CATERPILLAR®

SEBP4627-03
February 2008

RUTHZIL TRATOR COMERCIAL DE PEÇAS LTDA 11 97083-6812 ROLANDO

# Parts Manual

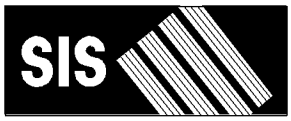


**See "General Information" for New Parts Manual Features.**

## 236B2 Skid Steer Loader

**HEN6750-Up (Machine)**
**CJS1-Up (Engine)**
**CYM1-Up (Engine)**

**Powered By 3044C Engine**
**This Parts Manual is also Available in .PDF Format on Compact Disc (CD-ROM)-Caterpillar Form No. SERP4627.**

# Product and Dealer Information

Note: For product identification plate locations, see the section “Product Identification Information” in the Operation and Maintenance Manual.

**Delivery Date:** _____

## Product Information

Model: _____

Product Identification Number: _____

Engine Serial Number: _____

Transmission Serial Number: _____

Generator Serial Number: _____

Attachment Serial Numbers: _____

Attachment Information: _____

Customer Equipment Number: _____

Dealer Equipment Number: _____

## Dealer Information

Name: _____ Branch: _____

Address: _____

_____

_____

| | Dealer Contact | Phone Number | Hours |
|---|---|---|---|
| Sales: | _____ | _____ | _____ |
| Parts: | _____ | _____ | _____ |
| Service: | _____ | _____ | _____ |

# Informations produit et concessionnaire

Nota: Voir l'emplacement de la plaque signalétique du produit au chapitre "Informations produit" du guide d'utilisation et d'entretien.

**Date de livraison:** _____

## Informations produit

Modèle: _____

Numéro d'identification produit: _____

Numéro de série du moteur: _____

Numéro de série de la boîte de vitesses: _____

Numéro de série de l'alternateur: _____

Numéros de série d'équipement: _____

Informations sur l'équipement: _____

Numéro matériel client: _____

Numéro matériel concessionnaire: _____

## Informations concessionnaire

Nom: _____ Agence: _____

Adresse: _____

_____

_____

| | Contact concessionnaire | Numéro de téléphone | Heures |
|---|---|---|---|
| Ventes: | | | |
| Pièces: | | | |
| Service: | | | |

# Información del Producto/Distribuidor

Nota: Para saber la ubicación de las placas de identificación del producto, ver la sección “Información sobre identificación del producto” en el Manual de Operación y Mantenimiento.

**Fecha de entrega:** _____

## Información del producto

Modelo: _____

Número de identificación del producto: _____

Número de serie del motor: _____

Número de serie de la transmisión: _____

Número de serie del generador: _____

Números de serie de los accesorios: _____

Información sobre los accesorios: _____

Número del equipo del cliente: _____

Número del equipo del distribuidor: _____

## Información del distribuidor

Nombre: _____ Sucursal: _____

Dirección: _____

_____

_____

| Comunicación con el distribuidor | Número de teléfono | Horas |
|---|---|---|
| Ventas: _____ | _____ | _____ |
| Piezas: _____ | _____ | _____ |
| Servicio: _____ | _____ | _____ |

# Informações Sobre Produto e Revendedor

Nota: Para localizações da placa de identificação do produto, consulte a seção, “Informações Sobre Identificação do Produto” no Manual de Operação e Manutenção.

**Data de Entrega:** _____

## Informações Sobre o Produto

Modelo: _____

Número de Identificação do Produto: _____

Número de Série do Motor: _____

Número de Série da Transmissão: _____

Número de Série do Gerador: _____

Números de Série de Acessórios: _____

Informações Sobre Acessórios: _____

Número do Equipamento do Cliente: _____

Número do Equipamento do Revendedor: _____

## Informações Sobre o Revendedor

Nome: _____ Filial: _____

Endereço: _____

_____

_____

| | Contato do Revendedor | Telefone | Horas |
|---|---|---|---|
| Vendas: | _____ | _____ | _____ |
| Peças: | _____ | _____ | _____ |
| Serviço: | _____ | _____ | _____ |

# Produkt- und Händlerinformation

Anmerkung: Für die Lage der Produkt-Identnummer und Seriennummern siehe Abschnitt “Produkt-Identinformation” im Betriebs- und Wartungshandbuch.

**Lieferdatum:** _____

## Produkt-Identinformation

Modell: _____

Produkt-Identnummer: _____

Seriennummer des Motors: _____

Seriennummer des Getriebes: _____

Seriennummer des Generators: _____

Seriennummern der Arbeitsgeräte: _____

Arbeitsgeräteinformation: _____

Kundennummer: _____

Händlernummer: _____

## Händlerinformation

Name: _____ Niederlassung: _____

Adresse: _____

_____

_____

| | Kontaktperson beim Händler | Telefon | Dienststunden |
|---|---|---|---|
| Verkauf: | _____ | _____ | _____ |
| Ersatzteile: | _____ | _____ | _____ |
| Service: | _____ | _____ | _____ |

# MEMORANDA

# TABLE OF CONTENTS


| Name | Page |
|---|---|
| **GENERAL INFORMATION** | A20 |
| **REPAIR ALTERNATIVES** | A39 |
| **SUPPLEMENTAL COOLANT ADDITIVES** | A44 |
| **MAINTENANCE PARTS** | A49 |
| **INDEX** | A68 |
| **MACHINE ARRANGEMENT** | 1 |
| CHASSIS AR | 1 |
| COMMON AR | 2 |
| CONTROL AR-MACHINE | 2 |
| CONVERSION AR-MACHINE | 3 |
| **ENGINE ARRANGEMENT** | 12 |
| ENGINE AR | 12 |
| ENGINE AR-PRIMARY | 13 |
| INSTALLATION AR-ENGINE | 16 |
| **BASIC ENGINE** | 17 |
| BEARING GP-MAIN | 17 |
| CAMSHAFT GP | 18 |
| CONNECTING ROD GP | 20 |
| COVER GP-VALVE MECHANISM | 21 |
| CRANKSHAFT GP | 22 |
| CYLINDER BLOCK GP | 24 |
| CYLINDER HEAD GP | 28 |
| DRAIN GP | 30 |
| DRAIN GP-ENGINE OIL | 31 |
| FLYWHEEL GP | 32 |
| GEAR GP-FRONT | 34 |
| GUARD GP-BELT | 37 |
| HOUSING GP-FLYWHEEL | 38 |
| HOUSING GP-FRONT | 40 |
| LIFTING GP-ENGINE | 44 |
| MOUNTING GP-ENGINE | 46 |
| PAN GP-OIL | 47 |
| PISTON & ROD GP | 51 |
| PISTON GP | 52 |
| PLUG GP-CYLINDER BLOCK | 53 |
| PLUG GP-ENGINE | 54 |
| PULLEY GP-CRANKSHAFT | 56 |
| PULLEY GP-WATER PUMP | 58 |
| V-BELT GP | 59 |
| VALVE MECHANISM GP | 60 |
| **LUBRICATION SYSTEM** | 61 |
| FILTER GP-ENGINE OIL | 61 |
| LINES GP-ENGINE OIL | 62 |
| PUMP GP-ENGINE OIL | 63 |
| VALVE GP-ENGINE OIL RELIEF | 64 |
| **COOLING SYSTEM** | 65 |
| COOLER GP-ENGINE OIL | 65 |
| HOUSING & REGULATOR GP | 66 |
| LINES GP-WATER | 67 |
| MOUNTING GP-RAD & OIL COOLER | 68 |
| PUMP GP-WATER | 70 |
| RADIATOR & HYD OIL COOLER GP | 71 |
| RADIATOR & OIL COOLER MTG GP | 72 |
| **AIR INLET AND EXHAUST SYSTEM** | 74 |
| AIR CLEANER GP | 74 |
| KIT-DEBRIS GUARD | 76 |
| LINES GP-AIR | 77 |
| MANIFOLD GP-EXHAUST | 79 |
| MANIFOLD GP-INLET | 80 |
| MUFFLER & MOUNTING GP | 81 |
| MUFFLER GP | 83 |
| TURBOCHARGER GP | 84 |
| **FUEL SYSTEM** | 88 |
| CABLE GP-GOVERNOR CONTROL | 88 |
| CONTROL GP-GOVERNOR | 89 |
| LINES GP-FUEL | 90 |
| LINES GP-FUEL INJECTION | 92 |
| LINES GP-FUEL PRM & FILTER | 96 |
| PUMP GP-FUEL INJECTION | 98 |
| PUMP GP-FUEL PRM & PRIM FILTER | 102 |
| **ELECTRICAL AND STARTING SYSTEM** | 103 |
| ALTERNATOR GP-CHARGING | 103 |
| BATTERY GP | 108 |
| CONTROL GP-INTERLOCK | 110 |
| CONVERSION AR-NON-ROADING | 111 |
| COVER GP-FUSE PANEL | 112 |
| ELECTRONICS GP-IMPLEMENT | 113 |
| ELECTRONICS GP-MACHINE | 114 |
| FASTENER GP-WIRING HARNESS | 115 |
| GLOW PLUG GP | 116 |
| HEATER GP-JACKET WATER | 117 |
| INSTALLATION GP-SECURITY | 119 |
| KIT-WORK TOOL CONTROL & WIRING | 121 |
| KIT-WORK TOOL WIRING | 122 |
| LAMP GP-FLOOD | 123 |
| LAMP GP-HEAD & SIGNAL | 125 |
| LAMP GP-STOP & TAIL | 127 |
| LAMP GP-WARNING BEACON | 129 |
| LIGHTING GP-FLOOD | 130 |
| LIGHTING GP-ROADING | 132 |
| LIGHTING GP-STOP & TAIL | 134 |
| LIGHTING GP-WARNING BEACON | 135 |
| SENSOR GP-TEMP & PRESS | 136 |
| STARTING MOTOR GP-ELECTRIC | 137 |
| SWITCH GP-PRESSURE | 140 |
| WARNING GP-BACKUP | 142 |

# TABLE OF CONTENTS


| Name | Page |
|---|---|
| WIRING GP-AIR CONDITIONER | 143 |
| WIRING GP-CHASSIS | 144 |
| WIRING GP-ENGINE | 149 |
| WIRING GP-HORN | 151 |
| WIRING GP-REAR LIGHTING | 152 |
| WIRING GP-WORK TOOL | 153 |
| **POWER TRAIN** | 155 |
| AXLE GP | 155 |
| DRIVE CONTROL AR-HYDROSTATIC | 157 |
| DRIVE GP-TANDEM | 160 |
| FILTER & LINES GP-HYDRAULIC | 161 |
| FILTER GP-OIL | 163 |
| LINES GP-HYDROSTATIC | 164 |
| MANIFOLD & LINES GP-CONTROL | 166 |
| MANIFOLD & SOLENOID GP-CONTROL | 170 |
| MANIFOLD GP-RETURN | 172 |
| MOTOR & MTG GP-HYDROSTATIC | 174 |
| MOTOR GP-PISTON | 176 |
| MOUNTING GP-PUMP | 180 |
| PUMP & MTG GP-HYDROSTATIC | 181 |
| PUMP GP-PISTON | 183 |
| TIRE & RIM GP | 187 |
| VALVE GP-SOLENOID | 194 |
| WHEEL & TIRE AR | 195 |
| WHEEL & TIRE GP | 198 |
| **FRAME AND BODY** | 200 |
| BUMPER GP | 200 |
| CONVERSION AR-ROADING | 201 |
| CONVERSION GP-ROADING | 204 |
| COUNTERWEIGHT GP | 208 |
| ENCLOSURE GP-ENGINE | 210 |
| FRAME & MTG GP-MACHINE | 212 |
| GUIDE GP-LINES | 214 |
| KIT-ENGINE ENCLOSURE SEAL | 215 |
| KIT-ROADING CONVERSION | 217 |
| LIFTING GP-MACHINE | 220 |
| MIRROR & MTG GP-REAR VIEW | 222 |
| MOUNTING GP-REGISTRATION | 223 |
| MOUNTING GP-ROADING LIGHTS | 225 |
| SUPPRESSION GP-SOUND | 227 |
| **HYDRAULIC SYSTEM** | 231 |
| ACCUMULATOR & MTG GP-HYDRAULIC | 231 |
| ADAPTER GP-OIL LINE | 232 |
| CYLINDER & MTG GP-ANGLE BLADE | 233 |
| CYLINDER & MTG GP-BUCKET | 235 |
| CYLINDER & MTG GP-LIFT ARM | 236 |
| CYLINDER GP-BUCKET | 239 |
| CYLINDER GP-GRAPPLE | 240 |
| CYLINDER GP-HYDRAULIC | 241 |
| CYLINDER GP-LIFT | 248 |
| CYLINDER GP-TILT | 250 |
| HYDRAULIC AR | 252 |
| INSTALLATION GP-AUXILIARY HYD | 254 |
| KIT-JOYSTICK CONVERSION | 256 |
| KIT-QUICK COUPLER CONVERSION | 259 |
| LINES GP-BUCKET | 262 |
| LINES GP-CONNECTING | 276 |
| LINES GP-GRAPPLE | 280 |
| LINES GP-HYDRAULIC FAN | 286 |
| LINES GP-HYDRAULIC OIL COOLER | 289 |
| LINES GP-LIFT CYLINDER | 291 |
| LINES GP-LOWERING CONTROL | 295 |
| LINES GP-PILOT | 297 |
| LINES GP-PUMP | 301 |
| LINES GP-TILT CYLINDER | 303 |
| LINES GP-WORK TOOL | 307 |
| MANIFOLD & LINES GP-COUPLER | 311 |
| MANIFOLD & MTG GP-CONTROL | 315 |
| MANIFOLD & SOLENOID GP-CONTROL | 317 |
| MANIFOLD GP-CONTROL | 318 |
| MOTOR & MTG GP-HYDRAULIC FAN | 320 |
| MOTOR GP-GEAR | 323 |
| MOUNTING GP-CYLINDER | 329 |
| PLUG GP-PILOT VALVE | 332 |
| PUMP & MTG GP-WORK TOOL | 333 |
| PUMP GP-GEAR | 335 |
| TANK & MTG GP-HYDRAULIC | 337 |
| TANK GP-HYDRAULIC | 338 |
| VALVE & MTG GP-CONTROL | 339 |
| VALVE GP-CONTROL | 340 |
| VALVE GP-MANUAL | 343 |
| VALVE GP-PILOT | 344 |
| VALVE GP-RELIEF | 354 |
| VALVE GP-SOLENOID | 355 |
| **WORK TOOLS** | 360 |
| ARM GP-MATERIAL HANDLING | 360 |
| BLADE AR | 361 |
| BLADE GP-ANGLING | 364 |
| BLADE GP-MULTIPURPOSE BUCKET | 368 |
| BUCKET AR-DIRT | 372 |
| BUCKET AR-GENERAL PURPOSE | 373 |
| BUCKET AR-GRAPPLE | 375 |
| BUCKET AR-LIGHT MATERIAL | 382 |
| BUCKET AR-MULTIPURPOSE | 382 |
| BUCKET AR-UTILITY | 385 |
| BUCKET AS-DIRT | 387 |
| BUCKET AS-GENERAL PURPOSE | 391 |
| BUCKET AS-LIGHT MATERIAL | 396 |
| BUCKET GP-DIRT | 399 |
| BUCKET GP-GENERAL PURPOSE | 400 |
| BUCKET GP-GRAPPLE | 401 |
| BUCKET GP-MULTIPURPOSE | 407 |
| BUCKET GP-UTILITY | 412 |

# TABLE OF CONTENTS


| Name | Page |
|---|---|
| CARRIAGE & FORK AR | 415 |
| CARRIAGE GP-FORK | 416 |
| COUPLER AR-QUICK | 417 |
| COUPLER GP-QUICK | 418 |
| COVER GP-LINES | 421 |
| CYLINDER & LINK GP-COUPLER | 422 |
| EDGE GP-BIT & CUTTING | 424 |
| EDGE GP-CUTTING | 424 |
| FORK AR-GRAPPLE | 430 |
| FORK GP-GRAPPLE | 432 |
| FORK GP-PALLET | 435 |
| FORK GP-UTILITY | 437 |
| FRAME GP-BLADE | 439 |
| FRAME GP-FORK | 440 |
| FRAME GP-GRAPPLE | 442 |
| GRAPPLE GP-UTILITY | 443 |
| HANDLE & PIN GP-COUPLER | 446 |
| HANDLE GP-COUPLER | 448 |
| KIT-ROADING PLATE & MOUNTING | 450 |
| LINK GP-COUPLER | 451 |
| LOCK GP-QUICK COUPLER | 452 |
| PLATE GP-ROADING | 453 |
| SPRING GP-BLADE | 455 |
| STEP GP-MATERIAL HANDLING ARM | 456 |
| STOP GP-GRAPPLE | 457 |
| STRAINER GP-WATER | 458 |
| TANK & MTG GP-WATER | 459 |
| TANK GP-WATER | 462 |
| TOOTH GP-UNI | 463 |
| **OPERATOR STATION** | 464 |
| ACCUMULATOR GP-REFRIGERANT | 464 |
| AIR CONDITIONER AR | 466 |
| AIR CONDITIONER GP | 467 |
| ARMREST & MOUNTING GP | 472 |
| ARMREST GP | 473 |
| BOX GP-STORAGE | 475 |
| CAB AR-ENCLOSED ROPS | 476 |
| CAB GP-ENCLOSED ROPS | 477 |
| CABLE GP-CONTROL | 479 |
| COMPRESSOR & MOTOR GP-REFRIG | 480 |
| COMPRESSOR & MTG GP-REFRIG | 483 |
| CONDENSER & MTG GP-REFRIGERANT | 484 |
| CONTROL GP-HANDLE | 485 |
| CONTROL GP-PILOT OPERATED HYD | 492 |
| COUPLING GP-DRIVE | 521 |
| COVER GP-CONSOLE | 523 |
| COVER GP-INSTRUMENT PANEL | 525 |
| DOOR & MTG GP-CAB | 526 |
| DOOR GP-CAB | 531 |
| DUCT & CONTROL GP | 537 |
| FRAME GP-WINDOW | 539 |
| GAUGE & WARNING GP | 541 |
| GUARD GP-ROPS/FOPS | 543 |
| HANDHOLD GP | 544 |
| HANDLE GP-MODULAR | 545 |
| HEATER & MTG GP-CAB | 547 |
| HEATER AR-CAB | 548 |
| HEATER GP-CAB | 549 |
| HOLDER-CUP | 554 |
| HOUSING AS-SIDE | 555 |
| INSTALLATION GP | 556 |
| KIT-AIR COND & HEATER INSTL | 556 |
| KIT-AIR CONDITIONER INSTL | 558 |
| KIT-CAB DOOR & MOUNTING | 560 |
| KIT-CAB SEAL | 562 |
| LEVER GP-GOVERNOR | 563 |
| LINER GP-CAB | 564 |
| LINER-CAB | 565 |
| LINES GP-AIR CONDITIONER | 566 |
| LINES GP-HEATER | 568 |
| LITERATURE GP | 570 |
| MIRROR GP-REAR VIEW | 571 |
| MODULE GP-WARNING INDICATOR | 572 |
| MOUNTING GP-ROPS | 574 |
| OPTION AR-CAB | 575 |
| PANEL AR-INSTRUMENT | 576 |
| PANEL GP-INSTRUMENT | 577 |
| PANEL GP-SIDE | 581 |
| PEDAL GP-GOVERNOR | 582 |
| PLATFORM GP-OPERATOR | 584 |
| SEAL GP-CAB | 586 |
| SEAT BELT GP | 588 |
| SEAT GP | 592 |
| SEAT GP-ADJUSTABLE | 594 |
| SPRING GP-GAS | 595 |
| VISOR GP-CAB | 596 |
| WINDOW GP-CAB | 598 |
| **SERVICE EQUIPMENT AND SUPPLIES** | 605 |
| FILM GP | 605 |
| PLATE & FILM GP | 610 |
| **PART NUMBER INDEX** | B1 |

# TABLE DES MATIÈRES


| Désignation | Page |
|---|---|
| **GÉNÉRALITÉS** | A23 |
| **OPTIONS DE RÉPARATION** | A40 |
| **ADDITIFS POUR LIQUIDE DE REFROIDISSEMENT** | A45 |
| **PIÈCES DE RECHANGE** | A52 |
| **INDEX** | A78 |
| **MACHINE COMPLÈTE** | 1 |
| VERSION DE CHASSIS | 1 |
| VERSION NORMALE | 2 |
| VERSION DE COMMANDE DE MACHINE | 2 |
| VERSION DE TRANSFORMATION MACHINE | 3 |
| **MOTEUR COMPLET** | 12 |
| MOTEUR (VERSION) | 12 |
| MOTEUR (VERSION PRINCIPALE) | 13 |
| MONTAGE DE MOTEUR (VERSION) | 16 |
| **MOTEUR DE BASE** | 17 |
| PALIER PRINCIPAL (ASS) | 17 |
| ARBRE A CAMES (ASS) | 18 |
| BIELLE (ASS) | 20 |
| CACHE-SOUPAPES (ASS) | 21 |
| VILEBREQUIN (ASS) | 22 |
| BLOC-CYLINDRES (ASS) | 24 |
| CULASSE (ASS) | 28 |
| VIDANGE D'EAU (ASS) | 30 |
| VIDANGE-HUILE DE MOTEUR (ASS) | 31 |
| VOLANT MOTEUR (ASS) | 32 |
| PIGNONNERIE AV (ASS) | 34 |
| PROTEGE-COURROIE (ASS) | 37 |
| CARTER DE VOLANT (ASS) | 38 |
| CARTER AV (ASS) | 40 |
| OEILLETONS DE LEVAGE MOTEUR (ASS) | 44 |
| MONTAGE DE MOTEUR (ASS) | 46 |
| HUILE MOTEUR - CARTER (ASS) | 47 |
| PISTON ET BIELLE (ASS) | 51 |
| PISTON (ASS) | 52 |
| BOUCHON DE BLOC-CYLINDRES (ASS) | 53 |
| BOUCHON DE MOTEUR (ASS) | 54 |
| VILEBREQUIN - POULIE (ASS) | 56 |
| POULIE DE POMPE À EAU (ASS) | 58 |
| *V-BELT GP | 59 |
| CULBUTERIE (ASS) | 60 |
| **CIRCUIT DE GRAISSAGE** | 61 |
| FILTRE À HUILE MOTEUR (ASS) | 61 |
| CANALISATIONS D'HUILE MOTEUR (ASS) | 62 |
| POMPE A HUILE MOTEUR (ASS) | 63 |
| CLAPET DE DÉCHARGE D'HUILE MOTEUR (ASS) | 64 |
| **CIRCUIT DE REFROIDISSEMENT** | 65 |
| REFROIDISSEUR D'HUILE MOTEUR (ASS) | 65 |
| THERMOSTAT ET BOITIER (ASS) | 66 |
| CANALISATIONS D'EAU (ASS) | 67 |
| MONTAGE DE RADIATEUR ET REFROIDISSEUR D'HUILE (ASS) | 68 |
| POMPE A EAU (ASS) | 70 |
| RADIATEUR ET REFROIDISSEUR D'HUILE HYDRAULIQUE (ASS) | 71 |
| RADIATEUR ET REFROIDISSEUR D'HUILE-MONTAGE (ASS) | 72 |
| **CIRCUIT D'ADMISSION D'AIR ET D'ÉCHAPPEMENT** | 74 |
| FILTRE A AIR (ASS) | 74 |
| KIT PROTÈGE-DÉBRIS | 76 |
| CANALISATIONS D'AIR (ASS) | 77 |
| COLLECTEUR D'ÉCHAPPEMENT (ASS) | 79 |
| COLLECTEUR D'ADMISSION (ASS) | 80 |
| SILENCIEUX ET MONTAGE (ASS) | 81 |
| SILENCIEUX (ASS) | 83 |
| TURBOCOMPRESSEUR (ASS) | 84 |
| **CIRCUIT DE CARBURANT** | 88 |
| CÂBLE DE COMMANDE DU RÉGULATEUR (ASS) | 88 |
| COMMANDE DE RÉGULATEUR (ASS) | 89 |
| CANALISATIONS DE CARBURANT (ASS) | 90 |
| CANALISATIONS D'INJECTION DE CARBURANT (ASS) | 92 |
| CANALISATIONS DE FILTRE ET D'AMORÇAGE DE CARBURANT (ASS) | 96 |
| POMPE D'INJECTION DE CARBURANT (ASS) | 98 |
| POMPE D'AMORÇAGE DE CARBURANT ET FILTRE PRINCIPAL | 102 |
| **CIRCUIT ÉLECTRIQUE ET DE DÉMARRAGE** | 103 |
| ALTERNATEUR DE CHARGE (ASS) | 103 |
| BATTERIE (ASS) | 108 |


* TRADUCTION NON DISPONIBLE AU MOMENT DE LA PUBLICATION

# TABLE DES MATIÈRES


| Désignation | Page |
|---|---|
| COMMANDE D'INTERVERROUILLAGE (ASS) | 110 |
| VERSION DE TRANSFORMATION - DÉPLACEMENT NON ROUTIER | 111 |
| COUVERCLE - PANNEAU DE FUSIBLES (ASS) | 112 |
| COMMANDE ÉLECTRONIQUE D'ÉQUIPEMENT (ASS) | 113 |
| ÉLECTRONIQUE - MACHINE (ENS) | 114 |
| BOULONNERIE DE FAISCEAU DE CABLES | 115 |
| BOUGIE DE PRÉCHAUFFAGE (ASS) | 116 |
| EAU DES CHEMISES - RECHAUFFEUR (ASS) | 117 |
| MONTAGE-SÉCURITÉ (ASS) | 119 |
| KIT DE COMMANDE D'OUTIL DE TRAVAIL ET CÂBLAGE | 121 |
| KIT DE CÂBLAGE D'OUTIL DE TRAVAIL | 122 |
| LAMPE - PHARE (ASS) | 123 |
| LAMPE - PHARE ET CLIGNOTANT | 125 |
| FEUX ARRIÈRE ET FEUX D'ARRÊT | 127 |
| LAMPE - GYROPHARE (ASS) | 129 |
| ÉCLAIRAGE - PROJECTEURS (ASS) | 130 |
| ÉCLAIRAGE - FEUX DE ROUTE (ASS) | 132 |
| ÉCLAIRAGE-FEUX DE STOP ET ARRIÈRE (ASS) | 134 |
| ÉCLAIRAGE - GYROPHARE (ASS) | 135 |
| CAPTEUR - TEMP. ET PRESSION (ASS) | 136 |
| DÉMARREUR ÉLECTRIQUE (ASS) | 137 |
| MANOCONTACT | 140 |
| AVERTISSEUR DE RECUL (ASS) | 142 |
| CABLAGE - CLIMATISEUR (ASS) | 143 |
| CABLAGE DE CHASSIS (ASS) | 144 |
| CABLAGE DE MOTEUR (ASS) | 149 |
| CÂBLAGE DE KLAXON (ASS) | 151 |
| CABLAGE D'ECLAIRAGE ARRIERE (ASS) | 152 |
| CÂBLAGE - OUTIL DE TRAVAIL (ASS) | 153 |
| **TRANSMISSION** | 155 |
| ESSIEU (ASS) | 155 |
| VERSION DE COMMANDE D'ENTRAINEMENT-HYDROSTATIQUE | 157 |
| ENTRAINEMENT EN TANDEM (ASS) | 160 |
| FILTRE ET CANALISATIONS HYRAULIQUES (ASS) | 161 |
| FILTRE A HUILE (ASS) | 163 |
| CANALISATIONS HYDROSTATIQUES (ASS) | 164 |
| COLLECTEUR ET CANALISATIONS (ASS) - COMMANDE | 166 |
| COLLECTEUR ET SOLÉNOÏDE (ASS)-COMMANDE | 170 |
| COLLECTEUR-RETOUR (ASS) | 172 |
| MOTEUR ET MONTAGE - HYDROSTATIQUE (ASS) | 174 |
| GROUPE DE MOTEUR A PISTONS | 176 |
| MONTAGE DE POMPE (ASS) | 180 |
| POMPE HYDROSTATIQUE ET MONTAGE (ASS) | 181 |
| POMPE A PISTONS (ASS) | 183 |
| PNEU ET JANTE (ASS) | 187 |
| SOUPAPE - SOLÉNOÏDE (ASS) | 194 |
| ROUE ET PNEU (VERSION) | 195 |
| ROUE ET PNEU (ASS) | 198 |
| **CHÂSSIS ET BENNE** | 200 |
| PARE-CHOCS (ASS) | 200 |
| VERSION DE TRANSFORMATION POUR DÉPLACEMENT ROUTIER | 201 |
| GROUPE DE TRANSFORMATION - DÉPLACEMENT ROUTIER | 204 |
| CONTREPOIDS (ASS) | 208 |
| CARENAGE DE MOTEUR (ASS) | 210 |
| BÂTI DE MACHINE ET MONTAGE (ASS) | 212 |
| GUIDE - CANALISATIONS (ASS) | 214 |
| KIT DE JOINT DE CARÉNAGE MOTEUR | 215 |
| KIT DE TRANSFORMATION POUR DÉPLACEMENTS SUR ROUTE | 217 |
| MACHINE DE LEVAGE | 220 |
| RÉTROVISEUR ET MONTAGE (ASS) | 222 |
| MONTAGE - IMMATRICULATION (ASS) | 223 |
| MONTAGE DE FEUX DE DÉPLACEMENT SUR ROUTE (ASS) | 225 |
| INSONORISATION (ASS) | 227 |
| **CIRCUIT HYDRAULIQUE** | 231 |
| ACCUMULATEUR ET MONTAGE - HYDRAULIQUE (ASS) | 231 |
| RACCORD DE CANALISATION D'HUILE (ASS) | 232 |
| VÉRIN DE LAME D'ORIENTATION ET MONTAGE (ASS) | 233 |
| VÉRIN ET MONTAGE - GODET (ASS) | 235 |
| VÉRIN DE BRAS DE LEVAGE ET MONTAGE (ASS) | 236 |
| VERIN DE GODET (ASS) | 239 |
| PINCE - VÉRIN (ASS) | 240 |
| VÉRIN HYDRAULIQUE (ASS) | 241 |
| VÉRIN DE LEVAGE (ASS) | 248 |
| VÉRIN D'INCLINAISON (ASS) | 250 |


* TRADUCTION NON DISPONIBLE AU MOMENT DE LA PUBLICATION

# TABLE DES MATIÈRES


| Désignation | Page |
|---|---|
| VERSION HYDRAULIQUE | 252 |
| MONTAGE HYDRAULIQUE AUXILIAIRE (ASS) | 254 |
| KIT DE TRANSFORMATION DE MANIPULATEUR | 256 |
| KIT DE TRANSFORMATION DU COUPLEUR EXPRESS | 259 |
| ECLAIRAGE DE GODET (ASS) | 262 |
| CANALISATIONS - BRANCHEMENT (ASS) | 276 |
| PINCE - CANALISATIONS (ASS) | 280 |
| CANALISATIONS HYDRAULIQUES DE VENTILATEUR (ASS) | 286 |
| CANALISATIONS DE REFROIDISSEUR D'HUILE HYDR. (ASS) | 289 |
| CANALISATIONS DE VÉRIN DE LEVAGE (ASS) | 291 |
| CANALISATIONS-COMMANDE D'ABAISSEMENT (ASS) | 295 |
| CANALISATIONS A COMMANDE PILOTE (ASS) | 297 |
| CANALISATIONS DE POMPE (ASS) | 301 |
| CANALISATIONS DU VÉRIN D'INCLINAISON (ASS) | 303 |
| CANALISATIONS - OUTIL DE TRAVAIL (ASS) | 307 |
| COLLECTEUR ET CANALISATIONS DE COUPLEUR (ASS) | 311 |
| COMMANDE DE COLLECTEUR ET MONTAGE (ASS) | 315 |
| COLLECTEUR ET SOLÉNOÏDE (ASS)-COMMANDE | 317 |
| COLLECTEUR - COMMANDE (ASS) | 318 |
| MOTEUR ET MONTAGE DE VENTILATEUR HYDRAULIQUE (ASS) | 320 |
| MOTEUR À ENGRENAGES (ASS) | 323 |
| MONTAGE DE VÉRIN (ASS) | 329 |
| BOUCHON DE SOUPAPE PILOTE (ASS) | 332 |
| POMPE ET MONTAGE - OUTIL DE TRAVAIL (ASS) | 333 |
| POMPE A ENGRENAGES (ASS) | 335 |
| RÉSERVOIR HYDRAULIQUE ET MONTAGE (ASS) | 337 |
| RÉSERVOIR HYDRAULIQUE (ASS) | 338 |
| DISTRIBUTEUR ET MONTAGE (ASS) | 339 |
| DISTRIBUTEUR (ASS) | 340 |
| SOUPAPE A COMMANDE MANUELLE (ASS) | 343 |
| SOUPAPE PILOTE (ASS) | 344 |
| CLAPET DE DECHARGE (ASS) | 354 |
| SOUPAPE - SOLÉNOÏDE (ASS) | 355 |
| **OUTILS DE TRAVAIL** | 360 |
| BRAS DE MANUTENTION (ASS) | 360 |
| LAME (VERSION) | 361 |
| LAME À ORIENTATION (ASS) | 364 |
| LAME DE GODET TOUS-TRAVAUX | 368 |
| GODET - SALETÉ (VERSION) | 372 |
| GODET NORMAL (VERSION) | 373 |
| GODET - PINCE (VERSION) | 375 |
| GODET - MATÉRIAUX MEUBLES (VERSION) | 382 |
| GODET TOUS-TRAVAUX (VERSION) | 382 |
| VERSION DE GODET POUR TRAVAUX DE SERVITUDE | 385 |
| GODET - SALETÉ (ENS) | 387 |
| GODET NORMAL (ENS) | 391 |
| GODET POUR MATERIAUX MEUBLES (ENS) | 396 |
| GODET POUR TERRASSEMENT (ASS) | 399 |
| GODET NORMAL (ASS) | 400 |
| GODET - PINCE (ASS) | 401 |
| GODET TOUS-TRAVAUX (ASS) | 407 |
| GODET POUR TRAVAUX DE SERVITUDE (ASS) | 412 |
| VERSION DE TABLIER ET DE FOURCHE | 415 |
| TABLIER - FOURCHE (ASS) | 416 |
| COUPLEUR EXPRESS (VERSION) | 417 |
| COUPLEUR EXPRESS (ASS) | 418 |
| COUVERCLE-CANALISATIONS (ASS) | 421 |
| VÉRIN ET BIELLE DE COUPLEUR (ASS) | 422 |
| EMBOUT ET LAME DE COUPE (ASS) | 424 |
| LAME DE COUPE (ASS) | 424 |
| FOURCHE - PINCE (VERSION) | 430 |
| FOURCHE - PINCE (ASS) | 432 |
| FOURCHE PALLETTE (ASS) | 435 |
| FOURCHE-RÉSEAU PUBLIC (ASS) | 437 |
| BÂTI DE LAME (ASS) | 439 |
| BÂTI DE FOURCHE (ASS) | 440 |
| PINCE - BÂTI (ASS) | 442 |
| PINCE-RÉSEAU PUBLIC (ASS) | 443 |
| POIGNÉE ET AXE DE COUPLEUR (ASS) | 446 |
| POIGNÉE DE COUPLEUR (ASS) | 448 |
| KIT DE PLAQUE DE DÉPLACEMENT ROUTIER ET MONTAGE | 450 |
| BIELLE DE COUPLEUR (ASS) | 451 |
| VERROUILLAGE DE COUPLEUR EXPRESS (ASS) | 452 |
| PLAQUE-DÉPLACEMENT ROUTIER (ASS) | 453 |
| RESSORT DE LAME (ASS) | 455 |


* TRADUCTION NON DISPONIBLE AU MOMENT DE LA PUBLICATION

# TABLE DES MATIÈRES


| Désignation | Page |
|---|---|
| MARCHEPIED-BRAS DE MANUTENTION (ASS) | 456 |
| ARRÊT-PINCE (ASS) | 457 |
| TAMIS D'EAU (ASS) | 458 |
| RÉSERVOIR D'EAU ET MONTAGE (ASS) | 459 |
| RÉSERVOIR D'EAU (ASS) | 462 |
| DENT MONOBLOC (ASS) | 463 |
| **POSTE DE CONDUITE** | 464 |
| ACCUMULATEUR - CLIMATISEUR (ASS) | 464 |
| CLIMATISEUR (VERSION) | 466 |
| CLIMATISEUR (ASS) | 467 |
| ACCOUDOIR ET MONTAGE (ASS) | 472 |
| ACCOUDOIR (ASS) | 473 |
| COFFRE DE RANGEMENT (ASS) | 475 |
| CABINE ROPS FERMÉE (VERSION) | 476 |
| *CAB GP-ENCLOSED ROPS | 477 |
| CABLAGE - COMMANDE MANUELLE ELECTRIQUE | 479 |
| COMPRESSEUR ET MOTEUR DE RÉFRIGÉRATION (ASS) | 480 |
| COMPRESSEUR ET MONTAGE - RÉFRIGÉRANT (ASS) | 483 |
| CONDENSATEUR ET MONTAGE (RÉFRIGÉRANT) | 484 |
| COMMANDE DE POIGNÉE (ASS) | 485 |
| COMMANDE HYDRAULIQUE PILOTE (ASS) | 492 |
| ACCOUPLEMENT D'ENTRAINEMENT (ASS) | 521 |
| COUVERCLE DE LA CONSOLE (ASS) | 523 |
| COUVERCLE DU TABLEAU DE BORD (ASS) | 525 |
| PORTE DE CABINE ET MONTAGE (ASS) | 526 |
| PORTIÈRE DE CABINE (ASS) | 531 |
| CONDUIT ET COMMANDE (ASS) | 537 |
| CADRE DE VITRE (ASS) | 539 |
| INDICATEURS ET TÉMOINS LUMINEUX (ASS) | 541 |
| PROTECTION DE ROPS/FOPS (ASS) | 543 |
| POIGNÉE | 544 |
| POIGNÉE MODULAIRE (ASS) | 545 |
| CHAUFFAGE ET MONTAGE - CABINE (ASS) | 547 |
| CHAUFFAGE DE CABINE (VERSION) | 548 |
| CHAUFFAGE DE CABINE (ASS) | 549 |
| *HOLDER-CUP | 554 |
| CÔTÉ CARTER (ENS) | 555 |
| GROUPE DE MONTAGE | 556 |
| KIT DE MONTAGE DE CLIMATISEUR ET CHAUFFAGE | 556 |
| KIT DE MONTAGE DE CLIMATISEUR | 558 |
| KIT DE PORTE DE CABINE ET MONTAGE | 560 |
| KIT DE JOINT DE CABINE | 562 |
| LEVIER DE RÉGULATEUR (ASS) | 563 |
| CABINE - REVÊTEMENT (ASS) | 564 |
| CAPITONNAGE | 565 |
| CANALISATIONS DE CLIMATISEUR (ASS) | 566 |
| CANALISATIONS DE CHAUFFAGE (ASS) | 568 |
| LITTÉRATURE (ASS) | 570 |
| RÉTROVISEUR (ASS) | 571 |
| MODULE - TÉMOIN (ASS) | 572 |
| MONTAGE DU TOIT ROPS (ASS) | 574 |
| VERSION D'OPTION DE CABINE | 575 |
| VERSION DE TABLEAU DE BORD | 576 |
| TABLEAU DE BORD (ASS) | 577 |
| PANNEAU LATERAL (ASS) | 581 |
| RÉGULATEUR - PÉDALE (ASS) | 582 |
| PLATE-FORME DE CABINE | 584 |
| JOINT DE CABINE (ASS) | 586 |
| CEINTURE DE SECURITE (ASS) | 588 |
| SIÈGE (ASS) | 592 |
| SIÈGE RÉGLABLE (ASS) | 594 |
| RESSORT-GAZ (ASS) | 595 |
| RETROVISEUR - CABINE (ASS) | 596 |
| VITRE DE CABINE (ASS) | 598 |
| **MATÉRIEL ET FOURNITURES D'ENTRETIEN** | 605 |
| PLAQUE SIGNALÉTIQUE (ASS) | 605 |
| PLAQUES SIGNALETIQUES ET AUTOCOLLANTS (ASS) | 610 |
| **INDEX DE NUMÉROS DE PIÈCES** | B1 |


* TRADUCTION NON DISPONIBLE AU MOMENT DE LA PUBLICATION

# CONTENIDO


| Nombre | Página |
|---|---|
| **INFORMACIÓN GENERAL** | A27 |
| **ALTERNATIVAS DE REPARACIÓN** | A41 |
| **ADITIVOS DE REFRIGERANTE SUPLEMENTARIOS** | A46 |
| **PIEZAS DE MANTENIMIENTO** | A56 |
| **INDICE** | A90 |
| **CONFIGURACION DE LA MAQUINA** | 1 |
| CHASIS (CONFIG) | 1 |
| CONFIGURACIÓN COMÚN | 2 |
| *CONTROL AR-MACHINE | 2 |
| CONVERSION DE LA MAQUINA (CONFIG) | 3 |
| **CONFIGURACION DE MOTOR** | 12 |
| CONFIGURACIÓN DE MOTORES | 12 |
| MOTOR PRIMARIO (CONFIG) | 13 |
| CONFIGURACIÓN DE INSTALACIÓN DEL MOTOR | 16 |
| **MOTOR BASICO** | 17 |
| GRUPO DE COJINETES DE BANCADA | 17 |
| ÁRBOL DE LEVAS (GR) | 18 |
| BIELA (GR) | 20 |
| TAPA DEL MECANISMO DE VÁLVULAS (GR) | 21 |
| CIGÜEÑAL (GR) | 22 |
| BLOQUE MOTOR (GR) | 24 |
| CULATA DE CILINDROS (GR) | 28 |
| DRENAJE (GR) | 30 |
| DRENAJE DEL ACEITE DE MOTOR | 31 |
| VOLANTE (GR) | 32 |
| ENGRANAJE DELANTERO (GR) | 34 |
| PROTECTOR DE CORREA (GR) | 37 |
| VOLANTE - CAJA DE (GR) | 38 |
| CAJA DELANTERA (GR) | 40 |
| CÁNCAMOS DE LEVANTAMIENTO DEL MOTOR (GR) | 44 |
| MONTAJE DEL MOTOR (GR) | 46 |
| CÁRTER - COLECTOR DEL (GR) | 47 |
| PISTÓN Y BIELA (GR) | 51 |
| PISTON (GR) | 52 |
| TAPÓN DEL BLOQUE MOTOR (GR) | 53 |
| TAPÓN DEL MOTOR (GR) | 54 |
| CIGÜEÑAL - POLEA DE (GR) | 56 |
| GRUPO, MANIJA, BOMBA DE AGUA | 58 |
| *V-BELT GP | 59 |
| MECANISMO DE VÁLVULAS (GR) | 60 |
| **SISTEMA DE LUBRICACION** | 61 |
| FILTRO DE ACEITE DEL MOTOR (GR) | 61 |
| TUBERÍAS DE ACEITE DEL MOTOR (GR) | 62 |
| BOMBA DE ACEITE DEL MOTOR (GR) | 63 |
| VALVULA DE ALIVIO DE ACEITE DE MOTOR (GR) | 64 |
| **SISTEMA DE ENFRIAMIENTO** | 65 |
| ENFRIADOR DE ACEITE DEL MOTOR (GR) | 65 |
| REGULADOR Y CAJA (GR) | 66 |
| TUBERÍAS DEL AGUA (GR) | 67 |
| GRUPO DEMONTAJE DE RADIADOR Y ENFRIAMIENTO DE ACEITE | 68 |
| BOMBA DE AGUA (GR) | 70 |
| RADIADOR Y ENFRIADOR DE ACEITE HIDRÁULICO (GR) | 71 |
| MONTAJE DE RADIADOR Y ENFRIAMIENTO DE ACEITE (GR) | 72 |
| **SISTEMA DE ESCAPE Y ADMISION DE AIRE** | 74 |
| FILTRO DE AIRE (GR) | 74 |
| *KIT-DEBRIS GUARD | 76 |
| AIRE - TUBERÍAS DE (GR) | 77 |
| MÚLTIPLE DE ESCAPE (GR) | 79 |
| MÚLTIPLE DE ADMISIÓN (GR) | 80 |
| SILENCIADOR Y MONTAJE GR | 81 |
| SILENCIADOR (GR) | 83 |
| TURBOCOMPRESOR (GR) | 84 |
| **SISTEMA DE COMBUSTIBLE** | 88 |
| CABLE GR-CONTROL DE MANDO | 88 |
| CONTROL DE REGULADOR (GR) | 89 |
| TUBERÍAS DE COMBUSTIBLE (GR) | 90 |
| TUBERÍAS DE INYECCIÓN DE COMBUSTIBLE (GR) | 92 |
| TUBERIAS (GR) -COMBUSTIBLE PRIMARIO Y FILTRO | 96 |
| BOMBA DE INYECCIÓN DE COMBUSTIBLE (GR) | 98 |
| BOMBA DE CEBADO Y FILTRO PRIMARIO DE COMBUSTIBLE (GR) | 102 |
| **SISTEMA DE ARRANQUE ELECTRICO** | 103 |
| CARGA - ALTERNADOR DE (GR) | 103 |
| BATERÍA (GR) | 108 |
| CONTROL DE TRABA (GR) | 110 |
| CONFIGURACIÓN DE TRANSFORMACIÓN PARA OBRAS | 111 |
| CUBIERTO DEL PANEL DE FUSIBLES (GR) | 112 |


* NO HAY TRADUCCION DISPONIBLE EN EL MOMENTO DE LA IMPRESION

# CONTENIDO


| Nombre | Página |
|---|---|
| IMPLEMENTOS (GR ELECTRÓNICO) | 113 |
| ELECTRÓNICA DE LA MÁQUINA (GR) | 114 |
| TORNILLERIA DE MAZO DE CABLES (GR) | 115 |
| BUJÍA INCANDESCENTE (GR) | 116 |
| AGUA DE LAS CAMISAS - CALENTADOR DEL (GR) | 117 |
| INSTALACION DE SEGURIDAD (GR) | 119 |
| *KIT-WORK TOOL CONTROL & WIRING | 121 |
| *KIT-WORK TOOL WIRING | 122 |
| REFLECTOR (GR) | 123 |
| LÁMPARA DE LUZ DELANTERA Y DE SEÑAL (GR) | 125 |
| LUCES DE PARADA Y COLA (GR) | 127 |
| LÁMPARA DE BALIZA DE ADVERTENCIA (GR) | 129 |
| LUCES DE REFLECTOR (GR) | 130 |
| LUCES DE DESPLAZAMIENTO (GR) | 132 |
| LUCES DE PARADA Y DE COLA (GR) | 134 |
| LUZ DE BALIZA (GR) | 135 |
| GRUPO DE SENSORES DE TEMPERATURA Y PRESIÓN | 136 |
| MOTOR DE ARRANQUE ELÉCTRICO (GR) | 137 |
| INTERRUPTOR DE PRESIÓN (GR) | 140 |
| RETROCESO - ALARMA DE (GR) | 142 |
| CABLES DEL ACONDICIONADOR DE AIRE (GR) | 143 |
| CABLES DEL CHASIS (GR) | 144 |
| CABLES DEL MOTOR (GR) | 149 |
| CABLE GR-BOCINA | 151 |
| ALAMBRADO DE LUCES TRASERAS (GR) | 152 |
| CABLES DE LA HERRAMIENTA DE TRABAJO (GR) | 153 |
| **TREN DE FUERZA** | 155 |
| EJE (GR) | 155 |
| CONTROL DE MANDO HIDROSTATICO (CONFIG) | 157 |
| MANDO TANDEM (GR) | 160 |
| FILTROS Y TUBERÍAS HIDRÁULICAS (GR) | 161 |
| FILTRO DE ACEITE (GR) | 163 |
| TUBERÍAS HIDROSTÁTICAS (GR) | 164 |
| *MANIFOLD & LINES GP-CONTROL | 166 |
| *MANIFOLD & SOLENOID GP-CONTROL | 170 |
| RETORNO EN EL MULTIPLE(GR) | 172 |
| MOTOR HIDROSTATICO Y MONTAJE (GR) | 174 |
| PISTONES DEL MOTOR (GR) | 176 |
| MONTAJE DE LA BOMBA (GR) | 180 |
| HIDROSTATICO, BOMBA Y GRUPO DE MONTAJE | 181 |
| BOMBA DE PISTONES (GR) | 183 |
| ARO Y LLANTA (GR) | 187 |
| VÁLVULA DE SOLENOIDE (GR) | 194 |
| RUEDA Y LLANTA (CONFIG) | 195 |
| RUEDA Y NEUMÁTICO (GR) | 198 |
| **BASTIDOR Y CAJA** | 200 |
| PARACHOQUES (GR) | 200 |
| CONFIGURACIÓN DE TRANSFORMACIÓN PARA CARRETERA | 201 |
| CONVERSION PARA DESPLAZAMIENTO POR CARRETERA (GR) | 204 |
| CONTRAPESO (GR) | 208 |
| COMPARTIMIENTO DEL MOTOR (GR) | 210 |
| BASTIDOR Y MONTAJE (GR)-MAQUINA | 212 |
| TUBERIAS DE LA GUIA (GR) | 214 |
| *KIT-ENGINE ENCLOSURE SEAL | 215 |
| *KIT-ROADING CONVERSION | 217 |
| LEVANTAMIENTO DE LA MÁQUINA (GR) | 220 |
| RETROVISOR Y MONTAJE (GR) | 222 |
| MONTAJE-REGISTRO (GR) | 223 |
| MONTAJE DE LUCES DE DESPLAZAMIENTO POR CARRETERA (GR) | 225 |
| INSONORIZADOR (GR) | 227 |
| **SISTEMA HIDRAULICO** | 231 |
| ACUMULADOR HIDRAULICO Y MONTAJE (GR) | 231 |
| GRUPO ADAPTADOR-TUBERIA DE ACEITE | 232 |
| CILINDRO Y MONTAJE (GR)- INCLINACIÓN DE LA HOJA | 233 |
| MONTAJE DEL CILINDRO DEL CUCHARÓN (GR) | 235 |
| GRUPO DE MONTAJE Y CILINDRO, LEVANTAMIENTO DEL BRAZO | 236 |
| CILINDRO DE CUCHARÓN (GR) | 239 |
| CILINDRO DE GARFIO (GR) | 240 |
| CILINDRO HIDRÁULICO (GRUPO) | 241 |
| CILINDRO DE LEVANTAMIENTO (GR) | 248 |
| INCLINACIÓN HORIZONTAL - CILINDRO DE (GR) | 250 |
| HIDRÁULICA (CONFIG) | 252 |
| GRUPO DE INSTALACIÓN DE SISTEMA HIDRÁULICO AUXILIAR | 254 |
| *KIT-JOYSTICK CONVERSION | 256 |
| *KIT-QUICK COUPLER CONVERSION | 259 |
| TUBERÍAS DEL CUCHARÓN (GR) | 262 |


* NO HAY TRADUCCION DISPONIBLE EN EL MOMENTO DE LA IMPRESION

# CONTENIDO


| Nombre | Página |
|---|---|
| TUBERIAS DE CONEXION (GR) | 276 |
| TUBERÍAS DEL GARFIO (GR) | 280 |
| TUBERÍAS HIDRÁULICAS DEL VENTILADOR (GR) | 286 |
| TUBERÍAS DEL ENFRIADOR DE ACEITE HIDRÁULICO (GR) | 289 |
| CILINDRO DE LEVANTAMIENTO - TUBERÍAS DEL (GR) | 291 |
| *LINES GP-LOWERING CONTROL | 295 |
| TUBERÍAS CON SERVOMANDO (GR) | 297 |
| BOMBA - TUBERÍAS DE (GR) | 301 |
| TUBERÍAS DEL CILINDRO DE INCLINACIÓN (GR) | 303 |
| TUBERIAS DE LA HERRAMIENTA DE TRABAJO | 307 |
| *MANIFOLD & LINES GP-COUPLER | 311 |
| MULTIPLE Y MONTAJE (GR) - CONTROL | 315 |
| *MANIFOLD & SOLENOID GP-CONTROL | 317 |
| CONTROL DEL MULTIPLE (GR) | 318 |
| MOTOR Y MONTAJE DE VENTILADOR HIDRAULICO (GR) | 320 |
| MOTOR DE ENGRANAJES (GR) | 323 |
| MONTAJE DE CILINDRO (GR) | 329 |
| TAPON DE LA VALVULA PILOTO (GR) | 332 |
| BOMBA Y MONTAJE DE LA HERRAMIENTA DE TRABAJO (GR) | 333 |
| BOMBA DE ENGRANAJES (GR) | 335 |
| TANQUE HIDRÁULICO Y MONTAJE (GR) | 337 |
| TANQUE HIDRÁULICO (GR) | 338 |
| VÁLVULA DE CONTROL Y MONTAJE (GR) | 339 |
| VÁLVULA DE CONTROL (GR) | 340 |
| VÁLVULA DE CONTROL MANUAL (GR) | 343 |
| VÁLVULA PILOTO (GR) | 344 |
| VÁLVULA DE ALIVIO (GR) | 354 |
| VÁLVULA DE SOLENOIDE (GR) | 355 |
| **HERRAMIENTAS** | 360 |
| AGUILÓN TELESCÓPICO (GR) | 360 |
| HOJA (CONFIG) | 361 |
| HOJA ORIENTABLE (GR) | 364 |
| GRUPO DE HOJA DE CUCHARÓN DE USO MÚLTIPLE | 368 |
| CUCHARON PARA TIERRA (CONF) | 372 |
| CUCHARÓN DE USO GENERAL (CONFIG) | 373 |
| CUCHARON DE GARFIO (CONF) | 375 |
| CUCHARÓN PARA MATERIALES LIVIANOS (CONFIG) | 382 |
| CUCHARÓN DE USO MÚLTIPLE (CONFIG) | 382 |
| CUCHARON UTILITARIO (CONFIG) | 385 |
| CUCHARON PARA TIERRA (CONJ) | 387 |
| CUCHARÓN DE USO GENERAL (CONJ) | 391 |
| CUCHARÓN PARA MATERIALES LIVIANOS | 396 |
| CUCHARÓN PARA TIERRA (GR) | 399 |
| CUCHARÓN DE USO GENERAL (GR) | 400 |
| CUCHARON DE GARFIO (GR) | 401 |
| CUCHARÓN DE USO MÚLTIPLE (GR) | 407 |
| CUCHARÓN UTILITARIO (GR) | 412 |
| CARGADOR Y HORQUILLA (CONF) | 415 |
| PORTAHORQUILLAS (GR) | 416 |
| ACOPLADOR RÁPIDO (CONFIG) | 417 |
| ACOPLADOR RÁPIDO (GR) | 418 |
| TAPA DE TUBERIAS (GR) | 421 |
| GRUPO DE CILINDRO Y ESLABON, ACOPLADOR | 422 |
| GRUPO DE CANTONERA Y CUCHILLA | 424 |
| CUCHILLA (GR) | 424 |
| HORQUILLA DE GARFIO (CONF) | 430 |
| HORQUILLA DE GARFIO (GR) | 432 |
| HORQUILLA PARA TARIMAS (GR) | 435 |
| HORQUILLA DE UTILIDAD (GR) | 437 |
| BASTIDOR DE HOJA (GR) | 439 |
| GRUPO DE BASTIDOR DE HORQUILLA | 440 |
| BASTIDOR DE GARFIO (GR) | 442 |
| GARFIO DE UTILIDAD (GR) | 443 |
| GRUPO DE MANIJA Y PIN-ACOPLADOR | 446 |
| ACOPLADOR DE MANIJA | 448 |
| JUEGO-PLACA DE DESPLAZAMIENTO Y MONTAJE | 450 |
| GRUPO DE ESLABON, ACOPLADOR | 451 |
| TRABA-ACOPLADOR RAPIDO (GR) | 452 |
| PLACA DE DESPLAZAMIENTO POR CARRETERA (GR) | 453 |
| RESORTE DE HOJA (GR) | 455 |
| ESCALON DE BRAZO DE MANEJO DE MATERIALES (GR) | 456 |
| TOPE DEL GARFIO(GR) | 457 |
| COLADOR DEL AGUA (GR) | 458 |
| MONTAJE DEL TANQUE DE AGUA (GR) | 459 |
| TANQUE DEL AGUA (GR) | 462 |
| DIENTE DE UNA PIEZA (UNI-TOOTH) (GR) | 463 |


* NO HAY TRADUCCION DISPONIBLE EN EL MOMENTO DE LA IMPRESION

# CONTENIDO


| Nombre | Página |
|---|---|
| **ESTACION DEL OPERADOR** | 464 |
| ACUMULADOR DEL ACONDICIONADOR DE AIRE (GR) | 464 |
| ACONDICIONADOR DE AIRE (CONFIG) | 466 |
| ACONDICIONADOR DE AIRE (GR) | 467 |
| POSABRAZOS Y MONTAJE (GR) | 472 |
| POSABRAZOS (GR) | 473 |
| CAJA DE ALMACENAMIENTO | 475 |
| SISTEMA ROPS DE CABINA CERRADA (CONFIG) | 476 |
| CABINA INCLUYE ROPS (GR) | 477 |
| CABLE DE CONTROL (GR) | 479 |
| COMPRESOR Y MOTOR GR-REFRIGERANTE | 480 |
| COMPRESOR DE REFRIGERANTE Y GRUPO DE MONTAJE | 483 |
| CONDENSADOR DEL REFRIGERANTE Y MONTAJE (GR) | 484 |
| CONTROL DE MANIJA (GR) | 485 |
| CONTROL HIDRÁULICO DE OPERACIÓN PILOTO (GR) | 492 |
| *COUPLING GP-DRIVE | 521 |
| TAPA DE LA CONSOLA (GR) | 523 |
| TAPA DEL TABLERO DE INSTRUMENTOS (GR) | 525 |
| PUERTA Y MONTAJE DE CABINA (GR) | 526 |
| PUERTA DE CABINA | 531 |
| CONDUCTO Y CONTROL (GR) | 537 |
| BASTIDOR DE LA VENTANA (GR) | 539 |
| INDICADORES Y ADVERTENCIA (GR) | 541 |
| PROTECTOR DE ROPS/FOPS | 543 |
| PASAMANOS (GR) | 544 |
| MANIJA MODULAR (GR) | 545 |
| CALEFACCIÓN Y MONTAJE DE LA CABINA (GR) | 547 |
| CALEFACCIÓN DE LA CABINA (CONFIG) | 548 |
| CALEFACCIÓN DE LA CABINA (GR) | 549 |
| *HOLDER-CUP | 554 |
| COMPARTIMENTO CONJ-LATERAL | 555 |
| GRUPO DE INSTALACIÓN | 556 |
| JUEGO DE INSTALACIÓN DEL ACONDICIONADOR DE AIRE Y CALENTADOR | 556 |
| JUEGO DE INSTALACIÓN DE ACONDICIONADOR DE AIRE | 558 |
| JUEGO, PUERTA DE CABINA Y MONTAJE | 560 |
| *KIT-CAB SEAL | 562 |
| GRUPO DE PALANCA-REGULADOR | 563 |
| REVESTIMIENTO DE LA CABINA (GR) | 564 |
| REVESTIMIENTO-TECHO | 565 |
| TUBERÍAS DE ACONDICIONADOR DE AIRE (GR) | 566 |
| TUBERÍAS DE LA CALEFACCIÓN (GR) | 568 |
| PUBLICACIONES (GR) | 570 |
| RETROVISOR (GR) | 571 |
| MÓDULO INDICADOR DE ADVERTENCIA (GR) | 572 |
| MONTAJE DE LA ESTRUCTURA ROPS (GR) | 574 |
| *OPTION AR-CAB | 575 |
| TABLERO DE INSTRUMENTOS (CONFIG) | 576 |
| TABLERO DE INSTRUMENTOS (GR) | 577 |
| PANEL LATERAL (GR) | 581 |
| REGULADOR - PEDAL DEL (GR) | 582 |
| PLATAFORMA DE LA CABINA | 584 |
| SELLO DE CABINA (GR) | 586 |
| CINTURÓN DE SEGURIDAD (GR) | 588 |
| ASIENTO (GR) | 592 |
| ASIENTO AJUSTABLE (GR) | 594 |
| RESORTE DE GAS (GR) | 595 |
| VISERA (GR) | 596 |
| VENTANA DE LA CABINA (GR) | 598 |
| **EQUIPO DE SERVICIO Y SUMINISTROS** | 605 |
| ETIQUETA DE ADVERTENCIA (GR) | 605 |
| CALCOMANÍAS Y PLACAS DE IDENTIFICACIÓN (GR) | 610 |
| **INDICE DE NUMEROS DE PIEZA** | B1 |


* NO HAY TRADUCCION DISPONIBLE EN EL MOMENTO DE LA IMPRESION

# ÍNDICE


| Designação | Página |
|---|---|
| **INFORMAÇÃO GERAL** | A31 |
| **ALTERNATIVAS DE REPARO** | A42 |
| **ADITIVOS SUPLEMENTARES DO LÍQUIDO ARREFECEDOR** | A47 |
| **PEÇAS DE MANUTENÇÃO** | A60 |
| **ÍNDICE** | A101 |
| **ARRANJO DA MÁQUINA** | 1 |
| CHASSI | 1 |
| ARRANJO BÁSICO | 2 |
| MÁQUINA AR DE CONTROLE | 2 |
| MÁQUINA - CONVERSÃO | 3 |
| **ARRANJO DO MOTOR** | 12 |
| MOTOR | 12 |
| MOTOR PRIMÁRIO | 13 |
| GRUPO DE INSTALAÇÃO - MOTOR | 16 |
| **MOTOR BÁSICO** | 17 |
| MANCAL - PRINCIPAL | 17 |
| EIXO-COMANDO DE VÁLVULA | 18 |
| BIELA | 20 |
| TAMPA - MECANISMO DAS VÁLVULAS | 21 |
| VIRABREQUIM | 22 |
| BLOCO DO MOTOR | 24 |
| CABEÇOTE DO MOTOR | 28 |
| DRENO | 30 |
| DRENO - ÓLEO DO MOTOR | 31 |
| VOLANTE DO MOTOR | 32 |
| ENGRENAGENS DE DISTRIBUIÇÃO | 34 |
| PROTETOR - CORREIAS | 37 |
| CAIXA DO VOLANTE DO MOTOR | 38 |
| CAIXA DIANTEIRA | 40 |
| LEVANTAMENTO DO MOTOR | 44 |
| MONTAGEM - MOTOR | 46 |
| CÁRTER DO ÓLEO DO MOTOR | 47 |
| PISTÃO E BIELA | 51 |
| PISTÃO | 52 |
| BUJÃO DO BLOCO DO CILINDRO | 53 |
| BUJÃO DO MOTOR | 54 |
| POLIA DO VIRABREQUIM | 56 |
| GRUPO DE POLIA - BOMBA DE ÁGUA | 58 |
| CORREIA EM V | 59 |
| MECANISMO DAS VÁLVULAS | 60 |
| **SISTEMA DE LUBRIFICAÇÃO** | 61 |
| FILTRO - ÓLEO DO MOTOR | 61 |
| TUBOS - ÓLEO DO MOTOR | 62 |
| BOMBA DE ÓLEO - MOTOR | 63 |
| VÁLVULA DE ALÍVIO - ÓLEO DO MOTOR | 64 |
| **SISTEMA DE ARREFECIMENTO** | 65 |
| ARREFECEDOR - ÓLEO DO MOTOR | 65 |
| TERMOSTATO / REGULADOR DE TEMPERATURA | 66 |
| TUBOS - ÁGUA | 67 |
| SUPORTE - ARREFECEDR DE ÓLEO E RADIADOR | 68 |
| BOMBA DE ÁGUA | 70 |
| RADIADOR E ARREFECEDOR DO ÓLEO HIDRÁULICO | 71 |
| RADIADOR E ARREFECEDOR DE ÓLEO - MONTAGEM | 72 |
| **SISTEMA DE ADMISSÃO DE AR E DE ESCAPE** | 74 |
| PURIFICADOR DE AR | 74 |
| JOGO-PROTETOR CONTRA DETRITOS | 76 |
| TUBOS - AR | 77 |
| COLETOR DE ESCAPE | 79 |
| COLETOR DE ADMISSÃO | 80 |
| AMORTECEDOR E MONTAGEM | 81 |
| SILENCIADOR | 83 |
| TURBOALIMENTADOR | 84 |
| **SISTEMA DE COMBUSTÍVEL** | 88 |
| CABO - CONTROLE DO GOVERNADOR | 88 |
| CONTROLE DO GOVERNADOR | 89 |
| TUBOS - COMBUSTÍVEL | 90 |
| TUBOS - INJEÇÃO DO COMBUSTÍVEL | 92 |
| TUBULAÇÕES - FILTRO E ESCORVA DO COMBUSTÍVEL | 96 |
| BOMBA DE INJEÇÃO DO COMBUSTÍVEL | 98 |
| BOMBA DE ESCORVA DO COMBUSTÍVEL E DO FILTRO PRIMÁRIO | 102 |
| **SISTEMA ELÉTRICO E DE PARTIDA** | 103 |
| ALTERNADOR DE CORRENTE | 103 |
| BATERIA | 108 |
| CONTROLE DE TRAVAMENTO | 110 |
| GR. DE CONVERSÃO - ARRANJO NÃO RODOVIÁRIO | 111 |
| TAMPA DO PAINEL DO FUSÍVEL | 112 |
| SIST. ELETRÔNICO - ACESSÓRIO | 113 |
| SISTEMA ELETRÔNICO - MÁQUINA | 114 |
| FIXADORES - CHICOTE | 115 |
| VELA DE AQUECIMENTO; VELA INCANDESCENTE | 116 |
| AQUECEDOR DA ÁGUA DO MOTOR | 117 |
| INSTALAÇÃO-SEGURANÇA | 119 |

# ÍNDICE


| Designação | Página |
|---|---|
| KIT-CONTROLE E FIAÇÃO DA FERRAMENTA DE TRABALHO | 121 |
| KIT-FIAÇÃO DA FERRAMENTA DE TRABALHO | 122 |
| LÂMPADA - FAROL | 123 |
| LÂMPADA DIANTEIRA E DE SINAL | 125 |
| LUZ TRASEIRA E DE FREIO | 127 |
| LUZ GIRATÓRIA DE ALARME | 129 |
| SISTEMA DE ILUMINAÇÃO - FARÓIS | 130 |
| ILUMINAÇÃO - RODOVIÁRIA | 132 |
| ILUMINAÇÃO - FREIO E MARCHA À RÉ | 134 |
| SIST. DE ILUMINAÇÃO - PISCA-PISCA GIRATÓRIO DE ADVERTÊNCIA | 135 |
| SENSOR DE PRESSÃO E TEMPERATURA | 136 |
| MOTOR ELÉTRICO DE PARTIDA | 137 |
| INTERRUPTOR - PRESSÃO | 140 |
| ALARME DE MARCHA À RÉ | 142 |
| CABOS/FIOS ELÉTRICOS - AR CONDICIONADO | 143 |
| CABOS/FIOS ELÉTRICOS - CHASSI | 144 |
| CABOS/FIOS ELÉTRICOS - MOTOR | 149 |
| FIAÇÃO - BUZINA | 151 |
| CABOS E FIOS ELÉTRICOS-LUZES TRASEIRAS | 152 |
| CABOS/FIOS ELÉTRICOS - FERRAMENTAS DE TRABALHO | 153 |
| **TREM DE FORÇA** | 155 |
| EIXO | 155 |
| CONTROLE DO COMANDO-HIDROSTÁTICO | 157 |
| COMANDO DO TANDEM | 160 |
| FILTRO HIDRÁULICO E TUBOS | 161 |
| FILTRO - ÓLEO | 163 |
| TUBOS - SISTEMA HIDROSTÁTICO | 164 |
| COLETOR E TUBULAÇÕES -CONTROLE | 166 |
| COLETOR E SOLENÓIDE-CONTROLE | 170 |
| COLETOR - RETORNO | 172 |
| MOTOR HIDROSTÁTICO E MONTAGEM | 174 |
| MOTOR - PISTÃO | 176 |
| MONTAGEM - BOMBA | 180 |
| BOMBA E MONTAGEM - HIDROSTÁTICA | 181 |
| BOMBA DE PISTÃO | 183 |
| PNEU E ARO | 187 |
| VÁLVULA SOLENÓIDE | 194 |
| RODA E PNEU | 195 |
| **CHASSI E CARROCERIA** | 200 |
| PÁRA-CHOQUE | 200 |
| GRUPO DE CONVERSÃO - ARRANJO RODOVIÁRIO | 201 |
| GR. DE CONVERSÃO - OPERAÇÃO RODOVIÁRIA | 204 |
| CONTRAPESO | 208 |
| COBERTURA DO MOTOR | 210 |
| ARMAÇÃO E MONTAGEM - MÁQUINA | 212 |
| GUIA - TUBOS | 214 |
| JOGO-RETENTOR DA COBERTURA DO MOTOR | 215 |
| KIT-CONVERSÃO DE RODAGEM | 217 |
| LEVANTAMENTO DA MÁQUINA | 220 |
| ESPELHO RETROVISOR E MONTAGEM | 222 |
| MONTAGEM DA PLACA DE REGISTRO | 223 |
| MONTAGEM - LUZES PARA ILUMINAÇÃO RODOVIÁRIA | 225 |
| REDUÇÃO DE RUÍDO | 227 |
| **SISTEMA HIDRÁULICO** | 231 |
| ACUMULADOR HIDRÁULICO E MONTAGEM | 231 |
| ADAPTADOR-TUBULAÇÃO DE ÓLEO | 232 |
| CILINDRO E MONTAGEM - LÂMINA ANGULÁVEL | 233 |
| CILINDRO E MONTAGEM - CAÇAMBA | 235 |
| CILINDRO E MONTAGEM - BRAÇO DE LEVANTAMENTO | 236 |
| CILINDRO DA CAÇAMBA | 239 |
| CILINDRO DA GARRA | 240 |
| CILINDRO HIDRÁULICO | 241 |
| CILINDRO DE LEVANTAMENTO | 248 |
| CILINDRO DE INCLINAÇÃO | 250 |
| COMANDO HIDRÁULICO | 252 |
| INSTALAÇÃO-SISTEMA HIDRÁULICO AUXILIAR | 254 |
| JOGO-CONVERSÃO DA ALAVANCA DE CONTROLE | 256 |
| KIT-CONVERSÃO DO ACOPLADOR RÁPIDO | 259 |
| TUBOS - CAÇAMBA | 262 |
| TUBOS DE CONEXÃO | 276 |
| TUBOS - GARRA | 280 |
| TUBOS - VENTILADOR HIDRÁULICOS | 286 |
| TUBOS - ARREFECEDOR DE ÓLEO HIDRÁULICO | 289 |
| TUBOS - CILINDRO DE LEVANTAMENTO | 291 |
| TUBULAÇÕES-CONTROLE DE ABAIXAMENTO | 295 |
| TUBOS - CIRCUITO PILOTO | 297 |
| TUBOS - BOMBA | 301 |
| TUBOS - CILINDRO DE INCLINAÇÃO | 303 |

# ÍNDICE


| Designação | Página |
|---|---|
| TUBOS - FERRAMENTA DE TRABALHO | 307 |
| COLETOR E TUBULAÇÕES-ACOPLADOR | 311 |
| COLETOR E MONTAGEM - CONTROLE | 315 |
| COLETOR E SOLENÓIDE-CONTROLE | 317 |
| COLETOR - CONTROLE | 318 |
| MOTOR E MONTAGEM - VENTILADOR HIDRÁULICO | 320 |
| MOTOR - ENGRENAGENS | 323 |
| MONTAGEM - CILINDRO | 329 |
| BUJÃO DA VÁLVULA PILOTO | 332 |
| BOMBA DA FERRAMENTA DE TRABALHO E MONTAGEM | 333 |
| BOMBA DE ENGRENAGENS | 335 |
| TANQUE DE ÓLEO HIDRÁULICO E MONTAGEM | 337 |
| TANQUE HIDRÁULICO | 338 |
| VÁLVULA DE CONTROLE E MONTAGEM | 339 |
| VÁLVULA DE CONTROLE | 340 |
| VÁLVULA MANUAL | 343 |
| VÁLVULA DE CONTROLE PILOTO | 344 |
| VÁLVULA DE ALÍVIO | 354 |
| VÁLVULA SOLENÓIDE | 355 |
| **FERRAMENTAS DE TRABALHO** | 360 |
| BRAÇO - MANIPULADOR DE MATERIAIS | 360 |
| LÂMINA | 361 |
| LÂMINA ANGULÁVEL | 364 |
| LÂMINA-CAÇAMBA DE APLICAÇÕES MÚLTIPLAS | 368 |
| CAÇAMBA PARA TERRA | 372 |
| CAÇAMBA - PARA APLICAÇAO GERAL | 373 |
| CAÇAMBA - GARRA | 375 |
| CAÇAMBA PARA MATERIAL LEVE | 382 |
| CAÇAMBA DE MÚLTIPLAS APLICAÇÕES | 382 |
| CAÇAMBA - SERVIÇOS GERAIS | 385 |
| CAÇAMBA PARA TERRA | 387 |
| CAÇAMBA PARA APLICAÇÃO GERAL | 391 |
| CACAMBA PARA MATERIAL LEVE | 396 |
| CACAMBA - TERRA | 399 |
| CAÇAMBA PARA APLICAÇÃO GERAL | 400 |
| CAÇAMBA - GARRA | 401 |
| CAÇAMBA DE MÚLTIPLAS APLICAÇÕES | 407 |
| CAÇAMBA PARA SERVIÇOS GERAIS | 412 |
| CACAMBA E GARFO | 415 |
| SUPORTE - GARFO | 416 |
| ACOPLADOR RÁPIDO | 417 |
| TAMPA - TUBULAÇÕES | 421 |
| CILINDRO E ARTICULAÇÃO - ACOPLADOR | 422 |
| BEIRA - PONTA CORTANTE | 424 |
| BORDA CORTANTE | 424 |
| GARFO DA GARRA | 430 |
| GARFO DE PALETAS | 435 |
| GARFO - SERVIÇOS PÚBLICOS | 437 |
| ARMAÇÃO - LÂMINA | 439 |
| ARMAÇÃO-GARFO | 440 |
| ARMAÇÃO DA GARRA | 442 |
| GARRA - SERVIÇOS PÚBLICOS | 443 |
| ALÇA E PINO - ACOPLADOR | 446 |
| ALÇA - ACOPLADOR | 448 |
| JOGO-PLACA DE RODAGEM E MONTAGEM | 450 |
| ARTICULAÇÃO - ACOPLADOR | 451 |
| TRAVA - ACOPLADOR RÁPIDO | 452 |
| PLACA-RODOVIÁRIO | 453 |
| MOLA - LÂMINA | 455 |
| DEGRAU - BRAÇO DE MANIPULAÇÃO DE MATERIAIS | 456 |
| BATENTE - GARRA | 457 |
| TELA FILTRANTE - ÁGUA | 458 |
| TANQUE DE ÁGUA E MONTAGEM | 459 |
| TANQUE DE ÁGUA | 462 |
| UNI-DENTE | 463 |
| **POSTO DO OPERADOR** | 464 |
| ACUMULADOR - AR CONDICIONADO | 464 |
| CONDICIONADOR DE AR | 466 |
| ENCOSTO DO BRAÇO E MONTAGEM | 472 |
| BRAÇO DO ASSENTO | 473 |
| CAIXA DE ARMAZENAMENTO | 475 |
| CABINE - ESTRUTURA ROPS COBERTA | 476 |
| CABINE - ESTRUTURA DE PROTEÇÃO CONTRA CAPOTAMENTO | 477 |
| CABO DE CONTROLE | 479 |
| COMPRESSOR E MOTOR - REFRIGERADO | 480 |
| COMPRESSOR DE REFRIGERANTE E MONTAGEM | 483 |
| CONDENSADOR DO REFRIGERANTE E MONTAGEM | 484 |
| CONTROLE-CABO | 485 |
| CONTROLE HIDRÁULICO DE OPERAÇÃO PILOTO | 492 |
| ACOPLAMENTO DE COMANDO | 521 |
| TAMPA - CONSOLO | 523 |
| TAMPA - PAINEL DE INSTRUMENTOS | 525 |
| PORTA E MONTAGEM-CABINA | 526 |
| PORTA DA CABINE | 531 |
| DUCTO E CONTROLE | 537 |
| ARMAÇÃO DO VIDRO | 539 |
| INDICADOR E ALARME | 541 |

# ÍNDICE


| Designação | Página |
|---|---|
| PROTETOR - ROPS/FOPS | 543 |
| PEGA-MÃO | 544 |
| ALAVANCA DE CONTROLE - MODULAR | 545 |
| AQUECEDOR DA CABINE E MONTAGEM | 547 |
| AQUECEDOR DA CABINE | 548 |
| PORTA-COPO | 554 |
| ALOJAMENTO - LATERAL | 555 |
| INSTALAÇÃO | 556 |
| JOGO-INSTALAÇÃO DO CONDICIONADOR DE AR E AQUECEDOR | 556 |
| JOGO-INSTALAÇÃO DO CONDICIONADOR DE AR | 558 |
| JOGO - PORTA DA CABINE E MONTAGEM | 560 |
| KIT-RETENTOR DA CABINE | 562 |
| ALAVANCA - GOVERNADOR | 563 |
| REVESTIMENTO DA CABINE | 564 |
| REVESTIMENTO - CABINE | 565 |
| TUBOS - AR CONDICIONADO | 566 |
| TUBOS - AQUECEDOR | 568 |
| PUBLICAÇÃO | 570 |
| ESPELHO RETROVISOR | 571 |
| MÓDULO - INDICADOR DE ALARME | 572 |
| MONTAGEM - ESTRUTURA ROPS | 574 |
| OPÇÃO-CABINE | 575 |
| PAINEL DE INSTRUMENTOS | 576 |
| PAINEL LATERAL | 581 |
| PEDAL DO GOVERNADOR | 582 |
| PLATAFORMA DO OPERADOR | 584 |
| RETENTOR-CABINE | 586 |
| CINTO DE SEGURANÇA | 588 |
| ASSENTO | 592 |
| ASSENTO AJUSTÁVEL | 594 |
| MOLA A GÁS | 595 |
| PÁRA-SOL DA CABINE | 596 |
| JANELA DA CABINE | 598 |
| **EQUIPAMENTO DE SERVIÇO E SUPRIMENTOS** | 605 |
| DECALQUE | 605 |
| PLACA E DECALQUE | 610 |
| **ÍNDICE DE NÚMERO DE PEÇA** | B1 |

# INHALTSVERZEICHNIS


| Bezeichnung | Seite |
|---|---|
| **ALLGEMEINE HINWEISE** | A35 |
| **REPARATURALTERNATIVEN** | A43 |
| **KÜHLMITTELZUSATZ** | A48 |
| **WARTUNGSTEILE** | A65 |
| **STICHWORTVERZEICHNIS** | A112 |
| **MASCHINE** | 1 |
| FAHRWERK | 1 |
| GRUNDAUSFÜHRUNG | 2 |
| MASCHINENSTEUERUNG | 2 |
| MASCHINEN-UMBAUSATZ | 3 |
| **MOTOR** | 12 |
| MOTORAUSFÜHRUNG | 12 |
| MOTOR-EINBAUSATZ | 16 |
| **MOTOR - GRUNDAUSFÜHRUNG** | 17 |
| HAUPTLAGER | 17 |
| NOCKENWELLE | 18 |
| *CONNECTING ROD GP | 20 |
| VENTILDECKEL | 21 |
| KURBELWELLE | 22 |
| MOTORBLOCK | 24 |
| ZYLINDERKOPF | 28 |
| ABLASS | 30 |
| MOTORÖLABLASS | 31 |
| SCHWUNGRAD | 32 |
| STIRNRAD | 34 |
| RIEMENSCHUTZ | 37 |
| SCHWUNGRADGEHÄUSE | 38 |
| STIRNRADGEHÄUSE | 40 |
| MOTORHUBÖSE | 44 |
| MOTORAUFLAGER | 46 |
| ÖLWANNE | 47 |
| PLEUELSTANGE UND KOLBEN | 51 |
| KOLBEN | 52 |
| ZYLINDERBLOCKSCHRAUBE | 53 |
| MOTORSTOPFEN | 54 |
| KURBELWELLEN-RIEMENSCHEIBE | 56 |
| WASSERPUMPE - RIEMENSCHEIBE | 58 |
| KEILRIEMEN | 59 |
| VENTILSTEUERUNG | 60 |
| **SCHMIERSYSTEM** | 61 |
| ÖLFILTER | 61 |
| MOTORÖLLEITUNGEN | 62 |
| SCHMIERPUMPE | 63 |
| MOTORÖLDRUCKBEGRENZUNGSVENTIL | 64 |
| **KÜHLSYSTEM** | 65 |
| MOTORÖLKÜHLER | 65 |
| KÜHLWASSER-TEMPERATURREGLER UND GEHÄUSE | 66 |
| KÜHLWASSERLEITUNGEN | 67 |
| KÜHLER U. ÖLKÜHLER - BEFESTIGUNG | 68 |
| KÜHLWASSERPUMPE | 70 |
| KÜHLER UND HYDRAULIKÖLKÜHLER | 71 |
| KÜHLER U. ÖLKÜHLERBEFESTIGUNG | 72 |
| **LUFTANSAUG- UND ABGASSYSTEM** | 74 |
| LUFTREINIGER | 74 |
| *KIT-DEBRIS GUARD | 76 |
| DRUCKLUFTLEITUNGEN | 77 |
| AUSPUFFKRÜMMER | 79 |
| ANSAUGKRÜMMER | 80 |
| SCHALLDÄMPFER U. BEFESTIGUNG | 81 |
| SCHALLDÄMPFER | 83 |
| TURBOLADER | 84 |
| **KRAFTSTOFFSYSTEM** | 88 |
| DREHZAHLREGLERKABEL | 88 |
| REGLERSTEUERUNG | 89 |
| KRAFTSTOFFLEITUNGEN | 90 |
| KRAFTSTOFFEINSPRITZLEITUNGEN | 92 |
| KRAFTSTOFFENTLÜFTUNGS- U. FILTERLEITUNGEN | 96 |
| KRAFTSTOFFEINSPRITZPUMPE | 98 |
| KRAFTSTOFFENTLÜFTUNGSPUMPE UND -HAUPTFILTER | 102 |
| **ELEKTRISCHE ANLAGE UND STARTSYSTEM** | 103 |
| DREHSTROMGENERATOR | 103 |
| BATTERIE | 108 |
| VERRIEGELUNGSSTEUERUNG | 110 |
| UMBAUSATZ - NICHT FÜR STRASSENVERKEHR | 111 |
| SICHERUNGSTAFEL - ABDECKUNG | 112 |
| ARBEITSGERÄTEELEKTRONIK | 113 |
| ELEKTRONIK - MASCHINE | 114 |
| VERDRAHTUNGSKABELBAUMHALTETEILE | 115 |
| GLÜHKERZE | 116 |
| UMLAUFKÜHLWASSERHEIZUNG | 117 |
| SICHERHEITSEINBAUSATZ | 119 |
| SATZ - ARBEITSGERÄTE U. VERDRAHTUNG | 121 |
| ARBEITSGERÄTEVERDRAHTUNGSSATZ | 122 |


* ÜBERSETZUNG ZUM ZEITPUNKT DER DRUCKLEGUNG NICHT VORHANDEN

# INHALTSVERZEICHNIS


| Bezeichnung | Seite |
|---|---|
| ARBEITSLEUCHTEN | 123 |
| SCHEINWERFER U. RICHTUNGSLEUCHTE | 125 |
| BREMS- UND RÜCKLEUCHTE | 127 |
| RUNDUM-KENNLEUCHTE | 129 |
| ARBEITSLEUCHTEN | 130 |
| BELEUCHTUNGSANLAGE (STRASSENAUSRÜSTUNG) | 132 |
| BREMS- UND RÜCKLEUCHTEN | 134 |
| RUNDUM-KENNLEUCHTE | 135 |
| TEMPERATUR- U. DRUCKSENSOR | 136 |
| STARTERMOTOR | 137 |
| DRUCKSCHALTER | 140 |
| RÜCKFAHRWARNHORN | 142 |
| KLIMAANLAGENVERDRAHTUNG | 143 |
| FAHRGESTELLVERDRAHTUNG | 144 |
| MOTORVERDRAHTUNG | 149 |
| WARNHORNVERDRAHTUNG | 151 |
| HECKBELEUCHTUNGSVERDRAHTUNG | 152 |
| ARBEITSGERÄT - VERDRAHTUNG | 153 |
| **KRAFTSÜBERTRAGUNG** | 155 |
| ACHSE | 155 |
| ANTRIEBSSTEUERUNG, HYDROSTATISCH | 157 |
| TANDEMANTRIEB | 160 |
| HYDRAULIKFILTER U. LEITUNGEN | 161 |
| ÖLFILTER | 163 |
| HYDROSTATIKLEITUNGEN | 164 |
| KRÜMMER U. LEITUNGEN - STEUERUNG | 166 |
| *MANIFOLD & SOLENOID GP-CONTROL | 170 |
| RÜCKLAUFVENTIL - VERTEILER | 172 |
| HYDROSTATIKMOTOR U. BEFESTIGUNG | 174 |
| KOLBENMOTOR | 176 |
| PUMPENAUFHÄNGUNG | 180 |
| HYDROSTATIKPUMPE U. BEFESTIGUNG | 181 |
| KOLBENPUMPE | 183 |
| REIFEN UND FELGE | 187 |
| MAGNETVENTIL | 194 |
| RAD UND REIFEN | 195 |
| **RAHMEN UND FAHRGESTELL** | 200 |
| STOSSSTANGE | 200 |
| UMBAUSATZ - FÜR STRASSENVERKEHR | 201 |
| STRASSENFAHRT - UMRÜSTSATZ | 204 |
| GEGENGEWICHT | 208 |
| MOTORVERKLEIDUNG | 210 |
| MASCHINENRAHMEN U. BEFESTIGUNG | 212 |
| LEITUNGSFÜHRUNG | 214 |
| *KIT-ENGINE ENCLOSURE SEAL | 215 |
| UMRÜSTSATZ FÜR STRASSENFAHRT | 217 |
| MASCHINENHUBÖSE | 220 |
| RÜCKSPIEGEL U. BEFESTIGUNG | 222 |
| TYPENSCHILDBEFESTIGUNG | 223 |
| BELEUCHTUNG FÜR STRASSENFAHRT - BEFESTIGUNG | 225 |
| SCHALLDÄMPFUNG | 227 |
| **HYDRAULIKSYSTEM** | 231 |
| HYDRAULIKDRUCKSPEICHER U. BEFESTIGUNG | 231 |
| ADAPTER - ÖLLEITUNG | 232 |
| ZYLINDER U. BEFESTIGUNG - WINKELSCHLID | 233 |
| *CYLINDER & MTG GP-BUCKET | 235 |
| HUBARMZYLINDER U. BEFESTIGUNGSSATZ | 236 |
| SCHAUFELZYLINDER | 239 |
| GREIFERZYLINDER | 240 |
| HYDRAULIKZYLINDER | 241 |
| HUBZYLINDER | 248 |
| KIPPZYLINDER | 250 |
| HYDRAULIKSYSTEM | 252 |
| *INSTALLATION GP-AUXILIARY HYD | 254 |
| *KIT-JOYSTICK CONVERSION | 256 |
| *KIT-QUICK COUPLER CONVERSION | 259 |
| SCHAUFELLEITUNGEN | 262 |
| ANSCHLUSSLEITUNGEN | 276 |
| GREIFERLEITUNGEN | 280 |
| HYDRAULIKLÜFTERLEITUNGEN | 286 |
| HYDRAULIKÖLKÜHLERLEITUNGEN | 289 |
| HUBZYLINDERLEITUNGEN | 291 |
| LEITUNGEN, ABSENKSTEUERUNG | 295 |
| VORSTEUERLEITUNGEN | 297 |
| HYDRAULIKPUMPE UND LEITUNGEN | 301 |
| NEIGEZYLINDERLEITUNGEN | 303 |
| ARBEITSGERÄT - LEITUNGEN | 307 |
| KRÜMMER & LEITUNGEN - WECHSLER | 311 |
| KRÜMMERSTEUERUNG U. BEFESTIGUNG | 315 |
| *MANIFOLD & SOLENOID GP-CONTROL | 317 |
| STEUERKRÜMMER | 318 |
| HYDRAULIKKÜHLERMOTOR U. BEFESTIGUNG | 320 |
| MOTORANTRIEB | 323 |
| ZYLINDERAUFHÄNGUNG | 329 |


* ÜBERSETZUNG ZUM ZEITPUNKT DER DRUCKLEGUNG NICHT VORHANDEN

# INHALTSVERZEICHNIS


| Bezeichnung | Seite |
|---|---|
| VORSTEUERVENTILSTOPFEN | 332 |
| ARBEITSGERÄTEPUMPE U. BEFESTIGUNG | 333 |
| ZAHNRADPUMPE | 335 |
| HYDRAULIKTANK UND BEFESTIGUNGSTEILE | 337 |
| HYDRAULIKTANK | 338 |
| STEUERVENTIL UND BEFESTIGUNGSTEILE | 339 |
| STEUERVENTIL | 340 |
| VENTIL, MECH. | 343 |
| VORSTEUERVENTIL | 344 |
| ÜBERDRUCKVENTIL | 354 |
| MAGNETVENTIL | 355 |
| **ARBEITSGERÄTE** | 360 |
| TRAGARM | 360 |
| SCHILD | 361 |
| SCHWENKSCHILD | 364 |
| SCHNEIDMESSER - KOMBISCHAUFEL | 368 |
| ERDSCHAUFEL | 372 |
| UNIVERSALSCHAUFEL | 373 |
| GREIFERSCHAUFEL | 375 |
| LEICHTGUTSCHAUFEL | 382 |
| KOMBISCHAUFEL | 382 |
| *BUCKET AR-UTILITY | 385 |
| ERDSCHAUFEL | 387 |
| UNIVERSALSCHAUFEL | 391 |
| LEICHTGUTSCHAUFEL | 396 |
| ERDSCHAUFEL | 399 |
| *BUCKET GP-GENERAL PURPOSE | 400 |
| GREIEFERSCHAUFEL | 401 |
| KOMBISCHAUFEL | 407 |
| MEHRZWECKSCHAUFEL | 412 |
| TRÄGER U. GABEL | 415 |
| GABELTRÄGER | 416 |
| SCHNELLWECHSELVORRICHTUNG | 417 |
| SCHNELLWECHSELEINRICHTUNG | 418 |
| LEITUNGSABDECKUNG | 421 |
| SCHNELLWECHSELEINRICHTUNG - ZYLINDER U. VERBINDUNG | 422 |
| SCHNEIDMESSER UND EINSATZSTÜCK | 424 |
| SCHNEIDMESSER | 424 |
| GREIFERGABEL | 430 |
| PALETTENGABEL | 435 |
| MEHRZWECKGABEL | 437 |
| SCHILDRAHMEN | 439 |
| *FRAME GP-FORK | 440 |
| GREIFERRAHMEN | 442 |
| MEHRZWECKGREIFER | 443 |
| GRIFF U. BOLZEN - ANSCHLUSS | 446 |
| ANSCHLUSSGRIFF | 448 |
| STRASSENFAHRTSCHILD UND BEFESTIGUNG | 450 |
| VERBINDUNG - SCHNELLWECHSELEINRICHTUNG | 451 |
| SCHNELLWECHSELEINRICHTUNGSSPERRE | 452 |
| SCHILD - STRASSENFAHRT | 453 |
| SCHILDFEDER | 455 |
| TRAGARMSTUFE | 456 |
| GREIFERANSCHLAG | 457 |
| WASSERSIEBEINSATZ | 458 |
| WASSERTANK U. BEFESTIGUNGSTEILE | 459 |
| WASSERTANK | 462 |
| UNIVERSAL-ZAHNSPITZE | 463 |
| **FAHRERHAUS** | 464 |
| KLIMAANLAGENDRUCKSPEICHER | 464 |
| KLIMAANLAGE | 466 |
| ARNLEHNE U. BEFESTIGUNG | 472 |
| ARMLEHNE | 473 |
| VERSTAUKASTEN | 475 |
| FAHRERHAUS MIT ÜBERROLLSCHUTZ | 476 |
| STEUERKABEL | 479 |
| KÜHLKOMPRESSOR U. MOTOR | 480 |
| KÄLTEMITTELKOMPRESSOR U. BEFESTIGUNG | 483 |
| KÄLTEMITTELKONDENSATOR U. BEFESTIGUNGSTEILE | 484 |
| STEUERHEBEL | 485 |
| HYDRAULIKBEDIENUNG (MIT VORSTEUERUNG) | 492 |
| ANTRIEBSKUPPLUNG | 521 |
| STEUERKONSOLENABDECKUNG | 523 |
| INSTRUMENTENTAFELABDECKUNG | 525 |
| FAHRERHAUSTÜR U. BEFESTIGUNG | 526 |
| FAHRERHAUSTÜR | 531 |
| LUFTKANAL UND REGULIERUNG | 537 |
| FENSTERRAHMEN | 539 |
| WARNANZEIGENSATZ | 541 |
| VERKLEIDUNG - ÜBERROLLSCHUTZ/ STEINSCHLAGSCHUTZ | 543 |
| HALTEGRIFF | 544 |
| MODULARHEBEL | 545 |
| FAHRERHAUSHEIZUNG U. BEFESTIGUNGSTEILE | 547 |
| FAHRERHAUSHEIZUNG | 548 |
| *HOLDER-CUP | 554 |
| SEITENGEHÄUSE | 555 |
| EINBAUSATZ | 556 |


* ÜBERSETZUNG ZUM ZEITPUNKT DER DRUCKLEGUNG NICHT VORHANDEN

# INHALTSVERZEICHNIS


| Bezeichnung | Seite |
|---|---|
| EINBAUSATZ - KLIMAANLAGE U. HEIZUNG | 556 |
| *KIT-AIR CONDITIONER INSTL | 558 |
| FAHRERHAUSTÜR U. BEFESTIGUNG | 560 |
| FAHRERHAUSDICHTUNGSSATZ | 562 |
| REGELERHEBEL | 563 |
| FAHRERHAUSAUSKLEIDUNG | 564 |
| FAHRERHAUS - LINER | 565 |
| KLIMAANLAGENLEITUNGEN | 566 |
| HEIZUNGSLEITUNGEN | 568 |
| DOKUMENTATION | 570 |
| RÜCKSPIEGEL | 571 |
| WARNANZEIGEMODUL | 572 |
| ÜBERROLLSCHUTZAUFLAGER | 574 |
| OPTION - FAHRERHAUS | 575 |
| INSTRUMENTENTAFEL | 576 |
| SEITENVERKLEIDUNG | 581 |
| GASPEDAL | 582 |
| FAHRERPLATTFORM | 584 |
| FAHERHAUSDICHTUNG | 586 |
| SICHERHEITSGURT | 588 |
| FAHRERSITZ | 592 |
| FAHRERSITZ, VERSTELLBAR | 594 |
| GASFEDERGRUPPE | 595 |
| FAHRERHAUS, SONNENBLENDE | 596 |
| FAHRERHAUSFENSTER | 598 |
| **WARTUNGSAUSRÜSTUNG UND -ZUBEHÖR** | 605 |
| AUFKLEBER | 605 |
| SCHILD UND AUFKLEBER | 610 |
| **ERSATZTEILNUMMERNINDEX** | B1 |


* ÜBERSETZUNG ZUM ZEITPUNKT DER DRUCKLEGUNG NICHT VORHANDEN

# GENERAL INFORMATION

## 1. MACHINE IDENTIFICATION

Caterpillar machines are identified by Product Identification Numbers (PIN). Some components included in a machine may be identified by Serial Numbers (S/N). Typical components that will be serialized include engines, transmissions, bulldozers, and rippers. The machine and engine are further identified by arrangement numbers and in some cases modification numbers. These numbers are shown on the product identification plate(s) and on the master plate in the operator's compartment.

Caterpillar dealers need all of these numbers to determine accurate parts identification.

SIS *New Feature*

Effective First Quarter 2001 the Caterpillar Product Identification Number (PIN) changed from 8 to 17 characters. In an effort to provide uniform equipment identification, Caterpillar and other construction equipment manufacturers are moving to comply with the latest version of the product identification numbering standard. Non-road machine PINs are defined by ISO 10261. The new PIN format will apply to all Caterpillar machines and generator sets. The PIN plates and frame marking will display the 17 character PIN. The new format will look like the following:

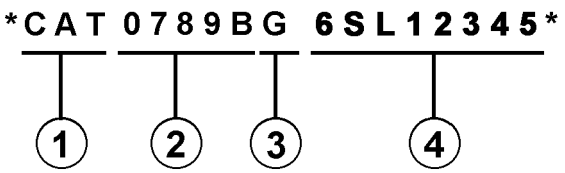


Where:

1. Caterpillar's World Manufacturing Code (characters 1-3)

2. Machine Descriptor (characters 4-8)

3. Check Character (character 9)

4. Machine Indicator Section (MIS) or Product Sequence Number (characters 10-17). These were previously referred to as the Serial Number.

Machines and generator sets produced before First Quarter 2001 will maintain their 8 character PIN format.

Components such as engines, transmissions, axles, etc. and work tools will continue to use an 8 character Serial Number (S/N).

## 2. ORDERING PARTS

**⚠ WARNING**

**When replacement parts are required for this product Caterpillar recommends using Caterpillar replacement parts or parts with equivalent specifications including, but not limited to, physical dimensions, type, strength and material.**

**Failure to heed this warning can lead to premature failures, product damage, personal injury or death.**

Quality Caterpillar replacement parts are available from Caterpillar dealers throughout the world. Their parts inventories are up to date and include all parts normally required to protect your investment in Caterpillar machines. Dealers may offer repair kits or remanufactured parts to allow selection of the most effective repair alternative for a particular situation. When ordering parts, your order should specify the quantity, part number, part name, and the serial number/product identification number of the machine for which the parts are needed.

## 3. PARTS MANUAL ORGANIZATION

Product information in this manual is presented as "information elements" that represent all of the components for the specific model. Engine Arrangement and Seat Group are examples of information elements. The information elements are organized alphabetically by part name and secondarily by part number within each major section of the manual.

## 4. TABLE OF CONTENTS

A table of contents (TOC) is found at the beginning of the manual. The TOC lists each section of the manual with a complete list of all information elements organized as they appear in the manual. Page numbers are provided for quick reference to detailed parts identification illustrations and serviceable consist lists.

## 5. MAINTENANCE PARTS INDEX

The Maintenance Parts Index, located near the beginning of the manual, references most frequently used maintenance part numbers, providing description, quantity, usage and page number. This information is organized alphabetically by part description.

### 6. INDEX

The index located near the front of the manual is an alphabetical listing of all information elements included in the manual. Page numbers are provided for quick reference to detailed parts identification illustrations and serviceable consist lists.

### 7. PART NUMBER INDEX

A numerical index listing all part numbers and the corresponding page number(s) appears at the back of the manual.

### 8. CAPTIONS

Captions located at the beginning of each information element identify the part number and part name along with additional descriptive information. PIN and S/N information found in each caption should be used to select correct information for a specific machine. Field replacement options, identification of optional attachment components, and where used ("part of") information is also provided.

The first line of a caption is shown in larger type font to indicate the beginning of an information element. Captions for additional pages that may be required to illustrate an information element will be shown in standard type font and will include the term *(contd.)* .

### 9. NON-SERVICED PARTS

In some instances it is necessary to display non-serviced parts that are a link to a lower level serviceable consist lists. These non-serviced part numbers are shown in *italic* type indicating that they are not available.

### 10. PARTS LIST REFERENCE NUMBERS

Numbers shown in the Ref No column correspond to numbers used in the associated graphic(s). An alphabetic suffix may be added to a reference number to identify lower level consist items. Numbers shown in the Graphic Ref column refer to the graphic number identifier displayed in the lower left corner of each illustration. The Graphic Ref number may be used in combination with the item Ref No to determine the correct part number. There may be intentional omission of a Ref No in a consist list as information is updated to reflect the latest serviceable part numbers.

### 11. INDENTED PART NAMES

When a part name is indented in a parts list, it is part of (included in) the group or assembly under which it is indented.

### 12. ILLUSTRATION REFERENCE LETTERS

When necessary, illustrations contain reference letters (A, B, C etc.) that are intended to track lines and harnesses from one point to another. They are also used to show where to reconnect illustrations that have been separated.

### 13. ABBREVIATIONS AND SYMBOLS

**O.D.** – Outside Diameter
**I.D.** – Inside Diameter
**A** – Not Part Of This Group
**B** – Use As Required
**C** – Change From Previous Type
**D** – Order By The Meter
**E** – Order By The Centimeter
**F** – Not Shown
**G** – Order By The Inch
**I** – Refer To Hydraulic Information System
**M** – Metric Part
**R** – Remfg Part May Be Available
**Y** – Separate Illustration
**Z** – Not Serviced Separately

SIS *New Feature*

### 14. DESCRIPTION OF TYPE CHANGES

Type - A type is defined as any configuration change that requires an additional Information Element for an Arrangement, Group, or Assembly. If serial number breaks for types are not available, a type # ( Type 1, Type 2, etc.) will be displayed in the caption. These "type" changes are identified with a "C" note (change from previous type) in the Parts List. Only the "types" that apply to this Parts Manual will be included. Additional types may exist causing "C" notes to appear on an Information Element when no other types are shown.

### 15.<END>

This symbol indicates the end of an information element.

**NOTE:**

**Continuing improvement and advancement of product design may cause changes to your machine which may not be included in this publication. Whenever a question arises regarding your caterpillar product or this publication, please consult your caterpillar dealer for the latest available information.**

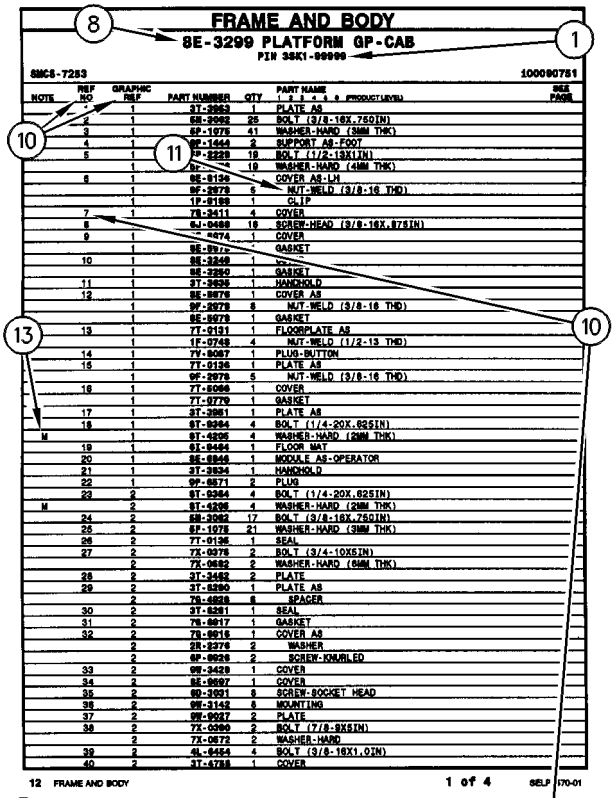

FRAME AND BODY

8E-3299 PLATFORM GP-CAB

PIN 3SK1-99999

SMCS-7283 100090751

| NOTE | REF NO | GRAPHIC REF | PART NUMBER | QTY | PART NAME 1 2 3 4 5 6 (PRODUCT LEVEL) | SEE PAGE |
|---|---|---|---|---|---|---|
| | * | 1 | 3T-3963 | 1 | PLATE AS | |
| | 2 | 1 | 6H-2062 | 25 | BOLT (3/8-16X.750IN) | |
| | 3 | 1 | 6P-1075 | 41 | WASHER-HARD (3MM THK) | |
| | 4 | 1 | 9F-1444 | 2 | SUPPORT AS-FOOT | |
| | 5 | 1 | 3P-2229 | 19 | BOLT (1/2-13X1IN) | |
| | | 1 | 6P-[illegible] | 19 | WASHER-HARD (4MM THK) | |
| | 6 | 1 | 8E-8136 | * | COVER AS-LH | |
| | | 1 | 9F-2979 | 6 | NUT-WELD (3/8-16 THD) | |
| | | 1 | 1P-8189 | 1 | CLIP | |
| | 7 | 1 | 7X-3411 | 4 | COVER | |
| | 8 | 1 | 6J-0468 | 18 | SCREW-HEAD (3/8-16X.87SIN) | |
| | 9 | 1 | [illegible]-4074 | 1 | COVER | |
| | | 1 | 8E-8976 | * | GASKET | |
| | 10 | 1 | 8E-3248 | 1 | [illegible] | |
| | | 1 | 8E-2260 | 1 | GASKET | |
| | 11 | 1 | 3T-3636 | 1 | HANDHOLD | |
| | 12 | 1 | 8E-8976 | 1 | COVER AS | |
| | | 1 | 9F-2979 | 8 | NUT-WELD (3/8-16 THD) | |
| | | 1 | 8E-8978 | 1 | GASKET | |
| | 13 | 1 | 7T-9131 | 1 | FLOORPLATE AS | |
| | | 1 | 1F-0748 | 4 | NUT-WELD (1/2-13 THD) | |
| | 14 | 1 | 7Y-8067 | 1 | PLUG-BUTTON | |
| | 15 | 1 | 7T-0136 | 1 | PLATE AS | |
| | | 1 | 9F-2978 | 5 | NUT-WELD (3/8-16 THD) | |
| | 16 | 1 | 7T-8066 | 1 | COVER | |
| | | 1 | 7T-9779 | 1 | GASKET | |
| | 17 | 1 | 3T-3961 | 1 | PLATE AS | |
| | 18 | 1 | 9T-0264 | 4 | BOLT (1/4-20X.62SIN) | |
| M | | 1 | 9T-4295 | 4 | WASHER-HARD (2MM THK) | |
| | 19 | 1 | 9X-8464 | 1 | FLOOR MAT | |
| | 20 | 1 | 8E-8846 | 1 | MODULE AS-OPERATOR | |
| | 21 | 1 | 3T-3934 | 1 | HANDHOLD | |
| | 22 | 1 | 9F-8671 | 2 | PLUG | |
| | 23 | 2 | 9T-0264 | 4 | BOLT (1/4-20X.62SIN) | |
| M | | 2 | 9T-4295 | 4 | WASHER-HARD (2MM THK) | |
| | 24 | 2 | 6H-2062 | 17 | BOLT (3/8-16X.750IN) | |
| | 25 | 2 | 6P-1075 | 21 | WASHER-HARD (3MM THK) | |
| | 26 | 2 | 7T-0136 | 1 | SEAL | |
| | 27 | 2 | 7X-0078 | 2 | BOLT (3/4-10X5IN) | |
| | | 2 | 7X-0682 | 2 | WASHER-HARD (6MM THK) | |
| | 28 | 2 | 3T-3482 | 2 | PLATE | |
| | 29 | 2 | 3T-8290 | 1 | PLATE AS | |
| | | 2 | 7S-4828 | 6 | SPACER | |
| | 30 | 2 | 3T-8281 | 1 | SEAL | |
| | 31 | 2 | 7S-8017 | 1 | GASKET | |
| | 32 | 2 | 7S-8016 | 1 | COVER AS | |
| | | 2 | 2R-2276 | 2 | WASHER | |
| | | 2 | 9F-8026 | 2 | SCREW-KNURLED | |
| | 33 | 2 | 9M-3429 | 1 | COVER | |
| | 34 | 2 | 8E-8697 | 1 | COVER | |
| | 35 | 2 | 9D-3091 | 8 | SCREW-SOCKET HEAD | |
| | 36 | 2 | 9M-3142 | 8 | MOUNTING | |
| | 37 | 2 | 9M-9017 | 2 | PLATE | |
| | 38 | 2 | 7X-0360 | 2 | BOLT (7/8-9X5IN) | |
| | | 2 | 7X-0672 | 2 | WASHER-HARD | |
| | 39 | 2 | 4L-8454 | 4 | BOLT (3/8-16X1.0IN) | |
| | 40 | 2 | 3T-4788 | 1 | COVER | |

12 FRAME AND BODY 1 of 4 SELP4570-01

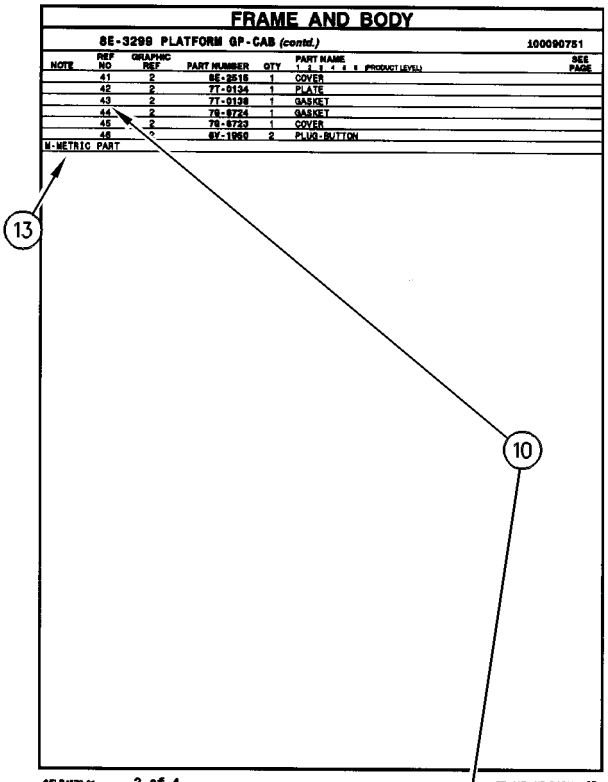

FRAME AND BODY

8E-3299 PLATFORM GP-CAB (contd.) 100090751

| NOTE | REF NO | GRAPHIC REF | PART NUMBER | QTY | PART NAME 1 2 3 4 5 6 (PRODUCT LEVEL) | SEE PAGE |
|---|---|---|---|---|---|---|
| | 41 | 2 | 8E-2515 | 1 | COVER | |
| | 42 | 2 | 7T-0134 | 1 | PLATE | |
| | 43 | 2 | 7T-0138 | 1 | GASKET | |
| | 44 | 2 | 7S-8724 | 1 | GASKET | |
| | 45 | 2 | 7S-8723 | 1 | COVER | |
| | 46 | * | 8Y-1950 | 2 | PLUG-BUTTON | |

M-METRIC PART

SELP4570-01 2 of 4 FRAME AND BODY 13

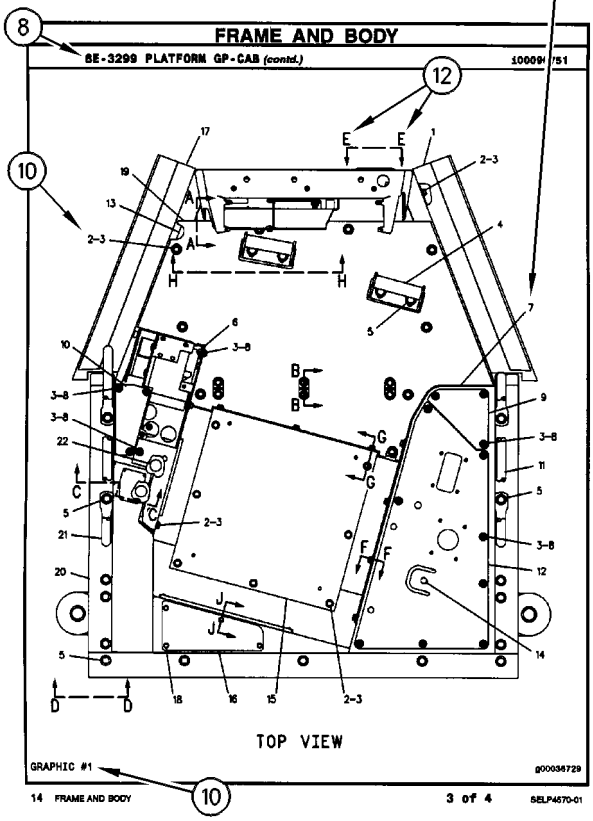

FRAME AND BODY

8E-3299 PLATFORM GP-CAB (contd.) 100090751

TOP VIEW

GRAPHIC #1 g00036729

14 FRAME AND BODY 3 of 4 SELP4570-01

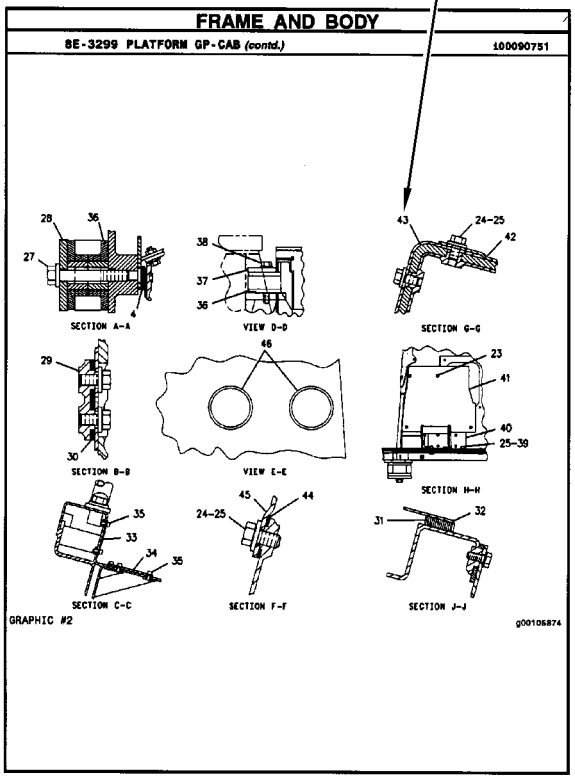

FRAME AND BODY

8E-3299 PLATFORM GP-CAB (contd.) 100090751

SECTION A-A

VIEW D-D

SECTION G-G

SECTION B-B

VIEW E-E

SECTION H-H

SECTION C-C

SECTION F-F

SECTION J-J

GRAPHIC #2 g00105874

SELP4570-01 4 of 4 FRAME AND BODY 15

# GÉNÉRALITÉS

## 1. IDENTIFICATION DE LA MACHINE

Toutes les machines Caterpillar portent un numéro d'identification (PIN). Certains composants des machines peuvent porter des numéros de série (S/N). En général, parmi les composants qui portent des numéros de série il y a les moteurs, les transmissions, les bulldozers et les rippers. En plus, la machine et le moteur peuvent recevoir des numéros de version, et dans certains cas, de modification. Ces numéros figurent sur les plaques de numéro de série et sur la plaque signalétique principale qui se trouve dans le poste de conduite.

Les concessionnaires Caterpillar doivent connaître tous ces numéros pour identifier correctement les pièces.

SIS *Nouvelle Caractéristique*

À partir du premier trimestre 2001, le numéro d'identification produit (PIN) Caterpillar passe de 8 à 17 caractères. Afin de permettre une identification uniforme des matériels, Caterpillar et d'autres constructeurs de machines de travaux publics s'efforcent de se conformer à la norme la plus récente portant sur les numéros d'identification des produits. Les numéros d'identification (PIN) de machines de chantier sont définis par la norme ISO 10261. Le nouveau format du numéro d'identification est valable pour toutes les machines et tous les groupes électrogènes Caterpillar. Le numéro d'identification produit (PIN) figurant sur la plaque et sur le châssis se composera de 17 caractères. Le nouveau format ressemblera à ceci:

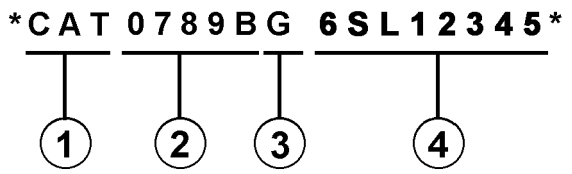


Il se décomposera de la façon suivante:

1. Code international de fabrication de Caterpillar (caractères 1 à 3)

2. Descriptif de la machine (caractères 4 à 8)

3. Contrôle (caractère 9)

4. Indicateur machine (MIS) ou numéro de séquence produit (caractères 10 à 17). Ceux-ci étaient auparavant désignés sous le terme de numéro de série.

Les machines et les groupes électrogènes construits avant le premier trimestre 2001 garderont le format à 8 caractères du numéro d'identification produit (PIN).

Les organes tels que les moteurs, les boîtes de vitesses, les essieux, etc., continueront d'être désignés par un numéro de série (S/N) à 8 caractères.

## 2. COMMANDE DE PIÈCES

**⚠ DANGER**

**Lorsqu'il faut remplacer des pièces de rechange pour ce produit Caterpillar recommande d'utiliser les pièces de rechange Caterpillar ou les pièces qui ont des spécifications équivalentes dont les dimensions physiques, le type, la force et le matériau. Ces équivalences ne se limitent pas à l'énoncé précédent.**

**L'inobservation de cette mise en garde peut entraîner des défaillances prématurées, des dommages au produit, des blessures ou même la mort.**

Les concessionnaires Caterpillar fournissent dans le monde entier des pièces de rechange de qualité Caterpillar. Leurs stocks de pièces sont constamment réapprovisionnés et comptent toutes les pièces nécessaires pour assurer la bonne marche de vos machines Caterpillar. Certains concessionnaires proposent également des kits de réparation ou des pièces rénovées, ce qui permet de choisir la solution la plus économique dans une situation donnée. Lors des commandes de pièces, mentionner la quantité, le numéro et la désignation des pièces ainsi que le numéro de série ou le numéro d'identification (PIN) de la machine pour laquelle ces pièces sont requises.

## 3. ORGANISATION DU CATALOGUE DE PIÈCES

Les renseignements sur les produits sont présentés sous forme de "Information element" (élément d'information) représentant tous les composants d'un modèle donné. "Engine Arrangement" (version de moteur) et "Seat Group" (assemblage de siège)" sont des exemples d'éléments d'information. Les éléments d'information sont classés par ordre alphabétique par la désignation standard des pièces et par numéros de pièces dans chaque partie importante du manuel.

### 4. TABLE DES MATIÈRES

*Nouvelle Caractéristique*

La table des matières se trouve au début du manuel. La table des matières fournit la liste de tous les chapitres du manuel avec une liste complète de tous les éléments d'information classés par ordre d'apparition dans le manuel. Les numéros de page sont fournis afin que l'utilisateur puisse trouver rapidement les illustrations détaillées concernant l'identification des pièces et les listes des pièces d'entretien.

### 5. INDEX DES PIÈCES D'ENTRETIEN

La rubrique "Index des pièces d'entretien" qui se trouve au début du manuel renvoie aux pièces d'entretien les plus fréquemment utilisées en précisant la désignation, la quantité, là où la pièce est utilisée et le numéro de page. Ces pièces sont classés par ordre alphabétique.

### 6. INDEX

L'index qui se trouve vers le début du manuel est une liste alphabétique de tous les éléments d'information du manuel. Les numéros de page sont fournis afin que l'utilisateur puisse trouver rapidement les illustrations détaillées concernant l'identification des pièces et les listes des pièces d'entretien.

### 7. INDEX DES NUMÉROS DE PIÈCES

Une liste numérique de tous les numéros de pièces et des pages correspondantes se trouve à la fin du manuel.

### 8. LÉGENDES

Les légendes qui se trouvent en haut de chaque page de chaque élément d'information fournissent le numéro de pièce, la désignation ainsi que des renseignements supplémentaires sur les pièces. Les renseignements concernant les numéros de série (S/N) qui se trouvent dans chaque légende doivent être utilisés pour sélectionner les informations correctes pour un moteur donné. Les informations concernant les options de remplacement sur le chantier, l'identification des composants des équipements offerts en option et les lieux d'application sont aussi fournies.

*Nouvelle Caractéristique*

Les lettres de la première ligne d'une légende sont présentées en police plus grande afin d'indiquer le début d'une unité d'information. Les légendes qui pourraient être requises pour des pages supplémentaires afin d'illustrer une unité d'information seront présentées en police standard et comprendront le terme (à suivre).

### 9. PIÈCES NON FOURNIES

*Nouvelle Caractéristique*

Dans certains cas, il est nécessaire d'indiquer les pièces non fournies qui sont en aval de la liste des pièces d'entretien. Les numéros des pièces non fournies dans la liste des pièces et les légendes seront en italique pour signaler qu'ils ne sont pas disponibles.

### 10. NUMÉROS DE RÉFÉRENCE DE LA LISTE DES PIÈCES

*Nouvelle Caractéristique*

Les numéros indiqués dans la colonne des numéros de références correspondent aux numéros utilisés dans les illustrations auxquelles ils sont associés. Un suffixe alphabétique peut être ajouté à un numéro de référence pour identifier la liste des articles en aval. Les numéros indiqués dans la colonne de référence de l'illustration renvoient à l'identification du numéro affiché dans le coin inférieur gauche de chaque illustration. Le numéro de référence de l'illustration pourrait être utilisé avec le numéro de référence de l'article pour déterminer le numéro de pièce correct. Il peut y avoir une omission intentionnelle d'un numéro de référence dans une liste de pièces suite à la mise à jour des informations en vue de refléter les numéros de pièces les plus récentes.

### 11. DÉSIGNATIONS DE PIÈCES EN RETRAIT

Lorsqu'une désignation de pièce est en retrait, cela veut dire que l'article en regard fait partie de l'ensemble sous lequel il figure.

### 12. LETTRES DE RÉFÉRENCE DES ILLUSTRATIONS

Quand cela est nécessaire, les illustrations comportent des lettres de référence (A, B, C, etc.) pour montrer le trajet des canalisations et faisceaux de câbles d'un point à l'autre. Elles sont utilisées également pour indiquer où relier les illustrations séparées auparavant.

### 13. ABRÉVIATIONS ET SYMBOLES

**O.D.** – Diamètre extérieur
**I.D.** – Diamètre intérieur
**A** – Ne fait pas partie de ce groupe
**B** – Utiliser selon besoin
**C** – Modification
**D** – Commander par mètre
**E** – Commander par centimètre
**F** – Non représenté
**G** – Commander par pouce
**I** – Voir "Hydraulic Information System"
**M** – Pièce métrique
**R** – Pièce rénovée éventuellement disponible
**Y** – Illustration séparée
**Z** – Non fourni séparément

**NOTA:**

En raison du progrès technique et des améliorations continuelles apportées au matériel, votre machine comporte peut-être des modifications qui n'apparaissent pas dans la présente publication. En cas de doute sur un détail de votre machine Caterpillar ou sur le texte de la présente publication, adressez-vous à votre concessionnaire Caterpillar.

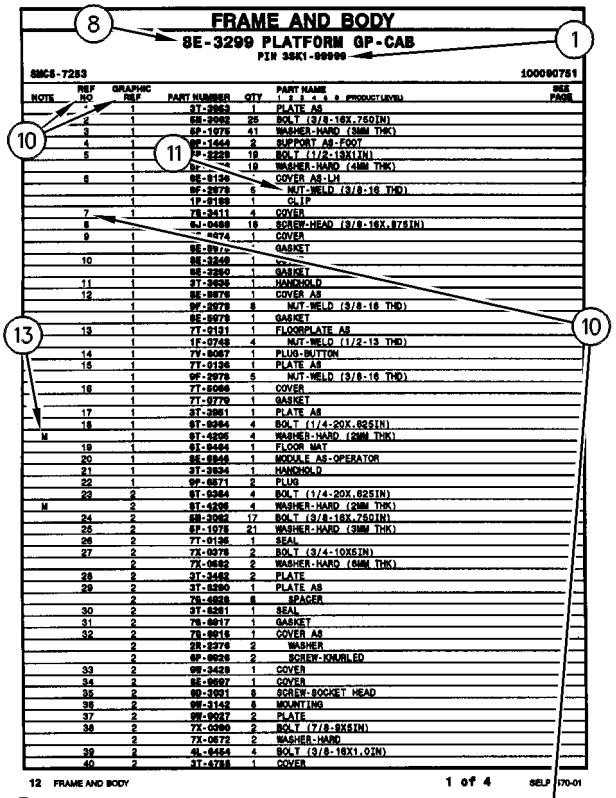

FRAME AND BODY

8E-3299 PLATFORM GP-CAB

PIN 3SK1-99999

SMCS-7283 100090751

| NOTE | REF NO | GRAPHIC REF | PART NUMBER | QTY | PART NAME 1 2 3 4 5 6 (PRODUCT LEVEL) | SEE PAGE |
|---|---|---|---|---|---|---|
| | * | 1 | 3T-3963 | 1 | PLATE AS | |
| | 2 | 1 | 6M-2062 | 25 | BOLT (3/8-16X.750IN) | |
| | 3 | 1 | 6P-1075 | 41 | WASHER-HARD (3MM THK) | |
| | 4 | 1 | 9F-1443 | 2 | SUPPORT AS-FOOT | |
| | 5 | 1 | 9P-2229 | 19 | BOLT (1/2-13X1IN) | |
| | | 1 | 6P-[illegible] | 19 | WASHER-HARD (4MM THK) | |
| | 6 | 1 | 8E-8136 | * | COVER AS-LH | |
| | | 1 | 9F-2979 | 6 | NUT-WELD (3/8-16 THD) | |
| | | 1 | 1P-8189 | 1 | CLIP | |
| | 7 | 1 | 7X-3411 | 4 | COVER | |
| | 8 | 1 | 6J-0468 | 18 | SCREW-HEAD (3/8-16X.87SIN) | |
| | 9 | 1 | [illegible]-4074 | 1 | COVER | |
| | | 1 | 8E-8976 | * | GASKET | |
| | 10 | 1 | 8E-3248 | 1 | [illegible] | |
| | | 1 | 8E-2260 | 1 | GASKET | |
| | 11 | 1 | 3T-3636 | 1 | HANDHOLD | |
| | 12 | 1 | 8E-8976 | 1 | COVER AS | |
| | | 1 | 9F-2979 | 8 | NUT-WELD (3/8-16 THD) | |
| | | 1 | 8E-8978 | 1 | GASKET | |
| | 13 | 1 | 7T-0131 | 1 | FLOORPLATE AS | |
| | | 1 | 1F-0748 | 4 | NUT-WELD (1/2-13 THD) | |
| | 14 | 1 | 7Y-8067 | 1 | PLUG-BUTTON | |
| | 15 | 1 | 7T-0126 | 1 | PLATE AS | |
| | | 1 | 9F-2978 | 5 | NUT-WELD (3/8-16 THD) | |
| | 16 | 1 | 7T-8066 | 1 | COVER | |
| | | 1 | 7T-0779 | 1 | GASKET | |
| | 17 | 1 | 3T-3961 | 1 | PLATE AS | |
| | 18 | 1 | 9T-0264 | 4 | BOLT (1/4-20X.62SIN) | |
| M | | 1 | 9T-4295 | 4 | WASHER-HARD (2MM THK) | |
| | 19 | 1 | 9X-8464 | 1 | FLOOR MAT | |
| | 20 | 1 | 8E-8946 | 1 | MODULE AS-OPERATOR | |
| | 21 | 1 | 3T-3934 | 1 | HANDHOLD | |
| | 22 | 1 | 9F-8871 | 2 | PLUG | |
| | 23 | 2 | 9T-0264 | 4 | BOLT (1/4-20X.62SIN) | |
| M | | 2 | 9T-4295 | 4 | WASHER-HARD (2MM THK) | |
| | 24 | 2 | 6M-2062 | 17 | BOLT (3/8-16X.750IN) | |
| | 25 | 2 | 6P-1075 | 21 | WASHER-HARD (3MM THK) | |
| | 26 | 2 | 7T-0136 | 1 | SEAL | |
| | 27 | 2 | 7X-0078 | 2 | BOLT (3/4-10X5IN) | |
| | | 2 | 7X-0682 | 2 | WASHER-HARD (6MM THK) | |
| | 28 | 2 | 3T-3482 | 2 | PLATE | |
| | 29 | 2 | 3T-8290 | 1 | PLATE AS | |
| | | 2 | 7G-4828 | 6 | SPACER | |
| | 30 | 2 | 3T-8281 | 1 | SEAL | |
| | 31 | 2 | 7G-8817 | 1 | GASKET | |
| | 32 | 2 | 7G-8816 | 1 | COVER AS | |
| | | 2 | 2R-2276 | 2 | WASHER | |
| | | 2 | 9F-8826 | 2 | SCREW-KNURLED | |
| | 33 | 2 | 9M-3429 | 1 | COVER | |
| | 34 | 2 | 8E-8697 | 1 | COVER | |
| | 35 | 2 | 9D-3931 | 8 | SCREW-SOCKET HEAD | |
| | 36 | 2 | 9M-3142 | 8 | MOUNTING | |
| | 37 | 2 | 9M-9017 | 2 | PLATE | |
| | 38 | 2 | 7X-0360 | 2 | BOLT (7/8-9X5IN) | |
| | | 2 | 7X-0672 | 2 | WASHER-HARD | |
| | 39 | 2 | 4L-8454 | 4 | BOLT (3/8-16X1.0IN) | |
| | 40 | 2 | 3T-4788 | 1 | COVER | |

12 FRAME AND BODY 1 of 4 SELP4570-01

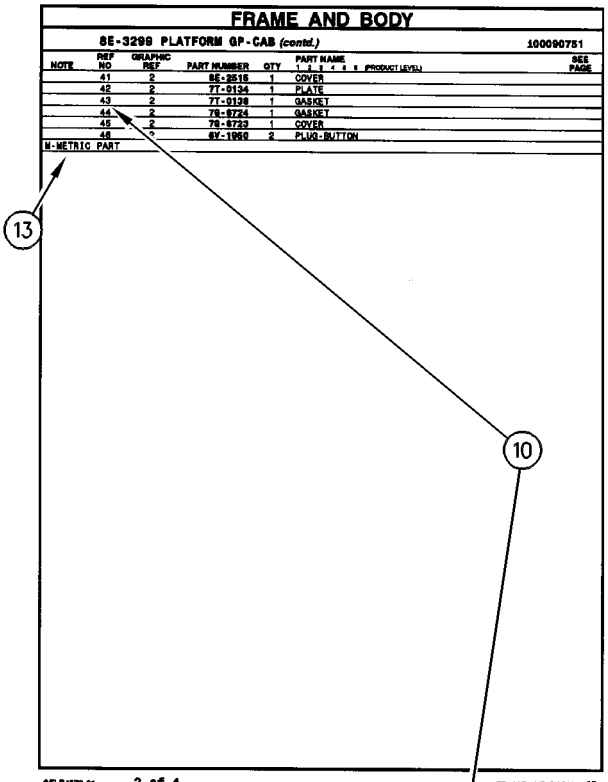

FRAME AND BODY

8E-3299 PLATFORM GP-CAB (contd.) 100090751

| NOTE | REF NO | GRAPHIC REF | PART NUMBER | QTY | PART NAME 1 2 3 4 5 6 (PRODUCT LEVEL) | SEE PAGE |
|---|---|---|---|---|---|---|
| | 41 | 2 | 8E-2516 | 1 | COVER | |
| | 42 | 2 | 7T-0134 | 1 | PLATE | |
| | 43 | 2 | 7T-0138 | 1 | GASKET | |
| | 44 | 2 | 7G-8724 | 1 | GASKET | |
| | 45 | 2 | 7G-8723 | 1 | COVER | |
| | 46 | * | 8Y-1950 | 2 | PLUG-BUTTON | |

M-METRIC PART

SELP4570-01 2 of 4 FRAME AND BODY 13

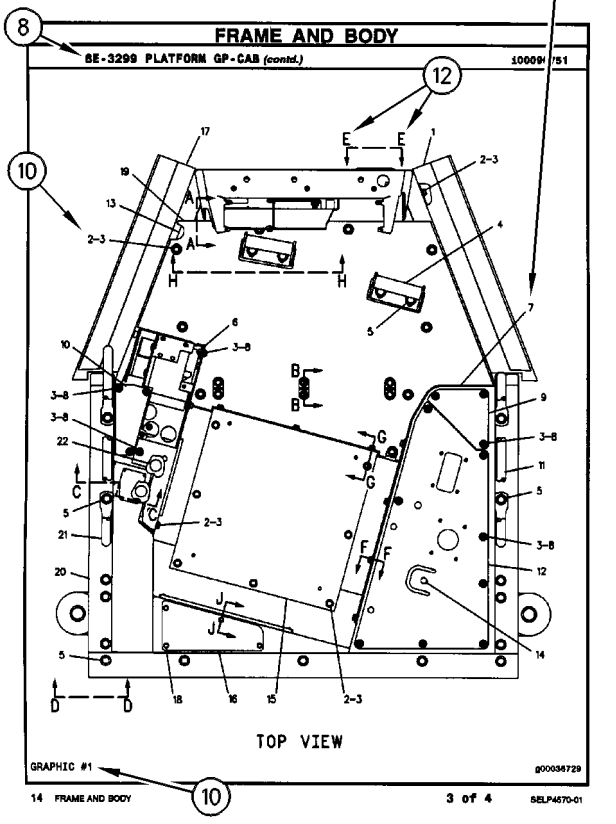

FRAME AND BODY

8E-3299 PLATFORM GP-CAB (contd.) 100090751

TOP VIEW

GRAPHIC #1 g00036729

14 FRAME AND BODY 3 of 4 SELP4570-01

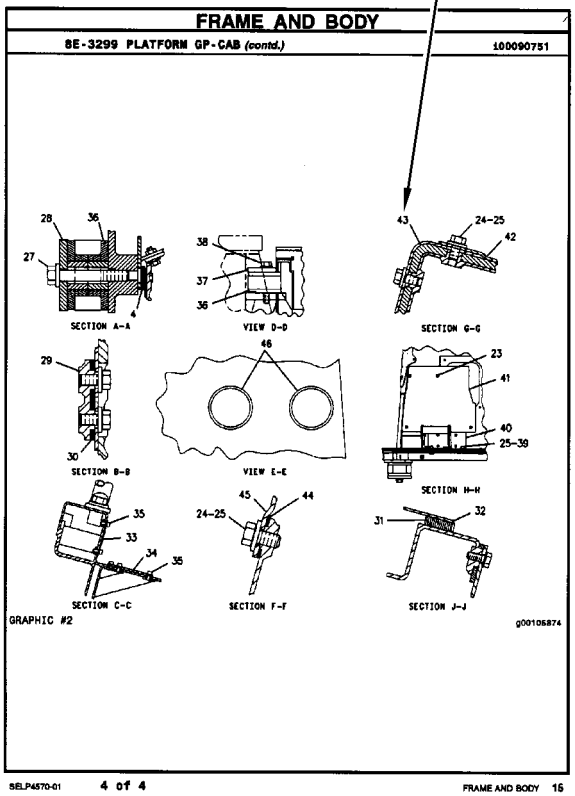

FRAME AND BODY

8E-3299 PLATFORM GP-CAB (contd.) 100090751

SECTION A-A

VIEW D-D

SECTION G-G

SECTION B-B

VIEW E-E

SECTION H-H

SECTION C-C

SECTION F-F

SECTION J-J

GRAPHIC #2 g00105874

SELP4570-01 4 of 4 FRAME AND BODY 15

# INFORMACIÓN GENERAL

## 1. MÁQUINAS

Las máquinas Caterpillar se identifican con Números de Identificación del Producto (PIN). Algunos componentes incluídos en la máquina pueden estar identificados con Números de Serie (N/S). Los componentes que tienen típicamente esta identificación incluyen motores, transmisiones, hojas topadoras y desgarradores. La máquina y el motor se identifican además con Números de Configuración y en algunos casos, Números de Modificación. Estos números están en las placas de identificación del producto o en la placa principal en la cabina del operador.

Los distribuidores Caterpillar necesitan estos números para identificar con exactitud los números de piezas de repuesto.

SIS *Nueva Característica*

A partir del primer trimestre del 2001, el Número de Identificación de Producto (PIN) de Caterpillar cambió de 8 a 17 caracteres. Para hacer más uniforme el método de identificación de equipos, Caterpillar y otros fabricantes de equipo de construcción han tomado medidas para cumplir con la versión más reciente de la norma de numeración de identificación de productos. Los Números de Identificación de Producto para máquinas que no se operan en carreteras son definidos por la norma ISO 10261. El nuevo formato PIN corresponderá a todas las máquinas y grupos electrógenos Caterpillar. Las placas y los caracteres PIN estampados en el bastidor mostrarán el PIN de 17 caracteres. El nuevo formato tendrá la apariencia siguiente:

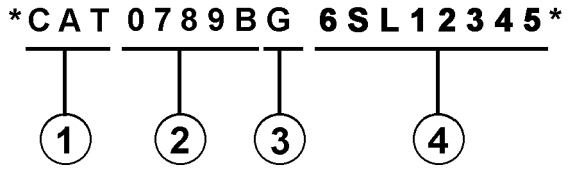


Significado de los caracteres:

1. Código de Fabricación Mundial de Caterpillar (caracteres 1-3)

2. Sección Descriptor de la Máquina (caracteres 4-8)

3. Carácter de Verificación (carácter 9)

4. Sección Indicador de la Máquina (MIS) o Número de Secuencia de Producto (caracteres 10-17). Anteriormente, estos caracteres constituían el Número de Serie.

Las máquinas y grupos electrógenos producidos antes del primer semestre del 2001 mantendrán su formato PIN de 8 caracteres.

Los componentes como motores, transmisiones, ejes, herramientas de trabajo, etc., continuarán usando un Número de Serie (S/N) de 8 caracteres.

## 2. COMO PEDIR REPUESTOS

**⚠ ADVERTENCIA**

**Cuando se necesiten piezas de repuesto para este producto, Caterpillar recomienda usar piezas de repuesto Caterpillar o piezas que tengan especificaciones equivalentes incluyendo, pero sin estar limitadas a, dimensiones físicas, tipo, fortaleza y material.**

**El no hacer caso de esta advertencia puede llevar a fallas prematuras, daños al producto y lesiones graves o mortales.**

Las piezas de repuesto Caterpillar de calidad están a la disposición de los distribuidores Caterpillar en todo el mundo. Sus existencias actualizadas incluyen todas las piezas normalmente requeridas para proteger su inversión en máquinas Caterpillar. Los distribuidores pueden tener juegos de reparación o piezas remanufacturadas para permitir la selección de la mejor alternativa de reparación en un caso en particular. Al pedir piezas de repuesto, especifique en su pedido la cantidad, el número de pieza, el nombre de la pieza y el número de serie/número de identificación del producto, de la máquina para la cual se necesitan estas piezas.

## 3. ORGANIZACION DEL MANUAL DE PIEZAS

La información sobre el producto, se presenta en este manual, como "elementos de información" que representan todos los componentes de un modelo específico. Las configuraciones de motores y los grupos de asientos son ejemplos de elementos de información. Los elementos de información están organizados primeramente por nombres de piezas en orden alfabético y en segundo lugar, por el número de pieza dentro de cada sección principal del manual.

**4. CONTENIDO**

La página de Contenido se encuentra al principio del manual. El Contenido indica cada sección del manual con una lista completa de todos los elementos de información organizados en el orden que aparecen en el manual. Los números de página proporcionan una referencia rápida a las ilustraciones detalladas de identificación de piezas y a las listas de componentes de repuesto de dichas piezas.

**5. ÍNDICE DE PIEZAS DE MANTENIMIENTO**

Al principio de este catálogo se encuentra un índice de los números de piezas utilizadas más frecuentemente para el mantenimiento, que incluye descripción, cantidad necesaria, lugar de utilización y número de página. Esta información está organizada alfabéticamente, por descripción de la pieza.

**6. ÍNDICE**

El Índice, ubicado cerca del principio del manual, es una lista en orden alfabético de todos los elementos de información incluídos en el manual. Los números de página proporcionan una referencia rápida a las ilustraciones detalladas de identificación de piezas y a las listas de componentes de repuesto de dichas piezas.

**7. INDICE NUMÉRICO DE PIEZAS**

Un índice numérico de piezas con el correspondiente número de página aparece al final de este catálogo.

**8. TÍTULOS**

Los títulos ubicados al principio de cada elemento de información identifican el número y el nombre de la pieza junto con información descriptiva. Se debe usar información sobre los Números de Identificación de Pieza (PIN) y los números de serie (S/N) para seleccionar la información que corresponda a una máquina en particular. También se suministra información sobre las opciones de reparación en el campo, la identificación de componentes de accesorios optativos y el lugar de ubicación de la pieza ("es parte de").

La primera línea del título se muestra con un tipo de letra más grande para indicar el comienzo de un elemento de información. Si se requieren páginas adicionales para ilustrar un elemento de información, los títulos se muestran con un tipo de letra normal y la continuación se indica entre paréntesis.

**9. PIEZAS QUE NO SE SUMINISTRAN COMO REPUESTO**

En algunos casos es necesario indicar piezas que no se suministran como repuesto pero que pueden estar conectadas a listas de componentes de otras piezas de repuesto. En tal caso, dichas piezas se muestran en cursiva para indicar que no son piezas disponibles.

**10. NÚMEROS DE REFERENCIA**

Los números en la columna de No. de Referencia corresponden a los números indicados en la ilustración que pertenece a ese número de pieza. Los números que tienen un sufijo alfabético identifican artículos de las listas de componentes de piezas. Los números en la columna de Referencia de la ilustración se identifican en la esquina inferior izquierda de cada ilustración. Para determinar el número de pieza correcto se puede utilizar tanto el No. de Referencia de la ilustración como el No. de Referencia del artículo. A medida que se actualiza la información para indicar los más recientes números de piezas de repuesto, puede omitirse intencionalmente un No. de Referencia en una lista de componentes de piezas.

**11. NOMBRES DE PIEZA SANGRADOS**

Cuando el nombre de una pieza está sangrado en una lista, significa que esta pieza forma parte del grupo o conjunto del renglón inmediatamente superior.

**12. LETRAS DE REFERENCIA DE ILUSTRACIONES**

Las ilustraciones contienen algunas veces letras de referencia (A, B, C etc.) cuyo propósito es seguir el trayecto de líneas y mazos de cables de un punto a otro. También se utilizan para mostrar dónde volver a unir ilustraciones que se habían separado.

**13. ABREVIATURAS Y SIMBOLOS**

**O.D.** – Diámetro exterior
**I.D.** – Diámetro interior
**A** – No es pieza de este grupo
**B** – Utilizado según la demanda
**C** – Indica cambio
**D** – Se pide por metro
**E** – Se pide por centímetro
**F** – No se muestra
**G** – Se pide por pulgada
**I** – Consulte el sistema de información hidráulica
**M** – Pieza métrica
**R** – Puede estar disponible como pieza remanufacturada
**Y** – Ilustración separada
**Z** – No se suministra por separado

SIS *Nueva Característica*

**14. DESCRIPCIÓN DE LOS CAMBIOS DE TIPO**

Tipo – Un tipo se define como cualquier cambio de configuración que requiere un Elemento de información adicional de una Configuración, Grupo o Conjunto. Si el número de serie se clasifica por tipos que no están disponibles, se mostrará un número de tipo (Tipo 1,Tipo 2,etc.) en el comentario de la fotografía. Estos cambios de "tipo" se identifican con una nota "C" (cambio con respecto al tipo anterior) en la Lista de Piezas. Se incluirían sólo los "tipos" que aplican a este Manual de Piezas. Es posible que haya tipos adicionales que causen la aparición de notas "C" en el Elemento de Información cuando no se muestran otros tipos."

**15.<END>**

Este símbolo indica el final de un elemento de información.

**NOTA:**

**Las contínuas mejoras y adelantos en diseño podrían originar cambios a su máquina que no se incluyen en esta publicación. Cuando tenga alguna pregunta acerca de su producto Caterpillar o de esta publicación, consulte al distribuidor Caterpillar para obtener la información más reciente.**

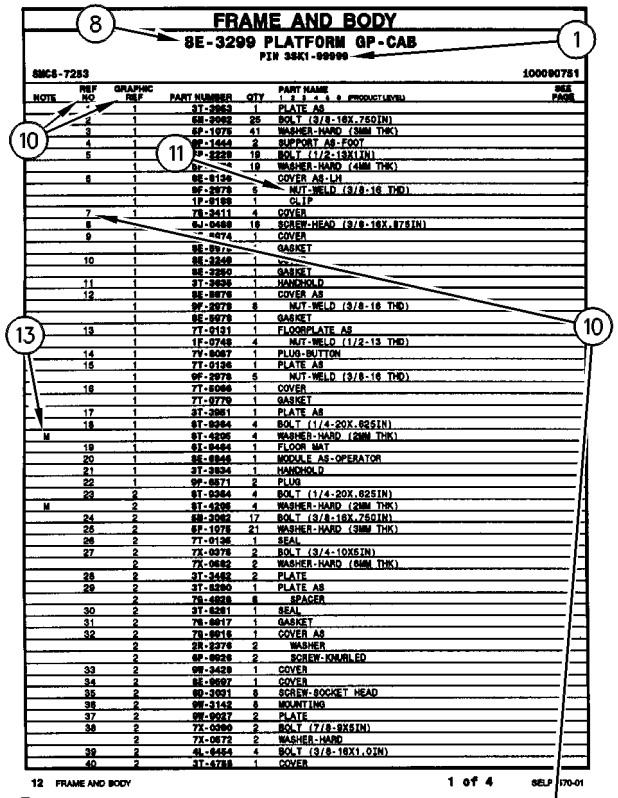

FRAME AND BODY

8E-3299 PLATFORM GP-CAB

PIN 3SK1-99999

SMCS-7283 100090751

| NOTE | REF NO | GRAPHIC REF | PART NUMBER | QTY | PART NAME 1 2 3 4 5 6 (PRODUCT LEVEL) | SEE PAGE |
|---|---|---|---|---|---|---|
| | * | 1 | 3T-3963 | 1 | PLATE AS | |
| | 2 | 1 | 6M-2062 | 25 | BOLT (3/8-16X.750IN) | |
| | 3 | 1 | 6P-1075 | 41 | WASHER-HARD (3MM THK) | |
| | 4 | 1 | 9E-1443 | 2 | SUPPORT AS-FOOT | |
| | 5 | 1 | 9P-2229 | 19 | BOLT (1/2-13X1IN) | |
| | | 1 | 6P-[illegible] | 19 | WASHER-HARD (4MM THK) | |
| | 6 | 1 | 9E-9139 | * | COVER AS-LH | |
| | | 1 | 9F-2979 | 6 | NUT-WELD (3/8-16 THD) | |
| | | 1 | 1P-0189 | 1 | CLIP | |
| | 7 | 1 | 7X-3411 | 4 | COVER | |
| | 8 | 1 | 6J-0468 | 18 | SCREW-HEAD (3/8-16X.875IN) | |
| | 9 | 1 | [illegible]-0074 | 1 | COVER | |
| | | 1 | 9E-[illegible] | * | GASKET | |
| | 10 | 1 | 9E-3249 | 1 | [illegible] | |
| | | 1 | 9E-2260 | 1 | GASKET | |
| | 11 | 1 | 3T-3636 | 1 | HANDHOLD | |
| | 12 | 1 | 9E-9076 | 1 | COVER AS | |
| | | 1 | 9F-2979 | 8 | NUT-WELD (3/8-16 THD) | |
| | | 1 | 9E-9078 | 1 | GASKET | |
| | 13 | 1 | 7T-9131 | 1 | FLOORPLATE AS | |
| | | 1 | 1F-0748 | 4 | NUT-WELD (1/2-13 THD) | |
| | 14 | 1 | 7Y-8067 | 1 | PLUG-BUTTON | |
| | 15 | 1 | 7T-0126 | 1 | PLATE AS | |
| | | 1 | 9F-2978 | 5 | NUT-WELD (3/8-16 THD) | |
| | 16 | 1 | 7T-8066 | 1 | COVER | |
| | | 1 | 7T-9779 | 1 | GASKET | |
| | 17 | 1 | 3T-3961 | 1 | PLATE AS | |
| | 18 | 1 | 9T-0264 | 4 | BOLT (1/4-20X.625IN) | |
| M | | 1 | 9T-4295 | 4 | WASHER-HARD (2MM THK) | |
| | 19 | 1 | 9X-8464 | 1 | FLOOR MAT | |
| | 20 | 1 | 9E-8946 | 1 | MODULE AS-OPERATOR | |
| | 21 | 1 | 3T-3934 | 1 | HANDHOLD | |
| | 22 | 1 | 9P-8671 | 2 | PLUG | |
| | 23 | 2 | 9T-0264 | 4 | BOLT (1/4-20X.625IN) | |
| M | | 2 | 9T-4295 | 4 | WASHER-HARD (2MM THK) | |
| | 24 | 2 | 6M-2062 | 17 | BOLT (3/8-16X.750IN) | |
| | 25 | 2 | 6P-1075 | 21 | WASHER-HARD (3MM THK) | |
| | 26 | 2 | 7T-0136 | 1 | SEAL | |
| | 27 | 2 | 7X-0078 | 2 | BOLT (3/4-10X5IN) | |
| | | 2 | 7X-0682 | 2 | WASHER-HARD (6MM THK) | |
| | 28 | 2 | 3T-3482 | 2 | PLATE | |
| | 29 | 2 | 3T-8290 | 1 | PLATE AS | |
| | | 2 | 7X-4828 | 6 | SPACER | |
| | 30 | 2 | 3T-8281 | 1 | SEAL | |
| | 31 | 2 | 7X-8017 | 1 | GASKET | |
| | 32 | 2 | 7X-8016 | 1 | COVER AS | |
| | | 2 | 2R-2276 | 2 | WASHER | |
| | | 2 | 9F-8026 | 2 | SCREW-KNURLED | |
| | 33 | 2 | 9M-3429 | 1 | COVER | |
| | 34 | 2 | 8E-9697 | 1 | COVER | |
| | 35 | 2 | 9D-3091 | 8 | SCREW-SOCKET HEAD | |
| | 36 | 2 | 9M-3142 | 8 | MOUNTING | |
| | 37 | 2 | 9M-9017 | 2 | PLATE | |
| | 38 | 2 | 7X-0360 | 2 | BOLT (7/8-9X5IN) | |
| | | 2 | 7X-0672 | 2 | WASHER-HARD | |
| | 39 | 2 | 4L-6454 | 4 | BOLT (3/8-16X1.0IN) | |
| | 40 | 2 | 3T-4788 | 1 | COVER | |

12 FRAME AND BODY 1 of 4 SELP4570-01

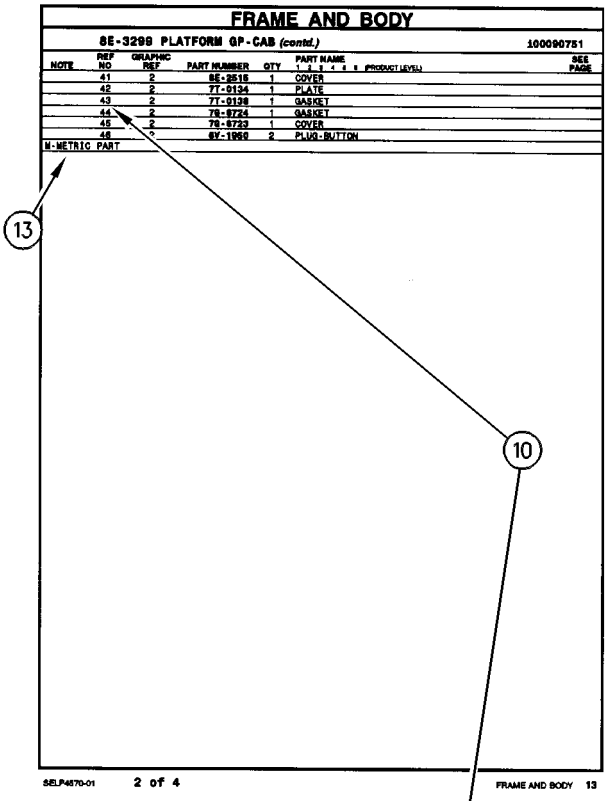

FRAME AND BODY

8E-3299 PLATFORM GP-CAB (contd.) 100090751

| NOTE | REF NO | GRAPHIC REF | PART NUMBER | QTY | PART NAME 1 2 3 4 5 6 (PRODUCT LEVEL) | SEE PAGE |
|---|---|---|---|---|---|---|
| | 41 | 2 | 8E-2515 | 1 | COVER | |
| | 42 | 2 | 7T-0134 | 1 | PLATE | |
| | 43 | 2 | 7T-0138 | 1 | GASKET | |
| | 44 | 2 | 7G-8724 | 1 | GASKET | |
| | 45 | 2 | 7G-8723 | 1 | COVER | |
| | 46 | * | 8Y-1952 | 2 | PLUG-BUTTON | |

M-METRIC PART

SELP4570-01 2 of 4 FRAME AND BODY 13

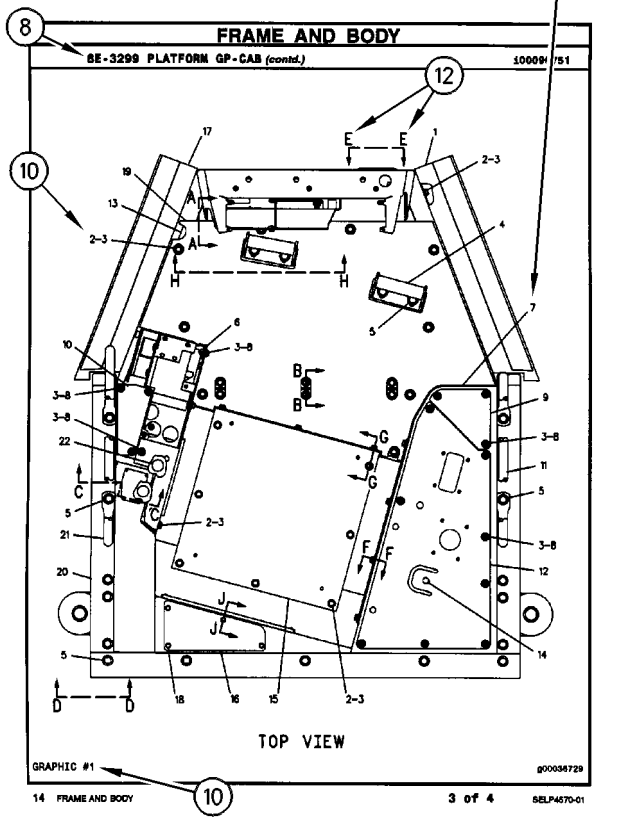

FRAME AND BODY

8E-3299 PLATFORM GP-CAB (contd.) 100090751

TOP VIEW

GRAPHIC #1 g00036729

14 FRAME AND BODY 3 of 4 SELP4570-01

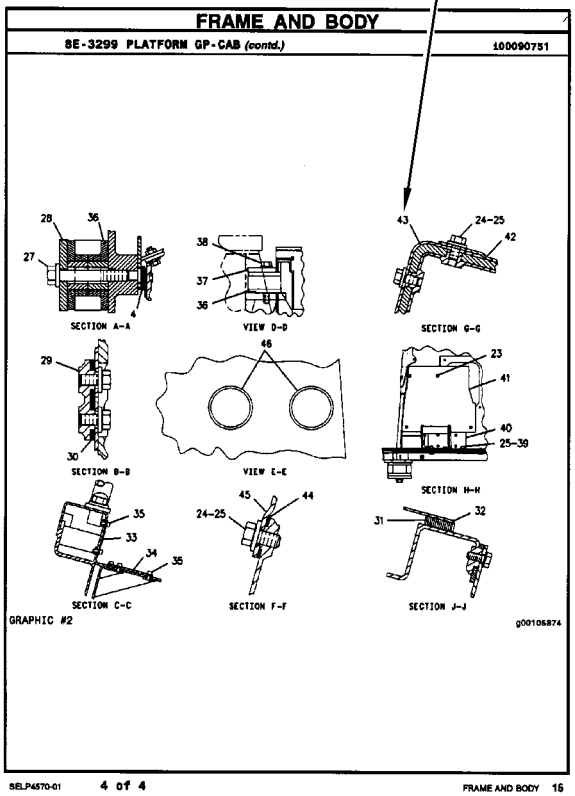

FRAME AND BODY

8E-3299 PLATFORM GP-CAB (contd.) 100090751

SECTION A-A

VIEW D-D

SECTION G-G

SECTION B-B

VIEW E-E

SECTION H-H

SECTION C-C

SECTION F-F

SECTION J-J

GRAPHIC #2 g00105874

SELP4570-01 4 of 4 FRAME AND BODY 15

# INFORMAÇÃO GERAL

## 1. IDENTIFICAÇÃO DA MÁQUINA

As máquinas Caterpillar são identificadas pelos Números de Informação do Produto (PIN). Alguns componentes incluídos numa máquina podem ser identificados por Números de Série (S/N). Componentes típicos que serão enumerados com números de série incluem motores, transmissões, lâminas e ríperes. Além do número de série, a máquina e o motor são ainda identificados por números de arranjo e, em alguns casos, números de modificações. Tais números encontram-se na(s) placa(s) de identificação do produto e na placa mestre no compartimento do operador.

SIS *Novidades*

A partir do primeiro trimestre de 2001 o Número de Identificação de Produto da Caterpillar (PIN) precisa ser mudado de 8 para 17 caracteres. Esforçando-se para fornecer uma identificação uniforme de equipamentos, a Caterpillar e outros fabricantes de equipamento de construção estão mudando para atender a versão mais atualizada do padrão de identificação de produtos. Os números de PIN para produtos de aplicações não rodoviárias são definidos pela ISO 10261. O novo formato de número PIN será adotado em todas as máquinas e grupos geradores Caterpillar. As placas e as marcações do chassi mostrarão os 17 dígitos de PIN. O novo formato terá a seguinte disposição:

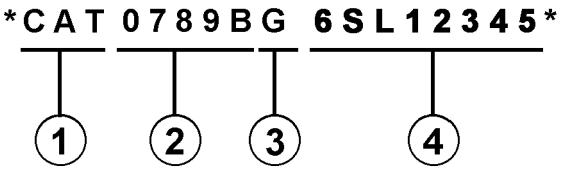


Onde:

1. Código de Fabricação Mundial da Caterpillar (dígitos 1-3)

2. Descrição da Máquina (dígitos 4-8)

3. Dígito de Verificação (dígito 9)

4. Seção de Indicador da Máquina (MIS) ou Número de Seqüência de Produto (dígitos 10-17). Estes eram anteriormente chamados de Número de Série.

Máquinas e grupos geradores produzidos antes do primeiro trimestre de 2001 manterão o formato de 8 caracteres de PIN.

Componentes como motores, transmissões, eixos, ferramentas de trabalho, etc. continuarão a usar Número de Série (S/N) com oito caracteres.

## 2. COMO OBTER PEÇAS

**⚠ CUIDADO**

**Quando peças de substituição são exigidas para este produto, a Caterpillar recomenda a utilização de peças de substituição Caterpillar ou peças com as especificações equivalentes incluindo, mas não limitadas, à dimensões físicas, tipos, resistência e materiais.**

**A inobservância desta advertência poderá resultar em falhas prematuras, danos ao produto, ferimentos ou morte.**

As Peças de Reposição de Qualidade Caterpillar encontram-se disponíveis nos revendedores Caterpillar no mundo inteiro. Seus estoques de peças são atualizados e incluem todas as peças normalmente necessárias para proteger seu investimento em máquinas Caterpillar. Alguns revendedores podem oferecer jogos de reparo ou peças de troca/remanufaturadas disponíveis como uma opção da alternativa de reparo mais eficaz para uma situação específica. Ao encomendar peças, seu pedido deve especificar a quantidade, o número e o nome da peça e o número de série/número de identificação do produto referentes à máquina para a qual as peças se destinam.

## 3. ORGANIZAÇÃO DO MANUAL DE PEÇAS

A informação do produto neste manual é apresentada em forma de "elementos de informação" que representam todos os componentes para o modelo específico. Arranjo de Motor e Grupo de Assento são exemplos de elementos de informação. Os elementos de informação são organizados em ordem alfabética por nome de peça ou secundariamente, por número de peça incluído em cada seção principal do manual.

## 4. LISTA DE CONTEÚDOS

A Lista de Conteúdos (TOC) se encontra no princípio do manual. A Lista de Conteúdos (TOC) relaciona em cada seção do manual uma lista completa com todos os elementos de informação organizados conforme aparecem no manual. Números de página são fornecidos para que se tenha referência rápida de ilustrações de peças detalhadas e listas de conteúdos que podem receber serviço de manutenção.

### 5. ÍNDICE DE PEÇAS DE MANUTENÇÃO

O Índice de Peças de Manutenção, localizado perto do princípio do manual, faz referência aos números de peça de manutenção usados com maior frequência, fornecendo uma descrição, a quantidade, o uso e o número de página. Esta informação é organizada com a descrição da peça em ordem alfabética.

### 6. ÍNDICE

O Índice localizado perto do princípio do manual, consiste de uma lista em ordem alfabética de todos os elementos de informação incluídos no manual. Números de página são fornecidos para que se tenha referência rápida de ilustrações de peças detalhadas e listas de conteúdos que podem receber serviço de manutenção.

### 7. ÍNDICE DE NÚMERO DE PEÇA

Um índice numérico relacionando todos os números de peça e a(s) página(s) correspondentes, aparece no final do manual.

### 8. LEGENDAS

As legendas localizadas no início de cada elemento de informação identificam o número e o nome de peça, juntamente com informação descritiva adicional. Informações sobre o Número de Informação do Produto (PIN) e o Número de Série (S/N) encontradas em cada legenda devem ser usadas para selecionar a informação correta sobre uma máquina específica. Opções de substituição no campo, identificação de componentes de acessórios opcionais e informações sobre onde são utilizados ("parte de") são também fornecidas.

A primeira linha de uma legenda é indicada em tipo maior para indicar o princípio de um elemento de informação. Legendas para páginas adicionais que podem ser necessárias para ilustrar um elemento de informação serão apresentadas em tipo padrão e incluirão o termo *(continua)* .

### 9. NÃO DISPONÍVEL SEPARADAMENTE

Em alguns casos, é necessário mostrar peças não disponíveis separadamente que têm uma ligação com listas de conteúdos de nível inferior que podem receber serviço de manutenção. Os números de peça destes componentes não disponíveis aparecerão em *itálico* , a fim de indicar que não estão disponíveis.

### 10. NÙMEROS DE REFERÊNCIA À LISTA DE PEÇAS

Os números indicados na coluna Ref No (No. de Referência) correspondem-se aos números usados no(s) gráfico(s) correspondente(s). Um sufixo com letras pode ser acrescentado a um número de referência para identificar itens de conteúdo de nível inferior. Os números indicados na coluna Graphic Ref (Referência de Gráfico) referem-se ao identificador de número de gráfico presente no canto esquerdo inferior de cada ilustração. O número de Referência de Gráfico pode ser usado em combinação com o item Ref No para determinar-se o número de peça correto. Poderá haver omissão intencional de um número de referência (Ref No) de uma lista de conteúdos uma vez que as informações são atualizadas para refletir os números de peça mais recentes que podem receber serviço de manutenção.

### 11. NOMES DE PEÇAS DESALINHADOS

Quando um nome de peça encontra-se desalinhado numa lista de peças, significa que tal item faz parte do (está incluído no) grupo ou conjunto sob o qual está relacionado.

### 12. LETRAS DE REFERÊNCIA NAS ILUSTRAÇÕES

Quando necessário, as ilustrações contêm letras de referência (A, B, C, etc.) que são utilizadas para seguir tubulações e cabos elétricos de um ponto a outro. Também foram utilizadas para indicar onde se pode reconectar as ilustrações que foram separadas.

### 13. ABREVIAÇÕES E SÍMBOLOS

**O.D.** – "Outside Diameter" (Diâmetro Externo)
**I.D.** – "Inside Diameter" (Diâmetro Interno)
**A** – Não faz parte deste grupo
**B** – Use conforme necessário
**C** – Indica modificação
**D** – Vendido por metro
**E** – Vendido por centímetro
**F** – Não ilustrado
**G** – Vendido por polegada
**I** – Consultar o Sistema de Informações Hidráulicas
**M** – Peça métrica
**R** – Peça remanufaturada pode estar disponível; consulte o seu revendedor Cat
**Y** – Ilustração separada
**Z** – Não disponível separadamente

SIS *Novidades*

### 14. <END>

Este símbolo indica o final de um elemento de informação.

**NOTA:**

**Os contínuos aperfeiçoamentos e avanços no projeto do produto podem ocasionar modificações em sua máquina que talvez ainda não estejam incluídas nesta publicação. Sempre que surgirem dúvidas quanto a um produto Caterpillar ou quanto à presente publicação, consulte o seu revendedor Caterpillar para obter as informações mais recentes disponíveis**.

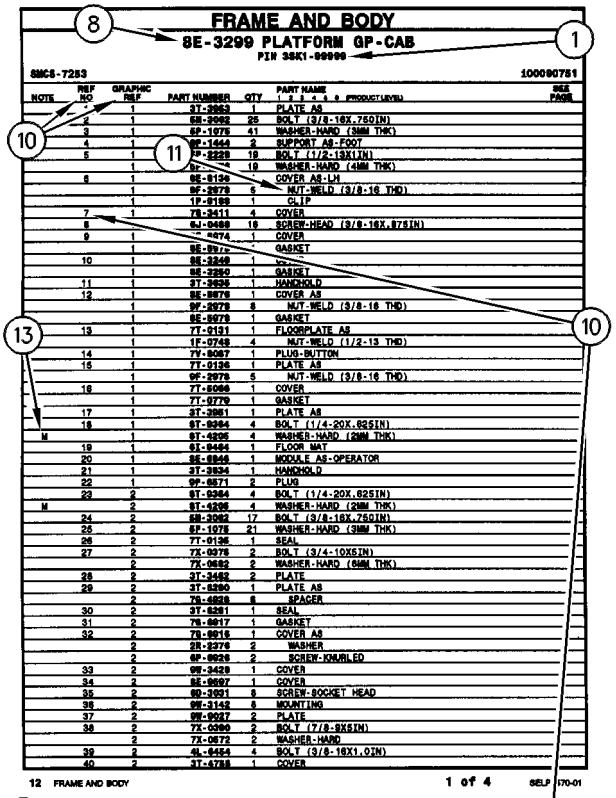

FRAME AND BODY

8E-3299 PLATFORM GP-CAB

PIN 3SK1-99999

SMCS-7283 100090751

| NOTE | REF NO | GRAPHIC REF | PART NUMBER | QTY | PART NAME 1 2 3 4 5 6 (PRODUCT LEVEL) | SEE PAGE |
|---|---|---|---|---|---|---|
| | * | 1 | 3T-3963 | 1 | PLATE AS | |
| | 2 | 1 | 6M-2062 | 25 | BOLT (3/8-16X.750IN) | |
| | 3 | 1 | 6P-1075 | 41 | WASHER-HARD (3MM THK) | |
| | 4 | 1 | 9E-1443 | 2 | SUPPORT AS-FOOT | |
| | 5 | 1 | 9P-2229 | 19 | BOLT (1/2-13X1IN) | |
| | | 1 | 9P-[illegible] | 19 | WASHER-HARD (4MM THK) | |
| | 6 | 1 | 9E-9139 | * | COVER AS-LH | |
| | | 1 | 9F-2979 | 6 | NUT-WELD (3/8-16 THD) | |
| | | 1 | 1P-0189 | 1 | CLIP | |
| | 7 | 1 | 7X-3411 | 4 | COVER | |
| | 8 | 1 | 6J-0468 | 18 | SCREW-HEAD (3/8-16X.87SIN) | |
| | 9 | 1 | [illegible]074 | 1 | COVER | |
| | | 1 | 9E-99[illegible] | * | GASKET | |
| | 10 | 1 | 9E-3249 | 1 | [illegible] | |
| | | 1 | 9E-2250 | 1 | GASKET | |
| | 11 | 1 | 3T-3936 | 1 | HANDHOLD | |
| | 12 | 1 | 9E-9976 | 1 | COVER AS | |
| | | 1 | 9F-2979 | 8 | NUT-WELD (3/8-16 THD) | |
| | | 1 | 9E-9978 | 1 | GASKET | |
| | 13 | 1 | 7T-9131 | 1 | FLOORPLATE AS | |
| | | 1 | 1F-0748 | 4 | NUT-WELD (1/2-13 THD) | |
| | 14 | 1 | 7Y-8067 | 1 | PLUG-BUTTON | |
| | 15 | 1 | 7T-0126 | 1 | PLATE AS | |
| | | 1 | 9F-2978 | 5 | NUT-WELD (3/8-16 THD) | |
| | 16 | 1 | 7T-5066 | 1 | COVER | |
| | | 1 | 7T-9779 | 1 | GASKET | |
| | 17 | 1 | 3T-3961 | 1 | PLATE AS | |
| | 18 | 1 | 9T-0264 | 4 | BOLT (1/4-20X.62SIN) | |
| M | | 1 | 9T-4295 | 4 | WASHER-HARD (2MM THK) | |
| | 19 | 1 | 9X-8464 | 1 | FLOOR MAT | |
| | 20 | 1 | 9E-6946 | 1 | MODULE AS-OPERATOR | |
| | 21 | 1 | 3T-3934 | 1 | HANDHOLD | |
| | 22 | 1 | 9F-8671 | 2 | PLUG | |
| | 23 | 2 | 9T-0264 | 4 | BOLT (1/4-20X.62SIN) | |
| M | | 2 | 9T-4295 | 4 | WASHER-HARD (2MM THK) | |
| | 24 | 2 | 6M-2062 | 17 | BOLT (3/8-16X.750IN) | |
| | 25 | 2 | 6P-1075 | 21 | WASHER-HARD (3MM THK) | |
| | 26 | 2 | 7T-0136 | 1 | SEAL | |
| | 27 | 2 | 7X-0075 | 2 | BOLT (3/4-10X5IN) | |
| | | 2 | 7X-0682 | 2 | WASHER-HARD (6MM THK) | |
| | 28 | 2 | 3T-3482 | 2 | PLATE | |
| | 29 | 2 | 3T-5290 | 1 | PLATE AS | |
| | | 2 | 7X-4828 | 6 | SPACER | |
| | 30 | 2 | 3T-5291 | 1 | SEAL | |
| | 31 | 2 | 7X-8017 | 1 | GASKET | |
| | 32 | 2 | 7X-8016 | 1 | COVER AS | |
| | | 2 | 2R-2276 | 2 | WASHER | |
| | | 2 | 9F-8026 | 2 | SCREW-KNURLED | |
| | 33 | 2 | 9M-3429 | 1 | COVER | |
| | 34 | 2 | 8E-9697 | 1 | COVER | |
| | 35 | 2 | 9D-3091 | 8 | SCREW-SOCKET HEAD | |
| | 36 | 2 | 9M-3142 | 8 | MOUNTING | |
| | 37 | 2 | 9M-9017 | 2 | PLATE | |
| | 38 | 2 | 7X-0360 | 2 | BOLT (7/8-9X5IN) | |
| | | 2 | 7X-0672 | 2 | WASHER-HARD | |
| | 39 | 2 | 4L-6454 | 4 | BOLT (3/8-16X1.0IN) | |
| | 40 | 2 | 3T-4788 | 1 | COVER | |

12 FRAME AND BODY 1 of 4 SELP4570-01

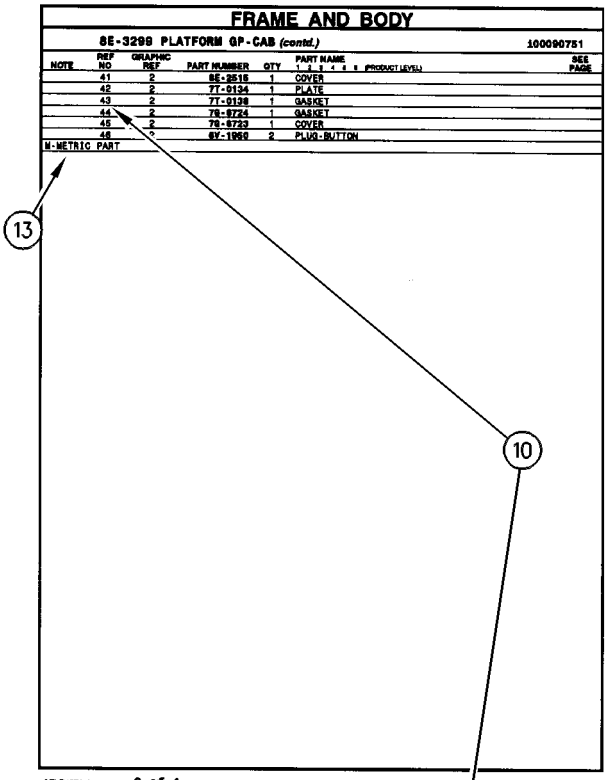

FRAME AND BODY

8E-3299 PLATFORM GP-CAB (contd.) 100090751

| NOTE | REF NO | GRAPHIC REF | PART NUMBER | QTY | PART NAME 1 2 3 4 5 6 (PRODUCT LEVEL) | SEE PAGE |
|---|---|---|---|---|---|---|
| | 41 | 2 | 6E-2515 | 1 | COVER | |
| | 42 | 2 | 7T-0134 | 1 | PLATE | |
| | 43 | 2 | 7T-0138 | 1 | GASKET | |
| | 44 | 2 | 7G-8724 | 1 | GASKET | |
| | 45 | 2 | 7G-8723 | 1 | COVER | |
| | 46 | * | 8Y-1950 | 2 | PLUG-BUTTON | |

M-METRIC PART

SELP4570-01 2 of 4 FRAME AND BODY 13

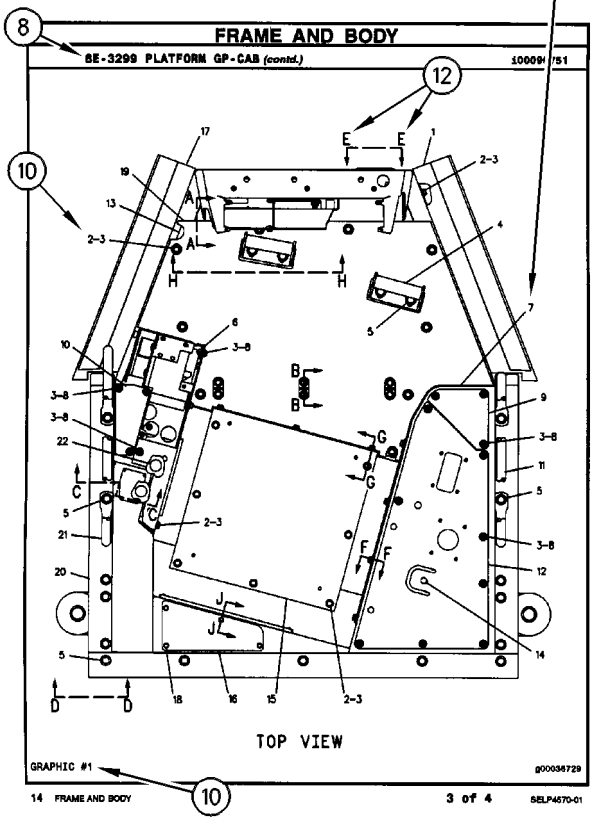

FRAME AND BODY

8E-3299 PLATFORM GP-CAB (contd.) 100090751

TOP VIEW

GRAPHIC #1 g00036729

14 FRAME AND BODY 3 of 4 SELP4570-01

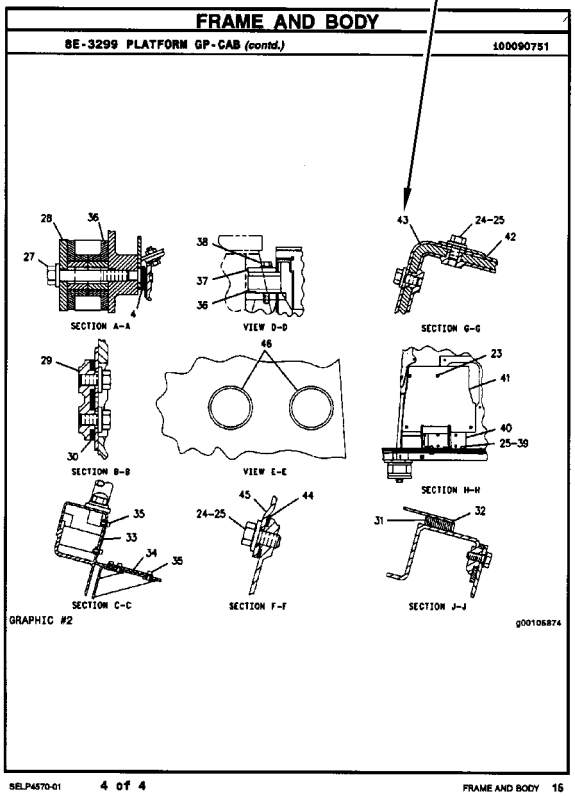

FRAME AND BODY

8E-3299 PLATFORM GP-CAB (contd.) 100090751

SECTION A-A

VIEW D-D

SECTION G-G

SECTION B-B

VIEW E-E

SECTION H-H

SECTION C-C

SECTION F-F

SECTION J-J

GRAPHIC #2 g00105874

SELP4570-01 4 of 4 FRAME AND BODY 15

# ALLGEMEINE HINWEISE

## 1. MASCHINENKENNZEICHNUNG

Caterpillar-Maschinen sind mit PRODUCT IDENTIFICATION NUMBERS (PIN) (Produkt-Identnummern) gekennzeichnet. Einige Baugruppen, z.B. Motoren, Getriebe, Planierschilde und Aufreißer, sind mit SERIAL NUMBERS (S/N) (Seriennummern) gekennzeichnet. An der Maschine und am Motor befinden sich außerdem ARRANGEMENT NUMBERS (Ausrüstungsnummern) sowie in einigen Fällen MODIFICATION NUMBERS (Änderungsnummern). Sie befinden sich auf den PIN-Schildern und auf dem Typenschild im Fahrerhaus.

Bei Ersatzteilbestellungen müssen dem Händler alle diese Nummern zur Verfügung gestellt werden.

SIS *Neu im Parts Manual*

Vom ersten Quartal 2001 ab wurde die Caterpillar Produkt-Identnummer (PIN) von 8 auf 17 Zeichen geändert. Um zur Standardisierung der Produkt-Identnummer beizutragen, sind Caterpillar und andere Baumaschinenhersteller bestrebt, die aktuellste Norm zur Produkt-Identnummerierung einzuführen. Produkt-Identnummern für Baumaschinen sind durch ISO 10261 definiert. Das neue Format der Produkt-Identnummern gilt für alle Caterpillar-Maschinen und -Stromaggregate. Die Produkt-Identschilder und -Identrahmenmarkierung enthalten die aus 17 Zeichen bestehende Identnummer. Das neue Format hat folgende Abschnitte:

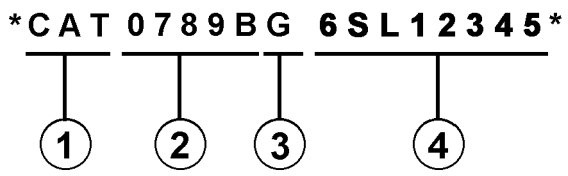


Abschnitte:

1. Caterpillars weltweiter Herstellungscode (Zeichen 1-3)

2. Modell (Zeichen 4-8)

3. Kontrollzeichen (Zeichen 9)

4. Maschinenspezifische Kennung (MIS) oder Produktsequenznummer (Zeichen 10-17). Diese wurde früher als Seriennummer bezeichnet.

Für vor dem ersten Quartal 2001 hergestellte Maschinen und Stromaggregate wird das aus 8 Zeichen bestehende PIN-Format beibehalten.

Bauteile wie z.B. Motoren, Getriebe, Achsen sowie Arbeitsgeräte werden weiterhin eine aus 8 Zeichen bestehende Seriennummer (S/N) aufweisen.

## 2. BESTELLEN VON ERSATZTEILEN

**⚠ WARNUNG**

**Wenn für diese Maschine Ersatzteile benötigt werden, empfiehlt Caterpillar, ausschließlich Caterpillar-Ersatzteile oder solche zu verwenden, die die gleichen technischen Merkmale hinsichtlich Typ, Festigkeit, Werkzeugeigenschaften und die gleichen Maße aufweisen.**

**Bei Nichtbeachtung dieser Warnung besteht Verletzungs- oder sogar Lebensgefahr! Ferner kann Nichtbeachtung vorzeitige Ausfälle der Teile und Beschädigung der Maschine zur Folge haben.**

Original Caterpillar-Ersatzteile können weltweit bei jedem Caterpillar-Händlern bestellt werden. Die umfangreichen Händlerlager enthalten normalerweise alle Teile, die Sie für Ihre Caterpillar-Maschine benötigen. Einige Händler bieten Reparatursätze, Austausch- oder werküberholte Teile an, so daß Sie eine Auswahl unter verschiedenen Reparaturmöglichkeiten treffen können. Ihre Bestellung muß folgende Angaben enthalten: Anzahl der benötigten Teile, Bestellnummer, Bezeichnung des Teils, Serien-Nr./Produkt-Ident-Nr., Ausrüstungs-Nr. und Änderungs-Nr. der Maschine, für die diese Teile benötigt werden.

## 3. AUFBAU DES PARTS MANUAL

Die Produktinformationen für alle Komponenten eines bestimmten Modells sind in INFORMATION ELEMENTS (Informationseinheiten) gegliedert. ENGINE ARRANGEMENT (Motorausführung) und SEAT GROUP (Fahrersitz) sind Beispiele für solche Informationseinheiten. Sie sind innerhalb jeder Gruppe alphabetisch, entsprechend der Ersatzteilbezeichnung, und zusätzlich numerisch, entsprechend der Ersatzteilnummer, geordnet.

## 4. INHALTSVERZEICHNIS

Das Inhaltsverzeichnis befindet sich am Anfang des Buches. Im Inhaltsverzeichnis werden die einzelnen Abschnitte des Buches aufgeführt. Die Abschnitte enthalten eine vollständige Aufstellung aller Informationseinheiten. Diese sind entsprechend ihrem Erscheinen im Buch geordnet. Das Inhaltsverzeichnis enthält Seitenangaben für Schnellverweise auf detaillierte Abbildungen und Teillisten.

# ALLGEMEINE HINWEISE

### 5. INDEX FÜR WARTUNGSTEILE

Der Index für Wartungsteile vorn im Buch enthält die Bestellnummern, Seitenangaben, Mengenangaben und Informationen über den Einsatzbereich für die am häufigsten benötigten Ersatzteile. Die Angaben sind alphabetisch entsprechend der Teilebezeichnung geordnet.

### 6. INDEX

Der Index vorn im Buch enthält eine alphabetische Liste aller Informationseinheiten. Er enthält Seitenangaben für Schnellverweise auf detaillierte Abbildungen und Teillisten.

### 7. INDEX FÜR BESTELLNUMMERN

Hinten im Buch befindet sich ein numerischer Index, mit allen Bestellnummern und dem Hinweis auf die Seite, auf der sich die betreffende Abbildung befindet.

### 8. ÜBERSCHRIFTEN

Die Überschriften, die sich am Anfang jeder der Informationseinheiten befinden, enthalten Bestellnummern, Ersatzteilbezeichnungen und zusätzliche beschreibende Informationen. Produkt-Ident- und Seriennummern in den Überschriften sollten zur Auswahl der richtigen Informationen für die betreffende Maschine verwendet werden. Die Überschriften enthalten außerdem Informationen über möglichen Außendienstersatz, mögliche Baugerätekomponenten und die Baugruppe, zu der das Teil gehört.

Die erste Zeile einer Überschrift erscheint in einer größeren Schriftart, um den Anfang einer Informationseinheit zu kennzeichnen. Überschriften für zusätzliche Seiten, die zur Erläuterung einer Informationseinheit notwendig sind, erscheinen in normaler Schriftart und enthalten den Begriff "(contd.)".

### 9. NICHT EINZELN LIEFERBARE TEILE

In einigen Fällen ist es notwendig nicht lieferbare Teile, die selbst mit einer eigenen Teilliste im Buch vertreten sind, aufzuführen. Die Bestellnummern dieser nicht einzeln lieferbaren Teile erscheinen kursiv, wodurch angezeigt wird, daß sie nur in Verbindung mit anderen Teilen lieferbar sind.

### 10. REFERENZNUMMER FÜR ERSATZTEILE

Die Zahlen, die in der Spalte "Ref No" aufgeführt sind, stimmen mit den Zahlen in den beigefügten Abbildungen überein. Ein Buchstaben-Suffix kann zu einer Referenznummer hinzugefügt werden, um zu kennzeichnen, daß das Teil mit einer eigenen Teilliste im Buch aufgeführt ist. Die in der Spalte "Graphic Ref" angeführten Zahlen verweisen auf die Identifikationsnummer der Abbildung, die sich in der linken unteren Ecke der Abbildung befindet. Diese Nummer kann zusammen mit der Referenznummer des Teils angegeben werden, um die richtige Ersatzteilnummer zu ermitteln. Referenznummern können absichtlich weggelassen werden, da die Nummern der lieferbaren Ersatzteile ständig aktualisiert werden.

### 11. EINGERÜCKTE BEZEICHNUNGEN

Wenn eine Bezeichnung eingerückt ist, wird dadurch angezeigt, daß das Teil zu einer Baugruppe gehört, unter deren Bezeichnung es eingerückt ist.

### 12. REFERENZBUCHSTABEN

Falls erforderlich sind in den Abbildungen Referenzbuchstaben enthalten (z.B. A, B, C, usw.), die Leitungen und Kabelbäume von einem Punkt zum anderen verfolgen. Außerdem geben sie die Stelle an, an der getrennte Abbildungen fortgesetzt werden.

### 13. ABKÜRZUNGEN UND SYMBOLE

**O.D.** – Außendurchmesser
**I.D.** – Innendurchmesser
**A** – kein Teil dieser Gruppe
**B** – nach Bedarf verwenden
**C** – Hinweis auf eine Änderung
**D** – in Meter-Länge bestellen
**E** – in Zentimeter-Länge bestellen
**F** – nicht gezeigt
**G** – in Zoll-Länge bestellen
**I** – siehe Hydraulikinformationssystem
**M** – metrisches Teil
**R** – werküberholtes Teil unter Umständen lieferbar
**Y** – separate Abbildung
**Z** – nicht einzeln lieferbar

SIS *Neu im Parts Manual*

**14. BESCHREIBUNG DER TYPENÄNDERUNGEN**

Typ-A bezieht sich auf alle Konfigurationsänderungen, die ein zusätzliches Informationselement für Ausführung, Gruppe oder Einheit benötigen. Wenn kein Seriennummernumbruch für Typen erhältlich ist, wird in der Überschrift eine Typennummer (Typ 1, Typ 2, etc.) angegeben. Diese "Typenänderungen" sind in der Teileliste mit der Anmerkung "C" (Änderung des vorherigen Typs) versehen. Es werden nur die für dieses Ersatzteilhandbuch relevanten "Typen" angegeben. Es können zusätzliche Typen vorhanden sein, was zu "C" Anmerkungen zu einem Informationselement führen kann, wenn keine anderen Typen angegeben werden.

**15. <END>**

Dieses Symbol zeigt das Ende eines Informationselements an.

**ANMERKUNG:**

**Ständig vorgenommene Verbesserungen und Weiterentwicklungen an Ihrer Maschine können Änderungen verursachen, die in der vorliegenden Ausgabe noch nicht berücksichtigt sind. Fragen zu Ihrer Caterpillar-Maschine oder diesem Ersatzteilbuch beantwortet Ihr Caterpillar-Händler.**

# ALLGEMEINE HINWEISE

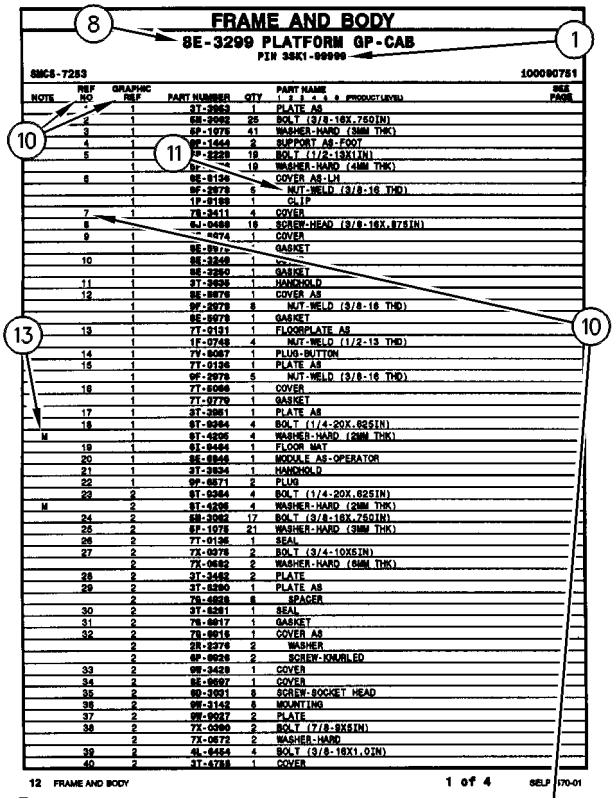


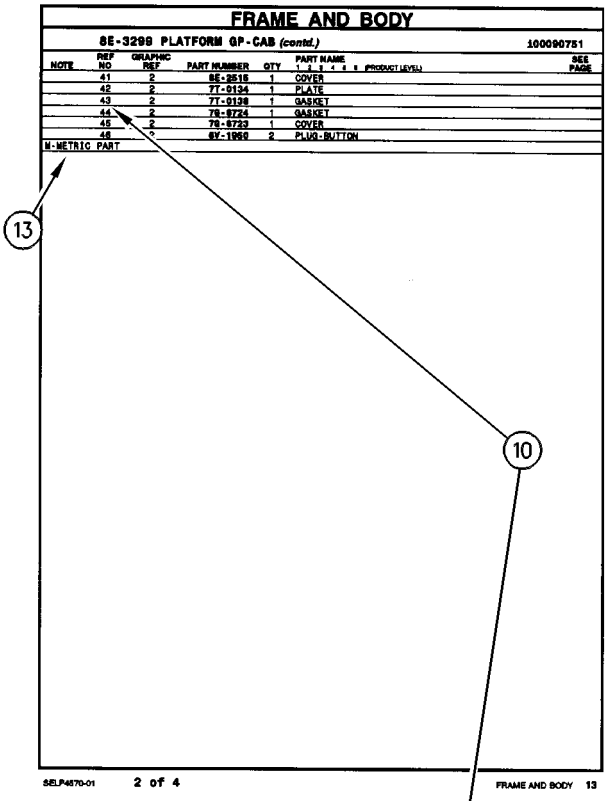


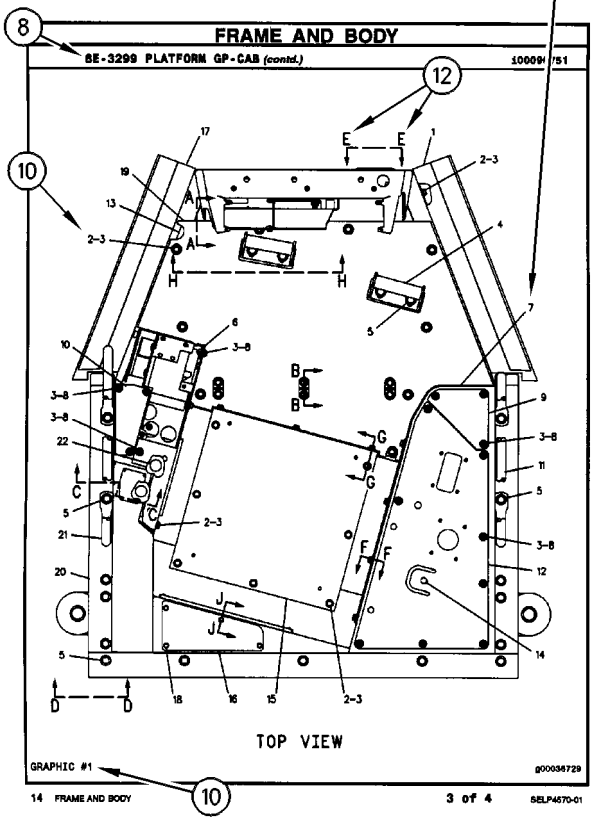


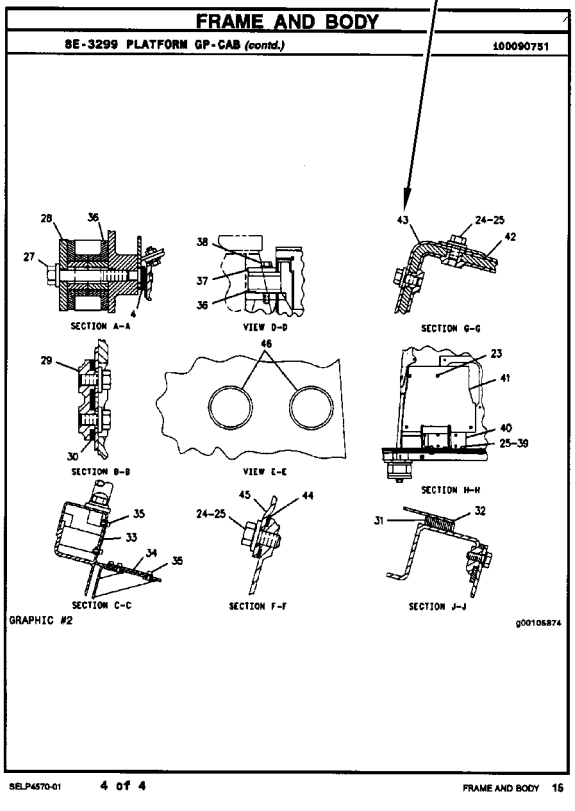

**REMANUFACTURED COMPONENTS**

As an option when making repairs consider Caterpillar Remanufactured Components. Components that are available through the Caterpillar Remanufactured Program are identified three ways in the parts book:

- with the letter R in the note field of the parts list
- with an R* at the beginning of the first line of the caption
- with an *R at the end of the first line of the caption

Typical components included in the Remanufacturing Program include:

ALTERNATORS
CONNECTING RODS
CRANKSHAFTS - UNDERSIZE
CRANKSHAFTS - UPGRADE TO NEW
CYLINDER HEADS
ELECTRONIC CONTROL MODULES (ECM)
ELECTRONIC SENSORS
FUEL INJECTORS
FUEL NOZZLES
FUEL PUMPS
GOVERNORS
OIL PUMPS
PISTONS
SHORT BLOCKS
STARTERS
TURBOCHARGERS - COMPLETE
TURBOCHARGER CARTRIDGES
WATER PUMPS

Caterpillar Remanufactured engines for many engine arrangements are also available.

# OPTIONS DE RÉPARATION

**COMPOSANTS RÉNOVÉS**

Comme option de réparation, considérer les composants rénovés Caterpillar. Les composants disponibles dans le cadre du programme Caterpillar de composants rénovés sont identifiés de trois façons dans le catalogue de pièces:

- avec la lettre "R" dans l'espace note de la liste des pièces
- avec R* au début de la première ligne des légendes
- avec *R à la fin de la première ligne des légendes

Les composants suivants figurent parmi les composants typiques du programme de rénovation:

ALTERNATEURS
BIELLES
VILEBREQUINS - SOUS-DIMENSIONNÉS
VILEBREQUINS - REMIS À NEUF
CULASSES
MODULES DE COMMANDE ÉLECTRONIQUE (ECM)
CAPTEURS ÉLECTRONIQUES
INJECTEURS
TÊTES D'INJECTEURS
POMPES À CARBURANT
RÉGULATEURS
POMPES À HUILE
PISTONS
BLOCS EMBIELLÉS
DÉMARREURS
TURBOCOMPRESSEURS - COMPLETS
CARTOUCHES DE TURBOCOMPRESSEUR
POMPES À EAU

Des moteurs rénovés sont aussi disponibles pour plusieurs versions de moteur.

# ALTERNATIVAS DE REPARACIÓN

**COMPONENTES REMANUFACTURADOS**

Al hacer reparaciones, tenga en cuenta la opción de Componentes Remanufacturados Caterpillar. Los componentes que están disponibles por medio del programa de Productos Remanufacturados Caterpillar se identifican de tres maneras en el manual de piezas:

- con la letra R en el espacio de Nota de la lista de piezas
- con una R* al comienzo de la primera línea de la leyenda
- con una *R al final de la primera línea de la leyenda

Los componentes que se incluyen típicamente en el Programa de Productos Remanufacturados son:

ALTERNADORES
BIELAS
CIGÜEÑALES - BAJOMEDIDA
CIGÜEÑALES - REMANUFACTURADOS A NUEVO
CULATAS
MÓDULOS DE CONTROL ELECTRÓNICO (ECM)
SENSORES ELECTRONICOS
INYECTORES
BOQUILLAS
BOMBAS DE COMBUSTIBLE
REGULADORES
BOMBAS DE ACEITE
PISTONES
MONOBLOQUES
MOTORES DE ARRANQUE
TURBOCOMPRESORES - COMPLETOS
NÚCLEOS DE TURBOCOMPRESOR
BOMBAS DE AGUA

También hay disponibles motores Remanufacturados Caterpillar para muchas de las configuraciones de motores.

# ALTERNATIVAS DE REPARO

**COMPONENTES REMANUFATURADOS**

Considere o uso de Componentes Remanufaturados Caterpillar ao efetuar reparos. Os componentes disponíveis através do Programa de Remanufatura Caterpillar são identificados de três formas no manual de peças:

- com um R na área da nota da lista de peças
- com um R* no princípio da primeira linha da legenda
- com um *R no final da primeira linha da legenda

Os componentes típicos que constam no Programa de Remanufatura incluem:

ALTERNADORES
BIELAS
VIRABREQUINS - SUBMEDIDAS
VIRABREQUINS - ATUALIZAÇÃO
CABEÇOTES
MÓDULOS DE CONTROLE ELETRÔNICO (ECM)
SENSORES ELETRÔNICOS
INJETORES DE COMBUSTÍVEL
BICOS DE ABASTECIMENTO DE COMBUSTÍVEL
BOMBAS DE COMBUSTÍVEL
GOVERNADORES
BOMBAS DE ÓLEO
PISTÕES
BLOCOS BÁSICOS DO MOTOR
MOTORES DE PARTIDA
TURBOALIMENTADORES - COMPLETOS
CARTUCHOS DE TURBOALIMENTADORES
BOMBAS D'ÁGUA

Motores Remanufaturados Caterpillar também encontram-se disponíveis para diversos arranjos de motor.

# REPARATURALTERNATIVEN

**WERKÜBERHOLTE AT-PRODUKTE**

Bei Reparaturen sollten werküberholte AT-Produkte von Caterpillar in Betracht gezogen werden. Die durch das AT-Programm von Caterpillar erhältlichen Teile sind im Parts Book auf drei verschiedene Arten gekennzeichnet:

- mit dem Buchstaben R in der Spalte NOTE der Ersatzteilliste
- mit einem R* am Anfang der ersten Zeile der Überschrift
- mit einem *R am Ende der ersten Zeile der Überschrift

Das AT-Programm umfaßt u.a. folgende Produkte:

DREHSTROMGENERATOREN
PLEUELSTANGEN
KURBELWELLEN - MIT UNTERMASS
KURBELWELLEN - MIT ORIGINALMASS
ZYLINDERKÖPFE
ELEKTRONISCHE STEUEREINHEITEN (EMC)
ELEKTRONISCHE SENSOREN
PUMPENDÜSEN
EINSPRITZDÜSEN
KRAFTSTOFFPUMPEN
DREHZAHLREGLER
ÖLPUMPEN
KOLBEN
TEILMOTOREN
ANLASSER
TURBOLADER - KOMPLETT
TURBOLADERLAUFZEUGE
KÜHLWASSERPUMPEN

Viele Motoren können durch werküberholte AT-Motoren von Caterpillar ersetzt werden.

# SUPPLEMENTAL COOLANT ADDITIVES

**CUSTOMER BENEFITS:**

Protects against cavitation, foam, erosion, corrosion, and scale buildup in cooling systems.

- Provides measured coolant conditioner.

**DESCRIPTION:**

Additives deplete from the coolant with normal operation. For this reason, Supplemental Coolant Additives (SCA) must be added to all heavy duty coolants at regular intervals. In addition, when not using a fully formulated, pre-charged antifreeze, like Caterpillar's DEAC, an initial charge of SCA must be added to the cooling system. The amount of SCA added to the system is dependent on the capacity of the system.

The SCA for initial fill is provided as a liquid. SCA's for maintenance intervals are available in liquid form and as a spin-on element. (No Spin-on available for 3600 Family of Engines)

**NOTE:**

The amount of SCA added at initial fill is not the same as the amount added at maintenance intervals.

The coolant additive elements can be used with any ethylene or propylene glycol type antifreeze which meets ASTM D4985 or ASTM D5345 Specifications.

**NOTE:**

For use with standard heavy duty coolant only, not for use with Extended Life Coolant.

**PARTS NEEDED:**

| Cooling System Capacity | | Liquid SCA at Initial Fill | Liquid SCA at Maintenance* | Spin-on SCA Maintenance Element* |
|---|---|---|---|---|
| Liters | Gallons | | | |
| 22-30 | (6-8) | 3P-2044 (1) | 6V-3542 (1) | 111-2370 (1) |
| 30-38 | (8-10) | 3P-2044 (1)<br>6V-3542 (1) | 111-2372 (1) | 111-2369 (1) |
| 38-49 | (10-13) | 3P-2044 (1)<br>8T-1589 (1) | 111-2372 (1) | 111-2369 (1) |
| 49-64 | (13-17) | 3P-2044 (2) | 8T-1589 (1) | 9N-3368 (1) |
| 64-83 | (17-22) | 3P-2044 (2)<br>8T-1589 (1) | 111-2372 (1)<br>6V-3542 (1) | 111-2371 (1) |
| 83-114 | (22-30) | 3P-2044 (3)<br>8T-1589 (1) | 3P-2044 (1) | 9N-3718 (1) |
| 114-163 | (30-43) | 3P-2044 (5) | 3P-2044 (1)<br>6V-3542 (1) | 111-2371 (2) |
| 163-242 | (43-64) | 3P-2044 (8) | 3P-2044 (2) | 9N-3718 (2) |

** Normal maintenance period is 250 hrs. See your Operation and Maintenance Manual for complete coolant maintenance instructions.*

( ) Indicates quantity required.

# ADDITIFS POUR LIQUIDE DE REFROIDISSEMENT

**AVANTAGES POUR LE CLIENT**

L'additif protège contre la cavitation, la mousse, l'érosion, la corrosion et l'accumulation de dépôts dans le circuit de refroidissement.

- L'additif complémentaire fournit une quantité mesurée d'additif.

**DESCRIPTION:**

Les additifs s'épuisent pendant l'utilisation du moteur. C'est pourquoi l'on doit ajouter de l'additif au liquide de refroidissement/antigel pour moteurs diesel à intervalles réguliers. En plus, si l'on n'utilise pas de l'antigel entièrement formulé et pré-chargé comme le liquide de refroidissement/antigel Caterpillar pour moteurs diesel, une quantité initiale d'additif doit être ajoutée au circuit de refroidissement. La quantité d'additif à ajouter au circuit dépend de la contenance du circuit.

L'additif pour le remplissage initial est fourni sous forme liquide. L'additif pour l'entretien ultérieur est disponible sous forme liquide et sous forme d'élément à visser. (Il n'y a pas d'élément à visser pour les moteurs de la famille 3600).

**NOTA:**

La quantité d'additif à ajouter au remplissage initial diffère de la quantité à ajouter aux intervalles d'entretien.

Les éléments d'additif peuvent être utilisés avec tout antigel de type éthylène ou propylène-glycol conforme à la norme ASTM D4985 ou ASTM D5345.

**NOTA:**

A utiliser uniquement avec du liquide de refroidissement pour moteurs diesel et non avec le liquide de refroidissement longue durée.

**PIÈCES NÉCESSAIRES:**

| Contenance du circuit de refroidissement | | Additif liquide au remplissage initial | Additif liquide aux intervalles d'entretien* | Elément d'additif à visser aux intervalles d'entretien* |
|---|---|---|---|---|
| Litres | Gallons U.S. | | | |
| 22-30 | (6-8) | 3P-2044 (1) | 6V-3542 (1) | 111-2370 (1) |
| 30-38 | (8-10) | 3P-2044 (1)<br>6V-3542 (1) | 111-2372 (1) | 111-2369 (1) |
| 38-49 | (10-13) | 3P-2044 (1)<br>8T-1589 (1) | 111-2372 (1) | 111-2369 (1) |
| 49-64 | (13-17) | 3P-2044 (2) | 8T-1589 (1) | 9N-3368 (1) |
| 64-83 | (17-22) | 3P-2044 (2)<br>8T-1589 (1) | 111-2372 (1)<br>6V-3542 (1) | 111-2371 (1) |
| 83-114 | (22-30) | 3P-2044 (3)<br>8T-1589 (1) | 3P-2044 (1) | 9N-3718 (1) |
| 114-163 | (30-43) | 3P-2044 (5) | 3P-2044 (1)<br>6V-3542 (1) | 111-2371 (2) |
| 163-242 | (43-64) | 3P-2044 (8) | 3P-2044 (2) | 9N-3718 (2) |

** L'intervalle d'entretien normal est de 250 heures-service. Voir le Guide d'utilisation et d'entretien pour de plus amples renseignements concernant l'entretien du circuit de refroidissement.*

( ) Indique la quantité exigée.

# ADITIVOS DE REFRIGERANTE SUPLEMENTARIOS

**VENTAJAS PARA EL USUARIO:**

Protegen contra la cavitación, la formación de espuma, la corrosión y la acumulación de escamas en los sistemas de enfriamiento.

- Suministra un acondicionador dosificado de refrigerante.

**DESCRIPCIÓN:**

Los aditivos en el refrigerante se agotan con la operación normal. Por esta razón, se debe agregar Aditivo de refrigerante suplementario (SCA) a todos los refrigerantes para servicio pesado, a intervalos regulares. Además, cuando no se usa un anticongelante de precarga completo, tal como el DEAC de Caterpillar, es necesario agregar una cantidad de aditivo de refrigerante suplementario inicial al sistema de enfriamiento. La cantidad de aditivo que se debe agregar depende de la capacidad del sistema.

El SCA de llenado inicial es líquido. El que se usa para el mantenimiento está disponible tanto en líquido como en un elemento enroscable. (No hay elemento enroscable disponible para la Familia de Motores 3600).

**NOTA:**

La cantidad de aditivo de llenado inicial no es la misma que se agrega en los intervalos de mantenimiento.

Los elementos de aditivo de refrigerante se pueden usar con cualquier anticongelante de tipo glicol etilénico o propílico que esté de acuerdo con las especificaciones de las normas ASTM D4985 o ASTM D5345.

**NOTA:**

Se debe utilizar únicamente con refrigerante estándar para servicio pesado; no se debe usar con Refrigerante de Larga Duración.

**PIEZAS NECESARIAS:**

| Capacidad del Sistema de Enfriamiento | | SCA líquido de llenado inicial | SCA líquido de mantenimiento* | Elemento de mantenimiento enroscable* |
|---|---|---|---|---|
| litros | gal EE.UU. | | | |
| 22-30 | 6-8 | 3P-2044 (1) | 6V-3542 (1) | 111-2370 (1) |
| 30-38 | 8-10 | 3P-2044 (1)<br>6V-3542 (1) | 111-2372 (1) | 111-2369 (1) |
| 38-49 | 10-13 | 3P-2044 (1)<br>8T-1589 (1) | 111-2372 (1) | 111-2369 (1) |
| 49-64 | 13-17 | 3P-2044 (2) | 8T-1589 (1) | 9N-3368 (1) |
| 64-83 | 17-22 | 3P-2044 (2)<br>8T-1589 (1) | 111-2372 (1)<br>6V-3542 (1) | 111-2371 (1) |
| 83-114 | 22-30 | 3P-2044 (3)<br>8T-1589 (1) | 3P-2044 (1) | 9N-3718 (1) |
| 114-163 | 30-43 | 3P-2044 (5) | 3P-2044 (1)<br>6V-3542 (1) | 111-2371 (2) |
| 163-242 | 43-64 | 3P-2044 (8) | 3P-2044 (2) | 9N-3718 (2) |

** El período normal de mantenimiento es de 250 horas. Para ver las instrucciones completas sobre el mantenimiento del refrigerante, consulte el Manual de Operación y Mantenimiento.*

( ) Indica la cantidad necesaria.

# ADITIVOS SUPLEMENTARES DO LÍQUIDO ARREFECEDOR

**BENEFÍCIOS PARA O CLIENTE:**

Protege contra cavitação, espuma, erosão, corrosão e acúmulo de crostas nos sistemas de arrefecimento.

- Fornece uma quantidade pré-determinada de condicionador de arrefecimento.

**DESCRIÇÃO:**

Com a operação normal, os aditivos se esgotam do líquido arrefecedor. Por isso, Aditivos Suplementares do Líquido Arrefecedor (SCA) devem ser acrescentados a todos os líquidos arrefecedores para serviço pesado em intervalos regulares. Além disso, quando um anticongelante pré-carregado, totalmente formulado não for usado, como o DEAC Caterpillar, uma carga inicial de SCA deve ser acrescentada ao sistema de arrefecimento. A quantidade de SCA acrescentada ao sistema depende da capacidade do sistema.

O SCA para abastecimento inicial é fornecido em forma de líquido. Os aditivos suplementares (SCA) para intervalos de manutenção estão à disposição em forma líquida e como um elemento com roscas. (Exceto os Motores da Família 3600)

**NOTA:**

A quantidade de SCA adicionada no abastecimento inicial não é a mesma que a acrescentada nos intervalos de manutenção.

Os elementos do aditivo do líquido arrefecedor podem ser usados com qualquer tipo de anticongelante etileno ou propileno que satisfaz as Especificações ASTM D4985 ou ASTM D5345.

**NOTA:**

Para uso apenas com líquido arrefecedor para serviço pesado padrão, não deve ser usado com Líquido Arrefecedor de Vida Longa.

**PEÇAS NECESSÁRIAS:**

| Capacidade do Sistema de Arrefecimento | | Líquido SCA Durante Abastecimento Inicial | Líquido SCA Durante Manutenção* | Elemento de Manutenção de SCA com Roscas* |
|---|---|---|---|---|
| Litros | Galões | | | |
| 22-30 | 6-8 | 3P-2044 (1) | 6V-3542 (1) | 111-2370 (1) |
| 30-38 | 8-10 | 3P-2044 (1)<br>6V-3542 (1) | 111-2372 (1) | 111-2369 (1) |
| 38-49 | 10-13 | 3P-2044 (1)<br>8T-1589 (1) | 111-2372 (1) | 111-2369 (1) |
| 49-64 | 13-17 | 3P-2044 (2) | 8T-1589 (1) | 9N-3368 (1) |
| 64-83 | 17-22 | 3P-2044 (2)<br>8T-1589 (1) | 111-2372 (1)<br>6V-3542 (1) | 111-2371 (1) |
| 83-114 | 22-30 | 3P-2044 (3)<br>8T-1589 (1) | 3P-2044 (1) | 9N-3718 (1) |
| 114-163 | 30-43 | 3P-2044 (5) | 3P-2044 (1)<br>6V-3542 (1) | 111-2371 (2) |
| 163-242 | 43-64 | 3P-2044 (8) | 3P-2044 (2) | 9N-3718 (2) |

** O período normal de manutenção é de 250 horas. Consulte o Manual de Operação e Manutenção para obter instruções completas quanto à manutenção do líquido arrefecedor.*

( ) Indica a quantidade exigida.

# KÜHLMITTELZUSATZ

**VORTEILE FÜR DEN KUNDEN:**

Schutz gegen Kavitation, Schaumbildung, Erosion, Korrosion und Kesselsteinbildung in Kühlsystemen.

- Richtig dosierter Kühlmittelzusatz

**BESCHREIBUNG:**

Additive erschöpfen sich während des Motorbetriebs. Deshalb muß allen HD-Kühlmitteln regelmäßig Kühlmittelzusatz beigefügt werden. Wenn bei Erstfüllung kein vollwertiges Fertigkühlmittel, wie das Frostschutz- und Kühlmittel für Dieselmotoren von Caterpiller (DEAC), verwendet wird, muß bei Erstfüllung Kühlmittelzusatz beigefügt werden. Wieviel Kühlmittelzusatz beigefügt werden muß, hängt vom Inhalt des Kühlsystems ab.

Für Erstfüllung ist Kühlmittelzusatz nur in flüssiger Form erhältlich. Für Wartungsintervalle ist Kühlmittelzusatz in flüssiger Form und als Zusatzelement erhältlich. (Für die Motorbaureihe 3600 sind keine Zusatzelemente erhältlich.)

**ANMERKUNG:**

Die Kühlmittelmenge bei Erstfüllung ist nicht die gleiche Menge, die bei Wartungsintervallen beigefügt werden muß.

Die Kühlmittelzusatzelemente können mit allen Frostschutzmitteln auf Ethylen- oder Propylenglykolbasis verwendet werden, die den Standards nach ASTM D4985 oder ASTM D5345 entsprechen.

**ANMERKUNG:**

Den Kühlmittelzusatz nicht mit Langzeitkühlmittel (ELC) von Caterpillar verwenden. Der Kühlmittelzusatz ist nur für HD-Kühlmittel bestimmt.

**TEILEBEZEICHNUNG:**

| Kühlsysteminhalt | | Kühlmittelzusatz bei Erstfüllung | Flüssiger Kühlmittelzusatz bei Wartung* | Kühlmittelzusatzelement bei Wartung* |
|---|---|---|---|---|
| Liter | US-Gall. | | | |
| 22-30 | (6-8) | 3P-2044 (1) | 6V-3542 (1) | 111-2370 (1) |
| 30-38 | (8-10) | 3P-2044 (1)<br>6V-3542 (1) | 111-2372 (1) | 111-2369 (1) |
| 38-49 | (10-13) | 3P-2044 (1)<br>8T-1589 (1) | 111-2372 (1) | 111-2369 (1) |
| 49-64 | (13-17) | 3P-2044 (2) | 8T-1589 (1) | 9N-3368 (1) |
| 64-83 | (17-22) | 3P-2044 (2)<br>8T-1589 (1) | 111-2372 (1)<br>6V-3542 (1) | 111-2371 (1) |
| 83-114 | (22-30) | 3P-2044 (3)<br>8T-1589 (1) | 3P-2044 (1) | 9N-3718 (1) |
| 114-163 | (30-43) | 3P-2044 (5) | 3P-2044 (1)<br>6V-3542 (1) | 111-2371 (2) |
| 163-242 | (43-64) | 3P-2044 (8) | 3P-2044 (2) | 9N-3718 (2) |

** Der normale Wartungsintervall beträgt 250 Betriebsstunden. Für vollständige Anweisungen zur Wartung des Kühlsystems, siehe Betriebs- und Wartungshandbuch.*

( ) Erforderliche Anzahl

# MAINTENANCE PARTS

| DESCRIPTION | PART NUMBER | QTY | WHERE USED | PAGE |
|---|---|---|---|---|
| **AIR INLET AND EXHAUST SYSTEM** | | | | |
| FILTER ELEMENT AS-AIR (PRIMARY) | 110-6326 | 1 | AIR CLEANER GP | 75 |
| FILTER ELEMENT AS-AIR (SECONDARY) | 110-6331 | 1 | AIR CLEANER GP | 75 |
| GASKET (SCREEN) | 5I-8111 | 1 | MUFFLER & MOUNTING GP | 81 |
| **BASIC ENGINE** | | | | |
| GASKET (VALVE MECHANISM) | 233-5483 | 1 | COVER GP-VALVE MECHANISM | 21 |
| KEY | 094-4628 | 1 | CAMSHAFT GP | 18 |
| PLUG (DRAIN, ENGINE OIL) | 135-8432 | 1 | PAN GP-OIL | 47 |
| | | 1 | PAN GP-OIL | 49 |
| V-BELT (WATER PUMP) | 235-4972 | 1 | V-BELT GP | 59 |
| **COOLING SYSTEM** | | | | |
| CAP AS-RADIATOR | 036-1865 | 1 | RADIATOR & HYD OIL COOLER GP | 71 |
| CAP-VENTED (COOLANT RECOVERY) | 169-6715 | 1 | RADIATOR & OIL COOLER MTG GP | 72 |
| GASKET-COVER (WATER PUMP) | 103-9750 | 1 | PUMP GP-WATER | 70 |
| GASKET (WATER TEMPERATURE REGULATOR) | 235-4959 | 1 | HOUSING & REGULATOR GP | 66 |
| | | 1 | LINES GP-WATER | 67 |
| REGULATOR AS-WATER TEMPERATURE (THERMOSTAT) | 235-4960 | 1 | HOUSING & REGULATOR GP | 66 |
| | | 1 | LINES GP-WATER | 67 |

# MAINTENANCE PARTS

| DESCRIPTION | PART NUMBER | QTY | WHERE USED | PAGE |
|---|---|---|---|---|
| **ELECTRICAL AND STARTING SYSTEM** | | | | |
| BATTERY (12-VOLT, MAINTENANCE FREE) | 230-6368 | 1 | BATTERY GP | 109 |
| BATTERY (12 VOLT, STANDARD) | 153-5656 | 1 | BATTERY GP | 108 |
| BELT-DRIVE (WARNING BEACON) | 9X-8139 | 1 | LAMP GP-WARNING BEACON | 129 |
| CIRCUIT BREAKER AS (105-AMPERE) (MAIN) | 171-2212 | 1 | WIRING GP-ENGINE | 149 |
| CIRCUIT BREAKER AS (30-AMPERE) (LIGHTING) | 147-1773 | 1 | LIGHTING GP-ROADING | 132 |
| FLASHER AS (12-VOLT) | 242-9000 | 1 | LIGHTING GP-ROADING | 132 |
| FUSE (10-AMPERE) | 113-8490 | 4 | KIT-WORK TOOL CONTROL & WIRING | 121 |
| | | 4 | KIT-WORK TOOL WIRING | 122 |
| | | 1 | WARNING GP-BACKUP | 142 |
| | | 16 | WIRING GP-CHASSIS | 145 |
| | | 4 | WIRING GP-WORK TOOL | 153 |
| FUSE (15-AMPERE) | 113-8491 | 2 | KIT-WORK TOOL CONTROL & WIRING | 121 |
| | | 1 | WIRING GP-AIR CONDITIONER | 143 |
| | | 5 | WIRING GP-CHASSIS | 145 |
| | | 2 | WIRING GP-WORK TOOL | 153 |
| FUSE (20-AMPERE) | 113-8492 | 2 | WIRING GP-CHASSIS | 145 |
| FUSE (30-AMPERE) | 124-3548 | 1 | WIRING GP-AIR CONDITIONER | 143 |
| | | 1 | WIRING GP-CHASSIS | 145 |
| GLOW PLUG | 107-3659 | 4 | GLOW PLUG GP | 116 |
| KEY AS-ELECTRONIC (SECURITY) | 206-5165 | 2 | ELECTRONICS GP-MACHINE | 114 |
| | | 1 | INSTALLATION GP-SECURITY | 119 |
| LAMP AS (RED, GREEN, LED, 12-VOLT) | 165-5655 | 1 | INSTALLATION GP-SECURITY | 120 |
| LAMP-HEAD | 9W-3324 | 1 | LAMP GP-HEAD & SIGNAL | 125 |
| LAMP (12-VOLT, 21-WATT) | 5G-3244 | 1 | LAMP GP-HEAD & SIGNAL | 125 |
| | 9W-3326 | 1 | LAMP GP-STOP & TAIL | 128 |
| LAMP (12-VOLT, 4-WATT) | 100-3246 | 1 | LAMP GP-HEAD & SIGNAL | 125 |
| LAMP (12-VOLT, 5-WATT) | 084-4348 | 1 | LAMP GP-STOP & TAIL | 127 |
| | | 1 | LAMP GP-STOP & TAIL | 128 |
| LAMP (12-VOLT, 55-WATT) | 9W-0607 | 1 | LAMP GP-FLOOD | 123 |
| | | 1 | LAMP GP-FLOOD | 124 |
| | 9X-8118 | 1 | LAMP GP-WARNING BEACON | 129 |
| **ENGINE ARRANGEMENT** | | | | |
| V-BELT GP | 287-6138 | 1 | ENGINE AR-PRIMARY | 14 |
| | | 1 | ENGINE AR-PRIMARY | 15 |
| **FRAME AND BODY** | | | | |
| BREATHER (TANDEM HOUSING) | 9G-5127 | 2 | FRAME & MTG GP-MACHINE | 212 |
| CIRCUIT BREAKER AS (30-AMPERE) | 147-1773 | 1 | KIT-ROADING CONVERSION | 217 |
| FLASHER AS (12-VOLT) | 242-9000 | 1 | KIT-ROADING CONVERSION | 217 |
| LAMP (12-VOLT) (REGISTRATION PLATE) | 7M-9957 | 1 | MOUNTING GP-REGISTRATION | 223 |
| PLUG-MAGNETIC (TANDEM) | 3S-9182 | 5 | FRAME & MTG GP-MACHINE | 212 |
| **FUEL SYSTEM** | | | | |
| CAP-FUEL | 304-3885 | 1 | LINES GP-FUEL | 90 |
| | | 1 | LINES GP-FUEL PRM & FILTER | 96 |
| FILTER AS-WATER SEP & FUEL | 233-9856 | 1 | PUMP GP-FUEL PRM & PRIM FILTER | 102 |

# MAINTENANCE PARTS

| DESCRIPTION | PART NUMBER | QTY | WHERE USED | PAGE |
|---|---|---|---|---|
| **HYDRAULIC SYSTEM** | | | | |
| BREATHER AS (INLINE) (HYDRAULIC OIL) | 207-9729 | 1 | TANK & MTG GP-HYDRAULIC | 337 |
| CAP AS-FILLER (HYDRAULIC TANK) | 142-8937 | 1 | TANK GP-HYDRAULIC | 338 |
| FUSE (10-AMPERE) | 113-8490 | 1 | KIT-QUICK COUPLER CONVERSION | 259 |
| SCREEN (HYDRAULIC OIL) | 195-6768 | 1 | LINES GP-PILOT | 299 |
| SCREEN-SUCTION (HYDRAULIC TANK) | 142-8929 | 1 | TANK GP-HYDRAULIC | 338 |
| **LUBRICATION SYSTEM** | | | | |
| FILTER-ENGINE OIL | 1R-0734 | 1 | FILTER GP-ENGINE OIL | 61 |
| STRAINER-OIL (ENGINE) | 233-5494 | 1 | LINES GP-ENGINE OIL | 62 |
| **OPERATOR STATION** | | | | |
| BLADE AS-WIPER (558-MM) (CAB DOOR) | 6W-3924 | 1 | DOOR GP-CAB | 534 |
| BLADE AS-WIPER (558-MM) (FRONT, REAR) | 6W-3924 | 1 | DOOR GP-CAB | 532 |
| BREATHER (AIR CONDITIONER) | 9G-5127 | 1 | COMPRESSOR & MOTOR GP-REFRIG | 480 |
| | | 1 | COMPRESSOR & MOTOR GP-REFRIG | 481 |
| BREATHER (AIR CONDITIONER COMPRESSOR) | 9G-5127 | 1 | KIT-AIR COND & HEATER INSTL | 556 |
| | | 1 | KIT-AIR CONDITIONER INSTL | 558 |
| FILTER ELEMENT-CAB AIR | 231-8130 | 1 | AIR CONDITIONER GP | 468 |
| | | 1 | HEATER GP-CAB | 549 |
| | 231-8132 | 1 | AIR CONDITIONER GP | 468 |
| | | 1 | AIR CONDITIONER GP | 470 |
| | | 1 | HEATER GP-CAB | 549 |
| | | 1 | HEATER GP-CAB | 551 |
| FILTER ELEMENT-CAB AIR (AIR) | 303-6658 | 1 | AIR CONDITIONER GP | 470 |
| | | 1 | HEATER GP-CAB | 551 |
| FUSE (10-AMPERE) | 113-8490 | 1 | CONTROL GP-PILOT OPERATED HYD | 510 |
| | | 1 | CONTROL GP-PILOT OPERATED HYD | 513 |
| | | 1 | CONTROL GP-PILOT OPERATED HYD | 515 |
| | | 1 | CONTROL GP-PILOT OPERATED HYD | 518 |
| FUSE (30-AMPERE) | 124-3548 | 1 | KIT-AIR COND & HEATER INSTL | 557 |
| | | 1 | KIT-AIR CONDITIONER INSTL | 559 |
| LAMP (12-VOLT) | 7X-9065 | 1 | GAUGE & WARNING GP | 542 |
| LAMP (12-VOLT, 10-WATT) | 6R-7490 | 1 | GAUGE & WARNING GP | 542 |
| **POWER TRAIN** | | | | |
| FILTER-OIL (ADVANCED EFFICIENCY) (HYDRAULIC) | 1G-8878 | 1 | FILTER GP-OIL | 163 |
| **WORK TOOLS** | | | | |
| CAP AS (WATER TANK) | 192-2606 | 1 | TANK GP-WATER | 462 |
| FUSE (10-AMPERE) | 113-8490 | 1 | COUPLER AR-QUICK | 417 |
| SCREEN (WATER TANK) | 119-1414 | 1 | STRAINER GP-WATER | 458 |

# PIÈCES DE RECHANGE

| DESCRIPTION | NUMÉRO DE PIECÈS | QTÉ | DOMAINE D'APPLICATION | PAGE |
|---|---|---|---|---|
| **CHÂSSIS ET BENNE** | | | | |
| AMPOULE (12 VOLTS) (PLAQUE D'IMMATRICULATION) | 7M-9957 | 1 | MONTAGE - IMMATRICULATION (ASS) | 223 |
| BOUCHON AIMANTÉ (TANDEM) | 3S-9182 | 5 | BÂTI DE MACHINE ET MONTAGE (ASS) | 212 |
| CLIGNOTANT (ENS) (12 VOLTS) | 242-9000 | 1 | KIT DE TRANSFORMATION POUR DÉPLACEMENTS SUR ROUTE | 217 |
| DISJONCTEUR (ENS) (30A) | 147-1773 | 1 | KIT DE TRANSFORMATION POUR DÉPLACEMENTS SUR ROUTE | 217 |
| RENIFLARD (CARTER DE TANDEM) | 9G-5127 | 2 | BÂTI DE MACHINE ET MONTAGE (ASS) | 212 |
| **CIRCUIT D'ADMISSION D'AIR ET D'ÉCHAPPEMENT** | | | | |
| ÉLÉMENT DE FILTRE À AIR (ENS) (PRINCIPAL) | 110-6326 | 1 | FILTRE A AIR (ASS) | 75 |
| ÉLÉMENT DE FILTRE À AIR (ENS) (SECONDAIRE) | 110-6331 | 1 | FILTRE A AIR (ASS) | 75 |
| JOINT PLAT (TAMIS) | 5I-8111 | 1 | SILENCIEUX ET MONTAGE (ASS) | 81 |
| **CIRCUIT DE CARBURANT** | | | | |
| BOUCHON DE CARBURANT | 304-3885 | 1 | CANALISATIONS DE CARBURANT (ASS) | 90 |
| | | 1 | CANALISATIONS DE FILTRE ET D'AMORÇAGE DE CARBURANT (ASS) | 96 |
| FILTRE - SÉPARATEUR D'EAU ET DE CARBURANT (ENS) | 233-9856 | 1 | POMPE D'AMORÇAGE DE CARBURANT ET FILTRE PRINCIPAL | 102 |
| **CIRCUIT DE GRAISSAGE** | | | | |
| CRÉPINE D'HUILE (MOTEUR) | 233-5494 | 1 | CANALISATIONS D'HUILE MOTEUR (ASS) | 62 |
| *FILTER-ENGINE OIL | 1R-0734 | 1 | FILTRE À HUILE MOTEUR (ASS) | 61 |
| **CIRCUIT DE REFROIDISSEMENT** | | | | |
| BOUCHON À ÉVENT (RÉSERVOIR D'EXPANSION DU LIQUIDE DE REFROIDISSEMENT) | 169-6715 | 1 | RADIATEUR ET REFROIDISSEUR D'HUILE-MONTAGE (ASS) | 72 |
| BOUCHON DE RADIATEUR (ENS) | 036-1865 | 1 | RADIATEUR ET REFROIDISSEUR D'HUILE HYDRAULIQUE (ASS) | 71 |
| JOINT DE COUVERCLE (POMPE À EAU) | 103-9750 | 1 | POMPE A EAU (ASS) | 70 |
| JOINT PLAT (RÉGULATEUR DE TEMPÉRATURE D'EAU) | 235-4959 | 1 | THERMOSTAT ET BOITIER (ASS) | 66 |
| | | 1 | CANALISATIONS D'EAU (ASS) | 67 |
| RÉGULATEUR DE TEMPÉRATURE D'EAU (ENS) (THERMOSTAT) | 235-4960 | 1 | CANALISATIONS D'EAU (ASS) | 67 |
| | | 1 | THERMOSTAT ET BOITIER (ASS) | 66 |

* TRADUCTION NON DISPONIBLE AU MOMENT DE LA PUBLICATION

# PIÈCES DE RECHANGE

| DESCRIPTION | NUMÉRO DE PIECÈS | QTÉ | DOMAINE D'APPLICATION | PAGE |
|---|---|---|---|---|
| **CIRCUIT ÉLECTRIQUE ET DE DÉMARRAGE** | | | | |
| AMPOULE (12-V, 5-W) | 084-4348 | 1 | FEUX ARRIÈRE ET FEUX D'ARRÊT | 127 |
| | | 1 | FEUX ARRIÈRE ET FEUX D'ARRÊT | 128 |
| AMPOULE (12V, 21W) | 5G-3244 | 1 | LAMPE - PHARE ET CLIGNOTANT | 125 |
| | 9W-3326 | 1 | FEUX ARRIÈRE ET FEUX D'ARRÊT | 128 |
| AMPOULE (12V, 4W) | 100-3246 | 1 | LAMPE - PHARE ET CLIGNOTANT | 125 |
| AMPOULE (12V, 55W) | 9W-0607 | 1 | LAMPE - PHARE (ASS) | 123 |
| | | 1 | LAMPE - PHARE (ASS) | 124 |
| | 9X-8118 | 1 | LAMPE - GYROPHARE (ASS) | 129 |
| BATTERIE (12V, SANS ENTRETIEN) | 230-6368 | 1 | BATTERIE (ASS) | 109 |
| BATTERIE (12V, STANDARD) | 153-5656 | 1 | BATTERIE (ASS) | 108 |
| BOUGIE DE PRECHAUFFAGE | 107-3659 | 4 | BOUGIE DE PRÉCHAUFFAGE (ASS) | 116 |
| CLÉ ÉLECTRONIQUE (ENS) (SÉCURITÉ) | 206-5165 | 2 | ÉLECTRONIQUE - MACHINE (ENS) | 114 |
| | | 1 | MONTAGE-SÉCURITÉ (ASS) | 119 |
| CLIGNOTANT (ENS) (12 VOLTS) | 242-9000 | 1 | ÉCLAIRAGE - FEUX DE ROUTE (ASS) | 132 |
| DISJONCTEUR (ENS) (105A) (PRINCIPAL) | 171-2212 | 1 | CABLAGE DE MOTEUR (ASS) | 149 |
| DISJONCTEUR (ENS) (30A) (ÉCLAIRAGE) | 147-1773 | 1 | ÉCLAIRAGE - FEUX DE ROUTE (ASS) | 132 |
| ENTRAÎNEMENT POUR COURROIE (GYROPHARE) | 9X-8139 | 1 | LAMPE - GYROPHARE (ASS) | 129 |
| FUSIBLE (10A) | 113-8490 | 1 | AVERTISSEUR DE RECUL (ASS) | 142 |
| | | 4 | CÂBLAGE - OUTIL DE TRAVAIL (ASS) | 153 |
| | | 16 | CABLAGE DE CHASSIS (ASS) | 145 |
| | | 4 | KIT DE CÂBLAGE D'OUTIL DE TRAVAIL | 122 |
| | | 4 | KIT DE COMMANDE D'OUTIL DE TRAVAIL ET CÂBLAGE | 121 |
| FUSIBLE (15A) | 113-8491 | 1 | CABLAGE - CLIMATISEUR (ASS) | 143 |
| | | 2 | CÂBLAGE - OUTIL DE TRAVAIL (ASS) | 153 |
| | | 5 | CABLAGE DE CHASSIS (ASS) | 145 |
| | | 2 | KIT DE COMMANDE D'OUTIL DE TRAVAIL ET CÂBLAGE | 121 |
| FUSIBLE (20A) | 113-8492 | 2 | CABLAGE DE CHASSIS (ASS) | 145 |
| FUSIBLE (30A) | 124-3548 | 1 | CABLAGE - CLIMATISEUR (ASS) | 143 |
| | | 1 | CABLAGE DE CHASSIS (ASS) | 145 |
| LAMPE - FEUX AV | 9W-3324 | 1 | LAMPE - PHARE ET CLIGNOTANT | 125 |
| LAMPE (ENS) (ROUGE, VERT, TÉMOIN LUMINEUX, 12V) | 165-5655 | 1 | MONTAGE-SÉCURITÉ (ASS) | 120 |
| **CIRCUIT HYDRAULIQUE** | | | | |
| BOUCHON DE GOULOTTE DE REMPLISSAGE (ENS) (RÉSERVOIR HYDRAULIQUE) | 142-8937 | 1 | RÉSERVOIR HYDRAULIQUE (ASS) | 338 |
| ÉCRAN (HUILE HYDRAULIQUE) | 195-6768 | 1 | CANALISATIONS A COMMANDE PILOTE (ASS) | 299 |
| FUSIBLE (10A) | 113-8490 | 1 | KIT DE TRANSFORMATION DU COUPLEUR EXPRESS | 259 |
| RENIFLARD (ENS) (*INLINE) (HUILE HYDRAULIQUE) | 207-9729 | 1 | RÉSERVOIR HYDRAULIQUE ET MONTAGE (ASS) | 337 |
| TAMIS D'ASPIRATION (RÉSERVOIR HYDRAULIQUE) | 142-8929 | 1 | RÉSERVOIR HYDRAULIQUE (ASS) | 338 |

* TRADUCTION NON DISPONIBLE AU MOMENT DE LA PUBLICATION

# PIÈCES DE RECHANGE

| DESCRIPTION | NUMÉRO DE PIECÈS | QTÉ | DOMAINE D'APPLICATION | PAGE |
|---|---|---|---|---|
| **MOTEUR COMPLET** | | | | |
| *V-BELT GP | 287-6138 | 1 | MOTEUR (VERSION PRINCIPALE) | 14 |
| | | 1 | MOTEUR (VERSION PRINCIPALE) | 15 |
| **MOTEUR DE BASE** | | | | |
| BOUCHON FILETÉ (ROBINET DE VIDANGE D'HUILE MOTEUR) | 135-8432 | 1 | HUILE MOTEUR - CARTER (ASS) | 47 |
| | | 1 | HUILE MOTEUR - CARTER (ASS) | 49 |
| CLÉ | 094-4628 | 1 | ARBRE A CAMES (ASS) | 18 |
| COURROIE TRAPEZOIDALE (POMPE À EAU) | 235-4972 | 1 | *V-BELT GP | 59 |
| JOINT PLAT (CULBUTERIE) | 233-5483 | 1 | CACHE-SOUPAPES (ASS) | 21 |
| **OUTILS DE TRAVAIL** | | | | |
| CHAPEAU (ENS) (RÉSERVOIR D'EAU) | 192-2606 | 1 | RÉSERVOIR D'EAU (ASS) | 462 |
| ÉCRAN (RÉSERVOIR D'EAU) | 119-1414 | 1 | TAMIS D'EAU (ASS) | 458 |
| FUSIBLE (10A) | 113-8490 | 1 | COUPLEUR EXPRESS (VERSION) | 417 |

* TRADUCTION NON DISPONIBLE AU MOMENT DE LA PUBLICATION

# PIÈCES DE RECHANGE

| DESCRIPTION | NUMÉRO DE PIECÈS | QTÉ | DOMAINE D'APPLICATION | PAGE |
|---|---|---|---|---|
| **POSTE DE CONDUITE** | | | | |
| AMPOULE (12 VOLTS) | 7X-9065 | 1 | INDICATEURS ET TÉMOINS LUMINEUX (ASS) | 542 |
| AMPOULE (12V, 10W) | 6R-7490 | 1 | INDICATEURS ET TÉMOINS LUMINEUX (ASS) | 542 |
| BALAI D'ESSUIE-GLACE (ENS) (*558-MM) (AVANT, ARRIÈRE) | 6W-3924 | 1 | PORTIÈRE DE CABINE (ASS) | 532 |
| BALAI D'ESSUIE-GLACE (ENS) (*558-MM) (PORTE DE CABINE) | 6W-3924 | 1 | PORTIÈRE DE CABINE (ASS) | 534 |
| ÉLÉMENT DE FILTRE À AIR DE CABINE | 231-8130 | 1 | CHAUFFAGE DE CABINE (ASS) | 549 |
| | | 1 | CLIMATISEUR (ASS) | 468 |
| | 231-8132 | 1 | CHAUFFAGE DE CABINE (ASS) | 549 |
| | | 1 | CHAUFFAGE DE CABINE (ASS) | 551 |
| | | 1 | CLIMATISEUR (ASS) | 468 |
| | | 1 | CLIMATISEUR (ASS) | 470 |
| ÉLÉMENT DE FILTRE À AIR DE CABINE (AIR) | 303-6658 | 1 | CHAUFFAGE DE CABINE (ASS) | 551 |
| | | 1 | CLIMATISEUR (ASS) | 470 |
| FUSIBLE (10A) | 113-8490 | 1 | COMMANDE HYDRAULIQUE PILOTE (ASS) | 510 |
| | | 1 | COMMANDE HYDRAULIQUE PILOTE (ASS) | 513 |
| | | 1 | COMMANDE HYDRAULIQUE PILOTE (ASS) | 515 |
| | | 1 | COMMANDE HYDRAULIQUE PILOTE (ASS) | 518 |
| FUSIBLE (30A) | 124-3548 | 1 | KIT DE MONTAGE DE CLIMATISEUR | 559 |
| | | 1 | KIT DE MONTAGE DE CLIMATISEUR ET CHAUFFAGE | 557 |
| RENIFLARD (CLIMATISEUR) | 9G-5127 | 1 | COMPRESSEUR ET MOTEUR DE RÉFRIGÉRATION (ASS) | 480 |
| | | 1 | COMPRESSEUR ET MOTEUR DE RÉFRIGÉRATION (ASS) | 481 |
| RENIFLARD (COMPRESSEUR DE CLIMATISEUR) | 9G-5127 | 1 | KIT DE MONTAGE DE CLIMATISEUR | 558 |
| | | 1 | KIT DE MONTAGE DE CLIMATISEUR ET CHAUFFAGE | 556 |
| **TRANSMISSION** | | | | |
| FILTRE À HUILE (EFFICACITÉ AVANCÉE) (HYDRAULIQUE) | 1G-8878 | 1 | FILTRE A HUILE (ASS) | 163 |

* TRADUCTION NON DISPONIBLE AU MOMENT DE LA PUBLICATION

# PIEZAS DE MANTENIMIENTO

| DESCRIPCION | NUMERO DE PIEZA | CANT | SE UTILIZA EN | PAGINA |
|---|---|---|---|---|
| **BASTIDOR Y CAJA** | | | | |
| CONJUNTO DE DESTELLADOR (12 VOLTIOS) | 242-9000 | 1 | *KIT-ROADING CONVERSION | 217 |
| DISYUNTOR (CONJ) (30-AMPERIOS) | 147-1773 | 1 | *KIT-ROADING CONVERSION | 217 |
| LÁMPARA (12 VOLTIOS) (PLACA DE REGISTRACIÓN) | 7M-9957 | 1 | MONTAJE-REGISTRO (GR) | 223 |
| RESPIRADERO (COMPARTIMENTO DE TANDEM) | 9G-5127 | 2 | BASTIDOR Y MONTAJE (GR)-MAQUINA | 212 |
| TAPÓN MAGNÉTICO (TANDEM) | 3S-9182 | 5 | BASTIDOR Y MONTAJE (GR)-MAQUINA | 212 |
| **CONFIGURACION DE MOTOR** | | | | |
| *V-BELT GP | 287-6138 | 1 | MOTOR PRIMARIO (CONFIG) | 14 |
| | | 1 | MOTOR PRIMARIO (CONFIG) | 15 |
| **ESTACION DEL OPERADOR** | | | | |
| *FILTER ELEMENT-CAB AIR | 231-8130 | 1 | ACONDICIONADOR DE AIRE (GR) | 468 |
| | | 1 | CALEFACCIÓN DE LA CABINA (GR) | 549 |
| | 231-8132 | 1 | ACONDICIONADOR DE AIRE (GR) | 468 |
| | | 1 | ACONDICIONADOR DE AIRE (GR) | 470 |
| | | 1 | CALEFACCIÓN DE LA CABINA (GR) | 549 |
| | | 1 | CALEFACCIÓN DE LA CABINA (GR) | 551 |
| *FILTER ELEMENT-CAB AIR (AIRE) | 303-6658 | 1 | ACONDICIONADOR DE AIRE (GR) | 470 |
| | | 1 | CALEFACCIÓN DE LA CABINA (GR) | 551 |
| FUSIBLE (10-AMPERIOS) | 113-8490 | 1 | CONTROL HIDRÁULICO DE OPERACIÓN PILOTO (GR) | 510 |
| | | 1 | CONTROL HIDRÁULICO DE OPERACIÓN PILOTO (GR) | 513 |
| | | 1 | CONTROL HIDRÁULICO DE OPERACIÓN PILOTO (GR) | 515 |
| | | 1 | CONTROL HIDRÁULICO DE OPERACIÓN PILOTO (GR) | 518 |
| FUSIBLE (30-AMPERIOS) | 124-3548 | 1 | JUEGO DE INSTALACIÓN DE ACONDICIONADOR DE AIRE | 559 |
| | | 1 | JUEGO DE INSTALACIÓN DEL ACONDICIONADOR DE AIRE Y CALENTADOR | 557 |
| HOJA DE LIMPIAPARABRISAS (CONJ) (*558-MM) (DELANTERO, TRASERO) | 6W-3924 | 1 | PUERTA DE CABINA | 532 |
| HOJA DE LIMPIAPARABRISAS (CONJ) (*558-MM) (PUERTA, CABINA) | 6W-3924 | 1 | PUERTA DE CABINA | 534 |
| LÁMPARA (12 VOLTIOS) | 7X-9065 | 1 | INDICADORES Y ADVERTENCIA (GR) | 542 |
| LÁMPARA (12 VOLTIOS, 10 VATIOS) | 6R-7490 | 1 | INDICADORES Y ADVERTENCIA (GR) | 542 |
| RESPIRADERO (AIRE ACONDICIONADO) | 9G-5127 | 1 | COMPRESOR Y MOTOR GR-REFRIGERANTE | 480 |
| | | 1 | COMPRESOR Y MOTOR GR-REFRIGERANTE | 481 |
| RESPIRADERO (COMPRESOR DE AIRE ACONDICIONADO) | 9G-5127 | 1 | JUEGO DE INSTALACIÓN DE ACONDICIONADOR DE AIRE | 558 |
| | | 1 | JUEGO DE INSTALACIÓN DEL ACONDICIONADOR DE AIRE Y CALENTADOR | 556 |

* NO HAY TRADUCCION DISPONIBLE EN EL MOMENTO DE LA IMPRESION

# PIEZAS DE MANTENIMIENTO

| DESCRIPCION | NUMERO DE PIEZA | CANT | SE UTILIZA EN | PAGINA |
|---|---|---|---|---|
| **HERRAMIENTAS** | | | | |
| FUSIBLE (10-AMPERIOS) | 113-8490 | 1 | ACOPLADOR RÁPIDO (CONFIG) | 417 |
| REJILLA (TANQUE DE AGUA) | 119-1414 | 1 | COLADOR DEL AGUA (GR) | 458 |
| TAPÓN (CONJ) (TANQUE DE AGUA) | 192-2606 | 1 | TANQUE DEL AGUA (GR) | 462 |
| **MOTOR BASICO** | | | | |
| CORREA TRAPEZOIDAL (BOMBA DE AGUA) | 235-4972 | 1 | *V-BELT GP | 59 |
| EMPAQUETADURA (MECANISMO DE VALVULA) | 233-5483 | 1 | TAPA DEL MECANISMO DE VÁLVULAS (GR) | 21 |
| LLAVE | 094-4628 | 1 | ÁRBOL DE LEVAS (GR) | 18 |
| TAPÓN (*DRAIN, ENGINE OIL) | 135-8432 | 1 | CÁRTER - COLECTOR DEL (GR) | 47 |
| | | 1 | CÁRTER - COLECTOR DEL (GR) | 49 |

* NO HAY TRADUCCION DISPONIBLE EN EL MOMENTO DE LA IMPRESION

# PIEZAS DE MANTENIMIENTO

| DESCRIPCION | NUMERO DE PIEZA | CANT | SE UTILIZA EN | PAGINA |
|---|---|---|---|---|
| **SISTEMA DE ARRANQUE ELECTRICO** | | | | |
| BATERÍA (12 VOLTIOS, ESTANDAR) | 153-5656 | 1 | BATERÍA (GR) | 108 |
| BATERÍA (12-VOLTIOS, LIBRE DE MANTENIMIENTO) | 230-6368 | 1 | BATERÍA (GR) | 109 |
| BUJÍA INCANDESCENTE | 107-3659 | 4 | BUJÍA INCANDESCENTE (GR) | 116 |
| CONJUNTO DE DESTELLADOR (12 VOLTIOS) | 242-9000 | 1 | LUCES DE DESPLAZAMIENTO (GR) | 132 |
| CONJUNTO DE LLAVE, ELECTRONICA (SEGURIDAD) | 206-5165 | 2 | ELECTRÓNICA DE LA MÁQUINA (GR) | 114 |
| | | 1 | INSTALACION DE SEGURIDAD (GR) | 119 |
| DISYUNTOR (CONJ) (105 AMPERIOS) (PRINCIPAL) | 171-2212 | 1 | CABLES DEL MOTOR (GR) | 149 |
| DISYUNTOR (CONJ) (30-AMPERIOS) (LUCES) | 147-1773 | 1 | LUCES DE DESPLAZAMIENTO (GR) | 132 |
| FUSIBLE (10-AMPERIOS) | 113-8490 | 4 | CABLES DE LA HERRAMIENTA DE TRABAJO (GR) | 153 |
| | | 16 | CABLES DEL CHASIS (GR) | 145 |
| | | 4 | *KIT-WORK TOOL CONTROL & WIRING | 121 |
| | | 4 | *KIT-WORK TOOL WIRING | 122 |
| | | 1 | RETROCESO - ALARMA DE (GR) | 142 |
| FUSIBLE (15 AMPERIOS) | 113-8491 | 2 | CABLES DE LA HERRAMIENTA DE TRABAJO (GR) | 153 |
| | | 1 | CABLES DEL ACONDICIONADOR DE AIRE (GR) | 143 |
| | | 5 | CABLES DEL CHASIS (GR) | 145 |
| | | 2 | *KIT-WORK TOOL CONTROL & WIRING | 121 |
| FUSIBLE (20-AMPERIOS) | 113-8492 | 2 | CABLES DEL CHASIS (GR) | 145 |
| FUSIBLE (30-AMPERIOS) | 124-3548 | 1 | CABLES DEL ACONDICIONADOR DE AIRE (GR) | 143 |
| | | 1 | CABLES DEL CHASIS (GR) | 145 |
| LÁMPARA (CONJ) (ROJO, VERDE, DIODO, 12 VOLTIOS) | 165-5655 | 1 | INSTALACION DE SEGURIDAD (GR) | 120 |
| LÁMPARA DE FARO DELANTERO | 9W-3324 | 1 | LÁMPARA DE LUZ DELANTERA Y DE SEÑAL (GR) | 125 |
| LÁMPARA (12 VLOTIOS, 5 VATIOS) | 084-4348 | 1 | LUCES DE PARADA Y COLA (GR) | 127 |
| | | 1 | LUCES DE PARADA Y COLA (GR) | 128 |
| LÁMPARA (12 VOLTIOS, 21 VATIOS) | 5G-3244 | 1 | LÁMPARA DE LUZ DELANTERA Y DE SEÑAL (GR) | 125 |
| | 9W-3326 | 1 | LUCES DE PARADA Y COLA (GR) | 128 |
| LÁMPARA (12 VOLTIOS, 4 VATIOS) | 100-3246 | 1 | LÁMPARA DE LUZ DELANTERA Y DE SEÑAL (GR) | 125 |
| LÁMPARA (12 VOLTIOS, 55 VATIOS) | 9X-8118 | 1 | LÁMPARA DE BALIZA DE ADVERTENCIA (GR) | 129 |
| | 9W-0607 | 1 | REFLECTOR (GR) | 123 |
| | | 1 | REFLECTOR (GR) | 124 |
| MANDO DE CORREA (BALIZA DE ADVERTENCIA) | 9X-8139 | 1 | LÁMPARA DE BALIZA DE ADVERTENCIA (GR) | 129 |

* NO HAY TRADUCCION DISPONIBLE EN EL MOMENTO DE LA IMPRESION

# PIEZAS DE MANTENIMIENTO

| DESCRIPCION | NUMERO DE PIEZA | CANT | SE UTILIZA EN | PAGINA |
|---|---|---|---|---|
| **SISTEMA DE COMBUSTIBLE** | | | | |
| FILTRO DE COMBUSTIBLE Y SEPARADOR DE AGUA (CONJ) | 233-9856 | 1 | BOMBA DE CEBADO Y FILTRO PRIMARIO DE COMBUSTIBLE (GR) | 102 |
| TAPA PARA EL COMBUSTIBLE | 304-3885 | 1 | TUBERÍAS DE COMBUSTIBLE (GR) | 90 |
| | | 1 | TUBERIAS (GR) -COMBUSTIBLE PRIMARIO Y FILTRO | 96 |
| **SISTEMA DE ENFRIAMIENTO** | | | | |
| (CONJ) REGULADOR, TEMPERATURA DEL AGUA (*THERMOSTAT) | 235-4960 | 1 | REGULADOR Y CAJA (GR) | 66 |
| | | 1 | TUBERÍAS DEL AGUA (GR) | 67 |
| EMPAQUETADURA (REGULADOR DE TEMPERATURA DEL AGUA) | 235-4959 | 1 | REGULADOR Y CAJA (GR) | 66 |
| | | 1 | TUBERÍAS DEL AGUA (GR) | 67 |
| JUNTA DE LA TAPA DE VÁLVULAS (BOMBA DE AGUA) | 103-9750 | 1 | BOMBA DE AGUA (GR) | 70 |
| TAPA CON RESPIRADERO (RECUPERACIÓN DE REFRIGERANTE) | 169-6715 | 1 | MONTAJE DE RADIADOR Y ENFRIAMIENTO DE ACEITE (GR) | 72 |
| TAPA DE RADIADOR (CONJ) | 036-1865 | 1 | RADIADOR Y ENFRIADOR DE ACEITE HIDRÁULICO (GR) | 71 |
| **SISTEMA DE ESCAPE Y ADMISION DE AIRE** | | | | |
| ELEMENTO DEL FILTRO DE AIRE (CONJ) (PRIMARIO) | 110-6326 | 1 | FILTRO DE AIRE (GR) | 75 |
| ELEMENTO DEL FILTRO DE AIRE (CONJ) (SECUNDARIO) | 110-6331 | 1 | FILTRO DE AIRE (GR) | 75 |
| EMPAQUETADURA (REJILLA) | 5I-8111 | 1 | SILENCIADOR Y MONTAJE GR | 81 |
| **SISTEMA DE LUBRICACION** | | | | |
| COLADOR DE ACEITE (MOTOR) | 233-5494 | 1 | TUBERÍAS DE ACEITE DEL MOTOR (GR) | 62 |
| *FILTER-ENGINE OIL | 1R-0734 | 1 | FILTRO DE ACEITE DEL MOTOR (GR) | 61 |
| **SISTEMA HIDRAULICO** | | | | |
| FUSIBLE (10-AMPERIOS) | 113-8490 | 1 | *KIT-QUICK COUPLER CONVERSION | 259 |
| REJILLA (ACEITE HIDRÁULICO) | 195-6768 | 1 | TUBERÍAS CON SERVOMANDO (GR) | 299 |
| REJILLA DE SUCCIÓN (TANQUE HIDRÁULICO) | 142-8929 | 1 | TANQUE HIDRÁULICO (GR) | 338 |
| RESPIRADERO (CONJ) (*INLINE) (ACEITE HIDRÁULICO) | 207-9729 | 1 | TANQUE HIDRÁULICO Y MONTAJE (GR) | 337 |
| TAPA DE LLENADO (CONJ) (TANQUE HIDRAULICO) | 142-8937 | 1 | TANQUE HIDRÁULICO (GR) | 338 |
| **TREN DE FUERZA** | | | | |
| FILTRO DE ACEITE (EFICIENCIA AVANZADA) (HIDRÁULICO) | 1G-8878 | 1 | FILTRO DE ACEITE (GR) | 163 |

* NO HAY TRADUCCION DISPONIBLE EN EL MOMENTO DE LA IMPRESION

# PEÇAS DE MANUTENÇÃO

| DESCRIÇÃO | NÚMERO DE PEÇA | QUANT | UTILIZADA EM | PÁGINA |
|---|---|---|---|---|
| **ARRANJO DO MOTOR** | | | | |
| CORREIA EM V | 287-6138 | 1 | MOTOR PRIMÁRIO | 14 |
| | | 1 | MOTOR PRIMÁRIO | 15 |
| **CHASSI E CARROCERIA** | | | | |
| BUJÃO MAGNÉTICO (TANDEM) | 3S-9182 | 5 | ARMAÇÃO E MONTAGEM - MÁQUINA | 212 |
| DISJUNTOR AUTOMÁTICO DE CIRCUITO (30 AMPERES) | 147-1773 | 1 | KIT-CONVERSÃO DE RODAGEM | 217 |
| LÂMPADA (12-VOLTS) (PLACA DE REGISTRO) | 7M-9957 | 1 | MONTAGEM DA PLACA DE REGISTRO | 223 |
| LUZ INTERMITENTE (12-VOLTS) | 242-9000 | 1 | KIT-CONVERSÃO DE RODAGEM | 217 |
| RESPIRO (ALOJAMENTO DO TANDEM) | 9G-5127 | 2 | ARMAÇÃO E MONTAGEM - MÁQUINA | 212 |
| **FERRAMENTAS DE TRABALHO** | | | | |
| FUSÍVEL (10 AMPERES) | 113-8490 | 1 | ACOPLADOR RÁPIDO | 417 |
| TAMPA (TANQUE DE ÁGUA) | 192-2606 | 1 | TANQUE DE ÁGUA | 462 |
| TELA FILTRANTE (TANQUE DE ÁGUA) | 119-1414 | 1 | TELA FILTRANTE - ÁGUA | 458 |
| **MOTOR BÁSICO** | | | | |
| CHAVE | 094-4628 | 1 | EIXO-COMANDO DE VÁLVULA | 18 |
| CORREIA EM V (BOMBA D'ÁGUA) | 235-4972 | 1 | CORREIA EM V | 59 |
| JUNTA (MECANISMO DE VÁLVULA) | 233-5483 | 1 | TAMPA - MECANISMO DAS VÁLVULAS | 21 |
| TAMPÃO (DRENO, ÓLEO DO MOTOR) | 135-8432 | 1 | CÁRTER DO ÓLEO DO MOTOR | 47 |
| | | 1 | CÁRTER DO ÓLEO DO MOTOR | 49 |

* TRADUÇÃO NÃO DISPONÍVEL NO MOMENTO DA IMPRESSÃO

# PEÇAS DE MANUTENÇÃO

| DESCRIÇÃO | NÚMERO DE PEÇA | QUANT | UTILIZADA EM | PÁGINA |
|---|---|---|---|---|
| **POSTO DO OPERADOR** | | | | |
| ELEMENTO FILTRANE-AR DA CABINE | 231-8130 | 1 | AQUECEDOR DA CABINE | 549 |
| | | 1 | CONDICIONADOR DE AR | 468 |
| | 231-8132 | 1 | AQUECEDOR DA CABINE | 549 |
| | | 1 | AQUECEDOR DA CABINE | 551 |
| | | 1 | CONDICIONADOR DE AR | 468 |
| | | 1 | CONDICIONADOR DE AR | 470 |
| ELEMENTO FILTRANE-AR DA CABINE (AR) | 303-6658 | 1 | AQUECEDOR DA CABINE | 551 |
| | | 1 | CONDICIONADOR DE AR | 470 |
| FUSÍVEL (10 AMPERES) | 113-8490 | 1 | CONTROLE HIDRÁULICO DE OPERAÇÃO PILOTO | 510 |
| | | 1 | CONTROLE HIDRÁULICO DE OPERAÇÃO PILOTO | 513 |
| | | 1 | CONTROLE HIDRÁULICO DE OPERAÇÃO PILOTO | 515 |
| | | 1 | CONTROLE HIDRÁULICO DE OPERAÇÃO PILOTO | 518 |
| FUSÍVEL (30 AMPERES) | 124-3548 | 1 | JOGO-INSTALAÇÃO DO CONDICIONADOR DE AR | 559 |
| | | 1 | JOGO-INSTALAÇÃO DO CONDICIONADOR DE AR E AQUECEDOR | 557 |
| LÂMINA DO LIMPADOR DE PÁRA-BRISA (558 MM) (DIANTEIRO, TRASEIRO) | 6W-3924 | 1 | PORTA DA CABINE | 532 |
| LÂMINA DO LIMPADOR DE PÁRA-BRISA (558 MM) (PORTA DA CABINE) | 6W-3924 | 1 | PORTA DA CABINE | 534 |
| LÂMPADA (12-VOLTS) | 7X-9065 | 1 | INDICADOR E ALARME | 542 |
| LÂMPADA (12-VOLTS, 10-WATTS) | 6R-7490 | 1 | INDICADOR E ALARME | 542 |
| RESPIRO (AR CONDICIONADO) | 9G-5127 | 1 | COMPRESSOR E MOTOR - REFRIGERADO | 480 |
| | | 1 | COMPRESSOR E MOTOR - REFRIGERADO | 481 |
| RESPIRO (COMPRESSOR DO AR CONDICIONADO) | 9G-5127 | 1 | JOGO-INSTALAÇÃO DO CONDICIONADOR DE AR | 558 |
| | | 1 | JOGO-INSTALAÇÃO DO CONDICIONADOR DE AR E AQUECEDOR | 556 |
| **SISTEMA DE ADMISSÃO DE AR E DE ESCAPE** | | | | |
| ELEMENTO DO FILTRO DE AR (PRIMÁRIO) | 110-6326 | 1 | PURIFICADOR DE AR | 75 |
| ELEMENTO DO FILTRO DE AR (SECUNDÁRIO) | 110-6331 | 1 | PURIFICADOR DE AR | 75 |
| JUNTA (TELA) | 5I-8111 | 1 | AMORTECEDOR E MONTAGEM | 81 |

* TRADUÇÃO NÃO DISPONÍVEL NO MOMENTO DA IMPRESSÃO

# PEÇAS DE MANUTENÇÃO

| DESCRIÇÃO | NÚMERO DE PEÇA | QUANT | UTILIZADA EM | PÁGINA |
|---|---|---|---|---|
| **SISTEMA DE ARREFECIMENTO** | | | | |
| JUNTA - TAMPA (BOMBA D'ÁGUA) | 103-9750 | 1 | BOMBA DE ÁGUA | 70 |
| JUNTA (REGULADOR DA TEMPERATURA DA ÁGUA) | 235-4959 | 1 | TERMOSTATO / REGULADOR DE TEMPERATURA | 66 |
| | | 1 | TUBOS - ÁGUA | 67 |
| REGULADOR - TEMPERATURA DA ÁGUA (TERMOSTATO) | 235-4960 | 1 | TERMOSTATO / REGULADOR DE TEMPERATURA | 66 |
| | | 1 | TUBOS - ÁGUA | 67 |
| TAMPA - RADIADOR | 036-1865 | 1 | RADIADOR E ARREFECEDOR DO ÓLEO HIDRÁULICO | 71 |
| TAMPA COM RESPIRO (RECUPERAÇÃO DO LÍQUIDO ARREFECEDOR) | 169-6715 | 1 | RADIADOR E ARREFECEDOR DE ÓLEO - MONTAGEM | 72 |
| **SISTEMA DE COMBUSTÍVEL** | | | | |
| FILTRO - SEPARADOR DE ÁGUA E COMBUSTÍVEL | 233-9856 | 1 | BOMBA DE ESCORVA DO COMBUSTÍVEL E DO FILTRO PRIMÁRIO | 102 |
| TAMPA - TANQUE DE COMBUSTÍVEL | 304-3885 | 1 | TUBOS - COMBUSTÍVEL | 90 |
| | | 1 | TUBULAÇÕES - FILTRO E ESCORVA DO COMBUSTÍVEL | 96 |
| **SISTEMA DE LUBRIFICAÇÃO** | | | | |
| *FILTER-ENGINE OIL | 1R-0734 | 1 | FILTRO - ÓLEO DO MOTOR | 61 |
| FILTRO DE ÓLEO (MOTOR) | 233-5494 | 1 | TUBOS - ÓLEO DO MOTOR | 62 |

* TRADUÇÃO NÃO DISPONÍVEL NO MOMENTO DA IMPRESSÃO

# PEÇAS DE MANUTENÇÃO

| DESCRIÇÃO | NÚMERO DE PEÇA | QUANT | UTILIZADA EM | PÁGINA |
|---|---|---|---|---|
| **SISTEMA ELÉTRICO E DE PARTIDA** | | | | |
| BATERIA (12 VOLTS, ISENTO DE MANUTENÇÃO) | 230-6368 | 1 | BATERIA | 109 |
| BATERIA (12 VOLTS, PADRÃO) | 153-5656 | 1 | BATERIA | 108 |
| CHAVE - ELETRÔNICO (SEGURANÇA) | 206-5165 | 1 | INSTALAÇÃO-SEGURANÇA | 119 |
| | | 2 | SISTEMA ELETRÔNICO - MÁQUINA | 114 |
| CORREIA DE COMANDO (PISCA-ALERTA) | 9X-8139 | 1 | LUZ GIRATÓRIA DE ALARME | 129 |
| DISJUNTOR AUTOMÁTICO DE CIRCUITO (105 AMPERES) (PRINCIPAL) | 171-2212 | 1 | CABOS/FIOS ELÉTRICOS - MOTOR | 149 |
| DISJUNTOR AUTOMÁTICO DE CIRCUITO (30 AMPERES) (ILUMINAÇÃO) | 147-1773 | 1 | ILUMINAÇÃO - RODOVIÁRIA | 132 |
| FAROL DIANTEIRO | 9W-3324 | 1 | LÂMPADA DIANTEIRA E DE SINAL | 125 |
| FUSÍVEL (10 AMPERES) | 113-8490 | 1 | ALARME DE MARCHA À RÉ | 142 |
| | | 16 | CABOS/FIOS ELÉTRICOS - CHASSI | 145 |
| | | 4 | CABOS/FIOS ELÉTRICOS - FERRAMENTAS DE TRABALHO | 153 |
| | | 4 | KIT-CONTROLE E FIAÇÃO DA FERRAMENTA DE TRABALHO | 121 |
| | | 4 | KIT-FIAÇÃO DA FERRAMENTA DE TRABALHO | 122 |
| FUSÍVEL (15 AMPERES) | 113-8491 | 1 | CABOS/FIOS ELÉTRICOS - AR CONDICIONADO | 143 |
| | | 5 | CABOS/FIOS ELÉTRICOS - CHASSI | 145 |
| | | 2 | CABOS/FIOS ELÉTRICOS - FERRAMENTAS DE TRABALHO | 153 |
| | | 2 | KIT-CONTROLE E FIAÇÃO DA FERRAMENTA DE TRABALHO | 121 |
| FUSÍVEL (20-AMPERES) | 113-8492 | 2 | CABOS/FIOS ELÉTRICOS - CHASSI | 145 |
| FUSÍVEL (30 AMPERES) | 124-3548 | 1 | CABOS/FIOS ELÉTRICOS - AR CONDICIONADO | 143 |
| | | 1 | CABOS/FIOS ELÉTRICOS - CHASSI | 145 |
| LÂMPADA (VERMELHA, VERDE, LED, 12 VOLTS) | 165-5655 | 1 | INSTALAÇÃO-SEGURANÇA | 120 |
| LÂMPADA (12-VOLTS, 21-WATTS) | 5G-3244 | 1 | LÂMPADA DIANTEIRA E DE SINAL | 125 |
| | 9W-3326 | 1 | LUZ TRASEIRA E DE FREIO | 128 |
| LÂMPADA (12-VOLTS, 4-WATTS) | 100-3246 | 1 | LÂMPADA DIANTEIRA E DE SINAL | 125 |
| LÂMPADA (12 VOLTS, 5 WATTS) | 084-4348 | 1 | LUZ TRASEIRA E DE FREIO | 127 |
| | | 1 | LUZ TRASEIRA E DE FREIO | 128 |
| LÂMPADA (12-VOLTS, 55-WATTS) | 9W-0607 | 1 | LÂMPADA - FAROL | 123 |
| | | 1 | LÂMPADA - FAROL | 124 |
| | 9X-8118 | 1 | LUZ GIRATÓRIA DE ALARME | 129 |
| LUZ INTERMITENTE (12-VOLTS) | 242-9000 | 1 | ILUMINAÇÃO - RODOVIÁRIA | 132 |
| VELA DE AQUECIMENTO; VELA INCANDESCENTE | 107-3659 | 4 | VELA DE AQUECIMENTO; VELA INCANDESCENTE | 116 |

* TRADUÇÃO NÃO DISPONÍVEL NO MOMENTO DA IMPRESSÃO

# PEÇAS DE MANUTENÇÃO

| DESCRIÇÃO | NÚMERO DE PEÇA | QUANT | UTILIZADA EM | PÁGINA |
|---|---|---|---|---|
| **SISTEMA HIDRÁULICO** | | | | |
| FUSÍVEL (10 AMPERES) | 113-8490 | 1 | KIT-CONVERSÃO DO ACOPLADOR RÁPIDO | 259 |
| RESPIRO (EM LINHA) (ÓLEO HIDRÁULICO) | 207-9729 | 1 | TANQUE DE ÓLEO HIDRÁULICO E MONTAGEM | 337 |
| TAMPA - BOCAL DE ENCHIMENTO (TANQUE HIDRÁULICO) | 142-8937 | 1 | TANQUE HIDRÁULICO | 338 |
| TELA DE SUCÇÃO (TANQUE HIDRÁULICO) | 142-8929 | 1 | TANQUE HIDRÁULICO | 338 |
| TELA FILTRANTE (ÓLEO HIDRÁULICO) | 195-6768 | 1 | TUBOS - CIRCUITO PILOTO | 299 |
| **TREM DE FORÇA** | | | | |
| FILTRO - ÓLEO (EFICIÊNCIA AVANÇADA) (HIDRÁULICO) | 1G-8878 | 1 | FILTRO - ÓLEO | 163 |

* TRADUÇÃO NÃO DISPONÍVEL NO MOMENTO DA IMPRESSÃO

# WARTUNGSTEILE

| BESCHREIBUNG | ERSATZTEIL-NUMMER | MENGE | VERWENDET IN | SEITE |
|---|---|---|---|---|
| **ARBEITSGERÄTE** | | | | |
| KAPPE (WASSERTANK) | 192-2606 | 1 | WASSERTANK | 462 |
| SCREEN (WASSERTANK) | 119-1414 | 1 | WASSERSIEBEINSATZ | 458 |
| SICHERUNG (10 A) | 113-8490 | 1 | SCHNELLWECHSELVORRICHTUNG | 417 |
| **ELEKTRISCHE ANLAGE UND STARTSYSTEM** | | | | |
| BATTERIE (12 V, STANDARD) | 153-5656 | 1 | BATTERIE | 108 |
| BATTERIE (12 V, WARTUNGSFREI) | 230-6368 | 1 | BATTERIE | 109 |
| BELEUCHTUNGSANLAGE (ROT, GRÜN, LED, 12 V) | 165-5655 | 1 | SICHERHEITSEINBAUSATZ | 120 |
| BLINKER (12 V) | 242-9000 | 1 | BELEUCHTUNGSANLAGE (STRASSENAUSRÜSTUNG) | 132 |
| ELEKTRONISCHER SCHLÜSSEL (SICHERHEIT) | 206-5165 | 2 | ELEKTRONIK - MASCHINE | 114 |
| | | 1 | SICHERHEITSEINBAUSATZ | 119 |
| GLÜHKERZE | 107-3659 | 4 | GLÜHKERZE | 116 |
| LAUFBAND UND ANTRIEB (RUNDUM-KENNLEUCHTE) | 9X-8139 | 1 | RUNDUM-KENNLEUCHTE | 129 |
| LEUCHTE (12 V, 21 W) | 5G-3244 | 1 | SCHEINWERFER U. RICHTUNGS-LEUCHTE | 125 |
| | 9W-3326 | 1 | BREMS- UND RÜCKLEUCHTE | 128 |
| LEUCHTE (12 V, 4 W) | 100-3246 | 1 | SCHEINWERFER U. RICHTUNGS-LEUCHTE | 125 |
| LEUCHTE (12 V, 5 W) | 084-4348 | 1 | BREMS- UND RÜCKLEUCHTE | 127 |
| | | 1 | BREMS- UND RÜCKLEUCHTE | 128 |
| LEUCHTE (12 V, 55 W) | 9W-0607 | 1 | ARBEITSLEUCHTEN | 123 |
| | | 1 | ARBEITSLEUCHTEN | 124 |
| | 9X-8118 | 1 | RUNDUM-KENNLEUCHTE | 129 |
| SCHEINWERFER | 9W-3324 | 1 | SCHEINWERFER U. RICHTUNGS-LEUCHTE | 125 |
| SICHERUNG (10 A) | 113-8490 | 4 | ARBEITSGERÄT - VERDRAHTUNG | 153 |
| | | 4 | ARBEITSGERÄTEVERDRAHTUNGS-SATZ | 122 |
| | | 16 | FAHRGESTELLVERDRAHTUNG | 145 |
| | | 1 | RÜCKFAHRWARNHORN | 142 |
| | | 4 | SATZ - ARBEITSGERÄTE U. VERDRAHTUNG | 121 |
| SICHERUNG (15 A) | 113-8491 | 2 | ARBEITSGERÄT - VERDRAHTUNG | 153 |
| | | 5 | FAHRGESTELLVERDRAHTUNG | 145 |
| | | 1 | KLIMAANLAGENVERDRAHTUNG | 143 |
| | | 2 | SATZ - ARBEITSGERÄTE U. VERDRAHTUNG | 121 |
| SICHERUNG (20 A) | 113-8492 | 2 | FAHRGESTELLVERDRAHTUNG | 145 |
| SICHERUNG (30 A) | 124-3548 | 1 | FAHRGESTELLVERDRAHTUNG | 145 |
| | | 1 | KLIMAANLAGENVERDRAHTUNG | 143 |
| UNTERBRECHER (105 A) (HAUPTUNTERBRECHER) | 171-2212 | 1 | MOTORVERDRAHTUNG | 149 |
| UNTERBRECHER (30 A) (BELEUCHTUNG) | 147-1773 | 1 | BELEUCHTUNGSANLAGE (STRASSENAUSRÜSTUNG) | 132 |

* ÜBERSETZUNG ZUM ZEITPUNKT DER DRUCKLEGUNG NICHT VORHANDEN

# WARTUNGSTEILE

| BESCHREIBUNG | ERSATZTEIL-NUMMER | MENGE | VERWENDET IN | SEITE |
|---|---|---|---|---|
| **FAHRERHAUS** | | | | |
| ENTLÜFTER (KLIMAANLAGE) | 9G-5127 | 1 | KÜHLKOMPRESSOR U. MOTOR | 480 |
| | | 1 | KÜHLKOMPRESSOR U. MOTOR | 481 |
| ENTLÜFTER (KLIMAANLAGEN-KOMRESSOR) | 9G-5127 | 1 | EINBAUSATZ - KLIMAANLAGE U. HEIZUNG | 556 |
| | | 1 | *KIT-AIR CONDITIONER INSTL | 558 |
| FILTERELEMENT - FAHRERHAUSLUFT | 231-8130 | 1 | FAHRERHAUSHEIZUNG | 549 |
| | | 1 | KLIMAANLAGE | 468 |
| | 231-8132 | 1 | FAHRERHAUSHEIZUNG | 549 |
| | | 1 | FAHRERHAUSHEIZUNG | 551 |
| | | 1 | KLIMAANLAGE | 468 |
| | | 1 | KLIMAANLAGE | 470 |
| FILTERELEMENT - FAHRERHAUSLUFT (DRUCKLUFT) | 303-6658 | 1 | KLIMAANLAGE | 470 |
| | | 1 | FAHRERHAUSHEIZUNG | 551 |
| LEUCHTE (12 V) | 7X-9065 | 1 | WARNANZEIGENSATZ | 542 |
| LEUCHTE (12 V, 10 W) | 6R-7490 | 1 | WARNANZEIGENSATZ | 542 |
| SCHEIBENWISCHERBLATT (*558-MM) (FAHRERHAUSTÜR) | 6W-3924 | 1 | FAHRERHAUSTÜR | 534 |
| SCHEIBENWISCHERBLATT (*558-MM) (VORN, HINTEN) | 6W-3924 | 1 | FAHRERHAUSTÜR | 532 |
| SICHERUNG (10 A) | 113-8490 | 1 | HYDRAULIKBEDIENUNG (MIT VORSTEUERUNG) | 510 |
| | | 1 | HYDRAULIKBEDIENUNG (MIT VORSTEUERUNG) | 513 |
| | | 1 | HYDRAULIKBEDIENUNG (MIT VORSTEUERUNG) | 515 |
| | | 1 | HYDRAULIKBEDIENUNG (MIT VORSTEUERUNG) | 518 |
| SICHERUNG (30 A) | 124-3548 | 1 | EINBAUSATZ - KLIMAANLAGE U. HEIZUNG | 557 |
| | | 1 | *KIT-AIR CONDITIONER INSTL | 559 |
| **HYDRAULIKSYSTEM** | | | | |
| ANSAUGSIEB (HYDRAULIKTANK) | 142-8929 | 1 | HYDRAULIKTANK | 338 |
| EINFÜLLKAPPE (HYDRAULIKTANK) | 142-8937 | 1 | HYDRAULIKTANK | 338 |
| ENTLÜFTER (*INLINE) (HYDRAULIKÖL) | 207-9729 | 1 | HYDRAULIKTANK UND BEFESTIGUNGSTEILE | 337 |
| SCREEN (HYDRAULIKÖL) | 195-6768 | 1 | VORSTEUERLEITUNGEN | 299 |
| SICHERUNG (10 A) | 113-8490 | 1 | *KIT-QUICK COUPLER CONVERSION | 259 |
| **KRAFTSTOFFSYSTEM** | | | | |
| KRAFTSTOFFTANKKAPPE | 304-3885 | 1 | KRAFTSTOFFENTLÜFTUNGS- U. FILTERLEITUNGEN | 96 |
| | | 1 | KRAFTSTOFFLEITUNGEN | 90 |
| WASSERABSCHEIDER UND KRAFTSTOFFILTER | 233-9856 | 1 | KRAFTSTOFFENTLÜFTUNGSPUMPE UND -HAUPTFILTER | 102 |
| **KRAFTSÜBERTRAGUNG** | | | | |
| ÖLFILTER (HOCHLEISTUNG) (HYDRAULIK) | 1G-8878 | 1 | ÖLFILTER | 163 |

* ÜBERSETZUNG ZUM ZEITPUNKT DER DRUCKLEGUNG NICHT VORHANDEN

# WARTUNGSTEILE

| BESCHREIBUNG | ERSATZTEIL-NUMMER | MENGE | VERWENDET IN | SEITE |
|---|---|---|---|---|
| **KÜHLSYSTEM** | | | | |
| DICHTUNG (KÜHLWASSERTHERMOSTAT) | 235-4959 | 1 | KÜHLWASSER-TEMPERATURREGLER UND GEHÄUSE | 66 |
| | | 1 | KÜHLWASSERLEITUNGEN | 67 |
| KAPPE MIT ENTLÜFTER (KÄLTEMITTELRÜCKGEWINNUNG) | 169-6715 | 1 | KÜHLER U. ÖLKÜHLERBEFESTIGUNG | 72 |
| KÜHLERKAPPE | 036-1865 | 1 | KÜHLER UND HYDRAULIKÖLKÜHLER | 71 |
| THERMOSTAT (THEMRMOSTAT) | 235-4960 | 1 | KÜHLWASSER-TEMPERATURREGLER UND GEHÄUSE | 66 |
| | | 1 | KÜHLWASSERLEITUNGEN | 67 |
| VENTILDECKELDICHTUNG (WASSERPUMPE) | 103-9750 | 1 | KÜHLWASSERPUMPE | 70 |
| **LUFTANSAUG- UND ABGASSYSTEM** | | | | |
| DICHTUNG (SIEB) | 5I-8111 | 1 | SCHALLDÄMPFER U. BEFESTIGUNG | 81 |
| LUFTFILTER (HAUPTELEMENT) | 110-6326 | 1 | LUFTREINIGER | 75 |
| LUFTFILTER (HILFSELEMENT) | 110-6331 | 1 | LUFTREINIGER | 75 |
| **MOTOR** | | | | |
| KEILRIEMEN | 287-6138 | 1 | MOTORAUSFÜHRUNG | 14 |
| | | 1 | MOTORAUSFÜHRUNG | 15 |
| **MOTOR - GRUNDAUSFÜHRUNG** | | | | |
| DICHTUNG (VENTILMECHANISMUS) | 233-5483 | 1 | VENTILDECKEL | 21 |
| KEILRIEMEN (WASSERPUMPE) | 235-4972 | 1 | KEILRIEMEN | 59 |
| SCHLÜSSEL | 094-4628 | 1 | NOCKENWELLE | 18 |
| SCHRAUBE (ABLASS, MOTORÖL) | 135-8432 | 1 | ÖLWANNE | 47 |
| | | 1 | ÖLWANNE | 49 |
| **RAHMEN UND FAHRGESTELL** | | | | |
| BLINKER (12 V) | 242-9000 | 1 | UMRÜSTSATZ FÜR STRASSENFAHRT | 217 |
| ENTLÜFTER (TANDEMGEHÄUSE) | 9G-5127 | 2 | MASCHINENRAHMEN U. BEFESTIGUNG | 212 |
| LEUCHTE (12 V) (KENNZEICHEN) | 7M-9957 | 1 | TYPENSCHILDBEFESTIGUNG | 223 |
| MAGNETSTOPFEN (TANDEM) | 3S-9182 | 5 | MASCHINENRAHMEN U. BEFESTIGUNG | 212 |
| UNTERBRECHER (30 A) | 147-1773 | 1 | UMRÜSTSATZ FÜR STRASSENFAHRT | 217 |
| **SCHMIERSYSTEM** | | | | |
| *FILTER-ENGINE OIL | 1R-0734 | 1 | ÖLFILTER | 61 |
| ÖLSIEB (MOTOR) | 233-5494 | 1 | MOTORÖLLEITUNGEN | 62 |

* ÜBERSETZUNG ZUM ZEITPUNKT DER DRUCKLEGUNG NICHT VORHANDEN

# INDEX


| Name | Page |
|---|---|
| **A** | |
| ACCUMULATOR & MTG GP-HYDRAULIC | 231 |
| ACCUMULATOR GP-REFRIGERANT–WITH DESICCANT | 464, 465 |
| ADAPTER GP-OIL LINE–PILOT | 232 |
| AIR CLEANER GP | 74, 75 |
| AIR CONDITIONER AR | 466 |
| AIR CONDITIONER GP | 467, 468, 470 |
| ALTERNATOR GP-CHARGING | 103, 105, 106, 107 |
| ARM GP-MATERIAL HANDLING | 360 |
| ARM GP-WINDOW WIPER | 532 |
| ARM GP-WINDOW WIPER (FRONT) | 534 |
| ARMREST & MOUNTING GP | 472 |
| ARMREST GP | 473 |
| AXLE GP | 155, 156, 157 |
| **B** | |
| BATTERY GP–HEAVY DUTY | 109 |
| BATTERY GP–STANDARD | 108 |
| BATTERY (12-VOLT, MAINTENANCE FREE) | 109 |
| BATTERY (12 VOLT, STANDARD) | 108 |
| BEARING GP-MAIN | 17 |
| BELT-DRIVE (WARNING BEACON) | 129 |
| BLADE AR–ANGLING | 361, 362, 363 |
| BLADE AS-WIPER (558-MM) (CAB DOOR) | 534 |
| BLADE AS-WIPER (558-MM) (FRONT, REAR) | 532 |
| BLADE GP-ANGLING | 364, 365, 366, 367 |
| BLADE GP-MULTIPURPOSE BUCKET | 368, 369, 370, 371 |
| BOX GP-STORAGE | 475 |
| BOX GP-STORAGE (LITERATURE) | 476 |
| BREATHER (AIR CONDITIONER) | 480, 481 |
| BREATHER (AIR CONDITIONER COMPRESSOR) | 556, 558 |
| BREATHER AS (INLINE) (HYDRAULIC OIL) | 337 |
| BREATHER (TANDEM HOUSING) | 212 |
| BUCKET AR-DIRT | 372, 373 |
| BUCKET AR-GENERAL PURPOSE | 373, 374, 375 |
| BUCKET AR-GRAPPLE | 375, 377, 378, 379, 380, 381 |
| BUCKET AR-GRAPPLE–INDUSTRIAL | 376 |
| BUCKET AR-LIGHT MATERIAL | 382 |
| BUCKET AR-MULTIPURPOSE | 382, 383, 384, 385 |
| BUCKET AR-UTILITY | 385, 386 |
| BUCKET AS-DIRT | 387, 388, 389, 390 |
| BUCKET AS-GENERAL PURPOSE | 391, 392, 393, 394, 395 |
| BUCKET AS-LIGHT MATERIAL | 396, 397, 398 |
| BUCKET GP-DIRT | 399 |
| BUCKET GP-GENERAL PURPOSE | 400 |
| BUCKET GP-GRAPPLE | 401, 402, 403, 404, 405, 406 |
| BUCKET GP-MULTIPURPOSE | 407, 408, 409, 410, 411 |
| BUCKET GP-UTILITY | 412, 413, 414 |
| BUMPER GP–REAR | 200 |
| **C** | |
| CAB AR-ENCLOSED ROPS | 476 |
| CAB GP-ENCLOSED ROPS | 477, 478 |

# INDEX


| Name | Page |
|---|---|
| CABLE GP-CONTROL–MANUAL LOWERING | 479 |
| CABLE GP-GOVERNOR CONTROL | 88 |
| CAMSHAFT GP | 18 |
| | 19 |
| CAP AS-FILLER (HYDRAULIC TANK) | 338 |
| CAP AS-RADIATOR | 71 |
| CAP AS (WATER TANK) | 462 |
| CAP-FUEL | 90 |
| | 96 |
| CAP-VENTED (COOLANT RECOVERY) | 72 |
| CARRIAGE & FORK AR | 415 |
| CARRIAGE GP-FORK | 416 |
| | 417 |
| CHASSIS AR | 1 |
| CIRCUIT BREAKER AS (105-AMPERE) (MAIN) | 149 |
| CIRCUIT BREAKER AS (30-AMPERE) | 217 |
| CIRCUIT BREAKER AS (30-AMPERE) (LIGHTING) | 132 |
| COIL AS-SOLENOID (12-VOLT) | 355 |
| COMMON AR | 2 |
| COMPRESSOR & MOTOR GP-REFRIG | 480 |
| | 481 |
| COMPRESSOR & MTG GP-REFRIG | 483 |
| COMPRESSOR GP-REFRIGERANT | 480 |
| | 481 |
| | 556 |
| | 558 |
| CONDENSER & MTG GP-REFRIGERANT | 484 |
| CONNECTING ROD GP | 20 |
| CONTROL AR-MACHINE– AUX PROPORTIONAL FLOW, 2-SPEED | 3 |
| CONTROL AR-MACHINE–AUXILIARY PROPORTIONAL FLOW CONTROL, 1-SPEED | 3 |
| CONTROL AR-MACHINE– ON, OFF AUXILIARY CONTROL, 1 SPEED | 2 |
| CONTROL GP-GOVERNOR | 89 |
| CONTROL GP-HANDLE | 491 |
| CONTROL GP-HANDLE– DIRECTION, SPEED | 485 |
| | 486 |
| CONTROL GP-HANDLE–LH | 488 |
| | 490 |
| CONTROL GP-HANDLE–RH | 489 |
| | 491 |
| CONTROL GP-HANDLE–WORK TOOL | 487 |
| CONTROL GP-INTERLOCK | 110 |
| CONTROL GP-PILOT OPERATED HYD | 492 |
| | 495 |
| | 496 |
| | 498 |
| | 499 |
| | 501 |
| | 502 |
| | 504 |
| | 505 |
| | 506 |
| | 507 |
| | 509 |
| | 510 |
| | 513 |
| | 515 |
| | 518 |
| CONTROL GP-UNPROGRAMMED | 113 |
| CONTROL GP-UNPROGRAMMED (SECURITY) | 114 |
| CONVERSION AR-MACHINE | 3 |
| CONVERSION AR-MACHINE–GERMANY | 6 |
| | 10 |
| | 11 |
| CONVERSION AR-MACHINE– GERMANY, HIGH FLOW, 2-SPEED | 7 |
| CONVERSION AR-MACHINE–ITALY | 5 |
| | 9 |
| CONVERSION AR-MACHINE– OUTSIDE NACD | 4 |
| | 8 |
| CONVERSION AR-NON-ROADING–NACD | 111 |
| CONVERSION AR-ROADING–GERMANY | 202 |
| | 203 |
| CONVERSION AR-ROADING–ITALY | 202 |
| CONVERSION AR-ROADING– OUTSIDE NACD | 201 |
| CONVERSION GP-ROADING–GERMANY | 204 |
| | 206 |
| CONVERSION GP-ROADING–ITALY | 205 |
| | 207 |
| COOLANT HEATER LINES | 568 |
| COOLER GP-ENGINE OIL | 65 |
| COUNTERWEIGHT GP | 208 |
| COUNTERWEIGHT GP–KIT | 209 |
| COUPLER AR-QUICK | 417 |
| COUPLER GP-QUICK | 418 |
| | 420 |
| COUPLING GP-DRIVE | 556 |
| | 558 |
| COUPLING GP-DRIVE– REFRIGERANT COMPRESSOR, MOTOR | 521 |
| COVER GP-CONSOLE | 523 |
| | 524 |
| COVER GP-FUSE PANEL | 112 |
| COVER GP-INSTRUMENT PANEL | 525 |
| COVER GP-LINES | 421 |
| COVER GP-VALVE MECHANISM | 21 |
| CRANKSHAFT GP | 22 |
| | 23 |
| CYLINDER & LINK GP-COUPLER–LH | 422 |
| CYLINDER & LINK GP-COUPLER–RH | 423 |
| CYLINDER & MTG GP-ANGLE BLADE | 233 |

# INDEX


| Name | Page |
|---|---|
| | 234 |
| CYLINDER & MTG GP-BUCKET | 235 |
| CYLINDER & MTG GP-LIFT ARM | 236 |
| CYLINDER BLOCK GP | 24 |
| | 26 |
| CYLINDER GP-BUCKET | 239 |
| CYLINDER GP-GRAPPLE | 240 |
| CYLINDER GP-HYDRAULIC | 243 |
| | 244 |
| | 245 |
| | 246 |
| | 247 |
| | 259 |
| CYLINDER GP-HYDRAULIC–ANGLE BLADE | 242 |
| CYLINDER GP-HYDRAULIC–COUPLER | 241 |
| CYLINDER GP-LIFT–LH | 248 |
| CYLINDER GP-LIFT–RH | 249 |
| CYLINDER GP-TILT–LH | 250 |
| CYLINDER GP-TILT–RH | 251 |
| CYLINDER HEAD GP | 28 |
| | 29 |

## D

| | |
|---|---|
| DOOR & MTG GP-CAB–GLASS | 529 |
| DOOR & MTG GP-CAB–POLYCARBONATE | 526 |
| DOOR GP-CAB | 536 |
| DOOR GP-CAB–GLASS | 531 |
| | 532 |
| DOOR GP-CAB–POLYCARBONATE | 534 |
| DOOR GP-CAB (POLYCARBONATE) | 526 |
| | 560 |
| DRAIN GP | 30 |
| DRAIN GP-ENGINE OIL | 31 |
| DRIVE CONTROL AR-HYDROSTATIC | 157 |
| | 158 |
| | 159 |
| DRIVE GP-TANDEM | 160 |
| DUCT & CONTROL GP | 537 |

## E

| | |
|---|---|
| EDGE GP-BIT & CUTTING | 424 |
| EDGE GP-CUTTING | 424 |
| | 425 |
| | 426 |
| | 427 |
| | 428 |
| | 429 |
| | 430 |
| ELECTRONICS GP-IMPLEMENT–WORK TOOL | 113 |
| ELECTRONICS GP-MACHINE–SECURITY | 114 |
| ENCLOSURE GP-ENGINE | 210 |
| ENGINE AR | 12 |
| ENGINE AR-PRIMARY | 13 |
| | 14 |
| | 15 |

## F

| | |
|---|---|
| FAN GP-BLOWER | 71 |
| FASTENER GP-VALVE | 357 |
| FASTENER GP-WIRING HARNESS | 115 |
| FILM (FOPS) | 543 |
| FILM-FUSE/RELAY | 112 |
| FILM GP | 159 |
| | 608 |
| FILM GP–CLEARANCE | 605 |
| FILM GP–UN | 606 |
| FILM-IDENTIFICATION (FUEL FILTER, WATER SEPARATOR) | 90 |
| | 96 |
| FILM-IDENTIFICATION (IGNITION SWITCH) | 119 |
| | 120 |
| FILM-IDENTIFICATION (POWER RECEPTACLE, 12-VOLT) | 611 |
| FILM-IDENTIFICATION (POWER RECEPTACLE, 12-VOLT) | 621 |
| FILM-IDENTIFICATION (POWER RECEPTACLE, 12-VOLT) | 614 |
| | 624 |
| | 627 |
| | 630 |
| FILM-IDENTIFICATION (13-KM/H) | 6 |
| | 10 |
| | 202 |
| FILM-IDENTIFICATION (20-KM/H) | 11 |
| | 203 |
| FILM-IDENTIFICATION (20-KM/H) | 7 |
| FILM-INFORMATION (READ OMM) | 611 |
| | 621 |
| FILM-INFORMATION (READ OMM) | 614 |
| | 624 |
| | 627 |
| | 630 |
| FILM-INFORMATION (TIE-DOWN LOCATION) | 360 |
| FILM-INSTRUCTION (DASH) | 542 |
| FILM-INSTRUCTION (INSTRUMENT PANEL) | 541 |
| FILM-INSTRUCTION (MACHINE CONTROL, LH, READ OMM) | 256 |
| FILM-INSTRUCTION (MACHINE CONTROL, READ OMM) | 498 |
| FILM-INSTRUCTION (MACHINE CONTROL, READ OMM) | 496 |
| | 502 |
| | 504 |
| | 506 |
| | 507 |
| | 509 |

# INDEX


| Name | Page |
|---|---|
| | 510 |
| | 513 |
| | 515 |
| | 518 |
| FILM-INSTRUCTION (MACHINE CONTROL, READ OMM) | 505 |
| FILM-INSTRUCTION (MACHINE CONTROL, READ OMM, LH) | 256 |
| FILM-INSTRUCTION (MACHINE CONTROL, RH, READ OMM) | 256 |
| | 257 |
| FILM-INSTRUCTION (MACHINE CONTROLS) | 492 |
| | 495 |
| | 499 |
| | 501 |
| FILM-INSTRUCTION (MACHINE SECURITY, INTL) | 119 |
| | 120 |
| FILM-INSTRUCTION (NO STEP) | 259 |
| | 311 |
| FILM-INSTRUCTION (NO STEP) | 617 |
| FILM (REFLECTIVE) | 453 |
| | 454 |
| FILM-STRIPE (REFLECTIVE, RED, WHITE) | 453 |
| | 454 |
| FILM (TEMPERATURE CONTROL) | 468 |
| | 470 |
| | 549 |
| | 551 |
| FILM-WARNING (CLEARANCE) | 605 |
| FILM-WARNING (CRUSH HAZARD, STAY BACK) | 330 |
| | 407 |
| | 408 |
| | 409 |
| | 411 |
| | 617 |
| FILM-WARNING (CRUSH HAZARD, STAY BACK) | 443 |
| FILM-WARNING (CRUSH HAZARD, STAY BACK, U.S.) | 617 |
| FILM-WARNING (HIGH PRESSURE, READ OMM, INTL) | 611 |
| | 627 |
| | 630 |
| FILM-WARNING (HIGH PRESSURE, READ OMM, U.S.) | 614 |
| FILM-WARNING (HIGH PRESSURE, READ OMM, U.S.) | 621 |
| | 624 |
| FILM-WARNING (IMPALED POINT) | 433 |
| | 434 |
| | 438 |
| | 442 |
| FILM-WARNING (NO ACCESS) | 611 |
| | 627 |
| FILM-WARNING (NO CLEARANCE, STAY BACK) | 364 |
| | 365 |
| FILM-WARNING (NO WELD, NO DRILL, READ OMM) | 614 |
| | 621 |
| | 624 |
| FILM-WARNING (STEERING) | 204 |
| | 206 |
| FILM (2-SPEED) | 158 |
| | 159 |
| | 254 |
| FILTER & LINES GP-HYDRAULIC | 161 |
| FILTER AS-WATER SEP & FUEL | 102 |
| FILTER ELEMENT AS-AIR (PRIMARY) | 75 |
| FILTER ELEMENT AS-AIR (SECONDARY) | 75 |
| FILTER ELEMENT-CAB AIR | 468 |
| | 470 |
| | 549 |
| | 551 |
| FILTER ELEMENT-CAB AIR (AIR) | 470 |
| FILTER ELEMENT-CAB AIR (AIR) | 551 |
| FILTER-ENGINE OIL | 61 |
| FILTER GP-ENGINE OIL | 61 |
| FILTER GP-OIL–HYDRAULIC | 163 |
| FILTER-OIL (ADVANCED EFFICIENCY) (HYDRAULIC) | 163 |
| FITTING GP | 301 |
| FITTING GP-HYDRAULIC | 301 |
| FLASHER AS (12-VOLT) | 132 |
| | 217 |
| FLOOR MAT | 2 |
| | 4 |
| | 5 |
| | 6 |
| | 7 |
| | 201 |
| | 202 |
| | 203 |
| FLYWHEEL GP | 32 |
| | 33 |
| FORK AR-GRAPPLE–INDUSTRIAL | 430 |
| FORK AR-GRAPPLE–UTILITY | 431 |
| FORK GP-GRAPPLE | 432 |
| | 434 |
| FORK GP-GRAPPLE–INDUSTRIAL | 433 |
| FORK GP-PALLET | 435 |
| FORK GP-PALLET–KIT | 435 |
| | 436 |
| FORK GP-UTILITY | 437 |
| | 438 |
| FRAME & MTG GP-MACHINE | 212 |
| FRAME GP-BLADE | 439 |
| FRAME GP-FORK–INDUSTRIAL | 440 |

# INDEX


| Name | Page |
|---|---|
| | 441 |
| FRAME GP-GRAPPLE–INDUSTRIAL | 442 |
| FRAME GP-MACHINE | 212 |
| FRAME GP-WINDOW–LH | 540 |
| FRAME GP-WINDOW–RH | 539 |
| FUSE (10-AMPERE) | 121 |
| | 122 |
| | 142 |
| | 145 |
| | 153 |
| | 259 |
| | 417 |
| | 513 |
| | 515 |
| | 518 |
| FUSE (10-AMPERE) | 510 |
| FUSE (15-AMPERE) | 121 |
| | 143 |
| | 145 |
| | 153 |
| FUSE (20-AMPERE) | 145 |
| FUSE (30-AMPERE) | 143 |
| | 145 |
| | 557 |
| | 559 |


## G


| | |
|---|---|
| GASKET-COVER (WATER PUMP) | 70 |
| GASKET (SCREEN) | 81 |
| GASKET (VALVE MECHANISM) | 21 |
| GASKET (WATER TEMPERATURE REGULATOR) | 67 |
| GASKET (WATER TEMPERATURE REGULATOR) | 66 |
| GAUGE & WARNING GP–LH | 541 |
| GAUGE & WARNING GP–RH | 542 |
| GAUGE GP-FUEL LEVEL | 542 |
| GAUGE GP-OIL LEVEL (DIPSTICK) (ENGINE) | 47 |
| | 49 |
| GAUGE-SIGHT (HYDRAULIC TANK) | 338 |
| GAUGE-SIGHT (RADIATOR) | 71 |
| GEAR GP-FRONT | 34 |
| | 35 |
| GLOW PLUG | 116 |
| GLOW PLUG GP | 116 |
| GRAPPLE GP-UTILITY | 443 |
| | 444 |
| | 445 |
| GUARD GP-BELT | 37 |
| GUARD GP-ROPS/FOPS | 543 |
| GUIDE GP-LINES | 214 |


## H


| | |
|---|---|
| HANDHOLD GP | 544 |
| HANDLE & PIN GP-COUPLER–LH | 446 |
| HANDLE & PIN GP-COUPLER–RH | 447 |
| HANDLE GP | 479 |
| HANDLE GP-COUPLER–LH | 448 |
| HANDLE GP-COUPLER–RH | 449 |
| HANDLE GP-MODULAR | 488 |
| | 489 |
| | 490 |
| | 545 |
| | 546 |
| HARNESS AS-CHASSIS (HORN) | 151 |
| HARNESS AS-CHASSIS (TRANSMISSION) | 556 |
| | 558 |
| HARNESS AS-CONTROL (SECURITY) | 120 |
| HARNESS AS-CONTROL (SECURITY) | 119 |
| HARNESS AS-ENGINE | 149 |
| HARNESS AS-FRONT LIGHTING | 132 |
| | 217 |
| HARNESS AS-FUEL TANK | 143 |
| | 556 |
| | 558 |
| HARNESS AS-HEATER & AIR COND | 143 |
| | 549 |
| | 551 |
| | 556 |
| | 558 |
| HARNESS AS-OPERATOR CONTROLS (JOYSTICK) | 495 |
| | 498 |
| | 499 |
| | 501 |
| HARNESS AS-OPERATOR CONTROLS (JOYSTICK, LH) | 256 |
| HARNESS AS-OPERATOR CONTROLS (JOYSTICK, RH) | 256 |
| HARNESS AS-OPERATOR CONTROLS (JOYSTICK, RH, LH) | 256 |
| HARNESS AS-PANEL | 577 |
| HARNESS AS-PLATFORM | 144 |
| HARNESS AS-PLATFORM (LOWER) | 144 |
| HARNESS AS-REAR (AUXILIARY HYDRAULICS) | 148 |
| HARNESS AS-REAR LIGHTING | 132 |
| | 145 |
| | 217 |
| | 224 |
| | 225 |
| HARNESS AS-REAR LIGHTING (BRAKE) | 152 |
| | 217 |
| HARNESS AS-WINDOW WIPER | 526 |
| | 529 |
| | 532 |

# INDEX


| Name | Page |
|---|---|
| | 534 |
| | 560 |
| | 561 |
| HARNESS AS-WIRING (SERVICE METER) | 525 |
| HARNESS AS-WORK TOOL | 459 |
| HARNESS AS-WORK TOOL (CONNECTING) | 362 |
| | 363 |
| HARNESS AS-WORK TOOL (LIFT ARM) | 121 |
| HARNESS AS-WORK TOOL (LIFT ARM) | 153 |
| HARNESS AS-WORK TOOL (PLATFORM) | 121 |
| HARNESS AS-WORK TOOL (PLATFORM) | 153 |
| HEATER & MTG GP-CAB | 547 |
| HEATER AR-CAB | 548 |
| HEATER GP-CAB | 549 |
| | 551 |
| HEATER GP-CAB–KIT | 553 |
| HEATER GP-JACKET WATER | 117 |
| | 118 |
| HOLDER-CUP | 554 |
| HORN AS (LOW TONE) | 505 |
| | 507 |
| HORN AS (24-VOLT, LOW TONE) | 510 |
| HOUSING & REGULATOR GP | 66 |
| HOUSING AS-SIDE–AIR CONDITIONER, HEATER | 555 |
| HOUSING GP-FLYWHEEL | 38 |
| | 39 |
| HOUSING GP-FRONT | 40 |
| | 42 |
| HYDRAULIC AR | 252 |
| | 253 |

## I

| | |
|---|---|
| INDICATOR | 75 |
| INSTALLATION AR-ENGINE | 16 |
| INSTALLATION GP–WITHOUT HEATER, AIR COND | 556 |
| INSTALLATION GP-AUXILIARY HYD–KIT, REAR | 254 |
| INSTALLATION GP-SECURITY | 119 |
| INSTALLATION GP-SECURITY–KIT | 120 |

## K

| | |
|---|---|
| KEY | 18 |
| KEY AS-ELECTRONIC (SECURITY) | 114 |
| KEY AS-ELECTRONIC (SECURITY) | 119 |
| KIT-AIR COND & HEATER INSTL | 556 |
| KIT-AIR CONDITIONER INSTL | 558 |
| KIT-CAB DOOR & MOUNTING–GLASS | 561 |
| KIT-CAB DOOR & MOUNTING–POLYCARBONATE | 560 |
| KIT-CAB SEAL–DEBRIS BARRIER | 562 |
| KIT-DEBRIS GUARD–TURBOCHARGER, EXHAUST MANIFOLD | 76 |
| KIT-ENGINE ENCLOSURE SEAL–DEBRIS BARRIER | 215 |
| KIT-JOYSTICK CONVERSION–DUAL CONTROL | 256 |
| KIT-PILOT VALVE (SPRING) | 346 |
| KIT-QUICK COUPLER CONVERSION–HYDRAULIC | 259 |
| KIT-ROADING CONVERSION | 217 |
| KIT-ROADING PLATE & MOUNTING–BUCKET | 450 |
| KIT-SEAL | 346 |
| KIT-WORK TOOL CONTROL & WIRING–RADIAL LIFT | 121 |
| KIT-WORK TOOL WIRING–RADIAL LIFT | 122 |

## L

| | |
|---|---|
| LAMP AS (RED, GREEN, LED, 12-VOLT) | 120 |
| LAMP GP-DOME (12-VOLT) | 542 |
| LAMP GP-FLOOD–12-VOLT | 123 |
| LAMP GP-FLOOD–12-VOLT, VERTICAL MOUNT | 124 |
| LAMP GP-HEAD & SIGNAL | 125 |
| LAMP GP-REGISTRATION PLATE | 223 |
| LAMP GP-STOP & TAIL–12-VOLT | 127 |
| | 128 |
| LAMP GP-WARNING BEACON–12-VOLT, AMBER | 129 |
| LAMP-HEAD | 125 |
| LAMP (12-VOLT) | 542 |
| LAMP (12-VOLT) (REGISTRATION PLATE) | 223 |
| LAMP (12-VOLT, 10-WATT) | 542 |
| LAMP (12-VOLT, 21-WATT) | 125 |
| | 128 |
| LAMP (12-VOLT, 4-WATT) | 125 |
| LAMP (12-VOLT, 5-WATT) | 127 |
| LAMP (12-VOLT, 5-WATT) | 128 |
| LAMP (12-VOLT, 55-WATT) | 123 |
| | 124 |
| | 129 |
| LEVER GP-GOVERNOR | 563 |
| LIFTING GP-ENGINE | 44 |
| | 45 |
| LIFTING GP-MACHINE–SINGLE POINT | 220 |
| LIFTING GP-MACHINE–4-POINT | 221 |
| LIGHTING GP-FLOOD–FRONT | 131 |
| LIGHTING GP-FLOOD–REAR | 130 |
| LIGHTING GP-ROADING | 132 |
| LIGHTING GP-STOP & TAIL | 134 |
| LIGHTING GP-WARNING BEACON–12-VOLT | 135 |
| LINER-CAB | 565 |
| LINER GP-CAB | 564 |
| LINES GP-AIR | 77 |

# INDEX


| Name | Page |
|---|---|
| | 78 |
| LINES GP-AIR CONDITIONER | 566 |
| LINES GP-BUCKET | 264 |
| | 266 |
| | 268 |
| | 270 |
| | 272 |
| | 274 |
| LINES GP-BUCKET–INDUSTRIAL | 262 |
| LINES GP-CONNECTING | 276 |
| | 278 |
| LINES GP-ENGINE OIL | 62 |
| LINES GP-FUEL | 90 |
| LINES GP-FUEL INJECTION | 92 |
| | 94 |
| LINES GP-FUEL PRM & FILTER | 96 |
| LINES GP-GRAPPLE | 280 |
| | 282 |
| | 284 |
| LINES GP-HEATER | 568 |
| LINES GP-HYDRAULIC FAN | 286 |
| | 287 |
| LINES GP-HYDRAULIC OIL COOLER | 289 |
| LINES GP-HYDROSTATIC | 164 |
| LINES GP-LIFT CYLINDER | 291 |
| | 293 |
| LINES GP-LOWERING CONTROL–MANUAL | 295 |
| LINES GP-PILOT–DIRECTION, SPEED | 297 |
| LINES GP-PILOT–WORK TOOL | 299 |
| LINES GP-PUMP | 301 |
| LINES GP-TILT CYLINDER | 303 |
| | 305 |
| LINES GP-WATER | 67 |
| LINES GP-WORK TOOL | 307 |
| | 309 |
| LINK GP-COUPLER | 451 |
| LITERATURE GP | 570 |
| LOCK GP | 210 |
| LOCK GP-CYLINDER | 475 |
| LOCK GP-QUICK COUPLER–MECHANICAL | 452 |


## M


| Name | Page |
|---|---|
| MANIFOLD & LINES GP-CONTROL–PARKING BRAKE | 166 |
| MANIFOLD & LINES GP-CONTROL–PARKING BRAKE, 2-SPEED | 168 |
| MANIFOLD & LINES GP-COUPLER | 311 |
| MANIFOLD & MTG GP-CONTROL–ANGLING BLADE | 316 |
| MANIFOLD & MTG GP-CONTROL–WORK TOOL POSITIONER | 315 |
| MANIFOLD & SOLENOID GP-CONTROL | 317 |
| MANIFOLD & SOLENOID GP-CONTROL–PARKING BRAKE | 170 |
| MANIFOLD & SOLENOID GP-CONTROL–12-VOLT | 171 |
| MANIFOLD GP-CONTROL–ANGLING BLADE | 319 |
| MANIFOLD GP-CONTROL–QUICK COUPLER | 318 |
| MANIFOLD GP-EXHAUST | 79 |
| MANIFOLD GP-INLET | 80 |
| MANIFOLD GP-RETURN | 172 |
| METER GP-SERVICE | 525 |
| MIRROR & MTG GP-REAR VIEW | 222 |
| MIRROR GP-REAR VIEW | 571 |
| MODULE GP-WARNING INDICATOR | 572 |
| | 573 |
| MOTOR & MTG GP-HYDRAULIC FAN | 320 |
| | 321 |
| | 322 |
| MOTOR & MTG GP-HYDROSTATIC | 175 |
| MOTOR & MTG GP-HYDROSTATIC–TWO SPEED | 174 |
| MOTOR GP-GEAR | 323 |
| | 325 |
| | 326 |
| | 327 |
| | 328 |
| MOTOR GP-GEAR–HYDRAULIC FAN | 324 |
| MOTOR GP-PISTON | 176 |
| | 178 |
| MOTOR GP-WINDOW WIPER | 532 |
| | 534 |
| MOUNTING GP-CYLINDER | 329 |
| | 330 |
| | 331 |
| MOUNTING GP-ENGINE | 46 |
| MOUNTING GP-PUMP | 180 |
| MOUNTING GP-RAD & OIL COOLER | 68 |
| MOUNTING GP-REGISTRATION | 223 |
| | 224 |
| MOUNTING GP-ROADING LIGHTS–REAR | 225 |
| MOUNTING GP-ROPS | 574 |
| MUFFLER & MOUNTING GP | 81 |
| | 82 |
| MUFFLER GP | 83 |


## O


| Name | Page |
|---|---|
| OPTION AR-CAB | 575 |
| | 576 |


## P


| Name | Page |
|---|---|
| PADLOCK GP | 204 |
| | 206 |
| PAN GP-OIL | 47 |
| | 49 |
| PANEL AR-INSTRUMENT | 576 |

# INDEX


| Name | Page |
|---|---|
| PANEL GP-FUSE | 121 |
| | 122 |
| | 145 |
| | 153 |
| PANEL GP-INSTRUMENT | 577 |
| | 579 |
| PANEL GP-SIDE | 581 |
| PEDAL GP-GOVERNOR | 583 |
| PEDAL GP-GOVERNOR–INCLUDES LEVER | 582 |
| PISTON & ROD GP | 51 |
| PISTON GP | 52 |
| PLATE & FILM GP | 4 |
| | 5 |
| | 6 |
| | 7 |
| | 610 |
| | 611 |
| | 614 |
| | 617 |
| | 619 |
| | 621 |
| | 624 |
| | 627 |
| | 630 |
| PLATE GP-ROADING–LH | 453 |
| PLATE GP-ROADING–RH | 454 |
| PLATE-IDENTIFICATION (ENGLISH, GERMAN, SPANISH) | 206 |
| | 207 |
| PLATE-INFORMATION (AIR CONDITIONER REFRIGERANT) | 559 |
| PLATE-INFORMATION (AIR CONDITIONER REFRIGERANT) | 557 |
| PLATFORM GP-OPERATOR | 584 |
| PLUG (DRAIN, ENGINE OIL) | 47 |
| | 49 |
| PLUG GP-CYLINDER BLOCK | 53 |
| PLUG GP-ENGINE | 54 |
| | 55 |
| PLUG GP-PILOT VALVE | 332 |
| PLUG KIT-CONN | 473 |
| PLUG-MAGNETIC (TANDEM) | 212 |
| POSITIONER GP-FORK | 435 |
| PULLEY GP-CRANKSHAFT | 56 |
| | 57 |
| PULLEY GP-WATER PUMP | 58 |
| PUMP & MTG GP-HYDROSTATIC | 181 |
| | 182 |
| PUMP & MTG GP-WORK TOOL | 333 |
| | 334 |
| PUMP GP-DIAPHRAGM | 459 |
| PUMP GP-ENGINE OIL | 63 |
| PUMP GP-FUEL INJECTION | 98 |
| | 100 |
| PUMP GP-FUEL PRM & PRIM FILTER | 102 |
| PUMP GP-GEAR | 336 |
| PUMP GP-GEAR–WORK TOOL | 335 |
| PUMP GP-PISTON | 183 |
| | 185 |
| PUMP GP-WATER | 70 |


## R


| | |
|---|---|
| RADIATOR & HYD OIL COOLER GP | 71 |
| RADIATOR & OIL COOLER MTG GP | 72 |
| RECOVERY GP-COOLANT | 72 |
| REGULATOR AS-ALTERNATOR | 103 |
| REGULATOR AS-WATER TEMPERATURE (THERMOSTAT) | 66 |
| | 67 |
| RELAY AS (SHELL) | 145 |
| RELAY AS (12-VOLT) | 121 |
| | 122 |
| | 149 |
| | 153 |
| | 217 |
| | 468 |
| | 470 |
| RELAY AS (12-VOLT) (BRAKE LIGHT) | 152 |
| RELAY AS (12-VOLT) (HEATER) | 549 |
| | 551 |
| RELAY AS (12-VOLT) (MAIN POWER) | 144 |
| RELAY AS (12-VOLT) (MAIN POWER) | 153 |
| RELAY AS (12-VOLT) (WORK TOOL) | 153 |
| ROCKER ARM GP | 60 |
| ROTATING GP-PUMP (LH) | 183 |
| | 185 |
| ROTATING GP-PUMP (RH) | 183 |
| | 185 |


## S


| | |
|---|---|
| SCREEN (HYDRAULIC OIL) | 299 |
| SCREEN-SUCTION (HYDRAULIC TANK) | 338 |
| SCREEN (WATER TANK) | 458 |
| SEAL GP-CAB | 586 |
| SEAT BELT GP | 588 |
| | 589 |
| | 590 |
| | 591 |
| SEAT GP–STATIC | 593 |
| SEAT GP–SUSPENSION | 592 |
| SEAT GP-ADJUSTABLE | 594 |
| SENDER AS-FUEL LEVEL | 212 |
| SENSOR GP-TEMP & PRESS–ENGINE | 136 |
| SENSOR-TEMPERATURE (COOLANT) | 141 |
| SOFTWARE GP-MACHINE (SECURITY) | 114 |
| | 119 |
| SOLENOID AS | 357 |
| SOLENOID (FUEL PUMP) | 100 |

# INDEX


| Name | Page |
|---|---|
| SPRING AS-GAS | 543 |
| SPRING AS-GAS (CAB) | 220, 595 |
| SPRING AS-GAS (GRILL) | 68 |
| SPRING AS-GAS (LOCKING) | 526, 529, 560, 561 |
| SPRING AS-GAS (SUPPORT) | 68 |
| SPRING GP-BLADE | 455 |
| SPRING GP-GAS–CAB | 595 |
| STARTING MOTOR GP-ELECTRIC–12-VOLT | 137, 139 |
| STEP GP-MATERIAL HANDLING ARM | 456 |
| STOP GP-GRAPPLE | 444, 445 |
| STOP GP-GRAPPLE–UTILITY | 457 |
| STRAINER GP-WATER | 458 |
| STRAINER-OIL (ENGINE) | 62 |
| SUN VISOR | 596, 597 |
| SUPPORT GP-STORAGE BOX | 6, 7, 10, 11, 202, 203 |
| SUPPRESSION GP-SOUND–BELT GUARD | 230 |
| SUPPRESSION GP-SOUND–ENGINE | 228 |
| SUPPRESSION GP-SOUND–HOOD | 227 |
| SUPPRESSION GP-SOUND–MACHINE | 229 |
| SWITCH AS-KEY START | 541 |
| SWITCH AS-LIMIT (WIPER) | 532, 534 |
| SWITCH AS-PRESSURE (AIR CONDITIONER) | 566 |
| SWITCH AS-PRESSURE (HYDRAULIC OIL) | 163 |
| SWITCH AS-PRESSURE (REFRIGERANT) | 557, 558 |
| SWITCH AS-ROCKER (AIR CONDITIONER) | 468 |
| SWITCH AS-ROCKER (AIR CONDITIONER) | 470 |
| SWITCH AS-ROCKER (COLD START) | 577, 579 |
| SWITCH AS-ROCKER (ELECTRIC POWER, WORK TOOL) | 121, 122 |
| SWITCH AS-ROCKER (ELECTRIC POWER, WORK TOOL) | 153 |
| SWITCH AS-ROCKER (FRONT WORK LIGHT) | 577, 579 |
| SWITCH AS-ROCKER (HAZARD WARNING LIGHTS) | 132, 217 |
| SWITCH AS-ROCKER (PARKING BRAKE) | 577, 579 |
| SWITCH AS-ROCKER (QUICK COUPLER) | 259, 417 |
| SWITCH AS-ROCKER (REAR WIPER) | 532, 534 |
| SWITCH AS-ROCKER (REAR WORK LAMPS) | 130 |
| SWITCH AS-ROCKER (ROADING LIGHTS) | 217 |
| SWITCH AS-ROCKER (ROADING LIGHTS) | 132 |
| SWITCH AS-ROCKER (TURN SIGNAL) | 132, 217 |
| SWITCH AS-ROCKER (WARNING BEACON) | 135 |
| SWITCH AS (SEAT) | 594 |
| SWITCH AS (STARTING MOTOR)(12-VOLT) | 137 |
| SWITCH AS-TEMPERATURE (HYDRAULIC OIL) | 338 |
| SWITCH GP-PRESSURE | 141 |
| SWITCH GP-PRESSURE–BRAKE LIGHT | 140 |
| SWITCH GP-PRESSURE (BACKUP ALARM) | 142, 256 |
| SWITCH GP-ROCKER (WORK TOOL POSITIONER) | 252 |
| SWITCH-PRESSURE (ENGINE OIL) | 141 |
| SWITCH-ROCKER (HEATER) | 468, 470, 549, 551 |
| SWITCH (SEAT) | 593 |
| SWITCH-TEMPERATURE (AIR CONDITIONER) | 468, 470 |
| SWITCH-TEMPERATURE (ENGINE COOLANT) | 136, 149 |


## T


| Name | Page |
|---|---|
| TANK & MTG GP-HYDRAULIC | 337 |
| TANK & MTG GP-WATER–KIT | 459 |
| TANK GP-HYDRAULIC | 338 |
| TANK GP-WATER | 462 |
| TIRE & RIM GP–HEAVY-DUTY, LH | 187 |
| TIRE & RIM GP–HEAVY-DUTY, RH | 187, 188 |
| TIRE & RIM GP–LH | 188, 189, 190, 191, 192 |
| TIRE & RIM GP–RH | 188, 189, 190, 191, 192, 193 |
| TOOTH GP-UNI | 463 |

# INDEX


| Name | Page |
|---|---|
| TURBOCHARGER GP | 84 |
| | 86 |

## V

| Name | Page |
|---|---|
| V-BELT GP | 14 |
| | 15 |
| | 59 |
| V-BELT (WATER PUMP) | 59 |
| VALVE & MTG GP-CONTROL | 339 |
| VALVE AS-RELIEF (ENGINE OIL PRESSURE) | 64 |
| VALVE GP-CONTROL–WORK TOOL, 3-FUNCTION | 340 |
| VALVE GP-ENGINE OIL RELIEF | 64 |
| VALVE GP-MANUAL–COUPLER PIN, LIFT ARM LWR CONT | 343 |
| VALVE GP-PILOT | 344 |
| | 348 |
| | 349 |
| | 350 |
| | 352 |
| VALVE GP-PILOT–WORK TOOL | 346 |
| VALVE GP-PILOT (LH) | 256 |
| VALVE GP-PILOT (RH) | 256 |
| VALVE GP-RELIEF | 326 |
| | 327 |
| | 354 |
| VALVE GP-RELIEF (CHARGE) | 183 |
| | 185 |
| VALVE GP-RELIEF (FAN SPEED) | 324 |
| VALVE GP-RELIEF (LIFT) | 340 |
| VALVE GP-RELIEF (TILT, AUXILIARY) | 340 |
| VALVE GP-SOLENOID | 194 |
| | 356 |
| | 357 |
| | 358 |
| VALVE GP-SOLENOID–A/C COMPRESSOR | 359 |
| VALVE GP-SOLENOID–AUXILIARY | 355 |
| VALVE GP-SOLENOID (QUICK COUPLER) | 318 |
| VALVE GP-SOLENOID (12 VDC) | 556 |
| | 558 |
| VALVE GP-SOLENOID (12 VDC) | 328 |
| VALVE GP-SOLENOID (12-VOLT) | 350 |
| | 352 |
| VALVE GP-SPEED SENSING (PISON PUMP) | 183 |
| VALVE GP-SPEED SENSING (PISON PUMP) | 185 |
| VALVE MECHANISM GP | 60 |
| VISOR GP-CAB | 596 |
| | 597 |

## W

| Name | Page |
|---|---|
| WARNING GP-BACKUP | 142 |
| WHEEL & TIRE AR | 197 |
| WHEEL & TIRE AR–HEAVY DUTY | 195 |
| | 196 |
| WHEEL & TIRE AR–LOW SIDE WALL | 196 |
| WHEEL & TIRE AR–SOLID | 195 |
| | 197 |
| | 198 |
| WHEEL & TIRE GP | 198 |
| | 199 |
| WINDOW GP-CAB | 598 |
| WINDOW GP-CAB–KIT, SIDE | 600 |
| WINDOW GP-CAB–RH,UPPER | 603 |
| WINDOW GP-CAB–SIDE | 599 |
| WINDOW GP-CAB–UPPER,LH | 601 |
| WIRING GP-AIR CONDITIONER | 143 |
| WIRING GP-CHASSIS | 144 |
| | 148 |
| WIRING GP-ENGINE | 149 |
| WIRING GP-HORN | 151 |
| WIRING GP-REAR LIGHTING | 152 |
| WIRING GP-WORK TOOL | 153 |

# INDEX


| Désignation | Page |
|---|---|

## A

| | |
|---|---|
| ACCOUDOIR (ASS) | 473 |
| ACCOUDOIR ET MONTAGE (ASS) | 472 |
| ACCOUPLEMENT D'ENTRAINEMENT (ASS) | 521 |
| | 556 |
| | 558 |
| ACCUMULATEUR - CLIMATISEUR (ASS) | 464 |
| | 465 |
| ACCUMULATEUR ET MONTAGE - HYDRAULIQUE (ASS) | 231 |
| ALTERNATEUR DE CHARGE (ASS) | 103 |
| | 105 |
| | 106 |
| | 107 |
| ALTERNATEUR DE RÉGULATEUR (ENS) | 103 |
| AMPOULE (12-V, 5-W) | 127 |
| | 128 |
| AMPOULE (12 VOLTS) | 542 |
| AMPOULE (12 VOLTS) (PLAQUE D'IMMATRICULATION) | 223 |
| AMPOULE (12V, 10W) | 542 |
| AMPOULE (12V, 21W) | 125 |
| | 128 |
| AMPOULE (12V, 4W) | 125 |
| AMPOULE (12V, 55W) | 129 |
| AMPOULE (12V, 55W) | 123 |
| | 124 |
| ARBRE A CAMES (ASS) | 18 |
| | 19 |
| ARRÊT-PINCE (ASS) | 444 |
| | 445 |
| | 457 |
| AUTOCOLLANT (COMMANDE DE TEMPÉRATURE) | 468 |
| | 470 |
| | 549 |
| | 551 |
| AUTOCOLLANT DE FUSIBLE/ RELAIS | 112 |
| AUTOCOLLANT DE MISE EN GARDE (AUCUN ACCÈS) | 611 |
| | 627 |
| AUTOCOLLANT DE MISE EN GARDE (DÉGAGEMENT) | 605 |
| AUTOCOLLANT DE MISE EN GARDE (DIRECTION) | 204 |
| | 206 |
| AUTOCOLLANT DE MISE EN GARDE (HAUTE PRESSION, LIRE LE GUIDE D'UTILISATION ET D'ENTRETIEN, INTERNATIONAL) | 611 |
| AUTOCOLLANT DE MISE EN GARDE (HAUTE PRESSION, LIRE LE GUIDE D'UTILISATION ET D'ENTRETIEN, INTERNATIONAL) | 627 |
| | 630 |
| AUTOCOLLANT DE MISE EN GARDE (PAS DE DÉGAGEMENT, RESTER À L'ÉCART) | 364 |
| | 365 |
| AUTOCOLLANT DE MISE EN GARDE (PAS DE SOUDAGE, PAS DE PERÇAGE, LIRE LE GUIDE D'UTILISATION ET D'ENTRETIEN) | 614 |
| | 621 |
| | 624 |
| AUTOCOLLANT DE MISE EN GARDE (POINT PERCÉ) | 433 |
| | 434 |
| | 438 |
| | 442 |
| AUTOCOLLANT DE MISE EN GARDE (PRESSION ÉLEVÉE, LIRE LE GUIDE D'UTILISATION ET D'ENTRETIEN, ÉTATS-UNIS) | 614 |
| AUTOCOLLANT DE MISE EN GARDE (PRESSION ÉLEVÉE, LIRE LE GUIDE D'UTILISATION ET D'ENTRETIEN, ÉTATS-UNIS) | 621 |
| | 624 |
| AUTOCOLLANT DE MISE EN GARDE (RISQUE D'ÉCRASEMENT, RESTER À L'ÉCART) | 407 |
| | 408 |
| | 409 |
| | 411 |
| | 443 |
| | 617 |
| AUTOCOLLANT DE MISE EN GARDE (RISQUE D'ÉCRASEMENT, RESTER À L'ÉCART) | 330 |
| AUTOCOLLANT DE MISE EN GARDE (RISQUE D'ÉCRASEMENT, RESTER À L'ÉCART, ÉTATS-UNIS) | 617 |
| AUTOCOLLANT D'IDENTIFICATION (CONTACTEUR D'ALLUMAGE) | 119 |
| AUTOCOLLANT D'IDENTIFICATION (CONTACTEUR D'ALLUMAGE) | 120 |
| AUTOCOLLANT D'IDENTIFICATION (FILTRE À CARBURANT, SÉPARATEUR D'EAU) | 90 |
| | 96 |
| AUTOCOLLANT D'IDENTIFICATION (PRISE DE COURANT, 12V) | 611 |
| | 614 |
| | 621 |
| | 624 |
| | 627 |
| | 630 |
| AUTOCOLLANT D'IDENTIFICATION (13-KM/H) | 202 |
| AUTOCOLLANT D'IDENTIFICATION (13-KM/H) | 6 |
| | 10 |


* TRADUCTION NON DISPONIBLE AU MOMENT DE LA PUBLICATION

# INDEX


| Désignation | Page |
|---|---|
| AUTOCOLLANT D'IDENTIFICATION (20 KM/H) | 203 |
| AUTOCOLLANT D'IDENTIFICATION (20 KM/H) | 7, 11 |
| AUTOCOLLANT (FOPS) | 543 |
| AUTOCOLLANT-INFORMATION (EMPLACEMENT DU TIRANT) | 360 |
| AUTOCOLLANT-INFORMATION (LIRE LE GUIDE D'UTILISATION ET D'ENTRETIEN) | 611, 614, 624, 627, 630 |
| AUTOCOLLANT-INFORMATION (LIRE LE GUIDE D'UTILISATION ET D'ENTRETIEN) | 621 |
| AUTOCOLLANT (RÉFLECTEUR) | 453, 454 |
| AUTOCOLLANT (2 VITESSES) | 158, 159, 254 |
| AVERTISSEUR DE RECUL (ASS) | 142 |
| AXE DE CULBUTEUR (ASS) | 60 |


## B


| Désignation | Page |
|---|---|
| BAÏONNETTE- NIVEAU DE CARBURANT (ASS) | 542 |
| BALAI D'ESSUIE-GLACE (ENS) (*558-MM) (AVANT, ARRIÈRE) | 532 |
| BALAI D'ESSUIE-GLACE (ENS) (*558-MM) (PORTE DE CABINE) | 534 |
| BANDE AUTOCOLLANTE (RÉFLECTEUR, ROUGE, BLANC) | 453, 454 |
| BÂTI DE FOURCHE (ASS) | 440, 441 |
| BÂTI DE LAME (ASS) | 439 |
| BÂTI DE MACHINE (ASS) | 212 |
| BÂTI DE MACHINE ET MONTAGE (ASS) | 212 |
| BATTERIE (ASS) | 108, 109 |
| BATTERIE (12V, SANS ENTRETIEN) | 109 |
| BATTERIE (12V, STANDARD) | 108 |
| BIELLE (ASS) | 20 |
| BIELLE DE COUPLEUR (ASS) | 451 |
| BLOC-CYLINDRES (ASS) | 24, 26 |
| BOBINE DE SOLÉNOÏDE (ENS) (12 VOLTS) | 355 |
| BOUCHON À ÉVENT (RÉSERVOIR D'EXPANSION DU LIQUIDE DE REFROIDISSEMENT) | 72 |
| BOUCHON AIMANTÉ (TANDEM) | 212 |
| BOUCHON DE BLOC-CYLINDRES (ASS) | 53 |
| BOUCHON DE CARBURANT | 90, 96 |
| BOUCHON DE GOULOTTE DE REMPLISSAGE (ENS) (RÉSERVOIR HYDRAULIQUE) | 338 |
| BOUCHON DE MOTEUR (ASS) | 54, 55 |
| BOUCHON DE RADIATEUR (ENS) | 71 |
| BOUCHON DE SOUPAPE PILOTE (ASS) | 332 |
| BOUCHON FILETÉ (ROBINET DE VIDANGE D'HUILE MOTEUR) | 47, 49 |
| BOUGIE DE PRECHAUFFAGE | 116 |
| BOUGIE DE PRÉCHAUFFAGE (ASS) | 116 |
| BOULONNERIE DE FAISCEAU DE CABLES | 115 |
| BOULONNERIE DE SOUPAPE (ASS) | 357 |
| BRAS DE MANUTENTION (ASS) | 360 |
| BRAS D'ESSUIE-GLACE (ASS) | 532 |
| BRAS D'ESSUIE-GLACE (ASS) (AVANT) | 534 |


## C


| Désignation | Page |
|---|---|
| *CAB GP-ENCLOSED ROPS | 477, 478 |
| CABINE - REVÊTEMENT (ASS) | 564 |
| CABINE ROPS FERMÉE (VERSION) | 476 |
| CABLAGE - CLIMATISEUR (ASS) | 143 |
| CABLAGE - COMMANDE MANUELLE ELECTRIQUE | 479 |
| CÂBLAGE - OUTIL DE TRAVAIL (ASS) | 153 |
| CABLAGE DE CHASSIS (ASS) | 144 |
| CABLAGE DE CHASSIS (ASS) | 148 |
| CÂBLAGE DE KLAXON (ASS) | 151 |
| CABLAGE DE MOTEUR (ASS) | 149 |
| CABLAGE D'ECLAIRAGE ARRIERE (ASS) | 152 |
| CABLAGE MOTEUR (ENS) | 149 |
| CÂBLE DE COMMANDE DU RÉGULATEUR (ASS) | 88 |
| CACHE-SOUPAPES (ASS) | 21 |
| CADENAS (ASS) | 204, 206 |
| CADRE DE VITRE (ASS) | 539, 540 |
| CANALISATIONS - BRANCHEMENT (ASS) | 276, 278 |
| CANALISATIONS - OUTIL DE TRAVAIL (ASS) | 307, 309 |
| CANALISATIONS A COMMANDE PILOTE (ASS) | 297, 299 |
| CANALISATIONS-COMMANDE D'ABAISSEMENT (ASS) | 295 |
| CANALISATIONS D'AIR (ASS) | 77 |


* TRADUCTION NON DISPONIBLE AU MOMENT DE LA PUBLICATION

# INDEX


| Désignation | Page |
|---|---|
| | 78 |
| CANALISATIONS DE CARBURANT (ASS) | 90 |
| CANALISATIONS DE CHAUFFAGE (ASS) | 568 |
| CANALISATIONS DE CLIMATISEUR (ASS) | 566 |
| CANALISATIONS DE FILTRE ET D'AMORÇAGE DE CARBURANT (ASS) | 96 |
| CANALISATIONS DE POMPE (ASS) | 301 |
| CANALISATIONS DE RÉCHAUFFEUR DE LIQUIDE DE REFROIDISSEMENT | 568 |
| CANALISATIONS DE REFROIDISSEUR D'HUILE HYDR. (ASS) | 289 |
| CANALISATIONS DE VÉRIN DE LEVAGE (ASS) | 291 |
| | 293 |
| CANALISATIONS D'EAU (ASS) | 67 |
| CANALISATIONS D'HUILE MOTEUR (ASS) | 62 |
| CANALISATIONS D'INJECTION DE CARBURANT (ASS) | 92 |
| | 94 |
| CANALISATIONS DU VÉRIN D'INCLINAISON (ASS) | 303 |
| | 305 |
| CANALISATIONS HYDRAULIQUES DE VENTILATEUR (ASS) | 286 |
| | 287 |
| CANALISATIONS HYDROSTATIQUES (ASS) | 164 |
| CAPITONNAGE | 565 |
| CAPTEUR - TEMP. ET PRESSION (ASS) | 136 |
| CAPTEUR DE TEMPÉRATURE (LIQUIDE DE REFROIDISSEMENT) | 141 |
| CARENAGE DE MOTEUR (ASS) | 210 |
| CARTER AV (ASS) | 40 |
| | 42 |
| CARTER DE VOLANT (ASS) | 38 |
| | 39 |
| CEINTURE DE SECURITE (ASS) | 588 |
| | 589 |
| | 590 |
| | 591 |
| CHAPEAU (ENS) (RÉSERVOIR D'EAU) | 462 |
| CHAUFFAGE DE CABINE (ASS) | 549 |
| | 551 |
| | 553 |
| CHAUFFAGE DE CABINE (VERSION) | 548 |
| CHAUFFAGE ET MONTAGE - CABINE (ASS) | 547 |
| CLAPET DE DECHARGE (ASS) | 326 |
| | 327 |
| | 354 |
| CLAPET DE DECHARGE (ASS) (CHARGE) | 183 |
| | 185 |
| CLAPET DE DECHARGE (ASS) (INCLINAISON, AUXILIAIRE) | 340 |
| CLAPET DE DECHARGE (ASS) (LEVAGE) | 340 |
| CLAPET DE DECHARGE (ASS) (VITESSE DU VENTILATEUR) | 324 |
| CLAPET DE DÉCHARGE D'HUILE MOTEUR (ASS) | 64 |
| CLAPET DE DECHARGE (PRESSION D'HUILE MOTEUR) | 64 |
| CLÉ | 18 |
| CLÉ ÉLECTRONIQUE (ENS) (SÉCURITÉ) | 114 |
| CLÉ ÉLECTRONIQUE (ENS) (SÉCURITÉ) | 119 |
| CLIGNOTANT (ENS) (12 VOLTS) | 132 |
| | 217 |
| CLIMATISEUR (ASS) | 467 |
| | 468 |
| | 470 |
| CLIMATISEUR (VERSION) | 466 |
| COFFRE DE RANGEMENT (ASS) | 475 |
| COFFRE DE RANGEMENT (ASS) (*LITERATURE) | 476 |
| COLLECTEUR - COMMANDE (ASS) | 318 |
| COLLECTEUR - COMMANDE (ASS) | 319 |
| COLLECTEUR D'ADMISSION (ASS) | 80 |
| COLLECTEUR D'ÉCHAPPEMENT (ASS) | 79 |
| COLLECTEUR ET CANALISATIONS (ASS) - COMMANDE | 166 |
| | 168 |
| COLLECTEUR ET CANALISATIONS DE COUPLEUR (ASS) | 311 |
| COLLECTEUR ET SOLÉNOÏDE (ASS)- COMMANDE | 170 |
| | 171 |
| | 317 |
| COLLECTEUR-RETOUR (ASS) | 172 |
| COMMANDE DE COLLECTEUR ET MONTAGE (ASS) | 315 |
| | 316 |
| COMMANDE DE FAISCEAU (ENS) (SÉCURITÉ) | 120 |
| COMMANDE DE FAISCEAU (ENS) (SÉCURITÉ) | 119 |
| COMMANDE DE POIGNÉE (ASS) | 485 |
| | 486 |
| | 487 |
| | 488 |
| | 489 |
| | 490 |
| | 491 |
| COMMANDE DE RÉGULATEUR (ASS) | 89 |
| COMMANDE D'INTERVERROUILLAGE (ASS) | 110 |
| COMMANDE ÉLECTRONIQUE D'ÉQUIPEMENT (ASS) | 113 |
| COMMANDE HYDRAULIQUE PILOTE (ASS) | 492 |
| | 495 |
| | 496 |


* TRADUCTION NON DISPONIBLE AU MOMENT DE LA PUBLICATION

# INDEX


| Désignation | Page |
|---|---|
| | 498 |
| | 499 |
| | 501 |
| | 502 |
| | 504 |
| | 505 |
| | 506 |
| | 507 |
| | 509 |
| | 510 |
| | 515 |
| | 518 |
| COMMANDE HYDRAULIQUE PILOTE (ASS) | 513 |
| COMMANDE NON PROGRAMMEE (ASS) | 113 |
| COMMANDE NON PROGRAMMEE (ASS) (SÉCURITÉ) | 114 |
| COMPRESSEUR DE REFRIGERANT (ASS) | 480 |
| | 481 |
| | 556 |
| | 558 |
| COMPRESSEUR ET MONTAGE - RÉFRIGÉRANT (ASS) | 483 |
| COMPRESSEUR ET MOTEUR DE RÉFRIGÉRATION (ASS) | 480 |
| | 481 |
| COMPTEUR D'ENTRETIEN (ASS) | 525 |
| CONDENSATEUR ET MONTAGE (RÉFRIGÉRANT) | 484 |
| CONDUIT ET COMMANDE (ASS) | 537 |
| CONTACTEUR DE DÉMARRAGE À CLÉ (ENS) | 541 |
| CONTACTEUR (ENS) (MOTEUR DE DÉMARRAGE)(12-VOLTS) | 137 |
| CONTACTEUR (ENS) (SIÈGE) | 594 |
| CONTREPOIDS (ASS) | 208 |
| | 209 |
| CÔTÉ CARTER (ENS) | 555 |
| COUPLEUR EXPRESS (ASS) | 418 |
| | 420 |
| COUPLEUR EXPRESS (VERSION) | 417 |
| COURROIE TRAPEZOIDALE (POMPE À EAU) | 59 |
| COUVERCLE - PANNEAU DE FUSIBLES (ASS) | 112 |
| COUVERCLE-CANALISATIONS (ASS) | 421 |
| COUVERCLE DE LA CONSOLE (ASS) | 523 |
| | 524 |
| COUVERCLE DU TABLEAU DE BORD (ASS) | 525 |
| CRÉPINE D'HUILE (MOTEUR) | 62 |
| CULASSE (ASS) | 28 |
| | 29 |
| CULBUTERIE (ASS) | 60 |

## D

| Désignation | Page |
|---|---|
| DÉMARREUR ÉLECTRIQUE (ASS) | 137 |
| | 139 |
| DENT MONOBLOC (ASS) | 463 |
| DISJONCTEUR DE SECURITE (ENS) (ESSUIE-GLACE) | 532 |
| DISJONCTEUR DE SECURITE (ENS) (ESSUIE-GLACE) | 534 |
| DISJONCTEUR (ENS) (105A) (PRINCIPAL) | 149 |
| DISJONCTEUR (ENS) (30A) | 217 |
| DISJONCTEUR (ENS) (30A) (ÉCLAIRAGE) | 132 |
| DISTRIBUTEUR (ASS) | 340 |
| DISTRIBUTEUR ET MONTAGE (ASS) | 339 |

## E

| | |
|---|---|
| EAU DES CHEMISES - RECHAUFFEUR (ASS) | 117 |
| | 118 |
| ÉCLAIRAGE - FEUX DE ROUTE (ASS) | 132 |
| ÉCLAIRAGE - GYROPHARE (ASS) | 135 |
| ÉCLAIRAGE - PROJECTEURS (ASS) | 130 |
| | 131 |
| ECLAIRAGE DE GODET (ASS) | 262 |
| | 264 |
| | 266 |
| | 268 |
| | 270 |
| | 272 |
| | 274 |
| ÉCLAIRAGE-FEUX DE STOP ET ARRIÈRE (ASS) | 134 |
| ÉCRAN (HUILE HYDRAULIQUE) | 299 |
| ÉCRAN (RÉSERVOIR D'EAU) | 458 |
| ÉLECTRONIQUE - MACHINE (ENS) | 114 |
| ÉLÉMENT DE FILTRE À AIR DE CABINE | 468 |
| | 470 |
| | 549 |
| | 551 |
| ÉLÉMENT DE FILTRE À AIR DE CABINE (AIR) | 470 |
| | 551 |
| ÉLÉMENT DE FILTRE À AIR (ENS) (PRINCIPAL) | 75 |
| ÉLÉMENT DE FILTRE À AIR (ENS) (SECONDAIRE) | 75 |
| EMBOUT ET LAME DE COUPE (ASS) | 424 |
| ENTRAINEMENT EN TANDEM (ASS) | 160 |
| ENTRAÎNEMENT POUR COURROIE (GYROPHARE) | 129 |
| ESSIEU (ASS) | 155 |
| | 156 |
| | 157 |


* TRADUCTION NON DISPONIBLE AU MOMENT DE LA PUBLICATION

# INDEX


| Désignation | Page |
|---|---|

## F

| Désignation | Page |
|---|---|
| FAISCEAU ARRIÈRE (ENS) (HYDRAULIQUE AUXILIAIRE) | 148 |
| FAISCEAU DE CABLES DE LA PLATE-FORME | 144 |
| FAISCEAU DE CABLES DE LA PLATE-FORME (INFÉRIEUR) | 144 |
| FAISCEAU DE CABLES (ENS) (COMPTEUR D'ENTRETIEN) | 525 |
| FAISCEAU DE CHÂSSIS (ENS) (BOITE DE VITESSE) | 556 |
| FAISCEAU DE CHÂSSIS (ENS) (BOITE DE VITESSE) | 558 |
| FAISCEAU DE CHÂSSIS (ENS) (KLAXON) | 151 |
| FAISCEAU DE CHAUFFAGE ET CLIMATISATION | 143<br>549<br>551<br>556<br>558 |
| FAISCEAU DE COMMANDES (ENS) (LEVIER) | 495<br>498<br>499<br>501 |
| FAISCEAU DE COMMANDES (ENS) (MANIPULATEUR, CÔTÉ DROIT) | 256 |
| FAISCEAU DE COMMANDES (ENS) (MANIPULATEUR, CÔTÉ GAUCHE) | 256 |
| FAISCEAU DE COMMANDES (ENS) (MANIPULATEUR, DROITE, GAUCHE) | 256 |
| FAISCEAU DE RÉSERVOIR DE CARBURANT (ENS) | 143<br>556<br>558 |
| FAISCEAU D'ÉCLAIRAGE ARRIÈRE (ENS) | 132<br>145<br>225 |
| FAISCEAU D'ÉCLAIRAGE ARRIÈRE (ENS) | 217 |
| FAISCEAU D'ÉCLAIRAGE ARRIÈRE (ENS) | 224 |
| FAISCEAU D'ÉCLAIRAGE ARRIÈRE (ENS) (FREIN) | 152 |
| FAISCEAU D'ÉCLAIRAGE ARRIÈRE (ENS) (FREIN) | 217 |
| FAISCEAU D'ÉCLAIRAGE AVANT (ENS) | 132<br>217 |
| FAISCEAU D'ESSUIE-GLACE (ENS) | 526<br>529<br>560<br>561 |
| FAISCEAU D'ESSUIE-GLACE (ENS) | 532<br>534 |
| FAISCEAU D'OUTIL DE TRAVAIL (ENS) | 459 |
| FAISCEAU D'OUTIL DE TRAVAIL (ENS) (ACCOUPLEMENT) | 362<br>363 |
| FAISCEAU D'OUTIL DE TRAVAIL (ENS) (BRAS DE LEVAGE) | 121<br>153 |
| FAISCEAU D'OUTIL DE TRAVAIL (ENS) (PLATEFORME) | 121<br>153 |
| FEUX ARRIÈRE ET FEUX D'ARRÊT | 127<br>128 |
| *FILTER-ENGINE OIL | 61 |
| FILTRE - SÉPARATEUR D'EAU ET DE CARBURANT (ENS) | 102 |
| FILTRE A AIR (ASS) | 74<br>75 |
| FILTRE A HUILE (ASS) | 163 |
| FILTRE À HUILE (EFFICACITÉ AVANCÉE) (HYDRAULIQUE) | 163 |
| FILTRE À HUILE MOTEUR (ASS) | 61 |
| FILTRE ET CANALISATIONS HYRAULIQUES (ASS) | 161 |
| FOURCHE - PINCE (ASS) | 432<br>433<br>434 |
| FOURCHE - PINCE (VERSION) | 430<br>431 |
| FOURCHE PALLETTE (ASS) | 435<br>436 |
| FOURCHE-RÉSEAU PUBLIC (ASS) | 437<br>438 |
| FUSIBLE (10A) | 121<br>122<br>142<br>145<br>153<br>259<br>417<br>510<br>513<br>515<br>518 |
| FUSIBLE (15A) | 121<br>143<br>145<br>153 |
| FUSIBLE (20A) | 145 |
| FUSIBLE (30A) | 143<br>145<br>557<br>559 |


* TRADUCTION NON DISPONIBLE AU MOMENT DE LA PUBLICATION

# INDEX


| Désignation | Page |
|---|---|
| **G** | |
| GODET - MATÉRIAUX MEUBLES (VERSION) | 382 |
| GODET - PINCE (ASS) | 401 |
| | 402 |
| | 403 |
| | 404 |
| | 405 |
| | 406 |
| GODET - PINCE (VERSION) | 375 |
| | 376 |
| | 377 |
| | 378 |
| | 379 |
| | 380 |
| | 381 |
| GODET - SALETÉ (ENS) | 387 |
| | 388 |
| | 389 |
| | 390 |
| GODET - SALETÉ (VERSION) | 372 |
| | 373 |
| GODET NORMAL (ASS) | 400 |
| GODET NORMAL (ENS) | 391 |
| | 392 |
| | 393 |
| | 394 |
| | 395 |
| GODET NORMAL (VERSION) | 373 |
| | 374 |
| | 375 |
| GODET POUR MATERIAUX MEUBLES (ENS) | 396 |
| | 397 |
| | 398 |
| GODET POUR TERRASSEMENT (ASS) | 399 |
| GODET POUR TRAVAUX DE SERVITUDE (ASS) | 412 |
| | 413 |
| | 414 |
| GODET TOUS-TRAVAUX (ASS) | 407 |
| | 408 |
| | 409 |
| | 410 |
| | 411 |
| GODET TOUS-TRAVAUX (VERSION) | 382 |
| | 383 |
| | 384 |
| | 385 |
| GRAISSEUR HYDRAULIQUE (ASS) | 301 |
| GROUPE DE MONTAGE | 556 |
| GROUPE DE MOTEUR A PISTONS | 176 |
| | 178 |
| GROUPE DE ROTATION DE POMPE (DROITE) | 183 |
| | 185 |
| GROUPE DE ROTATION DE POMPE (GAUCHE) | 183 |
| | 185 |
| GROUPE DE TRANSFORMATION - DÉPLACEMENT ROUTIER | 204 |
| | 205 |
| | 206 |
| | 207 |
| GUIDE - CANALISATIONS (ASS) | 214 |
| **H** | |
| *HOLDER-CUP | 554 |
| HUILE MOTEUR - CARTER (ASS) | 49 |
| HUILE MOTEUR - CARTER (ASS) | 47 |
| **I** | |
| INDICATEURS ET TÉMOINS LUMINEUX (ASS) | 541 |
| | 542 |
| INSONORISATION (ASS) | 227 |
| | 228 |
| | 229 |
| | 230 |
| INTERRUPTEUR - CONTACTEUR (SIÈGE) | 593 |
| INTERRUPTEUR À BASCULE (ASS) (POSITIONNEUR D'OUTIL DE TRAVAIL) | 252 |
| INTERRUPTEUR BALANCIER (ENS) (ALIMENTATION ÉLECTRIQUE, OUTIL DE TRAVAIL) | 122 |
| | 153 |
| INTERRUPTEUR BALANCIER (ENS) (ALIMENTATION ÉLECTRIQUE, OUTIL DE TRAVAIL) | 121 |
| INTERRUPTEUR BALANCIER (ENS) (CLIGNOTANT) | 132 |
| | 217 |
| INTERRUPTEUR BALANCIER (ENS) (CLIMATISEUR) | 470 |
| INTERRUPTEUR BALANCIER (ENS) (CLIMATISEUR) | 468 |
| INTERRUPTEUR BALANCIER (ENS) (COUPLEUR EXPRESS) | 259 |
| INTERRUPTEUR BALANCIER (ENS) (COUPLEUR EXPRESS) | 417 |
| INTERRUPTEUR BALANCIER (ENS) (DÉMARRAGE À FROID) | 577 |
| | 579 |
| INTERRUPTEUR BALANCIER (ENS) (ESSUIE-GLACE ARRIÈRE) | 532 |
| | 534 |


* TRADUCTION NON DISPONIBLE AU MOMENT DE LA PUBLICATION

# INDEX


| Désignation | Page |
|---|---|
| INTERRUPTEUR BALANCIER (ENS) (FEUX DE DÉPLACEMENT SUR ROUTE) | 132, 217 |
| INTERRUPTEUR BALANCIER (ENS) (FEUX DE DÉTRESSE) | 132, 217 |
| INTERRUPTEUR BALANCIER (ENS) (FREIN DE STATIONNEMENT) | 577, 579 |
| INTERRUPTEUR BALANCIER (ENS) (GYROPHARE) | 135 |
| INTERRUPTEUR BALANCIER (ENS) (PROJECTEUR AVANT) | 577, 579 |
| INTERRUPTEUR BALANCIER (ENS) (PROJECTEURS ARRIÈRE) | 130 |
| INTERRUPTEUR-CULBUTEUR (RÉCHAUFFEUR) | 468, 470, 549, 551 |


## J


| | |
|---|---|
| JAUGE D'HUILE MOTEUR (BAIONNETTE) (ASS) (MOTEUR) | 47, 49 |
| JOINT DE CABINE (ASS) | 586 |
| JOINT DE COUVERCLE (POMPE À EAU) | 70 |
| JOINT PLAT (CULBUTERIE) | 21 |
| JOINT PLAT (RÉGULATEUR DE TEMPÉRATURE D'EAU) | 66 |
| JOINT PLAT (RÉGULATEUR DE TEMPÉRATURE D'EAU) | 67 |
| JOINT PLAT (TAMIS) | 81 |


## K


| | |
|---|---|
| KIT DE CÂBLAGE D'OUTIL DE TRAVAIL | 122 |
| KIT DE COMMANDE D'OUTIL DE TRAVAIL ET CÂBLAGE | 121 |
| KIT DE JOINT DE CABINE | 562 |
| KIT DE JOINT DE CARÉNAGE MOTEUR | 215 |
| KIT DE JOINTS | 346 |
| KIT DE MONTAGE DE CLIMATISEUR | 558 |
| KIT DE MONTAGE DE CLIMATISEUR ET CHAUFFAGE | 556 |
| KIT DE PLAQUE DE DÉPLACEMENT ROUTIER ET MONTAGE | 450 |
| KIT DE PORTE DE CABINE ET MONTAGE | 560, 561 |
| KIT DE PRISE DE CONNEXION | 473 |
| KIT DE SOUPAPE PILOTE (RESSORT) | 346 |
| KIT DE TRANSFORMATION DE MANIPULATEUR | 256 |
| KIT DE TRANSFORMATION DU COUPLEUR EXPRESS | 259 |
| KIT DE TRANSFORMATION POUR DÉPLACEMENTS SUR ROUTE | 217 |
| KIT PROTÈGE-DÉBRIS | 76 |
| KLAXON (ENS) (BAS) | 505, 507 |
| KLAXON (ENS) (24V, FAIBLE) | 510 |


## L


| | |
|---|---|
| LAME À ORIENTATION (ASS) | 364, 365, 366, 367 |
| LAME DE COUPE (ASS) | 424, 425, 426, 427, 428, 429, 430 |
| LAME DE GODET TOUS-TRAVAUX | 368, 369, 370, 371 |
| LAME (VERSION) | 361, 362, 363 |
| LAMPE - FEUX AV | 125 |
| LAMPE - GYROPHARE (ASS) | 129 |
| LAMPE - PHARE (ASS) | 123, 124 |
| LAMPE - PHARE ET CLIGNOTANT | 125 |
| LAMPE (ENS) (ROUGE, VERT, TÉMOIN LUMINEUX, 12V) | 120 |
| LAMPE-PLAQUE D'IMMATRICULATION (ASS) | 223 |
| LEVIER DE RÉGULATEUR (ASS) | 563 |
| LITTÉRATURE (ASS) | 570 |
| LOGICIEL - MACHINE (ENS) (SÉCURITÉ) | 114, 119 |


## M


| | |
|---|---|
| MACHINE DE LEVAGE | 220, 221 |
| MANOCONTACT | 140, 141 |
| MANOCONTACT (AVERTISSEUR DE RECUL) | 142, 256 |


* TRADUCTION NON DISPONIBLE AU MOMENT DE LA PUBLICATION

# INDEX


| Désignation | Page |
|---|---|
| MANOCONTACT (ENS) (CLIMATISEUR) | 566 |
| MANOCONTACT (ENS) (HUILE HYDRAULIQUE) | 163 |
| MANOCONTACT (ENS) (RÉFRIGÉRANT) | 557 |
| | 558 |
| MANOCONTACT (HUILE MOTEUR) | 141 |
| MARCHEPIED-BRAS DE MANUTENTION (ASS) | 456 |
| MODULE - TÉMOIN (ASS) | 572 |
| | 573 |
| MONTAGE - IMMATRICULATION (ASS) | 223 |
| MONTAGE - IMMATRICULATION (ASS) | 224 |
| MONTAGE DE FEUX DE DÉPLACEMENT SUR ROUTE (ASS) | 225 |
| MONTAGE DE MOTEUR (ASS) | 46 |
| MONTAGE DE MOTEUR (VERSION) | 16 |
| MONTAGE DE POMPE (ASS) | 180 |
| MONTAGE DE RADIATEUR ET REFROIDISSEUR D'HUILE (ASS) | 68 |
| MONTAGE DE VÉRIN (ASS) | 329 |
| | 330 |
| | 331 |
| MONTAGE DU TOIT ROPS (ASS) | 574 |
| MONTAGE HYDRAULIQUE AUXILIAIRE (ASS) | 254 |
| MONTAGE-SÉCURITÉ (ASS) | 119 |
| | 120 |
| MOTEUR À ENGRENAGES (ASS) | 323 |
| | 324 |
| | 325 |
| | 326 |
| | 327 |
| | 328 |
| MOTEUR D'ESSUIE-GLACE (ASS) | 532 |
| | 534 |
| MOTEUR ET MONTAGE - HYDROSTATIQUE (ASS) | 174 |
| | 175 |
| MOTEUR ET MONTAGE DE VENTILATEUR HYDRAULIQUE (ASS) | 320 |
| | 321 |
| | 322 |
| MOTEUR (VERSION) | 12 |
| MOTEUR (VERSION PRINCIPALE) | 13 |
| | 14 |
| | 15 |

## O

| | |
|---|---|
| OEILLETONS DE LEVAGE MOTEUR (ASS) | 44 |
| | 45 |

## P

| | |
|---|---|
| PALIER PRINCIPAL (ASS) | 17 |
| PANNEAU - FUSIBLES (ASS) | 121 |
| | 122 |
| | 145 |
| PANNEAU - FUSIBLES (ASS) | 153 |
| PANNEAU DE FAISCEAU (ENS) | 577 |
| PANNEAU LATERAL (ASS) | 581 |
| PARE-CHOCS (ASS) | 200 |
| PARE-SOLEIL | 596 |
| | 597 |
| PIGNONNERIE AV (ASS) | 34 |
| | 35 |
| PINCE - BÂTI (ASS) | 442 |
| PINCE - CANALISATIONS (ASS) | 280 |
| | 282 |
| | 284 |
| PINCE - VÉRIN (ASS) | 240 |
| PINCE-RÉSEAU PUBLIC (ASS) | 443 |
| | 444 |
| | 445 |
| PISTON (ASS) | 52 |
| PISTON ET BIELLE (ASS) | 51 |
| PLAFONNIER (ASS) (12 VOLTS) | 542 |
| PLAQUE-DÉPLACEMENT ROUTIER (ASS) | 454 |
| PLAQUE-DÉPLACEMENT ROUTIER (ASS) | 453 |
| PLAQUE (IDENTIFICATION) (*ENGLISH, GERMAN, SPANISH) | 206 |
| | 207 |
| PLAQUE SIGNALÉTIQUE (*AIR CONDITIONER REFRIGERANT) | 557 |
| | 559 |
| PLAQUE SIGNALÉTIQUE (ASS) | 606 |
| | 608 |
| PLAQUE SIGNALÉTIQUE (ASS) | 159 |
| PLAQUE SIGNALÉTIQUE (ASS) | 605 |
| PLAQUES SIGNALETIQUES ET AUTOCOLLANTS (ASS) | 6 |
| | 7 |
| | 610 |
| | 611 |
| | 614 |
| | 617 |
| | 619 |
| | 621 |
| | 624 |
| | 627 |
| | 630 |
| PLAQUES SIGNALETIQUES ET AUTOCOLLANTS (ASS) | 4 |
| | 5 |
| PLATE-FORME DE CABINE | 584 |
| PNEU ET JANTE (ASS) | 187 |


* TRADUCTION NON DISPONIBLE AU MOMENT DE LA PUBLICATION

# INDEX


| Désignation | Page |
|---|---|
| | 188 |
| | 189 |
| | 190 |
| | 191 |
| | 192 |
| | 193 |
| POIGNÉE | 544 |
| POIGNÉE (ASS) | 479 |
| POIGNÉE DE COUPLEUR (ASS) | 448 |
| | 449 |
| POIGNÉE ET AXE DE COUPLEUR (ASS) | 446 |
| | 447 |
| POIGNÉE MODULAIRE (ASS) | 488 |
| | 489 |
| | 490 |
| | 545 |
| | 546 |
| POMPE - DIAPHRAGME (ASS) | 459 |
| POMPE A EAU (ASS) | 70 |
| POMPE A ENGRENAGES (ASS) | 335 |
| | 336 |
| POMPE A HUILE MOTEUR (ASS) | 63 |
| POMPE A PISTONS (ASS) | 183 |
| | 185 |
| POMPE D'AMORÇAGE DE CARBURANT ET FILTRE PRINCIPAL | 102 |
| POMPE D'INJECTION DE CARBURANT (ASS) | 98 |
| | 100 |
| POMPE ET MONTAGE - OUTIL DE TRAVAIL (ASS) | 333 |
| | 334 |
| POMPE HYDROSTATIQUE ET MONTAGE (ASS) | 181 |
| | 182 |
| PORTE DE CABINE ET MONTAGE (ASS) | 526 |
| | 529 |
| PORTIÈRE DE CABINE (ASS) | 534 |
| | 536 |
| PORTIÈRE DE CABINE (ASS) | 531 |
| | 532 |
| PORTIÈRE DE CABINE (ASS) (POLYCARBONATE) | 526 |
| | 560 |
| POSITIONNEUR DE FOURCHE (ASS) | 435 |
| POULIE DE POMPE À EAU (ASS) | 58 |
| PROTECTION DE ROPS/FOPS (ASS) | 543 |
| PROTEGE-COURROIE (ASS) | 37 |


## R


| Désignation | Page |
|---|---|
| RACCORD (ASS) | 301 |
| RACCORD DE CANALISATION D'HUILE (ASS) | 232 |
| RADIATEUR ET REFROIDISSEUR D'HUILE HYDRAULIQUE (ASS) | 71 |
| RADIATEUR ET REFROIDISSEUR D'HUILE-MONTAGE (ASS) | 72 |
| REFROIDISSEUR D'HUILE MOTEUR (ASS) | 65 |
| REGARD DE NIVEAU (RADIATEUR) | 71 |
| REGARD DE NIVEAU (RÉSERVOIR HYDRAULIQUE) | 338 |
| RÉGULATEUR - PÉDALE (ASS) | 582 |
| | 583 |
| RÉGULATEUR DE TEMPÉRATURE D'EAU (ENS) (THERMOSTAT) | 66 |
| | 67 |
| RELAIS (ENS) (COQUILLE) | 145 |
| RELAIS (ENS) (12 VOLTS) | 121 |
| | 149 |
| | 468 |
| | 470 |
| RELAIS (ENS) (12 VOLTS) | 217 |
| RELAIS (ENS) (12 VOLTS) | 121 |
| | 122 |
| | 153 |
| RELAIS (ENS) (12 VOLTS) (ÉCLAIRAGE DE FREIN) | 152 |
| RELAIS (ENS) (12 VOLTS) (OUTIL DE TRAVAIL) | 153 |
| RELAIS (ENS) (12 VOLTS) (PUISSANCE PRINCIPALE) | 153 |
| RELAIS (ENS) (12 VOLTS) (PUISSANCE PRINCIPALE) | 144 |
| RELAIS (ENS) (12 VOLTS) (RÉCHAUFFEUR) | 549 |
| | 551 |
| RENIFLARD (CARTER DE TANDEM) | 212 |
| RENIFLARD (CLIMATISEUR) | 480 |
| | 481 |
| RENIFLARD (COMPRESSEUR DE CLIMATISEUR) | 556 |
| | 558 |
| RENIFLARD (ENS) (*INLINE) (HUILE HYDRAULIQUE) | 337 |
| RÉSERVOIR D'EAU (ASS) | 462 |
| RÉSERVOIR D'EAU ET MONTAGE (ASS) | 459 |
| RÉSERVOIR HYDRAULIQUE (ASS) | 338 |
| RÉSERVOIR HYDRAULIQUE ET MONTAGE (ASS) | 337 |
| RESSORT DE LAME (ASS) | 455 |
| RESSORT-GAZ (ASS) | 595 |
| RETROVISEUR - CABINE (ASS) | 596 |
| | 597 |
| RÉTROVISEUR (ASS) | 571 |
| RÉTROVISEUR ET MONTAGE (ASS) | 222 |


* TRADUCTION NON DISPONIBLE AU MOMENT DE LA PUBLICATION

# INDEX


| Désignation | Page |
|---|---|
| ROTATION DE LA ROUE DU VENTILATEUR SOUFFLANT (COMMANDE DE MACHINE, CÔTÉ DROIT, LIRE LE GUIDE D'UTILISATION ET D'ENTRETIEN) | 256<br>257 |
| ROTATION DE LA ROUE DU VENTILATEUR SOUFFLANT (COMMANDE DE MACHINE, LIRE LE GUIDE D'UTILISATION ET D'ENTRETIEN) | 256 |
| ROTATION DE LA ROUE DU VENTILATEUR SOUFFLANT (COMMANDE DE MACHINE, LIRE LE GUIDE D'UTILISATION ET D'ENTRETIEN) | 496<br>498<br>502<br>504<br>505<br>506<br>507<br>509<br>510<br>513<br>515<br>518 |
| ROTATION DE LA ROUE DU VENTILATEUR SOUFFLANT (COMMANDE DE MACHINE, LIRE LE GUIDE D'UTILISATION ET D'ENTRETIEN, CÔTÉ GAUCHE) | 256 |
| ROTATION DE LA ROUE DU VENTILATEUR SOUFFLANT (COMMANDES DE MACHINE) | 492<br>495<br>499<br>501 |
| ROTATION DE LA ROUE DU VENTILATEUR SOUFFLANT (*MACHINE SECURITY, INTL) | 119<br>120 |
| ROTATION DE LA ROUE DU VENTILATEUR SOUFFLANT (N. D'ÉTAPE) | 259<br>311<br>617 |
| ROTATION DE LA ROUE DU VENTILATEUR SOUFFLANT (TABLEAU DE BORD) | 541<br>542 |
| ROUE ET PNEU (ASS) | 198<br>199 |
| ROUE ET PNEU (VERSION) | 195<br>196<br>197<br>198 |


## S


| Désignation | Page |
|---|---|
| SIÈGE (ASS) | 592<br>593 |
| SIÈGE RÉGLABLE (ASS) | 594 |
| SILENCIEUX (ASS) | 83 |
| SILENCIEUX ET MONTAGE (ASS) | 81<br>82 |
| SOLÉNOÏDE (ENS) | 357 |
| SOLÉNOÏDE (POMPE À CARBURANT) | 100 |
| SONDE - NIVEAU DE CARBURANT (ENS) | 212 |
| SOUPAPE - SOLÉNOÏDE (ASS) | 194<br>355<br>356<br>357<br>358<br>359 |
| SOUPAPE - SOLÉNOÏDE (ASS) (COUPLEUR EXPRESS) | 318 |
| SOUPAPE - SOLÉNOÏDE (ASS) (12 VCC) | 328 |
| SOUPAPE - SOLÉNOÏDE (ASS) (12 VCC) | 556<br>558 |
| SOUPAPE - SOLÉNOÏDE (ASS) (12 VOLTS) | 350<br>352 |
| SOUPAPE A COMMANDE MANUELLE (ASS) | 343 |
| SOUPAPE DE CAPTEUR DE VITESSE (ASS) (POMPE À PISTONS) | 185 |
| SOUPAPE DE CAPTEUR DE VITESSE (ASS) (POMPE À PISTONS) | 183 |
| SOUPAPE PILOTE (ASS) | 344<br>346<br>348<br>349<br>350<br>352 |
| SOUPAPE PILOTE (ASS) (DROITE) | 256 |
| SOUPAPE PILOTE (ASS) (GAUCHE) | 256 |
| SUPPORT DE BOÎTE DE RANGEMENT (ASS) | 6<br>7<br>10<br>11<br>202<br>203 |


## T


| Désignation | Page |
|---|---|
| TABLEAU DE BORD (ASS) | 577<br>579 |
| TABLIER - FOURCHE (ASS) | 416<br>417 |
| TAMIS D'ASPIRATION (RÉSERVOIR HYDRAULIQUE) | 338 |
| TAMIS D'EAU (ASS) | 458 |
| TAPIS DE PLANCHER | 2 |


* TRADUCTION NON DISPONIBLE AU MOMENT DE LA PUBLICATION

# INDEX


| Désignation | Page |
|---|---|
| | 4 |
| | 5 |
| | 6 |
| | 7 |
| | 201 |
| | 202 |
| | 203 |
| TÉMOIN | 75 |
| THERMOCONTACT (CLIMATISEUR) | 468 |
| | 470 |
| THERMOCONTACT (ENS) (HUILE HYDRAULIQUE) | 338 |
| THERMOCONTACT (LIQUIDE DE REFROIDISSEMENT DU MOTEUR) | 136 |
| THERMOCONTACT (LIQUIDE DE REFROIDISSEMENT DU MOTEUR) | 149 |
| THERMOSTAT ET BOITIER (ASS) | 66 |
| TURBOCOMPRESSEUR (ASS) | 84 |
| | 86 |

## V

| | |
|---|---|
| *V-BELT GP | 14 |
| | 15 |
| | 59 |
| VASE D'EXPANSION POUR LIQUIDE RÉFRIGERANT | 72 |
| VENTILATEUR SOUFFLANT (ASS) | 71 |
| VÉRIN DE BRAS DE LEVAGE ET MONTAGE (ASS) | 236 |
| VERIN DE GODET (ASS) | 239 |
| VÉRIN DE LAME D'ORIENTATION ET MONTAGE (ASS) | 233 |
| | 234 |
| VÉRIN DE LEVAGE (ASS) | 248 |
| | 249 |
| VÉRIN D'INCLINAISON (ASS) | 250 |
| | 251 |
| VÉRIN ET BIELLE DE COUPLEUR (ASS) | 422 |
| | 423 |
| VÉRIN ET MONTAGE - GODET (ASS) | 235 |
| VERIN-GAZ (ENS) | 543 |
| VERIN-GAZ (ENS) (CABINE) | 220 |
| VERIN-GAZ (ENS) (CABINE) | 595 |
| VERIN-GAZ (ENS) (GRILLE) | 68 |
| VERIN-GAZ (ENS) (SUPPORT) | 68 |
| VERIN-GAZ (ENS) (VERROUILLAGE) | 526 |
| | 529 |
| | 560 |
| | 561 |
| VÉRIN HYDRAULIQUE (ASS) | 259 |
| VÉRIN HYDRAULIQUE (ASS) | 241 |
| | 242 |
| | 243 |
| | 244 |
| | 245 |
| | 246 |
| | 247 |
| VERROUILLAGE (ASS) | 210 |
| VERROUILLAGE DE COUPLEUR EXPRESS (ASS) | 452 |
| VERROUILLAGE DE VÉRIN (ASS) | 475 |
| VERSION DE CHASSIS | 1 |
| VERSION DE COMMANDE DE MACHINE | 2 |
| | 3 |
| VERSION DE COMMANDE D'ENTRAINEMENT-HYDROSTATIQUE | 157 |
| | 158 |
| | 159 |
| VERSION DE GODET POUR TRAVAUX DE SERVITUDE | 385 |
| | 386 |
| VERSION DE TABLEAU DE BORD | 576 |
| VERSION DE TABLIER ET DE FOURCHE | 415 |
| VERSION DE TRANSFORMATION - DÉPLACEMENT NON ROUTIER | 111 |
| VERSION DE TRANSFORMATION MACHINE | 3 |
| | 4 |
| | 5 |
| | 6 |
| | 7 |
| | 8 |
| | 9 |
| | 10 |
| | 11 |
| VERSION DE TRANSFORMATION POUR DÉPLACEMENT ROUTIER | 201 |
| | 202 |
| | 203 |
| VERSION D'OPTION DE CABINE | 575 |
| | 576 |
| VERSION HYDRAULIQUE | 252 |
| | 253 |
| VERSION NORMALE | 2 |
| VIDANGE D'EAU (ASS) | 30 |
| VIDANGE-HUILE DE MOTEUR (ASS) | 31 |
| VILEBREQUIN - POULIE (ASS) | 56 |
| | 57 |
| VILEBREQUIN (ASS) | 22 |
| | 23 |
| VITRE DE CABINE (ASS) | 598 |
| | 599 |
| | 600 |
| | 601 |
| | 603 |
| VOLANT MOTEUR (ASS) | 32 |


* TRADUCTION NON DISPONIBLE AU MOMENT DE LA PUBLICATION

# INDEX


| Désignation | Page | Désignation | Page |
|---|---|---|---|
| | 33 | | |


* TRADUCTION NON DISPONIBLE AU MOMENT DE LA PUBLICATION

# INDICE


| Nombre | Página |
|---|---|

## A

ACONDICIONADOR DE AIRE (CONFIG) . . . . . 466
ACONDICIONADOR DE AIRE (GR) . . . . . 467
468
470
ACOPLADOR DE MANIJA . . . . . 448
449
ACOPLADOR RÁPIDO (CONFIG) . . . . . 417
ACOPLADOR RÁPIDO (GR) . . . . . 418
420
ACUMULADOR DEL ACONDICIONADOR DE AIRE (GR) . . . . . 464
465
ACUMULADOR HIDRAULICO Y MONTAJE (GR) . . . . . 231
AGUA DE LAS CAMISAS - CALENTADOR DEL (GR) . . . . . 117
118
AGUILÓN TELESCÓPICO (GR) . . . . . 360
AIRE - TUBERÍAS DE (GR) . . . . . 77
78
ALAMBRADO DE LUCES TRASERAS (GR) . . . . . 152
ALFOMBRILLA DEL PISO . . . . . 2
4
5
6
7
201
202
203
ÁRBOL DE LEVAS (GR) . . . . . 18
19
ARO Y LLANTA (GR) . . . . . 187
188
189
190
191
192
193
ASIENTO AJUSTABLE (GR) . . . . . 594
ASIENTO (GR) . . . . . 592
593

## B

BALANCÍN (GR) . . . . . 60
BASTIDOR DE GARFIO (GR) . . . . . 442
BASTIDOR DE HOJA (GR) . . . . . 439
BASTIDOR DE LA VENTANA (GR) . . . . . 539
540
BASTIDOR Y MONTAJE (GR)-MAQUINA . . . . . 212
BATERÍA (GR) . . . . . 108
109
BATERÍA (12 VOLTIOS, ESTANDAR) . . . . . 108
BATERÍA (12-VOLTIOS, LIBRE DE MANTENIMIENTO) . . . . . 109
BIELA (GR) . . . . . 20
BLOQUE MOTOR (GR) . . . . . 24
26
BOCINA (CONJ) (TONO BAJO) . . . . . 505
507
BOCINA (CONJ) (24-VOLTIOS, TONO BAJO) . . . 510
BOMBA - TUBERÍAS DE (GR) . . . . . 301
BOMBA DE ACEITE DEL MOTOR (GR) . . . . . 63
BOMBA DE AGUA (GR) . . . . . 70
BOMBA DE CEBADO Y FILTRO PRIMARIO DE COMBUSTIBLE (GR) . . . . . 102
BOMBA DE ENGRANAJES (GR) . . . . . 335
336
BOMBA DE INYECCIÓN DE COMBUSTIBLE (GR) . . . . . 98
100
BOMBA DE PISTONES (GR) . . . . . 183
185
BOMBA DEL DIAFRAGMA (GR) . . . . . 459
BOMBA Y MONTAJE DE LA HERRAMIENTA DE TRABAJO (GR) . . . . . 333
334
BRAZO DE LIMPIAPARABRISAS (GR) . . . . . 532
BRAZO DE LIMPIAPARABRISAS (GR) (DELANTERO) . . . . . 534
BUJÍA INCANDESCENTE . . . . . 116
BUJÍA INCANDESCENTE (GR) . . . . . 116

## C

CABINA INCLUYE ROPS (GR) . . . . . 477
478
CABLE DE CONTROL (GR) . . . . . 479
CABLE GR-BOCINA . . . . . 151
CABLE GR-CONTROL DE MANDO . . . . . 88
CABLES CONJ. - TANQUE DE COMBUSTIBLE . . . . . 143
556
558
CABLES CONJ. -LIMPIADOR DE VENTANAS . . . 526
529
532
534
560
561
CABLES DE LA HERRAMIENTA DE TRABAJO (GR) . . . . . 153
CABLES DEL ACONDICIONADOR DE AIRE (GR) . . . . . 143
CABLES DEL CHASIS (GR) . . . . . 144


* NO HAY TRADUCCION DISPONIBLE EN EL MOMENTO DE LA IMPRESION

# INDICE


| Nombre | Página |
|---|---|
| | 148 |
| CABLES DEL MOTOR (GR) | 149 |
| CAJA DE ALMACENAMIENTO | 475 |
| CAJA DE ALMACENAMIENTO (*LITERATURE) | 476 |
| CAJA DELANTERA (GR) | 40 |
| | 42 |
| CALCOMANÍA (CONTROL DE TEMPERATURA) | 468 |
| | 470 |
| | 549 |
| | 551 |
| CALCOMANÍA DE ADVERTENCIA (ALTA PRESIÓN, LEER OMM, INTL) | 627 |
| | 630 |
| CALCOMANÍA DE ADVERTENCIA (ALTA PRESIÓN, LEER OMM, INTL) | 611 |
| CALCOMANÍA DE ADVERTENCIA (CONTROLES DE LA MAQUINA) | 492 |
| | 495 |
| | 499 |
| | 501 |
| CALCOMANÍA DE ADVERTENCIA (*CRUSH HAZARD, STAY BACK, U.S.) | 617 |
| CALCOMANÍA DE ADVERTENCIA (DIRECCIÓN) | 204 |
| | 206 |
| CALCOMANÍA DE ADVERTENCIA (ESPACIO) | 605 |
| CALCOMANÍA DE ADVERTENCIA (*MACHINE CONTROL, LH, READ OMM) | 256 |
| CALCOMANÍA DE ADVERTENCIA (*MACHINE CONTROL, READ OMM) | 496 |
| | 498 |
| | 502 |
| | 504 |
| | 506 |
| | 507 |
| | 509 |
| | 510 |
| | 513 |
| | 515 |
| | 518 |
| CALCOMANÍA DE ADVERTENCIA (*MACHINE CONTROL, READ OMM) | 505 |
| CALCOMANÍA DE ADVERTENCIA (*MACHINE CONTROL, READ OMM, LH) | 256 |
| CALCOMANÍA DE ADVERTENCIA (*MACHINE CONTROL, RH, READ OMM) | 256 |
| | 257 |
| CALCOMANÍA DE ADVERTENCIA (*MACHINE SECURITY, INTL) | 119 |
| | 120 |
| CALCOMANÍA DE ADVERTENCIA (*NO ACCESS) | 611 |
| | 627 |
| CALCOMANÍA DE ADVERTENCIA (NO ESPACIO LIBRE, MANTENGASE DETRAS DE ESTE LUGAR) | 364 |
| | 365 |
| CALCOMANÍA DE ADVERTENCIA (NO PISAR) | 259 |
| | 617 |
| CALCOMANÍA DE ADVERTENCIA (NO PISAR) | 311 |
| CALCOMANÍA DE ADVERTENCIA (NO SUELDE, NO TALADRE, LEA EL OMM) | 614 |
| | 621 |
| | 624 |
| CALCOMANÍA DE ADVERTENCIA (PELIGRO DE APLASTAMIENTO, MANTENGASE DETRAS DE ESTE LUGAR) | 330 |
| | 407 |
| | 408 |
| | 409 |
| | 411 |
| | 443 |
| | 617 |
| CALCOMANÍA DE ADVERTENCIA (PELIGRO DE EMPALAMIENTO) | 433 |
| | 434 |
| | 442 |
| CALCOMANÍA DE ADVERTENCIA (PELIGRO DE EMPALAMIENTO) | 438 |
| CALCOMANÍA DE ADVERTENCIA (PRESIÓN ALTA, LEER OMM, EE.UU.) | 614 |
| CALCOMANÍA DE ADVERTENCIA (PRESIÓN ALTA, LEER OMM, EE.UU.) | 621 |
| | 624 |
| CALCOMANÍA DE ADVERTENCIA (TABLERO) | 542 |
| CALCOMANÍA DE ADVERTENCIA (TABLERO DE INSTRUMENTOS) | 541 |
| CALCOMANÍA DE IDENTIFICACIÓN (FILTRO DE COMBUSTIBLE, SEPARADOR DE AGUA) | 90 |
| | 96 |
| CALCOMANÍA DE IDENTIFICACIÓN (INTERRUPTOR DE ENCENDIDO) | 119 |
| | 120 |
| CALCOMANÍA DE IDENTIFICACIÓN (*POWER RECEPTACLE, 12-VOLT) | 611 |
| | 614 |
| | 621 |
| | 624 |
| | 627 |


* NO HAY TRADUCCION DISPONIBLE EN EL MOMENTO DE LA IMPRESION

# INDICE


| Nombre | Página |
|---|---|
| CALCOMANÍA DE IDENTIFICACIÓN (*POWER RECEPTACLE, 12-VOLT) | 630 |
| CALCOMANÍA DE IDENTIFICACIÓN (*13-KM/H) | 6 |
| | 10 |
| | 202 |
| CALCOMANÍA DE IDENTIFICACIÓN (20 KM/H) | 7 |
| | 11 |
| | 203 |
| CALCOMANÍA DE RAYAS (*REFLECTIVE, RED, WHITE) | 453 |
| | 454 |
| CALCOMANÍA (DOS VELOCIDADES) | 158 |
| | 159 |
| | 254 |
| CALCOMANÍA (*FOPS) | 543 |
| CALCOMANIA-FUSIBLE/RELÉ | 112 |
| CALCOMANÍA (*REFLECTIVE) | 453 |
| | 454 |
| CALCOMANÍAS Y PLACAS DE IDENTIFICACIÓN (GR) | 4 |
| | 5 |
| | 6 |
| | 7 |
| | 610 |
| | 611 |
| | 617 |
| | 619 |
| | 621 |
| CALCOMANÍAS Y PLACAS DE IDENTIFICACIÓN (GR) | 614 |
| | 624 |
| | 627 |
| | 630 |
| CALEFACCIÓN DE LA CABINA (CONFIG) | 548 |
| CALEFACCIÓN DE LA CABINA (GR) | 549 |
| CALEFACCIÓN DE LA CABINA (GR) | 551 |
| | 553 |
| CALEFACCIÓN Y MONTAJE DE LA CABINA (GR) | 547 |
| CÁNCAMOS DE LEVANTAMIENTO DEL MOTOR (GR) | 44 |
| | 45 |
| CANDADO (GR) | 204 |
| | 206 |
| CARGA - ALTERNADOR DE (GR) | 103 |
| | 105 |
| | 106 |
| | 107 |
| CARGADOR Y HORQUILLA (CONF) | 415 |
| CÁRTER - COLECTOR DEL (GR) | 47 |
| | 49 |
| CHASIS (CONFIG) | 1 |
| CIGÜEÑAL - POLEA DE (GR) | 56 |
| | 57 |
| CIGÜEÑAL (GR) | 22 |
| | 23 |
| CILINDRO DE CUCHARÓN (GR) | 239 |
| CILINDRO DE GARFIO (GR) | 240 |
| CILINDRO DE LEVANTAMIENTO - TUBERÍAS DEL (GR) | 291 |
| | 293 |
| CILINDRO DE LEVANTAMIENTO (GR) | 248 |
| | 249 |
| CILINDRO HIDRÁULICO (GRUPO) | 241 |
| | 242 |
| | 243 |
| | 244 |
| | 245 |
| | 246 |
| | 247 |
| | 259 |
| CILINDRO Y MONTAJE (GR)- INCLINACIÓN DE LA HOJA | 233 |
| | 234 |
| CINTURÓN DE SEGURIDAD (GR) | 588 |
| | 589 |
| | 590 |
| | 591 |
| *COIL AS-SOLENOID (12 VOLTIOS) | 355 |
| COLADOR DE ACEITE (MOTOR) | 62 |
| COLADOR DEL AGUA (GR) | 458 |
| COMPARTIMENTO CONJ-LATERAL | 555 |
| COMPARTIMIENTO DEL MOTOR (GR) | 210 |
| COMPRESOR DE REFRIGERANTE (GR) | 480 |
| | 481 |
| | 556 |
| | 558 |
| COMPRESOR DE REFRIGERANTE Y GRUPO DE MONTAJE | 483 |
| COMPRESOR Y MOTOR GR-REFRIGERANTE | 480 |
| | 481 |
| CONDENSADOR DEL REFRIGERANTE Y MONTAJE (GR) | 484 |
| CONDUCTO Y CONTROL (GR) | 537 |
| CONEXIÓN (GR) | 301 |
| CONEXION HIDRAULICA (GR) | 301 |
| CONFIGURACIÓN COMÚN | 2 |
| CONFIGURACIÓN DE CABLERIA, CALENTADOR Y ACONDICIONADOR DE AIRE | 143 |
| | 549 |
| | 551 |
| | 556 |


* NO HAY TRADUCCION DISPONIBLE EN EL MOMENTO DE LA IMPRESION

# INDICE


| Nombre | Página |
|---|---|
| | 558 |
| CONFIGURACIÓN DE INSTALACIÓN DEL MOTOR | 16 |
| CONFIGURACIÓN DE MOTORES | 12 |
| CONFIGURACIÓN DE TRANSFORMACIÓN PARA CARRETERA | 201 |
| | 202 |
| | 203 |
| CONFIGURACIÓN DE TRANSFORMACIÓN PARA OBRAS | 111 |
| (CONJ) REGULADOR, TEMPERATURA DEL AGUA (*THERMOSTAT) | 66 |
| | 67 |
| CONJUNTO DE DESTELLADOR (12 VOLTIOS) | 132 |
| | 217 |
| CONJUNTO DE LLAVE, ELECTRONICA (SEGURIDAD) | 114 |
| | 119 |
| CONJUNTO DE REGULADOR-ALTERNADOR | 103 |
| CONJUNTO MAZO DE CABLES-CONTROLES DEL OPERADOR (*JOYSTICK, LH) | 256 |
| CONJUNTO MAZO DE CABLES-CONTROLES DEL OPERADOR (*JOYSTICK, RH) | 256 |
| CONJUNTO MAZO DE CABLES-CONTROLES DEL OPERADOR (*JOYSTICK, RH, LH) | 256 |
| CONJUNTO MAZO DE CABLES-CONTROLES DEL OPERADOR (PALANCA UNIVERSAL) | 495 |
| | 498 |
| | 499 |
| | 501 |
| CONJUNTO, MAZO DE CABLES, LUCES DELANTERAS | 132 |
| | 217 |
| CONTRAPESO (GR) | 208 |
| | 209 |
| *CONTROL AR-MACHINE | 2 |
| | 3 |
| CONTROL DE MANDO HIDROSTATICO (CONFIG) | 157 |
| | 158 |
| | 159 |
| CONTROL DE MANIJA (GR) | 485 |
| | 486 |
| | 487 |
| | 488 |
| CONTROL DE MANIJA (GR) | 489 |
| | 490 |
| | 491 |
| CONTROL DE REGULADOR (GR) | 89 |
| CONTROL DE TRABA (GR) | 110 |
| CONTROL DEL MULTIPLE (GR) | 318 |
| | 319 |
| CONTROL HIDRÁULICO DE OPERACIÓN PILOTO (GR) | 492 |
| | 495 |
| | 496 |
| | 498 |
| | 499 |
| | 501 |
| | 502 |
| | 504 |
| | 505 |
| | 506 |
| | 507 |
| | 509 |
| | 510 |
| | 515 |
| | 518 |
| CONTROL HIDRÁULICO DE OPERACIÓN PILOTO (GR) | 513 |
| CONTROL NO PROGRAMADO (GR) | 113 |
| CONTROL NO PROGRAMADO (GR) (SEGURIDAD) | 114 |
| CONVERSION DE LA MAQUINA (CONFIG) | 3 |
| | 4 |
| | 5 |
| | 6 |
| | 7 |
| | 8 |
| | 9 |
| | 10 |
| | 11 |
| CONVERSION PARA DESPLAZAMIENTO POR CARRETERA (GR) | 204 |
| | 205 |
| | 206 |
| | 207 |
| CORREA TRAPEZOIDAL (BOMBA DE AGUA) | 59 |
| *COUPLING GP-DRIVE | 521 |
| | 556 |
| | 558 |
| CUBIERTO DEL PANEL DE FUSIBLES (GR) | 112 |
| CUCHARON DE GARFIO (CONF) | 375 |
| | 376 |
| | 377 |
| | 378 |
| | 379 |
| | 380 |
| | 381 |
| CUCHARON DE GARFIO (GR) | 401 |
| | 402 |
| | 403 |
| | 404 |
| | 405 |
| | 406 |


* NO HAY TRADUCCION DISPONIBLE EN EL MOMENTO DE LA IMPRESION

# INDICE


| Nombre | Página |
|---|---|
| CUCHARÓN DE USO GENERAL (CONFIG) | 373, 374, 375 |
| CUCHARÓN DE USO GENERAL (CONJ) | 391, 392, 393, 394, 395 |
| CUCHARÓN DE USO GENERAL (GR) | 400 |
| CUCHARÓN DE USO MÚLTIPLE (CONFIG) | 382, 383, 384, 385 |
| CUCHARÓN DE USO MÚLTIPLE (GR) | 407 |
| CUCHARÓN DE USO MÚLTIPLE (GR) | 408, 409, 410, 411 |
| CUCHARÓN PARA MATERIALES LIVIANOS | 396, 397, 398 |
| CUCHARÓN PARA MATERIALES LIVIANOS (CONFIG) | 382 |
| CUCHARON PARA TIERRA (CONF) | 372, 373 |
| CUCHARON PARA TIERRA (CONJ) | 387, 388, 389, 390 |
| CUCHARÓN PARA TIERRA (GR) | 399 |
| CUCHARON UTILITARIO (CONFIG) | 385, 386 |
| CUCHARÓN UTILITARIO (GR) | 412, 413, 414 |
| CUCHILLA (GR) | 424, 425, 426, 427, 428, 429, 430 |
| CULATA DE CILINDROS (GR) | 28, 29 |

## D

| | |
|---|---|
| DETECTOR DE NIVEL DEL COMBUSTIBLE | 212 |
| DIENTE DE UNA PIEZA (UNI-TOOTH) (GR) | 463 |
| DISYUNTOR (CONJ) (105 AMPERIOS) (PRINCIPAL) | 149 |
| DISYUNTOR (CONJ) (30-AMPERIOS) | 217 |
| DISYUNTOR (CONJ) (30-AMPERIOS) (LUCES) | 132 |
| DRENAJE DEL ACEITE DE MOTOR | 31 |
| DRENAJE (GR) | 30 |

## E

| | |
|---|---|
| EJE (GR) | 155, 156, 157 |
| ELECTRÓNICA DE LA MÁQUINA (GR) | 114 |
| ELEMENTO DEL FILTRO DE AIRE (CONJ) (PRIMARIO) | 75 |
| ELEMENTO DEL FILTRO DE AIRE (CONJ) (SECUNDARIO) | 75 |
| EMPAQUETADURA (MECANISMO DE VALVULA) | 21 |
| EMPAQUETADURA (REGULADOR DE TEMPERATURA DEL AGUA) | 66, 67 |
| EMPAQUETADURA (REJILLA) | 81 |
| ENFRIADOR DE ACEITE DEL MOTOR (GR) | 65 |
| ENGRANAJE DELANTERO (GR) | 34, 35 |
| ESCALON DE BRAZO DE MANEJO DE MATERIALES (GR) | 456 |
| ETIQUETA DE ADVERTENCIA (GR) | 159, 606, 608 |
| ETIQUETA DE ADVERTENCIA (GR) | 605 |

## F

| | |
|---|---|
| *FILTER ELEMENT-CAB AIR | 468, 470, 549, 551 |
| *FILTER ELEMENT-CAB AIR (AIRE) | 470, 551 |
| *FILTER-ENGINE OIL | 61 |
| FILTRO DE ACEITE DEL MOTOR (GR) | 61 |
| FILTRO DE ACEITE (EFICIENCIA AVANZADA) (HIDRÁULICO) | 163 |
| FILTRO DE ACEITE (GR) | 163 |
| FILTRO DE AIRE (GR) | 74, 75 |
| FILTRO DE COMBUSTIBLE Y SEPARADOR DE AGUA (CONJ) | 102 |
| FILTROS Y TUBERÍAS HIDRÁULICAS (GR) | 161 |
| FUSIBLE (10-AMPERIOS) | 142, 259, 417, 510 |


* NO HAY TRADUCCION DISPONIBLE EN EL MOMENTO DE LA IMPRESION

# INDICE


| Nombre | Página |
|---|---|
| | 513 |
| | 515 |
| | 518 |
| FUSIBLE (10-AMPERIOS) | 121 |
| | 122 |
| | 145 |
| | 153 |
| FUSIBLE (15 AMPERIOS) | 143 |
| FUSIBLE (15 AMPERIOS) | 121 |
| | 145 |
| | 153 |
| FUSIBLE (20-AMPERIOS) | 145 |
| FUSIBLE (30-AMPERIOS) | 143 |
| | 557 |
| | 559 |
| FUSIBLE (30-AMPERIOS) | 145 |

## G

| | |
|---|---|
| GARFIO DE UTILIDAD (GR) | 443 |
| | 444 |
| | 445 |
| GRUPO ADAPTADOR-TUBERIA DE ACEITE | 232 |
| GRUPO DE AJUSTADOR, VÁLVULA | 357 |
| GRUPO DE BASTIDOR DE HORQUILLA | 440 |
| | 441 |
| GRUPO DE BASTIDOR, MAQUINARIA | 212 |
| GRUPO DE CANTONERA Y CUCHILLA | 424 |
| GRUPO DE CILINDRO Y ESLABON, ACOPLADOR | 422 |
| | 423 |
| GRUPO DE COJINETES DE BANCADA | 17 |
| GRUPO DE ESLABON, ACOPLADOR | 451 |
| GRUPO DE HOJA DE CUCHARÓN DE USO MÚLTIPLE | 368 |
| | 369 |
| | 370 |
| | 371 |
| GRUPO DE INSTALACIÓN | 556 |
| GRUPO DE INSTALACIÓN DE SISTEMA HIDRÁULICO AUXILIAR | 254 |
| GRUPO DE MANIJA Y PIN-ACOPLADOR | 446 |
| | 447 |
| GRUPO DE MONTAJE Y CILINDRO, LEVANTAMIENTO DEL BRAZO | 236 |
| GRUPO DE PALANCA-REGULADOR | 563 |
| GRUPO DE POSICIONADOR DE LA HORQUILLA | 435 |
| GRUPO DE RESPALDO DE CAJA DE ALMACENAMIENTO | 202 |
| | 203 |
| GRUPO DE SENSORES DE TEMPERATURA Y PRESIÓN | 136 |
| GRUPO DE TRABA-CILINDRO | 475 |
| GRUPO DEMONTAJE DE RADIADOR Y ENFRIAMIENTO DE ACEITE | 68 |
| GRUPO GIRATORIO DE BOMBA (LADO DERECHO) | 183 |
| | 185 |
| GRUPO GIRATORIO DE BOMBA (LADO IZQUIERDO) | 183 |
| | 185 |
| GRUPO, MANIJA, BOMBA DE AGUA | 58 |

## H

| | |
|---|---|
| *HANDLE GP | 479 |
| HIDRÁULICA (CONFIG) | 252 |
| | 253 |
| HIDROSTATICO, BOMBA Y GRUPO DE MONTAJE | 181 |
| | 182 |
| HOJA (CONFIG) | 361 |
| | 362 |
| | 363 |
| HOJA DE LIMPIAPARABRISAS (CONJ) (*558-MM) (DELANTERO, TRASERO) | 532 |
| HOJA DE LIMPIAPARABRISAS (CONJ) (*558-MM) (PUERTA, CABINA) | 534 |
| HOJA ORIENTABLE (GR) | 364 |
| | 365 |
| | 366 |
| | 367 |
| *HOLDER-CUP | 554 |
| HORQUILLA DE GARFIO (CONF) | 430 |
| | 431 |
| HORQUILLA DE GARFIO (GR) | 432 |
| | 433 |
| | 434 |
| HORQUILLA DE UTILIDAD (GR) | 437 |
| | 438 |
| HORQUILLA PARA TARIMAS (GR) | 435 |
| | 436 |

## I

| | |
|---|---|
| IMPLEMENTOS (GR ELECTRÓNICO) | 113 |
| INCLINACIÓN HORIZONTAL - CILINDRO DE (GR) | 250 |
| | 251 |
| INDICADOR | 75 |
| INDICADOR DEL NIVEL DE ACEITE (GR) | 542 |
| INDICADOR DEL NIVEL DE ACEITE (VARILLA) (GR) (MOTOR) | 47 |
| | 49 |
| INDICADORES Y ADVERTENCIA (GR) | 542 |


* NO HAY TRADUCCION DISPONIBLE EN EL MOMENTO DE LA IMPRESION

# INDICE


| Nombre | Página |
|---|---|
| INDICADORES Y ADVERTENCIA (GR) | 541 |
| INSONORIZADOR (GR) | 227 |
| | 228 |
| | 229 |
| | 230 |
| INSTALACION DE SEGURIDAD (GR) | 119 |
| INSTALACION DE SEGURIDAD (GR) | 120 |
| INTERRUPTOR (ASIENTO) | 593 |
| INTERRUPTOR BASCULANTE (CALEFACTOR) | 468 |
| | 470 |
| | 549 |
| | 551 |
| INTERRUPTOR (CONJ) (ASIENTO) | 594 |
| INTERRUPTOR (CONJ) (*STARTING MOTOR)(12-VOLT) | 137 |
| INTERRUPTOR DE ARRANQUE CON LLAVE (CONJ) | 541 |
| INTERRUPTOR DE LÍMITE (CONJ) (LIMPIADOR) | 532 |
| | 534 |
| INTERRUPTOR DE PRESIÓN (ACEITE DE MOTOR) | 141 |
| INTERRUPTOR DE PRESIÓN (CONJ) (ACEITE HIDRÁULICO) | 163 |
| INTERRUPTOR DE PRESIÓN (CONJ) (AIRE ACONDICIONADO) | 566 |
| INTERRUPTOR DE PRESIÓN (CONJ) (REFRIGERANTE) | 557 |
| | 558 |
| INTERRUPTOR DE PRESIÓN (GR) | 140 |
| | 141 |
| INTERRUPTOR DE PRESIÓN (GR) (ALARMA DE RETROCESO) | 142 |
| INTERRUPTOR DE PRESIÓN (GR) (ALARMA DE RETROCESO) | 256 |
| INTERRUPTOR DE TEMPERATURA (AIRE ACONDICIONADO) | 468 |
| | 470 |
| INTERRUPTOR DE TEMPERATURA (CONJ) (ACEITE HIDRÁULICO) | 338 |
| INTERRUPTOR DE TEMPERATURA (REFRIGERANTE DEL MOTOR) | 136 |
| | 149 |
| INTERRUPTOR DE VOLQUETE (CONJ) (ACONDICIONADOR DE AIRE) | 470 |
| INTERRUPTOR DE VOLQUETE (CONJ) (ACONDICIONADOR DE AIRE) | 468 |
| INTERRUPTOR DE VOLQUETE (CONJ) (ACOPLADOR RAPIDO) | 259 |
| INTERRUPTOR DE VOLQUETE (CONJ) (ACOPLADOR RAPIDO) | 417 |
| INTERRUPTOR DE VOLQUETE (CONJ) (ARRANQUE EN FRIO) | 577 |
| | 579 |
| INTERRUPTOR DE VOLQUETE (CONJ) (BALIZA DE ADVERTENCIA) | 135 |
| INTERRUPTOR DE VOLQUETE (CONJ) (FRENO DE ESTACIONAMIENTO) | 577 |
| | 579 |
| INTERRUPTOR DE VOLQUETE (CONJ) (LIMPIAPARABRISAS TRASERO) | 532 |
| | 534 |
| INTERRUPTOR DE VOLQUETE (CONJ) (LUCES DE ADVERTENCIA DE PELIGRO) | 132 |
| | 217 |
| INTERRUPTOR DE VOLQUETE (CONJ) (LUCES DE DESPLAZAMIENTO) | 132 |
| | 217 |
| INTERRUPTOR DE VOLQUETE (CONJ) (LUCES DE TRABAJO TRASERAS) | 130 |
| INTERRUPTOR DE VOLQUETE (CONJ) (LUZ DE TRABAJO DELANTERA) | 577 |
| | 579 |
| INTERRUPTOR DE VOLQUETE (CONJ) (POTENCIA ELECTRICA, HERRAMIENTA DE TRABAJO) | 121 |
| | 122 |
| | 153 |
| INTERRUPTOR DE VOLQUETE (CONJ) (SEÑAL DE GIRO) | 132 |
| INTERRUPTOR DE VOLQUETE (CONJ) (SEÑAL DE GIRO) | 217 |
| INTERRUPTOR DE VOLQUETE (GR) (UBICADOR DE HERRAMIENTA DE TRABAJO) | 252 |


## J


| | |
|---|---|
| JUEGO DE ENCHUFE DE CONEXIÓN | 473 |
| JUEGO DE INSTALACIÓN DE ACONDICIONADOR DE AIRE | 558 |
| JUEGO DE INSTALACIÓN DEL ACONDICIONADOR DE AIRE Y CALENTADOR | 556 |
| JUEGO DE SELLOS | 346 |
| JUEGO DE VÁLVULA PILOTO (RESORTE) | 346 |
| JUEGO-PLACA DE DESPLAZAMIENTO Y MONTAJE | 450 |
| JUEGO, PUERTA DE CABINA Y MONTAJE | 560 |
| | 561 |
| JUNTA DE LA TAPA DE VÁLVULAS (BOMBA DE AGUA) | 70 |


* NO HAY TRADUCCION DISPONIBLE EN EL MOMENTO DE LA IMPRESION

# INDICE


| Nombre | Página |
|---|---|

## K

| | |
|---|---|
| *KIT-CAB SEAL | 562 |
| *KIT-DEBRIS GUARD | 76 |
| *KIT-ENGINE ENCLOSURE SEAL | 215 |
| *KIT-JOYSTICK CONVERSION | 256 |
| *KIT-QUICK COUPLER CONVERSION | 259 |
| *KIT-ROADING CONVERSION | 217 |
| *KIT-WORK TOOL CONTROL & WIRING | 121 |
| *KIT-WORK TOOL WIRING | 122 |

## L

| | |
|---|---|
| LÁMPARA (CONJ) (ROJO, VERDE, DIODO, 12 VOLTIOS) | 120 |
| LÁMPARA DE BALIZA DE ADVERTENCIA (GR) | 129 |
| LÁMPARA DE FARO DELANTERO | 125 |
| LÁMPARA DE LUZ DELANTERA Y DE SEÑAL (GR) | 125 |
| LAMPARA DE PLACA DE REGISTRO (GR) | 223 |
| LÁMPARA DEL TECHO (GR) (12 VOLTIOS) | 542 |
| LÁMPARA (12 VLOTIOS, 5 VATIOS) | 127, 128 |
| LÁMPARA (12 VOLTIOS) | 542 |
| LÁMPARA (12 VOLTIOS) (PLACA DE REGISTRACIÓN) | 223 |
| LÁMPARA (12 VOLTIOS, 10 VATIOS) | 542 |
| LÁMPARA (12 VOLTIOS, 21 VATIOS) | 125, 128 |
| LÁMPARA (12 VOLTIOS, 4 VATIOS) | 125 |
| LÁMPARA (12 VOLTIOS, 55 VATIOS) | 123, 124, 129 |
| LEVANTAMIENTO DE LA MÁQUINA (GR) | 220, 221 |
| *LINES GP-LOWERING CONTROL | 295 |
| LLAVE | 18 |
| *LOCK GP | 210 |
| LUCES DE DESPLAZAMIENTO (GR) | 132 |
| LUCES DE PARADA Y COLA (GR) | 127, 128 |
| LUCES DE PARADA Y DE COLA (GR) | 134 |
| LUCES DE REFLECTOR (GR) | 130 |
| LUCES DE REFLECTOR (GR) | 131 |
| LUZ DE BALIZA (GR) | 135 |

## M

| | |
|---|---|
| MANDO DE CORREA (BALIZA DE ADVERTENCIA) | 129 |
| MANDO TANDEM (GR) | 160 |
| *MANIFOLD & LINES GP-CONTROL | 166, 168 |
| *MANIFOLD & LINES GP-COUPLER | 311 |
| *MANIFOLD & SOLENOID GP-CONTROL | 170, 171, 317 |
| MANIJA MODULAR (GR) | 488, 489, 490 |
| MANIJA MODULAR (GR) | 545, 546 |
| MAZO DE CABLES (CONJ) (MEDIDOR DE SERVICIO) | 525 |
| MAZO DE CABLES DE CONTROL (CONJ) (SEGURIDAD) | 119, 120 |
| MAZO DE CABLES DE LA HERRAMIENTA | 459 |
| MAZO DE CABLES DE LA HERRAMIENTA (*CONNECTING) | 362, 363 |
| MAZO DE CABLES DE LA HERRAMIENTA (*LIFT ARM) | 121, 153 |
| MAZO DE CABLES DE LA HERRAMIENTA (PLATAFORMA) | 121, 153 |
| MAZO DE CABLES DE LA PLATAFORMA (CONJ) | 144 |
| MAZO DE CABLES DE LA PLATAFORMA (CONJ) (INFERIOR) | 144 |
| MAZO DE CABLES DE LUCES TRASERAS (CONJ) | 132, 145, 217, 224, 225 |
| MAZO DE CABLES DE LUCES TRASERAS (CONJ) (FRENO) | 152, 217 |
| MAZO DE CABLES DEL CHASIS (CONJ) (BOCINA) | 151 |
| MAZO DE CABLES DEL CHASIS (CONJ) (TRANSMISION) | 556, 558 |
| MAZO DE CABLES DEL MOTOR (CONJ) | 149 |
| MAZO DE CABLES DEL TABLERO (CONJ) | 577 |
| MAZO DE CABLES TRASERO (CONJ) (AUXILIARES HIDRÁULICOS) | 148 |
| MECANISMO DE VÁLVULAS (GR) | 60 |
| MEDIDOR DE SERVICIO (GR) | 525 |
| MIRILLA (RADIADOR) | 71 |
| MIRILLA (TANQUE HIDRÁULICO) | 338 |
| MÓDULO INDICADOR DE ADVERTENCIA (GR) | 572, 573 |


* NO HAY TRADUCCION DISPONIBLE EN EL MOMENTO DE LA IMPRESION

# INDICE


| Nombre | Página |
|---|---|
| MONTAJE DE CILINDRO (GR) | 331 |
| MONTAJE DE CILINDRO (GR) | 329, 330 |
| MONTAJE DE LA BOMBA (GR) | 180 |
| MONTAJE DE LA ESTRUCTURA ROPS (GR) | 574 |
| MONTAJE DE LUCES DE DESPLAZAMIENTO POR CARRETERA (GR) | 225 |
| MONTAJE DE RADIADOR Y ENFRIAMIENTO DE ACEITE (GR) | 72 |
| MONTAJE DEL CILINDRO DEL CUCHARÓN (GR) | 235 |
| MONTAJE DEL MOTOR (GR) | 46 |
| MONTAJE DEL TANQUE DE AGUA (GR) | 459 |
| MONTAJE-REGISTRO (GR) | 223, 224 |
| MOTOR DE ARRANQUE ELÉCTRICO (GR) | 137, 139 |
| MOTOR DE ENGRANAJES (GR) | 323, 324 |
| MOTOR DE ENGRANAJES (GR) | 325, 326, 327, 328 |
| MOTOR HIDROSTATICO Y MONTAJE (GR) | 174, 175 |
| MOTOR-LIMPIAPARABRISAS (GR) | 532, 534 |
| MOTOR PRIMARIO (CONFIG) | 13, 14, 15 |
| MOTOR Y MONTAJE DE VENTILADOR HIDRAULICO (GR) | 320, 321, 322 |
| MUELLE DE GAS (CONJ) | 543 |
| MUELLE DE GAS (CONJ) (CABINA) | 220 |
| MUELLE DE GAS (CONJ) (CABINA) | 595 |
| MUELLE DE GAS (CONJ) (PARRILLA) | 68 |
| MUELLE DE GAS (CONJ) (*SUPPORT) | 68 |
| MUELLE DE GAS (CONJ) (TRABA) | 560, 561 |
| MUELLE DE GAS (CONJ) (TRABA) | 526, 529 |
| MÚLTIPLE DE ADMISIÓN (GR) | 80 |
| MÚLTIPLE DE ESCAPE (GR) | 79 |
| MULTIPLE Y MONTAJE (GR) - CONTROL | 315, 316 |


## O


| Nombre | Página |
|---|---|
| *OPTION AR-CAB | 575, 576 |


## P


| Nombre | Página |
|---|---|
| PANEL DE FUSIBLES (GR) | 121, 122, 145, 153 |
| PANEL LATERAL (GR) | 581 |
| PARACHOQUES (GR) | 200 |
| PASAMANOS (GR) | 544 |
| PISTON (GR) | 52 |
| PISTÓN Y BIELA (GR) | 51 |
| PISTONES DEL MOTOR (GR) | 176, 178 |
| PLACA DE DESPLAZAMIENTO POR CARRETERA (GR) | 453, 454 |
| PLACA DE IDENTIFICACION (*ENGLISH, GERMAN, SPANISH) | 206, 207 |
| PLACA DE INFORMACION (*AIR CONDITIONER REFRIGERANT) | 557, 559 |
| PLACA DE INFORMACION (LEA EL OMM) | 611, 614, 621, 624, 627, 630 |
| PLACA DE INFORMACION (PUNTO DE AMARRE) | 360 |
| PLATAFORMA DE LA CABINA | 584 |
| PORTAHORQUILLAS (GR) | 416, 417 |
| POSABRAZOS (GR) | 473 |
| POSABRAZOS Y MONTAJE (GR) | 472 |
| PROTECTOR DE CORREA (GR) | 37 |
| PROTECTOR DE ROPS/FOPS | 543 |
| PUBLICACIONES (GR) | 570 |
| PUERTA DE CABINA | 531, 532, 534, 536 |
| PUERTA DE CABINA (*POLYCARBONATE) | 526, 560 |
| PUERTA Y MONTAJE DE CABINA (GR) | 526, 529 |


## R


| Nombre | Página |
|---|---|
| RADIADOR Y ENFRIADOR DE ACEITE HIDRÁULICO (GR) | 71 |
| RECUPERACIÓN DEL REFRIGERANTE (GR) | 72 |
| REFLECTOR (GR) | 123, 124 |


* NO HAY TRADUCCION DISPONIBLE EN EL MOMENTO DE LA IMPRESION

# INDICE


| Nombre | Página |
|---|---|
| REGULADOR - PEDAL DEL (GR) | 582, 583 |
| REGULADOR Y CAJA (GR) | 66 |
| REJILLA (ACEITE HIDRÁULICO) | 299 |
| REJILLA DE SUCCIÓN (TANQUE HIDRÁULICO) | 338 |
| REJILLA (TANQUE DE AGUA) | 458 |
| RELÉ (CONJ) (*SHELL) | 145 |
| RELÉ (CONJ) (12 VOLTIOS) | 121, 122, 149, 153, 217, 468, 470 |
| RELÉ (CONJ) (12 VOLTIOS) (CALEFACTOR) | 549, 551 |
| RELÉ (CONJ) (12 VOLTIOS) (CORRIENTE PRINCIPAL) | 144 |
| RELÉ (CONJ) (12 VOLTIOS) (CORRIENTE PRINCIPAL) | 153 |
| RELÉ (CONJ) (12 VOLTIOS) (HERRAMIENTA) | 153 |
| RELÉ (CONJ) (12 VOLTIOS) (LUZ DEL FRENO) | 152 |
| RESORTE DE GAS (GR) | 595 |
| RESORTE DE HOJA (GR) | 455 |
| RESPIRADERO (AIRE ACONDICIONADO) | 480, 481 |
| RESPIRADERO (COMPARTIMENTO DE TANDEM) | 212 |
| RESPIRADERO (COMPRESOR DE AIRE ACONDICIONADO) | 556 |
| RESPIRADERO (COMPRESOR DE AIRE ACONDICIONADO) | 558 |
| RESPIRADERO (CONJ) (*INLINE) (ACEITE HIDRÁULICO) | 337 |
| RETORNO EN EL MULTIPLE(GR) | 172 |
| RETROCESO - ALARMA DE (GR) | 142 |
| RETROVISOR (GR) | 571 |
| RETROVISOR Y MONTAJE (GR) | 222 |
| REVESTIMIENTO DE LA CABINA (GR) | 564 |
| REVESTIMIENTO-TECHO | 565 |
| RUEDA Y LLANTA (CONFIG) | 195, 196, 197, 198 |
| RUEDA Y NEUMÁTICO (GR) | 198, 199 |


## S


| Nombre | Página |
|---|---|
| SELLO DE CABINA (GR) | 586 |
| SENSOR DE LA TEMPERATURA (REFRIGERANTE) | 141 |
| SILENCIADOR (GR) | 83 |
| SILENCIADOR Y MONTAJE GR | 81, 82 |
| SISTEMA ROPS DE CABINA CERRADA (CONFIG) | 476 |
| SOFTWARE PARA LA MAQUINA (GR) (SEGURIDAD) | 119 |
| SOFTWARE PARA LA MAQUINA (GR) (SEGURIDAD) | 114 |
| SOLENOIDE (BOMBA DE COMBUSTIBLE) | 100 |
| SOLENOIDE (CONJ) | 357 |
| SOPLADOR - VENTILADOR (GR) | 71 |
| *SUPPORT GP-STORAGE BOX | 6, 7, 10, 11 |


## T


| Nombre | Página |
|---|---|
| TABLERO DE INSTRUMENTOS (CONFIG) | 576 |
| TABLERO DE INSTRUMENTOS (GR) | 577, 579 |
| TANQUE DEL AGUA (GR) | 462 |
| TANQUE HIDRÁULICO (GR) | 338 |
| TANQUE HIDRÁULICO Y MONTAJE (GR) | 337 |
| TAPA CON RESPIRADERO (RECUPERACIÓN DE REFRIGERANTE) | 72 |
| TAPA DE LA CONSOLA (GR) | 523, 524 |
| TAPA DE LLENADO (CONJ) (TANQUE HIDRAULICO) | 338 |
| TAPA DE RADIADOR (CONJ) | 71 |
| TAPA DE TUBERIAS (GR) | 421 |
| TAPA DEL MECANISMO DE VÁLVULAS (GR) | 21 |
| TAPA DEL TABLERO DE INSTRUMENTOS (GR) | 525 |
| TAPA PARA EL COMBUSTIBLE | 90, 96 |
| TAPÓN (CONJ) (TANQUE DE AGUA) | 462 |
| TAPON DE LA VALVULA PILOTO (GR) | 332 |
| TAPÓN DEL BLOQUE MOTOR (GR) | 53 |
| TAPÓN DEL MOTOR (GR) | 54, 55 |
| TAPÓN (*DRAIN, ENGINE OIL) | 47, 49 |
| TAPÓN MAGNÉTICO (TANDEM) | 212 |
| TOPE DEL GARFIO(GR) | 444, 445, 457 |
| TORNILLERIA DE MAZO DE CABLES (GR) | 115 |
| TRABA-ACOPLADOR RAPIDO (GR) | 452 |


* NO HAY TRADUCCION DISPONIBLE EN EL MOMENTO DE LA IMPRESION

# INDICE


| Nombre | Página |
|---|---|
| TUBERÍAS CON SERVOMANDO (GR) | 297, 299 |
| TUBERÍAS DE ACEITE DEL MOTOR (GR) | 62 |
| TUBERÍAS DE ACONDICIONADOR DE AIRE (GR) | 566 |
| TUBERIAS DE CALEFACCION | 568 |
| TUBERÍAS DE COMBUSTIBLE (GR) | 90 |
| TUBERIAS DE CONEXION (GR) | 276, 278 |
| TUBERÍAS DE INYECCIÓN DE COMBUSTIBLE (GR) | 92, 94 |
| TUBERÍAS DE LA CALEFACCIÓN (GR) | 568 |
| TUBERIAS DE LA GUIA (GR) | 214 |
| TUBERIAS DE LA HERRAMIENTA DE TRABAJO | 307, 309 |
| TUBERÍAS DEL AGUA (GR) | 67 |
| TUBERÍAS DEL CILINDRO DE INCLINACIÓN (GR) | 303, 305 |
| TUBERÍAS DEL CUCHARÓN (GR) | 262, 264, 266, 268, 270, 272, 274 |
| TUBERÍAS DEL ENFRIADOR DE ACEITE HIDRÁULICO (GR) | 289 |
| TUBERÍAS DEL GARFIO (GR) | 280, 282, 284 |
| TUBERIAS (GR) -COMBUSTIBLE PRIMARIO Y FILTRO | 96 |
| TUBERÍAS HIDRÁULICAS DEL VENTILADOR (GR) | 286, 287 |
| TUBERÍAS HIDROSTÁTICAS (GR) | 164 |
| TURBOCOMPRESOR (GR) | 84, 86 |
| VÁLVULA DE ALIVIO (GR) (ACEITE DEL MOTOR) | 183, 185 |
| VÁLVULA DE ALIVIO (GR) (LEVANTAMIENTO) | 340 |
| VÁLVULA DE ALIVIO (GR) (*TILT, AUXILIARY) | 340 |
| VÁLVULA DE ALIVIO (GR) (VELOCIDAD DEL VENTILADOR) | 324 |
| VÁLVULA DE CONTROL (GR) | 340 |
| VÁLVULA DE CONTROL MANUAL (GR) | 343 |
| VÁLVULA DE CONTROL Y MONTAJE (GR) | 339 |
| VÁLVULA DE DETECCIÓN DE VELOCIDAD (GR) (*PISON PUMP) | 183, 185 |
| VÁLVULA DE SOLENOIDE (GR) | 194, 356, 357, 358, 359 |
| VÁLVULA DE SOLENOIDE (GR) | 355 |
| VÁLVULA DE SOLENOIDE (GR) (ACOPLADOR RAPIDO) | 318 |
| VÁLVULA DE SOLENOIDE (GR) (12 VOLTIOS) | 350, 352 |
| VÁLVULA DE SOLENOIDE (GR) (12 VOLTIOS CORRIENTE DIRECTA) | 328 |
| VÁLVULA DE SOLENOIDE (GR) (12 VOLTIOS CORRIENTE DIRECTA) | 556, 558 |
| VÁLVULA PILOTO (GR) | 344, 346, 348, 349, 350, 352 |
| VÁLVULA PILOTO (GR) (LADO DERECHO) | 256 |
| VÁLVULA PILOTO (GR) (LADO IZQUIERDO) | 256 |
| VALVULA (PRESIÓN DEL ACEITE DE MOTOR) | 64 |
| VENTANA DE LA CABINA (GR) | 598, 599, 600, 601, 603 |
| VISERA | 596, 597 |
| VISERA (GR) | 596, 597 |
| VOLANTE - CAJA DE (GR) | 38, 39 |
| VOLANTE (GR) | 32, 33 |


## V


| | |
|---|---|
| *V-BELT GP | 14, 15, 59 |
| VALVULA DE ALIVIO DE ACEITE DE MOTOR (GR) | 64 |
| VÁLVULA DE ALIVIO (GR) | 326, 327, 354 |


* NO HAY TRADUCCION DISPONIBLE EN EL MOMENTO DE LA IMPRESION

# ÍNDICE


| Designação | Página |
|---|---|
| **A** | |
| ACOPLADOR RÁPIDO | 417 |
| | 418 |
| | 420 |
| ACOPLAMENTO DE COMANDO | 521 |
| | 556 |
| | 558 |
| ACUMULADOR - AR CONDICIONADO | 464 |
| | 465 |
| ACUMULADOR HIDRÁULICO E MONTAGEM | 231 |
| ADAPTADOR-TUBULAÇÃO DE ÓLEO | 232 |
| ADESIVO - FUSÍVEL/RELÉ | 112 |
| ALARME DE MARCHA À RÉ | 142 |
| ALAVANCA - GOVERNADOR | 563 |
| ALAVANCA DE CONTROLE - MODULAR | 488 |
| | 489 |
| | 490 |
| | 545 |
| | 546 |
| ALÇA | 479 |
| ALÇA - ACOPLADOR | 448 |
| | 449 |
| ALÇA E PINO - ACOPLADOR | 446 |
| | 447 |
| ALOJAMENTO - LATERAL | 555 |
| ALTERNADOR DE CORRENTE | 103 |
| | 105 |
| | 106 |
| | 107 |
| AMORTECEDOR E MONTAGEM | 81 |
| | 82 |
| AQUECEDOR DA ÁGUA DO MOTOR | 117 |
| | 118 |
| AQUECEDOR DA CABINE | 548 |
| | 549 |
| | 551 |
| | 553 |
| AQUECEDOR DA CABINE E MONTAGEM | 547 |
| ARMAÇÃO - LÂMINA | 439 |
| ARMAÇÃO DA GARRA | 442 |
| ARMAÇÃO DO VIDRO | 539 |
| | 540 |
| ARMAÇÃO E MONTAGEM - MÁQUINA | 212 |
| ARMAÇÃO-GARFO | 440 |
| | 441 |
| ARRANJO BÁSICO | 2 |
| ARREFECEDOR - ÓLEO DO MOTOR | 65 |
| ARTICULAÇÃO - ACOPLADOR | 451 |
| ASSENTO | 592 |
| | 593 |
| ASSENTO AJUSTÁVEL | 594 |

| Designação | Página |
|---|---|
| **B** | |
| BALANCIM | 60 |
| BATENTE - GARRA | 444 |
| | 445 |
| | 457 |
| BATERIA | 108 |
| | 109 |
| BATERIA (12 VOLTS, ISENTO DE MANUTENÇÃO) | 109 |
| BATERIA (12 VOLTS, PADRÃO) | 108 |
| BEIRA - PONTA CORTANTE | 424 |
| BIELA | 20 |
| BLOCO DO MOTOR | 24 |
| | 26 |
| BOBINA-SOLENÓIDE (12-VOLTS) | 355 |
| BOMBA DA FERRAMENTA DE TRABALHO E MONTAGEM | 333 |
| | 334 |
| BOMBA DE ÁGUA | 70 |
| BOMBA DE DIAFRAGMA | 459 |
| BOMBA DE ENGRENAGENS | 335 |
| | 336 |
| BOMBA DE ESCORVA DO COMBUSTÍVEL E DO FILTRO PRIMÁRIO | 102 |
| BOMBA DE INJEÇÃO DO COMBUSTÍVEL | 98 |
| | 100 |
| BOMBA DE ÓLEO - MOTOR | 63 |
| BOMBA DE PISTÃO | 183 |
| | 185 |
| BOMBA E MONTAGEM - HIDROSTÁTICA | 181 |
| | 182 |
| BORDA CORTANTE | 424 |
| | 425 |
| | 426 |
| | 427 |
| | 428 |
| | 429 |
| | 430 |
| BRAÇO - MANIPULADOR DE MATERIAIS | 360 |
| BRAÇO DO ASSENTO | 473 |
| BRAÇO DO LIMPADOR | 532 |
| BRAÇO DO LIMPADOR (DIANTEIRO) | 534 |
| BUJÃO DA VÁLVULA PILOTO | 332 |
| BUJÃO DO BLOCO DO CILINDRO | 53 |
| BUJÃO DO MOTOR | 54 |
| | 55 |
| BUJÃO MAGNÉTICO (TANDEM) | 212 |
| BUZINA (TOM BAIXO) | 505 |
| | 507 |
| BUZINA (24 VOLTS, TOM BAIXO) | 510 |


* TRADUÇÃO NÃO DISPONÍVEL NO MOMENTO DA IMPRESSÃO

# ÍNDICE


| Designação | Página |
|---|---|

## C

CABEÇOTE DO MOTOR . . . . . 28
29
CABINE - ESTRUTURA DE PROTEÇÃO CONTRA CAPOTAMENTO . . . . . 477
478
CABINE - ESTRUTURA ROPS COBERTA . . . . . 476
CABO - CONTROLE DO GOVERNADOR . . . . . 88
CABO DE CONTROLE . . . . . 479
CABOS E FIOS ELÉTRICOS-LUZES TRASEIRAS . . . . . 152
CABOS/FIOS ELÉTRICOS - AR CONDICIONADO . . . . . 143
CABOS/FIOS ELÉTRICOS - CHASSI . . . . . 144
148
CABOS/FIOS ELÉTRICOS - FERRAMENTAS DE TRABALHO . . . . . 153
CABOS/FIOS ELÉTRICOS - MOTOR . . . . . 149
CAÇAMBA - GARRA . . . . . 375
376
377
378
379
380
381
401
402
403
404
405
406
CAÇAMBA - PARA APLICAÇAO GERAL . . . . . 373
374
375
CAÇAMBA - SERVIÇOS GERAIS . . . . . 385
386
CACAMBA - TERRA . . . . . 399
CAÇAMBA DE MÚLTIPLAS APLICAÇÕES . . . . . 382
383
384
385
407
408
409
410
411
CACAMBA E GARFO . . . . . 415
CAÇAMBA PARA APLICAÇÃO GERAL . . . . . 391
392
393
394
395
400
CACAMBA PARA MATERIAL LEVE . . . . . 396
397
398
CAÇAMBA PARA MATERIAL LEVE . . . . . 382
CAÇAMBA PARA SERVIÇOS GERAIS . . . . . 412
413
414
CAÇAMBA PARA TERRA . . . . . 372
373
387
388
389
390
CADEADO . . . . . 204
206
CAIXA DE ARMAZENAMENTO . . . . . 475
CAIXA DE ARMAZENAMENTO (LITERATURA) . . . . . 476
CAIXA DIANTEIRA . . . . . 40
42
CAIXA DO VOLANTE DO MOTOR . . . . . 38
39
CÁRTER DO ÓLEO DO MOTOR . . . . . 47
49
CHASSI . . . . . 1
CHASSI - MÁQUINA . . . . . 212
CHAVE . . . . . 18
CHAVE - ELETRÔNICO (SEGURANÇA) . . . . . 114
119
CHAVE INTERRUPTORA DE PARTIDA . . . . . 541
CHICOTE - CABOS ELÉTRICOS (MARCADOR DE HORAS DE SERVIÇO) . . . . . 525
CHICOTE - CHASSI (BUZINA) . . . . . 151
CHICOTE - CHASSI (TRANSMISSÃO) . . . . . 556
CHICOTE - CHASSI (TRANSMISSÃO) . . . . . 558
CHICOTE - MOTOR . . . . . 149
CHICOTE - PLATAFORMA . . . . . 144
CHICOTE - PLATAFORMA (INFERIOR) . . . . . 144
CHICOTE - TRASEIRO (SISTEMA HIDRÁULICO AUXILIAR) . . . . . 148
CILINDRO DA CAÇAMBA . . . . . 239
CILINDRO DA GARRA . . . . . 240
CILINDRO DE INCLINAÇÃO . . . . . 250
251
CILINDRO DE LEVANTAMENTO . . . . . 248
249
CILINDRO E ARTICULAÇÃO - ACOPLADOR . . . . 422
423
CILINDRO E MONTAGEM - BRAÇO DE LEVANTAMENTO . . . . . 236
CILINDRO E MONTAGEM - CAÇAMBA . . . . . 235
CILINDRO E MONTAGEM - LÂMINA ANGULÁVEL . . . . . 233


* TRADUÇÃO NÃO DISPONÍVEL NO MOMENTO DA IMPRESSÃO

# ÍNDICE


| Designação | Página |
|---|---|
| | 234 |
| CILINDRO HIDRÁULICO | 241 |
| | 242 |
| | 243 |
| | 244 |
| | 245 |
| | 246 |
| | 247 |
| | 259 |
| CINTO DE SEGURANÇA | 588 |
| | 589 |
| | 590 |
| | 591 |
| COBERTURA DO MOTOR | 210 |
| COLETOR - CONTROLE | 318 |
| | 319 |
| COLETOR - RETORNO | 172 |
| COLETOR DE ADMISSÃO | 80 |
| COLETOR DE ESCAPE | 79 |
| COLETOR E MONTAGEM - CONTROLE | 315 |
| | 316 |
| COLETOR E SOLENÓIDE-CONTROLE | 170 |
| | 171 |
| | 317 |
| COLETOR E TUBULAÇÕES -CONTROLE | 166 |
| | 168 |
| COLETOR E TUBULAÇÕES-ACOPLADOR | 311 |
| COMANDO DO TANDEM | 160 |
| COMANDO HIDRÁULICO | 252 |
| | 253 |
| COMPRESSOR DE REFRIGERANTE | 480 |
| | 481 |
| | 556 |
| | 558 |
| COMPRESSOR DE REFRIGERANTE E MONTAGEM | 483 |
| COMPRESSOR E MOTOR - REFRIGERADO | 480 |
| | 481 |
| CONDENSADOR DO REFRIGERANTE E MONTAGEM | 484 |
| CONDICIONADOR DE AR | 466 |
| | 467 |
| | 468 |
| | 470 |
| CONEXÃO | 301 |
| CONEXÃO - HIDRÁULICA | 301 |
| CONTRAPESO | 208 |
| | 209 |
| CONTROLE - NÃO PROGRAMADO | 113 |
| CONTROLE - NÃO PROGRAMADO (SEGURANÇA) | 114 |
| CONTROLE-CABO | 485 |
| | 486 |
| | 487 |
| | 488 |
| | 489 |
| | 490 |
| | 491 |
| CONTROLE DE TRAVAMENTO | 110 |
| CONTROLE DO COMANDO-HIDROSTÁTICO | 157 |
| | 158 |
| | 159 |
| CONTROLE DO GOVERNADOR | 89 |
| CONTROLE HIDRÁULICO DE OPERAÇÃO PILOTO | 492 |
| | 495 |
| | 496 |
| | 498 |
| | 499 |
| | 501 |
| | 502 |
| | 504 |
| | 505 |
| | 506 |
| | 507 |
| | 509 |
| | 510 |
| | 513 |
| | 515 |
| | 518 |
| CORREIA DE COMANDO (PISCA-ALERTA) | 129 |
| CORREIA EM V | 14 |
| | 15 |
| | 59 |
| CORREIA EM V (BOMBA D'ÁGUA) | 59 |


## D


| | |
|---|---|
| DECALQUE | 159 |
| | 605 |
| | 606 |
| | 608 |
| DECALQUE - ADVERTÊNCIA (ALTA PRESSÃO, CONSULTAR OMM, EUA) | 621 |
| | 624 |
| DECALQUE - ADVERTÊNCIA (ALTA PRESSÃO, CONSULTAR OMM, EUA) | 614 |
| DECALQUE - ADVERTÊNCIA (ALTA PRESSÃO, CONSULTAR OMM, INTERNACIONAL) | 611 |
| | 627 |
| | 630 |
| DECALQUE - ADVERTÊNCIA (DIREÇÃO) | 204 |
| | 206 |
| DECALQUE - ADVERTÊNCIA (FOLGA) | 605 |
| DECALQUE - ADVERTÊNCIA (NÃO É ACESSO) | 611 |


* TRADUÇÃO NÃO DISPONÍVEL NO MOMENTO DA IMPRESSÃO

# ÍNDICE


| Designação | Página |
|---|---|
| | 627 |
| DECALQUE - ADVERTÊNCIA (NAO HÁ VAO LIVRE, MANTENHA DISTANCIA) | 364 |
| | 365 |
| DECALQUE - ADVERTÊNCIA (NÃO SOLDAR, NÃO PERFURAR, CONSULTAR OMM) | 614 |
| DECALQUE - ADVERTÊNCIA (NÃO SOLDAR, NÃO PERFURAR, CONSULTAR OMM) | 621 |
| | 624 |
| DECALQUE - ADVERTÊNCIA (PERIGO DE ESMAGAMENTO, MANTENHA DISTÂNCIA) | 617 |
| DECALQUE - ADVERTÊNCIA (PERIGO DE ESMAGAMENTO, MANTENHA DISTÂNCIA) | 330 |
| | 407 |
| | 408 |
| | 409 |
| | 411 |
| | 443 |
| DECALQUE - ADVERTÊNCIA (PERIGO DE ESMAGAMENTO, MANTENHA DISTANCIA, EUA) | 617 |
| DECALQUE - ADVERTÊNCIA (PONTO DE UNIÃO) | 433 |
| | 434 |
| | 438 |
| | 442 |
| DECALQUE - IDENTIFICAÇÃO (FILTRO DE COMBUSTÍVEL, SEPARADOR DE ÁGUA) | 90 |
| | 96 |
| DECALQUE - IDENTIFICAÇÃO (IGNIÇÃO) | 119 |
| | 120 |
| DECALQUE - IDENTIFICAÇÃO (TOMADA DE FORÇA, 12 VOLTS) | 611 |
| | 614 |
| | 621 |
| | 624 |
| | 627 |
| | 630 |
| DECALQUE - IDENTIFICAÇÃO (13 KM/H) | 10 |
| | 202 |
| DECALQUE - IDENTIFICAÇÃO (13 KM/H) | 6 |
| DECALQUE - IDENTIFICAÇÃO (20-KM/H) | 7 |
| | 11 |
| | 203 |
| DECALQUE - INFORMAÇÕES (CONSULTAR OMM) | 611 |
| | 614 |
| | 621 |
| | 624 |
| | 627 |
| | 630 |
| DECALQUE - INFORMAÇÕES (LOCAL DE AMARRAÇÃO) | 360 |
| DECALQUE - INSTRUÇÃO (CONTROLE DA MÁQUINA, CONSULTAR OMM, ESQUERDO) | 256 |
| DECALQUE - INSTRUÇÃO (CONTROLE DA MÁQUINA, DIREITO, CONSULTAR OMM) | 256 |
| DECALQUE - INSTRUÇÃO (CONTROLE DA MÁQUINA, DIREITO, CONSULTAR OMM) | 256 |
| DECALQUE - INSTRUÇÃO (CONTROLE DA MÁQUINA, DIREITO, CONSULTAR OMM) | 257 |
| DECALQUE - INSTRUÇÃO (CONTROLE DA MÁQUINA, LER OMM) | 498 |
| DECALQUE - INSTRUÇÃO (CONTROLE DA MÁQUINA, LER OMM) | 496 |
| | 502 |
| | 504 |
| | 505 |
| | 506 |
| | 507 |
| | 509 |
| | 510 |
| | 513 |
| | 515 |
| | 518 |
| DECALQUE - INSTRUÇÃO (CONTROLES DA MÁQUINA) | 492 |
| | 495 |
| | 499 |
| | 501 |
| DECALQUE - INSTRUÇÃO (PAINEL) | 542 |
| DECALQUE - INSTRUÇÃO (PAINEL DE INSTRUMENTOS) | 541 |
| DECALQUE - INSTRUÇÃO (SEGURANÇA DA MÁQUINA, INTERNACIONAL) | 119 |
| | 120 |
| DECALQUE - INSTRUÇÃO (SEM DEGRAUS) | 259 |
| | 311 |
| | 617 |
| DECALQUE - TIRA (REFLETOR, VERMELHO, BRANCO) | 453 |
| | 454 |
| DECALQUE (CONTROLE DE TEMPERATURA) | 468 |
| | 549 |
| DECALQUE (CONTROLE DE TEMPERATURA) | 470 |
| | 551 |
| DECALQUE (FOPS) | 543 |
| DECALQUE (REFLETOR) | 453 |
| | 454 |
| DECALQUE (2 VELOCIDADES) | 158 |
| | 159 |


* TRADUÇÃO NÃO DISPONÍVEL NO MOMENTO DA IMPRESSÃO

# ÍNDICE


| Designação | Página |
|---|---|
| | 254 |
| DEGRAU - BRAÇO DE MANIPULAÇÃO DE MATERIAIS | 456 |
| DISJUNTOR AUTOMÁTICO DE CIRCUITO (105 AMPERES) (PRINCIPAL) | 149 |
| DISJUNTOR AUTOMÁTICO DE CIRCUITO (30 AMPERES) | 217 |
| DISJUNTOR AUTOMÁTICO DE CIRCUITO (30 AMPERES) (ILUMINAÇÃO) | 132 |
| DRENO | 30 |
| DRENO - ÓLEO DO MOTOR | 31 |
| DUCTO E CONTROLE | 537 |

## E

| | |
|---|---|
| EIXO | 155 |
| | 156 |
| | 157 |
| EIXO-COMANDO DE VÁLVULA | 18 |
| | 19 |
| ELEMENTO DO FILTRO DE AR (PRIMÁRIO) | 75 |
| ELEMENTO DO FILTRO DE AR (SECUNDÁRIO) | 75 |
| ELEMENTO FILTRANE-AR DA CABINE | 468 |
| | 470 |
| | 549 |
| | 551 |
| ELEMENTO FILTRANE-AR DA CABINE (AR) | 470 |
| | 551 |
| EMISSOR - NÍVEL DO COMBUSTÍVEL | 212 |
| ENCOSTO DO BRAÇO E MONTAGEM | 472 |
| ENGRENAGENS DE DISTRIBUIÇÃO | 34 |
| | 35 |
| ESPELHO RETROVISOR | 571 |
| ESPELHO RETROVISOR E MONTAGEM | 222 |

## F

| | |
|---|---|
| FAROL DIANTEIRO | 125 |
| FIAÇÃO - AQUECEDOR E AR CONDICIONADO | 143 |
| | 549 |
| | 551 |
| | 556 |
| | 558 |
| FIAÇÃO - BUZINA | 151 |
| FIAÇÃO - CONTROLE (SEGURANÇA) | 120 |
| FIAÇÃO - CONTROLE (SEGURANÇA) | 119 |
| FIAÇAO - CONTROLES DO OPERADOR (ALAVANCA DE CONTROLE) | 495 |
| | 498 |
| | 499 |
| | 501 |
| FIAÇAO - CONTROLES DO OPERADOR (ALAVANCA DE CONTROLE, DIREITA) | 256 |
| FIAÇAO - CONTROLES DO OPERADOR (ALAVANCA DE CONTROLE, DIREITA, ESQUERDA) | 256 |
| FIAÇAO - CONTROLES DO OPERADOR (ALAVANCA DE CONTROLE, ESQUERDA) | 256 |
| FIAÇÃO - FERRAMENTA DE TRABALHO | 459 |
| FIAÇÃO - FERRAMENTA DE TRABALHO (BRAÇO DE LEVANTAMENTO) | 121 |
| | 153 |
| FIAÇÃO - FERRAMENTA DE TRABALHO (CONECTANDO) | 362 |
| | 363 |
| FIAÇÃO - FERRAMENTA DE TRABALHO (PLATAFORMA) | 121 |
| | 153 |
| FIAÇÃO - LUZES TRASEIRAS | 132 |
| | 145 |
| | 217 |
| | 224 |
| | 225 |
| FIAÇÃO - LUZES TRASEIRAS (FREIO) | 152 |
| FIAÇÃO - LUZES TRASEIRAS (FREIO) | 217 |
| FIAÇÃO - PAINEL | 577 |
| FIAÇÃO -LUZES DIANTEIRAS | 132 |
| | 217 |
| FIAÇÃO-LIMPADOR DE VIDROS | 526 |
| | 529 |
| | 532 |
| | 534 |
| | 560 |
| | 561 |
| FIAÇÃO-TANQUE DE COMBUSTÍVEL | 143 |
| | 556 |
| | 558 |
| *FILTER-ENGINE OIL | 61 |
| FILTRO - ÓLEO | 163 |
| FILTRO - ÓLEO DO MOTOR | 61 |
| FILTRO - ÓLEO (EFICIÊNCIA AVANÇADA) (HIDRÁULICO) | 163 |
| FILTRO - SEPARADOR DE ÁGUA E COMBUSTÍVEL | 102 |
| FILTRO DE ÓLEO (MOTOR) | 62 |
| FILTRO HIDRÁULICO E TUBOS | 161 |
| FIXADOR - VÁLVULA | 357 |
| FIXADORES - CHICOTE | 115 |
| FUSÍVEL (10 AMPERES) | 121 |
| | 122 |
| | 142 |
| | 145 |
| | 153 |
| | 259 |


* TRADUÇÃO NÃO DISPONÍVEL NO MOMENTO DA IMPRESSÃO

# ÍNDICE


| Designação | Página |
|---|---|
| | 417 |
| | 513 |
| | 515 |
| | 518 |
| FUSÍVEL (10 AMPERES) | 510 |
| FUSÍVEL (15 AMPERES) | 121 |
| | 143 |
| | 145 |
| | 153 |
| FUSÍVEL (20-AMPERES) | 145 |
| FUSÍVEL (30 AMPERES) | 143 |
| | 145 |
| | 557 |
| | 559 |

## G

| | |
|---|---|
| GARFO - SERVIÇOS PÚBLICOS | 437 |
| | 438 |
| GARFO DA GARRA | 430 |
| | 431 |
| | 432 |
| | 433 |
| | 434 |
| GARFO DE PALETAS | 435 |
| | 436 |
| GARRA - SERVIÇOS PÚBLICOS | 443 |
| | 444 |
| | 445 |
| GR. DE CONVERSÃO - ARRANJO NÃO RODOVIÁRIO | 111 |
| GR. DE CONVERSÃO - OPERAÇÃO RODOVIÁRIA | 204 |
| | 205 |
| | 206 |
| | 207 |
| GRUPO DE CONVERSÃO - ARRANJO RODOVIÁRIO | 201 |
| | 202 |
| | 203 |
| GRUPO DE INSTALAÇÃO - MOTOR | 16 |
| GRUPO DE POLIA - BOMBA DE ÁGUA | 58 |
| GRUPO ROTATIVO DA BOMBA (DIREITO) | 183 |
| | 185 |
| GRUPO ROTATIVO DA BOMBA (ESQUERDO) | 183 |
| | 185 |
| GUIA - TUBOS | 214 |

## I

| | |
|---|---|
| ILUMINAÇÃO - FREIO E MARCHA À RÉ | 134 |
| ILUMINAÇÃO - RODOVIÁRIA | 132 |
| INDICADOR | 75 |
| INDICADOR - NÍVEL DO ÓLEO (VARETA) (MOTOR) | 47 |
| | 49 |
| INDICADOR E ALARME | 541 |
| | 542 |
| INSTALAÇÃO | 556 |
| INSTALAÇÃO-SEGURANÇA | 119 |
| | 120 |
| INSTALAÇÃO-SISTEMA HIDRÁULICO AUXILIAR | 254 |
| INTERRUPTOR - BALANCIM (ACOPLADOR RAPIDO) | 417 |
| INTERRUPTOR - BALANCIM (ACOPLADOR RAPIDO) | 259 |
| INTERRUPTOR - BALANCIM (AQUECEDOR) | 468 |
| | 470 |
| | 549 |
| | 551 |
| INTERRUPTOR - BALANCIM (CONDICIONADOR DE AR) | 468 |
| INTERRUPTOR - BALANCIM (CONDICIONADOR DE AR) | 470 |
| INTERRUPTOR - BALANCIM (ENERGIA ELÉTRICA, FERRAMENTA DE TRABALHO) | 121 |
| | 122 |
| | 153 |
| INTERRUPTOR - BALANCIM (FARÓIS DE ESTRADA) | 132 |
| | 217 |
| INTERRUPTOR - BALANCIM (FAROL DIANTEIRO) | 577 |
| | 579 |
| INTERRUPTOR - BALANCIM (FREIO DE ESTACIONAMENTO) | 577 |
| | 579 |
| INTERRUPTOR - BALANCIM (LIMPADOR TRASEIRO) | 532 |
| | 534 |
| INTERRUPTOR - BALANCIM (LUZES DE ADVERTÊNCIA CONTRA PERIGO) | 217 |
| INTERRUPTOR - BALANCIM (LUZES DE ADVERTÊNCIA CONTRA PERIGO) | 132 |
| INTERRUPTOR - BALANCIM (LUZES DE TRABALHO TRASEIRAS) | 130 |
| INTERRUPTOR - BALANCIM (PARTIDA A FRIO) | 577 |
| | 579 |
| INTERRUPTOR - BALANCIM (PISCA-ALERTA) | 135 |
| INTERRUPTOR - BALANCIM (POSICIONADOR DA FERRAMENTA DE TRABALHO) | 252 |


* TRADUÇÃO NÃO DISPONÍVEL NO MOMENTO DA IMPRESSÃO

# ÍNDICE


| Designação | Página |
|---|---|
| INTERRUPTOR - BALANCIM (SETA DE DIREÇÃO) | 132, 217 |
| INTERRUPTOR - LIMITADOR (LIMPADOR) | 532, 534 |
| INTERRUPTOR - PRESSÃO | 140, 141 |
| INTERRUPTOR - PRESSÃO (ALARME DE MARCHA-À-RÉ) | 142, 256 |
| INTERRUPTOR - PRESSÃO (AR CONDICIONADO) | 566 |
| INTERRUPTOR - PRESSÃO (ÓLEO DO MOTOR) | 141 |
| INTERRUPTOR - PRESSÃO (ÓLEO HIDRÁULICO) | 163 |
| INTERRUPTOR - PRESSÃO (REFRIGERANTE) | 557, 558 |
| INTERRUPTOR - TEMPERATURA (AR CONDICIONADO) | 468, 470 |
| INTERRUPTOR - TEMPERATURA (LÍQUIDO ARREFECEDOR DO MOTOR) | 136, 149 |
| INTERRUPTOR - TEMPERATURA (ÓLEO HIDRÁULICO) | 338 |
| INTERRUPTOR (ASSENTO) | 593, 594 |
| INTERRUPTOR (MOTOR DE PARTIDA)(12-VOLT) | 137 |


## J


| | |
|---|---|
| JANELA DA CABINE | 598, 599, 600, 601, 603 |
| JOGO - PORTA DA CABINE E MONTAGEM | 560, 561 |
| JOGO - VÁLVULA PILOTO (MOLA) | 346 |
| JOGO-CONVERSÃO DA ALAVANCA DE CONTROLE | 256 |
| JOGO DE BUJÃO-CON | 473 |
| JOGO DE RETENTOR | 346 |
| JOGO-INSTALAÇÃO DO CONDICIONADOR DE AR | 558 |
| JOGO-INSTALAÇÃO DO CONDICIONADOR DE AR E AQUECEDOR | 556 |
| JOGO-PLACA DE RODAGEM E MONTAGEM | 450 |
| JOGO-PROTETOR CONTRA DETRITOS | 76 |
| JOGO-RETENTOR DA COBERTURA DO MOTOR | 215 |
| JUNTA - TAMPA (BOMBA D'ÁGUA) | 70 |
| JUNTA (MECANISMO DE VÁLVULA) | 21 |
| JUNTA (REGULADOR DA TEMPERATURA DA ÁGUA) | 66, 67 |
| JUNTA (TELA) | 81 |


## K


| | |
|---|---|
| KIT-CONTROLE E FIAÇÃO DA FERRAMENTA DE TRABALHO | 121 |
| KIT-CONVERSÃO DE RODAGEM | 217 |
| KIT-CONVERSÃO DO ACOPLADOR RÁPIDO | 259 |
| KIT-FIAÇÃO DA FERRAMENTA DE TRABALHO | 122 |
| KIT-RETENTOR DA CABINE | 562 |


## L


| | |
|---|---|
| LÂMINA | 361, 362, 363 |
| LÂMINA ANGULÁVEL | 364, 365, 366, 367 |
| LÂMINA-CAÇAMBA DE APLICAÇÕES MÚLTIPLAS | 368, 369, 370, 371 |
| LÂMINA DO LIMPADOR DE PÁRA-BRISA (558 MM) (DIANTEIRO, TRASEIRO) | 532 |
| LÂMINA DO LIMPADOR DE PÁRA-BRISA (558 MM) (PORTA DA CABINE) | 534 |
| LÂMPADA - FAROL | 123, 124 |
| LÂMPADA - TETO (12-VOLTS) | 542 |
| LÂMPADA DIANTEIRA E DE SINAL | 125 |
| LAMPADA-PLACA DE REGISTRO | 223 |
| LÂMPADA (VERMELHA, VERDE, LED, 12 VOLTS) | 120 |
| LÂMPADA (12-VOLTS) | 542 |
| LÂMPADA (12-VOLTS) (PLACA DE REGISTRO) | 223 |
| LÂMPADA (12-VOLTS, 10-WATTS) | 542 |
| LÂMPADA (12-VOLTS, 21-WATTS) | 125, 128 |
| LÂMPADA (12-VOLTS, 4-WATTS) | 125 |
| LÂMPADA (12 VOLTS, 5 WATTS) | 127, 128 |


* TRADUÇÃO NÃO DISPONÍVEL NO MOMENTO DA IMPRESSÃO

# ÍNDICE


| Designação | Página |
|---|---|
| LÂMPADA (12-VOLTS, 55-WATTS) | 123, 124, 129 |
| LEVANTAMENTO DA MÁQUINA | 220, 221 |
| LEVANTAMENTO DO MOTOR | 44, 45 |
| LUZ GIRATÓRIA DE ALARME | 129 |
| LUZ INTERMITENTE (12-VOLTS) | 132, 217 |
| LUZ TRASEIRA E DE FREIO | 127, 128 |


## M


| | |
|---|---|
| MANCAL - PRINCIPAL | 17 |
| MÁQUINA - CONVERSÃO | 3, 4, 5, 6, 7, 8, 9, 10, 11 |
| MÁQUINA AR DE CONTROLE | 2, 3 |
| MARCADOR DE HORAS DE SERVIÇO | 525 |
| MECANISMO DAS VÁLVULAS | 60 |
| MEDIDOR - NÍVEL DE COMBUSTÍVEL | 542 |
| MÓDULO - INDICADOR DE ALARME | 572, 573 |
| MOLA - LÂMINA | 455 |
| MOLA A GÁS | 595 |
| MOLA ACIONADA A GAS | 543 |
| MOLA ACIONADA A GAS (CABINE) | 220 |
| MOLA ACIONADA A GAS (CABINE) | 595 |
| MOLA ACIONADA A GAS (GRELHA) | 68 |
| MOLA ACIONADA A GAS (SUPORTE) | 68 |
| MOLA ACIONADA A GAS (TRAVAMENTO) | 526, 529, 560, 561 |
| MONTAGEM - BOMBA | 180 |
| MONTAGEM - CILINDRO | 329, 330, 331 |
| MONTAGEM - ESTRUTURA ROPS | 574 |
| MONTAGEM - LUZES PARA ILUMINAÇÃO RODOVIÁRIA | 225 |
| MONTAGEM - MOTOR | 46 |
| MONTAGEM DA PLACA DE REGISTRO | 223, 224 |
| MOTOR | 12 |
| MOTOR - ENGRENAGENS | 323, 324, 325, 326, 327, 328 |
| MOTOR - LIMPADOR DO VIDRO | 532, 534 |
| MOTOR - PISTÃO | 176, 178 |
| MOTOR E MONTAGEM - VENTILADOR HIDRÁULICO | 320, 321, 322 |
| MOTOR ELÉTRICO DE PARTIDA | 137, 139 |
| MOTOR HIDROSTÁTICO E MONTAGEM | 174, 175 |
| MOTOR PRIMÁRIO | 13, 14, 15 |


## O


| | |
|---|---|
| OPÇÃO-CABINE | 575, 576 |


## P


| | |
|---|---|
| PAINEL DE FUSÍVEIS | 121, 122, 145, 153 |
| PAINEL DE INSTRUMENTOS | 576, 577, 579 |
| PAINEL LATERAL | 581 |
| PÁRA-CHOQUE | 200 |
| PÁRA-SOL | 596, 597 |
| PÁRA-SOL DA CABINE | 596, 597 |
| PEDAL DO GOVERNADOR | 582, 583 |
| PEGA-MÃO | 544 |
| PISTÃO | 52 |
| PISTÃO E BIELA | 51 |
| PLACA DE IDENTIFICAÇÃO (INGLÊS, ALEMÃO, ESPANHOL ) | 207 |
| PLACA DE IDENTIFICAÇÃO (INGLÊS, ALEMÃO, ESPANHOL ) | 206 |


* TRADUÇÃO NÃO DISPONÍVEL NO MOMENTO DA IMPRESSÃO

# ÍNDICE


| Designação | Página |
|---|---|
| PLACA DE INFORMAÇÃO (REFRIGERANTE DO AR CONDICIONADO) | 557, 559 |
| PLACA E DECALQUE | 4, 5, 6, 7, 610, 611, 614, 617, 619, 621, 624, 627, 630 |
| PLACA-RODOVIÁRIO | 453, 454 |
| PLATAFORMA DO OPERADOR | 584 |
| PNEU E ARO | 187, 188, 189, 190, 191, 192, 193 |
| POLIA DO VIRABREQUIM | 56, 57 |
| PORTA-COPO | 554 |
| PORTA DA CABINE | 531, 532, 534, 536 |
| PORTA DA CABINE (POLICARBONATO) | 560 |
| PORTA DA CABINE (POLICARBONATO) | 526 |
| PORTA E MONTAGEM-CABINA | 526, 529 |
| POSICIONADOR-GARFO | 435 |
| PROTETOR - CORREIAS | 37 |
| PROTETOR - ROPS/FOPS | 543 |
| PUBLICAÇÃO | 570 |
| PURIFICADOR DE AR | 74, 75 |

## R

| | |
|---|---|
| RADIADOR E ARREFECEDOR DE ÓLEO - MONTAGEM | 72 |
| RADIADOR E ARREFECEDOR DO ÓLEO HIDRÁULICO | 71 |
| RECUPERAÇÃO DE LÍQUIDO ARREFECEDOR | 72 |
| REDUÇÃO DE RUÍDO | 227, 228, 229, 230 |
| REGULADOR - ALTERNADOR | 103 |
| REGULADOR - TEMPERATURA DA ÁGUA (TERMOSTATO) | 66, 67 |
| RELÉ (CONJ) (CARCAÇA) | 145 |
| RELÉ (CONJ) (12-VOLTS) | 121, 122, 149, 153, 217, 468, 470 |
| RELÉ (CONJ) (12-VOLTS) (AQUECEDOR) | 549, 551 |
| RELÉ (CONJ) (12-VOLTS) (FERRAMENTA DE TRABALHO) | 153 |
| RELÉ (CONJ) (12-VOLTS) (LUZ DE FREIO) | 152 |
| RELÉ (CONJ) (12-VOLTS) (POTÊNCIA PRINCIPAL) | 144, 153 |
| RESPIRO (ALOJAMENTO DO TANDEM) | 212 |
| RESPIRO (AR CONDICIONADO) | 480, 481 |
| RESPIRO (COMPRESSOR DO AR CONDICIONADO) | 556, 558 |
| RESPIRO (EM LINHA) (ÓLEO HIDRÁULICO) | 337 |
| RETENTOR-CABINE | 586 |
| REVESTIMENTO - CABINE | 565 |
| REVESTIMENTO DA CABINE | 564 |
| RODA E PNEU | 195, 196, 197, 198, 199 |

## S

| | |
|---|---|
| SENSOR DE PRESSÃO E TEMPERATURA | 136 |
| SENSOR DE TEMPERATURA (LÍQUIDO ARREFECEDOR) | 141 |
| SILENCIADOR | 83 |
| SIST. DE ILUMINAÇÃO - PISCA-PISCA GIRATÓRIO DE ADVERTÊNCIA | 135 |
| SIST. ELETRÔNICO - ACESSÓRIO | 113 |
| SISTEMA DE ILUMINAÇÃO - FARÓIS | 130, 131 |
| SISTEMA ELETRÔNICO - MÁQUINA | 114 |
| SOFTWARE - MÁQUINA (SEGURANÇA) | 114, 119 |


* TRADUÇÃO NÃO DISPONÍVEL NO MOMENTO DA IMPRESSÃO

# ÍNDICE


| Designação | Página |
|---|---|
| SOLENÓIDE | 357 |
| SOLENÓIDE (BOMBA DE COMBUSTÍVEL) | 100 |
| SUPORTE - ARREFECEDR DE ÓLEO E RADIADOR | 68 |
| SUPORTE - CAIXA DE ARMAZENAGEM | 6 7 10 11 202 203 |
| SUPORTE - GARFO | 416 417 |

## T

| | |
|---|---|
| TAMPA - BOCAL DE ENCHIMENTO (TANQUE HIDRÁULICO) | 338 |
| TAMPA - CONSOLO | 523 524 |
| TAMPA - MECANISMO DAS VÁLVULAS | 21 |
| TAMPA - PAINEL DE INSTRUMENTOS | 525 |
| TAMPA - RADIADOR | 71 |
| TAMPA - TANQUE DE COMBUSTÍVEL | 90 96 |
| TAMPA - TUBULAÇÕES | 421 |
| TAMPA COM RESPIRO (RECUPERAÇÃO DO LÍQUIDO ARREFECEDOR) | 72 |
| TAMPA DO PAINEL DO FUSÍVEL | 112 |
| TAMPA (TANQUE DE ÁGUA) | 462 |
| TAMPÃO (DRENO, ÓLEO DO MOTOR) | 47 49 |
| TANQUE DE ÁGUA | 462 |
| TANQUE DE ÁGUA E MONTAGEM | 459 |
| TANQUE DE ÓLEO HIDRÁULICO E MONTAGEM | 337 |
| TANQUE HIDRÁULICO | 338 |
| TAPETE | 2 4 5 6 7 201 202 203 |
| TELA DE SUCÇÃO (TANQUE HIDRÁULICO) | 338 |
| TELA FILTRANTE - ÁGUA | 458 |
| TELA FILTRANTE (ÓLEO HIDRÁULICO) | 299 |
| TELA FILTRANTE (TANQUE DE ÁGUA) | 458 |
| TERMOSTATO / REGULADOR DE TEMPERATURA | 66 |
| TRAVA | 210 |
| TRAVA - ACOPLADOR RÁPIDO | 452 |
| TRAVA-CILINDRO | 475 |
| TUBOS - ÁGUA | 67 |
| TUBOS - AQUECEDOR | 568 |
| TUBOS - AR | 77 78 |
| TUBOS - AR CONDICIONADO | 566 |
| TUBOS - ARREFECEDOR DE ÓLEO HIDRÁULICO | 289 |
| TUBOS - BOMBA | 301 |
| TUBOS - CAÇAMBA | 262 264 266 268 270 272 274 |
| TUBOS - CILINDRO DE INCLINAÇÃO | 303 305 |
| TUBOS - CILINDRO DE LEVANTAMENTO | 291 293 |
| TUBOS - CIRCUITO PILOTO | 297 299 |
| TUBOS - COMBUSTÍVEL | 90 |
| TUBOS - FERRAMENTA DE TRABALHO | 307 309 |
| TUBOS - GARRA | 280 282 284 |
| TUBOS - INJEÇÃO DO COMBUSTÍVEL | 92 94 |
| TUBOS - ÓLEO DO MOTOR | 62 |
| TUBOS - SISTEMA HIDROSTÁTICO | 164 |
| TUBOS - VENTILADOR HIDRÁULICOS | 286 287 |
| TUBOS DE CONEXÃO | 276 278 |
| TUBOS DO AQUECEDOR | 568 |
| TUBULAÇÕES - FILTRO E ESCORVA DO COMBUSTÍVEL | 96 |
| TUBULAÇÕES-CONTROLE DE ABAIXAMENTO | 295 |
| TURBOALIMENTADOR | 84 86 |

## U

| | |
|---|---|
| UNI-DENTE | 463 |

## V

| | |
|---|---|
| VÁLVULA - SENSOR DE VELOCIDADE (BOMBA DO PISTÃO) | 183 185 |
| VÁLVULA DE ALÍVIO | 326 |


* TRADUÇÃO NÃO DISPONÍVEL NO MOMENTO DA IMPRESSÃO

# ÍNDICE


| Designação | Página |
|---|---|
| | 327 |
| | 354 |
| VÁLVULA DE ALÍVIO - ÓLEO DO MOTOR | 64 |
| VÁLVULA DE ALÍVIO (CARGA) | 183 |
| | 185 |
| VÁLVULA DE ALÍVIO (INCLINAÇÃO, AUXILIAR) | 340 |
| VÁLVULA DE ALÍVIO (LEVANTAMENTO) | 340 |
| VÁLVULA DE ALÍVIO (PRESSÃO DO ÓLEO DO MOTOR) | 64 |
| VÁLVULA DE ALÍVIO (VELOCIDADE DO VENTILADOR) | 324 |
| VÁLVULA DE CONTROLE | 340 |
| VÁLVULA DE CONTROLE E MONTAGEM | 339 |
| VÁLVULA DE CONTROLE PILOTO | 344 |
| | 346 |
| | 348 |
| | 349 |
| | 350 |
| | 352 |
| VÁLVULA DE CONTROLE PILOTO (DIREITO) | 256 |
| VÁLVULA DE CONTROLE PILOTO (ESQUERDO) | 256 |
| VÁLVULA MANUAL | 343 |
| VÁLVULA SOLENÓIDE | 194 |
| | 355 |
| | 356 |
| | 357 |
| | 358 |
| | 359 |
| VÁLVULA SOLENÓIDE (ACOPLADOR RÁPIDO) | 318 |
| VÁLVULA SOLENÓIDE (12 VDC) | 328 |
| | 556 |
| | 558 |
| VÁLVULA SOLENÓIDE (12-VOLTS) | 350 |
| | 352 |
| VELA DE AQUECIMENTO; VELA INCANDESCENTE | 116 |
| VENTILADOR DE SOPRO | 71 |
| VIGIA (RADIADOR) | 71 |
| VIGIA (TANQUE HIDRÁULICO) | 338 |
| VIRABREQUIM | 22 |
| | 23 |
| VOLANTE DO MOTOR | 32 |
| | 33 |


* TRADUÇÃO NÃO DISPONÍVEL NO MOMENTO DA IMPRESSÃO

# STICHWORTVERZEICHNIS


| Bezeichnung | Seite |
|---|---|

## A

ABLASS . . . . . 30
ACHSE . . . . . 155, 156, 157
ADAPTER - ÖLLEITUNG . . . . . 232
ANSAUGKRÜMMER . . . . . 80
ANSAUGSIEB (HYDRAULIKTANK) . . . . . 338
ANSCHLUSSGRIFF . . . . . 448, 449
ANSCHLUSSLEITUNGEN . . . . . 276, 278
ANSCHLUSSSTÜCK . . . . . 301
ANTRIEBSKUPPLUNG . . . . . 521, 556, 558
ANTRIEBSSTEUERUNG, HYDROSTATISCH . . . . 157, 158
ANTRIEBSSTEUERUNG, HYDROSTATISCH . . . . 159
ANZEIGE . . . . . 75
ARBEITSGERÄT - LEITUNGEN . . . . . 307, 309
ARBEITSGERÄT - VERDRAHTUNG . . . . . 153
ARBEITSGERÄTEELEKTRONIK . . . . . 113
ARBEITSGERÄTEPUMPE U. BEFESTIGUNG . . . 333, 334
ARBEITSGERÄTEVERDRAHTUNGSSATZ . . . . . 122
ARBEITSLEUCHTEN . . . . . 123, 124, 130, 131
ARMLEHNE . . . . . 473
ARNLEHNE U. BEFESTIGUNG . . . . . 472
AUFKLEBER . . . . . 159, 605, 606, 608
AUFKLEBER - INFORMATION (BETRIEBS- U. WARTUNGSHANDBUCH LESEN) . . . . . 611, 614, 621, 630
AUFKLEBER - INFORMATION (BETRIEBS- U. WARTUNGSHANDBUCH LESEN) . . . . . 624, 627
AUFKLEBER - INFORMATION (FESTZURR-STELLE) . . . . . 360
AUFKLEBER - SOICHERUNG/RELAIS . . . . . 112
AUFKLEBER (*FOPS) . . . . . 543
AUFKLEBER (REFLEKTIEREND, ROT, WEISS) . . . . . 453, 454
AUFKLEBER (REFLEKTIV) . . . . . 453, 454
AUFKLEBER (TEMPERATURREGELUNG) . . . . . 468, 549
AUFKLEBER (TEMPERATURREGELUNG) . . . . . 470, 551
AUFKLEBER (2-GANG) . . . . . 158, 159, 254
AUSPUFFKRÜMMER . . . . . 79

## B

BATTERIE . . . . . 108, 109
BATTERIE (12 V, STANDARD) . . . . . 108
BATTERIE (12 V, WARTUNGSFREI) . . . . . 109
BEDIENUNGSELEMENTE - KABELSTRANG (JOYSTICK) . . . . . 495, 498, 499, 501
BEDIENUNGSELEMENTE - KABELSTRANG (*JOYSTICK, LH) . . . . . 256
BEDIENUNGSELEMENTE - KABELSTRANG (*JOYSTICK, RH) . . . . . 256
BEDIENUNGSELEMENTE - KABELSTRANG (*JOYSTICK, RH, LH) . . . . . 256
BELEUCHTUNG FÜR STRASSENFAHRT - BEFESTIGUNG . . . . . 225
BELEUCHTUNGSANLAGE (ROT, GRÜN, LED, 12 V) . . . . . 120
BELEUCHTUNGSANLAGE (STRASSENAUSRÜ-STUNG) . . . . . 132
BETRIEBSSTUNDENZÄHLER . . . . . 525
BLINKER (12 V) . . . . . 132, 217
BREMS- UND RÜCKLEUCHTE . . . . . 127, 128
BREMS- UND RÜCKLEUCHTEN . . . . . 134
*BUCKET AR-UTILITY . . . . . 385, 386
*BUCKET GP-GENERAL PURPOSE . . . . . 400

## C

*CONNECTING ROD GP . . . . . 20
*CYLINDER & MTG GP-BUCKET . . . . . 235

## D

DICHTUNG (KÜHLWASSERTHERMOSTAT) . . . . 66, 67
DICHTUNG (SIEB) . . . . . 81


* ÜBERSETZUNG ZUM ZEITPUNKT DER DRUCKLEGUNG NICHT VORHANDEN

# STICHWORTVERZEICHNIS


| Bezeichnung | Seite |
|---|---|
| DICHTUNG (VENTILMECHANISMUS) | 21 |
| DICHTUNGSSATZ | 346 |
| DOKUMENTATION | 570 |
| DREHSTROMGENERATOR | 103 |
| | 105 |
| | 106 |
| | 107 |
| DREHZAHLGEBERVENTIL (*PISON PUMP) | 183 |
| | 185 |
| DREHZAHLREGLERKABEL | 88 |
| DRUCKBEGRENZUNGSVENTIL (MOTORÖL-DRUCK) | 64 |
| DRUCKLÜFTER | 71 |
| DRUCKLUFTLEITUNGEN | 77 |
| | 78 |
| DRUCKSCHALTER | 140 |
| | 141 |
| DRUCKSCHALTER (HYDRAULIKÖL) | 163 |
| DRUCKSCHALTER (KLIMAANLAGE) | 566 |
| DRUCKSCHALTER (KÜHLMITTEL) | 557 |
| | 558 |
| DRUCKSCHALTER (MOTORÖL) | 141 |
| DRUCKSCHALTER (RÜCKFAHRALARM) | 142 |
| | 256 |

## E

| | |
|---|---|
| EINBAUSATZ | 556 |
| EINBAUSATZ - KLIMAANLAGE U. HEIZUNG | 556 |
| EINFÜLLKAPPE (HYDRAULIKTANK) | 338 |
| ELEKTRONIK - MASCHINE | 114 |
| ELEKTRONISCHER SCHLÜSSEL (SICHERHEIT) | 114 |
| | 119 |
| ENDSCHALTER (SCHEIBENWISCHER) | 532 |
| | 534 |
| ENTLÜFTER (*INLINE) (HYDRAULIKÖL) | 337 |
| ENTLÜFTER (KLIMAANLAGE) | 480 |
| | 481 |
| ENTLÜFTER (KLIMAANLAGENKOMRESSOR) | 556 |
| | 558 |
| ENTLÜFTER (TANDEMGEHÄUSE) | 212 |
| ERDSCHAUFEL | 372 |
| | 373 |
| | 387 |
| | 388 |
| | 389 |
| | 390 |
| | 399 |

## F

| | |
|---|---|
| FAHERHAUSDICHTUNG | 586 |
| FAHRERHAUS - LINER | 565 |
| FAHRERHAUS MIT ÜBERROLLSCHUTZ | 476 |
| | 477 |
| | 478 |
| FAHRERHAUS, SONNENBLENDE | 596 |
| | 597 |
| FAHRERHAUSAUSKLEIDUNG | 564 |
| FAHRERHAUSBELEUCHTUNG (12 V) | 542 |
| FAHRERHAUSDICHTUNGSSATZ | 562 |
| FAHRERHAUSFENSTER | 598 |
| | 599 |
| | 600 |
| | 601 |
| | 603 |
| FAHRERHAUSHEIZUNG | 548 |
| | 549 |
| | 551 |
| | 553 |
| FAHRERHAUSHEIZUNG U. BEFESTIGUNGSTEILE | 547 |
| FAHRERHAUSTÜR | 531 |
| | 532 |
| | 534 |
| | 536 |
| FAHRERHAUSTÜR (*POLYCARBONATE) | 526 |
| FAHRERHAUSTÜR (*POLYCARBONATE) | 560 |
| FAHRERHAUSTÜR U. BEFESTIGUNG | 526 |
| | 529 |
| | 560 |
| | 561 |
| FAHRERPLATTFORM | 584 |
| FAHRERPLATTFORM-KABELSTRANG | 144 |
| FAHRERPLATTFORM-KABELSTRANG (UNTEN) | 144 |
| FAHRERSITZ | 592 |
| | 593 |
| FAHRERSITZ, VERSTELLBAR | 594 |
| FAHRGESTELLVERDRAHTUNG | 144 |
| | 148 |
| FAHRWERK | 1 |
| FAHRWERK-KABELBAUM (GETRIEBE) | 556 |
| | 558 |
| FAHRWERK-KABELBAUM (WARNHORN) | 151 |
| FENSTERRAHMEN | 539 |
| | 540 |
| *FILTER-ENGINE OIL | 61 |
| FILTERELEMENT - FAHRERHAUSLUFT | 468 |
| | 470 |
| | 549 |
| | 551 |


* ÜBERSETZUNG ZUM ZEITPUNKT DER DRUCKLEGUNG NICHT VORHANDEN

# STICHWORTVERZEICHNIS


| Bezeichnung | Seite |
|---|---|
| FILTERELEMENT - FAHRERHAUSLUFT (DRUCKLUFT) | 551 |
| FILTERELEMENT - FAHRERHAUSLUFT (DRUCKLUFT) | 470 |
| *FRAME GP-FORK | 440 |
| | 441 |
| FUSSMATTE | 2 |
| | 4 |
| | 5 |
| | 6 |
| | 7 |
| | 201 |
| | 202 |
| | 203 |


## G


| | |
|---|---|
| GABELEINSTELLER | 435 |
| GABELTRÄGER | 416 |
| | 417 |
| GASFEDER | 543 |
| GASFEDER (FAHRERHAUS) | 220 |
| | 595 |
| GASFEDER (GITTER) | 68 |
| GASFEDER (SPERRUNG) | 526 |
| | 529 |
| | 560 |
| | 561 |
| GASFEDER (*SUPPORT) | 68 |
| GASFEDERGRUPPE | 595 |
| GASPEDAL | 582 |
| | 583 |
| GEGENGEWICHT | 208 |
| | 209 |
| GLÜHKERZE | 116 |
| GREIEFERSCHAUFEL | 401 |
| | 402 |
| | 403 |
| | 404 |
| | 405 |
| | 406 |
| GREIFERANSCHLAG | 444 |
| | 445 |
| | 457 |
| GREIFERGABEL | 430 |
| | 431 |
| | 432 |
| | 433 |
| | 434 |
| GREIFERLEITUNGEN | 280 |
| | 282 |
| | 284 |
| GREIFERRAHMEN | 442 |
| GREIFERSCHAUFEL | 375 |
| | 376 |
| | 377 |
| | 378 |
| | 379 |
| | 380 |
| | 381 |
| GREIFERZYLINDER | 240 |
| GRIFF U. BOLZEN - ANSCHLUSS | 446 |
| | 447 |
| GRUNDAUSFÜHRUNG | 2 |


## H


| | |
|---|---|
| HALTEGRIFF | 544 |
| *HANDLE GP | 479 |
| HAUPTLAGER | 17 |
| HECKBELEUCHTUNGSVERDRAHTUNG | 152 |
| HEIZUNGSLEITUNGEN | 568 |
| HINTERER KABELSTRANG (ZUSATZHYDRAULIK) | 148 |
| *HOLDER-CUP | 554 |
| HUBARMZYLINDER U. BEFESTIGUNGSSATZ | 236 |
| HUBZYLINDER | 248 |
| | 249 |
| HUBZYLINDERLEITUNGEN | 291 |
| | 293 |
| HYDRAULIKBEDIENUNG (MIT VORSTEUERUNG) | 492 |
| | 495 |
| | 496 |
| | 498 |
| | 499 |
| | 501 |
| | 502 |
| | 504 |
| | 505 |
| | 506 |
| | 507 |
| | 509 |
| | 510 |
| | 513 |
| | 515 |
| | 518 |
| HYDRAULIKDRUCKSPEICHER U. BEFESTIGUNG | 231 |
| HYDRAULIKFILTER U. LEITUNGEN | 161 |
| HYDRAULIKFITTING | 301 |
| HYDRAULIKKÜHLERMOTOR U. BEFESTIGUNG | 320 |
| | 321 |
| | 322 |


* ÜBERSETZUNG ZUM ZEITPUNKT DER DRUCKLEGUNG NICHT VORHANDEN

# STICHWORTVERZEICHNIS


| Bezeichnung | Seite |
|---|---|
| HYDRAULIKLÜFTERLEITUNGEN | 286, 287 |
| HYDRAULIKÖLKÜHLERLEITUNGEN | 289 |
| HYDRAULIKPUMPE UND LEITUNGEN | 301 |
| HYDRAULIKSYSTEM | 252, 253 |
| HYDRAULIKTANK | 338 |
| HYDRAULIKTANK UND BEFESTIGUNGSTEILE | 337 |
| HYDRAULIKZYLINDER | 241, 242, 243, 244, 245, 246, 247, 259 |
| HYDROSTATIKLEITUNGEN | 164 |
| HYDROSTATIKMOTOR U. BEFESTIGUNG | 174, 175 |
| HYDROSTATIKPUMPE U. BEFESTIGUNG | 181, 182 |

## I

| Bezeichnung | Seite |
|---|---|
| IDENTIFIKATIONSSCHILD (*ENGLISH, GERMAN, SPANISH) | 207 |
| IDENTIFIKATIONSSCHILD (*ENGLISH, GERMAN, SPANISH) | 206 |
| IDENTIFIZIERUNGS-AUFKLEBER (KRAFTSTOFFFILTER, WASSERABSCHEIDER) | 90, 96 |
| IDENTIFIZIERUNGS-AUFKLEBER (STARTSCHLÜSSELSCHALTER) | 119, 120 |
| IDENTIFIZIERUNGS-AUFKLEBER (STECKDOSE, 12 V) | 611, 614, 621, 624, 627, 630 |
| IDENTIFIZIERUNGS-AUFKLEBER (12 KM/H) | 6, 10 |
| IDENTIFIZIERUNGS-AUFKLEBER (12 KM/H) | 202 |
| IDENTIFIZIERUNGS-AUFKLEBER (20 KM/H) | 7, 11 |
| IDENTIFIZIERUNGS-AUFKLEBER (20 KM/H) | 203 |
| INFORMATIONSSCHILD (*AIR CONDITIONER REFRIGERANT) | 557, 559 |
| *INSTALLATION GP-AUXILIARY HYD | 254 |
| INSTRUKTIONS-AUFKLEBER (INSTRUMENTENBRETT) | 542 |
| INSTRUKTIONS-AUFKLEBER (INSTRUMENTENTAFEL) | 541 |
| INSTRUKTIONS-AUFKLEBER (*MACHINE CONTROL, LH, READ OMM) | 256 |
| INSTRUKTIONS-AUFKLEBER (*MACHINE CONTROL, READ OMM, LH) | 256 |
| INSTRUKTIONS-AUFKLEBER (*MACHINE CONTROL, RH, READ OMM) | 257 |
| INSTRUKTIONS-AUFKLEBER (*MACHINE CONTROL, RH, READ OMM) | 256 |
| INSTRUKTIONS-AUFKLEBER (*MACHINE SECURITY, INTL) | 119, 120 |
| INSTRUKTIONS-AUFKLEBER (MASCHINENSTEUERUNG, HANDBUCH LESEN) | 496, 498, 502, 504, 506, 507, 509, 510, 513, 515, 518 |
| INSTRUKTIONS-AUFKLEBER (MASCHINENSTEUERUNG, HANDBUCH LESEN) | 505 |
| INSTRUKTIONS-AUFKLEBER (MASCHINENSTEUERUNGEN) | 499, 501 |
| INSTRUKTIONS-AUFKLEBER (MASCHINENSTEUERUNGEN) | 492, 495 |
| INSTRUKTIONS-AUFKLEBER (NICHT BETRETEN) | 617 |
| INSTRUKTIONS-AUFKLEBER (NICHT BETRETEN) | 311 |
| INSTRUKTIONS-AUFKLEBER (NICHT BETRETEN) | 259 |
| INSTRUMENTENTAFEL | 576, 577, 579 |
| INSTRUMENTENTAFEL-KABELSTRANG | 577 |
| INSTRUMENTENTAFEL-SICHERUNG | 121, 122, 145, 153 |
| INSTRUMENTENTAFELABDECKUNG | 525 |


* ÜBERSETZUNG ZUM ZEITPUNKT DER DRUCKLEGUNG NICHT VORHANDEN

# STICHWORTVERZEICHNIS


| Bezeichnung | Seite |
|---|---|

## K

KABELSTRANG - ARBEITSGERÄT . . . . . 459
KABELSTRANG - ARBEITSGERÄT (*CONNECTING) . . . . . 362, 363
KABELSTRANG - ARBEITSGERÄT (*LIFT ARM) . . . . . 121, 153
KABELSTRANG - ARBEITSGERÄT (PLATTFORM) . . . . . 121, 153
KABELSTRANG - HECKBELEUCHTUNG . . . . . 132, 145, 217, 224, 225
KABELSTRANG - HECKBELEUCHTUNG (BREMSE) . . . . . 152, 217
KABELSTRANG - HEIZUNG U. KLIMAANLAGE . . . . . 143, 549, 551, 556, 558
KABELSTRANG - VORDERE BELEUCHTUNG . . . . . 132, 217
KÄLTEMITTELKOMPRESSOR . . . . . 480, 481, 556, 558
KÄLTEMITTELKOMPRESSOR U. BEFESTIGUNG . . . . . 483
KÄLTEMITTELKONDENSATOR U. BEFESTIGUNGSTEILE . . . . . 484
KAPPE MIT ENTLÜFTER (KÄLTEMITTELRÜCKGEWINNUNG) . . . . . 72
KAPPE (WASSERTANK) . . . . . 462
KEILRIEMEN . . . . . 14, 15, 59
KEILRIEMEN (WASSERPUMPE) . . . . . 59
KIPPSCHALTER (ARBEITSGERÄTEANORDNUNG) . . . . . 252
KIPPSCHALTER (ELEKTRISCHER STROM, ARBEITSGERÄT) . . . . . 121, 122, 153
KIPPSCHALTER (FAHRTRICHTUNGSBLINKER) . . . . . 132, 217
KIPPSCHALTER (FESTSTELLBREMSE) . . . . . 577, 579
KIPPSCHALTER (HEIZUNG) . . . . . 468, 470
KIPPSCHALTER (HEIZUNG) . . . . . 549, 551
KIPPSCHALTER (HINTERE ARBEITSSCHEINWERFER) . . . . . 130
KIPPSCHALTER (HINTERER SCHEIBENWISCHER) . . . . . 532, 534
KIPPSCHALTER (KALTSTART) . . . . . 577, 579
KIPPSCHALTER (KLIMAANLAGE) . . . . . 468, 470
KIPPSCHALTER (RUNDUM-KENNLEUCHTE) . . . 135
KIPPSCHALTER (SCHNELLWECHSELEINRICHTUNG) . . . . . 259, 417
KIPPSCHALTER (STRASSENBELEUCHTUNG) . . . . . 132, 217
KIPPSCHALTER (VORDERER ARBIETSSCHEINWERFER) . . . . . 577, 579
KIPPSCHALTER (WARNLEUCHTEN) . . . . . 132, 217
KIPPZYLINDER . . . . . 250, 251
*KIT-AIR CONDITIONER INSTL . . . . . 558
*KIT-DEBRIS GUARD . . . . . 76
*KIT-ENGINE ENCLOSURE SEAL . . . . . 215
*KIT-JOYSTICK CONVERSION . . . . . 256
*KIT-QUICK COUPLER CONVERSION . . . . . 259
KLIMAANLAGE . . . . . 466, 467, 468, 470
KLIMAANLAGENDRUCKSPEICHER . . . . . 464, 465
KLIMAANLAGENLEITUNGEN . . . . . 566
KLIMAANLAGENVERDRAHTUNG . . . . . 143
KOLBEN . . . . . 52
KOLBENMOTOR . . . . . 176, 178
KOLBENPUMPE . . . . . 183, 185
KOLBENPUMPENUMLAUFSATZ (LINKS) . . . . . 183, 185
KOLBENPUMPENUMLAUFSATZ (RECHTS) . . . . 183, 185
KOMBISCHAUFEL . . . . . 382, 383, 384


* ÜBERSETZUNG ZUM ZEITPUNKT DER DRUCKLEGUNG NICHT VORHANDEN

# STICHWORTVERZEICHNIS


| Bezeichnung | Seite |
|---|---|
| | 385 |
| | 407 |
| | 408 |
| | 409 |
| | 410 |
| | 411 |
| KRAFTSTOFFEINSPRITZLEITUNGEN | 92 |
| | 94 |
| KRAFTSTOFFEINSPRITZPUMPE | 98 |
| | 100 |
| KRAFTSTOFFENTLÜFTUNGS- U. FILTERLEITUNGEN | 96 |
| KRAFTSTOFFENTLÜFTUNGSPUMPE UND -HAUPTFILTER | 102 |
| KRAFTSTOFFLEITUNGEN | 90 |
| KRAFTSTOFFSTANDANZEIGE | 542 |
| KRAFTSTOFFSTANDGEBER | 212 |
| KRAFTSTOFFTANK-KABELSTRANG | 143 |
| | 556 |
| | 558 |
| KRAFTSTOFFTANKKAPPE | 90 |
| | 96 |
| KRÜMMER & LEITUNGEN - WECHSLER | 311 |
| KRÜMMER U. LEITUNGEN - STEUERUNG | 166 |
| | 168 |
| KRÜMMERSTEUERUNG U. BEFESTIGUNG | 315 |
| | 316 |
| KÜHLER U. ÖLKÜHLER - BEFESTIGUNG | 68 |
| KÜHLER U. ÖLKÜHLERBEFESTIGUNG | 72 |
| KÜHLER UND HYDRAULIKÖLKÜHLER | 71 |
| KÜHLERKAPPE | 71 |
| KÜHLKOMPRESSOR U. MOTOR | 480 |
| | 481 |
| KÜHLMITTELÜBERLAUFBEHÄLTER | 72 |
| KÜHLWASSER-TEMPERATURREGLER UND GEHÄUSE | 66 |
| KÜHLWASSERLEITUNGEN | 67 |
| KÜHLWASSERPUMPE | 70 |
| KURBELWELLE | 22 |
| | 23 |
| KURBELWELLEN-RIEMENSCHEIBE | 56 |
| | 57 |

## L

| | |
|---|---|
| LAUFBAND UND ANTRIEB (RUNDUM-KENNLEUCHTE) | 129 |
| LEICHTGUTSCHAUFEL | 382 |
| | 396 |
| | 397 |
| | 398 |
| LEITUNGEN, ABSENKSTEUERUNG | 295 |
| LEITUNGSABDECKUNG | 421 |
| LEITUNGSFÜHRUNG | 214 |
| LEUCHTE (12 V) | 542 |
| LEUCHTE (12 V) (KENNZEICHEN) | 223 |
| LEUCHTE (12 V, 10 W) | 542 |
| LEUCHTE (12 V, 21 W) | 125 |
| | 128 |
| LEUCHTE (12 V, 4 W) | 125 |
| LEUCHTE (12 V, 5 W) | 127 |
| LEUCHTE (12 V, 5 W) | 128 |
| LEUCHTE (12 V, 55 W) | 123 |
| | 124 |
| | 129 |
| *LOCK GP | 210 |
| LUFTFILTER (HAUPTELEMENT) | 75 |
| LUFTFILTER (HILFSELEMENT) | 75 |
| LUFTKANAL UND REGULIERUNG | 537 |
| LUFTREINIGER | 74 |
| | 75 |

## M

| | |
|---|---|
| MAGNETSPULE | 357 |
| MAGNETSTOPFEN (TANDEM) | 212 |
| MAGNETVENTIL | 194 |
| | 355 |
| | 356 |
| | 357 |
| | 358 |
| | 359 |
| MAGNETVENTIL (SCHNELLWECHSELEIN-RICHTUNG) | 318 |
| MAGNETVENTIL (12 V) | 350 |
| | 352 |
| MAGNETVENTIL (12 V DC) | 328 |
| | 556 |
| | 558 |
| *MANIFOLD & SOLENOID GP-CONTROL | 170 |
| | 171 |
| | 317 |
| MASCHINEN-UMBAUSATZ | 3 |
| | 4 |
| | 5 |
| | 6 |
| | 7 |
| | 8 |
| | 9 |
| | 10 |
| | 11 |
| MASCHINENHUBÖSE | 220 |
| | 221 |
| MASCHINENRAHMEN | 212 |
| MASCHINENRAHMEN U. BEFESTIGUNG | 212 |
| MASCHINENSTEUERUNG | 2 |


* ÜBERSETZUNG ZUM ZEITPUNKT DER DRUCKLEGUNG NICHT VORHANDEN

# STICHWORTVERZEICHNIS


| Bezeichnung | Seite |
|---|---|
| | 3 |
| MEHRZWECKGABEL | 437 |
| | 438 |
| MEHRZWECKGREIFER | 443 |
| | 444 |
| | 445 |
| MEHRZWECKSCHAUFEL | 412 |
| | 413 |
| | 414 |
| MEMBRANPUMPE | 459 |
| MODULARHEBEL | 488 |
| | 489 |
| | 490 |
| | 545 |
| | 546 |
| MOTOR-EINBAUSATZ | 16 |
| MOTORANTRIEB | 323 |
| | 324 |
| | 325 |
| | 326 |
| | 327 |
| | 328 |
| MOTORAUFLAGER | 46 |
| MOTORAUSFÜHRUNG | 12 |
| | 13 |
| | 14 |
| | 15 |
| MOTORBLOCK | 24 |
| | 26 |
| MOTORHUBÖSE | 44 |
| | 45 |
| MOTORKABELSTRANG | 149 |
| MOTORÖLABLASS | 31 |
| MOTORÖLDRUCKBEGRENZUNGSVENTIL | 64 |
| MOTORÖLKÜHLER | 65 |
| MOTORÖLLEITUNGEN | 62 |
| MOTORSTOPFEN | 54 |
| | 55 |
| MOTORVERDRAHTUNG | 149 |
| MOTORVERKLEIDUNG | 210 |

## N

| | |
|---|---|
| NEIGEZYLINDERLEITUNGEN | 303 |
| | 305 |
| NOCKENWELLE | 18 |
| | 19 |

## O

| | |
|---|---|
| ÖLFILTER | 61 |
| | 163 |
| ÖLFILTER (HOCHLEISTUNG) (HYDRAULIK) | 163 |
| ÖLMESSSTAB (MOTOR) | 47 |
| | 49 |
| ÖLSIEB (MOTOR) | 62 |
| ÖLWANNE | 47 |
| | 49 |
| OPTION - FAHRERHAUS | 575 |
| | 576 |

## P

| | |
|---|---|
| PALETTENGABEL | 435 |
| | 436 |
| PLEUELSTANGE UND KOLBEN | 51 |
| *PLUG KIT-CONN | 473 |
| PUMPENAUFHÄNGUNG | 180 |

## R

| | |
|---|---|
| RAD UND REIFEN | 195 |
| | 196 |
| | 197 |
| | 198 |
| | 199 |
| REGELERHEBEL | 563 |
| REGLERSTEUERUNG | 89 |
| REGULATOR - DREHSTROMGENERATOR | 103 |
| REIFEN UND FELGE | 187 |
| | 188 |
| | 189 |
| | 190 |
| | 191 |
| | 192 |
| | 193 |
| RELAIS (SCHALE) | 145 |
| RELAIS (12 V) | 121 |
| | 122 |
| | 149 |
| | 153 |
| | 468 |
| | 470 |
| RELAIS (12 V) | 217 |
| RELAIS (12 V) (ARBEITSGERÄT) | 153 |
| RELAIS (12 V) (BREMSLEUCHTE) | 152 |
| RELAIS (12 V) (HAUPTSTROM) | 144 |
| | 153 |
| RELAIS (12 V) (HEIZUNG) | 549 |
| | 551 |
| RIEMENSCHUTZ | 37 |
| RÜCKFAHRWARNHORN | 142 |
| RÜCKLAUFVENTIL - VERTEILER | 172 |
| RÜCKSPIEGEL | 571 |
| RÜCKSPIEGEL U. BEFESTIGUNG | 222 |
| RUNDUM-KENNLEUCHTE | 129 |


* ÜBERSETZUNG ZUM ZEITPUNKT DER DRUCKLEGUNG NICHT VORHANDEN

# STICHWORTVERZEICHNIS


| Bezeichnung | Seite |
|---|---|
| | 135 |
| **S** | |
| SATZ - ARBEITSGERÄTE U. VERDRAHTUNG | 121 |
| SCHALLDÄMPFER | 83 |
| SCHALLDÄMPFER U. BEFESTIGUNG | 81 |
| | 82 |
| SCHALLDÄMPFUNG | 227 |
| | 228 |
| | 229 |
| | 230 |
| SCHALTER (SITZ) | 593 |
| SCHALTER (SITZ) | 594 |
| SCHALTER (STARTERMOTOR)(12 V) | 137 |
| SCHAUFELLEITUNGEN | 262 |
| | 264 |
| | 266 |
| | 268 |
| | 270 |
| | 272 |
| | 274 |
| SCHAUFELZYLINDER | 239 |
| SCHAUGLAS (HYDRAULIKTANK) | 338 |
| SCHAUGLAS (KÜHLER) | 71 |
| SCHEIBENWISCHERARM | 532 |
| SCHEIBENWISCHERARM (VORNE) | 534 |
| SCHEIBENWISCHERBLATT (*558-MM) (FAHRERHAUSTÜR) | 534 |
| SCHEIBENWISCHERBLATT (*558-MM) (VORN, HINTEN) | 532 |
| SCHEIBENWISCHERKABELSTRANG | 526 |
| | 529 |
| | 532 |
| | 534 |
| | 560 |
| | 561 |
| SCHEIBENWISCHERMOTOR | 532 |
| | 534 |
| SCHEINWERFER | 125 |
| SCHEINWERFER U. RICHTUNGSLEUCHTE | 125 |
| SCHILD | 361 |
| | 362 |
| | 363 |
| SCHILD - STRASSENFAHRT | 453 |
| | 454 |
| SCHILD UND AUFKLEBER | 4 |
| | 5 |
| | 6 |
| | 7 |
| | 610 |
| | 611 |
| | 614 |
| | 617 |
| | 619 |
| | 621 |
| | 624 |
| | 627 |
| | 630 |
| SCHILDFEDER | 455 |
| SCHILDRAHMEN | 439 |
| SCHLÜSSEL | 18 |
| SCHMIERPUMPE | 63 |
| SCHNEIDMESSER | 424 |
| | 425 |
| | 426 |
| | 427 |
| | 428 |
| | 429 |
| | 430 |
| SCHNEIDMESSER - KOMBISCHAUFEL | 368 |
| | 369 |
| | 370 |
| | 371 |
| SCHNEIDMESSER UND EINSATZSTÜCK | 424 |
| SCHNELLWECHSELEINRICHTUNG | 418 |
| | 420 |
| SCHNELLWECHSELEINRICHTUNG - ZYLINDER U. VERBINDUNG | 422 |
| | 423 |
| SCHNELLWECHSELEINRICHTUNGSSPERRE | 452 |
| SCHNELLWECHSELVORRICHTUNG | 417 |
| SCHRAUBE (ABLASS, MOTORÖL) | 47 |
| SCHRAUBE (ABLASS, MOTORÖL) | 49 |
| SCHWENKSCHILD | 364 |
| | 365 |
| | 366 |
| | 367 |
| SCHWUNGRAD | 32 |
| | 33 |
| SCHWUNGRADGEHÄUSE | 38 |
| | 39 |
| SCREEN (HYDRAULIKÖL) | 299 |
| SCREEN (WASSERTANK) | 458 |
| SEITENGEHÄUSE | 555 |
| SEITENVERKLEIDUNG | 581 |
| SICHERHEITSEINBAUSATZ | 119 |
| | 120 |
| SICHERHEITSGURT | 588 |
| | 589 |
| | 590 |
| | 591 |
| SICHERUNG (10 A) | 121 |
| | 122 |
| | 142 |


* ÜBERSETZUNG ZUM ZEITPUNKT DER DRUCKLEGUNG NICHT VORHANDEN

# STICHWORTVERZEICHNIS


| Bezeichnung | Seite |
|---|---|
| | 145 |
| | 153 |
| | 259 |
| | 417 |
| | 510 |
| | 513 |
| | 515 |
| | 518 |
| SICHERUNG (15 A) | 121 |
| | 143 |
| | 145 |
| | 153 |
| SICHERUNG (20 A) | 145 |
| SICHERUNG (30 A) | 143 |
| | 145 |
| | 557 |
| | 559 |
| SICHERUNGSTAFEL - ABDECKUNG | 112 |
| SOFTWARE - MASCHINE (SICHERHEIT) | 114 |
| | 119 |
| SOLENOID (KRAFTSTOFFPUMPE) | 100 |
| SOLENOIDSPULE (12 V) | 355 |
| SONNENBLENDE | 596 |
| | 597 |
| STARTERMOTOR | 137 |
| | 139 |
| STARTSCHLÜSSELSCHALTER | 541 |
| STEUERHEBEL | 485 |
| | 486 |
| | 487 |
| | 488 |
| | 489 |
| | 490 |
| | 491 |
| STEUERKABEL | 479 |
| STEUERKONSOLENABDECKUNG | 523 |
| | 524 |
| STEUERKRÜMMER | 318 |
| | 319 |
| STEUERUNG - NICHT PROGRAMMIERT | 113 |
| STEUERUNG - NICHT PROGRAMMIERT (SICHERHEIT) | 114 |
| STEUERUNGS-KABELSTRANG (SICHERHEIT) | 119 |
| | 120 |
| STEUERVENTIL | 340 |
| STEUERVENTIL UND BEFESTIGUNGSTEILE | 339 |
| STIRNRAD | 34 |
| | 35 |
| STIRNRADGEHÄUSE | 40 |
| | 42 |
| STOSSSTANGE | 200 |
| STRASSENFAHRT - UMRÜSTSATZ | 204 |
| | 205 |
| | 206 |
| | 207 |
| STRASSENFAHRTSCHILD UND BEFESTIGUNG | 450 |


## T


| | |
|---|---|
| TANDEMANTRIEB | 160 |
| TEMPERATUR- U. DRUCKSENSOR | 136 |
| TEMPERATURSCHALTER (HYDRAULIKÖL) | 338 |
| TEMPERATURSCHALTER (KLIMAANLAGE) | 468 |
| | 470 |
| TEMPERATURSCHALTER (MOTORKÜHLMITTEL) | 136 |
| TEMPERATURSCHALTER (MOTORKÜHLMITTEL) | 149 |
| TEMPERATURSENSOR (KÜHLMITTEL) | 141 |
| THERMOSTAT (THEMRMOSTAT) | 66 |
| | 67 |
| TRAGARM | 360 |
| TRAGARMSTUFE | 456 |
| TRÄGER - STAUKASTEN | 6 |
| | 7 |
| | 10 |
| | 11 |
| | 202 |
| | 203 |
| TRÄGER U. GABEL | 415 |
| TURBOLADER | 84 |
| | 86 |
| TYPENSCHILDBEFESTIGUNG | 223 |
| | 224 |


## U


| | |
|---|---|
| ÜBERDRUCKVENTIL | 326 |
| | 327 |
| | 354 |
| ÜBERDRUCKVENTIL (GEBLÄSEGESCHWINDIGKEIT) | 324 |
| ÜBERDRUCKVENTIL (HUB) | 340 |
| ÜBERDRUCKVENTIL (LADUNG) | 183 |
| | 185 |
| ÜBERDRUCKVENTIL (*TILT, AUXILIARY) | 340 |
| ÜBERROLLSCHUTZAUFLAGER | 574 |
| UMBAUSATZ - FÜR STRASSENVERKEHR | 201 |
| | 202 |
| | 203 |
| UMBAUSATZ - NICHT FÜR STRASSENVERKEHR | 111 |
| UMLAUFKÜHLWASSERHEIZUNG | 117 |
| | 118 |


* ÜBERSETZUNG ZUM ZEITPUNKT DER DRUCKLEGUNG NICHT VORHANDEN

# STICHWORTVERZEICHNIS


| Bezeichnung | Seite |
|---|---|
| UMRÜSTSATZ FÜR STRASSENFAHRT | 217 |
| UNIVERSAL-ZAHNSPITZE | 463 |
| UNIVERSALSCHAUFEL | 373, 374, 375, 391, 392, 393, 394, 395 |
| UNTERBRECHER (105 A) (HAUPTUNTERBRECHER) | 149 |
| UNTERBRECHER (30 A) | 217 |
| UNTERBRECHER (30 A) (BELEUCHTUNG) | 132 |


## V


| Bezeichnung | Seite |
|---|---|
| VENTIL, MECH. | 343 |
| VENTILBEFESTIGUNG | 357 |
| VENTILDECKEL | 21 |
| VENTILDECKELDICHTUNG (WASSERPUMPE) | 70 |
| VENTILKIPPHEBEL | 60 |
| VENTILSTEUERUNG | 60 |
| VERBINDUNG - SCHNELLWECHSELEINRICHTUNG | 451 |
| VERDRAHTUNGSKABELBAUM-HALTETEILE | 115 |
| VERDRAHTUNGSKABELBAUM (WARTUNGSANZEIGE) | 525 |
| VERKLEIDUNG - ÜBERROLLSCHUTZ/ STEINSCHLAGSCHUTZ | 543 |
| VERRIEGELUNGSSTEUERUNG | 110 |
| VERSTAUKASTEN | 475 |
| VERSTAUKASTEN (*LITERATURE) | 476 |
| VORHÄNGESCHLOSS | 204, 206 |
| VORSTEUERLEITUNGEN | 297, 299 |
| VORSTEUERVENTIL | 344, 346, 348, 349, 350, 352 |
| VORSTEUERVENTIL (LINKS) | 256 |
| VORSTEUERVENTIL (RECHTS) | 256 |
| VORSTEUERVENTILSATZ (FEDER) | 346 |
| VORSTEUERVENTILSTOPFEN | 332 |


## W


| Bezeichnung | Seite |
|---|---|
| WARNANZEIGEMODUL | 572, 573 |
| WARNANZEIGENSATZ | 541, 542 |
| WARNAUFKLEBER (AUFGESPIESSTER PUNKT) | 433, 434, 438, 442 |
| WARNAUFKLEBER (FREIRAUM) | 605 |
| WARNAUFKLEBER (HOCHDRUCK, HANDBICH LESEN, INTL) | 611, 627, 630 |
| WARNAUFKLEBER (HOCHDRUCK, HANDBICH LESEN, US) | 614, 621, 624 |
| WARNAUFKLEBER (KEIN ZUGANG) | 611, 627 |
| WARNAUFKLEBER (LENKUNG) | 204, 206 |
| WARNAUFKLEBER (NICHT SCHWEISSEN, NICHT BOHREN, HANDBUCH LESEN) | 614, 621, 624 |
| WARNAUFKLEBER (QUETSCHGEFAHR, DIESEN BEREICH NICHT BETRETEN) | 364, 365 |
| WARNAUFKLEBER (QUETSCHGEFAHR, NICHT BETRETEN) | 330, 407, 408, 409, 411, 443 |
| WARNAUFKLEBER (QUETSCHGEFAHR, NICHT BETRETEN) | 617 |
| WARNAUFKLEBER (QUETSCHGEFAHR, NICHT BETRETEN, U.S) | 617 |
| WARNHORN (NIEDRIGER TON) | 505, 507 |
| WARNHORN (24 V, NIEDRIGER TON) | 510 |
| WARNHORNVERDRAHTUNG | 151 |
| WASSERABSCHEIDER UND KRAFTSTOFFILTER | 102 |
| WASSERPUMPE - RIEMENSCHEIBE | 58 |
| WASSERSIEBEINSATZ | 458 |
| WASSERTANK | 462 |
| WASSERTANK U. BEFESTIGUNGSTEILE | 459 |


## Z


| Bezeichnung | Seite |
|---|---|
| ZAHNRADPUMPE | 335, 336 |


* ÜBERSETZUNG ZUM ZEITPUNKT DER DRUCKLEGUNG NICHT VORHANDEN

# STICHWORTVERZEICHNIS


| Bezeichnung | Seite |
|---|---|
| ZULASSUNGSSCHILDLEUCHTE | 223 |
| ZYLINDER - SPERRVORRICHTUNG | 475 |
| ZYLINDER U. BEFESTIGUNG - WINKELSCHLID | 233, 234 |
| ZYLINDERAUFHÄNGUNG | 329, 330, 331 |
| ZYLINDERBLOCKSCHRAUBE | 53 |
| ZYLINDERKOPF | 28, 29 |


* ÜBERSETZUNG ZUM ZEITPUNKT DER DRUCKLEGUNG NICHT VORHANDEN

# MACHINE ARRANGEMENT

## *295-7510* CHASSIS AR

**S/N: HEN8070-UP**

**PART OF 295-7237 COMMON AR**

**SMCS-7000** **i02758820**

| NOTE | PART NUMBER | QTY | PART NAME 1 2 3 4 5 6 (PRODUCT LEVEL) | SEE PAGE |
|---|---|---|---|---|
| Y | *261-6275* | 1 | AXLE GP | 157 |
| Y | *218-5660* | 1 | BUMPER GP (REAR) | 200 |
| Y | *218-5602* | 1 | CONTROL GP-GOVERNOR | 89 |
| Y | *218-5799* | 1 | CYLINDER & MTG GP-LIFT ARM | 236 |
| Y | *218-5803* | 1 | ENCLOSURE GP-ENGINE | 210 |
| Y | *218-5675* | 1 | FRAME & MTG GP-MACHINE | 212 |
| Y | *150-8621* | 1 | GUIDE GP-LINES | 214 |
| Y | *295-7030* | 1 | LINES GP-FUEL | 90 |
| Y | *218-0918* | 1 | MOUNTING GP-PUMP | 180 |
| Y | *218-6430* | 1 | PANEL GP-SIDE | 581 |
| Y | *218-6390* | 1 | PLATFORM GP-OPERATOR | 584 |
| Y | *216-4700* | 1 | WIRING GP-CHASSIS | 144 |

Y-SEPARATE ILLUSTRATION

**<END>**

## *295-7518* CHASSIS AR

**S/N: HEN6750-7749**

**PART OF 295-7236 COMMON AR**

**SMCS-7000** **i02731075**

| NOTE | PART NUMBER | QTY | PART NAME 1 2 3 4 5 6 (PRODUCT LEVEL) | SEE PAGE |
|---|---|---|---|---|
| Y | *261-6275* | 1 | AXLE GP | 157 |
| Y | *218-5660* | 1 | BUMPER GP (REAR) | 200 |
| Y | *218-5602* | 1 | CONTROL GP-GOVERNOR | 89 |
| Y | *218-5799* | 1 | CYLINDER & MTG GP-LIFT ARM | 236 |
| Y | *218-5803* | 1 | ENCLOSURE GP-ENGINE | 210 |
| Y | *218-5675* | 1 | FRAME & MTG GP-MACHINE | 212 |
| Y | *150-8621* | 1 | GUIDE GP-LINES | 214 |
| Y | *218-0929* | 1 | LINES GP-FUEL PRM & FILTER | 96 |
| Y | *218-0918* | 1 | MOUNTING GP-PUMP | 180 |
| Y | *218-6430* | 1 | PANEL GP-SIDE | 581 |
| Y | *218-6390* | 1 | PLATFORM GP-OPERATOR | 584 |
| Y | *216-4700* | 1 | WIRING GP-CHASSIS | 144 |

Y-SEPARATE ILLUSTRATION

**<END>**

# MACHINE ARRANGEMENT

## *295-7236* COMMON AR

**S/N: HEN6750-8069**

**SMCS-7000** **i02731065**

| NOTE | PART NUMBER | QTY | PART NAME 1 2 3 4 5 6 (PRODUCT LEVEL) | SEE PAGE |
|---|---|---|---|---|
| Y | *218-6350* | 1 | CAB AR-ENCLOSED ROPS | 476 |
| Y | *295-7518* | 1 | CHASSIS AR | 1 |
| Y | *295-7136* | 1 | FILM GP | 608 |
| Y | *278-1237* | 1 | HYDRAULIC AR | 252 |
| Y | *295-7107* | 1 | INSTALLATION AR-ENGINE | 16 |
| Y | *216-4746* | 1 | LIGHTING GP-FLOOD (REAR) | 130 |
| Y | *6V-1970* | 1 | LITERATURE GP | 570 |
| Y | *225-7969* | 1 | WARNING GP-BACKUP | 142 |
| | | | | |
| | **229-8752** | 1 | FLOOR MAT | |

Y-SEPARATE ILLUSTRATION

**<END>**

## *295-7237* COMMON AR

**S/N: HEN8070-UP**

**SMCS-7000** **i02833189**

| NOTE | PART NUMBER | QTY | PART NAME 1 2 3 4 5 6 (PRODUCT LEVEL) | SEE PAGE |
|---|---|---|---|---|
| Y | *218-6350* | 1 | CAB AR-ENCLOSED ROPS | 476 |
| Y | *295-7510* | 1 | CHASSIS AR | 1 |
| Y | *295-7136* | 1 | FILM GP | 608 |
| Y | *295-7220* | 1 | HYDRAULIC AR | 253 |
| Y | *295-7107* | 1 | INSTALLATION AR-ENGINE | 16 |
| Y | *216-4746* | 1 | LIGHTING GP-FLOOD (REAR) | 130 |
| Y | *6V-1970* | 1 | LITERATURE GP (LITERATURE COMPARTMENT) | 570 |
| Y | *225-7969* | 1 | WARNING GP-BACKUP | 142 |
| | | | | |
| | **229-8752** | 1 | FLOOR MAT | |

Y-SEPARATE ILLUSTRATION

**<END>**

## *295-7494* CONTROL AR-MACHINE–ON, OFF AUXILIARY CONTROL, 1 SPEED

**S/N: HEN6750-UP**

**AN ATTACHMENT**

**SMCS-4062, 4284, 4351, 5059, 5705** **i02736490**

| NOTE | PART NUMBER | QTY | PART NAME 1 2 3 4 5 6 (PRODUCT LEVEL) | SEE PAGE |
|---|---|---|---|---|
| Y | *218-5611* | 1 | CONTROL GP-PILOT OPERATED HYD | 492 |
| Y | *218-5604* | 1 | DRIVE CONTROL AR-HYDROSTATIC | 157 |
| Y | *142-9060* | 1 | DRIVE GP-TANDEM | 160 |

Y-SEPARATE ILLUSTRATION

**<END>**

# MACHINE ARRANGEMENT

## *295-7495* CONTROL AR-MACHINE–
### AUXILIARY PROPORTIONAL FLOW CONTROL, 1-SPEED
**S/N: HEN6750-UP**
**AN ATTACHMENT**

**SMCS-4062, 4284, 4351, 5059, 5705** **i02736426**

| NOTE | PART NUMBER | QTY | PART NAME 1 2 3 4 5 6 (PRODUCT LEVEL) | SEE PAGE |
|---|---|---|---|---|
| Y | *218-5618* | 1 | CONTROL GP-PILOT OPERATED HYD | 499 |
| Y | *218-5605* | 1 | DRIVE CONTROL AR-HYDROSTATIC | 158 |
| Y | *142-9060* | 1 | DRIVE GP-TANDEM | 160 |
| Y-SEPARATE ILLUSTRATION | | | | |

**<END>**

## *295-7496* CONTROL AR-MACHINE–
### AUX PROPORTIONAL FLOW, 2-SPEED
**S/N: HEN6750-UP**
**AN ATTACHMENT**

**SMCS-4062, 4284, 4351, 5059, 5705** **i02793533**

| NOTE | PART NUMBER | QTY | PART NAME 1 2 3 4 5 6 (PRODUCT LEVEL) | SEE PAGE |
|---|---|---|---|---|
| Y | *218-5618* | 1 | CONTROL GP-PILOT OPERATED HYD | 499 |
| Y | *295-7497* | 1 | DRIVE CONTROL AR-HYDROSTATIC | 159 |
| Y | *142-9060* | 1 | DRIVE GP-TANDEM | 160 |
| Y-SEPARATE ILLUSTRATION | | | | |

**<END>**

## *261-6126* CONVERSION AR-MACHINE
**S/N: HEN6750-UP**
**AN ATTACHMENT**

**SMCS-7000** **i02858091**

| NOTE | PART NUMBER | QTY | PART NAME 1 2 3 4 5 6 (PRODUCT LEVEL) | SEE PAGE |
|---|---|---|---|---|
| Y | *218-0940* | 1 | GUARD GP-BELT | 37 |
| Y | *142-8652* | 1 | LIGHTING GP-STOP & TAIL | 134 |
| Y | *222-9815* | 1 | MUFFLER & MOUNTING GP | 81 |
| | | | S/N: HEN6750-7026 | |
| Y | *258-2462* | 1 | MUFFLER & MOUNTING GP | 82 |
| | | | S/N: HEN7027-UP | |
| Y | *218-5790* | 1 | PANEL AR-INSTRUMENT | 576 |
| Y | *190-8084* | 1 | PUMP & MTG GP-WORK TOOL | 333 |
| Y | *218-0924* | 1 | RADIATOR & OIL COOLER MTG GP | 72 |
| Y-SEPARATE ILLUSTRATION | | | | |

**<END>**

# MACHINE ARRANGEMENT

## *261-6165* CONVERSION AR-MACHINE—OUTSIDE NACD

**S/N: HEN6750-UP**
**STAGE II SOUND**
**AN ATTACHMENT**

**SMCS-7000** **i02799267**

| NOTE | PART NUMBER | QTY | PART NAME 1 2 3 4 5 6 (PRODUCT LEVEL) | SEE PAGE |
|---|---|---|---|---|
| Y | *216-6146* | 1 | BOX GP-STORAGE | 475 |
| Y | *233-5991* | 1 | LIFTING GP-MACHINE (FOUR POINT) | 221 |
| Y | *142-8652* | 1 | LIGHTING GP-STOP & TAIL | 134 |
| Y | *272-3051* | 1 | MUFFLER GP | 83 |
| Y | *218-5791* | 1 | PANEL AR-INSTRUMENT (EAME) | 576 |
| Y | *306-8137* | 1 | PUMP & MTG GP-WORK TOOL | 334 |
| Y | *218-0924* | 1 | RADIATOR & OIL COOLER MTG GP | 72 |
| Y | *257-7400* | 1 | SUPPRESSION GP-SOUND (ENGINE) | 228 |
| Y | *233-5615* | 1 | SUPPRESSION GP-SOUND (HOOD) | 227 |
| Y | *261-6384* | 1 | SUPPRESSION GP-SOUND (MACHINE) | 229 |
| Y | *278-1279* | 1 | SUPPRESSION GP-SOUND (BELT GUARD) | 230 |
| Y | *230-3743* | 1 | WIRING GP-HORN (WITH MOUNTING) | 151 |
| | | | | |
| | **229-8752** | 1 | FLOOR MAT | |
| | *261-6362* | 1 | PLATE & FILM GP | |
| | **225-4148** | 1 | PLATE (CE MARK) | |

Y-SEPARATE ILLUSTRATION

**<END>**

## *278-5351* CONVERSION AR-MACHINE—OUTSIDE NACD

**S/N: HEN6750-UP**
**AN ATTACHMENT**

**SMCS-7000** **i02799271**

| NOTE | PART NUMBER | QTY | PART NAME 1 2 3 4 5 6 (PRODUCT LEVEL) | SEE PAGE |
|---|---|---|---|---|
| Y | *216-6146* | 1 | BOX GP-STORAGE | 475 |
| Y | **191-9684** | 1 | FILM GP (CLEARANCE) | 605 |
| Y | *233-5991* | 1 | LIFTING GP-MACHINE (FOUR POINT) | 221 |
| Y | *142-8652* | 1 | LIGHTING GP-STOP & TAIL | 134 |
| Y | *272-3051* | 1 | MUFFLER GP | 83 |
| Y | *218-5791* | 1 | PANEL AR-INSTRUMENT (EAME) | 576 |
| Y | *306-8137* | 1 | PUMP & MTG GP-WORK TOOL | 334 |
| Y | *218-0924* | 1 | RADIATOR & OIL COOLER MTG GP | 72 |
| Y | *278-1279* | 1 | SUPPRESSION GP-SOUND (BELT GUARD) | 230 |
| Y | *257-7400* | 1 | SUPPRESSION GP-SOUND (ENGINE) | 228 |
| Y | *233-5615* | 1 | SUPPRESSION GP-SOUND (HOOD) | 227 |
| Y | *261-6384* | 1 | SUPPRESSION GP-SOUND (MACHINE) | 229 |
| Y | *230-3743* | 1 | WIRING GP-HORN (WITH MOUNTING) | 151 |
| | | | | |
| | **229-8752** | 1 | FLOOR MAT | |
| | *261-6362* | 1 | PLATE & FILM GP | |
| | **225-4148** | 1 | PLATE (CE MARK) | |

Y-SEPARATE ILLUSTRATION

**<END>**

# MACHINE ARRANGEMENT

## *278-5373* CONVERSION AR-MACHINE–ITALY

**S/N: HEN6750-UP**

**AN ATTACHMENT**

**SMCS-7000** **i02799272**

| NOTE | PART NUMBER | QTY | PART NAME 1 2 3 4 5 6 (PRODUCT LEVEL) | SEE PAGE |
|---|---|---|---|---|
| Y | *216-6146* | 1 | BOX GP-STORAGE | 475 |
| Y | *278-1293* | 1 | CONVERSION GP-ROADING | 207 |
| Y | **177-9152** | 1 | KIT-ROADING PLATE & MOUNTING (BUCKET) | 450 |
| Y | *233-5991* | 1 | LIFTING GP-MACHINE (FOUR POINT) | 221 |
| Y | *216-4715* | 1 | LIGHTING GP-ROADING | 132 |
| Y | *175-4238* | 1 | LOCK GP-QUICK COUPLER (MECHANICAL) | 452 |
| Y | *236-5058* | 1 | MIRROR & MTG GP-REAR VIEW (WITH ROADING LIGHT MOUNT) | 222 |
| Y | *225-7963* | 1 | MOUNTING GP-REGISTRATION | 224 |
| Y | *272-3051* | 1 | MUFFLER GP | 83 |
| Y | *218-5791* | 1 | PANEL AR-INSTRUMENT (EAME) | 576 |
| Y | *306-8137* | 1 | PUMP & MTG GP-WORK TOOL | 334 |
| Y | *218-0924* | 1 | RADIATOR & OIL COOLER MTG GP | 72 |
| Y | *278-1279* | 1 | SUPPRESSION GP-SOUND (BELT GUARD) | 230 |
| Y | *257-7400* | 1 | SUPPRESSION GP-SOUND (ENGINE) | 228 |
| Y | *233-5615* | 1 | SUPPRESSION GP-SOUND (HOOD) | 227 |
| Y | *261-6384* | 1 | SUPPRESSION GP-SOUND (MACHINE) | 229 |
| Y | *230-3743* | 1 | WIRING GP-HORN (WITH MOUNTING) | 151 |
| Y | *225-7964* | 1 | WIRING GP-REAR LIGHTING | 152 |
| | | | | |
| | **229-8752** | 1 | FLOOR MAT | |
| | *261-6362* | 1 | PLATE & FILM GP | |
| | **225-4148** | 1 | PLATE (CE MARK) | |

Y-SEPARATE ILLUSTRATION

**<END>**

# MACHINE ARRANGEMENT

## *278-5418* CONVERSION AR-MACHINE—GERMANY

**S/N: HEN6750-UP**

**AN ATTACHMENT**

**SMCS-7000** **i02799275**

| NOTE | PART NUMBER | QTY | PART NAME 1 2 3 4 5 6 (PRODUCT LEVEL) | SEE PAGE |
|---|---|---|---|---|
| Y | *216-6146* | 1 | BOX GP-STORAGE | 475 |
| Y | *278-1292* | 1 | CONVERSION GP-ROADING (GERMANY) | 206 |
| Y | **177-9152** | 1 | KIT-ROADING PLATE & MOUNTING (BUCKET) | 450 |
| Y | *233-5991* | 1 | LIFTING GP-MACHINE (FOUR POINT) | 221 |
| Y | *216-4715* | 1 | LIGHTING GP-ROADING | 132 |
| Y | *175-4238* | 1 | LOCK GP-QUICK COUPLER (MECHANICAL) | 452 |
| Y | *236-5058* | 1 | MIRROR & MTG GP-REAR VIEW (WITH ROADING LIGHT MOUNT) | 222 |
| Y | *272-3051* | 1 | MUFFLER GP | 83 |
| Y | *218-5791* | 1 | PANEL AR-INSTRUMENT (EAME) | 576 |
| Y | *306-8137* | 1 | PUMP & MTG GP-WORK TOOL | 334 |
| Y | *218-0924* | 1 | RADIATOR & OIL COOLER MTG GP | 72 |
| Y | *278-1279* | 1 | SUPPRESSION GP-SOUND (BELT GUARD) | 230 |
| Y | *257-7400* | 1 | SUPPRESSION GP-SOUND (ENGINE) | 228 |
| Y | *233-5615* | 1 | SUPPRESSION GP-SOUND (HOOD) | 227 |
| Y | *261-6384* | 1 | SUPPRESSION GP-SOUND (MACHINE) | 229 |
| Y | *173-3022* | 1 | VISOR GP-CAB | 597 |
| Y | *230-3743* | 1 | WIRING GP-HORN (WITH MOUNTING) | 151 |
| | | | | |
| | **233-5680** | 3 | FILM-IDENTIFICATION (13-KM/H) | |
| | | | (1-FACING THE REAR OF THE MACHINE, ON THE ENGINE ENCLOSURE, THE LEFT EDGE OF THE FILM TO BE LOCATED 17-MM FROM THE | |
| | | | VERTICAL CENTERLINE OF THE MACHINE. THE BOTTOM EDGE OF THE FILM IS 5-MM ABOVE THE SEAM BETWEEN THE HOOD & DOOR | |
| | | | ASSEMBLY) | |
| | | | (1-FACING THE RIGHT SIDE OF THE MACHINE, LOCATED ON THE LOWER FRAME ASSEMBLY, THE RIGHT EDGE OF THE FILM IS TO BE | |
| | | | 661-MM FROM THE FRONT EDGE OF THE LOWER FRAME ASSEMBLY. THE BOTTOM EDGE OF THE FILM IS 425-MM FROM THE EDGE OF THE | |
| | | | LOWER FRAME ASSEMBLY) | |
| | | | (1-FACING THE LEFT SIDE OF THE MACHINE LOCATED ON THE LOWER FRAME ASSEMBLY, THE RIGHT EDGE OF THE FILM IS TO BE 661-MM | |
| | | | FROM THE FRONT EDGE OF THE LOWER FRAME ASSEMBLY. THE BOTTOM EDGE OF THE FILM IS 425-MM FROM THE BOTTOM EDGE OF THE | |
| | | | LOWER FRAME ASSEMBLY) | |
| | **229-8752** | 1 | FLOOR MAT | |
| | *261-6362* | 1 | PLATE & FILM GP | |
| | **225-4148** | 1 | PLATE (CE MARK) | |
| | *222-5695* | 1 | SUPPORT GP-STORAGE BOX | |
| | **216-6144** | 1 | BRACKET AS | |

Y-SEPARATE ILLUSTRATION

**<END>**

# MACHINE ARRANGEMENT

## *278-5448* CONVERSION AR-MACHINE–
### GERMANY, HIGH FLOW, 2-SPEED
### S/N: HEN6750-UP
### AN ATTACHMENT

**SMCS-7000** **i02799276**

| NOTE | PART NUMBER | QTY | PART NAME 1 2 3 4 5 6 (PRODUCT LEVEL) | SEE PAGE |
|---|---|---|---|---|
| Y | *216-6146* | 1 | BOX GP-STORAGE | 475 |
| Y | *278-1292* | 1 | CONVERSION GP-ROADING (GERMANY) | 206 |
| Y | **177-9152** | 1 | KIT-ROADING PLATE & MOUNTING (BUCKET) | 450 |
| Y | *233-5991* | 1 | LIFTING GP-MACHINE (FOUR POINT) | 221 |
| Y | *216-4715* | 1 | LIGHTING GP-ROADING | 132 |
| Y | *175-4238* | 1 | LOCK GP-QUICK COUPLER (MECHANICAL) | 452 |
| Y | *236-5058* | 1 | MIRROR & MTG GP-REAR VIEW (WITH ROADING LIGHT MOUNT) | 222 |
| Y | *272-3051* | 1 | MUFFLER GP | 83 |
| Y | *218-5791* | 1 | PANEL AR-INSTRUMENT (EAME) | 576 |
| Y | *306-8137* | 1 | PUMP & MTG GP-WORK TOOL | 334 |
| Y | *218-0924* | 1 | RADIATOR & OIL COOLER MTG GP | 72 |
| Y | *278-1279* | 1 | SUPPRESSION GP-SOUND (BELT GUARD) | 230 |
| Y | *257-7400* | 1 | SUPPRESSION GP-SOUND (ENGINE) | 228 |
| Y | *233-5615* | 1 | SUPPRESSION GP-SOUND (HOOD) | 227 |
| Y | *261-6384* | 1 | SUPPRESSION GP-SOUND (MACHINE) | 229 |
| Y | *173-3022* | 1 | VISOR GP-CAB | 597 |
| Y | *230-3743* | 1 | WIRING GP-HORN (WITH MOUNTING) | 151 |
| | | | | |
| | **117-6558** | 3 | FILM-IDENTIFICATION (20-KM/H) | |
| | | | (1 - ON REAR OF MACHINE, ON ENGINE ENCLOSURE, THE LEFT EDGE OF THE FILM 17-MM FROM THE VENTRICLE CENTERLINE OF THE | |
| | | | MACHINE. THE BOTTOM EDGE 5-MM ABOVE THE SEAM BETWEEN HOOD & DOOR ASSEMBLY.) | |
| | | | (1 - ON LEFT SIDE OF MACHINE. ON LOWER FRAME ASSEMBLY, THE RIGHT EDGE OF | |
| | | | FILM 661-MM FROM THE FRONT EDGE OF THE LOWER FRAME ASSEMBLY. THE BOTTOM EDGE OF FILM 425-MM FROM THE BOTTOM EDGE OF | |
| | | | THE LOWER FRAME ASSEMBLY) | |
| | | | (1 - ON RIGHT SIDE OF MACHINE. ON LOWER FRAME ASSEMBLY, THE RIGHT EDGE OF | |
| | | | FILM 661-MM FROM THE FRONT EDGE OF THE LOWER FRAME ASSEMBLY. THE BOTTOM EDGE OF FILM 425-MM FROM THE BOTTOM EDGE OF | |
| | | | THE LOWER FRAME ASSEMBLY) | |
| | **229-8752** | 1 | FLOOR MAT | |
| | *261-6362* | 1 | PLATE & FILM GP | |
| | **225-4148** | 1 | PLATE (CE MARK) | |
| | *222-5695* | 1 | SUPPORT GP-STORAGE BOX | |
| | **216-6144** | 1 | BRACKET AS | |

Y-SEPARATE ILLUSTRATION

**<END>**

# MACHINE ARRANGEMENT

## *295-7064* CONVERSION AR-MACHINE—OUTSIDE NACD

**S/N: HEN6750-UP**

**AN ATTACHMENT**

**SMCS-7000** **i02799251**

| NOTE | PART NUMBER | QTY | PART NAME 1 2 3 4 5 6 (PRODUCT LEVEL) | SEE PAGE |
|---|---|---|---|---|
| Y | *216-6146* | 1 | BOX GP-STORAGE | 475 |
| Y | *233-5991* | 1 | LIFTING GP-MACHINE (FOUR POINT) | 221 |
| Y | *142-8652* | 1 | LIGHTING GP-STOP & TAIL | 134 |
| Y | *272-3051* | 1 | MUFFLER GP | 83 |
| Y | *218-5791* | 1 | PANEL AR-INSTRUMENT | 576 |
| Y | *306-8137* | 1 | PUMP & MTG GP-WORK TOOL | 334 |
| Y | *218-0924* | 1 | RADIATOR & OIL COOLER MTG GP | 72 |
| Y | *233-5615* | 1 | SUPPRESSION GP-SOUND (HOOD) | 227 |
| Y | *257-7400* | 1 | SUPPRESSION GP-SOUND (ENGINE) | 228 |
| Y | *261-6384* | 1 | SUPPRESSION GP-SOUND (MACHINE) | 229 |
| Y | *278-1279* | 1 | SUPPRESSION GP-SOUND (BELT GUARD) | 230 |
| Y | *230-3743* | 1 | WIRING GP-HORN (WITH MOUNTING) | 151 |

Y-SEPARATE ILLUSTRATION

**<END>**

## *295-7071* CONVERSION AR-MACHINE—OUTSIDE NACD

**S/N: HEN6750-UP**

**AN ATTACHMENT**

**SMCS-7000** **i02867143**

| NOTE | PART NUMBER | QTY | PART NAME 1 2 3 4 5 6 (PRODUCT LEVEL) | SEE PAGE |
|---|---|---|---|---|
| Y | *216-6146* | 1 | BOX GP-STORAGE | 475 |
| Y | **191-9684** | 1 | FILM GP (CLEARANCE) | 605 |
| Y | *233-5991* | 1 | LIFTING GP-MACHINE (FOUR POINT) | 221 |
| Y | *142-8652* | 1 | LIGHTING GP-STOP & TAIL | 134 |
| Y | *272-3051* | 1 | MUFFLER GP | 83 |
| Y | *218-5791* | 1 | PANEL AR-INSTRUMENT | 576 |
| Y | *306-8137* | 1 | PUMP & MTG GP-WORK TOOL | 334 |
| Y | *218-0924* | 1 | RADIATOR & OIL COOLER MTG GP | 72 |
| Y | *233-5615* | 1 | SUPPRESSION GP-SOUND (HOOD) | 227 |
| Y | *261-6384* | 1 | SUPPRESSION GP-SOUND (MACHINE) | 229 |
| Y | *278-1279* | 1 | SUPPRESSION GP-SOUND (BELT GUARD) | 230 |
| Y | *230-3743* | 1 | WIRING GP-HORN (WITH MOUNTING) | 151 |

Y-SEPARATE ILLUSTRATION

**<END>**

# MACHINE ARRANGEMENT

## *295-7154* CONVERSION AR-MACHINE—ITALY

**S/N: HEN6750-UP**
**STANDARD FLOW**
**AN ATTACHMENT**

**SMCS-7000** **i02867142**

| NOTE | PART NUMBER | QTY | PART NAME 1 2 3 4 5 6 (PRODUCT LEVEL) | SEE PAGE |
|---|---|---|---|---|
| Y | *216-6146* | 1 | BOX GP-STORAGE | 475 |
| Y | *278-1293* | 1 | CONVERSION GP-ROADING (ITALY) | 207 |
| Y | **177-9152** | 1 | KIT-ROADING PLATE & MOUNTING (BUCKET) | 450 |
| Y | *233-5991* | 1 | LIFTING GP-MACHINE (FOUR POINT) | 221 |
| Y | *216-4715* | 1 | LIGHTING GP-ROADING | 132 |
| Y | *175-4238* | 1 | LOCK GP-QUICK COUPLER (MECHANICAL) | 452 |
| Y | *236-5058* | 1 | MIRROR & MTG GP-REAR VIEW (WITH ROADING LIGHT MOUNT) | 222 |
| Y | *225-7963* | 1 | MOUNTING GP-REGISTRATION | 224 |
| Y | *272-3051* | 1 | MUFFLER GP | 83 |
| Y | *218-5791* | 1 | PANEL AR-INSTRUMENT | 576 |
| Y | *306-8137* | 1 | PUMP & MTG GP-WORK TOOL | 334 |
| Y | *218-0924* | 1 | RADIATOR & OIL COOLER MTG GP | 72 |
| Y | *233-5615* | 1 | SUPPRESSION GP-SOUND (HOOD) | 227 |
| Y | *261-6384* | 1 | SUPPRESSION GP-SOUND (MACHINE) | 229 |
| Y | *278-1279* | 1 | SUPPRESSION GP-SOUND (BELT GUARD) | 230 |
| Y | *230-3743* | 1 | WIRING GP-HORN (WITH MOUNTING) | 151 |
| Y | *225-7964* | 1 | WIRING GP-REAR LIGHTING | 152 |

Y-SEPARATE ILLUSTRATION

**<END>**

# MACHINE ARRANGEMENT

## *295-7170* CONVERSION AR-MACHINE–GERMANY

**S/N: HEN6750-UP**

**1 SPEED**

**AN ATTACHMENT**

**SMCS-7000** **i02867141**

| NOTE | PART NUMBER | QTY | PART NAME 1 2 3 4 5 6 (PRODUCT LEVEL) | SEE PAGE |
|---|---|---|---|---|
| Y | *216-6146* | 1 | BOX GP-STORAGE | 475 |
| Y | *278-1292* | 1 | CONVERSION GP-ROADING (GERMANY) | 206 |
| Y | **177-9152** | 1 | KIT-ROADING PLATE & MOUNTING (BUCKET) | 450 |
| Y | *233-5991* | 1 | LIFTING GP-MACHINE (FOUR POINT) | 221 |
| Y | *216-4715* | 1 | LIGHTING GP-ROADING | 132 |
| Y | *175-4238* | 1 | LOCK GP-QUICK COUPLER (MECHANICAL) | 452 |
| Y | *236-5058* | 1 | MIRROR & MTG GP-REAR VIEW (WITH ROADING LIGHT MOUNT) | 222 |
| Y | *272-3051* | 1 | MUFFLER GP | 83 |
| Y | *218-5791* | 1 | PANEL AR-INSTRUMENT | 576 |
| Y | *306-8137* | 1 | PUMP & MTG GP-WORK TOOL | 334 |
| Y | *218-0924* | 1 | RADIATOR & OIL COOLER MTG GP | 72 |
| Y | *233-5615* | 1 | SUPPRESSION GP-SOUND (HOOD) | 227 |
| Y | *261-6384* | 1 | SUPPRESSION GP-SOUND (MACHINE) | 229 |
| Y | *278-1279* | 1 | SUPPRESSION GP-SOUND (BELT GUARD) | 230 |
| Y | *173-3022* | 1 | VISOR GP-CAB | 597 |
| Y | *230-3743* | 1 | WIRING GP-HORN (WITH MOUNTING) | 151 |
| | | | | |
| | *222-5695* | 1 | SUPPORT GP-STORAGE BOX | |
| | **216-6144** | 1 | BRACKET AS | |
| | | | | |
| | **233-5680** | 3 | FILM-IDENTIFICATION (13-KM/H) | |
| | | | (1-FACING THE REAR OF THE MACHINE, ON THE ENGINE ENCLOSURE, THE LEFT EDGE OF THE FILM TO BE LOCATED 17-MM FROM THE | |
| | | | VERTICAL CENTERLINE OF THE MACHINE. THE BOTTOM EDGE OF THE FILM IS 5-MM ABOVE THE SEAM BETWEEN THE HOOD & DOOR | |
| | | | ASSEMBLY) | |
| | | | (1-FACING THE RIGHT SIDE OF THE MACHINE, LOCATED ON THE LOWER FRAME ASSEMBLY, THE RIGHT EDGE OF THE FILM IS TO BE | |
| | | | 661-MM FROM THE FRONT EDGE OF THE LOWER FRAME ASSEMBLY. THE BOTTOM EDGE OF THE FILM IS 425-MM FROM THE EDGE OF THE | |
| | | | LOWER FRAME ASSEMBLY) | |
| | | | (1-FACING THE LEFT SIDE OF THE MACHINE LOCATED ON THE LOWER FRAME ASSEMBLY, THE RIGHT EDGE OF THE FILM IS TO BE 661-MM | |
| | | | FROM THE FRONT EDGE OF THE LOWER FRAME ASSEMBLY. THE BOTTOM EDGE OF THE FILM IS 425-MM FROM THE BOTTOM EDGE OF THE | |
| | | | LOWER FRAME ASSEMBLY) | |

Y-SEPARATE ILLUSTRATION

**<END>**

# MACHINE ARRANGEMENT

## *295-7171* CONVERSION AR-MACHINE—GERMANY

**S/N: HEN6750-UP**
**2 SPEED**
**AN ATTACHMENT**

**SMCS-7000** **i02867138**

| NOTE | PART NUMBER | QTY | PART NAME 1 2 3 4 5 6 (PRODUCT LEVEL) | SEE PAGE |
|---|---|---|---|---|
| Y | *216-6146* | 1 | BOX GP-STORAGE | 475 |
| Y | *278-1292* | 1 | CONVERSION GP-ROADING (GERMANY) | 206 |
| Y | **177-9152** | 1 | KIT-ROADING PLATE & MOUNTING (BUCKET) | 450 |
| Y | *233-5991* | 1 | LIFTING GP-MACHINE (FOUR POINT) | 221 |
| Y | *216-4715* | 1 | LIGHTING GP-ROADING | 132 |
| Y | *175-4238* | 1 | LOCK GP-QUICK COUPLER (MECHANICAL) | 452 |
| Y | *236-5058* | 1 | MIRROR & MTG GP-REAR VIEW (WITH ROADING LIGHT MOUNT) | 222 |
| Y | *272-3051* | 1 | MUFFLER GP | 83 |
| Y | *218-5791* | 1 | PANEL AR-INSTRUMENT | 576 |
| Y | *306-8137* | 1 | PUMP & MTG GP-WORK TOOL | 334 |
| Y | *218-0924* | 1 | RADIATOR & OIL COOLER MTG GP | 72 |
| Y | *233-5615* | 1 | SUPPRESSION GP-SOUND (HOOD) | 227 |
| Y | *261-6384* | 1 | SUPPRESSION GP-SOUND (MACHINE) | 229 |
| Y | *278-1279* | 1 | SUPPRESSION GP-SOUND (BELT GUARD) | 230 |
| Y | *173-3022* | 1 | VISOR GP-CAB | 597 |
| Y | *230-3743* | 1 | WIRING GP-HORN (WITH MOUNTING) | 151 |
| | | | | |
| | *222-5695* | 1 | SUPPORT GP-STORAGE BOX | |
| | **216-6144** | 1 | BRACKET AS | |
| | | | | |
| | **117-6558** | 3 | FILM-IDENTIFICATION (20-KM/H) | |
| | | | (1 - ON REAR OF MACHINE, ON ENGINE ENCLOSURE, LEFT EDGE OF FILM 17-MM FROM THE VENTRICLE CENTERLINE OF MACHINE. | |
| | | | BOTTOM EDGE 5-MM ABOVE SEAM BETWEEN HOOD & DOOR ASSEMBLY.) | |
| | | | (1 - ON LEFT SIDE OF MACHINE. ON LOWER FRAME ASSEMBLY, RIGHT EDGE OF FILM | |
| | | | 661-MM FROM FRONT EDGE OF LOWER FRAME ASSEMBLY. BOTTOM EDGE OF FILM 425-MM FROM BOTTOM EDGE OF LOWER FRAME ASSEMBLY) | |
| | | | (1 - ON RIGHT SIDE OF MACHINE. ON LOWER FRAME ASSEMBLY, RIGHT EDGE OF FILM 661-MM FROM FRONT EDGE OF LOWER FRAME | |
| | | | ASSEMBLY. BOTTOM EDGE OF FILM 425-MM FROM BOTTOM EDGE OF LOWER FRAME ASSEMBLY) | |

Y-SEPARATE ILLUSTRATION

**<END>**

# ENGINE ARRANGEMENT

## *295-7124* ENGINE AR

**S/N: HEN6750-UP**

**AN ATTACHMENT**

**SMCS-1000** **i02732303**

| NOTE | PART NUMBER | QTY | PART NAME 1 2 3 4 5 6 (PRODUCT LEVEL) | SEE PAGE |
|---|---|---|---|---|
| Y | **308-9664** | 1 | ENGINE AR-PRIMARY | 15 |

Y-SEPARATE ILLUSTRATION

# ENGINE ARRANGEMENT

## *295-7024* ENGINE AR-PRIMARY

**S/N: HEN7725-UP**
**AN ATTACHMENT**

**SMCS-1000** **i02736234**

| NOTE | PART NUMBER | QTY | PART NAME 1 2 3 4 5 6 (PRODUCT LEVEL) | SEE PAGE |
|---|---|---|---|---|
| Y | **300-6603** | 1 | ENGINE AR-PRIMARY | 14 |

Y-SEPARATE ILLUSTRATION

# ENGINE ARRANGEMENT

## 300-6603 ENGINE AR-PRIMARY

**S/N: CYM1-UP**
**55 BRAKE KW (74 BHP) AT 2500 RPM**
**PART OF 295-7024 ENGINE AR-PRIMARY**
**AN ATTACHMENT**

**SMCS-1000** **i02899543**

| NOTE | PART NUMBER | QTY | PART NAME 1 2 3 4 5 6 (PRODUCT LEVEL) | SEE PAGE |
|---|---|---|---|---|
| Y | *315-8353* | 1 | ALTERNATOR GP-CHARGING | 107 |
| Y | *292-4041* | 1 | BEARING GP-MAIN | 17 |
| Y | *315-8329* | 1 | CAMSHAFT GP | 19 |
| Y | *287-4033* | 1 | CONNECTING ROD GP | 20 |
| Y | *314-9900* | 1 | COOLER GP-ENGINE OIL | 65 |
| Y | *315-7762* | 1 | COVER GP-VALVE MECHANISM | 21 |
| Y | *314-9860* | 1 | CRANKSHAFT GP | 23 |
| Y | *315-8330* | 1 | CYLINDER BLOCK GP | 26 |
| Y | *233-5500* | 1 | CYLINDER HEAD GP | 28 |
| Y | *314-9901* | 1 | FILTER GP-ENGINE OIL | 61 |
| Y | *314-9861* | 1 | FLYWHEEL GP | 33 |
| Y | *315-7766* | 1 | GEAR GP-FRONT | 35 |
| Y | *235-5904* | 1 | GLOW PLUG GP | 116 |
| Y | *315-8355* | 1 | HOUSING & REGULATOR GP | 66 |
| Y | *315-7764* | 1 | HOUSING GP-FLYWHEEL | 39 |
| Y | *315-8336* | 1 | HOUSING GP-FRONT | 40 |
| Y | *315-7761* | 1 | LIFTING GP-ENGINE | 45 |
| Y | *247-6317* | 1 | LINES GP-AIR | 77 |
| Y | *287-5377* | 1 | LINES GP-ENGINE OIL | 62 |
| Y | *315-8350* | 1 | LINES GP-FUEL INJECTION | 94 |
| Y | *287-5323* | 1 | MANIFOLD GP-EXHAUST | 79 |
| Y | *287-4832* | 1 | MANIFOLD GP-INLET | 80 |
| Y | *315-7765* | 1 | PAN GP-OIL | 47 |
| Y | *315-8348* | 1 | PISTON GP | 52 |
| Y | *315-8331* | 1 | PLUG GP-CYLINDER BLOCK | 53 |
| Y | *287-2922* | 1 | PLUG GP-ENGINE | 54 |
| Y | *287-2983* | 1 | PLUG GP-ENGINE | 55 |
| Y | *301-3396* | 1 | PULLEY GP-CRANKSHAFT | 57 |
| Y | *287-6114* | 1 | PULLEY GP-WATER PUMP | 58 |
| Y | *235-5895* | 1 | PUMP GP-ENGINE OIL | 63 |
| Y | *315-8352* | 1 | PUMP GP-FUEL INJECTION | 100 |
| Y | *287-6056* | 1 | PUMP GP-WATER | 70 |
| Y | *287-6181* | 1 | STARTING MOTOR GP-ELECTRIC | 139 |
| Y | *314-9918* | 1 | SWITCH GP-PRESSURE | 141 |
| Y | *315-7768* | 1 | TURBOCHARGER GP | 86 |
| Y | *287-6138* | 1 | V-BELT GP | 59 |
| Y | *287-5665* | 1 | VALVE GP-ENGINE OIL RELIEF | 64 |
| Y | *235-5880* | 1 | VALVE MECHANISM GP | 60 |

Y-SEPARATE ILLUSTRATION

# ENGINE ARRANGEMENT

## 308-9664 ENGINE AR-PRIMARY

**S/N: CJS1-UP**
**53 BRAKE KW (71 BHP) AT 2600 RPM**
**PART OF 295-7124 ENGINE AR**
**AN ATTACHMENT**

**SMCS-1000** **i02801769**

| NOTE | PART NUMBER | QTY | PART NAME<br>1 2 3 4 5 6 (PRODUCT LEVEL) | SEE PAGE |
|---|---|---|---|---|
| Y | *287-6361* | 1 | ALTERNATOR GP-CHARGING | 105 |
| Y | *292-4041* | 1 | BEARING GP-MAIN | 17 |
| Y | *287-6138* | 1 | V-BELT GP | 59 |
| Y | *233-5473* | 1 | CAMSHAFT GP | 18 |
| Y | *287-4033* | 1 | CONNECTING ROD GP | 20 |
| Y | *314-9900* | 1 | COOLER GP-ENGINE OIL | 65 |
| Y | *315-7762* | 1 | COVER GP-VALVE MECHANISM | 21 |
| Y | *287-4649* | 1 | CRANKSHAFT GP | 22 |
| Y | *287-2416* | 1 | CYLINDER BLOCK GP | 24 |
| Y | *233-5500* | 1 | CYLINDER HEAD GP | 28 |
| Y | *292-4040* | 1 | DRAIN GP | 30 |
| Y | *287-5377* | 1 | LINES GP-ENGINE OIL | 62 |
| Y | *314-9901* | 1 | FILTER GP-ENGINE OIL | 61 |
| Y | *235-5890* | 1 | FLYWHEEL GP | 32 |
| Y | *287-4830* | 1 | GEAR GP-FRONT | 34 |
| Y | *235-5904* | 1 | GLOW PLUG GP | 116 |
| Y | *287-3357* | 1 | HOUSING GP-FLYWHEEL | 38 |
| Y | *316-9040* | 1 | HOUSING GP-FRONT | 42 |
| Y | *287-1844* | 1 | LIFTING GP-ENGINE | 44 |
| Y | *247-6317* | 1 | LINES GP-AIR | 77 |
| Y | *235-5901* | 1 | LINES GP-FUEL INJECTION | 92 |
| Y | *235-5900* | 1 | LINES GP-WATER (TEMPERATURE REGULATOR) | 67 |
| Y | *287-5323* | 1 | MANIFOLD GP-EXHAUST | 79 |
| Y | *287-4832* | 1 | MANIFOLD GP-INLET | 80 |
| Y | *316-9079* | 1 | PAN GP-OIL | 49 |
| Y | *235-5889* | 1 | PISTON & ROD GP | 51 |
| Y | *287-2922* | 1 | PLUG GP-ENGINE | 54 |
| Y | *287-2983* | 1 | PLUG GP-ENGINE | 55 |
| Y | *241-6015* | 1 | PULLEY GP-CRANKSHAFT | 56 |
| Y | *287-6114* | 1 | PULLEY GP-WATER PUMP | 58 |
| Y | *235-5895* | 1 | PUMP GP-ENGINE OIL | 63 |
| Y | *249-7347* | 1 | PUMP GP-FUEL INJECTION | 98 |
| Y | *287-6056* | 1 | PUMP GP-WATER | 70 |
| Y | *238-8277* | 1 | SENSOR GP-TEMP & PRESS<br>(ENGINE COOLANT, ENGINE OIL) | 136 |
| Y | *287-6181* | 1 | STARTING MOTOR GP-ELECTRIC | 139 |
| Y | *235-5894* | 1 | TURBOCHARGER GP | 84 |
| Y | *287-5665* | 1 | VALVE GP-ENGINE OIL RELIEF | 64 |
| Y | *235-5880* | 1 | VALVE MECHANISM GP | 60 |
| | | | AVAILABLE GASKET KIT(S): | |
| | **239-6773** | 1 | KIT-GASKET | |

Y-SEPARATE ILLUSTRATION

# ENGINE ARRANGEMENT

## *295-7107* INSTALLATION AR-ENGINE

**S/N: HEN6750-UP**

**PART OF 295-7236, 295-7237 COMMON AR**

**SMCS-1000** **i02796143**

| NOTE | PART NUMBER | QTY | PART NAME 1 2 3 4 5 6 (PRODUCT LEVEL) | SEE PAGE |
|---|---|---|---|---|
| Y | *222-9812* | 1 | AIR CLEANER GP | 74 |
| Y | *218-4836* | 1 | DRAIN GP-ENGINE OIL | 31 |
| Y | *280-8320* | 1 | LINES GP-AIR | 78 |
| Y | *218-0923* | 1 | MOUNTING GP-ENGINE | 46 |
| Y | *218-0938* | 1 | MOUNTING GP-RAD & OIL COOLER | 68 |
| Y | *312-4617* | 1 | WIRING GP-ENGINE | 149 |

Y-SEPARATE ILLUSTRATION

# 292-4041 BEARING GP-MAIN

**S/N: CYM1-UP; CJS1-UP**
**PART OF 300-6603, 308-9664 ENGINE AR-PRIMARY**
**AN ATTACHMENT**

**SMCS-1203** **i02879495**

| NOTE | REF NO | GRAPHIC REF | PART NUMBER | QTY | PART NAME 1 2 3 4 5 6 (PRODUCT LEVEL) | SEE PAGE |
|---|---|---|---|---|---|---|
| | 1 | 1 | **103-9288** | 1 | PLATE-THRUST (STANDARD) | |
| AB | | 1 | **103-9289** | 1 | PLATE-THRUST (0.15-MM OS) | |
| AB | | 1 | **103-9290** | 1 | PLATE-THRUST (0.35-MM OS) | |
| | 2 | 1 | **233-5486** | 1 | BEARING-MAIN | |
| AB | | 1 | **294-4890** | 1 | KIT-BEARING (0.25-MM US) | |
| AB | | 1 | **294-4891** | 1 | KIT-BEARING (0.50-MM US) | |
| AB | | 1 | **294-4892** | 1 | KIT-BEARING (0.75-MM US) | |

A-NOT PART OF THIS GROUP
B-USE AS REQUIRED

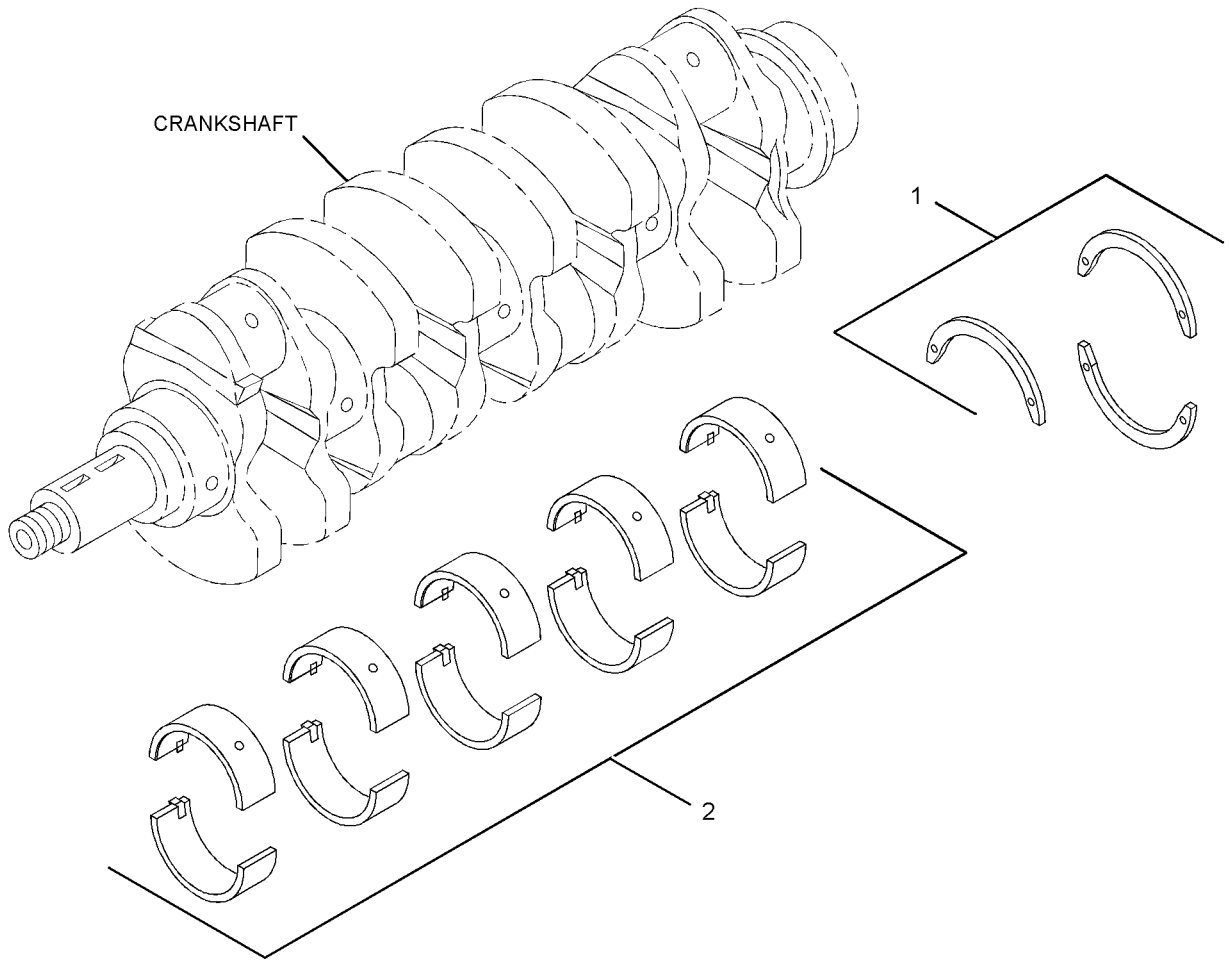


GRAPHIC #1 **<END>** g01379195

# BASIC ENGINE

## *233-5473* CAMSHAFT GP

**S/N: CJS1-UP**

**PART OF 308-9664 ENGINE AR-PRIMARY**

**AN ATTACHMENT**

**SMCS-1210, 1211, 1212** **i01941303**

| NOTE | REF NO | GRAPHIC REF | PART NUMBER | QTY | PART NAME 1 2 3 4 5 6 (PRODUCT LEVEL) | SEE PAGE |
|---|---|---|---|---|---|---|
| M | 1 | 1 | **6V-5215** | 2 | BOLT (M8X1.25X16-MM) | |
| | 2 | 1 | **9M-1974** | 2 | WASHER-HARD (8.8X16X2-MM THK) | |
| | 3 | 1 | **094-4628** | 1 | KEY | |
| | 4 | 1 | **103-9272** | 8 | TAPPET | |
| | 5 | 1 | **233-5479** | 1 | CAMSHAFT | |
| | 6 | 1 | **233-5485** | 1 | PLATE-THRUST | |
| | 7 | 1 | **233-5487** | 8 | PUSHROD | |

M-METRIC PART

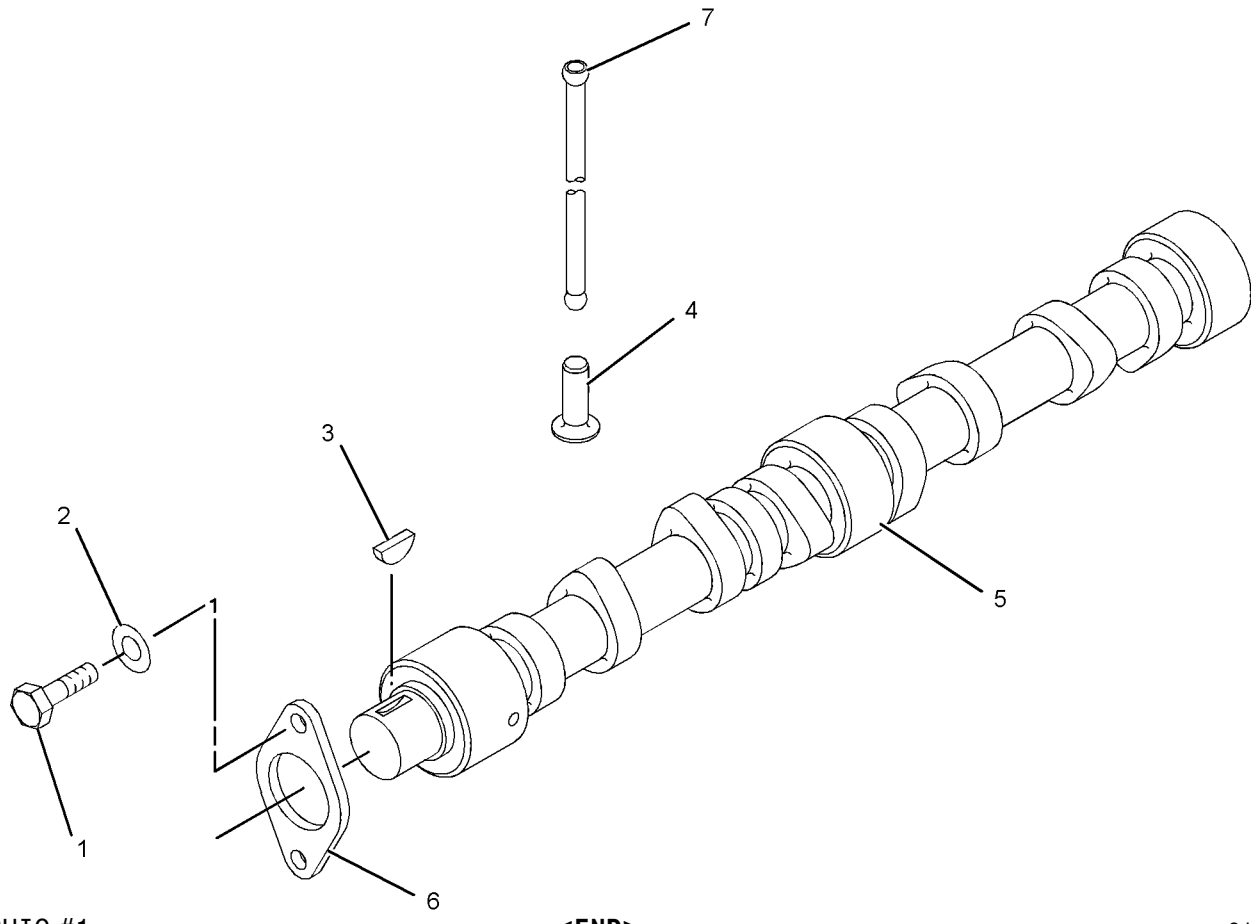


GRAPHIC #1 **<END>** g01010413

# *315-8329* CAMSHAFT GP

**S/N: CYM1-UP**

**PART OF 300-6603 ENGINE AR-PRIMARY**

**AN ATTACHMENT**

**SMCS-1210, 1211, 1212** **i02824211**

| NOTE | REF NO | GRAPHIC REF | PART NUMBER | QTY | PART NAME 1 2 3 4 5 6 (PRODUCT LEVEL) | SEE PAGE |
|---|---|---|---|---|---|---|
| | 1 | 1 | **3B-4505** | 2 | LOCKWASHER | |
| M | 2 | 1 | **8T-4200** | 2 | BOLT (M8X1.25X16-MM) | |
| | 3 | 1 | **094-4628** | 1 | KEY | |
| | 4 | 1 | **233-5485** | 1 | PLATE-THRUST | |
| | 5 | 1 | **314-9926** | 8 | PUSHROD | |
| | 6 | 1 | **314-9927** | 8 | TAPPET | |
| | 7 | 1 | **315-4664** | 1 | CAMSHAFT | |

M-METRIC PART

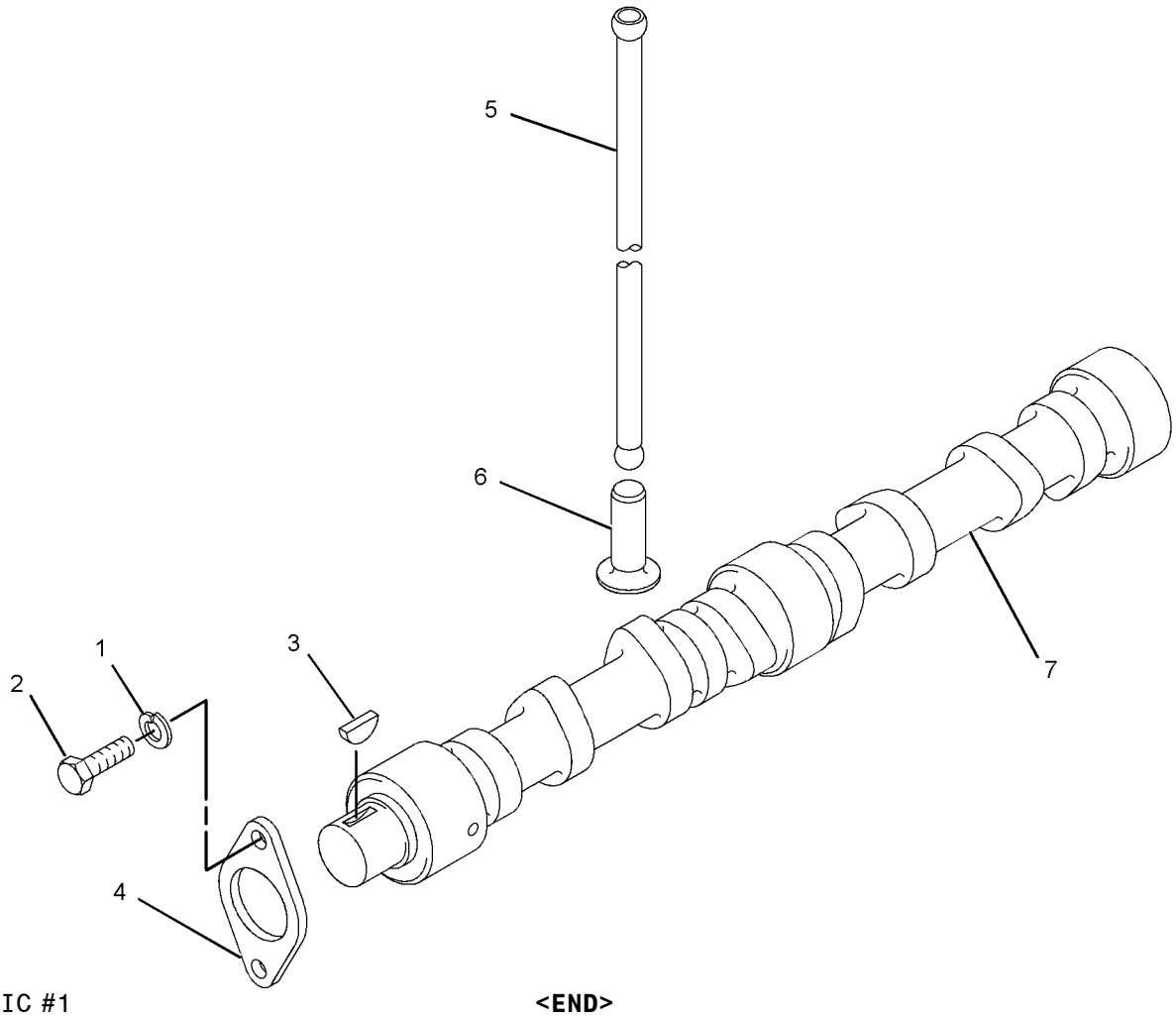


GRAPHIC #1 **<END>** g01448098

# BASIC ENGINE

## *287-4033* CONNECTING ROD GP

**S/N: CYM1-UP; CJS1-UP**
**PART OF 300-6603, 308-9664 ENGINE AR-PRIMARY**
**AN ATTACHMENT**

**SMCS-1218** **i02735544**

| NOTE | REF NO | GRAPHIC REF | PART NUMBER | QTY | PART NAME 1 2 3 4 5 6 (PRODUCT LEVEL) | SEE PAGE |
|---|---|---|---|---|---|---|
| | 1 | 1 | **103-9680** | 4 | ROD AS-CONNECTING | |
| | | | | | (EACH INCLUDES) | |
| | 1A | 1 | **128-2955** | 2 | BOLT-CONNECTING ROD | |
| | 1B | 1 | **128-2956** | 2 | NUT | |
| | 1C | 1 | **128-2958** | 1 | BUSHING | |
| | 2 | 1 | **238-8282** | 1 | BEARING (STANDARD) | |
| AB | | 1 | **238-8283** | | BEARING (0.25-MM US) | |
| AB | | 1 | **238-8284** | | BEARING (0.5-MM US) | |
| AB | | 1 | **238-8285** | | BEARING (0.75-MM US) | |

A-NOT PART OF THIS GROUP
B-USE AS REQUIRED

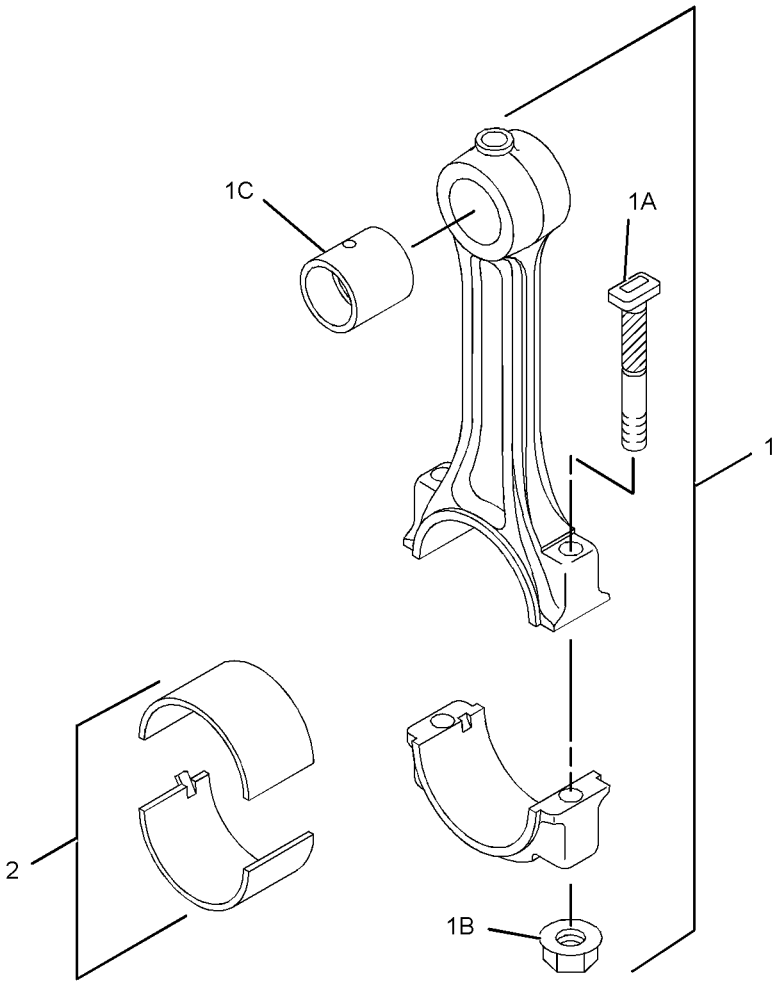


GRAPHIC #1 **<END>** g01380324

# 315-7762 COVER GP-VALVE MECHANISM

**S/N: CYM1-UP; CJS1-UP**
**PART OF 300-6603, 308-9664 ENGINE AR-PRIMARY**
**AN ATTACHMENT**

**SMCS-1107** **i02801850**

| NOTE | REF NO | GRAPHIC REF | PART NUMBER | QTY | PART NAME 1 2 3 4 5 6 (PRODUCT LEVEL) | SEE PAGE |
|---|---|---|---|---|---|---|
| | 1 | 1 | **3B-4505** | 5 | LOCKWASHER | |
| M | 2 | 1 | **099-3649** | 5 | BOLT (M8X1.25X40-MM) | |
| | 3 | 1 | **233-5483** | 1 | GASKET (VALVE MECHANISM) | |
| | 4 | 1 | **294-7917** | 1 | COVER-VALVE MECHANISM | |
| | 5 | 1 | **310-8798** | 1 | CAP-OIL FILLER | |

M-METRIC PART

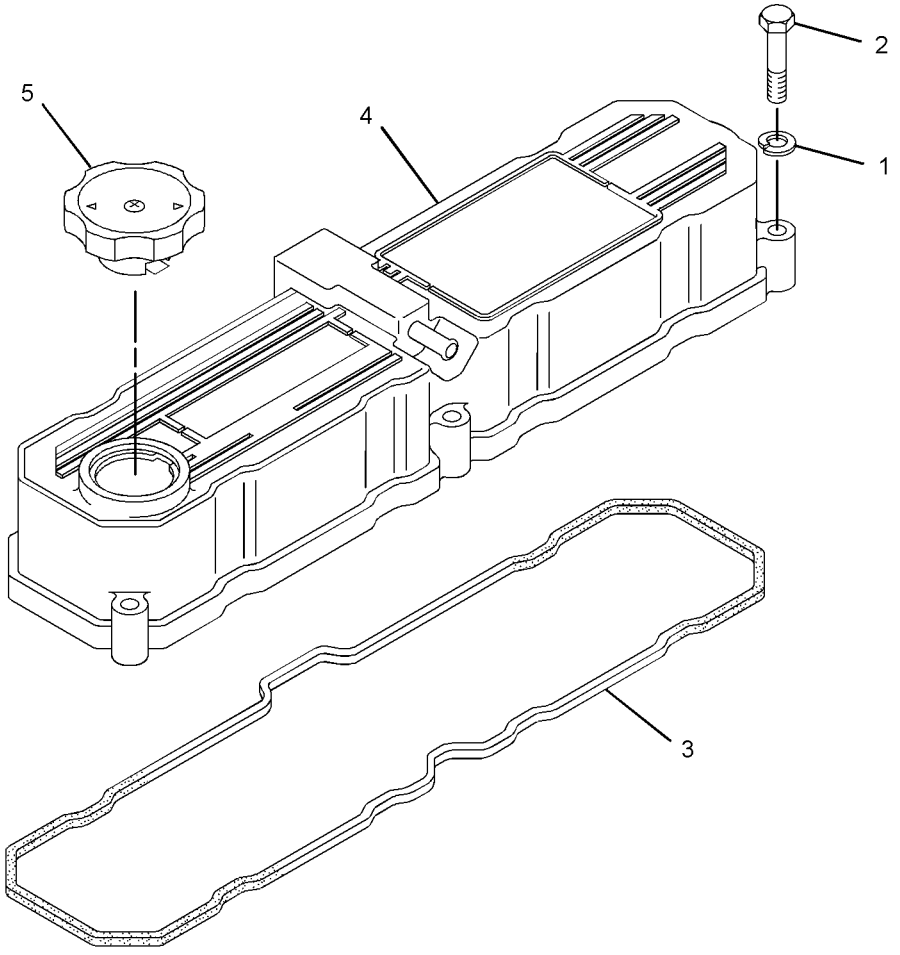


GRAPHIC #1 **<END>** g01400933

# BASIC ENGINE

## *287-4649* CRANKSHAFT GP

**S/N: CJS1-UP**
**PART OF 308-9664 ENGINE AR-PRIMARY**
**AN ATTACHMENT**

**SMCS-1202** **i02735545**

| NOTE | REF NO | GRAPHIC REF | PART NUMBER | QTY | PART NAME 1 2 3 4 5 6 (PRODUCT LEVEL) | SEE PAGE |
|---|---|---|---|---|---|---|
| | 1 | 1 | **234-4794** | 1 | CRANKSHAFT AS | |
| | 1A | 1 | **085-9513** | 2 | PIN | |
| | 1B | 1 | **094-4628** | 2 | KEY | |
| | 1C | 1 | **130-7596** | 1 | NUT | |

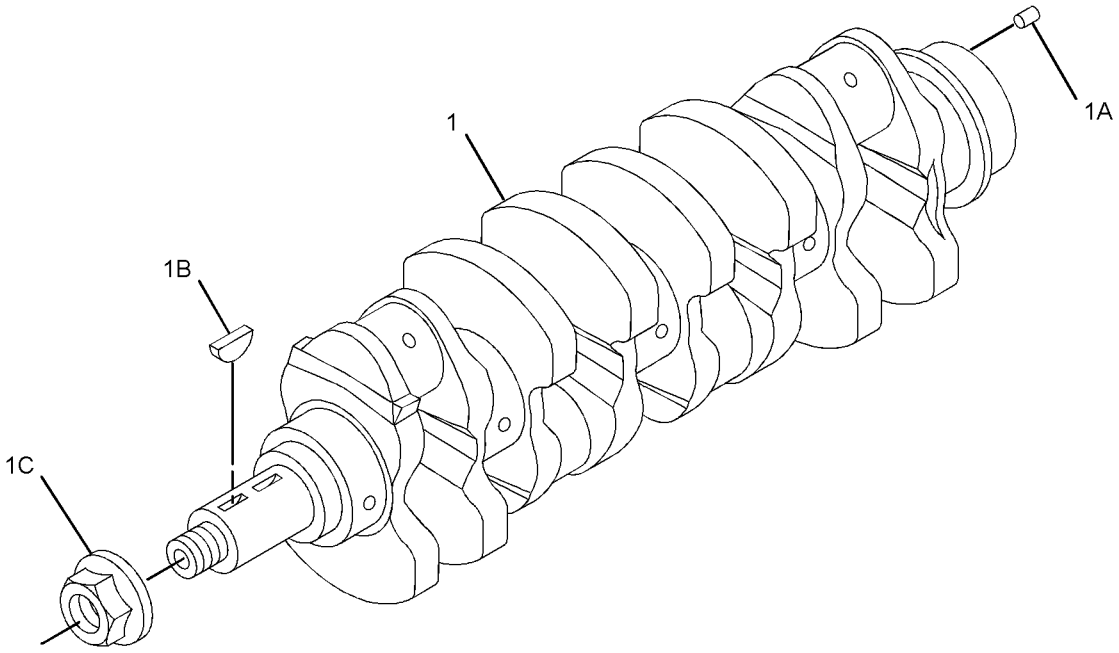


GRAPHIC #1 **<END>** g01380298

# *314-9860* CRANKSHAFT GP

**S/N: CYM1-UP**
**PART OF 300-6603 ENGINE AR-PRIMARY**
**AN ATTACHMENT**

**SMCS-1202** **i02822912**

| NOTE | REF NO | GRAPHIC REF | PART NUMBER | QTY | PART NAME 1 2 3 4 5 6 (PRODUCT LEVEL) | SEE PAGE |
|---|---|---|---|---|---|---|
| | 1 | 1 | **085-9513** | 2 | PIN | |
| | 2 | 1 | **094-4628** | 2 | KEY | |
| | 3 | 1 | **130-7596** | 1 | NUT | |
| | 4 | 1 | **294-7922** | 1 | CRANKSHAFT | |

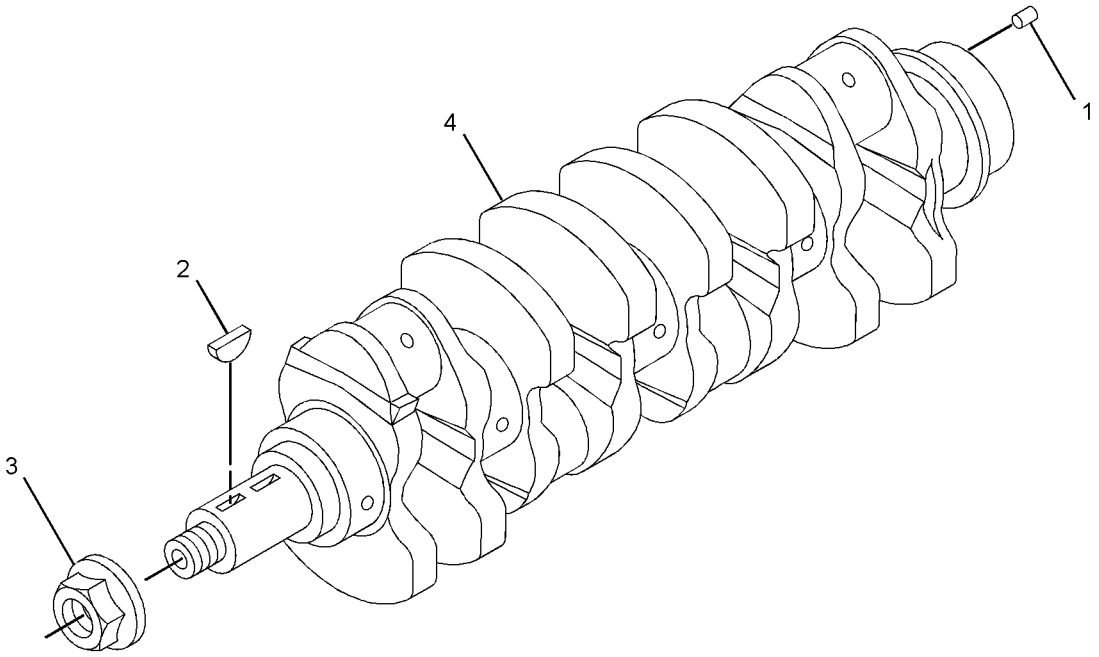


GRAPHIC #1 **<END>** g01392963

# BASIC ENGINE

## *287-2416* CYLINDER BLOCK GP

**S/N: CJS1-UP**

**PART OF 308-9664 ENGINE AR-PRIMARY**

**AN ATTACHMENT**

**SMCS-1201** **i02854033**

| NOTE | REF NO | GRAPHIC REF | PART NUMBER | QTY | PART NAME 1 2 3 4 5 6 (PRODUCT LEVEL) | SEE PAGE |
|---|---|---|---|---|---|---|
| | 1 | 1 | **5I-7525** | 1 | PLUG | |
| | 2 | 1 | **096-3741** | 4 | CAP | |
| | 3 | 1 | **099-4420** | 2 | PIN | |
| | 4 | 1 | **103-9062** | 1 | BUSHING | |
| | 5 | 1 | **103-9275** | 2 | DOWEL | |
| | 6 | 1 | **103-9703** | 1 | SHAFT-IDLER | |
| | 7 | 1 | **183-5916** | 6 | PIN-SPRING | |
| | 8 | 1 | **104-1218** | 2 | DOWEL | |
| | 9 | 1 | **233-5457** | 4 | ORIFICE-JET (OIL PISTON COOLING) | |
| | 10 | 1 | **239-8504** | 1 | CYLINDER BLOCK GP | |
| | 10A | 1 | **3P-1896** | 10 | PLUG-CUP | |
| | 10B | 1 | **103-9276** | 10 | BOLT | |
| | 11 | 1 | **310-2682** | 2 | PLUG | |
| | 12 | 1 | **103-9279** | 2 | SEAL-SIDE | |

*287-2416* **CYLINDER BLOCK GP** *(contd. )* **i02854033**

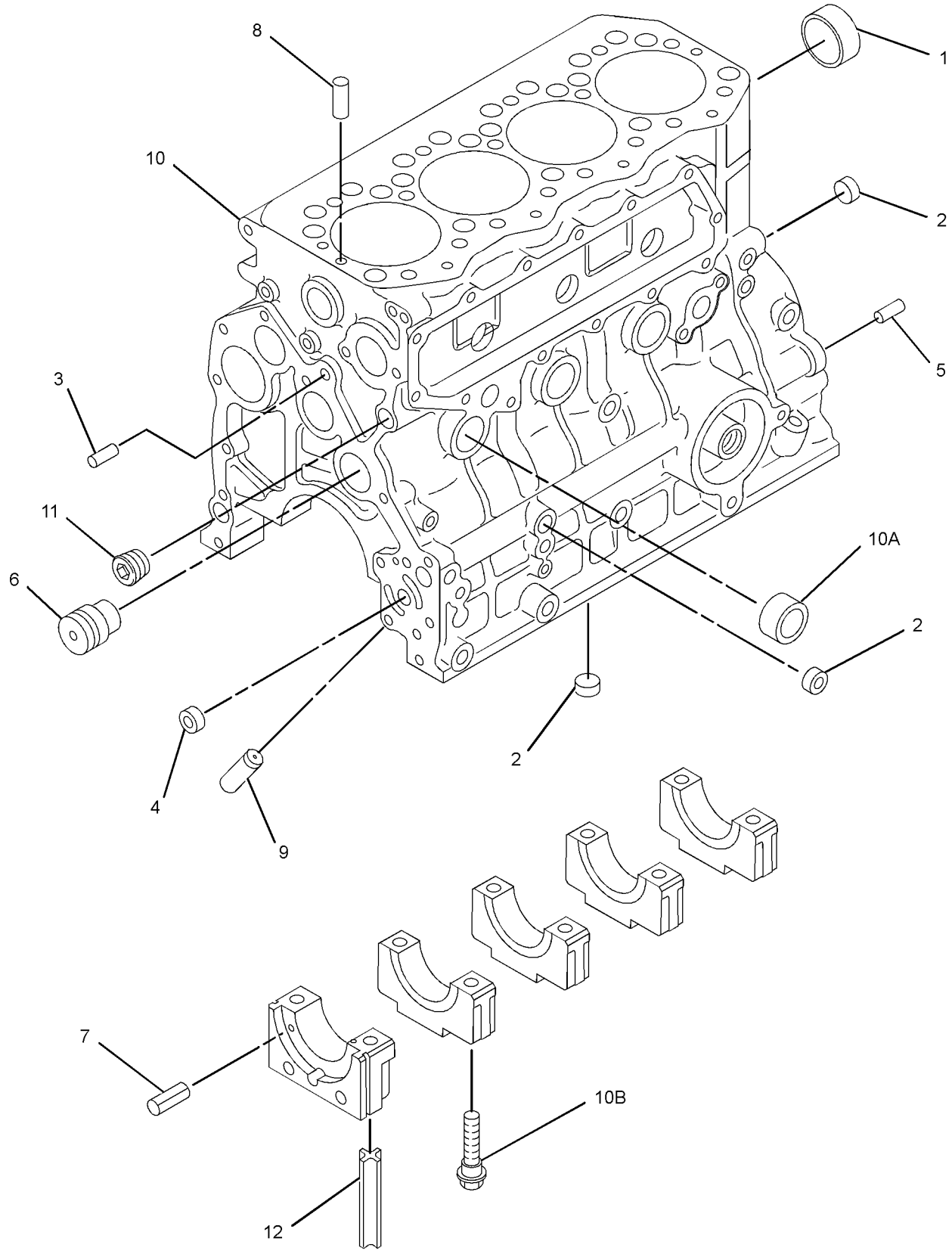


GRAPHIC #1 **<END>** g01443371

# BASIC ENGINE

## *315-8330* CYLINDER BLOCK GP

**S/N: CYM1-UP**

**PART OF 300-6603 ENGINE AR-PRIMARY**

**AN ATTACHMENT**

**SMCS-1201** **i02824956**

| NOTE | REF NO | GRAPHIC REF | PART NUMBER | QTY | PART NAME 1 2 3 4 5 6 (PRODUCT LEVEL) | SEE PAGE |
|---|---|---|---|---|---|---|
| | 1 | 1 | **5I-7525** | 1 | PLUG | |
| | 2 | 1 | **096-3741** | 5 | CAP | |
| | 3 | 1 | **099-4420** | 2 | PIN | |
| | 4 | 1 | **103-9703** | 1 | SHAFT-IDLER | |
| | 5 | 1 | **107-3669** | 4 | JET | |
| | 6 | 1 | **183-5916** | 1 | PIN-SPRING | |
| | 7 | 1 | **199-2139** | 2 | PIN | |
| | 8 | 1 | **233-5488** | 2 | PIN | |
| | 9 | 1 | **310-2682** | 2 | PLUG | |
| | 10 | 1 | **314-9929** | 1 | CYLINDER BLOCK AS | |
| | 10A | 1 | **103-9276** | 10 | BOLT | |
| | 10B | 1 | **199-2129** | 10 | CAP | |
| | 11 | 1 | **314-9938** | 1 | BUSHING | |

*315-8330* **CYLINDER BLOCK GP** *(contd.)* **i02824956**

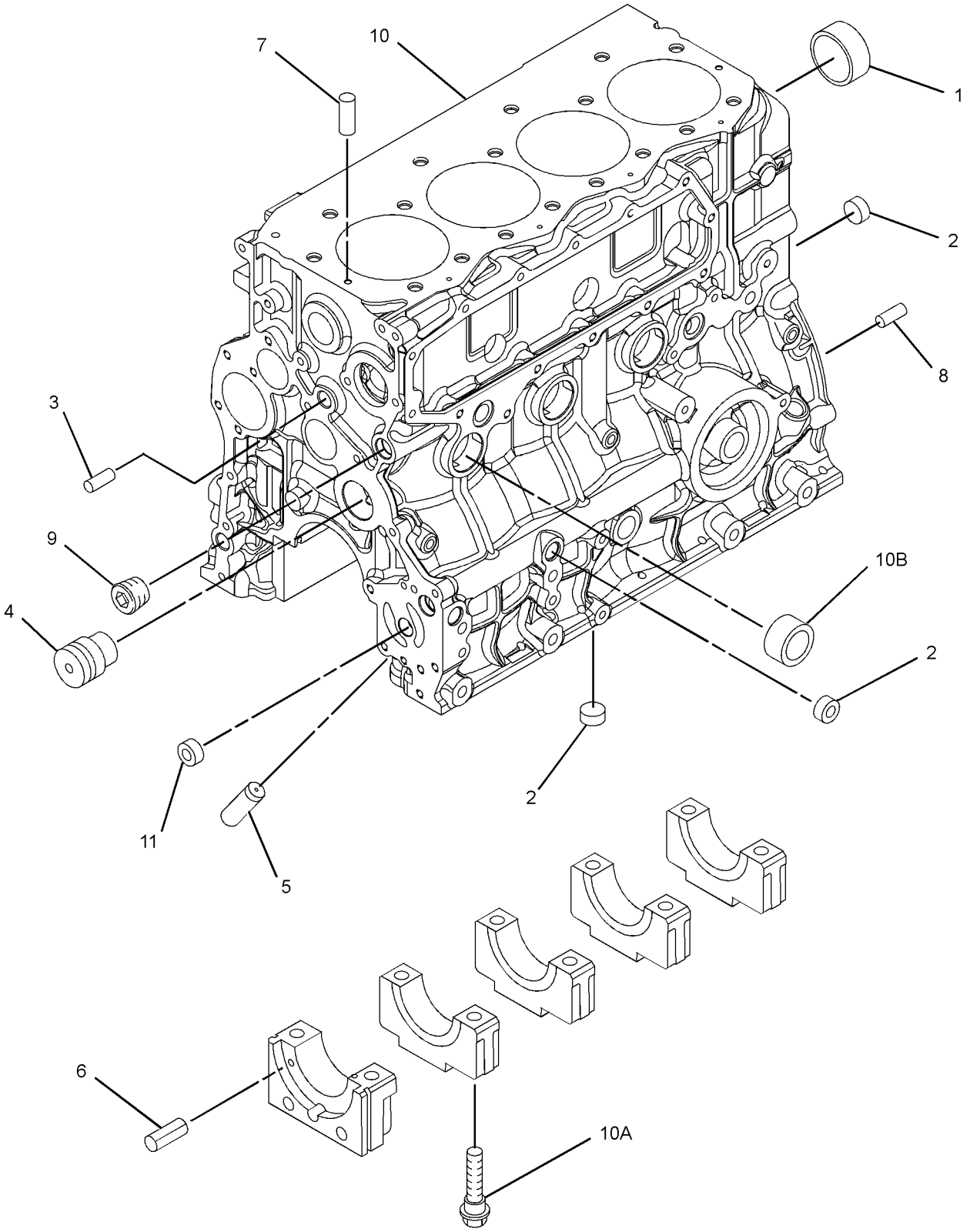


GRAPHIC #1 **<END>** g01448140

# *233-5500* CYLINDER HEAD GP

**S/N: CJS1-16657**
**PART OF 308-9664 ENGINE AR-PRIMARY**
**AN ATTACHMENT**

**SMCS-1100, 1101, 1103, 1104, 1105, 1108, 1109, 1115, 1117, 1121, 1124, 1125**

**i02843018**

| NOTE | REF NO | GRAPHIC REF | PART NUMBER | QTY | PART NAME 1 2 3 4 5 6 (PRODUCT LEVEL) | SEE PAGE |
|---|---|---|---|---|---|---|
| | 1 | 1 | **233-5454** | 17 | BOLT (M12X1.75X115-MM) | |
| | 2 | 1 | **299-4645** | 1 | GASKET-HEAD | |
| | 3 | 1 | **233-5465** | 1 | HEAD AS | |
| | 3A | 1 | **212-8475** | 7 | CAP | |
| | 3B | 1 | **257-8736** | 12 | CAP-SEALING | |
| | 3C | 1 | **233-5453** | 1 | CYLINDER HEAD | |
| | 3D | 1 | **233-5462** | 4 | INSERT-INLET | |
| | 3E | 1 | **233-5463** | 4 | INSERT-EXHAUST | |
| | 3F | 1 | **233-5464** | 8 | GUIDE | |

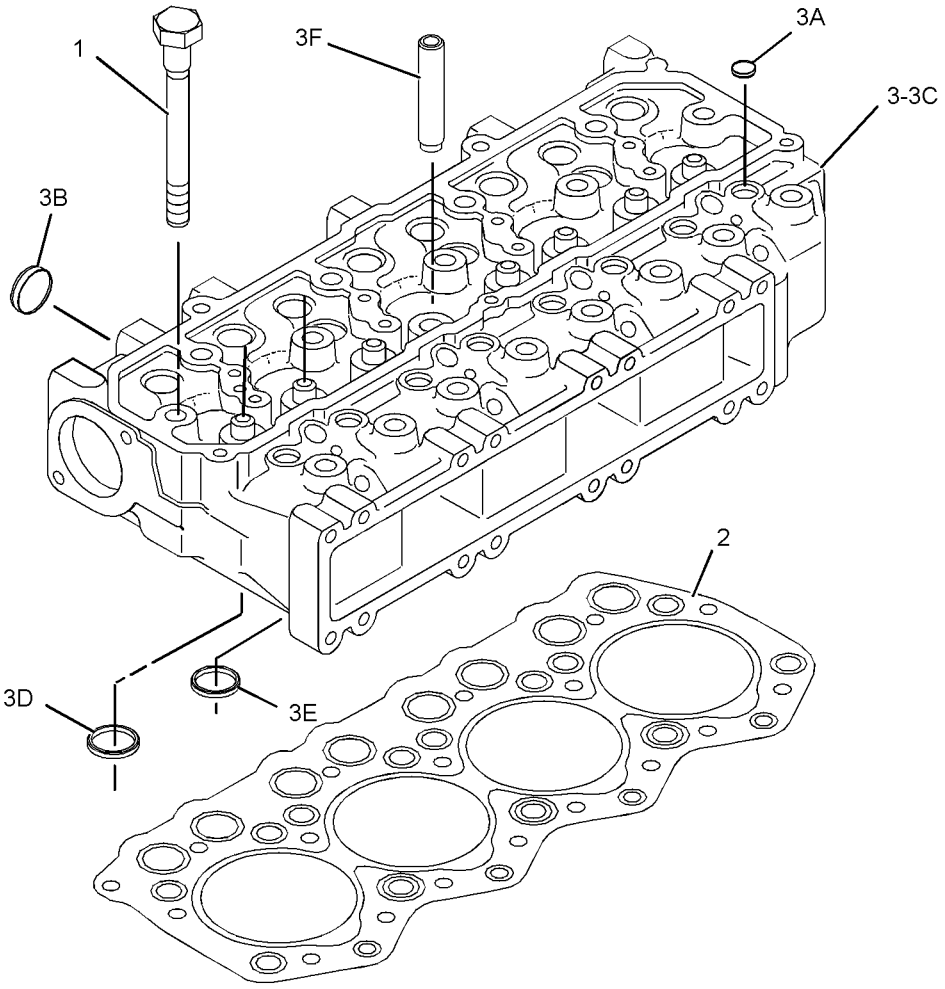


GRAPHIC #1

**<END>**

g01330815

# 233-5500 CYLINDER HEAD GP

**S/N: CYM1-UP; CJS16658-UP**
**PART OF 300-6603, 308-9664 ENGINE AR-PRIMARY**
**AN ATTACHMENT**

**SMCS-1100, 1101, 1103, 1104, 1105, 1108, 1109, 1115, 1117, 1121, 1124, 1125**

**i02868157**

| NOTE | REF NO | GRAPHIC REF | PART NUMBER | QTY | PART NAME 1 2 3 4 5 6 (PRODUCT LEVEL) | SEE PAGE |
|---|---|---|---|---|---|---|
| | 1 | 1 | **103-9246** | 17 | BOLT-CYLINDER HEAD | |
| | 2 | 1 | **299-4645** | 1 | GASKET-HEAD | |
| C | 3 | 1 | **319-7263** | 1 | CYLINDER HEAD AS | |
| | 4 | 1 | **319-7262** | 1 | STUD | |

C-CHANGE FROM PREVIOUS TYPE

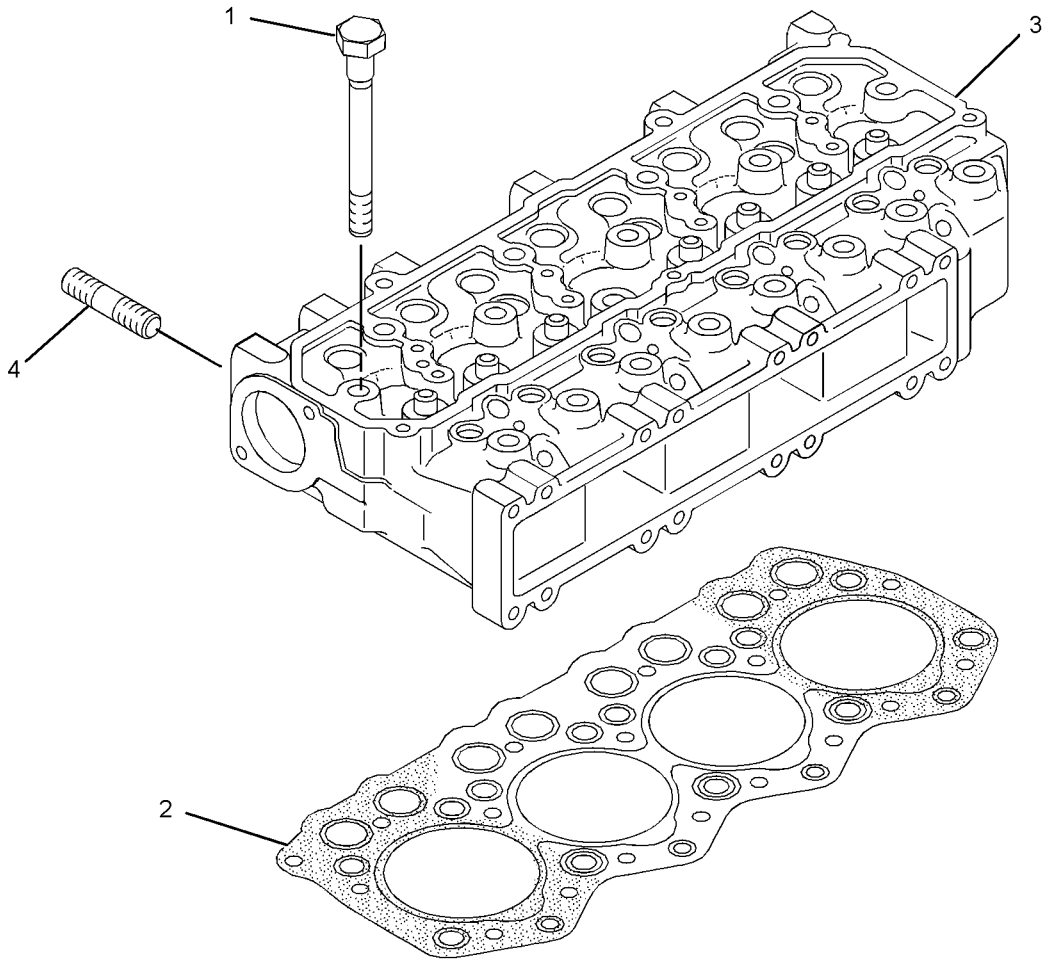


GRAPHIC #1

**<END>**

g01442689

# BASIC ENGINE

## 292-4040 DRAIN GP

**S/N: CJS1-UP**
**PART OF 308-9664 ENGINE AR-PRIMARY**
**AN ATTACHMENT**

**SMCS-1372** **i02618795**

| NOTE | REF NO | GRAPHIC REF | PART NUMBER | QTY | PART NAME 1 2 3 4 5 6 (PRODUCT LEVEL) | SEE PAGE |
|---|---|---|---|---|---|---|
| | 1 | 1 | **238-8278** | 1 | VALVE AS-DRAIN | |

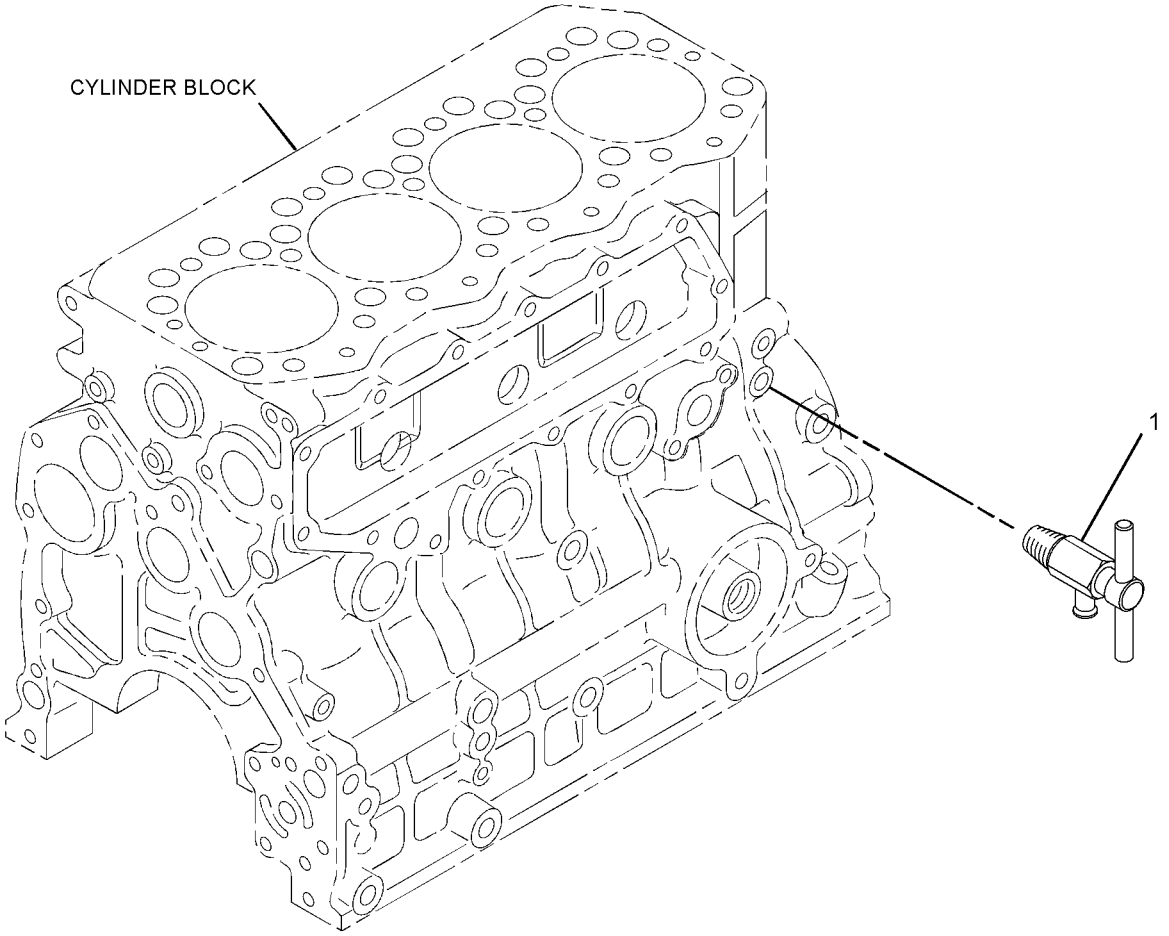


GRAPHIC #1 **<END>** g01354785

# *218-4836* DRAIN GP-ENGINE OIL

**S/N: HEN6750-UP**

**PART OF 295-7107 INSTALLATION AR-ENGINE**

**SMCS-1302** **i02212560**

| NOTE | REF NO | GRAPHIC REF | PART NUMBER | QTY | PART NAME 1 2 3 4 5 6 (PRODUCT LEVEL) | SEE PAGE |
|---|---|---|---|---|---|---|
| | 1 | 1 | **1P-4278** | 1 | CLAMP-HOSE | |
| | 2 | 1 | **8C-3445** | 1 | CAP-DUST | |
| | 3 | 1 | **8C-3446** | 1 | VALVE-FLUID SAMPLING (ENGINE OIL) | |
| | 4 | 1 | **110-2570** | 1 | CAP | |
| | 5 | 1 | **218-0919** | 1 | ADAPTER | |
| | 6 | 1 | **231-3605** | 1 | GUARD | |
| M | 7 | 1 | **8T-4192** | 1 | BOLT (M12X1.75X25-MM) | |
| | 8 | 1 | **8T-4223** | 1 | WASHER-HARD (13.5X25.5X3-MM THK) | |
| | 9 | 1 | **5P-1442** | | HOSE (68-CM) | |
| | 10 | 1 | **8L-2779** | 1 | SEAL-O-RING | |

M-METRIC PART

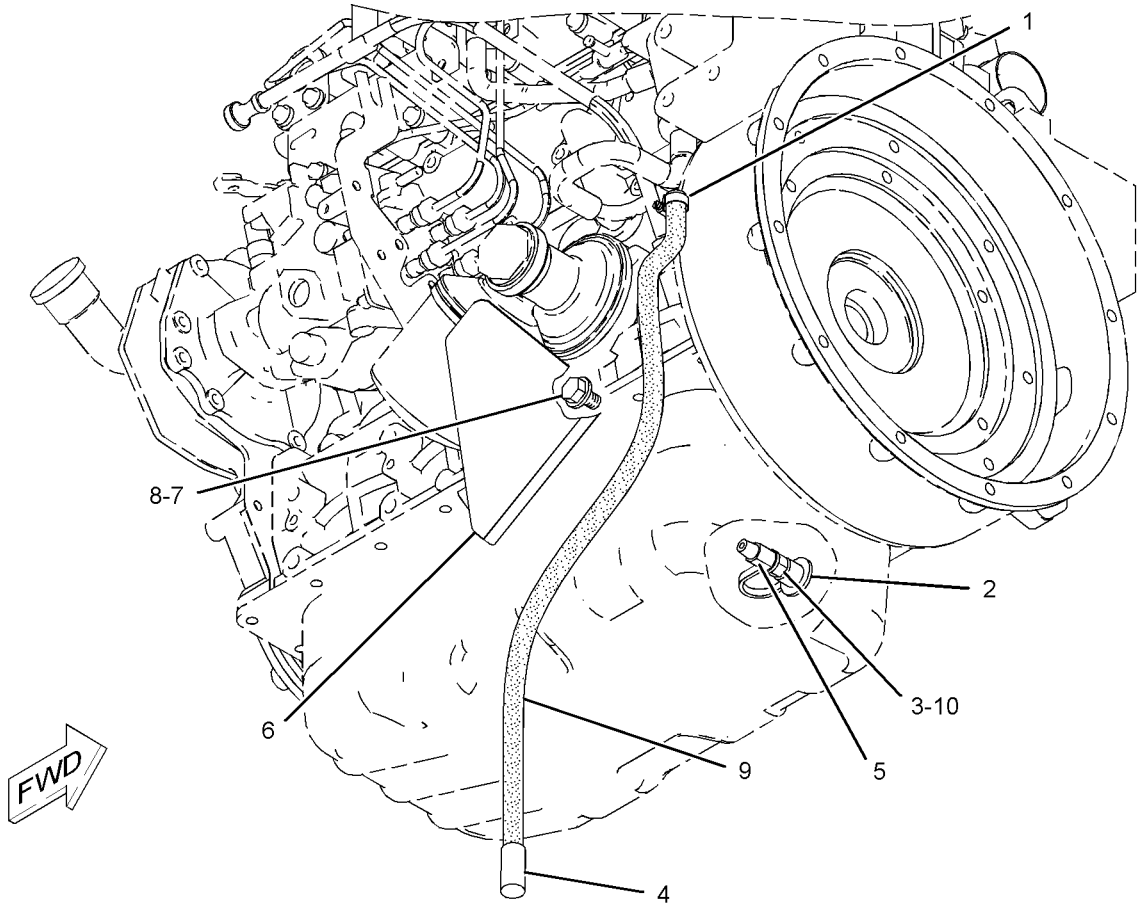


GRAPHIC #1 **<END>** g01120825

# BASIC ENGINE

## *235-5890* FLYWHEEL GP

**S/N: CJS1-UP**
**PART OF 308-9664 ENGINE AR-PRIMARY**
**AN ATTACHMENT**

**SMCS-1156, 1158** **i02613784**

| NOTE | REF NO | GRAPHIC REF | PART NUMBER | QTY | PART NAME 1 2 3 4 5 6 (PRODUCT LEVEL) | SEE PAGE |
|---|---|---|---|---|---|---|
| | 1 | 1 | **234-4791** | 1 | FLYWHEEL AS | |
| M | 1A | 1 | **226-3693** | 4 | BOLT (M12X1.25X30-MM) | |
| | 1B | 1 | **032-8139** | 1 | GEAR-STARTER (112-TEETH) | |

M-METRIC PART

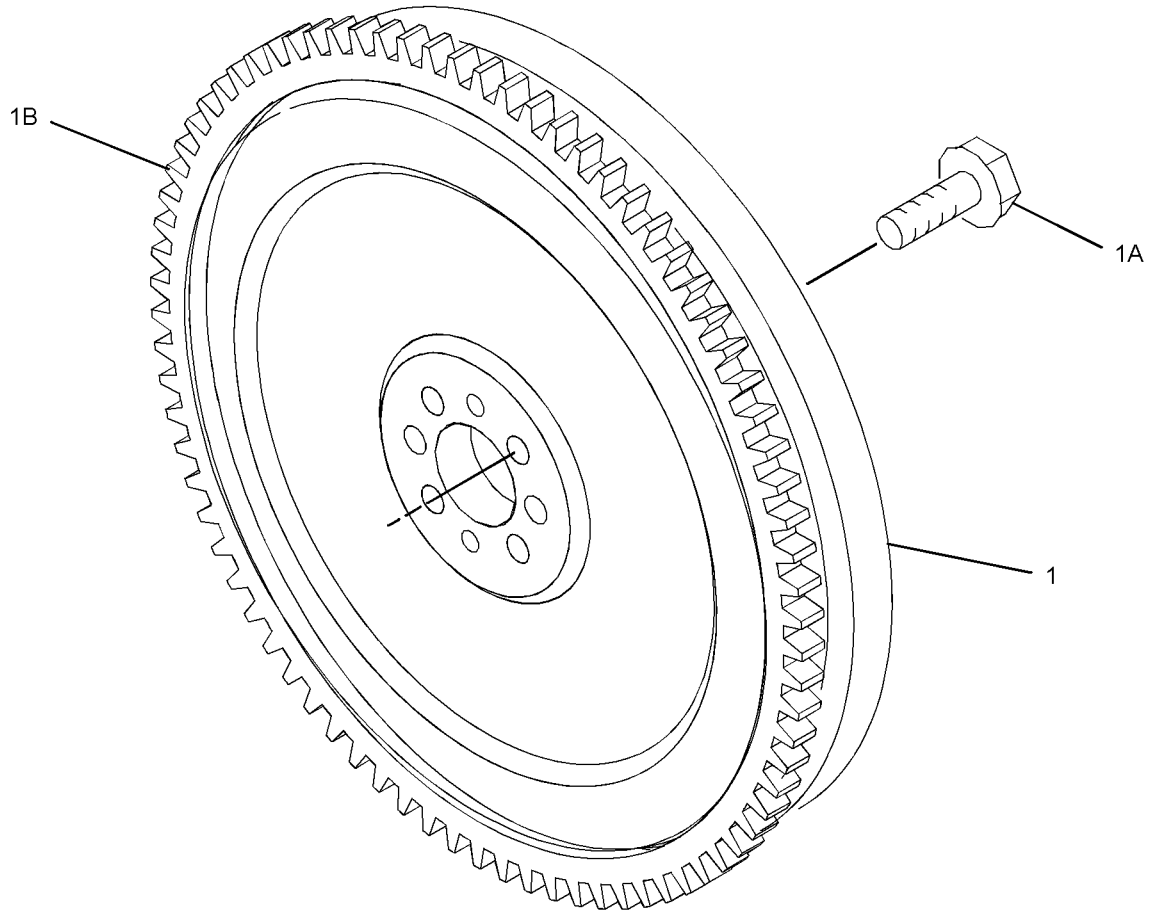


GRAPHIC #1 **<END>** g01310290

# *314-9861* FLYWHEEL GP

**S/N: CYM1-UP**

**PART OF 300-6603 ENGINE AR-PRIMARY**

**AN ATTACHMENT**

**SMCS-1156, 1158** **i02824838**

| NOTE | REF NO | GRAPHIC REF | PART NUMBER | QTY | PART NAME 1 2 3 4 5 6 (PRODUCT LEVEL) | SEE PAGE |
|---|---|---|---|---|---|---|
| M | 1 | 1 | **226-3693** | 6 | BOLT (M12X1.25X30-MM) | |
| | 2 | 1 | **234-4791** | 1 | FLYWHEEL AS | |
| | 2A | 1 | **032-8139** | 1 | GEAR-STARTER (112-TEETH) | |

M-METRIC PART

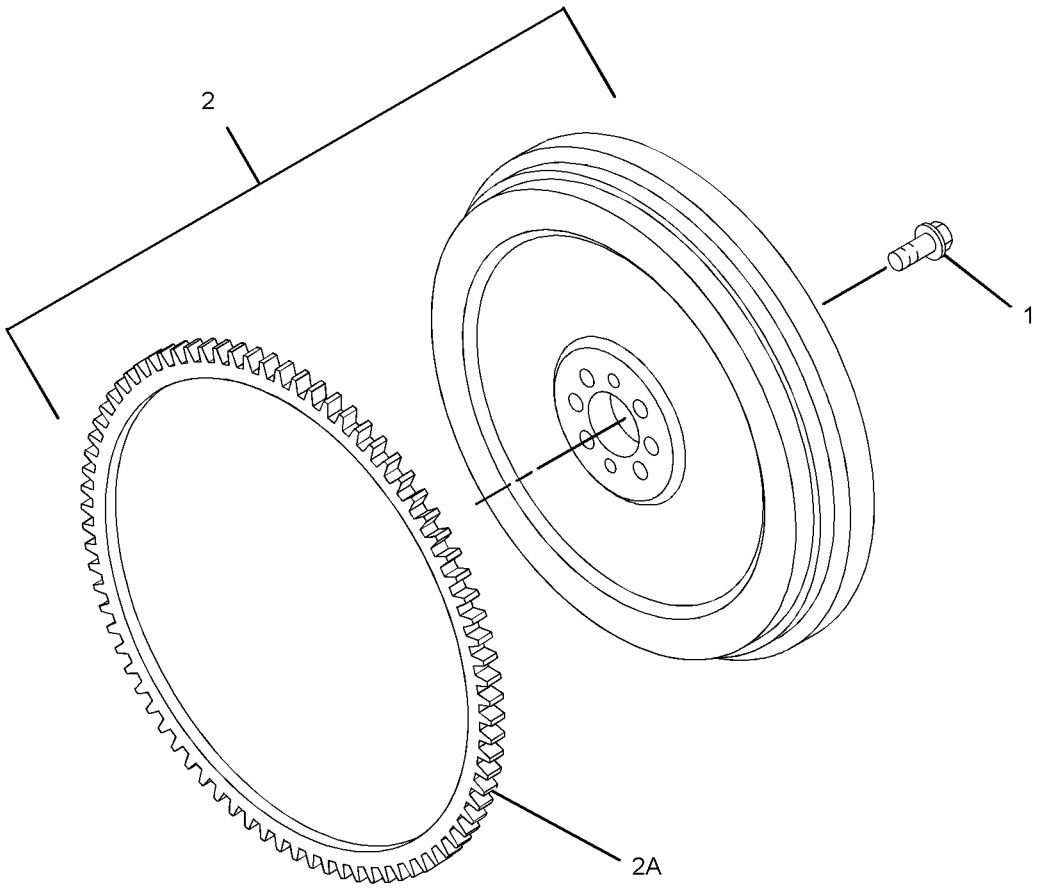


GRAPHIC #1 **<END>** g01394554

# BASIC ENGINE

## *287-4830* GEAR GP-FRONT

**S/N: CJS1-UP**

**PART OF 308-9664 ENGINE AR-PRIMARY**

**AN ATTACHMENT**

**SMCS-1206, 1212, 1234, 1288, 1313** **i02568578**

| NOTE | REF NO | GRAPHIC REF | PART NUMBER | QTY | PART NAME 1 2 3 4 5 6 (PRODUCT LEVEL) | SEE PAGE |
|---|---|---|---|---|---|---|
| M | 1 | 1 | **5I-4936** | 1 | BOLT (M10X1.25X20-MM) | |
| | 2 | 1 | **222-8202** | 1 | PLATE | |
| | 3 | 1 | **8T-4121** | 1 | WASHER-HARD (11X21X2.5-MM THK) | |
| | 4 | 1 | **117-2827** | 1 | GEAR (46-TEETH) | |
| | 5 | 1 | **117-2829** | 1 | GEAR (23-TEETH) | |
| | 6 | 1 | **117-3283** | 1 | GEAR AS-IDLER (49-TEETH) | |
| | 7 | 1 | **117-3285** | 1 | GEAR-PUMP (OIL, 31-TEETH) | |
| | 8 | 1 | **239-4292** | 1 | GEAR | |

M-METRIC PART

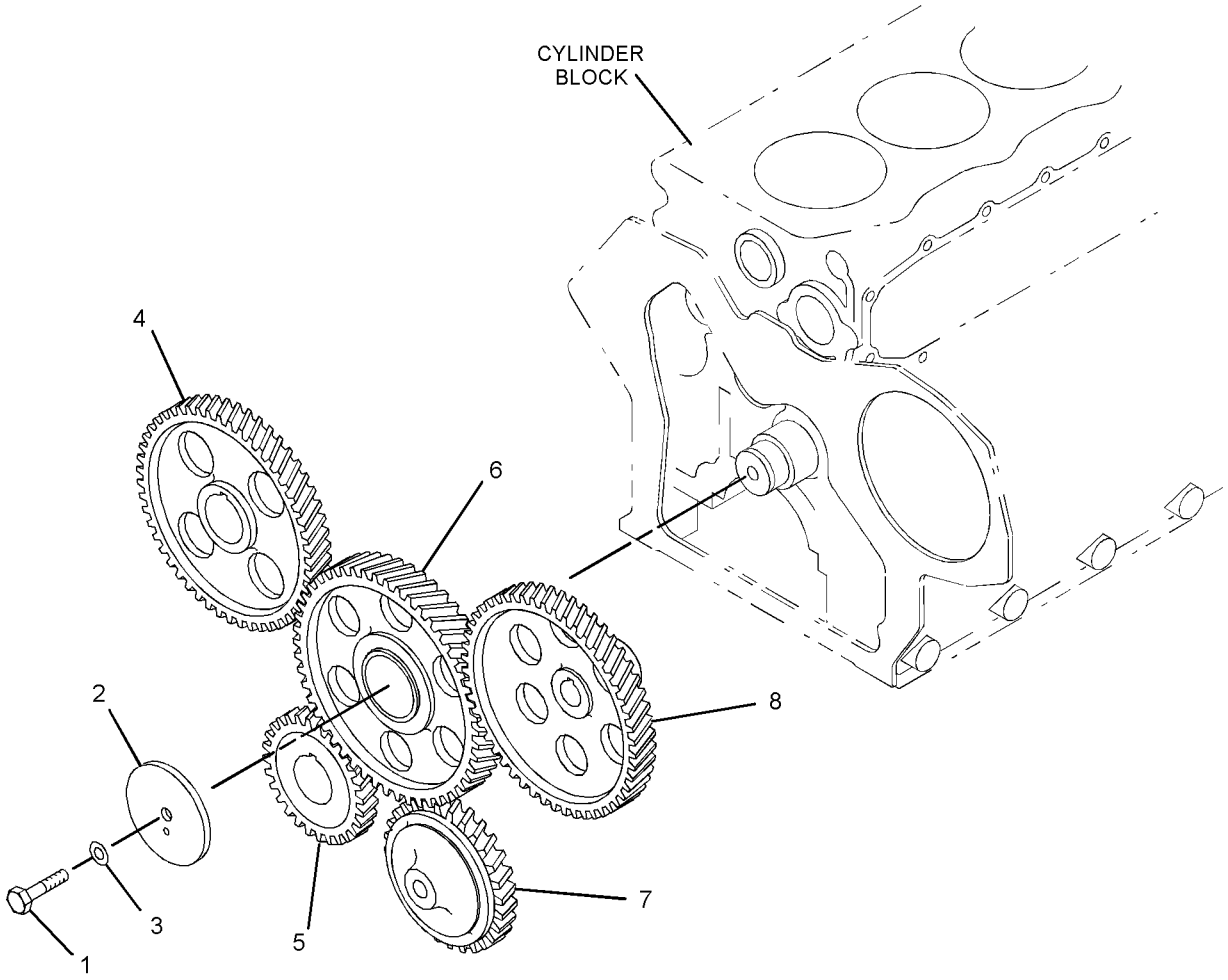


GRAPHIC #1 **<END>** g01322038

# *315-7766* GEAR GP-FRONT

**S/N: CYM1-UP**

**PART OF 300-6603 ENGINE AR-PRIMARY**

**AN ATTACHMENT**

**SMCS-1206, 1212, 1234, 1288, 1313** **i02824959**

| NOTE | REF NO | GRAPHIC REF | PART NUMBER | QTY | PART NAME 1 2 3 4 5 6 (PRODUCT LEVEL) | SEE PAGE |
|---|---|---|---|---|---|---|
| | 1 | 1 | **315-4680** | 1 | GEAR-CRANKSHAFT | |
| | 2 | 1 | **315-4681** | 1 | GEAR-CAMSHAFT | |
| | 3 | 1 | **315-4682** | 1 | GEAR-PUMP | |
| | 4 | 1 | **315-4683** | 1 | GEAR-IDLER | |
| | 5 | 1 | **315-4684** | 1 | GEAR-OIL PUMP | |

*315-7766* **GEAR GP-FRONT** *(contd.)* **i02824959**

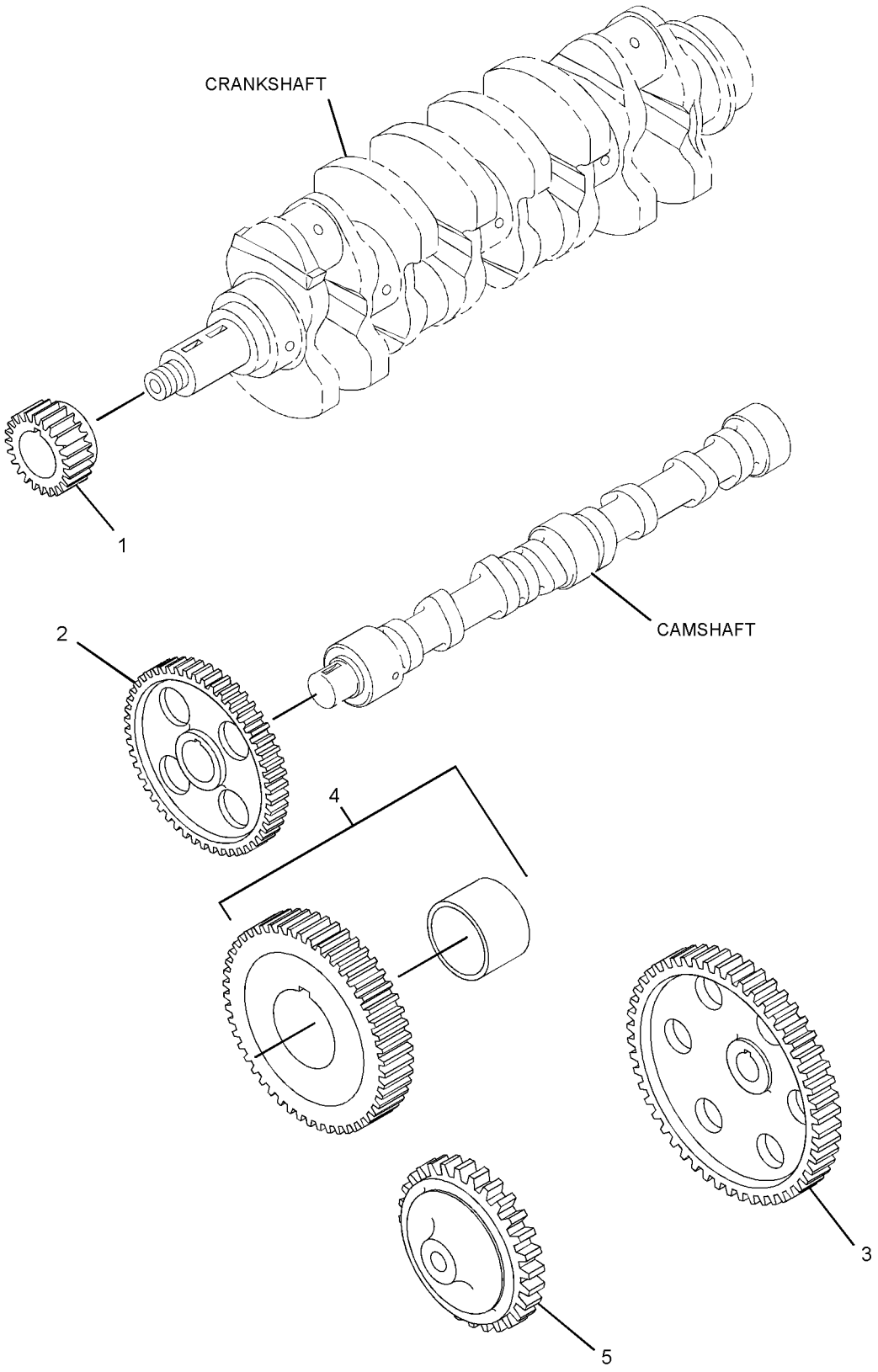


GRAPHIC #1 **<END>** g01413229

# 218-0940 GUARD GP-BELT

**S/N: HEN6750-UP**

**PART OF 261-6126 CONVERSION AR-MACHINE, 278-1279 SUPPRESSION GP-SOUND AN ATTACHMENT**

**SMCS-7174** **i02630790**

| NOTE | REF NO | GRAPHIC REF | PART NUMBER | QTY | PART NAME 1 2 3 4 5 6 (PRODUCT LEVEL) | SEE PAGE |
|---|---|---|---|---|---|---|
| | 1 | 1 | **218-0921** | 1 | GUARD-BELT | |
| | 2 | 1 | **280-8300** | 1 | BRACKET AS | |
| | 3 | 1 | **228-1768** | 1 | BRACKET AS | |
| | 4 | 1 | **101-2867** | 3 | WASHER-HARD (7.2X25X2-MM THK) | |
| | 5 | 1 | **5P-4116** | 6 | WASHER-HARD (8.8X20.5X2-MM THK) | |
| M | 6 | 1 | **8T-4189** | 2 | BOLT (M8X1.25X20-MM) | |
| M | 7 | 1 | **134-7722** | 2 | BOLT-LOCKING (M8X1.25X16-MM) | |
| M | 8 | 1 | **8T-4908** | 2 | BOLT (M8X1.25X25-MM) | |
| M | 9 | 1 | **3E-8020** | 3 | SCREW-TRUSS HEAD (M6X1X25-MM) | |

M-METRIC PART

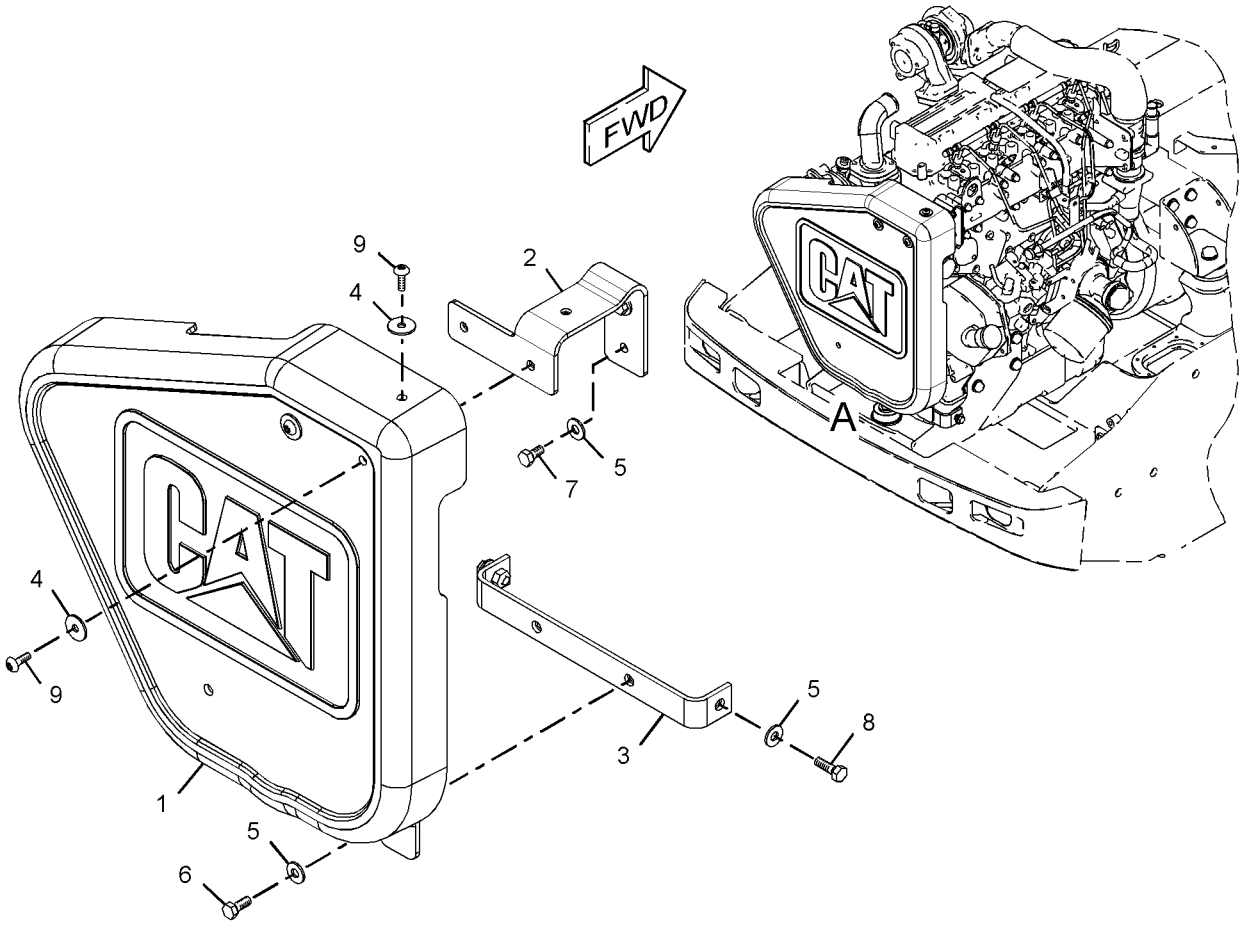


VIEW OF AREA A

GRAPHIC #1 **<END>** g01365299

# *287-3357* HOUSING GP-FLYWHEEL

**S/N: CJS1-UP**

**PART OF 308-9664 ENGINE AR-PRIMARY**

**AN ATTACHMENT**

**SMCS-1157** **i02877118**

| NOTE | REF NO | GRAPHIC REF | PART NUMBER | QTY | PART NAME 1 2 3 4 5 6 (PRODUCT LEVEL) | SEE PAGE |
|---|---|---|---|---|---|---|
| | 1 | 1 | **096-4415** | 2 | LOCKWASHER | |
| | 2 | 1 | **103-9280** | 1 | GASKET-REAR | |
| | 3 | 1 | **117-5015** | 1 | SEAL AS-OIL | |
| M | 4 | 1 | **185-8182** | 2 | BOLT (M10X1.5X20-MM) | |
| | 5 | 1 | **199-2354** | 10 | BOLT (M10X1.25X25-MM) | |
| | 6 | 1 | **212-8499** | 3 | STUD | |
| | 7 | 1 | **212-8510** | 3 | NUT | |
| M | 8 | 1 | **9X-8912** | 2 | BOLT (M10X1.25X30-MM) | |
| | 9 | 1 | **233-5482** | 1 | EYE | |
| | 10 | 1 | **315-7703** | 1 | HOUSING-FLYWHEEL | |
| | 11 | 1 | **5I-7628** | 1 | GASKET | |
| | 12 | 1 | **5I-8056** | 1 | PLUG | |

M-METRIC PART

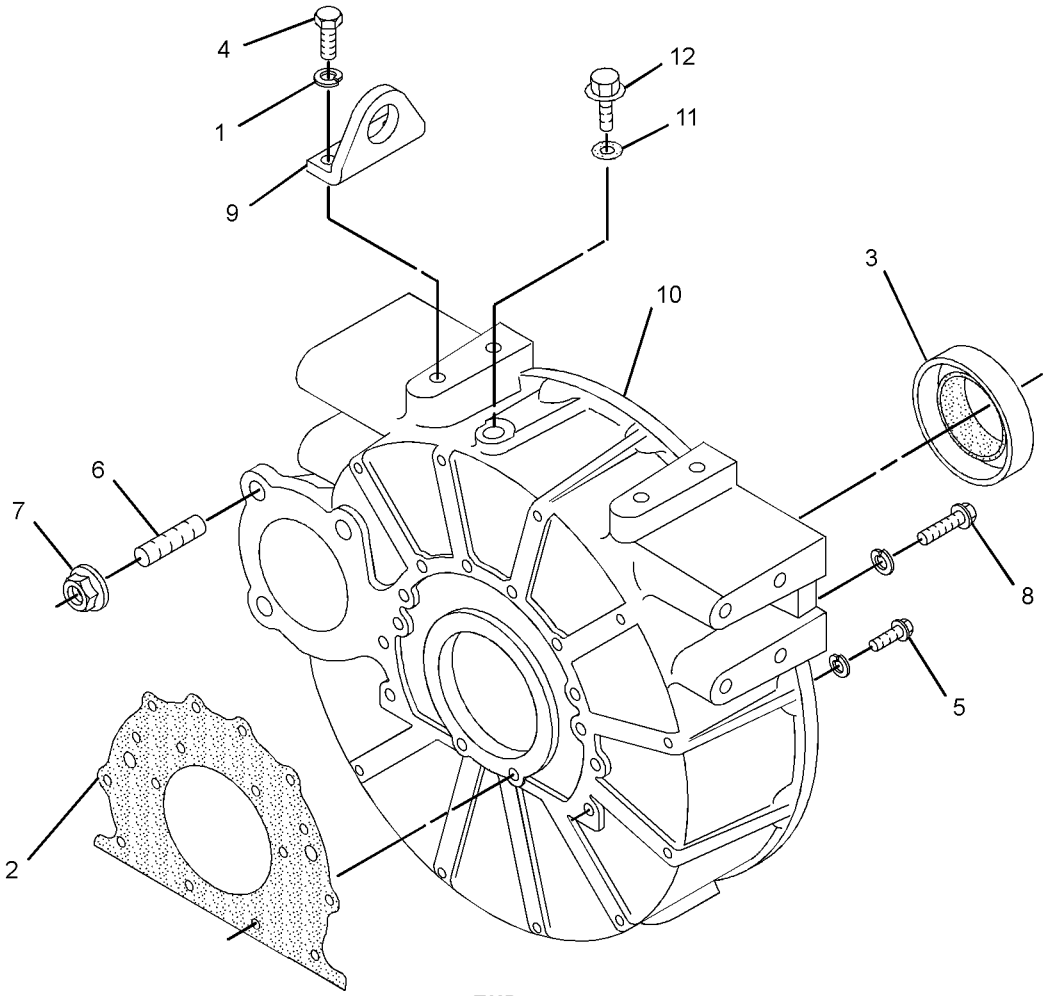


GRAPHIC #1 **<END>** g01442694

# *315-7764* HOUSING GP-FLYWHEEL

**S/N: CYM1-UP**

**PART OF 300-6603 ENGINE AR-PRIMARY**

**AN ATTACHMENT**

**SMCS-1157** **i02825004**

| NOTE | REF NO | GRAPHIC REF | PART NUMBER | QTY | PART NAME 1 2 3 4 5 6 (PRODUCT LEVEL) | SEE PAGE |
|---|---|---|---|---|---|---|
| | 1 | 1 | **5I-7628** | 1 | GASKET | |
| | 2 | 1 | **5I-8056** | 1 | PLUG | |
| M | 3 | 1 | **8T-4137** | 2 | BOLT (M10X1.5X20-MM) | |
| M | 4 | 1 | **8T-4195** | 2 | BOLT (M10X1.5X30-MM) | |
| | 5 | 1 | **8T-4896** | 14 | WASHER-HARD (10.2X18.5X2.5-MM THK) | |
| | 6 | 1 | **103-9280** | 1 | GASKET-REAR | |
| | 7 | 1 | **117-5015** | 1 | SEAL AS-OIL | |
| M | 8 | 1 | **140-5217** | 10 | BOLT (M10X1.25X25-MM) | |
| | 9 | 1 | **212-8499** | 3 | STUD | |
| | 10 | 1 | **212-8510** | 3 | NUT | |
| | 11 | 1 | **233-5482** | 1 | EYE | |
| | 12 | 1 | **315-7703** | 1 | HOUSING-FLYWHEEL | |

M-METRIC PART

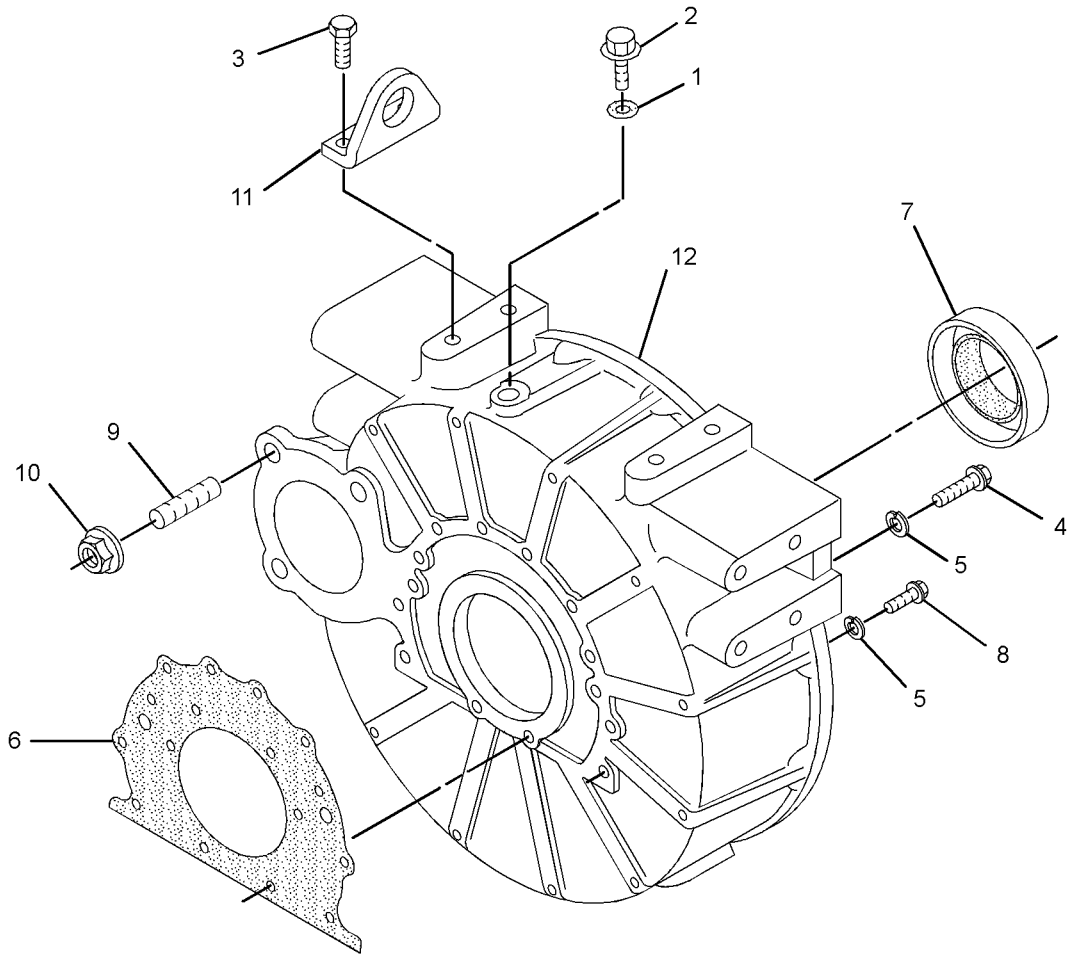


GRAPHIC #1 **<END>** g01433304

# BASIC ENGINE

## *315-8336* HOUSING GP-FRONT

**S/N: CYM1-UP**

**PART OF 300-6603 ENGINE AR-PRIMARY**

**AN ATTACHMENT**

**SMCS-1151, 1160, 1162, 1166, 3108** **i02868846**

| NOTE | REF NO | GRAPHIC REF | PART NUMBER | QTY | PART NAME 1 2 3 4 5 6 (PRODUCT LEVEL) | SEE PAGE |
|---|---|---|---|---|---|---|
| | 1 | 1 | **3B-4505** | 5 | LOCKWASHER | |
| M | 2 | 1 | **6V-7357** | 2 | BOLT (M6X1X25-MM) | |
| M | 3 | 1 | **8T-4200** | 5 | BOLT (M8X1.25X16-MM) | |
| | 4 | 1 | **8T-4224** | 15 | WASHER-HARD (8.8X16X2-MM THK) | |
| M | 5 | 1 | **8T-7329** | 11 | BOLT (M8X1.25X55-MM) | |
| | 6 | 1 | **9X-8256** | 6 | WASHER (6.6X12X2-MM THK) | |
| | 7 | 1 | **096-2500** | 2 | LOCKWASHER | |
| | 8 | 1 | **096-9529** | 1 | SEAL-O-RING | |
| | 9 | 1 | **199-2212** | 4 | BOLT (M6X1X18-MM) | |
| | 10 | 1 | **239-8429** | 1 | SEAL AS-CRANKSHAFT | |
| | 11 | 1 | **246-1259** | 1 | COVER-INSULATION | |
| | 12 | 1 | **246-1260** | 1 | COVER-INSULATION | |
| | 13 | 1 | **285-9066** | 4 | BOLT (M8X1.25X65-MM) | |
| | 14 | 1 | **314-9947** | 1 | GASKET | |
| | 15 | 1 | **314-9948** | 1 | FASTENER GP-FRONT COVER | |
| | 16 | 1 | **314-9949** | 1 | COVER | |
| | 17 | 1 | **315-4667** | 1 | GASKET | |
| | 18 | 1 | **315-4668** | 1 | PLATE | |
| | 19 | 1 | **315-4686** | 1 | HOUSING-FRONT | |
| | 20 | 1 | **315-4687** | 1 | COVER | |
| | 21 | 1 | **233-5499** | 1 | SEAL | |

M-METRIC PART

*315-8336* **HOUSING GP-FRONT** *(contd.)* **i02868846**

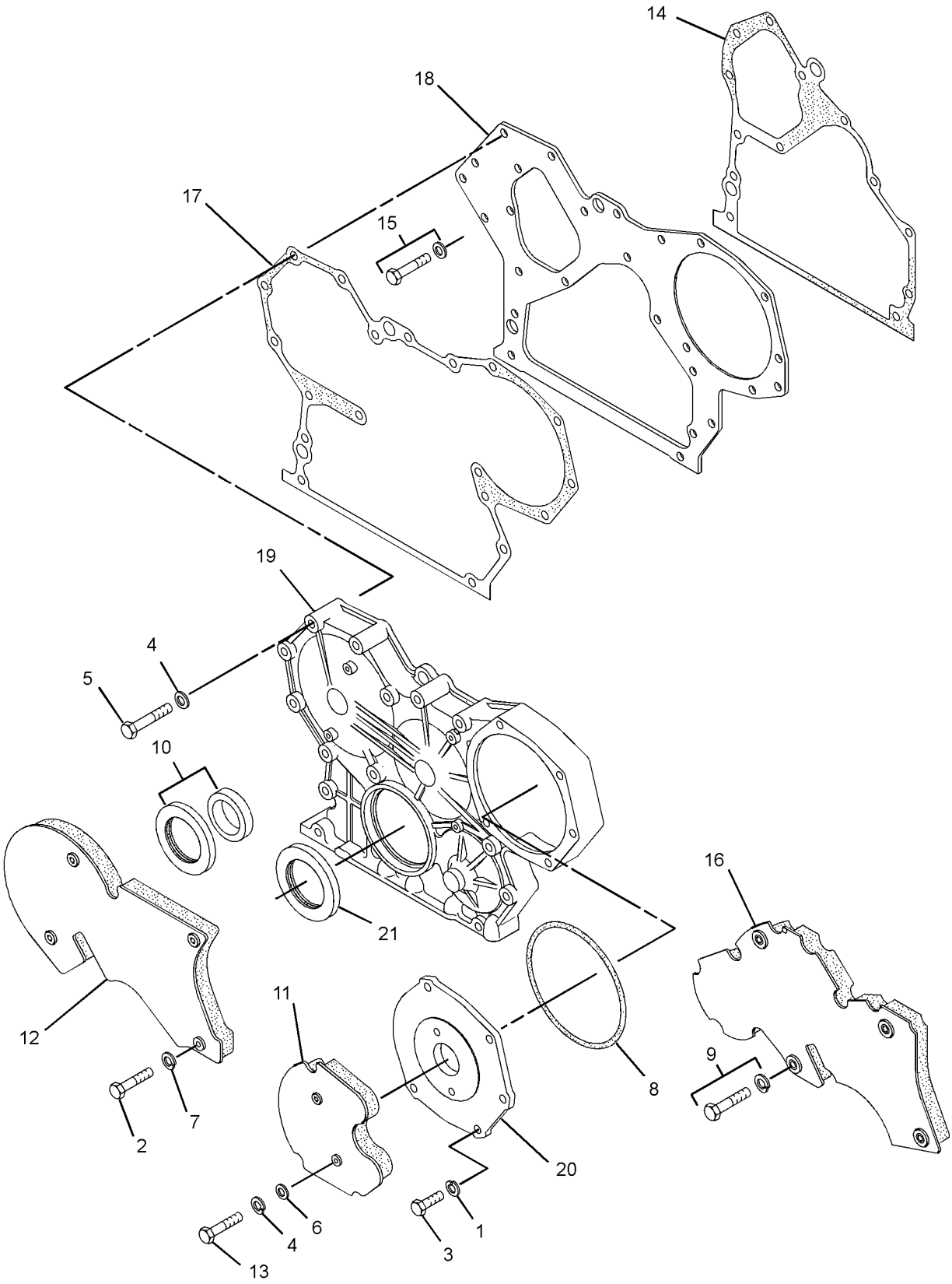


GRAPHIC #1 **<END>** g01413578

# BASIC ENGINE

## *316-9040* HOUSING GP-FRONT

**S/N: CJS1-UP**

**PART OF 308-9664 ENGINE AR-PRIMARY**

**AN ATTACHMENT**

**SMCS-1151, 1160, 1162, 1166, 3108** **i02902182**

| NOTE | REF NO | GRAPHIC REF | PART NUMBER | QTY | PART NAME 1 2 3 4 5 6 (PRODUCT LEVEL) | SEE PAGE |
|---|---|---|---|---|---|---|
| | 1 | 1 | **3B-4505** | 5 | LOCKWASHER | |
| M | 2 | 1 | **8T-4200** | 5 | BOLT (M8X1.25X16-MM) | |
| | 3 | 1 | **8T-4224** | 13 | WASHER-HARD (8.8X16X2-MM THK) | |
| M | 4 | 1 | **8T-7329** | 13 | BOLT (M8X1.25X55-MM) | |
| | 5 | 1 | **096-9529** | 1 | SEAL-O-RING | |
| | 6 | 1 | **103-9277** | 1 | GASKET-FRONT PLATE | |
| | 7 | 1 | **117-3447** | 1 | GASKET | |
| | 8 | 1 | **117-3448** | 1 | PLATE | |
| | 9 | 1 | **238-8279** | 1 | HOUSING-FRONT | |
| | 10 | 1 | **239-8429** | 2 | SEAL AS-CRANKSHAFT | |
| | 11 | 1 | **246-1258** | 1 | COVER-GEAR | |
| | 12 | 1 | **314-9948** | 5 | FASTENER GP-FRONT COVER | |

M-METRIC PART

*316-9040* **HOUSING GP-FRONT** *(contd.)* **i02902182**

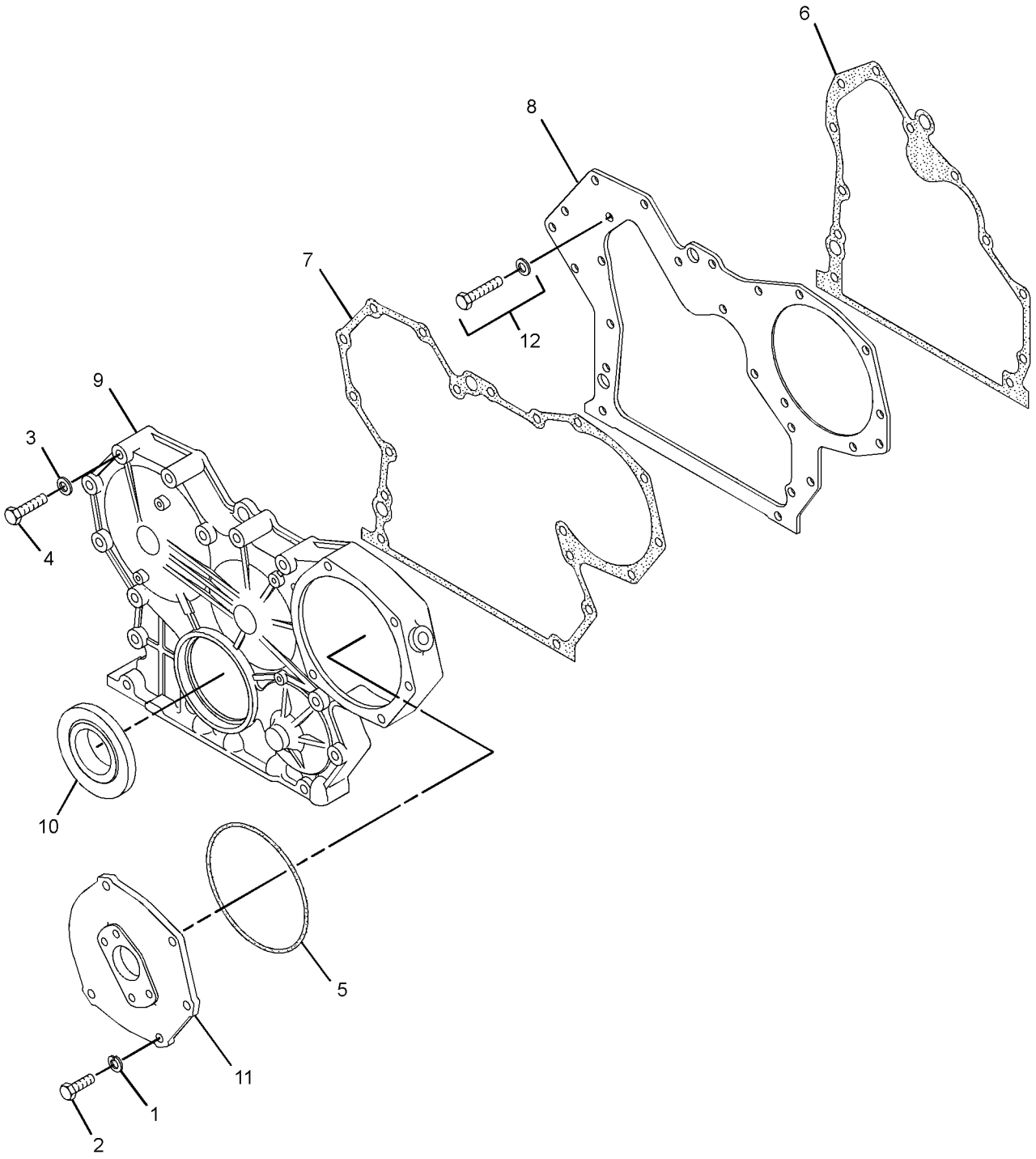


GRAPHIC #1 **<END>** g01401110

# *287-1844* LIFTING GP-ENGINE

**S/N: CJS1-UP**
**PART OF 308-9664 ENGINE AR-PRIMARY**
**AN ATTACHMENT**

**SMCS-1122** **i02816278**

| NOTE | REF NO | GRAPHIC REF | PART NUMBER | QTY | PART NAME 1 2 3 4 5 6 (PRODUCT LEVEL) | SEE PAGE |
|---|---|---|---|---|---|---|
| | 1 | 1 | **233-5466** | 1 | EYE | |
| | 2 | 1 | **233-5468** | 1 | GASKET | |
| | 3 | 1 | **234-4810** | 1 | COVER-CYLINDER HEAD | |
| M | 4 | 1 | **199-2205** | 4 | BOLT AS (M8X1.25X16-MM) | |
| | 5 | 1 | **3B-4505** | 4 | LOCKWASHER | |

M-METRIC PART

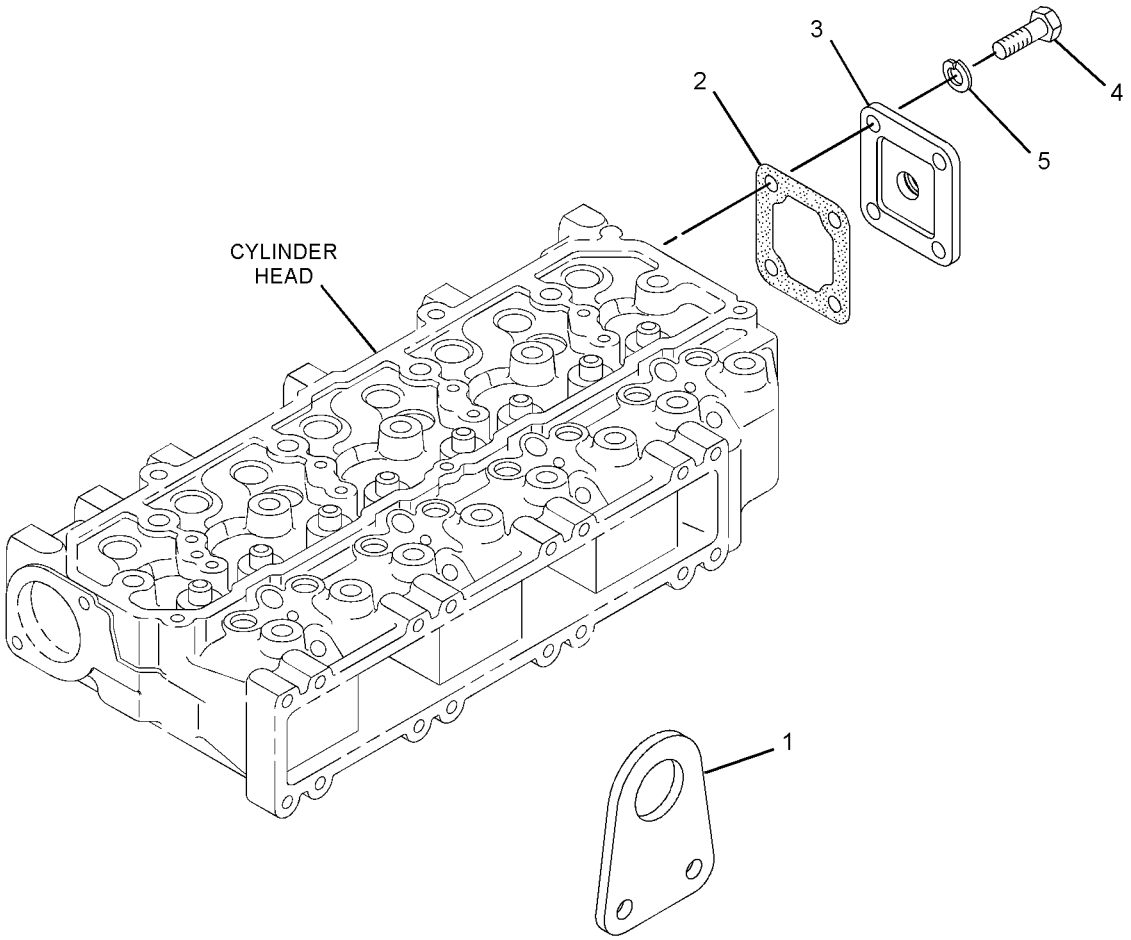


GRAPHIC #1 **<END>** g01352020

# *315-7761* LIFTING GP-ENGINE

**S/N: CYM1-UP**

**PART OF 300-6603 ENGINE AR-PRIMARY**

**AN ATTACHMENT**

**SMCS-1122** **i02864974**

| NOTE | REF NO | GRAPHIC REF | PART NUMBER | QTY | PART NAME 1 2 3 4 5 6 (PRODUCT LEVEL) | SEE PAGE |
|---|---|---|---|---|---|---|
| | 1 | 1 | **3B-4505** | 4 | LOCKWASHER | |
| M | 2 | 1 | **8T-4200** | 4 | BOLT (M8X1.25X16-MM) | |
| | 3 | 1 | **233-5466** | 1 | EYE | |
| | 4 | 1 | **233-5468** | 1 | GASKET | |
| | 5 | 1 | **315-7704** | 1 | COVER | |

M-METRIC PART

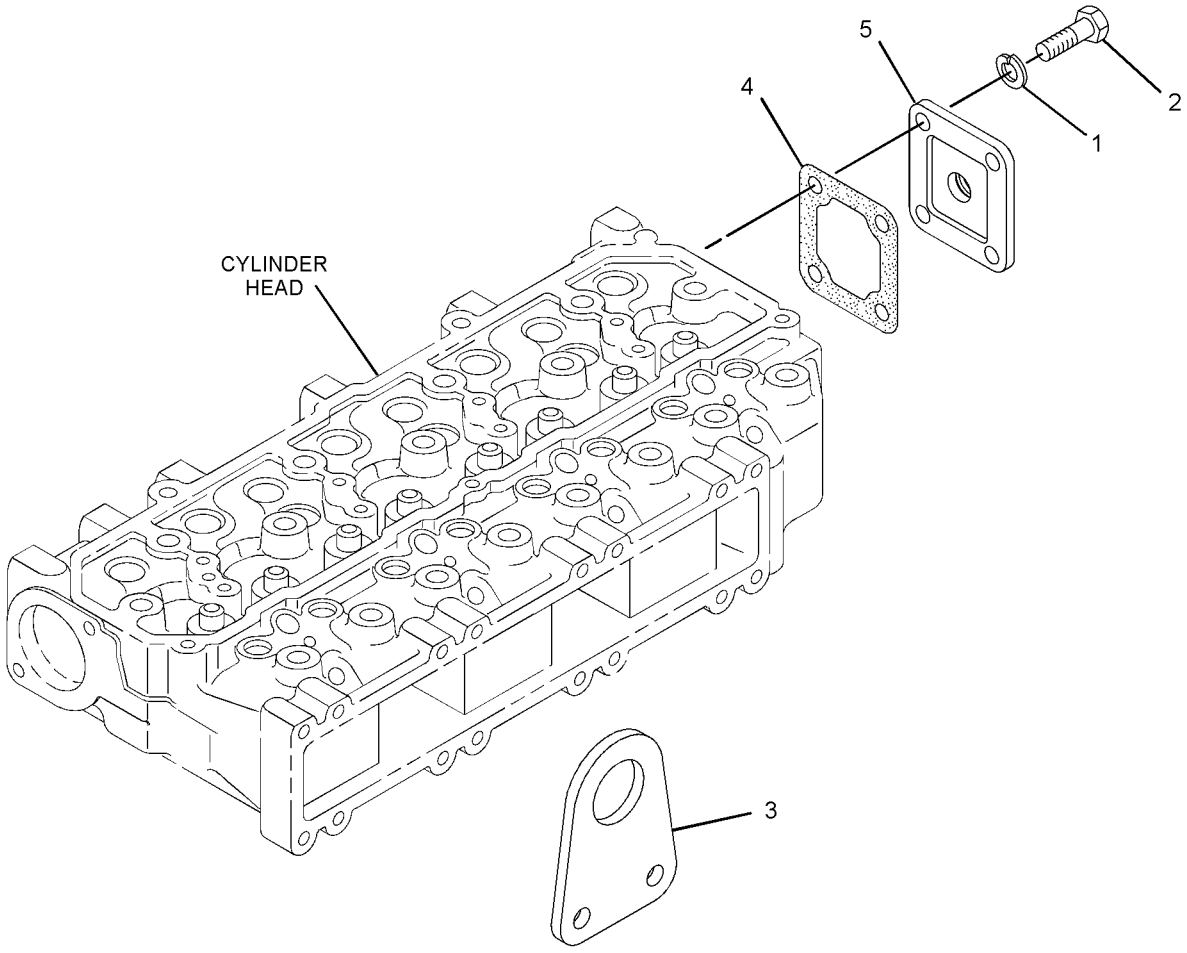


GRAPHIC #1 **<END>** g01430113

# *218-0923* MOUNTING GP-ENGINE

**S/N: HEN6750-UP**

**PART OF 295-7107 INSTALLATION AR-ENGINE**

**SMCS-1152, 1153, 1154** **i01991622**

| NOTE | REF NO | GRAPHIC REF | PART NUMBER | QTY | PART NAME 1 2 3 4 5 6 (PRODUCT LEVEL) | SEE PAGE |
|---|---|---|---|---|---|---|
| | 1 | 1 | **9R-0390** | 2 | MOUNT AS | |
| | 2 | 1 | **9W-6226** | 1 | SLEEVE | |
| | 3 | 1 | **9W-8096** | 2 | MOUNT | |
| | 4 | 1 | **218-0917** | 1 | BRACKET AS | |
| | 5 | 1 | **225-7921** | 2 | BRACKET AS | |
| M | 6 | 1 | **129-3180** | 1 | LOCKNUT (M12X1.75-THD) | |
| | 7 | 1 | **165-7095** | 4 | WASHER (16.5X71.5X3-MM THK) | |
| | 8 | 1 | **5P-1076** | 2 | WASHER-HARD (13.5X30X4-MM THK) | |
| M | 9 | 1 | **7X-2556** | 2 | BOLT (M16X2X100-MM) | |
| | 10 | 1 | **8T-4122** | 2 | WASHER-HARD (17X32X3.5-MM THK) | |
| M | 11 | 1 | **8T-4132** | 2 | NUT (M16X2-THD) | |
| M | 12 | 1 | **8T-4176** | 1 | BOLT (M12X1.75X90-MM) | |
| M | 13 | 1 | **8T-4192** | 16 | BOLT (M12X1.75X25-MM) | |
| | 14 | 1 | **8T-4223** | 16 | WASHER-HARD (13.5X25.5X3-MM THK) | |

M-METRIC PART

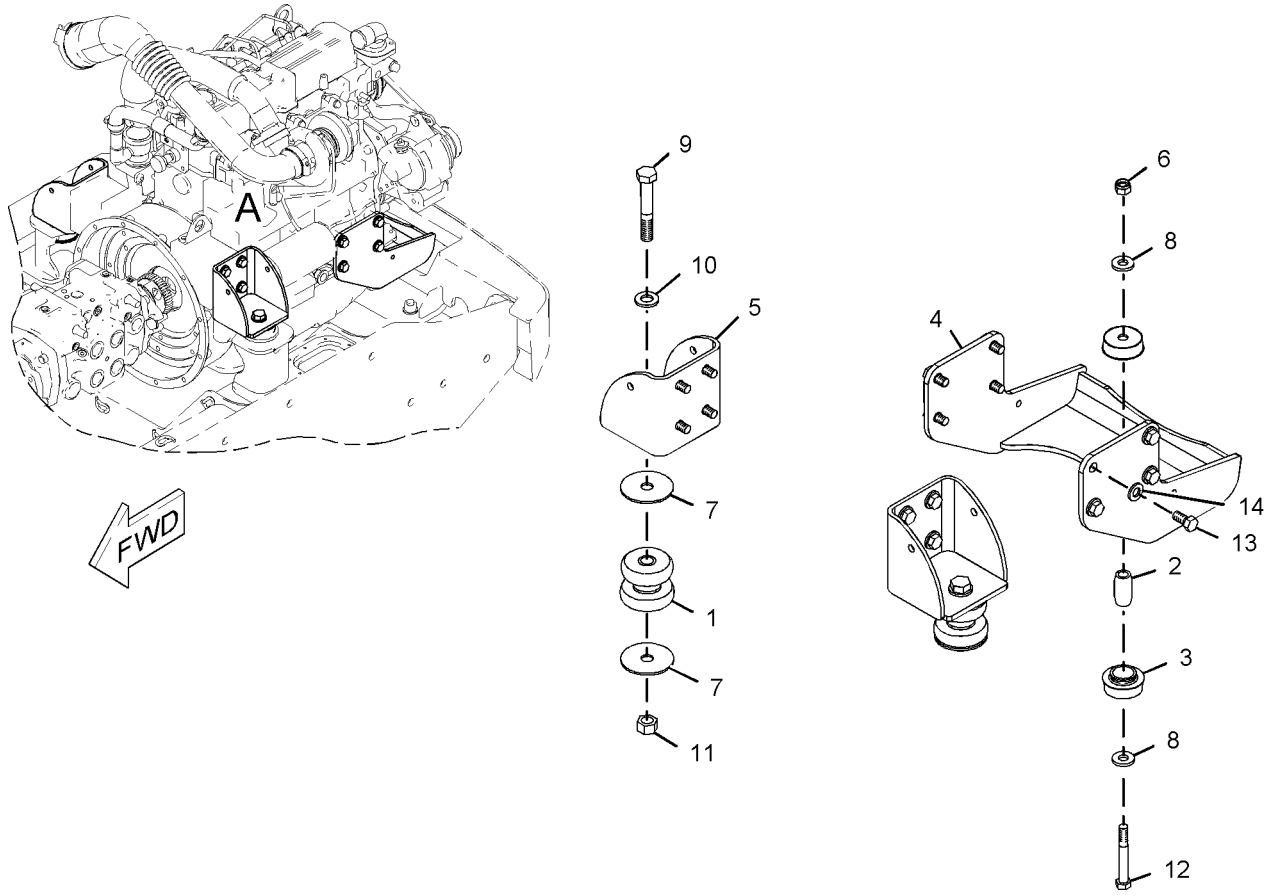


VIEW OF AREA A

GRAPHIC #1 **<END>** g01033382

# *315-7765* PAN GP-OIL

**S/N: CYM1-UP**

**PART OF 300-6603 ENGINE AR-PRIMARY**

**AN ATTACHMENT**

**SMCS-1302** **i02939180**

| NOTE | REF NO | GRAPHIC REF | PART NUMBER | QTY | PART NAME 1 2 3 4 5 6 (PRODUCT LEVEL) | SEE PAGE |
|---|---|---|---|---|---|---|
| | 1 | 1 | **3B-4505** | 25 | LOCKWASHER | |
| | 2 | 1 | **5I-4993** | 2 | SEAL | |
| M | 3 | 1 | **8T-4200** | 25 | BOLT (M8X1.25X16-MM) | |
| | 4 | 1 | **165-2601** | 1 | SEALANT-SILICONE | |
| M | 5 | 1 | **195-8403** | 1 | BOLT AS (M6X1X14-MM) | |
| | 6 | 1 | **234-4812** | 1 | GUIDE | |
| | 7 | 1 | **300-9449** | 1 | PAN AS-OIL | |
| | 7A | 1 | **096-8482** | 1 | GASKET | |
| | 7B | 1 | **135-8432** | 1 | PLUG (DRAIN, ENGINE OIL) | |
| | 8 | 1 | **309-8909** | 1 | GAUGE GP-OIL LEVEL (DIPSTICK) (ENGINE) | |
| | 9 | 1 | **315-2354** | 1 | STAY | |
| | 10 | 1 | **315-2356** | 1 | GUIDE | |

M-METRIC PART

*315-7765* **PAN GP-OIL** *(contd.)* **i02939180**

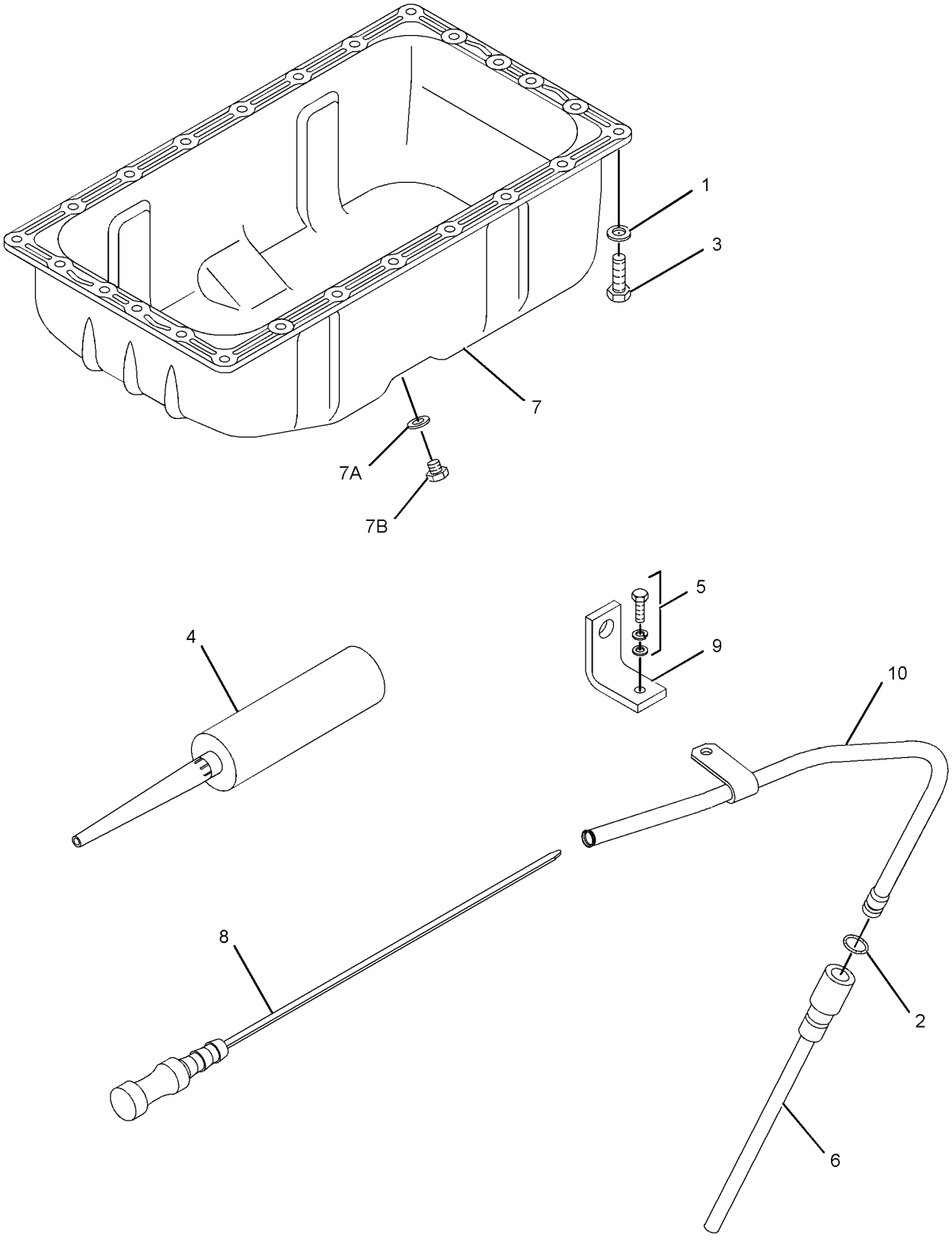


GRAPHIC #1 **<END>** g01446213

# *316-9079* PAN GP-OIL

**S/N: CJS1-UP**
**PART OF 308-9664 ENGINE AR-PRIMARY**
**AN ATTACHMENT**

**SMCS-1302** **i02863036**

| NOTE | REF NO | GRAPHIC REF | PART NUMBER | QTY | PART NAME 1 2 3 4 5 6 (PRODUCT LEVEL) | SEE PAGE |
|---|---|---|---|---|---|---|
| | 1 | 1 | **3B-4505** | 25 | LOCKWASHER | |
| | 2 | 1 | **5I-4993** | 2 | SEAL | |
| M | 3 | 1 | **8T-4200** | 25 | BOLT (M8X1.25X16-MM) | |
| M | 5 | 1 | **195-8403** | 1 | BOLT AS (M6X1X14-MM) | |
| | 6 | 1 | **234-4813** | 1 | STAY | |
| | 7 | 1 | **300-9449** | 1 | PAN AS-OIL | |
| | 7A | 1 | **096-8482** | 1 | GASKET | |
| | 7B | 1 | **135-8432** | 1 | PLUG (DRAIN, ENGINE OIL) | |
| | 8 | 1 | **309-8907** | 1 | TUBE | |
| | 9 | 1 | **309-8909** | 1 | GAUGE GP-OIL LEVEL (DIPSTICK) (ENGINE) | |
| | 10 | 1 | **316-9072** | 1 | TUBE-OIL GAUGE | |
| | | | | | | |
| F | | | **165-2601** | 1 | SEALANT-SILICONE | |

F-NOT SHOWN
M-METRIC PART

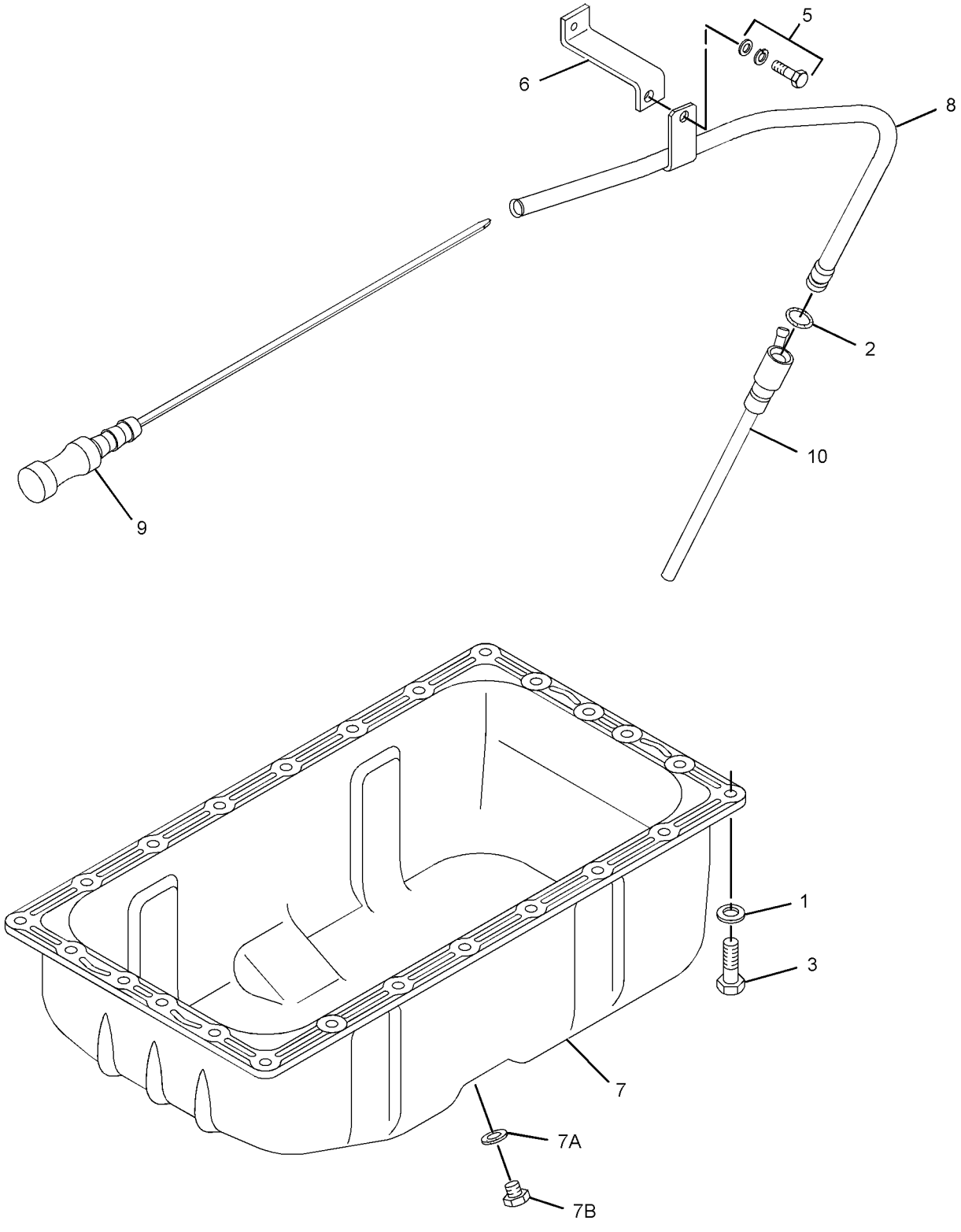


GRAPHIC #1 **<END>** g01401289

# 235-5889 PISTON & ROD GP

**S/N: CJS1-UP**
**PART OF 308-9664 ENGINE AR-PRIMARY**
**AN ATTACHMENT**

**SMCS-1225** **i02887927**

| NOTE | REF NO | GRAPHIC REF | PART NUMBER | QTY | PART NAME 1 2 3 4 5 6 (PRODUCT LEVEL) | SEE PAGE |
|---|---|---|---|---|---|---|
| | 1 | 1 | **257-8738** | 8 | RING-SNAP | |
| | 2 | 1 | **234-4815** | 4 | PIN-PISTON | |
| | 3 | 1 | **234-4814** | 4 | PISTON (STANDARD) | |
| AB | | 1 | **234-4816** | | PISTON (0.50-MM OS) | |
| AB | | 1 | **234-4817** | | PISTON (0.25-MM OS) | |
| | 4 | 1 | **226-8204** | 4 | SET-PISTON RING (STANDARD) | |
| AB | | 1 | **238-8280** | | RING GP-PISTON (0.25MM OS) | |
| AB | | 1 | **238-8281** | | RING GP-PISTON (0.50MM OS) | |

A-NOT PART OF THIS GROUP
B-USE AS REQUIRED

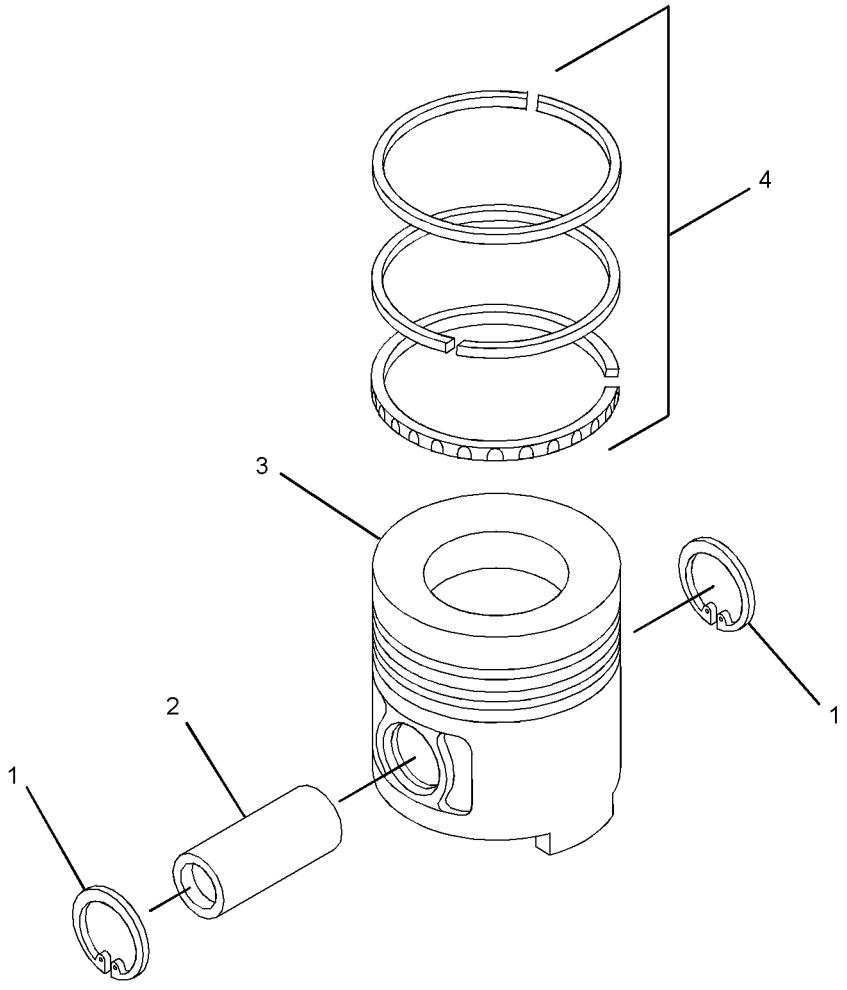


GRAPHIC #1 **<END>** g01348295

# BASIC ENGINE

## *315-8348* PISTON GP

**S/N: CYM1-UP**
**PART OF 300-6603 ENGINE AR-PRIMARY**
**AN ATTACHMENT**

**SMCS-1214, 1215** **i02883796**

| NOTE | REF NO | GRAPHIC REF | PART NUMBER | QTY | PART NAME 1 2 3 4 5 6 (PRODUCT LEVEL) | SEE PAGE |
|---|---|---|---|---|---|---|
| | 1 | 1 | **212-8597** | 8 | RING | |
| | 2 | 1 | **234-4815** | 4 | PIN-PISTON | |
| | 3 | 1 | **314-9962** | 4 | RING-PISTON (STANDARD) | |
| AB | | 1 | **314-9964** | 1 | RING-PISTON (0.25-MM OS) | |
| AB | | 1 | **314-9963** | 1 | RING-PISTON (0.5-MM OS) | |
| | 4 | 1 | **315-4669** | 4 | PISTON (STANDARD) | |
| AB | | 1 | **315-4670** | 1 | PISTON (0.25-MM OS) | |
| AB | | 1 | **315-4671** | 1 | PISTON (0.50-MM OS) | |

A-NOT PART OF THIS GROUP
B-USE AS REQUIRED

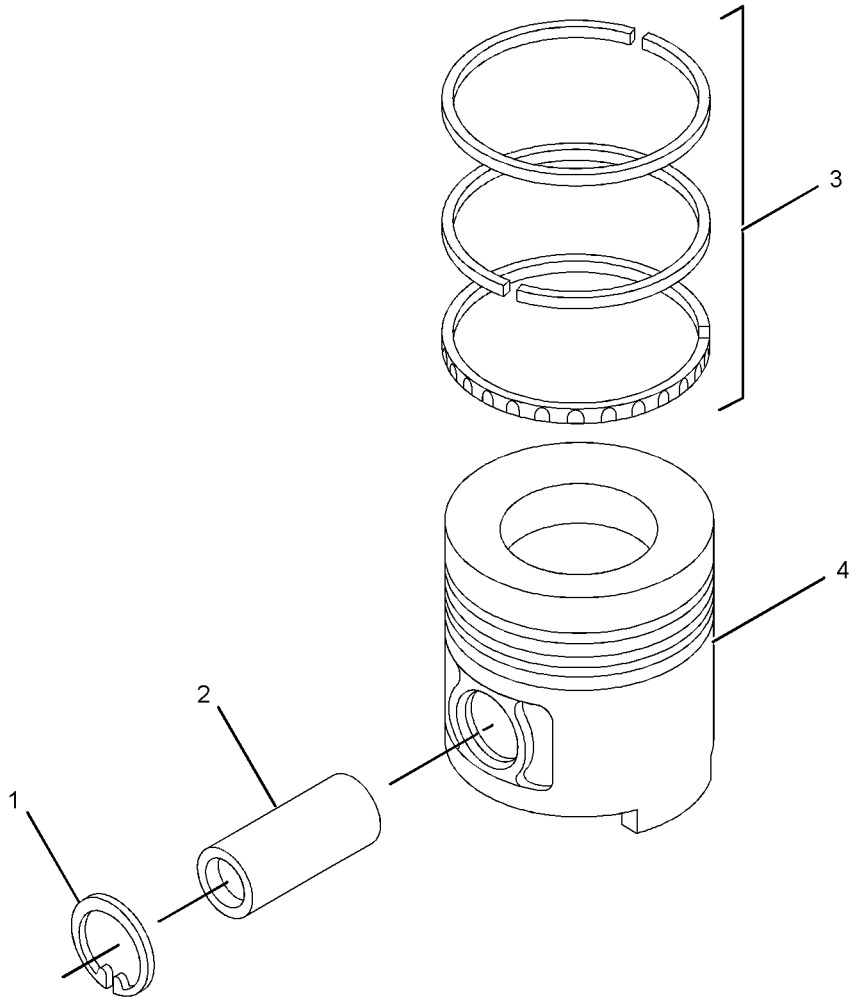


GRAPHIC #1 **<END>** g01445478

# *315-8331* PLUG GP-CYLINDER BLOCK

**S/N: CYM1-UP**
**PART OF 300-6603 ENGINE AR-PRIMARY**
**AN ATTACHMENT**

**SMCS-1201** **i02825576**

| NOTE | REF NO | GRAPHIC REF | PART NUMBER | QTY | PART NAME 1 2 3 4 5 6 (PRODUCT LEVEL) | SEE PAGE |
|---|---|---|---|---|---|---|
| | 1 | 1 | **195-8220** | 1 | PLUG | |

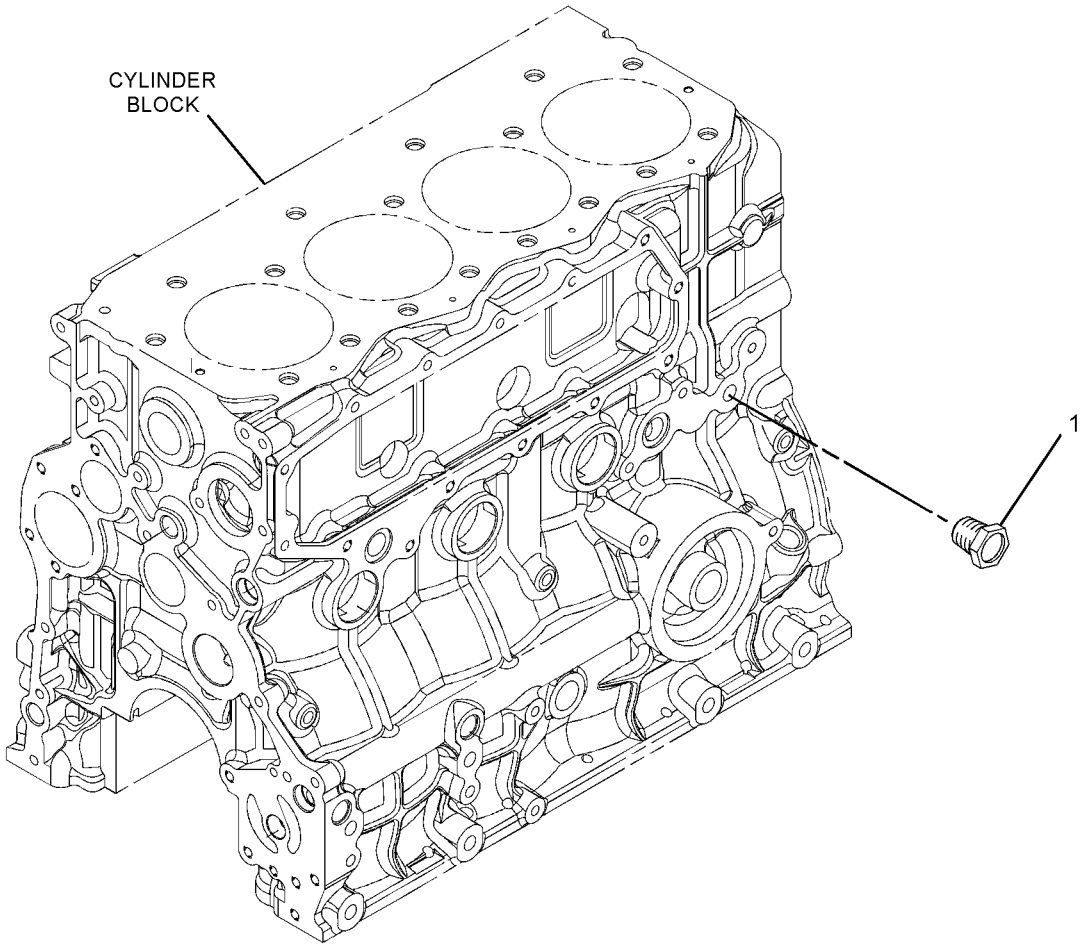


GRAPHIC #1 **<END>** g01448190

# BASIC ENGINE

## *287-2922* PLUG GP-ENGINE

**S/N: CYM1-UP; CJS1-UP**
**PART OF 300-6603, 308-9664 ENGINE AR-PRIMARY**
**AN ATTACHMENT**

**SMCS-1000** **i02568378**

| NOTE | REF NO | GRAPHIC REF | PART NUMBER | QTY | PART NAME 1 2 3 4 5 6 (PRODUCT LEVEL) | SEE PAGE |
|---|---|---|---|---|---|---|
| | 1 | 1 | **5I-7505** | 6 | PLUG | |

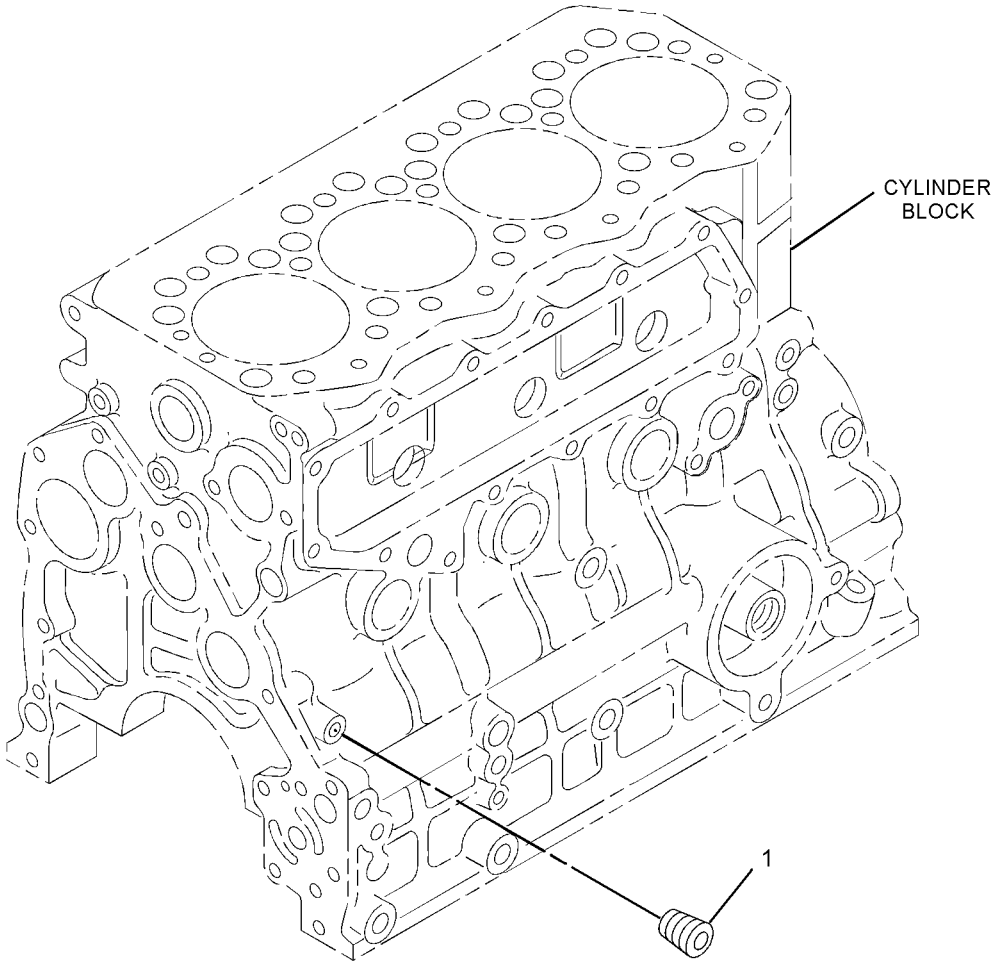


GRAPHIC #1 **<END>** g01325237

# 287-2983 PLUG GP-ENGINE

**S/N: CYM1-UP; CJS1-UP**
**PART OF 300-6603, 308-9664 ENGINE AR-PRIMARY**
**AN ATTACHMENT**

**SMCS-1000** **i02616574**

| NOTE | REF NO | GRAPHIC REF | PART NUMBER | QTY | PART NAME 1 2 3 4 5 6 (PRODUCT LEVEL) | SEE PAGE |
|---|---|---|---|---|---|---|
| | 1 | 1 | **195-8211** | 1 | PLUG | |

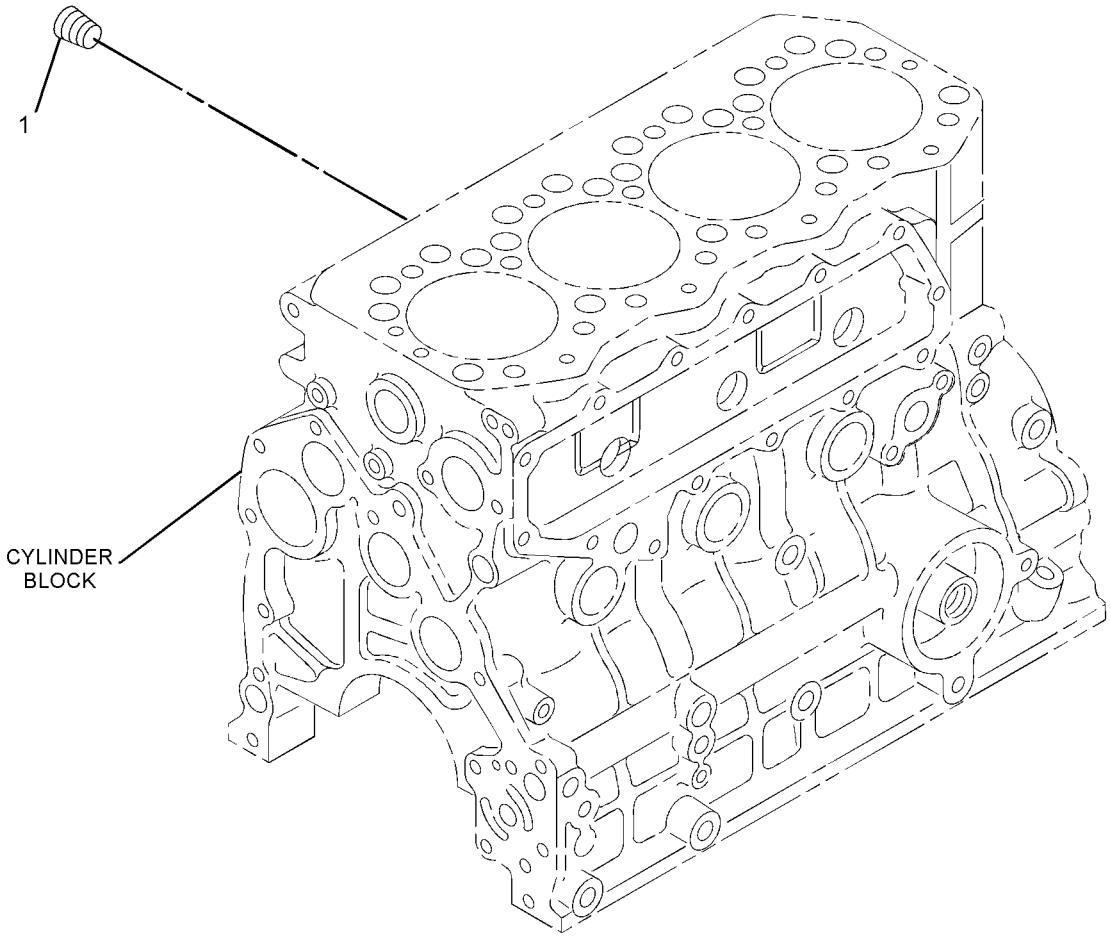


GRAPHIC #1 **<END>** g01325240

# BASIC ENGINE

## *241-6015* PULLEY GP-CRANKSHAFT

**S/N: CJS1-UP**

**PART OF 308-9664 ENGINE AR-PRIMARY**

**AN ATTACHMENT**

**SMCS-1205** **i01983274**

| NOTE | REF NO | GRAPHIC REF | PART NUMBER | QTY | PART NAME 1 2 3 4 5 6 (PRODUCT LEVEL) | SEE PAGE |
|---|---|---|---|---|---|---|
| | 1 | 1 | **238-8286** | 1 | PULLEY-CRANKSHAFT | |

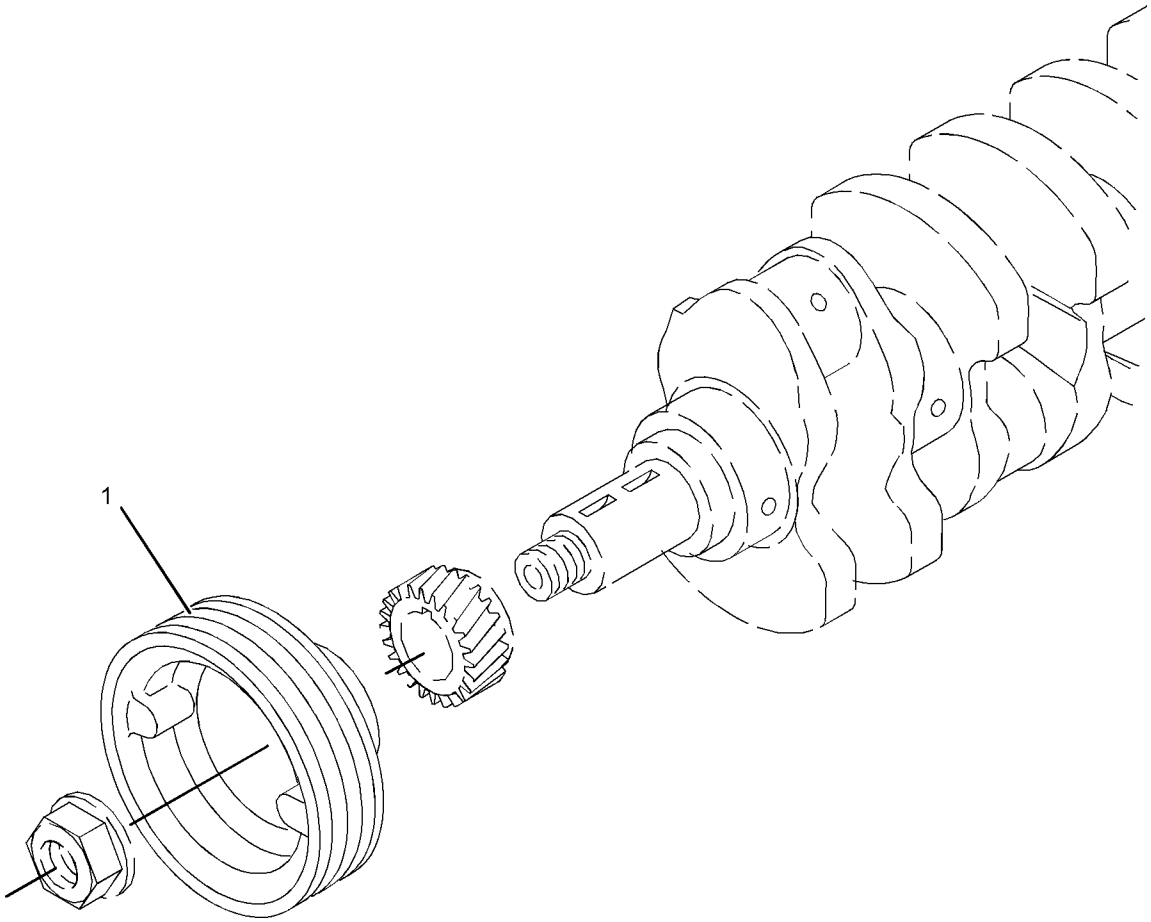


GRAPHIC #1 **<END>** g01049373

# *301-3396* PULLEY GP-CRANKSHAFT

**S/N: CYM1-UP**
**PART OF 300-6603 ENGINE AR-PRIMARY**
**AN ATTACHMENT**

**SMCS-1205** **i02864961**

| NOTE | REF NO | GRAPHIC REF | PART NUMBER | QTY | PART NAME 1 2 3 4 5 6 (PRODUCT LEVEL) | SEE PAGE |
|---|---|---|---|---|---|---|
| | 1 | 1 | **301-3397** | 1 | PULLEY-CRANKSHAFT (2-GROOVE) | |

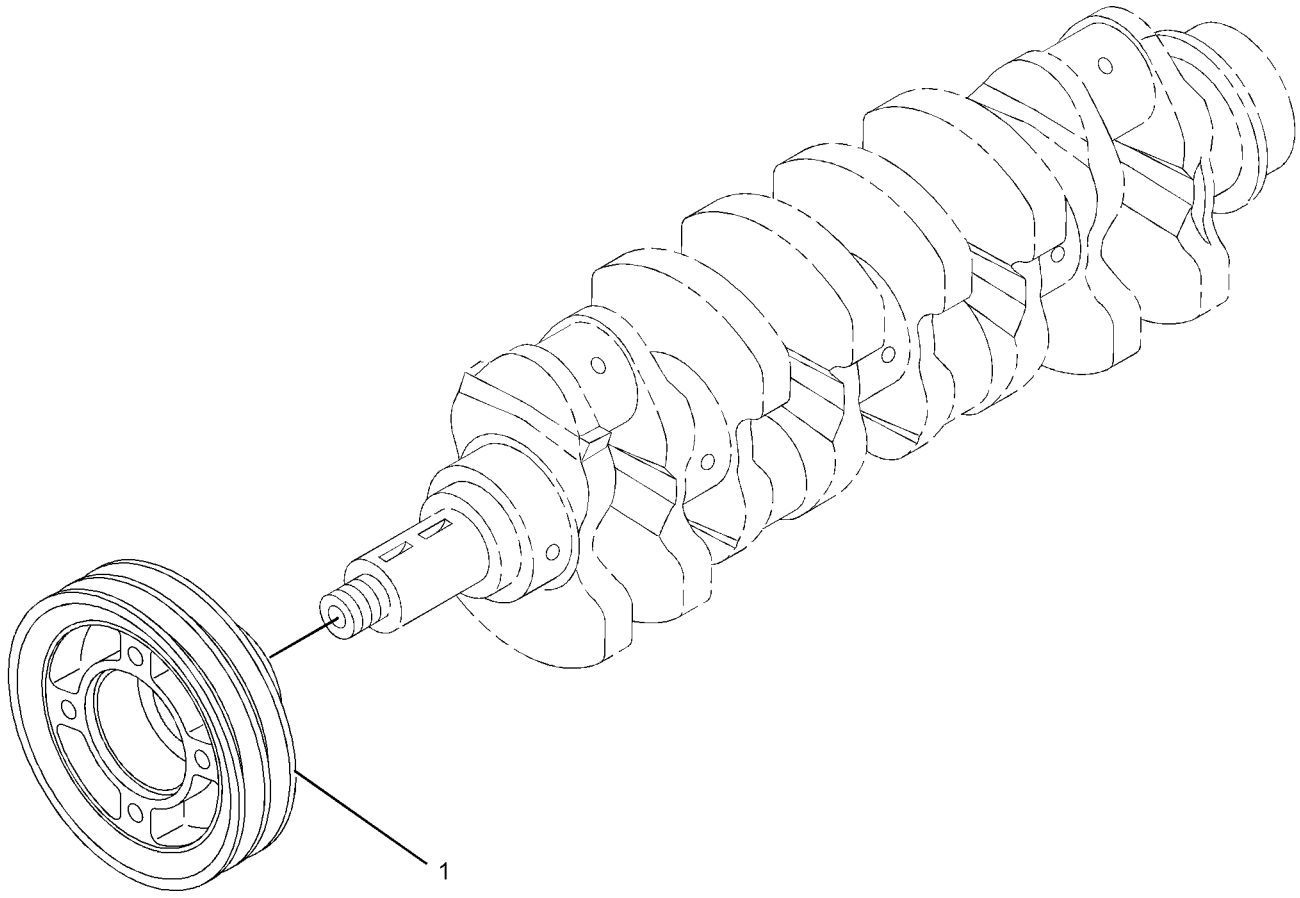


GRAPHIC #1 **<END>** g01351097

# *287-6114* PULLEY GP-WATER PUMP

**S/N: CYM1-UP; CJS1-UP**
**PART OF 300-6603, 308-9664 ENGINE AR-PRIMARY**
**AN ATTACHMENT**

**SMCS-1384** **i02568573**

| NOTE | REF NO | GRAPHIC REF | PART NUMBER | QTY | PART NAME 1 2 3 4 5 6 (PRODUCT LEVEL) | SEE PAGE |
|---|---|---|---|---|---|---|
| M | 1 | 1 | **8T-0642** | 4 | BOLT (M8X1.25X14-MM) | |
| | 2 | 1 | **9M-1974** | 4 | WASHER-HARD (8.8X16X2-MM THK) | |
| | 3 | 1 | **234-4807** | 1 | PULLEY | |

M-METRIC PART

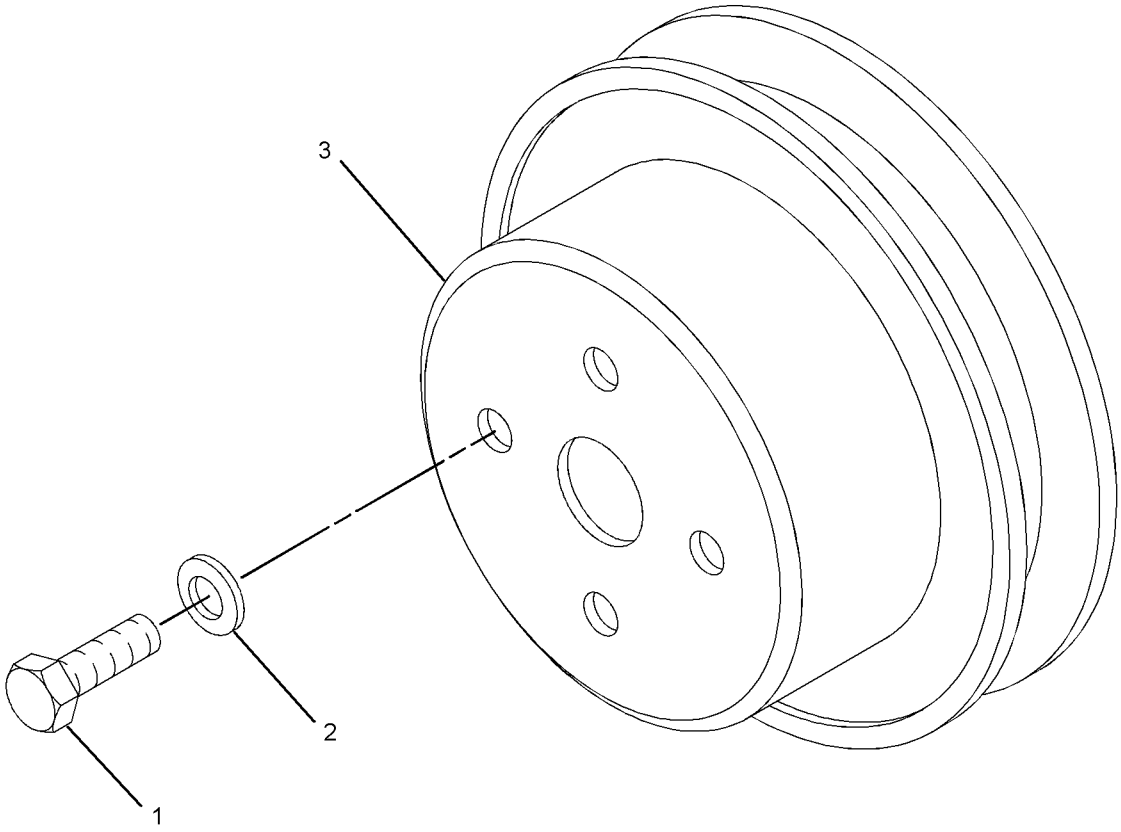


GRAPHIC #1 **<END>** g01326766

# *287-6138* V-BELT GP

**S/N: CYM1-UP; CJS1-UP**
**PART OF 300-6603, 308-9664 ENGINE AR-PRIMARY**
**AN ATTACHMENT**

**SMCS-1357** **i02760620**

| NOTE | REF NO | GRAPHIC REF | PART NUMBER | QTY | PART NAME 1 2 3 4 5 6 (PRODUCT LEVEL) | SEE PAGE |
|---|---|---|---|---|---|---|
| | 1 | 1 | **235-4972** | 1 | V-BELT (WATER PUMP) | |

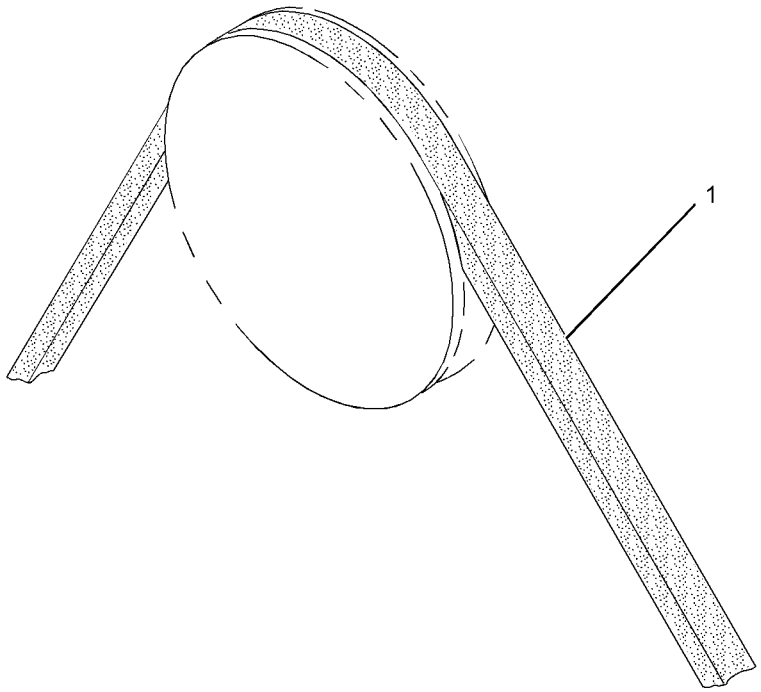


GRAPHIC #1 **<END>** g01321905

# BASIC ENGINE

## *235-5880* VALVE MECHANISM GP

**S/N: CYM1-UP; CJS1-UP**

**PART OF 300-6603, 308-9664 ENGINE AR-PRIMARY**

**AN ATTACHMENT**

**SMCS-1102, 1112, 1121, 1123, 1208, 1209** **i02628721**

| NOTE | REF NO | GRAPHIC REF | PART NUMBER | QTY | PART NAME 1 2 3 4 5 6 (PRODUCT LEVEL) | SEE PAGE |
|---|---|---|---|---|---|---|
| | 1 | 1 | **5I-7625** | 8 | RETAINER | |
| | 2 | 1 | **5I-7630** | 8 | CAP | |
| | 3 | 1 | **5I-7719** | 16 | RETAINER | |
| M | 4 | 1 | **6V-3940** | 4 | BOLT (M8X1.25X25-MM) | |
| | 5 | 1 | **9M-1974** | 4 | WASHER-HARD (8.8X16X2-MM THK) | |
| | 6 | 1 | **233-5469** | 4 | VALVE-INLET | |
| | 7 | 1 | **233-5470** | 4 | VALVE-EXHAUST | |
| | 8 | 1 | **233-5471** | 8 | SPRING-VALVE | |
| | 10 | 1 | **233-5501** | 1 | ROCKER ARM GP | |
| | | 1 | **233-5476** | 1 | SHAFT AS | |
| | 10A | 1 | **095-2005** | 1 | CAP | |
| | 10B | 1 | **195-8324** | 2 | RING-SNAP | |
| | 10C | 1 | **221-5245** | 8 | ROCKER AS | |
| | 10D | 1 | **221-5250** | 3 | SPRING | |
| | 10E | 1 | **233-5477** | 4 | BRACKET | |
| | 10F | 1 | **233-5478** | 4 | BOLT | |

M-METRIC PART

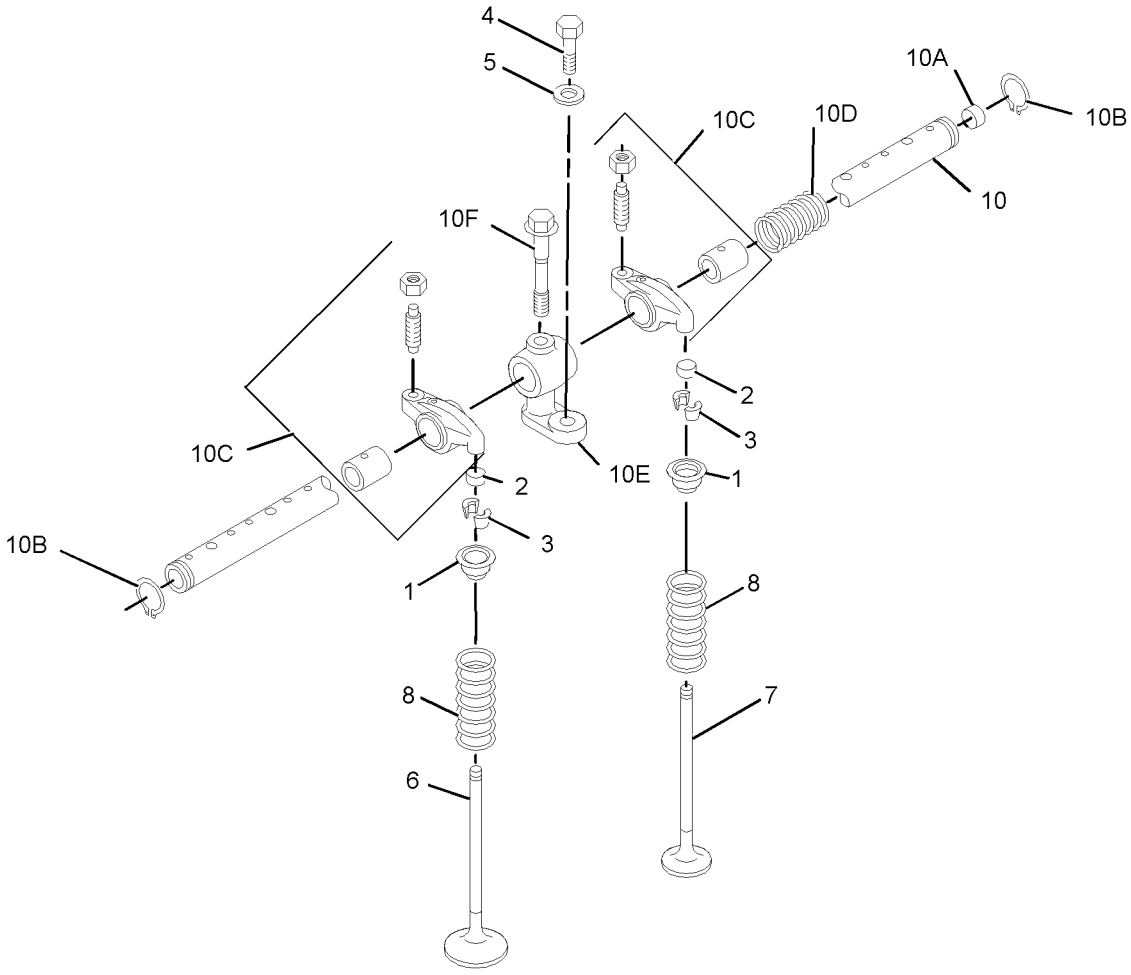


GRAPHIC #1 **<END>** g01348046

# *314-9901* FILTER GP-ENGINE OIL

**S/N: CYM1-UP; CJS1-UP**
**PART OF 300-6603, 308-9664 ENGINE AR-PRIMARY**
**AN ATTACHMENT**

**SMCS-1308** **i02895566**

| NOTE | REF NO | GRAPHIC REF | PART NUMBER | QTY | PART NAME 1 2 3 4 5 6 (PRODUCT LEVEL) | SEE PAGE |
|---|---|---|---|---|---|---|
| M | 1 | 1 | **6V-3940** | 1 | BOLT (M8X1.25X25-MM) | |
| | 2 | 1 | **9M-1974** | 1 | WASHER-HARD (8.8X16X2-MM THK) | |
| | 3 | 1 | **095-1537** | 1 | SEAL-O-RING | |
| | 4 | 1 | **095-1671** | 1 | SEAL-O-RING | |
| | 5 | 1 | **234-4827** | 1 | BOLT | |
| | 6 | 1 | **235-4955** | 1 | BRACKET AS | |
| | 6A | 1 | **234-4826** | 1 | UNION | |
| | 7 | 1 | **253-0244** | 1 | BUSHING-THREADED | |
| | 8 | 1 | **1R-0734** | 1 | FILTER-ENGINE OIL | |

M-METRIC PART

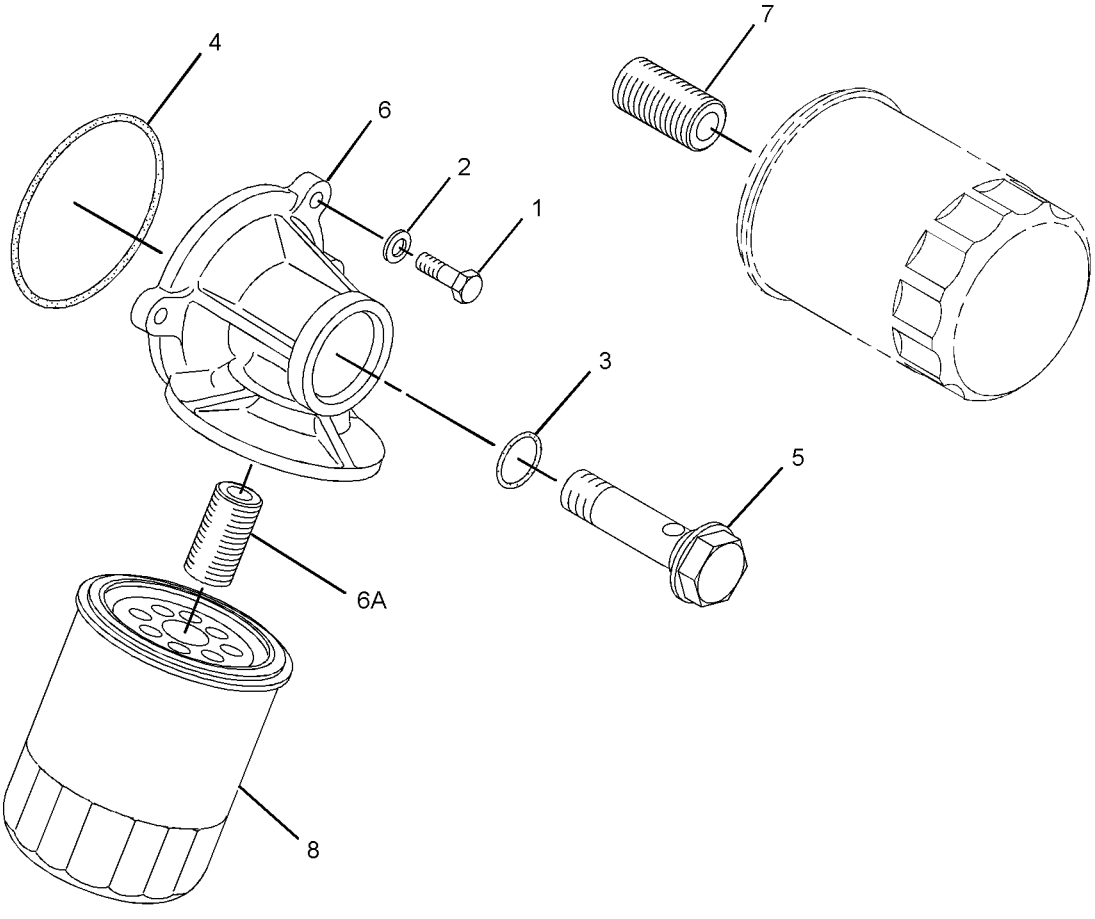


GRAPHIC #1 **<END>** g01392106

# LUBRICATION SYSTEM

## *287-5377* LINES GP-ENGINE OIL

**S/N: CYM1-UP; CJS1-UP**
**PART OF 300-6603, 308-9664 ENGINE AR-PRIMARY**
**AN ATTACHMENT**

**SMCS-1307** **i02555558**

| NOTE | REF NO | GRAPHIC REF | PART NUMBER | QTY | PART NAME 1 2 3 4 5 6 (PRODUCT LEVEL) | SEE PAGE |
|---|---|---|---|---|---|---|
| M | 1 | 1 | **6V-5215** | 3 | BOLT (M8X1.25X16-MM) | |
| | 2 | 1 | **9M-1974** | 3 | WASHER-HARD (8.8X16X2-MM THK) | |
| | 3 | 1 | **233-5494** | 1 | STRAINER-OIL (ENGINE) | |
| | 4 | 1 | **239-8513** | 1 | SEAL-O-RING | |

M-METRIC PART

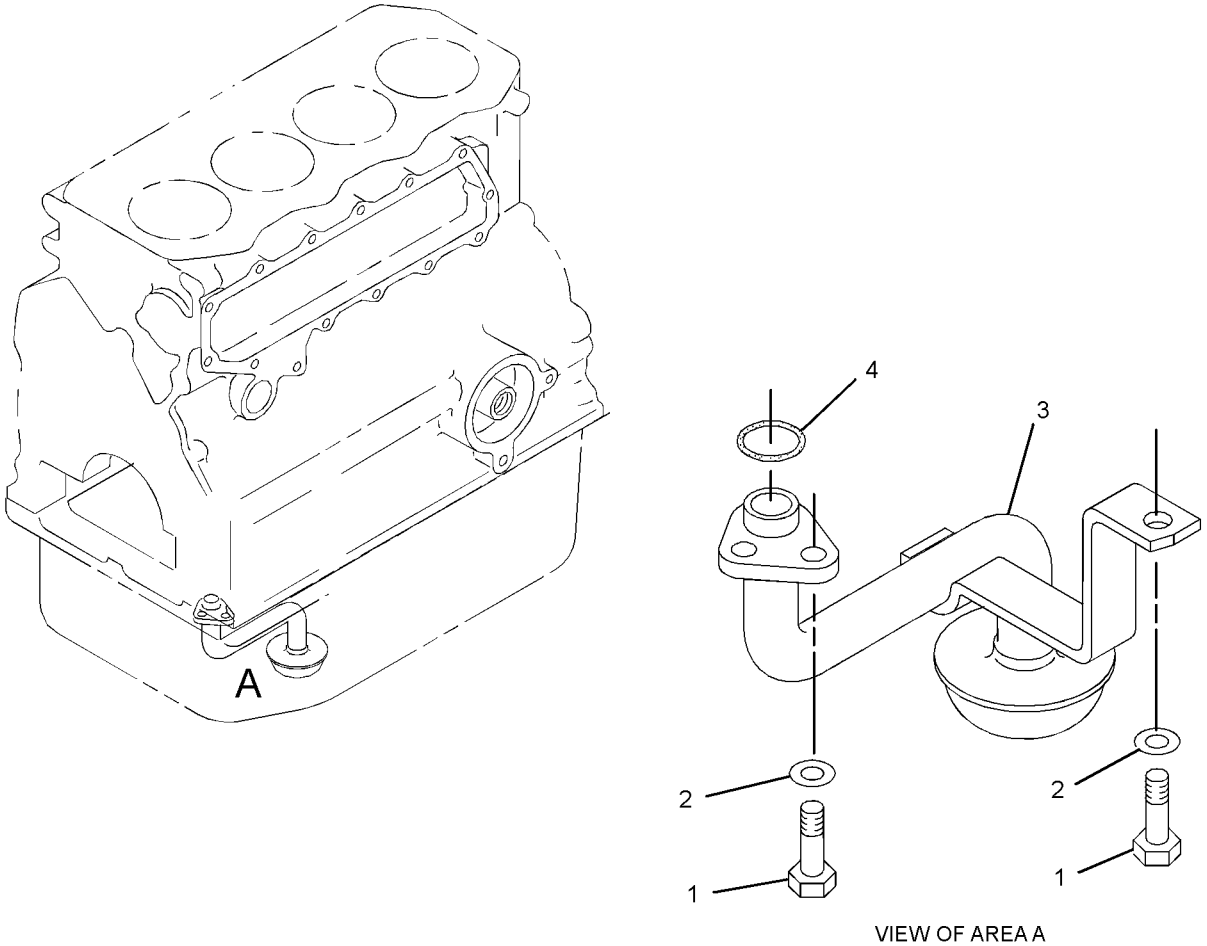


VIEW OF AREA A

GRAPHIC #1 **<END>** g01342337

# *235-5895* PUMP GP-ENGINE OIL

**S/N: CYM1-UP; CJS1-UP**
**PART OF 300-6603, 308-9664 ENGINE AR-PRIMARY**
**AN ATTACHMENT**

**SMCS-1304, 1315** **i02524390**

| NOTE | REF NO | GRAPHIC REF | PART NUMBER | QTY | PART NAME 1 2 3 4 5 6 (PRODUCT LEVEL) | SEE PAGE |
|---|---|---|---|---|---|---|
| M | 1 | 1 | **6V-5217** | 4 | BOLT (M8X1.25X20-MM) | |
| | 2 | 1 | **9M-1974** | 4 | WASHER-HARD (8.8X16X2-MM THK) | |
| | 3 | 1 | **113-1141** | 1 | PUMP AS-OIL | |
| | 4 | 1 | **101-6544** | 1 | NUT | |
| | 5 | 1 | **6V-5839** | 1 | WASHER (11X21X2.5-MM THK) | |
| | 6 | 1 | **103-9083** | 1 | SEAL-O-RING | |

M-METRIC PART

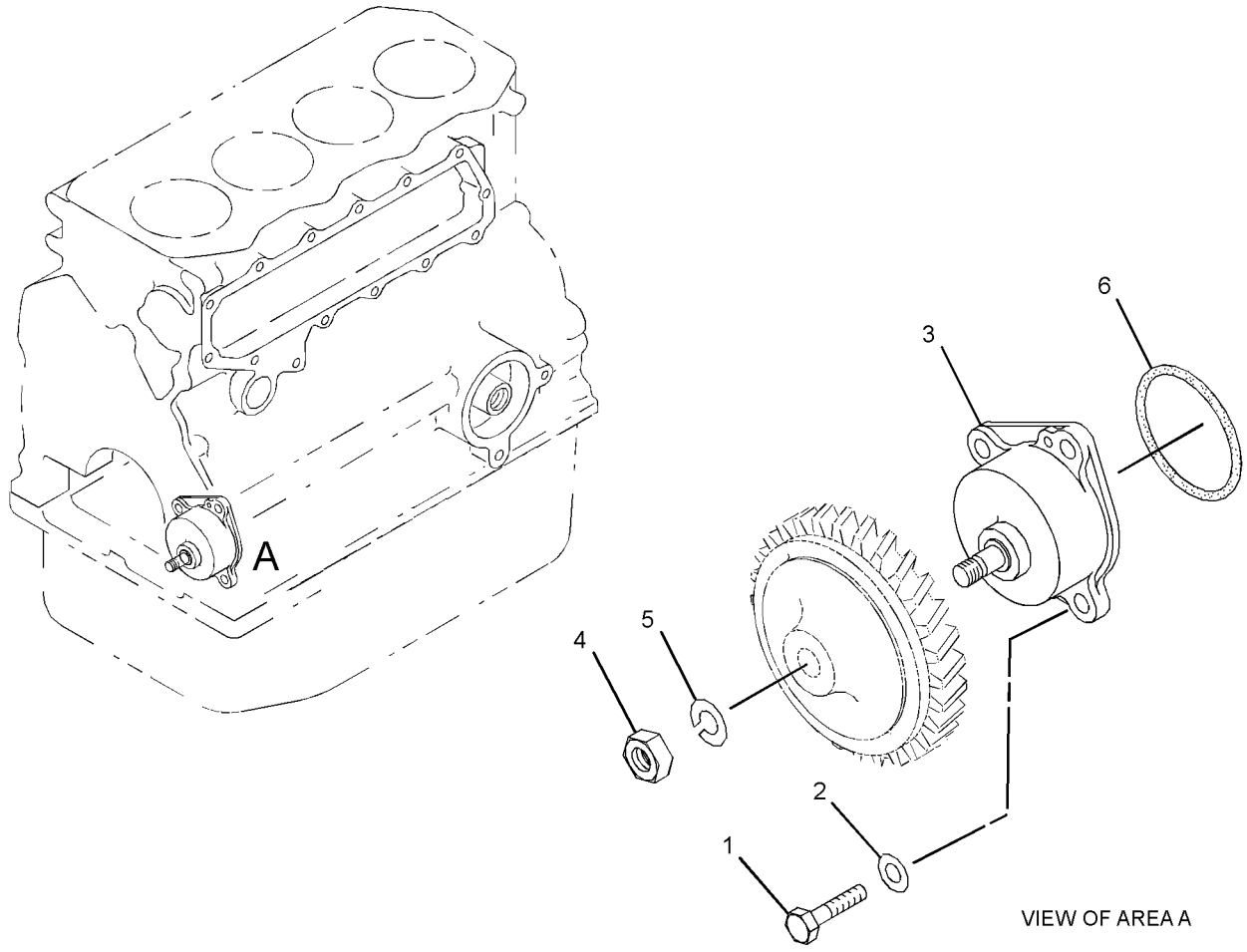


GRAPHIC #1 **<END>** g01348493

# *287-5665* VALVE GP-ENGINE OIL RELIEF

**S/N: CYM1-UP; CJS1-UP**
**PART OF 300-6603, 308-9664 ENGINE AR-PRIMARY**
**AN ATTACHMENT**

**SMCS-1315** **i02555581**

| NOTE | REF NO | GRAPHIC REF | PART NUMBER | QTY | PART NAME 1 2 3 4 5 6 (PRODUCT LEVEL) | SEE PAGE |
|---|---|---|---|---|---|---|
| | 1 | 1 | **107-3672** | 1 | VALVE AS-RELIEF (ENGINE OIL PRESSURE) | |
| | 2 | 1 | **103-9725** | 1 | VALVE AS (OIL BYPASS) (ENGINE) | |
| | 3 | 1 | **233-5496** | 1 | GASKET | |
| | 4 | 1 | **234-4796** | 1 | GASKET | |

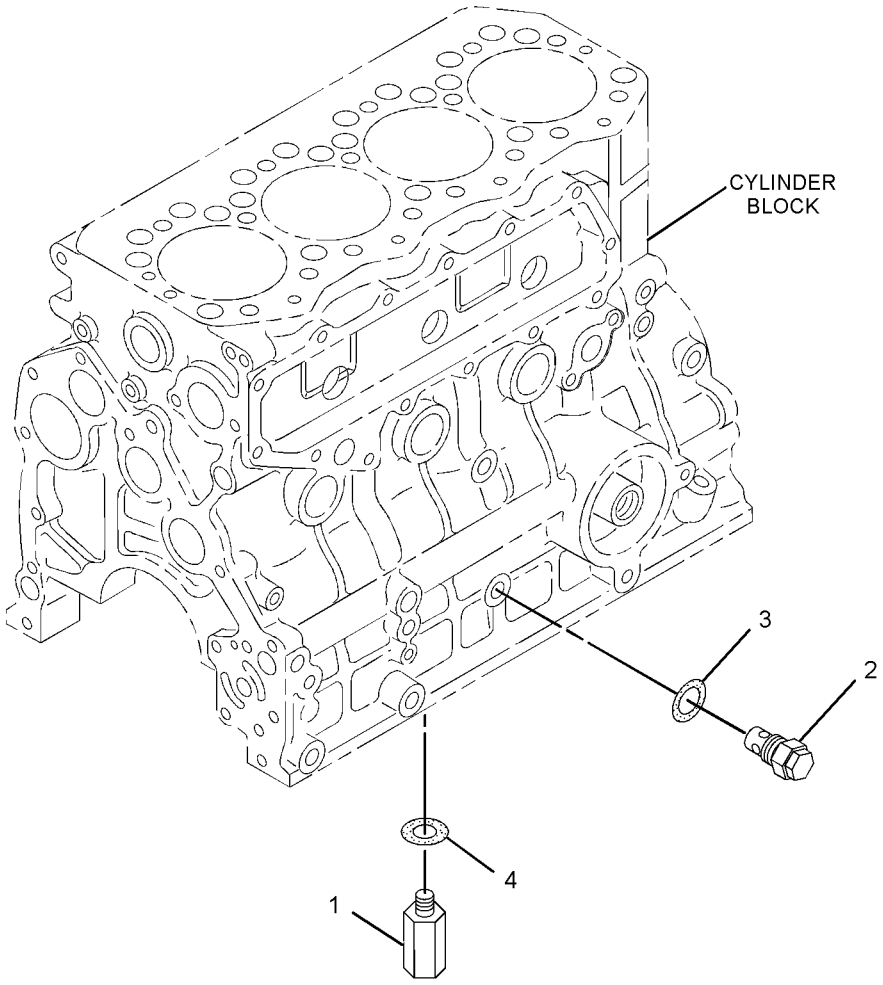


GRAPHIC #1 **<END>** g01323255

## *314-9900* COOLER GP-ENGINE OIL

**S/N: CYM1-UP; CJS1-UP**
**PART OF 300-6603, 308-9664 ENGINE AR-PRIMARY**
**AN ATTACHMENT**

**SMCS-1378** **i02801846**

| NOTE | REF NO | GRAPHIC REF | PART NUMBER | QTY | PART NAME 1 2 3 4 5 6 (PRODUCT LEVEL) | SEE PAGE |
|---|---|---|---|---|---|---|
| | 1 | 1 | **3B-4505** | 13 | LOCKWASHER | |
| | 2 | 1 | **4I-9404** | 2 | SEAL-O-RING | |
| M | 3 | 1 | **6V-2317** | 1 | BOLT (M8X1.25X30-MM) | |
| | 4 | 1 | **9M-1974** | 1 | WASHER-HARD (8.8X16X2-MM THK) | |
| | 5 | 1 | **095-1513** | 4 | SEAL-O-RING | |
| | 6 | 1 | **199-2235** | 13 | BOLT (M8X1.25X22-MM) | |
| | 7 | 1 | **234-4797** | 1 | GASKET | |
| | 8 | 1 | **234-4798** | 1 | STUD | |
| | 9 | 1 | **234-4800** | 1 | GASKET | |
| | 10 | 1 | **234-4801** | 1 | COVER | |
| | 11 | 1 | **234-4802** | 1 | COVER AS | |
| | 11A | 1 | **096-3321** | 2 | PLUG | |
| | 12 | 1 | **234-4803** | 1 | COOLER AS | |
| | 13 | 1 | **244-7127** | 5 | NUT-FLANGE | |

M-METRIC PART

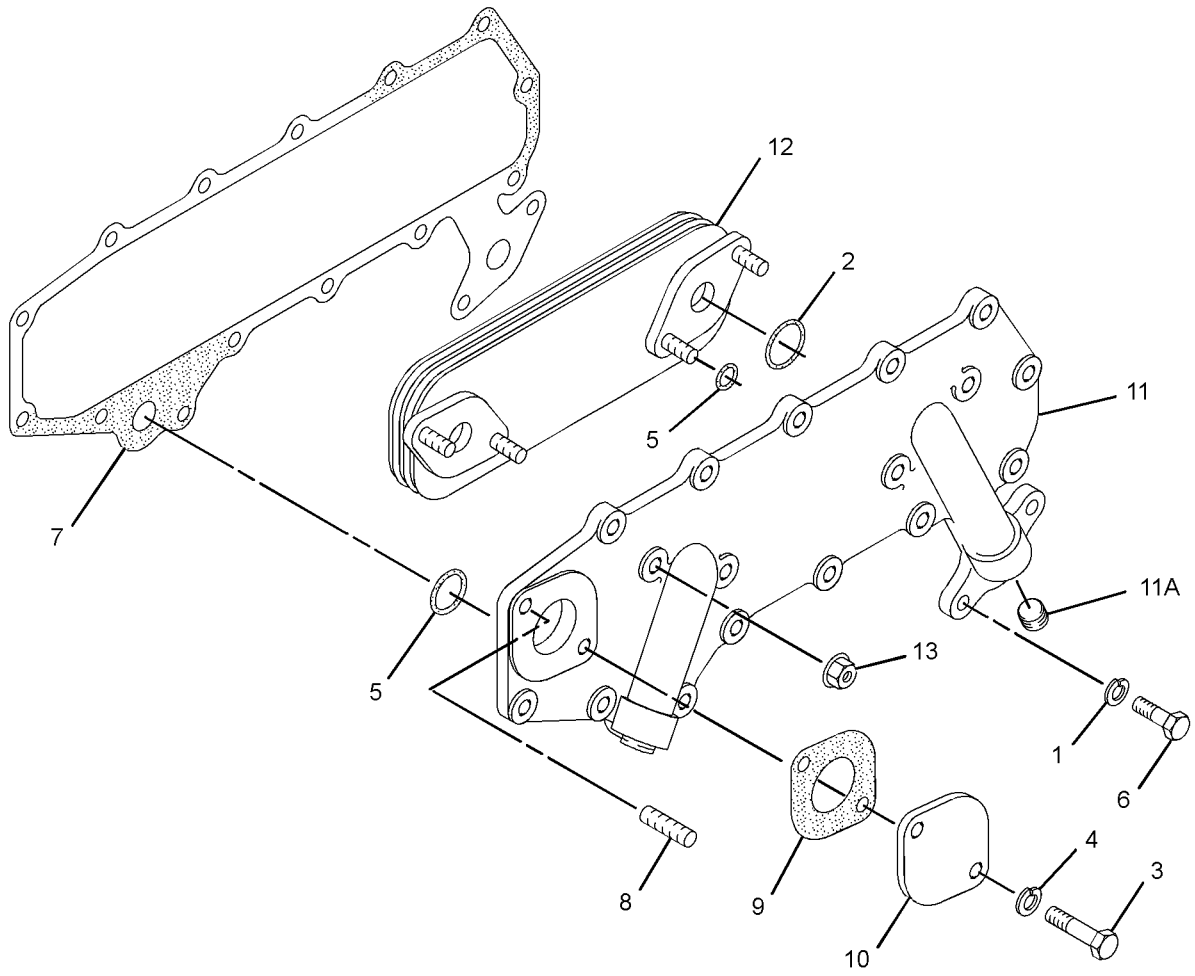


GRAPHIC #1 **<END>** g01392888

# COOLING SYSTEM

## *315-8355* HOUSING & REGULATOR GP

**S/N: CYM1-UP**
**PART OF 300-6603 ENGINE AR-PRIMARY**
**AN ATTACHMENT**

**SMCS-1355, 1393** **i02822904**

| NOTE | REF NO | GRAPHIC REF | PART NUMBER | QTY | PART NAME 1 2 3 4 5 6 (PRODUCT LEVEL) | SEE PAGE |
|---|---|---|---|---|---|---|
| | 1 | 1 | **5I-7628** | 2 | GASKET | |
| | 2 | 1 | **5I-8056** | 1 | PLUG | |
| M | 3 | 1 | **6V-5221** | 1 | BOLT (M8X1.25X80-MM) | |
| M | 4 | 1 | **8T-0276** | 1 | BOLT (M8X1.25X45-MM) | |
| | 5 | 1 | **9M-1974** | 2 | WASHER-HARD (8.8X16X2-MM THK) | |
| | 6 | 1 | **096-8475** | 2 | BOLT (25-MM LG) | |
| | 7 | 1 | **234-4809** | 1 | WASHER | |
| | 8 | 1 | **5I-7728** | 1 | GASKET | |
| | 9 | 1 | **234-4831** | 1 | COVER | |
| | 10 | 1 | **235-4959** | 1 | GASKET (WATER TEMPERATURE REGULATOR) | |
| | 11 | 1 | **235-4960** | 1 | REGULATOR AS-WATER TEMPERATURE (THERMOSTAT) | |
| | 12 | 1 | **246-8315** | 1 | HOSE-BYPASS | |
| | 13 | 1 | **257-8739** | 2 | CLAMP-HOSE | |
| | 14 | 1 | **294-7915** | 1 | HOUSING AS | |
| | | | | | | |
| F | | | **315-7700** | 1 | PLUG | |

F-NOT SHOWN
M-METRIC PART

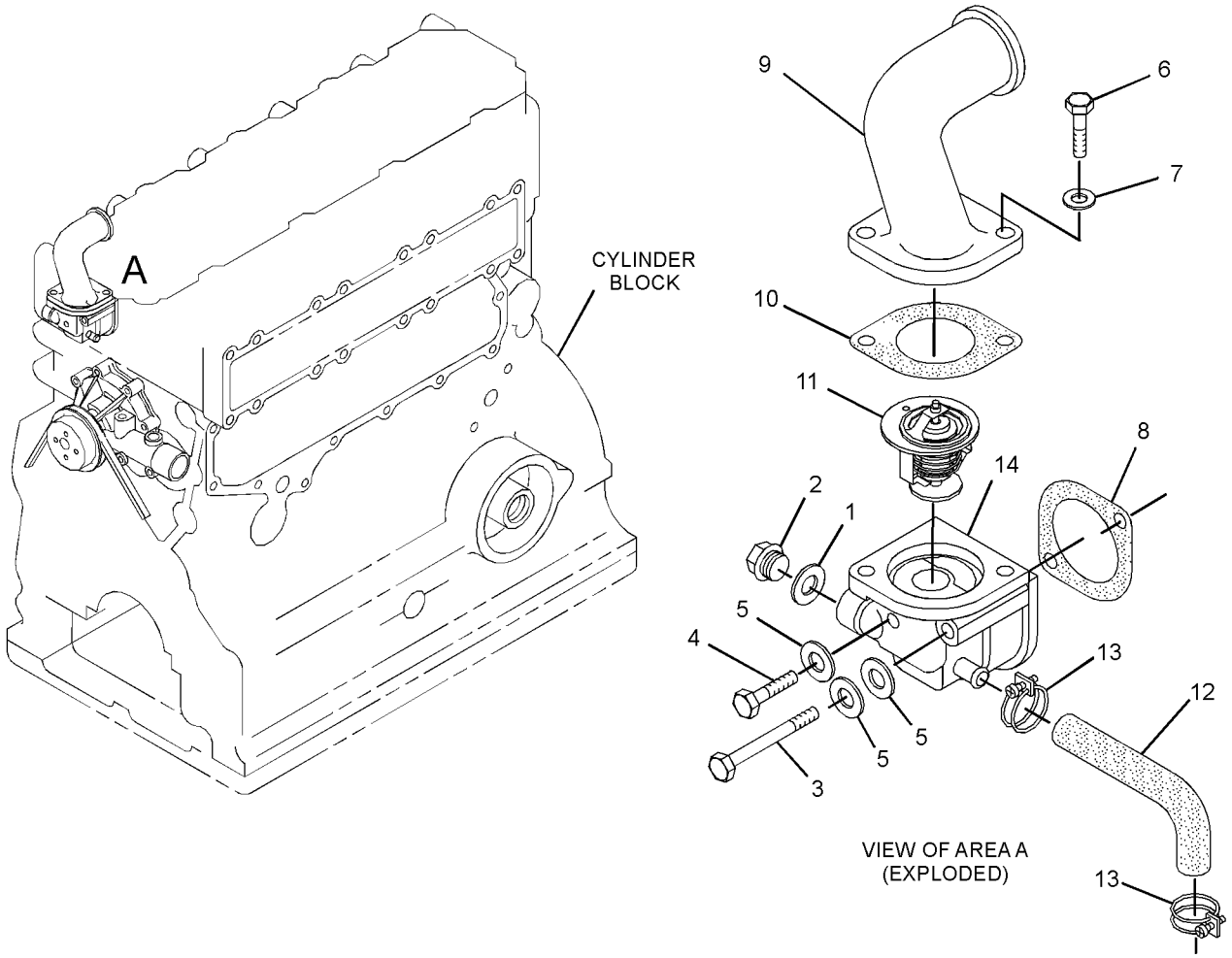


GRAPHIC #1 **<END>** g01433287

# COOLING SYSTEM

## *235-5900* LINES GP-WATER

**S/N: CJS1-UP**
**PART OF 308-9664 ENGINE AR-PRIMARY**
**AN ATTACHMENT**

**SMCS-1355, 1380, 1393** **i02643608**

| NOTE | REF NO | GRAPHIC REF | PART NUMBER | QTY | PART NAME 1 2 3 4 5 6 (PRODUCT LEVEL) | SEE PAGE |
|---|---|---|---|---|---|---|
| | 1 | 1 | **5I-7628** | 2 | GASKET | |
| | 2 | 1 | **5I-8056** | 2 | PLUG (DRAIN) | |
| | 3 | 1 | **096-8475** | 2 | BOLT (25-MM LG) | |
| M | 4 | 1 | **6V-5221** | 1 | BOLT (M8X1.25X80-MM) | |
| M | 5 | 1 | **8T-0276** | 1 | BOLT (M8X1.25X45-MM) | |
| | 6 | 1 | **9M-1974** | 4 | WASHER-HARD (8.8X16X2-MM THK) | |
| | 7 | 1 | **5I-7728** | 1 | GASKET | |
| | 8 | 1 | **246-8315** | 1 | HOSE-BYPASS | |
| | 9 | 1 | **257-8739** | 2 | CLAMP-HOSE (HOSE) | |
| | 10 | 1 | **234-4831** | 1 | COVER | |
| | 11 | 1 | **235-4959** | 1 | GASKET (WATER TEMPERATURE REGULATOR) | |
| | 12 | 1 | **235-4960** | 1 | REGULATOR AS-WATER TEMPERATURE (THERMOSTAT) | |
| | 13 | 1 | **246-8314** | 1 | HOUSING | |

M-METRIC PART

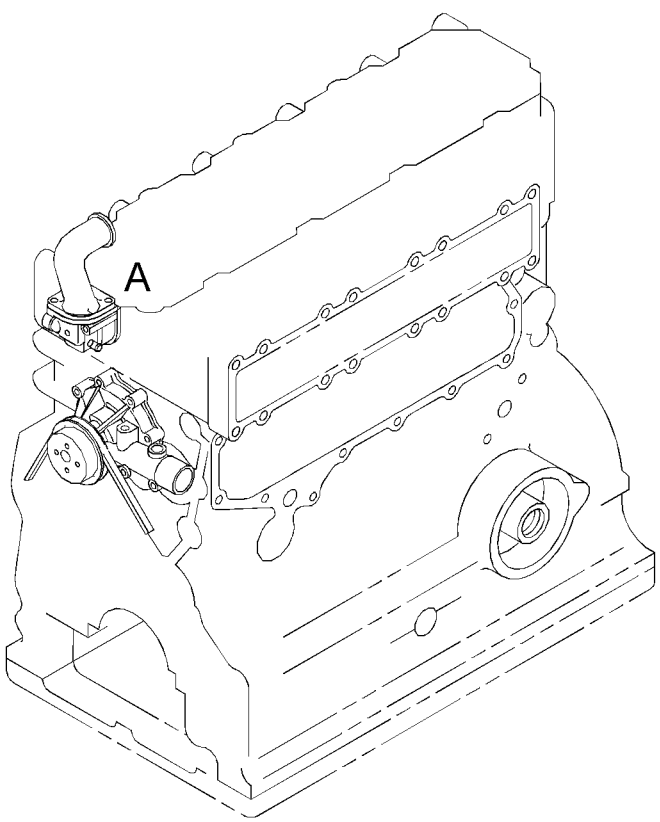


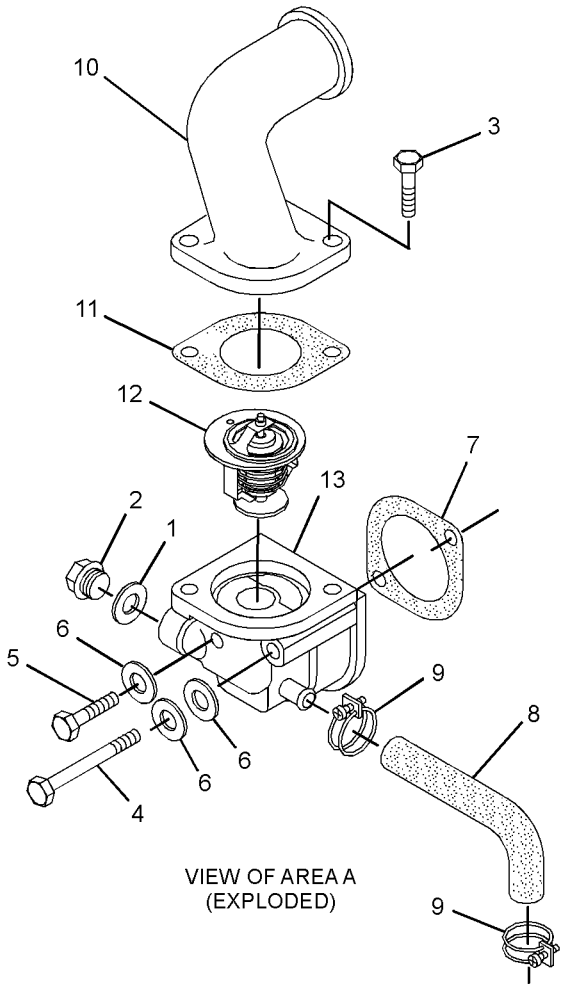


VIEW OF AREA A
(EXPLODED)

GRAPHIC #1 **<END>** g01345074

# COOLING SYSTEM

## *218-0938* MOUNTING GP-RAD & OIL COOLER

**S/N: HEN6750-UP**

**PART OF 295-7107 INSTALLATION AR-ENGINE**

**SMCS-1353, 1374** **i02771654**

| NOTE | REF NO | GRAPHIC REF | PART NUMBER | QTY | PART NAME 1 2 3 4 5 6 (PRODUCT LEVEL) | SEE PAGE |
|---|---|---|---|---|---|---|
| BD | 1 | 1 | **5P-8309** | | SEAL | |
| | 2 | 1 | **5P-0372** | 2 | LOCK PIN | |
| | 3 | 1 | **5V-8309** | 1 | STRIKER AS | |
| | 4 | 1 | **8T-0318** | 1 | SHIM (0.8-MM THK) | |
| | 5 | 1 | **8T-4159** | 1 | BUMPER | |
| | 6 | 1 | **142-8832** | 1 | PIN AS | |
| | 7 | 1 | **193-8345** | 1 | SPRING AS-GAS (GRILL) | |
| | 8 | 1 | **208-6176** | 4 | STUD-BALL | |
| | 9 | 1 | **220-8586** | 1 | SUPPORT AS | |
| | 10 | 1 | **220-8587** | 1 | SUPPORT AS | |
| | 11 | 1 | **220-8588** | 1 | GRILL AS | |
| M | | 1 | **8T-3612** | 1 | NUT-WELD (M8X1.25-THD) | |
| | 12 | 1 | **223-4275** | 1 | LATCH AS | |
| | 13 | 1 | **232-1789** | 1 | SPRING AS-GAS (SUPPORT) | |
| | 14 | 1 | **178-2255** | 2 | PIN | |
| | 15 | 1 | **2K-4973** | 1 | LOCKNUT (3/8-16-THD) | |
| M | 16 | 1 | **5C-7261** | 1 | NUT (M8X1.25-THD) | |
| | 17 | 1 | **7X-7729** | 1 | WASHER (11X25X3-MM THK) | |
| | 18 | 1 | **8T-4121** | 8 | WASHER-HARD (11X21X2.5-MM THK) | |
| M | 19 | 1 | **8T-4133** | 4 | NUT (M10X1.5-THD) | |
| M | 20 | 1 | **8T-4181** | 3 | BOLT (M6X1X20-MM) | |
| | 21 | 1 | **8T-4205** | 3 | WASHER-HARD (7.2X14.5X2-MM THK) | |
| M | 22 | 1 | **8T-6466** | 4 | BOLT (M10X1.5X60-MM) | |

B-USE AS REQUIRED
D-ORDER BY THE METER
M-METRIC PART

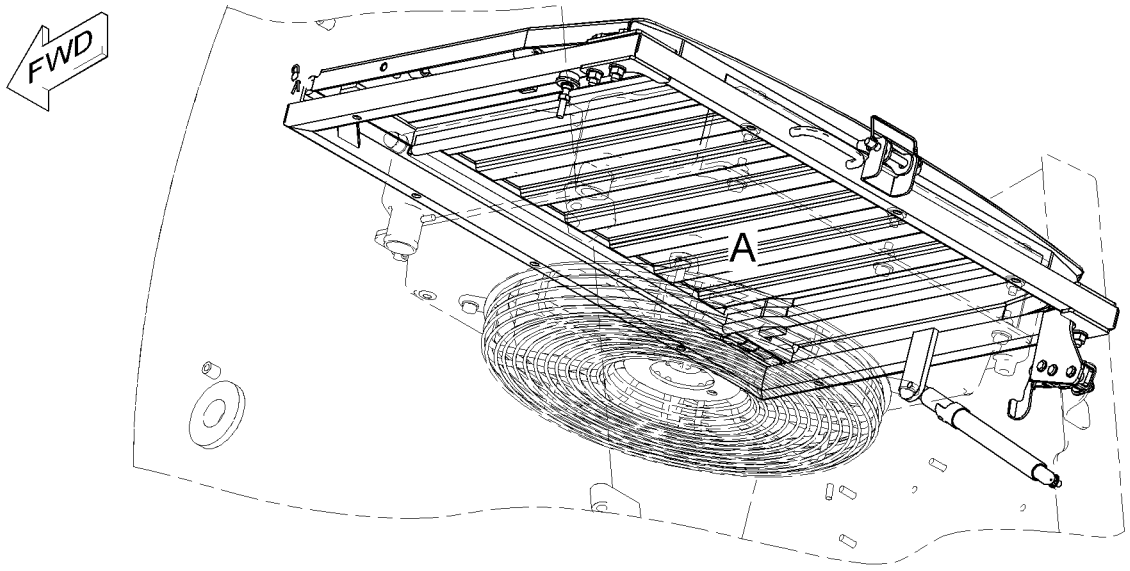


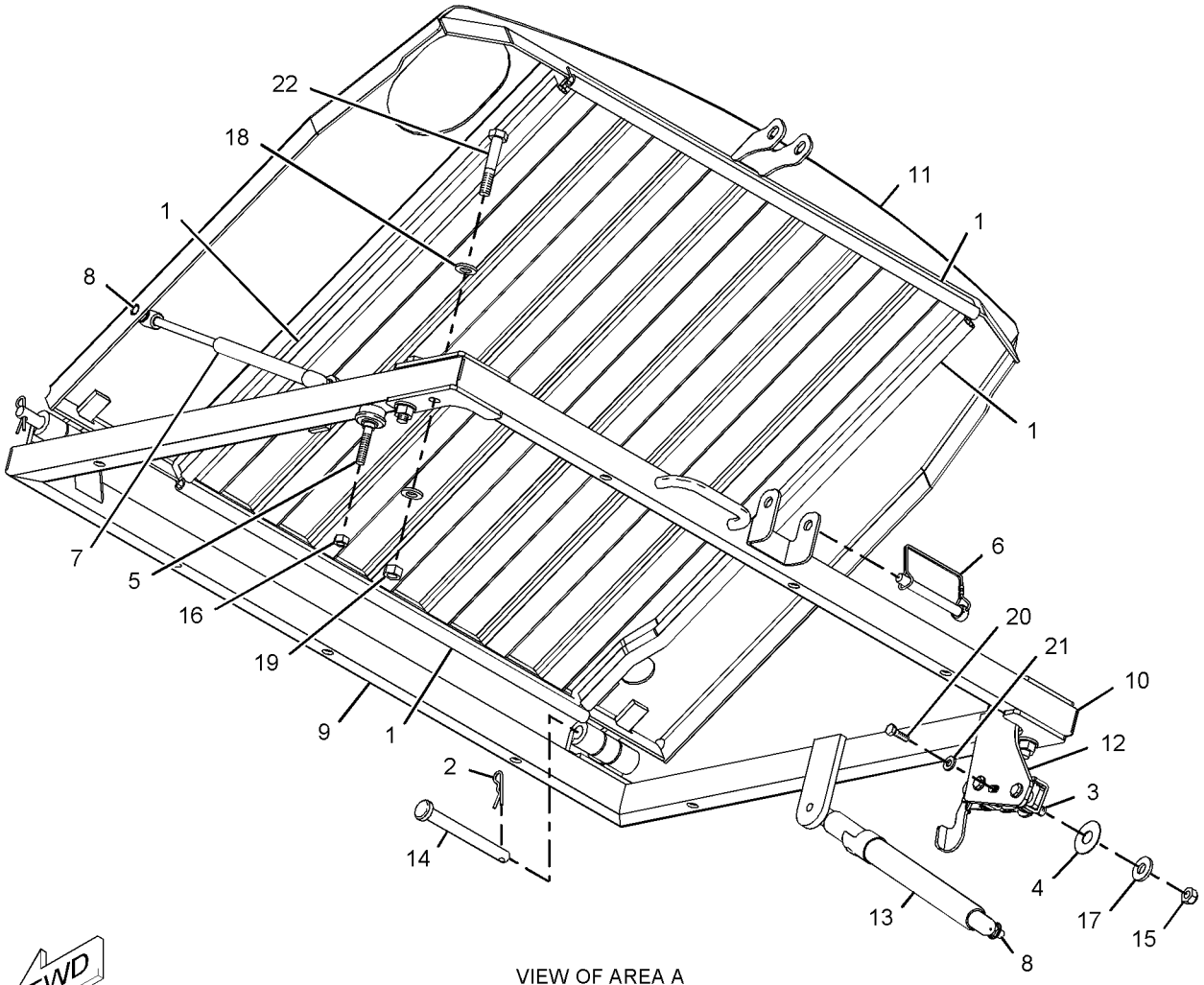


VIEW OF AREA A

GRAPHIC #1 **<END>** g01033317

## *287-6056* PUMP GP-WATER

**S/N: CYM1-UP; CJS1-UP**
**PART OF 300-6603, 308-9664 ENGINE AR-PRIMARY**
**AN ATTACHMENT**

**SMCS-1355, 1361** **i02735546**

| NOTE | REF NO | GRAPHIC REF | PART NUMBER | QTY | PART NAME 1 2 3 4 5 6 (PRODUCT LEVEL) | SEE PAGE |
|---|---|---|---|---|---|---|
| | 1 | 1 | **8T-4224** | 5 | WASHER-HARD (8.8X16X2-MM THK) | |
| | 2 | 1 | **235-4952** | 1 | PUMP GP-WATER | |
| M | 2A | 1 | **6V-3940** | 2 | BOLT (M8X1.25X25-MM) | |
| M | 2B | 1 | **8T-7547** | 1 | BOLT (M8X1.25X30-MM) | |
| | 2C | 1 | **9M-1974** | 3 | WASHER-HARD (8.8X16X2-MM THK) | |
| | 2D | 1 | **234-4832** | 1 | FLANGE | |
| | 2E | 1 | **103-9747** | 1 | COVER-PUMP | |
| | 2F | 1 | **103-9750** | 1 | GASKET-COVER (WATER PUMP) | |
| | 3 | 1 | **235-4958** | 1 | GASKET | |
| M | 4 | 1 | **7X-2537** | 1 | BOLT (M8X1.25X35-MM) | |
| | 5 | 1 | **285-9066** | 1 | BOLT (M8X1.25X65-MM) | |
| | | | | | | |
| FM | | | **7X-0818** | 4 | BOLT (M8X1.25X45-MM) | |

F-NOT SHOWN
M-METRIC PART

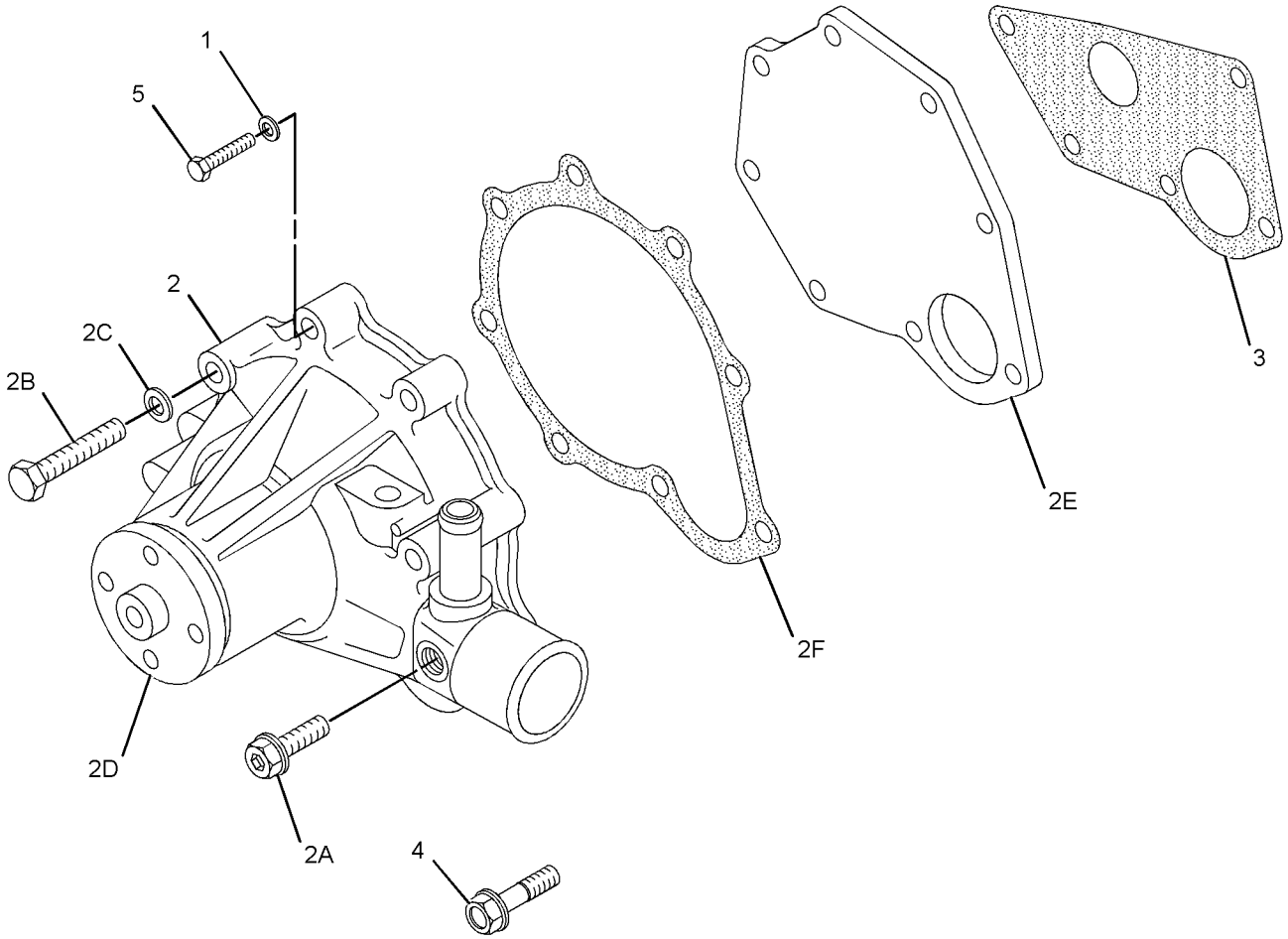


GRAPHIC #1 **<END>** g01352842

## *221-9124* RADIATOR & HYD OIL COOLER GP

**S/N: HEN6750-UP**
**PART OF 218-0924 RADIATOR & OIL COOLER MTG GP**
**AN ATTACHMENT**

**SMCS-1351, 1356, 1386** **i02813507**

| NOTE | REF NO | GRAPHIC REF | PART NUMBER | QTY | PART NAME 1 2 3 4 5 6 (PRODUCT LEVEL) | SEE PAGE |
|---|---|---|---|---|---|---|
| | 1 | 1 | **036-1865** | 1 | CAP AS-RADIATOR | |
| | 2 | 1 | **069-4080** | 1 | FITTING | |
| | 3 | 1 | **207-6154** | 1 | GAUGE-SIGHT (RADIATOR) | |
| | 4 | 1 | *217-3572* | 1 | FAN GP-BLOWER | |
| | | 1 | **8T-4224** | 4 | WASHER-HARD (8.8X16X2-MM THK) | |
| M | | 1 | **8T-4908** | 4 | BOLT (M8X1.25X25-MM) | |
| | | 1 | **203-4827** | 1 | FAN AS | |
| | | 1 | **229-8796** | 1 | ADAPTER | |
| | 5 | 1 | **218-0926** | 1 | GUARD AS | |
| | 6 | 1 | **220-1043** | 1 | SHROUD AS | |
| M | 7 | 1 | **227-6715** | 1 | STUD (M10X1.15-THD) | |
| | 8 | 1 | **280-8312** | 1 | RADIATOR & HYD OIL COOLER AS | |
| | 9 | 1 | **4K-8864** | 2 | CLIP | |
| | 10 | 1 | **7M-7410** | 1 | PLUG-PIPE | |
| | 11 | 1 | **7X-7729** | 12 | WASHER (11X25X3-MM THK) | |
| | 12 | 1 | **8T-4121** | 4 | WASHER-HARD (11X21X2.5-MM THK) | |
| M | 13 | 1 | **8T-4133** | 6 | NUT (M10X1.5-THD) | |
| M | 14 | 1 | **8T-4196** | 9 | BOLT (M10X1.5X35-MM) | |

M-METRIC PART

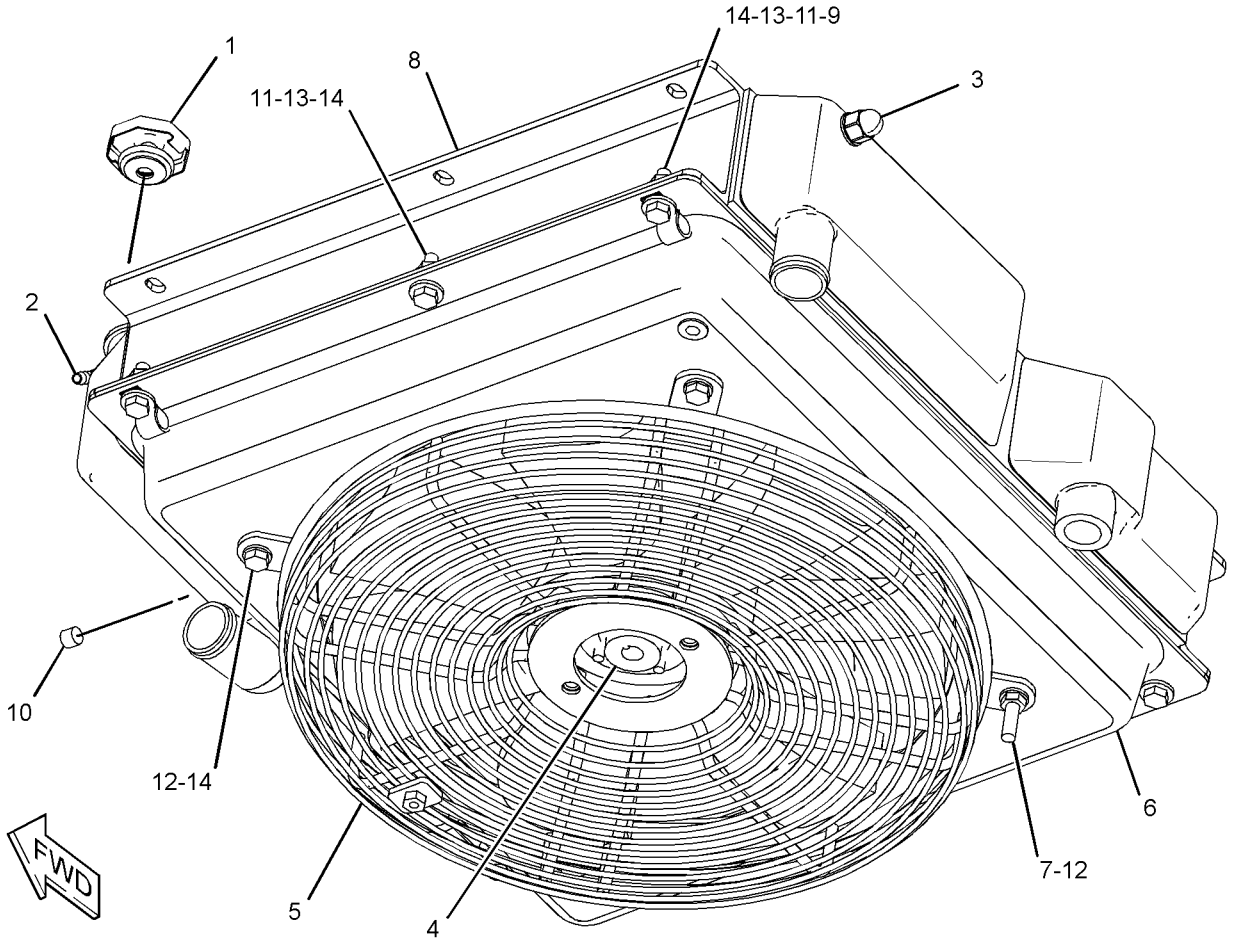


GRAPHIC #1 **<END>** g01376155

# *218-0924* RADIATOR & OIL COOLER MTG GP

**S/N: HEN6750-UP**

**PART OF 261-6126, 261-6165, 278-5351, 278-5373, 278-5418, 278-5448, 295-7064, 295-7071, 295-7154, 295-7170, 295-7171 CONVERSION AR-MACHINE AN ATTACHMENT**

**SMCS-1351, 1354** **i02757039**

| NOTE | REF NO | GRAPHIC REF | PART NUMBER | QTY | PART NAME 1 2 3 4 5 6 (PRODUCT LEVEL) | SEE PAGE |
|---|---|---|---|---|---|---|
| | 1 | 1 | **1P-4278** | 2 | CLAMP-HOSE | |
| | 2 | 1 | **7X-1443** | 4 | PROTECTOR | |
| | 3 | 1 | **257-3576** | 1 | SPACER (11X14.3X11-MM THK) | |
| | 4 | 1 | **218-0935** | 1 | HOSE (WATER PUMP) | |
| | 5 | 1 | **218-0936** | 1 | HOSE (TEMPERATURE REGULATOR) | |
| Y | 6 | 1 | *221-9124* | 1 | RADIATOR & HYD OIL COOLER GP | 71 |
| | 7 | 1 | **222-1178** | 4 | CLAMP | |
| C | 8 | 1 | **285-5794** | 1 | RECOVERY GP-COOLANT | |
| | | 1 | **169-6715** | 1 | CAP-VENTED (COOLANT RECOVERY) | |
| M | 9 | 1 | **131-3540** | 2 | LOCKNUT (M8X1.25-THD) | |
| | 10 | 1 | **4K-8864** | 1 | CLIP | |
| | 11 | 1 | **5P-7470** | 1 | CLIP (SLOT) | |
| | 12 | 1 | **5P-7471** | 1 | CLIP (TAB) | |
| | 13 | 1 | **5P-7703** | 1 | GROMMET | |
| | 14 | 1 | **7X-7729** | 12 | WASHER (11X25X3-MM THK) | |
| | 15 | 1 | **8T-4121** | 2 | WASHER-HARD (11X21X2.5-MM THK) | |
| M | 16 | 1 | **8T-4133** | 6 | NUT (M10X1.5-THD) | |
| M | 17 | 1 | **8T-4191** | 1 | BOLT (M10X1.5X16-MM) | |
| | 18 | 1 | **8T-4224** | 2 | WASHER-HARD (8.8X16X2-MM THK) | |
| M | 19 | 1 | **8T-5005** | 1 | BOLT (M10X1.5X70-MM) | |
| M | 20 | 1 | **8T-6466** | 5 | BOLT (M10X1.5X60-MM) | |
| M | 21 | 1 | **9X-2125** | 1 | BOLT-LOCKING (M10X1.5X25-MM) | |
| E | 22 | 1 | **5P-1420** | | HOSE (146-CM) | |

C-CHANGE FROM PREVIOUS TYPE
E-ORDER BY THE CENTIMETER
M-METRIC PART
Y-SEPARATE ILLUSTRATION

*218-0924* **RADIATOR & OIL COOLER MTG GP** *(contd.)* **i02757039**

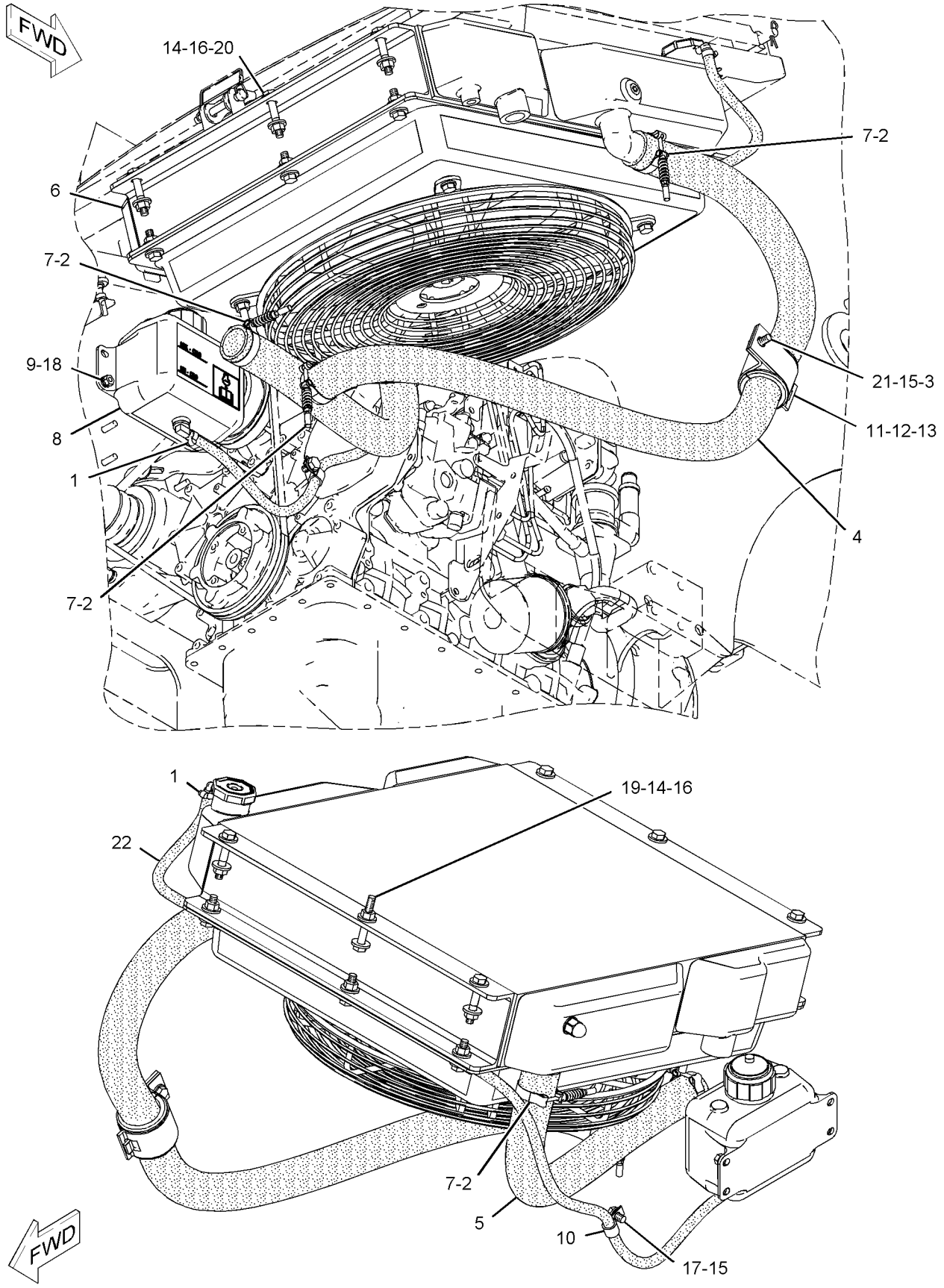


GRAPHIC #1 **<END>** g01031014

# AIR INLET AND EXHAUST SYSTEM

## *222-9812* AIR CLEANER GP

**S/N: HEN6750-UP**

**PART OF 295-7107 INSTALLATION AR-ENGINE**

**SMCS-1051, 1054** **i01991441**

| NOTE | REF NO | GRAPHIC REF | PART NUMBER | QTY | PART NAME 1 2 3 4 5 6 (PRODUCT LEVEL) | SEE PAGE |
|---|---|---|---|---|---|---|
| Y | 1 | 1 | *243-0405* | 1 | AIR CLEANER GP | 75 |
| M | 2 | 1 | **5C-7261** | 2 | NUT (M8X1.25-THD) | |
| | 3 | 1 | **5P-4116** | 2 | WASHER-HARD (8.8X20.5X2-MM THK) | |

M-METRIC PART
Y-SEPARATE ILLUSTRATION

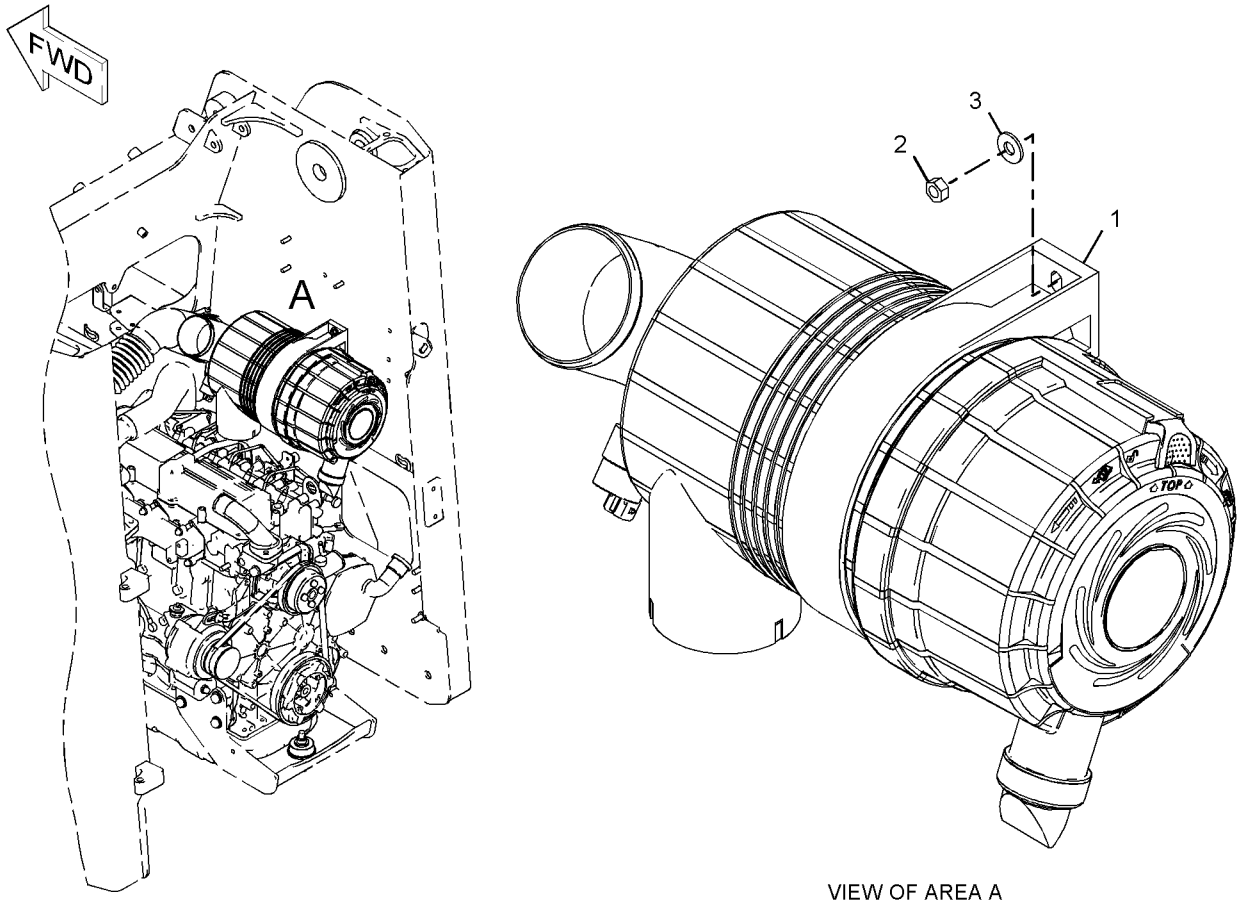


VIEW OF AREA A

GRAPHIC #1 **<END>** g01034818

# AIR INLET AND EXHAUST SYSTEM

## *243-0405* AIR CLEANER GP

**S/N: HEN6750-UP**

**PART OF 222-9812 AIR CLEANER GP**

**SMCS-1051, 1054** **i02637269**

| NOTE | REF NO | GRAPHIC REF | PART NUMBER | QTY | PART NAME 1 2 3 4 5 6 (PRODUCT LEVEL) | SEE PAGE |
|---|---|---|---|---|---|---|
| | 1 | 1 | **152-4898** | 1 | BAND-MOUNTING | |
| | 2 | 1 | **237-7325** | 1 | INDICATOR | |
| | 3 | 1 | **243-0406** | 1 | AIR CLEANER GP | |
| | | 1 | **110-6326** | 1 | FILTER ELEMENT AS-AIR (PRIMARY) | |
| | | 1 | **110-6331** | 1 | FILTER ELEMENT AS-AIR (SECONDARY) | |
| | | 1 | **112-9717** | 1 | VALVE-VACUATOR | |
| | | 1 | **243-0407** | 1 | COVER AS | |
| | 4 | 1 | **280-8298** | 1 | CLAMP | |

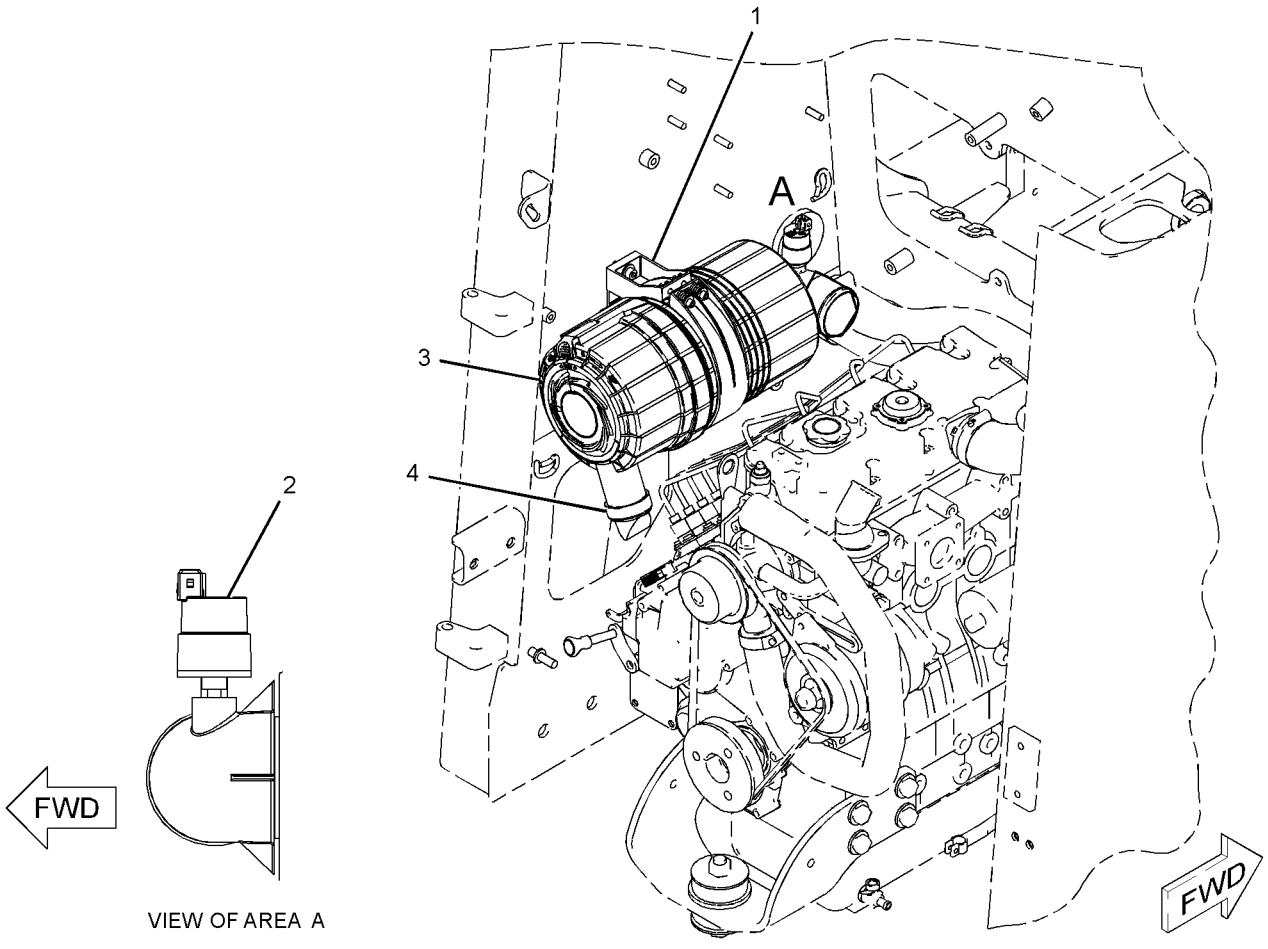


VIEW OF AREA A

GRAPHIC #1 **<END>** g01326594

# AIR INLET AND EXHAUST SYSTEM

## 272-3062 KIT-DEBRIS GUARD—TURBOCHARGER, EXHAUST MANIFOLD

**S/N: HEN6750-UP**

**AN ATTACHMENT**

**SMCS-1052, 1059** **i02921012**

| NOTE | REF NO | GRAPHIC REF | PART NUMBER | QTY | PART NAME 1 2 3 4 5 6 (PRODUCT LEVEL) | SEE PAGE |
|---|---|---|---|---|---|---|
| | 1 | 1 | **272-3052** | 1 | GUARD AS-EXHAUST | |
| | 2 | 1 | **280-8355** | 1 | GUARD AS | |

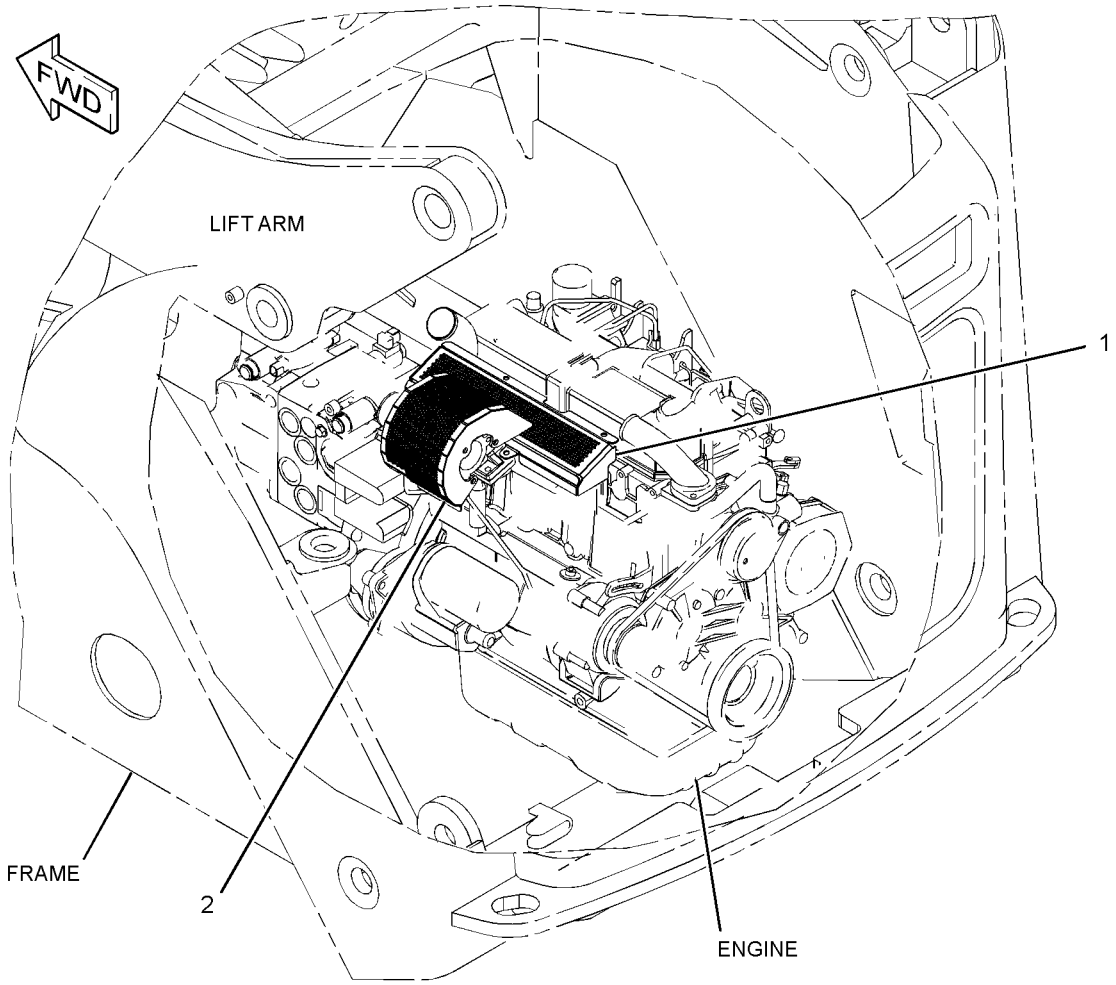


GRAPHIC #1 **<END>** g01452325

# AIR INLET AND EXHAUST SYSTEM

## *247-6317* LINES GP-AIR

**S/N: CYM1-UP; CJS1-UP**
**PART OF 300-6603, 308-9664 ENGINE AR-PRIMARY**
**AN ATTACHMENT**

**SMCS-1071** **i02712952**

| NOTE | REF NO | GRAPHIC REF | PART NUMBER | QTY | PART NAME 1 2 3 4 5 6 (PRODUCT LEVEL) | SEE PAGE |
|---|---|---|---|---|---|---|
| M | 1 | 1 | **6V-3940** | 4 | BOLT (M8X1.25X25-MM) | |
| | 2 | 1 | **9M-1974** | 4 | WASHER-HARD (8.8X16X2-MM THK) | |
| | 3 | 1 | **5I-7678** | 1 | GASKET | |
| | 4 | 1 | **5I-8021** | 1 | ELBOW AS | |
| | | 1 | **5I-8023** | 1 | PLUG | |

M-METRIC PART

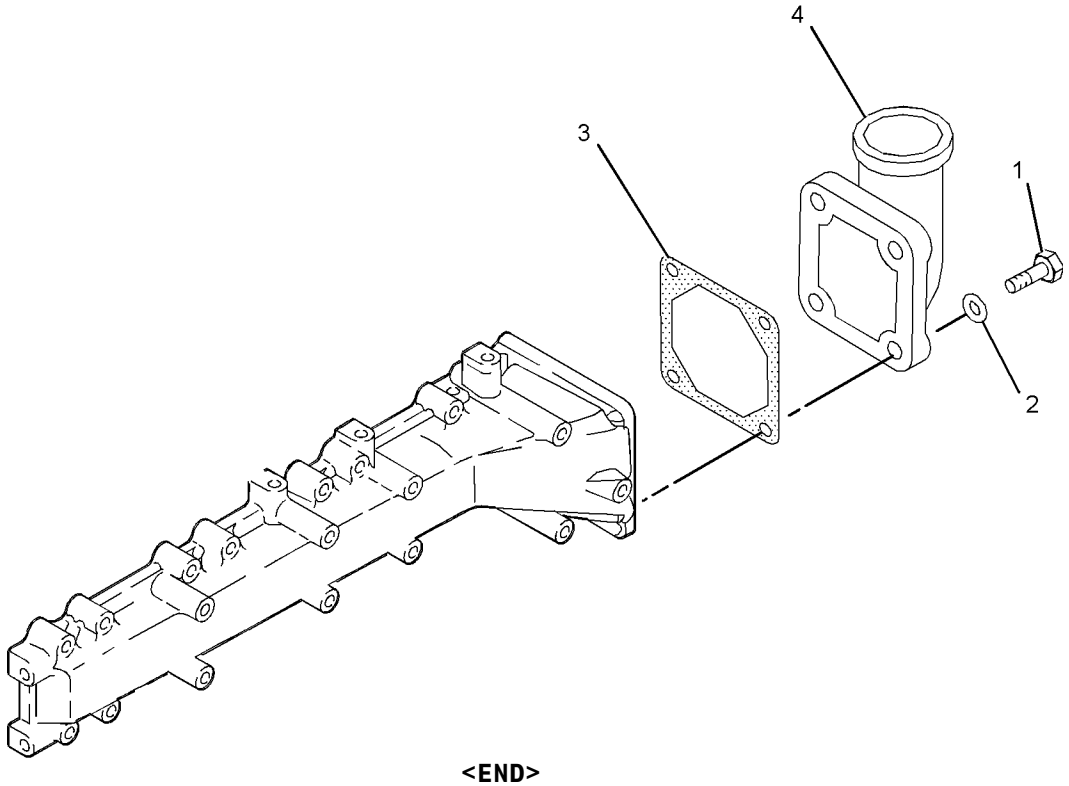


GRAPHIC #1 **<END>** g01048173

# AIR INLET AND EXHAUST SYSTEM

## *280-8320* LINES GP-AIR

**S/N: HEN6750-UP**

**PART OF 295-7107 INSTALLATION AR-ENGINE**

**SMCS-1071** **i02868031**

| NOTE | REF NO | GRAPHIC REF | PART NUMBER | QTY | PART NAME 1 2 3 4 5 6 (PRODUCT LEVEL) | SEE PAGE |
|---|---|---|---|---|---|---|
| | 1 | 1 | **5P-4868** | 1 | CLAMP-HOSE | |
| | 2 | 1 | **8T-6726** | 1 | CLAMP-HOSE | |
| | 3 | 1 | **280-8319** | 1 | HOSE | |
| B | 4 | 1 | **280-8341** | 3 | SPACER (8.7X15.8X21.1-MM THK) | |
| | 5 | 1 | **295-7129** | 1 | HOSE | |
| | 6 | 1 | **5D-1026** | 1 | CLAMP-HOSE | |
| | 7 | 1 | **3S-8665** | 2 | CLIP | |
| M | 8 | 1 | **8T-4177** | 1 | BOLT (M8X1.25X90-MM) | |
| | 9 | 1 | **8T-4224** | 1 | WASHER-HARD (8.8X16X2-MM THK) | |

B-USE AS REQUIRED
M-METRIC PART

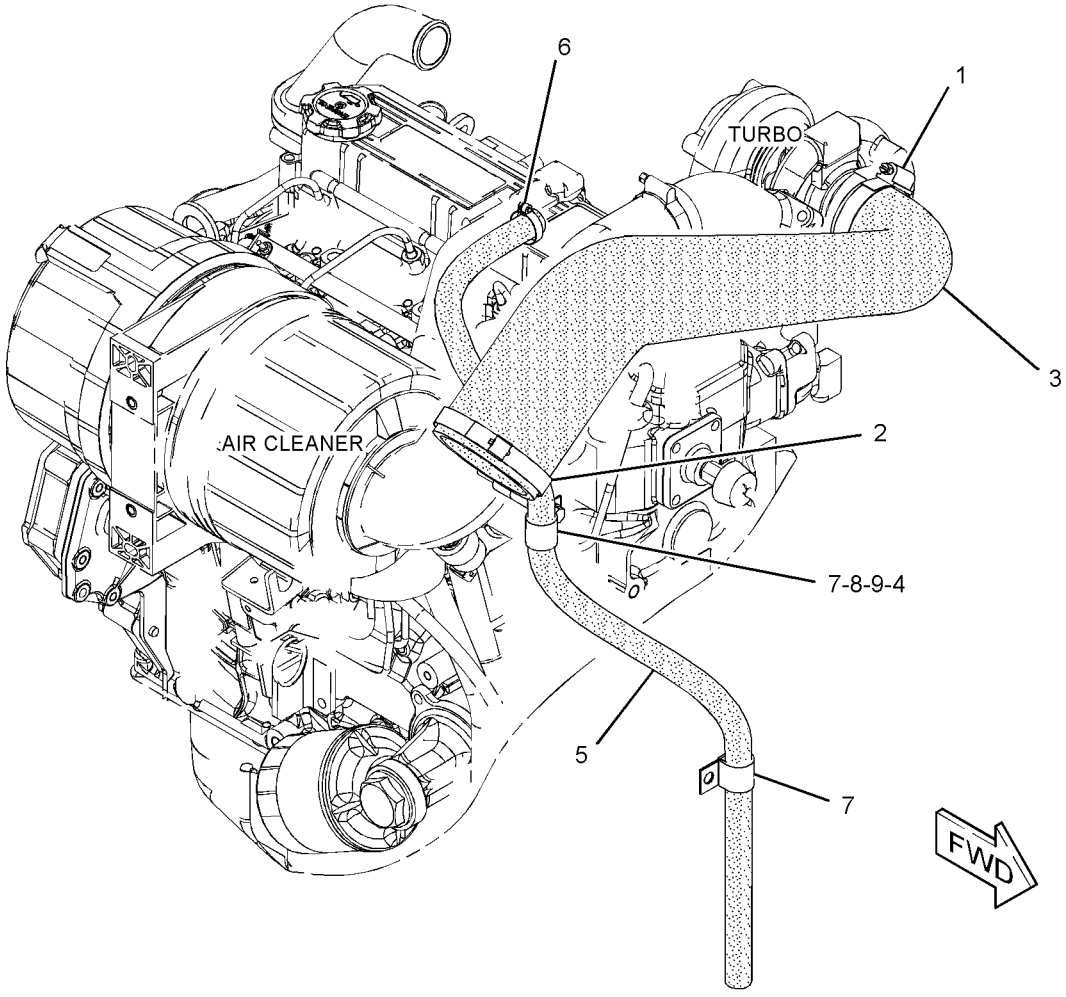


GRAPHIC #1 **<END>** g01448793

# AIR INLET AND EXHAUST SYSTEM

## *287-5323* MANIFOLD GP-EXHAUST

**S/N: CYM1-UP; CJS1-UP**
**PART OF 300-6603, 308-9664 ENGINE AR-PRIMARY**
**AN ATTACHMENT**

**SMCS-1059** **i02674008**

| NOTE | REF NO | GRAPHIC REF | PART NUMBER | QTY | PART NAME 1 2 3 4 5 6 (PRODUCT LEVEL) | SEE PAGE |
|---|---|---|---|---|---|---|
| | 1 | 1 | **5I-7931** | 4 | STUD | |
| | 2 | 1 | **195-8260** | 8 | NUT (M8X1.25-THD) | |
| | 3 | 1 | **233-5460** | 8 | BOLT | |
| | 4 | 1 | **234-4823** | 1 | MANIFOLD | |
| | 5 | 1 | **234-4824** | 1 | GASKET-MANIFOLD | |

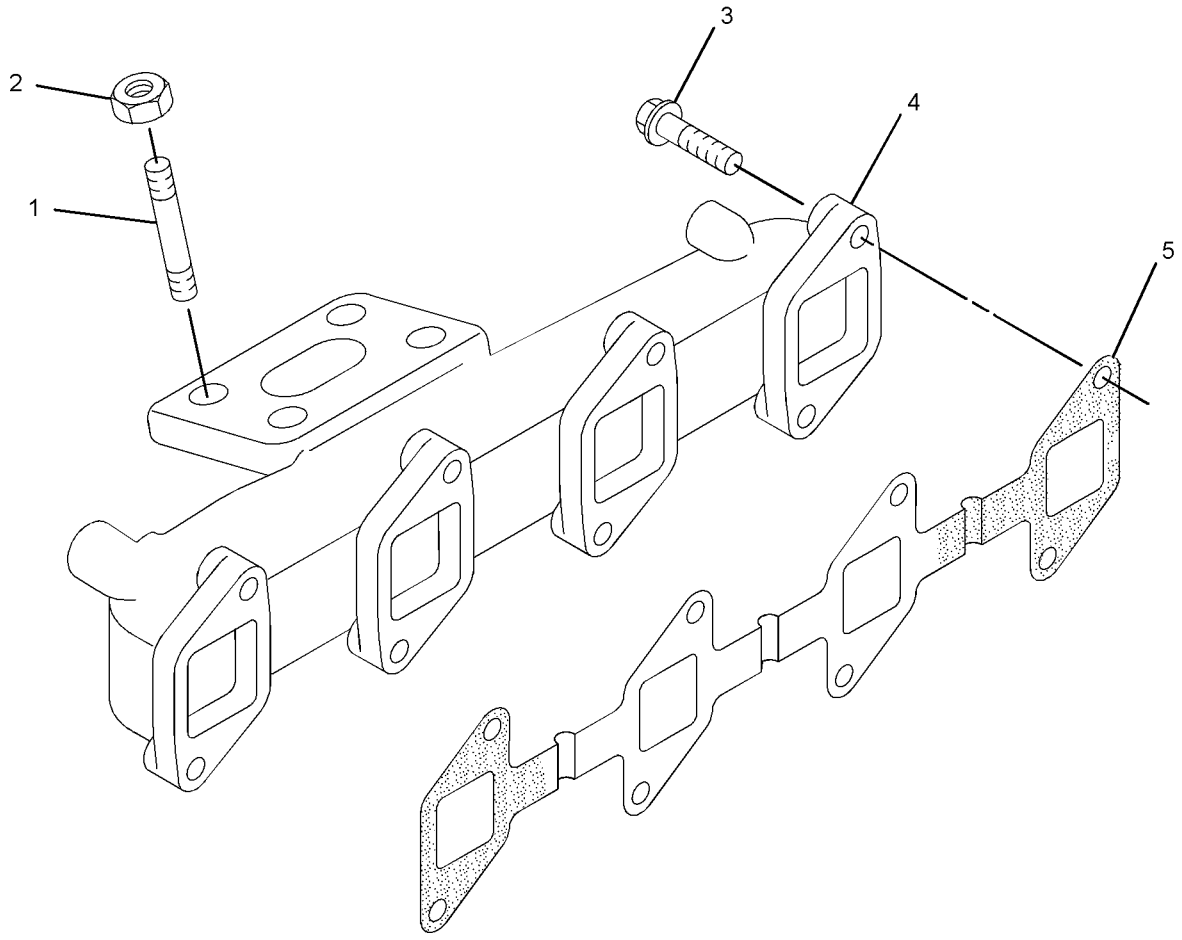


GRAPHIC #1 **<END>** g01327717

# AIR INLET AND EXHAUST SYSTEM

## *287-4832* MANIFOLD GP-INLET

**S/N: CYM1-UP; CJS1-UP**
**PART OF 300-6603, 308-9664 ENGINE AR-PRIMARY**
**AN ATTACHMENT**

**SMCS-1058** **i02568577**

| NOTE | REF NO | GRAPHIC REF | PART NUMBER | QTY | PART NAME 1 2 3 4 5 6 (PRODUCT LEVEL) | SEE PAGE |
|---|---|---|---|---|---|---|
| | 1 | 1 | **234-4805** | 1 | MANIFOLD-INLET | |
| | 2 | 1 | **234-4806** | 1 | GASKET (INLET MANIFOLD) | |
| M | 3 | 1 | **099-3649** | 12 | BOLT (M8X1.25X40-MM) | |
| M | 4 | 1 | **8T-4177** | 2 | BOLT (M8X1.25X90-MM) | |
| | 5 | 1 | **3B-4505** | 14 | LOCKWASHER | |
| M | 6 | 1 | **7X-0818** | 2 | BOLT (M8X1.25X45-MM) | |
| | 7 | 1 | **8T-4224** | 2 | WASHER-HARD (8.8X16X2-MM THK) | |

M-METRIC PART

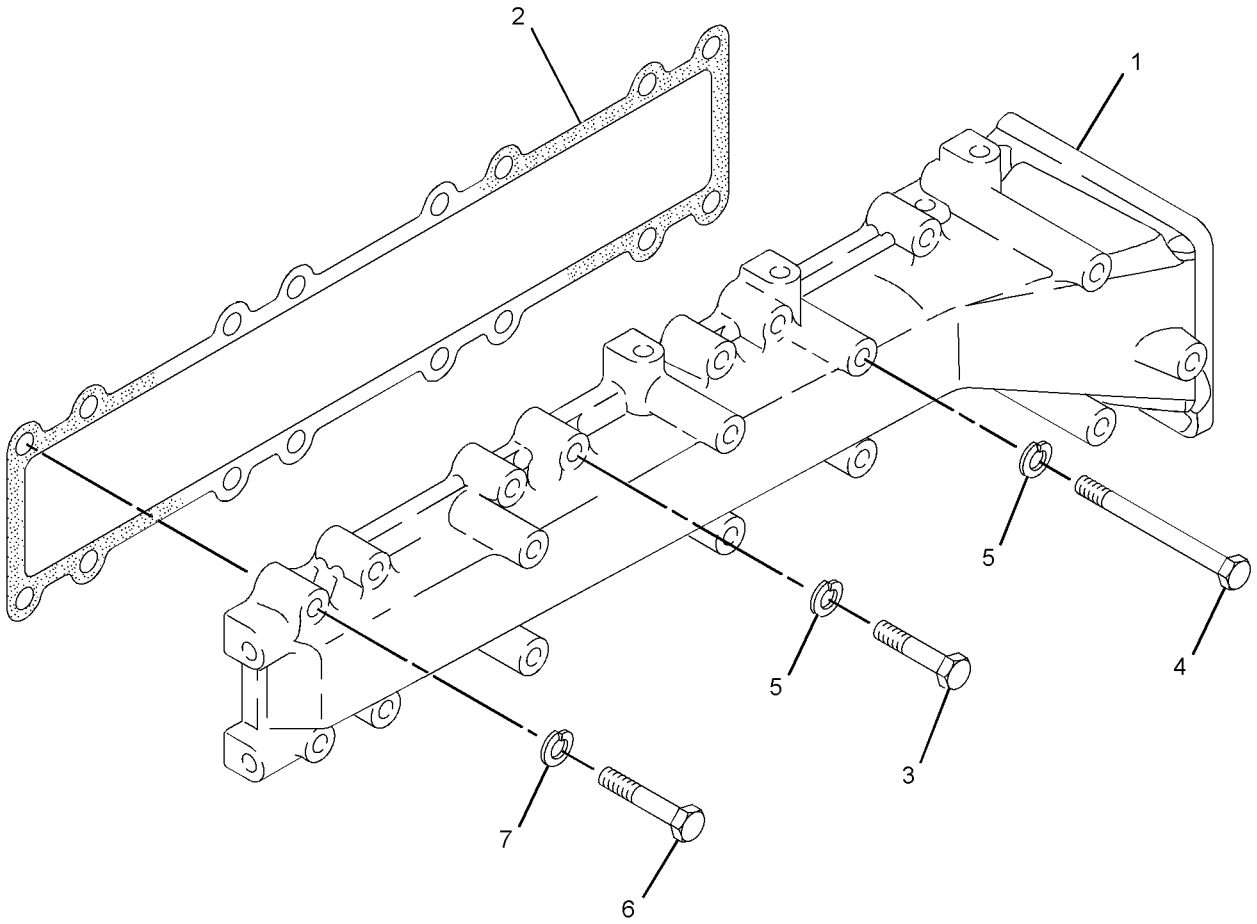


GRAPHIC #1 **<END>** g01327572

# *222-9815* MUFFLER & MOUNTING GP

**S/N: HEN6750-7026**
**PART OF 261-6126 CONVERSION AR-MACHINE**
**CANNOT BE USED WITH EUROPEAN MARKET**
**AN ATTACHMENT**

**SMCS-1062** **i02477476**

| NOTE | REF NO | GRAPHIC REF | PART NUMBER | QTY | PART NAME 1 2 3 4 5 6 (PRODUCT LEVEL) | SEE PAGE |
|---|---|---|---|---|---|---|
| | 1 | 1 | **198-4776** | 3 | WASHER-HARD (8.8X20X8-MM THK) | |
| | 2 | 1 | **5I-8111** | 1 | GASKET (SCREEN) | |
| | 3 | 1 | **222-9816** | 1 | MUFFLER AS | |
| | 4 | 1 | **243-1167** | 1 | PLATE | |
| M | 5 | 1 | **6V-8231** | 1 | NUT (M10X1.25-THD) | |
| | 6 | 1 | **8T-4224** | 2 | WASHER-HARD (8.8X16X2-MM THK) | |
| M | 7 | 1 | **8T-7547** | 5 | BOLT (M8X1.25X30-MM) | |
| | 8 | 1 | **8T-7934** | 1 | WASHER-HARD (11X21X5-MM THK) | |

M-METRIC PART

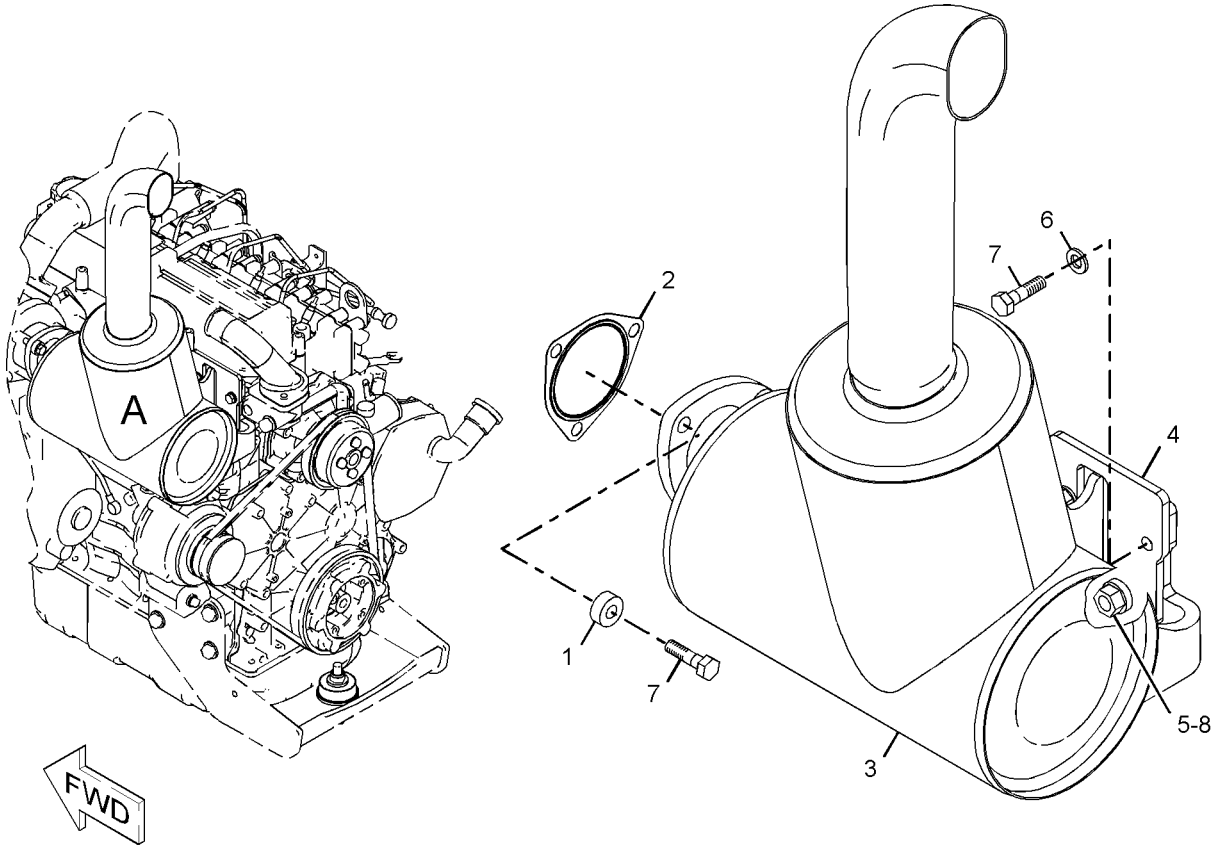


VIEW OF AREA A

GRAPHIC #1 **<END>** g01030898

# AIR INLET AND EXHAUST SYSTEM

## *258-2462* MUFFLER & MOUNTING GP

**S/N: HEN7027-UP**
**PART OF 261-6126 CONVERSION AR-MACHINE**
**AN ATTACHMENT**

**SMCS-1062** **i02930638**

| NOTE | REF NO | GRAPHIC REF | PART NUMBER | QTY | PART NAME 1 2 3 4 5 6 (PRODUCT LEVEL) | SEE PAGE |
|---|---|---|---|---|---|---|
| | 1 | 1 | **5I-8111** | 1 | GASKET | |
| | 2 | 1 | **198-4776** | 3 | WASHER-HARD (8.8X20X8-MM THK) | |
| | 3 | 1 | **258-2419** | 1 | MUFFLER AS | |
| | 4 | 1 | **280-8240** | 1 | PLATE | |
| | 5 | 1 | **232-3121** | 1 | NUT (M10X1.25-THD) | |
| | 6 | 1 | **280-8341** | 2 | SPACER (8.7X15.8X21.1-MM THK) | |
| M | 7 | 1 | **8T-7547** | 3 | BOLT (M8X1.25X30-MM) | |
| | 8 | 1 | **280-8377** | 1 | SPACER (11.1X19.1X25-MM THK) | |
| M | 9 | 1 | **305-5385** | 2 | BOLT (M8X1.25X50-MM) | |

M-METRIC PART

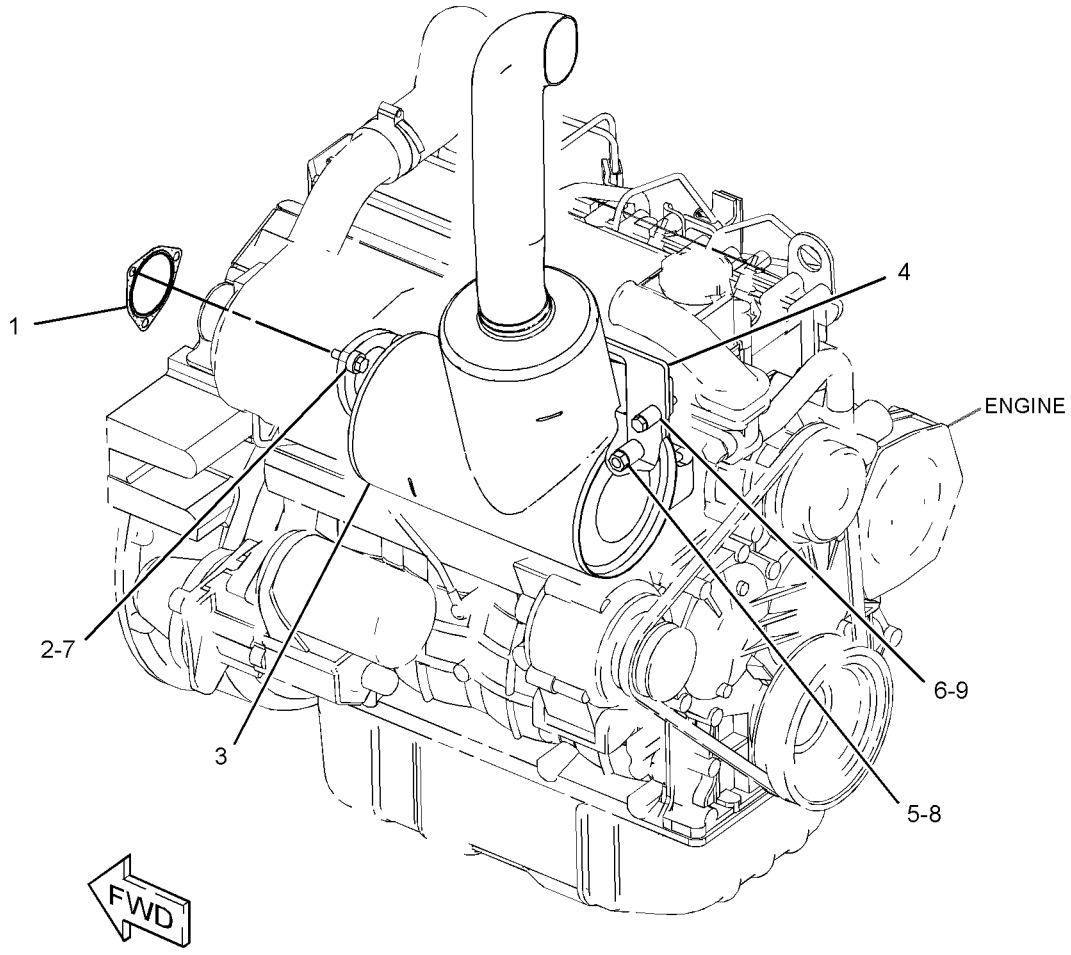


GRAPHIC #1 **<END>** g01457027

# *272-3051* MUFFLER GP

**S/N: HEN6750-UP**
**STAGE II SOUND**
**PART OF 261-6165, 278-5351, 278-5373, 278-5418, 278-5448, 295-7064, 295-7071, 295-7154, 295-7170, 295-7171 CONVERSION AR-MACHINE**
**FOR USE WITH EUROPEAN MARKET ONLY**
**AN ATTACHMENT**

**SMCS-1062** **i02906348**

| NOTE | REF NO | GRAPHIC REF | PART NUMBER | QTY | PART NAME 1 2 3 4 5 6 (PRODUCT LEVEL) | SEE PAGE |
|---|---|---|---|---|---|---|
| | 1 | 1 | **5I-8111** | 1 | GASKET | |
| | 2 | 1 | **198-4776** | 3 | WASHER-HARD (8.8X20X8-MM THK) | |
| | 3 | 1 | **280-8240** | 1 | PLATE | |
| | 4 | 1 | **272-3050** | 1 | MUFFLER AS | |
| | 5 | 1 | **232-3121** | 1 | NUT (M10X1.25-THD) | |
| | 6 | 1 | **280-8341** | 2 | SPACER (8.7X15.8X21.1-MM THK) | |
| M | 7 | 1 | **8T-7547** | 3 | BOLT (M8X1.25X30-MM) | |
| | 8 | 1 | **280-8377** | 1 | SPACER (11.1X19.1X25-MM THK) | |
| M | 9 | 1 | **305-5385** | 2 | BOLT (M8X1.25X50-MM) | |

M-METRIC PART

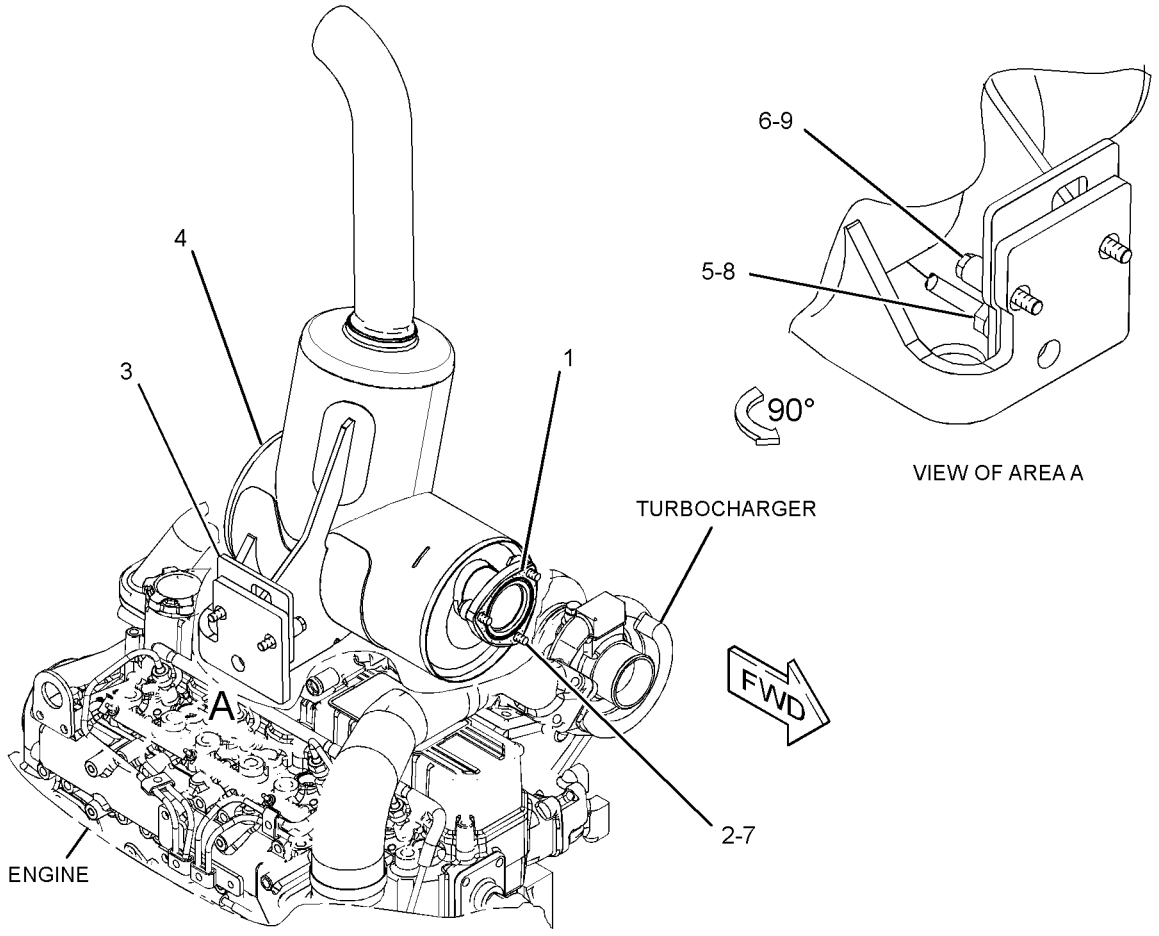


GRAPHIC #1 **<END>** g01448328

# AIR INLET AND EXHAUST SYSTEM

## *235-5894* TURBOCHARGER GP

**S/N: CJS1-UP**

**PART OF 308-9664 ENGINE AR-PRIMARY**

**AN ATTACHMENT**

**SMCS-1052, 1053** **i02524388**

| NOTE | REF NO | GRAPHIC REF | PART NUMBER | QTY | PART NAME 1 2 3 4 5 6 (PRODUCT LEVEL) | SEE PAGE |
|---|---|---|---|---|---|---|
| | 1 | 1 | **5I-7933** | 1 | GASKET | |
| | 2 | 1 | **5I-5077** | 2 | CLAMP | |
| | 3 | 1 | **5I-7623** | 1 | BOLT | |
| | 4 | 1 | **235-4964** | 1 | TURBOCHARGER GP | |
| | 5 | 1 | **5I-7689** | 1 | GASKET | |
| | 6 | 1 | **5I-8109** | 1 | HOSE | |
| | 7 | 1 | **5I-8110** | 1 | ELBOW | |
| M | 8 | 1 | **6V-7357** | 1 | BOLT (M6X1X25-MM) | |
| | 9 | 1 | **096-2500** | 3 | LOCKWASHER | |
| | 10 | 1 | **191-3206** | 4 | GASKET | |
| M | 11 | 1 | **6V-2317** | 2 | BOLT (M8X1.25X30-MM) | |
| | 12 | 1 | **9M-1974** | 2 | WASHER-HARD (8.8X16X2-MM THK) | |
| | 13 | 1 | **5P-0597** | 1 | CLAMP-HOSE | |
| | 14 | 1 | **5P-4868** | 1 | CLAMP-HOSE | |
| | 15 | 1 | **234-4818** | 1 | GASKET | |
| | 16 | 1 | **234-4819** | 1 | HOSE | |
| | 17 | 1 | **234-4820** | 1 | PIPE | |
| | 18 | 1 | **234-4821** | 1 | PIPE | |
| | 19 | 1 | **234-4822** | 2 | CLAMP | |
| | 20 | 1 | **235-4966** | 1 | BOLT | |
| | 21 | 1 | **235-4967** | 1 | CONNECTOR | |
| | 22 | 1 | **235-4968** | 1 | PIPE | |
| M | 23 | 1 | **5C-2890** | 1 | NUT (M6X1-THD) | |
| M | 24 | 1 | **5C-9553** | 2 | BOLT (M6X1X16-MM) | |

M-METRIC PART

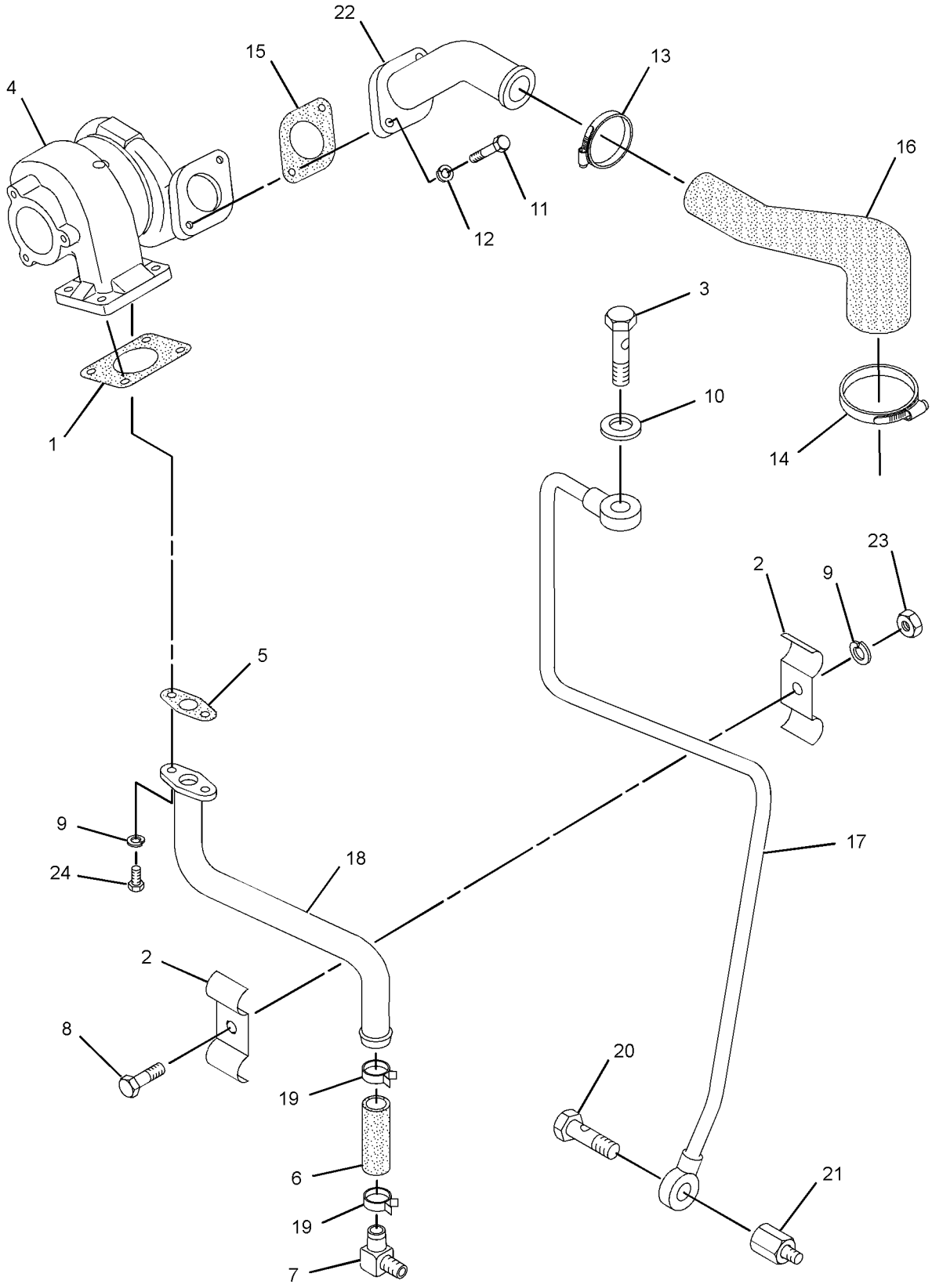


GRAPHIC #1 **<END>** g01345914

# AIR INLET AND EXHAUST SYSTEM

## *315-7768* TURBOCHARGER GP

**S/N: CYM1-UP**

**PART OF 300-6603 ENGINE AR-PRIMARY**

**AN ATTACHMENT**

**SMCS-1052, 1053** **i02883798**

| NOTE | REF NO | GRAPHIC REF | PART NUMBER | QTY | PART NAME 1 2 3 4 5 6 (PRODUCT LEVEL) | SEE PAGE |
|---|---|---|---|---|---|---|
| M | 1 | 1 | **5C-2890** | 1 | NUT (M6X1-THD) | |
| M | 2 | 1 | **5C-9553** | 2 | BOLT (M6X1X16-MM) | |
| | 3 | 1 | **5I-5077** | 2 | CLAMP | |
| | 4 | 1 | **5I-7623** | 1 | BOLT (M10X1.25X20-MM) | |
| | 5 | 1 | **5I-7689** | 1 | GASKET | |
| | 6 | 1 | **5I-7933** | 1 | GASKET | |
| | 7 | 1 | **5I-8109** | 1 | HOSE | |
| | 8 | 1 | **5I-8110** | 1 | ELBOW | |
| M | 9 | 1 | **6V-2317** | 2 | BOLT (M8X1.25X30-MM) | |
| M | 10 | 1 | **6V-7357** | 1 | BOLT (M6X1X25-MM) | |
| | 11 | 1 | **9M-1974** | 2 | WASHER-HARD (8.8X16X2-MM THK) | |
| | 12 | 1 | **096-2500** | 3 | LOCKWASHER | |
| | 13 | 1 | **191-3206** | 4 | GASKET | |
| | 14 | 1 | **5P-0597** | 1 | CLAMP-HOSE | |
| | 15 | 1 | **5P-4868** | 1 | CLAMP-HOSE | |
| | 16 | 1 | **234-4818** | 1 | GASKET | |
| | 17 | 1 | **234-4820** | 1 | PIPE | |
| | 18 | 1 | **234-4821** | 1 | PIPE | |
| | 19 | 1 | **234-4822** | 2 | CLAMP | |
| | 20 | 1 | **235-4966** | 1 | BOLT | |
| | 21 | 1 | **235-4967** | 1 | CONNECTOR | |
| | 22 | 1 | **235-4968** | 1 | PIPE | |
| | 23 | 1 | **314-9972** | 1 | TURBOCHARGER AS | |
| | 24 | 1 | **314-9974** | 1 | HOSE-AIR | |

M-METRIC PART

*315-7768* **TURBOCHARGER GP** *(contd. )* **i02883798**

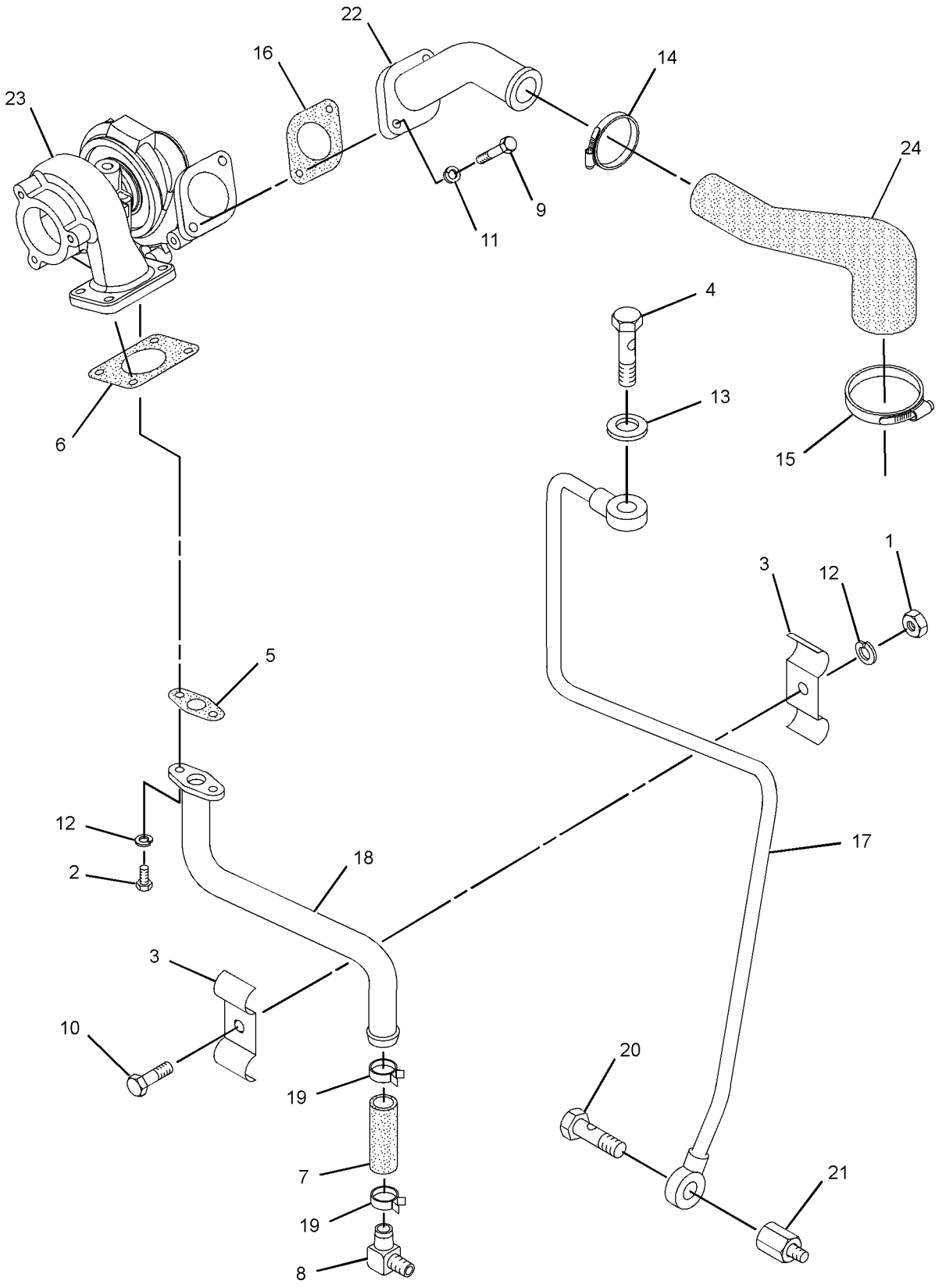


GRAPHIC #1 **<END>** g01445155

# *218-5566* CABLE GP-GOVERNOR CONTROL

**S/N: HEN6750-UP**

**PART OF 218-5565 PEDAL GP-GOVERNOR**

**SMCS-1265** **i02533085**

| NOTE | REF NO | GRAPHIC REF | PART NUMBER | QTY | PART NAME 1 2 3 4 5 6 (PRODUCT LEVEL) | SEE PAGE |
|---|---|---|---|---|---|---|
| | 1 | 1 | **8T-4744** | 1 | PIN AS-SPRING | |
| | 2 | 1 | **253-8677** | 1 | PIN AS-SPRING | |
| | 3 | 1 | **285-7970** | 1 | END-YOKE ROD | |
| M | 4 | 1 | **5C-2874** | 1 | NUT (M5X0.8-THD) | |
| M | 5 | 1 | **5C-2890** | 1 | NUT (M6X1-THD) | |
| | 6 | 1 | **8T-4742** | 1 | END-YOKE ROD | |

M-METRIC PART

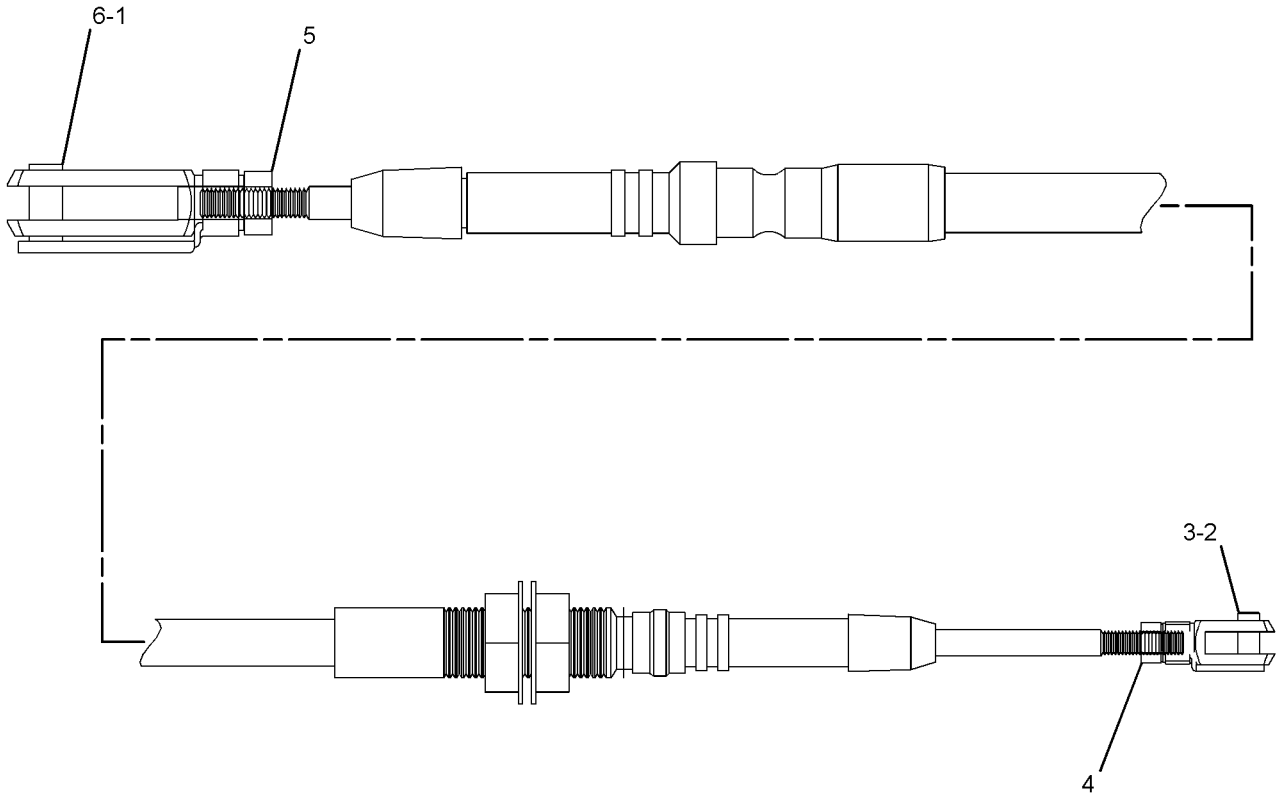


GRAPHIC #1 **<END>** g01266306

# *218-5602* CONTROL GP-GOVERNOR

**S/N: HEN6750-UP**

**PART OF 295-7510, 295-7518 CHASSIS AR**

**SMCS-1265, 1276** **i01934895**

| NOTE | REF NO | GRAPHIC REF | PART NUMBER | QTY | PART NAME 1 2 3 4 5 6 (PRODUCT LEVEL) | SEE PAGE |
|---|---|---|---|---|---|---|
| | 1 | 1 | **7K-1181** | 1 | STRAP-CABLE | |
| | 2 | 1 | **218-6616** | 1 | BRACKET AS | |
| | 3 | 1 | **218-6617** | 1 | BRACKET-STOP | |
| Y | 4 | 1 | *218-5565* | 1 | PEDAL GP-GOVERNOR (INCLUDES LEVER) | 582 |
| | 5 | 1 | **237-7296** | 4 | SCREW-FLAT HEAD (M6X1X35-MM) | |
| | 6 | 1 | **4B-4863** | 2 | WASHER (4.7X11X1.2-MM THK) | |
| M | 7 | 1 | **5C-2890** | 4 | NUT (M6X1-THD) | |
| | 8 | 1 | **8T-3984** | 1 | KNOB | |
| M | 9 | 1 | **8T-3998** | 2 | BOLT (M4X0.7X12-MM) | |
| M | 10 | 1 | **8T-4138** | 3 | BOLT (M6X1X20-MM) | |
| | 11 | 1 | **8T-4205** | 7 | WASHER-HARD (7.2X14.5X2-MM THK) | |

M-METRIC PART
Y-SEPARATE ILLUSTRATION

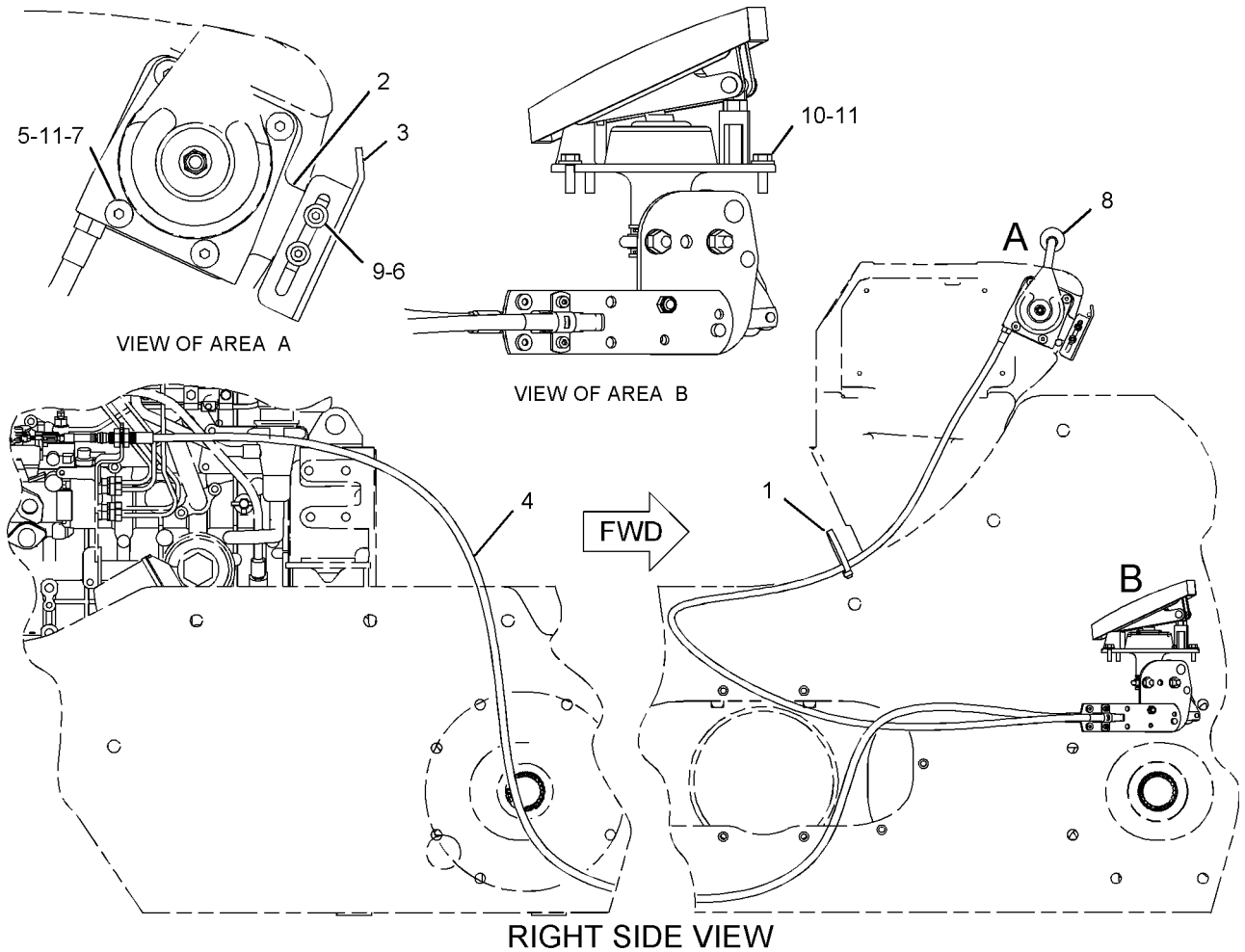


GRAPHIC #1 **<END>** g01029882

# FUEL SYSTEM

## *295-7030* LINES GP-FUEL

**S/N: HEN8070-UP**

**PART OF 295-7510 CHASSIS AR**

**SMCS-1274** **i02906384**

| NOTE | REF NO | GRAPHIC REF | PART NUMBER | QTY | PART NAME 1 2 3 4 5 6 (PRODUCT LEVEL) | SEE PAGE |
|---|---|---|---|---|---|---|
| | 1 | 1 | **1P-4278** | 11 | CLAMP-HOSE | |
| | 2 | 1 | **3E-7404** | 1 | CLAMP-HOSE | |
| | 3 | 1 | **5P-4536** | 1 | ELBOW (90-DEG) | |
| | 4 | 1 | **9X-2038** | 2 | WASHER (7X19X2-MM THK) | |
| | 5 | 1 | **304-3885** | 1 | CAP-FUEL | |
| | 6 | 1 | **152-4892** | 1 | HOSE | |
| | 7 | 1 | **180-3007** | 1 | CLAMP-HOSE | |
| | 8 | 1 | **232-6142** | 1 | BRACKET AS | |
| | 9 | 1 | **252-0368** | 1 | GUARD AS | |
| | | 1 | **6W-5698** | 1 | GROMMET | |
| | | 1 | **142-8928** | 1 | ELBOW | |
| | 10 | 1 | **280-8348** | 1 | TEE | |
| | 11 | 1 | **295-7112** | 2 | HOSE | |
| Y | 12 | 1 | **305-6411** | 1 | PUMP GP-FUEL PRM & PRIM FILTER | 102 |
| | 13 | 1 | **4B-9302** | 2 | CLIP | |
| | 14 | 1 | **4D-6466** | 4 | CLIP | |
| M | 15 | 1 | **5C-7261** | 1 | NUT (M8X1.25-THD) | |
| M | 16 | 1 | **5C-9553** | 2 | BOLT (M6X1X16-MM) | |
| | 17 | 1 | **5P-4116** | 2 | WASHER-HARD (8.8X20.5X2-MM THK) | |
| | 18 | 1 | **8T-4121** | 6 | WASHER-HARD (11X21X2.5-MM THK) | |
| M | 19 | 1 | **8T-4133** | 2 | NUT (M10X1.5-THD) | |
| M | 20 | 1 | **8T-4137** | 1 | BOLT (M10X1.5X20-MM) | |
| M | 21 | 1 | **8T-4191** | 1 | BOLT (M10X1.5X16-MM) | |
| M | 22 | 1 | **8T-4196** | 2 | BOLT (M10X1.5X35-MM) | |
| M | 23 | 1 | **8T-7547** | 1 | BOLT (M8X1.25X30-MM) | |
| | 24 | 1 | **3S-2093** | 1 | STRAP-CABLE | |
| E | 25 | 1 | **5P-1442** | | HOSE (128-CM) | |
| E | 26 | 1 | **8C-6959** | | HOSE (33-CM) | |
| E | 27 | 1 | **5P-6442** | | HOSE (63-CM) | |
| E | 28 | 1 | **5P-1420** | | HOSE (98-CM) | |
| E | 28A | 1 | **5P-1420** | | HOSE (161-CM) | |
| | 29 | 1 | **195-8372** | 1 | CLIP | |
| | 30 | 1 | **314-9708** | 1 | FILM-IDENTIFICATION (FUEL FILTER, WATER SEPARATOR) | |

E-ORDER BY THE CENTIMETER
M-METRIC PART
Y-SEPARATE ILLUSTRATION

*295 - 7030* **LINES GP - FUEL** *(contd. )* **i02906384**

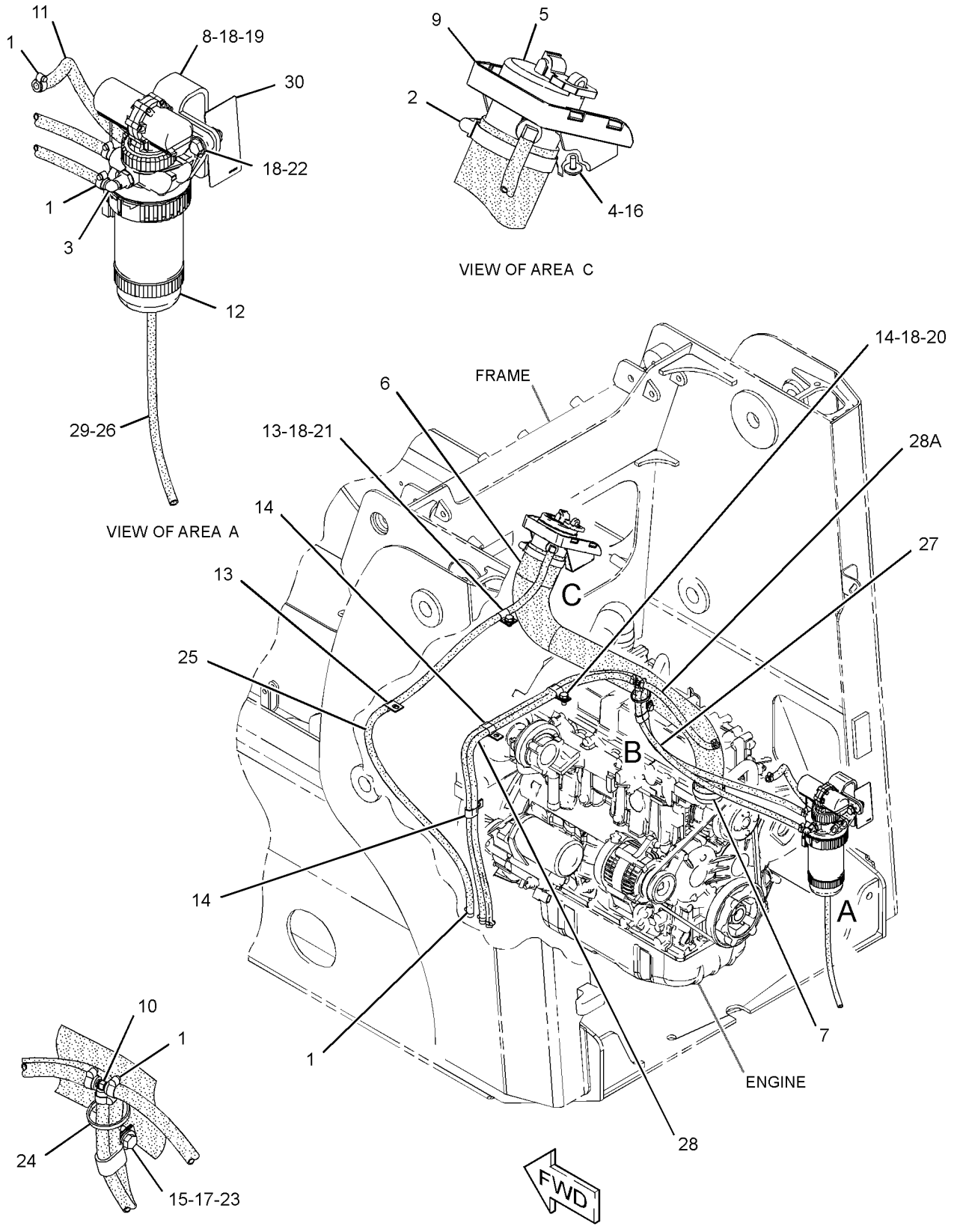


GRAPHIC #1 **<END>** g01448758

# FUEL SYSTEM

## *235-5901* LINES GP-FUEL INJECTION

**S/N: CJS1-UP**

**PART OF 308-9664 ENGINE AR-PRIMARY**

**AN ATTACHMENT**

**SMCS-1252, 1254** **i02828453**

| NOTE | REF NO | GRAPHIC REF | PART NUMBER | QTY | PART NAME 1 2 3 4 5 6 (PRODUCT LEVEL) | SEE PAGE |
|---|---|---|---|---|---|---|
| | 1 | 1 | **113-0363** | 4 | SUPPORT | |
| | 2 | 1 | **5P-0537** | 5 | WASHER-HARD (7.2X14.5X2-MM THK) | |
| M | 3 | 1 | **6V-2317** | 4 | BOLT (M8X1.25X30-MM) | |
| M | 4 | 1 | **8T-4908** | 2 | BOLT (M8X1.25X25-MM) | |
| M | 5 | 1 | **6V-5215** | 3 | BOLT (M8X1.25X16-MM) | |
| | 7 | 1 | **9M-1974** | 9 | WASHER-HARD (8.8X16X2-MM THK) | |
| | 8 | 1 | **113-0364** | 4 | HOSE | |
| | 9 | 1 | **122-8948** | 7 | CLAMP | |
| | 10 | 1 | **122-8949** | 3 | CLAMP | |
| | 11 | 1 | **195-8355** | 4 | GASKET | |
| | 13 | 1 | **094-7235** | 1 | CAP | |
| | 14 | 1 | **234-4809** | 2 | WASHER | |
| | 15 | 1 | **239-0687** | 1 | TUBE | |
| | 16 | 1 | **239-0719** | 1 | TUBE AS-FUEL INJECTION (CYL. NO. 1) | |
| | 17 | 1 | **239-0720** | 1 | TUBE AS-FUEL INJECTION (CYL. NO. 2) | |
| | 18 | 1 | **239-0721** | 1 | TUBE AS-FUEL INJECTION (CYL. NO.3) | |
| | 19 | 1 | **239-0722** | 1 | TUBE AS-FUEL INJECTION (CYL. NO.4) | |
| | 20 | 1 | **239-0728** | 1 | STAY | |
| | 21 | 1 | **239-0729** | 1 | SUPPORT | |
| | 22 | 1 | *239-0734* | 4 | NOZZLE AS | |
| | | | | | (EACH INCLUDES) | |
| | | 1 | **300-2952** | 1 | NOZZLE | |
| B | | 1 | **096-8994** | | SHIM (0.7-MM THK) | |
| B | | 1 | **099-7519** | | SHIM (0.75-MM THK) | |
| B | | 1 | **099-7520** | | SHIM (0.8-MM THK) | |
| B | | 1 | **099-7521** | | SHIM (0.85-MM THK) | |
| B | | 1 | **096-8995** | | SHIM (0.9-MM THK) | |
| B | | 1 | **096-8996** | | SHIM (0.98-MM THK) | |
| B | | 1 | **099-7522** | | SHIM (1.03-MM THK) | |
| B | | 1 | **099-7523** | | SHIM (1.08-MM THK) | |
| B | | 1 | **099-7524** | | SHIM (1.13-MM THK) | |
| B | | 1 | **102-7341** | | SHIM (1.15-MM THK) | |
| B | | 1 | **099-7525** | | SHIM (1.18-MM THK) | |
| B | | 1 | **102-7342** | | SHIM (1.20-MM THK) | |
| B | | 1 | **096-8997** | | SHIM (1.23-MM THK) | |
| B | | 1 | **104-8039** | | SHIM (1.25-MM THK) | |
| B | | 1 | **102-7343** | | SHIM (1.30-MM THK) | |
| B | | 1 | **102-7344** | | SHIM (1.35-MM THK) | |
| B | | 1 | **102-7345** | | SHIM (1.40-MM THK) | |
| B | | 1 | **102-7346** | | SHIM (1.45-MM THK) | |
| B | | 1 | **102-7347** | | SHIM (1.50-MM THK) | |
| B | | 1 | **102-7348** | | SHIM (1.55-MM THK) | |
| B | | 1 | **102-7349** | | SHIM (1.60-MM THK) | |
| B | | 1 | **102-7350** | | SHIM (1.65-MM THK) | |
| B | | 1 | **102-7351** | | SHIM (1.70-MM THK) | |
| B | | 1 | **096-8990** | | SHIM (1.80-MM THK) | |
| | 23 | 1 | **294-5520** | 1 | STAY | |
| M | 24 | 1 | **195-8364** | 5 | BOLT AS (M6X1X25-MM) | |

B-USE AS REQUIRED
M-METRIC PART

*235-5901* **LINES GP-FUEL INJECTION** *(contd.)* **i02828453**

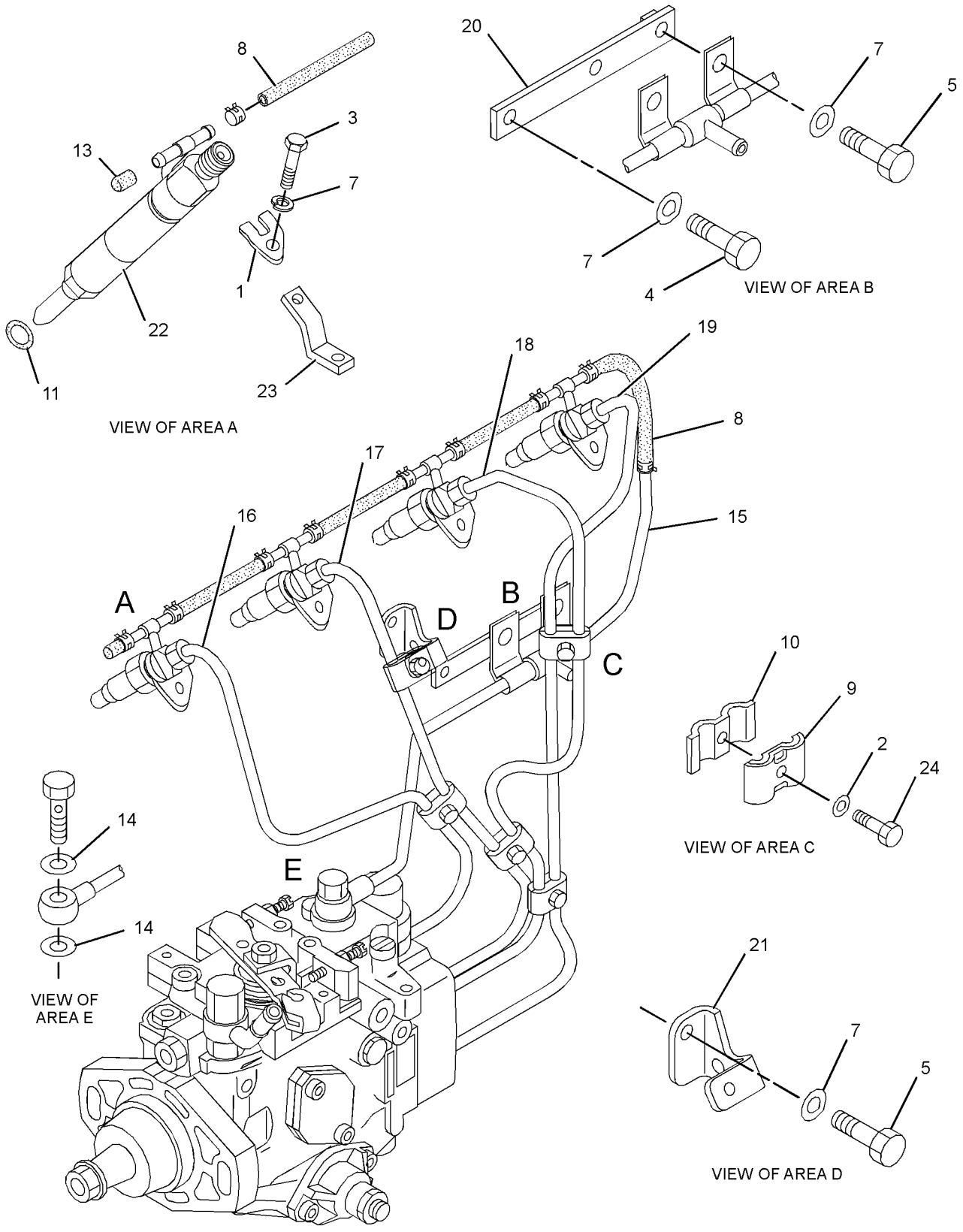


GRAPHIC #1 **<END>** g01350573

# FUEL SYSTEM

## *315-8350* LINES GP-FUEL INJECTION

**S/N: CYM1-UP**

**PART OF 300-6603 ENGINE AR-PRIMARY**

**AN ATTACHMENT**

**SMCS-1252, 1254** **i02883793**

| NOTE | REF NO | GRAPHIC REF | PART NUMBER | QTY | PART NAME 1 2 3 4 5 6 (PRODUCT LEVEL) | SEE PAGE |
|---|---|---|---|---|---|---|
| | 1 | 1 | **3B-4505** | 2 | LOCKWASHER | |
| M | 2 | 1 | **6V-2317** | 4 | BOLT (M8X1.25X30-MM) | |
| M | 3 | 1 | **8T-4200** | 2 | BOLT (M8X1.25X16-MM) | |
| | 4 | 1 | **9M-1974** | 4 | WASHER-HARD (8.8X16X2-MM THK) | |
| | 5 | 1 | **094-7235** | 1 | CAP | |
| | 6 | 1 | **113-0363** | 4 | SUPPORT | |
| | 7 | 1 | **113-0364** | 4 | HOSE | |
| | 8 | 1 | **122-8948** | 6 | CLAMP | |
| | 9 | 1 | **122-8949** | 2 | CLAMP | |
| M | 10 | 1 | **195-8364** | 4 | BOLT AS (M6X1X25-MM) | |
| | 11 | 1 | **196-8356** | 8 | CLIP | |
| | 12 | 1 | **314-9980** | 1 | TUBE (CYL NO. 1) | |
| | 13 | 1 | **314-9981** | 1 | TUBE (CYL NO. 2) | |
| | 14 | 1 | **314-9982** | 1 | TUBE (CYL NO. 3) | |
| | 15 | 1 | **314-9983** | 1 | TUBE (CYL NO. 4) | |
| | 16 | 1 | **314-9984** | 4 | WASHER | |
| | 17 | 1 | **314-9985** | 4 | INJECTOR AS | |
| | | | | | (EACH INCLUDES) | |
| | | 1 | **314-9986** | 1 | NOZZLE AS-FUEL INJECTION | |
| | 18 | 1 | **314-9987** | 1 | TUBE | |
| | 19 | 1 | **314-9988** | 1 | BRACKET | |
| | 20 | 1 | **314-9989** | 1 | HOSE | |

M-METRIC PART

*315-8350* **LINES GP-FUEL INJECTION** *(contd.)* **i02883793**

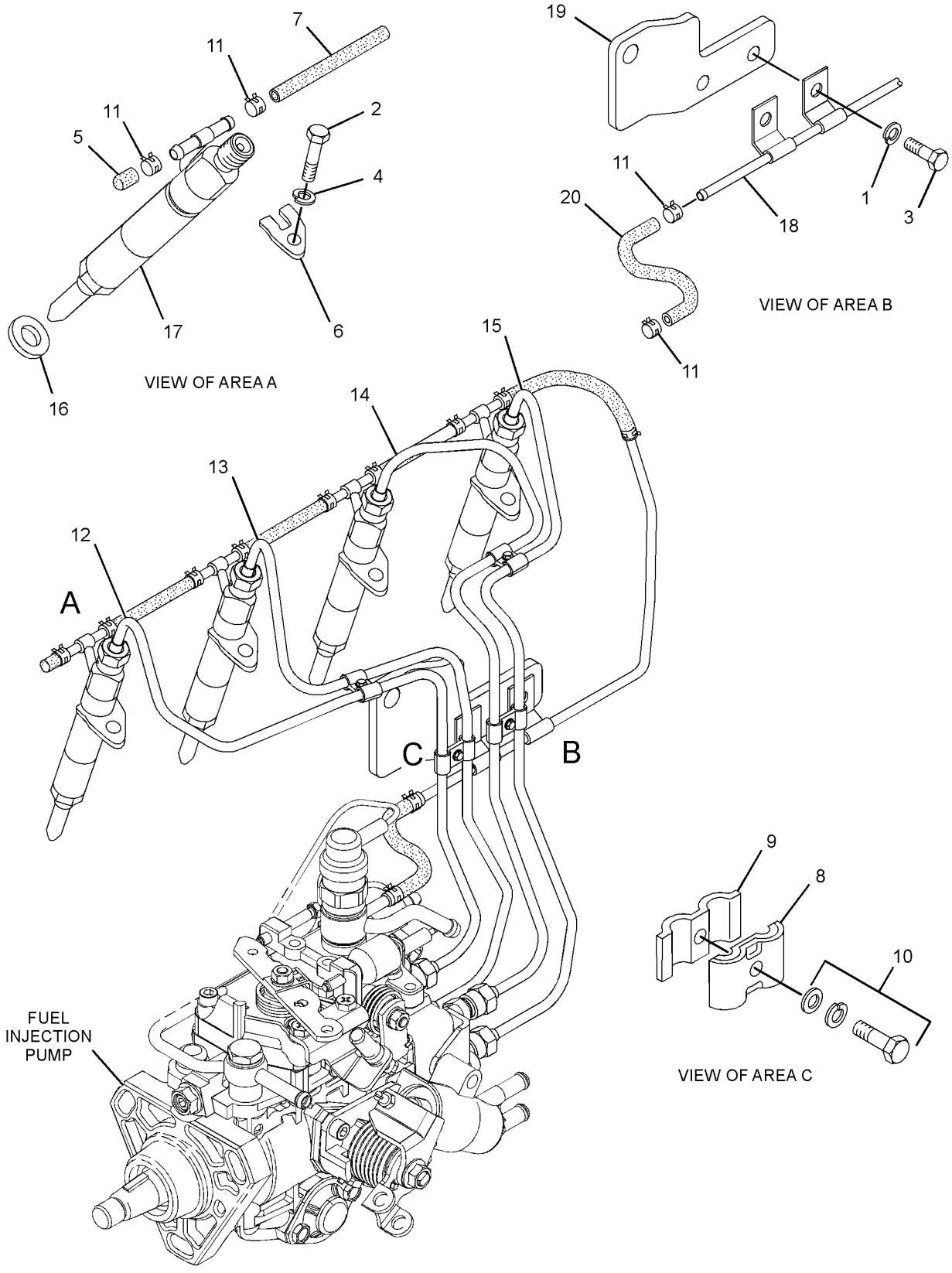


GRAPHIC #1 **<END>** g01395214

# FUEL SYSTEM

## *218-0929* LINES GP-FUEL PRM & FILTER

**S/N: HEN6750-8069**

**PART OF 295-7518 CHASSIS AR**

**SMCS-1258, 1263, 1274** **i02904844**

| NOTE | REF NO | GRAPHIC REF | PART NUMBER | QTY | PART NAME 1 2 3 4 5 6 (PRODUCT LEVEL) | SEE PAGE |
|---|---|---|---|---|---|---|
| | 1 | 1 | **1P-4278** | 11 | CLAMP-HOSE | |
| | 2 | 1 | **3E-7404** | 1 | CLAMP-HOSE | |
| | 3 | 1 | **9X-2038** | 2 | WASHER (7X19X2-MM THK) | |
| | 4 | 1 | **3S-2093** | 1 | STRAP-CABLE | |
| C | 5 | 1 | **5P-4536** | 1 | ELBOW (90-DEG) | |
| | 6 | 1 | **252-0368** | 1 | GUARD AS | |
| | | 1 | **6W-5698** | 1 | GROMMET | |
| | | 1 | **142-8928** | 1 | ELBOW | |
| | 7 | 1 | **304-3885** | 1 | CAP-FUEL | |
| | 8 | 1 | **195-8372** | 1 | CLIP | |
| | 9 | 1 | **152-4892** | 1 | HOSE | |
| C | 10 | 1 | **280-8348** | 1 | TEE | |
| CY | 11 | 1 | **305-6411** | 1 | PUMP GP-FUEL PRM & PRIM FILTER (ELECTRIC) | 102 |
| | 12 | 1 | **232-6142** | 1 | BRACKET AS | |
| | 13 | 1 | **242-6055** | 1 | HOSE | |
| | 14 | 1 | **314-9708** | 1 | FILM-IDENTIFICATION (FUEL FILTER, WATER SEPARATOR) | |
| | 15 | 1 | **4B-9302** | 2 | CLIP | |
| | 16 | 1 | **4D-6466** | 4 | CLIP | |
| M | 17 | 1 | **5C-7261** | 1 | NUT (M8X1.25-THD) | |
| M | 18 | 1 | **5C-9553** | 2 | BOLT (M6X1X16-MM) | |
| | 19 | 1 | **180-3007** | 1 | CLAMP-HOSE | |
| | 20 | 1 | **5P-4116** | 2 | WASHER-HARD (8.8X20.5X2-MM THK) | |
| E | 21 | 1 | **5P-1420** | | HOSE (98-CM) | |
| E | 21A | 1 | **5P-1420** | | HOSE (161-CM) | |
| E | 21B | 1 | **5P-1420** | | HOSE (16-CM) | |
| | 22 | 1 | **8T-4121** | 6 | WASHER-HARD (11X21X2.5-MM THK) | |
| M | 23 | 1 | **8T-4133** | 2 | NUT (M10X1.5-THD) | |
| M | 24 | 1 | **8T-4137** | 1 | BOLT (M10X1.5X20-MM) | |
| M | 25 | 1 | **8T-4191** | 1 | BOLT (M10X1.5X16-MM) | |
| M | 26 | 1 | **8T-4196** | 2 | BOLT (M10X1.5X35-MM) | |
| M | 27 | 1 | **8T-7547** | 1 | BOLT (M8X1.25X30-MM) | |
| E | 28 | 1 | **8C-6959** | | HOSE (33-CM) | |
| E | 29 | 1 | **5P-1442** | | HOSE (128-CM) | |
| CE | 30 | 1 | **5P-6442** | | HOSE (63-CM) | |

C-CHANGE FROM PREVIOUS TYPE
E-ORDER BY THE CENTIMETER
M-METRIC PART
Y-SEPARATE ILLUSTRATION

*218-0929* **LINES GP-FUEL PRM & FILTER** *(contd.)* **i02904844**

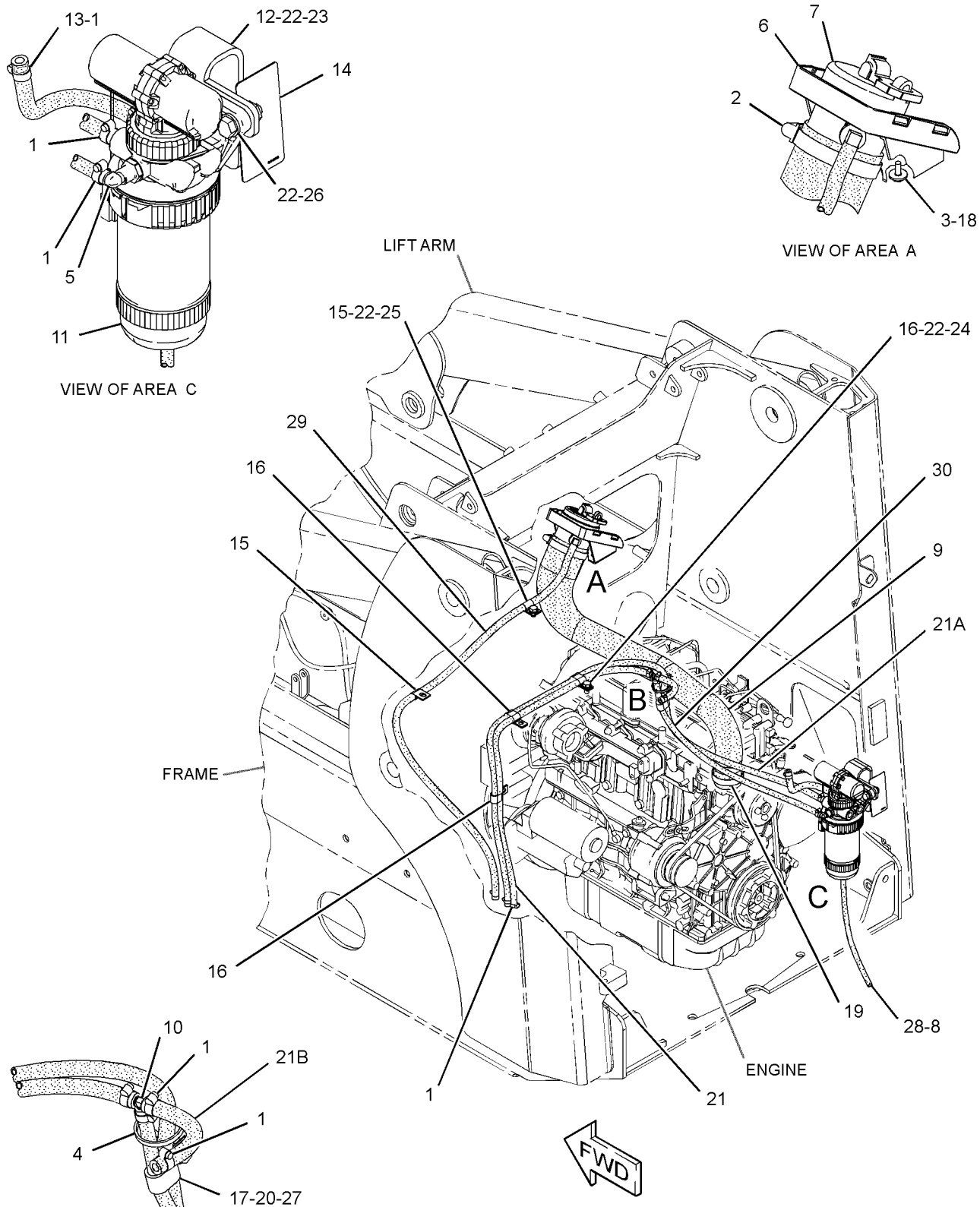


GRAPHIC #1 **<END>** g01448781

# *249-7347* PUMP GP-FUEL INJECTION

**S/N: CJS1-UP**

**PART OF 308-9664 ENGINE AR-PRIMARY**

**AN ATTACHMENT**

**SMCS-1251, 1290, 5479** **i02525864**

| NOTE | REF NO | GRAPHIC REF | PART NUMBER | QTY | PART NAME 1 2 3 4 5 6 (PRODUCT LEVEL) | SEE PAGE |
|---|---|---|---|---|---|---|
| | 1 | 1 | **5J-3886** | 1 | SEAL-O-RING | |
| M | 2 | 1 | **5P-7970** | 1 | NUT (M8X1.25-THD) | |
| M | 3 | 1 | **6V-5217** | 3 | BOLT (M8X1.25X20-MM) | |
| | 4 | 1 | **9M-1974** | 4 | WASHER-HARD (8.8X16X2-MM THK) | |
| | 5 | 1 | **8T-4121** | 1 | WASHER-HARD (11X21X2.5-MM THK) | |
| M | 6 | 1 | **8T-4136** | 1 | BOLT (M10X1.5X25-MM) | |
| | 7 | 1 | **212-8510** | 1 | NUT | |
| | 8 | 1 | **8C-3080** | 1 | SEAL-O-RING | |
| | 9 | 1 | **225-5244** | 1 | FLANGE | |
| | 10 | 1 | **234-4836** | 1 | BRACKET | |
| | 11 | 1 | **234-4835** | 1 | STUD | |
| C | 12 | 1 | **235-4969** | 1 | BRACKET | |
| | 13 | 1 | **235-4970** | 1 | BOLT | |
| | 14 | 1 | **249-7346** | 1 | PUMP AS | |

C-CHANGE FROM PREVIOUS TYPE
M-METRIC PART

*249-7347* **PUMP GP-FUEL INJECTION** *(contd.)* **i02525864**

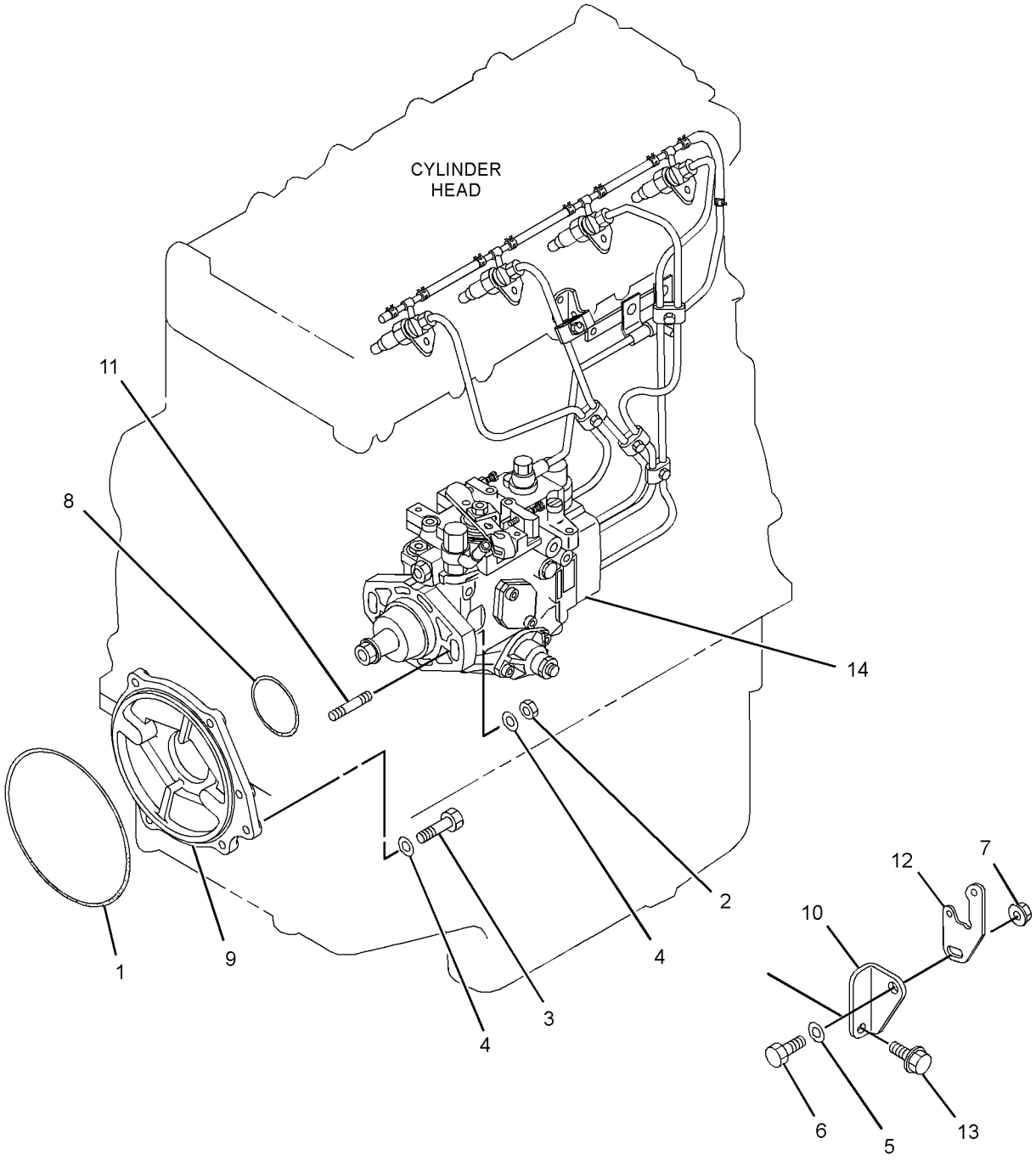


GRAPHIC #1 **<END>** g01354102

# FUEL SYSTEM

## *315-8352* PUMP GP-FUEL INJECTION

**S/N: CYM1-UP**

**PART OF 300-6603 ENGINE AR-PRIMARY**

**AN ATTACHMENT**

**SMCS-1251, 1290, 5479** **i02910791**

| NOTE | REF NO | GRAPHIC REF | PART NUMBER | QTY | PART NAME 1 2 3 4 5 6 (PRODUCT LEVEL) | SEE PAGE |
|---|---|---|---|---|---|---|
| M | 1 | 1 | **6V-5217** | 1 | BOLT (M8X1.25X20-MM) | |
| | 2 | 1 | **7X-0796** | 1 | LOCKWASHER | |
| | 3 | 1 | **8T-4121** | 2 | WASHER-HARD (11X21X2.5-MM THK) | |
| M | 4 | 1 | **8T-4137** | 1 | BOLT (M10X1.5X20-MM) | |
| | 5 | 1 | **8T-4896** | 1 | WASHER-HARD (10.2X18.5X2.5-MM THK) | |
| | 6 | 1 | **9M-1974** | 1 | WASHER-HARD (8.8X16X2-MM THK) | |
| M | 7 | 1 | **140-5217** | 1 | BOLT (M10X1.25X25-MM) | |
| | 8 | 1 | **199-2333** | 1 | BOLT | |
| | 9 | 1 | **212-8510** | 1 | NUT | |
| | 10 | 1 | **225-5249** | 1 | RETAINER | |
| | 11 | 1 | **234-4835** | 3 | STUD | |
| | 12 | 1 | **241-6010** | 1 | BOLT | |
| | 13 | 1 | **244-7127** | 3 | NUT-FLANGE | |
| | 14 | 1 | **294-5060** | 1 | SEAL-O-RING | |
| | 15 | 1 | **300-3988** | 1 | SEAL-O-RING | |
| | 16 | 1 | **300-3867** | 1 | WASHER | |
| | 17 | 1 | **314-9991** | 1 | FLANGE | |
| | 18 | 1 | **314-9992** | 1 | BRACKET | |
| | 19 | 1 | **314-9999** | 1 | NUT | |
| | 20 | 1 | **315-4677** | 1 | PUMP GP-FUEL INJECTION | |
| | 20A | 1 | **300-3573** | 1 | SOLENOID (FUEL PUMP) | |
| | 21 | 1 | **315-8326** | 1 | BRACKET | |

M-METRIC PART

*315-8352* **PUMP GP-FUEL INJECTION** *(contd. )* **i02910791**

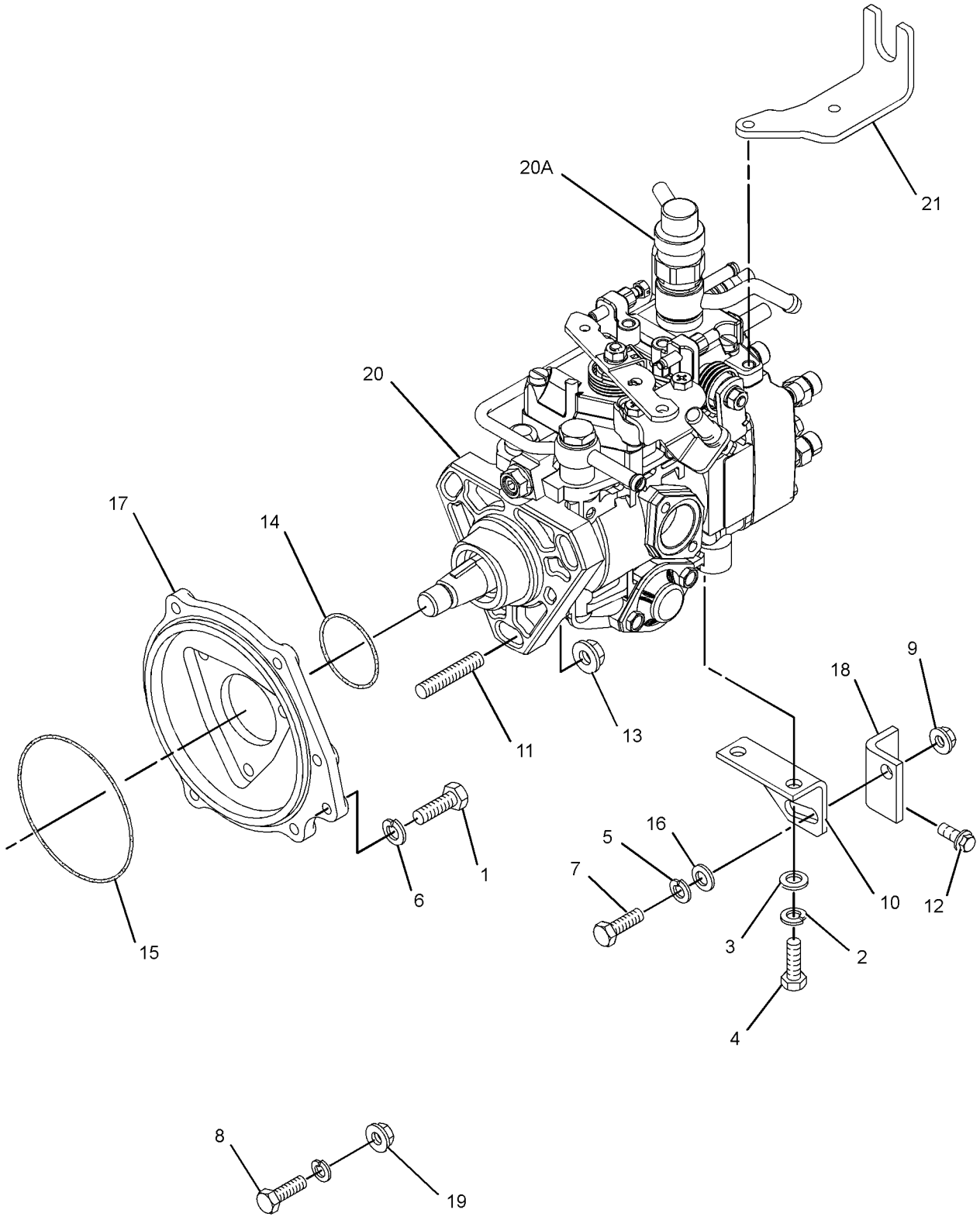


GRAPHIC #1 **<END>** g01445444

# 305-6411 PUMP GP-FUEL PRM & PRIM FILTER

**S/N: HEN6750-UP**

**PART OF 295-7030 LINES GP-FUEL, 218-0929 LINES GP-FUEL PRM & FILTER**

**SMCS-1258, 1261, 1263** **i02758829**

| NOTE | REF NO | GRAPHIC REF | PART NUMBER | QTY | PART NAME 1 2 3 4 5 6 (PRODUCT LEVEL) | SEE PAGE |
|---|---|---|---|---|---|---|
| | 1 | 1 | **112-9401** | 1 | BOWL AS-WATER COLLECTION | |
| | | 1 | **128-8614** | 1 | KIT-SEAL (WATER SEPARATOR) | |
| | | | | | (INCLUDES SEALS) | |
| | 2 | 1 | **118-8118** | 1 | RING-RETAINING | |
| | 3 | 1 | **233-9856** | 1 | FILTER AS-WATER SEP & FUEL | |
| | 4 | 1 | **228-9132** | 1 | FITTING | |

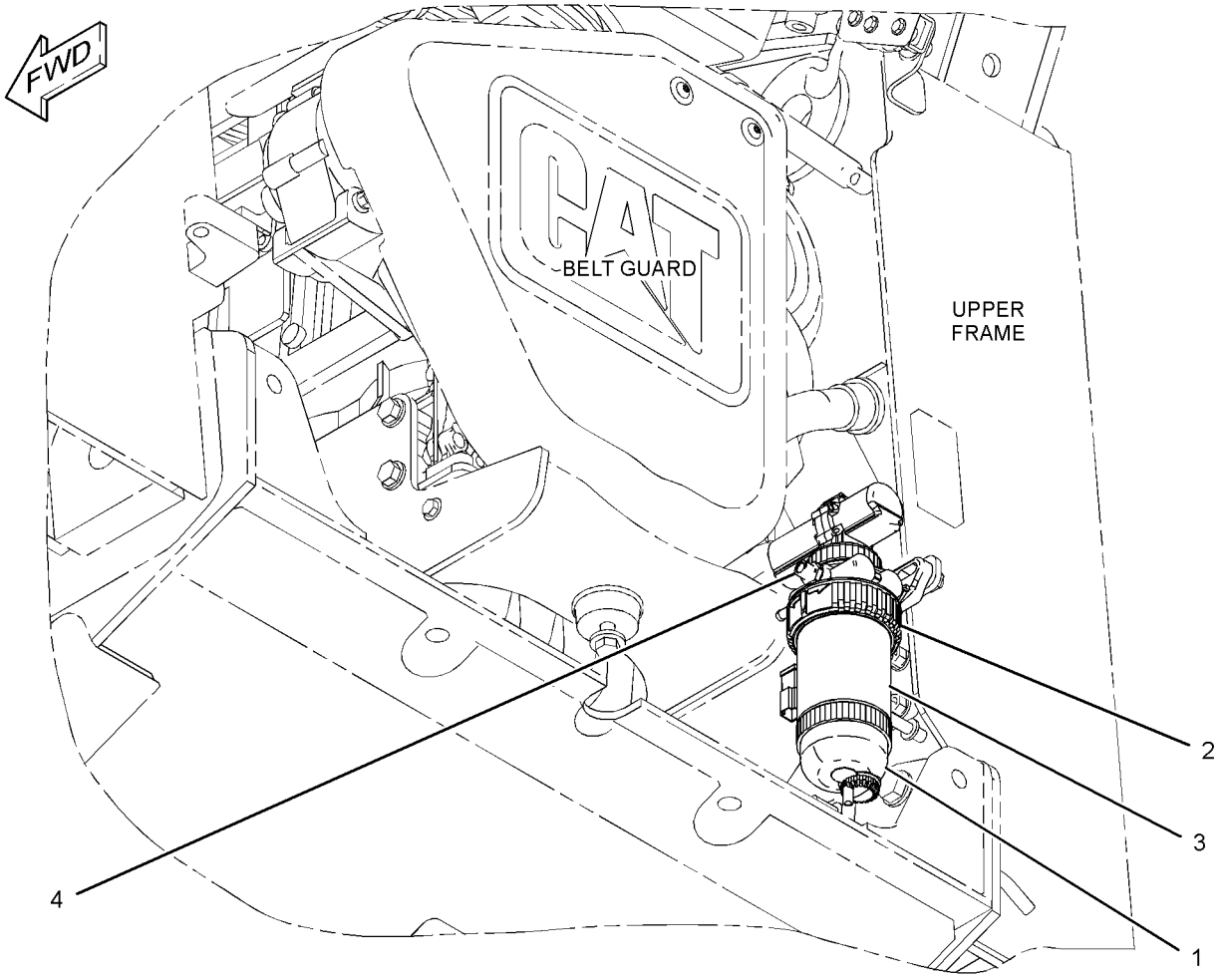


GRAPHIC #1 **<END>** g01382945

# *105-2814* ALTERNATOR GP-CHARGING*R

**S/N: CJS1-UP**
**12 VOLT, 90 AMPERE**
**PART OF 287-6361 ALTERNATOR GP-CHARGING**
**AN ATTACHMENT**

**SMCS-1405** **i02712949**

| NOTE | REF NO | GRAPHIC REF | PART NUMBER | QTY | PART NAME 1 2 3 4 5 6 (PRODUCT LEVEL) | SEE PAGE |
|---|---|---|---|---|---|---|
| | 1 | 1 | **113-4458** | 1 | PULLEY-ALTERNATOR | |
| | 2 | 1 | **113-4459** | 1 | FRAME AS-ALTERNATOR | |
| | 3 | 1 | **113-4460** | 1 | ROTOR AS-ALTERNATOR | |
| | 4 | 1 | **113-4461** | 1 | FRAME AS-ALTERNATOR | |
| | 5 | 1 | **113-4462** | 1 | REGULATOR AS-ALTERNATOR | |
| | 6 | 1 | **113-4463** | 1 | RECTIFIER AS-ALTERNATOR | |
| | 7 | 1 | **113-4464** | 1 | COVER-ALTERNATOR | |
| | 8 | 1 | **113-4469** | 4 | BUSHING-ALTERNATOR | |
| | 9 | 1 | **113-4470** | 1 | BUSHING-ALTERNATOR | |
| M | 10 | 1 | **5C-2890** | 1 | NUT (M6X1-THD) | |
| | 11 | 1 | **8T-4205** | 1 | WASHER-HARD (7.2X14.5X2-MM THK) | |
| | 12 | 1 | **1H-3244** | 1 | LOCKWASHER | |
| | | | | | AVAILABLE REPAIR KIT(S): | |
| | | | **113-4465** | 1 | KIT-ALTERNATOR BEARING | |
| | | | | | (INCLUDES COVERS, BEARINGS & WASHERS) | |
| | | | **113-4466** | 1 | KIT-REPAIR (ALTERNATOR BRUSHES) | |
| | | | | | (INCLUDES HOLDER ASSEMBLY & SEALS) | |
| | | | **113-4467** | 1 | KIT-ALTERNATOR TERMINAL | |
| | | | | | (INCLUDES SCREWS, PLATE & NUTS) | |
| | | | **113-4468** | 1 | KIT-ALTERNATOR HARDWARE | |
| | | | | | (INCLUDES SCREWS) | |

M-METRIC PART

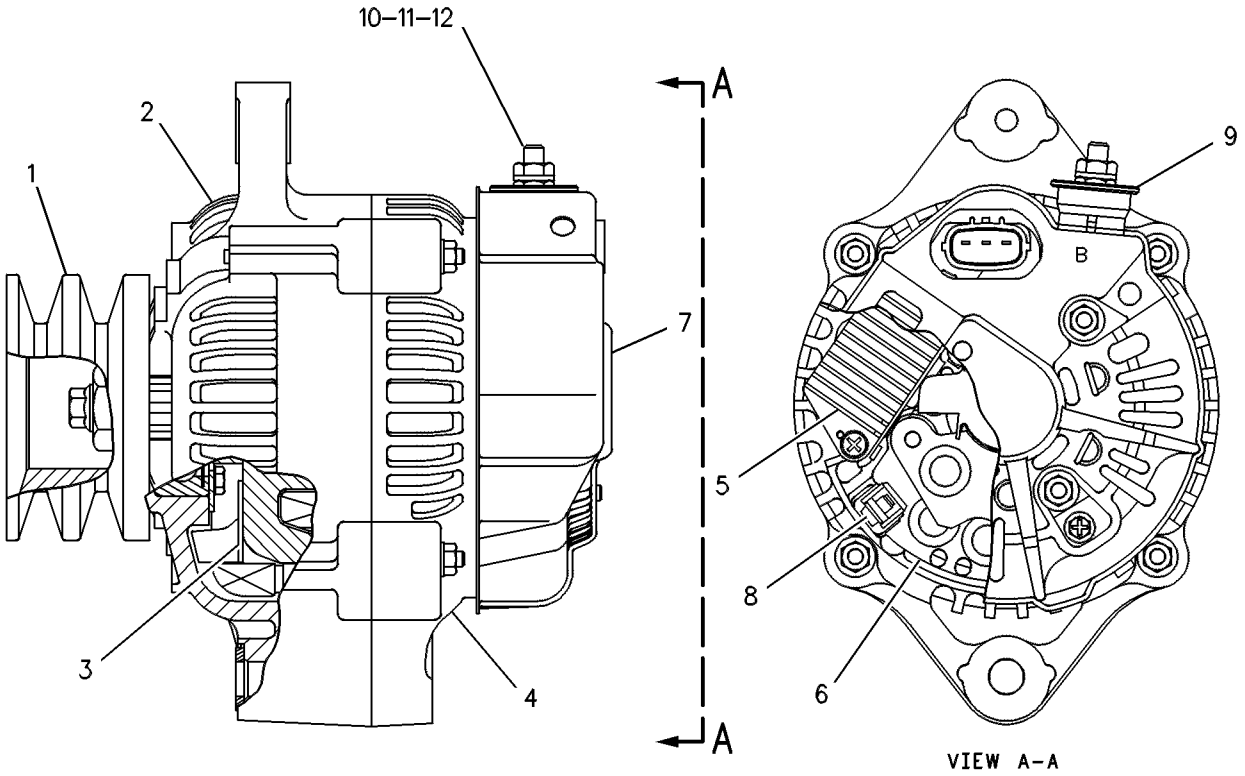


GRAPHIC #1 **<END>** g00128916

# *287-6361* ALTERNATOR GP-CHARGING

**S/N: CJS1-31382**
**PART OF 308-9664 ENGINE AR-PRIMARY**
**AN ATTACHMENT**

**SMCS-1405** **i02735547**

| NOTE | REF NO | GRAPHIC REF | PART NUMBER | QTY | PART NAME 1 2 3 4 5 6 (PRODUCT LEVEL) | SEE PAGE |
|---|---|---|---|---|---|---|
| M | 1 | 1 | **6V-5217** | 1 | BOLT (M8X1.25X20-MM) | |
| | 2 | 1 | **8T-4896** | 1 | WASHER-HARD (10.2X18.5X2.5-MM THK) | |
| | 3 | 1 | **9M-1974** | 1 | WASHER-HARD (8.8X16X2-MM THK) | |
| | 4 | 1 | **235-4962** | 1 | PLATE | |
| | 5 | 1 | **235-4973** | 1 | BOLT (M10X1.5X90-MM) | |
| | 6 | 1 | **239-0771** | 1 | BRACKET | |
| YR | 7 | 1 | **105-2814** | 1 | ALTERNATOR GP-CHARGING | 103 |
| M | 8 | 1 | **8T-4189** | 2 | BOLT (M8X1.25X20-MM) | |
| | 9 | 1 | **3B-4505** | 2 | LOCKWASHER | |

M-METRIC PART
R-REMFG PART MAY BE AVAILABLE
Y-SEPARATE ILLUSTRATION

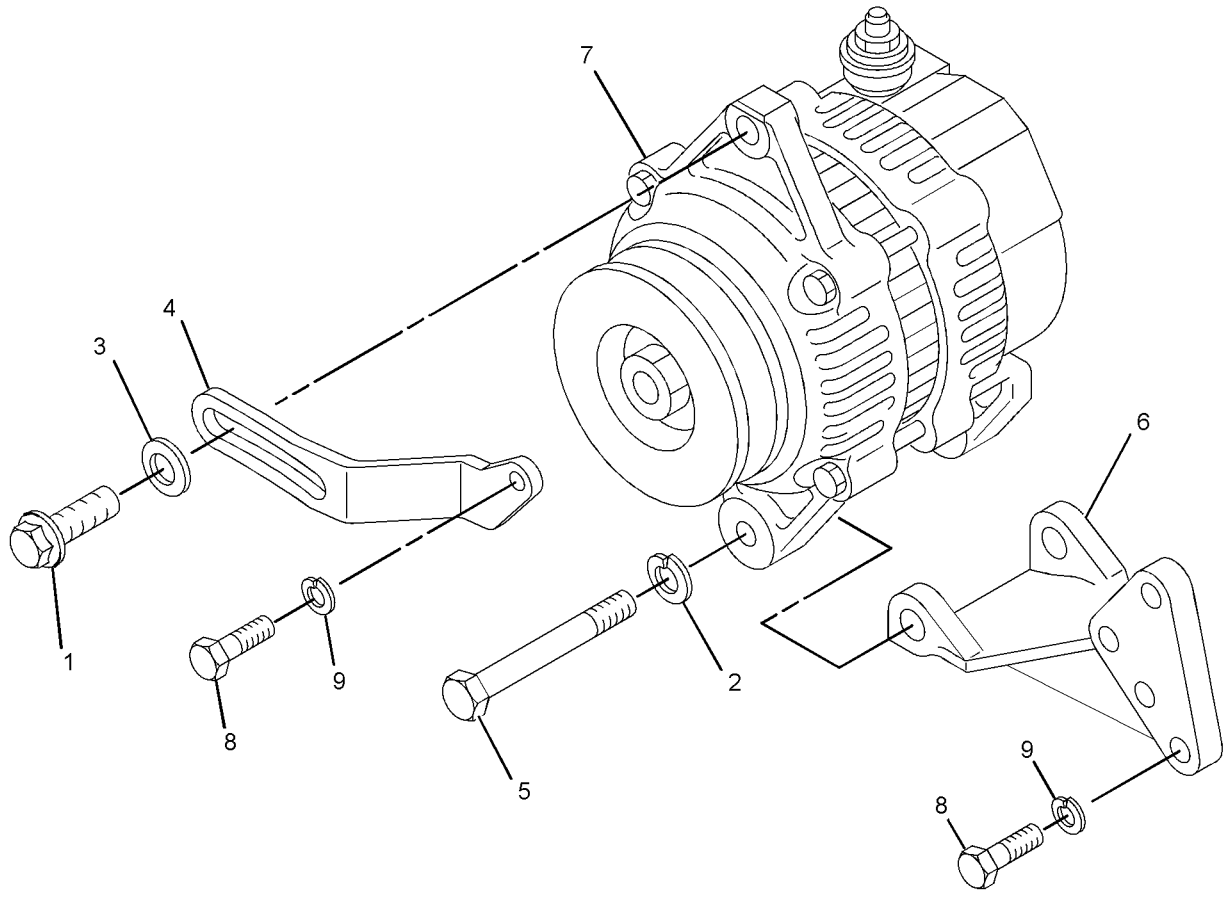


GRAPHIC #1 **<END>** g01377214

# *287-6361* ALTERNATOR GP-CHARGING

**S/N: CJS31383-UP**
**PART OF 308-9664 ENGINE AR-PRIMARY**
**AN ATTACHMENT**

**SMCS-1405** **i02814901**

| NOTE | REF NO | GRAPHIC REF | PART NUMBER | QTY | PART NAME 1 2 3 4 5 6 (PRODUCT LEVEL) | SEE PAGE |
|---|---|---|---|---|---|---|
| M | 1 | 1 | **6V-5217** | 1 | BOLT (M8X1.25X20-MM) | |
| | 2 | 1 | **8T-4896** | 1 | WASHER-HARD (10.2X18.5X2.5-MM THK) | |
| | 3 | 1 | **9M-1974** | 1 | WASHER-HARD (8.8X16X2-MM THK) | |
| | 4 | 1 | **235-4962** | 1 | PLATE | |
| | 5 | 1 | **235-4973** | 1 | BOLT (M10X1.5X90-MM) | |
| C | 6 | 1 | **294-7916** | 1 | BRACKET | |
| YR | 7 | 1 | **105-2814** | 1 | ALTERNATOR GP-CHARGING | 103 |
| M | 8 | 1 | **8T-4189** | 2 | BOLT (M8X1.25X20-MM) | |
| | 9 | 1 | **3B-4505** | 2 | LOCKWASHER | |

C-CHANGE FROM PREVIOUS TYPE
M-METRIC PART
R-REMFG PART MAY BE AVAILABLE
Y-SEPARATE ILLUSTRATION

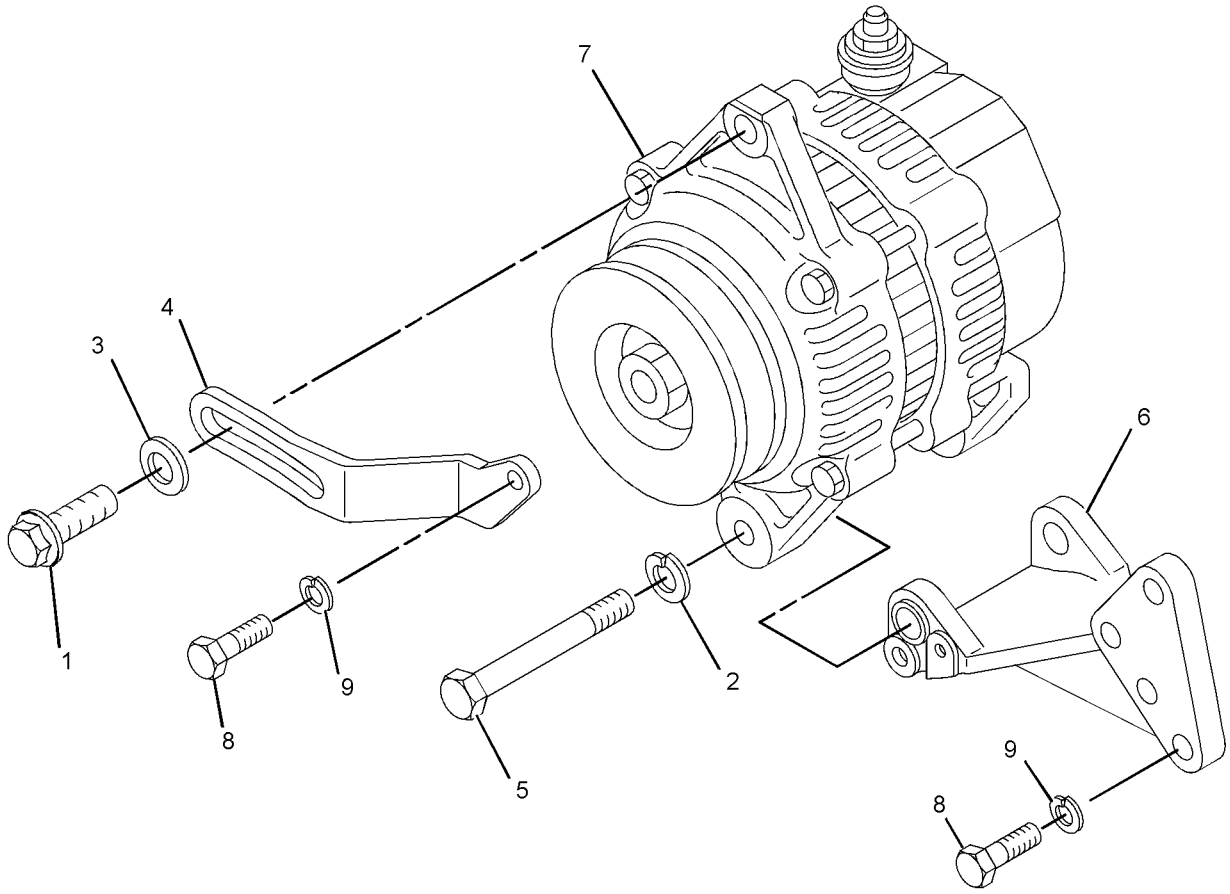


GRAPHIC #1 **<END>** g01414335

# *315-8353* ALTERNATOR GP-CHARGING

**S/N: CYM1-UP**
**PART OF 300-6603 ENGINE AR-PRIMARY**
**AN ATTACHMENT**

**SMCS-1405** **i02822892**

| NOTE | REF NO | GRAPHIC REF | PART NUMBER | QTY | PART NAME 1 2 3 4 5 6 (PRODUCT LEVEL) | SEE PAGE |
|---|---|---|---|---|---|---|
| | 1 | 1 | **3B-4505** | 2 | LOCKWASHER | |
| M | 2 | 1 | **6V-5217** | 1 | BOLT (M8X1.25X20-MM) | |
| M | 3 | 1 | **8T-4189** | 2 | BOLT (M8X1.25X20-MM) | |
| | 4 | 1 | **8T-4896** | 1 | WASHER-HARD (10.2X18.5X2.5-MM THK) | |
| | 5 | 1 | **9M-1974** | 1 | WASHER-HARD (8.8X16X2-MM THK) | |
| | 6 | 1 | **235-4962** | 1 | PLATE | |
| | 7 | 1 | **235-4973** | 1 | BOLT (M10X1.5X90-MM) | |
| | 8 | 1 | *239-0772* | 1 | ALTERNATOR GP-CHARGING | |
| | 9 | 1 | **294-7916** | 1 | BRACKET | |

M-METRIC PART

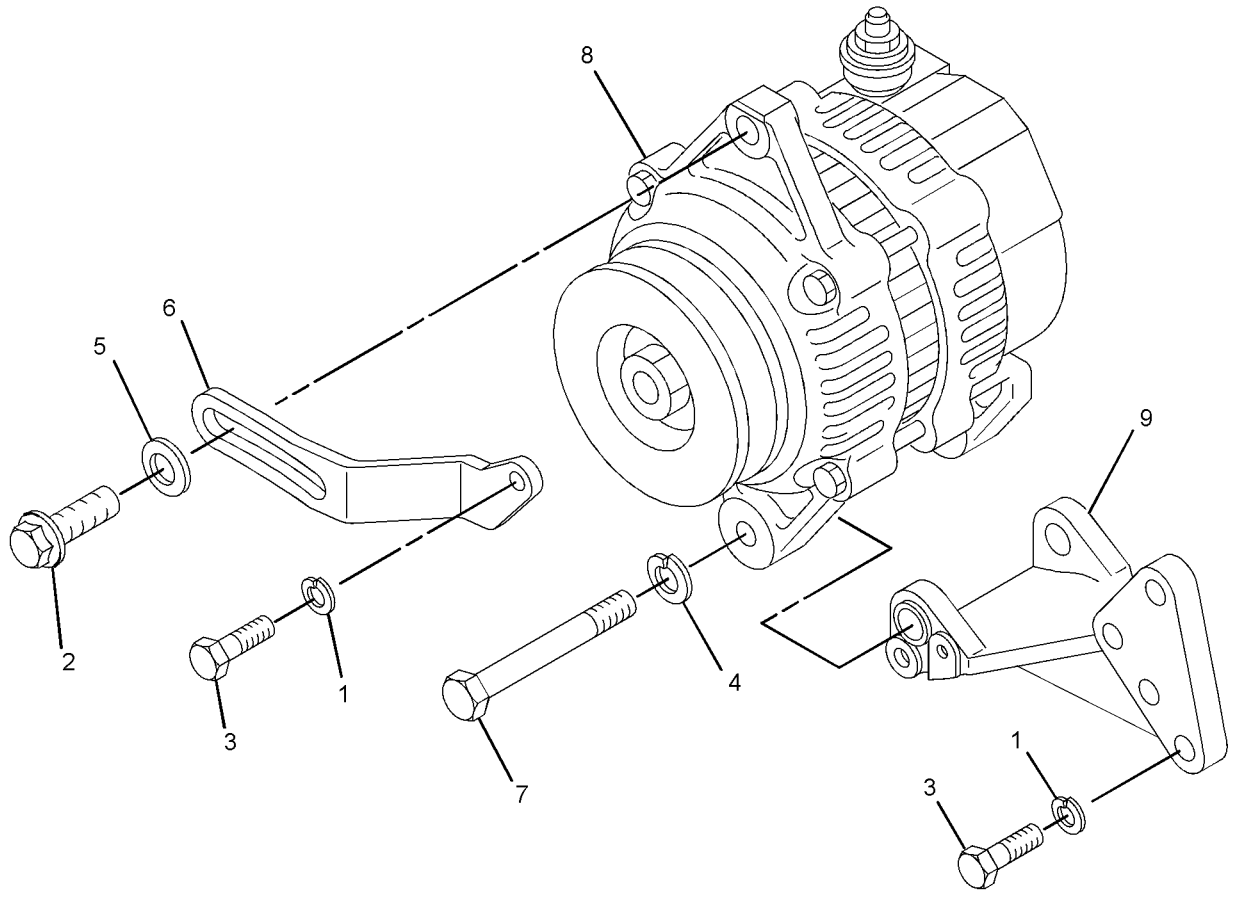


GRAPHIC #1 **<END>** g01433294

# *225-7950* BATTERY GP–STANDARD

**S/N: HEN6750-UP**
**CANNOT BE USED WITH 225-7952–PAGE 109**
**AN ATTACHMENT**

**SMCS-1401** **i02014204**

| NOTE | REF NO | GRAPHIC REF | PART NUMBER | QTY | PART NAME 1 2 3 4 5 6 (PRODUCT LEVEL) | SEE PAGE |
|---|---|---|---|---|---|---|
| | 1 | 1 | **153-5656** | 1 | BATTERY (12 VOLT, STANDARD) | |
| | 2 | 1 | **193-8329** | 1 | CLAMP | |
| | 3 | 1 | **5P-4116** | 2 | WASHER-HARD (8.8X20.5X2-MM THK) | |
| M | 4 | 1 | **8T-4189** | 1 | BOLT (M8X1.25X20-MM) | |
| M | 5 | 1 | **8T-6912** | 1 | BOLT (M8X1.25X50-MM) | |

M-METRIC PART

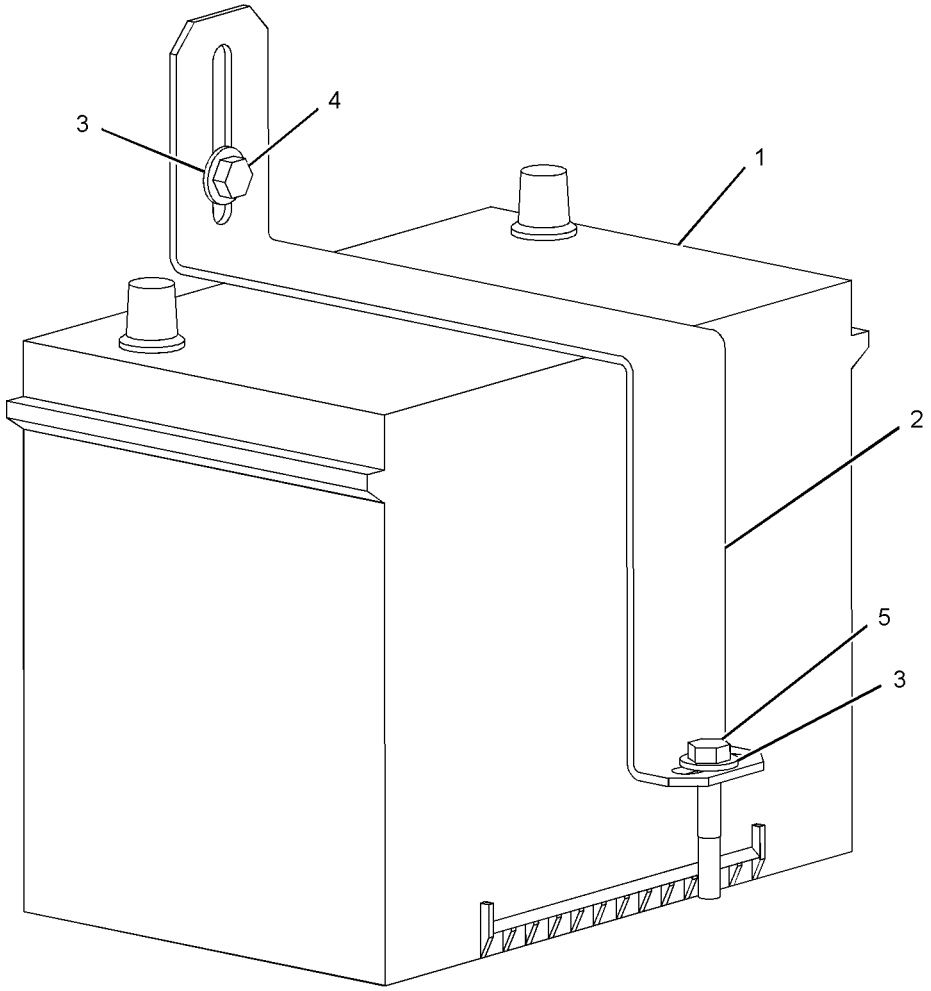


GRAPHIC #1 **<END>** g01010454

# *225-7952* BATTERY GP—HEAVY DUTY

**S/N: HEN6750-UP**

**CANNOT BE USED WITH 225-7950—PAGE 108**

**AN ATTACHMENT**

**SMCS-1401** **i02014205**

| NOTE | REF NO | GRAPHIC REF | PART NUMBER | QTY | PART NAME 1 2 3 4 5 6 (PRODUCT LEVEL) | SEE PAGE |
|---|---|---|---|---|---|---|
| | 1 | 1 | **193-8329** | 1 | CLAMP | |
| | 2 | 1 | **230-6368** | 1 | BATTERY (12-VOLT, MAINTENANCE FREE) | |
| | 3 | 1 | **5P-4116** | 2 | WASHER-HARD (8.8X20.5X2-MM THK) | |
| M | 4 | 1 | **8T-4189** | 2 | BOLT (M8X1.25X20-MM) | |

M-METRIC PART

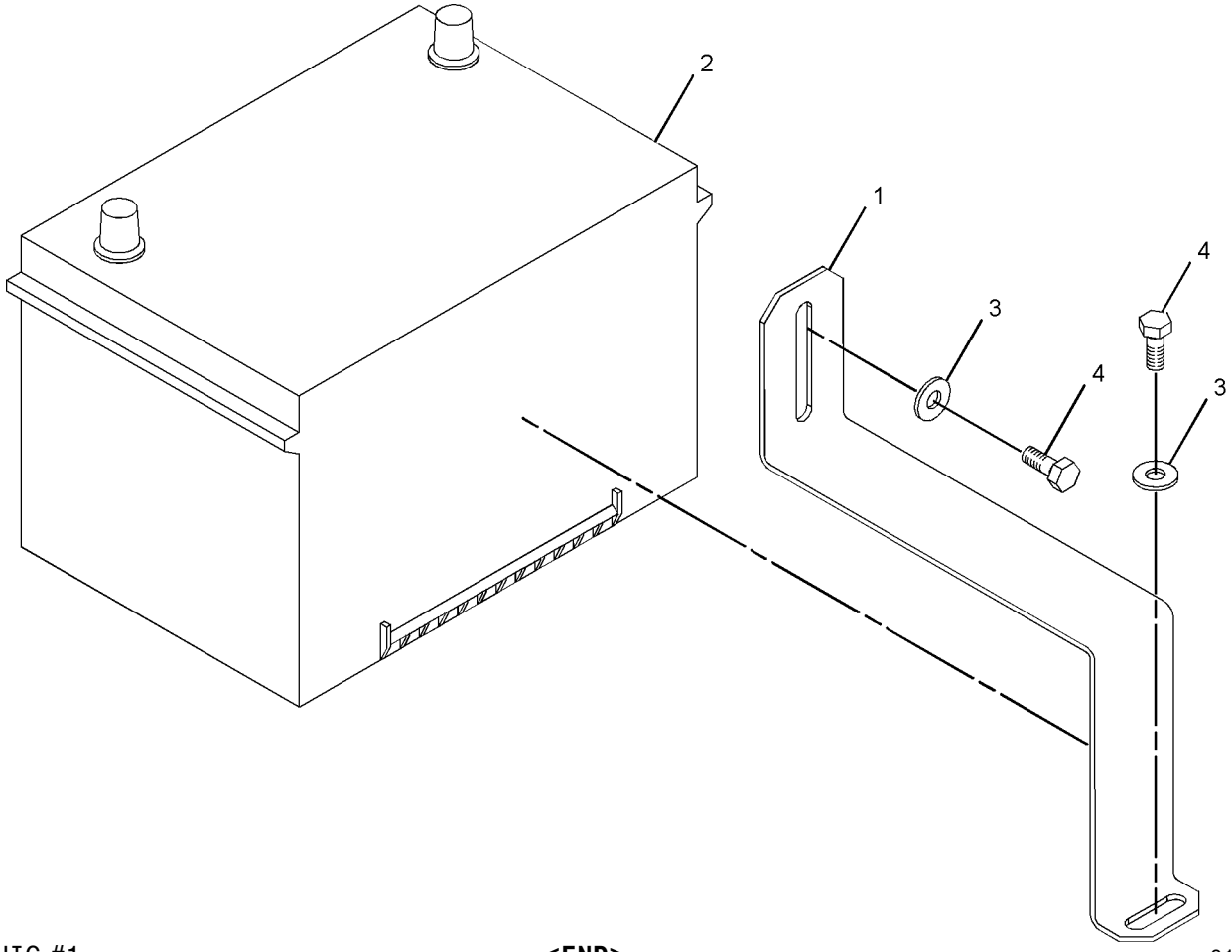


GRAPHIC #1 **<END>** g01015484

# 154-4233 CONTROL GP-INTERLOCK

**S/N: HEN6750-UP**

**PART OF 216-4700 WIRING GP-CHASSIS**

**SMCS-7630** **i01698898**

| NOTE | REF NO | GRAPHIC REF | PART NUMBER | QTY | PART NAME 1 2 3 4 5 6 (PRODUCT LEVEL) | SEE PAGE |
|---|---|---|---|---|---|---|
| | 1 | 1 | **7X-6315** | 1 | STRAP AS-GROUND | |
| | 2 | 1 | **184-2472** | 1 | SCREW-PAN HEAD (NO 8-32X9.52-MM) | |
| | 3 | 1 | **134-4126** | 1 | WASHER (4.52X8.28X0.76-MM THK) | |

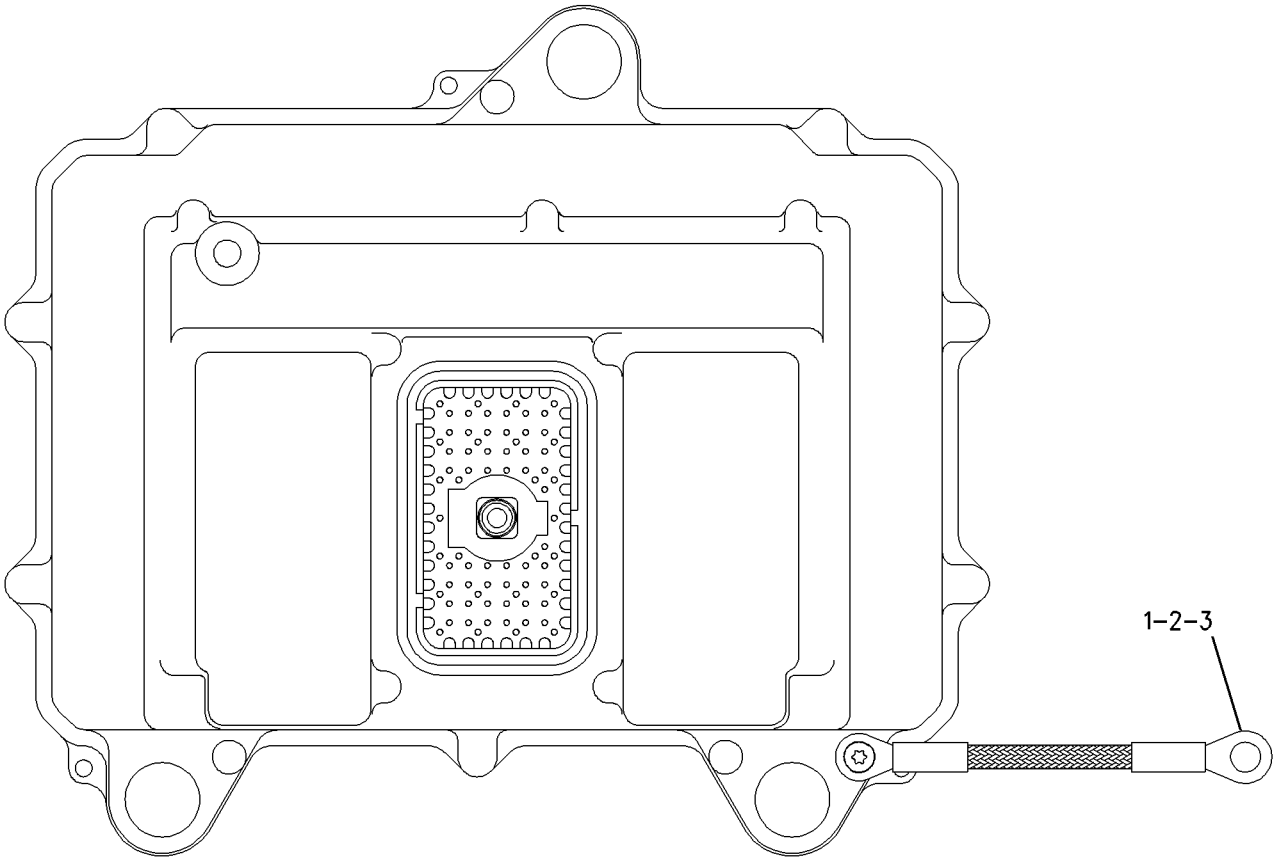


GRAPHIC #1 **<END>** g00843169

# ELECTRICAL AND STARTING SYSTEM

## *218-5780* CONVERSION AR-NON-ROADING—NACD

**S/N: HEN6750-UP**

**AN ATTACHMENT**

**SMCS-7000** **i02001174**

| NOTE | PART NUMBER | QTY | PART NAME 1 2 3 4 5 6 (PRODUCT LEVEL) | SEE PAGE |
|---|---|---|---|---|
| Y | *142-8652* | 1 | LIGHTING GP-STOP & TAIL | 134 |
| Y | *218-5790* | 1 | PANEL AR-INSTRUMENT | 576 |

Y-SEPARATE ILLUSTRATION

**<END>**

# *216-4755* COVER GP-FUSE PANEL

**S/N: HEN6750-UP**

**PART OF 216-4700 WIRING GP-CHASSIS**

**SMCS-1417** **i02757074**

| NOTE | REF NO | GRAPHIC REF | PART NUMBER | QTY | PART NAME 1 2 3 4 5 6 (PRODUCT LEVEL) | SEE PAGE |
|---|---|---|---|---|---|---|
| | 1 | 1 | **116-7471** | 1 | PULLER-MINIFUSE | |
| | 2 | 1 | **164-3765** | 2 | RETAINER | |
| | 3 | 1 | **216-4714** | 1 | FILM-FUSE/RELAY | |
| | 4 | 1 | **225-5193** | 1 | COVER AS | |
| M | 5 | 1 | **232-6692** | 2 | SCREW (M6X1X20-MM) | |
| E | 6 | 1 | **103-2543** | | SEAL (3-CM) | |
| CJ | 7 | 1 | **5P-5969** | | SEAL (9-DM) | |

C-CHANGE FROM PREVIOUS TYPE
E-ORDER BY THE CENTIMETER
J-ORDER BY THE DECIMETER
M-METRIC PART

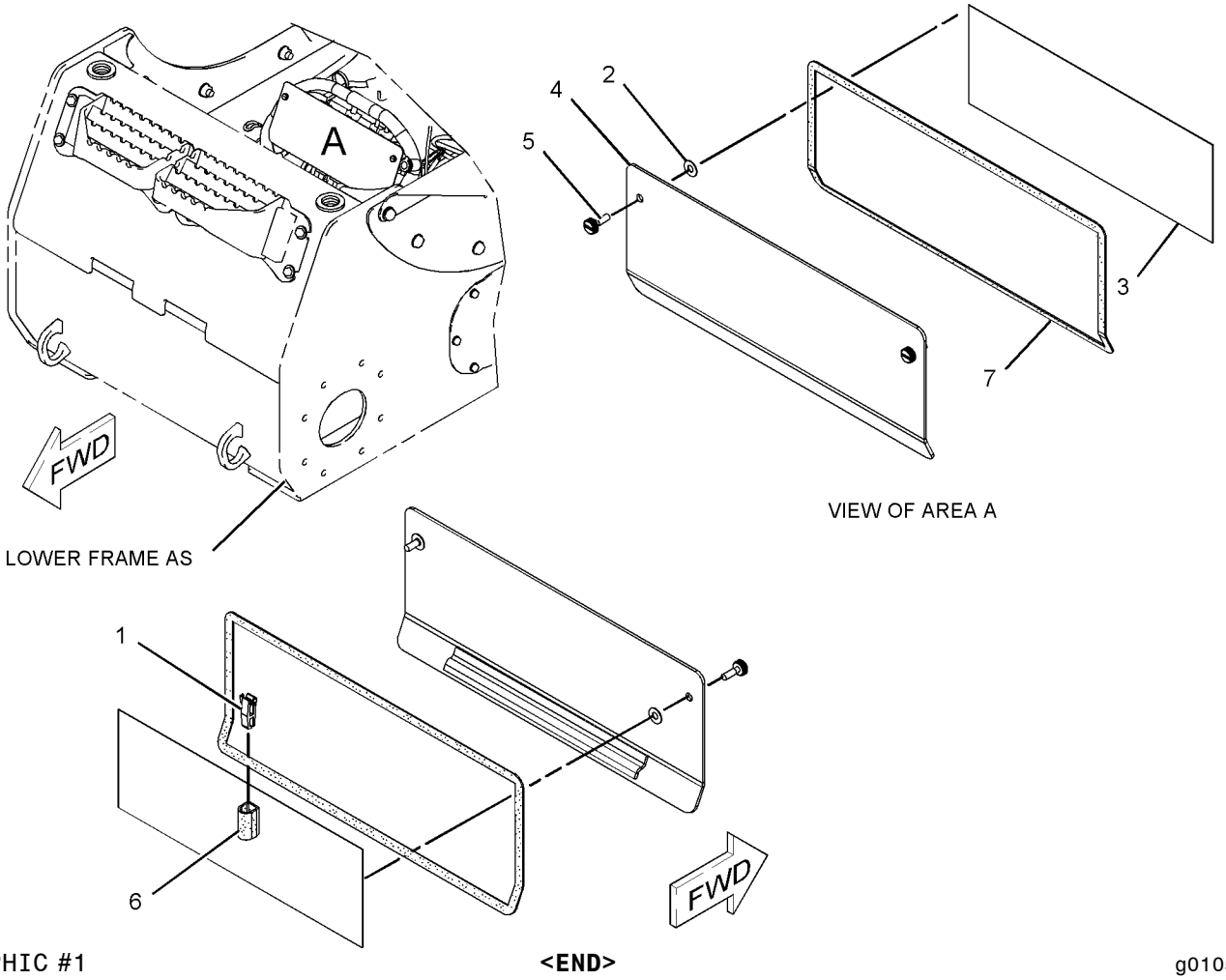


GRAPHIC #1 **<END>** g01056852

## *225-8000* ELECTRONICS GP-IMPLEMENT—WORK TOOL

**S/N: HEN6750-UP**

**PART OF 216-4700 WIRING GP-CHASSIS**

**SMCS-7610, 7620** **i02492938**

| NOTE | PART NUMBER | QTY | PART NAME 1 2 3 4 5 6 (PRODUCT LEVEL) | SEE PAGE |
|---|---|---|---|---|
| R | **216-0658** | 1 | CONTROL GP-UNPROGRAMMED | |
| | **7X-6315** | 1 | STRAP AS-GROUND | |
| | **120-4897** | 1 | SCREW-PAN HEAD (NO 8-32X9.52) | |
| | **134-4126** | 1 | WASHER (4.52X8.28X0.76-MM THK) | |
| | **284-3058** | 1 | SOFTWARE GP-IMPLEMENT | |
| | | | —OR— | |
| | **284-3059** | 1 | SERVICE GP-IMPLEMENT | |
| | | | (OPTIONAL SERVICE REPLACEMENT) | |
| | | | (INCLUDES CONTROL GP, SOFTWARE GP) | |

R-REMFG PART MAY BE AVAILABLE

**<END>**

# *207-5262* ELECTRONICS GP-MACHINE–SECURITY

**S/N: HEN6750-UP**

**PART OF 225-7991, 239-5010 INSTALLATION GP-SECURITY**

**AN ATTACHMENT**

**SMCS-7610, 7620** **i02348756**

| NOTE | REF NO | GRAPHIC REF | PART NUMBER | QTY | PART NAME 1 2 3 4 5 6 (PRODUCT LEVEL) | SEE PAGE |
|---|---|---|---|---|---|---|
| | 1 | 1 | *156-6155* | 1 | CONTROL GP-UNPROGRAMMED (SECURITY) | |
| | 1A | 1 | **7X-6315** | 1 | STRAP AS-GROUND | |
| | 1B | 1 | **184-2472** | 1 | SCREW-PAN HEAD (NO 8-32X9.52-MM) | |
| | 1C | 1 | **134-4126** | 1 | WASHER (4.52X8.28XO.76-MM THK) | |
| | 2 | 1 | **243-6464** | 1 | SOFTWARE GP-MACHINE (SECURITY) | |
| | 3 | 1 | **206-5162** | 2 | KEY AS-ELECTRONIC (SECURITY) | |
| | | | | | –OR– | |
| | | 1 | **206-5165** | 2 | KEY AS-ELECTRONIC (SECURITY) | |
| | 4 | 1 | **219-6314** | 2 | KEY RING (IDENTIFICATION) | |

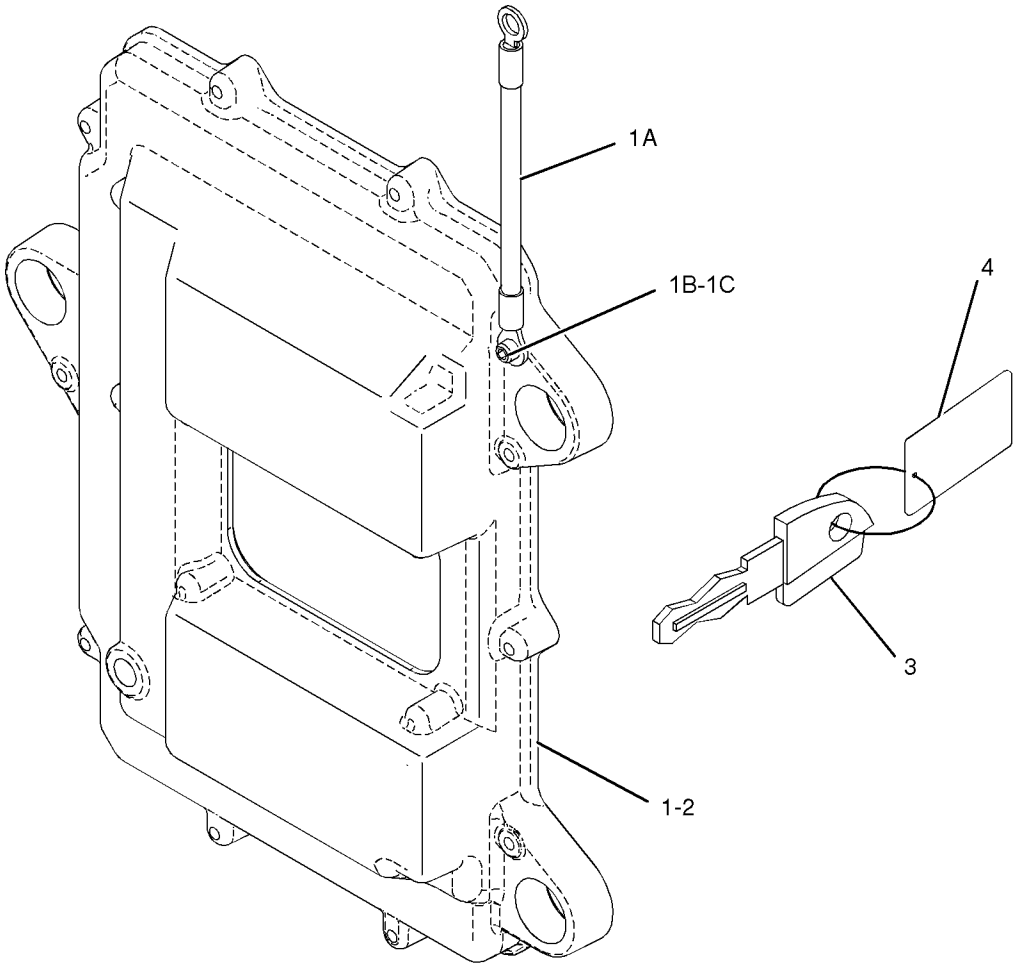


GRAPHIC #1 **<END>** g01026135

# *216-4750* FASTENER GP-WIRING HARNESS

**S/N: HEN6750-UP**

**PART OF 218-6350 CAB AR-ENCLOSED ROPS**

**SMCS-1408** **i02738481**

| NOTE | REF NO | GRAPHIC REF | PART NUMBER | QTY | PART NAME 1 2 3 4 5 6 (PRODUCT LEVEL) | SEE PAGE |
|---|---|---|---|---|---|---|
| | 1 | 1 | **4B-4863** | 2 | WASHER (4.7X11X1.2-MM THK) | |
| | 2 | 1 | **7G-1060** | 1 | STRAP AS-GROUND | |
| | 3 | 1 | **9R-7941** | 1 | SOCKET AS | |
| | | 1 | **9R-7980** | 1 | COVER | |
| M | 4 | 1 | **111-4627** | 4 | SCREW-MACHINE (M6X1X30-MM) | |
| | 5 | 1 | **195-0936** | 4 | INSERT-THREADED (M6X1) | |
| B | 6 | 1 | **3S-2093** | 6 | STRAP-CABLE | |
| M | 7 | 1 | **5C-8312** | 2 | NUT (M4X0.7-THD) | |
| | 8 | 1 | **7G-7053** | 1 | GROMMET | |
| | 9 | 1 | **8T-4121** | 2 | WASHER-HARD (11X21X2.5-MM THK) | |
| M | 10 | 1 | **8T-4133** | 1 | NUT (M10X1.5-THD) | |
| M | 11 | 1 | **9X-1046** | 2 | SCREW (M4X0.7X18-MM) | |
| M | 12 | 1 | **9X-2042** | 6 | SCREW-TRUSS HEAD (M6X1X12-MM) | |
| | 13 | 1 | **101-2867** | 4 | WASHER-HARD (7.2X25X2-MM THK) | |

B-USE AS REQUIRED
M-METRIC PART

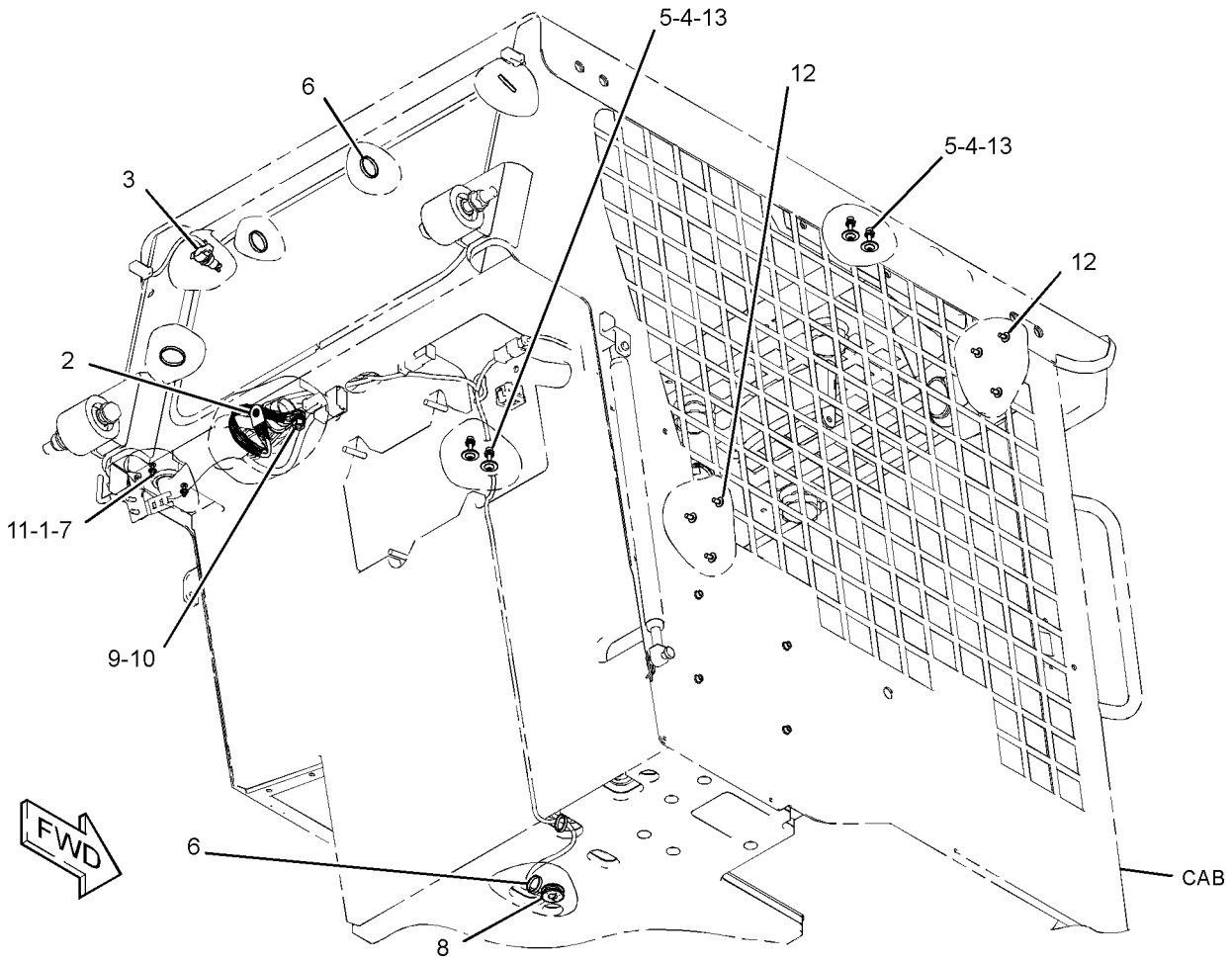


GRAPHIC #1 **<END>** g01376950

# *235-5904* GLOW PLUG GP

**S/N: CYM1-UP; CJS1-UP**
**PART OF 300-6603, 308-9664 ENGINE AR-PRIMARY**
**AN ATTACHMENT**

**SMCS-1412** **i02162785**

| NOTE | REF NO | GRAPHIC REF | PART NUMBER | QTY | PART NAME 1 2 3 4 5 6 (PRODUCT LEVEL) | SEE PAGE |
|---|---|---|---|---|---|---|
| | 1 | 1 | **107-3659** | 4 | GLOW PLUG | |
| | 2 | 1 | **257-8390** | 1 | PLATE-CONNECTION | |

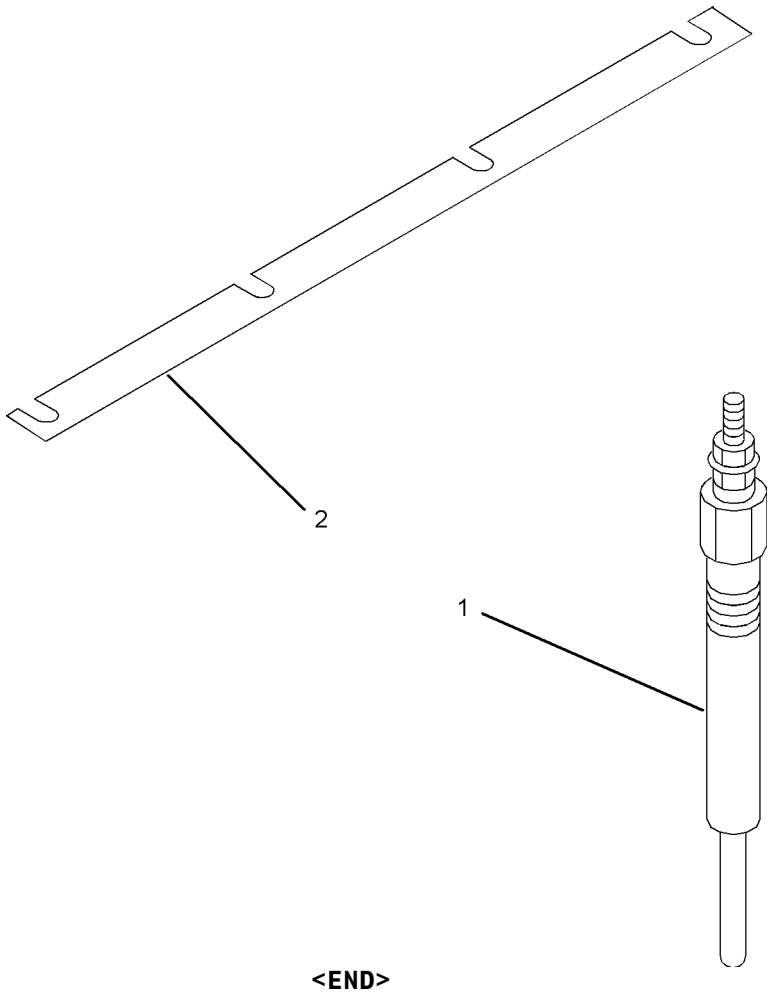


GRAPHIC #1 **<END>** g01011629

# *218-0942* HEATER GP-JACKET WATER

**S/N: HEN6750-UP**
**120-VOLT, 530-WATT**
**AN ATTACHMENT**

**SMCS-1383** **i02762194**

| NOTE | REF NO | GRAPHIC REF | PART NUMBER | QTY | PART NAME 1 2 3 4 5 6 (PRODUCT LEVEL) | SEE PAGE |
|---|---|---|---|---|---|---|
| | 1 | 1 | **9X-6772** | 2 | STRAP-CABLE | |
| | 2 | 1 | *225-5642* | 1 | HEATER GP-JACKET WATER | |
| | 2A | 1 | **7X-6312** | 1 | CORD AS-JACKET WATER HEATER | |
| | 2B | 1 | **225-5541** | 1 | ELEMENT AS-JACKET WATER HEATER (120-VOLT, 530-WATT) | |
| | 2C | 1 | **232-4703** | 1 | GASKET | |

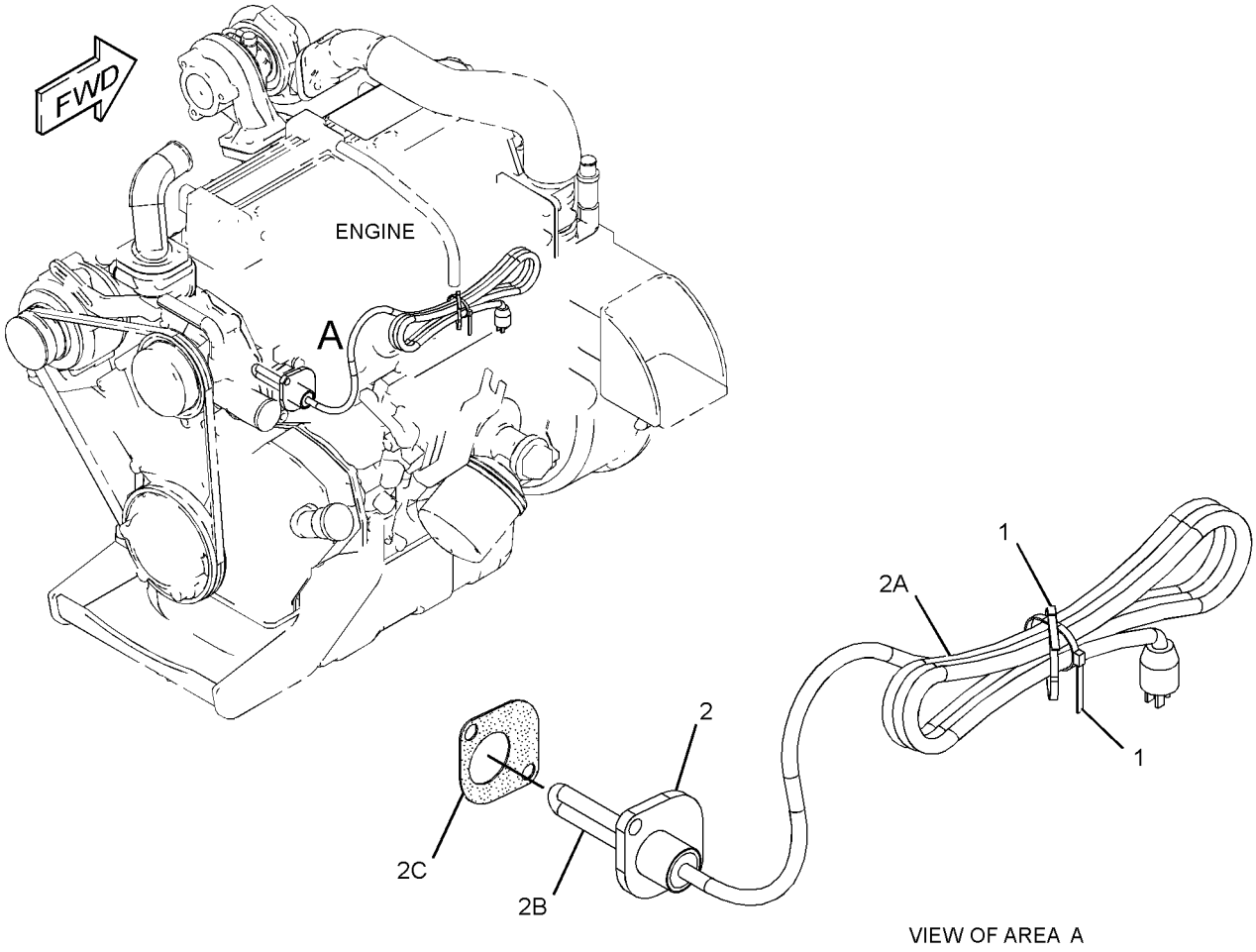


GRAPHIC #1 **<END>** g01335541

# *218-0943* HEATER GP-JACKET WATER

**S/N: HEN6750-UP**
**240-VOLT, 530-WATT**
**AN ATTACHMENT**

**SMCS-1383** **i02762195**

| NOTE | REF NO | GRAPHIC REF | PART NUMBER | QTY | PART NAME 1 2 3 4 5 6 (PRODUCT LEVEL) | SEE PAGE |
|---|---|---|---|---|---|---|
| | 1 | 1 | **9X-6772** | 2 | STRAP-CABLE | |
| | 2 | 1 | *225-5644* | 1 | HEATER GP-JACKET WATER | |
| | 2A | 1 | **217-5912** | 1 | CORD AS | |
| | 2B | 1 | **225-5535** | 1 | ELEMENT AS-JACKET WATER HEATER (240-VOLT, 530-WATT) | |
| | 2C | 1 | **232-4703** | 1 | GASKET | |

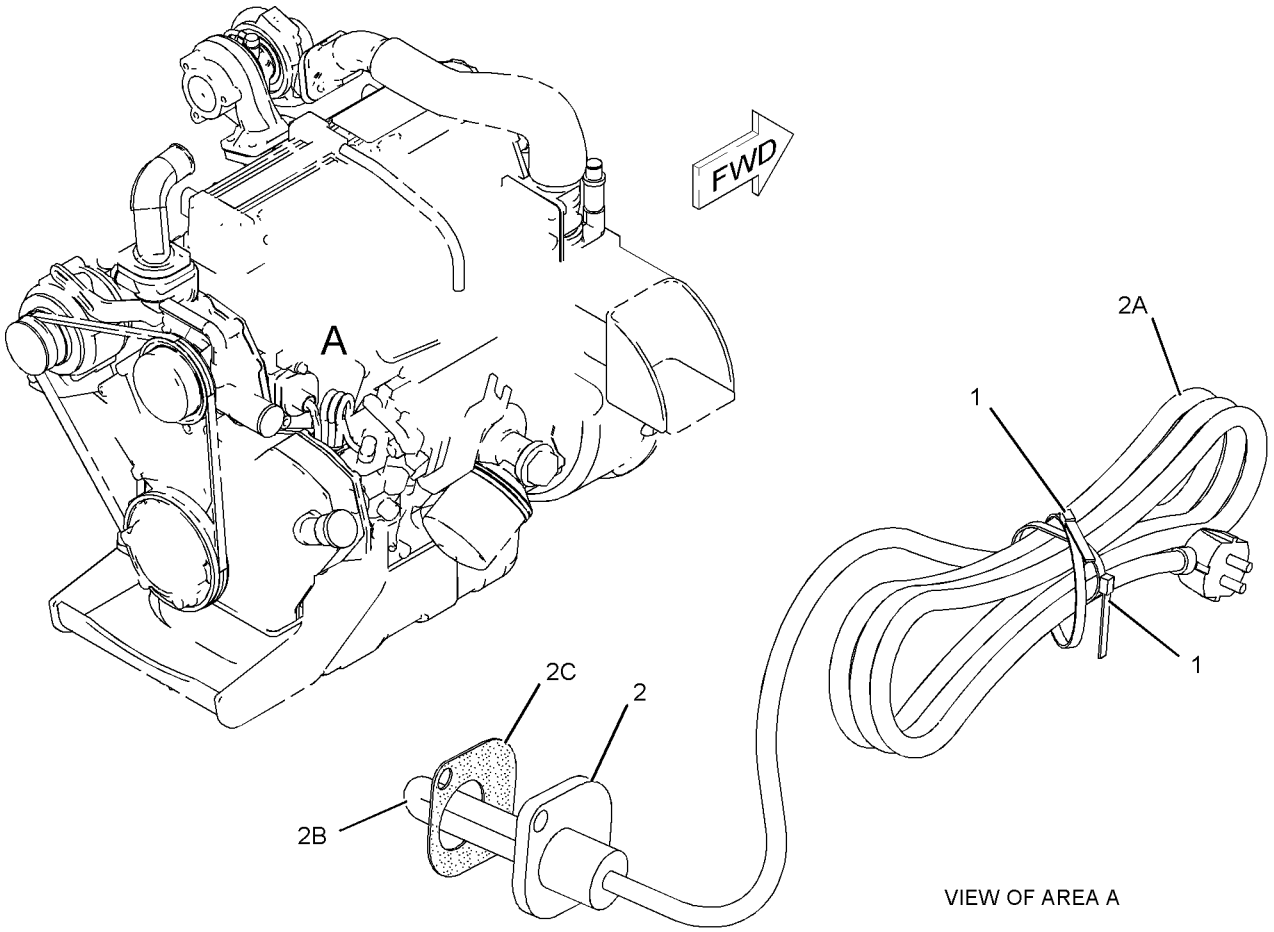


GRAPHIC #1 **<END>** g01108040

# *225-7991* INSTALLATION GP-SECURITY

**S/N: HEN675O-UP**
**AN ATTACHMENT**

**SMCS-7631** **i02659112**

| NOTE | PART NUMBER | QTY | PART NAME 1 2 3 4 5 6 (PRODUCT LEVEL) | SEE PAGE |
|---|---|---|---|---|
| Y | **207-5262** | 1 | ELECTRONICS GP-MACHINE (SECURITY) | 114 |
| | | | | |
| | **243-6464** | 1 | SOFTWARE GP-MACHINE (SECURITY) | |
| | **205-8257** | 1 | COIL AS (EXCITER) | |
| D | **5P-5677** | | WIRE (18-GA, BLACK) (0.4-M) | |
| | **186-3735** | 2 | PIN-CONNECTOR (16-GA TO 18-GA) | |
| | **222-3870** | 1 | COIL AS (FERRITE) | |
| | **102-8802** | 2 | KIT-RECEPTACLE (2-PIN) | |
| | | | (INCLUDES RECEPTACLE AS & WEDGE) | |
| | **186-3735** | 4 | PIN-CONNECTOR (16-GA TO 18-GA) | |
| D | **5P-5677** | | WIRE (18-GA, BLACK) (0.4-M) | |
| E | **9X-1813** | | SLEEVE (15-CM) | |
| | **216-4709** | 1 | HARNESS AS-CONTROL (SECURITY) | |
| | **102-8804** | 1 | KIT-RECEPTACLE (4-PIN) | |
| | **102-8801** | 1 | KIT-RECEPTACLE (12-PIN) | |
| | | | (EACH KIT INCLUDES RECEPTACLE AS & WEDGE) | |
| | **155-2270** | 2 | KIT-CONNECTING PLUG (2-PIN) | |
| | | | (INCLUDES PLUG AS, WEDGE & INTERFACE SEAL) | |
| E | **125-7874** | | TUBE-HEAT SHRINK (5.72-MM DIA) (10-CM) | |
| | **150-6766** | 1 | PLUG AS-CONNECTOR (26-PIN) | |
| | **206-5162** | 2 | KEY AS-ELECTRONIC (SECURITY) | |
| | | | —OR— | |
| | **206-5165** | 1 | KEY AS-ELECTRONIC (SECURITY) | |
| | | | | |
| | **198-5389** | 1 | FILM-IDENTIFICATION (IGNITION SWITCH) | |
| | **205-0826** | 1 | FILM-INSTRUCTION (MACHINE SECURITY, INTL) | |
| | **102-8802** | 1 | KIT-RECEPTACLE (2-PIN) | |
| | | | (INCLUDES RECEPTACLE AS & WEDGE) | |
| | **8T-9655** | 6 | MOUNT-ISOLATION | |
| M | **5C-7261** | 3 | NUT (M8X1.25-THD) | |
| | **4P-8134** | 3 | CLIP | |
| | **6I-1418** | 3 | SPACER (8.2X12.7X28.7-MM THK) | |
| | **3S-2093** | 7 | STRAP-CABLE | |
| | **7K-1181** | 5 | STRAP-CABLE | |
| | **7X-0579** | 3 | WASHER-HARD (8.8X25.5X2-MM THK) | |

D-ORDER BY THE METER
E-ORDER BY THE CENTIMETER
M-METRIC PART
Y-SEPARATE ILLUSTRATION

**<END>**

# ELECTRICAL AND STARTING SYSTEM

## 239-5010 INSTALLATION GP-SECURITY–KIT

**S/N: HEN6750-UP**

**FIELD INSTALLATION**

**SMCS-7631** **i02359042**

| NOTE | PART NUMBER | QTY | PART NAME 1 2 3 4 5 6 (PRODUCT LEVEL) | SEE PAGE |
|---|---|---|---|---|
| Y | **207-5262** | 1 | ELECTRONICS GP-MACHINE (SECURITY) | 114 |
| M | **7X-0818** | 3 | BOLT (M8X1.25X45-MM) | |
| | **4P-7581** | 3 | CLIP | |
| | **205-8257** | 1 | COIL AS (EXCITER) | |
| | **186-3735** | 2 | PIN-CONNECTOR (16-GA TO 18-GA) | |
| BD | **5P-5677** | | WIRE (18-GA, BLACK) | |
| | **222-3870** | 1 | COIL AS (FERRITE) | |
| | **102-8802** | 2 | KIT-RECEPTACLE (2-PIN) | |
| | | | (INCLUDES RECEPTACLE AS & WEDGE) | |
| | **186-3735** | 4 | PIN-CONNECTOR (16-GA TO 18-GA) | |
| BD | **5P-5677** | | WIRE (18-GA, BLACK) | |
| BE | **9X-1813** | | SLEEVE (1) | |
| | **198-5389** | 1 | FILM-IDENTIFICATION (IGNITION SWITCH) | |
| | **205-0826** | 1 | FILM-INSTRUCTION (MACHINE SECURITY, INTL) | |
| | **216-4709** | 1 | HARNESS AS-CONTROL (SECURITY) | |
| | **102-8804** | 1 | KIT-RECEPTACLE (4-PIN) | |
| | **102-8801** | 1 | KIT-RECEPTACLE (12-PIN) | |
| | | | (EACH KIT INCLUDES RECEPTACLE AS & WEDGE) | |
| | **155-2270** | 2 | KIT-CONNECTING PLUG (2-PIN) | |
| | | | (INCLUDES PLUG AS, WEDGE & INTERFACE SEAL) | |
| M | **195-0937** | 3 | INSERT-THREADED (M8X1.25-THD) | |
| | **155-2260** | 1 | KIT-CONNECTING PLUG (3-PIN) | |
| | | | (INCLUDES PLUG AS & WEDGE) | |
| | **102-8802** | 1 | KIT-RECEPTACLE (2-PIN) | |
| | | | (INCLUDES RECEPTACLE AS & WEDGE) | |
| | **102-8803** | 1 | KIT-RECEPTACLE (3-PIN) | |
| | | | (INCLUDES RECEPTACLE AS & WEDGE) | |
| | **165-5655** | 1 | LAMP AS (RED, GREEN, LED, 12-VOLT) | |
| | **186-3735** | 3 | PIN-CONNECTOR (16-GA TO 18-GA) | |
| | **8T-9655** | 6 | MOUNT-ISOLATION | |
| M | **5C-7261** | 3 | NUT (M8X1.25-THD) | |
| | **8T-8737** | 2 | PLUG-SEAL | |
| | **6I-1418** | 3 | SPACER (8.2X12.7X28.7-MM THK) | |
| | **115-8109** | 1 | SPLICE-WIRE | |
| | **7K-1181** | 12 | STRAP-CABLE | |
| | **9N-0869** | 9 | WASHER-HARD (8.8X25.5X2-MM THK) | |
| | **207-3814** | 1 | WIRE AS (PRODUCT LINK, SPLICE) | |
| | **186-3735** | 1 | PIN-CONNECTOR (16-GA TO 18-GA) | |
| | **186-3736** | 2 | SOCKET-CONNECTOR (16-GA TO 18-GA) | |
| BE | **125-7874** | | TUBE-HEAT SHRINK (5.72-MM DIA) | |

B-USE AS REQUIRED
D-ORDER BY THE METER
E-ORDER BY THE CENTIMETER
M-METRIC PART
Y-SEPARATE ILLUSTRATION

**<END>**

# 233-5706 KIT-WORK TOOL CONTROL & WIRING—RADIAL LIFT

**S/N: HEN6750-UP**
**AN ATTACHMENT**

**SMCS-1408, 5705** **i02302986**

| NOTE | PART NUMBER | QTY | PART NAME 1 2 3 4 5 6 (PRODUCT LEVEL) | SEE PAGE |
|---|---|---|---|---|
| Y | **231-4258** | 1 | CONTROL GP-HANDLE (LH) | 490 |
| | | | | |
| | **221-3881** | 1 | PANEL GP-FUSE | |
| | **113-8490** | 4 | FUSE (10-AMPERE) | |
| | **113-8491** | 2 | FUSE (15-AMPERE) | |
| | **146-9439** | 5 | RELAY AS (12-VOLT) | |
| | **215-5564** | 2 | SUPPRESSOR-ARC | |
| | | | | |
| | **225-7961** | 1 | HARNESS AS-WORK TOOL (LIFT ARM) | |
| | **156-1460** | 1 | RECEPTACLE (8-PIN) | |
| | | | (INCLUDES RECEPTACLE AS & WEDGE) | |
| | **156-1458** | 1 | COVER | |
| | **1S-9593** | 1 | STRAP-CABLE | |
| | **225-8012** | 1 | HARNESS AS-WORK TOOL (PLATFORM) | |
| | **155-2255** | 1 | KIT-CONNECTING PLUG (12-PIN) | |
| | **155-2265** | 1 | KIT-CONNECTING PLUG (8-PIN) | |
| | **196-2382** | 1 | KIT-CONNECTING PLUG (2-PIN) | |
| | **196-2383** | 11 | KIT-CONNECTING PLUG (8-PIN) | |
| | **196-2384** | | KIT-CONNECTING PLUG (8-PIN) | |
| | | | (EACH PLUG KIT INCLUDES PLUG AS, WEDGE & INTERFACE SEAL) | |
| | **177-9645** | 1 | KIT-RECEPTACLE (2-PIN) | |
| | | | (INCLUDES RECEPTACLE AS & WEDGE) | |
| | **102-8806** | 1 | KIT-RECEPTACLE (8-PIN) | |
| | | | (INCLUDES RECEPTACLE AS & WEDGE) | |
| | **115-1615** | 1 | RELAY AS (12-VOLT) | |
| | **146-9439** | 1 | RELAY AS (12-VOLT) | |
| | **142-8633** | 1 | SWITCH AS-ROCKER (ELECTRIC POWER, WORK TOOL) | |
| | | | | |
| M | **5C-9553** | 1 | BOLT (M6X1X16-MM) | |
| | **159-9496** | 1 | LOCKWASHER | |
| M | **095-0733** | 2 | SCREW-MACHINE (M4X0.7X40-MM) | |
| | **3S-2093** | 9 | STRAP-CABLE | |
| | **4B-4863** | 2 | WASHER (4.7X11X1.2-MM THK) | |
| | **8T-4205** | 1 | WASHER-HARD (7.2X14.5X2-MM THK) | |
| | **3E-3389** | 1 | WEDGE-RECEPTACLE LOCK | |

M-METRIC PART
Y-SEPARATE ILLUSTRATION

**<END>**

# ELECTRICAL AND STARTING SYSTEM

## *218-6741* KIT-WORK TOOL WIRING—RADIAL LIFT

**S/N: HEN6750-UP**

**AN ATTACHMENT**

**SMCS-1408** **i02293279**

| NOTE | PART NUMBER | QTY | PART NAME 1 2 3 4 5 6 (PRODUCT LEVEL) | SEE PAGE |
|---|---|---|---|---|
| M | **5C-9553** | 1 | BOLT (M6X1X16-MM) | |
| | **225-7961** | 1 | HARNESS AS-WORK TOOL (LIFT ARM) | |
| | **156-1460** | 1 | RECEPTACLE (8-PIN) | |
| | **1S-9593** | 1 | STRAP-CABLE | |
| | **156-1458** | 1 | COVER | |
| | **225-8012** | 1 | HARNESS AS-WORK TOOL (PLATFORM) | |
| | **155-2255** | 1 | KIT-CONNECTING PLUG (12-PIN) | |
| | **155-2265** | 1 | KIT-CONNECTING PLUG (8-PIN) | |
| | | | (EACH INCLUDES PLUG AS, WEDGE, & INTERFACE SEAL) | |
| | **196-2381** | 1 | KIT-CONNECTING PLUG (2-PIN) | |
| | | | (INCLUDES PLUG AS, LOCK, & TERMINAL AS) | |
| | **177-9645** | 1 | KIT-RECEPTACLE (2-PIN) | |
| | | | (INCLUDES RECEPTACLE AS & WEDGE) | |
| | **159-9496** | 1 | LOCKWASHER | |
| | **159-9495** | 1 | NUT (1-1/2-18-THD) | |
| | **221-3881** | 1 | PANEL GP-FUSE | |
| | **113-8490** | 4 | FUSE (10-AMPERE) | |
| | **113-9491** | 2 | MUFFLER | |
| | **146-9439** | 5 | RELAY AS (12-VOLT) | |
| | **215-5564** | 2 | SUPPRESSOR-ARC | |
| | **115-1615** | 1 | RELAY AS (12-VOLT) | |
| | **146-9439** | 1 | RELAY AS (12-VOLT) | |
| M | **095-0733** | 2 | SCREW-MACHINE (M4X0.7X40-MM) | |
| | **3S-2093** | 9 | STRAP-CABLE | |
| | **142-8633** | 1 | SWITCH AS-ROCKER (ELECTRIC POWER, WORK TOOL) | |
| | **4B-4863** | 2 | WASHER (4.7X11X1.2-MM THK) | |
| | **8T-4205** | 1 | WASHER-HARD (7.2X14.5X2-MM THK) | |
| | **3E-3389** | 1 | WEDGE-RECEPTACLE LOCK | |

M-METRIC PART

**<END>**

# *234-4328* LAMP GP-FLOOD–12-VOLT

**S/N: HEN6750-UP**

**PART OF 218-6425 LIGHTING GP-FLOOD**

**SMCS-1434** **i02532634**

| NOTE | REF NO | GRAPHIC REF | PART NUMBER | QTY | PART NAME 1 2 3 4 5 6 (PRODUCT LEVEL) | SEE PAGE |
|---|---|---|---|---|---|---|
| | 1 | 1 | **9W-0607** | 1 | LAMP (12-VOLT, 55-WATT) | |
| M | 2 | 1 | **8T-0389** | 1 | LOCKNUT (M10X1.5-THD) | |
| | 3 | 1 | **9X-4244** | 2 | SCREW-SPECIAL | |
| | 4 | 1 | **202-6614** | 1 | LENS AS | |
| | 5 | 1 | **234-7730** | 1 | BODY AS | |
| | 6 | 1 | **164-7556** | 1 | BRACKET (LAMP RETAINING) | |
| | 7 | 1 | **234-7731** | 1 | BRACKET AS | |
| | 8 | 1 | **8T-4121** | 1 | WASHER-HARD (11X21X2.5-MM THK) | |

M-METRIC PART

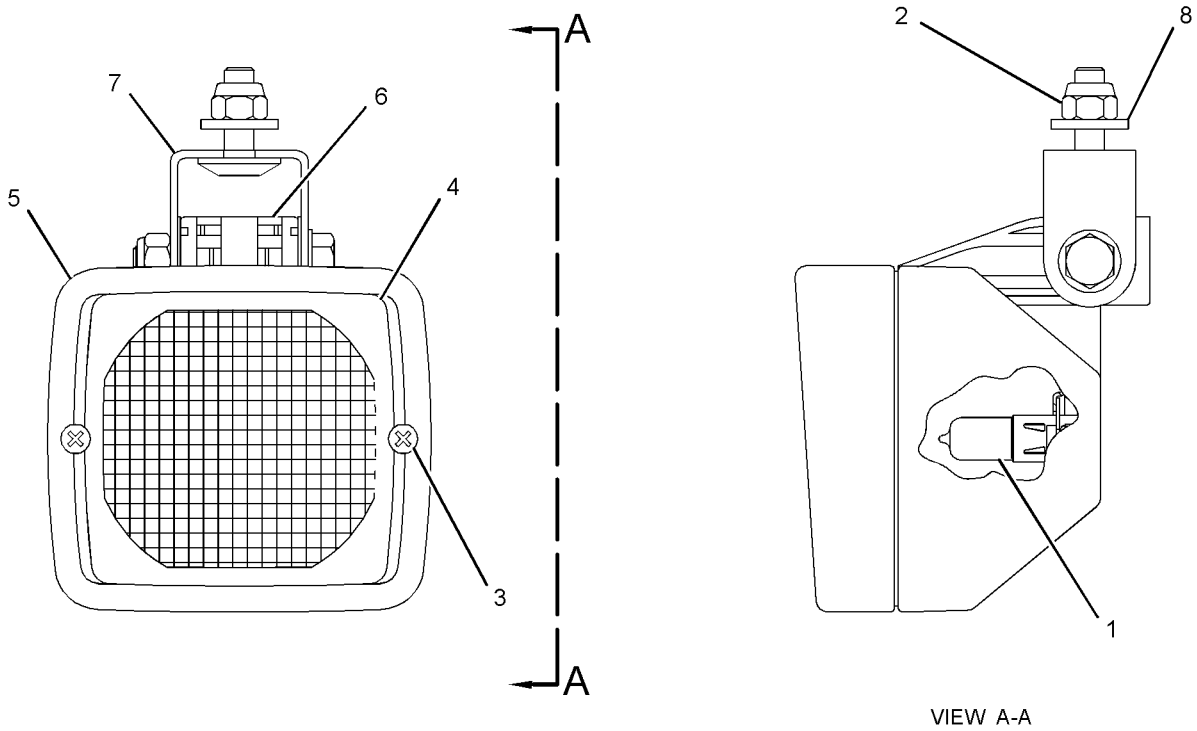


GRAPHIC #1 **<END>** g01283627

# *234-7727* LAMP GP-FLOOD–12-VOLT, VERTICAL MOUNT

**S/N: HEN6750-UP**

**PART OF 216-4746 LIGHTING GP-FLOOD**

**ALSO AN ATTACHMENT**

**SMCS-1434** **i01957412**

| NOTE | REF NO | GRAPHIC REF | PART NUMBER | QTY | PART NAME 1 2 3 4 5 6 (PRODUCT LEVEL) | SEE PAGE |
|---|---|---|---|---|---|---|
| | 1 | 1 | **9W-0607** | 1 | LAMP (12-VOLT, 55-WATT) | |
| | 2 | 1 | **9X-4244** | 2 | SCREW-SPECIAL | |
| | 3 | 1 | **202-6611** | 1 | LENS AS | |
| | 4 | 1 | **234-7758** | 1 | BODY AS | |
| | 5 | 1 | **164-7556** | 1 | BRACKET (LAMP RETAINING) | |
| | 6 | 1 | **234-7756** | 1 | BRACKET-MOUNTING | |

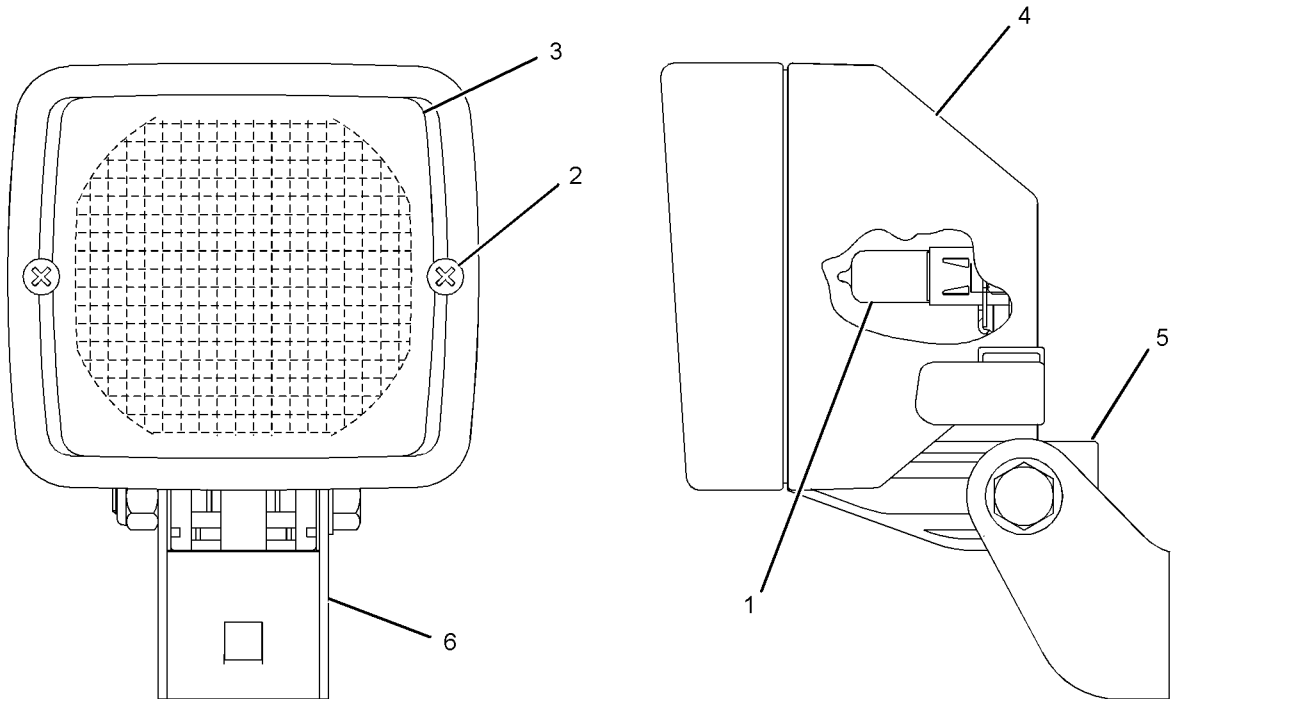


GRAPHIC #1 **<END>** g01017848

# 3E-7584 LAMP GP-HEAD & SIGNAL

**S/N: HEN6750-UP**

**PART OF 277-0654 KIT-ROADING CONVERSION, 216-4715 LIGHTING GP-ROADING AN ATTACHMENT**

**SMCS-1429, 1430** **i02577854**

| NOTE | REF NO | GRAPHIC REF | PART NUMBER | QTY | PART NAME 1 2 3 4 5 6 (PRODUCT LEVEL) | SEE PAGE |
|---|---|---|---|---|---|---|
| | 1 | 1 | **9X-4244** | 4 | SCREW-SPECIAL | |
| | 2 | 1 | **100-3251** | 2 | SCREW-LENS | |
| | 3 | 1 | **9X-9865** | 1 | SEAL | |
| | 4 | 1 | **100-3248** | 1 | LENS AS (HEADLIGHT) | |
| | 5 | 1 | **9W-3324** | 1 | LAMP-HEAD | |
| | 6 | 1 | **100-3247** | 1 | BODY AS-LAMP | |
| M | 7 | 1 | **8T-5005** | 1 | BOLT (M10X1.5X70-MM) | |
| M | 8 | 1 | **8T-0389** | 1 | LOCKNUT (M10X1.15-THD) | |
| | 9 | 1 | **100-3253** | 1 | SPACER (SPHERICAL) | |
| | 10 | 1 | **100-3254** | 1 | SPACER (SPHERICAL) | |
| | 11 | 1 | **100-3255** | 1 | WASHER (SPHERICAL) | |
| J | 12 | 1 | **102-8805** | 1 | KIT-RECEPTACLE (6-PIN) | |
| | | | | | (INCLUDES RECEPTACLE AS & WEDGE) | |
| | 13 | 1 | **8T-8729** | 5 | PIN-CONNECTOR | |
| J | 14 | 1 | **3E-3383** | 1 | WEDGE-RECEPTACLE LOCK (6-PIN) | |
| | 15 | 1 | **8T-8737** | 1 | PLUG-SEAL | |
| | 16 | 1 | **100-3246** | 1 | LAMP (12-VOLT, 4-WATT) | |
| | 17 | 1 | **5G-3244** | 1 | LAMP (12-VOLT, 21-WATT) | |
| | 18 | 1 | **100-3250** | 1 | LENS (AMBER) (FRONT TURN) | |

J-KIT MARKED J INCLUDES PART MARKED J
M-METRIC PART

**3E-7584 LAMP GP-HEAD & SIGNAL** *(contd. )* **i02577854**

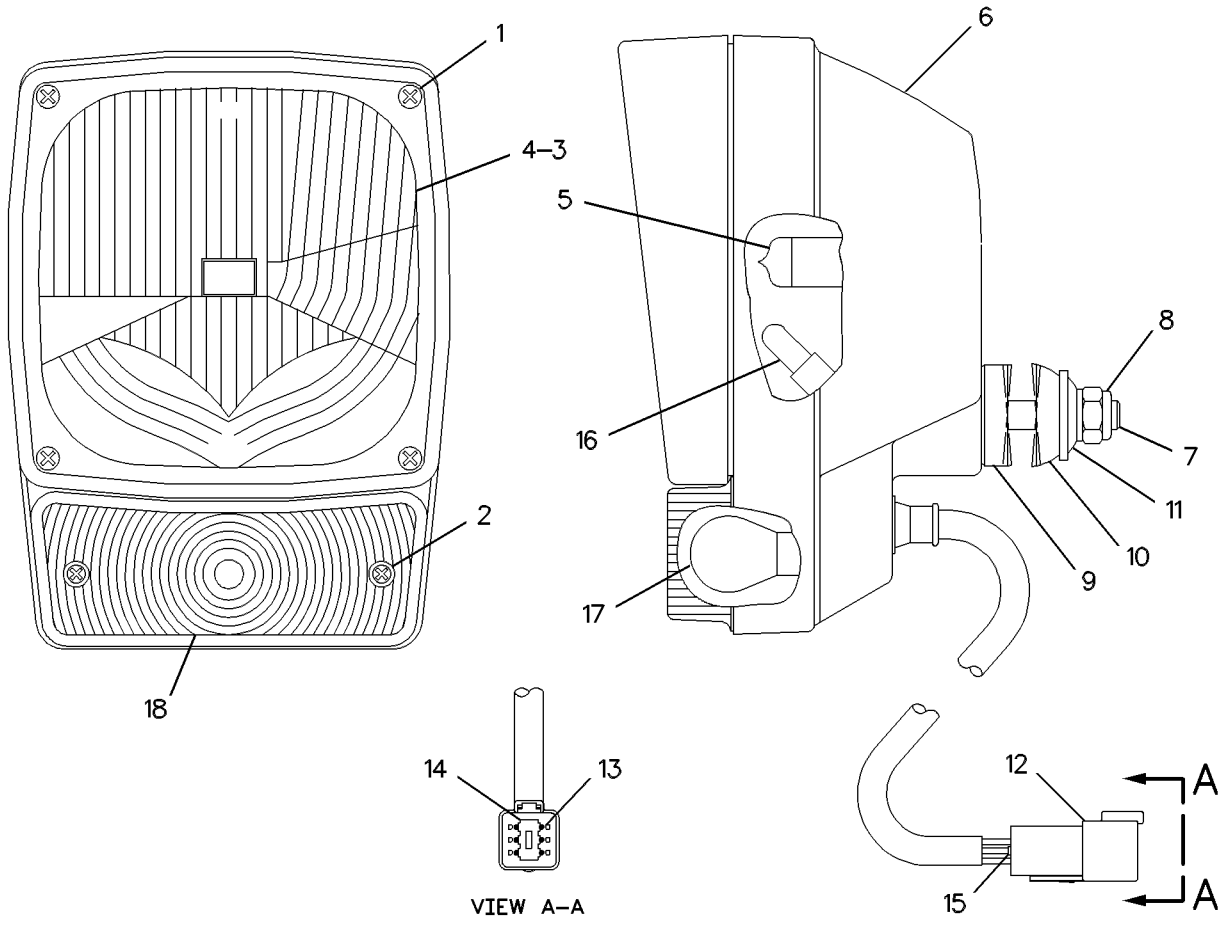


GRAPHIC #1 **<END>** g00460921

# 142-7503 LAMP GP-STOP & TAIL–12-VOLT

**S/N: HEN6750-UP**
**PART OF 142-8652 LIGHTING GP-STOP & TAIL**
**AN ATTACHMENT**

**SMCS-1432** **i02577856**

| NOTE | REF NO | GRAPHIC REF | PART NUMBER | QTY | PART NAME 1 2 3 4 5 6 (PRODUCT LEVEL) | SEE PAGE |
|---|---|---|---|---|---|---|
| | 1 | 1 | **084-4348** | 1 | LAMP (12-VOLT, 5-WATT) | |
| | 2 | 1 | **102-8804** | 1 | KIT-RECEPTACLE (4-PIN) | |
| | | | | | (INCLUDES RECEPTACLE AS & WEDGE) | |
| | 3 | 1 | **165-4895** | 1 | LENS | |
| M | 4 | 1 | **5C-2890** | 2 | NUT (M6X1-THD) | |
| | 5 | 1 | **8T-0087** | 2 | LOCKWASHER | |

M-METRIC PART

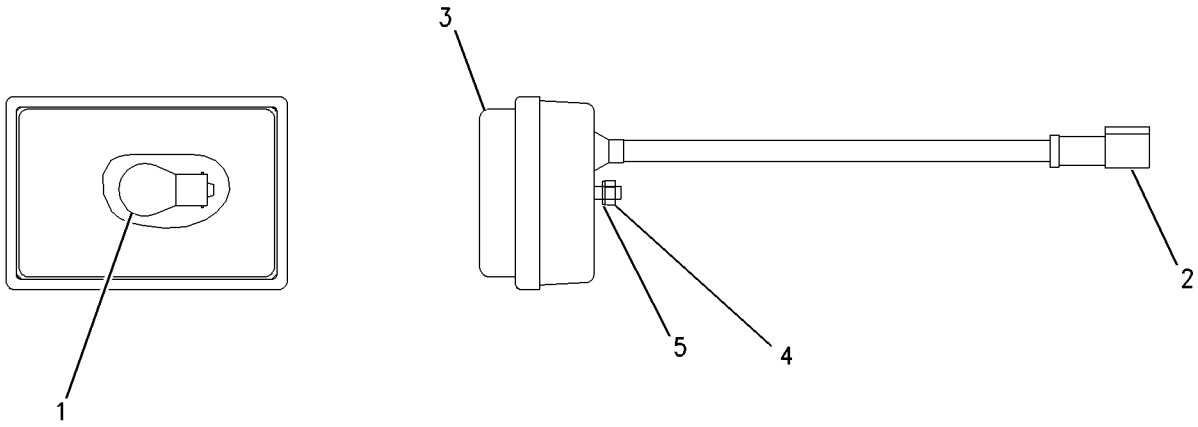


GRAPHIC #1 **<END>** g00669668

# 142-8634 LAMP GP-STOP & TAIL–12-VOLT

**S/N: HEN6750-UP**

**PART OF 277-0654 KIT-ROADING CONVERSION, 216-4715 LIGHTING GP-ROADING AN ATTACHMENT**

**SMCS-1432** **i02570776**

| NOTE | REF NO | GRAPHIC REF | PART NUMBER | QTY | PART NAME 1 2 3 4 5 6 (PRODUCT LEVEL) | SEE PAGE |
|---|---|---|---|---|---|---|
| | 1 | 1 | **9W-3326** | 1 | LAMP (12-VOLT, 21-WATT) | |
| | 2 | 1 | **084-4348** | 1 | LAMP (12-VOLT, 5-WATT) | |
| | 3 | 1 | **102-8804** | 1 | KIT-RECEPTACLE (4-PIN) | |
| | | | | | (INCLUDES RECEPTACLE AS & WEDGE) | |
| | 4 | 1 | **146-2438** | 1 | LENS (REAR, LH) | |
| M | 5 | 1 | **5C-2890** | 2 | NUT (M6X1-THD) | |
| | 6 | 1 | **1H-3244** | 2 | LOCKWASHER | |
| | 7 | 1 | **186-3735** | 4 | PIN-CONNECTOR (16-GA TO 18-GA) | |

M-METRIC PART

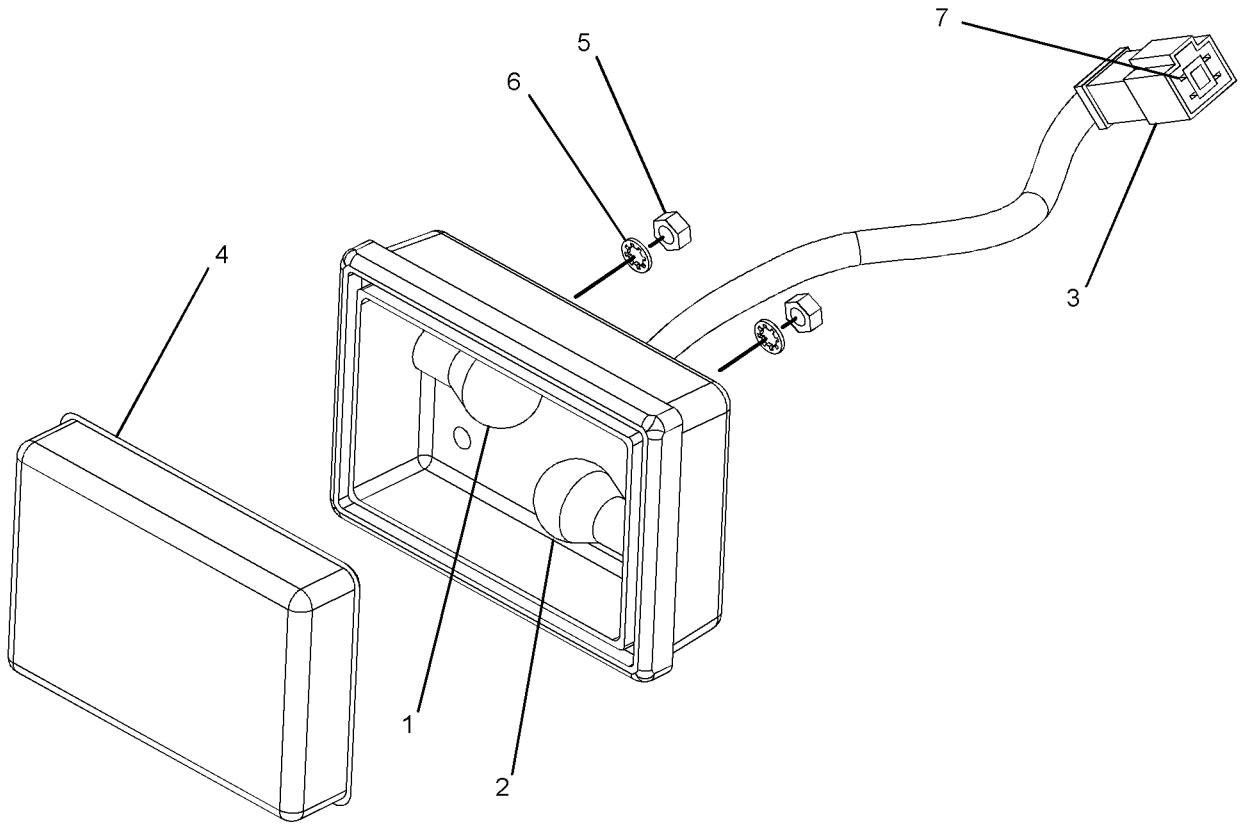


GRAPHIC #1 **<END>** g01212497

## 128-6985 LAMP GP-WARNING BEACON–12-VOLT, AMBER

**S/N: HEN6750-UP**

**PART OF 234-0793, 278-1293 CONVERSION GP-ROADING, 142-8653 LIGHTING GP-WARNING BEACON**

**AN ATTACHMENT**

**SMCS-1431** **i02712963**

| NOTE | REF NO | GRAPHIC REF | PART NUMBER | QTY | PART NAME 1 2 3 4 5 6 (PRODUCT LEVEL) | SEE PAGE |
|---|---|---|---|---|---|---|
| | 1 | 1 | **9X-8121** | 1 | LENS (AMBER, WARNING BEACON) | |
| | 2 | 1 | **9X-8118** | 1 | LAMP (12-VOLT, 55-WATT) | |
| | 3 | 1 | **9X-8139** | 1 | BELT-DRIVE (WARNING BEACON) | |
| | 4 | 1 | **9R-7958** | 1 | CORD AS | |
| | 5 | 1 | **9R-7942** | 1 | PLUG AS | |

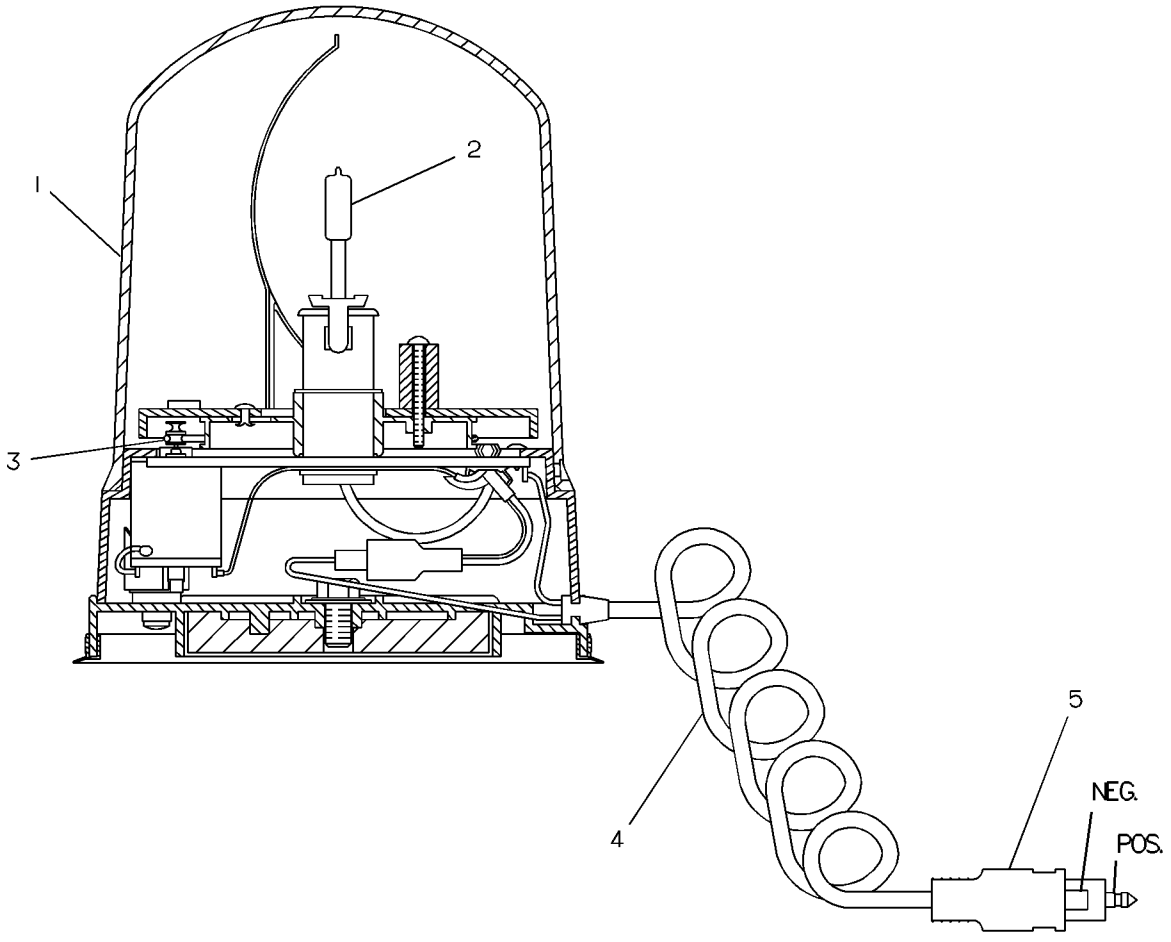


GRAPHIC #1 **<END>** g00130921

# *216-4746* LIGHTING GP-FLOOD–REAR

**S/N: HEN6750-UP**
**PART OF 295-7236, 295-7237 COMMON AR**
**ALSO AN ATTACHMENT**

**SMCS-1434** **i02262618**

| NOTE | REF NO | GRAPHIC REF | PART NUMBER | QTY | PART NAME 1 2 3 4 5 6 (PRODUCT LEVEL) | SEE PAGE |
|---|---|---|---|---|---|---|
| | 1 | 1 | **142-9326** | 1 | SWITCH AS-ROCKER (REAR WORK LAMPS) | |
| | | 1 | **111-7899** | 1 | GASKET | |
| Y | 2 | 1 | **234-7727** | 2 | LAMP GP-FLOOD (12-VOLT) (REAR) | 124 |
| M | 3 | 1 | **195-0937** | 2 | INSERT-THREADED (M8X1.25-THD) | |
| | 4 | 1 | **5P-8439** | 2 | GROMMET | |
| M | 5 | 1 | **6V-2317** | 2 | BOLT (M8X1.25X30-MM) | |
| | 6 | 1 | **8T-4224** | 4 | WASHER-HARD (8.8X16X2-MM THK) | |

M-METRIC PART
Y-SEPARATE ILLUSTRATION

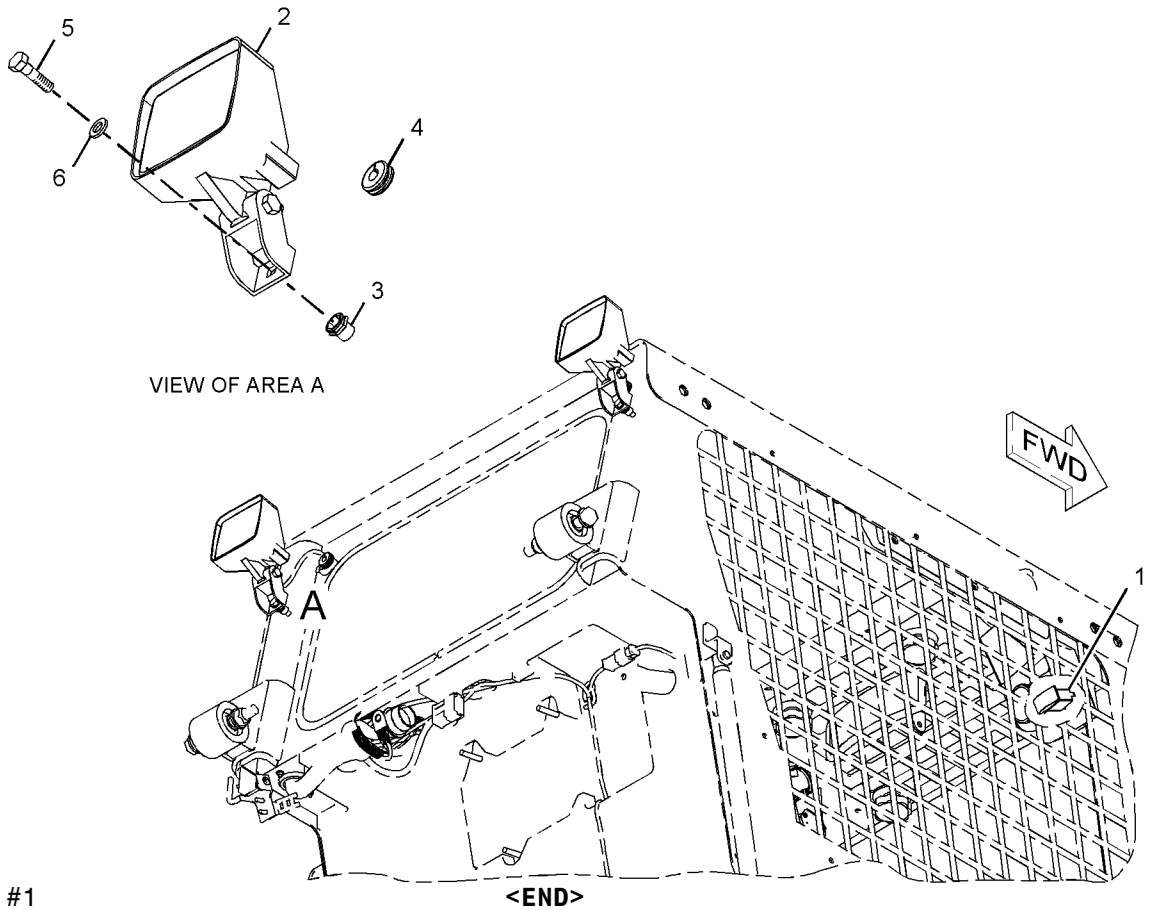


GRAPHIC #1 **<END>** g01136313

# *218-6425* LIGHTING GP-FLOOD–FRONT

**S/N: HEN6750-UP**

**PART OF 218-6350 CAB AR-ENCLOSED ROPS**

**SMCS-1434** **i02889665**

| NOTE | REF NO | GRAPHIC REF | PART NUMBER | QTY | PART NAME 1 2 3 4 5 6 (PRODUCT LEVEL) | SEE PAGE |
|---|---|---|---|---|---|---|
| Y | 1 | | **234-4328** | 2 | LAMP GP-FLOOD (12-VOLT) (FRONT) | 123 |
| | 2 | | **5P-8439** | 2 | GROMMET | |
| | 3 | | **8T-4121** | 4 | WASHER-HARD (11X21X2.5-MM THK) | |

Y-SEPARATE ILLUSTRATION

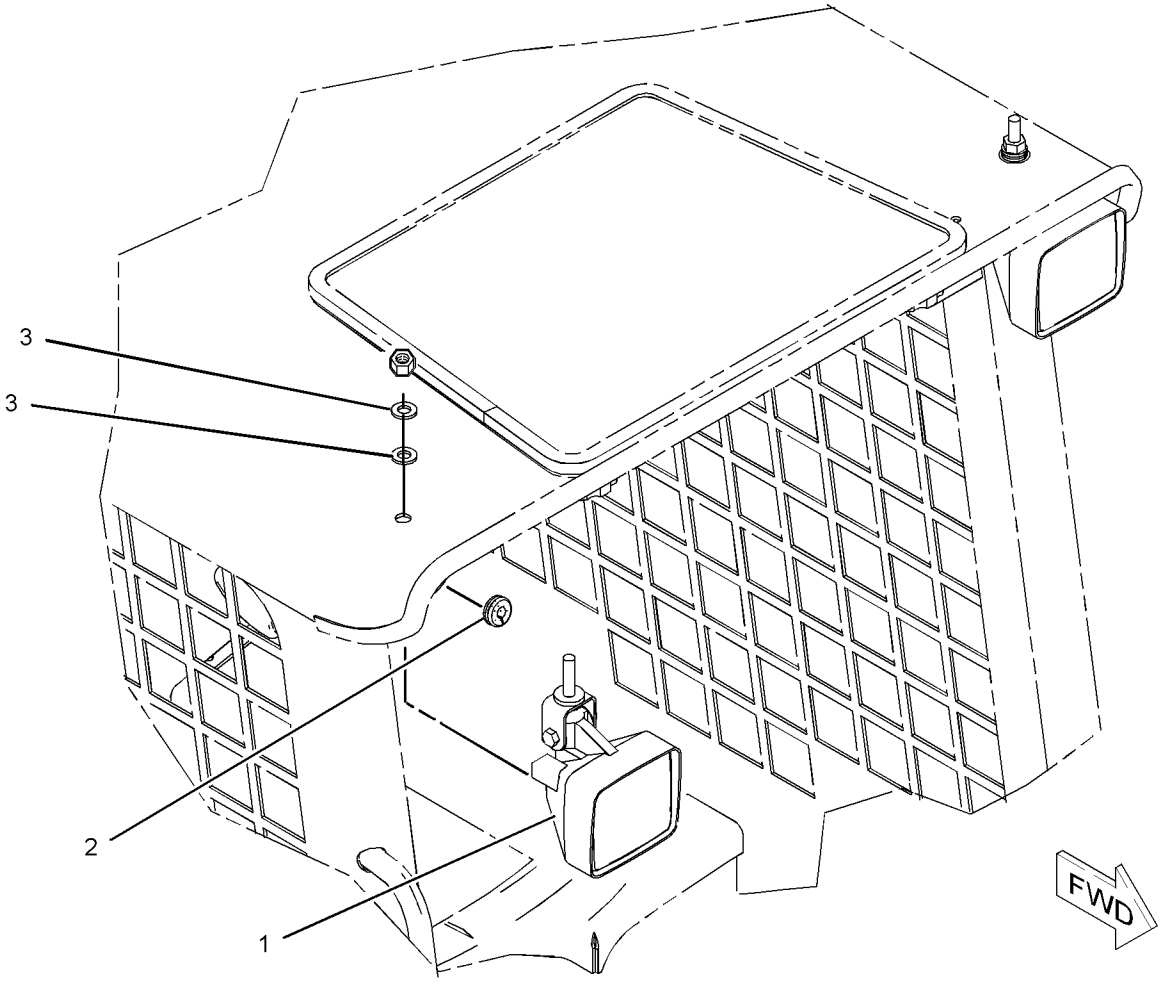


GRAPHIC #1 **<END>** g01040888

# ELECTRICAL AND STARTING SYSTEM

## *216-4715* LIGHTING GP-ROADING

**S/N: HEN6750-UP**

**PART OF 278-5373, 278-5418, 278-5448, 295-7154, 295-7170, 295-7171 CONVERSION AR-MACHINE, 236-5116, 236-5117, 251-1510 CONVERSION AR-ROADING AN ATTACHMENT**

**SMCS-1429** **i02771658**

| NOTE | REF NO | GRAPHIC REF | PART NUMBER | QTY | PART NAME 1 2 3 4 5 6 (PRODUCT LEVEL) | SEE PAGE |
|---|---|---|---|---|---|---|
| Y | 1 | 1 | **3E-7584** | 2 | LAMP GP-HEAD & SIGNAL | 125 |
| | 2 | 1 | **7D-5473** | 2 | BOLT-SOCKET HEAD (8-32X0.75-IN) | |
| | 3 | 1 | **8T-1887** | 2 | CLIP (SLOT) | |
| | 4 | 1 | **8T-1888** | 2 | CLIP (TAB) | |
| | 5 | 1 | **8W-8909** | 2 | SLEEVE | |
| | 6 | 1 | **9R-1499** | 2 | REFLECTOR | |
| Y | 7 | 1 | **142-8634** | 2 | LAMP GP-STOP & TAIL | 128 |
| | 8 | 1 | **147-1773** | 1 | CIRCUIT BREAKER AS (30-AMPERE) (LIGHTING) | |
| | | 1 | **6V-8378** | 2 | NUT (10-32-THD) | |
| | | 1 | **8F-1434** | 2 | LOCKWASHER | |
| | | 1 | **8T-0328** | 2 | WASHER-HARD (5.5X10X1-MM THK) | |
| | 9 | 1 | **216-4727** | 1 | HARNESS AS-REAR LIGHTING | |
| | | 1 | **102-8805** | 1 | KIT-RECEPTACLE (6-PIN) | |
| | | 1 | **102-8806** | 1 | KIT-RECEPTACLE (8-PIN) | |
| | | | | | (EACH KIT INCLUDES RECEPTACLE AS & WEDGE) | |
| | | 1 | **155-2265** | 1 | KIT-CONNECTING PLUG (8-PIN) | |
| | | | | | (INCLUDES PLUG AS, WEDGE & INTERFACE SEAL) | |
| | 10 | 1 | **225-7962** | 1 | SWITCH GP-ROCKER (ROADING) | |
| | | 1 | **226-5900** | 1 | SWITCH AS-ROCKER (TURN SIGNAL) | |
| | | 1 | **142-9329** | 1 | SWITCH AS-ROCKER (ROADING LIGHTS) | |
| | | 1 | **142-9331** | 1 | SWITCH AS-ROCKER (HAZARD WARNING LIGHTS) | |
| | | | | | (EACH SWITCH AS-ROCKER INCLUDES) | |
| | | 1 | **111-7899** | 1 | GASKET | |
| | 11 | 1 | **225-7990** | 1 | HARNESS AS-FRONT LIGHTING | |
| | | 1 | **155-2274** | 1 | KIT-CONNECTING PLUG (6-PIN) | |
| | | | | | (INCLUDES PLUG AS, WEDGE & INTERFACE SEAL) | |
| | 12 | 1 | **225-8013** | 1 | WIRE AS | |
| | 13 | 1 | **242-9000** | 1 | FLASHER AS (12-VOLT) | |
| | 14 | 1 | **195-0935** | 1 | INSERT-THREADED (M6X1-THD) | |
| | 15 | 1 | **206-1346** | 2 | STRAP-CABLE | |
| | 16 | 1 | **3S-2093** | 18 | STRAP-CABLE | |
| | 17 | 1 | **4B-4863** | 2 | WASHER (4.7X11X1.2-MM THK) | |
| | 18 | 1 | **4P-7581** | 1 | CLIP | |
| M | 19 | 1 | **8T-4201** | 1 | BOLT-LOCKING (M10X1.5X20-MM) | |
| M | 20 | 1 | **9X-2042** | 1 | SCREW-TRUSS HEAD (M6X1X12-MM) | |

M-METRIC PART
Y-SEPARATE ILLUSTRATION

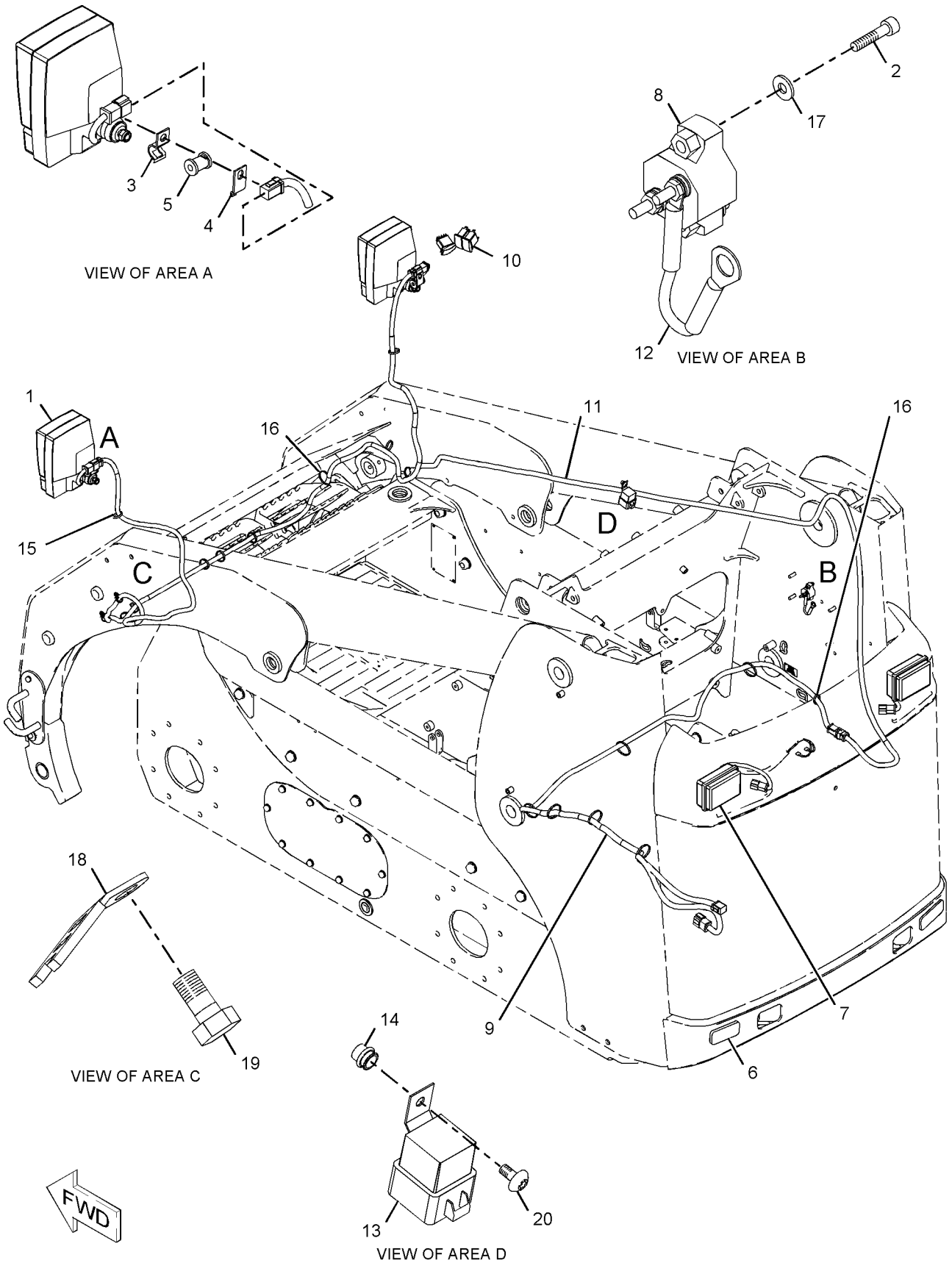


GRAPHIC #1

**<END>**

g01029883

# *142-8652* LIGHTING GP-STOP & TAIL

**S/N: HEN6750-UP**

**PART OF 261-6126, 261-6165, 278-5351, 295-7064, 295-7071 CONVERSION AR-MACHINE, 218-5780 CONVERSION AR-NON-ROADING, 218-5781, 218-5784 CONVERSION AR-ROADING AN ATTACHMENT**

**SMCS-1432** **i02757097**

| NOTE | REF NO | GRAPHIC REF | PART NUMBER | QTY | PART NAME 1 2 3 4 5 6 (PRODUCT LEVEL) | SEE PAGE |
|---|---|---|---|---|---|---|
| | 1 | 1 | **3S-2093** | 2 | STRAP-CABLE | |
| | 2 | 1 | **9R-1499** | 2 | REFLECTOR | |
| Y | 3 | 1 | **142-7503** | 2 | LAMP GP-STOP & TAIL (12-VOLT) | 127 |
| | 4 | 1 | **4P-7581** | 2 | CLIP | |
| | 5 | 1 | **8T-4205** | 4 | WASHER-HARD (7.2X14.5X2-MM THK) | |

Y-SEPARATE ILLUSTRATION

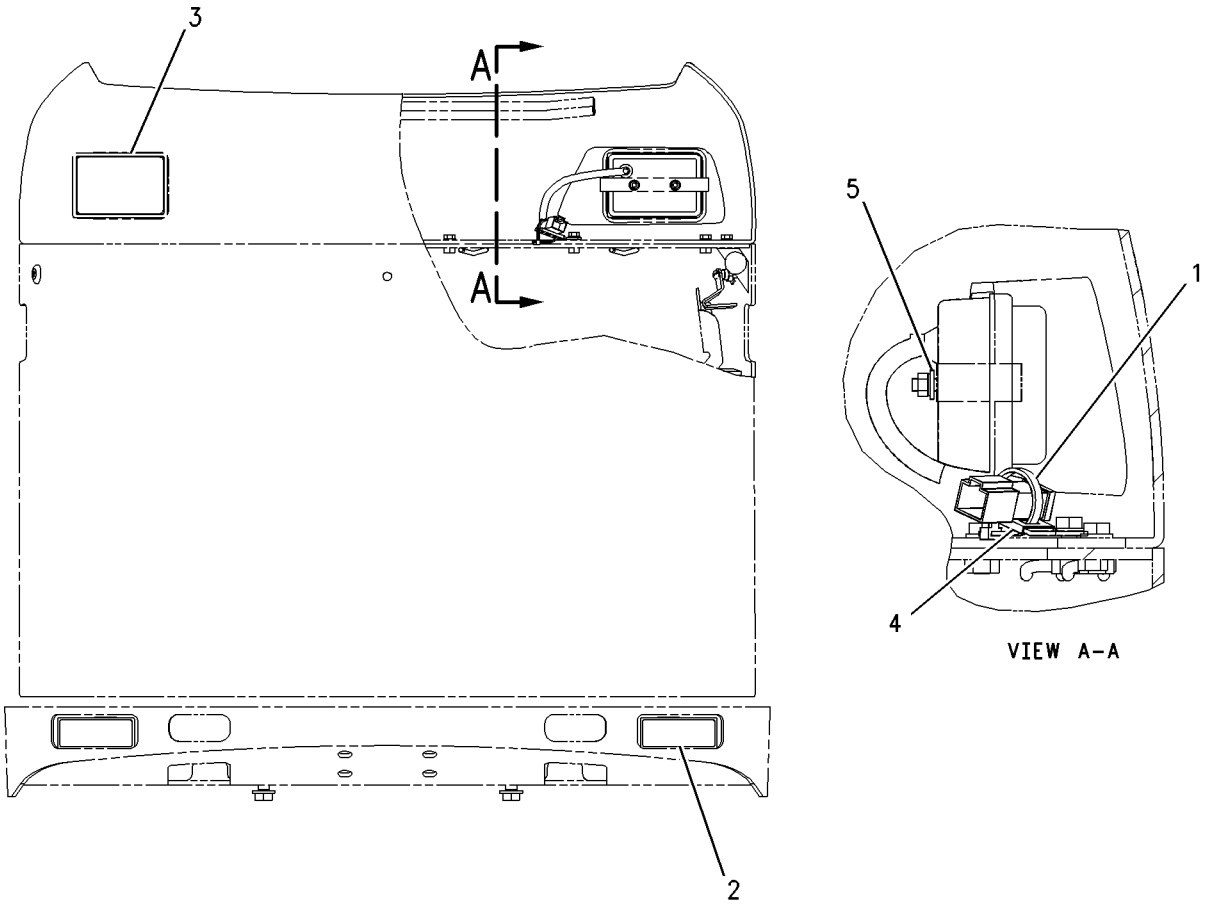


GRAPHIC #1 **<END>** g00771277

# *142-8653* LIGHTING GP-WARNING BEACON–12-VOLT

**S/N: HEN6750-UP**
**AN ATTACHMENT**

**SMCS-1431** **i02262621**

| NOTE | REF NO | GRAPHIC REF | PART NUMBER | QTY | PART NAME 1 2 3 4 5 6 (PRODUCT LEVEL) | SEE PAGE |
|---|---|---|---|---|---|---|
| Y | 1 | 1 | **128-6985** | 1 | LAMP GP-WARNING BEACON (12-VOLT, AMBER) | 129 |
| | 2 | 1 | **142-9327** | 1 | SWITCH AS-ROCKER (WARNING BEACON) | |
| | | 1 | **111-7899** | 1 | GASKET | |

Y-SEPARATE ILLUSTRATION

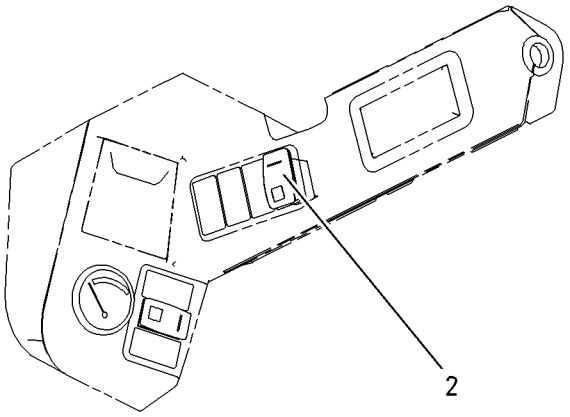


RH CONTROL PANEL

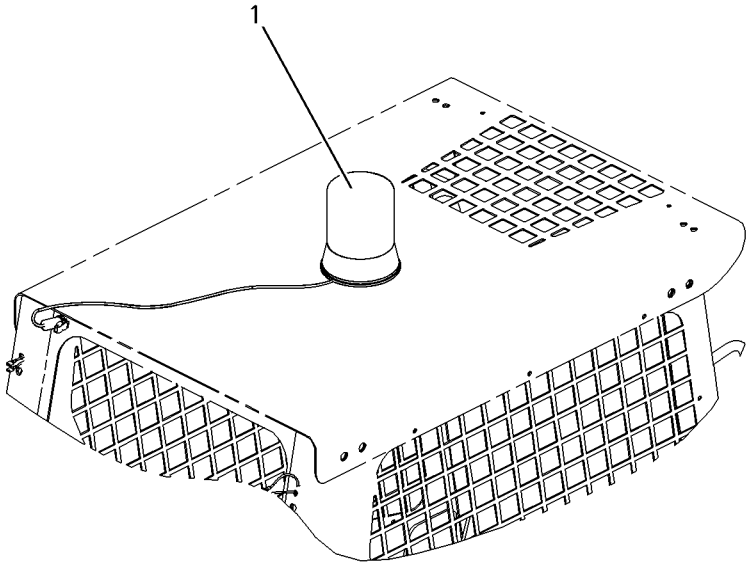


GRAPHIC #1 **<END>** g00867567

# *238-8277* SENSOR GP-TEMP & PRESS–ENGINE

**S/N: CJS1-UP**

**PART OF 308-9664 ENGINE AR-PRIMARY**

**AN ATTACHMENT**

**SMCS-1906, 1924** **i02525089**

| NOTE | REF NO | GRAPHIC REF | PART NUMBER | QTY | PART NAME 1 2 3 4 5 6 (PRODUCT LEVEL) | SEE PAGE |
|---|---|---|---|---|---|---|
| | 1 | 1 | **292-6568** | 1 | SWITCH-PRESSURE (ENGINE OIL) | |
| | 2 | 1 | **238-8274** | 1 | SWITCH-TEMPERATURE (ENGINE COOLANT) | |

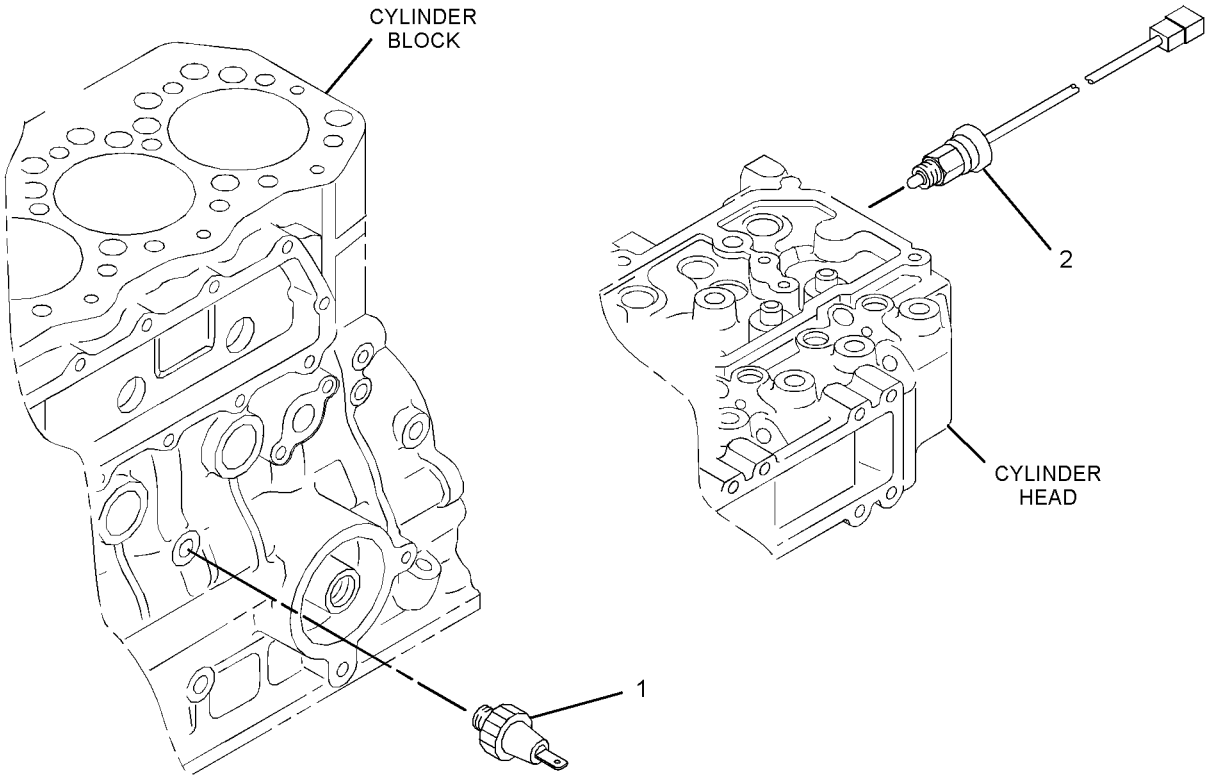


GRAPHIC #1 **<END>** g01341914

# *143-0539* STARTING MOTOR GP-ELECTRIC–12-VOLT*R

**S/N: CYM1-UP; CJS1-UP**

**PART OF 287-6181 STARTING MOTOR GP-ELECTRIC**

**AN ATTACHMENT**

**SMCS-1453** **i02712964**

| NOTE | REF NO | GRAPHIC REF | PART NUMBER | QTY | PART NAME 1 2 3 4 5 6 (PRODUCT LEVEL) | SEE PAGE |
|---|---|---|---|---|---|---|
| | 1 | 1 | **8C-9778** | 1 | PLUNGER AS | |
| | 2 | 1 | **8C-9783** | 1 | GASKET | |
| | 3 | 1 | **2P-8104** | 1 | BEARING | |
| | 4 | 1 | **7T-6092** | 1 | HOLDER AS-BRUSH | |
| M | 5 | 1 | **8T-4133** | 2 | NUT (M10X1.5-THD) | |
| | 6 | 1 | **7T-6088** | 1 | BEARING AS | |
| | 7 | 1 | **7T-6087** | 1 | WASHER | |
| | 8 | 1 | **7T-6093** | 1 | CLUTCH AS | |
| | 9 | 1 | **8J-4455** | 1 | BALL | |
| | 10 | 1 | **7T-6090** | 1 | SPRING | |
| | 11 | 1 | **8T-4121** | 2 | WASHER-HARD (11X21X2.5-MM THK) | |
| | 12 | 1 | **3E-5153** | 1 | COVER-STARTING MOTOR | |
| M | 13 | 1 | **9X-2036** | 1 | SCREW-PAN HEAD | |
| | 14 | 1 | **8F-1434** | 1 | LOCKWASHER | |
| | 15 | 1 | **100-4113** | 1 | SWITCH AS (STARTING MOTOR)(12-VOLT) | |
| | 16 | 1 | **100-4119** | 1 | ARMATURE AS | |
| | 17 | 1 | **100-4118** | 1 | CASE AS-STARTING MOTOR | |
| | 18 | 1 | **100-4115** | 1 | HOUSING-STARTING MOTOR | |
| | 19 | 1 | **143-1344** | 1 | FRAME-STARTER | |
| | 20 | 1 | **100-3685** | 1 | CAP | |
| | 21 | 1 | **3E-5154** | 1 | BUSHING-STARTING MOTOR | |
| | | | | | AVAILABLE REPAIR KIT(S): | |
| | | | **7T-6099** | 1 | KIT-GEAR (STARTING MOTOR) | |
| | | | | | (INCLUDES RETAINER, PINION & ROLLERS) | |
| | | | **146-6729** | 1 | KIT-HARDWARE (STARTING MOTOR) | |
| | | | | | (INCLUDES BOLTS, SCREWS, SCREW ASSEMBLIES & PLATE) | |
| | | | **100-4112** | 1 | KIT-CONTACT (STARTING MOTOR) | |
| | | | | | (INCLUDES NUT, WASHERS, SEAL, BUSHINGS, PLATE & BOLT) | |

M-METRIC PART

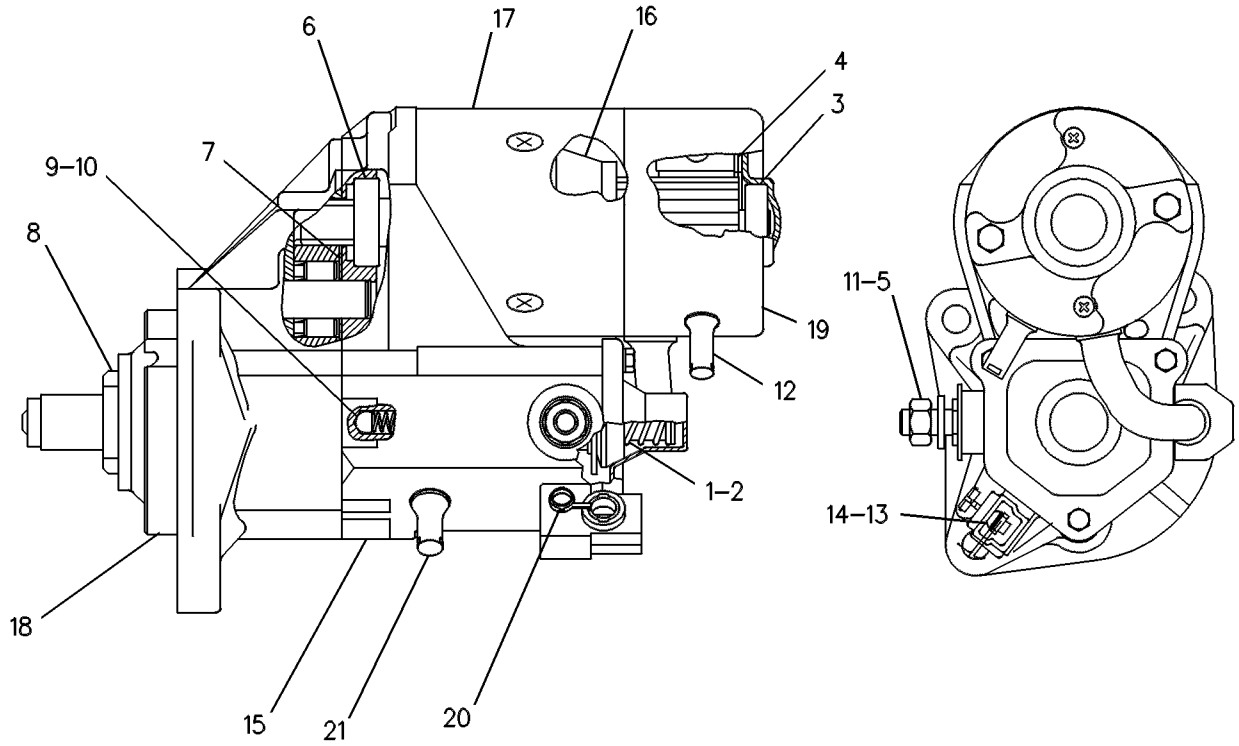


GRAPHIC #1 **<END>** g00131126

# *287-6181* STARTING MOTOR GP-ELECTRIC–12-VOLT

**S/N: CYM1-UP; CJS1-UP**
**PART OF 300-6603, 308-9664 ENGINE AR-PRIMARY**
**AN ATTACHMENT**

**SMCS-1453** **i02568571**

| NOTE | REF NO | GRAPHIC REF | PART NUMBER | QTY | PART NAME 1 2 3 4 5 6 (PRODUCT LEVEL) | SEE PAGE |
|---|---|---|---|---|---|---|
| YR | 1 | 1 | **143-0539** | 1 | STARTING MOTOR GP-ELECTRIC | 137 |

R-REMFG PART MAY BE AVAILABLE
Y-SEPARATE ILLUSTRATION

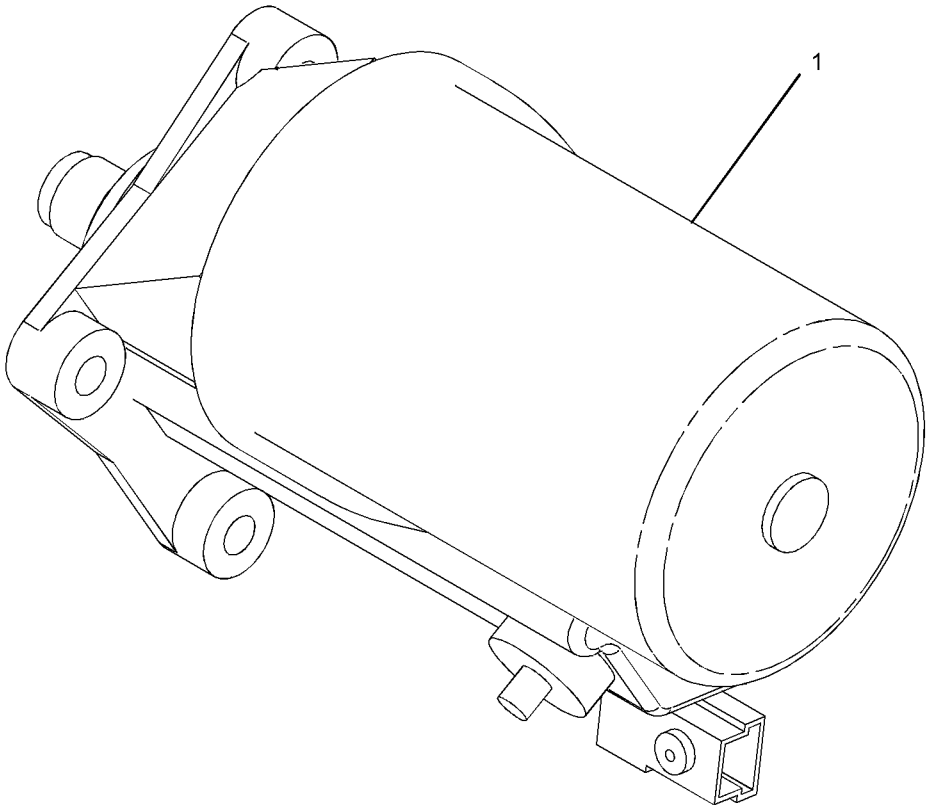


GRAPHIC #1 **<END>** g01345353

# 184-1564 SWITCH GP-PRESSURE–BRAKE LIGHT

**S/N: HEN6750-UP**

**PART OF 277-0654 KIT-ROADING CONVERSION, 225-7964 WIRING GP-REAR LIGHTING AN ATTACHMENT**

**SMCS-1435, 7400** **i02570793**

| NOTE | REF NO | GRAPHIC REF | PART NUMBER | QTY | PART NAME 1 2 3 4 5 6 (PRODUCT LEVEL) | SEE PAGE |
|---|---|---|---|---|---|---|
| | 1 | 1 | **9X-1813** | | SLEEVE (19-CM) | |
| | 2 | 1 | **102-8802** | 1 | KIT-RECEPTACLE (2-PIN) | |
| | | | | | (INCLUDES RECECPTACLE AS & WEDGE) | |
| | 3 | 1 | **8T-8729** | 2 | PIN-CONNECTOR | |
| | 4 | 1 | **3E-3365** | 1 | WEDGE-RECEPTACLE LOCK (2-PIN) | |
| | 5 | 1 | **3J-1907** | 1 | SEAL-O-RING | |

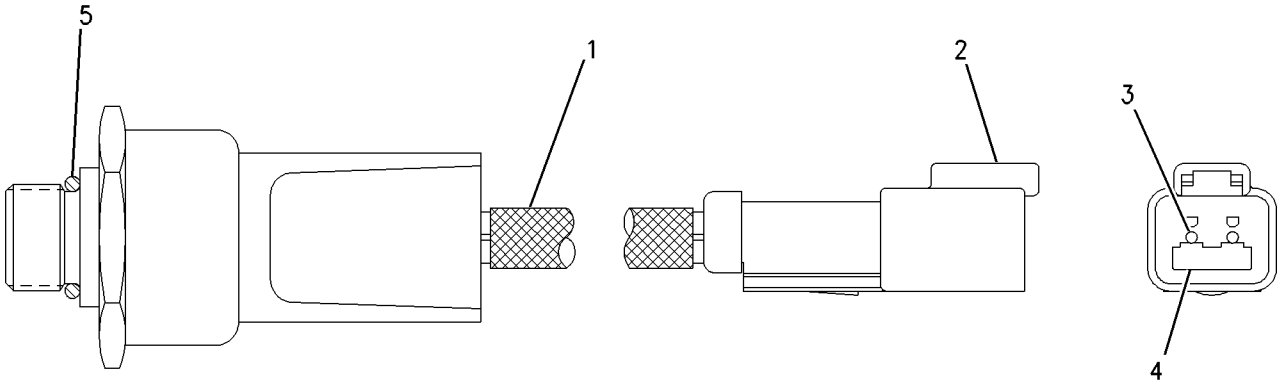


GRAPHIC #1 **<END>** g00788762

# *314-9918* SWITCH GP-PRESSURE

**S/N: CYM1-UP**

**PART OF 300-6603 ENGINE AR-PRIMARY**

**AN ATTACHMENT**

**SMCS-1435, 7400** **i02879784**

| NOTE | REF NO | GRAPHIC REF | PART NUMBER | QTY | PART NAME 1 2 3 4 5 6 (PRODUCT LEVEL) | SEE PAGE |
|---|---|---|---|---|---|---|
| | 1 | 1 | **292-6568** | 1 | SWITCH-PRESSURE (ENGINE OIL) | |
| | 2 | 1 | **315-0001** | 1 | SENSOR-TEMPERATURE (COOLANT) | |

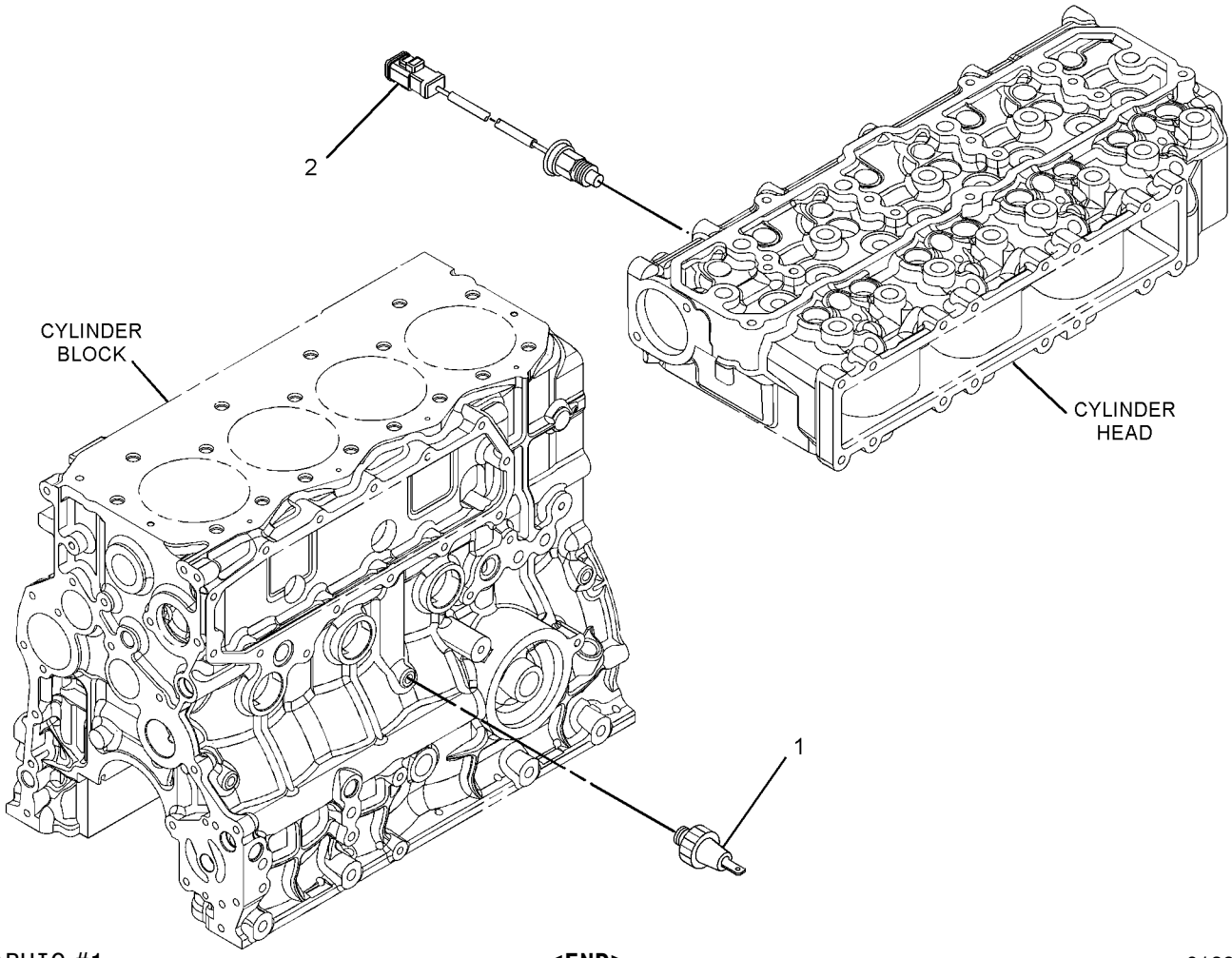


GRAPHIC #1 **<END>** g01397800

# *225-7969* WARNING GP-BACKUP

**S/N: HEN6750-UP**
**PART OF 295-7236, 295-7237 COMMON AR**
**CANNOT BE USED WITH 142-8714—PAGE 332**
**ALSO AN ATTACHMENT**

**SMCS-7406** **i02359135**

| NOTE | REF NO | GRAPHIC REF | PART NUMBER | QTY | PART NAME 1 2 3 4 5 6 (PRODUCT LEVEL) | SEE PAGE |
|---|---|---|---|---|---|---|
| | 1 | 1 | **8T-4205** | 2 | WASHER-HARD (7.2X14.5X2-MM THK) | |
| | 2 | 1 | **161-2539** | 1 | ALARM AS | |
| | 3 | 1 | **192-0836** | 1 | SWITCH GP-PRESSURE (BACKUP ALARM) | |
| | | 1 | **102-8802** | 2 | KIT-RECEPTACLE (2-PIN) | |
| | | | | | (INCLUDES RECEPTACLE AS & WEDGE) | |
| | | 1 | **3E-3365** | 1 | WEDGE-RECEPTACLE LOCK (2-PIN) | |
| | | 1 | **3J-1907** | 1 | SEAL-O-RING | |
| | | 1 | **8T-8729** | 1 | PIN-CONNECTOR | |
| M | 4 | 1 | **6V-7357** | 2 | BOLT (M6X1X25-MM) | |
| | | | | | | |
| F | | 1 | **113-8490** | 1 | FUSE (10-AMPERE) | |

F-NOT SHOWN
M-METRIC PART

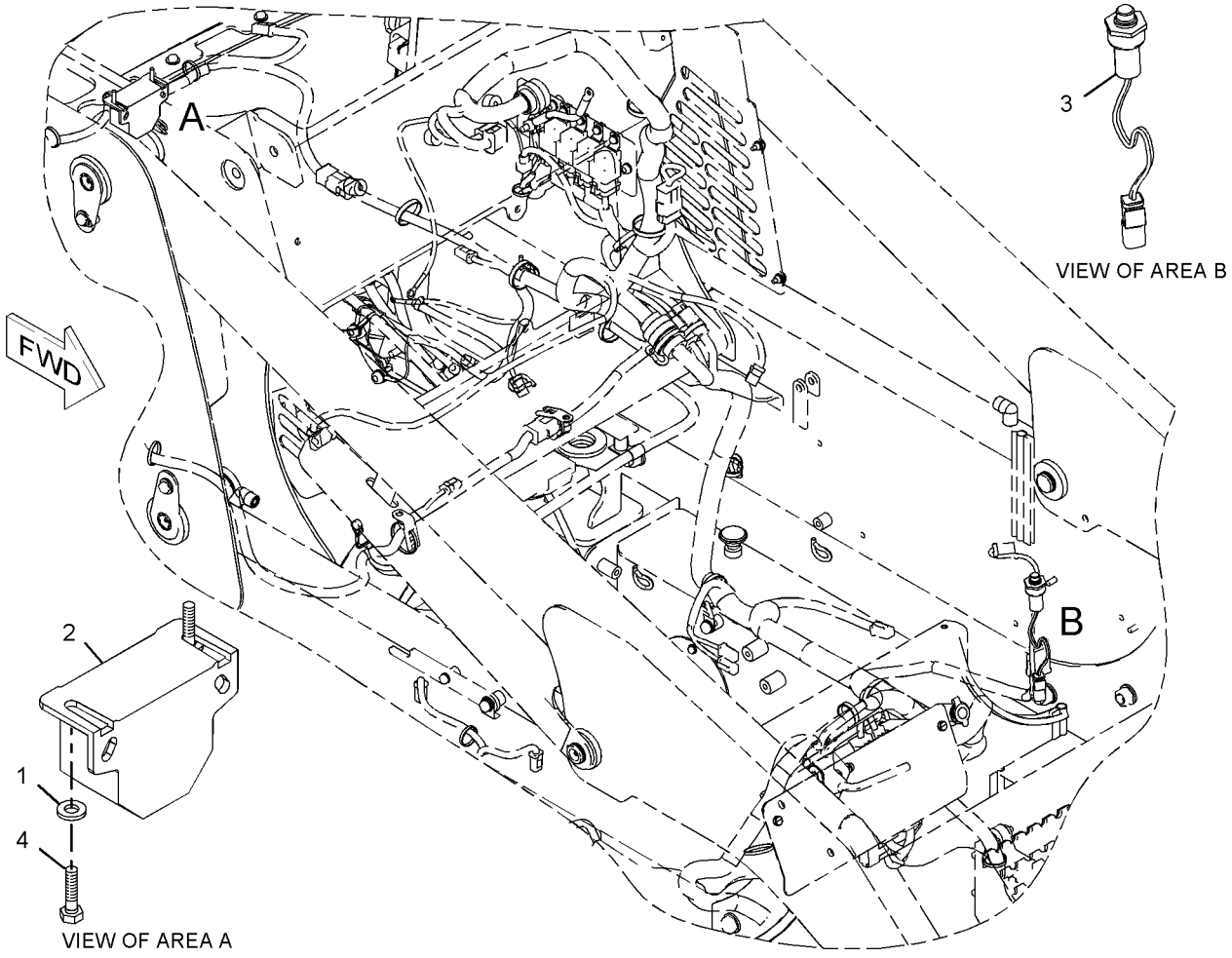


GRAPHIC #1 **<END>** g01030769

# *225-7948* WIRING GP-AIR CONDITIONER

**S/N: HEN6750-UP**
**PART OF 218-6050 AIR CONDITIONER AR**
**AN ATTACHMENT**

**SMCS-1408, 7320** **i02359133**

| NOTE | REF NO | GRAPHIC REF | PART NUMBER | QTY | PART NAME 1 2 3 4 5 6 (PRODUCT LEVEL) | SEE PAGE |
|---|---|---|---|---|---|---|
| | 1 | 1 | **3S-2093** | 12 | STRAP-CABLE | |
| | 2 | 1 | **202-2168** | 1 | HARNESS AS-FUEL TANK | |
| | | 1 | **102-8802** | 1 | KIT-RECEPTACLE (2-PIN) | |
| | | | | | (INCLUDES RECEPTACLE AS & WEDGE) | |
| | | 1 | **155-2270** | 1 | KIT-CONNECTING PLUG (2-PIN) | |
| | | | | | (INCLUDES PLUG AS, WEDGE & INTERFACE SEAL) | |
| | 3 | 1 | **221-3879** | 1 | HARNESS AS-HEATER & AIR COND | |
| | | 1 | **155-2260** | 1 | KIT-CONNECTING PLUG (3-PIN) | |
| | | 1 | **155-2270** | 1 | KIT-CONNECTING PLUG (2-PIN) | |
| | | | | | (EACH KIT INCLUDES PLUG AS, WEDGE & INTERFACE SEAL) | |
| | | | | | | |
| BF | | 1 | **124-3548** | 1 | FUSE (30-AMPERE) | |
| BF | | 1 | **113-8491** | 1 | FUSE (15-AMPERE) | |

B-USE AS REQUIRED
F-NOT SHOWN

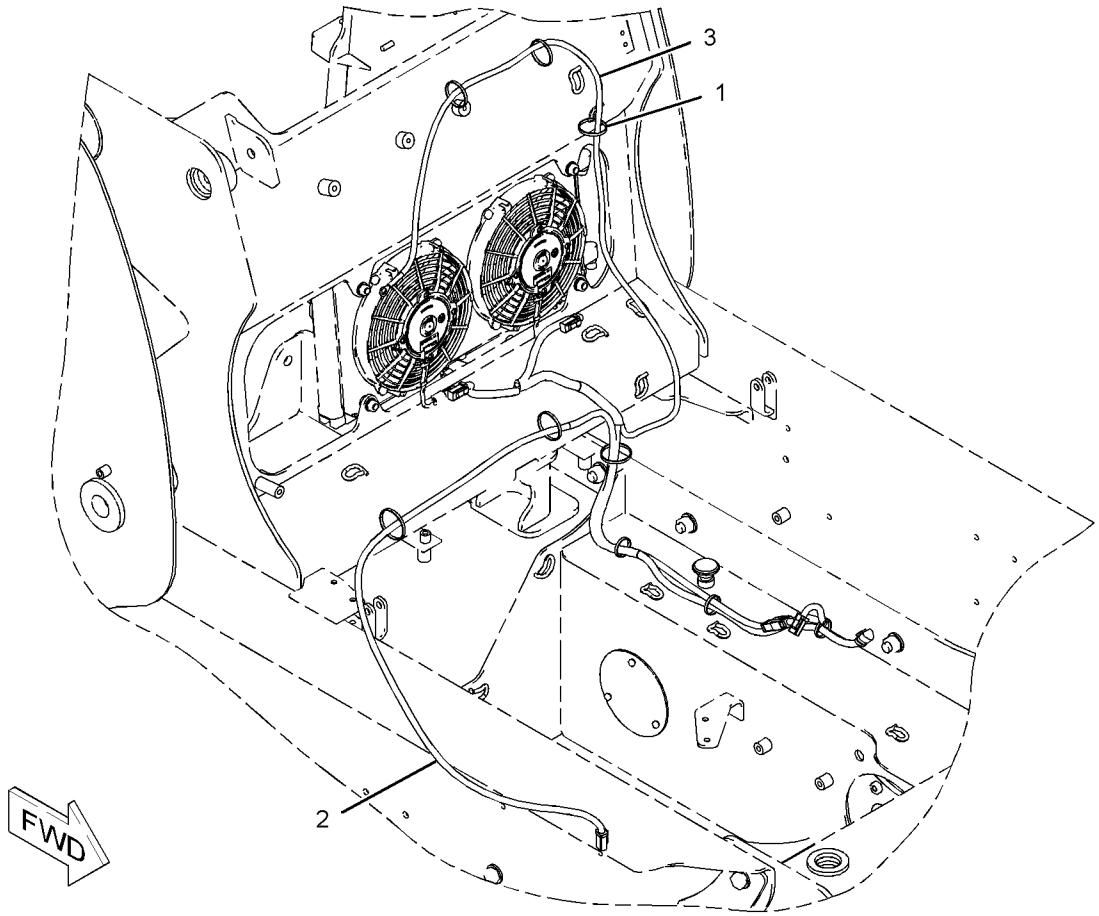


GRAPHIC #1 **<END>** g01029283

## *216-4700* WIRING GP-CHASSIS

**S/N: HEN6750-UP**

**PART OF 295-7510, 295-7518 CHASSIS AR**

**SMCS-1408, 7051** **i02534368**

| NOTE | REF NO | GRAPHIC REF | PART NUMBER | QTY | PART NAME 1 2 3 4 5 6 (PRODUCT LEVEL) | SEE PAGE |
|---|---|---|---|---|---|---|
| | 1 | 1 | **4B-4863** | 2 | WASHER (4.7X11X1.2-MM THK) | |
| | 2 | 1 | **6I-1418** | 6 | SPACER (8.2X12.7X28.7-MM THK) | |
| | 3 | 2 | **7K-1181** | 17 | STRAP-CABLE | |
| | 4 | 1 | **8M-4963** | 1 | STRAP AS-GROUND | |
| | 5 | 1 | **8T-8799** | 1 | BOOT | |
| | 6 | 1 | **8T-9655** | 12 | MOUNT-ISOLATION | |
| | 7 | 2 | **090-9434** | 3 | SPACER (9X20X10-MM THK) | |
| | 8 | 2 | **106-8704** | 1 | SUPPRESSOR AS-ARC | |
| | 9 | 2 | **114-4516** | 1 | BLOCK | |
| | 10 | 1,2 | **115-1615** | 4 | RELAY AS (12-VOLT) (MAIN POWER) | |
| Y | 11 | 1 | **154-4233** | 1 | CONTROL GP-INTERLOCK | 110 |
| | 12 | 2 | **177-9645** | 1 | KIT-RECEPTACLE (2-PIN) | |
| | | | | | (INCLUDES RECEPTACLE AS & WEDGE) | |
| | 13 | 1 | **178-7539** | 1 | RECEPTACLE AS (POWER SUPPLY) | |
| | 14 | 2 | **258-4199** | 1 | HARNESS AS-PLATFORM | |
| | | 2 | **102-8804** | 1 | KIT-RECEPTACLE (4-PIN) | |
| | | 2 | **102-8801** | 1 | KIT-RECEPTACLE (12-PIN) | |
| | | | | | (EACH RECEPACTLE KIT INCLUDES RECEPTACLE AS & WEDGE) | |
| | | 2 | **8L-8413** | 25 | STRAP-CABLE | |
| | | 2 | **8T-8799** | 3 | BOOT | |
| | | 2 | **9X-1054** | 4 | PLUG AS-CONNECTOR (4-PIN) | |
| | | 2 | **100-3320** | 1 | PLUG AS-CONNECTOR (2-PIN) | |
| | | 2 | **126-5011** | 1 | SEAL-CONNECTOR | |
| | | 2 | **119-3662** | | TUBE-HEAT SHRINK (10.85-MM DIA) (46-CM) | |
| | | 2 | **125-7874** | | TUBE-HEAT SHRINK (5.72-MM DIA) (30-CM) | |
| | | 2 | **125-7875** | | TUBE-HEAT SHRINK (7.44-MM DIA) (10-CM) | |
| | | 2 | **155-2255** | 3 | KIT-CONNECTING PLUG (12-PIN) | |
| | | 2 | **155-2265** | 1 | KIT-CONNECTING PLUG (8-PIN) | |
| | | 2 | **155-2260** | 3 | KIT-CONNECTING PLUG (3-PIN) | |
| | | 2 | **155-2270** | 4 | KIT-CONNECTING PLUG (2-PIN) | |
| | | 2 | **155-2271** | 2 | KIT-CONNECTING PLUG (4-PIN) | |
| | | 2 | **155-2274** | 1 | KIT-CONNECTING PLUG (6-PIN) | |
| | | | | | (EACH PLUG KIT INCLUDES PLUG AS, WEDGE & INTERFACE SEAL) | |
| | | 2 | **167-3693** | 2 | PLUG AS-CONNECTOR (31-PIN) | |
| | | 2 | **177-9648** | 1 | KIT-CONNECTING PLUG (2-PIN) | |
| | | 2 | **177-9656** | 1 | KIT-CONNECTING PLUG (4-PIN) | |
| | | | | | (EACH RECEPTACLE KIT INCLUDES RECEPTACLE AS & WEDGE) | |
| | | 2 | **213-0139** | 6 | PIN | |
| | 15 | 1 | **216-4702** | 1 | HARNESS AS-PLATFORM (LOWER) | |
| | | 1 | **102-8805** | 1 | KIT-RECEPTACLE (6-PIN) | |
| | | 1 | **102-8801** | 1 | KIT-RECEPTACLE (12-PIN) | |
| | | | | | (EACH RECEPTACLE KIT INCLUDES RECEPTACLE AS & WEDGE) | |
| | | 1 | **7R-2751** | 7 | PLUG-CONNECTOR | |
| | | 1 | **8C-6354** | 1 | CAP-RECEPTACLE | |
| | | 1 | **8L-8413** | 25 | STRAP-CABLE | |
| | | 1 | **9W-1951** | 1 | RECEPTACLE-CONNECTOR (9-PIN) | |
| | | 1 | **119-3662** | | TUBE-HEAT SHRINK (10.85-MM DIA) (7-CM) | |
| | | 1 | **119-3662** | | TUBE-HEAT SHRINK (10.85-MM DIA) (20-CM) | |
| | | 1 | **119-3662** | | TUBE-HEAT SHRINK (10.85-MM DIA) (13-CM) | |
| | | 1 | **119-3662** | | TUBE-HEAT SHRINK (10.85-MM DIA) (7-CM) | |
| | | 1 | **125-7874** | | TUBE-HEAT SHRINK (5.72-MM DIA) (60-CM) | |
| | | 1 | **125-7874** | | TUBE-HEAT SHRINK (5.72-MM DIA) (65-CM) | |
| | | 1 | **125-7874** | | TUBE-HEAT SHRINK (5.72-MM DIA) (60-CM) | |

*216-4700* **WIRING GP-CHASSIS** *(contd.)* **i02534368**

| NOTE | REF NO | GRAPHIC REF | PART NUMBER | QTY | PART NAME 1 2 3 4 5 6 (PRODUCT LEVEL) | SEE PAGE |
|---|---|---|---|---|---|---|
| | | 1 | **125-7875** | | TUBE-HEAT SHRINK (7.44-MM DIA) (5-CM) | |
| | | 1 | **125-7875** | | TUBE-HEAT SHRINK (7.44-MM DIA) (10-CM) | |
| | | 1 | **125-7875** | | TUBE-HEAT SHRINK (7.44-MM DIA) (15-CM) | |
| | | 1 | **125-7875** | | TUBE-HEAT SHRINK (7.44-MM DIA) (20-CM) | |
| | | 1 | **128-4123** | 41 | SEAL | |
| | 16 | 1 | **216-4703** | 1 | HARNESS AS-REAR LIGHTING | |
| | | 1 | **102-8806** | 1 | KIT-RECEPTACLE (8-PIN) | |
| | | | | | (INCLUDES RECEPTACLE AS & WEDGE) | |
| | | 1 | **125-7874** | 5 | TUBE-HEAT SHRINK (5.72-MM DIA) | |
| | | 1 | **125-7875** | 5 | TUBE-HEAT SHRINK (7.44-MM DIA) | |
| | | 1 | **155-2271** | 2 | KIT-CONNECTING PLUG (4-PIN) | |
| | | | | | (INCLUDES PLUG AS, WEDGE & INTERFACE SEAL) | |
| Y | 17 | 1 | *216-4755* | 1 | COVER GP-FUSE PANEL | 112 |
| | 18 | 1 | **221-3880** | 1 | PANEL GP-FUSE | |
| | | 1 | **113-8490** | 16 | FUSE (10-AMPERE) | |
| | | 1 | **113-8491** | 5 | FUSE (15-AMPERE) | |
| | | 1 | **113-8492** | 2 | FUSE (20-AMPERE) | |
| | | 1 | **124-3548** | 1 | FUSE (30-AMPERE) | |
| | 19 | 1 | **225-5190** | 1 | BRACKET AS | |
| | 20 | 2 | **225-7981** | 1 | BRACKET AS | |
| Y | 21 | 1 | *225-8000* | 1 | ELECTRONICS GP-IMPLEMENT (WORK TOOL) | 113 |
| M | 22 | 1 | **095-0733** | 2 | SCREW-MACHINE (M4X0.7X40-MM) | |
| B | 23 | 1 | **155-2255** | 1 | KIT-CONNECTING PLUG (12-PIN) | |
| B | 24 | 2 | **155-2271** | 1 | KIT-CONNECTING PLUG (4-PIN) | |
| | | | | | (EACH PLUG KIT INCLUDES PLUG AS, WEDGE & INTERFACE SEAL) | |
| B | 25 | 1,2 | **102-8802** | 2 | KIT-RECEPTACLE (2-PIN) | |
| B | 26 | 2 | **102-8803** | 2 | KIT-RECEPTACLE (3-PIN) | |
| B | 27 | 1,2 | **102-8804** | 3 | KIT-RECEPTACLE (4-PIN) | |
| B | 28 | 1 | **102-8806** | 1 | KIT-RECEPTACLE (8-PIN) | |
| | | | | | (EACH RECEPTACAL KIT INCLUDES RECEPTACAL AS & WEDGE) | |
| | 29 | 1 | **3S-2093** | 25 | STRAP-CABLE | |
| | 30 | 2 | **4P-7581** | 3 | CLIP | |
| | 31 | 1 | **4P-8134** | 5 | CLIP | |
| M | 32 | 2 | **5C-7261** | 3 | NUT (M8X1.25-THD) | |
| M | 33 | 1,2 | **5C-9553** | 5 | BOLT (M6X1X16-MM) | |
| M | 34 | 2 | **6V-5698** | 2 | SCREW-BUTTON HEAD (M4X0.7X10-MM) | |
| | 35 | 1 | **7X-0579** | 6 | WASHER-HARD (8.8X25.5X2-MM THK) | |
| M | 36 | 1 | **7X-0818** | 6 | BOLT (M8X1.25X45-MM) | |
| | 37 | 1 | **8C-8558** | 2 | SCREW-LOCK (4-40X0.25-IN) | |
| | 38 | 1,2 | **8T-4121** | 2 | WASHER-HARD (11X21X2.5-MM THK) | |
| M | 39 | 1,2 | **8T-4133** | 4 | NUT (M10X1.5-THD) | |
| | 40 | 1,2 | **8T-4205** | 5 | WASHER-HARD (7.2X14.5X2-MM THK) | |
| | 41 | 2 | **8T-4224** | 3 | WASHER-HARD (8.8X16X2-MM THK) | |
| M | 42 | 1 | **9X-2044** | 4 | SCREW-TRUSS HEAD (M6X1X16-MM) | |
| B | 45 | 1,2 | **8T-8737** | 48 | PLUG-SEAL | |
| | 46 | 2 | **246-9371** | 1 | RELAY AS (SHELL) | |
| | 47 | 2 | **178-3620** | 4 | STRAP-DUAL CLAMP | |

B-USE AS REQUIRED
M-METRIC PART
Y-SEPARATE ILLUSTRATION

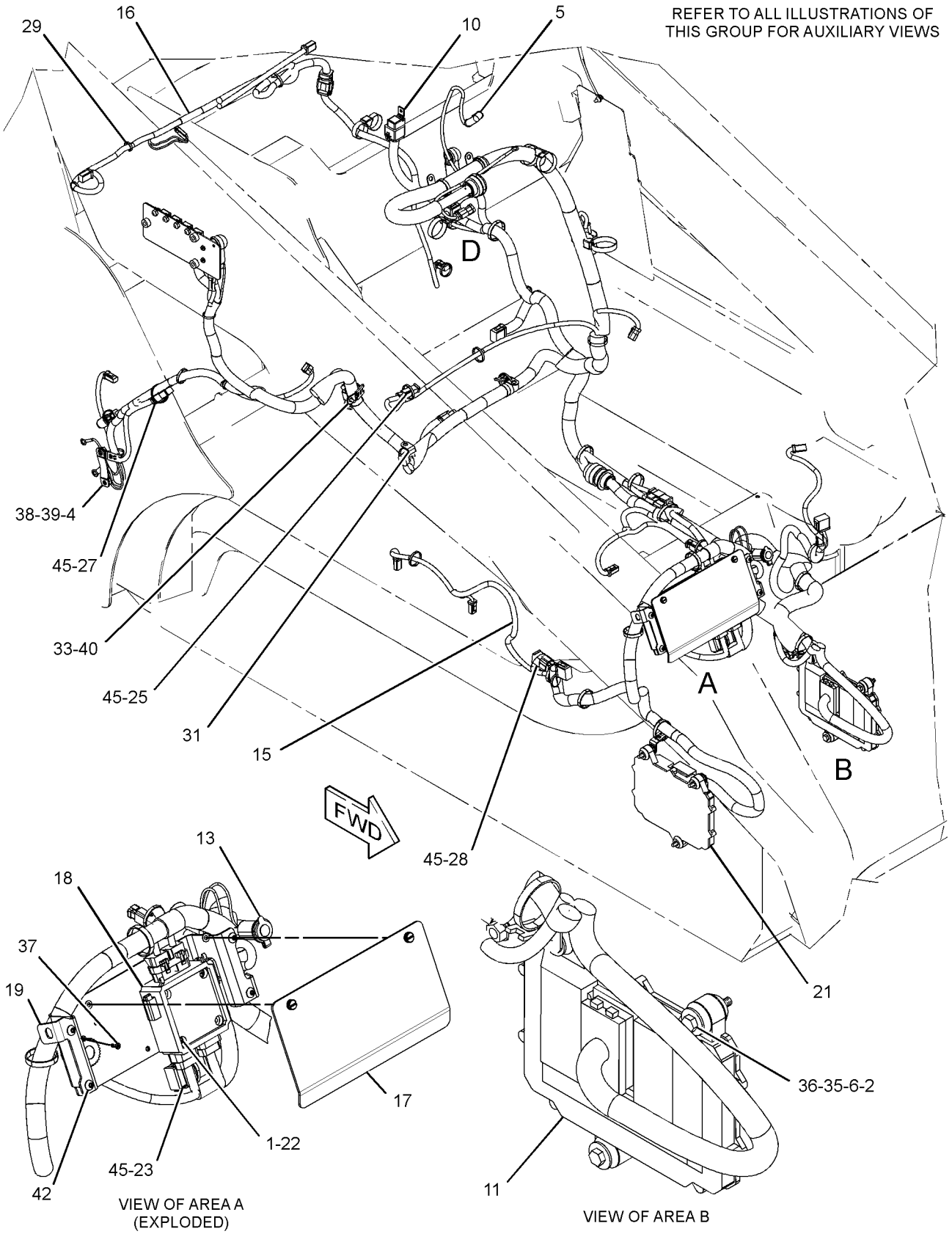


GRAPHIC #1 g01382095

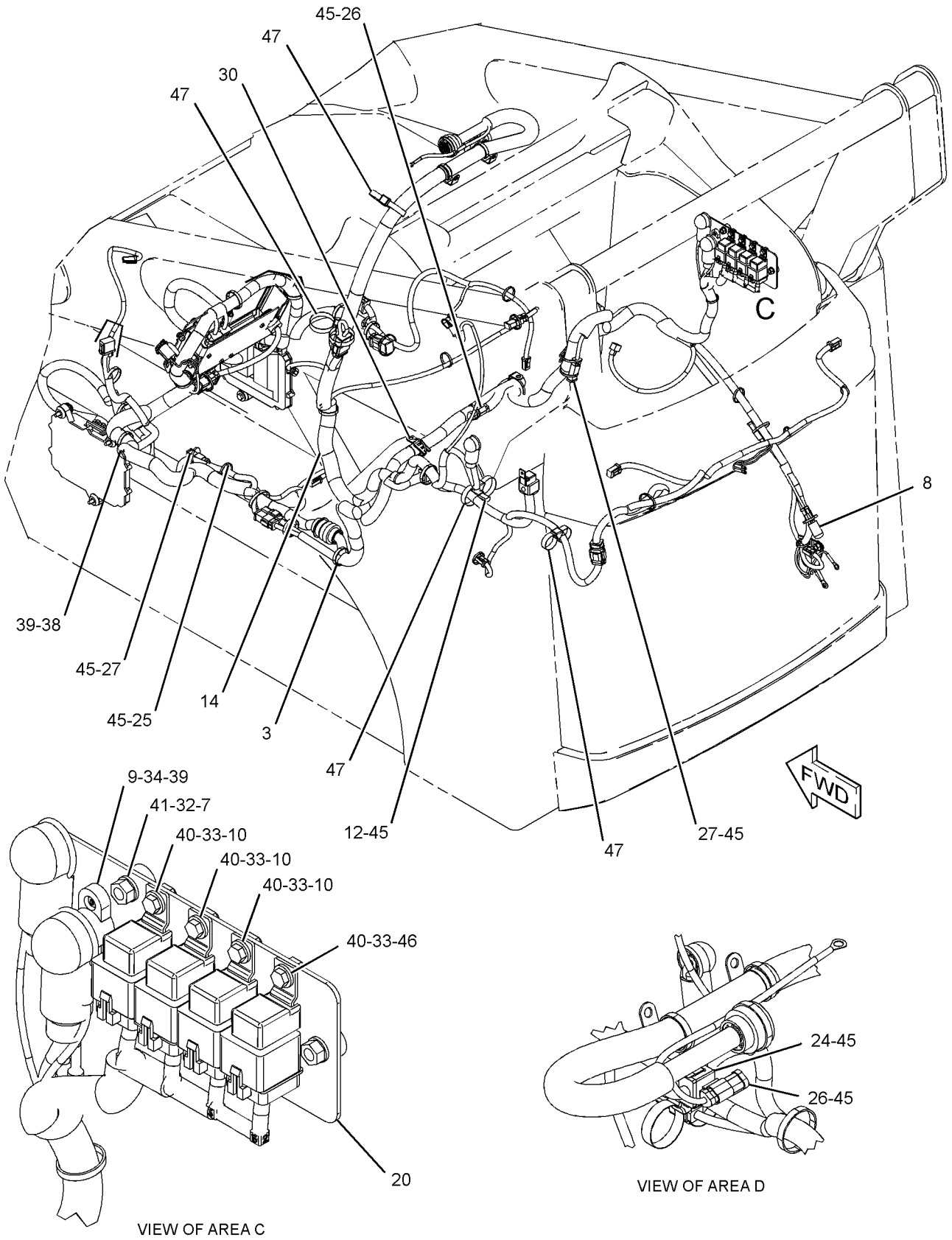


GRAPHIC #2 **<END>** g01382100

# *216-6153* WIRING GP-CHASSIS

**S/N: HEN6750-UP**
**REAR AUXILIARY**
**PART OF 218-6751 INSTALLATION GP-AUXILIARY HYD**
**AN ATTACHMENT**

**SMCS-1408, 7051** **i02940511**

| NOTE | REF NO | GRAPHIC REF | PART NUMBER | QTY | PART NAME 1 2 3 4 5 6 (PRODUCT LEVEL) | SEE PAGE |
|---|---|---|---|---|---|---|
| | 1 | 1 | **3S-2093** | 3 | STRAP-CABLE | |
| | 2 | 1 | **8T-8737** | 8 | PLUG-SEAL | |
| | 3 | 1 | **106-8704** | 1 | SUPPRESSOR AS-ARC | |
| | | 1 | **102-8802** | 1 | KIT-RECEPTACLE (2-PIN) | |
| | | | | | (INCLUDES RECEPTACLE AS & WEDGE) | |
| | | 1 | **186-3735** | 1 | PIN-CONNECTOR (16-GA TO 18-GA) | |
| | 4 | 1 | **212-6524** | 1 | HARNESS AS-REAR (AUXILIARY HYDRAULICS) | |
| | | 1 | **102-8802** | 1 | KIT-RECEPTACLE (2-PIN) | |
| | | 1 | **102-8806** | 1 | KIT-RECEPTACLE (8-PIN) | |
| | | | | | (EACH RECEPTACLE KIT INCLUDES RECEPTACLE AS & WEDGE) | |
| | | 1 | **155-2265** | 1 | KIT-CONNECTING PLUG (8-PIN) | |
| | | 1 | **155-2270** | 1 | KIT-CONNECTING PLUG (2-PIN) | |
| | | | | | (EACH PLUG KIT INCLUDES PLUG AS, WEDGE & INTERFACE SEAL) | |
| | 5 | 1 | **102-8806** | 1 | KIT-RECEPTACLE (8-PIN) | |
| | | | | | (INCLUDES RECEPTACLE AS & WEDGE) | |

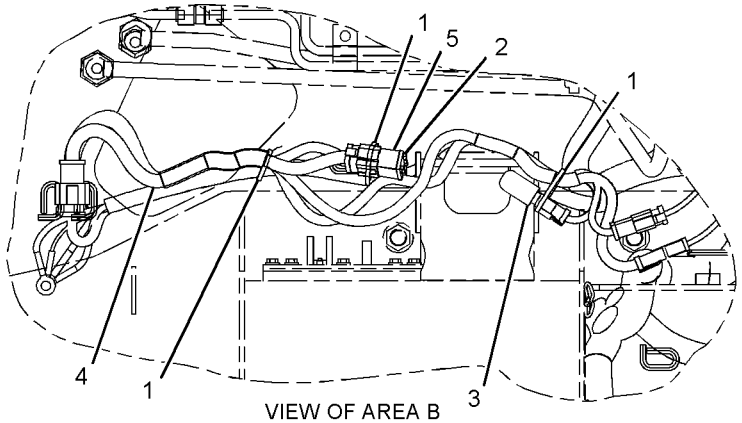


VIEW OF AREA B

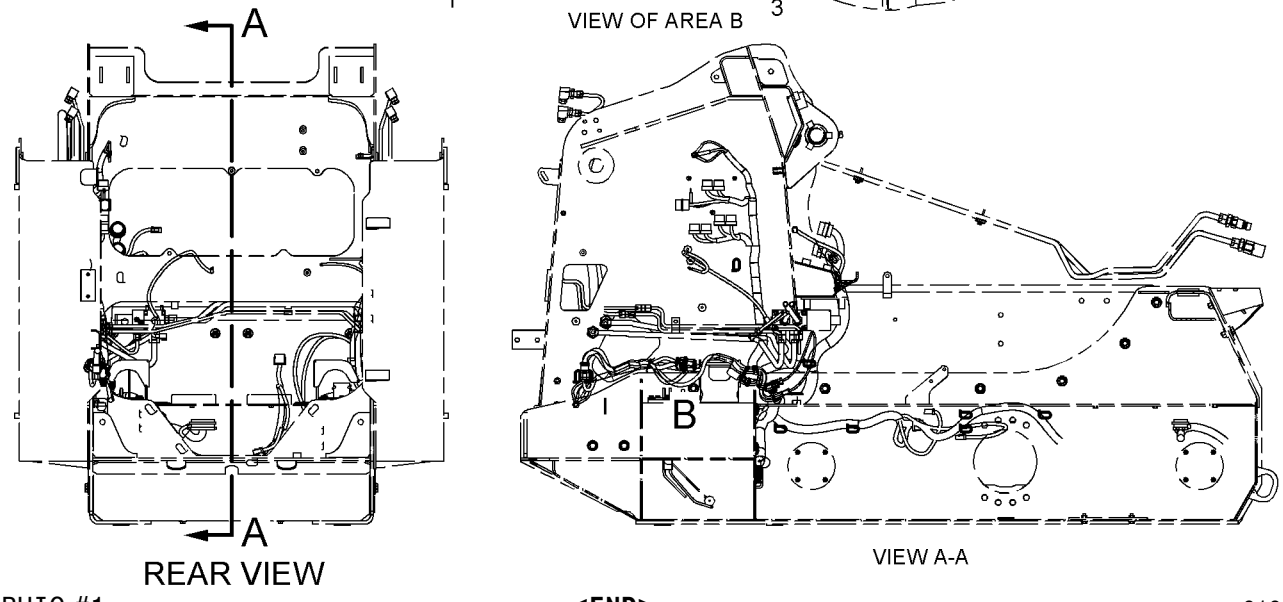


REAR VIEW

VIEW A-A

GRAPHIC #1 **<END>** g01047241

# *312-4617* WIRING GP-ENGINE

**S/N: HEN6750-UP**

**PART OF 295-7107 INSTALLATION AR-ENGINE**

**SMCS-1000, 1408, 1420** **i02913124**

| NOTE | REF NO | GRAPHIC REF | PART NUMBER | QTY | PART NAME 1 2 3 4 5 6 (PRODUCT LEVEL) | SEE PAGE |
|---|---|---|---|---|---|---|
| | 1 | 1 | **5L-4507** | 2 | SCREW-MACHINE (10-32X0.875-IN) | |
| | 2 | 1 | **7G-1060** | 1 | STRAP AS-GROUND | |
| | 3 | 1 | **090-9434** | 5 | SPACER (9X20X10-MM THK) | |
| | 4 | 1 | **115-1615** | 2 | RELAY AS (12-VOLT) | |
| | 5 | 1 | **142-7513** | 1 | CABLE AS-BATTERY (POSITIVE) | |
| | 6 | 1 | **171-2212** | 1 | CIRCUIT BREAKER AS (105-AMPERE) (MAIN) | |
| | | 1 | **6V-8187** | 2 | NUT (1/4-28-THD) | |
| | | 1 | **8T-4205** | 2 | WASHER-HARD (7.2X14.5X2-MM THK) | |
| | | 1 | **253-2111** | 2 | LOCKWASHER | |
| | 7 | 1 | **216-4721** | 1 | HARNESS AS-ENGINE | |
| | 8 | 1 | **217-5793** | 1 | SWITCH-TEMPERATURE (ENGINE COOLANT) | |
| | 9 | 1 | **225-7955** | 1 | CABLE AS-BATTERY (NEGATIVE) | |
| | 10 | 1 | **225-7980** | 1 | BRACKET AS | |
| | 11 | 1 | **3S-2093** | 9 | STRAP-CABLE | |
| | 12 | 1 | **4B-4274** | 2 | WASHER (5.5X13X1.2-MM THK) | |
| | 13 | 1 | **4P-7581** | 1 | CLIP | |
| | 14 | 1 | **4P-8134** | 4 | CLIP | |
| M | 15 | 1 | **5C-7261** | 4 | NUT (M8X1.25-THD) | |
| M | 16 | 1 | **5C-9553** | 2 | BOLT (M6X1X16-MM) | |
| | 17 | 1 | **5P-4116** | 3 | WASHER-HARD (8.8X20.5X2-MM THK) | |
| M | 18 | 1 | **7X-2537** | 1 | BOLT (M8X1.25X35-MM) | |
| | 19 | 1 | **8T-4121** | 1 | WASHER-HARD (11X21X2.5-MM THK) | |
| M | 20 | 1 | **8T-4133** | 1 | NUT (M10X1.5-THD) | |
| M | 21 | 1 | **8T-4200** | 1 | BOLT (M8X1.25X16-MM) | |
| | 22 | 1 | **8T-4205** | 2 | WASHER-HARD (7.2X14.5X2-MM THK) | |
| | 23 | 1 | **8T-4224** | 3 | WASHER-HARD (8.8X16X2-MM THK) | |
| M | 24 | 1 | **8T-7547** | 1 | BOLT (M8X1.25X30-MM) | |
| | 25 | 1 | **206-1345** | 1 | STRAP-CABLE | |

M-METRIC PART

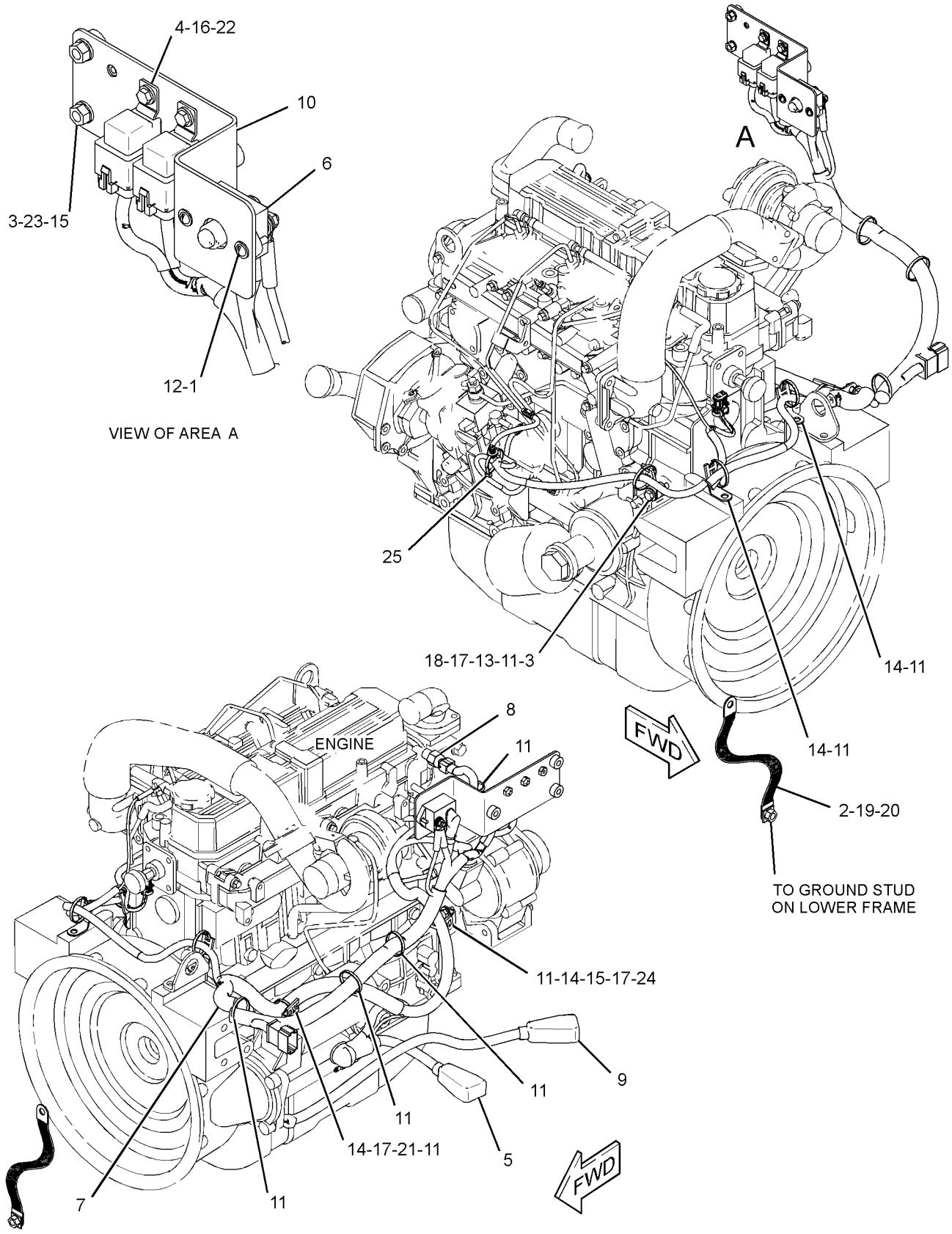


GRAPHIC #1 **<END>** g01452413

# *230-3743* WIRING GP-HORN

**S/N: HEN6750-UP**

**PART OF 261-6165, 278-5351, 278-5373, 278-5418, 278-5448, 295-7064, 295-7071, 295-7154, 295-7170, 295-7171 CONVERSION AR-MACHINE, 218-5781, 218-5784, 236-5116, 236-5117, 251-1510 CONVERSION AR-ROADING AN ATTACHMENT**

**SMCS-1408, 7402** **i02757122**

| NOTE | REF NO | GRAPHIC REF | PART NUMBER | QTY | PART NAME 1 2 3 4 5 6 (PRODUCT LEVEL) | SEE PAGE |
|---|---|---|---|---|---|---|
| | 1 | 1 | **3S-2093** | 5 | STRAP-CABLE | |
| M | 2 | 1 | **8T-4186** | 1 | BOLT (M10X1.5X40-MM) | |
| | 3 | 1 | **142-8833** | 1 | SPACER (11X14.3X9-MM THK) | |
| M | 4 | 1 | **8T-4133** | 1 | NUT (M10X1.5-THD) | |
| | 5 | 1 | **186-3362** | 1 | HARNESS AS-CHASSIS (HORN) | |
| | | 1 | **102-8802** | 1 | KIT-RECEPTACLE (2-PIN) | |
| | | | | | (INCLUDES RECEPTACLE AS & WEDGE) | |
| | | 1 | **155-2270** | 1 | KIT-CONNECTING PLUG (2-PIN) | |
| | | | | | (INCLUDES PLUG AS, WEDGE & INTERFACE SEAL) | |
| | 6 | 1 | **8T-4121** | 3 | WASHER-HARD (11X21X2.5-MM THK) | |

M-METRIC PART

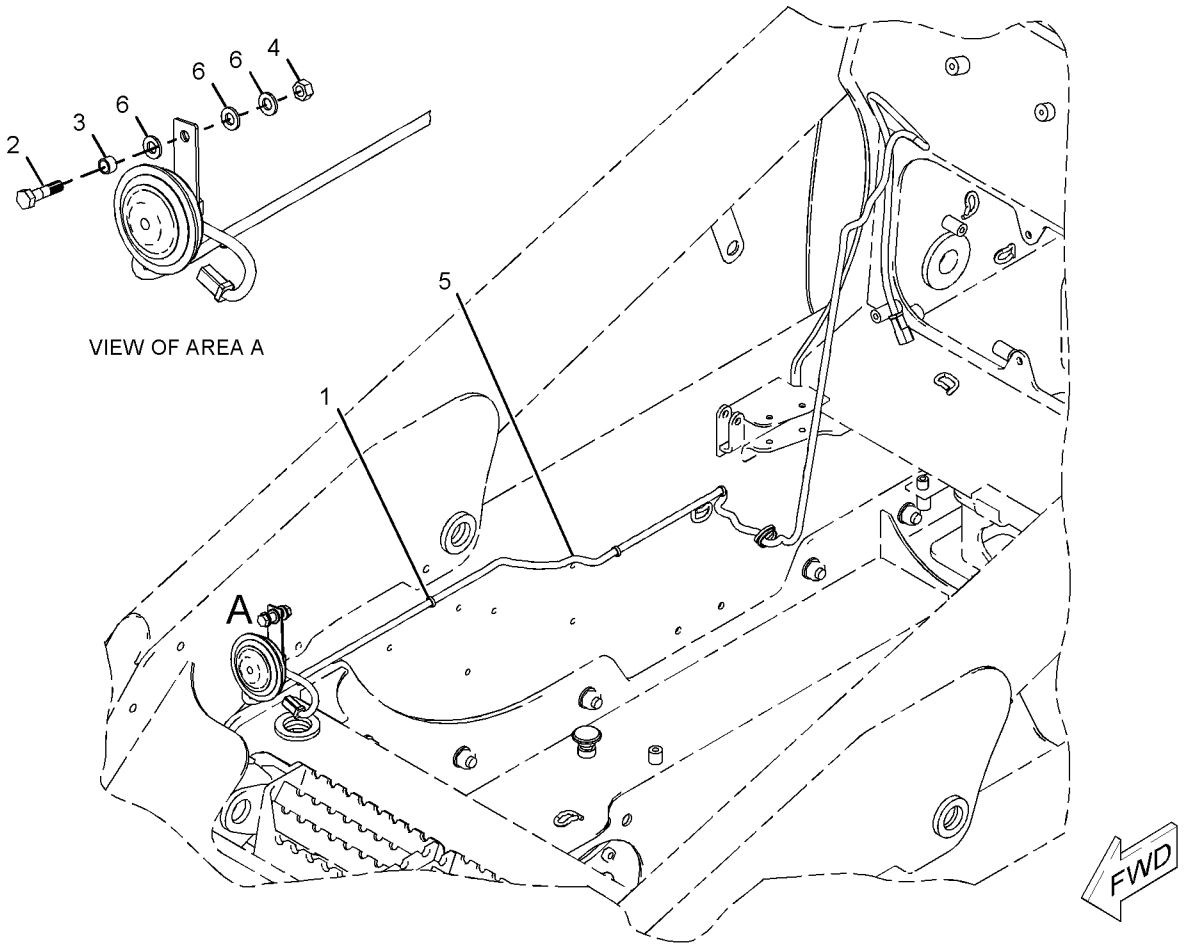


GRAPHIC #1 **<END>** g01037702

# *225-7964* WIRING GP-REAR LIGHTING

**S/N: HEN6750-UP**
**PART OF 278-5373, 295-7154 CONVERSION AR-MACHINE, 236-5117 CONVERSION AR-ROADING**
**AN ATTACHMENT**

**SMCS-1408, 1429** **i02359264**

| NOTE | REF NO | GRAPHIC REF | PART NUMBER | QTY | PART NAME 1 2 3 4 5 6 (PRODUCT LEVEL) | SEE PAGE |
|---|---|---|---|---|---|---|
| | 1 | 1 | **115-1615** | 1 | RELAY AS (12-VOLT) (BRAKE LIGHT) | |
| | 2 | 1 | *166-2033* | 2 | TEE AS | |
| | | | | | (EACH INCLUDES) | |
| | | 1 | **4J-5477** | 1 | SEAL-O-RING | |
| | | 1 | **7X-2444** | 1 | TEE-SWIVEL | |
| Y | 3 | 1 | **184-1564** | 2 | SWITCH GP-PRESSURE (BRAKE LIGHT) | 140 |
| | 4 | 1 | **216-4711** | 1 | HARNESS AS-REAR LIGHTING (BRAKE) | |
| | | 1 | **102-8803** | 1 | KIT-RECEPTACLE (3-PIN) | |
| | | | | | (INCLUDES RECEPTACLE AS & WEDGE) | |
| | | 1 | **155-2270** | 2 | KIT-CONNECTING PLUG (2-PIN) | |
| | | | | | (EACH INCLUDES PLUG AS, WEDGE & INTERFACE SEAL) | |
| B | 5 | 1 | **3S-2093** | 4 | STRAP-CABLE | |

B-USE AS REQUIRED
Y-SEPARATE ILLUSTRATION

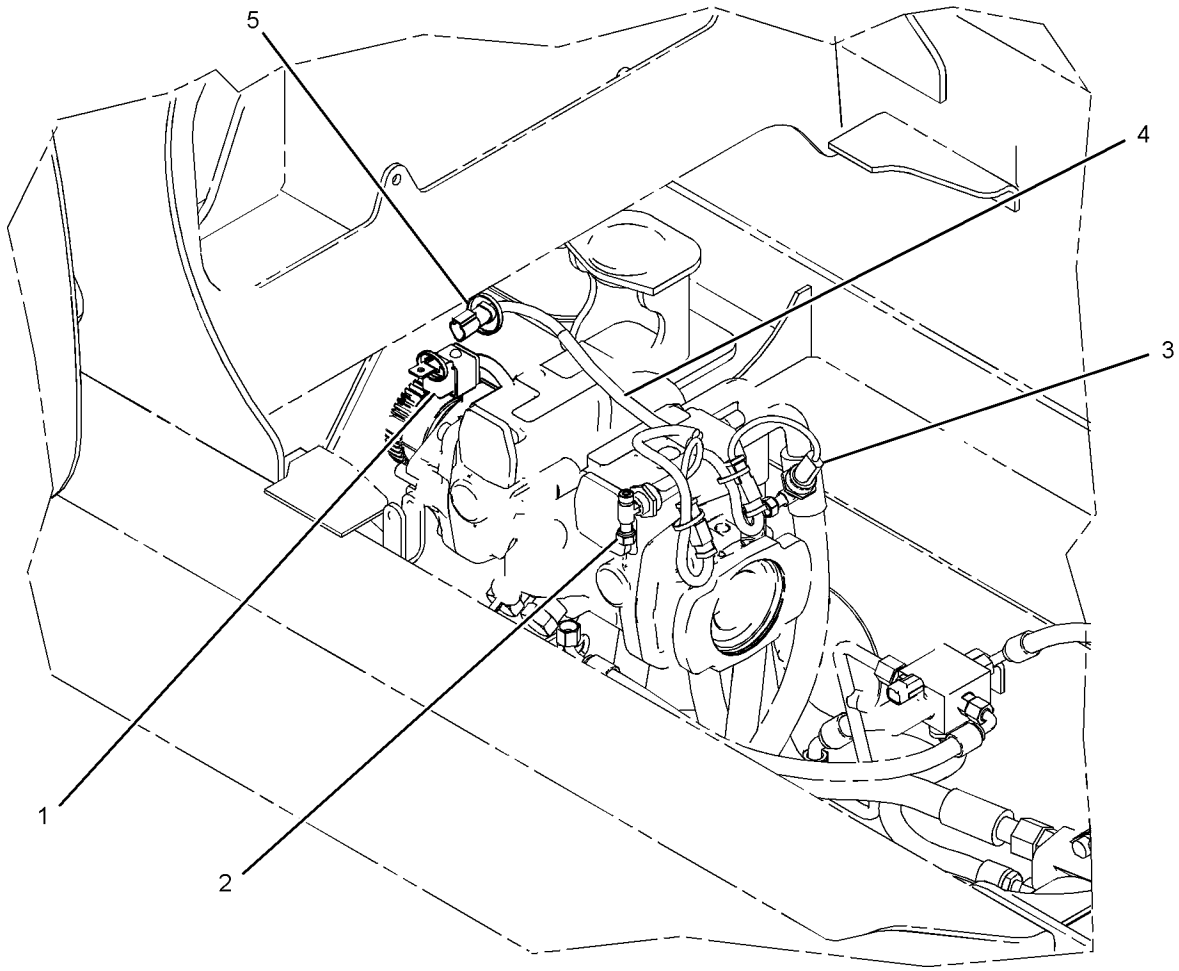


GRAPHIC #1 **<END>** g01030665

# *225-7960* WIRING GP-WORK TOOL

**S/N: HEN6750-UP**
**PART OF 218-5933 CONTROL GP-PILOT OPERATED HYD**
**AN ATTACHMENT**

**SMCS-1408** **i02536847**

| NOTE | REF NO | GRAPHIC REF | PART NUMBER | QTY | PART NAME 1 2 3 4 5 6 (PRODUCT LEVEL) | SEE PAGE |
|---|---|---|---|---|---|---|
| | 1 | 1 | **4B-4863** | 2 | WASHER (4.7X11X1.2-MM THK) | |
| | 2 | 1 | **115-1615** | 1 | RELAY AS (12-VOLT) (MAIN POWER) | |
| | 3 | 1 | **142-8633** | 1 | SWITCH AS-ROCKER (ELECTRIC POWER, WORK TOOL) | |
| | 4 | 1 | **146-9439** | 1 | RELAY AS (12-VOLT) (WORK TOOL) | |
| | 5 | 1 | **159-9495** | 1 | NUT (1-1/2-18-THD) | |
| | 6 | 1 | **159-9496** | 1 | LOCKWASHER | |
| | 7 | 1 | **221-3881** | 1 | PANEL GP-FUSE | |
| | | 1 | **113-8490** | 4 | FUSE (10-AMPERE) | |
| | | 1 | **113-8491** | 2 | FUSE (15-AMPERE) | |
| | | 1 | **146-9439** | 5 | RELAY AS (12-VOLT) | |
| | | 1 | **215-5564** | 2 | SUPPRESSOR-ARC | |
| | 8 | 1 | **225-7961** | 1 | HARNESS AS-WORK TOOL (LIFT ARM) | |
| | | 1 | **102-8806** | 1 | KIT-RECEPTACLE (8-PIN) | |
| | | | | | (INCLUDES RECEPTACLE AS & WEDGE) | |
| | 9 | 1 | **225-8012** | 1 | HARNESS AS-WORK TOOL (PLATFORM) | |
| | | 1 | **177-9645** | 1 | KIT-RECEPTACLE (2-PIN) | |
| | | | | | (INCLUDES RECEPTACLE AS & WEDGE) | |
| | | 1 | **155-2255** | 1 | KIT-CONNECTING PLUG (12-PIN) | |
| | | 1 | **155-2265** | 1 | KIT-CONNECTING PLUG (8-PIN) | |
| | | | | | (EACH KIT INCLUDES PLUG AS, WEDGE & INTERFACE SEAL) | |
| | | 1 | **196-2383** | 1 | KIT-CONNECTING PLUG (8-PIN) | |
| | | 1 | **196-2384** | 1 | KIT-CONNECTING PLUG (8-PIN) | |
| M | 10 | 1 | **095-0733** | 2 | SCREW-MACHINE (M4X0.7X40-MM) | |
| | 11 | 1 | **102-8806** | 1 | KIT-RECEPTACLE (8-PIN) | |
| | | | | | (INCLUDES RECEPTACLE AS & WEDGE) | |
| | 12 | 1 | **3E-3389** | 1 | WEDGE-RECEPTACLE LOCK | |
| | 13 | 1 | **3S-2093** | 8 | STRAP-CABLE | |
| M | 14 | 1 | **5C-9553** | 1 | BOLT (M6X1X16-MM) | |
| | 15 | 1 | **8T-4205** | 1 | WASHER-HARD (7.2X14.5X2-MM THK) | |
| | 16 | 1 | **178-3620** | 1 | STRAP-DUAL CLAMP | |

M-METRIC PART

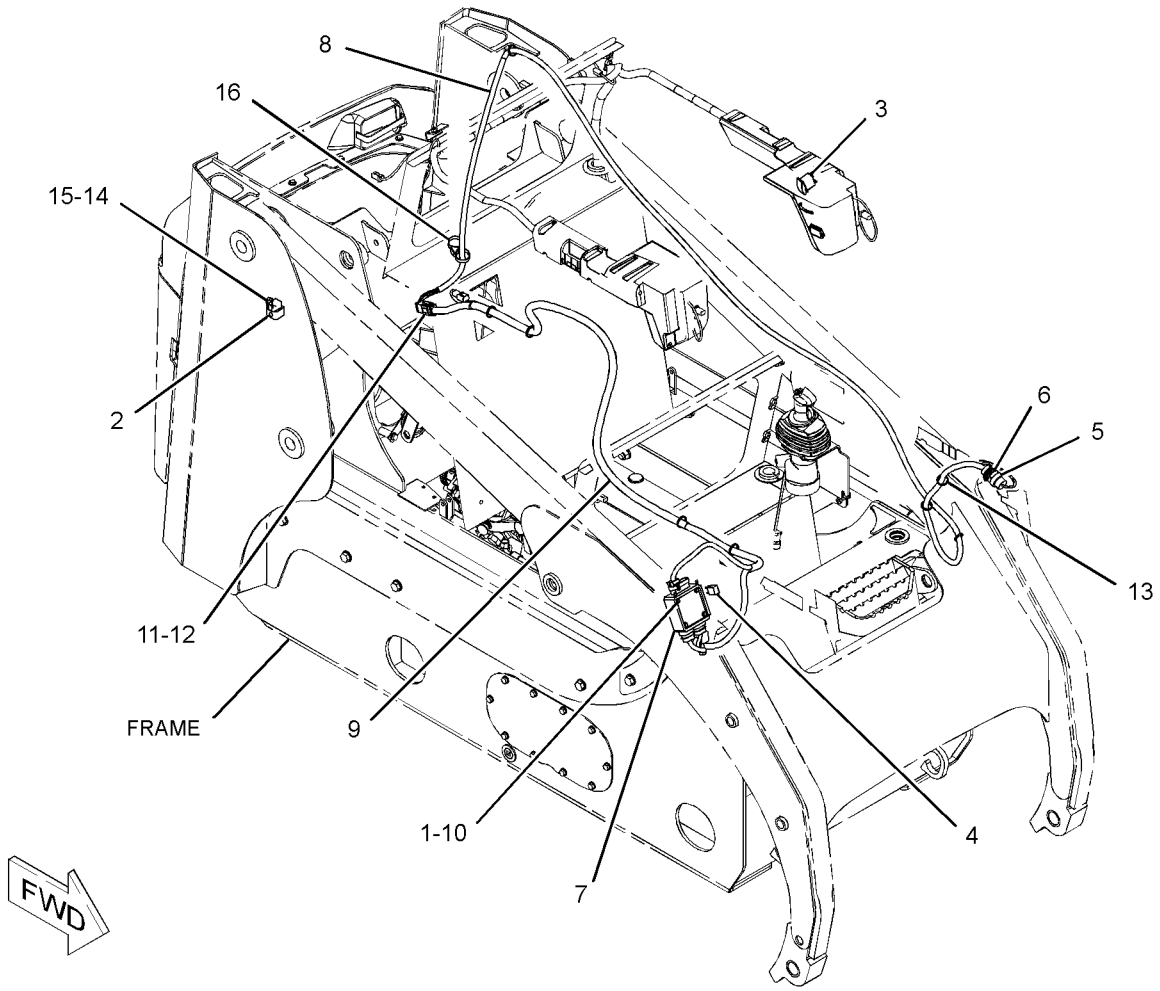


GRAPHIC #1 **<END>** g01304905

# 142-9058 AXLE GP

**S/N: HEN6750-UP**
**PART OF 261-6275 AXLE GP**
**ALSO AN ATTACHMENT**

**SMCS-3278** **i01938931**

| NOTE | REF NO | GRAPHIC REF | PART NUMBER | QTY | PART NAME 1 2 3 4 5 6 (PRODUCT LEVEL) | SEE PAGE |
|---|---|---|---|---|---|---|
| | 1 | 1 | **142-9023** | 1 | HOUSING-AXLE | |
| | 2 | 1 | **142-9024** | 1 | SPINDLE-WHEEL | |
| | 3 | 1 | **142-9029** | 1 | SPACER (57.16X69.85X27.54MM THK) | |
| | 4 | 1 | **155-5652** | 1 | SEAL-LIP TYPE | |
| | 5 | 1 | **155-9010** | 1 | CONE-BEARING | |
| | 6 | 1 | **155-9432** | 1 | CONE-BEARING | |
| | 7 | 1 | **155-9433** | 2 | CUP-BEARING | |
| | 8 | 1 | **159-5772** | 8 | STUD (9/16-18-2A THD) | |
| | 9 | 1 | **169-1679** | 1 | SEAL-LIP TYPE | |

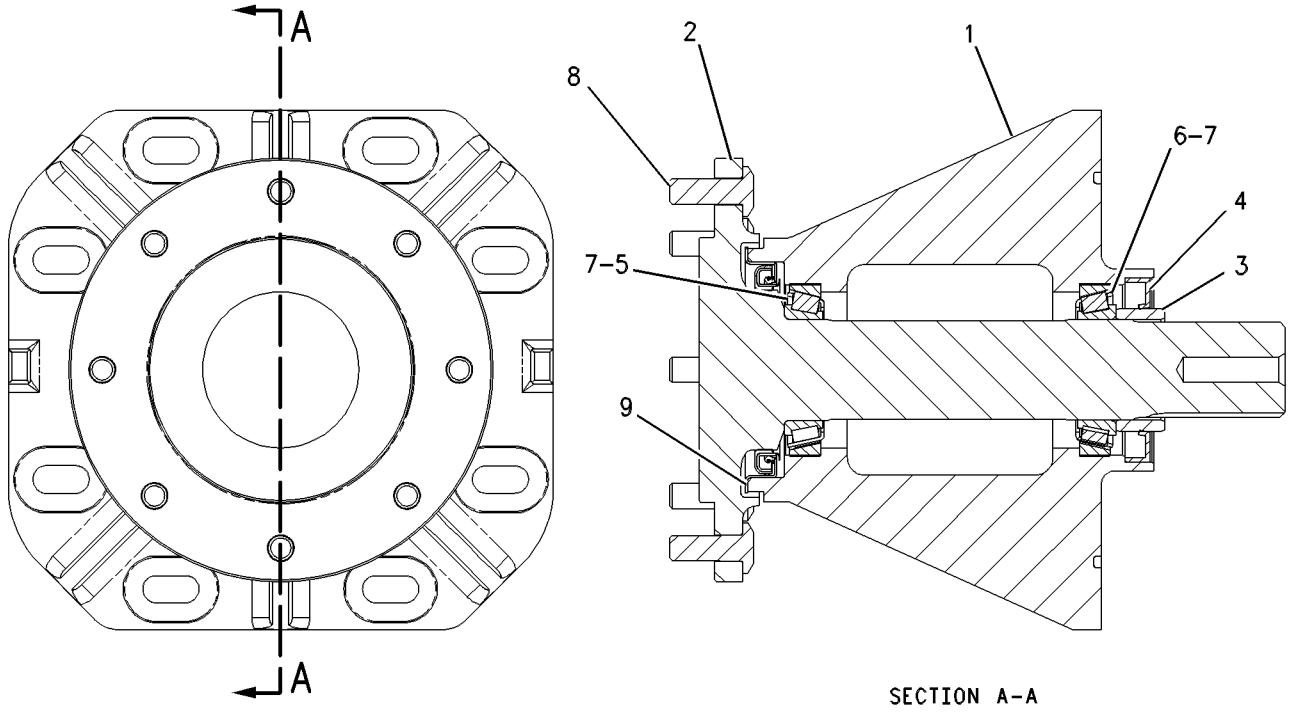


SECTION A-A

GRAPHIC #1 **<END>** g00592470

## 258-2859 AXLE GP

**S/N: HEN6750-UP**

**AN ATTACHMENT**

**SMCS-3278** **i02477523**

| NOTE | REF NO | GRAPHIC REF | PART NUMBER | QTY | PART NAME 1 2 3 4 5 6 (PRODUCT LEVEL) | SEE PAGE |
|---|---|---|---|---|---|---|
| | 1 | 1 | **142-9024** | 1 | SPINDLE-WHEEL | |
| | 2 | 1 | **142-9029** | 1 | SPACER (57.16X69.85X27.54-MM THK) | |
| | 3 | 1 | **155-9010** | 1 | CONE-BEARING | |
| | 4 | 1 | **155-9432** | 1 | CONE-BEARING | |
| | 5 | 1 | **155-9433** | 2 | CUP-BEARING | |
| | 6 | 1 | **159-5772** | 8 | STUD | |
| | 7 | 1 | **264-4320** | 1 | RETAINER-SEAL | |
| | 8 | 1 | **2B-0858** | 1 | PLUG-PIPE | |

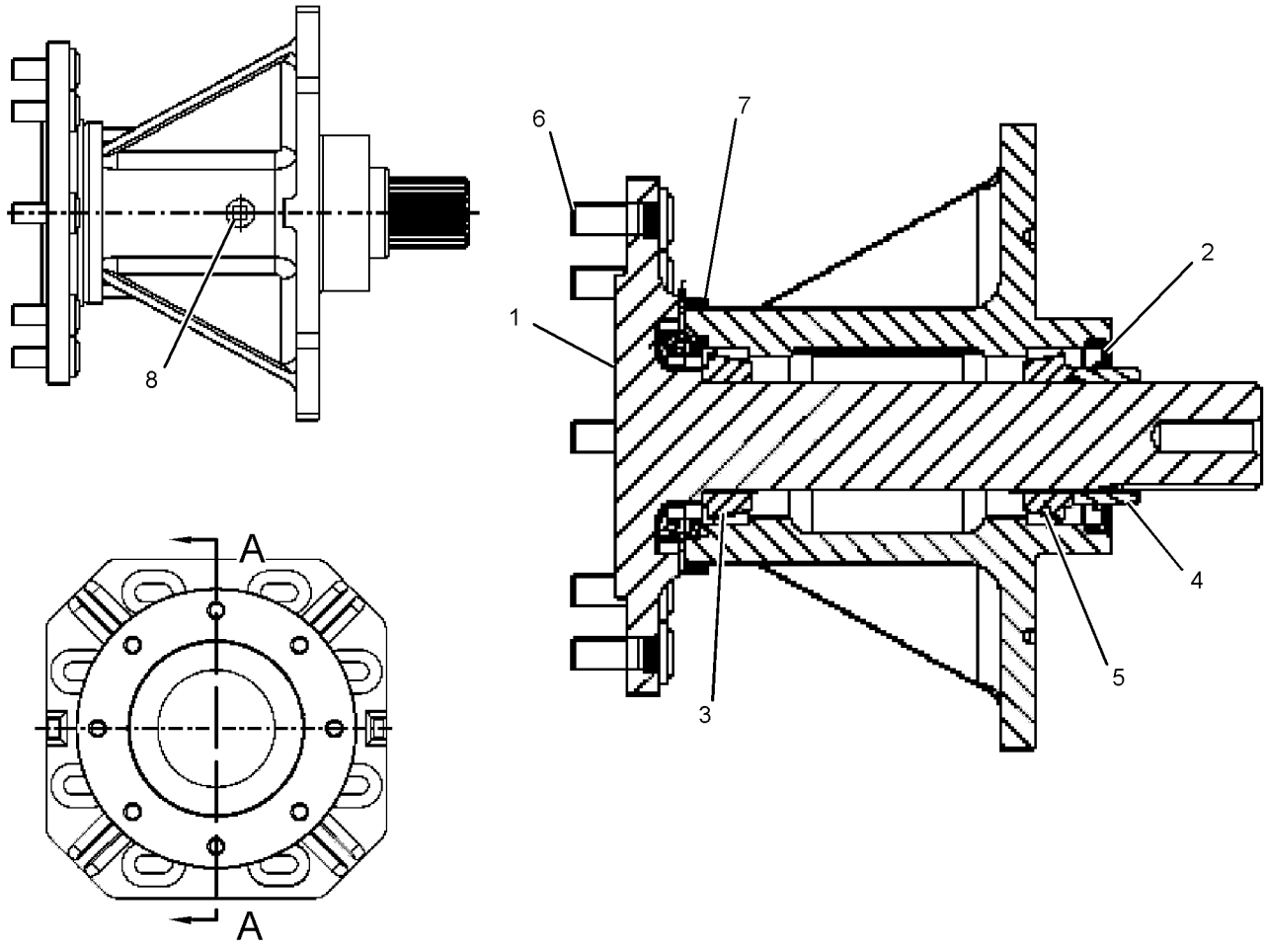


GRAPHIC #1 **<END>** g01237275

## *261-6275* AXLE GP

**S/N: HEN6750-UP**
**PART OF 295-7510, 295-7518 CHASSIS AR**
**ALSO AN ATTACHMENT**

**SMCS-3278** **i02476320**

| NOTE | PART NUMBER | QTY | PART NAME 1 2 3 4 5 6 (PRODUCT LEVEL) | SEE PAGE |
|---|---|---|---|---|
| Y | **142-9058** | 4 | AXLE GP | 155 |

Y-SEPARATE ILLUSTRATION

**<END>**

## *218-5603* DRIVE CONTROL AR-HYDROSTATIC

**S/N: HEN6750-UP**
**FOR USE WITH 218-5611—PAGE 492. CANNOT BE USED WITH 218-5604—PAGE 157, 218-5605—PAGE 158, 218-5606—PAGE 158, 218-5607—PAGE 158, 218-5608—PAGE 159, 218-5612—PAGE 496, 218-5618—PAGE 499**
**AN ATTACHMENT**

**SMCS-4284, 4351, 5059, 5705** **i01955771**

| NOTE | PART NUMBER | QTY | PART NAME 1 2 3 4 5 6 (PRODUCT LEVEL) | SEE PAGE |
|---|---|---|---|---|
| Y | *218-5635* | 1 | MANIFOLD & LINES GP-CONTROL (PARKING BRAKE) | 166 |
| Y | *218-5930* | 1 | CONTROL GP-PILOT OPERATED HYD | 502 |
| Y | *218-5621* | 1 | LINES GP-HYDROSTATIC | 164 |
| Y | *191-9780* | 1 | MOTOR & MTG GP-HYDROSTATIC | 175 |
| Y | *218-0928* | 1 | PUMP & MTG GP-HYDROSTATIC | 181 |

Y-SEPARATE ILLUSTRATION

**<END>**

## *218-5604* DRIVE CONTROL AR-HYDROSTATIC

**S/N: HEN6750-UP**
**PART OF 295-7494 CONTROL AR-MACHINE**
**FOR USE WITH 218-5611—PAGE 492. CANNOT BE USED WITH 218-5603—PAGE 157, 218-5605—PAGE 158, 218-5606—PAGE 158, 218-5607—PAGE 158, 218-5608—PAGE 159, 218-5612—PAGE 496, 218-5618—PAGE 499**
**AN ATTACHMENT**

**SMCS-4284, 4351, 5059, 5705** **i01955785**

| NOTE | PART NUMBER | QTY | PART NAME 1 2 3 4 5 6 (PRODUCT LEVEL) | SEE PAGE |
|---|---|---|---|---|
| Y | *218-5635* | 1 | MANIFOLD & LINES GP-CONTROL (PARKING BRAKE) | 166 |
| Y | *218-5931* | 1 | CONTROL GP-PILOT OPERATED HYD | 505 |
| Y | *218-5621* | 1 | LINES GP-HYDROSTATIC | 164 |
| Y | *191-9780* | 1 | MOTOR & MTG GP-HYDROSTATIC | 175 |
| Y | *218-0928* | 1 | PUMP & MTG GP-HYDROSTATIC | 181 |

Y-SEPARATE ILLUSTRATION

**<END>**

## *218-5605* DRIVE CONTROL AR-HYDROSTATIC

**S/N: HEN6750-UP**
**PART OF 295-7495 CONTROL AR-MACHINE**
**FOR USE WITH 218-5612—PAGE 496, 218-5618—PAGE 499. CANNOT BE USED WITH 218-5611—PAGE 492, 218-5603—PAGE 157, 218-5604—PAGE 157, 218-5606—PAGE 158, 218-5607—PAGE 158, 218-5608—PAGE 159**
**AN ATTACHMENT**

**SMCS-4284, 4351, 5059, 5705** **i01955787**

| NOTE | PART NUMBER | QTY | PART NAME 1 2 3 4 5 6 (PRODUCT LEVEL) | SEE PAGE |
|---|---|---|---|---|
| Y | *218-5635* | 1 | MANIFOLD & LINES GP-CONTROL (PARKING BRAKE) | 166 |
| Y | *218-5932* | 1 | CONTROL GP-PILOT OPERATED HYD | 507 |
| Y | *218-5621* | 1 | LINES GP-HYDROSTATIC | 164 |
| Y | *191-9780* | 1 | MOTOR & MTG GP-HYDROSTATIC | 175 |
| Y | *218-0928* | 1 | PUMP & MTG GP-HYDROSTATIC | 181 |
| Y-SEPARATE ILLUSTRATION | | | | |

**<END>**

## *218-5606* DRIVE CONTROL AR-HYDROSTATIC

**S/N: HEN6750-UP**
**FOR USE WITH 218-5612—PAGE 496, 218-5618—PAGE 499. CANNOT BE USED WITH 218-5611—PAGE 492, 218-5603—PAGE 157, 218-5604—PAGE 157, 218-5605—PAGE 158, 218-5607—PAGE 158, 218-5608—PAGE 159**
**AN ATTACHMENT**

**SMCS-4284, 4351, 5059, 5705** **i02500649**

| NOTE | PART NUMBER | QTY | PART NAME 1 2 3 4 5 6 (PRODUCT LEVEL) | SEE PAGE |
|---|---|---|---|---|
| Y | *218-5635* | 1 | MANIFOLD & LINES GP-CONTROL (PARKING BRAKE) | 166 |
| Y | *218-5933* | 1 | CONTROL GP-PILOT OPERATED HYD (HYDROSTATIC) | 510 |
| Y | *218-5621* | 1 | LINES GP-HYDROSTATIC | 164 |
| Y | *191-9780* | 1 | MOTOR & MTG GP-HYDROSTATIC | 175 |
| Y | *218-0928* | 1 | PUMP & MTG GP-HYDROSTATIC | 181 |
| Y-SEPARATE ILLUSTRATION | | | | |

**<END>**

## *218-5607* DRIVE CONTROL AR-HYDROSTATIC

**S/N: HEN6750-UP**
**TWO SPEED**
**FOR USE WITH 218-5612—PAGE 496, 218-5618—PAGE 499. CANNOT BE USED WITH 218-5611—PAGE 492, 218-5603—PAGE 157, 218-5604—PAGE 157, 218-5605—PAGE 158, 218-5606—PAGE 158, 218-5608—PAGE 159**
**AN ATTACHMENT**

**SMCS-4284, 4351, 5059, 5705** **i02010314**

| NOTE | PART NUMBER | QTY | PART NAME 1 2 3 4 5 6 (PRODUCT LEVEL) | SEE PAGE |
|---|---|---|---|---|
| Y | *218-5636* | 1 | MANIFOLD & LINES GP-CONTROL (PARKING BRAKE, 2-SPEED) | 168 |
| Y | *218-5934* | 1 | CONTROL GP-PILOT OPERATED HYD | 515 |
| | *218-6305* | 1 | FILM GP | |
| | **234-0746** | 2 | FILM (2-SPEED) | |
| Y | *218-5621* | 1 | LINES GP-HYDROSTATIC | 164 |
| Y | *190-7457* | 1 | MOTOR & MTG GP-HYDROSTATIC | 174 |
| Y | *218-5928* | 1 | PUMP & MTG GP-HYDROSTATIC | 182 |
| Y-SEPARATE ILLUSTRATION | | | | |

**<END>**

## *218-5608* DRIVE CONTROL AR-HYDROSTATIC

**S/N: HEN6750-UP**
**TWO SPEED**
**FOR USE WITH 218-5612—PAGE 496, 218-5618—PAGE 499. CANNOT BE USED WITH 218-5611—PAGE 492, 218-5603—PAGE 157, 218-5604—PAGE 157, 218-5605—PAGE 158, 218-5606—PAGE 158, 218-5607—PAGE 158**
**AN ATTACHMENT**

**SMCS-4284, 4351, 5059, 5705** **i02639941**

| NOTE | PART NUMBER | QTY | PART NAME 1 2 3 4 5 6 (PRODUCT LEVEL) | SEE PAGE |
|---|---|---|---|---|
| Y | *218-5933* | 1 | CONTROL GP-PILOT OPERATED HYD | 510 |
| Y | *218-5621* | 1 | LINES GP-HYDROSTATIC | 164 |
| Y | *218-5636* | 1 | MANIFOLD & LINES GP-CONTROL (PARKING BRAKE, 2-SPEED) | 168 |
| Y | *190-7457* | 1 | MOTOR & MTG GP-HYDROSTATIC | 174 |
| Y | *218-5928* | 1 | PUMP & MTG GP-HYDROSTATIC | 182 |
| | **234-0746** | 2 | FILM (2-SPEED) | |
| | **133-9931** | 1 | JUMPER AS | |
| D | **5P-5677** | | WIRE (18-GA, BLACK) (0.1-M) | |
| | **186-3735** | 2 | PIN-CONNECTOR (16-GA TO 18-GA) | |
| | **8T-8737** | 1 | PLUG-SEAL | |
| | **102-8803** | 1 | KIT-RECEPTACLE (3-PIN) | |
| | | | (INCLUDES RECEPTACLE AS & WEDGE) | |

D-ORDER BY THE METER
Y-SEPARATE ILLUSTRATION

**<END>**

## *295-7497* DRIVE CONTROL AR-HYDROSTATIC

**S/N: HEN6750-UP**
**PART OF 295-7496 CONTROL AR-MACHINE**
**AN ATTACHMENT**

**SMCS-4284, 4351, 5059, 5705** **i02736721**

| NOTE | PART NUMBER | QTY | PART NAME 1 2 3 4 5 6 (PRODUCT LEVEL) | SEE PAGE |
|---|---|---|---|---|
| Y | *218-5934* | 1 | CONTROL GP-PILOT OPERATED HYD | 515 |
| Y | *218-5621* | 1 | LINES GP-HYDROSTATIC | 164 |
| Y | *218-5636* | 1 | MANIFOLD & LINES GP-CONTROL (PARKING BRAKE, 2-SPEED) | 168 |
| Y | *190-7457* | 1 | MOTOR & MTG GP-HYDROSTATIC | 174 |
| Y | *218-5928* | 1 | PUMP & MTG GP-HYDROSTATIC | 182 |
| | | | | |
| | *295-7417* | 1 | FILM GP | |
| | **295-7437** | 2 | FILM-IDENTIFICATION (TWO SPEED) | |

Y-SEPARATE ILLUSTRATION

**<END>**

## *142-9060* DRIVE GP-TANDEM

**S/N: HEN6750-UP**

**PART OF 295-7494, 295-7495, 295-7496 CONTROL AR-MACHINE**

**AN ATTACHMENT**

**SMCS-4062** **i02585294**

| NOTE | REF NO | GRAPHIC REF | PART NUMBER | QTY | PART NAME 1 2 3 4 5 6 (PRODUCT LEVEL) | SEE PAGE |
|---|---|---|---|---|---|---|
| | 1 | 1 | **5P-3092** | 4 | SEAL-O-RING | |
| | 2 | 1 | **142-9032** | 4 | SPROCKET (13-TEETH) (MOTOR) | |
| | 3 | 1 | **142-9033** | 2 | RETAINER | |
| | 4 | 1 | **142-9034** | 4 | SPROCKET (27-TEETH) (AXLE) | |
| | 5 | 1 | **152-1157** | 32 | WASHER (15.5X32X8-MM THK) | |
| | 6 | 1 | **165-4892** | 2 | SPACER (60.6X72.1X11.87-MM THK) | |
| | 7 | 1 | **168-7571** | 4 | CHAIN AS | |
| | 8 | 1 | **200-0999** | 32 | STUD | |
| M | 9 | 1 | **100-3866** | 4 | BOLT-SELF-LOCKING (M16X2X40-MM) | |
| | 10 | 1 | **142-9036** | 32 | NUT (9/16-18-THD) | |
| | 11 | 1 | **7X-0610** | 4 | WASHER-HARD (20X75X6-MM THK) | |
| M | 12 | 1 | **8C-8992** | 2 | BOLT-LOCKING (M12X1.75X30-MM) | |
| | 13 | 1 | **8T-4122** | 4 | WASHER-HARD (17X32X3.5-MM THK) | |

M-METRIC PART

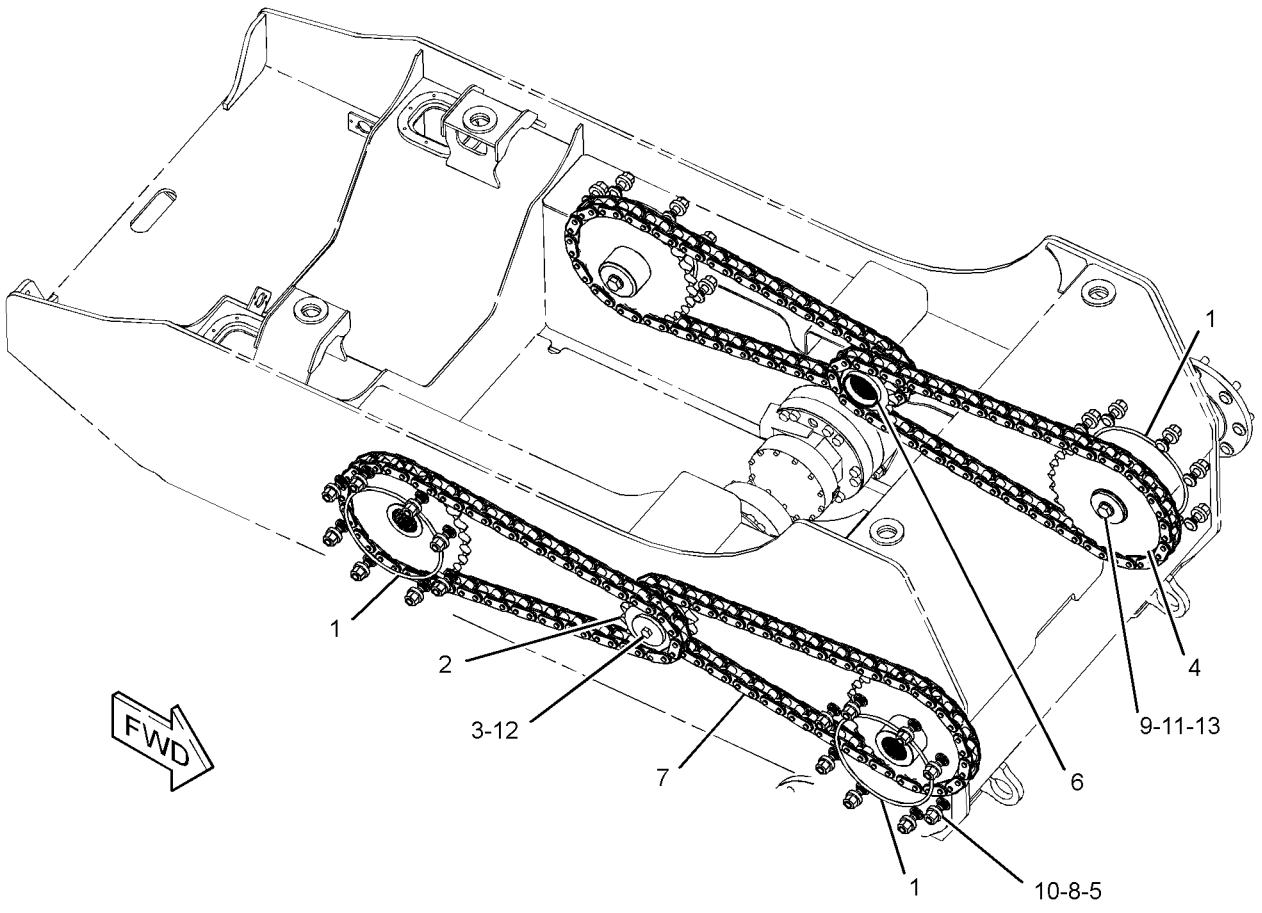


GRAPHIC #1 **<END>** g01230339

# *218-5624* FILTER & LINES GP-HYDRAULIC

**S/N: HEN6750-UP**

**PART OF 278-1237, 295-7220 HYDRAULIC AR**

**SMCS-5057, 5068** **i02067425**

| NOTE | REF NO | GRAPHIC REF | PART NUMBER | QTY | PART NAME 1 2 3 4 5 6 (PRODUCT LEVEL) | SEE PAGE |
|---|---|---|---|---|---|---|
| I | 1 | 1 | **218-5577** | 1 | HOSE AS | |
| Y | 2 | 1 | **223-9974** | 1 | FILTER GP-OIL (HYDRAULIC) | 163 |
| I | 3 | 1 | **238-7736** | 1 | HOSE AS | |
| | 4 | 1 | *148-8315* | 1 | CONNECTOR AS | |
| | | 1 | **2M-9780** | 1 | SEAL-O-RING | |
| | | 1 | **6V-8642** | 1 | CONNECTOR | |
| | | 1 | **7J-9108** | 1 | SEAL-O-RING | |
| | 5 | 1 | *148-8328* | 1 | CONNECTOR AS | |
| | | 1 | **3D-2824** | 1 | SEAL-O-RING | |
| | | 1 | **6V-8398** | 1 | SEAL-O-RING | |
| | | 1 | **6V-8633** | 1 | CONNECTOR | |
| | 6 | 1 | *148-8340* | 1 | CONNECTOR AS | |
| | | 1 | **3K-0360** | 1 | SEAL-O-RING | |
| | | 1 | **6V-8398** | 1 | SEAL-O-RING | |
| | | 1 | **6V-8639** | 1 | CONNECTOR | |
| | 7 | 1 | *148-8341* | 1 | CONNECTOR AS | |
| | | 1 | **3D-2824** | 1 | SEAL-O-RING | |
| | | 1 | **6V-8713** | 1 | CONNECTOR | |
| | | 1 | **7J-9108** | 1 | SEAL-O-RING | |
| | 8 | 1 | **8T-4121** | 5 | WASHER-HARD (11X21X2.5-MM THK) | |
| M | 9 | 1 | **8T-4136** | 1 | BOLT (M10X1.5X25-MM) | |
| M | 10 | 1 | **8T-4137** | 4 | BOLT (M10X1.5X20-MM) | |
| | 11 | 1 | **9M-4972** | 1 | CLIP | |

I-REFER TO HYDRAULIC INFORMATION SYSTEM
M-METRIC PART
Y-SEPARATE ILLUSTRATION

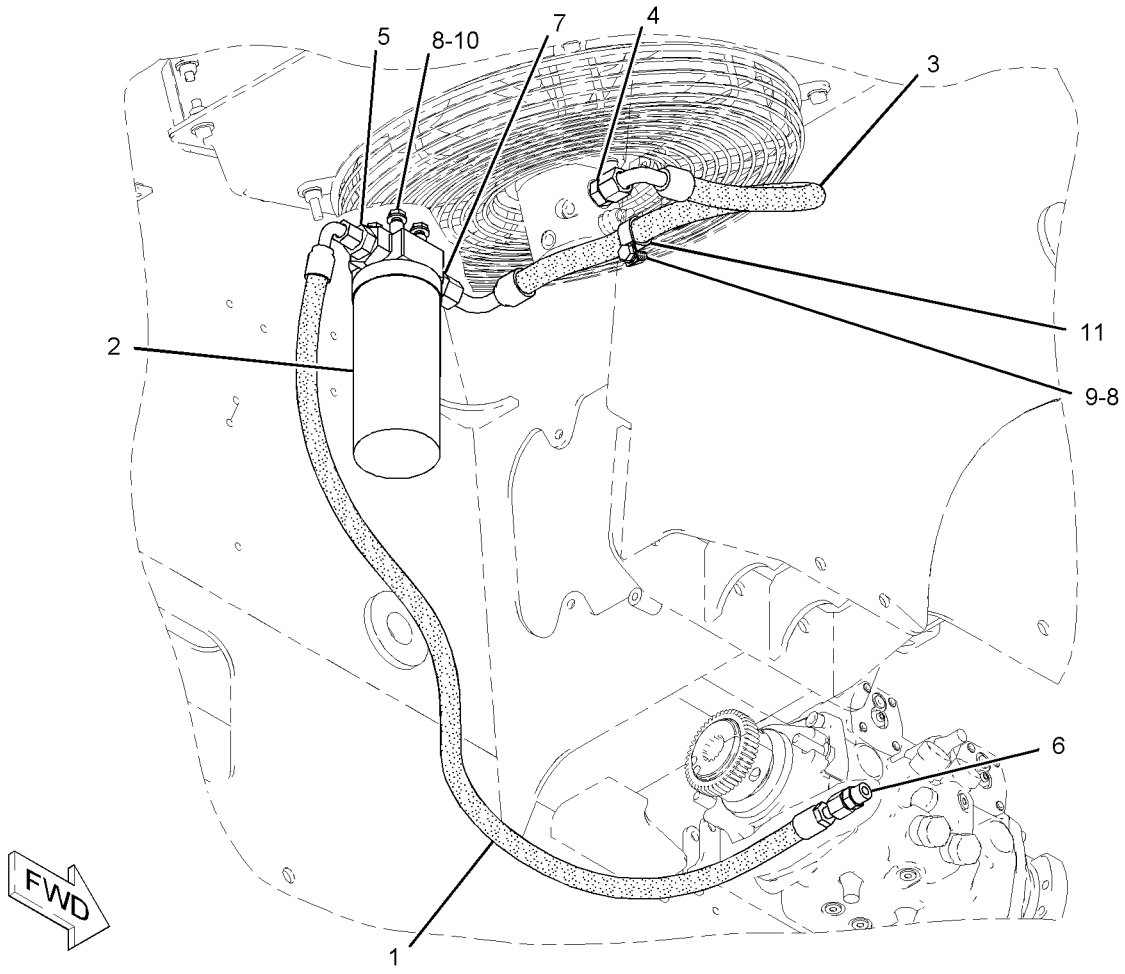


GRAPHIC #1 **<END>** g01059304

# 223-9974 FILTER GP-OIL–HYDRAULIC

**S/N: HEN6750-UP**

**PART OF 218-5624 FILTER & LINES GP-HYDRAULIC**

**SMCS-5068** **i02469830**

| NOTE | REF NO | GRAPHIC REF | PART NUMBER | QTY | PART NAME 1 2 3 4 5 6 (PRODUCT LEVEL) | SEE PAGE |
|---|---|---|---|---|---|---|
| | 1 | 1 | **3J-1907** | 1 | SEAL-O-RING | |
| | 2 | 1 | **134-0404** | 1 | SWITCH AS-PRESSURE (HYDRAULIC OIL) | |
| | 3 | 1 | **1G-8878** | 1 | FILTER-OIL (ADVANCED EFFICIENCY) (HYDRAULIC) | |

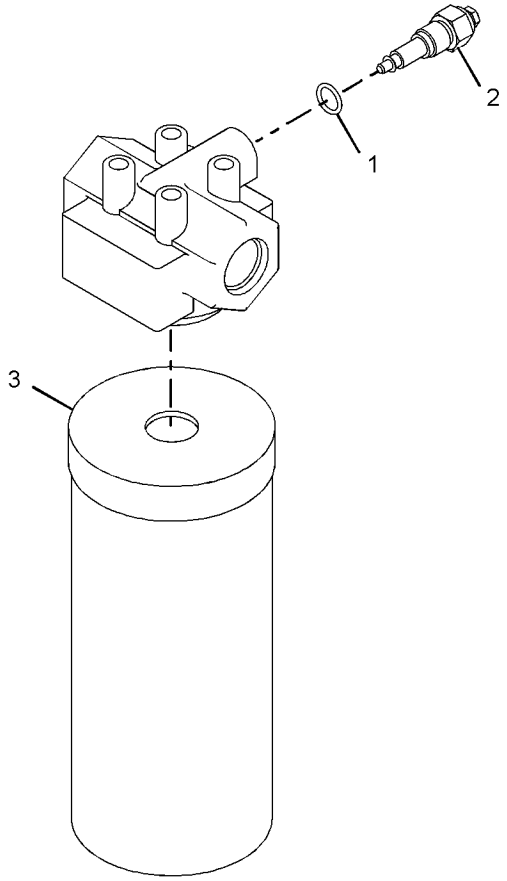


GRAPHIC #1 **<END>** g01035150

## *218-5621* LINES GP-HYDROSTATIC

**S/N: HEN6750-UP**

**PART OF 218-5603, 218-5604, 218-5605, 218-5606, 218-5607, 218-5608, 295-7497**
**DRIVE CONTROL AR-HYDROSTATIC**
**AN ATTACHMENT**

**SMCS-3154** **i02769670**

| NOTE | REF NO | GRAPHIC REF | PART NUMBER | QTY | PART NAME 1 2 3 4 5 6 (PRODUCT LEVEL) | SEE PAGE |
|---|---|---|---|---|---|---|
| | 2 | 1 | **6V-0852** | 5 | CAP-DUST | |
| C | 3 | 1 | *188-2008* | 2 | ELBOW AS (45-DEG) | |
| | | | | | (EACH INCLUDES) | |
| | | 1 | **3D-2824** | 1 | SEAL-O-RING | |
| | | 1 | **5K-9090** | 1 | SEAL-O-RING | |
| | | 1 | **8T-7970** | 1 | ELBOW | |
| I | 4 | 1 | **218-6095** | 2 | HOSE AS | |
| I | 5 | 1 | **142-9241** | 2 | HOSE AS | |
| | 6 | 1 | *164-5567* | 5 | COUPLER AS-QUICK DISCONNECT | |
| | | | | | (EACH INCLUDES) | |
| | | 1 | **3J-1907** | 1 | SEAL-O-RING | |
| | | 1 | **6V-3965** | 1 | COUPLER-QUICK DISCONNECT | |
| | 7 | 1 | *164-5608* | 2 | CONNECTOR AS | |
| | | | | | (EACH INCLUDES) | |
| | | 1 | **8T-1687** | 1 | CONNECTOR | |
| | | 1 | **3K-0360** | 1 | SEAL-O-RING | |
| | | 1 | **6V-8398** | 1 | SEAL-O-RING | |
| CY | 8 | 1 | *308-0421* | 1 | MANIFOLD GP-RETURN | 172 |
| C | 9 | 1 | **306-0175** | 1 | HOSE AS | |
| I | 10 | 1 | **218-5758** | 2 | HOSE AS | |
| | 11 | 1 | *148-8327* | 8 | CONNECTOR AS | |
| | | | | | (EACH INCLUDES) | |
| | | 1 | **6V-8637** | 1 | CONNECTOR (SEAL) | |
| | | 1 | **3D-2824** | 1 | SEAL-O-RING | |
| | | 1 | **6V-9746** | 1 | SEAL-O-RING | |
| M | 12 | 1 | **5C-7261** | 3 | NUT (M8X1.25-THD) | |
| | 14 | 1 | **5P-4116** | 3 | WASHER-HARD (8.8X20.5X2-MM THK) | |

C-CHANGE FROM PREVIOUS TYPE
I-REFER TO HYDRAULIC INFORMATION SYSTEM
M-METRIC PART
Y-SEPARATE ILLUSTRATION

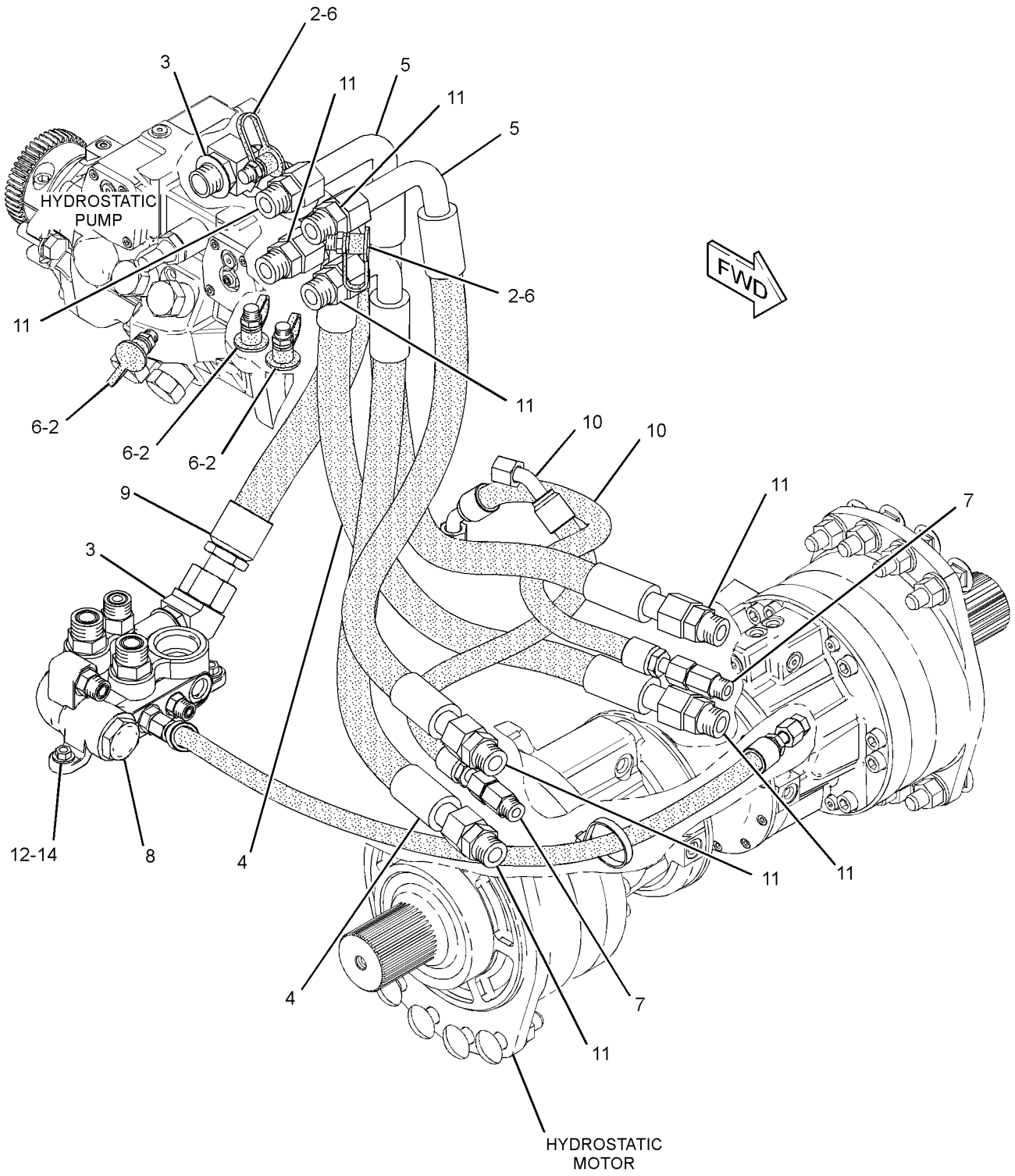


GRAPHIC #1 **<END>** g01386376

# *218-5635* MANIFOLD & LINES GP-CONTROL—PARKING BRAKE

**S/N: HEN6750-UP**

**PART OF 218-5603, 218-5604, 218-5605, 218-5606 DRIVE CONTROL AR-HYDROSTATIC**

**AN ATTACHMENT**

**SMCS-5057, 5264, 5479** **i02595599**

| NOTE | REF NO | GRAPHIC REF | PART NUMBER | QTY | PART NAME 1 2 3 4 5 6 (PRODUCT LEVEL) | SEE PAGE |
|---|---|---|---|---|---|---|
| I | 1 | 1 | **100-7530** | 1 | HOSE AS | |
| CY | 2 | 1 | **233-7131** | 1 | MANIFOLD & SOLENOID GP-CONTROL (PARKING BRAKE) | 170 |
| I | 3 | 1 | **218-5580** | 1 | HOSE AS | |
| I | 4 | 1 | **218-5581** | 1 | HOSE AS | |
| | 5 | 1 | **218-6879** | 1 | TUBE AS | |
| | 6 | 1 | *148-8336* | 3 | CONNECTOR AS | |
| | | | | | (EACH INCLUDES) | |
| | | 1 | **3J-1907** | 1 | SEAL-O-RING | |
| | | 1 | **6V-8397** | 1 | SEAL-O-RING | |
| | | 1 | **6V-8636** | 1 | CONNECTOR | |
| | 7 | 1 | *148-8435* | 1 | TEE AS | |
| | | 1 | **3J-1907** | 1 | SEAL-O-RING | |
| | | 1 | **6V-8397** | 2 | SEAL-O-RING | |
| | | 1 | **6V-8781** | 1 | TEE-FACE SEAL | |
| | 8 | 1 | *161-8560* | 1 | CONNECTOR AS | |
| | | 1 | **3J-1907** | 1 | SEAL-O-RING | |
| | | 1 | **7J-9108** | 1 | SEAL-O-RING | |
| | | 1 | **8C-6758** | 1 | CONNECTOR | |
| M | 9 | 1 | **5C-7261** | 2 | NUT (M8X1.25-THD) | |
| | 10 | 1 | **6V-8398** | 2 | SEAL-O-RING | |
| | 11 | 1 | **8T-4224** | 4 | WASHER-HARD (8.8X16X2-MM THK) | |
| M | 12 | 1 | **8T-6870** | 2 | BOLT (M8X1.25X70-MM) | |

C-CHANGE FROM PREVIOUS TYPE
I-REFER TO HYDRAULIC INFORMATION SYSTEM
M-METRIC PART
Y-SEPARATE ILLUSTRATION

*218-5635* **MANIFOLD & LINES GP-CONTROL** ***(contd.)*** **i02595599**

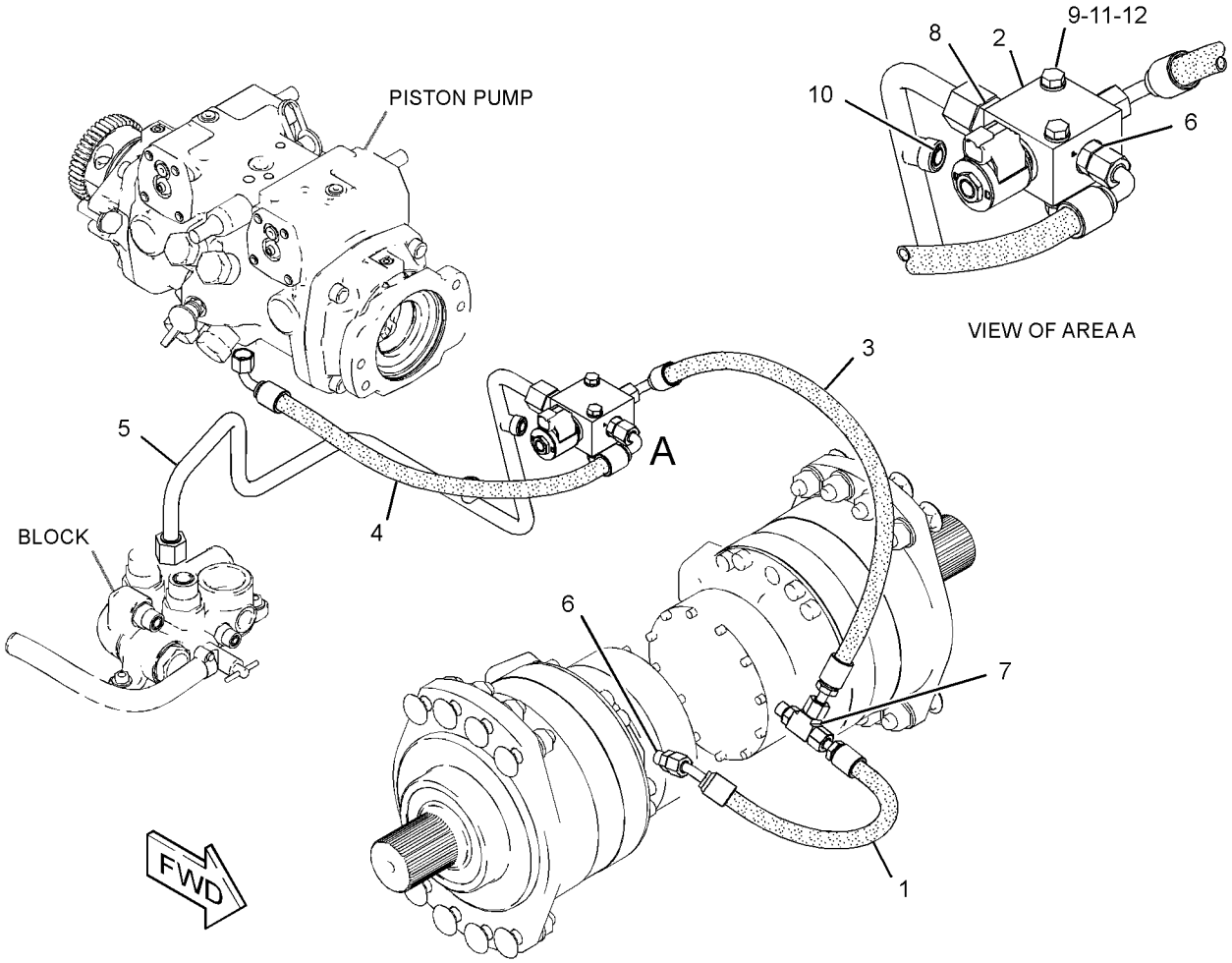


GRAPHIC #1 **<END>** g01299758

# *218-5636* MANIFOLD & LINES GP-CONTROL–

**PARKING BRAKE, 2-SPEED**

**S/N: HEN6750-UP**

**PART OF 218-5607, 218-5608, 295-7497 DRIVE CONTROL AR-HYDROSTATIC**

**AN ATTACHMENT**

**SMCS-5057, 5264, 5479** **i02595688**

| NOTE | REF NO | GRAPHIC REF | PART NUMBER | QTY | PART NAME 1 2 3 4 5 6 (PRODUCT LEVEL) | SEE PAGE |
|---|---|---|---|---|---|---|
| I | 1 | 1 | **100-7530** | 2 | HOSE AS | |
| I | 2 | 1 | **218-5580** | 2 | HOSE AS | |
| I | 3 | 1 | **218-5581** | 1 | HOSE AS | |
| | 4 | 1 | **218-6879** | 1 | TUBE AS | |
| CY | 5 | 1 | **293-6591** | 1 | MANIFOLD & SOLENOID GP-CONTROL (PARKING BRAKE, 2-SPEED) | 171 |
| | 6 | 1 | *148-8326* | 1 | CONNECTOR AS | |
| | | 1 | **3J-7354** | 1 | SEAL-O-RING | |
| | | 1 | **6V-8397** | 1 | SEAL-O-RING | |
| | | 1 | **6V-9872** | 1 | CONNECTOR | |
| | 7 | 1 | *148-8336* | 5 | CONNECTOR AS | |
| | | | | | (EACH INCLUDES) | |
| | | 1 | **3J-1907** | 1 | SEAL-O-RING | |
| | | 1 | **6V-8397** | 1 | SEAL-O-RING | |
| | | 1 | **6V-8636** | 1 | CONNECTOR | |
| | 8 | 1 | *148-8433* | 1 | TEE AS | |
| | | 1 | **6V-8397** | 2 | SEAL-O-RING | |
| | | 1 | **6V-9836** | 1 | TEE-SWIVEL | |
| | 9 | 1 | *161-8560* | 1 | CONNECTOR AS | |
| | | 1 | **3J-1907** | 1 | SEAL-O-RING | |
| | | 1 | **7J-9108** | 1 | SEAL-O-RING | |
| | | 1 | **8C-6758** | 1 | CONNECTOR | |
| | 10 | 1 | *173-7225* | 1 | TEE AS | |
| | | 1 | **3J-7354** | 1 | SEAL-O-RING | |
| | | 1 | **6V-8397** | 2 | SEAL-O-RING | |
| | | 1 | **6V-9161** | 1 | TEE | |
| M | 11 | 1 | **5C-7261** | 2 | NUT (M8X1.25-THD) | |
| M | 12 | 1 | **7X-2539** | 2 | BOLT (M8X1.25X110-MM) | |
| | 13 | 1 | **8T-4224** | 4 | WASHER-HARD (8.8X16X2-MM THK) | |
| | 14 | 1 | **6V-8398** | 2 | SEAL-O-RING | |

C-CHANGE FROM PREVIOUS TYPE
I-REFER TO HYDRAULIC INFORMATION SYSTEM
M-METRIC PART
Y-SEPARATE ILLUSTRATION

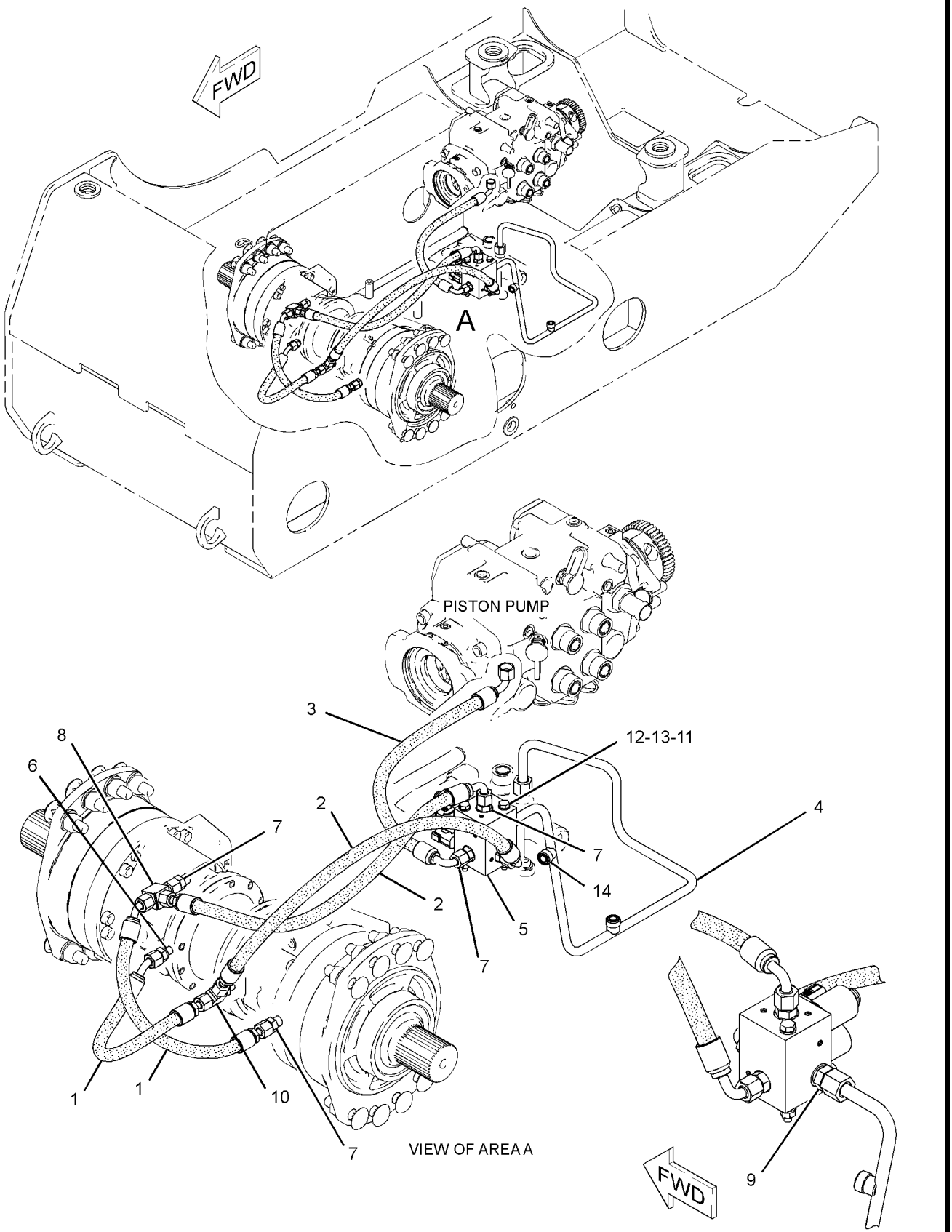


GRAPHIC #1 **<END>** g01172521

# *233-7131* MANIFOLD & SOLENOID GP-CONTROL—PARKING BRAKE

**S/N: HEN6750-UP**

**PART OF 218-5635 MANIFOLD & LINES GP-CONTROL**

**AN ATTACHMENT**

**SMCS-5264, 5479** **i02837179**

| NOTE | REF NO | GRAPHIC REF | PART NUMBER | QTY | PART NAME 1 2 3 4 5 6 (PRODUCT LEVEL) | SEE PAGE |
|---|---|---|---|---|---|---|
| Y | 1 | 1 | **259-8194** | 1 | VALVE GP-SOLENOID | 194 |
| | 2 | 1 | **259-8195** | 1 | MANIFOLD | |

Y-SEPARATE ILLUSTRATION

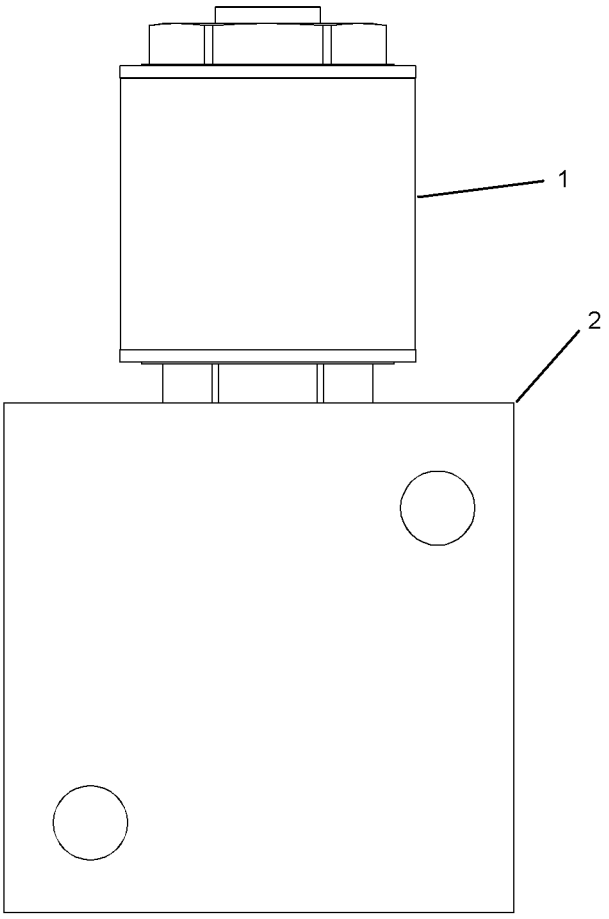


RIGHT SIDE VIEW

GRAPHIC #1

**<END>**

g01416438

# 293-6591 MANIFOLD & SOLENOID GP-CONTROL–12-VOLT

**S/N: HEN6750-UP**

**PART OF 218-5636 MANIFOLD & LINES GP-CONTROL**

**AN ATTACHMENT**

**SMCS-5264, 5479** **i02940522**

| NOTE | PART NUMBER | QTY | PART NAME 1 2 3 4 5 6 (PRODUCT LEVEL) | SEE PAGE |
|---|---|---|---|---|
| | | | (NO SERVICED PARTS) | |

**<END>**

# POWER TRAIN

## *308-0421* MANIFOLD GP-RETURN

**S/N: HEN6750-UP**

**PART OF 218-5621 LINES GP-HYDROSTATIC**

**AN ATTACHMENT**

**SMCS-5264** **i02730543**

| NOTE | REF NO | GRAPHIC REF | PART NUMBER | QTY | PART NAME 1 2 3 4 5 6 (PRODUCT LEVEL) | SEE PAGE |
|---|---|---|---|---|---|---|
| | 1 | 1 | **7K-1181** | 1 | STRAP-CABLE | |
| | 2 | 1 | **105-4593** | 1 | POPPET | |
| | 3 | 1 | **212-6603** | 1 | PLUG AS | |
| | | 1 | **6V-8978** | 1 | SEAL-O-RING | |
| | 4 | 1 | **212-6604** | 1 | SPRING | |
| I | 5 | 1 | **233-5716** | 1 | HOSE AS | |
| | 6 | 1 | **305-4185** | 1 | BLOCK | |
| | 7 | 1 | *148-8318* | 1 | CONNECTOR AS | |
| | | 1 | **3K-0360** | 1 | SEAL-O-RING | |
| | | 1 | **6V-8397** | 1 | SEAL-O-RING | |
| | | 1 | **6V-8634** | 1 | CONNECTOR | |
| | 8 | 1 | *148-8327* | 2 | CONNECTOR AS | |
| | | | | | (EACH INCLUDES) | |
| | | 1 | **3D-2824** | 1 | SEAL-O-RING | |
| | | 1 | **6V-8637** | 1 | CONNECTOR | |
| | | 1 | **6V-9746** | 1 | SEAL-O-RING | |
| | 9 | 1 | *148-8336* | 1 | CONNECTOR AS | |
| | | 1 | **3J-1907** | 1 | SEAL-O-RING | |
| | | 1 | **6V-8397** | 1 | SEAL-O-RING | |
| | | 1 | **6V-8636** | 1 | CONNECTOR | |
| | 10 | 1 | *148-8340* | 1 | CONNECTOR AS | |
| | | 1 | **3K-0360** | 1 | SEAL-O-RING | |
| | | 1 | **6V-8398** | 1 | SEAL-O-RING | |
| | | 1 | **6V-8639** | 1 | CONNECTOR | |
| | 11 | 1 | *148-8342* | 1 | CONNECTOR AS | |
| | | 1 | **3K-0360** | 1 | SEAL-O-RING | |
| | | 1 | **6V-8632** | 1 | CONNECTOR | |
| | | 1 | **7J-9108** | 1 | SEAL-O-RING | |
| | 12 | 1 | *165-4934* | 1 | PLUG AS | |
| | | 1 | **6V-8397** | 1 | SEAL-O-RING | |
| | | 1 | **6V-9508** | 1 | PLUG | |

I-REFER TO HYDRAULIC INFORMATION SYSTEM

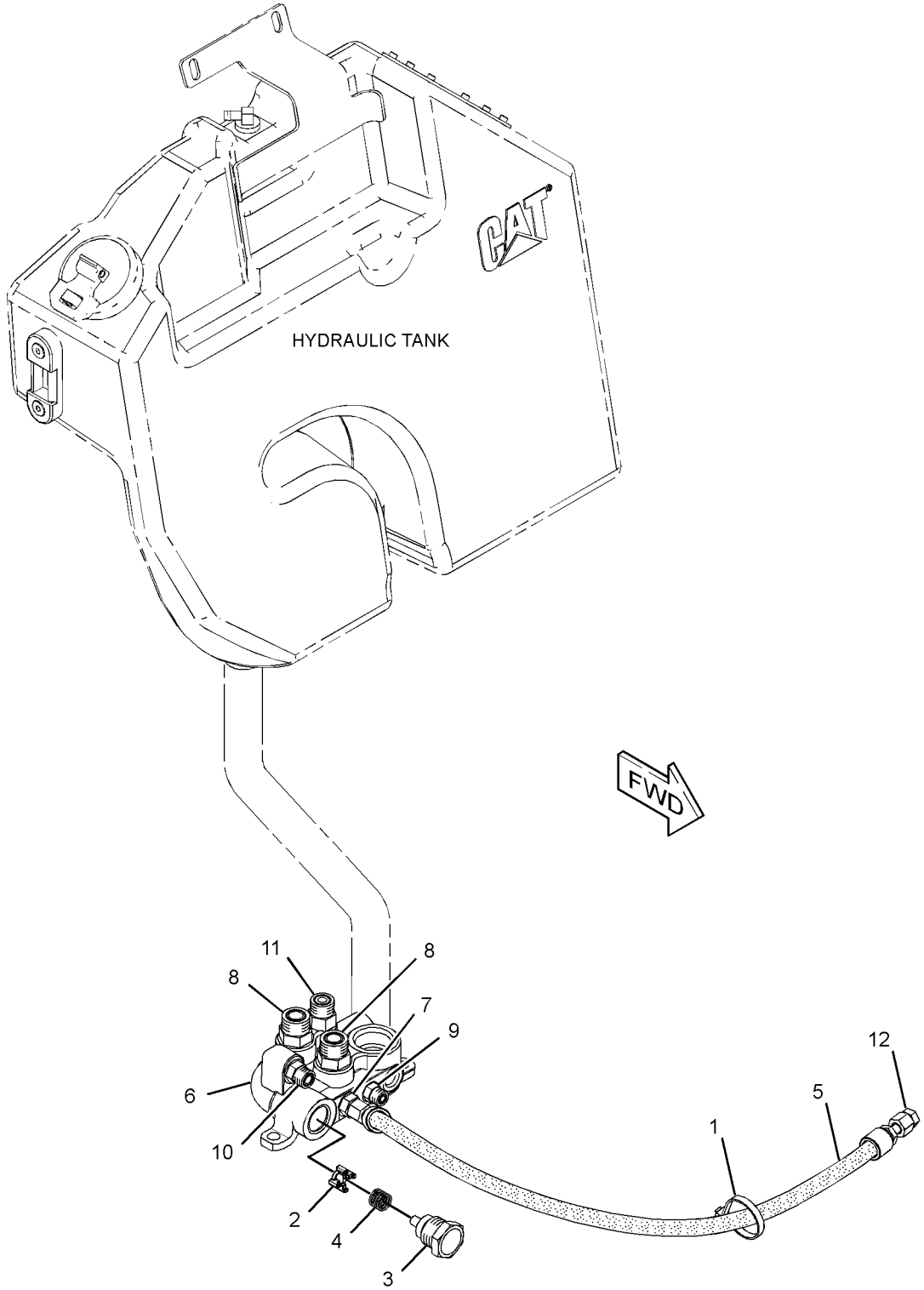


GRAPHIC #1 **<END>** g01380873

# *190-7457* MOTOR & MTG GP-HYDROSTATIC—TWO SPEED

**S/N: HEN6750-UP**

**PART OF 218-5607, 218-5608, 295-7497 DRIVE CONTROL AR-HYDROSTATIC**

**AN ATTACHMENT**

**SMCS-5058** **i02637361**

| NOTE | REF NO | GRAPHIC REF | PART NUMBER | QTY | PART NAME 1 2 3 4 5 6 (PRODUCT LEVEL) | SEE PAGE |
|---|---|---|---|---|---|---|
| M | 1 | 1 | **193-8340** | 16 | BOLT-CARRIAGE (M16X2X65-MM) | |
| CYR | 2 | 1 | **280-7858** | 2 | MOTOR GP-PISTON (2-SPEED) | 178 |
| | 3 | 1 | **8T-4122** | 16 | WASHER-HARD (17X32X3.5-MM THK) | |
| M | 4 | 1 | **8T-4132** | 16 | NUT (M16X2-THD) | |

C-CHANGE FROM PREVIOUS TYPE
M-METRIC PART
R-REMFG PART MAY BE AVAILABLE
Y-SEPARATE ILLUSTRATION

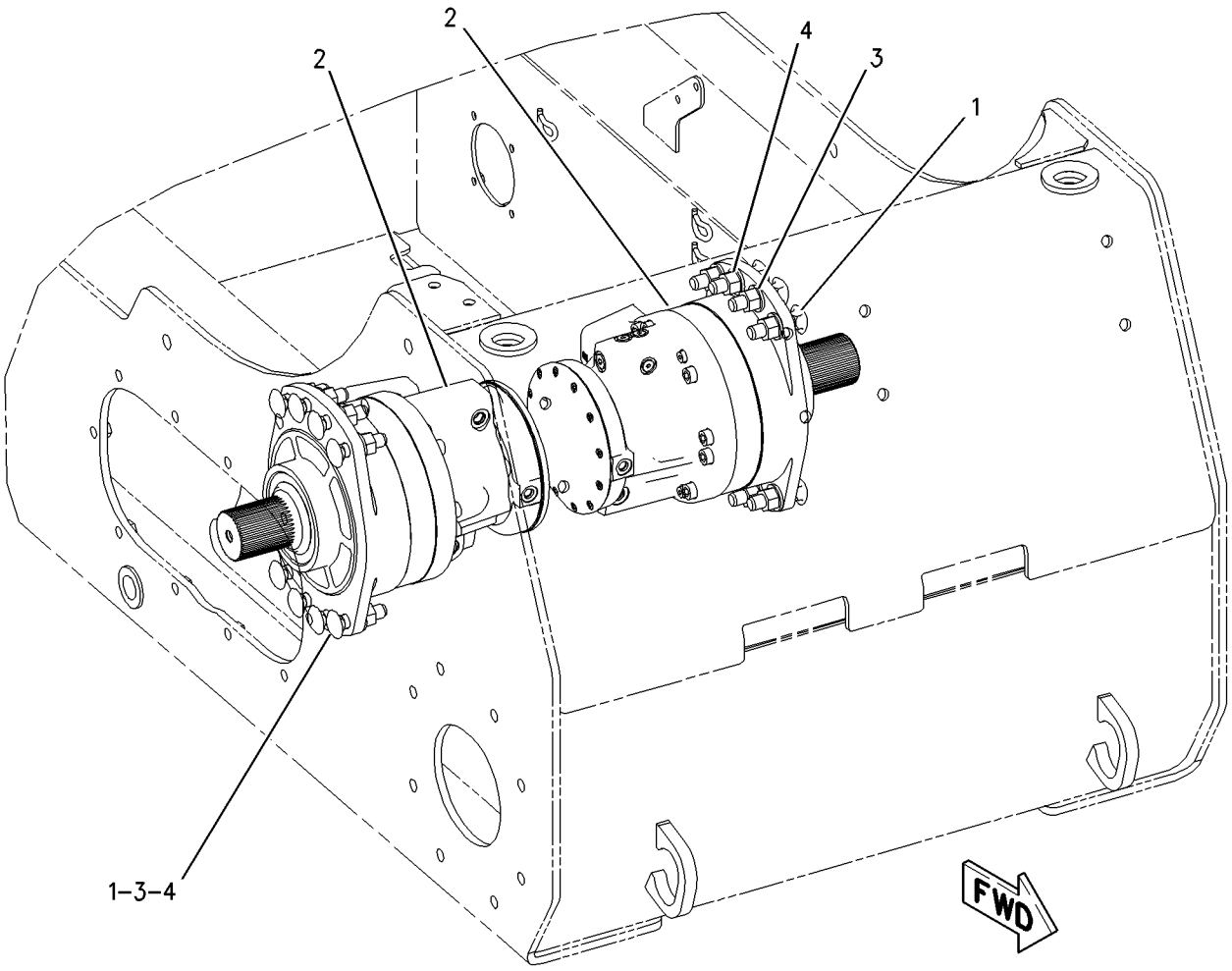


GRAPHIC #1 **<END>** g00933476

# *191-9780* MOTOR & MTG GP-HYDROSTATIC

**S/N: HEN6750-UP**

**PART OF 218-5603, 218-5604, 218-5605, 218-5606 DRIVE CONTROL AR-HYDROSTATIC AN ATTACHMENT**

**SMCS-5058** **i02639967**

| NOTE | REF NO | GRAPHIC REF | PART NUMBER | QTY | PART NAME 1 2 3 4 5 6 (PRODUCT LEVEL) | SEE PAGE |
|---|---|---|---|---|---|---|
| M | 1 | 1 | **193-8340** | 16 | BOLT-CARRIAGE (M16X2X65-MM) | |
| CYR | 2 | 1 | **280-7856** | 2 | MOTOR GP-PISTON | 176 |
| | 3 | 1 | **8T-4122** | 16 | WASHER-HARD (17X32X3.5-MM THK) | |
| M | 4 | 1 | **8T-4132** | 16 | NUT (M16X2-THD) | |

C-CHANGE FROM PREVIOUS TYPE
M-METRIC PART
R-REMFG PART MAY BE AVAILABLE
Y-SEPARATE ILLUSTRATION

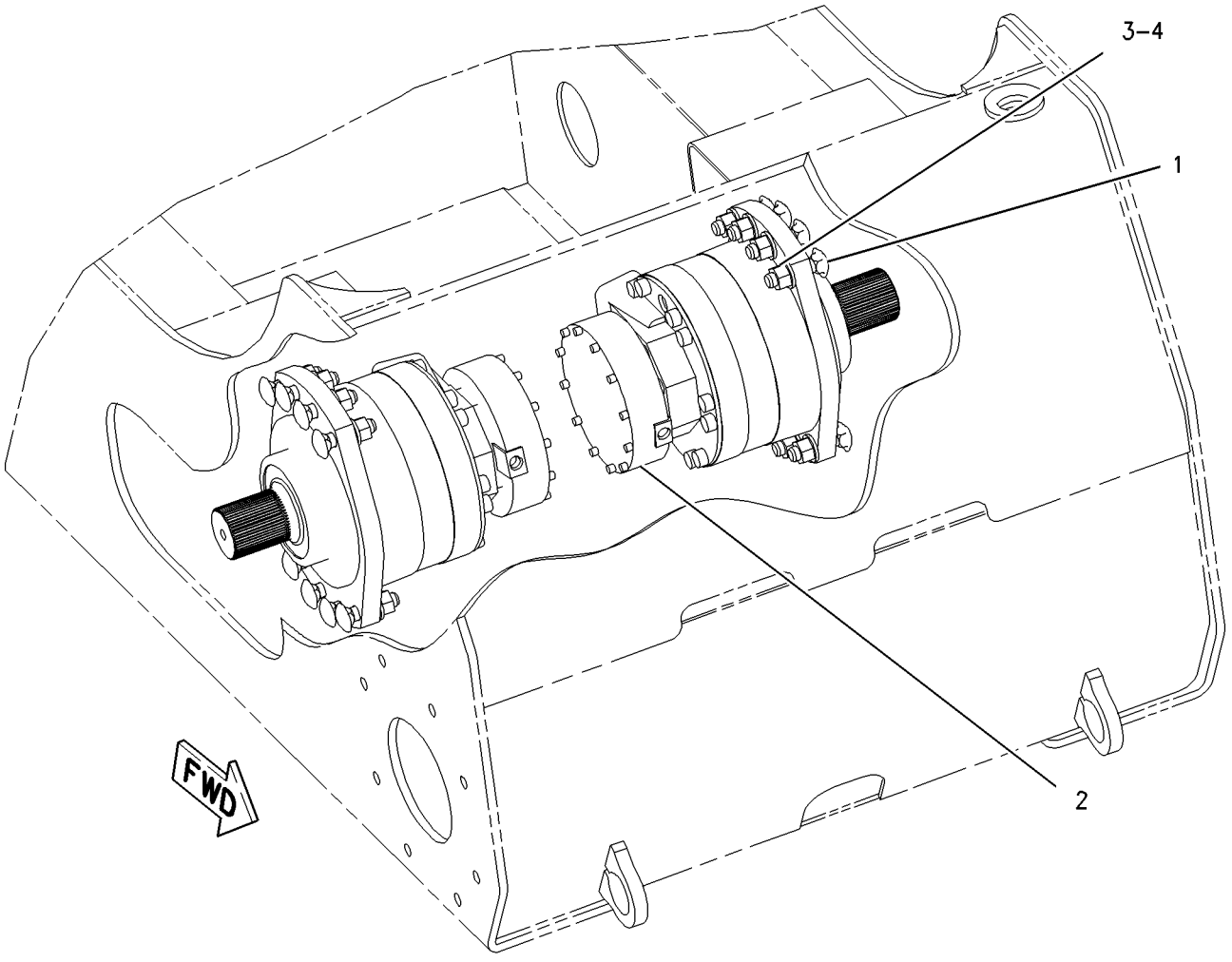


GRAPHIC #1 **<END>** g00913035

# 280-7856 MOTOR GP-PISTON*R

**S/N: HEN6750-UP**

**PART OF 191-9780 MOTOR & MTG GP-HYDROSTATIC**

**AN ATTACHMENT**

**SMCS-5058** **i02752613**

| NOTE | REF NO | GRAPHIC REF | PART NUMBER | QTY | PART NAME 1 2 3 4 5 6 (PRODUCT LEVEL) | SEE PAGE |
|---|---|---|---|---|---|---|
| M | 1 | 1 | **160-8493** | 12 | BOLT-SOCKET HEAD (M14X2X80-MM) | |
| | 2 | 1 | **140-2513** | 1 | SHIM (0.01-MM THK) | |
| | 3 | 1 | **140-2514** | 2 | SHIM (0.3-MM THK) | |
| | 4 | 1 | **222-5693** | 1 | PLUG-O-RING | |
| J | 5 | 1 | **033-5853** | 1 | SEAL-O-RING | |
| | 6 | 1 | **190-6534** | 1 | RING-SPLIT | |
| | 7 | 1 | **289-6354** | 1 | PLUG-O-RING | |
| | 8 | 1 | **8T-5095** | 5 | WASHER-PLATED (11X16X2-MM THK) | |
| M | 9 | 1 | **5C-7883** | 12 | BOLT-SOCKET HEAD (M6X1X16-MM) | |
| | 10 | 1 | **268-1935** | 1 | BEARING-TAPERED ROLLER | |
| | 11 | 1 | **141-3049** | 1 | BEARING (INNER) | |
| | 12 | 1 | **172-8173** | 15 | DISC-BRAKE (OUTER) | |
| | 13 | 1 | **268-1923** | 13 | PLATE-INNER (BRAKE) | |
| | 14 | 1 | **141-3046** | 1 | KIT-SHIM (PISTON MOTOR) | |
| | | | | | (INCLUDES SHIMS) | |
| M | 15 | 1 | **8T-0271** | 5 | BOLT-SOCKET HEAD (M10X1.5X35-MM) | |
| J | 16 | 1 | **033-6042** | 1 | SEAL-O-RING | |
| | | | | | AVAILABLE REPAIR KIT(S): | |
| J | | | **289-6337** | 1 | KIT-SEAL (PISTON MOTOR) | |
| | | | | | (INCUDES SEALS, SEAL RINGS & GASKET) | |

J-KIT MARKED J INCLUDES PARTS MARKED J
M-METRIC PART

**280-7856 MOTOR GP-PISTON** *(contd. )* **i02752613**

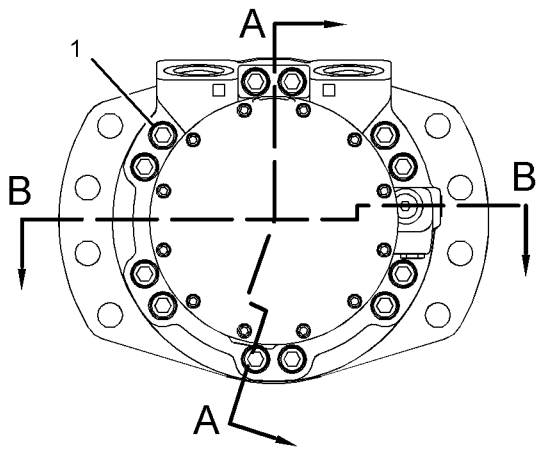


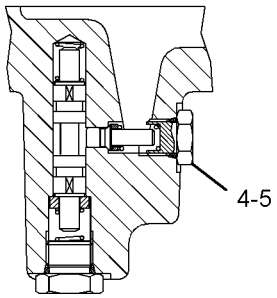


SECTION C-C

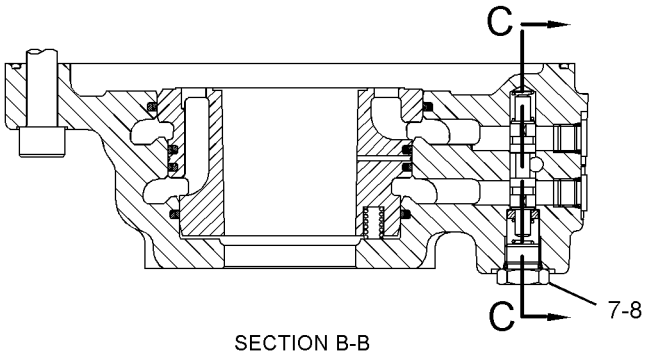


SECTION B-B

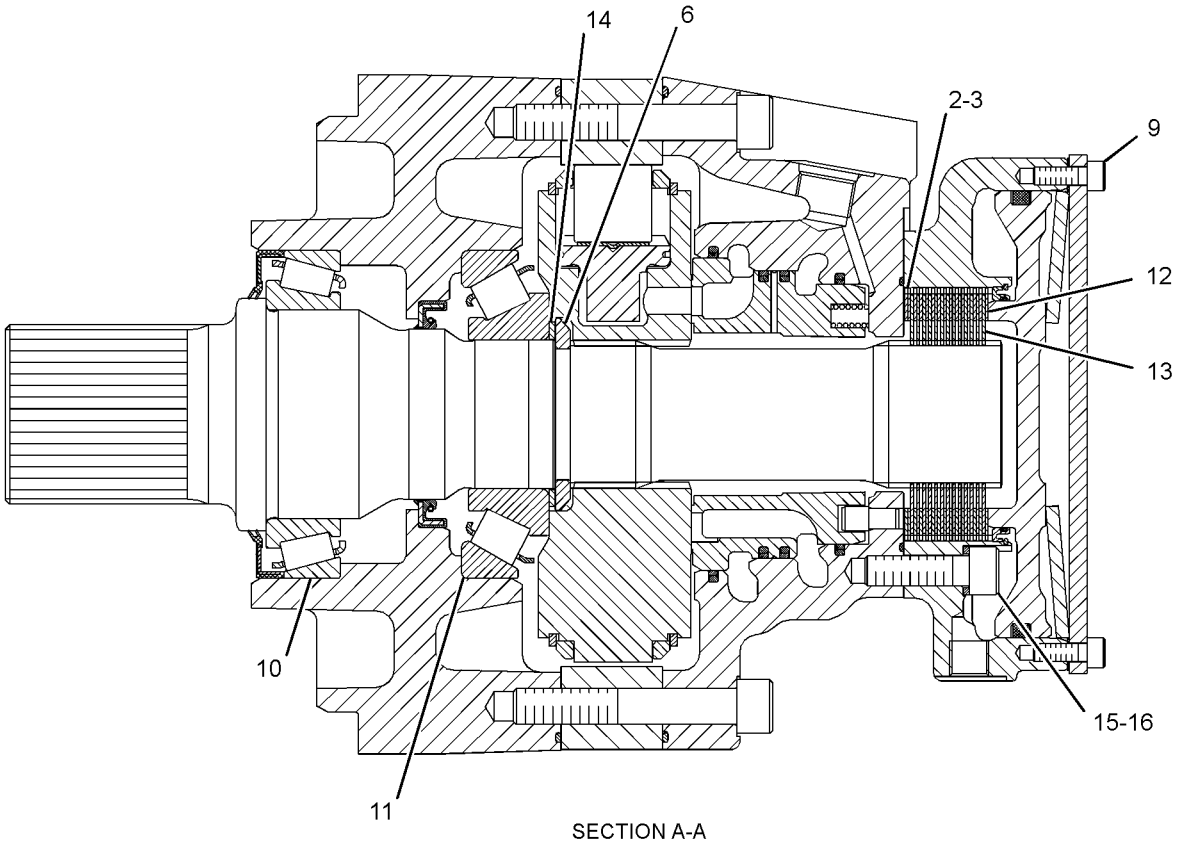


SECTION A-A

GRAPHIC #1 **<END>** g01378257

# 280-7858 MOTOR GP-PISTON*R

**S/N: HEN6750-UP**

**PART OF 190-7457 MOTOR & MTG GP-HYDROSTATIC**

**AN ATTACHMENT**

**SMCS-5058** **i02752614**

| NOTE | REF NO | GRAPHIC REF | PART NUMBER | QTY | PART NAME 1 2 3 4 5 6 (PRODUCT LEVEL) | SEE PAGE |
|---|---|---|---|---|---|---|
| M | 1 | 1 | **8T-1159** | 5 | BOLT-SOCKET HEAD (M10X1.5X25-MM) | |
| | 2 | 1 | **140-2514** | 1 | SHIM (0.3-MM THK) | |
| | 3 | 1 | **140-2513** | 1 | SHIM (0.01-MM THK) | |
| | 4 | 1 | **190-6534** | 1 | RING-SPLIT | |
| M | 5 | 1 | **6V-5193** | 2 | BOLT-SOCKET HEAD (M8X1.25X40-MM) | |
| M | 6 | 1 | **160-8493** | 10 | BOLT-SOCKET HEAD (M14X2X80-MM) | |
| J | 7 | 1 | **033-6042** | 1 | SEAL-O-RING | |
| J | 8 | 1 | **033-5853** | 1 | SEAL-O-RING | |
| M | 9 | 1 | **6V-5683** | 12 | BOLT (M6X1X16-MM) | |
| | 10 | 1 | **222-5693** | 1 | PLUG-O-RING | |
| | 11 | 1 | **289-6354** | 1 | PLUG-O-RING | |
| | 12 | 1 | **268-1935** | 1 | BEARING-TAPERED ROLLER | |
| | 13 | 1 | **141-3049** | 1 | BEARING (INNER) | |
| | 14 | 1 | **172-8173** | 10 | DISC-BRAKE (OUTER) | |
| | 15 | 1 | **268-1923** | 9 | PLATE-INNER (BRAKE) | |
| | 16 | 1 | **141-3046** | 1 | KIT-SHIM (PISTON MOTOR) | |
| | 17 | 1 | **3K-0360** | 1 | SEAL-O-RING | |
| | 18 | 1 | **9S-8005** | 1 | PLUG-O-RING | |
| | | | | | AVAILABLE REPAIR KIT(S): | |
| J | | | **289-6338** | 1 | KIT-SEAL (PISTON MOTOR) | |
| | | | | | (INCLUDES SEALS, SEAL RINGS & GASKET) | |

J-KIT MARKED J INCLUDES PARTS MARKED J
M-METRIC PART

**280-7858 MOTOR GP-PISTON** *(contd. )* **i02752614**

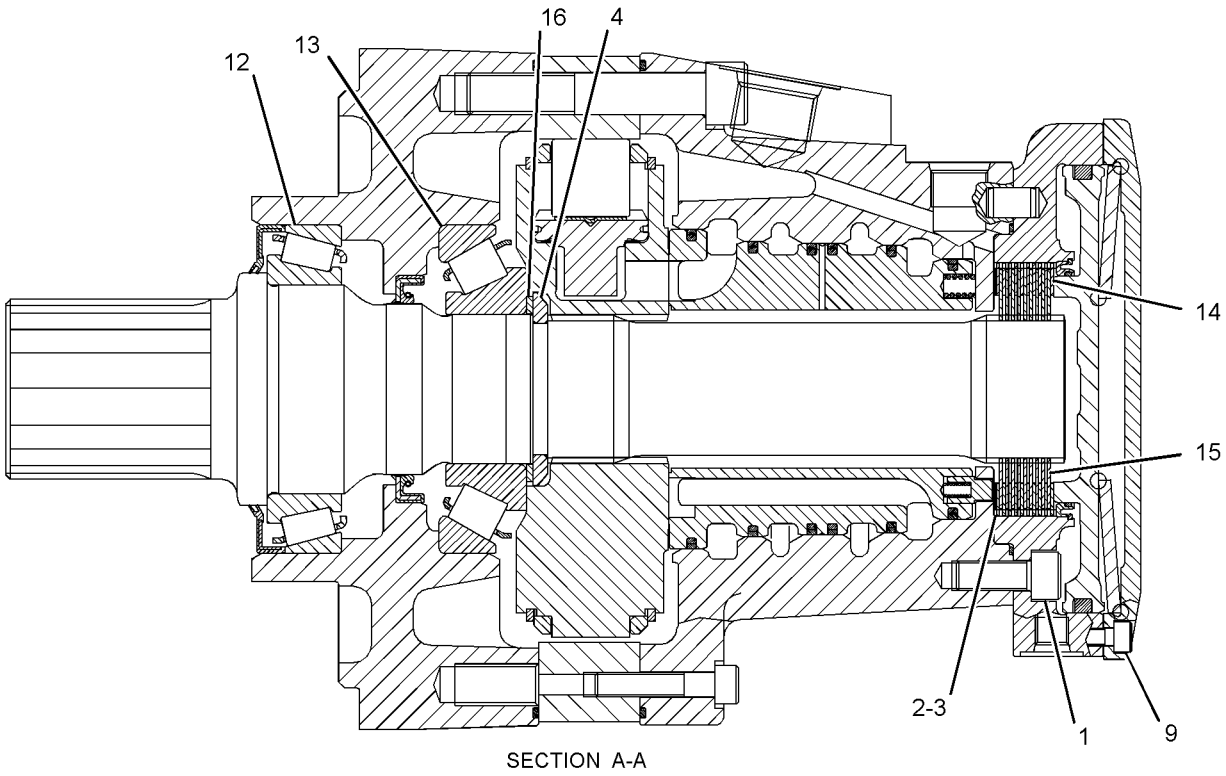


SECTION A-A

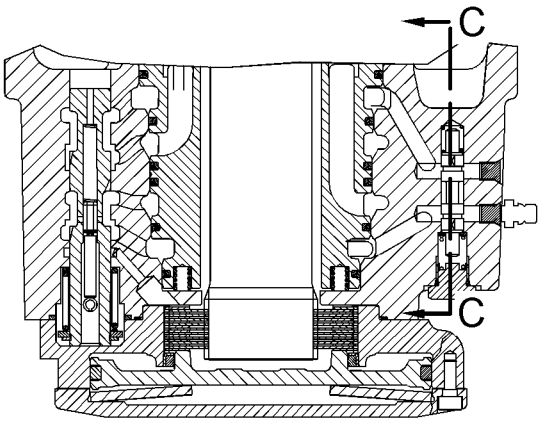


SECTION B-B

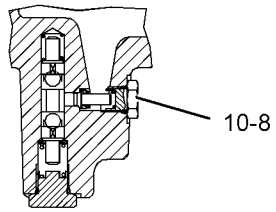


SECTION C-C

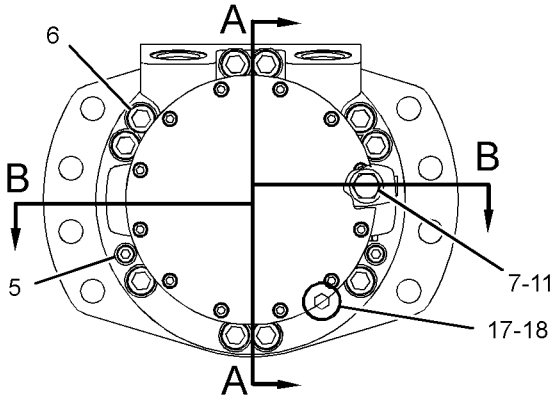


GRAPHIC #1 **<END>** g01323567

## *218-0918* MOUNTING GP-PUMP

**S/N: HEN6750-UP**

**PART OF 295-7510, 295-7518 CHASSIS AR**

**SMCS-3203, 5062, 5070** **i01971011**

| NOTE | REF NO | GRAPHIC REF | PART NUMBER | QTY | PART NAME 1 2 3 4 5 6 (PRODUCT LEVEL) | SEE PAGE |
|---|---|---|---|---|---|---|
| | 1 | 1 | **142-8719** | 1 | PLATE-ADAPTER | |
| | 2 | 1 | **226-7635** | 1 | FLANGE | |
| | 3 | 1 | **8T-4121** | 12 | WASHER-HARD (11X21X2.5-MM THK) | |
| M | 4 | 1 | **8T-4195** | 8 | BOLT (M10X1.5X30-MM) | |
| M | 5 | 1 | **8T-4196** | 12 | BOLT (M10X1.5X35-MM) | |

M-METRIC PART

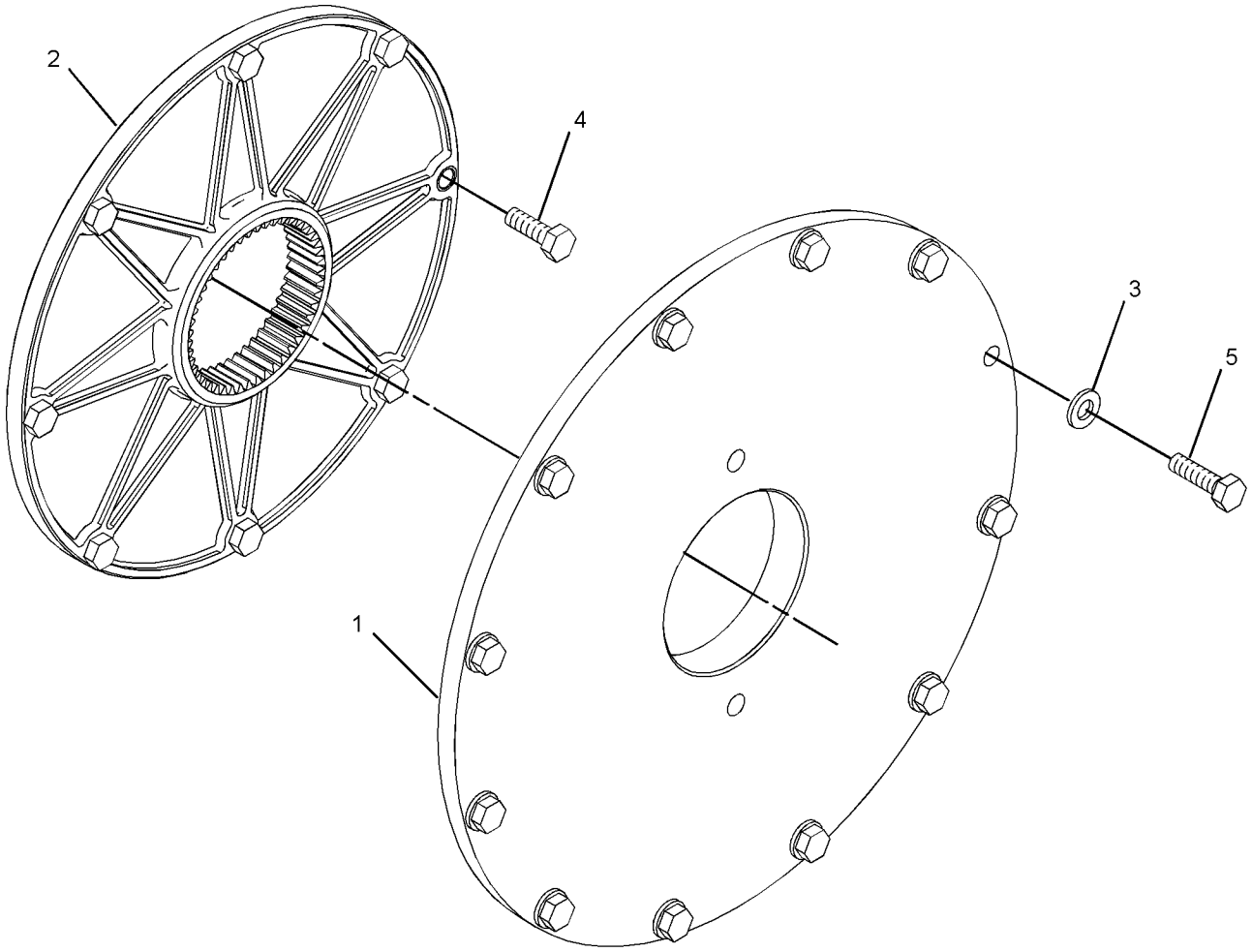


GRAPHIC #1 **<END>** g01024585

# *218-0928* PUMP & MTG GP-HYDROSTATIC

**S/N: HEN6750-UP**

**PART OF 218-5603, 218-5604, 218-5605, 218-5606 DRIVE CONTROL AR-HYDROSTATIC AN ATTACHMENT**

**SMCS-3203, 5070** **i02595807**

| NOTE | REF NO | GRAPHIC REF | PART NUMBER | QTY | PART NAME 1 2 3 4 5 6 (PRODUCT LEVEL) | SEE PAGE |
|---|---|---|---|---|---|---|
| | 1 | 1 | **165-0142** | 2 | WASHER-HARD (14.8X27X3-MM THK) | |
| M | 2 | 1 | **167-4339** | 2 | BOLT (M14X2X40-MM) | |
| CYR | 3 | 1 | **289-6359** | 1 | PUMP GP-PISTON (HYDROSTATIC) | 185 |
| | 4 | 1 | **252-9197** | 1 | BOLT-SOCKET HEAD (M12X1.75X35-MM) | |
| | 5 | 1 | **263-4996** | 1 | HUB AS-COUPLING | |
| | | 1 | **096-0194** | 1 | RING-RETAINING | |

C-CHANGE FROM PREVIOUS TYPE
M-METRIC PART
R-REMFG PART MAY BE AVAILABLE
Y-SEPARATE ILLUSTRATION

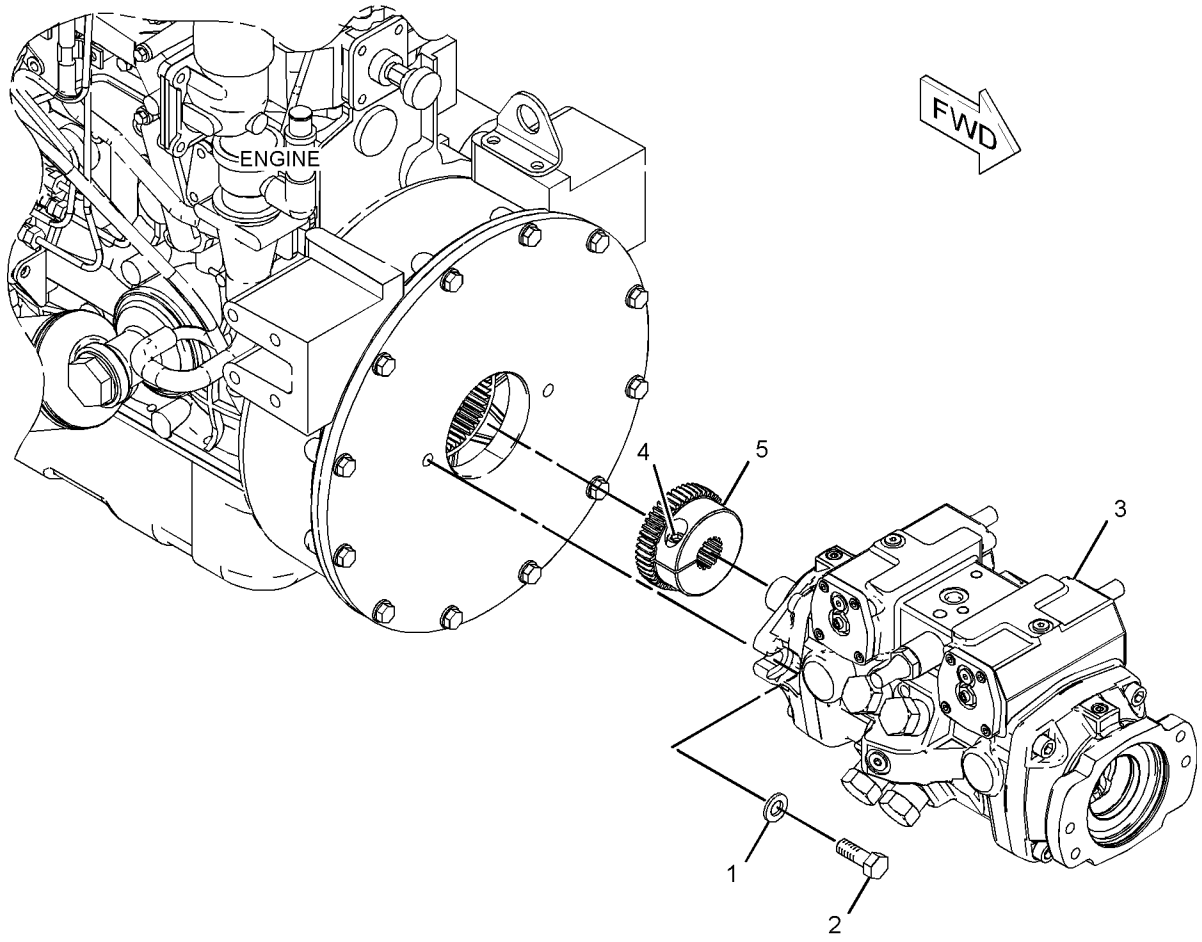


GRAPHIC #1 **<END>** g01149522

# *218-5928* PUMP & MTG GP-HYDROSTATIC

**S/N: HEN6750-UP**

**PART OF 218-5607, 218-5608, 295-7497 DRIVE CONTROL AR-HYDROSTATIC**

**AN ATTACHMENT**

**SMCS-3203, 5070** **i02595843**

| NOTE | REF NO | GRAPHIC REF | PART NUMBER | QTY | PART NAME 1 2 3 4 5 6 (PRODUCT LEVEL) | SEE PAGE |
|---|---|---|---|---|---|---|
| | 1 | 1 | **165-0142** | 2 | WASHER-HARD (14.8X27X3-MM THK) | |
| M | 2 | 1 | **167-4339** | 2 | BOLT (M14X2X40-MM) | |
| CYR | 3 | 1 | **289-6351** | 1 | PUMP GP-PISTON | 183 |
| | 4 | 1 | **252-9197** | 1 | BOLT-SOCKET HEAD (M12X1.75X35-MM) | |
| | 5 | 1 | **263-4996** | 1 | HUB AS-COUPLING | |
| | | 1 | **096-0194** | 1 | RING-RETAINING | |

C-CHANGE FROM PREVIOUS TYPE
M-METRIC PART
R-REMFG PART MAY BE AVAILABLE
Y-SEPARATE ILLUSTRATION

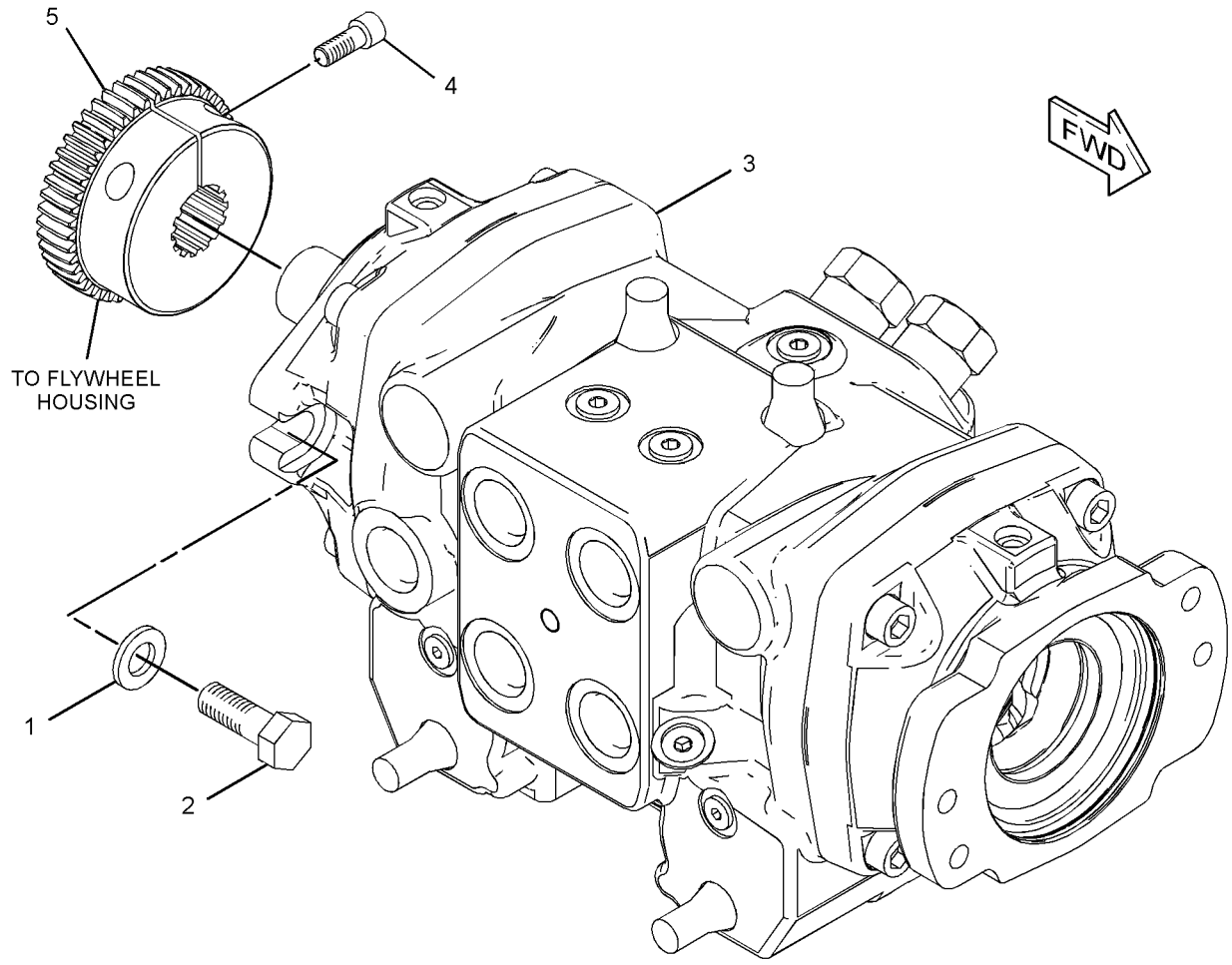


GRAPHIC #1 **<END>** g01164286

# 289-6351 PUMP GP-PISTON*R

**S/N: HEN6750-UP**
**PART OF 218-5928 PUMP & MTG GP-HYDROSTATIC**
**AN ATTACHMENT**

**SMCS-3203, 5070** **i02909918**

| NOTE | REF NO | GRAPHIC REF | PART NUMBER | QTY | PART NAME 1 2 3 4 5 6 (PRODUCT LEVEL) | SEE PAGE |
|---|---|---|---|---|---|---|
| | 1 | 1 | **6E-5060** | 3 | CAP AS | |
| J | 2 | 1 | **167-7713** | 4 | RING-BACKUP | |
| | 3 | 1 | **121-4459** | 2 | BEARING-ROLLER | |
| | 4 | 1 | **108-3565** | 2 | CLIP (CIRCLE) | |
| | 5 | 1 | **204-1454** | 2 | PIN-THREADED | |
| JM | 6 | 1 | **204-1455** | 2 | NUT-SEALING (M8X1-THD) | |
| | 7 | 1 | **204-1456** | 1 | SHIM | |
| | 8 | 1 | **204-1457** | 1 | VALVE GP-SPEED SENSING (PISON PUMP) | |
| | 9 | 1 | **121-4870** | 4 | VALVE-RELIEF (VIBRATORY PISTON PUMP) | |
| | 10 | 1 | **204-1459** | 1 | VALVE GP-RELIEF (CHARGE) | |
| J | 11 | 1 | **135-2655** | 2 | SEAL-O-RING | |
| | 12 | 1 | **3J-7354** | 2 | SEAL-O-RING | |
| J | 13 | 1 | **3K-0715** | 1 | SEAL-O-RING | |
| J | 14 | 1 | **6V-5326** | 4 | SEAL-O-RING | |
| J | 15 | 1 | **6V-5586** | 2 | SEAL-O-RING | |
| J | 16 | 1 | **6V-8352** | 1 | SEAL-O-RING | |
| M | 17 | 1 | **8T-0267** | 8 | BOLT-SOCKET HEAD (M6X1X12-MM) | |
| | 18 | 1 | **9S-8002** | 2 | PLUG-O-RING | |
| M | 19 | 1 | **9X-6606** | 2 | NUT-HEX (M10X1-THD) | |
| | 20 | 1 | **126-5643** | 2 | CAGE | |
| | 21 | 1 | **081-3698** | 2 | BEARING | |
| | 22 | 1 | **204-1452** | 3 | RING-RETAINING | |
| J | 23 | 1 | **204-1453** | 1 | SEAL | |
| | 24 | 1 | **126-5640** | 2 | BEARING-ROLLER | |
| | 25 | 1 | **1G-3410** | 4 | WIRE | |
| | 26 | 1 | **280-7863** | 1 | ROTATING GP-PUMP (RH) | |
| | 27 | 1 | **6E-0725** | 4 | ROLLER | |
| | 28 | 1 | **280-7865** | 1 | ROTATING GP-PUMP (LH) | |
| | 29 | 1 | **268-1929** | 2 | CRADLE | |
| | | | | | AVAILABLE REPAIR KIT(S): | |
| | | | **268-9529** | 1 | KIT-SEAL (PISTON PUMP) | |
| | | | | | (INCLUDES RINGS, SEALS & SPACERS) | |

J-KIT MARKED J INCLUDES PARTS MARKED J
M-METRIC PART

## 289-6351 PUMP GP-PISTON *(contd. )* i02909918

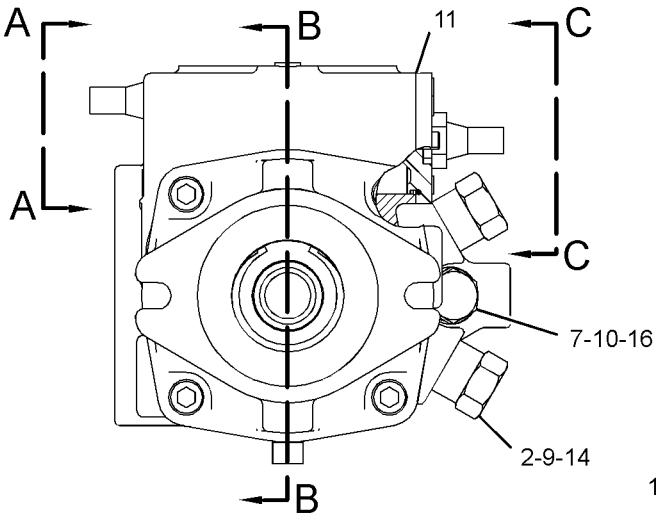


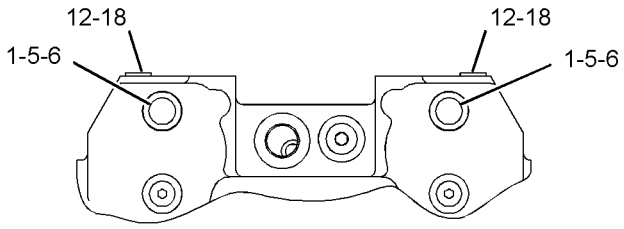


VIEW A-A

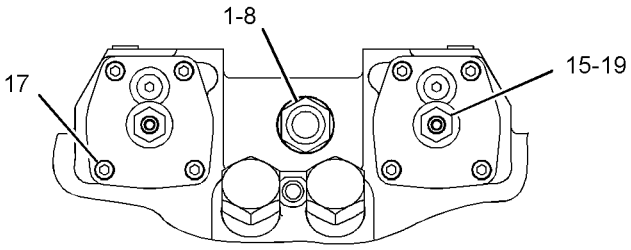


VIEW C-C

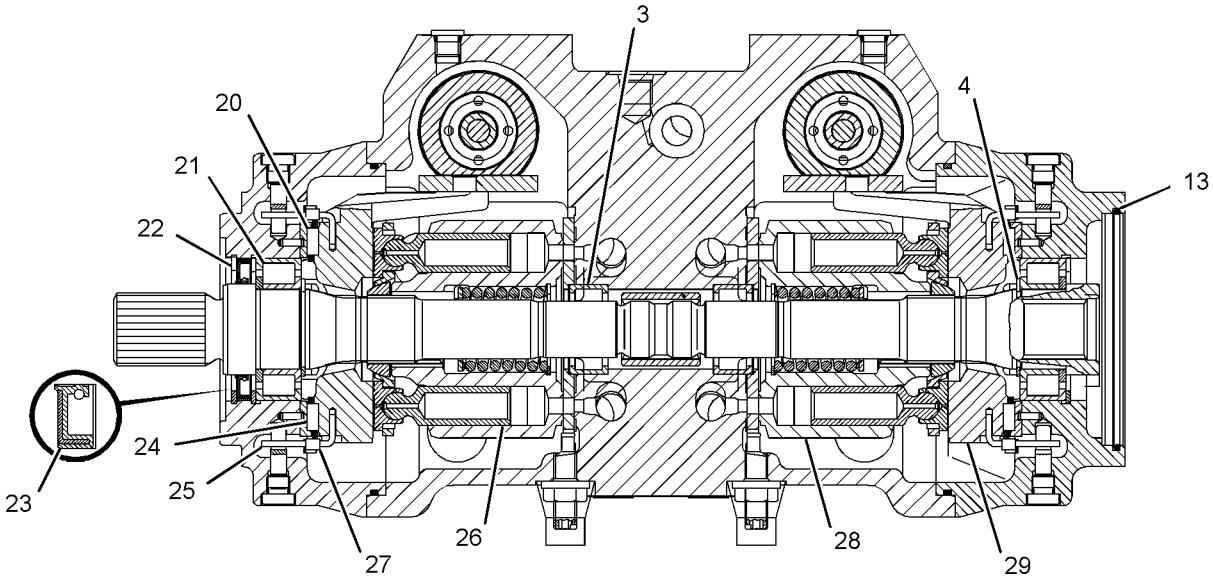


SECTION B-B

GRAPHIC #1 **<END>** g01299835

# 289-6359 PUMP GP-PISTON*R

**S/N: HEN6750-UP**
**PART OF 218-0928 PUMP & MTG GP-HYDROSTATIC**
**AN ATTACHMENT**

**SMCS-3203, 5070** **i02902401**

| NOTE | REF NO | GRAPHIC REF | PART NUMBER | QTY | PART NAME 1 2 3 4 5 6 (PRODUCT LEVEL) | SEE PAGE |
|---|---|---|---|---|---|---|
| | 1 | 1 | **6E-5060** | 3 | CAP AS | |
| J | 2 | 1 | **167-7713** | 4 | RING-BACKUP | |
| | 3 | 1 | **121-4459** | 2 | BEARING-ROLLER | |
| | 4 | 1 | **108-3565** | 2 | CLIP | |
| | 5 | 1 | **204-1454** | 2 | PIN-THREADED | |
| JM | 6 | 1 | **204-1455** | 2 | NUT-SEALING (M8X1-THD) | |
| | 7 | 1 | **204-1456** | 1 | SHIM | |
| | 8 | 1 | **204-1457** | 1 | VALVE GP-SPEED SENSING (PISON PUMP) | |
| | 9 | 1 | **121-4870** | 4 | VALVE-RELIEF (VIBRATORY PISTON PUMP) | |
| | 10 | 1 | **204-1459** | 1 | VALVE GP-RELIEF (CHARGE) | |
| J | 11 | 1 | **135-2655** | 2 | SEAL-O-RING | |
| | 12 | 1 | **3J-7354** | 2 | SEAL-O-RING | |
| J | 13 | 1 | **3K-0715** | 1 | SEAL-O-RING | |
| J | 14 | 1 | **6V-5326** | 4 | SEAL-O-RING | |
| J | 15 | 1 | **6V-5586** | 2 | SEAL-O-RING | |
| J | 16 | 1 | **6V-8352** | 1 | SEAL-O-RING | |
| M | 17 | 1 | **8T-0267** | 8 | BOLT-SOCKET HEAD (M6X1X12-MM) | |
| | 18 | 1 | **9S-8002** | 2 | PLUG-O-RING | |
| M | 19 | 1 | **9X-6606** | 2 | NUT-HEX (M10X1-THD) | |
| | 20 | 1 | **126-5643** | 2 | CAGE (CRADLE BEARING) | |
| | 21 | 1 | **081-3698** | 2 | BEARING | |
| | 22 | 1 | **204-1452** | 3 | RING-RETAINING | |
| J | 23 | 1 | **204-1453** | 1 | SEAL (RING) | |
| | 24 | 1 | **126-5640** | 2 | BEARING-ROLLER | |
| | 25 | 1 | **1G-3410** | 4 | WIRE | |
| | 26 | 1 | **280-7863** | 1 | ROTATING GP-PUMP (RH) | |
| | 27 | 1 | **6E-0725** | 4 | ROLLER | |
| | 28 | 1 | **280-7865** | 1 | ROTATING GP-PUMP (LH) | |
| | 29 | 1 | **268-1929** | 2 | CRADLE | |
| | | | | | AVAILABLE REPAIR KIT(S): | |
| J | | | **268-9529** | 1 | KIT-SEAL (PISTON PUMP) | |
| | | | | | (ALSO INCLUDES RINGS, SEALS & SPACERS) | |

J-KIT MARKED J INCLUDES PARTS MARKED J
M-METRIC PART

**289-6359 PUMP GP-PISTON** *(contd. )* **i02902401**

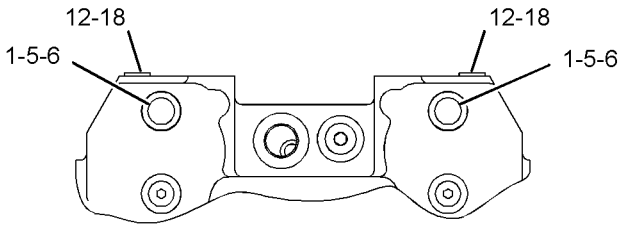


VIEW A-A

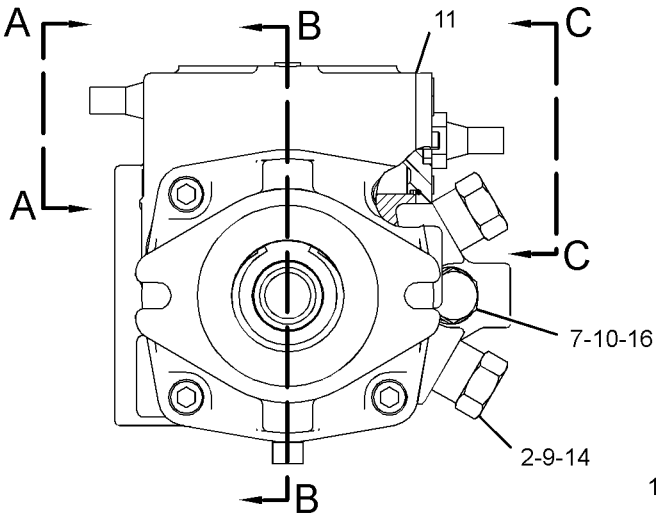


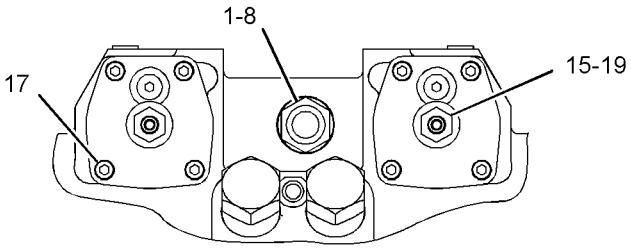


VIEW C-C

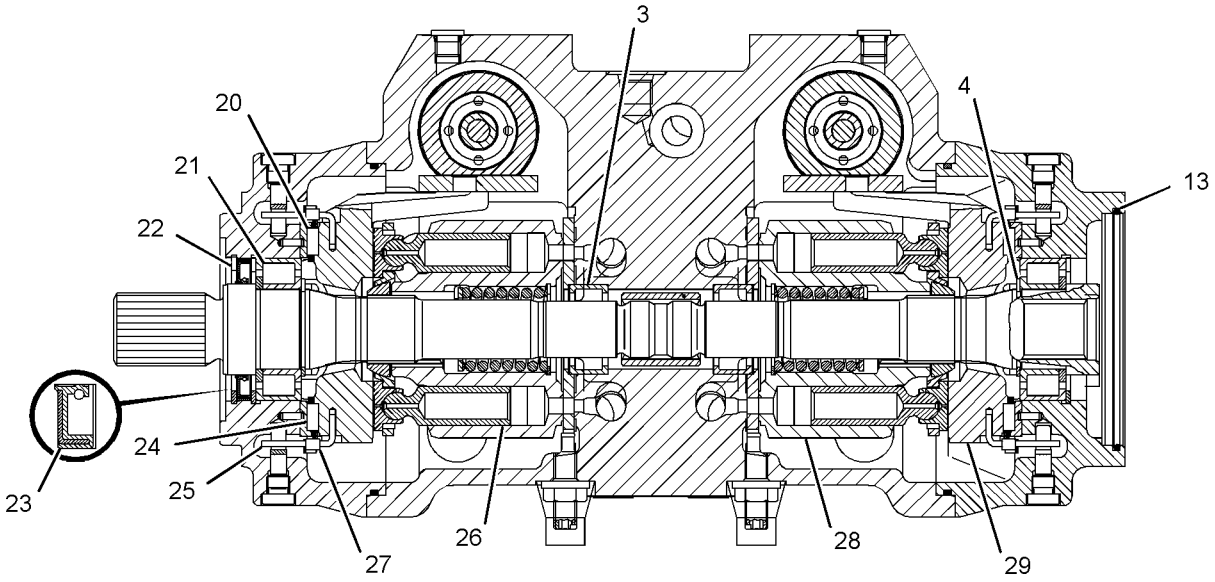


SECTION B-B

GRAPHIC #1 **<END>** g01299835

## *165-4901* TIRE & RIM GP—HEAVY-DUTY, LH

**S/N: HEN6750-UP**
**(16.5X9.75). DIRECTIONAL TIRE**
**PART OF 165-4898 WHEEL & TIRE AR**
**AN ATTACHMENT**

**SMCS-4202** **i02474449**

| NOTE | PART NUMBER | QTY | PART NAME 1 2 3 4 5 6 (PRODUCT LEVEL) | SEE PAGE |
|---|---|---|---|---|
| | **150-8599** | 1 | VALVE AS-TIRE | |
| | **142-8731** | 1 | WHEEL AS | |
| | | | | |
| | *165-4909* | 1 | TIRE (12-16.5) | |

**<END>**

## *165-4902* TIRE & RIM GP—HEAVY-DUTY, RH

**S/N: HEN6750-UP**
**(16.5X9.75). DIRECTIONAL TIRE**
**PART OF 165-4898 WHEEL & TIRE AR**
**AN ATTACHMENT**

**SMCS-4202** **i02474458**

| NOTE | PART NUMBER | QTY | PART NAME 1 2 3 4 5 6 (PRODUCT LEVEL) | SEE PAGE |
|---|---|---|---|---|
| | **150-8599** | 1 | VALVE AS-TIRE | |
| | **142-8731** | 1 | WHEEL AS | |
| | | | | |
| | *165-4909* | 1 | TIRE (12-16.5) | |

**<END>**

## *165-4906* TIRE & RIM GP—HEAVY-DUTY, LH

**S/N: HEN6750-UP**
**(16.5X9.75). DIRECTIONAL TIRE**
**PART OF 165-4903 WHEEL & TIRE AR**
**AN ATTACHMENT**

**SMCS-4202** **i02571051**

| NOTE | PART NUMBER | QTY | PART NAME 1 2 3 4 5 6 (PRODUCT LEVEL) | SEE PAGE |
|---|---|---|---|---|
| | **150-8599** | 1 | VALVE AS-TIRE | |
| | **142-8759** | 1 | WHEEL AS | |
| | | | | |
| | *165-4909* | 1 | TIRE (12-16.5) | |

**<END>**

## *165-4907* TIRE & RIM GP—HEAVY-DUTY, RH

**S/N: HEN6750-UP**
**(16.5X9.75). DIRECTIONAL TIRE**
**PART OF 165-4903 WHEEL & TIRE AR**
**AN ATTACHMENT**

**SMCS-4202** **i02571052**

| NOTE | PART NUMBER | QTY | PART NAME 1 2 3 4 5 6 (PRODUCT LEVEL) | SEE PAGE |
|---|---|---|---|---|
| | **150-8599** | 1 | VALVE AS-TIRE | |
| | **142-8759** | 1 | WHEEL AS | |
| | | | | |
| | *165-4909* | 1 | TIRE (12-16.5) | |

**<END>**

## *185-8674* TIRE & RIM GP—LH

**S/N: HEN6750-UP**
**(546X248). DIRECTIONAL TIRE**
**PART OF 185-8662 WHEEL & TIRE AR**
**AN ATTACHMENT**

**SMCS-4202** **i02571069**

| NOTE | PART NUMBER | QTY | PART NAME 1 2 3 4 5 6 (PRODUCT LEVEL) | SEE PAGE |
|---|---|---|---|---|
| | **150-8599** | 1 | VALVE AS-TIRE | |
| | **185-9936** | 1 | WHEEL AS | |
| | | | | |
| | **185-9935** | 1 | TIRE (305-546) | |

**<END>**

## *185-8675* TIRE & RIM GP—RH

**S/N: HEN6750-UP**
**(546X248). DIRECTIONAL TIRE**
**PART OF 185-8662 WHEEL & TIRE AR**
**AN ATTACHMENT**

**SMCS-4202** **i02571070**

| NOTE | PART NUMBER | QTY | PART NAME 1 2 3 4 5 6 (PRODUCT LEVEL) | SEE PAGE |
|---|---|---|---|---|
| | **150-8599** | 1 | VALVE AS-TIRE | |
| | **185-9936** | 1 | WHEEL AS | |
| | | | | |
| | **185-9935** | 1 | TIRE (305-546) | |

**<END>**

## *185-8676* TIRE & RIM GP–LH

**S/N: HEN6750-UP**
**(546X248). DIRECTIONAL TIRE**
**PART OF 185-8663 WHEEL & TIRE AR**
**AN ATTACHMENT**

**SMCS-4202** **i02474467**

| NOTE | PART NUMBER | QTY | PART NAME 1 2 3 4 5 6 (PRODUCT LEVEL) | SEE PAGE |
|---|---|---|---|---|
| | **150-8599** | 1 | VALVE AS-TIRE | |
| | **185-9937** | 1 | WHEEL AS | |
| | | | | |
| | *185-9935* | 1 | TIRE (305-546) | |

**<END>**

## *185-8677* TIRE & RIM GP–RH

**S/N: HEN6750-UP**
**(547X248). DIRECTIONAL TIRE**
**PART OF 185-8663 WHEEL & TIRE AR**
**AN ATTACHMENT**

**SMCS-4202** **i02474504**

| NOTE | PART NUMBER | QTY | PART NAME 1 2 3 4 5 6 (PRODUCT LEVEL) | SEE PAGE |
|---|---|---|---|---|
| | **150-8599** | 1 | VALVE AS-TIRE | |
| | **185-9937** | 1 | WHEEL AS | |
| | | | | |
| | *185-9935* | 1 | TIRE (305-546) | |

**<END>**

## *185-9928* TIRE & RIM GP–LH

**S/N: HEN6750-UP**
**(16.5X9.75). DIRECTIONAL TIRE**
**PART OF 185-8666 WHEEL & TIRE AR**
**AN ATTACHMENT**

**SMCS-4202** **i02571082**

| NOTE | PART NUMBER | QTY | PART NAME 1 2 3 4 5 6 (PRODUCT LEVEL) | SEE PAGE |
|---|---|---|---|---|
| | **150-8599** | 1 | VALVE AS-TIRE | |
| | **142-8759** | 1 | WHEEL AS | |
| | | | | |
| | **185-9933** | 1 | TIRE (12-16.5) | |

**<END>**

## *185-9929* TIRE & RIM GP–RH

**S/N: HEN6750-UP**
**(16.5X9.75). DIRECTIONAL TIRE**
**PART OF 185-8666 WHEEL & TIRE AR**
**AN ATTACHMENT**

**SMCS-4202** **i02571083**

| NOTE | PART NUMBER | QTY | PART NAME 1 2 3 4 5 6 (PRODUCT LEVEL) | SEE PAGE |
|---|---|---|---|---|
| | **150-8599** | 1 | VALVE AS-TIRE | |
| | **142-8759** | 1 | WHEEL AS | |
| | | | | |
| | **185-9933** | 1 | TIRE (12-16.5) | |

**<END>**

## *185-9930* TIRE & RIM GP–LH

**S/N: HEN6750-UP**
**(16.5X9.75). DIRECTIONAL TIRE**
**PART OF 185-8667 WHEEL & TIRE AR**
**AN ATTACHMENT**

**SMCS-4202** **i02362232**

| NOTE | PART NUMBER | QTY | PART NAME 1 2 3 4 5 6 (PRODUCT LEVEL) | SEE PAGE |
|---|---|---|---|---|
| | **150-8599** | 1 | VALVE AS-TIRE | |
| | **142-8731** | 1 | WHEEL AS | |
| | | | | |
| | *185-9933* | 1 | TIRE (12-16.5) | |

**<END>**

## *185-9931* TIRE & RIM GP–RH

**S/N: HEN6750-UP**
**(16.5X9.75). DIRECTIONAL TIRE**
**PART OF 185-8667 WHEEL & TIRE AR**
**AN ATTACHMENT**

**SMCS-4202** **i02362236**

| NOTE | PART NUMBER | QTY | PART NAME 1 2 3 4 5 6 (PRODUCT LEVEL) | SEE PAGE |
|---|---|---|---|---|
| | **150-8599** | 1 | VALVE AS-TIRE | |
| | **142-8731** | 1 | WHEEL AS | |
| | | | | |
| | *185-9933* | 1 | TIRE (12-16.5) | |

**<END>**

## *188-0124* TIRE & RIM GP–LH

**S/N: HEN6750-UP**
**(16.5X9.75). DIRECTIONAL TIRE**
**PART OF 187-3239 WHEEL & TIRE AR**
**AN ATTACHMENT**

**SMCS-4202** **i02474523**

| NOTE | PART NUMBER | QTY | PART NAME 1 2 3 4 5 6 (PRODUCT LEVEL) | SEE PAGE |
|---|---|---|---|---|
| | **142-8731** | 1 | WHEEL AS | |
| | **150-8599** | 1 | VALVE AS-TIRE | |
| | | | | |
| | *185-9933* | 1 | TIRE (12-16.5) | |

**<END>**

## *188-0125* TIRE & RIM GP–RH

**S/N: HEN6750-UP**
**(16.5X9.75). DIRECTIONAL TIRE**
**PART OF 187-3239 WHEEL & TIRE AR**
**AN ATTACHMENT**

**SMCS-4202** **i02474537**

| NOTE | PART NUMBER | QTY | PART NAME 1 2 3 4 5 6 (PRODUCT LEVEL) | SEE PAGE |
|---|---|---|---|---|
| | **142-8731** | 1 | WHEEL AS | |
| | **150-8599** | 1 | VALVE AS-TIRE | |
| | | | | |
| | *185-9933* | 1 | TIRE (12-16.5) | |

**<END>**

## *199-5438* TIRE & RIM GP–LH

**S/N: HEN6750-UP**
**(16.5X12). DIRECTIONAL TIRE**
**PART OF 178-2256 WHEEL & TIRE AR**
**AN ATTACHMENT**

**SMCS-4202** **i02362244**

| NOTE | PART NUMBER | QTY | PART NAME 1 2 3 4 5 6 (PRODUCT LEVEL) | SEE PAGE |
|---|---|---|---|---|
| | **150-8599** | 1 | VALVE AS-TIRE | |
| | **178-2270** | 1 | WHEEL AS | |
| | | | | |
| | *199-5440* | 1 | TIRE (33/15.5-16.5) | |

**<END>**

## *199-5439* TIRE & RIM GP—RH

**S/N: HEN6750-UP**
**(16.5X12). DIRECTIONAL TIRE**
**PART OF 178-2256 WHEEL & TIRE AR**
**AN ATTACHMENT**

**SMCS-4202** **i02362243**

| NOTE | PART NUMBER | QTY | PART NAME 1 2 3 4 5 6 (PRODUCT LEVEL) | SEE PAGE |
|---|---|---|---|---|
| | **150-8599** | 1 | VALVE AS-TIRE | |
| | **178-2270** | 1 | WHEEL AS | |
| | | | | |
| | *199-5440* | 1 | TIRE (33/15.5-16.5) | |

**<END>**

## 265-2898 TIRE & RIM GP—LH

**S/N: HEN6750-UP**
**PART OF 252-0346 WHEEL & TIRE AR**
**AN ATTACHMENT**

**SMCS-4202** **i02361217**

| NOTE | PART NUMBER | QTY | PART NAME 1 2 3 4 5 6 (PRODUCT LEVEL) | SEE PAGE |
|---|---|---|---|---|
| | **150-8599** | 1 | VALVE AS-TIRE | |
| | **142-8731** | 1 | WHEEL AS | |
| | | | | |
| | *222-3963* | 1 | TIRE (12-16.5) | |

**<END>**

## 265-2899 TIRE & RIM GP—RH

**S/N: HEN6750-UP**
**PART OF 252-0346 WHEEL & TIRE AR**
**AN ATTACHMENT**

**SMCS-4202** **i02361220**

| NOTE | PART NUMBER | QTY | PART NAME 1 2 3 4 5 6 (PRODUCT LEVEL) | SEE PAGE |
|---|---|---|---|---|
| | **150-8599** | 1 | VALVE AS-TIRE | |
| | **142-8731** | 1 | WHEEL AS | |
| | | | | |
| | *222-3963* | 1 | TIRE (12-16.5) | |

**<END>**

## 265-2900 TIRE & RIM GP—LH

**S/N: HEN6750-UP**
**PART OF 252-0347 WHEEL & TIRE AR**
**AN ATTACHMENT**

**SMCS-4202** **i02279760**

| NOTE | PART NUMBER | QTY | PART NAME 1 2 3 4 5 6 (PRODUCT LEVEL) | SEE PAGE |
|---|---|---|---|---|
| | **150-8599** | 1 | VALVE AS-TIRE | |
| | **142-8759** | 1 | WHEEL AS | |
| | | | | |
| | **222-3963** | 1 | TIRE (12-16.5) | |

**<END>**

# 265-2901 TIRE & RIM GP–RH

**S/N: HEN6750-UP**
**PART OF 252-0347 WHEEL & TIRE AR**
**AN ATTACHMENT**

**SMCS-4202** **i02279766**

| NOTE | PART NUMBER | QTY | PART NAME 1 2 3 4 5 6 (PRODUCT LEVEL) | SEE PAGE |
|---|---|---|---|---|
| | **150-8599** | 1 | VALVE AS-TIRE | |
| | **142-8759** | 1 | WHEEL AS | |
| | | | | |
| | **222-3963** | 1 | TIRE (12-16.5) | |

**<END>**

# *259-8194* VALVE GP-SOLENOID

**S/N: HEN6750-UP**

**PART OF 233-7131 MANIFOLD & SOLENOID GP-CONTROL**

**AN ATTACHMENT**

**SMCS-5479** **i02485890**

| NOTE | REF NO | GRAPHIC REF | PART NUMBER | QTY | PART NAME 1 2 3 4 5 6 (PRODUCT LEVEL) | SEE PAGE |
|---|---|---|---|---|---|---|
| | 1 | 1 | **238-4626** | 1 | COIL AS (AUXILIARY FLOW CONTROL) | |

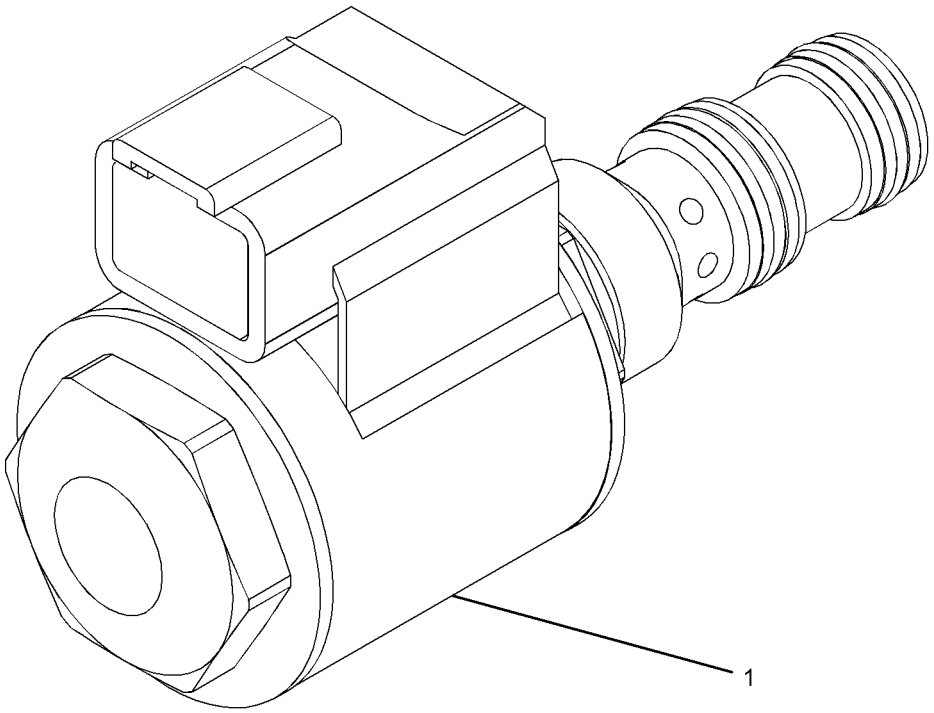


GRAPHIC #1 **<END>** g01121017

## *159-5761* WHEEL & TIRE AR—SOLID

**S/N: HEN6750-UP**
**AN ATTACHMENT**

**SMCS-4200, 4201, 4203** **i02361156**

| NOTE | PART NUMBER | QTY | PART NAME 1 2 3 4 5 6 (PRODUCT LEVEL) | SEE PAGE |
|---|---|---|---|---|
| | **142-7493** | 32 | NUT-LUG (9/16-18-2B THD) | |
| | **187-3230** | 4 | TIRE-SOLID (33X6X8) | |

**<END>**

## *165-4898* WHEEL & TIRE AR—HEAVY DUTY

**S/N: HEN6750-UP**
**AN ATTACHMENT**

**SMCS-4200, 4201, 4203** **i02361187**

| NOTE | PART NUMBER | QTY | PART NAME 1 2 3 4 5 6 (PRODUCT LEVEL) | SEE PAGE |
|---|---|---|---|---|
| Y | *165-4901* | 2 | TIRE & RIM GP (LH) | 187 |
| Y | *165-4902* | 2 | TIRE & RIM GP (RH) | 187 |
| | | | | |
| | **142-7493** | 32 | NUT-LUG (9/16-18-2B THD) | |

Y-SEPARATE ILLUSTRATION

**<END>**

## *165-4903* WHEEL & TIRE AR—HEAVY DUTY

**S/N: HEN6750-UP**
**AN ATTACHMENT**

**SMCS-4200, 4201, 4203** **i02571050**

| NOTE | PART NUMBER | QTY | PART NAME 1 2 3 4 5 6 (PRODUCT LEVEL) | SEE PAGE |
|---|---|---|---|---|
| Y | *165-4906* | 2 | TIRE & RIM GP (LH) | 187 |
| Y | *165-4907* | 2 | TIRE & RIM GP (RH) | 188 |
| | | | | |
| | **142-7493** | 32 | NUT-LUG (9/16-18-2B-THD) | |

Y-SEPARATE ILLUSTRATION

**<END>**

## *178-2256* WHEEL & TIRE AR—HEAVY DUTY

**S/N: HEN6750-UP**
**AN ATTACHMENT**

**SMCS-4200, 4201, 4203** **i02361189**

| NOTE | PART NUMBER | QTY | PART NAME 1 2 3 4 5 6 (PRODUCT LEVEL) | SEE PAGE |
|---|---|---|---|---|
| Y | *199-5438* | 2 | TIRE & RIM GP (LH) | 191 |
| Y | *199-5439* | 2 | TIRE & RIM GP (RH) | 192 |
| | | | | |
| | **142-7493** | 32 | NUT-LUG (9/16-18-2B THD) | |

Y-SEPARATE ILLUSTRATION

**<END>**

## *185-8662* WHEEL & TIRE AR—LOW SIDE WALL

**S/N: HEN6750-UP**
**AN ATTACHMENT**

**SMCS-4200, 4201, 4203** **i02571068**

| NOTE | PART NUMBER | QTY | PART NAME 1 2 3 4 5 6 (PRODUCT LEVEL) | SEE PAGE |
|---|---|---|---|---|
| Y | *185-8674* | 2 | TIRE & RIM GP (LH) | 188 |
| Y | *185-8675* | 2 | TIRE & RIM GP (RH) | 188 |
| | | | | |
| | **142-7493** | 32 | NUT-LUG (9/16-18-2B-THD) | |

Y-SEPARATE ILLUSTRATION

**<END>**

## *185-8663* WHEEL & TIRE AR—LOW SIDE WALL

**S/N: HEN6750-UP**
**AN ATTACHMENT**

**SMCS-4200, 4201, 4203** **i02361197**

| NOTE | PART NUMBER | QTY | PART NAME 1 2 3 4 5 6 (PRODUCT LEVEL) | SEE PAGE |
|---|---|---|---|---|
| Y | *185-8676* | 2 | TIRE & RIM GP (LH) | 189 |
| Y | *185-8677* | 2 | TIRE & RIM GP (RH) | 189 |
| | | | | |
| | **142-7493** | 32 | NUT-LUG (9/16-18-2B THD) | |

Y-SEPARATE ILLUSTRATION

**<END>**

## *185-8666* WHEEL & TIRE AR—HEAVY DUTY

**S/N: HEN6750-UP**
**AN ATTACHMENT**

**SMCS-4200, 4201, 4203** **i02571081**

| NOTE | PART NUMBER | QTY | PART NAME 1 2 3 4 5 6 (PRODUCT LEVEL) | SEE PAGE |
|---|---|---|---|---|
| Y | *185-9928* | 2 | TIRE & RIM GP (LH) | 189 |
| Y | *185-9929* | 2 | TIRE & RIM GP (RH) | 190 |
| | | | | |
| | **142-7493** | 32 | NUT-LUG (9/16-18-2B-THD) | |

Y-SEPARATE ILLUSTRATION

**<END>**

## *185-8667* WHEEL & TIRE AR—HEAVY DUTY

**S/N: HEN6750-UP**
**AN ATTACHMENT**

**SMCS-4200, 4201, 4203** **i02361203**

| NOTE | PART NUMBER | QTY | PART NAME 1 2 3 4 5 6 (PRODUCT LEVEL) | SEE PAGE |
|---|---|---|---|---|
| Y | *185-9930* | 2 | TIRE & RIM GP (LH) | 190 |
| Y | *185-9931* | 2 | TIRE & RIM GP (RH) | 190 |
| | | | | |
| | **142-7493** | 32 | NUT-LUG (9/16-18-2B THD) | |

Y-SEPARATE ILLUSTRATION

**<END>**

# POWER TRAIN

## *187-3239* WHEEL & TIRE AR

**S/N: HEN6750-UP**
**AN ATTACHMENT**

**SMCS-4200, 4201, 4203** **i02361206**

| NOTE | PART NUMBER | QTY | PART NAME 1 2 3 4 5 6 (PRODUCT LEVEL) | SEE PAGE |
|---|---|---|---|---|
| Y | *188-0124* | 2 | TIRE & RIM GP (LH) | 191 |
| Y | *188-0125* | 2 | TIRE & RIM GP (RH) | 191 |
| | | | | |
| | **142-7493** | 32 | NUT-LUG (9/16-18-2B THD) | |

Y-SEPARATE ILLUSTRATION

**<END>**

## *252-0346* WHEEL & TIRE AR

**S/N: HEN6750-UP**
**AN ATTACHMENT**

**SMCS-4200, 4201, 4203** **i02279611**

| NOTE | PART NUMBER | QTY | PART NAME 1 2 3 4 5 6 (PRODUCT LEVEL) | SEE PAGE |
|---|---|---|---|---|
| Y | **265-2899** | 2 | TIRE & RIM GP (RH) | 192 |
| Y | **265-2898** | 2 | TIRE & RIM GP (LH) | 192 |
| | | | | |
| | **142-7493** | 32 | NUT-LUG (9/16-18-2B THD) | |

Y-SEPARATE ILLUSTRATION

**<END>**

## *252-0347* WHEEL & TIRE AR

**S/N: HEN6750-UP**
**AN ATTACHMENT**

**SMCS-4200, 4201, 4203** **i02279615**

| NOTE | PART NUMBER | QTY | PART NAME 1 2 3 4 5 6 (PRODUCT LEVEL) | SEE PAGE |
|---|---|---|---|---|
| Y | **265-2900** | 2 | TIRE & RIM GP (LH) | 192 |
| Y | **265-2901** | 2 | TIRE & RIM GP (RH) | 193 |
| | | | | |
| | **142-7493** | 32 | NUT-LUG (9/16-18-2B THD) | |

Y-SEPARATE ILLUSTRATION

**<END>**

## *252-0366* WHEEL & TIRE AR—SOLID

**S/N: HEN6750-UP**
**33X6X11**
**AN ATTACHMENT**

**SMCS-4200, 4201, 4203** **i02233317**

| NOTE | PART NUMBER | QTY | PART NAME 1 2 3 4 5 6 (PRODUCT LEVEL) | SEE PAGE |
|---|---|---|---|---|
| | **142-7493** | 32 | NUT-LUG (9/16-18-2B THD) | |
| | **226-3734** | 2 | TIRE-SOLID (33X6X11) (LH) | |
| | **226-3735** | 2 | TIRE-SOLID (33X6X11) (RH) | |

**<END>**

## *252-0377* WHEEL & TIRE AR—SOLID

**S/N: HEN6750-UP**
**33X6X11**
**AN ATTACHMENT**

**SMCS-4200, 4201, 4203** **i02233313**

| NOTE | PART NUMBER | QTY | PART NAME 1 2 3 4 5 6 (PRODUCT LEVEL) | SEE PAGE |
|---|---|---|---|---|
| | **142-7493** | 32 | NUT-LUG (9/16-18-2B THD) | |
| | **226-3734** | 2 | TIRE-SOLID (33X6X11) (RH) | |
| | **226-3735** | 2 | TIRE-SOLID (33X6X11) (LH) | |

**<END>**

## *259-9892* WHEEL & TIRE GP

**S/N: HEN6750-UP**
**AN ATTACHMENT**

**SMCS-4200, 4201, 4202, 4203, 4208, 4209** **i02797678**

| NOTE | PART NUMBER | QTY | PART NAME 1 2 3 4 5 6 (PRODUCT LEVEL) | SEE PAGE |
|---|---|---|---|---|
| | **226-3734** | 2 | TIRE-SOLID (33X6X11) | |
| | **226-3735** | 2 | TIRE-SOLID (33X6X11) | |

**<END>**

# 317-0691 WHEEL & TIRE GP

**S/N: HEN6750-UP**

**FIELD INSTALLATION**

**SMCS-4200, 4201, 4202, 4203, 4208, 4209** **i02839893**

| NOTE | REF NO | GRAPHIC REF | PART NUMBER | QTY | PART NAME 1 2 3 4 5 6 (PRODUCT LEVEL) | SEE PAGE |
|---|---|---|---|---|---|---|
| | 1 | 1 | **311-4928** | 4 | TIRE (33X6X10) | |

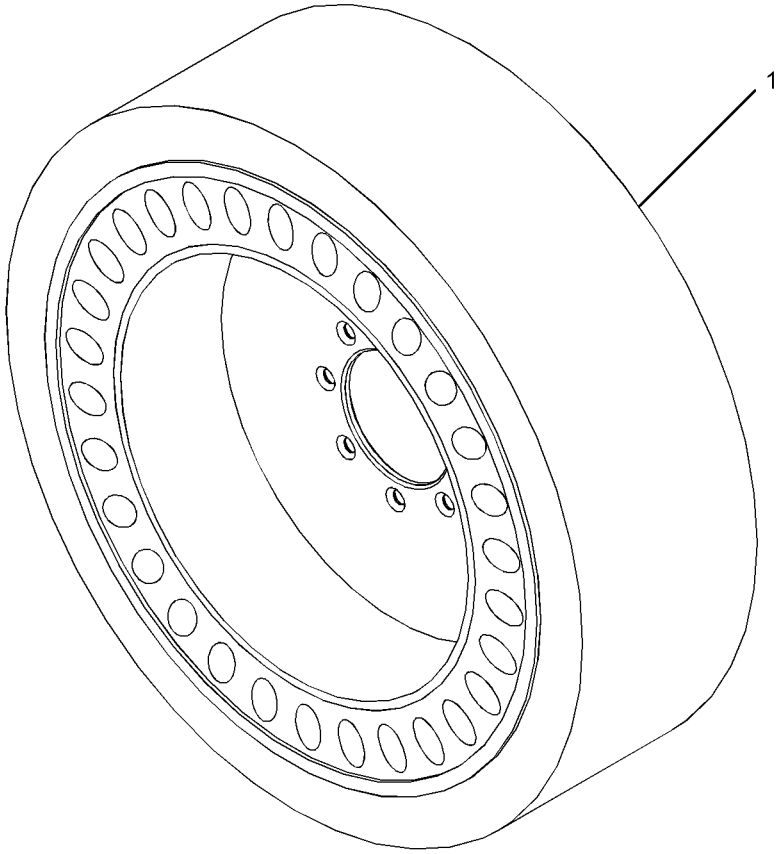


GRAPHIC #1 **<END>** g01417448

# FRAME AND BODY

## *218-5660* BUMPER GP–REAR

**S/N: HEN6750-UP**

**PART OF 295-7510, 295-7518 CHASSIS AR**

**SMCS-7156** **i01934911**

| NOTE | REF NO | GRAPHIC REF | PART NUMBER | QTY | PART NAME 1 2 3 4 5 6 (PRODUCT LEVEL) | SEE PAGE |
|---|---|---|---|---|---|---|
| | 1 | 1 | **142-9021** | 2 | STUD | |
| | 2 | 1 | **154-4006** | 2 | BOSS | |
| | 3 | 1 | **218-5661** | 1 | BUMPER AS | |
| | 4 | 1 | **8T-4122** | 6 | WASHER-HARD (17X32X3.5-MM THK) | |
| M | 5 | 1 | **8T-4132** | 4 | NUT (M16X2-THD) | |
| M | 6 | 1 | **8T-7338** | 2 | BOLT (M16X2X45-MM) | |

M-METRIC PART

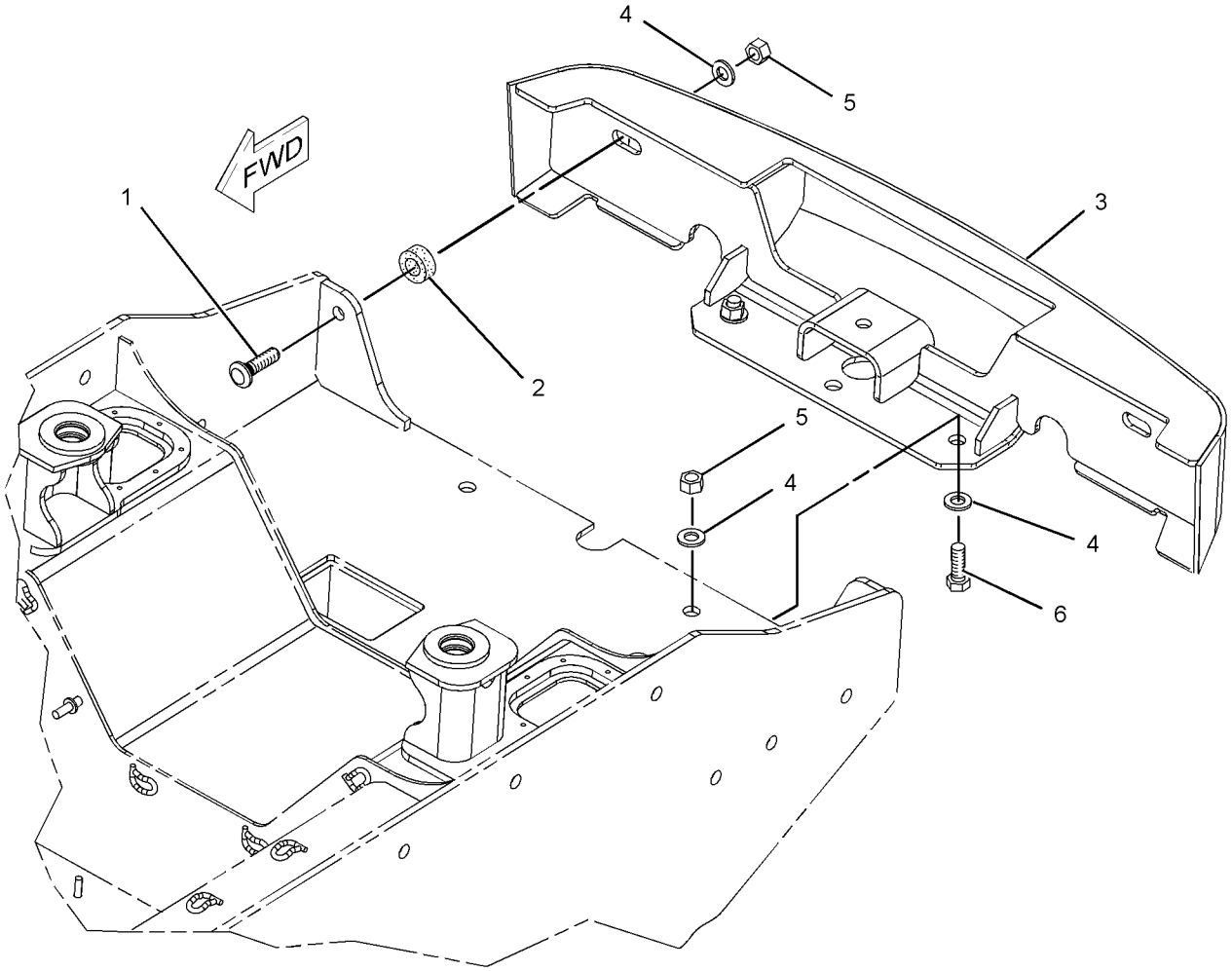


GRAPHIC #1 **<END>** g01019293

## *218-5781* CONVERSION AR-ROADING—OUTSIDE NACD

**S/N: HEN6750-UP**
**AN ATTACHMENT**

**SMCS-7000** **i02124759**

| NOTE | PART NUMBER | QTY | PART NAME 1 2 3 4 5 6 (PRODUCT LEVEL) | SEE PAGE |
|---|---|---|---|---|
| Y | *216-6146* | 1 | BOX GP-STORAGE | 475 |
| Y | *233-5991* | 1 | LIFTING GP-MACHINE (FOUR POINT) | 221 |
| Y | *142-8652* | 1 | LIGHTING GP-STOP & TAIL (REAR) | 134 |
| Y | *218-5791* | 1 | PANEL AR-INSTRUMENT | 576 |
| Y | *233-5615* | 1 | SUPPRESSION GP-SOUND (HOOD) (ENGINE) | 227 |
| Y | *230-3743* | 1 | WIRING GP-HORN (WITH MOUNTING) | 151 |
| | | | | |
| | **229-8752** | 1 | FLOOR MAT | |
| Y-SEPARATE ILLUSTRATION | | | | |

**<END>**

## *218-5784* CONVERSION AR-ROADING—OUTSIDE NACD

**S/N: HEN6750-UP**
**AN ATTACHMENT**

**SMCS-7000** **i02124761**

| NOTE | PART NUMBER | QTY | PART NAME 1 2 3 4 5 6 (PRODUCT LEVEL) | SEE PAGE |
|---|---|---|---|---|
| Y | *216-6146* | 1 | BOX GP-STORAGE | 475 |
| Y | **191-9684** | 1 | FILM GP (CLEARANCE) | 605 |
| Y | *233-5991* | 1 | LIFTING GP-MACHINE (FOUR POINT) | 221 |
| Y | *142-8652* | 1 | LIGHTING GP-STOP & TAIL (REAR) | 134 |
| Y | *218-5791* | 1 | PANEL AR-INSTRUMENT | 576 |
| Y | *233-5615* | 1 | SUPPRESSION GP-SOUND (HOOD) (ENGINE) | 227 |
| Y | *230-3743* | 1 | WIRING GP-HORN (WITH MOUNTING) | 151 |
| | | | | |
| | **229-8752** | 1 | FLOOR MAT | |
| Y-SEPARATE ILLUSTRATION | | | | |

**<END>**

## *236-5116* CONVERSION AR-ROADING—GERMANY

**S/N: HEN6750-UP**

**FOR USE WITH 218-5603—PAGE 157, 218-5604—PAGE 157, 218-5605—PAGE 158, 218-5606—PAGE 158**

**AN ATTACHMENT**

**SMCS-7000** **i02940529**

| NOTE | PART NUMBER | QTY | PART NAME 1 2 3 4 5 6 (PRODUCT LEVEL) | SEE PAGE |
|---|---|---|---|---|
| Y | *216-6146* | 1 | BOX GP-STORAGE | 475 |
| Y | *234-0792* | 1 | CONVERSION GP-ROADING | 204 |
| Y | **177-9152** | 1 | KIT-ROADING PLATE & MOUNTING (BUCKET) | 450 |
| Y | *233-5991* | 1 | LIFTING GP-MACHINE (FOUR POINT) | 221 |
| Y | *216-4715* | 1 | LIGHTING GP-ROADING | 132 |
| Y | *175-4238* | 1 | LOCK GP-QUICK COUPLER (MECHANICAL) | 452 |
| Y | *236-5058* | 1 | MIRROR & MTG GP-REAR VIEW (WITH ROADING LIGHT MOUNT) | 222 |
| Y | *218-5791* | 1 | PANEL AR-INSTRUMENT | 576 |
| Y | *233-5615* | 1 | SUPPRESSION GP-SOUND (HOOD) (ENGINE) | 227 |
| Y | *173-3022* | 1 | VISOR GP-CAB | 597 |
| Y | *230-3743* | 1 | WIRING GP-HORN (WITH MOUNTING) | 151 |
| | | | | |
| | **233-5680** | 3 | FILM-IDENTIFICATION (13-KM/H) | |
| | **229-8752** | 1 | FLOOR MAT | |
| | *222-5695* | 1 | SUPPORT GP-STORAGE BOX | |
| | **216-6144** | 1 | BRACKET AS | |

Y-SEPARATE ILLUSTRATION

**<END>**

## *236-5117* CONVERSION AR-ROADING—ITALY

**S/N: HEN6750-UP**

**AN ATTACHMENT**

**SMCS-7000** **i02124797**

| NOTE | PART NUMBER | QTY | PART NAME 1 2 3 4 5 6 (PRODUCT LEVEL) | SEE PAGE |
|---|---|---|---|---|
| Y | *216-6146* | 1 | BOX GP-STORAGE | 475 |
| Y | *234-0793* | 1 | CONVERSION GP-ROADING | 205 |
| Y | **177-9152** | 1 | KIT-ROADING PLATE & MOUNTING (BUCKET) | 450 |
| Y | *233-5991* | 1 | LIFTING GP-MACHINE (FOUR POINT) | 221 |
| Y | *216-4715* | 1 | LIGHTING GP-ROADING | 132 |
| Y | *175-4238* | 1 | LOCK GP-QUICK COUPLER (MECHANICAL) | 452 |
| Y | *236-5058* | 1 | MIRROR & MTG GP-REAR VIEW (WITH ROADING LIGHT MOUNT) | 222 |
| Y | *225-7963* | 1 | MOUNTING GP-REGISTRATION | 224 |
| Y | *218-5791* | 1 | PANEL AR-INSTRUMENT | 576 |
| Y | *233-5615* | 1 | SUPPRESSION GP-SOUND (HOOD) (ENGINE) | 227 |
| Y | *230-3743* | 1 | WIRING GP-HORN (WITH MOUNTING) | 151 |
| Y | *225-7964* | 1 | WIRING GP-REAR LIGHTING | 152 |
| | | | | |
| | **229-8752** | 1 | FLOOR MAT | |

Y-SEPARATE ILLUSTRATION

**<END>**

## *251-1510* CONVERSION AR-ROADING—GERMANY

**S/N: HEN6750-UP**

**FOR USE WITH 218-5607—PAGE 158, 218-5608—PAGE 159**

**AN ATTACHMENT**

**SMCS-7000** **i02940536**

| NOTE | PART NUMBER | QTY | PART NAME 1 2 3 4 5 6 (PRODUCT LEVEL) | SEE PAGE |
|---|---|---|---|---|
| Y | *216-6146* | 1 | BOX GP-STORAGE | 475 |
| Y | *234-0792* | 1 | CONVERSION GP-ROADING | 204 |
| Y | **177-9152** | 1 | KIT-ROADING PLATE & MOUNTING (BUCKET) | 450 |
| Y | *233-5991* | 1 | LIFTING GP-MACHINE (FOUR POINT) | 221 |
| Y | *216-4715* | 1 | LIGHTING GP-ROADING | 132 |
| Y | *175-4238* | 1 | LOCK GP-QUICK COUPLER (MECHANICAL) | 452 |
| Y | *236-5058* | 1 | MIRROR & MTG GP-REAR VIEW (WITH ROADING LIGHT MOUNT) | 222 |
| Y | *218-5791* | 1 | PANEL AR-INSTRUMENT | 576 |
| Y | *233-5615* | 1 | SUPPRESSION GP-SOUND (HOOD) | 227 |
| Y | *173-3022* | 1 | VISOR GP-CAB | 597 |
| Y | *230-3743* | 1 | WIRING GP-HORN (WITH MOUNTING) | 151 |
| | | | | |
| | **117-6558** | 3 | FILM-IDENTIFICATION (20-KM/H) | |
| | **229-8752** | 1 | FLOOR MAT | |
| | *222-5695* | 1 | SUPPORT GP-STORAGE BOX | |
| | **216-6144** | 1 | BRACKET AS | |

Y-SEPARATE ILLUSTRATION

**<END>**

# FRAME AND BODY

## *234-0792* CONVERSION GP-ROADING—GERMANY

**S/N: HEN6750-UP**

**PART OF 236-5116, 251-1510 CONVERSION AR-ROADING**

**AN ATTACHMENT**

**SMCS-7000** **i02785770**

| NOTE | REF NO | GRAPHIC REF | PART NUMBER | QTY | PART NAME 1 2 3 4 5 6 (PRODUCT LEVEL) | SEE PAGE |
|---|---|---|---|---|---|---|
| | 1 | 1 | **246-2641** | 1 | PADLOCK GP | |
| | | 1 | **5P-8500** | 1 | KEY | |
| | | | | | (WITH PLASTIC OVERMOLD) | |
| | 2 | 1 | **113-7634** | 1 | FILM-WARNING (STEERING) | |
| | 3 | 1 | **159-7342** | 1 | PLATE-INFORMATION (MAXIMUM WEIGHT) | |
| | 4 | 1 | **168-8389** | 4 | TACK-FASTENER | |
| | 5 | 1 | **173-3015** | 1 | BRACKET AS | |
| | 6 | 1 | **173-3016** | 1 | CHOCK | |
| | 7 | 1 | **173-3018** | 1 | BRACKET | |
| M | 8 | 1 | **8T-4171** | 5 | BOLT (M6X1X12-MM) | |
| | 9 | 1 | **8T-4205** | 5 | WASHER-HARD (7.2X14.5X2-MM THK) | |

M-METRIC PART

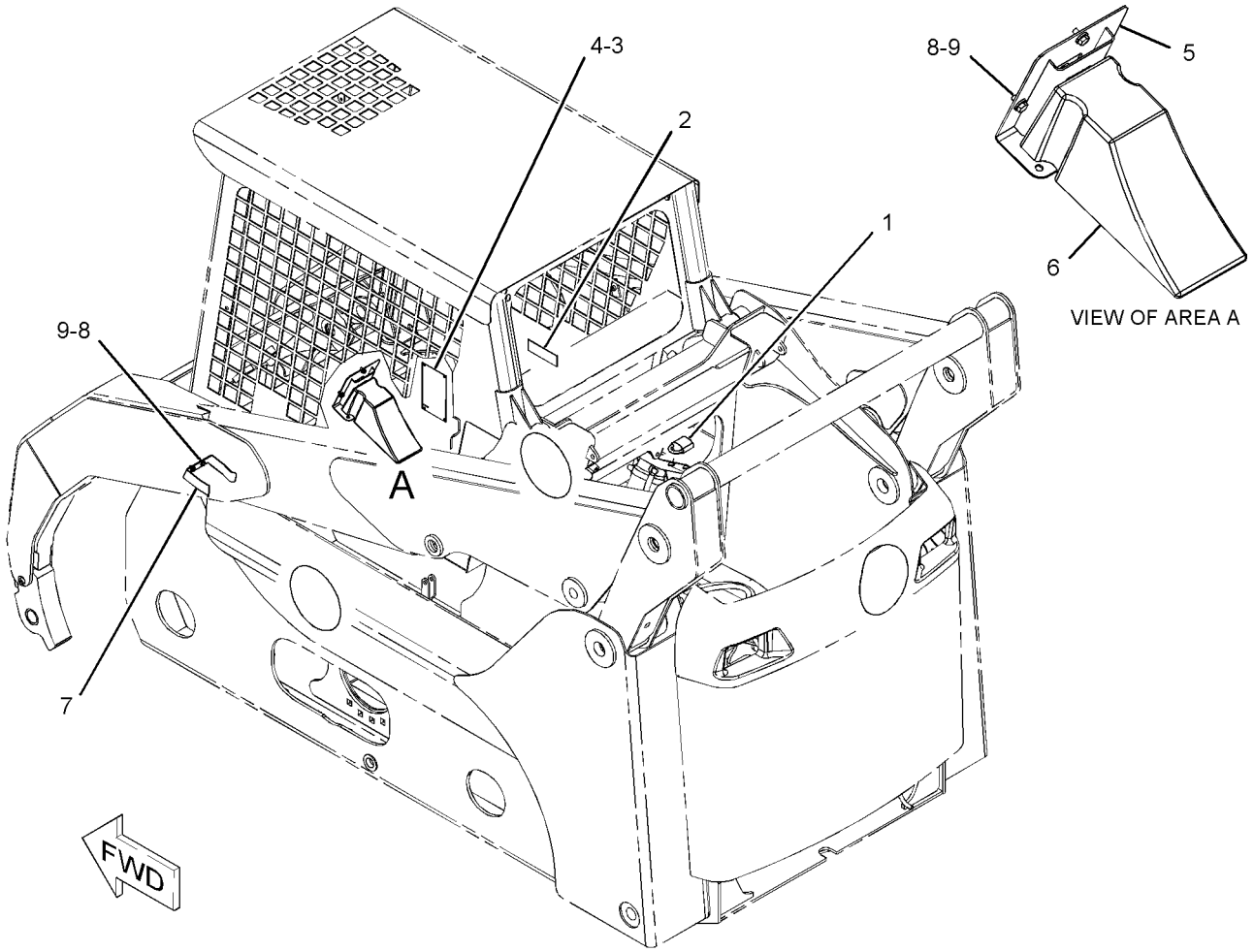


GRAPHIC #1 **<END>** g01131744

# *234-0793* CONVERSION GP-ROADING–ITALY

**S/N: HEN6750-UP**
**PART OF 236-5117 CONVERSION AR-ROADING**
**AN ATTACHMENT**

**SMCS-7000** **i02771681**

| NOTE | REF NO | GRAPHIC REF | PART NUMBER | QTY | PART NAME 1 2 3 4 5 6 (PRODUCT LEVEL) | SEE PAGE |
|---|---|---|---|---|---|---|
| Y | 1 | 1 | **128-6985** | 1 | LAMP GP-WARNING BEACON (12-VOLT, AMBER) | 129 |
| | 2 | 1 | **159-7342** | 1 | PLATE-INFORMATION (MAXIMUM WEIGHT) | |
| | 3 | 1 | **168-8389** | 4 | TACK-FASTENER | |
| | 4 | 1 | **186-2360** | 4 | COVER AS | |
| | | | | | (EACH INCLUDES) | |
| BE | | 1 | **129-1854** | | FASTENER-LOOP | |
| BE | | 1 | **129-1855** | | FASTENER-HOOK | |

B-USE AS REQUIRED
E-ORDER BY THE CENTIMETER
Y-SEPARATE ILLUSTRATION

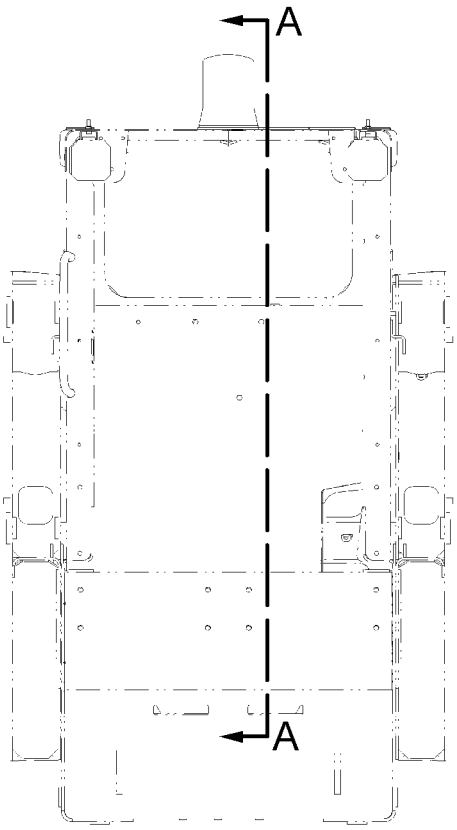


FRONT VIEW

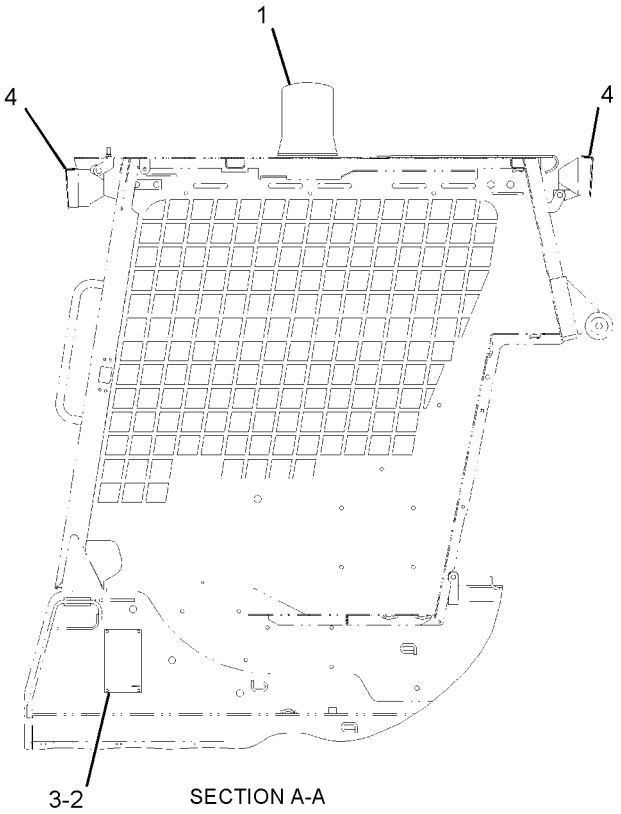


SECTION A-A

GRAPHIC #1 **<END>** g01130743

## *278-1292* CONVERSION GP-ROADING—GERMANY

**S/N: HEN6750-UP**

**PART OF 278-5418, 278-5448, 295-7170, 295-7171 CONVERSION AR-MACHINE**

**AN ATTACHMENT**

**SMCS-7000** **i02866415**

| NOTE | REF NO | GRAPHIC REF | PART NUMBER | QTY | PART NAME 1 2 3 4 5 6 (PRODUCT LEVEL) | SEE PAGE |
|---|---|---|---|---|---|---|
| | 1 | 1 | **246-2641** | 1 | PADLOCK GP | |
| | | 1 | **5P-8500** | 1 | KEY | |
| | | | | | (WITH PLASTIC OVERMOLD) | |
| | 2 | 1 | **113-7634** | 1 | FILM-WARNING (STEERING) | |
| | 3 | 1 | **258-3849** | 1 | PLATE-IDENTIFICATION (ENGLISH, GERMAN, SPANISH) | |
| | 5 | 1 | **173-3015** | 1 | BRACKET AS | |
| | 6 | 1 | **173-3016** | 1 | CHOCK | |
| | 7 | 1 | **173-3018** | 1 | BRACKET | |
| M | 8 | 1 | **8T-4171** | 5 | BOLT (M6X1X12-MM) | |
| | 9 | 1 | **8T-4205** | 5 | WASHER-HARD (7.2X14.5X2-MM THK) | |

M-METRIC PART

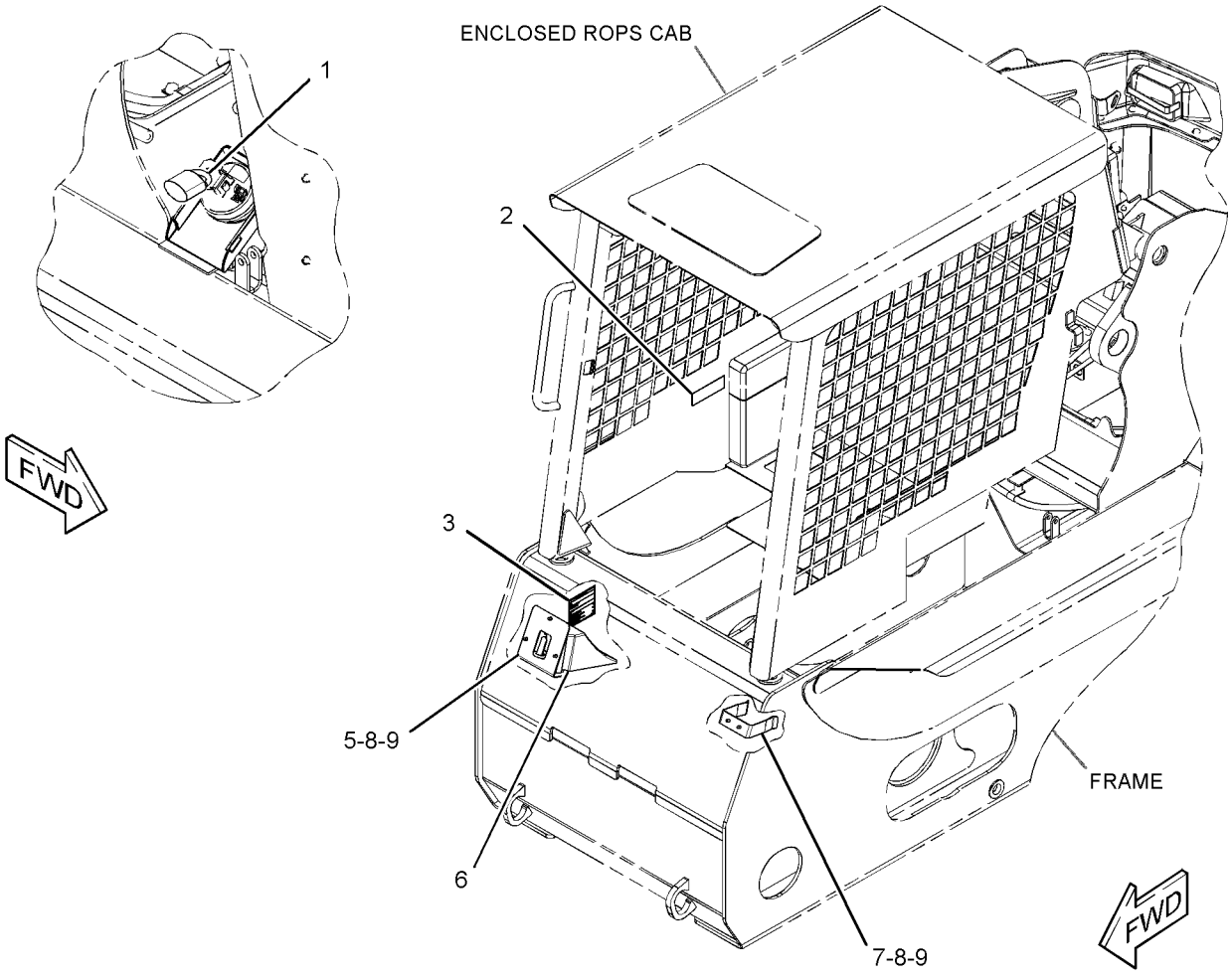


GRAPHIC #1 **<END>** g01437301

## *278-1293* CONVERSION GP-ROADING–ITALY

**S/N: HEN6750-UP**

**PART OF 278-5373, 295-7154 CONVERSION AR-MACHINE**

**AN ATTACHMENT**

**SMCS-7000** **i02866420**

| NOTE | REF NO | GRAPHIC REF | PART NUMBER | QTY | PART NAME 1 2 3 4 5 6 (PRODUCT LEVEL) | SEE PAGE |
|---|---|---|---|---|---|---|
| Y | 1 | 1 | **128-6985** | 1 | LAMP GP-WARNING BEACON (12-VOLT, AMBER) | 129 |
| | 2 | 1 | **186-2360** | 4 | COVER AS | |
| | | | | | (EACH INCLUDES) | |
| E | | 1 | **129-1854** | | FASTENER-LOOP (10-CM) | |
| E | | 1 | **129-1855** | | FASTENER-HOOK (10-CM) | |
| | 3 | 1 | **258-3849** | 1 | PLATE-IDENTIFICATION (ENGLISH, GERMAN, SPANISH) | |

E-ORDER BY THE CENTIMETER
Y-SEPARATE ILLUSTRATION

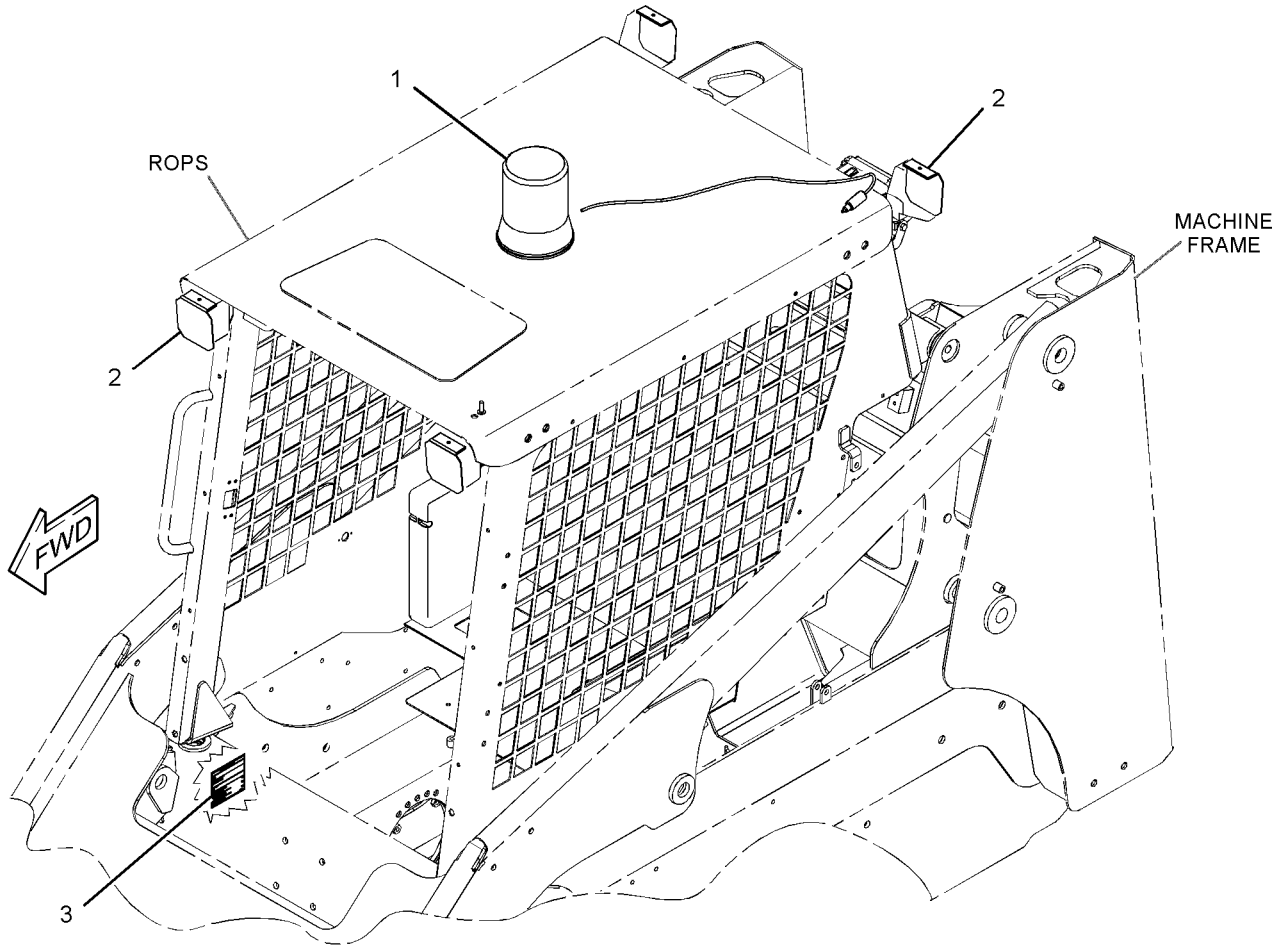


GRAPHIC #1 **<END>** g01436156

# FRAME AND BODY

## *183-7132* COUNTERWEIGHT GP

**S/N: HEN6750-UP**

**16.19-KG (35.69-LB), 33.99-KG (74.94-LB)**

**AN ATTACHMENT**

**SMCS-7056** **i01793980**

| NOTE | REF NO | GRAPHIC REF | PART NUMBER | QTY | PART NAME 1 2 3 4 5 6 (PRODUCT LEVEL) | SEE PAGE |
|---|---|---|---|---|---|---|
| | 1 | 1 | **183-7131** | 2 | BLOCK | |
| | 2 | 1 | **183-7133** | 1 | BLOCK | |
| | 3 | 1 | **183-7134** | 1 | BLOCK | |
| M | 4 | 1 | **8T-4189** | 4 | BOLT (M8X1.25X20-MM) | |
| | 5 | 1 | **8T-4223** | 4 | WASHER-HARD (13.5X25.5X3-MM THK) | |
| | 6 | 1 | **8T-4224** | 4 | WASHER-HARD (8.8X16X2-MM THK) | |
| M | 7 | 1 | **8T-4648** | 4 | BOLT (M12X1.75X70-MM) | |

M-METRIC PART

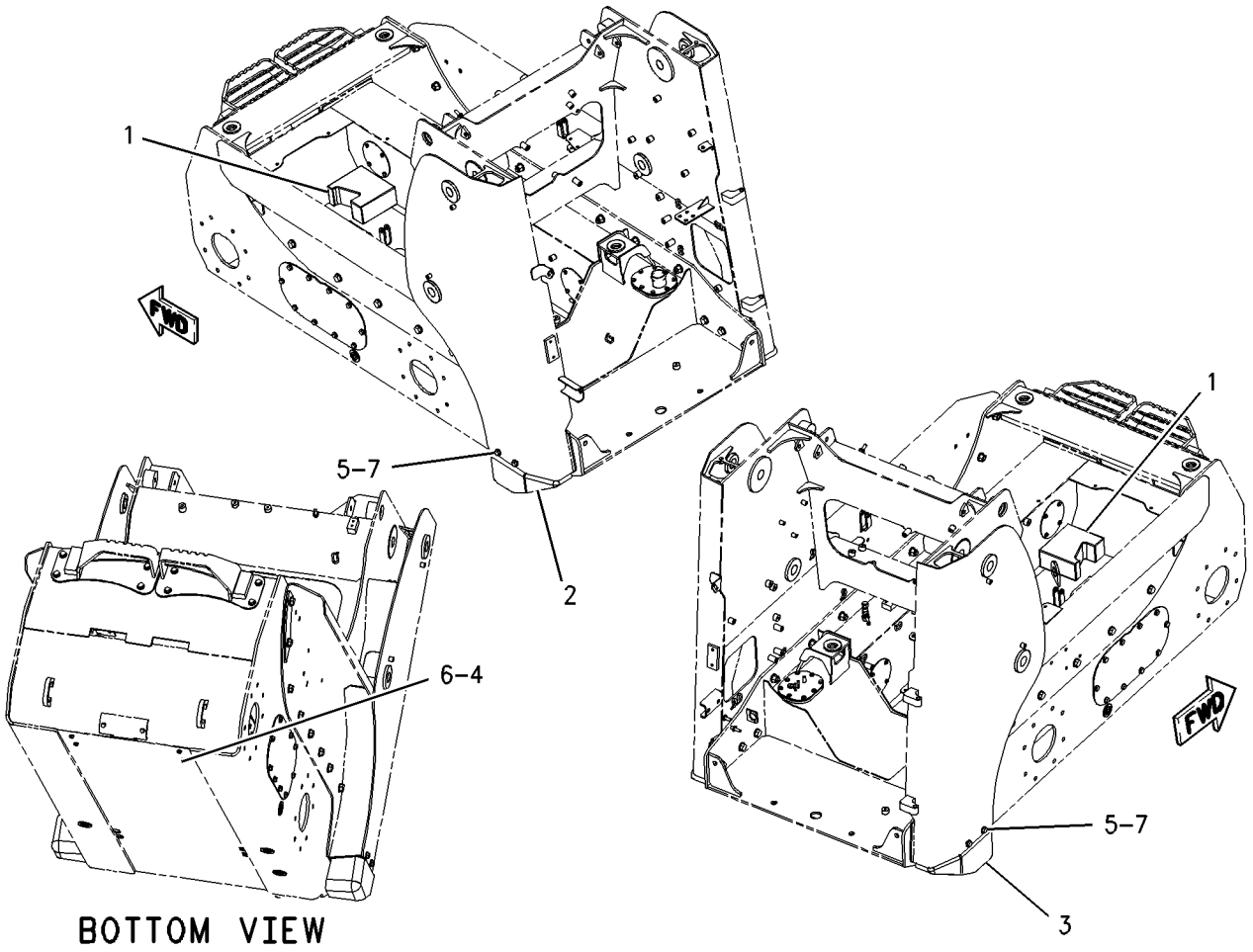


GRAPHIC #1 **<END>** g00918000

# 185-9941 COUNTERWEIGHT GP–KIT

**S/N: HEN6750-UP**
**16.19-KG (35.69-LB), 33.99-KG (74.94-LB)**
**CANNOT BE USED WITH 183-7132–PAGE 208**
**AN ATTACHMENT**

**SMCS-7056** **i01912001**

| NOTE | REF NO | GRAPHIC REF | PART NUMBER | QTY | PART NAME 1 2 3 4 5 6 (PRODUCT LEVEL) | SEE PAGE |
|---|---|---|---|---|---|---|
| | 1 | 1 | **183-7131** | 2 | BLOCK (16.19 KG) | |
| | 2 | 1 | **183-7133** | 1 | BLOCK (33.99 KG)(LH) | |
| | 3 | 1 | **183-7134** | 1 | BLOCK (33.99 KG)(RH) | |
| M | 4 | 1 | **8T-4189** | 4 | BOLT (M8X1.25X20-MM) | |
| | 5 | 1 | **8T-4223** | 4 | WASHER-HARD (13.5X25.5X3-MM THK) | |
| | 6 | 1 | **8T-4224** | 4 | WASHER-HARD (8.8X16X2-MM THK) | |
| M | 7 | 1 | **8T-4648** | 4 | BOLT (M12X1.75X70-MM) | |

M-METRIC PART

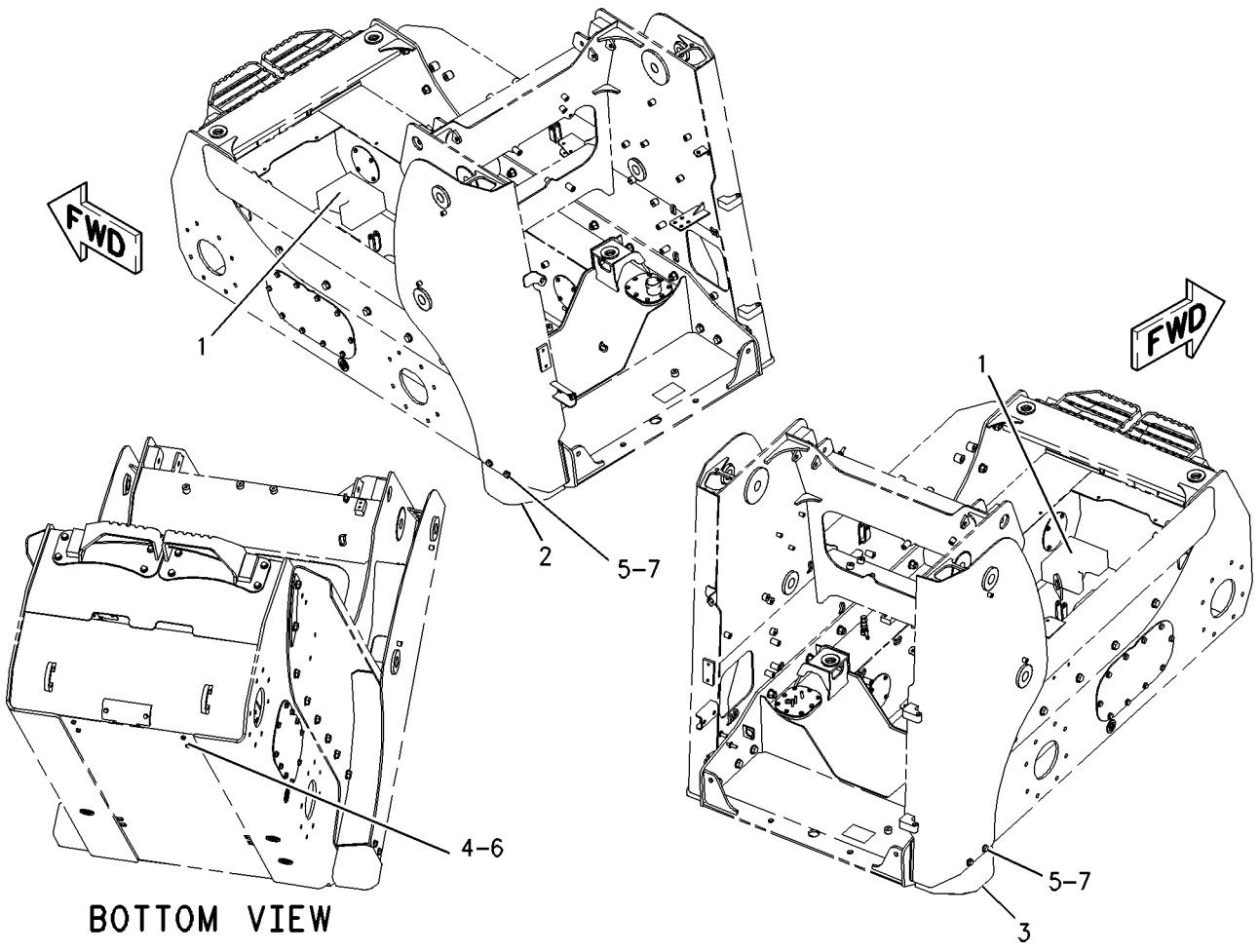


GRAPHIC #1 **<END>** g00995790

# FRAME AND BODY

## *218-5803* ENCLOSURE GP-ENGINE

**S/N: HEN6750-UP**

**PART OF 295-7510, 295-7518 CHASSIS AR**

**SMCS-7263** **i02014410**

| NOTE | REF NO | GRAPHIC REF | PART NUMBER | QTY | PART NAME 1 2 3 4 5 6 (PRODUCT LEVEL) | SEE PAGE |
|---|---|---|---|---|---|---|
| | 1 | 1 | **110-0885** | 2 | BUMPER | |
| | 2 | 1 | **142-8801** | 1 | HOOD AS | |
| | 3 | 1 | **142-8831** | 1 | STRIKER AS | |
| | 4 | 1 | **142-8832** | 1 | PIN AS | |
| | 5 | 1 | **159-8405** | 2 | BOLT-SHOULDER | |
| | 6 | 1 | **218-5802** | 1 | DOOR AS-ACCESS | |
| | 7 | 1 | **223-4240** | 1 | LATCH AS | |
| J | 8 | 1 | **224-3875** | 1 | LOCK GP | |
| | | 1 | **226-0291** | 1 | LOCK AS | |
| | | 1 | **233-4872** | 1 | CAM | |
| M | 9 | 1 | **131-3540** | 3 | LOCKNUT (M8X1.25-THD) | |
| | 10 | 1 | **2K-4973** | 2 | LOCKNUT (3/8-16-THD) | |
| M | 11 | 1 | **5C-7261** | 2 | NUT (M8X1.25-THD) | |
| | 12 | 1 | **5P-4116** | 11 | WASHER-HARD (8.8X20.5X2-MM THK) | |
| M | 13 | 1 | **7X-2537** | 3 | BOLT (M8X1.25X35-MM) | |
| | 14 | 1 | **7X-7729** | 2 | WASHER (11X25X3-MM THK) | |
| M | 15 | 1 | **8T-4137** | 2 | BOLT (M10X1.5X20-MM) | |
| M | 16 | 1 | **8T-4181** | 4 | BOLT (M6X1X20-MM) | |
| | 17 | 1 | **8T-4205** | 4 | WASHER-HARD (7.2X14.5X2-MM THK) | |
| M | 18 | 1 | **8T-4908** | 5 | BOLT (M8X1.25X25-MM) | |

J-REQUIRES 5P-8500 KEY
M-METRIC PART

*218-5803* **ENCLOSURE GP-ENGINE** *(contd.)* **i02014410**

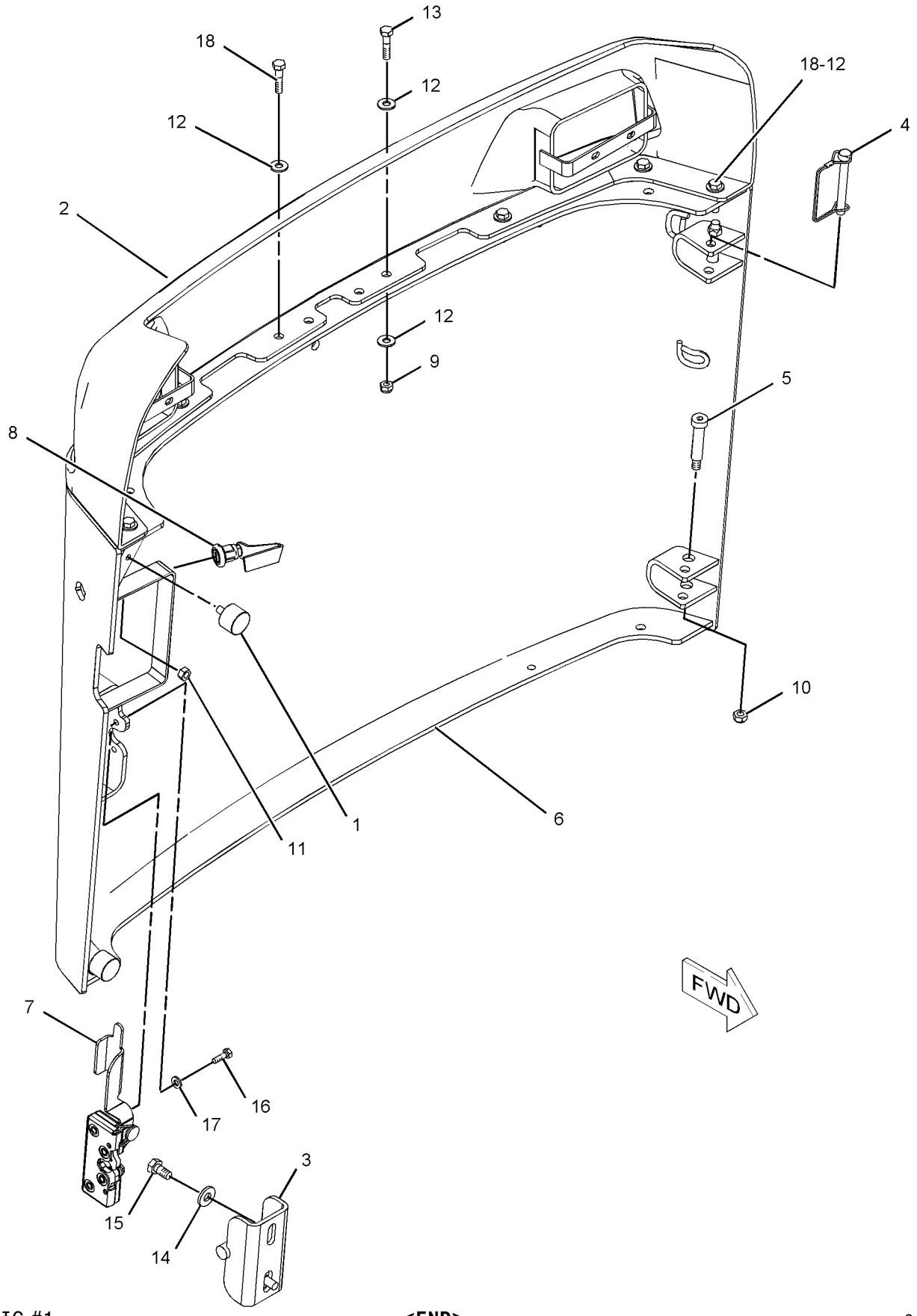


GRAPHIC #1 **<END>** g01030767

# FRAME AND BODY

## *218-5675* FRAME & MTG GP-MACHINE

**S/N: HEN6750-UP**

**PART OF 295-7510, 295-7518 CHASSIS AR**

**SMCS-6119, 7050, 7481** **i02779201**

| NOTE | REF NO | GRAPHIC REF | PART NUMBER | QTY | PART NAME 1 2 3 4 5 6 (PRODUCT LEVEL) | SEE PAGE |
|---|---|---|---|---|---|---|
| | 1 | 1 | **3S-9182** | 5 | PLUG-MAGNETIC (TANDEM) | |
| | 2 | 1 | **9G-5127** | 2 | BREATHER (TANDEM HOUSING) | |
| | 3 | 1 | **142-8810** | 1 | PLATE AS | |
| | 4 | 1 | **142-8823** | 2 | GASKET | |
| | 5 | 1 | **142-8897** | 2 | COVER | |
| | 6 | 1 | **191-9576** | 1 | COVER AS | |
| | 7 | 1 | **207-9733** | 1 | STEP AS (LH) | |
| | 8 | 1 | **207-9734** | 1 | STEP AS (RH) | |
| | 9 | 1 | **261-6101** | 4 | COVER | |
| | 10 | 1 | **218-6343** | 1 | PLATE | |
| | 11 | 1 | *218-6546* | 1 | FRAME GP-MACHINE | |
| | | 1 | **218-5673** | 1 | FRAME AS-LOWER | |
| | | 1 | **261-6202** | 1 | FRAME AS-UPPER | |
| | | 1 | **218-5798** | 1 | ARM AS-LIFT | |
| | | 1 | **7T-1099** | 4 | LINK | |
| M | | 1 | **8T-3597** | 2 | NUT-WELD (M12X1.75-THD) | |
| | | 1 | **6K-4148** | 4 | BEARING-SLEEVE | |
| | 12 | 1 | **224-8544** | 1 | SENDER AS-FUEL LEVEL | |
| | | 1 | **186-3735** | 2 | PIN-CONNECTOR (16-GA TO 18-GA) | |
| | | 1 | **102-8802** | 1 | KIT-RECEPTACLE (2-PIN) | |
| | | | | | (INCLUDES RECEPTACLE AS & WEDGE) | |
| | 14 | 1 | **5P-1076** | 16 | WASHER-HARD (13.5X30X4-MM THK) | |
| | 15 | 1 | **5P-4116** | 4 | WASHER-HARD (8.8X20.5X2-MM THK) | |
| | 16 | 1 | **8T-4121** | 20 | WASHER-HARD (11X21X2.5-MM THK) | |
| | 17 | 1 | **8T-4122** | 36 | WASHER-HARD (17X32X3.5-MM THK) | |
| M | 18 | 1 | **8T-4132** | 18 | NUT (M16X2-THD) | |
| M | 19 | 1 | **8T-4136** | 20 | BOLT (M10X1.5X25-MM) | |
| M | 20 | 1 | **8T-4189** | 2 | BOLT (M8X1.25X20-MM) | |
| M | 21 | 1 | **8T-4194** | 8 | BOLT (M12X1.75X50-MM) | |
| | 22 | 1 | **8T-4205** | 16 | WASHER-HARD (7.2X14.5X2-MM THK) | |
| | 23 | 1 | **8T-4224** | 2 | WASHER-HARD (8.8X16X2-MM THK) | |
| M | 24 | 1 | **8T-4244** | 8 | NUT (M12X1.75-THD) | |
| M | 25 | 1 | **8T-4908** | 4 | BOLT (M8X1.25X25-MM) | |
| M | 26 | 1 | **8T-4970** | 16 | BOLT (M6X1X14-MM) | |
| M | 27 | 1 | **8T-7338** | 18 | BOLT (M16X2X45-MM) | |

M-METRIC PART

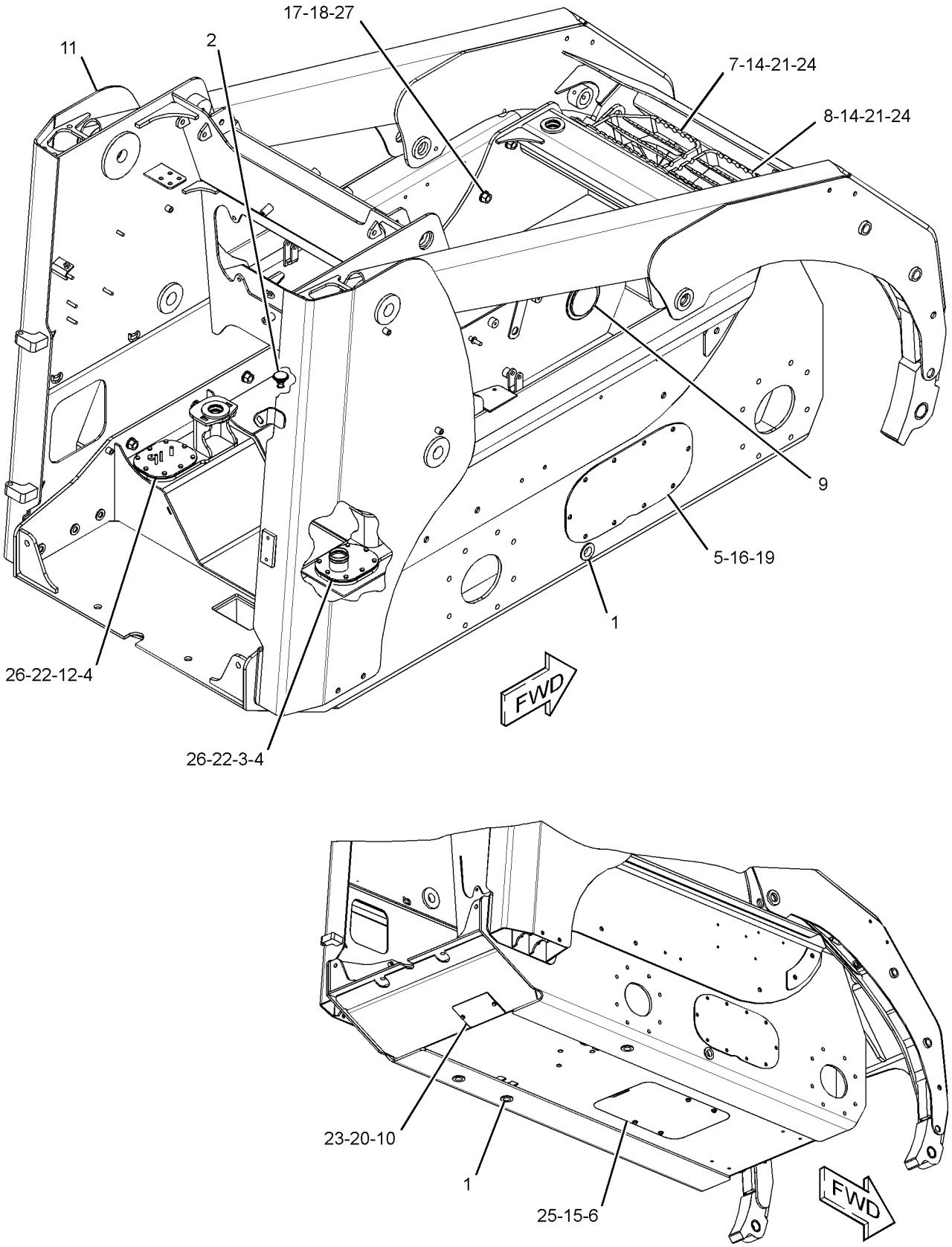


GRAPHIC #1 **<END>** g01388954

# *150-8621* GUIDE GP-LINES

**S/N: HEN6750-UP**
**PART OF 295-7510, 295-7518 CHASSIS AR**
**ALSO AN ATTACHMENT**

**SMCS-5057** **i02059885**

| NOTE | REF NO | GRAPHIC REF | PART NUMBER | QTY | PART NAME 1 2 3 4 5 6 (PRODUCT LEVEL) | SEE PAGE |
|---|---|---|---|---|---|---|
| | 1 | 1 | **227-4315** | 1 | PLATE AS | |
| | 2 | 1 | **247-4877** | 1 | BOLT (M8X1.25X12-MM) | |
| M | 3 | 1 | **6V-9189** | 1 | LOCKNUT (M8X1.25-THD) | |
| | 4 | 1 | **7X-0603** | 2 | WASHER-HARD (9.9X35X2.5-MM THK) | |
| M | 5 | 1 | **7X-2539** | 1 | BOLT (M8X1.25X110-MM) | |
| | 6 | 1 | **8T-4224** | 1 | WASHER-HARD (8.8X16X2-MM THK) | |

M-METRIC PART

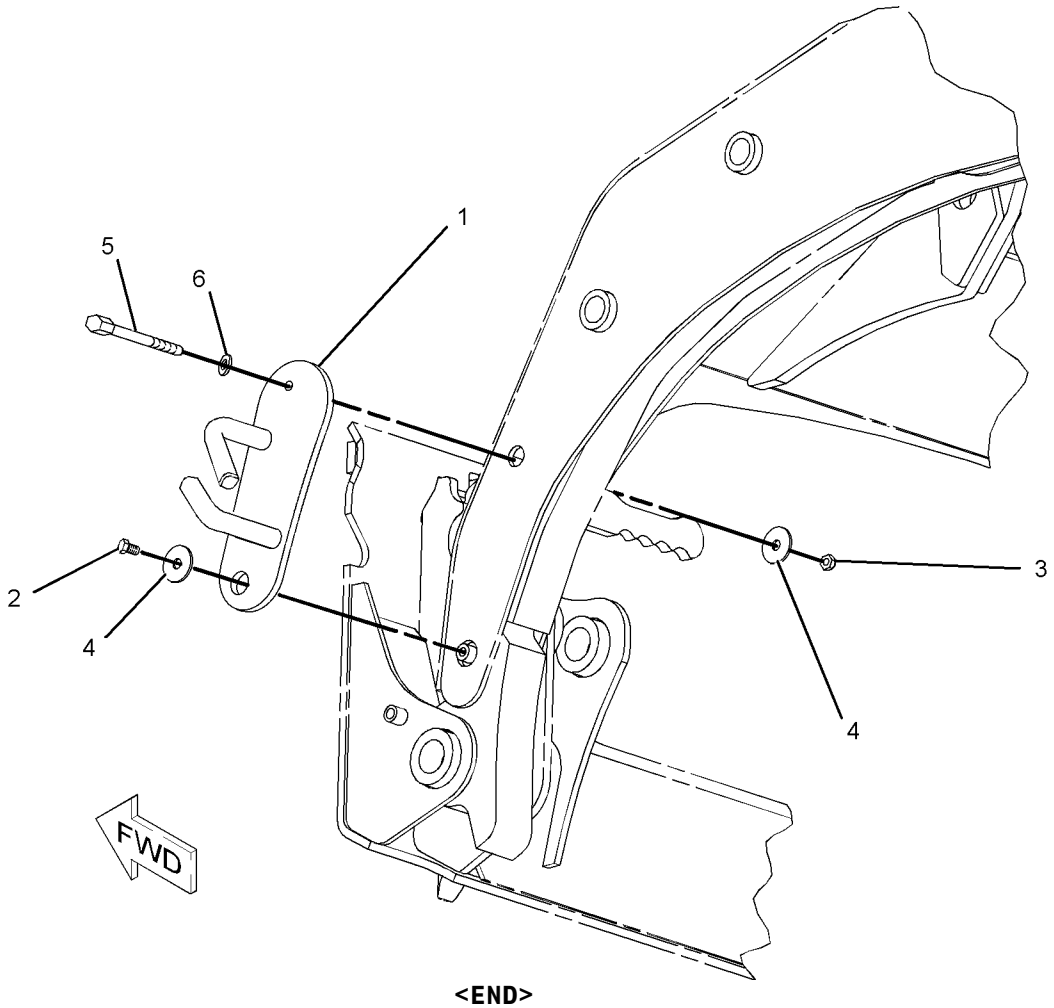


GRAPHIC #1 **<END>** g01056803

# 264-5864 KIT-ENGINE ENCLOSURE SEAL–DEBRIS BARRIER

**S/N: HEN6750-UP**
**AN ATTACHMENT**

**SMCS-7263** **i02312073**

| NOTE | REF NO | GRAPHIC REF | PART NUMBER | QTY | PART NAME 1 2 3 4 5 6 (PRODUCT LEVEL) | SEE PAGE |
|---|---|---|---|---|---|---|
| | 1 | 1 | **262-5254** | 1 | BAFFLE | |
| | 2 | 1 | **262-5255** | 1 | BAFFLE | |
| | 3 | 1 | **262-5256** | 1 | BAFFLE | |
| | 4 | 1 | **262-5257** | 1 | BAFFLE | |
| | 5 | 1 | **263-1362** | 1 | GRILL AS | |
| | 6 | 1 | **263-1363** | 1 | GRILL AS | |
| | 7 | 1 | **263-1364** | 1 | BRACKET AS | |
| | 8 | 1 | **263-9699** | 1 | BAFFLE AS | |
| | 9 | 1 | **264-0007** | 1 | BAFFLE | |
| | 10 | 1 | **264-2461** | 2 | GRILL AS | |
| | 11 | 1 | **264-5862** | 4 | GUARD AS-BRUSH | |
| | 12 | 1 | **266-3314** | 16 | BOLT-FLANGE HEAD (M6X1X20.5-MM) | |
| | 13 | 1 | **267-4675** | 1 | BAFFLE AS | |
| | 14 | 1 | **267-8943** | 1 | INSULATION | |
| M | 15 | 1 | **5C-2890** | 23 | NUT (M6X1-THD) | |
| M | 16 | 1 | **6V-7357** | 2 | BOLT (M6X1X25-MM) | |
| M | 17 | 1 | **6V-9632** | 7 | NUT-WELD (M6X1-THD) | |
| M | 18 | 1 | **8T-4138** | 28 | BOLT (M6X1X20-MM) | |
| | 19 | 1 | **8T-4205** | 53 | WASHER-HARD (7.2X14.5X2-MM THK) | |
| E | 20 | 1 | **124-3243** | | SEAL (120-CM EACH) | |

E-ORDER BY THE CENTIMETER
M-METRIC PART

**264-5864 KIT-ENGINE ENCLOSURE SEAL** *(contd. )* **i02312073**

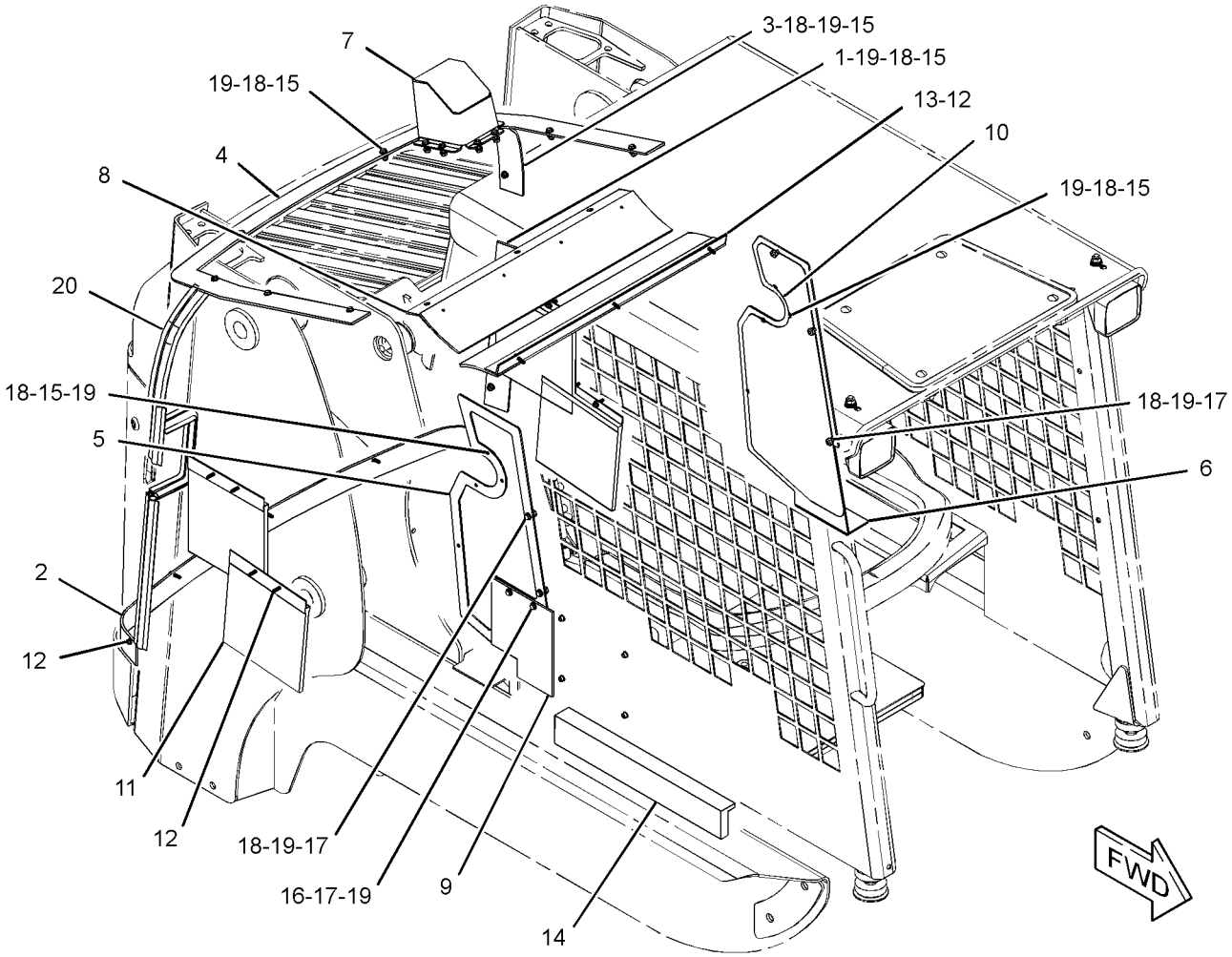


GRAPHIC #1

**<END>**

g01164588

# FRAME AND BODY

## 277-0654 KIT-ROADING CONVERSION

**S/N: HEN6750-UP**
**AN ATTACHMENT**

**SMCS-1408, 1429, 1430, 1432, 7000, 7319** **i02546003**

| NOTE | REF NO | GRAPHIC REF | PART NUMBER | QTY | PART NAME 1 2 3 4 5 6 (PRODUCT LEVEL) | SEE PAGE |
|---|---|---|---|---|---|---|
| Y | 1 | 2 | **3E-7584** | 2 | LAMP GP-HEAD & SIGNAL | 125 |
| | 2 | 2 | **7D-5473** | 2 | BOLT-SOCKET HEAD (8-32X0.75-IN) | |
| | 3 | 2 | **8T-1887** | 2 | CLIP (SLOT) | |
| | 4 | 2 | **8T-1888** | 2 | CLIP (TAB) | |
| | 5 | 2 | **8W-8909** | 2 | SLEEVE | |
| | 6 | 2 | **132-5166** | 2 | MIRROR GP | |
| | | 2 | **148-2371** | 1 | CLAMP (TOP) | |
| | | 2 | **148-2372** | 1 | CLAMP (BOTTOM) | |
| Y | 7 | 1 | **142-8634** | 2 | LAMP GP-STOP & TAIL | 128 |
| | 8 | 2 | **142-9329** | 1 | SWITCH AS-ROCKER (ROADING LIGHTS) | |
| | 9 | 2 | **142-9331** | 1 | SWITCH AS-ROCKER (HAZARD WARNING LIGHTS) | |
| | 10 | 2 | **147-1773** | 1 | CIRCUIT BREAKER AS (30-AMPERE) | |
| | | 2 | **6V-8378** | 2 | NUT (10-32-THD) | |
| | | 2 | **8F-1434** | 2 | LOCKWASHER | |
| | | 2 | **8T-0328** | 2 | WASHER-HARD (5.5X10X1-MM THK) | |
| | 11 | 2 | *166-2033* | 2 | TEE AS | |
| | | | | | (EACH INCLUDES) | |
| | | 2 | **4J-5477** | 1 | SEAL-O-RING | |
| | | 2 | **7X-2444** | 1 | TEE-SWIVEL | |
| | 12 | 2 | **175-4239** | 2 | BRACKET AS | |
| Y | 13 | 2 | **184-1564** | 2 | SWITCH GP-PRESSURE | 140 |
| | 14 | 2 | **216-4711** | 1 | HARNESS AS-REAR LIGHTING (BRAKE) | |
| | | 2 | **102-8803** | 1 | KIT-RECEPTACLE (3-PIN) | |
| | | | | | (INCLUDES RECEPTACLE AS & WEDGE) | |
| | | 2 | **155-2270** | 2 | KIT-CONNECTING PLUG (2-PIN) | |
| | | | | | (EACH INCLUDES PLUG AS, WEDGE & INTERFACE SEAL) | |
| E | | 2 | **125-7874** | | TUBE-HEAT SHRINK (5.72-MM DIA) (5-CM) | |
| | 15 | 1 | **216-4727** | 1 | HARNESS AS-REAR LIGHTING | |
| | | 1 | **102-8805** | 1 | KIT-RECEPTACLE (6-PIN) | |
| | | 1 | **102-8806** | 1 | KIT-RECEPTACLE (8-PIN) | |
| | | | | | (EACH KIT INCLUDES RECEPTACLE AS & WEDGE) | |
| | | 1 | **155-2265** | 1 | KIT-CONNECTING PLUG (8-PIN) | |
| | | | | | (INCLUDES PLUG AS, WEDGE & INTERFACE SEAL) | |
| E | | 1 | **125-7874** | | TUBE-HEAT SHRINK (5.72-MM DIA) (20-CM) | |
| E | | 1 | **125-7875** | | TUBE-HEAT SHRINK (7.44-MM DIA) (5-CM) | |
| | 16 | 1 | **225-7990** | 1 | HARNESS AS-FRONT LIGHTING | |
| | | 1 | **155-2274** | 1 | KIT-CONNECTING PLUG (6-PIN) | |
| | | | | | (INCLUDES PLUG AS, WEDGE & INTERFACE SEAL) | |
| E | | 1 | **125-7874** | | TUBE-HEAT SHRINK (5.72-MM DIA) (5-CM) | |
| E | | 1 | **125-7875** | | TUBE-HEAT SHRINK (7.44-MM DIA) (5-CM) | |
| | 17 | 2 | **225-8013** | 1 | WIRE AS | |
| | 18 | 2 | **226-5900** | 1 | SWITCH AS-ROCKER (TURN SIGNAL) | |
| | 19 | 2 | **238-7637** | 2 | PLATE | |
| | 20 | 2 | **242-9000** | 1 | FLASHER AS (12-VOLT) | |
| | 21 | 2 | **115-1615** | 1 | RELAY AS (12-VOLT) | |
| | 22 | 2 | **195-0935** | 1 | INSERT-THREADED (M6X1) | |
| | 23 | 1 | **206-1346** | 2 | STRAP-CABLE | |
| B | 24 | 1 | **3S-2093** | 22 | STRAP-CABLE | |
| | 25 | 2 | **4B-4863** | 2 | WASHER (4.7X11X1.2-MM THK) | |
| | 26 | 1 | **4P-7581** | 1 | CLIP | |
| M | 27 | 2 | **5C-9553** | 4 | BOLT (M6X1X16-MM) | |
| | 28 | 2 | **8T-4121** | 4 | WASHER-HARD (11X21X2.5-MM THK) | |
| M | 29 | 2 | **8T-4133** | 2 | NUT (M10X1.5-THD) | |
| M | 30 | 1 | **8T-4201** | 1 | BOLT-LOCKING (M10X1.5X20-MM) | |
| | 31 | 2 | **8T-4205** | 4 | WASHER-HARD (7.2X14.5X2-MM THK) | |

## 277-0654 KIT-ROADING CONVERSION *(contd. )* i02546003

| NOTE | REF NO | GRAPHIC REF | PART NUMBER | QTY | PART NAME 1 2 3 4 5 6 (PRODUCT LEVEL) | SEE PAGE |
|---|---|---|---|---|---|---|
| M | 32 | 2 | **8T-6685** | 4 | BOLT (M10X1.5X110-MM) | |
| M | 33 | 2 | **9X-2042** | 1 | SCREW-TRUSS HEAD (M6X1X12-MM) | |

B-USE AS REQUIRED
E-ORDER BY THE CENTIMETER
M-METRIC PART
Y-SEPARATE ILLUSTRATION

REFER TO ALL ILLUSTRATIONS OF THIS GROUP FOR AUXILIARY VIEWS

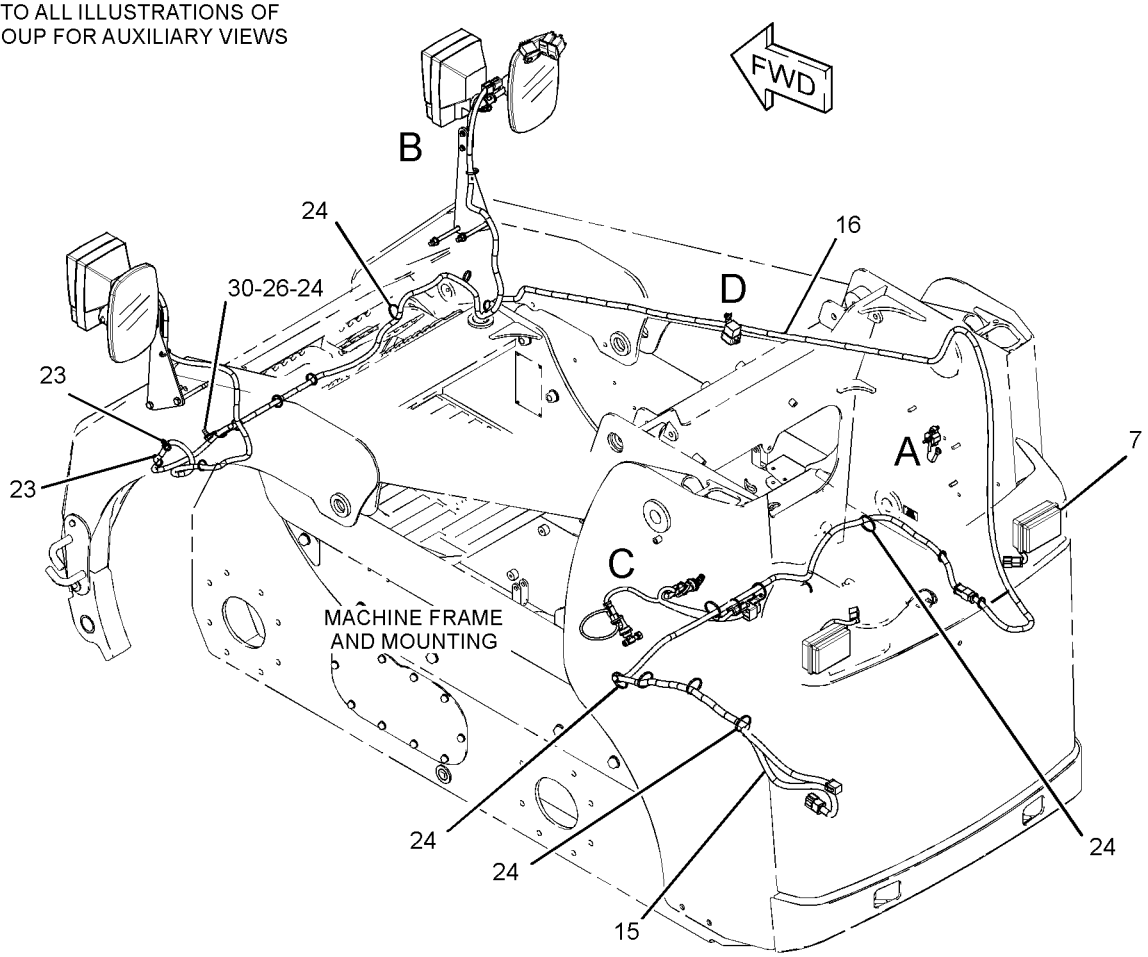


GRAPHIC #1 g01347062

**277-0654 KIT-ROADING CONVERSION** *(contd. )* **i02546003**

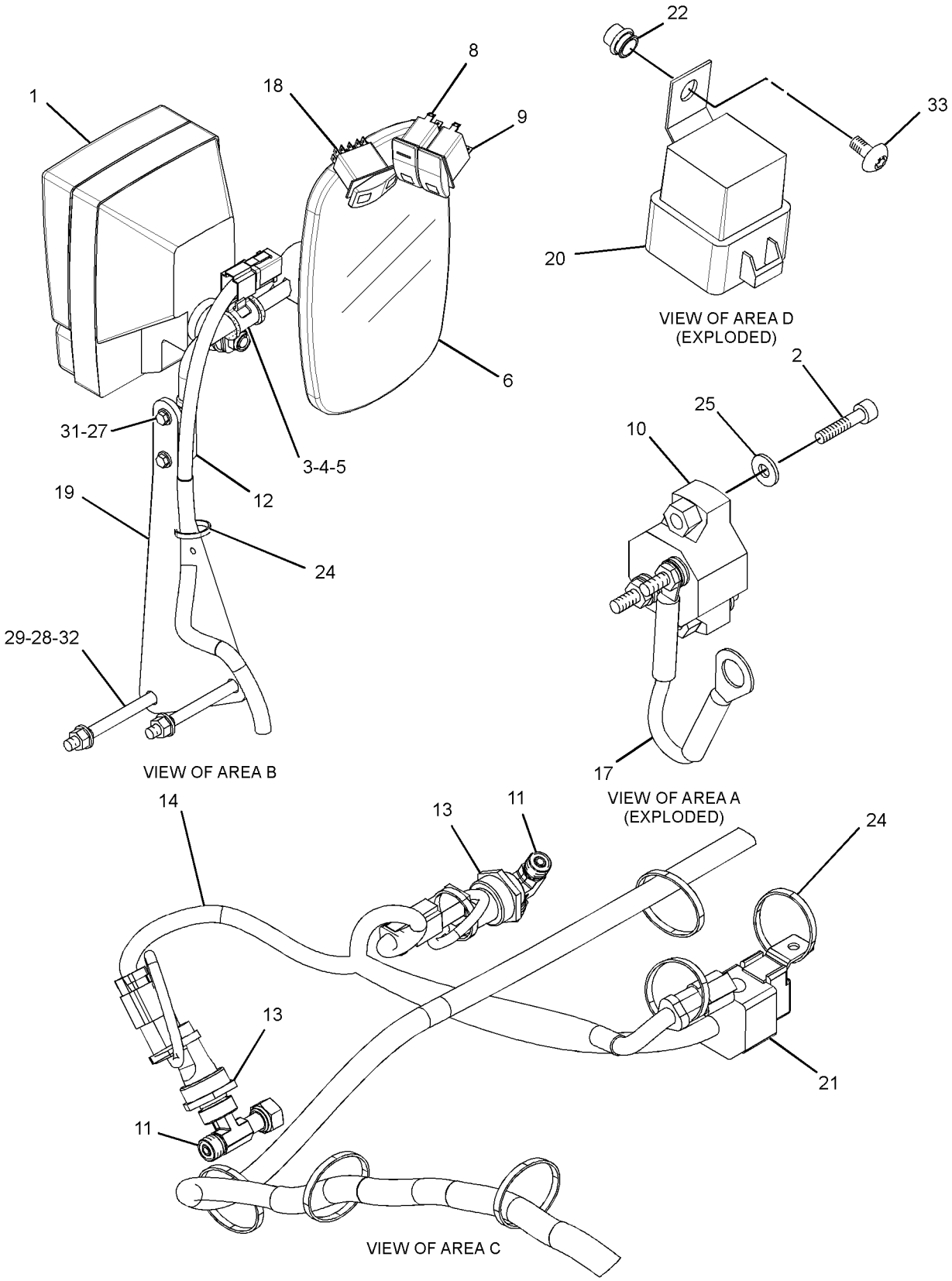


GRAPHIC #2 **<END>** g01347063

# *233-5990* LIFTING GP-MACHINE—SINGLE POINT

**S/N: HEN6750-UP**

**CANNOT BE USED WITH 233-5991—PAGE 221**

**AN ATTACHMENT**

**SMCS-1122, 6459, 7000** **i02771700**

| NOTE | REF NO | GRAPHIC REF | PART NUMBER | QTY | PART NAME 1 2 3 4 5 6 (PRODUCT LEVEL) | SEE PAGE |
|---|---|---|---|---|---|---|
| | 1 | 1 | **5P-0372** | 2 | LOCK PIN | |
| | 2 | 1 | **7E-2700** | 2 | FILM-SYMBOL (LIFT EYE LOCATION) | |
| | 3 | 1 | **9C-5344** | 1 | SPACER (10.5X20X18-MM THK) | |
| | 4 | 1 | **095-1325** | 1 | PIN-CLEVIS | |
| | 5 | 1 | **152-1154** | 1 | BRACKET AS-LIFT | |
| | 6 | 1 | **152-1156** | 4 | PLATE | |
| | 7 | 1 | **153-2683** | 1 | SPRING AS-GAS (CAB) | |
| | 8 | 1 | **177-3405** | 1 | PIN | |
| | 9 | 1 | **233-5892** | 1 | PLATE AS | |
| | 10 | 1 | **233-5893** | 1 | PLATE AS | |
| M | 11 | 1 | **159-2953** | 8 | SCREW-FLAT HEAD (M16X2-THD) | |
| | 12 | 1 | **8T-4122** | 4 | WASHER-HARD (17X32X3.5-MM THK) | |
| M | 13 | 1 | **8T-4132** | 4 | NUT (M16X2-THD) | |
| | 14 | 1 | **8T-4224** | 4 | WASHER-HARD (8.8X16X2-MM THK) | |
| M | 15 | 1 | **8T-4908** | 4 | BOLT (M8X1.25X25-MM) | |

M-METRIC PART

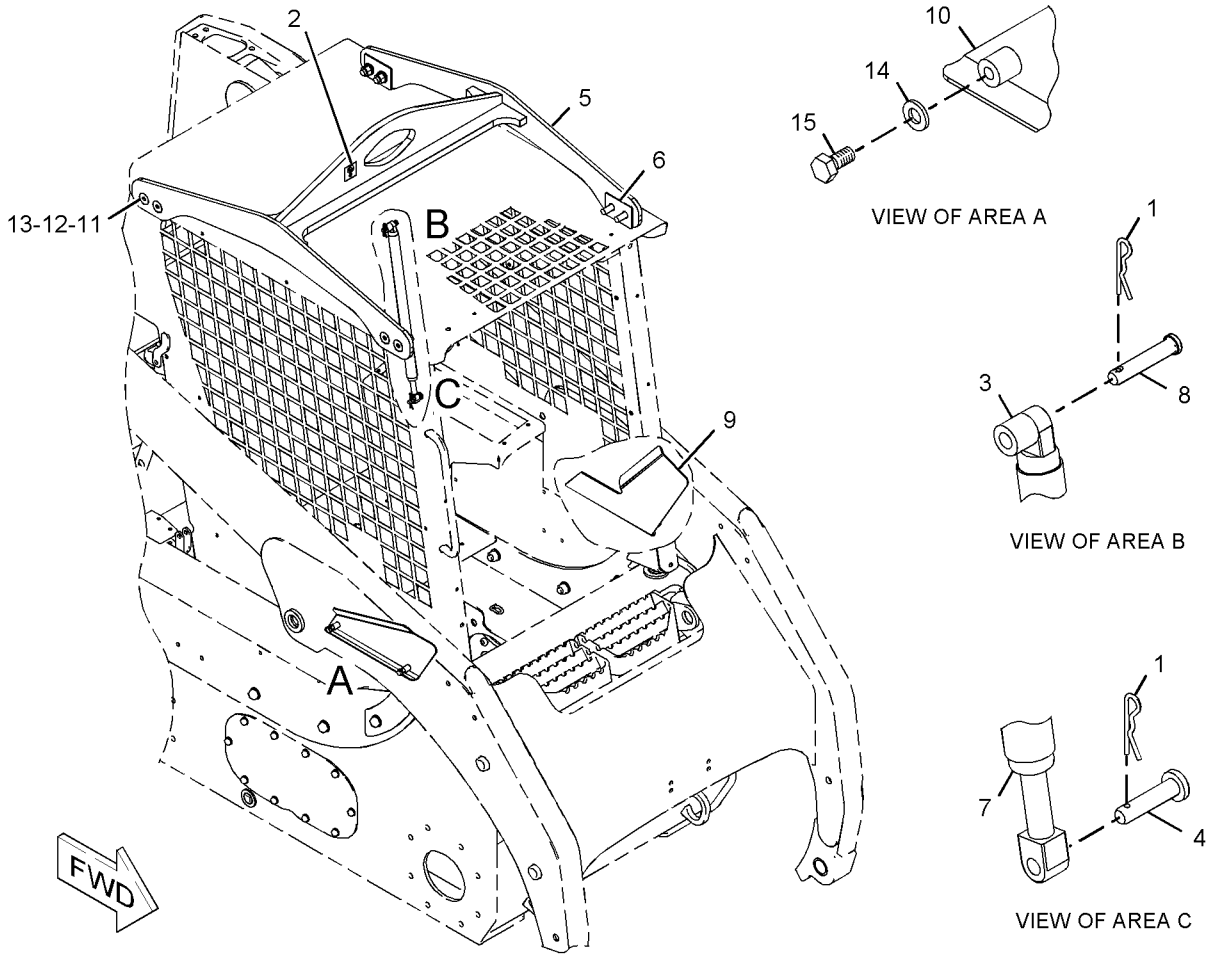


GRAPHIC #1

**<END>**

g01034570

## *233-5991* LIFTING GP-MACHINE—4-POINT

**S/N: HEN6750-UP**

**PART OF 261-6165, 278-5351, 278-5373, 278-5418, 278-5448, 295-7064, 295-7071, 295-7154, 295-7170, 295-7171 CONVERSION AR-MACHINE, 218-5781, 218-5784, 236-5116, 236-5117, 251-1510 CONVERSION AR-ROADING**

**CANNOT BE USED WITH 233-5990—PAGE 220**

**AN ATTACHMENT**

**SMCS-1122, 6459, 7000** **i01994551**

| NOTE | REF NO | GRAPHIC REF | PART NUMBER | QTY | PART NAME 1 2 3 4 5 6 (PRODUCT LEVEL) | SEE PAGE |
|---|---|---|---|---|---|---|
| | 1 | 1 | **7E-2700** | 4 | FILM-SYMBOL (LIFT EYE LOCATION) | |
| | 2 | 1 | **142-8826** | 4 | PLATE-LIFT | |
| | 3 | 1 | **233-5892** | 1 | PLATE AS | |
| | 4 | 1 | **233-5893** | 1 | PLATE AS | |
| M | 5 | 1 | **159-2953** | 8 | SCREW-FLAT HEAD (M16X2-THD) | |
| | 6 | 1 | **8T-4122** | 4 | WASHER-HARD (17X32X3.5-MM THK) | |
| M | 7 | 1 | **8T-4132** | 4 | NUT (M16X2-THD) | |
| | 8 | 1 | **8T-4224** | 4 | WASHER-HARD (8.8X16X2-MM THK) | |
| M | 9 | 1 | **8T-4908** | 4 | BOLT (M8X1.25X25-MM) | |

M-METRIC PART

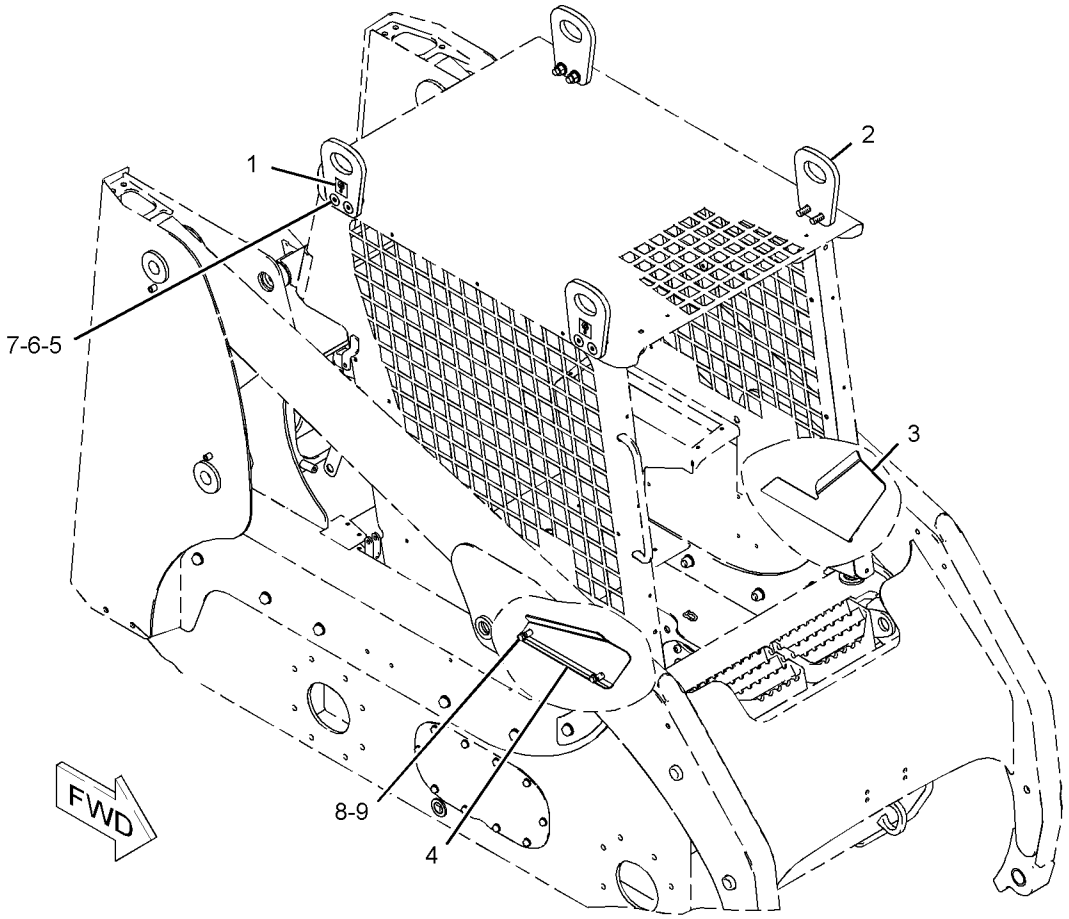


GRAPHIC #1 **<END>** g01034582

# *236-5058* MIRROR & MTG GP-REAR VIEW

**S/N: HEN6750-UP**

**PART OF 278-5373, 278-5418, 278-5448, 295-7154, 295-7170, 295-7171 CONVERSION AR-MACHINE, 236-5116, 236-5117, 251-1510 CONVERSION AR-ROADING AN ATTACHMENT**

**SMCS-7319** **i02262626**

| NOTE | REF NO | GRAPHIC REF | PART NUMBER | QTY | PART NAME 1 2 3 4 5 6 (PRODUCT LEVEL) | SEE PAGE |
|---|---|---|---|---|---|---|
| | 1 | 1 | **132-5166** | 2 | MIRROR GP | |
| | | | | | (EACH INCLUDES) | |
| | | 1 | **148-2371** | 1 | CLAMP (TOP) | |
| | | 1 | **148-2372** | 1 | CLAMP (BOTTOM) | |
| | 2 | 1 | **175-4237** | 1 | BLOCK AS | |
| | 3 | 1 | **175-4239** | 2 | BRACKET AS | |
| | 4 | 1 | **238-7637** | 2 | PLATE | |
| M | 5 | 1 | **5C-9553** | 4 | BOLT (M6X1X16-MM) | |
| | 6 | 1 | **8T-4121** | 4 | WASHER-HARD (11X21X2.5-MM THK) | |
| M | 7 | 1 | **8T-4133** | 2 | NUT (M10X1.5-THD) | |
| | 8 | 1 | **8T-4205** | 4 | WASHER-HARD (7.2X14.5X2-MM THK) | |
| M | 9 | 1 | **8T-6685** | 4 | BOLT (M10X1.5X110-MM) | |

M-METRIC PART

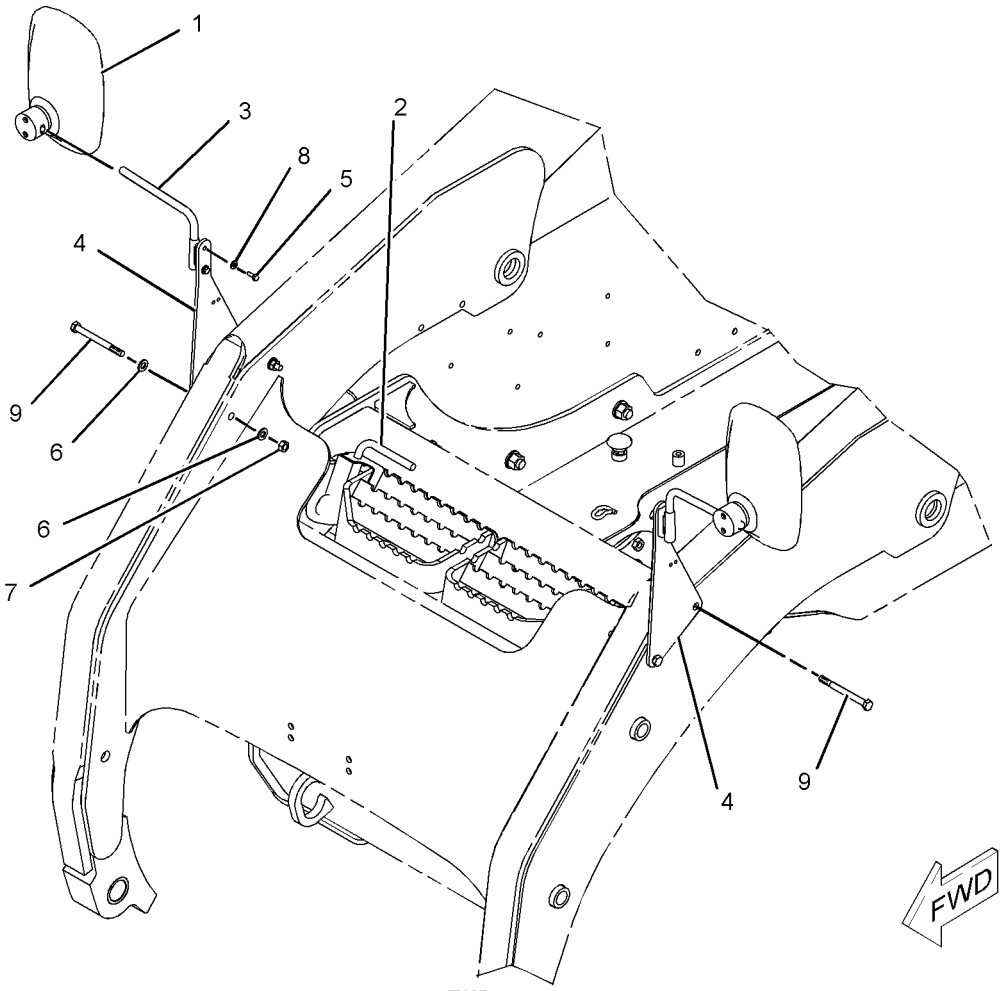


GRAPHIC #1

**<END>**

g01017421

# *173-3021* MOUNTING GP-REGISTRATION

**S/N: HEN6750-UP**
**PART OF 225-7963 MOUNTING GP-REGISTRATION**
**AN ATTACHMENT**

**SMCS-1408, 1429, 7050** **i02005879**

| NOTE | REF NO | GRAPHIC REF | PART NUMBER | QTY | PART NAME 1 2 3 4 5 6 (PRODUCT LEVEL) | SEE PAGE |
|---|---|---|---|---|---|---|
| | 1 | 1 | **175-4236** | 1 | PLATE | |
| | 2 | 1 | **190-8962** | 1 | LAMP GP-REGISTRATION PLATE | |
| | | 1 | **7M-9957** | 1 | LAMP (12-VOLT) (REGISTRATION PLATE) | |
| | 3 | 1 | **204-1365** | 1 | PLATE | |
| | 4 | 1 | **207-9780** | 1 | BRACKET AS | |
| | 5 | 1 | **215-4001** | 1 | PLATE | |
| | 6 | 1 | **4B-4863** | 2 | WASHER (4.7X11X1.2-MM THK) | |
| M | 7 | 1 | **5C-8312** | 2 | NUT (M4X0.7 THD) | |
| M | 8 | 1 | **6V-9672** | 2 | SCREW-MACHINE (M4X0.7X16-MM) | |
| M | 9 | 1 | **8T-4171** | 3 | BOLT (M6X1X12-MM) | |
| | 10 | 1 | **8T-4205** | 3 | WASHER-HARD (7.2X14.5X2-MM THK) | |

M-METRIC PART

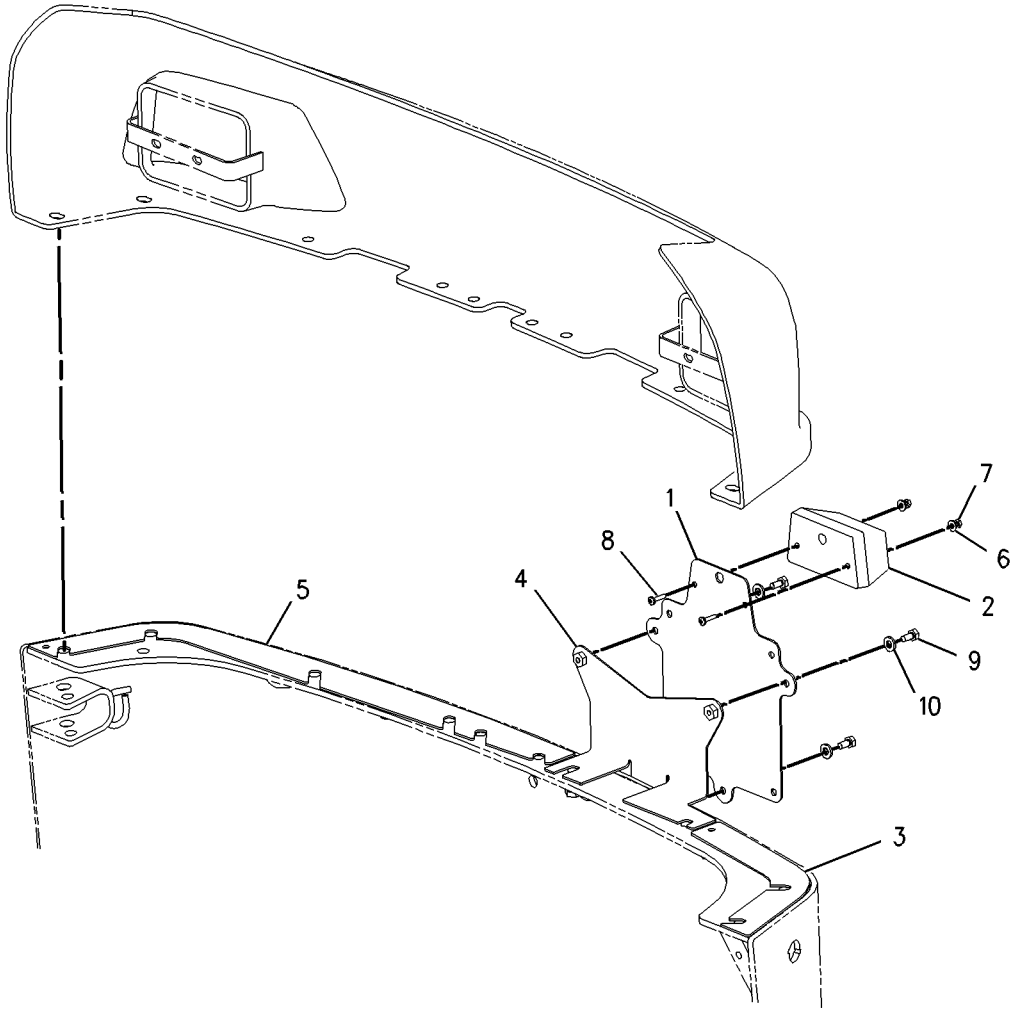


GRAPHIC #1 **<END>** g00874745

# *225-7963* MOUNTING GP-REGISTRATION

**S/N: HEN6750-UP**
**PART OF 278-5373, 295-7154 CONVERSION AR-MACHINE, 236-5117 CONVERSION AR-ROADING**
**AN ATTACHMENT**

**SMCS-1408, 1429, 7050** **i02940540**

| NOTE | REF NO | GRAPHIC REF | PART NUMBER | QTY | PART NAME 1 2 3 4 5 6 (PRODUCT LEVEL) | SEE PAGE |
|---|---|---|---|---|---|---|
| Y | 1 | 1 | *173-3021* | 1 | MOUNTING GP-REGISTRATION | 223 |
| | 2 | 1 | **186-0239** | 1 | HARNESS AS-REAR LIGHTING | |
| | | 1 | **102-8804** | 1 | KIT-RECEPTACLE (4-PIN) | |
| | | 1 | **155-2271** | 1 | KIT-CONNECTING PLUG (4-PIN) | |

Y-SEPARATE ILLUSTRATION

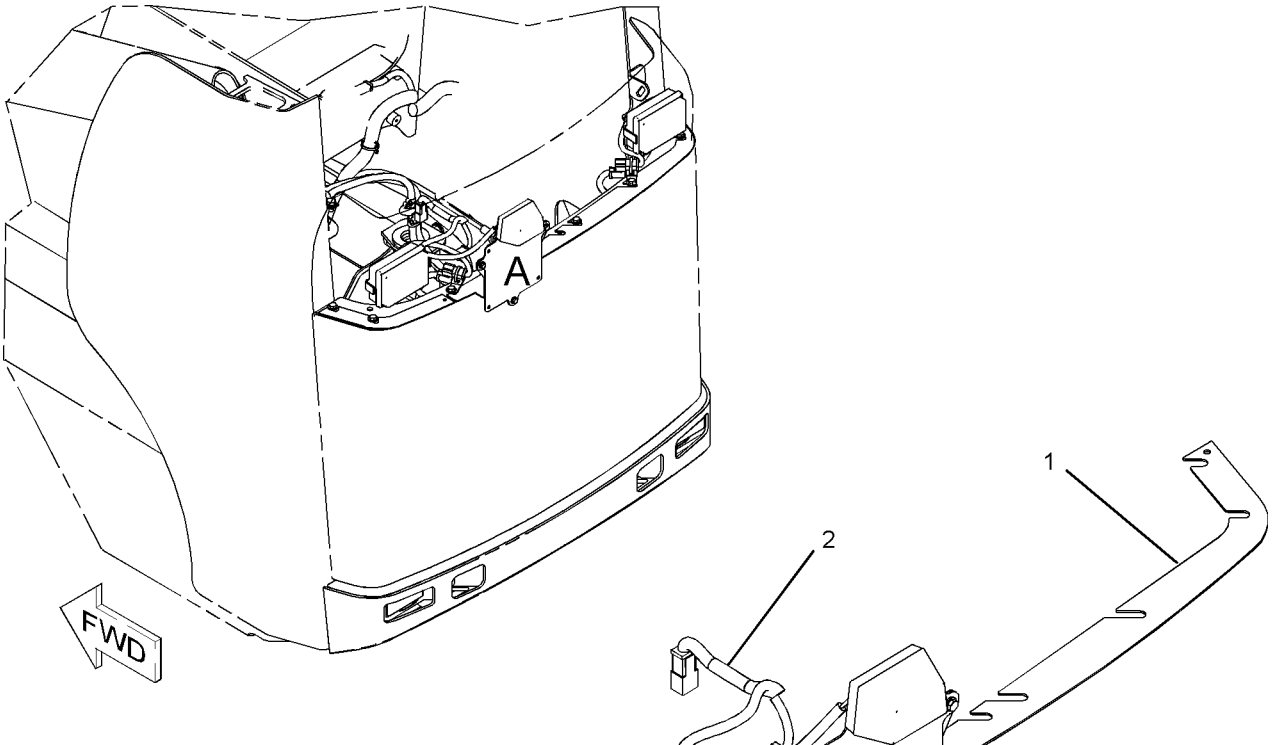


GRAPHIC #1

**<END>**

g01030726

# *175-4228* MOUNTING GP-ROADING LIGHTS–REAR

**S/N: HEN6750-UP**

**CANNOT BE USED WITH 218-5780–PAGE 111, 218-5781–PAGE 201, 218-5784–PAGE 201 AN ATTACHMENT**

**SMCS-1429** **i02571196**

| NOTE | REF NO | GRAPHIC REF | PART NUMBER | QTY | PART NAME 1 2 3 4 5 6 (PRODUCT LEVEL) | SEE PAGE |
|---|---|---|---|---|---|---|
| | 1 | 1 | **3S-2093** | 6 | STRAP-CABLE | |
| | 2 | 1 | **9R-1499** | 2 | REFLECTOR | |
| | 3 | 1 | **165-7098** | 2 | SUPPORT AS | |
| | 4 | 1 | **166-2561** | 1 | BRACKET AS | |
| | 5 | 1 | **183-7117** | 2 | HARNESS AS-REAR LIGHTING | |
| | | | | | (EACH INCLUDES) | |
| | | 1 | **102-8804** | 1 | KIT-RECEPTACLE (4-PIN) | |
| M | 6 | 1 | **5C-2890** | 4 | NUT (M6X1-THD) | |
| M | 7 | 1 | **6V-7357** | 4 | BOLT (M6X1X25-MM) | |
| M | 8 | 1 | **8T-4138** | 4 | BOLT (M6X1X20-MM) | |
| | 9 | 1 | **8T-4205** | 12 | WASHER-HARD (7.2X14.5X2-MM THK) | |

M-METRIC PART

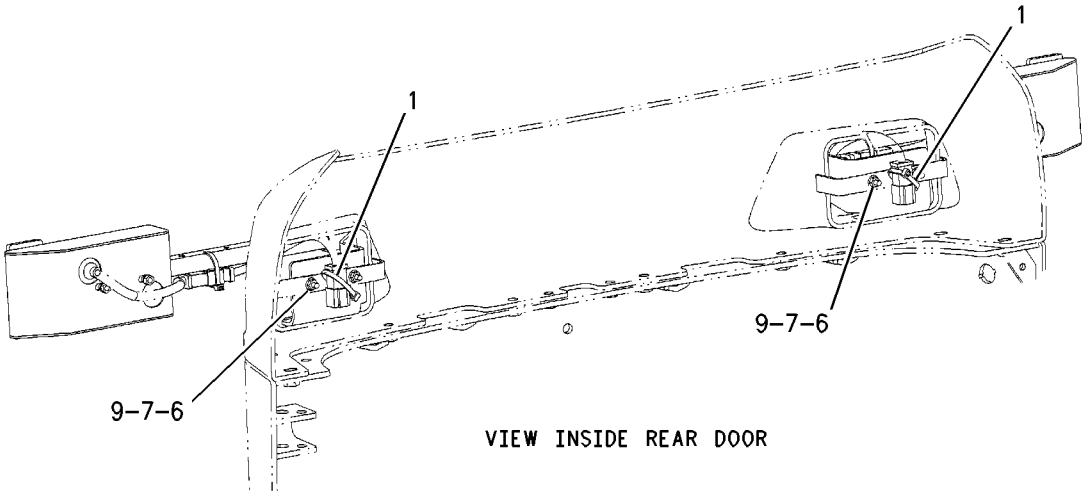


VIEW INSIDE REAR DOOR

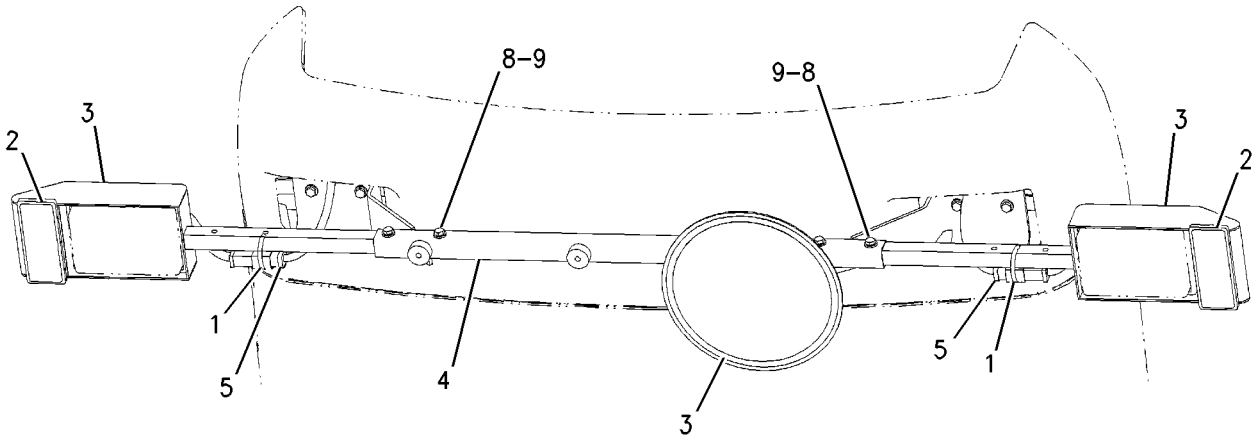


REAR VIEW
GERMAN MACHINE

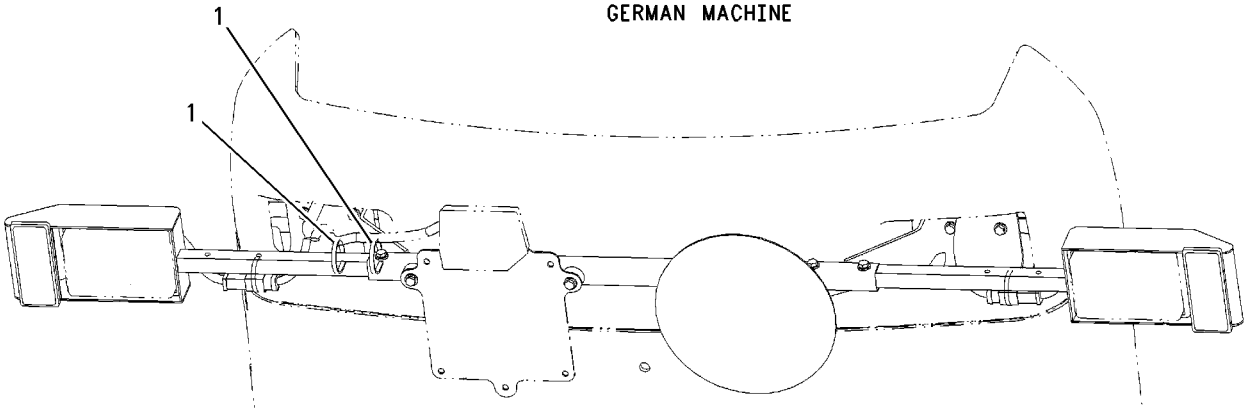


REAR VIEW
ITALIAN MACHINE

GRAPHIC #1 **<END>** g00902191

## *233-5615* SUPPRESSION GP-SOUND–HOOD

**S/N: HEN6750-UP**

**PART OF 261-6165, 278-5351, 278-5373, 278-5418, 278-5448, 295-7064, 295-7071, 295-7154, 295-7170, 295-7171 CONVERSION AR-MACHINE, 218-5781, 218-5784, 236-5116, 236-5117, 251-1510 CONVERSION AR-ROADING AN ATTACHMENT**

**SMCS-1801, 7076** **i01958646**

| NOTE | REF NO | GRAPHIC REF | PART NUMBER | QTY | PART NAME 1 2 3 4 5 6 (PRODUCT LEVEL) | SEE PAGE |
|---|---|---|---|---|---|---|
| | 1 | 1 | **176-4079** | 2 | INSULATION | |
| | 2 | 1 | **234-0747** | 1 | INSULATION | |
| | 3 | 1 | **234-0776** | 1 | INSULATION | |
| | 4 | 1 | **236-5088** | 1 | INSULATION | |

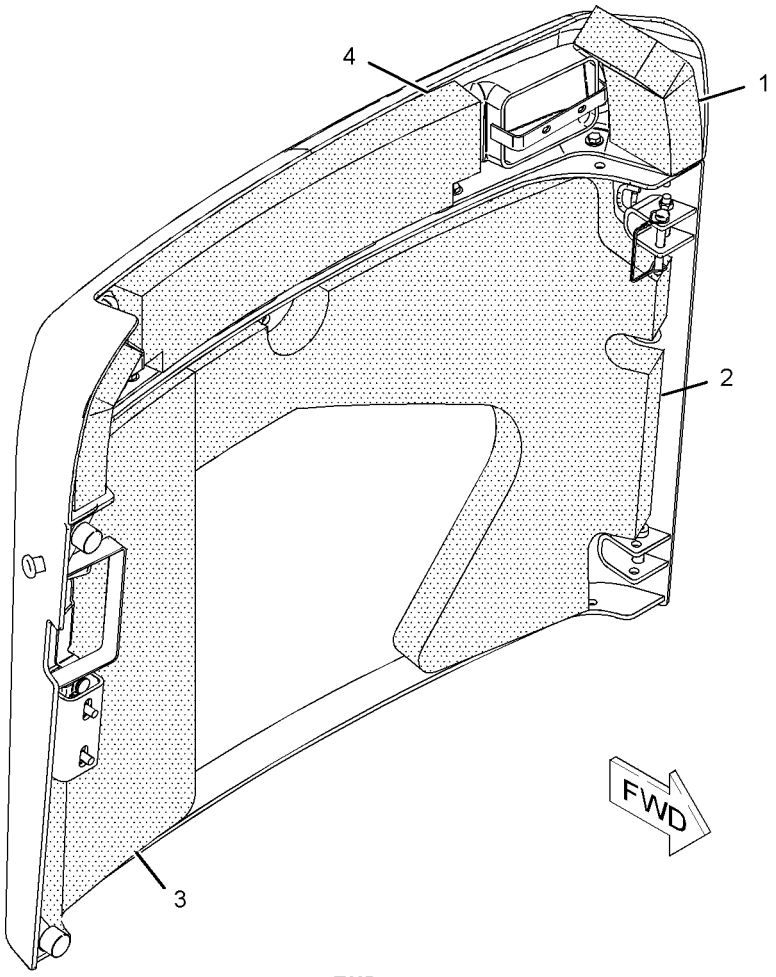


GRAPHIC #1 **<END>** g01019040

## *257-7400* SUPPRESSION GP-SOUND–ENGINE

**S/N: HEN6750-UP**
**STAGE II SOUND**
**PART OF 261-6165, 278-5351, 278-5373, 278-5418, 278-5448, 295-7064 CONVERSION**
**AR-MACHINE**
**AN ATTACHMENT**

**SMCS-1801, 7076** **i02430219**

| NOTE | REF NO | GRAPHIC REF | PART NUMBER | QTY | PART NAME 1 2 3 4 5 6 (PRODUCT LEVEL) | SEE PAGE |
|---|---|---|---|---|---|---|
| | 1 | 1 | **246-1259** | 1 | COVER-INSULATION | |
| | 2 | 1 | **246-1260** | 1 | COVER-INSULATION | |
| | 3 | 1 | **012-0380** | 6 | LOCKWASHER | |
| M | 4 | 1 | **6V-7357** | 2 | BOLT (M6X1X25-MM) | |
| M | 5 | 1 | **8T-4138** | 4 | BOLT (M6X1X20-MM) | |
| | 6 | 1 | **9X-2026** | 6 | WASHER (6.5X17X1-MM THK) | |

M-METRIC PART

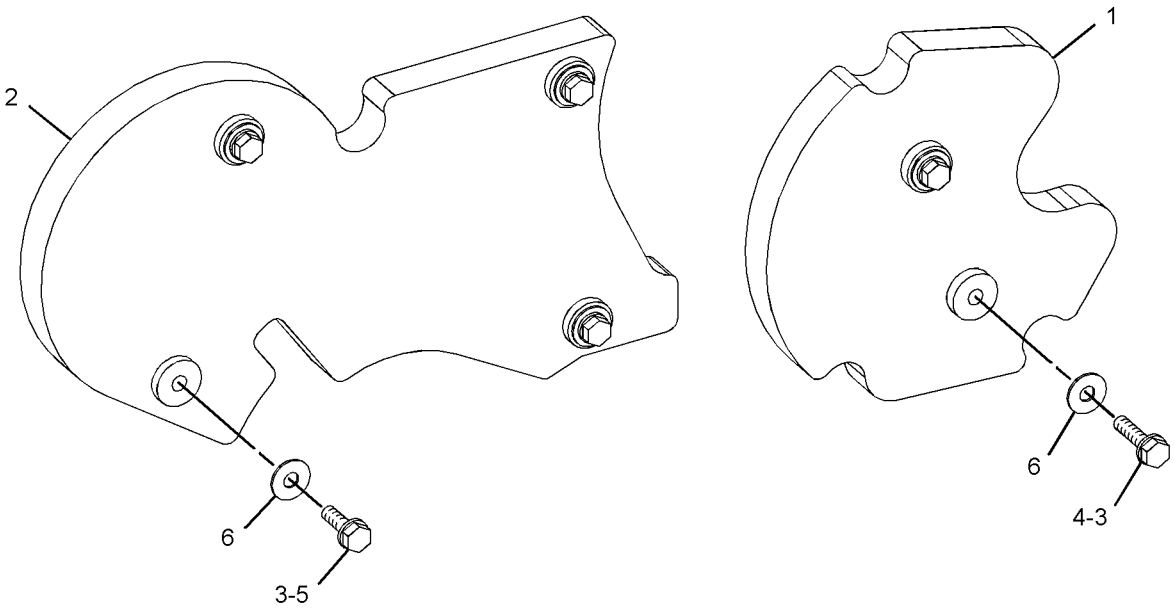


GRAPHIC #1 **<END>** g01229777

## *261-6384* SUPPRESSION GP-SOUND–MACHINE

**S/N: HEN6750-UP**

**PART OF 261-6165, 278-5351, 278-5373, 278-5418, 278-5448, 295-7064, 295-7071, 295-7154, 295-7170, 295-7171 CONVERSION AR-MACHINE**

**AN ATTACHMENT**

**SMCS-1801, 7076** **i02857804**

| NOTE | REF NO | GRAPHIC REF | PART NUMBER | QTY | PART NAME 1 2 3 4 5 6 (PRODUCT LEVEL) | SEE PAGE |
|---|---|---|---|---|---|---|
| | 1 | 1 | **176-4079** | 6 | INSULATION | |
| | 2 | 1 | **261-6371** | 2 | INSULATION | |
| | 3 | 1 | **261-6372** | 1 | INSULATION | |
| | 4 | 1 | **261-6373** | 1 | INSULATION | |
| | 5 | 1 | **261-6374** | 1 | INSULATION | |
| | 6 | 1 | **261-6375** | 1 | INSULATION | |
| | 7 | 1 | **261-6376** | 2 | INSULATION | |
| | 8 | 1 | **261-6377** | 1 | INSULATION | |
| | 9 | 1 | **261-6378** | 2 | INSULATION | |
| | 10 | 1 | **261-6379** | 4 | INSULATION | |
| | 11 | 1 | **261-6380** | 1 | INSULATION | |

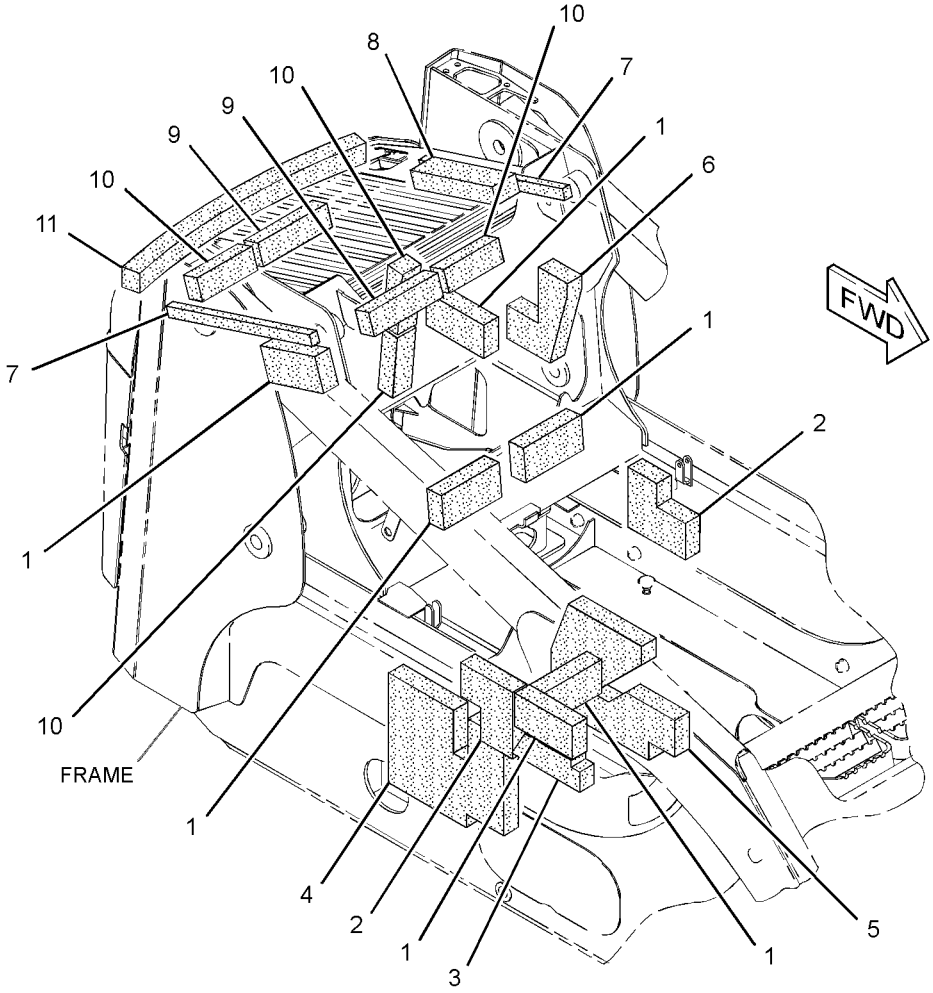


GRAPHIC #1 **<END>** g01448794

# *278-1279* SUPPRESSION GP-SOUND–BELT GUARD

**S/N: HEN6750-UP**
**EUROPEAN MARKET**
**PART OF 261-6165, 278-5351, 278-5373, 278-5418, 278-5448, 295-7064, 295-7071, 295-7154, 295-7170, 295-7171 CONVERSION AR-MACHINE**
**AN ATTACHMENT**

**SMCS-1801, 7076** **i02644571**

| NOTE | REF NO | GRAPHIC REF | PART NUMBER | QTY | PART NAME 1 2 3 4 5 6 (PRODUCT LEVEL) | SEE PAGE |
|---|---|---|---|---|---|---|
| CY | 1 | 1 | *218-0940* | 1 | GUARD GP-BELT | 37 |

C-CHANGE FROM PREVIOUS TYPE
Y-SEPARATE ILLUSTRATION

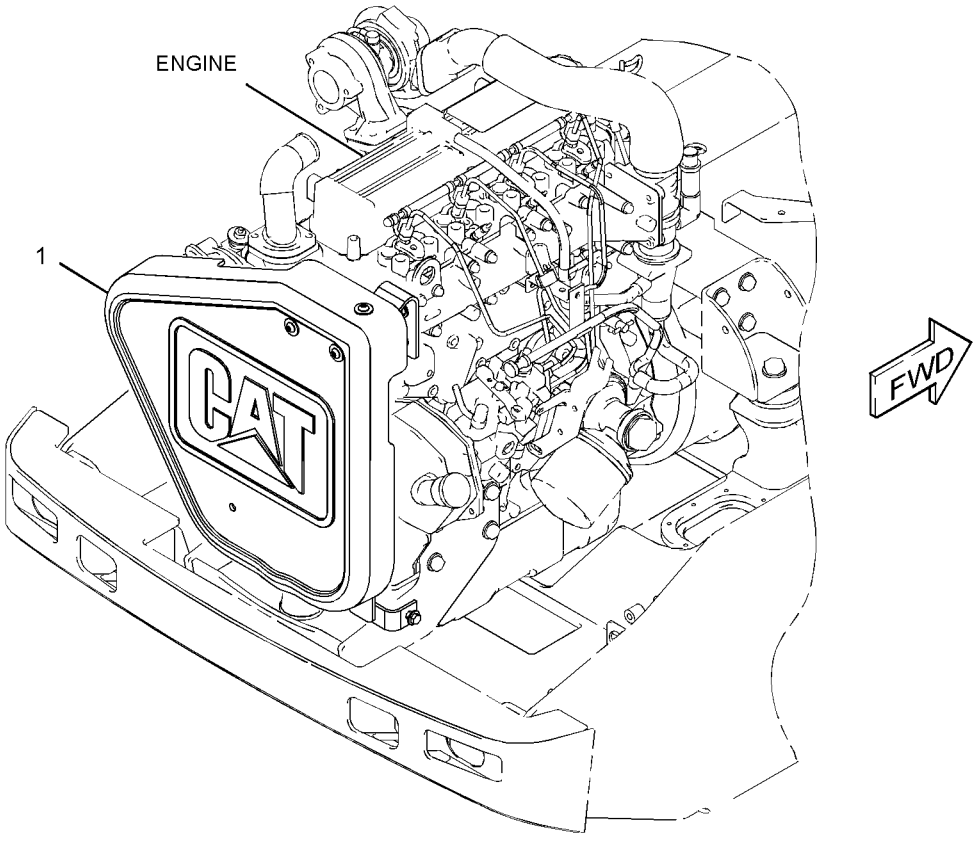


GRAPHIC #1 **<END>** g01304846

# *193-0447* ACCUMULATOR & MTG GP-HYDRAULIC

**S/N: HEN6750-UP**

**PART OF 278-1237, 295-7220 HYDRAULIC AR**

**SMCS-5077** **i02565521**

| NOTE | REF NO | GRAPHIC REF | PART NUMBER | QTY | PART NAME 1 2 3 4 5 6 (PRODUCT LEVEL) | SEE PAGE |
|---|---|---|---|---|---|---|
| | 1 | 1 | *149-0686* | 1 | ACCUMULATOR GP-HYDRAULIC (CHARGED) | |
| | | 1 | **227-8807** | 1 | ACCUMULATOR GP-HYDRAULIC (UNCHARGED) | |
| | 2 | 1 | *194-7632* | 1 | ELBOW AS | |
| | | 1 | **3K-0360** | 1 | SEAL-O-RING | |
| | | 1 | **194-7631** | 1 | ELBOW | |
| | 3 | 1 | **3K-0360** | 1 | SEAL-O-RING | |

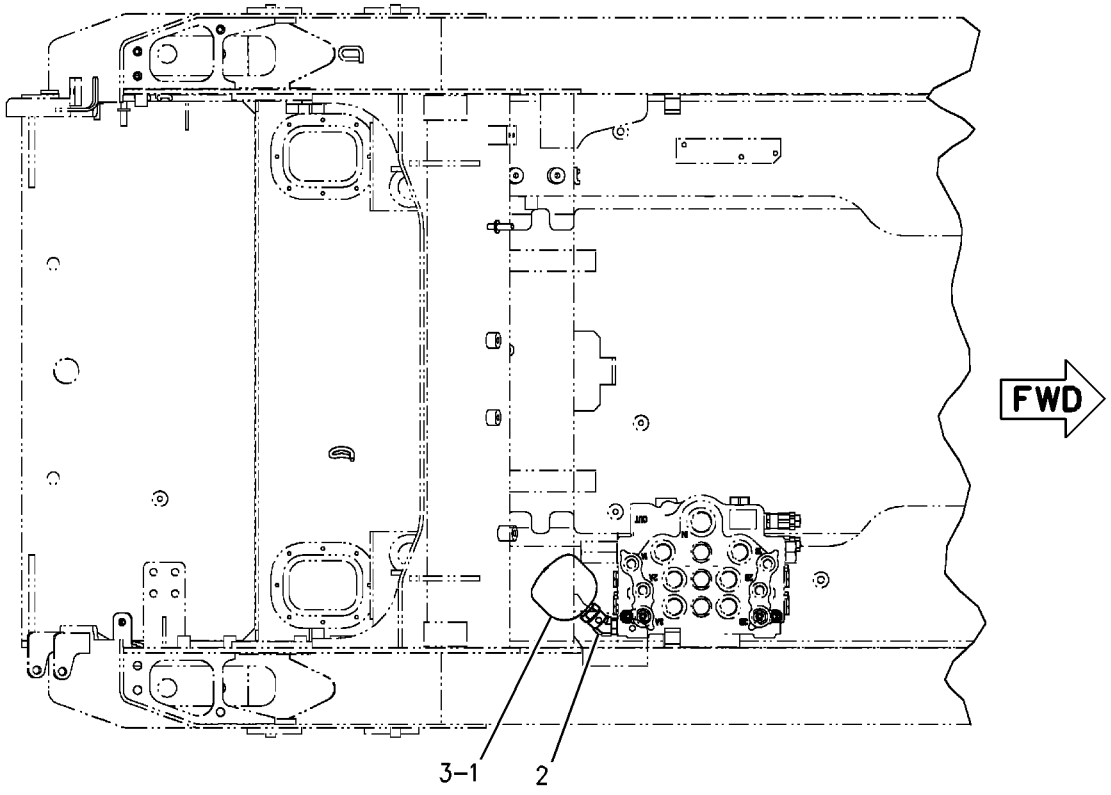


TOP VIEW

GRAPHIC #1 **<END>** g00902240

# HYDRAULIC SYSTEM

## *179-7001* ADAPTER GP-OIL LINE–PILOT

**S/N: HEN6750-UP**

**PART OF 218-5632 LINES GP-PILOT**

**SMCS-5057** **i01836385**

| NOTE | REF NO | GRAPHIC REF | PART NUMBER | QTY | PART NAME 1 2 3 4 5 6 (PRODUCT LEVEL) | SEE PAGE |
|---|---|---|---|---|---|---|
| | 1 | 1 | **179-7002** | 1 | ADAPTER AS | |
| | 2 | 1 | **214-7568** | 1 | SEAL-O-RING | |

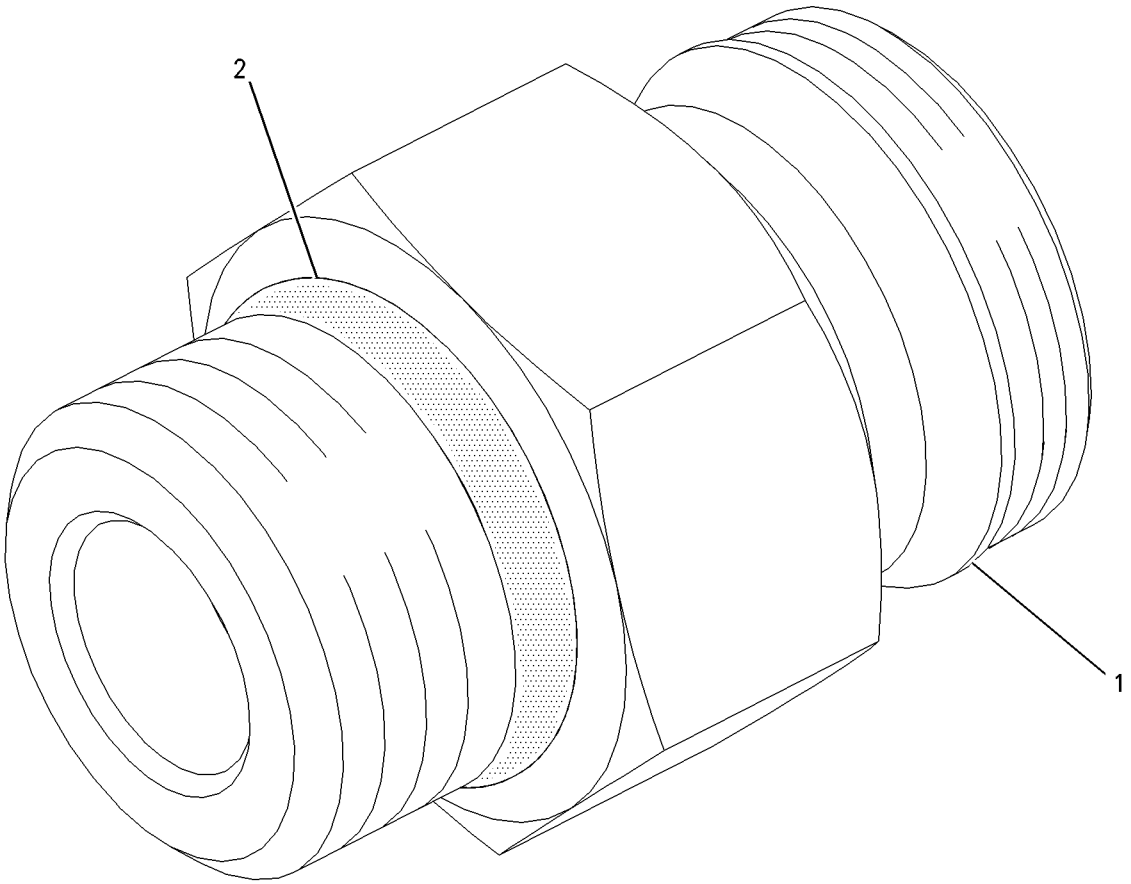


GRAPHIC #1 **<END>** g00938522

# *230-5406* CYLINDER & MTG GP-ANGLE BLADE

**S/N: HEN6750-UP**
**PART OF 177-1989, 177-1990 BLADE AR**
**AN ATTACHMENT**

**SMCS-6701** **i01860855**

| NOTE | REF NO | GRAPHIC REF | PART NUMBER | QTY | PART NAME 1 2 3 4 5 6 (PRODUCT LEVEL) | SEE PAGE |
|---|---|---|---|---|---|---|
| | 1 | 1 | **064-3843** | 1 | RING-SNAP | |
| | 2 | 1 | **210-0855** | 1 | PIN AS | |
| | 3 | 1 | **213-3943** | 1 | BUSHING | |
| Y | 4 | 1 | **225-9521** | 1 | CYLINDER GP-HYDRAULIC (ANGLE BLADE) | 242 |
| | 5 | 1 | **3B-8489** | 1 | FITTING-GREASE | |
| | 6 | 1 | **7X-7729** | 1 | WASHER (11X25X3-MM THK) | |
| M | 7 | 1 | **8T-4137** | 1 | BOLT (M10X1.5X20-MM) | |

M-METRIC PART
Y-SEPARATE ILLUSTRATION

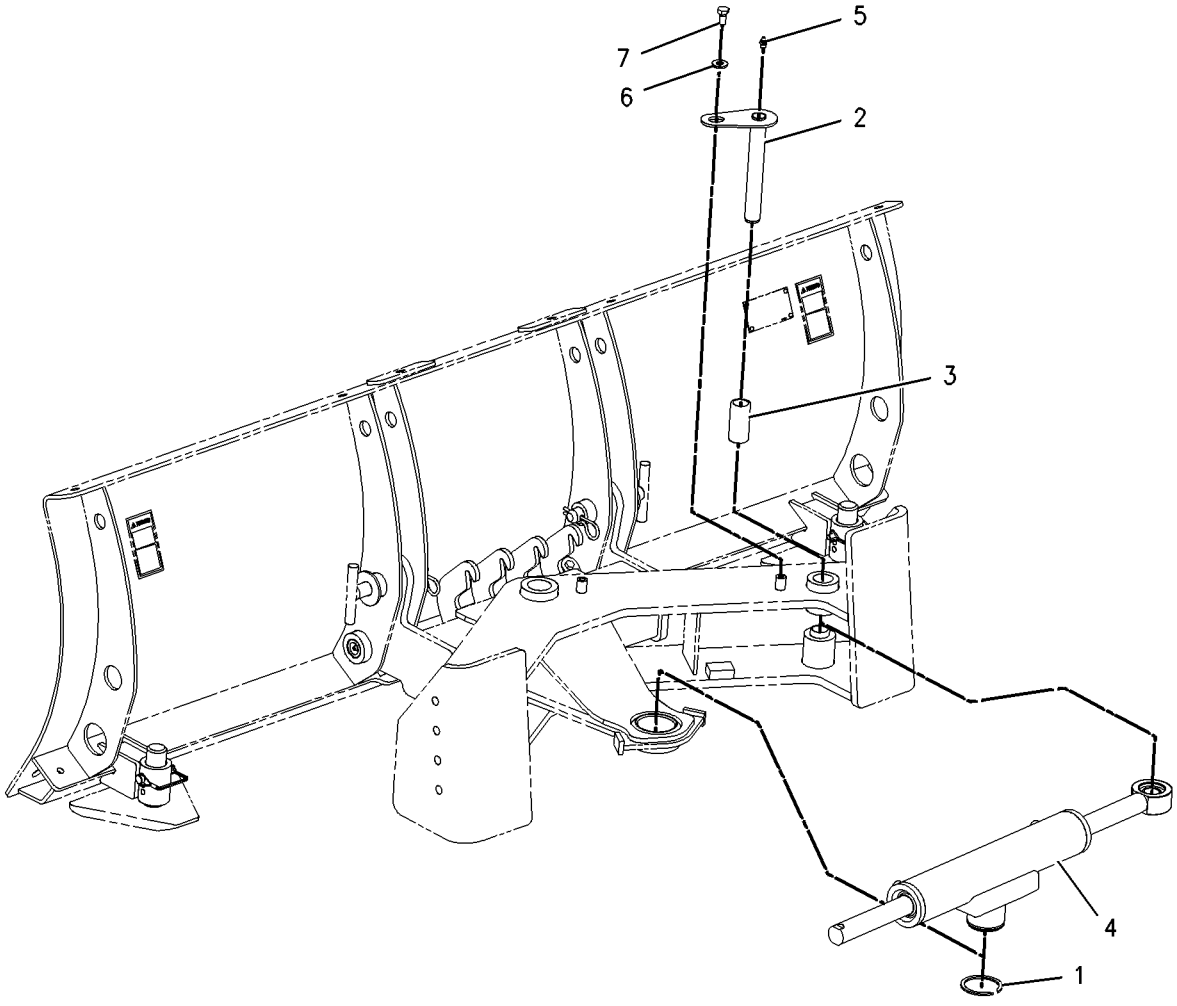


GRAPHIC #1 **<END>** g00978845

# HYDRAULIC SYSTEM

## *231-5274* CYLINDER & MTG GP-ANGLE BLADE

**S/N: HEN6750-UP**
**PART OF 231-5275, 231-5277 BLADE AR**
**AN ATTACHMENT**

**SMCS-6701** **i02785772**

| NOTE | REF NO | GRAPHIC REF | PART NUMBER | QTY | PART NAME 1 2 3 4 5 6 (PRODUCT LEVEL) | SEE PAGE |
|---|---|---|---|---|---|---|
| CJY | 1 | 1 | **274-9930** | 2 | CYLINDER GP-HYDRAULIC (LOWER RADIATOR) | 244 |
| CJY | 2 | 1 | **274-9931** | 1 | CYLINDER GP-HYDRAULIC (UPPER) | 245 |
| | 3 | 1 | **231-5266** | 6 | PIN AS | |
| | 4 | 1 | **238-0999** | 12 | SPACER (25.4X28.4X13-MM THK) | |
| M | 5 | 1 | **8T-4200** | 6 | BOLT (M8X1.25X16-MM) | |
| | 6 | 1 | **6V-8397** | 6 | SEAL-O-RING | |
| | 7 | 1 | **8T-4224** | 6 | WASHER-HARD (8.8X16X2-MM THK) | |
| | 8 | 1 | **244-1370** | 6 | SPACER (8.2X13X6-MM THK) | |
| | | | | | AVAILABLE REPAIR KIT(S): | |
| J | | | **266-6140** | 1 | KIT-SEAL (SWING CYLINDER) | |
| | | | | | (INCLUDES RINGS, SEALS & SETSCREW) | |

C-CHANGE FROM PREVIOUS TYPE
J-KIT MARKED J AVAILABLE FOR PART(S) MARKED J
M-METRIC PART
Y-SEPARATE ILLUSTRATION

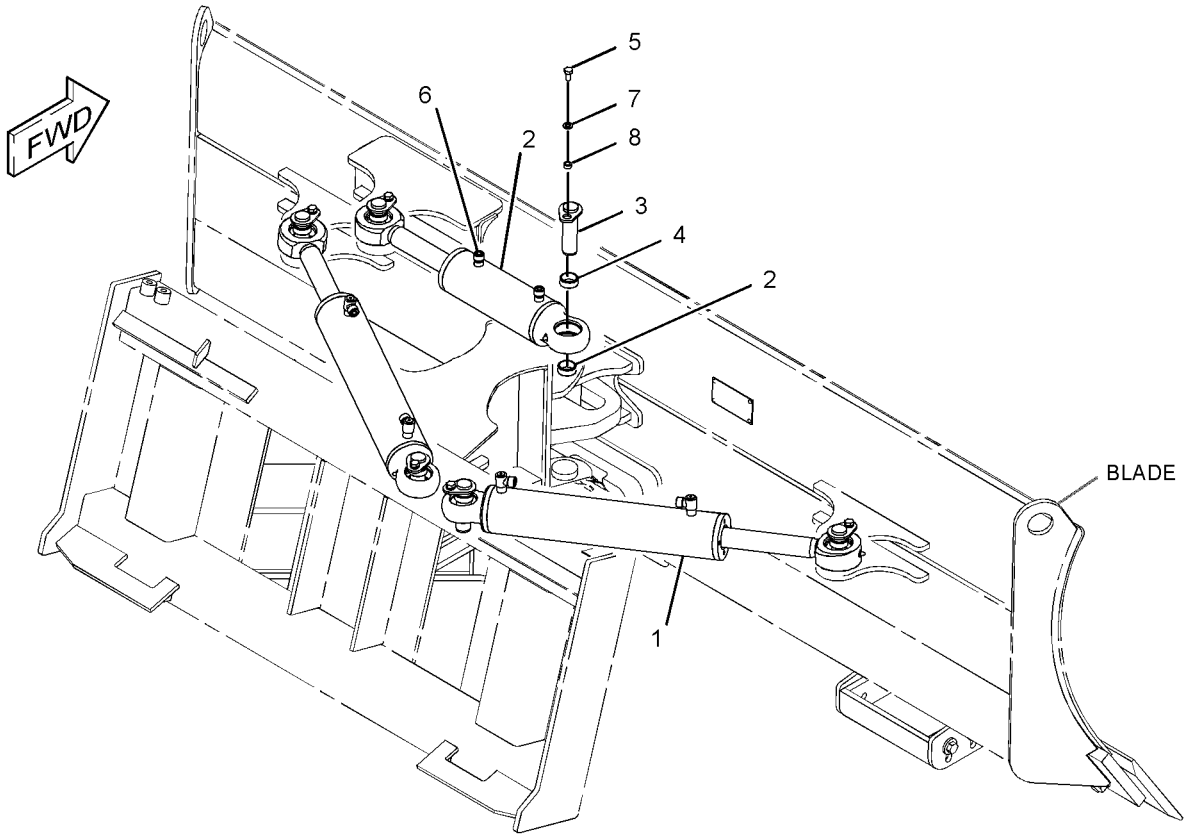


GRAPHIC #1 **<END>** g01270108

# *286-9248* CYLINDER & MTG GP-BUCKET

**S/N: HEN6750-UP**

**PART OF 286-9300, 286-9301 BUCKET AR-GRAPPLE**

**AN ATTACHMENT**

**SMCS-5457** **i02723716**

| NOTE | REF NO | GRAPHIC REF | PART NUMBER | QTY | PART NAME 1 2 3 4 5 6 (PRODUCT LEVEL) | SEE PAGE |
|---|---|---|---|---|---|---|
| | 1 | 1 | **157-0941** | 2 | PIN | |
| | 2 | 1 | **157-0942** | 2 | PIN | |
| | 3 | 1 | **286-9273** | 2 | PLATE | |
| | 4 | 1 | **286-9289** | 2 | PLATE AS | |
| | 5 | 1 | **3B-8489** | 2 | FITTING-GREASE | |
| | 6 | 1 | **4M-5285** | 4 | RING-RETAINING (EXTERNAL) | |
| M | 7 | 1 | **6V-9189** | 2 | LOCKNUT (M8X1.25-THD) | |
| | 8 | 1 | **7X-7729** | 8 | WASHER (11X25X3-MM THK) | |
| M | 9 | 1 | **8T-4195** | 8 | BOLT (M10X1.5X30-MM) | |
| M | 10 | 1 | **8T-6869** | 2 | BOLT (M8X1.25X60-MM) | |
| | 11 | 1 | **9X-6274** | 4 | WASHER (32.5X50X1.6-MM THK) | |

M-METRIC PART

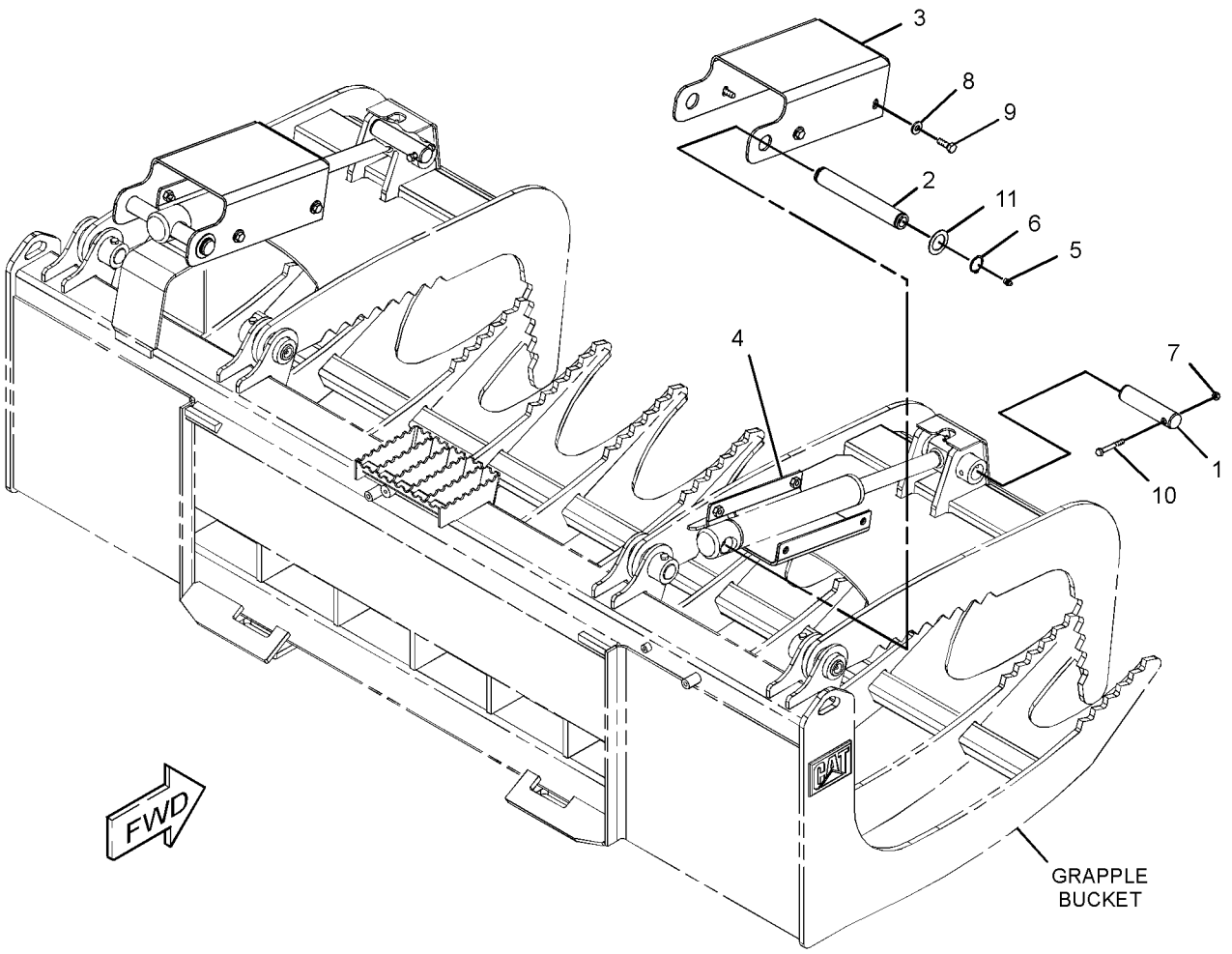


GRAPHIC #1 **<END>** g01372951

# HYDRAULIC SYSTEM

## *218-5799* CYLINDER & MTG GP-LIFT ARM

**S/N: HEN6750-UP**

**PART OF 295-7510, 295-7518 CHASSIS AR**

**SMCS-5102, 5104, 6118, 6119** **i02023878**

| NOTE | REF NO | GRAPHIC REF | PART NUMBER | QTY | PART NAME 1 2 3 4 5 6 (PRODUCT LEVEL) | SEE PAGE |
|---|---|---|---|---|---|---|
| | 1 | 2 | **142-8832** | 1 | PIN AS | |
| | 2 | 1 | **142-8880** | 1 | LEVER | |
| | 3 | 1 | **142-8881** | 1 | BRACKET | |
| | 4 | 1 | **142-9089** | 1 | SUPPORT AS (LIFT ARM BRACE) | |
| | 5 | 2 | **142-9090** | 4 | PIN AS | |
| | 6 | 2 | **142-9091** | 4 | PIN AS | |
| | 7 | 2 | **142-9093** | 2 | PIN | |
| | 8 | 1 | **142-9094** | 2 | PIN | |
| | 9 | 2 | **142-9142** | 2 | SPACER (39X57X18-MM THK) | |
| | 10 | 1 | **169-6712** | 1 | STEP AS | |
| Y | 11 | 1 | **230-3685** | 1 | CYLINDER GP-LIFT (LH) | 248 |
| Y | 12 | 2 | **230-3687** | 1 | CYLINDER GP-TILT (LH) | 250 |
| Y | 13 | 1 | **230-3695** | 1 | CYLINDER GP-LIFT (RH) | 249 |
| Y | 14 | 2 | **230-3697** | 1 | CYLINDER GP-TILT (RH) | 251 |
| | 15 | 1 | **1H-8134** | 4 | RING-RETAINING (EXTERNAL) | |
| | 16 | 2 | **3B-8489** | 10 | FITTING-GREASE | |
| | 17 | 1 | **3S-8536** | 1 | SPACER (0.406X0.656X0.38-IN THK) | |
| | 18 | 2 | **5H-9743** | 1 | GROMMET | |
| M | 19 | 2 | **6V-9189** | 2 | LOCKNUT (M8X1.25-THD) | |
| | 20 | 2 | **7X-7729** | 8 | WASHER (11X25X3-MM THK) | |
| M | 21 | 2 | **8T-3647** | 2 | BOLT (M8X1.25X80-MM) | |
| | 22 | 1 | **8T-4121** | 5 | WASHER-HARD (11X21X2.5-MM THK) | |
| M | 23 | 1 | **8T-4136** | 1 | BOLT (M10X1.5X25-MM) | |
| M | 24 | 1 | **8T-4189** | 1 | BOLT (M8X1.25X20-MM) | |
| M | 25 | 2 | **8T-4191** | 8 | BOLT (M10X1.5X16-MM) | |
| M | 26 | 1 | **8T-4196** | 4 | BOLT (M10X1.5X35-MM) | |
| | 27 | 1 | **8T-4224** | 1 | WASHER-HARD (8.8X16X2-MM THK) | |

M-METRIC PART
Y-SEPARATE ILLUSTRATION

*218-5799* **CYLINDER & MTG GP-LIFT ARM** ***(contd.)*** **i02023878**

REFER TO ALL ILLUSTRATIONS OF
THIS GROUP FOR AUXILIARY VIEWS

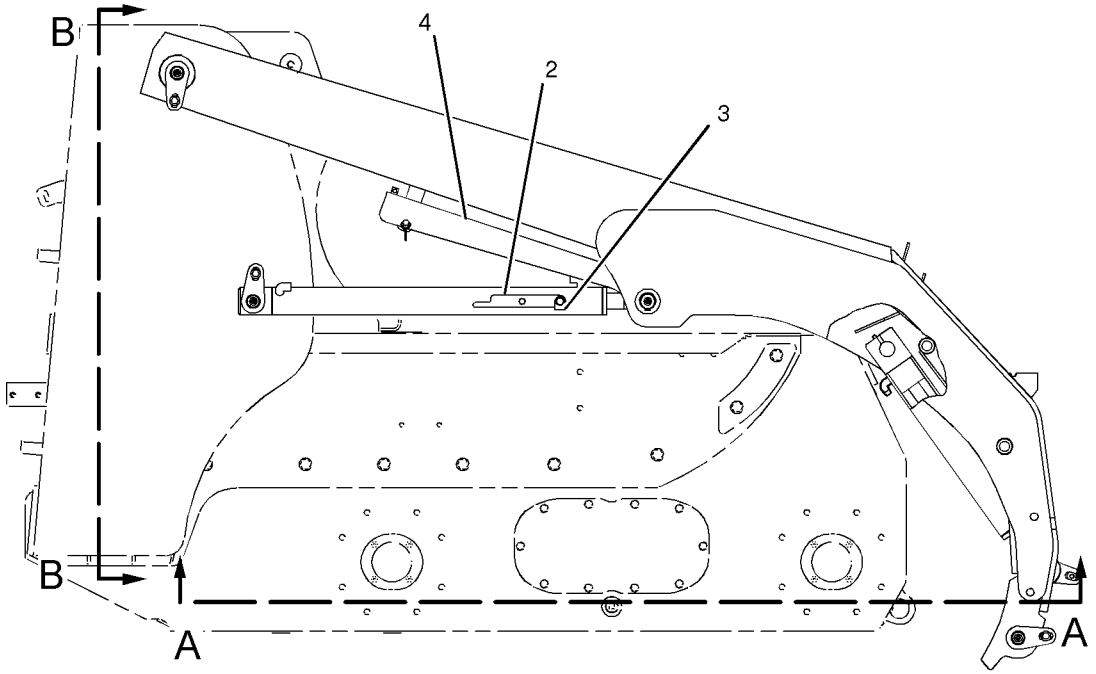


RIGHT SIDE VIEW

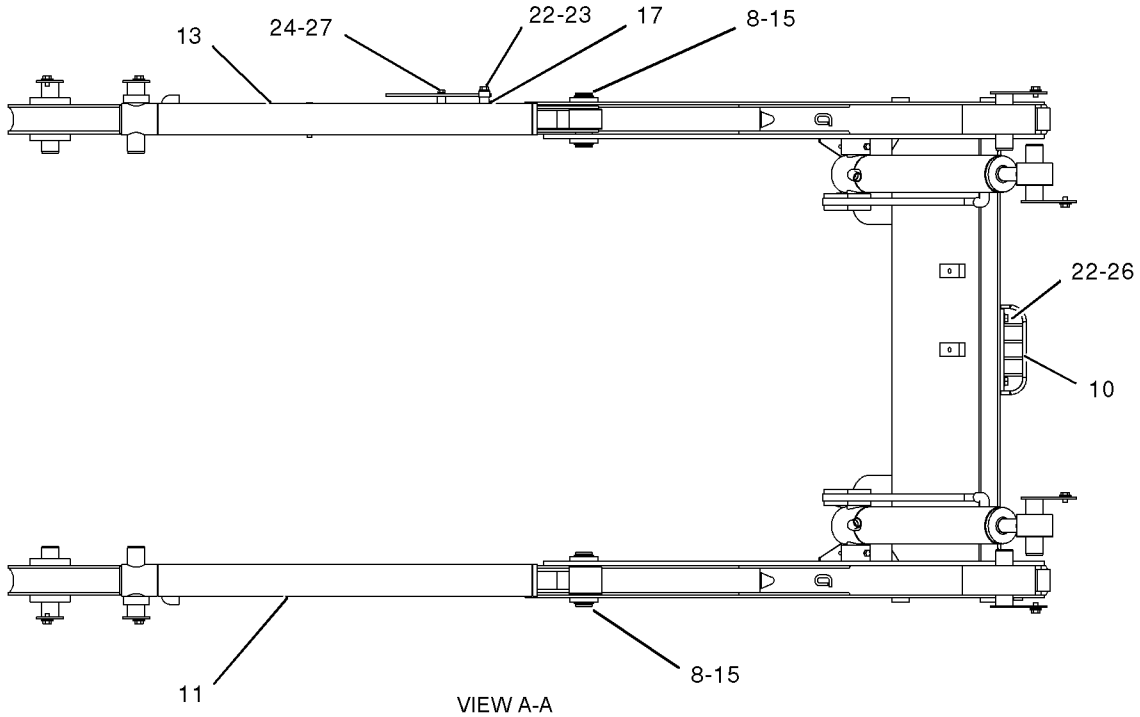


VIEW A-A

GRAPHIC #1

g01025275

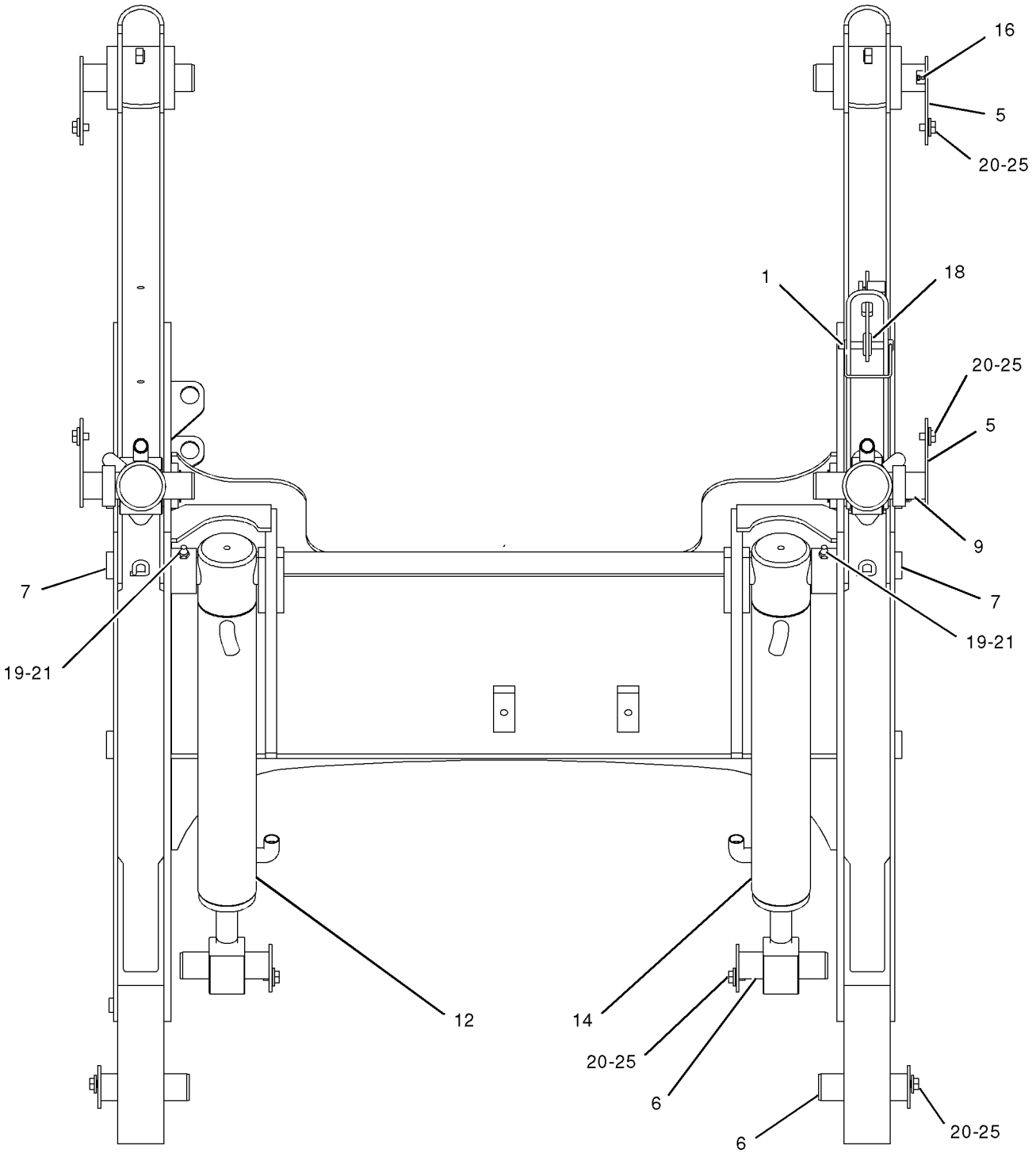


VIEW B-B

GRAPHIC #2

**<END>**

g01026623

# 293-6264 CYLINDER GP-BUCKET

**S/N: HEN6750-UP**
**50-MM (2-IN) BORE X 225-MM (8.9-IN) STROKE**
**PART OF 286-9300, 286-9301 BUCKET AR-GRAPPLE**
**AN ATTACHMENT**

**SMCS-5498** **i02723730**

| NOTE | REF NO | GRAPHIC REF | PART NUMBER | QTY | PART NAME 1 2 3 4 5 6 (PRODUCT LEVEL) | SEE PAGE |
|---|---|---|---|---|---|---|
| | 1 | 1 | **6B-6682** | 1 | NUT-FULL (3/4-16-THD) | |
| | 2 | 1 | **3B-8489** | 1 | FITTING-GREASE | |
| | 3 | 1 | **7J-0204** | 2 | SEAL-O-RING | |
| | 4 | 1 | **9S-8007** | 2 | PLUG | |
| | | | | | AVAILABLE REPAIR KIT(S): | |
| | | | **262-0941** | 1 | KIT-SEAL | |
| | | | | | (INCLUDES RINGS, SEALS & SEAL O-RINGS) | |

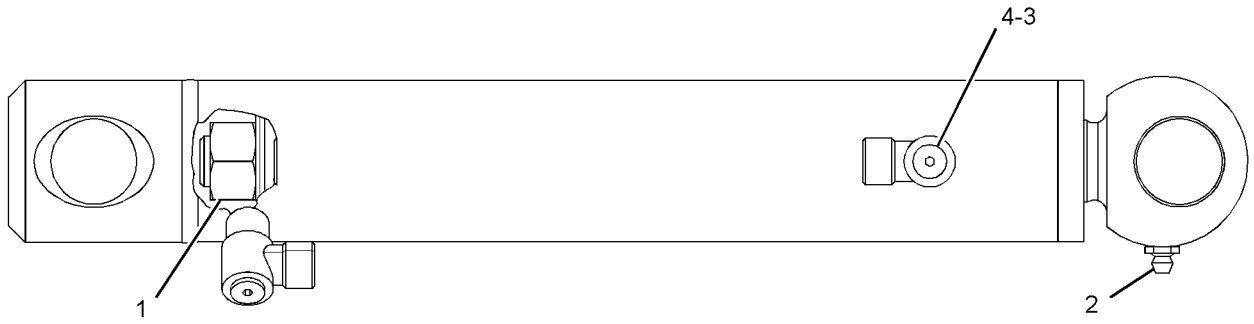


GRAPHIC #1 **<END>** g01373044

# HYDRAULIC SYSTEM

## 164-9295 CYLINDER GP-GRAPPLE

**S/N: HEN6750-UP**
**40-MM (1.6-IN) BORE X 200-MM (7.9-IN) STROKE**
**PART OF 285-6116 GRAPPLE GP-UTILITY**
**AN ATTACHMENT**

**SMCS-5457** **i01217084**

| NOTE | REF NO | GRAPHIC REF | PART NUMBER | QTY | PART NAME 1 2 3 4 5 6 (PRODUCT LEVEL) | SEE PAGE |
|---|---|---|---|---|---|---|
| | 1 | 1 | **3B-8489** | 1 | FITTING-GREASE | |
| | | | | | AVAILABLE REPAIR KIT(S): | |
| | | | **172-5285** | 1 | KIT-SEAL | |
| | | | | | (INCLUDES WIPER RING, PISTON GUIDE RING, PISTON SEAL AND O-RINGS) | |

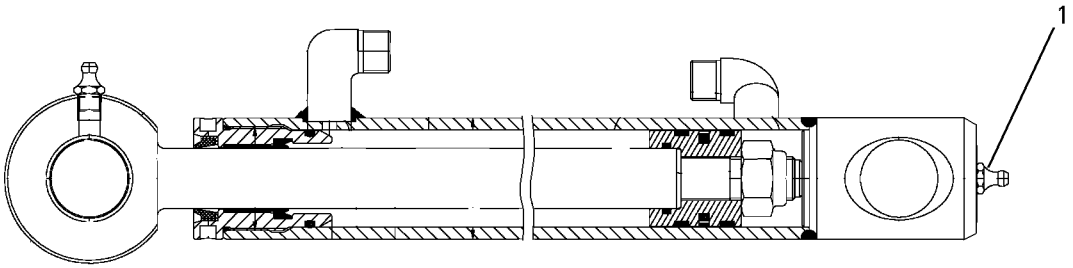


GRAPHIC #1 **<END>** g00604934

# 192-2640 CYLINDER GP-HYDRAULIC–COUPLER

**S/N: HEN6750-UP**
**35-MM (1.4-IN) BORE X 103.5-MM (4.1-IN) STROKE**
**PART OF 215-3962, 215-3963 CYLINDER & LINK GP-COUPLER, 218-6755 KIT-QUICK COUPLER CONVERSION**
**AN ATTACHMENT**

**SMCS-5362, 7562** **i01672784**

| NOTE | PART NUMBER | QTY | PART NAME 1 2 3 4 5 6 (PRODUCT LEVEL) | SEE PAGE |
|---|---|---|---|---|
| | | | (NO SERVICED PARTS) | |

**<END>**

## *225-9521* CYLINDER GP-HYDRAULIC—ANGLE BLADE

**S/N: HEN6750-UP**
**63-MM (2.5-IN) BORE X 300-MM (11.8-IN) STROKE**
**PART OF 230-5406 CYLINDER & MTG GP-ANGLE BLADE**
**AN ATTACHMENT**

**SMCS-5362, 7562** **i02757293**

| NOTE | REF NO | GRAPHIC REF | PART NUMBER | QTY | PART NAME 1 2 3 4 5 6 (PRODUCT LEVEL) | SEE PAGE |
|---|---|---|---|---|---|---|
| | 1 | 1 | **214-5555** | 1 | ROD END AS | |
| | | | | | AVAILABLE REPAIR KIT(S): | |
| | | | **177-1958** | 1 | KIT-SEAL | |
| | | | | | (INCLUDES O-RINGS,SEALS,BACK RINGS,PISTON GUIDE RING.ROD GUIDE RING AND WIPER RINGS) | |

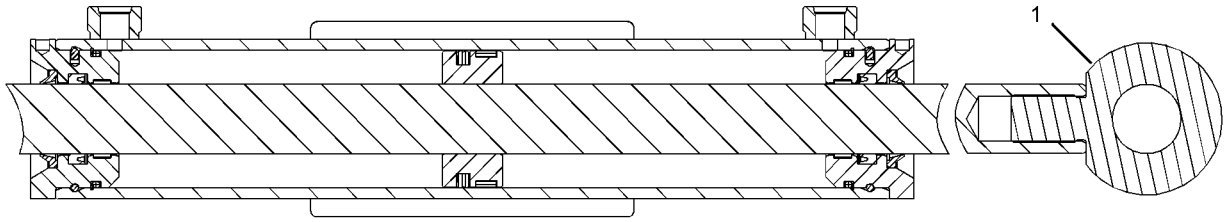


GRAPHIC #1 **<END>** g01282929

# HYDRAULIC SYSTEM

## 255-0943 CYLINDER GP-HYDRAULIC

**S/N: HEN6750-UP**
**40-MM (1.6-IN) BORE X 200-MM (7.9-IN) STROKE**
**PART OF 285-6116 GRAPPLE GP-UTILITY**
**AN ATTACHMENT**

**SMCS-5362, 7562** **i02888528**

| NOTE | REF NO | GRAPHIC REF | PART NUMBER | QTY | PART NAME 1 2 3 4 5 6 (PRODUCT LEVEL) | SEE PAGE |
|---|---|---|---|---|---|---|
| | 1 | 1 | **254-9097** | 1 | BEARING-SLEEVE | |
| | 2 | 1 | **3B-8489** | 2 | FITTING-GREASE | |
| | 3 | 1 | **7J-0204** | 2 | SEAL-O-RING | |
| | 4 | 1 | **9S-8007** | 2 | PLUG | |
| | 5 | 1 | **2K-4821** | 1 | LOCKNUT (5/8-18-THD) | |
| | | | | | AVAILABLE REPAIR KIT(S): | |
| | | | **286-3591** | 1 | KIT-SEAL | |
| | | | | | (INCLUDES SEALS, SEAL-O-RINGS & RING BACK-UPS) | |

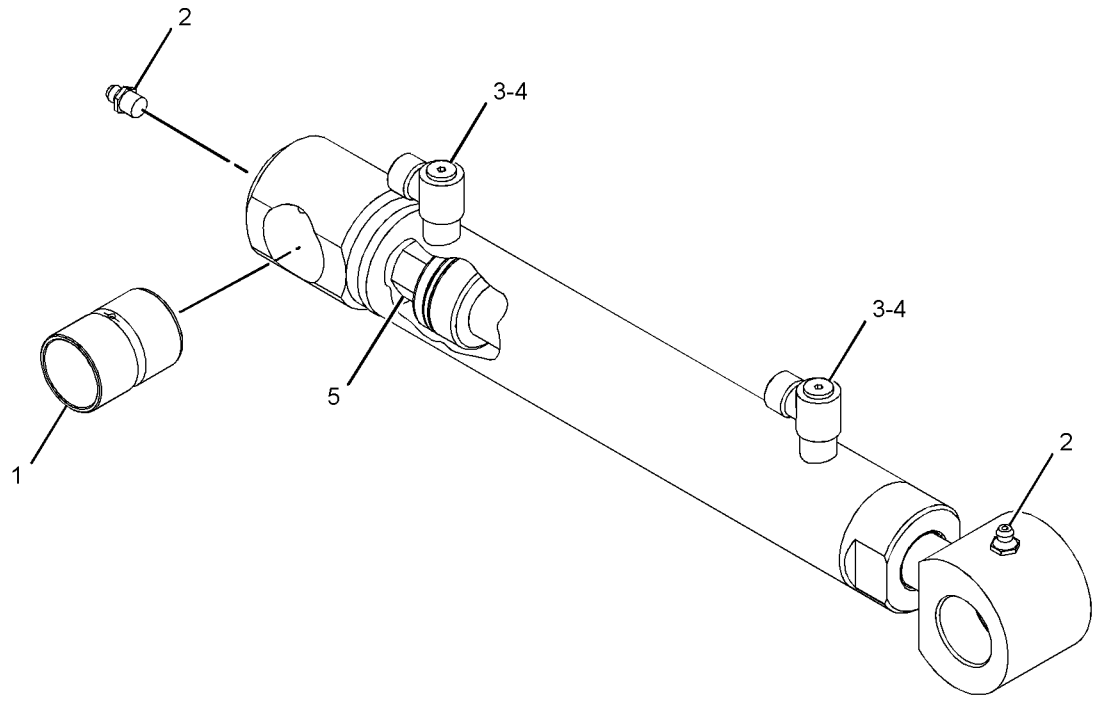


GRAPHIC #1 **<END>** g01439380

## 274-9930 CYLINDER GP-HYDRAULIC

**S/N: HEN6750-UP**
**70-MM (2.8-IN) BORE X 314-MM (12.4-IN) STROKE**
**PART OF 231-5274 CYLINDER & MTG GP-ANGLE BLADE**
**AN ATTACHMENT**

**SMCS-5362, 7562** **i02785773**

| NOTE | REF NO | GRAPHIC REF | PART NUMBER | QTY | PART NAME 1 2 3 4 5 6 (PRODUCT LEVEL) | SEE PAGE |
|---|---|---|---|---|---|---|
| | 1 | 1 | **7D-8508** | 1 | NUT-FULL (7/8-14-THD) | |
| | 2 | 1 | **8Q-6027** | 2 | BEARING-SPHERICAL | |
| | 3 | 1 | **027-1287** | 2 | FITTING-GREASE | |
| | 4 | 1 | **278-4524** | 1 | ROD AS | |
| | 5 | 1 | **278-4875** | 2 | RING-RETAINING | |
| | 6 | 1 | **7J-0204** | 2 | SEAL-O-RING | |
| | 7 | 1 | **9S-8007** | 2 | PLUG | |
| | | | | | AVAILABLE REPAIR KIT(S): | |
| | | | **266-6140** | 1 | KIT-SEAL (SWING CYLINDER) | |
| | | | | | (INCLUDES SEALS, RINGS & SETSCREW) | |

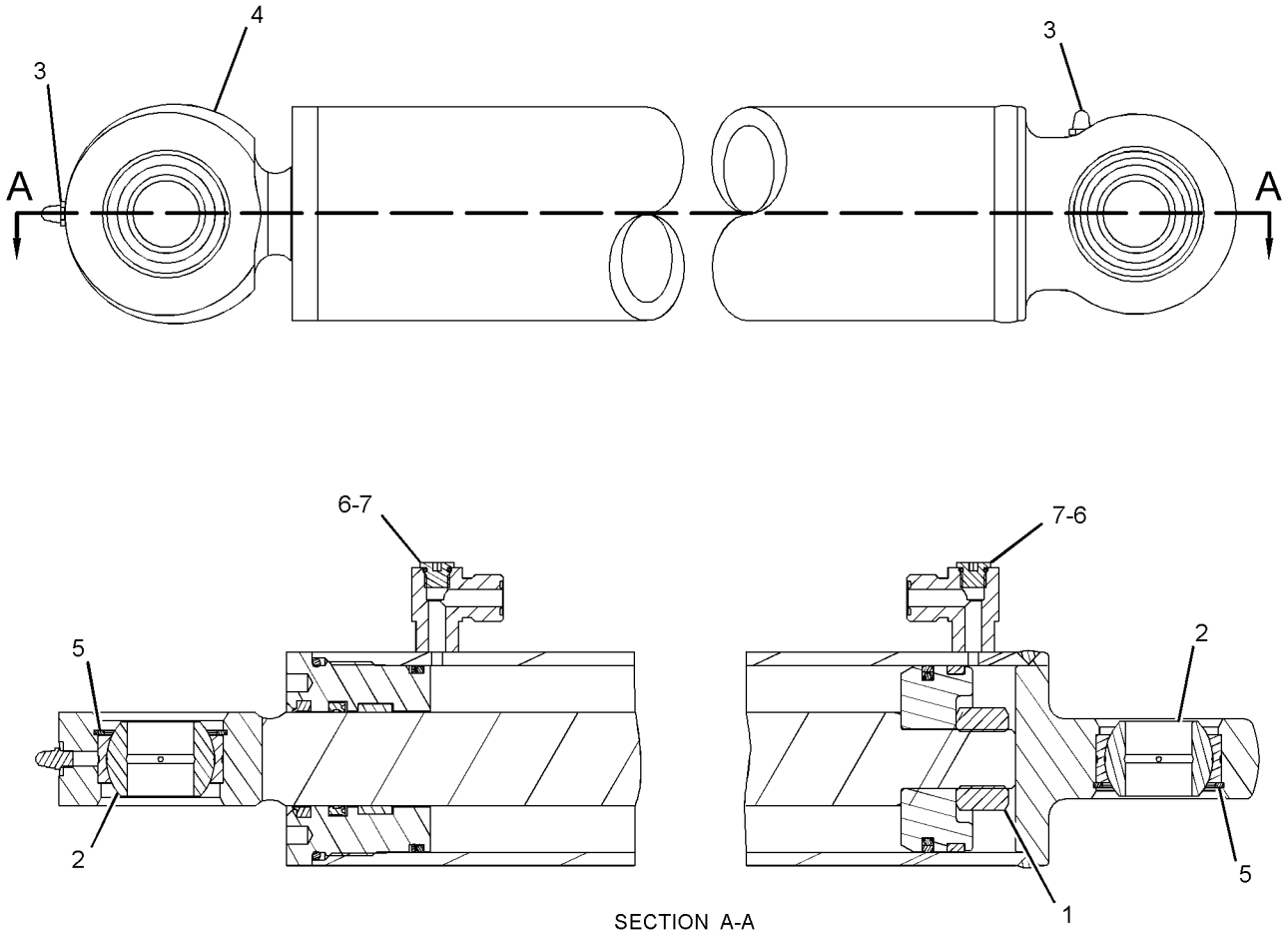


GRAPHIC #1 **<END>** g01305293

# 274-9931 CYLINDER GP-HYDRAULIC

**S/N: HEN6750-UP**
**70-MM (2.8-IN) BORE X 120-MM (4.7-IN) STROKE**
**PART OF 231-5274 CYLINDER & MTG GP-ANGLE BLADE**
**AN ATTACHMENT**

**SMCS-5362, 7562** **i02785774**

| NOTE | REF NO | GRAPHIC REF | PART NUMBER | QTY | PART NAME 1 2 3 4 5 6 (PRODUCT LEVEL) | SEE PAGE |
|---|---|---|---|---|---|---|
| | 1 | 1 | **7D-8508** | 1 | NUT-FULL (7/8-14-THD) | |
| | 2 | 1 | **8Q-6027** | 2 | BEARING-SPHERICAL | |
| | 3 | 1 | **027-1287** | 2 | FITTING-GREASE | |
| | 4 | 1 | **278-4525** | 1 | ROD AS | |
| | 5 | 1 | **278-4875** | 2 | RING-RETAINING | |
| | | | | | AVAILABLE REPAIR KIT(S): | |
| | | | **266-6140** | 1 | KIT-SEAL | |
| | | | | | (INCLUDES RINGS, SEALS & SCREW) | |

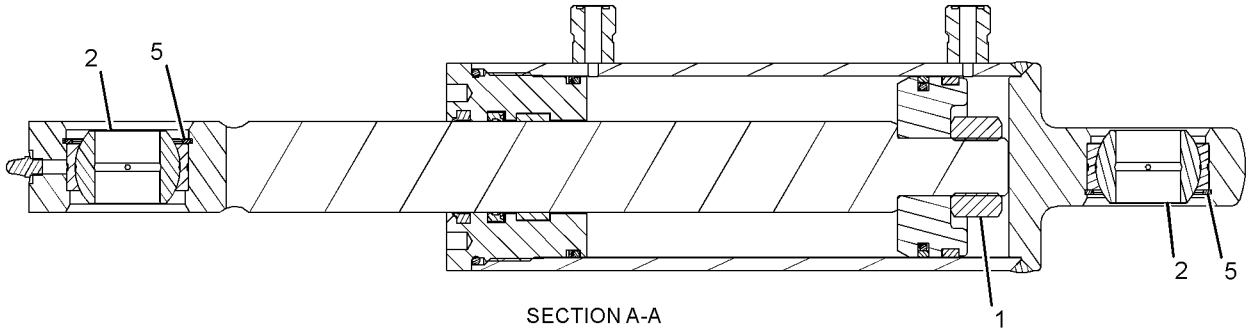


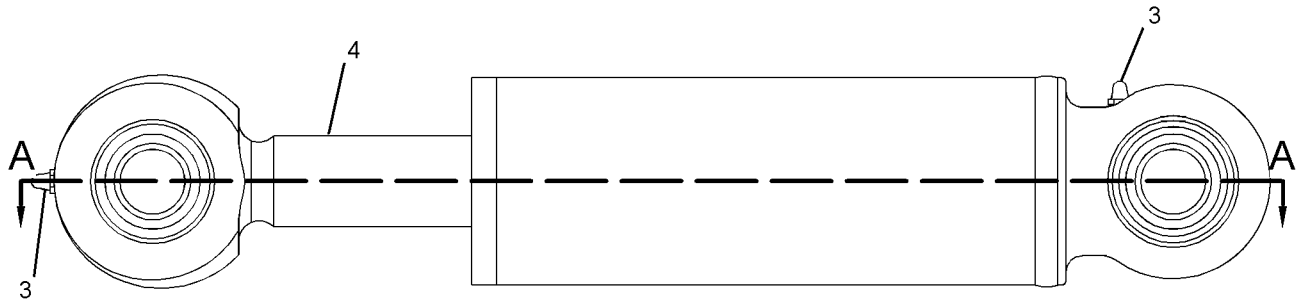


GRAPHIC #1 **<END>** g01270194

# 278-1969 CYLINDER GP-HYDRAULIC

**S/N: HEN6750-UP**
**60-MM (2.4-IN) BORE X 200-MM (7.9-IN) STROKE**
**PART OF 279-5382, 279-5390, 279-5398, 279-5403 BUCKET AR-MULTIPURPOSE AN ATTACHMENT**

**SMCS-5362, 7562** **i02712982**

| NOTE | REF NO | GRAPHIC REF | PART NUMBER | QTY | PART NAME 1 2 3 4 5 6 (PRODUCT LEVEL) | SEE PAGE |
|---|---|---|---|---|---|---|
| | 1 | 1 | **7D-8508** | 1 | NUT-FULL (7/8-14-THD) | |
| | 2 | 1 | **254-9097** | 1 | BEARING-SLEEVE | |
| | 3 | 1 | **3B-8489** | 1 | FITTING-GREASE | |
| | | | | | AVAILABLE REPAIR KIT(S): | |
| | | | **278-1970** | 1 | KIT-SEAL (HYDRAULIC CYLINDER) | |
| | | | | | (INCLUDES RINGS & SEALS) | |

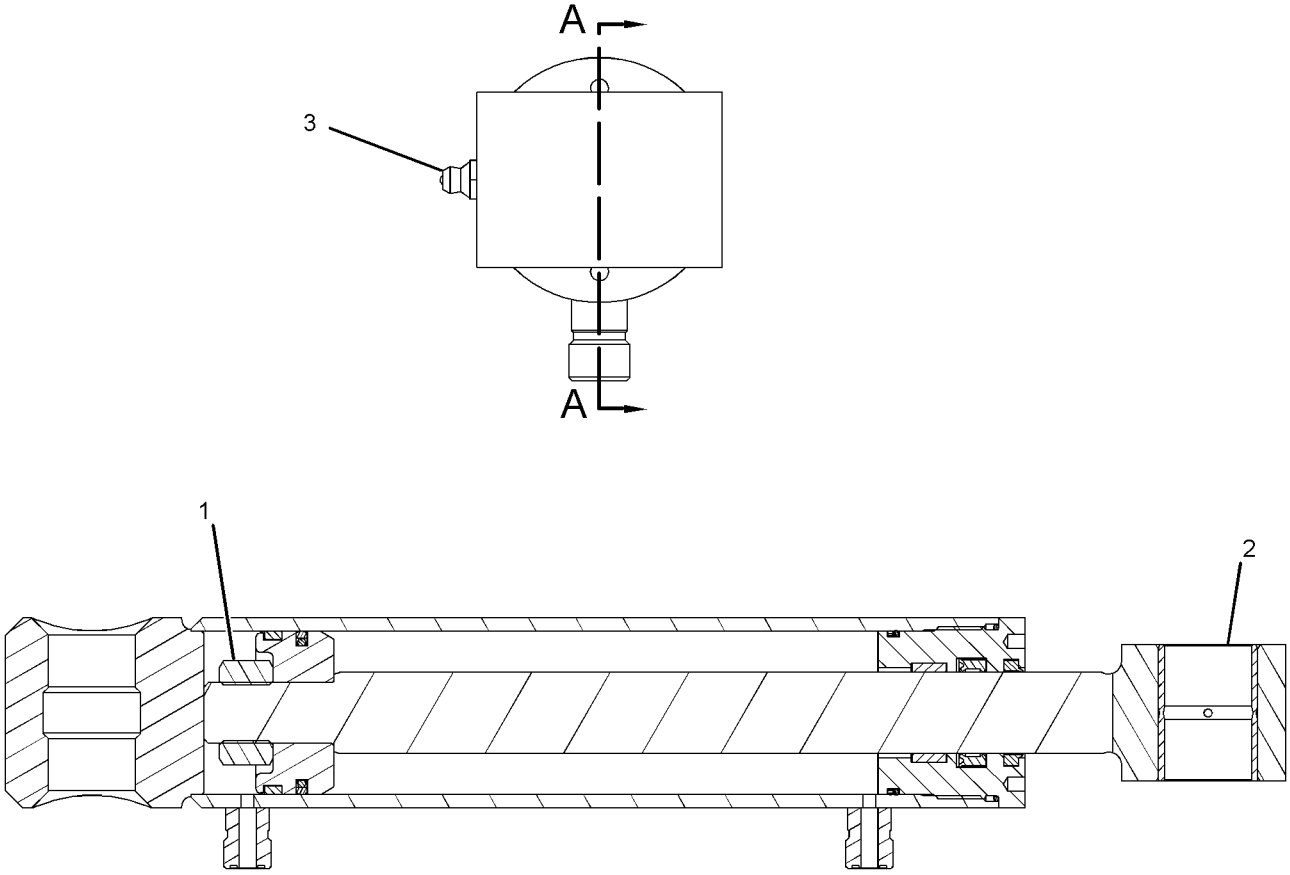


SECTION A-A

GRAPHIC #1 **<END>** g01281180

# 278-1975 CYLINDER GP-HYDRAULIC

**S/N: HEN6750-UP**
**60-MM (2.4-IN) BORE X 200-MM (7.9-IN) STROKE**
**PART OF 157-7223, 157-7224, 157-7225, 217-6229 BUCKET AR-GRAPPLE, 279-5350, 279-5360 FORK AR-GRAPPLE**
**AN ATTACHMENT**

**SMCS-5362, 7562** **i02712984**

| NOTE | REF NO | GRAPHIC REF | PART NUMBER | QTY | PART NAME 1 2 3 4 5 6 (PRODUCT LEVEL) | SEE PAGE |
|---|---|---|---|---|---|---|
| | 1 | 1 | **7D-8508** | 1 | NUT-FULL (7/8-14-THD) | |
| | 2 | 1 | **254-9097** | 1 | BEARING-SLEEVE | |
| | 3 | 1 | **255-0942** | 1 | BEARING-SLEEVE | |
| | 4 | 1 | **3B-8489** | 1 | FITTING-GREASE | |
| | 5 | 1 | **7J-0204** | 2 | SEAL-O-RING | |
| | 6 | 1 | **9S-8007** | 2 | PLUG | |
| | | | | | AVAILABLE REPAIR KIT(S): | |
| | | | **278-1970** | 1 | KIT-SEAL (HYDRAULIC CYLINDER) | |
| | | | | | (INCLUDES RINGS, SEALS & SEAL-O-RINGS) | |

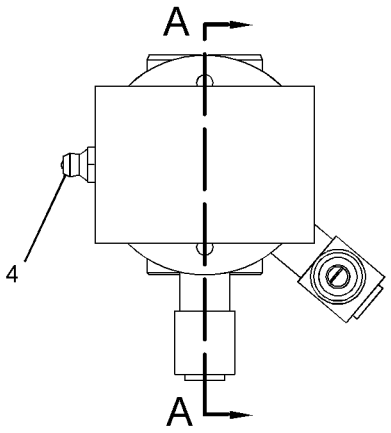


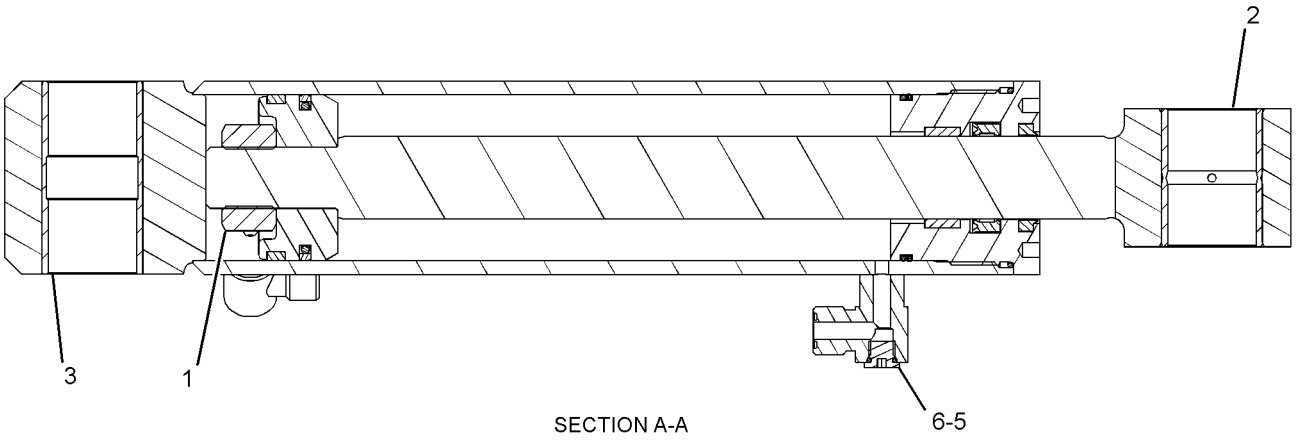


SECTION A-A

GRAPHIC #1 **<END>** g01280909

# HYDRAULIC SYSTEM

## 230-3685 CYLINDER GP-LIFT–LH

**S/N: HEN6750-UP**
**60-MM (2.4-IN) BORE X 715-MM (28.2-IN) STROKE**
**PART OF 218-5799 CYLINDER & MTG GP-LIFT ARM**

**SMCS-5102** **i01955932**

| NOTE | REF NO | GRAPHIC REF | PART NUMBER | QTY | PART NAME 1 2 3 4 5 6 (PRODUCT LEVEL) | SEE PAGE |
|---|---|---|---|---|---|---|
| | | | | | AVAILABLE REPAIR KIT(S): | |
| | | | **218-6823** | 1 | KIT-SEAL | |
| | | | | | (INCLUDES SEALS, PISTON WEAR BAND, O-RINGS & BACK-UP RING) | |

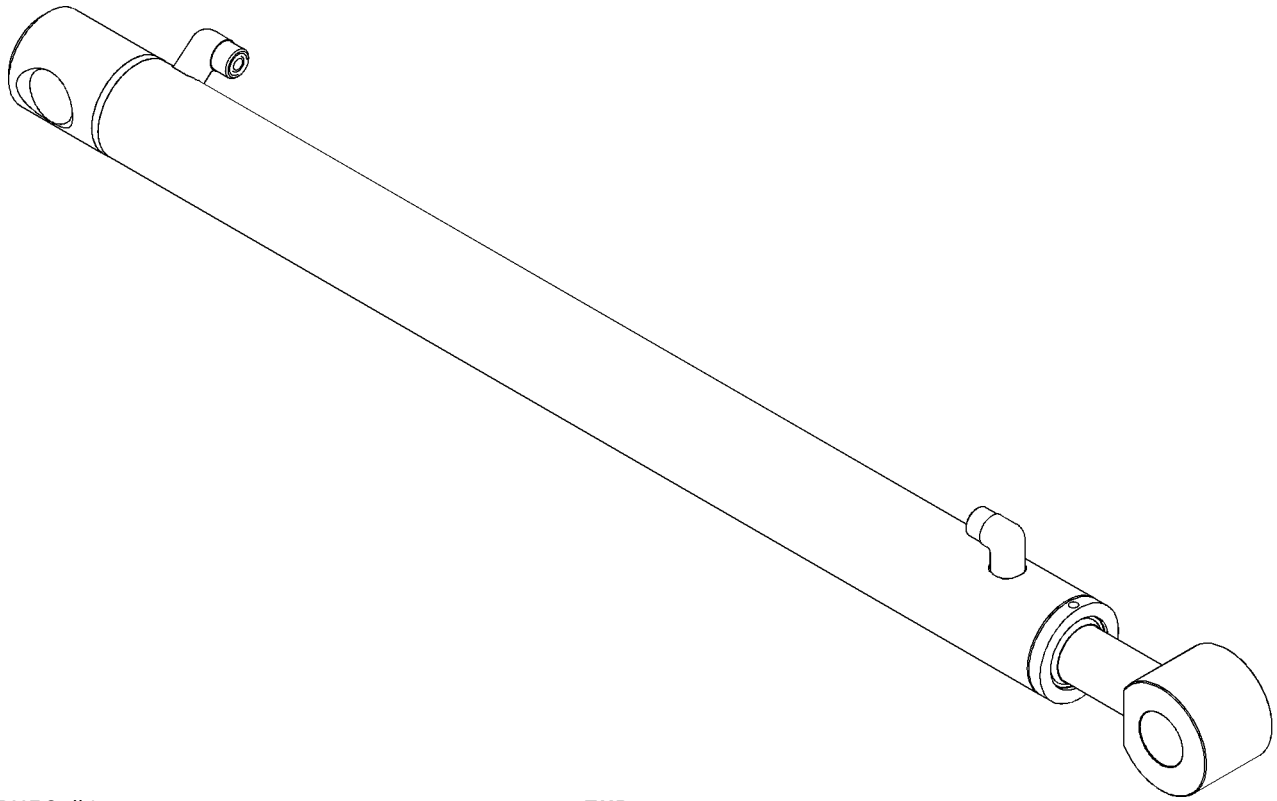

GRAPHIC #1 **<END>** g01017307

# 230-3695 CYLINDER GP-LIFT–RH

**S/N: HEN6750-UP**
**60-MM (2.4-IN) BORE X 715-MM (28.2-IN) STROKE**
**PART OF 218-5799 CYLINDER & MTG GP-LIFT ARM**

**SMCS-5102** **i01955934**

| NOTE | REF NO | GRAPHIC REF | PART NUMBER | QTY | PART NAME 1 2 3 4 5 6 (PRODUCT LEVEL) | SEE PAGE |
|---|---|---|---|---|---|---|
| | | | | | AVAILABLE REPAIR KIT(S): | |
| | | | **218-6823** | 1 | KIT-SEAL | |
| | | | | | (INCLUDES SEALS, PISTON WEAR BAND, O-RINGS & BACK-UP RING) | |

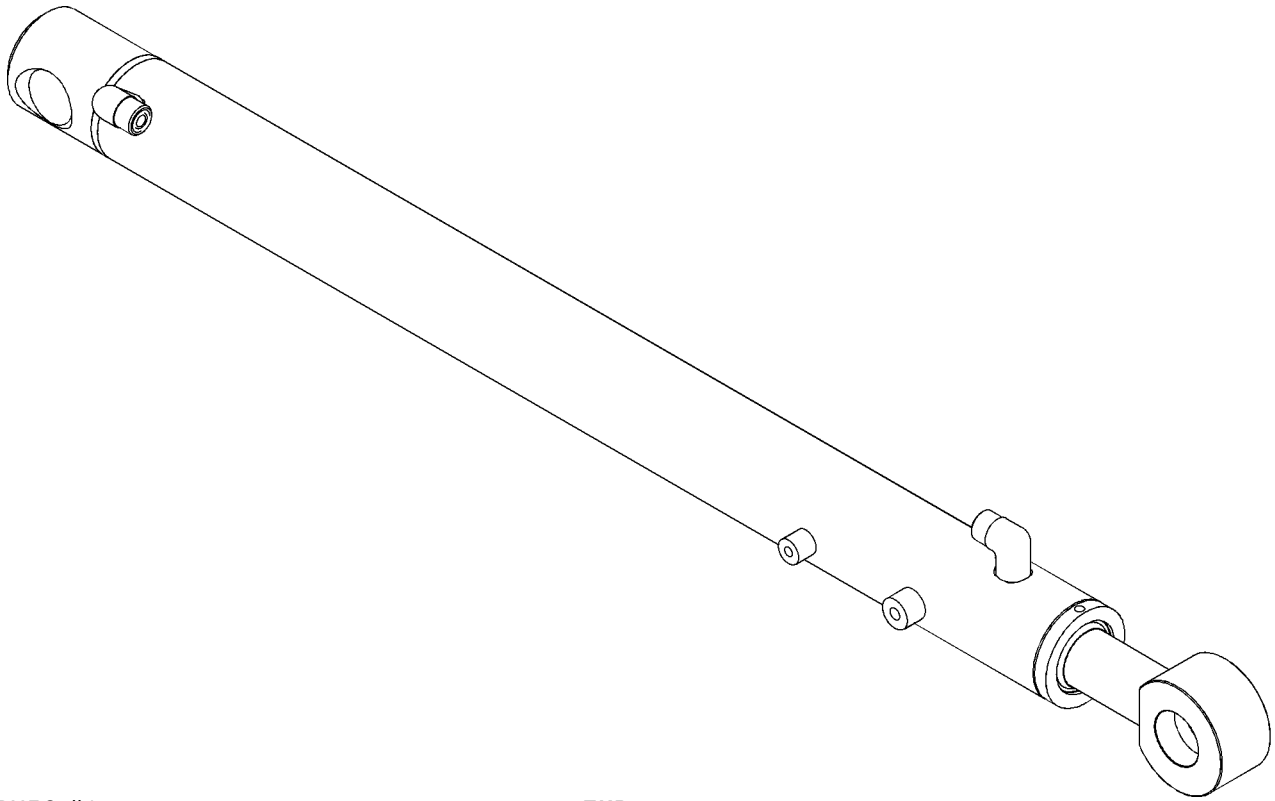

GRAPHIC #1 **<END>** g01017301

# HYDRAULIC SYSTEM

## 230-3687 CYLINDER GP-TILT–LH

**S/N: HEN6750-UP**
**70-MM (2.76-IN) BORE X 354-MM (13.94-IN) STROKE**
**PART OF 218-5799 CYLINDER & MTG GP-LIFT ARM**

**SMCS-5104** **i01936135**

| NOTE | REF NO | GRAPHIC REF | PART NUMBER | QTY | PART NAME 1 2 3 4 5 6 (PRODUCT LEVEL) | SEE PAGE |
|---|---|---|---|---|---|---|
| F | | 1 | **3B-8489** | 1 | FITTING-GREASE | |
| | | | | | AVAILABLE REPAIR KIT(S): | |
| | | | **218-6822** | 1 | KIT-SEAL | |
| | | | | | (INCLUDES PISTON SEAL, PISTON WEAR BAND, O-RINGS, BACK UP RINGS, WIPER SEAL & ROD SEAL) | |

F-NOT SHOWN

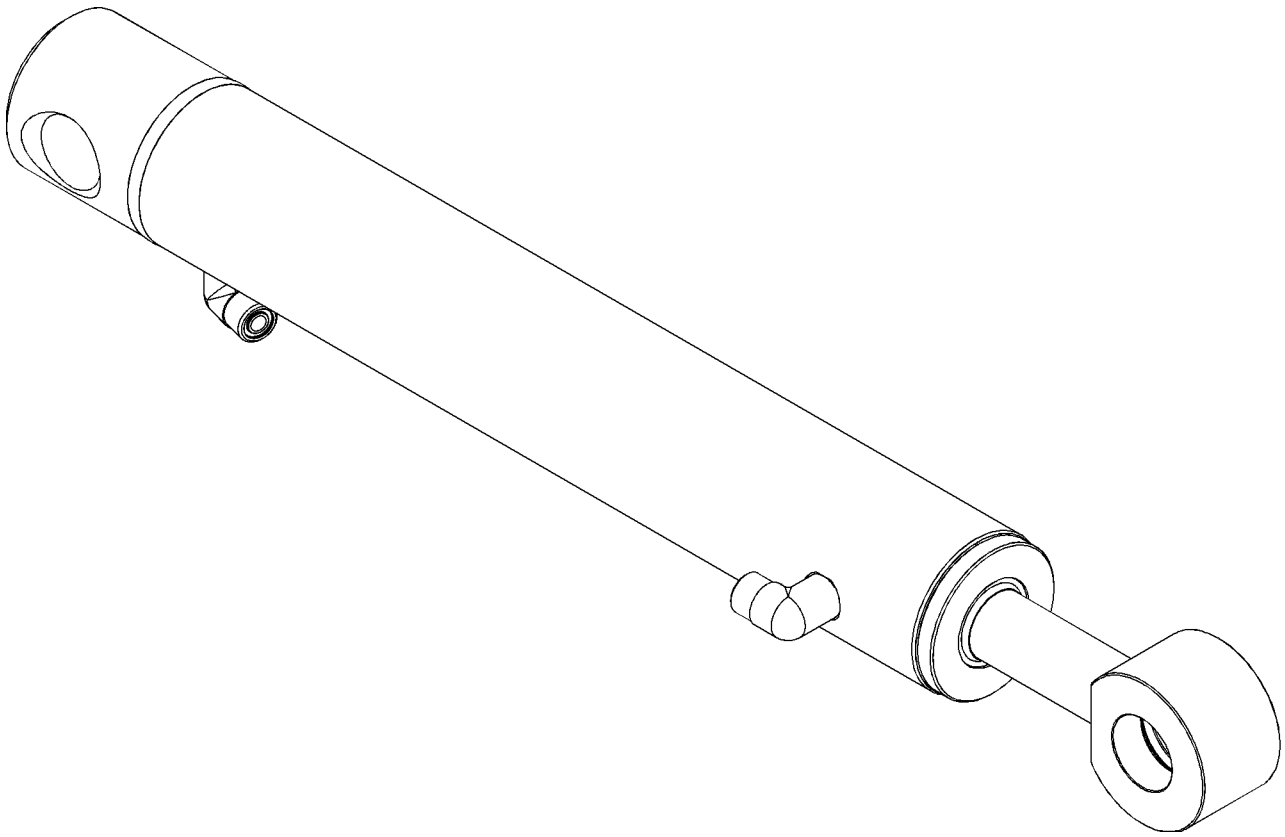

GRAPHIC #1 **<END>** g01011084

# HYDRAULIC SYSTEM

## 230-3697 CYLINDER GP-TILT–RH

**S/N: HEN6750-UP**
**70-MM (2.76-IN) BORE X 354-MM (13.94-IN) STROKE**
**PART OF 218-5799 CYLINDER & MTG GP-LIFT ARM**

**SMCS-5104** **i01936134**

| NOTE | REF NO | GRAPHIC REF | PART NUMBER | QTY | PART NAME 1 2 3 4 5 6 (PRODUCT LEVEL) | SEE PAGE |
|---|---|---|---|---|---|---|
| F | | 1 | **3B-8489** | 1 | FITTING-GREASE | |
| | | | | | AVAILABLE REPAIR KIT(S): | |
| | | | **218-6822** | 1 | KIT-SEAL | |
| | | | | | (INCLUDES PISTON SEAL, PISTON WEAR BAND, O-RINGS, BACK UP RINGS, WIPER SEAL & ROD SEAL) | |

F-NOT SHOWN

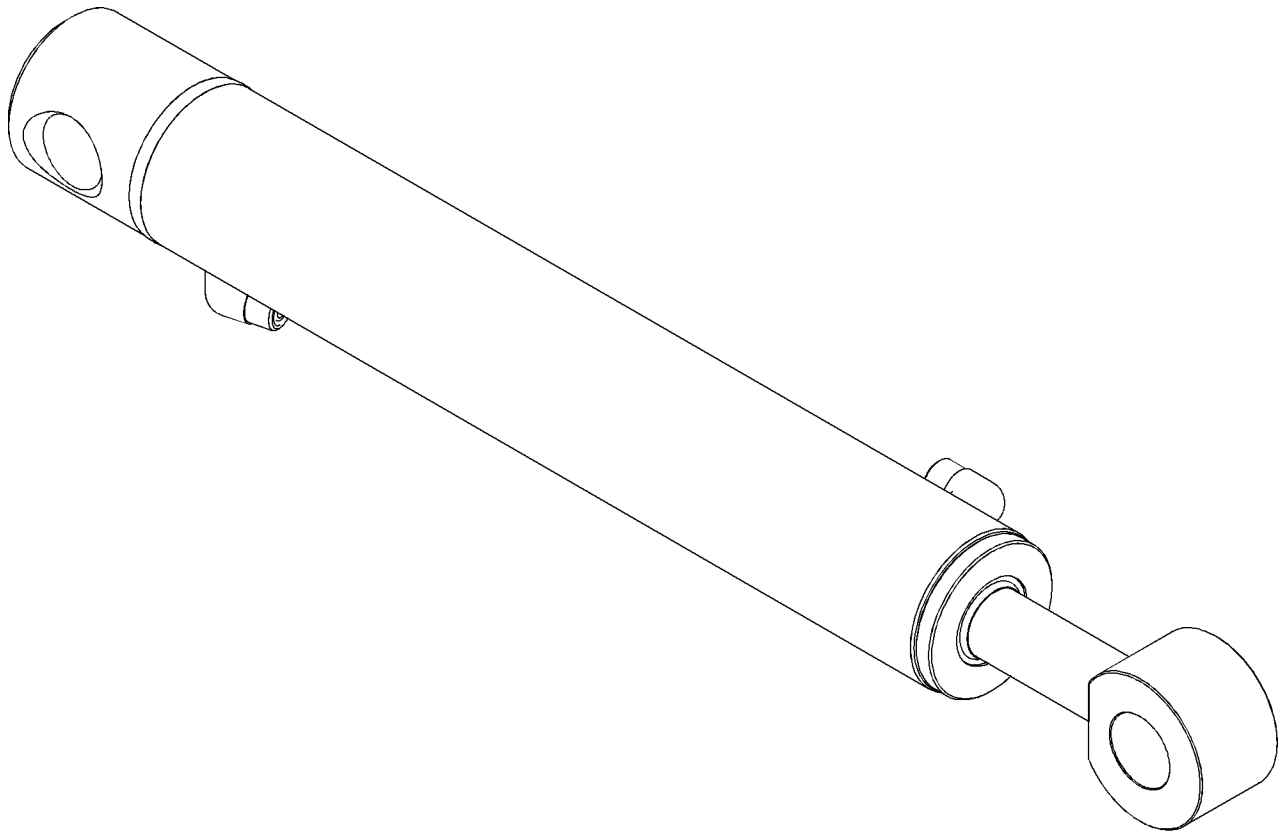

GRAPHIC #1 **<END>** g01011013

# HYDRAULIC SYSTEM

## *218-5750* HYDRAULIC AR

**S/N: HEN6750-UP**
**WITHOUT WORK TOOL POSITIONER**
**AN ATTACHMENT**

**SMCS-5050** **i01957467**

| NOTE | PART NUMBER | QTY | PART NAME 1 2 3 4 5 6 (PRODUCT LEVEL) | SEE PAGE |
|---|---|---|---|---|
| Y | *218-5731* | 1 | LINES GP-LIFT CYLINDER | 291 |
| Y | *218-5732* | 1 | LINES GP-TILT CYLINDER | 303 |

Y-SEPARATE ILLUSTRATION

**<END>**

## *218-5751* HYDRAULIC AR

**S/N: HEN6750-UP**
**WITH WORK TOOL POSITIONER**
**AN ATTACHMENT**

**SMCS-5050** **i02940662**

| NOTE | PART NUMBER | QTY | PART NAME 1 2 3 4 5 6 (PRODUCT LEVEL) | SEE PAGE |
|---|---|---|---|---|
| Y | *218-5733* | 1 | LINES GP-LIFT CYLINDER | 293 |
| Y | *218-5734* | 1 | LINES GP-TILT CYLINDER | 305 |
| Y | *218-5729* | 1 | MANIFOLD & MTG GP-CONTROL | 315 |
| | | | | |
| | **142-9116** | 1 | SWITCH GP-ROCKER (WORK TOOL POSITIONER) | |
| | | | (LOCATE SECOND SLOT FROM REAR ON LH INSTRUMENT PANEL) | |
| | **111-7899** | 1 | GASKET | |

Y-SEPARATE ILLUSTRATION

**<END>**

## *278-1237* HYDRAULIC AR

**S/N: HEN6750-8069**
**PART OF 295-7236 COMMON AR**

**SMCS-5050** **i02433912**

| NOTE | PART NUMBER | QTY | PART NAME 1 2 3 4 5 6 (PRODUCT LEVEL) | SEE PAGE |
|---|---|---|---|---|
| Y | *193-0447* | 1 | ACCUMULATOR & MTG GP-HYDRAULIC | 231 |
| Y | *218-5624* | 1 | FILTER & LINES GP-HYDRAULIC | 161 |
| Y | *218-5625* | 1 | LINES GP-HYDRAULIC OIL COOLER | 289 |
| Y | *218-5631* | 1 | LINES GP-PILOT | 297 |
| Y | *218-5632* | 1 | LINES GP-PILOT | 299 |
| Y | *218-5730* | 1 | LINES GP-PUMP | 301 |
| Y | *218-5634* | 1 | LINES GP-WORK TOOL | 307 |
| Y | *218-5627* | 1 | MOTOR & MTG GP-HYDRAULIC FAN | 320 |
| Y | *233-5980* | 1 | TANK & MTG GP-HYDRAULIC | 337 |
| Y | *218-6275* | 1 | VALVE & MTG GP-CONTROL | 339 |

Y-SEPARATE ILLUSTRATION

**<END>**

# HYDRAULIC SYSTEM

## *295-7220* HYDRAULIC AR

**S/N: HEN8070-UP**

**PART OF 295-7237 COMMON AR**

**SMCS-5050** **i02833191**

| NOTE | PART NUMBER | QTY | PART NAME 1 2 3 4 5 6 (PRODUCT LEVEL) | SEE PAGE |
|---|---|---|---|---|
| Y | *193-0447* | 1 | ACCUMULATOR & MTG GP-HYDRAULIC | 231 |
| Y | *218-5624* | 1 | FILTER & LINES GP-HYDRAULIC | 161 |
| Y | *218-5625* | 1 | LINES GP-HYDRAULIC OIL COOLER | 289 |
| Y | *218-5631* | 1 | LINES GP-PILOT (DIRECTION, SPEED) | 297 |
| Y | *218-5632* | 1 | LINES GP-PILOT (WORK TOOL) | 299 |
| Y | *218-5730* | 1 | LINES GP-PUMP | 301 |
| Y | *218-5634* | 1 | LINES GP-WORK TOOL | 307 |
| Y | *295-7221* | 1 | MOTOR & MTG GP-HYDRAULIC FAN | 322 |
| Y | *233-5980* | 1 | TANK & MTG GP-HYDRAULIC | 337 |
| Y | *218-6275* | 1 | VALVE & MTG GP-CONTROL | 339 |

Y-SEPARATE ILLUSTRATION

**<END>**

# HYDRAULIC SYSTEM

## 218-6751 INSTALLATION GP-AUXILIARY HYD–KIT, REAR

**S/N: HEN6750-UP**
**AN ATTACHMENT**

**SMCS-1408, 5057, 5479, 7557** **i02135827**

| NOTE | REF NO | GRAPHIC REF | PART NUMBER | QTY | PART NAME 1 2 3 4 5 6 (PRODUCT LEVEL) | SEE PAGE |
|---|---|---|---|---|---|---|
| E | 1 | 1 | **3E-8082** | | SEAL (50-CM) | |
| | 2 | 1 | **7K-1181** | 14 | STRAP-CABLE | |
| | 3 | 1 | **199-5248** | 2 | PLATE | |
| | 4 | 1 | **199-5249** | 2 | PLATE | |
| Y | 5 | 1 | **212-6570** | 1 | VALVE GP-SOLENOID (REAR AUXILIARY) | 357 |
| | 6 | 1 | **215-3988** | 1 | BAR | |
| Y | 7 | 1 | *216-6153* | 1 | WIRING GP-CHASSIS (REAR AUXILIARY HYDRAULICS) | 148 |
| | 8 | 1 | **218-7012** | 1 | FILM-STRIPE | |
| | 9 | 1 | **218-7013** | 1 | FILM-STRIPE | |
| I | 10 | 1 | **233-5984** | 1 | HOSE AS | |
| I | 11 | 1 | **233-5985** | 1 | HOSE AS | |
| I | 12 | 1 | **233-5986** | 1 | HOSE AS | |
| I | 13 | 1 | **233-5987** | 2 | HOSE AS | |
| I | 14 | 1 | **233-5998** | 1 | HOSE AS | |
| | 15 | 1 | **234-0746** | 2 | FILM (2-SPEED) | |
| | 16 | 1 | **252-0325** | 1 | TUBE AS | |
| | 17 | 1 | **252-0326** | 1 | TUBE AS | |
| | 18 | 1 | *148-8315* | 4 | CONNECTOR AS | |
| | | | | | (EACH INCLUDES) | |
| | | 1 | **6V-8642** | 1 | CONNECTOR | |
| | | 1 | **2M-9780** | 1 | SEAL-O-RING | |
| | | 1 | **7J-9108** | 1 | SEAL-O-RING | |
| | 19 | 1 | *148-8435* | 1 | TEE AS | |
| | | 1 | **6V-8781** | 1 | TEE-FACE SEAL | |
| | | 1 | **3J-1907** | 1 | SEAL-O-RING | |
| | | 1 | **6V-8397** | 2 | SEAL-O-RING | |
| | 20 | 1 | *148-8439* | 1 | TEE AS | |
| | | 1 | **6V-8774** | 1 | TEE | |
| | | 1 | **3J-1907** | 1 | SEAL-O-RING | |
| | | 1 | **6V-8397** | 2 | SEAL-O-RING | |
| | 21 | 1 | *149-5452* | 4 | UNION AS | |
| | | | | | (EACH INCLUDES) | |
| | | 1 | **6V-8994** | 1 | UNION | |
| | | 1 | **6V-8397** | 2 | SEAL-O-RING | |
| | 22 | 1 | **3K-0360** | 2 | SEAL-O-RING | |
| | 23 | 1 | **5P-6944** | 2 | ADAPTER | |
| M | 24 | 1 | **6V-8213** | 2 | BOLT-SOCKET HEAD (M8X1.25X70-MM) | |
| | 25 | 1 | **6V-9168** | 4 | NUT (11/16-16-THD) | |
| | 26 | 1 | **6V-9829** | 4 | CAP AS | |
| | 27 | 1 | **7J-9108** | 4 | SEAL-O-RING | |

E-ORDER BY THE CENTIMETER
I-REFER TO HYDRAULIC INFORMATION SYSTEM
M-METRIC PART
Y-SEPARATE ILLUSTRATION

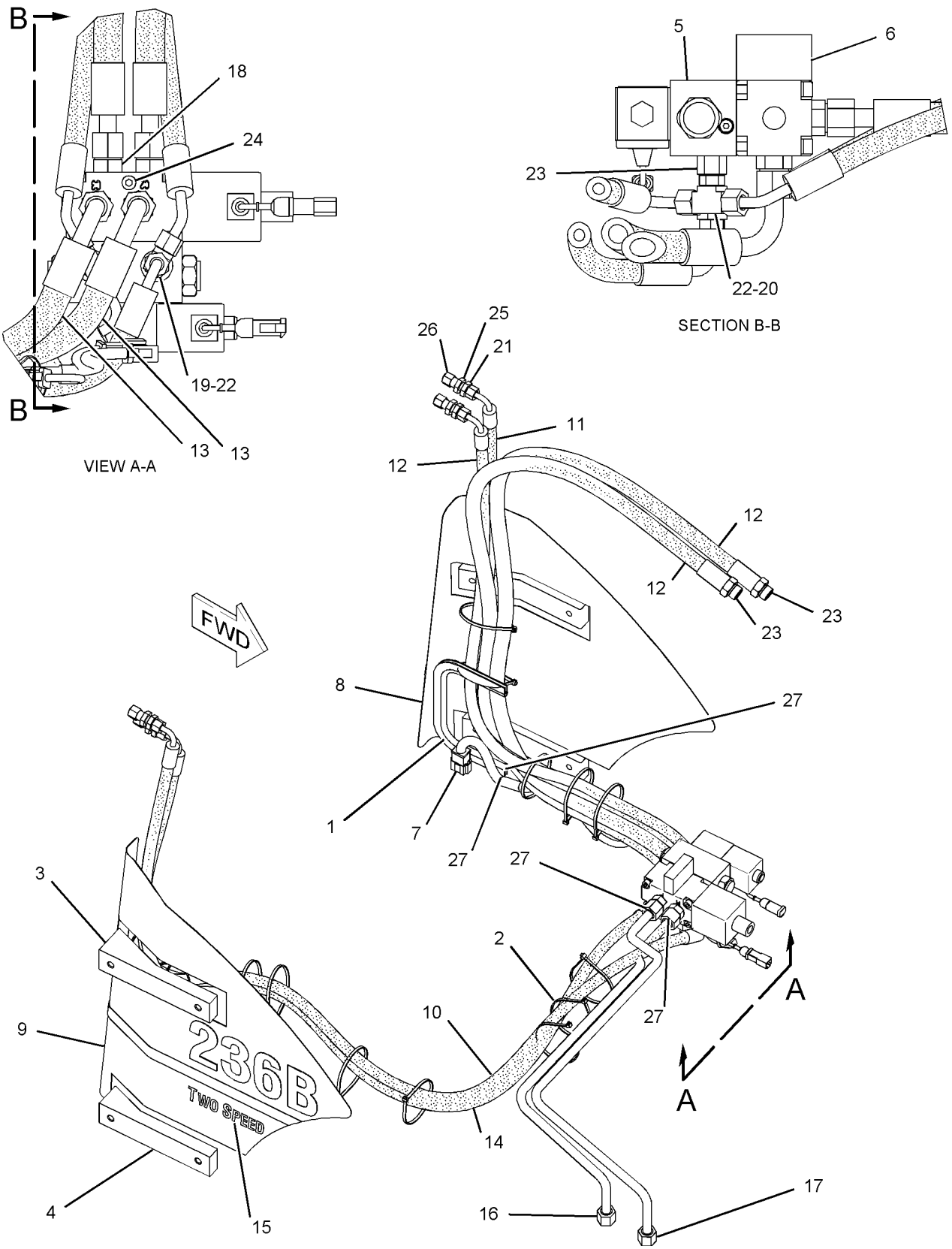


GRAPHIC #1 **<END>** g01085235

# HYDRAULIC SYSTEM

## 233-5720 KIT-JOYSTICK CONVERSION—DUAL CONTROL

**S/N: HEN6750-UP**

**AN ATTACHMENT**

**SMCS-1408, 5057, 5059, 5264, 5705** **i02796022**

| NOTE | REF NO | GRAPHIC REF | PART NUMBER | QTY | PART NAME 1 2 3 4 5 6 (PRODUCT LEVEL) | SEE PAGE |
|---|---|---|---|---|---|---|
| I | 1 | 1 | **190-7453** | 1 | HOSE AS | |
| B | 2 | 1 | **3S-2093** | 4 | STRAP-CABLE | |
| | 3 | 1 | **7K-1181** | 2 | STRAP-CABLE | |
| B | 5 | 1 | **192-0836** | 1 | SWITCH GP-PRESSURE (BACKUP ALARM) | |
| | | 1 | **3J-1907** | 1 | SEAL-O-RING | |
| | | 1 | **186-3735** | 1 | PIN-CONNECTOR (16-GA TO 18-GA) | |
| | | 1 | **102-8802** | 2 | KIT-RECEPTACLE (2-PIN) | |
| | | | | | (EACH INCLUDES RECEPTACLE AS & WEDGE) | |
| | 6 | 1 | **232-4486** | 1 | MANIFOLD | |
| | 7 | 1 | **233-5664** | 1 | HOSE AS | |
| | 8 | 1 | **233-5721** | 1 | PLATE | |
| | 9 | 1 | **233-5722** | 1 | HOSE AS | |
| | 10 | 1 | **233-5723** | 1 | HOSE AS | |
| | 11 | 1 | **233-5724** | 1 | HOSE AS | |
| | 12 | 1 | **233-5725** | 1 | HOSE AS | |
| | 13 | 1 | **233-5726** | 1 | HOSE AS | |
| | 14 | 1 | **233-5727** | 1 | HOSE AS | |
| | 15 | 1 | **233-5728** | 1 | HOSE AS | |
| | 16 | 1 | **233-5729** | 1 | HOSE AS | |
| | 17 | 1 | **233-5730** | 1 | HOSE AS | |
| | 18 | 1 | **233-5731** | 1 | HOSE AS | |
| Y | 19 | 1 | **233-5732** | 1 | VALVE GP-PILOT (LH) | 348 |
| Y | 20 | 1 | **233-5733** | 1 | VALVE GP-PILOT (RH) | 349 |
| B | 21 | 1 | **233-5734** | 1 | FILM-INSTRUCTION (MACHINE CONTROL, LH, READ OMM) | |
| B | 22 | 1 | **233-5736** | 1 | FILM-INSTRUCTION (MACHINE CONTROL, READ OMM, LH) | |
| B | 23 | 1 | **233-5735** | 1 | FILM-INSTRUCTION (MACHINE CONTROL, RH, READ OMM) | |
| B | 24 | 1 | **262-7669** | 1 | FILM-INSTRUCTION (MACHINE CONTROL, RH, READ OMM) | |
| | | | | | FOR USE WITH CONTROL NOT INCLUDING THUMBWHEEL | |
| | 25 | 1 | **233-5824** | 1 | HARNESS AS-OPERATOR CONTROLS (JOYSTICK, LH) | |
| | | 1 | **102-8802** | 1 | KIT-RECEPTACLE (2-PIN) | |
| | | | | | (INCLUDES RECEPTACLE AS & WEDGE) | |
| | | 1 | **155-2270** | 1 | KIT-CONNECTING PLUG (2-PIN) | |
| | | | | | (INCLUDES PLUG AS, WEDGE & INTERFACE SEAL) | |
| | 26 | 1 | **233-5825** | 1 | HARNESS AS-OPERATOR CONTROLS (JOYSTICK, RH) | |
| | | 1 | **102-8802** | 1 | KIT-RECEPTACLE (2-PIN) | |
| | | | | | (INCLUDES RECEPTACLE AS & WEDGE) | |
| | | 1 | **155-2270** | 1 | KIT-CONNECTING PLUG (2-PIN) | |
| | | | | | (INCLUDES PLUG AS, WEDGE & INTERFACE SEAL) | |
| | 27 | 1 | **233-5826** | 1 | HARNESS AS-OPERATOR CONTROLS (JOYSTICK, LH) | |
| | | 1 | **102-8802** | 1 | KIT-RECEPTACLE (2-PIN) | |
| | | | | | (INCLUDES RECEPTACLE AS & WEDGE) | |
| | | 1 | **155-2270** | 1 | KIT-CONNECTING PLUG (2-PIN) | |
| | | | | | (INCLUDES PLUG AS, WEDGE & INTERFACE SEAL) | |
| | 28 | 1 | **233-5828** | 1 | HARNESS AS-OPERATOR CONTROLS (JOYSTICK, RH, LH) | |
| | | 1 | **102-8802** | 1 | KIT-RECEPTACLE (2-PIN) | |
| | | | | | (INCLUDES RECEPTACLE AS & WEDGE) | |
| | | 1 | **155-2270** | 1 | KIT-CONNECTING PLUG (2-PIN) | |
| | | | | | (INCLUDES PLUG AS, WEDGE & INTERFACE SEAL) | |
| | 29 | 1 | *148-8325* | 3 | CONNECTOR AS | |
| | | | | | (EACH INCLUDES) | |
| | | 1 | **3J-1907** | 1 | SEAL-O-RING | |
| | | 1 | **4J-5477** | 1 | SEAL-O-RING | |
| | | 1 | **6V-8641** | 1 | CONNECTOR | |

## 233-5720 KIT-JOYSTICK CONVERSION *(contd. )* i02796022

| NOTE | REF NO | GRAPHIC REF | PART NUMBER | QTY | PART NAME 1 2 3 4 5 6 (PRODUCT LEVEL) | SEE PAGE |
|---|---|---|---|---|---|---|
| | 30 | 1 | *148-8336* | 1 | CONNECTOR AS | |
| | | 1 | **3J-1907** | 1 | SEAL-O-RING | |
| | | 1 | **6V-8397** | 1 | SEAL-O-RING | |
| | | 1 | **6V-8636** | 1 | CONNECTOR | |
| | 31 | 1 | *148-8340* | 2 | CONNECTOR AS | |
| | | | | | (EACH INCLUDES) | |
| | | 1 | **3K-0360** | 1 | SEAL-O-RING | |
| | | 1 | **6V-8398** | 1 | SEAL-O-RING | |
| | | 1 | **6V-8639** | 1 | CONNECTOR | |
| | 32 | 1 | *148-8351* | 1 | ELBOW AS | |
| | | 1 | **4J-5477** | 1 | SEAL-O-RING | |
| | | 1 | **6V-9849** | 1 | ELBOW | |
| | 33 | 1 | *148-8368* | 2 | ELBOW AS | |
| | | | | | (EACH INCLUDES) | |
| | | 1 | **3J-1907** | 1 | SEAL-O-RING | |
| | | 1 | **4J-5477** | 1 | SEAL-O-RING | |
| | | 1 | **6V-8627** | 1 | ELBOW | |
| | 34 | 1 | *148-8369* | 2 | ELBOW AS | |
| | | | | | (EACH INCLUDES) | |
| | | 1 | **3J-7354** | 1 | SEAL-O-RING | |
| | | 1 | **4J-5477** | 1 | SEAL-O-RING | |
| | | 1 | **6V-8628** | 1 | ELBOW | |
| B | 35 | 1 | *148-8407* | 1 | PLUG AS | |
| | | 1 | **3J-1907** | 1 | SEAL-O-RING | |
| | | 1 | **9S-4191** | 1 | PLUG-O-RING | |
| | 36 | 1 | *148-8435* | 1 | TEE AS | |
| | | 1 | **3J-1907** | 1 | SEAL-O-RING | |
| | | 1 | **6V-8397** | 2 | SEAL-O-RING | |
| | | 1 | **6V-8781** | 1 | TEE-FACE SEAL | |
| | 37 | 1 | *148-8439* | 2 | TEE AS | |
| | | | | | (EACH INCLUDES) | |
| | | 1 | **3J-1907** | 1 | SEAL-O-RING | |
| | | 1 | **6V-8397** | 2 | SEAL-O-RING | |
| | | 1 | **6V-8774** | 1 | TEE | |
| | 38 | 1 | *148-8444* | 2 | TEE AS-SWIVEL | |
| | | | | | (EACH INCLUDES) | |
| | | 1 | **6V-8398** | 2 | SEAL-O-RING | |
| | | 1 | **6V-9837** | 1 | TEE-SWIVEL | |
| | 39 | 1 | *166-2033* | 2 | TEE AS | |
| | | | | | (EACH INCLUDES) | |
| | | 1 | **4J-5477** | 1 | SEAL-O-RING | |
| | | 1 | **7X-2444** | 1 | TEE-SWIVEL | |
| | 40 | 1 | **4K-6177** | 1 | CLIP | |
| | 41 | 1 | **6V-9828** | 1 | CAP AS | |
| | 42 | 1 | **6V-9830** | 1 | CAP AS | |
| | 43 | 1 | **8T-4121** | 8 | WASHER-HARD (11X21X2.5-MM THK) | |
| M | 44 | 1 | **8T-4133** | 4 | NUT (M10X1.5-THD) | |
| M | 45 | 1 | **8T-4195** | 2 | BOLT (M10X1.5X30-MM) | |
| M | 46 | 1 | **8T-6685** | 2 | BOLT (M10X1.5X110-MM) | |
| B | 47 | | **270-8668** | 1 | FILM-INSTRUCTION (MACHINE CONTROL, RH, READ OMM) | |
| | | | | | FOR USE WITH CONTROL INCLUDING THUMBWHEEL | |
| B | 48 | 1 | **293-4075** | 1 | BRACKET | |

B-USE AS REQUIRED
I-REFER TO HYDRAULIC INFORMATION SYSTEM
M-METRIC PART
Y-SEPARATE ILLUSTRATION

## 233-5720 KIT-JOYSTICK CONVERSION *(contd. )* i02796022

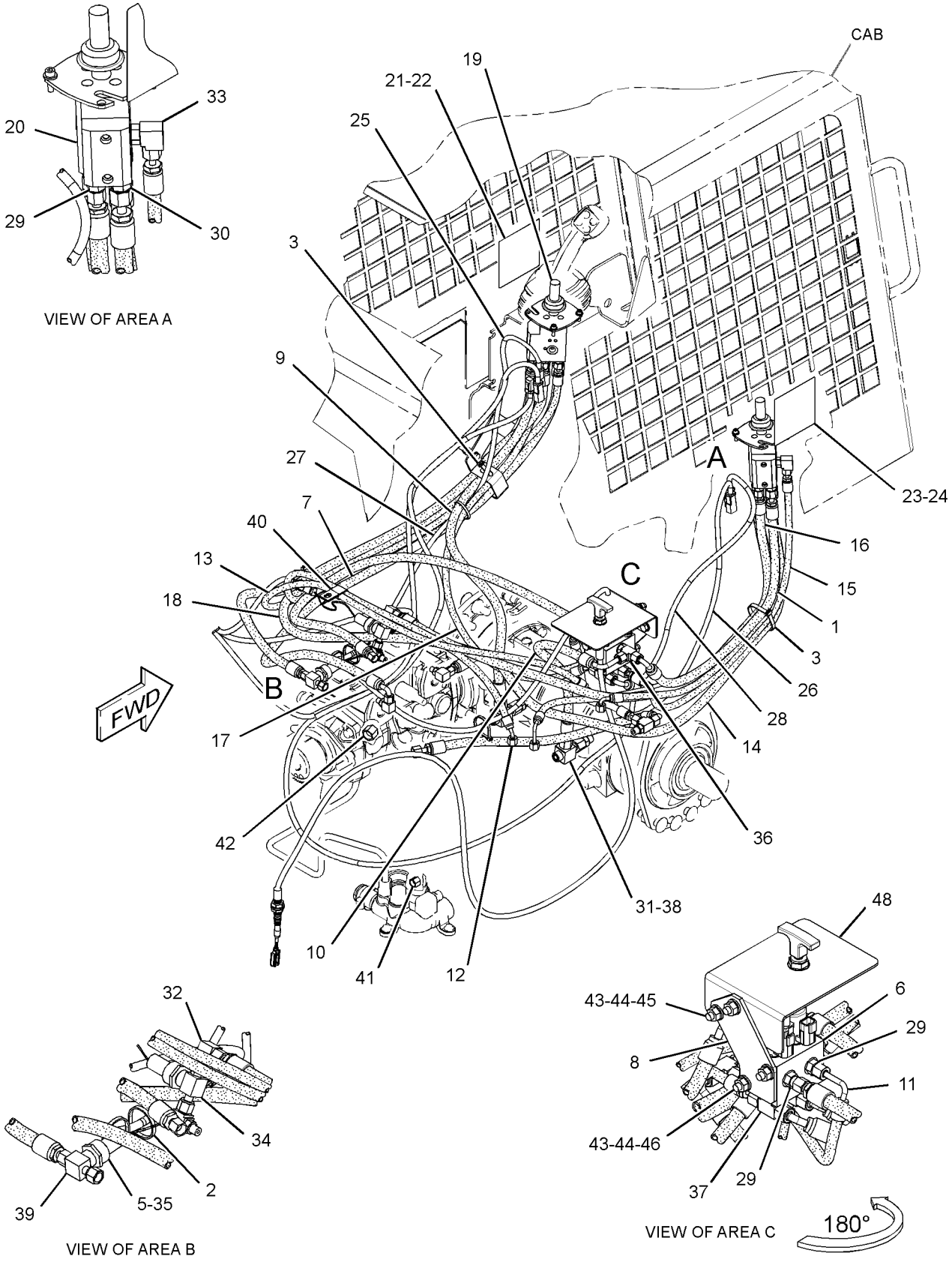


GRAPHIC #1 **<END>** g01442673

## 218-6755 KIT-QUICK COUPLER CONVERSION—HYDRAULIC

**S/N: HEN6750-UP**
**AN ATTACHMENT**

**SMCS-5057, 5133, 5479, 6129** **i02757313**

| NOTE | REF NO | GRAPHIC REF | PART NUMBER | QTY | PART NAME 1 2 3 4 5 6 (PRODUCT LEVEL) | SEE PAGE |
|---|---|---|---|---|---|---|
| | 1 | 1 | **3S-2093** | 3 | STRAP-CABLE | |
| | 2 | 1 | **5P-0372** | 2 | LOCK PIN | |
| | 3 | 1 | **113-8490** | 1 | FUSE (10-AMPERE) | |
| | 4 | 1 | **124-2456** | 1 | FILM-INSTRUCTION (NO STEP) | |
| | 5 | 1 | **166-2560** | 2 | PIN-SPRING | |
| Y | 6 | 1 | **192-2640** | 2 | CYLINDER GP-HYDRAULIC | 241 |
| | 7 | 1 | **195-6754** | 2 | PIN-SPRING | |
| | 8 | 1 | **200-6345** | 1 | MOUNT (DUAL SWIVEL) | |
| | 9 | 1 | **207-9737** | 1 | BRACKET AS | |
| M | | 1 | **8T-3612** | 2 | NUT-WELD (M8X1.25-THD) | |
| I | 10 | 1 | **207-9756** | 4 | HOSE AS | |
| I | 11 | 1 | **207-9758** | 2 | HOSE AS | |
| | 12 | 1 | **207-9785** | 2 | PIN | |
| Y | 13 | 1 | **233-7128** | 1 | MANIFOLD GP-CONTROL (QUICK COUPLER) | 318 |
| | 14 | 1 | **212-6521** | 1 | SWITCH AS-ROCKER (QUICK COUPLER) | |
| | | 1 | **111-7899** | 1 | GASKET | |
| | 15 | 1 | **212-6690** | 1 | GUARD | |
| Y | 16 | 1 | *215-3957* | 2 | LINK GP-COUPLER | 451 |
| I | 17 | 1 | **218-6015** | 1 | HOSE AS | |
| | 18 | 1 | **218-6332** | 1 | BRACKET AS | |
| M | | 1 | **9R-2672** | 1 | BOSS (M10X1.5X20-MM) | |
| | 19 | 1 | **218-6333** | 1 | BRACKET AS | |
| | 20 | 1 | **218-6511** | 1 | TUBE AS | |
| | 21 | 1 | **218-6512** | 1 | TUBE AS | |
| | 22 | 1 | **124-2113** | 5 | COUPLING-PERMANENT | |
| | 23 | 1 | **124-2159** | 1 | COUPLING-PERMANENT | |
| | 24 | 1 | *148-8325* | 4 | CONNECTOR AS | |
| | | | | | (EACH INCLUDES) | |
| | | 1 | **6V-8641** | 2 | CONNECTOR | |
| | | 1 | **3J-1907** | 2 | SEAL-O-RING | |
| | | 1 | **4J-5477** | 2 | SEAL-O-RING | |
| | 25 | 1 | *148-8336* | 2 | CONNECTOR AS | |
| | | | | | (EACH INCLUDES) | |
| | | 1 | **6V-8636** | 1 | CONNECTOR | |
| | | 1 | **3J-1907** | 1 | SEAL-O-RING | |
| | | 1 | **6V-8397** | 1 | SEAL-O-RING | |
| | 26 | 1 | *148-8378* | 2 | ELBOW AS | |
| | | | | | (EACH INCLUDES) | |
| | | 1 | **6V-8724** | 1 | ELBOW | |
| | | 1 | **3J-1907** | 1 | SEAL-O-RING | |
| | | 1 | **6V-8397** | 1 | SEAL-O-RING | |
| | 27 | 1 | *148-8439* | 1 | TEE AS | |
| | | 1 | **6V-8774** | | TEE | |
| | | 1 | **3J-1907** | 1 | SEAL-O-RING | |
| | | 1 | **6V-8397** | 4 | SEAL-O-RING | |
| | 28 | 1 | *148-8446* | 1 | TEE AS-SWIVEL | |
| | | 1 | **6V-9838** | 1 | TEE-SWIVEL | |
| | | 1 | **7J-9108** | 2 | SEAL-O-RING | |
| | 29 | 1 | *150-4034* | 2 | TEE AS | |
| | | | | | (EACH INCLUDES) | |
| | | 1 | **8T-0379** | 1 | TEE-BULKHEAD | |
| | | 1 | **6V-8397** | 3 | SEAL-O-RING | |
| | 30 | 1 | *156-4282* | 1 | REDUCER AS | |
| | | 1 | **6V-8938** | 1 | REDUCER-O-RING | |
| | | 1 | **6V-8397** | 1 | SEAL-O-RING | |
| | 31 | 1 | **1P-7009** | 1 | CLIP | |

## 218-6755 KIT-QUICK COUPLER CONVERSION *(contd.)* i02757313

| NOTE | REF NO | GRAPHIC REF | PART NUMBER | QTY | PART NAME 1 2 3 4 5 6 (PRODUCT LEVEL) | SEE PAGE |
|---|---|---|---|---|---|---|
| | 32 | 1 | **3B-4628** | 2 | PIN-COTTER | |
| M | 33 | 1 | **5C-7261** | 1 | NUT (M8X1.25-THD) | |
| | 34 | 1 | **5K-8451** | 1 | CLIP | |
| | 35 | 1 | **5P-4116** | 2 | WASHER-HARD (8.8X20.5X2-MM THK) | |
| | 36 | 1 | **6K-8178** | 1 | CLIP | |
| | 37 | 1 | **6V-8397** | 4 | SEAL-O-RING | |
| | 38 | 1 | **9X-6581** | 1 | NUT-O-RING SEAL (1-14-THD) | |
| | 39 | 1 | **6V-9168** | 2 | NUT (11/16-16-THD) | |
| | 40 | 1 | **7G-2950** | 1 | CLIP (SLOT) | |
| | 41 | 1 | **7G-2951** | 1 | CLIP (TAB) | |
| | 42 | 1 | **7H-7055** | 8 | CLIP | |
| | 43 | 1 | **7X-7729** | 3 | WASHER (11X25X3-MM THK) | |
| | 44 | 1 | **8L-5188** | 2 | PIN | |
| | 45 | 1 | **8T-4121** | 13 | WASHER-HARD (11X21X2.5-MM THK) | |
| M | 46 | 1 | **8T-4133** | 4 | NUT (M10X1.5-THD) | |
| M | 47 | 1 | **8T-4136** | 1 | BOLT (M10X1.5X25-MM) | |
| M | 48 | 1 | **8T-4189** | 2 | BOLT (M8X1.25X20-MM) | |
| M | 49 | 1 | **8T-4191** | 2 | BOLT (M10X1.5X16-MM) | |
| M | 50 | 1 | **8T-4196** | 4 | BOLT (M10X1.5X35-MM) | |
| M | 51 | 1 | **8T-4201** | 3 | BOLT-LOCKING (M10X1.5X20-MM) | |
| | 52 | 1 | **8T-4224** | 2 | WASHER-HARD (8.8X16X2-MM THK) | |
| M | 53 | 1 | **8T-4908** | 1 | BOLT (M8X1.25X25-MM) | |
| M | 54 | 1 | **8T-5005** | 2 | BOLT (M10X1.5X70-MM) | |
| | 55 | 1 | **9M-8406** | 3 | CLIP | |
| | 56 | 1 | **9T-7303** | 4 | SPACER (16X28X1.5-MM THK) | |
| EI | 57 | 1 | **122-6867** | | HOSE (520CM) | |

E-ORDER BY THE CENTIMETER
I-REFER TO HYDRAULIC INFORMATION SYSTEM
M-METRIC PART
Y-SEPARATE ILLUSTRATION

## 218-6755 KIT-QUICK COUPLER CONVERSION *(contd. )* i02757313

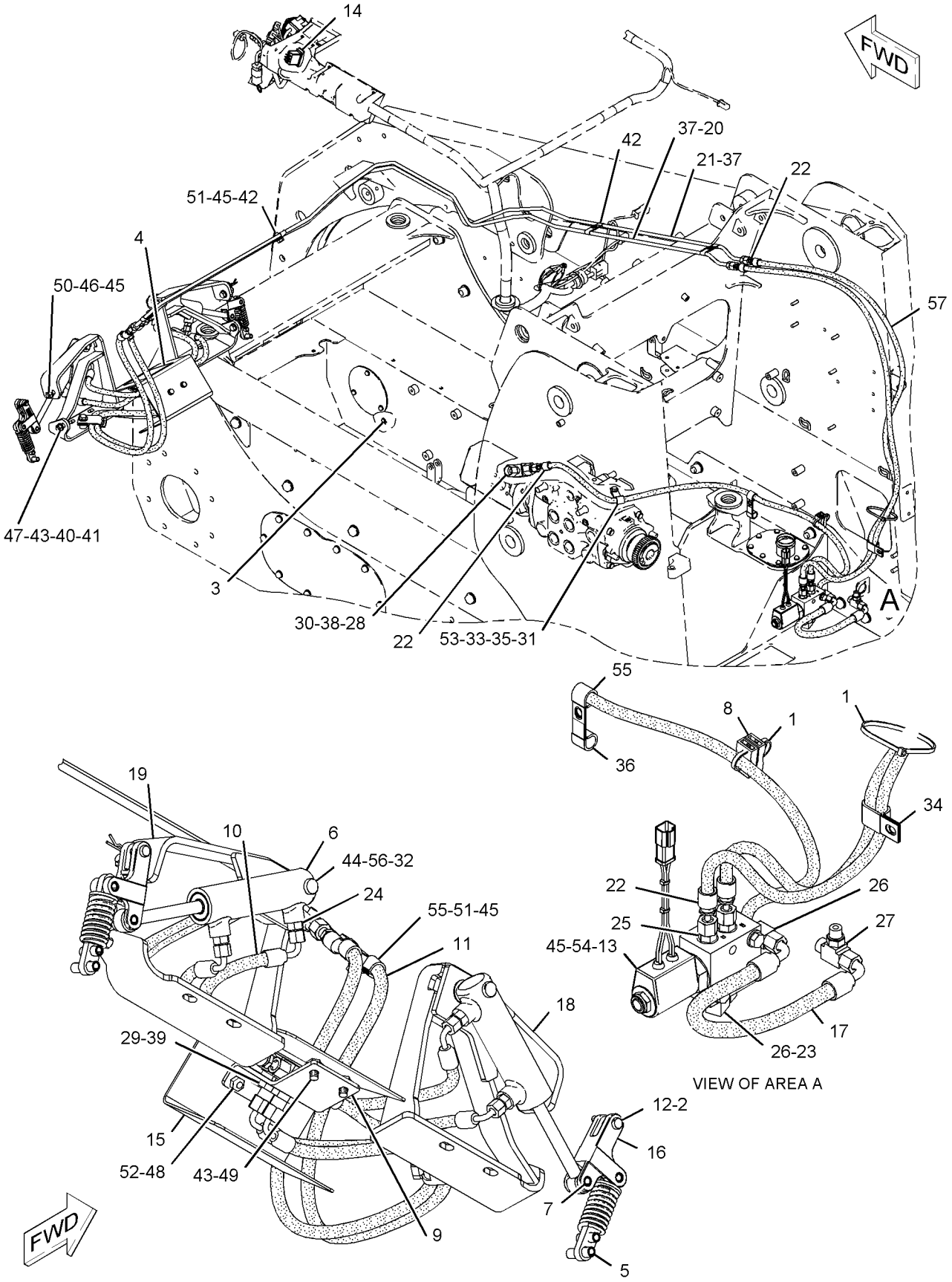


VIEW OF AREA A

GRAPHIC #1 **<END>** g01032997

# HYDRAULIC SYSTEM

## *279-5412* LINES GP-BUCKET—INDUSTRIAL

**S/N: HEN6750-UP**

**PART OF 279-5350, 279-5360 FORK AR-GRAPPLE**

**AN ATTACHMENT**

**SMCS-5057** **i02616554**

| NOTE | REF NO | GRAPHIC REF | PART NUMBER | QTY | PART NAME 1 2 3 4 5 6 (PRODUCT LEVEL) | SEE PAGE |
|---|---|---|---|---|---|---|
| | 1 | 1 | **3E-7404** | 2 | CLAMP-HOSE | |
| I | 2 | 1 | **294-5503** | 1 | HOSE AS | |
| | 3 | 1 | **153-2994** | 1 | COUPLER AS-QUICK DISCONNECT (FEMALE) | |
| | 4 | 1 | **153-2995** | 1 | FITTING AS (QUICK DISCONNECT, MALE) | |
| | 5 | 1 | **161-0185** | 1 | TUBE AS | |
| | 6 | 1 | **161-0186** | 1 | TUBE AS | |
| | 7 | 1 | **161-0188** | 2 | TUBE AS | |
| I | 8 | 1 | **161-0189** | 2 | HOSE AS | |
| I | 9 | 1 | **161-0190** | 2 | HOSE AS | |
| | 10 | 1 | **163-1385** | 1 | ELBOW | |
| I | 11 | 1 | **294-5502** | 1 | HOSE AS | |
| | 12 | 1 | *148-8319* | 2 | CONNECTOR AS | |
| | | | | | (EACH INCLUDES) | |
| | | 1 | **2M-9780** | 1 | SEAL-O-RING | |
| | | 1 | **6V-8397** | 1 | SEAL-O-RING | |
| | | 1 | **6V-8715** | 1 | CONNECTOR | |
| | 13 | 1 | **2V-3216** | 6 | CLIP | |
| | 14 | 1 | **6V-8397** | 13 | SEAL-O-RING | |
| | 15 | 1 | **7S-3916** | 2 | CLIP (TAB) | |
| | 16 | 1 | **7S-3919** | 2 | CLIP (SLOT) | |
| | 17 | 1 | **8T-4121** | 2 | WASHER-HARD (11X21X2.5-MM THK) | |
| M | 18 | 1 | **8T-4136** | 2 | BOLT (M10X1.5X25-MM) | |
| M | 19 | 1 | **8T-4171** | 4 | BOLT (M6X1X12-MM) | |
| | 20 | 1 | **9R-2004** | 2 | BLOCK | |

I-REFER TO HYDRAULIC INFORMATION SYSTEM
M-METRIC PART

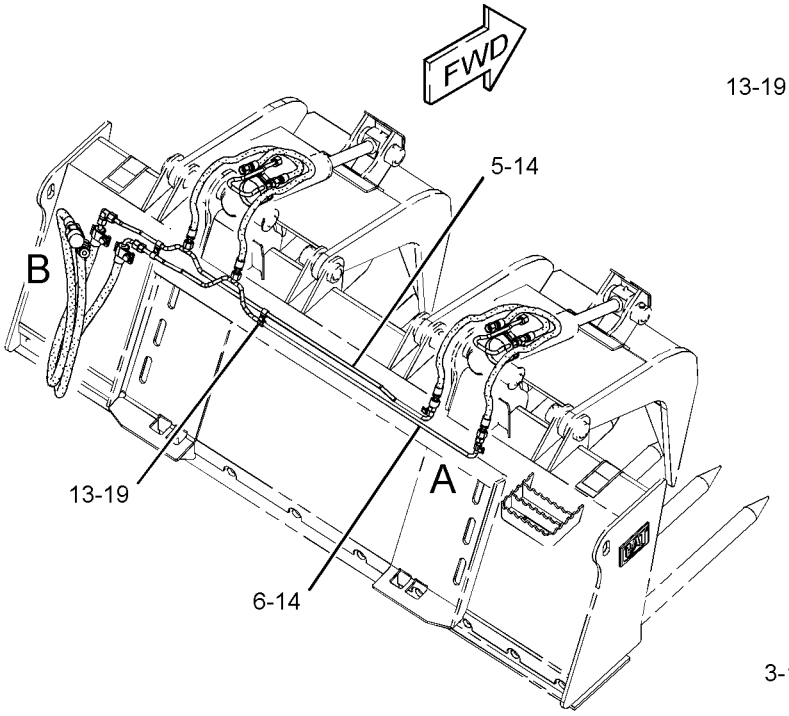


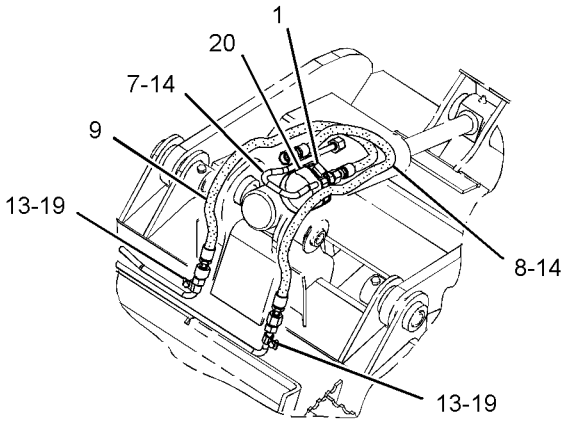


VIEW OF AREA A

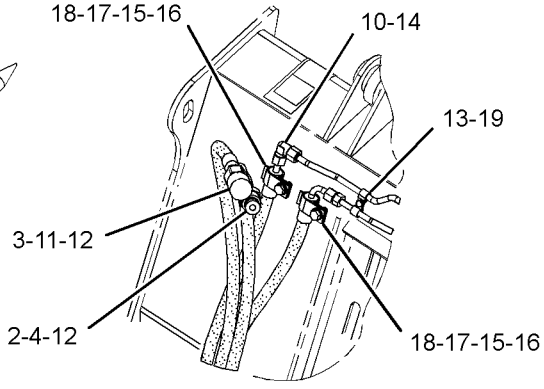


VIEW OF AREA B

GRAPHIC #1 **<END>** g01280859

# HYDRAULIC SYSTEM

## *279-5413* LINES GP-BUCKET

**S/N: HEN6750-UP**

**PART OF 279-5382 BUCKET AR-MULTIPURPOSE**

**AN ATTACHMENT**

**SMCS-5057** **i02552042**

| NOTE | REF NO | GRAPHIC REF | PART NUMBER | QTY | PART NAME 1 2 3 4 5 6 (PRODUCT LEVEL) | SEE PAGE |
|---|---|---|---|---|---|---|
| | 1 | 1 | **153-2994** | 1 | COUPLER AS-QUICK DISCONNECT (FEMALE) | |
| I | 2 | 1 | **154-5020** | 2 | HOSE AS | |
| I | 3 | 1 | **154-5021** | 1 | HOSE AS | |
| I | 4 | 1 | **154-5022** | 1 | HOSE AS | |
| | | 1 | **163-8811** | 2 | CLAMP | |
| | 5 | 1 | **163-1386** | 1 | TEE-UNION | |
| | 6 | 1 | **185-7887** | 1 | COUPLER AS-QUICK DISCONNECT (MALE) | |
| I | 7 | 1 | **279-5417** | 1 | HOSE AS | |
| I | 8 | 1 | **279-5418** | 1 | HOSE AS | |
| | 9 | 1 | *148-8319* | 2 | CONNECTOR AS | |
| | | | | | (EACH INCLUDES) | |
| | | 1 | **2M-9780** | 1 | SEAL-O-RING | |
| | | 1 | **6V-8397** | 1 | SEAL-O-RING | |
| | | 1 | **6V-8715** | 1 | CONNECTOR | |
| | 10 | 1 | *150-3056* | 1 | TEE AS | |
| | | 1 | **6V-8397** | 3 | SEAL-O-RING | |
| | | 1 | **6V-8788** | 1 | TEE | |
| | 11 | 1 | **1S-0994** | 1 | CLIP | |
| | 12 | 1 | **6D-4247** | 3 | CLIP | |
| | 13 | 1 | **6V-8397** | 7 | SEAL-O-RING | |
| M | 14 | 1 | **8T-4189** | 4 | BOLT (M8X1.25X20-MM) | |
| | 15 | 1 | **8T-4224** | 4 | WASHER-HARD (8.8X16X2-MM THK) | |
| B | 16 | 1 | **9X-6273** | 2 | WASHER (32.5X50X0.8-MM THK) | |
| B | 17 | 1 | **9X-6274** | 2 | WASHER (32.5X50X1.6-MM THK) | |

B-USE AS REQUIRED
I-REFER TO HYDRAULIC INFORMATION SYSTEM
M-METRIC PART

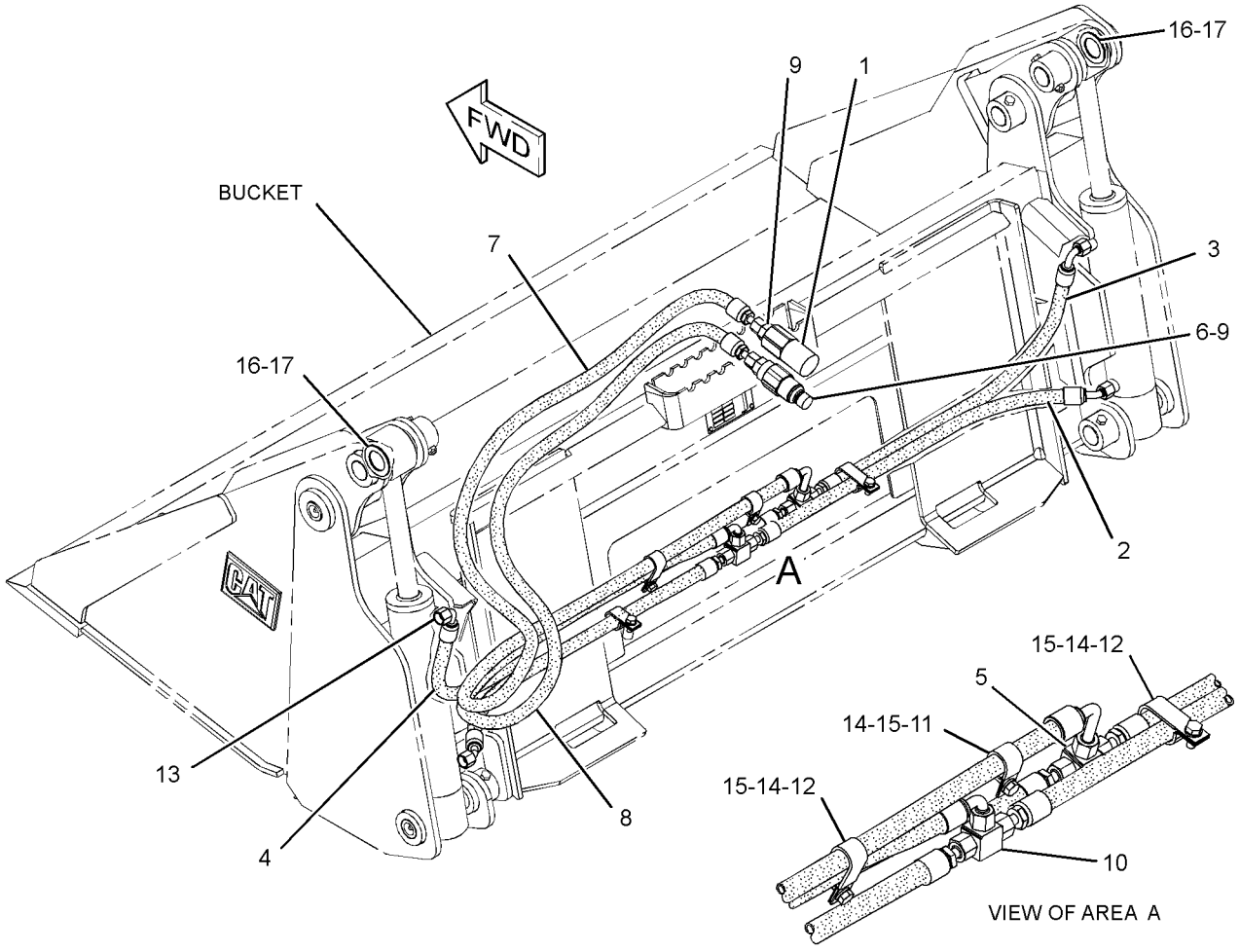


GRAPHIC #1 **<END>** g01278435

# HYDRAULIC SYSTEM

## *279-5414* LINES GP-BUCKET

**S/N: HEN6750-UP**
**PART OF 279-5390 BUCKET AR-MULTIPURPOSE**
**AN ATTACHMENT**

**SMCS-5057** **i02664837**

| NOTE | REF NO | GRAPHIC REF | PART NUMBER | QTY | PART NAME 1 2 3 4 5 6 (PRODUCT LEVEL) | SEE PAGE |
|---|---|---|---|---|---|---|
| | 1 | 1 | **153-2994** | 1 | COUPLER AS-QUICK DISCONNECT (FEMALE) | |
| I | 2 | 1 | **156-5508** | 1 | HOSE AS | |
| I | 3 | 1 | **156-5509** | 2 | HOSE AS | |
| I | 4 | 1 | **156-5510** | 1 | HOSE AS | |
| | 5 | 1 | **163-1386** | 1 | TEE-UNION | |
| | 6 | 1 | **185-7887** | 1 | COUPLER AS-QUICK DISCONNECT (MALE) | |
| I | 7 | 1 | **279-5417** | 1 | HOSE AS | |
| I | 8 | 1 | **279-5418** | 1 | HOSE AS | |
| | 9 | 1 | *148-8319* | 2 | CONNECTOR AS | |
| | | | | | (EACH INCLUDES) | |
| | | 1 | **2M-9780** | 1 | SEAL-O-RING | |
| | | 1 | **6V-8397** | 1 | SEAL-O-RING | |
| | | 1 | **6V-8715** | 1 | CONNECTOR | |
| | 10 | 1 | *150-3056* | 1 | TEE AS | |
| | | 1 | **6V-8397** | 3 | SEAL-O-RING | |
| | | 1 | **6V-8788** | 1 | TEE | |
| | 11 | 1 | **1S-0994** | 1 | CLIP | |
| | 12 | 1 | **6D-4247** | 3 | CLIP | |
| | 13 | 1 | **6V-8397** | 7 | SEAL-O-RING | |
| M | 14 | 1 | **8T-4189** | 4 | BOLT (M8X1.25X20-MM) | |
| | 15 | 1 | **8T-4224** | 4 | WASHER-HARD (8.8X16X2-MM THK) | |
| B | 16 | 1 | **9X-6273** | 2 | WASHER (32.5X50X0.8-MM THK) | |
| B | 17 | 1 | **9X-6274** | 2 | WASHER (32.5X50X1.6-MM THK) | |

B-USE AS REQUIRED
I-REFER TO HYDRAULIC INFORMATION SYSTEM
M-METRIC PART

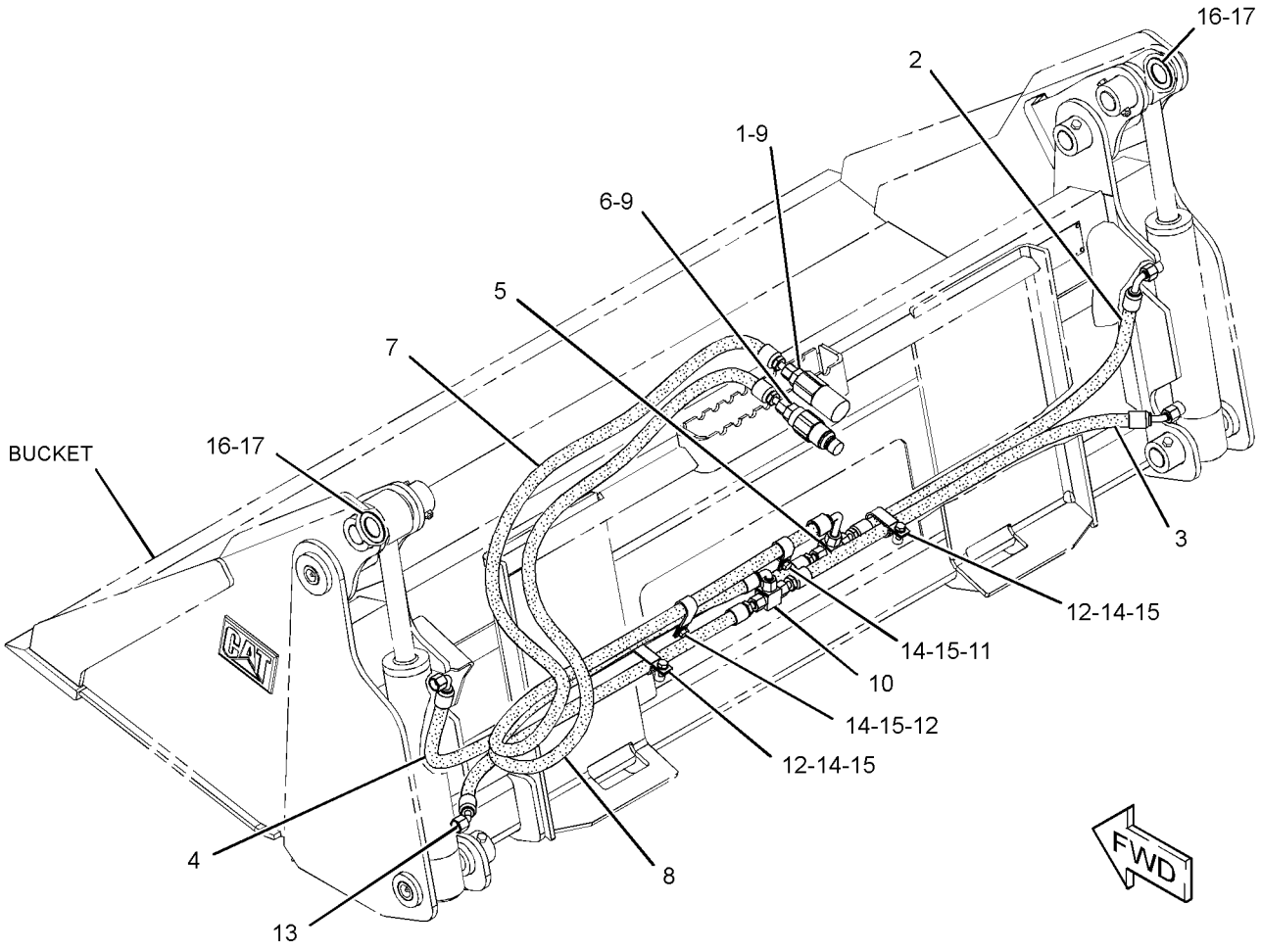


GRAPHIC #1 **<END>** g01339126

# HYDRAULIC SYSTEM

## *279-5415* LINES GP-BUCKET

**S/N: HEN6750-UP**
**PART OF 279-5398 BUCKET AR-MULTIPURPOSE**
**AN ATTACHMENT**

**SMCS-5057** **i02552160**

| NOTE | REF NO | GRAPHIC REF | PART NUMBER | QTY | PART NAME 1 2 3 4 5 6 (PRODUCT LEVEL) | SEE PAGE |
|---|---|---|---|---|---|---|
| | 1 | 1 | **153-2994** | 1 | COUPLER AS-QUICK DISCONNECT (FEMALE) | |
| I | 2 | 1 | **159-4535** | 1 | HOSE AS | |
| I | 3 | 1 | **159-4536** | 2 | HOSE AS | |
| I | 4 | 1 | **159-4537** | 1 | HOSE AS | |
| | 5 | 1 | **163-1386** | 1 | TEE-UNION | |
| | 6 | 1 | **185-7887** | 1 | COUPLER AS-QUICK DISCONNECT (MALE) | |
| I | 7 | 1 | **279-5417** | 1 | HOSE AS | |
| I | 8 | 1 | **279-5418** | 1 | HOSE AS | |
| | 9 | 1 | *148-8319* | 2 | CONNECTOR AS | |
| | | | | | (EACH INCLUDES) | |
| | | 1 | **2M-9780** | 1 | SEAL-O-RING | |
| | | 1 | **6V-8397** | 1 | SEAL-O-RING | |
| | | 1 | **6V-8715** | 1 | CONNECTOR | |
| | 10 | 1 | *150-3056* | 1 | TEE AS | |
| | | 1 | **6V-8397** | 3 | SEAL-O-RING | |
| | | 1 | **6V-8788** | 1 | TEE | |
| | 11 | 1 | **1S-0994** | 1 | CLIP | |
| | 12 | 1 | **6D-4247** | 3 | CLIP | |
| | 13 | 1 | **6V-8397** | 7 | SEAL-O-RING | |
| M | 14 | 1 | **8T-4189** | 4 | BOLT (M8X1.25X20-MM) | |
| | 15 | 1 | **8T-4224** | 4 | WASHER-HARD (8.8X16X2-MM THK) | |
| B | 16 | 1 | **9X-6273** | 2 | WASHER (32.5X50X0.8-MM THK) | |
| B | 17 | 1 | **9X-6274** | 2 | WASHER (32.5X50X1.6-MM THK) | |

B-USE AS REQUIRED
I-REFER TO HYDRAULIC INFORMATION SYSTEM
M-METRIC PART

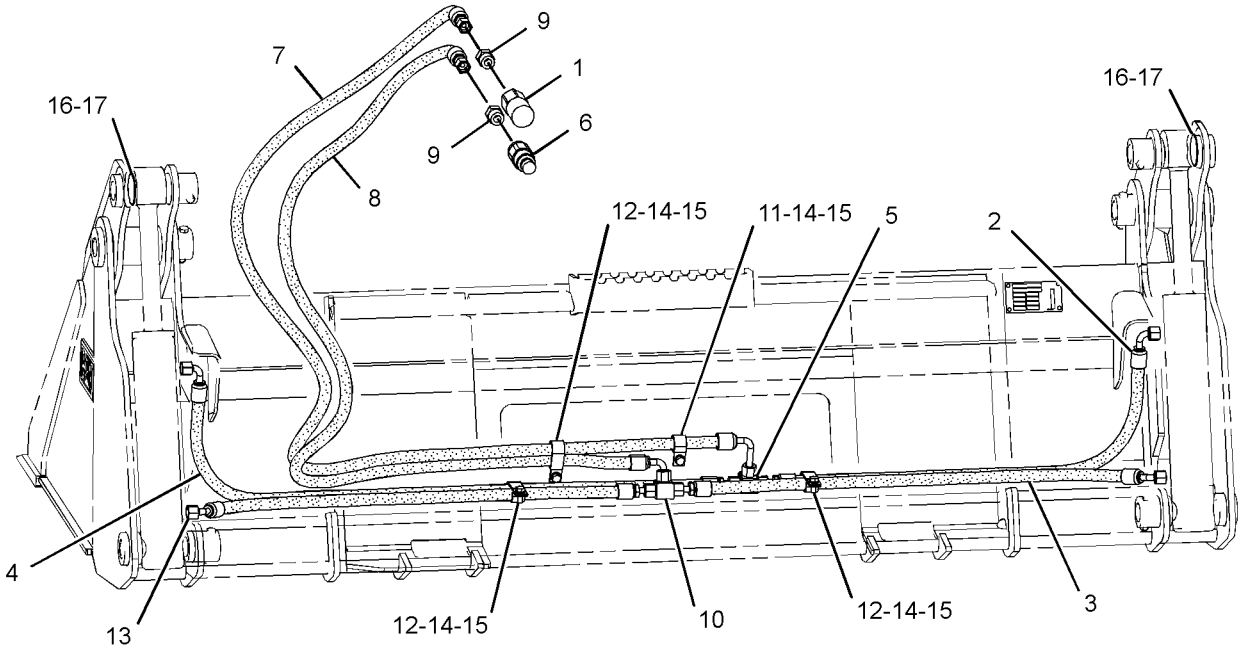


REAR VIEW
(UPPER LEFT)

GRAPHIC #1 **<END>** g01280163

# HYDRAULIC SYSTEM

## *279-5416* LINES GP-BUCKET

**S/N: HEN6750-UP**
**PART OF 279-5403 BUCKET AR-MULTIPURPOSE**
**AN ATTACHMENT**

**SMCS-5057** **i02552257**

| NOTE | REF NO | GRAPHIC REF | PART NUMBER | QTY | PART NAME 1 2 3 4 5 6 (PRODUCT LEVEL) | SEE PAGE |
|---|---|---|---|---|---|---|
| | 1 | 1 | **153-2994** | 1 | COUPLER AS-QUICK DISCONNECT (FEMALE) | |
| | 2 | 1 | **163-1386** | 1 | TEE-UNION | |
| | 3 | 1 | **185-7887** | 1 | COUPLER AS-QUICK DISCONNECT (MALE) | |
| I | 4 | 1 | **199-8309** | 1 | HOSE AS | |
| I | 5 | 1 | **199-8310** | 2 | HOSE AS | |
| I | 6 | 1 | **199-8311** | 1 | HOSE AS | |
| I | 7 | 1 | **279-5417** | 1 | HOSE AS | |
| I | 8 | 1 | **279-5418** | 1 | HOSE AS | |
| | 9 | 1 | *148-8319* | 2 | CONNECTOR AS | |
| | | | | | (EACH INCLUDES) | |
| | | 1 | **2M-9780** | 1 | SEAL-O-RING | |
| | | 1 | **6V-8397** | 1 | SEAL-O-RING | |
| | | 1 | **6V-8715** | 1 | CONNECTOR | |
| | 10 | 1 | *150-3056* | 1 | TEE AS | |
| | | 1 | **6V-8397** | 3 | SEAL-O-RING | |
| | | 1 | **6V-8788** | 1 | TEE | |
| | 11 | 1 | **1S-0994** | 1 | CLIP | |
| | 12 | 1 | **6D-4247** | 3 | CLIP | |
| | 13 | 1 | **6V-8397** | 7 | SEAL-O-RING | |
| M | 14 | 1 | **8T-4189** | 4 | BOLT (M8X1.25X20-MM) | |
| | 15 | 1 | **8T-4224** | 4 | WASHER-HARD (8.8X16X2-MM THK) | |
| B | 16 | 1 | **9X-6273** | 2 | WASHER (32.5X50X0.8-MM THK) | |
| B | 17 | 1 | **9X-6274** | 2 | WASHER (32.5X50X1.6-MM THK) | |

B-USE AS REQUIRED
I-REFER TO HYDRAULIC INFORMATION SYSTEM
M-METRIC PART

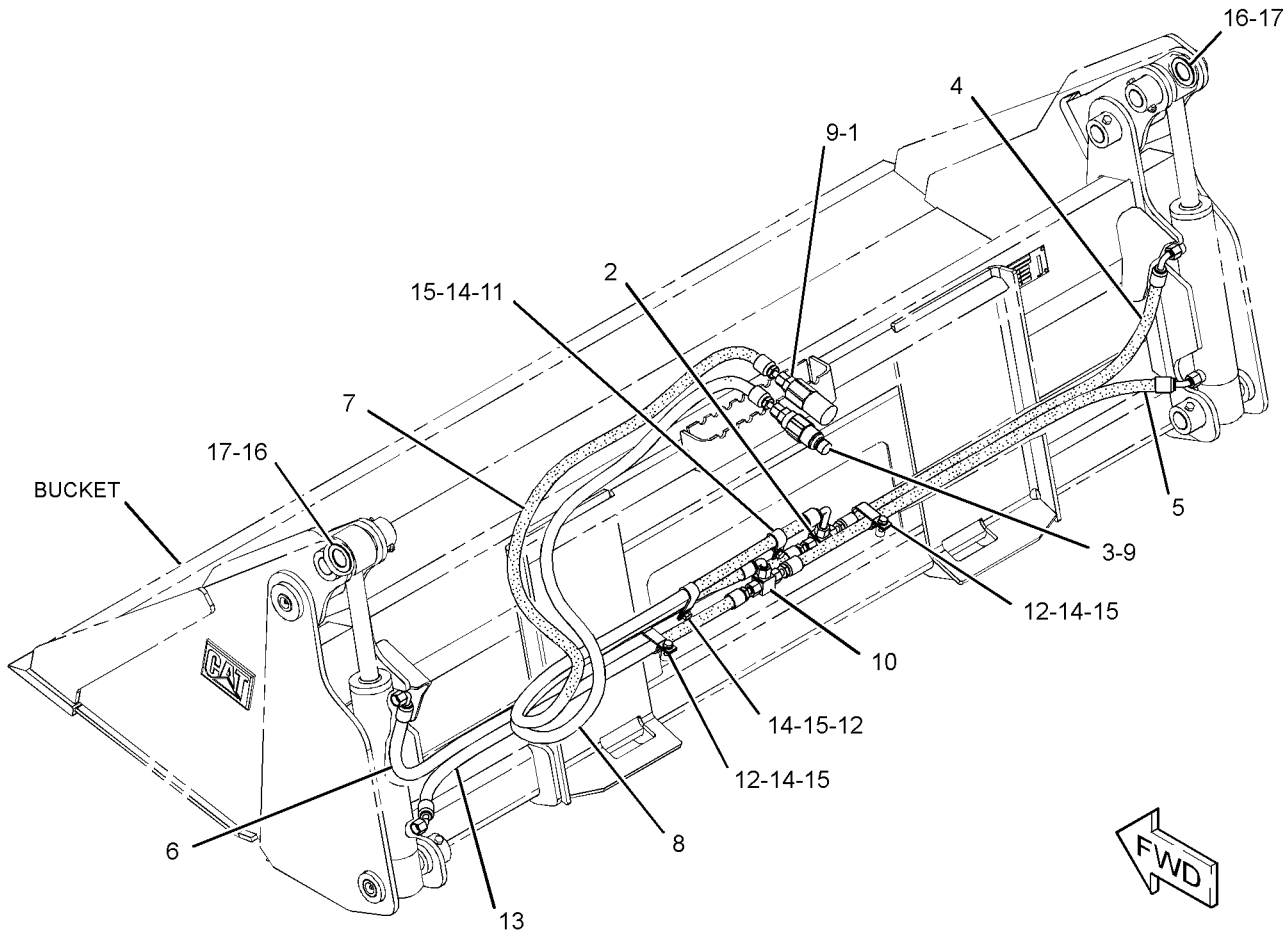


GRAPHIC #1 **<END>** g01278627

# HYDRAULIC SYSTEM

## *285-6113* LINES GP-BUCKET

**S/N: HEN6750-UP**
**PART OF 285-6116 GRAPPLE GP-UTILITY**
**AN ATTACHMENT**
**TYPE 1**

**SMCS-5057** **i02645962**

| NOTE | REF NO | GRAPHIC REF | PART NUMBER | QTY | PART NAME 1 2 3 4 5 6 (PRODUCT LEVEL) | SEE PAGE |
|---|---|---|---|---|---|---|
| | 1 | 1 | **2J-6540** | 1 | CLAMP (HOSE) | |
| | 2 | 1 | **153-2994** | 1 | COUPLER AS-QUICK DISCONNECT (FEMALE) | |
| | 3 | 1 | **153-2995** | 1 | FITTING AS (QUICK DISCONNECT, MALE) | |
| | 4 | 1 | **174-2388** | 1 | TUBE AS | |
| | 5 | 1 | **174-2389** | 1 | TUBE AS | |
| I | 6 | 1 | **174-2393** | 2 | HOSE AS | |
| | 7 | 1 | **174-3097** | 1 | TUBE AS | |
| | 8 | 1 | *183-4085* | 1 | ELBOW AS | |
| | | 1 | **6V-8397** | 2 | SEAL-O-RING | |
| | | 1 | **183-4084** | 1 | ELBOW | |
| I | 9 | 1 | **294-5504** | 1 | HOSE AS | |
| I | 10 | 1 | **294-5505** | 1 | HOSE AS | |
| | 11 | 1 | *148-8319* | 2 | CONNECTOR AS | |
| | | | | | (EACH INCLUDES) | |
| | | 1 | **2M-9780** | 1 | SEAL-O-RING | |
| | | 1 | **6V-8397** | 1 | SEAL-O-RING | |
| | | 1 | **6V-8715** | 1 | CONNECTOR | |
| | 12 | 1 | **6V-8397** | 6 | SEAL-O-RING | |
| | 13 | 1 | **7S-3912** | 2 | CLIP (TAB) | |
| | 14 | 1 | **7S-3913** | 2 | CLIP (SLOT) | |
| | 15 | 1 | **8T-1893** | 2 | CLIP (SLOT) | |
| | 16 | 1 | **8T-1894** | 2 | CLIP (TAB) | |
| | 17 | 1 | **8T-4121** | 6 | WASHER-HARD (11X21X2.5-MM THK) | |
| M | 18 | 1 | **8T-4137** | 4 | BOLT (M10X1.5X20-MM) | |
| | 19 | 1 | **9R-2004** | 1 | BLOCK | |

I-REFER TO HYDRAULIC INFORMATION SYSTEM
M-METRIC PART

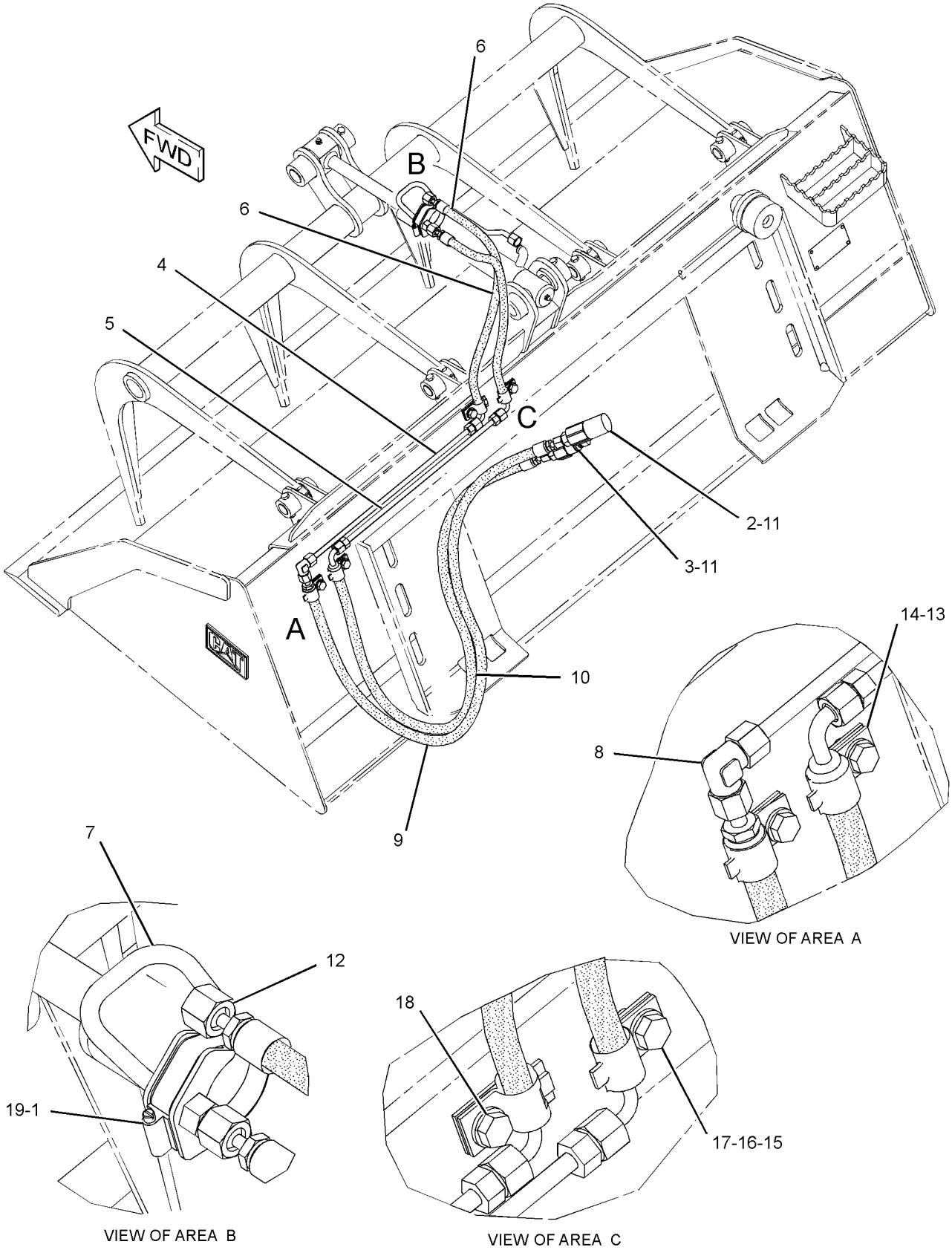


GRAPHIC #1 **<END>** g01279537

# HYDRAULIC SYSTEM

## *285-6113* LINES GP-BUCKET

**S/N: HEN6750-UP**
**PART OF 285-6116 GRAPPLE GP-UTILITY**
**AN ATTACHMENT**
**TYPE 2**

**SMCS-5057** **i02890974**

| NOTE | REF NO | GRAPHIC REF | PART NUMBER | QTY | PART NAME 1 2 3 4 5 6 (PRODUCT LEVEL) | SEE PAGE |
|---|---|---|---|---|---|---|
| | 1 | 1 | **153-2994** | 1 | COUPLER AS-QUICK DISCONNECT (FEMALE) | |
| | 2 | 1 | **153-2995** | 1 | FITTING AS (QUICK DISCONNECT, MALE) | |
| | 3 | 1 | **174-2388** | 1 | TUBE AS | |
| | 4 | 1 | **174-2389** | 1 | TUBE AS | |
| CI | 5 | 1 | **174-2393** | 1 | HOSE AS | |
| | 6 | 1 | *183-4085* | 1 | ELBOW AS | |
| | | 1 | **6V-8397** | 2 | SEAL-O-RING | |
| | | 1 | **183-4084** | 1 | ELBOW | |
| I | 7 | 1 | **294-5504** | 1 | HOSE AS | |
| I | 8 | 1 | **294-5505** | 1 | HOSE AS | |
| CI | 9 | 1 | **307-3808** | 1 | HOSE AS | |
| | 10 | 1 | *148-8319* | 2 | CONNECTOR AS | |
| | | | | | (EACH INCLUDES) | |
| | | 1 | **2M-9780** | 1 | SEAL-O-RING | |
| | | 1 | **6V-8397** | 1 | SEAL-O-RING | |
| | | 1 | **6V-8715** | 1 | CONNECTOR | |
| C | 11 | 1 | **6V-8397** | 5 | SEAL-O-RING | |
| | 12 | 1 | **7S-3912** | 2 | CLIP (TAB) | |
| | 13 | 1 | **7S-3913** | 2 | CLIP (SLOT) | |
| | 14 | 1 | **8T-1893** | 2 | CLIP (SLOT) | |
| | 15 | 1 | **8T-1894** | 2 | CLIP (TAB) | |
| | 16 | 1 | **8T-4121** | 6 | WASHER-HARD (11X21X2.5-MM THK) | |
| M | 17 | 1 | **8T-4137** | 4 | BOLT (M10X1.5X20-MM) | |

C-CHANGE FROM PREVIOUS TYPE
I-REFER TO HYDRAULIC INFORMATION SYSTEM
M-METRIC PART

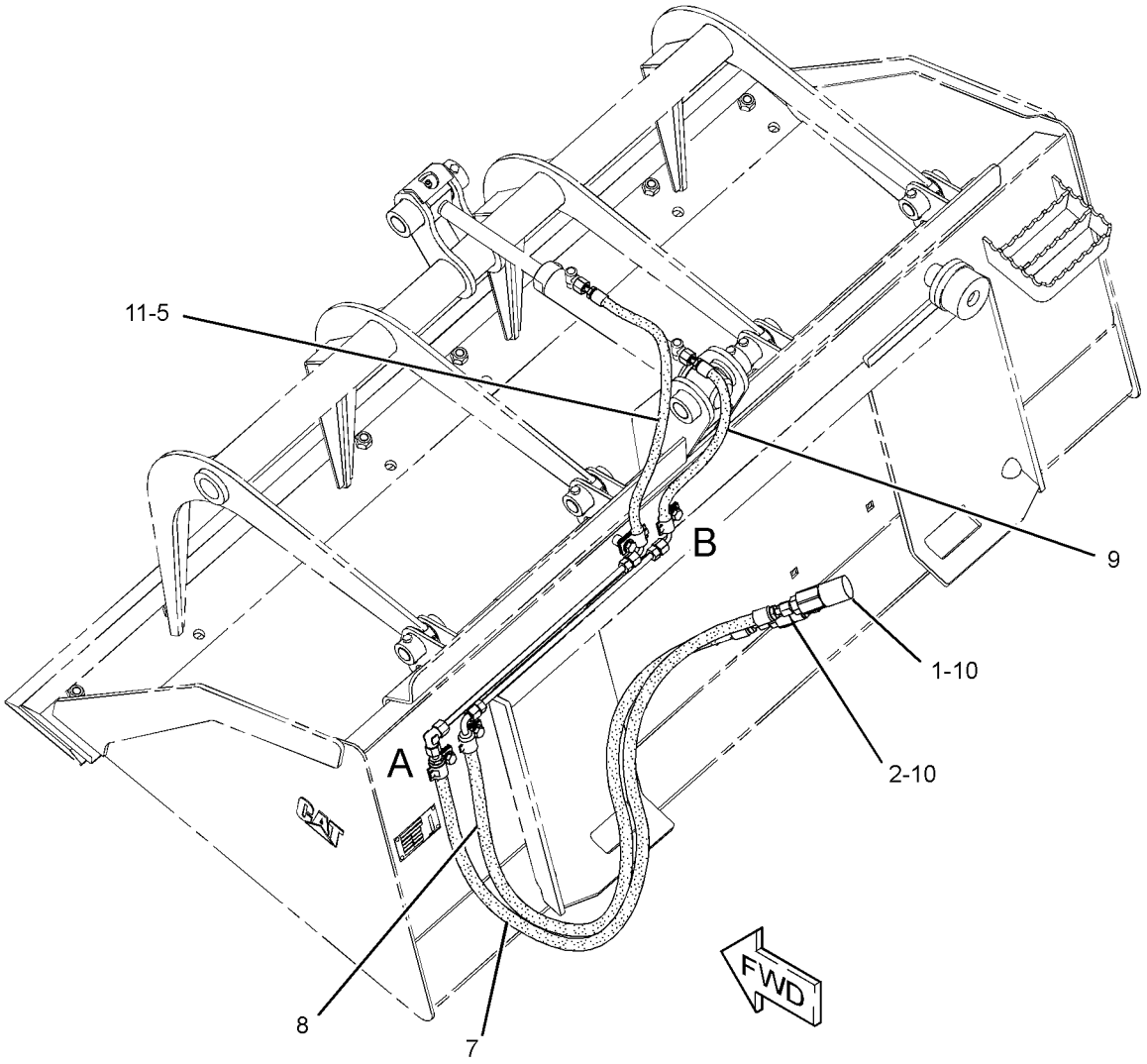


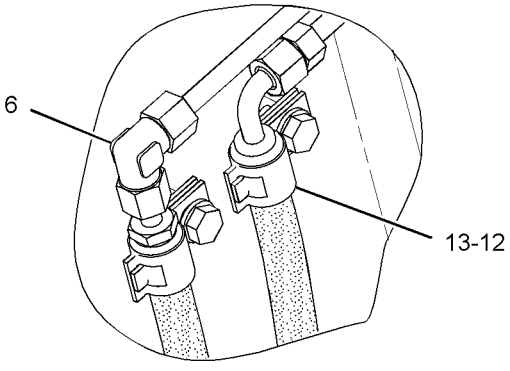


VIEW OF AREA A

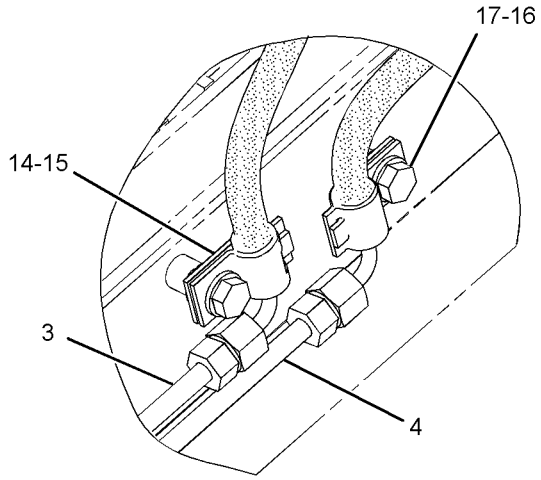


VIEW OF AREA B

GRAPHIC #1 **<END>** g01439824

# HYDRAULIC SYSTEM

## *177-1986* LINES GP-CONNECTING

**S/N: HEN6750-UP**

**PART OF 177-1989, 177-1990 BLADE AR**

**AN ATTACHMENT**

**SMCS-5057** **i01928980**

| NOTE | REF NO | GRAPHIC REF | PART NUMBER | QTY | PART NAME 1 2 3 4 5 6 (PRODUCT LEVEL) | SEE PAGE |
|---|---|---|---|---|---|---|
| | 1 | 1 | **153-2994** | 1 | COUPLER AS-QUICK DISCONNECT (FEMALE) | |
| | 2 | 1 | **153-2995** | 1 | FITTING AS (QUICK DISCONNECT, MALE) | |
| | 3 | 1 | **163-1385** | 2 | ELBOW | |
| I | 4 | 1 | **177-1910** | 2 | HOSE AS | |
| I | 5 | 1 | **177-1911** | 1 | HOSE AS | |
| I | 6 | 1 | **177-1912** | 1 | HOSE AS | |
| | 7 | 1 | *148-8319* | 2 | CONNECTOR AS | |
| | | | | | (EACH INCLUDES) | |
| | | 1 | **2M-9780** | 1 | SEAL-O-RING | |
| | | 1 | **6V-8397** | 1 | SEAL-O-RING | |
| | | 1 | **6V-8715** | 1 | CONNECTOR | |
| | 8 | 1 | **148-8378** | 2 | ELBOW AS | |
| | | | | | (EACH INCLUDES) | |
| | | 1 | **3J-1907** | 1 | SEAL-O-RING | |
| | | 1 | **6V-8397** | 1 | SEAL-O-RING | |
| | | 1 | **6V-8724** | 1 | ELBOW | |
| | 9 | 1 | **6V-8397** | 4 | SEAL-O-RING | |
| | 10 | 1 | **8T-4121** | 4 | WASHER-HARD (11X21X2.5-MM THK) | |
| M | 11 | 1 | **8T-4133** | 2 | NUT (M10X1.5-THD) | |
| M | 12 | 1 | **8T-4185** | 1 | BOLT (M10X1.5X50-MM) | |
| M | 13 | 1 | **8T-4195** | 1 | BOLT (M10X1.5X30-MM) | |
| | 14 | 1 | **8T-8192** | 2 | CLIP (SLOT) | |
| | 15 | 1 | **8T-8193** | 2 | CLIP (TAB) | |

I-REFER TO HYDRAULIC INFORMATION SYSTEM
M-METRIC PART

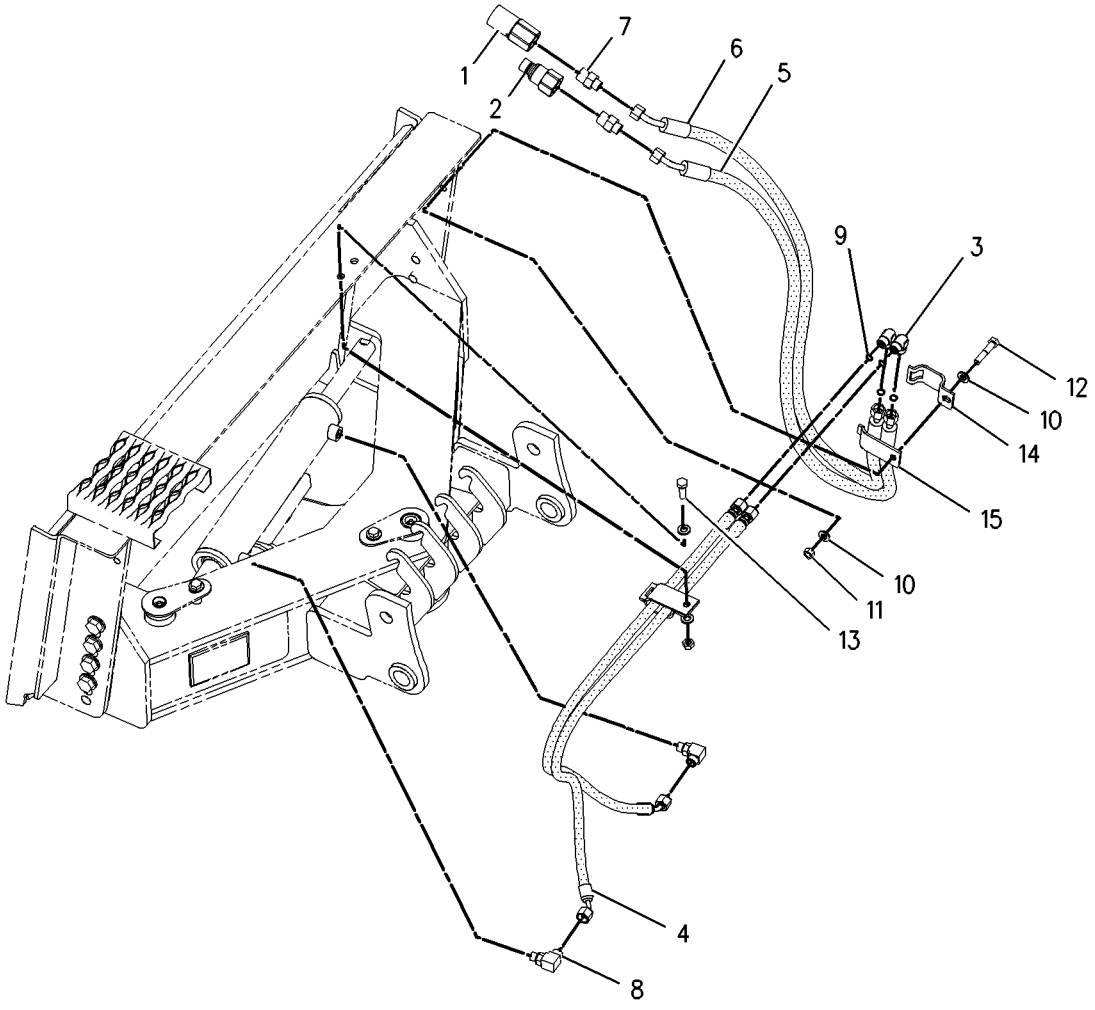


GRAPHIC #1 **<END>** g00978933

# HYDRAULIC SYSTEM

## *231-5273* LINES GP-CONNECTING

**S/N: HEN6750-UP**

**PART OF 231-5275, 231-5277 BLADE AR**

**AN ATTACHMENT**

**SMCS-5057** **i01964116**

| NOTE | REF NO | GRAPHIC REF | PART NUMBER | QTY | PART NAME 1 2 3 4 5 6 (PRODUCT LEVEL) | SEE PAGE |
|---|---|---|---|---|---|---|
| | 1 | 1 | **153-2994** | 1 | COUPLER AS-QUICK DISCONNECT (FEMALE) | |
| | 2 | 1 | **153-2995** | 1 | FITTING AS (QUICK DISCONNECT, MALE) | |
| I | 3 | 1 | **231-0124** | 2 | HOSE AS | |
| I | 4 | 1 | **231-0125** | 1 | HOSE AS | |
| I | 5 | 1 | **231-0126** | 2 | HOSE AS | |
| I | 6 | 1 | **231-0127** | 2 | HOSE AS | |
| I | 7 | 1 | **238-1003** | 1 | HOSE AS | |
| | 8 | 1 | *148-8315* | 2 | CONNECTOR AS | |
| | | | | | (EACH INCLUDES) | |
| | | 1 | **2M-9780** | 1 | SEAL-O-RING | |
| | | 1 | **6V-8642** | 1 | CONNECTOR | |
| | | 1 | **7J-9108** | 1 | SEAL-O-RING | |
| | 9 | 1 | *148-8336* | 6 | CONNECTOR AS | |
| | | | | | (EACH INCLUDES) | |
| | | 1 | **3J-1907** | 1 | SEAL-O-RING | |
| | | 1 | **6V-8397** | 1 | SEAL-O-RING | |
| | | 1 | **6V-8636** | 1 | CONNECTOR | |
| | 10 | 1 | *148-8342* | 2 | CONNECTOR AS | |
| | | | | | (EACH INCLUDES) | |
| | | 1 | **3K-0360** | 1 | SEAL-O-RING | |
| | | 1 | **6V-8632** | 1 | CONNECTOR | |
| | | 1 | **7J-9108** | 1 | SEAL-O-RING | |
| | 11 | 1 | **5P-1076** | 2 | WASHER-HARD (13.5X30X4-MM THK) | |
| | 12 | 1 | **7G-5984** | 1 | CLIP (TAB) | |
| | 13 | 1 | **7G-5985** | 1 | CLIP (SLOT) | |
| | 14 | 1 | **7G-5986** | 1 | GROMMET | |
| M | 15 | 1 | **8T-4139** | 2 | BOLT (M12X1.75X30-MM) | |

I-REFER TO HYDRAULIC INFORMATION SYSTEM
M-METRIC PART

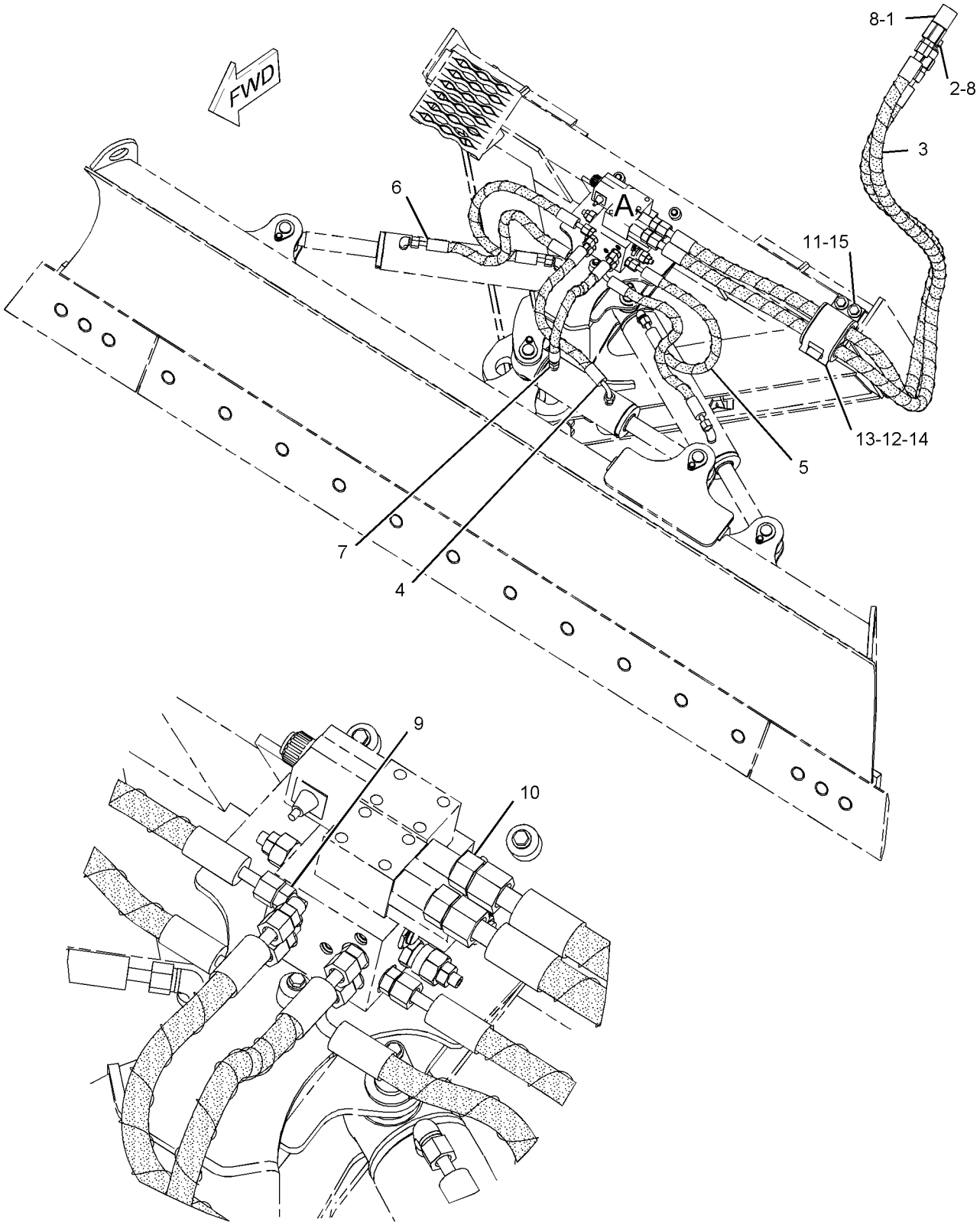


VIEW OF AREA A

GRAPHIC #1 **<END>** g01041993

# HYDRAULIC SYSTEM

## *161-0187* LINES GP-GRAPPLE

**S/N: HEN6750-UP**
**INDUSTRIAL**
**PART OF 157-7223, 157-7224, 157-7225, 217-6229 BUCKET AR-GRAPPLE**
**AN ATTACHMENT**

**SMCS-5057, 5555** **i01928983**

| NOTE | REF NO | GRAPHIC REF | PART NUMBER | QTY | PART NAME 1 2 3 4 5 6 (PRODUCT LEVEL) | SEE PAGE |
|---|---|---|---|---|---|---|
| | 1 | 1 | **3E-7404** | 2 | CLAMP-HOSE | |
| | 2 | 1 | **153-2994** | 1 | COUPLER AS-QUICK DISCONNECT (FEMALE) | |
| | 3 | 1 | **153-2995** | 1 | FITTING AS (QUICK DISCONNECT, MALE) | |
| | 4 | 1 | **161-0185** | 1 | TUBE AS | |
| | 5 | 1 | **161-0186** | 1 | TUBE AS | |
| | 6 | 1 | **161-0188** | 2 | TUBE AS | |
| I | 7 | 1 | **161-0189** | 2 | HOSE AS | |
| I | 8 | 1 | **161-0190** | 2 | HOSE AS | |
| | 9 | 1 | **163-1385** | 1 | ELBOW | |
| I | 10 | 1 | **163-9320** | 1 | HOSE AS | |
| I | 11 | 1 | **166-9312** | 1 | HOSE AS | |
| | 12 | 1 | *148-8319* | 2 | CONNECTOR AS | |
| | | | | | (EACH INCLUDES) | |
| | | 1 | **2M-9780** | 1 | SEAL-O-RING | |
| | | 1 | **6V-8397** | 1 | SEAL-O-RING | |
| | | 1 | **6V-8715** | 1 | CONNECTOR | |
| | 13 | 1 | **2V-3216** | 6 | CLIP | |
| | 14 | 1 | **6V-8397** | 13 | SEAL-O-RING | |
| | 15 | 1 | **7S-3916** | 2 | CLIP (TAB) | |
| | 16 | 1 | **7S-3919** | 2 | CLIP (SLOT) | |
| | 17 | 1 | **8T-4121** | 2 | WASHER-HARD (11X21X2.5-MM THK) | |
| M | 18 | 1 | **8T-4136** | 2 | BOLT (M10X1.5X25-MM) | |
| M | 19 | 1 | **8T-4171** | 4 | BOLT (M6X1X12-MM) | |
| | 20 | 1 | **9R-2004** | 2 | BLOCK | |

I-REFER TO HYDRAULIC INFORMATION SYSTEM
M-METRIC PART

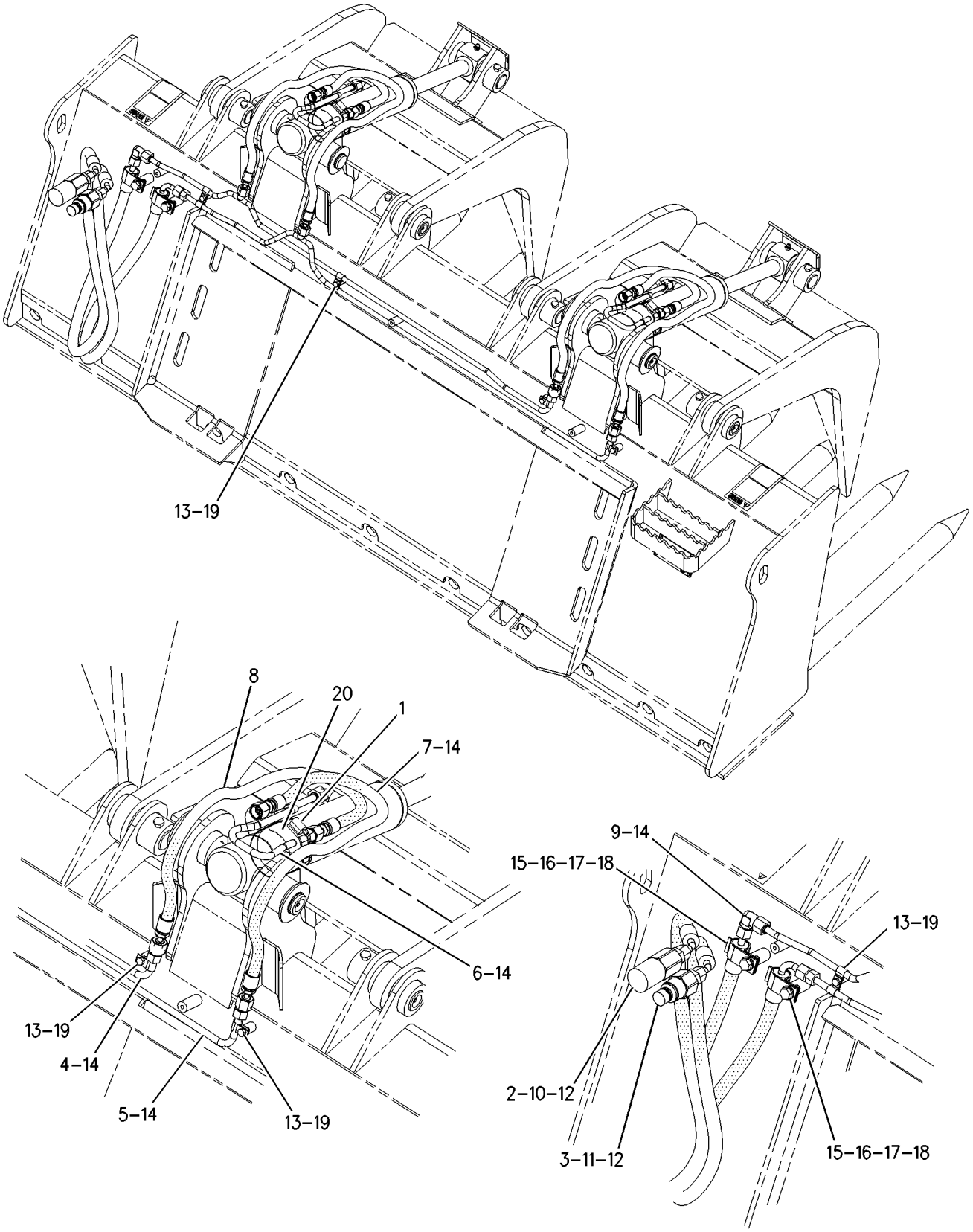


GRAPHIC #1 **<END>** g00733464

# HYDRAULIC SYSTEM

## *286-9250* LINES GP-GRAPPLE

**S/N: HEN6750-UP**
**2134-MM (84-IN)**
**PART OF 286-9301 BUCKET AR-GRAPPLE**
**AN ATTACHMENT**

**SMCS-5057, 5555** **i02742008**

| NOTE | REF NO | GRAPHIC REF | PART NUMBER | QTY | PART NAME 1 2 3 4 5 6 (PRODUCT LEVEL) | SEE PAGE |
|---|---|---|---|---|---|---|
| | 1 | 1 | **2H-7829** | 10 | CLIP | |
| | 2 | 1 | **9S-4200** | 2 | CLIP | |
| | 3 | 1 | **153-2994** | 1 | COUPLER AS-QUICK DISCONNECT (FEMALE) | |
| I | 4 | 1 | **161-0189** | 2 | HOSE AS | |
| | 5 | 1 | **163-1385** | 1 | ELBOW | |
| I | 6 | 1 | **177-1911** | 2 | HOSE AS | |
| | 7 | 1 | **185-7887** | 1 | COUPLER AS-QUICK DISCONNECT (MALE) | |
| I | 8 | 1 | **286-9263** | 2 | HOSE AS | |
| | 9 | 1 | **286-9265** | 1 | TUBE AS | |
| | 10 | 1 | **286-9266** | 1 | TUBE AS | |
| | 11 | 1 | **286-9267** | 1 | TUBE AS | |
| | 12 | 1 | **286-9268** | 1 | TUBE AS | |
| | 13 | 1 | **286-9271** | 1 | GUARD | |
| | 14 | 1 | *148-8319* | 2 | CONNECTOR AS | |
| | | | | | (EACH INCLUDES) | |
| | | 1 | **2M-9780** | 1 | SEAL-O-RING | |
| | | 1 | **6V-8397** | 1 | SEAL-O-RING | |
| | | 1 | **6V-8715** | 1 | CONNECTOR | |
| | 15 | 1 | **5P-4116** | 6 | WASHER-HARD (8.8X20.5X2-MM THK) | |
| | 16 | 1 | **6V-8397** | 13 | SEAL-O-RING | |
| | 17 | 1 | **7S-3916** | 2 | CLIP (TAB) | |
| | 18 | 1 | **7S-3919** | 2 | CLIP (SLOT) | |
| | 19 | 1 | **7X-7729** | 5 | WASHER (11X25X3-MM THK) | |
| M | 20 | 1 | **8T-4195** | 5 | BOLT (M10X1.5X30-MM) | |
| M | 21 | 1 | **8T-4200** | 6 | BOLT (M8X1.25X16-MM) | |

I-REFER TO HYDRAULIC INFORMATION SYSTEM
M-METRIC PART

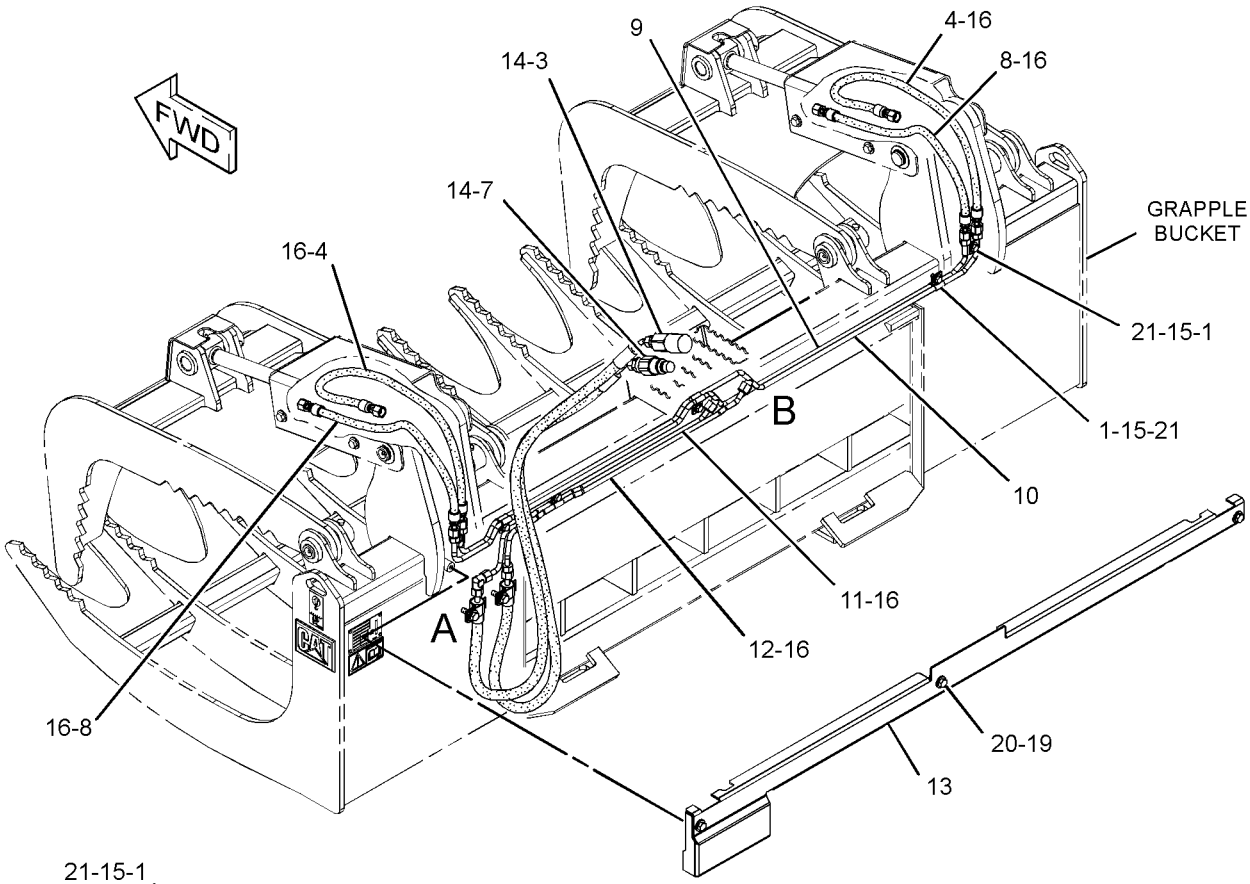


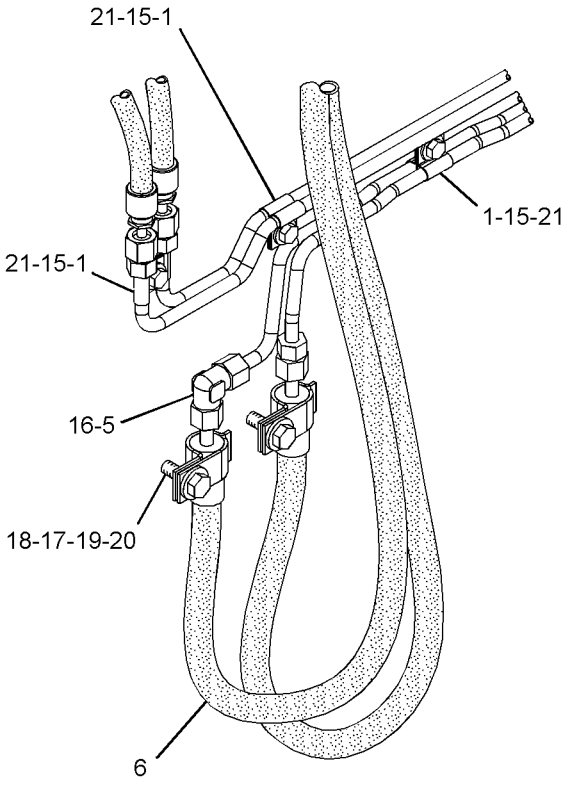


VIEW OF AREA A

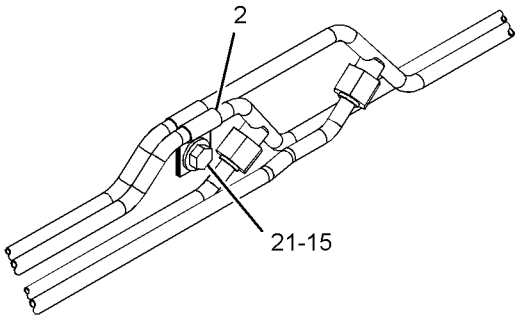


VIEW OF AREA B

GRAPHIC #1 **<END>** g01373025

# HYDRAULIC SYSTEM

## *286-9279* LINES GP-GRAPPLE

**S/N: HEN6750-UP**
**1829-MM (72-IN)**
**PART OF 286-9300 BUCKET AR-GRAPPLE**
**AN ATTACHMENT**

**SMCS-5057, 5555** **i02914649**

| NOTE | REF NO | GRAPHIC REF | PART NUMBER | QTY | PART NAME 1 2 3 4 5 6 (PRODUCT LEVEL) | SEE PAGE |
|---|---|---|---|---|---|---|
| | 1 | 1 | **2H-7829** | 10 | CLIP | |
| | 2 | 1 | **9S-4200** | 2 | CLIP | |
| | 3 | 1 | **153-2994** | 1 | COUPLER AS-QUICK DISCONNECT (FEMALE) | |
| I | 4 | 1 | **161-0189** | 2 | HOSE AS | |
| | 5 | 1 | **163-1385** | 1 | ELBOW | |
| I | 6 | 1 | **177-1911** | 2 | HOSE AS | |
| | 7 | 1 | **185-7887** | 1 | COUPLER AS-QUICK DISCONNECT (MALE) | |
| | 8 | 1 | **286-9249** | 1 | GUARD | |
| I | 9 | 1 | **286-9263** | 2 | HOSE AS | |
| | 10 | 1 | **286-9267** | 1 | TUBE AS | |
| | 11 | 1 | **286-9268** | 1 | TUBE AS | |
| | 12 | 1 | **286-9280** | 1 | TUBE AS | |
| | 13 | 1 | **286-9281** | 1 | TUBE AS | |
| | 14 | 1 | *148-8319* | 2 | CONNECTOR AS | |
| | | | | | (EACH INCLUDES) | |
| | | 1 | **2M-9780** | 1 | SEAL-O-RING | |
| | | 1 | **6V-8397** | 1 | SEAL-O-RING | |
| | | 1 | **6V-8715** | 1 | CONNECTOR | |
| | 15 | 1 | **8T-4224** | 6 | WASHER-HARD (8.8X16X2-MM THK) | |
| | 16 | 1 | **6V-8397** | 13 | SEAL-O-RING | |
| | 17 | 1 | **7S-3916** | 2 | CLIP (TAB) | |
| | 18 | 1 | **7S-3919** | 2 | CLIP (SLOT) | |
| | 19 | 1 | **7X-7729** | 5 | WASHER (11X25X3-MM THK) | |
| M | 20 | 1 | **8T-4195** | 5 | BOLT (M10X1.5X30-MM) | |
| M | 21 | 1 | **8T-4200** | 6 | BOLT (M8X1.25X16-MM) | |
| | 22 | 1 | **5P-5148** | 2 | STRAP-TIE | |

I-REFER TO HYDRAULIC INFORMATION SYSTEM
M-METRIC PART

*286-9279* **LINES GP-GRAPPLE** *(contd.)* **i02914649**

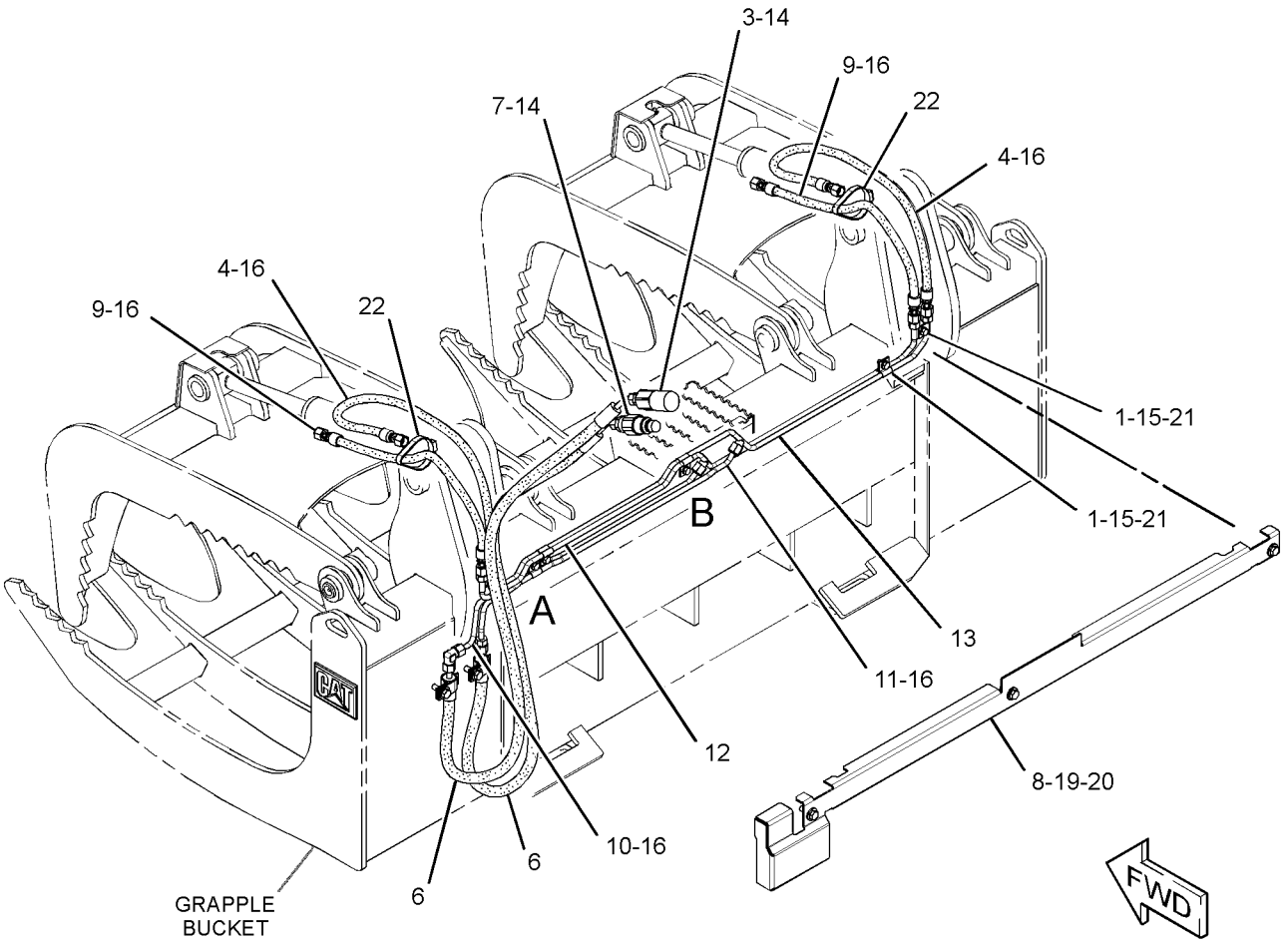


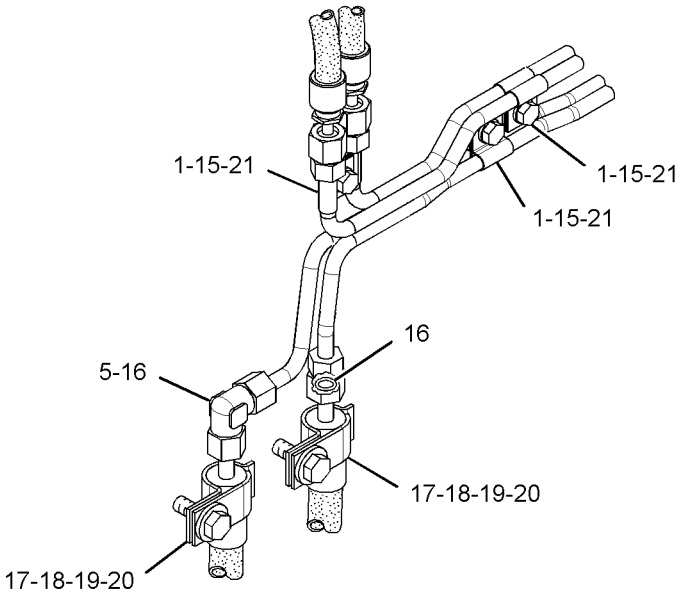


VIEW OF AREA A
(HOSES REMOVED FOR CLARITY)

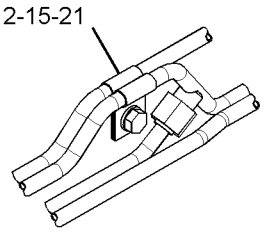


VIEW OF AREA B

GRAPHIC #1 **<END>** g01453768

## *218-5630* LINES GP-HYDRAULIC FAN

**S/N: HEN6750-UP**

**PART OF 218-5950 HEATER AR-CAB, 218-5850 INSTALLATION GP**

**AN ATTACHMENT**

**SMCS-5057** **i01983989**

| NOTE | REF NO | GRAPHIC REF | PART NUMBER | QTY | PART NAME 1 2 3 4 5 6 (PRODUCT LEVEL) | SEE PAGE |
|---|---|---|---|---|---|---|
| | 1 | 1 | **8C-3451** | 1 | CAP-DUST | |
| I | 2 | 1 | **218-5584** | 1 | HOSE AS | |
| I | 3 | 1 | **218-5588** | 1 | HOSE AS | |
| | 4 | 1 | *229-5466* | 1 | FITTING AS | |
| | | 1 | **3J-7354** | 2 | SEAL-O-RING | |
| | | 1 | **229-5465** | 2 | FITTING | |
| | 5 | 1 | *148-8315* | 1 | CONNECTOR AS | |
| | | 1 | **2M-9780** | 1 | SEAL-O-RING | |
| | | 1 | **6V-8642** | 1 | CONNECTOR | |
| | | 1 | **7J-9108** | 1 | SEAL-O-RING | |
| | 6 | 1 | *148-8316* | 2 | CONNECTOR AS | |
| | | | | | (EACH INCLUDES) | |
| | | 1 | **3J-7354** | 1 | SEAL-O-RING | |
| | | 1 | **4J-5477** | 1 | SEAL-O-RING | |
| | | 1 | **6V-8647** | 1 | CONNECTOR | |
| | 7 | 1 | **4S-1962** | 1 | CLIP | |
| | 8 | 1 | **6V-1228** | 1 | CLIP | |
| | 9 | 1 | **6V-9829** | 1 | CAP AS | |

I-REFER TO HYDRAULIC INFORMATION SYSTEM

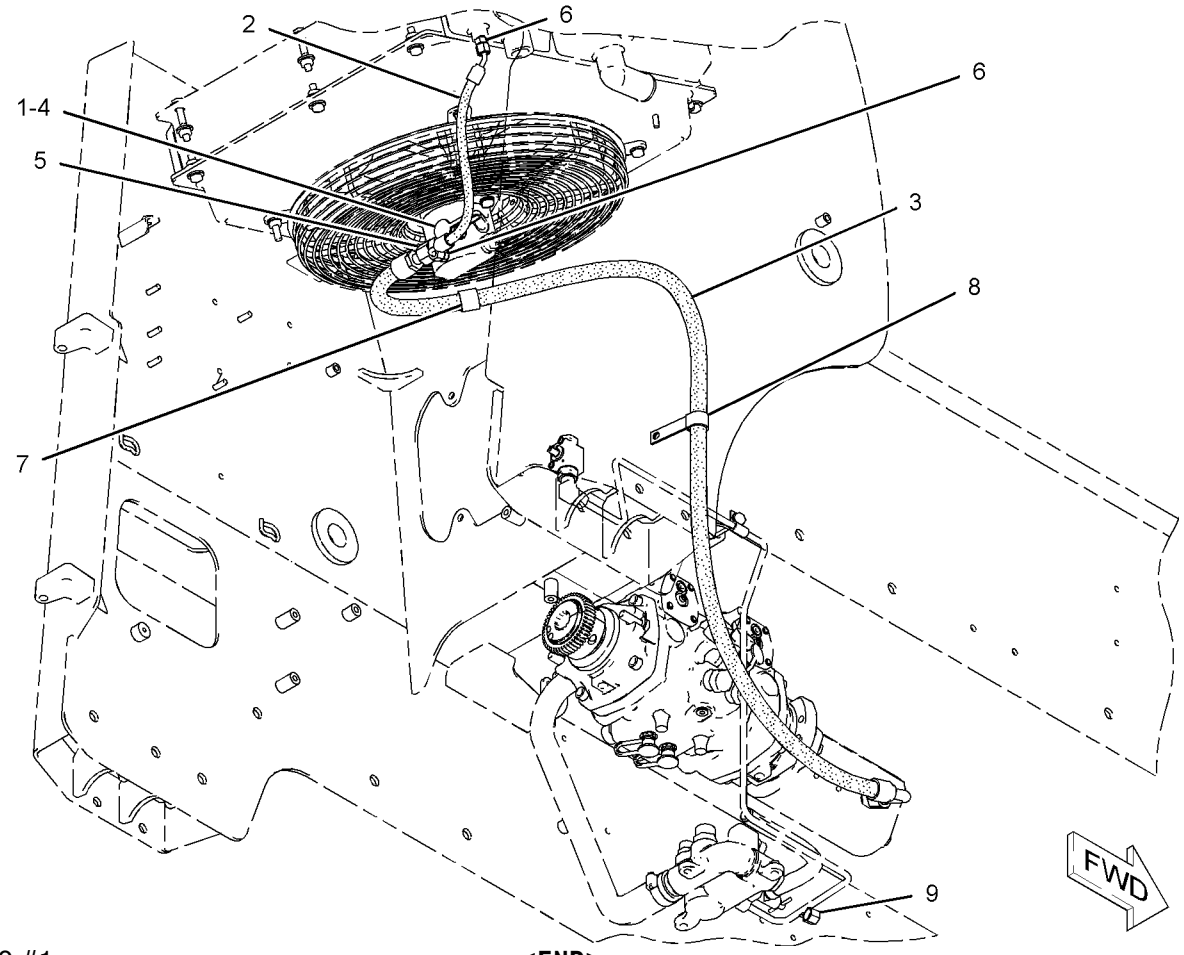


GRAPHIC #1 **<END>** g01028189

# HYDRAULIC SYSTEM

## *218-6565* LINES GP-HYDRAULIC FAN

**S/N: HEN6750-UP**
**PART OF 218-6050 AIR CONDITIONER AR**
**AN ATTACHMENT**

**SMCS-5057** **i01983966**

| NOTE | REF NO | GRAPHIC REF | PART NUMBER | QTY | PART NAME 1 2 3 4 5 6 (PRODUCT LEVEL) | SEE PAGE |
|---|---|---|---|---|---|---|
| | 1 | 1 | **8C-3451** | 1 | CAP-DUST | |
| I | 2 | 1 | **218-5584** | 1 | HOSE AS | |
| I | 3 | 1 | **218-6876** | 1 | HOSE AS | |
| I | 4 | 1 | **218-6877** | 1 | HOSE AS | |
| | 5 | 1 | *229-5466* | 1 | FITTING AS | |
| | | 1 | **3J-7354** | 2 | SEAL-O-RING | |
| | | 1 | **229-5465** | 2 | FITTING | |
| I | 6 | 1 | **233-5666** | 1 | HOSE AS | |
| | 7 | 1 | *148-8315* | 3 | CONNECTOR AS | |
| | | | | | (EACH INCLUDES) | |
| | | 1 | **2M-9780** | 1 | SEAL-O-RING | |
| | | 1 | **6V-8642** | 1 | CONNECTOR | |
| | | 1 | **7J-9108** | 1 | SEAL-O-RING | |
| | 8 | 1 | *148-8316* | 3 | CONNECTOR AS | |
| | | | | | (EACH INCLUDES) | |
| | | 1 | **3J-7354** | 1 | SEAL-O-RING | |
| | | 1 | **4J-5477** | 1 | SEAL-O-RING | |
| | | 1 | **6V-8647** | 1 | CONNECTOR | |
| | 9 | 1 | **4S-1962** | 1 | CLIP | |
| | 10 | 1 | **6V-1228** | 1 | CLIP | |
| | 11 | 1 | **7D-7233** | 1 | CLIP | |

I-REFER TO HYDRAULIC INFORMATION SYSTEM

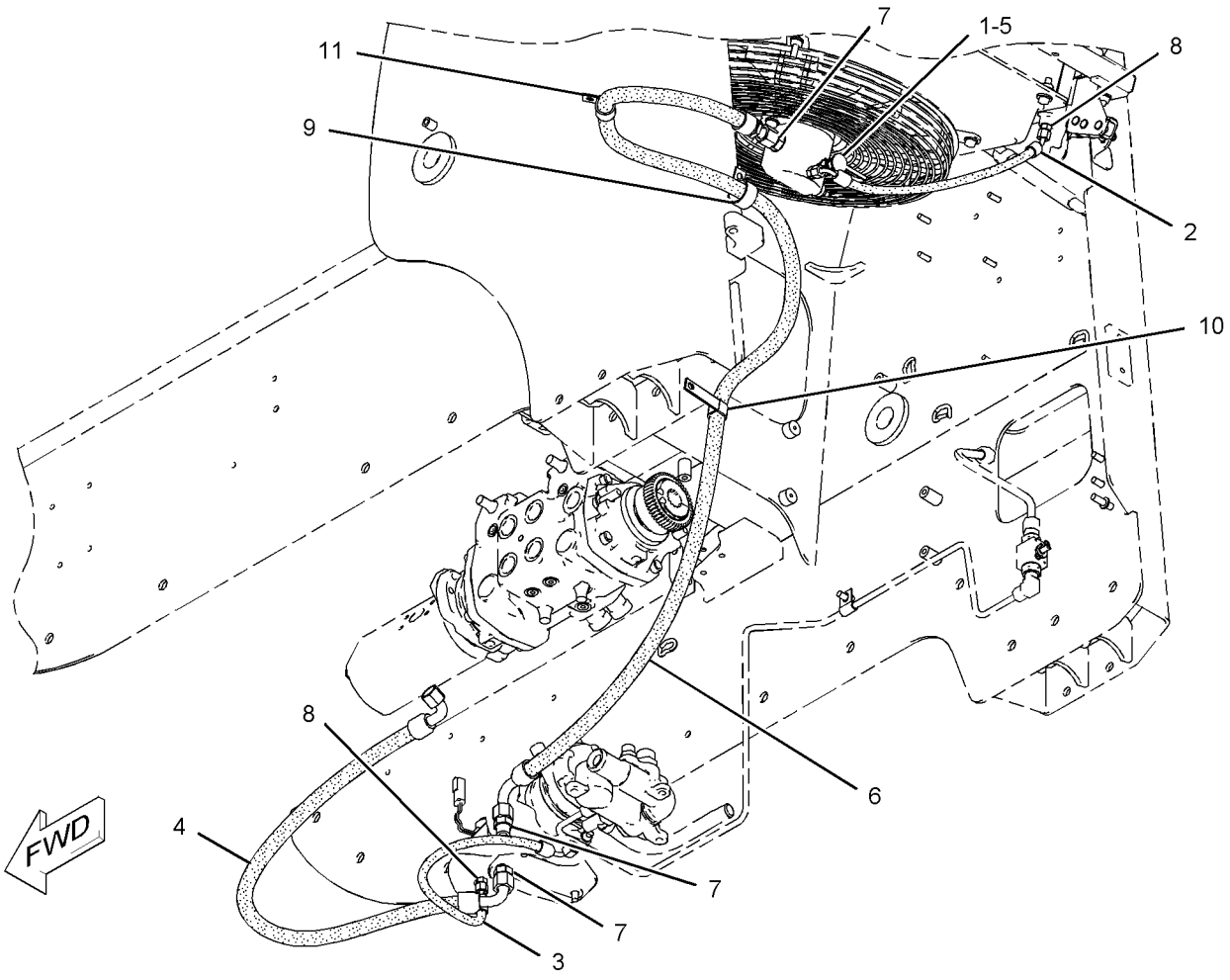


GRAPHIC #1 **<END>** g01028175

# *218-5625* LINES GP-HYDRAULIC OIL COOLER

**S/N: HEN6750-UP**

**PART OF 278-1237, 295-7220 HYDRAULIC AR**

**SMCS-5057** **i02235599**

| NOTE | REF NO | GRAPHIC REF | PART NUMBER | QTY | PART NAME 1 2 3 4 5 6 (PRODUCT LEVEL) | SEE PAGE |
|---|---|---|---|---|---|---|
| | 1 | 1 | **3S-2093** | 1 | STRAP-CABLE | |
| | 2 | 1 | *106-8715* | 1 | ELBOW AS | |
| | | 1 | **3D-2824** | 1 | SEAL-O-RING | |
| | | 1 | **6V-9746** | 1 | SEAL-O-RING | |
| | | 1 | **8C-8400** | 1 | ELBOW | |
| I | 3 | 1 | **218-5585** | 1 | HOSE AS | |
| I | 4 | 1 | **218-6304** | 1 | HOSE AS | |
| | 5 | 1 | *148-8347* | 1 | ELBOW AS | |
| | | 1 | **3D-2824** | 1 | SEAL-O-RING | |
| | | 1 | **6V-9007** | 1 | ELBOW | |
| | | 1 | **6V-9746** | 1 | SEAL-O-RING | |
| | 6 | 1 | **5D-0718** | 1 | CLIP | |
| | 7 | 1 | **092-2467** | 1 | SPACER (10.5X2X45-MM THK) | |
| | 8 | 1 | **6V-1889** | 2 | CLIP | |
| | 9 | 1 | **7X-7729** | 1 | WASHER (11X25X3-MM THK) | |
| | 10 | 1 | **8T-4121** | 4 | WASHER-HARD (11X21X2.5-MM THK) | |
| M | 11 | 1 | **8T-4133** | 3 | NUT (M10X1.5-THD) | |
| | 12 | 1 | **234-9525** | 1 | STUD (M10X1.5-THD) | |
| M | 13 | 1 | **8T-4195** | 2 | BOLT (M10X1.5X30-MM) | |
| | 14 | 1 | **7K-1181** | 1 | STRAP-CABLE | |
| | 15 | 1 | **4P-7581** | 1 | CLIP | |

I-REFER TO HYDRAULIC INFORMATION SYSTEM
M-METRIC PART

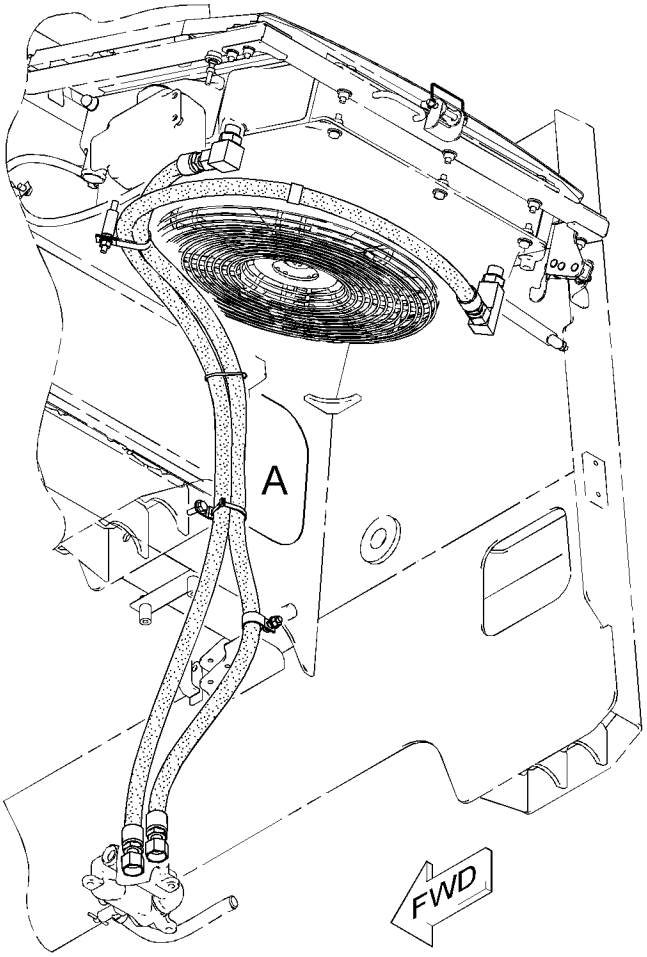


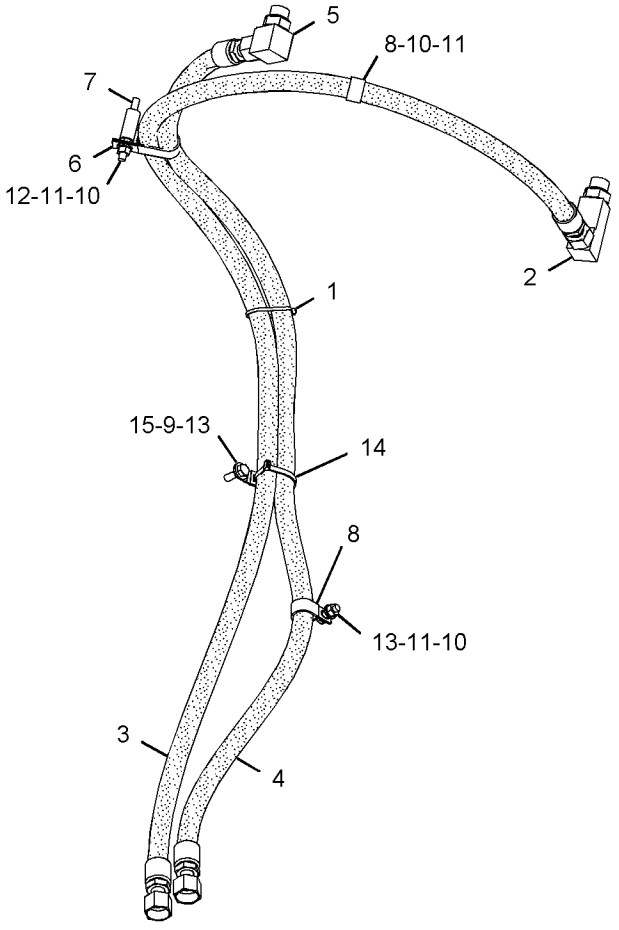


VIEW OF AREA A

GRAPHIC #1 **<END>** g01129072

# HYDRAULIC SYSTEM

## *218-5731* LINES GP-LIFT CYLINDER

**S/N: HEN6750-UP**
**PART OF 218-5750 HYDRAULIC AR**
**AN ATTACHMENT**

**SMCS-5057, 5102** **i02559811**

| NOTE | REF NO | GRAPHIC REF | PART NUMBER | QTY | PART NAME 1 2 3 4 5 6 (PRODUCT LEVEL) | SEE PAGE |
|---|---|---|---|---|---|---|
| | 1 | 1 | **6V-3582** | 2 | CLAMP-HOSE | |
| | 2 | 1 | **142-8997** | 2 | BLOCK | |
| | 3 | 1 | **187-1273** | 2 | TUBE AS | |
| | 4 | 1 | **187-1274** | 1 | TUBE AS | |
| | 5 | 1 | **187-1275** | 1 | TUBE AS | |
| C | 6 | 1 | **285-9286** | 1 | BLOCK | |
| I | 7 | 1 | **218-5739** | 4 | HOSE AS | |
| | 8 | 1 | **289-3752** | 1 | TUBE AS | |
| | 9 | 1 | **289-3753** | 1 | TUBE AS | |
| | 10 | 1 | **289-3754** | 1 | TUBE AS | |
| | 11 | 1 | **289-3755** | 1 | TUBE AS | |
| | 12 | 1 | **218-5764** | 1 | PLATE | |
| | 13 | 1 | *148-8341* | 2 | CONNECTOR AS | |
| | | | | | (EACH INCLUDES) | |
| | | 1 | **3D-2824** | 1 | SEAL-O-RING | |
| | | 1 | **6V-8713** | 1 | CONNECTOR | |
| | | 1 | **7J-9108** | 1 | SEAL-O-RING | |
| | 14 | 1 | **6V-8398** | 13 | SEAL-O-RING | |
| | 15 | 1 | **7J-9108** | 2 | SEAL-O-RING | |
| | 16 | 1 | **8T-4121** | 2 | WASHER-HARD (11X21X2.5-MM THK) | |
| M | 17 | 1 | **8T-4136** | 2 | BOLT (M10X1.5X25-MM) | |

C-CHANGE FROM PREVIOUS TYPE
I-REFER TO HYDRAULIC INFORMATION SYSTEM
M-METRIC PART

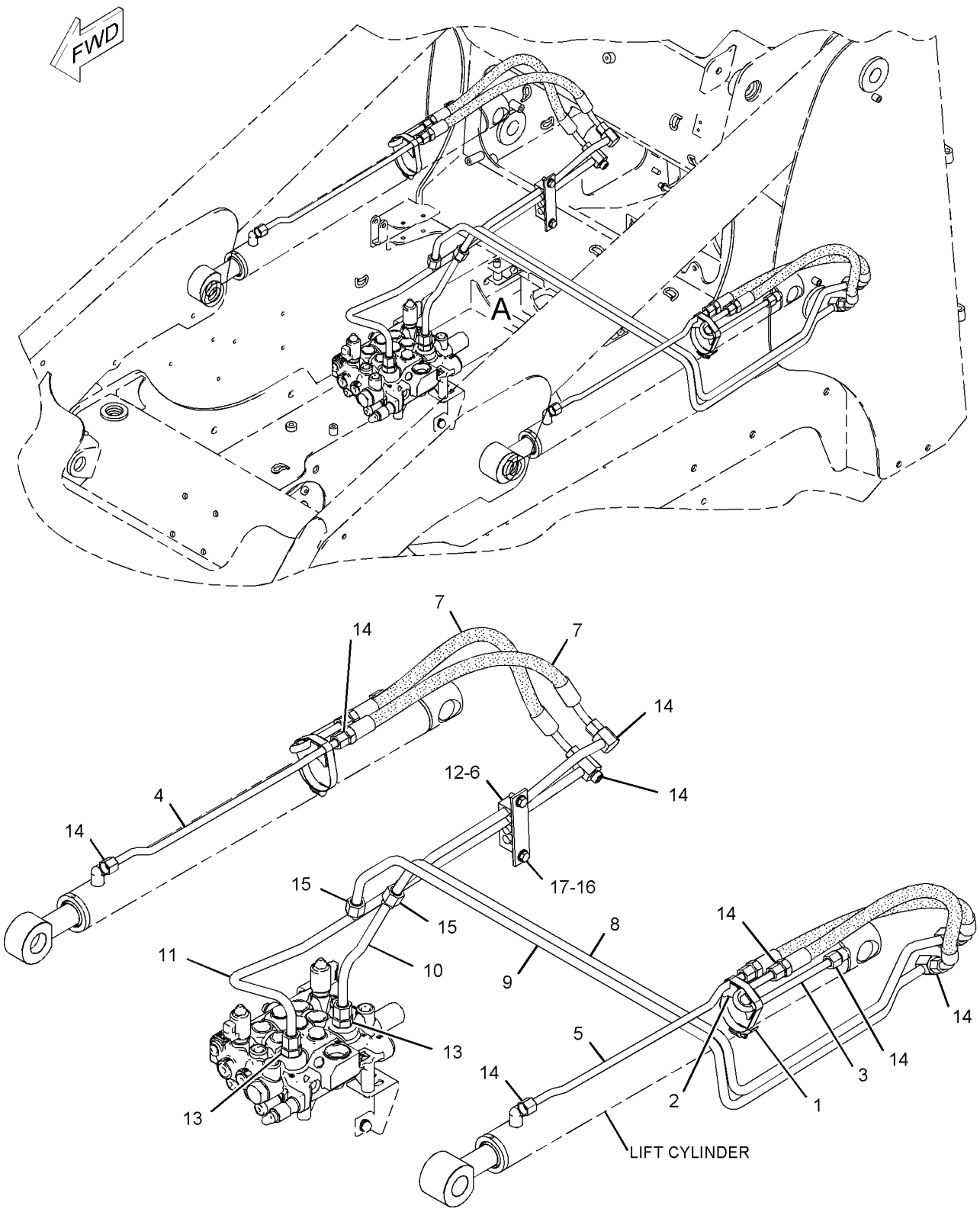


VIEW OF AREA A

GRAPHIC #1

**<END>**

g01021340

# HYDRAULIC SYSTEM

## *218-5733* LINES GP-LIFT CYLINDER

**S/N: HEN6750-UP**
**WITH WORK TOOL POSITIONER**
**PART OF 218-5751 HYDRAULIC AR**
**AN ATTACHMENT**

**SMCS-5057, 5102** **i02559812**

| NOTE | REF NO | GRAPHIC REF | PART NUMBER | QTY | PART NAME 1 2 3 4 5 6 (PRODUCT LEVEL) | SEE PAGE |
|---|---|---|---|---|---|---|
| | 1 | 1 | **6V-3582** | 2 | CLAMP-HOSE | |
| | 2 | 1 | **142-8997** | 2 | BLOCK | |
| | 3 | 1 | **187-1273** | 2 | TUBE AS | |
| | 4 | 1 | **187-1274** | 1 | TUBE AS | |
| | 5 | 1 | **187-1275** | 1 | TUBE AS | |
| C | 6 | 1 | **285-9286** | 1 | BLOCK | |
| | 7 | 1 | **289-3750** | 1 | TUBE AS | |
| | 8 | 1 | **289-3751** | 1 | TUBE AS | |
| I | 9 | 1 | **218-5739** | 4 | HOSE AS | |
| | 10 | 1 | **289-3752** | 1 | TUBE AS | |
| | 11 | 1 | **289-3753** | 1 | TUBE AS | |
| | 12 | 1 | **289-3755** | 1 | TUBE AS | |
| | 13 | 1 | **289-3756** | 1 | TUBE AS | |
| | 14 | 1 | **218-5764** | 1 | PLATE | |
| | 15 | 1 | *148-8315* | 1 | CONNECTOR AS | |
| | | 1 | **2M-9780** | 1 | SEAL-O-RING | |
| | | 1 | **6V-8642** | 1 | CONNECTOR | |
| | | 1 | **7J-9108** | 1 | SEAL-O-RING | |
| | 16 | 1 | *148-8341* | 2 | CONNECTOR AS | |
| | | | | | (EACH INCLUDES) | |
| | | 1 | **3D-2824** | 1 | SEAL-O-RING | |
| | | 1 | **6V-8713** | 1 | CONNECTOR | |
| | | 1 | **7J-9108** | 1 | SEAL-O-RING | |
| | 17 | 1 | *148-8390* | 1 | ELBOW AS | |
| | | 1 | **2M-9780** | 1 | SEAL-O-RING | |
| | | 1 | **6V-8626** | 1 | ELBOW | |
| | | 1 | **7J-9108** | 1 | SEAL-O-RING | |
| | 18 | 1 | **6V-8398** | 13 | SEAL-O-RING | |
| | 19 | 1 | **7J-9108** | 3 | SEAL-O-RING | |
| | 20 | 1 | **8T-4121** | 2 | WASHER-HARD (11X21X2.5-MM THK) | |
| M | 21 | 1 | **8T-4136** | 2 | BOLT (M10X1.5X25-MM) | |

C-CHANGE FROM PREVIOUS TYPE
I-REFER TO HYDRAULIC INFORMATION SYSTEM
M-METRIC PART

## *218-5733* **LINES GP-LIFT CYLINDER** *(contd.)* **i02559812**

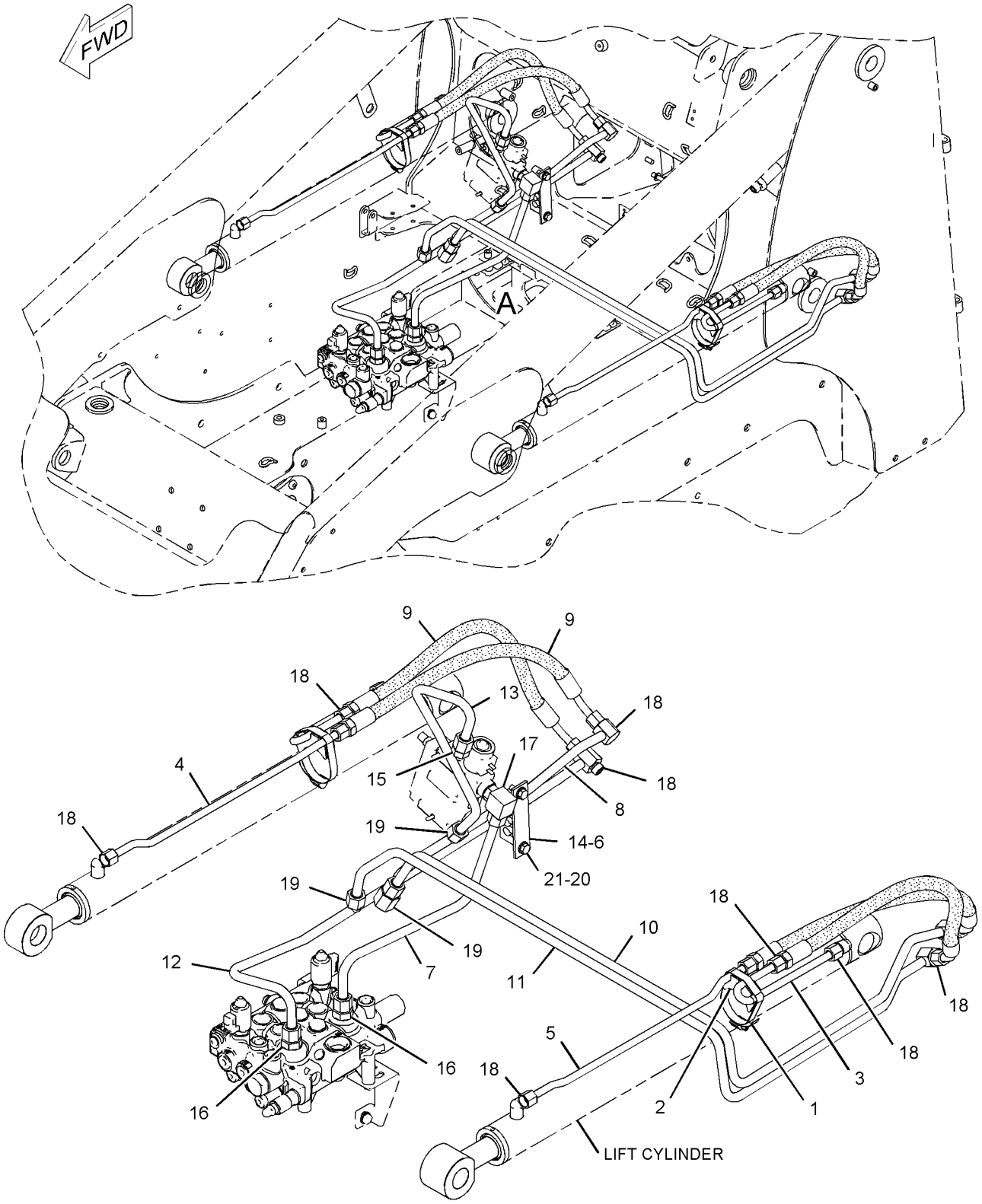


VIEW OF AREA A

GRAPHIC #1

**<END>**

g01021413

## *218-5617* LINES GP-LOWERING CONTROL–MANUAL

**S/N: HEN6750-UP**
**PART OF 218-6509 COUPLER AR-QUICK**
**AN ATTACHMENT**

**SMCS-5057, 5147, 5154** **i02753073**

| NOTE | REF NO | GRAPHIC REF | PART NUMBER | QTY | PART NAME 1 2 3 4 5 6 (PRODUCT LEVEL) | SEE PAGE |
|---|---|---|---|---|---|---|
| Y | 1 | 1 | **112-1817** | 1 | VALVE GP-MANUAL (LOWERING CONTROL) | 343 |
| | 2 | 1 | **218-5579** | 1 | TUBE AS | |
| | 3 | 1 | **218-5827** | 1 | TUBE AS | |
| | 4 | 1 | **269-9404** | 1 | BRACKET | |
| | 5 | 1 | **270-0216** | 1 | BRACKET | |
| CY | 6 | 1 | *298-7198* | 1 | CABLE GP-CONTROL (MANUAL LOWERING) (LOWERING CONTROL) | 479 |
| | 7 | 1 | **283-9264** | 1 | BRACKET | |
| | 8 | 1 | *148-8365* | 1 | ELBOW AS | |
| | | 1 | **3J-1907** | 1 | SEAL-O-RING | |
| | | 1 | **6V-8398** | 1 | SEAL-O-RING | |
| | | 1 | **8T-6876** | 1 | ELBOW | |
| | 9 | 1 | *148-8378* | 1 | ELBOW AS | |
| | | 1 | **3J-1907** | 1 | SEAL-O-RING | |
| | | 1 | **6V-8397** | 1 | SEAL-O-RING | |
| | | 1 | **6V-8724** | 1 | ELBOW | |
| | 10 | 1 | **4B-4274** | 1 | WASHER (5.5X13X1.2-MM THK) | |
| | 11 | 1 | **5P-9297** | 1 | CLIP | |
| | 12 | 1 | **6V-8397** | 1 | SEAL-O-RING | |
| M | 13 | 1 | **8T-0287** | 1 | BOLT (M5X0.8X10-MM) | |
| | 14 | 1 | **8M-4791** | 2 | WASHER-HARD (13.5X27X3-MM THK) | |
| M | 15 | 1 | **8T-0285** | 2 | SCREW-MACHINE (M4X0.7X12-MM) | |
| | 16 | 1 | **8T-4121** | 5 | WASHER-HARD (11X21X2.5-MM THK) | |
| M | 17 | 1 | **8T-4133** | 2 | NUT (M10X1.5-THD) | |
| M | 18 | 1 | **8T-4136** | 2 | BOLT (M10X1.5X25-MM) | |
| M | 19 | 1 | **8T-4137** | 1 | BOLT (M10X1.5X20-MM) | |
| | 20 | 1 | **9X-1481** | 1 | WASHER (13X25.4X1.6-MM THK) | |

C-CHANGE FROM PREVIOUS TYPE
M-METRIC PART
Y-SEPARATE ILLUSTRATION

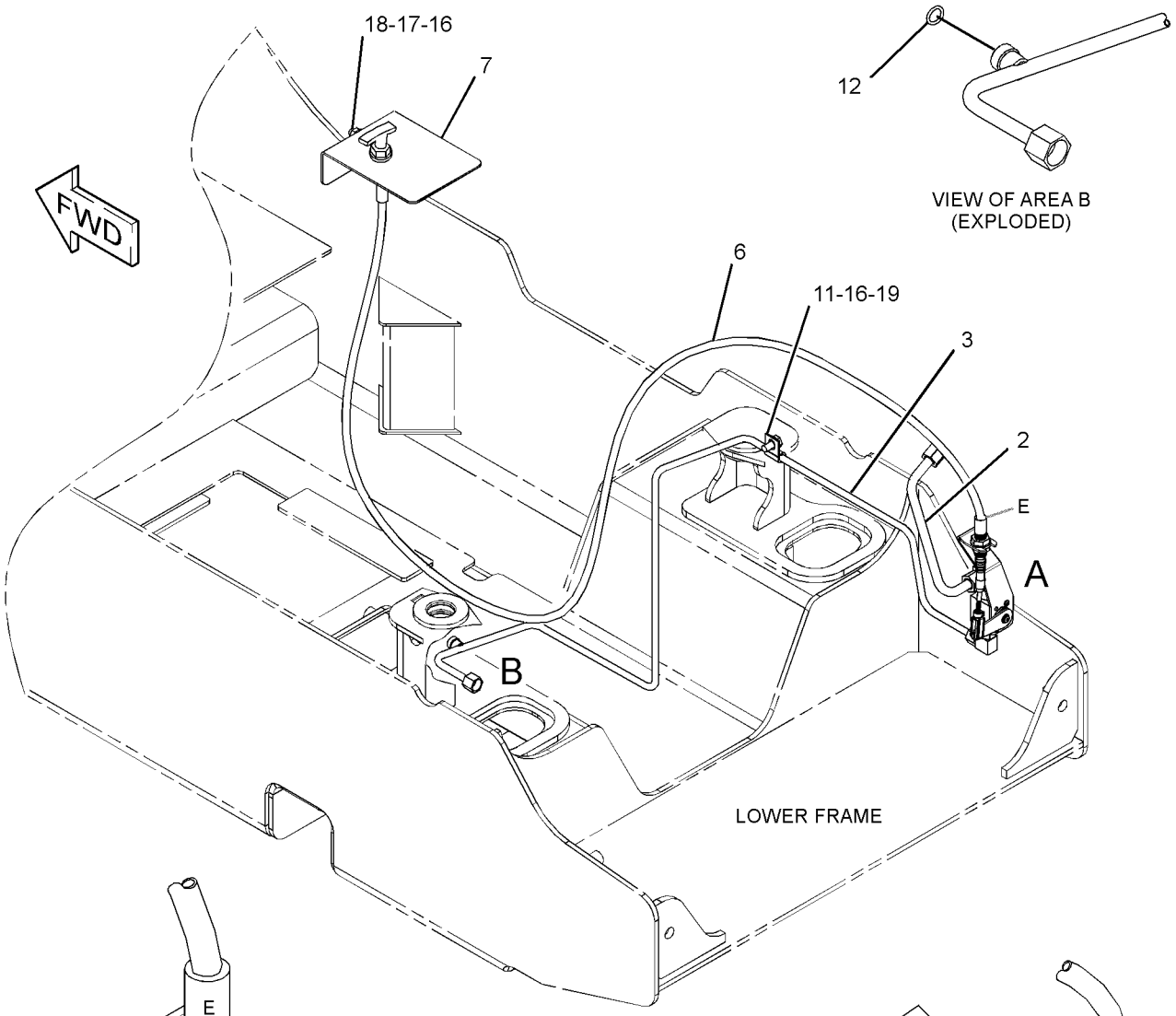





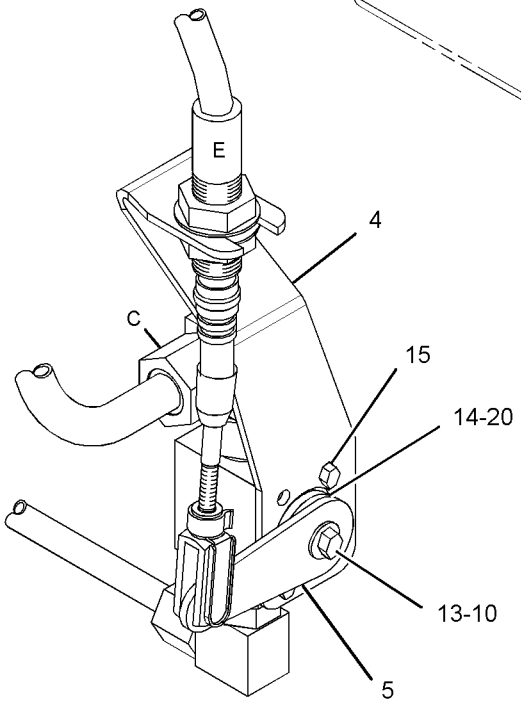


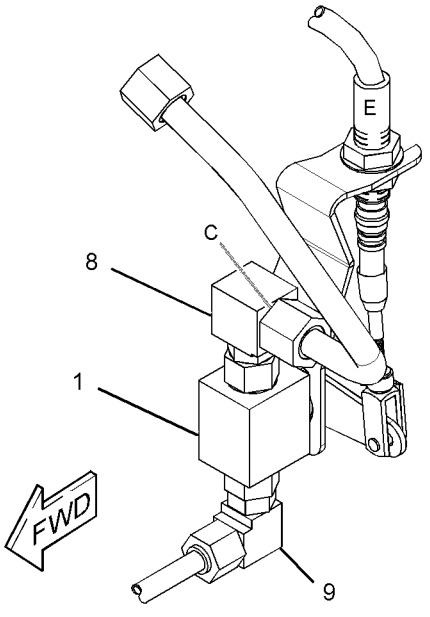


GRAPHIC #1 **<END>** g01362481

## *218-5631* LINES GP-PILOT—DIRECTION, SPEED

**S/N: HEN6750-UP**

**PART OF 278-1237, 295-7220 HYDRAULIC AR**

**SMCS-5057, 5059** **i02757329**

| NOTE | REF NO | GRAPHIC REF | PART NUMBER | QTY | PART NAME 1 2 3 4 5 6 (PRODUCT LEVEL) | SEE PAGE |
|---|---|---|---|---|---|---|
| | 1 | 1 | **6V-0852** | 1 | CAP-DUST | |
| | 2 | 1 | **7K-1181** | 2 | STRAP-CABLE | |
| | 3 | 1 | *148-8423* | 1 | TEE AS | |
| | | 1 | **8T-3311** | 1 | TEE | |
| | | 1 | **3J-1907** | 1 | SEAL-O-RING | |
| | | 1 | **4J-5477** | 1 | SEAL-O-RING | |
| | 4 | 1 | *164-5567* | 1 | COUPLER AS-QUICK DISCONNECT | |
| | | 1 | **6V-3965** | 1 | COUPLER-QUICK DISCONNECT | |
| | | 1 | **3J-1907** | 1 | SEAL-O-RING | |
| | 5 | 1 | **193-8392** | 2 | HOSE AS | |
| | 6 | 1 | **193-8393** | 2 | HOSE AS | |
| | 7 | 1 | **218-5770** | 1 | HOSE AS | |
| | 8 | 1 | **218-5968** | 1 | BRACKET | |
| | 9 | 1 | **218-6864** | 1 | HOSE AS | |
| | 10 | 1 | *148-8316* | 2 | CONNECTOR AS | |
| | | | | | (EACH INCLUDES) | |
| | | 1 | **6V-8647** | 1 | CONNECTOR | |
| | | 1 | **3J-7354** | 1 | SEAL-O-RING | |
| | | 1 | **4J-5477** | 1 | SEAL-O-RING | |
| | 11 | 1 | *148-8325* | 5 | CONNECTOR AS | |
| | | | | | (EACH INCLUDES) | |
| | | 1 | **6V-8641** | 1 | CONNECTOR | |
| | | 1 | **3J-1907** | 1 | SEAL-O-RING | |
| | | 1 | **4J-5477** | 1 | SEAL-O-RING | |
| | 12 | 1 | *148-8369* | 2 | ELBOW AS | |
| | | | | | (EACH INCLUDES) | |
| | | 1 | **6V-8628** | 1 | ELBOW | |
| | | 1 | **3J-7354** | 1 | SEAL-O-RING | |
| | | 1 | **4J-5477** | 1 | SEAL-O-RING | |
| | 13 | 1 | *150-4043* | 1 | CONNECTOR AS | |
| | | 1 | **6V-9873** | 1 | CONNECTOR | |
| | | 1 | **3J-1907** | 1 | SEAL-O-RING | |
| | | 1 | **6V-8398** | 1 | SEAL-O-RING | |

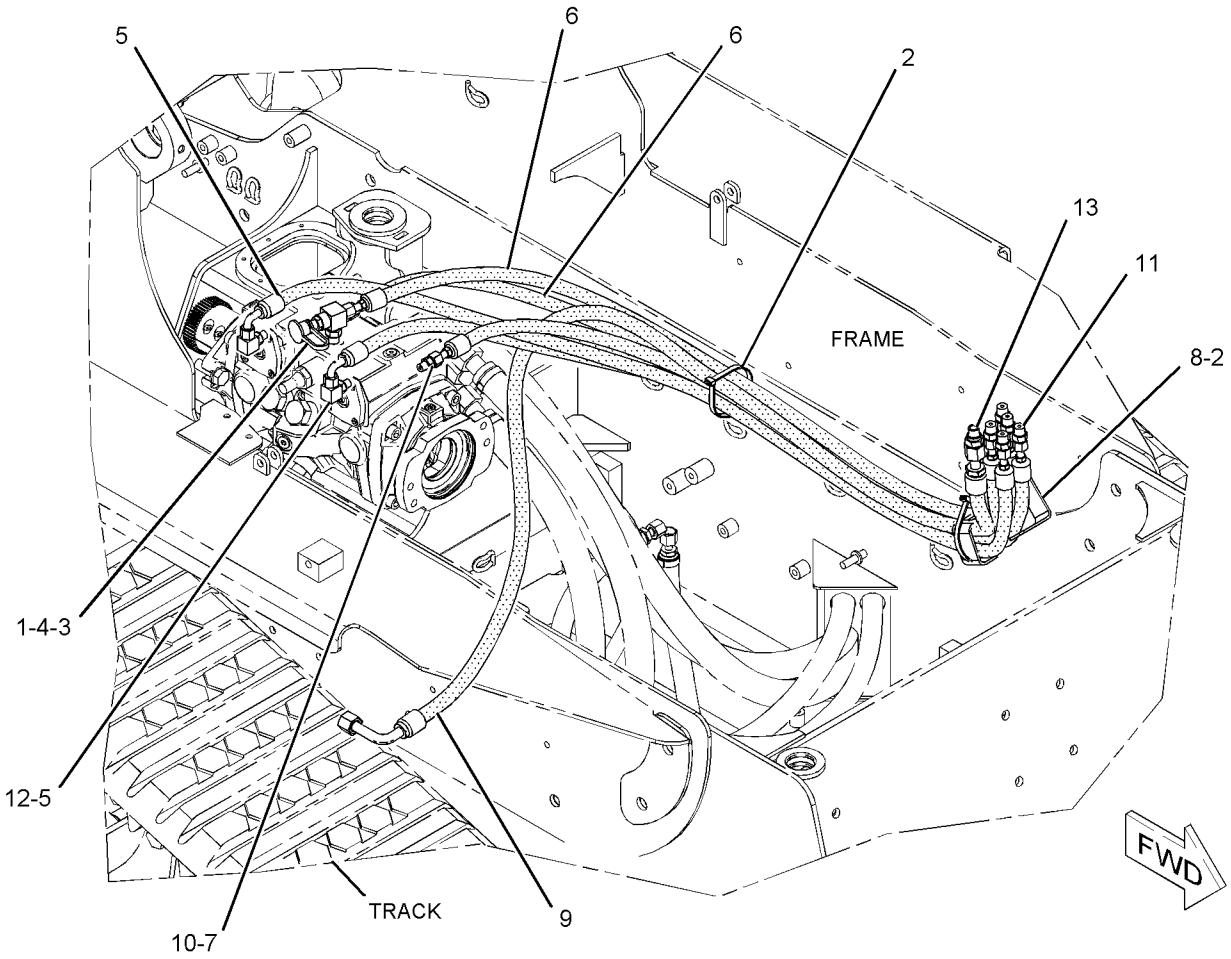


GRAPHIC #1 **<END>** g01066425

# *218-5632* LINES GP-PILOT—WORK TOOL

**S/N: HEN6750-UP**

**PART OF 278-1237, 295-7220 HYDRAULIC AR**

**SMCS-5057, 5059** **i02235600**

| NOTE | REF NO | GRAPHIC REF | PART NUMBER | QTY | PART NAME 1 2 3 4 5 6 (PRODUCT LEVEL) | SEE PAGE |
|---|---|---|---|---|---|---|
| | 1 | 1 | *154-5232* | 1 | ADAPTER AS | |
| | | 1 | **112-9783** | 1 | ADAPTER | |
| | | 1 | **3K-0360** | 1 | SEAL-O-RING | |
| | | 1 | **4J-5477** | 1 | SEAL-O-RING | |
| Y | 2 | 1 | *179-7001* | 1 | ADAPTER GP-OIL LINE | 232 |
| I | 3 | 1 | **190-7453** | 1 | HOSE AS | |
| | 4 | 1 | **195-6768** | 1 | SCREEN (HYDRAULIC OIL) | |
| | 5 | 1 | **195-6769** | 1 | WASHER (6.99X12.7X5.46-MM THK) | |
| | 6 | 1 | **218-5571** | 2 | HOSE AS | |
| | 7 | 1 | **218-5572** | 2 | HOSE AS | |
| | 8 | 1 | **218-6601** | 1 | HOSE AS | |
| | 9 | 1 | **123-4750** | 1 | VALVE-CHECK | |
| | 10 | 1 | *148-8325* | 9 | CONNECTOR AS | |
| | | | | | (EACH INCLUDES) | |
| | | 1 | **6V-8641** | 1 | CONNECTOR | |
| | | 1 | **3J-1907** | 1 | SEAL-O-RING | |
| | | 1 | **4J-5477** | 1 | SEAL-O-RING | |
| | 11 | 1 | *148-8435* | 1 | TEE AS | |
| | | 1 | **6V-8781** | 1 | TEE-FACE SEAL | |
| | | 1 | **3J-1907** | 1 | SEAL-O-RING | |
| | | 1 | **6V-8397** | 2 | SEAL-O-RING | |
| | 12 | 1 | *150-4027* | 1 | TEE AS | |
| | | 1 | **3E-2310** | 1 | TEE | |
| | | 1 | **3J-1907** | 1 | SEAL-O-RING | |
| | | 1 | **6V-8397** | 1 | SEAL-O-RING | |
| I | 13 | 1 | **193-8313** | 1 | HOSE AS | |
| | 16 | 1 | **6D-3479** | 1 | CLIP | |
| | 17 | 1 | **8T-4121** | 1 | WASHER-HARD (11X21X2.5-MM THK) | |
| M | 18 | 1 | **8T-4191** | 1 | BOLT (M10X1.5X16-MM) | |

I-REFER TO HYDRAULIC INFORMATION SYSTEM
M-METRIC PART
Y-SEPARATE ILLUSTRATION

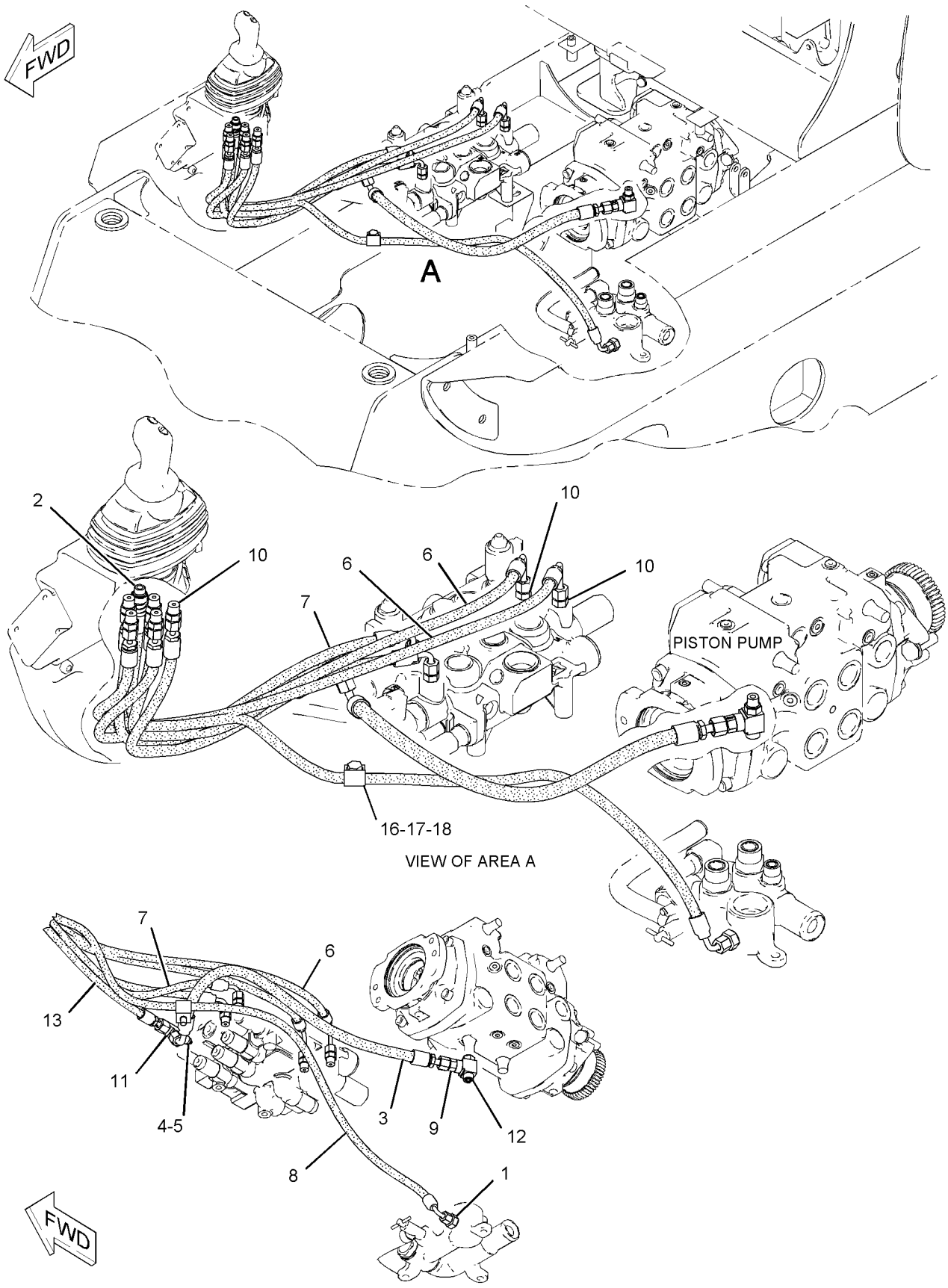


GRAPHIC #1

**<END>**

g01127586

# HYDRAULIC SYSTEM

## *218-5730* LINES GP-PUMP

**S/N: HEN6750-UP**

**PART OF 278-1237, 295-7220 HYDRAULIC AR**

**SMCS-5057** **i02212121**

| NOTE | REF NO | GRAPHIC REF | PART NUMBER | QTY | PART NAME 1 2 3 4 5 6 (PRODUCT LEVEL) | SEE PAGE |
|---|---|---|---|---|---|---|
| | 1 | 1 | **2S-3440** | 2 | CLAMP-HOSE | |
| | 2 | 1 | **6V-0852** | 1 | CAP-DUST | |
| | 3 | 1 | **9U-6994** | 1 | FITTING GP | |
| | | 1 | **7M-8485** | 1 | SEAL-O-RING | |
| | 4 | 1 | **9U-6995** | 1 | FITTING GP-HYDRAULIC | |
| | | 1 | **2S-4078** | 1 | SEAL-O-RING | |
| | 5 | 1 | **159-5740** | 1 | HOSE | |
| | 6 | 1 | *164-5567* | 1 | COUPLER AS-QUICK DISCONNECT | |
| | | 1 | **3J-1907** | 1 | SEAL-O-RING | |
| | | 1 | **6V-3965** | 1 | COUPLER-QUICK DISCONNECT | |
| | 7 | 1 | **180-3007** | 3 | CLAMP-HOSE | |
| | 8 | 1 | **193-0464** | 1 | TUBE | |
| | 9 | 1 | **193-8308** | 1 | ADAPTER | |
| I | 10 | 1 | **193-8321** | 1 | HOSE AS | |
| | 11 | 1 | **193-8322** | 1 | HOSE | |
| C | 12 | 1 | **218-6981** | 1 | HOSE | |
| | 13 | 1 | **218-5756** | 1 | HOSE | |
| | 14 | 1 | *148-8315* | 1 | CONNECTOR AS | |
| | | 1 | **2M-9780** | 1 | SEAL-O-RING | |
| | | 1 | **6V-8642** | 1 | CONNECTOR | |
| | | 1 | **7J-9108** | 1 | SEAL-O-RING | |
| | 15 | 1 | *148-8360* | 1 | ELBOW AS | |
| | | 1 | **6V-9182** | 1 | ELBOW | |
| | | 1 | **6V-9746** | 1 | SEAL-O-RING | |
| | | 1 | **7M-8485** | 1 | SEAL-O-RING | |
| | 16 | 1 | **1P-4578** | 2 | FLANGE-HALF | |
| | 17 | 1 | **4J-0522** | 1 | SEAL-O-RING | |
| | 18 | 1 | **4J-5267** | 1 | SEAL-O-RING | |
| | 20 | 1 | **5P-2230** | 3 | CLAMP-HOSE | |
| | 21 | 1 | **8C-3205** | 2 | FLANGE-HALF | |
| | 22 | 1 | **8T-4121** | 8 | WASHER-HARD (11X21X2.5-MM THK) | |
| M | 23 | 1 | **8T-4196** | 8 | BOLT (M10X1.5X35-MM) | |

C-CHANGE FROM PREVIOUS TYPE
I-REFER TO HYDRAULIC INFORMATION SYSTEM
M-METRIC PART

*218-5730* **LINES GP-PUMP** *(contd.)* **i02212121**

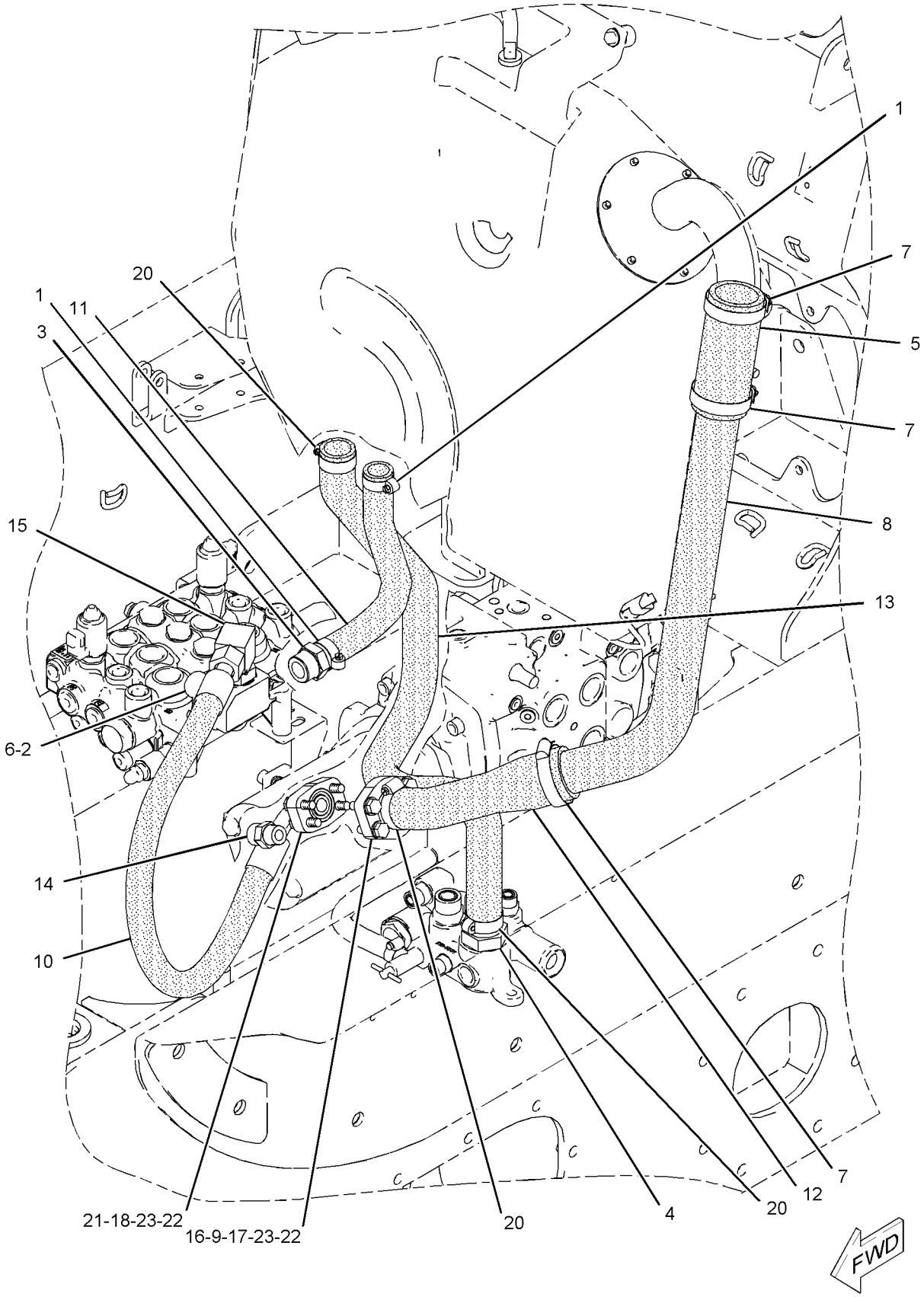


GRAPHIC #1 **<END>** g01107858

# HYDRAULIC SYSTEM

## *218-5732* LINES GP-TILT CYLINDER

**S/N: HEN6750-UP**
**PART OF 218-5750 HYDRAULIC AR**
**AN ATTACHMENT**

**SMCS-5057, 5104** **i02545861**

| NOTE | REF NO | GRAPHIC REF | PART NUMBER | QTY | PART NAME 1 2 3 4 5 6 (PRODUCT LEVEL) | SEE PAGE |
|---|---|---|---|---|---|---|
| | 1 | 1 | **116-4415** | 2 | PLATE-COVER | |
| | 2 | 1 | **142-8998** | 2 | CLIP | |
| I | 3 | 1 | **142-9234** | 4 | HOSE AS | |
| I | 4 | 1 | **218-5740** | 2 | HOSE AS | |
| | 5 | 1 | **289-3781** | 1 | TUBE AS | |
| | 6 | 1 | **218-5744** | 1 | TUBE AS | |
| | 7 | 1 | **218-6517** | 1 | TUBE AS | |
| | 8 | 1 | **289-3788** | 1 | TUBE AS | |
| | 9 | 1 | *148-8315* | 2 | CONNECTOR AS | |
| | | | | | (EACH INCLUDES) | |
| | | 1 | **2M-9780** | 1 | SEAL-O-RING | |
| | | 1 | **6V-8642** | 1 | CONNECTOR | |
| | | 1 | **7J-9108** | 1 | SEAL-O-RING | |
| | 10 | 1 | **6V-8398** | 8 | SEAL-O-RING | |
| | 11 | 1 | **7J-9108** | 4 | SEAL-O-RING | |
| | 12 | 1 | **253-2121** | 2 | BOLT | |
| | 13 | 1 | **8T-4121** | 2 | WASHER-HARD (11X21X2.5-MM THK) | |
| M | 14 | 1 | **8T-4136** | 2 | BOLT (M10X1.5X25-MM) | |
| | 15 | 1 | **8T-4205** | 2 | WASHER-HARD (7.2X14.5X2-MM THK) | |
| | 16 | 1 | **9R-1005** | 2 | CLIP (SLOT) | |
| | 17 | 1 | **9R-7802** | 2 | CLIP (SLOT) | |
| | 18 | 1 | **9R-7803** | 2 | CLIP (TAB) | |

I-REFER TO HYDRAULIC INFORMATION SYSTEM
M-METRIC PART

*218-5732* **LINES GP-TILT CYLINDER** *(contd.)* **i02545861**

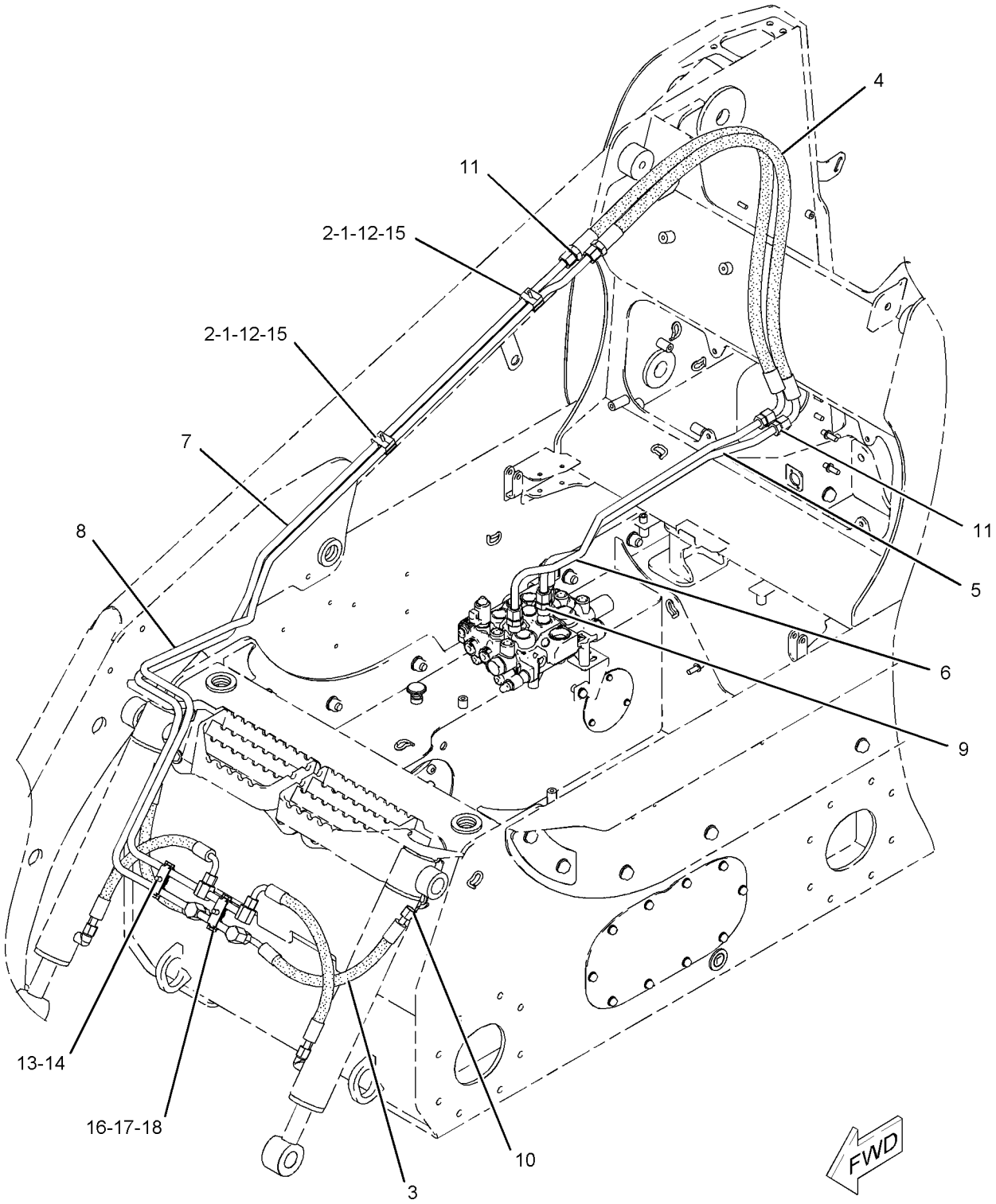


GRAPHIC #1 **<END>** g01031331

# HYDRAULIC SYSTEM

## *218-5734* LINES GP-TILT CYLINDER

**S/N: HEN6750-UP**
**PART OF 218-5751 HYDRAULIC AR**
**FOR USE WITH WORK TOOL POSITIONER**
**AN ATTACHMENT**

**SMCS-5057, 5104** **i02545862**

| NOTE | REF NO | GRAPHIC REF | PART NUMBER | QTY | PART NAME 1 2 3 4 5 6 (PRODUCT LEVEL) | SEE PAGE |
|---|---|---|---|---|---|---|
| | 1 | 1 | **116-4415** | 2 | PLATE-COVER | |
| | 2 | 1 | **142-8998** | 2 | CLIP | |
| I | 3 | 1 | **142-9234** | 4 | HOSE AS | |
| | 4 | 1 | *205-3692* | 1 | ELBOW AS | |
| | | 1 | **2M-9780** | 1 | SEAL-O-RING | |
| | | 1 | **6V-8397** | 1 | SEAL-O-RING | |
| | | 1 | **9X-2134** | 1 | ELBOW | |
| | 5 | 1 | **218-5735** | 1 | TUBE AS | |
| | 6 | 1 | **289-3780** | 1 | TUBE AS | |
| I | 7 | 1 | **218-5740** | 2 | HOSE AS | |
| | 8 | 1 | **218-5741** | 1 | TUBE AS | |
| | 9 | 1 | **218-5742** | 1 | TUBE AS | |
| | 10 | 1 | **218-6517** | 1 | TUBE AS | |
| | 11 | 1 | **289-3788** | 1 | TUBE AS | |
| | 12 | 1 | *148-8319* | 1 | CONNECTOR AS | |
| | | 1 | **2M-9780** | 1 | SEAL-O-RING | |
| | | 1 | **6V-8397** | 1 | SEAL-O-RING | |
| | | 1 | **6V-8715** | 1 | CONNECTOR | |
| | 13 | 1 | *148-8315* | 2 | CONNECTOR AS | |
| | | | | | (EACH INCLUDES) | |
| | | 1 | **2M-9780** | 1 | SEAL-O-RING | |
| | | 1 | **6V-8642** | 1 | CONNECTOR | |
| | | 1 | **7J-9108** | 1 | SEAL-O-RING | |
| | 14 | 1 | **6V-8397** | 2 | SEAL-O-RING | |
| | 15 | 1 | **6V-8398** | 8 | SEAL-O-RING | |
| | 16 | 1 | **7J-9108** | 4 | SEAL-O-RING | |
| | 17 | 1 | **253-2121** | 2 | BOLT | |
| | 18 | 1 | **8T-4121** | 2 | WASHER-HARD (11X21X2.5-MM THK) | |
| M | 19 | 1 | **8T-4136** | 2 | BOLT (M10X1.5X25-MM) | |
| | 20 | 1 | **8T-4205** | 2 | WASHER-HARD (7.2X14.5X2-MM THK) | |
| | 21 | 1 | **9R-1005** | 2 | CLIP (SLOT) | |
| | 22 | 1 | **9R-7802** | 2 | CLIP (SLOT) | |
| | 23 | 1 | **9R-7803** | 2 | CLIP (TAB) | |

I-REFER TO HYDRAULIC INFORMATION SYSTEM
M-METRIC PART

*218-5734* **LINES GP-TILT CYLINDER** *(contd.)* **i02545862**

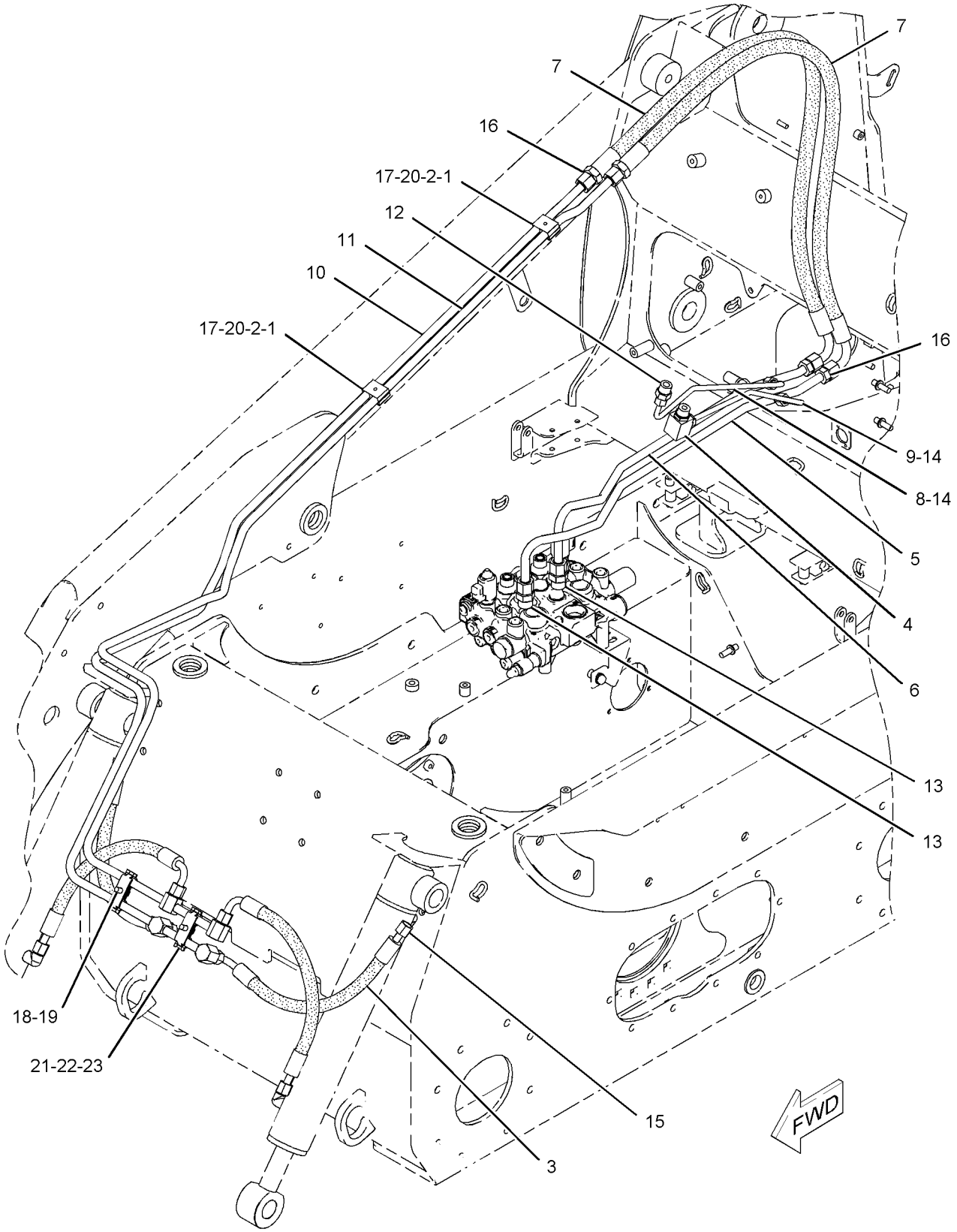


GRAPHIC #1 **<END>** g01031075

## *218-5634* LINES GP-WORK TOOL

**S/N: HEN6750-8069**

**PART OF 278-1237 HYDRAULIC AR**

**SMCS-5057** **i01990757**

| NOTE | REF NO | GRAPHIC REF | PART NUMBER | QTY | PART NAME 1 2 3 4 5 6 (PRODUCT LEVEL) | SEE PAGE |
|---|---|---|---|---|---|---|
| M | 1 | 1 | **101-3129** | 1 | STUD (M10X1.5 THD) | |
| | 2 | 1 | **102-8703** | 2 | PLATE-COVER | |
| | 3 | 1 | **193-8334** | 1 | FITTING AS (QUICK DISCONNECT, MALE) | |
| | 4 | 1 | **193-8335** | 1 | FITTING AS (QUICK DISCONNECT, FEMALE) | |
| | 5 | 1 | **195-6750** | 4 | CLAMP-DOUBLE | |
| | 6 | 1 | **218-5597** | 1 | TUBE AS | |
| | 7 | 1 | **218-5598** | 1 | TUBE AS | |
| | 8 | 1 | **218-5599** | 3 | BLOCK | |
| | 9 | 1 | **218-5717** | 1 | TUBE AS | |
| | 10 | 1 | **218-5718** | 1 | TUBE AS | |
| I | 11 | 1 | **218-5740** | 2 | HOSE AS | |
| | 12 | 1 | **218-5764** | 3 | PLATE | |
| | 13 | 1 | **218-6006** | 1 | BRACKET AS | |
| | 14 | 1 | **218-6011** | 2 | BRACKET AS | |
| | 15 | 1 | **8T-4224** | 2 | WASHER-HARD (8.8X16X2-MM THK) | |
| | 16 | 1 | *148-8341* | 2 | CONNECTOR AS | |
| | | | | | (EACH INCLUDES) | |
| | | 1 | **3D-2824** | 1 | SEAL-O-RING | |
| | | 1 | **6V-8713** | 1 | CONNECTOR | |
| | | 1 | **7J-9108** | 1 | SEAL-O-RING | |
| M | 17 | 1 | **5C-9553** | 4 | BOLT (M6X1X16-MM) | |
| | 18 | 1 | **6V-9170** | 2 | NUT-BULKHEAD (1-14-THD) | |
| | 19 | 1 | **7J-9108** | 6 | SEAL-O-RING | |
| | 20 | 1 | **8T-4121** | 8 | WASHER-HARD (11X21X2.5-MM THK) | |
| M | 21 | 1 | **8T-4136** | 2 | BOLT (M10X1.5X25-MM) | |
| M | 22 | 1 | **8T-4195** | 3 | BOLT (M10X1.5X30-MM) | |
| M | 23 | 1 | **8T-4198** | 2 | BOLT (M10X1.5X100-MM) | |
| | 24 | 1 | **8T-4205** | 4 | WASHER-HARD (7.2X14.5X2-MM THK) | |

I-REFER TO HYDRAULIC INFORMATION SYSTEM
M-METRIC PART

## *218-5634* **LINES GP-WORK TOOL** *(contd.)* **i01990757**

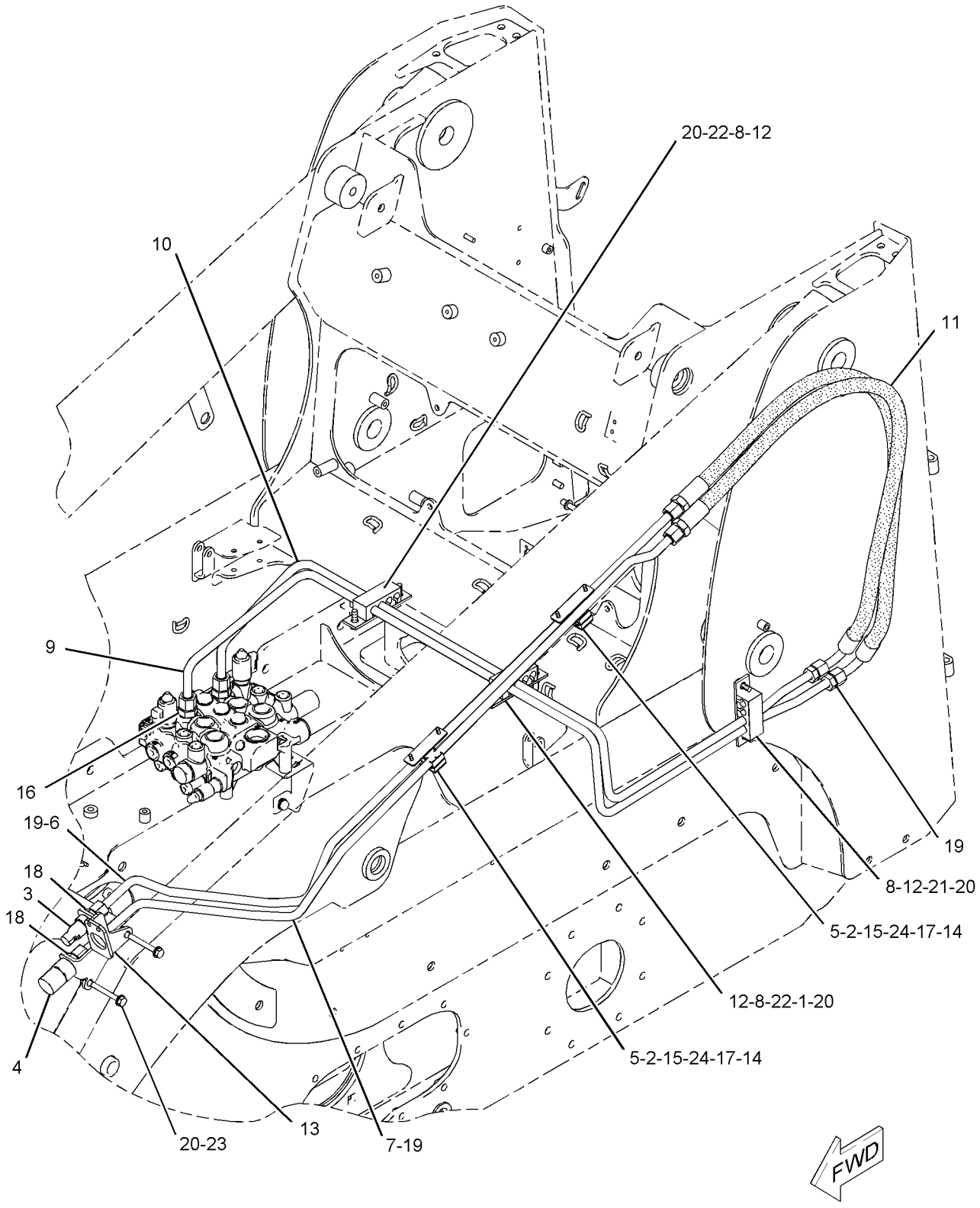


GRAPHIC #1 **<END>** g01031111

# HYDRAULIC SYSTEM

## *218-5634* LINES GP-WORK TOOL

**S/N: HEN6750-UP**

**PART OF 278-1237, 295-7220 HYDRAULIC AR**

**SMCS-5057** **i02559809**

| NOTE | REF NO | GRAPHIC REF | PART NUMBER | QTY | PART NAME 1 2 3 4 5 6 (PRODUCT LEVEL) | SEE PAGE |
|---|---|---|---|---|---|---|
| M | 1 | 1 | **101-3129** | 1 | STUD (M10X1.5 THD) | |
| | 2 | 1 | **102-8703** | 2 | PLATE-COVER | |
| | 3 | 1 | **193-8334** | 1 | FITTING AS (QUICK DISCONNECT, MALE) | |
| | 4 | 1 | **193-8335** | 1 | FITTING AS (QUICK DISCONNECT, FEMALE) | |
| | 5 | 1 | **195-6750** | 4 | CLAMP-DOUBLE | |
| | 6 | 1 | **291-5059** | 1 | TUBE AS | |
| | 7 | 1 | **291-5060** | 1 | TUBE AS | |
| C | 8 | 1 | **285-9286** | 3 | BLOCK | |
| | 9 | 1 | **291-5061** | 1 | TUBE AS | |
| | 10 | 1 | **291-5062** | 1 | TUBE AS | |
| I | 11 | 1 | **218-5740** | 2 | HOSE AS | |
| | 12 | 1 | **218-5764** | 3 | PLATE | |
| | 13 | 1 | **218-6006** | 1 | BRACKET AS | |
| | 14 | 1 | **218-6011** | 2 | BRACKET AS | |
| | 15 | 1 | **8T-4224** | 2 | WASHER-HARD (8.8X16X2-MM THK) | |
| | 16 | 1 | *148-8341* | 2 | CONNECTOR AS | |
| | | | | | (EACH INCLUDES) | |
| | | 1 | **3D-2824** | 1 | SEAL-O-RING | |
| | | 1 | **6V-8713** | 1 | CONNECTOR | |
| | | 1 | **7J-9108** | 1 | SEAL-O-RING | |
| M | 17 | 1 | **5C-9553** | 4 | BOLT (M6X1X16-MM) | |
| | 18 | 1 | **6V-9170** | 2 | NUT-BULKHEAD (1-14-THD) | |
| | 19 | 1 | **7J-9108** | 6 | SEAL-O-RING | |
| | 20 | 1 | **8T-4121** | 8 | WASHER-HARD (11X21X2.5-MM THK) | |
| M | 21 | 1 | **8T-4136** | 2 | BOLT (M10X1.5X25-MM) | |
| M | 22 | 1 | **8T-4195** | 3 | BOLT (M10X1.5X30-MM) | |
| M | 23 | 1 | **8T-4198** | 2 | BOLT (M10X1.5X100-MM) | |
| | 24 | 1 | **8T-4205** | 4 | WASHER-HARD (7.2X14.5X2-MM THK) | |

C-CHANGE FROM PREVIOUS TYPE
I-REFER TO HYDRAULIC INFORMATION SYSTEM
M-METRIC PART

## *218-5634* **LINES GP-WORK TOOL** *(contd.)* **i02559809**

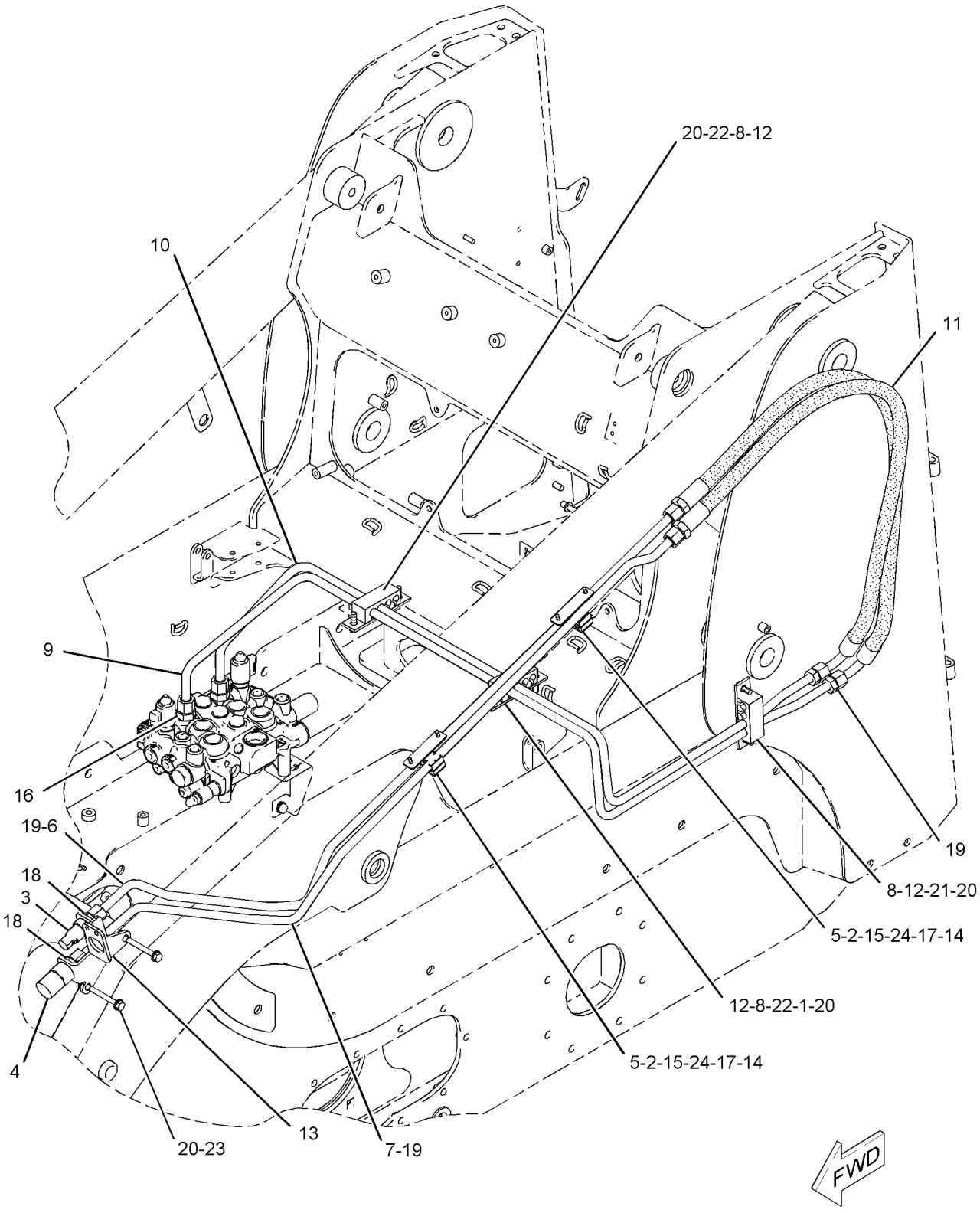


GRAPHIC #1 **<END>** g01031111

# HYDRAULIC SYSTEM

## *218-6520* MANIFOLD & LINES GP-COUPLER

**S/N: HEN6750-UP**
**WITH MANUAL LOWERING CONTROL**
**PART OF 218-6510 COUPLER AR-QUICK**
**AN ATTACHMENT**

**SMCS-5057, 5147, 5264, 6129** **i02785779**

| NOTE | REF NO | GRAPHIC REF | PART NUMBER | QTY | PART NAME 1 2 3 4 5 6 (PRODUCT LEVEL) | SEE PAGE |
|---|---|---|---|---|---|---|
| | 1 | 2 | **3S-2093** | 3 | STRAP-CABLE | |
| | 2 | 2 | **9X-6581** | 1 | NUT-O-RING SEAL (1-14-THD) | |
| Y | 3 | 2 | **112-1817** | 1 | VALVE GP-MANUAL (MANUAL LOWERING CONTROL) | 343 |
| | 4 | 1 | **124-2456** | 1 | FILM-INSTRUCTION (NO STEP) | |
| | 5 | 1 | **178-3620** | 1 | STRAP-DUAL CLAMP | |
| | 6 | 2 | **200-6345** | 1 | MOUNT (DUAL SWIVEL) | |
| | 7 | 1 | **207-9737** | 1 | BRACKET AS | |
| I | 8 | 1 | **207-9756** | 4 | HOSE AS | |
| I | 9 | 1 | **207-9758** | 2 | HOSE AS | |
| | 10 | 1 | **212-6690** | 1 | GUARD | |
| | 11 | 2 | **218-5579** | 1 | TUBE AS | |
| | 12 | 1 | **218-5827** | 1 | TUBE AS | |
| I | 13 | 1 | **218-5942** | 1 | HOSE AS | |
| I | 14 | 1 | **218-6015** | 1 | HOSE AS | |
| | 15 | 1 | **218-6511** | 1 | TUBE AS | |
| | 16 | 1 | **218-6512** | 1 | TUBE AS | |
| I | 17 | 1 | **218-6515** | 2 | HOSE AS | |
| Y | 18 | 2 | **233-7128** | 1 | MANIFOLD GP-CONTROL (QUICK COUPLER) | 318 |
| | 19 | 1 | **269-9404** | 1 | BRACKET | |
| | 20 | 1 | **270-0216** | 1 | BRACKET | |
| CY | 21 | 1 | *298-7198* | 1 | CABLE GP-CONTROL (MANUAL LOWERING) | 479 |
| | 22 | 2 | **283-9264** | 1 | BRACKET | |
| | 23 | 1 | *148-8325* | 4 | CONNECTOR AS | |
| | | | | | (EACH INCLUDES) | |
| | | 1 | **6V-8641** | 1 | CONNECTOR | |
| | | 1 | **3J-1907** | 1 | SEAL-O-RING | |
| | | 1 | **4J-5477** | 1 | SEAL-O-RING | |
| | 24 | 1 | *148-8336* | 2 | CONNECTOR AS | |
| | | | | | (EACH INCLUDES) | |
| | | 1 | **6V-8636** | 1 | CONNECTOR | |
| | | 1 | **3J-1907** | 1 | SEAL-O-RING | |
| | | 1 | **6V-8397** | 1 | SEAL-O-RING | |
| | 25 | 2 | *148-8365* | 1 | ELBOW AS | |
| | | 2 | **8T-6876** | 1 | ELBOW | |
| | | 2 | **3J-1907** | 1 | SEAL-O-RING | |
| | | 2 | **6V-8398** | 1 | SEAL-O-RING | |
| | 26 | 2 | *148-8367* | 1 | ELBOW AS | |
| | | 2 | **6V-8397** | 1 | SEAL-O-RING | |
| | | 2 | **6V-9850** | 1 | ELBOW | |
| | 27 | 2 | *148-8378* | 2 | ELBOW AS | |
| | | | | | (EACH INCLUDES) | |
| | | 2 | **6V-8724** | 1 | ELBOW | |
| | | 2 | **3J-1907** | 1 | SEAL-O-RING | |
| | | 2 | **6V-8397** | 1 | SEAL-O-RING | |
| | 28 | 2 | *148-8439* | 1 | TEE AS | |
| | | 2 | **6V-8774** | 1 | TEE | |
| | | 2 | **3J-1907** | 1 | SEAL-O-RING | |
| | | 2 | **6V-8397** | 2 | SEAL-O-RING | |
| | 29 | 2 | *148-8446* | 1 | TEE AS-SWIVEL | |
| | | 2 | **6V-9838** | 1 | TEE-SWIVEL | |
| | | 2 | **7J-9108** | 2 | SEAL-O-RING | |
| | 30 | 1 | *150-4034* | 2 | TEE AS | |
| | | | | | (EACH INCLUDES) | |
| | | 1 | **8T-0379** | 1 | TEE-BULKHEAD | |

## *218-6520* MANIFOLD & LINES GP-COUPLER *(contd.)* i02785779

| NOTE | REF NO | GRAPHIC REF | PART NUMBER | QTY | PART NAME 1 2 3 4 5 6 (PRODUCT LEVEL) | SEE PAGE |
|---|---|---|---|---|---|---|
| | | 1 | **6V-8397** | 3 | SEAL-O-RING | |
| | 31 | 2 | *156-4282* | 1 | REDUCER AS | |
| | | 2 | **6V-8938** | 1 | REDUCER-O-RING | |
| | | 2 | **6V-8397** | 1 | SEAL-O-RING | |
| | 32 | 2 | **1P-7009** | 1 | CLIP | |
| | 33 | 1 | **4B-4274** | 1 | WASHER (5.5X13X1.2-MM THK) | |
| M | 34 | 2 | **5C-7261** | 1 | NUT (M8X1.25-THD) | |
| | 35 | 2 | **5P-4116** | 2 | WASHER-HARD (8.8X20.5X2-MM THK) | |
| | 36 | 1 | **5P-9297** | 1 | CLIP | |
| | 37 | 2 | **6V-8397** | 5 | SEAL-O-RING | |
| | 38 | 1 | **6V-9168** | 2 | NUT (11/16-16-THD) | |
| M | 39 | 1 | **8T-0287** | 1 | BOLT (M5X0.8X10-MM) | |
| | 40 | 1 | **7G-2950** | 1 | CLIP (SLOT) | |
| | 41 | 1 | **7G-2951** | 1 | CLIP (TAB) | |
| | 42 | 1 | **7H-7055** | 8 | CLIP | |
| | 43 | 1 | **7X-7729** | 3 | WASHER (11X25X3-MM THK) | |
| | 44 | 1 | **8M-4791** | 2 | WASHER-HARD (13.5X27X3-MM THK) | |
| M | 45 | 1 | **8T-0285** | 2 | SCREW-MACHINE (M4X0.7X12-MM) | |
| | 46 | 1,2 | **8T-4121** | 10 | WASHER-HARD (11X21X2.5-MM THK) | |
| M | 47 | 2 | **8T-4133** | 2 | NUT (M10X1.5-THD) | |
| M | 48 | 1,2 | **8T-4136** | 3 | BOLT (M10X1.5X25-MM) | |
| M | 49 | 1 | **8T-4137** | 1 | BOLT (M10X1.5X20-MM) | |
| M | 50 | 1 | **8T-4189** | 2 | BOLT (M8X1.25X20-MM) | |
| M | 51 | 1 | **8T-4191** | 2 | BOLT (M10X1.5X16-MM) | |
| M | 52 | 1 | **8T-4201** | 3 | BOLT-LOCKING (M10X1.5X20-MM) | |
| | 53 | 1 | **8T-4224** | 2 | WASHER-HARD (8.8X16X2-MM THK) | |
| M | 54 | 2 | **8T-4908** | 1 | BOLT (M8X1.25X25-MM) | |
| M | 55 | 2 | **8T-5005** | 2 | BOLT (M10X1.5X70-MM) | |
| | 56 | 1 | **9M-8406** | 3 | CLIP | |
| | 57 | 1 | **9X-1481** | 1 | WASHER (13X25.4X1.6-MM THK) | |

C-CHANGE FROM PREVIOUS TYPE
I-REFER TO HYDRAULIC INFORMATION SYSTEM
M-METRIC PART
Y-SEPARATE ILLUSTRATION

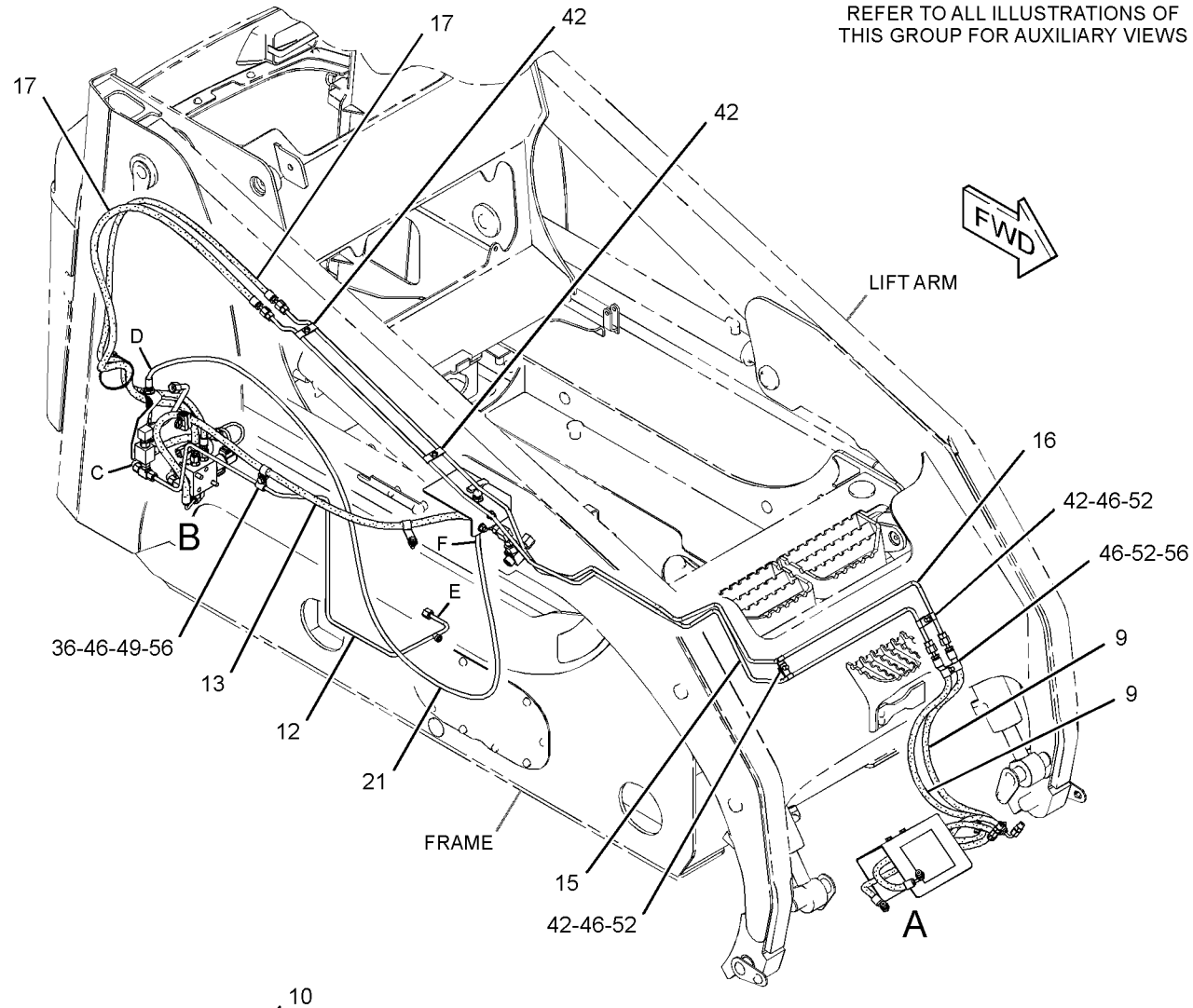


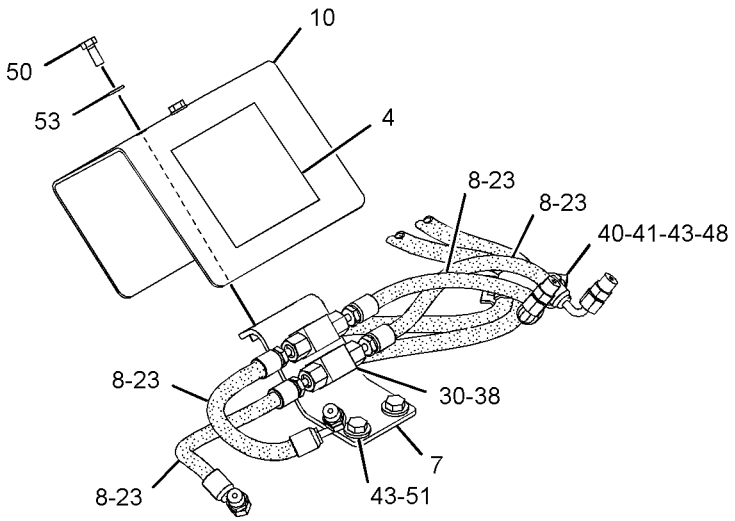


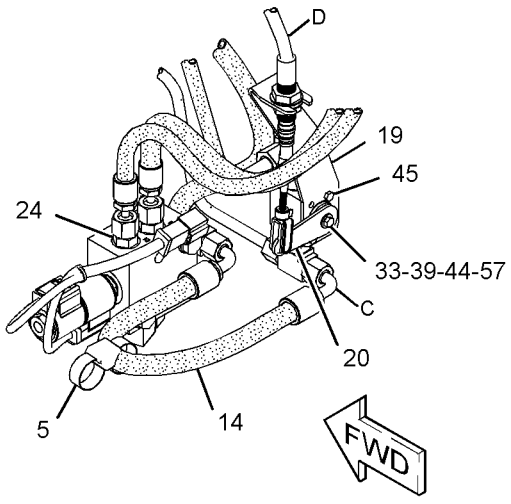


VIEW OF AREA A
(EXPLODED)

GRAPHIC #1

g01353307

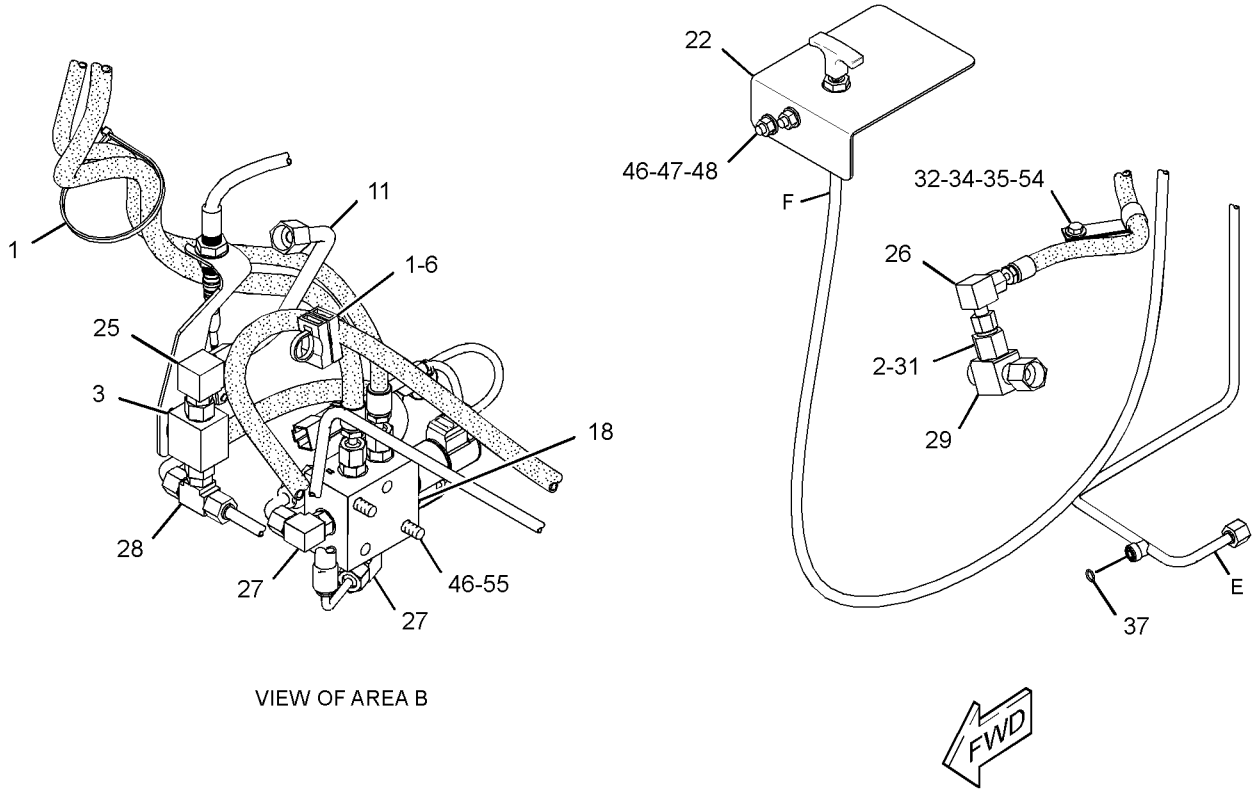


GRAPHIC #2 **<END>** g01353314

# *218-5729* MANIFOLD & MTG GP-CONTROL—WORK TOOL POSITIONER

**S/N: HEN6750-UP**
**PART OF 218-5751 HYDRAULIC AR**
**AN ATTACHMENT**

**SMCS-5264** **i01999744**

| NOTE | REF NO | GRAPHIC REF | PART NUMBER | QTY | PART NAME 1 2 3 4 5 6 (PRODUCT LEVEL) | SEE PAGE |
|---|---|---|---|---|---|---|
| Y | 1 | 1 | **224-9408** | 1 | MANIFOLD & SOLENOID GP-CONTROL | 317 |
| M | 2 | 1 | **7X-2535** | 2 | BOLT (M6X1X60-MM) | |
| | 3 | 1 | **8T-4205** | 2 | WASHER-HARD (7.2X14.5X2-MM THK) | |

M-METRIC PART
Y-SEPARATE ILLUSTRATION

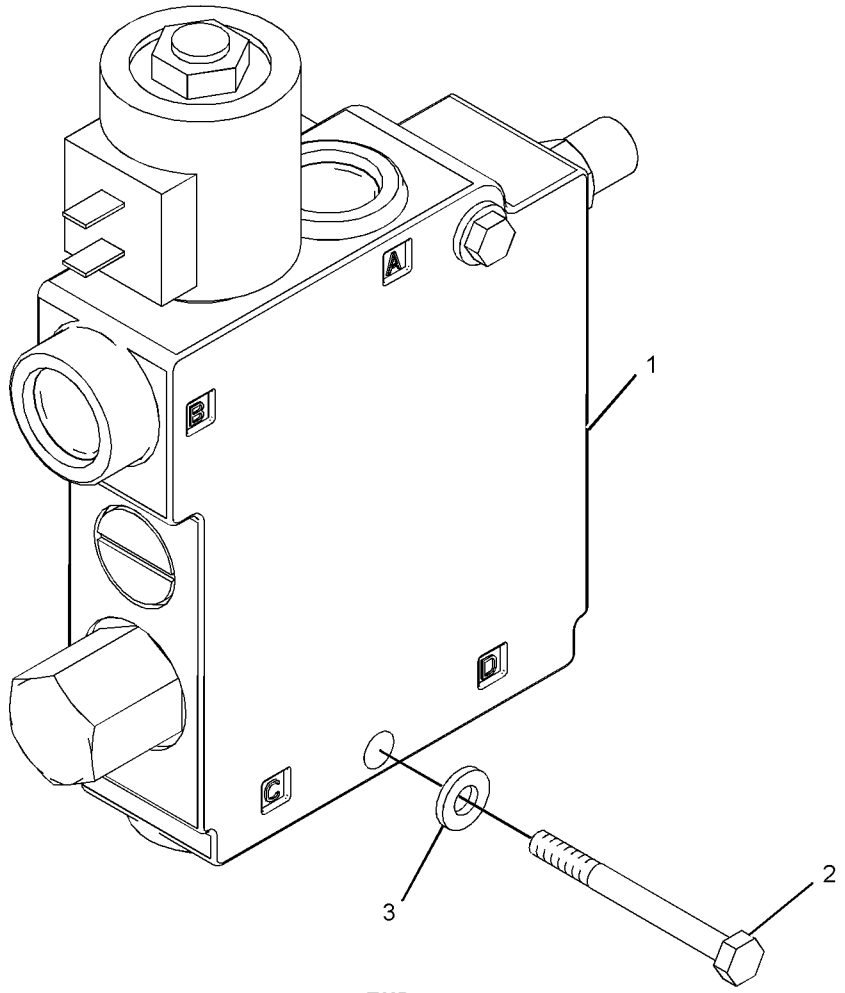


GRAPHIC #1 **<END>** g01014976

## *231-5278* MANIFOLD & MTG GP-CONTROL—ANGLING BLADE

**S/N: HEN6750-UP**

**PART OF 231-5275, 231-5277 BLADE AR**

**AN ATTACHMENT**

**SMCS-5264** **i02337085**

| NOTE | REF NO | GRAPHIC REF | PART NUMBER | QTY | PART NAME 1 2 3 4 5 6 (PRODUCT LEVEL) | SEE PAGE |
|---|---|---|---|---|---|---|
| Y | 1 | 1 | **258-9011** | 1 | MANIFOLD GP-CONTROL (ANGLING BLADE) | 319 |
| | 2 | 1 | **231-5279** | 1 | COVER | |
| | 3 | 1 | **5P-4116** | 3 | WASHER-HARD (8.8X20.5X2-MM THK) | |
| M | 4 | 1 | **8T-4189** | 2 | BOLT (M8X1.25X20-MM) | |
| M | 5 | 1 | **8T-4200** | 3 | BOLT (M8X1.25X16-MM) | |
| | 6 | 1 | **8T-4224** | 2 | WASHER-HARD (8.8X16X2-MM THK) | |

M-METRIC PART
Y-SEPARATE ILLUSTRATION

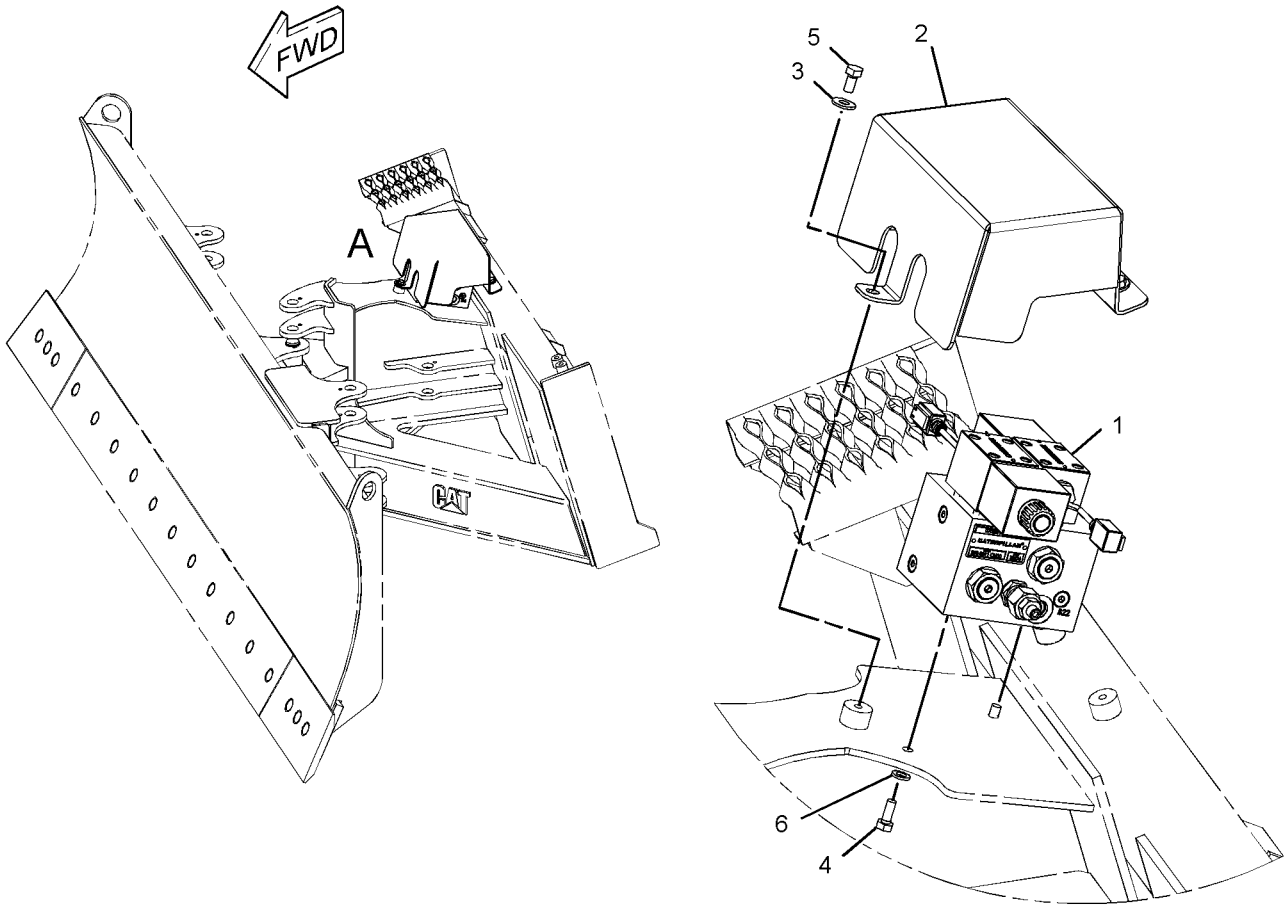


VIEW OF AREA A

GRAPHIC #1 **<END>** g01167422

# 224-9408 MANIFOLD & SOLENOID GP-CONTROL

**S/N: HEN6750-UP**

**PART OF 218-5729 MANIFOLD & MTG GP-CONTROL**

**AN ATTACHMENT**

**SMCS-5264, 5479** **i02757349**

| NOTE | REF NO | GRAPHIC REF | PART NUMBER | QTY | PART NAME 1 2 3 4 5 6 (PRODUCT LEVEL) | SEE PAGE |
|---|---|---|---|---|---|---|
| | 1 | 1 | **102-8804** | 1 | KIT-RECEPTACLE (4-PIN) | |
| | 2 | 1 | **3E-3377** | 1 | WEDGE-RECEPTACLE LOCK (4-PIN) | |
| | 3 | 1 | **186-3735** | 2 | PIN-CONNECTOR (16-GA TO 18-GA) | |
| | 4 | 1 | **9G-3695** | 2 | PLUG | |
| J | 5 | 1 | **218-6858** | 1 | CARTRIDGE AS-VALVE | |
| J | 6 | 1 | **218-6857** | 1 | COIL AS | |
| | | | | | AVAILABLE REPAIR KIT(S): | |
| | | | **218-6856** | 1 | KIT-SEAL | |
| | | | | | (INCLUDES O-RINGS, COVER, & BACK-UP WASHER) | |
| J | | | **155-1279** | 1 | KIT-SEAL | |

J-KIT MARKED J SERVICES PARTS MARKED J

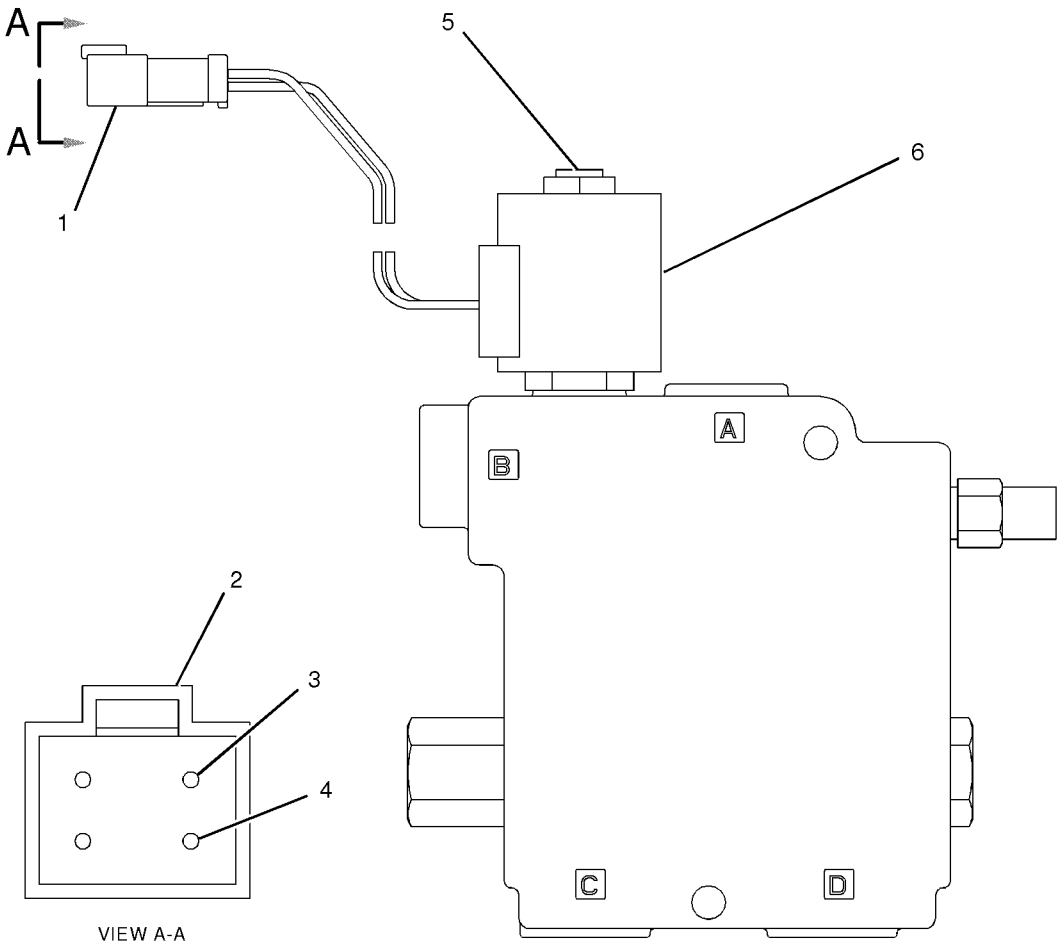


GRAPHIC #1 **<END>** g01014993

# 233-7128 MANIFOLD GP-CONTROL–QUICK COUPLER

**S/N: HEN6750-UP**

**PART OF 218-6755 KIT-QUICK COUPLER CONVERSION, 218-6520 MANIFOLD & LINES**

**GP-COUPLER**

**AN ATTACHMENT**

**SMCS-5117, 5264, 5479** **i02216438**

| NOTE | REF NO | GRAPHIC REF | PART NUMBER | QTY | PART NAME 1 2 3 4 5 6 (PRODUCT LEVEL) | SEE PAGE |
|---|---|---|---|---|---|---|
| | 1 | 1 | **245-1911** | 1 | WIRE AS | |
| J | 2 | 1 | **249-7160** | 1 | VALVE GP-SOLENOID (QUICK COUPLER) | |
| | | 1 | **238-4626** | 2 | COIL AS | |
| | | | | | AVAILABLE REPAIR KIT(S): | |
| J | | | **106-3108** | 1 | KIT-SEAL | |

J-KIT MARKED J IS AVAILABLE FOR PART MARKED J

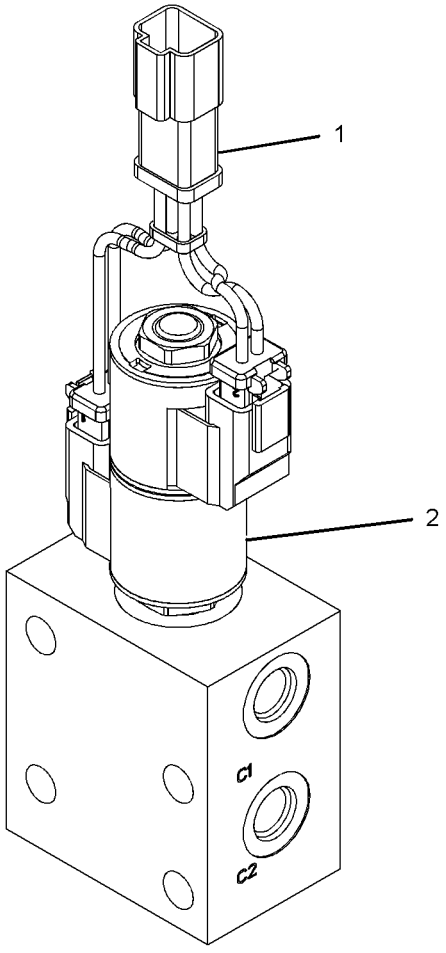


GRAPHIC #1 **<END>** g01132286

# 258-9011 MANIFOLD GP-CONTROL–ANGLING BLADE

**S/N: HEN6750-UP**

**PART OF 231-5278 MANIFOLD & MTG GP-CONTROL**

**AN ATTACHMENT**

**SMCS-5117, 5264, 5479** **i02318509**

| NOTE | REF NO | GRAPHIC REF | PART NUMBER | QTY | PART NAME 1 2 3 4 5 6 (PRODUCT LEVEL) | SEE PAGE |
|---|---|---|---|---|---|---|
| M | 1 | 1 | **9X-6615** | 8 | BOLT (M5X0.8X30-MM) | |
| | 2 | 1 | **243-5601** | 7 | PLUG | |
| | 3 | 1 | **244-1363** | 1 | VALVE GP-SOLENOID | |
| | 4 | 1 | **244-1364** | 1 | VALVE GP-SOLENOID | |
| | 5 | 1 | **244-1365** | 2 | VALVE GP-RELIEF | |
| | 6 | 1 | **266-8903** | 4 | VALVE GP-CHECK | |
| | 7 | 1 | **180-7451** | 8 | WASHER-HARD (5.3X8.8X2-MM THK) | |

M-METRIC PART

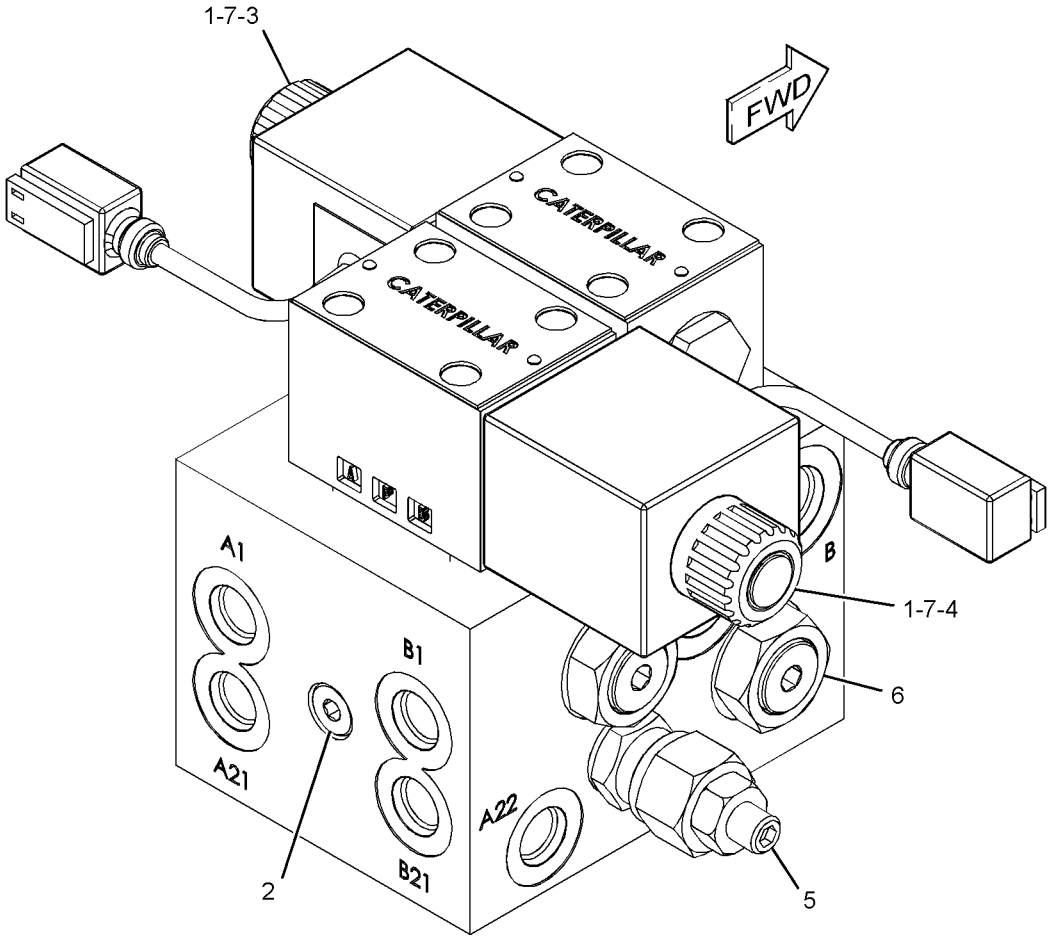


GRAPHIC #1 **<END>** g01178679

# *218-5627* MOTOR & MTG GP-HYDRAULIC FAN

**S/N: HEN6750-6756**

**PART OF 278-1237 HYDRAULIC AR**

**SMCS-1386** **i01936126**

| NOTE | REF NO | GRAPHIC REF | PART NUMBER | QTY | PART NAME 1 2 3 4 5 6 (PRODUCT LEVEL) | SEE PAGE |
|---|---|---|---|---|---|---|
| Y | 1 | 1 | **225-9260** | 1 | MOTOR GP-GEAR (HYDRAULIC FAN) | 324 |
| | 2 | 1 | **8T-4121** | 2 | WASHER-HARD (11X21X2.5-MM THK) | |
| M | 3 | 1 | **8T-4196** | 2 | BOLT (M10X1.5X35-MM) | |
| | 4 | 1 | **8T-4224** | 1 | WASHER-HARD (8.8X16X2-MM THK) | |
| M | 5 | 1 | **8T-7547** | 1 | BOLT (M8X1.25X30-MM) | |

M-METRIC PART
Y-SEPARATE ILLUSTRATION

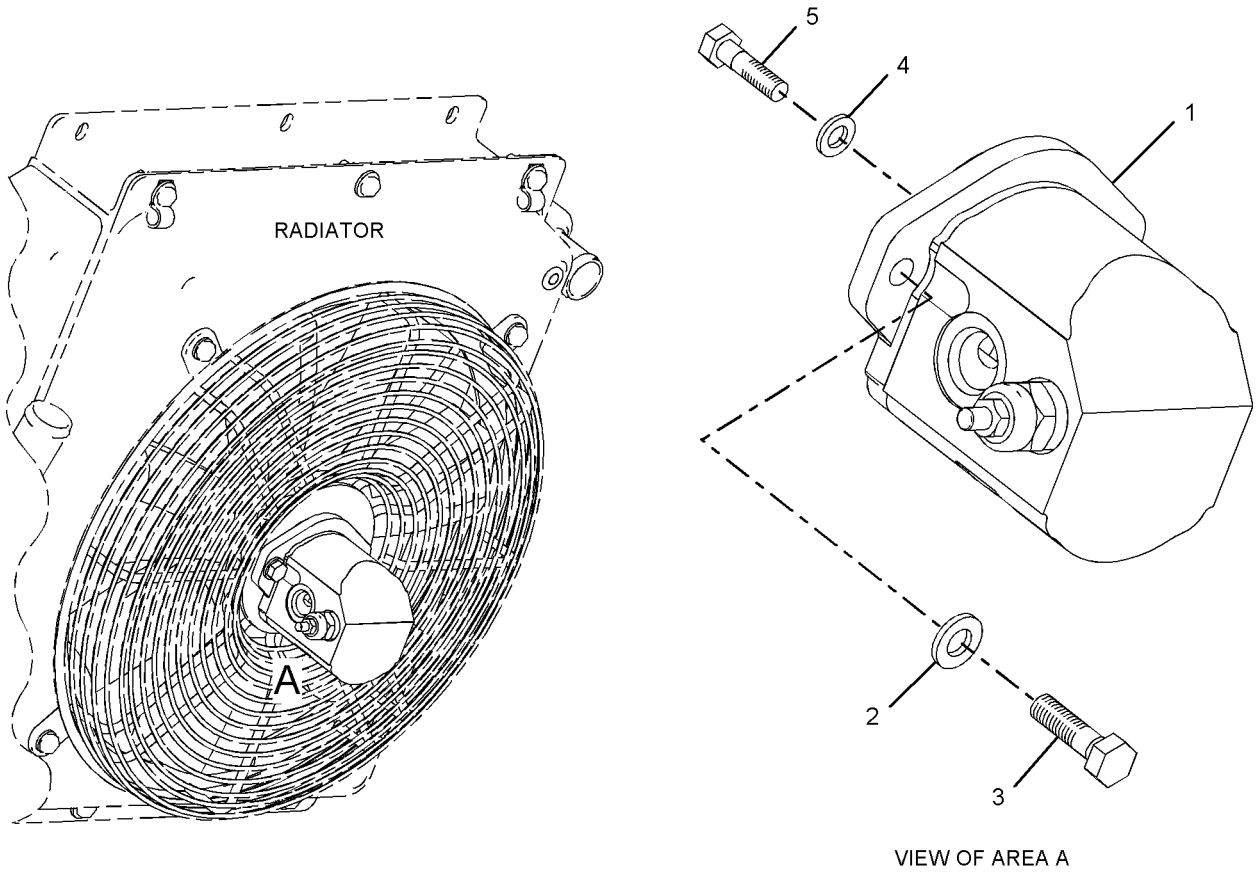


VIEW OF AREA A

GRAPHIC #1 **<END>** g01017963

# *218-5627* MOTOR & MTG GP-HYDRAULIC FAN

**S/N: HEN6757-8069**

**PART OF 278-1237 HYDRAULIC AR**

**SMCS-1386** **i02928733**

| NOTE | REF NO | GRAPHIC REF | PART NUMBER | QTY | PART NAME 1 2 3 4 5 6 (PRODUCT LEVEL) | SEE PAGE |
|---|---|---|---|---|---|---|
| CY | 1 | 1 | **307-3036** | 1 | MOTOR GP-GEAR (HYDRAULIC FAN) | 326 |
| | 2 | 1 | **8T-4121** | 2 | WASHER-HARD (11X21X2.5-MM THK) | |
| M | 3 | 1 | **8T-4196** | 2 | BOLT (M10X1.5X35-MM) | |
| | 4 | 1 | **8T-4224** | 1 | WASHER-HARD (8.8X16X2-MM THK) | |
| M | 5 | 1 | **8T-7547** | 1 | BOLT (M8X1.25X30-MM) | |

C-CHANGE FROM PREVIOUS TYPE
M-METRIC PART
Y-SEPARATE ILLUSTRATION

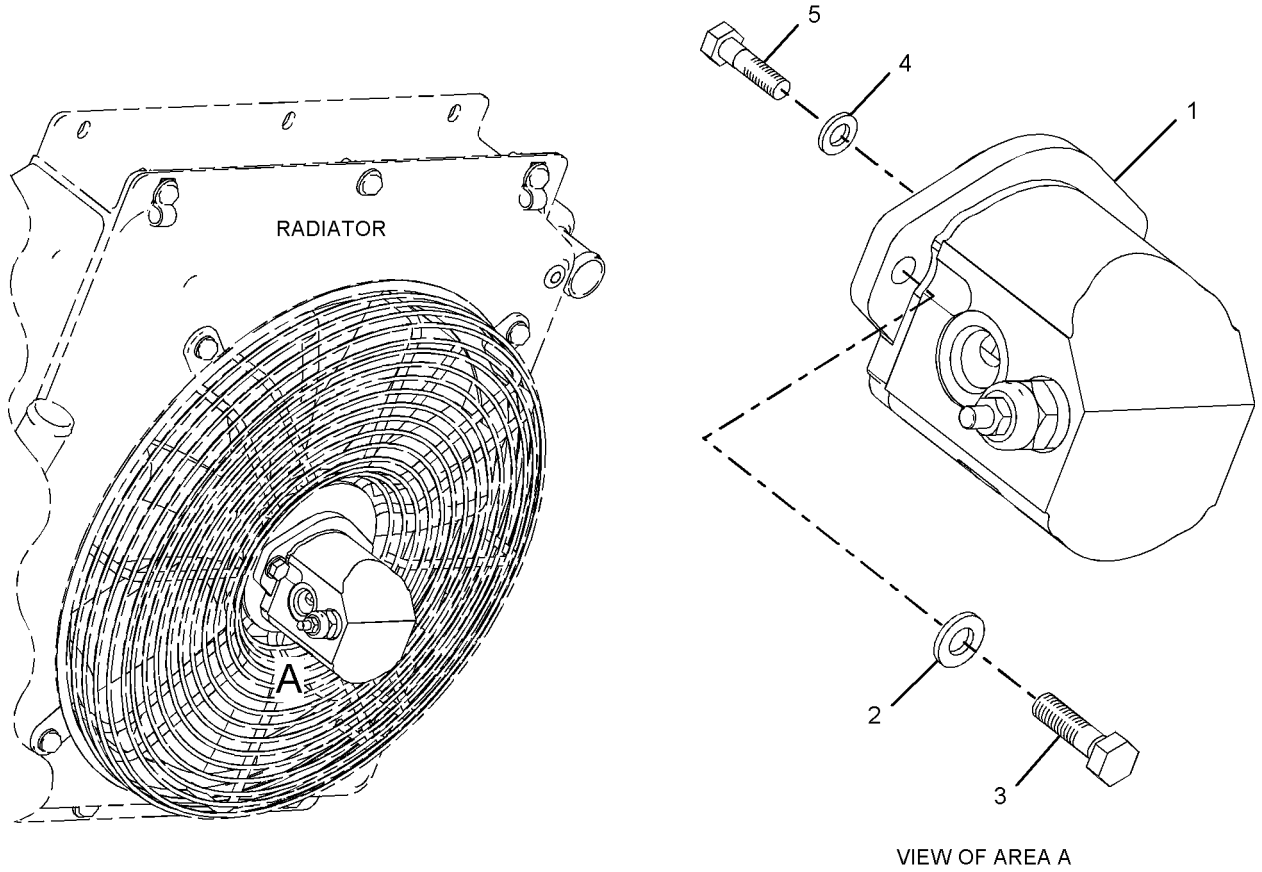


VIEW OF AREA A

GRAPHIC #1 **<END>** g01017963

# HYDRAULIC SYSTEM

## *295-7221* MOTOR & MTG GP-HYDRAULIC FAN

**S/N: HEN8070-UP**

**PART OF 295-7220 HYDRAULIC AR**

**SMCS-1386** **i02833244**

| NOTE | REF NO | GRAPHIC REF | PART NUMBER | QTY | PART NAME 1 2 3 4 5 6 (PRODUCT LEVEL) | SEE PAGE |
|---|---|---|---|---|---|---|
| Y | 1 | 1 | **307-3037** | 1 | MOTOR GP-GEAR (HYDRAULIC FAN) | 327 |
| | 2 | 1 | **8T-4121** | 2 | WASHER-HARD (11X21X2.5-MM THK) | |
| M | 3 | 1 | **8T-4196** | 2 | BOLT (M10X1.5X35-MM) | |
| | 4 | 1 | **8T-4224** | 1 | WASHER-HARD (8.8X16X2-MM THK) | |
| M | 5 | 1 | **8T-7547** | 1 | BOLT (M8X1.25X30-MM) | |

M-METRIC PART
Y-SEPARATE ILLUSTRATION

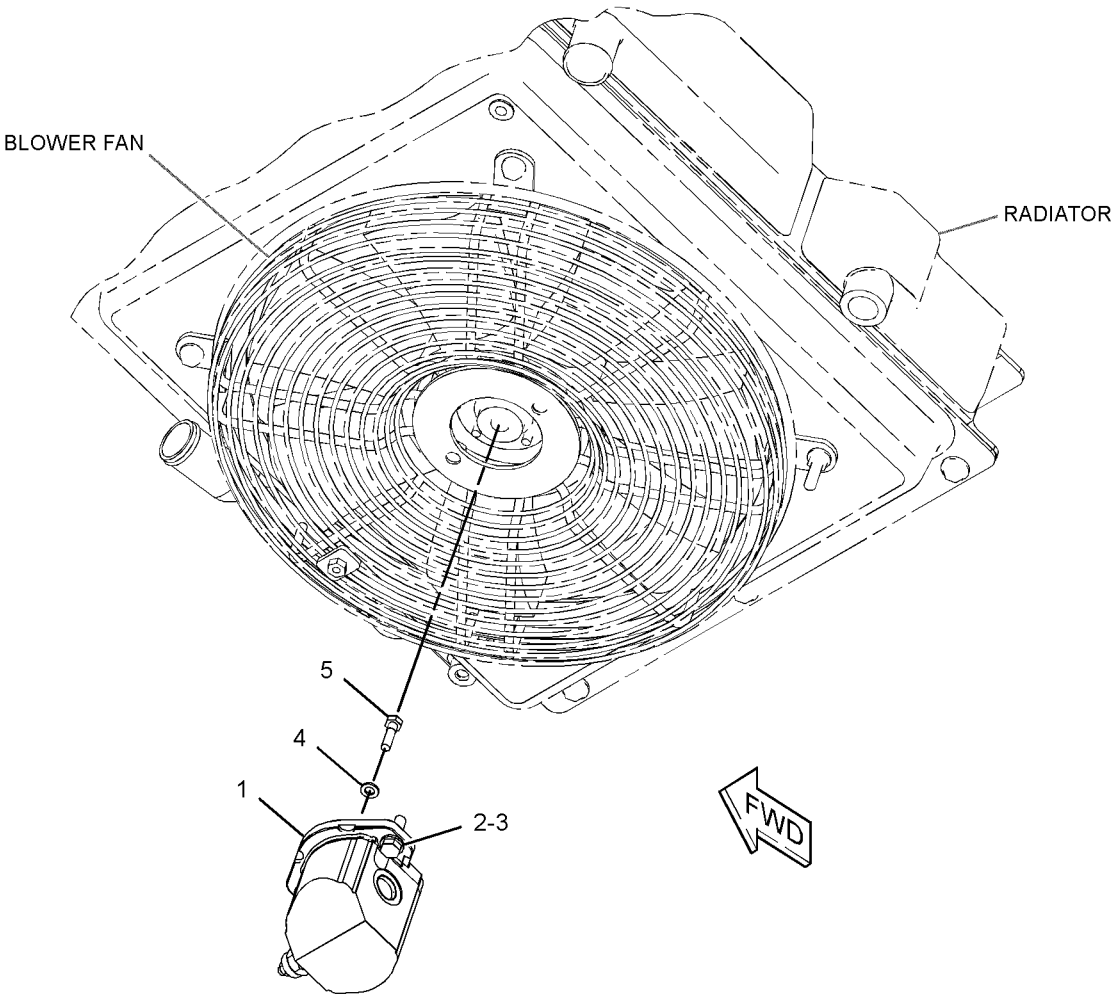


GRAPHIC #1 **<END>** g01414236

# 218-6840 MOTOR GP-GEAR

**S/N: HEN6750-UP**

**PART OF 218-6832 COMPRESSOR & MOTOR GP-REFRIG, 218-6747 KIT-AIR COND & HEATER INSTL, 218-6749 KIT-AIR CONDITIONER INSTL**

**AN ATTACHMENT**

**SMCS-1386, 5061** **i02881089**

| NOTE | REF NO | GRAPHIC REF | PART NUMBER | QTY | PART NAME 1 2 3 4 5 6 (PRODUCT LEVEL) | SEE PAGE |
|---|---|---|---|---|---|---|
| | 1 | 1 | **230-3726** | 1 | SEAL-SHAFT | |
| Y | 2 | 1 | **231-6287** | 1 | VALVE GP-SOLENOID (A/C COMPRESSOR) | 359 |
| | 3 | 1 | **096-0194** | 1 | RING-RETAINING | |
| | 4 | 1 | **2M-9780** | 1 | SEAL-O-RING | |
| | 5 | 1 | **3D-2824** | 1 | SEAL-O-RING | |
| | 6 | 1 | **9S-8006** | 1 | PLUG-O-RING | |

Y-SEPARATE ILLUSTRATION

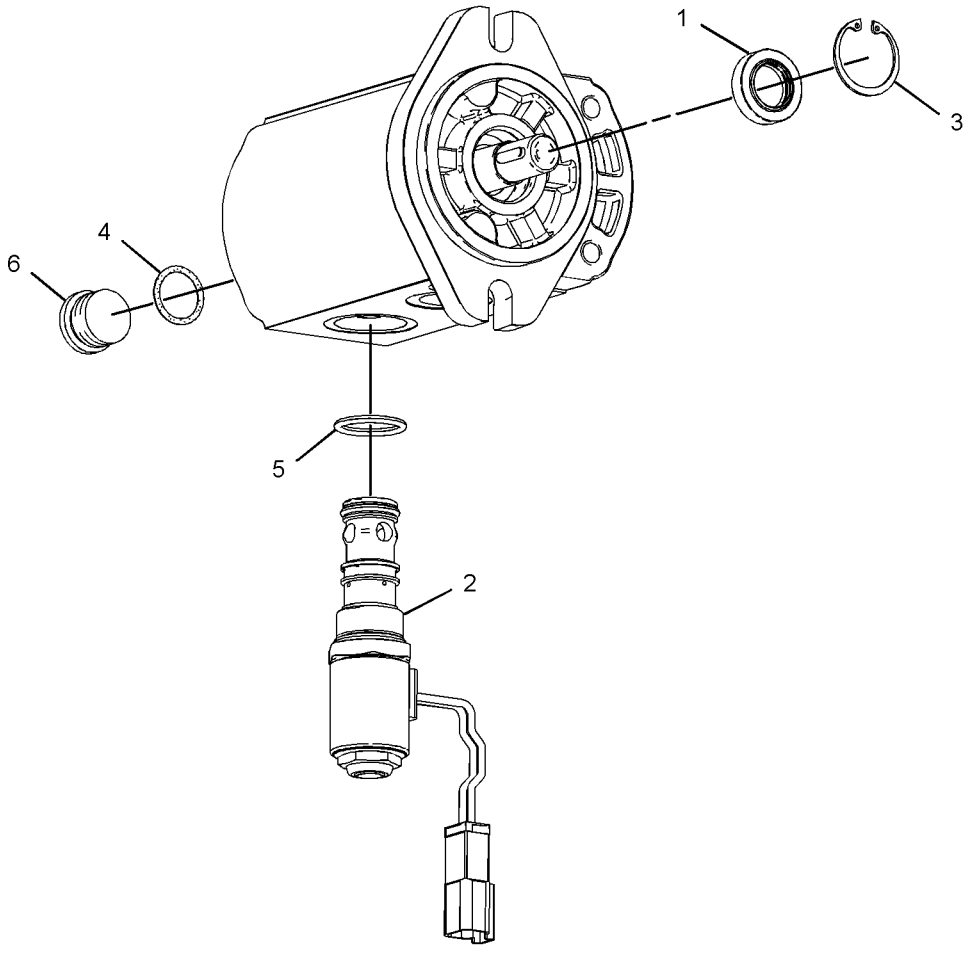


GRAPHIC #1 **<END>** g01437613

# 225-9260 MOTOR GP-GEAR–HYDRAULIC FAN

**S/N: HEN6750-6756**

**PART OF 218-5627 MOTOR & MTG GP-HYDRAULIC FAN**

**SMCS-1386, 5061** **i02690485**

| NOTE | REF NO | GRAPHIC REF | PART NUMBER | QTY | PART NAME 1 2 3 4 5 6 (PRODUCT LEVEL) | SEE PAGE |
|---|---|---|---|---|---|---|
| | 1 | 1 | **228-9240** | 1 | VALVE GP-RELIEF (FAN SPEED) | |
| | | 1 | **215-3277** | 1 | SEAL-O-RING | |
| | | 1 | **6F-6672** | 1 | SEAL-O-RING | |
| | | | | | AVAILABLE REPAIR KIT(S): | |
| | | | **278-8716** | 1 | KIT-SEAL (GEAR MOTOR) | |
| | | | | | (INCLUDES SEALS, SNAP RING, SEAL BACK-UPS & AXIAL SEAL KIT) | |

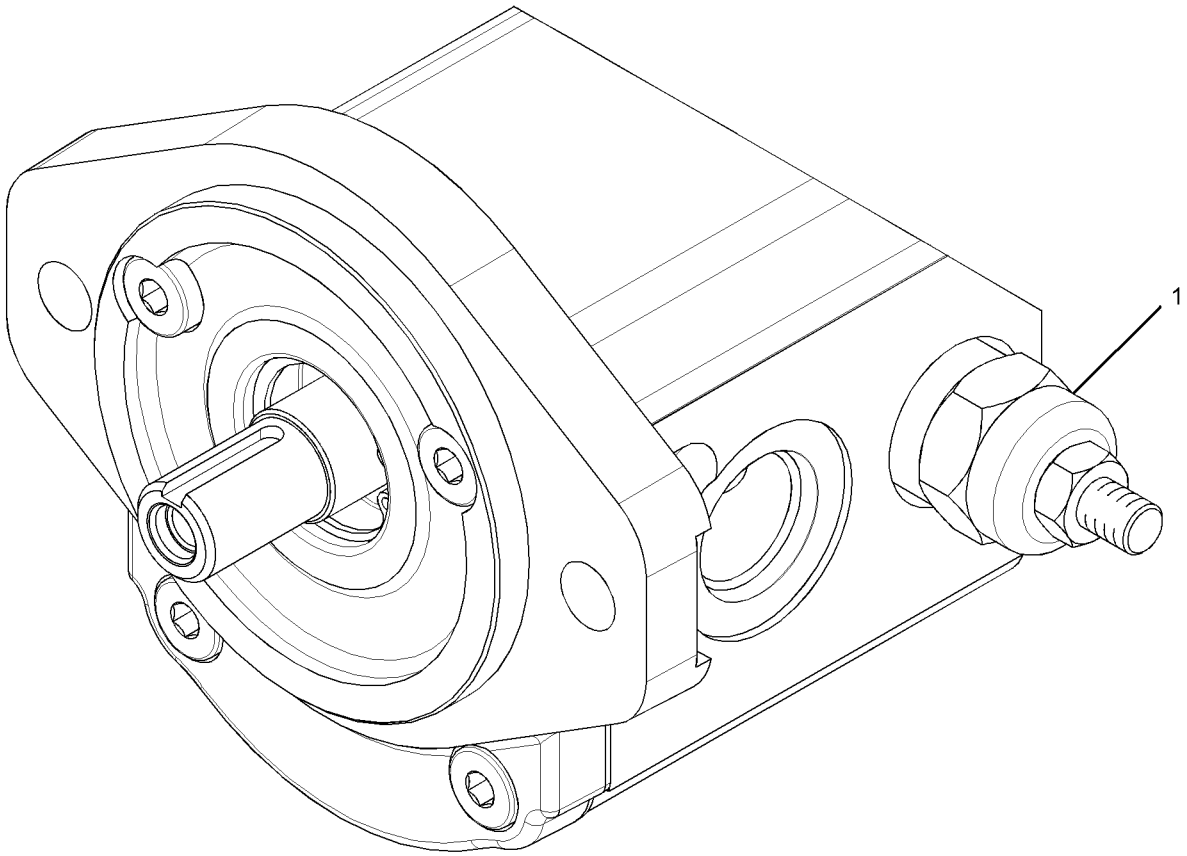


GRAPHIC #1 **<END>** g01360433

# 289-6360 MOTOR GP-GEAR

**S/N: HEN6750-UP**
**PART OF 218-6747 KIT-AIR COND & HEATER INSTL, 218-6749 KIT-AIR CONDITIONER INSTL, 307-6115 MOTOR GP-GEAR**
**AN ATTACHMENT**

**SMCS-1386, 5061** **i02876777**

| NOTE | REF NO | GRAPHIC REF | PART NUMBER | QTY | PART NAME 1 2 3 4 5 6 (PRODUCT LEVEL) | SEE PAGE |
|---|---|---|---|---|---|---|
| M | 1 | 1 | **086-2369** | 4 | BOLT-SOCKET HEAD (M10X1.5X130-MM) | |
| | 2 | 1 | **8T-5095** | 4 | WASHER-PLATED (11X16X2-MM THK) | |
| | 3 | 1 | **2M-9780** | 1 | SEAL-O-RING | |
| | 4 | 1 | **9S-8006** | 1 | PLUG-O-RING | |
| | | | | | | |
| | | | | | PARTS SHOWN IN GRAPHIC(S) WITHOUT A REFERENCE NUMBER ARE NOT SERVICED SEPARATELY | |
| | | | | | AVAILABLE GASKET KIT(S): | |
| | | | **278-8716** | 1 | KIT-SEAL | |
| | | | | | (INCLUDES O-RING, E-SEAL, SHAFT SEAL, SNAP RING, & SEAL BACK-UPS) | |

M-METRIC PART

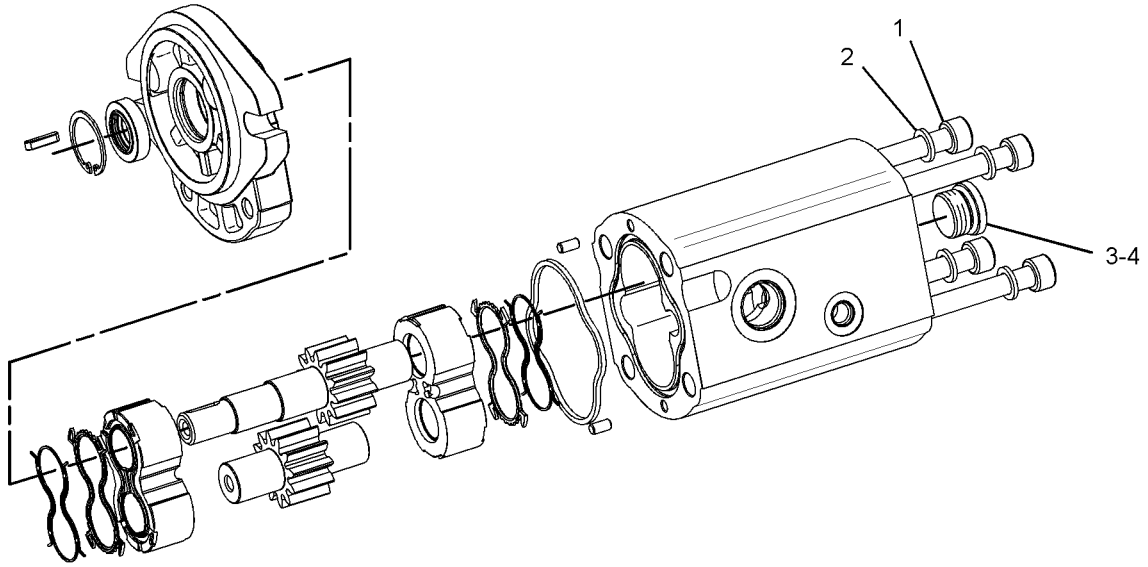


GRAPHIC #1 **<END>** g01434677

# HYDRAULIC SYSTEM

## 307-3036 MOTOR GP-GEAR

**S/N: HEN6757-8069**

**PART OF 218-5627 MOTOR & MTG GP-HYDRAULIC FAN**

**SMCS-1386, 5061** **i02839812**

| NOTE | REF NO | GRAPHIC REF | PART NUMBER | QTY | PART NAME 1 2 3 4 5 6 (PRODUCT LEVEL) | SEE PAGE |
|---|---|---|---|---|---|---|
| | 1 | 1 | **228-9240** | 1 | VALVE GP-RELIEF | |
| | | 1 | **6F-6672** | 1 | SEAL-O-RING | |
| | | 1 | **215-3277** | 1 | SEAL-O-RING | |
| M | 2 | 1 | **9T-4884** | 2 | BOLT (M10X1.5X30-MM) | |
| | | | | | AVAILABLE REPAIR KIT(S): | |
| | | | **278-8716** | 1 | KIT-SEAL | |
| | | | | | (INCLUDES SEALS, SNAP RING, AND AXIAL SEAL KIT) | |

M-METRIC PART

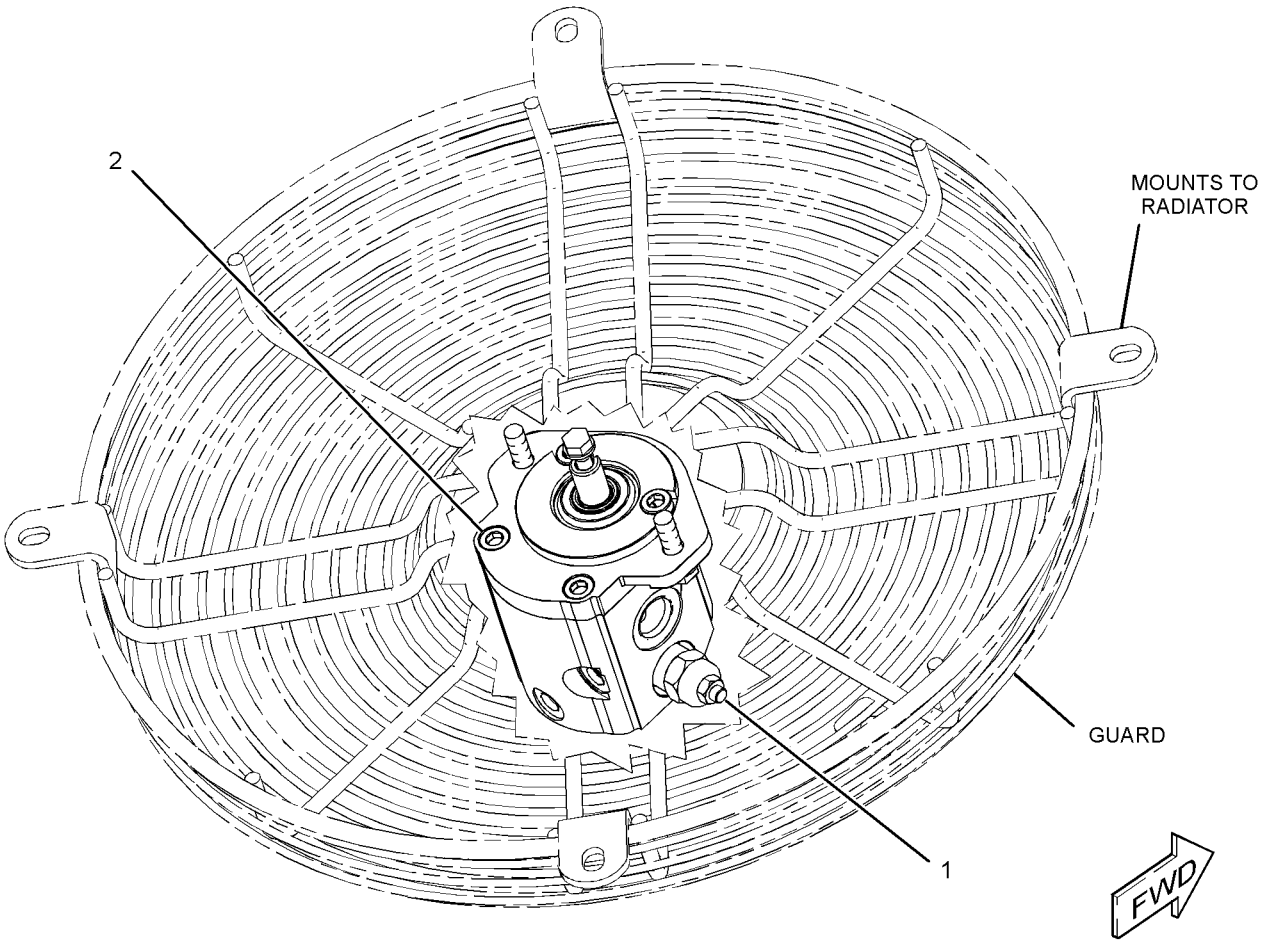


GRAPHIC #1 **<END>** g01417312

# HYDRAULIC SYSTEM

## 307-3037 MOTOR GP-GEAR

**S/N: HEN8070-UP**

**PART OF 295-7221 MOTOR & MTG GP-HYDRAULIC FAN**

**SMCS-1386, 5061** **i02833249**

| NOTE | REF NO | GRAPHIC REF | PART NUMBER | QTY | PART NAME 1 2 3 4 5 6 (PRODUCT LEVEL) | SEE PAGE |
|---|---|---|---|---|---|---|
| | 1 | 1 | **228-9240** | 1 | VALVE GP-RELIEF | |
| | | 1 | **6F-6672** | 1 | SEAL-O-RING | |
| | | 1 | **215-3277** | 1 | SEAL-O-RING | |
| M | 2 | 1 | **9T-4884** | 2 | BOLT (M10X1.5X30-MM) | |
| | | | | | AVAILABLE REPAIR KIT(S): | |
| | | | **278-8716** | 1 | KIT-SEAL | |
| | | | | | (INCLUDES O-RING-SEAL, E-SEAL, SEAL-O-RINGS, SHAFT SEAL, SNAP RING, SEAL BACK-UPS & AXIAL SEAL KIT) | |

M-METRIC PART

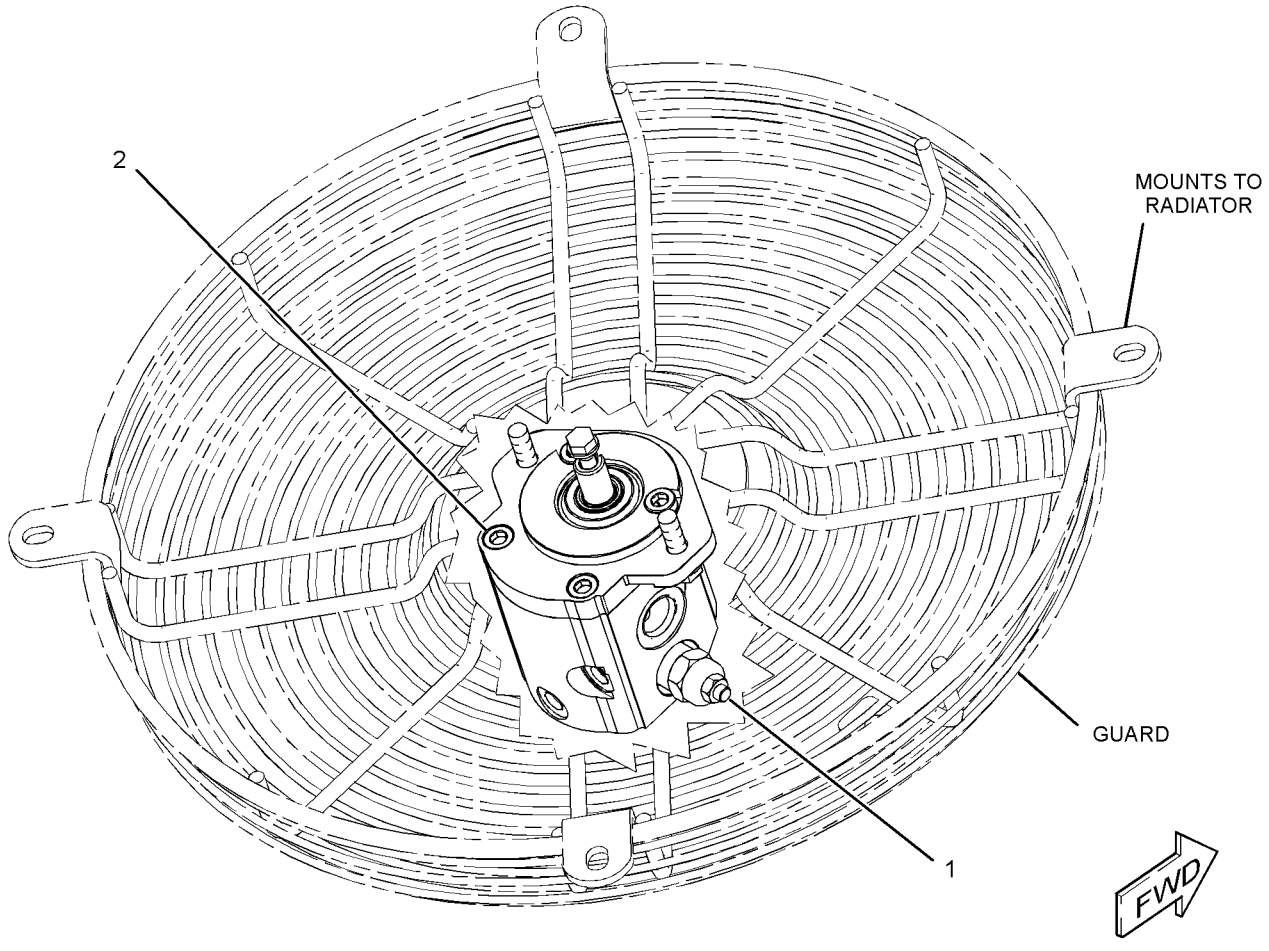


GRAPHIC #1 **<END>** g01413973

# 307-6115 MOTOR GP-GEAR

**S/N: HEN6750-UP**
**PART OF 218-6832 COMPRESSOR & MOTOR GP-REFRIG**
**AN ATTACHMENT**

**SMCS-1386, 5061** **i02877059**

| NOTE | REF NO | GRAPHIC REF | PART NUMBER | QTY | PART NAME 1 2 3 4 5 6 (PRODUCT LEVEL) | SEE PAGE |
|---|---|---|---|---|---|---|
| | 1 | 1 | **283-9566** | 1 | VALVE GP-SOLENOID (12 VDC) | |
| Y | 2 | 1 | **289-6360** | 1 | MOTOR GP-GEAR | 325 |

Y-SEPARATE ILLUSTRATION

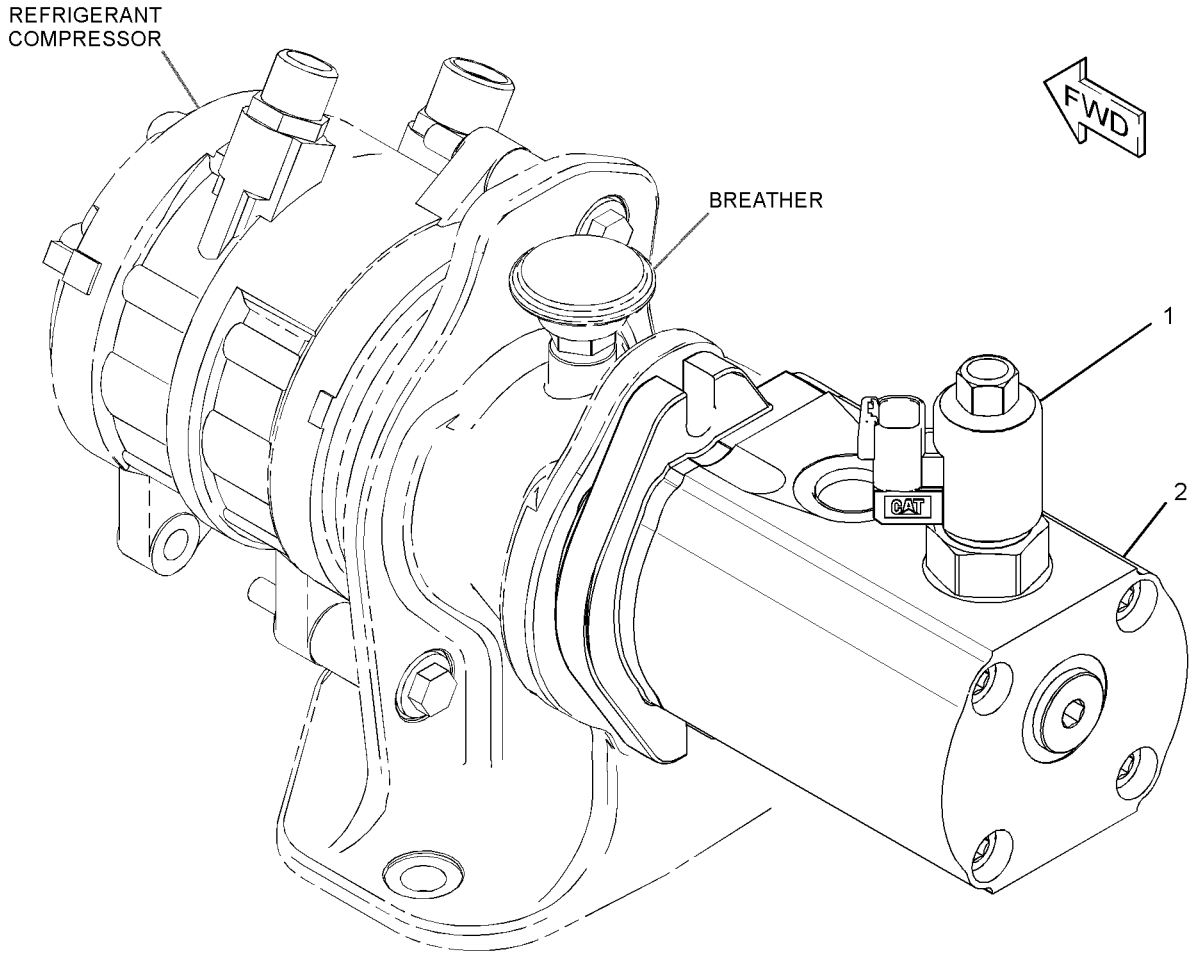


GRAPHIC #1 **<END>** g01432998

# HYDRAULIC SYSTEM

## *154-5011* MOUNTING GP-CYLINDER

**S/N: HEN6750-UP**

**PART OF 279-5382, 279-5390, 279-5398, 279-5403 BUCKET AR-MULTIPURPOSE AN ATTACHMENT**

**SMCS-5498** **i01066088**

| NOTE | REF NO | GRAPHIC REF | PART NUMBER | QTY | PART NAME 1 2 3 4 5 6 (PRODUCT LEVEL) | SEE PAGE |
|---|---|---|---|---|---|---|
| | 1 | 1 | **154-5012** | 2 | PIN | |
| | 2 | 1 | **154-5013** | 2 | PIN | |
| | 3 | 1 | **3B-8489** | 2 | FITTING-GREASE | |
| M | 4 | 1 | **6V-9189** | 4 | LOCKNUT (M8X1.25-THD) | |
| M | 5 | 1 | **8T-6869** | 4 | BOLT (M8X1.25X60-MM) | |

M-METRIC PART

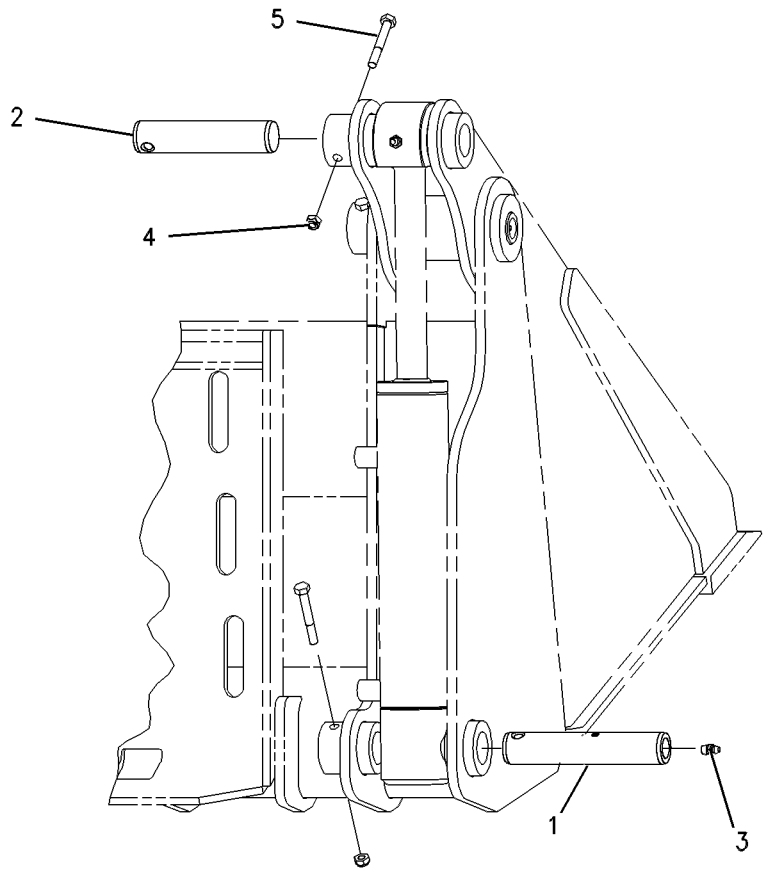


GRAPHIC #1 **<END>** g00560356

# HYDRAULIC SYSTEM

## *156-0891* MOUNTING GP-CYLINDER

**S/N: HEN6750-UP**

**PART OF 157-7223, 157-7224, 157-7225, 217-6229 BUCKET AR-GRAPPLE, 279-5350, 279-5360 FORK AR-GRAPPLE**

**AN ATTACHMENT**

**SMCS-5498** **i02578037**

| NOTE | REF NO | GRAPHIC REF | PART NUMBER | QTY | PART NAME 1 2 3 4 5 6 (PRODUCT LEVEL) | SEE PAGE |
|---|---|---|---|---|---|---|
| | 1 | 1 | **255-8058** | 2 | PLATE | |
| | 2 | 1 | **156-0913** | 1 | PLATE | |
| | 3 | 1 | **157-0941** | 2 | PIN | |
| | 4 | 1 | **157-0942** | 2 | PIN | |
| | 5 | 1 | **159-8035** | 2 | FILM-WARNING (CRUSH HAZARD, STAY BACK) | |
| | 6 | 1 | **3B-8489** | 2 | FITTING-GREASE | |
| | 7 | 1 | **4M-5285** | 4 | RING-RETAINING (EXTERNAL) | |
| M | 8 | 1 | **6V-9189** | 2 | LOCKNUT (M8X1.25-THD) | |
| M | 9 | 1 | **8T-4138** | 3 | BOLT (M6X1X20-MM) | |
| M | 10 | 1 | **8T-6869** | 2 | BOLT (M8X1.25X60-MM) | |
| | 11 | 1 | **9X-2026** | 3 | WASHER (6.5X17X1-MM THK) | |
| | 12 | 1 | **9X-6274** | 4 | WASHER (32.5X50X1.6-MM THK) | |

M-METRIC PART

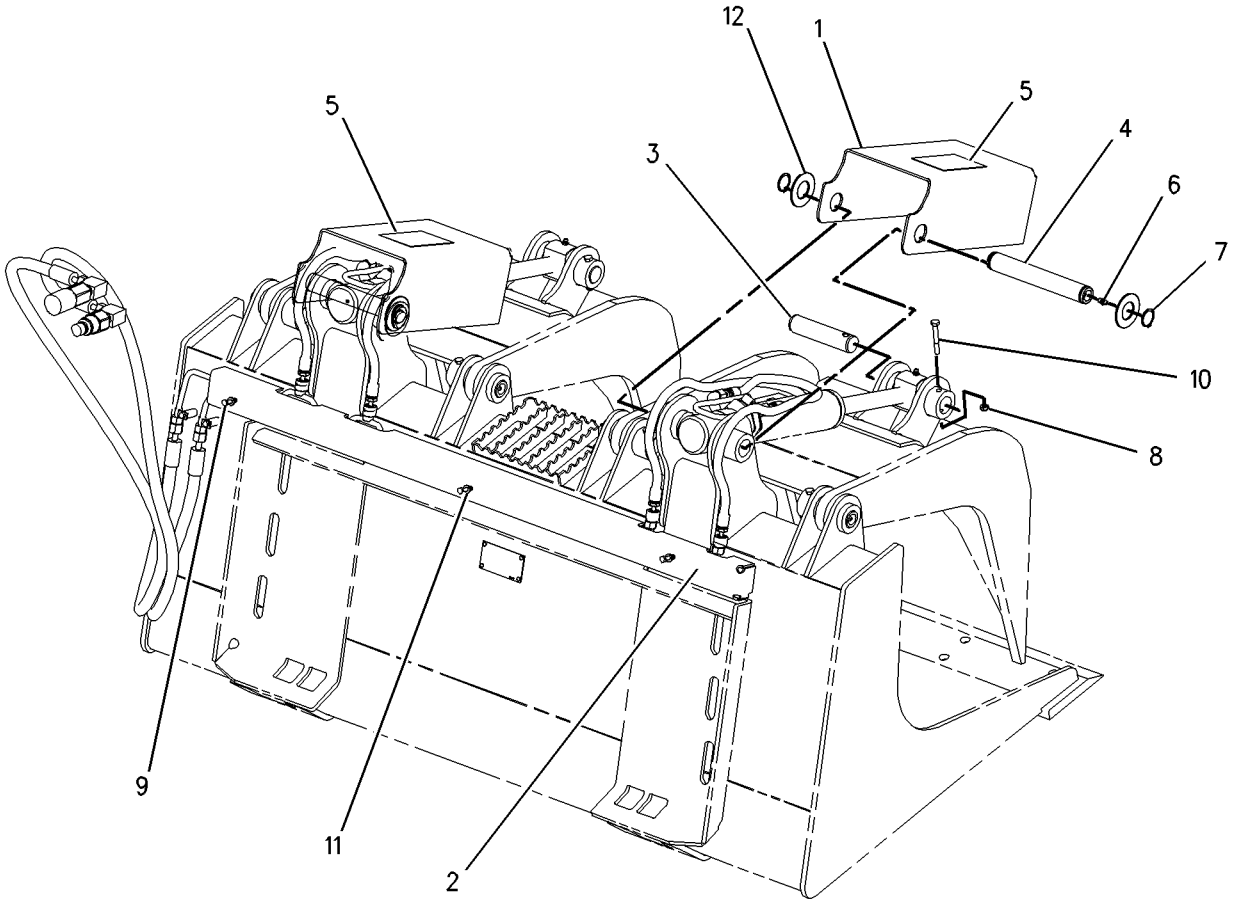


GRAPHIC #1 **<END>** g00777681

# HYDRAULIC SYSTEM

## *165-8731* MOUNTING GP-CYLINDER

**S/N: HEN6750-UP**
**PART OF 285-6116 GRAPPLE GP-UTILITY**
**AN ATTACHMENT**

**SMCS-5498** **i02017132**

| NOTE | REF NO | GRAPHIC REF | PART NUMBER | QTY | PART NAME 1 2 3 4 5 6 (PRODUCT LEVEL) | SEE PAGE |
|---|---|---|---|---|---|---|
| | 1 | 1 | **154-5013** | 2 | PIN | |
| M | 2 | 1 | **6V-9189** | 2 | LOCKNUT (M8X1.25-THD) | |
| M | 3 | 1 | **8T-6869** | 2 | BOLT (M8X1.25X60-MM) | |

M-METRIC PART

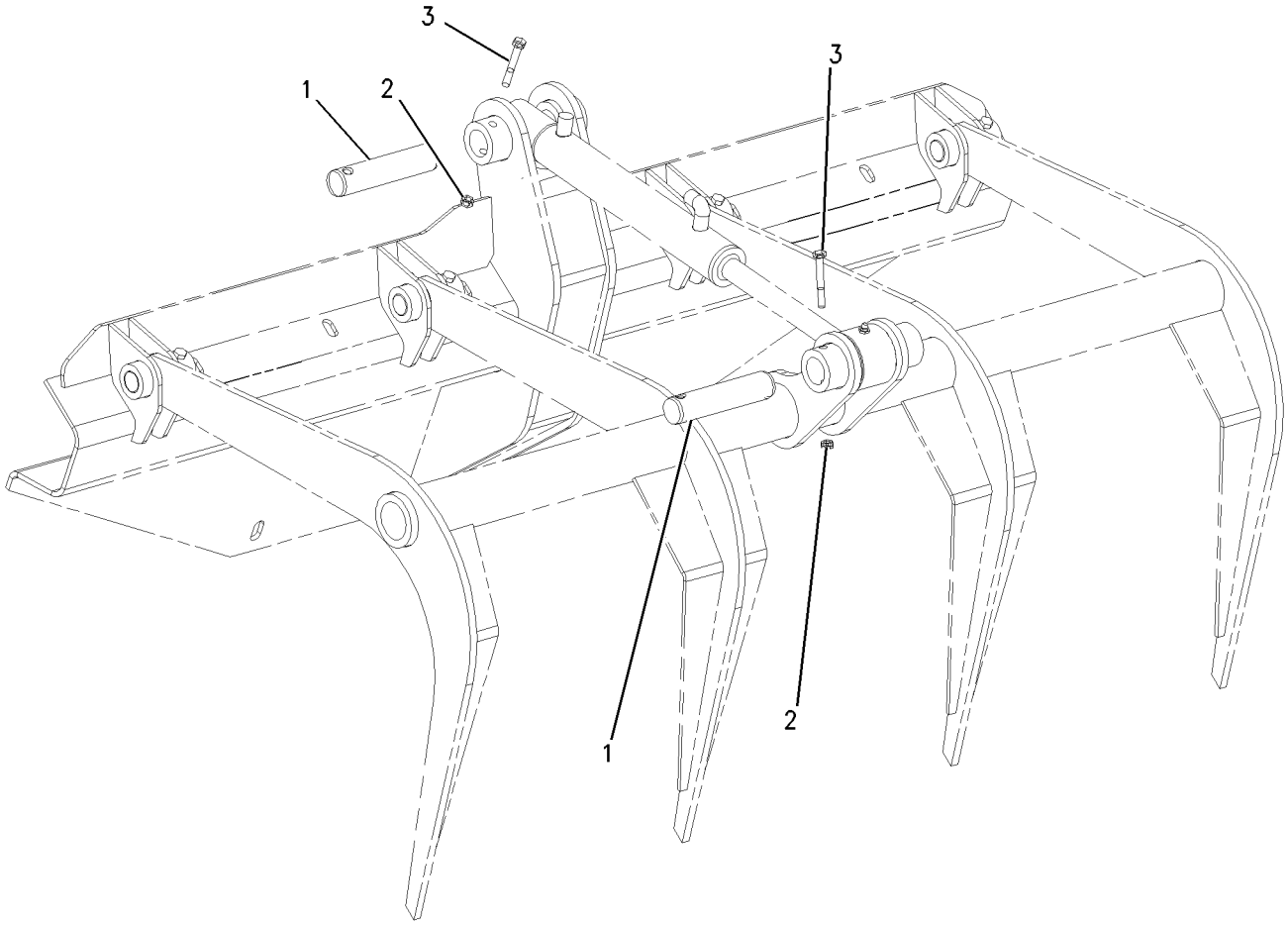


GRAPHIC #1 **<END>** g00652937

# HYDRAULIC SYSTEM

## *142-8714* PLUG GP-PILOT VALVE

**S/N: HEN6750-UP**
**CANNOT BE USED WITH 225-7969—PAGE 142**
**AN ATTACHMENT**

**SMCS-5059** **i01788841**

| NOTE | REF NO | GRAPHIC REF | PART NUMBER | QTY | PART NAME 1 2 3 4 5 6 (PRODUCT LEVEL) | SEE PAGE |
|---|---|---|---|---|---|---|
| | 1 | 1 | *148-8407* | 1 | PLUG AS | |
| | | 1 | **3J-1907** | 1 | SEAL-O-RING | |
| | | 1 | **9S-4191** | 1 | PLUG-O-RING | |

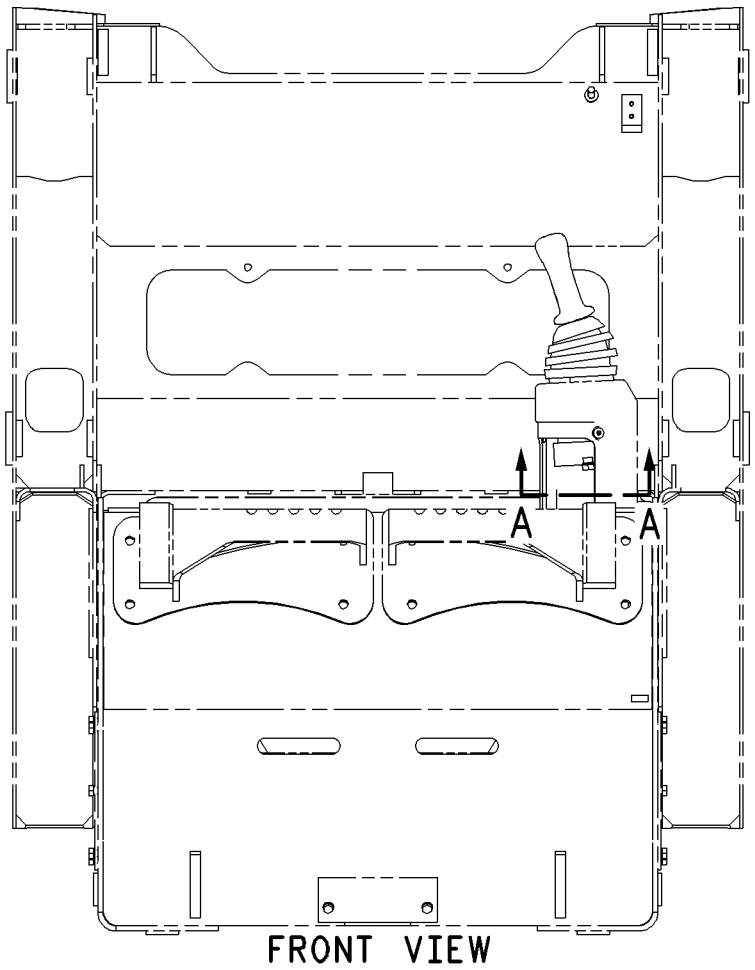


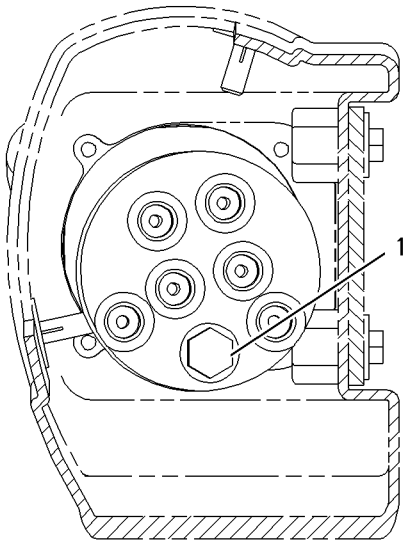


GRAPHIC #1 **<END>** g00915486

# *190-8084* PUMP & MTG GP-WORK TOOL

**S/N: HEN6750-UP**
**PART OF 261-6126 CONVERSION AR-MACHINE**
**AN ATTACHMENT**

**SMCS-6700** **i02212112**

| NOTE | REF NO | GRAPHIC REF | PART NUMBER | QTY | PART NAME 1 2 3 4 5 6 (PRODUCT LEVEL) | SEE PAGE |
|---|---|---|---|---|---|---|
| CY | 1 | 1 | **238-7642** | 1 | PUMP GP-GEAR | 335 |
| | 2 | 1 | **8T-4223** | 2 | WASHER-HARD (13.5X25.5X3-MM THK) | |
| M | 3 | 1 | **8T-4956** | 2 | BOLT (M12X1.75X35-MM) | |
| | 4 | 1 | **8T-5049** | 1 | SEAL-O-RING | |

C-CHANGE FROM PREVIOUS TYPE
M-METRIC PART
Y-SEPARATE ILLUSTRATION

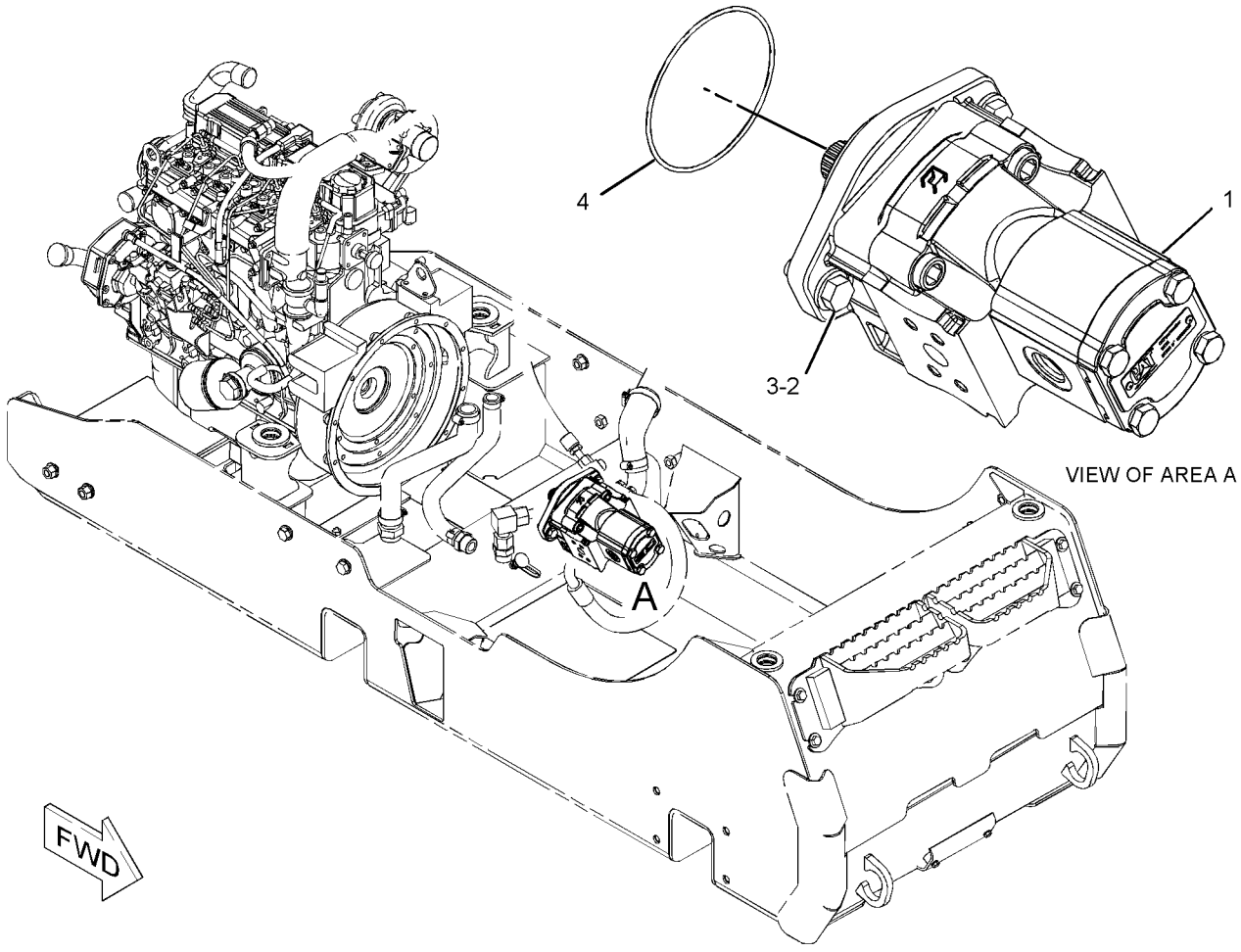


GRAPHIC #1 **<END>** g01131877

# *306-8137* PUMP & MTG GP-WORK TOOL

**S/N: HEN6750-UP**

**PART OF 261-6165, 278-5351, 278-5373, 278-5418, 278-5448, 295-7064, 295-7071, 295-7154, 295-7170, 295-7171 CONVERSION AR-MACHINE AN ATTACHMENT**

**SMCS-6700** **i02731045**

| NOTE | REF NO | GRAPHIC REF | PART NUMBER | QTY | PART NAME 1 2 3 4 5 6 (PRODUCT LEVEL) | SEE PAGE |
|---|---|---|---|---|---|---|
| Y | 1 | 1 | **289-6358** | 1 | PUMP GP-GEAR | 336 |
| | 2 | 1 | **8T-4223** | 2 | WASHER-HARD (13.5X25.5X3-MM THK) | |
| M | 3 | 1 | **8T-4956** | 2 | BOLT (M12X1.75X35-MM) | |
| | 4 | 1 | **8T-5049** | 1 | SEAL-O-RING | |

M-METRIC PART
Y-SEPARATE ILLUSTRATION

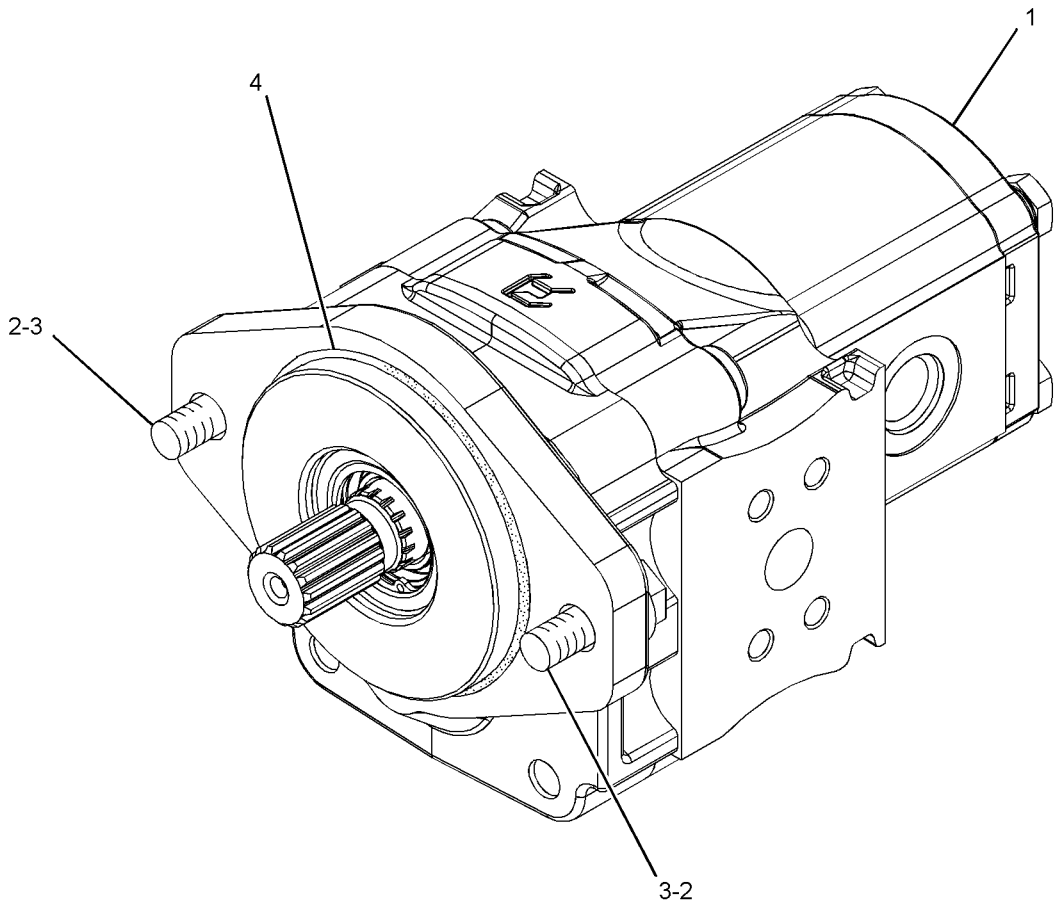


GRAPHIC #1 **<END>** g01372516

# 238-7642 PUMP GP-GEAR–WORK TOOL

**S/N: HEN6750-UP**
**PART OF 190-8084 PUMP & MTG GP-WORK TOOL**
**AN ATTACHMENT**

**SMCS-5073** **i02894705**

| NOTE | REF NO | GRAPHIC REF | PART NUMBER | QTY | PART NAME 1 2 3 4 5 6 (PRODUCT LEVEL) | SEE PAGE |
|---|---|---|---|---|---|---|
| J | 1 | 1 | **230-3757** | 2 | SEAL-SHAFT | |
| | 2 | 1 | **8C-3110** | 1 | RING-RETAINING | |
| | 3 | 1 | **313-5646** | 4 | BOLT | |
| | 4 | 1 | **271-2360** | 4 | WASHER-HARD (15X22X2.5-MM THK) | |
| M | 5 | 1 | **8T-4198** | 4 | BOLT (M10X1.5X100-MM) | |
| | 6 | 1 | **8T-5095** | 4 | WASHER-PLATED (11X16X2-MM THK) | |
| | | | | | AVAILABLE REPAIR KIT(S): | |
| J | | | **278-8714** | 1 | KIT-SEAL | |
| | | | | | (INCLUDES E-SEALS,SEAL-O-RINGS, SNAP RING, & SEAL BACK-UPS) | |

J-KIT MARKED J IS AVAILABLE FOR PART MARKED J
M-METRIC PART

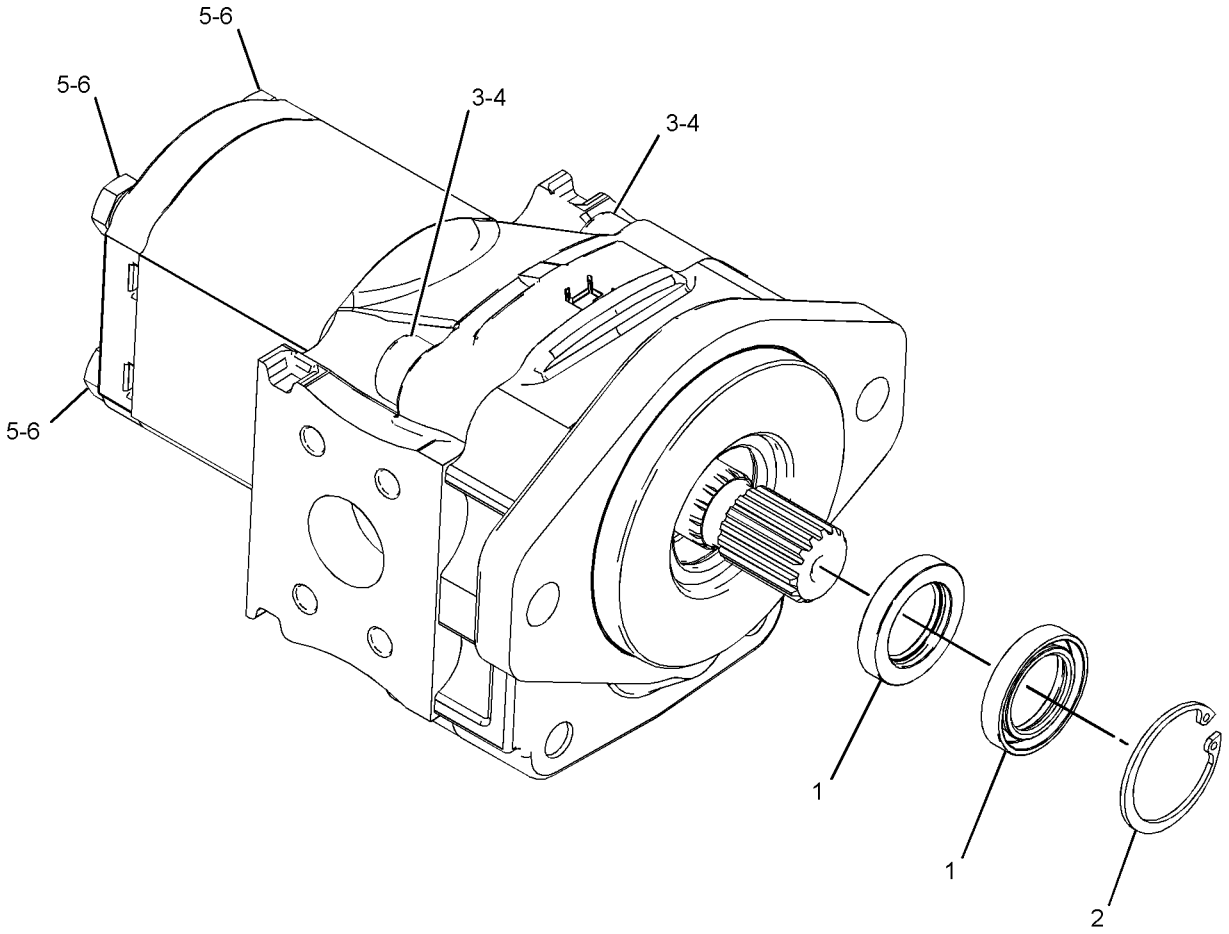


GRAPHIC #1 **<END>** g01442438

# HYDRAULIC SYSTEM

## *289-6358* PUMP GP-GEAR

**S/N: HEN6750-UP**
**PART OF 306-8137 PUMP & MTG GP-WORK TOOL**
**AN ATTACHMENT**

**SMCS-5073** **i02731047**

| NOTE | REF NO | GRAPHIC REF | PART NUMBER | QTY | PART NAME 1 2 3 4 5 6 (PRODUCT LEVEL) | SEE PAGE |
|---|---|---|---|---|---|---|
| J | 1 | 1 | **230-3757** | 2 | SEAL-SHAFT | |
| J | 2 | 1 | **8C-3110** | 1 | RING-RETAINING | |
| | 3 | 1 | **8T-5095** | 4 | WASHER-PLATED (11X16X2-MM THK) | |
| M | 4 | 1 | **8T-4198** | 4 | BOLT (M10X1.5X100-MM) | |
| | 5 | 1 | **271-2360** | 4 | WASHER-HARD (15X22X2.5-MM THK) | |
| M | 6 | 1 | **095-0690** | 4 | BOLT-SOCKET HEAD (M14X2X60-MM) | |
| | | | | | | |
| | | | | | PARTS SHOWN IN GRAPHIC(S) WITHOUT A REFERENCE NUMBER ARE NOT SERVICED SEPARATELY | |
| | | | | | AVAILABLE REPAIR KIT(S): | |
| J | | | **278-8714** | 1 | KIT-SEAL (GEAR PUMP) | |
| | | | | | (INCLUDES E-SEALS, SEAL-O-RINGS, SHAFT SEALS, SNAP RING & SEAL BACKUP) | |

J-‘(KIT MARKED J SERVICES PART MARKED J)
M-METRIC PART

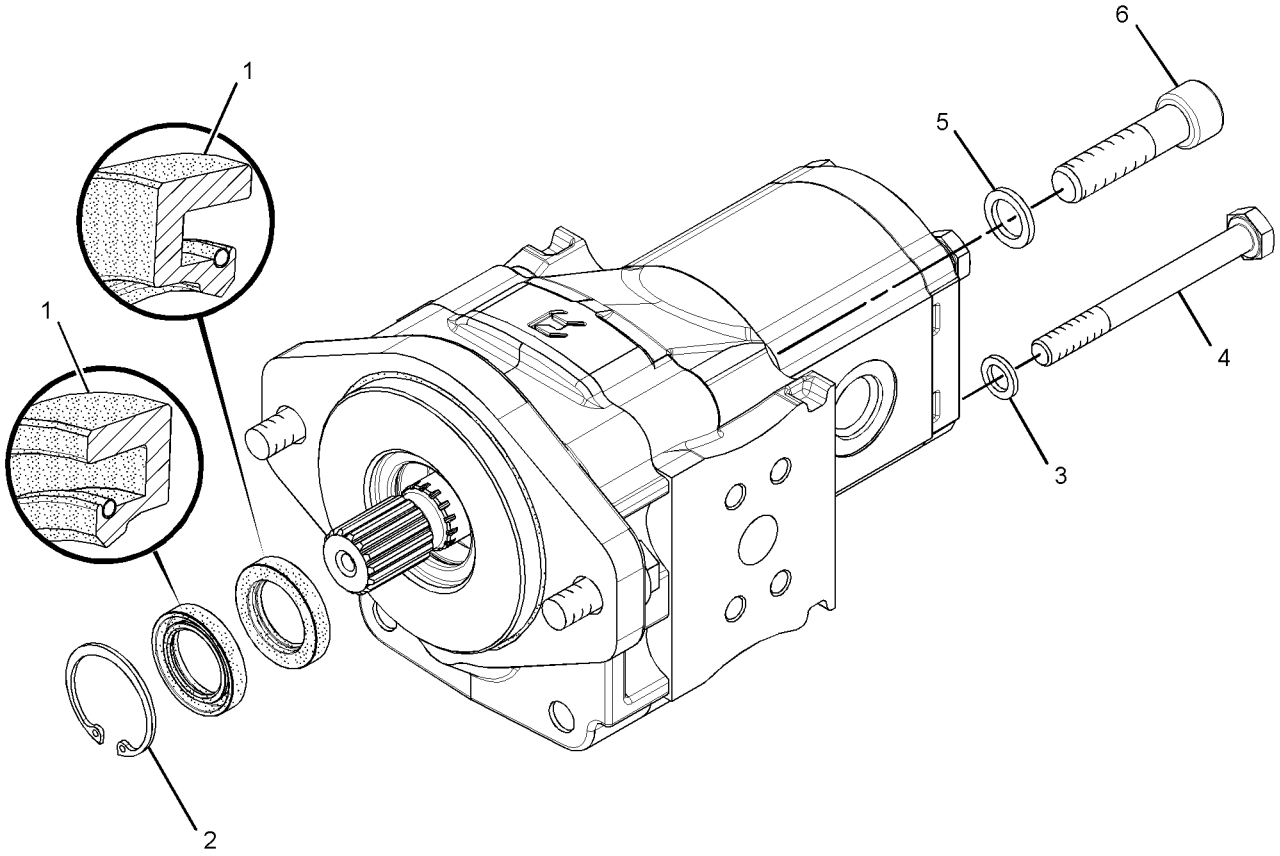


GRAPHIC #1 **<END>** g01372557

# HYDRAULIC SYSTEM

## *233-5980* TANK & MTG GP-HYDRAULIC

**S/N: HEN6750-UP**

**PART OF 278-1237, 295-7220 HYDRAULIC AR**

**SMCS-5056** **i02890213**

| NOTE | REF NO | GRAPHIC REF | PART NUMBER | QTY | PART NAME 1 2 3 4 5 6 (PRODUCT LEVEL) | SEE PAGE |
|---|---|---|---|---|---|---|
| | 1 | 1 | **5P-4961** | 2 | CLAMP-HOSE | |
| | 2 | 1 | **154-4014** | 1 | BRACKET | |
| Y | 3 | 1 | **204-1491** | 1 | TANK GP-HYDRAULIC | 338 |
| | 4 | 1 | **207-9729** | 1 | BREATHER AS (INLINE) (HYDRAULIC OIL) | |
| B | 5 | 1 | **233-5997** | 1 | HOSE | |
| | 6 | 1 | **6D-4246** | 1 | CLIP | |
| | 7 | 1 | **8T-4121** | 1 | WASHER-HARD (11X21X2.5-MM THK) | |
| M | 8 | 1 | **8T-4136** | 1 | BOLT (M10X1.5X25-MM) | |
| M | 9 | 1 | **8T-4189** | 2 | BOLT (M8X1.25X20-MM) | |
| E | 10 | 1 | **5P-1442** | | HOSE (65-CM) | |

B-USE AS REQUIRED
E-ORDER BY THE CENTIMETER
M-METRIC PART
Y-SEPARATE ILLUSTRATION

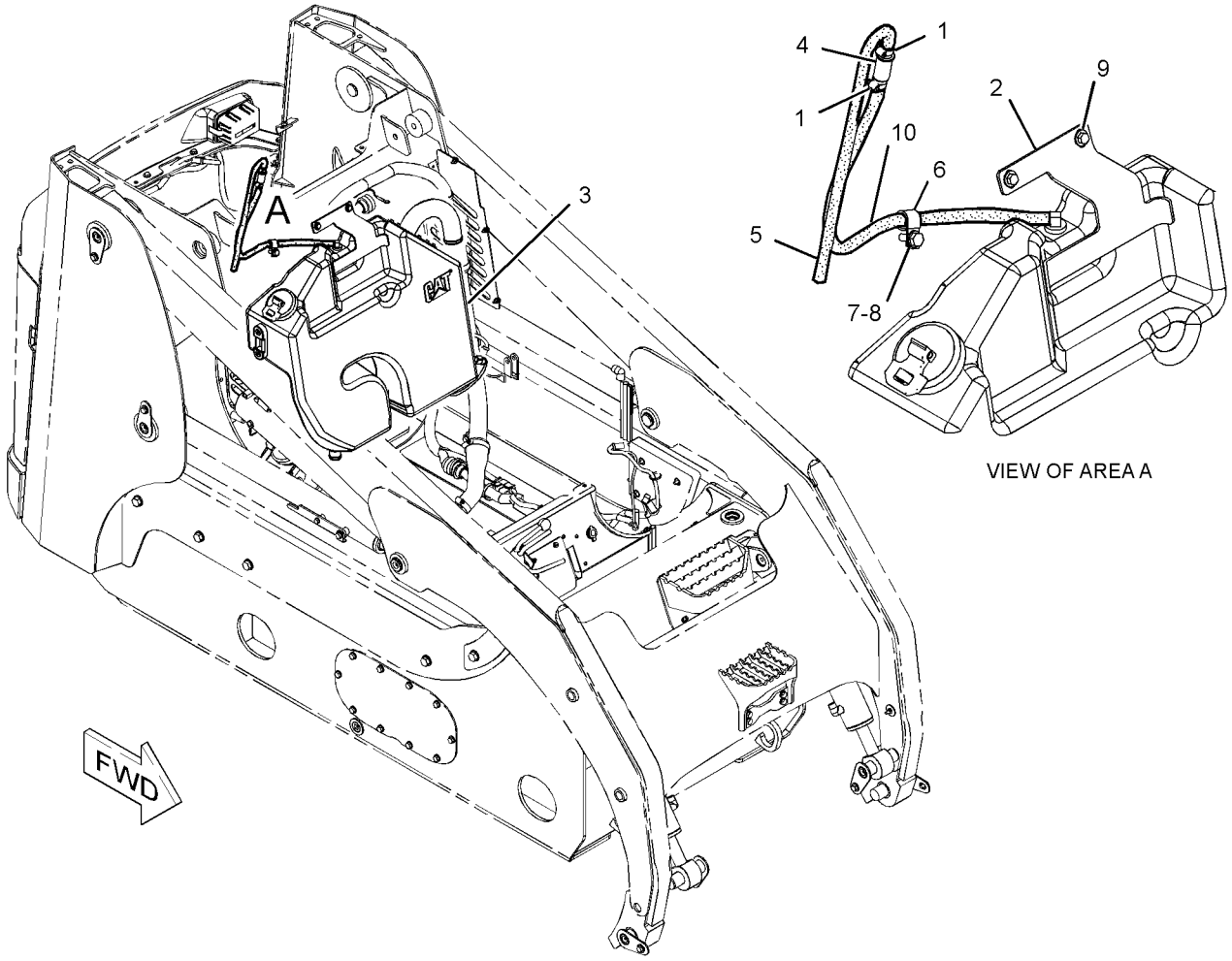


GRAPHIC #1 **<END>** g01309558

# HYDRAULIC SYSTEM

## 204-1491 TANK GP-HYDRAULIC

**S/N: HEN6750-UP**

**PART OF 233-5980 TANK & MTG GP-HYDRAULIC**

**SMCS-5056** **i02014392**

| NOTE | REF NO | GRAPHIC REF | PART NUMBER | QTY | PART NAME 1 2 3 4 5 6 (PRODUCT LEVEL) | SEE PAGE |
|---|---|---|---|---|---|---|
| | 1 | 1 | **6W-5698** | 1 | GROMMET | |
| M | 2 | 1 | **099-2374** | 6 | BOLT-SOCKET HEAD (M5X0.8X12-MM) | |
| | 3 | 1 | **132-3056** | 1 | SEAL-O-RING | |
| | 4 | 1 | **142-8928** | 1 | ELBOW | |
| | 5 | 1 | **142-8929** | 1 | SCREEN-SUCTION (HYDRAULIC TANK) | |
| | 6 | 1 | **142-8937** | 1 | CAP AS-FILLER (HYDRAULIC TANK) | |
| | 7 | 1 | **204-1492** | 1 | TANK GP-HYDRAULIC | |
| | | 1 | **192-2668** | 1 | GAUGE-SIGHT (HYDRAULIC TANK) | |
| | 8 | 1 | **204-1499** | 1 | TUBE AS | |
| | 9 | 1 | **236-1872** | 1 | SWITCH AS-TEMPERATURE (HYDRAULIC OIL) | |
| | | 1 | **102-8803** | 1 | KIT-RECEPTACLE (3-PIN) | |
| | 10 | 1 | **3K-0360** | 1 | SEAL-O-RING | |

M-METRIC PART

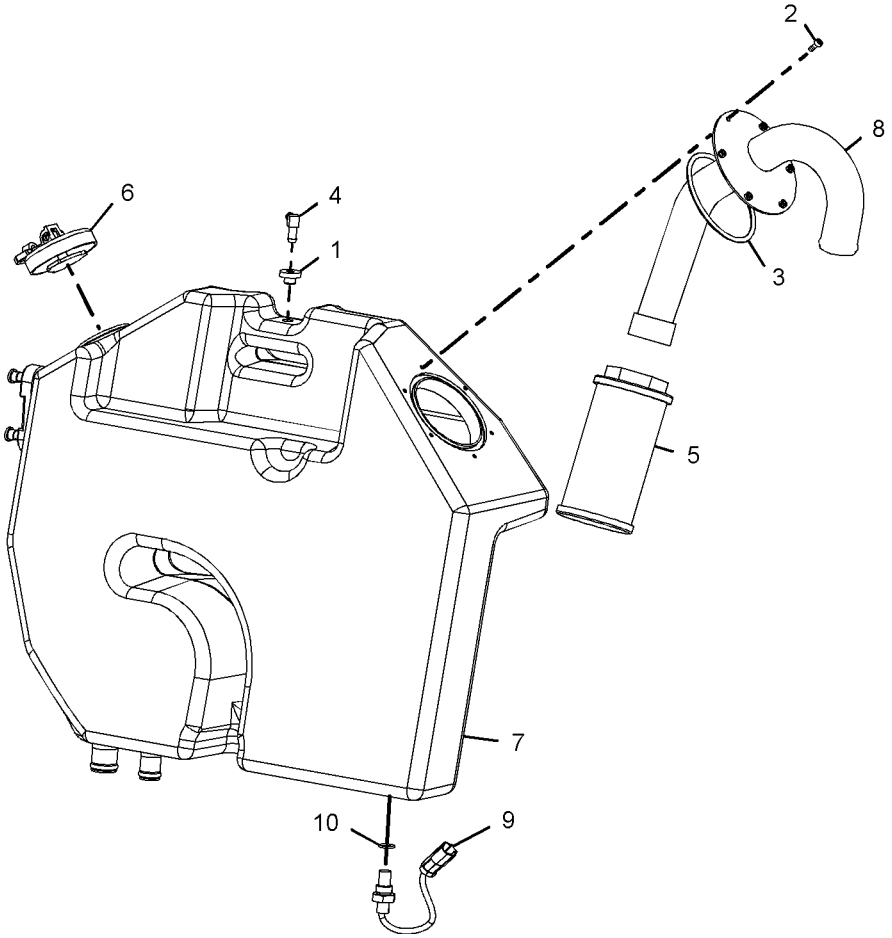


GRAPHIC #1 **<END>** g01032724

# *218-6275* VALVE & MTG GP-CONTROL

**S/N: HEN6750-UP**
**WORK TOOL, 3-FUNCTION**
**PART OF 278-1237, 295-7220 HYDRAULIC AR**

**SMCS-5051** **i01936140**

| NOTE | REF NO | GRAPHIC REF | PART NUMBER | QTY | PART NAME 1 2 3 4 5 6 (PRODUCT LEVEL) | SEE PAGE |
|---|---|---|---|---|---|---|
| Y | 1 | 1 | **216-6169** | 1 | VALVE GP-CONTROL | 340 |
| | 2 | 1 | **218-6561** | 1 | BRACKET | |
| | 3 | 1 | **8T-4121** | 4 | WASHER-HARD (11X21X2.5-MM THK) | |
| M | 4 | 1 | **8T-4136** | 2 | BOLT (M10X1.5X25-MM) | |
| M | 5 | 1 | **8T-4137** | 2 | BOLT (M10X1.5X20-MM) | |

M-METRIC PART
Y-SEPARATE ILLUSTRATION

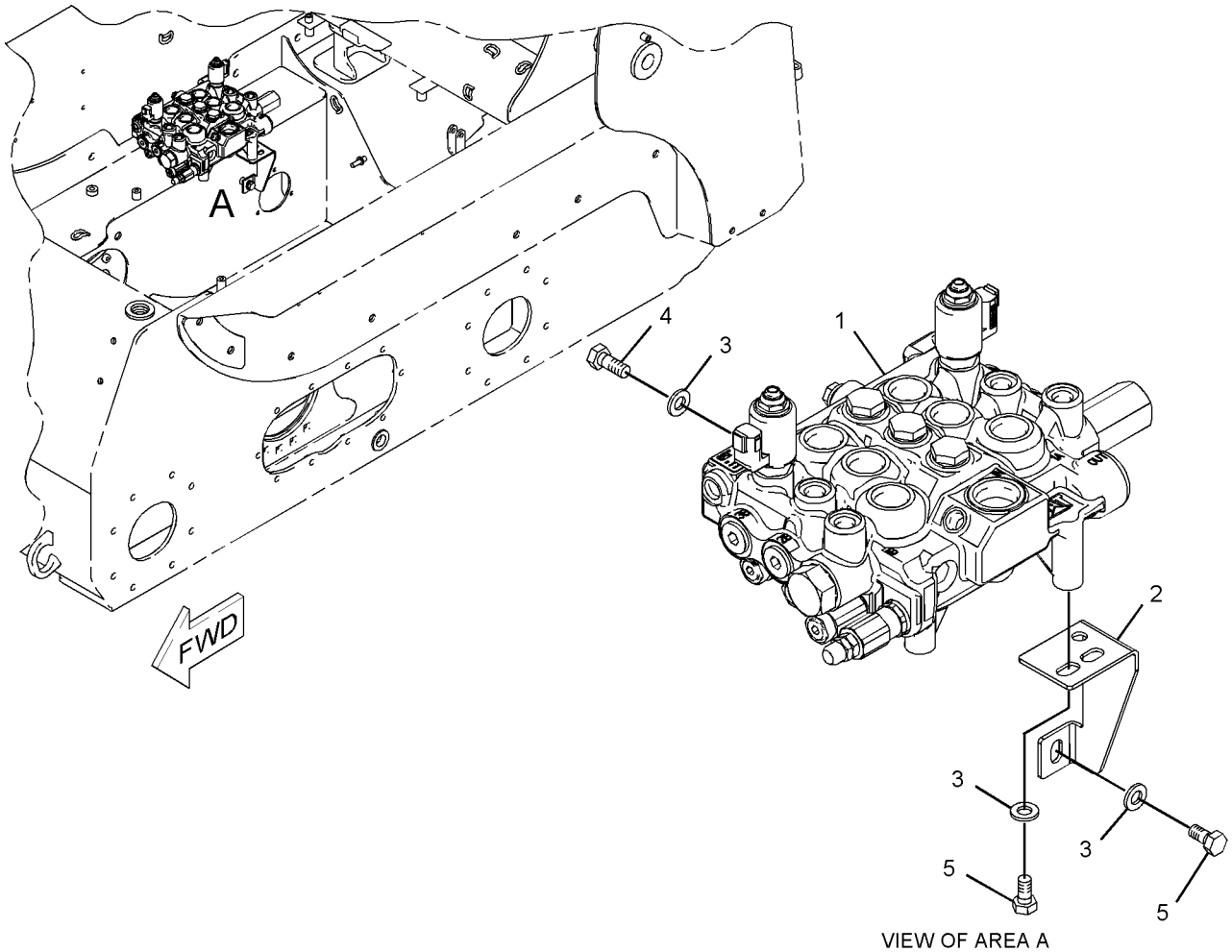


VIEW OF AREA A

GRAPHIC #1 **<END>** g01017761

# 216-6169 VALVE GP-CONTROL—WORK TOOL, 3-FUNCTION

**S/N: HEN6750-UP**

**PART OF 218-6275 VALVE & MTG GP-CONTROL**

**SMCS-5051** **i02605594**

| NOTE | REF NO | GRAPHIC REF | PART NUMBER | QTY | PART NAME 1 2 3 4 5 6 (PRODUCT LEVEL) | SEE PAGE |
|---|---|---|---|---|---|---|
| CY | 1 | 1 | **295-1799** | 1 | VALVE GP-RELIEF (MAIN) | 354 |
| | 2 | 1 | **216-6160** | 2 | VALVE GP-RELIEF (TILT, AUXILIARY) | |
| | 3 | 1 | **216-6161** | 2 | VALVE GP-RELIEF (LIFT) | |
| Y | 4 | 1 | **185-4254** | 2 | VALVE GP-SOLENOID (12-VOLT) (MODULATION,AUXILIARY CIRCUIT) | 355 |
| C | 5 | 2 | **4J-7533** | 2 | SEAL-O-RING | |
| | 6 | 2 | **204-1485** | 6 | WASHER (0.47X0.75X0.02-MM THK) | |
| | 7 | 2 | **204-1482** | 1 | SPRING | |
| | 8 | 2 | **204-1488** | 1 | SPRING | |
| | 9 | 2 | **204-1489** | 4 | SPRING | |
| | 10 | 2 | **204-1486** | 1 | WASHER (0.32X0.74X0.02-MM THK) | |
| | 11 | 2 | **127-6316** | 1 | BOLT-SHOULDER | |
| | 12 | 2 | **204-1476** | 4 | PLUG | |
| C | 13 | 2 | **4K-1388** | 2 | SEAL-O-RING | |
| | 14 | 2 | **204-1471** | 1 | CAP | |
| | 15 | 2 | **204-1481** | 1 | CAP | |
| | 16 | 2 | **144-4531** | 3 | VALVE-CHECK | |
| | 17 | 2 | **003-3082** | 3 | SPRING | |
| | 18 | 2 | **8I-5078** | 3 | SEAL-O-RING | |
| | 19 | 2 | **144-4532** | 3 | PLUG | |
| | 20 | 2 | **216-6156** | 1 | VALVE-CHECK | |
| | 21 | 2 | **216-6157** | 1 | SPRING | |
| C | 22 | 2 | **3J-1907** | 1 | SEAL-O-RING | |
| | 23 | 2 | **216-6159** | 1 | PLUG | |
| C | 24 | 1 | **2M-9780** | 4 | SEAL-O-RING | |

C-CHANGE FROM PREVIOUS TYPE
Y-SEPARATE ILLUSTRATION

## 216-6169 VALVE GP-CONTROL *(contd. )*

i02605594

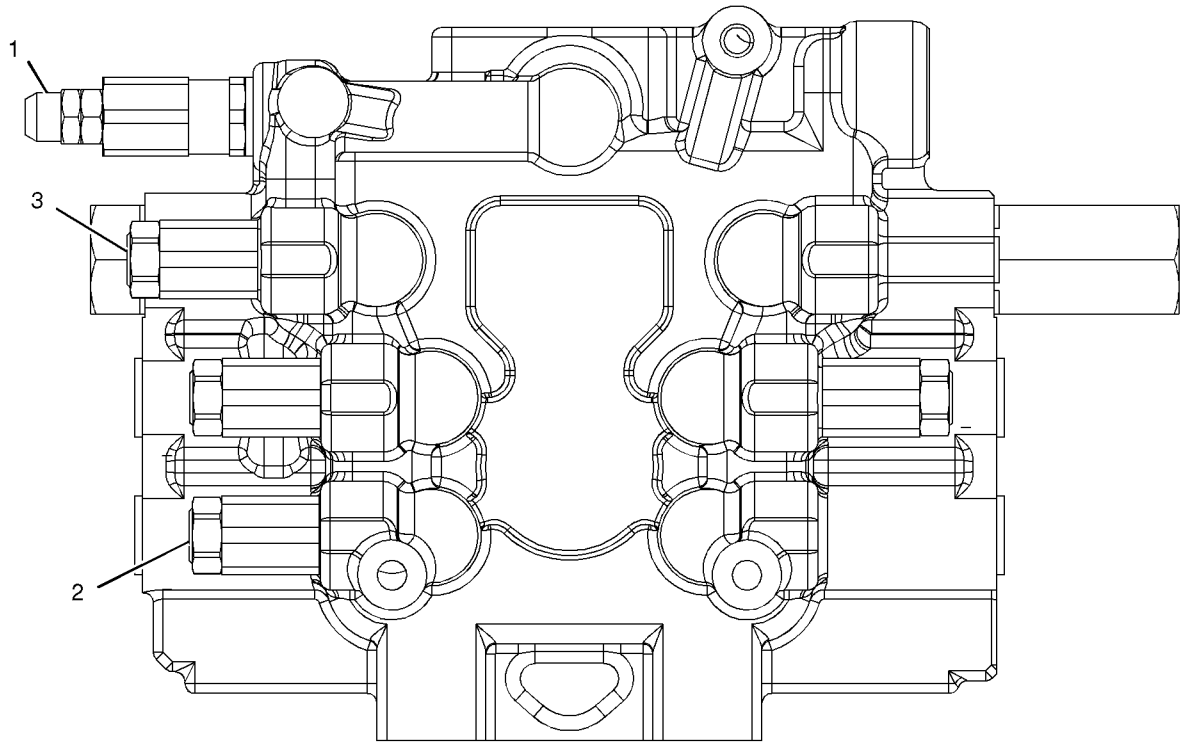


VIEW B-B

REFER TO ALL ILLUSTRATIONS OF THIS GROUP FOR AUXILIARY VIEWS

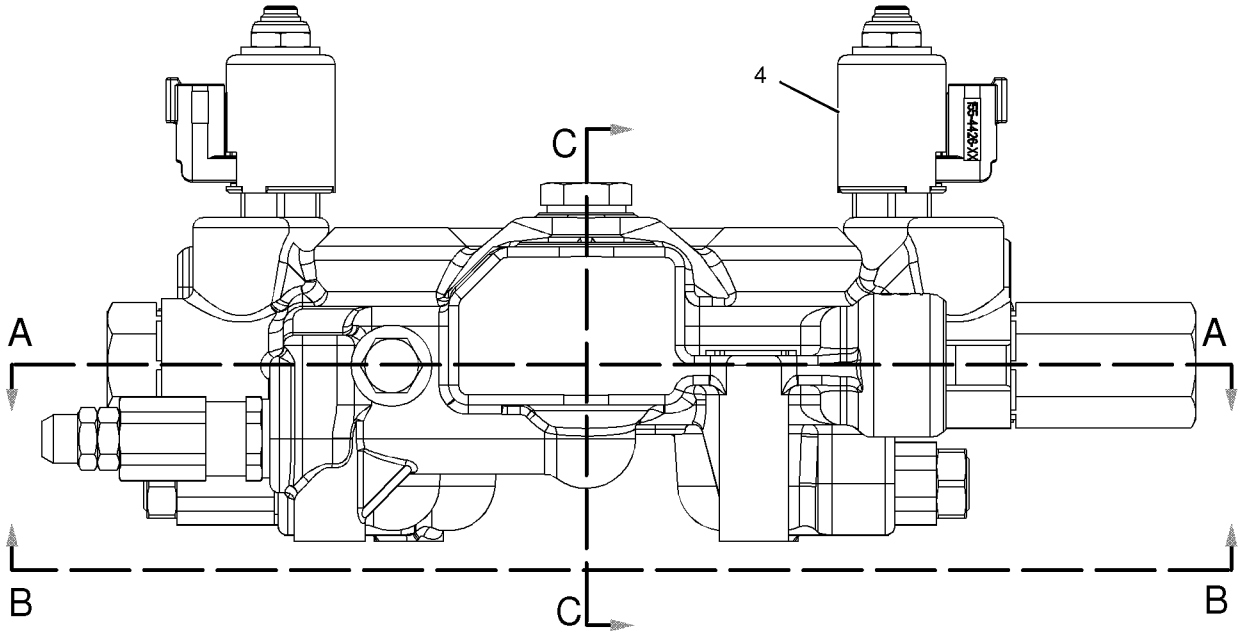


GRAPHIC #1

g01037621

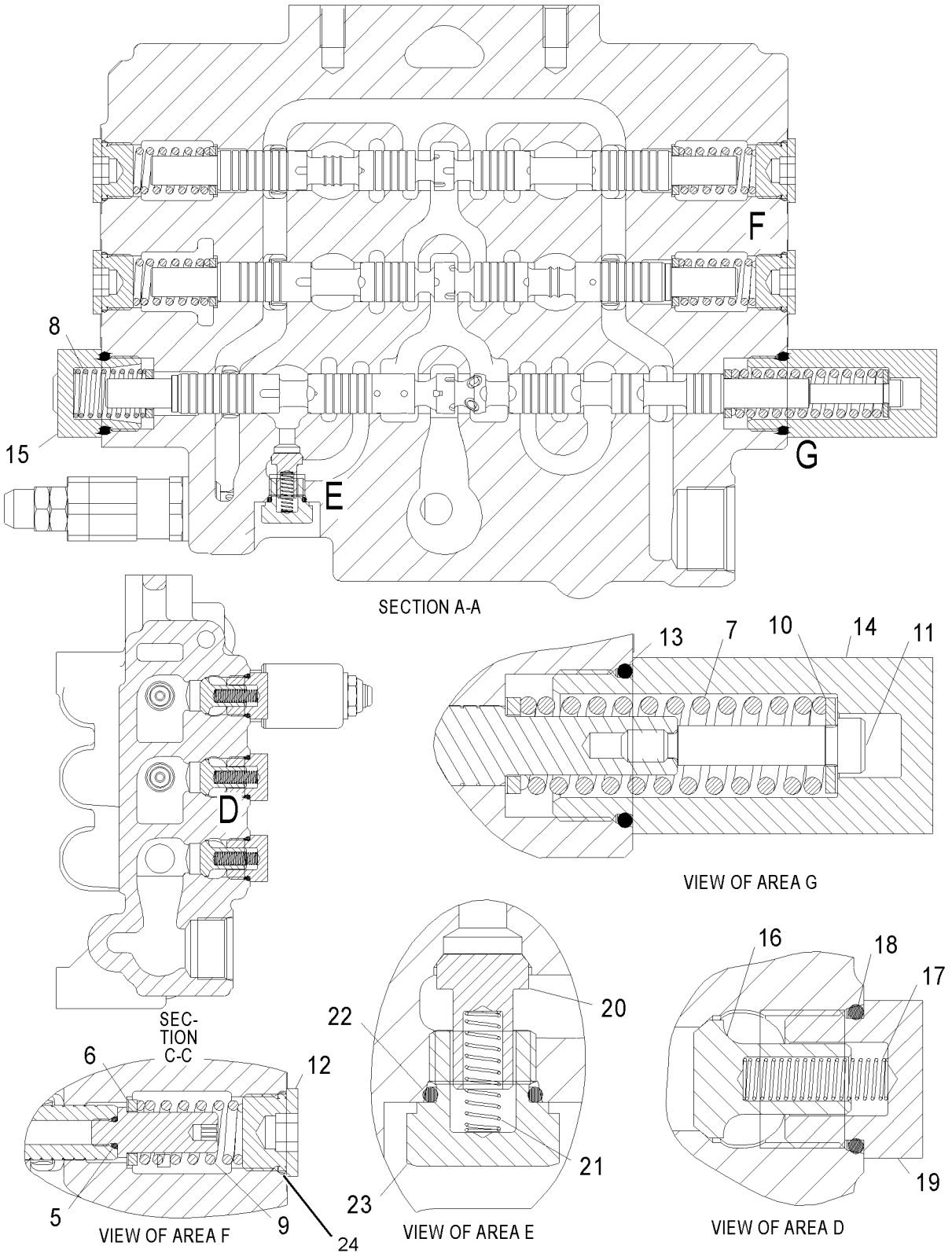


GRAPHIC #2 **<END>** g01304442

## 112-1817 VALVE GP-MANUAL–COUPLER PIN, LIFT ARM LWR CONT

**S/N: HEN6750-UP**

**PART OF 218-5617 LINES GP-LOWERING CONTROL, 218-6520 MANIFOLD & LINES GP-COUPLER AN ATTACHMENT**

**SMCS-5147** **i02903081**

| NOTE | PART NUMBER | QTY | PART NAME 1 2 3 4 5 6 (PRODUCT LEVEL) | SEE PAGE |
|---|---|---|---|---|
| J | *202-0671* | 1 | VALVE GP-MANUAL (COUPLER PIN, LIFT ARM LWR CONT) | |
| | | | –OR– | |
| J | *202-0673* | 1 | VALVE GP-MANUAL (COUPLER PIN, LIFT ARM LWR CONT) | |
| | | | –OR– | |
| J | *202-0674* | 1 | VALVE GP-MANUAL (COUPLER PIN, LIFT ARM LWR CONT) | |
| | | | AVAILABLE REPAIR KIT(S): | |
| J | **112-9861** | 1 | KIT-SEAL (DEAD ENGINE LOWERING) | |
| | | | (INCLUDES SEALS, CONNECTORS & THRUST RING) | |

J-KIT MARKED J SERVICES PARTS MARKED J

**<END>**

# HYDRAULIC SYSTEM

## 218-6119 VALVE GP-PILOT

**S/N: HEN6750-UP**

**PART OF 218-5930, 218-5931, 218-5932, 218-5933, 218-5934 CONTROL GP-PILOT**

**OPERATED HYD**

**AN ATTACHMENT**

**SMCS-5059, 5705** **i02513658**

| NOTE | REF NO | GRAPHIC REF | PART NUMBER | QTY | PART NAME 1 2 3 4 5 6 (PRODUCT LEVEL) | SEE PAGE |
|---|---|---|---|---|---|---|
| Y | 1 | 1 | **195-9700** | 1 | VALVE GP-SOLENOID (12-VOLT) | 356 |
| M | 2 | 1 | **8T-1158** | 1 | BOLT-SOCKET HEAD (M8X1.25X20-MM) | |
| | 3 | 1 | **217-3850** | 1 | KIT-UNIVERSAL JOINT | |
| | | | | | (INCLUDES UNIVERSAL JOINT & SHIMS) | |
| | 4 | 1 | **122-1904** | 1 | PLATE | |
| | 5 | 1 | **289-8451** | 2 | KIT-PLUNGER | |
| | | | | | (INCLUDES PLUNGER GUIDE, PLUNGER, SNAP RING, WASHER & BUSHING) | |
| | 6 | 1 | **160-6778** | 1 | KIT-PILOT VALVE (SPRING) | |
| | | | | | (INCLUDES SPRINGS) | |
| | 7 | 1 | **289-9560** | 1 | KIT-SEAL | |
| | | | | | (INCLUDES O-RINGS, PINS & ASSEMBLY SCREW) | |
| | 8 | 1 | **151-4965** | 1 | KIT-SEAL | |
| | | | | | (INCLUDES O-RINGS, PIN & BOLT) | |
| | 9 | 1 | **282-7760** | 1 | VALVE GP-SHUTTLE | |
| | | | | | | |
| | | | | | PARTS SHOWN IN GRAPHIC(S) WITHOUT A REFERENCE NUMBER ARE NOT SERVICED SEPARATELY | |

M-METRIC PART
Y-SEPARATE ILLUSTRATION

**218-6119 VALVE GP-PILOT** *(contd. )* **i02513658**

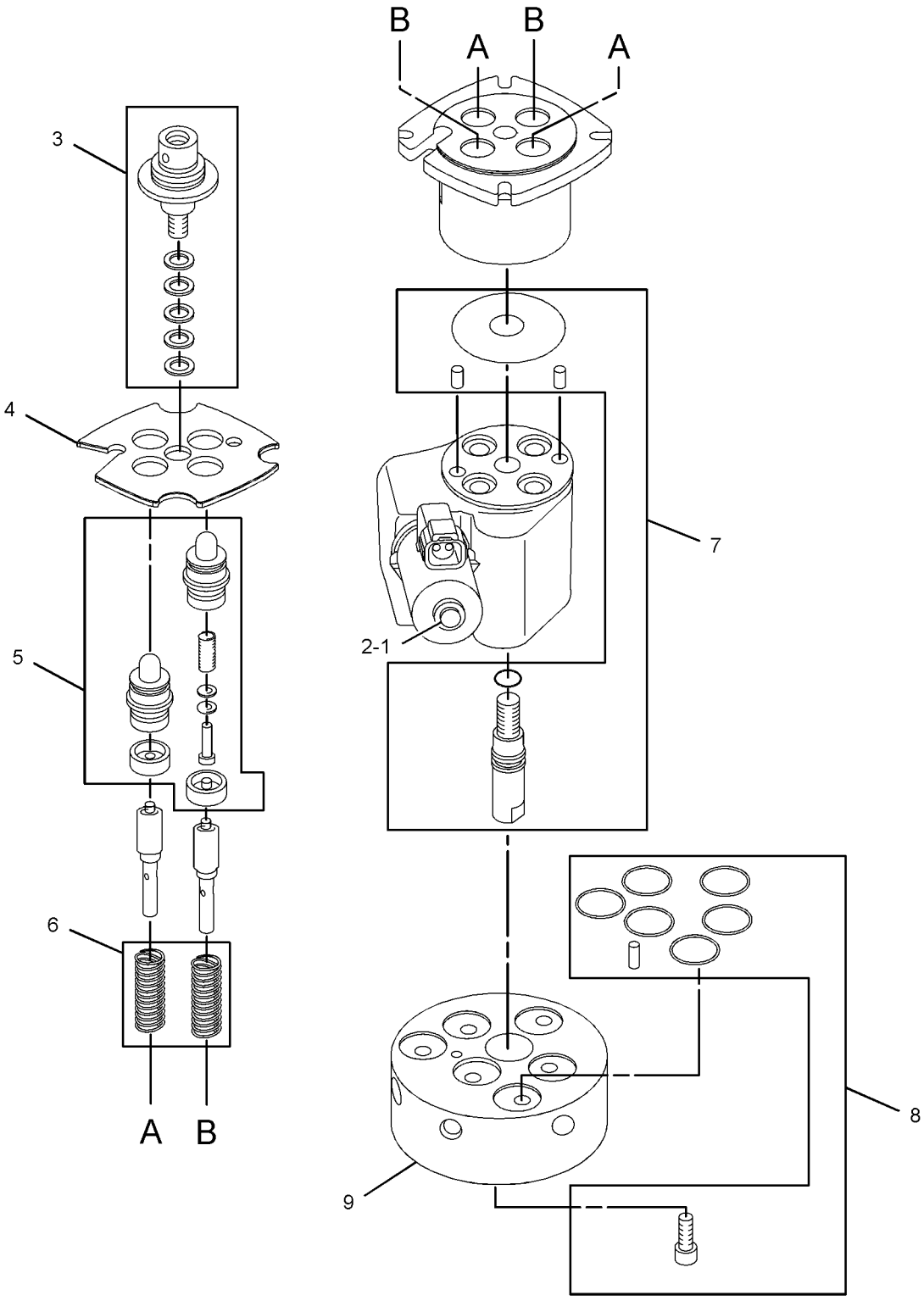


GRAPHIC #1 **<END>** g01301843

# HYDRAULIC SYSTEM

## 228-9228 VALVE GP-PILOT—WORK TOOL

**S/N: HEN6750-6862**

**PART OF 218-5611, 218-5612, 218-5618 CONTROL GP-PILOT OPERATED HYD AN ATTACHMENT**

**SMCS-5059, 5705** **i02513660**

| NOTE | REF NO | GRAPHIC REF | PART NUMBER | QTY | PART NAME 1 2 3 4 5 6 (PRODUCT LEVEL) | SEE PAGE |
|---|---|---|---|---|---|---|
| | 1 | 1 | **7K-1181** | 1 | STRAP-CABLE | |
| | 2 | 1 | **172-0970** | 1 | COIL AS | |
| | | 1 | **102-8802** | 1 | KIT-RECEPTACLE (2-PIN) | |
| | | | | | (INCLUDES RECEPTACLE AS & WEDGE) | |
| | | 1 | **8T-8729** | 2 | PIN-CONNECTOR (16-GA TO 18-GA) | |
| Y | 3 | 1 | **195-9700** | 1 | VALVE GP-SOLENOID (12-VOLT) (SPEED & DIRECTION) | 356 |
| M | 4 | 1 | **8T-1158** | 1 | BOLT-SOCKET HEAD (M8X1.25X20-MM) | |
| M | 5 | 1 | **8T-9405** | 1 | BOLT-SOCKET HEAD (M4X0.7X16-MM) | |
| | 6 | 1 | **102-8802** | 1 | KIT-RECEPTACLE (2-PIN) | |
| | | | | | (INCLUDES RECEPTACLE AS AND WEDGE) | |
| | 7 | 1 | **289-8440** | 1 | KIT-JOINT (PILOT VALVE) | |
| | | | | | (INCLUDES PLATE AS) | |
| | 8 | 1 | **164-9440** | 1 | PLATE | |
| | 9 | 1 | **8U-9427** | 3 | KIT-PLUNGER | |
| | 10 | 1 | **203-1100** | 1 | KIT-PLUNGER | |
| | | | | | (INCLUDES PLUNGER,GUIDE,RING,CLIP & CUP) | |
| | 11 | 1 | **160-6778** | 1 | KIT-PILOT VALVE (SPRING) | |
| | | | | | (INCLUDES SPRINGS) | |
| | 12 | 1 | **9T-2837** | 1 | KIT-SEAL | |
| | | | | | (INCLUDES PINS,SEALS & BOLT) | |
| | | | | | | |
| | | | | | PARTS SHOWN IN GRAPHIC(S) WITHOUT A REFERENCE NUMBER ARE NOT SERVICED SEPARATELY | |

M-METRIC PART
Y-SEPARATE ILLUSTRATION

**228-9228 VALVE GP-PILOT** *(contd. )* **i02513660**

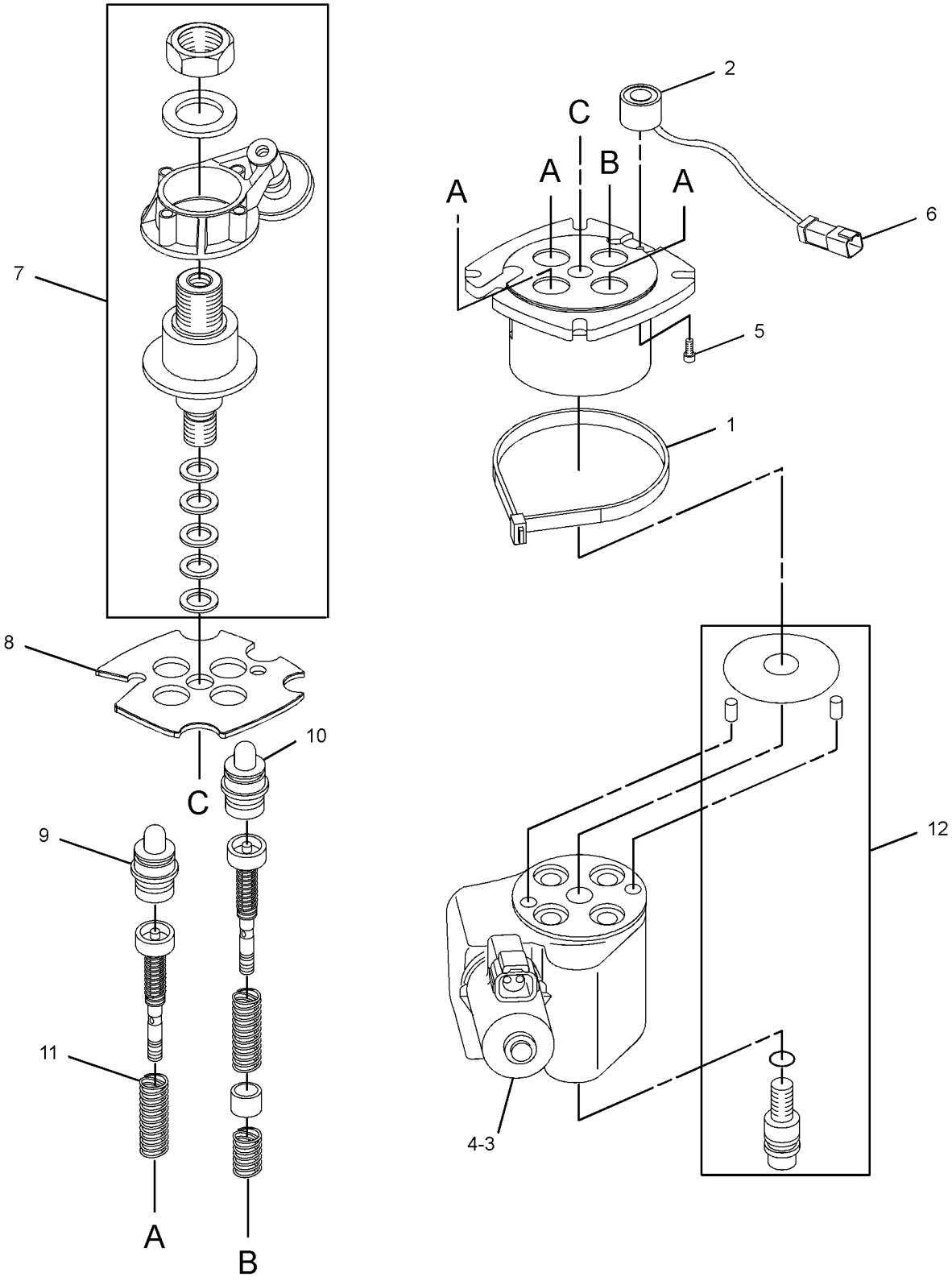


GRAPHIC #1 **<END>** g01298433

# HYDRAULIC SYSTEM

## 233-5732 VALVE GP-PILOT

**S/N: HEN6750-UP**

**PART OF 233-5720 KIT-JOYSTICK CONVERSION**

**AN ATTACHMENT**

**SMCS-5059, 5705** **i02647017**

| NOTE | REF NO | GRAPHIC REF | PART NUMBER | QTY | PART NAME 1 2 3 4 5 6 (PRODUCT LEVEL) | SEE PAGE |
|---|---|---|---|---|---|---|
| | 1 | 1 | **300-1318** | 1 | KIT-DETENT | |
| | | 1 | **1M-0976** | 2 | WASHER | |
| | 2 | 1 | **300-1705** | 1 | KIT-PLUNGER | |
| | | 1 | **1M-0976** | 2 | WASHER | |

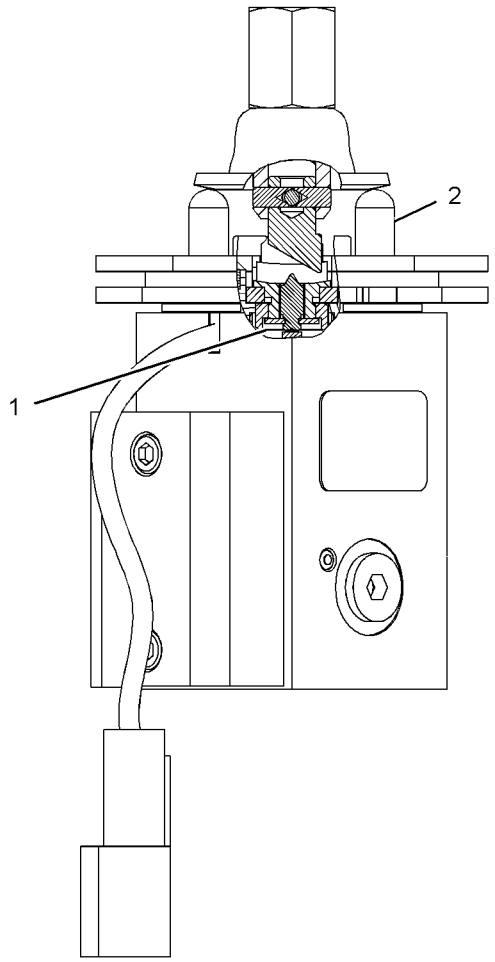


GRAPHIC #1 **<END>** g01337860

# 233-5733 VALVE GP-PILOT

**S/N: HEN6750-UP**
**PART OF 233-5720 KIT-JOYSTICK CONVERSION**
**AN ATTACHMENT**

**SMCS-5059, 5705** **i02647018**

| NOTE | REF NO | GRAPHIC REF | PART NUMBER | QTY | PART NAME 1 2 3 4 5 6 (PRODUCT LEVEL) | SEE PAGE |
|---|---|---|---|---|---|---|
| | 1 | 1 | **301-0642** | 1 | KIT-PLUNGER | |
| | | | | | (INCLUDES PLUNGER AS) | |
| | | 1 | **1M-0976** | 2 | WASHER | |

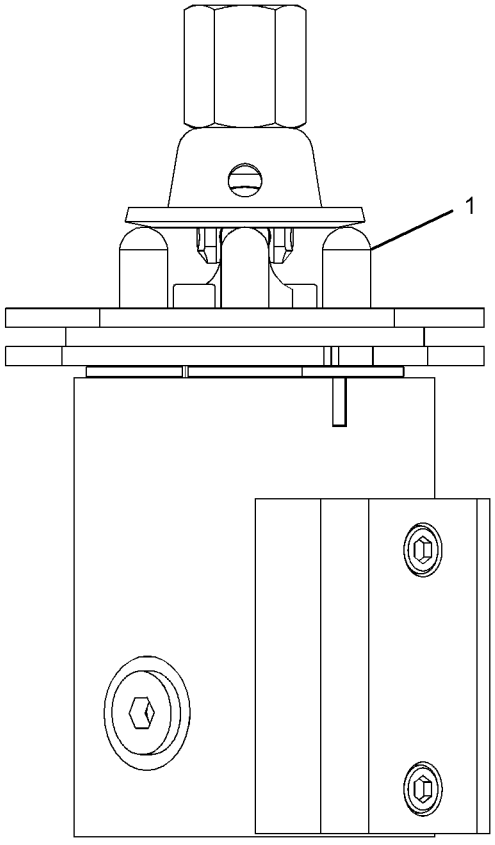


GRAPHIC #1 **<END>** g01342020

# HYDRAULIC SYSTEM

## 299-9116 VALVE GP-PILOT

**S/N: HEN6863-UP**

**PART OF 218-5930, 218-5931, 218-5932, 218-5933, 218-5934 CONTROL GP-PILOT**

**OPERATED HYD**

**AN ATTACHMENT**

**SMCS-5059, 5705** **i02906493**

| NOTE | REF NO | GRAPHIC REF | PART NUMBER | QTY | PART NAME 1 2 3 4 5 6 (PRODUCT LEVEL) | SEE PAGE |
|---|---|---|---|---|---|---|
| Y | 1 | 1 | **195-9700** | 1 | VALVE GP-SOLENOID (12-VOLT) | 356 |
| M | 2 | 1 | **8T-1158** | 1 | BOLT-SOCKET HEAD (M8X1.25X20-MM) | |
| | 3 | 1 | **217-3850** | 1 | KIT-UNIVERSAL JOINT | |
| | | | | | (INCLUDES SHIMS & UNIVERSAL JOINT) | |
| | 4 | 1 | **299-9121** | 1 | PLATE | |
| | 5 | 1 | **198-1076** | 2 | KIT-PLUNGER | |
| | | | | | (EACH INCLUDES PLUNGERS, RINGS, WASHERS & CAPS) | |
| | 6 | 1 | **160-6778** | 1 | KIT-PILOT VALVE (SPRING) | |
| | | | | | (INCLUDES SPRINGS) | |
| | 7 | 1 | **289-9560** | 1 | KIT-SEAL | |
| | | | | | (INCLUDES RINGS, PLUG & SCREW) | |
| | 8 | 1 | **151-4965** | 1 | KIT-SEAL | |
| | | | | | (INCLUDES O-RINGS, PIN & BOLT) | |
| | 9 | 1 | **312-7676** | 1 | VALVE GP-SHUTTLE | |
| | | | | | | |
| | | | | | PARTS SHOWN IN GRAPHIC(S) WITHOUT A REFERENCE NUMBER ARE NOT SERVICED SEPARATELY | |

M-METRIC PART
Y-SEPARATE ILLUSTRATION

**299-9116 VALVE GP-PILOT** *(contd. )* **i02906493**

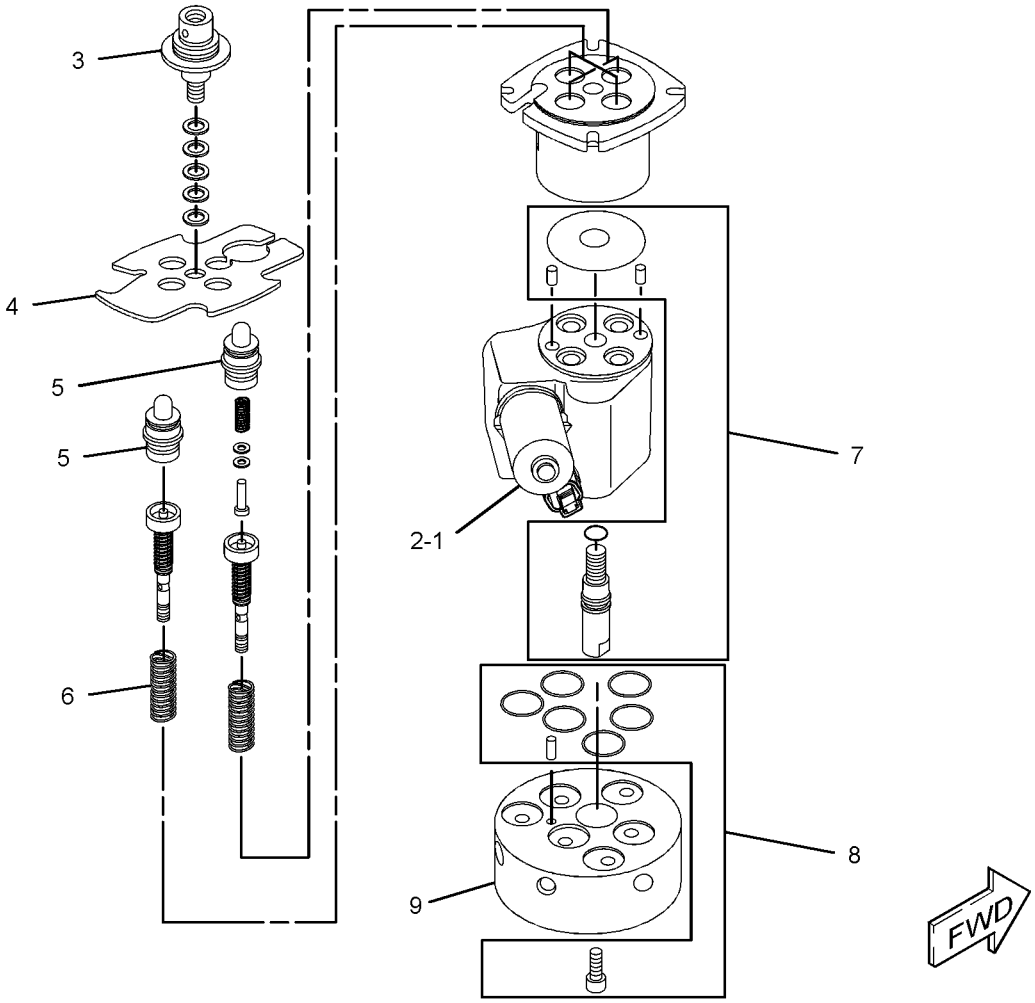


GRAPHIC #1 **<END>** g01417329

# HYDRAULIC SYSTEM

## 299-9119 VALVE GP-PILOT

**S/N: HEN6863-UP**

**PART OF 218-5611, 218-5612, 218-5618 CONTROL GP-PILOT OPERATED HYD AN ATTACHMENT**

**SMCS-5059, 5705** **i02906497**

| NOTE | REF NO | GRAPHIC REF | PART NUMBER | QTY | PART NAME 1 2 3 4 5 6 (PRODUCT LEVEL) | SEE PAGE |
|---|---|---|---|---|---|---|
| | 1 | 1 | **7K-1181** | 1 | STRAP-CABLE | |
| | 2 | 1 | **172-0970** | 1 | COIL AS | |
| | | 1 | **186-3735** | 2 | PIN-CONNECTOR (16-GA TO 18-GA) | |
| | | 1 | **102-8802** | 1 | KIT-RECEPTACLE (2-PIN) | |
| | | | | | (INCLUDES RECEPTACLE AS & WEDGE) | |
| Y | 3 | 1 | **195-9700** | 1 | VALVE GP-SOLENOID (12-VOLT) | 356 |
| M | 4 | 1 | **8T-1158** | 1 | BOLT-SOCKET HEAD (M8X1.25X20-MM) | |
| M | 5 | 1 | **8T-9405** | 1 | BOLT-SOCKET HEAD (M4X0.7X16-MM) | |
| | 6 | 1 | **102-8802** | 1 | KIT-RECEPTACLE (2-PIN) | |
| | | | | | (INCLUDES RECEPTACLE AS & WEDGE) | |
| | 7 | 1 | **313-6251** | 1 | KIT-JOINT | |
| | | | | | (INCLUDES SHIMS, NUT, WASHER, DETENT ARM & CARDAN) | |
| | 8 | 1 | **299-9121** | 1 | PLATE | |
| | 9 | 1 | **198-1076** | 3 | KIT-PLUNGER (PILOT VALVE) | |
| | | | | | (INCLUDES PLUNGERS, SNAP RINGS, CAPS & WASHERS) | |
| | 10 | 1 | **203-1100** | 1 | KIT-PLUNGER | |
| | | | | | (INCLUDES PLUNGERS, SNAP RINGS & RETAINERS) | |
| | 11 | 1 | **160-6778** | 1 | KIT-PILOT VALVE (SPRING) | |
| | | | | | (INCLUDES SPRINGS) | |
| | 12 | 1 | **9T-2837** | 1 | KIT-SEAL (PILOT VALVE) | |
| | | | | | (INCLUDES PINS, O-RINGS & BOLT) | |

M-METRIC PART
Y-SEPARATE ILLUSTRATION

**299-9119 VALVE GP-PILOT** *(contd. )* **i02906497**

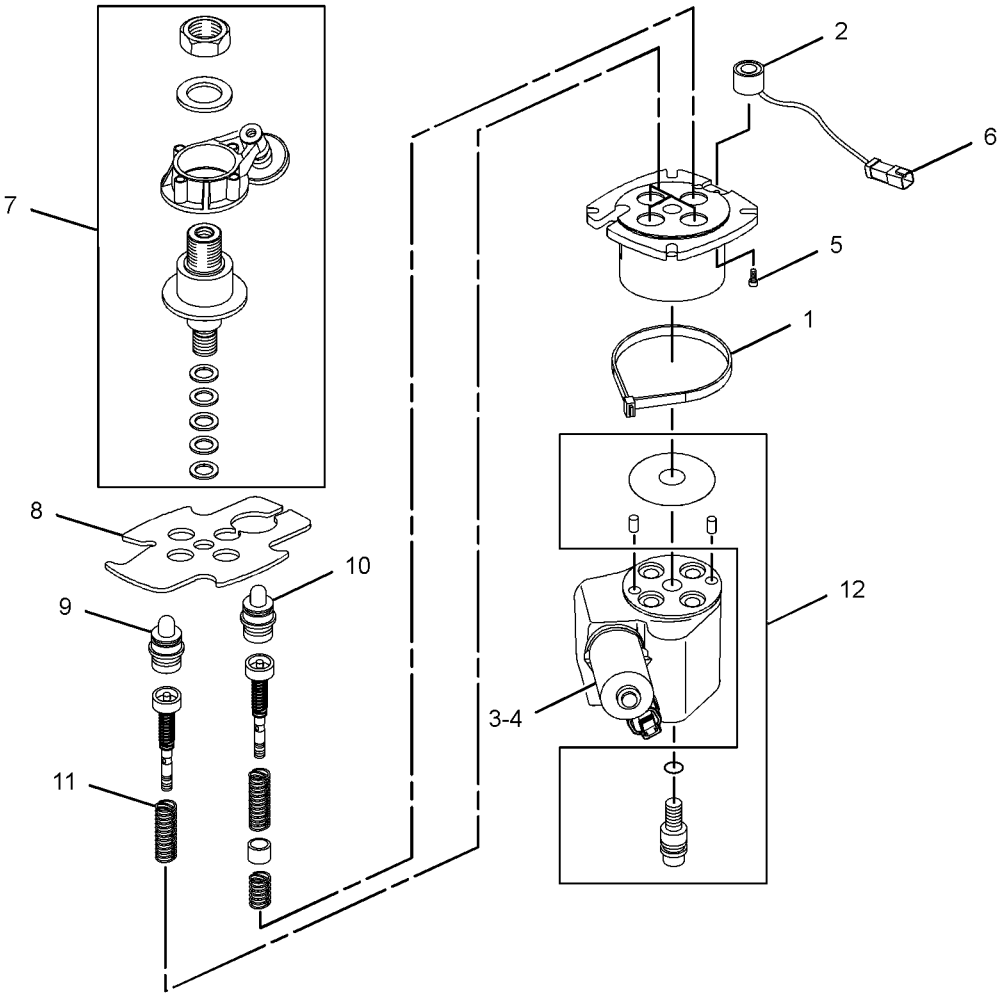


GRAPHIC #1 **<END>** g01417349

# HYDRAULIC SYSTEM

## 295-1799 VALVE GP-RELIEF

**S/N: HEN6750-UP**

**PART OF 216-6169 VALVE GP-CONTROL**

**SMCS-5069, 5117** **i02605603**

| NOTE | REF NO | GRAPHIC REF | PART NUMBER | QTY | PART NAME 1 2 3 4 5 6 (PRODUCT LEVEL) | SEE PAGE |
|---|---|---|---|---|---|---|
| | 1 | 1 | **130-1676** | 1 | SEAL-O-RING | |

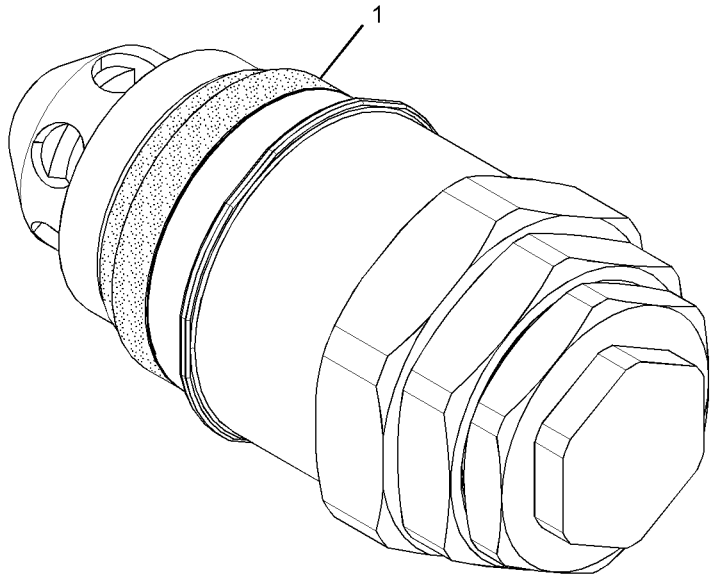


GRAPHIC #1 **<END>** g01304645

# 185-4254 VALVE GP-SOLENOID–AUXILIARY

**S/N: HEN6750-UP**

**PART OF 216-6169 VALVE GP-CONTROL**

**SMCS-5479** **i02372783**

| NOTE | REF NO | GRAPHIC REF | PART NUMBER | QTY | PART NAME 1 2 3 4 5 6 (PRODUCT LEVEL) | SEE PAGE |
|---|---|---|---|---|---|---|
| | 1 | 1 | **226-9629** | 1 | COIL AS-SOLENOID (12-VOLT) | |
| | 2 | 1 | **164-2108** | 1 | WASHER (13.03X25.4X2.38-MM THK) | |
| | 3 | 1 | **218-2373** | 1 | NUT (1/2-28-THD) | |
| | 4 | 1 | *185-4253* | 1 | VALVE AS | |

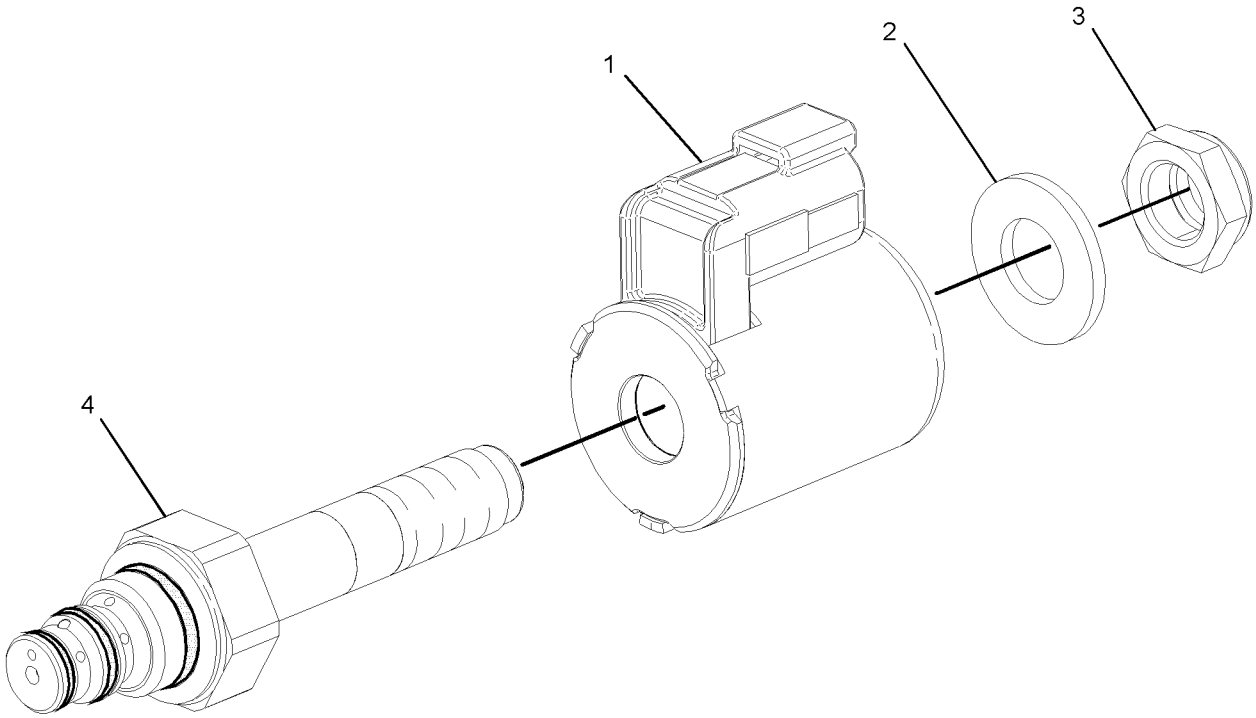


GRAPHIC #1 **<END>** g01185611

# 195-9700 VALVE GP-SOLENOID

**S/N: HEN6750-UP**

**PART OF 218-6119, 228-9228, 299-9116, 299-9119 VALVE GP-PILOT**

**AN ATTACHMENT**

**SMCS-5479** **i02712998**

| NOTE | REF NO | GRAPHIC REF | PART NUMBER | QTY | PART NAME 1 2 3 4 5 6 (PRODUCT LEVEL) | SEE PAGE |
|---|---|---|---|---|---|---|
| | 1 | 1 | **212-0061** | 1 | FLANGE | |
| | | | | | AVAILABLE REPAIR KIT(S): | |
| | | | **200-2371** | 1 | KIT-SEAL | |
| | | | | | (INCLUDES 3 SEALS) | |

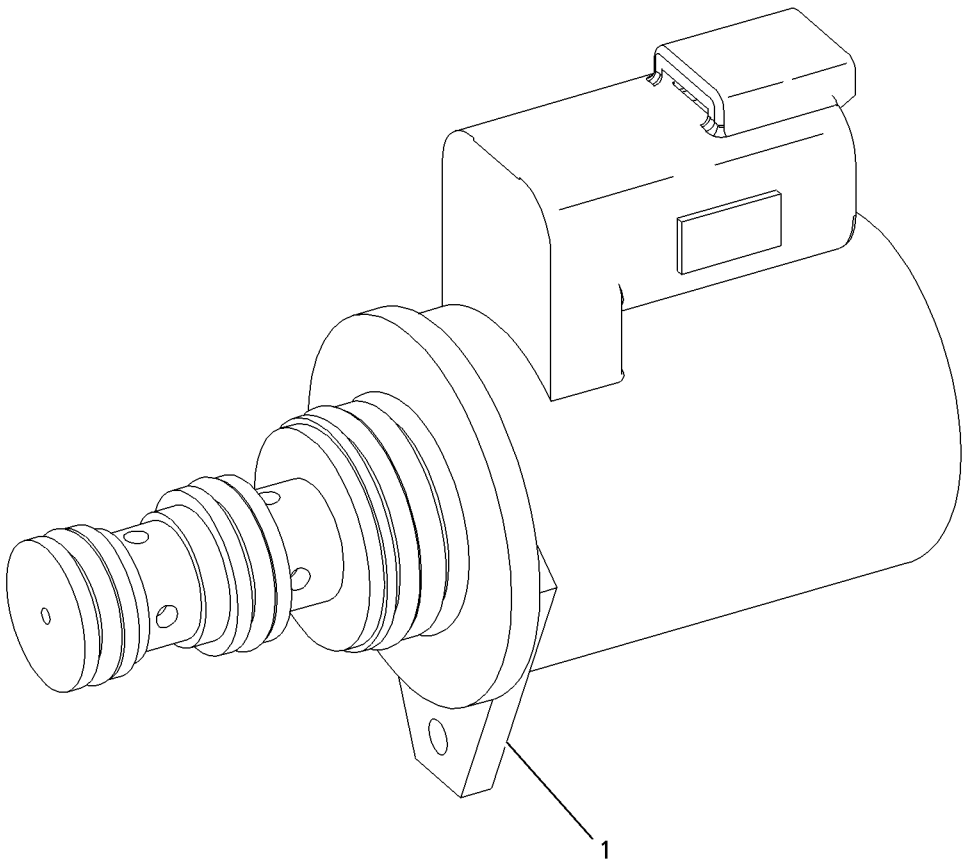


GRAPHIC #1 **<END>** g00947284

# 212-6570 VALVE GP-SOLENOID

**S/N: HEN6750-UP**
**PART OF 218-6751 INSTALLATION GP-AUXILIARY HYD**
**AN ATTACHMENT**

**SMCS-5479** **i02785780**

| NOTE | REF NO | GRAPHIC REF | PART NUMBER | QTY | PART NAME 1 2 3 4 5 6 (PRODUCT LEVEL) | SEE PAGE |
|---|---|---|---|---|---|---|
| M | 1 | 1 | **9X-6615** | 4 | BOLT (M5X0.8X30-MM) | |
| | 2 | 1 | **210-5544** | 1 | VALVE GP-SOLENOID | |
| | | 1 | **212-3350** | 1 | SOLENOID AS | |
| | | 1 | **224-6563** | 1 | FASTENER GP-VALVE | |
| | | 1 | **3D-4245** | 1 | SEAL-O-RING | |
| | | 1 | **4J-5267** | 1 | SEAL-O-RING | |
| | | 1 | **224-6562** | 1 | CARTRIDGE AS | |
| | | 1 | **6V-8399** | 1 | SEAL-O-RING | |
| M | 3 | 1 | **6V-8213** | 4 | BOLT-SOCKET HEAD (M8X1.25X70-MM) | |
| Y | 4 | 1 | **215-3271** | 1 | VALVE GP-SOLENOID | 358 |
| | 5 | 1 | **8T-4827** | 2 | SEAL-O-RING | |
| | 6 | 1 | **218-6854** | 4 | WASHER | |
| | 7 | 1 | **211-9032** | 4 | WASHER-HARD (8.8X13X2-MM THK) | |
| | 8 | 1 | **224-9420** | 1 | VALVE AS | |
| | | | | | AVAILABLE REPAIR KIT(S): | |
| | | | **215-3275** | 1 | KIT-SEAL | |

M-METRIC PART
Y-SEPARATE ILLUSTRATION

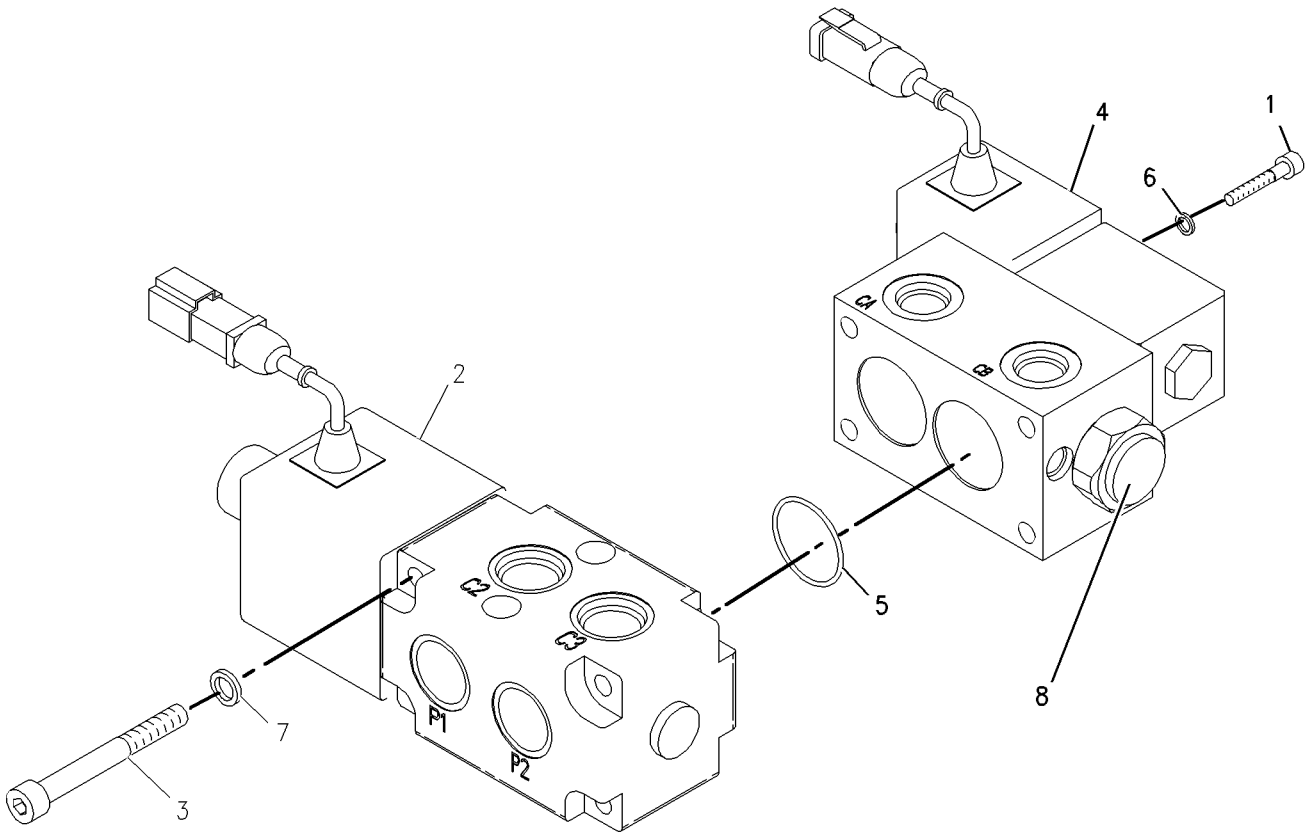


GRAPHIC #1 **<END>** g00948217

# HYDRAULIC SYSTEM

## 215-3271 VALVE GP-SOLENOID

**S/N: HEN6750-UP**
**PART OF 212-6570 VALVE GP-SOLENOID**
**AN ATTACHMENT**

**SMCS-5479** **i02571311**

| NOTE | REF NO | GRAPHIC REF | PART NUMBER | QTY | PART NAME 1 2 3 4 5 6 (PRODUCT LEVEL) | SEE PAGE |
|---|---|---|---|---|---|---|
| | 1 | 1 | **215-3272** | 1 | SOLENOID | |
| | | 1 | **155-2270** | 1 | KIT-CONNECTING PLUG (2-PIN) | |
| | | | | | (INCLUDES PLUG, WEDGE, & INTERFACE SEAL) | |
| | | 1 | **186-3736** | 1 | SOCKET-CONNECTOR (16-GA TO 18-GA) | |
| | 2 | 1 | **215-3273** | 1 | CARTRIDGE AS-VALVE | |
| | | 1 | **6V-8399** | 1 | SEAL-O-RING | |
| | 3 | 1 | **215-3274** | 1 | SEAL & RETAINER AS | |

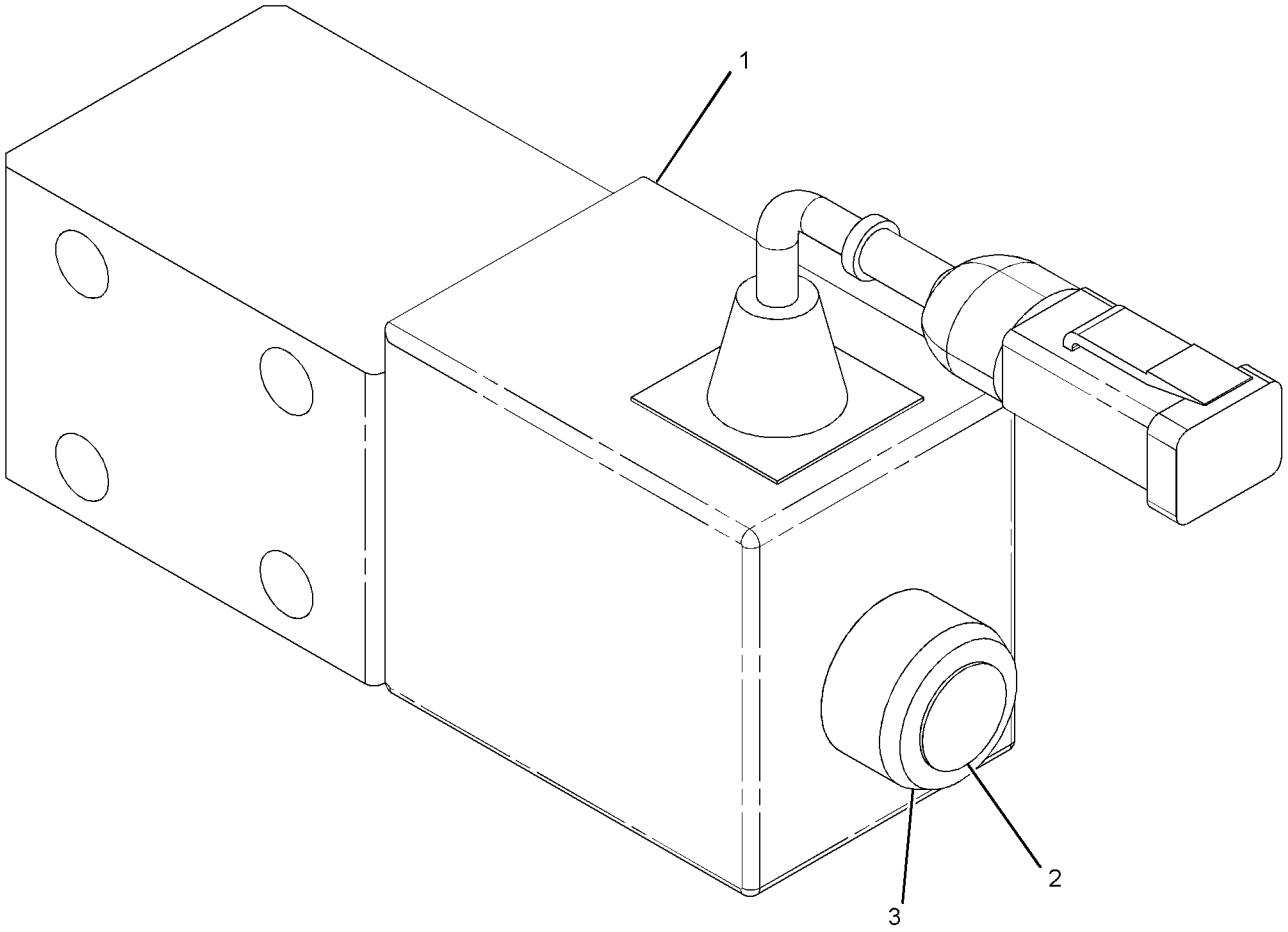


GRAPHIC #1 **<END>** g01164346

# 231-6287 VALVE GP-SOLENOID–A/C COMPRESSOR

**S/N: HEN6750-UP**
**PART OF 218-6840 MOTOR GP-GEAR**
**AN ATTACHMENT**

**SMCS-5479** **i01961984**

| NOTE | REF NO | GRAPHIC REF | PART NUMBER | QTY | PART NAME 1 2 3 4 5 6 (PRODUCT LEVEL) | SEE PAGE |
|---|---|---|---|---|---|---|
| | 1 | 1 | **3E-8621** | 1 | COIL AS | |
| | | 1 | **1S-9593** | 1 | STRAP-CABLE | |
| | | 1 | **3E-3365** | 1 | WEDGE-RECEPTACLE LOCK (2-PIN) | |
| | | 1 | **186-3735** | 2 | PIN-CONNECTOR (16-GA TO 18-GA) | |
| | | 1 | **102-8802** | 1 | KIT-RECEPTACLE (2-PIN) | |
| | | | | | (INCLUDES RECEPTACLE AS & WEDGE) | |
| | 2 | 1 | **156-5970** | 1 | NUT (1/2-20-2B-THD) | |
| | 3 | 1 | **231-6564** | 1 | CARTRIDGE AS-VALVE | |
| | | 1 | **3D-2824** | 1 | SEAL-O-RING | |
| | | 1 | **6F-6672** | 1 | SEAL-O-RING | |
| | | 1 | **156-5970** | 1 | NUT (1/2-20-2B-THD) | |
| | | 1 | **194-3873** | 2 | RING-BACKUP | |
| | 4 | 1 | **3D-2824** | 1 | SEAL-O-RING | |
| | 5 | 1 | **6F-6672** | 1 | SEAL-O-RING | |

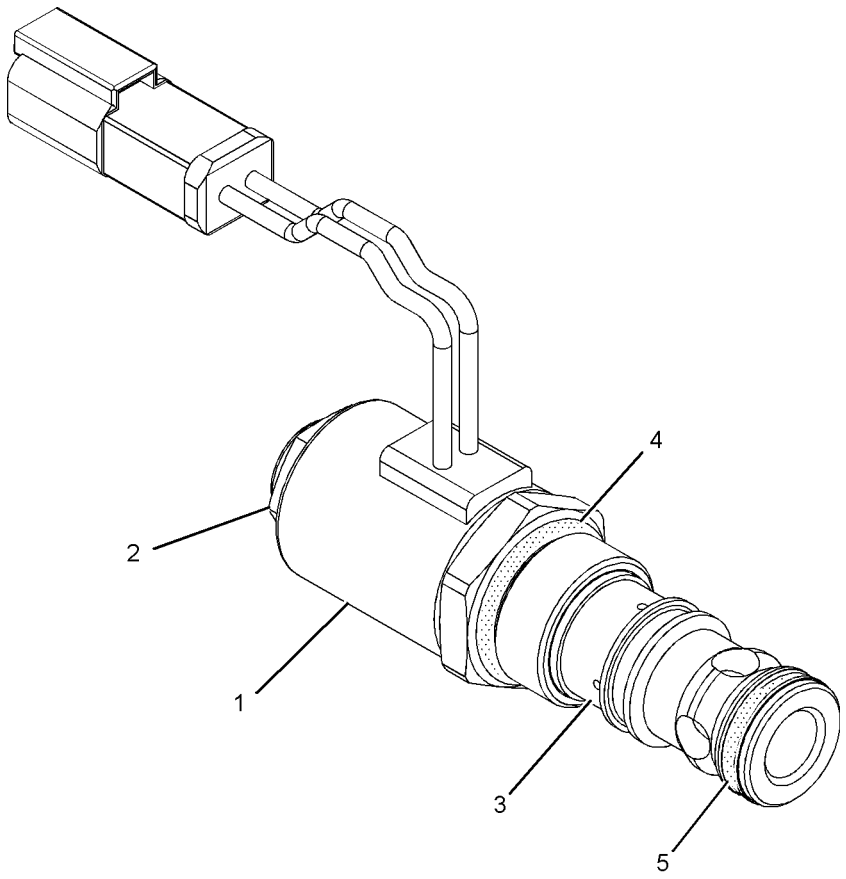


GRAPHIC #1 **<END>** g01026804

# *216-8756* ARM GP-MATERIAL HANDLING

**S/N: HEN6750-UP**

**AN ATTACHMENT**

**SMCS-6542** **i02342557**

| NOTE | REF NO | GRAPHIC REF | PART NUMBER | QTY | PART NAME 1 2 3 4 5 6 (PRODUCT LEVEL) | SEE PAGE |
|---|---|---|---|---|---|---|
| | 1 | 1 | **9V-2714** | 1 | HOOK | |
| | 2 | 1 | **9V-2715** | 1 | SHACKLE AS | |
| | 3 | 1 | **156-5762** | 2 | FILM-INFORMATION (TIE-DOWN LOCATION) | |
| Y | 4 | 1 | *188-7733* | 1 | STEP GP-MATERIAL HANDLING ARM | 456 |
| | 5 | 1 | **216-8850** | 1 | ARM AS | |
| M | 6 | 1 | **7X-2475** | 1 | BOLT (M16X2X130-MM) | |
| | 7 | 1 | **8T-4122** | 1 | WASHER-HARD (17X32X3.5-MM THK) | |
| M | 8 | 1 | **8T-1757** | 1 | NUT (M16X2-THD) | |

M-METRIC PART
Y-SEPARATE ILLUSTRATION

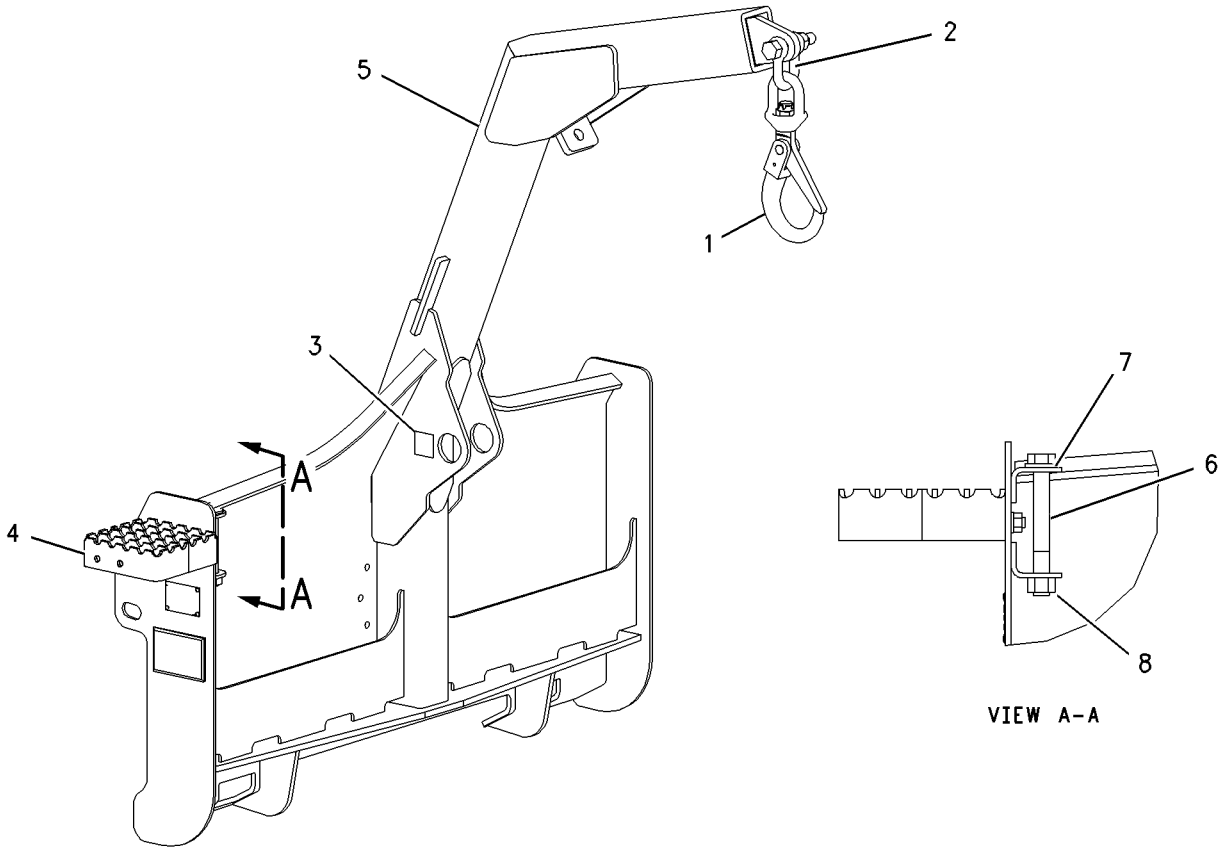


GRAPHIC #1 **<END>** g00934159

## 177-1989 BLADE AR–ANGLING

**S/N: HEN6750-UP**
**1829-MM (72-IN)**
**AN ATTACHMENT**

**SMCS-6060, 6701** **i01860746**

| NOTE | PART NUMBER | QTY | PART NAME 1 2 3 4 5 6 (PRODUCT LEVEL) | SEE PAGE |
|---|---|---|---|---|
| Y | *177-1981* | 1 | BLADE GP-ANGLING | 364 |
| Y | *230-5406* | 1 | CYLINDER & MTG GP-ANGLE BLADE | 233 |
| Y | *135-9386* | 1 | EDGE GP-CUTTING | 427 |
| Y | *230-5670* | 1 | FRAME GP-BLADE | 439 |
| Y | *177-1986* | 1 | LINES GP-CONNECTING | 276 |
| Y | *177-1983* | 1 | SPRING GP-BLADE | 455 |

Y-SEPARATE ILLUSTRATION

**<END>**

## 177-1990 BLADE AR–ANGLING

**S/N: HEN6750-UP**
**2134-MM (84-IN)**
**AN ATTACHMENT**

**SMCS-6060, 6701** **i01861063**

| NOTE | PART NUMBER | QTY | PART NAME 1 2 3 4 5 6 (PRODUCT LEVEL) | SEE PAGE |
|---|---|---|---|---|
| Y | *177-1982* | 1 | BLADE GP-ANGLING | 365 |
| Y | *230-5406* | 1 | CYLINDER & MTG GP-ANGLE BLADE | 233 |
| Y | *149-5741* | 1 | EDGE GP-CUTTING | 429 |
| Y | *230-5670* | 1 | FRAME GP-BLADE | 439 |
| Y | *177-1986* | 1 | LINES GP-CONNECTING | 276 |
| Y | *177-1983* | 1 | SPRING GP-BLADE | 455 |

Y-SEPARATE ILLUSTRATION

**<END>**

# WORK TOOLS

## 231-5275 BLADE AR—ANGLING

**S/N: HEN6750-UP**
**2337-MM (92-IN)**
**AN ATTACHMENT**

**SMCS-6060, 6701** **i02752371**

| NOTE | REF NO | GRAPHIC REF | PART NUMBER | QTY | PART NAME 1 2 3 4 5 6 (PRODUCT LEVEL) | SEE PAGE |
|---|---|---|---|---|---|---|
| | 1 | 1 | **7K-1181** | 3 | STRAP-CABLE | |
| Y | 2 | 1 | *222-7724* | 1 | BLADE GP-ANGLING | 366 |
| | 3 | 1 | **225-8015** | 1 | HARNESS AS-WORK TOOL (CONNECTING) | |
| Y | 4 | 1 | *231-5273* | 1 | LINES GP-CONNECTING | 278 |
| Y | 5 | 1 | *231-5274* | 1 | CYLINDER & MTG GP-ANGLE BLADE | 234 |
| Y | 6 | 1 | *231-5278* | 1 | MANIFOLD & MTG GP-CONTROL (ANGLING BLADE) | 316 |
| Y | 7 | 1 | *247-0678* | 1 | PLATE & FILM GP | 617 |

Y-SEPARATE ILLUSTRATION

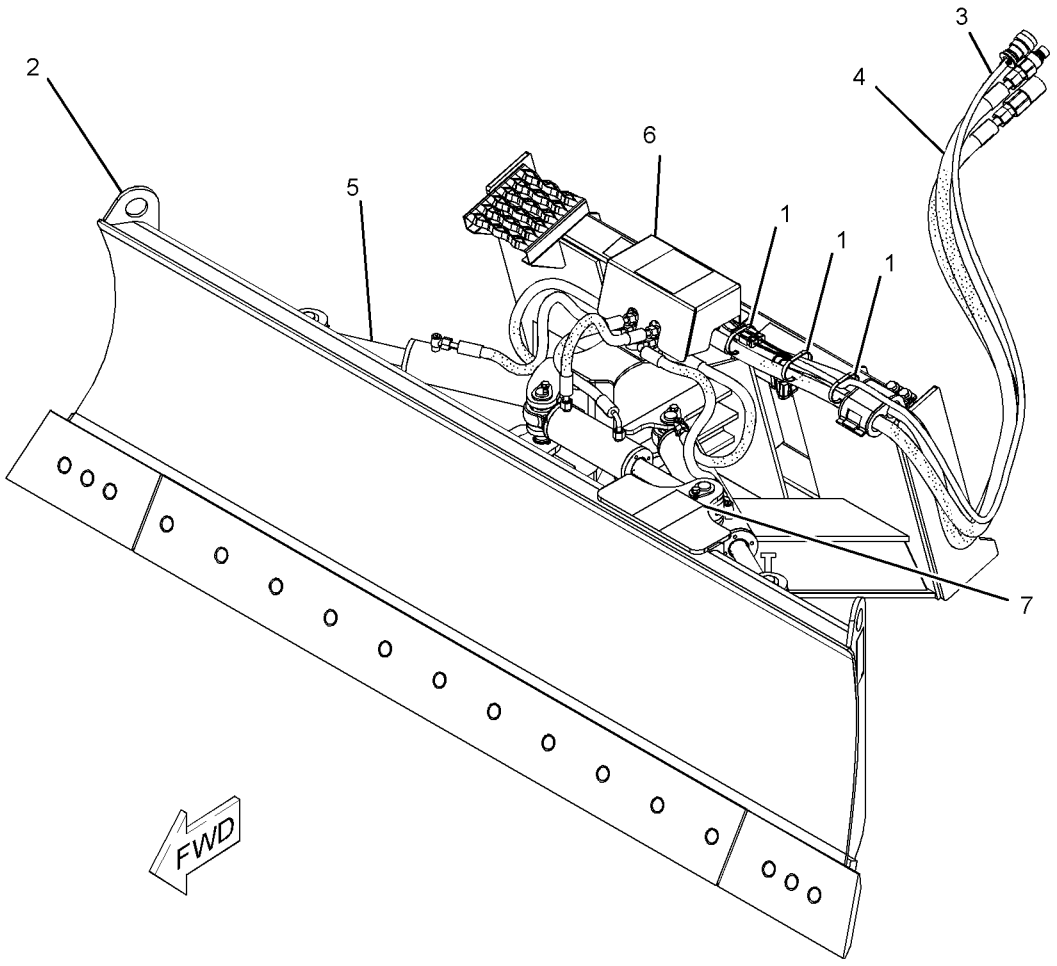


GRAPHIC #1 **<END>** g01381201

# WORK TOOLS

## 231-5277 BLADE AR–ANGLING

**S/N: HEN6750-UP**
**2007-MM (79-IN)**
**AN ATTACHMENT**

**SMCS-6060, 6701** **i02752372**

| NOTE | REF NO | GRAPHIC REF | PART NUMBER | QTY | PART NAME 1 2 3 4 5 6 (PRODUCT LEVEL) | SEE PAGE |
|---|---|---|---|---|---|---|
| | 1 | 1 | **7K-1181** | 3 | STRAP-CABLE | |
| | 2 | 1 | **225-8015** | 1 | HARNESS AS-WORK TOOL (CONNECTING) | |
| Y | 3 | 1 | *231-5273* | 1 | LINES GP-CONNECTING | 278 |
| Y | 4 | 1 | *231-5274* | 1 | CYLINDER & MTG GP-ANGLE BLADE | 234 |
| Y | 5 | 1 | *231-5276* | 1 | BLADE GP-ANGLING | 367 |
| Y | 6 | 1 | *231-5278* | 1 | MANIFOLD & MTG GP-CONTROL (ANGLING BLADE) | 316 |
| Y | 7 | 1 | *247-0678* | 1 | PLATE & FILM GP | 617 |

Y-SEPARATE ILLUSTRATION

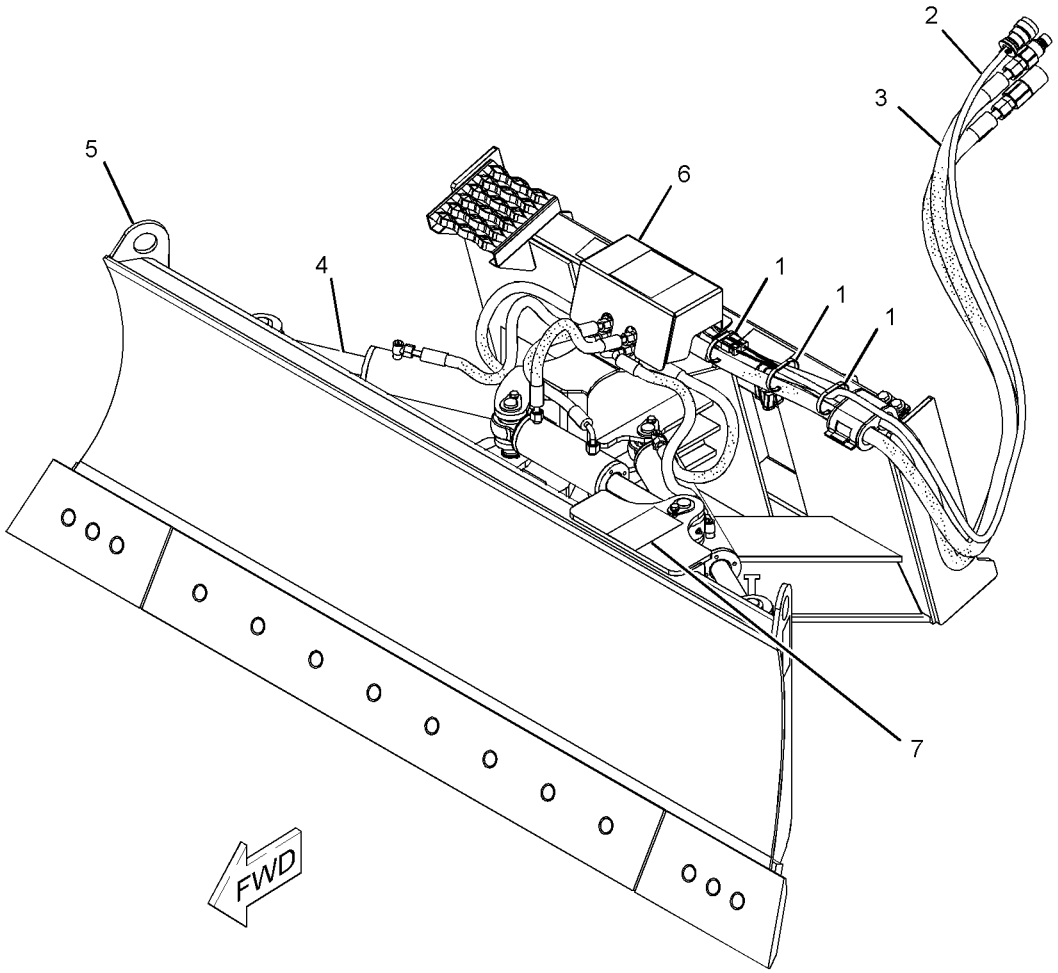


GRAPHIC #1 **<END>** g01381202

# WORK TOOLS

## *177-1981* BLADE GP-ANGLING

**S/N: HEN6750-UP**
**1829-MM (72-IN)**
**PART OF 177-1989 BLADE AR**
**AN ATTACHMENT**

**SMCS-6060, 6701** **i01905763**

| NOTE | REF NO | GRAPHIC REF | PART NUMBER | QTY | PART NAME 1 2 3 4 5 6 (PRODUCT LEVEL) | SEE PAGE |
|---|---|---|---|---|---|---|
| | 1 | 1 | **157-0940** | 2 | PIN | |
| | 2 | 1 | **166-0319** | 2 | PIN AS | |
| | 3 | 1 | **169-4868** | 2 | FILM-WARNING (NO CLEARANCE, STAY BACK) | |
| | 4 | 1 | **177-1921** | 2 | PIN AS | |
| | 5 | 1 | **177-1972** | 2 | SKID AS | |
| | 6 | 1 | **177-1987** | 1 | BLADE AS | |
| | 7 | 1 | **3B-8489** | 2 | FITTING-GREASE | |
| M | 8 | 1 | **6V-9189** | 2 | LOCKNUT (M8X1.25-THD) | |
| M | 9 | 1 | **8T-6869** | 2 | BOLT (M8X1.25X60-MM) | |
| | 10 | 1 | **9R-2959** | 2 | CLIP | |

M-METRIC PART

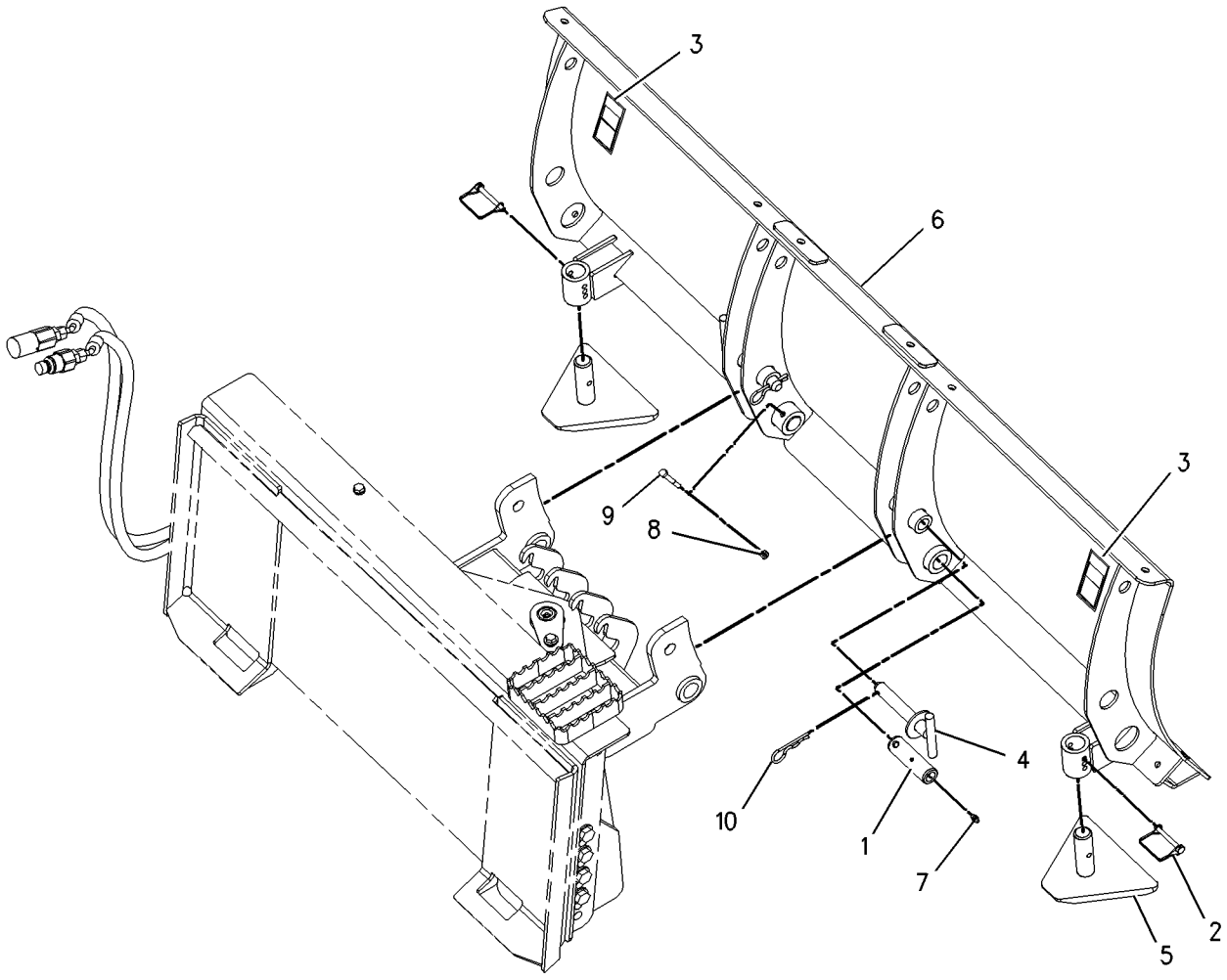


GRAPHIC #1 **<END>** g00777694

# *177-1982* BLADE GP-ANGLING

**S/N: HEN6750-UP**
**2134-MM (84-IN)**
**PART OF 177-1990 BLADE AR**
**AN ATTACHMENT**

**SMCS-6060, 6701** **i01911992**

| NOTE | REF NO | GRAPHIC REF | PART NUMBER | QTY | PART NAME 1 2 3 4 5 6 (PRODUCT LEVEL) | SEE PAGE |
|---|---|---|---|---|---|---|
| | 1 | 1 | **157-0940** | 2 | PIN | |
| | 2 | 1 | **166-0319** | 2 | PIN AS | |
| | 3 | 1 | **169-4868** | 2 | FILM-WARNING (NO CLEARANCE, STAY BACK) | |
| | 4 | 1 | **177-1921** | 2 | PIN AS | |
| | 5 | 1 | **177-1972** | 2 | SKID AS | |
| | 6 | 1 | **177-1988** | 1 | BLADE AS | |
| | 7 | 1 | **3B-8489** | 2 | FITTING-GREASE | |
| M | 8 | 1 | **6V-9189** | 2 | LOCKNUT (M8X1.25-THD) | |
| M | 9 | 1 | **8T-6869** | 2 | BOLT (M8X1.25X60-MM) | |
| | 10 | 1 | **9R-2959** | 2 | CLIP | |

M-METRIC PART

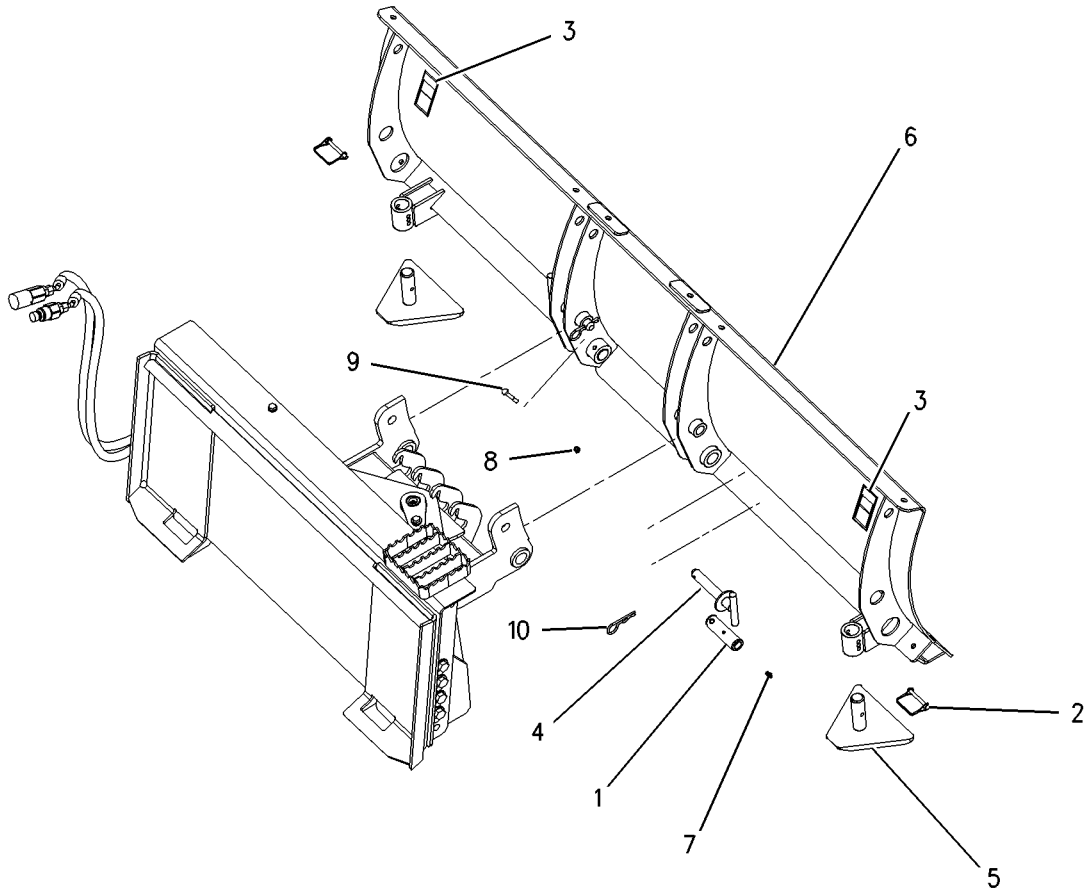


GRAPHIC #1 **<END>** g00710327

# WORK TOOLS

## *222-7724* BLADE GP-ANGLING

**S/N: HEN6750-UP**
**2134-MM (84-IN)**
**PART OF 231-5275 BLADE AR**
**AN ATTACHMENT**

**SMCS-6060, 6701** **i02280909**

| NOTE | REF NO | GRAPHIC REF | PART NUMBER | QTY | PART NAME 1 2 3 4 5 6 (PRODUCT LEVEL) | SEE PAGE |
|---|---|---|---|---|---|---|
| B | 1 | 1 | **8E-5702** | 22 | SHIM (0.8-MM THK) | |
| | 2 | 1 | **255-6540** | 1 | PLATE-INSTRUCTION (BUCKET SPECIFICATIONS) | |
| | 3 | 1 | **168-8389** | 4 | TACK-FASTENER | |
| | 4 | 1 | **222-7412** | 1 | BLADE AS-ANGLING | |
| | 5 | 1 | **222-7725** | 1 | FRAME GP-BLADE | |
| | 6 | 1 | **231-5271** | 1 | PIN | |
| | 7 | 1 | **238-1004** | 2 | MOUNT AS | |
| | 8 | 1 | **238-1005** | 2 | SKID AS | |
| | 9 | 1 | **244-1367** | 1 | BUSHING | |
| Y | 10 | 1 | *222-7546* | 1 | EDGE GP-BIT & CUTTING | 424 |
| | 11 | 1 | **5P-1076** | 8 | WASHER-HARD (13.5X30X4-MM THK) | |
| | 12 | 1 | **6V-7644** | 2 | RING-RETAINING | |
| M | 13 | 1 | **8C-8478** | 4 | BOLT (M20X2.5X140-MM) | |
| | 14 | 1 | **8J-2880** | 1 | CAP-BEARING | |
| | 15 | 1 | **8T-4123** | 4 | WASHER (22X35X3.5-MM THK) | |
| M | 16 | 1 | **8T-4139** | 8 | BOLT (M12X1.75X30-MM) | |

B-USE AS REQUIRED
M-METRIC PART
Y-SEPARATE ILLUSTRATION

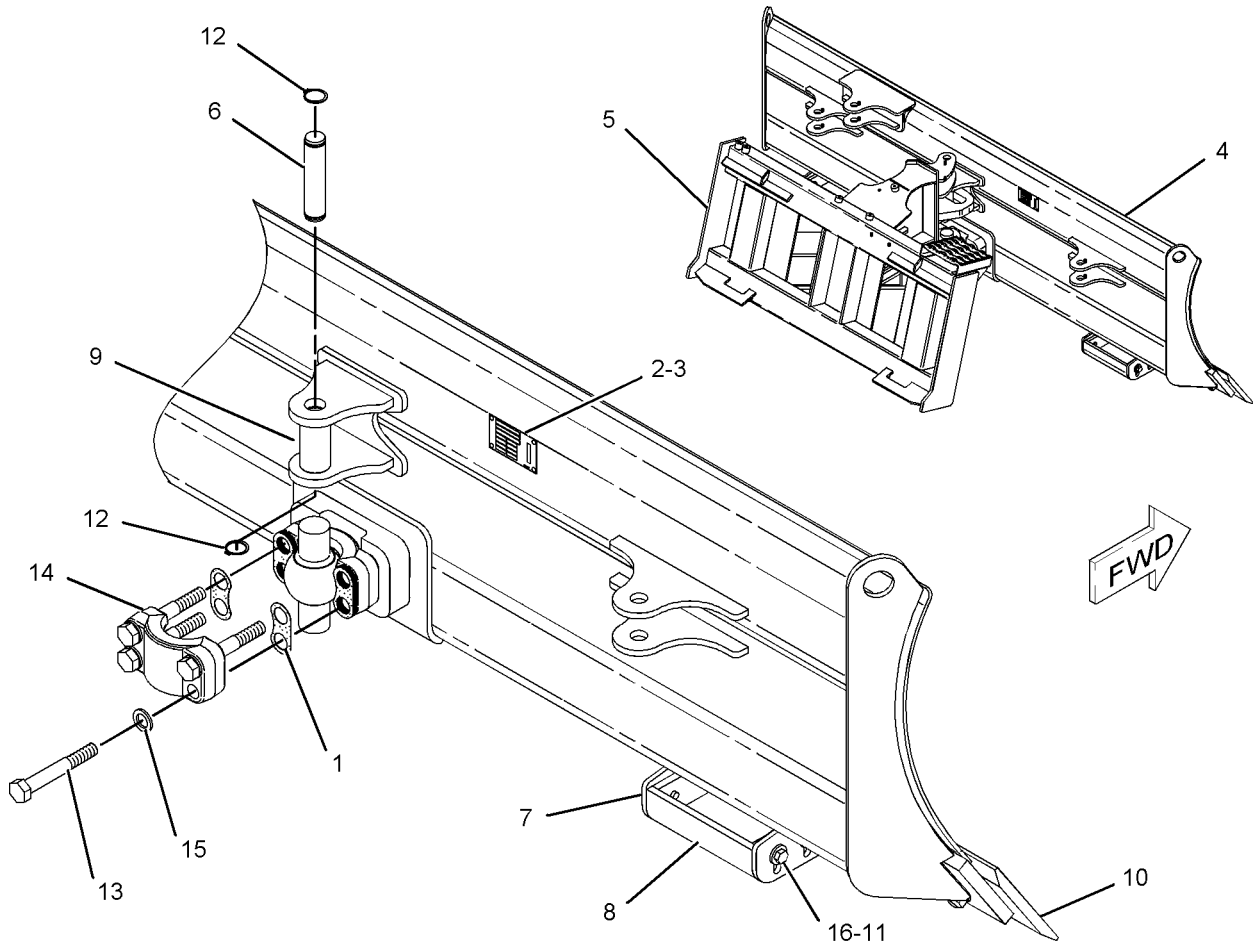


GRAPHIC #1 **<END>** g01021080

# *231-5276* BLADE GP-ANGLING

**S/N: HEN6750-UP**
**1829-MM (72-IN)**
**PART OF 231-5277 BLADE AR**
**AN ATTACHMENT**

**SMCS-6060, 6701** **i02280916**

| NOTE | REF NO | GRAPHIC REF | PART NUMBER | QTY | PART NAME 1 2 3 4 5 6 (PRODUCT LEVEL) | SEE PAGE |
|---|---|---|---|---|---|---|
| B | 1 | 1 | **8E-5702** | 22 | SHIM (0.8-MM THK) | |
| | 2 | 1 | **255-6540** | 1 | PLATE-INSTRUCTION (BUCKET SPECIFICATIONS) | |
| | 3 | 1 | **168-8389** | 4 | TACK-FASTENER | |
| | 4 | 1 | **222-7725** | 1 | FRAME GP-BLADE | |
| | 5 | 1 | **230-4596** | 1 | BLADE AS-ANGLING | |
| | 6 | 1 | **231-5271** | 1 | PIN | |
| | 7 | 1 | **238-1004** | 2 | MOUNT AS | |
| | 8 | 1 | **238-1005** | 2 | SKID AS | |
| | 9 | 1 | **244-1367** | 1 | BUSHING | |
| Y | 10 | 1 | *222-7545* | 1 | EDGE GP-BIT & CUTTING | 424 |
| | 11 | 1 | **5P-1076** | 8 | WASHER-HARD (13.5X30X4-MM THK) | |
| | 12 | 1 | **6V-7644** | 2 | RING-RETAINING | |
| M | 13 | 1 | **8C-8478** | 4 | BOLT (M20X2.5X140-MM) | |
| | 14 | 1 | **8J-2880** | 1 | CAP-BEARING | |
| | 15 | 1 | **8T-4123** | 4 | WASHER (22X35X3.5-MM THK) | |
| M | 16 | 1 | **8T-4139** | 8 | BOLT (M12X1.75X30-MM) | |

B-USE AS REQUIRED
M-METRIC PART
Y-SEPARATE ILLUSTRATION

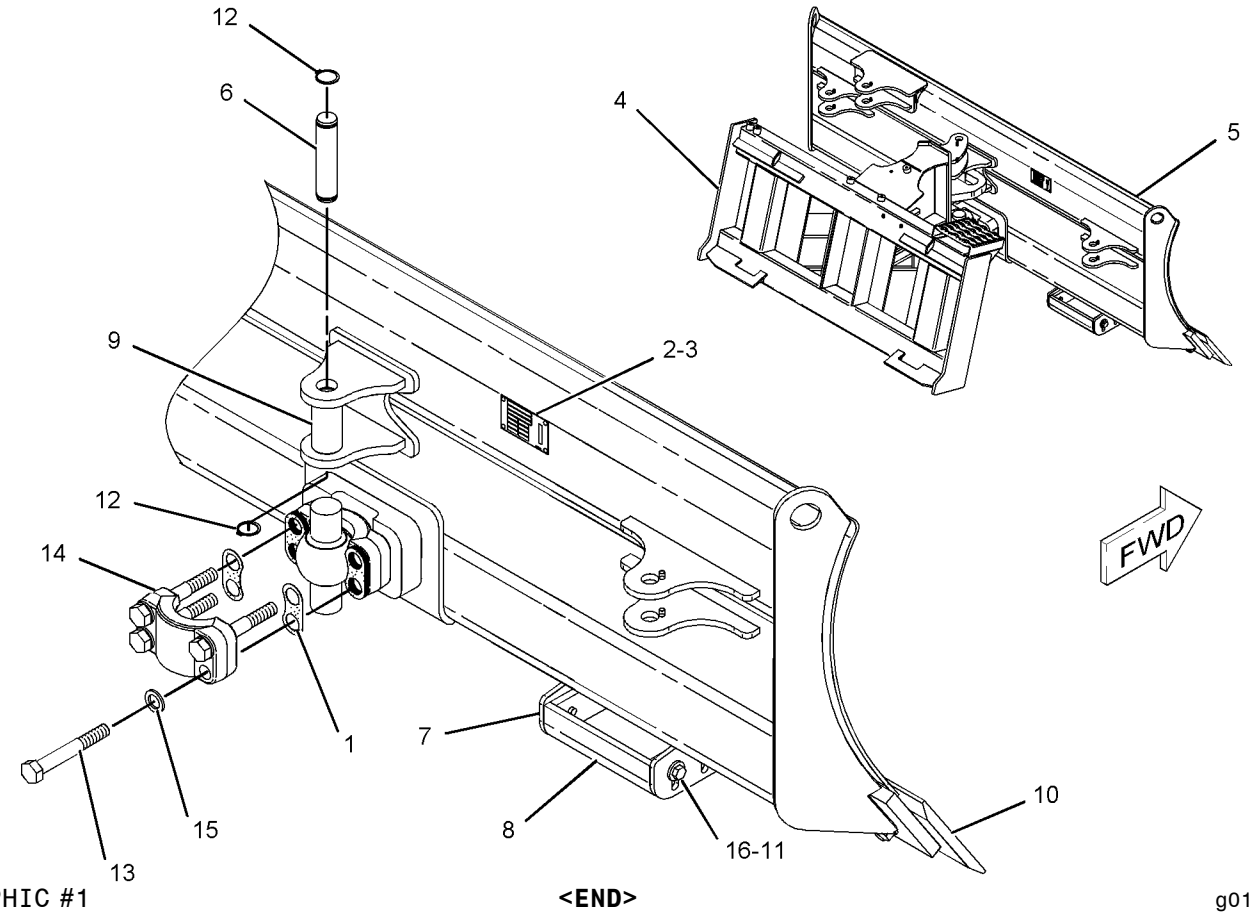


GRAPHIC #1 **<END>** g01020723

# *279-5384* BLADE GP-MULTIPURPOSE BUCKET

**S/N: HEN6750-UP**
**1524-MM (60-IN)**
**PART OF 279-5383 BUCKET GP-MULTIPURPOSE**
**AN ATTACHMENT**

**SMCS-6060, 6104** **i02552040**

| NOTE | REF NO | GRAPHIC REF | PART NUMBER | QTY | PART NAME 1 2 3 4 5 6 (PRODUCT LEVEL) | SEE PAGE |
|---|---|---|---|---|---|---|
| | 1 | 1 | **154-2704** | 1 | PLATE-INSTRUCTION (BUCKET SPECIFICATIONS) | |
| | 2 | 1 | **168-8389** | 4 | TACK-FASTENER | |
| | 3 | 1 | **279-5385** | 1 | BLADE AS | |

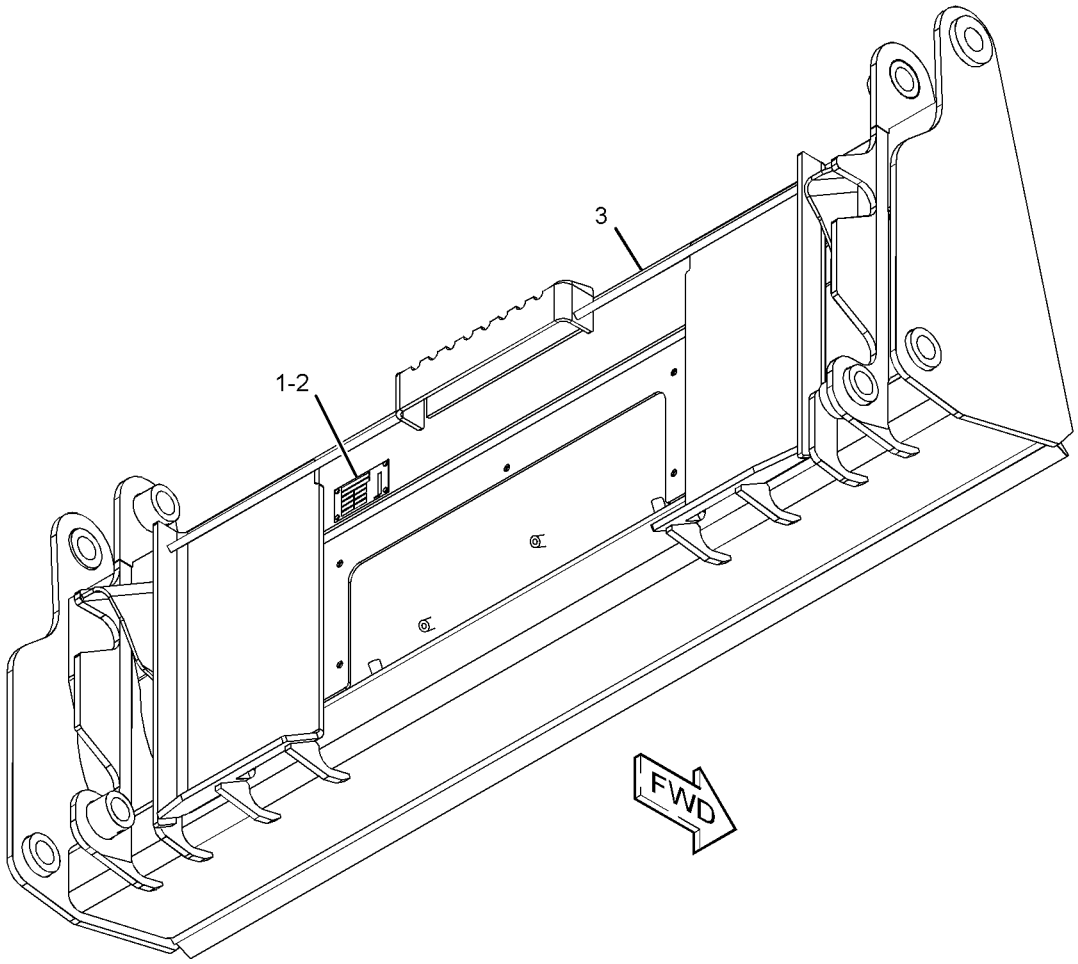


GRAPHIC #1 **<END>** g01278496

# *279-5388* BLADE GP-MULTIPURPOSE BUCKET

**S/N: HEN6750-UP**
**1676-MM (66-IN)**
**PART OF 279-5389 BUCKET GP-MULTIPURPOSE**
**AN ATTACHMENT**

**SMCS-6060, 6104** **i02552100**

| NOTE | REF NO | GRAPHIC REF | PART NUMBER | QTY | PART NAME 1 2 3 4 5 6 (PRODUCT LEVEL) | SEE PAGE |
|---|---|---|---|---|---|---|
| | 1 | 1 | **154-2704** | 1 | PLATE-INSTRUCTION (BUCKET SPECIFICATIONS) | |
| | 2 | 1 | **168-8389** | 4 | TACK-FASTENER | |
| | 3 | 1 | **279-5387** | 1 | BLADE AS | |

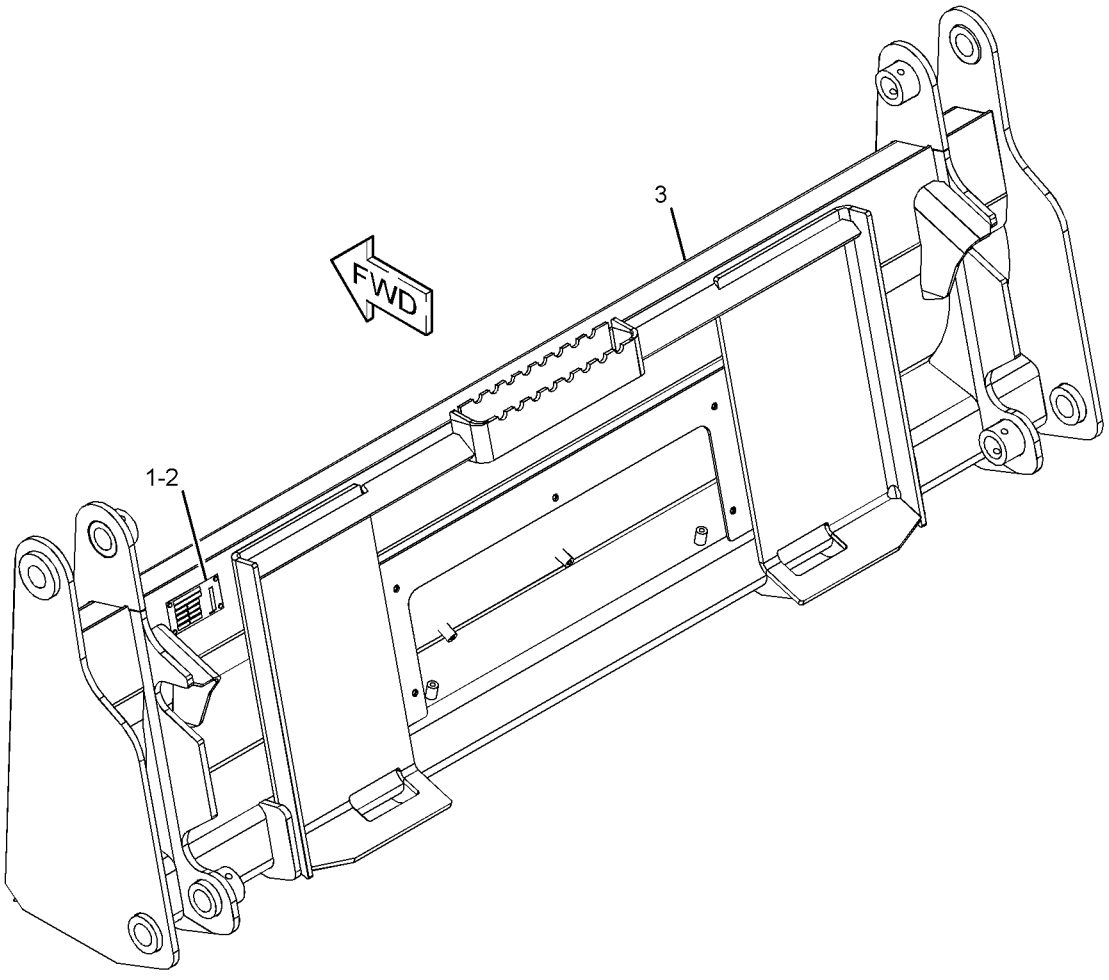


GRAPHIC #1 **<END>** g01279242

# *279-5396* BLADE GP-MULTIPURPOSE BUCKET

**S/N: HEN6750-UP**
**1829-MM (72-IN)**
**PART OF 279-5397 BUCKET GP-MULTIPURPOSE**
**AN ATTACHMENT**

**SMCS-6060, 6104** **i02552170**

| NOTE | REF NO | GRAPHIC REF | PART NUMBER | QTY | PART NAME 1 2 3 4 5 6 (PRODUCT LEVEL) | SEE PAGE |
|---|---|---|---|---|---|---|
| | 1 | 1 | **154-2704** | 1 | PLATE-INSTRUCTION (BUCKET SPECIFICATIONS) | |
| | 2 | 1 | **168-8389** | 4 | TACK-FASTENER | |
| | 3 | 1 | **279-5395** | 1 | BLADE AS | |

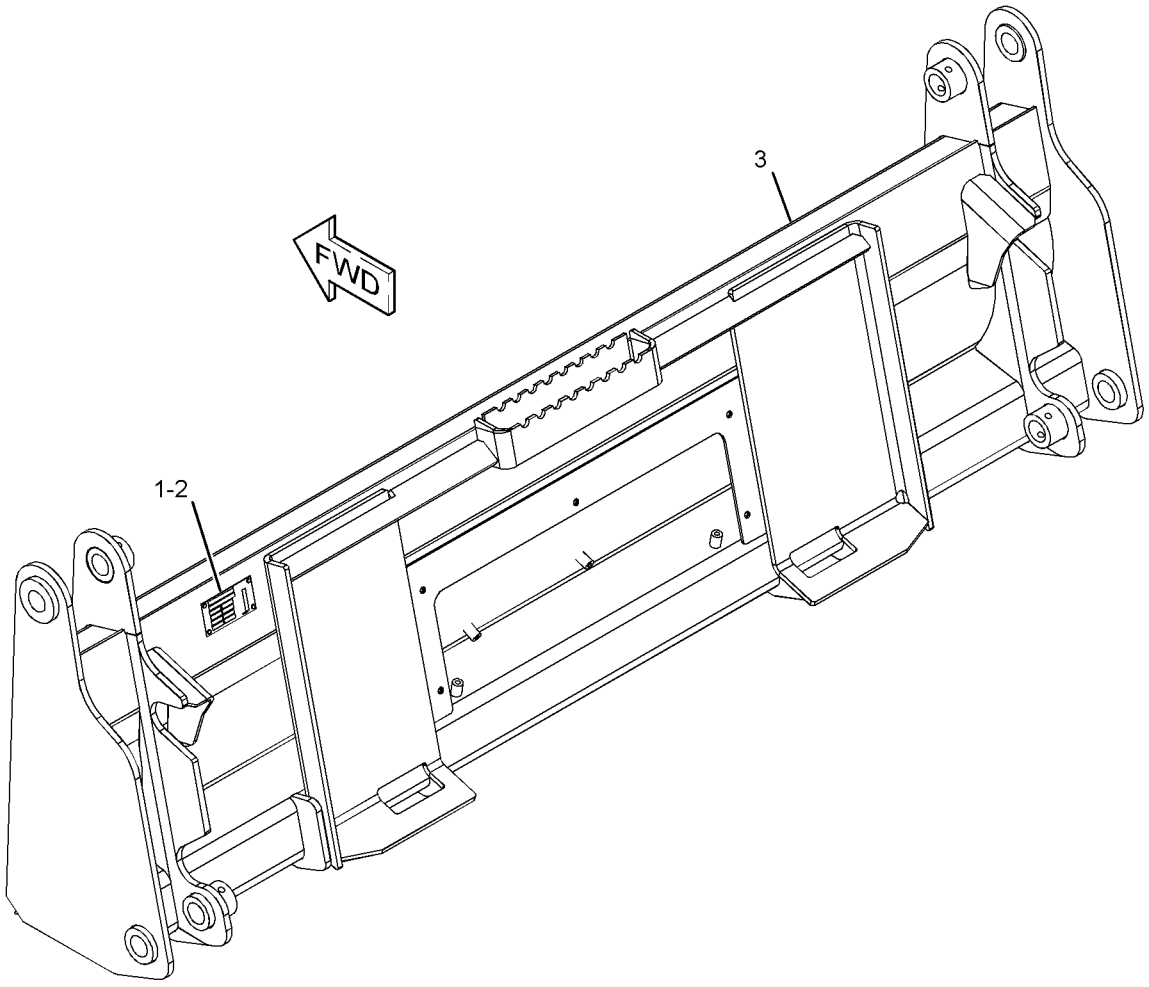


GRAPHIC #1 **<END>** g01279973

# *279-5405* BLADE GP-MULTIPURPOSE BUCKET

**S/N: HEN6750-UP**
**1981-MM (78-IN)**
**PART OF 279-5404 BUCKET GP-MULTIPURPOSE**
**AN ATTACHMENT**

**SMCS-6060, 6104** **i02552256**

| NOTE | REF NO | GRAPHIC REF | PART NUMBER | QTY | PART NAME 1 2 3 4 5 6 (PRODUCT LEVEL) | SEE PAGE |
|---|---|---|---|---|---|---|
| | 1 | 1 | **154-2704** | 1 | PLATE-INSTRUCTION (BUCKET SPECIFICATIONS) | |
| | 2 | 1 | **168-8389** | 4 | TACK-FASTENER | |
| | 3 | 1 | **279-5406** | 1 | BLADE AS | |

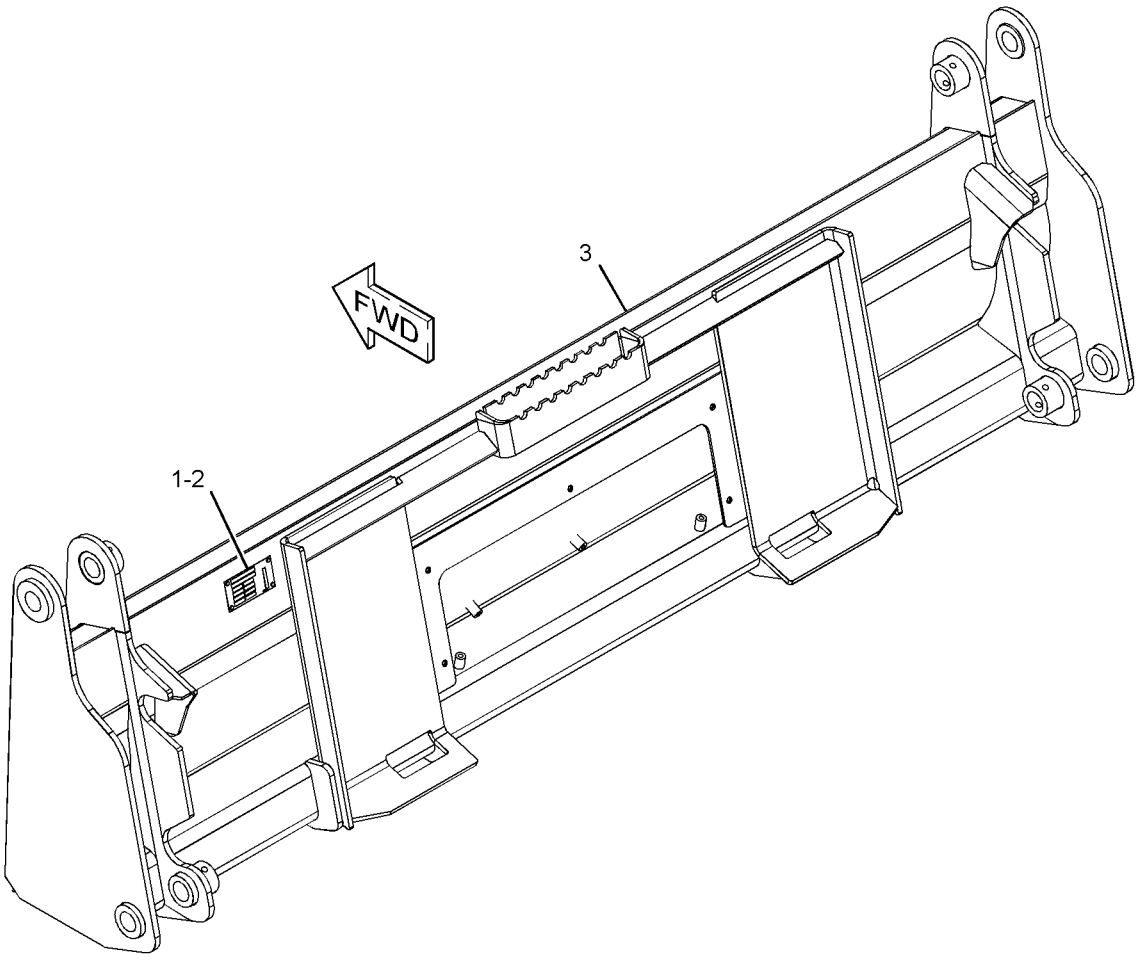


GRAPHIC #1 **<END>** g01278518

# WORK TOOLS

## 268-4083 BUCKET AR-DIRT

**S/N: HEN6750-UP**
**FIELD REPLACEMENT FOR 268-4084—PAGE 399**
**AN ATTACHMENT AND FIELD INSTALLATION**

**SMCS-6001** **i02539980**

| NOTE | PART NUMBER | QTY | PART NAME 1 2 3 4 5 6 (PRODUCT LEVEL) | SEE PAGE |
|---|---|---|---|---|
| Y | **268-4084** | 1 | BUCKET GP-DIRT | 399 |
| Y | *135-9387* | 1 | EDGE GP-CUTTING | 428 |
| Y-SEPARATE ILLUSTRATION | | | | |

**<END>**

## 279-5435 BUCKET AR-DIRT

**S/N: HEN6750-UP**
**AN ATTACHMENT**

**SMCS-6001** **i02552331**

| NOTE | PART NUMBER | QTY | PART NAME 1 2 3 4 5 6 (PRODUCT LEVEL) | SEE PAGE |
|---|---|---|---|---|
| Y | **279-5434** | 1 | BUCKET AS-DIRT | 387 |
| Y | *135-9383* | 1 | EDGE GP-CUTTING | 424 |
| Y-SEPARATE ILLUSTRATION | | | | |

**<END>**

## 279-5438 BUCKET AR-DIRT

**S/N: HEN6750-UP**
**AN ATTACHMENT**

**SMCS-6001** **i02571312**

| NOTE | PART NUMBER | QTY | PART NAME 1 2 3 4 5 6 (PRODUCT LEVEL) | SEE PAGE |
|---|---|---|---|---|
| Y | **279-5437** | 1 | BUCKET AS-DIRT | 388 |
| Y | *135-9384* | 1 | EDGE GP-CUTTING | 425 |
| Y-SEPARATE ILLUSTRATION | | | | |

**<END>**

## 279-5441 BUCKET AR-DIRT

**S/N: HEN6750-UP**
**AN ATTACHMENT**

**SMCS-6001** **i02571314**

| NOTE | PART NUMBER | QTY | PART NAME 1 2 3 4 5 6 (PRODUCT LEVEL) | SEE PAGE |
|---|---|---|---|---|
| Y | **279-5440** | 1 | BUCKET AS-DIRT | 389 |
| Y | *135-9385* | 1 | EDGE GP-CUTTING | 426 |
| Y-SEPARATE ILLUSTRATION | | | | |

**<END>**

# WORK TOOLS

## 285-6090 BUCKET AR-DIRT

**S/N: HEN6750-UP**
**AN ATTACHMENT**

**SMCS-6001** **i02552446**

| NOTE | PART NUMBER | QTY | PART NAME 1 2 3 4 5 6 (PRODUCT LEVEL) | SEE PAGE |
|---|---|---|---|---|
| Y | **285-6089** | 1 | BUCKET AS-DIRT | 390 |
| Y | *135-9386* | 1 | EDGE GP-CUTTING (DIRT) | 427 |

Y-SEPARATE ILLUSTRATION

**<END>**

## *229-3426* BUCKET AR-GENERAL PURPOSE

**S/N: HEN6750-UP**
**AN ATTACHMENT**

**SMCS-6101** **i02757807**

| NOTE | PART NUMBER | QTY | PART NAME 1 2 3 4 5 6 (PRODUCT LEVEL) | SEE PAGE |
|---|---|---|---|---|
| Y | *229-3427* | 1 | BUCKET AS-GENERAL PURPOSE | 391 |
| Y | *141-4999* | 9 | TOOTH GP-UNI | 463 |

Y-SEPARATE ILLUSTRATION

**<END>**

## 279-5365 BUCKET AR-GENERAL PURPOSE

**S/N: HEN6750-UP**
**AN ATTACHMENT**

**SMCS-6101** **i02550406**

| NOTE | PART NUMBER | QTY | PART NAME 1 2 3 4 5 6 (PRODUCT LEVEL) | SEE PAGE |
|---|---|---|---|---|
| Y | **279-5364** | 1 | BUCKET AS-GENERAL PURPOSE | 392 |
| Y | *135-9384* | 1 | EDGE GP-CUTTING | 425 |

Y-SEPARATE ILLUSTRATION

**<END>**

## 279-5366 BUCKET AR-GENERAL PURPOSE

**S/N: HEN6750-UP**
**AN ATTACHMENT**

**SMCS-6101** **i02550436**

| NOTE | PART NUMBER | QTY | PART NAME 1 2 3 4 5 6 (PRODUCT LEVEL) | SEE PAGE |
|---|---|---|---|---|
| Y | **279-5364** | 1 | BUCKET AS-GENERAL PURPOSE | 392 |
| Y | *141-4999* | 8 | TOOTH GP-UNI | 463 |

Y-SEPARATE ILLUSTRATION

**<END>**

## 279-5369 BUCKET AR-GENERAL PURPOSE

**S/N: HEN6750-UP**
**AN ATTACHMENT**

**SMCS-6101** **i02551081**

| NOTE | PART NUMBER | QTY | PART NAME 1 2 3 4 5 6 (PRODUCT LEVEL) | SEE PAGE |
|---|---|---|---|---|
| Y | **279-5368** | 1 | BUCKET AS-GENERAL PURPOSE | 393 |
| Y | *135-9385* | 1 | EDGE GP-CUTTING | 426 |

Y-SEPARATE ILLUSTRATION

**<END>**

## 279-5370 BUCKET AR-GENERAL PURPOSE

**S/N: HEN6750-UP**
**AN ATTACHMENT**

**SMCS-6101** **i02551084**

| NOTE | PART NUMBER | QTY | PART NAME 1 2 3 4 5 6 (PRODUCT LEVEL) | SEE PAGE |
|---|---|---|---|---|
| Y | **279-5368** | 1 | BUCKET AS-GENERAL PURPOSE | 393 |
| Y | *141-4999* | 8 | TOOTH GP-UNI | 463 |

Y-SEPARATE ILLUSTRATION

**<END>**

## 279-5373 BUCKET AR-GENERAL PURPOSE

**S/N: HEN6750-UP**
**AN ATTACHMENT**

**SMCS-6101** **i02552012**

| NOTE | PART NUMBER | QTY | PART NAME 1 2 3 4 5 6 (PRODUCT LEVEL) | SEE PAGE |
|---|---|---|---|---|
| Y | **279-5372** | 1 | BUCKET AS-GENERAL PURPOSE | 394 |
| Y | *135-9386* | 1 | EDGE GP-CUTTING | 427 |

Y-SEPARATE ILLUSTRATION

**<END>**

## 279-5374 BUCKET AR-GENERAL PURPOSE

**S/N: HEN6750-UP**
**AN ATTACHMENT**

**SMCS-6101** **i02552011**

| NOTE | PART NUMBER | QTY | PART NAME 1 2 3 4 5 6 (PRODUCT LEVEL) | SEE PAGE |
|---|---|---|---|---|
| Y | **279-5372** | 1 | BUCKET AS-GENERAL PURPOSE | 394 |
| Y | *141-4999* | 8 | TOOTH GP-UNI | 463 |

Y-SEPARATE ILLUSTRATION

**<END>**

# WORK TOOLS

## 279-5377 BUCKET AR-GENERAL PURPOSE

**S/N: HEN6750-UP**
**AN ATTACHMENT**

**SMCS-6101** **i02552020**

| NOTE | PART NUMBER | QTY | PART NAME 1 2 3 4 5 6 (PRODUCT LEVEL) | SEE PAGE |
|---|---|---|---|---|
| Y | **279-5376** | 1 | BUCKET AS-GENERAL PURPOSE | 395 |
| Y | *135-9387* | 1 | EDGE GP-CUTTING | 428 |
| Y-SEPARATE ILLUSTRATION | | | | |

**<END>**

## 279-5378 BUCKET AR-GENERAL PURPOSE

**S/N: HEN6750-UP**
**AN ATTACHMENT**

**SMCS-6101** **i02552018**

| NOTE | PART NUMBER | QTY | PART NAME 1 2 3 4 5 6 (PRODUCT LEVEL) | SEE PAGE |
|---|---|---|---|---|
| Y | **279-5376** | 1 | BUCKET AS-GENERAL PURPOSE | 395 |
| Y | *141-4999* | 9 | TOOTH GP-UNI | 463 |
| Y-SEPARATE ILLUSTRATION | | | | |

**<END>**

## 157-7223 BUCKET AR-GRAPPLE

**S/N: HEN6750-UP**
**INDUSTRIAL**
**PART OF 157-7226 BUCKET AR-GRAPPLE**
**AN ATTACHMENT**

**SMCS-6704** **i02508973**

| NOTE | PART NUMBER | QTY | PART NAME 1 2 3 4 5 6 (PRODUCT LEVEL) | SEE PAGE |
|---|---|---|---|---|
| Y | *156-0884* | 1 | BUCKET GP-GRAPPLE | 401 |
| Y | **278-1975** | 2 | CYLINDER GP-HYDRAULIC | 247 |
| Y | *161-0187* | 1 | LINES GP-GRAPPLE | 280 |
| Y | *156-0891* | 1 | MOUNTING GP-CYLINDER | 330 |
| Y-SEPARATE ILLUSTRATION | | | | |

**<END>**

## 157-7224 BUCKET AR-GRAPPLE

**S/N: HEN6750-UP**
**INDUSTRIAL**
**PART OF 157-7227 BUCKET AR-GRAPPLE**
**AN ATTACHMENT**

**SMCS-6704** **i02508941**

| NOTE | PART NUMBER | QTY | PART NAME 1 2 3 4 5 6 (PRODUCT LEVEL) | SEE PAGE |
|---|---|---|---|---|
| Y | *156-0885* | 1 | BUCKET GP-GRAPPLE | 402 |
| Y | *156-0891* | 1 | MOUNTING GP-CYLINDER | 330 |
| Y | **278-1975** | 2 | CYLINDER GP-HYDRAULIC | 247 |
| Y | *161-0187* | 1 | LINES GP-GRAPPLE | 280 |
| Y-SEPARATE ILLUSTRATION | | | | |

**<END>**

# WORK TOOLS

## 157-7225 BUCKET AR-GRAPPLE—INDUSTRIAL

**S/N: HEN6750-UP**
**PART OF 158-6095 BUCKET AR-GRAPPLE**
**AN ATTACHMENT**

**SMCS-6704** **i02509114**

| NOTE | PART NUMBER | QTY | PART NAME 1 2 3 4 5 6 (PRODUCT LEVEL) | SEE PAGE |
|---|---|---|---|---|
| Y | *156-0886* | 1 | BUCKET GP-GRAPPLE | 403 |
| Y | **278-1975** | 2 | CYLINDER GP-HYDRAULIC | 247 |
| Y | *161-0187* | 1 | LINES GP-GRAPPLE | 280 |
| Y | *156-0891* | 1 | MOUNTING GP-CYLINDER | 330 |

Y-SEPARATE ILLUSTRATION

**<END>**

## *157-7226* BUCKET AR-GRAPPLE—INDUSTRIAL

**S/N: HEN6750-UP**
**AN ATTACHMENT**

**SMCS-6704** **i01788957**

| NOTE | PART NUMBER | QTY | PART NAME 1 2 3 4 5 6 (PRODUCT LEVEL) | SEE PAGE |
|---|---|---|---|---|
| Y | **157-7223** | 1 | BUCKET AR-GRAPPLE | 375 |
| Y | *135-9384* | 1 | EDGE GP-CUTTING | 425 |

Y-SEPARATE ILLUSTRATION

**<END>**

## *157-7227* BUCKET AR-GRAPPLE—INDUSTRIAL

**S/N: HEN6750-UP**
**AN ATTACHMENT**

**SMCS-6704** **i01788965**

| NOTE | PART NUMBER | QTY | PART NAME 1 2 3 4 5 6 (PRODUCT LEVEL) | SEE PAGE |
|---|---|---|---|---|
| Y | **157-7224** | 1 | BUCKET AR-GRAPPLE | 375 |
| Y | *135-9385* | 1 | EDGE GP-CUTTING | 426 |

Y-SEPARATE ILLUSTRATION

**<END>**

## 158-6095 BUCKET AR-GRAPPLE—INDUSTRIAL

**S/N: HEN6750-UP**
**AN ATTACHMENT**

**SMCS-6704** **i01060288**

| NOTE | PART NUMBER | QTY | PART NAME 1 2 3 4 5 6 (PRODUCT LEVEL) | SEE PAGE |
|---|---|---|---|---|
| Y | **157-7225** | 1 | BUCKET AR-GRAPPLE | 376 |
| Y | *135-9386* | 1 | EDGE GP-CUTTING | 427 |

Y-SEPARATE ILLUSTRATION

**<END>**

# WORK TOOLS

## 217-6229 BUCKET AR-GRAPPLE

**S/N: HEN6750-UP**
**PART OF 217-6230 BUCKET AR-GRAPPLE**
**AN ATTACHMENT**

**SMCS-6704** **i02513475**

| NOTE | REF NO | GRAPHIC REF | PART NUMBER | QTY | PART NAME 1 2 3 4 5 6 (PRODUCT LEVEL) | SEE PAGE |
|---|---|---|---|---|---|---|
| Y | 1 | 1 | *156-0891* | 1 | MOUNTING GP-CYLINDER | 330 |
| Y | 2 | 1 | *161-0187* | 1 | LINES GP-GRAPPLE | 280 |
| Y | 3 | 1 | *217-6228* | 1 | BUCKET GP-GRAPPLE (INDUSTRIAL) | 404 |
| CY | 4 | 1 | **278-1975** | 2 | CYLINDER GP-HYDRAULIC | 247 |

C-CHANGE FROM PREVIOUS TYPE
Y-SEPARATE ILLUSTRATION

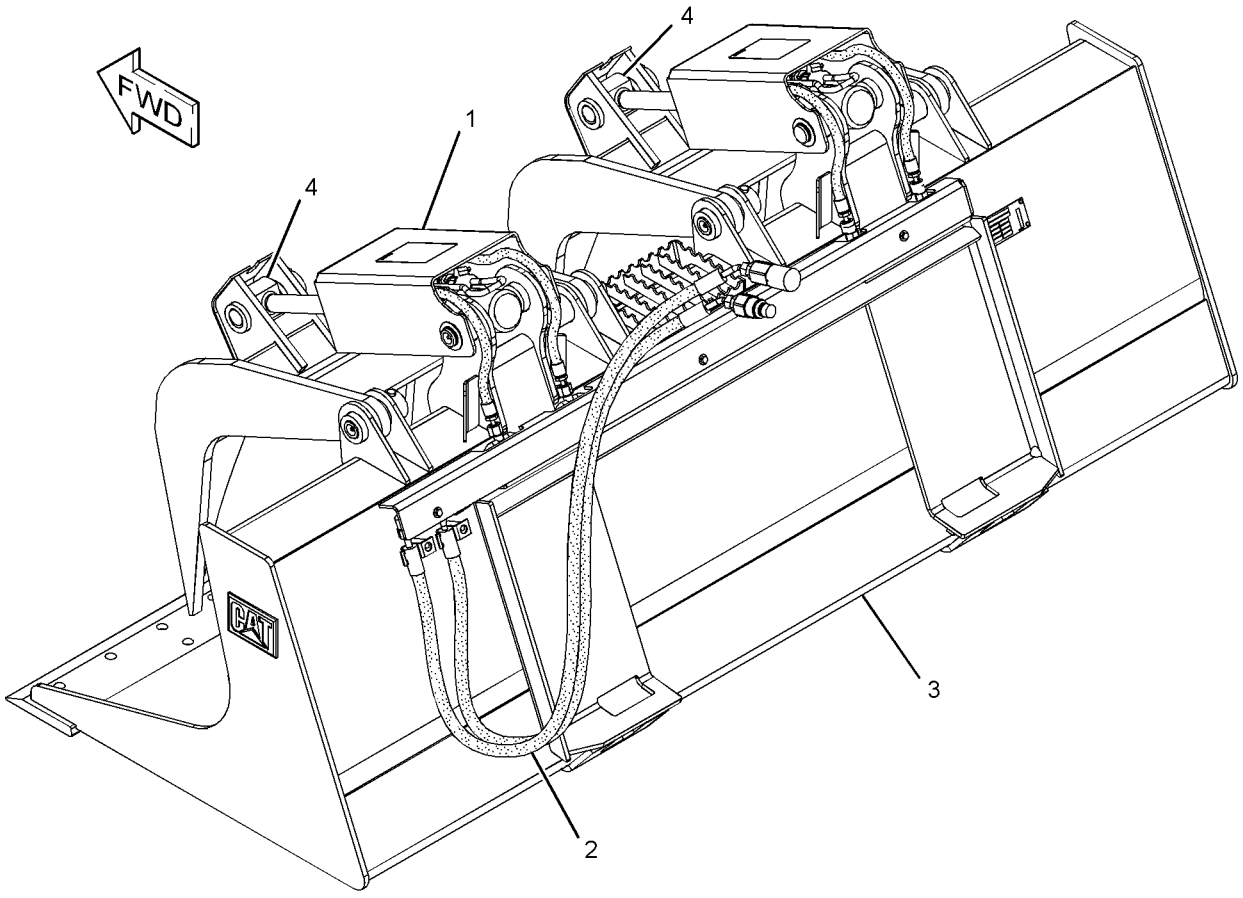


GRAPHIC #1 **<END>** g01281607

# WORK TOOLS

## *217-6230* BUCKET AR-GRAPPLE

**S/N: HEN6750-UP**
**AN ATTACHMENT**

**SMCS-6704** **i01877714**

| NOTE | PART NUMBER | QTY | PART NAME 1 2 3 4 5 6 (PRODUCT LEVEL) | SEE PAGE |
|---|---|---|---|---|
| Y | **217-6229** | 1 | BUCKET AR-GRAPPLE | 377 |
| Y | *135-9387* | 1 | EDGE GP-CUTTING | 428 |

Y-SEPARATE ILLUSTRATION

**<END>**

## 285-6093 BUCKET AR-GRAPPLE

**S/N: HEN6750-UP**
**AN ATTACHMENT**

**SMCS-6704** **i02552451**

| NOTE | PART NUMBER | QTY | PART NAME 1 2 3 4 5 6 (PRODUCT LEVEL) | SEE PAGE |
|---|---|---|---|---|
| Y | **285-6099** | 1 | BUCKET GP-UTILITY (66-IN) | 413 |
| Y | *285-6116* | 1 | GRAPPLE GP-UTILITY | 444 |

Y-SEPARATE ILLUSTRATION

**<END>**

## 285-6104 BUCKET AR-GRAPPLE

**S/N: HEN6750-UP**
**AN ATTACHMENT**

**SMCS-6704** **i02552487**

| NOTE | PART NUMBER | QTY | PART NAME 1 2 3 4 5 6 (PRODUCT LEVEL) | SEE PAGE |
|---|---|---|---|---|
| Y | **285-6102** | 1 | BUCKET GP-UTILITY (72-IN) | 414 |
| Y | *285-6116* | 1 | GRAPPLE GP-UTILITY | 444 |

Y-SEPARATE ILLUSTRATION

**<END>**

## 285-6111 BUCKET AR-GRAPPLE

**S/N: HEN6750-UP**
**AN ATTACHMENT**

**SMCS-6704** **i02552741**

| NOTE | PART NUMBER | QTY | PART NAME 1 2 3 4 5 6 (PRODUCT LEVEL) | SEE PAGE |
|---|---|---|---|---|
| Y | **285-6100** | 1 | BUCKET AR-UTILITY | 385 |
| Y | *285-6116* | 1 | GRAPPLE GP-UTILITY | 444 |

Y-SEPARATE ILLUSTRATION

**<END>**

# WORK TOOLS

## 285-6112 BUCKET AR-GRAPPLE

**S/N: HEN6750-UP**

**AN ATTACHMENT**

**SMCS-6704** **i02552759**

| NOTE | PART NUMBER | QTY | PART NAME 1 2 3 4 5 6 (PRODUCT LEVEL) | SEE PAGE |
|---|---|---|---|---|
| Y | **285-6101** | 1 | BUCKET AR-UTILITY | 386 |
| Y | *285-6116* | 1 | GRAPPLE GP-UTILITY | 444 |

Y-SEPARATE ILLUSTRATION

**<END>**

# WORK TOOLS

## *286-9300* BUCKET AR-GRAPPLE

**S/N: HEN6750-UP**

**AN ATTACHMENT**

**SMCS-6704** **i02723699**

| NOTE | REF NO | GRAPHIC REF | PART NUMBER | QTY | PART NAME 1 2 3 4 5 6 (PRODUCT LEVEL) | SEE PAGE |
|---|---|---|---|---|---|---|
| Y | 1 | 1 | *286-9248* | 1 | CYLINDER & MTG GP-BUCKET | 235 |
| Y | 2 | 1 | *286-9251* | 1 | PLATE & FILM GP | 619 |
| Y | 3 | 1 | *286-9278* | 1 | BUCKET GP-GRAPPLE | 406 |
| Y | 4 | 1 | *286-9279* | 1 | LINES GP-GRAPPLE | 284 |
| Y | 5 | 1 | *293-6264* | 2 | CYLINDER GP-BUCKET | 239 |

Y-SEPARATE ILLUSTRATION

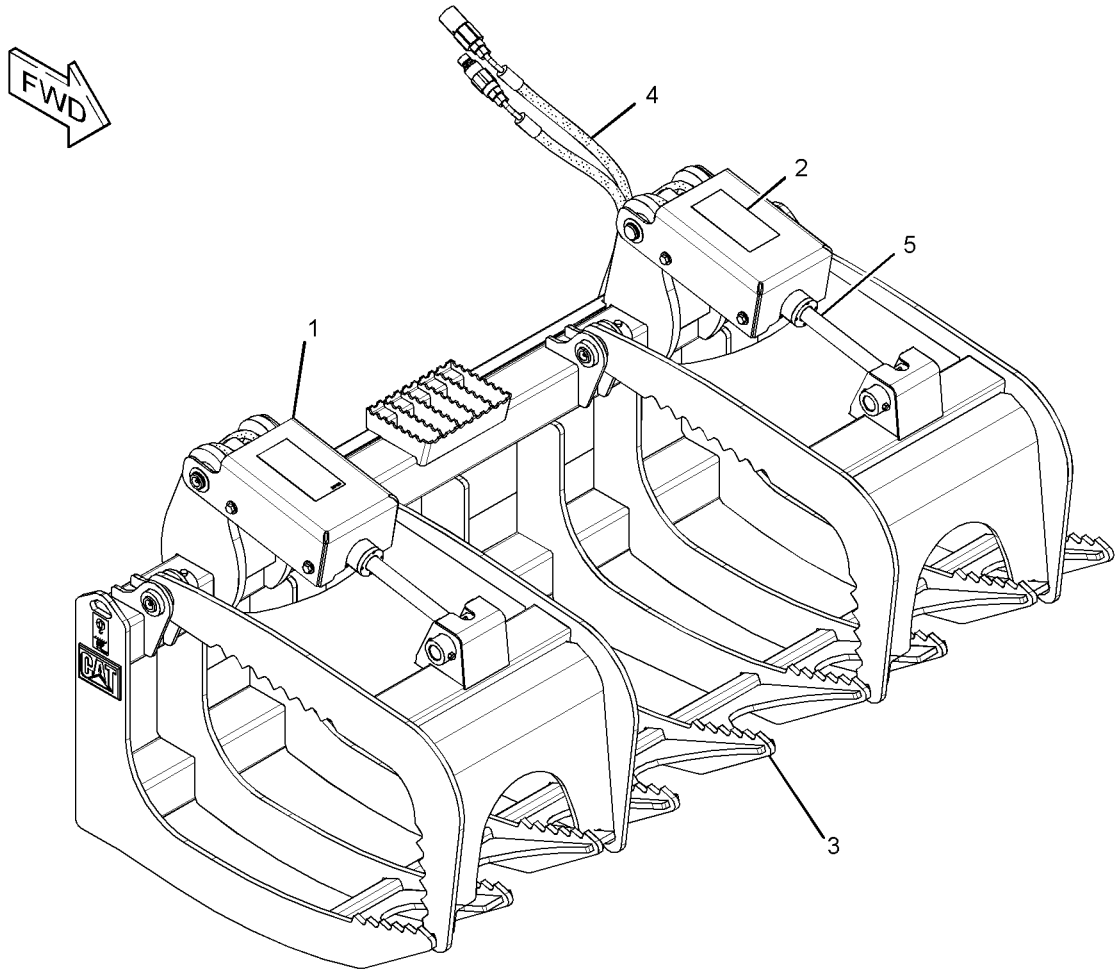


GRAPHIC #1 **<END>** g01372572

# WORK TOOLS

## *286-9301* BUCKET AR-GRAPPLE

**S/N: HEN6750-UP**
**AN ATTACHMENT**

**SMCS-6704** **i02723700**

| NOTE | REF NO | GRAPHIC REF | PART NUMBER | QTY | PART NAME 1 2 3 4 5 6 (PRODUCT LEVEL) | SEE PAGE |
|---|---|---|---|---|---|---|
| Y | 1 | 1 | *286-9244* | 1 | BUCKET GP-GRAPPLE | 405 |
| Y | 2 | 1 | *286-9248* | 1 | CYLINDER & MTG GP-BUCKET | 235 |
| Y | 3 | 1 | *286-9250* | 1 | LINES GP-GRAPPLE | 282 |
| Y | 4 | 1 | *286-9251* | 1 | PLATE & FILM GP | 619 |
| Y | 5 | 1 | **293-6264** | 2 | CYLINDER GP-BUCKET | 239 |

Y-SEPARATE ILLUSTRATION

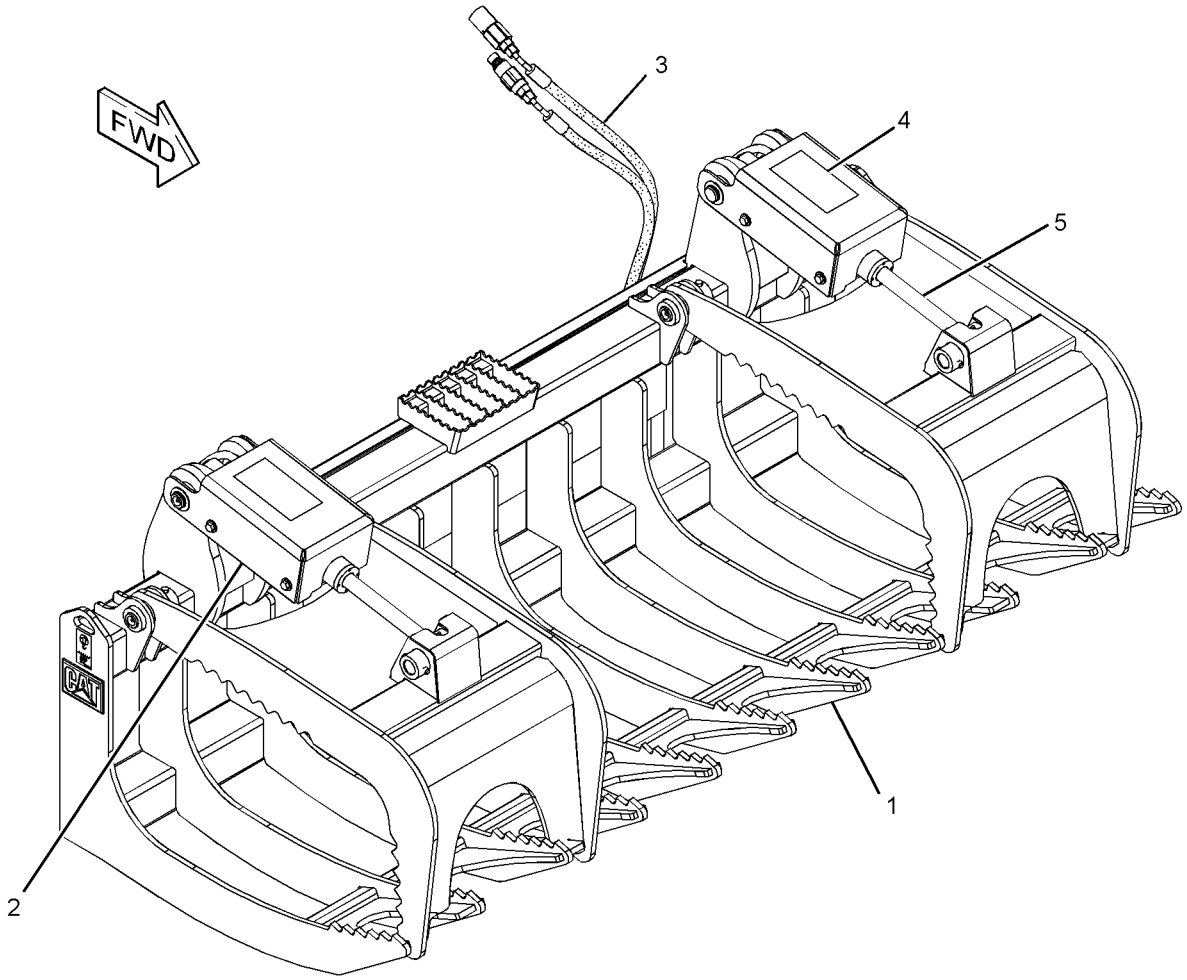


GRAPHIC #1 **<END>** g01372972

## 279-5420 BUCKET AR-LIGHT MATERIAL

**S/N: HEN6750-UP**
**AN ATTACHMENT**

**SMCS-6103** **i02552302**

| NOTE | PART NUMBER | QTY | PART NAME 1 2 3 4 5 6 (PRODUCT LEVEL) | SEE PAGE |
|---|---|---|---|---|
| Y | **279-5421** | 1 | BUCKET AS-LIGHT MATERIAL | 396 |
| Y | *135-9386* | 1 | EDGE GP-CUTTING | 427 |

Y-SEPARATE ILLUSTRATION

**<END>**

## 279-5425 BUCKET AR-LIGHT MATERIAL

**S/N: HEN6750-UP**
**AN ATTACHMENT**

**SMCS-6103** **i02552308**

| NOTE | PART NUMBER | QTY | PART NAME 1 2 3 4 5 6 (PRODUCT LEVEL) | SEE PAGE |
|---|---|---|---|---|
| Y | **279-5424** | 1 | BUCKET AS-LIGHT MATERIAL | 397 |
| Y | *135-9387* | 1 | EDGE GP-CUTTING | 428 |

Y-SEPARATE ILLUSTRATION

**<END>**

## 279-5430 BUCKET AR-LIGHT MATERIAL

**S/N: HEN6750-UP**
**AN ATTACHMENT**

**SMCS-6103** **i02552313**

| NOTE | PART NUMBER | QTY | PART NAME 1 2 3 4 5 6 (PRODUCT LEVEL) | SEE PAGE |
|---|---|---|---|---|
| Y | **279-5429** | 1 | BUCKET AS-LIGHT MATERIAL | 398 |
| Y | *195-7124* | 1 | EDGE GP-CUTTING | 430 |

Y-SEPARATE ILLUSTRATION

**<END>**

## 279-5380 BUCKET AR-MULTIPURPOSE

**S/N: HEN6750-UP**
**AN ATTACHMENT**

**SMCS-6104** **i02552027**

| NOTE | PART NUMBER | QTY | PART NAME 1 2 3 4 5 6 (PRODUCT LEVEL) | SEE PAGE |
|---|---|---|---|---|
| Y | **279-5382** | 1 | BUCKET AR-MULTIPURPOSE | 383 |
| Y | *141-4999* | 8 | TOOTH GP-UNI | 463 |

Y-SEPARATE ILLUSTRATION

**<END>**

# WORK TOOLS

## 279-5381 BUCKET AR-MULTIPURPOSE

**S/N: HEN6750-UP**
**AN ATTACHMENT**

**SMCS-6104** **i02552030**

| NOTE | PART NUMBER | QTY | PART NAME 1 2 3 4 5 6 (PRODUCT LEVEL) | SEE PAGE |
|---|---|---|---|---|
| Y | **279-5382** | 1 | BUCKET AR-MULTIPURPOSE | 383 |
| Y | *135-9384* | 1 | EDGE GP-CUTTING | 425 |
| Y-SEPARATE ILLUSTRATION | | | | |

**<END>**

## *279-5382* BUCKET AR-MULTIPURPOSE

**S/N: HEN6750-UP**
**PART OF 279-5380, 279-5381 BUCKET AR-MULTIPURPOSE**
**AN ATTACHMENT**

**SMCS-6104** **i02770080**

| NOTE | PART NUMBER | QTY | PART NAME 1 2 3 4 5 6 (PRODUCT LEVEL) | SEE PAGE |
|---|---|---|---|---|
| Y | *279-5383* | 1 | BUCKET GP-MULTIPURPOSE (60-IN) | 407 |
| Y | *162-5236* | 1 | COVER GP-LINES | 421 |
| Y | *278-1969* | 2 | CYLINDER GP-HYDRAULIC | 246 |
| Y | *279-5413* | 1 | LINES GP-BUCKET | 264 |
| Y | *154-5011* | 1 | MOUNTING GP-CYLINDER | 329 |
| Y-SEPARATE ILLUSTRATION | | | | |

**<END>**

## *279-5390* BUCKET AR-MULTIPURPOSE

**S/N: HEN6750-UP**
**PART OF 279-5391, 279-5392 BUCKET AR-MULTIPURPOSE**
**AN ATTACHMENT**

**SMCS-6104** **i02770129**

| NOTE | PART NUMBER | QTY | PART NAME 1 2 3 4 5 6 (PRODUCT LEVEL) | SEE PAGE |
|---|---|---|---|---|
| Y | *279-5389* | 1 | BUCKET GP-MULTIPURPOSE | 408 |
| Y | *162-5236* | 1 | COVER GP-LINES | 421 |
| Y | *278-1969* | 2 | CYLINDER GP-HYDRAULIC | 246 |
| Y | *279-5414* | 1 | LINES GP-BUCKET | 266 |
| Y | *154-5011* | 1 | MOUNTING GP-CYLINDER | 329 |
| Y-SEPARATE ILLUSTRATION | | | | |

**<END>**

## 279-5391 BUCKET AR-MULTIPURPOSE

**S/N: HEN6750-UP**
**AN ATTACHMENT**

**SMCS-6104** **i02552078**

| NOTE | PART NUMBER | QTY | PART NAME 1 2 3 4 5 6 (PRODUCT LEVEL) | SEE PAGE |
|---|---|---|---|---|
| Y | **279-5390** | 1 | BUCKET AR-MULTIPURPOSE | 383 |
| Y | *135-9385* | 1 | EDGE GP-CUTTING | 426 |
| Y-SEPARATE ILLUSTRATION | | | | |

**<END>**

# WORK TOOLS

## 279-5392 BUCKET AR-MULTIPURPOSE

**S/N: HEN6750-UP**
**AN ATTACHMENT**

**SMCS-6104** **i02552071**

| NOTE | PART NUMBER | QTY | PART NAME 1 2 3 4 5 6 (PRODUCT LEVEL) | SEE PAGE |
|---|---|---|---|---|
| Y | **279-5390** | 1 | BUCKET AR-MULTIPURPOSE | 383 |
| Y | *141-4999* | 8 | TOOTH GP-UNI | 463 |
| Y-SEPARATE ILLUSTRATION | | | | |

**<END>**

## *279-5398* BUCKET AR-MULTIPURPOSE

**S/N: HEN6750-UP**
**PART OF 279-5400 BUCKET AR-MULTIPURPOSE, 279-5399 BUCKET GP-MULTIPURPOSE**
**AN ATTACHMENT**

**SMCS-6104** **i02770203**

| NOTE | PART NUMBER | QTY | PART NAME 1 2 3 4 5 6 (PRODUCT LEVEL) | SEE PAGE |
|---|---|---|---|---|
| Y | *279-5397* | 1 | BUCKET GP-MULTIPURPOSE | 409 |
| Y | *162-5236* | 1 | COVER GP-LINES | 421 |
| Y | *278-1969* | 2 | CYLINDER GP-HYDRAULIC | 246 |
| Y | *279-5415* | 1 | LINES GP-BUCKET | 268 |
| Y | *154-5011* | 1 | MOUNTING GP-CYLINDER | 329 |
| Y-SEPARATE ILLUSTRATION | | | | |

**<END>**

## 279-5400 BUCKET AR-MULTIPURPOSE

**S/N: HEN6750-UP**
**AN ATTACHMENT**

**SMCS-6104** **i02552121**

| NOTE | PART NUMBER | QTY | PART NAME 1 2 3 4 5 6 (PRODUCT LEVEL) | SEE PAGE |
|---|---|---|---|---|
| Y | **279-5398** | 1 | BUCKET AR-MULTIPURPOSE | 384 |
| Y | *141-4999* | 8 | TOOTH GP-UNI | 463 |
| Y-SEPARATE ILLUSTRATION | | | | |

**<END>**

## 279-5401 BUCKET AR-MULTIPURPOSE

**S/N: HEN6750-UP**
**AN ATTACHMENT**

**SMCS-6104** **i02552198**

| NOTE | PART NUMBER | QTY | PART NAME 1 2 3 4 5 6 (PRODUCT LEVEL) | SEE PAGE |
|---|---|---|---|---|
| Y | **279-5403** | 1 | BUCKET AR-MULTIPURPOSE | 385 |
| Y | *141-4999* | 9 | TOOTH GP-UNI | 463 |
| Y-SEPARATE ILLUSTRATION | | | | |

**<END>**

# WORK TOOLS

## 279-5402 BUCKET AR-MULTIPURPOSE

**S/N: HEN6750-UP**
**AN ATTACHMENT**

**SMCS-6104** **i02552200**

| NOTE | PART NUMBER | QTY | PART NAME 1 2 3 4 5 6 (PRODUCT LEVEL) | SEE PAGE |
|---|---|---|---|---|
| Y | **279-5403** | 1 | BUCKET AR-MULTIPURPOSE | 385 |
| Y | *135-9387* | 1 | EDGE GP-CUTTING | 428 |
| Y-SEPARATE ILLUSTRATION | | | | |

**<END>**

## *279-5403* BUCKET AR-MULTIPURPOSE

**S/N: HEN6750-UP**
**PART OF 279-5401, 279-5402 BUCKET AR-MULTIPURPOSE**
**AN ATTACHMENT**

**SMCS-6104** **i02770224**

| NOTE | PART NUMBER | QTY | PART NAME 1 2 3 4 5 6 (PRODUCT LEVEL) | SEE PAGE |
|---|---|---|---|---|
| Y | *279-5404* | 1 | BUCKET GP-MULTIPURPOSE (78-IN) | 411 |
| Y | *162-5236* | 1 | COVER GP-LINES | 421 |
| Y | *278-1969* | 2 | CYLINDER GP-HYDRAULIC | 246 |
| Y | *279-5416* | 1 | LINES GP-BUCKET | 270 |
| Y | *154-5011* | 1 | MOUNTING GP-CYLINDER | 329 |
| Y-SEPARATE ILLUSTRATION | | | | |

**<END>**

## 285-6095 BUCKET AR-UTILITY

**S/N: HEN6750-UP**
**AN ATTACHMENT**

**i02552467**

| NOTE | PART NUMBER | QTY | PART NAME 1 2 3 4 5 6 (PRODUCT LEVEL) | SEE PAGE |
|---|---|---|---|---|
| Y | **285-6096** | 1 | BUCKET GP-UTILITY (60-IN) | 412 |
| Y | *135-9384* | 1 | EDGE GP-CUTTING | 425 |
| Y-SEPARATE ILLUSTRATION | | | | |

**<END>**

## 285-6100 BUCKET AR-UTILITY

**S/N: HEN6750-UP**
**PART OF 285-6111 BUCKET AR-GRAPPLE**
**AN ATTACHMENT**

**i02552478**

| NOTE | PART NUMBER | QTY | PART NAME 1 2 3 4 5 6 (PRODUCT LEVEL) | SEE PAGE |
|---|---|---|---|---|
| Y | **285-6099** | 1 | BUCKET GP-UTILITY (66-IN) | 413 |
| Y | *135-9385* | 1 | EDGE GP-CUTTING | 426 |
| Y-SEPARATE ILLUSTRATION | | | | |

**<END>**

# WORK TOOLS

## 285-6101 BUCKET AR-UTILITY

**S/N: HEN6750-UP**
**PART OF 285-6112 BUCKET AR-GRAPPLE**
**AN ATTACHMENT**

**i02552482**

| NOTE | PART NUMBER | QTY | PART NAME 1 2 3 4 5 6 (PRODUCT LEVEL) | SEE PAGE |
|---|---|---|---|---|
| Y | **285-6102** | 1 | BUCKET GP-UTILITY (72-IN) | 414 |
| Y | *135-9386* | 1 | EDGE GP-CUTTING | 427 |

Y-SEPARATE ILLUSTRATION

**<END>**

# WORK TOOLS

## 279-5434 BUCKET AS-DIRT

**S/N: HEN6750-UP**
**1372-MM (54-IN)**
**PART OF 279-5435 BUCKET AR-DIRT**
**AN ATTACHMENT**

**SMCS-6001** **i02552332**

| NOTE | REF NO | GRAPHIC REF | PART NUMBER | QTY | PART NAME 1 2 3 4 5 6 (PRODUCT LEVEL) | SEE PAGE |
|---|---|---|---|---|---|---|
| | 1 | 1 | **154-2704** | 1 | PLATE-INSTRUCTION (BUCKET SPECIFICATIONS) | |
| | 2 | 1 | **168-8389** | 4 | TACK-FASTENER | |
| | | | | | | |
| | | | | | PARTS SHOWN IN GRAPHIC WITHOUT A REFERENCE NUMBER ARE NOT SERVICED SEPARATELY | |

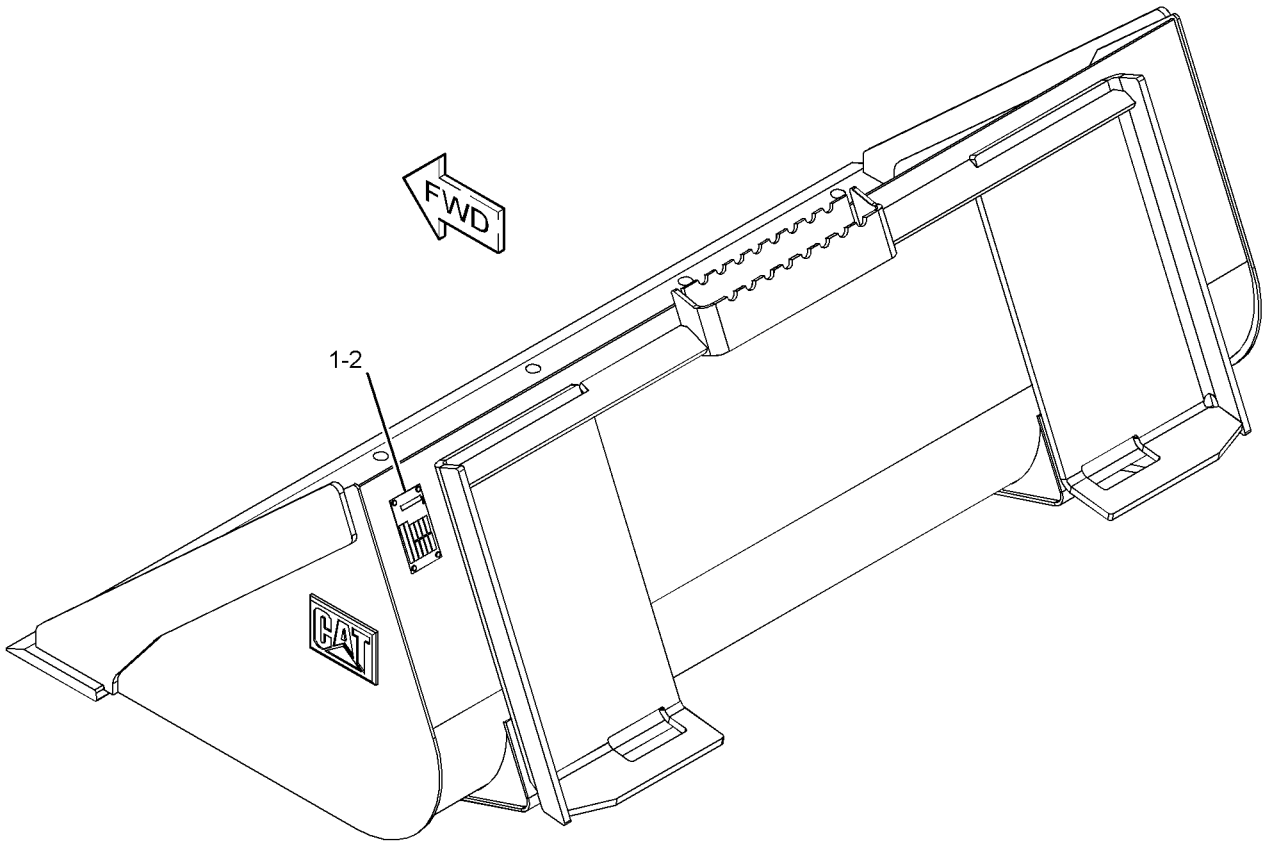


GRAPHIC #1 **<END>** g01280557

# WORK TOOLS

## 279-5437 BUCKET AS-DIRT

**S/N: HEN6750-UP**
**1524-MM (60-IN)**
**PART OF 279-5438 BUCKET AR-DIRT**
**AN ATTACHMENT**

**SMCS-6001** **i02757638**

| NOTE | REF NO | GRAPHIC REF | PART NUMBER | QTY | PART NAME 1 2 3 4 5 6 (PRODUCT LEVEL) | SEE PAGE |
|---|---|---|---|---|---|---|
| | 1 | 1 | **154-2704** | 1 | PLATE-INSTRUCTION (BUCKET SPECIFICATIONS) | |
| | 2 | 1 | **168-8389** | 4 | TACK-FASTENER | |
| | | | | | | |
| | | | | | PARTS SHOWN IN GRAPHIC WITHOUT A REFERENCE NUMBER ARE NOT SERVICED SEPARATELY | |

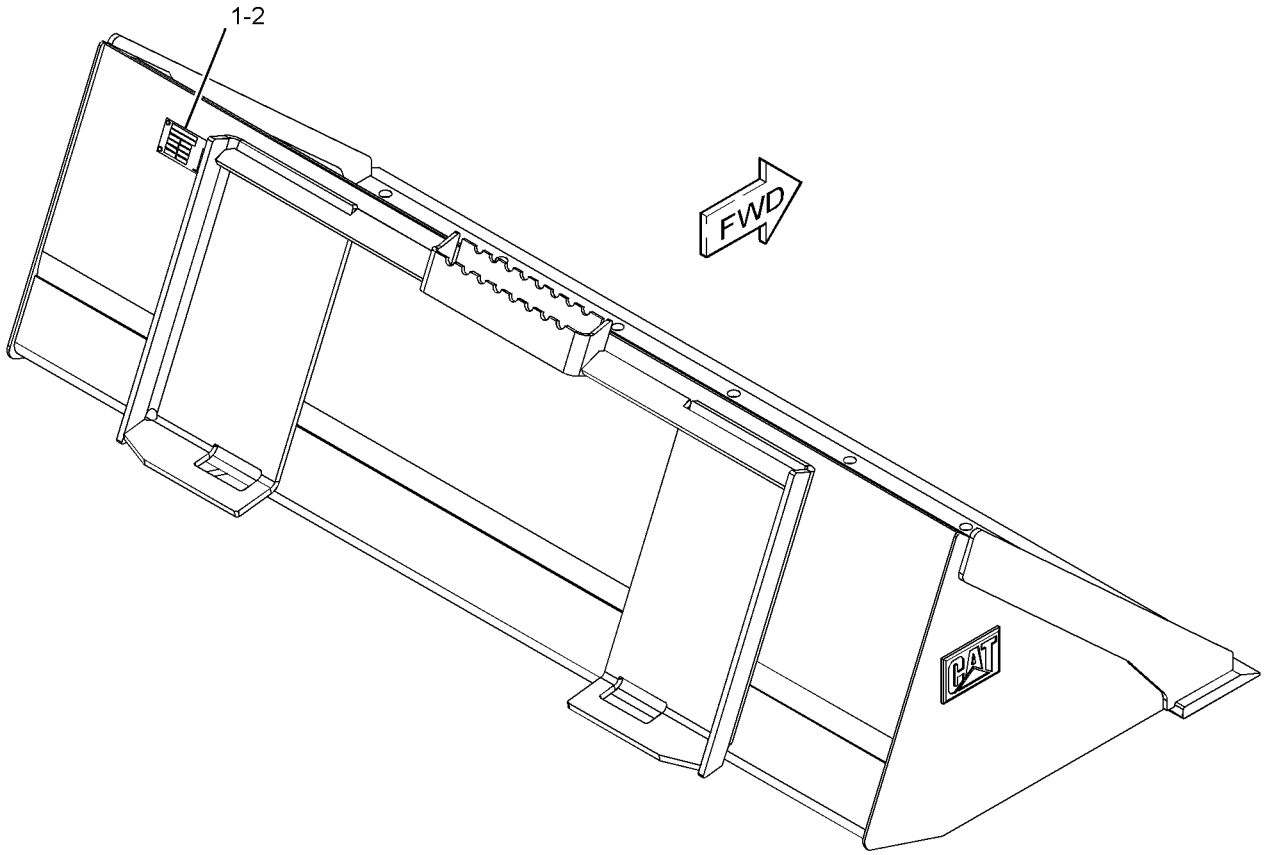


GRAPHIC #1 **<END>** g01280552

# WORK TOOLS

## 279-5440 BUCKET AS-DIRT

**S/N: HEN6750-UP**
**1676-MM (66-IN)**
**PART OF 279-5441 BUCKET AR-DIRT**
**AN ATTACHMENT**

**SMCS-6001** **i02552428**

| NOTE | REF NO | GRAPHIC REF | PART NUMBER | QTY | PART NAME 1 2 3 4 5 6 (PRODUCT LEVEL) | SEE PAGE |
|---|---|---|---|---|---|---|
| | 1 | 1 | **154-2704** | 1 | PLATE-INSTRUCTION (BUCKET SPECIFICATIONS) | |
| | 2 | 1 | **168-8389** | 4 | TACK-FASTENER | |
| | | | | | | |
| | | | | | PARTS SHOWN IN GRAPHIC WITHOUT A REFERENCE NUMBER ARE NOT SERVICED SEPARATELY | |

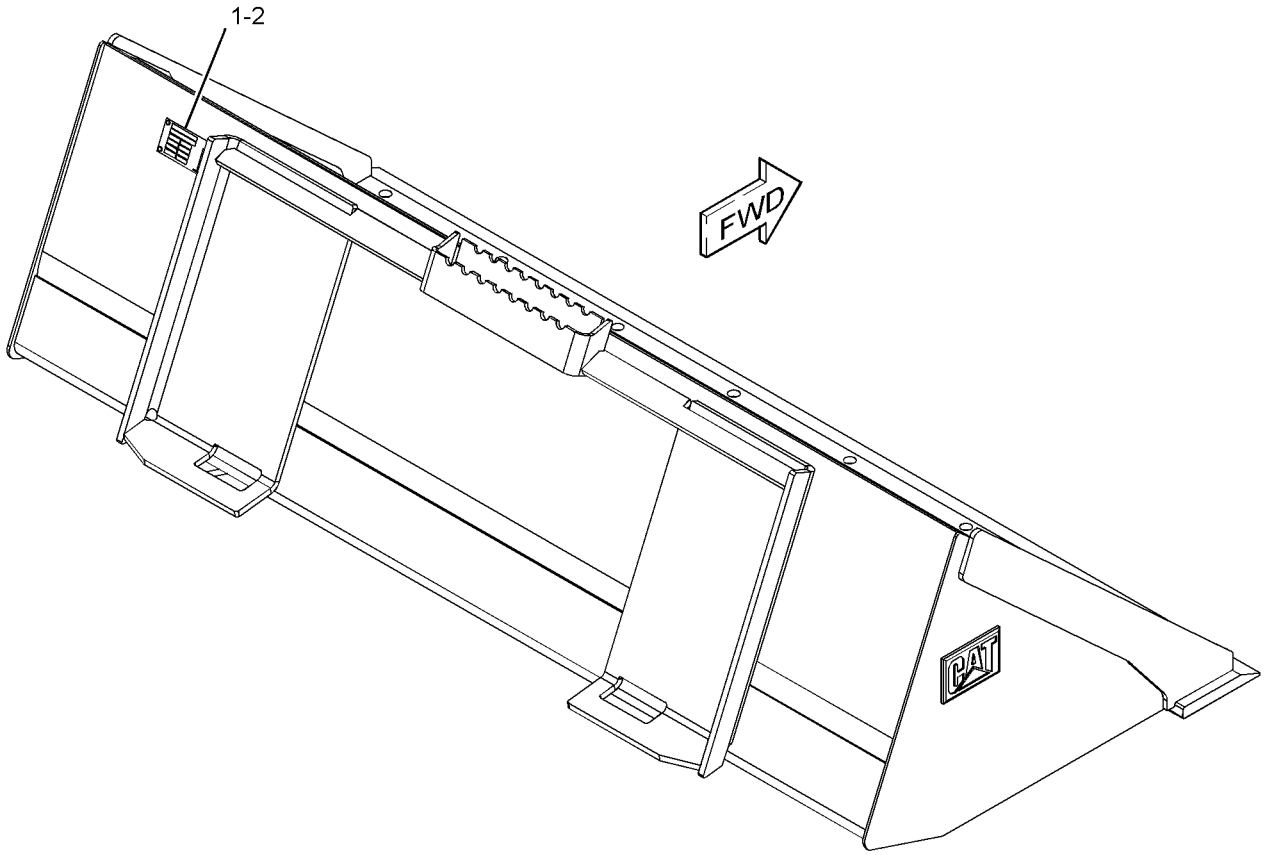


GRAPHIC #1 **<END>** g01280552

# WORK TOOLS

## 285-6089 BUCKET AS-DIRT

**S/N: HEN6750-UP**
**1829-MM (72-IN)**
**PART OF 285-6090 BUCKET AR-DIRT**
**AN ATTACHMENT**

**SMCS-6001** **i02552447**

| NOTE | REF NO | GRAPHIC REF | PART NUMBER | QTY | PART NAME 1 2 3 4 5 6 (PRODUCT LEVEL) | SEE PAGE |
|---|---|---|---|---|---|---|
| | 1 | 1 | **154-2704** | 1 | PLATE-INSTRUCTION (BUCKET SPECIFICATIONS) | |
| | 2 | 1 | **168-8389** | 4 | TACK-FASTENER | |
| | | | | | | |
| | | | | | | |
| | | | | | PARTS SHOWN IN GRAPHIC(S) WITHOUT A REFERENCE NUMBER ARE NOT SERVICED SEPARATELY | |

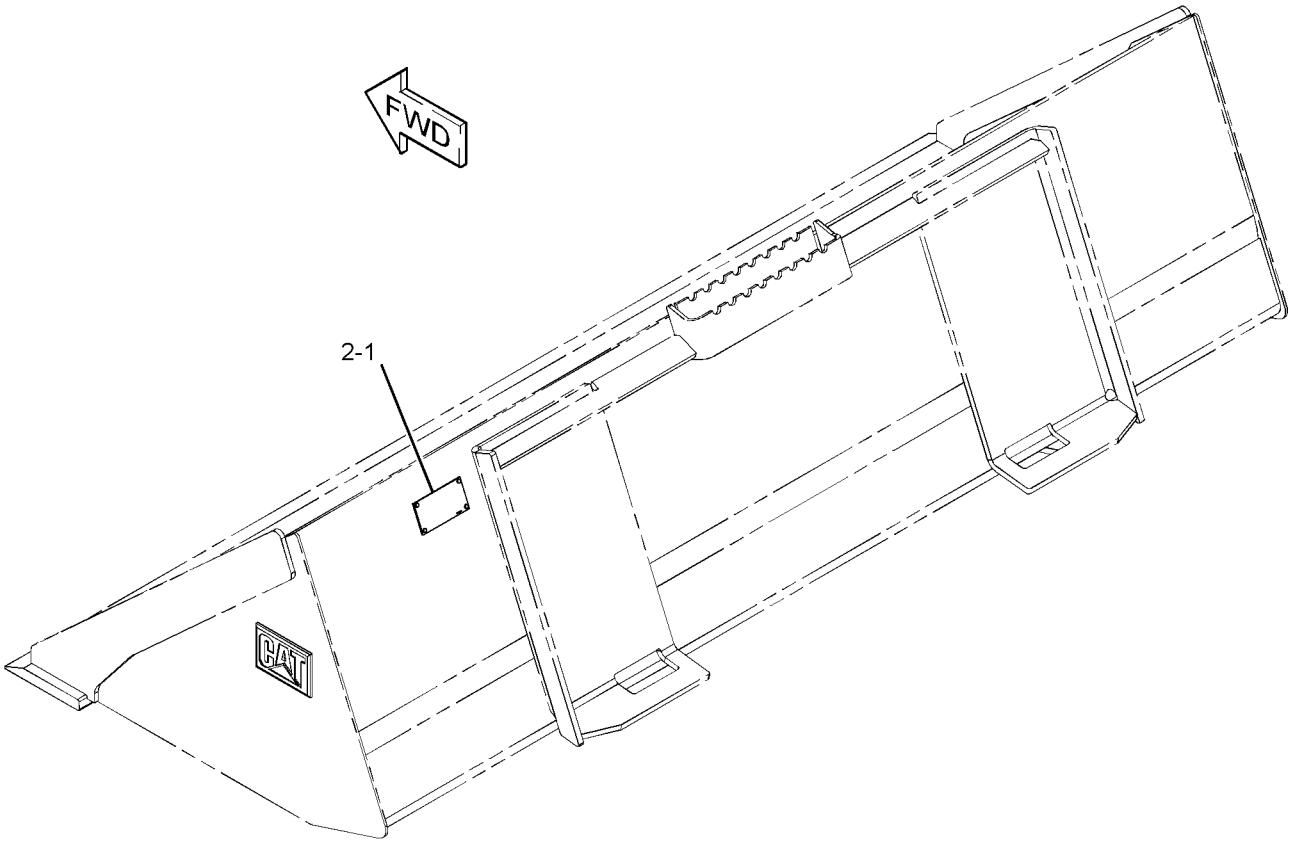


GRAPHIC #1 **<END>** g01279287

# 229-3427 BUCKET AS-GENERAL PURPOSE

**S/N: HEN6750-UP**
**2134-MM (84-IN)**
**PART OF 229-3433 BUCKET GP-GENERAL PURPOSE**
**AN ATTACHMENT**

**SMCS-6101** **i02757635**

| NOTE | REF NO | GRAPHIC REF | PART NUMBER | QTY | PART NAME 1 2 3 4 5 6 (PRODUCT LEVEL) | SEE PAGE |
|---|---|---|---|---|---|---|
| | 1 | 1 | **154-2704** | 1 | PLATE-INSTRUCTION (BUCKET SPECIFICATIONS) | |
| | 2 | 1 | **168-8389** | 4 | TACK-FASTENER | |
| | | | | | PARTS SHOWN IN GRAPHIC WITHOUT A REFERENCE NUMBER ARE NOT SERVICED SEPARATELY | |

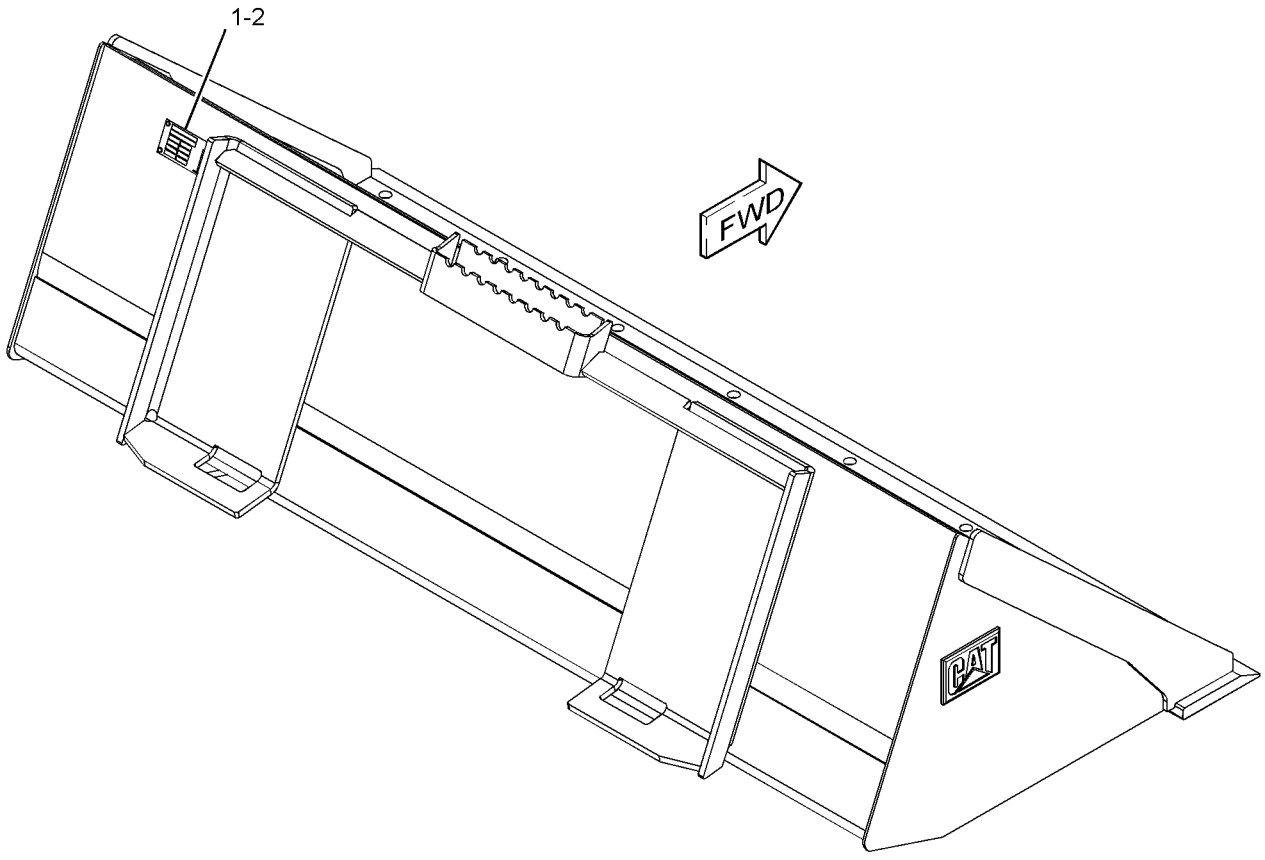


GRAPHIC #1 **<END>** g01280552

# 279-5364 BUCKET AS-GENERAL PURPOSE

**S/N: HEN6750-UP**
**1524-MM (60-IN)**
**PART OF 279-5365, 279-5366 BUCKET AR-GENERAL PURPOSE**
**AN ATTACHMENT**

**SMCS-6101** **i02550408**

| NOTE | REF NO | GRAPHIC REF | PART NUMBER | QTY | PART NAME 1 2 3 4 5 6 (PRODUCT LEVEL) | SEE PAGE |
|---|---|---|---|---|---|---|
| | 1 | 1 | **154-2704** | 1 | PLATE-INSTRUCTION (BUCKET SPECIFICATIONS) | |
| | 2 | 1 | **168-8389** | 4 | TACK-FASTENER | |
| | | | | | | |
| | | | | | PARTS SHOWN IN GRAPHIC(S) WITHOUT A REFERENCE NUMBER ARE NOT SERVICED SEPARATELY | |

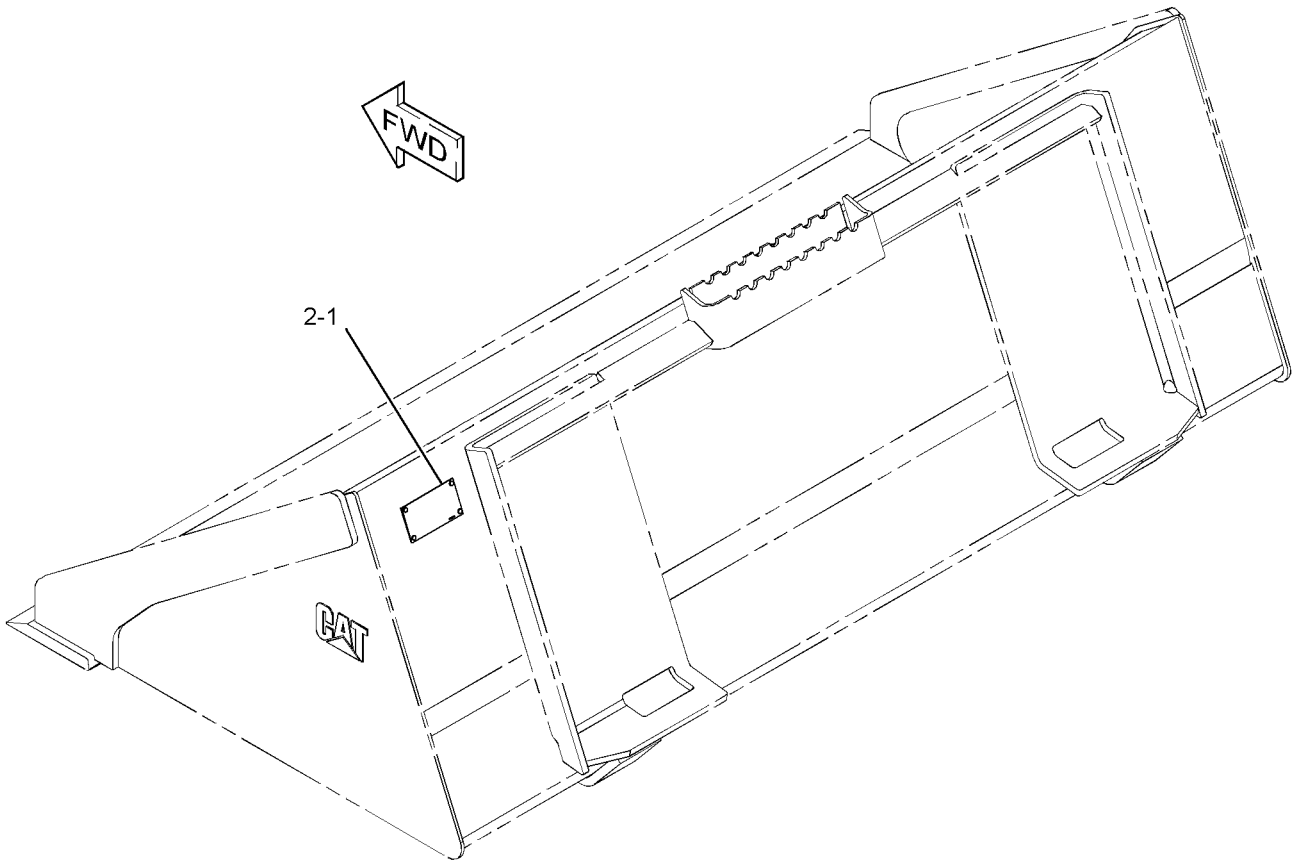


GRAPHIC #1 **<END>** g01279308

# 279-5368 BUCKET AS-GENERAL PURPOSE

**S/N: HEN6750-UP**
**1676-MM (66-IN)**
**PART OF 279-5369, 279-5370 BUCKET AR-GENERAL PURPOSE**
**AN ATTACHMENT**

**SMCS-6101** **i02551091**

| NOTE | REF NO | GRAPHIC REF | PART NUMBER | QTY | PART NAME 1 2 3 4 5 6 (PRODUCT LEVEL) | SEE PAGE |
|---|---|---|---|---|---|---|
| | 1 | 1 | **154-2704** | 1 | PLATE-INSTRUCTION (BUCKET SPECIFICATIONS) | |
| | 2 | 1 | **168-8389** | 4 | TACK-FASTENER | |
| | | | | | | |
| | | | | | PARTS SHOWN IN GRAPHIC(S) WITHOUT A REFERENCE NUMBER ARE NOT SERVICED SEPARATELY | |

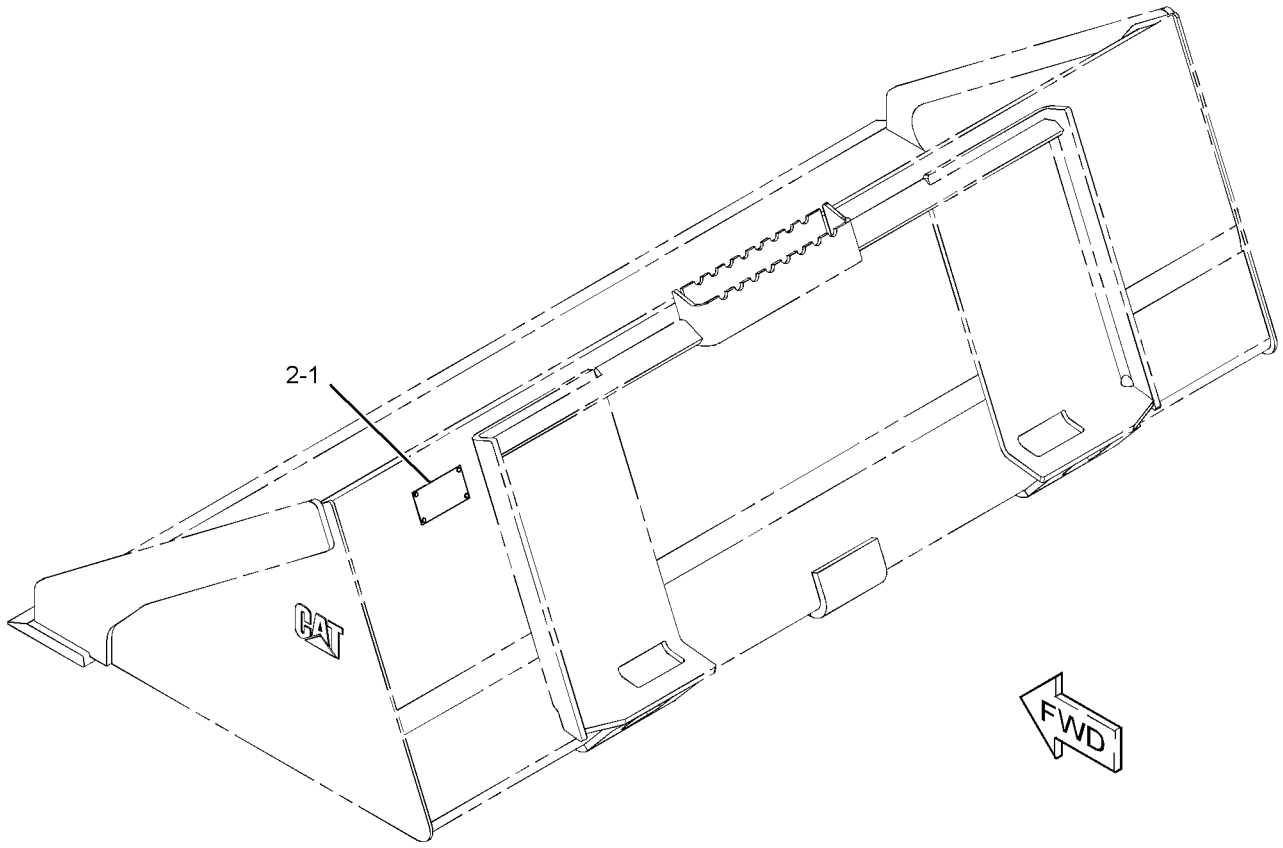


GRAPHIC #1 **<END>** g01279437

# 279-5372 BUCKET AS-GENERAL PURPOSE

**S/N: HEN6750-UP**
**1829-MM (72-IN)**
**PART OF 279-5373, 279-5374 BUCKET AR-GENERAL PURPOSE**
**AN ATTACHMENT**

**SMCS-6101** **i02552014**

| NOTE | REF NO | GRAPHIC REF | PART NUMBER | QTY | PART NAME 1 2 3 4 5 6 (PRODUCT LEVEL) | SEE PAGE |
|---|---|---|---|---|---|---|
| | 1 | 1 | **154-2704** | 1 | PLATE-INSTRUCTION (BUCKET SPECIFICATIONS) | |
| | 2 | 1 | **168-8389** | 4 | TACK-FASTENER | |
| | | | | | | |
| | | | | | PARTS SHOWN IN GRAPHIC(S) WITHOUT A REFERENCE NUMBER ARE NOT SERVICED SEPARATELY | |

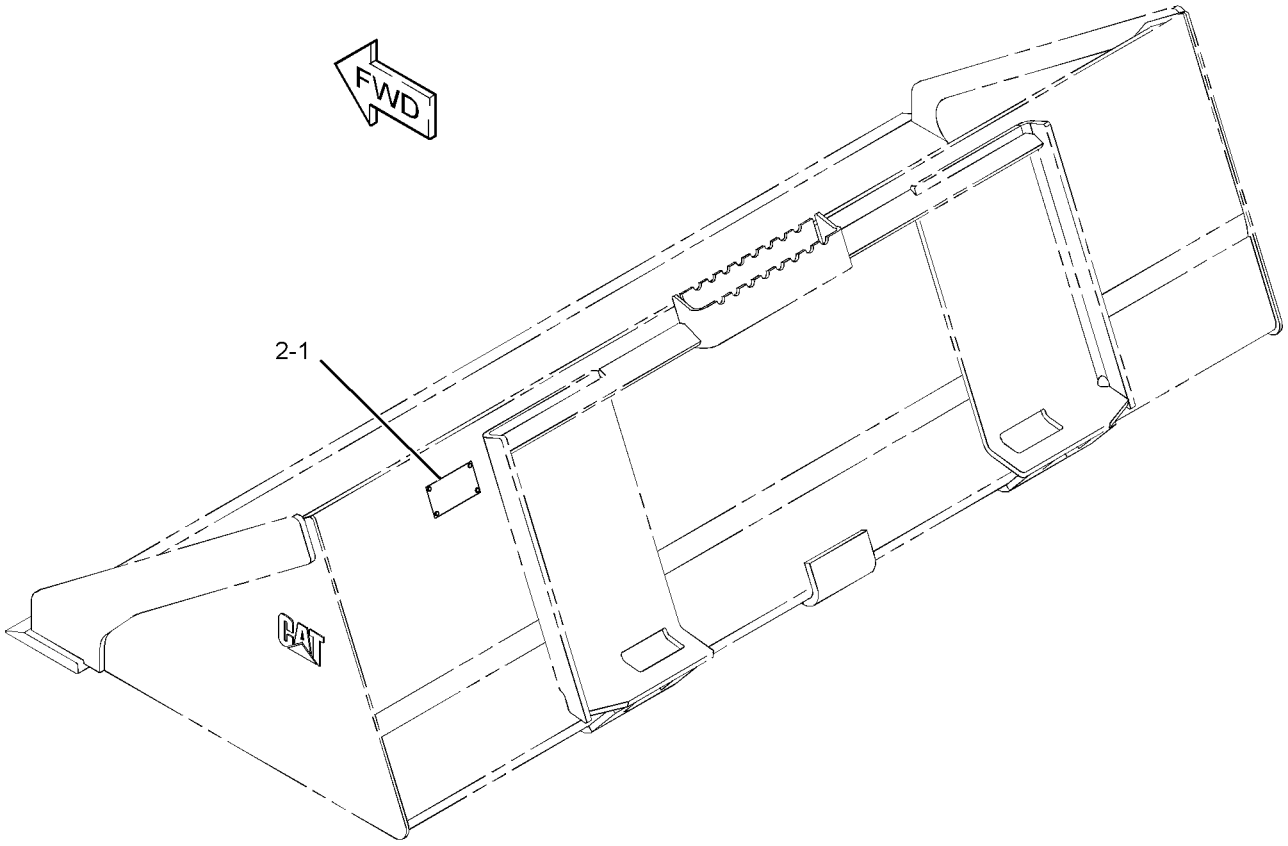


GRAPHIC #1 **<END>** g01279461

# WORK TOOLS

## 279-5376 BUCKET AS-GENERAL PURPOSE

**S/N: HEN6750-UP**
**1981-MM (78-IN)**
**PART OF 279-5377, 279-5378 BUCKET AR-GENERAL PURPOSE**
**AN ATTACHMENT**

**SMCS-6101** **i02571315**

| NOTE | REF NO | GRAPHIC REF | PART NUMBER | QTY | PART NAME 1 2 3 4 5 6 (PRODUCT LEVEL) | SEE PAGE |
|---|---|---|---|---|---|---|
| | 1 | 1 | **154-2704** | 1 | PLATE-INSTRUCTION (BUCKET SPECIFICATIONS) | |
| | 2 | 1 | **168-8389** | 4 | TACK-FASTENER | |
| | | | | | | |
| | | | | | PARTS SHOWN IN GRAPHIC(S) WITHOUT A REFERENCE NUMBER ARE NOT SERVICED SEPARATELY | |

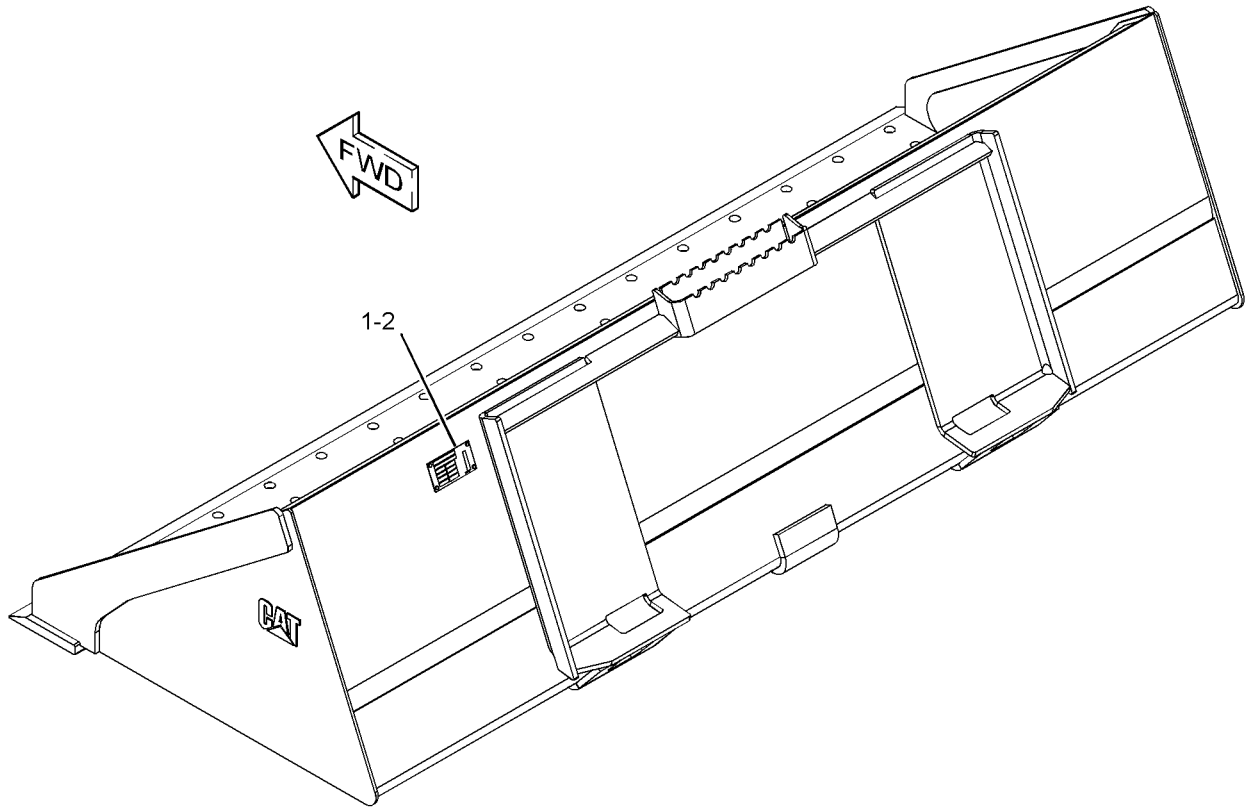


GRAPHIC #1 **<END>** g01288290

# 279-5421 BUCKET AS-LIGHT MATERIAL

**S/N: HEN6750-UP**
**1829-MM (72-IN)**
**PART OF 279-5420 BUCKET AR-LIGHT MATERIAL**
**AN ATTACHMENT**

**SMCS-6103** **i02571326**

| NOTE | REF NO | GRAPHIC REF | PART NUMBER | QTY | PART NAME 1 2 3 4 5 6 (PRODUCT LEVEL) | SEE PAGE |
|---|---|---|---|---|---|---|
| | 1 | 1 | **154-2704** | 1 | PLATE-INSTRUCTION (BUCKET SPECIFICATIONS) | |
| | 2 | 1 | **168-8389** | 4 | TACK-FASTENER | |
| | | | | | | |
| | | | | | PARTS SHOWN IN GRAPHIC(S) WITHOUT A REFERENCE NUMBER ARE NOT SERVICED SEPARATELY | |

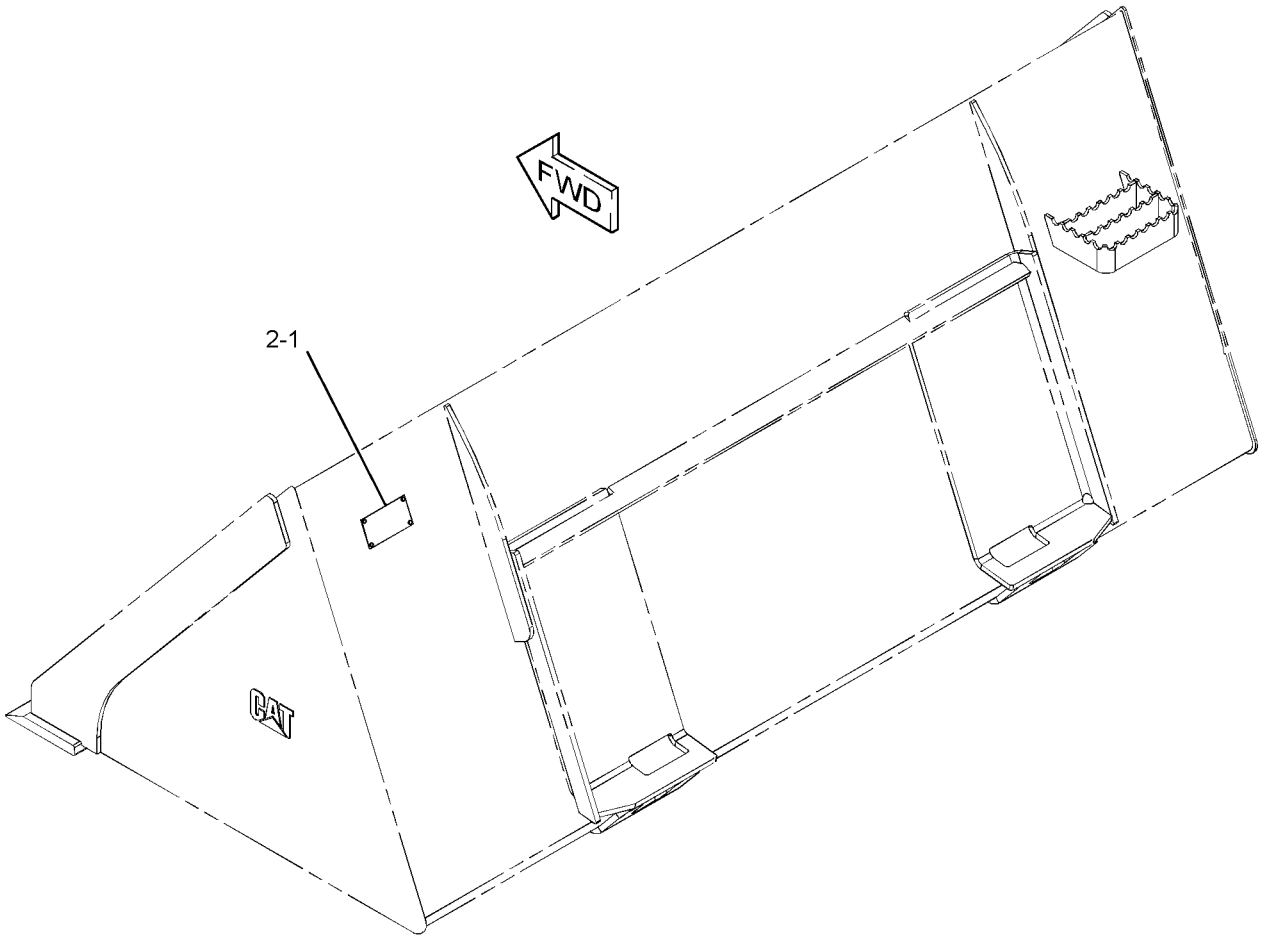


GRAPHIC #1 **<END>** g01278476

# WORK TOOLS

## 279-5424 BUCKET AS-LIGHT MATERIAL

**S/N: HEN6750-UP**
**1981-MM (78-IN)**
**PART OF 279-5425 BUCKET AR-LIGHT MATERIAL**
**AN ATTACHMENT**

**SMCS-6103** **i02571330**

| NOTE | REF NO | GRAPHIC REF | PART NUMBER | QTY | PART NAME 1 2 3 4 5 6 (PRODUCT LEVEL) | SEE PAGE |
|---|---|---|---|---|---|---|
| | 1 | 1 | **154-2704** | 1 | PLATE-INSTRUCTION (BUCKET SPECIFICATIONS) | |
| | 2 | 1 | **168-8389** | 4 | TACK-FASTENER | |
| | | | | | | |
| | | | | | PARTS SHOWN IN GRAPHIC(S) WITHOUT A REFERENCE NUMBER ARE NOT SERVICED SEPARATELY | |

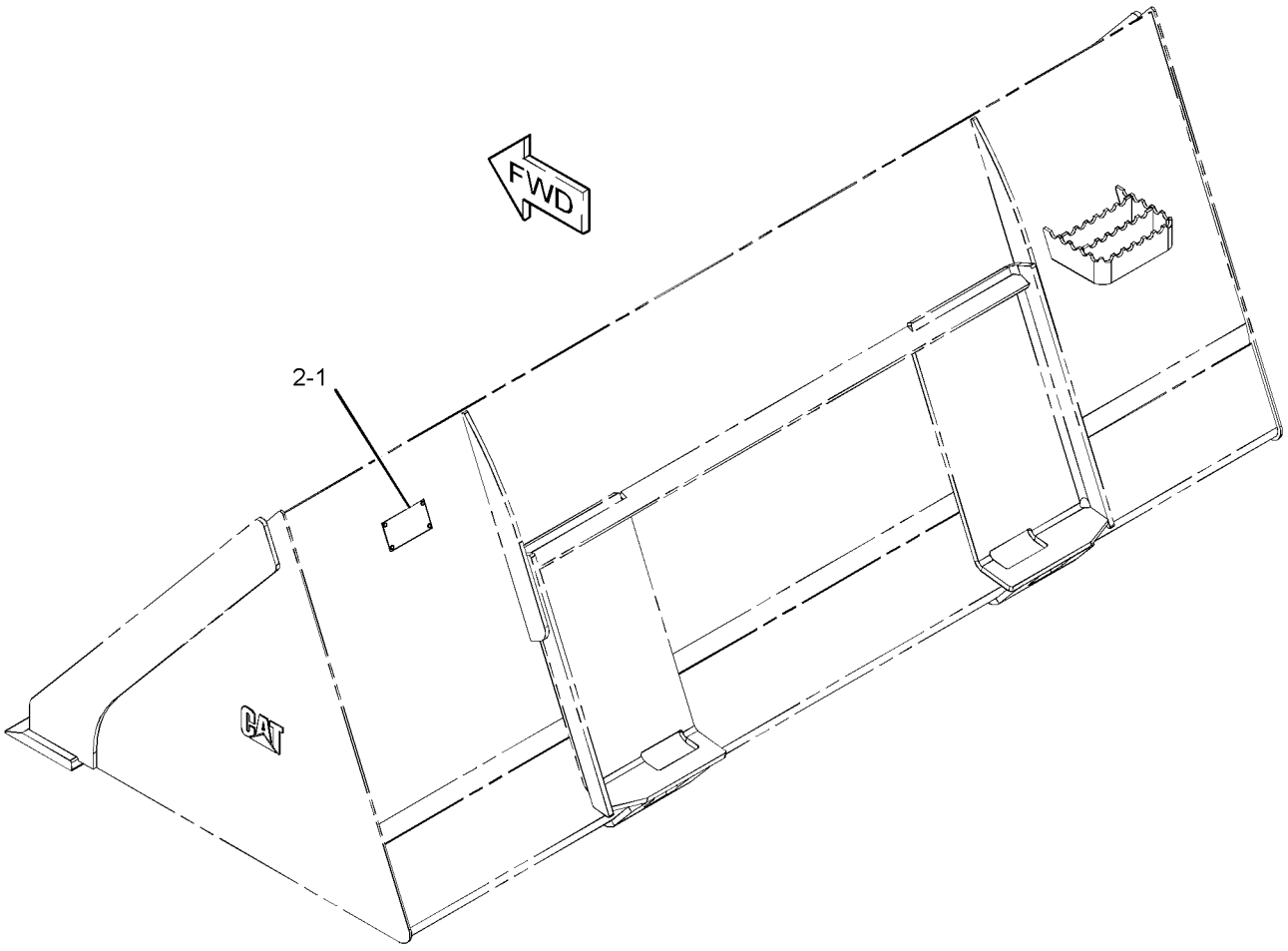


GRAPHIC #1 **<END>** g01278485

# WORK TOOLS

## 279-5429 BUCKET AS-LIGHT MATERIAL

**S/N: HEN6750-UP**
**2134-MM (84-IN)**
**PART OF 279-5430 BUCKET AR-LIGHT MATERIAL**
**AN ATTACHMENT**

**SMCS-6103** **i02571331**

| NOTE | REF NO | GRAPHIC REF | PART NUMBER | QTY | PART NAME 1 2 3 4 5 6 (PRODUCT LEVEL) | SEE PAGE |
|---|---|---|---|---|---|---|
| | 1 | 1 | **154-2704** | 1 | PLATE-INSTRUCTION (BUCKET SPECIFICATIONS) | |
| | 2 | 1 | **168-8389** | 4 | TACK-FASTENER | |
| | | | | | | |
| | | | | | PARTS SHOWN IN GRAPHIC(S) WITHOUT A REFERENCE NUMBER ARE NOT SERVICED SEPARATELY | |

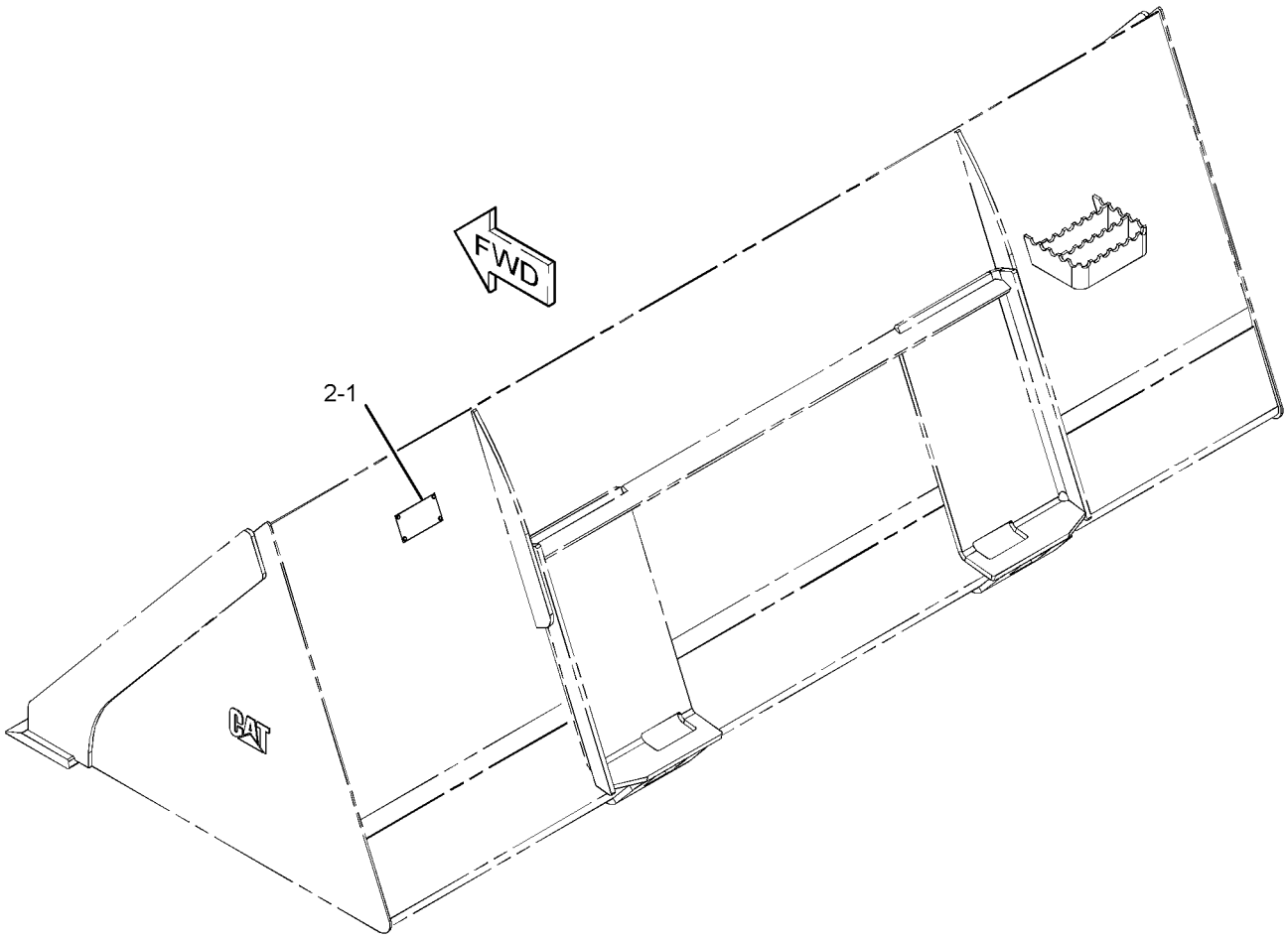


GRAPHIC #1 **<END>** g01278489

# 268-4084 BUCKET GP-DIRT

**S/N: HEN6750-UP**
**1981-MM (78-IN)**
**PART OF 268-4083 BUCKET AR-DIRT**
**FIELD REPLACEMENT ORDER 268-4083—PAGE 372**
**AN ATTACHMENT**

**SMCS-6001** **i02540002**

| NOTE | REF NO | GRAPHIC REF | PART NUMBER | QTY | PART NAME 1 2 3 4 5 6 (PRODUCT LEVEL) | SEE PAGE |
|---|---|---|---|---|---|---|
| | 1 | 1 | **154-2704** | 1 | PLATE-INSTRUCTION (BUCKET SPECIFICATIONS) | |
| | 2 | 1 | **168-8389** | 4 | TACK-FASTENER | |
| | | | | | | |
| | | | | | PARTS SHOWN IN GRAPHIC(S) WITHOUT A REFERENCE NUMBER ARE NOT SERVICED SEPARATELY | |

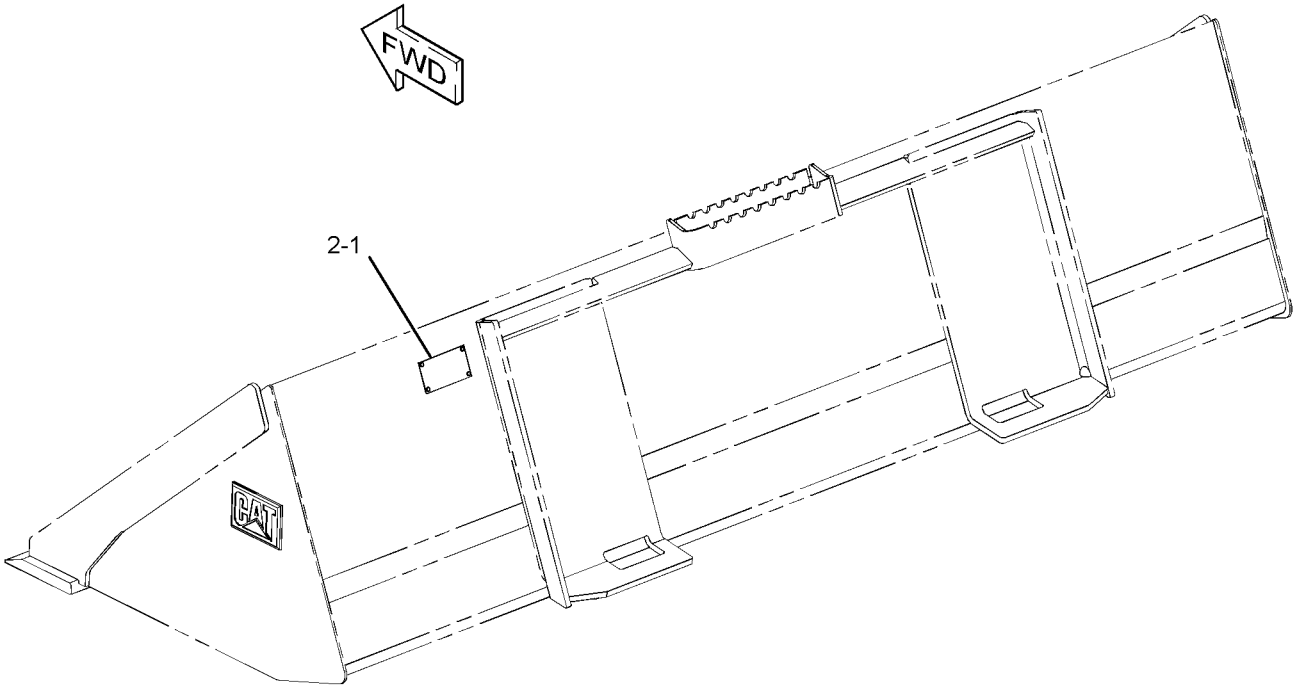


GRAPHIC #1 **<END>** g01279383

# WORK TOOLS

## *229-3433* BUCKET GP-GENERAL PURPOSE

**S/N: HEN6750-UP**

**AN ATTACHMENT**

**SMCS-6101** **i02757808**

| NOTE | PART NUMBER | QTY | PART NAME 1 2 3 4 5 6 (PRODUCT LEVEL) | SEE PAGE |
|---|---|---|---|---|
| Y | *229-3427* | 1 | BUCKET AS-GENERAL PURPOSE | 391 |
| Y | *195-7124* | 1 | EDGE GP-CUTTING | 430 |

Y-SEPARATE ILLUSTRATION

**<END>**

# WORK TOOLS

## *156-0884* BUCKET GP-GRAPPLE

**S/N: HEN6750-UP**
**1524-MM (60-IN). INDUSTRIAL**
**PART OF 157-7223 BUCKET AR-GRAPPLE**
**AN ATTACHMENT**

**SMCS-6704** **i02024106**

| NOTE | REF NO | GRAPHIC REF | PART NUMBER | QTY | PART NAME 1 2 3 4 5 6 (PRODUCT LEVEL) | SEE PAGE |
|---|---|---|---|---|---|---|
| | 1 | 1 | **157-0940** | 4 | PIN | |
| | 2 | 1 | **169-8941** | 1 | BUCKET AS-GRAPPLE | |
| M | | 1 | **8Y-4489** | 2 | BOSS (M10X1.5-THD) | |
| | | 1 | **149-5435** | 1 | EDGE | |
| | 3 | 1 | **222-7467** | 2 | FORK AS | |
| | | | | | (EACH INCLUDES) | |
| | | 1 | **158-5648** | 2 | BEARING-SLEEVE | |
| | 4 | 1 | **3B-8489** | 4 | FITTING-GREASE | |
| M | 5 | 1 | **6V-9189** | 4 | LOCKNUT (M8X1.25-THD) | |
| M | 6 | 1 | **8T-6869** | 4 | BOLT (M8X1.25X60-MM) | |

M-METRIC PART

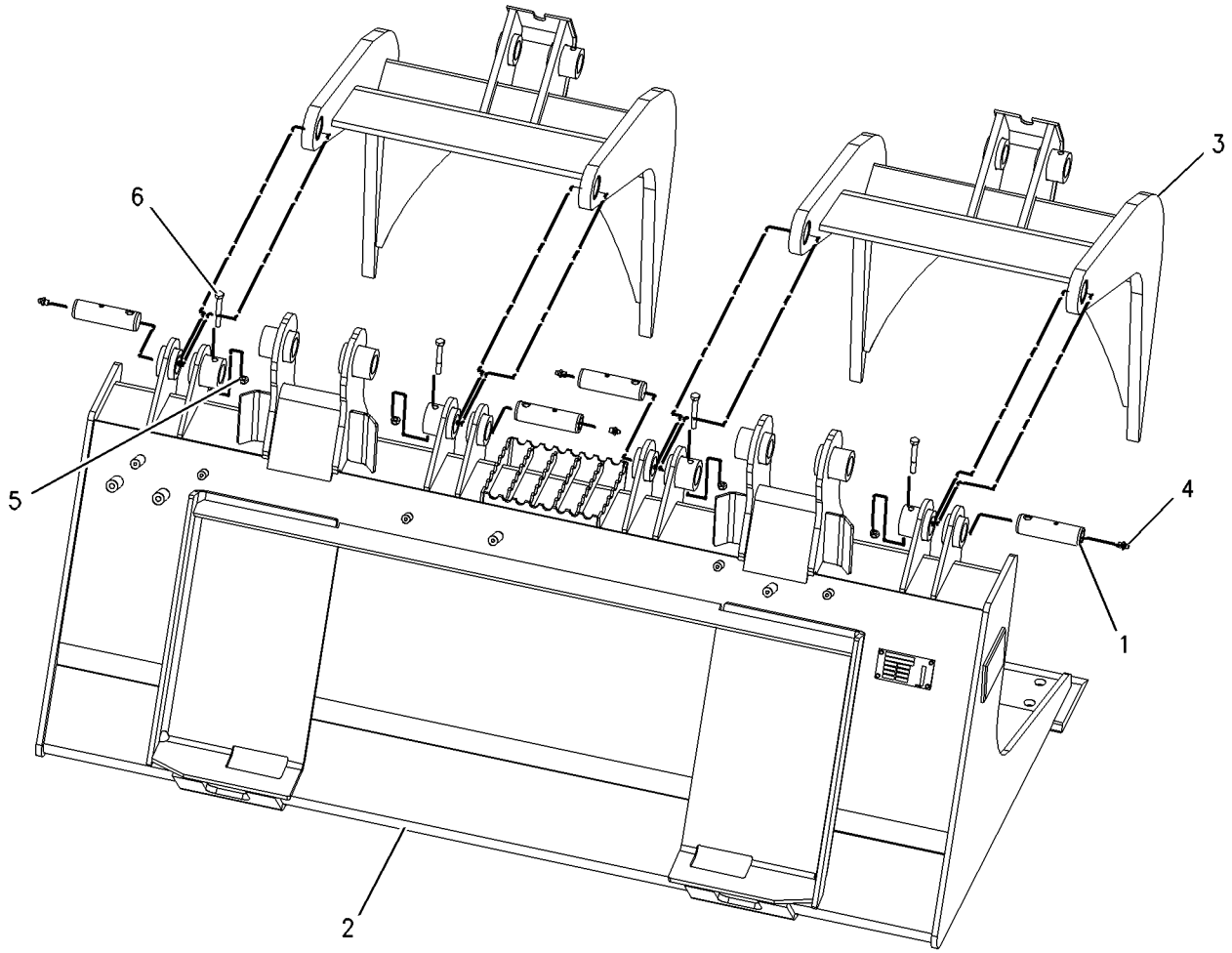


GRAPHIC #1 **<END>** g00978796

# WORK TOOLS

## *156-0885* BUCKET GP-GRAPPLE

**S/N: HEN6750-UP**
**1676-MM (66-IN). INDUSTRIAL**
**PART OF 157-7224 BUCKET AR-GRAPPLE**
**AN ATTACHMENT**

**SMCS-6704** **i01886368**

| NOTE | REF NO | GRAPHIC REF | PART NUMBER | QTY | PART NAME 1 2 3 4 5 6 (PRODUCT LEVEL) | SEE PAGE |
|---|---|---|---|---|---|---|
| | 1 | 1 | **157-0940** | 4 | PIN | |
| | 2 | 1 | **169-8942** | 1 | BUCKET AS-GRAPPLE | |
| M | | 1 | **8Y-4489** | 2 | BOSS (M10X1.5-THD) | |
| | | 1 | **149-5436** | 1 | EDGE | |
| | 3 | 1 | **222-7467** | 2 | FORK AS | |
| | | | | | (EACH INCLUDES) | |
| | | 1 | **158-5648** | 2 | BEARING-SLEEVE | |
| | 4 | 1 | **3B-8489** | 4 | FITTING-GREASE | |
| M | 5 | 1 | **6V-9189** | 4 | LOCKNUT (M8X1.25-THD) | |
| M | 6 | 1 | **8T-6869** | 4 | BOLT (M8X1.25X60-MM) | |

M-METRIC PART

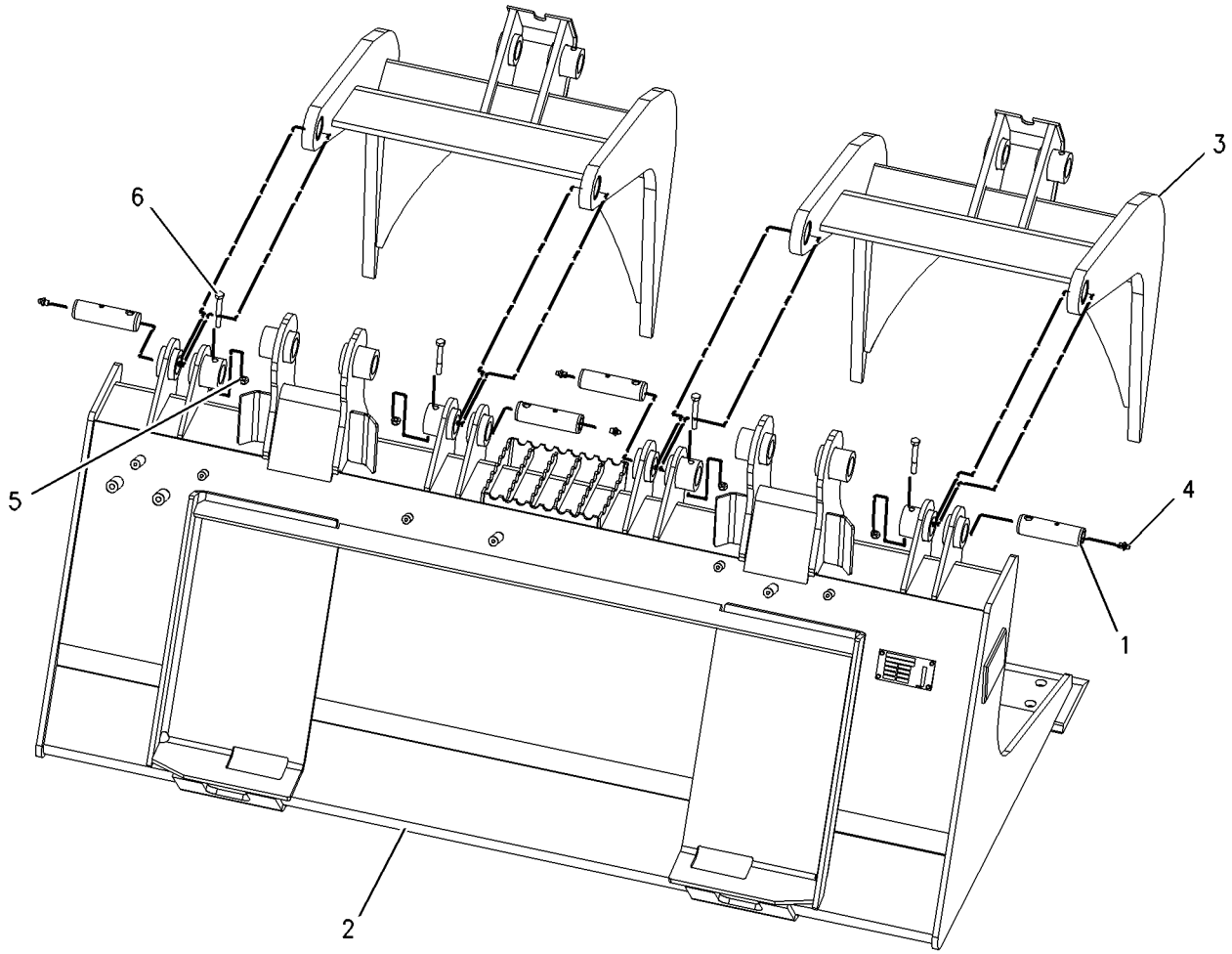


GRAPHIC #1 **<END>** g00978796

# WORK TOOLS

## *156-0886* BUCKET GP-GRAPPLE

**S/N: HEN6750-UP**
**1829-MM (72-IN). INDUSTRIAL**
**PART OF 157-7225 BUCKET AR-GRAPPLE**
**AN ATTACHMENT**

**SMCS-6704** **i02359451**

| NOTE | REF NO | GRAPHIC REF | PART NUMBER | QTY | PART NAME 1 2 3 4 5 6 (PRODUCT LEVEL) | SEE PAGE |
|---|---|---|---|---|---|---|
| | 1 | 1 | **157-0940** | 4 | PIN | |
| | 2 | 1 | **169-8943** | 1 | BUCKET AS-GRAPPLE (INDUSTRIAL) | |
| | | 1 | **149-5437** | 1 | EDGE | |
| | 3 | 1 | **222-7467** | 2 | FORK AS | |
| | | | | | (EACH INCLUDES) | |
| | | 1 | **158-5648** | 2 | BEARING-SLEEVE | |
| | 4 | 1 | **3B-8489** | 4 | FITTING-GREASE | |
| M | 5 | 1 | **6V-9189** | 4 | LOCKNUT (M8X1.25-THD) | |
| M | 6 | 1 | **8T-6869** | 4 | BOLT (M8X1.25X60-MM) | |

M-METRIC PART

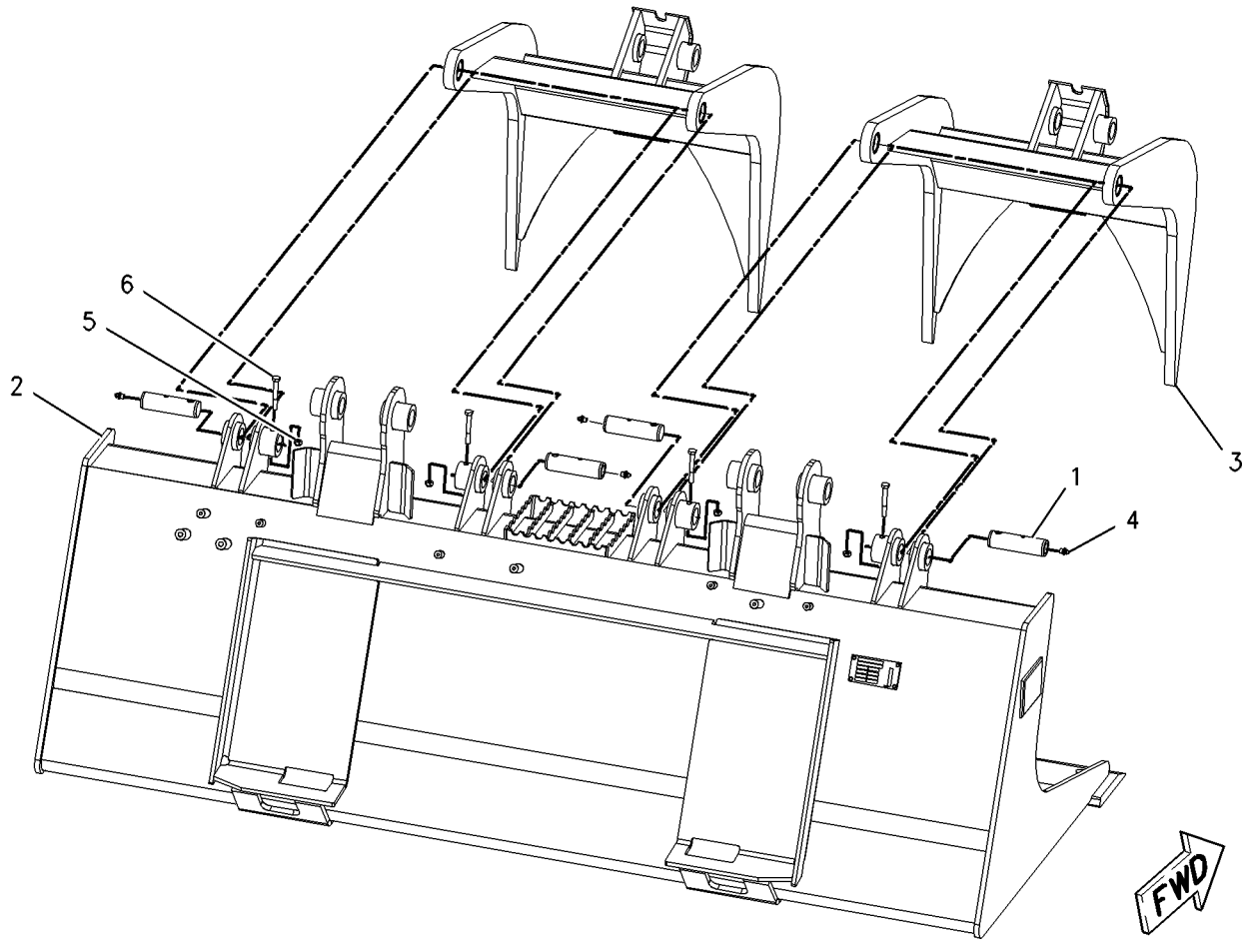


GRAPHIC #1 **<END>** g00993692

# WORK TOOLS

## *217-6228* BUCKET GP-GRAPPLE

**S/N: HEN6750-UP**
**1981-MM (78-IN). INDUSTRIAL**
**PART OF 217-6229 BUCKET AR-GRAPPLE**
**AN ATTACHMENT**

**SMCS-6704** **i02359453**

| NOTE | REF NO | GRAPHIC REF | PART NUMBER | QTY | PART NAME 1 2 3 4 5 6 (PRODUCT LEVEL) | SEE PAGE |
|---|---|---|---|---|---|---|
| | 1 | 1 | **157-0940** | 4 | PIN | |
| | 2 | 1 | **217-6227** | 1 | BUCKET AS-GRAPPLE (INDUSTRIAL) | |
| | 3 | 1 | **222-7467** | 2 | FORK AS | |
| | | | | | (EACH INCLUDES) | |
| | | 1 | **158-5648** | 2 | BEARING-SLEEVE | |
| | 4 | 1 | **3B-8489** | 4 | FITTING-GREASE | |
| M | 5 | 1 | **6V-9189** | 4 | LOCKNUT (M8X1.25-THD) | |
| M | 6 | 1 | **8T-6869** | 4 | BOLT (M8X1.25X60-MM) | |

M-METRIC PART

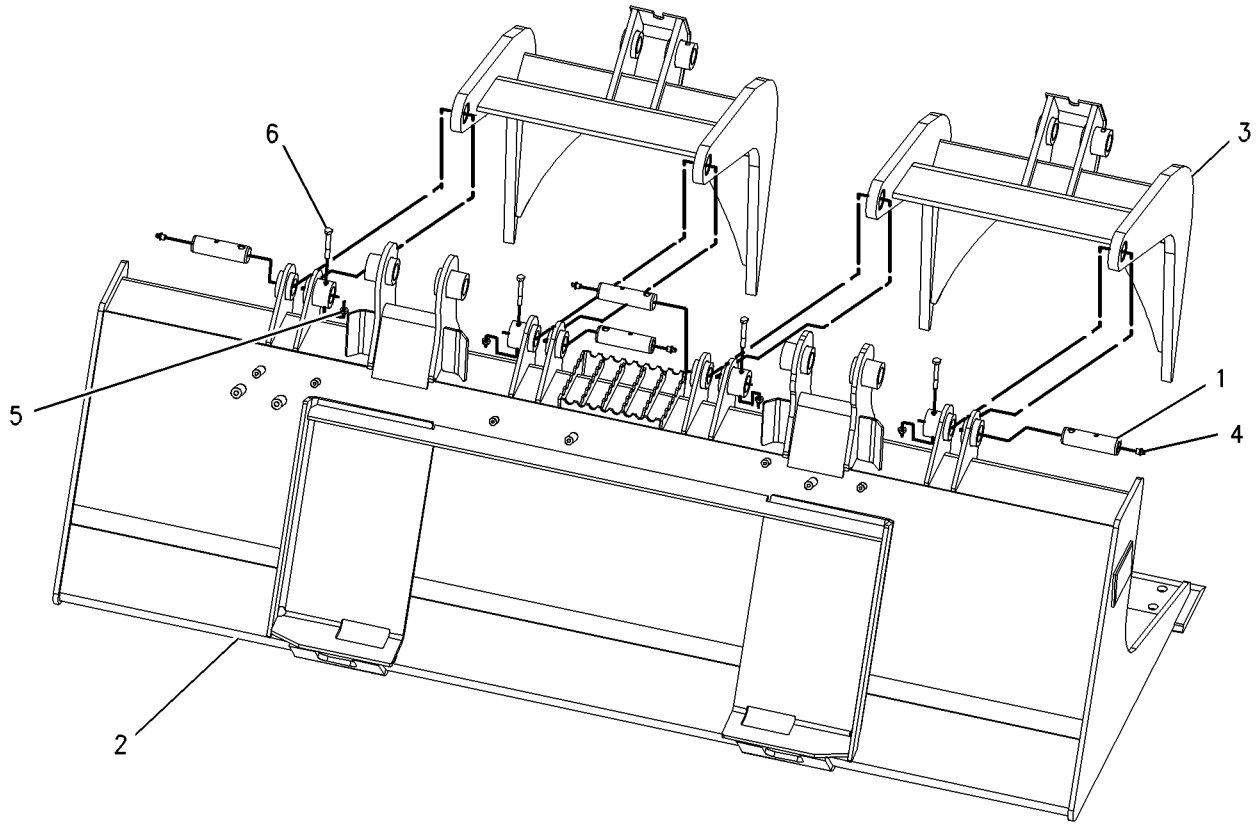


GRAPHIC #1 **<END>** g00992181

# *286-9244* BUCKET GP-GRAPPLE

**S/N: HEN6750-UP**
**PART OF 286-9301 BUCKET AR-GRAPPLE**
**AN ATTACHMENT**

**SMCS-6704** **i02723701**

| NOTE | REF NO | GRAPHIC REF | PART NUMBER | QTY | PART NAME 1 2 3 4 5 6 (PRODUCT LEVEL) | SEE PAGE |
|---|---|---|---|---|---|---|
| | 1 | 1 | **157-0940** | 4 | PIN | |
| | 2 | 1 | **286-9229** | 1 | TINE AS | |
| | 3 | 1 | **286-9243** | 2 | FORK AS | |
| | | | | | (EACH INCLUDES) | |
| | | 1 | **158-5648** | 2 | BEARING-SLEEVE | |
| | 4 | 1 | **3B-8489** | 4 | FITTING-GREASE | |
| M | 5 | 1 | **6V-9189** | 4 | LOCKNUT (M8X1.25-THD) | |
| M | 6 | 1 | **8T-6869** | 4 | BOLT (M8X1.25X60-MM) | |

M-METRIC PART

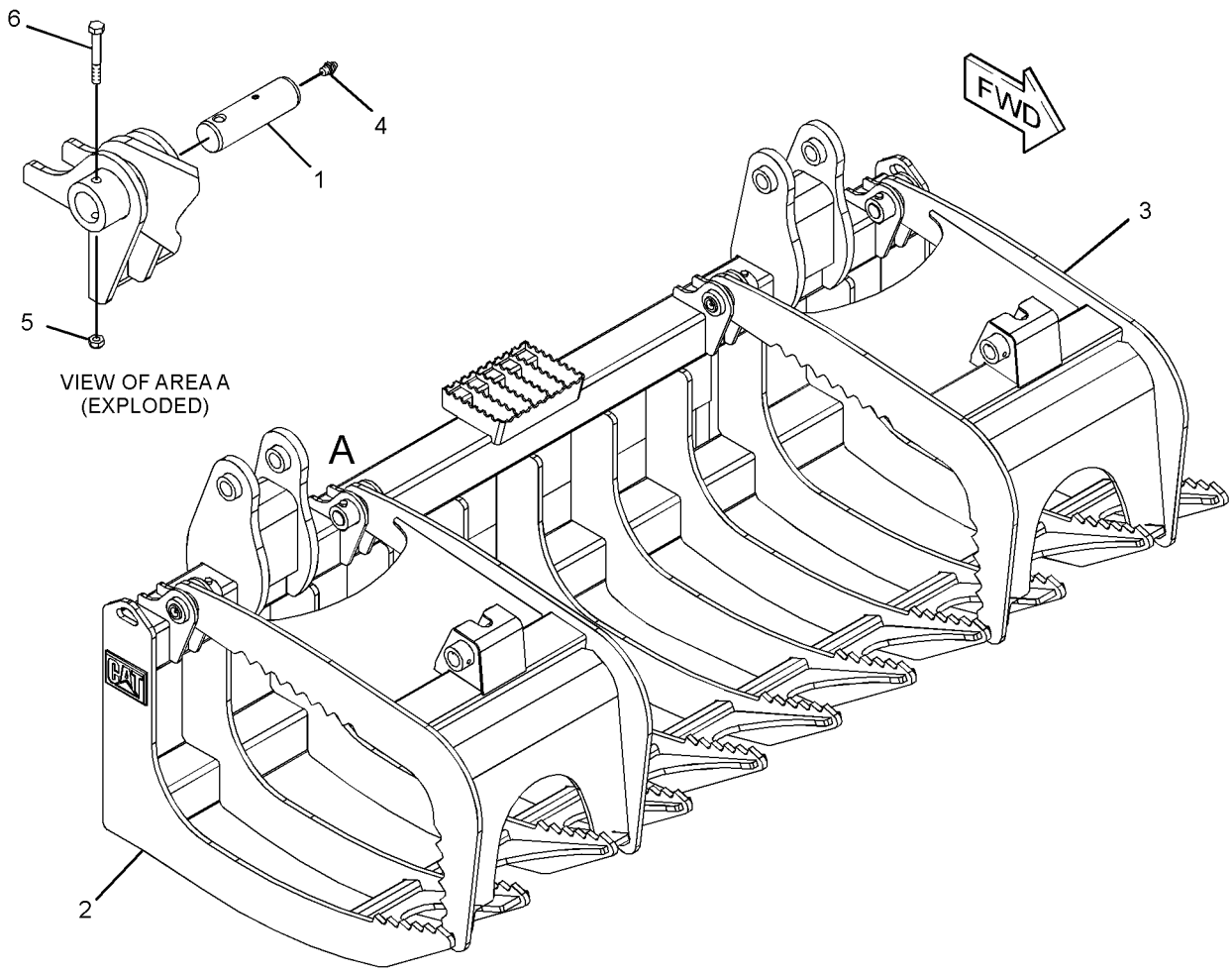


GRAPHIC #1 **<END>** g01372924

## *286-9278* BUCKET GP-GRAPPLE

**S/N: HEN6750-UP**

**PART OF 286-9300 BUCKET AR-GRAPPLE**

**AN ATTACHMENT**

**SMCS-6704** **i02723727**

| NOTE | REF NO | GRAPHIC REF | PART NUMBER | QTY | PART NAME 1 2 3 4 5 6 (PRODUCT LEVEL) | SEE PAGE |
|---|---|---|---|---|---|---|
| | 1 | 1 | **157-0940** | 4 | PIN | |
| | 2 | 1 | **286-9243** | 2 | FORK AS | |
| | | | | | (EACH INCLUDES) | |
| | | 1 | **158-5648** | 2 | BEARING-SLEEVE | |
| | 3 | 1 | **286-9274** | 1 | TINE AS | |
| | | 1 | **8R-3857** | 5 | BOSS (M8X1.2X12-MM) | |
| | | 1 | **161-4130** | 2 | PLATE-IDENTIFICATION (CAT) | |
| | 4 | 1 | **3B-8489** | 4 | FITTING-GREASE | |
| M | 5 | 1 | **6V-9189** | 4 | LOCKNUT (M8X1.25-THD) | |
| M | 6 | 1 | **8T-6869** | 4 | BOLT (M8X1.25X60-MM) | |

M-METRIC PART

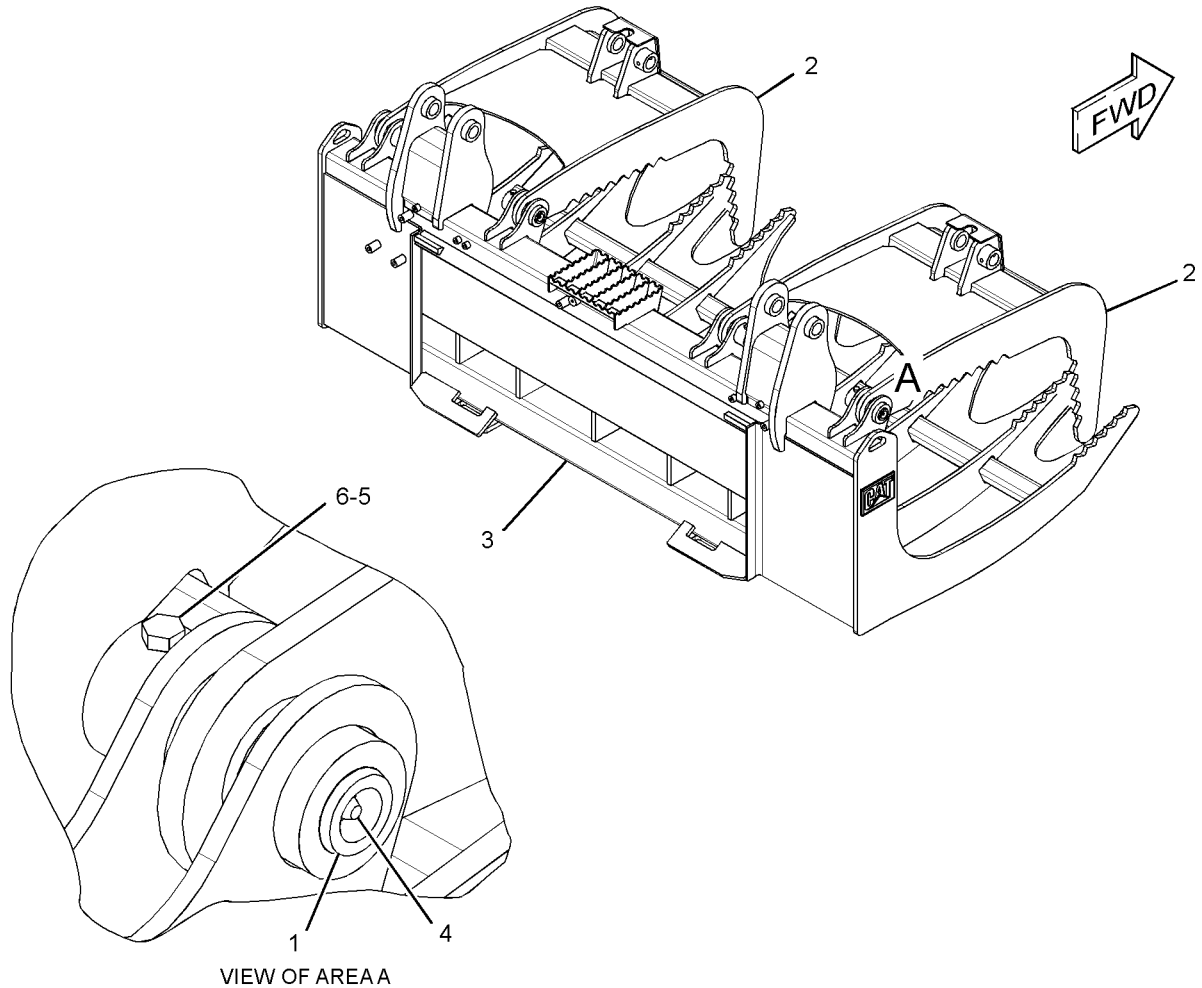


VIEW OF AREA A

GRAPHIC #1 **<END>** g01372568

# *279-5383* BUCKET GP-MULTIPURPOSE

**S/N: HEN6750-UP**
**1524-MM (60-IN)**
**PART OF 279-5382 BUCKET AR-MULTIPURPOSE**
**AN ATTACHMENT**

**SMCS-6104** **i02772041**

| NOTE | REF NO | GRAPHIC REF | PART NUMBER | QTY | PART NAME 1 2 3 4 5 6 (PRODUCT LEVEL) | SEE PAGE |
|---|---|---|---|---|---|---|
| | 1 | 1 | **149-4232** | 1 | CLAM AS | |
| | | 1 | **159-8038** | 2 | FILM-WARNING (CRUSH HAZARD, STAY BACK) | |
| | 1A | 1 | **142-8805** | 4 | BEARING-SLEEVE | |
| | 1B | 1 | **149-5435** | 1 | EDGE | |
| | 1C | 1 | **161-4130** | 2 | PLATE-IDENTIFICATION (CAT) | |
| | 2 | 1 | **154-5012** | 2 | PIN | |
| | 3 | 1 | **159-8038** | 2 | FILM-WARNING (CRUSH HAZARD, STAY BACK) | |
| Y | 4 | 1 | *279-5384* | 1 | BLADE GP-MULTIPURPOSE BUCKET (60-IN) | 368 |
| | 5 | 1 | **3B-8489** | 2 | FITTING-GREASE | |
| M | 6 | 1 | **6V-9189** | 2 | LOCKNUT (M8X1.25-THD) | |
| M | 7 | 1 | **8T-6869** | 2 | BOLT (M8X1.25X60-MM) | |

M-METRIC PART
Y-SEPARATE ILLUSTRATION

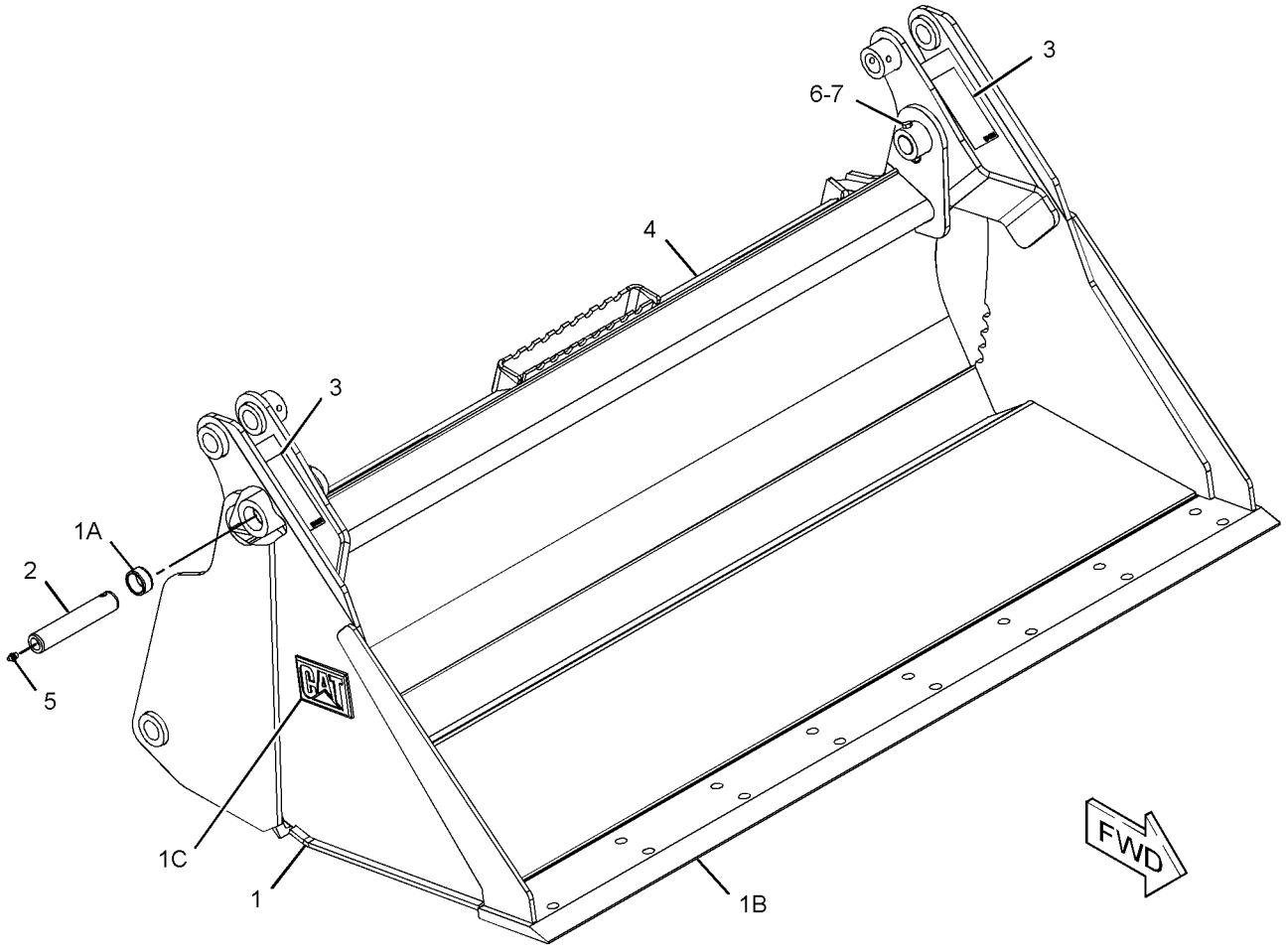


GRAPHIC #1 **<END>** g01278464

# *279-5389* BUCKET GP-MULTIPURPOSE

**S/N: HEN6750-UP**
**1676-MM (66-IN)**
**PART OF 279-5390 BUCKET AR-MULTIPURPOSE**
**AN ATTACHMENT**

**SMCS-6104** **i02772043**

| NOTE | REF NO | GRAPHIC REF | PART NUMBER | QTY | PART NAME 1 2 3 4 5 6 (PRODUCT LEVEL) | SEE PAGE |
|---|---|---|---|---|---|---|
| | 1 | 1 | **154-5012** | 2 | PIN | |
| | 2 | 1 | **154-5053** | 1 | CLAM AS | |
| | 2A | 1 | **142-8805** | 4 | BEARING-SLEEVE | |
| | 2B | 1 | **149-5436** | 1 | EDGE | |
| | 2C | 1 | **159-8038** | 2 | FILM-WARNING (CRUSH HAZARD, STAY BACK) | |
| | 2D | 1 | **161-4130** | 2 | PLATE-IDENTIFICATION (CAT) | |
| Y | 3 | 1 | *279-5388* | 1 | BLADE GP-MULTIPURPOSE BUCKET (66-IN) | 369 |
| | 4 | 1 | **3B-8489** | 2 | FITTING-GREASE | |
| M | 5 | 1 | **6V-9189** | 2 | LOCKNUT (M8X1.25-THD) | |
| M | 6 | 1 | **8T-6869** | 2 | BOLT (M8X1.25X60-MM) | |

M-METRIC PART
Y-SEPARATE ILLUSTRATION

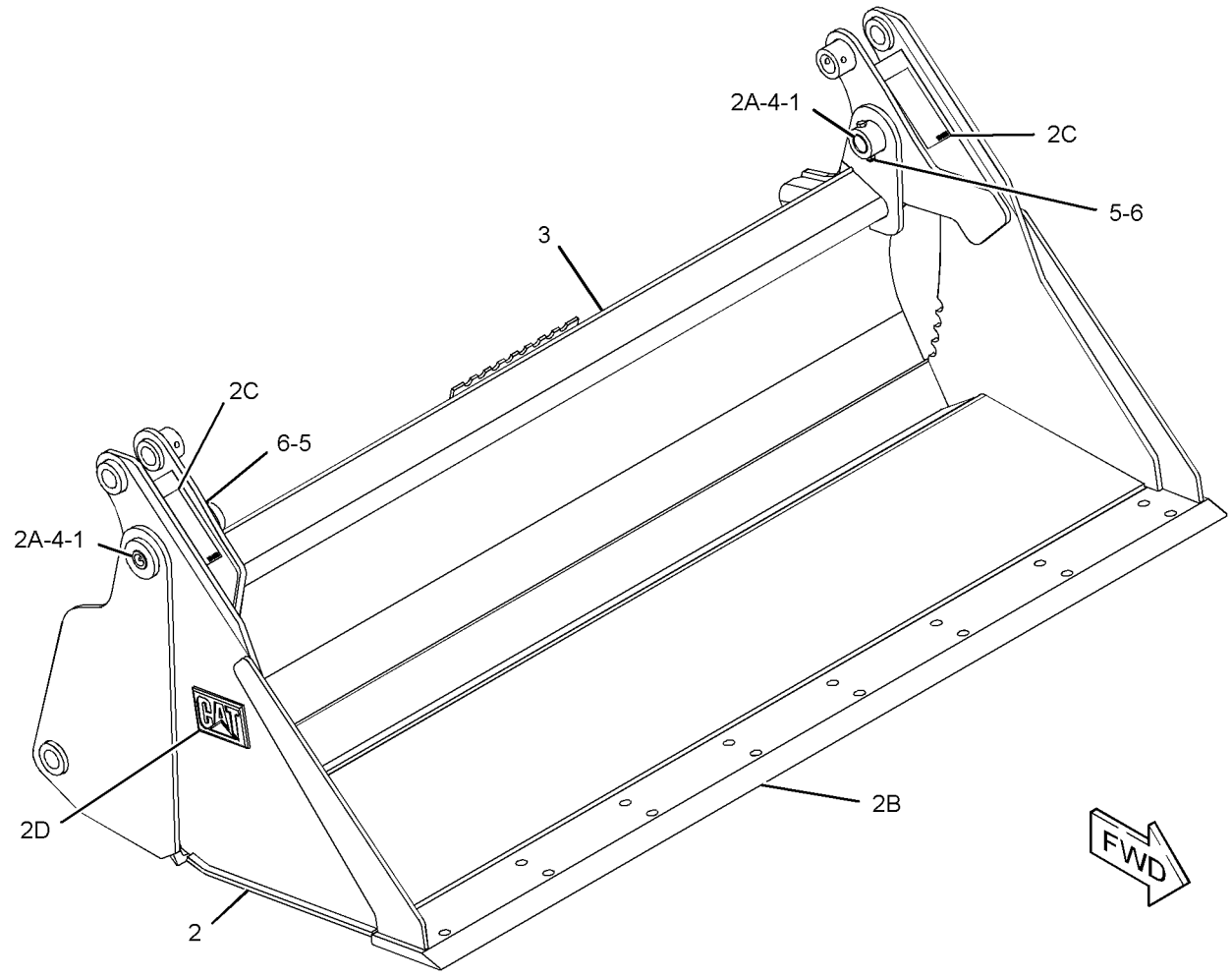


GRAPHIC #1 **<END>** g01279399

# WORK TOOLS

## *279-5397* BUCKET GP-MULTIPURPOSE

**S/N: HEN6750-UP**
**1829-MM (72-IN)**
**PART OF 279-5398 BUCKET AR-MULTIPURPOSE**
**AN ATTACHMENT**

**SMCS-6104** **i02772044**

| NOTE | REF NO | GRAPHIC REF | PART NUMBER | QTY | PART NAME 1 2 3 4 5 6 (PRODUCT LEVEL) | SEE PAGE |
|---|---|---|---|---|---|---|
| | 1 | 1 | **154-5012** | 2 | PIN | |
| | 2 | 1 | **154-5070** | 1 | CLAM AS | |
| | 2A | 1 | **142-8805** | 4 | BEARING-SLEEVE | |
| | 2B | 1 | **149-5437** | 1 | EDGE | |
| | 2C | 1 | **161-4130** | 2 | PLATE-IDENTIFICATION (CAT) | |
| | 2D | 1 | **159-8038** | 2 | FILM-WARNING (CRUSH HAZARD, STAY BACK) | |
| M | 3 | 1 | **8T-6869** | 2 | BOLT (M8X1.25X60-MM) | |
| Y | 4 | 1 | *279-5396* | 1 | BLADE GP-MULTIPURPOSE BUCKET (72-IN) | 370 |
| | 5 | 1 | **3B-8489** | 2 | FITTING-GREASE | |
| M | 6 | 1 | **6V-9189** | 2 | LOCKNUT (M8X1.25-THD) | |

M-METRIC PART
Y-SEPARATE ILLUSTRATION

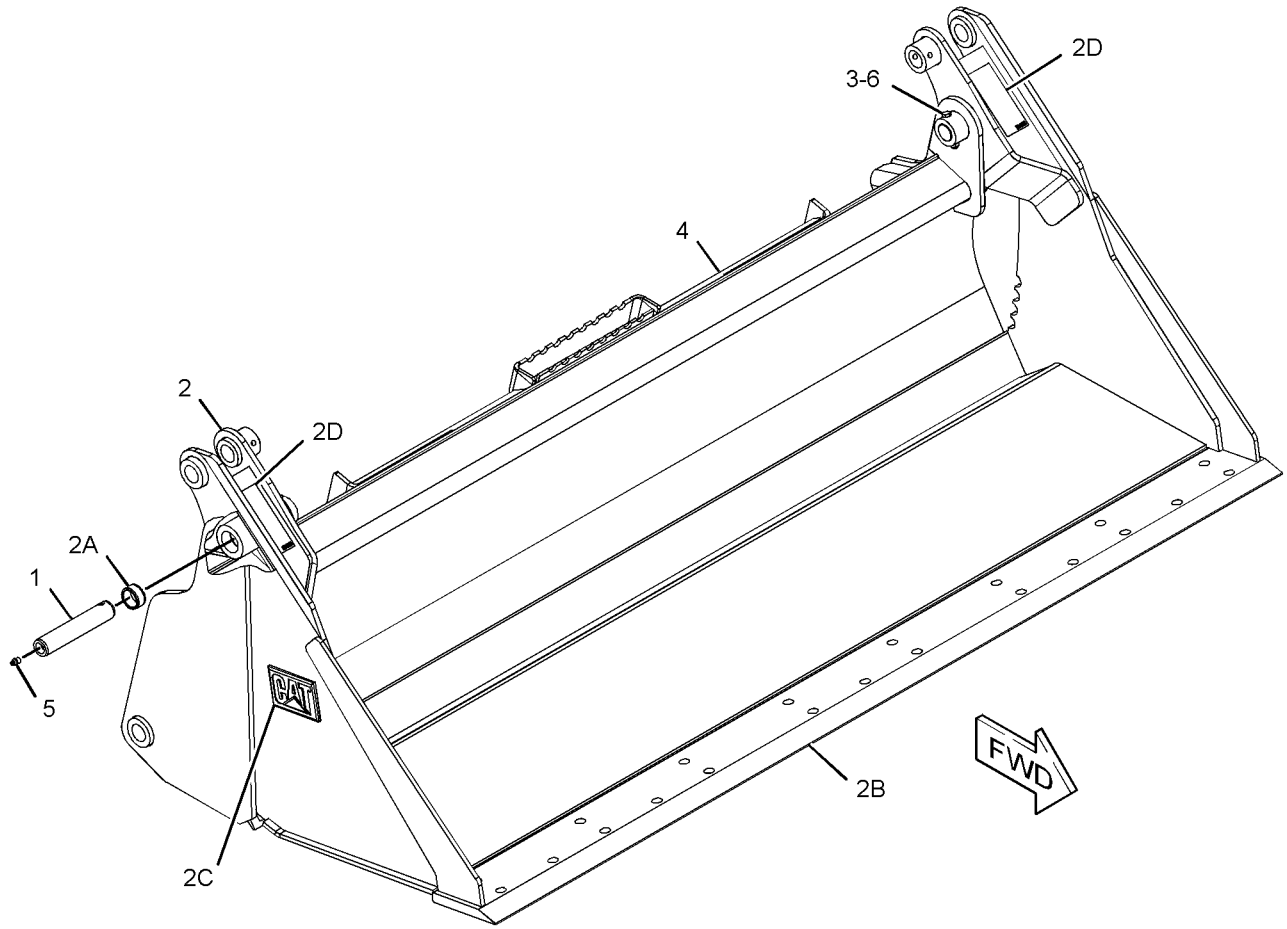


GRAPHIC #1 **<END>** g01280800

# WORK TOOLS

## 279-5399 BUCKET GP-MULTIPURPOSE

**S/N: HEN6750-UP**

**AN ATTACHMENT**

**SMCS-6104** **i02552131**

| NOTE | PART NUMBER | QTY | PART NAME 1 2 3 4 5 6 (PRODUCT LEVEL) | SEE PAGE |
|---|---|---|---|---|
| Y | **279-5398** | 1 | BUCKET AR-MULTIPURPOSE | 384 |
| Y | *135-9386* | 1 | EDGE GP-CUTTING | 427 |

Y-SEPARATE ILLUSTRATION

**<END>**

# WORK TOOLS

## *279-5404* BUCKET GP-MULTIPURPOSE

**S/N: HEN6750-UP**
**1981-MM (78-IN)**
**PART OF 279-5403 BUCKET AR-MULTIPURPOSE**
**AN ATTACHMENT**

**SMCS-6104** **i02552254**

| NOTE | REF NO | GRAPHIC REF | PART NUMBER | QTY | PART NAME 1 2 3 4 5 6 (PRODUCT LEVEL) | SEE PAGE |
|---|---|---|---|---|---|---|
| | 1 | 1 | **154-5012** | 2 | PIN | |
| | 2 | 1 | **159-8038** | 2 | FILM-WARNING (CRUSH HAZARD, STAY BACK) | |
| | 3 | 1 | **199-8308** | 1 | CLAM AS | |
| | | 1 | **142-8805** | 4 | BEARING-SLEEVE | |
| | | 1 | **159-8038** | 2 | FILM-WARNING (CRUSH HAZARD, STAY BACK) | |
| | | 1 | **161-4130** | 2 | PLATE-IDENTIFICATION (CAT) | |
| | | 1 | **199-7722** | 1 | EDGE | |
| | | 1 | **199-8317** | 1 | EDGE | |
| Y | 4 | 1 | *279-5405* | 1 | BLADE GP-MULTIPURPOSE BUCKET (78-IN) | 371 |
| | 5 | 1 | **3B-8489** | 2 | FITTING-GREASE | |
| M | 6 | 1 | **6V-9189** | 2 | LOCKNUT (M8X1.25-THD) | |
| M | 7 | 1 | **8T-6869** | 2 | BOLT (M8X1.25X60-MM) | |

M-METRIC PART
Y-SEPARATE ILLUSTRATION

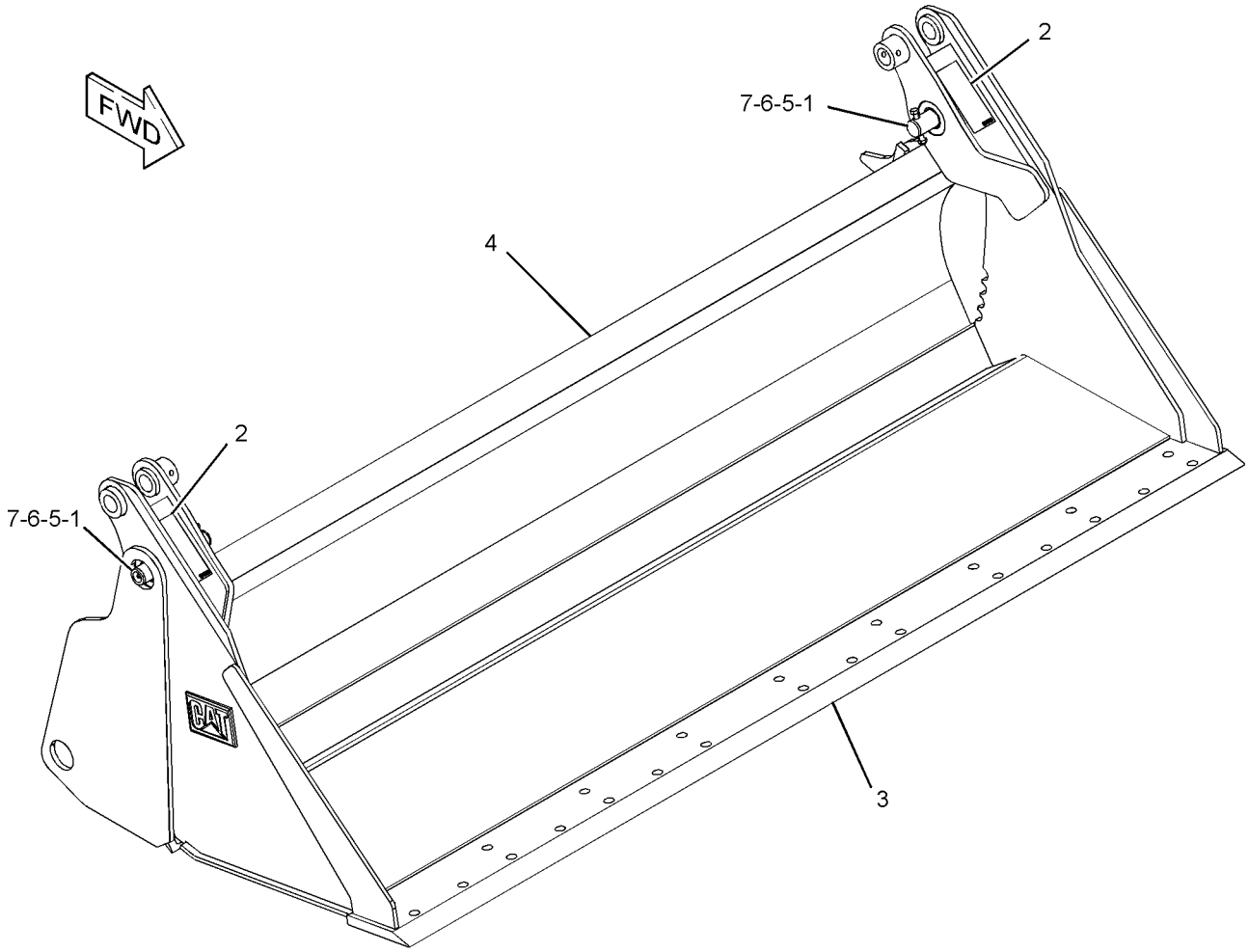


GRAPHIC #1 **<END>** g01278497

# 285-6096 BUCKET GP-UTILITY

**S/N: HEN6750-UP**
**1524-MM (60-IN)**
**PART OF 285-6095 BUCKET AR-UTILITY**
**AN ATTACHMENT**

**SMCS-6101** **i02764095**

| NOTE | REF NO | GRAPHIC REF | PART NUMBER | QTY | PART NAME 1 2 3 4 5 6 (PRODUCT LEVEL) | SEE PAGE |
|---|---|---|---|---|---|---|
| | 1 | 1 | **154-2704** | 1 | PLATE-INSTRUCTION (BUCKET SPECIFICATIONS) | |
| | 2 | 1 | **168-8389** | 4 | TACK-FASTENER | |
| | | | | | | |
| | | | | | PARTS SHOWN IN GRAPHIC(S) WITHOUT A REFERENCE NUMBER ARE NOT SERVICED SEPARATELY | |

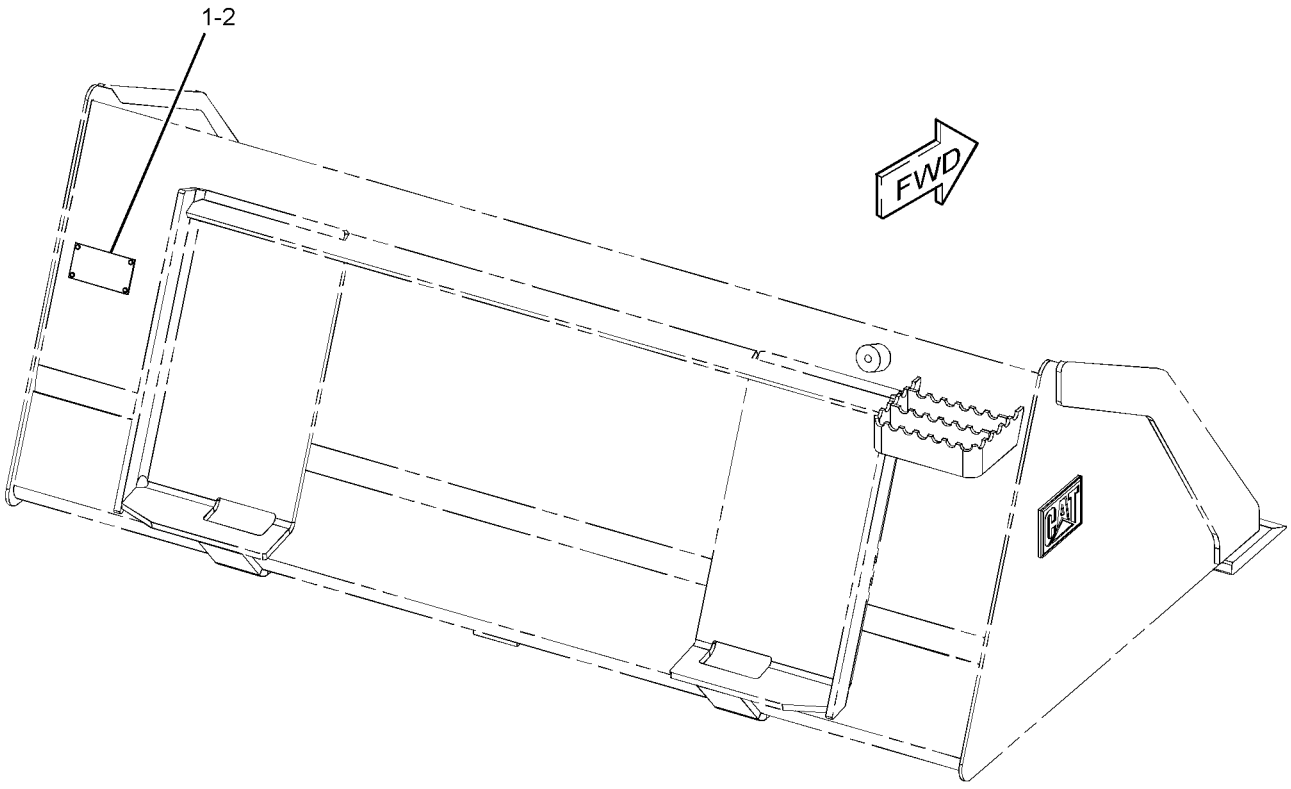


GRAPHIC #1 **<END>** g01278644

# WORK TOOLS

## 285-6099 BUCKET GP-UTILITY

**S/N: HEN6750-UP**
**1676-MM (66-IN)**
**PART OF 285-6093 BUCKET AR-GRAPPLE, 285-6100 BUCKET AR-UTILITY**
**AN ATTACHMENT**

**SMCS-6101** **i02552452**

| NOTE | REF NO | GRAPHIC REF | PART NUMBER | QTY | PART NAME 1 2 3 4 5 6 (PRODUCT LEVEL) | SEE PAGE |
|---|---|---|---|---|---|---|
| | 1 | 1 | **154-2704** | 1 | PLATE-INSTRUCTION (BUCKET SPECIFICATIONS) | |
| | 2 | 1 | **168-8389** | 4 | TACK-FASTENER | |
| | | | | | | |
| | | | | | PARTS SHOWN IN GRAPHIC(S) WITHOUT A REFERENCE NUMBER ARE NOT SERVICED SEPARATELY | |

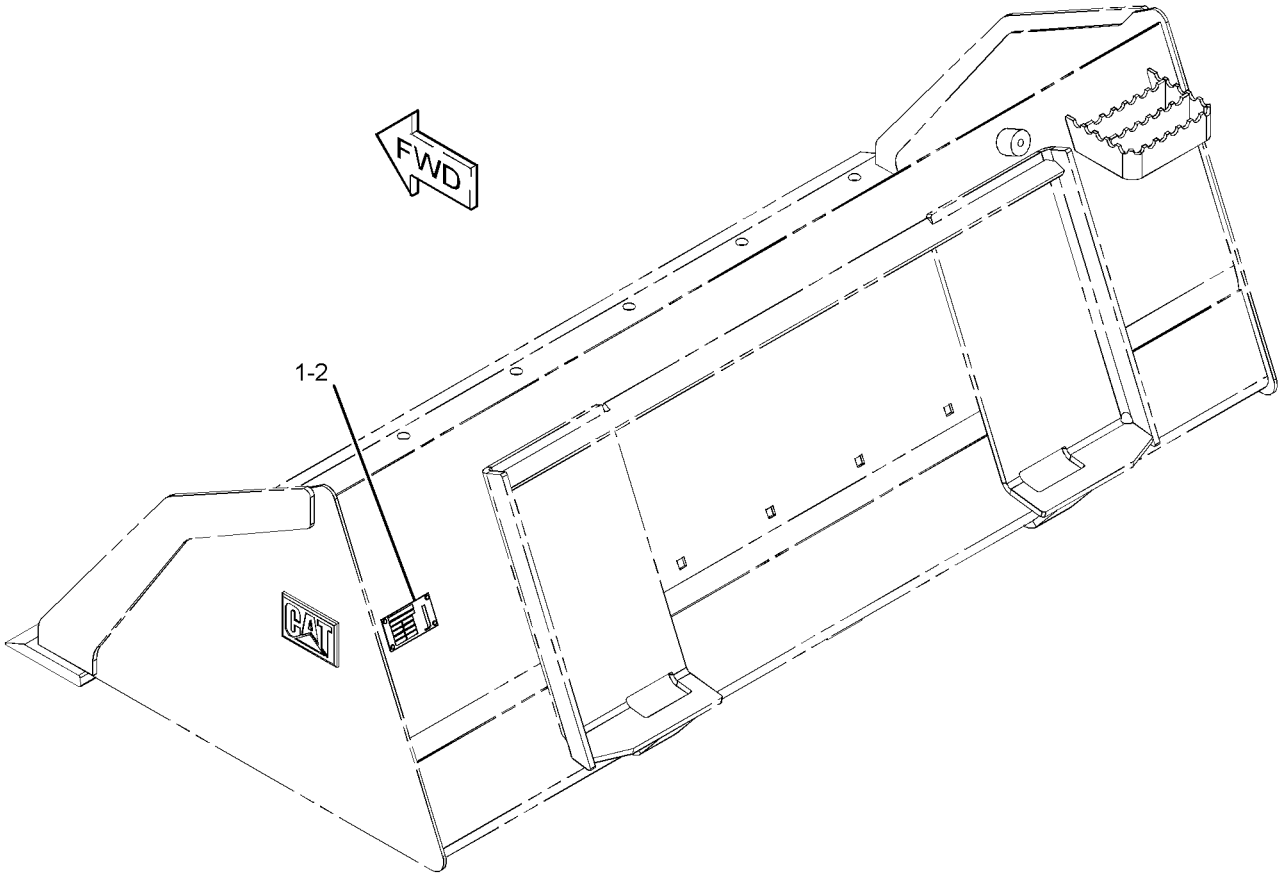


GRAPHIC #1 **<END>** g01279288

# WORK TOOLS

## 285-6102 BUCKET GP-UTILITY

**S/N: HEN6750-UP**
**1829-MM (72-IN)**
**PART OF 285-6104 BUCKET AR-GRAPPLE, 285-6101 BUCKET AR-UTILITY**
**AN ATTACHMENT**

**SMCS-6101** **i02760165**

| NOTE | REF NO | GRAPHIC REF | PART NUMBER | QTY | PART NAME 1 2 3 4 5 6 (PRODUCT LEVEL) | SEE PAGE |
|---|---|---|---|---|---|---|
| | 1 | 1 | **154-2704** | 1 | PLATE-INSTRUCTION (BUCKET SPECIFICATIONS) | |
| | 2 | 1 | **168-8389** | 4 | TACK-FASTENER | |
| | | | | | | |
| | | | | | PARTS SHOWN IN GRAPHIC (S) WITHOUT A REFERENCE NUMBER ARE NOT SERVICED SEPARATELY | |

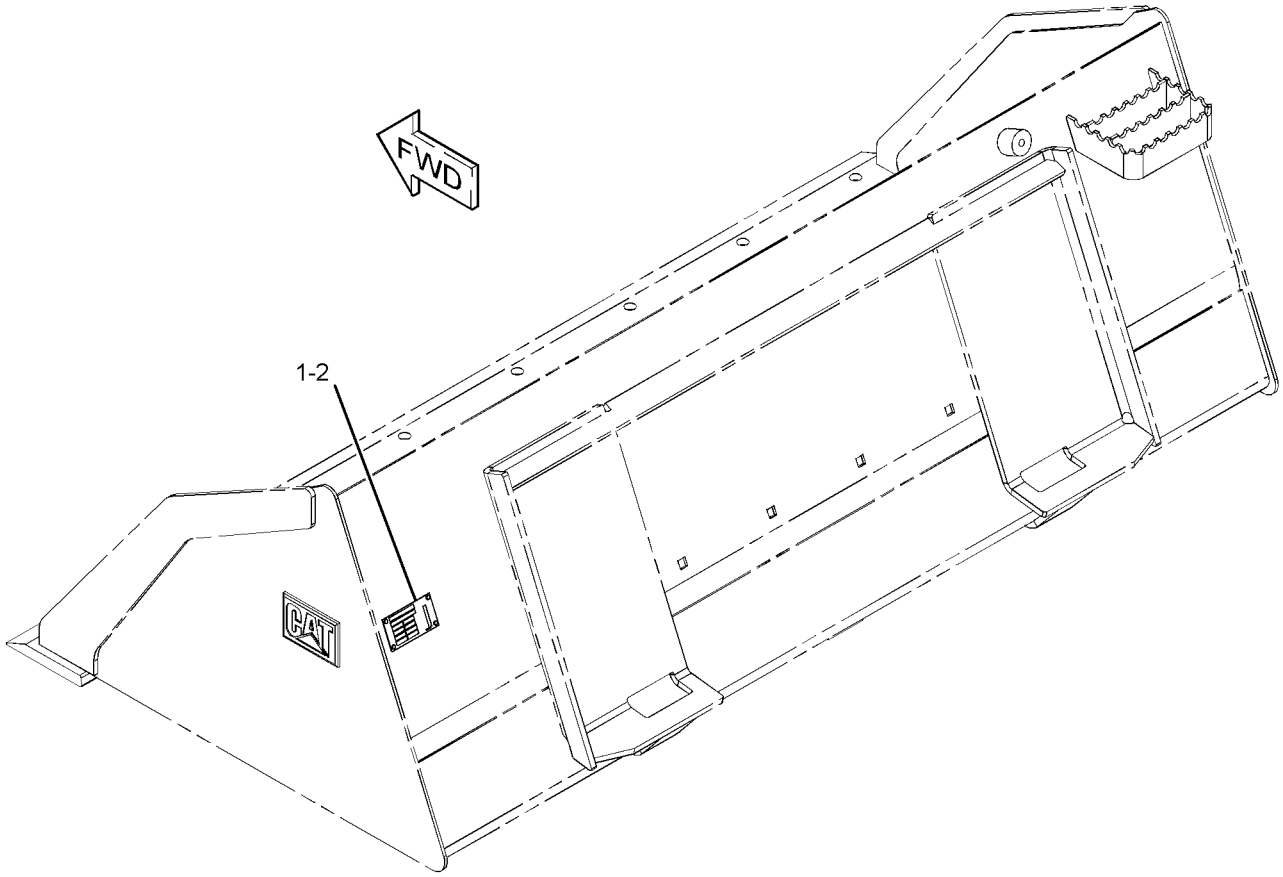


GRAPHIC #1 **<END>** g01279288

## 293-9427 CARRIAGE & FORK AR

**S/N: HEN6750-UP**
**AN ATTACHMENT**

**SMCS-6136, 6402** **i02628876**

| NOTE | PART NUMBER | QTY | PART NAME 1 2 3 4 5 6 (PRODUCT LEVEL) | SEE PAGE |
|---|---|---|---|---|
| Y | **261-6681** | 1 | CARRIAGE GP-FORK | 416 |
| Y | **195-6943** | 2 | FORK GP-PALLET (36-IN) | 435 |

Y-SEPARATE ILLUSTRATION

**<END>**

## 293-9428 CARRIAGE & FORK AR

**S/N: HEN6750-UP**
**AN ATTACHMENT**

**SMCS-6136, 6402** **i02628877**

| NOTE | PART NUMBER | QTY | PART NAME 1 2 3 4 5 6 (PRODUCT LEVEL) | SEE PAGE |
|---|---|---|---|---|
| Y | **261-6681** | 1 | CARRIAGE GP-FORK | 416 |
| Y | **195-6942** | 2 | FORK GP-PALLET (42-IN) | 435 |

Y-SEPARATE ILLUSTRATION

**<END>**

## 293-9429 CARRIAGE & FORK AR

**S/N: HEN6750-UP**
**AN ATTACHMENT**

**SMCS-6136, 6402** **i02628878**

| NOTE | PART NUMBER | QTY | PART NAME 1 2 3 4 5 6 (PRODUCT LEVEL) | SEE PAGE |
|---|---|---|---|---|
| Y | **261-6681** | 1 | CARRIAGE GP-FORK | 416 |
| Y | **195-8545** | 2 | FORK GP-PALLET (48-IN) | 435 |

Y-SEPARATE ILLUSTRATION

**<END>**

# WORK TOOLS

## *261-6681* CARRIAGE GP-FORK

**S/N: HEN6750-UP**

**PART OF 293-9427, 293-9428, 293-9429 CARRIAGE & FORK AR, 293-9426 CARRIAGE GP-FORK**

**AN ATTACHMENT**

**SMCS-6402** **i02539756**

| NOTE | REF NO | GRAPHIC REF | PART NUMBER | QTY | PART NAME 1 2 3 4 5 6 (PRODUCT LEVEL) | SEE PAGE |
|---|---|---|---|---|---|---|
| | 1 | 1 | **157-4835** | 1 | PLATE-INSTRUCTION | |
| | 2 | 1 | **168-8389** | 4 | TACK-FASTENER | |
| | 3 | 1 | **252-8595** | 1 | STEP AS | |
| | 4 | 1 | **8T-4121** | 2 | WASHER-HARD (11X21X2.5-MM THK) | |
| M | 5 | 1 | **8T-4133** | 2 | NUT (M10X1.5-THD) | |
| M | 6 | 1 | **8T-4136** | 2 | BOLT (M10X1.5X25-MM) | |
| | | | | | | |
| | | | | | PARTS SHOWN IN GRAPHIC(S) WITHOUT A REFERENCE NUMBER ARE NOT SERVICED SEPARATELY | |

M-METRIC PART

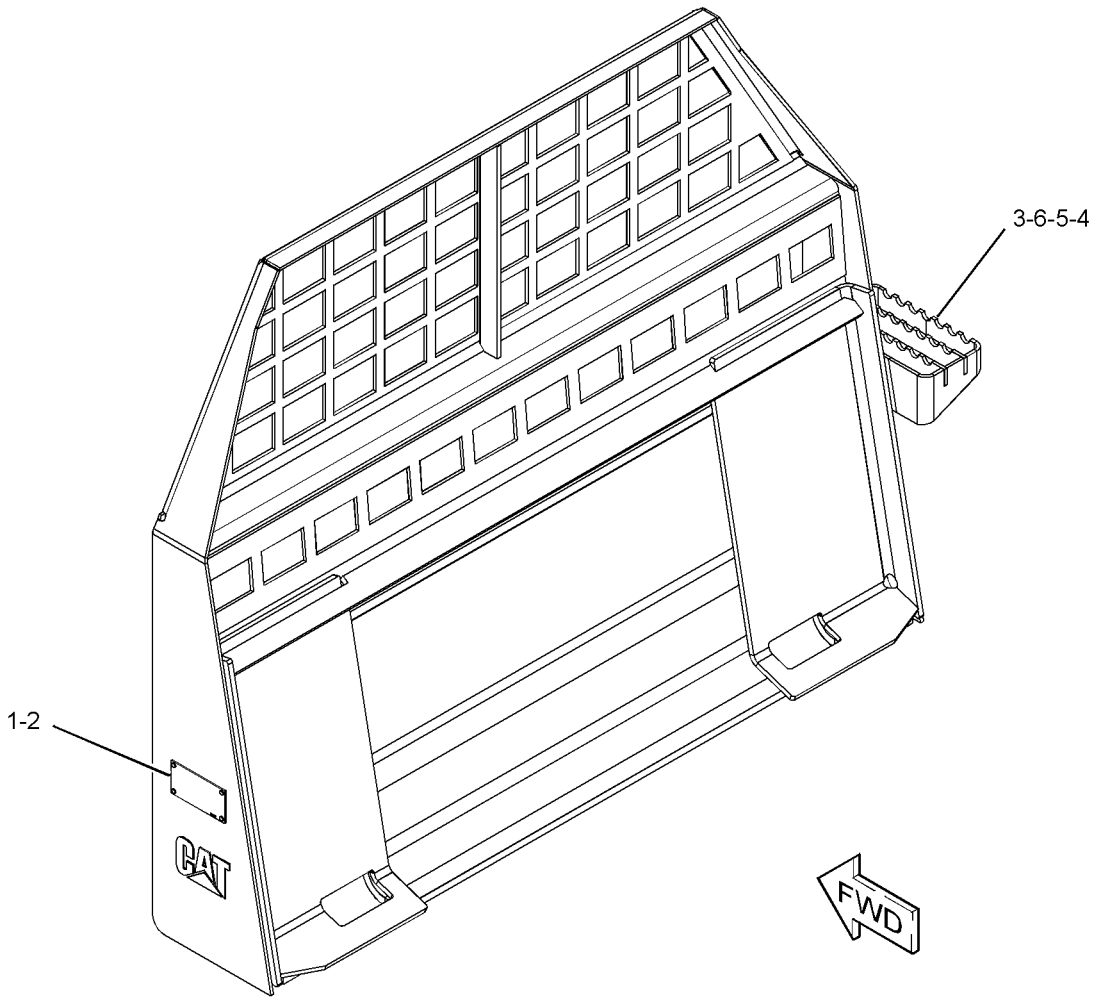


GRAPHIC #1 **<END>** g01282475

# WORK TOOLS

## 293-9426 CARRIAGE GP-FORK

**S/N: HEN6750-UP**
**AN ATTACHMENT**

**SMCS-6402** **i02628875**

| NOTE | PART NUMBER | QTY | PART NAME 1 2 3 4 5 6 (PRODUCT LEVEL) | SEE PAGE |
|---|---|---|---|---|
| Y | **261-6681** | 6 | CARRIAGE GP-FORK | 416 |
| Y-SEPARATE ILLUSTRATION | | | | |

**<END>**

## *218-6509* COUPLER AR-QUICK

**S/N: HEN6750-UP**
**MANNUAL**
**CANNOT BE USED WITH 218-6510—PAGE 417**
**AN ATTACHMENT**

**SMCS-6129** **i01959762**

| NOTE | PART NUMBER | QTY | PART NAME 1 2 3 4 5 6 (PRODUCT LEVEL) | SEE PAGE |
|---|---|---|---|---|
| Y | *196-8870* | 1 | COUPLER GP-QUICK | 420 |
| Y | *218-5617* | 1 | LINES GP-LOWERING CONTROL (MANUAL) | 295 |
| Y-SEPARATE ILLUSTRATION | | | | |

**<END>**

## *218-6510* COUPLER AR-QUICK

**S/N: HEN6750-UP**
**HYDRAULIC**
**CANNOT BE USED WITH 218-6509—PAGE 417**
**AN ATTACHMENT**

**SMCS-6129** **i02474658**

| NOTE | PART NUMBER | QTY | PART NAME 1 2 3 4 5 6 (PRODUCT LEVEL) | SEE PAGE |
|---|---|---|---|---|
| Y | *192-2655* | 1 | COUPLER GP-QUICK | 418 |
| | **113-8490** | 1 | FUSE (10-AMPERE) | |
| | **212-6521** | 1 | SWITCH AS-ROCKER (QUICK COUPLER) | |
| | | | (LOCATE IN FOURTH SLOT FROM REAR ON LH INSTRUMENT PANEL) | |
| | **111-7899** | 1 | GASKET | |
| Y | *218-6520* | 1 | MANIFOLD & LINES GP-COUPLER | 311 |
| Y-SEPARATE ILLUSTRATION | | | | |

**<END>**

# WORK TOOLS

## *192-2655* COUPLER GP-QUICK

**S/N: HEN6750-UP**
**HYDRAULIC**
**PART OF 218-6510 COUPLER AR-QUICK**
**AN ATTACHMENT**

**SMCS-6129** **i02235744**

| NOTE | REF NO | GRAPHIC REF | PART NUMBER | QTY | PART NAME 1 2 3 4 5 6 (PRODUCT LEVEL) | SEE PAGE |
|---|---|---|---|---|---|---|
| | 1 | 1 | **5B-0651** | 2 | FITTING-STRAIGHT | |
| | 2 | 1 | **5P-0372** | 2 | LOCK PIN | |
| C | 3 | 1 | **252-0426** | 1 | COUPLER AS | |
| | | 1 | **126-5701** | 2 | PLATE-RETAINER | |
| | 4 | 1 | **207-9785** | 2 | PIN | |
| Y | 5 | 1 | *215-3962* | 1 | CYLINDER & LINK GP-COUPLER (LH) | 422 |
| Y | 6 | 1 | *215-3963* | 1 | CYLINDER & LINK GP-COUPLER (RH) | 423 |
| | 7 | 1 | **218-6332** | 1 | BRACKET AS (LH) | |
| M | | 1 | **9R-2672** | 1 | BOSS (M10X1.5X20-MM) | |
| | 8 | 1 | **218-6333** | 1 | BRACKET AS (RH) | |
| | 9 | 1 | **3B-4628** | 2 | PIN-COTTER | |
| | 10 | 1 | **8L-5188** | 2 | PIN | |
| | 11 | 1 | **8T-4121** | 12 | WASHER-HARD (11X21X2.5-MM THK) | |
| M | 12 | 1 | **8T-4133** | 4 | NUT (M10X1.5-THD) | |
| M | 13 | 1 | **8T-4196** | 8 | BOLT (M10X1.5X35-MM) | |
| | 14 | 1 | **9T-7303** | 4 | SPACER (16X28X1.5-MM THK) | |

C-CHANGE FROM PREVIOUS TYPE
M-METRIC PART
Y-SEPARATE ILLUSTRATION

*192-2655* **COUPLER GP-QUICK** *(contd.)* **i02235744**

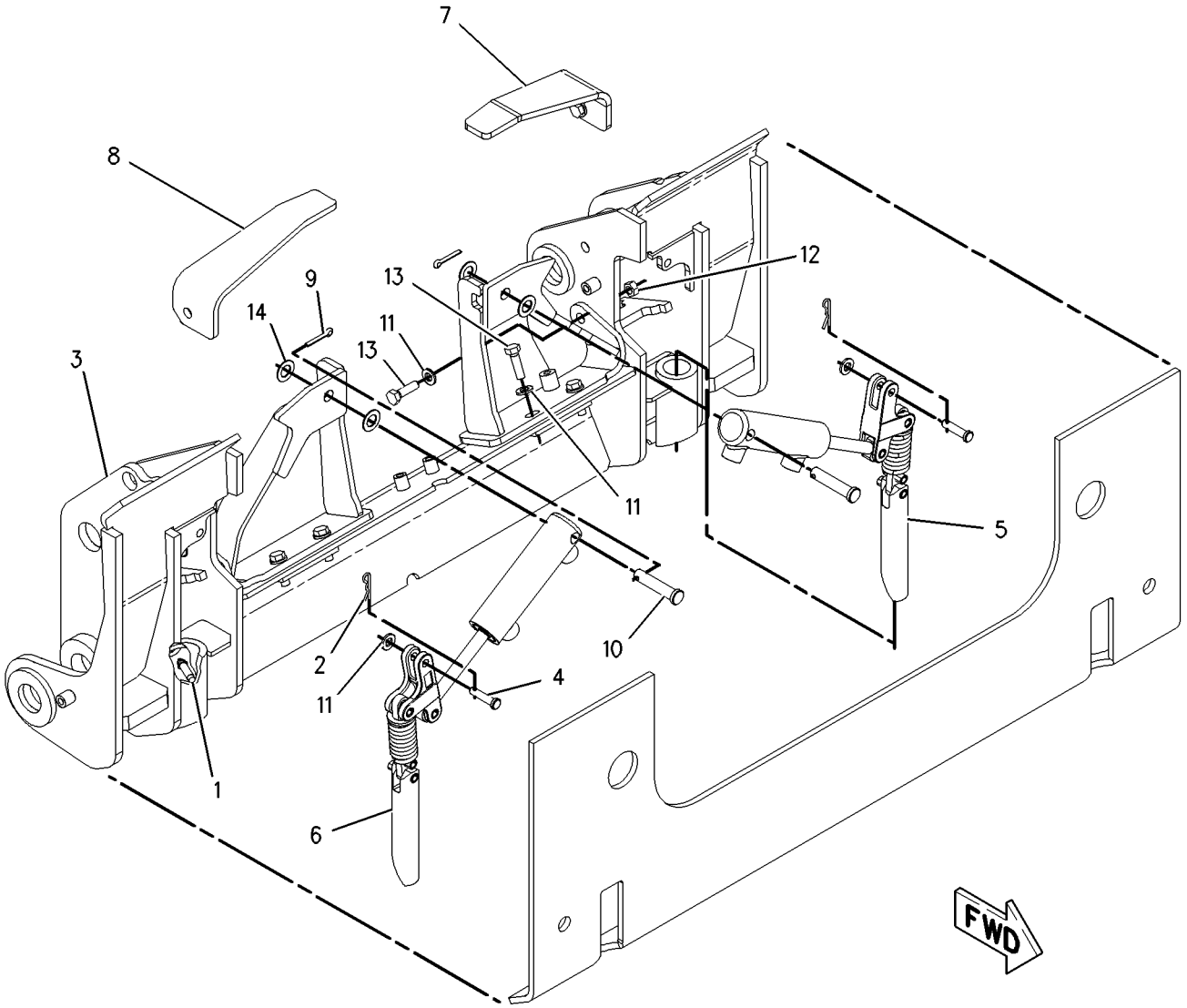


GRAPHIC #1 **<END>** g00983789

# WORK TOOLS

## *196-8870* COUPLER GP-QUICK

**S/N: HEN6750-UP**
**MANUAL**
**PART OF 218-6509 COUPLER AR-QUICK**
**AN ATTACHMENT**

**SMCS-6129** **i02235733**

| NOTE | REF NO | GRAPHIC REF | PART NUMBER | QTY | PART NAME 1 2 3 4 5 6 (PRODUCT LEVEL) | SEE PAGE |
|---|---|---|---|---|---|---|
| | 1 | 1 | **5B-0651** | 2 | FITTING-STRAIGHT | |
| | 2 | 1 | **159-5797** | 2 | SPRING | |
| C | 3 | 1 | **252-0426** | 1 | COUPLER AS | |
| | | 1 | **126-5701** | 2 | PLATE-RETAINER | |
| Y | 4 | 1 | **215-3960** | 1 | HANDLE & PIN GP-COUPLER (LH) | 446 |
| Y | 5 | 1 | **215-3961** | 1 | HANDLE & PIN GP-COUPLER (RH) | 447 |
| | 6 | 1 | **131-5879** | 2 | WASHER (11X32X3-MM THK) | |
| | 7 | 1 | **132-7551** | 2 | SPACER (11X19X6-MM THK) | |
| M | 8 | 1 | **6V-7744** | 2 | LOCKNUT (M10X1.5-THD) | |
| M | 9 | 1 | **7X-2621** | 2 | BOLT (M10X1.5X12-MM) | |
| | 10 | 1 | **7X-7729** | 4 | WASHER (11X25X3-MM THK) | |
| | 11 | 1 | **8T-4121** | 6 | WASHER-HARD (11X21X2.5-MM THK) | |
| M | 12 | 1 | **8T-4172** | 2 | BOLT (M10X1.5X80-MM) | |
| M | 13 | 1 | **8T-4196** | 4 | BOLT (M10X1.5X35-MM) | |

C-CHANGE FROM PREVIOUS TYPE
M-METRIC PART
Y-SEPARATE ILLUSTRATION

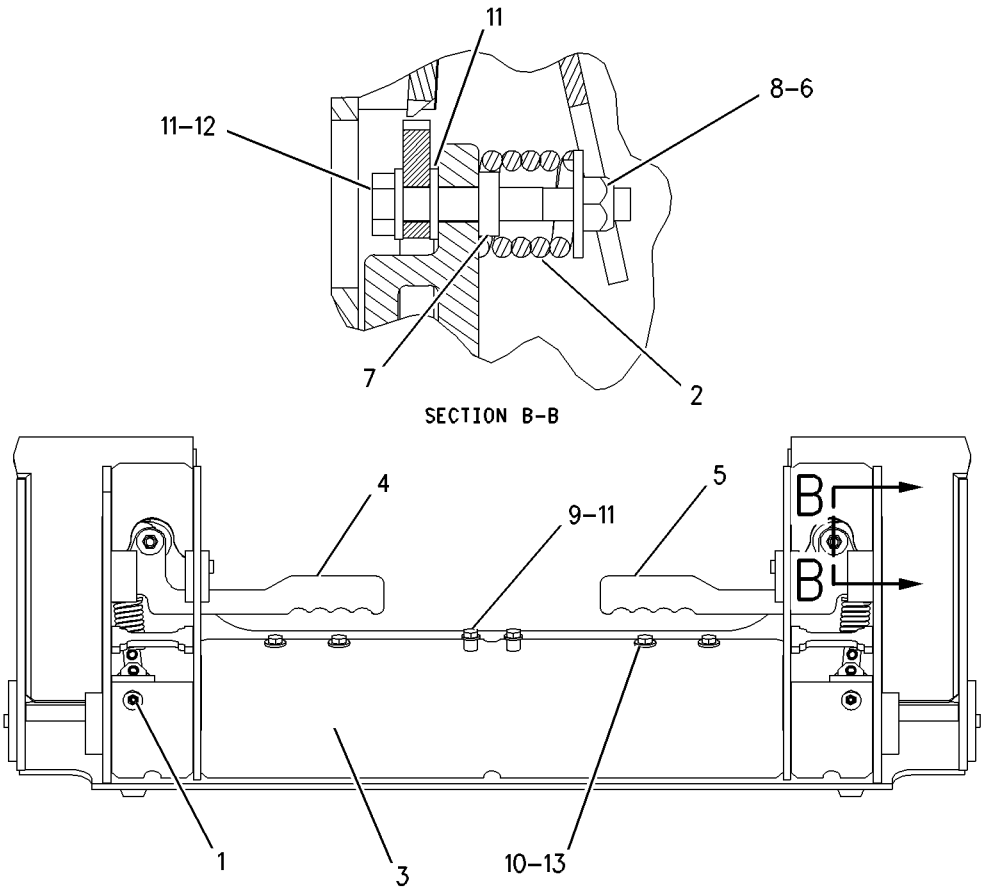


GRAPHIC #1 **<END>** g00858646

# WORK TOOLS

## *162-5236* COVER GP-LINES

**S/N: HEN6750-UP**

**PART OF 279-5382, 279-5390, 279-5398, 279-5403 BUCKET AR-MULTIPURPOSE AN ATTACHMENT**

**SMCS-5057** **i01227894**

| NOTE | REF NO | GRAPHIC REF | PART NUMBER | QTY | PART NAME 1 2 3 4 5 6 (PRODUCT LEVEL) | SEE PAGE |
|---|---|---|---|---|---|---|
| | 1 | 1 | **161-4128** | 1 | PLATE | |
| M | 2 | 1 | **5C-9553** | 5 | BOLT (M6X1.0X16MM) | |
| | 3 | 1 | **9X-2026** | 5 | WASHER (1MM THK) | |

M-METRIC PART

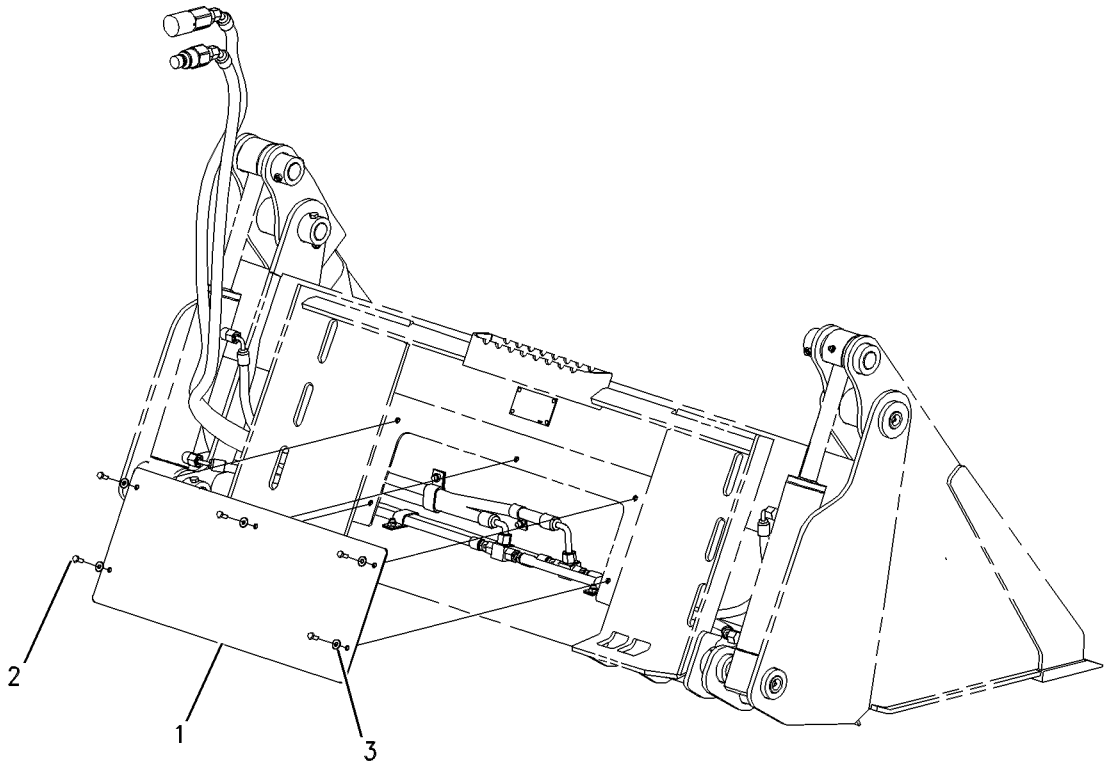


GRAPHIC #1 **<END>** g00560360

# *215-3962* CYLINDER & LINK GP-COUPLER–LH

**S/N: HEN6750-UP**
**PART OF 192-2655 COUPLER GP-QUICK**
**AN ATTACHMENT**

**SMCS-5133, 6129** **i02711951**

| NOTE | REF NO | GRAPHIC REF | PART NUMBER | QTY | PART NAME 1 2 3 4 5 6 (PRODUCT LEVEL) | SEE PAGE |
|---|---|---|---|---|---|---|
| | 1 | 1 | **166-2560** | 1 | PIN-SPRING | |
| Y | 2 | 1 | **192-2640** | 1 | CYLINDER GP-HYDRAULIC (COUPLER) | 241 |
| | 3 | 1 | **192-2642** | 1 | PIN | |
| | 4 | 1 | **195-6754** | 1 | PIN-SPRING | |
| Y | 5 | 1 | *215-3957* | 1 | LINK GP-COUPLER | 451 |

Y-SEPARATE ILLUSTRATION

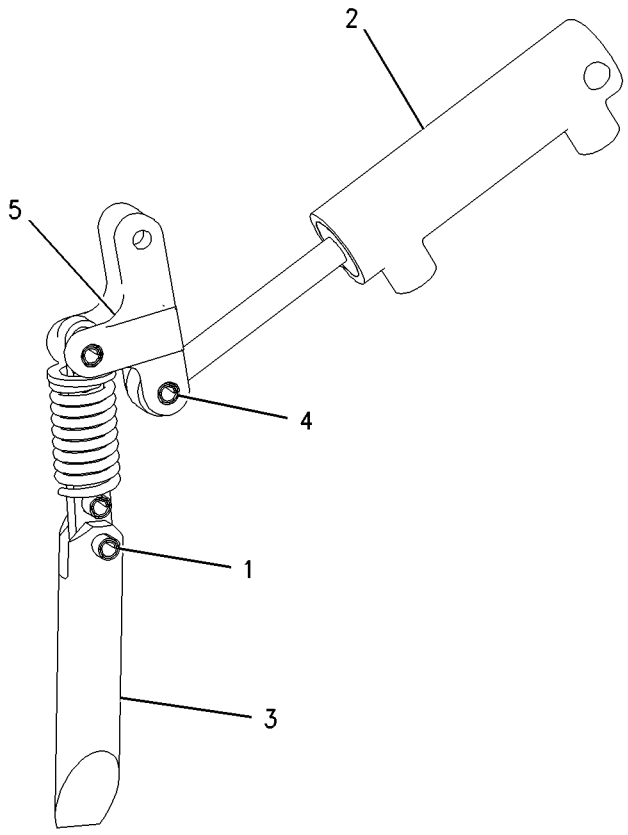


GRAPHIC #1 **<END>** g00871294

# *215-3963* CYLINDER & LINK GP-COUPLER–RH

**S/N: HEN6750-UP**
**PART OF 192-2655 COUPLER GP-QUICK**
**AN ATTACHMENT**

**SMCS-5133, 6129** **i02711952**

| NOTE | REF NO | GRAPHIC REF | PART NUMBER | QTY | PART NAME 1 2 3 4 5 6 (PRODUCT LEVEL) | SEE PAGE |
|---|---|---|---|---|---|---|
| | 1 | 1 | **166-2560** | 1 | PIN-SPRING | |
| Y | 2 | 1 | **192-2640** | 1 | CYLINDER GP-HYDRAULIC (COUPLER) | 241 |
| | 3 | 1 | **192-2642** | 1 | PIN | |
| | 4 | 1 | **195-6754** | 1 | PIN-SPRING | |
| Y | 5 | 1 | *215-3957* | 1 | LINK GP-COUPLER | 451 |

Y-SEPARATE ILLUSTRATION

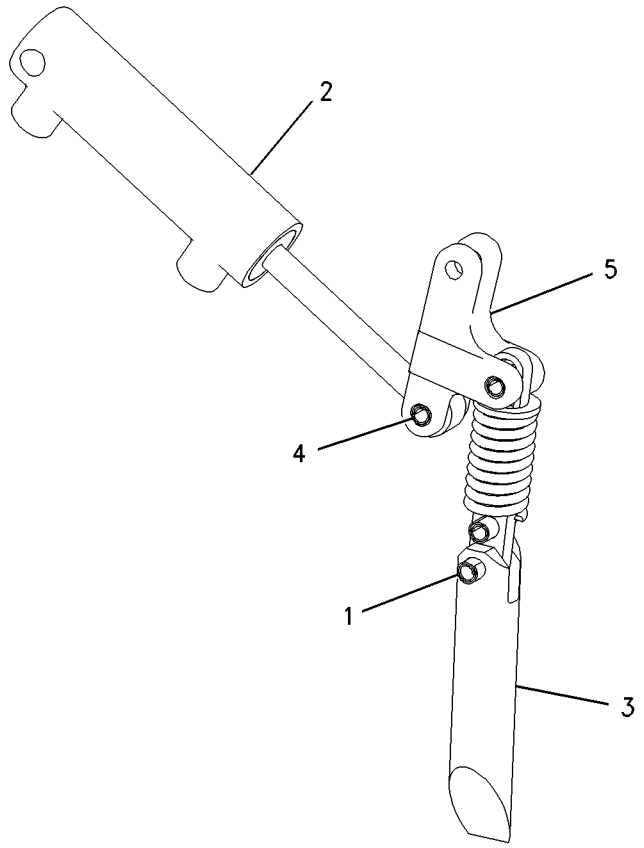


GRAPHIC #1 **<END>** g00871299

# WORK TOOLS

## *222-7545* EDGE GP-BIT & CUTTING

**S/N: HEN6750-UP**
**PART OF 231-5276 BLADE GP-ANGLING**
**AN ATTACHMENT**

**SMCS-6801, 6804** **i02103534**

| NOTE | PART NUMBER | QTY | PART NAME 1 2 3 4 5 6 (PRODUCT LEVEL) | SEE PAGE |
|---|---|---|---|---|
| | **6Y-5839** | 1 | BIT-END | |
| | **6Y-5840** | 1 | BIT-END | |
| | **3F-5108** | 10 | BOLT-PLOW (5/8-11X2.25-IN) | |
| | **4F-3658** | 4 | BOLT-PLOW (5/8-11X3-IN) | |
| | **142-4914** | 1 | EDGE-CUTTING | |
| | **4K-0367** | 14 | NUT-FULL (5/8-11-THD) | |
| | **5P-8247** | 14 | WASHER-HARD (17X32X3.5-MM THK) | |

**<END>**

## *222-7546* EDGE GP-BIT & CUTTING

**S/N: HEN6750-UP**
**PART OF 222-7724 BLADE GP-ANGLING**
**AN ATTACHMENT**

**SMCS-6801, 6804** **i02571926**

| NOTE | PART NUMBER | QTY | PART NAME 1 2 3 4 5 6 (PRODUCT LEVEL) | SEE PAGE |
|---|---|---|---|---|
| | **6Y-5839** | 1 | BIT-END | |
| | **6Y-5840** | 1 | BIT-END | |
| | **3F-5108** | 13 | BOLT-PLOW (5/8-11X2.25-IN) | |
| | **4F-3658** | 4 | BOLT-PLOW (5/8-11X3-IN) | |
| | **143-3088** | 1 | EDGE-CUTTING | |
| | **4K-0367** | 17 | NUT-FULL (5/8-11-THD) | |
| | **5P-8247** | 17 | WASHER-HARD (17X32X3.5-MM THK) | |

**<END>**

## *135-9383* EDGE GP-CUTTING

**S/N: HEN6750-UP**
**PART OF 279-5435 BUCKET AR-DIRT**
**FOR USE WITH 137.20-CM (54-IN) BUCKET**
**AN ATTACHMENT**

**SMCS-6801** **i02571125**

| NOTE | PART NUMBER | QTY | PART NAME 1 2 3 4 5 6 (PRODUCT LEVEL) | SEE PAGE |
|---|---|---|---|---|
| | **135-9393** | 1 | EDGE-CUTTING | |
| M | **8T-4778** | 6 | LOCKNUT (M16X2-THD) | |
| M | **159-2953** | 6 | SCREW-FLAT HEAD (M16X2-THD) | |

M-METRIC PART

**<END>**

# *135-9384* EDGE GP-CUTTING

**S/N: HEN6750-UP**

**PART OF 279-5438 BUCKET AR-DIRT, 279-5365 BUCKET AR-GENERAL PURPOSE, 157-7226 BUCKET AR-GRAPPLE, 279-5381 BUCKET AR-MULTIPURPOSE, 285-6095 BUCKET AR-UTILITY**

**FOR USE WITH 152.40-CM (60-IN) BUCKET**

**AN ATTACHMENT**

**SMCS-6801** **i01372033**

| NOTE | REF NO | GRAPHIC REF | PART NUMBER | QTY | PART NAME 1 2 3 4 5 6 (PRODUCT LEVEL) | SEE PAGE |
|---|---|---|---|---|---|---|
| | 1 | 1 | **135-9394** | 1 | EDGE-CUTTING | |
| M | 2 | 1 | **8T-4778** | 8 | LOCKNUT (M16X2.00 THD) | |
| M | 3 | 1 | **159-2953** | 8 | SCREW-FLAT HEAD (M16X2.00 THD) | |

M-METRIC PART

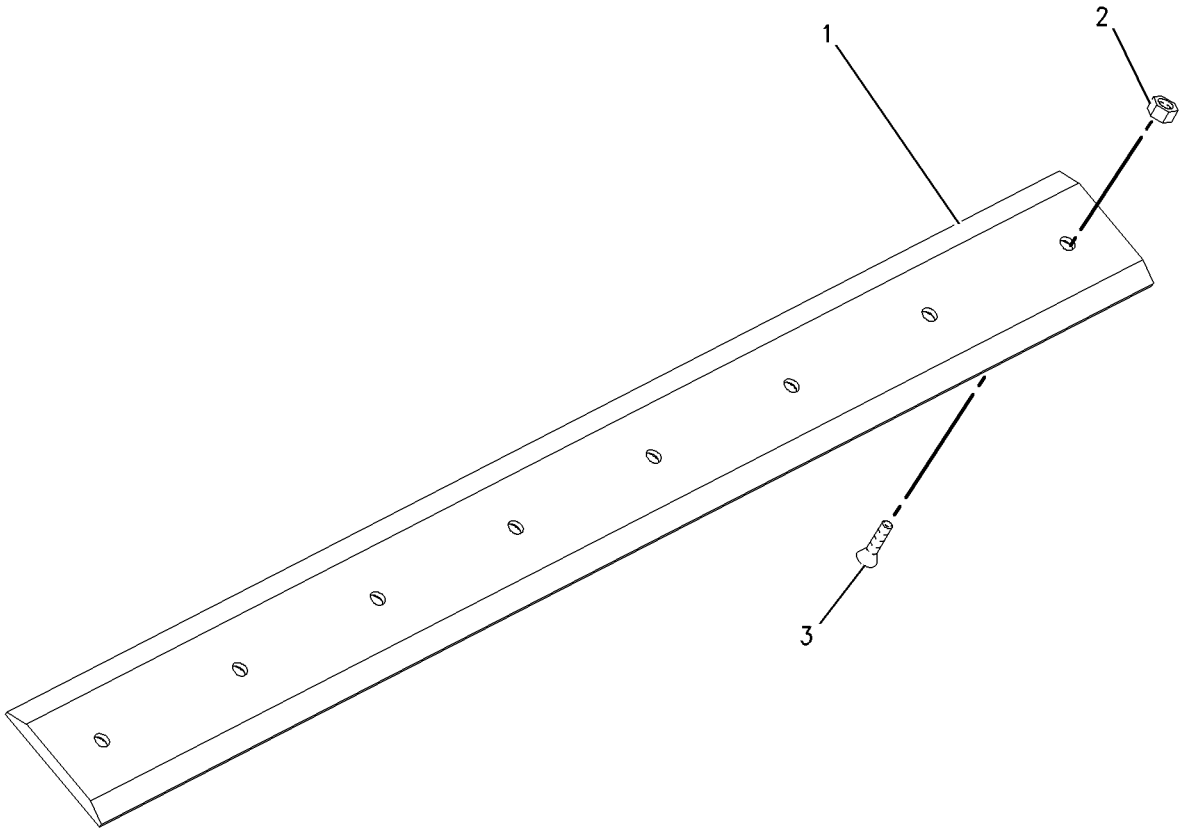


GRAPHIC #1 **<END>** g00724087

# *135-9385* EDGE GP-CUTTING

**S/N: HEN6750-UP**

**PART OF 279-5441 BUCKET AR-DIRT, 279-5369 BUCKET AR-GENERAL PURPOSE, 157-7227 BUCKET AR-GRAPPLE, 279-5391 BUCKET AR-MULTIPURPOSE, 285-6100 BUCKET AR-UTILITY**

**FOR USE WITH 167.64-CM (66-IN) BUCKET**

**AN ATTACHMENT**

**SMCS-6801** **i01228508**

| NOTE | REF NO | GRAPHIC REF | PART NUMBER | QTY | PART NAME 1 2 3 4 5 6 (PRODUCT LEVEL) | SEE PAGE |
|---|---|---|---|---|---|---|
| | 1 | 1 | **135-9395** | 1 | EDGE-CUTTING | |
| M | 2 | 1 | **8T-4778** | 8 | LOCKNUT (M16X2.00 THD) | |
| M | 3 | 1 | **159-2953** | 8 | SCREW-FLAT HEAD (M16X2.00 THD) | |

M-METRIC PART

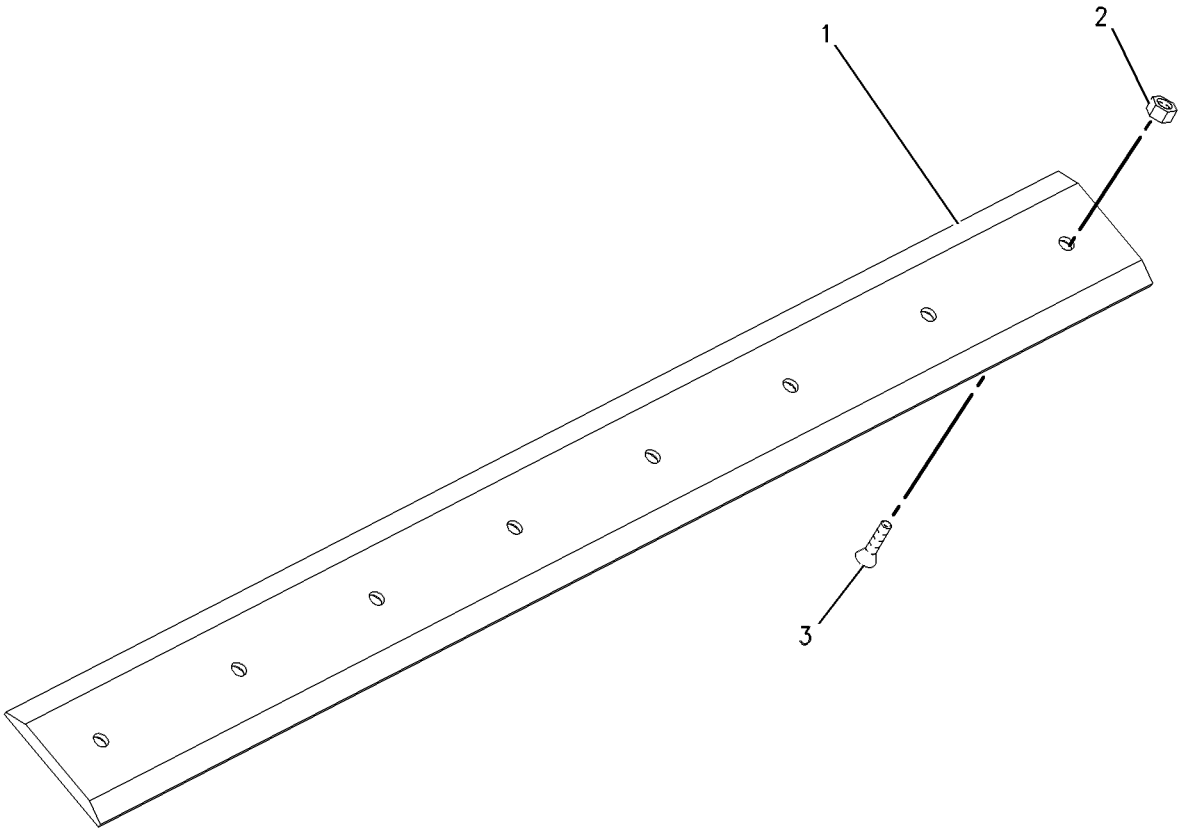


GRAPHIC #1 **<END>** g00657004

# *135-9386* EDGE GP-CUTTING

**S/N: HEN6750-UP**

**PART OF 177-1989 BLADE AR, 285-6090 BUCKET AR-DIRT, 279-5373 BUCKET AR-GENERAL PURPOSE, 158-6095 BUCKET AR-GRAPPLE, 279-5420 BUCKET AR-LIGHT MATERIAL, 285-6101 BUCKET AR-UTILITY, 279-5399 BUCKET GP-MULTIPURPOSE**

**FOR USE WITH 182.88-CM (72-IN) BUCKET**

**AN ATTACHMENT**

**SMCS-6801** **i01372498**

| NOTE | REF NO | GRAPHIC REF | PART NUMBER | QTY | PART NAME 1 2 3 4 5 6 (PRODUCT LEVEL) | SEE PAGE |
|---|---|---|---|---|---|---|
| | 1 | 1 | **135-9396** | 1 | EDGE-CUTTING | |
| M | 2 | 1 | **8T-4778** | 11 | LOCKNUT (M16X2.00 THD) | |
| M | 3 | 1 | **159-2953** | 11 | SCREW-FLAT HEAD (M16X2.00 THD) | |

M-METRIC PART

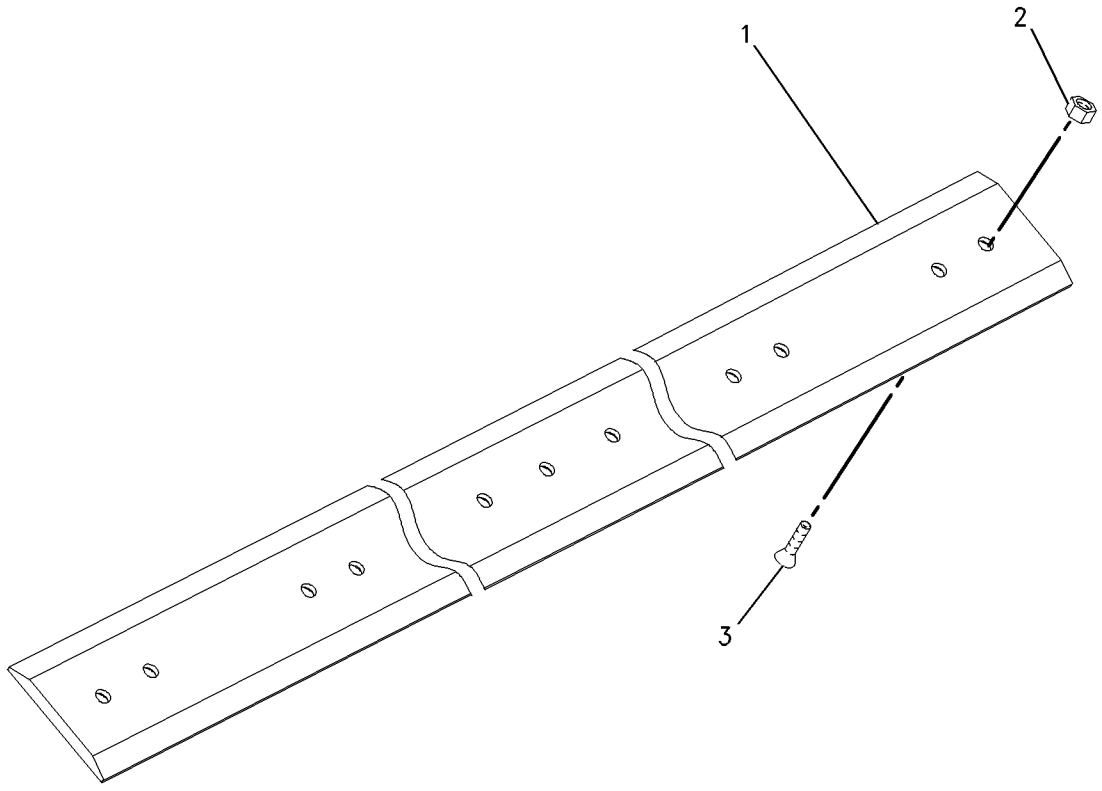


GRAPHIC #1 **<END>** g00724435

# WORK TOOLS

## *135-9387* EDGE GP-CUTTING

**S/N: HEN6750-UP**

**PART OF 268-4083 BUCKET AR-DIRT, 279-5377 BUCKET AR-GENERAL PURPOSE, 217-6230 BUCKET AR-GRAPPLE, 279-5425 BUCKET AR-LIGHT MATERIAL, 279-5402 BUCKET AR-MULTIPURPOSE**

**FOR USE WITH 198.12-CM (78-IN) BUCKET**

**AN ATTACHMENT**

**SMCS-6801** **i01755490**

| NOTE | REF NO | GRAPHIC REF | PART NUMBER | QTY | PART NAME 1 2 3 4 5 6 (PRODUCT LEVEL) | SEE PAGE |
|---|---|---|---|---|---|---|
| | 1 | 1 | **135-9397** | 1 | EDGE-CUTTING | |
| M | 2 | 1 | **8T-4778** | 11 | LOCKNUT (M16X2 THD) | |
| M | 3 | 1 | **159-2953** | 11 | SCREW-FLAT HEAD (M16X2.00 THD) | |

M-METRIC PART

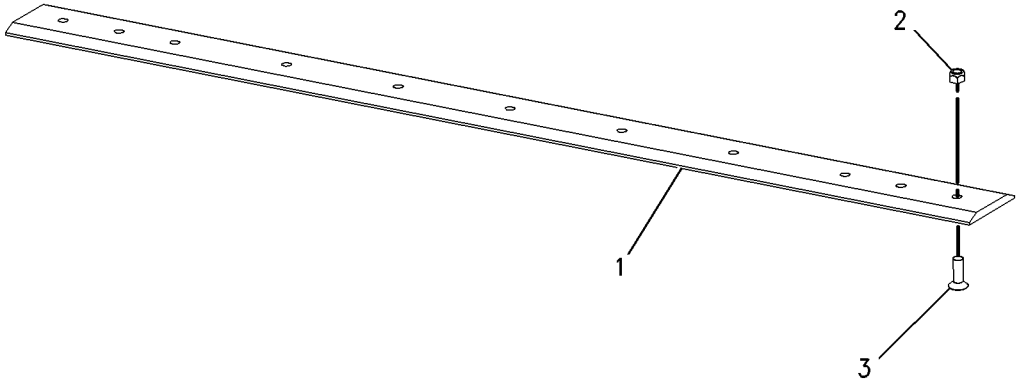


GRAPHIC #1 **<END>** g00898154

# *149-5741* EDGE GP-CUTTING

**S/N: HEN6750-UP**
**PART OF 177-1990 BLADE AR**
**FOR USE WITH 218.9-CM (85-IN) BUCKET**
**AN ATTACHMENT**

**SMCS-6801** **i01832720**

| NOTE | REF NO | GRAPHIC REF | PART NUMBER | QTY | PART NAME 1 2 3 4 5 6 (PRODUCT LEVEL) | SEE PAGE |
|---|---|---|---|---|---|---|
| | 1 | 1 | **195-5124** | 1 | EDGE-CUTTING | |
| M | 2 | 1 | **8T-4778** | 7 | LOCKNUT (M16X2 THD) | |
| M | 3 | 1 | **159-2953** | 7 | SCREW-FLAT HEAD (M16X2.00 THD) | |

M-METRIC PART

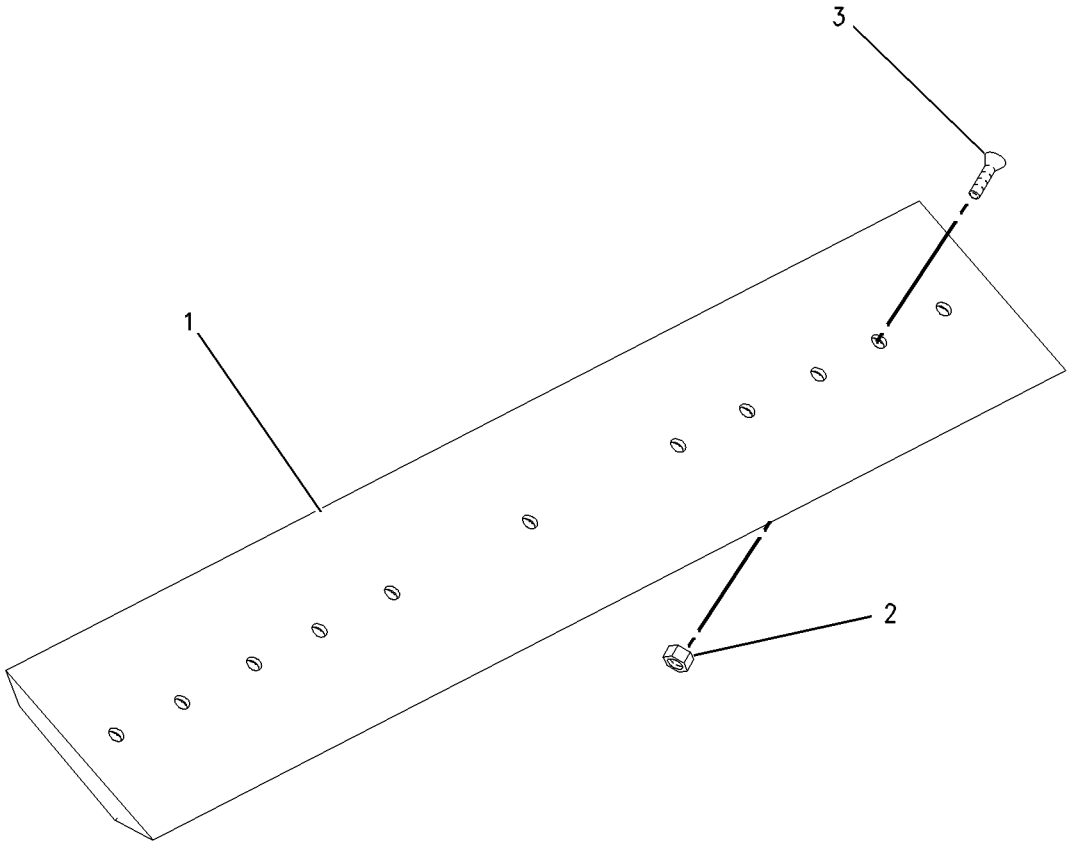


GRAPHIC #1 **<END>** g00936281

## *195-7124* EDGE GP-CUTTING

**S/N: HEN6750-UP**
**PART OF 279-5430 BUCKET AR-LIGHT MATERIAL, 229-3433 BUCKET GP-GENERAL PURPOSE**
**FOR USE WITH 213.36CM (84 IN) BUCKET**
**AN ATTACHMENT**

**SMCS-6801** **i01859534**

| NOTE | PART NUMBER | QTY | PART NAME 1 2 3 4 5 6 (PRODUCT LEVEL) | SEE PAGE |
|---|---|---|---|---|
| | **195-5124** | 1 | EDGE-CUTTING | |
| M | **8T-4778** | 11 | LOCKNUT (M16X2 THD) | |
| M | **159-2953** | 11 | SCREW-FLAT HEAD (M16X2.00 THD) | |

M-METRIC PART

**<END>**

## 279-5350 FORK AR-GRAPPLE—INDUSTRIAL

**S/N: HEN6750-UP**
**1676-MM (66-IN)**
**AN ATTACHMENT**

**SMCS-6705** **i02715580**

| NOTE | PART NUMBER | QTY | PART NAME 1 2 3 4 5 6 (PRODUCT LEVEL) | SEE PAGE |
|---|---|---|---|---|
| Y | **278-1975** | 2 | CYLINDER GP-HYDRAULIC | 247 |
| Y | *164-9614* | 9 | FORK GP-GRAPPLE (INDUSTRIAL) | 432 |
| Y | *279-5351* | 1 | FORK GP-GRAPPLE (66-IN, INDUSTRIAL) | 433 |
| Y | *279-5412* | 1 | LINES GP-BUCKET (INDUSTRIAL) | 262 |
| Y | *156-0891* | 1 | MOUNTING GP-CYLINDER (INDUSTRIAL) | 330 |

Y-SEPARATE ILLUSTRATION

**<END>**

## 279-5360 FORK AR-GRAPPLE—INDUSTRIAL

**S/N: HEN6750-UP**
**1829-MM (72-IN)**
**AN ATTACHMENT**

**SMCS-6705** **i02715593**

| NOTE | PART NUMBER | QTY | PART NAME 1 2 3 4 5 6 (PRODUCT LEVEL) | SEE PAGE |
|---|---|---|---|---|
| Y | **278-1975** | 2 | CYLINDER GP-HYDRAULIC | 247 |
| Y | *164-9614* | 2 | FORK GP-GRAPPLE (INDUSTRIAL) | 432 |
| Y | *279-5359* | 1 | FRAME GP-GRAPPLE (72-IN, INDUSTRIAL) | 442 |
| Y | *279-5412* | 1 | LINES GP-BUCKET (INDUSTRIAL) | 262 |
| Y | *156-0891* | 1 | MOUNTING GP-CYLINDER (INDUSTRIAL) | 330 |

Y-SEPARATE ILLUSTRATION

**<END>**

## 285-6114 FORK AR-GRAPPLE–UTILITY

**S/N: HEN6750-UP**
**1676-MM (66-IN)**
**AN ATTACHMENT**

**SMCS-6705** **i02552497**

| NOTE | PART NUMBER | QTY | PART NAME 1 2 3 4 5 6 (PRODUCT LEVEL) | SEE PAGE |
|---|---|---|---|---|
| Y | **285-6105** | 1 | FORK GP-UTILITY (66-IN) | 438 |
| Y | *285-6116* | 1 | GRAPPLE GP-UTILITY | 444 |

Y-SEPARATE ILLUSTRATION

**<END>**

## 285-6115 FORK AR-GRAPPLE–UTILITY

**S/N: HEN6750-UP**
**1829-MM(72-IN)**
**AN ATTACHMENT**

**SMCS-6705** **i02552699**

| NOTE | PART NUMBER | QTY | PART NAME 1 2 3 4 5 6 (PRODUCT LEVEL) | SEE PAGE |
|---|---|---|---|---|
| Y | **285-6110** | 1 | FORK GP-GRAPPLE | 434 |
| Y | *285-6116* | 1 | GRAPPLE GP-UTILITY | 444 |

Y-SEPARATE ILLUSTRATION

**<END>**

# WORK TOOLS

## *164-9614* FORK GP-GRAPPLE

**S/N: HEN6750-UP**

**PART OF 279-5350, 279-5360 FORK AR-GRAPPLE**

**AN ATTACHMENT**

**SMCS-6705** **i01075196**

| NOTE | REF NO | GRAPHIC REF | PART NUMBER | QTY | PART NAME 1 2 3 4 5 6 (PRODUCT LEVEL) | SEE PAGE |
|---|---|---|---|---|---|---|
| | 1 | 1 | **3E-4370** | 1 | PIN-SPRING | |
| | 2 | 1 | **162-8154** | 1 | TINE | |

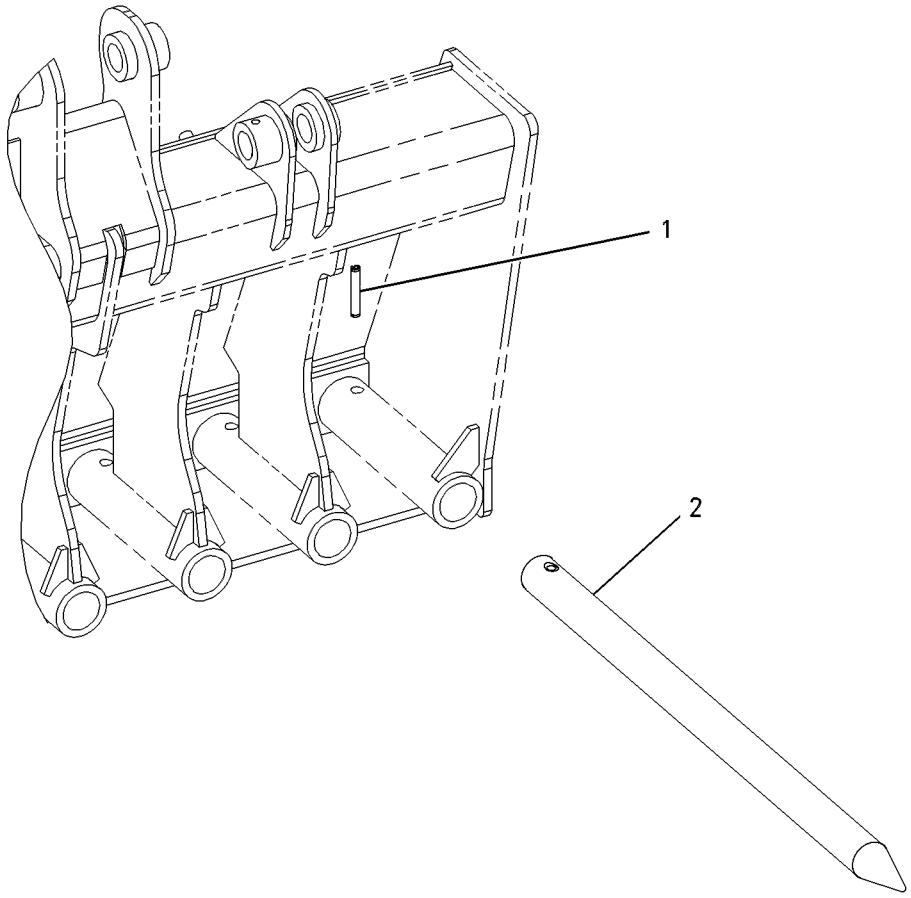


GRAPHIC #1 **<END>** g00559648

# *279-5351* FORK GP-GRAPPLE–INDUSTRIAL

**S/N: HEN6750-UP**
**1676-MM (66-IN)**
**PART OF 279-5350 FORK AR-GRAPPLE**
**AN ATTACHMENT**

**SMCS-6705** **i02571199**

| NOTE | REF NO | GRAPHIC REF | PART NUMBER | QTY | PART NAME 1 2 3 4 5 6 (PRODUCT LEVEL) | SEE PAGE |
|---|---|---|---|---|---|---|
| | 1 | 1 | **157-0940** | 4 | PIN | |
| | 2 | 1 | **164-9989** | 2 | FILM-WARNING (IMPALED POINT) | |
| | 3 | 1 | **222-7467** | 2 | FORK AS | |
| Y | 4 | 1 | *279-5352* | 1 | FRAME GP-FORK (66-IN, INDUSTRIAL) | 440 |
| | 5 | 1 | **3B-8489** | 4 | FITTING-GREASE | |
| M | 6 | 1 | **6V-9189** | 4 | LOCKNUT (M8X1.25-THD) | |
| M | 7 | 1 | **8T-6869** | 4 | BOLT (M8X1.25X60-MM) | |

M-METRIC PART
Y-SEPARATE ILLUSTRATION

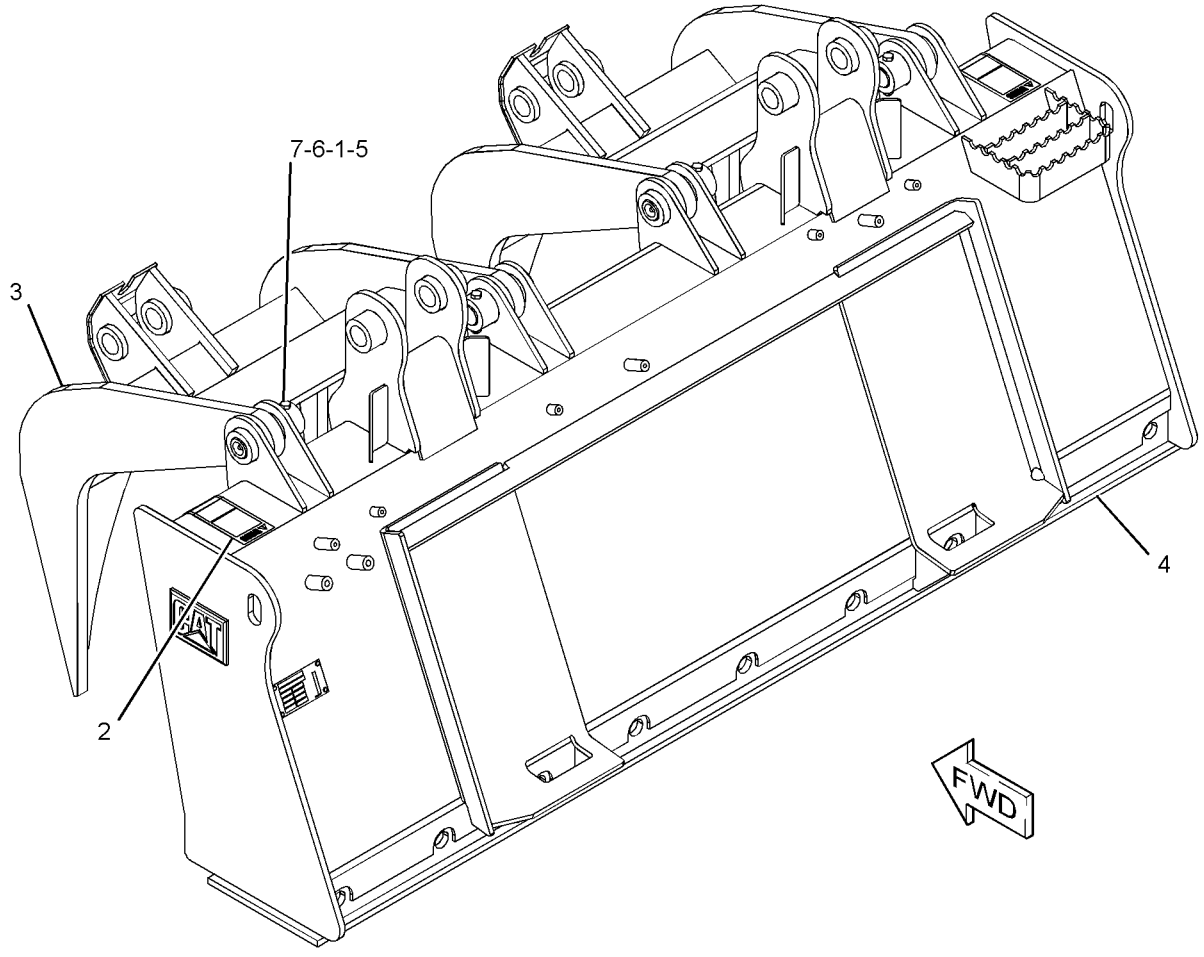


GRAPHIC #1 **<END>** g01279797

# 285-6110 FORK GP-GRAPPLE

**S/N: HEN6750-UP**
**1829-MM (72-IN)**
**PART OF 285-6115 FORK AR-GRAPPLE**
**AN ATTACHMENT**

**SMCS-6705** **i02760170**

| NOTE | REF NO | GRAPHIC REF | PART NUMBER | QTY | PART NAME 1 2 3 4 5 6 (PRODUCT LEVEL) | SEE PAGE |
|---|---|---|---|---|---|---|
| | 1 | 1 | **164-9989** | 2 | FILM-WARNING (IMPALED POINT) | |
| Y | 2 | 1 | *165-8732* | 9 | FORK GP-UTILITY | 437 |
| | | | | | | |
| | | | | | PARTS SHOWN IN GRAPHIC(S) WITHOUT A REFERENCE NUMBER ARE NOT SERVICED SEPARATELY | |

Y-SEPARATE ILLUSTRATION

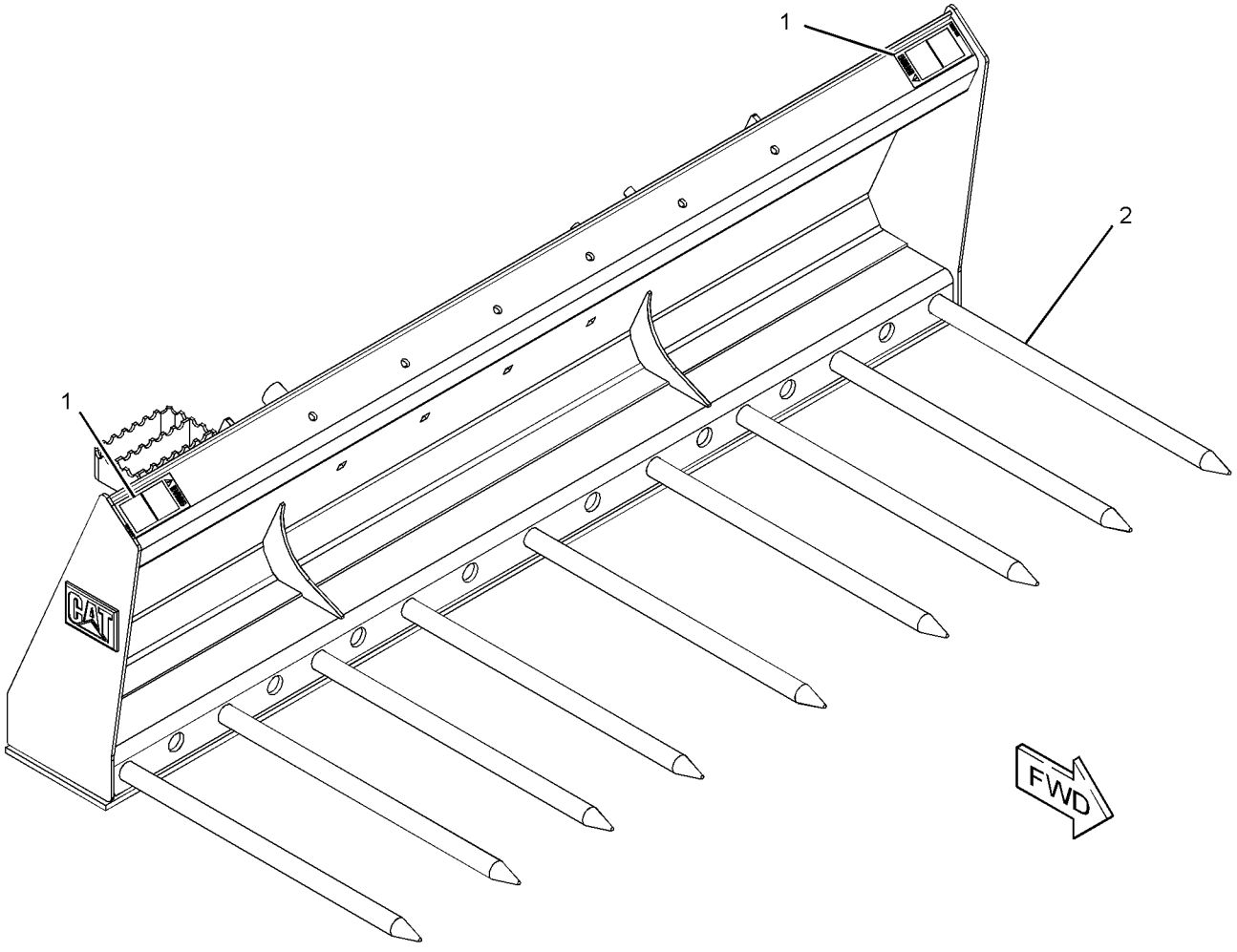


GRAPHIC #1 **<END>** g01381750

## *195-6942* FORK GP-PALLET

**S/N: HEN6750-UP**
**1067-MM (42-IN)**
**PART OF 293-9428 CARRIAGE & FORK AR**
**AN ATTACHMENT**

**SMCS-6136** **i02569271**

| NOTE | PART NUMBER | QTY | PART NAME 1 2 3 4 5 6 (PRODUCT LEVEL) | SEE PAGE |
|---|---|---|---|---|
| | 221-3429 | 1 | POSITIONER GP-FORK | |

**<END>**

## *195-6943* FORK GP-PALLET

**S/N: HEN6750-UP**
**914-MM (36-IN)**
**PART OF 293-9427 CARRIAGE & FORK AR**
**AN ATTACHMENT**

**SMCS-6136** **i02569272**

| NOTE | PART NUMBER | QTY | PART NAME 1 2 3 4 5 6 (PRODUCT LEVEL) | SEE PAGE |
|---|---|---|---|---|
| | 221-3429 | 1 | POSITIONER GP-FORK | |

**<END>**

## *195-8545* FORK GP-PALLET

**S/N: HEN6750-UP**
**1219-MM (48-IN)**
**PART OF 293-9429 CARRIAGE & FORK AR**
**AN ATTACHMENT**

**SMCS-6136** **i02569274**

| NOTE | PART NUMBER | QTY | PART NAME 1 2 3 4 5 6 (PRODUCT LEVEL) | SEE PAGE |
|---|---|---|---|---|
| | 221-3429 | 1 | POSITIONER GP-FORK | |

**<END>**

## 243-0001 FORK GP-PALLET–KIT

**S/N: HEN6750-UP**
**914-MM (36-IN)**
**AN ATTACHMENT**

**SMCS-6136** **i01964024**

| NOTE | PART NUMBER | QTY | PART NAME 1 2 3 4 5 6 (PRODUCT LEVEL) | SEE PAGE |
|---|---|---|---|---|
| | 195-6943 | 12 | FORK GP-PALLET (36 IN) | |
| | | | (EACH INCLUDES) | |
| | 221-3429 | 1 | POSITIONER GP-FORK | |

**<END>**

# WORK TOOLS

## 243-0002 FORK GP-PALLET–KIT

**S/N: HEN6750-UP**
**1067-MM (42-IN)**
**AN ATTACHMENT**

**SMCS-6136** **i01964030**

| NOTE | PART NUMBER | QTY | PART NAME 1 2 3 4 5 6 (PRODUCT LEVEL) | SEE PAGE |
|---|---|---|---|---|
| | **195-6942** | 12 | FORK GP-PALLET (42 IN) | |
| | | | (EACH INCLUDES) | |
| | **221-3429** | 1 | POSITIONER GP-FORK | |

**<END>**

## 243-0003 FORK GP-PALLET–KIT

**S/N: HEN6750-UP**
**1219-MM (48-IN)**
**AN ATTACHMENT**

**SMCS-6136** **i01964031**

| NOTE | PART NUMBER | QTY | PART NAME 1 2 3 4 5 6 (PRODUCT LEVEL) | SEE PAGE |
|---|---|---|---|---|
| | **195-8545** | 12 | FORK GP-PALLET (48 IN) | |
| | | | (EACH INCLUDES) | |
| | **221-3429** | 1 | POSITIONER GP-FORK | |

**<END>**

# *165-8732* FORK GP-UTILITY

**S/N: HEN6750-UP**
**PART OF 285-6110 FORK GP-GRAPPLE, 285-6105 FORK GP-UTILITY**
**AN ATTACHMENT**

**SMCS-6458** **i01204324**

| NOTE | REF NO | GRAPHIC REF | PART NUMBER | QTY | PART NAME 1 2 3 4 5 6 (PRODUCT LEVEL) | SEE PAGE |
|---|---|---|---|---|---|---|
| | 1 | 1 | **9R-2959** | 1 | CLIP | |
| | 2 | 1 | **166-4041** | 1 | TINE | |

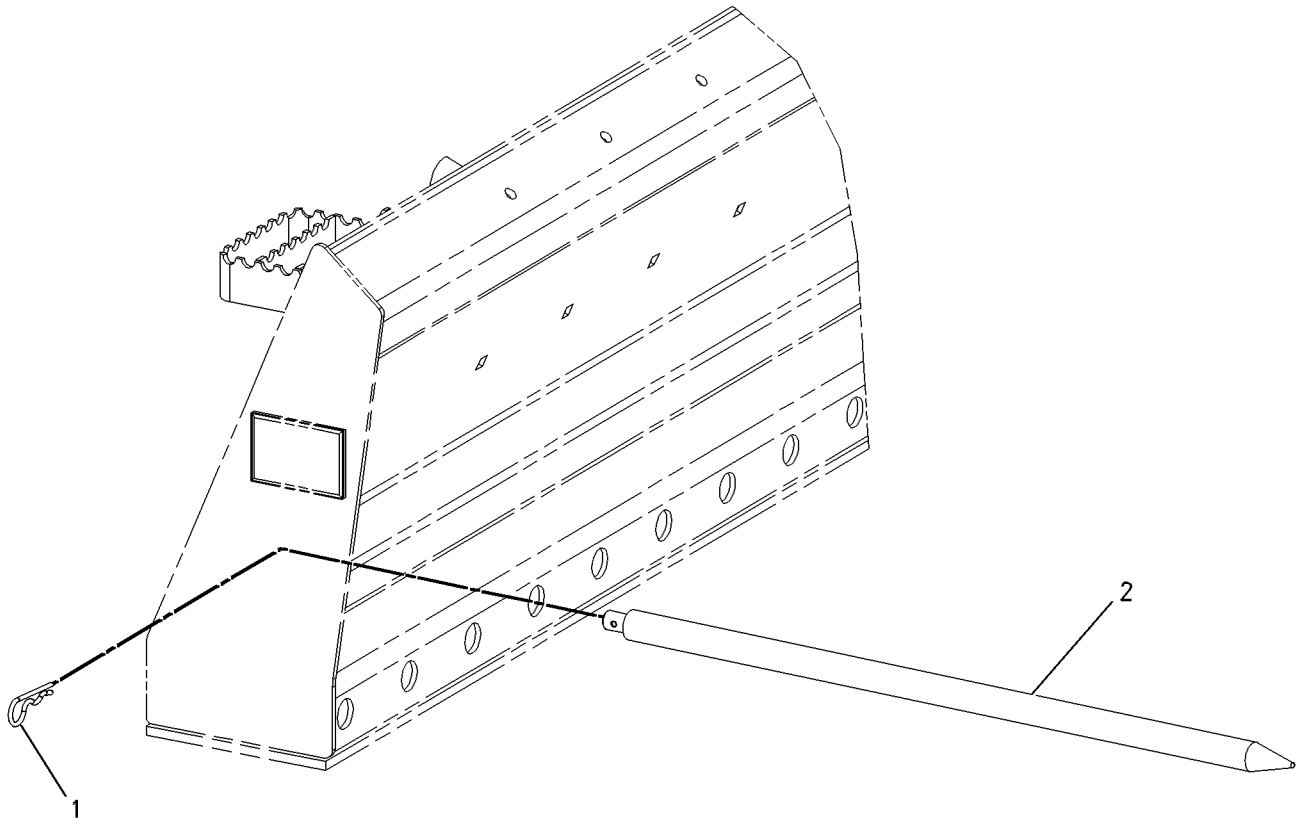


GRAPHIC #1 **<END>** g00639778

# 285-6105 FORK GP-UTILITY

**S/N: HEN6750-UP**
**1676-MM (66-IN)**
**PART OF 285-6114 FORK AR-GRAPPLE**
**AN ATTACHMENT**

**SMCS-6458** **i02552504**

| NOTE | REF NO | GRAPHIC REF | PART NUMBER | QTY | PART NAME 1 2 3 4 5 6 (PRODUCT LEVEL) | SEE PAGE |
|---|---|---|---|---|---|---|
| | 1 | 1 | **164-9989** | 2 | FILM-WARNING (IMPALED POINT) | |
| Y | 2 | 1 | *165-8732* | 7 | FORK GP-UTILITY | 437 |
| | | | | | | |
| | | | | | PARTS SHOWN IN GRAPHIC(S) WITHOUT A REFERENCE NUMBER ARE NOT SERVICED SEPARATELY | |

Y-SEPARATE ILLUSTRATION

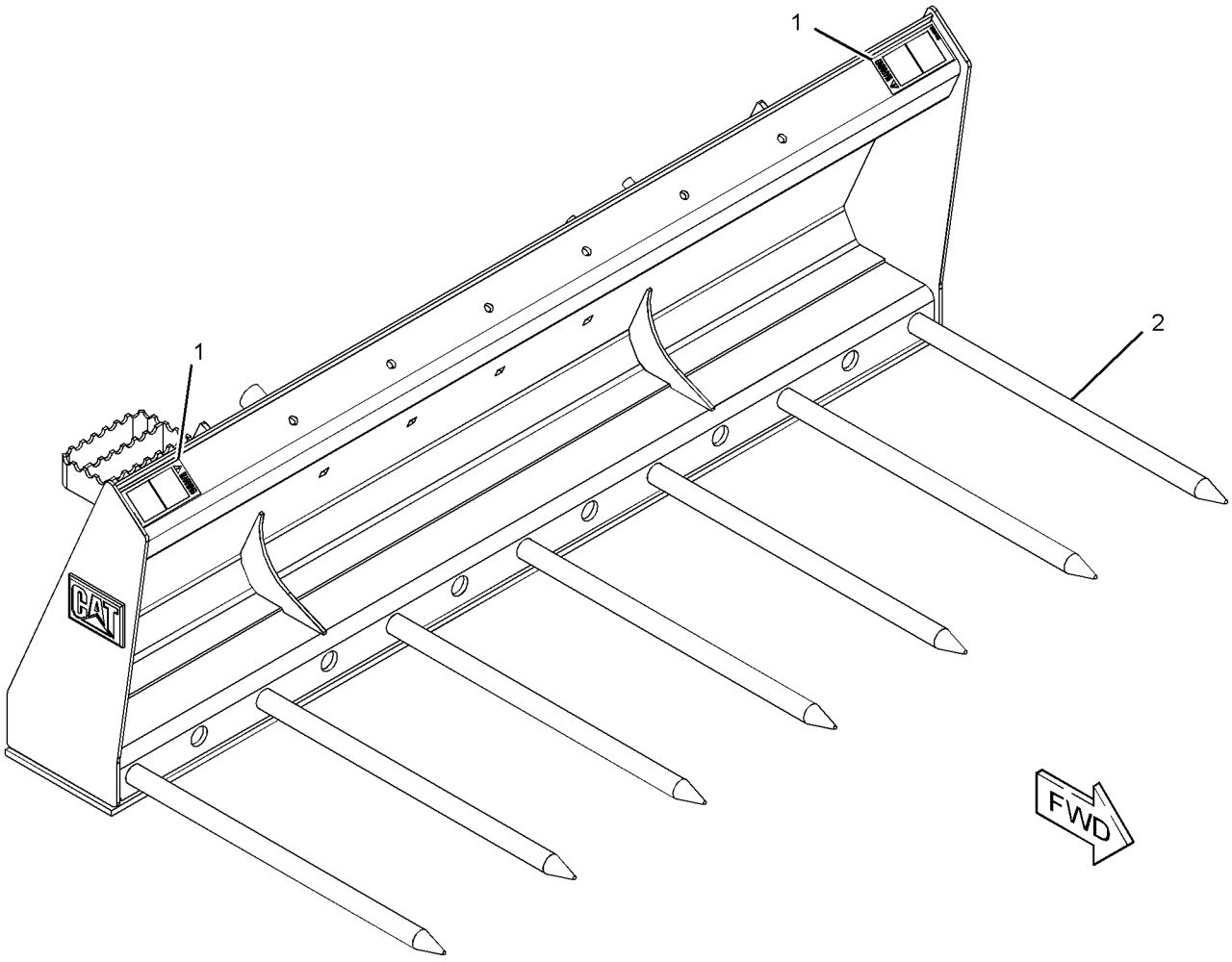


GRAPHIC #1 **<END>** g01280417

# WORK TOOLS

## *230-5670* FRAME GP-BLADE

**S/N: HEN6750-UP**
**PART OF 177-1989, 177-1990 BLADE AR**
**AN ATTACHMENT**

**SMCS-6060** **i01860873**

| NOTE | REF NO | GRAPHIC REF | PART NUMBER | QTY | PART NAME 1 2 3 4 5 6 (PRODUCT LEVEL) | SEE PAGE |
|---|---|---|---|---|---|---|
| | 1 | 1 | **177-1914** | 1 | PIN AS | |
| B | 2 | 1 | **177-1955** | 1 | SHIM (1-MM THK) | |
| B | 3 | 1 | **177-1956** | 1 | SHIM (2-MM) | |
| B | 4 | 1 | **177-1957** | 1 | SHIM (3-MM) | |
| | 5 | 1 | **177-1971** | 1 | FRAME AS | |
| | 6 | 1 | **177-1975** | 1 | FRAME AS | |
| | 7 | 1 | **230-5407** | 1 | FRAME AS | |
| | 8 | 1 | **3B-8489** | 1 | FITTING-GREASE | |
| | 9 | 1 | **5B-0935** | 1 | FITTING-GREASE | |
| M | 10 | 1 | **7X-2553** | 8 | BOLT (M16X2X40-MM) | |
| | 11 | 1 | **7X-7729** | 1 | WASHER (11X25X3-MM THK) | |
| | 12 | 1 | **8T-4122** | 8 | WASHER-HARD (17X32X3.5-MM THK) | |
| M | 13 | 1 | **8T-4137** | 1 | BOLT (M10X1.5X20-MM) | |

B-USE AS REQUIRED
M-METRIC PART

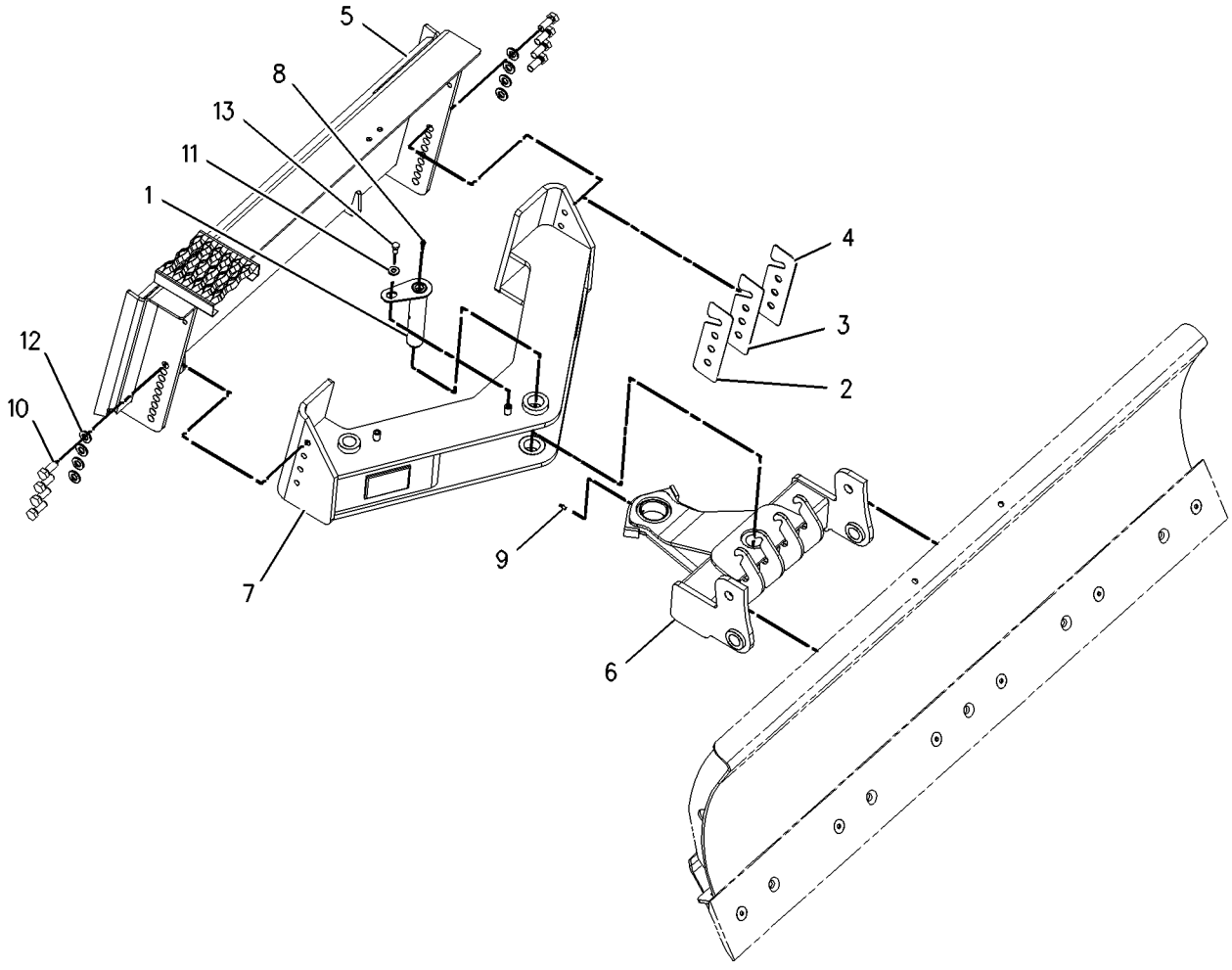


GRAPHIC #1 **<END>** g00978893

# 279-5352 FRAME GP-FORK–INDUSTRIAL

**S/N: HEN6750-UP**
**PART OF 279-5351 FORK GP-GRAPPLE**
**AN ATTACHMENT**

**SMCS-6705** **i02550300**

| NOTE | REF NO | GRAPHIC REF | PART NUMBER | QTY | PART NAME 1 2 3 4 5 6 (PRODUCT LEVEL) | SEE PAGE |
|---|---|---|---|---|---|---|
| | 1 | 1 | **154-2704** | 1 | PLATE-INSTRUCTION (BUCKET SPECIFICATIONS) | |
| | 2 | 1 | **168-8389** | 4 | TACK-FASTENER | |
| | 3 | 1 | **279-5353** | 1 | FORK AS | |

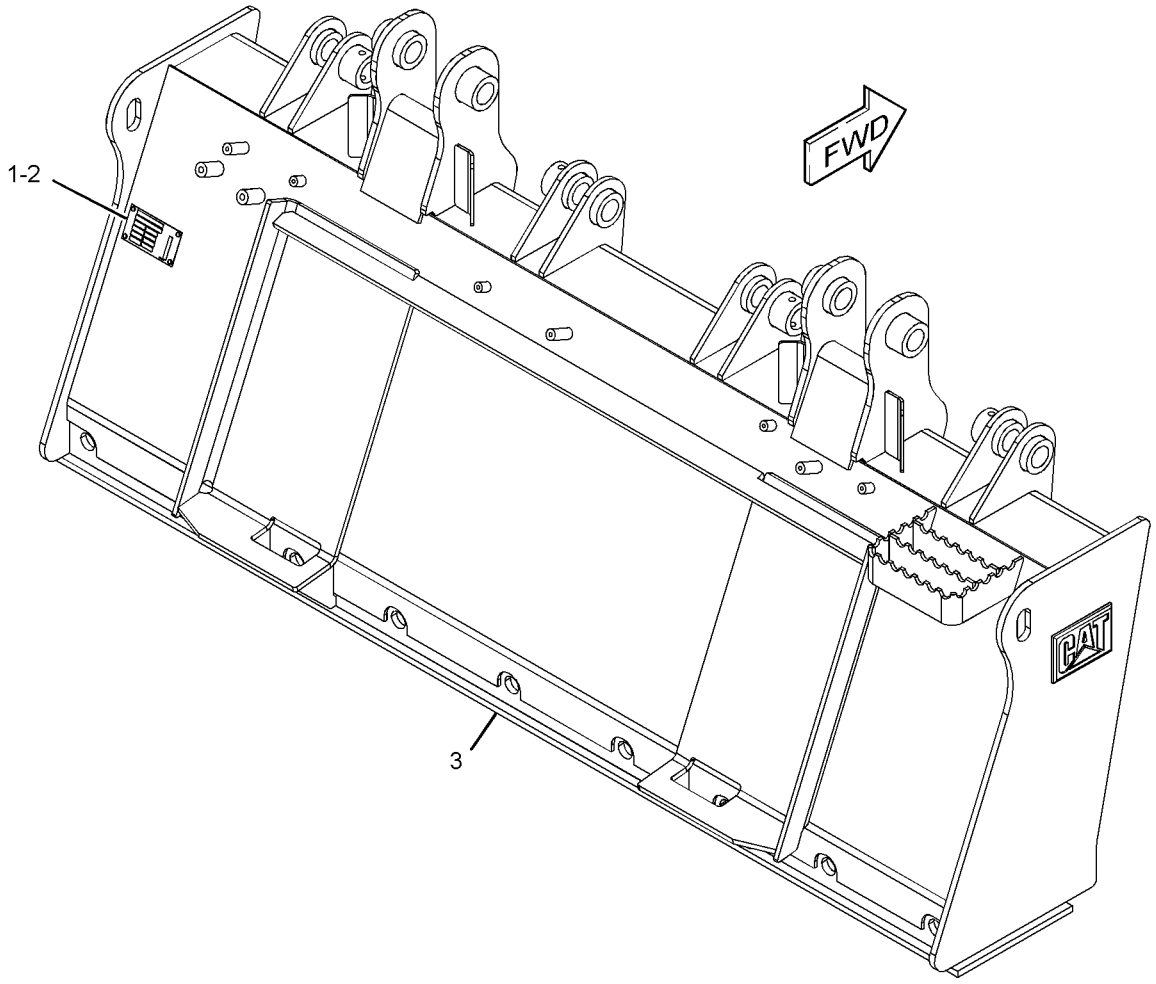


GRAPHIC #1 **<END>** g01280687

# 279-5358 FRAME GP-FORK–INDUSTRIAL

**S/N: HEN6750-UP**
**1829-MM (72-IN)**
**PART OF 279-5359 FRAME GP-GRAPPLE**
**AN ATTACHMENT**

**SMCS-6705** **i02550334**

| NOTE | REF NO | GRAPHIC REF | PART NUMBER | QTY | PART NAME 1 2 3 4 5 6 (PRODUCT LEVEL) | SEE PAGE |
|---|---|---|---|---|---|---|
| | 1 | 1 | **154-2704** | 1 | PLATE-INSTRUCTION (BUCKET SPECIFICATIONS) | |
| | 2 | 1 | **168-8389** | 4 | TACK-FASTENER | |
| | 3 | 1 | **279-5357** | 1 | FORK AS | |

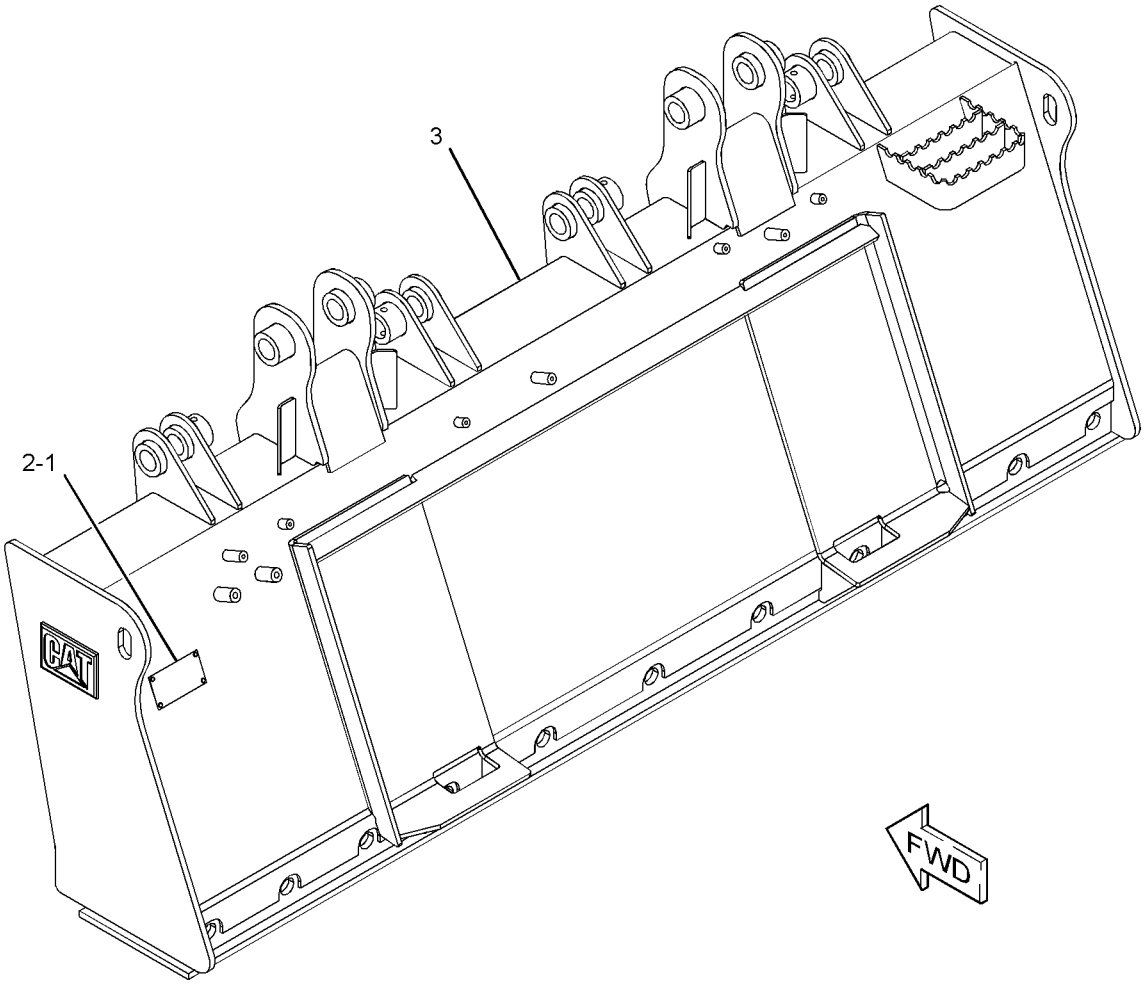


GRAPHIC #1 **<END>** g01279388

# *279-5359* FRAME GP-GRAPPLE–INDUSTRIAL

**S/N: HEN6750-UP**
**1829-MM (72-IN)**
**PART OF 279-5360 FORK AR-GRAPPLE**
**AN ATTACHMENT**

**SMCS-6705** **i02550333**

| NOTE | REF NO | GRAPHIC REF | PART NUMBER | QTY | PART NAME 1 2 3 4 5 6 (PRODUCT LEVEL) | SEE PAGE |
|---|---|---|---|---|---|---|
| | 1 | 1 | **157-0940** | 4 | PIN | |
| | 2 | 1 | **164-9989** | 2 | FILM-WARNING (IMPALED POINT) | |
| | 3 | 1 | **222-7467** | 2 | FORK AS | |
| Y | 4 | 1 | *279-5358* | 1 | FRAME GP-FORK (72-IN, INDUSTRIAL) | 441 |
| | 5 | 1 | **3B-8489** | 4 | FITTING-GREASE | |
| M | 6 | 1 | **6V-9189** | 4 | LOCKNUT (M8X1.25-THD) | |
| M | 7 | 1 | **8T-6869** | 4 | BOLT (M8X1.25X60-MM) | |

M-METRIC PART
Y-SEPARATE ILLUSTRATION

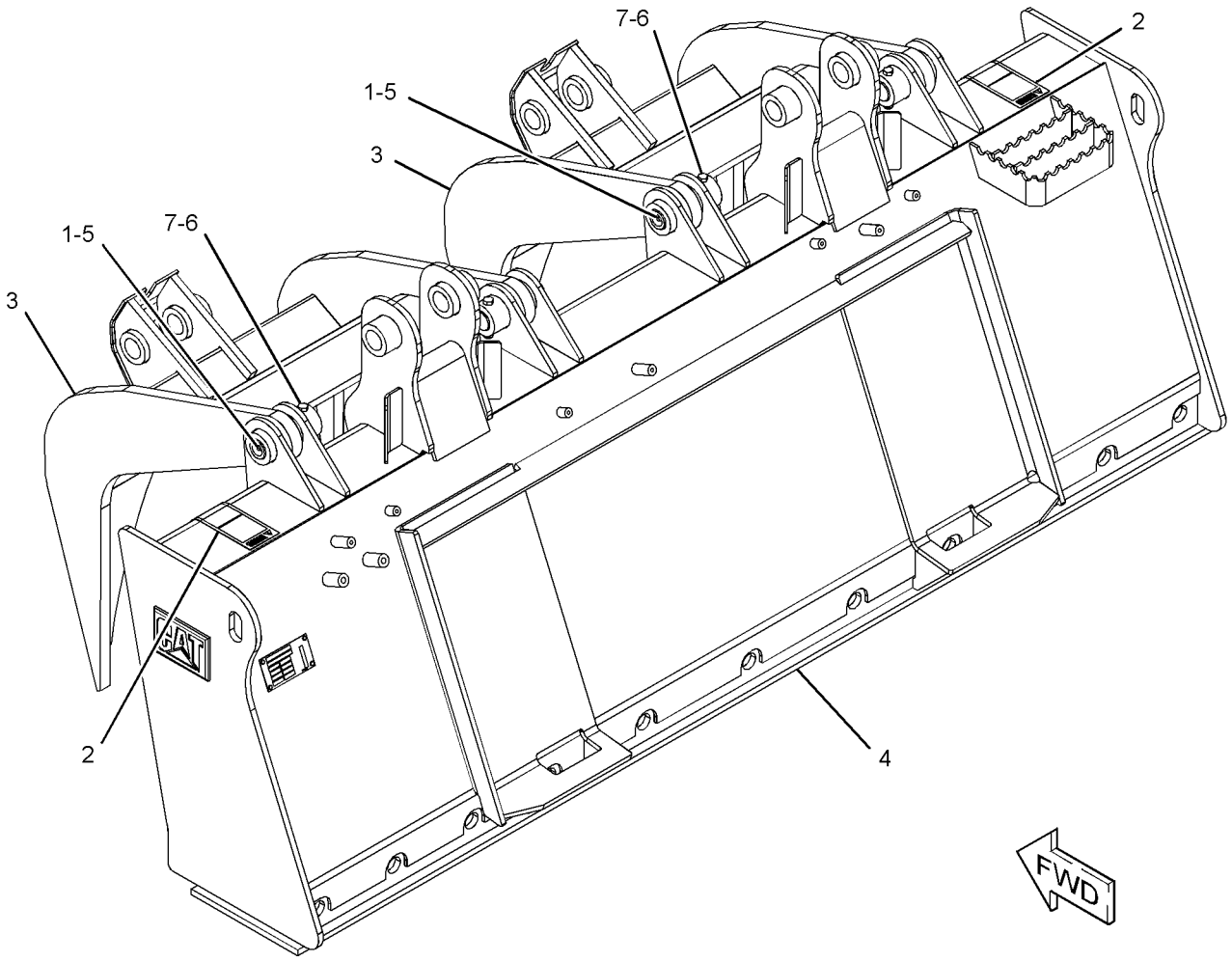


GRAPHIC #1 **<END>** g01280924

# WORK TOOLS

## *165-8740* GRAPPLE GP-UTILITY

**S/N: HEN6750-UP**
**PART OF 285-6116 GRAPPLE GP-UTILITY**
**AN ATTACHMENT**

**SMCS-6307** **i02772047**

| NOTE | REF NO | GRAPHIC REF | PART NUMBER | QTY | PART NAME 1 2 3 4 5 6 (PRODUCT LEVEL) | SEE PAGE |
|---|---|---|---|---|---|---|
| | 1 | 1 | **3B-8488** | 4 | FITTING-GREASE | |
| | 2 | 1 | **159-5411** | 4 | PIN | |
| | 3 | 1 | **165-8743** | 1 | ARM AS | |
| | 4 | 1 | **169-3569** | 1 | BRACKET AS | |
| | | 1 | **159-8035** | 2 | FILM-WARNING (CRUSH HAZARD, STAY BACK) | |
| M | 5 | 1 | **6V-9189** | 4 | LOCKNUT (M8X1.25-THD) | |
| M | 6 | 1 | **8T-6912** | 4 | BOLT (M8X1.25X50-MM) | |

M-METRIC PART

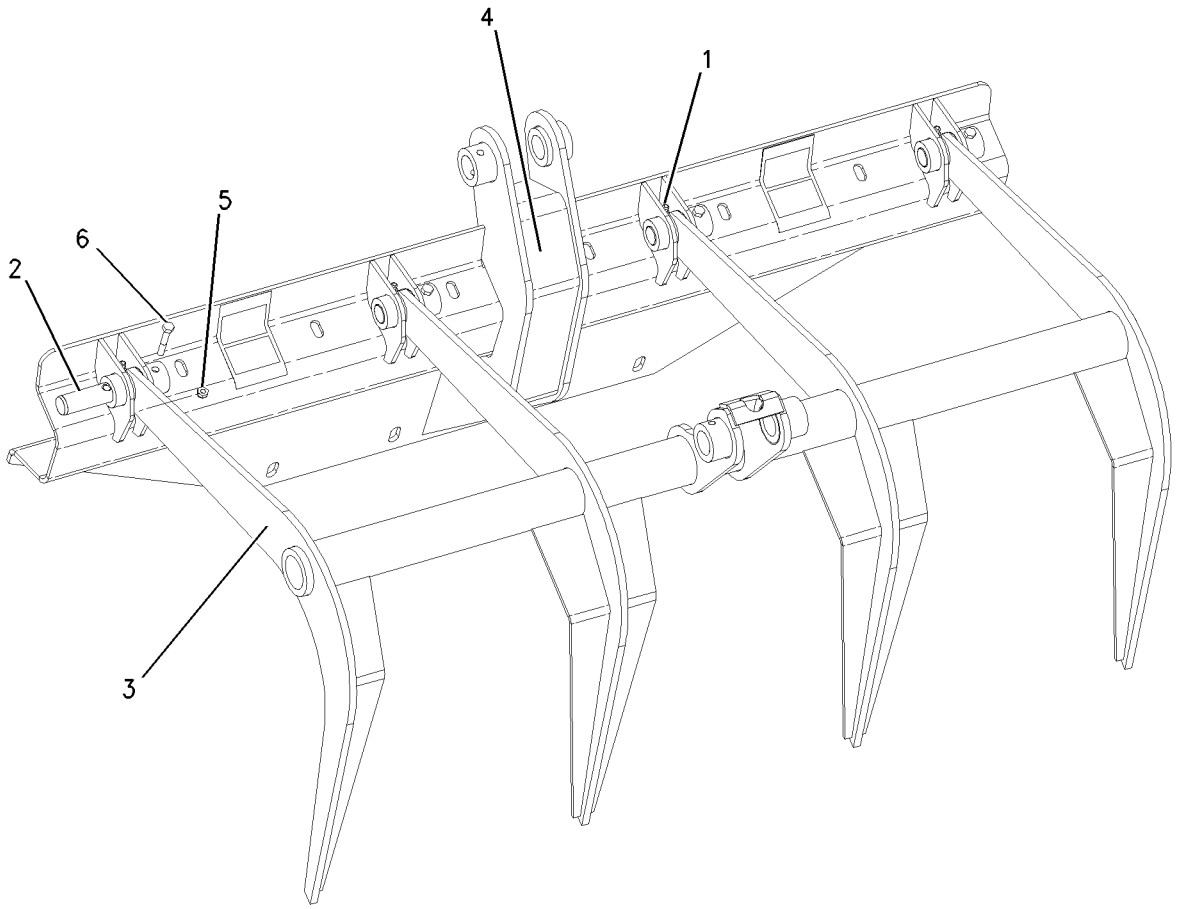


GRAPHIC #1 **<END>** g00777325

# WORK TOOLS

## *285-6116* GRAPPLE GP-UTILITY

**S/N: HEN6750-UP**
**PART OF 285-6093, 285-6104, 285-6111, 285-6112 BUCKET AR-GRAPPLE, 285-6114, 285-6115 FORK AR-GRAPPLE**
**AN ATTACHMENT**
**TYPE 1**

**SMCS-6307** **i02711972**

| NOTE | REF NO | GRAPHIC REF | PART NUMBER | QTY | PART NAME 1 2 3 4 5 6 (PRODUCT LEVEL) | SEE PAGE |
|---|---|---|---|---|---|---|
| Y | 1 | 1 | **164-9295** | 1 | CYLINDER GP-GRAPPLE | 240 |
| Y | 2 | 1 | *165-8731* | 1 | MOUNTING GP-CYLINDER (UTILITY) | 331 |
| Y | 3 | 1 | *165-8740* | 1 | GRAPPLE GP-UTILITY | 443 |
| M | 4 | 1 | **170-5836** | 4 | BOLT | |
| Y | 5 | 1 | *173-7407* | 1 | STOP GP-GRAPPLE | 457 |
| | 6 | 1 | **239-5029** | 1 | GUARD | |
| Y | 7 | 1 | *285-6113* | 1 | LINES GP-BUCKET | 272 |
| | 8 | 1 | **5P-1076** | 4 | WASHER-HARD (13.5X30X4-MM THK) | |
| M | 9 | 1 | **8T-4139** | 6 | BOLT (M12X1.75X30-MM) | |
| | 10 | 1 | **8T-4223** | 6 | WASHER-HARD (13.5X25.5X3-MM THK) | |
| M | 11 | 1 | **8T-4244** | 10 | NUT (M12X1.75-THD) | |

M-METRIC PART
Y-SEPARATE ILLUSTRATION

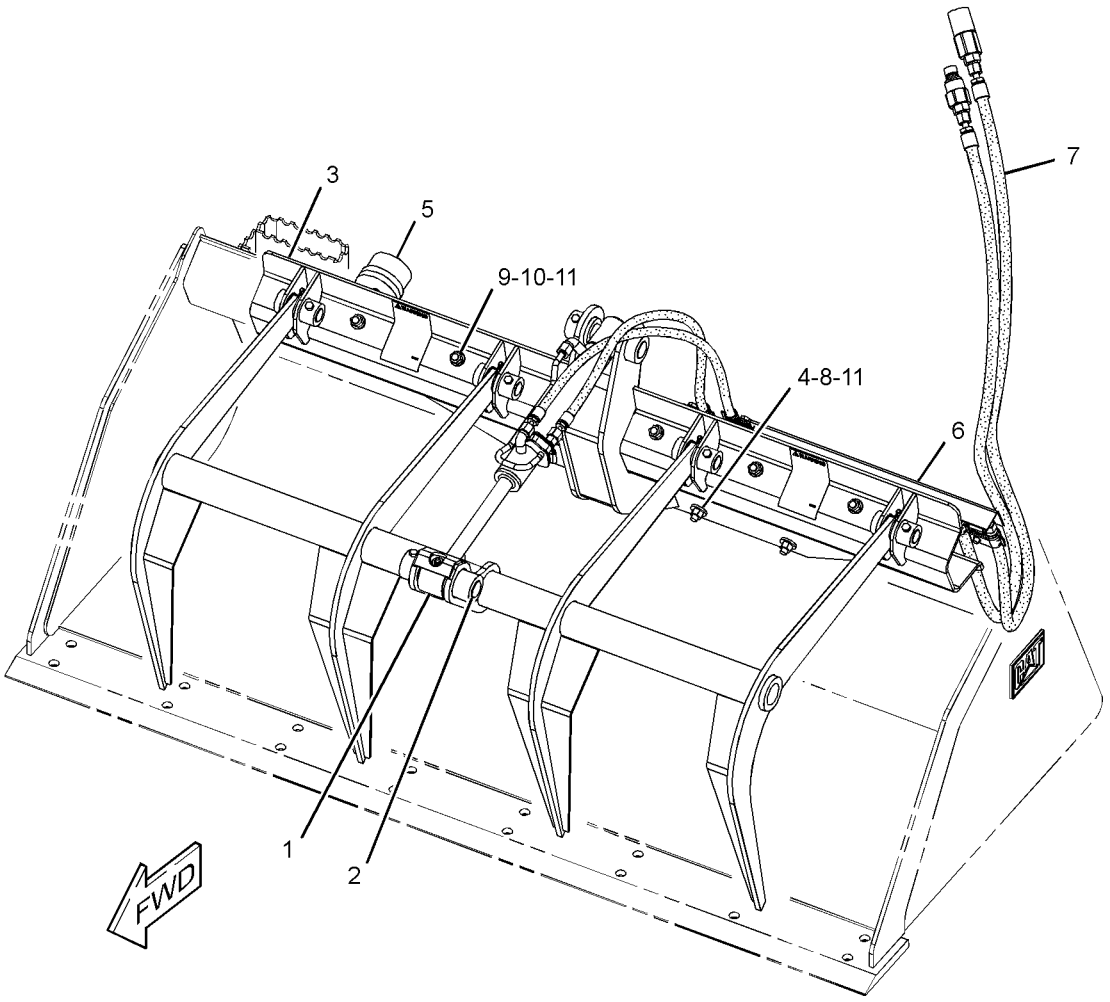


GRAPHIC #1 **<END>** g01278678

# 285-6116 GRAPPLE GP-UTILITY

**S/N: HEN6750-UP**
**PART OF 285-6093, 285-6104, 285-6111, 285-6112 BUCKET AR-GRAPPLE, 285-6114, 285-6115 FORK AR-GRAPPLE**
**AN ATTACHMENT**
**TYPE 2**

**SMCS-6307** **i02941009**

| NOTE | REF NO | GRAPHIC REF | PART NUMBER | QTY | PART NAME 1 2 3 4 5 6 (PRODUCT LEVEL) | SEE PAGE |
|---|---|---|---|---|---|---|
| CY | 1 | 1 | **255-0943** | 1 | CYLINDER GP-HYDRAULIC | 243 |
| Y | 2 | 1 | *165-8731* | 1 | MOUNTING GP-CYLINDER (UTILITY) | 331 |
| Y | 3 | 1 | *165-8740* | 1 | GRAPPLE GP-UTILITY | 443 |
| M | 4 | 1 | **170-5836** | 4 | BOLT (M12X1.75X35-MM) | |
| Y | 5 | 1 | *173-7407* | 1 | STOP GP-GRAPPLE | 457 |
| | 6 | 1 | **239-5029** | 1 | GUARD | |
| Y | 7 | 1 | *285-6113* | 1 | LINES GP-BUCKET | 272 |
| | 8 | 1 | **5P-1076** | 4 | WASHER-HARD (13.5X30X4-MM THK) | |
| M | 9 | 1 | **8T-4139** | 6 | BOLT (M12X1.75X30-MM) | |
| | 10 | 1 | **8T-4223** | 6 | WASHER-HARD (13.5X25.5X3-MM THK) | |
| M | 11 | 1 | **8T-4244** | 10 | NUT (M12X1.75-THD) | |

C-CHANGE FROM PREVIOUS TYPE
M-METRIC PART
Y-SEPARATE ILLUSTRATION

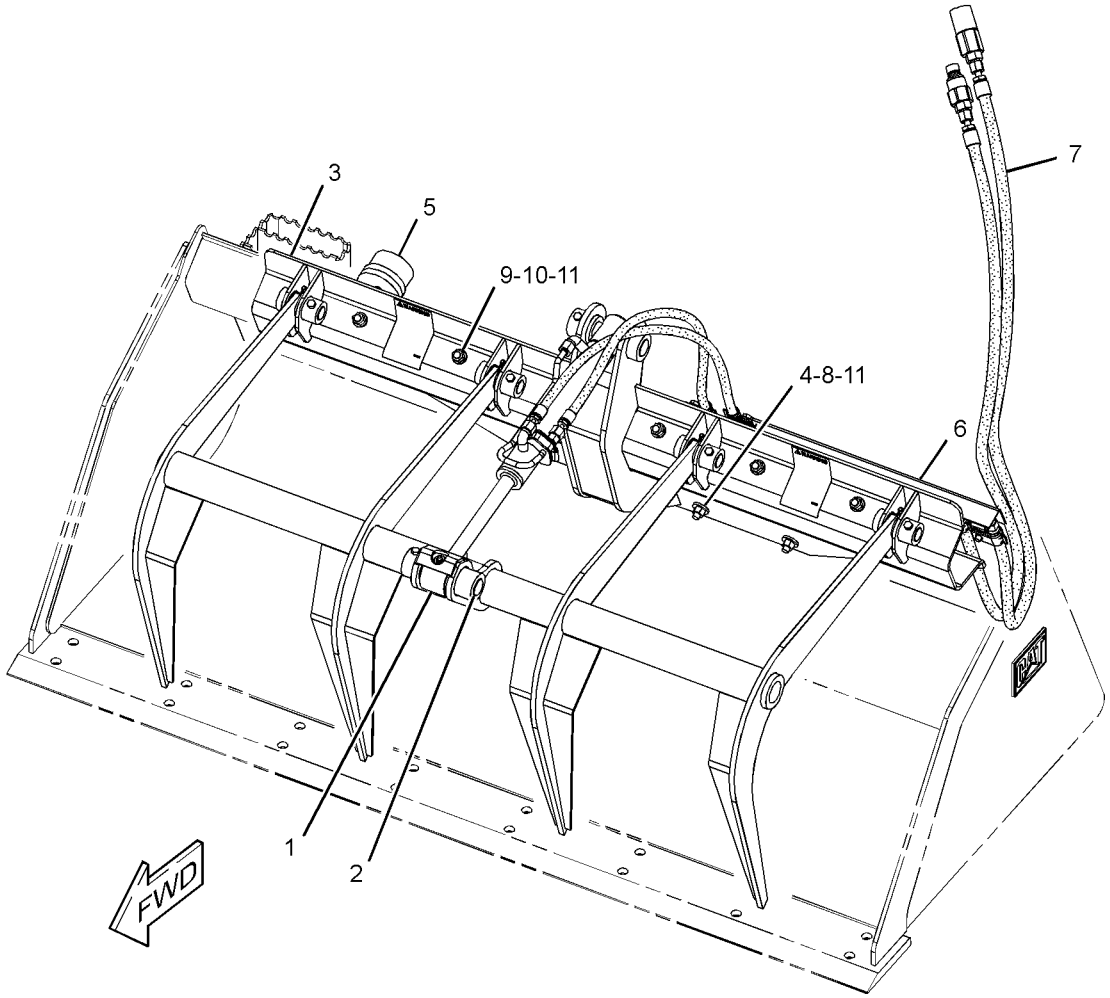


GRAPHIC #1 **<END>** g01278678

# *215-3960* HANDLE & PIN GP-COUPLER–LH

**S/N: HEN6750-UP**
**PART OF 196-8870 COUPLER GP-QUICK**
**AN ATTACHMENT**

**SMCS-6129** **i01928985**

| NOTE | REF NO | GRAPHIC REF | PART NUMBER | QTY | PART NAME 1 2 3 4 5 6 (PRODUCT LEVEL) | SEE PAGE |
|---|---|---|---|---|---|---|
| | 1 | 1 | **166-2560** | 1 | PIN-SPRING | |
| | 2 | 1 | **192-2642** | 1 | PIN | |
| Y | 3 | 1 | *215-3958* | 1 | HANDLE GP-COUPLER (LH) | 448 |

Y-SEPARATE ILLUSTRATION

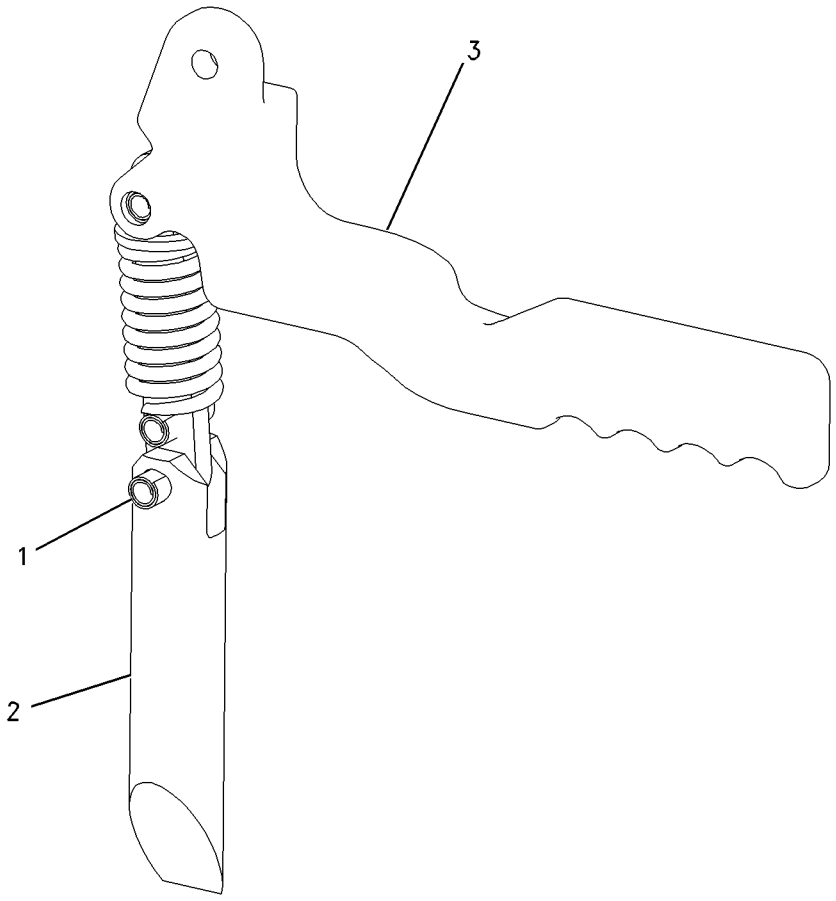


GRAPHIC #1 **<END>** g00861964

# *215-3961* HANDLE & PIN GP-COUPLER—RH

**S/N: HEN6750-UP**
**PART OF 196-8870 COUPLER GP-QUICK**
**AN ATTACHMENT**

**SMCS-6129** **i01928984**

| NOTE | REF NO | GRAPHIC REF | PART NUMBER | QTY | PART NAME 1 2 3 4 5 6 (PRODUCT LEVEL) | SEE PAGE |
|---|---|---|---|---|---|---|
| | 1 | 1 | **166-2560** | 1 | PIN-SPRING | |
| | 2 | 1 | **192-2642** | 1 | PIN | |
| Y | 3 | 1 | *215-3959* | 1 | HANDLE GP-COUPLER (RH) | 449 |

Y-SEPARATE ILLUSTRATION

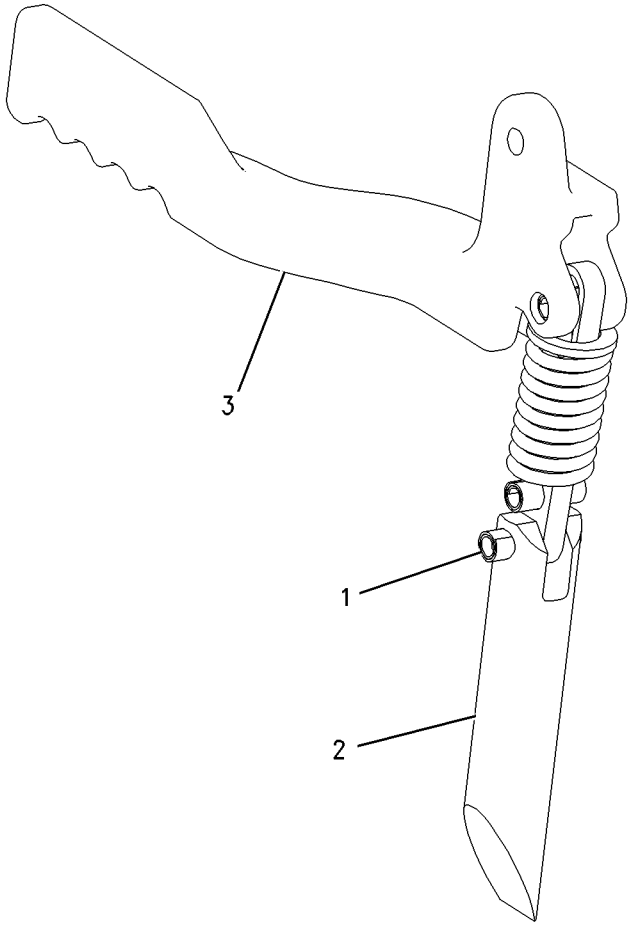


GRAPHIC #1 **<END>** g00861970

# *215-3958* HANDLE GP-COUPLER–LH

**S/N: HEN6750-UP**
**PART OF 215-3960 HANDLE & PIN GP-COUPLER**
**AN ATTACHMENT**

**SMCS-6129** **i02706274**

| NOTE | REF NO | GRAPHIC REF | PART NUMBER | QTY | PART NAME 1 2 3 4 5 6 (PRODUCT LEVEL) | SEE PAGE |
|---|---|---|---|---|---|---|
| | 1 | 1 | **192-2637** | 1 | PLATE | |
| | 2 | 1 | **238-7693** | 1 | SPRING | |
| | 3 | 1 | **258-2533** | 1 | HANDLE-LH | |
| | 4 | 1 | **195-6754** | 2 | PIN-SPRING | |
| | 5 | 1 | **8T-4123** | 2 | WASHER (22X35X3.5-MM THK) | |

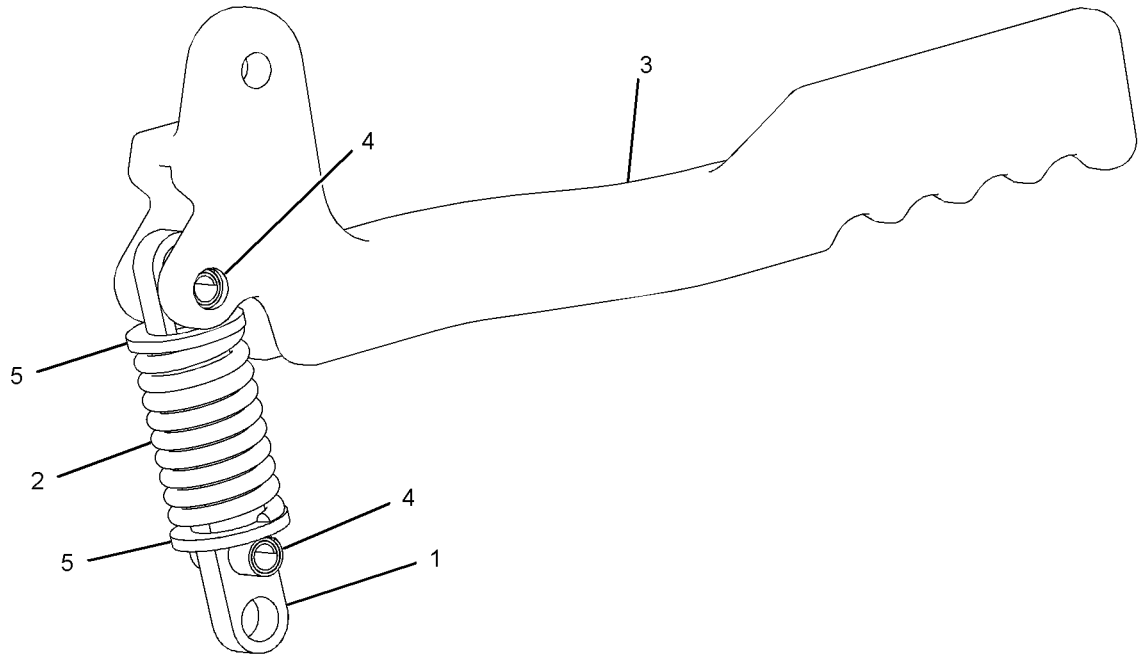


GRAPHIC #1 **<END>** g01154451

# *215-3959* HANDLE GP-COUPLER–RH

**S/N: HEN6750-UP**
**PART OF 215-3961 HANDLE & PIN GP-COUPLER**
**AN ATTACHMENT**

**SMCS-6129** **i02706275**

| NOTE | REF NO | GRAPHIC REF | PART NUMBER | QTY | PART NAME 1 2 3 4 5 6 (PRODUCT LEVEL) | SEE PAGE |
|---|---|---|---|---|---|---|
| | 1 | 1 | **192-2637** | 1 | PLATE | |
| | 2 | 1 | **258-2534** | 1 | HANDLE-RH | |
| | 3 | 1 | **195-6754** | 2 | PIN-SPRING | |
| | 4 | 1 | **238-7693** | 1 | SPRING | |
| | 5 | 1 | **8T-4123** | 2 | WASHER (22X35X3.5-MM THK) | |

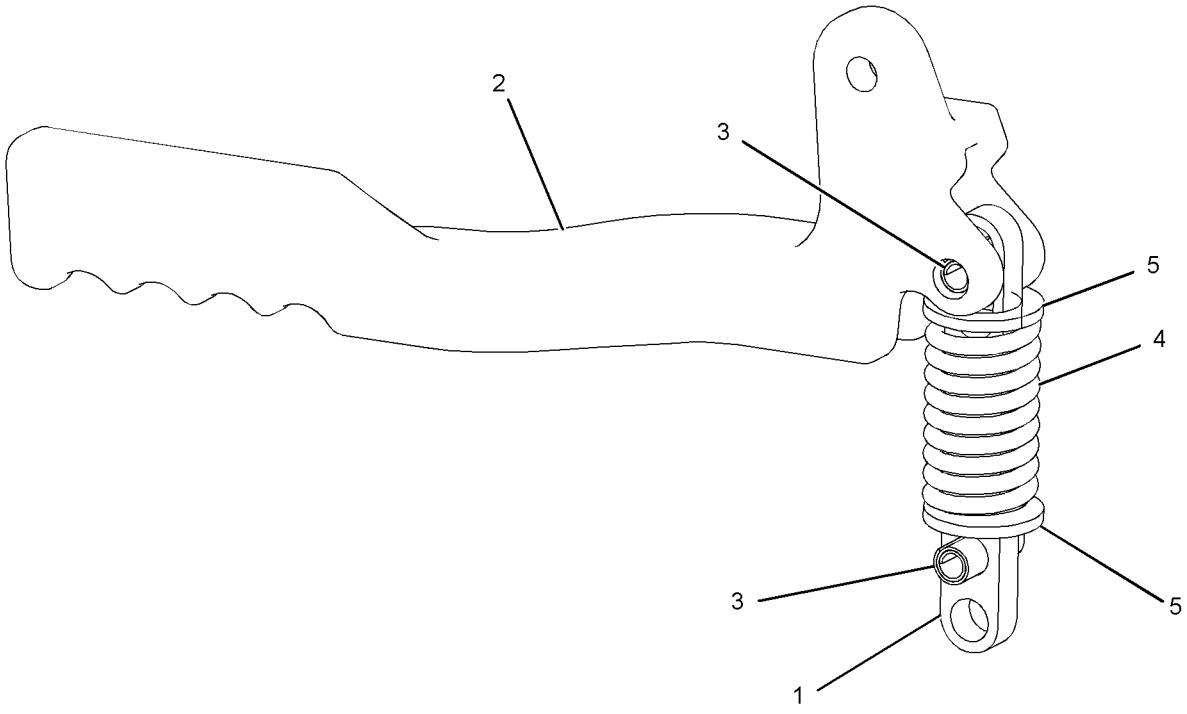


GRAPHIC #1 **<END>** g01104663

# 177-9152 KIT-ROADING PLATE & MOUNTING—BUCKET

**S/N: HEN6750-UP**

**PART OF 278-5373, 278-5418, 278-5448, 295-7154, 295-7170, 295-7171 CONVERSION AR-MACHINE, 236-5116, 236-5117, 251-1510 CONVERSION AR-ROADING AN ATTACHMENT**

**SMCS-7405, 7557** **i01905397**

| NOTE | REF NO | GRAPHIC REF | PART NUMBER | QTY | PART NAME 1 2 3 4 5 6 (PRODUCT LEVEL) | SEE PAGE |
|---|---|---|---|---|---|---|
| | 1 | 1 | **177-9153** | 2 | PLATE | |
| Y | 2 | 1 | *184-6097* | 1 | PLATE GP-ROADING (LH) | 453 |
| Y | 3 | 1 | *184-6098* | 1 | PLATE GP-ROADING (RH) | 454 |
| | 4 | 1 | **039-8557** | 2 | WASHER (13X26X6-MM THK) | |
| M | 5 | 1 | **6V-8949** | 4 | NUT (M10X1.5-6H THD) | |
| | 6 | 1 | **8T-4121** | 8 | WASHER-HARD (11X21X2.5-MM THK) | |
| M | 7 | 1 | **8T-4137** | 2 | BOLT (M10X1.5X20-MM) | |
| M | 8 | 1 | **8T-4186** | 2 | BOLT (M10X1.5X40-MM) | |

M-METRIC PART
Y-SEPARATE ILLUSTRATION

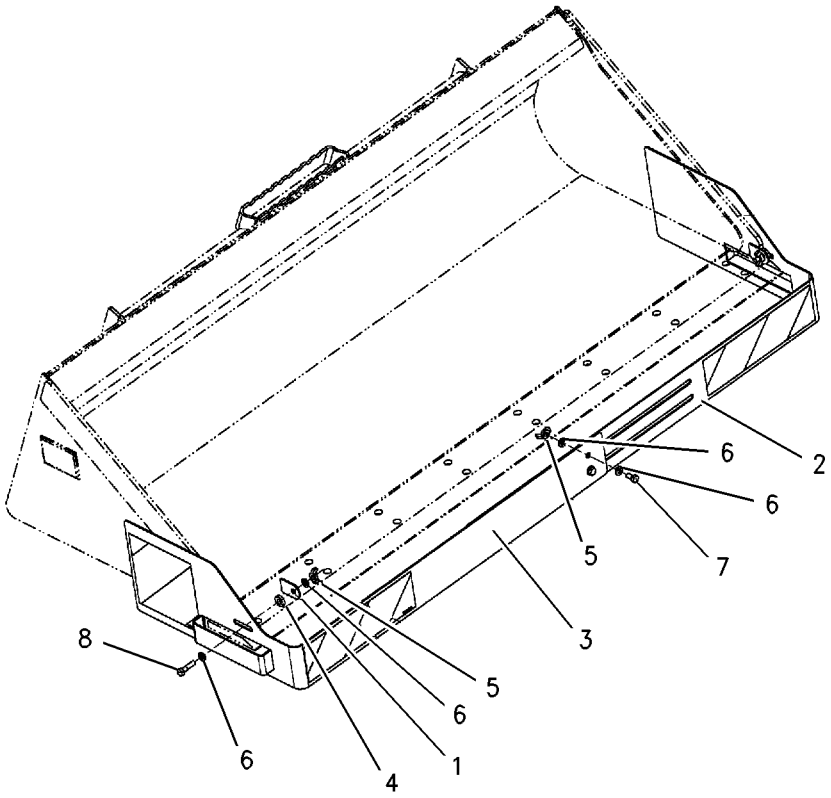


GRAPHIC #1 **<END>** g00778934

# WORK TOOLS

## *215-3957* LINK GP-COUPLER

**S/N: HEN6750-UP**

**PART OF 215-3962, 215-3963 CYLINDER & LINK GP-COUPLER, 218-6755 KIT-QUICK COUPLER CONVERSION**

**AN ATTACHMENT**

**SMCS-6129** **i02232650**

| NOTE | REF NO | GRAPHIC REF | PART NUMBER | QTY | PART NAME 1 2 3 4 5 6 (PRODUCT LEVEL) | SEE PAGE |
|---|---|---|---|---|---|---|
| | 1 | 1 | **192-2637** | 1 | PLATE | |
| | 2 | 1 | **192-2638** | 1 | BRACKET | |
| C | 3 | 1 | **238-7693** | 1 | SPRING | |
| | 4 | 1 | **195-6754** | 2 | PIN-SPRING | |
| C | 5 | 1 | **8T-4123** | 2 | WASHER (22X35X3.5-MM THK) | |

C-CHANGE FROM PREVIOUS TYPE

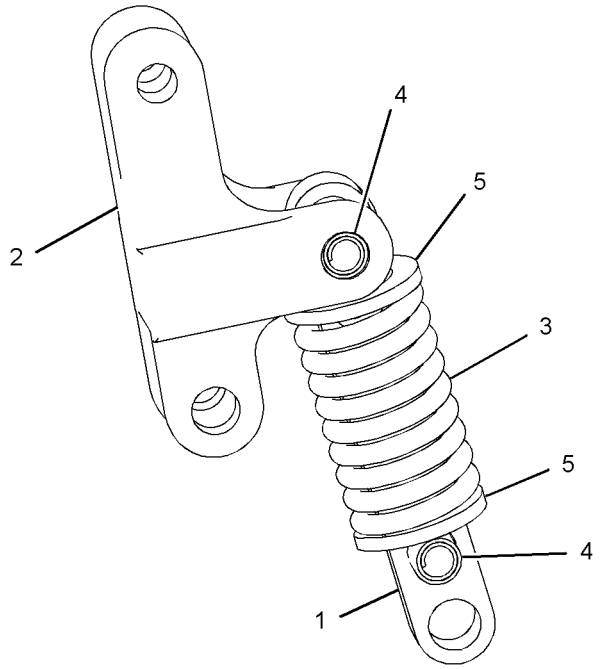


GRAPHIC #1 **<END>** g01130555

# *175-4238* LOCK GP-QUICK COUPLER–MECHANICAL

**S/N: HEN6750-UP**

**PART OF 278-5373, 278-5418, 278-5448, 295-7154, 295-7170, 295-7171 CONVERSION AR-MACHINE, 236-5116, 236-5117, 251-1510 CONVERSION AR-ROADING AN ATTACHMENT**

**SMCS-6129** **i01408856**

| NOTE | REF NO | GRAPHIC REF | PART NUMBER | QTY | PART NAME 1 2 3 4 5 6 (PRODUCT LEVEL) | SEE PAGE |
|---|---|---|---|---|---|---|
| | 1 | 1 | **9R-5301** | 1 | PIN-COTTER | |
| | 2 | 1 | **178-2247** | 1 | PIN | |
| | 3 | 1 | **9X-8257** | 1 | WASHER (17.5X30X3.5-MM THK) | |

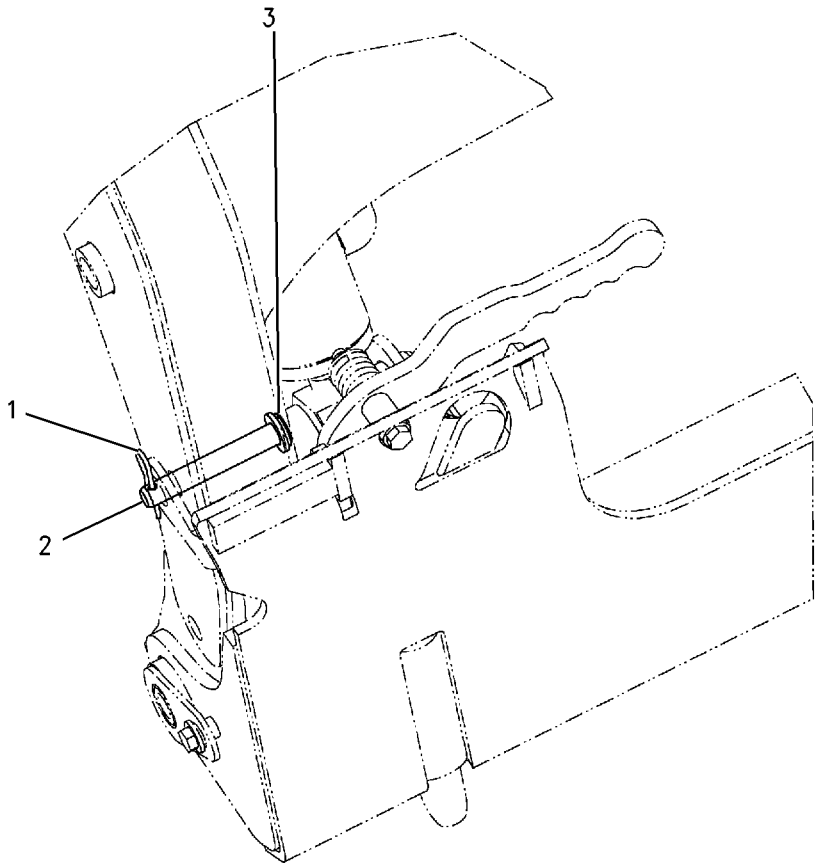


GRAPHIC #1 **<END>** g00741828

# *184-6097* PLATE GP-ROADING–LH

**S/N: HEN6750-UP**
**PART OF 177-9152 KIT-ROADING PLATE & MOUNTING**
**AN ATTACHMENT**

**SMCS-7405, 7557** **i02939455**

| NOTE | REF NO | GRAPHIC REF | PART NUMBER | QTY | PART NAME 1 2 3 4 5 6 (PRODUCT LEVEL) | SEE PAGE |
|---|---|---|---|---|---|---|
| | 1 | 1 | **177-7414** | 1 | FILM-STRIPE (REFLECTIVE, RED, WHITE) | |
| | 2 | 1 | **177-7415** | 1 | FILM (REFLECTIVE) | |
| | 3 | 1 | **177-9150** | 1 | PLATE AS (LH) | |

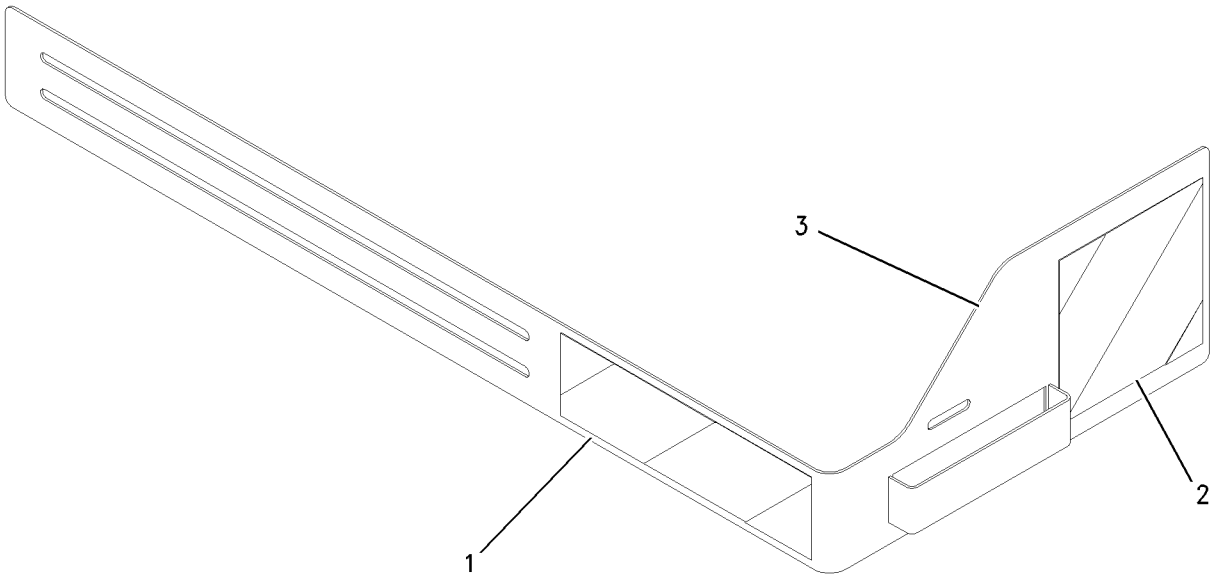


GRAPHIC #1 **<END>** g00995785

# *184-6098* PLATE GP-ROADING–RH

**S/N: HEN6750-UP**

**PART OF 177-9152 KIT-ROADING PLATE & MOUNTING**

**AN ATTACHMENT**

**SMCS-7405, 7557** **i02939456**

| NOTE | REF NO | GRAPHIC REF | PART NUMBER | QTY | PART NAME 1 2 3 4 5 6 (PRODUCT LEVEL) | SEE PAGE |
|---|---|---|---|---|---|---|
| | 1 | 1 | **177-7414** | 1 | FILM-STRIPE (REFLECTIVE, RED, WHITE) | |
| | 2 | 1 | **177-7415** | 1 | FILM (REFLECTIVE) | |
| | 3 | 1 | **177-9151** | 1 | PLATE AS (RH) | |

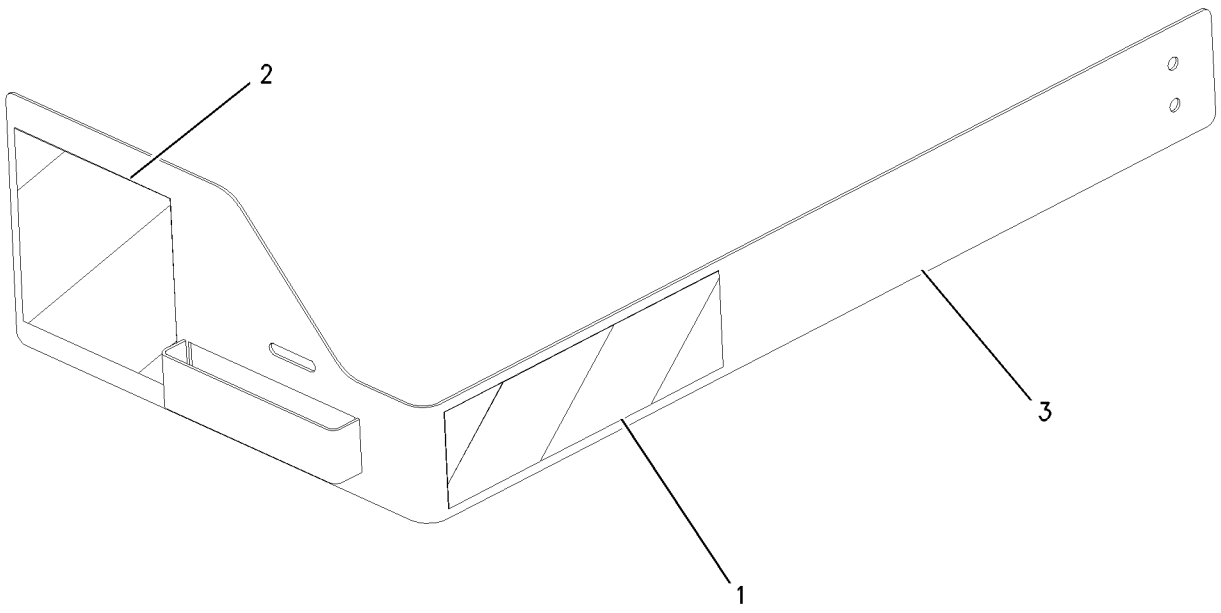


GRAPHIC #1 **<END>** g00995786

# *177-1983* SPRING GP-BLADE

**S/N: HEN6750-UP**
**PART OF 177-1989, 177-1990 BLADE AR**
**AN ATTACHMENT**

**SMCS-6060** **i01497986**

| NOTE | REF NO | GRAPHIC REF | PART NUMBER | QTY | PART NAME 1 2 3 4 5 6 (PRODUCT LEVEL) | SEE PAGE |
|---|---|---|---|---|---|---|
| | 1 | 1 | **177-1941** | 4 | SPRING | |
| | 2 | 1 | **177-1973** | 1 | PLATE AS | |
| M | 3 | 1 | **8T-4194** | 2 | BOLT (M12X1.75X50-MM) | |
| | 4 | 1 | **8T-4223** | 4 | WASHER-HARD (13.5X25.5X3-MM THK) | |
| M | 5 | 1 | **8T-4244** | 2 | NUT (M12X1.75-THD) | |

M-METRIC PART

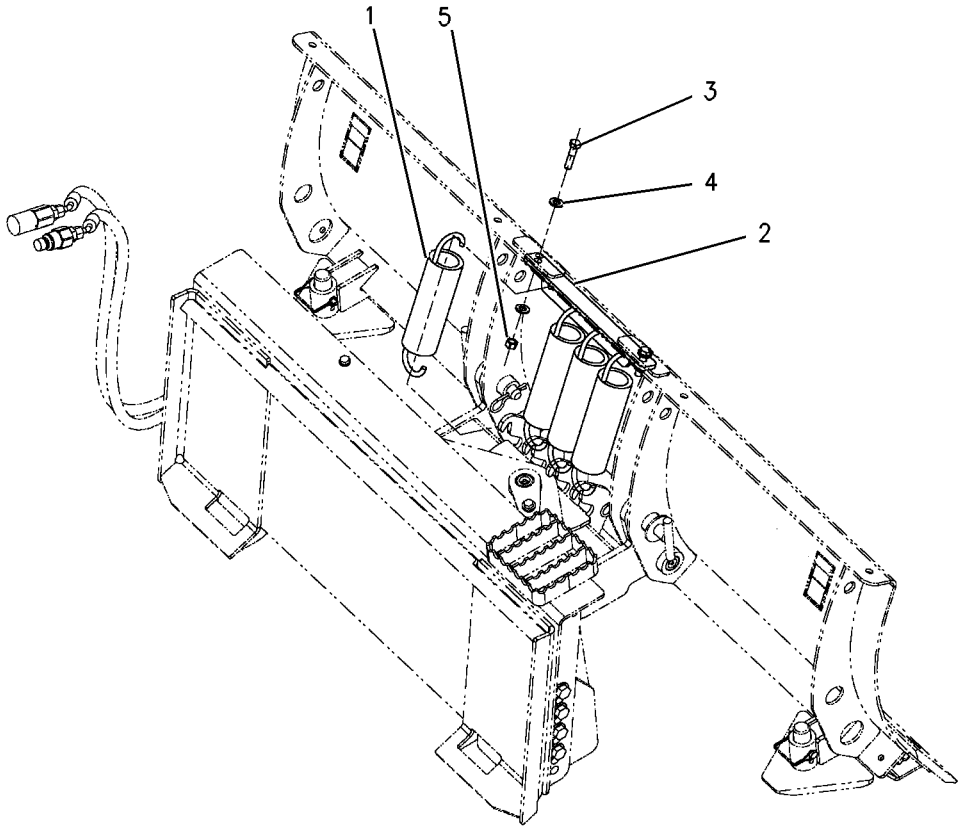


GRAPHIC #1 **<END>** g00777337

# *188-7733* STEP GP-MATERIAL HANDLING ARM

**S/N: HEN6750-UP**

**PART OF 216-8756 ARM GP-MATERIAL HANDLING**

**AN ATTACHMENT**

**SMCS-6542** **i01498007**

| NOTE | REF NO | GRAPHIC REF | PART NUMBER | QTY | PART NAME 1 2 3 4 5 6 (PRODUCT LEVEL) | SEE PAGE |
|---|---|---|---|---|---|---|
| | 1 | 1 | **186-5186** | 1 | STEP AS | |
| | 2 | 1 | **8T-4121** | 2 | WASHER-HARD (11X21X2.5-MM THK) | |
| M | 3 | 1 | **8T-4133** | 2 | NUT (M10X1.5-THD) | |
| M | 4 | 1 | **8T-4136** | 2 | BOLT (M10X1.5X25-MM) | |

M-METRIC PART

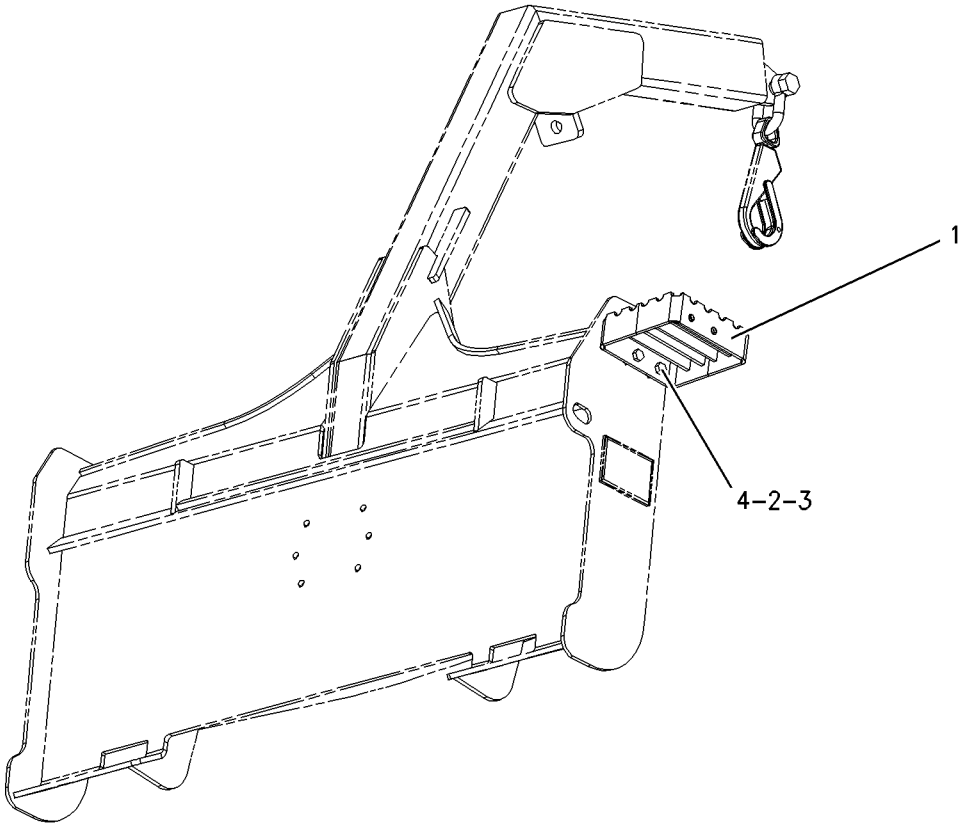


GRAPHIC #1 **<END>** g00777345

# *173-7407* STOP GP-GRAPPLE–UTILITY

**S/N: HEN6750-UP**
**PART OF 285-6116 GRAPPLE GP-UTILITY**
**AN ATTACHMENT**

**SMCS-6307** **i01218895**

| NOTE | REF NO | GRAPHIC REF | PART NUMBER | QTY | PART NAME 1 2 3 4 5 6 (PRODUCT LEVEL) | SEE PAGE |
|---|---|---|---|---|---|---|
| | 1 | 1 | **8Y-7386** | 1 | SPACER (12.5X17.1X16.5-MM THK) | |
| | 2 | 1 | **2S-6408** | 2 | WASHER-RETAINING (0.531X3.25X0.438-IN THK) | |
| | 3 | 1 | **8T-4223** | 1 | WASHER-HARD (13.5X25.5X3-MM THK) | |
| M | 4 | 1 | **8T-4910** | 1 | BOLT (M12X1.75X60-MM) | |
| | 5 | 1 | **8Y-7385** | 1 | STOP | |

M-METRIC PART

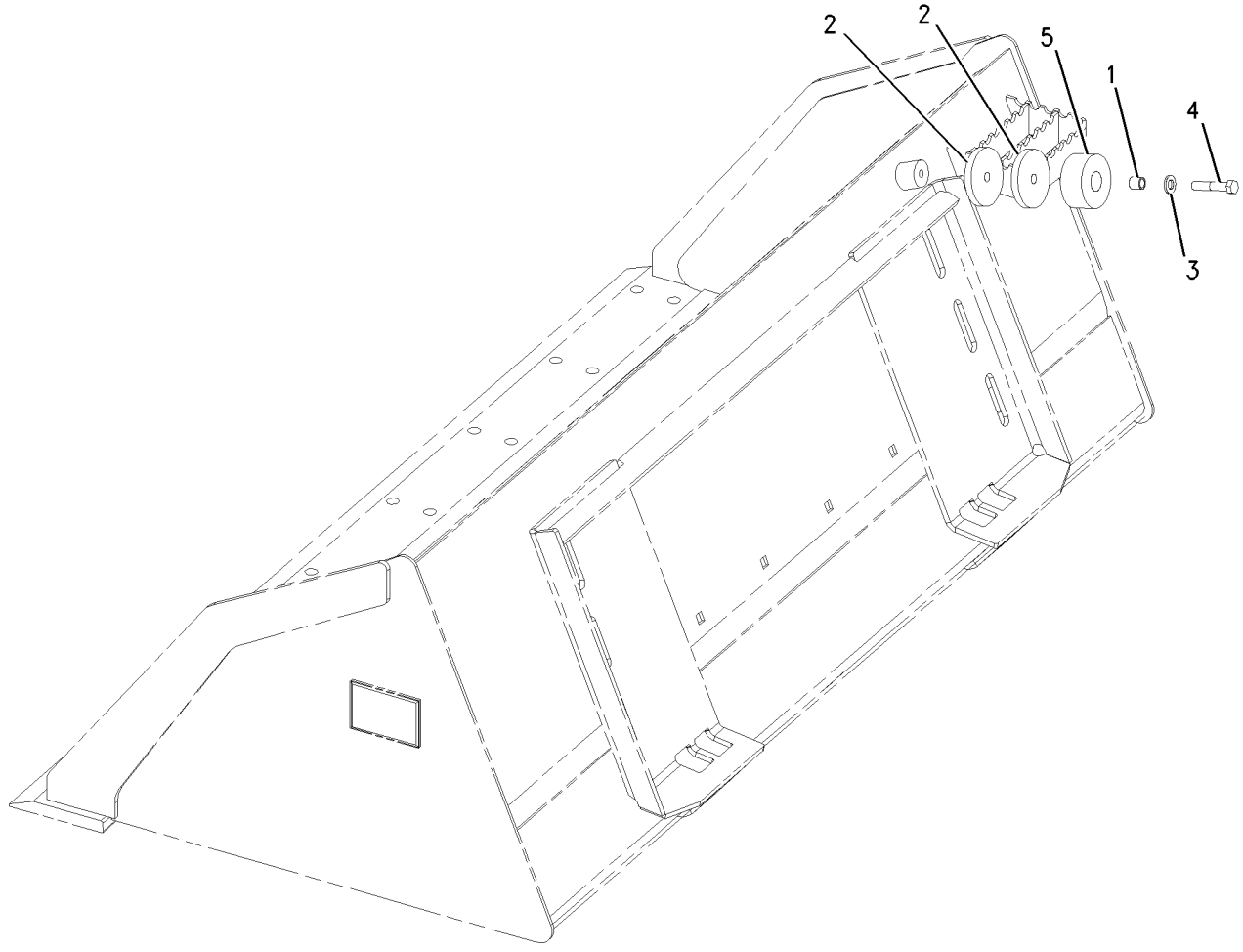


GRAPHIC #1 **<END>** g00651574

# *116-2001* STRAINER GP-WATER

**S/N: HEN6750-UP**
**PART OF 252-0386 TANK & MTG GP-WATER**
**AN ATTACHMENT**

**SMCS-5612** **i02571404**

| NOTE | REF NO | GRAPHIC REF | PART NUMBER | QTY | PART NAME 1 2 3 4 5 6 (PRODUCT LEVEL) | SEE PAGE |
|---|---|---|---|---|---|---|
| | 1 | 1 | **119-1415** | 1 | GASKET | |
| | 2 | 1 | **119-1414** | 1 | SCREEN (WATER TANK) | |

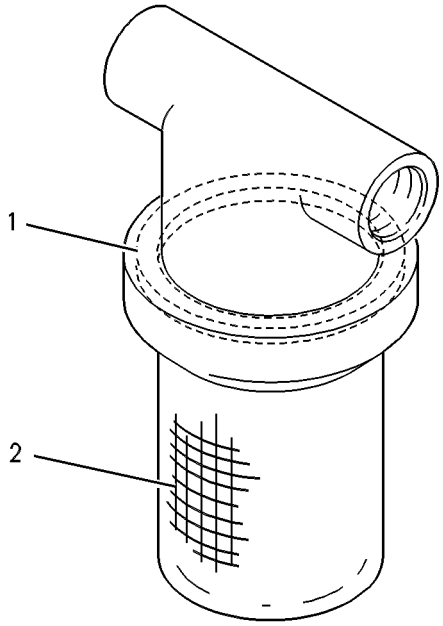


GRAPHIC #1 **<END>** g00293866

# WORK TOOLS

## 252-0386 TANK & MTG GP-WATER—KIT

**S/N: HEN6750-UP**
**AN ATTACHMENT**

**SMCS-5613** **i02571301**

| NOTE | REF NO | GRAPHIC REF | PART NUMBER | QTY | PART NAME 1 2 3 4 5 6 (PRODUCT LEVEL) | SEE PAGE |
|---|---|---|---|---|---|---|
| | 1 | 1 | **3B-7255** | 1 | BUSHING-REDUCING | |
| | 2 | 1 | **3S-2093** | 4 | STRAP-CABLE | |
| | 3 | 1 | **4E-0724** | 1 | SPACER (9X20X28-MM THK) | |
| | 4 | 1 | **7X-0495** | 1 | ADAPTER | |
| | 5 | 1 | **8T-0737** | 1 | VALVE-SHUTOFF | |
| Y | 6 | 1 | **116-2001** | 1 | STRAINER GP-WATER | 458 |
| | 7 | 1 | **124-1916** | 1 | COUPLING-PERMANENT | |
| | 8 | 1 | **124-1917** | 1 | COUPLING-PERMANENT | |
| | 9 | 1 | **165-4894** | 1 | HARNESS AS-WORK TOOL | |
| | | 1 | **102-8806** | 1 | KIT-RECEPTACLE (8-PIN) | |
| | | | | | (INCLUDES RECEPTACLE AS & WEDGE) | |
| | | 1 | **155-2265** | 1 | KIT-CONNECTING PLUG (8-PIN) | |
| | | 1 | **155-2270** | 1 | KIT-CONNECTING PLUG (2-PIN) | |
| | | | | | (EACH PLUG KIT INCLUDES PLUG AS, WEDGE & INTERFACE SEAL) | |
| Y | 10 | 1 | **166-2551** | 1 | TANK GP-WATER | 462 |
| I | 11 | 1 | **166-2552** | 1 | HOSE AS | |
| | 12 | 1 | **166-2557** | 1 | PLATE | |
| | 13 | 1 | **166-2558** | 1 | COUPLING | |
| | 14 | 1 | **166-2559** | 2 | BRACKET | |
| | 15 | 1 | **218-5847** | 1 | PLATE | |
| | 16 | 1 | **218-5975** | 1 | BRACKET AS | |
| | 17 | 1 | **233-5719** | 1 | PUMP GP-DIAPHRAGM | |
| | 18 | 1 | **233-5892** | 1 | PLATE AS | |
| | 19 | 1 | **233-5893** | 1 | PLATE AS | |
| | 20 | 1 | **003-2143** | 1 | ELBOW | |
| | 21 | 1 | **067-2551** | 2 | CLIP | |
| | 22 | 1 | **095-0912** | 2 | CLIP | |
| M | 23 | 1 | **111-4627** | 4 | SCREW-MACHINE (M6X1X30-MM) | |
| | 24 | 1 | **119-3859** | 6 | SCREW-PAN HEAD (10-16X0.75-IN) | |
| M | 25 | 1 | **129-3178** | 4 | LOCKNUT (M6X1-THD) | |
| | 26 | 1 | **1L-2279** | 1 | ELBOW | |
| M | 27 | 1 | **5C-7261** | 3 | NUT (M8X1.25-THD) | |
| | 28 | 1 | **5P-4116** | 1 | WASHER-HARD (8.8X20.5X2-MM THK) | |
| | 29 | 1 | **5P-8246** | 2 | WASHER-HARD (15.5X29X3-MM THK) | |
| | 30 | 1 | **8T-4122** | 16 | WASHER-HARD (17X32X3.5-MM THK) | |
| M | 31 | 1 | **8T-4132** | 4 | NUT (M16X2-THD) | |
| | 32 | 1 | **8T-4205** | 6 | WASHER-HARD (7.2X14.5X2-MM THK) | |
| | 33 | 1 | **8T-4224** | 8 | WASHER-HARD (8.8X16X2-MM THK) | |
| M | 34 | 1 | **8T-4779** | 12 | BOLT (M16X2X35-MM) | |
| M | 35 | 1 | **8T-4908** | 6 | BOLT (M8X1.25X25-MM) | |
| M | 36 | 1 | **8T-6869** | 1 | BOLT (M8X1.25X60-MM) | |
| G | 37 | 1 | **122-6869** | | HOSE-HYDRAULIC (142-IN) | |
| | 38 | 1 | **142-7505** | 2 | PLATE AS | |
| | 39 | 1 | **166-2556** | 1 | BRACKET | |
| BE | 40 | 1 | **167-0608** | | SEAL | |
| | 41 | 1 | **195-6696** | 1 | PLATE | |
| | 42 | 1 | **7K-1181** | 2 | STRAP-CABLE | |
| | 43 | 1 | **8T-4121** | 7 | WASHER-HARD (11X21X2.5-MM THK) | |
| M | 44 | 1 | **8T-4133** | 2 | NUT (M10X1.5-THD) | |
| M | 45 | 1 | **8T-4136** | 2 | BOLT (M10X1.5X25-MM) | |
| M | 46 | 1 | **8T-4137** | 5 | BOLT (M10X1.5X20-MM) | |
| M | 47 | 1 | **8T-4191** | 2 | BOLT (M10X1.5X16-MM) | |

## 252-0386 TANK & MTG GP-WATER *(contd. )* i02571301

B-USE AS REQUIRED
E-ORDER BY THE CENTIMETER
G-ORDER BY THE INCH
I-REFER TO HYDRAULIC INFORMATION SYSTEM
M-METRIC PART
Y-SEPARATE ILLUSTRATION

**252-0386 TANK & MTG GP-WATER** *(contd. )* **i02571301**

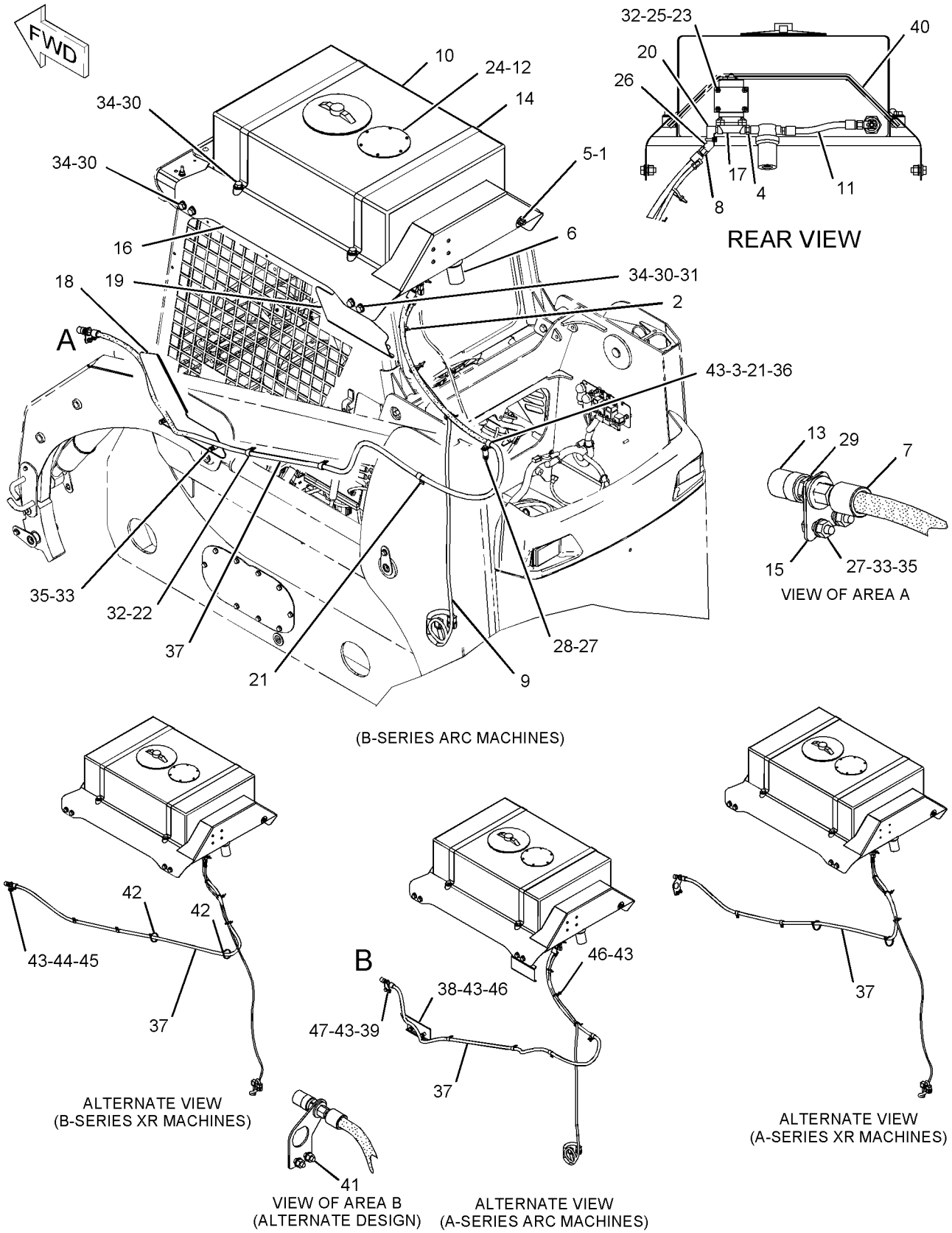


GRAPHIC #1

**<END>**

g01094533

# WORK TOOLS

## 166-2551 TANK GP-WATER

**S/N: HEN6750-UP**
**PART OF 252-0386 TANK & MTG GP-WATER**
**AN ATTACHMENT**

**SMCS-5613** **i02571400**

| NOTE | REF NO | GRAPHIC REF | PART NUMBER | QTY | PART NAME 1 2 3 4 5 6 (PRODUCT LEVEL) | SEE PAGE |
|---|---|---|---|---|---|---|
| | 1 | 1 | **192-2606** | 1 | CAP AS (WATER TANK) | |
| | 2 | 1 | **192-2607** | 1 | FITTING-DRAIN | |

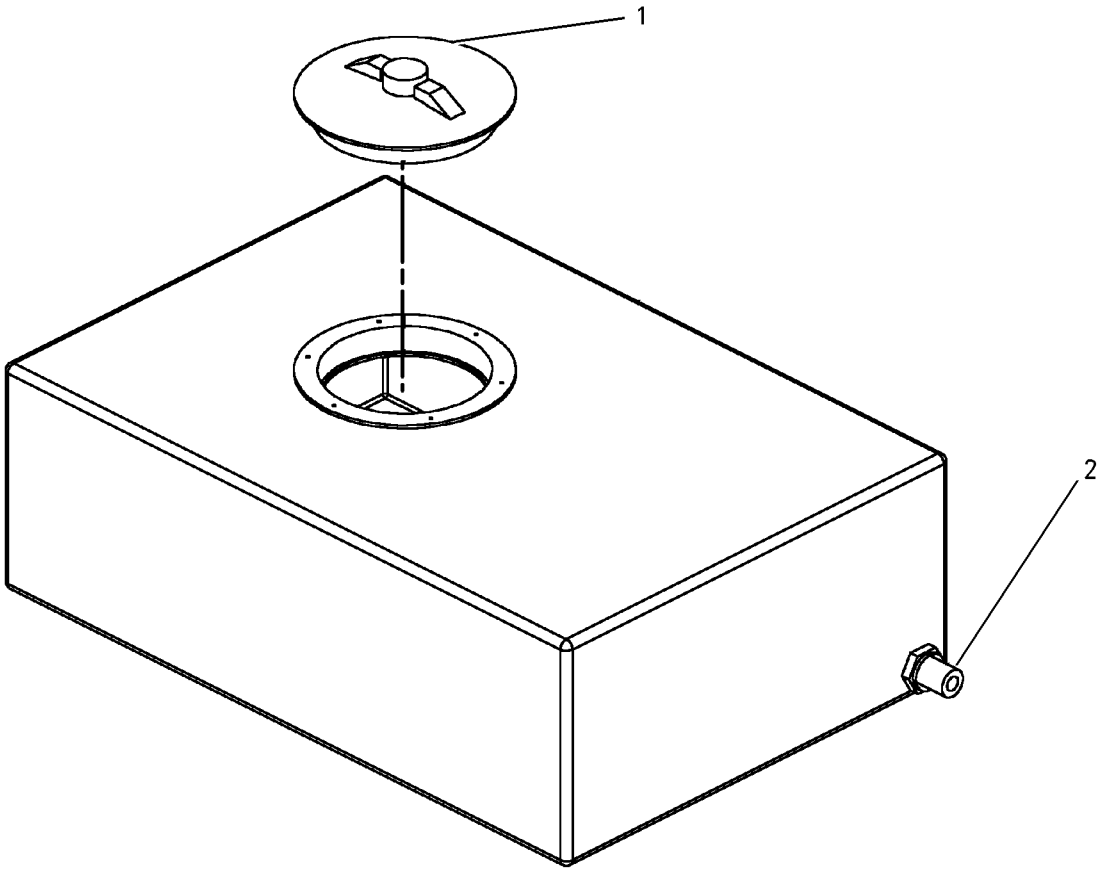


GRAPHIC #1 **<END>** g00742953

# *141-4999* TOOTH GP-UNI

**S/N: HEN6750-UP**

**PART OF 229-3426, 279-5366, 279-5370, 279-5374, 279-5378 BUCKET AR-GENERAL PURPOSE, 279-5380, 279-5392, 279-5400, 279-5401 BUCKET AR-MULTIPURPOSE AN ATTACHMENT**

**SMCS-6822** **i02163942**

| NOTE | REF NO | GRAPHIC REF | PART NUMBER | QTY | PART NAME 1 2 3 4 5 6 (PRODUCT LEVEL) | SEE PAGE |
|---|---|---|---|---|---|---|
| | 1 | 1 | **132-4720** | 1 | TOOTH-UNI-SINGLE STRAP | |
| | 2 | 1 | **246-4349** | 2 | SCREW-FLAT HEAD (M16X2-THD) | |
| M | 3 | 1 | **8T-4778** | 2 | LOCKNUT (M16X2-THD) | |

M-METRIC PART

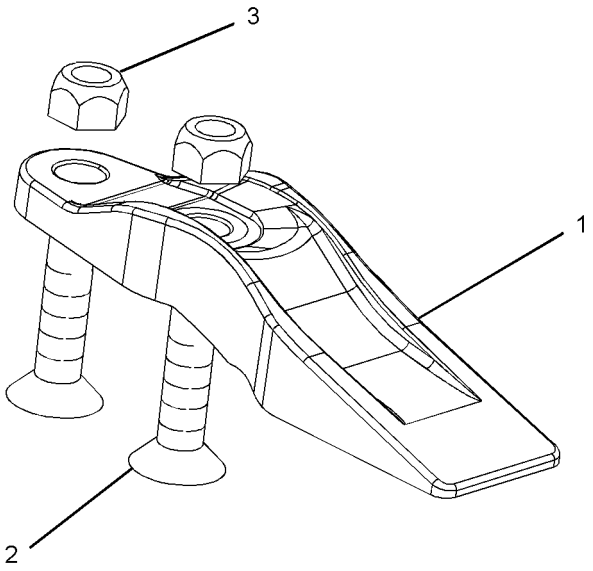


GRAPHIC #1 **<END>** g01097424

# OPERATOR STATION

## *176-3900* ACCUMULATOR GP-REFRIGERANT—WITH DESICCANT

**S/N: HEN6750-UP**

**FIELD REPLACEMENT FOR 186-6190—PAGE 465**

**SMCS-7320** **i02195254**

| NOTE | REF NO | GRAPHIC REF | PART NUMBER | QTY | PART NAME 1 2 3 4 5 6 (PRODUCT LEVEL) | SEE PAGE |
|---|---|---|---|---|---|---|
| | | | | | (NO SERVICED PARTS) | |

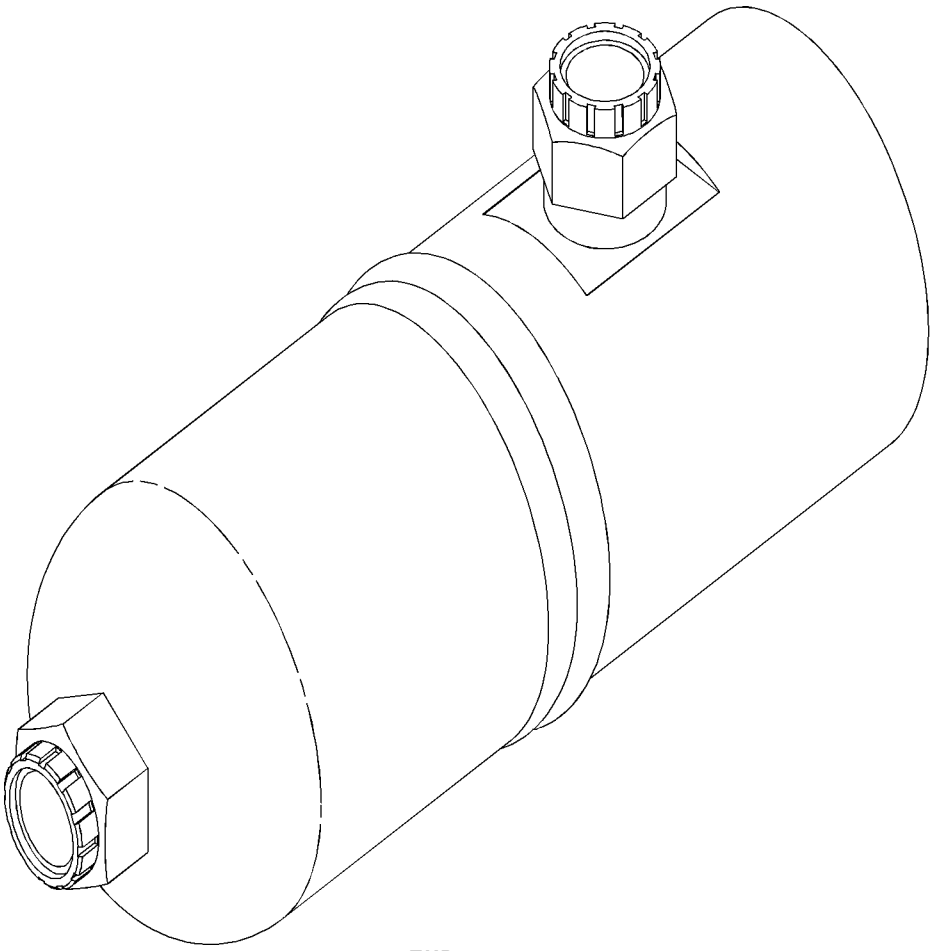

GRAPHIC #1 **<END>** g01035076

## *186-6190* ACCUMULATOR GP-REFRIGERANT–WITH DESICCANT

**S/N: HEN6750-UP**
**PART OF 218-6747 KIT-AIR COND & HEATER INSTL, 218-6749 KIT-AIR CONDITIONER INSTL, 218-5680 LINES GP-AIR CONDITIONER**
**FIELD REPLACEMENT ORDER 176-3900–PAGE 464**
**AN ATTACHMENT**

**SMCS-7320** **i02306357**

| NOTE | REF NO | GRAPHIC REF | PART NUMBER | QTY | PART NAME 1 2 3 4 5 6 (PRODUCT LEVEL) | SEE PAGE |
|---|---|---|---|---|---|---|
| | | | | | (NO SERVICED PARTS) | |

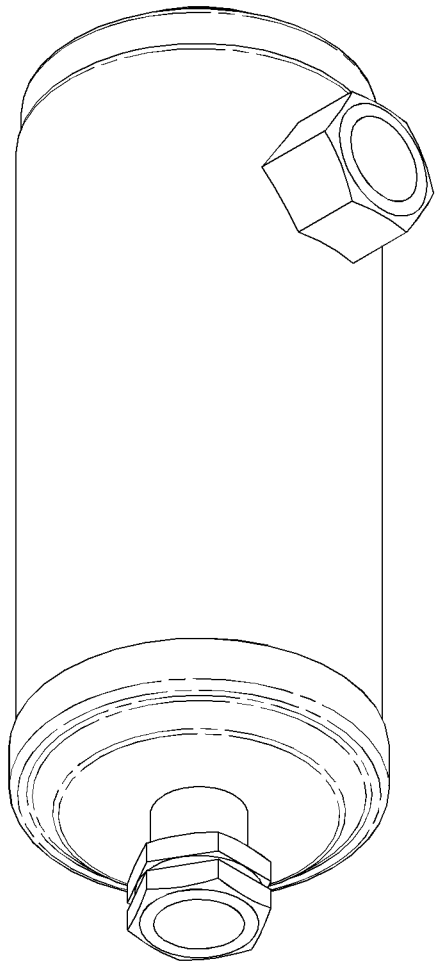

GRAPHIC #1 **<END>** g01155244

# OPERATOR STATION

## *218-6050* AIR CONDITIONER AR

**S/N: HEN6750-UP**
**PART OF 295-7332 OPTION AR-CAB**
**CANNOT BE USED WITH 218-5850—PAGE 556, 218-5950—PAGE 548**
**AN ATTACHMENT**

**SMCS-7320** **i01989090**

| NOTE | PART NUMBER | QTY | PART NAME 1 2 3 4 5 6 (PRODUCT LEVEL) | SEE PAGE |
|---|---|---|---|---|
| Y | *218-6404* | 1 | AIR CONDITIONER GP | 467 |
| Y | *218-6830* | 1 | COMPRESSOR & MTG GP-REFRIG | 483 |
| Y | *218-6148* | 1 | CONDENSER & MTG GP-REFRIGERANT | 484 |
| Y | *218-6394* | 1 | DUCT & CONTROL GP | 537 |
| Y | *218-5680* | 1 | LINES GP-AIR CONDITIONER | 566 |
| Y | *218-5619* | 1 | LINES GP-HEATER | 568 |
| Y | *218-6565* | 1 | LINES GP-HYDRAULIC FAN | 287 |
| Y | *225-7948* | 1 | WIRING GP-AIR CONDITIONER | 143 |

Y-SEPARATE ILLUSTRATION

**<END>**

# OPERATOR STATION

## *218-6404* AIR CONDITIONER GP

**S/N: HEN6750-UP**
**PART OF 218-6050 AIR CONDITIONER AR**
**AN ATTACHMENT**

**SMCS-7320, 7342** **i02010224**

| NOTE | REF NO | GRAPHIC REF | PART NUMBER | QTY | PART NAME 1 2 3 4 5 6 (PRODUCT LEVEL) | SEE PAGE |
|---|---|---|---|---|---|---|
| | 1 | 1 | **218-6402** | 1 | INSULATION AS | |
| Y | 2 | 1 | *218-6405* | 1 | AIR CONDITIONER GP | 468 |
| | 3 | 1 | **8T-4224** | 4 | WASHER-HARD (8.8X16X2MM THK) | |
| M | 4 | 1 | **8T-6869** | 4 | BOLT (M8X1.25X60MM) | |

M-METRIC PART
Y-SEPARATE ILLUSTRATION

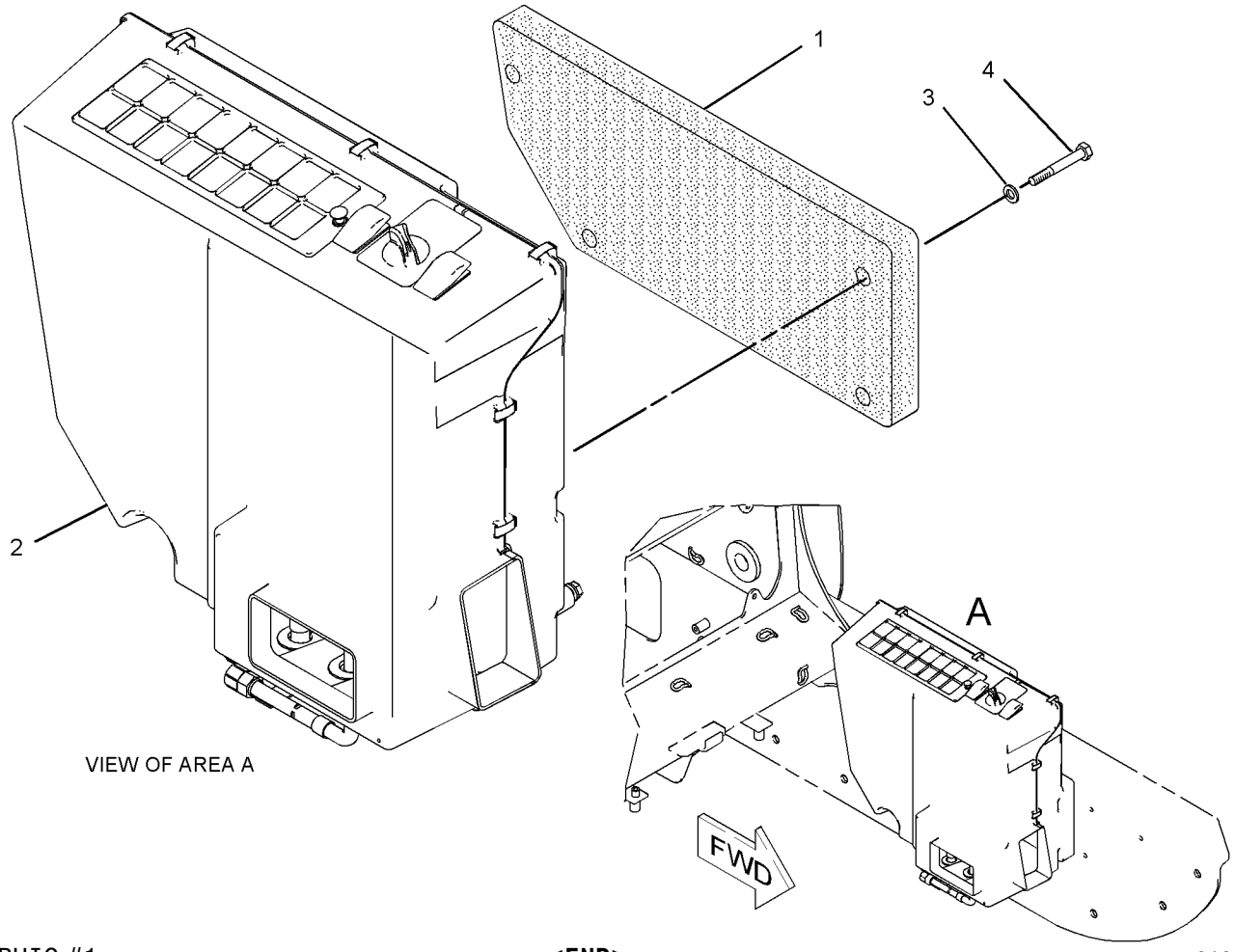


VIEW OF AREA A

GRAPHIC #1 **<END>** g01036189

# OPERATOR STATION

## *218-6405* AIR CONDITIONER GP

**S/N: HEN6750-UP**

**PART OF 218-6404 AIR CONDITIONER GP, 218-6747 KIT-AIR COND & HEATER INSTL, 218-6749 KIT-AIR CONDITIONER INSTL**

**AN ATTACHMENT**

**TYPE 1**

**SMCS-7320, 7342** **i02839369**

| NOTE | REF NO | GRAPHIC REF | PART NUMBER | QTY | PART NAME 1 2 3 4 5 6 (PRODUCT LEVEL) | SEE PAGE |
|---|---|---|---|---|---|---|
| | 1 | 1 | **185-4015** | 10 | CLIP | |
| | 2 | 1 | **202-2284** | 1 | SWITCH AS-ROCKER (AIR CONDITIONER) | |
| | 3 | 1 | **218-6399** | 1 | SEAL | |
| | 4 | 1 | **206-7398** | 1 | KNOB-CONTROL (TEMPERATURE SELECT) | |
| | 5 | 1 | **119-9631** | 1 | SWITCH-TEMPERATURE (AIR CONDITIONER) | |
| | 6 | 1 | **305-2969** | 2 | THUMBSCREW | |
| | 7 | 1 | **231-8123** | 1 | COIL AS-EVAPORATOR | |
| | 8 | 1 | **231-8124** | 1 | COIL AS-HEATER | |
| | 9 | 1 | **295-5440** | 1 | MOTOR | |
| | 10 | 1 | **236-5067** | 1 | SWITCH-ROCKER (HEATER) | |
| | 11 | 1 | **231-8127** | 2 | GROMMET | |
| | 12 | 1 | **231-8128** | 1 | GRILL | |
| | 13 | 1 | **231-8129** | 1 | PIN | |
| | 14 | 1 | **231-8130** | 1 | FILTER ELEMENT-CAB AIR | |
| | 15 | 1 | **231-8131** | 1 | PLATE | |
| | 16 | 1 | **231-8132** | 1 | FILTER ELEMENT-CAB AIR | |
| | 17 | 1 | **231-8133** | 1 | PANEL | |
| | 18 | 1 | **231-8137** | 1 | FILM (TEMPERATURE CONTROL) | |
| | 19 | 1 | **231-8141** | 1 | GROMMET | |
| | 20 | 1 | **231-8142** | 1 | RETAINER | |
| | 21 | 1 | **236-5069** | 3 | RELAY AS (12-VOLT) | |
| | 22 | 1 | **231-8121** | 1 | HOUSING | |
| Y | 23 | 1 | **231-8122** | 1 | HOUSING AS-SIDE (AIR CONDITIONER, HEATER) | 555 |
| | 24 | 1 | **231-8126** | 1 | VALVE AS | |
| | 25 | 1 | **232-1384** | 1 | TUBE | |
| | 26 | 1 | **218-6948** | 1 | HARNESS AS-HEATER & AIR COND | |

Y-SEPARATE ILLUSTRATION

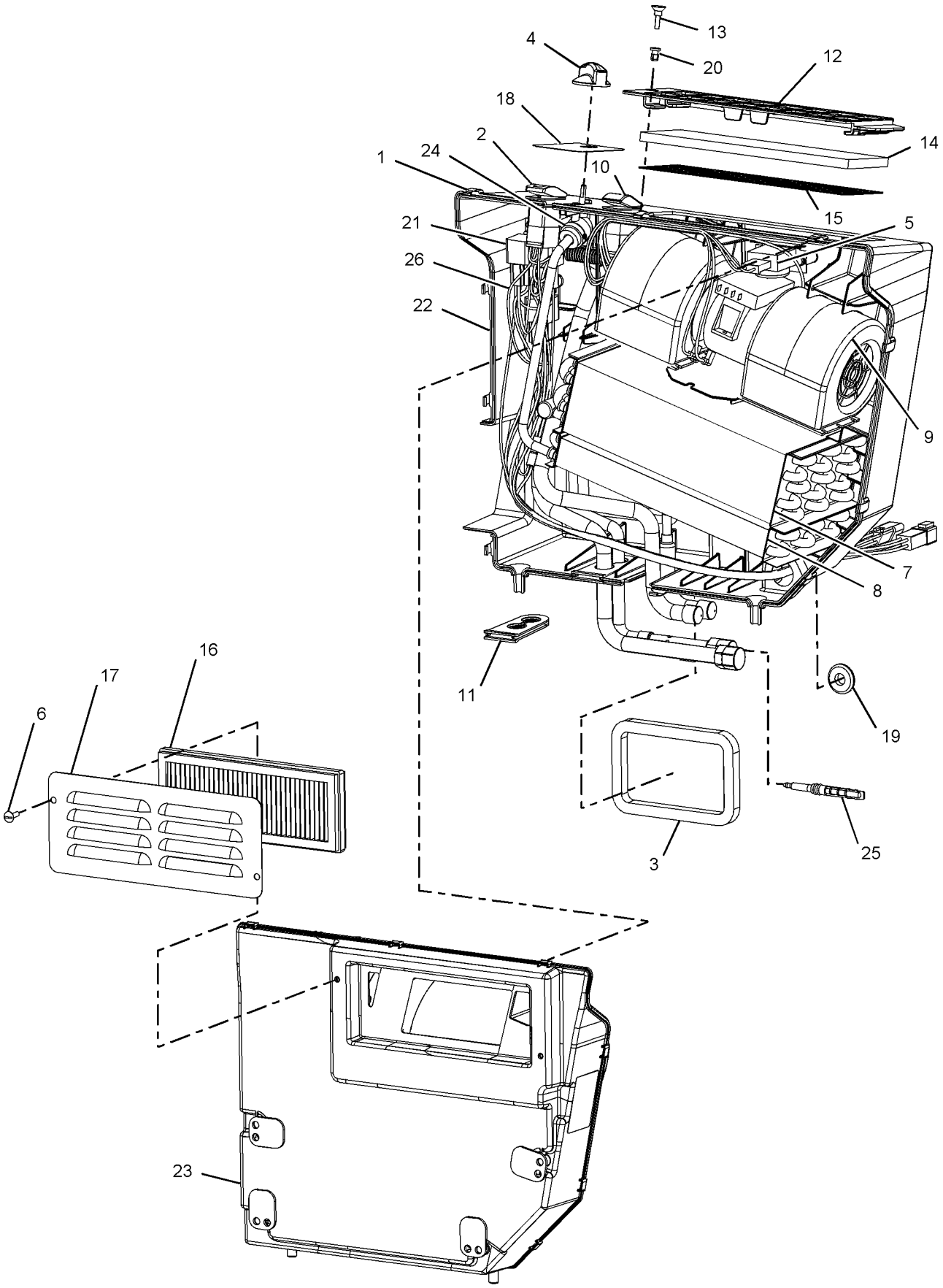


GRAPHIC #1 **<END>** g01039889

# OPERATOR STATION

## *218-6405* AIR CONDITIONER GP

**S/N: HEN6750-UP**
**PART OF 218-6404 AIR CONDITIONER GP, 218-6747 KIT-AIR COND & HEATER INSTL, 218-6749 KIT-AIR CONDITIONER INSTL**
**AN ATTACHMENT**
**TYPE 2**

**SMCS-7320, 7342** **i02839376**

| NOTE | REF NO | GRAPHIC REF | PART NUMBER | QTY | PART NAME 1 2 3 4 5 6 (PRODUCT LEVEL) | SEE PAGE |
|---|---|---|---|---|---|---|
| | 1 | 1 | **185-4015** | 10 | CLIP | |
| | 2 | 1 | **202-2284** | 1 | SWITCH AS-ROCKER (AIR CONDITIONER) | |
| | 3 | 1 | **218-6399** | 1 | SEAL | |
| | 4 | 1 | **206-7398** | 1 | KNOB-CONTROL (TEMPERATURE SELECT) | |
| | 5 | 1 | **119-9631** | 1 | SWITCH-TEMPERATURE (AIR CONDITIONER) | |
| | 6 | 1 | **305-2969** | 2 | THUMBSCREW | |
| | 7 | 1 | **231-8123** | 1 | COIL AS-EVAPORATOR | |
| | 8 | 1 | **231-8124** | 1 | COIL AS-HEATER | |
| | 9 | 1 | **295-5440** | 1 | MOTOR | |
| | 10 | 1 | **236-5067** | 1 | SWITCH-ROCKER (HEATER) | |
| | 11 | 1 | **231-8127** | 2 | GROMMET | |
| C | 12 | 1 | **312-2635** | 1 | COVER GP-ACCESS | |
| | | 1 | **231-8129** | 1 | PIN | |
| | | 1 | **231-8142** | 1 | RETAINER | |
| C | 14 | 1 | **303-6658** | 1 | FILTER ELEMENT-CAB AIR (AIR) | |
| | 16 | 1 | **231-8132** | 1 | FILTER ELEMENT-CAB AIR | |
| | 17 | 1 | **231-8133** | 1 | PANEL | |
| | 18 | 1 | **231-8137** | 1 | FILM (TEMPERATURE CONTROL) | |
| | 19 | 1 | **231-8141** | 1 | GROMMET | |
| | 21 | 1 | **236-5069** | 3 | RELAY AS (12-VOLT) | |
| C | 22 | 1 | **312-1683** | 1 | HOUSING-COVER | |
| Y | 23 | 1 | **231-8122** | 1 | HOUSING AS-SIDE (AIR CONDITIONER, HEATER) | 555 |
| | 24 | 1 | **231-8126** | 1 | VALVE AS | |
| | 25 | 1 | **232-1384** | 1 | TUBE | |
| | 26 | 1 | **218-6948** | 1 | HARNESS AS-HEATER & AIR COND | |

C-CHANGE FROM PREVIOUS TYPE
Y-SEPARATE ILLUSTRATION

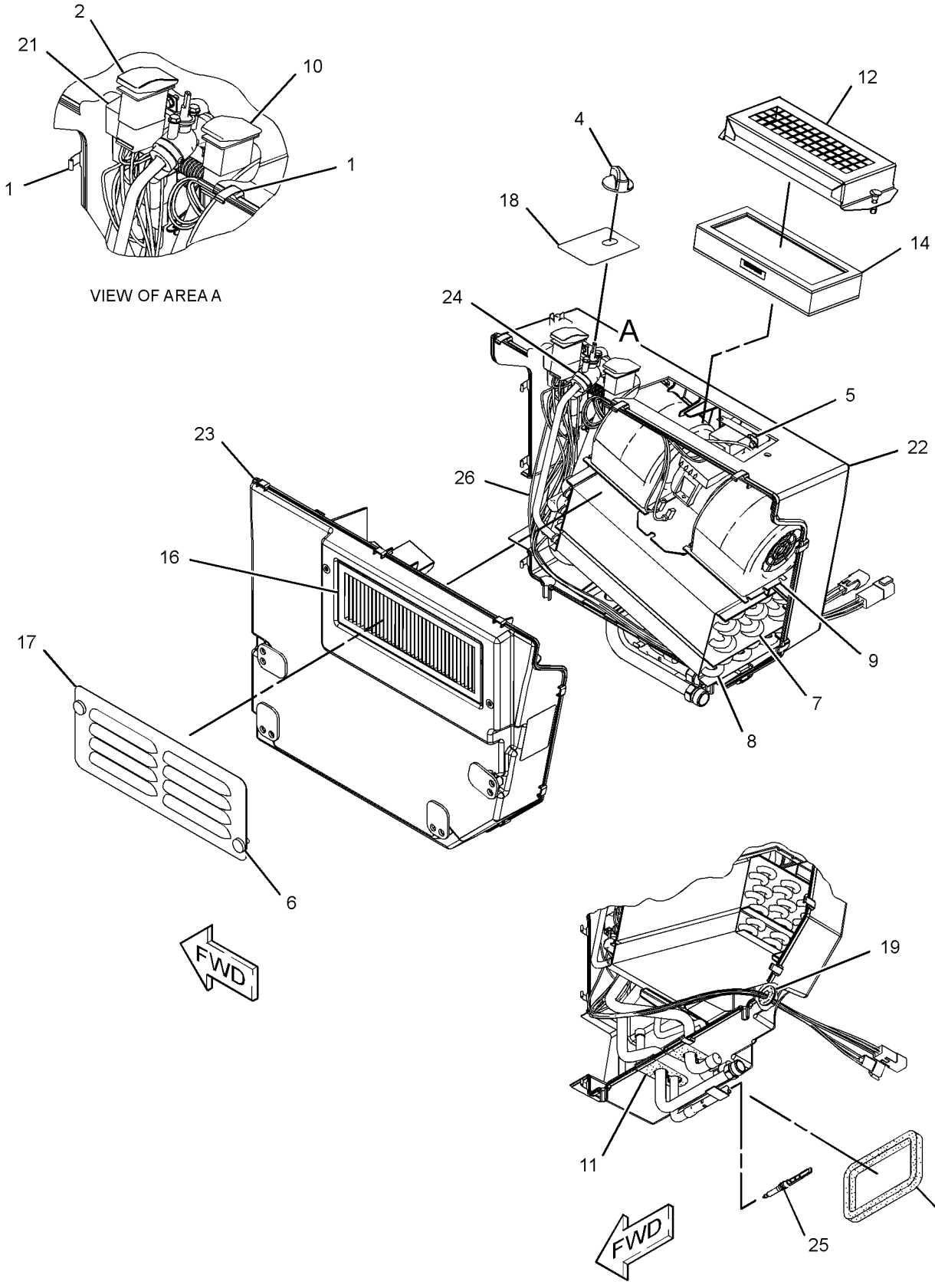


GRAPHIC #1 **<END>** g01416823

# OPERATOR STATION

## *236-4830* ARMREST & MOUNTING GP

**S/N: HEN6750-UP**

**PART OF 218-6350 CAB AR-ENCLOSED ROPS**

**SMCS-7307** **i01955195**

| NOTE | REF NO | GRAPHIC REF | PART NUMBER | QTY | PART NAME 1 2 3 4 5 6 (PRODUCT LEVEL) | SEE PAGE |
|---|---|---|---|---|---|---|
| | 1 | 1 | **4E-1384** | 2 | BUMPER-CONICAL | |
| | 2 | 1 | **195-0939** | 4 | STUD | |
| | 3 | 1 | **218-6442** | 2 | PLATE | |
| Y | 4 | 1 | **236-4833** | 1 | ARMREST GP | 473 |
| M | 5 | 1 | **195-0937** | 2 | INSERT-THREADED (M8X1.25-THD) | |
| M | 6 | 1 | **5C-7261** | 2 | NUT (M8X1.25-THD) | |
| | 7 | 1 | **8T-4121** | 4 | WASHER-HARD (11X21X2.5-MM THK) | |
| M | 8 | 1 | **8T-4133** | 4 | NUT (M10X1.5-THD) | |

M-METRIC PART
Y-SEPARATE ILLUSTRATION

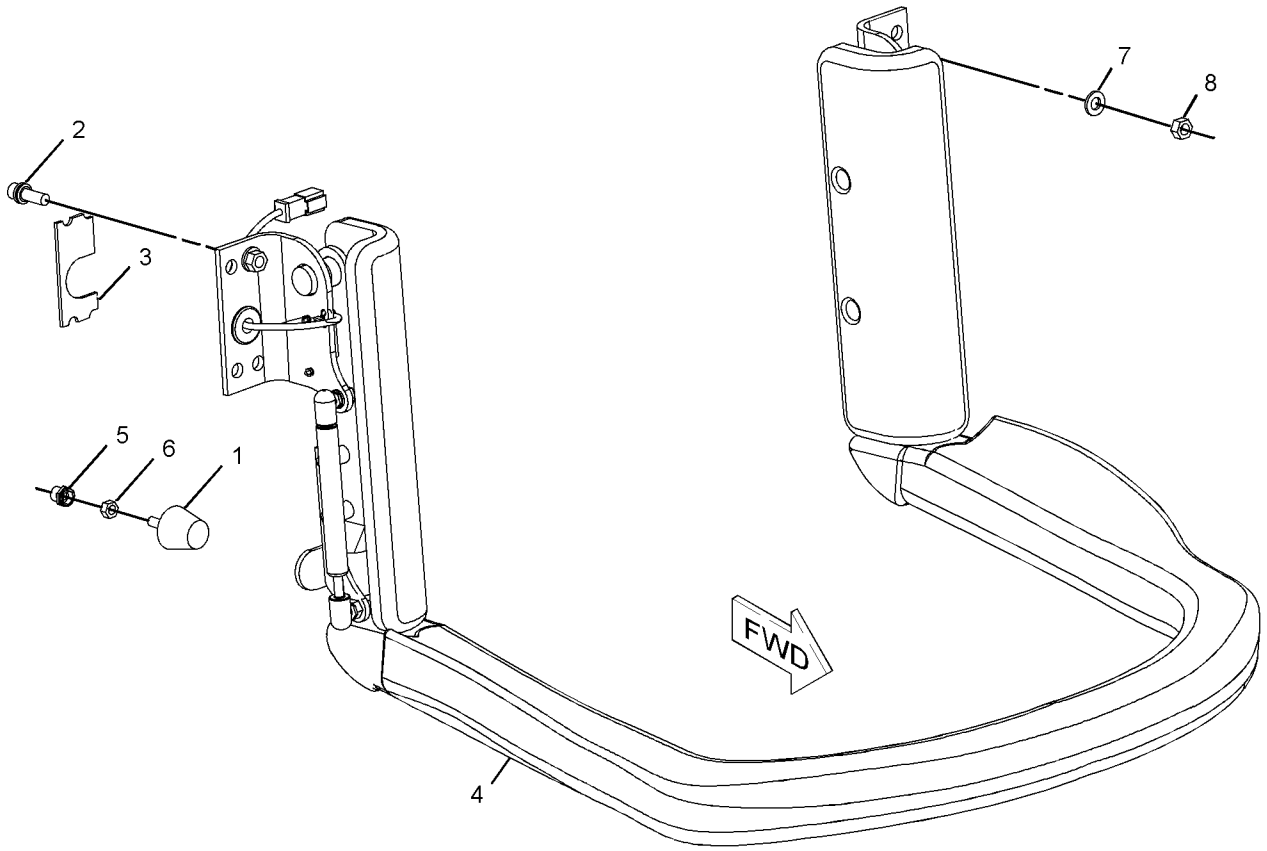


GRAPHIC #1 **<END>** g01016683

# OPERATOR STATION

## 236-4833 ARMREST GP

**S/N: HEN6750-UP**

**PART OF 236-4830 ARMREST & MOUNTING GP**

**SMCS-7307** **i01955198**

| NOTE | REF NO | GRAPHIC REF | PART NUMBER | QTY | PART NAME 1 2 3 4 5 6 (PRODUCT LEVEL) | SEE PAGE |
|---|---|---|---|---|---|---|
| | 1 | 1 | **3S-2093** | 1 | STRAP-CABLE | |
| | 2 | 1 | **7D-8431** | 2 | RING-RETAINING | |
| | 3 | 1 | **7G-7053** | 1 | GROMMET | |
| | 4 | 1 | **9P-4609** | 1 | ACTUATOR-MAGNETIC | |
| | 5 | 1 | **9S-0285** | 2 | BEARING-SLEEVE | |
| | 6 | 1 | **130-1916** | 2 | STUD-BALL | |
| | 7 | 1 | **142-9278** | 1 | BRACKET AS | |
| | 8 | 1 | **142-9279** | 1 | BRACKET AS | |
| | 9 | 1 | **142-9287** | 1 | SPRING AS-GAS | |
| | 10 | 1 | **142-9386** | 1 | BRACKET AS (LH) | |
| | 11 | 1 | **152-4875** | 2 | COVER AS | |
| | 12 | 1 | **152-4884** | 1 | BRACKET AS (RH) | |
| | 13 | 1 | **162-0223** | 1 | SWITCH AS (INTERLOCK) | |
| | | 1 | **3E-3374** | 1 | WEDGE-PLUG LOCK (4-PIN) | |
| | | 1 | **186-3736** | 1 | SOCKET-CONNECTOR (16-GA TO 18-GA) | |
| | | 1 | **9G-3695** | 1 | PLUG | |
| | | 1 | **9X-1813** | | SLEEVE (24CM) | |
| | | 1 | **176-2947** | 1 | PLUG KIT-CONN | |
| | 14 | 1 | **236-4832** | 1 | ARMREST AS | |
| | 15 | 1 | **103-6262** | 4 | SCREW-MACHINE (4-40X0.63-IN) | |
| | 16 | 1 | **142-2928** | 4 | LOCKNUT (4-40-THD) | |
| M | 17 | 1 | **5C-9553** | 4 | BOLT (M6X1X16-MM) | |
| | 18 | 1 | **8T-4205** | 4 | WASHER-HARD (7.2X14.5X2-MM THK) | |
| | 19 | 1 | **8T-4224** | 1 | WASHER-HARD (8.8X16X2-MM THK) | |
| M | 20 | 1 | **9X-2042** | 4 | SCREW-TRUSS HEAD (M6X1X12-MM) | |

M-METRIC PART

**236-4833 ARMREST GP** *(contd. )* **i01955198**

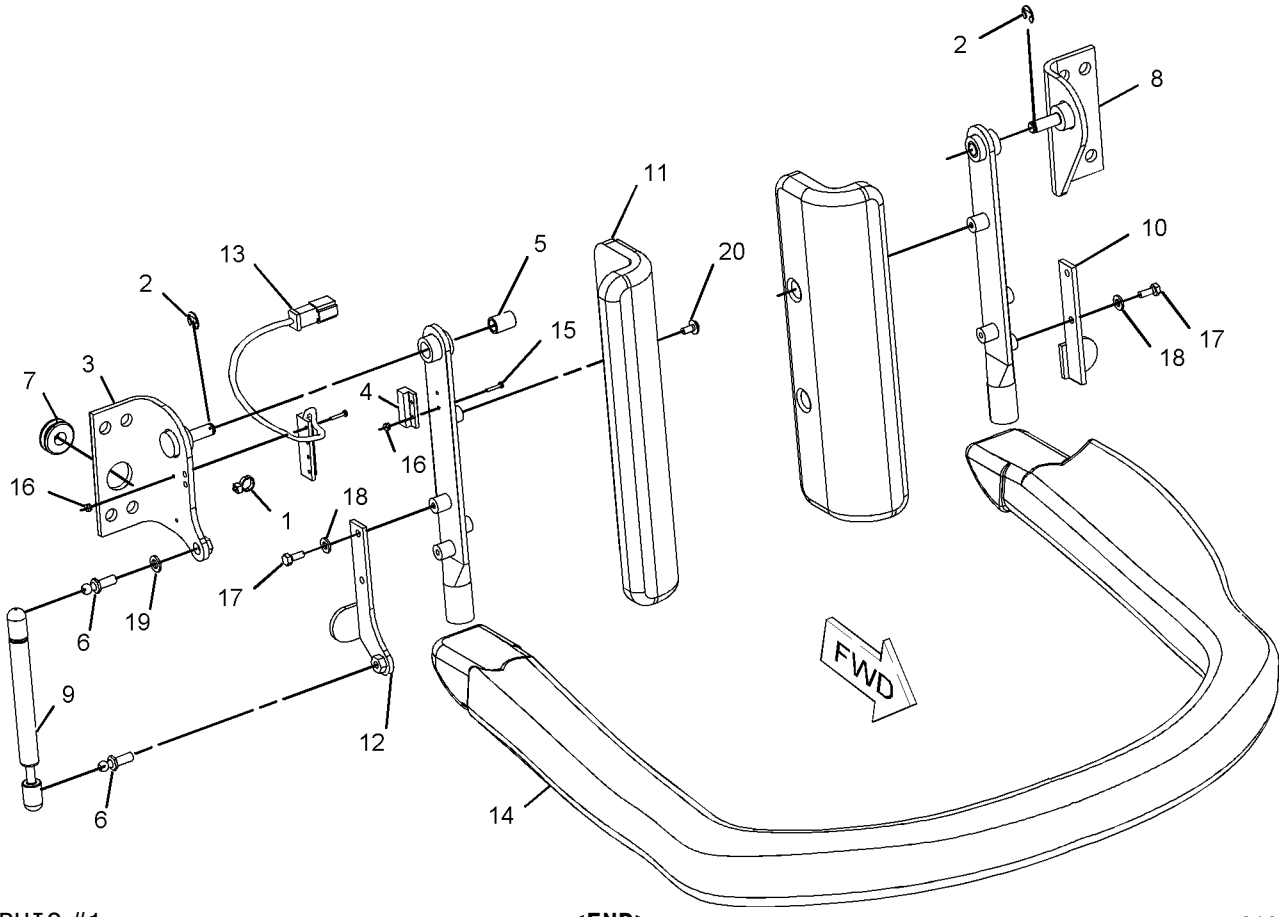


GRAPHIC #1 **<END>** g01016724

# *216-6146* BOX GP-STORAGE

**S/N: HEN6750-UP**

**PART OF 261-6165, 278-5351, 278-5373, 278-5418, 278-5448, 295-7064, 295-7071, 295-7154, 295-7170, 295-7171 CONVERSION AR-MACHINE, 218-5781, 218-5784, 236-5116, 236-5117, 251-1510 CONVERSION AR-ROADING AN ATTACHMENT**

**SMCS-7268** **i02014480**

| NOTE | REF NO | GRAPHIC REF | PART NUMBER | QTY | PART NAME 1 2 3 4 5 6 (PRODUCT LEVEL) | SEE PAGE |
|---|---|---|---|---|---|---|
| J | 1 | 1 | **8T-2895** | 1 | LOCK GP-CYLINDER | |
| | | 1 | **226-0323** | 1 | CAM-LOCK | |
| | | 1 | **226-0291** | 1 | LOCK AS | |
| | 2 | 1 | **216-6145** | 1 | BOX AS-STORAGE | |
| | | 1 | **7G-4262** | 1 | HINGE | |
| D | 3 | 1 | **6V-1392** | | SEAL (1M) | |

D-ORDER BY THE METER
J-REQUIRES 5P8500 KEY

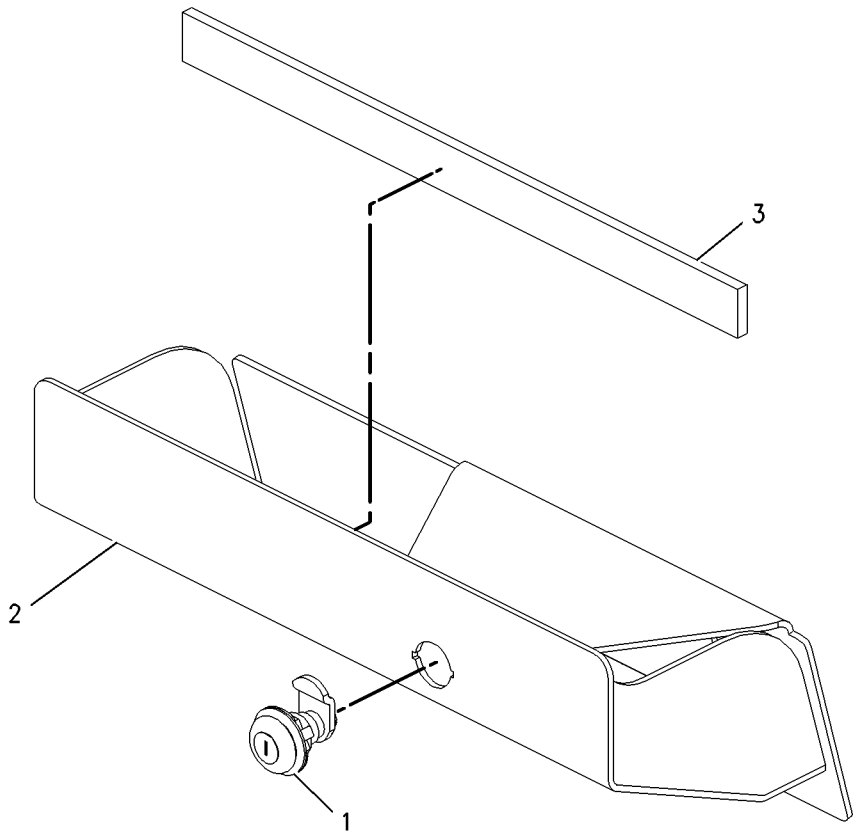


GRAPHIC #1 **<END>** g00932357

# OPERATOR STATION

## *218-6350* CAB AR-ENCLOSED ROPS

**S/N: HEN6750-UP**

**PART OF 295-7236, 295-7237 COMMON AR**

**SMCS-7301** **i02917493**

| NOTE | PART NUMBER | QTY | PART NAME 1 2 3 4 5 6 (PRODUCT LEVEL) | SEE PAGE |
|---|---|---|---|---|
| Y | *236-4830* | 1 | ARMREST & MOUNTING GP | 472 |
| Y | *322-5614* | 1 | CAB GP-ENCLOSED ROPS | 478 |
| Y | *216-4750* | 1 | FASTENER GP-WIRING HARNESS | 115 |
| Y | *218-6425* | 1 | LIGHTING GP-FLOOD (FRONT) | 131 |
| Y | *218-6356* | 1 | LINER GP-CAB | 564 |
| Y | *218-6395* | 1 | MIRROR GP-REAR VIEW | 571 |
| Y | *218-6370* | 1 | MOUNTING GP-ROPS | 574 |
| Y | *218-6380* | 1 | SPRING GP-GAS (CAB) | 595 |
| Y | *195-6723* | 1 | WINDOW GP-CAB (UPPER REAR) | 598 |
| | | | | |
| | *218-6420* | 1 | BOX GP-STORAGE (LITERATURE) | |
| | **152-4871** | 1 | BOX-STORAGE | |
| | **5P-7957** | 1 | LANYARD | |
| M | **9X-2042** | 4 | SCREW-TRUSS HEAD (M6X1X12-MM) | |
| | **195-0935** | 4 | INSERT-THREADED (M6X1-THD) | |

M-METRIC PART
Y-SEPARATE ILLUSTRATION

**<END>**

# OPERATOR STATION

## *218-6367* CAB GP-ENCLOSED ROPS

**S/N: HEN6750-UP**

**PART OF 322-5614 CAB GP-ENCLOSED ROPS**

**SMCS-7301** **i02905117**

| NOTE | REF NO | GRAPHIC REF | PART NUMBER | QTY | PART NAME 1 2 3 4 5 6 (PRODUCT LEVEL) | SEE PAGE |
|---|---|---|---|---|---|---|
| | | | | | PARTS SHOWN IN GRAPHIC(S) WITHOUT A REFERENCE NUMBER ARE NOT SERVICED SEPARATELY | |

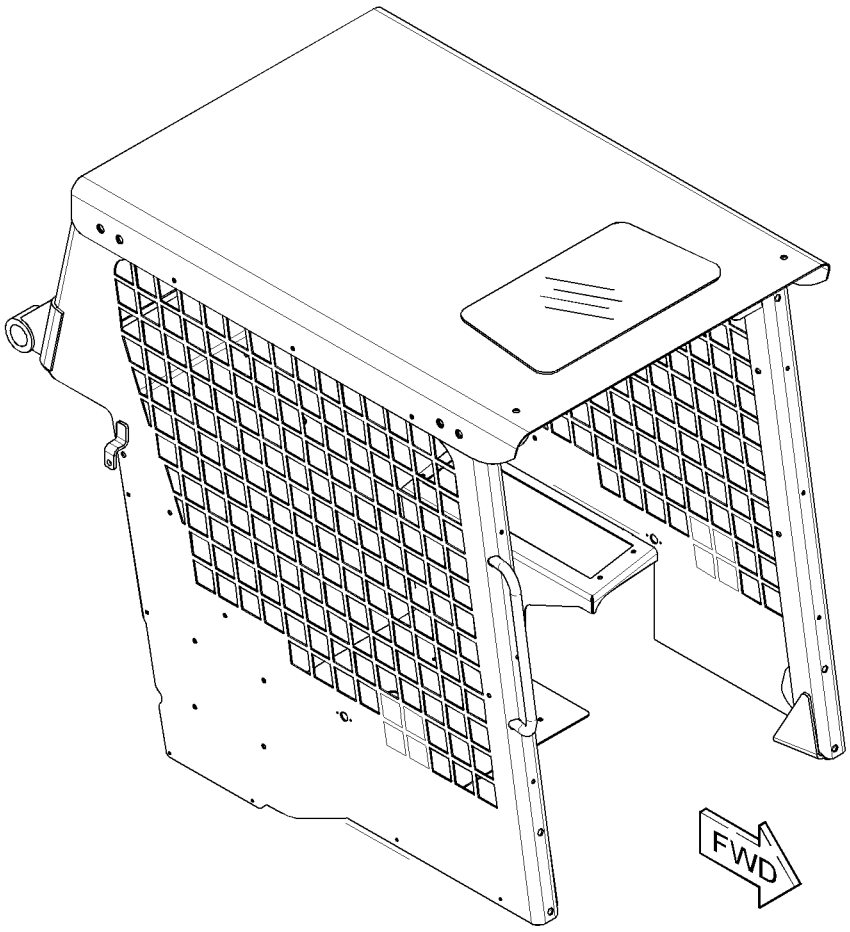


GRAPHIC #1 **<END>** g01448791

# OPERATOR STATION

## *322-5614* CAB GP-ENCLOSED ROPS

**S/N: HEN6750-UP**

**PART OF 218-6350 CAB AR-ENCLOSED ROPS**

**SMCS-7301** **i02917566**

| NOTE | REF NO | GRAPHIC REF | PART NUMBER | QTY | PART NAME 1 2 3 4 5 6 (PRODUCT LEVEL) | SEE PAGE |
|---|---|---|---|---|---|---|
| | 1 | 1 | **214-9186** | 7 | BUTTON | |
| Y | 2 | 1 | *218-6367* | 1 | CAB GP-ENCLOSED ROPS | 477 |
| | 3 | 1 | **280-6072** | 1 | WINDOW | |

Y-SEPARATE ILLUSTRATION

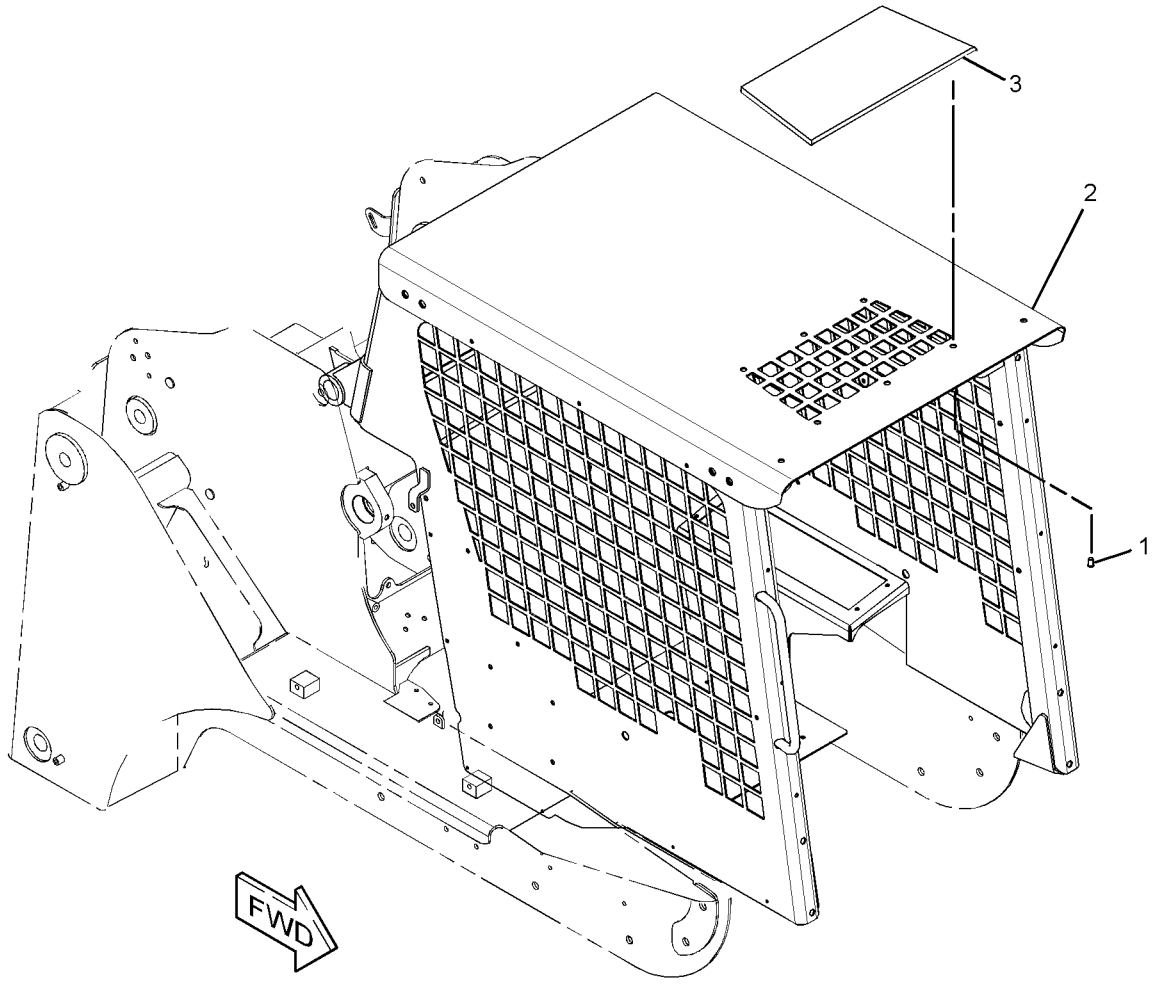


GRAPHIC #1 **<END>** g01451967

## *298-7198* CABLE GP-CONTROL—MANUAL LOWERING

**S/N: HEN6750-UP**

**PART OF 218-5617 LINES GP-LOWERING CONTROL, 218-6520 MANIFOLD & LINES GP-COUPLER AN ATTACHMENT**

**SMCS-5154** **i02748033**

| NOTE | PART NUMBER | QTY | PART NAME 1 2 3 4 5 6 (PRODUCT LEVEL) | SEE PAGE |
|---|---|---|---|---|
| | **276-0074** | 1 | CABLE AS | |
| | **8T-4742** | 1 | END-YOKE ROD | |
| | **8T-4744** | 1 | PIN AS-SPRING | |
| | **298-7197** | 1 | HANDLE GP | |
| | **292-2437** | 1 | NUT | |
| | **292-2438** | 1 | SEAL | |
| | **284-3914** | 1 | HANDLE | |

**<END>**

# OPERATOR STATION

## *218-6832* COMPRESSOR & MOTOR GP-REFRIG

**S/N: HEN6750-UP**
**PART OF 218-6830 COMPRESSOR & MTG GP-REFRIG**
**AN ATTACHMENT**
**TYPE 1**

**SMCS-1802, 5061** **i02941010**

| NOTE | REF NO | GRAPHIC REF | PART NUMBER | QTY | PART NAME 1 2 3 4 5 6 (PRODUCT LEVEL) | SEE PAGE |
|---|---|---|---|---|---|---|
| | 1 | 1 | **2D-5248** | 1 | GASKET | |
| | 2 | 1 | **9G-5127** | 1 | BREATHER (AIR CONDITIONER) | |
| | 3 | 1 | **9G-7101** | 2 | SPACER (10.5X20X30-MM THK) | |
| | 4 | 1 | **218-6833** | 1 | COMPRESSOR GP-REFRIGERANT | |
| Y | 5 | 1 | *276-5708* | 1 | COUPLING GP-DRIVE | 521 |
| Y | 6 | 1 | **218-6840** | 1 | MOTOR GP-GEAR (REFRIGERANT COMPRESSOR) | 323 |
| | 7 | 1 | **233-5590** | 1 | HOUSING-SUPPORT | |
| M | 8 | 1 | **5C-7261** | 2 | NUT (M8X1.25-THD) | |
| | 9 | 1 | **5P-4116** | 2 | WASHER-HARD (8.8X20.5X2-MM THK) | |
| | 10 | 1 | **8T-4121** | 2 | WASHER-HARD (11X21X2.5-MM THK) | |
| | 11 | 1 | **8T-4224** | 2 | WASHER-HARD (8.8X16X2-MM THK) | |
| M | 12 | 1 | **8T-6870** | 2 | BOLT (M8X1.25X70-MM) | |
| M | 13 | 1 | **9X-6032** | 2 | BOLT-SOCKET HEAD (M10X1.5X30-MM) | |

M-METRIC PART
Y-SEPARATE ILLUSTRATION

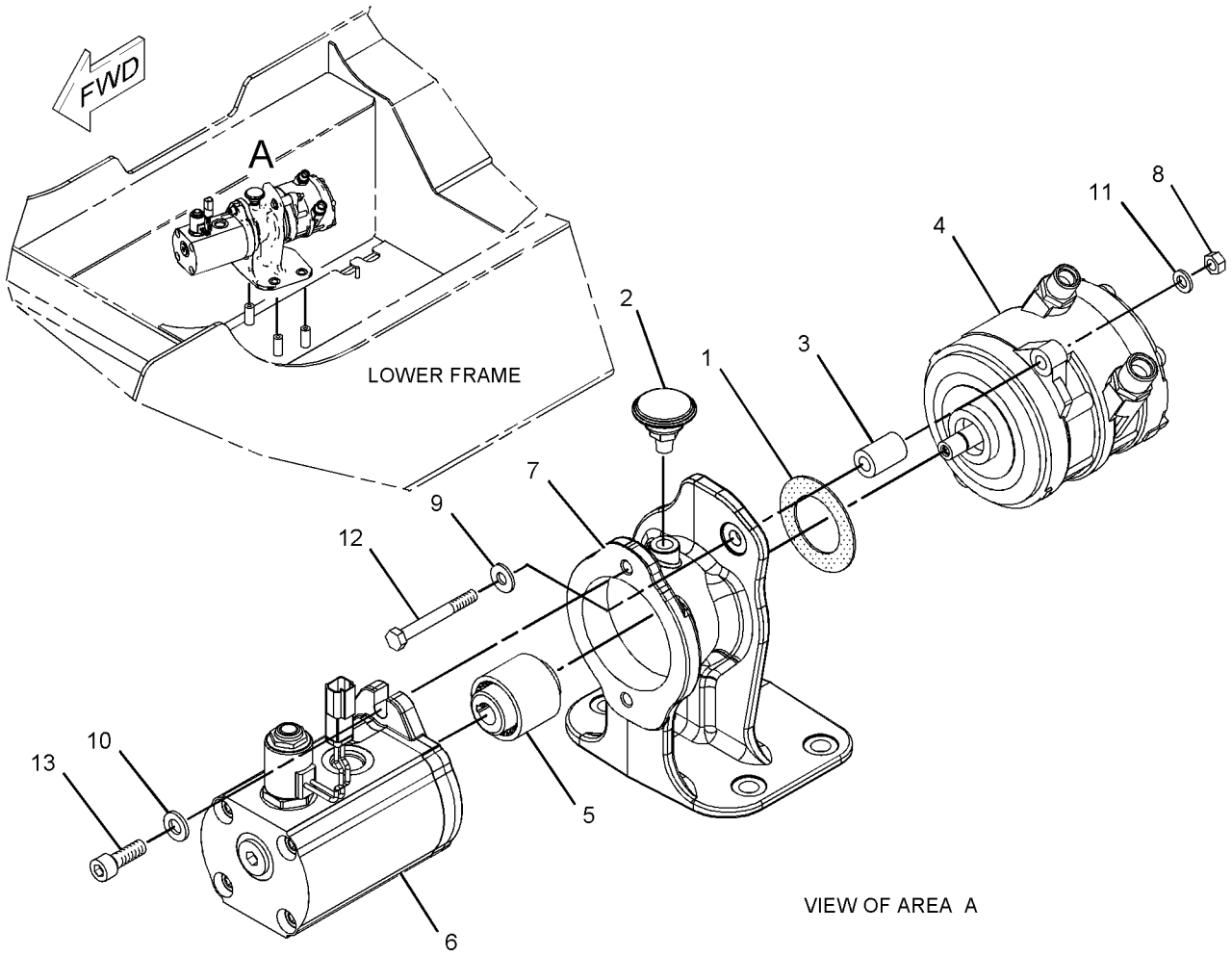


GRAPHIC #1 **<END>** g01059394

# *218-6832* COMPRESSOR & MOTOR GP-REFRIG

**S/N: HEN6750-UP**
**PART OF 218-6830 COMPRESSOR & MTG GP-REFRIG**
**AN ATTACHMENT**
**TYPE 2**

**SMCS-1802, 5061** **i02877015**

| NOTE | REF NO | GRAPHIC REF | PART NUMBER | QTY | PART NAME 1 2 3 4 5 6 (PRODUCT LEVEL) | SEE PAGE |
|---|---|---|---|---|---|---|
| | 1 | 1 | **2D-5248** | 1 | GASKET | |
| | 2 | 1 | **9G-5127** | 1 | BREATHER (AIR CONDITIONER) | |
| | 3 | 1 | **9G-7101** | 2 | SPACER (10.5X20X30-MM THK) | |
| | 4 | 1 | **218-6833** | 1 | COMPRESSOR GP-REFRIGERANT | |
| Y | 5 | 1 | *276-5708* | 1 | COUPLING GP-DRIVE | 521 |
| CY | 6 | 1 | **307-6115** | 1 | MOTOR GP-GEAR (VALVE) | 328 |
| | 7 | 1 | **233-5590** | 1 | HOUSING-SUPPORT | |
| M | 8 | 1 | **5C-7261** | 2 | NUT (M8X1.25-THD) | |
| | 9 | 1 | **5P-4116** | 2 | WASHER-HARD (8.8X20.5X2-MM THK) | |
| | 10 | 1 | **8T-4121** | 2 | WASHER-HARD (11X21X2.5-MM THK) | |
| | 11 | 1 | **8T-4224** | 2 | WASHER-HARD (8.8X16X2-MM THK) | |
| M | 12 | 1 | **8T-6870** | 2 | BOLT (M8X1.25X70-MM) | |
| M | 13 | 1 | **9X-6032** | 2 | BOLT-SOCKET HEAD (M10X1.5X30-MM) | |

C-CHANGE FROM PREVIOUS TYPE
M-METRIC PART
Y-SEPARATE ILLUSTRATION

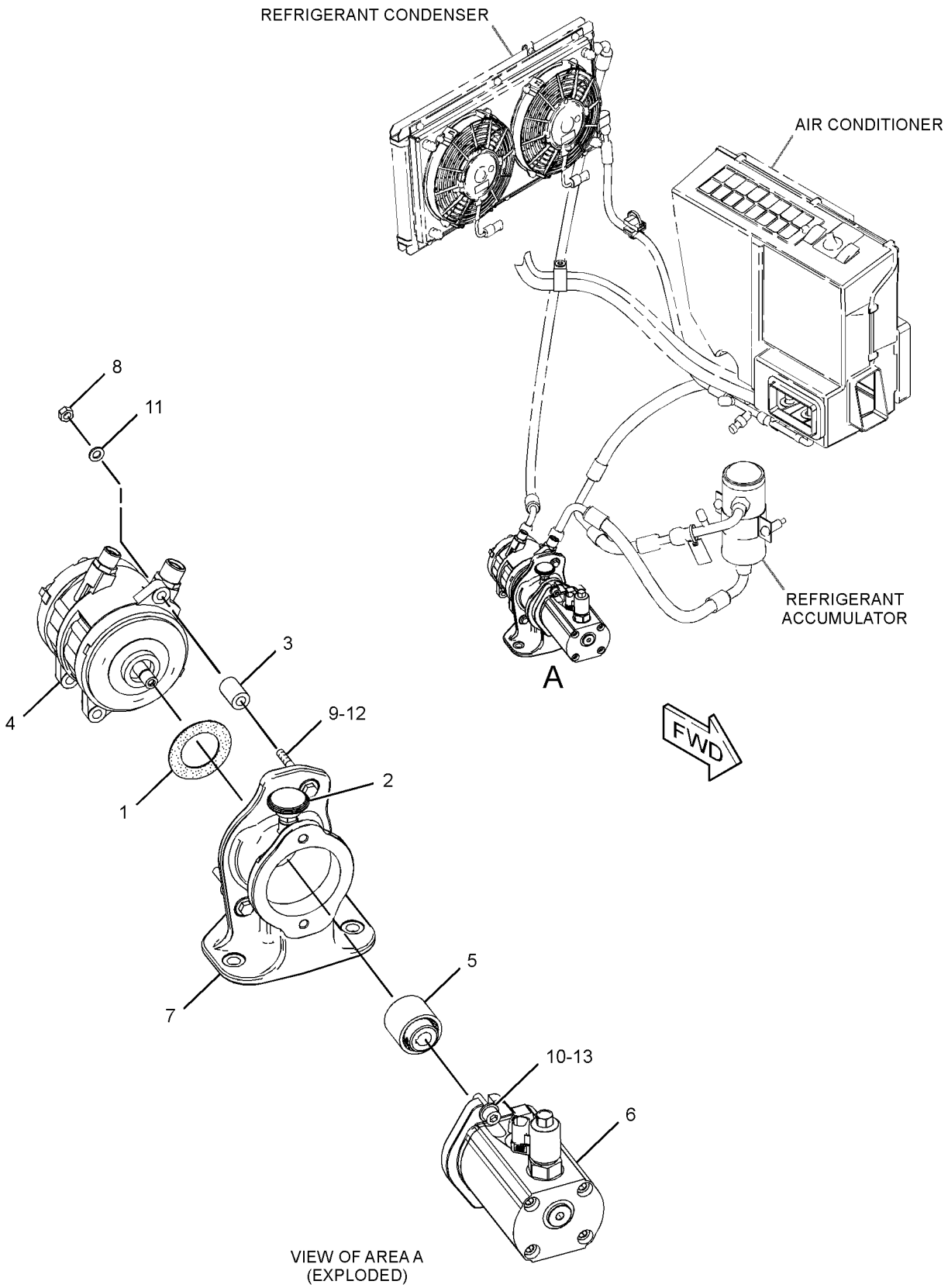


VIEW OF AREA A
(EXPLODED)

GRAPHIC #1 **<END>** g01433559

# OPERATOR STATION

## *218-6830* COMPRESSOR & MTG GP-REFRIG

**S/N: HEN6750-UP**
**PART OF 218-6050 AIR CONDITIONER AR**
**AN ATTACHMENT**

**SMCS-1802** **i01958280**

| NOTE | REF NO | GRAPHIC REF | PART NUMBER | QTY | PART NAME 1 2 3 4 5 6 (PRODUCT LEVEL) | SEE PAGE |
|---|---|---|---|---|---|---|
| Y | 1 | 1 | *218-6832* | 1 | COMPRESSOR & MOTOR GP-REFRIG | 480 |
| | 2 | 1 | **8T-4121** | 3 | WASHER-HARD (11X21X2.5-MM THK) | |
| M | 3 | 1 | **8T-4136** | 3 | BOLT (M10X1.5X25-MM) | |

M-METRIC PART
Y-SEPARATE ILLUSTRATION

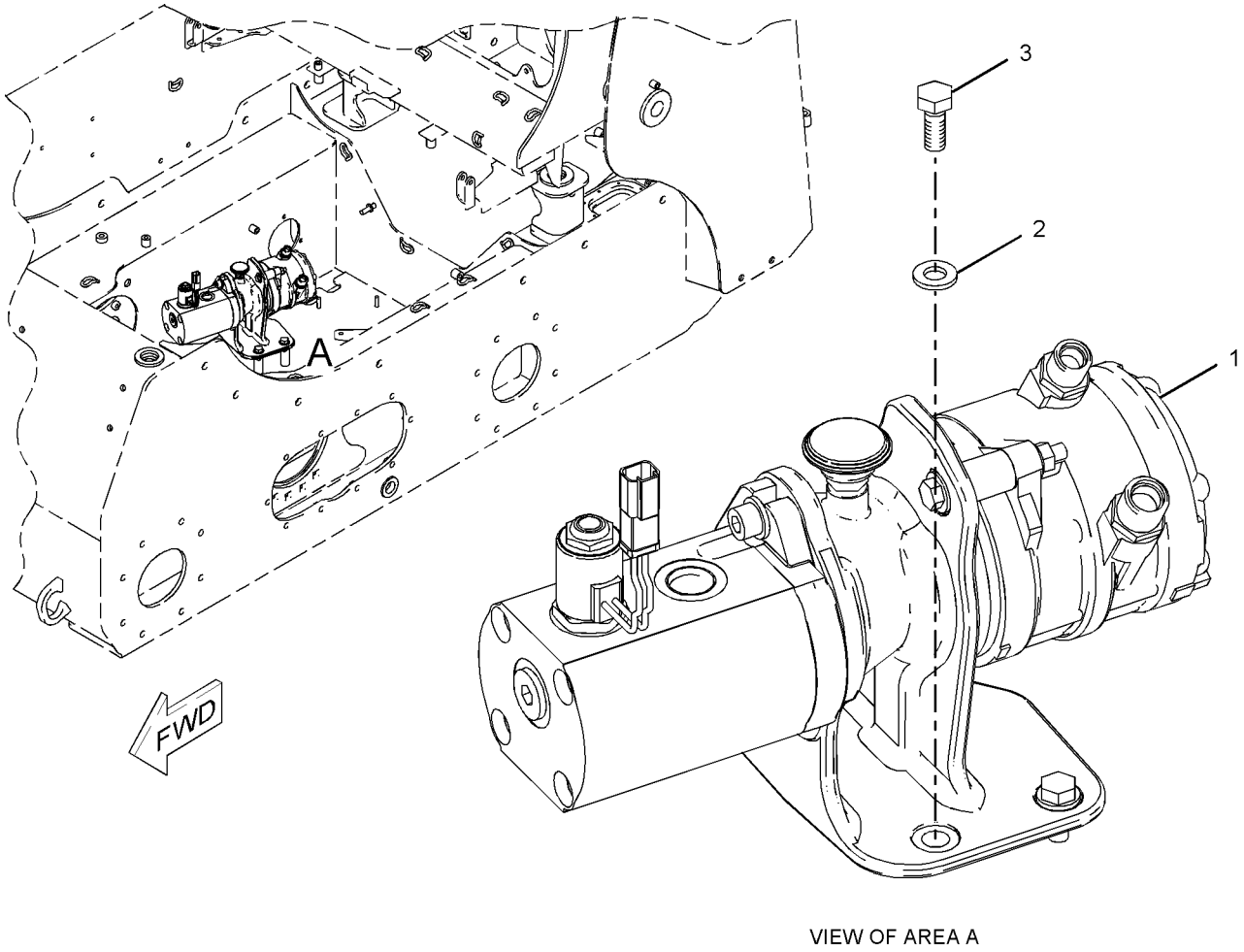


VIEW OF AREA A

GRAPHIC #1 **<END>** g01018664

# OPERATOR STATION

## *218-6148* CONDENSER & MTG GP-REFRIGERANT

**S/N: HEN6750-UP**
**PART OF 218-6050 AIR CONDITIONER AR**
**AN ATTACHMENT**

**SMCS-1805** **i02449992**

| NOTE | REF NO | GRAPHIC REF | PART NUMBER | QTY | PART NAME 1 2 3 4 5 6 (PRODUCT LEVEL) | SEE PAGE |
|---|---|---|---|---|---|---|
| | 1 | 1 | **116-5763** | 3 | CLIP-SPRING | |
| | 2 | 1 | **218-6060** | 1 | SHROUD AS | |
| | 3 | 1 | **218-6250** | 2 | FAN AS | |
| C | 4 | 1 | **252-0348** | 1 | COIL AS | |
| M | 5 | 1 | **5C-7261** | 14 | NUT (M8X1.25-THD) | |
| | 6 | 1 | **5P-4116** | 3 | WASHER-HARD (8.8X20.5X2-MM THK) | |
| | 7 | 1 | **6B-2882** | 4 | SPACER (0.406X0.75X0.312-IN THK) | |
| | 8 | 1 | **8T-4121** | 4 | WASHER-HARD (11X21X2.5-MM THK) | |
| M | 9 | 1 | **8T-4133** | 4 | NUT (M10X1.5-THD) | |
| M | 10 | 1 | **8T-4189** | 14 | BOLT (M8X1.25X20-MM) | |
| | 11 | 1 | **8T-4224** | 20 | WASHER-HARD (8.8X16X2-MM THK) | |
| M | 12 | 1 | **8T-4908** | 3 | BOLT (M8X1.25X25-MM) | |

C-CHANGE FROM PREVIOUS TYPE
M-METRIC PART

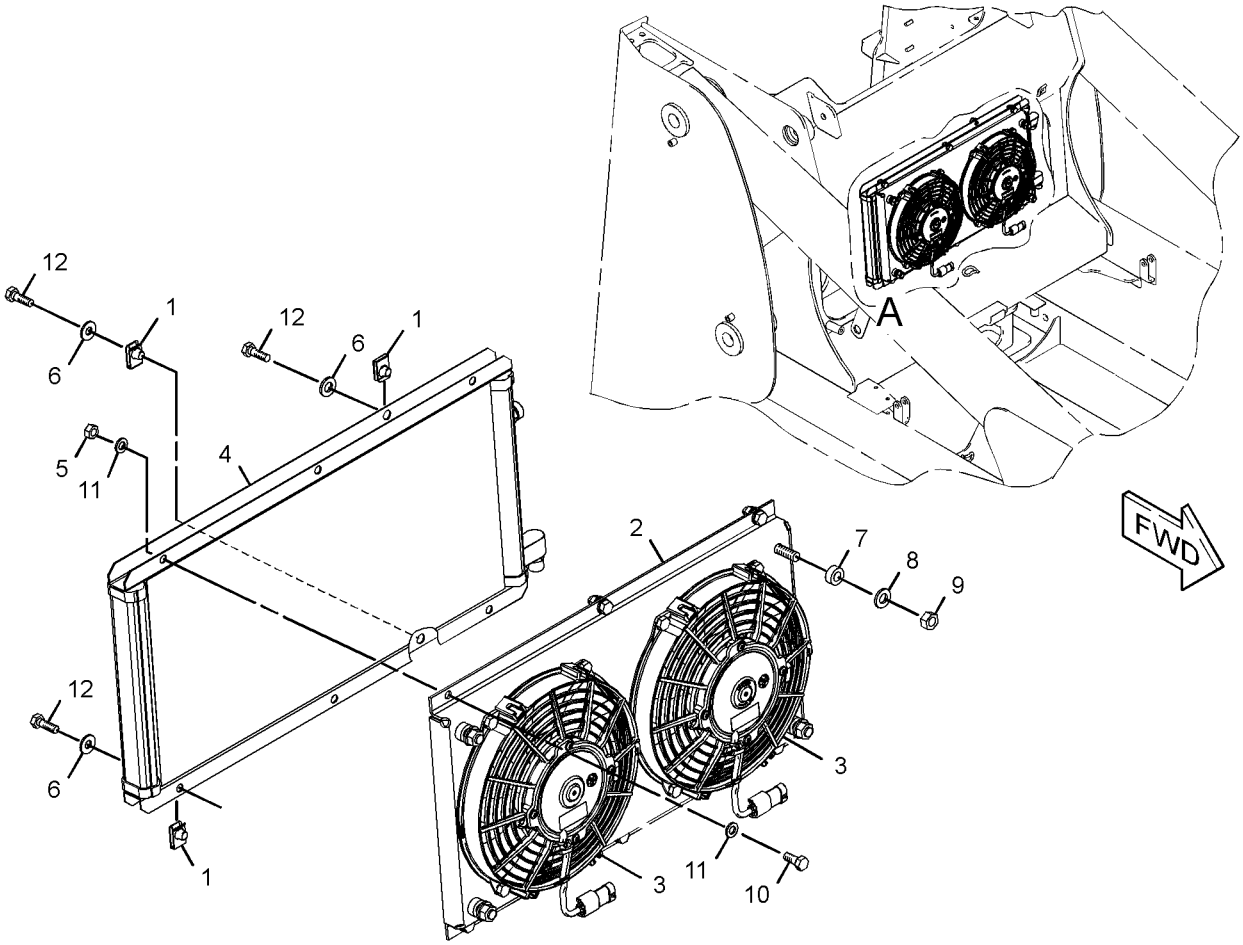


VIEW OF AREA A

GRAPHIC #1 **<END>** g01229749

# 218-6480 CONTROL GP-HANDLE–DIRECTION, SPEED

**S/N: HEN6750-UP**
**PART OF 218-5930 CONTROL GP-PILOT OPERATED HYD**
**AN ATTACHMENT**

**SMCS-5705** **i02545867**

| NOTE | REF NO | GRAPHIC REF | PART NUMBER | QTY | PART NAME 1 2 3 4 5 6 (PRODUCT LEVEL) | SEE PAGE |
|---|---|---|---|---|---|---|
| | 1 | 1 | **173-0702** | 1 | BOOT | |
| Y | 2 | 1 | **218-6117** | 1 | HANDLE GP-MODULAR | 545 |
| | 3 | 1 | **158-3770** | 1 | KIT-PILOT VALVE (LEVER) | |
| | | | | | (INCLUDES NUT, LEVER & PIN) | |

Y-SEPARATE ILLUSTRATION

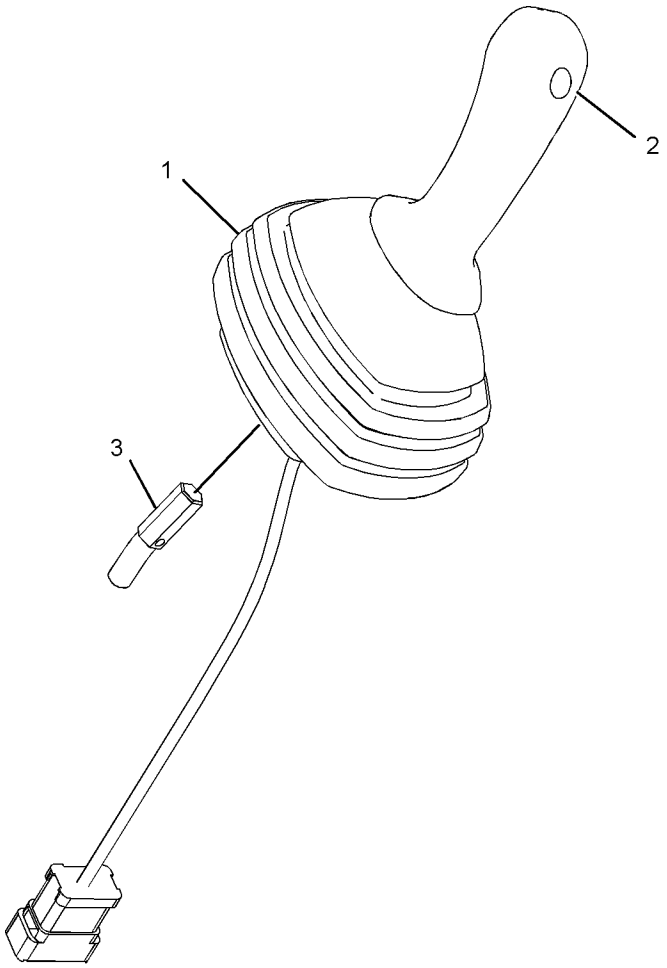


GRAPHIC #1 **<END>** g01111218

# OPERATOR STATION

## 218-6485 CONTROL GP-HANDLE—DIRECTION, SPEED

**S/N: HEN6750-UP**

**PART OF 218-5931 CONTROL GP-PILOT OPERATED HYD**

**AN ATTACHMENT**

**SMCS-5705** **i02545868**

| NOTE | REF NO | GRAPHIC REF | PART NUMBER | QTY | PART NAME 1 2 3 4 5 6 (PRODUCT LEVEL) | SEE PAGE |
|---|---|---|---|---|---|---|
| | 1 | 1 | **173-0702** | 1 | BOOT | |
| Y | 2 | 1 | **218-6118** | 1 | HANDLE GP-MODULAR | 546 |
| | 3 | 1 | **158-3770** | 1 | KIT-PILOT VALVE (LEVER) | |
| | | | | | (INCLUDES NUT, LEVER & PIN) | |

Y-SEPARATE ILLUSTRATION

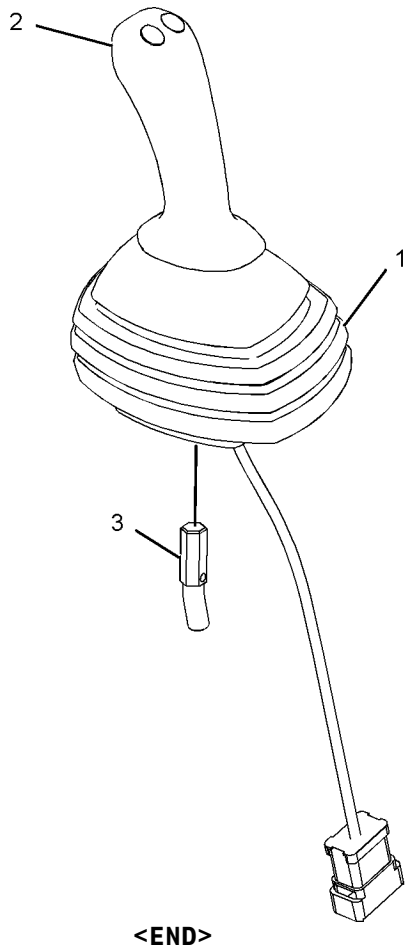


GRAPHIC #1 **<END>** g01111214

# 218-6490 CONTROL GP-HANDLE–WORK TOOL

**S/N: HEN6750-UP**
**PART OF 218-5611 CONTROL GP-PILOT OPERATED HYD**
**AN ATTACHMENT**

**SMCS-5705** **i02545869**

| NOTE | REF NO | GRAPHIC REF | PART NUMBER | QTY | PART NAME 1 2 3 4 5 6 (PRODUCT LEVEL) | SEE PAGE |
|---|---|---|---|---|---|---|
| | 1 | 1 | **173-0703** | 1 | BOOT | |
| Y | 2 | 1 | **218-6118** | 1 | HANDLE GP-MODULAR | 546 |
| | 3 | 1 | **158-3770** | 1 | KIT-PILOT VALVE (LEVER) | |
| | | | | | (INCLUDES NUT, LEVER & PIN) | |

Y-SEPARATE ILLUSTRATION

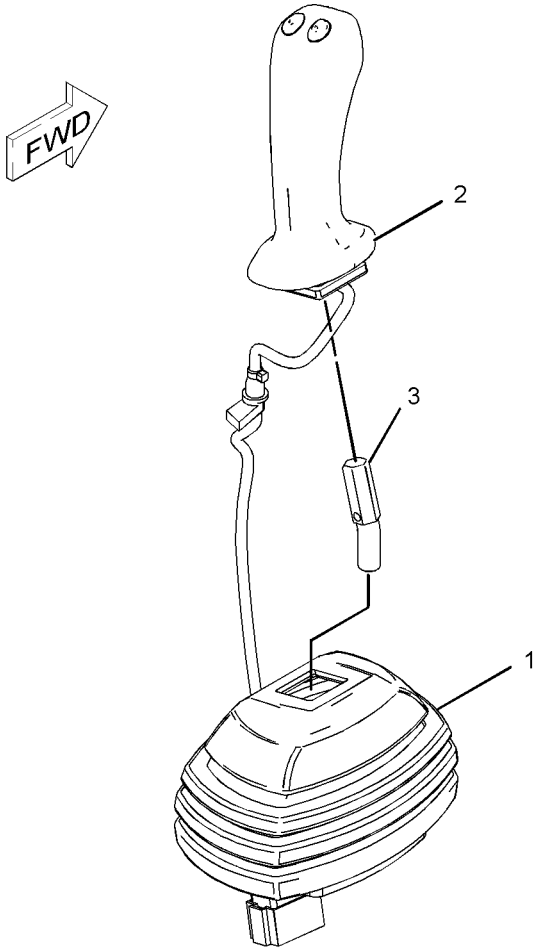


GRAPHIC #1 **<END>** g01111213

# OPERATOR STATION

## 231-4256 CONTROL GP-HANDLE–LH

**S/N: HEN6750-UP**

**PART OF 218-5932 CONTROL GP-PILOT OPERATED HYD**

**AN ATTACHMENT**

**SMCS-5705** **i02189555**

| NOTE | REF NO | GRAPHIC REF | PART NUMBER | QTY | PART NAME 1 2 3 4 5 6 (PRODUCT LEVEL) | SEE PAGE |
|---|---|---|---|---|---|---|
| | 1 | 1 | **223-3725** | 1 | HANDLE GP-MODULAR | |
| | 1A | 1 | **186-3735** | 4 | PIN-CONNECTOR (16-GA TO 18-GA) | |
| | 1B | 1 | **174-3091** | 1 | KIT-RECEPTACLE (12-PIN) | |
| | | | | | (INCLUDES RECEPTACLE AS & WEDGE) | |
| | 2 | 1 | **223-3728** | 1 | BOOT | |
| | 3 | 1 | **231-4261** | 1 | ADAPTER (LH) | |
| M | 4 | 1 | **213-7489** | 3 | SCREW (M4X25-MM) | |
| M | 5 | 1 | **178-9983** | 3 | LOCKNUT (M4X0.7-THD) | |
| | 6 | 1 | **1S-9593** | 1 | STRAP-CABLE | |
| | 7 | 1 | **8T-8737** | 8 | PLUG-SEAL | |
| | 8 | 1 | **252-6934** | 1 | GROMMET | |

M-METRIC PART

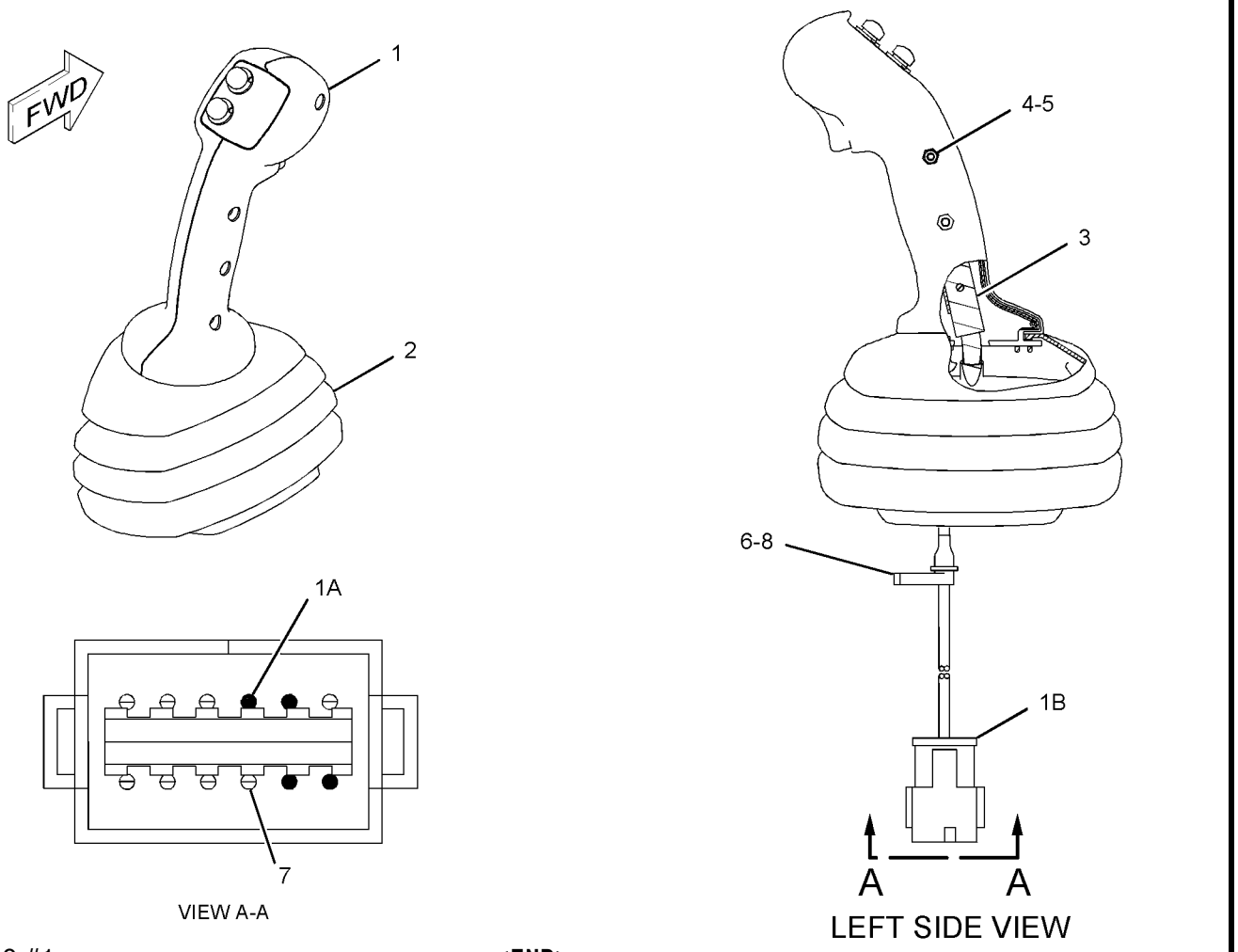


GRAPHIC #1 **<END>** g01132335

## 231-4257 CONTROL GP-HANDLE–RH

**S/N: HEN6750-UP**

**PART OF 218-5612 CONTROL GP-PILOT OPERATED HYD**

**AN ATTACHMENT**

**SMCS-5705** **i02250695**

| NOTE | REF NO | GRAPHIC REF | PART NUMBER | QTY | PART NAME 1 2 3 4 5 6 (PRODUCT LEVEL) | SEE PAGE |
|---|---|---|---|---|---|---|
| | 1 | 1 | **223-3725** | 1 | HANDLE GP-MODULAR | |
| | 1A | 1 | **186-3735** | 4 | PIN-CONNECTOR (16-GA TO 18-GA) | |
| | 1B | 1 | **174-3091** | 1 | KIT-RECEPTACLE (12-PIN) | |
| | | | | | (INCLUDES RECEPTACLE AS & WEDGE) | |
| | 2 | 1 | **223-3728** | 1 | BOOT | |
| | 3 | 1 | **231-4262** | 1 | ADAPTER (RH) | |
| M | 4 | 1 | **213-7489** | 3 | SCREW (M4X25-MM) | |
| M | 5 | 1 | **178-9983** | 3 | LOCKNUT (M4X0.7-THD) | |
| | 6 | 1 | **1S-9593** | 1 | STRAP-CABLE | |
| | 7 | 1 | **8T-8737** | 8 | PLUG-SEAL | |
| | 8 | 1 | **252-6934** | 1 | GROMMET | |

M-METRIC PART

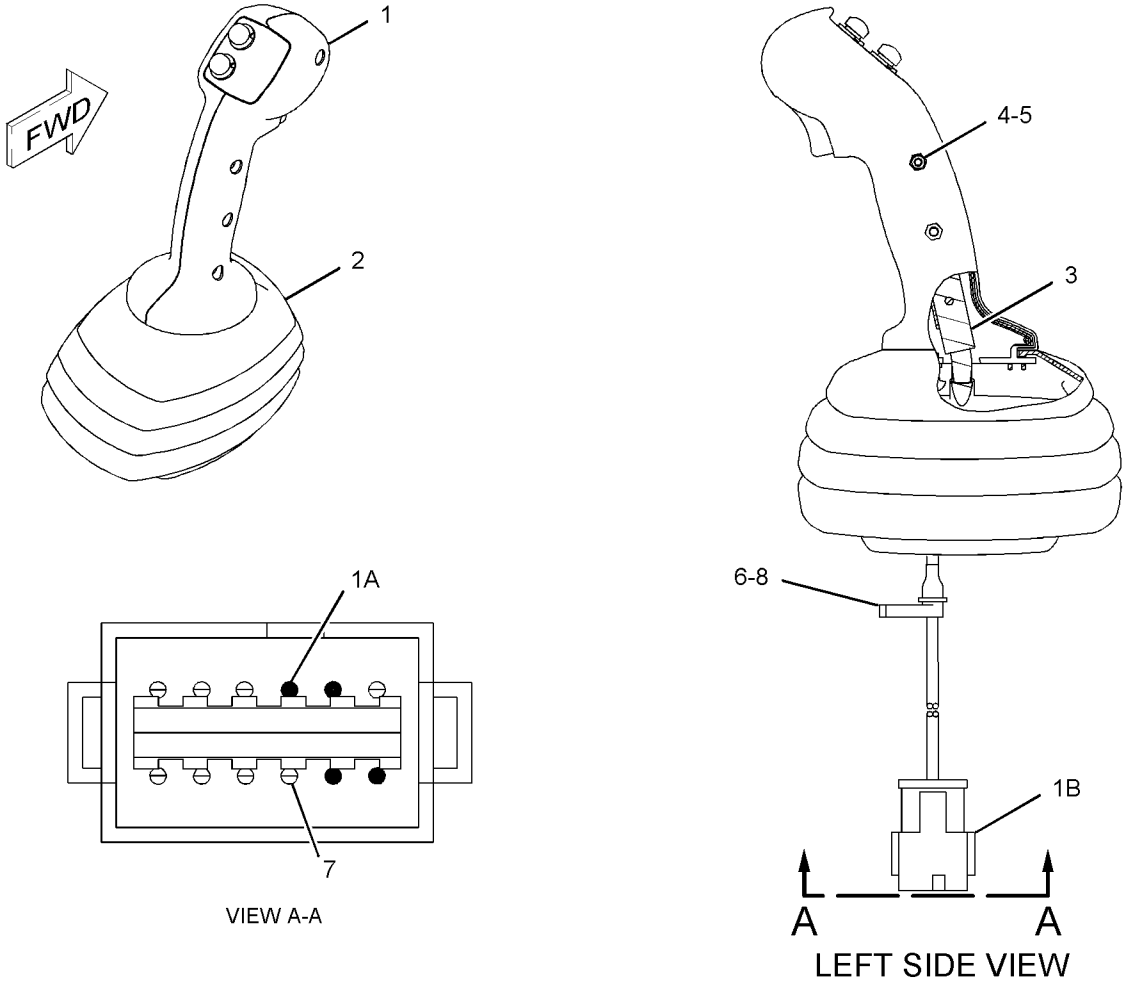


GRAPHIC #1 **<END>** g01133018

# OPERATOR STATION

## 231-4258 CONTROL GP-HANDLE–LH

**S/N: HEN6750-UP**

**PART OF 218-5933, 218-5934 CONTROL GP-PILOT OPERATED HYD, 233-5706 KIT-WORK TOOL CONTROL & WIRING AN ATTACHMENT**

**SMCS-5705** **i02189624**

| NOTE | REF NO | GRAPHIC REF | PART NUMBER | QTY | PART NAME 1 2 3 4 5 6 (PRODUCT LEVEL) | SEE PAGE |
|---|---|---|---|---|---|---|
| | 1 | 1 | **223-3726** | 1 | HANDLE GP-MODULAR | |
| | 1A | 1 | **186-3735** | 7 | PIN-CONNECTOR (16-GA TO 18-GA) | |
| | 1B | 1 | **174-3091** | 1 | KIT-RECEPTACLE (12-PIN) | |
| | | | | | (INCLUDES RECEPTACLE AS & WEDGE) | |
| | 2 | 1 | **223-3728** | 1 | BOOT | |
| | 3 | 1 | **231-4261** | 1 | ADAPTER (LH) | |
| M | 4 | 1 | **213-7489** | 3 | SCREW (M4X25-MM) | |
| M | 5 | 1 | **178-9983** | 3 | LOCKNUT (M4X0.7-THD) | |
| | 6 | 1 | **1S-9593** | 1 | STRAP-CABLE | |
| | 7 | 1 | **8T-8737** | 3 | PLUG-SEAL | |
| | 8 | 1 | **252-6934** | 1 | GROMMET | |

M-METRIC PART

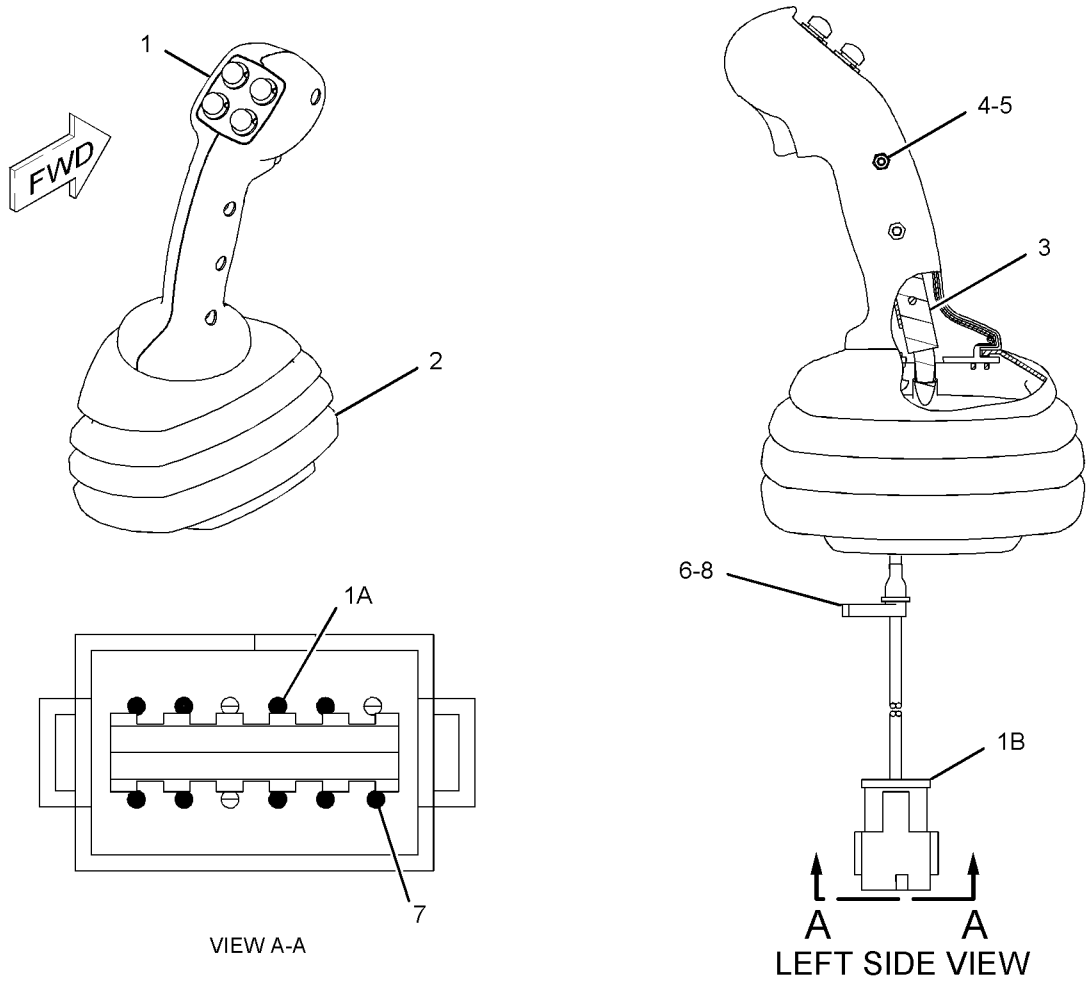


GRAPHIC #1 **<END>** g01132255

# OPERATOR STATION

## 231-4260 CONTROL GP-HANDLE–RH

**S/N: HEN6750-UP**

**PART OF 218-5618 CONTROL GP-PILOT OPERATED HYD**

**AN ATTACHMENT**

**SMCS-5705** **i02189795**

| NOTE | REF NO | GRAPHIC REF | PART NUMBER | QTY | PART NAME 1 2 3 4 5 6 (PRODUCT LEVEL) | SEE PAGE |
|---|---|---|---|---|---|---|
| | 1 | 1 | **215-8307** | 1 | CONTROL GP-HANDLE | |
| | 1A | 1 | **186-3735** | 7 | PIN-CONNECTOR (16-GA TO 18-GA) | |
| | 1B | 1 | **174-3091** | 1 | KIT-RECEPTACLE (12-PIN) | |
| | | | | | (INCLUDES RECEPTACLE AS & WEDGE) | |
| | 2 | 1 | **223-3728** | 1 | BOOT | |
| | 3 | 1 | **231-4262** | 1 | ADAPTER (RH) | |
| M | 4 | 1 | **213-7489** | 3 | SCREW (M4X25-MM) | |
| M | 5 | 1 | **178-9983** | 3 | LOCKNUT (M4X0.7-THD) | |
| | 6 | 1 | **1S-9593** | 1 | STRAP-CABLE | |
| | 7 | 1 | **8T-8737** | 5 | PLUG-SEAL | |
| | 8 | 1 | **252-6934** | 1 | GROMMET | |

M-METRIC PART

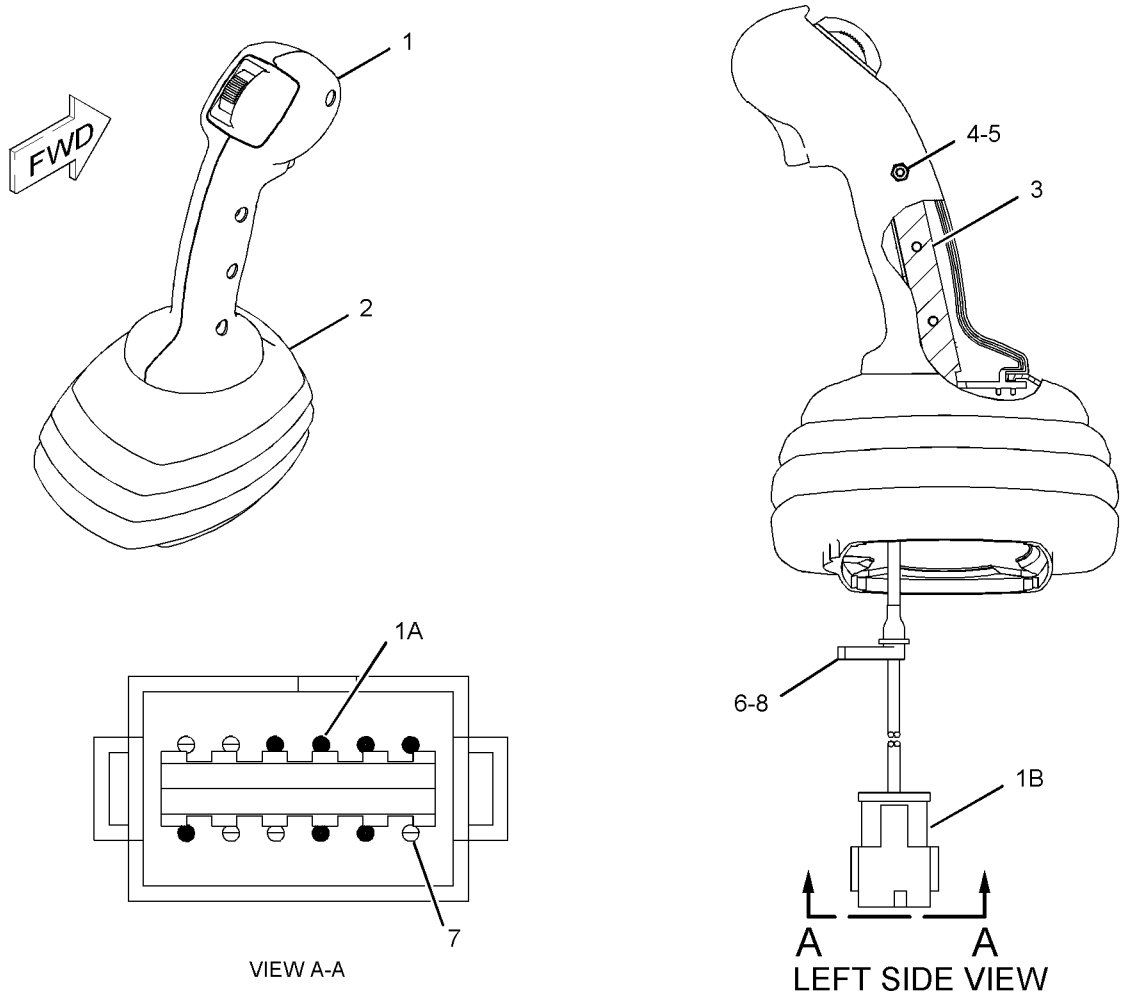


GRAPHIC #1 **<END>** g01132271

# OPERATOR STATION

## *218-5611* CONTROL GP-PILOT OPERATED HYD

**S/N: HEN6750-6862**
**ON/OFF AUXILIARY SWITCH**
**PART OF 295-7494 CONTROL AR-MACHINE**
**CANNOT BE USED WITH 218-5612—PAGE 496, 218-5618—PAGE 499**
**AN ATTACHMENT**

**SMCS-5059, 5705** **i02195836**

| NOTE | REF NO | GRAPHIC REF | PART NUMBER | QTY | PART NAME 1 2 3 4 5 6 (PRODUCT LEVEL) | SEE PAGE |
|---|---|---|---|---|---|---|
| | 1 | 2 | **8T-4205** | 3 | WASHER-HARD (7.2X14.5X2-MM THK) | |
| | 2 | 2 | **110-8760** | 1 | STRAP | |
| | 3 | 2 | **216-4704** | 1 | HARNESS AS-OPERATOR CONTROLS (JOYSTICK) | |
| | | 2 | **155-2255** | 1 | KIT-CONNECTING PLUG (12-PIN) | |
| | | 2 | **155-2270** | 2 | KIT-CONNECTING PLUG (2-PIN) | |
| | | | | | (EACH PLUG KIT INCLUDES PLUG AS, WEDGE & INTERFACE SEAL) | |
| | | 2 | **102-8801** | 1 | KIT-RECEPTACLE (12-PIN) | |
| | | | | | (INCLUDES RECEPTACLE AS & WEDGE) | |
| | 4 | 2 | **218-6421** | 1 | BRACKET AS | |
| M | | 1 | **6V-9632** | 3 | NUT-WELD (M6X1-THD) | |
| | | 1 | **7T-1099** | 1 | LINK | |
| M | | 1 | **8T-3612** | 3 | NUT-WELD (M8X1.25-THD) | |
| Y | 5 | 2 | **218-6490** | 1 | CONTROL GP-HANDLE (WORK TOOL) | 487 |
| Y | 6 | 2 | **228-9228** | 1 | VALVE GP-PILOT (WORK TOOL) | 346 |
| | 7 | 1 | **237-5332** | 1 | FILM-INSTRUCTION (MACHINE CONTROLS) | |
| M | 8 | 2 | **8T-0269** | 3 | BOLT-SOCKET HEAD (M6X1X20-MM) | |

M-METRIC PART
Y-SEPARATE ILLUSTRATION

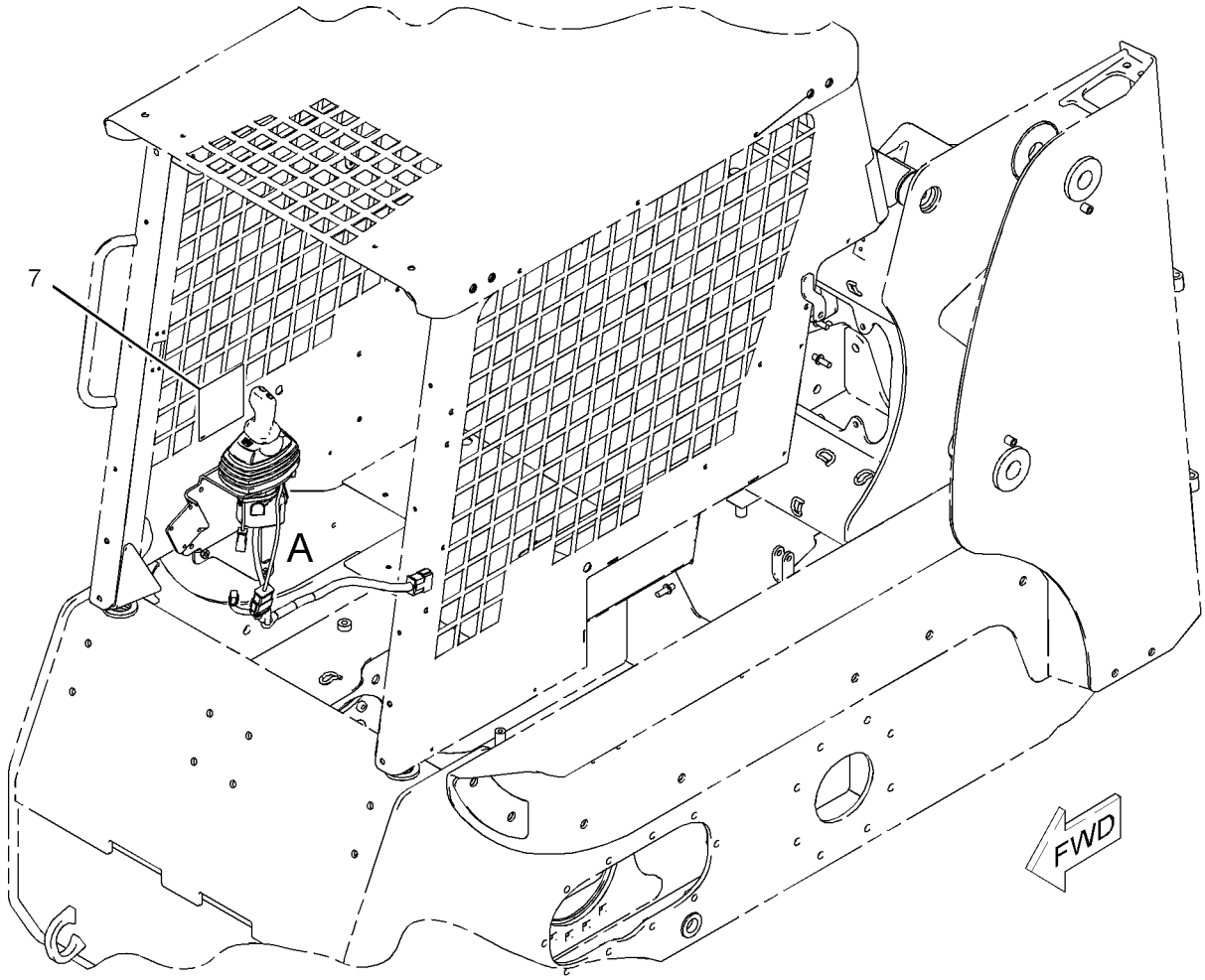


GRAPHIC #1 g01016393

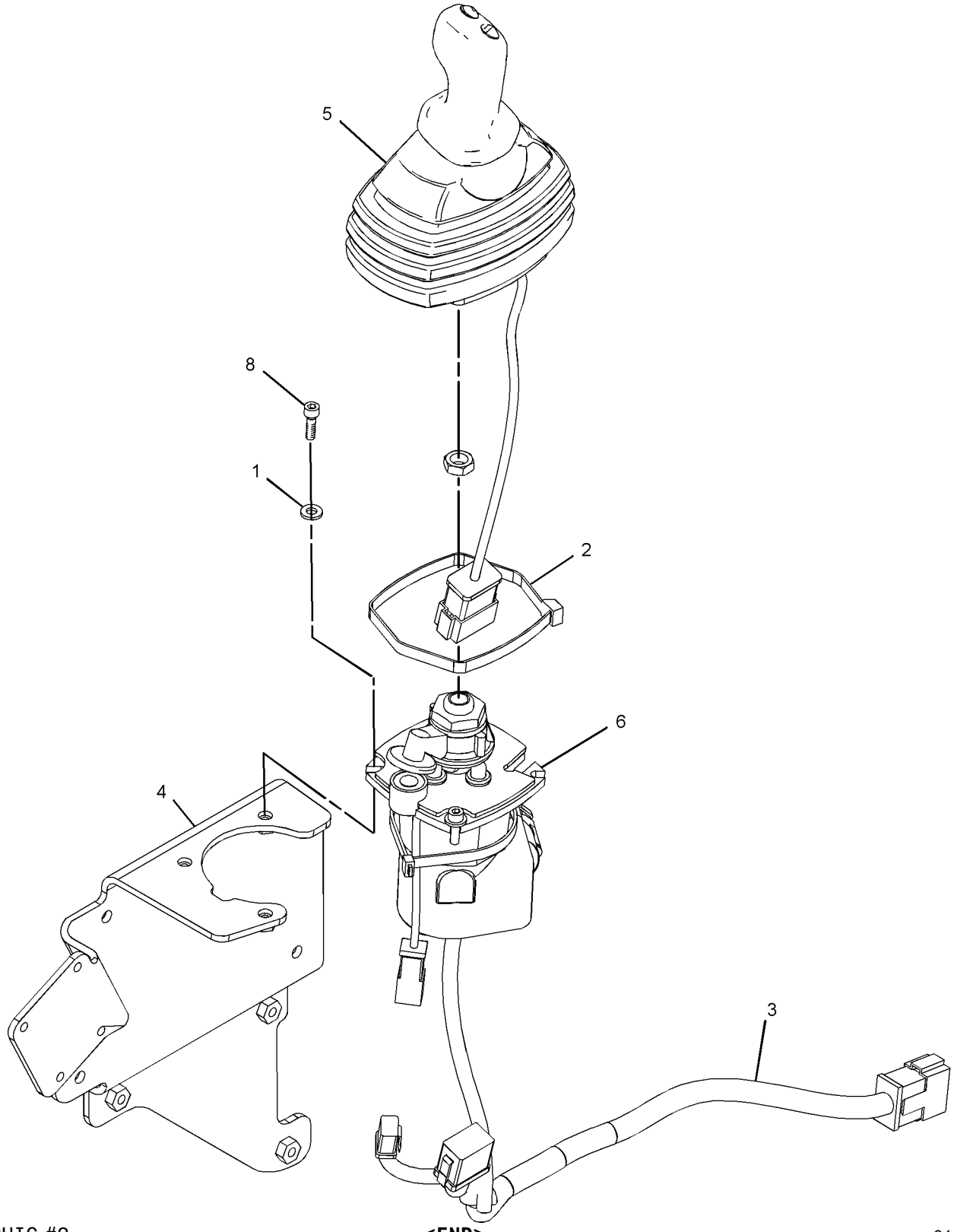


GRAPHIC #2

**<END>**

g01111318

# *218-5611* CONTROL GP-PILOT OPERATED HYD

**S/N: HEN6863-UP**
**ON/OFF AUXILIARY SWITCH**
**PART OF 295-7494 CONTROL AR-MACHINE**
**CANNOT BE USED WITH 218-5612—PAGE 496, 218-5618—PAGE 499**
**AN ATTACHMENT**

**SMCS-5059, 5705** **i02839671**

| NOTE | REF NO | GRAPHIC REF | PART NUMBER | QTY | PART NAME 1 2 3 4 5 6 (PRODUCT LEVEL) | SEE PAGE |
|---|---|---|---|---|---|---|
| CY | 1 | 1 | **299-9119** | 1 | VALVE GP-PILOT | 352 |
| | 2 | 1 | **216-4704** | 1 | HARNESS AS-OPERATOR CONTROLS (JOYSTICK) | |
| | 3 | 1 | **218-6421** | 1 | BRACKET AS | |
| Y | 4 | 1 | **218-6490** | 1 | CONTROL GP-HANDLE (WORK TOOL) | 487 |
| | 5 | 1 | **237-5332** | 1 | FILM-INSTRUCTION (MACHINE CONTROLS) | |
| | | | | | CENTER FILM ON CANOPY | |
| M | 6 | 1 | **8T-0269** | 3 | BOLT-SOCKET HEAD (M6X1X20-MM) | |
| | 7 | 1 | **8T-4205** | 3 | WASHER-HARD (7.2X14.5X2-MM THK) | |

C-CHANGE FROM PREVIOUS TYPE
M-METRIC PART
Y-SEPARATE ILLUSTRATION

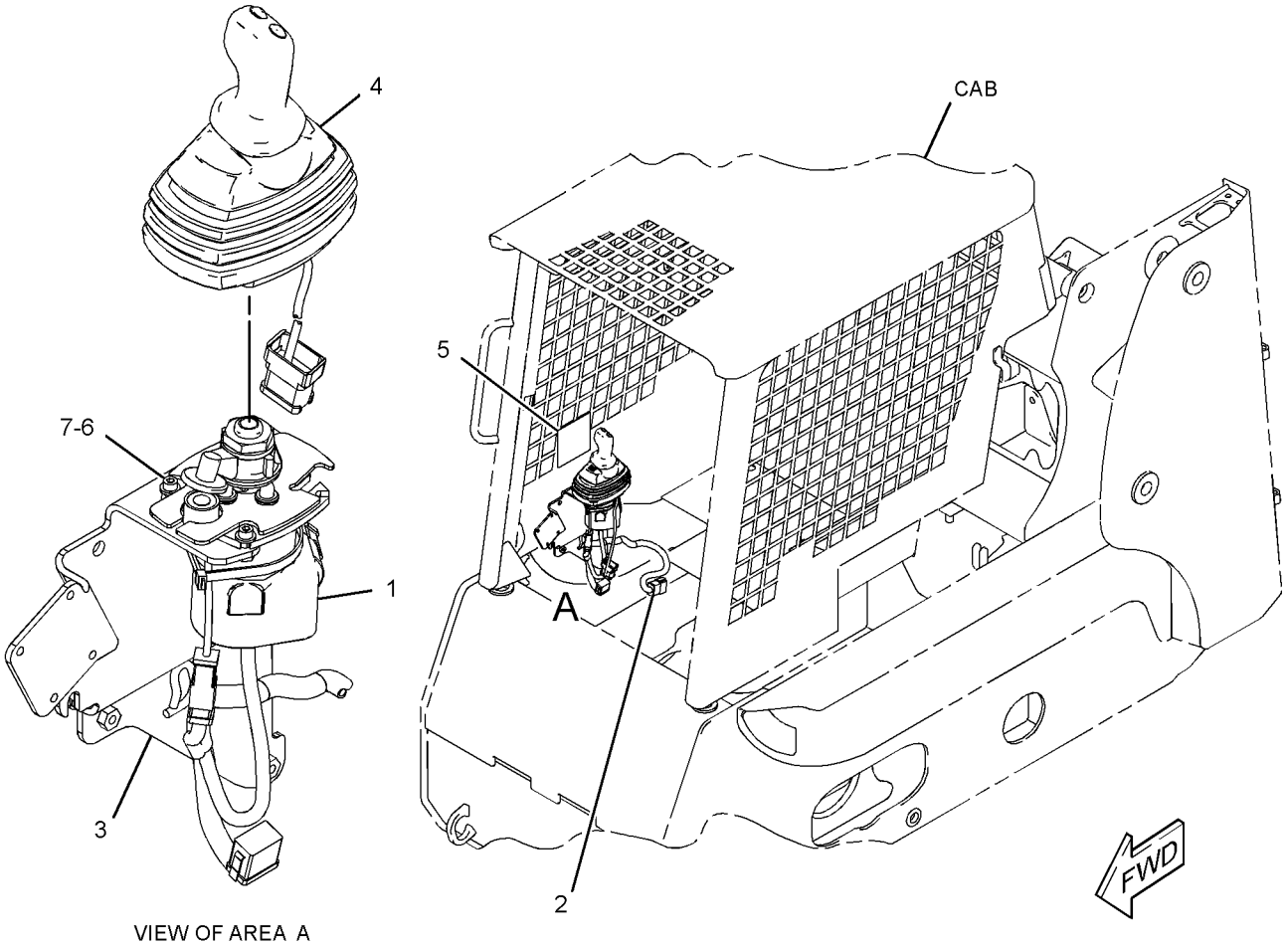


VIEW OF AREA A
(EXPLODED)

GRAPHIC #1 **<END>** g01417487

# OPERATOR STATION

## *218-5612* CONTROL GP-PILOT OPERATED HYD

**S/N: HEN6750-6862**
**ON/OFF AUXILIARY SWITCH**
**CANNOT BE USED WITH 218-5611—PAGE 492, 218-5618—PAGE 499**
**AN ATTACHMENT**

**SMCS-5059, 5705** **i02280917**

| NOTE | REF NO | GRAPHIC REF | PART NUMBER | QTY | PART NAME 1 2 3 4 5 6 (PRODUCT LEVEL) | SEE PAGE |
|---|---|---|---|---|---|---|
| M | 1 | 2 | **095-1207** | 1 | NUT (M12X1.75-THD) | |
| | 2 | 2 | **110-8760** | 1 | STRAP | |
| | 3 | 2 | **216-4704** | 1 | HARNESS AS-OPERATOR CONTROLS (JOYSTICK) | |
| | | 2 | **155-2255** | 1 | KIT-CONNECTING PLUG (12-PIN) | |
| | | 2 | **155-2270** | 2 | KIT-CONNECTING PLUG (2-PIN) | |
| | | | | | (EACH PLUG KIT INCLUDES PLUG AS, WEDGE & INTERFACE SEAL) | |
| | | 2 | **102-8801** | 1 | KIT-RECEPTACLE (12-PIN) | |
| | | | | | (INCLUDES RECEPTACLE AS & WEDGE) | |
| | 4 | 2 | **218-6421** | 1 | BRACKET AS | |
| Y | 5 | 2 | **228-9228** | 1 | VALVE GP-PILOT (WORK TOOL) | 346 |
| Y | 6 | 2 | **231-4257** | 1 | CONTROL GP-HANDLE (RH) (WORK TOOL) | 489 |
| | 7 | 1 | **262-7668** | 1 | FILM-INSTRUCTION (MACHINE CONTROL, READ OMM) | |
| M | 8 | 2 | **8T-0269** | 3 | BOLT-SOCKET HEAD (M6X1X20-MM) | |
| | 9 | 2 | **8T-4205** | 3 | WASHER-HARD (7.2X14.5X2-MM THK) | |

M-METRIC PART
Y-SEPARATE ILLUSTRATION

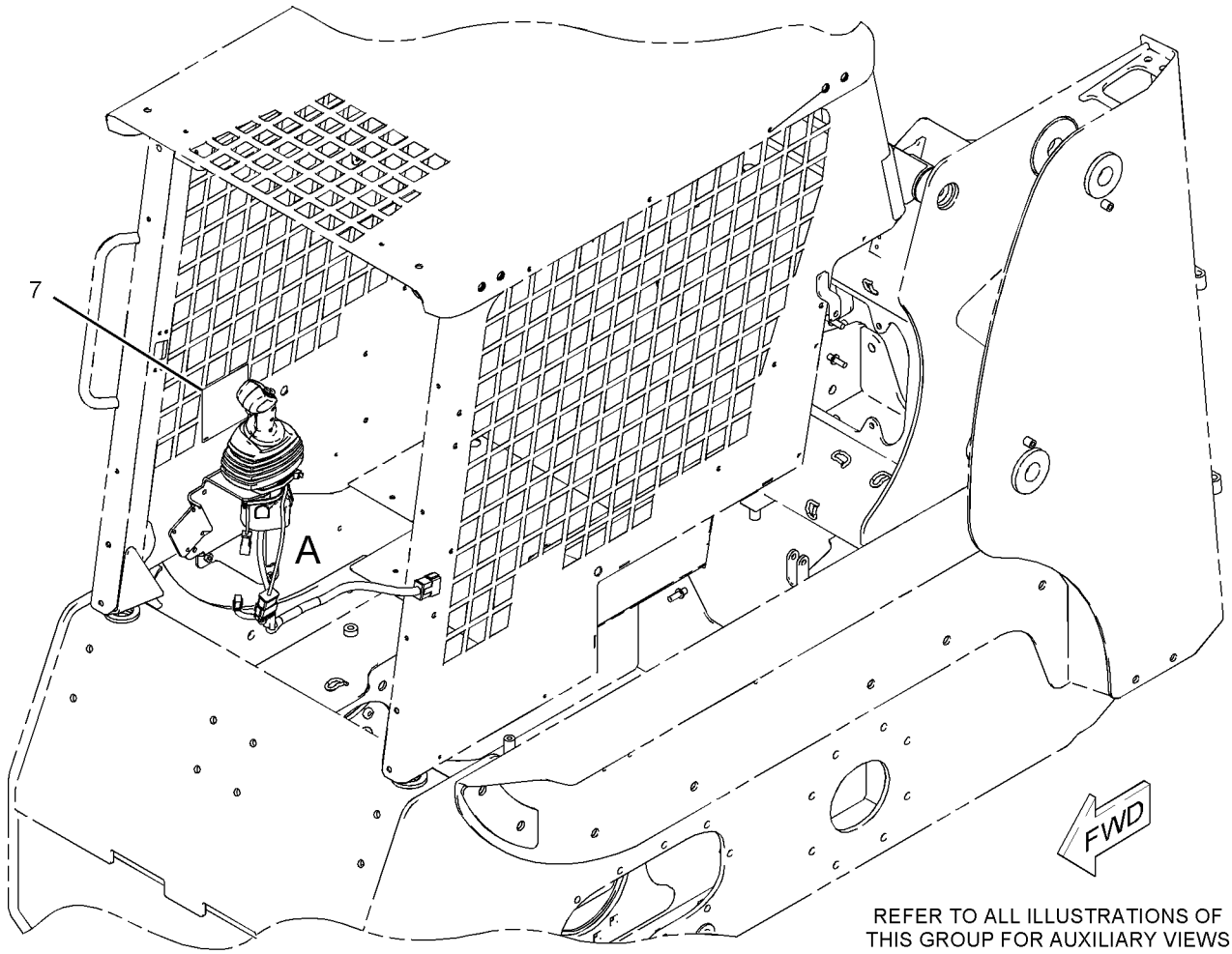


REFER TO ALL ILLUSTRATIONS OF THIS GROUP FOR AUXILIARY VIEWS

GRAPHIC #1 g01017033

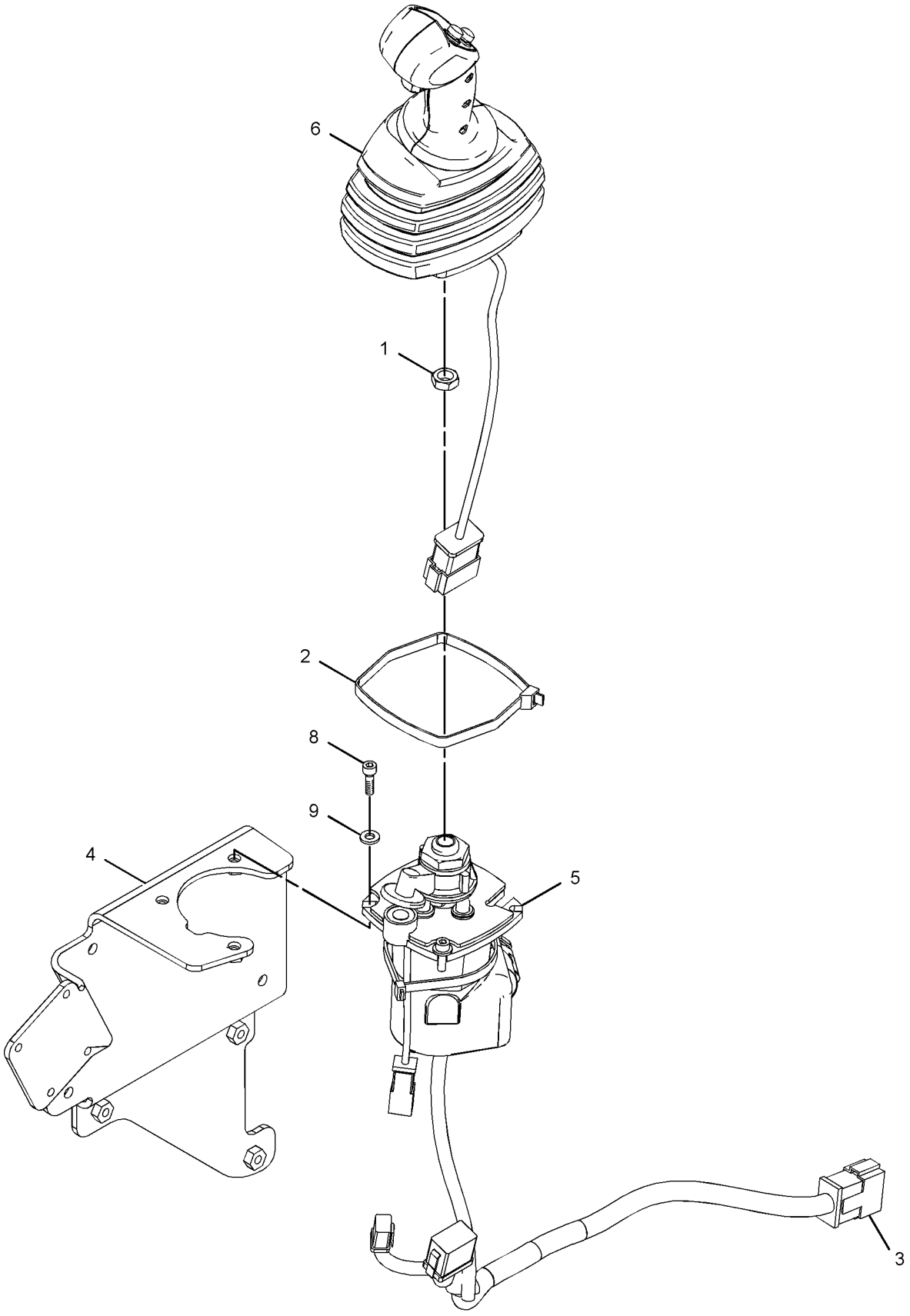


VIEW OF AREA A

**<END>**

GRAPHIC #2 g01017034

# OPERATOR STATION

## *218-5612* CONTROL GP-PILOT OPERATED HYD

**S/N: HEN6863-UP**
**ON/OFF AUXILIARY SWITCH**
**CANNOT BE USED WITH 218-5611—PAGE 492, 218-5618—PAGE 499**
**AN ATTACHMENT**

**SMCS-5059, 5705** **i02839693**

| NOTE | REF NO | GRAPHIC REF | PART NUMBER | QTY | PART NAME 1 2 3 4 5 6 (PRODUCT LEVEL) | SEE PAGE |
|---|---|---|---|---|---|---|
| M | 1 | 1 | **095-1207** | 1 | NUT (M12X1.75-THD) | |
| | 2 | 1 | **216-4704** | 1 | HARNESS AS-OPERATOR CONTROLS (JOYSTICK) | |
| | 3 | 1 | **218-6421** | 1 | BRACKET AS | |
| | 4 | 1 | **262-7668** | 1 | FILM-INSTRUCTION (MACHINE CONTROL, READ OMM) | |
| | | | | | CENTER FILM ON CANOPY | |
| Y | 5 | 1 | **299-9119** | 1 | VALVE GP-PILOT | 352 |
| Y | 6 | 1 | **231-4257** | 1 | CONTROL GP-HANDLE (RH) (WORK TOOL) | 489 |
| M | 7 | 1 | **8T-0269** | 3 | BOLT-SOCKET HEAD (M6X1X20-MM) | |
| | 8 | 1 | **8T-4205** | 3 | WASHER-HARD (7.2X14.5X2-MM THK) | |

M-METRIC PART
Y-SEPARATE ILLUSTRATION

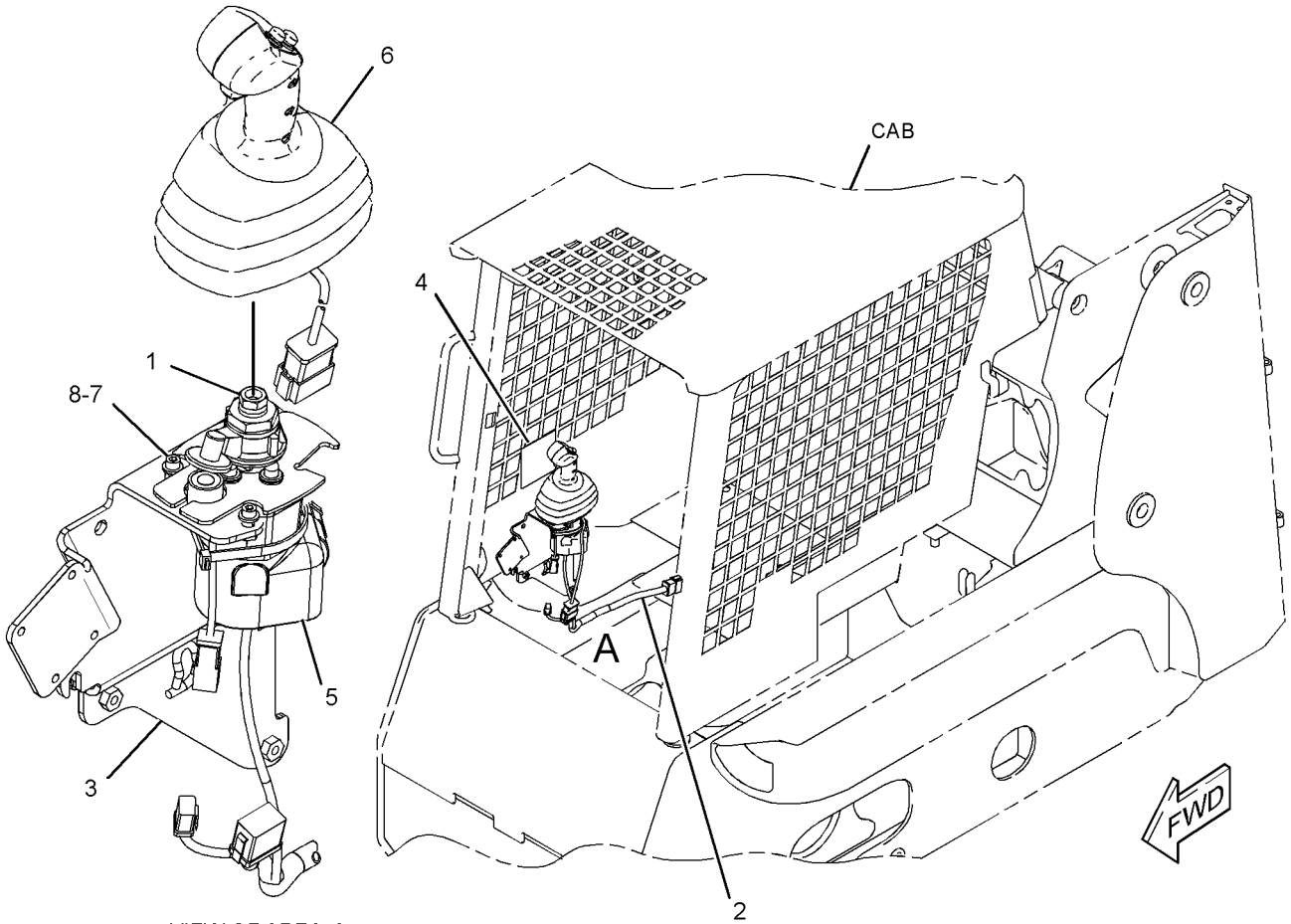


VIEW OF AREA A
(EXPLODED)

GRAPHIC #1 **<END>** g01417504

# *218-5618* CONTROL GP-PILOT OPERATED HYD

**S/N: HEN6750-6862**
**PROPORTIONAL AUXILIARY SWITCH**
**PART OF 295-7495, 295-7496 CONTROL AR-MACHINE**
**CANNOT BE USED WITH 218-5611—PAGE 492, 218-5612—PAGE 496**
**AN ATTACHMENT**

**SMCS-5059, 5705** **i02941007**

| NOTE | REF NO | GRAPHIC REF | PART NUMBER | QTY | PART NAME 1 2 3 4 5 6 (PRODUCT LEVEL) | SEE PAGE |
|---|---|---|---|---|---|---|
| M | 1 | 2 | **095-1207** | 1 | NUT (M12X1.75-THD) | |
| | 2 | 2 | **110-8760** | 1 | STRAP | |
| | 3 | 2 | **216-4704** | 1 | HARNESS AS-OPERATOR CONTROLS (JOYSTICK) | |
| | | 2 | **155-2255** | 1 | KIT-CONNECTING PLUG (12-PIN) | |
| | | 2 | **155-2270** | 2 | KIT-CONNECTING PLUG (2-PIN) | |
| | | 2 | **102-8801** | 1 | KIT-RECEPTACLE (12-PIN) | |
| | 4 | 2 | **218-6421** | 1 | BRACKET AS | |
| Y | 5 | 2 | **228-9228** | 1 | VALVE GP-PILOT (WORK TOOL) | 346 |
| Y | 6 | 2 | **231-4260** | 1 | CONTROL GP-HANDLE (RH) (WORK TOOL) | 491 |
| | 7 | 1 | **235-5243** | 1 | FILM-INSTRUCTION (MACHINE CONTROLS) | |
| M | 8 | 2 | **8T-0269** | 3 | BOLT-SOCKET HEAD (M6X1X20-MM) | |
| | 9 | 2 | **8T-4205** | 3 | WASHER-HARD (7.2X14.5X2-MM THK) | |

M-METRIC PART
Y-SEPARATE ILLUSTRATION

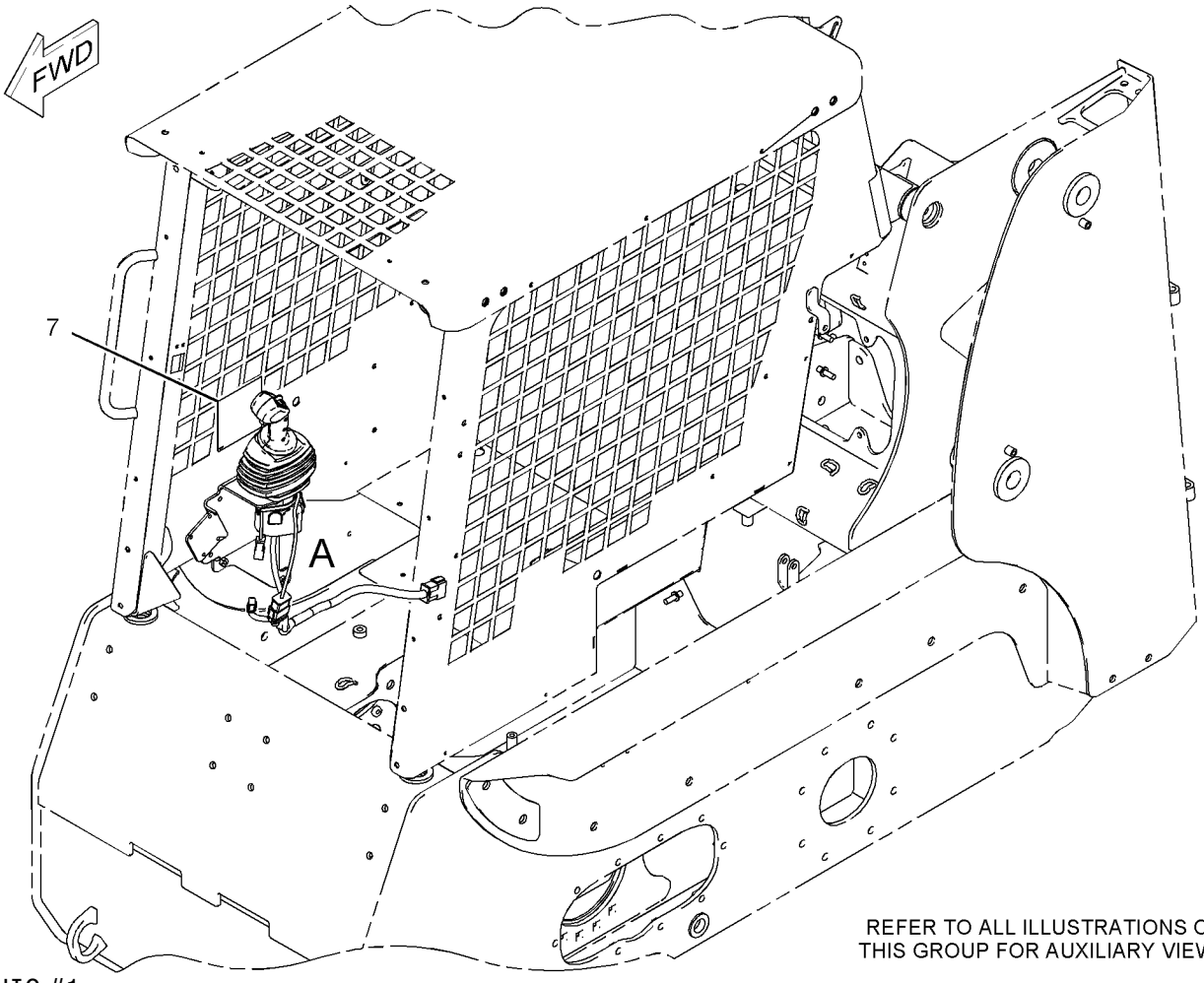


REFER TO ALL ILLUSTRATIONS OF THIS GROUP FOR AUXILIARY VIEWS

GRAPHIC #1 g01016439

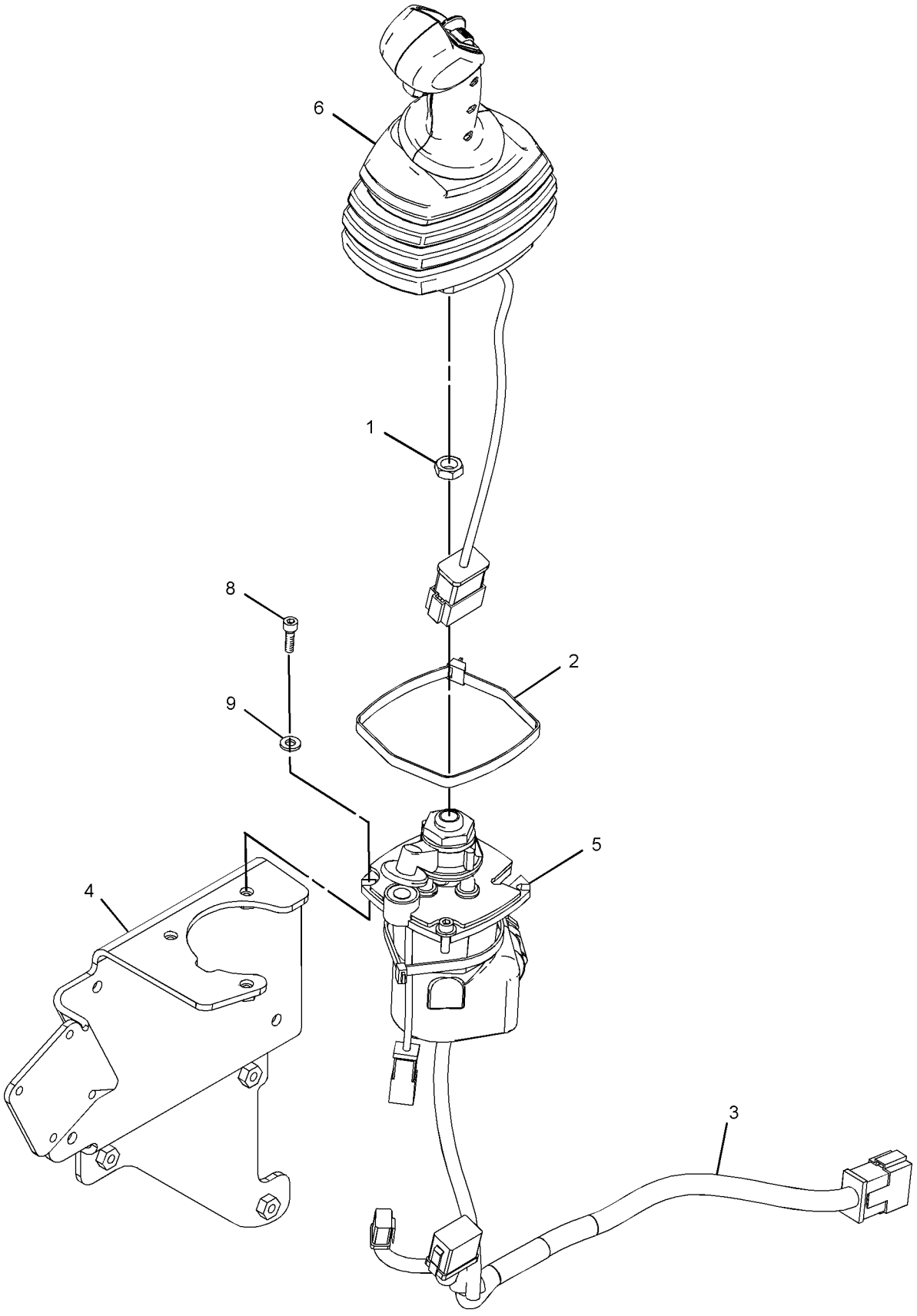


VIEW OF AREA A

GRAPHIC #2

**<END>**

g01016444

## *218-5618* CONTROL GP-PILOT OPERATED HYD

**S/N: HEN6863-UP**
**PROPORTIONAL AUXILIARY SWITCH**
**PART OF 295-7495, 295-7496 CONTROL AR-MACHINE**
**CANNOT BE USED WITH 218-5611—PAGE 492, 218-5612—PAGE 496**
**AN ATTACHMENT**

**SMCS-5059, 5705** **i02839699**

| NOTE | REF NO | GRAPHIC REF | PART NUMBER | QTY | PART NAME 1 2 3 4 5 6 (PRODUCT LEVEL) | SEE PAGE |
|---|---|---|---|---|---|---|
| M | 1 | 1 | **095-1207** | 1 | NUT (M12X1.75-THD) | |
| | 2 | 1 | **216-4704** | 1 | HARNESS AS-OPERATOR CONTROLS (JOYSTICK) | |
| | 3 | 1 | **218-6421** | 1 | BRACKET AS | |
| CY | 4 | 1 | **299-9119** | 1 | VALVE GP-PILOT | 352 |
| Y | 5 | 1 | **231-4260** | 1 | CONTROL GP-HANDLE (RH) (WORK TOOL) | 491 |
| | 6 | 1 | **235-5243** | 1 | FILM-INSTRUCTION (MACHINE CONTROLS) | |
| | | | | | CENTER FILM ON CANOPY | |
| M | 7 | 1 | **8T-0269** | 3 | BOLT-SOCKET HEAD (M6X1X20-MM) | |
| | 8 | 1 | **8T-4205** | 3 | WASHER-HARD (7.2X14.5X2-MM THK) | |

C-CHANGE FROM PREVIOUS TYPE
M-METRIC PART
Y-SEPARATE ILLUSTRATION

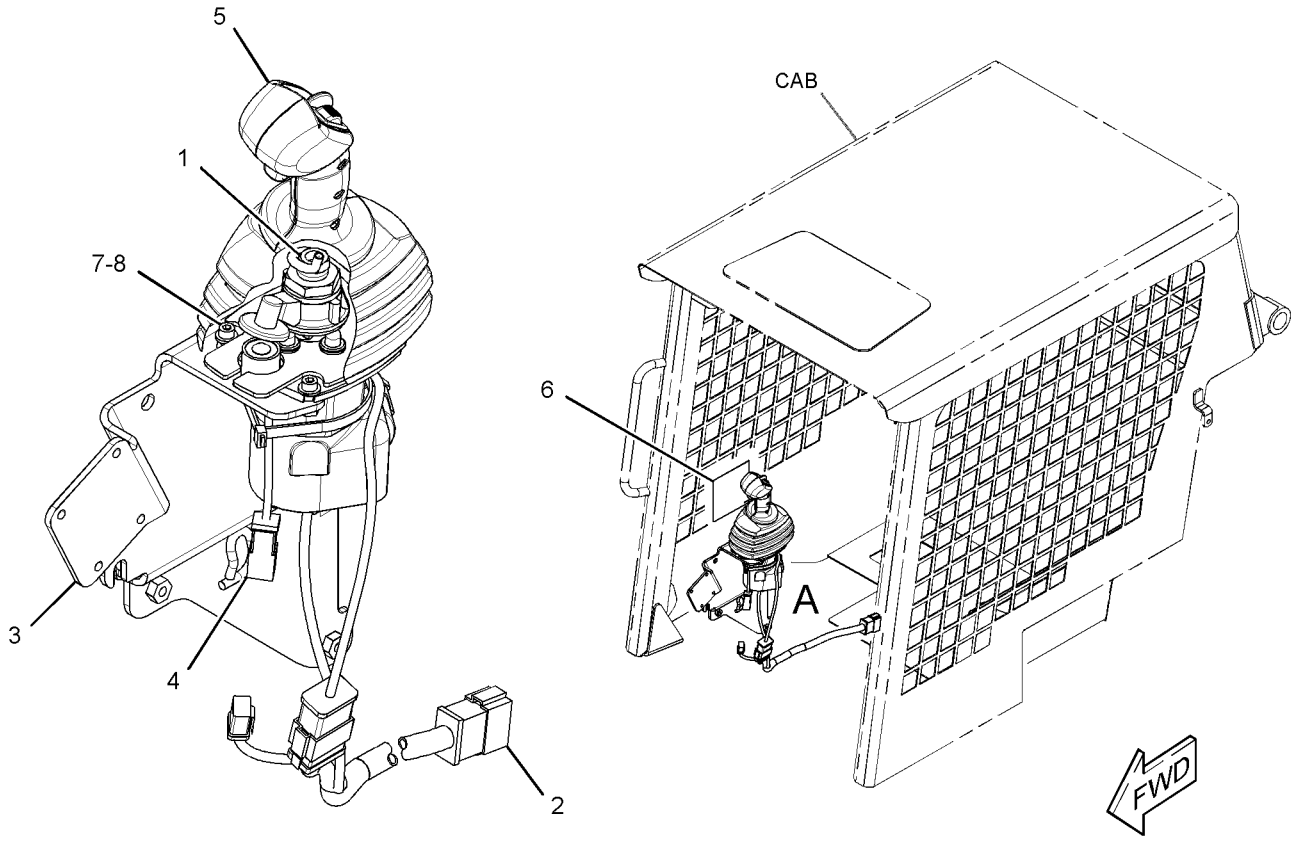


VIEW OF AREA A

GRAPHIC #1 **<END>** g01417564

# OPERATOR STATION

## *218-5930* CONTROL GP-PILOT OPERATED HYD

**S/N: HEN6750-6862**
**PART OF 218-5603 DRIVE CONTROL AR-HYDROSTATIC**
**CANNOT BE USED WITH 218-5931—PAGE 505, 218-5932—PAGE 507**
**AN ATTACHMENT**

**SMCS-5059, 5705** **i02451276**

| NOTE | REF NO | GRAPHIC REF | PART NUMBER | QTY | PART NAME 1 2 3 4 5 6 (PRODUCT LEVEL) | SEE PAGE |
|---|---|---|---|---|---|---|
| | 1 | 2 | **110-8760** | 1 | STRAP | |
| Y | 3 | 2 | **218-6119** | 1 | VALVE GP-PILOT (DIRECTION, SPEED) | 344 |
| | 4 | 2 | **218-6422** | 1 | BRACKET AS | |
| Y | 5 | 2 | **218-6480** | 1 | CONTROL GP-HANDLE (DIRECTION, SPEED) | 485 |
| | 6 | 1 | **237-5331** | 1 | FILM-INSTRUCTION (MACHINE CONTROL, READ OMM) | |
| M | 7 | 2 | **8T-0269** | 3 | BOLT-SOCKET HEAD (M6X1X20-MM) | |
| | 8 | 2 | **8T-4205** | 3 | WASHER-HARD (7.2X14.5X2-MM THK) | |

M-METRIC PART
Y-SEPARATE ILLUSTRATION

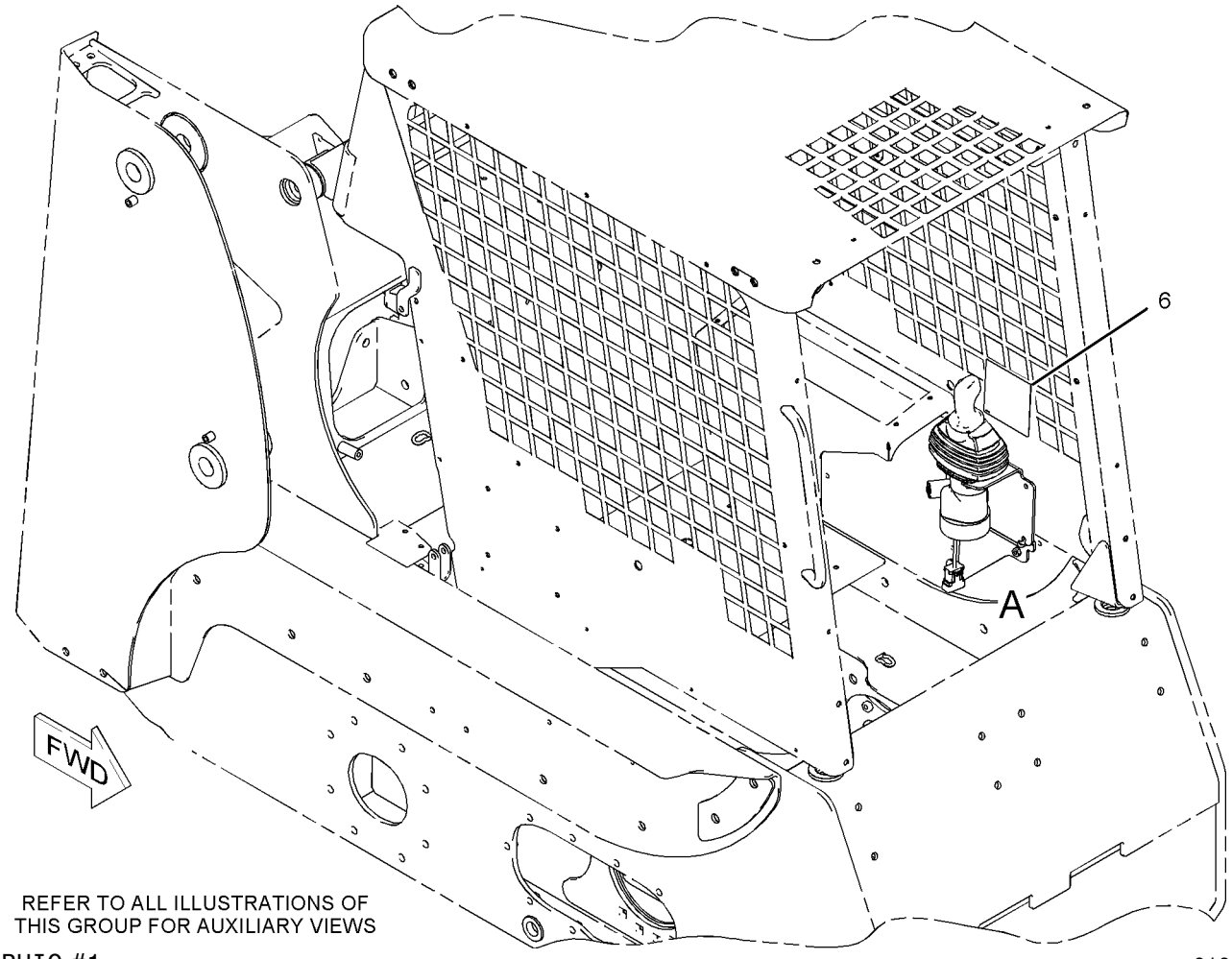


REFER TO ALL ILLUSTRATIONS OF THIS GROUP FOR AUXILIARY VIEWS

GRAPHIC #1 g01017159

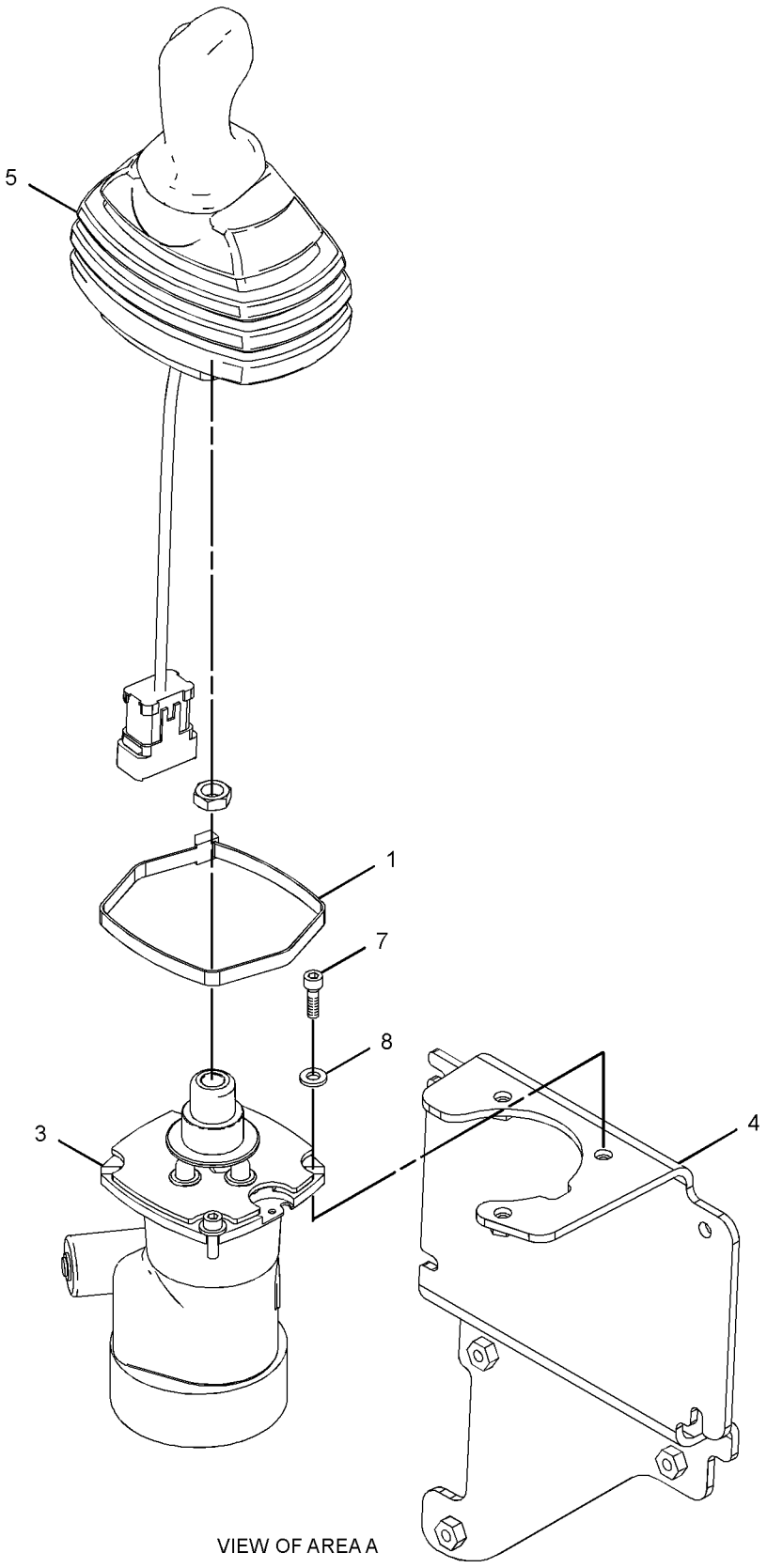


VIEW OF AREA A

GRAPHIC #2 **<END>** g01225787

# OPERATOR STATION

## *218-5930* CONTROL GP-PILOT OPERATED HYD

**S/N: HEN6863-UP**
**PART OF 218-5603 DRIVE CONTROL AR-HYDROSTATIC**
**CANNOT BE USED WITH 218-5931—PAGE 505, 218-5932—PAGE 507**
**AN ATTACHMENT**

**SMCS-5059, 5705** **i02839730**

| NOTE | REF NO | GRAPHIC REF | PART NUMBER | QTY | PART NAME 1 2 3 4 5 6 (PRODUCT LEVEL) | SEE PAGE |
|---|---|---|---|---|---|---|
| | 1 | 1 | **218-6422** | 1 | BRACKET AS | |
| Y | 2 | 1 | **218-6480** | 1 | CONTROL GP-HANDLE (DIRECTION, SPEED) | 485 |
| CY | 3 | 1 | **299-9116** | 1 | VALVE GP-PILOT (DIRECTION, SPEED) | 350 |
| | 4 | 1 | **237-5331** | 1 | FILM-INSTRUCTION (MACHINE CONTROL, READ OMM) | |
| M | 5 | 1 | **8T-0269** | 3 | BOLT-SOCKET HEAD (M6X1X20-MM) | |
| | 6 | 1 | **8T-4205** | 3 | WASHER-HARD (7.2X14.5X2-MM THK) | |

C-CHANGE FROM PREVIOUS TYPE
M-METRIC PART
Y-SEPARATE ILLUSTRATION

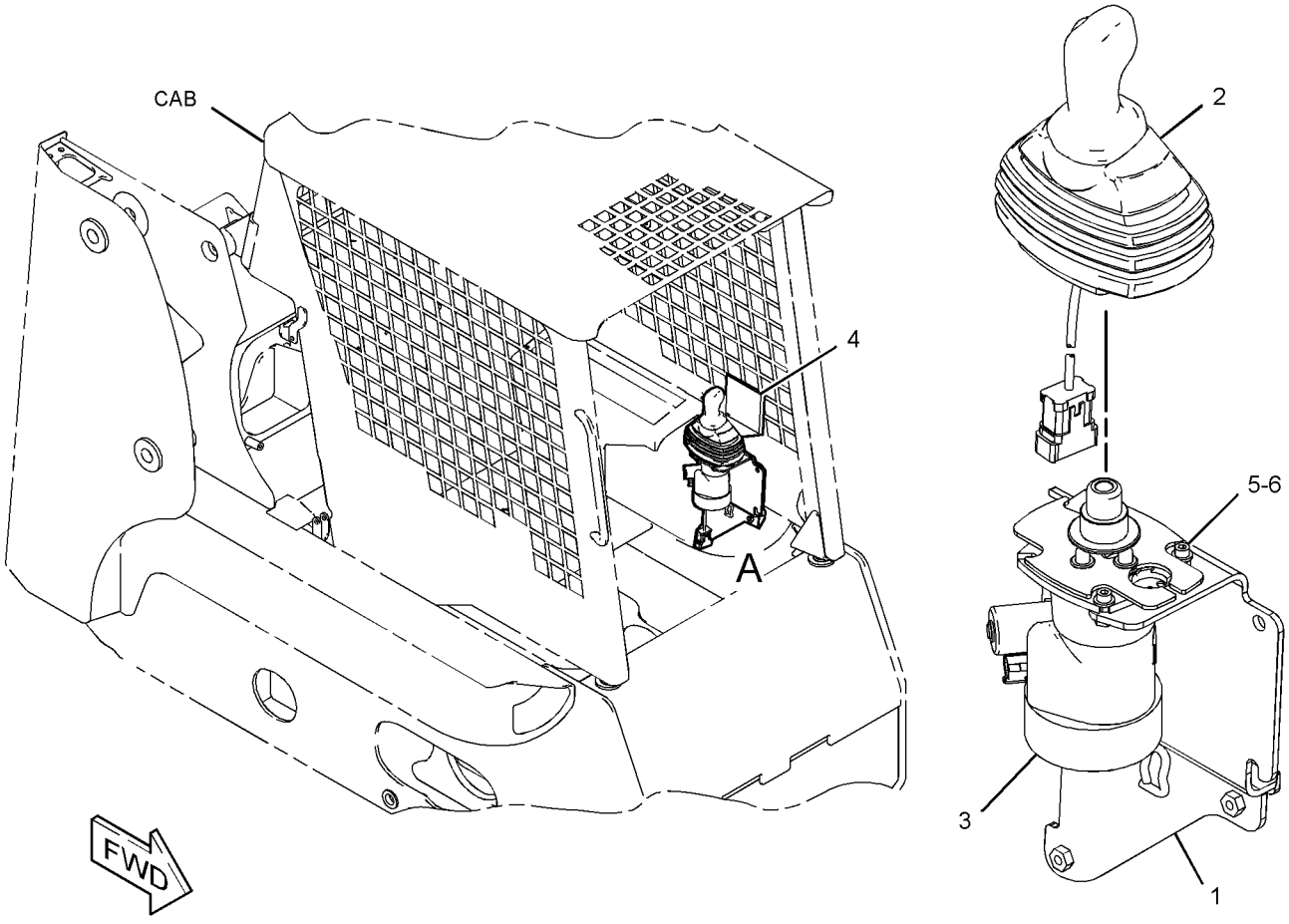


VIEW OF AREA A
(EXPLODED)

GRAPHIC #1 **<END>** g01417246

# OPERATOR STATION

## *218-5931* CONTROL GP-PILOT OPERATED HYD

**S/N: HEN6750-7110**
**HORN**
**PART OF 218-5604 DRIVE CONTROL AR-HYDROSTATIC**
**CANNOT BE USED WITH 218-5930—PAGE 502, 218-5932—PAGE 507**
**AN ATTACHMENT**

**SMCS-5059, 5705** **i02451259**

| NOTE | REF NO | GRAPHIC REF | PART NUMBER | QTY | PART NAME 1 2 3 4 5 6 (PRODUCT LEVEL) | SEE PAGE |
|---|---|---|---|---|---|---|
| | 1 | 1 | **110-8760** | 1 | STRAP | |
| M | 2 | 1 | **8T-4137** | 1 | BOLT (M10X1.5X20-MM) | |
| | 3 | 1 | **164-9425** | 1 | HORN AS (LOW TONE) | |
| | 4 | 1 | **8T-4205** | 3 | WASHER-HARD (7.2X14.5X2-MM THK) | |
| Y | 5 | 1 | **218-6119** | 1 | VALVE GP-PILOT (DIRECTION, SPEED) | 344 |
| | 6 | 1 | **218-6422** | 1 | BRACKET AS | |
| Y | 7 | 1 | **218-6485** | 1 | CONTROL GP-HANDLE (DIRECTION, SPEED) | 486 |
| | 8 | 1 | **237-5331** | 1 | FILM-INSTRUCTION (MACHINE CONTROL, READ OMM) | |
| M | 9 | 1 | **8T-0269** | 3 | BOLT-SOCKET HEAD (M6X1X20-MM) | |
| | 10 | 1 | **8T-4121** | 1 | WASHER-HARD (11X21X2.5-MM THK) | |

M-METRIC PART
Y-SEPARATE ILLUSTRATION

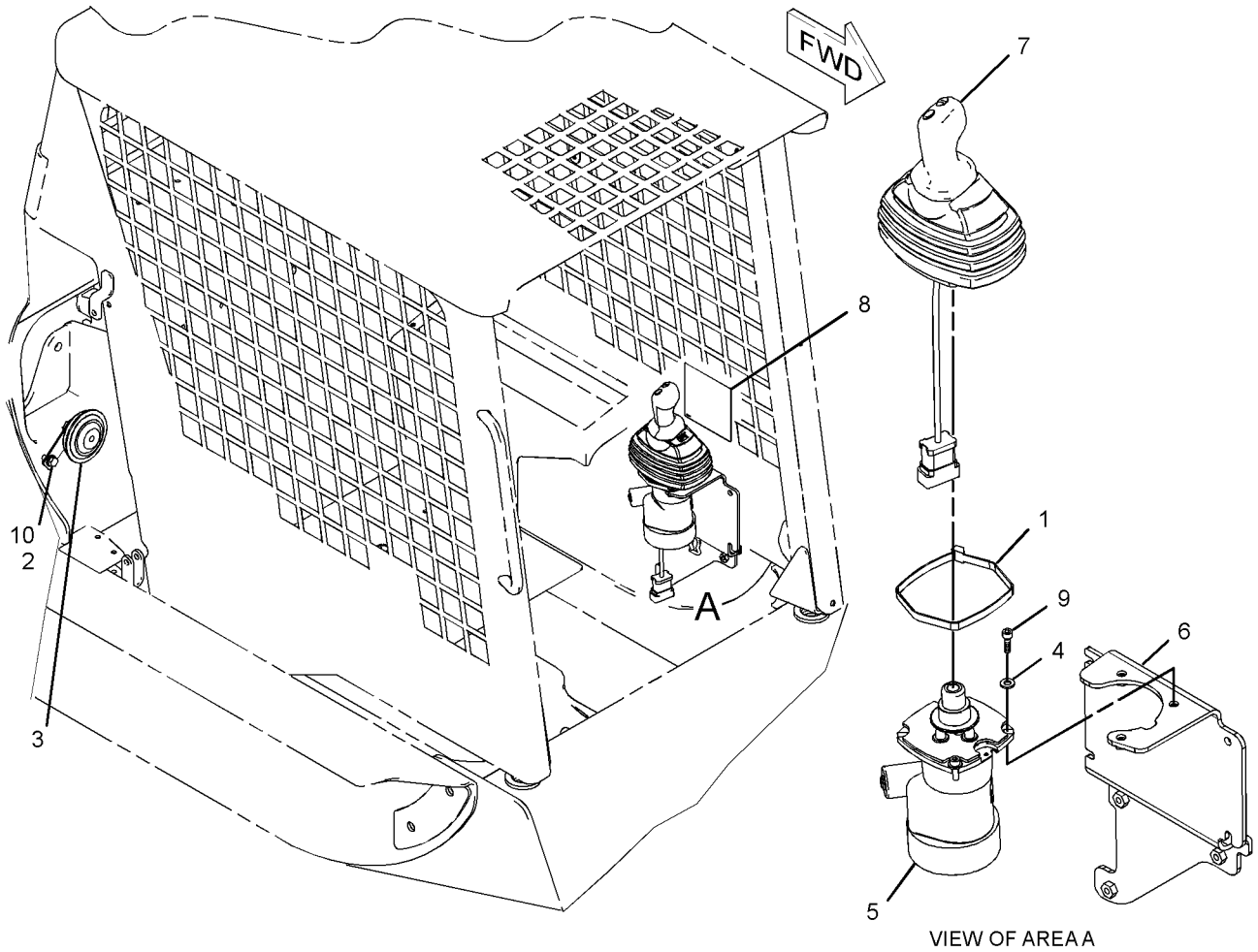


VIEW OF AREA A

GRAPHIC #1 **<END>** g01225060

# OPERATOR STATION

## *218-5931* CONTROL GP-PILOT OPERATED HYD

**S/N: HEN7111-UP**
**HORN**
**PART OF 218-5604 DRIVE CONTROL AR-HYDROSTATIC**
**CANNOT BE USED WITH 218-5930—PAGE 502, 218-5932—PAGE 507**
**AN ATTACHMENT**

**SMCS-5059, 5705** **i02839745**

| NOTE | REF NO | GRAPHIC REF | PART NUMBER | QTY | PART NAME 1 2 3 4 5 6 (PRODUCT LEVEL) | SEE PAGE |
|---|---|---|---|---|---|---|
| | 1 | 1 | **218-6422** | 1 | BRACKET AS | |
| Y | 2 | 1 | **218-6485** | 1 | CONTROL GP-HANDLE | 486 |
| CY | 3 | 1 | **299-9116** | 1 | VALVE GP-PILOT | 350 |
| | 4 | 1 | **164-9425** | 1 | HORN AS (24-VOLT, LOW TONE) | |
| | 5 | 1 | **237-5331** | 1 | FILM-INSTRUCTION (MACHINE CONTROL, READ OMM) | |
| M | 6 | 1 | **8T-0269** | 3 | BOLT-SOCKET HEAD (M6X1X20-MM) | |
| | 7 | 1 | **8T-4121** | 1 | WASHER-HARD (11X21X2.5-MM THK) | |
| M | 8 | 1 | **8T-4137** | 1 | BOLT (M10X1.5X20-MM) | |
| | 9 | 1 | **8T-4205** | 3 | WASHER-HARD (7.2X14.5X2-MM THK) | |

C-CHANGE FROM PREVIOUS TYPE
M-METRIC PART
Y-SEPARATE ILLUSTRATION

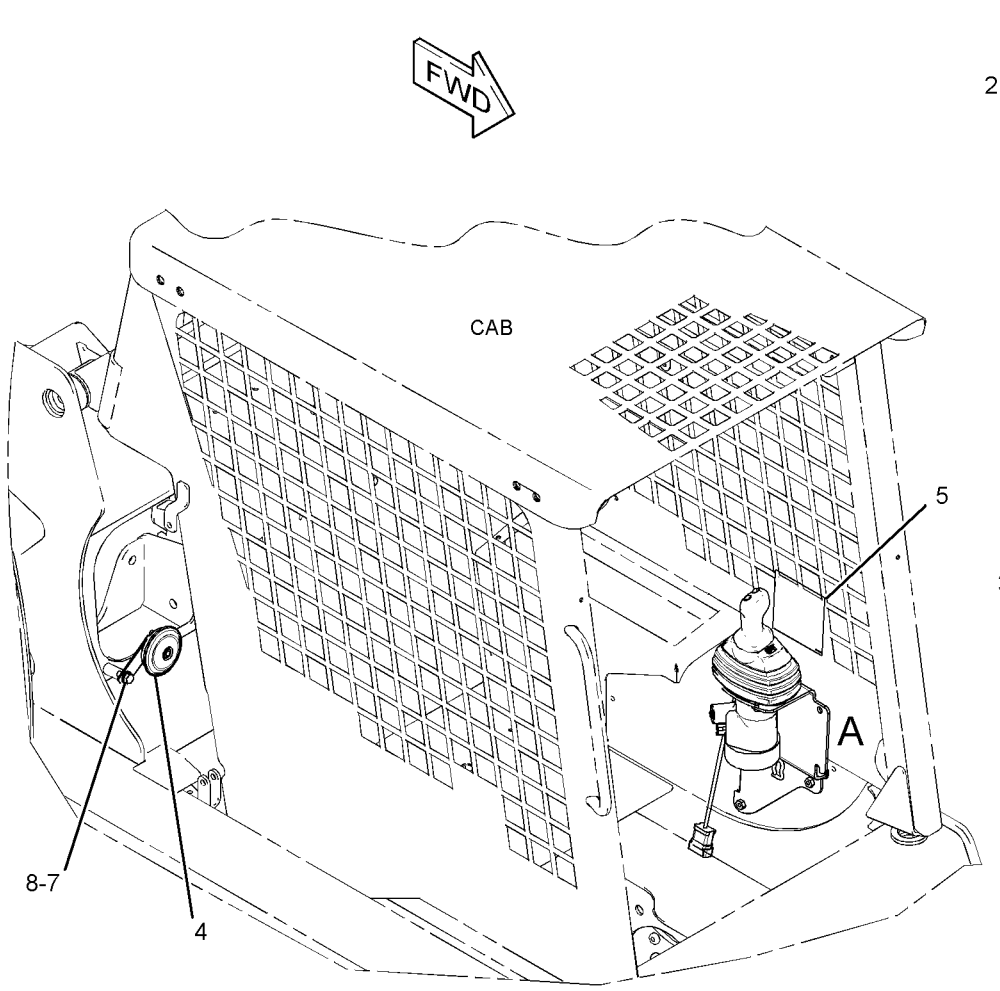


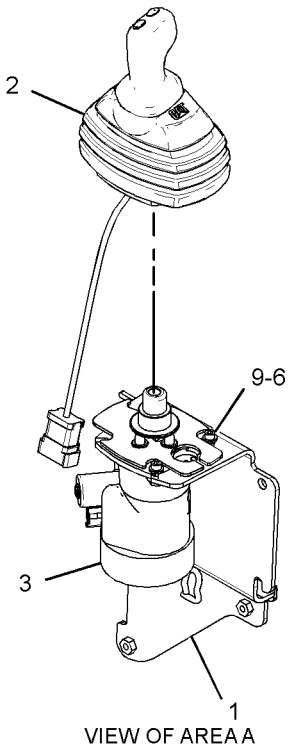


GRAPHIC #1 **<END>** g01455653

# OPERATOR STATION

## *218-5932* CONTROL GP-PILOT OPERATED HYD

**S/N: HEN6750-7110**
**HORN**
**PART OF 218-5605 DRIVE CONTROL AR-HYDROSTATIC**
**CANNOT BE USED WITH 218-5930—PAGE 502, 218-5931—PAGE 505**
**AN ATTACHMENT**

**SMCS-5059, 5705** **i02451290**

| NOTE | REF NO | GRAPHIC REF | PART NUMBER | QTY | PART NAME 1 2 3 4 5 6 (PRODUCT LEVEL) | SEE PAGE |
|---|---|---|---|---|---|---|
| M | 1 | 2 | **095-1207** | 1 | NUT (M12X1.75-THD) | |
| | 2 | 2 | **110-8760** | 1 | STRAP | |
| Y | 3 | 2 | **218-6119** | 1 | VALVE GP-PILOT (DIRECTION, SPEED) | 344 |
| | 4 | 2 | **218-6422** | 1 | BRACKET AS | |
| Y | 5 | 2 | **231-4256** | 1 | CONTROL GP-HANDLE (LH) (DIRECTION, SPEED) | 488 |
| | 6 | 1 | **235-5246** | 1 | FILM-INSTRUCTION (MACHINE CONTROL, READ OMM) | |
| M | 7 | 2 | **8T-0269** | 3 | BOLT-SOCKET HEAD (M6X1X20-MM) | |
| | 8 | 2 | **8T-4205** | 3 | WASHER-HARD (7.2X14.5X2-MM THK) | |
| M | 9 | 2 | **8T-4137** | 1 | BOLT (M10X1.5X20-MM) | |
| | 10 | 2 | **164-9425** | 1 | HORN AS (LOW TONE) | |
| | 11 | 2 | **8T-4121** | 1 | WASHER-HARD (11X21X2.5-MM THK) | |

M-METRIC PART
Y-SEPARATE ILLUSTRATION

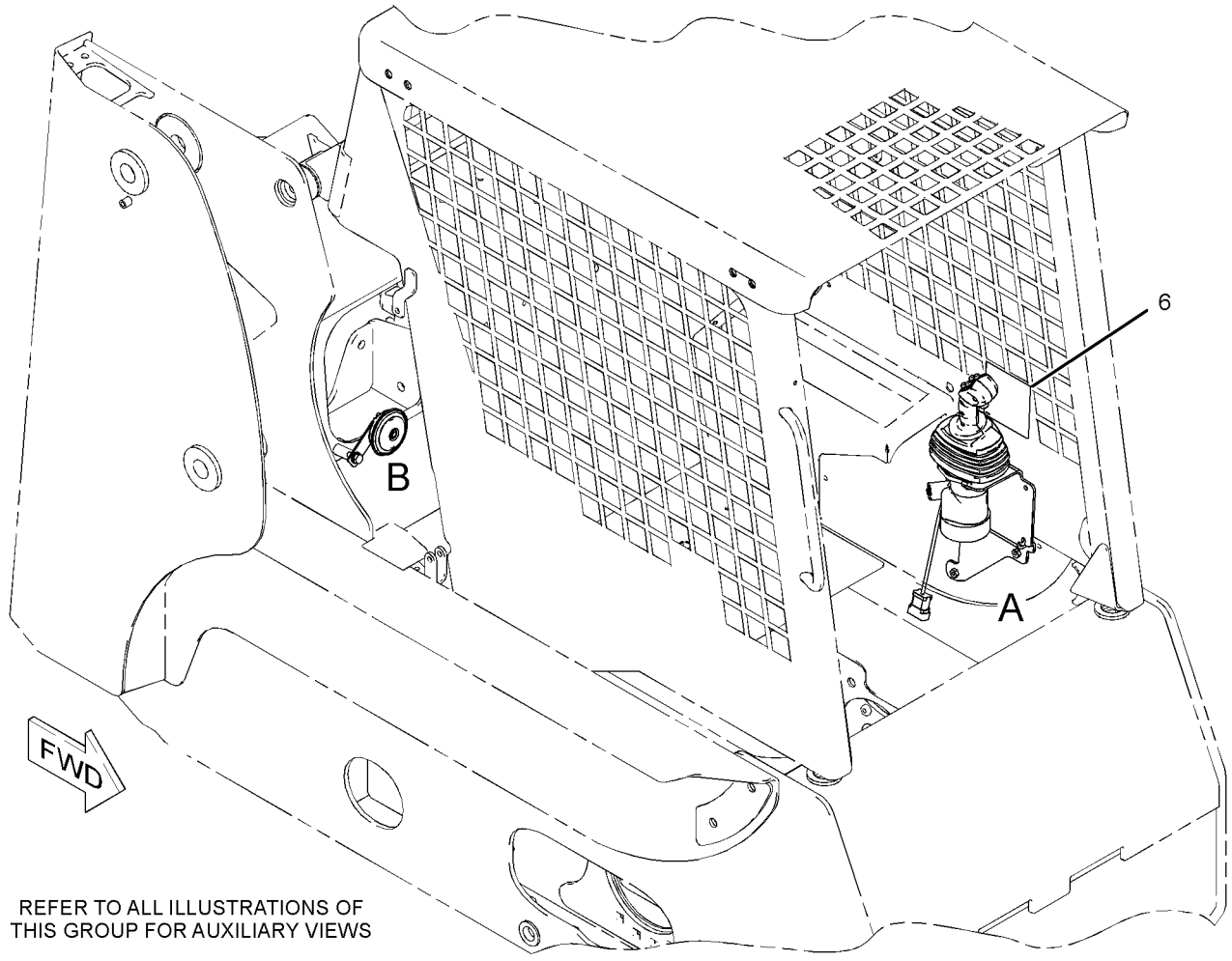


GRAPHIC #1 g01229647

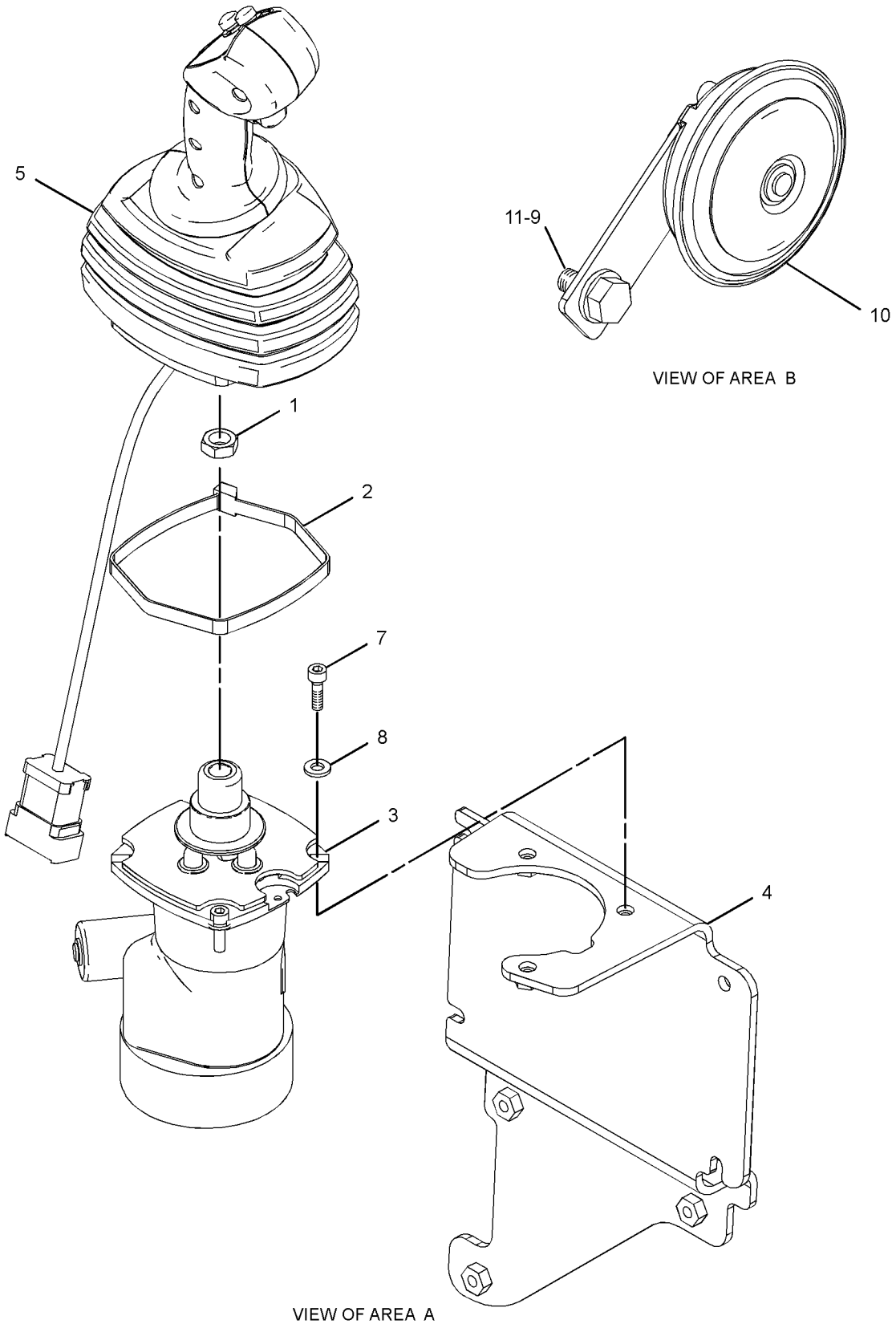


GRAPHIC #2 **<END>** g01229637

# *218-5932* CONTROL GP-PILOT OPERATED HYD

**S/N: HEN7111-UP**
**HORN**
**PART OF 218-5605 DRIVE CONTROL AR-HYDROSTATIC**
**CANNOT BE USED WITH 218-5930—PAGE 502, 218-5931—PAGE 505**
**AN ATTACHMENT**

**SMCS-5059, 5705** **i02839747**

| NOTE | REF NO | GRAPHIC REF | PART NUMBER | QTY | PART NAME 1 2 3 4 5 6 (PRODUCT LEVEL) | SEE PAGE |
|---|---|---|---|---|---|---|
| M | 1 | 1 | **095-1207** | 1 | NUT (M12X1.75-THD) | |
| | 2 | 1 | **218-6422** | 1 | BRACKET AS | |
| CY | 3 | 1 | **299-9116** | 1 | VALVE GP-PILOT | 350 |
| | 4 | 1 | **164-9425** | 1 | HORN AS (24-VOLT, LOW TONE) | |
| Y | 5 | 1 | **231-4256** | 1 | CONTROL GP-HANDLE (LH) (DIRECTION, SPEED) | 488 |
| | 6 | 1 | **235-5246** | 1 | FILM-INSTRUCTION (MACHINE CONTROL, READ OMM) | |
| | | | | | CENTER FILM ON CANOPY | |
| M | 7 | 1 | **8T-0269** | 3 | BOLT-SOCKET HEAD (M6X1X20-MM) | |
| | 8 | 1 | **8T-4121** | 1 | WASHER-HARD (11X21X2.5-MM THK) | |
| M | 9 | 1 | **8T-4137** | 1 | BOLT (M10X1.5X20-MM) | |
| | 10 | 1 | **8T-4205** | 3 | WASHER-HARD (7.2X14.5X2-MM THK) | |

C-CHANGE FROM PREVIOUS TYPE
M-METRIC PART
Y-SEPARATE ILLUSTRATION

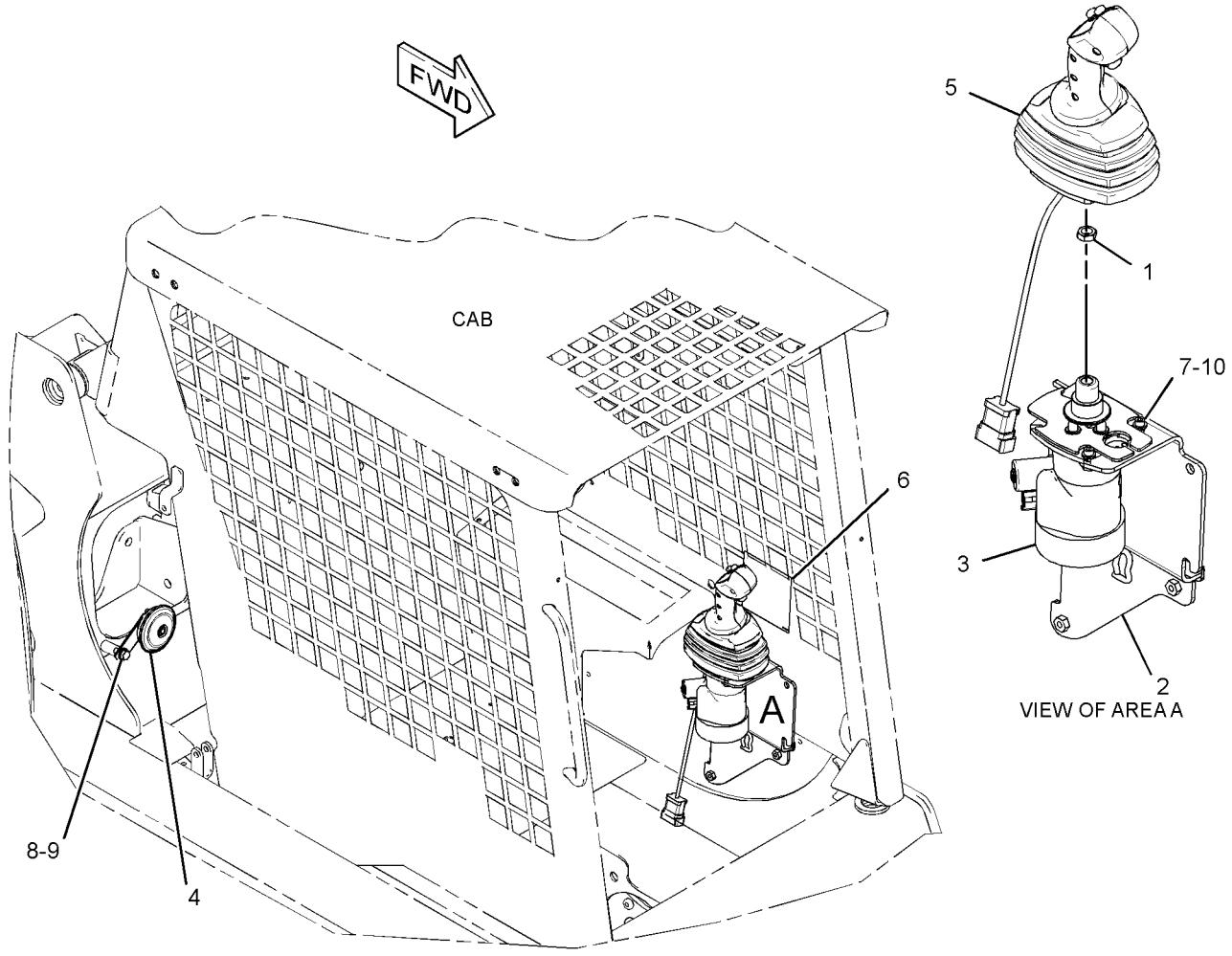


GRAPHIC #1 **<END>** g01455640

# OPERATOR STATION

## *218-5933* CONTROL GP-PILOT OPERATED HYD

**S/N: HEN6750-UP**
**PART OF 218-5606, 218-5608 DRIVE CONTROL AR-HYDROSTATIC**
**AN ATTACHMENT**
**TYPE 1**

**SMCS-5059, 5705** **i02639946**

| NOTE | REF NO | GRAPHIC REF | PART NUMBER | QTY | PART NAME 1 2 3 4 5 6 (PRODUCT LEVEL) | SEE PAGE |
|---|---|---|---|---|---|---|
| M | 1 | 2 | **095-1207** | 1 | NUT (M12X1.75-THD) | |
| | 2 | 2 | **110-8760** | 1 | STRAP | |
| | 3 | 2 | **8T-4205** | 3 | WASHER-HARD (7.2X14.5X2-MM THK) | |
| M | 4 | 2 | **8T-0269** | 3 | BOLT-SOCKET HEAD (M6X1X20-MM) | |
| | 5 | 1 | **235-5246** | 1 | FILM-INSTRUCTION (MACHINE CONTROL, READ OMM) | |
| Y | 6 | 2 | **218-6119** | 1 | VALVE GP-PILOT (DIRECTION, SPEED) | 344 |
| | 7 | 2 | **218-6422** | 1 | BRACKET AS | |
| Y | 8 | 2 | *225-7960* | 1 | WIRING GP-WORK TOOL (RADIAL LIFT) | 153 |
| Y | 9 | 2 | **231-4258** | 1 | CONTROL GP-HANDLE (LH) (DIRECTION, SPEED) | 490 |
| | | | | | | |
| BF | | 1 | **113-8490** | 1 | FUSE (10-AMPERE) | |
| BF | | 1 | **164-9425** | 1 | HORN AS (24-VOLT, LOW TONE) | |
| BF | | 1 | **177-9853** | 1 | RECEPTACLE AS | |
| F | | 1 | **178-3586** | 1 | LOCK | |
| BF | | 1 | **8T-4121** | 1 | WASHER-HARD (11X21X2.5-MM THK) | |
| BFM | | 1 | **8T-4137** | 1 | BOLT (M10X1.5X20-MM) | |

B-USE AS REQUIRED
F-NOT SHOWN
M-METRIC PART
Y-SEPARATE ILLUSTRATION

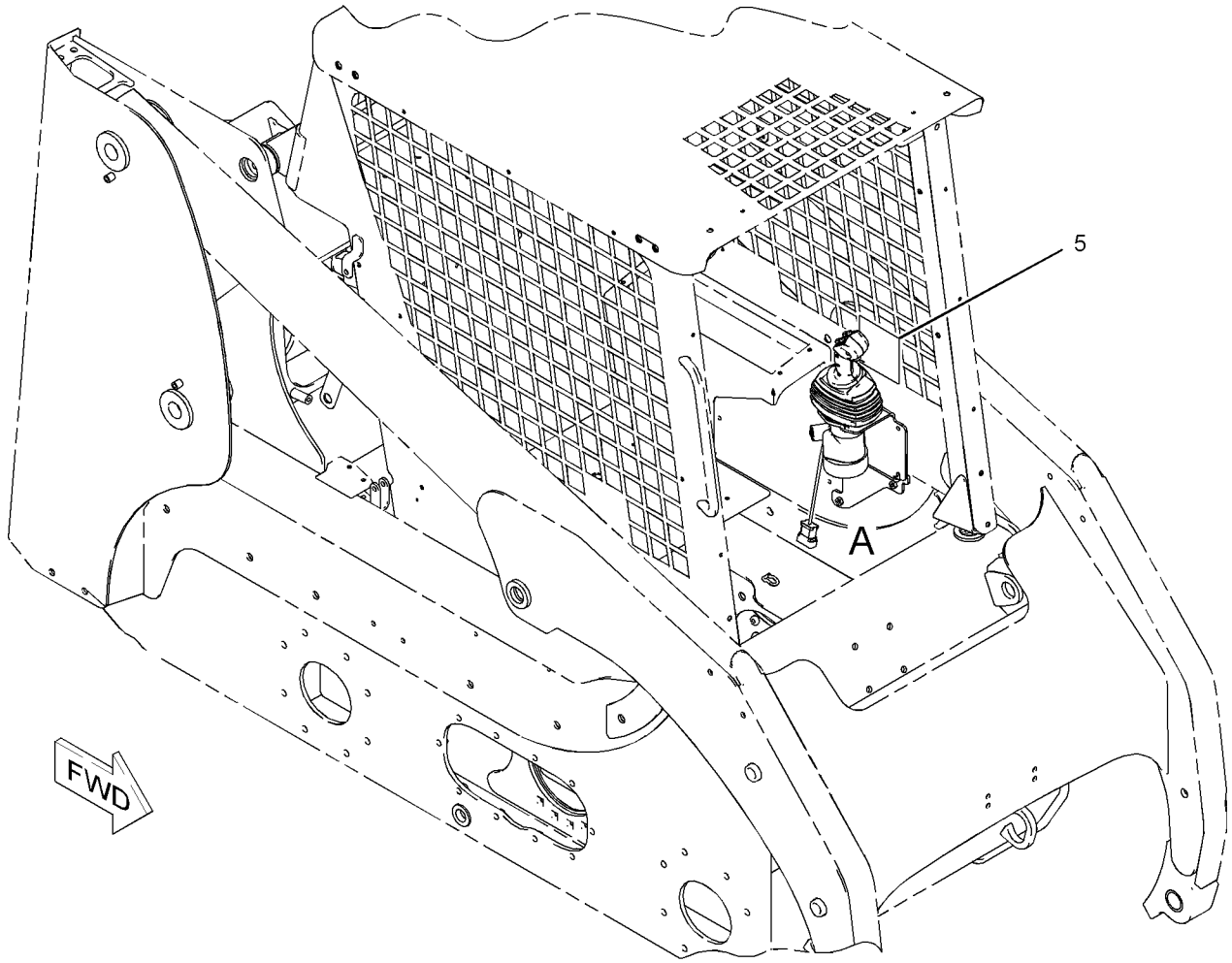


GRAPHIC #1 g01041619

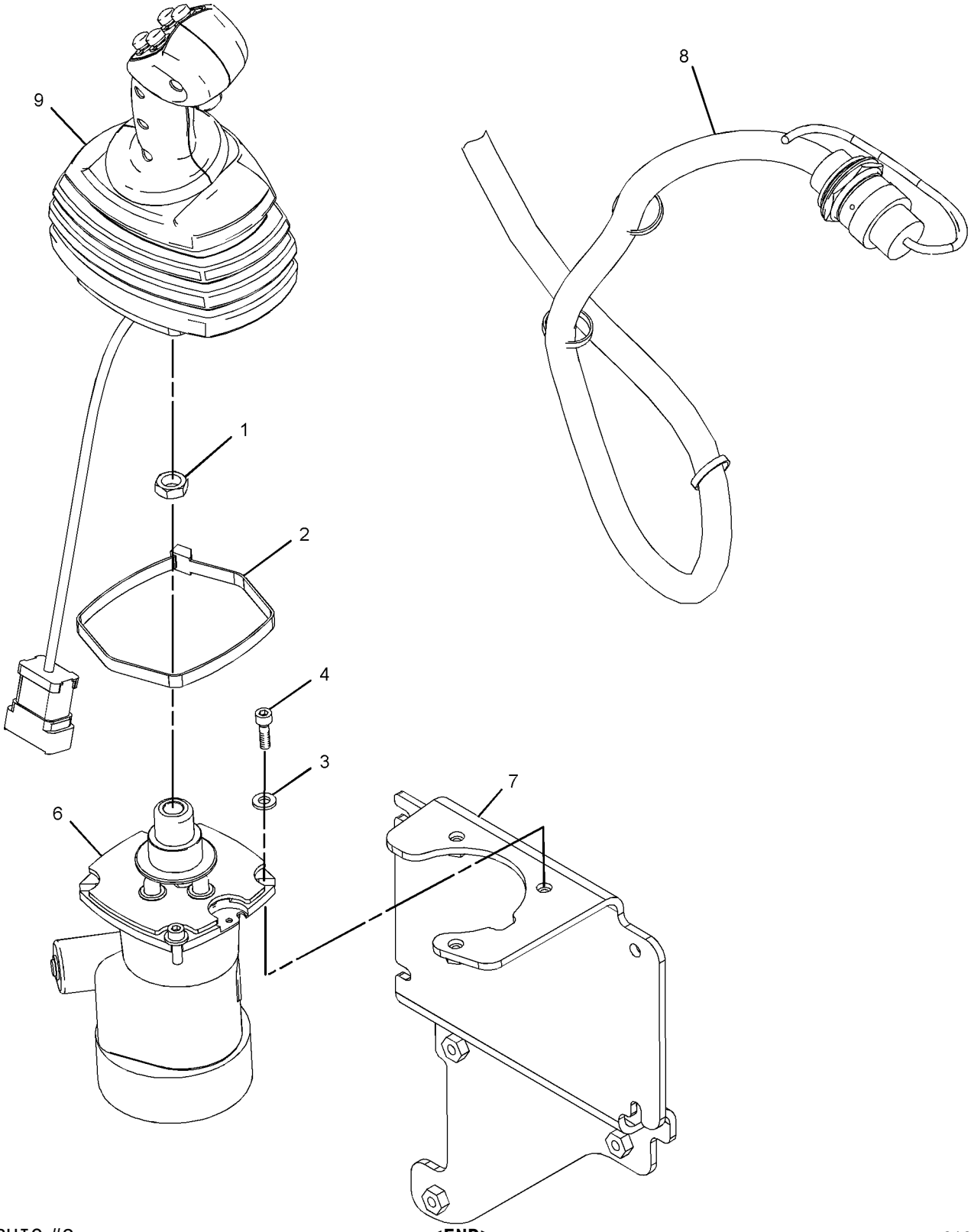


GRAPHIC #2

**<END>**

g01041620

# *218-5933* CONTROL GP-PILOT OPERATED HYD

**S/N: HEN6750-UP**
**PART OF 218-5606, 218-5608 DRIVE CONTROL AR-HYDROSTATIC**
**AN ATTACHMENT**
**TYPE 2**

**SMCS-5059, 5705** **i02839752**

| NOTE | REF NO | GRAPHIC REF | PART NUMBER | QTY | PART NAME 1 2 3 4 5 6 (PRODUCT LEVEL) | SEE PAGE |
|---|---|---|---|---|---|---|
| M | 1 | 2 | **095-1207** | 1 | NUT (M12X1.75-THD) | |
| | 2 | 1 | **113-8490** | 1 | FUSE (10-AMPERE) | |
| | 3 | 2 | **218-6422** | 1 | BRACKET AS | |
| Y | 4 | 2 | *225-7960* | 1 | WIRING GP-WORK TOOL (RADIAL LIFT) | 153 |
| Y | 5 | 1 | **299-9116** | 1 | VALVE GP-PILOT | 350 |
| | 6 | 1 | **164-9425** | 1 | HORN AS (24-VOLT, LOW TONE) | |
| Y | 7 | 2 | **231-4258** | 1 | CONTROL GP-HANDLE (LH) (DIRECTION, SPEED) | 490 |
| | 8 | | **235-5246** | 1 | FILM-INSTRUCTION (MACHINE CONTROL, READ OMM) (CENTER FILM ON CANOPY) | |
| M | 9 | 2 | **8T-0269** | 3 | BOLT-SOCKET HEAD (M6X1X20-MM) | |
| | 10 | 1 | **8T-4121** | 1 | WASHER-HARD (11X21X2.5-MM THK) | |
| M | 11 | 1 | **8T-4137** | 1 | BOLT (M10X1.5X20-MM) | |
| | 12 | 2 | **8T-4205** | 3 | WASHER-HARD (7.2X14.5X2-MM THK) | |

M-METRIC PART
Y-SEPARATE ILLUSTRATION

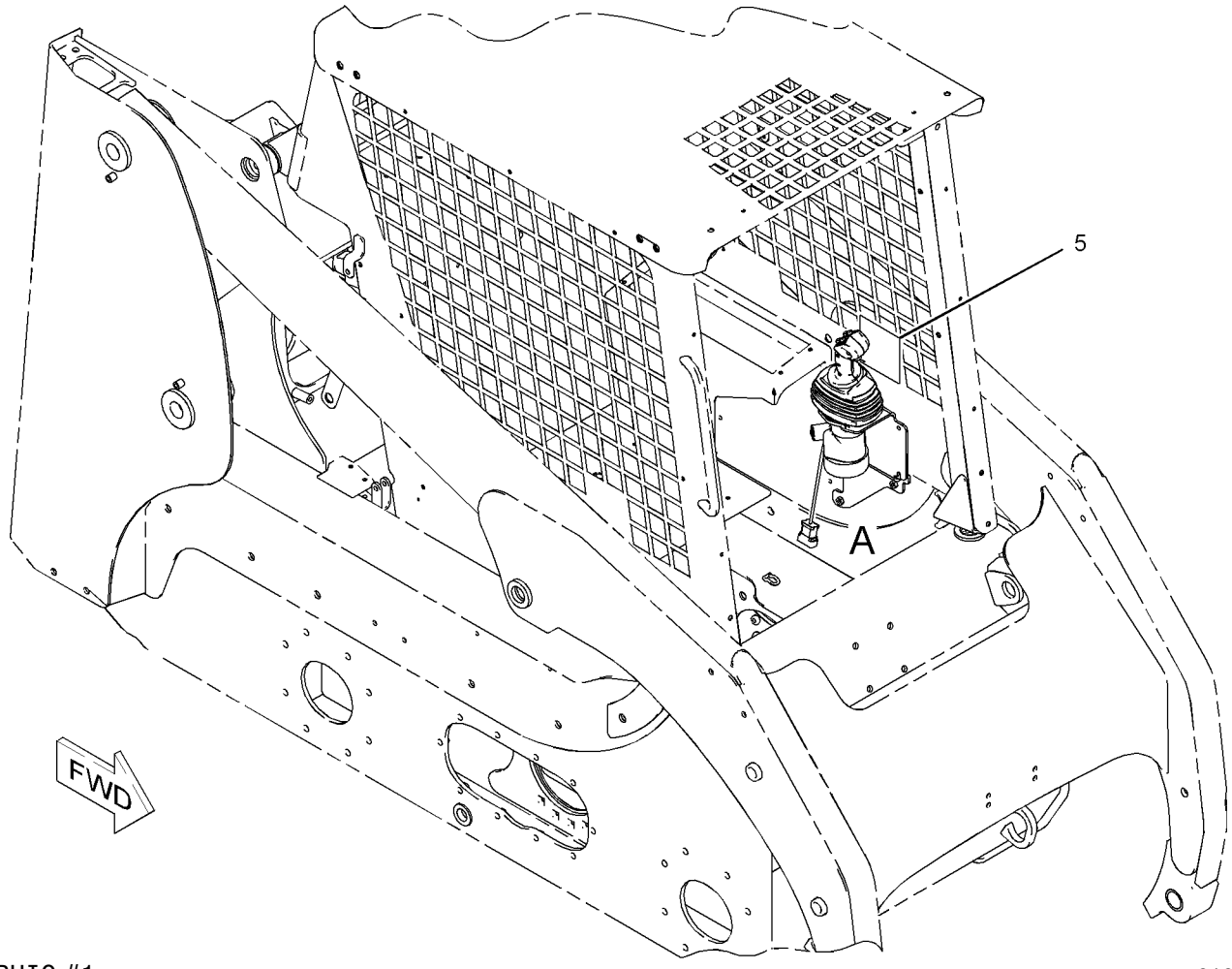


GRAPHIC #1 g01041619

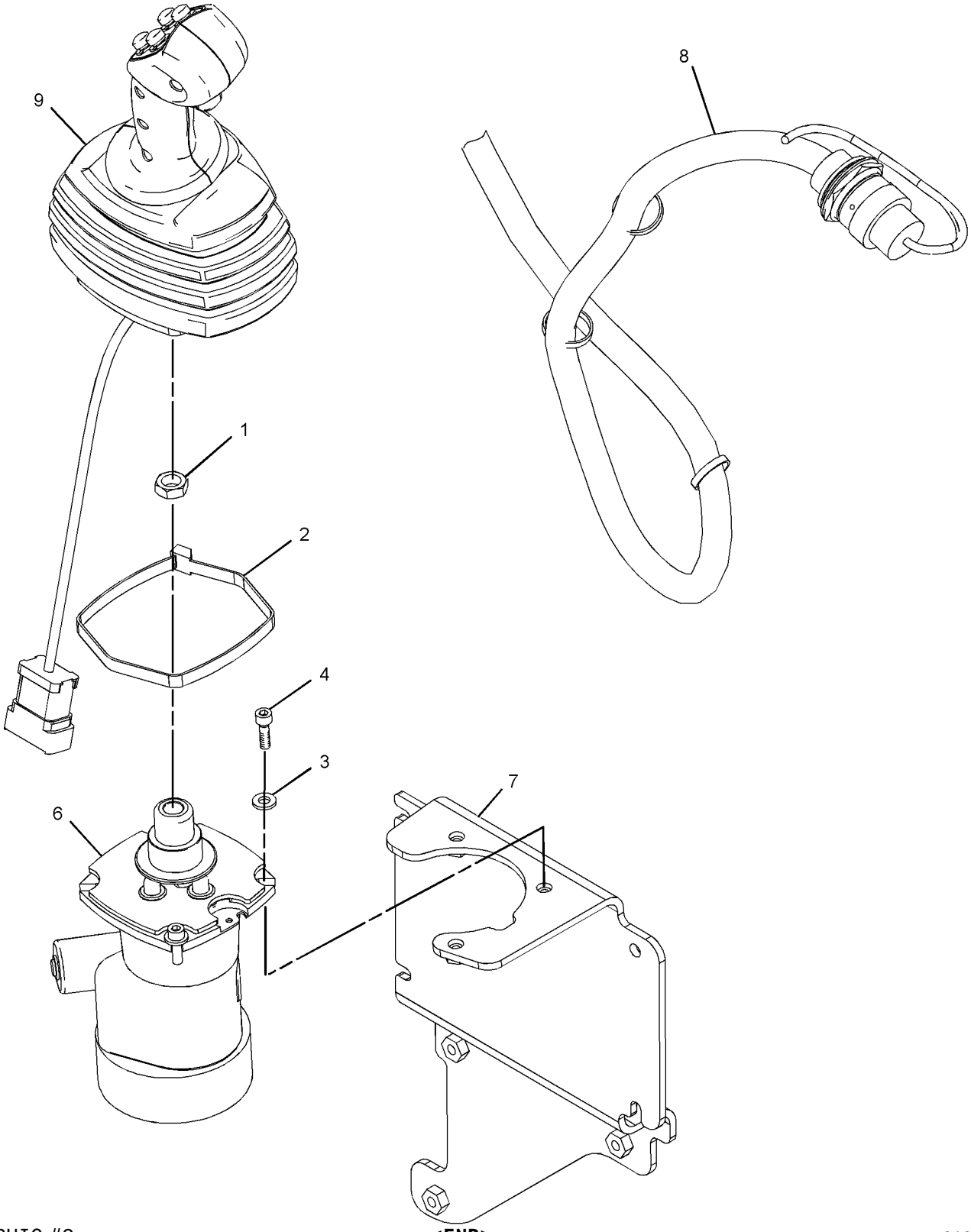


GRAPHIC #2

**<END>**

g01041620

# OPERATOR STATION

## *218-5934* CONTROL GP-PILOT OPERATED HYD

**S/N: HEN6750-7110**

**PART OF 218-5607, 295-7497 DRIVE CONTROL AR-HYDROSTATIC**

**AN ATTACHMENT**

**SMCS-5059, 5705** **i02024017**

| NOTE | REF NO | GRAPHIC REF | PART NUMBER | QTY | PART NAME 1 2 3 4 5 6 (PRODUCT LEVEL) | SEE PAGE |
|---|---|---|---|---|---|---|
| M | 1 | 2 | **095-1207** | 1 | NUT (M12X1.75-THD) | |
| | 2 | 2 | **110-8760** | 1 | STRAP | |
| | 3 | 1 | **113-8490** | 1 | FUSE (10-AMPERE) | |
| | 4 | 1 | **164-9425** | 1 | HORN AS (24-VOLT, LOW TONE) | |
| | | 1 | **177-9853** | 1 | RECEPTACLE AS (2-PIN) | |
| | | 1 | **178-3586** | 1 | LOCK | |
| Y | 5 | 2 | **218-6119** | 1 | VALVE GP-PILOT (DIRECTION, SPEED) | 344 |
| | 6 | 2 | **218-6422** | 1 | BRACKET AS | |
| Y | 7 | 2 | **231-4258** | 1 | CONTROL GP-HANDLE (LH) (SPEED & DIRECTION) | 490 |
| | 8 | 1 | **235-5246** | 1 | FILM-INSTRUCTION (MACHINE CONTROL, READ OMM) | |
| M | 9 | 2 | **8T-0269** | 3 | BOLT-SOCKET HEAD (M6X1X20-MM) | |
| | 10 | 1 | **8T-4121** | 1 | WASHER-HARD (11X21X2.5-MM THK) | |
| M | 11 | 1 | **8T-4137** | 1 | BOLT (M10X1.5X20-MM) | |
| | 12 | 2 | **8T-4205** | 3 | WASHER-HARD (7.2X14.5X2-MM THK) | |
| | 13 | 1 | **133-9931** | 1 | JUMPER AS (2-SPEED) | |
| | | 1 | **3E-3371** | 1 | WEDGE-RECEPTACLE LOCK (3-PIN) | |
| | | 1 | **186-3735** | 2 | PIN-CONNECTOR (16-GA TO 18-GA) | |
| | | 1 | **8T-8737** | 1 | PLUG-SEAL | |
| | | 1 | **102-8803** | 1 | KIT-RECEPTACLE (3-PIN) | |
| BD | | 1 | **5P-5677** | | WIRE (18-GA, BLACK) | |

B-USE AS REQUIRED
D-ORDER BY THE METER
M-METRIC PART
Y-SEPARATE ILLUSTRATION

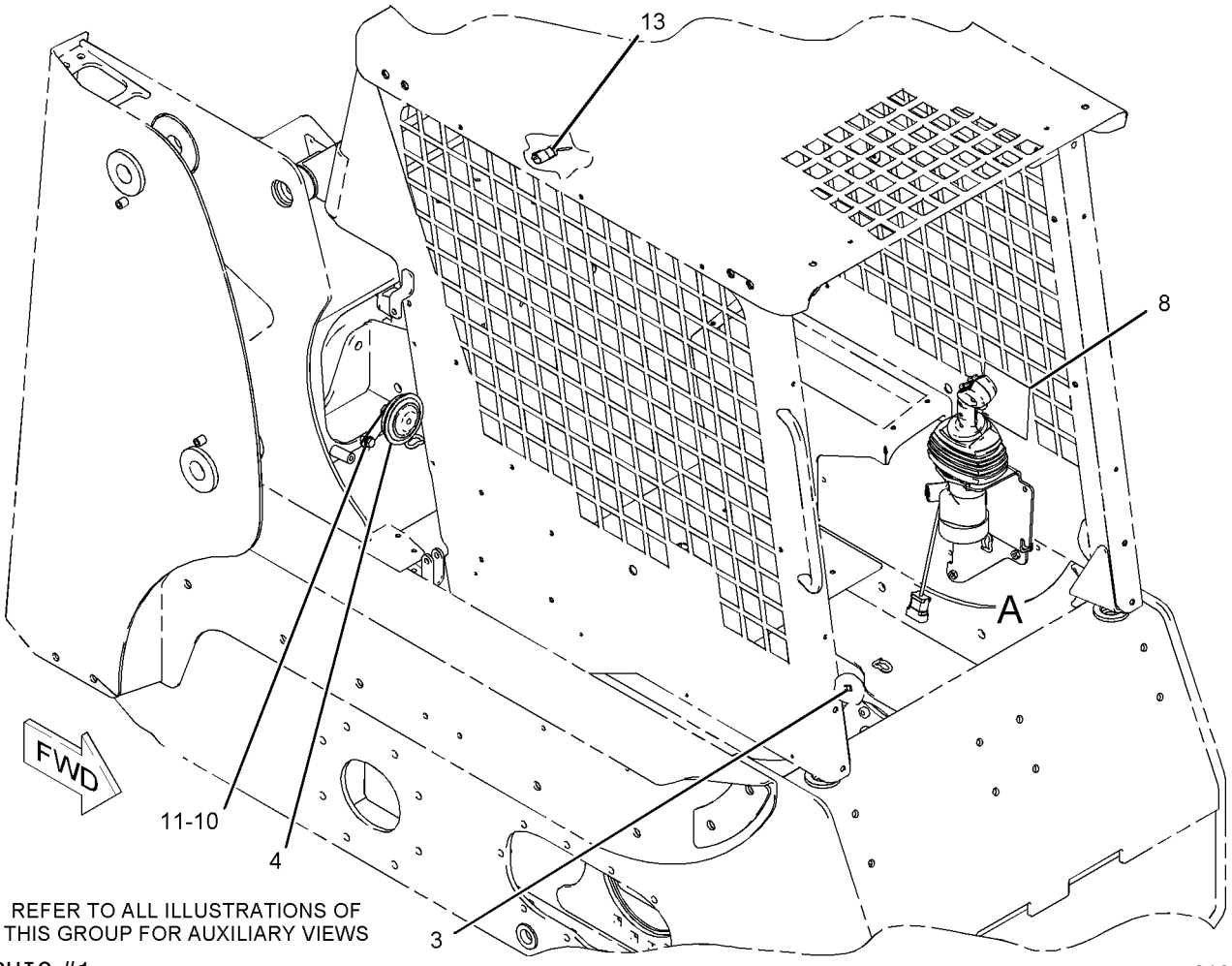


REFER TO ALL ILLUSTRATIONS OF THIS GROUP FOR AUXILIARY VIEWS

GRAPHIC #1

g01045335

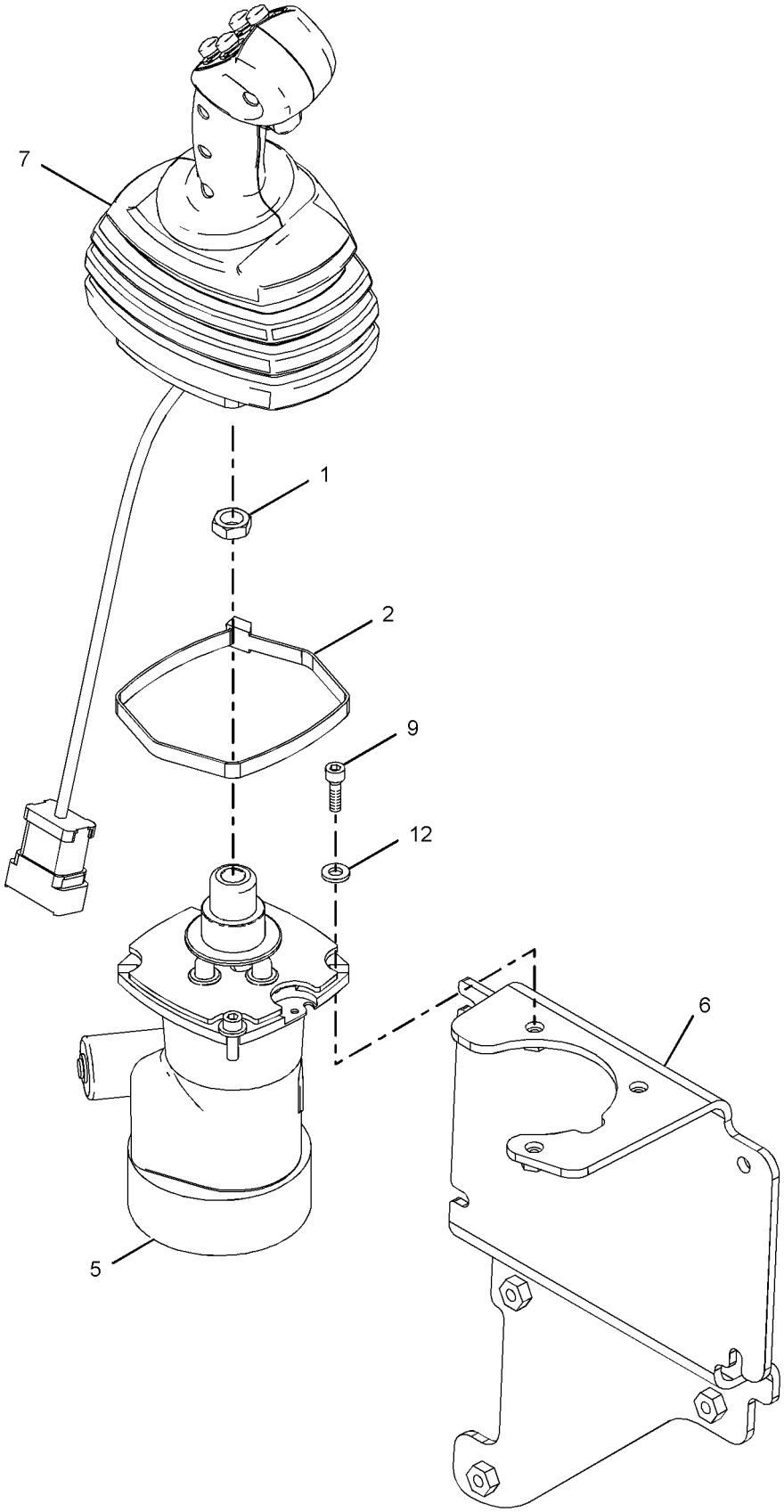


VIEW OF AREA A

GRAPHIC #2 **<END>** g01040792

# OPERATOR STATION

## *218-5934* CONTROL GP-PILOT OPERATED HYD

**S/N: HEN7111-UP**

**PART OF 218-5607, 295-7497 DRIVE CONTROL AR-HYDROSTATIC**

**AN ATTACHMENT**

**SMCS-5059, 5705** **i02839755**

| NOTE | REF NO | GRAPHIC REF | PART NUMBER | QTY | PART NAME 1 2 3 4 5 6 (PRODUCT LEVEL) | SEE PAGE |
|---|---|---|---|---|---|---|
| M | 1 | 2 | **095-1207** | 1 | NUT (M12X1.75-THD) | |
| | 2 | 1 | **113-8490** | 1 | FUSE (10-AMPERE) | |
| | 3 | 1 | **133-9931** | 1 | JUMPER AS (2-SPEED) | |
| | | 1 | **186-3735** | 2 | PIN-CONNECTOR (16-GA TO 18-GA) | |
| | | 1 | **8T-8737** | 1 | PLUG-SEAL | |
| | | 1 | **102-8803** | 1 | KIT-RECEPTACLE (3-PIN) | |
| | | | | | (INCLUDES RECEPTACLE AS & WEDGE) | |
| BD | | 1 | **5P-5677** | | WIRE (18-GA, BLACK) | |
| | 4 | 2 | **218-6422** | 1 | BRACKET AS | |
| Y | 5 | | **299-9116** | 1 | VALVE GP-PILOT | 350 |
| | 6 | 1 | **164-9425** | 1 | HORN AS (24-VOLT, LOW TONE) | |
| Y | 7 | 2 | **231-4258** | 1 | CONTROL GP-HANDLE (LH) (SPEED & DIRECTION) | 490 |
| | 8 | 1 | **235-5246** | 1 | FILM-INSTRUCTION (MACHINE CONTROL, READ OMM) | |
| | | | | | (CENTER FILM ON CANOPY) | |
| M | 9 | 2 | **8T-0269** | 3 | BOLT-SOCKET HEAD (M6X1X20-MM) | |
| | 10 | 1 | **8T-4121** | 1 | WASHER-HARD (11X21X2.5-MM THK) | |
| M | 11 | 1 | **8T-4137** | 1 | BOLT (M10X1.5X20-MM) | |
| | 12 | 2 | **8T-4205** | 3 | WASHER-HARD (7.2X14.5X2-MM THK) | |

B-USE AS REQUIRED
D-ORDER BY THE METER
M-METRIC PART
Y-SEPARATE ILLUSTRATION

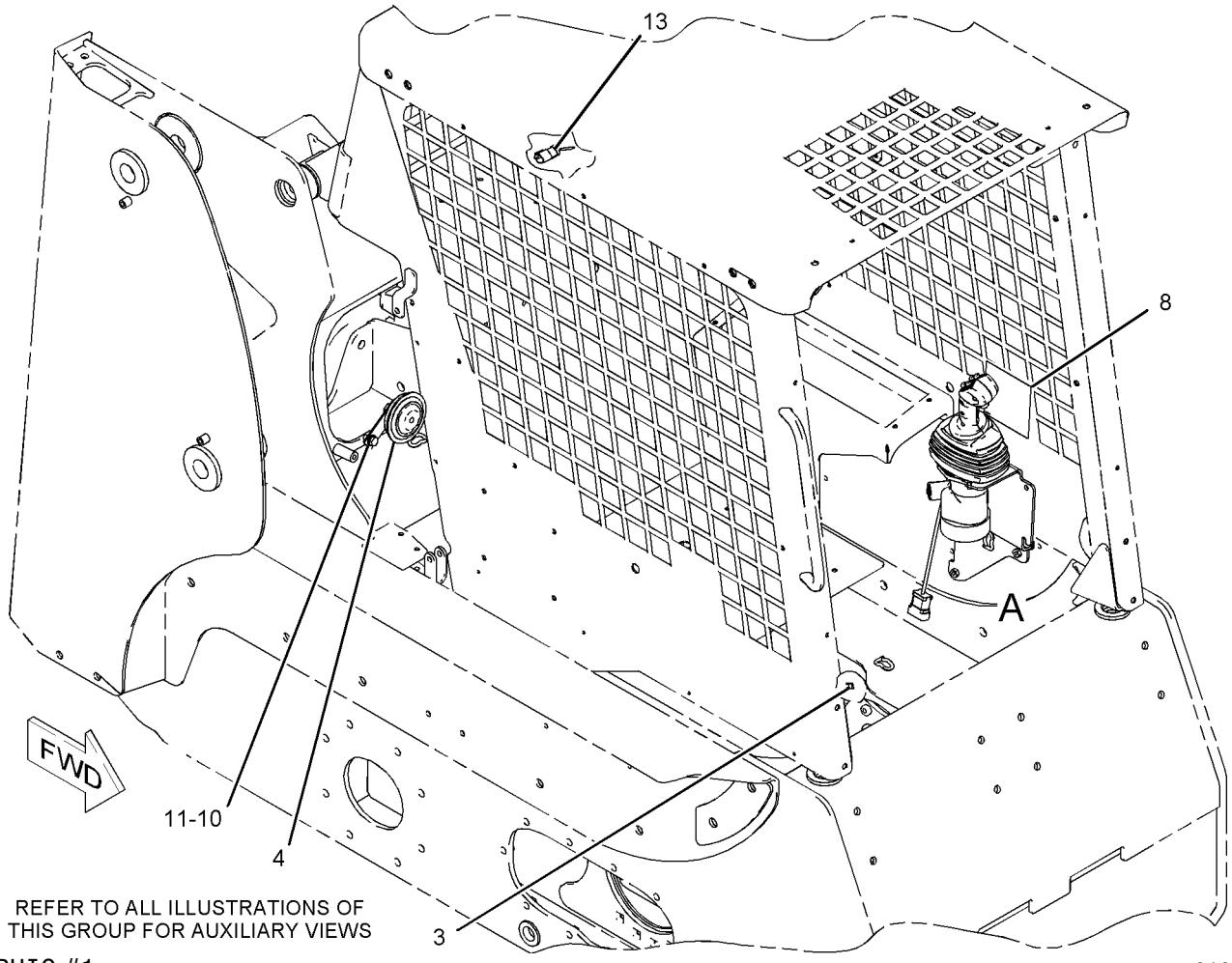


REFER TO ALL ILLUSTRATIONS OF
THIS GROUP FOR AUXILIARY VIEWS

GRAPHIC #1

g01045335

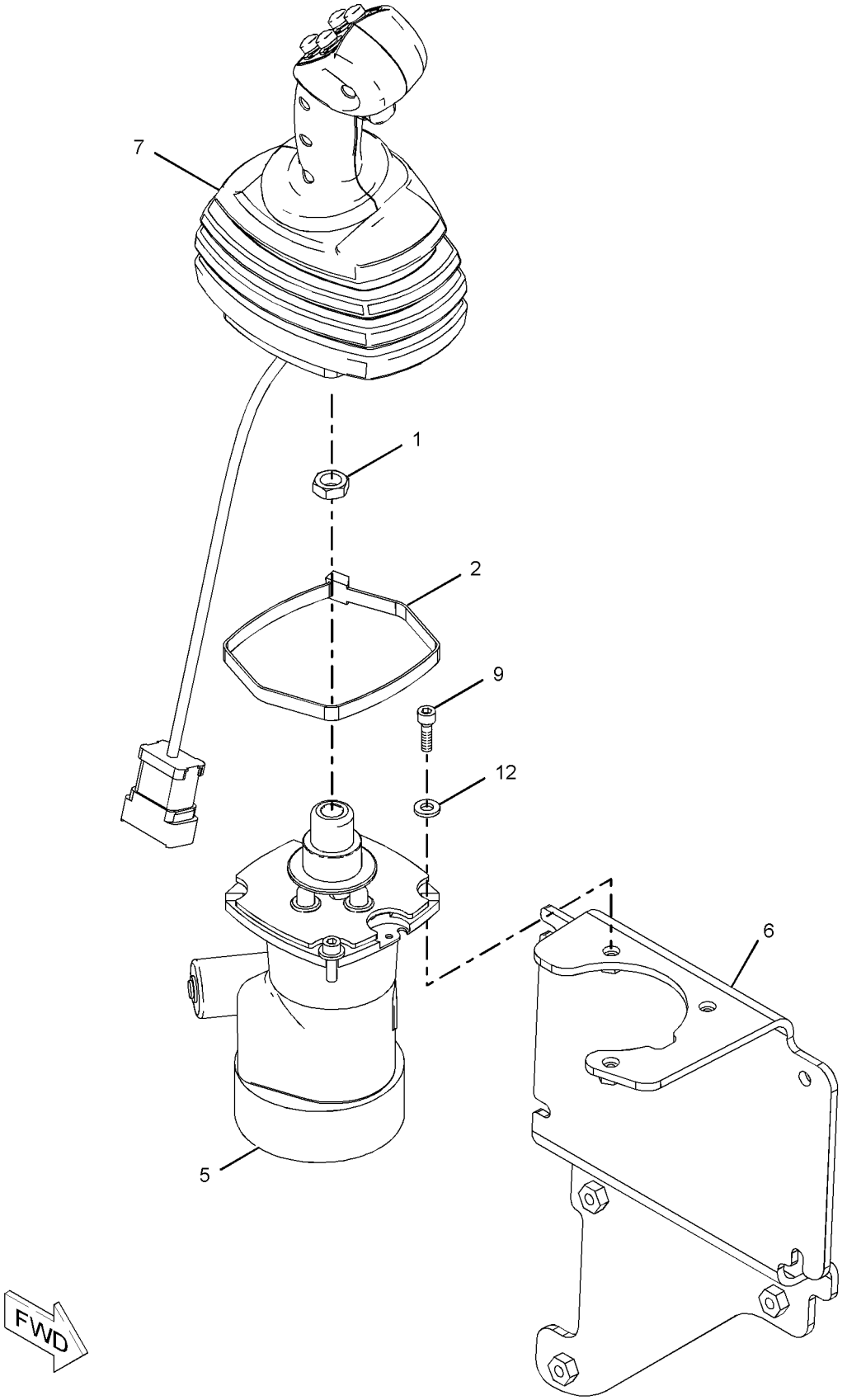


VIEW OF AREA A

GRAPHIC #2 **<END>** g01040792

## *276-5708* COUPLING GP-DRIVE–REFRIGERANT COMPRESSOR, MOTOR

**S/N: HEN6750-UP**

**PART OF 218-6832 COMPRESSOR & MOTOR GP-REFRIG**

**AN ATTACHMENT**

**SMCS-1802, 5061** **i02445864**

| NOTE | REF NO | GRAPHIC REF | PART NUMBER | QTY | PART NAME 1 2 3 4 5 6 (PRODUCT LEVEL) | SEE PAGE |
|---|---|---|---|---|---|---|
| | 1 | 1 | **218-6836** | 1 | COUPLING GP-DRIVE | |
| | | 1 | **218-6837** | 1 | COUPLING | |
| | | 1 | **218-6838** | 1 | HUB (COMPRESSOR) | |
| | | 1 | **276-4063** | 1 | HUB (MOTOR) | |
| M | 2 | 1 | **233-1012** | 1 | SETSCREW-HEX SOCKET (M5X0.8X8-MM) | |

M-METRIC PART

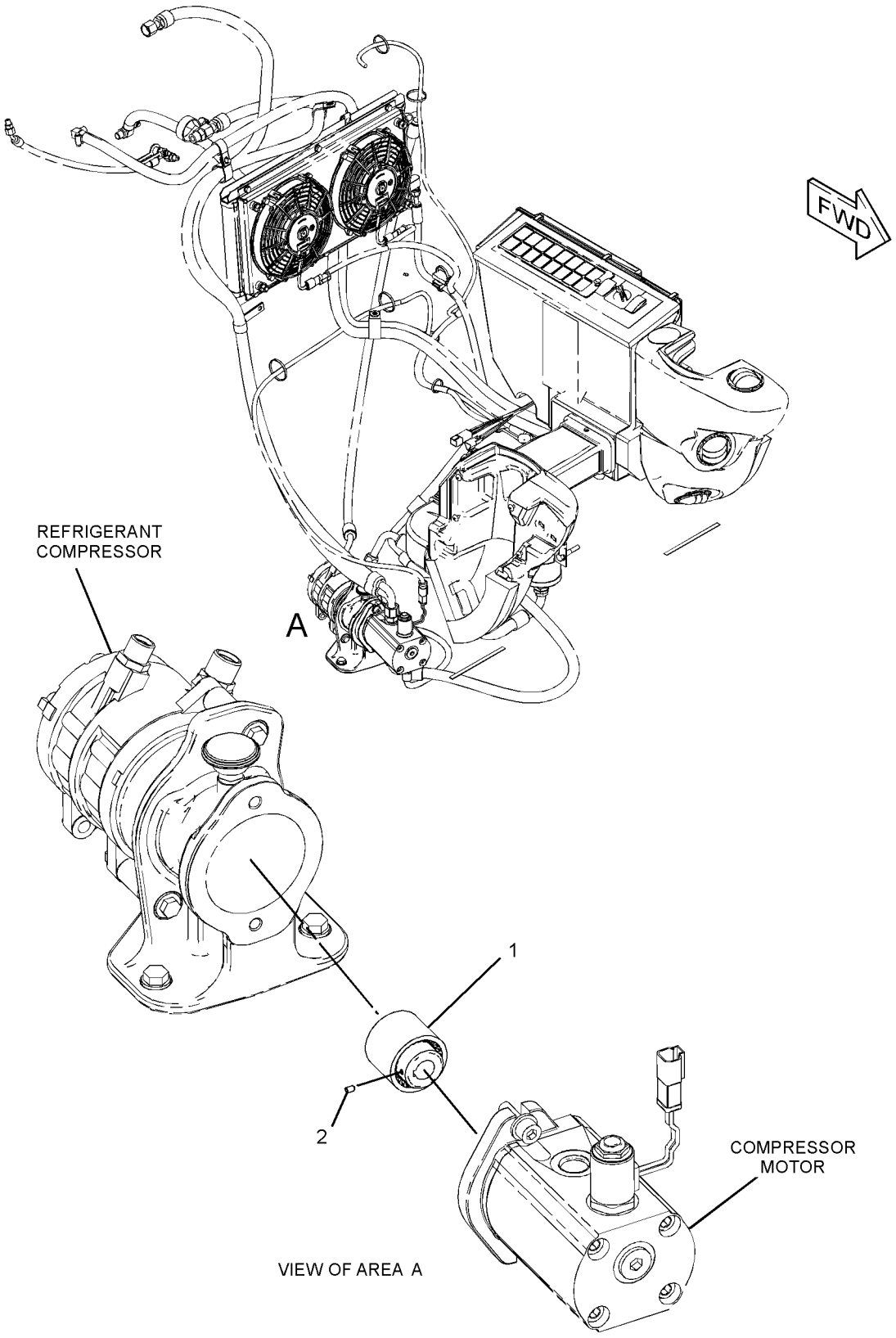


GRAPHIC #1 **<END>** g01229666

# OPERATOR STATION

## *218-6418* COVER GP-CONSOLE

**S/N: HEN6750-UP**
**PART OF 218-5850 INSTALLATION GP**
**AN ATTACHMENT**

**SMCS-5258** **i02602678**

| NOTE | REF NO | GRAPHIC REF | PART NUMBER | QTY | PART NAME 1 2 3 4 5 6 (PRODUCT LEVEL) | SEE PAGE |
|---|---|---|---|---|---|---|
| E | 1 | 1 | **124-3243** | | SEAL (52-CM) | |
| | 2 | 1 | **114-6658** | 6 | WASHER (6.5X17X1-MM THK) | |
| | 3 | 1 | **218-6386** | 1 | COVER AS | |
| | 4 | 1 | **218-6387** | 1 | COVER AS | |
| | 5 | 1 | **218-6388** | 1 | COVER AS | |
| | 6 | 1 | **218-6435** | 2 | SPACER (16.6X21.8X25.4-MM THK) | |
| | 7 | 1 | **8T-4224** | 2 | WASHER-HARD (8.8X16X2-MM THK) | |
| M | 8 | 1 | **8T-6912** | 2 | BOLT (M8X1.25X50-MM) | |
| M | 9 | 1 | **9X-2044** | 7 | SCREW-TRUSS HEAD (M6X1X16-MM) | |
| | 10 | 1 | **9X-6165** | 1 | WASHER (6.5X22X2.5-MM THK) | |

E-ORDER BY THE CENTIMETER
M-METRIC PART

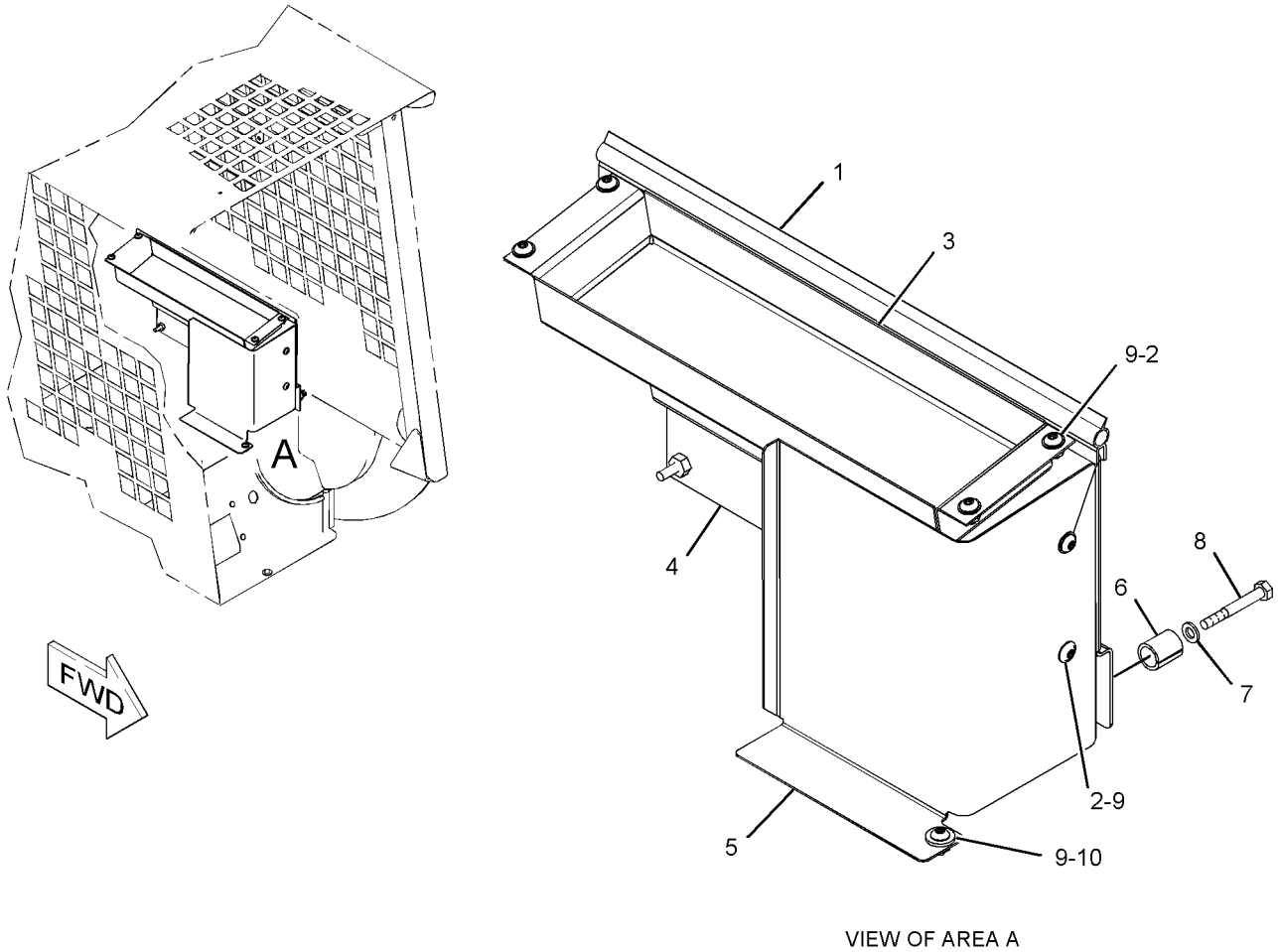


VIEW OF AREA A

GRAPHIC #1 **<END>** g01132491

# OPERATOR STATION

## *218-6419* COVER GP-CONSOLE

**S/N: HEN6750-UP**
**PART OF 218-5850 INSTALLATION GP**
**AN ATTACHMENT**

**SMCS-5258** **i02392269**

| NOTE | REF NO | GRAPHIC REF | PART NUMBER | QTY | PART NAME 1 2 3 4 5 6 (PRODUCT LEVEL) | SEE PAGE |
|---|---|---|---|---|---|---|
| | 1 | 1 | **218-6389** | 1 | CONSOLE (RH) | |
| | 2 | 1 | **218-6391** | 1 | CONSOLE (LH) | |
| M | 3 | 1 | **175-0005** | 8 | SCREW-BUTTON HEAD (M6X1X25-MM) | |

M-METRIC PART

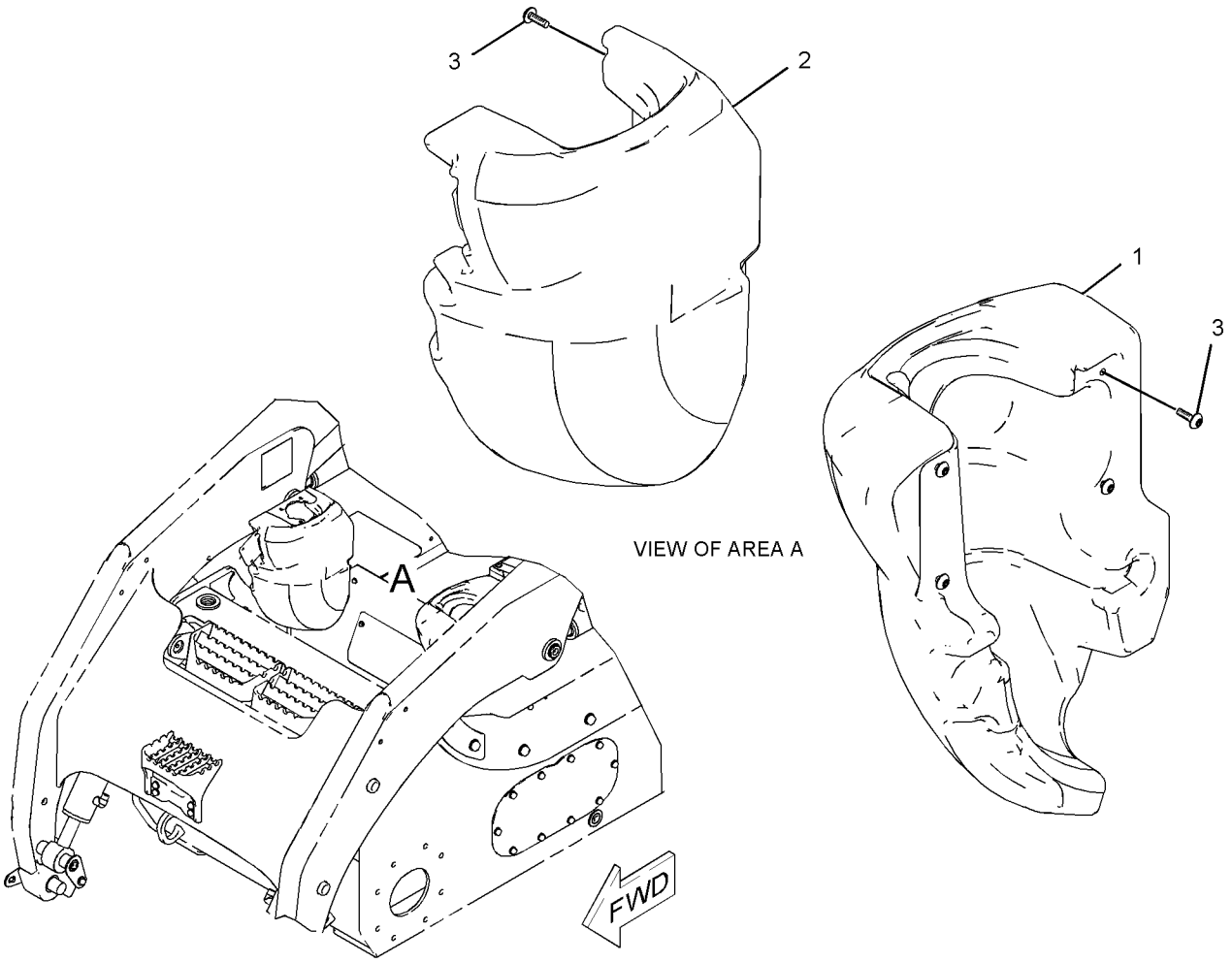


GRAPHIC #1 **<END>** g01019449

## *142-9118* COVER GP-INSTRUMENT PANEL

**S/N: HEN6750-UP**

**PART OF 216-4751, 225-7998 PANEL GP-INSTRUMENT**

**AN ATTACHMENT**

**SMCS-1408, 7451, 7478** **i02757282**

| NOTE | REF NO | GRAPHIC REF | PART NUMBER | QTY | PART NAME 1 2 3 4 5 6 (PRODUCT LEVEL) | SEE PAGE |
|---|---|---|---|---|---|---|
| C | 1 | 1 | **106-8704** | 1 | SUPPRESSOR AS-ARC (HOUR METER) | |
| | | 1 | **102-8802** | 1 | KIT-RECEPTACLE (2-PIN) | |
| | | | | | (INCLUDES RECEPTACLE AS & WEDGE) | |
| | | 1 | **186-3735** | 2 | PIN-CONNECTOR (16-GA TO 18-GA) | |
| | | 1 | **155-2270** | 1 | KIT-CONNECTING PLUG (2-PIN) | |
| | | | | | (INCLUDES PLUG AS, WEDGE & INTERFACE SEAL) | |
| | 2 | 1 | **158-6695** | 1 | COVER | |
| C | 3 | 1 | **200-5717** | 1 | METER GP-SERVICE | |
| | | 1 | **214-2465** | 1 | KIT-SERVICE METER | |
| | | | | | (INCLUDES BOLTS, LOCKNUTS & FILM) | |
| C | 4 | 1 | **266-2928** | 1 | HARNESS AS-WIRING (SERVICE METER) | |
| | | 1 | **8L-8413** | 1 | STRAP-CABLE | |
| | | 1 | **155-2270** | 1 | KIT-CONNECTING PLUG (2-PIN) | |
| | | | | | (INCLUDES PLUG AS, WEDGE & INTERFACE SEAL) | |
| | 5 | 1 | **103-2006** | 2 | SCREW-PAN HEAD (6-19X0.37-IN) | |
| C | 6 | 1 | **3S-2093** | 1 | STRAP-CABLE | |

C-CHANGE FROM PREVIOUS TYPE

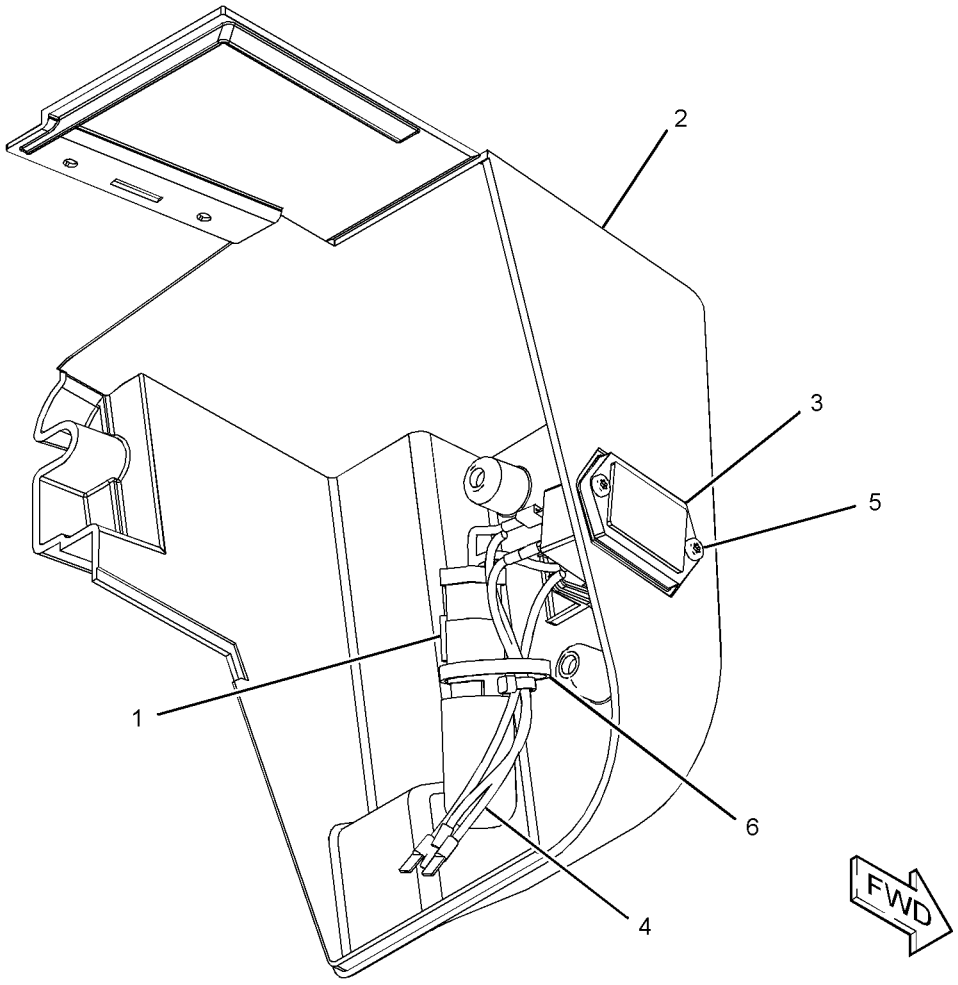


GRAPHIC #1 **<END>** g01195576

# OPERATOR STATION

## *218-6440* DOOR & MTG GP-CAB—POLYCARBONATE

**S/N: HEN6750-UP**

**CANNOT BE USED WITH 218-6400—PAGE 544, 223-0600—PAGE 529**

**AN ATTACHMENT**

**SMCS-7308** **i02772052**

| NOTE | REF NO | GRAPHIC REF | PART NUMBER | QTY | PART NAME 1 2 3 4 5 6 (PRODUCT LEVEL) | SEE PAGE |
|---|---|---|---|---|---|---|
| E | 1 | 2 | **125-3518** | | SEAL (6-CM EACH) | |
| E | 2 | 2 | **125-3518** | | SEAL (65-CM) | |
| E | 3 | 2 | **144-0195** | | HOSE (40-CM) | |
| D | 4 | 2 | **5P-9909** | | SEAL (0.05-M EACH) | |
| | 5 | 1 | **5P-0372** | 2 | LOCK PIN | |
| | 6 | 2 | **8T-2444** | 2 | STUD-BALL | |
| | 7 | 2 | **8T-3848** | 1 | STRIKER AS-LATCH | |
| | | 2 | **6V-4270** | 1 | LOCKWASHER | |
| | 8 | 1 | **9C-5344** | 1 | SPACER (10.5X20X18-MM THK) | |
| | 9 | 1 | **095-1325** | 1 | PIN-CLEVIS | |
| | 10 | 1 | **153-2683** | 1 | SPRING AS-GAS (LOCKING) | |
| | 11 | 1 | **177-3405** | 1 | PIN | |
| | 12 | 2 | **218-0728** | 2 | SPRING | |
| CY | 13 | 2 | *276-3440* | 1 | DOOR GP-CAB (POLYCARBONATE) | 534 |
| | 14 | 2 | **219-9739** | 1 | TANK AS-WINDOW WASHER | |
| | 15 | 2 | **221-3877** | 1 | HARNESS AS-WINDOW WIPER | |
| | | 2 | **102-8805** | 1 | KIT-RECEPTACLE (6-PIN) | |
| | | | | | (INCLUDES RECEPTACLE AS & WEDGE) | |
| | | 2 | **123-7615** | 1 | CONNECTOR | |
| | | 2 | **5W-1987** | 2 | TERMINAL | |
| E | | 2 | **125-7875** | | TUBE-HEAT SHRINK (7.44-MM DIA) (5-CM) | |
| | | 2 | **155-2274** | 1 | KIT-CONNECTING PLUG (6-PIN) | |
| | | | | | (INCLUDES PLUG AS, WEDGE & INTERFACE SEAL) | |
| | 16 | 2 | **280-1575** | 1 | PLATE AS | |
| | 17 | 2 | **223-0591** | 1 | PLATE AS | |
| | 18 | 2 | **223-0601** | 2 | PLATE AS | |
| | 19 | 2 | **223-0608** | 1 | HINGE AS | |
| | 20 | 2 | **223-0617** | 1 | MOUNT | |
| | 21 | 2 | **230-3214** | 1 | SPRING AS-GAS (CAB DOOR) | |
| M | 22 | 2 | **127-2170** | 8 | SCREW-TRUSS HEAD (M8X1.25X20-MM) | |
| | 23 | 2 | **142-9356** | 1 | BLOCK | |
| M | 24 | 2 | **195-0937** | 8 | INSERT-THREADED (M8X1.25-THD) | |
| | 25 | 2 | **3S-2093** | 3 | STRAP-CABLE | |
| M | 26 | 2 | **5C-2890** | 13 | NUT (M6X1-THD) | |
| D | 27 | 2 | **5P-5969** | | SEAL (2.2-M) | |
| | 28 | 2 | **8T-4121** | 4 | WASHER-HARD (11X21X2.5-MM THK) | |
| M | 29 | 2 | **8T-4133** | 4 | NUT (M10X1.5-THD) | |
| | 30 | 2 | **8T-4205** | 13 | WASHER-HARD (7.2X14.5X2-MM THK) | |
| | 31 | 2 | **8T-4222** | 1 | WASHER-PLATED (11X32X2.5-MM THK) | |
| | 32 | 2 | **8T-4224** | 2 | WASHER-HARD (8.8X16X2-MM THK) | |
| M | 33 | 2 | **9X-2041** | 4 | SCREW-TRUSS HEAD (M10X1.5X20-MM) | |
| M | 34 | 2 | **9X-2044** | 3 | SCREW-TRUSS HEAD (M6X1X16-MM) | |
| M | 35 | 2 | **9X-2045** | 4 | SCREW-TRUSS HEAD (M6X1X20-MM) | |
| D | 36 | 2 | **5P-8309** | | SEAL (0.72) | |

C-CHANGE FROM PREVIOUS TYPE
D-ORDER BY THE METER
E-ORDER BY THE CENTIMETER
M-METRIC PART
Y-SEPARATE ILLUSTRATION

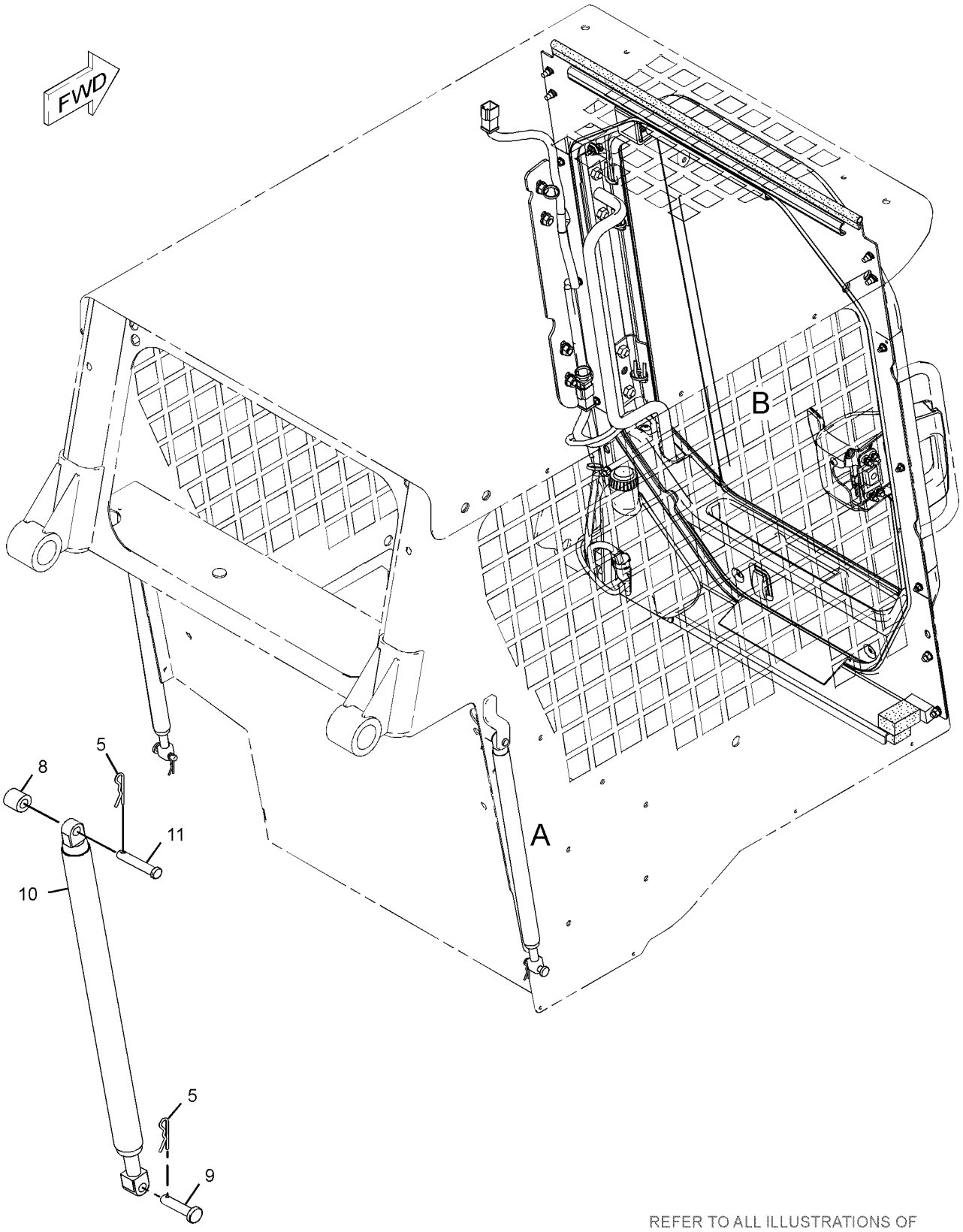


VIEW OF AREA A

REFER TO ALL ILLUSTRATIONS OF THIS GROUP FOR AUXILIARY VIEWS

GRAPHIC #1

g01249527

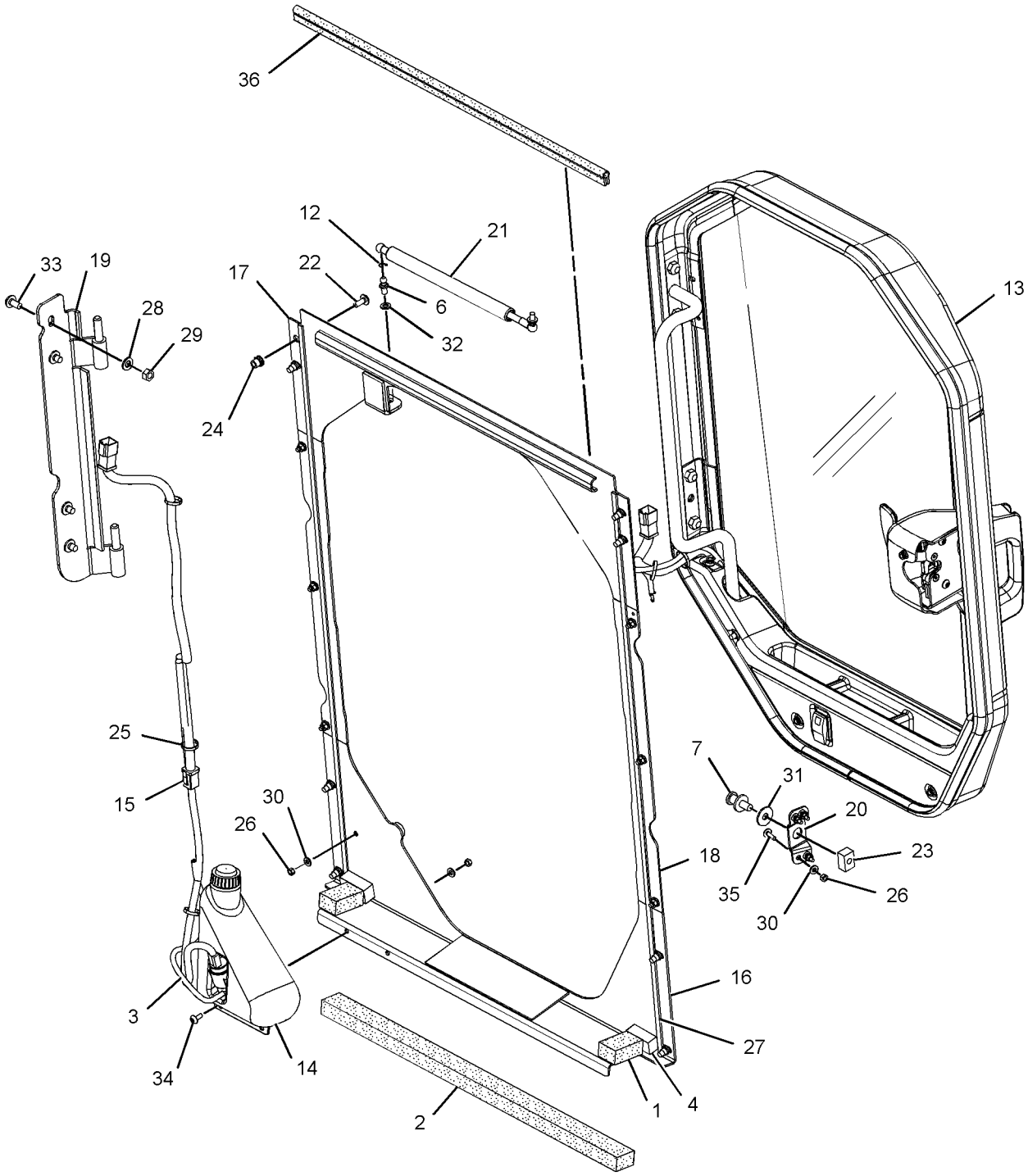


VIEW OF AREA B

GRAPHIC #2 **<END>** g01249529

# OPERATOR STATION

## *223-0600* DOOR & MTG GP-CAB—GLASS

**S/N: HEN6750-UP**

**CANNOT BE USED WITH 218-6400—PAGE 544, 218-6440—PAGE 526**

**AN ATTACHMENT**

**SMCS-7308** **i02545016**

| NOTE | REF NO | GRAPHIC REF | PART NUMBER | QTY | PART NAME 1 2 3 4 5 6 (PRODUCT LEVEL) | SEE PAGE |
|---|---|---|---|---|---|---|
| D | 1 | 1 | **5P-8309** | | SEAL (0.72-M) | |
| E | 2 | 1 | **125-3518** | | SEAL (65-CM) | |
| E | 3 | 1 | **144-0195** | | HOSE (40-CM) | |
| D | 4 | 1 | **5P-9909** | | SEAL (.05-M EACH) | |
| | 5 | 1 | **5P-0372** | 2 | LOCK PIN | |
| | 6 | 1 | **8T-2444** | 2 | STUD-BALL | |
| | 7 | 1 | **8T-3848** | 1 | STRIKER AS-LATCH | |
| | | 1 | **6V-4270** | 1 | LOCKWASHER | |
| | 8 | 1 | **9C-5344** | 1 | SPACER (10.5X20X18-MM THK) | |
| | 9 | 1 | **095-1325** | 1 | PIN-CLEVIS | |
| | 10 | 1 | **153-2683** | 1 | SPRING AS-GAS (LOCKING) | |
| | 11 | 1 | **177-3405** | 1 | PIN | |
| | 12 | 1 | **218-0728** | 2 | SPRING | |
| | 13 | 1 | **219-9739** | 1 | TANK AS-WINDOW WASHER | |
| | 14 | 1 | **221-3877** | 1 | HARNESS AS-WINDOW WIPER | |
| | | 1 | **102-8805** | 1 | KIT-RECEPTACLE (6-PIN) | |
| | | | | | (INCLUDES RECEPTACLE AS & WEDGE) | |
| | | 1 | **5W-1987** | 2 | TERMINAL | |
| E | | 1 | **125-7875** | | TUBE-HEAT SHRINK (7.44-MM DIA) (5-CM) | |
| | | 1 | **155-2274** | 1 | KIT-CONNECTING PLUG (6-PIN) | |
| | | | | | (INCLUDES PLUG AS, WEDGE & INTERFACE SEAL) | |
| C | 15 | 1 | **280-1575** | 1 | PLATE AS | |
| | 16 | 1 | **223-0591** | 1 | PLATE AS | |
| | 17 | 1 | **223-0601** | 2 | PLATE AS | |
| | 18 | 1 | **223-0608** | 1 | HINGE AS | |
| Y | 19 | 1 | *223-0616* | 1 | DOOR GP-CAB (GLASS) | 532 |
| | 20 | 1 | **223-0617** | 1 | MOUNT | |
| | 21 | 1 | **230-3214** | 1 | SPRING AS-GAS (CAB DOOR) | |
| M | 22 | 1 | **127-2170** | 8 | SCREW-TRUSS HEAD (M8X1.25X20-MM) | |
| | 23 | 1 | **142-9356** | 1 | BLOCK | |
| CM | 24 | 1 | **195-0937** | 8 | INSERT-THREADED (M8X1.25-THD) | |
| | 25 | 1 | **3S-2093** | 3 | STRAP-CABLE | |
| M | 26 | 1 | **5C-2890** | 13 | NUT (M6X1-THD) | |
| | 28 | 1 | **8T-4121** | 4 | WASHER-HARD (11X21X2.5-MM THK) | |
| M | 29 | 1 | **8T-4133** | 4 | NUT (M10X1.5-THD) | |
| | 30 | 1 | **8T-4205** | 13 | WASHER-HARD (7.2X14.5X2-MM THK) | |
| B | 31 | 1 | **8T-4222** | 1 | WASHER-PLATED (11X32X2.5-MM THK) | |
| C | 32 | 1 | **8T-4224** | 2 | WASHER-HARD (8.8X16X2-MM THK) | |
| M | 33 | 1 | **9X-2041** | 4 | SCREW-TRUSS HEAD (M10X1.5X20-MM) | |
| M | 34 | 1 | **9X-2044** | 3 | SCREW-TRUSS HEAD (M6X1X16-MM) | |
| M | 35 | 1 | **9X-2045** | 4 | SCREW-TRUSS HEAD (M6X1X20-MM) | |
| E | 36 | 1 | **125-3518** | | SEAL (6-CM EACH) | |
| CD | 37 | 1 | **5P-5969** | | SEAL (1.1-M EACH) | |

B-USE AS REQUIRED
C-CHANGE FROM PREVIOUS TYPE
D-ORDER BY THE METER
E-ORDER BY THE CENTIMETER
M-METRIC PART
Y-SEPARATE ILLUSTRATION

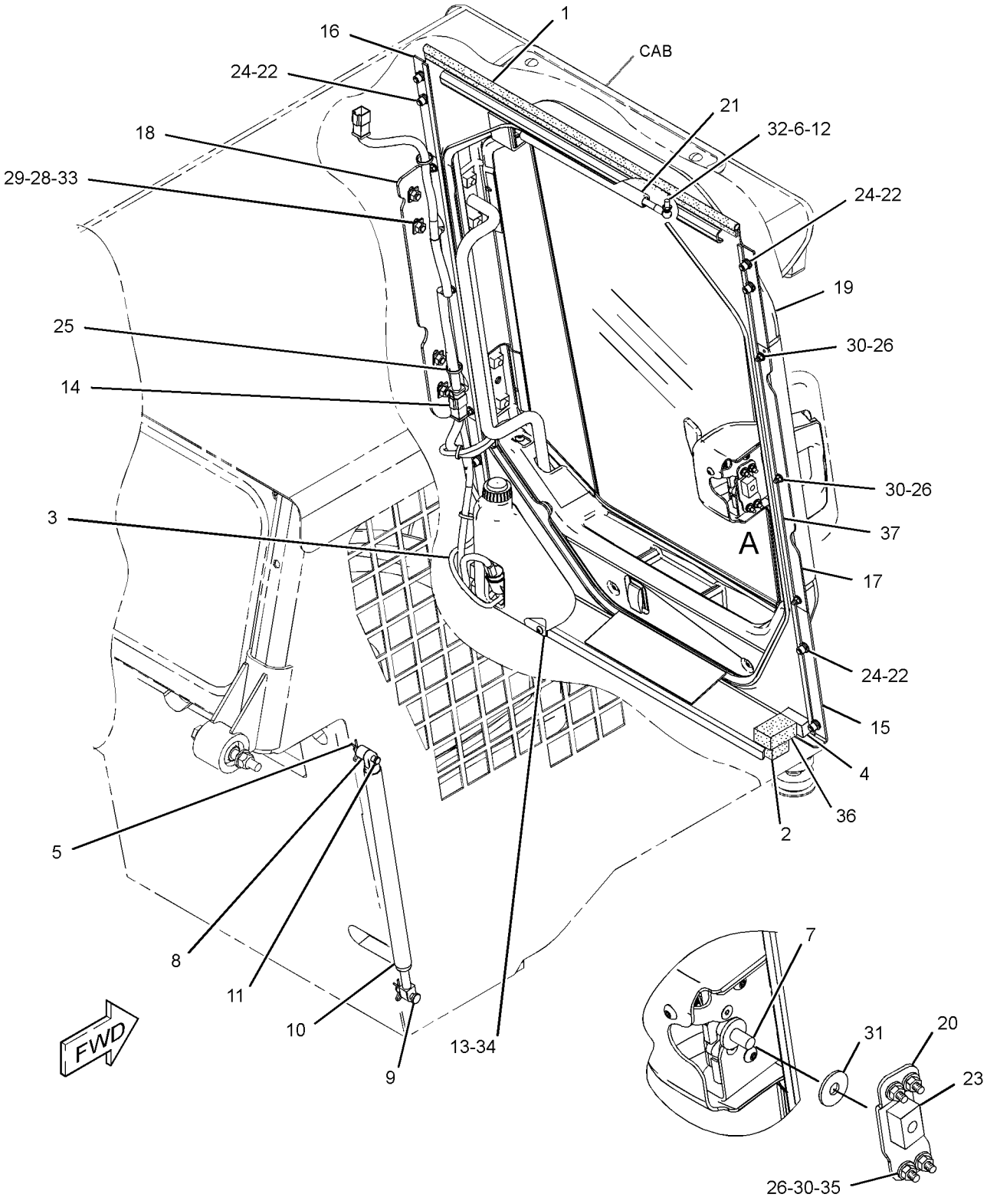


VIEW OF AREA A
(EXPLODED)

GRAPHIC #1 **<END>** g01258688

# OPERATOR STATION

## *218-6431* DOOR GP-CAB–GLASS

**S/N: HEN6750-UP**
**PART OF 223-0616 DOOR GP-CAB**
**AN ATTACHMENT**

**SMCS-7308** **i02619575**

| NOTE | REF NO | GRAPHIC REF | PART NUMBER | QTY | PART NAME 1 2 3 4 5 6 (PRODUCT LEVEL) | SEE PAGE |
|---|---|---|---|---|---|---|
| | 1 | 1 | **223-0609** | 1 | GLASS-CAB (DOOR) | |
| | 2 | 1 | **223-0610** | 1 | GLASS-CAB (DOOR) | |
| | 3 | 1 | **223-0612** | 1 | GLASS-CAB (DOOR) | |
| | 4 | 1 | **282-9059** | 1 | FRAME AS | |

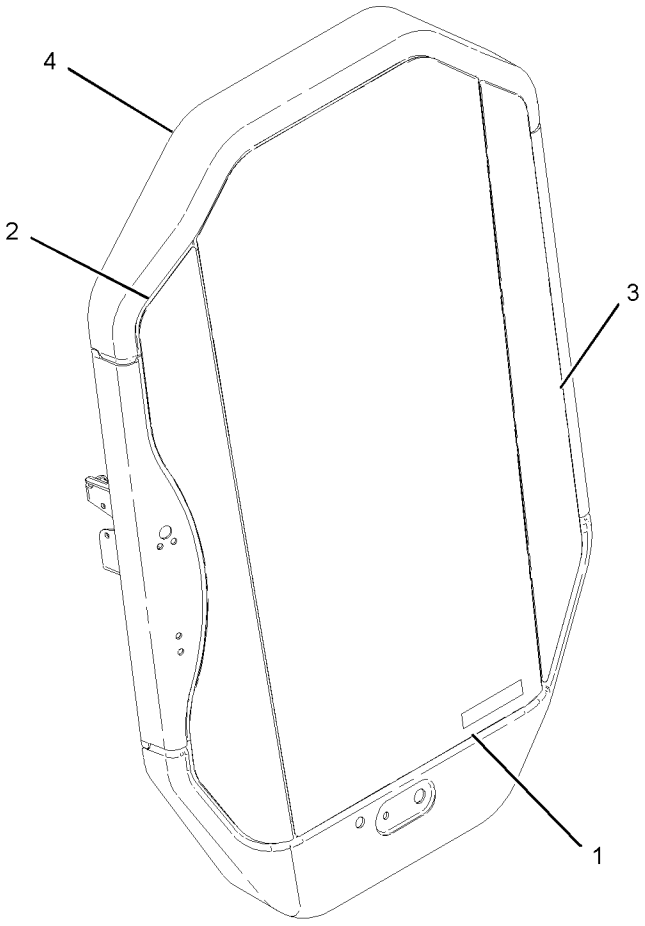


GRAPHIC #1

**<END>**

g01010846

# OPERATOR STATION

## *223-0616* DOOR GP-CAB—GLASS

**S/N: HEN6750-UP**

**PART OF 223-0600 DOOR & MTG GP-CAB, 218-6744 KIT-CAB DOOR & MOUNTING**

**AN ATTACHMENT**

**SMCS-7308** **i02870323**

| NOTE | REF NO | GRAPHIC REF | PART NUMBER | QTY | PART NAME 1 2 3 4 5 6 (PRODUCT LEVEL) | SEE PAGE |
|---|---|---|---|---|---|---|
| E | 1 | 1 | **124-3243** | | SEAL (306-CM) | |
| E | 2 | 1 | **144-0195** | | HOSE (73-CM) | |
| | 3 | 1 | **8G-1151** | 2 | CONNECTOR | |
| | 4 | 1 | **6W-3924** | 1 | BLADE AS-WIPER (558-MM) (FRONT, REAR) | |
| | 6 | 1 | **138-4883** | 1 | SWITCH AS-ROCKER (REAR WIPER) | |
| | 7 | 1 | **205-5148** | 2 | SCREW-FLAT HEAD (M6X1X25-MM) | |
| Y | 8 | 1 | *218-6431* | 1 | DOOR GP-CAB (GLASS) | 531 |
| | 9 | 1 | **221-3876** | 1 | HARNESS AS-WINDOW WIPER | |
| | 10 | 1 | **263-2135** | 1 | ARM GP-WINDOW WIPER | |
| | | 1 | **136-3191** | 1 | NOZZLE AS-WASHER | |
| E | | 1 | **194-5171** | | HOSE (60-CM) | |
| | | 1 | **240-8666** | 2 | CLIP (WASHER HOSE) | |
| C | 11 | 1 | **313-9185** | 1 | COVER AS | |
| | 12 | 1 | **223-8488** | 1 | COVER-LATCH | |
| | 13 | 1 | **223-8495** | 1 | HANDLE AS | |
| M | | 1 | **6V-9632** | 1 | NUT-WELD (M6X1-THD) | |
| | 14 | 1 | **225-3187** | 1 | LATCH AS | |
| | 15 | 1 | **229-8757** | 1 | SWITCH AS-LIMIT (WIPER) | |
| | 17 | 1 | **235-4768** | 2 | HINGE | |
| | 18 | 1 | **248-2171** | 1 | HANDLE AS | |
| | 19 | 1 | **248-2376** | 1 | MOTOR GP-WINDOW WIPER | |
| | | 1 | **102-8804** | 1 | KIT-RECEPTACLE (4-PIN) | |
| | | | | | (INCLUDES RECEPTACLE AS & WEDGE) | |
| | | 1 | **186-3735** | 4 | PIN-CONNECTOR (16-GA TO 18-GA) | |
| | 20 | 1 | **032-9828** | 1 | GROMMET | |
| M | 21 | 1 | **134-8273** | 4 | SCREW-FLAT HEAD (M10X1.15-THD) | |
| | 22 | 1 | **3S-2093** | 3 | STRAP-CABLE | |
| M | 23 | 1 | **9X-2044** | 14 | SCREW-TRUSS HEAD (M6X1X16-MM) | |
| M | 24 | 1 | **9X-2045** | 2 | SCREW-TRUSS HEAD (M6X1X20-MM) | |

C-CHANGE FROM PREVIOUS TYPE
E-ORDER BY THE CENTIMETER
M-METRIC PART
Y-SEPARATE ILLUSTRATION

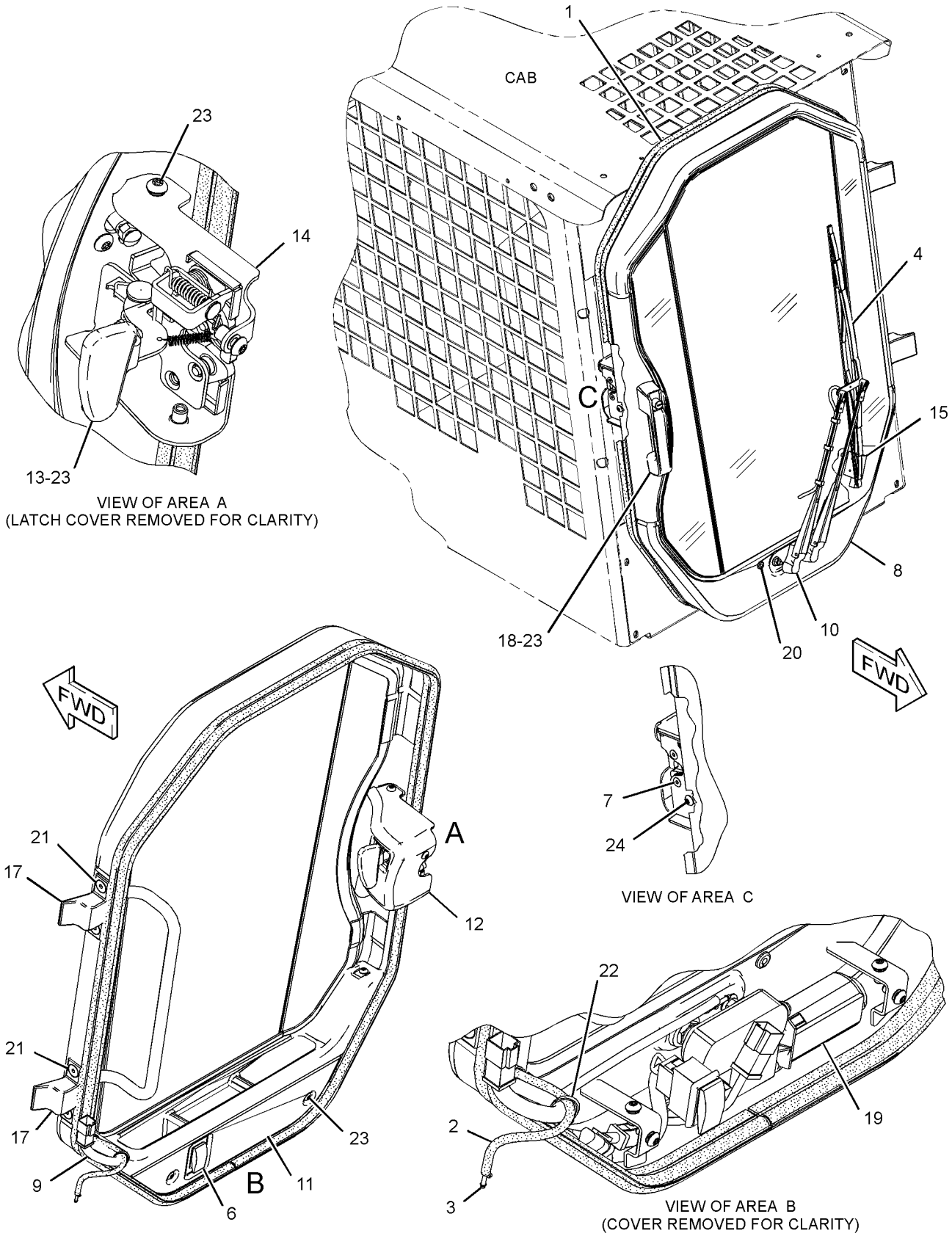


GRAPHIC #1 **<END>** g01431673

# OPERATOR STATION

## *276-3440* DOOR GP-CAB—POLYCARBONATE

**S/N: HEN6750-UP**

**PART OF 218-6440 DOOR & MTG GP-CAB, 218-6743 KIT-CAB DOOR & MOUNTING**

**AN ATTACHMENT**

**SMCS-7308** **i02870329**

| NOTE | REF NO | GRAPHIC REF | PART NUMBER | QTY | PART NAME 1 2 3 4 5 6 (PRODUCT LEVEL) | SEE PAGE |
|---|---|---|---|---|---|---|
| | 1 | 1 | **8G-1151** | 2 | CONNECTOR (HOSE) | |
| | 2 | 1 | **6W-3924** | 1 | BLADE AS-WIPER (558-MM) (CAB DOOR) | |
| | 4 | 1 | **138-4883** | 1 | SWITCH AS-ROCKER (REAR WIPER) | |
| | 5 | 1 | **205-5148** | 2 | SCREW-FLAT HEAD (M6X1X25-MM) | |
| | 6 | 1 | **221-3876** | 1 | HARNESS AS-WINDOW WIPER | |
| | 7 | 1 | **223-8488** | 1 | COVER-LATCH | |
| | 8 | 1 | **223-8495** | 1 | HANDLE AS | |
| M | | 1 | **6V-9632** | 1 | NUT-WELD (M6X1-THD) | |
| | 9 | 1 | **225-3187** | 1 | LATCH AS | |
| | 10 | 1 | **229-8757** | 1 | SWITCH AS-LIMIT (WIPER) | |
| | 11 | 1 | **235-4768** | 2 | HINGE | |
| | 12 | 1 | **248-2171** | 1 | HANDLE AS | |
| | 13 | 1 | **248-2376** | 1 | MOTOR GP-WINDOW WIPER | |
| | | 1 | **102-8802** | 1 | KIT-RECEPTACLE (2-PIN) | |
| | | | | | (INCLUDES RECEPTACLE AS & WEDGE) | |
| | | 1 | **186-3735** | 4 | PIN-CONNECTOR (16-GA TO 18-GA) | |
| | 14 | 1 | **263-2135** | 1 | ARM GP-WINDOW WIPER (FRONT) | |
| | | 1 | **136-3191** | 1 | NOZZLE AS-WASHER | |
| | | 1 | **194-5171** | | HOSE (60-CM) | |
| | | 1 | **240-8666** | 2 | CLIP | |
| Y | 15 | 1 | *276-3615* | 1 | DOOR GP-CAB | 536 |
| | 16 | 1 | **313-9185** | 1 | COVER AS | |
| | 17 | 1 | **032-9828** | 1 | GROMMET | |
| M | 18 | 1 | **134-8273** | 4 | SCREW-FLAT HEAD (M10X1.15-THD) | |
| | 19 | 1 | **3S-2093** | 3 | STRAP-CABLE | |
| M | 20 | 1 | **9X-2044** | 14 | SCREW-TRUSS HEAD (M6X1X16-MM) | |
| M | 21 | 1 | **9X-2045** | 2 | SCREW-TRUSS HEAD (M6X1X20-MM) | |
| E | 22 | 1 | **144-0195** | | HOSE (73-CM) | |
| E | 23 | 1 | **124-3243** | | SEAL (306-CM) | |

E-ORDER BY THE CENTIMETER
M-METRIC PART
Y-SEPARATE ILLUSTRATION

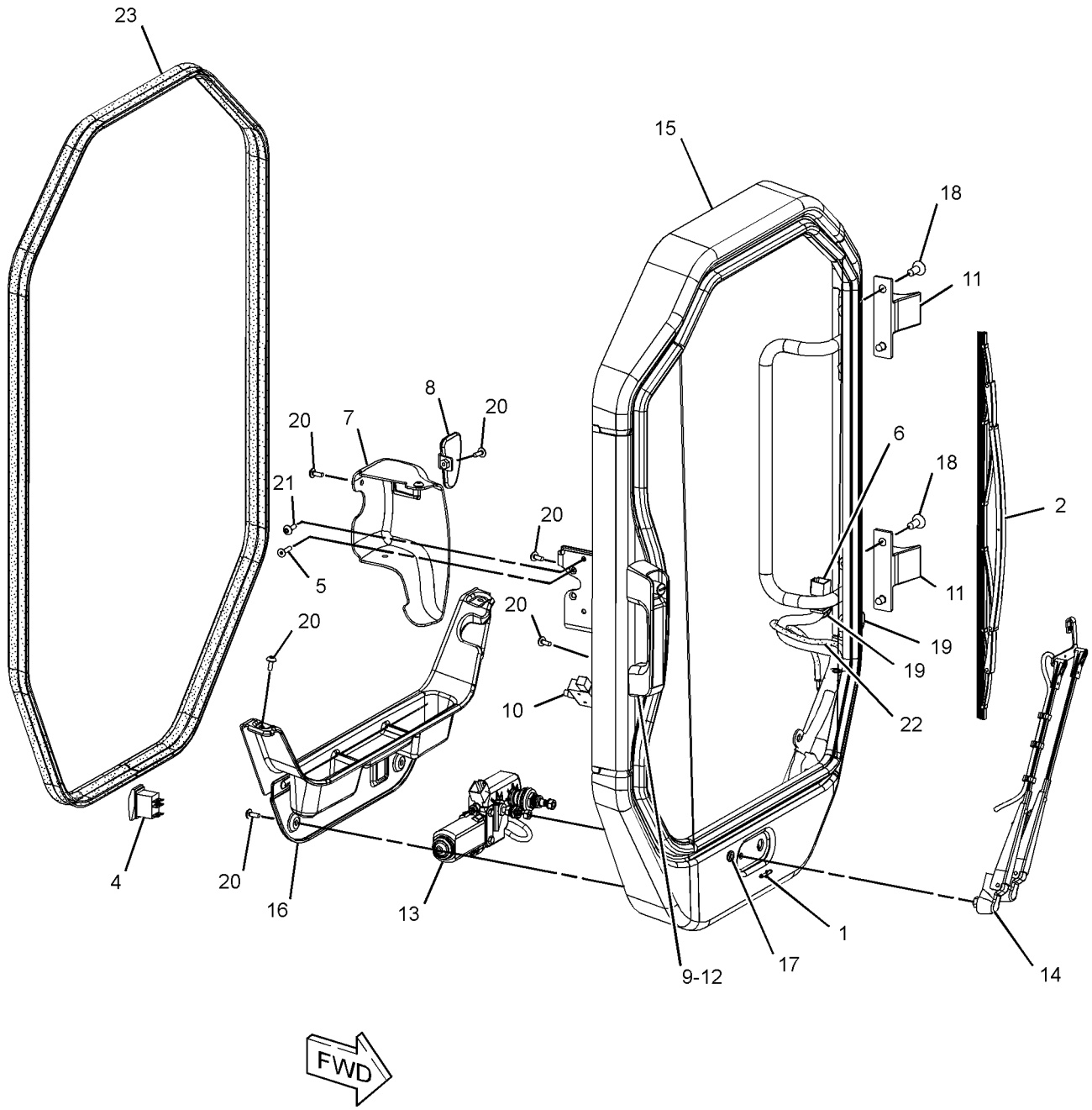


GRAPHIC #1 **<END>** g01380641

# OPERATOR STATION

## *276-3615* DOOR GP-CAB

**S/N: HEN6750-UP**
**PART OF 276-3440 DOOR GP-CAB**
**AN ATTACHMENT**

**SMCS-7308** **i02644469**

| NOTE | REF NO | GRAPHIC REF | PART NUMBER | QTY | PART NAME 1 2 3 4 5 6 (PRODUCT LEVEL) | SEE PAGE |
|---|---|---|---|---|---|---|
| | 1 | 1 | **5C-8310** | 1 | BRACKET-RING | |
| | 2 | 1 | **5C-8311** | 1 | RING | |
| | 3 | 1 | **8T-6842** | 1 | FILM-INSTRUCTION (PULL RING, ALTERNATE EXIT) | |
| | 4 | 1 | **276-3599** | 1 | WINDOW (POLYCARBONATE) | |
| | 5 | 1 | **279-3232** | 1 | SEAL | |
| | 6 | 1 | **282-9059** | 1 | FRAME AS | |
| | 7 | 1 | **283-7554** | 1 | STRIP-LOCKING | |

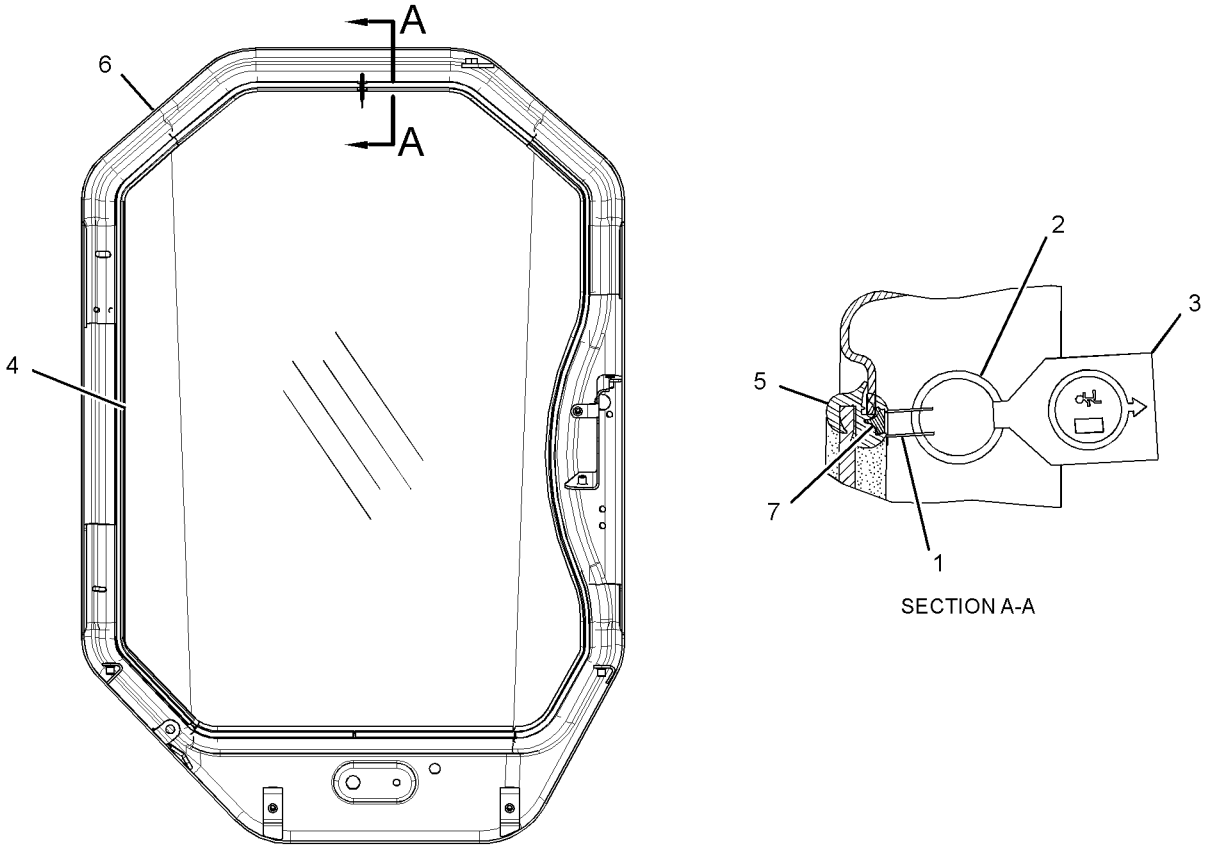


SECTION A-A

REAR VIEW

GRAPHIC #1 **<END>** g01327089

# OPERATOR STATION

## *218-6394* DUCT & CONTROL GP

**S/N: HEN6750-UP**

**PART OF 218-6050 AIR CONDITIONER AR, 218-5950 HEATER AR-CAB**

**AN ATTACHMENT**

**SMCS-7337, 734D** **i02541254**

| NOTE | REF NO | GRAPHIC REF | PART NUMBER | QTY | PART NAME 1 2 3 4 5 6 (PRODUCT LEVEL) | SEE PAGE |
|---|---|---|---|---|---|---|
| CD | 1 | 1 | **5P-5969** | | SEAL (0.2-M EACH) | |
| | 2 | 1 | **146-6371** | 6 | LOUVER AS | |
| | 3 | 1 | **218-6396** | 1 | DUCT | |
| | 4 | 1 | **218-6397** | 1 | CONSOLE (RH) | |
| | 5 | 1 | **218-6398** | 1 | CONSOLE (LH) | |
| CD | 6 | 1 | **5P-7070** | | INSULATION-STRIP (0.5-M) | |
| | 7 | 1 | **218-6414** | 1 | SEAL | |
| | 8 | 1 | **285-9133** | 1 | INSULATION | |
| M | 9 | 1 | **175-0005** | 8 | SCREW-BUTTON HEAD (M6X1X25-MM) | |
| | 10 | 1 | **285-8570** | 1 | INSULATION | |
| | 11 | 1 | **240-6877** | 1 | SEAL | |
| | 12 | 1 | **240-6878** | 1 | SEAL | |
| | 13 | 1 | **240-6879** | 2 | SEAL | |
| | 14 | 1 | **6V-6689** | 2 | SCREW-SELF-TAPPING (10-16X.625-IN) | |
| | 15 | 1 | **285-8565** | 1 | INSULATION | |

C-CHANGE FROM PREVIOUS TYPE
D-ORDER BY THE METER
M-METRIC PART

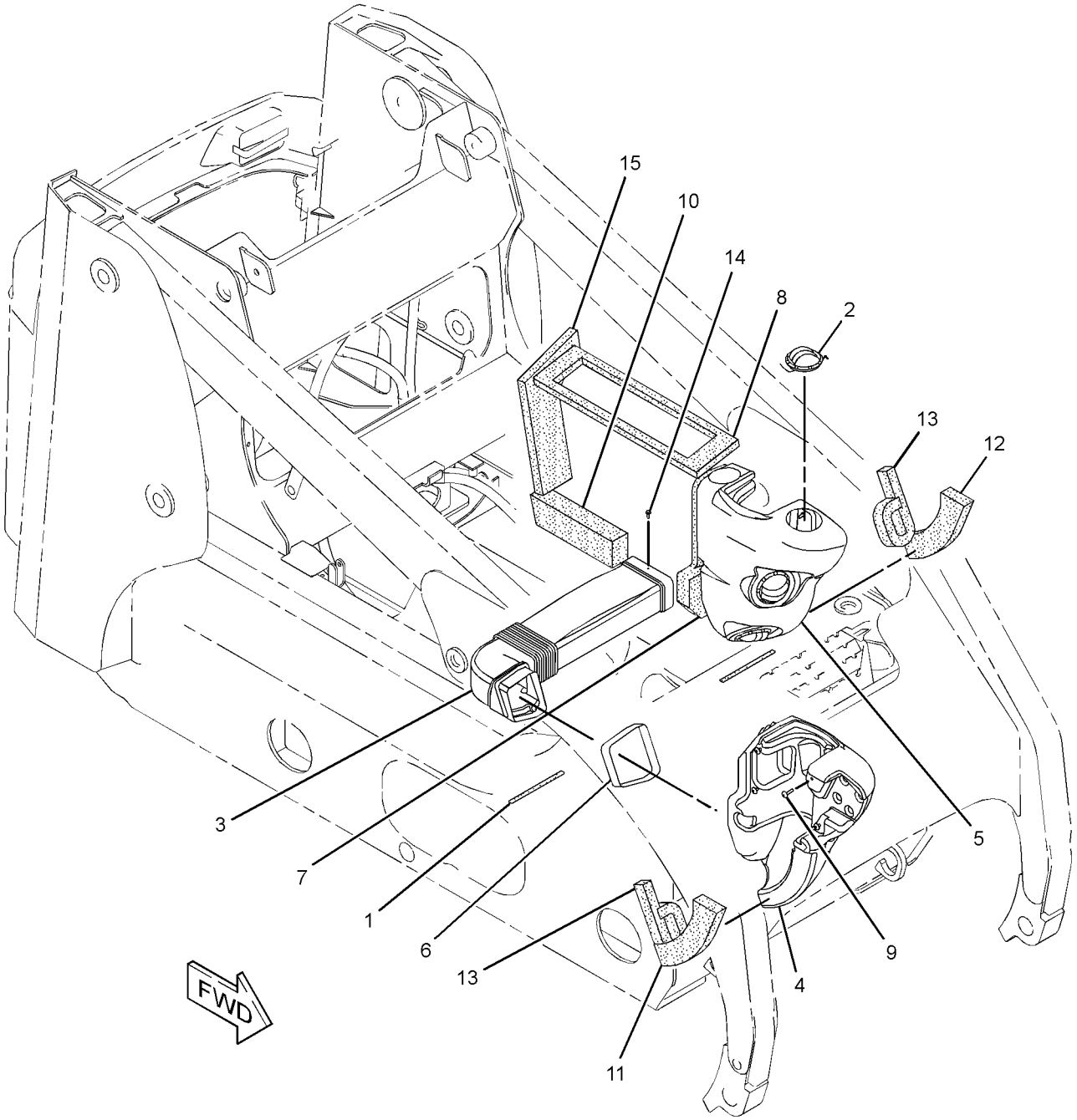


GRAPHIC #1 **<END>** g01293158

# OPERATOR STATION

## 231-7325 FRAME GP-WINDOW–RH

**S/N: HEN6750-UP**
**PART OF 224-7058 WINDOW GP-CAB**
**AN ATTACHMENT**

**SMCS-7310** **i02064824**

| NOTE | REF NO | GRAPHIC REF | PART NUMBER | QTY | PART NAME 1 2 3 4 5 6 (PRODUCT LEVEL) | SEE PAGE |
|---|---|---|---|---|---|---|
| | 1 | 1 | **231-7326** | 1 | FRAME AS-WINDOW (RH) | |
| | 1A | 1 | **5C-7682** | 1 | SCREW (8-32-THD) | |
| JZ | 1B | 1 | | 1 | BOLT | |
| JZ | 1C | 1 | | 1 | LATCH | |
| JZ | 1D | 1 | | 1 | SCREW | |
| JZ | 1E | 1 | | 1 | SPRING | |
| JZ | 1F | 1 | | 2 | CLIP | |
| JZ | 1G | 1 | | 2 | WASHER | |
| | 1H | 1 | **231-7401** | 1 | HINGE | |
| | 2 | 1 | **239-6138** | 1 | BRACKET AS | |
| | 3 | 1 | **5C-7682** | 2 | SCREW (8-32-THD) | |
| | | | | | AVAILABLE REPAIR KIT(S): | |
| J | | | **231-7329** | 1 | KIT-LATCH | |

J-KIT MARKED J SERVICES PART MARKED J
Z-NOT SERVICED SEPARATELY

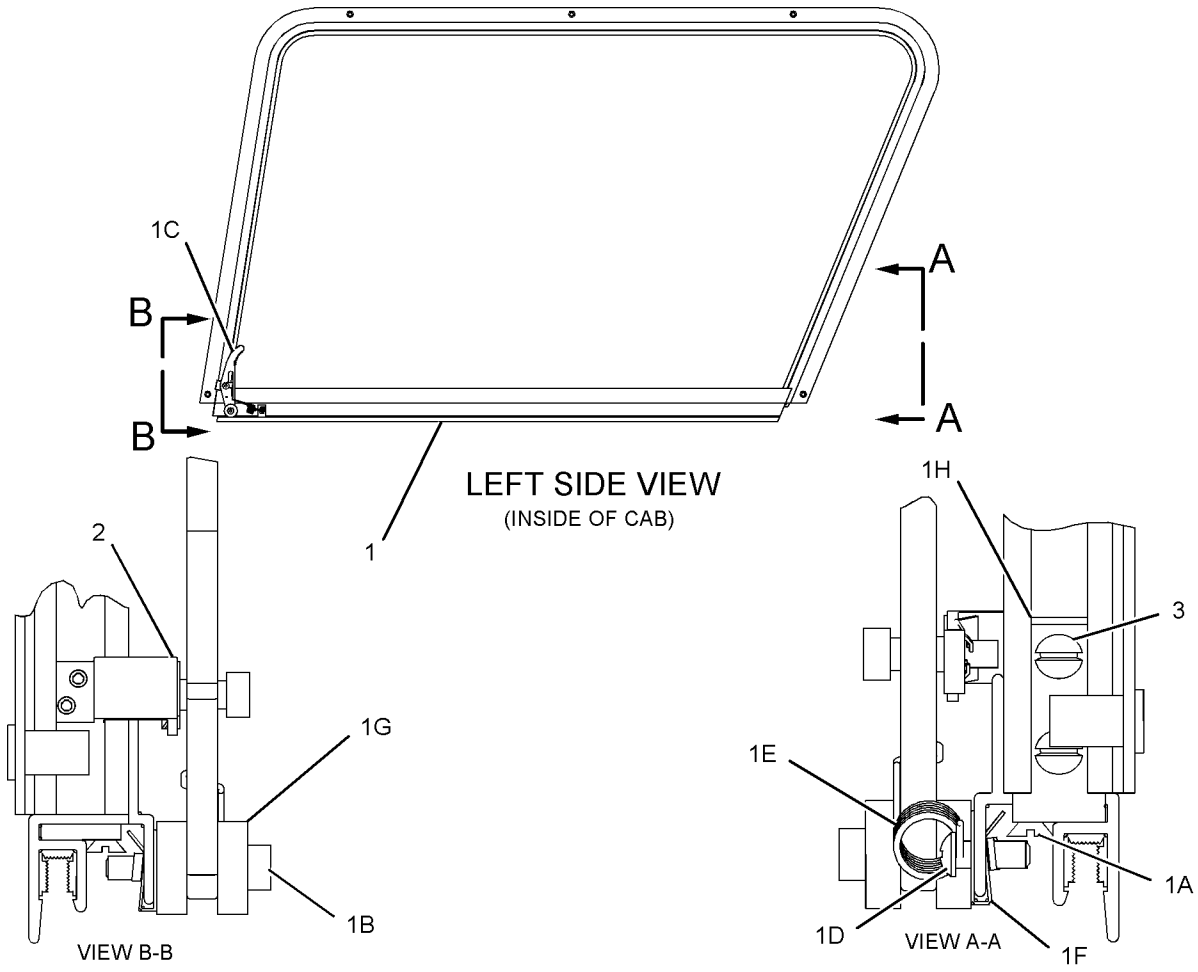


GRAPHIC #1 **<END>** g01066130

# OPERATOR STATION

## 231-7327 FRAME GP-WINDOW–LH

**S/N: HEN6750-UP**
**PART OF 224-7057 WINDOW GP-CAB**
**AN ATTACHMENT**

**SMCS-7310** **i02064823**

| NOTE | REF NO | GRAPHIC REF | PART NUMBER | QTY | PART NAME 1 2 3 4 5 6 (PRODUCT LEVEL) | SEE PAGE |
|---|---|---|---|---|---|---|
| | 1 | 1 | **231-7328** | 1 | FRAME AS-WINDOW (LH) | |
| | 1A | 1 | **5C-7682** | 1 | SCREW (8-32-THD) | |
| JZ | 1B | 1 | | 1 | BOLT | |
| JZ | 1C | 1 | | 1 | LATCH | |
| JZ | 1D | 1 | | 1 | SCREW | |
| JZ | 1E | 1 | | 1 | SPRING | |
| JZ | 1F | 1 | | 2 | CLIP | |
| JZ | 1G | 1 | | 2 | WASHER | |
| | 1H | 1 | **231-7401** | 1 | HINGE | |
| | 2 | 1 | **239-6138** | 1 | BRACKET AS | |
| | 3 | 1 | **5C-7682** | 2 | SCREW (8-32-THD) | |
| | | | | | AVAILABLE REPAIR KIT(S): | |
| J | | | **231-7329** | 1 | KIT-LATCH | |

J-KIT MARKED J SERVICES PARTS MAKED J
Z-NOT SERVICED SEPARATELY

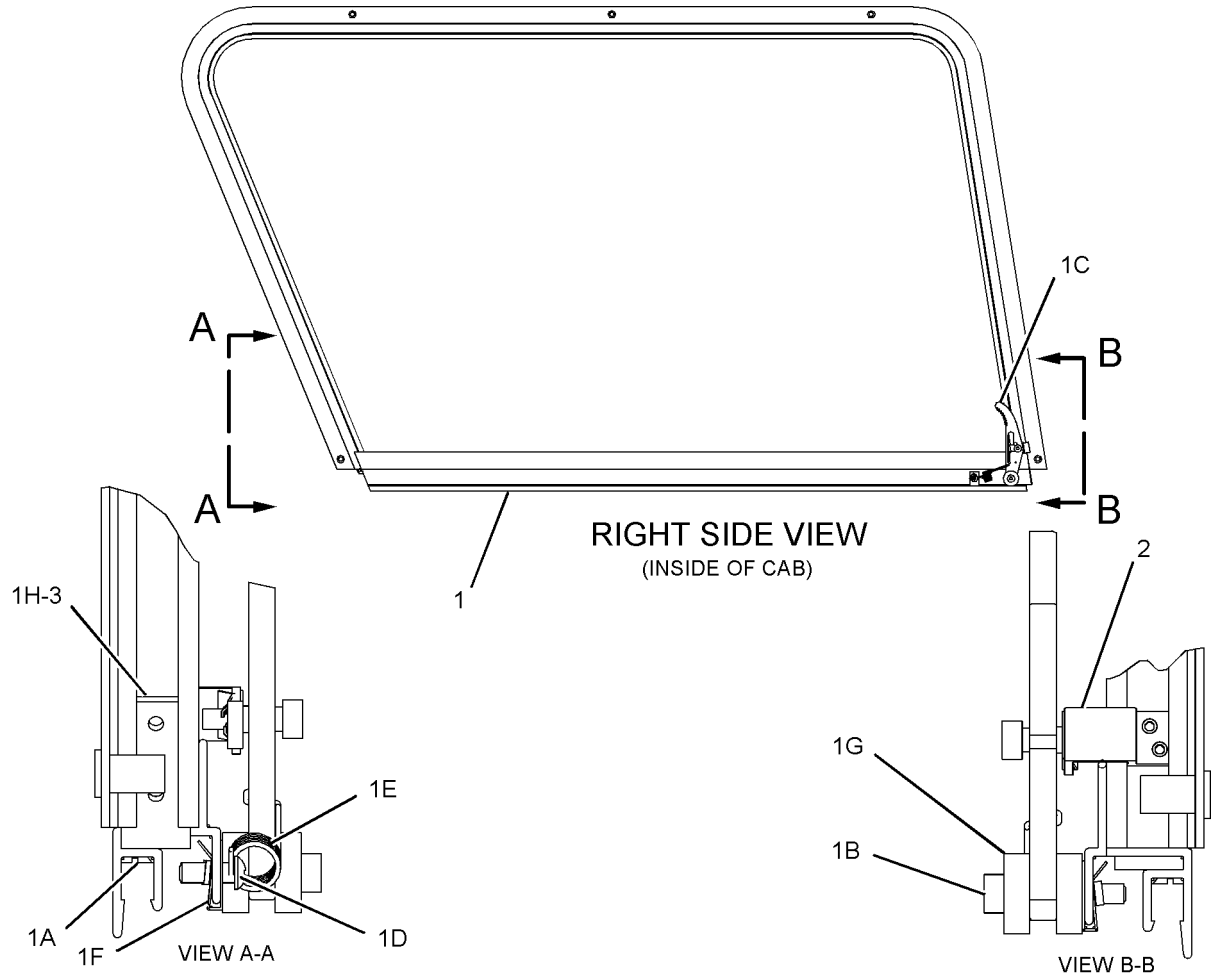


GRAPHIC #1 **<END>** g01066272

## *216-4712* GAUGE & WARNING GP–LH

**S/N: HEN6750-UP**

**PART OF 216-4751, 225-7998 PANEL GP-INSTRUMENT**

**AN ATTACHMENT**

**SMCS-7450, 7451** **i02014376**

| NOTE | REF NO | GRAPHIC REF | PART NUMBER | QTY | PART NAME 1 2 3 4 5 6 (PRODUCT LEVEL) | SEE PAGE |
|---|---|---|---|---|---|---|
| J | 1 | 1 | **142-8858** | 1 | SWITCH AS-KEY START | |
| | | 1 | **167-1530** | 1 | NUT (1-32-THD) | |
| | 2 | 1 | **158-6694** | 1 | PANEL | |
| | 3 | 1 | **197-6894** | 1 | FILM-INSTRUCTION (INSTRUMENT PANEL) | |
| | 4 | 1 | **216-4753** | 1 | FILM (KEY SWITCH) | |
| Y | 5 | 1 | **223-6537** | 1 | MODULE GP-WARNING INDICATOR | 572 |
| | 6 | 1 | **103-2006** | 2 | SCREW-PAN HEAD (6-19X0.37-IN) | |

J-REQUIRES 5P-8500 KEY
Y-SEPARATE ILLUSTRATION

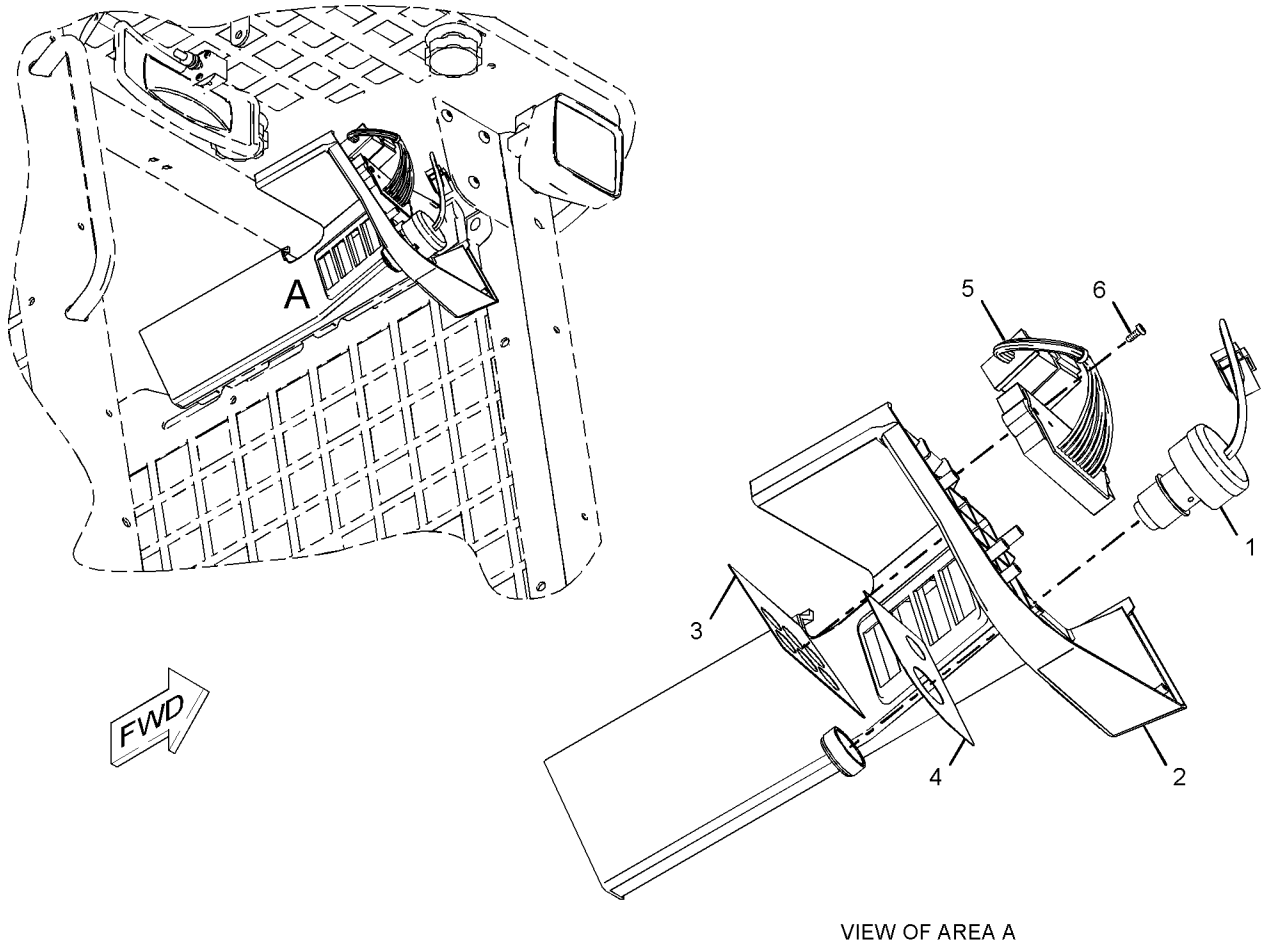


VIEW OF AREA A

GRAPHIC #1 **<END>** g01028652

# OPERATOR STATION

## *216-4713* GAUGE & WARNING GP–RH

**S/N: HEN6750-UP**

**PART OF 216-4751, 225-7998 PANEL GP-INSTRUMENT**

**AN ATTACHMENT**

**SMCS-7450, 7451** **i02772056**

| NOTE | REF NO | GRAPHIC REF | PART NUMBER | QTY | PART NAME 1 2 3 4 5 6 (PRODUCT LEVEL) | SEE PAGE |
|---|---|---|---|---|---|---|
| | 1 | 1 | **084-4277** | 1 | LAMP GP-DOME (12-VOLT) | |
| | | 1 | **6R-7490** | 1 | LAMP (12-VOLT, 10-WATT) | |
| | 2 | 1 | **158-6697** | 1 | PANEL | |
| | 3 | 1 | **216-4754** | 1 | FILM-INSTRUCTION (DASH) | |
| Y | 4 | 1 | **249-2910** | 1 | MODULE GP-WARNING INDICATOR | 573 |
| | 5 | 1 | **103-2006** | 2 | SCREW-PAN HEAD (6-19X0.37-IN) | |
| | 6 | 1 | **170-6305** | 1 | GAUGE GP-FUEL LEVEL | |
| | | 1 | **4B-2043** | 3 | NUT (8-32-THD) | |
| | | 1 | **7X-9065** | 1 | LAMP (12-VOLT) | |
| | | 1 | **9B-7233** | 3 | LOCKWASHER | |

Y-SEPARATE ILLUSTRATION

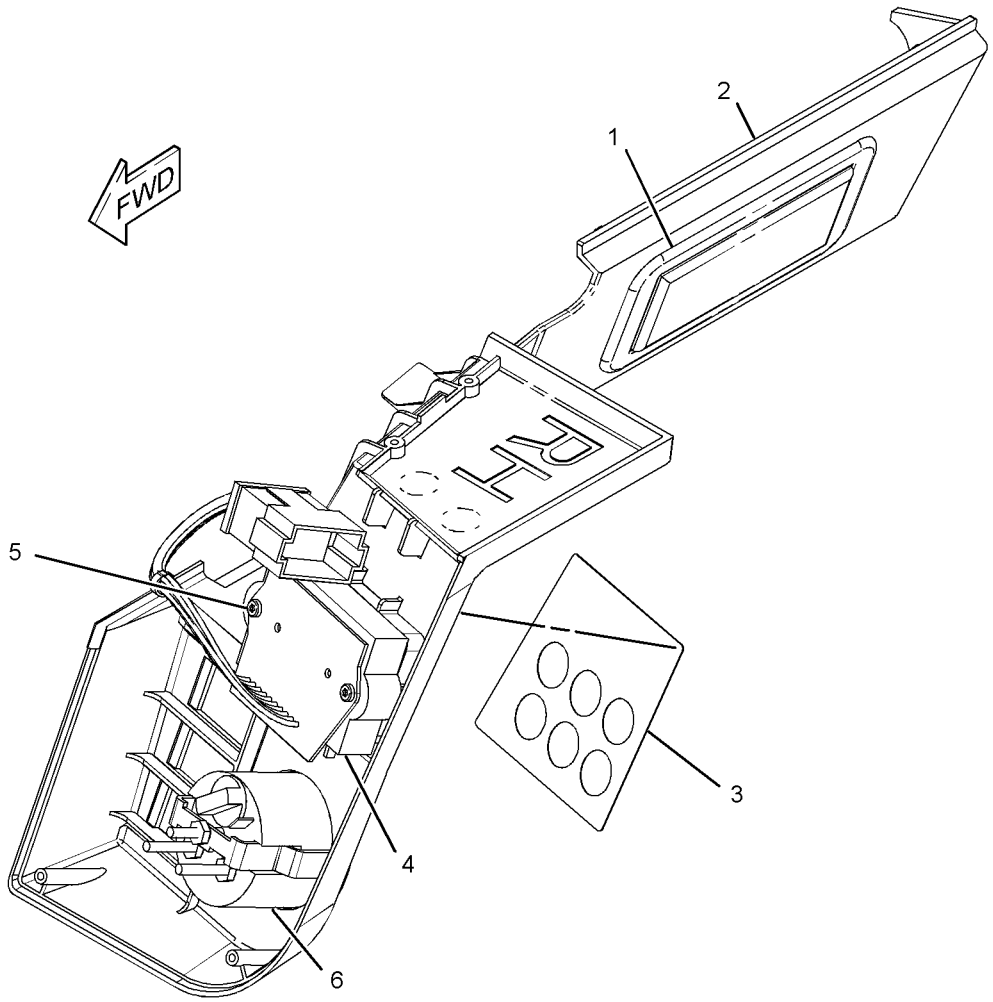


GRAPHIC #1 **<END>** g01142720

# OPERATOR STATION

## *233-5632* GUARD GP-ROPS/FOPS

**S/N: HEN6750-UP**
**AN ATTACHMENT**

**SMCS-7323** **i02866878**

| NOTE | REF NO | GRAPHIC REF | PART NUMBER | QTY | PART NAME 1 2 3 4 5 6 (PRODUCT LEVEL) | SEE PAGE |
|---|---|---|---|---|---|---|
| | 1 | 1 | **152-1161** | 1 | PLATE AS-FOPS | |
| | 2 | 1 | **153-2683** | 1 | SPRING AS-GAS | |
| | 4 | 1 | **247-7182** | 1 | FILM (FOPS) | |
| M | 5 | 1 | **7X-2553** | 8 | BOLT (M16X2X40-MM) | |
| | 6 | 1 | **8T-4122** | 12 | WASHER-HARD (17X32X3.5-MM THK) | |
| M | 7 | 1 | **8T-4132** | 4 | NUT (M16X2-THD) | |
| D | 8 | 1 | **8T-5372** | | SEAL (1.4-M) | |

D-ORDER BY THE METER
M-METRIC PART

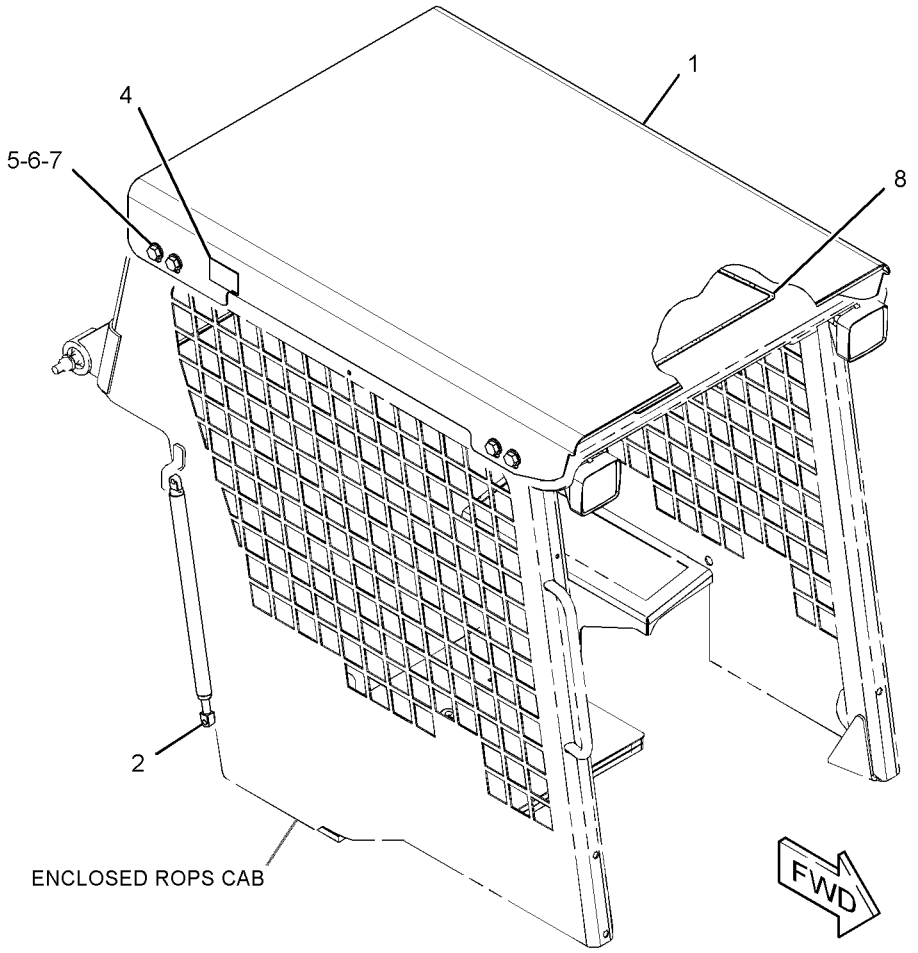


GRAPHIC #1 **<END>** g01437181

# OPERATOR STATION

## *218-6400* HANDHOLD GP

**S/N: HEN6750-UP**
**PART OF 295-7302, 295-7312 OPTION AR-CAB**
**CANNOT BE USED WITH 218-6440—PAGE 526, 223-0600—PAGE 529**
**AN ATTACHMENT**

**SMCS-7256** **i01908092**

| NOTE | REF NO | GRAPHIC REF | PART NUMBER | QTY | PART NAME 1 2 3 4 5 6 (PRODUCT LEVEL) | SEE PAGE |
|---|---|---|---|---|---|---|
| | 1 | 1 | **218-6377** | 1 | HANDLE | |
| | 2 | 1 | **8T-4121** | 2 | WASHER-HARD (11X21X2.5-MM THK) | |
| M | 3 | 1 | **8T-4133** | 2 | NUT (M10X1.5-THD) | |
| M | 4 | 1 | **9X-2041** | 2 | SCREW-TRUSS HEAD (M10X1.5X20-MM) | |

M-METRIC PART

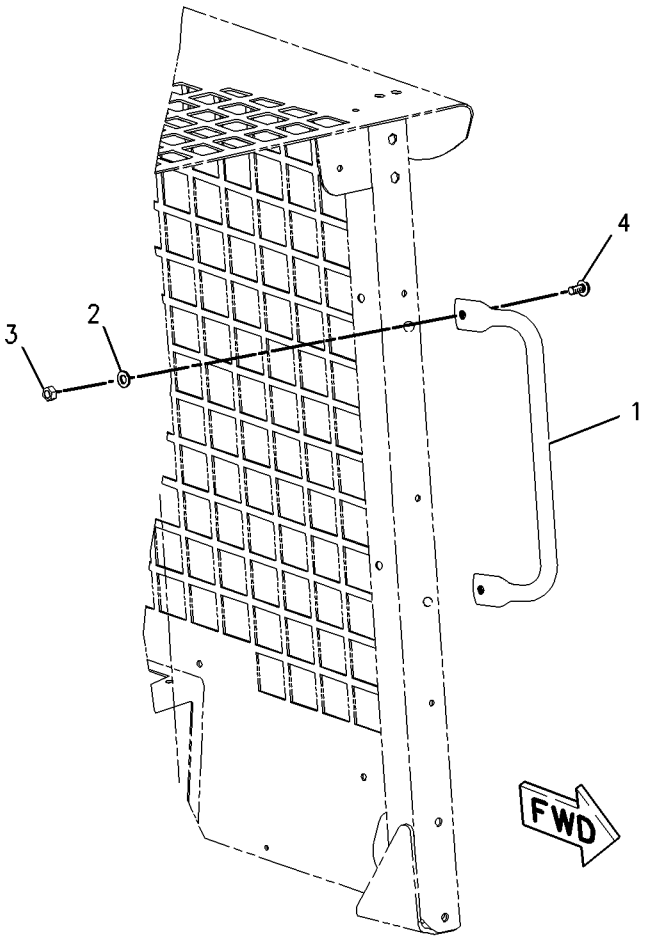


GRAPHIC #1 **<END>** g01002446

# OPERATOR STATION

## 218-6117 HANDLE GP-MODULAR

**S/N: HEN6750-UP**
**PART OF 218-6480 CONTROL GP-HANDLE**
**AN ATTACHMENT**

**SMCS-5705** **i02492650**

| NOTE | REF NO | GRAPHIC REF | PART NUMBER | QTY | PART NAME 1 2 3 4 5 6 (PRODUCT LEVEL) | SEE PAGE |
|---|---|---|---|---|---|---|
| | 1 | 1 | **8L-8413** | 1 | STRAP-CABLE | |
| | 2 | 1 | **159-9853** | 1 | GROMMET | |
| | 3 | 1 | **174-3091** | 1 | KIT-RECEPTACLE (12-PIN) | |
| | | | | | (INCLUDES RECEPTACLE AS & WEDGE) | |
| | 4 | 1 | **186-3735** | 2 | PIN-CONNECTOR (16-GA TO 18-GA) | |
| | 5 | 1 | **8T-8737** | 10 | PLUG-SEAL | |

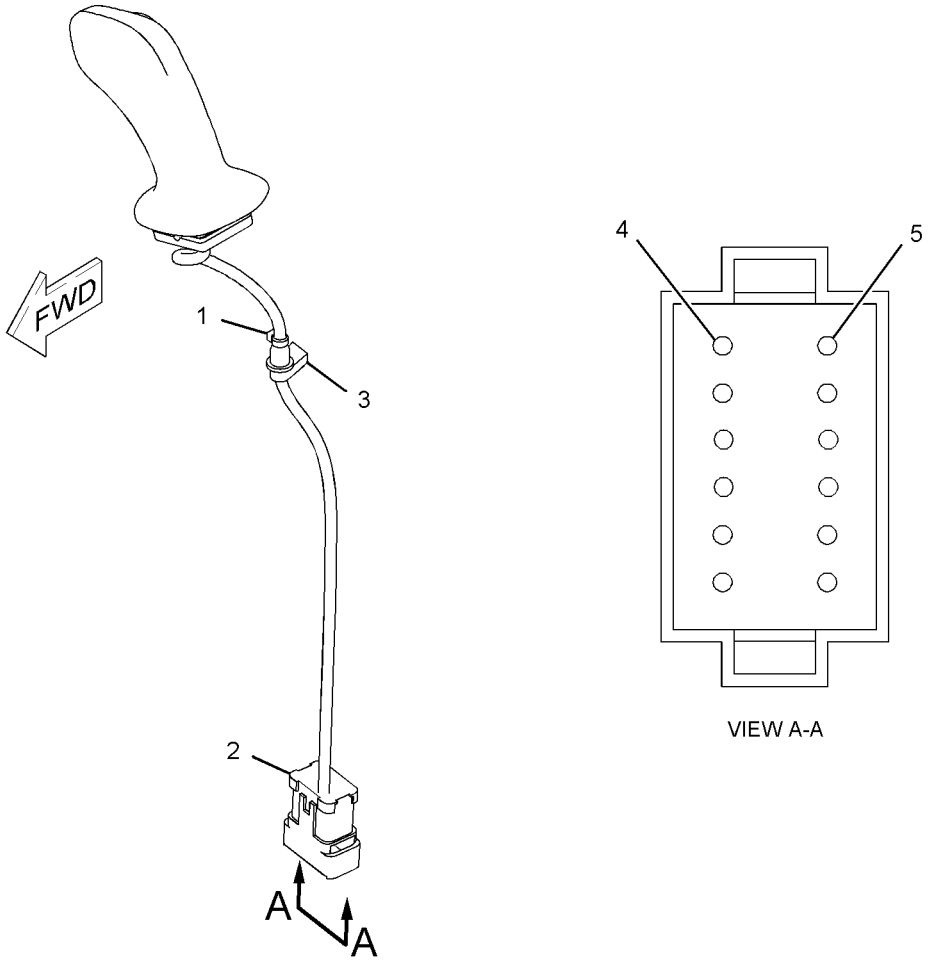


GRAPHIC #1 **<END>** g01010901

## 218-6118 HANDLE GP-MODULAR

**S/N: HEN6750-UP**

**PART OF 218-6485, 218-6490 CONTROL GP-HANDLE**

**AN ATTACHMENT**

**SMCS-5705** **i02578035**

| NOTE | REF NO | GRAPHIC REF | PART NUMBER | QTY | PART NAME 1 2 3 4 5 6 (PRODUCT LEVEL) | SEE PAGE |
|---|---|---|---|---|---|---|
| | 1 | 1 | **8L-8413** | 1 | STRAP-CABLE | |
| | 2 | 1 | **159-9853** | 1 | GROMMET | |
| | 3 | 1 | **174-3091** | 1 | KIT-RECEPTACLE (12-PIN) | |
| | | | | | (INCLUDES RECEPTACLE AS & WEDGE) | |
| | 4 | 1 | **186-3735** | 4 | PIN-CONNECTOR (16-GA TO 18-GA) | |
| | 5 | 1 | **8T-8737** | 8 | PLUG-SEAL | |

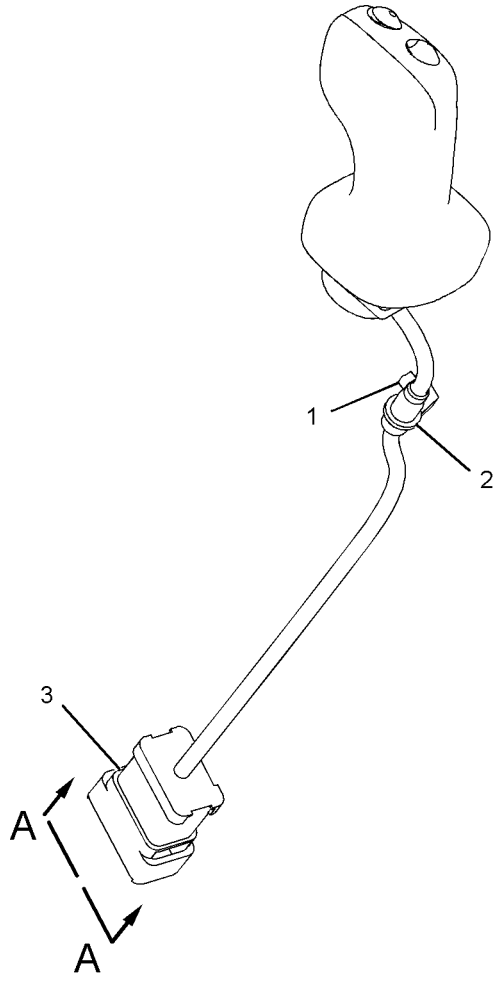


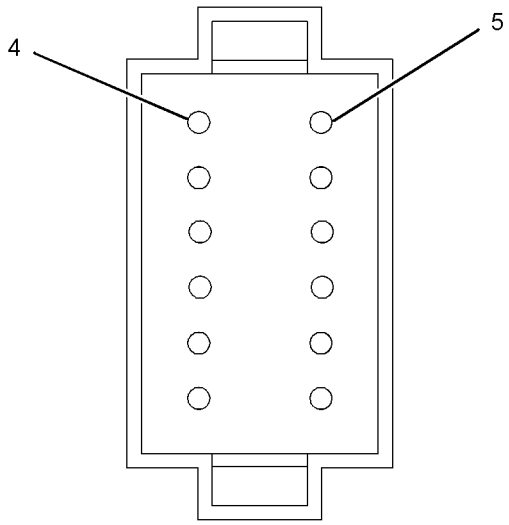


VIEW A-A

GRAPHIC #1 **<END>** g01113888

# OPERATOR STATION

## *218-6392* HEATER & MTG GP-CAB

**S/N: HEN6750-UP**
**PART OF 218-5950 HEATER AR-CAB**
**AN ATTACHMENT**

**SMCS-7304** **i02014370**

| NOTE | REF NO | GRAPHIC REF | PART NUMBER | QTY | PART NAME 1 2 3 4 5 6 (PRODUCT LEVEL) | SEE PAGE |
|---|---|---|---|---|---|---|
| Y | 1 | 1 | *218-6393* | 1 | HEATER GP-CAB | 549 |
| | 2 | 1 | **218-6402** | 1 | INSULATION AS | |
| | 3 | 1 | **8T-4224** | 4 | WASHER-HARD (8.8X16X2-MM THK) | |
| M | 4 | 1 | **8T-6869** | 4 | BOLT (M8X1.25X60-MM) | |

M-METRIC PART
Y-SEPARATE ILLUSTRATION

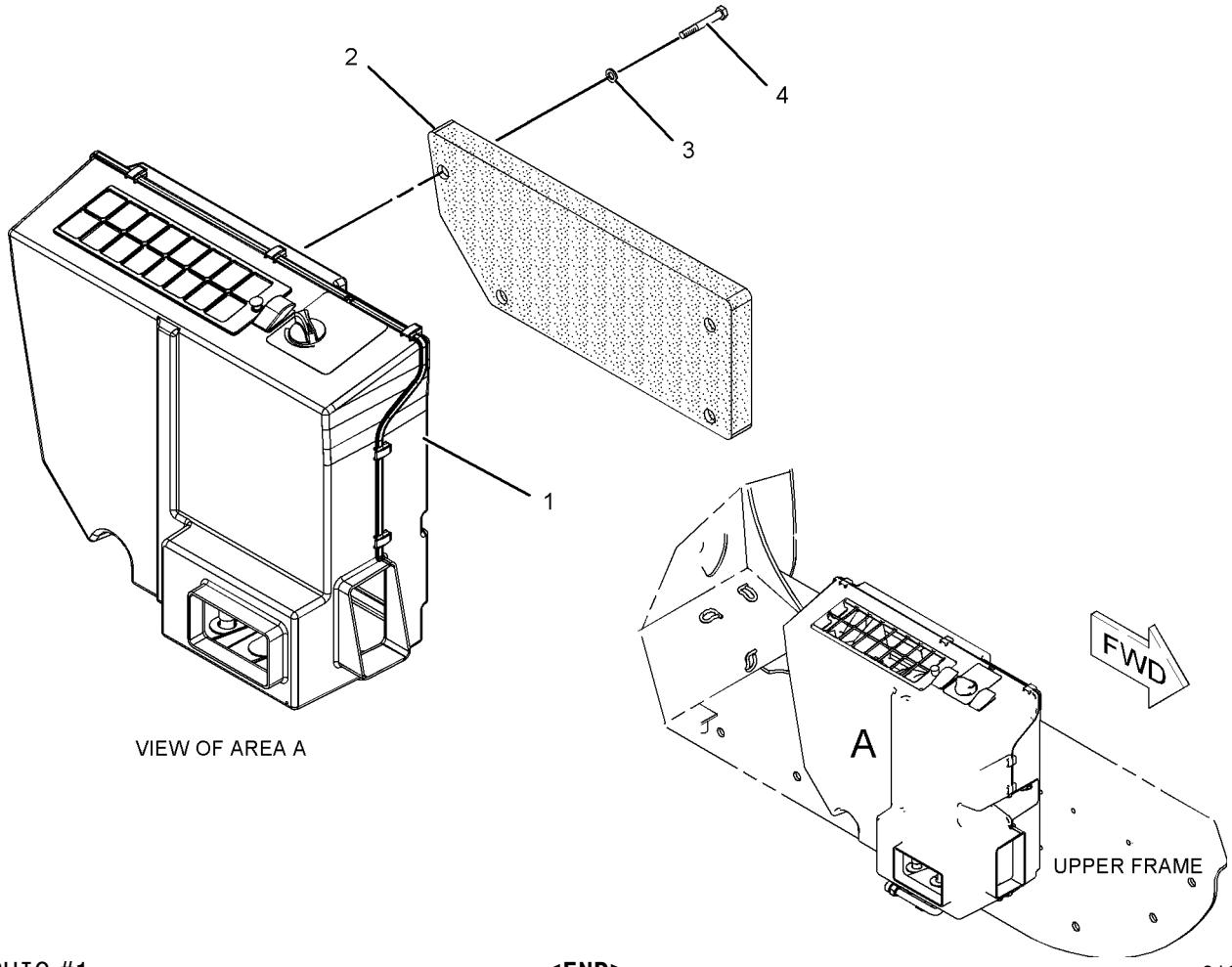


GRAPHIC #1 **<END>** g01036187

# OPERATOR STATION

## *218-5950* HEATER AR-CAB

**S/N: HEN6750-UP**
**PART OF 295-7322 OPTION AR-CAB**
**CANNOT BE USED WITH 218-5850–PAGE 556, 218-6050–PAGE 466**
**AN ATTACHMENT**

**SMCS-7304** **i02443352**

| NOTE | PART NUMBER | QTY | PART NAME 1 2 3 4 5 6 (PRODUCT LEVEL) | SEE PAGE |
|---|---|---|---|---|
| Y | *218-6394* | 1 | DUCT & CONTROL GP | 537 |
| Y | *218-6392* | 1 | HEATER & MTG GP-CAB | 547 |
| Y | *218-5619* | 1 | LINES GP-HEATER | 568 |
| Y | *218-5630* | 1 | LINES GP-HYDRAULIC FAN | 286 |
| | | | | |
| M | **8T-4191** | 1 | BOLT (M10X1.5X16-MM) | |
| | **8T-4121** | 1 | WASHER-HARD (11X21X2.5-MM THK) | |

M-METRIC PART
Y-SEPARATE ILLUSTRATION

**<END>**

# OPERATOR STATION

## *218-6393* HEATER GP-CAB

**S/N: HEN6750-UP**

**PART OF 218-6392 HEATER & MTG GP-CAB, 218-6746 HEATER GP-CAB**

**AN ATTACHMENT**

**TYPE 1**

**SMCS-7304, 7342** **i02839368**

| NOTE | REF NO | GRAPHIC REF | PART NUMBER | QTY | PART NAME 1 2 3 4 5 6 (PRODUCT LEVEL) | SEE PAGE |
|---|---|---|---|---|---|---|
| | 1 | 1 | **185-4015** | 10 | CLIP | |
| | 2 | 1 | **218-6399** | 1 | SEAL | |
| | 3 | 1 | **231-8121** | 1 | HOUSING | |
| Y | 4 | 1 | **231-8122** | 1 | HOUSING AS-SIDE (AIR CONDITIONER, HEATER) | 555 |
| | 5 | 1 | **231-8124** | 1 | COIL AS-HEATER | |
| | 6 | 1 | **295-5440** | 1 | MOTOR | |
| | 7 | 1 | **231-8126** | 1 | VALVE AS | |
| | 8 | 1 | **231-8127** | 1 | GROMMET | |
| | 9 | 1 | **231-8128** | 1 | GRILL | |
| | 10 | 1 | **231-8129** | 1 | PIN | |
| | 11 | 1 | **231-8130** | 1 | FILTER ELEMENT-CAB AIR | |
| | 12 | 1 | **231-8131** | 1 | PLATE | |
| | 13 | 1 | **231-8132** | 1 | FILTER ELEMENT-CAB AIR | |
| | 14 | 1 | **231-8133** | 1 | PANEL | |
| | 15 | 1 | **231-8141** | 1 | GROMMET | |
| | 16 | 1 | **231-8142** | 1 | RETAINER | |
| | 17 | 1 | **231-8143** | 1 | FILM (TEMPERATURE CONTROL) | |
| | 18 | 1 | **231-8144** | 1 | BAFFLE | |
| | 19 | 1 | **231-8145** | 1 | GROMMET | |
| | 20 | 1 | **206-7398** | 1 | KNOB-CONTROL (TEMPERATURE SELECT) | |
| | 21 | 1 | **305-2969** | 2 | THUMBSCREW | |
| | 22 | 1 | **218-6947** | 1 | HARNESS AS-HEATER & AIR COND | |
| | 23 | 1 | **236-5067** | 1 | SWITCH-ROCKER (HEATER) | |
| | 24 | 1 | **236-5069** | 1 | RELAY AS (12-VOLT) (HEATER) | |

Y-SEPARATE ILLUSTRATION

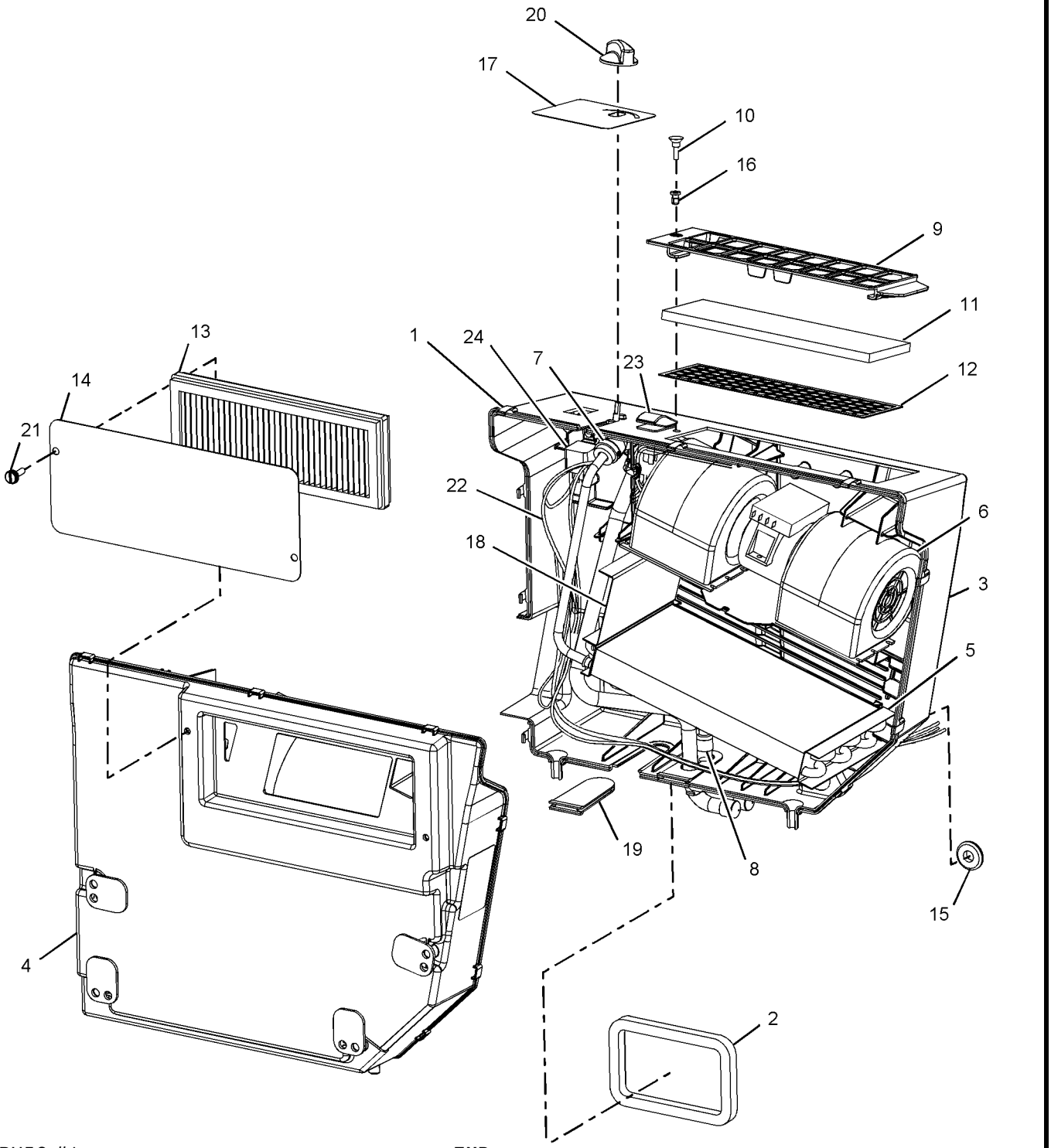


GRAPHIC #1 **<END>** g01027810

# OPERATOR STATION

## *218-6393* HEATER GP-CAB

**S/N: HEN6750-UP**
**PART OF 218-6746 HEATER GP-CAB**
**AN ATTACHMENT**
**TYPE 2**

**SMCS-7304, 7342** **i02839375**

| NOTE | REF NO | GRAPHIC REF | PART NUMBER | QTY | PART NAME 1 2 3 4 5 6 (PRODUCT LEVEL) | SEE PAGE |
|---|---|---|---|---|---|---|
| | 1 | 1 | **185-4015** | 10 | CLIP | |
| | 2 | 1 | **218-6399** | 1 | SEAL | |
| C | 3 | 1 | **312-1683** | 1 | HOUSING-COVER | |
| Y | 4 | 1 | **231-8122** | 1 | HOUSING AS-SIDE (AIR CONDITIONER, HEATER) | 555 |
| | 5 | 1 | **231-8124** | 1 | COIL AS-HEATER | |
| | 6 | 1 | **295-5440** | 1 | MOTOR | |
| | 7 | 1 | **231-8126** | 1 | VALVE AS | |
| | 8 | 1 | **231-8127** | 1 | GROMMET | |
| C | 9 | 1 | **312-2635** | 1 | COVER GP-ACCESS | |
| | | 1 | **231-8129** | 2 | PIN | |
| | | 1 | **231-8142** | 2 | RETAINER | |
| C | 11 | 1 | **303-6658** | 1 | FILTER ELEMENT-CAB AIR (AIR) | |
| | 13 | 1 | **231-8132** | 1 | FILTER ELEMENT-CAB AIR | |
| | 14 | 1 | **231-8133** | 1 | PANEL | |
| | 15 | 1 | **231-8141** | 1 | GROMMET | |
| | 17 | 1 | **231-8143** | 1 | FILM (TEMPERATURE CONTROL) | |
| | 18 | 1 | **231-8144** | 1 | BAFFLE | |
| | 19 | 1 | **231-8145** | 1 | GROMMET | |
| | 20 | 1 | **206-7398** | 1 | KNOB-CONTROL (TEMPERATURE SELECT) | |
| | 21 | 1 | **305-2969** | 2 | THUMBSCREW | |
| | 22 | 1 | **218-6947** | 1 | HARNESS AS-HEATER & AIR COND | |
| | 23 | 1 | **236-5067** | 1 | SWITCH-ROCKER (HEATER) | |
| | 24 | 1 | **236-5069** | 1 | RELAY AS (12-VOLT) (HEATER) | |

C-CHANGE FROM PREVIOUS TYPE
Y-SEPARATE ILLUSTRATION

*218-6393* **HEATER GP-CAB** *(contd.)* **i02839375**

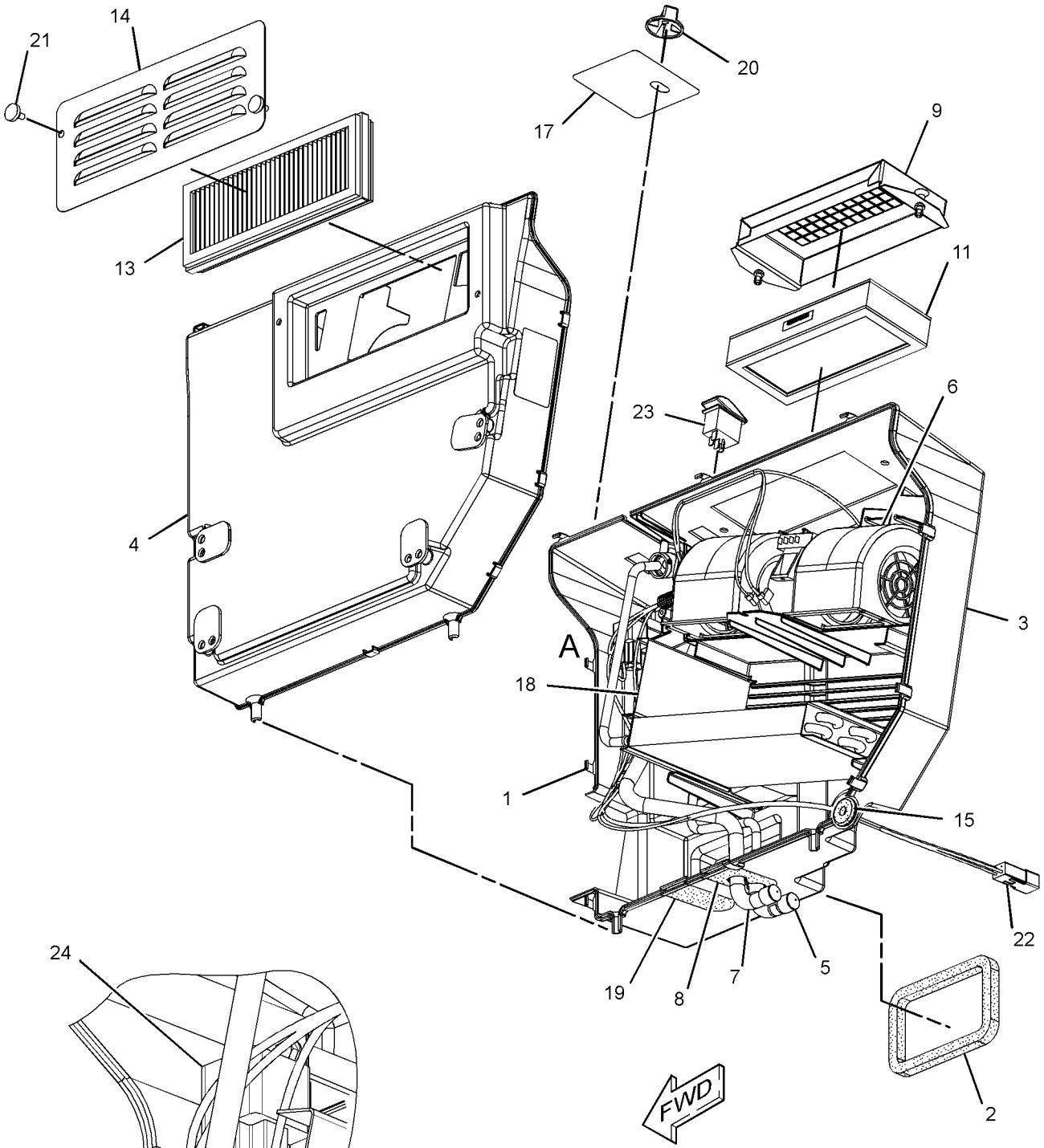


VIEW OF AREA A

GRAPHIC #1 **<END>** g01416774

# OPERATOR STATION

## 218-6746 HEATER GP-CAB—KIT

**S/N: HEN6750-UP**
**AN ATTACHMENT**

**SMCS-7304, 7342** **i02890258**

| NOTE | PART NUMBER | QTY | PART NAME 1 2 3 4 5 6 (PRODUCT LEVEL) | SEE PAGE |
|---|---|---|---|---|
| Y | *218-6393* | 1 | HEATER GP-CAB | 549 |
| | | | | |
| | **218-6402** | 1 | INSULATION AS | |
| | **146-6371** | 6 | LOUVER AS | |
| | **8F-8151** | 1 | VALVE-SHUTOFF (WATER) | |
| | | | | |
| | **150-7568** | 1 | ADAPTER | |
| M | **7X-2537** | 4 | BOLT (M8X1.25X35-MM) | |
| M | **8T-4137** | 1 | BOLT (M10X1.5X20-MM) | |
| M | **8T-4189** | 1 | BOLT (M8X1.25X20-MM) | |
| M | **8T-4191** | 1 | BOLT (M10X1.5X16-MM) | |
| M | **8T-4200** | 1 | BOLT (M8X1.25X16-MM) | |
| M | **8T-6869** | 4 | BOLT (M8X1.25X60-MM) | |
| | **8T-0154** | 4 | CLAMP-HOSE | |
| | **6D-4636** | 2 | CLIP | |
| | **3S-8665** | 1 | CLIP | |
| | **6D-1641** | 2 | CLIP | |
| | **6V-2235** | 1 | CLIP | |
| | **9X-8250** | 4 | CLIP | |
| | **218-6398** | 1 | CONSOLE (LH) | |
| | **218-6397** | 1 | CONSOLE (RH) | |
| | **218-6396** | 1 | DUCT (CROSSOVER) | |
| | **004-6810** | 1 | ELBOW | |
| | **218-6645** | 1 | ELBOW | |
| | **250-1493** | 1 | ELBOW | |
| E | **206-2724** | | GUARD (110-CM) | |
| E | **136-1953** | | HOSE (387-CM) | |
| | **176-4079** | 1 | INSULATION | |
| | **285-9133** | 1 | INSULATION | |
| | **285-8570** | 1 | INSULATION | |
| | **285-8565** | 1 | INSULATION | |
| M | **8T-4133** | 2 | NUT (M10X1.5-THD) | |
| M | **175-0005** | 8 | SCREW-BUTTON HEAD (M6X1X25-MM) | |
| | **6V-6689** | 2 | SCREW-SELF-TAPPING (10-16X.625-IN) | |
| | **240-6879** | 2 | SEAL | |
| | **240-6878** | 1 | SEAL | |
| | **240-6877** | 1 | SEAL | |
| | **218-6414** | 1 | SEAL | |
| | **218-6401** | 1 | SEAL | |
| D | **8T-5372** | | SEAL (0.4-M) | |
| | **178-3620** | 2 | STRAP-DUAL CLAMP (DUAL CLAMP) | |
| | **5P-4116** | 1 | WASHER-HARD (8.8X20.5X2-MM THK) | |
| | **8T-4121** | 5 | WASHER-HARD (11X21X2.5-MM THK) | |
| | **8T-4224** | 5 | WASHER-HARD (8.8X16X2-MM THK) | |

D-ORDER BY THE METER
E-ORDER BY THE CENTIMETER
M-METRIC PART
Y-SEPARATE ILLUSTRATION

**<END>**

# OPERATOR STATION

## *245-6811* HOLDER-CUP

**S/N: HEN6750-UP**

**AN ATTACHMENT**

**SMCS-731C** **i02825213**

| NOTE | REF NO | GRAPHIC REF | PART NUMBER | QTY | PART NAME 1 2 3 4 5 6 (PRODUCT LEVEL) | SEE PAGE |
|---|---|---|---|---|---|---|
| | | | | | (NO SERVICED PARTS) | |

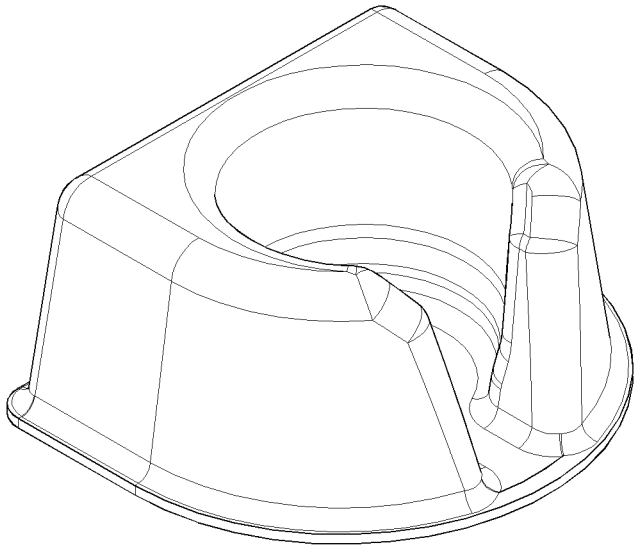

GRAPHIC #1 **<END>** g01409609

# 231-8122 HOUSING AS-SIDE—AIR CONDITIONER, HEATER

**S/N: HEN6750-UP**

**PART OF 218-6405 AIR CONDITIONER GP, 218-6393 HEATER GP-CAB**

**AN ATTACHMENT**

**SMCS-7320** **i02014573**

| NOTE | REF NO | GRAPHIC REF | PART NUMBER | QTY | PART NAME 1 2 3 4 5 6 (PRODUCT LEVEL) | SEE PAGE |
|---|---|---|---|---|---|---|
| | 1 | 1 | **233-5929** | 2 | LOCKWASHER | |
| | 2 | 1 | **233-5931** | 4 | LOCKWASHER | |
| M | 3 | 1 | **131-3540** | 4 | LOCKNUT (M8X1.25 THD) | |
| | 4 | 1 | **233-5934** | 4 | MOUNT | |
| M | 5 | 1 | **129-3178** | 2 | LOCKNUT (M6X1 THD) | |

M-METRIC PART

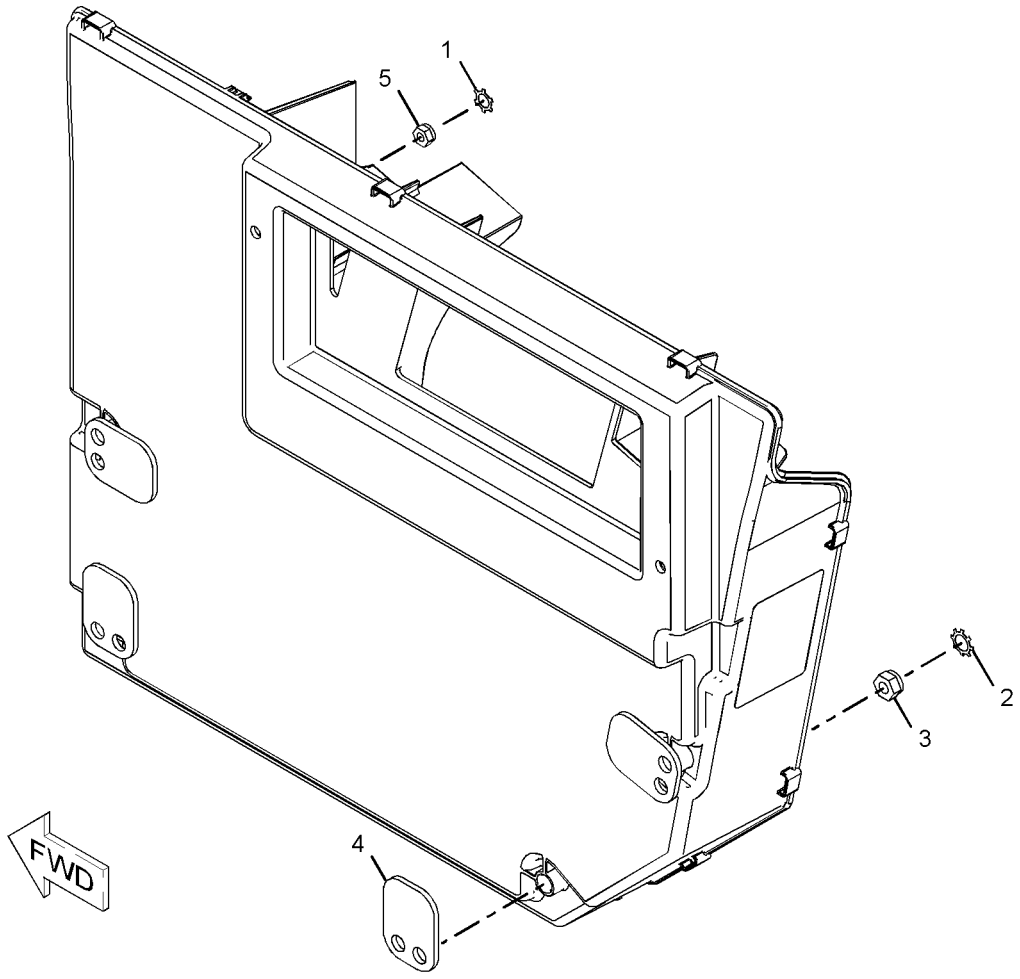


GRAPHIC #1 **<END>** g01041727

# OPERATOR STATION

## *218-5850* INSTALLATION GP—WITHOUT HEATER, AIR COND

**S/N: HEN6750-UP**
**PART OF 295-7302, 295-7312 OPTION AR-CAB**
**AN ATTACHMENT**

**SMCS-5057, 5258** **i01989069**

| NOTE | PART NUMBER | QTY | PART NAME 1 2 3 4 5 6 (PRODUCT LEVEL) | SEE PAGE |
|---|---|---|---|---|
| Y | *218-6418* | 1 | COVER GP-CONSOLE | 523 |
| Y | *218-6419* | 1 | COVER GP-CONSOLE | 524 |
| Y | *218-5630* | 1 | LINES GP-HYDRAULIC FAN | 286 |
| Y-SEPARATE ILLUSTRATION | | | | |

**<END>**

## 218-6747 KIT-AIR COND & HEATER INSTL

**S/N: HEN6750-UP**
**AN ATTACHMENT**

**SMCS-1405, 1802, 1805, 1808, 7174, 7304, 7320, 734D** **i02940677**

| NOTE | PART NUMBER | QTY | PART NAME 1 2 3 4 5 6 (PRODUCT LEVEL) | SEE PAGE |
|---|---|---|---|---|
| Y | **218-6840** | 1 | MOTOR GP-GEAR (REFRIGERANT COMPRESSOR) | 323 |
| | | | —OR— | |
| Y | **289-6360** | 1 | MOTOR GP-GEAR | 325 |
| Y | **186-6190** | 1 | ACCUMULATOR GP-REFRIGERANT (WITH DESICCANT) | 465 |
| Y | *218-6405* | 1 | AIR CONDITIONER GP | 468 |
| | | | | |
| | **218-6833** | 1 | COMPRESSOR GP-REFRIGERANT | |
| | **218-6836** | 1 | COUPLING GP-DRIVE | |
| | **218-6837** | 1 | COUPLING | |
| | **218-6838** | 1 | HUB (COMPRESSOR) | |
| | **276-4063** | 1 | HUB (MOTOR) | |
| | **283-9566** | 1 | VALVE GP-SOLENOID (12 VDC) | |
| | | | | |
| | **9G-5127** | 1 | BREATHER (AIR CONDITIONER COMPRESSOR) | |
| | **252-0348** | 1 | COIL AS | |
| | *148-8316* | 1 | CONNECTOR AS | |
| | **6V-8647** | 1 | CONNECTOR | |
| | **3J-7354** | 1 | SEAL-O-RING | |
| | **4J-5477** | 1 | SEAL-O-RING | |
| | *148-8315* | 2 | CONNECTOR AS | |
| | | | (EACH INCLUDES) | |
| | **6V-8642** | 1 | CONNECTOR | |
| | **2M-9780** | 1 | SEAL-O-RING | |
| | **7J-9108** | 1 | SEAL-O-RING | |
| | **218-6250** | 2 | FAN AS | |
| | **234-0566** | 1 | FITTING AS | |
| | **3E-4051** | 1 | CAP-SEAL | |
| | **3E-4057** | 1 | VALVE AS | |
| | **242-7389** | 1 | HARNESS AS-CHASSIS (TRANSMISSION) | |
| | **202-2168** | 1 | HARNESS AS-FUEL TANK | |
| | **221-3879** | 1 | HARNESS AS-HEATER & AIR COND | |
| I | **218-6876** | 1 | HOSE AS | |
| I | **233-5666** | 1 | HOSE AS | |
| I | **218-5685** | 1 | HOSE AS | |
| I | **218-5686** | 1 | HOSE AS | |
| | **233-5814** | 1 | HOSE AS | |
| I | **252-0358** | 1 | HOSE AS | |
| | **218-6402** | 1 | INSULATION AS | |
| | **146-6371** | 6 | LOUVER AS | |
| | **218-6060** | 1 | SHROUD AS | |

## 218-6747 KIT-AIR COND & HEATER INSTL *(contd.)* i02940677

| NOTE | PART NUMBER | QTY | PART NAME 1 2 3 4 5 6 (PRODUCT LEVEL) | SEE PAGE |
|---|---|---|---|---|
| | **236-6923** | 1 | SWITCH AS-PRESSURE (REFRIGERANT) | |
| | | | | |
| M | **8T-4136** | 3 | BOLT (M10X1.5X25-MM) | |
| M | **8T-4137** | 1 | BOLT (M10X1.5X20-MM) | |
| M | **8T-4189** | 15 | BOLT (M8X1.25X20-MM) | |
| M | **8T-4191** | 2 | BOLT (M10X1.5X16-MM) | |
| M | **8T-4908** | 3 | BOLT (M8X1.25X25-MM) | |
| M | **8T-6869** | 4 | BOLT (M8X1.25X60-MM) | |
| M | **8T-6870** | 2 | BOLT (M8X1.25X70-MM) | |
| M | **085-8091** | 2 | BOLT (M10X1.5X55-MM) | |
| M | **9X-6032** | 2 | BOLT-SOCKET HEAD (M10X1.5X30-MM) | |
| | **8T-0154** | 4 | CLAMP-HOSE | |
| | **7D-7233** | 1 | CLIP | |
| | **6D-1641** | 2 | CLIP | |
| | **6V-2235** | 1 | CLIP | |
| | **9X-8250** | 4 | CLIP | |
| | **101-8296** | 2 | CLIP | |
| | **116-5763** | 3 | CLIP-SPRING | |
| | **218-6397** | 1 | CONSOLE (RH) | |
| | **218-6398** | 1 | CONSOLE (LH) | |
| | **124-2135** | 1 | COUPLING-PERMANENT | |
| | **124-2150** | 2 | COUPLING-PERMANENT | |
| | **218-6396** | 1 | DUCT | |
| | **004-6810** | 1 | ELBOW | |
| | **218-6645** | 1 | ELBOW | |
| | **124-3548** | 1 | FUSE (30-AMPERE) | |
| | **2D-5248** | 1 | GASKET | |
| E | **136-1953** | | HOSE (387-CM) | |
| E | **122-6871** | | HOSE-HYDRAULIC (41-IN) | |
| | **233-5590** | 1 | HOUSING-SUPPORT | |
| | **218-6437** | 1 | INSULATION | |
| | **285-8565** | 1 | INSULATION | |
| | **285-8570** | 1 | INSULATION | |
| | **285-9133** | 1 | INSULATION | |
| | **200-6345** | 1 | MOUNT (DUAL SWIVEL) | |
| M | **5C-7261** | 16 | NUT (M8X1.25-THD) | |
| M | **8T-4133** | 6 | NUT (M10X1.5-THD) | |
| | **246-9039** | 1 | PLATE-INFORMATION (AIR CONDITIONER REFRIGERANT) | |
| | **6V-6689** | 2 | SCREW-SELF-TAPPING (10-16X.625-IN) | |
| D | **5P-5924** | | SEAL (0.2-M) | |
| D | **8T-5372** | | SEAL (0.4-M) | |
| | **218-6401** | 1 | SEAL | |
| | **218-6414** | 1 | SEAL | |
| | **230-9696** | 1 | SEAL | |
| | **240-6877** | 1 | SEAL | |
| | **240-6878** | 1 | SEAL | |
| | **240-6879** | 2 | SEAL | |
| | **9X-7378** | 1 | SEAL-O-RING | |
| | **9X-7380** | 1 | SEAL-O-RING | |
| | **9X-7381** | 3 | SEAL-O-RING | |
| | **9X-7382** | 2 | SEAL-O-RING | |
| | **9X-7383** | 3 | SEAL-O-RING | |
| M | **233-1012** | 1 | SETSCREW-HEX SOCKET (M5X0.8X8-MM) | |
| | **6B-2882** | 4 | SPACER (0.406X0.75X0.312-IN THK) | |
| | **9C-2741** | 2 | SPACER (13.94X17.14X34-MM THK) | |
| | **9G-7101** | 2 | SPACER (10.5X20X30-MM THK) | |
| | **3S-2093** | 15 | STRAP-CABLE | |
| | **5P-4116** | 6 | WASHER-HARD (8.8X20.5X2-MM THK) | |
| | **8T-4121** | 18 | WASHER-HARD (11X21X2.5-MM THK) | |

**218-6747 KIT-AIR COND & HEATER INSTL** *(contd. )* **i02940677**

| NOTE | PART NUMBER | QTY | PART NAME 1 2 3 4 5 6 (PRODUCT LEVEL) | SEE PAGE |
|---|---|---|---|---|
| | **8T-4224** | 26 | WASHER-HARD (8.8X16X2-MM THK) | |

D-ORDER BY THE METER
E-ORDER BY THE CENTIMETER
I-REFER TO HYDRAULIC INFORMATION SYSTEM
M-METRIC PART
Y-SEPARATE ILLUSTRATION

**<END>**

## 218-6749 KIT-AIR CONDITIONER INSTL

**S/N: HEN6750-UP**
**AN ATTACHMENT**

**SMCS-1405, 1802, 1805, 1808, 7174, 7320, 734D** **i02940904**

| NOTE | PART NUMBER | QTY | PART NAME 1 2 3 4 5 6 (PRODUCT LEVEL) | SEE PAGE |
|---|---|---|---|---|
| Y | **186-6190** | 1 | ACCUMULATOR GP-REFRIGERANT (WITH DESICCANT) | 465 |
| Y | **218-6405** | 1 | AIR CONDITIONER GP | 468 |
| Y | **218-6840** | 1 | MOTOR GP-GEAR (REFRIGERANT COMPRESSOR) | 323 |
| | | | —OR— | |
| Y | **289-6360** | 1 | MOTOR GP-GEAR | 325 |
| | | | | |
| | **218-6833** | 1 | COMPRESSOR GP-REFRIGERANT | |
| | **218-6836** | 1 | COUPLING GP-DRIVE | |
| | **218-6837** | 1 | COUPLING | |
| | **218-6838** | 1 | HUB (COMPRESSOR) | |
| | **276-4063** | 1 | HUB (MOTOR) | |
| | **283-9566** | 1 | VALVE GP-SOLENOID (12 VDC) | |
| | | | | |
| | **252-0348** | 1 | COIL AS | |
| | *148-8316* | 1 | CONNECTOR AS | |
| | **6V-8647** | 1 | CONNECTOR | |
| | **3J-7354** | 1 | SEAL-O-RING | |
| | **4J-5477** | 1 | SEAL-O-RING | |
| | *148-8315* | 2 | CONNECTOR AS | |
| | | | (EACH INCLUDES) | |
| | **6V-8642** | 1 | CONNECTOR | |
| | **2M-9780** | 1 | SEAL-O-RING | |
| | **7J-9108** | 1 | SEAL-O-RING | |
| | **218-6250** | 2 | FAN AS | |
| | **234-0566** | 1 | FITTING AS | |
| | **3E-4051** | 1 | CAP-SEAL | |
| | **3E-4057** | 1 | VALVE AS | |
| | **242-7389** | 1 | HARNESS AS-CHASSIS (TRANSMISSION) | |
| | **202-2168** | 1 | HARNESS AS-FUEL TANK | |
| | **221-3879** | 1 | HARNESS AS-HEATER & AIR COND | |
| I | **218-6876** | 1 | HOSE AS | |
| I | **233-5666** | 1 | HOSE AS | |
| I | **218-5685** | 1 | HOSE AS | |
| I | **218-5686** | 1 | HOSE AS | |
| | **233-5814** | 1 | HOSE AS | |
| I | **252-0358** | 1 | HOSE AS | |
| | **218-6060** | 1 | SHROUD AS | |
| | **236-6923** | 1 | SWITCH AS-PRESSURE (REFRIGERANT) | |
| | **9G-5127** | 1 | BREATHER (AIR CONDITIONER COMPRESSOR) | |
| | | | | |
| M | **8T-4136** | 3 | BOLT (M10X1.5X25-MM) | |
| M | **8T-4189** | 14 | BOLT (M8X1.25X20-MM) | |
| M | **8T-4908** | 3 | BOLT (M8X1.25X25-MM) | |
| M | **8T-6870** | 2 | BOLT (M8X1.25X70-MM) | |

## 218-6749 KIT-AIR CONDITIONER INSTL *(contd. )* i02940904

| NOTE | PART NUMBER | QTY | PART NAME 1 2 3 4 5 6 (PRODUCT LEVEL) | SEE PAGE |
|---|---|---|---|---|
| M | **085-8091** | 2 | BOLT (M10X1.5X55-MM) | |
| M | **9X-6032** | 2 | BOLT-SOCKET HEAD (M10X1.5X30-MM) | |
| | **7D-7233** | 1 | CLIP | |
| | **101-8296** | 2 | CLIP | |
| | **116-5763** | 3 | CLIP-SPRING | |
| | **124-2135** | 1 | COUPLING-PERMANENT | |
| | **124-2150** | 2 | COUPLING-PERMANENT | |
| | **124-3548** | 1 | FUSE (30-AMPERE) | |
| | **2D-5248** | 1 | GASKET | |
| BG | **122-6871** | | HOSE-HYDRAULIC (104-CM) | |
| | **233-5590** | 1 | HOUSING-SUPPORT | |
| | **200-6345** | 1 | MOUNT (DUAL SWIVEL) | |
| M | **5C-7261** | 16 | NUT (M8X1.25-THD) | |
| M | **8T-4133** | 4 | NUT (M10X1.5-THD) | |
| | **246-9039** | 1 | PLATE-INFORMATION (AIR CONDITIONER REFRIGERANT) | |
| M | **233-1012** | 1 | SETSCREW-HEX SOCKET (M5X0.8X8-MM) | |
| D | **5P-5924** | | SEAL (0.3-M) | |
| | **9X-7378** | 1 | SEAL-O-RING | |
| | **9X-7380** | 1 | SEAL-O-RING | |
| | **9X-7381** | 3 | SEAL-O-RING | |
| | **9X-7382** | 2 | SEAL-O-RING | |
| | **9X-7383** | 3 | SEAL-O-RING | |
| | **6B-2882** | 4 | SPACER (0.406X0.75X0.312-IN THK) | |
| | **9C-2741** | 2 | SPACER (13.94X17.14X34-MM THK) | |
| | **9G-7101** | 2 | SPACER (10.5X20X30-MM THK) | |
| | **3S-2093** | 15 | STRAP-CABLE | |
| | **5P-4116** | 5 | WASHER-HARD (8.8X20.5X2-MM THK) | |
| | **8T-4121** | 11 | WASHER-HARD (11X21X2.5-MM THK) | |
| | **8T-4224** | 22 | WASHER-HARD (8.8X16X2-MM THK) | |

B-USE AS REQUIRED
D-ORDER BY THE METER
G-ORDER BY THE INCH
I-REFER TO HYDRAULIC INFORMATION SYSTEM
M-METRIC PART
Y-SEPARATE ILLUSTRATION

**<END>**

# OPERATOR STATION

## *218-6743* KIT-CAB DOOR & MOUNTING—POLYCARBONATE

**S/N: HEN6750-UP**

**CANNOT BE USED WITH 218-6744—PAGE 561**

**AN ATTACHMENT**

**SMCS-7308** **i02772066**

| NOTE | PART NUMBER | QTY | PART NAME 1 2 3 4 5 6 (PRODUCT LEVEL) | SEE PAGE |
|---|---|---|---|---|
| Y | *276-3440* | 1 | DOOR GP-CAB (POLYCARBONATE) | 534 |
| | | | | |
| | **221-3877** | 1 | HARNESS AS-WINDOW WIPER | |
| E | **125-7875** | | TUBE-HEAT SHRINK (7.44-MM DIA) (5-CM) | |
| | **102-8805** | 1 | KIT-RECEPTACLE (6-PIN) | |
| | | | (INCLUDES RECEPTACLE AS & WEDGE) | |
| | **5W-1987** | 2 | TERMINAL | |
| | **123-7615** | 1 | CONNECTOR | |
| | **155-2274** | 1 | KIT-CONNECTING PLUG (6-PIN) | |
| | | | (INCLUDES PLUG AS, WEDGE & INTERFACE SEAL) | |
| | **223-0608** | 1 | HINGE AS | |
| | **280-1575** | 1 | PLATE AS | |
| | **223-0591** | 1 | PLATE AS | |
| | **223-0601** | 2 | PLATE AS | |
| | **153-2683** | 1 | SPRING AS-GAS (LOCKING) | |
| | **230-3214** | 1 | SPRING AS-GAS (CAB DOOR) | |
| | **8T-3848** | 1 | STRIKER AS-LATCH | |
| | **6V-4270** | 1 | LOCKWASHER | |
| | **219-9739** | 1 | TANK AS-WINDOW WASHER | |
| | | | | |
| | **142-9356** | 1 | BLOCK | |
| E | **144-0195** | | HOSE (40-CM) | |
| M | **195-0937** | 8 | INSERT-THREADED (M8X1.25-THD) | |
| | **5P-0372** | 2 | LOCK PIN | |
| | **223-0617** | 1 | MOUNT | |
| M | **5C-2890** | 13 | NUT (M6X1-THD) | |
| M | **8T-4133** | 4 | NUT (M10X1.5-THD) | |
| | **177-3405** | 1 | PIN | |
| | **095-1325** | 1 | PIN-CLEVIS | |
| M | **9X-2041** | 4 | SCREW-TRUSS HEAD (M10X1.5X20-MM) | |
| M | **9X-2044** | 3 | SCREW-TRUSS HEAD (M6X1X16-MM) | |
| M | **9X-2045** | 4 | SCREW-TRUSS HEAD (M6X1X20-MM) | |
| M | **127-2170** | 8 | SCREW-TRUSS HEAD (M8X1.25X20-MM) | |
| D | **5P-8309** | | SEAL (0.72-M) | |
| D | **5P-9909** | | SEAL (0.1-M) | |
| E | **125-3518** | | SEAL (77-CM) | |
| D | **5P-5969** | | SEAL (2.2-M) | |
| | **9C-5344** | 1 | SPACER (10.5X20X18-MM THK) | |
| | **218-0728** | 2 | SPRING | |
| | **3S-2093** | 3 | STRAP-CABLE | |
| | **8T-2444** | 2 | STUD-BALL | |
| | **8T-4121** | 4 | WASHER-HARD (11X21X2.5-MM THK) | |
| | **8T-4205** | 13 | WASHER-HARD (7.2X14.5X2-MM THK) | |
| | **8T-4224** | 2 | WASHER-HARD (8.8X16X2-MM THK) | |
| | **8T-4222** | 1 | WASHER-PLATED (11X32X2.5-MM THK) | |

D-ORDER BY THE METER
E-ORDER BY THE CENTIMETER
M-METRIC PART
Y-SEPARATE ILLUSTRATION

**<END>**

# OPERATOR STATION

## 218-6744 KIT-CAB DOOR & MOUNTING—GLASS

**S/N: HEN6750-UP**

**CANNOT BE USED WITH 218-6743—PAGE 560**

**AN ATTACHMENT**

**SMCS-7308** **i02772068**

| NOTE | PART NUMBER | QTY | PART NAME 1 2 3 4 5 6 (PRODUCT LEVEL) | SEE PAGE |
|---|---|---|---|---|
| Y | *223-0616* | 1 | DOOR GP-CAB (GLASS) | 532 |
| | | | | |
| | **221-3877** | 1 | HARNESS AS-WINDOW WIPER | |
| | **102-8805** | 1 | KIT-RECEPTACLE (6-PIN) | |
| | | | (INCLUDES RECEPTACLE AS & WEDGE) | |
| | **5W-1987** | 2 | TERMINAL | |
| | **123-7615** | 1 | CONNECTOR | |
| E | **125-7875** | | TUBE-HEAT SHRINK (7.44-MM DIA) (5-CM) | |
| | **155-2274** | 1 | KIT-CONNECTING PLUG (6-PIN) | |
| | | | (INCLUDES PLUG AS, WEDGE & INTERFACE SEAL) | |
| | **223-0608** | 1 | HINGE AS | |
| | **223-0591** | 1 | PLATE AS | |
| | **223-0601** | 2 | PLATE AS | |
| C | **280-1575** | 1 | PLATE AS | |
| | **153-2683** | 1 | SPRING AS-GAS (LOCKING) | |
| | **230-3214** | 1 | SPRING AS-GAS (CAB DOOR) | |
| | **8T-3848** | 1 | STRIKER AS-LATCH | |
| | **6V-4270** | 1 | LOCKWASHER | |
| | **219-9739** | 1 | TANK AS-WINDOW WASHER | |
| | | | | |
| | **142-9356** | 1 | BLOCK | |
| E | **144-0195** | | HOSE (40-CM) | |
| CM | **195-0937** | 8 | INSERT-THREADED (M8X1.25-THD) | |
| | **5P-0372** | 2 | LOCK PIN | |
| | **223-0617** | 1 | MOUNT | |
| M | **5C-2890** | 13 | NUT (M6X1-THD) | |
| M | **8T-4133** | 4 | NUT (M10X1.5-THD) | |
| | **177-3405** | 1 | PIN | |
| | **095-1325** | 1 | PIN-CLEVIS | |
| M | **9X-2041** | 4 | SCREW-TRUSS HEAD (M10X1.5X20-MM) | |
| M | **9X-2044** | 3 | SCREW-TRUSS HEAD (M6X1X16-MM) | |
| M | **9X-2045** | 4 | SCREW-TRUSS HEAD (M6X1X20-MM) | |
| M | **127-2170** | 8 | SCREW-TRUSS HEAD (M8X1.25X20-MM) | |
| D | **5P-8309** | | SEAL (0.72-M) | |
| D | **5P-9909** | | SEAL (0.1-M) | |
| E | **125-3518** | | SEAL (77-CM) | |
| CD | **5P-5969** | | SEAL (2.2-M) | |
| | **9C-5344** | 1 | SPACER (10.5X20X18-MM THK) | |
| | **218-0728** | 2 | SPRING | |
| | **3S-2093** | 3 | STRAP-CABLE | |
| | **8T-2444** | 2 | STUD-BALL | |
| | **8T-4121** | 4 | WASHER-HARD (11X21X2.5-MM THK) | |
| | **8T-4205** | 13 | WASHER-HARD (7.2X14.5X2-MM THK) | |
| | **8T-4224** | 2 | WASHER-HARD (8.8X16X2-MM THK) | |
| | **8T-4222** | 1 | WASHER-PLATED (11X32X2.5-MM THK) | |

C-CHANGE FROM PREVIOUS TYPE
D-ORDER BY THE METER
E-ORDER BY THE CENTIMETER
M-METRIC PART
Y-SEPARATE ILLUSTRATION

**<END>**

# OPERATOR STATION

## 218-6748 KIT-CAB SEAL—DEBRIS BARRIER

**S/N: HEN6750-UP**

**AN ATTACHMENT**

**SMCS-7301** **i02513699**

| NOTE | PART NUMBER | QTY | PART NAME 1 2 3 4 5 6 (PRODUCT LEVEL) | SEE PAGE |
|---|---|---|---|---|
| | **218-6036** | 1 | BRACKET AS (LH) | |
| | **218-6037** | 1 | BRACKET AS (RH) | |
| | **187-3211** | 1 | PLATE AS | |
| M | **8T-3612** | 2 | NUT-WELD (M8X1.25-THD) | |
| | | | | |
| M | **7X-2537** | 2 | BOLT (M8X1.25X35-MM) | |
| | **189-4523** | 2 | BOSS | |
| | **187-3212** | 1 | PLATE | |
| | **287-6603** | 2 | PLUG-BUTTON | |
| | **3T-7856** | 2 | PLUG-BUTTON | |
| | **288-5767** | 8 | PLUG-BUTTON | |
| E | **124-3243** | | SEAL (98-CM) | |
| | **284-3743** | 2 | SEAL-RUBBER | |
| | **284-3744** | 1 | SEAL-RUBBER | |
| | **8T-4224** | 2 | WASHER-HARD (8.8X16X2-MM THK) | |

E-ORDER BY THE CENTIMETER
M-METRIC PART

**<END>**

# OPERATOR STATION

## 234-0774 LEVER GP-GOVERNOR

**S/N: HEN6750-UP**

**PART OF 218-5565 PEDAL GP-GOVERNOR**

**SMCS-1265, 1276** **i01910964**

| NOTE | REF NO | GRAPHIC REF | PART NUMBER | QTY | PART NAME 1 2 3 4 5 6 (PRODUCT LEVEL) | SEE PAGE |
|---|---|---|---|---|---|---|
| | 1 | 1 | **192-2663** | 1 | LEVER GP-GOVERNOR | |
| M | | 1 | **8T-4971** | 1 | BOLT (M6X1X30-MM) | |
| M | | 1 | **129-3178** | 1 | LOCKNUT (M6X1-THD) | |
| | 2 | 1 | **234-0732** | 1 | CABLE AS | |
| | 3 | 1 | **8T-4742** | 1 | END-YOKE ROD | |
| | 4 | 1 | **8T-4744** | 1 | PIN AS-SPRING | |
| M | 5 | 1 | **5C-2890** | 1 | NUT (M6X1-THD) | |
| M | 6 | 1 | **8T-4971** | 1 | BOLT (M6X1X30-MM) | |
| M | 7 | 1 | **129-3178** | 1 | LOCKNUT (M6X1-THD) | |

M-METRIC PART

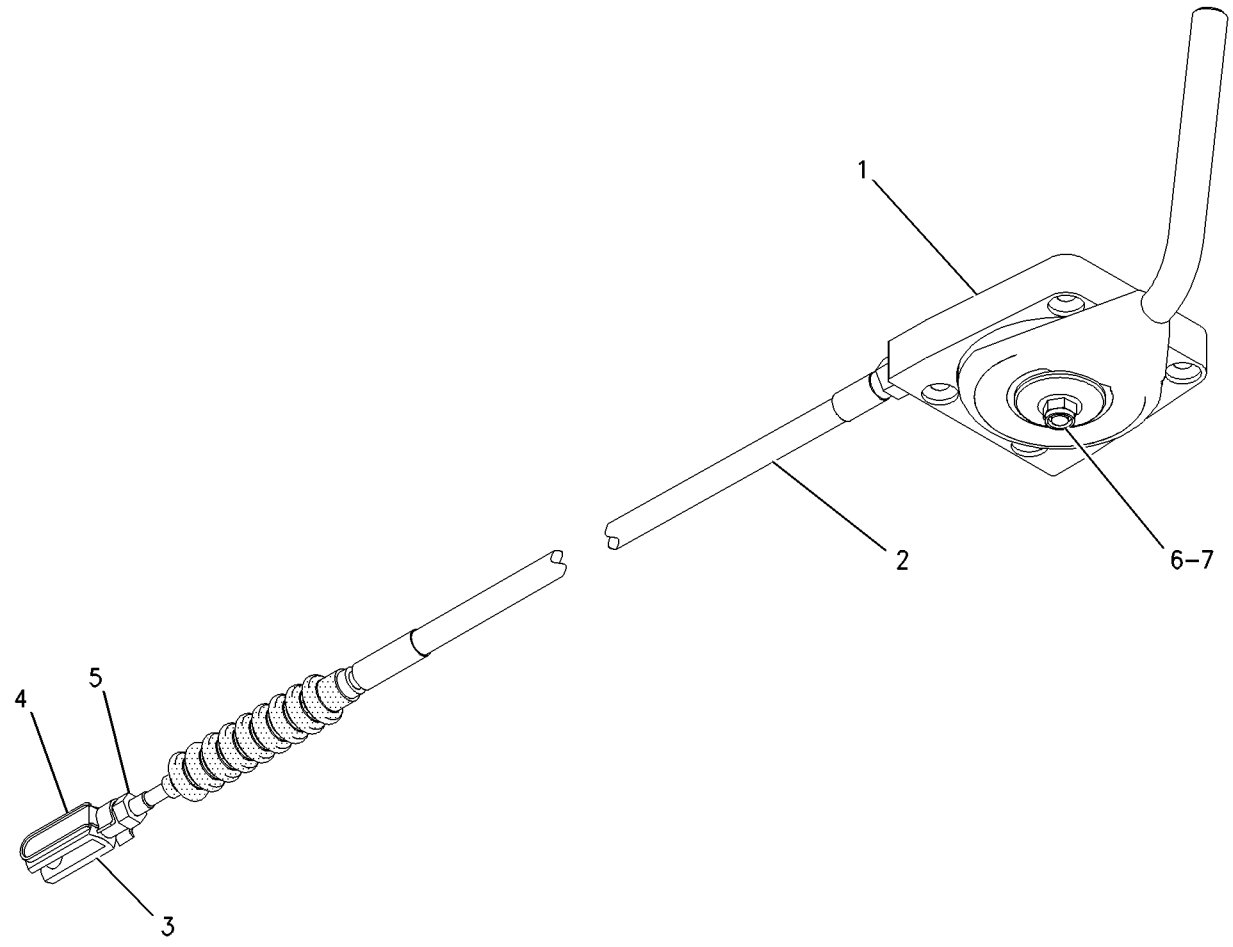


GRAPHIC #1 **<END>** g00995803

# OPERATOR STATION

## *218-6356* LINER GP-CAB

**S/N: HEN6750-UP**

**PART OF 218-6350 CAB AR-ENCLOSED ROPS**

**SMCS-7268, 7329** **i02634183**

| NOTE | REF NO | GRAPHIC REF | PART NUMBER | QTY | PART NAME 1 2 3 4 5 6 (PRODUCT LEVEL) | SEE PAGE |
|---|---|---|---|---|---|---|
| E | 1 | 1 | **9X-2092** | | STRIP-EDGE (113CM) | |
| | 2 | 1 | **218-6357** | 1 | INSULATION | |
| | 3 | 1 | **218-6359** | 1 | LINER-REAR WALL | |
| | 4 | 1 | **218-6436** | 1 | INSULATION | |
| | 5 | 1 | **292-3114** | 2 | SEAL | |

E-ORDER BY THE CENTIMETER

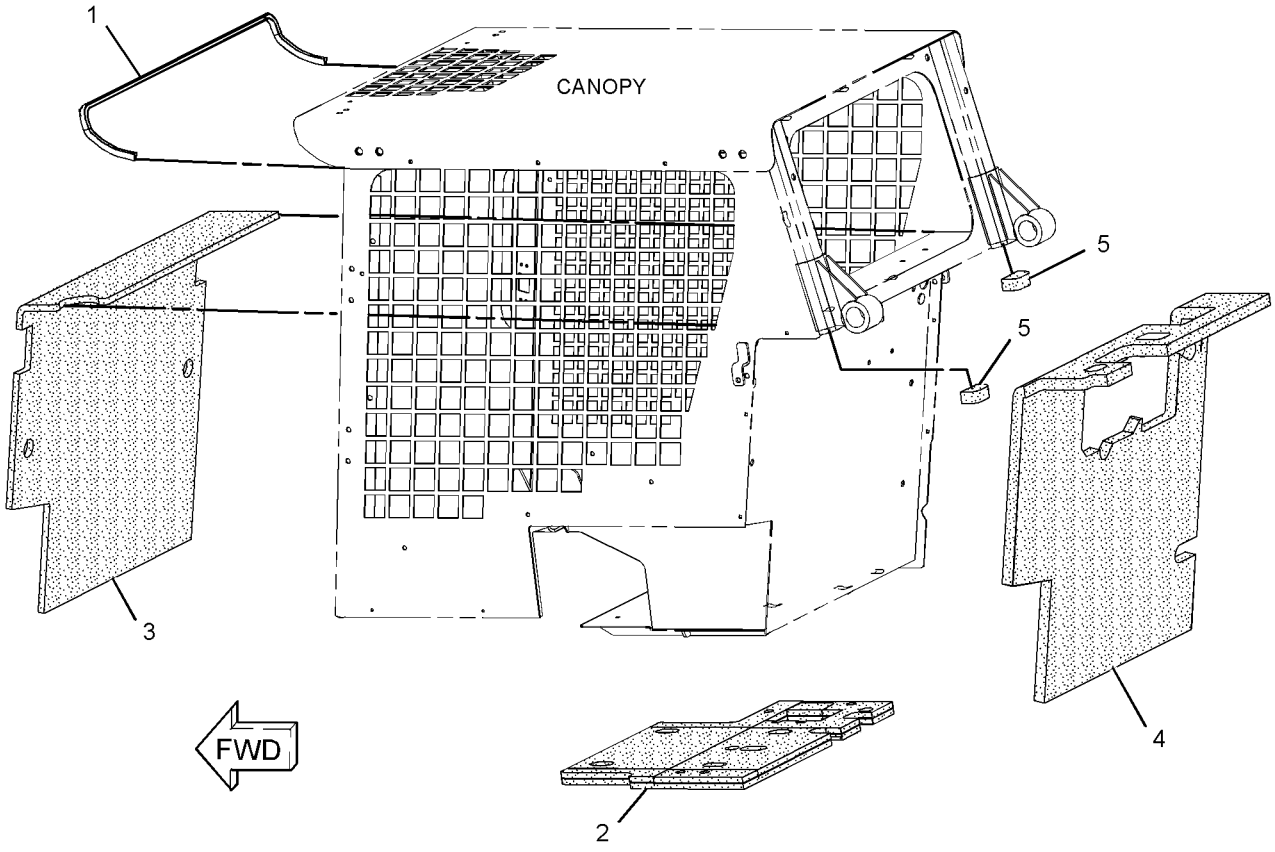


GRAPHIC #1 **<END>** g01352204

# OPERATOR STATION

## *142-9311* LINER-CAB

**S/N: HEN6750-UP**

**AN ATTACHMENT**

**SMCS-7329** **i02016735**

| NOTE | REF NO | GRAPHIC REF | PART NUMBER | QTY | PART NAME 1 2 3 4 5 6 (PRODUCT LEVEL) | SEE PAGE |
|---|---|---|---|---|---|---|
| | | | | | (NO SERVICED PARTS) | |

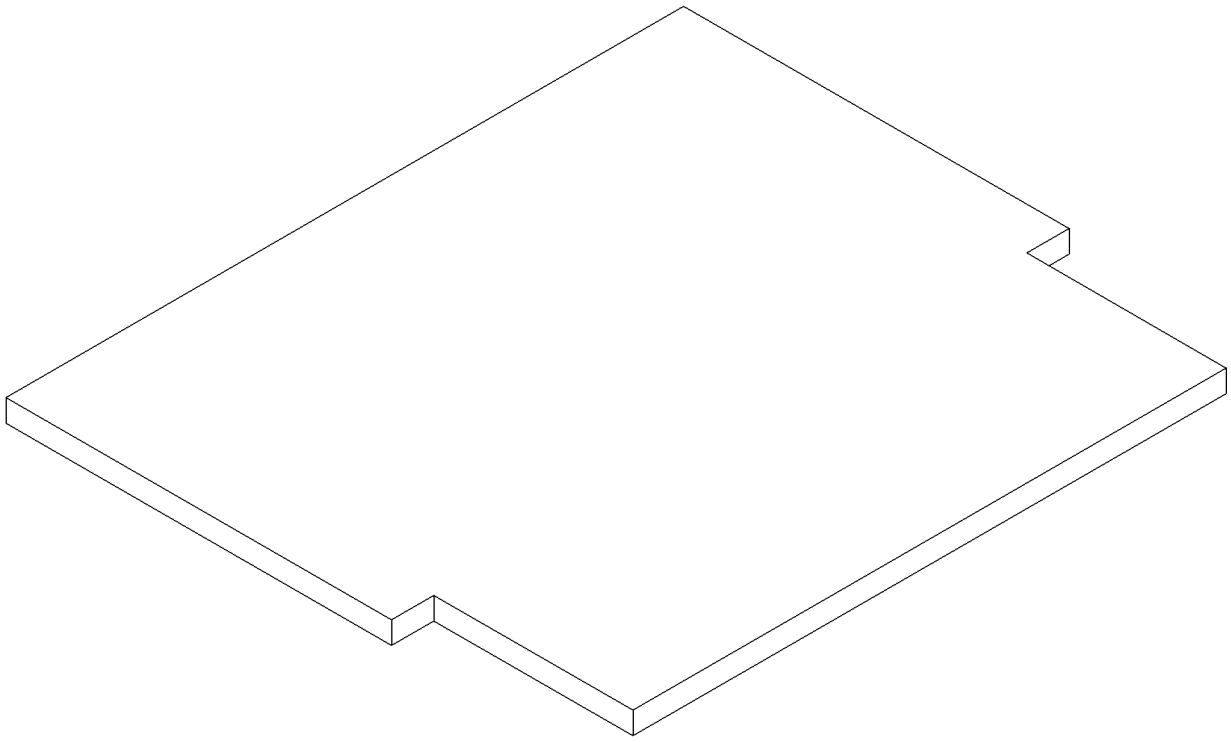

GRAPHIC #1 **<END>** g00782727

# OPERATOR STATION

## *218-5680* LINES GP-AIR CONDITIONER

**S/N: HEN6750-UP**

**PART OF 218-6050 AIR CONDITIONER AR**

**AN ATTACHMENT**

**SMCS-1808, 7320** **i02772070**

| NOTE | REF NO | GRAPHIC REF | PART NUMBER | QTY | PART NAME 1 2 3 4 5 6 (PRODUCT LEVEL) | SEE PAGE |
|---|---|---|---|---|---|---|
| | 1 | 1 | **3S-2093** | 3 | STRAP-CABLE | |
| | 2 | 1 | **200-6345** | 1 | MOUNT (DUAL SWIVEL) | |
| I | 3 | 1 | **218-5685** | 1 | HOSE AS | |
| I | 4 | 1 | **218-5686** | 1 | HOSE AS | |
| CI | 5 | 1 | **252-0358** | 1 | HOSE AS | |
| | 6 | 1 | **236-6923** | 1 | SWITCH AS-PRESSURE (AIR CONDITIONER) | |
| M | 7 | 1 | **085-8091** | 2 | BOLT (M10X1.5X55-MM) | |
| | 8 | 1 | **101-8296** | 2 | CLIP | |
| Y | 9 | 1 | *186-6190* | 1 | ACCUMULATOR GP-REFRIGERANT (WITH DESICCANT) | 465 |
| | 10 | 1 | **233-5814** | 1 | HOSE AS | |
| | 11 | 1 | *234-0566* | 1 | FITTING AS | |
| | | 1 | **3E-4051** | 1 | CAP-SEAL | |
| | | 1 | **3E-4057** | 1 | VALVE AS | |
| | 12 | 1 | **246-9039** | 1 | PLATE-INFORMATION (AIR CONDITIONER REFRIGERANT) | |
| | 13 | 1 | **8T-4121** | 2 | WASHER-HARD (11X21X2.5-MM THK) | |
| | 14 | 1 | **9C-2741** | 2 | SPACER (13.94X17.14X34-MM THK) | |
| | 15 | 1 | **9X-7378** | 1 | SEAL-O-RING | |
| | 16 | 1 | **9X-7380** | 1 | SEAL-O-RING | |
| | 17 | 1 | **9X-7381** | 3 | SEAL-O-RING | |
| | 18 | 1 | **9X-7382** | 2 | SEAL-O-RING | |
| | 19 | 1 | **9X-7383** | 3 | SEAL-O-RING | |
| D | 20 | 1 | **5P-5924** | | SEAL (0.15M) | |

C-CHANGE FROM PREVIOUS TYPE
D-ORDER BY THE METER
I-REFER TO HYDRAULIC INFORMATION SYSTEM
M-METRIC PART
Y-SEPARATE ILLUSTRATION

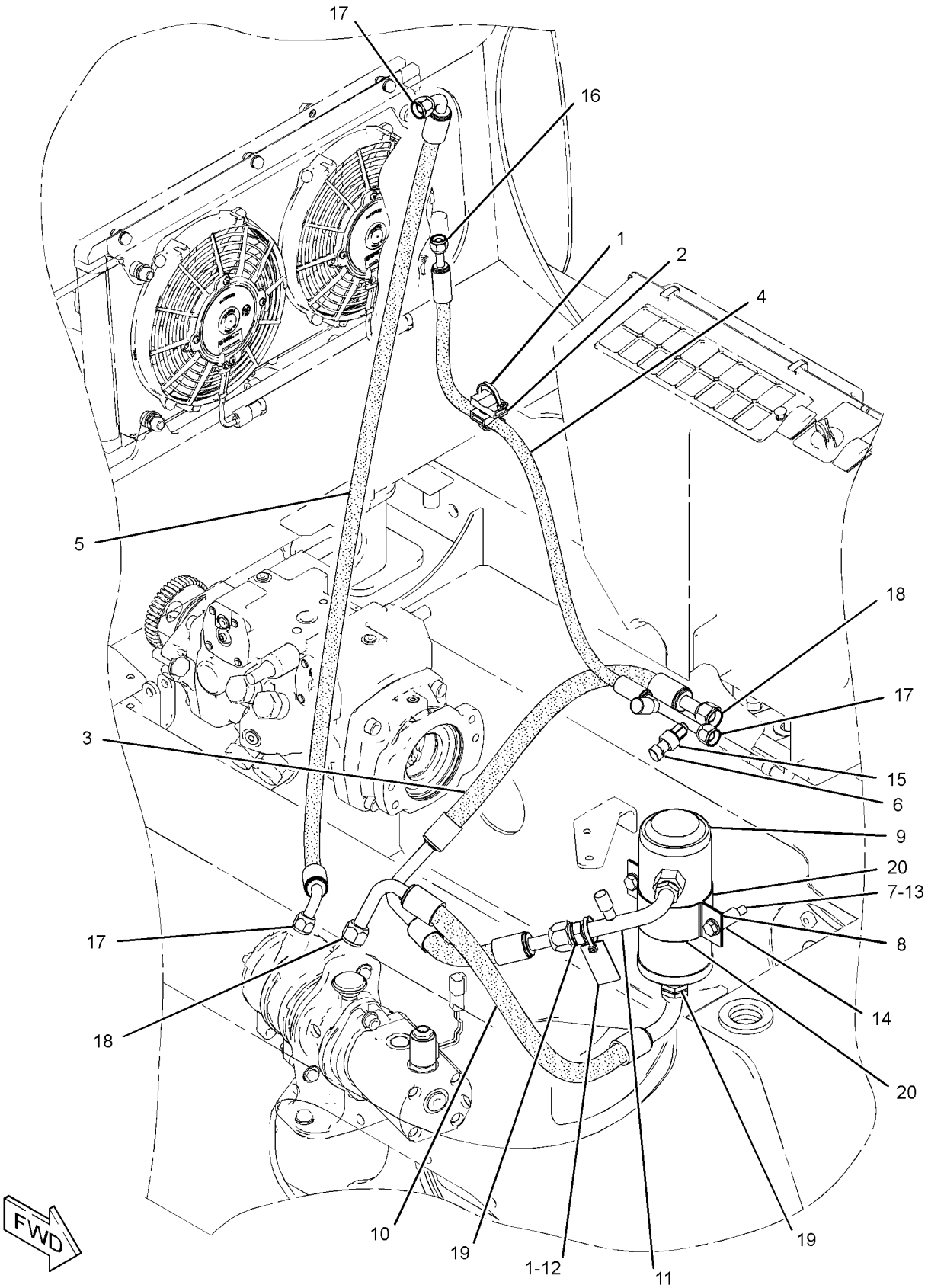


GRAPHIC #1 **<END>** g01163289

# OPERATOR STATION

## *218-5619* LINES GP-HEATER

**S/N: HEN6750-UP**

**PART OF 218-6050 AIR CONDITIONER AR, 218-5950 HEATER AR-CAB AN ATTACHMENT**

**SMCS-1812, 7304** **i02738484**

| NOTE | REF NO | GRAPHIC REF | PART NUMBER | QTY | PART NAME 1 2 3 4 5 6 (PRODUCT LEVEL) | SEE PAGE |
|---|---|---|---|---|---|---|
| | 1 | 1 | **8T-0154** | 4 | CLAMP-HOSE | |
| | 2 | 1 | **004-6810** | 1 | ELBOW | |
| | 3 | 1 | **218-6645** | 1 | ELBOW | |
| | 4 | 1 | **5P-4116** | 1 | WASHER-HARD (8.8X20.5X2-MM THK) | |
| | 5 | 1 | **6D-1641** | 2 | CLIP | |
| | 6 | 1 | **6V-2235** | 1 | CLIP | |
| | 7 | 1 | **8T-4121** | 5 | WASHER-HARD (11X21X2.5-MM THK) | |
| M | 8 | 1 | **8T-4133** | 2 | NUT (M10X1.5-THD) | |
| M | 9 | 1 | **8T-4195** | 1 | BOLT (M10X1.5X30-MM) | |
| M | 10 | 1 | **8T-4908** | 1 | BOLT (M8X1.25X25-MM) | |
| M | 11 | 1 | **8T-4191** | 1 | BOLT (M10X1.5X16-MM) | |
| | 12 | 1 | **9X-8250** | 4 | CLIP | |
| E | 13 | 1 | **136-1953** | | HOSE | |
| | | | | | (FOR MODELS 236, 246, & 248 CUT TO 160-CM) | |
| | | | | | (FOR MODELS 252, 262, 267, 268, 277, & 287 CUT TO 170-CM) | |
| E | 14 | 1 | **136-1953** | | HOSE | |
| | | | | | (FOR MODELS 236, 246, & 248 CUT TO 212-CM) | |
| | | | | | (FOR MODELS 252, 262, 267, 268, 277, & 287 CUT TO 217-CM) | |

E-ORDER BY THE CENTIMETER
M-METRIC PART

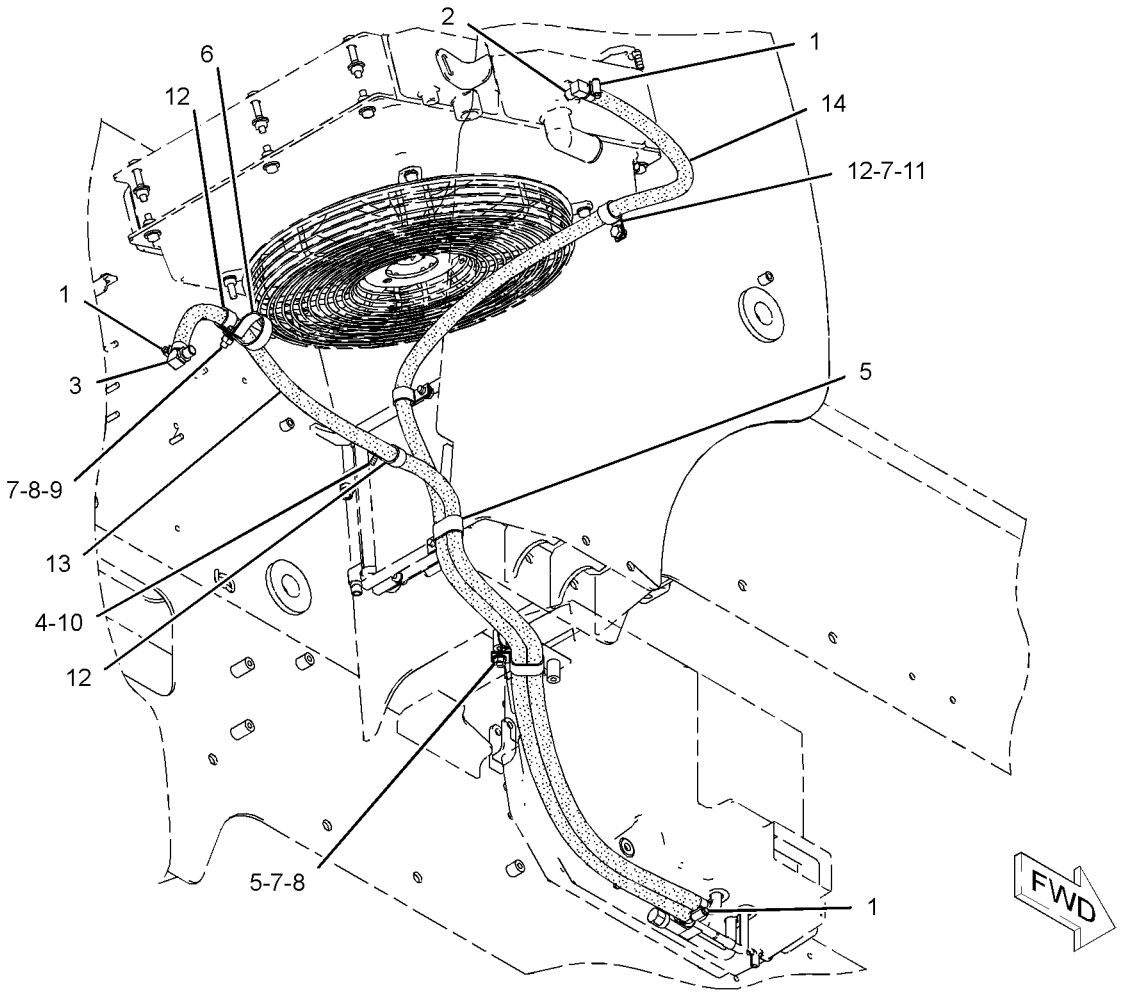


GRAPHIC #1 **<END>** g01375906

# OPERATOR STATION

## *6V-1970* LITERATURE GP

**S/N: HEN6750-UP**

**PART OF 295-7236, 295-7237 COMMON AR**

**SMCS-0374, 0375, 7300** **i02831417**

| NOTE | PART NUMBER | QTY | PART NAME 1 2 3 4 5 6 (PRODUCT LEVEL) | SEE PAGE |
|---|---|---|---|---|
| | **5P-8500** | 2 | KEY (LITERATURE COMPARTMENT) | |
| | **5P-7958** | 1 | SLEEVE-CABLE SPLICE | |

**<END>**

# OPERATOR STATION

## *218-6395* MIRROR GP-REAR VIEW

**S/N: HEN6750-UP**

**PART OF 218-6350 CAB AR-ENCLOSED ROPS**

**SMCS-7319** **i02007402**

| NOTE | REF NO | GRAPHIC REF | PART NUMBER | QTY | PART NAME 1 2 3 4 5 6 (PRODUCT LEVEL) | SEE PAGE |
|---|---|---|---|---|---|---|
| | 1 | 1 | **218-6384** | 1 | MIRROR AS | |
| | 2 | 1 | **3B-4505** | 1 | LOCKWASHER | |
| M | 3 | 1 | **5C-7261** | 1 | NUT (M8X1.25-THD) | |
| | 4 | 1 | **8T-4224** | | WASHER-HARD (8.8X16X2-MM THK) | |

M-METRIC PART

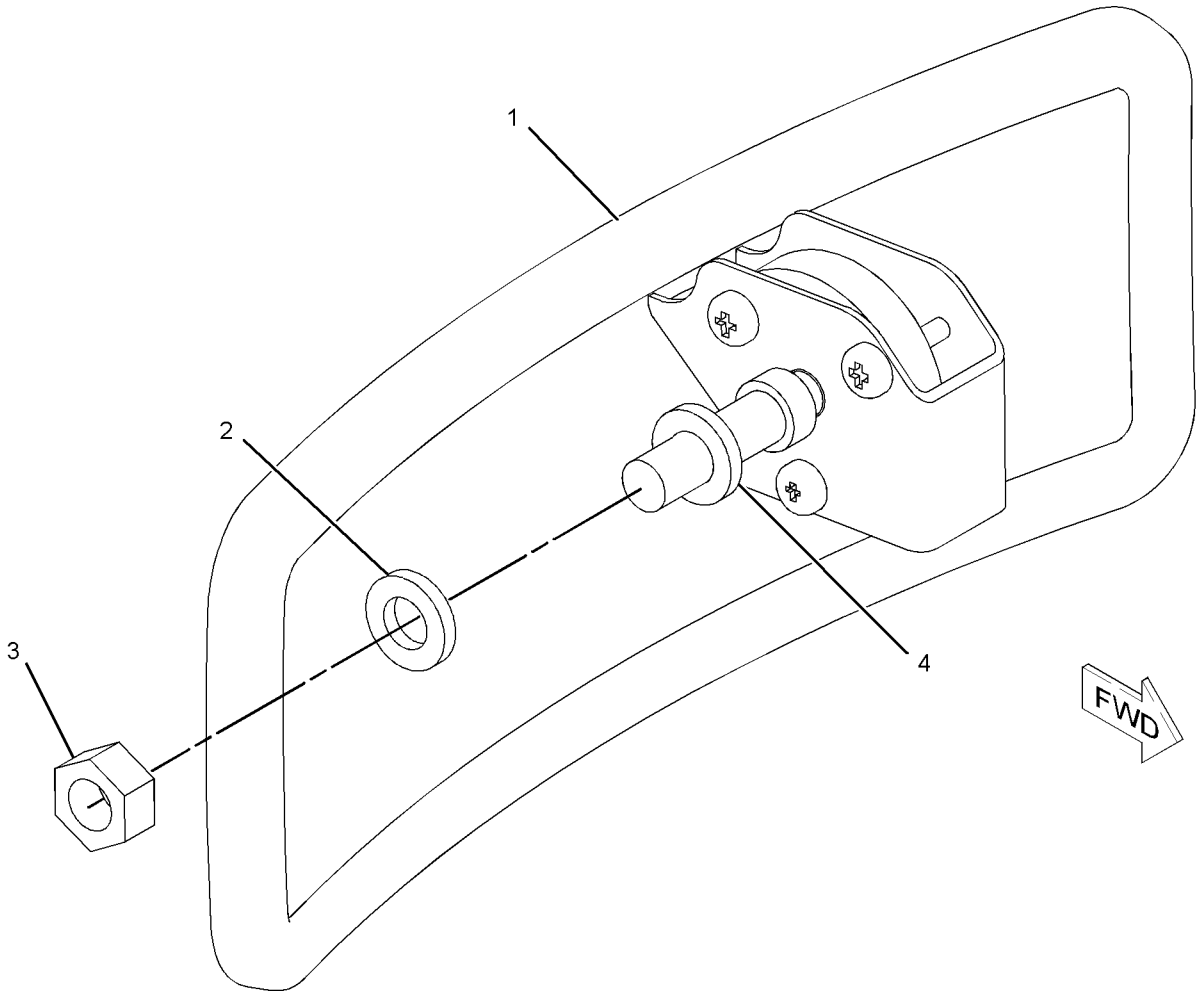


GRAPHIC #1 **<END>** g01038484

# OPERATOR STATION

## 223-6537 MODULE GP-WARNING INDICATOR

**S/N: HEN6750-UP**

**PART OF 216-4712 GAUGE & WARNING GP**

**AN ATTACHMENT**

**SMCS-7407, 7431** **i02492652**

| NOTE | REF NO | GRAPHIC REF | PART NUMBER | QTY | PART NAME 1 2 3 4 5 6 (PRODUCT LEVEL) | SEE PAGE |
|---|---|---|---|---|---|---|
| | 1 | 1 | **102-8801** | 1 | KIT-RECEPTACLE (12-PIN) | |
| | | | | | (INCLUDES RECEPTACLE AS & WEDGE) | |
| | 2 | 1 | **232-4706** | 1 | GASKET | |
| | 4 | 1 | **186-3735** | 9 | PIN-CONNECTOR (16-GA TO 18-GA) | |
| | 5 | 1 | **8T-8737** | 1 | PLUG-SEAL | |

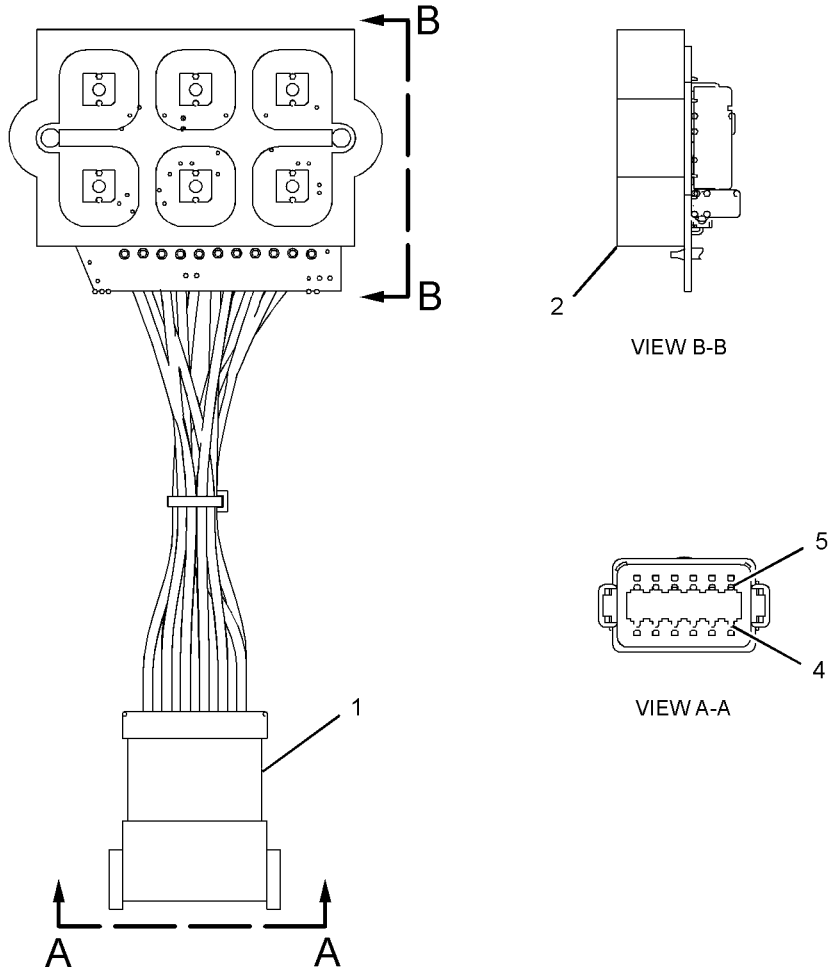


GRAPHIC #1 **<END>** g01307796

# OPERATOR STATION

## 249-2910 MODULE GP-WARNING INDICATOR

**S/N: HEN6750-UP**
**PART OF 216-4713 GAUGE & WARNING GP**
**AN ATTACHMENT**

**SMCS-7407, 7431** **i02757214**

| NOTE | REF NO | GRAPHIC REF | PART NUMBER | QTY | PART NAME 1 2 3 4 5 6 (PRODUCT LEVEL) | SEE PAGE |
|---|---|---|---|---|---|---|
| | 1 | 1 | **8T-8737** | 3 | PLUG-SEAL | |
| | 2 | 1 | **232-4706** | 1 | GASKET | |
| | 3 | 1 | **186-3735** | 9 | PIN-CONNECTOR (16-GA TO 18-GA) | |
| | 4 | 1 | **102-8801** | 1 | KIT-RECEPTACLE (12-PIN) | |
| | | | | | (INCLUDES RECEPTACLE AS & WEDGE) | |

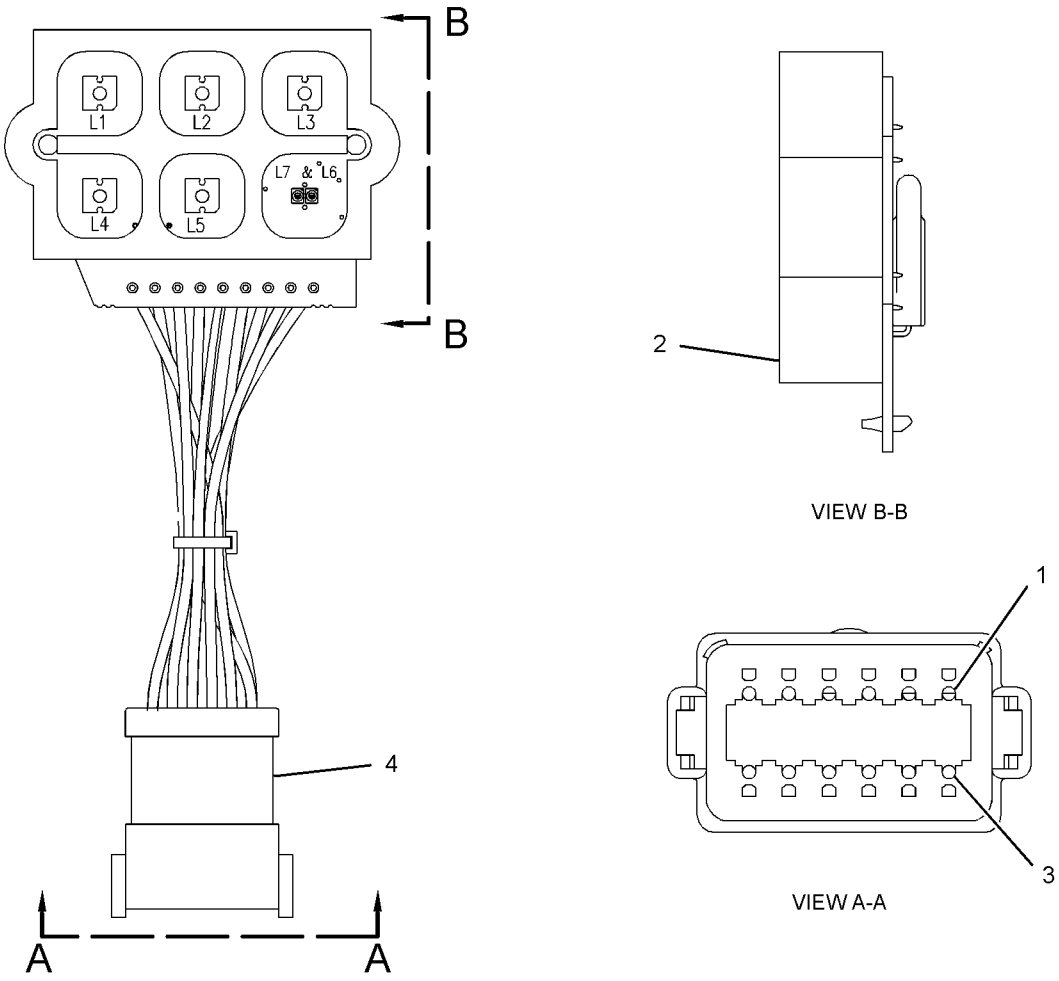


GRAPHIC #1 **<END>** g01152784

# OPERATOR STATION

## *218-6370* MOUNTING GP-ROPS

**S/N: HEN6750-UP**

**PART OF 218-6350 CAB AR-ENCLOSED ROPS**

**SMCS-7266, 7325** **i01955254**

| NOTE | REF NO | GRAPHIC REF | PART NUMBER | QTY | PART NAME 1 2 3 4 5 6 (PRODUCT LEVEL) | SEE PAGE |
|---|---|---|---|---|---|---|
| | 1 | 1 | **152-5878** | 2 | MOUNT AS | |
| | 2 | 1 | **153-6981** | 2 | MOUNT | |
| | 3 | 1 | **159-5790** | 1 | BRACKET | |
| | 4 | 1 | **159-5792** | 1 | BAR AS | |
| | 5 | 1 | **159-5794** | 1 | SPRING | |
| | 6 | 1 | **218-6381** | 2 | SPACER | |
| | 7 | 1 | **165-7095** | 4 | WASHER (16.5X71.5X3-MM THK) | |
| | 8 | 1 | **4P-7581** | 1 | CLIP | |
| M | 9 | 1 | **6V-9805** | 2 | BOLT (M6X1X20-MM) | |
| M | 10 | 1 | **7X-2475** | 2 | BOLT (M16X2X130-MM) | |
| | 11 | 1 | **8T-4122** | 4 | WASHER-HARD (17X32X3.5-MM THK) | |
| M | 12 | 1 | **8T-4173** | 2 | BOLT (M16X2X110-MM) | |
| | 13 | 1 | **8T-4205** | 2 | WASHER-HARD (7.2X14.5X2-MM THK) | |
| M | 14 | 1 | **8T-4778** | 4 | LOCKNUT (M16X2-THD) | |

M-METRIC PART

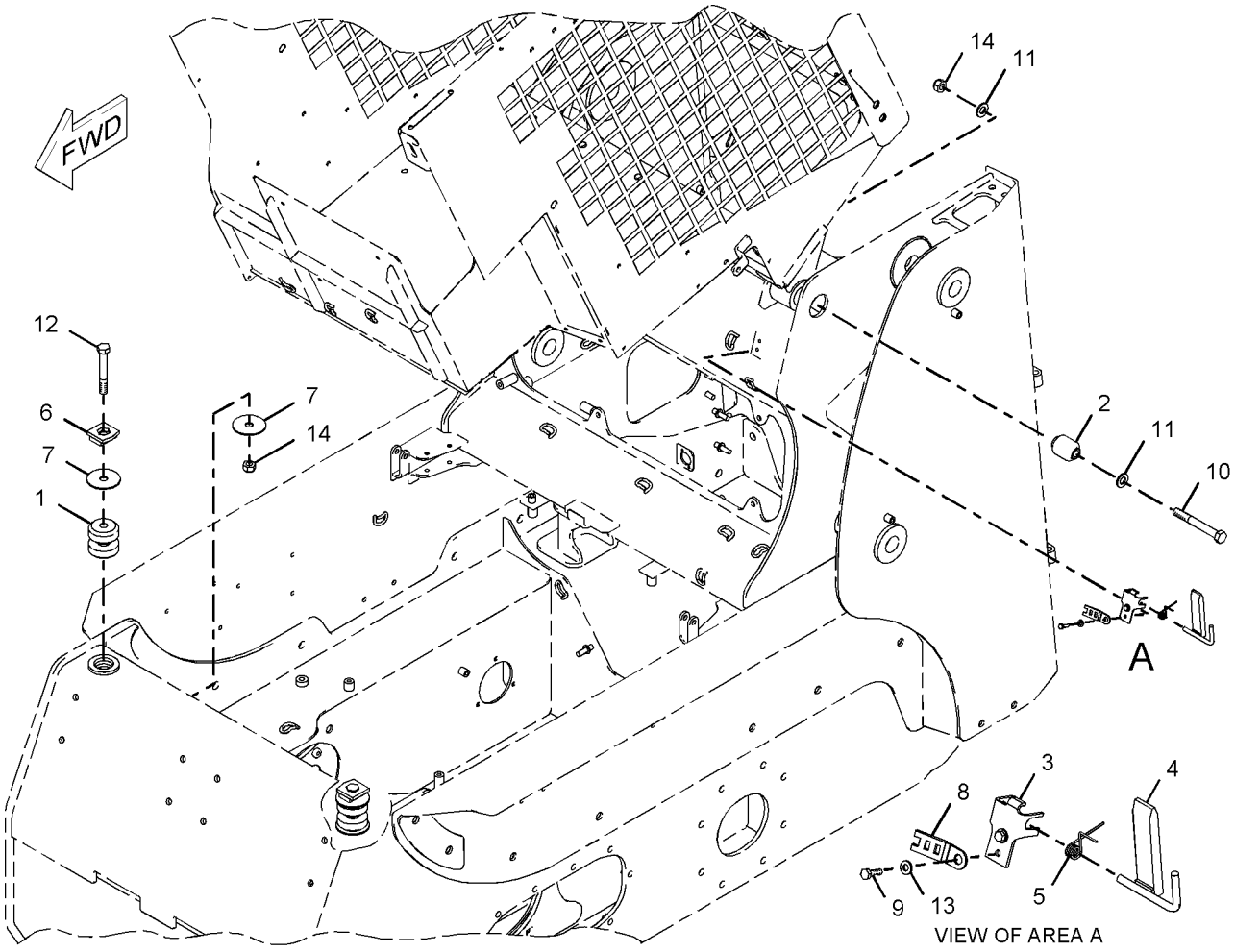


GRAPHIC #1 **<END>** g01018977

# OPERATOR STATION

## *295-7302* OPTION AR-CAB

**S/N: HEN6750-UP**
**AN ATTACHMENT**

**SMCS-7301** **i02732318**

| NOTE | PART NUMBER | QTY | PART NAME 1 2 3 4 5 6 (PRODUCT LEVEL) | SEE PAGE |
|---|---|---|---|---|
| Y | *218-6400* | 1 | HANDHOLD GP | 544 |
| Y | *218-5850* | 1 | INSTALLATION GP (WITHOUT A/C, HEATER) | 556 |
| Y | *218-5562* | 1 | SEAT GP (STATIC) | 593 |
| Y-SEPARATE ILLUSTRATION | | | | |

**<END>**

## *295-7312* OPTION AR-CAB

**S/N: HEN6750-UP**
**AN ATTACHMENT**

**SMCS-7301** **i02732293**

| NOTE | PART NUMBER | QTY | PART NAME 1 2 3 4 5 6 (PRODUCT LEVEL) | SEE PAGE |
|---|---|---|---|---|
| Y | *218-6400* | 1 | HANDHOLD GP | 544 |
| Y | *218-5850* | 1 | INSTALLATION GP (WITHOUT A/C, HEATER) | 556 |
| Y | *142-9305* | 1 | SEAT GP (SUSPENSION) | 592 |
| | | | | |
| | **245-6811** | 1 | HOLDER-CUP | |
| Y-SEPARATE ILLUSTRATION | | | | |

**<END>**

## *295-7322* OPTION AR-CAB

**S/N: HEN6750-UP**
**AN ATTACHMENT**

**SMCS-7301** **i02736308**

| NOTE | PART NUMBER | QTY | PART NAME 1 2 3 4 5 6 (PRODUCT LEVEL) | SEE PAGE |
|---|---|---|---|---|
| Y | *218-5950* | 1 | HEATER AR-CAB | 548 |
| Y | *218-6406* | 1 | SEAL GP-CAB | 586 |
| Y | *142-9305* | 1 | SEAT GP (SUSPENSION) | 592 |
| Y | *218-6411* | 1 | WINDOW GP-CAB (SIDE) | 599 |
| | | | | |
| | **245-6811** | 1 | HOLDER-CUP | |
| Y-SEPARATE ILLUSTRATION | | | | |

**<END>**

# OPERATOR STATION

## *295-7332* OPTION AR-CAB

**S/N: HEN6750-UP**

**AN ATTACHMENT**

**SMCS-7301** **i02736307**

| NOTE | PART NUMBER | QTY | PART NAME 1 2 3 4 5 6 (PRODUCT LEVEL) | SEE PAGE |
|---|---|---|---|---|
| Y | *218-6050* | 1 | AIR CONDITIONER AR | 466 |
| Y | *218-6406* | 1 | SEAL GP-CAB | 586 |
| Y | *142-9305* | 1 | SEAT GP (SUSPENSION) | 592 |
| Y | *218-6411* | 1 | WINDOW GP-CAB (SIDE) | 599 |
| | | | | |
| | **245-6811** | 1 | HOLDER-CUP | |

Y-SEPARATE ILLUSTRATION

**<END>**

## *218-5790* PANEL AR-INSTRUMENT

**S/N: HEN6750-UP**

**NACD**

**PART OF 261-6126 CONVERSION AR-MACHINE, 218-5780 CONVERSION AR-NON-ROADING**

**CANNOT BE USED WITH 218-5791—PAGE 576**

**AN ATTACHMENT**

**SMCS-7451** **i01957627**

| NOTE | PART NUMBER | QTY | PART NAME 1 2 3 4 5 6 (PRODUCT LEVEL) | SEE PAGE |
|---|---|---|---|---|
| Y | **225-7998** | 1 | PANEL GP-INSTRUMENT | 579 |

Y-SEPARATE ILLUSTRATION

**<END>**

## *218-5791* PANEL AR-INSTRUMENT

**S/N: HEN6750-UP**

**EAME**

**PART OF 261-6165, 278-5351, 278-5373, 278-5418, 278-5448, 295-7064, 295-7071, 295-7154, 295-7170, 295-7171 CONVERSION AR-MACHINE, 218-5781, 218-5784, 236-5116, 236-5117, 251-1510 CONVERSION AR-ROADING**

**CANNOT BE USED WITH 218-5790—PAGE 576**

**AN ATTACHMENT**

**SMCS-7451** **i01957887**

| NOTE | PART NUMBER | QTY | PART NAME 1 2 3 4 5 6 (PRODUCT LEVEL) | SEE PAGE |
|---|---|---|---|---|
| Y | **216-4751** | 1 | PANEL GP-INSTRUMENT | 577 |

Y-SEPARATE ILLUSTRATION

**<END>**

# OPERATOR STATION

## *216-4751* PANEL GP-INSTRUMENT

**S/N: HEN6750-UP**
**EAME**
**PART OF 218-5791 PANEL AR-INSTRUMENT**
**AN ATTACHMENT**

**SMCS-7451** **i02941014**

| NOTE | REF NO | GRAPHIC REF | PART NUMBER | QTY | PART NAME 1 2 3 4 5 6 (PRODUCT LEVEL) | SEE PAGE |
|---|---|---|---|---|---|---|
| | 1 | 1 | **109-2356** | 5 | PLUG | |
| Y | 2 | 1 | *142-9118* | 1 | COVER GP-INSTRUMENT PANEL (SERVICE METER) | 525 |
| | 3 | 1 | **142-9320** | 1 | SWITCH AS-ROCKER (PARKING BRAKE) | |
| | | 1 | **111-7899** | 1 | GASKET | |
| | 4 | 1 | **142-9325** | 1 | SWITCH AS-ROCKER (COLD START) | |
| | | 1 | **111-7899** | 1 | GASKET | |
| | 5 | 1 | **142-9328** | 1 | SWITCH AS-ROCKER (FRONT WORK LIGHT) | |
| | | 1 | **111-7899** | 1 | GASKET | |
| | 6 | 1 | **158-6696** | 1 | COVER | |
| | 7 | 1 | **158-6698** | 1 | COVER | |
| | 8 | 1 | **158-6699** | 1 | COVER | |
| | 9 | 1 | **165-0312** | 1 | WIRE AS | |
| Y | 10 | 1 | *216-4712* | 1 | GAUGE & WARNING GP (LH) | 541 |
| Y | 11 | 1 | *216-4713* | 1 | GAUGE & WARNING GP (RH) | 542 |
| | 12 | 1 | **216-4752** | 1 | HARNESS AS-PANEL | |
| | | 1 | **155-2255** | 2 | KIT-CONNECTING PLUG (12-PIN) | |
| | | 1 | **155-2260** | 1 | KIT-CONNECTING PLUG (3-PIN) | |
| | | 1 | **155-2270** | 6 | KIT-CONNECTING PLUG (2-PIN) | |
| | | 1 | **155-2271** | 3 | KIT-CONNECTING PLUG (4-PIN) | |
| | | 1 | **155-2274** | 1 | KIT-CONNECTING PLUG (6-PIN) | |
| | | | | | (EACH PLUG KIT INCLUDES PLUG AS, WEDGE & INTERFACE SEAL) | |
| | | 1 | **102-8804** | 2 | KIT-RECEPTACLE (4-PIN) | |
| | | 1 | **102-8805** | 1 | KIT-RECEPTACLE (6-PIN) | |
| | | 1 | **102-8801** | 1 | KIT-RECEPTACLE (12-PIN) | |
| | | | | | (EACH RECEPTACLE KIT INCLUDES RECEPTACLE AS & WEDGE) | |
| | 13 | 1 | **223-5941** | 1 | SWITCH AS-ROCKER (WORK TOOL HYD PRESS RELEASE) | |
| | | 1 | **111-7899** | 1 | GASKET | |
| | 14 | 1 | **226-5901** | 1 | SWITCH AS-ROCKER (INTERLOCK OVERRIDE) | |
| | | 1 | **111-7899** | 1 | GASKET | |
| | 15 | 1 | **103-2006** | 16 | SCREW-PAN HEAD (6-19X0.37-IN) | |

Y-SEPARATE ILLUSTRATION

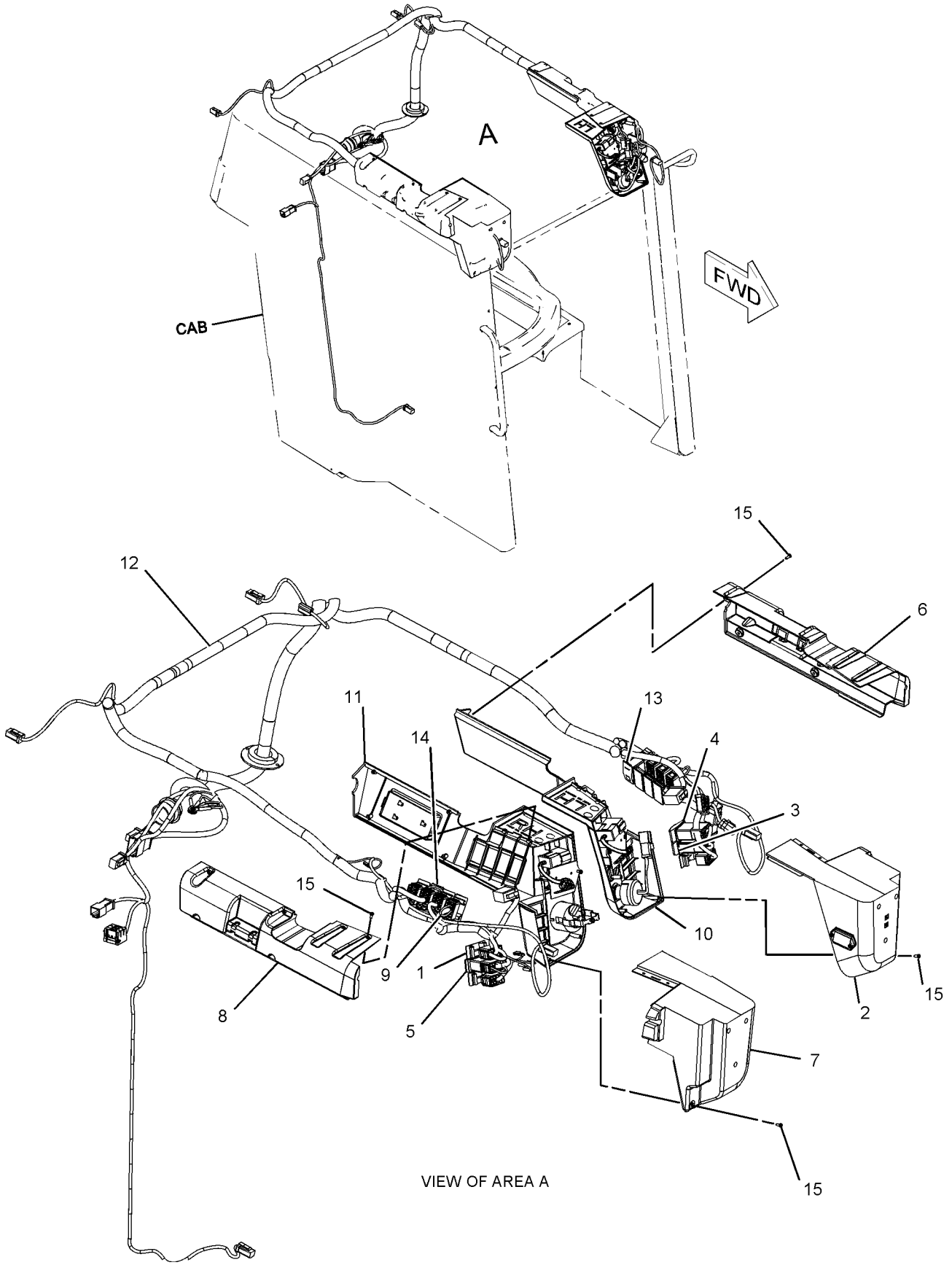


GRAPHIC #1 **<END>** g01125969

# OPERATOR STATION

## *225-7998* PANEL GP-INSTRUMENT

**S/N: HEN6750-UP**
**NACD**
**PART OF 218-5790 PANEL AR-INSTRUMENT**
**AN ATTACHMENT**

**SMCS-7451** **i02259865**

| NOTE | REF NO | GRAPHIC REF | PART NUMBER | QTY | PART NAME 1 2 3 4 5 6 (PRODUCT LEVEL) | SEE PAGE |
|---|---|---|---|---|---|---|
| | 1 | 1 | **109-2356** | 5 | PLUG | |
| Y | 2 | 1 | *142-9118* | 1 | COVER GP-INSTRUMENT PANEL (SERVICE METER) | 525 |
| | 3 | 1 | **142-9320** | 1 | SWITCH AS-ROCKER (PARKING BRAKE) | |
| | | 1 | **111-7899** | 1 | GASKET | |
| | 4 | 1 | **142-9325** | 1 | SWITCH AS-ROCKER (COLD START) | |
| | | 1 | **111-7899** | 1 | GASKET | |
| | 5 | 1 | **142-9328** | 1 | SWITCH AS-ROCKER (FRONT WORK LIGHT) | |
| | | 1 | **111-7899** | 1 | GASKET | |
| | 6 | 1 | **158-6696** | 1 | COVER | |
| | 7 | 1 | **158-6698** | 1 | COVER | |
| | 8 | 1 | **158-6699** | 1 | COVER | |
| Y | 9 | 1 | *216-4712* | 1 | GAUGE & WARNING GP (LH) | 541 |
| Y | 10 | 1 | *216-4713* | 1 | GAUGE & WARNING GP (RH) | 542 |
| | 11 | 1 | **223-5941** | 1 | SWITCH AS-ROCKER (WORK TOOL HYD PRESS RELEASE) | |
| | | 1 | **111-7899** | 1 | GASKET | |
| | 12 | 1 | **225-7999** | 1 | HARNESS AS-PANEL | |
| | | 1 | **102-8804** | 2 | KIT-RECEPTACLE (4-PIN) | |
| | | 1 | **102-8805** | 1 | KIT-RECEPTACLE (6-PIN) | |
| | | 1 | **102-8801** | 1 | KIT-RECEPTACLE (12-PIN) | |
| | | | | | (EACH RECEPTACLE KIT INCLUDES RECEPTACLE AS & WEDGE) | |
| | | 1 | **155-2255** | 1 | KIT-CONNECTING PLUG (12-PIN) | |
| | | 1 | **155-2271** | 2 | KIT-CONNECTING PLUG (4-PIN) | |
| | | 1 | **155-2274** | 1 | KIT-CONNECTING PLUG (6-PIN) | |
| | | 1 | **155-2270** | 6 | KIT-CONNECTING PLUG (2-PIN) | |
| | | | | | (EACH PLUG KIT INCLUDES PLUG AS, WEDGE, & INTERFACE SEAL) | |
| | | 1 | **155-2260** | 1 | KIT-CONNECTING PLUG (3-PIN) | |
| | | | | | (INCLUDES PLUG AS, WEDGES, & INTERFACE SEAL) | |
| | 13 | 1 | **226-5901** | 1 | SWITCH AS-ROCKER (INTERLOCK OVERRIDE) | |
| | | 1 | **111-7899** | 1 | GASKET | |
| | 14 | 1 | **103-2006** | 16 | SCREW-PAN HEAD (6-19X0.37-IN) | |

Y-SEPARATE ILLUSTRATION

*225-7998* **PANEL GP-INSTRUMENT** *(contd.)* **i02259865**

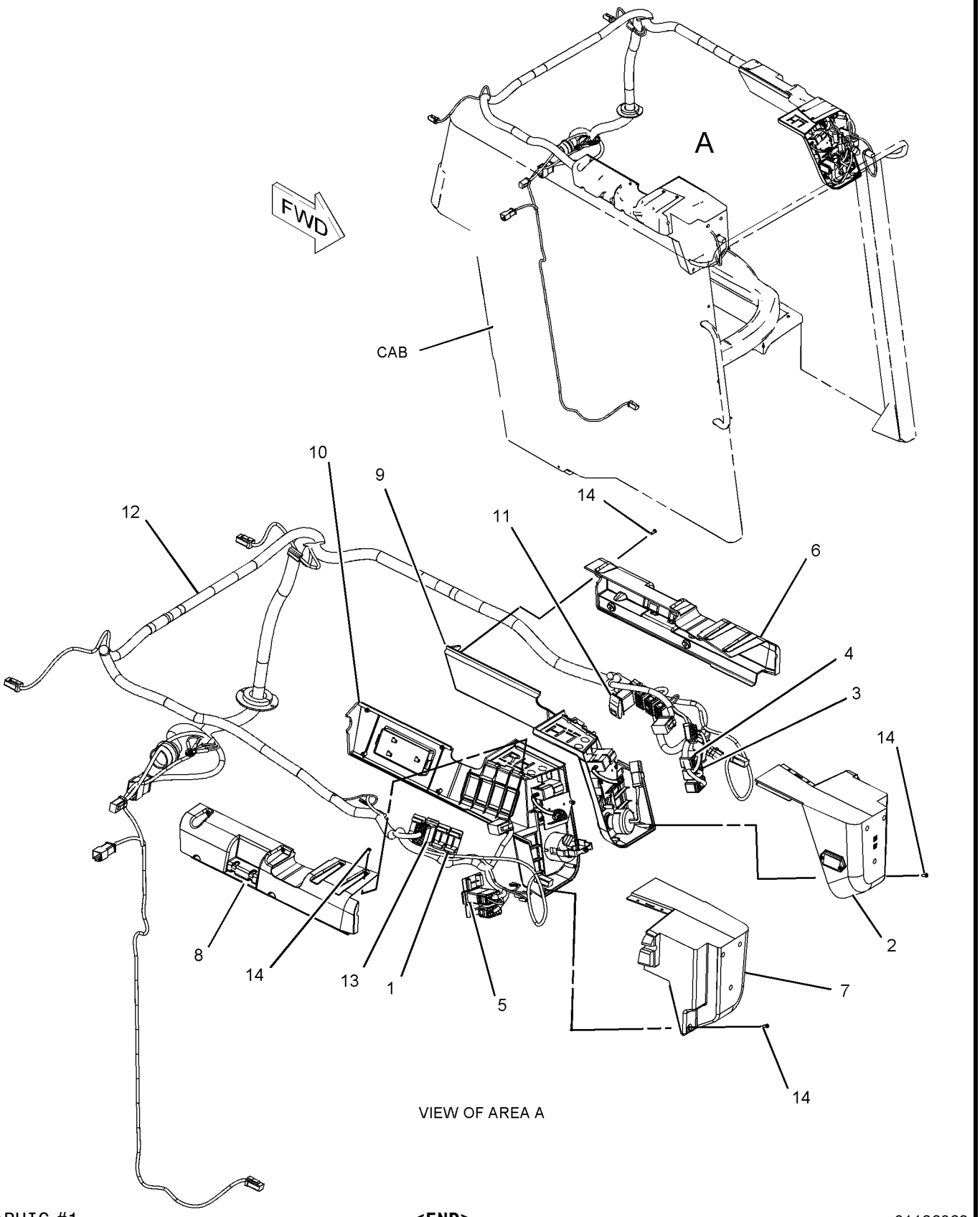


VIEW OF AREA A

GRAPHIC #1 **<END>** g01136068

# OPERATOR STATION

## *218-6430* PANEL GP-SIDE

**S/N: HEN6750-UP**

**PART OF 295-7510, 295-7518 CHASSIS AR**

**SMCS-7267** **i01955463**

| NOTE | REF NO | GRAPHIC REF | PART NUMBER | QTY | PART NAME 1 2 3 4 5 6 (PRODUCT LEVEL) | SEE PAGE |
|---|---|---|---|---|---|---|
| | 1 | 1 | **193-8385** | 1 | PLATE (RH) | |
| | 2 | 1 | **218-6423** | 1 | PLATE (LH) | |
| M | 3 | 1 | **131-3543** | 5 | BOLT-ROUND HEAD (M6X1-6G-THD) | |
| M | 4 | 1 | **5C-2890** | 5 | NUT (M6X1-THD) | |
| | 5 | 1 | **8T-4205** | 5 | WASHER-HARD (7.2X14.5X2-MM THK) | |

M-METRIC PART

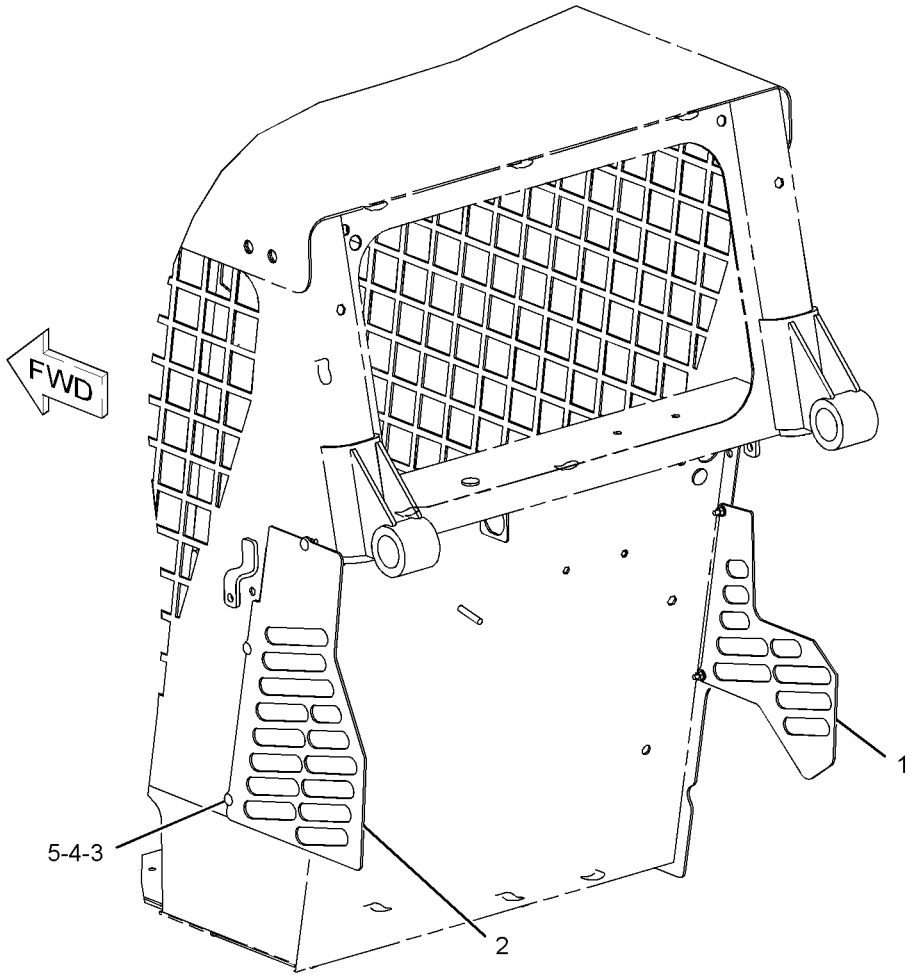


GRAPHIC #1 **<END>** g01017460

# OPERATOR STATION

## *218-5565* PEDAL GP-GOVERNOR—INCLUDES LEVER

**S/N: HEN6750-UP**

**PART OF 218-5602 CONTROL GP-GOVERNOR**

**SMCS-1265, 1276** **i02312058**

| NOTE | REF NO | GRAPHIC REF | PART NUMBER | QTY | PART NAME 1 2 3 4 5 6 (PRODUCT LEVEL) | SEE PAGE |
|---|---|---|---|---|---|---|
| Y | 1 | 1 | **218-5566** | 1 | CABLE GP-GOVERNOR CONTROL | 88 |
| Y | 2 | 1 | **263-6688** | 1 | PEDAL GP-GOVERNOR | 583 |
| Y | 3 | 1 | **234-0774** | 1 | LEVER GP-GOVERNOR | 563 |

Y-SEPARATE ILLUSTRATION

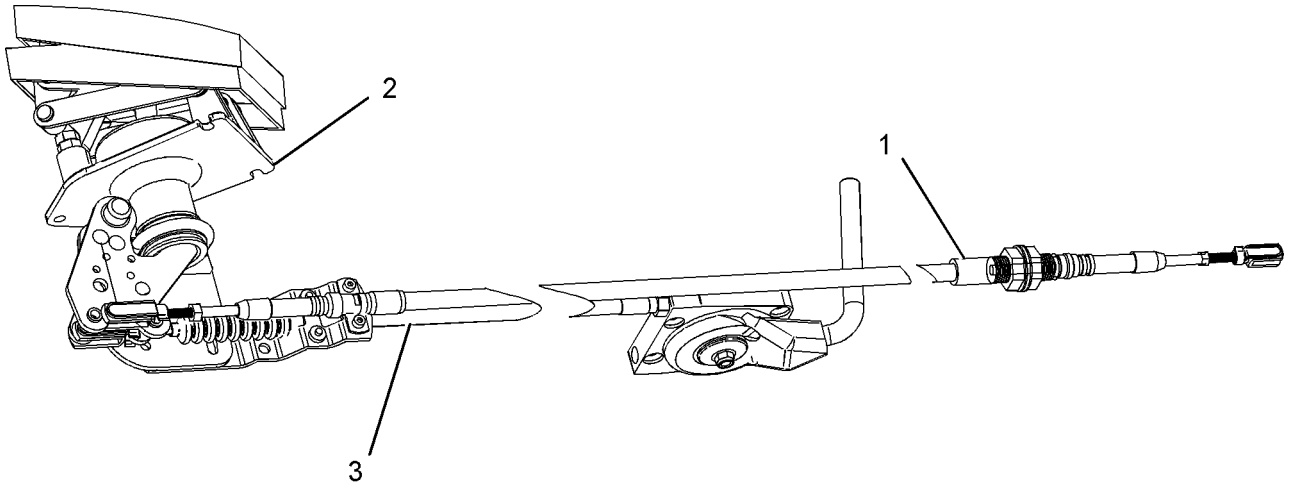


GRAPHIC #1 **<END>** g01010528

# OPERATOR STATION

## 263-6688 PEDAL GP-GOVERNOR

**S/N: HEN6750-UP**

**PART OF 218-5565 PEDAL GP-GOVERNOR**

**SMCS-1265, 1276** **i02757215**

| NOTE | REF NO | GRAPHIC REF | PART NUMBER | QTY | PART NAME 1 2 3 4 5 6 (PRODUCT LEVEL) | SEE PAGE |
|---|---|---|---|---|---|---|
| M | 1 | 1 | **095-0641** | 4 | BOLT-SOCKET HEAD (M4X0.7X10-MM) | |
| M | 2 | 1 | **129-3178** | 1 | LOCKNUT (M6X1-THD) | |
| | 3 | 1 | **3F-9556** | 2 | LOCKWASHER | |
| M | 4 | 1 | **5C-7261** | 1 | NUT (M8X1.25-THD) | |
| M | 5 | 1 | **5C-9553** | 1 | BOLT (M6X1X16-MM) | |
| | 6 | 1 | **6V-8186** | 2 | NUT-FULL (5/16-24-THD) | |
| M | 7 | 1 | **8T-4197** | 1 | BOLT (M8X1.25X40-MM) | |
| | 8 | 1 | **8T-4205** | 1 | WASHER-HARD (7.2X14.5X2-MM THK) | |
| | 9 | 1 | **8T-6902** | 1 | CLIP | |
| | | | | | AVAILABLE REPAIR KIT(S): | |
| | | | **164-1154** | 1 | KIT-SERVICE | |
| | | | | | (INCLUDES CLAMPS & SCREWS) | |

M-METRIC PART

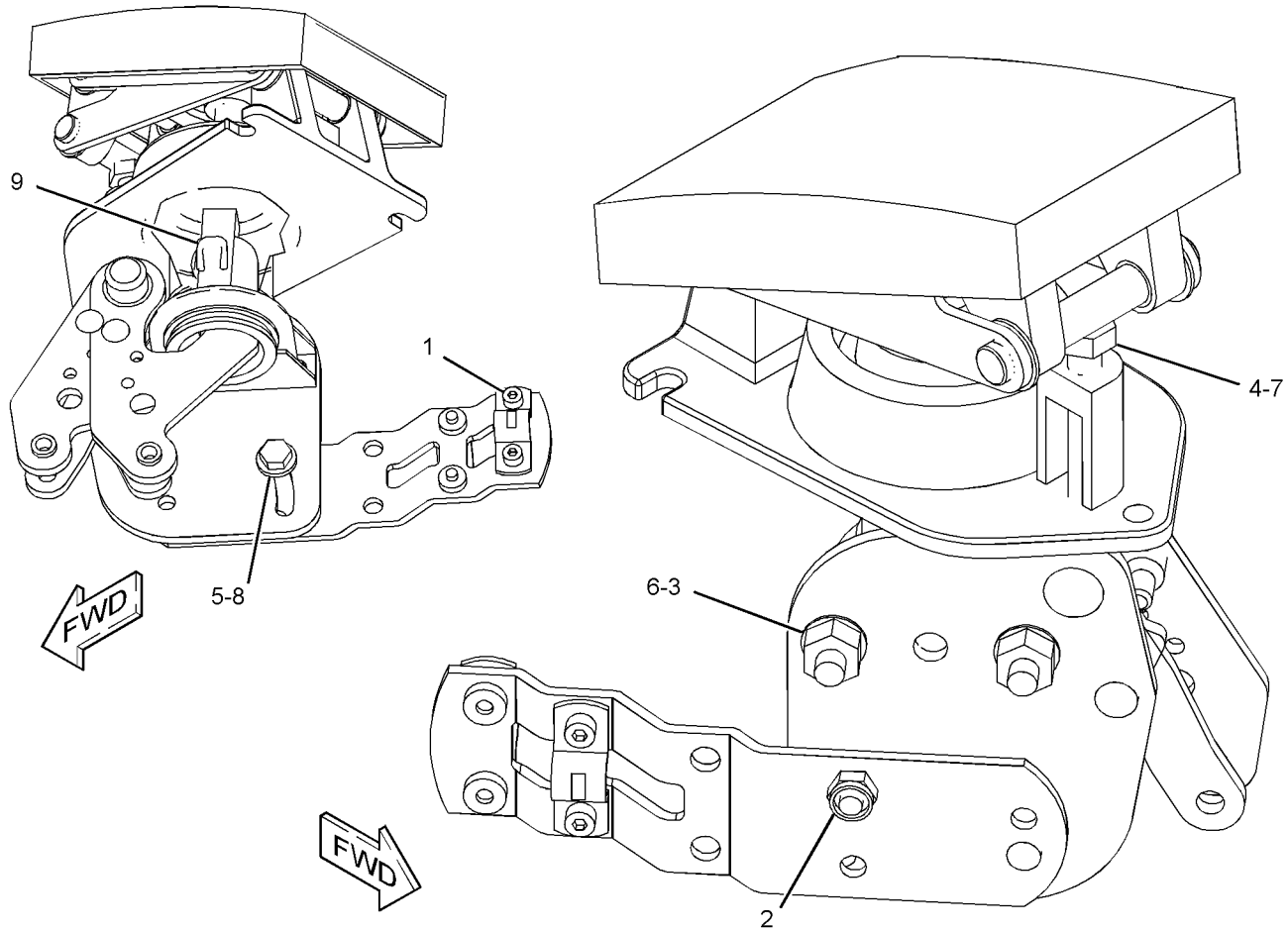


GRAPHIC #1 **<END>** g01164366

# OPERATOR STATION

## *218-6390* PLATFORM GP-OPERATOR

**S/N: HEN6750-UP**

**PART OF 295-7510, 295-7518 CHASSIS AR**

**SMCS-7253** **i02885850**

| NOTE | REF NO | GRAPHIC REF | PART NUMBER | QTY | PART NAME 1 2 3 4 5 6 (PRODUCT LEVEL) | SEE PAGE |
|---|---|---|---|---|---|---|
| E | 1 | 1 | **124-3243** | | SEAL (42-CM) | |
| D | 2 | 1 | **5P-5927** | | SEAL (7-M) | |
| | 3 | 1 | **218-6361** | 1 | PLATE AS | |
| | 4 | 1 | **218-6362** | 2 | INSULATION AS | |
| | | | | | (EACH INCLUDES) | |
| | | 1 | **218-6435** | 3 | SPACER (16.6X21.8X25.4-MM THK) | |
| | 5 | 1 | **218-6363** | 1 | PLATE AS | |
| | 6 | 1 | **218-6417** | 1 | FLOORPLATE AS | |
| | 7 | 1 | **218-6438** | 1 | SEAL | |
| | 8 | 1 | **101-2867** | 1 | WASHER-HARD (7.2X25X2-MM THK) | |
| M | 9 | 1 | **5C-7261** | 1 | NUT (M8X1.25-THD) | |
| M | 10 | 1 | **5C-9553** | 6 | BOLT (M6X1X16-MM) | |
| M | 11 | 1 | **8T-4138** | 2 | BOLT (M6X1X20-MM) | |
| | 12 | 1 | **8T-4205** | 6 | WASHER-HARD (7.2X14.5X2-MM THK) | |
| | 13 | 1 | **8T-4224** | 10 | WASHER-HARD (8.8X16X2-MM THK) | |
| M | 14 | 1 | **8T-4908** | 3 | BOLT (M8X1.25X25-MM) | |
| M | 16 | 1 | **8T-6912** | 5 | BOLT (M8X1.25X50-MM) | |
| M | 17 | 1 | **9X-2045** | 3 | SCREW-TRUSS HEAD (M6X1X20-MM) | |
| | 18 | 1 | **9X-6165** | 2 | WASHER (6.5X22X2.5-MM THK) | |
| M | 20 | 1 | **9X-6277** | 1 | BOLT (M8X1.25X60-MM) | |

D-ORDER BY THE METER
E-ORDER BY THE CENTIMETER
M-METRIC PART

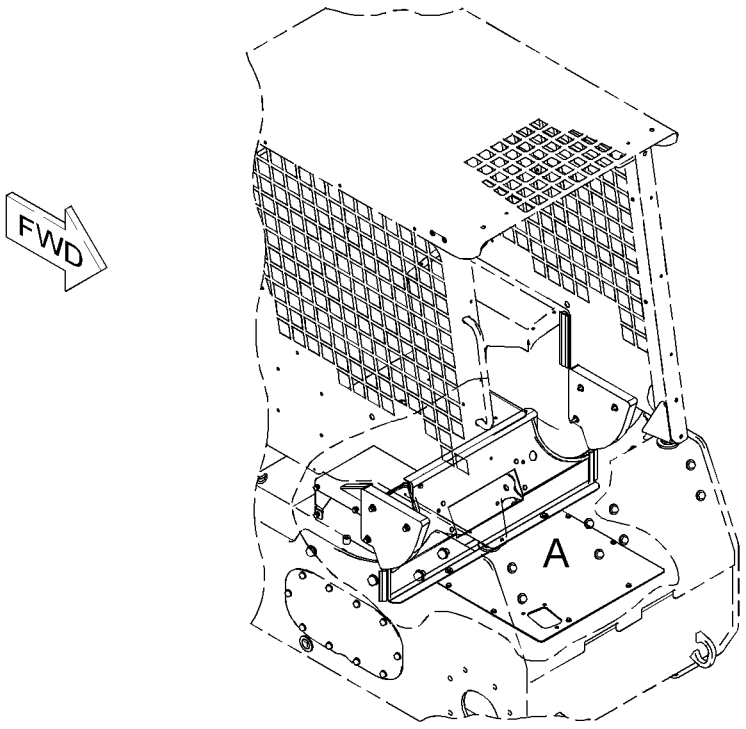


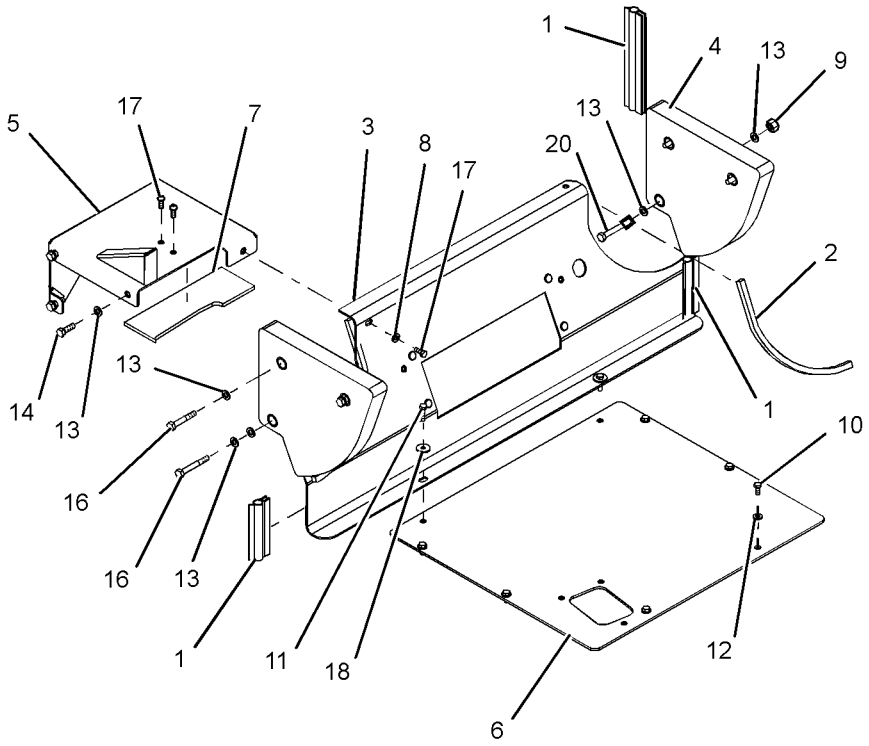


VIEW OF AREA A

GRAPHIC #1 **<END>** g01441474

# OPERATOR STATION

## *218-6406* SEAL GP-CAB

**S/N: HEN6750-UP**
**PART OF 295-7322, 295-7332 OPTION AR-CAB**
**AN ATTACHMENT**

**SMCS-7301** **i02891531**

| NOTE | REF NO | GRAPHIC REF | PART NUMBER | QTY | PART NAME 1 2 3 4 5 6 (PRODUCT LEVEL) | SEE PAGE |
|---|---|---|---|---|---|---|
| E | 1 | 1 | **124-3243** | | SEAL (59-CM) | |
| E | 1A | 1 | **124-3243** | | SEAL (39-CM) | |
| | 2 | 1 | **187-3211** | 1 | PLATE AS | |
| M | | 1 | **8T-3612** | 2 | NUT-WELD (M8X1.25-THD) | |
| | 3 | 1 | **187-3212** | 1 | PLATE | |
| | 4 | 1 | **218-6036** | 1 | BRACKET AS (LH) | |
| | 5 | 1 | **218-6037** | 1 | BRACKET AS (RH) | |
| | 6 | 1 | **284-3743** | 2 | SEAL-RUBBER | |
| | 7 | 1 | **284-3744** | 1 | SEAL-RUBBER | |
| | 8 | 1 | **287-6603** | 2 | PLUG-BUTTON | |
| | 9 | 1 | **288-5767** | 8 | PLUG-BUTTON | |
| | 10 | 1 | **189-4523** | 2 | BOSS | |
| M | 11 | 1 | **7X-2537** | 2 | BOLT (M8X1.25X35-MM) | |
| | 12 | 1 | **8T-4224** | 2 | WASHER-HARD (8.8X16X2-MM THK) | |

E-ORDER BY THE CENTIMETER
M-METRIC PART

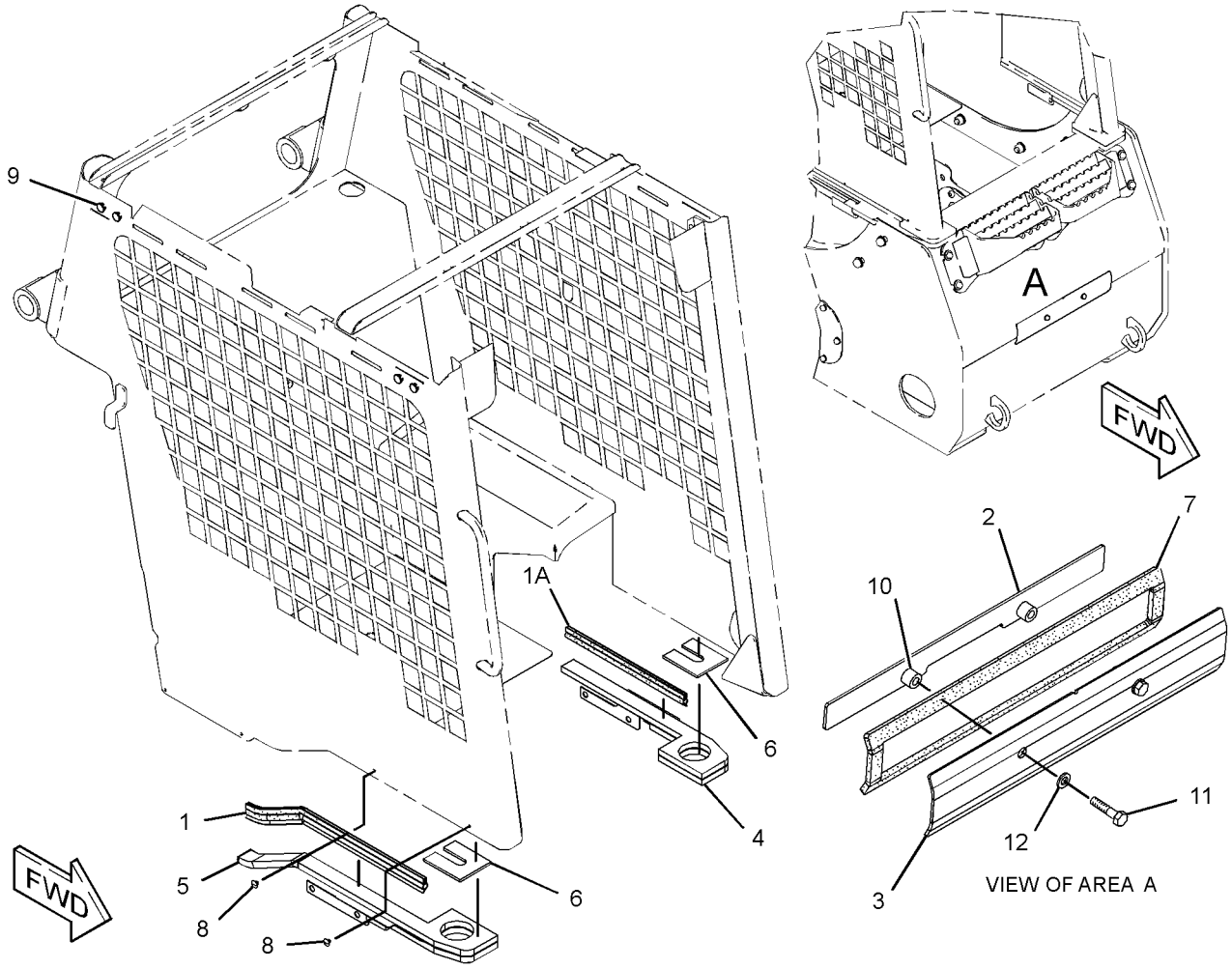


GRAPHIC #1 **<END>** g01441642

# OPERATOR STATION

## *276-6019* SEAT BELT GP

**S/N: HEN6750-UP**
**3-INCH, RETRACTABLE SUSPENSION**
**AN ATTACHMENT**

**SMCS-7327** **i02450731**

| NOTE | REF NO | GRAPHIC REF | PART NUMBER | QTY | PART NAME 1 2 3 4 5 6 (PRODUCT LEVEL) | SEE PAGE |
|---|---|---|---|---|---|---|
| | 1 | 1 | **6E-6549** | 2 | WASHER (11X27X6-MM THK) | |
| | 2 | 1 | **0T-0244** | 2 | BOLT (7/16-20X1.25-IN) | |
| | 3 | 1 | **8S-0934** | 2 | LOCKNUT-FLANGE (7/16-20-THD) | |
| | 4 | 1 | **8T-4223** | 2 | WASHER-HARD (13.5X25.5X3-MM THK) | |

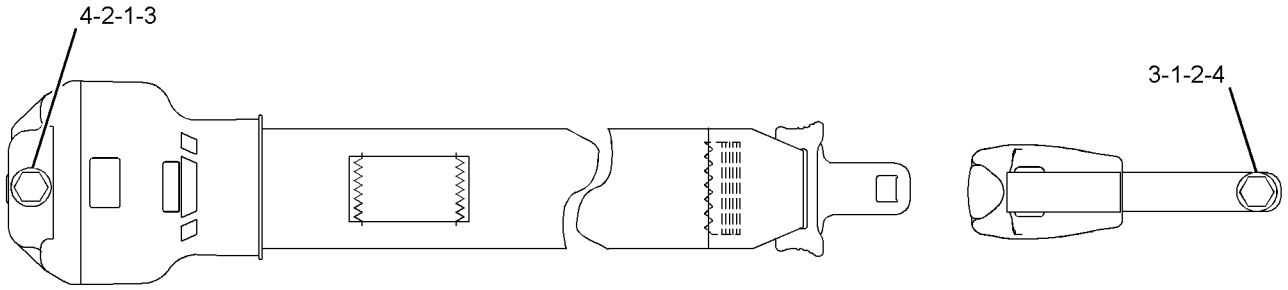


GRAPHIC #1 **<END>** g01230176

# OPERATOR STATION

## 276-6020 SEAT BELT GP

**S/N: HEN6750-UP**
**3-INCH, RETRACTABLE STATIC**
**AN ATTACHMENT**

**SMCS-7327** **i02718272**

| NOTE | REF NO | GRAPHIC REF | PART NUMBER | QTY | PART NAME 1 2 3 4 5 6 (PRODUCT LEVEL) | SEE PAGE |
|---|---|---|---|---|---|---|
| | 1 | 1 | **2D-6412** | 2 | WASHER (7/16X15/16X1/4-IN THK) | |
| | 2 | 1 | **0T-0244** | 2 | BOLT (7/16-20X1.25-IN) | |
| | 3 | 1 | **8S-0934** | 2 | LOCKNUT-FLANGE (7/16-20-THD) | |
| | 4 | 1 | **8T-4223** | 2 | WASHER-HARD (13.5X25.5X3-MM THK) | |

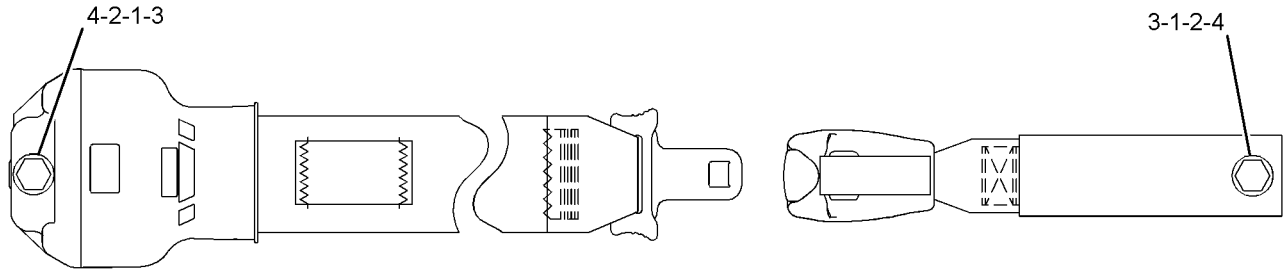


GRAPHIC #1 **<END>** g01230231

# OPERATOR STATION

## 276-7276 SEAT BELT GP

**S/N: HEN6750-UP**
**2-INCH, SUSPENSION**
**AN ATTACHMENT**

**SMCS-7327** **i02738465**

| NOTE | REF NO | GRAPHIC REF | PART NUMBER | QTY | PART NAME 1 2 3 4 5 6 (PRODUCT LEVEL) | SEE PAGE |
|---|---|---|---|---|---|---|
| | 1 | 1 | **2D-6412** | 2 | WASHER (7/16X15/16X1/4-IN THK) | |
| | 2 | 1 | **0T-0244** | 2 | BOLT (7/16-20X1.25-IN) | |
| | 3 | 1 | **8S-0934** | 2 | LOCKNUT-FLANGE (7/16-20-THD) | |
| | 4 | 1 | **8T-4223** | 2 | WASHER-HARD (13.5X25.5X3-MM THK) | |

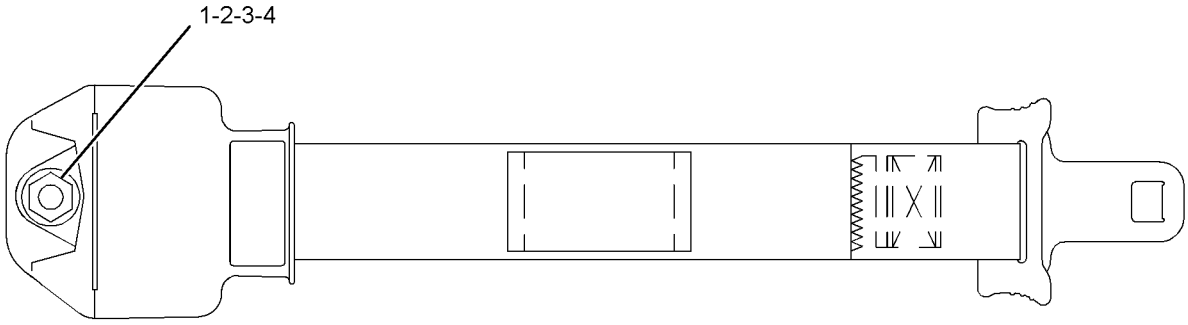


GRAPHIC #1 **<END>** g01230125

# 276-7277 SEAT BELT GP

**S/N: HEN6750-UP**
**2-INCH, RETRACTABLE SUSPENSION**
**AN ATTACHMENT**

**SMCS-7327** **i02712903**

| NOTE | REF NO | GRAPHIC REF | PART NUMBER | QTY | PART NAME 1 2 3 4 5 6 (PRODUCT LEVEL) | SEE PAGE |
|---|---|---|---|---|---|---|
| | 1 | 1 | **2D-6412** | 2 | WASHER (7/16X15/16X1/4-IN THK) | |
| | 2 | 1 | **0T-0244** | 2 | BOLT (7/16-20X1.25-IN) | |
| | 3 | 1 | **8S-0934** | 2 | LOCKNUT-FLANGE (7/16-20-THD) | |
| | 4 | 1 | **8T-4223** | 2 | WASHER-HARD (13.5X25.5X3-MM THK) | |

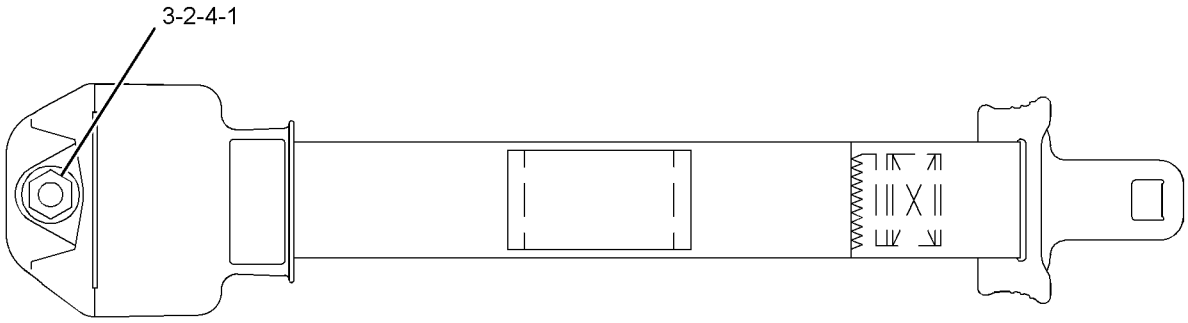


GRAPHIC #1 **<END>** g01230239

## *142-9305* SEAT GP–SUSPENSION

**S/N: HEN6750-UP**

**PART OF 295-7312, 295-7322, 295-7332 OPTION AR-CAB**

**CANNOT BE USED WITH 218-5562–PAGE 593, 218-5611–PAGE 492, 218-5618–PAGE 499 AN ATTACHMENT**

**SMCS-7312, 7324** **i02571422**

| NOTE | REF NO | GRAPHIC REF | PART NUMBER | QTY | PART NAME 1 2 3 4 5 6 (PRODUCT LEVEL) | SEE PAGE |
|---|---|---|---|---|---|---|
| CY | 1 | 1 | **219-4380** | 1 | SEAT GP-ADJUSTABLE | 594 |
| M | 2 | 1 | **5C-7261** | 4 | NUT (M8X1.25-THD) | |
| | 3 | 1 | **8T-4224** | 4 | WASHER-HARD (8.8X16X2-MM THK) | |

C-CHANGE FROM PREVIOUS TYPE
M-METRIC PART
Y-SEPARATE ILLUSTRATION

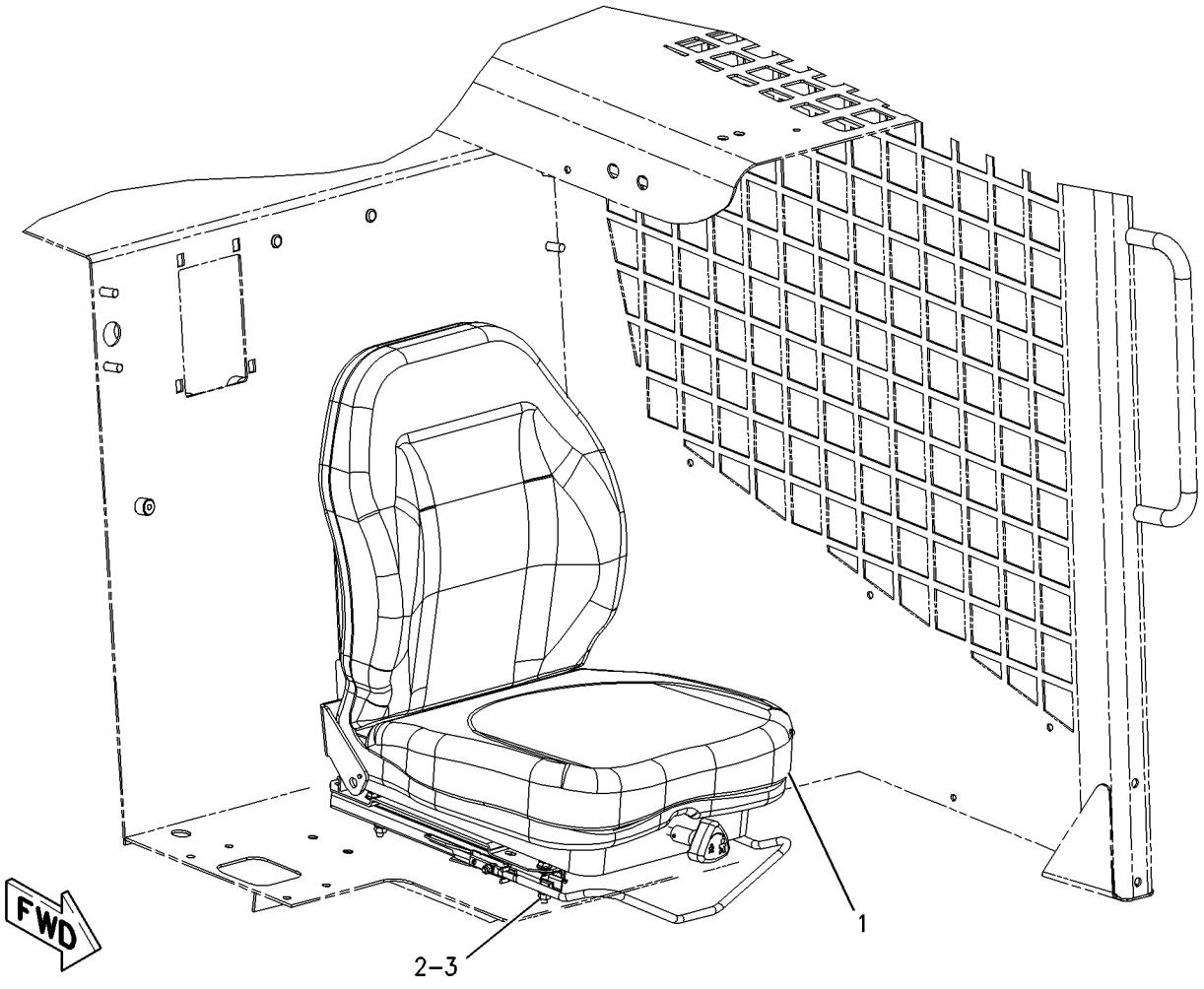


GRAPHIC #1 **<END>** g00914893

# *218-5562* SEAT GP–STATIC

**S/N: HEN6750-UP**
**PART OF 295-7302 OPTION AR-CAB**
**CANNOT BE USED WITH 142-9305–PAGE 592**
**AN ATTACHMENT**

**SMCS-7312, 7324** **i02757222**

| NOTE | REF NO | GRAPHIC REF | PART NUMBER | QTY | PART NAME 1 2 3 4 5 6 (PRODUCT LEVEL) | SEE PAGE |
|---|---|---|---|---|---|---|
| | 1 | 1 | **218-6662** | 1 | SEAT GP (STATIC) | |
| | | 1 | **153-1260** | 1 | SWITCH (SEAT) | |
| | | 1 | **154-3985** | 1 | WIRE AS | |
| | | 1 | **219-4379** | 1 | HANDLE | |
| M | 2 | 1 | **5C-7261** | 4 | NUT (M8X1.25-THD) | |
| | 3 | 1 | **8T-4224** | 4 | WASHER-HARD (8.8X16X2-MM THK) | |

M-METRIC PART

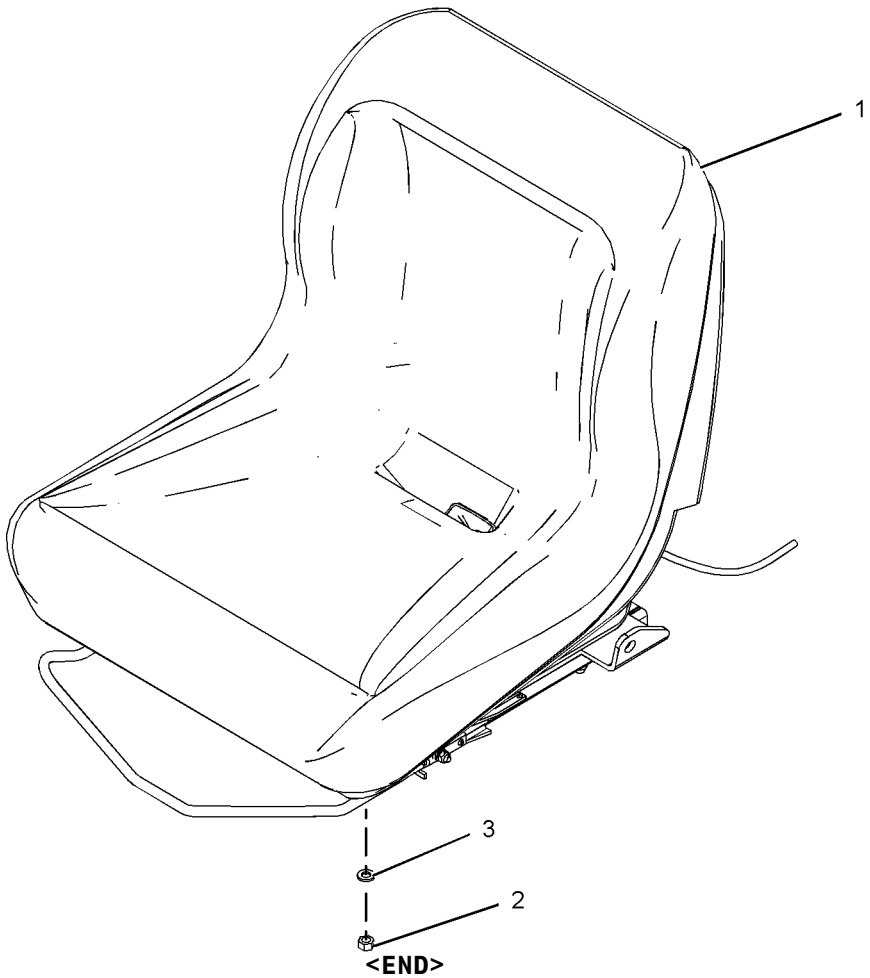


GRAPHIC #1

**<END>**

g01018112

# OPERATOR STATION

## 219-4380 SEAT GP-ADJUSTABLE

**S/N: HEN6750-UP**
**PART OF 142-9305 SEAT GP**
**AN ATTACHMENT**

**SMCS-7312, 7321** **i01901346**

| NOTE | REF NO | GRAPHIC REF | PART NUMBER | QTY | PART NAME 1 2 3 4 5 6 (PRODUCT LEVEL) | SEE PAGE |
|---|---|---|---|---|---|---|
| | 1 | 1 | **154-3985** | 1 | WIRE AS | |
| | 2 | 1 | **154-3986** | 1 | SWITCH AS (SEAT) | |
| | 3 | 1 | **154-8711** | 1 | KIT-SPRING (ADJUSTABLE SEAT) | |
| Z | | 1 | | 2 | SPRING | |
| Z | 3A | 1 | | 1 | CABLE AS | |
| Z | 3B | 1 | | 2 | NUT-PUSH | |
| | 4 | 1 | **154-8715** | 1 | KIT-DAMPER (ADJUSTABLE SEAT) | |
| | | | | | (INCLUDES DAMPER, NUT-LOCK, WASHER & SPACER) | |
| | 5 | 1 | **173-2543** | 1 | KIT-CUSHION | |
| | 6 | 1 | **219-4379** | 1 | HANDLE | |
| | 7 | 1 | **219-4388** | 1 | KIT-HANDLE (KNOB) | |
| Z | | 1 | | 1 | KNOB | |
| Z | 7A | 1 | | 1 | SHAFT | |
| Z | 7B | 1 | | 2 | PIN-SPRING | |
| Z | 7C | 1 | | 1 | HANGER (SPRING) | |
| Z | 7D | 1 | | 1 | NUT-PUSH | |
| Z | | 1 | | 2 | SPACER | |

Z-NOT SERVICED SEPARATELY

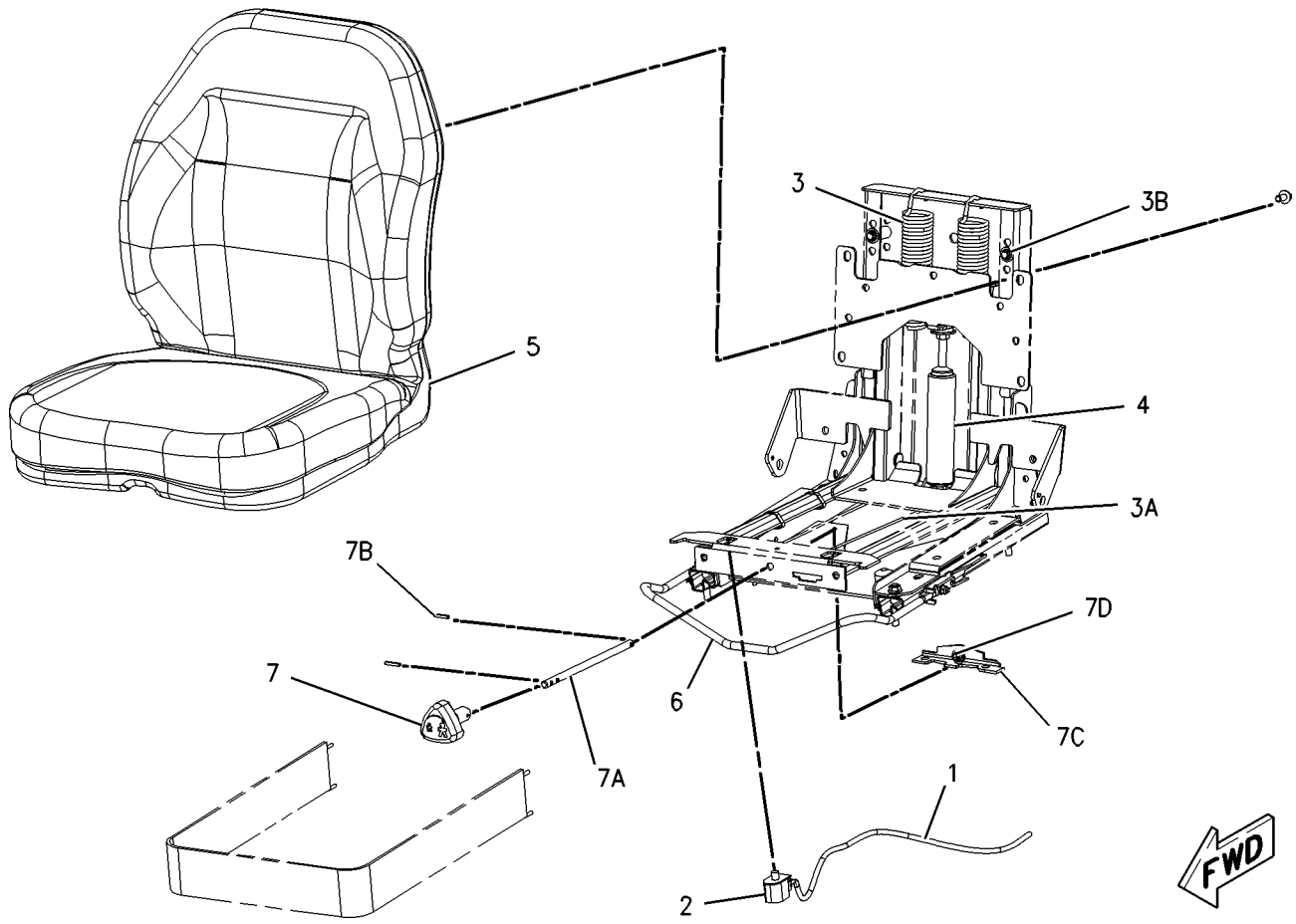


GRAPHIC #1 **<END>** g00915009

# OPERATOR STATION

## *218-6380* SPRING GP-GAS–CAB

**S/N: HEN6750-UP**

**PART OF 218-6350 CAB AR-ENCLOSED ROPS**

**SMCS-7301** **i02772071**

| NOTE | REF NO | GRAPHIC REF | PART NUMBER | QTY | PART NAME 1 2 3 4 5 6 (PRODUCT LEVEL) | SEE PAGE |
|---|---|---|---|---|---|---|
| | 1 | 1 | **5P-0372** | 2 | LOCK PIN | |
| | 2 | 1 | **9C-5344** | 1 | SPACER (10.5X20X18-MM THK) | |
| | 3 | 1 | **095-1325** | 1 | PIN-CLEVIS | |
| | 4 | 1 | **153-2682** | 1 | SPRING AS-GAS (CAB) | |
| | 5 | 1 | **177-3405** | 1 | PIN | |

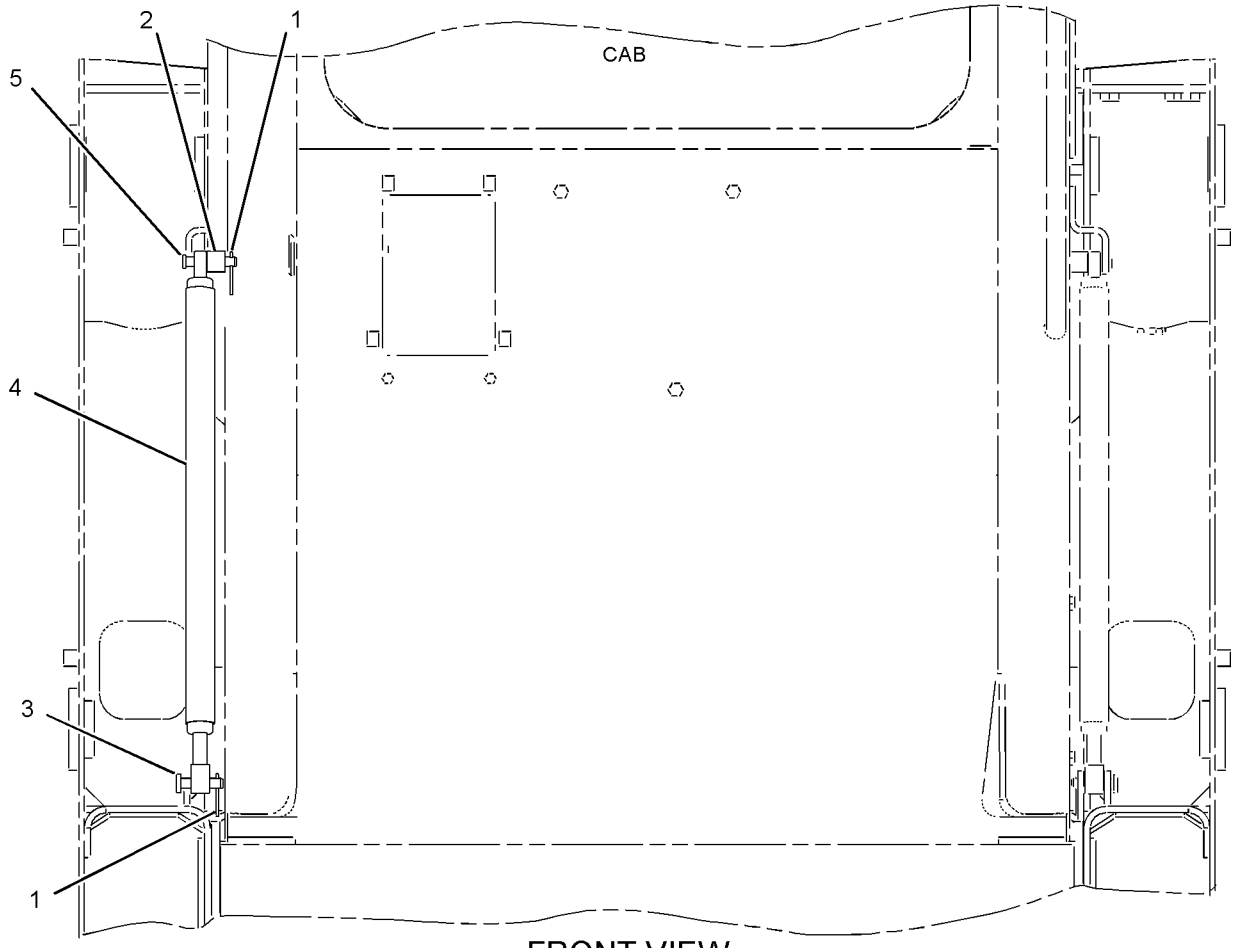


FRONT VIEW

GRAPHIC #1

**<END>**

g01031997

# OPERATOR STATION

## 166-2569 VISOR GP-CAB

**S/N: HEN6750-UP**
**PART OF 173-3022 VISOR GP-CAB**
**AN ATTACHMENT**

**SMCS-7301** **i01297216**

| NOTE | REF NO | GRAPHIC REF | PART NUMBER | QTY | PART NAME 1 2 3 4 5 6 (PRODUCT LEVEL) | SEE PAGE |
|---|---|---|---|---|---|---|
| | 1 | 1 | **2S-5717** | 1 | LOCKNUT (3/8-16-THD) | |
| | 2 | 1 | **5T-7869** | 2 | CLAMP | |
| | 3 | 1 | **5T-7870** | 1 | KNOB | |
| | 4 | 1 | **1D-4677** | 2 | BOLT-ROUND HEAD (3/8-16X1-IN) | |
| M | 5 | 1 | **9X-2042** | 4 | SCREW-TRUSS HEAD (M6X1X12-MM) | |

M-METRIC PART

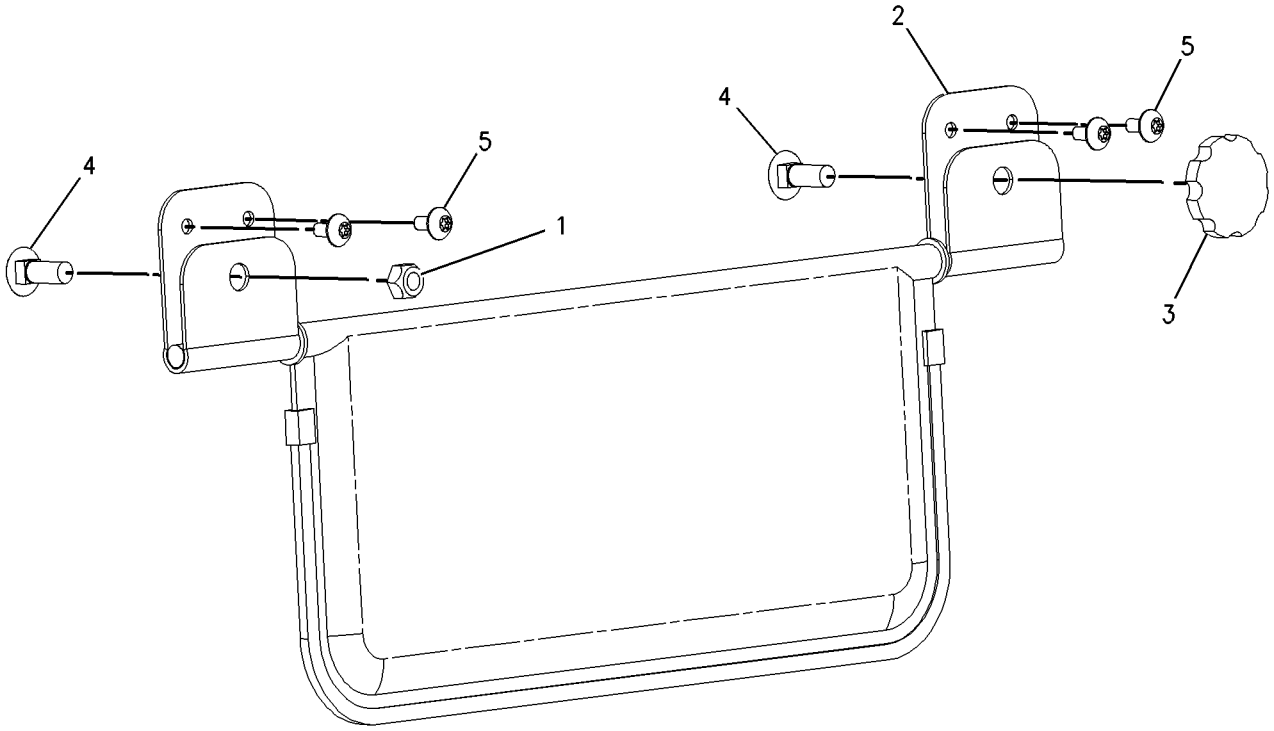


GRAPHIC #1 **<END>** g00695703

# OPERATOR STATION

## *173-3022* VISOR GP-CAB

**S/N: HEN6750-UP**

**PART OF 278-5418, 278-5448, 295-7170, 295-7171 CONVERSION AR-MACHINE, 236-5116, 251-1510 CONVERSION AR-ROADING**

**AN ATTACHMENT**

**SMCS-7301** **i01486233**

| NOTE | REF NO | GRAPHIC REF | PART NUMBER | QTY | PART NAME 1 2 3 4 5 6 (PRODUCT LEVEL) | SEE PAGE |
|---|---|---|---|---|---|---|
| | 1 | 1 | **166-2562** | 1 | PLATE AS | |
| Y | 2 | 1 | **166-2569** | 1 | VISOR GP-CAB | 596 |
| | 3 | 1 | **195-0936** | 4 | INSERT-THREADED (M6X1) | |
| M | 4 | 1 | **9X-2045** | 4 | SCREW-TRUSS HEAD (M6X1X20-MM) | |

M-METRIC PART
Y-SEPARATE ILLUSTRATION

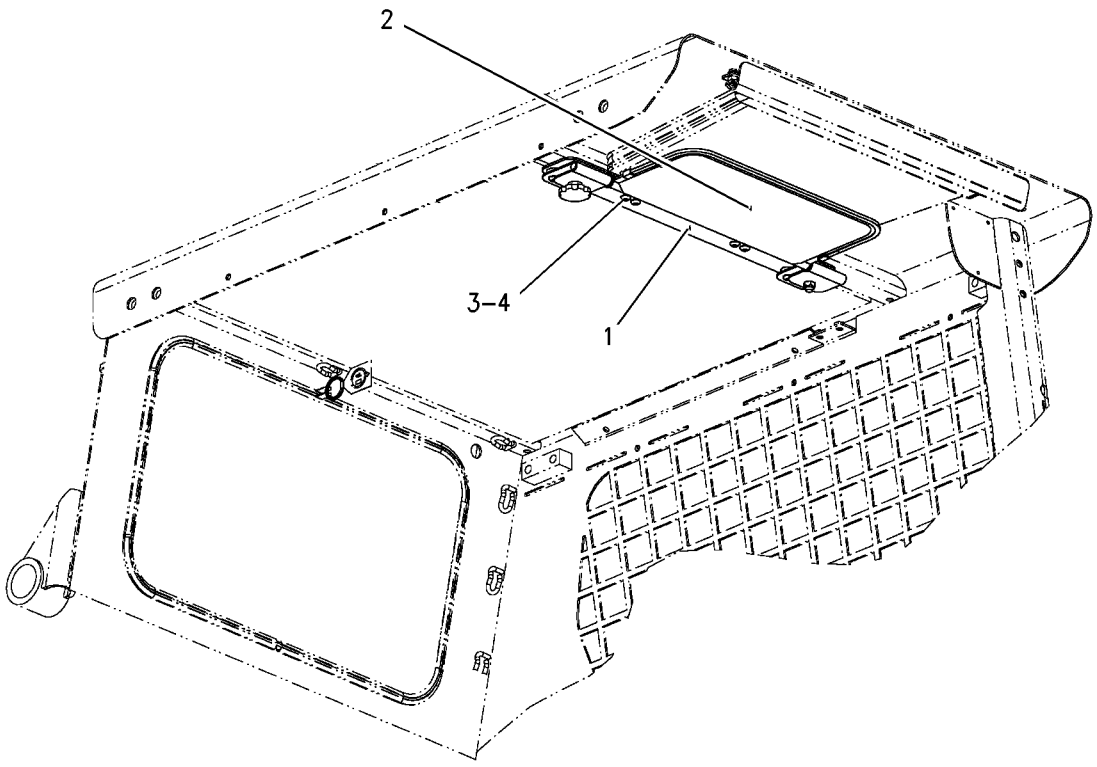


GRAPHIC #1 **<END>** g00772669

# OPERATOR STATION

## *195-6723* WINDOW GP-CAB

**S/N: HEN6750-UP**

**TOP & REAR**

**PART OF 218-6350 CAB AR-ENCLOSED ROPS**

**SMCS-7310** **i02534285**

| NOTE | REF NO | GRAPHIC REF | PART NUMBER | QTY | PART NAME 1 2 3 4 5 6 (PRODUCT LEVEL) | SEE PAGE |
|---|---|---|---|---|---|---|
| | 1 | 1 | **5C-8310** | 1 | BRACKET-RING | |
| | 2 | 1 | **5C-8311** | 1 | RING | |
| | 3 | 1 | **8T-6842** | 1 | FILM-INSTRUCTION (PULL RING, ALTERNATE EXIT) | |
| | 4 | 1 | **142-9319** | 1 | WINDOW | |
| CE | 5 | 1 | **108-0656** | | SEAL (192-CM) | |
| CE | 6 | 1 | **104-5957** | | STRIP-LOCKING (186-CM) | |

C-CHANGE FROM PREVIOUS TYPE
E-ORDER BY THE CENTIMETER

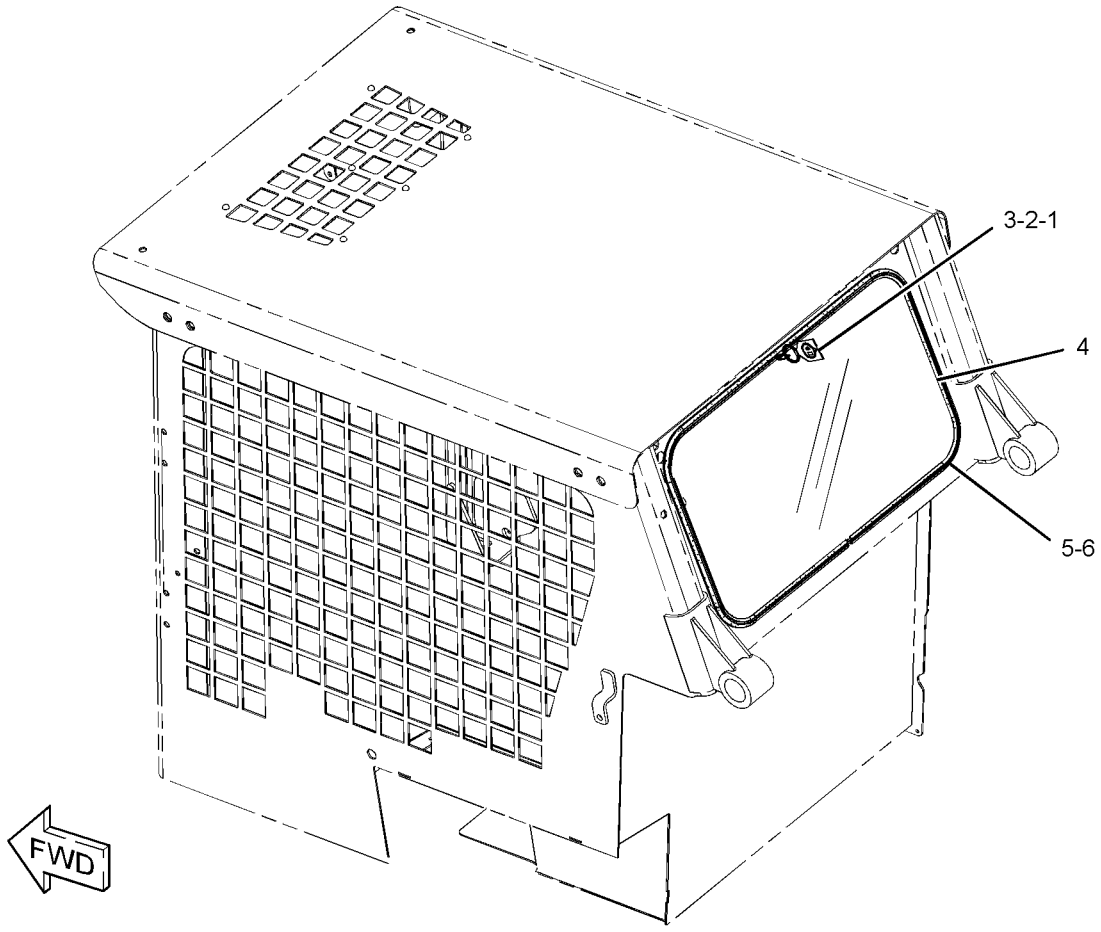


GRAPHIC #1 **<END>** g01268492

# *218-6411* WINDOW GP-CAB—SIDE

**S/N: HEN6750-UP**
**PART OF 295-7322, 295-7332 OPTION AR-CAB**
**AN ATTACHMENT**

**SMCS-7310** **i02501965**

| NOTE | REF NO | GRAPHIC REF | PART NUMBER | QTY | PART NAME 1 2 3 4 5 6 (PRODUCT LEVEL) | SEE PAGE |
|---|---|---|---|---|---|---|
| Y | 1 | 1 | **224-7057** | 1 | WINDOW GP-CAB (UPPER, LH) | 601 |
| Y | 2 | 1 | **224-7058** | 1 | WINDOW GP-CAB (UPPER, RH) | 603 |
| | 3 | 1 | **231-7321** | 1 | WINDOW AS-CAB (LOWER, RH) | |
| | | 1 | **239-6109** | 1 | LATCH AS | |
| E | | 1 | **282-6961** | | SEAL (122-CM) | |
| | 4 | 1 | **231-7324** | 1 | WINDOW AS-CAB (LOWER, LH) | |
| | | 1 | **239-6109** | 1 | LATCH AS | |
| E | | 1 | **282-6961** | | SEAL (122-CM) | |
| M | 5 | 1 | **9X-2045** | 10 | SCREW-TRUSS HEAD (M6X1X20-MM) | |

E-ORDER BY THE CENTIMETER
M-METRIC PART
Y-SEPARATE ILLUSTRATION

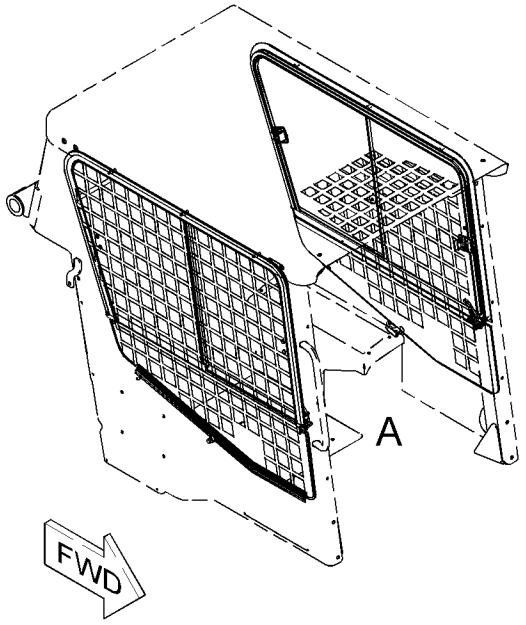


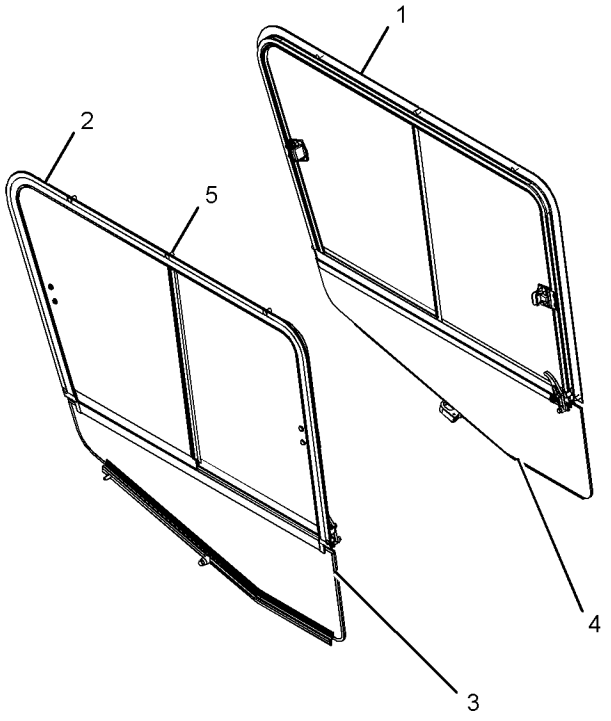


VIEW OF AREA A

GRAPHIC #1 **<END>** g01057739

# OPERATOR STATION

## 218-6745 WINDOW GP-CAB—KIT, SIDE

**S/N: HEN6750-UP**
**CANNOT BE USED WITH 218-6411—PAGE 599**
**AN ATTACHMENT**

**SMCS-7310** **i02300613**

| NOTE | PART NUMBER | QTY | PART NAME 1 2 3 4 5 6 (PRODUCT LEVEL) | SEE PAGE |
|---|---|---|---|---|
| Y | **224-7057** | 1 | WINDOW GP-CAB (UPPER, LH) | 601 |
| Y | **224-7058** | 1 | WINDOW GP-CAB (UPPER, RH) | 603 |
| | | | | |
| | **231-7321** | 1 | WINDOW AS-CAB (LOWER, RH) | |
| D | **5P-5930** | | SEAL (12-M) | |
| | **239-6109** | | LATCH AS | |
| | **231-7324** | 1 | WINDOW AS-CAB (LOWER, LH) | |
| | **239-6109** | 1 | LATCH AS | |
| D | **5P-5930** | | SEAL (2-M) | |
| M | **9X-2045** | 10 | SCREW-TRUSS HEAD (M6X1X20-MM) | |

D-ORDER BY THE METER
M-METRIC PART
Y-SEPARATE ILLUSTRATION

**<END>**

## 224-7057 WINDOW GP-CAB–UPPER,LH

**S/N: HEN6750-UP**

**PART OF 218-6411, 218-6745 WINDOW GP-CAB**

**AN ATTACHMENT**

**SMCS-7310** **i02492653**

| NOTE | REF NO | GRAPHIC REF | PART NUMBER | QTY | PART NAME 1 2 3 4 5 6 (PRODUCT LEVEL) | SEE PAGE |
|---|---|---|---|---|---|---|
| | 1 | 1 | **231-7322** | 1 | WINDOW AS-CAB (SLIDING, REAR) | |
| E | | 1 | **207-0573** | | SEAL (76-CM) | |
| | | 1 | **231-7331** | 1 | LATCH AS | |
| | 2 | 1 | **231-7323** | 1 | WINDOW AS-CAB (SLIDING, FRONT) | |
| E | | 1 | **207-0573** | | SEAL (41-CM) | |
| | | 1 | **231-7331** | 1 | LATCH AS | |
| Y | 3 | 1 | **231-7327** | 1 | FRAME GP-WINDOW (LH) | 540 |
| | 4 | 1 | **231-7372** | 1 | CATCH | |
| | 5 | 1 | **243-1323** | 1 | CATCH | |
| | 6 | 1 | **6D-5797** | 2 | SCREW-SOCKET | |
| | 7 | 1 | **9X-8918** | 2 | SCREW-FLAT HEAD (8-32X0.5-IN) | |
| E | 8 | 1 | **207-0539** | | SEAL (125-CM) | |
| E | 9 | 1 | **207-0539** | | SEAL (138-CM) | |
| E | 10 | 1 | **207-0539** | | SEAL (81-CM) | |
| E | 11 | 1 | **207-0573** | | SEAL (62-CM) | |
| E | 12 | 1 | **207-0573** | | SEAL (80-CM) | |
| E | 13 | 1 | **3E-3892** | | SEAL (31-CM EACH) | |
| E | 14 | 1 | **3E-3892** | | SEAL (75-CM) | |
| E | 15 | 1 | **3E-3892** | | SEAL (65-CM) | |
| E | 16 | 1 | **3E-3892** | | SEAL (4-CM EACH) | |

E-ORDER BY THE CENTIMETER
Y-SEPARATE ILLUSTRATION

**224-7057 WINDOW GP-CAB** *(contd. )* **i02492653**

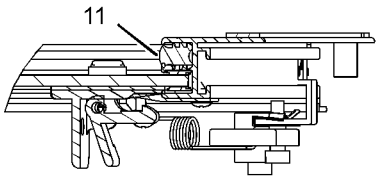


VIEW OF AREA E

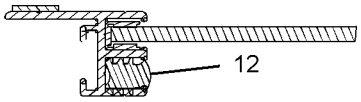


SECTION H-H

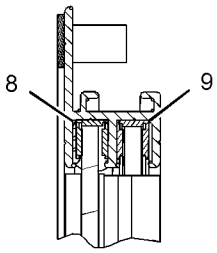


VIEW OF AREA C

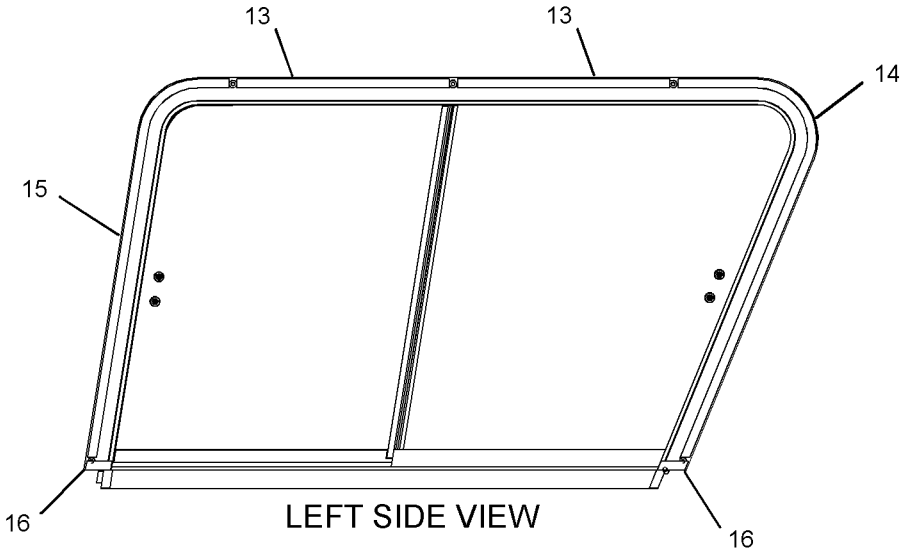


LEFT SIDE VIEW

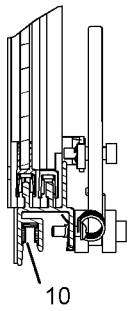


VIEW OF AREA D

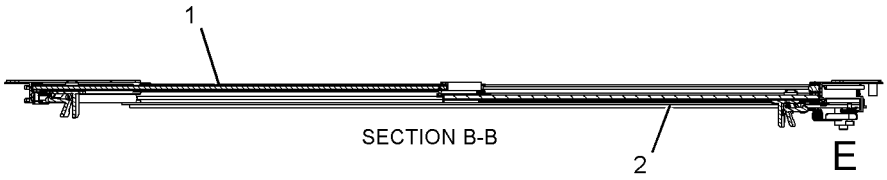


SECTION B-B

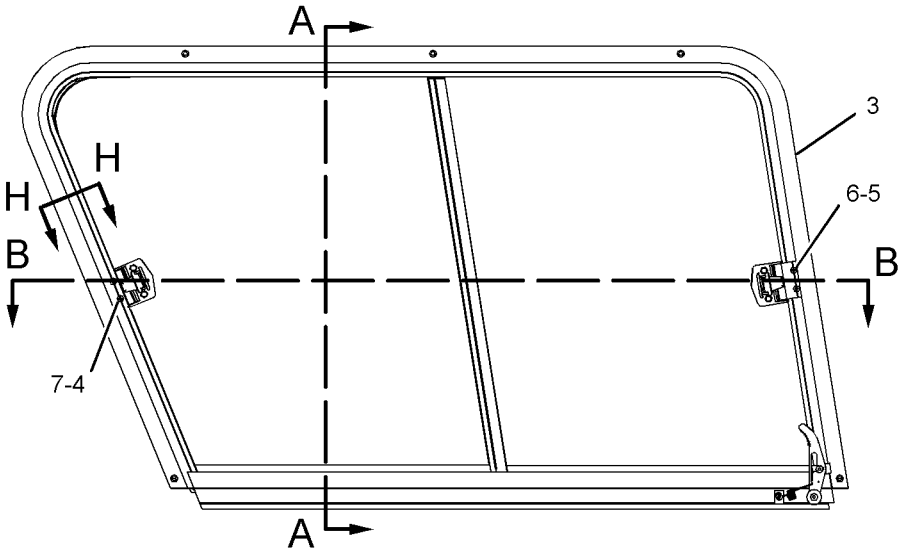


RIGHT SIDE VIEW
(INSIDE OF CAB)

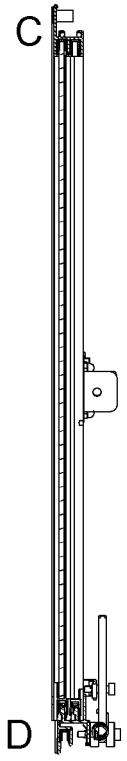


SECTION A-A

GRAPHIC #1 **<END>** g01276116

# OPERATOR STATION

## 224-7058 WINDOW GP-CAB–RH,UPPER

**S/N: HEN6750-UP**

**PART OF 218-6411, 218-6745 WINDOW GP-CAB**

**AN ATTACHMENT**

**SMCS-7310** **i02492654**

| NOTE | REF NO | GRAPHIC REF | PART NUMBER | QTY | PART NAME 1 2 3 4 5 6 (PRODUCT LEVEL) | SEE PAGE |
|---|---|---|---|---|---|---|
| | 1 | 1 | **231-7319** | 1 | WINDOW AS-CAB (SLIDING, REAR) | |
| E | | | **207-0573** | | SEAL (38-CM) | |
| | | | **231-7331** | 1 | LATCH AS | |
| | 2 | 1 | **231-7320** | 1 | WINDOW AS-CAB (SLIDING, FRONT) | |
| E | | 1 | **207-0573** | | SEAL (41-CM) | |
| | | 1 | **231-7331** | 1 | LATCH AS | |
| Y | 3 | 1 | **231-7325** | 1 | FRAME GP-WINDOW (RH) | 539 |
| | 4 | 1 | **231-7372** | 1 | CATCH | |
| | 5 | 1 | **243-1323** | 1 | CATCH | |
| | 6 | 1 | **6D-5797** | 2 | SCREW-SOCKET | |
| | 7 | 1 | **9X-8918** | 2 | SCREW-FLAT HEAD (8-32X0.5-IN) | |
| E | 8 | 1 | **3E-3892** | | SEAL (4-CM EACH) | |
| E | 9 | 1 | **3E-3892** | | SEAL (31-CM EACH) | |
| E | 10 | 1 | **3E-3892** | | SEAL (75-CM) | |
| E | 11 | 1 | **3E-3892** | | SEAL (65-CM) | |
| E | 12 | 1 | **207-0539** | | SEAL (81-CM) | |
| E | 13 | 1 | **207-0539** | | SEAL (138-CM) | |
| E | 14 | 1 | **207-0539** | | SEAL (125-CM) | |
| E | 15 | 1 | **207-0573** | | SEAL (80-CM) | |
| E | 16 | 1 | **207-0573** | | SEAL (62-CM) | |

E-ORDER BY THE CENTIMETER
Y-SEPARATE ILLUSTRATION

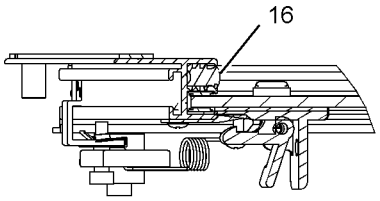


VIEW OF AREA E

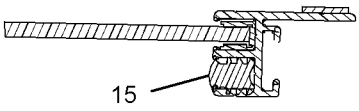


SECTION H-H

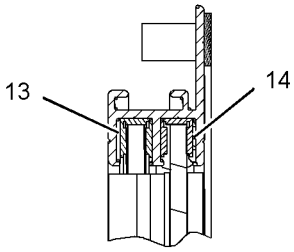


VIEW OF AREA C

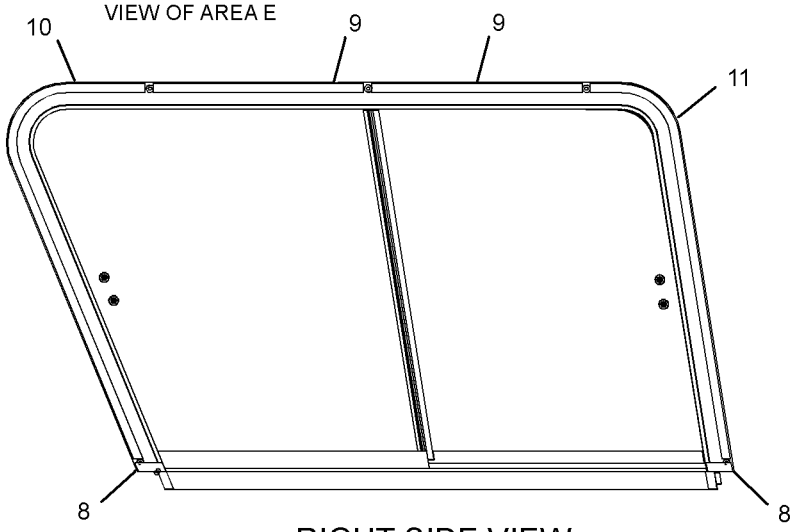


RIGHT SIDE VIEW

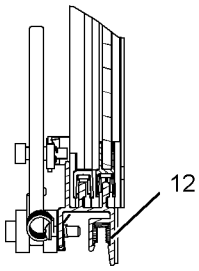


VIEW OF AREA D

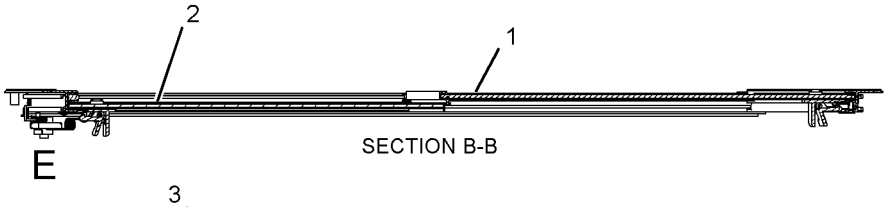


SECTION B-B

E

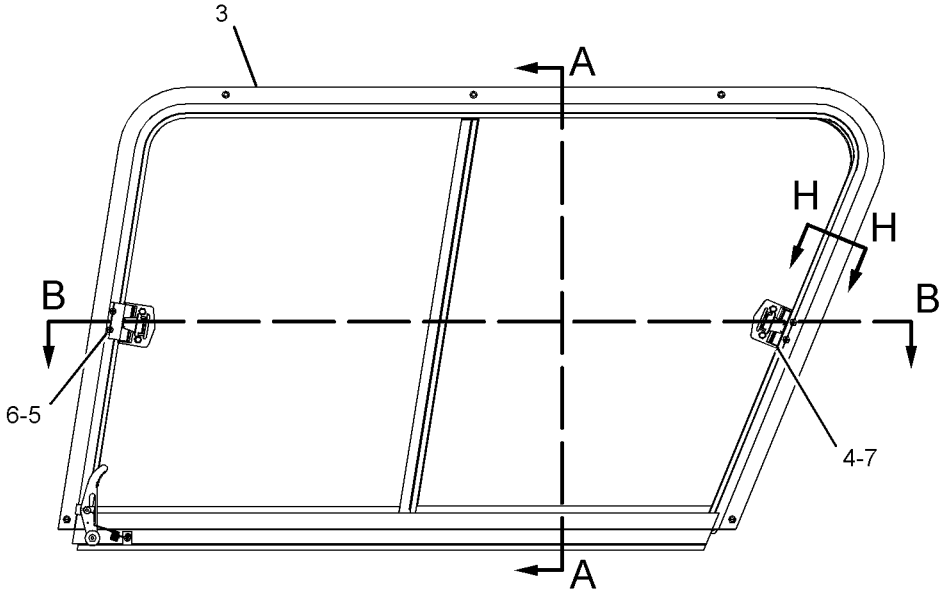


LEFT SIDE VIEW
(INSIDE OF CAB)

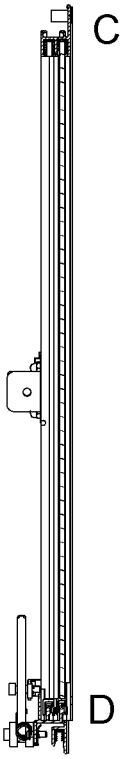


SECTION A-A

GRAPHIC #1 **<END>** g01276182

## *191-9684* FILM GP—CLEARANCE

**S/N: HEN6750-UP**

**PART OF 278-5351, 295-7071 CONVERSION AR-MACHINE, 218-5784 CONVERSION AR-ROADING**

**AN ATTACHMENT**

**SMCS-7557** **i01983232**

| NOTE | REF NO | GRAPHIC REF | PART NUMBER | QTY | PART NAME 1 2 3 4 5 6 (PRODUCT LEVEL) | SEE PAGE |
|---|---|---|---|---|---|---|
| | 1 | 1 | **160-1600** | 1 | FILM-WARNING (CLEARANCE) | |

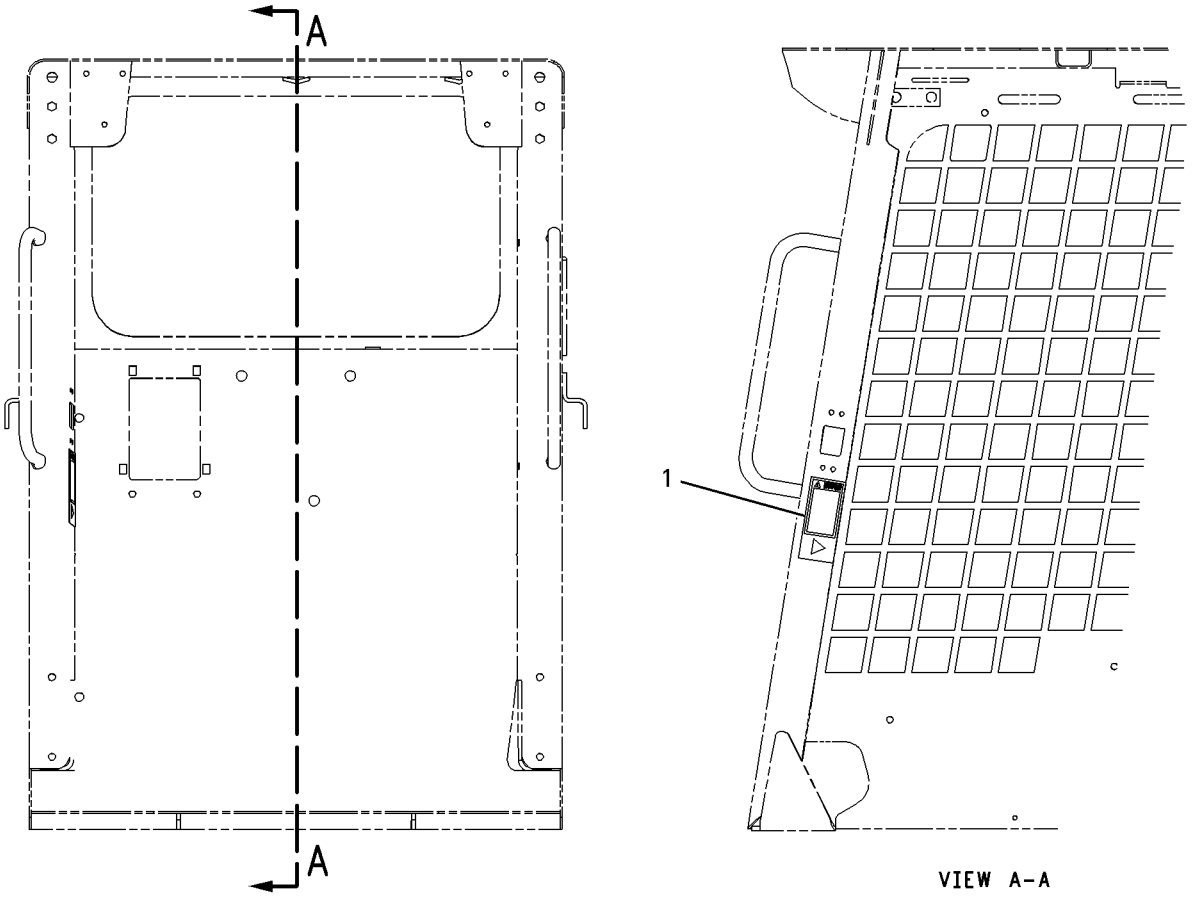


GRAPHIC #1 **<END>** g00771257

# SERVICE EQUIPMENT AND SUPPLIES

## *238-7734* FILM GP–UN

**S/N: HEN6750-UP**

**AN ATTACHMENT**

**SMCS-7557** **i02797728**

| NOTE | REF NO | GRAPHIC REF | PART NUMBER | QTY | PART NAME 1 2 3 4 5 6 (PRODUCT LEVEL) | SEE PAGE |
|---|---|---|---|---|---|---|
| | 1 | 1 | **252-9015** | 1 | FILM-IDENTIFICATION (UN) | |
| | 2 | 1 | **252-9016** | 2 | FILM-IDENTIFICATION (UN) | |
| | 3 | 1 | **252-9017** | 2 | FILM-IDENTIFICATION (UN) | |

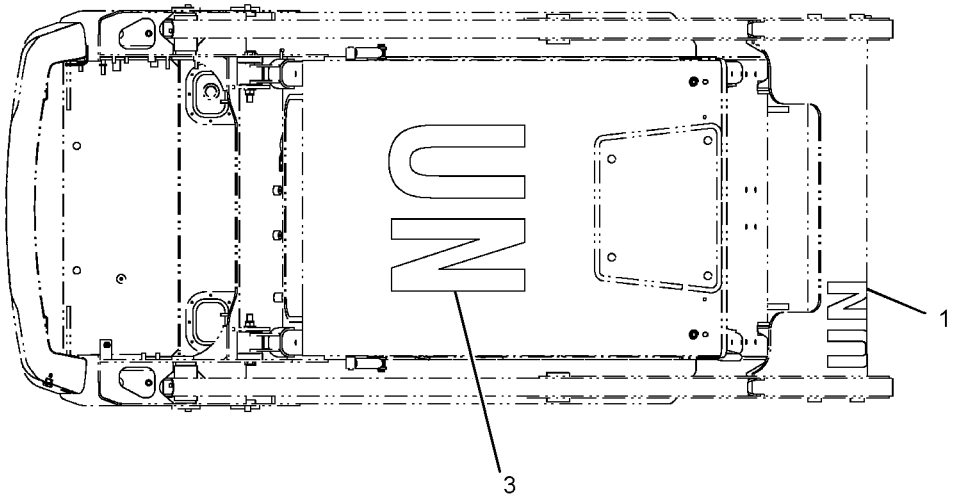


TOP VIEW FWD

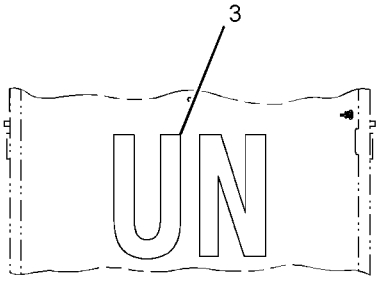


VIEW A-A

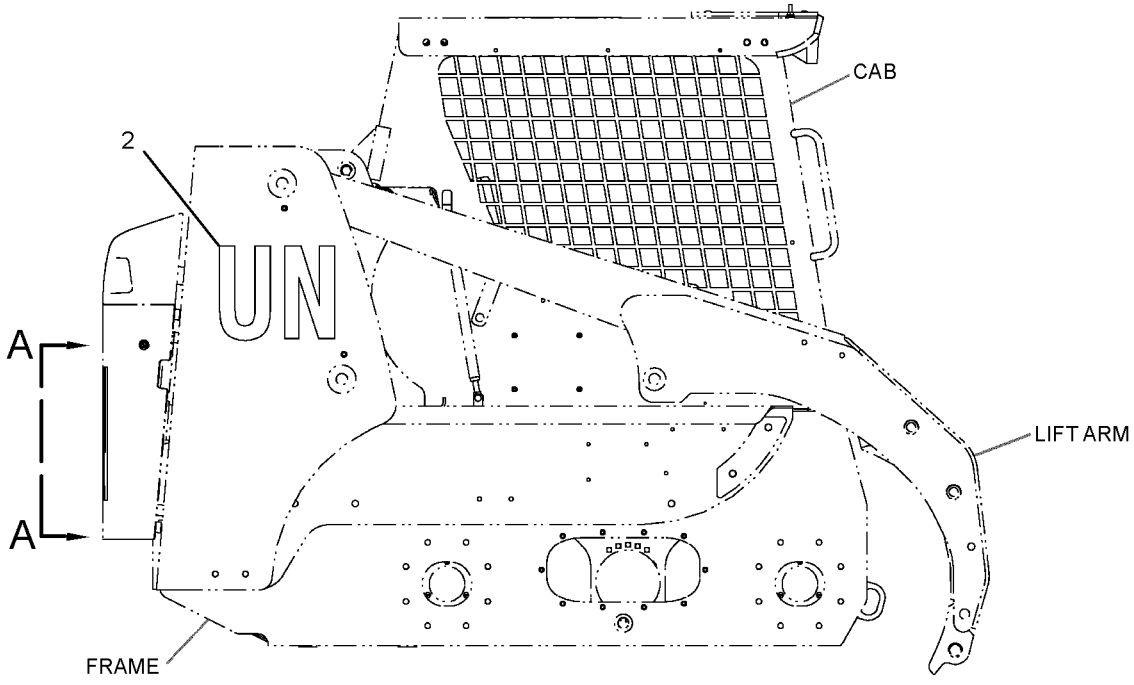


RIGHT SIDE VIEW

GRAPHIC #1 **<END>** g01397986

# SERVICE EQUIPMENT AND SUPPLIES

## *295-7136* FILM GP

**S/N: HEN6750-UP**

**PART OF 295-7236, 295-7237 COMMON AR**

**SMCS-7557** **i02731074**

| NOTE | REF NO | GRAPHIC REF | PART NUMBER | QTY | PART NAME 1 2 3 4 5 6 (PRODUCT LEVEL) | SEE PAGE |
|---|---|---|---|---|---|---|
| | 1 | 1 | **258-3423** | 1 | FILM-IDENTIFICATION (CATERPILLAR) | |
| | 2 | 1 | **258-3424** | 1 | FILM-IDENTIFICATION (CAT, LIFT ARM, LH) | |
| | 3 | 1 | **258-3425** | 1 | FILM-IDENTIFICATION (CAT, LIFT ARM, RH) | |
| | 4 | 1 | **258-3427** | 1 | FILM-IDENTIFICATION (CAT, REAR) | |
| | 5 | 1 | **295-7426** | 1 | FILM-IDENTIFICATION (236B2, LH) | |
| | 6 | 1 | **295-7427** | 1 | FILM-IDENTIFICATION (236B2, RH) | |

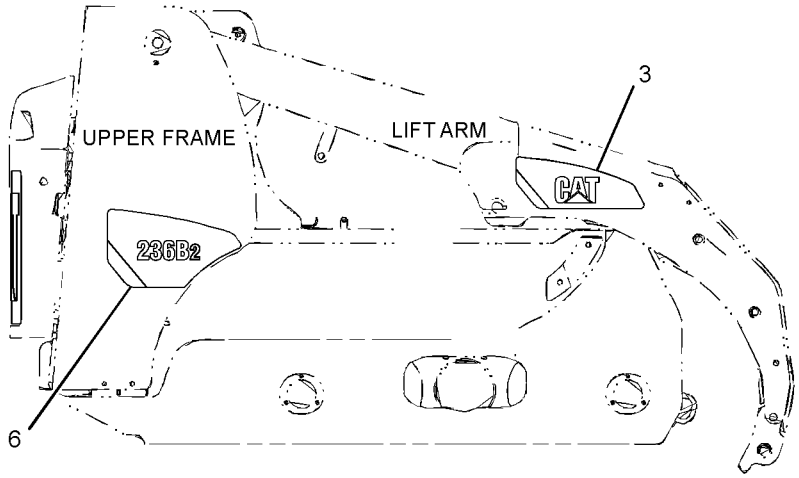


RIGHT SIDE VIEW

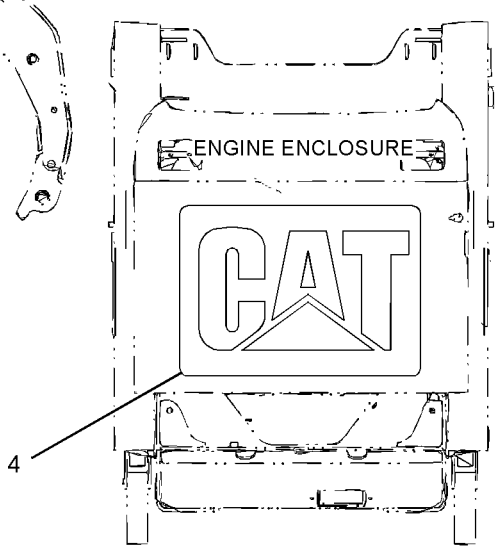


REAR VIEW

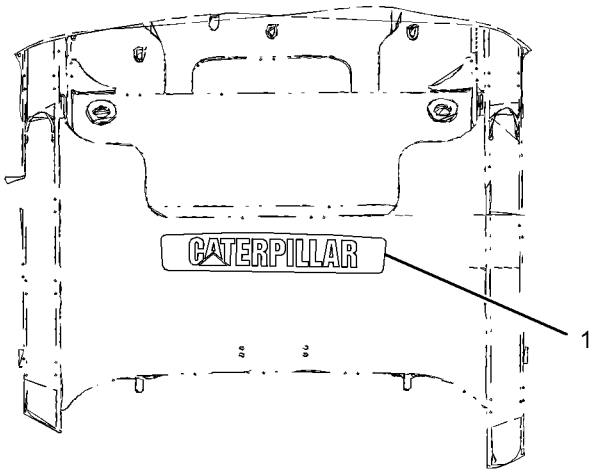


VIEW A-A

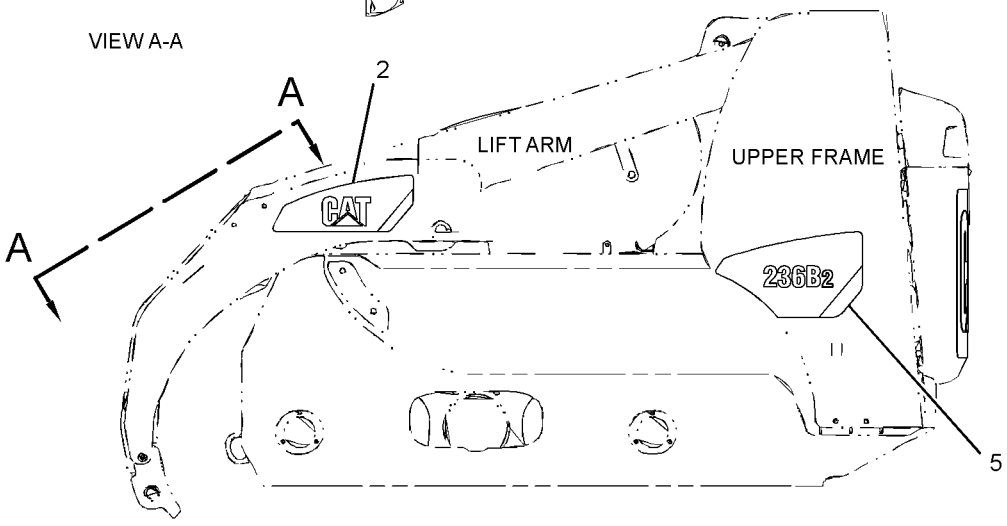


LEFT SIDE VIEW

GRAPHIC #1 **<END>** g01372154

# SERVICE EQUIPMENT AND SUPPLIES

## *195-6740* PLATE & FILM GP

**S/N: HEN6750-UP**
**AN ATTACHMENT**

**SMCS-7405, 7557** **i02890284**

| NOTE | REF NO | GRAPHIC REF | PART NUMBER | QTY | PART NAME 1 2 3 4 5 6 (PRODUCT LEVEL) | SEE PAGE |
|---|---|---|---|---|---|---|
| | 1 | 1 | **199-3410** | 1 | FILM-IDENTIFICATION<br>(SYNTHETIC HYD OIL, READ OMM) | |

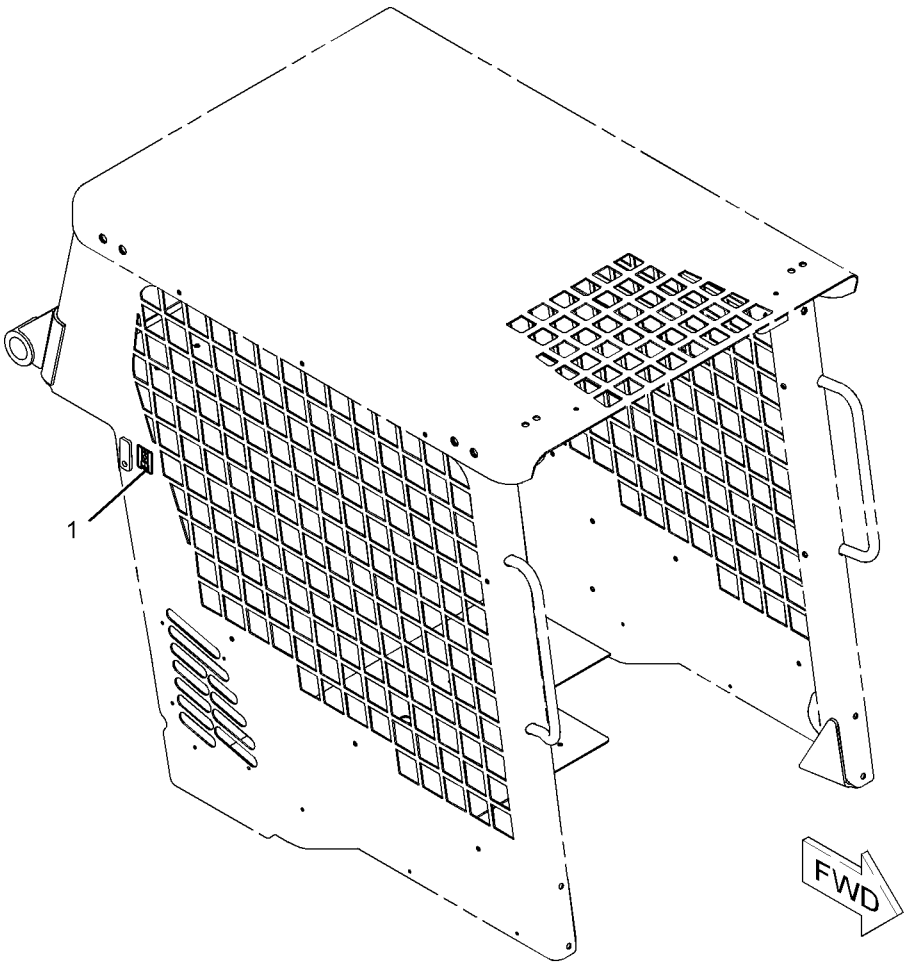


GRAPHIC #1 **<END>** g01086583

# SERVICE EQUIPMENT AND SUPPLIES

## *218-5951* PLATE & FILM GP

**S/N: HEN6750-UP**
**AN ATTACHMENT**

**SMCS-7405, 7557** **i02843436**

| NOTE | REF NO | GRAPHIC REF | PART NUMBER | QTY | PART NAME 1 2 3 4 5 6 (PRODUCT LEVEL) | SEE PAGE |
|---|---|---|---|---|---|---|
| | 1 | 1 | **239-6986** | 1 | PLATE-IDENTIFICATION (MACHINE) | |
| | 2 | 2 | **157-2853** | 1 | FILM-INFORMATION (READ OMM) | |
| | 3 | 1,2 | **225-7977** | 1 | FILM-IDENTIFICATION (RELAY LAYOUT) | |
| | 4 | 1 | **224-0554** | 1 | FILM-WARNING (UNIVERSAL, READ OMM, INTL) | |
| | 5 | 1 | **224-9022** | 1 | FILM-WARNING (SEAT BELT) | |
| | 6 | 2 | **233-5711** | 1 | FILM-INSTRUCTION (SERVICE CHART) | |
| | 7 | 1 | **4P-6422** | 1 | FILM-WARNING (NO ETHER SPRAY/AIR INTAKE) | |
| | 8 | 1 | **235-1368** | 1 | FILM-WARNING (RADIATOR) | |
| | 9 | 2 | **169-2876** | 1 | FILM-IDENTIFICATION (POWER RECEPTACLE, 12-VOLT) | |
| | 10 | 1 | **219-0302** | 1 | FILM-WARNING (NO WELD, NO DRILL, READ OMM) | |
| | 11 | 2 | **224-0672** | 1 | FILM-WARNING (HIGH PRESSURE, READ OMM, INTL) | |
| | 12 | 1 | **224-9855** | 1 | FILM-INSTRUCTION (START AID, READ OMM, INTL) | |
| | 13 | 2 | **225-0312** | 1 | FILM-WARNING (JUMP START, READ OMM, INTL) | |
| | 14 | 1 | **225-7976** | 1 | FILM-IDENTIFICATION (RELAY LAYOUT) | |
| | 15 | 1 | **234-6069** | 1 | FILM-WARNING (CRUSH HAZARD) | |
| | 16 | 2 | **234-6071** | 1 | FILM-WARNING (LIFT ARM BRACE) | |
| | 17 | 1 | **234-6076** | 1 | FILM-WARNING (NO ACCESS) | |
| | 18 | 1,2 | **234-6078** | 2 | FILM-WARNING (CAB TILT SUPPORT) | |
| | 19 | 1 | **234-6081** | 1 | FILM-WARNING (WORK TOOL) | |
| | 20 | 2 | **234-9575** | 1 | FILM-INSTRUCTION (GOVERNOR CONTROL) | |
| | 21 | 1 | **156-5762** | 4 | FILM-INFORMATION (TIE-DOWN LOCATION) | |
| | 22 | 1 | **234-6065** | 1 | FILM-CERTIFICATION (OPS, READ OMM) | |
| | 23 | 2 | **295-2567** | 1 | FILM-INSTRUCTION (BUCKET LOWER) | |

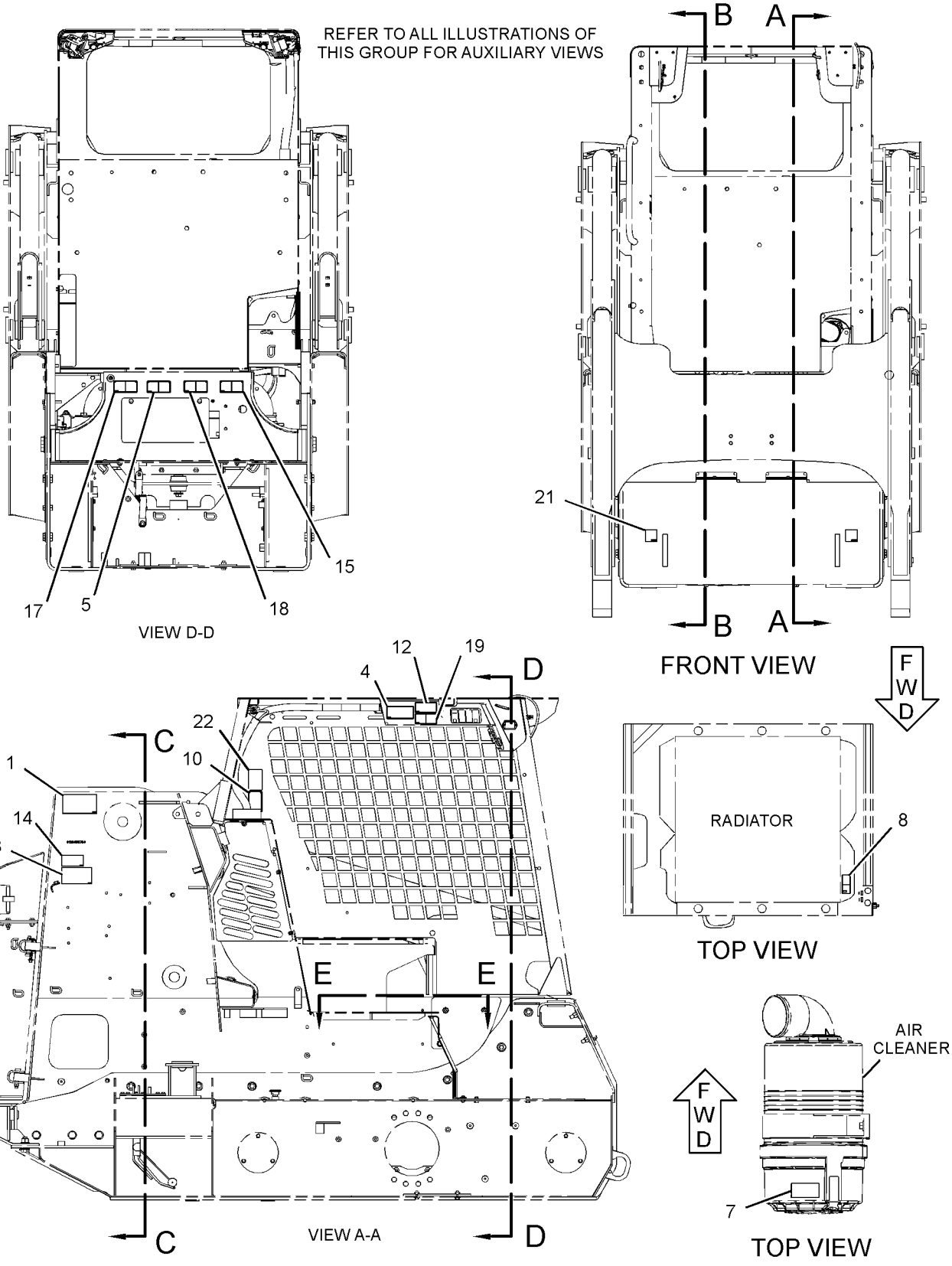


GRAPHIC #1

g01323054

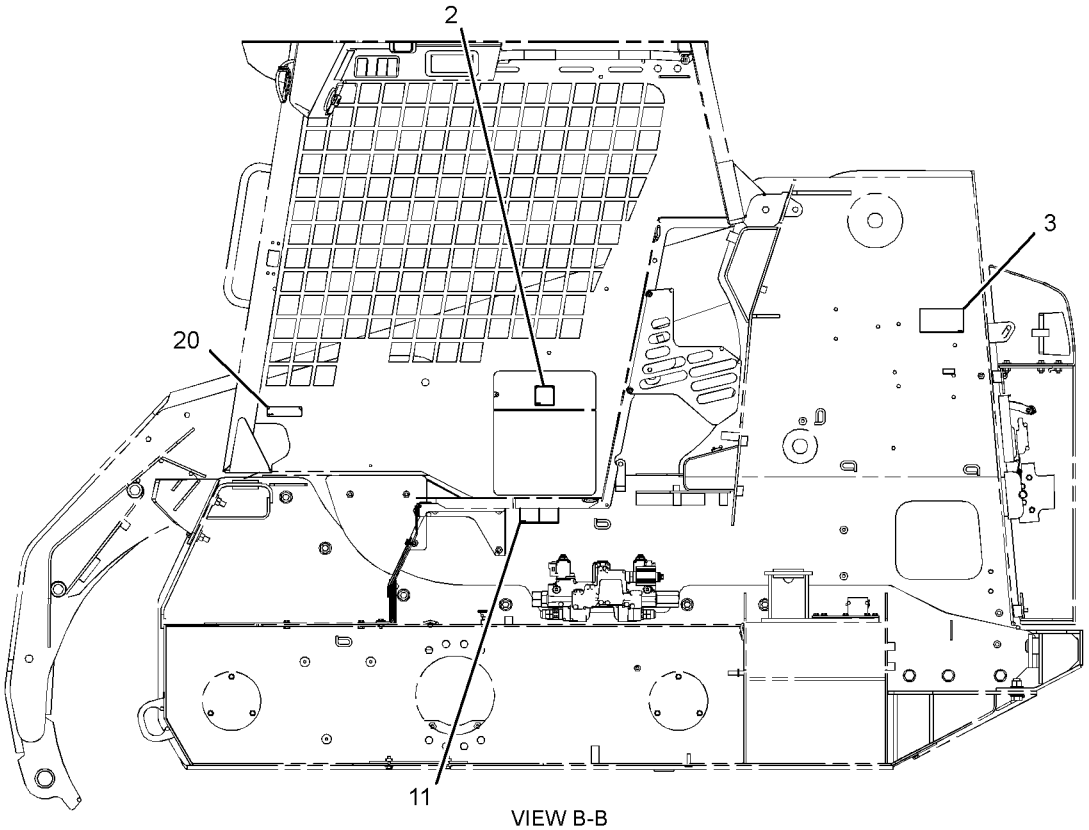


VIEW B-B

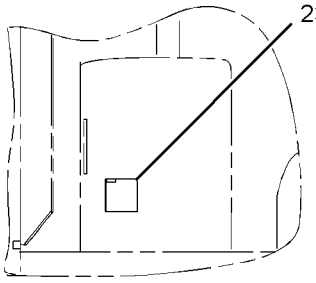


VIEW E-E

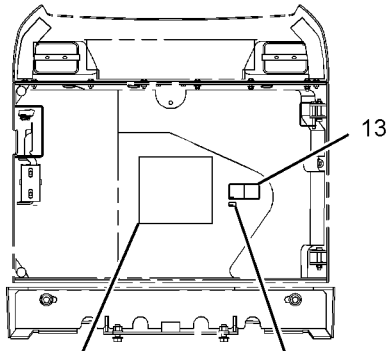


VIEW C-C

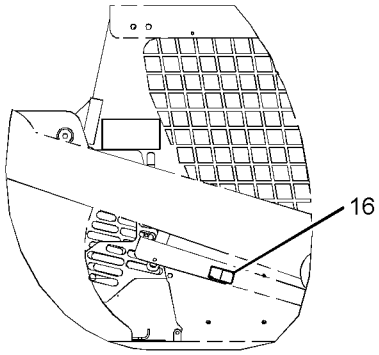


RIGHT SIDE VIEW

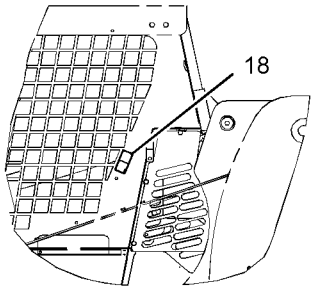


LEFT SIDE VIEW

GRAPHIC #2 **<END>** g01323051

# SERVICE EQUIPMENT AND SUPPLIES

## *218-6291* PLATE & FILM GP

**S/N: HEN6750-UP**

**AN ATTACHMENT**

**SMCS-7405, 7557** **i02593859**

| NOTE | REF NO | GRAPHIC REF | PART NUMBER | QTY | PART NAME 1 2 3 4 5 6 (PRODUCT LEVEL) | SEE PAGE |
|---|---|---|---|---|---|---|
| | 1 | 1 | **239-6986** | 1 | PLATE-IDENTIFICATION (MACHINE) | |
| | 2 | 1 | **157-2853** | 1 | FILM-INFORMATION (READ OMM) | |
| | 3 | 1 | **225-7977** | 1 | FILM-IDENTIFICATION (RELAY LAYOUT) | |
| | 4 | 1 | **224-7830** | 1 | FILM-WARNING (HIGH PRESSURE, READ OMM, U.S.) | |
| | 5 | 2 | **224-9021** | 1 | FILM-WARNING (SEAT BELT) | |
| | 6 | 1 | **225-3305** | 1 | FILM-WARNING (UNIVERSAL, READ OMM, U.S.) | |
| | 7 | 2 | **233-5711** | 1 | FILM-INSTRUCTION (SERVICE CHART) | |
| | 8 | 2 | **4P-6422** | 1 | FILM-WARNING (NO ETHER SPRAY/AIR INTAKE) | |
| | 9 | 2 | **235-1365** | 1 | FILM-WARNING (HOT FLUID UNDER PRESSURE) | |
| | 10 | 2 | **169-2876** | 1 | FILM-IDENTIFICATION (POWER RECEPTACLE, 12-VOLT) | |
| | 11 | 1 | **219-0302** | 1 | FILM-WARNING (NO WELD, NO DRILL, READ OMM) | |
| | 12 | 1 | **224-9855** | 1 | FILM-INSTRUCTION (START AID, READ OMM, INTL) | |
| | 13 | 2 | **225-0313** | 1 | FILM-WARNING (JUMP START, READ OMM, U.S.) | |
| | 14 | 1 | **225-7976** | 1 | FILM-IDENTIFICATION (RELAY LAYOUT) | |
| | 15 | 2 | **234-6067** | 2 | FILM-WARNING (CRUSH HAZARD, CAB, READ OMM) | |
| | 16 | 2 | **234-6070** | 1 | FILM-WARNING (CRUSH HAZARD, CAB, READ OMM) | |
| | 17 | 2 | **234-6072** | 1 | FILM-WARNING (CRUSH HAZARD, READ OMM) | |
| | 18 | 2 | **234-6074** | 1 | FILM-WARNING (FALL/CRUSH HAZARD, NO ACCESS) | |
| | 19 | 1 | **234-6077** | 1 | FILM-WARNING (CRUSH HAZARD, READ OMM) | |
| | 20 | 1 | **234-9575** | 1 | FILM-INSTRUCTION (GOVERNOR CONTROL) | |
| | 21 | 1 | **156-5762** | 4 | FILM-INFORMATION (TIE-DOWN LOCATION) | |
| | 22 | 1 | **234-6065** | 1 | FILM-CERTIFICATION (OPS, READ OMM) | |
| | 23 | 1 | **295-2567** | 1 | FILM-INSTRUCTION (BUCKET LOWER) | |
| | | | | | | |
| A | | | **246-4291** | 1 | PLATE-SERIAL NUMBER (ENGINE) | |

A-NOT PART OF THIS GROUP

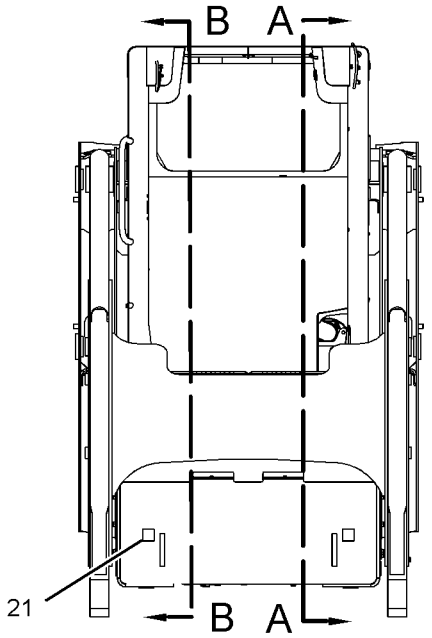


FRONT VIEW

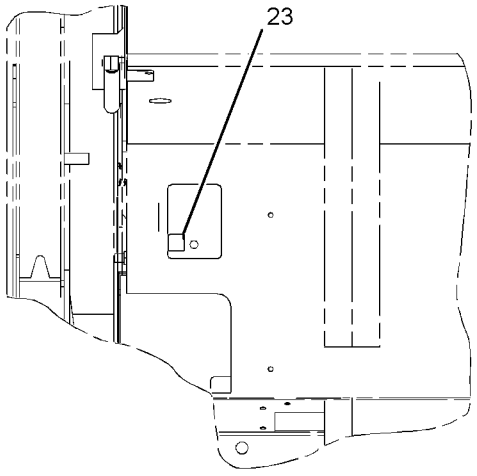


VIEW J-J

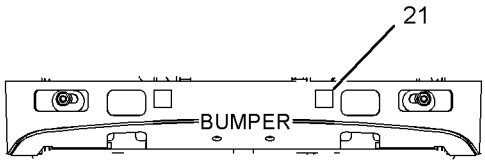


REAR VIEW

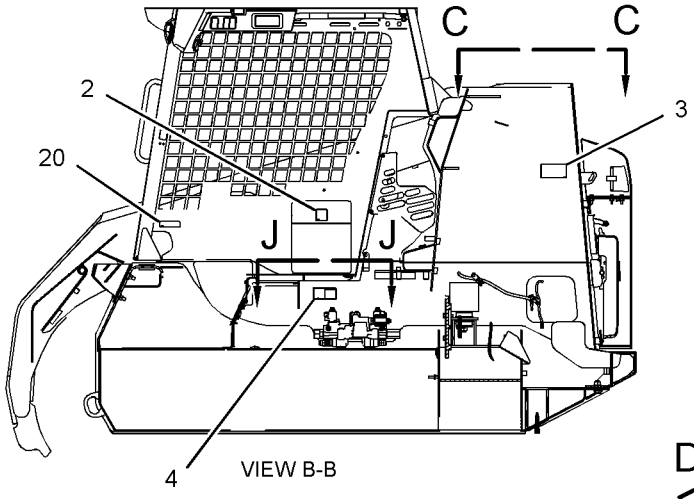


VIEW B-B

REFER TO ALL ILLUSTRATIONS OF THIS GROUP FOR AUXILIARY VIEWS

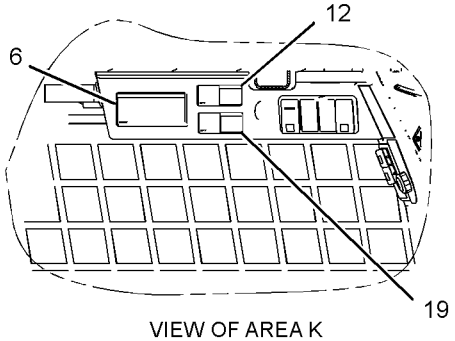


VIEW OF AREA K

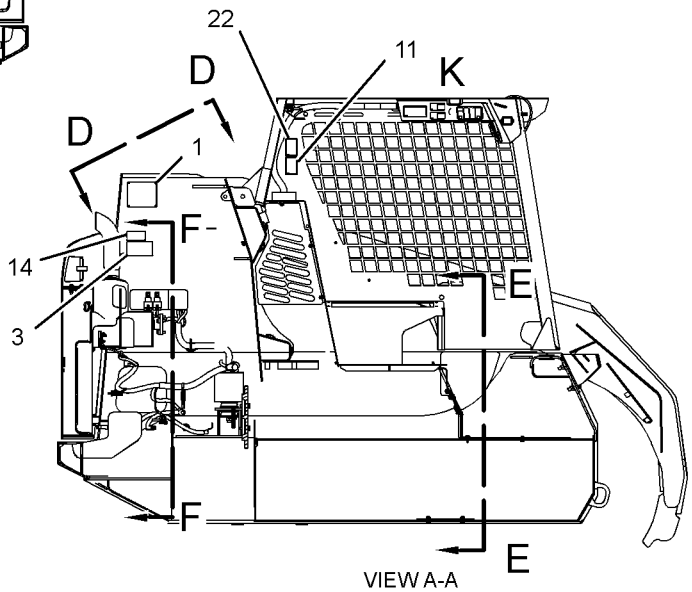


VIEW A-A

GRAPHIC #1

g01305792

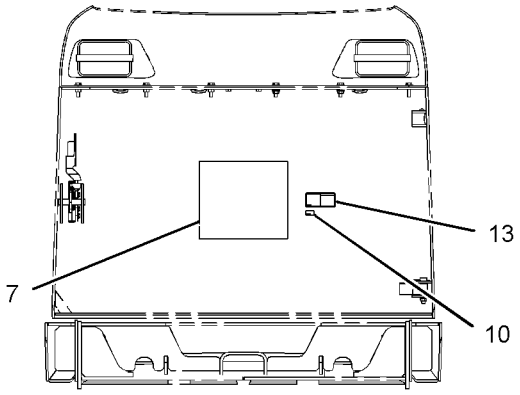


VIEW F-F

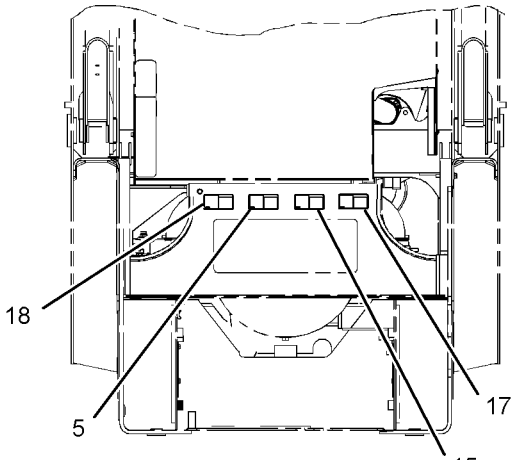


VIEW E-E

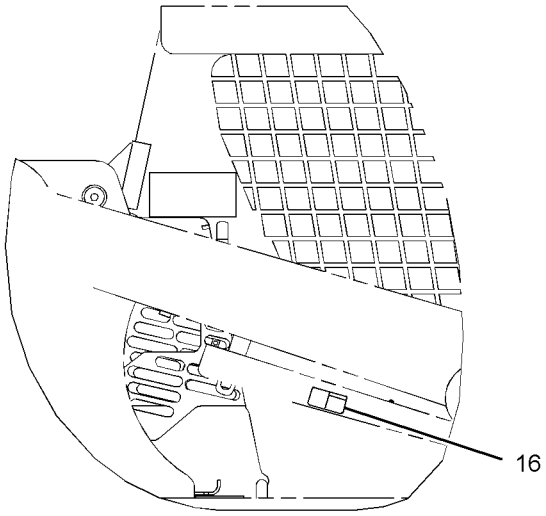


RIGHT SIDE VIEW

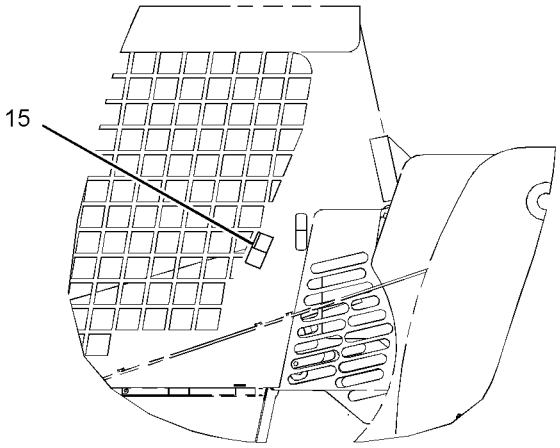


LEFT SIDE VIEW

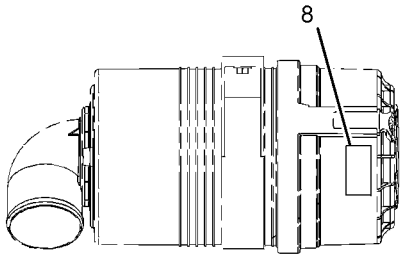


VIEW C-C

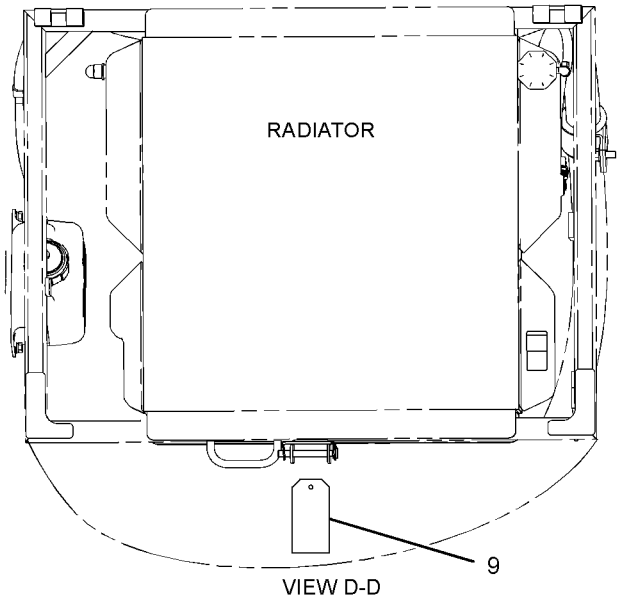


VIEW D-D

GRAPHIC #2 **<END>** g01305793

# SERVICE EQUIPMENT AND SUPPLIES

## *247-0678* PLATE & FILM GP

**S/N: HEN6750-UP**
**PART OF 231-5275, 231-5277 BLADE AR**
**AN ATTACHMENT**

**SMCS-7405, 7557** **i02469823**

| NOTE | REF NO | GRAPHIC REF | PART NUMBER | QTY | PART NAME 1 2 3 4 5 6 (PRODUCT LEVEL) | SEE PAGE |
|---|---|---|---|---|---|---|
| | 1 | 1 | **7X-3229** | 4 | FILM-INSTRUCTION (LIFT EYE, TIE-DOWN LOCATION) | |
| | 2 | 1 | **226-1242** | 2 | FILM-WARNING (CRUSH HAZARD, STAY BACK, U.S.) | |
| | 3 | 1 | **228-3581** | 1 | FILM-WARNING (DO NOT OPERATE, READ OMM) | |
| | 4 | 1 | **159-8035** | 1 | FILM-WARNING (CRUSH HAZARD, STAY BACK) | |
| | 5 | 1 | **124-2456** | 1 | FILM-INSTRUCTION (NO STEP) | |

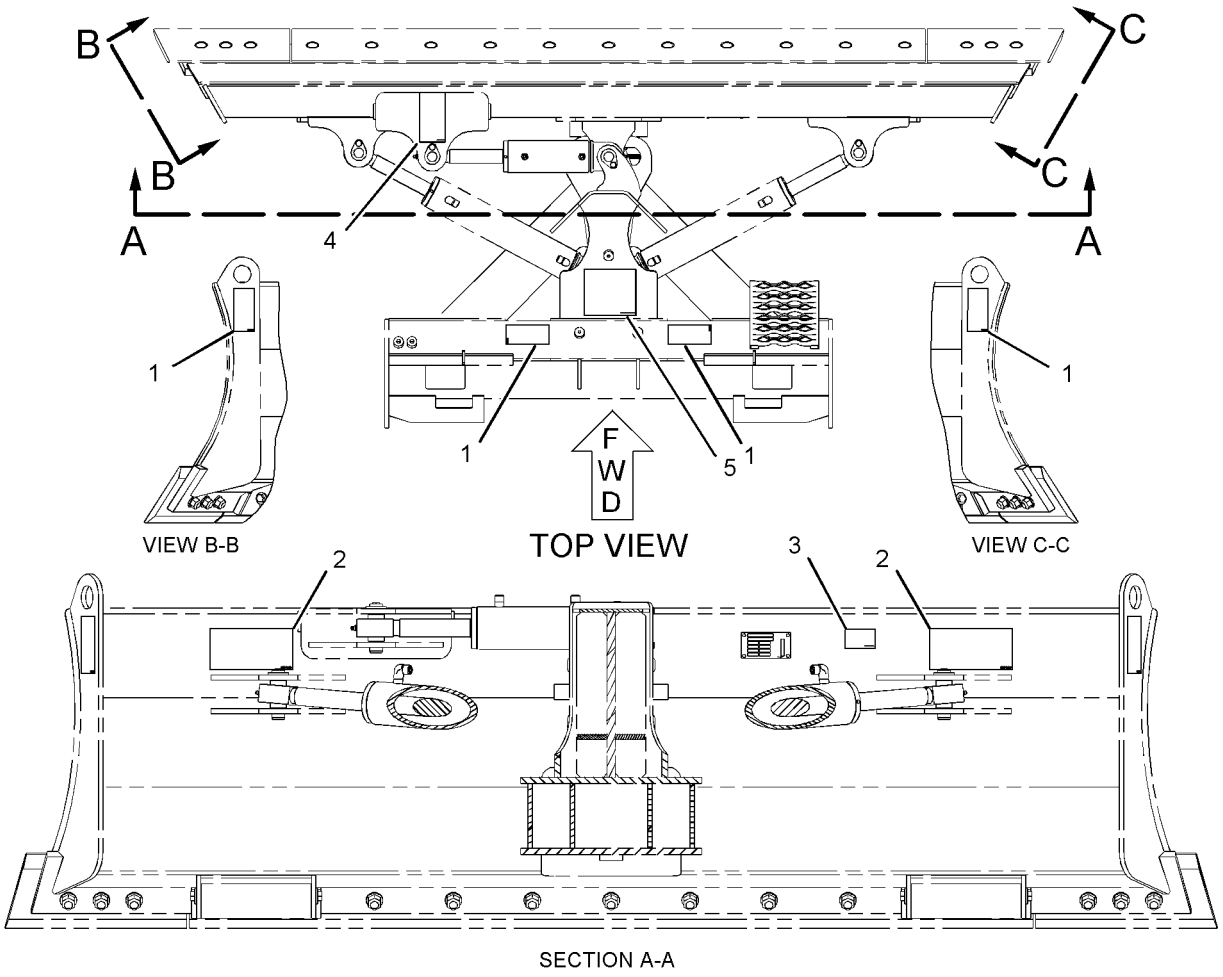


GRAPHIC #1 **<END>** g01120449

# SERVICE EQUIPMENT AND SUPPLIES

## *286-9251* PLATE & FILM GP

**S/N: HEN6750-UP**

**PART OF 286-9300, 286-9301 BUCKET AR-GRAPPLE**

**AN ATTACHMENT**

**SMCS-7405, 7557** **i02723719**

| NOTE | REF NO | GRAPHIC REF | PART NUMBER | QTY | PART NAME 1 2 3 4 5 6 (PRODUCT LEVEL) | SEE PAGE |
|---|---|---|---|---|---|---|
| | 1 | 1 | **168-8389** | 4 | TACK-FASTENER | |
| | 2 | 1 | **228-3369** | 1 | FILM-WARNING (DO NOT OPERATE, READ OMM) | |
| | 3 | 1 | **247-6118** | 2 | FILM-WARNING (CRUSH HAZARD, STAY BACK) | |
| | 4 | 1 | **248-5245** | 2 | FILM-INFORMATION (LIFT EYE, TIE-DOWN LOCATION) | |
| | 5 | 1 | **255-6540** | 1 | PLATE-INSTRUCTION (BUCKET SPECIFICATIONS) | |

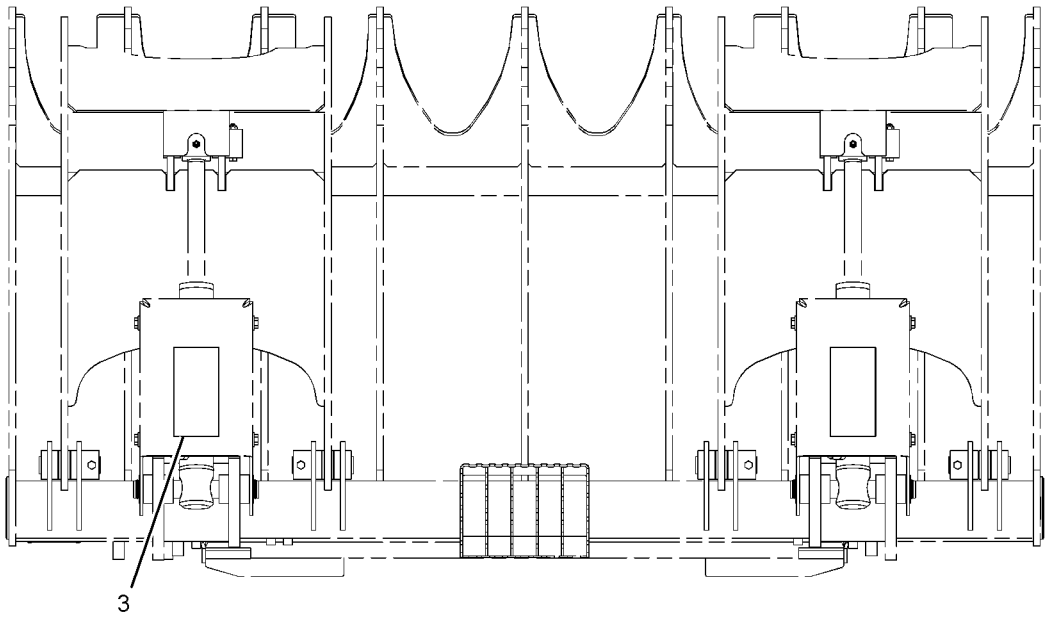


TOP VIEW

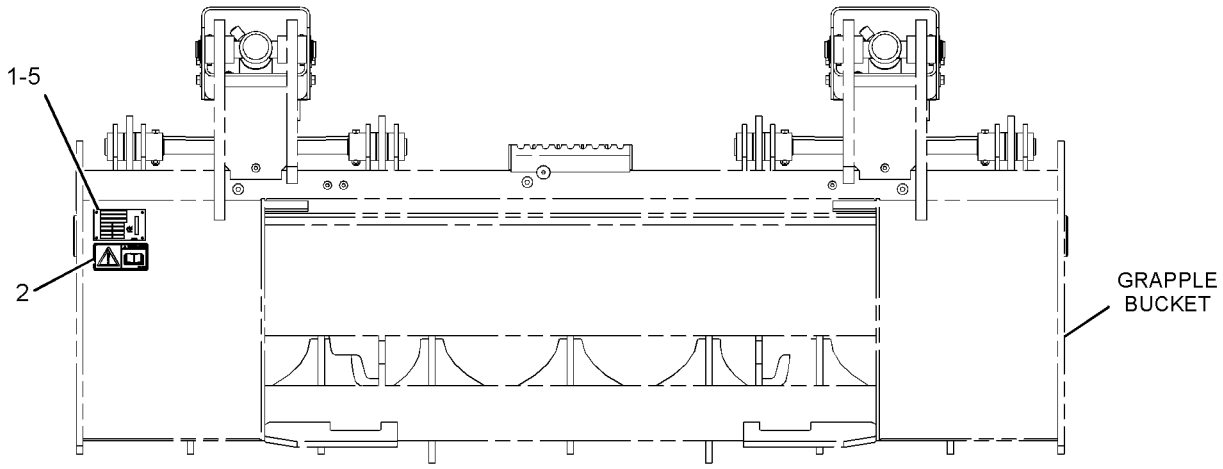


REAR VIEW

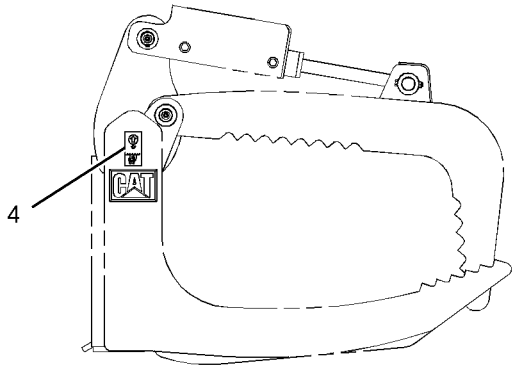


RIGHT SIDE VIEW

GRAPHIC #1

**<END>**

g01373367

# SERVICE EQUIPMENT AND SUPPLIES

## *295-7191* PLATE & FILM GP

**S/N: HEN6750-8069**

**AN ATTACHMENT**

**SMCS-7405, 7557** **i02796051**

| NOTE | REF NO | GRAPHIC REF | PART NUMBER | QTY | PART NAME 1 2 3 4 5 6 (PRODUCT LEVEL) | SEE PAGE |
|---|---|---|---|---|---|---|
| | 1 | 1 | **157-2853** | 1 | FILM-INFORMATION (READ OMM) | |
| | 2 | 1 | **225-7977** | 1 | FILM-IDENTIFICATION (RELAY LAYOUT) | |
| | 3 | 2 | **169-2876** | 1 | FILM-IDENTIFICATION (POWER RECEPTACLE, 12-VOLT) | |
| | 4 | 1 | **219-0302** | 1 | FILM-WARNING (NO WELD, NO DRILL, READ OMM) | |
| | 5 | 1 | **224-7830** | 1 | FILM-WARNING (HIGH PRESSURE, READ OMM, U.S.) | |
| | 6 | 2 | **224-8945** | 1 | FILM-WARNING (DO NOT USE ETHER, U.S) | |
| | 7 | 1 | **224-9021** | 1 | FILM-WARNING (SEAT BELT) | |
| | 8 | 1 | **225-3305** | 1 | FILM-WARNING (UNIVERSAL, READ OMM, U.S.) | |
| | 9 | 1 | **234-6065** | 1 | FILM-CERTIFICATION (OPS, READ OMM) | |
| | 10 | 2 | **234-6070** | 1 | FILM-WARNING (CRUSH HAZARD, CAB, READ OMM) | |
| | 11 | 1 | **234-6074** | 1 | FILM-WARNING (FALL/CRUSH HAZARD, NO ACCESS) | |
| | 12 | 1 | **234-6077** | 1 | FILM-WARNING (CRUSH HAZARD, READ OMM) | |
| | 14 | 2 | **235-1365** | 1 | FILM-WARNING (HOT FLUID UNDER PRESSURE) | |
| | 15 | 1 | **239-6986** | 1 | PLATE-IDENTIFICATION (MACHINE) | |
| | 16 | 1 | **263-4836** | 4 | FILM-SYMBOL (TIE-DOWN) | |
| | 17 | 2 | **295-2567** | 1 | FILM-INSTRUCTION (BUCKET LOWER) | |
| | 18 | 2 | **295-7199** | 1 | FILM-INSTRUCTION (SERVICE CHART) | |
| | 19 | 1 | **224-9855** | 1 | FILM-INSTRUCTION (START AID, READ OMM, INTL) | |
| | 20 | 2 | **225-0313** | 1 | FILM-WARNING (JUMP START, READ OMM, U.S.) | |
| | 21 | 1 | **225-7976** | 1 | FILM-IDENTIFICATION (RELAY LAYOUT) | |
| | 22 | 1,2 | **234-6067** | 2 | FILM-WARNING (CRUSH HAZARD, CAB, READ OMM) | |
| | 23 | 1 | **234-6072** | 1 | FILM-WARNING (CRUSH HAZARD, READ OMM) | |
| | 24 | 1 | **234-9575** | 1 | FILM-INSTRUCTION (GOVERNOR CONTROL) | |
| | 25 | 2 | **312-7747** | 1 | PLATE-WARNING (UNIVERSAL) | |

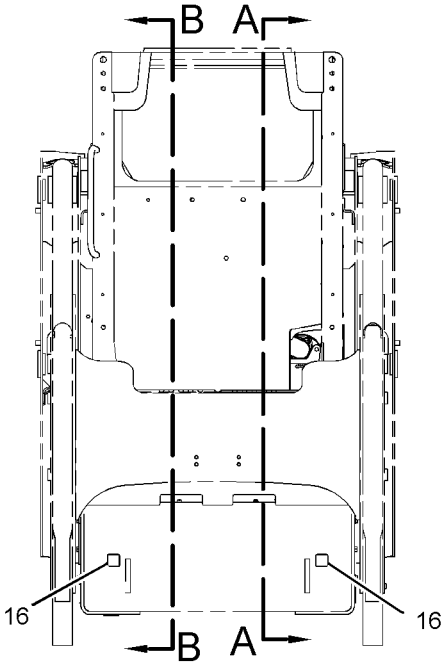


FRONT VIEW

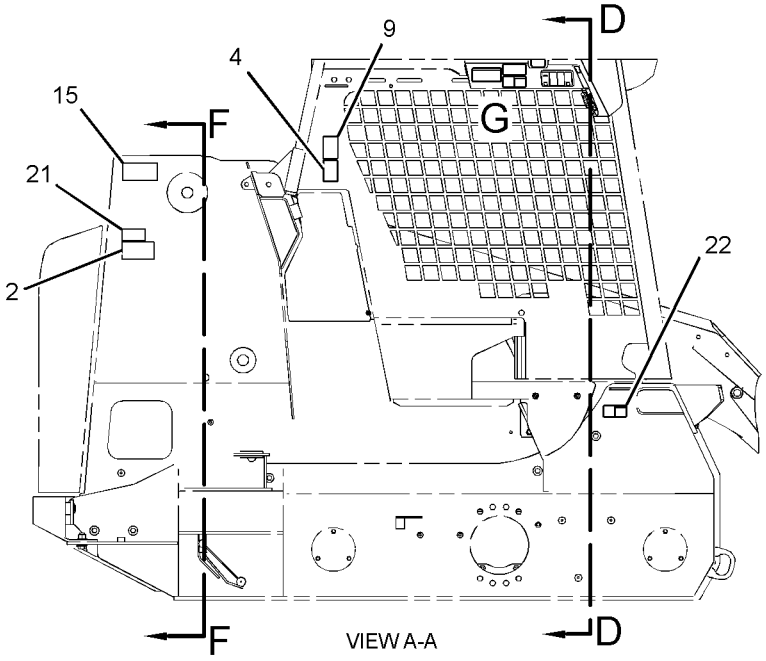


VIEW A-A

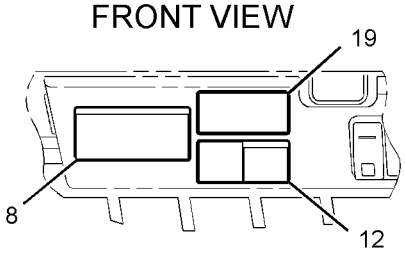


VIEW OF AREA G

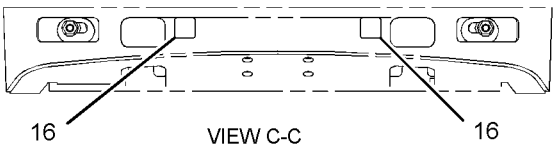


VIEW C-C

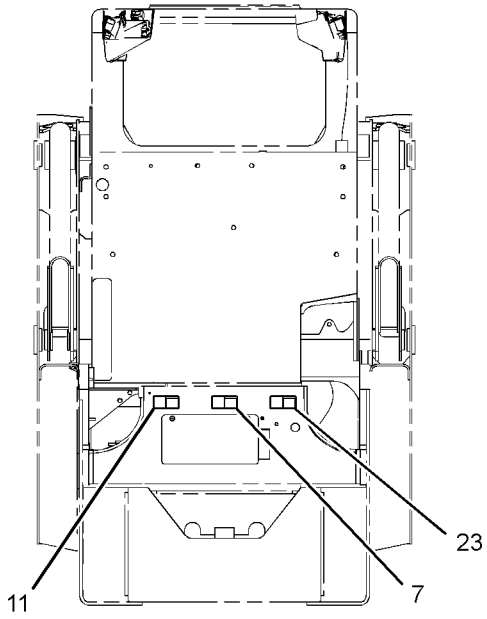


VIEW D-D

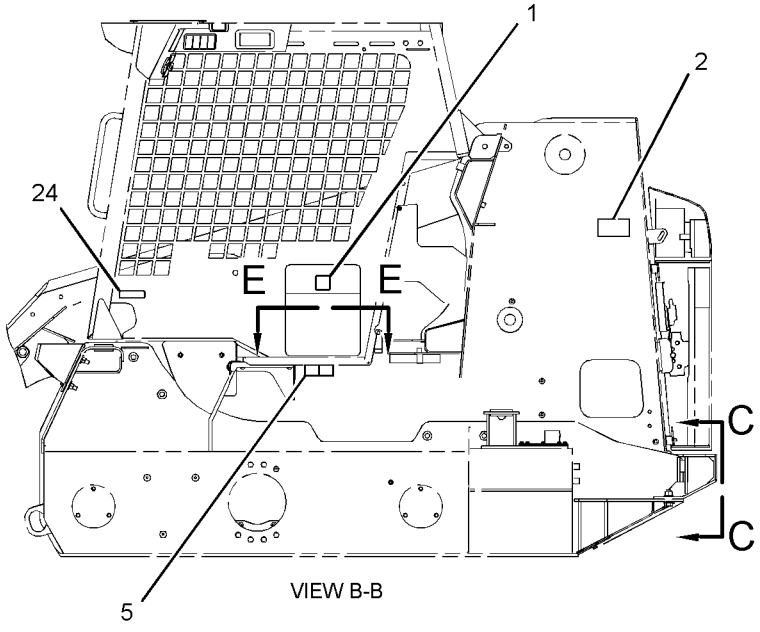


VIEW B-B

REFER TO ALL ILLUSTRATIONS OF THIS GROUP FOR AUXILIARY VIEWS

GRAPHIC #1

g01419802

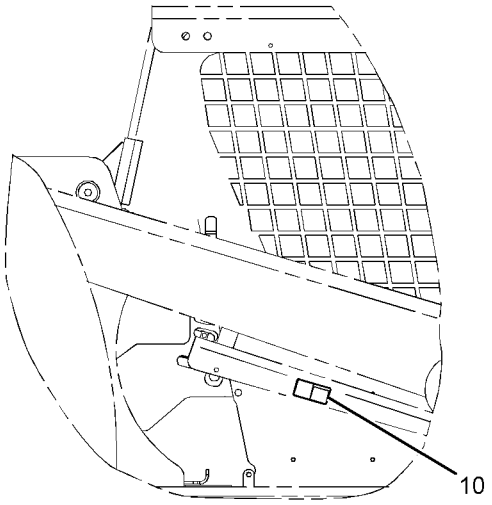


RIGHT SIDE VIEW

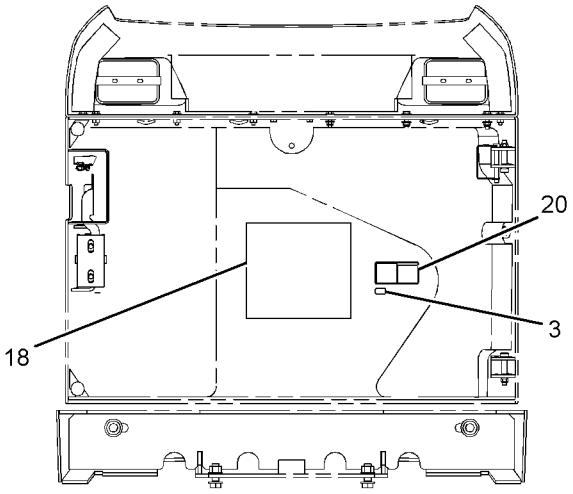


VIEW F-F

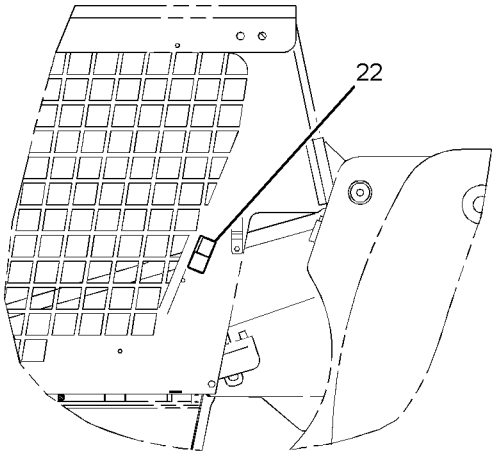


LEFT SIDE VIEW

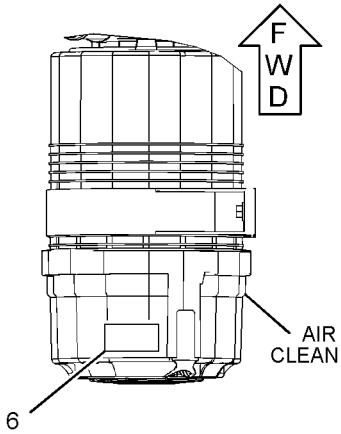


TOP VIEW

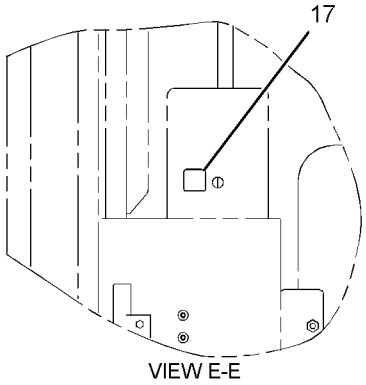


VIEW E-E

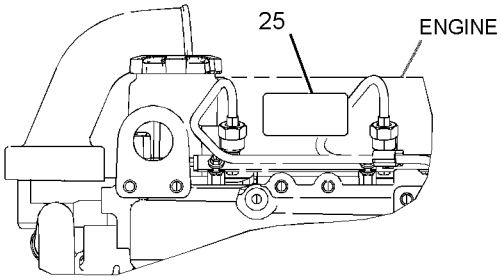


LEFT SIDE VIEW

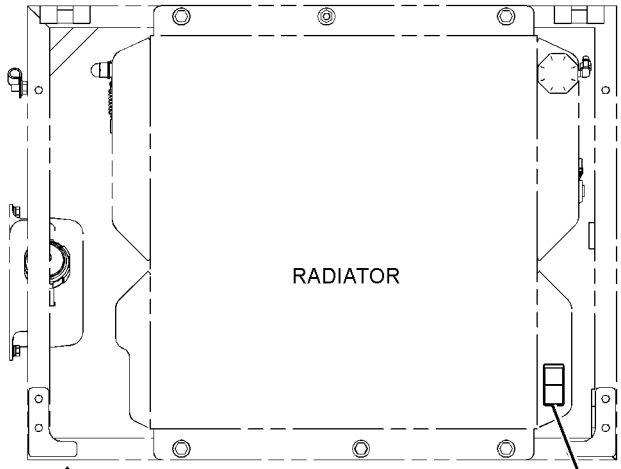


TOP VIEW

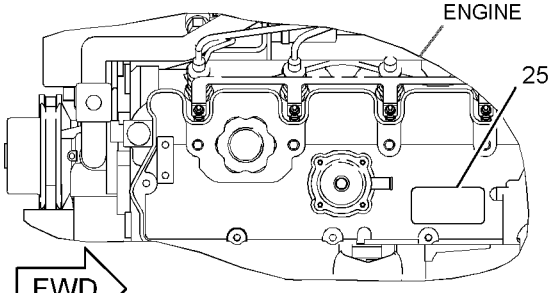


TOP VIEW

GRAPHIC #2

**<END>**

g01419803

# SERVICE EQUIPMENT AND SUPPLIES

## *295-7191* PLATE & FILM GP

**S/N: HEN8070-UP**

**AN ATTACHMENT**

**SMCS-7405, 7557** **i02875370**

| NOTE | REF NO | GRAPHIC REF | PART NUMBER | QTY | PART NAME 1 2 3 4 5 6 (PRODUCT LEVEL) | SEE PAGE |
|---|---|---|---|---|---|---|
| | 1 | 1 | **157-2853** | 1 | FILM-INFORMATION (READ OMM) | |
| | 2 | 1 | **225-7977** | 1 | FILM-IDENTIFICATION (RELAY LAYOUT) | |
| | 3 | 2 | **169-2876** | 1 | FILM-IDENTIFICATION (POWER RECEPTACLE, 12-VOLT) | |
| | 4 | 1 | **219-0302** | 1 | FILM-WARNING (NO WELD, NO DRILL, READ OMM) | |
| | 5 | 1 | **224-7830** | 1 | FILM-WARNING (HIGH PRESSURE, READ OMM, U.S.) | |
| | 6 | 2 | **224-8945** | 1 | FILM-WARNING (DO NOT USE ETHER, U.S) | |
| | 7 | 1 | **224-9021** | 1 | FILM-WARNING (SEAT BELT) | |
| | 8 | 1 | **225-3305** | 1 | FILM-WARNING (UNIVERSAL, READ OMM, U.S.) | |
| | 9 | 1 | **234-6065** | 1 | FILM-CERTIFICATION (OPS, READ OMM) | |
| | 10 | 2 | **295-7317** | 1 | FILM-WARNING (CRUSH HAZARD, CAB, READ OMM) | |
| | 11 | 1 | **295-7318** | 1 | FILM-WARNING (FALL/CRUSH HAZARD, NO ACCESS) | |
| | 12 | 1 | **295-7319** | 1 | FILM-WARNING (CRUSH HAZARD, READ OMM) | |
| | 14 | 2 | **235-1365** | 1 | FILM-WARNING (HOT FLUID UNDER PRESSURE) | |
| | 15 | 1 | **239-6986** | 1 | PLATE-IDENTIFICATION (MACHINE) | |
| | 16 | 1 | **263-4836** | 4 | FILM-SYMBOL (TIE-DOWN) | |
| | 17 | 2 | **295-2567** | 1 | FILM-INSTRUCTION (BUCKET LOWER) | |
| | 18 | 2 | **295-7199** | 1 | FILM-INSTRUCTION (SERVICE CHART) | |
| | 19 | 1 | **224-9855** | 1 | FILM-INSTRUCTION (START AID, READ OMM, INTL) | |
| | 20 | 2 | **225-0313** | 1 | FILM-WARNING (JUMP START, READ OMM, U.S.) | |
| | 21 | 1 | **225-7976** | 1 | FILM-IDENTIFICATION (RELAY LAYOUT) | |
| | 22 | 1,2 | **295-7315** | 2 | FILM-WARNING (CRUSH HAZARD, CAB, READ OMM) | |
| | 23 | 1 | **295-7320** | 1 | FILM-WARNING (CRUSH HAZARD, READ OMM) | |
| | 24 | 1 | **234-9575** | 1 | FILM-INSTRUCTION (GOVERNOR CONTROL) | |
| | 25 | 2 | **312-7747** | 1 | PLATE-WARNING (UNIVERSAL) | |

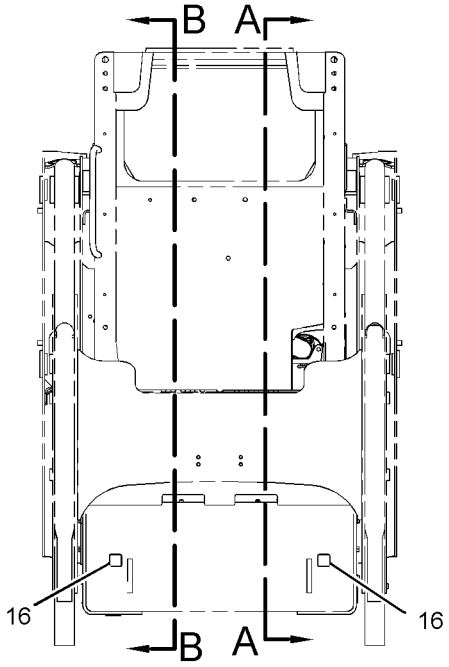


FRONT VIEW

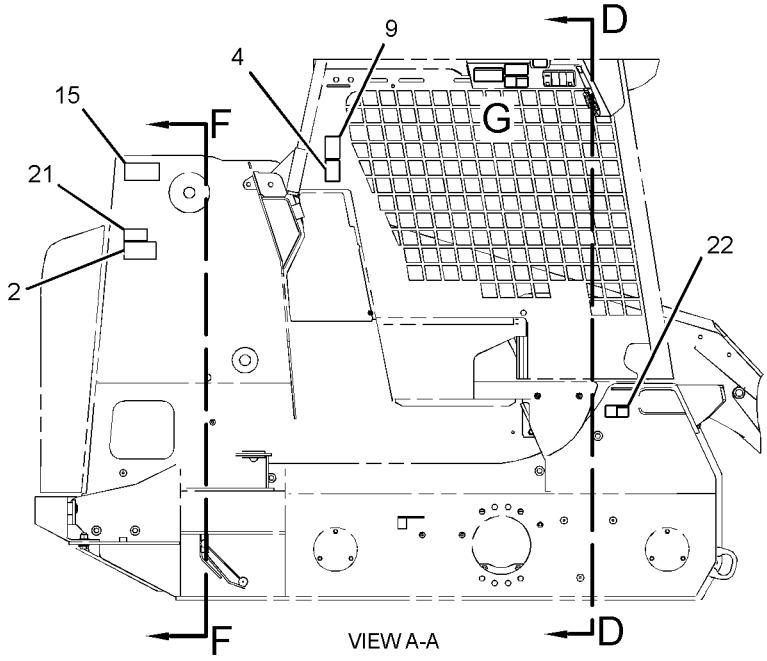


VIEW A-A

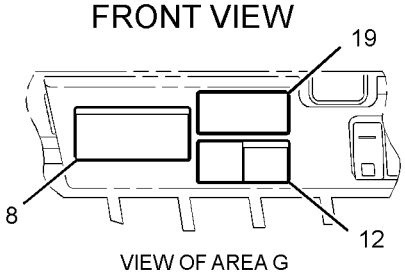


VIEW OF AREA G

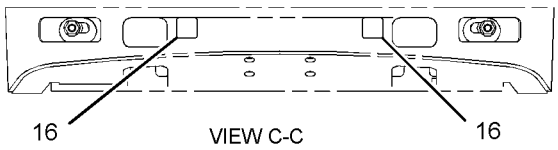


VIEW C-C

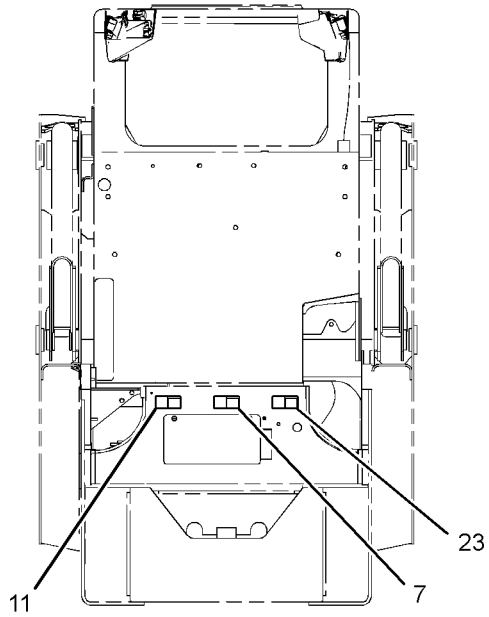


VIEW D-D

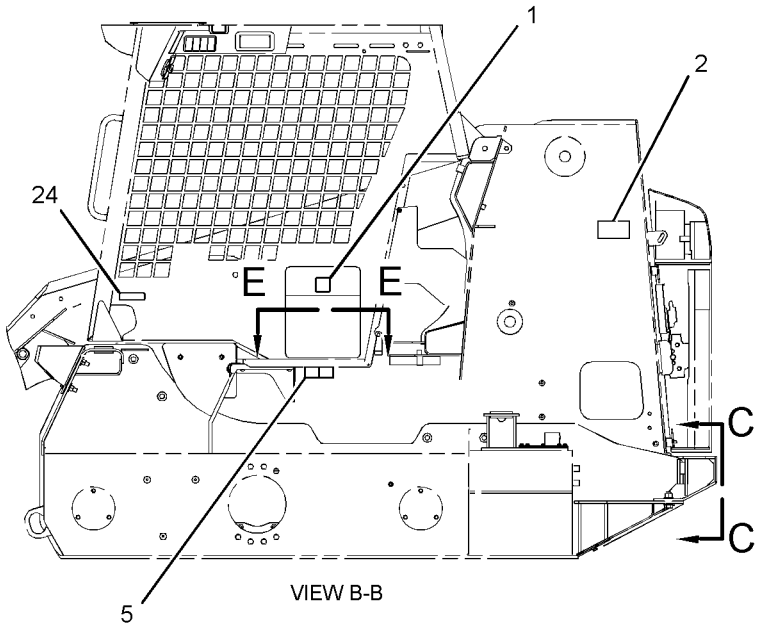


VIEW B-B

REFER TO ALL ILLUSTRATIONS OF THIS GROUP FOR AUXILIARY VIEWS

GRAPHIC #1

g01419802

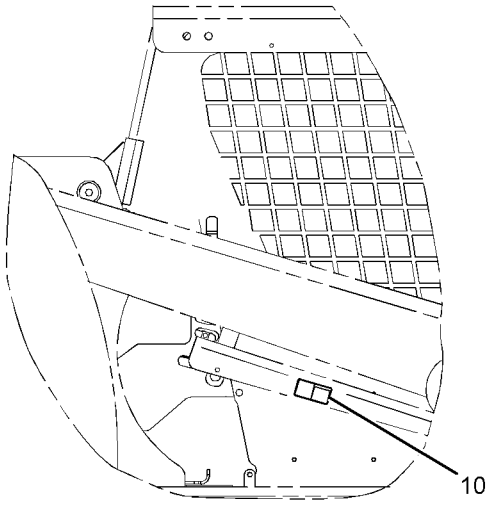


RIGHT SIDE VIEW

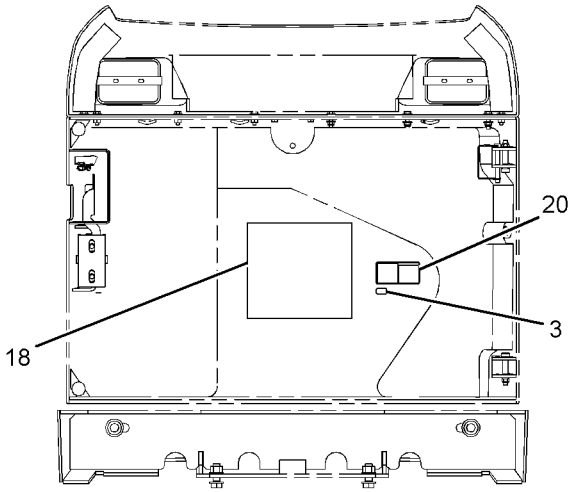


VIEW F-F

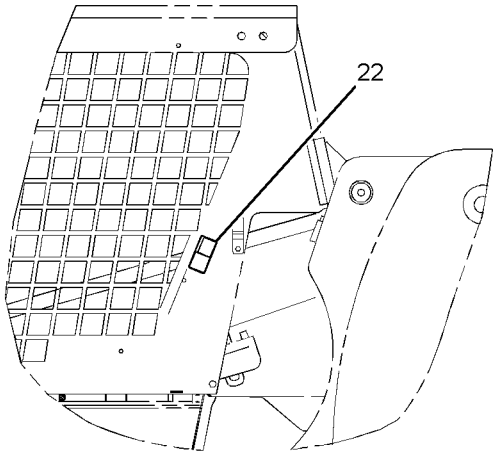


LEFT SIDE VIEW

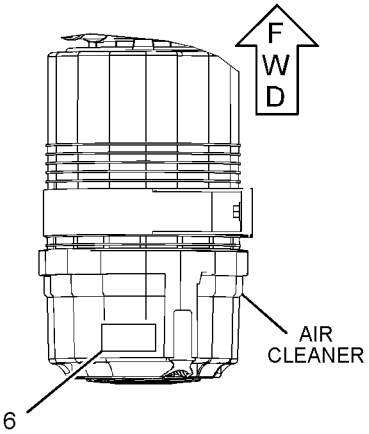


TOP VIEW

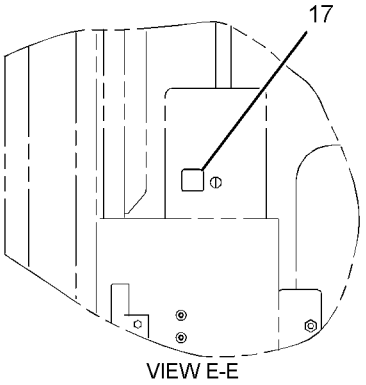


VIEW E-E

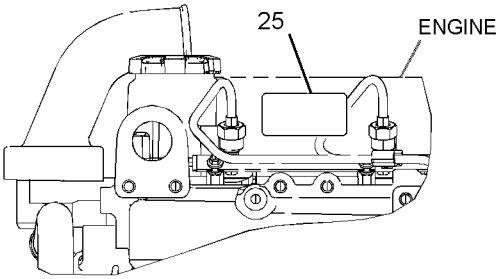


LEFT SIDE VIEW

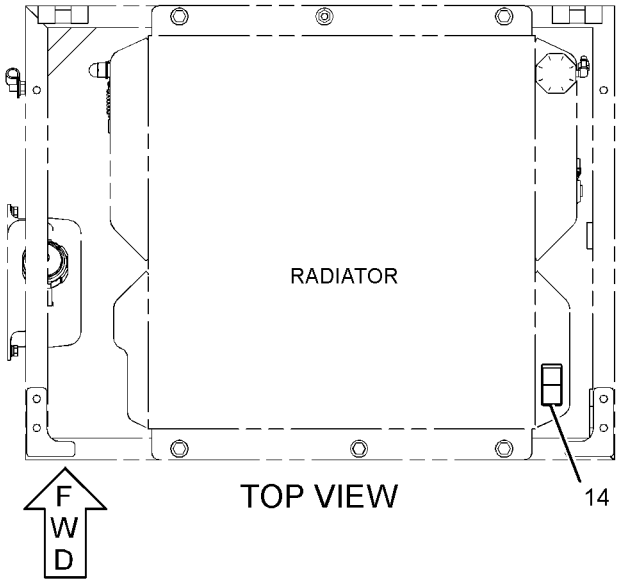


TOP VIEW

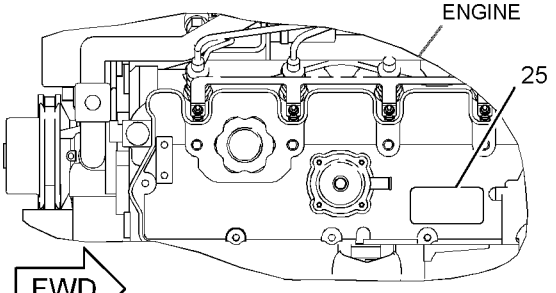


TOP VIEW

GRAPHIC #2 **<END>** g01419803

# SERVICE EQUIPMENT AND SUPPLIES

## *295-7195* PLATE & FILM GP

**S/N: HEN6750-8069**

**AN ATTACHMENT**

**SMCS-7405, 7557** **i02796056**

| NOTE | REF NO | GRAPHIC REF | PART NUMBER | QTY | PART NAME 1 2 3 4 5 6 (PRODUCT LEVEL) | SEE PAGE |
|---|---|---|---|---|---|---|
| | 1 | 1 | **157-2853** | 1 | FILM-INFORMATION (READ OMM) | |
| | 2 | 2 | **295-2567** | 1 | FILM-INSTRUCTION (BUCKET LOWER) | |
| | 3 | 2 | **169-2876** | 1 | FILM-IDENTIFICATION (POWER RECEPTACLE, 12-VOLT) | |
| | 4 | 1 | **219-0302** | 1 | FILM-WARNING (NO WELD, NO DRILL, READ OMM) | |
| | 5 | 1 | **225-7976** | 1 | FILM-IDENTIFICATION (RELAY LAYOUT) | |
| | 6 | 1 | **234-6065** | 1 | FILM-CERTIFICATION (OPS, READ OMM) | |
| | 7 | 1 | **239-6986** | 1 | PLATE-IDENTIFICATION (MACHINE) | |
| | 8 | 1 | **224-0554** | 1 | FILM-WARNING (UNIVERSAL, READ OMM, INTL) | |
| | 9 | 2 | **295-7199** | 1 | FILM-INSTRUCTION (SERVICE CHART) | |
| | 10 | 1 | **224-0672** | 1 | FILM-WARNING (HIGH PRESSURE, READ OMM, INTL) | |
| | 11 | 2 | **224-8946** | 1 | FILM-WARNING (NO ETHER SPRAY/AIR INTK, INTL) | |
| | 12 | 1 | **224-9022** | 1 | FILM-WARNING (SEAT BELT) | |
| | 13 | 1 | **224-9855** | 1 | FILM-INSTRUCTION (START AID, READ OMM, INTL) | |
| | 14 | 2 | **225-0312** | 1 | FILM-WARNING (JUMP START, READ OMM, INTL) | |
| | 15 | 1 | **225-7977** | 1 | FILM-IDENTIFICATION (RELAY LAYOUT) | |
| | 16 | 1 | **234-6069** | 1 | FILM-WARNING (CRUSH HAZARD) | |
| | 17 | 2 | **234-6071** | 1 | FILM-WARNING (LIFT ARM BRACE) | |
| | 18 | 1 | **234-6076** | 1 | FILM-WARNING (NO ACCESS) | |
| | 19 | 1,2 | **234-6078** | 2 | FILM-WARNING (CAB TILT SUPPORT) | |
| | 20 | 1 | **234-6081** | 1 | FILM-WARNING (WORK TOOL) | |
| | 21 | 1 | **234-9575** | 1 | FILM-INSTRUCTION (GOVERNOR CONTROL) | |
| | 22 | 2 | **235-1368** | 1 | FILM-WARNING (RADIATOR) | |
| | 23 | 1 | **263-4836** | 4 | FILM-SYMBOL (TIE-DOWN) | |
| | 24 | 1 | **312-7748** | 1 | PLATE-WARNING (UNIVERSAL, READ OMM) | |

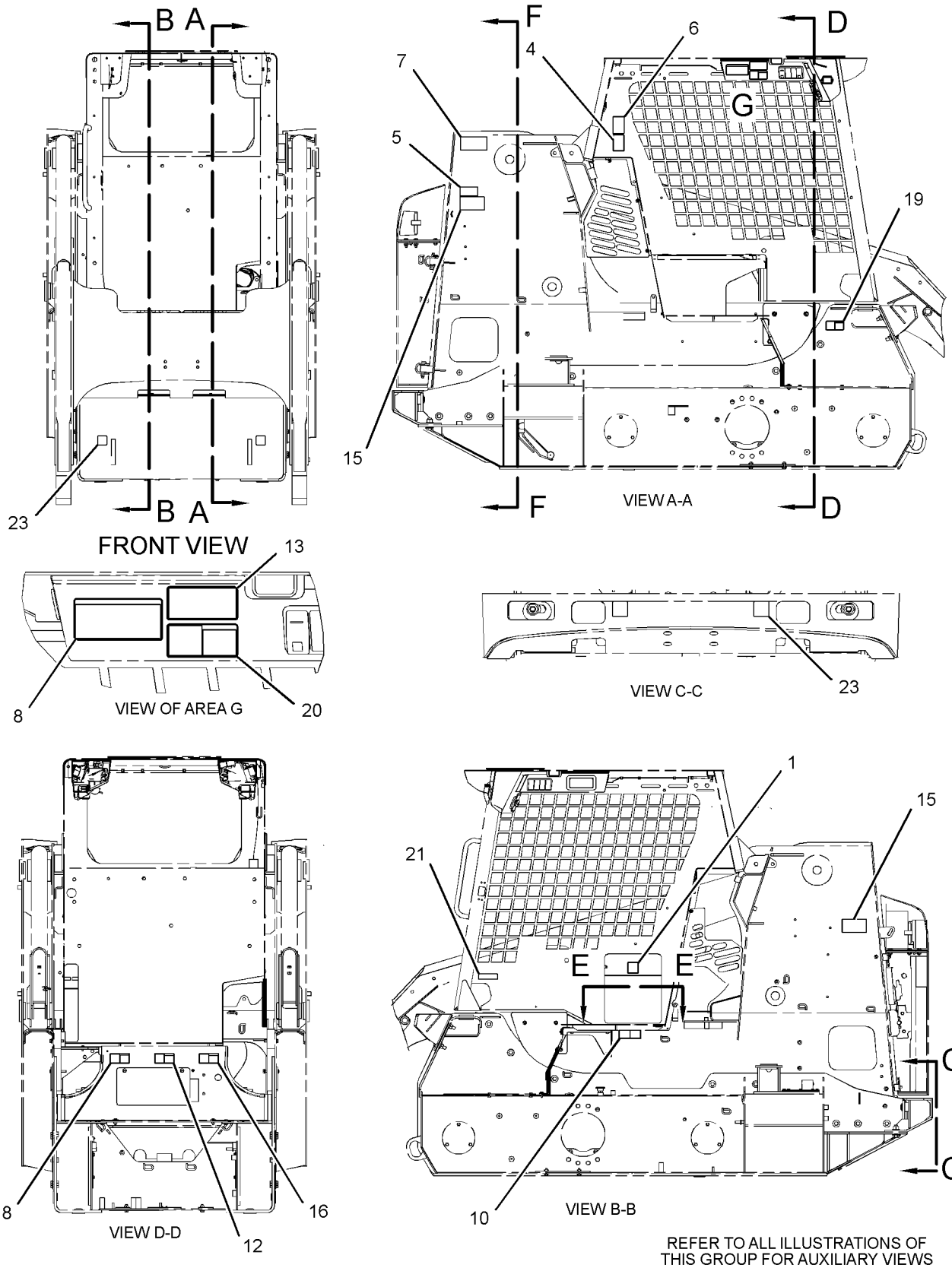


GRAPHIC #1

g01377028

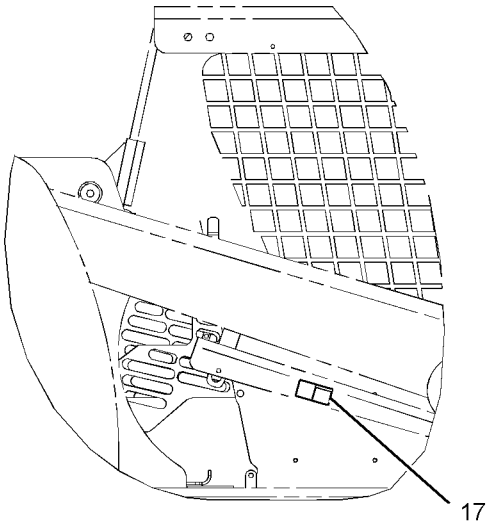


RIGHT SIDE VIEW

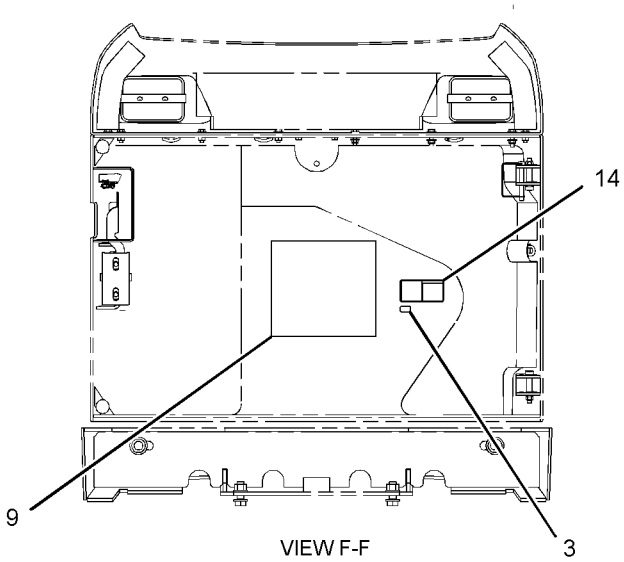


VIEW F-F

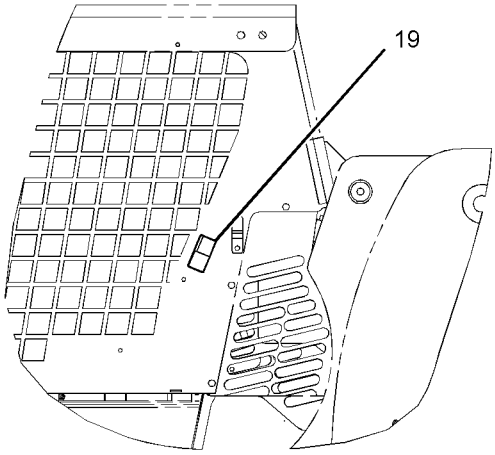


LEFT SIDE VIEW

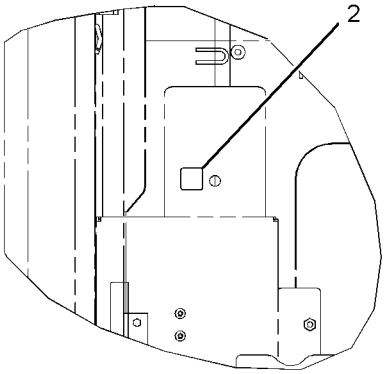


VIEW E-E

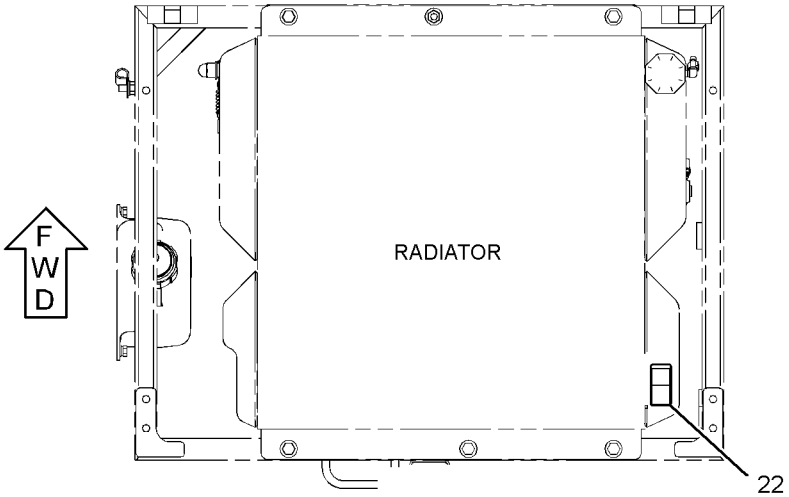


TOP VIEW

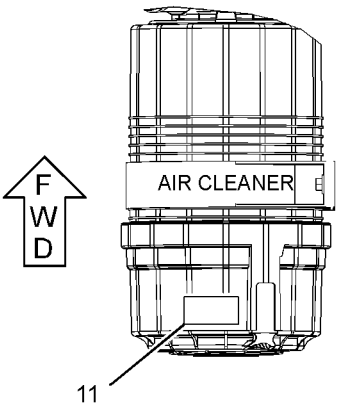


TOP VIEW

GRAPHIC #2 **<END>** g01377037

# SERVICE EQUIPMENT AND SUPPLIES

## *295-7195* PLATE & FILM GP

**S/N: HEN8070-UP**

**AN ATTACHMENT**

**SMCS-7405, 7557** **i02875427**

| NOTE | REF NO | GRAPHIC REF | PART NUMBER | QTY | PART NAME 1 2 3 4 5 6 (PRODUCT LEVEL) | SEE PAGE |
|---|---|---|---|---|---|---|
| | 1 | 1 | **157-2853** | 1 | FILM-INFORMATION (READ OMM) | |
| | 2 | 2 | **295-2567** | 1 | FILM-INSTRUCTION (BUCKET LOWER) | |
| | 3 | 2 | **169-2876** | 1 | FILM-IDENTIFICATION (POWER RECEPTACLE, 12-VOLT) | |
| | 4 | 1 | **219-0302** | 1 | FILM-WARNING (NO WELD, NO DRILL, READ OMM) | |
| | 5 | 1 | **225-7976** | 1 | FILM-IDENTIFICATION (RELAY LAYOUT) | |
| | 6 | 1 | **234-6065** | 1 | FILM-CERTIFICATION (OPS, READ OMM) | |
| | 7 | 1 | **239-6986** | 1 | PLATE-IDENTIFICATION (MACHINE) | |
| | 8 | 1 | **224-0554** | 1 | FILM-WARNING (UNIVERSAL, READ OMM, INTL) | |
| | 9 | 2 | **295-7199** | 1 | FILM-INSTRUCTION (SERVICE CHART) | |
| | 10 | 1 | **224-0672** | 1 | FILM-WARNING (HIGH PRESSURE, READ OMM, INTL) | |
| | 11 | 2 | **224-8946** | 1 | FILM-WARNING (NO ETHER SPRAY/AIR INTK, INTL) | |
| | 12 | 1 | **224-9022** | 1 | FILM-WARNING (SEAT BELT) | |
| | 13 | 1 | **224-9855** | 1 | FILM-INSTRUCTION (START AID, READ OMM, INTL) | |
| | 14 | 2 | **225-0312** | 1 | FILM-WARNING (JUMP START, READ OMM, INTL) | |
| | 15 | 1 | **225-7977** | 1 | FILM-IDENTIFICATION (RELAY LAYOUT) | |
| C | 16 | 1 | **295-7330** | 1 | FILM-WARNING (CRUSH HAZARD, READ OMM) (STATION) | |
| C | 17 | 2 | **295-7327** | 1 | FILM-WARNING (CRUSH HAZARD, READ OMM) | |
| C | 18 | 1 | **295-7328** | 1 | FILM-WARNING (FALL/CRUSH HAZARD, NO ACCESS) | |
| C | 19 | 1,2 | **295-7325** | 2 | FILM-WARNING (CRUSH HAZARD, CAB, READ OMM) (CAB SUPPORT) | |
| C | 20 | 1 | **295-7329** | 1 | FILM-WARNING (CRUSH HAZARD, READ OMM) (WORKTOOL) | |
| | 21 | 1 | **234-9575** | 1 | FILM-INSTRUCTION (GOVERNOR CONTROL) | |
| | 22 | 2 | **235-1368** | 1 | FILM-WARNING (RADIATOR) | |
| | 23 | 1 | **263-4836** | 4 | FILM-SYMBOL (TIE-DOWN) | |
| | 24 | 1 | **312-7748** | 1 | PLATE-WARNING (UNIVERSAL, READ OMM) | |

C-CHANGE FROM PREVIOUS TYPE

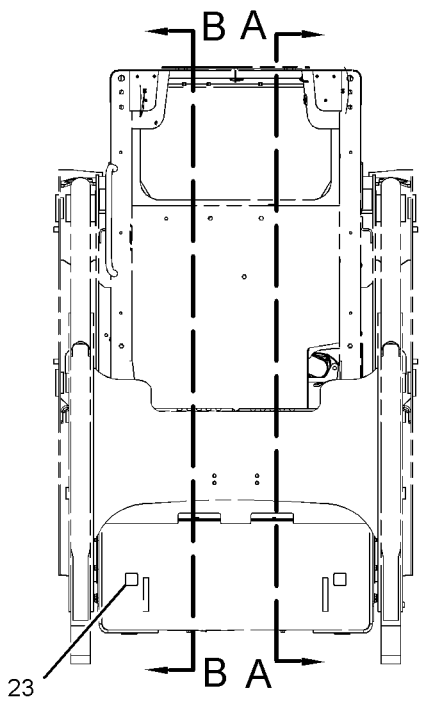


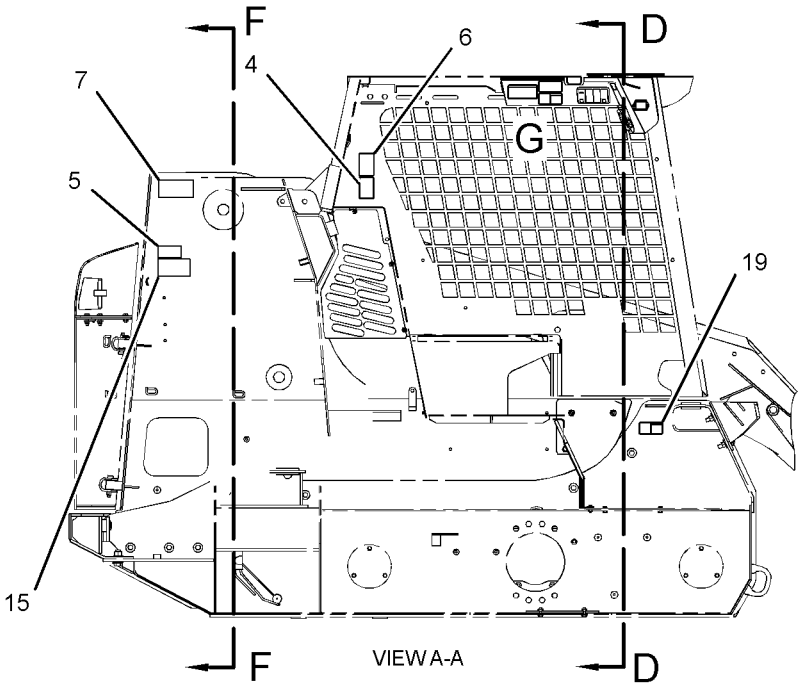


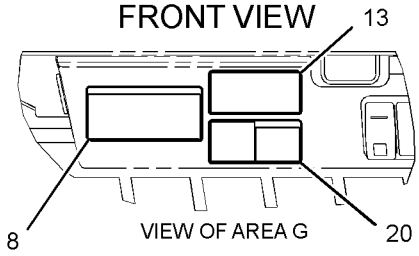


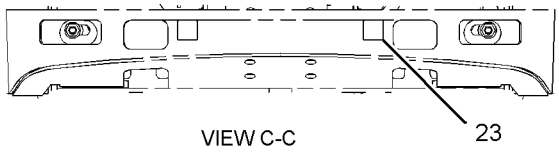


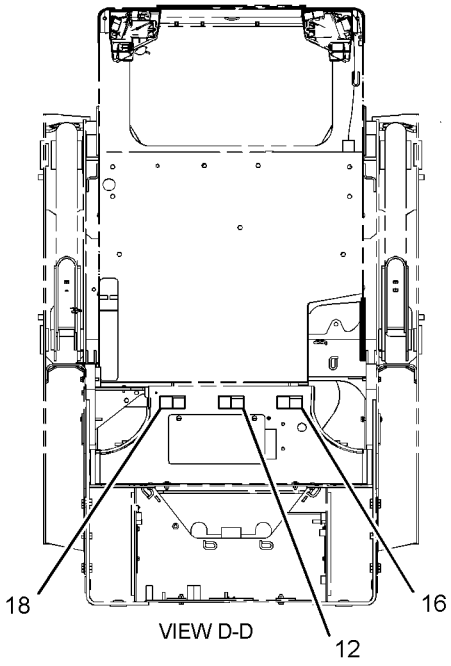


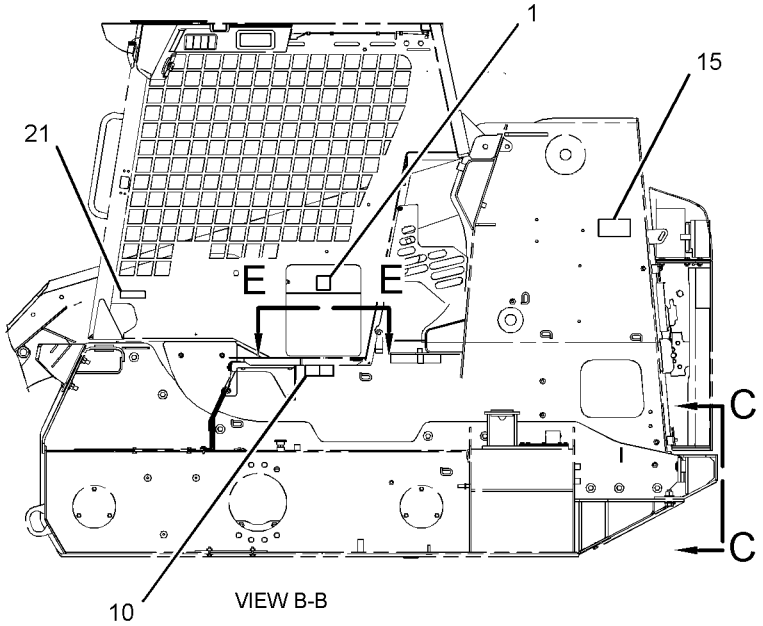


REFER TO ALL ILLUSTRATIONS OF THIS GROUP FOR AUXILIARY VIEWS

GRAPHIC #1

g01377028

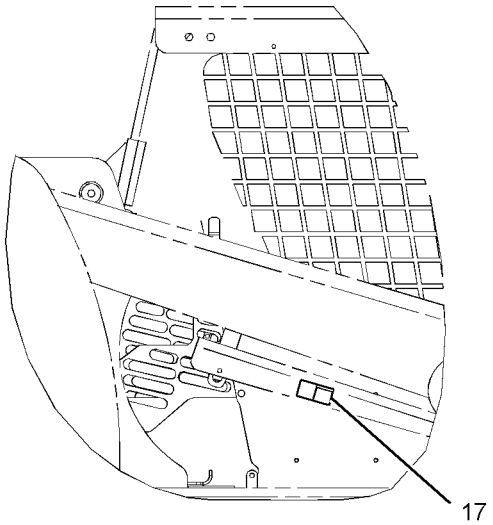


RIGHT SIDE VIEW

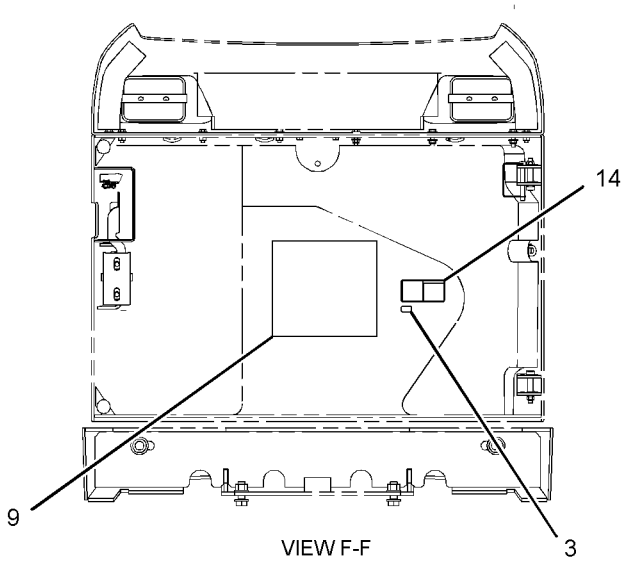


VIEW F-F

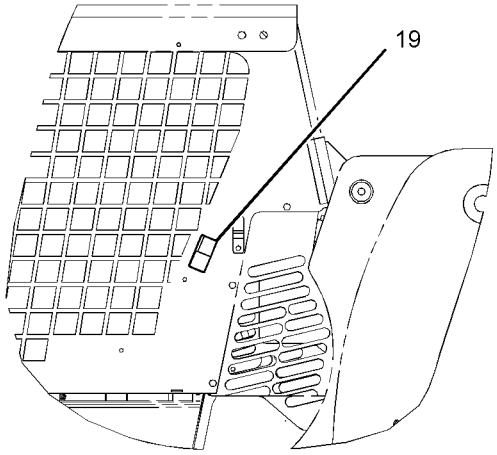


LEFT SIDE VIEW

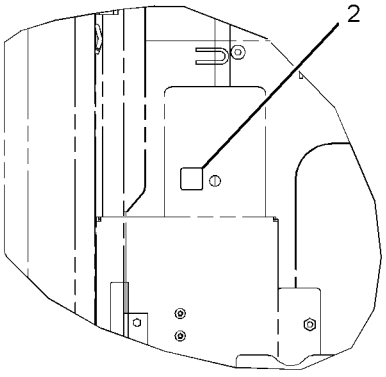


VIEW E-E

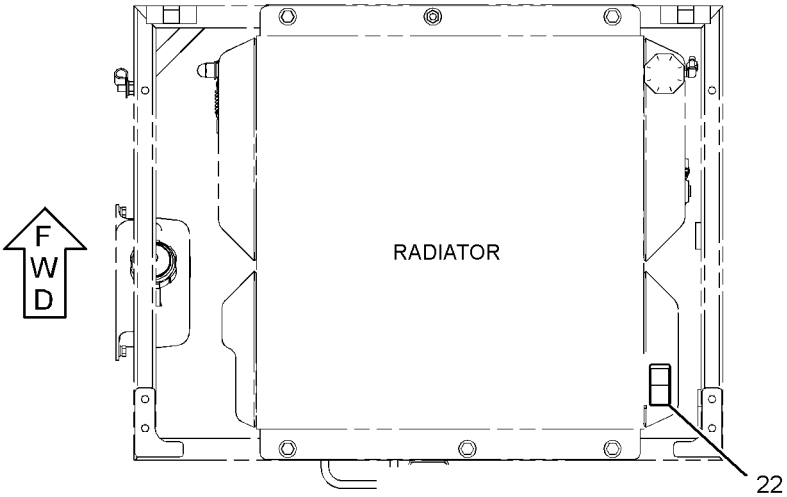


TOP VIEW

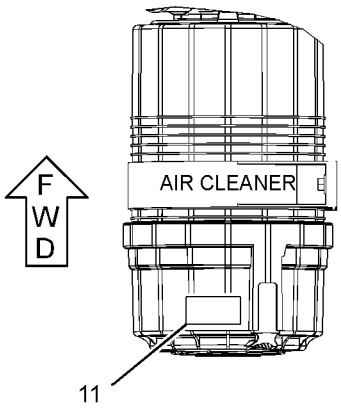


TOP VIEW

GRAPHIC #2 **<END>** g01377037

# PART NUMBER INDEX


| Part | Page |
|---|---|
| **0** | |
| 0T-0244 | 588 |
| | 589 |
| | 590 |
| | 591 |
| **1** | |
| 1D-4677 | 596 |
| 1G-3410 | 183 |
| | 185 |
| 1G-8878 | 163 |
| 1H-3244 | 103 |
| | 128 |
| 1H-8134 | 236 |
| 1L-2279 | 459 |
| 1M-0976 | 348 |
| | 349 |
| 1P-4278 | 31 |
| | 72 |
| | 90 |
| | 96 |
| 1P-4578 | 301 |
| 1P-7009 | 259 |
| | 312 |
| 1R-0734 | 61 |
| 1S-0994 | 264 |
| | 266 |
| | 268 |
| | 270 |
| 1S-9593 | 121 |
| | 122 |
| | 359 |
| | 488 |
| | 489 |
| | 490 |
| | 491 |
| **2** | |
| 2B-0858 | 156 |
| 2D-5248 | 480 |
| | 481 |
| | 557 |
| | 559 |
| 2D-6412 | 589 |
| | 590 |
| | 591 |
| 2H-7829 | 282 |
| | 284 |
| 2J-6540 | 272 |
| 2K-4821 | 243 |
| 2K-4973 | 68 |
| | 210 |
| 2M-9780 | 161 |
| | 254 |
| | 262 |
| | 264 |
| | 266 |
| | 268 |
| | 270 |
| | 272 |
| | 274 |
| | 276 |
| | 278 |
| | 280 |
| | 282 |
| | 284 |
| | 286 |
| | 287 |
| | 293 |
| | 301 |
| | 303 |
| | 305 |
| | 323 |
| | 325 |
| | 340 |
| | 556 |
| | 558 |
| 2P-8104 | 137 |
| 2S-3440 | 301 |
| 2S-4078 | 301 |
| 2S-5717 | 596 |
| 2S-6408 | 457 |
| 2V-3216 | 262 |
| | 280 |
| **3** | |
| 3B-4505 | 19 |
| | 21 |
| | 40 |
| | 42 |
| | 44 |
| | 45 |
| | 47 |
| | 49 |
| | 65 |
| | 80 |
| | 94 |
| | 105 |
| | 106 |
| | 107 |
| | 571 |
| 3B-4628 | 260 |
| | 418 |
| 3B-7255 | 459 |
| 3B-8488 | 443 |
| 3B-8489 | 233 |
| | 235 |
| | 236 |
| | 239 |
| | 240 |
| | 243 |
| | 246 |
| | 247 |
| | 250 |
| | 251 |
| | 329 |
| | 330 |
| | 364 |
| | 365 |
| | 401 |
| | 402 |
| | 403 |
| | 404 |
| | 405 |
| | 406 |
| | 407 |
| | 408 |
| | 409 |
| | 411 |
| | 433 |
| | 439 |
| | 442 |
| 3D-2824 | 161 |
| | 164 |
| | 172 |
| | 289 |
| | 291 |
| | 293 |
| | 307 |
| | 309 |
| | 323 |
| | 359 |
| 3D-4245 | 357 |
| 3E-2310 | 299 |
| 3E-3365 | 140 |
| | 142 |
| | 359 |
| 3E-3371 | 515 |
| 3E-3374 | 473 |
| 3E-3377 | 317 |
| 3E-3383 | 125 |
| 3E-3389 | 121 |
| | 122 |
| | 153 |
| 3E-3892 | 601 |
| | 603 |
| 3E-4051 | 556 |
| | 558 |
| | 566 |
| 3E-4057 | 556 |
| | 558 |
| | 566 |
| 3E-4370 | 432 |
| 3E-5153 | 137 |
| 3E-5154 | 137 |
| 3E-7404 | 90 |
| | 96 |
| | 262 |
| | 280 |
| 3E-7584 | ►125 |
| | 132 |
| | 217 |
| 3E-8020 | 37 |
| 3E-8082 | 254 |
| 3E-8621 | 359 |
| 3F-5108 | 424 |
| 3F-9556 | 583 |
| 3J-1907 | 140 |
| | 142 |
| | 163 |
| | 164 |
| | 166 |
| | 168 |
| | 172 |
| | 254 |
| | 256 |
| | 257 |
| | 259 |
| | 276 |
| 3J-7354 | 168 |
| | 183 |
| | 185 |
| | 257 |
| | 286 |
| | 287 |
| | 297 |
| | 556 |
| | 558 |
| 3K-0360 | 161 |
| | 164 |
| | 172 |
| | 178 |
| | 231 |
| | 254 |
| | 257 |
| | 278 |
| | 299 |
| | 338 |
| 3K-0715 | 183 |
| | 185 |
| 3P-1896 | 24 |
| 3S-2093 | 90 |
| | 96 |
| | 115 |
| | 119 |
| | 121 |
| | 122 |
| | 132 |
| | 134 |
| | 143 |
| | 145 |
| | 148 |
| | 149 |
| | 151 |
| | 152 |
| | 153 |
| | 217 |
| | 225 |
| | 256 |
| | 259 |
| | 289 |
| | 311 |
| | 459 |
| | 473 |
| | 525 |
| | 526 |
| | 529 |
| | 532 |
| | 534 |
| | 557 |
| | 559 |
| | 560 |
| | 561 |
| | 566 |
| 3S-8536 | 236 |
| 3S-8665 | 78 |


► **PRIMARY REFERENCE**

# PART NUMBER INDEX


| Part | Page |
|---|---|
| | 553 |
| 3S-9182 | 212 |
| 3T-7856 | 562 |
| **4** | |
| 4B-2043 | 542 |
| 4B-4274 | 149 |
| | 295 |
| | 312 |
| 4B-4863 | 89 |
| | 115 |
| | 121 |
| | 122 |
| | 132 |
| | 144 |
| | 153 |
| | 217 |
| | 223 |
| 4B-9302 | 90 |
| | 96 |
| 4D-6466 | 90 |
| | 96 |
| 4E-0724 | 459 |
| 4E-1384 | 472 |
| 4F-3658 | 424 |
| 4I-9404 | 65 |
| 4J-0522 | 301 |
| 4J-5267 | 301 |
| | 357 |
| 4J-5477 | 152 |
| | 217 |
| | 256 |
| | 257 |
| | 259 |
| | 286 |
| | 287 |
| | 297 |
| | 299 |
| | 311 |
| | 556 |
| | 558 |
| 4J-7533 | 340 |
| 4K-0367 | 424 |
| 4K-1388 | 340 |
| 4K-6177 | 257 |
| 4K-8864 | 71 |
| | 72 |
| 4M-5285 | 235 |
| | 330 |
| 4P-6422 | 611 |
| | 614 |
| 4P-7581 | 120 |
| | 132 |
| | 134 |
| | 145 |
| | 149 |
| | 217 |
| | 289 |
| | 574 |
| 4P-8134 | 119 |
| | 145 |
| | 149 |
| 4S-1962 | 286 |
| | 287 |
| **5** | |
| 5B-0651 | 418 |
| | 420 |
| 5B-0935 | 439 |
| 5C-2874 | 88 |
| 5C-2890 | 84 |
| | 86 |
| | 88 |
| | 89 |
| | 103 |
| | 127 |
| | 128 |
| | 215 |
| | 225 |
| | 526 |
| | 529 |
| | 560 |
| | 561 |
| | 563 |
| | 581 |
| 5C-7261 | 68 |
| | 74 |
| | 90 |
| | 96 |
| | 119 |
| | 120 |
| | 145 |
| | 149 |
| | 164 |
| | 166 |
| | 168 |
| | 210 |
| | 260 |
| | 312 |
| | 459 |
| | 472 |
| | 480 |
| | 481 |
| | 484 |
| | 557 |
| | 559 |
| | 571 |
| | 583 |
| | 584 |
| | 592 |
| | 593 |
| 5C-7682 | 539 |
| | 540 |
| 5C-7883 | 176 |
| 5C-8310 | 536 |
| | 598 |
| 5C-8311 | 536 |
| | 598 |
| 5C-8312 | 115 |
| | 223 |
| 5C-9553 | 84 |
| | 86 |
| | 90 |
| | 96 |
| | 121 |
| | 122 |
| | 145 |
| | 149 |
| | 153 |
| | 217 |
| | 222 |
| | 307 |
| | 309 |
| | 421 |
| | 473 |
| | 583 |
| | 584 |
| 5D-0718 | 289 |
| 5D-1026 | 78 |
| 5G-3244 | 125 |
| 5H-9743 | 236 |
| 5I-4936 | 34 |
| 5I-4993 | 47 |
| | 49 |
| 5I-5077 | 84 |
| | 86 |
| 5I-7505 | 54 |
| 5I-7525 | 24 |
| | 26 |
| 5I-7623 | 84 |
| | 86 |
| 5I-7625 | 60 |
| 5I-7628 | 38 |
| | 39 |
| | 66 |
| | 67 |
| 5I-7630 | 60 |
| 5I-7678 | 77 |
| 5I-7689 | 84 |
| | 86 |
| 5I-7719 | 60 |
| 5I-7728 | 66 |
| | 67 |
| 5I-7931 | 79 |
| 5I-7933 | 84 |
| | 86 |
| 5I-8021 | 77 |
| 5I-8023 | 77 |
| 5I-8056 | 38 |
| | 39 |
| | 66 |
| | 67 |
| 5I-8109 | 84 |
| | 86 |
| 5I-8110 | 84 |
| | 86 |
| 5I-8111 | 81 |
| | 82 |
| | 83 |
| 5J-3886 | 98 |
| 5K-8451 | 260 |
| 5K-9090 | 164 |
| 5L-4507 | 149 |
| 5P-0372 | 68 |
| | 220 |
| | 259 |
| | 418 |
| | 526 |
| | 529 |
| | 560 |
| | 561 |
| | 595 |
| 5P-0537 | 92 |
| 5P-0597 | 84 |
| | 86 |
| 5P-1076 | 46 |
| | 212 |
| | 278 |
| | 366 |
| | 367 |
| | 444 |
| | 445 |
| 5P-1420 | 72 |
| | 90 |
| | 96 |
| 5P-1442 | 31 |
| | 90 |
| | 96 |
| | 337 |
| 5P-2230 | 301 |
| 5P-3092 | 160 |
| 5P-4116 | 37 |
| | 74 |
| | 90 |
| | 96 |
| | 108 |
| | 109 |
| | 149 |
| | 164 |
| | 210 |
| | 212 |
| | 260 |
| | 282 |
| | 312 |
| | 316 |
| | 459 |
| | 480 |
| | 481 |
| | 484 |
| | 553 |
| | 557 |
| | 559 |
| | 568 |
| 5P-4536 | 90 |
| | 96 |
| 5P-4868 | 78 |
| | 84 |
| | 86 |
| 5P-4961 | 337 |
| 5P-5148 | 284 |
| 5P-5677 | 119 |
| | 120 |
| | 159 |
| | 515 |
| | 518 |
| 5P-5924 | 557 |
| | 559 |
| | 566 |
| 5P-5927 | 584 |
| 5P-5930 | 600 |
| 5P-5969 | 112 |
| | 526 |
| | 529 |
| | 537 |
| | 560 |
| | 561 |


► **PRIMARY REFERENCE**

# PART NUMBER INDEX


| Part | Page |
|---|---|
| 5P-6442 | 90 |
| | 96 |
| 5P-6944 | 254 |
| 5P-7070 | 537 |
| 5P-7470 | 72 |
| 5P-7471 | 72 |
| 5P-7703 | 72 |
| 5P-7957 | 476 |
| 5P-7958 | 570 |
| 5P-7970 | 98 |
| 5P-8246 | 459 |
| 5P-8247 | 424 |
| 5P-8309 | 68 |
| | 526 |
| | 529 |
| | 560 |
| | 561 |
| 5P-8439 | 130 |
| | 131 |
| 5P-8500 | 204 |
| | 206 |
| | 570 |
| 5P-9297 | 295 |
| | 312 |
| 5P-9909 | 526 |
| | 529 |
| | 560 |
| | 561 |
| 5T-7869 | 596 |
| 5T-7870 | 596 |
| 5V-8309 | 68 |
| 5W-1987 | 526 |
| | 529 |
| | 560 |
| | 561 |
| **6** | |
| 6B-2882 | 484 |
| | 557 |
| | 559 |
| 6B-6682 | 239 |
| 6D-1641 | 553 |
| | 557 |
| | 568 |
| 6D-3479 | 299 |
| 6D-4246 | 337 |
| 6D-4247 | 264 |
| | 266 |
| | 268 |
| | 270 |
| 6D-4636 | 553 |
| 6D-5797 | 601 |
| | 603 |
| 6E-0725 | 183 |
| | 185 |
| 6E-5060 | 183 |
| | 185 |
| 6E-6549 | 588 |
| 6F-6672 | 324 |
| | 326 |
| | 327 |
| | 359 |
| 6I-1418 | 119 |
| | 120 |
| | 144 |
| 6K-4148 | 212 |
| 6K-8178 | 260 |
| 6R-7490 | 542 |
| 6V-0852 | 164 |
| | 297 |
| | 301 |
| 6V-1228 | 286 |
| | 287 |
| 6V-1392 | 475 |
| 6V-1889 | 289 |
| 6V-1970 | 2 |
| | ►570 |
| 6V-2235 | 553 |
| | 557 |
| | 568 |
| 6V-2317 | 65 |
| | 84 |
| | 86 |
| | 92 |
| | 94 |
| | 130 |
| 6V-3582 | 291 |
| | 293 |
| 6V-3940 | 60 |
| | 61 |
| | 70 |
| | 77 |
| 6V-3965 | 164 |
| | 297 |
| | 301 |
| 6V-4270 | 526 |
| | 529 |
| | 560 |
| | 561 |
| 6V-5193 | 178 |
| 6V-5215 | 18 |
| | 62 |
| | 92 |
| 6V-5217 | 63 |
| | 98 |
| | 100 |
| | 105 |
| | 106 |
| | 107 |
| 6V-5221 | 66 |
| | 67 |
| 6V-5326 | 183 |
| | 185 |
| 6V-5586 | 183 |
| | 185 |
| 6V-5683 | 178 |
| 6V-5698 | 145 |
| 6V-5839 | 63 |
| 6V-6689 | 537 |
| | 553 |
| | 557 |
| 6V-7357 | 40 |
| | 84 |
| | 86 |
| | 142 |
| | 215 |
| | 225 |
| | 228 |
| 6V-7644 | 366 |
| | 367 |
| 6V-7744 | 420 |
| 6V-8186 | 583 |
| 6V-8187 | 149 |
| 6V-8213 | 254 |
| | 357 |
| 6V-8231 | 81 |
| 6V-8352 | 183 |
| | 185 |
| 6V-8378 | 132 |
| | 217 |
| 6V-8397 | 166 |
| | 168 |
| | 172 |
| | 234 |
| | 254 |
| | 257 |
| | 259 |
| | 260 |
| | 262 |
| | 264 |
| | 266 |
| | 268 |
| | 270 |
| | 272 |
| | 274 |
| | 276 |
| | 278 |
| | 280 |
| | 282 |
| | 284 |
| | 295 |
| | 299 |
| | 305 |
| | 311 |
| | 312 |
| 6V-8398 | 161 |
| | 164 |
| | 166 |
| | 168 |
| | 172 |
| | 257 |
| | 291 |
| | 293 |
| | 295 |
| | 297 |
| | 303 |
| | 305 |
| | 311 |
| 6V-8399 | 357 |
| | 358 |
| 6V-8626 | 293 |
| 6V-8627 | 257 |
| 6V-8628 | 257 |
| | 297 |
| 6V-8632 | 172 |
| | 278 |
| 6V-8633 | 161 |
| 6V-8634 | 172 |
| 6V-8636 | 166 |
| | 168 |
| | 172 |
| | 257 |
| | 259 |
| 6V-8637 | 164 |
| | 172 |
| 6V-8639 | 161 |
| | 172 |
| | 257 |
| 6V-8641 | 256 |
| | 259 |
| | 297 |
| | 299 |
| | 311 |
| 6V-8642 | 161 |
| | 254 |
| | 278 |
| | 286 |
| | 287 |
| | 293 |
| | 301 |
| | 303 |
| | 305 |
| | 556 |
| | 558 |
| 6V-8647 | 286 |
| | 287 |
| | 297 |
| | 556 |
| | 558 |
| 6V-8713 | 161 |
| | 291 |
| | 293 |
| | 307 |
| | 309 |
| 6V-8715 | 262 |
| | 264 |
| | 266 |
| | 268 |
| | 270 |
| | 272 |
| | 274 |
| | 276 |
| | 280 |
| | 282 |
| | 284 |
| | 305 |
| 6V-8724 | 259 |
| | 276 |
| | 295 |
| | 311 |
| 6V-8774 | 254 |
| | 257 |
| | 259 |
| | 311 |
| 6V-8781 | 166 |
| | 254 |
| | 257 |
| | 299 |
| 6V-8788 | 264 |
| | 266 |
| | 268 |
| | 270 |
| 6V-8938 | 259 |
| | 312 |
| 6V-8949 | 450 |
| 6V-8978 | 172 |


► **PRIMARY REFERENCE**

# PART NUMBER INDEX


| Part | Page |
|---|---|
| 6V-8994 | 254 |
| 6V-9007 | 289 |
| 6V-9161 | 168 |
| 6V-9168 | 254 |
| | 260 |
| | 312 |
| 6V-9170 | 307 |
| | 309 |
| 6V-9182 | 301 |
| 6V-9189 | 214 |
| | 235 |
| | 236 |
| | 329 |
| | 330 |
| | 331 |
| | 364 |
| | 365 |
| | 401 |
| | 402 |
| | 403 |
| | 404 |
| | 405 |
| | 406 |
| | 407 |
| | 408 |
| | 409 |
| | 411 |
| | 433 |
| | 442 |
| | 443 |
| 6V-9508 | 172 |
| 6V-9632 | 215 |
| | 492 |
| | 532 |
| | 534 |
| 6V-9672 | 223 |
| 6V-9746 | 164 |
| | 172 |
| | 289 |
| | 301 |
| 6V-9805 | 574 |
| 6V-9828 | 257 |
| 6V-9829 | 254 |
| | 286 |
| 6V-9830 | 257 |
| 6V-9836 | 168 |
| 6V-9837 | 257 |
| 6V-9838 | 259 |
| | 311 |
| 6V-9849 | 257 |
| 6V-9850 | 311 |
| 6V-9872 | 168 |
| 6V-9873 | 297 |
| 6W-3924 | 532 |
| | 534 |
| 6W-5698 | 90 |
| | 96 |
| | 338 |
| 6Y-5839 | 424 |
| 6Y-5840 | 424 |

## 7

| Part | Page |
|---|---|
| 7D-5473 | 132 |
| | 217 |
| 7D-7233 | 287 |
| | 557 |
| | 559 |
| 7D-8431 | 473 |
| 7D-8508 | 244 |
| | 245 |
| | 246 |
| | 247 |
| 7E-2700 | 220 |
| | 221 |
| 7G-1060 | 115 |
| | 149 |
| 7G-2950 | 260 |
| | 312 |
| 7G-2951 | 260 |
| | 312 |
| 7G-4262 | 475 |
| 7G-5984 | 278 |
| 7G-5985 | 278 |
| 7G-5986 | 278 |
| 7G-7053 | 115 |
| | 473 |
| 7H-7055 | 260 |
| | 312 |
| 7J-0204 | 239 |
| | 243 |
| | 244 |
| | 247 |
| 7J-9108 | 161 |
| | 166 |
| | 168 |
| | 172 |
| | 254 |
| | 259 |
| | 278 |
| | 286 |
| | 287 |
| | 291 |
| | 293 |
| | 301 |
| | 303 |
| | 305 |
| | 307 |
| | 309 |
| | 311 |
| | 556 |
| | 558 |
| 7K-1181 | 89 |
| | 119 |
| | 120 |
| | 144 |
| | 172 |
| | 254 |
| | 256 |
| | 289 |
| | 297 |
| | 346 |
| | 352 |
| | 362 |
| | 363 |
| | 459 |
| 7M-7410 | 71 |
| 7M-8485 | 301 |
| 7M-9957 | 223 |
| 7R-2751 | 144 |
| 7S-3912 | 272 |
| | 274 |
| 7S-3913 | 272 |
| | 274 |
| 7S-3916 | 262 |
| | 280 |
| | 282 |
| | 284 |
| 7S-3919 | 262 |
| | 280 |
| | 282 |
| | 284 |
| 7T-1099 | 212 |
| | 492 |
| 7T-6087 | 137 |
| 7T-6088 | 137 |
| 7T-6090 | 137 |
| 7T-6092 | 137 |
| 7T-6093 | 137 |
| 7T-6099 | 137 |
| 7X-0495 | 459 |
| 7X-0579 | 119 |
| | 145 |
| 7X-0603 | 214 |
| 7X-0610 | 160 |
| 7X-0796 | 100 |
| 7X-0818 | 70 |
| | 80 |
| | 120 |
| | 145 |
| 7X-1443 | 72 |
| 7X-2444 | 152 |
| | 217 |
| | 257 |
| 7X-2475 | 360 |
| | 574 |
| 7X-2535 | 315 |
| 7X-2537 | 70 |
| | 149 |
| | 210 |
| | 553 |
| | 562 |
| | 586 |
| 7X-2539 | 168 |
| | 214 |
| 7X-2553 | 439 |
| | 543 |
| 7X-2556 | 46 |
| 7X-2621 | 420 |
| 7X-3229 | 617 |
| 7X-6312 | 117 |
| 7X-6315 | 110 |
| | 113 |
| | 114 |
| 7X-7729 | 68 |
| | 71 |
| | 72 |
| | 210 |
| | 233 |
| | 235 |
| | 236 |
| | 260 |
| | 282 |
| | 284 |
| | 289 |
| | 312 |
| | 420 |
| | 439 |
| 7X-9065 | 542 |

## 8

| Part | Page |
|---|---|
| 8C-3080 | 98 |
| 8C-3110 | 335 |
| | 336 |
| 8C-3205 | 301 |
| 8C-3445 | 31 |
| 8C-3446 | 31 |
| 8C-3451 | 286 |
| | 287 |
| 8C-6354 | 144 |
| 8C-6758 | 166 |
| | 168 |
| 8C-6959 | 90 |
| | 96 |
| 8C-8400 | 289 |
| 8C-8478 | 366 |
| | 367 |
| 8C-8558 | 145 |
| 8C-8992 | 160 |
| 8C-9778 | 137 |
| 8C-9783 | 137 |
| 8E-5702 | 366 |
| | 367 |
| 8F-1434 | 132 |
| | 137 |
| | 217 |
| 8F-8151 | 553 |
| 8G-1151 | 532 |
| | 534 |
| 8I-5078 | 340 |
| 8J-2880 | 366 |
| | 367 |
| 8J-4455 | 137 |
| 8L-2779 | 31 |
| 8L-5188 | 260 |
| | 418 |
| 8L-8413 | 144 |
| | 525 |
| | 545 |
| | 546 |
| 8M-4791 | 295 |
| | 312 |
| 8M-4963 | 144 |
| 8Q-6027 | 244 |
| | 245 |
| 8R-3857 | 406 |
| 8S-0934 | 588 |
| | 589 |
| | 590 |
| | 591 |
| 8T-0087 | 127 |
| 8T-0154 | 553 |
| | 557 |
| | 568 |
| 8T-0267 | 183 |
| | 185 |
| 8T-0269 | 492 |

# PART NUMBER INDEX


| Part | Page |
|---|---|
| | 495 |
| | 496 |
| | 498 |
| | 499 |
| | 501 |
| | 502 |
| | 504 |
| | 505 |
| | 506 |
| | 507 |
| | 509 |
| | 510 |
| | 513 |
| | 515 |
| | 518 |
| 8T-0271 | 176 |
| 8T-0276 | 66 |
| | 67 |
| 8T-0285 | 295 |
| | 312 |
| 8T-0287 | 295 |
| | 312 |
| 8T-0318 | 68 |
| 8T-0328 | 132 |
| | 217 |
| 8T-0379 | 259 |
| | 311 |
| 8T-0389 | 123 |
| | 125 |
| 8T-0642 | 58 |
| 8T-0737 | 459 |
| 8T-1158 | 344 |
| | 346 |
| | 350 |
| | 352 |
| 8T-1159 | 178 |
| 8T-1687 | 164 |
| 8T-1757 | 360 |
| 8T-1887 | 132 |
| | 217 |
| 8T-1888 | 132 |
| | 217 |
| 8T-1893 | 272 |
| | 274 |
| 8T-1894 | 272 |
| | 274 |
| 8T-2444 | 526 |
| | 529 |
| | 560 |
| | 561 |
| 8T-2895 | 475 |
| 8T-3311 | 297 |
| 8T-3597 | 212 |
| 8T-3612 | 68 |
| | 259 |
| | 492 |
| | 562 |
| | 586 |
| 8T-3647 | 236 |
| 8T-3848 | 526 |
| | 529 |
| | 560 |
| | 561 |
| 8T-3984 | 89 |
| 8T-3998 | 89 |
| 8T-4121 | 34 |
| | 68 |
| | 71 |
| | 72 |
| | 90 |
| | 96 |
| | 98 |
| | 100 |
| | 115 |
| | 123 |
| | 131 |
| | 137 |
| | 145 |
| | 149 |
| | 151 |
| | 161 |
| | 180 |
| | 212 |
| | 217 |
| | 222 |
| | 236 |
| | 257 |
| | 260 |
| | 262 |
| | 272 |
| | 274 |
| | 276 |
| | 280 |
| | 289 |
| | 291 |
| | 293 |
| | 295 |
| | 299 |
| | 301 |
| | 303 |
| | 305 |
| | 307 |
| | 309 |
| | 312 |
| | 320 |
| | 321 |
| | 322 |
| | 337 |
| | 339 |
| | 416 |
| | 418 |
| | 420 |
| | 450 |
| | 456 |
| | 459 |
| | 472 |
| | 480 |
| | 481 |
| | 483 |
| | 484 |
| | 505 |
| | 506 |
| | 507 |
| | 509 |
| | 510 |
| | 513 |
| | 515 |
| | 518 |
| | 526 |
| | 529 |
| 8T-4122 | 46 |
| | 160 |
| | 174 |
| | 175 |
| | 200 |
| | 212 |
| | 220 |
| | 221 |
| | 360 |
| | 439 |
| | 459 |
| | 543 |
| | 574 |
| 8T-4123 | 366 |
| | 367 |
| | 448 |
| | 449 |
| | 451 |
| 8T-4132 | 46 |
| | 174 |
| | 175 |
| | 200 |
| | 212 |
| | 220 |
| | 221 |
| | 459 |
| | 543 |
| 8T-4133 | 68 |
| | 71 |
| | 72 |
| | 90 |
| | 96 |
| | 115 |
| | 137 |
| | 145 |
| | 149 |
| | 151 |
| | 217 |
| | 222 |
| | 257 |
| | 260 |
| | 276 |
| | 289 |
| | 295 |
| | 312 |
| | 416 |
| | 418 |
| | 456 |
| | 459 |
| | 472 |
| | 484 |
| | 526 |
| | 529 |
| | 544 |
| | 548 |
| | 553 |
| | 557 |
| | 559 |
| | 560 |
| | 561 |
| | 566 |
| | 568 |
| | 559 |
| | 560 |
| | 561 |
| | 568 |
| 8T-4136 | 98 |
| | 161 |
| | 212 |
| | 236 |
| | 260 |
| | 262 |
| | 280 |
| | 291 |
| | 293 |
| | 295 |
| | 303 |
| | 305 |
| | 307 |
| | 309 |
| | 312 |
| | 337 |
| | 339 |
| | 416 |
| | 456 |
| | 459 |
| | 483 |
| | 557 |
| | 558 |
| 8T-4137 | 39 |
| | 90 |
| | 96 |
| | 100 |
| | 161 |
| | 210 |
| | 233 |
| | 272 |
| | 274 |
| | 295 |
| | 312 |
| | 339 |
| | 439 |
| | 450 |
| | 459 |
| | 505 |
| | 506 |
| | 507 |
| | 509 |
| | 510 |
| | 513 |
| | 515 |
| | 518 |
| | 553 |
| | 557 |
| 8T-4138 | 89 |
| | 215 |
| | 225 |
| | 228 |
| | 330 |
| | 584 |
| 8T-4139 | 278 |
| | 366 |
| | 367 |
| | 444 |
| | 445 |
| 8T-4159 | 68 |
| 8T-4171 | 204 |


► **PRIMARY REFERENCE**

# PART NUMBER INDEX


| Part | Page | Part | Page | Part | Page | Part | Page |
|---|---|---|---|---|---|---|---|
| | 206 | | 96 | | 504 | | 316 |
| | 223 | | 180 | | 505 | | 320 |
| | 262 | | 236 | | 506 | | 321 |
| | 280 | | 260 | | 507 | | 322 |
| 8T-4172 . . . . . | 420 | | 301 | | 509 | | 459 |
| 8T-4173 . . . . . | 574 | | 320 | | 510 | | 467 |
| 8T-4176 . . . . . | 46 | | 321 | | 513 | | 473 |
| 8T-4177 . . . . . | 78 | | 322 | | 515 | | 480 |
| | 80 | | 418 | | 518 | | 481 |
| 8T-4181 . . . . . | 68 | | 420 | | 526 | | 484 |
| | 210 | 8T-4197 . . . . . | 583 | | 529 | | 523 |
| 8T-4185 . . . . . | 276 | 8T-4198 . . . . . | 307 | | 560 | | 526 |
| 8T-4186 . . . . . | 151 | | 309 | | 561 | | 529 |
| | 450 | | 335 | | 574 | | 547 |
| 8T-4189 . . . . . | 37 | | 336 | | 581 | | 553 |
| | 105 | 8T-4200 . . . . . | 19 | | 583 | | 558 |
| | 106 | | 40 | | 584 | | 559 |
| | 107 | | 42 | 8T-4222 . . . . . | 526 | | 560 |
| | 108 | | 45 | | 529 | | 561 |
| | 109 | | 47 | | 560 | | 562 |
| | 208 | | 49 | | 561 | | 571 |
| | 209 | | 94 | 8T-4223 . . . . . | 31 | | 584 |
| | 212 | | 149 | | 46 | | 586 |
| | 236 | | 234 | | 208 | | 592 |
| | 260 | | 282 | | 209 | | 593 |
| | 264 | | 284 | | 333 | 8T-4244 . . . . . | 212 |
| | 266 | | 316 | | 334 | | 444 |
| | 268 | | 553 | | 444 | | 445 |
| | 270 | 8T-4201 . . . . . | 132 | | 445 | | 455 |
| | 312 | | 217 | | 455 | 8T-4648 . . . . . | 208 |
| | 316 | | 260 | | 457 | | 209 |
| | 337 | | 312 | | 588 | 8T-4742 . . . . . | 88 |
| | 484 | 8T-4205 . . . . . | 68 | | 589 | | 479 |
| | 553 | | 89 | | 590 | | 563 |
| | 557 | | 103 | | 591 | 8T-4744 . . . . . | 88 |
| | 558 | | 121 | 8T-4224 . . . . . | 40 | | 479 |
| 8T-4191 . . . . . | 72 | | 122 | | 42 | | 563 |
| | 90 | | 134 | | 70 | 8T-4778 . . . . . | 424 |
| | 96 | | 142 | | 71 | | 425 |
| | 236 | | 145 | | 72 | | 426 |
| | 260 | | 149 | | 78 | | 427 |
| | 299 | | 153 | | 80 | | 428 |
| | 312 | | 204 | | 81 | | 429 |
| | 459 | | 206 | | 130 | | 430 |
| | 548 | | 210 | | 145 | | 463 |
| | 553 | | 212 | | 149 | | 574 |
| | 557 | | 215 | | 166 | 8T-4779 . . . . . | 459 |
| | 568 | | 217 | | 168 | 8T-4827 . . . . . | 357 |
| 8T-4192 . . . . . | 31 | | 222 | | 208 | 8T-4896 . . . . . | 39 |
| | 46 | | 223 | | 209 | | 100 |
| 8T-4194 . . . . . | 212 | | 225 | | 212 | | 105 |
| | 455 | | 303 | | 214 | | 106 |
| 8T-4195 . . . . . | 39 | | 305 | | 220 | | 107 |
| | 180 | | 307 | | 221 | 8T-4908 . . . . . | 37 |
| | 235 | | 309 | | 234 | | 71 |
| | 257 | | 315 | | 236 | | 92 |
| | 276 | | 459 | | 260 | | 210 |
| | 282 | | 473 | | 264 | | 212 |
| | 284 | | 492 | | 266 | | 220 |
| | 289 | | 495 | | 268 | | 221 |
| | 307 | | 496 | | 270 | | 260 |
| | 309 | | 498 | | 284 | | 312 |
| | 568 | | 499 | | 307 | | 459 |
| 8T-4196 . . . . . | 71 | | 501 | | 309 | | 484 |
| | 90 | | 502 | | 312 | | 557 |

# PART NUMBER INDEX


| Part | Page |
|---|---|
| | 558 |
| | 568 |
| | 584 |
| 8T-4910 | 457 |
| 8T-4956 | 333 |
| | 334 |
| 8T-4970 | 212 |
| 8T-4971 | 563 |
| 8T-5005 | 72 |
| | 125 |
| | 260 |
| | 312 |
| 8T-5049 | 333 |
| | 334 |
| 8T-5095 | 176 |
| | 325 |
| | 335 |
| | 336 |
| 8T-5372 | 543 |
| | 553 |
| | 557 |
| 8T-6466 | 68 |
| | 72 |
| 8T-6685 | 218 |
| | 222 |
| | 257 |
| 8T-6726 | 78 |
| 8T-6842 | 536 |
| | 598 |
| 8T-6869 | 235 |
| | 329 |
| | 330 |
| | 331 |
| | 364 |
| | 365 |
| | 401 |
| | 402 |
| | 403 |
| | 404 |
| | 405 |
| | 406 |
| | 407 |
| | 408 |
| | 409 |
| | 411 |
| | 433 |
| | 442 |
| | 459 |
| | 467 |
| | 547 |
| | 553 |
| | 557 |
| 8T-6870 | 166 |
| | 480 |
| | 481 |
| | 557 |
| | 558 |
| 8T-6876 | 295 |
| | 311 |
| 8T-6902 | 583 |
| 8T-6912 | 108 |
| | 443 |
| | 523 |
| | 584 |
| 8T-7329 | 40 |
| | 42 |
| 8T-7338 | 200 |
| | 212 |
| 8T-7547 | 70 |
| | 81 |
| | 82 |
| | 83 |
| | 90 |
| | 96 |
| | 149 |
| | 320 |
| | 321 |
| | 322 |
| 8T-7934 | 81 |
| 8T-7970 | 164 |
| 8T-8192 | 276 |
| 8T-8193 | 276 |
| 8T-8729 | 125 |
| | 140 |
| | 142 |
| | 346 |
| 8T-8737 | 120 |
| | 125 |
| | 145 |
| | 148 |
| | 159 |
| | 488 |
| | 489 |
| | 490 |
| | 491 |
| | 515 |
| | 518 |
| | 545 |
| | 546 |
| | 572 |
| | 573 |
| 8T-8799 | 144 |
| 8T-9405 | 346 |
| | 352 |
| 8T-9655 | 119 |
| | 120 |
| | 144 |
| 8U-9427 | 346 |
| 8W-8909 | 132 |
| | 217 |
| 8Y-4489 | 401 |
| | 402 |
| 8Y-7385 | 457 |
| 8Y-7386 | 457 |
| 9B-7233 | 542 |
| 9C-2741 | 557 |
| | 559 |
| | 566 |
| 9C-5344 | 220 |
| | 526 |
| | 529 |
| | 560 |
| | 561 |
| | 595 |
| 9G-3695 | 317 |
| | 473 |
| 9G-5127 | 212 |
| | 480 |
| | 481 |
| | 556 |
| | 558 |
| 9G-7101 | 480 |
| | 481 |
| | 557 |
| | 559 |
| 9M-1974 | 18 |
| | 58 |
| | 60 |
| | 61 |
| | 62 |
| | 63 |
| | 65 |
| | 66 |
| | 67 |
| | 70 |
| | 77 |
| | 84 |
| | 86 |
| | 92 |
| | 94 |
| | 98 |
| | 100 |
| | 105 |
| | 106 |
| | 107 |
| 9M-4972 | 161 |
| 9M-8406 | 260 |
| | 312 |
| 9N-0869 | 120 |
| 9P-4609 | 473 |
| 9R-0390 | 46 |
| 9R-1005 | 303 |
| | 305 |
| 9R-1499 | 132 |
| | 134 |
| | 225 |
| 9R-2004 | 262 |
| | 272 |
| | 280 |
| 9R-2672 | 259 |
| | 418 |
| 9R-2959 | 364 |
| | 365 |
| | 437 |
| 9R-5301 | 452 |
| 9R-7802 | 303 |
| | 305 |
| 9R-7803 | 303 |
| | 305 |
| 9R-7941 | 115 |
| 9R-7942 | 129 |
| 9R-7958 | 129 |
| 9R-7980 | 115 |
| 9S-0285 | 473 |
| 9S-4191 | 257 |
| | 332 |
| 9S-4200 | 282 |
| | 284 |
| 9S-8002 | 183 |
| | 185 |
| 9S-8005 | 178 |
| 9S-8006 | 323 |
| | 325 |
| 9S-8007 | 239 |
| | 243 |
| | 244 |
| | 247 |
| 9T-2837 | 346 |
| | 352 |
| 9T-4884 | 326 |
| | 327 |
| 9T-7303 | 260 |
| | 418 |
| 9U-6994 | 301 |
| 9U-6995 | 301 |
| 9V-2714 | 360 |
| 9V-2715 | 360 |
| 9W-0607 | 123 |
| | 124 |
| 9W-1951 | 144 |
| 9W-3324 | 125 |
| 9W-3326 | 128 |
| 9W-6226 | 46 |
| 9W-8096 | 46 |
| 9X-1046 | 115 |
| 9X-1054 | 144 |
| 9X-1481 | 295 |
| | 312 |
| 9X-1813 | 119 |
| | 120 |
| | 140 |
| | 473 |
| 9X-2026 | 228 |
| | 330 |
| | 421 |
| 9X-2036 | 137 |
| 9X-2038 | 90 |
| | 96 |
| 9X-2041 | 526 |
| | 529 |
| | 544 |
| | 560 |
| | 561 |
| 9X-2042 | 115 |
| | 132 |
| | 218 |
| | 473 |
| | 476 |
| | 596 |
| 9X-2044 | 145 |
| | 523 |
| | 526 |
| | 529 |
| | 532 |
| | 534 |
| | 560 |
| | 561 |
| 9X-2045 | 526 |
| | 529 |
| | 532 |
| | 534 |
| | 560 |
| | 561 |
| | 584 |
| | 597 |
| | 599 |


9

► **PRIMARY REFERENCE**

# PART NUMBER INDEX


| Part | Page |
|---|---|
| | 600 |
| 9X-2092 | 564 |
| 9X-2125 | 72 |
| 9X-2134 | 305 |
| 9X-4244 | 123 |
| | 124 |
| | 125 |
| 9X-6032 | 480 |
| | 481 |
| | 557 |
| | 559 |
| 9X-6165 | 523 |
| | 584 |
| 9X-6273 | 264 |
| | 266 |
| | 268 |
| | 270 |
| 9X-6274 | 235 |
| | 264 |
| | 266 |
| | 268 |
| | 270 |
| | 330 |
| 9X-6277 | 584 |
| 9X-6581 | 260 |
| | 311 |
| 9X-6606 | 183 |
| | 185 |
| 9X-6615 | 319 |
| | 357 |
| 9X-6772 | 117 |
| | 118 |
| 9X-7378 | 557 |
| | 559 |
| | 566 |
| 9X-7380 | 557 |
| | 559 |
| | 566 |
| 9X-7381 | 557 |
| | 559 |
| | 566 |
| 9X-7382 | 557 |
| | 559 |
| | 566 |
| 9X-7383 | 557 |
| | 559 |
| | 566 |
| 9X-8118 | 129 |
| 9X-8121 | 129 |
| 9X-8139 | 129 |
| 9X-8250 | 553 |
| | 557 |
| | 568 |
| 9X-8256 | 40 |
| 9X-8257 | 452 |
| 9X-8912 | 38 |
| 9X-8918 | 601 |
| | 603 |
| 9X-9865 | 125 |

## 0

| Part | Page |
|---|---|
| 003-2143 | 459 |
| 003-3082 | 340 |
| 004-6810 | 553 |
| | 557 |
| | 568 |
| 012-0380 | 228 |
| 027-1287 | 244 |
| | 245 |
| 032-8139 | 32 |
| | 33 |
| 032-9828 | 532 |
| | 534 |
| 033-5853 | 176 |
| | 178 |
| 033-6042 | 176 |
| | 178 |
| 036-1865 | 71 |
| 039-8557 | 450 |
| 064-3843 | 233 |
| 067-2551 | 459 |
| 069-4080 | 71 |
| 081-3698 | 183 |
| | 185 |
| 084-4277 | 542 |
| 084-4348 | 127 |
| | 128 |
| 085-8091 | 557 |
| | 559 |
| | 566 |
| 085-9513 | 22 |
| | 23 |
| 086-2369 | 325 |
| 090-9434 | 144 |
| | 149 |
| 092-2467 | 289 |
| 094-4628 | 18 |
| | 19 |
| | 22 |
| | 23 |
| 094-7235 | 92 |
| | 94 |
| 095-0641 | 583 |
| 095-0690 | 336 |
| 095-0733 | 121 |
| | 122 |
| | 145 |
| | 153 |
| 095-0912 | 459 |
| 095-1207 | 496 |
| | 498 |
| | 499 |
| | 501 |
| | 507 |
| | 509 |
| | 510 |
| | 513 |
| | 515 |
| | 518 |
| 095-1325 | 220 |
| | 526 |
| | 529 |
| | 560 |
| | 561 |
| | 595 |
| 095-1513 | 65 |
| 095-1537 | 61 |
| 095-1671 | 61 |
| 095-2005 | 60 |
| 096-0194 | 181 |
| | 182 |
| | 323 |
| 096-2500 | 40 |
| | 84 |
| | 86 |
| 096-3321 | 65 |
| 096-3741 | 24 |
| | 26 |
| 096-4415 | 38 |
| 096-8475 | 66 |
| | 67 |
| 096-8482 | 47 |
| | 49 |
| 096-8990 | 92 |
| 096-8994 | 92 |
| 096-8995 | 92 |
| 096-8996 | 92 |
| 096-8997 | 92 |
| 096-9529 | 40 |
| | 42 |
| 099-2374 | 338 |
| 099-3649 | 21 |
| | 80 |
| 099-4420 | 24 |
| | 26 |
| 099-7519 | 92 |
| 099-7520 | 92 |
| 099-7521 | 92 |
| 099-7522 | 92 |
| 099-7523 | 92 |
| 099-7524 | 92 |
| 099-7525 | 92 |

## 1

| Part | Page |
|---|---|
| 100-3246 | 125 |
| 100-3247 | 125 |
| 100-3248 | 125 |
| 100-3250 | 125 |
| 100-3251 | 125 |
| 100-3253 | 125 |
| 100-3254 | 125 |
| 100-3255 | 125 |
| 100-3320 | 144 |
| 100-3685 | 137 |
| 100-3866 | 160 |
| 100-4112 | 137 |
| 100-4113 | 137 |
| 100-4115 | 137 |
| 100-4118 | 137 |
| 100-4119 | 137 |
| 100-7530 | 166 |
| | 168 |
| 101-2867 | 37 |
| | 115 |
| | 584 |
| 101-3129 | 307 |
| | 309 |
| 101-6544 | 63 |
| 101-8296 | 557 |
| | 559 |
| | 566 |
| 102-7341 | 92 |
| 102-7342 | 92 |
| 102-7343 | 92 |
| 102-7344 | 92 |
| 102-7345 | 92 |
| 102-7346 | 92 |
| 102-7347 | 92 |
| 102-7348 | 92 |
| 102-7349 | 92 |
| 102-7350 | 92 |
| 102-7351 | 92 |
| 102-8703 | 307 |
| | 309 |
| 102-8801 | 119 |
| | 120 |
| | 144 |
| | 492 |
| | 496 |
| | 499 |
| | 572 |
| | 573 |
| | 577 |
| | 579 |
| 102-8802 | 119 |
| | 120 |
| | 140 |
| | 142 |
| | 143 |
| | 145 |
| | 148 |
| | 151 |
| | 212 |
| | 256 |
| | 346 |
| | 352 |
| | 359 |
| | 525 |
| | 534 |
| 102-8803 | 120 |
| | 145 |
| | 152 |
| | 159 |
| | 217 |
| | 338 |
| | 515 |
| | 518 |
| 102-8804 | 119 |
| | 120 |
| | 127 |
| | 128 |
| | 144 |
| | 145 |
| | 224 |
| | 225 |
| | 317 |
| | 532 |
| | 577 |
| | 579 |
| 102-8805 | 125 |
| | 132 |
| | 144 |
| | 217 |
| | 526 |
| | 529 |
| | 560 |


► **PRIMARY REFERENCE**

# PART NUMBER INDEX


| Part | Page |
|---|---|
| | 561 |
| | 577 |
| | 579 |
| 102-8806 . . . . . | 121 |
| | 132 |
| | 145 |
| | 148 |
| | 153 |
| | 217 |
| | 459 |
| 103-2006 . . . . . | 525 |
| | 541 |
| | 542 |
| | 577 |
| | 579 |
| 103-2543 . . . . . | 112 |
| 103-6262 . . . . . | 473 |
| 103-9062 . . . . . | 24 |
| 103-9083 . . . . . | 63 |
| 103-9246 . . . . . | 29 |
| 103-9272 . . . . . | 18 |
| 103-9275 . . . . . | 24 |
| 103-9276 . . . . . | 24 |
| | 26 |
| 103-9277 . . . . . | 42 |
| 103-9279 . . . . . | 24 |
| 103-9280 . . . . . | 38 |
| | 39 |
| 103-9288 . . . . . | 17 |
| 103-9289 . . . . . | 17 |
| 103-9290 . . . . . | 17 |
| 103-9680 . . . . . | 20 |
| 103-9703 . . . . . | 24 |
| | 26 |
| 103-9725 . . . . . | 64 |
| 103-9747 . . . . . | 70 |
| 103-9750 . . . . . | 70 |
| 104-1218 . . . . . | 24 |
| 104-5957 . . . . . | 598 |
| 104-8039 . . . . . | 92 |
| 105-2814 . . . . . | ▶103 |
| | 105 |
| | 106 |
| 105-4593 . . . . . | 172 |
| 106-3108 . . . . . | 318 |
| 106-8704 . . . . . | 144 |
| | 148 |
| | 525 |
| 106-8715 . . . . . | 289 |
| 107-3659 . . . . . | 116 |
| 107-3669 . . . . . | 26 |
| 107-3672 . . . . . | 64 |
| 108-0656 . . . . . | 598 |
| 108-3565 . . . . . | 183 |
| | 185 |
| 109-2356 . . . . . | 577 |
| | 579 |
| 110-0885 . . . . . | 210 |
| 110-2570 . . . . . | 31 |
| 110-6326 . . . . . | 75 |
| 110-6331 . . . . . | 75 |
| 110-8760 . . . . . | 492 |
| | 496 |
| | 499 |
| | 502 |
| | 505 |
| | 507 |
| | 510 |
| | 515 |
| 111-4627 . . . . . | 115 |
| | 459 |
| 111-7899 . . . . . | 130 |
| | 132 |
| | 135 |
| | 252 |
| | 259 |
| | 417 |
| | 577 |
| | 579 |
| 112-1817 . . . . . | 295 |
| | 311 |
| | ▶343 |
| 112-9401 . . . . . | 102 |
| 112-9717 . . . . . | 75 |
| 112-9783 . . . . . | 299 |
| 112-9861 . . . . . | 343 |
| 113-0363 . . . . . | 92 |
| | 94 |
| 113-0364 . . . . . | 92 |
| | 94 |
| 113-1141 . . . . . | 63 |
| 113-4458 . . . . . | 103 |
| 113-4459 . . . . . | 103 |
| 113-4460 . . . . . | 103 |
| 113-4461 . . . . . | 103 |
| 113-4462 . . . . . | 103 |
| 113-4463 . . . . . | 103 |
| 113-4464 . . . . . | 103 |
| 113-4465 . . . . . | 103 |
| 113-4466 . . . . . | 103 |
| 113-4467 . . . . . | 103 |
| 113-4468 . . . . . | 103 |
| 113-4469 . . . . . | 103 |
| 113-4470 . . . . . | 103 |
| 113-7634 . . . . . | 204 |
| | 206 |
| 113-8490 . . . . . | 121 |
| | 122 |
| | 142 |
| | 145 |
| | 153 |
| | 259 |
| | 417 |
| | 510 |
| | 513 |
| | 515 |
| | 518 |
| 113-8491 . . . . . | 121 |
| | 143 |
| | 145 |
| | 153 |
| 113-8492 . . . . . | 145 |
| 113-9491 . . . . . | 122 |
| 114-4516 . . . . . | 144 |
| 114-6658 . . . . . | 523 |
| 115-1615 . . . . . | 121 |
| | 122 |
| | 144 |
| | 149 |
| | 152 |
| | 153 |
| | 217 |
| 115-8109 . . . . . | 120 |
| 116-2001 . . . . . | ▶458 |
| | 459 |
| 116-4415 . . . . . | 303 |
| | 305 |
| 116-5763 . . . . . | 484 |
| | 557 |
| | 559 |
| 116-7471 . . . . . | 112 |
| 117-2827 . . . . . | 34 |
| 117-2829 . . . . . | 34 |
| 117-3283 . . . . . | 34 |
| 117-3285 . . . . . | 34 |
| 117-3447 . . . . . | 42 |
| 117-3448 . . . . . | 42 |
| 117-5015 . . . . . | 38 |
| | 39 |
| 117-6558 . . . . . | 7 |
| | 11 |
| | 203 |
| 118-8118 . . . . . | 102 |
| 119-1414 . . . . . | 458 |
| 119-1415 . . . . . | 458 |
| 119-3662 . . . . . | 144 |
| 119-3859 . . . . . | 459 |
| 119-9631 . . . . . | 468 |
| | 470 |
| 120-4897 . . . . . | 113 |
| 121-4459 . . . . . | 183 |
| | 185 |
| 121-4870 . . . . . | 183 |
| | 185 |
| 122-1904 . . . . . | 344 |
| 122-6867 . . . . . | 260 |
| 122-6869 . . . . . | 459 |
| 122-6871 . . . . . | 557 |
| | 559 |
| 122-8948 . . . . . | 92 |
| | 94 |
| 122-8949 . . . . . | 92 |
| | 94 |
| 123-4750 . . . . . | 299 |
| 123-7615 . . . . . | 526 |
| | 560 |
| | 561 |
| 124-1916 . . . . . | 459 |
| 124-1917 . . . . . | 459 |
| 124-2113 . . . . . | 259 |
| 124-2135 . . . . . | 557 |
| | 559 |
| 124-2150 . . . . . | 557 |
| | 559 |
| 124-2159 . . . . . | 259 |
| 124-2456 . . . . . | 259 |
| | 311 |
| | 617 |
| 124-3243 . . . . . | 215 |
| | 523 |
| | 532 |
| | 534 |
| | 562 |
| | 584 |
| | 586 |
| 124-3548 . . . . . | 143 |
| | 145 |
| | 557 |
| | 559 |
| 125-3518 . . . . . | 526 |
| | 529 |
| | 560 |
| | 561 |
| 125-7874 . . . . . | 119 |
| | 120 |
| | 144 |
| | 145 |
| | 217 |
| 125-7875 . . . . . | 144 |
| | 145 |
| | 217 |
| | 526 |
| | 529 |
| | 560 |
| | 561 |
| 126-5011 . . . . . | 144 |
| 126-5640 . . . . . | 183 |
| | 185 |
| 126-5643 . . . . . | 183 |
| | 185 |
| 126-5701 . . . . . | 418 |
| | 420 |
| 127-2170 . . . . . | 526 |
| | 529 |
| | 560 |
| | 561 |
| 127-6316 . . . . . | 340 |
| 128-2955 . . . . . | 20 |
| 128-2956 . . . . . | 20 |
| 128-2958 . . . . . | 20 |
| 128-4123 . . . . . | 145 |
| 128-6985 . . . . . | ▶129 |
| | 135 |
| | 205 |
| | 207 |
| 128-8614 . . . . . | 102 |
| 129-1854 . . . . . | 205 |
| | 207 |
| 129-1855 . . . . . | 205 |
| | 207 |
| 129-3178 . . . . . | 459 |
| | 555 |
| | 563 |
| | 583 |
| 129-3180 . . . . . | 46 |
| 130-1676 . . . . . | 354 |
| 130-1916 . . . . . | 473 |
| 130-7596 . . . . . | 22 |
| | 23 |
| 131-3540 . . . . . | 72 |
| | 210 |
| | 555 |
| 131-3543 . . . . . | 581 |
| 131-5879 . . . . . | 420 |
| 132-3056 . . . . . | 338 |
| 132-4720 . . . . . | 463 |
| 132-5166 . . . . . | 217 |
| | 222 |
| 132-7551 . . . . . | 420 |
| 133-9931 . . . . . | 159 |


▶ **PRIMARY REFERENCE**

# PART NUMBER INDEX


| Part | Page |
|---|---|
| | 515 |
| | 518 |
| 134-0404 | 163 |
| 134-4126 | 110 |
| | 113 |
| | 114 |
| 134-7722 | 37 |
| 134-8273 | 532 |
| | 534 |
| 135-2655 | 183 |
| | 185 |
| 135-8432 | 47 |
| | 49 |
| 135-9383 | 372 |
| | ▶424 |
| 135-9384 | 372 |
| | 373 |
| | 376 |
| | 383 |
| | 385 |
| | ▶425 |
| 135-9385 | 372 |
| | 374 |
| | 376 |
| | 383 |
| | 385 |
| | ▶426 |
| 135-9386 | 361 |
| | 373 |
| | 374 |
| | 376 |
| | 382 |
| | 386 |
| | 410 |
| | ▶427 |
| 135-9387 | 372 |
| | 375 |
| | 378 |
| | 382 |
| | 385 |
| | ▶428 |
| 135-9393 | 424 |
| 135-9394 | 425 |
| 135-9395 | 426 |
| 135-9396 | 427 |
| 135-9397 | 428 |
| 136-1953 | 553 |
| | 557 |
| | 568 |
| 136-3191 | 532 |
| | 534 |
| 138-4883 | 532 |
| | 534 |
| 140-2513 | 176 |
| | 178 |
| 140-2514 | 176 |
| | 178 |
| 140-5217 | 39 |
| | 100 |
| 141-3046 | 176 |
| | 178 |
| 141-3049 | 176 |
| | 178 |
| 141-4999 | 373 |
| | 374 |
| | 375 |
| | 382 |
| | 384 |
| | ▶463 |
| 142-2928 | 473 |
| 142-4914 | 424 |
| 142-7493 | 195 |
| | 196 |
| | 197 |
| | 198 |
| 142-7503 | ▶127 |
| | 134 |
| 142-7505 | 459 |
| 142-7513 | 149 |
| 142-8633 | 121 |
| | 122 |
| | 153 |
| 142-8634 | ▶128 |
| | 132 |
| | 217 |
| 142-8652 | 3 |
| | 4 |
| | 8 |
| | 111 |
| | ▶134 |
| | 201 |
| 142-8653 | ▶135 |
| 142-8714 | ▶332 |
| 142-8719 | 180 |
| 142-8731 | 187 |
| | 190 |
| | 191 |
| | 192 |
| 142-8759 | 187 |
| | 188 |
| | 189 |
| | 190 |
| | 192 |
| | 193 |
| 142-8801 | 210 |
| 142-8805 | 407 |
| | 408 |
| | 409 |
| | 411 |
| 142-8810 | 212 |
| 142-8823 | 212 |
| 142-8826 | 221 |
| 142-8831 | 210 |
| 142-8832 | 68 |
| | 210 |
| | 236 |
| 142-8833 | 151 |
| 142-8858 | 541 |
| 142-8880 | 236 |
| 142-8881 | 236 |
| 142-8897 | 212 |
| 142-8928 | 90 |
| | 96 |
| | 338 |
| 142-8929 | 338 |
| 142-8937 | 338 |
| 142-8997 | 291 |
| | 293 |
| 142-8998 | 303 |
| | 305 |
| 142-9021 | 200 |
| 142-9023 | 155 |
| 142-9024 | 155 |
| | 156 |
| 142-9029 | 155 |
| | 156 |
| 142-9032 | 160 |
| 142-9033 | 160 |
| 142-9034 | 160 |
| 142-9036 | 160 |
| 142-9058 | ▶155 |
| | 157 |
| 142-9060 | 2 |
| | 3 |
| | ▶160 |
| 142-9089 | 236 |
| 142-9090 | 236 |
| 142-9091 | 236 |
| 142-9093 | 236 |
| 142-9094 | 236 |
| 142-9116 | 252 |
| 142-9118 | ▶525 |
| | 577 |
| | 579 |
| 142-9142 | 236 |
| 142-9234 | 303 |
| | 305 |
| 142-9241 | 164 |
| 142-9278 | 473 |
| 142-9279 | 473 |
| 142-9287 | 473 |
| 142-9305 | 575 |
| | 576 |
| | ▶592 |
| 142-9311 | ▶565 |
| 142-9319 | 598 |
| 142-9320 | 577 |
| | 579 |
| 142-9325 | 577 |
| | 579 |
| 142-9326 | 130 |
| 142-9327 | 135 |
| 142-9328 | 577 |
| | 579 |
| 142-9329 | 132 |
| | 217 |
| 142-9331 | 132 |
| | 217 |
| 142-9356 | 526 |
| | 529 |
| | 560 |
| | 561 |
| 142-9386 | 473 |
| 143-0539 | ▶137 |
| | 139 |
| 143-1344 | 137 |
| 143-3088 | 424 |
| 144-0195 | 526 |
| | 529 |
| | 532 |
| | 534 |
| | 560 |
| | 561 |
| 144-4531 | 340 |
| 144-4532 | 340 |
| 146-2438 | 128 |
| 146-6371 | 537 |
| | 553 |
| | 556 |
| 146-6729 | 137 |
| 146-9439 | 121 |
| | 122 |
| | 153 |
| 147-1773 | 132 |
| | 217 |
| 148-2371 | 217 |
| | 222 |
| 148-2372 | 217 |
| | 222 |
| 148-8315 | 161 |
| | 254 |
| | 278 |
| | 286 |
| | 287 |
| | 293 |
| | 301 |
| | 303 |
| | 305 |
| | 556 |
| | 558 |
| 148-8316 | 286 |
| | 287 |
| | 297 |
| | 556 |
| | 558 |
| 148-8318 | 172 |
| 148-8319 | 262 |
| | 264 |
| | 266 |
| | 268 |
| | 270 |
| | 272 |
| | 274 |
| | 276 |
| | 280 |
| | 282 |
| | 284 |
| | 305 |
| 148-8325 | 256 |
| | 259 |
| | 297 |
| | 299 |
| | 311 |
| 148-8326 | 168 |
| 148-8327 | 164 |
| | 172 |
| 148-8328 | 161 |
| 148-8336 | 166 |
| | 168 |
| | 172 |
| | 257 |
| | 259 |
| | 278 |
| | 311 |
| 148-8340 | 161 |
| | 172 |
| | 257 |
| 148-8341 | 161 |
| | 291 |
| | 293 |


▶ **PRIMARY REFERENCE**

# PART NUMBER INDEX


| Part | Page | Part | Page | Part | Page | Part | Page |
|---|---|---|---|---|---|---|---|
| | 307 | 152-1154 | 220 | 154-4014 | 337 | | 224 |
| | 309 | 152-1156 | 220 | 154-4233 | ▶110 | | 577 |
| 148-8342 | 172 | 152-1157 | 160 | | 144 | | 579 |
| | 278 | 152-1161 | 543 | 154-5011 | ▶329 | 155-2274 | 132 |
| 148-8347 | 289 | 152-4871 | 476 | | 383 | | 144 |
| 148-8351 | 257 | 152-4875 | 473 | | 384 | | 217 |
| 148-8360 | 301 | 152-4884 | 473 | | 385 | | 526 |
| 148-8365 | 295 | 152-4892 | 90 | 154-5012 | 329 | | 529 |
| | 311 | | 96 | | 407 | | 560 |
| 148-8367 | 311 | 152-4898 | 75 | | 408 | | 561 |
| 148-8368 | 257 | 152-5878 | 574 | | 409 | | 577 |
| 148-8369 | 257 | 153-1260 | 593 | | 411 | | 579 |
| | 297 | 153-2682 | 595 | 154-5013 | 329 | 155-5652 | 155 |
| 148-8378 | 259 | 153-2683 | 220 | | 331 | 155-9010 | 155 |
| | 276 | | 526 | 154-5020 | 264 | | 156 |
| | 295 | | 529 | 154-5021 | 264 | 155-9432 | 155 |
| | 311 | | 543 | 154-5022 | 264 | | 156 |
| 148-8390 | 293 | | 560 | 154-5053 | 408 | 155-9433 | 155 |
| 148-8407 | 257 | | 561 | 154-5070 | 409 | | 156 |
| | 332 | 153-2994 | 262 | 154-5232 | 299 | 156-0884 | 375 |
| 148-8423 | 297 | | 264 | 154-8711 | 594 | | ▶401 |
| 148-8433 | 168 | | 266 | 154-8715 | 594 | 156-0885 | 375 |
| 148-8435 | 166 | | 268 | 155-1279 | 317 | | ▶402 |
| | 254 | | 270 | 155-2255 | 121 | 156-0886 | 376 |
| | 257 | | 272 | | 122 | | ▶403 |
| | 299 | | 274 | | 144 | 156-0891 | ▶330 |
| 148-8439 | 254 | | 276 | | 145 | | 375 |
| | 257 | | 278 | | 153 | | 376 |
| | 259 | | 280 | | 492 | | 377 |
| | 311 | | 282 | | 496 | | 430 |
| 148-8444 | 257 | | 284 | | 499 | 156-0913 | 330 |
| 148-8446 | 259 | 153-2995 | 262 | | 577 | 156-1458 | 121 |
| | 311 | | 272 | | 579 | | 122 |
| 149-0686 | 231 | | 274 | 155-2260 | 120 | 156-1460 | 121 |
| 149-4232 | 407 | | 276 | | 143 | | 122 |
| 149-5435 | 401 | | 278 | | 144 | 156-4282 | 259 |
| | 407 | | 280 | | 577 | | 312 |
| 149-5436 | 402 | 153-5656 | 108 | | 579 | 156-5508 | 266 |
| | 408 | 153-6981 | 574 | 155-2265 | 121 | 156-5509 | 266 |
| 149-5437 | 403 | 154-2704 | 368 | | 122 | 156-5510 | 266 |
| | 409 | | 369 | | 132 | 156-5762 | 360 |
| 149-5452 | 254 | | 370 | | 144 | | 611 |
| 149-5741 | 361 | | 371 | | 148 | | 614 |
| | ▶429 | | 387 | | 153 | 156-5970 | 359 |
| 150-3056 | 264 | | 388 | | 217 | 156-6155 | 114 |
| | 266 | | 389 | | 459 | 157-0940 | 364 |
| | 268 | | 390 | 155-2270 | 119 | | 365 |
| | 270 | | 391 | | 120 | | 401 |
| 150-4027 | 299 | | 392 | | 143 | | 402 |
| 150-4034 | 259 | | 393 | | 144 | | 403 |
| | 311 | | 394 | | 148 | | 404 |
| 150-4043 | 297 | | 395 | | 151 | | 405 |
| 150-6766 | 119 | | 396 | | 152 | | 406 |
| 150-7568 | 553 | | 397 | | 217 | | 433 |
| 150-8599 | 187 | | 398 | | 256 | | 442 |
| | 188 | | 399 | | 358 | 157-0941 | 235 |
| | 189 | | 412 | | 459 | | 330 |
| | 190 | | 413 | | 492 | 157-0942 | 235 |
| | 191 | | 414 | | 496 | | 330 |
| | 192 | | 440 | | 499 | 157-2853 | 611 |
| | 193 | | 441 | | 525 | | 614 |
| 150-8621 | 1 | 154-3985 | 593 | | 577 | | 621 |
| | ▶214 | | 594 | | 579 | | 624 |
| 151-4965 | 344 | 154-3986 | 594 | 155-2271 | 144 | | 627 |
| | 350 | 154-4006 | 200 | | 145 | | 630 |


▶ **PRIMARY REFERENCE**

# PART NUMBER INDEX


| Part | Page |
|---|---|
| 157-4835 | 416 |
| 157-7223 | ▶375 |
| | 376 |
| 157-7224 | ▶375 |
| | 376 |
| 157-7225 | ▶376 |
| 157-7226 | ▶376 |
| 157-7227 | ▶376 |
| 158-3770 | 485 |
| | 486 |
| | 487 |
| 158-5648 | 401 |
| | 402 |
| | 403 |
| | 404 |
| | 405 |
| | 406 |
| 158-6095 | ▶376 |
| 158-6694 | 541 |
| 158-6695 | 525 |
| 158-6696 | 577 |
| | 579 |
| 158-6697 | 542 |
| 158-6698 | 577 |
| | 579 |
| 158-6699 | 577 |
| | 579 |
| 159-2953 | 220 |
| | 221 |
| | 424 |
| | 425 |
| | 426 |
| | 427 |
| | 428 |
| | 429 |
| | 430 |
| 159-4535 | 268 |
| 159-4536 | 268 |
| 159-4537 | 268 |
| 159-5411 | 443 |
| 159-5740 | 301 |
| 159-5761 | ▶195 |
| 159-5772 | 155 |
| | 156 |
| 159-5790 | 574 |
| 159-5792 | 574 |
| 159-5794 | 574 |
| 159-5797 | 420 |
| 159-7342 | 204 |
| | 205 |
| 159-8035 | 330 |
| | 443 |
| | 617 |
| 159-8038 | 407 |
| | 408 |
| | 409 |
| | 411 |
| 159-8405 | 210 |
| 159-9495 | 122 |
| | 153 |
| 159-9496 | 121 |
| | 122 |
| | 153 |
| 159-9853 | 545 |
| | 546 |
| 160-1600 | 605 |
| 160-6778 | 344 |
| | 346 |
| | 350 |
| | 352 |
| 160-8493 | 176 |
| | 178 |
| 161-0185 | 262 |
| | 280 |
| 161-0186 | 262 |
| | 280 |
| 161-0187 | ▶280 |
| | 375 |
| | 376 |
| | 377 |
| 161-0188 | 262 |
| | 280 |
| 161-0189 | 262 |
| | 280 |
| | 282 |
| | 284 |
| 161-0190 | 262 |
| | 280 |
| 161-2539 | 142 |
| 161-4128 | 421 |
| 161-4130 | 406 |
| | 407 |
| | 408 |
| | 409 |
| | 411 |
| 161-8560 | 166 |
| | 168 |
| 162-0223 | 473 |
| 162-5236 | 383 |
| | 384 |
| | 385 |
| | ▶421 |
| 162-8154 | 432 |
| 163-1385 | 262 |
| | 276 |
| | 280 |
| | 282 |
| | 284 |
| 163-1386 | 264 |
| | 266 |
| | 268 |
| | 270 |
| 163-8811 | 264 |
| 163-9320 | 280 |
| 164-1154 | 583 |
| 164-2108 | 355 |
| 164-3765 | 112 |
| 164-5567 | 164 |
| | 297 |
| | 301 |
| 164-5608 | 164 |
| 164-7556 | 123 |
| | 124 |
| 164-9295 | ▶240 |
| | 444 |
| 164-9425 | 505 |
| | 506 |
| | 507 |
| | 509 |
| | 510 |
| | 513 |
| | 515 |
| | 518 |
| 164-9440 | 346 |
| 164-9614 | 430 |
| | ▶432 |
| 164-9989 | 433 |
| | 434 |
| | 438 |
| | 442 |
| 165-0142 | 181 |
| | 182 |
| 165-0312 | 577 |
| 165-2601 | 47 |
| | 49 |
| 165-4892 | 160 |
| 165-4894 | 459 |
| 165-4895 | 127 |
| 165-4898 | ▶195 |
| 165-4901 | ▶187 |
| | 195 |
| 165-4902 | ▶187 |
| | 195 |
| 165-4903 | ▶195 |
| 165-4906 | ▶187 |
| | 195 |
| 165-4907 | ▶188 |
| | 195 |
| 165-4909 | 187 |
| | 188 |
| 165-4934 | 172 |
| 165-5655 | 120 |
| 165-7095 | 46 |
| | 574 |
| 165-7098 | 225 |
| 165-8731 | ▶331 |
| | 444 |
| | 445 |
| 165-8732 | 434 |
| | ▶437 |
| | 438 |
| 165-8740 | ▶443 |
| | 444 |
| | 445 |
| 165-8743 | 443 |
| 166-0319 | 364 |
| | 365 |
| 166-2033 | 152 |
| | 217 |
| | 257 |
| 166-2551 | 459 |
| | ▶462 |
| 166-2552 | 459 |
| 166-2556 | 459 |
| 166-2557 | 459 |
| 166-2558 | 459 |
| 166-2559 | 459 |
| 166-2560 | 259 |
| | 422 |
| | 423 |
| | 446 |
| | 447 |
| 166-2561 | 225 |
| 166-2562 | 597 |
| 166-2569 | ▶596 |
| 166-4041 | 437 |
| 166-9312 | 280 |
| 167-0608 | 459 |
| 167-1530 | 541 |
| 167-3693 | 144 |
| 167-4339 | 181 |
| | 182 |
| 167-7713 | 183 |
| | 185 |
| 168-7571 | 160 |
| 168-8389 | 204 |
| | 205 |
| | 366 |
| | 367 |
| | 368 |
| | 369 |
| | 370 |
| | 371 |
| | 387 |
| | 388 |
| | 389 |
| | 390 |
| | 391 |
| | 392 |
| | 393 |
| | 394 |
| | 395 |
| | 396 |
| | 397 |
| | 398 |
| | 399 |
| | 412 |
| | 413 |
| | 414 |
| | 416 |
| | 440 |
| | 441 |
| | 619 |
| 169-1679 | 155 |
| 169-2876 | 611 |
| | 614 |
| | 621 |
| | 624 |
| | 627 |
| | 630 |
| 169-3569 | 443 |
| 169-4868 | 364 |
| | 365 |
| 169-6712 | 236 |
| 169-6715 | 72 |
| 169-8941 | 401 |
| 169-8942 | 402 |
| 169-8943 | 403 |
| 170-5836 | 444 |
| | 445 |
| 170-6305 | 542 |
| 171-2212 | 149 |
| 172-0970 | 346 |
| | 352 |
| 172-5285 | 240 |
| 172-8173 | 176 |
| | 178 |
| 173-0702 | 485 |
| | 486 |


▶ **PRIMARY REFERENCE**

# PART NUMBER INDEX


| Part | Page |
|---|---|
| 173-0703 | 487 |
| 173-2543 | 594 |
| 173-3015 | 204 |
| | 206 |
| 173-3016 | 204 |
| | 206 |
| 173-3018 | 204 |
| | 206 |
| 173-3021 | ▶223 |
| | 224 |
| 173-3022 | 6 |
| | 7 |
| | 10 |
| | 11 |
| | 202 |
| | 203 |
| | ▶597 |
| 173-7225 | 168 |
| 173-7407 | 444 |
| | 445 |
| | ▶457 |
| 174-2388 | 272 |
| | 274 |
| 174-2389 | 272 |
| | 274 |
| 174-2393 | 272 |
| | 274 |
| 174-3091 | 488 |
| | 489 |
| | 490 |
| | 491 |
| | 545 |
| | 546 |
| 174-3097 | 272 |
| 175-0005 | 524 |
| | 537 |
| | 553 |
| 175-4228 | ▶225 |
| 175-4236 | 223 |
| 175-4237 | 222 |
| 175-4238 | 5 |
| | 6 |
| | 7 |
| | 9 |
| | 10 |
| | 11 |
| | 202 |
| | 203 |
| | ▶452 |
| 175-4239 | 217 |
| | 222 |
| 176-2947 | 473 |
| 176-3900 | ▶464 |
| 176-4079 | 227 |
| | 229 |
| | 553 |
| 177-1910 | 276 |
| 177-1911 | 276 |
| | 282 |
| | 284 |
| 177-1912 | 276 |
| 177-1914 | 439 |
| 177-1921 | 364 |
| | 365 |
| 177-1941 | 455 |
| 177-1955 | 439 |
| 177-1956 | 439 |
| 177-1957 | 439 |
| 177-1958 | 242 |
| 177-1971 | 439 |
| 177-1972 | 364 |
| | 365 |
| 177-1973 | 455 |
| 177-1975 | 439 |
| 177-1981 | 361 |
| | ▶364 |
| 177-1982 | 361 |
| | ▶365 |
| 177-1983 | 361 |
| | ▶455 |
| 177-1986 | ▶276 |
| | 361 |
| 177-1987 | 364 |
| 177-1988 | 365 |
| 177-1989 | ▶361 |
| 177-1990 | ▶361 |
| 177-3405 | 220 |
| | 526 |
| | 529 |
| | 560 |
| | 561 |
| | 595 |
| 177-7414 | 453 |
| | 454 |
| 177-7415 | 453 |
| | 454 |
| 177-9150 | 453 |
| 177-9151 | 454 |
| 177-9152 | 5 |
| | 6 |
| | 7 |
| | 9 |
| | 10 |
| | 11 |
| | 202 |
| | 203 |
| | ▶450 |
| 177-9153 | 450 |
| 177-9645 | 121 |
| | 122 |
| | 144 |
| | 153 |
| 177-9648 | 144 |
| 177-9656 | 144 |
| 177-9853 | 510 |
| | 515 |
| 178-2247 | 452 |
| 178-2255 | 68 |
| 178-2256 | ▶195 |
| 178-2270 | 191 |
| | 192 |
| 178-3586 | 510 |
| | 515 |
| 178-3620 | 145 |
| | 153 |
| | 311 |
| | 553 |
| 178-7539 | 144 |
| 178-9983 | 488 |
| | 489 |
| | 490 |
| | 491 |
| 179-7001 | ▶232 |
| | 299 |
| 179-7002 | 232 |
| 180-3007 | 90 |
| | 96 |
| | 301 |
| 180-7451 | 319 |
| 183-4084 | 272 |
| | 274 |
| 183-4085 | 272 |
| | 274 |
| 183-5916 | 24 |
| | 26 |
| 183-7117 | 225 |
| 183-7131 | 208 |
| | 209 |
| 183-7132 | ▶208 |
| 183-7133 | 208 |
| | 209 |
| 183-7134 | 208 |
| | 209 |
| 184-1564 | ▶140 |
| | 152 |
| | 217 |
| 184-2472 | 110 |
| | 114 |
| 184-6097 | 450 |
| | ▶453 |
| 184-6098 | 450 |
| | ▶454 |
| 185-4015 | 468 |
| | 470 |
| | 549 |
| | 551 |
| 185-4253 | 355 |
| 185-4254 | 340 |
| | ▶355 |
| 185-7887 | 264 |
| | 266 |
| | 268 |
| | 270 |
| | 282 |
| | 284 |
| 185-8182 | 38 |
| 185-8662 | ▶196 |
| 185-8663 | ▶196 |
| 185-8666 | ▶196 |
| 185-8667 | ▶196 |
| 185-8674 | ▶188 |
| | 196 |
| 185-8675 | ▶188 |
| | 196 |
| 185-8676 | ▶189 |
| | 196 |
| 185-8677 | ▶189 |
| | 196 |
| 185-9928 | ▶189 |
| | 196 |
| 185-9929 | ▶190 |
| | 196 |
| 185-9930 | ▶190 |
| | 196 |
| 185-9931 | ▶190 |
| 185-9933 | 189 |
| | 190 |
| | 191 |
| 185-9935 | 188 |
| | 189 |
| 185-9936 | 188 |
| 185-9937 | 189 |
| 185-9941 | ▶209 |
| 186-0239 | 224 |
| 186-2360 | 205 |
| | 207 |
| 186-3362 | 151 |
| 186-3735 | 119 |
| | 120 |
| | 128 |
| | 148 |
| | 159 |
| | 212 |
| | 256 |
| | 317 |
| | 352 |
| | 359 |
| | 488 |
| | 489 |
| | 490 |
| | 491 |
| | 515 |
| | 518 |
| | 525 |
| | 532 |
| | 534 |
| | 545 |
| | 546 |
| | 572 |
| | 573 |
| 186-3736 | 120 |
| | 358 |
| | 473 |
| 186-5186 | 456 |
| 186-6190 | ▶465 |
| | 556 |
| | 558 |
| | 566 |
| 187-1273 | 291 |
| | 293 |
| 187-1274 | 291 |
| | 293 |
| 187-1275 | 291 |
| | 293 |
| 187-3211 | 562 |
| | 586 |
| 187-3212 | 562 |
| | 586 |
| 187-3230 | 195 |
| 187-3239 | ▶197 |
| 188-0124 | ▶191 |
| | 197 |
| 188-0125 | ▶191 |
| | 197 |
| 188-2008 | 164 |
| 188-7733 | 360 |
| | ▶456 |
| 189-4523 | 562 |
| | 586 |


▶ **PRIMARY REFERENCE**

# PART NUMBER INDEX


| Part | Page |
|---|---|
| 190-6534 | 176 |
| | 178 |
| 190-7453 | 256 |
| | 299 |
| 190-7457 | 158 |
| | 159 |
| | ▶174 |
| 190-8084 | 3 |
| | ▶333 |
| 190-8962 | 223 |
| 191-3206 | 84 |
| | 86 |
| 191-9576 | 212 |
| 191-9684 | 4 |
| | 8 |
| | 201 |
| | ▶605 |
| 191-9780 | 157 |
| | 158 |
| | ▶175 |
| 192-0836 | 142 |
| | 256 |
| 192-2606 | 462 |
| 192-2607 | 462 |
| 192-2637 | 448 |
| | 449 |
| | 451 |
| 192-2638 | 451 |
| 192-2640 | ▶241 |
| | 259 |
| | 422 |
| | 423 |
| 192-2642 | 422 |
| | 423 |
| | 446 |
| | 447 |
| 192-2655 | 417 |
| | ▶418 |
| 192-2663 | 563 |
| 192-2668 | 338 |
| 193-0447 | ▶231 |
| | 252 |
| | 253 |
| 193-0464 | 301 |
| 193-8308 | 301 |
| 193-8313 | 299 |
| 193-8321 | 301 |
| 193-8322 | 301 |
| 193-8329 | 108 |
| | 109 |
| 193-8334 | 307 |
| | 309 |
| 193-8335 | 307 |
| | 309 |
| 193-8340 | 174 |
| | 175 |
| 193-8345 | 68 |
| 193-8385 | 581 |
| 193-8392 | 297 |
| 193-8393 | 297 |
| 194-3873 | 359 |
| 194-5171 | 532 |
| | 534 |
| 194-7631 | 231 |
| 194-7632 | 231 |
| 195-0935 | 132 |
| | 217 |
| | 476 |
| 195-0936 | 115 |
| | 597 |
| 195-0937 | 120 |
| | 130 |
| | 472 |
| | 526 |
| | 529 |
| | 560 |
| | 561 |
| 195-0939 | 472 |
| 195-5124 | 429 |
| | 430 |
| 195-6696 | 459 |
| 195-6723 | 476 |
| | ▶598 |
| 195-6740 | ▶610 |
| 195-6750 | 307 |
| | 309 |
| 195-6754 | 259 |
| | 422 |
| | 423 |
| 195-6768 | 299 |
| 195-6769 | 299 |
| 195-6942 | 415 |
| | ▶435 |
| | 436 |
| 195-6943 | 415 |
| | 435 |
| 195-7124 | 382 |
| | 400 |
| | ▶430 |
| 195-8211 | 55 |
| 195-8220 | 53 |
| 195-8260 | 79 |
| 195-8324 | 60 |
| 195-8355 | 92 |
| 195-8364 | 92 |
| | 94 |
| 195-8372 | 90 |
| | 96 |
| 195-8403 | 47 |
| | 49 |
| 195-8545 | 415 |
| | ▶435 |
| | 436 |
| 195-9700 | 344 |
| | 346 |
| | 350 |
| | 352 |
| | ▶356 |
| 196-2381 | 122 |
| 196-2382 | 121 |
| 196-2383 | 121 |
| | 153 |
| 196-2384 | 121 |
| | 153 |
| 196-8356 | 94 |
| 196-8870 | 417 |
| | ▶420 |
| 197-6894 | 541 |
| 198-1076 | 350 |
| | 352 |
| 198-4776 | 81 |
| | 82 |
| | 83 |
| 198-5389 | 119 |
| | 120 |
| 199-2129 | 26 |
| 199-2139 | 26 |
| 199-2205 | 44 |
| 199-2212 | 40 |
| 199-2235 | 65 |
| 199-2333 | 100 |
| 199-2354 | 38 |
| 199-3410 | 610 |
| 199-5248 | 254 |
| 199-5249 | 254 |
| 199-5438 | ▶191 |
| | 195 |
| 199-5439 | ▶192 |
| | 195 |
| 199-5440 | 191 |
| | 192 |
| 199-7722 | 411 |
| 199-8308 | 411 |
| 199-8309 | 270 |
| 199-8310 | 270 |
| 199-8311 | 270 |
| 199-8317 | 411 |
| **2** | |
| 200-0999 | 160 |
| 200-2371 | 356 |
| 200-5717 | 525 |
| 200-6345 | 259 |
| | 311 |
| | 557 |
| | 559 |
| | 566 |
| 202-0671 | 343 |
| 202-0673 | 343 |
| 202-0674 | 343 |
| 202-2168 | 143 |
| | 556 |
| | 558 |
| 202-2284 | 468 |
| | 470 |
| 202-6611 | 124 |
| 202-6614 | 123 |
| 203-1100 | 346 |
| | 352 |
| 203-4827 | 71 |
| 204-1365 | 223 |
| 204-1452 | 183 |
| | 185 |
| 204-1453 | 183 |
| | 185 |
| 204-1454 | 183 |
| | 185 |
| 204-1455 | 183 |
| | 185 |
| 204-1456 | 183 |
| | 185 |
| 204-1457 | 183 |
| | 185 |
| 204-1459 | 183 |
| | 185 |
| 204-1471 | 340 |
| 204-1476 | 340 |
| 204-1481 | 340 |
| 204-1482 | 340 |
| 204-1485 | 340 |
| 204-1486 | 340 |
| 204-1488 | 340 |
| 204-1489 | 340 |
| 204-1491 | 337 |
| | ▶338 |
| 204-1492 | 338 |
| 204-1499 | 338 |
| 205-0826 | 119 |
| | 120 |
| 205-3692 | 305 |
| 205-5148 | 532 |
| | 534 |
| 205-8257 | 119 |
| | 120 |
| 206-1345 | 149 |
| 206-1346 | 132 |
| | 217 |
| 206-2724 | 553 |
| 206-5162 | 114 |
| | 119 |
| 206-5165 | 114 |
| | 119 |
| 206-7398 | 468 |
| | 470 |
| | 549 |
| | 551 |
| 207-0539 | 601 |
| | 603 |
| 207-0573 | 601 |
| | 603 |
| 207-3814 | 120 |
| 207-5262 | ▶114 |
| | 119 |
| | 120 |
| 207-6154 | 71 |
| 207-9729 | 337 |
| 207-9733 | 212 |
| 207-9734 | 212 |
| 207-9737 | 259 |
| | 311 |
| 207-9756 | 259 |
| | 311 |
| 207-9758 | 259 |
| | 311 |
| 207-9780 | 223 |
| 207-9785 | 259 |
| | 418 |
| 208-6176 | 68 |
| 210-0855 | 233 |
| 210-5544 | 357 |
| 211-9032 | 357 |
| 212-0061 | 356 |
| 212-3350 | 357 |
| 212-6521 | 259 |
| | 417 |


▶ **PRIMARY REFERENCE**

# PART NUMBER INDEX


| Part | Page |
|---|---|
| 212-6524 | 148 |
| 212-6570 | 254 |
| | ▶357 |
| 212-6603 | 172 |
| 212-6604 | 172 |
| 212-6690 | 259 |
| | 311 |
| 212-8475 | 28 |
| 212-8499 | 38 |
| | 39 |
| 212-8510 | 38 |
| | 39 |
| | 98 |
| | 100 |
| 212-8597 | 52 |
| 213-0139 | 144 |
| 213-3943 | 233 |
| 213-7489 | 488 |
| | 489 |
| | 490 |
| | 491 |
| 214-2465 | 525 |
| 214-5555 | 242 |
| 214-7568 | 232 |
| 214-9186 | 478 |
| 215-3271 | 357 |
| | ▶358 |
| 215-3272 | 358 |
| 215-3273 | 358 |
| 215-3274 | 358 |
| 215-3275 | 357 |
| 215-3277 | 324 |
| | 326 |
| | 327 |
| 215-3957 | 259 |
| | 422 |
| | 423 |
| | ▶451 |
| 215-3958 | 446 |
| | ▶448 |
| 215-3959 | 447 |
| | ▶449 |
| 215-3960 | 420 |
| | ▶446 |
| 215-3961 | 420 |
| | ▶447 |
| 215-3962 | 418 |
| | ▶422 |
| 215-3963 | 418 |
| | ▶423 |
| 215-3988 | 254 |
| 215-4001 | 223 |
| 215-5564 | 121 |
| | 122 |
| | 153 |
| 215-8307 | 491 |
| 216-0658 | 113 |
| 216-4700 | 1 |
| | ▶144 |
| 216-4702 | 144 |
| 216-4703 | 145 |
| 216-4704 | 492 |
| | 495 |
| | 496 |
| | 498 |
| | 499 |
| | 501 |
| 216-4709 | 119 |
| | 120 |
| 216-4711 | 152 |
| | 217 |
| 216-4712 | ▶541 |
| | 577 |
| | 579 |
| 216-4713 | ▶542 |
| | 577 |
| | 579 |
| 216-4714 | 112 |
| 216-4715 | 5 |
| | 6 |
| | 7 |
| | 9 |
| | 10 |
| | 11 |
| | ▶132 |
| | 202 |
| | 203 |
| 216-4721 | 149 |
| 216-4727 | 132 |
| | 217 |
| 216-4746 | 2 |
| | ▶130 |
| 216-4750 | ▶115 |
| | 476 |
| 216-4751 | 576 |
| | ▶577 |
| 216-4752 | 577 |
| 216-4753 | 541 |
| 216-4754 | 542 |
| 216-4755 | ▶112 |
| | 145 |
| 216-6144 | 6 |
| | 7 |
| | 10 |
| | 11 |
| | ▶148 |
| | 254 |
| 216-6156 | 340 |
| 216-6157 | 340 |
| 216-6159 | 340 |
| 216-6160 | 340 |
| 216-6161 | 340 |
| 216-6169 | 339 |
| | ▶340 |
| 216-8756 | ▶360 |
| 216-8850 | 360 |
| 217-3572 | 71 |
| 217-3850 | 344 |
| | 350 |
| 217-5793 | 149 |
| 217-5912 | 118 |
| 217-6227 | 404 |
| 217-6228 | 377 |
| | ▶404 |
| 217-6229 | ▶377 |
| | 378 |
| 217-6230 | ▶378 |
| 218-0728 | 526 |
| | 529 |
| | 560 |
| | 561 |
| 218-0917 | 46 |
| 218-0918 | 1 |
| | ▶180 |
| 218-0919 | 31 |
| 218-0921 | 37 |
| 218-0923 | 16 |
| | ▶46 |
| 218-0924 | 3 |
| | 4 |
| | 5 |
| | 6 |
| | 7 |
| | 8 |
| | 9 |
| | 10 |
| | 11 |
| | ▶72 |
| 218-0926 | 71 |
| 218-0928 | 157 |
| | 158 |
| | ▶181 |
| 218-0929 | 1 |
| | ▶96 |
| 218-0935 | 72 |
| 218-0936 | 72 |
| 218-0938 | 16 |
| | ▶68 |
| 218-0940 | 3 |
| | ▶37 |
| | 230 |
| 218-0942 | ▶117 |
| 218-0943 | ▶118 |
| 218-2373 | 355 |
| 218-4836 | 16 |
| | ▶31 |
| 218-5562 | 575 |
| | ▶593 |
| 218-5565 | 89 |
| | ▶582 |
| 218-5566 | ▶88 |
| | 582 |
| 218-5571 | 299 |
| 218-5572 | 299 |
| 218-5577 | 161 |
| 218-5579 | 295 |
| | 311 |
| 218-5580 | 166 |
| | 168 |
| 218-5581 | 166 |
| 218-5584 | 286 |
| | 287 |
| 218-5585 | 289 |
| 218-5588 | 286 |
| 218-5597 | 307 |
| 218-5598 | 307 |
| 218-5599 | 307 |
| 218-5602 | 1 |
| | ▶89 |
| 218-5603 | ▶157 |
| 218-5604 | 2 |
| | ▶157 |
| 218-5605 | 3 |
| | ▶158 |
| 218-5606 | ▶158 |
| 218-5607 | ▶158 |
| 218-5608 | ▶159 |
| 218-5611 | 2 |
| | ▶492 |
| | ▶495 |
| 218-5612 | ▶496 |
| | ▶498 |
| 218-5617 | ▶295 |
| | 417 |
| 218-5618 | 3 |
| | ▶499 |
| | ▶501 |
| 218-5619 | 466 |
| | 548 |
| | ▶568 |
| 218-5621 | 157 |
| | 158 |
| | 159 |
| | ▶164 |
| 218-5624 | ▶161 |
| | 252 |
| | 253 |
| 218-5625 | 252 |
| | 253 |
| | ▶289 |
| 218-5627 | 252 |
| | ▶320 |
| | ▶321 |
| 218-5630 | ▶286 |
| | 548 |
| | 556 |
| 218-5631 | 252 |
| | 253 |
| | ▶297 |
| 218-5632 | 252 |
| | 253 |
| | ▶299 |
| 218-5634 | 252 |
| | 253 |
| | ▶307 |
| | ▶309 |
| 218-5635 | 157 |
| | 158 |
| | ▶166 |
| 218-5636 | 158 |
| | 159 |
| | ▶168 |
| 218-5660 | 1 |
| | ▶200 |


▶ **PRIMARY REFERENCE**

# PART NUMBER INDEX


| Part | Page |
|---|---|
| 218-5661 | 200 |
| 218-5673 | 212 |
| 218-5675 | 1 |
| | ▶212 |
| 218-5680 | 466 |
| | ▶566 |
| 218-5685 | 556 |
| | 558 |
| | 566 |
| 218-5686 | 556 |
| | 558 |
| | 566 |
| 218-5717 | 307 |
| 218-5718 | 307 |
| 218-5729 | 252 |
| | ▶315 |
| 218-5730 | 252 |
| | 253 |
| | ▶301 |
| 218-5731 | 252 |
| | ▶291 |
| 218-5732 | 252 |
| | ▶303 |
| 218-5733 | 252 |
| | ▶293 |
| 218-5734 | 252 |
| | ▶305 |
| 218-5735 | 305 |
| 218-5739 | 291 |
| | 293 |
| 218-5740 | 303 |
| | 305 |
| | 307 |
| | 309 |
| 218-5741 | 305 |
| 218-5742 | 305 |
| 218-5744 | 303 |
| 218-5750 | ▶252 |
| 218-5751 | ▶252 |
| 218-5756 | 301 |
| 218-5758 | 164 |
| 218-5764 | 291 |
| | 293 |
| | 307 |
| | 309 |
| 218-5770 | 297 |
| 218-5780 | ▶111 |
| 218-5781 | ▶201 |
| 218-5784 | ▶201 |
| 218-5790 | 3 |
| | 111 |
| | ▶576 |
| 218-5791 | 4 |
| | 5 |
| | 6 |
| | 7 |
| | 8 |
| | 9 |
| | 10 |
| | 11 |
| | 201 |
| | 202 |
| | 203 |
| | ▶576 |
| 218-5798 | 212 |
| 218-5799 | 1 |
| | ▶236 |
| 218-5802 | 210 |
| 218-5803 | 1 |
| | ▶210 |
| 218-5827 | 295 |
| | 311 |
| 218-5847 | 459 |
| 218-5850 | ▶556 |
| | 575 |
| 218-5928 | 158 |
| | 159 |
| | ▶182 |
| 218-5930 | 157 |
| | ▶502 |
| | ▶504 |
| 218-5931 | 157 |
| | ▶505 |
| | ▶506 |
| 218-5932 | 158 |
| | ▶507 |
| | ▶509 |
| 218-5933 | 158 |
| | 159 |
| | ▶510 |
| | ▶513 |
| 218-5934 | 158 |
| | 159 |
| | ▶515 |
| | ▶518 |
| 218-5942 | 311 |
| 218-5950 | ▶548 |
| | 575 |
| 218-5951 | ▶611 |
| 218-5968 | 297 |
| 218-5975 | 459 |
| 218-6006 | 307 |
| | 309 |
| 218-6011 | 307 |
| | 309 |
| 218-6015 | 259 |
| | 311 |
| 218-6036 | 562 |
| | 586 |
| 218-6037 | 562 |
| | 586 |
| 218-6050 | ▶466 |
| | 576 |
| 218-6060 | 484 |
| | 556 |
| | 558 |
| 218-6095 | 164 |
| 218-6117 | 485 |
| | ▶545 |
| 218-6118 | 486 |
| | 487 |
| | ▶546 |
| 218-6119 | ▶344 |
| | 502 |
| | 505 |
| | 507 |
| | 510 |
| | 515 |
| 218-6148 | 466 |
| | ▶484 |
| 218-6250 | 484 |
| | 556 |
| | 558 |
| 218-6275 | 252 |
| | 253 |
| | ▶339 |
| 218-6291 | ▶614 |
| 218-6304 | 289 |
| 218-6305 | 158 |
| 218-6332 | 259 |
| | 418 |
| 218-6333 | 259 |
| | 418 |
| 218-6343 | 212 |
| 218-6350 | 2 |
| | ▶476 |
| 218-6356 | 476 |
| | ▶564 |
| 218-6357 | 564 |
| 218-6359 | 564 |
| 218-6361 | 584 |
| 218-6362 | 584 |
| 218-6363 | 584 |
| 218-6367 | ▶477 |
| | 478 |
| 218-6370 | 476 |
| | ▶574 |
| 218-6377 | 544 |
| 218-6380 | 476 |
| | ▶595 |
| 218-6381 | 574 |
| 218-6384 | 571 |
| 218-6386 | 523 |
| 218-6387 | 523 |
| 218-6388 | 523 |
| 218-6389 | 524 |
| 218-6390 | 1 |
| | ▶584 |
| 218-6391 | 524 |
| 218-6392 | ▶547 |
| | 548 |
| 218-6393 | 547 |
| | ▶549 |
| | ▶551 |
| | 553 |
| 218-6394 | 466 |
| | ▶537 |
| | 548 |
| 218-6395 | 476 |
| | ▶571 |
| 218-6396 | 537 |
| | 553 |
| | 557 |
| 218-6397 | 537 |
| | 553 |
| | 557 |
| 218-6398 | 537 |
| | 553 |
| | 557 |
| 218-6399 | 468 |
| | 470 |
| | 549 |
| | 551 |
| 218-6400 | ▶544 |
| | 575 |
| 218-6401 | 553 |
| | 557 |
| 218-6402 | 467 |
| | 547 |
| | 553 |
| | 556 |
| 218-6404 | 466 |
| | ▶467 |
| 218-6405 | 467 |
| | ▶468 |
| | ▶470 |
| | 556 |
| | 558 |
| 218-6406 | 575 |
| | 576 |
| | ▶586 |
| 218-6411 | 575 |
| | 576 |
| | ▶599 |
| 218-6414 | 537 |
| | 553 |
| | 557 |
| 218-6417 | 584 |
| 218-6418 | ▶523 |
| | 556 |
| 218-6419 | ▶524 |
| | 556 |
| 218-6420 | 476 |
| 218-6421 | 492 |
| | 495 |
| | 496 |
| | 498 |
| | 499 |
| | 501 |
| 218-6422 | 502 |
| | 504 |
| | 505 |
| | 506 |
| | 507 |
| | 509 |
| | 510 |
| | 513 |
| | 515 |
| | 518 |
| 218-6423 | 581 |
| 218-6425 | ▶131 |
| | 476 |
| 218-6430 | 1 |
| | ▶581 |
| 218-6431 | ▶531 |
| | 532 |
| 218-6435 | 523 |
| | 584 |
| 218-6436 | 564 |
| 218-6437 | 557 |
| 218-6438 | 584 |
| 218-6440 | ▶526 |
| 218-6442 | 472 |
| 218-6480 | ▶485 |
| | 502 |
| | 504 |
| 218-6485 | ▶486 |
| | 505 |
| | 506 |
| 218-6490 | ▶487 |


▶ **PRIMARY REFERENCE**

# PART NUMBER INDEX


| Part | Page |
|---|---|
| | 492 |
| | 495 |
| 218-6509 . . . . . | ▶417 |
| 218-6510 . . . . . | ▶417 |
| 218-6511 . . . . . | 259 |
| | 311 |
| 218-6512 . . . . . | 259 |
| | 311 |
| 218-6515 . . . . . | 311 |
| 218-6517 . . . . . | 303 |
| | 305 |
| 218-6520 . . . . . | ▶311 |
| | 417 |
| 218-6546 . . . . . | 212 |
| 218-6561 . . . . . | 339 |
| 218-6565 . . . . . | ▶287 |
| | 466 |
| 218-6601 . . . . . | 299 |
| 218-6616 . . . . . | 89 |
| 218-6617 . . . . . | 89 |
| 218-6645 . . . . . | 553 |
| | 557 |
| | 568 |
| 218-6662 . . . . . | 593 |
| 218-6741 . . . . . | ▶122 |
| 218-6743 . . . . . | ▶560 |
| 218-6744 . . . . . | ▶561 |
| 218-6745 . . . . . | ▶600 |
| 218-6746 . . . . . | ▶553 |
| 218-6747 . . . . . | ▶556 |
| 218-6748 . . . . . | ▶562 |
| 218-6749 . . . . . | ▶558 |
| 218-6751 . . . . . | ▶254 |
| 218-6755 . . . . . | ▶259 |
| 218-6822 . . . . . | 250 |
| | 251 |
| 218-6823 . . . . . | 248 |
| | 249 |
| 218-6830 . . . . . | 466 |
| | ▶483 |
| 218-6832 . . . . . | ▶480 |
| | ▶481 |
| | 483 |
| 218-6833 . . . . . | 480 |
| | 481 |
| | 556 |
| | 558 |
| 218-6836 . . . . . | 521 |
| | 556 |
| | 558 |
| 218-6837 . . . . . | 521 |
| | 556 |
| | 558 |
| 218-6838 . . . . . | 521 |
| | 556 |
| | 558 |
| 218-6840 . . . . . | ▶323 |
| | 480 |
| | 556 |
| | 558 |
| 218-6854 . . . . . | 357 |
| 218-6856 . . . . . | 317 |
| 218-6857 . . . . . | 317 |
| 218-6858 . . . . . | 317 |
| 218-6864 . . . . . | 297 |
| 218-6876 . . . . . | 287 |
| | 556 |
| | 558 |
| 218-6877 . . . . . | 287 |
| 218-6879 . . . . . | 166 |
| | 168 |
| 218-6947 . . . . . | 549 |
| | 551 |
| 218-6948 . . . . . | 468 |
| | 470 |
| 218-6981 . . . . . | 301 |
| 218-7012 . . . . . | 254 |
| 218-7013 . . . . . | 254 |
| 219-0302 . . . . . | 611 |
| | 614 |
| | 621 |
| | 624 |
| | 627 |
| | 630 |
| 219-4379 . . . . . | 593 |
| | 594 |
| 219-4380 . . . . . | 592 |
| | ▶594 |
| 219-4388 . . . . . | 594 |
| 219-6314 . . . . . | 114 |
| 219-9739 . . . . . | 526 |
| | 529 |
| | 560 |
| | 561 |
| 220-1043 . . . . . | 71 |
| 220-8586 . . . . . | 68 |
| 220-8587 . . . . . | 68 |
| 220-8588 . . . . . | 68 |
| 221-3429 . . . . . | 435 |
| | 436 |
| 221-3876 . . . . . | 532 |
| | 534 |
| 221-3877 . . . . . | 526 |
| | 529 |
| | 560 |
| | 561 |
| 221-3879 . . . . . | 143 |
| | 556 |
| | 558 |
| 221-3880 . . . . . | 145 |
| 221-3881 . . . . . | 121 |
| | 122 |
| | 153 |
| 221-5245 . . . . . | 60 |
| 221-5250 . . . . . | 60 |
| 221-9124 . . . . . | ▶71 |
| | 72 |
| 222-1178 . . . . . | 72 |
| 222-3870 . . . . . | 119 |
| | 120 |
| 222-3963 . . . . . | 192 |
| | 193 |
| 222-5693 . . . . . | 176 |
| | 178 |
| 222-5695 . . . . . | 6 |
| | 7 |
| | 10 |
| | 11 |
| | 202 |
| | 203 |
| 222-7412 . . . . . | 366 |
| 222-7467 . . . . . | 401 |
| | 402 |
| | 403 |
| | 404 |
| | 433 |
| | 442 |
| 222-7545 . . . . . | 367 |
| | ▶424 |
| 222-7546 . . . . . | 366 |
| | ▶424 |
| 222-7724 . . . . . | 362 |
| | ▶366 |
| 222-7725 . . . . . | 366 |
| | 367 |
| 222-8202 . . . . . | 34 |
| 222-9812 . . . . . | 16 |
| | ▶74 |
| 222-9815 . . . . . | 3 |
| | ▶81 |
| 222-9816 . . . . . | 81 |
| 223-0591 . . . . . | 526 |
| | 529 |
| | 560 |
| | 561 |
| 223-0600 . . . . . | ▶529 |
| 223-0601 . . . . . | 526 |
| | 529 |
| | 560 |
| | 561 |
| 223-0608 . . . . . | 526 |
| | 529 |
| | 560 |
| | 561 |
| 223-0609 . . . . . | 531 |
| 223-0610 . . . . . | 531 |
| 223-0612 . . . . . | 531 |
| 223-0616 . . . . . | 529 |
| | ▶532 |
| | 560 |
| | 561 |
| 223-0617 . . . . . | 526 |
| | 529 |
| | 560 |
| | 561 |
| 223-3725 . . . . . | 488 |
| | 489 |
| 223-3726 . . . . . | 490 |
| 223-3728 . . . . . | 488 |
| | 489 |
| | 490 |
| | 491 |
| 223-4240 . . . . . | 210 |
| 223-4275 . . . . . | 68 |
| 223-5941 . . . . . | 577 |
| | 579 |
| 223-6537 . . . . . | 541 |
| | ▶572 |
| 223-8488 . . . . . | 532 |
| | 534 |
| 223-8495 . . . . . | 532 |
| | 534 |
| 223-9974 . . . . . | 161 |
| | ▶163 |
| 224-0554 . . . . . | 611 |
| | 627 |
| | 630 |
| 224-0672 . . . . . | 611 |
| | 627 |
| | 630 |
| 224-3875 . . . . . | 210 |
| 224-6562 . . . . . | 357 |
| 224-6563 . . . . . | 357 |
| 224-7057 . . . . . | 599 |
| | 600 |
| | ▶601 |
| 224-7058 . . . . . | 599 |
| | 600 |
| | ▶603 |
| 224-7830 . . . . . | 614 |
| | 621 |
| | 624 |
| 224-8544 . . . . . | 212 |
| 224-8945 . . . . . | 621 |
| | 624 |
| 224-8946 . . . . . | 627 |
| | 630 |
| 224-9021 . . . . . | 614 |
| | 621 |
| | 624 |
| 224-9022 . . . . . | 611 |
| | 627 |
| | 630 |
| 224-9408 . . . . . | 315 |
| | ▶317 |
| 224-9420 . . . . . | 357 |
| 224-9855 . . . . . | 611 |
| | 614 |
| | 621 |
| | 624 |
| 225-0312 . . . . . | 611 |
| | 627 |
| | 630 |
| 225-0313 . . . . . | 614 |
| | 621 |
| | 624 |
| 225-3187 . . . . . | 532 |
| | 534 |
| 225-3305 . . . . . | 614 |
| | 621 |
| | 624 |
| 225-4148 . . . . . | 4 |
| | 5 |
| | 6 |
| | 7 |
| 225-5190 . . . . . | 145 |
| 225-5193 . . . . . | 112 |
| 225-5244 . . . . . | 98 |
| 225-5249 . . . . . | 100 |
| 225-5535 . . . . . | 118 |
| 225-5541 . . . . . | 117 |
| 225-5642 . . . . . | 117 |
| 225-5644 . . . . . | 118 |
| 225-7921 . . . . . | 46 |
| 225-7948 . . . . . | ▶143 |
| | 466 |
| 225-7950 . . . . . | ▶108 |
| 225-7952 . . . . . | ▶109 |
| 225-7955 . . . . . | 149 |


▶ **PRIMARY REFERENCE**

# PART NUMBER INDEX


| Part | Page |
|---|---|
| 225-7960 | ▶153 |
| | 510 |
| | 513 |
| 225-7961 | 121 |
| | 122 |
| | 153 |
| 225-7962 | 132 |
| 225-7963 | 5 |
| | 9 |
| | 202 |
| | ▶224 |
| 225-7964 | 5 |
| | 9 |
| | ▶152 |
| | 202 |
| 225-7969 | 2 |
| | ▶142 |
| 225-7976 | 611 |
| | 614 |
| | 621 |
| | 624 |
| | 627 |
| | 630 |
| 225-7977 | 611 |
| | 614 |
| | 621 |
| | 624 |
| | 627 |
| | 630 |
| 225-7980 | 149 |
| 225-7981 | 145 |
| 225-7990 | 132 |
| | 217 |
| 225-7991 | ▶119 |
| 225-7998 | 576 |
| | ▶579 |
| 225-7999 | 579 |
| 225-8000 | ▶113 |
| | 145 |
| 225-8012 | 121 |
| | 122 |
| | 153 |
| 225-8013 | 132 |
| | 217 |
| 225-8015 | 362 |
| | 363 |
| 225-9260 | 320 |
| | ▶324 |
| 225-9521 | 233 |
| | ▶242 |
| 226-0291 | 210 |
| | 475 |
| 226-0323 | 475 |
| 226-1242 | 617 |
| 226-3693 | 32 |
| | 33 |
| 226-3734 | 197 |
| | 198 |
| 226-3735 | 197 |
| | 198 |
| 226-5900 | 132 |
| | 217 |
| 226-5901 | 577 |
| | 579 |
| 226-7635 | 180 |
| 226-8204 | 51 |
| 226-9629 | 355 |
| 227-4315 | 214 |
| 227-6715 | 71 |
| 227-8807 | 231 |
| 228-1768 | 37 |
| 228-3369 | 619 |
| 228-3581 | 617 |
| 228-9132 | 102 |
| 228-9228 | ▶346 |
| | 492 |
| | 496 |
| | 499 |
| 228-9240 | 324 |
| | 326 |
| | 327 |
| 229-3426 | ▶373 |
| 229-3427 | 373 |
| | ▶391 |
| | 400 |
| 229-3433 | ▶400 |
| 229-5465 | 286 |
| | 287 |
| 229-5466 | 286 |
| | 287 |
| 229-8752 | 2 |
| | 4 |
| | 5 |
| | 6 |
| | 7 |
| | 201 |
| | 202 |
| | 203 |
| 229-8757 | 532 |
| | 534 |
| 229-8796 | 71 |
| 230-3214 | 526 |
| | 529 |
| | 560 |
| | 561 |
| 230-3685 | 236 |
| | ▶248 |
| 230-3687 | 236 |
| | ▶250 |
| 230-3695 | 236 |
| | ▶249 |
| 230-3697 | 236 |
| | ▶251 |
| 230-3726 | 323 |
| 230-3743 | 4 |
| | 5 |
| | 6 |
| | 7 |
| | 8 |
| | 9 |
| | 10 |
| | 11 |
| | ▶151 |
| | 201 |
| | 202 |
| | 203 |
| 230-3757 | 335 |
| | 336 |
| 230-4596 | 367 |
| 230-5406 | ▶233 |
| | 361 |
| 230-5407 | 439 |
| 230-5670 | 361 |
| | ▶439 |
| 230-6368 | 109 |
| 230-9696 | 557 |
| 231-0124 | 278 |
| 231-0125 | 278 |
| 231-0126 | 278 |
| 231-0127 | 278 |
| 231-3605 | 31 |
| 231-4256 | ▶488 |
| | 507 |
| | 509 |
| 231-4257 | ▶489 |
| | 496 |
| | 498 |
| 231-4258 | 121 |
| | ▶490 |
| | 510 |
| | 513 |
| | 515 |
| | 518 |
| 231-4260 | ▶491 |
| | 499 |
| | 501 |
| 231-4261 | 488 |
| | 490 |
| 231-4262 | 489 |
| | 491 |
| 231-5266 | 234 |
| 231-5271 | 366 |
| | 367 |
| 231-5273 | ▶278 |
| | 362 |
| | 363 |
| 231-5274 | ▶234 |
| | 362 |
| | 363 |
| 231-5275 | ▶362 |
| 231-5276 | 363 |
| | ▶367 |
| 231-5277 | ▶363 |
| 231-5278 | ▶316 |
| | 362 |
| | 363 |
| 231-5279 | 316 |
| 231-6287 | 323 |
| | ▶359 |
| 231-6564 | 359 |
| 231-7319 | 603 |
| 231-7320 | 603 |
| 231-7321 | 599 |
| | 600 |
| 231-7322 | 601 |
| 231-7323 | 601 |
| 231-7324 | 599 |
| | 600 |
| 231-7325 | ▶539 |
| | 603 |
| 231-7326 | 539 |
| 231-7327 | ▶540 |
| | 601 |
| 231-7328 | 540 |
| 231-7329 | 539 |
| | 540 |
| 231-7331 | 601 |
| | 603 |
| 231-7372 | 601 |
| | 603 |
| 231-7401 | 539 |
| | 540 |
| 231-8121 | 468 |
| | 549 |
| 231-8122 | 468 |
| | 470 |
| | 549 |
| | 551 |
| | ▶555 |
| 231-8123 | 468 |
| | 470 |
| 231-8124 | 468 |
| | 470 |
| | 549 |
| | 551 |
| 231-8126 | 468 |
| | 470 |
| | 549 |
| | 551 |
| 231-8127 | 468 |
| | 470 |
| | 549 |
| 231-8128 | 468 |
| | 549 |
| 231-8129 | 468 |
| | 470 |
| | 549 |
| | 551 |
| 231-8130 | 468 |
| | 549 |
| 231-8131 | 468 |
| | 549 |
| 231-8132 | 468 |
| | 470 |
| | 549 |
| | 551 |
| 231-8133 | 468 |
| | 470 |
| | 549 |
| | 551 |
| 231-8137 | 468 |
| | 470 |
| 231-8141 | 468 |
| | 470 |
| | 549 |
| | 551 |
| 231-8142 | 468 |
| | 470 |
| | 549 |
| | 551 |
| 231-8143 | 549 |
| | 551 |
| 231-8144 | 549 |
| | 551 |
| 231-8145 | 549 |
| | 551 |
| 232-1384 | 468 |
| | 470 |
| 232-1789 | 68 |


▶ PRIMARY REFERENCE

# PART NUMBER INDEX


| Part | Page |
|---|---|
| 232-3121 | 82 |
| | 83 |
| 232-4486 | 256 |
| 232-4703 | 117 |
| | 118 |
| 232-4706 | 572 |
| | 573 |
| 232-6142 | 90 |
| | 96 |
| 232-6692 | 112 |
| 233-1012 | 521 |
| | 557 |
| | 559 |
| 233-4872 | 210 |
| 233-5453 | 28 |
| 233-5454 | 28 |
| 233-5457 | 24 |
| 233-5460 | 79 |
| 233-5462 | 28 |
| 233-5463 | 28 |
| 233-5464 | 28 |
| 233-5465 | 28 |
| 233-5466 | 44 |
| | 45 |
| 233-5468 | 44 |
| | 45 |
| 233-5469 | 60 |
| 233-5470 | 60 |
| 233-5471 | 60 |
| 233-5473 | 15 |
| | ▶18 |
| 233-5476 | 60 |
| 233-5477 | 60 |
| 233-5478 | 60 |
| 233-5479 | 18 |
| 233-5482 | 38 |
| | 39 |
| 233-5483 | 21 |
| 233-5485 | 18 |
| | 19 |
| 233-5486 | 17 |
| 233-5487 | 18 |
| 233-5488 | 26 |
| 233-5494 | 62 |
| 233-5496 | 64 |
| 233-5499 | 40 |
| 233-5500 | 14 |
| | 15 |
| | ▶28 |
| | ▶29 |
| 233-5501 | 60 |
| 233-5590 | 480 |
| | 481 |
| | 557 |
| | 559 |
| 233-5615 | 4 |
| | 5 |
| | 6 |
| | 7 |
| | 8 |
| | 9 |
| | 10 |
| | 11 |
| | 201 |
| | 202 |
| | 203 |
| | ▶227 |
| 233-5632 | ▶543 |
| 233-5664 | 256 |
| 233-5666 | 287 |
| | 556 |
| | 558 |
| 233-5680 | 6 |
| | 10 |
| | 202 |
| 233-5706 | ▶121 |
| 233-5711 | 611 |
| | 614 |
| 233-5716 | 172 |
| 233-5719 | 459 |
| 233-5720 | ▶256 |
| 233-5721 | 256 |
| 233-5722 | 256 |
| 233-5723 | 256 |
| 233-5724 | 256 |
| 233-5725 | 256 |
| 233-5726 | 256 |
| 233-5727 | 256 |
| 233-5728 | 256 |
| 233-5729 | 256 |
| 233-5730 | 256 |
| 233-5731 | 256 |
| 233-5732 | 256 |
| | ▶348 |
| 233-5733 | 256 |
| | ▶349 |
| 233-5734 | 256 |
| 233-5735 | 256 |
| 233-5736 | 256 |
| 233-5814 | 556 |
| | 558 |
| | 566 |
| 233-5824 | 256 |
| 233-5825 | 256 |
| 233-5826 | 256 |
| 233-5828 | 256 |
| 233-5892 | 220 |
| | 221 |
| | 459 |
| 233-5893 | 220 |
| | 221 |
| | 459 |
| 233-5929 | 555 |
| 233-5931 | 555 |
| 233-5934 | 555 |
| 233-5980 | 252 |
| | 253 |
| | ▶337 |
| 233-5984 | 254 |
| 233-5985 | 254 |
| 233-5986 | 254 |
| 233-5987 | 254 |
| 233-5990 | ▶220 |
| 233-5991 | 4 |
| | 5 |
| | 6 |
| | 7 |
| | 8 |
| | 9 |
| | 10 |
| 233-5997 | 337 |
| 233-5998 | 254 |
| 233-7128 | 259 |
| | 311 |
| | ▶318 |
| 233-7131 | 166 |
| | ▶170 |
| 233-9856 | 102 |
| 234-0566 | 556 |
| | 558 |
| | 566 |
| 234-0732 | 563 |
| 234-0746 | 158 |
| | 159 |
| | 254 |
| 234-0747 | 227 |
| 234-0774 | ▶563 |
| | 582 |
| 234-0776 | 227 |
| 234-0792 | 202 |
| | 203 |
| | ▶204 |
| 234-0793 | 202 |
| | ▶205 |
| 234-4328 | ▶123 |
| | 131 |
| 234-4791 | 32 |
| | 33 |
| 234-4794 | 22 |
| 234-4796 | 64 |
| 234-4797 | 65 |
| 234-4798 | 65 |
| 234-4800 | 65 |
| 234-4801 | 65 |
| 234-4802 | 65 |
| 234-4803 | 65 |
| 234-4805 | 80 |
| 234-4806 | 80 |
| 234-4807 | 58 |
| 234-4809 | 66 |
| | 92 |
| 234-4810 | 44 |
| 234-4812 | 47 |
| 234-4813 | 49 |
| 234-4814 | 51 |
| 234-4815 | 51 |
| | 52 |
| 234-4816 | 51 |
| 234-4817 | 51 |
| 234-4818 | 84 |
| | 86 |
| 234-4819 | 84 |
| 234-4820 | 84 |
| | 86 |
| 234-4821 | 84 |
| | 86 |
| 234-4822 | 84 |
| | 86 |
| 234-4823 | 79 |
| 234-4824 | 79 |
| 234-4826 | 61 |
| 234-4827 | 61 |
| 234-4831 | 66 |
| | 67 |
| 234-4832 | 70 |
| 234-4835 | 98 |
| | 100 |
| 234-4836 | 98 |
| 234-6065 | 611 |
| | 614 |
| | 621 |
| | 624 |
| | 627 |
| | 630 |
| 234-6067 | 614 |
| | 621 |
| 234-6069 | 611 |
| | 627 |
| 234-6070 | 614 |
| | 621 |
| 234-6071 | 611 |
| | 627 |
| 234-6072 | 614 |
| | 621 |
| 234-6074 | 614 |
| | 621 |
| 234-6076 | 611 |
| | 627 |
| 234-6077 | 614 |
| | 621 |
| 234-6078 | 611 |
| | 627 |
| 234-6081 | 611 |
| | 627 |
| 234-7727 | ▶124 |
| | 130 |
| 234-7730 | 123 |
| 234-7731 | 123 |
| 234-7756 | 124 |
| 234-7758 | 124 |
| 234-9525 | 289 |
| 234-9575 | 611 |
| | 614 |
| | 621 |
| | 624 |
| | 627 |
| | 630 |
| 235-1365 | 614 |
| | 621 |
| | 624 |
| 235-1368 | 611 |
| | 627 |
| | 630 |
| 235-4768 | 532 |
| | 534 |
| 235-4952 | 70 |
| 235-4955 | 61 |
| 235-4958 | 70 |
| 235-4959 | 66 |
| | 67 |
| 235-4960 | 66 |
| | 67 |
| 235-4962 | 105 |
| | 106 |
| | 107 |


▶ **PRIMARY REFERENCE**

# PART NUMBER INDEX


| Part | Page |
|---|---|
| 235-4964 | 84 |
| 235-4966 | 84 |
| | 86 |
| 235-4967 | 84 |
| | 86 |
| 235-4968 | 84 |
| | 86 |
| 235-4969 | 98 |
| 235-4970 | 98 |
| 235-4972 | 59 |
| 235-4973 | 105 |
| | 106 |
| | 107 |
| 235-5243 | 499 |
| | 501 |
| 235-5246 | 507 |
| | 509 |
| | 510 |
| | 513 |
| | 515 |
| | 518 |
| 235-5880 | 14 |
| | 15 |
| | ▶60 |
| 235-5889 | 15 |
| | ▶51 |
| 235-5890 | 15 |
| | ▶32 |
| 235-5894 | 15 |
| | ▶84 |
| 235-5895 | 14 |
| | 15 |
| | ▶63 |
| 235-5900 | 15 |
| | ▶67 |
| 235-5901 | 15 |
| | ▶92 |
| 235-5904 | 14 |
| | 15 |
| | ▶116 |
| 236-1872 | 338 |
| 236-4830 | ▶472 |
| | 476 |
| 236-4832 | 473 |
| 236-4833 | 472 |
| | ▶473 |
| 236-5058 | 5 |
| | 6 |
| | 7 |
| | 9 |
| | 10 |
| | 11 |
| | 202 |
| | 203 |
| | ▶222 |
| 236-5067 | 468 |
| | 470 |
| | 549 |
| | 551 |
| 236-5069 | 468 |
| | 470 |
| | 549 |
| | 551 |
| 236-5088 | 227 |
| 236-5116 | ▶202 |
| 236-5117 | ▶202 |
| 236-6923 | 557 |
| | 558 |
| | 566 |
| 237-5331 | 502 |
| | 504 |
| | 505 |
| | 506 |
| 237-5332 | 492 |
| | 495 |
| 237-7296 | 89 |
| 237-7325 | 75 |
| 238-0999 | 234 |
| 238-1003 | 278 |
| 238-1004 | 366 |
| | 367 |
| 238-1005 | 366 |
| | 367 |
| 238-4626 | 194 |
| | 318 |
| 238-7637 | 217 |
| | 222 |
| 238-7642 | 333 |
| | ▶335 |
| 238-7693 | 448 |
| | 449 |
| | 451 |
| 238-7734 | ▶606 |
| 238-7736 | 161 |
| 238-8274 | 136 |
| 238-8277 | 15 |
| | ▶136 |
| 238-8278 | 30 |
| 238-8279 | 42 |
| 238-8280 | 51 |
| 238-8281 | 51 |
| 238-8282 | 20 |
| 238-8283 | 20 |
| 238-8284 | 20 |
| 238-8285 | 20 |
| 238-8286 | 56 |
| 239-0687 | 92 |
| 239-0719 | 92 |
| 239-0720 | 92 |
| 239-0721 | 92 |
| 239-0722 | 92 |
| 239-0728 | 92 |
| 239-0729 | 92 |
| 239-0734 | 92 |
| 239-0771 | 105 |
| 239-0772 | 107 |
| 239-4292 | 34 |
| 239-5010 | ▶120 |
| 239-5029 | 444 |
| | 445 |
| 239-6109 | 599 |
| | 600 |
| 239-6138 | 539 |
| | 540 |
| 239-6773 | 15 |
| 239-6986 | 611 |
| | 614 |
| | 621 |
| | 624 |
| | 627 |
| | 630 |
| 239-8429 | 40 |
| | 42 |
| 239-8504 | 24 |
| 239-8513 | 62 |
| 240-6877 | 537 |
| | 553 |
| | 557 |
| 240-6878 | 537 |
| | 553 |
| | 557 |
| 240-6879 | 537 |
| | 553 |
| | 557 |
| 240-8666 | 532 |
| | 534 |
| 241-6010 | 100 |
| 241-6015 | 15 |
| | ▶56 |
| 242-6055 | 96 |
| 242-7389 | 556 |
| | 558 |
| 242-9000 | 132 |
| | 217 |
| 243-0001 | ▶435 |
| 243-0002 | ▶436 |
| 243-0003 | ▶436 |
| 243-0405 | 74 |
| | ▶75 |
| 243-0406 | 75 |
| 243-0407 | 75 |
| 243-1167 | 81 |
| 243-1323 | 601 |
| | 603 |
| 243-5601 | 319 |
| 243-6464 | 114 |
| | 119 |
| 244-1363 | 319 |
| 244-1364 | 319 |
| 244-1365 | 319 |
| 244-1367 | 366 |
| | 367 |
| 244-1370 | 234 |
| 244-7127 | 65 |
| | 100 |
| 245-1911 | 318 |
| 245-6811 | ▶554 |
| | 575 |
| | 576 |
| 246-1258 | 42 |
| 246-1259 | 40 |
| | 228 |
| 246-1260 | 40 |
| | 228 |
| 246-2641 | 204 |
| | 206 |
| 246-4291 | 614 |
| 246-4349 | 463 |
| 246-8314 | 67 |
| 246-8315 | 66 |
| | 67 |
| 246-9039 | 557 |
| | 559 |
| | 566 |
| 246-9371 | 145 |
| 247-0678 | 362 |
| | 363 |
| | ▶617 |
| 247-4877 | 214 |
| 247-6118 | 619 |
| 247-6317 | 14 |
| | 15 |
| | ▶77 |
| 247-7182 | 543 |
| 248-2171 | 532 |
| | 534 |
| 248-2376 | 532 |
| | 534 |
| 248-5245 | 619 |
| 249-2910 | 542 |
| | ▶573 |
| 249-7160 | 318 |
| 249-7346 | 98 |
| 249-7347 | 15 |
| | ▶98 |
| 250-1493 | 553 |
| 251-1510 | ▶203 |
| 252-0325 | 254 |
| 252-0326 | 254 |
| 252-0346 | ▶197 |
| 252-0347 | ▶197 |
| 252-0348 | 484 |
| | 556 |
| | 558 |
| 252-0358 | 556 |
| | 558 |
| | 566 |
| 252-0366 | ▶197 |
| 252-0368 | 90 |
| | 96 |
| 252-0377 | ▶198 |
| 252-0386 | ▶459 |
| 252-0426 | 418 |
| | 420 |
| 252-6934 | 488 |
| | 489 |
| | 490 |
| | 491 |
| 252-8595 | 416 |
| 252-9015 | 606 |
| 252-9016 | 606 |
| 252-9017 | 606 |
| 252-9197 | 181 |
| | 182 |
| 253-0244 | 61 |
| 253-2111 | 149 |
| 253-2121 | 303 |
| | 305 |
| 253-8677 | 88 |
| 254-9097 | 243 |
| | 246 |
| | 247 |
| 255-0942 | 247 |
| 255-0943 | ▶243 |
| | 445 |
| 255-6540 | 366 |
| | 367 |
| | 619 |
| 255-8058 | 330 |
| 257-3576 | 72 |


▶ PRIMARY REFERENCE

# PART NUMBER INDEX


| Part | Page |
|---|---|
| 257-7400 | 4 |
| | 5 |
| | 6 |
| | 7 |
| | 8 |
| | ▶228 |
| 257-8390 | 116 |
| 257-8736 | 28 |
| 257-8738 | 51 |
| 257-8739 | 66 |
| | 67 |
| 258-2419 | 82 |
| 258-2462 | 3 |
| | ▶82 |
| 258-2533 | 448 |
| 258-2534 | 449 |
| 258-2859 | ▶156 |
| 258-3423 | 608 |
| 258-3424 | 608 |
| 258-3425 | 608 |
| 258-3427 | 608 |
| 258-3849 | 206 |
| | 207 |
| 258-4199 | 144 |
| 258-9011 | 316 |
| | ▶319 |
| 259-8194 | 170 |
| | ▶194 |
| 259-8195 | 170 |
| 259-9892 | ▶198 |
| 261-6101 | 212 |
| 261-6126 | ▶3 |
| 261-6165 | ▶4 |
| 261-6202 | 212 |
| 261-6275 | 1 |
| | ▶157 |
| 261-6362 | 4 |
| | 5 |
| | 6 |
| | 7 |
| 261-6371 | 229 |
| 261-6372 | 229 |
| 261-6373 | 229 |
| 261-6374 | 229 |
| 261-6375 | 229 |
| 261-6376 | 229 |
| 261-6377 | 229 |
| 261-6378 | 229 |
| 261-6379 | 229 |
| 261-6380 | 229 |
| 261-6384 | 4 |
| | 5 |
| | 6 |
| | 7 |
| | 8 |
| | 9 |
| | 10 |
| | 11 |
| | ▶229 |
| 261-6681 | 415 |
| | ▶416 |
| | 417 |
| 262-0941 | 239 |
| 262-5254 | 215 |
| 262-5255 | 215 |
| 262-5256 | 215 |
| 262-5257 | 215 |
| 262-7668 | 496 |
| | 498 |
| 262-7669 | 256 |
| 263-1362 | 215 |
| 263-1363 | 215 |
| 263-1364 | 215 |
| 263-2135 | 532 |
| | 534 |
| 263-4836 | 621 |
| | 624 |
| | 627 |
| | 630 |
| 263-4996 | 181 |
| | 182 |
| 263-6688 | 582 |
| | ▶583 |
| 263-9699 | 215 |
| 264-0007 | 215 |
| 264-2461 | 215 |
| 264-4320 | 156 |
| 264-5862 | 215 |
| 264-5864 | ▶215 |
| 265-2898 | ▶192 |
| | 197 |
| 265-2899 | ▶192 |
| | 197 |
| 265-2900 | ▶192 |
| | 197 |
| 265-2901 | ▶193 |
| | 197 |
| 266-2928 | 525 |
| 266-3314 | 215 |
| 266-6140 | 234 |
| | 244 |
| | 245 |
| 266-8903 | 319 |
| 267-4675 | 215 |
| 267-8943 | 215 |
| 268-1923 | 176 |
| | 178 |
| 268-1929 | 183 |
| | 185 |
| 268-1935 | 176 |
| | 178 |
| 268-4083 | ▶372 |
| 268-4084 | 372 |
| | ▶399 |
| 268-9529 | 183 |
| | 185 |
| 269-9404 | 295 |
| | 311 |
| 270-0216 | 295 |
| | 311 |
| 270-8668 | 257 |
| 271-2360 | 335 |
| | 336 |
| 272-3050 | 83 |
| 272-3051 | 4 |
| | 5 |
| | 6 |
| | 7 |
| | 8 |
| | 9 |
| | 10 |
| | 11 |
| | ▶83 |
| 272-3052 | 76 |
| 272-3062 | ▶76 |
| 274-9930 | 234 |
| | ▶244 |
| 274-9931 | 234 |
| | ▶245 |
| 276-0074 | 479 |
| 276-3440 | 526 |
| | ▶534 |
| | 560 |
| 276-3599 | 536 |
| 276-3615 | 534 |
| | ▶536 |
| 276-4063 | 521 |
| | 556 |
| | 558 |
| 276-5708 | 480 |
| | 481 |
| | ▶521 |
| 276-6019 | ▶588 |
| 276-6020 | ▶589 |
| 276-7276 | ▶590 |
| 276-7277 | ▶591 |
| 277-0654 | ▶217 |
| 278-1237 | 2 |
| | ▶252 |
| 278-1279 | 4 |
| | 5 |
| | 6 |
| | 7 |
| | 8 |
| | 9 |
| | 10 |
| | 11 |
| | ▶230 |
| 278-1292 | 6 |
| | 7 |
| | 10 |
| | 11 |
| | ▶206 |
| 278-1293 | 5 |
| | 9 |
| | ▶207 |
| 278-1969 | ▶246 |
| | 383 |
| | 384 |
| | 385 |
| 278-1970 | 246 |
| | 247 |
| 278-1975 | ▶247 |
| | 375 |
| | 376 |
| | 377 |
| | 430 |
| 278-4524 | 244 |
| 278-4525 | 245 |
| 278-4875 | 244 |
| | 245 |
| 278-5351 | ▶4 |
| 278-5373 | ▶5 |
| 278-5418 | ▶6 |
| 278-5448 | ▶7 |
| 278-8714 | 335 |
| | 336 |
| 278-8716 | 324 |
| | 325 |
| | 326 |
| | 327 |
| 279-3232 | 536 |
| 279-5350 | ▶430 |
| 279-5351 | 430 |
| | ▶433 |
| 279-5352 | 433 |
| | ▶440 |
| 279-5353 | 440 |
| 279-5357 | 441 |
| 279-5358 | ▶441 |
| | 442 |
| 279-5359 | 430 |
| | ▶442 |
| 279-5360 | ▶430 |
| 279-5364 | 373 |
| | ▶392 |
| 279-5365 | ▶373 |
| 279-5366 | ▶373 |
| 279-5368 | 374 |
| | ▶393 |
| 279-5369 | ▶374 |
| 279-5370 | ▶374 |
| 279-5372 | 374 |
| | ▶394 |
| 279-5373 | ▶374 |
| 279-5374 | ▶374 |
| 279-5376 | 375 |
| | ▶395 |
| 279-5377 | ▶375 |
| 279-5378 | ▶375 |
| 279-5380 | ▶382 |
| 279-5381 | ▶383 |
| 279-5382 | 382 |
| | 383 |
| 279-5383 | 383 |
| | ▶407 |
| 279-5384 | ▶368 |
| | 407 |
| 279-5385 | 368 |
| 279-5387 | 369 |
| 279-5388 | ▶369 |
| | 408 |
| 279-5389 | 383 |
| | ▶408 |
| 279-5390 | 383 |
| | 384 |
| 279-5391 | ▶383 |
| 279-5392 | ▶384 |
| 279-5395 | 370 |
| 279-5396 | ▶370 |
| | 409 |
| 279-5397 | 384 |
| | ▶409 |
| 279-5398 | ▶384 |
| | 410 |
| 279-5399 | ▶410 |
| 279-5400 | ▶384 |
| 279-5401 | ▶384 |
| 279-5402 | ▶385 |
| 279-5403 | 384 |


▶ **PRIMARY REFERENCE**

# PART NUMBER INDEX


| Part | Page | Part | Page | Part | Page | Part | Page |
|---|---|---|---|---|---|---|---|
| | 385 | | 83 | | 557 | | ▶80 |
| 279-5404 | 385 | 280-8348 | 90 | 285-9066 | 40 | 287-5323 | 14 |
| | ▶411 | | 96 | | 70 | | 15 |
| 279-5405 | ▶371 | 280-8355 | 76 | 285-9133 | 537 | | ▶79 |
| | 411 | 280-8377 | 82 | | 553 | 287-5377 | 14 |
| 279-5406 | 371 | | 83 | | 557 | | 15 |
| 279-5412 | ▶262 | 282-6961 | 599 | 285-9286 | 291 | | ▶62 |
| | 430 | 282-7760 | 344 | | 293 | 287-5665 | 14 |
| 279-5413 | ▶264 | 282-9059 | 531 | | 309 | | 15 |
| | 383 | | 536 | 286-3591 | 243 | | ▶64 |
| 279-5414 | ▶266 | 283-7554 | 536 | 286-9229 | 405 | 287-6056 | 14 |
| | 383 | 283-9264 | 295 | 286-9243 | 405 | | 15 |
| 279-5415 | ▶268 | | 311 | | 406 | | ▶70 |
| | 384 | 283-9566 | 328 | 286-9244 | 381 | 287-6114 | 14 |
| 279-5416 | ▶270 | | 556 | | ▶405 | | 15 |
| | 385 | | 558 | 286-9248 | ▶235 | | ▶58 |
| 279-5417 | 264 | 284-3058 | 113 | | 380 | 287-6138 | 14 |
| | 266 | 284-3059 | 113 | | 381 | | 15 |
| | 268 | 284-3743 | 562 | 286-9249 | 284 | | ▶59 |
| | 270 | | 586 | 286-9250 | ▶282 | 287-6181 | 14 |
| 279-5418 | 264 | 284-3744 | 562 | | 381 | | 15 |
| | 266 | | 586 | 286-9251 | 380 | | ▶139 |
| | 268 | 284-3914 | 479 | | 381 | 287-6361 | 15 |
| | 270 | 285-5794 | 72 | | ▶619 | | ▶105 |
| 279-5420 | ▶382 | 285-6089 | 373 | 286-9263 | 282 | | ▶106 |
| 279-5421 | 382 | | ▶390 | | 284 | 287-6603 | 562 |
| | ▶396 | 285-6090 | ▶373 | 286-9265 | 282 | | 586 |
| 279-5424 | 382 | 285-6093 | ▶378 | 286-9266 | 282 | 288-5767 | 562 |
| | ▶397 | 285-6095 | ▶385 | 286-9267 | 282 | | 586 |
| 279-5425 | ▶382 | 285-6096 | 385 | | 284 | 289-3750 | 293 |
| 279-5429 | 382 | | ▶412 | 286-9268 | 282 | 289-3751 | 293 |
| | ▶398 | 285-6099 | 378 | | 284 | 289-3752 | 291 |
| 279-5430 | ▶382 | | 385 | 286-9271 | 282 | | 293 |
| 279-5434 | 372 | | ▶413 | 286-9273 | 235 | 289-3753 | 291 |
| | ▶387 | 285-6100 | 378 | 286-9274 | 406 | | 293 |
| 279-5435 | ▶372 | | ▶385 | 286-9278 | 380 | 289-3754 | 291 |
| 279-5437 | 372 | 285-6101 | 379 | | ▶406 | 289-3755 | 291 |
| | ▶388 | | ▶386 | 286-9279 | ▶284 | | 293 |
| 279-5438 | ▶372 | 285-6102 | 378 | | 380 | 289-3756 | 293 |
| 279-5440 | 372 | | 386 | 286-9280 | 284 | 289-3780 | 305 |
| | ▶389 | | ▶414 | 286-9281 | 284 | 289-3781 | 303 |
| 279-5441 | ▶372 | 285-6104 | ▶378 | 286-9289 | 235 | 289-3788 | 303 |
| 280-1575 | 526 | 285-6105 | 431 | 286-9300 | ▶380 | | 305 |
| | 529 | | ▶438 | 286-9301 | ▶381 | 289-6337 | 176 |
| | 560 | 285-6110 | 431 | 287-1844 | 15 | 289-6338 | 178 |
| | 561 | | ▶434 | | ▶44 | 289-6351 | 182 |
| 280-6072 | 478 | 285-6111 | ▶378 | 287-2416 | 15 | | ▶183 |
| 280-7856 | 175 | 285-6112 | ▶379 | | ▶24 | 289-6354 | 176 |
| | ▶176 | 285-6113 | ▶272 | 287-2922 | 14 | | 178 |
| 280-7858 | 174 | | ▶274 | | 15 | 289-6358 | 334 |
| | ▶178 | | 444 | | ▶54 | | ▶336 |
| 280-7863 | 183 | | 445 | 287-2983 | 14 | 289-6359 | 181 |
| | 185 | 285-6114 | ▶431 | | 15 | | ▶185 |
| 280-7865 | 183 | 285-6115 | ▶431 | | ▶55 | 289-6360 | ▶325 |
| | 185 | 285-6116 | 378 | 287-3357 | 15 | | 328 |
| 280-8240 | 82 | | 379 | | ▶38 | | 556 |
| | 83 | | 431 | 287-4033 | 14 | | 558 |
| 280-8298 | 75 | | ▶444 | | 15 | 289-8440 | 346 |
| 280-8300 | 37 | | ▶445 | | ▶20 | 289-8451 | 344 |
| 280-8312 | 71 | 285-7970 | 88 | 287-4649 | 15 | 289-9560 | 344 |
| 280-8319 | 78 | 285-8565 | 537 | | ▶22 | | 350 |
| 280-8320 | 16 | | 553 | 287-4830 | 15 | 291-5059 | 309 |
| | ▶78 | | 557 | | ▶34 | 291-5060 | 309 |
| 280-8341 | 78 | 285-8570 | 537 | 287-4832 | 14 | 291-5061 | 309 |
| | 82 | | 553 | | 15 | 291-5062 | 309 |


▶ PRIMARY REFERENCE

# PART NUMBER INDEX


| Part | Page |
|---|---|
| 292-2437 | 479 |
| 292-2438 | 479 |
| 292-3114 | 564 |
| 292-4040 | 15 |
| | ▶30 |
| 292-4041 | 14 |
| | 15 |
| | ▶17 |
| 292-6568 | 136 |
| | 141 |
| 293-4075 | 257 |
| 293-6264 | ▶239 |
| | 380 |
| | 381 |
| 293-6591 | 168 |
| | ▶171 |
| 293-9426 | ▶417 |
| 293-9427 | ▶415 |
| 293-9428 | ▶415 |
| 293-9429 | ▶415 |
| 294-4890 | 17 |
| 294-4891 | 17 |
| 294-4892 | 17 |
| 294-5060 | 100 |
| 294-5502 | 262 |
| 294-5503 | 262 |
| 294-5504 | 272 |
| | 274 |
| 294-5505 | 272 |
| | 274 |
| 294-5520 | 92 |
| 294-7915 | 66 |
| 294-7916 | 106 |
| | 107 |
| 294-7917 | 21 |
| 294-7922 | 23 |
| 295-1799 | 340 |
| | ▶354 |
| 295-2567 | 611 |
| | 614 |
| | 621 |
| | 624 |
| | 627 |
| | 630 |
| 295-5440 | 468 |
| | 470 |
| | 549 |
| | 551 |
| 295-7024 | ▶13 |
| 295-7030 | 1 |
| | ▶90 |
| 295-7064 | ▶8 |
| 295-7071 | ▶8 |
| 295-7107 | 2 |
| | ▶16 |
| 295-7112 | 90 |
| 295-7124 | ▶12 |
| 295-7129 | 78 |
| 295-7136 | 2 |
| | ▶608 |
| 295-7154 | ▶9 |
| 295-7170 | ▶10 |
| 295-7171 | ▶11 |
| 295-7191 | ▶621 |
| | ▶624 |
| 295-7195 | ▶627 |
| | ▶630 |
| 295-7199 | 621 |
| | 624 |
| | 627 |
| | 630 |
| 295-7220 | 2 |
| | ▶253 |
| 295-7221 | 253 |
| | ▶322 |
| 295-7236 | ▶2 |
| 295-7237 | ▶2 |
| 295-7302 | ▶575 |
| 295-7312 | ▶575 |
| 295-7315 | 624 |
| 295-7317 | 624 |
| 295-7318 | 624 |
| 295-7319 | 624 |
| 295-7320 | 624 |
| 295-7322 | ▶575 |
| 295-7325 | 630 |
| 295-7327 | 630 |
| 295-7328 | 630 |
| 295-7329 | 630 |
| 295-7330 | 630 |
| 295-7332 | ▶576 |
| 295-7417 | 159 |
| 295-7426 | 608 |
| 295-7427 | 608 |
| 295-7437 | 159 |
| 295-7494 | ▶2 |
| 295-7495 | ▶3 |
| 295-7496 | ▶3 |
| 295-7497 | 3 |
| | ▶159 |
| 295-7510 | ▶1 |
| | 2 |
| 295-7518 | ▶1 |
| | 2 |
| 298-7197 | 479 |
| 298-7198 | 295 |
| | 311 |
| | ▶479 |
| 299-4645 | 28 |
| | 29 |
| 299-9116 | ▶350 |
| | 504 |
| | 506 |
| | 509 |
| | 513 |
| | 518 |
| 299-9119 | ▶352 |
| | 495 |
| | 498 |
| | 501 |
| 299-9121 | 350 |
| | 352 |
| 300-1318 | 348 |
| 300-1705 | 348 |
| 300-2952 | 92 |
| 300-3573 | 100 |
| 300-3867 | 100 |
| 300-3988 | 100 |
| 300-6603 | 13 |
| | ▶14 |
| 300-9449 | 47 |
| | 49 |
| 301-0642 | 349 |
| 301-3396 | 14 |
| | ▶57 |
| 301-3397 | 57 |
| 303-6658 | 470 |
| | 551 |
| 304-3885 | 90 |
| | 96 |
| 305-2969 | 468 |
| | 470 |
| | 549 |
| | 551 |
| 305-4185 | 172 |
| 305-5385 | 82 |
| | 83 |
| 305-6411 | 90 |
| | 96 |
| | ▶102 |
| 306-0175 | 164 |
| 306-8137 | 4 |
| | 5 |
| | 6 |
| | 7 |
| | 8 |
| | 9 |
| | 10 |
| | 11 |
| | ▶334 |
| 307-3036 | 321 |
| | ▶326 |
| 307-3037 | 322 |
| | ▶327 |
| 307-3808 | 274 |
| 307-6115 | ▶328 |
| | 481 |
| 308-0421 | 164 |
| | ▶172 |
| 308-9664 | 12 |
| | ▶15 |
| 309-8907 | 49 |
| 309-8909 | 47 |
| | 49 |
| 310-2682 | 24 |
| | 26 |
| 310-8798 | 21 |
| 311-4928 | 199 |
| 312-1683 | 470 |
| | 551 |
| 312-2635 | 470 |
| | 551 |
| 312-4617 | 16 |
| | ▶149 |
| 312-7676 | 350 |
| 312-7747 | 621 |
| | 624 |
| 312-7748 | 627 |
| | 630 |
| 313-5646 | 335 |
| 313-6251 | 352 |
| 313-9185 | 532 |
| | 534 |
| 314-9708 | 90 |
| | 96 |
| 314-9860 | 14 |
| | ▶23 |
| 314-9861 | 14 |
| | ▶33 |
| 314-9900 | 14 |
| | 15 |
| | ▶65 |
| 314-9901 | 14 |
| | 15 |
| | ▶61 |
| 314-9918 | 14 |
| | ▶141 |
| 314-9926 | 19 |
| 314-9927 | 19 |
| 314-9929 | 26 |
| 314-9938 | 26 |
| 314-9947 | 40 |
| 314-9948 | 40 |
| | 42 |
| 314-9949 | 40 |
| 314-9962 | 52 |
| 314-9963 | 52 |
| 314-9964 | 52 |
| 314-9972 | 86 |
| 314-9974 | 86 |
| 314-9980 | 94 |
| 314-9981 | 94 |
| 314-9982 | 94 |
| 314-9983 | 94 |
| 314-9984 | 94 |
| 314-9985 | 94 |
| 314-9986 | 94 |
| 314-9987 | 94 |
| 314-9988 | 94 |
| 314-9989 | 94 |
| 314-9991 | 100 |
| 314-9992 | 100 |
| 314-9999 | 100 |
| 315-0001 | 141 |
| 315-2354 | 47 |
| 315-2356 | 47 |
| 315-4664 | 19 |
| 315-4667 | 40 |
| 315-4668 | 40 |
| 315-4669 | 52 |
| 315-4670 | 52 |
| 315-4671 | 52 |
| 315-4677 | 100 |
| 315-4680 | 35 |
| 315-4681 | 35 |
| 315-4682 | 35 |
| 315-4683 | 35 |
| 315-4684 | 35 |
| 315-4686 | 40 |
| 315-4687 | 40 |
| 315-7700 | 66 |
| 315-7703 | 38 |
| | 39 |
| 315-7704 | 45 |
| 315-7761 | 14 |
| | ▶45 |


3

▶ **PRIMARY REFERENCE**

# PART NUMBER INDEX


| Part | Page | Part | Page | Part | Page | Part | Page |
|---|---|---|---|---|---|---|---|
| 315-7762 | 14 | | | | | | |
| | 15 | | | | | | |
| | ►21 | | | | | | |
| 315-7764 | 14 | | | | | | |
| | ►39 | | | | | | |
| 315-7765 | 14 | | | | | | |
| | ►47 | | | | | | |
| 315-7766 | 14 | | | | | | |
| | ►35 | | | | | | |
| 315-7768 | 14 | | | | | | |
| | ►86 | | | | | | |
| 315-8326 | 100 | | | | | | |
| 315-8329 | 14 | | | | | | |
| | ►19 | | | | | | |
| 315-8330 | 14 | | | | | | |
| | ►26 | | | | | | |
| 315-8331 | 14 | | | | | | |
| | ►53 | | | | | | |
| 315-8336 | 14 | | | | | | |
| | ►40 | | | | | | |
| 315-8348 | 14 | | | | | | |
| | ►52 | | | | | | |
| 315-8350 | 14 | | | | | | |
| | ►94 | | | | | | |
| 315-8352 | 14 | | | | | | |
| | ►100 | | | | | | |
| 315-8353 | 14 | | | | | | |
| | ►107 | | | | | | |
| 315-8355 | 14 | | | | | | |
| | ►66 | | | | | | |
| 316-9040 | 15 | | | | | | |
| | ►42 | | | | | | |
| 316-9072 | 49 | | | | | | |
| 316-9079 | 15 | | | | | | |
| | ►49 | | | | | | |
| 317-0691 | ►199 | | | | | | |
| 319-7262 | 29 | | | | | | |
| 319-7263 | 29 | | | | | | |
| 322-5614 | 476 | | | | | | |
| | ►478 | | | | | | |


► PRIMARY REFERENCE



© 2008 Caterpillar
All Rights Reserved

Printed in U.S.A.