SEBP5921-15
December 2011

RUTHZIL TRATOR COMERCIAL DE PEÇAS LTDA 11 97083-6812 ROLANDO

Parts Manual

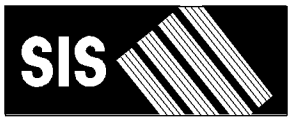

See "General Information" for New Parts Manual Features.

236B3 Skid Steer Loader

A9H1-Up (Machine)
CYM1-Up (Engine)

Powered By C3.4 IND Engine
This Parts Manual is also available .pdf format on Compact Disc (CD - ROM) Caterpillar Form No. SERP5921.

Product and Dealer Information

Note: For product identification plate locations, see the section “Product Identification Information” in the Operation and Maintenance Manual.

Delivery Date: _____

Product Information

Model: _____

Product Identification Number: _____

Engine Serial Number: _____

Transmission Serial Number: _____

Generator Serial Number: _____

Attachment Serial Numbers: _____

Attachment Information: _____

Customer Equipment Number: _____

Dealer Equipment Number: _____

Dealer Information

Name: _____ Branch: _____

Address: _____

_____

_____

	Dealer Contact	Phone Number	Hours
Sales:	_____	_____	_____
Parts:	_____	_____	_____
Service:	_____	_____	_____

MEMORANDA

TABLE OF CONTENTS

Name	Page
GENERAL INFORMATION	A4
REPAIR ALTERNATIVES	A7
SUPPLEMENTAL COOLANT ADDITIVES	A8
MAINTENANCE PARTS	A9
INDEX	A12
MACHINE ARRANGEMENT	1
CHASSIS AR	1
COMMON AR	1
CONTROL AR-MACHINE	2
CONVERSION AR-MACHINE	4
ENGINE ARRANGEMENT	7
ENGINE AR-PRIMARY	7
INSTALLATION AR-ENGINE	9
BASIC ENGINE	10
ACCESSORY GP-ENGINE	10
BEARING GP-MAIN	11
CAMSHAFT GP	12
CONNECTING ROD GP	13
COVER GP-VALVE MECHANISM	14
CRANKSHAFT GP	15
CYLINDER BLOCK GP	16
CYLINDER HEAD GP	18
DRAIN GP-ENGINE OIL	19
FLYWHEEL GP	20
GEAR GP-FRONT	21
GUARD GP-BELT	22
HOUSING GP-FLYWHEEL	23
HOUSING GP-FRONT	25
LIFTING GP-ENGINE	27
MOUNTING GP-ENGINE	28
PAN GP-OIL	29
PISTON GP	31
PLUG GP-ENGINE	32
PULLEY GP-CRANKSHAFT	34
PULLEY GP-WATER PUMP	35
V-BELT GP	36
VALVE MECHANISM GP	37
LUBRICATION SYSTEM	38
FILTER GP-ENGINE OIL	38
LINES GP-ENGINE OIL	39
PUMP GP-ENGINE OIL	40
VALVE GP-ENGINE OIL RELIEF	41
COOLING SYSTEM	42
COOLER GP-ENGINE OIL	42
DRAIN GP-COOLANT	43
HOUSING & REGULATOR GP	44
LINES GP-WATER	45
MOUNTING GP-RAD & OIL COOLER	46
PUMP GP-WATER	48
RADIATOR & HYD OIL COOLER GP	50
RADIATOR & OIL COOLER MTG GP	52
AIR INLET AND EXHAUST SYSTEM	54
AIR CLEANER GP	54
LINES GP-AIR	56
MANIFOLD GP-EXHAUST	59
MANIFOLD GP-INLET	60
MUFFLER & MOUNTING GP	61
TURBOCHARGER GP	63
FUEL SYSTEM	65
CONTROL GP-GOVERNOR	65
LINES GP-FUEL	66
LINES GP-FUEL INJECTION	70
PUMP GP-FUEL INJECTION	72
PUMP GP-FUEL PRM & PRIM FILTER	74
ELECTRICAL AND STARTING SYSTEM	76
ALTERNATOR GP-CHARGING	76
BATTERY & WIRING GP	79
ELECTRONICS GP-MACHINE	81
GLOW PLUG GP	82
HEATER GP-JACKET WATER	83
KIT-WORK TOOL WIRING	85
LAMP GP-FLOOD	89
LAMP GP-HEAD & SIGNAL	91
LAMP GP-STOP & TAIL	92
LAMP GP-WARNING BEACON	96
LIGHTING GP-FLOOD	97
LIGHTING GP-ROADING	99
RELAY GP	101
STARTING MOTOR GP-ELECTRIC	102
SWITCH GP-PRESSURE	105
WIRING GP-CAB	108
WIRING GP-ENGINE	115
WIRING GP-HORN	117
WIRING GP-MACHINE	118
WIRING GP-WORK TOOL	125
POWER TRAIN	128
AXLE GP	128
CONTROL GP-PARKING BRAKE	130
DRIVE GP-TANDEM	132
FILTER & LINES GP-HYDRAULIC	134
FILTER GP-OIL	136
LINES GP-HYDROSTATIC	137
MANIFOLD & LINES GP-CONTROL	143
MANIFOLD & SOLENOID GP-CONTROL	149
MANIFOLD GP-RETURN	151
MOTOR & MTG GP-HYDROSTATIC	153

TABLE OF CONTENTS

Name	Page
MOTOR GP-PISTON	157
MOUNTING GP-PUMP	166
POWER TRAIN AR	167
PUMP & MTG GP-HYDROSTATIC	168
PUMP GP-PISTON	170
TIRE & RIM GP	174
VALVE GP-RELIEF	180
VALVE GP-SOLENOID	181
WHEEL & TIRE AR	183
FRAME AND BODY	186
BUMPER GP	186
CONVERSION AR-ROADING	187
CONVERSION GP-ROADING	189
COUNTERWEIGHT GP	192
ENCLOSURE GP-ENGINE	193
FRAME AS-LOWER	195
FRAME AS-UPPER	197
FRAME GP-LOADER	199
FRAME GP-MACHINE	203
GUIDE GP-LINES	204
KIT-ROADING CONVERSION	205
LIFTING GP-MACHINE	208
MIRROR & MTG GP-REAR VIEW	210
MOUNTING GP-REGISTRATION	211
SUPPRESSION GP-SOUND	213
HYDRAULIC SYSTEM	215
ACCUMULATOR & MTG GP-HYDRAULIC	215
ACCUMULATOR GP-HYDRAULIC	216
ADAPTER GP-OIL LINE	218
CYLINDER & MTG GP-ANGLE BLADE	219
CYLINDER & MTG GP-LIFT ARM	221
CYLINDER GP-BUCKET	224
CYLINDER GP-GRAPPLE	226
CYLINDER GP-HYDRAULIC	228
CYLINDER GP-LIFT	233
CYLINDER GP-TILT	237
HYDRAULIC AR	241
KIT-QUICK COUPLER CONVERSION	242
LINES GP-BUCKET	245
LINES GP-CONNECTING	259
LINES GP-COUPLER	263
LINES GP-GRAPPLE	266
LINES GP-HYDRAULIC OIL COOLER	272
LINES GP-LIFT CYLINDER	276
LINES GP-PILOT	281
LINES GP-PUMP	285
LINES GP-TILT CYLINDER	287
LINES GP-WORK TOOL	291
MANIFOLD & MTG GP-CONTROL	293
MANIFOLD & SOLENOID GP-CONTROL	295
MANIFOLD GP-CONTROL	296
MOTOR & MTG GP-HYDRAULIC FAN	299
MOTOR AR-HYDRAULIC FAN	301
MOTOR GP-GEAR	302
MOUNTING GP-CYLINDER	303
PUMP & MTG GP-WORK TOOL	307
PUMP GP-GEAR	309
TANK & MTG GP-HYDRAULIC	311
TANK GP-HYDRAULIC	312
VALVE & MTG GP-CONTROL	313
VALVE GP-CONTROL	314
VALVE GP-PILOT	316
VALVE GP-SOLENOID	321
IMPLEMENTS	322
ARM AS-LIFT	322
BRACKET GP-SUPPORT	323
WORK TOOLS	324
ARM GP-MATERIAL HANDLING	324
BLADE AR	325
BLADE AS-ANGLING	328
BLADE GP-ANGLING	332
BLADE GP-MULTIPURPOSE BUCKET	336
BUCKET AR-DIRT	346
BUCKET AR-GENERAL PURPOSE	347
BUCKET AR-GRAPPLE	349
BUCKET AR-LIGHT MATERIAL	355
BUCKET AR-MULTIPURPOSE	356
BUCKET AR-UTILITY	359
BUCKET AS-DIRT	361
BUCKET AS-GENERAL PURPOSE	374
BUCKET AS-GRAPPLE	384
BUCKET AS-LIGHT MATERIAL	392
BUCKET AS-UTILITY	400
BUCKET GP-DIRT	403
BUCKET GP-GENERAL PURPOSE	406
BUCKET GP-GRAPPLE	407
BUCKET GP-MULTIPURPOSE	414
BUCKET GP-UTILITY	419
CARRIAGE & FORK AR	422
CARRIAGE GP-FORK	423
CLAM AS-MULTIPURPOSE BUCKET	424
CONVERSION GP-WORK TOOL	429
COUPLER AR-QUICK	430
COUPLER GP-QUICK	431
COVER GP-LINES	434
CYLINDER & LINK GP-COUPLER	435
EDGE GP-BIT & CUTTING	437
EDGE GP-CUTTING	438
FORK AR-GRAPPLE	446
FORK GP-GRAPPLE	447
FORK GP-PALLET	450
FORK GP-UTILITY	454
FRAME GP-BLADE	456
FRAME GP-FORK	457

TABLE OF CONTENTS

Name	Page
GRAPPLE & CYLINDER GP-UTILITY	459
GRAPPLE GP-UTILITY	460
HANDLE & PIN GP-COUPLER	461
KIT-ANGLE BLADE	463
KIT-ROADING PLATE & MOUNTING	467
LINK GP-COUPLER	468
LOCK GP-QUICK COUPLER	469
SPRING GP-BLADE	472
STEP GP-MATERIAL HANDLING ARM	473
STOP GP-BUCKET	474
STRAINER GP-WATER	475
TANK & MTG GP-WATER	476
TANK GP-WATER	480
TOOTH GP-UNI	481
OPERATOR STATION	482
ACCUMULATOR GP-REFRIGERANT	482
AIR CONDITIONER AR	484
AIR CONDITIONER GP	485
ARM GP-WINDOW WIPER	488
ARMREST & MOUNTING GP	489
ARMREST GP	490
BOX GP-STORAGE	492
CAB AR	494
CAB AR-ENCLOSED ROPS	494
CAB AR-OPEN ROPS	495
CAB AS	496
CAB GP-ENCLOSED ROPS	497
COMPRESSOR & MTG GP-REFRIG	498
COMPRESSOR GP-REFRIGERANT	499
CONDENSER & MTG GP-REFRIGERANT	500
CONTROL GP-HANDLE	501
CONTROL GP-PILOT OPERATED HYD	506
COVER GP-CONSOLE	514
DOOR & MTG GP-CAB	516
DOOR GP-CAB	521
DUCT GP-CAB AIR	527
FRAME GP-WINDOW	529
GUARD GP-ROPS/FOPS	531
HANDHOLD GP	532
HANDLE GP-MODULAR	533
HEATER & MTG GP-CAB	534
HEATER AR-CAB	535
HEATER GP-CAB	536
HOUSING AS-SIDE	539
INSTALLATION GP-COVER & LINES	540
LEVER GP-GOVERNOR	541
LINER GP-CAB	542
LINER-CAB	543
LINES GP-AIR CONDITIONER	544
LINES GP-HEATER	546
LITERATURE GP	547
MIRROR GP-REAR VIEW	548
MODULE GP-WARNING INDICATOR	549
MOTOR GP-WINDOW WIPER	551
MOUNTING GP-ROPS	552
PANEL GP-INSTRUMENT	553
PANEL GP-SIDE	556
PEDAL GP-GOVERNOR	557
PLATFORM GP-OPERATOR	559
SEAL GP-CAB	560
SEAT BELT GP	562
SEAT GP	566
SEAT GP-ADJUSTABLE	568
SPRING GP-GAS	569
VISOR GP-CAB	570
WINDOW GP-CAB	572
SERVICE EQUIPMENT AND SUPPLIES	578
FILM GP	578
PLATE & FILM GP	583
PART NUMBER INDEX	B1

GENERAL INFORMATION

1. MACHINE IDENTIFICATION

Caterpillar machines are identified by Product Identification Numbers (PIN). Some components included in a machine may be identified by Serial Numbers (S/N). Typical components that will be serialized include engines, transmissions, bulldozers, and rippers. The machine and engine are further identified by arrangement numbers and in some cases modification numbers. These numbers are shown on the product identification plate(s) and on the master plate in the operator's compartment.

Caterpillar dealers need all of these numbers to determine accurate parts identification.

SIS *New Feature*

Effective First Quarter 2001 the Caterpillar Product Identification Number (PIN) changed from 8 to 17 characters. In an effort to provide uniform equipment identification, Caterpillar and other construction equipment manufacturers are moving to comply with the latest version of the product identification numbering standard. Non-road machine PINs are defined by ISO 10261. The new PIN format will apply to all Caterpillar machines and generator sets. The PIN plates and frame marking will display the 17 character PIN. The new format will look like the following:

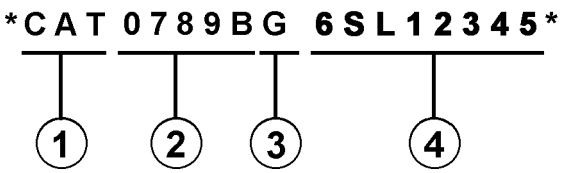

Where:

1. Caterpillar's World Manufacturing Code (characters 1-3)

2. Machine Descriptor (characters 4-8)

3. Check Character (character 9)

4. Machine Indicator Section (MIS) or Product Sequence Number (characters 10-17). These were previously referred to as the Serial Number.

Machines and generator sets produced before First Quarter 2001 will maintain their 8 character PIN format.

Components such as engines, transmissions, axles, etc. and work tools will continue to use an 8 character Serial Number (S/N).

2. ORDERING PARTS

⚠ WARNING

When replacement parts are required for this product Caterpillar recommends using Caterpillar replacement parts or parts with equivalent specifications including, but not limited to, physical dimensions, type, strength and material.

Failure to heed this warning can lead to premature failures, product damage, personal injury or death.

Quality Caterpillar replacement parts are available from Caterpillar dealers throughout the world. Their parts inventories are up to date and include all parts normally required to protect your investment in Caterpillar machines. Dealers may offer repair kits or remanufactured parts to allow selection of the most effective repair alternative for a particular situation. When ordering parts, your order should specify the quantity, part number, part name, and the serial number/product identification number of the machine for which the parts are needed.

3. PARTS MANUAL ORGANIZATION

Product information in this manual is presented as "information elements" that represent all of the components for the specific model. Engine Arrangement and Seat Group are examples of information elements. The information elements are organized alphabetically by part name and secondarily by part number within each major section of the manual.

4. TABLE OF CONTENTS

A table of contents (TOC) is found at the beginning of the manual. The TOC lists each section of the manual with a complete list of all information elements organized as they appear in the manual. Page numbers are provided for quick reference to detailed parts identification illustrations and serviceable consist lists.

5. MAINTENANCE PARTS INDEX

The Maintenance Parts Index, located near the beginning of the manual, references most frequently used maintenance part numbers, providing description, quantity, usage and page number. This information is organized alphabetically by part description.

6. INDEX

The index located near the front of the manual is an alphabetical listing of all information elements included in the manual. Page numbers are provided for quick reference to detailed parts identification illustrations and serviceable consist lists.

7. PART NUMBER INDEX

A numerical index listing all part numbers and the corresponding page number(s) appears at the back of the manual.

8. CAPTIONS

Captions located at the beginning of each information element identify the part number and part name along with additional descriptive information. PIN and S/N information found in each caption should be used to select correct information for a specific machine. Field replacement options, identification of optional attachment components, and where used ("part of") information is also provided.

The first line of a caption is shown in larger type font to indicate the beginning of an information element. Captions for additional pages that may be required to illustrate an information element will be shown in standard type font and will include the term *(contd.)* .

9. NON-SERVICED PARTS

In some instances it is necessary to display non-serviced parts that are a link to a lower level serviceable consist lists. These non-serviced part numbers are shown in *italic* type indicating that they are not available.

10. PARTS LIST REFERENCE NUMBERS

Numbers shown in the Ref No column correspond to numbers used in the associated graphic(s). An alphabetic suffix may be added to a reference number to identify lower level consist items. Numbers shown in the Graphic Ref column refer to the graphic number identifier displayed in the lower left corner of each illustration. The Graphic Ref number may be used in combination with the item Ref No to determine the correct part number. There may be intentional omission of a Ref No in a consist list as information is updated to reflect the latest serviceable part numbers.

11. INDENTED PART NAMES

When a part name is indented in a parts list, it is part of (included in) the group or assembly under which it is indented.

12. ILLUSTRATION REFERENCE LETTERS

When necessary, illustrations contain reference letters (A, B, C etc.) that are intended to track lines and harnesses from one point to another. They are also used to show where to reconnect illustrations that have been separated.

13. ABBREVIATIONS AND SYMBOLS

O.D. – Outside Diameter
I.D. – Inside Diameter
A – Not Part Of This Group
B – Use As Required
C – Change From Previous Type
D – Order By The Meter
E – Order By The Centimeter
F – Not Shown
G – Order By The Inch
I – Refer To Hydraulic Information System
M – Metric Part
R – Remfg Part May Be Available
Y – Separate Illustration
Z – Not Serviced Separately

SIS *New Feature*

14. DESCRIPTION OF TYPE CHANGES

Type - A type is defined as any configuration change that requires an additional Information Element for an Arrangement, Group, or Assembly. If serial number breaks for types are not available, a type # (Type 1, Type 2, etc.) will be displayed in the caption. These "type" changes are identified with a "C" note (change from previous type) in the Parts List. Only the "types" that apply to this Parts Manual will be included. Additional types may exist causing "C" notes to appear on an Information Element when no other types are shown.

15.<END>

This symbol indicates the end of an information element.

NOTE:

Continuing improvement and advancement of product design may cause changes to your machine which may not be included in this publication. Whenever a question arises regarding your Caterpillar product or this publication, please consult your Caterpillar dealer for the latest available information.

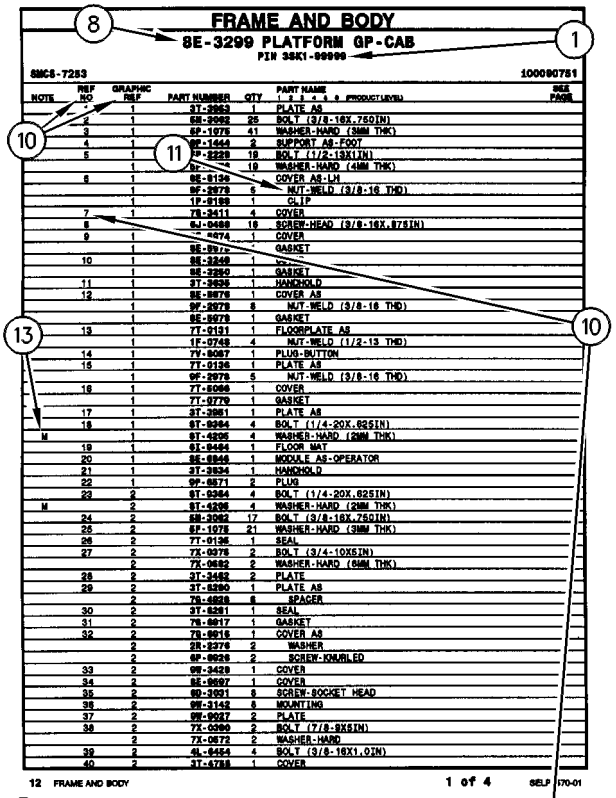
FRAME AND BODY
8E-3299 PLATFORM GP-CAB
PIN 3SK1-99999
SMCS-7283
100090751
1
8
10
11
13
10
12 FRAME AND BODY
1 of 4
SELP4570-01

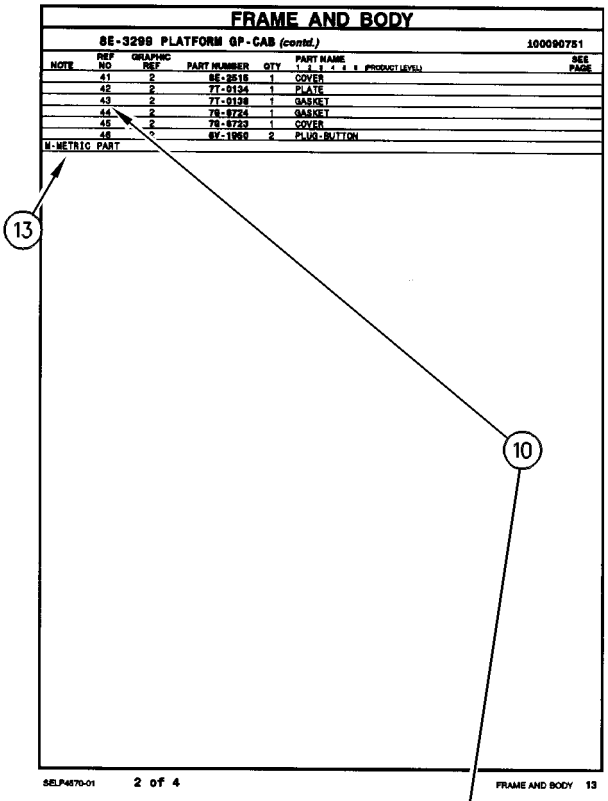
FRAME AND BODY
8E-3299 PLATFORM GP-CAB (contd.)
100090751
13
10
M-METRIC PART
SELP4570-01
2 of 4
FRAME AND BODY 13

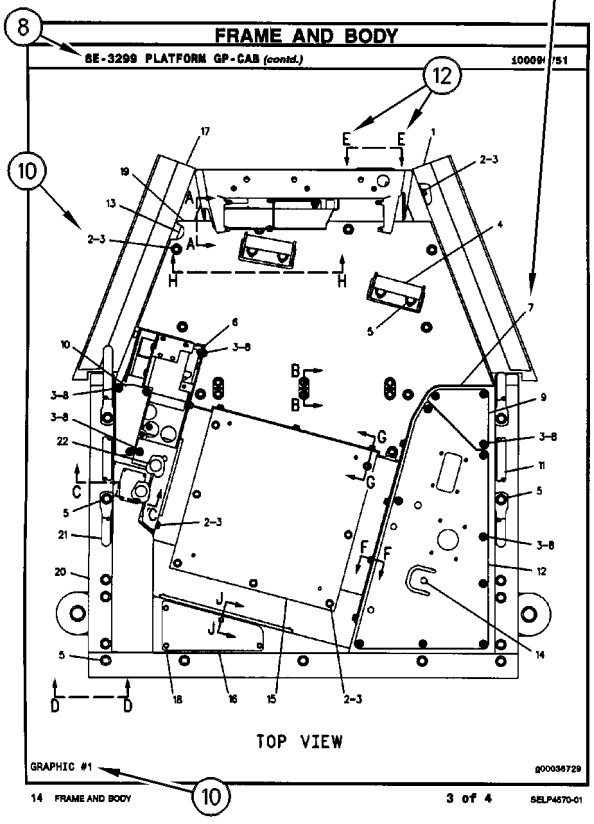
FRAME AND BODY
8E-3299 PLATFORM GP-CAB (contd.)
100090751
8
12
10
TOP VIEW
GRAPHIC #1
g00036729
14 FRAME AND BODY
10
3 of 4
SELP4570-01

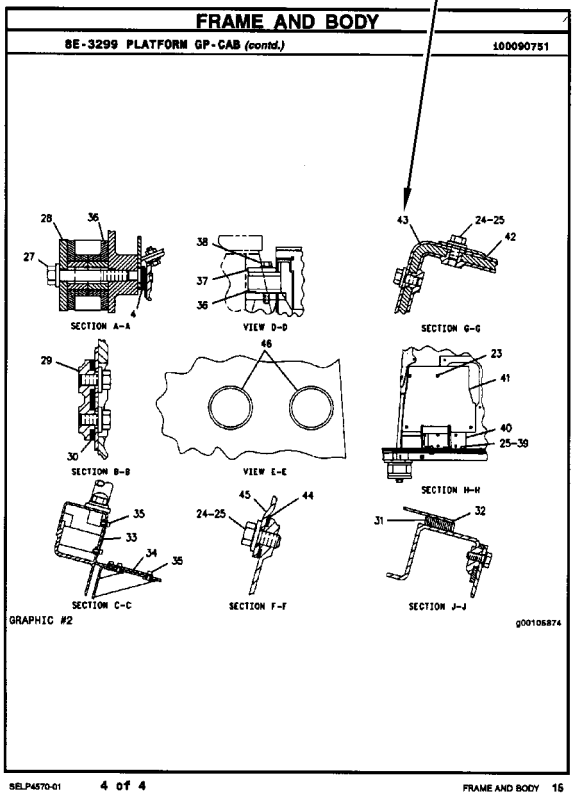
FRAME AND BODY
8E-3299 PLATFORM GP-CAB (contd.)
100090751
SECTION A-A
VIEW D-D
SECTION G-G
SECTION B-B
VIEW E-E
SECTION H-H
SECTION C-C
SECTION F-F
SECTION J-J
GRAPHIC #2
g00105874
SELP4570-01
4 of 4
FRAME AND BODY 15

REPAIR ALTERNATIVES

REMANUFACTURED COMPONENTS

As an option when making repairs consider Caterpillar Remanufactured Components. Components that are available through the Caterpillar Remanufactured Program are identified three ways in the parts book:

- with the letter R in the note field of the parts list
- with an R* at the beginning of the first line of the caption
- with an *R at the end of the first line of the caption

Typical components included in the Remanufacturing Program include:

ALTERNATORS
CONNECTING RODS
CRANKSHAFTS - UNDERSIZE
CRANKSHAFTS - UPGRADE TO NEW
CYLINDER HEADS
ELECTRONIC CONTROL MODULES (ECM)
ELECTRONIC SENSORS
FUEL INJECTORS
FUEL NOZZLES
FUEL PUMPS
GOVERNORS
OIL PUMPS
PISTONS
SHORT BLOCKS
STARTERS
TURBOCHARGERS - COMPLETE
TURBOCHARGER CARTRIDGES
WATER PUMPS

Caterpillar Remanufactured engines for many engine arrangements are also available.

SUPPLEMENTAL COOLANT ADDITIVES

CUSTOMER BENEFITS:

Protects against cavitation, foam, erosion, corrosion, and scale buildup in cooling systems.

- Provides measured coolant conditioner.

DESCRIPTION:

Additives deplete from the coolant with normal operation. For this reason, Supplemental Coolant Additives (SCA) must be added to all heavy duty coolants at regular intervals. In addition, when not using a fully formulated, pre-charged antifreeze, like Caterpillar's DEAC, an initial charge of SCA must be added to the cooling system. The amount of SCA added to the system is dependent on the capacity of the system.

The SCA for initial fill is provided as a liquid. SCA's for maintenance intervals are available in liquid form and as a spin-on element. (No Spin-on available for 3600 Family of Engines)

NOTE:

The amount of SCA added at initial fill is not the same as the amount added at maintenance intervals.

The coolant additive elements can be used with any ethylene or propylene glycol type antifreeze which meets ASTM D4985 or ASTM D5345 Specifications.

NOTE:

For use with standard heavy duty coolant only, not for use with Extended Life Coolant.

PARTS NEEDED:

Cooling System Capacity		Liquid SCA at Initial Fill	Liquid SCA at Maintenance*	Spin-on SCA Maintenance Element*
Liters	Gallons			
22-30	(6-8)	3P-2044 (1)	6V-3542 (1)	111-2370 (1)
30-38	(8-10)	3P-2044 (1) 6V-3542 (1)	111-2372 (1)	111-2369 (1)
38-49	(10-13)	3P-2044 (1) 8T-1589 (1)	111-2372 (1)	111-2369 (1)
49-64	(13-17)	3P-2044 (2)	8T-1589 (1)	9N-3368 (1)
64-83	(17-22)	3P-2044 (2) 8T-1589 (1)	111-2372 (1) 6V-3542 (1)	111-2371 (1)
83-114	(22-30)	3P-2044 (3) 8T-1589 (1)	3P-2044 (1)	9N-3718 (1)
114-163	(30-43)	3P-2044 (5)	3P-2044 (1) 6V-3542 (1)	111-2371 (2)
163-242	(43-64)	3P-2044 (8)	3P-2044 (2)	9N-3718 (2)

** Normal maintenance period is 250 hrs. See your Operation and Maintenance Manual for complete coolant maintenance instructions.*

( ) Indicates quantity required.

MAINTENANCE PARTS

DESCRIPTION	PART NUMBER	QTY	WHERE USED	PAGE
AIR INLET AND EXHAUST SYSTEM				
FILTER ELEMENT AS-AIR (PRIMARY)	110-6326	1	AIR CLEANER GP	55
FILTER ELEMENT AS-AIR (SECONDARY)	110-6331	1	AIR CLEANER GP	55
BASIC ENGINE				
CAP-OIL FILLER (ENGINE)	310-8798	1	COVER GP-VALVE MECHANISM	14
GASKET (VALVE MECHANISM)	233-5483	1	COVER GP-VALVE MECHANISM	14
PLUG (DRAIN, ENGINE OIL)	135-8432	1	PAN GP-OIL	29
V-BELT (WATER PUMP)	352-4169	1	V-BELT GP	36
COOLING SYSTEM				
CAP AS-RADIATOR (SEA WATER HEAT EXCHANGER)	036-1865	1	RADIATOR & HYD OIL COOLER GP	50
		1	RADIATOR & HYD OIL COOLER GP	51
CAP-VENTED (COOLANT RECOVERY)	169-6715	1	RADIATOR & OIL COOLER MTG GP	52
GASKET (WATER TEMPERATURE REGULATOR)	235-4959	1	HOUSING & REGULATOR GP	44
		1	LINES GP-WATER	45
REGULATOR AS-WATER TEMPERATURE (THERMOSTAT)	235-4960	1	HOUSING & REGULATOR GP	44
		1	LINES GP-WATER	45

MAINTENANCE PARTS

DESCRIPTION	PART NUMBER	QTY	WHERE USED	PAGE
ELECTRICAL AND STARTING SYSTEM				
BATTERY (12-VOLT, MAINTENANCE FREE)	230-6368	1	BATTERY & WIRING GP	79
BELT-DRIVE (WARNING BEACON)	9X-8139	1	LAMP GP-WARNING BEACON	96
FLASHER AS (12-VOLT) (STOP LIGHT)	242-9000	1	LAMP GP-STOP & TAIL	95
		1	LIGHTING GP-ROADING	99
FUSE (10-AMPERE)	113-8490	7	WIRING GP-CAB	108
		7	WIRING GP-CAB	111
FUSE (100-AMPERE)	235-1845	1	WIRING GP-MACHINE	118
		1	WIRING GP-MACHINE	121
FUSE (15-AMPERE)	113-8491	10	WIRING GP-CAB	108
		10	WIRING GP-CAB	111
FUSE (20-AMPERE)	113-8492	2	WIRING GP-CAB	108
		2	WIRING GP-CAB	111
	267-2680	1	RELAY GP	101
		2	WIRING GP-CAB	108
		2	WIRING GP-CAB	111
FUSE (20-AMPERE) (MAIN)	267-2680	2	WIRING GP-CAB	111
FUSE (30-AMPERE)	124-3548	1	WIRING GP-CAB	108
		2	WIRING GP-CAB	111
FUSE (60-AMPERE)	267-2701	1	RELAY GP	101
FUSE AS (MAIN POWER)	258-4136	1	WIRING GP-CAB	108
		1	WIRING GP-CAB	111
FUSE AS (ROADING)	258-4134	1	LIGHTING GP-ROADING	99
GLOW PLUG	107-3659	4	GLOW PLUG GP	82
LAMP (12-VOLT, 21-WATT) (STOP LIGHT)	9W-3326	1	LAMP GP-STOP & TAIL	93
LAMP (12-VOLT, 21-WATT) (TURN SIGNAL)	9W-3326	1	LAMP GP-HEAD & SIGNAL	91
LAMP (12-VOLT, 4-WATT)	100-3246	1	LAMP GP-HEAD & SIGNAL	91
LAMP (12-VOLT, 5-WATT) (STOP, TAIL)	084-4348	1	LAMP GP-STOP & TAIL	92
		1	LAMP GP-STOP & TAIL	93
LAMP (12-VOLT, 55-WATT) (FLOODLIGHT)	9W-0607	1	LAMP GP-FLOOD	89
		1	LAMP GP-FLOOD	90
LAMP (12-VOLT, 55-WATT) (WARNING BEACON)	9X-8118	1	LAMP GP-WARNING BEACON	96
LAMP-HEAD (12-VOLT, 60/55-WATT) (CLEAR)	9W-3324	1	LAMP GP-HEAD & SIGNAL	91
FRAME AND BODY				
BREATHER (EXHAUST BYPASS)	9G-5127	2	FRAME GP-LOADER	199
		2	FRAME GP-LOADER	201
FUSE AS (ROADING)	258-4134	1	KIT-ROADING CONVERSION	207
LAMP (12-VOLT, 10-WATT)	195-9712	1	KIT-ROADING CONVERSION	206
LAMP (12-VOLT, 10-WATT) (REGISTRATION PLATE)	195-9712	1	MOUNTING GP-REGISTRATION	211
PLUG-MAGNETIC (FRAME)	3S-9182	5	FRAME GP-LOADER	199
		5	FRAME GP-LOADER	201

MAINTENANCE PARTS

DESCRIPTION	PART NUMBER	QTY	WHERE USED	PAGE
FUEL SYSTEM				
CAP-FUEL (FILLER) (FILTER)	304-3885	1	LINES GP-FUEL	66
		1	LINES GP-FUEL	68
FILTER AS-WATER SEP & FUEL	233-9856	1	PUMP GP-FUEL PRM & PRIM FILTER	74
FILTER ELEMENT-WTR SEP & FUEL	361-9555	1	PUMP GP-FUEL PRM & PRIM FILTER	75
HYDRAULIC SYSTEM				
BREATHER (INLINE) (HYDRAULIC OIL)	207-9729	1	TANK & MTG GP-HYDRAULIC	311
CAP AS-FILLER (HYDRAULIC TANK)	142-8937	1	TANK GP-HYDRAULIC	312
SCREEN (HYDRAULIC)	195-6768	1	LINES GP-PILOT	283
SCREEN-SUCTION (HYDRAULIC TANK)	348-4609	1	TANK GP-HYDRAULIC	312
LUBRICATION SYSTEM				
FILTER AS-ENGINE OIL	267-2528	1	FILTER GP-ENGINE OIL	38
OPERATOR STATION				
BLADE-WIPER (558-MM) (CAB DOOR)	320-1390	1	DOOR GP-CAB	524
BLADE-WIPER (558-MM) (FRONT, REAR)	320-1390	1	DOOR GP-CAB	522
FILTER ELEMENT-CAB AIR	231-8132	1	AIR CONDITIONER GP	486
		1	HEATER GP-CAB	536
	303-6658	1	AIR CONDITIONER GP	486
		1	HEATER GP-CAB	536
LAMP (12-VOLT) (DOME)	210-8754	1	PANEL GP-INSTRUMENT	553
LAMP (12-VOLT) (FUEL LEVEL INDICATOR)	7X-9065	1	PANEL GP-INSTRUMENT	554
LAMP AS (12-VOLT) (FLOODLIGHT)	330-8684	1	PANEL GP-INSTRUMENT	554
V-BELT (COMPRESSOR)	258-3539	1	COMPRESSOR & MTG GP-REFRIG	498
POWER TRAIN				
FILTER-OIL (ADVANCED EFFICIENCY) (HYDRAULIC)	1G-8878	1	FILTER GP-OIL	136
WORK TOOLS				
CAP AS (WATER TANK)	192-2606	1	TANK GP-WATER	480
FUSE (10-AMPERE)	3K-8782	1	CONVERSION GP-WORK TOOL	429
SCREEN (WATER TANK)	119-1414	1	STRAINER GP-WATER	475

INDEX

Name	Page
A	
ACCESSORY GP-ENGINE	10
ACCUMULATOR & MTG GP-HYDRAULIC	215
ACCUMULATOR GP-HYDRAULIC–CHARGED	216
ACCUMULATOR GP-HYDRAULIC–UNCHARGED	217
ACCUMULATOR GP-REFRIGERANT–CHARGED	483
ACCUMULATOR GP-REFRIGERANT–UNCHARGED	482
ADAPTER GP-OIL LINE	218
AIR CLEANER GP	54 55
AIR CONDITIONER AR	484
AIR CONDITIONER GP	485 486
ALTERNATOR GP-CHARGING	76 78
ARM AS-LIFT	322
ARM GP-MATERIAL HANDLING	324
ARM GP-WINDOW WIPER	488
ARMREST & MOUNTING GP	489
ARMREST GP	490
AXLE GP	129
AXLE GP–TANDEM	128
B	
BATTERY & WIRING GP	79
BATTERY (12-VOLT, MAINTENANCE FREE)	79
BEARING GP-MAIN	11
BELT-DRIVE (WARNING BEACON)	96
BLADE AR–ANGLING	325 326 327
BLADE AS-ANGLING	328 329 330 331
BLADE GP-ANGLING	332 333 334 335
BLADE GP-MULTIPURPOSE BUCKET	336 337 338 339 340 341 342 343 344 345
BLADE-WIPER (558-MM) (CAB DOOR)	524
BLADE-WIPER (558-MM) (FRONT, REAR)	522
BOX GP-STORAGE	492
BOX GP-STORAGE–LITERATURE	493
BRACKET GP-SUPPORT	323
BREATHER (EXHAUST BYPASS)	199 201
BREATHER (INLINE) (HYDRAULIC OIL)	311
BUCKET AR-DIRT	346 347
BUCKET AR-GENERAL PURPOSE	347 348 349
BUCKET AR-GRAPPLE	349 350 352 353 354
BUCKET AR-GRAPPLE–INDUSTRIAL	350 351
BUCKET AR-LIGHT MATERIAL	355
BUCKET AR-MULTIPURPOSE	356 357 358 359
BUCKET AR-UTILITY	359 360
BUCKET AS-DIRT	361 362 363 364 365 366 367 368 369 370 371 372 373
BUCKET AS-GENERAL PURPOSE	374 375 376 377 378 379 380 381
BUCKET AS-GENERAL PURPOSE–HIGH CAPACITY	382 383
BUCKET AS-GRAPPLE	384 385 386 387

INDEX

Name	Page
	388
	389
BUCKET AS-GRAPPLE–INDUSTRIAL	390
	391
BUCKET AS-LIGHT MATERIAL	392
	393
	394
	395
	396
	397
	398
	399
BUCKET AS-UTILITY	400
	401
	402
BUCKET GP-DIRT	403
	404
	405
BUCKET GP-GENERAL PURPOSE	406
BUCKET GP-GRAPPLE	407
	408
	409
	412
	413
BUCKET GP-GRAPPLE–INDUSTRIAL	410
	411
BUCKET GP-MULTIPURPOSE	414
	415
	416
	417
	418
BUCKET GP-UTILITY	419
	420
	421
BUMPER GP–REAR	186

C

CAB AR	494
CAB AR-ENCLOSED ROPS	494
CAB AR-OPEN ROPS	495
CAB AR-OPEN ROPS–MECH SUSP SEAT	495
CAB AS	496
CAB GP-ENCLOSED ROPS	497
CAMSHAFT GP	12
CAP AS (WATER TANK)	480
CAP AS-FILLER (HYDRAULIC TANK)	312
CAP AS-RADIATOR (SEA WATER HEAT EXCHANGER)	50
	51
CAP-FUEL (FILLER) (FILTER)	66
	68
CAP-OIL FILLER (ENGINE)	14
CAP-VENTED (COOLANT RECOVERY)	52
CARRIAGE & FORK AR	422
CARRIAGE GP-FORK	423
CHASSIS AR	1
CLAM AS-MULTIPURPOSE BUCKET	424
	425
	426
	427
	428
COMMON AR	1
COMPRESSOR & MTG GP-REFRIG	498
COMPRESSOR GP-REFRIGERANT–AIR CONDITIONER	499
CONDENSER & MTG GP-REFRIGERANT	500
CONNECTING ROD GP	13
CONTROL AR-MACHINE–AUX PROPORTIONAL FLOW, 1-SPEED	2
	3
CONTROL AR-MACHINE–AUX PROPORTIONAL FLOW, 2-SPEED	3
	4
CONTROL AR-MACHINE–ON, OFF AUXILIARY CONTROL, 1-SPEED	2
CONTROL GP-GOVERNOR	65
CONTROL GP-HANDLE	505
CONTROL GP-HANDLE–DIRECTION, SPEED	501
CONTROL GP-HANDLE–LH	503
	504
CONTROL GP-HANDLE–RH	505
CONTROL GP-HANDLE–WORK TOOL	502
CONTROL GP-PARKING BRAKE–2-SPEED	130
CONTROL GP-PILOT OPERATED HYD	510
	511
	512
	513
CONTROL GP-PILOT OPERATED HYD–AUXILIARY	507
CONTROL GP-PILOT OPERATED HYD–HYDROSTATIC	508
	509
CONTROL GP-PILOT OPERATED HYD–WORK TOOL	506
CONTROL GP-UNPROGRAMMED (MACHINE)	81
CONVERSION AR-MACHINE–EUROPEAN MARKET	5
CONVERSION AR-MACHINE–NACD	4
CONVERSION AR-MACHINE–OUTSIDE NACD	5
CONVERSION AR-MACHINE–STANDARD FLOW	6
CONVERSION AR-ROADING–GERMANY, 2-SPEED	188
CONVERSION AR-ROADING–STANDARD FLOW	187
CONVERSION GP-ROADING–GERMANY	189

INDEX

Name	Page
CONVERSION GP-ROADING–ITALY	190, 191
CONVERSION GP-WORK TOOL–KIT, HIGH FLOW	429
COOLER GP-ENGINE OIL	42
COUNTERWEIGHT GP	192
COUPLER AR-QUICK–HYDRAULIC	430
COUPLER AR-QUICK–MANUAL	430
COUPLER GP-QUICK	431, 433
COVER GP-ACCESS	486, 536
COVER GP-CONSOLE–WITH AIR CONDITIONER, HEATER	514
COVER GP-CONSOLE–WITHOUT AIR CONDITIONER, HEATER	515
COVER GP-LINES	434
COVER GP-VALVE MECHANISM	14
CRANKSHAFT GP	15
CYLINDER & LINK GP-COUPLER–LH	435
CYLINDER & LINK GP-COUPLER–RH	436
CYLINDER & MTG GP-ANGLE BLADE	219, 220
CYLINDER & MTG GP-LIFT ARM	221
CYLINDER BLOCK GP	16
CYLINDER GP-BUCKET	224, 225
CYLINDER GP-GRAPPLE–INDUSTRIAL	227
CYLINDER GP-GRAPPLE–UTILITY	226
CYLINDER GP-HYDRAULIC–ANGLE BLADE	229, 230
CYLINDER GP-HYDRAULIC–BUCKET	232
CYLINDER GP-HYDRAULIC–COUPLER	228
CYLINDER GP-HYDRAULIC–TILT	231
CYLINDER GP-LIFT–LH	235
CYLINDER GP-LIFT–RH	233
CYLINDER GP-TILT–LH	239
CYLINDER GP-TILT–RH	237
CYLINDER HEAD GP	18

D

Name	Page
DOOR & MTG GP-CAB–GLASS	519
DOOR & MTG GP-CAB–POLYCARBONATE	516
DOOR GP-CAB–GLASS	521, 522
DOOR GP-CAB–POLYCARBONATE	524, 526
DRAIN GP-COOLANT	43
DRAIN GP-ENGINE OIL	19
DRIVE GP-TANDEM	132, 133
DUCT GP-CAB AIR	527

E

Name	Page
EDGE GP-BIT & CUTTING	437, 438
EDGE GP-CUTTING	355, 438, 439, 440, 441, 442, 443, 444, 445
ELECTRONICS GP-MACHINE	81
ENCLOSURE GP-ENGINE	193
ENGINE AR-PRIMARY	7, 8

F

Name	Page
FAN GP-BLOWER	50
FAN GP-BLOWER (RADIATOR, HYD OIL COOLING)	51
FASTENER GP-FRONT COVER	25
FILM (FOPS)	531
FILM (POWER DISTRIBUTION)	108, 111
FILM (REFLECTIVE)	467
FILM (TEMPERATURE CONTROL)	486, 536
FILM GP	580
FILM GP–TWO SPEED	582
FILM GP–UN	578
FILM-IDENTIFICATION (13-KM/H)	187, 205
FILM-IDENTIFICATION (20-KM/H)	188, 205
FILM-IDENTIFICATION (FUSE, RELAY PANEL)	109, 112
FILM-INFORMATION (LIFT EYE LOCATION)	208
FILM-INFORMATION (TIE-DOWN LOCATION)	324
FILM-INSTRUCTION (DASH)	554
FILM-INSTRUCTION (INSTRUMENT PANEL)	554
FILM-INSTRUCTION (KEY SWITCH)	554
FILM-INSTRUCTION (MACHINE CONTROL, READ OMM)	508, 509, 510, 511, 512, 513
FILM-INSTRUCTION (MACHINE CONTROLS)	506, 507
FILM-INSTRUCTION (NO STEP)	242

INDEX

Name	Page
	263
	584
FILM-INSTRUCTION (PULL RING, ALTERNATE EXIT)	526
	572
FILM-STRIPE (REFLECTIVE, RED, WHITE)	467
FILM-WARNING (CRUSH HAZARD)	411
	448
	449
	455
	457
	458
FILM-WARNING (CRUSH HAZARD, STAY BACK)	304
	424
	425
	426
	427
	460
	584
FILM-WARNING (CRUSH HAZARD, STAY BACK, U.S.)	584
FILM-WARNING (STEERING)	189
	205
FILTER & LINES GP-HYDRAULIC	134
FILTER AS-ENGINE OIL	38
FILTER AS-WATER SEP & FUEL	74
FILTER ELEMENT AS-AIR (PRIMARY)	55
FILTER ELEMENT AS-AIR (SECONDARY)	55
FILTER ELEMENT-CAB AIR	486
	536
FILTER ELEMENT-WTR SEP & FUEL	75
FILTER GP-ENGINE OIL	38
FILTER GP-OIL–HYDRAULIC	136
FILTER-OIL (ADVANCED EFFICIENCY) (HYDRAULIC)	136
FITTING GP	285
FITTING GP-HYDRAULIC	285
FLASHER AS (12-VOLT) (STOP LIGHT)	95
	99
FLOOR MAT	1
FLYWHEEL GP	20
FORK AR-GRAPPLE–INDUSTRIAL	446
FORK AR-GRAPPLE–UTILITY	446
FORK GP-GRAPPLE	447
FORK GP-GRAPPLE–INDUSTRIAL	448
FORK GP-GRAPPLE–UTILITY	449
FORK GP-PALLET	450
	451
	452
FORK GP-PALLET–KIT	453
FORK GP-UTILITY	454
	455
FRAME AS-LOWER	195
	196
FRAME AS-UPPER	197
FRAME GP-BLADE	334
	456
FRAME GP-BLADE (WORK TOOL)	335
FRAME GP-FORK–INDUSTRIAL	457
	458
FRAME GP-LOADER	199
	201
FRAME GP-MACHINE	203
FRAME GP-WINDOW–LH	530
FRAME GP-WINDOW–RH	529
FUSE (10-AMPERE)	108
	111
	429
FUSE (100-AMPERE)	118
	121
FUSE (15-AMPERE)	108
	111
FUSE (20-AMPERE)	101
	108
	111
FUSE (20-AMPERE) (MAIN)	111
FUSE (30-AMPERE)	108
	111
FUSE (60-AMPERE)	101
FUSE AS (MAIN POWER)	108
	111
FUSE AS (ROADING)	99
	207

G

GASKET (VALVE MECHANISM)	14
GASKET (WATER TEMPERATURE REGULATOR)	44
	45
GAUGE GP-FUEL LEVEL	554
GAUGE GP-OIL LEVEL (DIPSTICK) (ENGINE)	29
GAUGE-SIGHT (HYDRAULIC TANK)	312
GAUGE-SIGHT (RADIATOR)	50
	51
GEAR GP-FRONT	21
GLOW PLUG	82
GLOW PLUG GP	82
GRAPPLE & CYLINDER GP-UTILITY	459
GRAPPLE GP-UTILITY	460
GUARD GP-BELT	22
GUARD GP-ROPS/FOPS	531
GUIDE GP-LINES	204

H

HANDHOLD GP	532
HANDLE & PIN GP-COUPLER–LH	462
HANDLE & PIN GP-COUPLER–RH	461

INDEX

Name	Page
HANDLE GP-MODULAR	503, 504
HANDLE GP-MODULAR–WORK TOOL	533
HARNESS AS-CAB (REAR)	108, 111
HARNESS AS-CHASSIS (HORN)	117
HARNESS AS-ENGINE	115
HARNESS AS-HEATER & AIR COND	486, 536, 544
HARNESS AS-LIGHTING (REAR)	118, 121
HARNESS AS-PANEL	553
HARNESS AS-PLATFORM	118, 121
HARNESS AS-REAR LIGHTING	99, 207
HARNESS AS-REAR LIGHTING (RIGHT SIDE, LICENSE PLATE)	206
HARNESS AS-REAR LIGHTING (RIGHT SIDE, LICENSE PLATE) (INDICATOR)	212
HARNESS AS-SOLENOID (DEMAND FAN)	124
HARNESS AS-SWITCH (HYDRAULIC FILTER)	134
HARNESS AS-SWITCH (REAR LIGHTS)	95, 99
HARNESS AS-WINDOW WIPER	516, 519, 522, 524
HARNESS AS-WIRING (SPEED SENSOR)	119, 122
HARNESS AS-WORK TOOL	126, 429
HARNESS AS-WORK TOOL (CONNECTING)	326, 327
HARNESS AS-WORK TOOL (LIFT ARM)	85, 87, 125
HARNESS AS-WORK TOOL (WATER TANK)	476
HEATER & MTG GP-CAB	534
HEATER AR-CAB	535
HEATER GP-CAB	536
HEATER GP-CAB–KIT	538
HEATER GP-JACKET WATER	83, 84
HEATER GP-JACKET WATER (120-VOLT, 530-WATT)	83
HEATER GP-JACKET WATER (240-VOLT, 530-WATT)	84
HOUSING & REGULATOR GP	44
HOUSING AS-SIDE– AIR CONDITIONER, HEATER	539
HOUSING GP-FLYWHEEL	23
	24
HOUSING GP-FRONT	25
HYDRAULIC AR	241
HYDRAULIC AR– WITH WORK TOOL POSITIONER	241
HYDRAULIC AR– WITHOUT WORK TOOL POSITIONER	241

I

INDICATOR (AIR CLEANER)	55
INSTALLATION AR-ENGINE	9
INSTALLATION GP-COVER & LINES– WITHOUT A/C, HEATER	540

K

KIT-ANGLE BLADE	463, 465
KIT-QUICK COUPLER CONVERSION– HYDRAULIC	242
KIT-RECEPTACLE (2-PIN)	115, 118, 119, 121, 122
KIT-ROADING CONVERSION–FRONT	207
KIT-ROADING CONVERSION–GERMANY	205
KIT-ROADING CONVERSION– ITALY, LIGHTS, SWITCHES	206
KIT-ROADING PLATE & MOUNTING– BUCKET	467
KIT-WORK TOOL WIRING	85, 87

L

LAMP (12-VOLT) (DOME)	553
LAMP (12-VOLT) (FUEL LEVEL INDICATOR)	554
LAMP (12-VOLT, 10-WATT)	206
LAMP (12-VOLT, 10-WATT) (REGISTRATION PLATE)	211
LAMP (12-VOLT, 21-WATT) (STOP LIGHT)	93
LAMP (12-VOLT, 21-WATT) (TURN SIGNAL)	91
LAMP (12-VOLT, 4-WATT)	91
LAMP (12-VOLT, 5-WATT) (STOP, TAIL)	92, 93
LAMP (12-VOLT, 55-WATT) (FLOODLIGHT)	89, 90
LAMP (12-VOLT, 55-WATT) (WARNING BEACON)	96
LAMP AS (12-VOLT) (FLOODLIGHT)	554
LAMP GP-DOME (12-VOLT)	553
LAMP GP-FLOOD	89, 90

INDEX

Name	Page
LAMP GP-HEAD & SIGNAL–RH	91
LAMP GP-REGISTRATION PLATE	206
	211
LAMP GP-STOP & TAIL	92
	93
LAMP GP-STOP & TAIL–REAR	94
	95
LAMP GP-WARNING BEACON–AMBER	96
LAMP-HEAD (12-VOLT, 60/55-WATT) (CLEAR)	91
LEVER GP-GOVERNOR	541
LEVER GP-HAND CONTROL (GOVERNOR)	541
LIFTING GP-ENGINE	27
LIFTING GP-MACHINE–4-POINT	209
LIFTING GP-MACHINE–SINGLE POINT	208
LIGHTING GP-FLOOD–FRONT	98
LIGHTING GP-FLOOD–REAR	97
LIGHTING GP-ROADING	99
LINER GP-CAB	542
LINER-CAB–GRAY	543
LINES GP-AIR	56
	57
	58
LINES GP-AIR CONDITIONER	544
LINES GP-BUCKET–INDUSTRIAL	245
LINES GP-BUCKET–MULTIPURPOSE	247
	249
	251
	253
	257
LINES GP-BUCKET–UTILITY	255
LINES GP-CONNECTING	259
	261
LINES GP-COUPLER	263
LINES GP-ENGINE OIL	39
LINES GP-FUEL	66
	68
LINES GP-FUEL INJECTION	70
LINES GP-GRAPPLE	266
	268
	270
LINES GP-HEATER	546
LINES GP-HYDRAULIC OIL COOLER	272
	274
LINES GP-HYDROSTATIC	137
	139
	141
LINES GP-LIFT CYLINDER–WITH WORK TOOL POSITIONER	276
LINES GP-LIFT CYLINDER–WITHOUT WORK TOOL POSITIONER	279
LINES GP-PILOT–DIRECTION, SPEED	281
LINES GP-PILOT–WORK TOOL	283
LINES GP-PUMP	285
LINES GP-TILT CYLINDER	287
	289
LINES GP-WATER	45
LINES GP-WORK TOOL	291
LINK GP-COUPLER	468
LITERATURE GP	547
LOCK GP (ENGINE)	193
LOCK GP-CYLINDER	492
LOCK GP-QUICK COUPLER–LH	471
LOCK GP-QUICK COUPLER–MECHANICAL	469
LOCK GP-QUICK COUPLER–RH	470

M

MANIFOLD & LINES GP-CONTROL–PARKING BRAKE	143
	147
MANIFOLD & LINES GP-CONTROL–PARKING BRAKE, 2-SPEED	145
MANIFOLD & MTG GP-CONTROL–ANGLING BLADE	294
MANIFOLD & MTG GP-CONTROL–WORK TOOL POSITIONER	293
MANIFOLD & SOLENOID GP-CONTROL	295
MANIFOLD & SOLENOID GP-CONTROL–PARKING BRAKE	149
MANIFOLD & SOLENOID GP-CONTROL–PARKING BRAKE, 2-SPEED	150
MANIFOLD GP-CONTROL–ANGLING BLADE	297
MANIFOLD GP-CONTROL–QUICK COUPLER	296
MANIFOLD GP-EXHAUST	59
MANIFOLD GP-INLET	60
MANIFOLD GP-RETURN	151
MIRROR & MTG GP-REAR VIEW–WITH ROADING LIGHT MOUNT	210
MIRROR GP-REAR VIEW	207
	548
MODULE GP-WARNING INDICATOR	549
	550
MOTOR & MTG GP-HYDRAULIC FAN	299
	300
MOTOR & MTG GP-HYDROSTATIC	153
	154
MOTOR & MTG GP-HYDROSTATIC–HYDROSTATIC	155
	156
MOTOR AR-HYDRAULIC FAN–NACD	301
MOTOR AR-HYDRAULIC FAN–STANDARD	301
MOTOR GP-GEAR (FAN, DEMAND)	299
MOTOR GP-GEAR–HYDRAULIC FAN	302
MOTOR GP-PISTON	161
MOTOR GP-PISTON–2-SPEED, LH	162
MOTOR GP-PISTON–2-SPEED, RH	164
MOTOR GP-PISTON–HYDROSTATIC	157
	159

INDEX

Name	Page
MOTOR GP-WINDOW WIPER	551
MOUNTING GP-CYLINDER	303 304 305
MOUNTING GP-CYLINDER–GRAPPLE BUCKET	306
MOUNTING GP-ENGINE	28
MOUNTING GP-LICENSE PLATE	211 212
MOUNTING GP-PUMP	166
MOUNTING GP-RAD & OIL COOLER	46
MOUNTING GP-REGISTRATION	212
MOUNTING GP-REGISTRATION–WITH WIRING & LIGHTS	211
MOUNTING GP-ROPS	552
MUFFLER & MOUNTING GP	61 62

O

ORIFICE AS-AIR CONDITIONER	486

P

PADLOCK GP	189 205
PAN GP-OIL	29
PANEL GP-INSTRUMENT	553
PANEL GP-SIDE	556
PEDAL GP-GOVERNOR	557 558
PISTON GP	31
PLATE & FILM GP	583 584 586 588 591
PLATE AS-FOPS	531
PLATFORM GP-OPERATOR	559
PLUG (DRAIN, ENGINE OIL)	29
PLUG GP-ENGINE	32 33
PLUG-MAGNETIC (FRAME)	199 201
POSITIONER GP-FORK	450 451 452
POWER TRAIN AR	167
PULLEY GP-CRANKSHAFT	34
PULLEY GP-WATER PUMP	35
PUMP & MTG GP-HYDROSTATIC	168 169
PUMP & MTG GP-WORK TOOL	307 308
PUMP GP-DIAPHRAGM (WATER TANK)	476
PUMP GP-ENGINE OIL	40
PUMP GP-FUEL INJECTION	72
PUMP GP-FUEL PRM & PRIM FILTER–WATER SEPARATOR	74 75
PUMP GP-GEAR	310
PUMP GP-GEAR–WORK TOOL	309
PUMP GP-PISTON	170 172
PUMP GP-WATER	48 49

R

RADIATOR & HYD OIL COOLER GP	50 51
RADIATOR & OIL COOLER MTG GP	52
RECOVERY GP-COOLANT	52
REGULATOR AS-ALTERNATOR	76
REGULATOR AS-WATER TEMPERATURE (THERMOSTAT)	44 45
RELAY AS (12-VOLT) (AIR CONDITIONER, HEATER)	486
RELAY AS (12-VOLT) (BRAKE LIGHT)	206
RELAY AS (12-VOLT) (CAB)	109 112
RELAY AS (12-VOLT) (COLD START)	115
RELAY AS (12-VOLT) (HEATER)	536
RELAY AS (12-VOLT) (ROADING LIGHTING)	207
RELAY AS (12-VOLT) (START)	115
RELAY AS (12-VOLT) (STOP LIGHT)	99 107
RELAY AS (12-VOLT) (WORK TOOL)	85 87 125 126
RELAY GP–MAIN POWER	101
ROTATING GP-PUMP (LH)	170 172
ROTATING GP-PUMP (RH)	170 172

S

SCREEN (HYDRAULIC)	283
SCREEN (WATER TANK)	475
SCREEN-SUCTION (HYDRAULIC TANK)	312
SEAL GP-CAB	560
SEAL-CRANKSHAFT (FRONT)	25
SEAT BELT GP–RETRACTABLE, 2-IN	564 565
SEAT BELT GP–RETRACTABLE, 3-IN	562 563
SEAT GP–STATIC	567

INDEX

Name	Page
SEAT GP–SUSPENSION	566
SEAT GP-ADJUSTABLE	568
SENDER AS-FUEL LEVEL	199, 201
SENSOR AS-TEMPERATURE (HYDRAULIC OIL)	312
SENSOR GP-TEMPERATURE (ENGINE COOLANT)	115
SERVICE GP-MACHINE	81
SOFTWARE GP-MACHINE	81
SOLENOID (COLD START ADVANCE)	72
SOLENOID (FUEL SHUTOFF)	72
SOLENOID AS (SWING BOOM, WORK TOOL)	297
SPRING AS-GAS	490, 531
SPRING AS-GAS (CAB DOOR)	516, 519
SPRING AS-GAS (CAB)	208, 569
SPRING AS-GAS (GRILL)	46
SPRING AS-GAS (LOCKING)	516, 519
SPRING AS-GAS (SUPPORT)	46
SPRING GP-BLADE	472
SPRING GP-GAS–CAB, DOOR	569
STARTING MOTOR GP-ELECTRIC	102, 104
STEP GP-MATERIAL HANDLING ARM	473
STOP GP-BUCKET–UTILITY	474
STRAINER GP-WATER	475
SUN VISOR	570, 571
SUPPRESSION GP-SOUND	214
SUPPRESSION GP-SOUND–MACHINE	213
SWITCH (SEAT)	567
SWITCH AS (SEAT)	568
SWITCH AS (STARTING MOTOR)(12-VOLT)	102
SWITCH AS-LIMIT	524
SWITCH AS-LIMIT (ENGINE START, HYD LOCKOUT)	522
SWITCH AS-MAGNETIC (INTERLOCK)	490
SWITCH AS-PRESSURE (HYDRAULIC OIL)	136
SWITCH AS-PRESSURE (REFRIGERANT COMPR, HIGH SIDE)	544
SWITCH AS-ROCKER (AIR CONDITIONER)	486
SWITCH AS-ROCKER (ELECTRIC POWER, WORK TOOL)	85, 87, 125, 126
SWITCH AS-ROCKER (FRONT WORK LIGHT)	553
SWITCH AS-ROCKER (HAZARD WARNING LIGHTS)	95, 99
SWITCH AS-ROCKER (INTERLOCK OVERRIDE)	553
SWITCH AS-ROCKER (PARKING BRAKE)	553
SWITCH AS-ROCKER (QUICK COUPLER)	242, 264
SWITCH AS-ROCKER (REAR WINDOW WASHER, WIPER)	522, 524
SWITCH AS-ROCKER (REAR WORK LAMPS)	97
SWITCH AS-ROCKER (ROADING LIGHTS)	99, 207
SWITCH AS-ROCKER (TURN SIGNAL)	95, 99
SWITCH AS-ROCKER (WARNING BEACON)	190
SWITCH AS-ROCKER (WORK TOOL HYD PRESS RELEASE)	553
SWITCH AS-START (KEY)	553
SWITCH AS-TOGGLE (IDLE SPEED)	429
SWITCH GP-PRESSURE	106, 107
SWITCH GP-PRESSURE (BACKUP ALARM)	118, 121
SWITCH GP-PRESSURE–BRAKE LIGHT	105
SWITCH GP-ROCKER (WORK TOOL POSITIONER)	276
SWITCH-OIL PRESS (ENGINE)	106
SWITCH-ROCKER (HEATER)	486, 536
SWITCH-TEMPERATURE (HVAC) (AIR CONDITIONER)	486

T

Name	Page
TANK & MTG GP-HYDRAULIC	311
TANK & MTG GP-WATER–KIT	476
TANK GP-HYDRAULIC	312
TANK GP-WATER	480
TINE GP	413
TIRE & RIM GP–HEAVY-DUTY, LH	174, 175
TIRE & RIM GP–HEAVY-DUTY, RH	175
TIRE & RIM GP–LH	174, 176, 177, 178
TIRE & RIM GP–RH	174, 176, 177, 178, 179
TOOTH GP-UNI	481
TURBOCHARGER GP	63

INDEX

Name	Page
V	
V-BELT (COMPRESSOR)	498
V-BELT (WATER PUMP)	36
V-BELT GP	36
VALVE & MTG GP-CONTROL–WORK TOOL, 3-FUNCTION	313
VALVE (PRESSURE RELIEF) (ENGINE OIL PRESSURE)	41
VALVE AS-RELIEF (REFRIGERANT COMPRESSOR)	499
VALVE GP-CHECK	297
VALVE GP-CONTROL–WORK TOOL, 3-FUNCTION	314
VALVE GP-ENGINE OIL RELIEF	41
VALVE GP-FLUSHING (PISTON MOTOR)	161 162 164
VALVE GP-PILOT–DIRECTION, SPEED	318 319
VALVE GP-PILOT–WORK TOOL	316
VALVE GP-RELIEF (ANGLE BLADE)	463 465
VALVE GP-RELIEF (CHARGE)	170 172
VALVE GP-RELIEF (CROSSOVER)	170 172
VALVE GP-RELIEF (GEAR MOTOR)	302
VALVE GP-RELIEF (LIFT)	314
VALVE GP-RELIEF (SWING BOOM, WORK TOOL)	297
VALVE GP-RELIEF (TILT)	314
VALVE GP-RELIEF–MAIN	180
VALVE GP-SHUTTLE (DIRECTION, SPEED)	318 319
VALVE GP-SOLENOID (12-VOLT) (ANGLE)	297
VALVE GP-SOLENOID (12-VOLT) (HYDRAULIC LOCKOUT)	314
VALVE GP-SOLENOID (12-VOLT) (QUICK COUPLER)	296
VALVE GP-SOLENOID (12-VOLT) (TILT)	297
VALVE GP-SOLENOID (12-VOLT) (WORK TOOL)	316 318 319
VALVE GP-SOLENOID (MOTOR, 2-SPEED)	150
VALVE GP-SOLENOID (PARKING BRAKE)	149 150
VALVE GP-SOLENOID (REAR AXLE FAN UNLOADER)	299
VALVE GP-SOLENOID–MOTOR, 2-SPEED	181
VALVE GP-SOLENOID–PARKING BRAKE	182
VALVE GP-SOLENOID–WORK TOOL	321
VALVE GP-SPEED CONTROL (2-SPEED)	162 164
VALVE GP-SPEED SENSING (PISTON PUMP)	170 172
VALVE MECHANISM GP	37
VISOR GP-CAB	570 571
W	
WHEEL & TIRE AR	184
WHEEL & TIRE AR–HEAVY DUTY	183 184
WHEEL & TIRE AR–SOLID	185
WINDOW GP-CAB	572
WINDOW GP-CAB–SIDE	573
WINDOW GP-CAB–UPPER, RH	576
WINDOW GP-CAB–UPPER,LH	574
WIRING GP-CAB	108 111
WIRING GP-ENGINE	115
WIRING GP-HORN–WITH MOUNTING	117
WIRING GP-MACHINE	118 121
WIRING GP-MACHINE–DEMAND FAN	124
WIRING GP-WORK TOOL	125
WIRING GP-WORK TOOL–STANDARD FLOW	126

MACHINE ARRANGEMENT

326-4785 CHASSIS AR

S/N: A9H1-UP

PART OF 326-5420 COMMON AR

SMCS-7000 **i03902023**

NOTE	PART NUMBER	QTY	PART NAME 1 2 3 4 5 6 (PRODUCT LEVEL)	SEE PAGE
Y	*261-6275*	1	AXLE GP	129
Y	*328-2278*	1	BATTERY & WIRING GP	79
Y	*218-5660*	1	BUMPER GP (REAR)	186
Y	*218-5602*	1	CONTROL GP-GOVERNOR	65
Y	*218-5799*	1	CYLINDER & MTG GP-LIFT ARM	221
Y	*326-5609*	1	ENCLOSURE GP-ENGINE	193
Y	*326-4792*	1	FRAME GP-LOADER	199
Y	*150-8621*	1	GUIDE GP-LINES	204
Y	*218-6430*	1	PANEL GP-SIDE	556
Y	*326-5572*	1	PLATFORM GP-OPERATOR	559
Y	*328-2274*	1	WIRING GP-MACHINE	118

Y-SEPARATE ILLUSTRATION

<END>

326-5420 COMMON AR

S/N: A9H1-UP

SMCS-7000 **i03901874**

NOTE	PART NUMBER	QTY	PART NAME 1 2 3 4 5 6 (PRODUCT LEVEL)	SEE PAGE
Y	*326-5400*	1	CAB AR	494
Y	*326-4785*	1	CHASSIS AR	1
Y	*354-6568*	1	FILM GP	580
Y	*326-5435*	1	HYDRAULIC AR	241
Y	*326-5372*	1	INSTALLATION AR-ENGINE	9
Y	*6V-1970*	1	LITERATURE GP	547
Y	*326-5258*	1	POWERTRAIN AR	167
	229-8752	1	FLOOR MAT	

Y-SEPARATE ILLUSTRATION

<END>

MACHINE ARRANGEMENT

326-5276 CONTROL AR-MACHINE–
ON, OFF AUXILIARY CONTROL, 1-SPEED
S/N: A9H1-UP
AN ATTACHMENT

SMCS-4062, 4284, 4351, 5059, 5705 **i04650172**

NOTE	PART NUMBER	QTY	PART NAME 1 2 3 4 5 6 (PRODUCT LEVEL)	SEE PAGE
Y	*326-5264*	1	CONTROL GP-PILOT OPERATED HYD (WORK TOOL)	506
Y	*343-5543*	1	CONTROL GP-PILOT OPERATED HYD (HYDROSTATIC)	512
Y	*370-4182*	1	LINES GP-HYDROSTATIC	139
			S/N: A9H1730-UP	
Y	*218-5635*	1	MANIFOLD & LINES GP-CONTROL (PARKING BRAKE)	143
			S/N: A9H1-1729	
Y	*370-4192*	1	MANIFOLD & LINES GP-CONTROL (PARKING BRAKE)	147
			S/N: A9H1730-UP	
Y	*191-9780*	1	MOTOR & MTG GP-HYDROSTATIC	154
			S/N: A9H1-1729	
Y	*370-4197*	1	MOTOR & MTG GP-HYDROSTATIC	155
			S/N: A9H1730-UP	
Y	*218-0928*	1	PUMP & MTG GP-HYDROSTATIC	168

Y-SEPARATE ILLUSTRATION

<END>

326-5277 CONTROL AR-MACHINE–
AUX PROPORTIONAL FLOW, 1-SPEED
S/N: A9H1-UP
AN ATTACHMENT

SMCS-4062, 4284, 4351, 5059, 5705 **i04650173**

NOTE	PART NUMBER	QTY	PART NAME 1 2 3 4 5 6 (PRODUCT LEVEL)	SEE PAGE
Y	*326-5265*	1	CONTROL GP-PILOT OPERATED HYD (AUXILIARY)	507
Y	*343-5542*	1	CONTROL GP-PILOT OPERATED HYD (HYDROSTATIC)	510
Y	*370-4182*	1	LINES GP-HYDROSTATIC	139
			S/N: A9H1730-UP	
Y	*218-5635*	1	MANIFOLD & LINES GP-CONTROL (PARKING BRAKE)	143
			S/N: A9H1-1729	
Y	*370-4192*	1	MANIFOLD & LINES GP-CONTROL (PARKING BRAKE)	147
			S/N: A9H1730-UP	
Y	*191-9780*	1	MOTOR & MTG GP-HYDROSTATIC	154
			S/N: A9H1-1729	
Y	*370-4197*	1	MOTOR & MTG GP-HYDROSTATIC	155
			S/N: A9H1730-UP	
Y	*218-0928*	1	PUMP & MTG GP-HYDROSTATIC	168

Y-SEPARATE ILLUSTRATION

<END>

MACHINE ARRANGEMENT

326-5278 CONTROL AR-MACHINE–
AUX PROPORTIONAL FLOW, 2-SPEED
S/N: A9H1-UP
AN ATTACHMENT

SMCS-4062, 4284, 4351, 5059, 5705 **i03901805**

NOTE	PART NUMBER	QTY	PART NAME 1 2 3 4 5 6 (PRODUCT LEVEL)	SEE PAGE
Y	*326-5265*	1	CONTROL GP-PILOT OPERATED HYD (AUXILIARY)	507
Y	*326-5267*	1	CONTROL GP-PILOT OPERATED HYD (HYDROSTATIC)	508
Y	*356-1897*	1	FILM GP	582
Y	*218-5636*	1	MANIFOLD & LINES GP-CONTROL (PARKING BRAKE, 2-SPEED)	145
Y	*190-7457*	1	MOTOR & MTG GP-HYDROSTATIC (2-SPEED)	153
Y	*218-5928*	1	PUMP & MTG GP-HYDROSTATIC	169

Y-SEPARATE ILLUSTRATION

<END>

326-5427 CONTROL AR-MACHINE–
AUX PROPORTIONAL FLOW, 1-SPEED
S/N: A9H1-UP
AN ATTACHMENT

SMCS-4062, 4284, 4351, 5059, 5705 **i04650174**

NOTE	PART NUMBER	QTY	PART NAME 1 2 3 4 5 6 (PRODUCT LEVEL)	SEE PAGE
Y	*326-5265*	1	CONTROL GP-PILOT OPERATED HYD (AUXILIARY)	507
Y	*326-5267*	1	CONTROL GP-PILOT OPERATED HYD (HYDROSTATIC)	508
Y	*370-4182*	1	LINES GP-HYDROSTATIC	139
			S/N: A9H1730-UP	
Y	*218-5635*	1	MANIFOLD & LINES GP-CONTROL (PARKING BRAKE)	143
			S/N: A9H1-1729	
Y	*370-4192*	1	MANIFOLD & LINES GP-CONTROL (PARKING BRAKE)	147
			S/N: A9H1730-UP	
Y	*191-9780*	1	MOTOR & MTG GP-HYDROSTATIC	154
			S/N: A9H1-1729	
Y	*370-4197*	1	MOTOR & MTG GP-HYDROSTATIC	155
			S/N: A9H1730-UP	
Y	*218-0928*	1	PUMP & MTG GP-HYDROSTATIC	168
Y	*328-2335*	1	WIRING GP-WORK TOOL	125
			S/N: A9H1-1470	
Y	*375-6446*	1	WIRING GP-WORK TOOL	126
			S/N: A9H1471-UP	

Y-SEPARATE ILLUSTRATION

<END>

MACHINE ARRANGEMENT

326-5428 CONTROL AR-MACHINE—AUX PROPORTIONAL FLOW, 2-SPEED

S/N: A9H1-UP

AN ATTACHMENT

SMCS-4062, 4284, 4351, 5059, 5705 **i04561270**

NOTE	PART NUMBER	QTY	PART NAME 1 2 3 4 5 6 (PRODUCT LEVEL)	SEE PAGE
Y	*326-5265*	1	CONTROL GP-PILOT OPERATED HYD (AUXILIARY)	507
Y	*326-5267*	1	CONTROL GP-PILOT OPERATED HYD (HYDROSTATIC)	508
Y	*370-4207*	1	CONTROL GP-PARKING BRAKE (PARKING BRAKE, 2-SPEED)	130
			S/N: A9H1730-UP	
Y	*356-1897*	1	FILM GP (TWO SPEED)	582
Y	*370-4194*	1	LINES GP-HYDROSTATIC	141
			S/N: A9H1730-UP	
Y	*218-5636*	1	MANIFOLD & LINES GP-CONTROL (PARKING BRAKE, 2-SPEED)	145
			S/N: A9H1-1729	
Y	*190-7457*	1	MOTOR & MTG GP-HYDROSTATIC (2-SPEED)	153
			S/N: A9H1-1729	
Y	*372-3916*	1	MOTOR & MTG GP-HYDROSTATIC (2-SPEED)	156
			S/N: A9H1730-UP	
Y	*218-5928*	1	PUMP & MTG GP-HYDROSTATIC	169
			S/N: A9H1-1729	
Y	*218-0928*	1	PUMP & MTG GP-HYDROSTATIC	168
			S/N: A9H1730-UP	
Y	*328-2335*	1	WIRING GP-WORK TOOL	125
			S/N: A9H1-1470	
Y	*375-6446*	1	WIRING GP-WORK TOOL	126
			S/N: A9H1471-UP	

Y-SEPARATE ILLUSTRATION

<END>

326-5249 CONVERSION AR-MACHINE—NACD

S/N: A9H1-UP

CANNOT BE USED WITH 326-5289—PAGE 5, 326-5299—PAGE 5, 326-5489—PAGE 6, 326-5529—PAGE 187, 326-5559—PAGE 188

AN ATTACHMENT

SMCS-7000 **i03901796**

NOTE	PART NUMBER	QTY	PART NAME 1 2 3 4 5 6 (PRODUCT LEVEL)	SEE PAGE
Y	*328-2344*	1	LAMP GP-STOP & TAIL (REAR)	94
Y	*258-2462*	1	MUFFLER & MOUNTING GP	61
Y	*190-8084*	1	PUMP & MTG GP-WORK TOOL	307

Y-SEPARATE ILLUSTRATION

<END>

MACHINE ARRANGEMENT

326-5289 CONVERSION AR-MACHINE—EUROPEAN MARKET

S/N: A9H1-UP

CANNOT BE USED WITH 326-5249—PAGE 4, 326-5299—PAGE 5, 326-5529—PAGE 187, 326-5489—PAGE 6, 326-5559—PAGE 188

AN ATTACHMENT

SMCS-7000 **i04403695**

NOTE	PART NUMBER	QTY	PART NAME 1 2 3 4 5 6 (PRODUCT LEVEL)	SEE PAGE
Y	*216-6146*	1	BOX GP-STORAGE	492
Y	*328-2344*	1	LAMP GP-STOP & TAIL (REAR)	94
Y	*233-5991*	1	LIFTING GP-MACHINE (FOUR POINT)	209
Y	*295-7221*	1	MOTOR & MTG GP-HYDRAULIC FAN	300
Y	*280-8347*	1	MUFFLER & MOUNTING GP	62
Y	*306-8137*	1	PUMP & MTG GP-WORK TOOL	308
Y	*326-5394*	1	SUPPRESSION GP-SOUND (HOOD)	214
Y	*261-6384*	1	SUPPRESSION GP-SOUND (MACHINE)	213
Y	*230-3743*	1	WIRING GP-HORN (WITH MOUNTING)	117

Y-SEPARATE ILLUSTRATION

<END>

326-5299 CONVERSION AR-MACHINE—OUTSIDE NACD

S/N: A9H1-UP

CANNOT BE USED WITH 326-5289—PAGE 5, 326-5249—PAGE 4, 326-5489—PAGE 6, 326-5529—PAGE 187, 326-5559—PAGE 188

AN ATTACHMENT

SMCS-7000 **i04403696**

NOTE	PART NUMBER	QTY	PART NAME 1 2 3 4 5 6 (PRODUCT LEVEL)	SEE PAGE
Y	*216-6146*	1	BOX GP-STORAGE	492
Y	*328-2346*	1	LAMP GP-STOP & TAIL (REAR)	95
Y	*233-5991*	1	LIFTING GP-MACHINE (FOUR POINT)	209
Y	*295-7221*	1	MOTOR & MTG GP-HYDRAULIC FAN	300
Y	*280-8347*	1	MUFFLER & MOUNTING GP	62
Y	*306-8137*	1	PUMP & MTG GP-WORK TOOL	308
Y	*261-6384*	1	SUPPRESSION GP-SOUND (MACHINE)	213
Y	*326-5394*	1	SUPPRESSION GP-SOUND (HOOD)	214
Y	*230-3743*	1	WIRING GP-HORN (WITH MOUNTING)	117

Y-SEPARATE ILLUSTRATION

<END>

MACHINE ARRANGEMENT

326-5489 CONVERSION AR-MACHINE—STANDARD FLOW

S/N: A9H1-UP
ITALY
CANNOT BE USED WITH 326-5289—PAGE 5, 326-5299—PAGE 5, 326-5249—PAGE 4, 326-5529—PAGE 187, 326-5559—PAGE 188
AN ATTACHMENT

SMCS-7000 **i04403697**

NOTE	PART NUMBER	QTY	PART NAME 1 2 3 4 5 6 (PRODUCT LEVEL)	SEE PAGE
Y	*216-6146*	1	BOX GP-STORAGE	492
Y	*278-1293*	1	CONVERSION GP-ROADING (ITALY)	190
Y	**319-9480**	1	KIT-ROADING PLATE & MOUNTING (BUCKET)	467
Y	*233-5991*	1	LIFTING GP-MACHINE (FOUR POINT)	209
Y	*328-2333*	1	LIGHTING GP-ROADING	99
Y	*175-4238*	1	LOCK GP-QUICK COUPLER (MECHANICAL)	469
Y	*236-5058*	1	MIRROR & MTG GP-REAR VIEW (WITH ROADING LIGHT MOUNT)	210
Y	*295-7221*	1	MOTOR & MTG GP-HYDRAULIC FAN	300
Y	*225-7963*	1	MOUNTING GP-REGISTRATION	212
Y	*280-8347*	1	MUFFLER & MOUNTING GP	62
Y	*306-8137*	1	PUMP & MTG GP-WORK TOOL	308
Y	*261-6384*	1	SUPPRESSION GP-SOUND (MACHINE)	213
Y	*326-5394*	1	SUPPRESSION GP-SOUND (HOOD)	214
Y	*328-2348*	1	SWITCH GP-PRESSURE (BRAKE LIGHT)	107
Y	*230-3743*	1	WIRING GP-HORN (WITH MOUNTING)	117

Y-SEPARATE ILLUSTRATION

<END>

ENGINE ARRANGEMENT

326-5239 ENGINE AR-PRIMARY

S/N: A9H1-UP

AN ATTACHMENT

SMCS-1000 **i03907346**

NOTE	PART NUMBER	QTY	PART NAME 1 2 3 4 5 6 (PRODUCT LEVEL)	SEE PAGE
Y	**342-1219**	1	ENGINE AR-PRIMARY	8

Y-SEPARATE ILLUSTRATION

ENGINE ARRANGEMENT

342-1219 ENGINE AR-PRIMARY

S/N: CYM1-UP
55 BRAKE KW (74 BHP) AT 2500 RPM
PART OF 326-5239 ENGINE AR-PRIMARY
AN ATTACHMENT

SMCS-1000 **i04550986**

NOTE	PART NUMBER	QTY	PART NAME 1 2 3 4 5 6 (PRODUCT LEVEL)	SEE PAGE
Y	*323-2009*	1	ACCESSORY GP-ENGINE	10
Y	*315-8353*	1	ALTERNATOR GP-CHARGING	78
Y	*292-4041*	1	BEARING GP-MAIN	11
Y	*315-8329*	1	CAMSHAFT GP	12
Y	*287-4033*	1	CONNECTING ROD GP	13
Y	*361-2880*	1	COOLER GP-ENGINE OIL	42
Y	*315-7762*	1	COVER GP-VALVE MECHANISM	14
Y	*314-9860*	1	CRANKSHAFT GP	15
Y	*330-7633*	1	CYLINDER BLOCK GP	16
Y	*233-5500*	1	CYLINDER HEAD GP	18
Y	*292-4040*	1	DRAIN GP-COOLANT	43
Y	*361-3334*	1	FILTER GP-ENGINE OIL	38
Y	*314-9861*	1	FLYWHEEL GP	20
Y	*315-7766*	1	GEAR GP-FRONT	21
Y	*235-5904*	1	GLOW PLUG GP	82
Y	*361-2874*	1	HOUSING GP-FLYWHEEL	24
			S/N: CYM1-14968	
Y	*287-3357*	1	HOUSING GP-FLYWHEEL	23
			S/N: CYM14969-UP	
Y	*315-8336*	1	HOUSING GP-FRONT	25
Y	*315-7761*	1	LIFTING GP-ENGINE	27
Y	*315-7769*	1	LINES GP-AIR	57
Y	*247-6317*	1	LINES GP-AIR	56
Y	*287-5377*	1	LINES GP-ENGINE OIL	39
Y	*315-8350*	1	LINES GP-FUEL INJECTION	70
Y	*235-5900*	1	LINES GP-WATER (TEMPERATURE REGULATOR)	45
			S/N: CYM1-13305	
Y	*315-8355*	1	HOUSING & REGULATOR GP	44
			S/N: CYM13306-UP	
Y	*287-5323*	1	MANIFOLD GP-EXHAUST	59
Y	*335-5750*	1	MANIFOLD GP-INLET	60
Y	*315-7765*	1	PAN GP-OIL	29
Y	*315-8348*	1	PISTON GP	31
Y	*287-2922*	1	PLUG GP-ENGINE	32
Y	*287-2983*	1	PLUG GP-ENGINE	33
Y	*301-3396*	1	PULLEY GP-CRANKSHAFT	34
Y	*287-6114*	1	PULLEY GP-WATER PUMP	35
Y	*235-5895*	1	PUMP GP-ENGINE OIL	40
Y	*315-8352*	1	PUMP GP-FUEL INJECTION	72
Y	*287-6056*	1	PUMP GP-WATER	48
Y	*287-6181*	1	STARTING MOTOR GP-ELECTRIC	104
Y	*300-1071*	1	SWITCH GP-PRESSURE (ENGINE OIL)	106
Y	*315-7768*	1	TURBOCHARGER GP	63
Y	*287-6138*	1	V-BELT GP (WATER PUMP)	36
Y	*287-5665*	1	VALVE GP-ENGINE OIL RELIEF	41
Y	*235-5880*	1	VALVE MECHANISM GP	37

Y-SEPARATE ILLUSTRATION

ENGINE ARRANGEMENT

326-5372 INSTALLATION AR-ENGINE

S/N: A9H1-UP

PART OF 326-5420 COMMON AR

SMCS-1000 **i03902009**

NOTE	PART NUMBER	QTY	PART NAME 1 2 3 4 5 6 (PRODUCT LEVEL)	SEE PAGE
Y	*222-9812*	1	AIR CLEANER GP	54
Y	*326-5368*	1	DRAIN GP-ENGINE OIL	19
Y	*280-8407*	1	GUARD GP-BELT	22
Y	*326-5376*	1	LINES GP-AIR	58
Y	*326-5365*	1	LINES GP-FUEL	66
Y	*326-5329*	1	MOUNTING GP-ENGINE	28
Y	*218-0918*	1	MOUNTING GP-PUMP	166
Y	*218-0938*	1	MOUNTING GP-RAD & OIL COOLER	46
Y	*218-0924*	1	RADIATOR & OIL COOLER MTG GP	52
Y	*328-2276*	1	WIRING GP-ENGINE	115

Y-SEPARATE ILLUSTRATION

BASIC ENGINE

323-2009 ACCESSORY GP-ENGINE

S/N: CYM1-UP

PART OF 342-1219 ENGINE AR-PRIMARY

AN ATTACHMENT

SMCS-1207, 1358, 1405, 1802 **i03637509**

NOTE	PART NUMBER	QTY	PART NAME 1 2 3 4 5 6 (PRODUCT LEVEL)	SEE PAGE
			AVAILABLE REPAIR KIT(S):	
	341-3561	1	KIT-GASKET	
			KIT HAS ALL SEALING GASKET FOR WHOLE ENGINE EXCEPT FOR FRONT AND REAR SEALS.	

<END>

292-4041 BEARING GP-MAIN

S/N: CYM1-UP
PART OF 342-1219 ENGINE AR-PRIMARY
AN ATTACHMENT

SMCS-1203 **i03790794**

NOTE	REF NO	GRAPHIC REF	PART NUMBER	QTY	PART NAME 1 2 3 4 5 6 (PRODUCT LEVEL)	SEE PAGE
	1	1	**103-9288**	3	PLATE-THRUST (STANDARD)	
AB		1	**103-9289**		PLATE-THRUST (0.15-MM OS)	
AB		1	**103-9290**		PLATE-THRUST (0.35-MM OS)	
	2	1	**233-5486**	1	BEARING-MAIN (STANDARD)	
AB		1	**294-4890**		KIT-BEARING (0.25-MM US)	
AB		1	**294-4891**		KIT-BEARING (0.5-MM US)	
AB		1	**294-4892**		KIT-BEARING (0.75-MM US)	

A-NOT PART OF THIS GROUP
B-USE AS REQUIRED

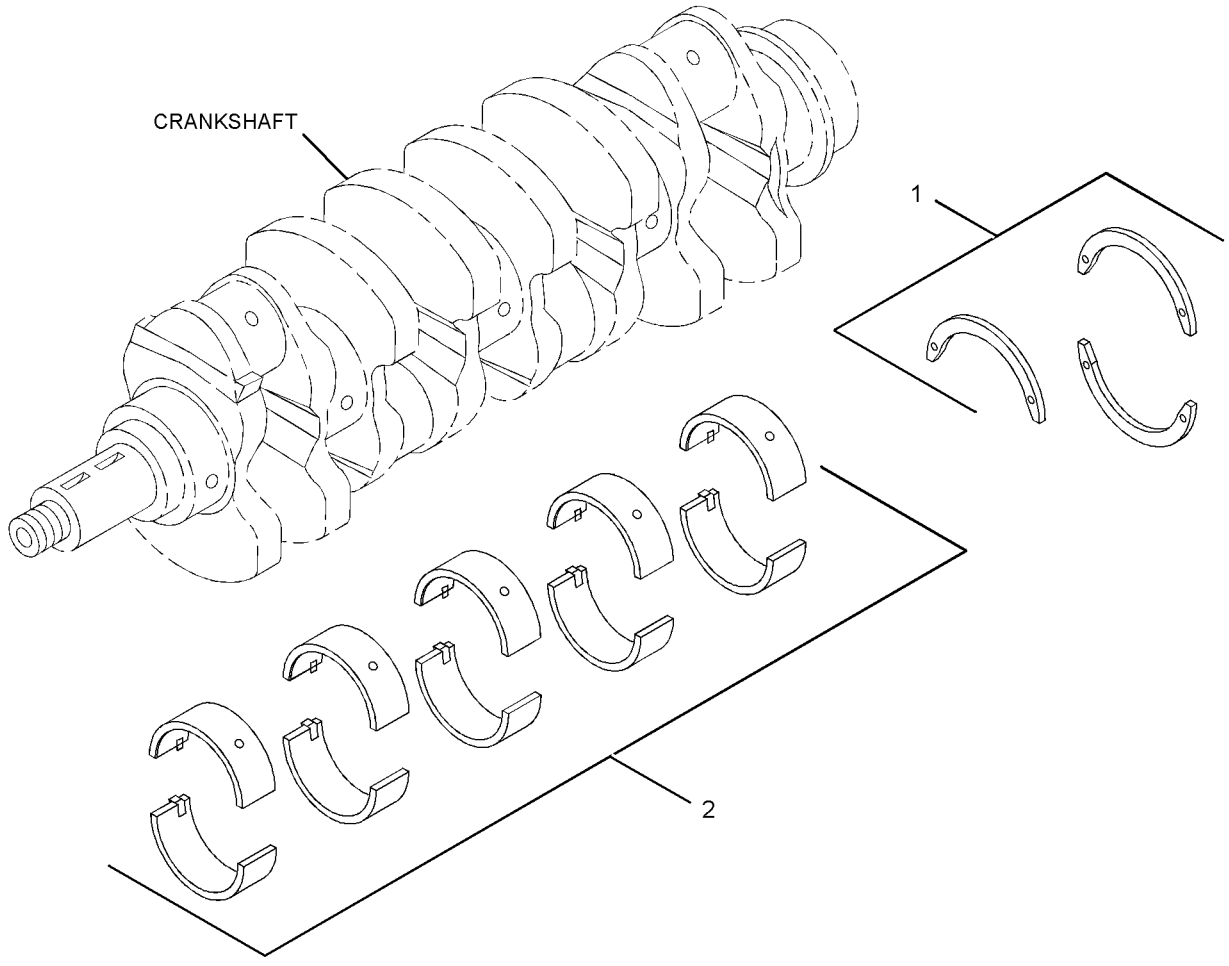

GRAPHIC #1 **<END>** g01379195

BASIC ENGINE

315-8329 CAMSHAFT GP

S/N: CYM1-UP
PART OF 342-1219 ENGINE AR-PRIMARY
AN ATTACHMENT

SMCS-1210, 1211, 1212 **i03606061**

NOTE	REF NO	GRAPHIC REF	PART NUMBER	QTY	PART NAME 1 2 3 4 5 6 (PRODUCT LEVEL)	SEE PAGE
	1	1	**3B-4505**	2	LOCKWASHER	
M	2	1	**8T-4200**	2	BOLT (M8X1.25X16-MM)	
	3	1	**094-4628**	1	KEY	
	4	1	**233-5485**	1	PLATE-THRUST	
	5	1	**103-9273**	8	PUSHROD	
	6	1	**103-9272**	8	TAPPET	
	7	1	**315-4664**	1	CAMSHAFT	

M-METRIC PART

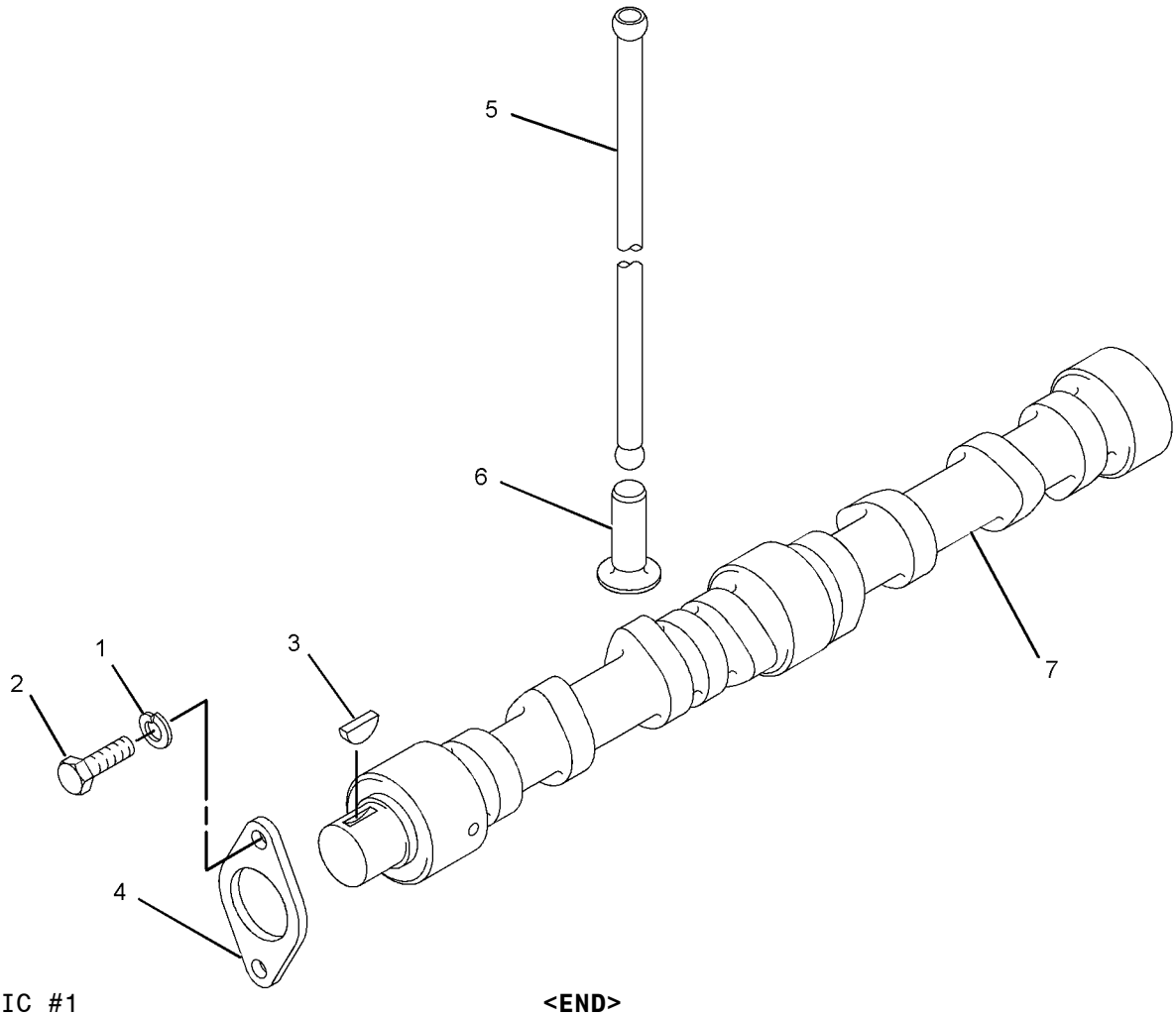

GRAPHIC #1 **<END>** g01448098

287-4033 CONNECTING ROD GP

S/N: CYM1-UP
PART OF 342-1219 ENGINE AR-PRIMARY
AN ATTACHMENT

SMCS-1218 **i03894132**

NOTE	REF NO	GRAPHIC REF	PART NUMBER	QTY	PART NAME 1 2 3 4 5 6 (PRODUCT LEVEL)	SEE PAGE
	1	1	**103-9680**	4	ROD AS-CONNECTING	
					(EACH INCLUDES)	
	1A	1	**128-2955**	2	BOLT-CONNECTING ROD	
	1B	1	**128-2956**	2	NUT	
	1C	1	**128-2958**	1	BUSHING	
	2	1	**238-8282**	1	SET-BEARING (STANDARD)	
					(INCLUDES A COMPLETE SET OF ROD BEARINGS)	
AB		1	**238-8283**		SET-BEARING (0.25-MM US)	
AB		1	**238-8284**		SET-BEARING (0.5-MM US)	
AB		1	**238-8285**		SET-BEARING (0.75-MM US)	

A-NOT PART OF THIS GROUP
B-USE AS REQUIRED

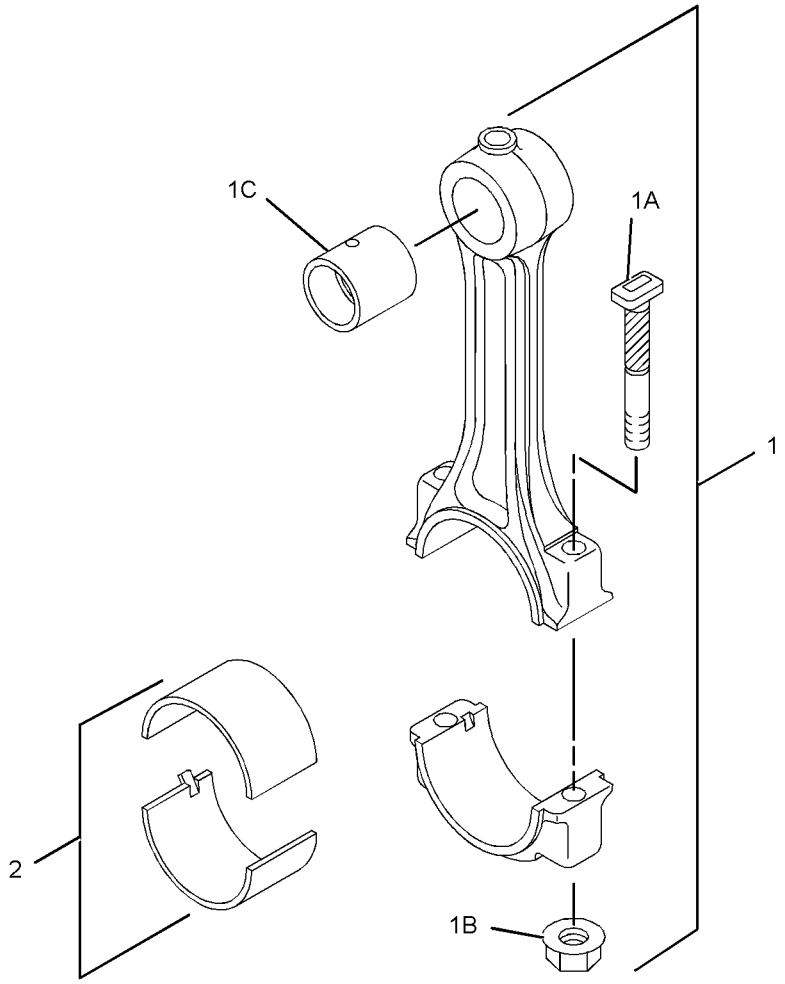

GRAPHIC #1 **<END>** g01380324

315-7762 COVER GP-VALVE MECHANISM

S/N: CYM1-UP
PART OF 342-1219 ENGINE AR-PRIMARY
AN ATTACHMENT

SMCS-1107 **i03649086**

NOTE	REF NO	GRAPHIC REF	PART NUMBER	QTY	PART NAME 1 2 3 4 5 6 (PRODUCT LEVEL)	SEE PAGE
	1	1	**3B-4505**	5	LOCKWASHER	
M	2	1	**099-3649**	5	BOLT (M8X1.25X40-MM)	
	3	1	**233-5483**	1	GASKET (VALVE MECHANISM)	
	4	1	**348-7676**	1	COVER-VALVE MECHANISM	
	5	1	**310-8798**	1	CAP-OIL FILLER (ENGINE)	

M-METRIC PART

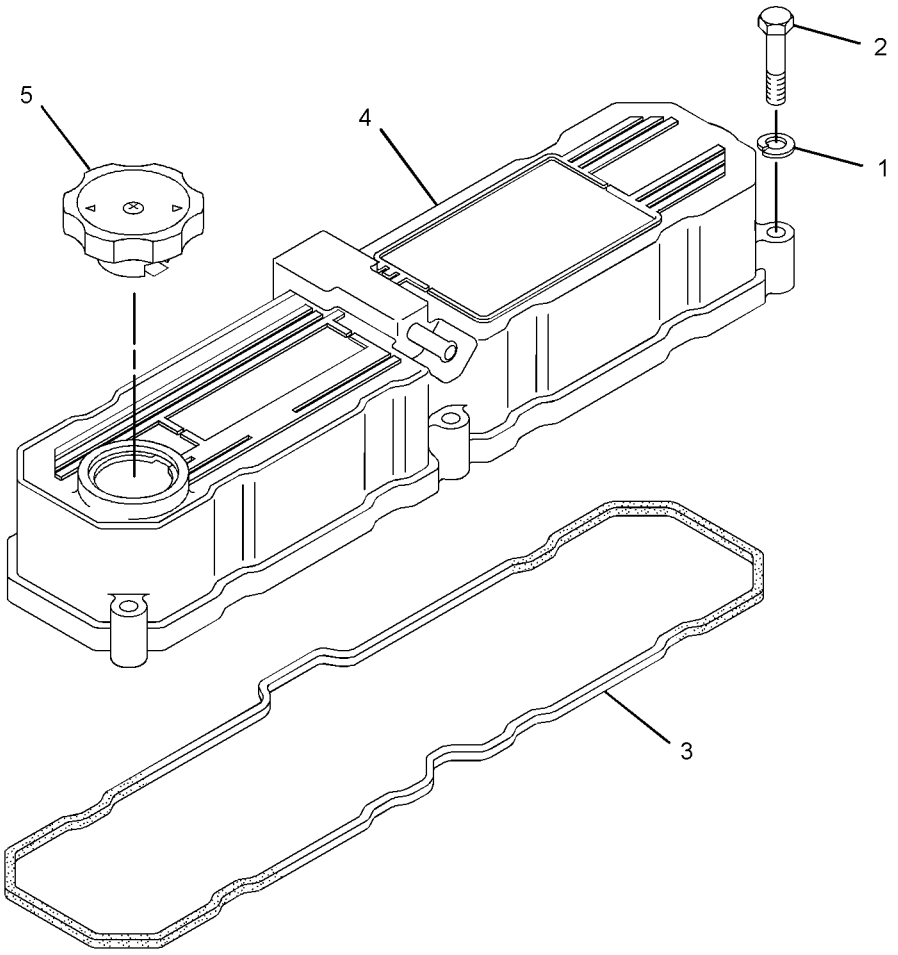

GRAPHIC #1 **<END>** g01400933

314-9860 CRANKSHAFT GP

S/N: CYM1-UP
PART OF 342-1219 ENGINE AR-PRIMARY
AN ATTACHMENT

SMCS-1202 **i02822912**

NOTE	REF NO	GRAPHIC REF	PART NUMBER	QTY	PART NAME 1 2 3 4 5 6 (PRODUCT LEVEL)	SEE PAGE
	1	1	**085-9513**	2	PIN	
	2	1	**094-4628**	2	KEY	
	3	1	**130-7596**	1	NUT	
	4	1	**294-7922**	1	CRANKSHAFT	

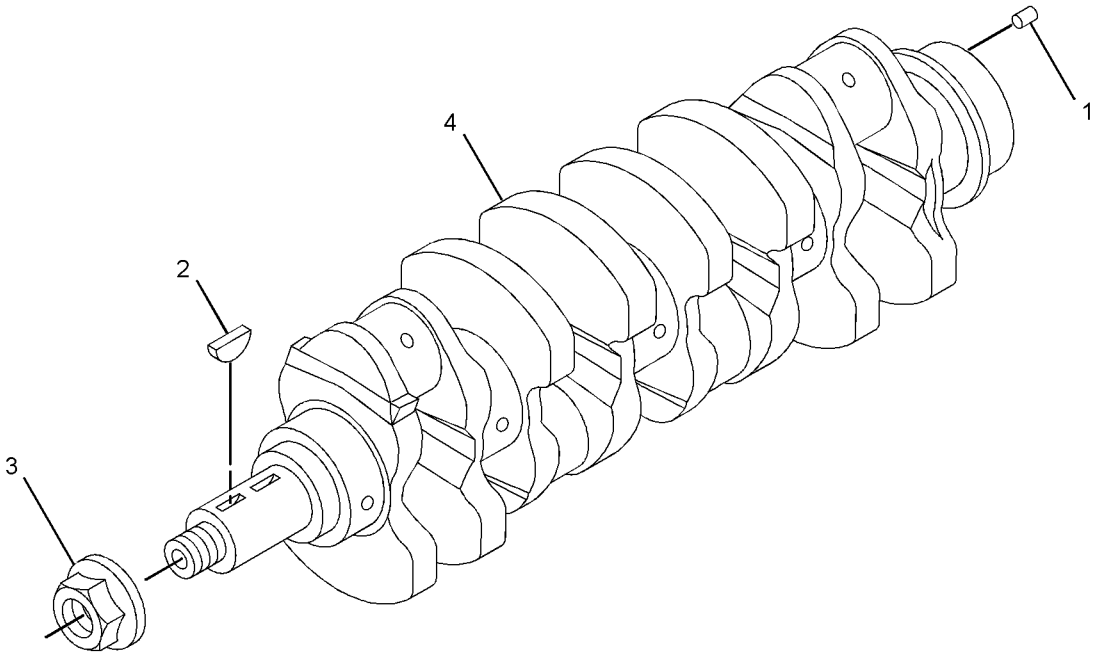

GRAPHIC #1 **<END>** g01392963

BASIC ENGINE

330-7633 CYLINDER BLOCK GP

S/N: CYM1-UP
PART OF 342-1219 ENGINE AR-PRIMARY
AN ATTACHMENT

SMCS-1201 **i03098184**

NOTE	REF NO	GRAPHIC REF	PART NUMBER	QTY	PART NAME 1 2 3 4 5 6 (PRODUCT LEVEL)	SEE PAGE
	1	1	**5I-7525**	1	PLUG	
	2	1	**096-3741**	5	CAP	
	3	1	**099-4420**	2	PIN	
	4	1	**103-9279**	2	SEAL-SIDE	
	5	1	**103-9703**	1	SHAFT-IDLER	
	6	1	**183-5916**	6	PIN-SPRING	
	7	1	**104-1218**	2	DOWEL	
	8	1	**233-5457**	4	ORIFICE-JET (OIL PISTON COOLING)	
	9	1	**233-5488**	2	PIN	
	10	1	**310-2682**	2	PLUG	
	11	1	**314-9938**	1	BUSHING	
	12	1	**330-7634**	1	CYLINDER BLOCK GP	
	12A	1	**3P-1896**	10	PLUG-CUP	
	12B	1	**096-3741**	5	CAP	
	12C	1	**103-9276**	10	BOLT	

330-7633 **CYLINDER BLOCK GP** *(contd.)* **i03098184**

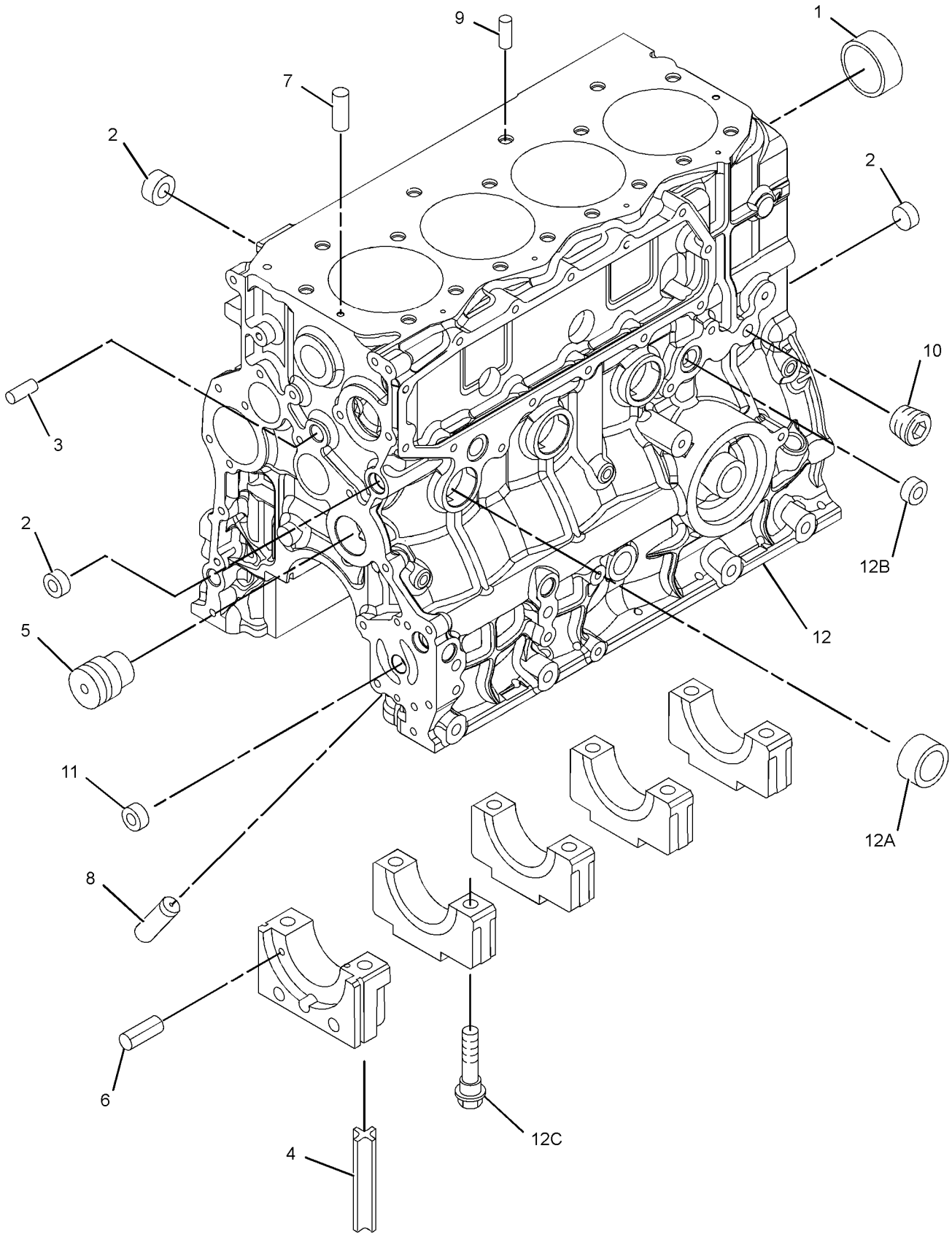

GRAPHIC #1 **<END>** g01562194

BASIC ENGINE

233-5500 CYLINDER HEAD GP

S/N: CYM1-UP
PART OF 342-1219 ENGINE AR-PRIMARY
AN ATTACHMENT

SMCS-1100, 1101, 1103, 1104, 1105, 1108, 1109, 1115, 1117, 1121, 1124, 1125

i03536270

NOTE	REF NO	GRAPHIC REF	PART NUMBER	QTY	PART NAME 1 2 3 4 5 6 (PRODUCT LEVEL)	SEE PAGE
	1	1	**103-9246**	17	BOLT-CYLINDER HEAD	
	2	1	**299-4645**	1	GASKET-HEAD	
C	3	1	**319-7263**	1	CYLINDER HEAD AS	
	4	1	**319-7262**	1	STUD	
	5	1	**103-9252**	4	SEAT-VALVE (INLET)	
	6	1	**103-9253**	4	SEAT-VALVE (EXHAUST)	
	7	1	**103-9247**	8	GUIDE-VALVE	

C-CHANGE FROM PREVIOUS TYPE

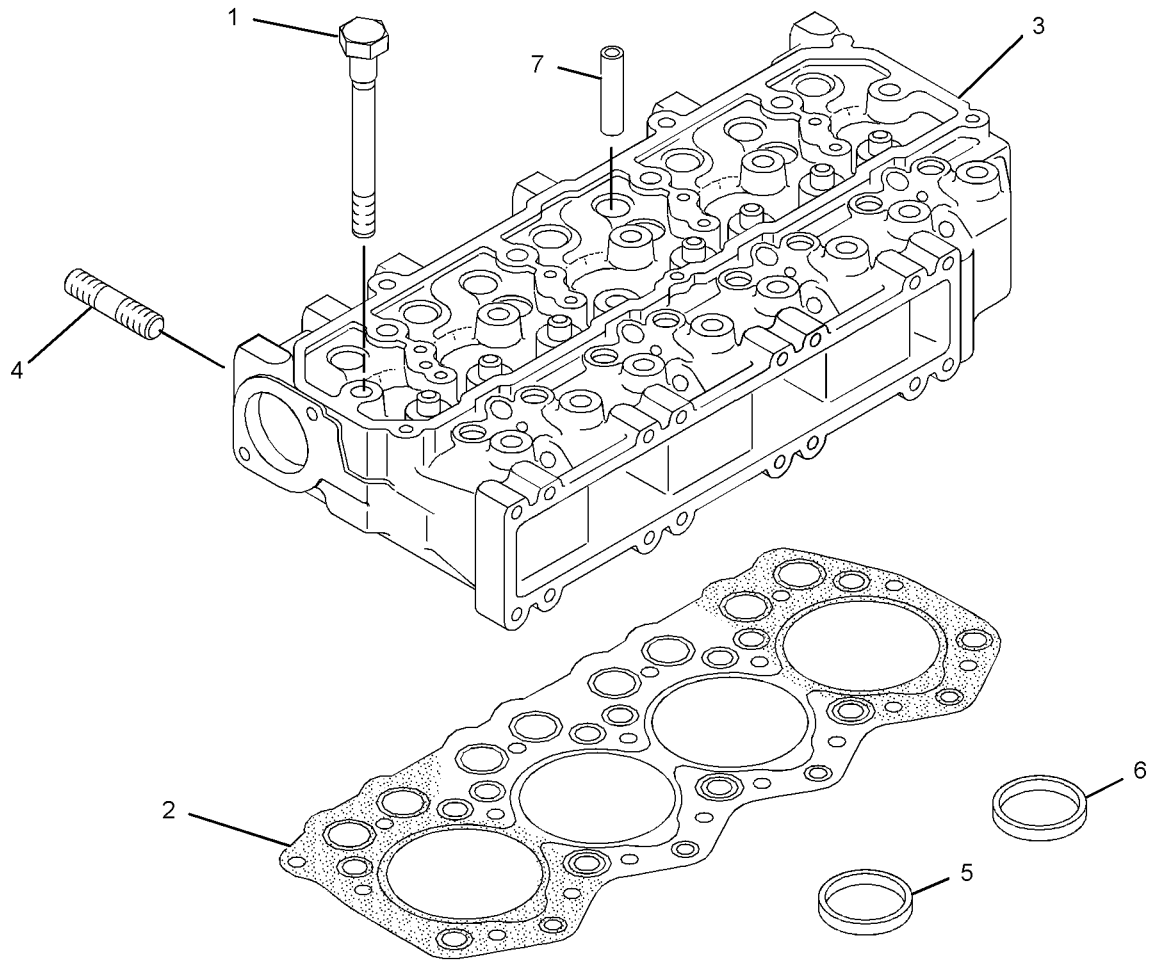

GRAPHIC #1

<END>

g01869753

326-5368 DRAIN GP-ENGINE OIL

S/N: A9H1-UP

PART OF 326-5372 INSTALLATION AR-ENGINE

SMCS-1302 **i04557262**

NOTE	REF NO	GRAPHIC REF	PART NUMBER	QTY	PART NAME 1 2 3 4 5 6 (PRODUCT LEVEL)	SEE PAGE
	1	1	**1P-4278**	1	CLAMP-HOSE	
	2	1	**110-2570**	1	CAP (ENGINE OIL)	
	3	1	**326-5336**	1	GUARD AS	
M	4	1	**8T-4179**	1	BOLT (M12X1.75X20-MM)	
M	5	1	**8T-4189**	1	BOLT (M8X1.25X20-MM)	
	6	1	**8T-4223**	1	WASHER-HARD (13.5X25.5X3-MM THK)	
	7	1	**8T-4224**	1	WASHER-HARD (8.8X16X2-MM THK)	
E	8	1	**5P-1442**		HOSE (51-CM)	

E-ORDER BY THE CENTIMETER
M-METRIC PART

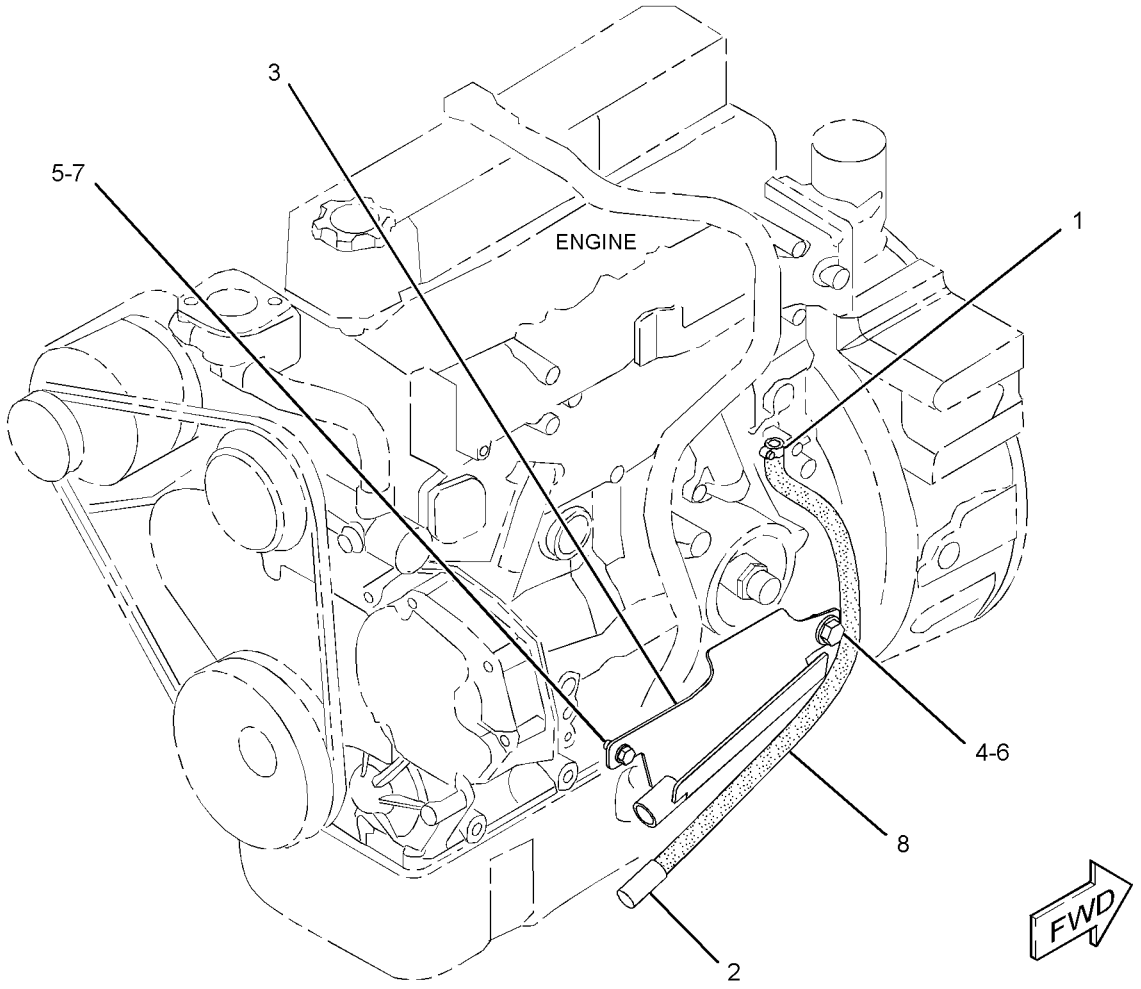

GRAPHIC #1 **<END>** g02146753

BASIC ENGINE

314-9861 FLYWHEEL GP

S/N: CYM1-UP
PART OF 342-1219 ENGINE AR-PRIMARY
AN ATTACHMENT

SMCS-1156, 1158 **i04440336**

NOTE	REF NO	GRAPHIC REF	PART NUMBER	QTY	PART NAME 1 2 3 4 5 6 (PRODUCT LEVEL)	SEE PAGE
	1	1	**373-9551**	6	BOLT	
	2	1	**234-4791**	1	FLYWHEEL AS	
	2A	1	**032-8139**	1	GEAR-STARTER (112-TEETH)	

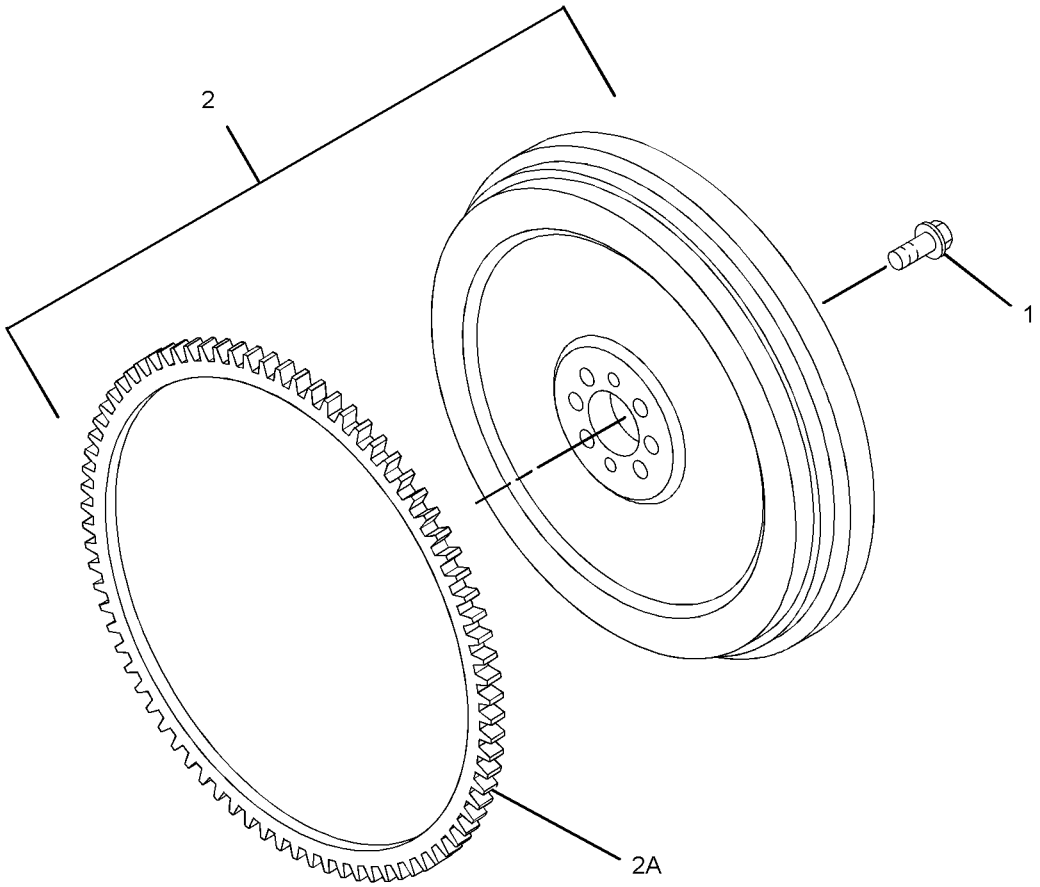

GRAPHIC #1 **<END>** g01394554

315-7766 GEAR GP-FRONT

S/N: CYM1-UP

PART OF 342-1219 ENGINE AR-PRIMARY

AN ATTACHMENT

SMCS-1206, 1212, 1234, 1288, 1313 **i04199430**

NOTE	REF NO	GRAPHIC REF	PART NUMBER	QTY	PART NAME 1 2 3 4 5 6 (PRODUCT LEVEL)	SEE PAGE
M	1	1	**5I-4936**	1	BOLT (M10X1.25X20-MM)	
	2	1	**5I-7543**	1	PLATE	
	3	1	**8T-4121**	1	WASHER-HARD (11X21X2.5-MM THK)	
	4	1	**117-2827**	1	GEAR (46-TEETH)	
	5	1	**117-2829**	1	GEAR (23-TEETH)	
	6	1	**117-3285**	1	GEAR-PUMP (OIL, 31-TEETH)	
	7	1	**239-4292**	1	GEAR	
	8	1	**322-3150**	1	GEAR-IDLER	

M-METRIC PART

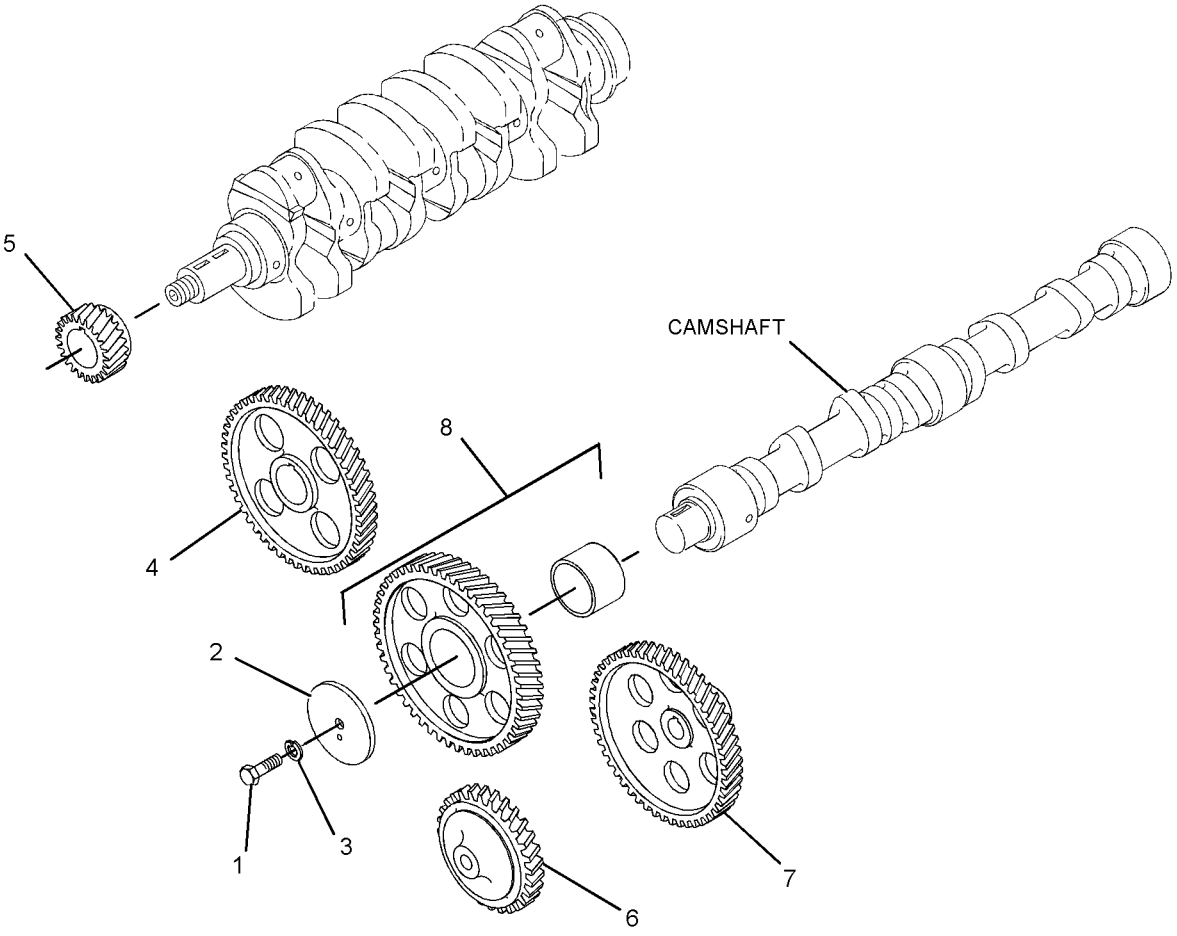

GRAPHIC #1 **<END>** g02395036

BASIC ENGINE

280-8407 GUARD GP-BELT

S/N: A9H1-UP

PART OF 326-5372 INSTALLATION AR-ENGINE

SMCS-7174 **i03902842**

NOTE	REF NO	GRAPHIC REF	PART NUMBER	QTY	PART NAME 1 2 3 4 5 6 (PRODUCT LEVEL)	SEE PAGE
	1	1	**280-8307**	1	BRACKET AS	
	2	1	**280-8314**	1	BRACKET AS	
	3	1	**280-8335**	2	SPACER (6.5X12X4.5-MM THK)	
	4	1	**280-8408**	1	GUARD-BELT	
	5	1	**280-8409**	1	BRACKET AS	
M		1	**6V-9632**	2	NUT-WELD (M6X1-THD)	
M		1	**8T-3612**	2	NUT-WELD (M8X1.25-THD)	
	6	1	**280-8417**	8	NUT-PUSH ON	
	7	1	**354-6574**	5	BOLT-SPECIAL	
M	8	1	**134-7722**	2	BOLT-LOCKING (M8X1.25X16-MM)	
	9	1	**5P-4116**	7	WASHER-HARD (8.8X20.5X2-MM THK)	
M	10	1	**6V-7357**	2	BOLT (M6X1X25-MM)	
M	11	1	**8T-4908**	2	BOLT (M8X1.25X25-MM)	
	12	1	**8T-7934**	2	WASHER-HARD (11X21X5-MM THK)	

M-METRIC PART

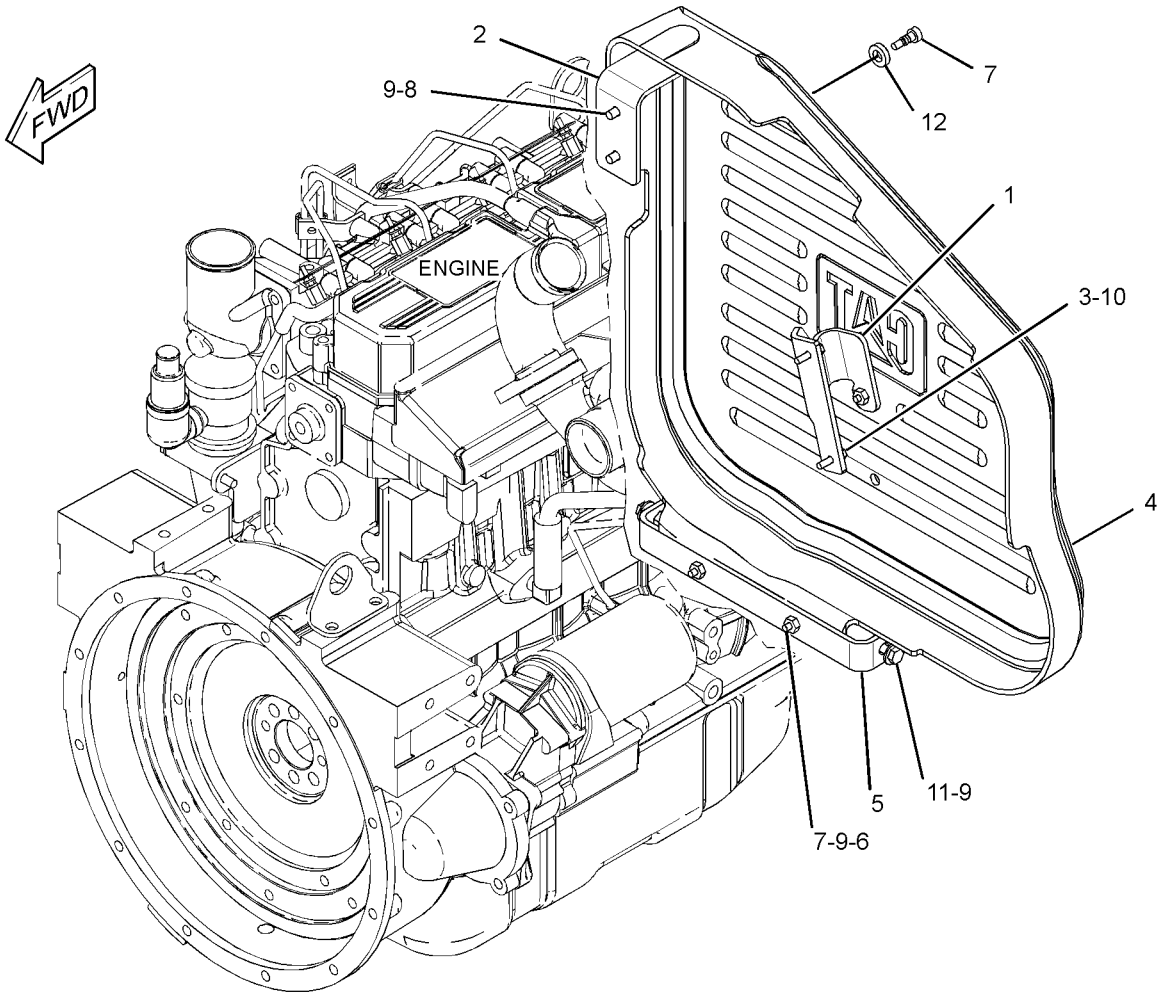

GRAPHIC #1 **<END>** g02146743

287-3357 HOUSING GP-FLYWHEEL

S/N: CYM14969-UP
PART OF 342-1219 ENGINE AR-PRIMARY
AN ATTACHMENT

SMCS-1157 **i02877118**

NOTE	REF NO	GRAPHIC REF	PART NUMBER	QTY	PART NAME 1 2 3 4 5 6 (PRODUCT LEVEL)	SEE PAGE
	1	1	**096-4415**	2	LOCKWASHER	
	2	1	**103-9280**	1	GASKET-REAR	
	3	1	**117-5015**	1	SEAL AS-OIL	
M	4	1	**185-8182**	2	BOLT (M10X1.5X20-MM)	
	5	1	**199-2354**	10	BOLT (M10X1.25X25-MM)	
	6	1	**212-8499**	3	STUD	
M	7	1	**212-8510**	3	NUT (M10X1.25 THD)	
M	8	1	**9X-8912**	2	BOLT (M10X1.25X30-MM)	
	9	1	**233-5482**	1	EYE	
	10	1	**315-7703**	1	HOUSING-FLYWHEEL	
	11	1	**5I-7628**	1	GASKET	
	12	1	**5I-8056**	1	PLUG	

M-METRIC PART

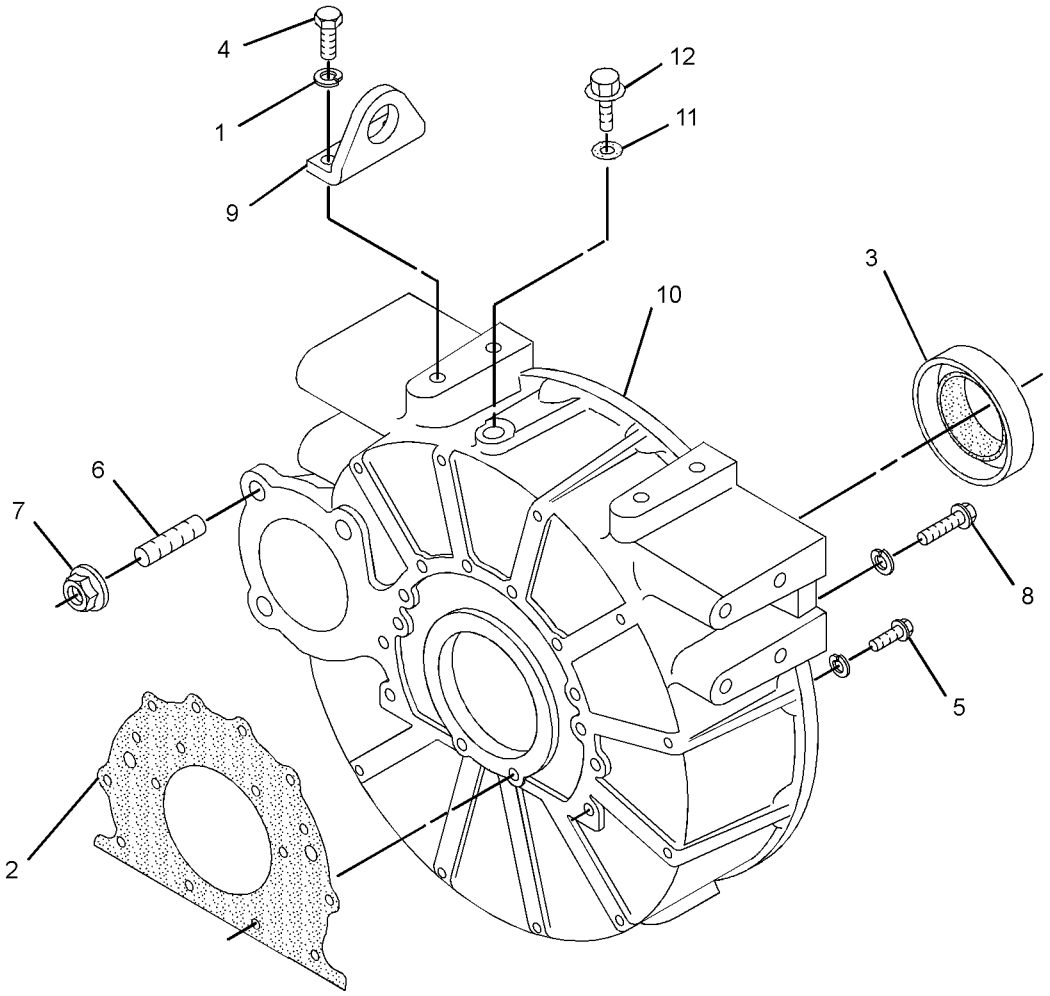

GRAPHIC #1 **<END>** g01442694

361-2874 HOUSING GP-FLYWHEEL

S/N: CYM1-14968

PART OF 342-1219 ENGINE AR-PRIMARY

AN ATTACHMENT

SMCS-1157 **i03937751**

NOTE	PART NUMBER	QTY	PART NAME 1 2 3 4 5 6 (PRODUCT LEVEL)	SEE PAGE
M	**8T-4137**	2	BOLT (M10X1.5X20-MM)	
M	**8T-4195**	2	BOLT (M10X1.5X30-MM)	
M	**140-5217**	10	BOLT (M10X1.25X25-MM)	
	233-5482	1	EYE	
	5I-7628	1	GASKET	
	103-9280	1	GASKET-REAR	
M	**212-8510**	3	NUT (M10X1.25-THD)	
	5I-8056	1	PLUG	
	117-5015	1	SEAL AS-OIL	
	212-8499	3	STUD	
	8T-4896	14	WASHER-HARD (10.2X18.5X2.5-MM THK)	

M-METRIC PART

<END>

315-8336 HOUSING GP-FRONT

S/N: CYM1-UP

PART OF 342-1219 ENGINE AR-PRIMARY

AN ATTACHMENT

SMCS-1151, 1160, 1162, 1166, 3108 **i04204981**

NOTE	REF NO	GRAPHIC REF	PART NUMBER	QTY	PART NAME 1 2 3 4 5 6 (PRODUCT LEVEL)	SEE PAGE
	1	1	**3B-4505**	5	LOCKWASHER	
M	2	1	**6V-7357**	2	BOLT (M6X1X25-MM)	
M	3	1	**8T-4200**	5	BOLT (M8X1.25X16-MM)	
	4	1	**8T-4224**	15	WASHER-HARD (8.8X16X2-MM THK)	
M	5	1	**8T-7329**	11	BOLT (M8X1.25X55-MM)	
	6	1	**9X-8256**	6	WASHER (6.6X12X2-MM THK)	
	7	1	**096-2500**	2	LOCKWASHER	
	8	1	**096-9529**	1	SEAL-O-RING	
	9	1	**199-2212**	4	BOLT (M6X1X18-MM)	
	11	1	**246-1259**	1	COVER-INSULATION (LH)	
	12	1	**246-1260**	1	COVER-INSULATION (RH)	
	13	1	**285-9066**	4	BOLT (M8X1.25X65-MM)	
	14	1	**314-9947**	1	GASKET	
	15	1	**314-9948**	1	FASTENER GP-FRONT COVER	
	17	1	**315-4667**	1	GASKET	
	18	1	**360-2177**	1	PLATE	
	19	1	**315-4686**	1	HOUSING-FRONT	
	20	1	**315-4687**	1	COVER	
	21	1	**239-8429**	1	SEAL-CRANKSHAFT (FRONT)	

M-METRIC PART

315-8336 **HOUSING GP-FRONT** *(contd.)* **i04204981**

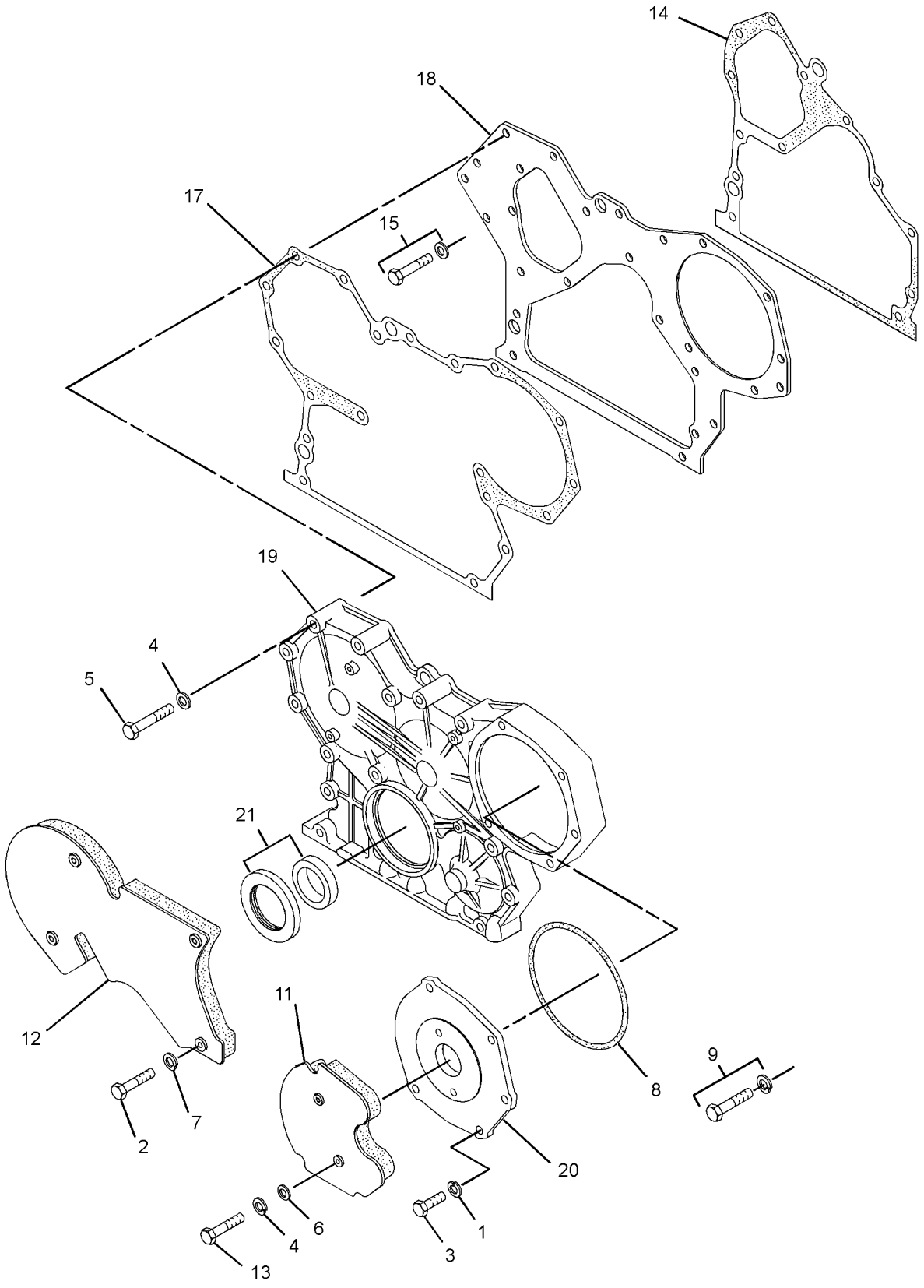

GRAPHIC #1 **<END>** g01658277

315-7761 LIFTING GP-ENGINE

S/N: CYM1-UP
PART OF 342-1219 ENGINE AR-PRIMARY
AN ATTACHMENT

SMCS-1122 **i02864974**

NOTE	REF NO	GRAPHIC REF	PART NUMBER	QTY	PART NAME 1 2 3 4 5 6 (PRODUCT LEVEL)	SEE PAGE
	1	1	**3B-4505**	4	LOCKWASHER	
M	2	1	**8T-4200**	4	BOLT (M8X1.25X16-MM)	
	3	1	**233-5466**	1	EYE	
	4	1	**233-5468**	1	GASKET	
	5	1	**315-7704**	1	COVER	

M-METRIC PART

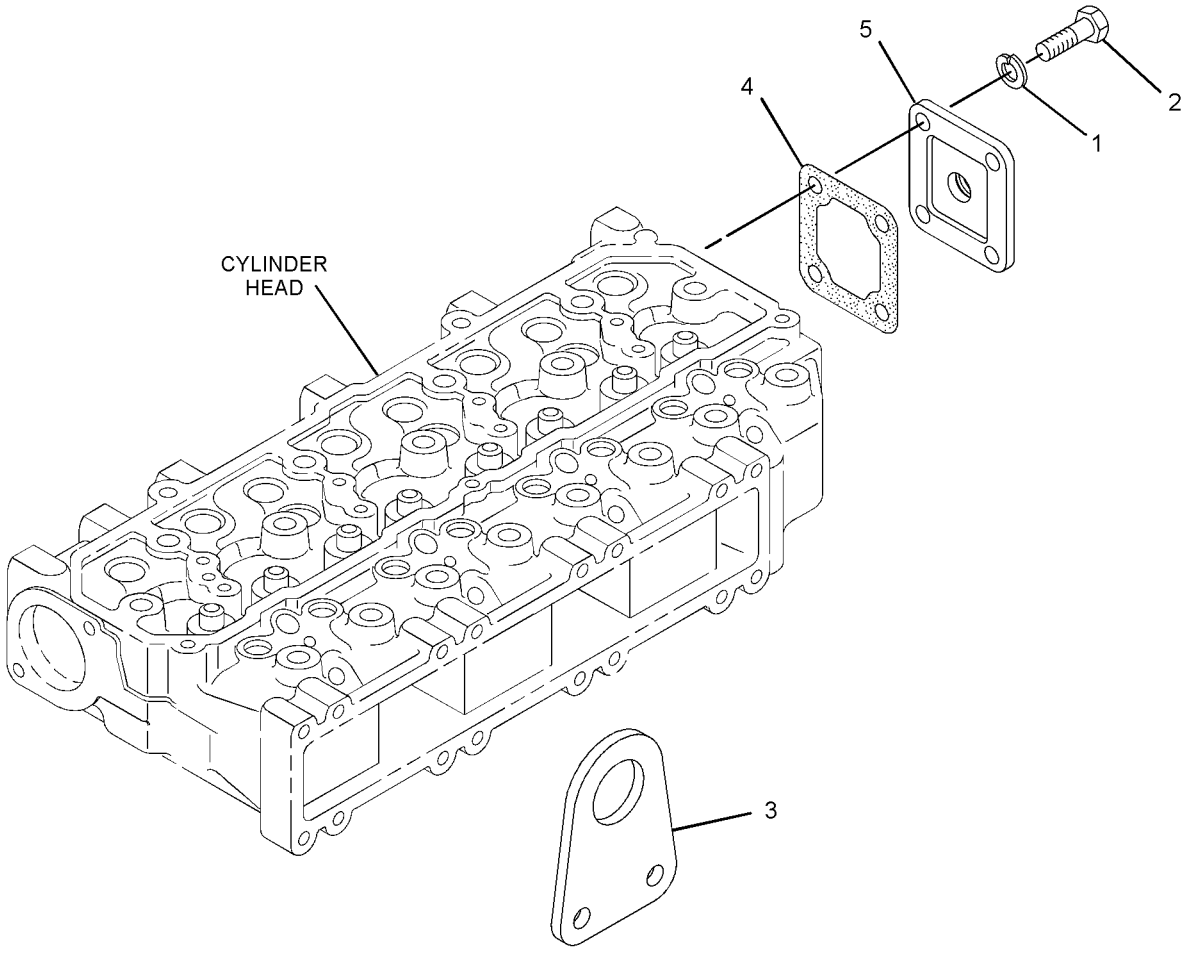

GRAPHIC #1 **<END>** g01430113

BASIC ENGINE

326-5329 MOUNTING GP-ENGINE

S/N: A9H1-UP

PART OF 326-5372 INSTALLATION AR-ENGINE

SMCS-1152, 1153, 1154 **i03902847**

NOTE	REF NO	GRAPHIC REF	PART NUMBER	QTY	PART NAME 1 2 3 4 5 6 (PRODUCT LEVEL)	SEE PAGE
	1	1	**118-2990**	2	MOUNT AS	
	2	1	**230-3621**	1	MOUNT AS	
		1	**149-3488**	2	MOUNT-ENGINE	
		1	**241-6397**	1	SLEEVE	
	3	1	**258-2448**	1	BRACKET AS	
	4	1	**326-5358**	2	BRACKET AS	
M	5	1	**129-3180**	1	LOCKNUT (M12X1.75-THD)	
	6	1	**165-7095**	4	WASHER (16.5X71.5X3-MM THK)	
	7	1	**5P-1076**	2	WASHER-HARD (13.5X30X4-MM THK)	
M	8	1	**7X-2556**	2	BOLT (M16X2X100-MM)	
	9	1	**8T-4122**	2	WASHER-HARD (17X32X3.5-MM THK)	
M	10	1	**8T-4132**	2	NUT (M16X2-THD)	
M	11	1	**8T-4176**	1	BOLT (M12X1.75X90-MM)	
M	12	1	**8T-4192**	16	BOLT (M12X1.75X25-MM)	
	13	1	**8T-4223**	16	WASHER-HARD (13.5X25.5X3-MM THK)	

M-METRIC PART

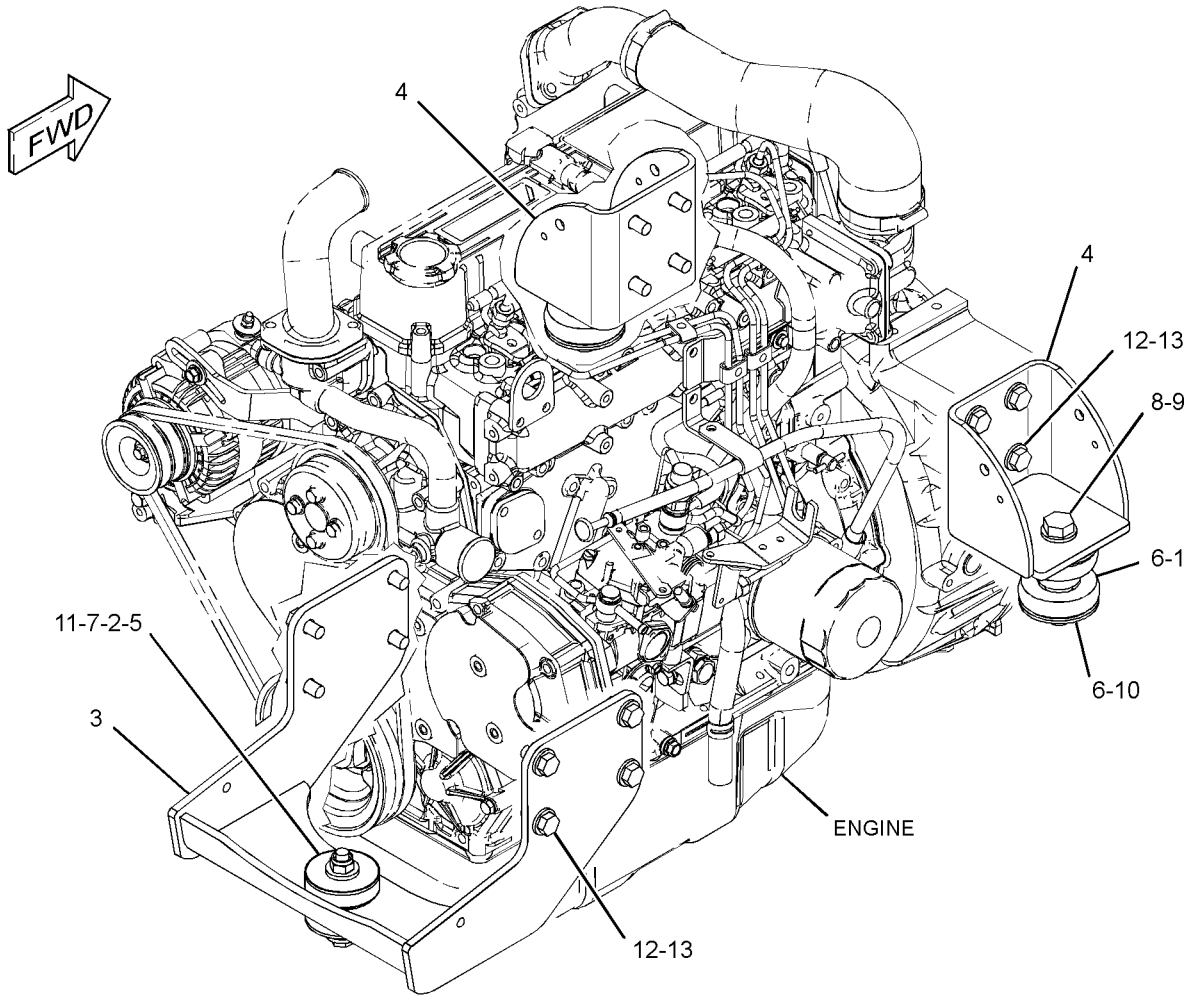

GRAPHIC #1 **<END>** g02146775

315-7765 PAN GP-OIL

S/N: CYM1-UP

PART OF 342-1219 ENGINE AR-PRIMARY

AN ATTACHMENT

SMCS-1302 **i03198483**

NOTE	REF NO	GRAPHIC REF	PART NUMBER	QTY	PART NAME 1 2 3 4 5 6 (PRODUCT LEVEL)	SEE PAGE
	1	1	**3B-4505**	25	LOCKWASHER	
	2	1	**5I-4993**	2	SEAL	
M	3	1	**8T-4200**	25	BOLT (M8X1.25X16-MM)	
	4	1	**165-2601**	1	SEALANT-SILICONE	
M	5	1	**195-8403**	1	BOLT AS	
	6	1	**234-4812**	1	GUIDE	
	7	1	**300-9449**	1	PAN AS-OIL	
	7A	1	**096-8482**	1	GASKET	
	7B	1	**135-8432**	1	PLUG (DRAIN, ENGINE OIL)	
	8	1	**309-8909**	1	GAUGE GP-OIL LEVEL (DIPSTICK) (ENGINE)	
C	9	1	**325-5905**	1	BRACKET	
	10	1	**315-2356**	1	GUIDE	

C-CHANGE FROM PREVIOUS TYPE
M-METRIC PART

315-7765 **PAN GP-OIL** *(contd.)* **i03198483**

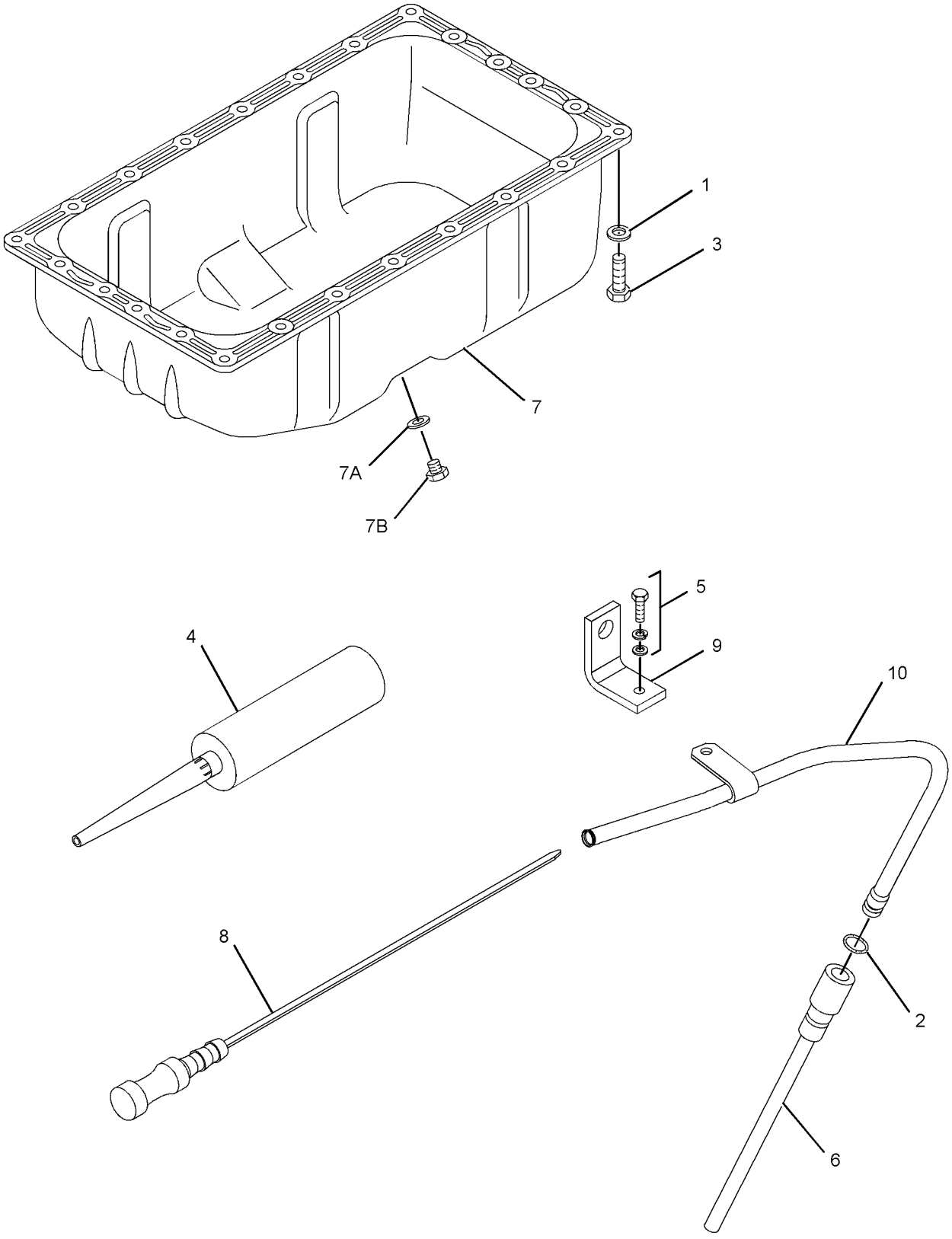

GRAPHIC #1 **<END>** g01852093

315-8348 PISTON GP

S/N: CYM1-UP
PART OF 342-1219 ENGINE AR-PRIMARY
AN ATTACHMENT

SMCS-1214, 1215 **i02883796**

NOTE	REF NO	GRAPHIC REF	PART NUMBER	QTY	PART NAME 1 2 3 4 5 6 (PRODUCT LEVEL)	SEE PAGE
	1	1	**212-8597**	8	RING	
	2	1	**234-4815**	4	PIN-PISTON	
	3	1	**314-9962**	4	RING-PISTON (STANDARD)	
AB		1	**314-9964**	1	RING-PISTON (0.25-MM OS)	
AB		1	**314-9963**	1	RING-PISTON (0.5-MM OS)	
	4	1	**315-4669**	4	PISTON (STANDARD)	
AB		1	**315-4670**	1	PISTON (0.25-MM OS)	
AB		1	**315-4671**	1	PISTON (0.50-MM OS)	

A-NOT PART OF THIS GROUP
B-USE AS REQUIRED

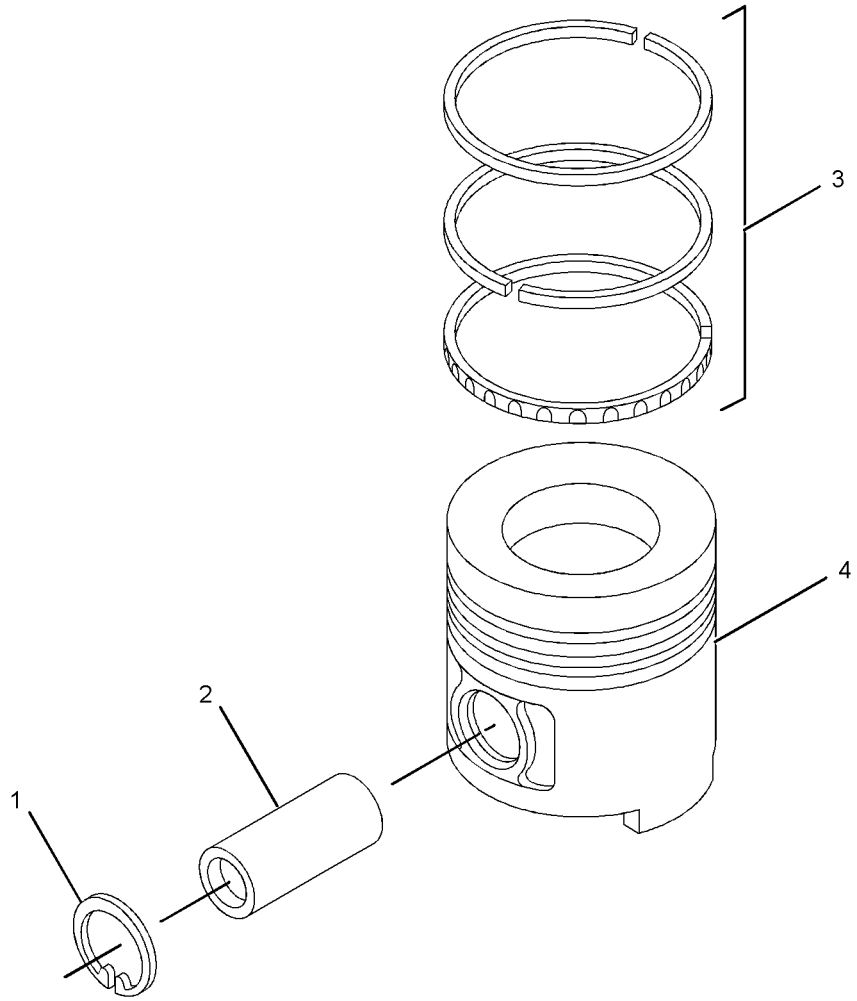

GRAPHIC #1 **<END>** g01445478

BASIC ENGINE

287-2922 PLUG GP-ENGINE

S/N: CYM1-UP
PART OF 342-1219 ENGINE AR-PRIMARY
AN ATTACHMENT

SMCS-1000 **i02568378**

NOTE	REF NO	GRAPHIC REF	PART NUMBER	QTY	PART NAME 1 2 3 4 5 6 (PRODUCT LEVEL)	SEE PAGE
	1	1	**5I-7505**	6	PLUG	

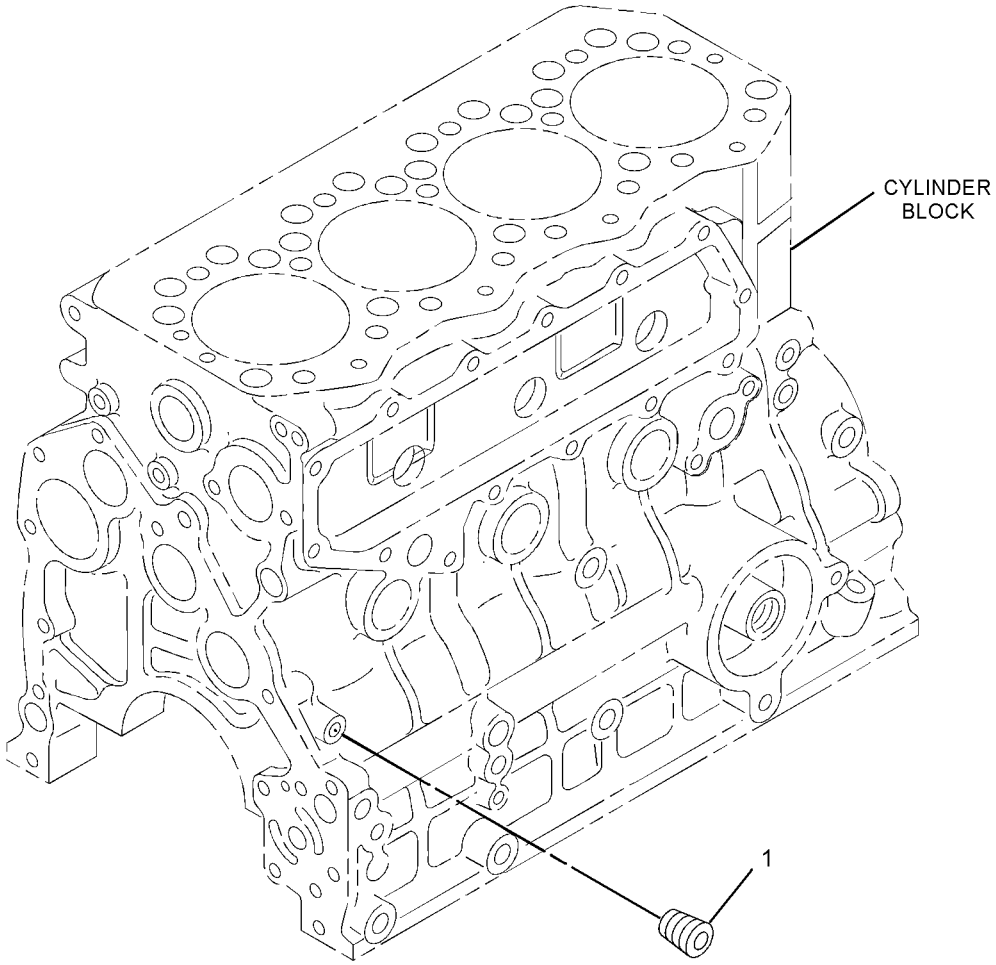

GRAPHIC #1 **<END>** g01325237

287-2983 PLUG GP-ENGINE

S/N: CYM1-UP
PART OF 342-1219 ENGINE AR-PRIMARY
AN ATTACHMENT

SMCS-1000 **i02616574**

NOTE	REF NO	GRAPHIC REF	PART NUMBER	QTY	PART NAME 1 2 3 4 5 6 (PRODUCT LEVEL)	SEE PAGE
	1	1	**195-8211**	1	PLUG	

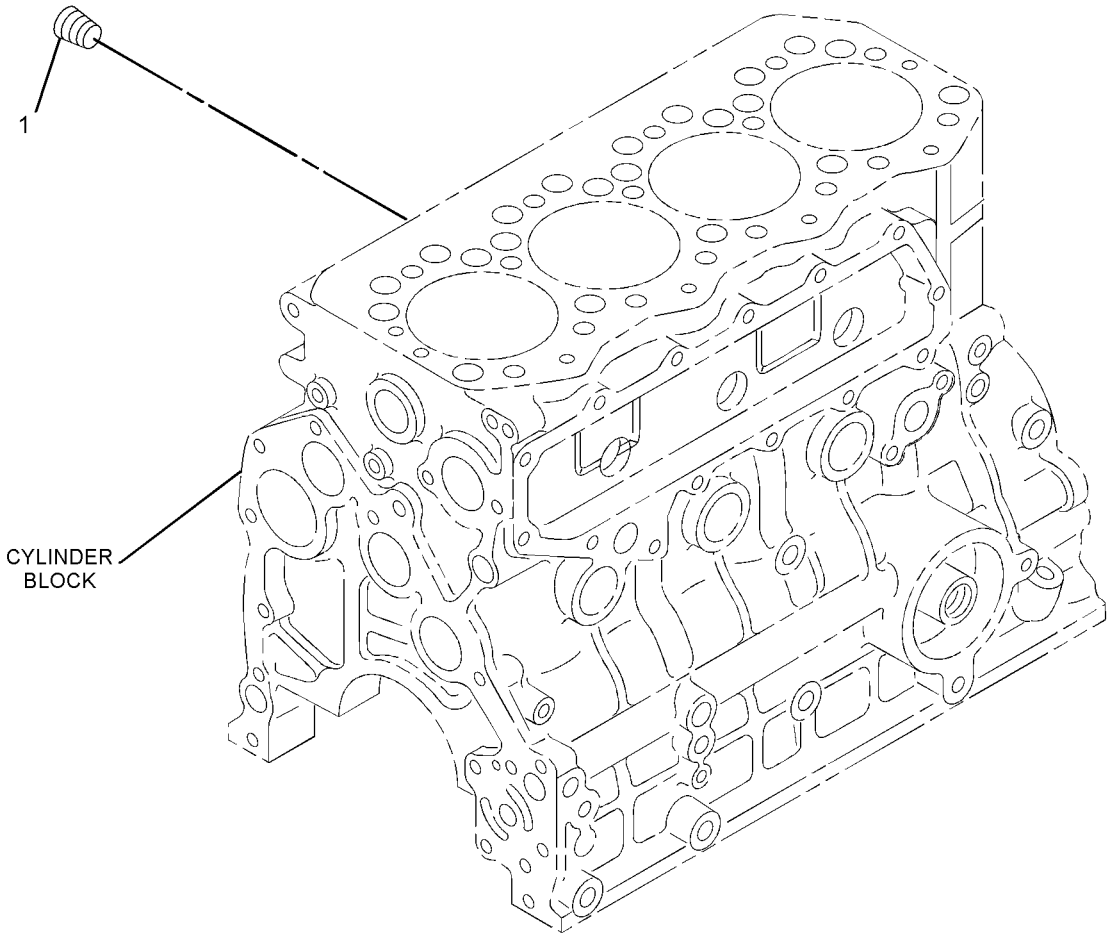

GRAPHIC #1 **<END>** g01325240

BASIC ENGINE

301-3396 PULLEY GP-CRANKSHAFT

S/N: CYM1-UP
PART OF 342-1219 ENGINE AR-PRIMARY
AN ATTACHMENT

SMCS-1205 **i02864961**

NOTE	REF NO	GRAPHIC REF	PART NUMBER	QTY	PART NAME 1 2 3 4 5 6 (PRODUCT LEVEL)	SEE PAGE
	1	1	**301-3397**	1	PULLEY-CRANKSHAFT (2-GROOVE)	

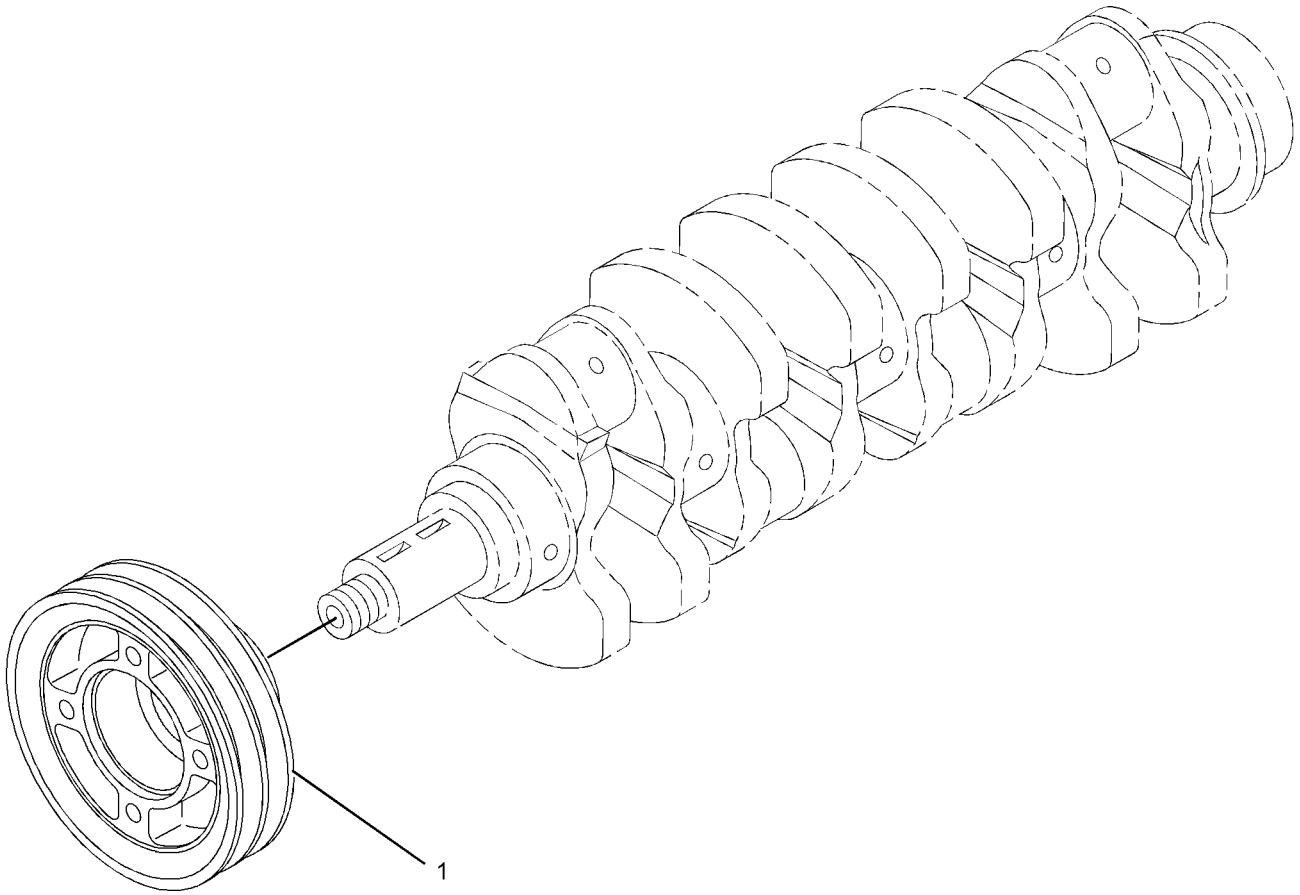

GRAPHIC #1 **<END>** g01351097

287-6114 PULLEY GP-WATER PUMP

S/N: CYM1-UP
PART OF 342-1219 ENGINE AR-PRIMARY
AN ATTACHMENT

SMCS-1384 **i03552847**

NOTE	REF NO	GRAPHIC REF	PART NUMBER	QTY	PART NAME 1 2 3 4 5 6 (PRODUCT LEVEL)	SEE PAGE
M	1	1	**8T-0642**	4	BOLT (M8X1.25X14-MM)	
	2	1	**9M-1974**	4	WASHER-HARD (8.8X16X2-MM THK)	
	3	1	**234-4807**	1	PULLEY (1-GROOVE)	

M-METRIC PART

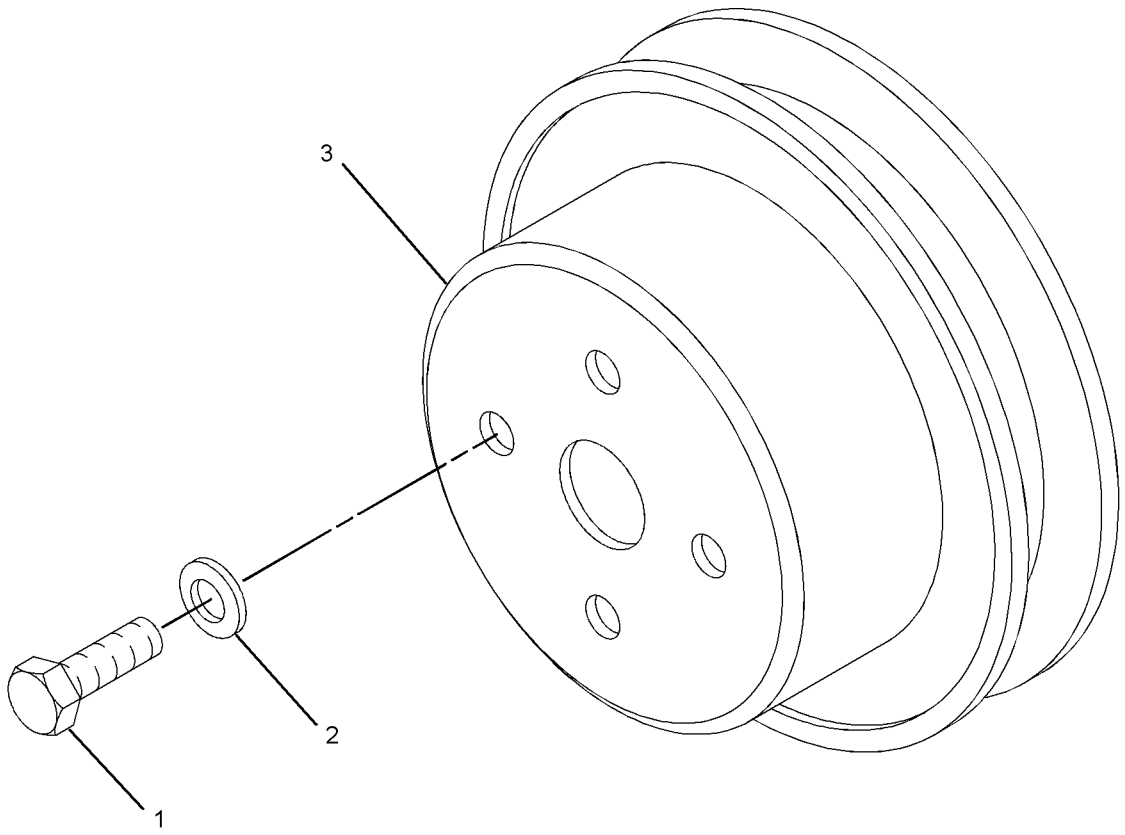

GRAPHIC #1 **<END>** g01326766

BASIC ENGINE

287-6138 V-BELT GP

S/N: CYM1-UP
WATER PUMP
PART OF 342-1219 ENGINE AR-PRIMARY
AN ATTACHMENT

SMCS-1357 **i03880351**

NOTE	REF NO	GRAPHIC REF	PART NUMBER	QTY	PART NAME 1 2 3 4 5 6 (PRODUCT LEVEL)	SEE PAGE
	1	1	**352-4169**	1	V-BELT (WATER PUMP)	

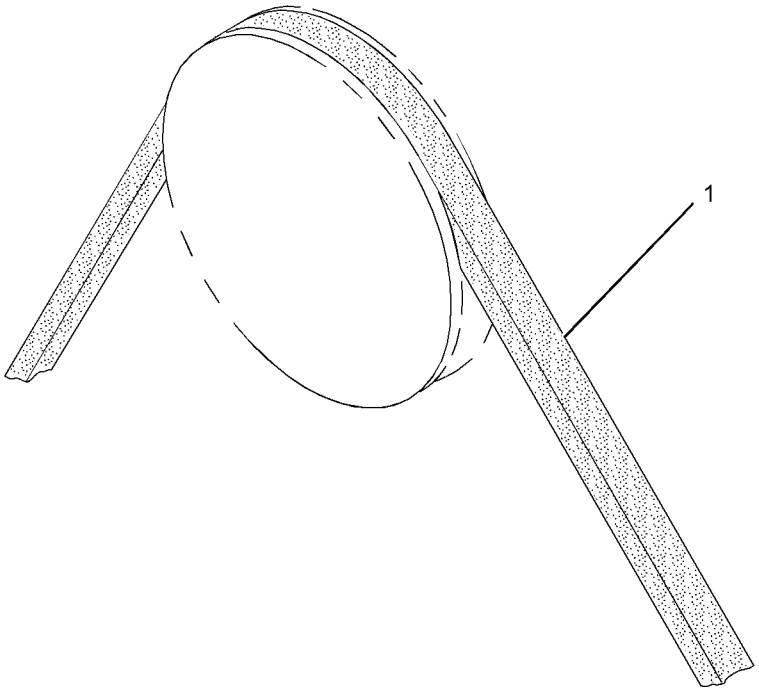

GRAPHIC #1 **<END>** g01321905

BASIC ENGINE

235-5880 VALVE MECHANISM GP

S/N: CYM1-UP

PART OF 342-1219 ENGINE AR-PRIMARY

AN ATTACHMENT

SMCS-1102, 1112, 1121, 1123, 1208, 1209 **i04204989**

NOTE	PART NUMBER	QTY	PART NAME 1 2 3 4 5 6 (PRODUCT LEVEL)	SEE PAGE
M	**6V-3940**	4	BOLT (M8X1.25X25-MM)	
	103-9268	4	BOLT	
M	**8T-4908**	4	BOLT (M8X1.25X25-MM)	
	233-5477	4	BRACKET	
	5I-7630	8	CAP	
	5I-7625	8	RETAINER	
	5I-7719	16	RETAINER	
	195-8324	2	RING-SNAP	
	221-5245	8	ROCKER AS	
			(EACH INCLUDES)	
M	**160-8500**	1	NUT (M8X1.25-THD)	
	103-9260	8	SEAL-VALVE STEM	
	233-5476	1	SHAFT AS	
	095-2005	1	CAP	
	103-2782	8	SPRING	
	221-5250	3	SPRING	
	233-5470	4	VALVE-EXHAUST	
	233-5469	4	VALVE-INLET	
	9M-1974	8	WASHER-HARD (8.8X16X2-MM THK)	

M-METRIC PART

<END>

LUBRICATION SYSTEM

361-3334 FILTER GP-ENGINE OIL

S/N: CYM1-UP
PART OF 342-1219 ENGINE AR-PRIMARY
AN ATTACHMENT

SMCS-1308 **i03907399**

NOTE	REF NO	GRAPHIC REF	PART NUMBER	QTY	PART NAME 1 2 3 4 5 6 (PRODUCT LEVEL)	SEE PAGE
	1	1	**253-0244**	1	BUSHING-THREADED	
	2	1	**267-2528**	1	FILTER AS-ENGINE OIL	

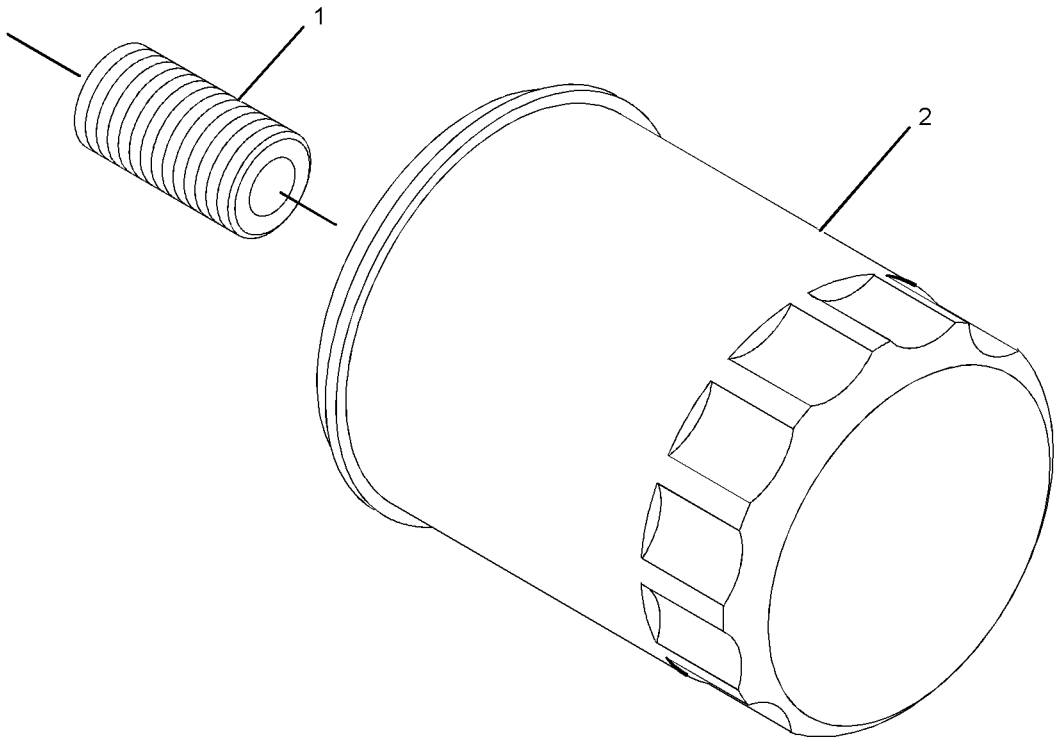

GRAPHIC #1 **<END>** g02150821

287-5377 LINES GP-ENGINE OIL

S/N: CYM1-UP

PART OF 342-1219 ENGINE AR-PRIMARY

AN ATTACHMENT

SMCS-1307 **i02555558**

NOTE	REF NO	GRAPHIC REF	PART NUMBER	QTY	PART NAME 1 2 3 4 5 6 (PRODUCT LEVEL)	SEE PAGE
M	1	1	**6V-5215**	3	BOLT (M8X1.25X16-MM)	
	2	1	**9M-1974**	3	WASHER-HARD (8.8X16X2-MM THK)	
	3	1	**233-5494**	1	STRAINER AS-OIL (ENGINE)	
	4	1	**239-8513**	1	SEAL-O-RING	

M-METRIC PART

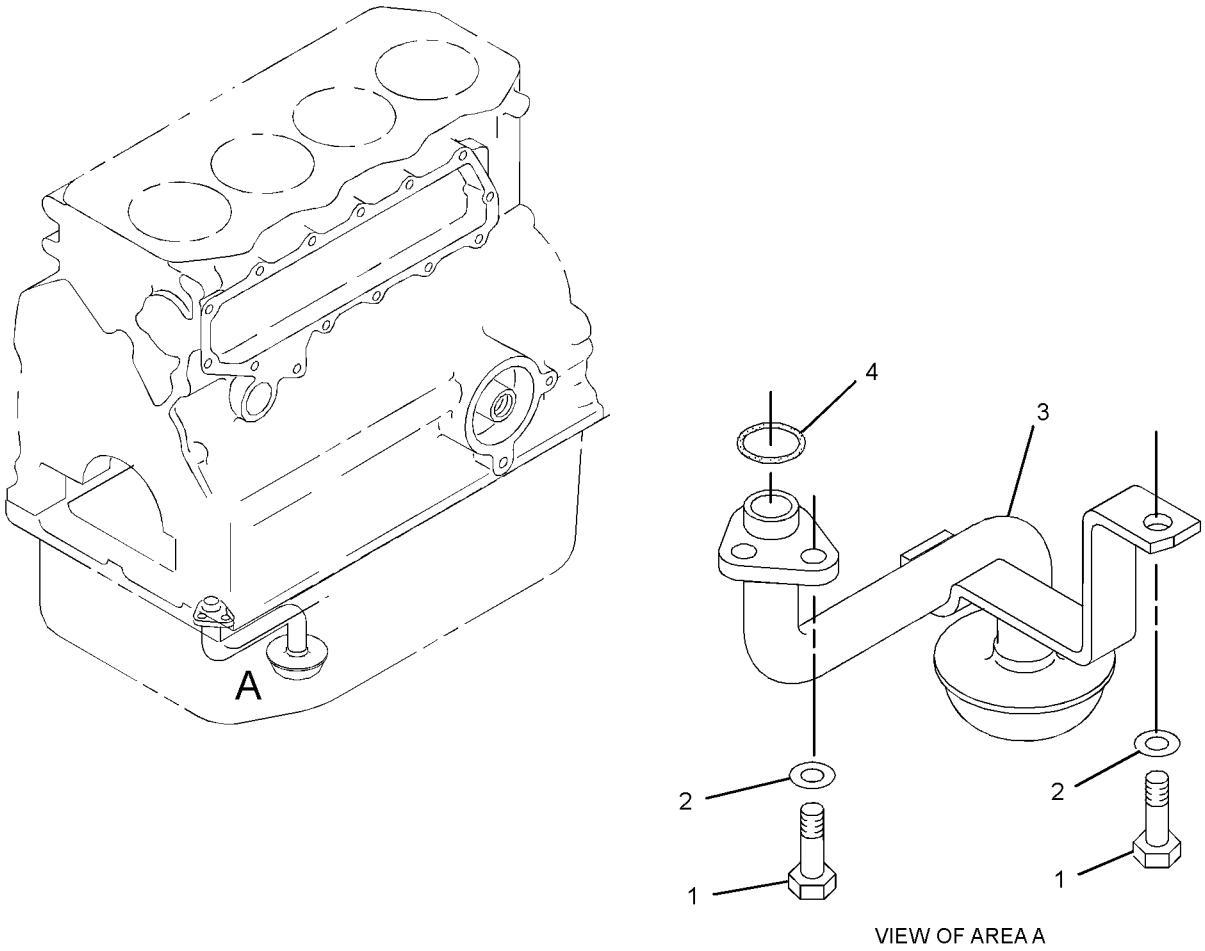

VIEW OF AREA A

GRAPHIC #1 **<END>** g01342337

LUBRICATION SYSTEM

235-5895 PUMP GP-ENGINE OIL

S/N: CYM1-UP
PART OF 342-1219 ENGINE AR-PRIMARY
AN ATTACHMENT

SMCS-1304, 1315 **i02524390**

NOTE	REF NO	GRAPHIC REF	PART NUMBER	QTY	PART NAME 1 2 3 4 5 6 (PRODUCT LEVEL)	SEE PAGE
M	1	1	**6V-5217**	4	BOLT (M8X1.25X20-MM)	
	2	1	**9M-1974**	4	WASHER-HARD (8.8X16X2-MM THK)	
	3	1	**113-1141**	1	PUMP AS-OIL	
	4	1	**101-6544**	1	NUT	
	5	1	**6V-5839**	1	WASHER (11X21X2.5-MM THK)	
	6	1	**103-9083**	1	SEAL-O-RING	

M-METRIC PART

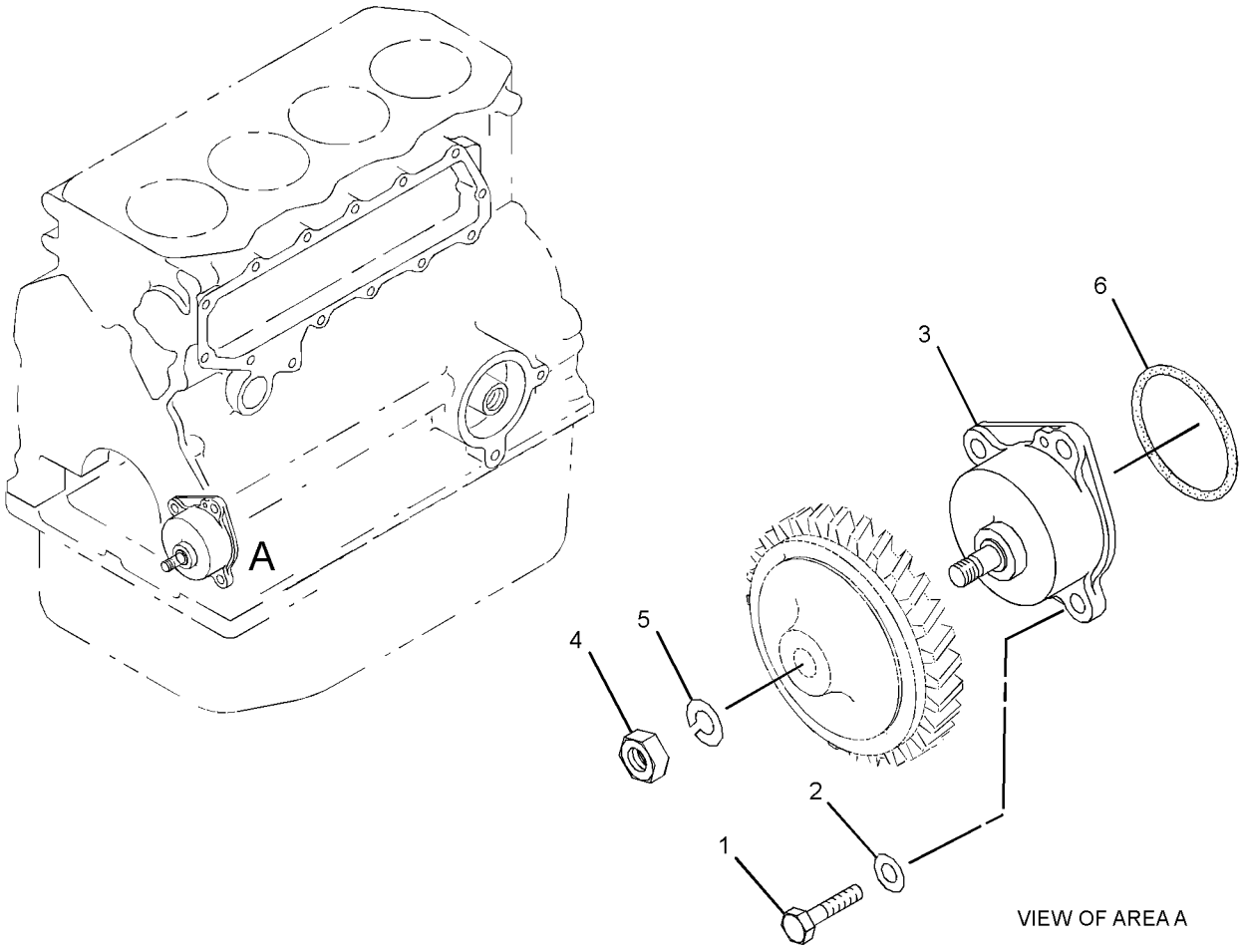

GRAPHIC #1 **<END>** g01348493

287-5665 VALVE GP-ENGINE OIL RELIEF

S/N: CYM1-UP
PART OF 342-1219 ENGINE AR-PRIMARY
AN ATTACHMENT

SMCS-1315 **i02961094**

NOTE	REF NO	GRAPHIC REF	PART NUMBER	QTY	PART NAME 1 2 3 4 5 6 (PRODUCT LEVEL)	SEE PAGE
	1	1	**294-1767**	1	VALVE (PRESSURE RELIEF) (ENGINE OIL PRESSURE)	
	2	1	**103-9725**	1	VALVE AS-RELIEF (ENGINE)	
	3	1	**233-5496**	1	GASKET	
	4	1	**234-4796**	1	GASKET	

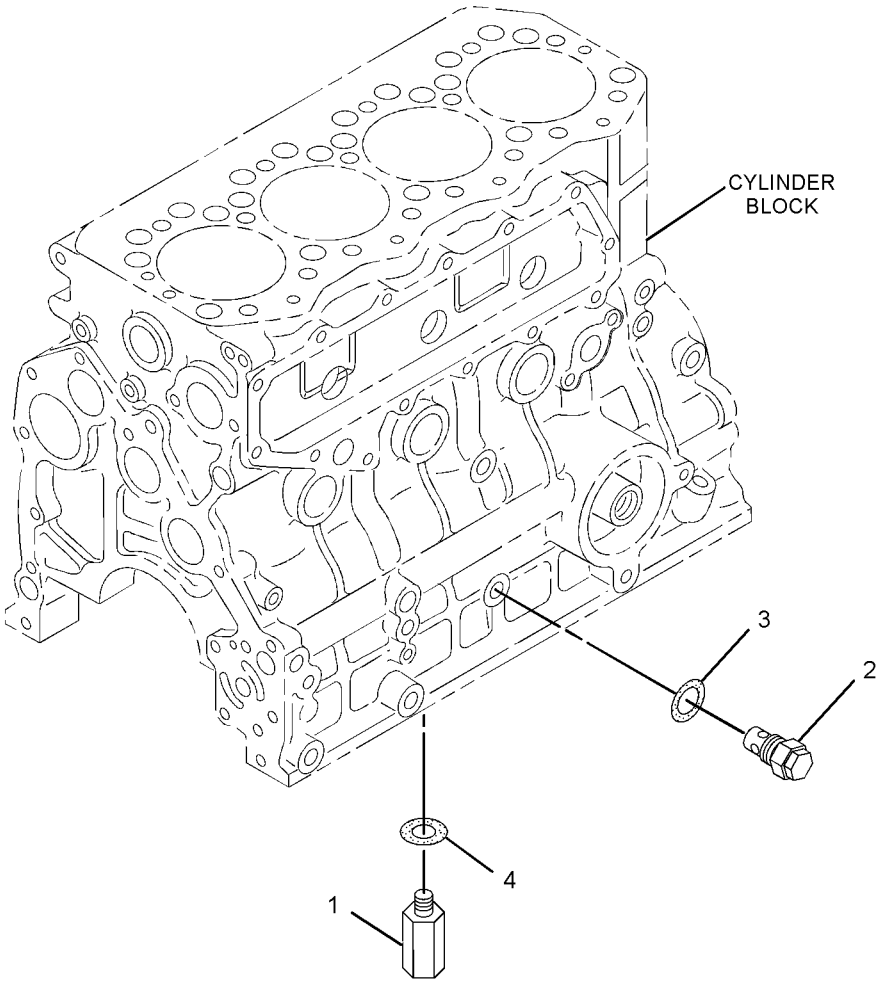

GRAPHIC #1 **<END>** g01323255

COOLING SYSTEM

361-2880 COOLER GP-ENGINE OIL

S/N: CYM1-UP
PART OF 342-1219 ENGINE AR-PRIMARY
AN ATTACHMENT

SMCS-1378 **i03937750**

NOTE	PART NUMBER	QTY	PART NAME 1 2 3 4 5 6 (PRODUCT LEVEL)	SEE PAGE
	336-9857	15	BOLT	
	195-8356	1	BOLT AS	
	234-4803	2	COOLER AS	
	234-4801	1	COVER	
	234-4802	1	COVER AS	
	234-4800	1	GASKET	
	336-9856	1	GASKET	
M	**178-3336**	5	NUT-HEX FLANGE (M8X1.25-THD)	
	4I-9404	2	SEAL-O-RING	
	095-1513	4	SEAL-O-RING	
	239-8513	2	SEAL-O-RING	
	234-4798	1	STUD	

M-METRIC PART

<END>

292-4040 DRAIN GP-COOLANT

S/N: CYM1-UP

PART OF 342-1219 ENGINE AR-PRIMARY

AN ATTACHMENT

SMCS-1380, 1395 **i03552850**

NOTE	REF NO	GRAPHIC REF	PART NUMBER	QTY	PART NAME 1 2 3 4 5 6 (PRODUCT LEVEL)	SEE PAGE
	1	1	**238-8278**	1	VALVE AS-DRAIN (WATER)	

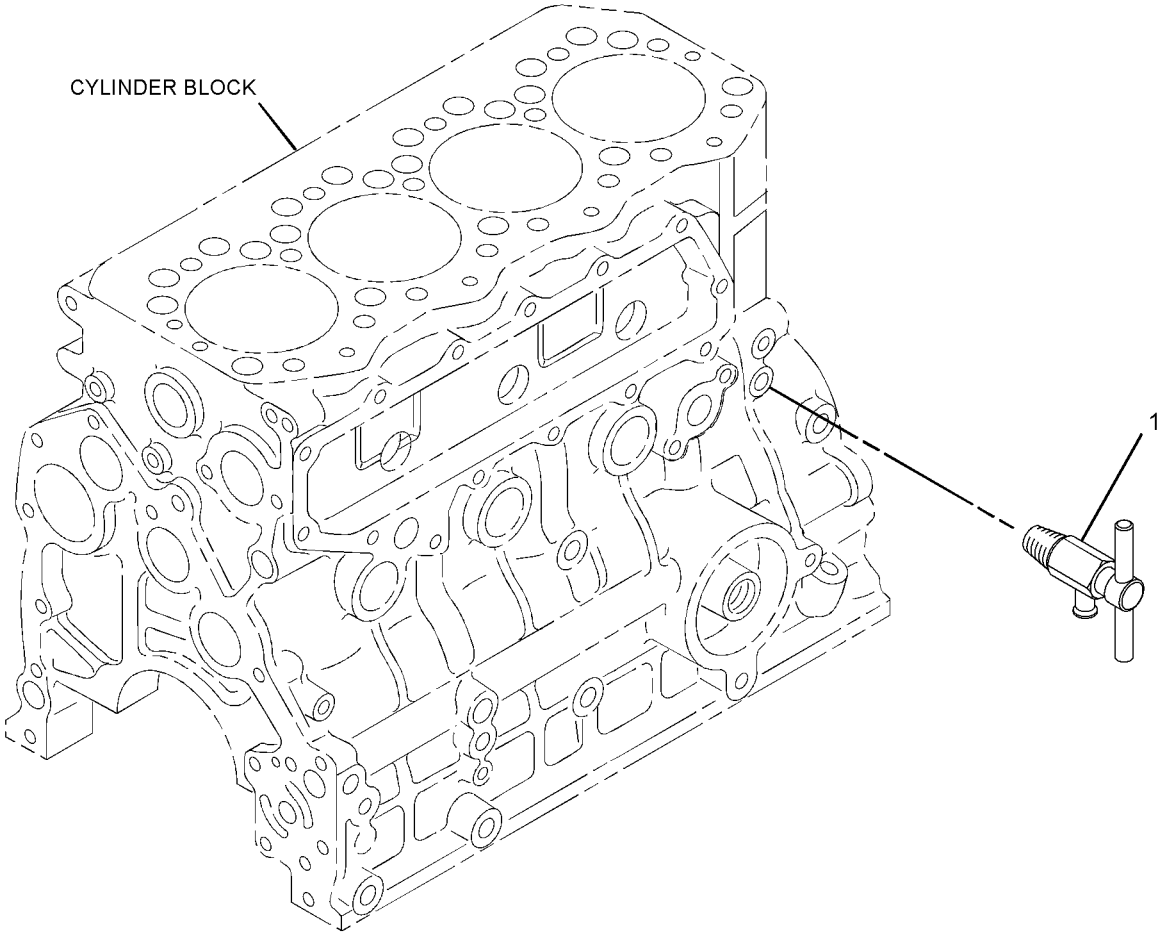

GRAPHIC #1 **<END>** g01354785

315-8355 HOUSING & REGULATOR GP

S/N: CYM13306-UP
PART OF 342-1219 ENGINE AR-PRIMARY
AN ATTACHMENT

SMCS-1355, 1393 **i03672028**

NOTE	REF NO	GRAPHIC REF	PART NUMBER	QTY	PART NAME 1 2 3 4 5 6 (PRODUCT LEVEL)	SEE PAGE
	1	1	**294-7915**	1	HOUSING AS	
	2	1	**235-4960**	1	REGULATOR AS-WATER TEMPERATURE (THERMOSTAT)	
	3	1	**235-4959**	1	GASKET (WATER TEMPERATURE REGULATOR)	
	4	1	**234-4831**	1	COVER	
	5	1	**096-8475**	2	BOLT (25-MM LG)	
	6	1	**303-6257**	1	GASKET	
	7	1	**257-8739**	2	CLAMP-HOSE	
	8	1	**246-8315**	1	HOSE-BYPASS	
M	9	1	**6V-5221**	1	BOLT (M8X1.25X80-MM)	
M	10	1	**8T-0276**	1	BOLT (M8X1.25X45-MM)	
	11	1	**5I-8056**	1	PLUG	
	12	1	**5I-7628**	1	GASKET	
	13	1	**234-4809**	1	WASHER-SPECIAL	
	14	1	**315-7700**	1	PLUG	
	15	1	**9M-1974**	2	WASHER-HARD (8.8X16X2-MM THK)	

M-METRIC PART

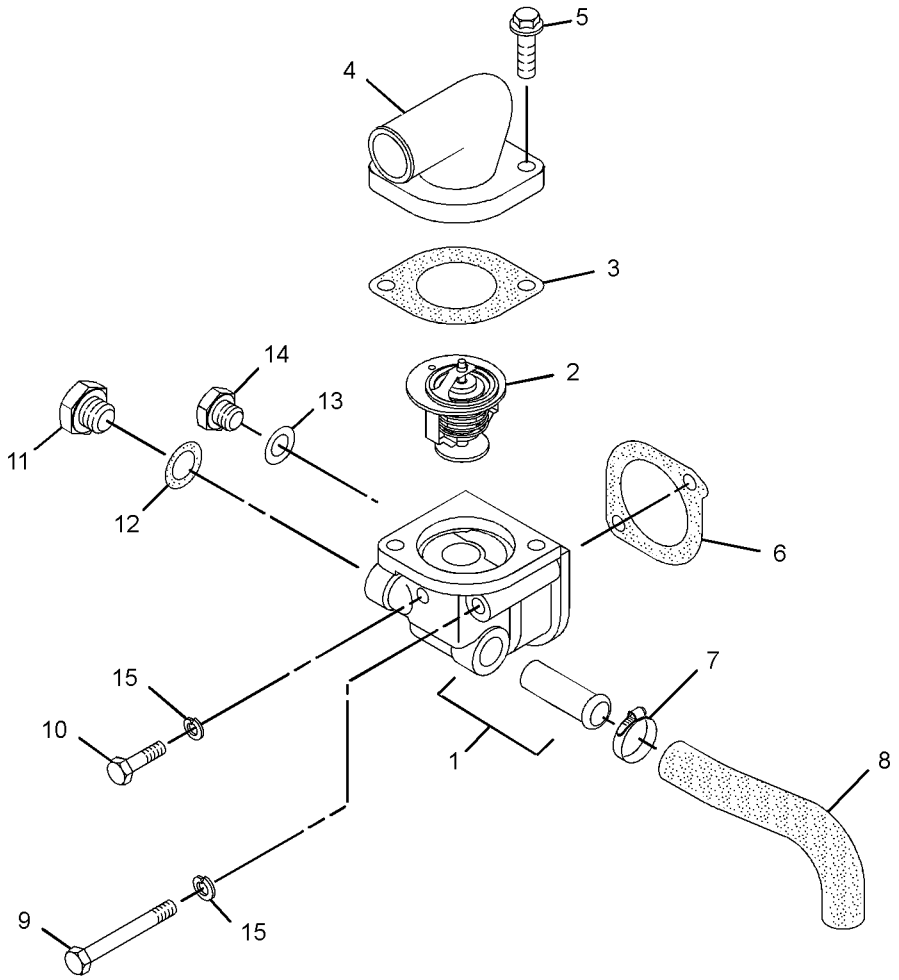

GRAPHIC #1 **<END>** g01943155

COOLING SYSTEM

235-5900 LINES GP-WATER

S/N: CYM1-13305
PART OF 342-1219 ENGINE AR-PRIMARY
AN ATTACHMENT

SMCS-1355, 1380, 1393 **i02643608**

NOTE	REF NO	GRAPHIC REF	PART NUMBER	QTY	PART NAME 1 2 3 4 5 6 (PRODUCT LEVEL)	SEE PAGE
	1	1	**5I-7628**	2	GASKET	
	2	1	**5I-8056**	2	PLUG (DRAIN)	
	3	1	**096-8475**	2	BOLT (25-MM LG)	
M	4	1	**6V-5221**	1	BOLT (M8X1.25X80-MM)	
M	5	1	**8T-0276**	1	BOLT (M8X1.25X45-MM)	
	6	1	**9M-1974**	4	WASHER-HARD (8.8X16X2-MM THK)	
	7	1	**5I-7728**	1	GASKET	
	8	1	**246-8315**	1	HOSE-BYPASS	
	9	1	**257-8739**	2	CLAMP-HOSE (HOSE)	
	10	1	**234-4831**	1	COVER	
	11	1	**235-4959**	1	GASKET (WATER TEMPERATURE REGULATOR)	
	12	1	**235-4960**	1	REGULATOR AS-WATER TEMPERATURE (THERMOSTAT)	
	13	1	**246-8314**	1	HOUSING	

M-METRIC PART

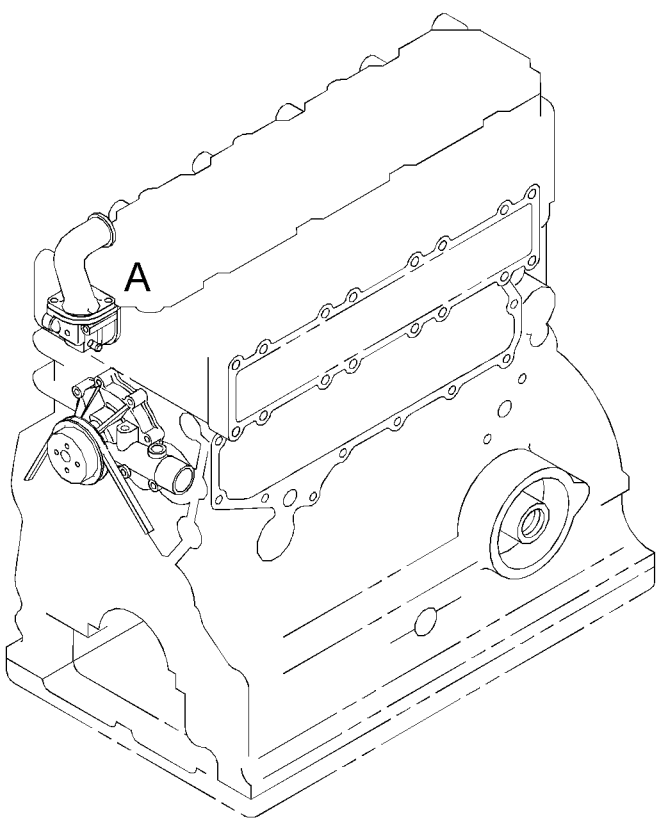

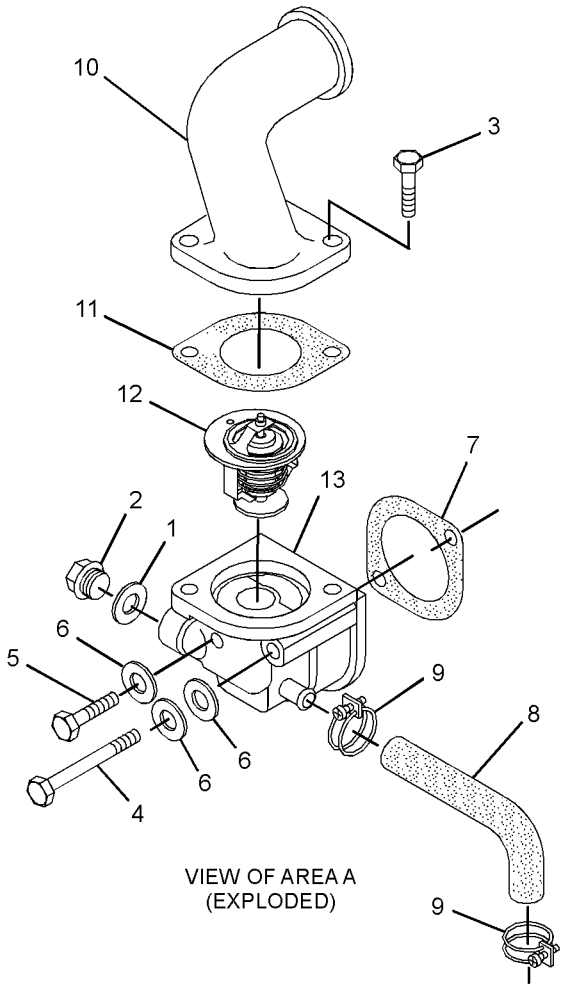

VIEW OF AREA A
(EXPLODED)

GRAPHIC #1 **<END>** g01345074

COOLING SYSTEM

218-0938 MOUNTING GP-RAD & OIL COOLER

S/N: A9H1-UP

PART OF 326-5372 INSTALLATION AR-ENGINE

SMCS-1353, 1374 **i04557272**

NOTE	REF NO	GRAPHIC REF	PART NUMBER	QTY	PART NAME 1 2 3 4 5 6 (PRODUCT LEVEL)	SEE PAGE
D	1	1	**5P-8309**		SEAL (0.6-M EACH)	
	2	1	**5P-0372**	2	LOCK PIN	
	3	1	**5V-8309**	1	STRIKER AS (LATCH)	
	4	1	**8T-0318**	1	SHIM (0.8-MM THK)	
	5	1	**8T-4159**	1	BUMPER	
	6	1	**142-8832**	1	PIN AS	
	7	1	**193-8345**	1	SPRING AS-GAS (GRILL)	
	8	1	**208-6176**	4	STUD-BALL	
	9	1	**220-8586**	1	SUPPORT AS	
	10	1	**220-8587**	1	SUPPORT AS	
	11	1	**220-8588**	1	GRILL AS	
	12	1	**223-4275**	1	LATCH AS	
	13	1	**232-1789**	1	SPRING AS-GAS (SUPPORT)	
	14	1	**178-2255**	2	PIN	
	15	1	**2K-4973**	1	LOCKNUT (3/8-16-THD)	
M	16	1	**5C-7261**	1	NUT (M8X1.25-THD)	
	17	1	**7X-7729**	1	WASHER (11X25X3-MM THK)	
	18	1	**8T-4121**	8	WASHER-HARD (11X21X2.5-MM THK)	
M	19	1	**8T-4133**	4	NUT (M10X1.5-THD)	
M	20	1	**8T-4181**	3	BOLT (M6X1X20-MM)	
	21	1	**8T-4205**	3	WASHER-HARD (7.2X14.5X2-MM THK)	
M	22	1	**8T-6466**	4	BOLT (M10X1.5X60-MM)	

D-ORDER BY THE METER
M-METRIC PART

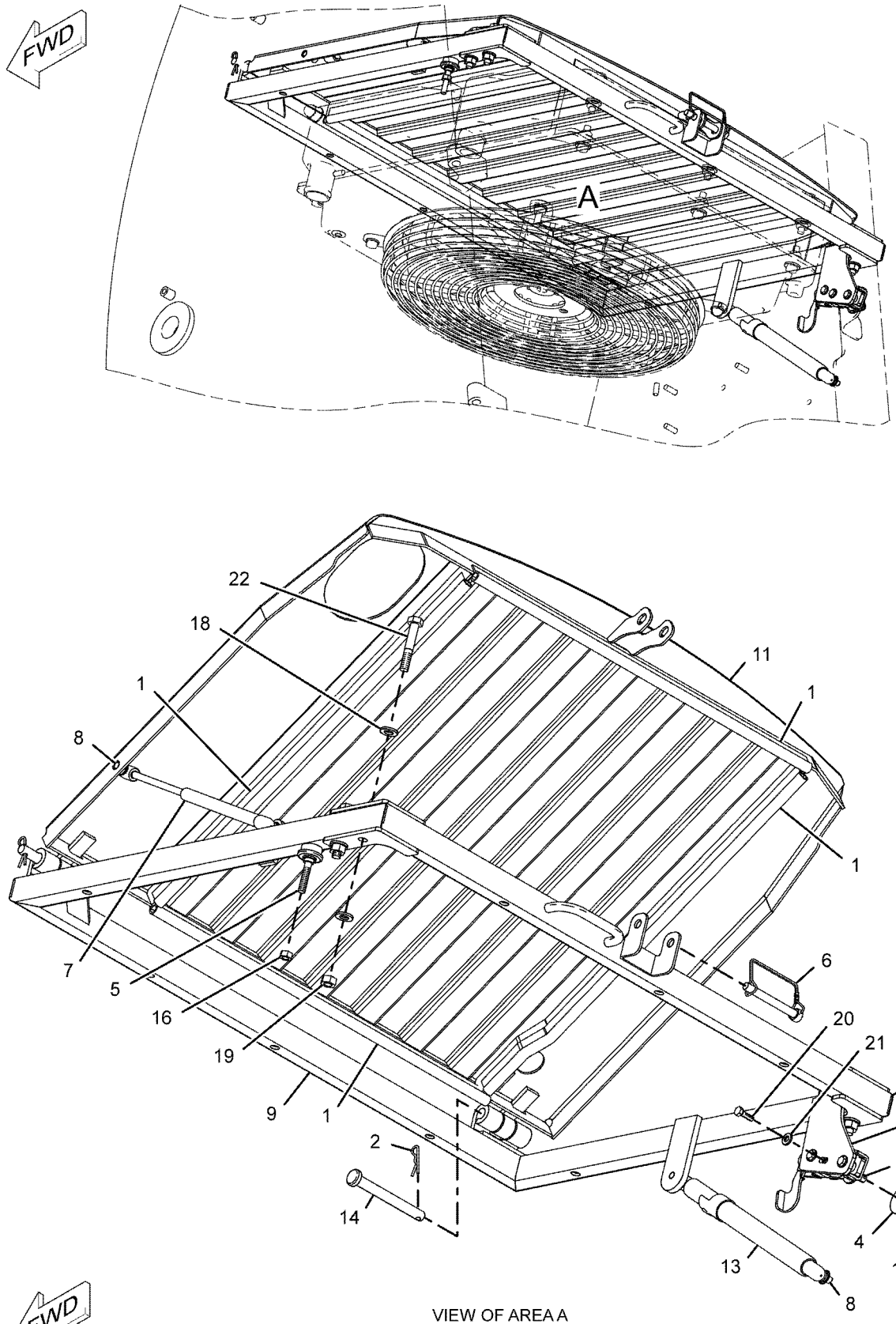

VIEW OF AREA A

GRAPHIC #1 **<END>** g01033317

287-6056 PUMP GP-WATER

S/N: CYM1-UP
PART OF 342-1219 ENGINE AR-PRIMARY
AN ATTACHMENT

SMCS-1355, 1361 **i03355624**

NOTE	REF NO	GRAPHIC REF	PART NUMBER	QTY	PART NAME 1 2 3 4 5 6 (PRODUCT LEVEL)	SEE PAGE
	1	1	**8T-4224**	5	WASHER-HARD (8.8X16X2-MM THK)	
	2	1	**285-9066**	1	BOLT (M8X1.25X65-MM)	
Y	3	1	**335-9117**	1	PUMP GP-WATER	49
	4	1	**335-9125**	1	GASKET	
M	5	1	**7X-0818**	4	BOLT (M8X1.25X45-MM)	

M-METRIC PART
Y-SEPARATE ILLUSTRATION

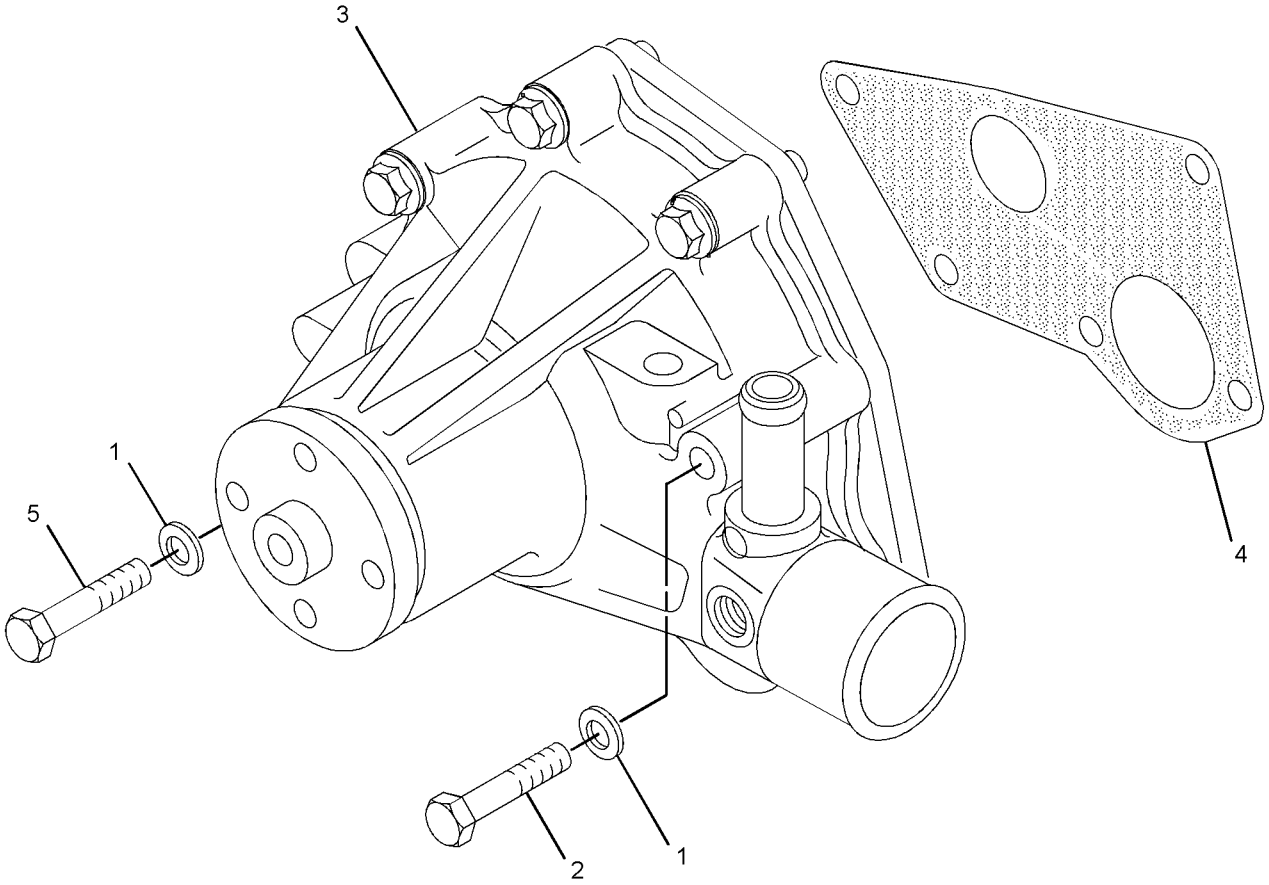

GRAPHIC #1 **<END>** g01757413

335-9117 PUMP GP-WATER

S/N: CYM1-UP
PART OF 287-6056 PUMP GP-WATER
AN ATTACHMENT

SMCS-1355, 1361 **i03562121**

NOTE	REF NO	GRAPHIC REF	PART NUMBER	QTY	PART NAME 1 2 3 4 5 6 (PRODUCT LEVEL)	SEE PAGE
M	1	1	**6V-3940**	2	BOLT (M8X1.25X25-MM)	
M	2	1	**7X-2537**	1	BOLT (M8X1.25X35-MM)	
	3	1	**9M-1974**	2	WASHER-HARD (8.8X16X2-MM THK)	
	4	1	**103-9747**	1	COVER-PUMP	
	5	1	**195-8460**	1	PLUG	
	6	1	**335-9124**	1	GASKET	

M-METRIC PART

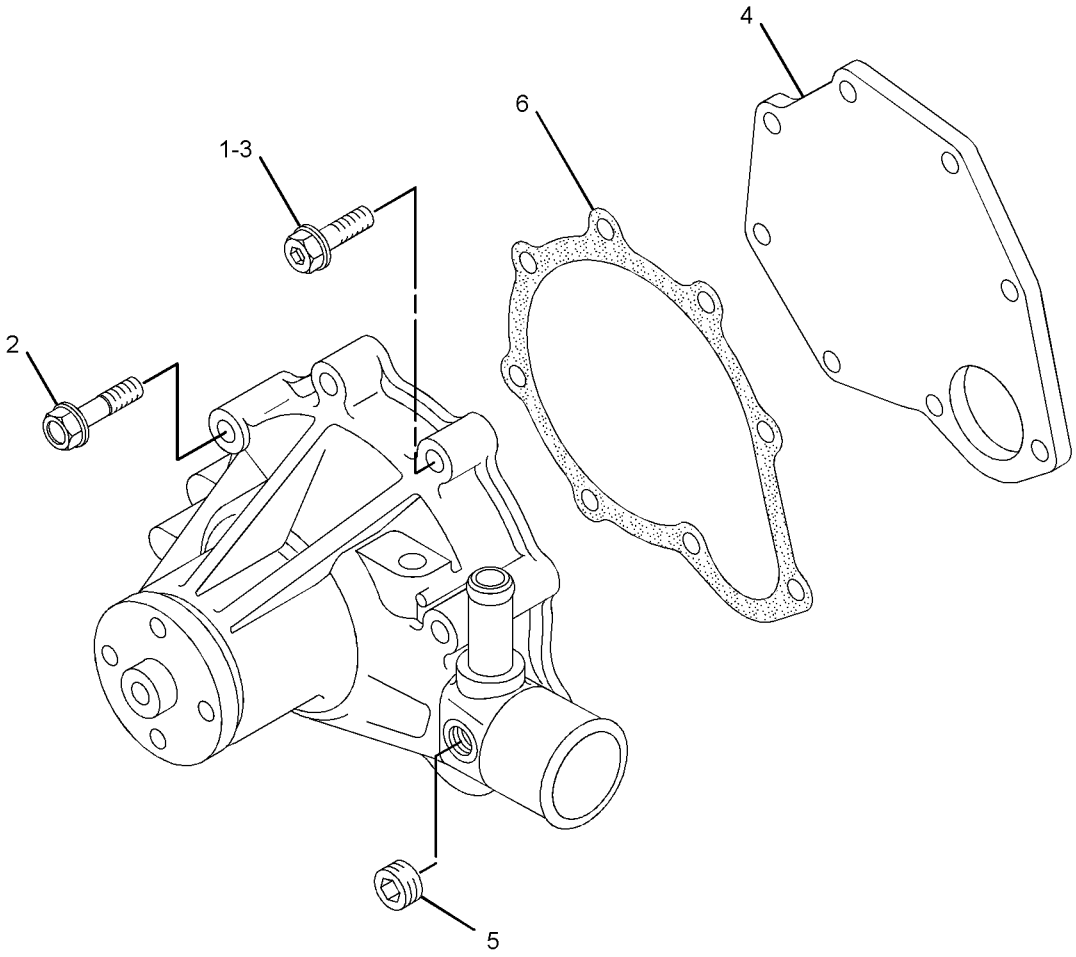

GRAPHIC #1 **<END>** g01757556

COOLING SYSTEM

221-9124 RADIATOR & HYD OIL COOLER GP

S/N: A9H1-1756

PART OF 218-0924 RADIATOR & OIL COOLER MTG GP

SMCS-1351, 1356, 1386 **i04280618**

NOTE	REF NO	GRAPHIC REF	PART NUMBER	QTY	PART NAME 1 2 3 4 5 6 (PRODUCT LEVEL)	SEE PAGE
	1	1	**036-1865**	1	CAP AS-RADIATOR (SEA WATER HEAT EXCHANGER)	
	2	1	**069-4080**	1	FITTING	
	3	1	**207-6154**	1	GAUGE-SIGHT (RADIATOR)	
	4	1	*217-3572*	1	FAN GP-BLOWER	
		1	**8T-4224**	4	WASHER-HARD (8.8X16X2-MM THK)	
M		1	**8T-4908**	4	BOLT (M8X1.25X25-MM)	
		1	**203-4827**	1	FAN AS (7-BLADE) (7-BLADE)	
		1	**229-8796**	1	ADAPTER	
	5	1	**218-0926**	1	GUARD AS	
	6	1	**220-1043**	1	SHROUD AS	
M	7	1	**227-6715**	1	STUD (M10X1.5X30-MM)	
	8	1	**280-8312**	1	RADIATOR & HYD OIL COOLER AS	
	9	1	**4K-8864**	2	CLIP	
	10	1	**7M-7410**	1	PLUG-PIPE	
	11	1	**7X-7729**	12	WASHER (11X25X3-MM THK)	
	12	1	**8T-4121**	4	WASHER-HARD (11X21X2.5-MM THK)	
M	13	1	**8T-4133**	6	NUT (M10X1.5-THD)	
M	14	1	**8T-4196**	9	BOLT (M10X1.5X35-MM)	

M-METRIC PART

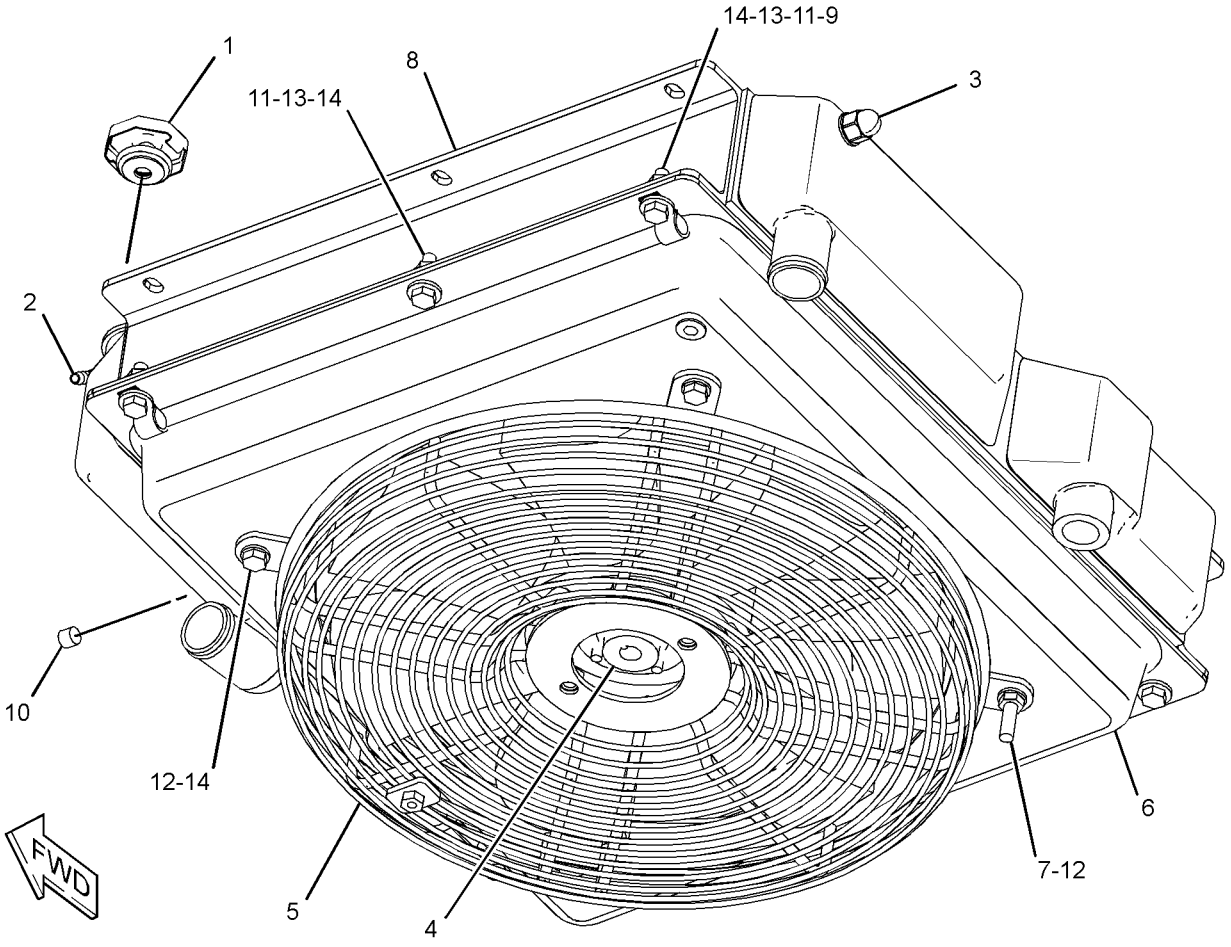

GRAPHIC #1 **<END>** g01376155

COOLING SYSTEM

221-9124 RADIATOR & HYD OIL COOLER GP

S/N: A9H1757-UP

PART OF 218-0924 RADIATOR & OIL COOLER MTG GP

SMCS-1351, 1356, 1386 **i04654980**

NOTE	REF NO	GRAPHIC REF	PART NUMBER	QTY	PART NAME 1 2 3 4 5 6 (PRODUCT LEVEL)	SEE PAGE
	1	1	**036-1865**	1	CAP AS-RADIATOR (SEA WATER HEAT EXCHANGER)	
	2	1	**069-4080**	1	FITTING	
C	3	1	**362-2973**	1	GAUGE-SIGHT (RADIATOR)	
	4	1	*217-3572*	1	FAN GP-BLOWER (RADIATOR, HYD OIL COOLING)	
		1	**8T-4224**	4	WASHER-HARD (8.8X16X2-MM THK)	
M		1	**8T-4908**	4	BOLT (M8X1.25X25-MM)	
		1	**203-4827**	1	FAN AS (7-BLADE)	
		1	**229-8796**	1	ADAPTER	
	5	1	**218-0926**	1	GUARD AS	
	6	1	**220-1043**	1	SHROUD AS	
M	7	1	**227-6715**	1	STUD (M10X1.5X30-MM)	
C	8	1	**361-4665**	1	COOLER AS	
	9	1	**4K-8864**	2	CLIP	
	10	1	**7M-7410**	1	PLUG-PIPE	
	11	1	**7X-7729**	12	WASHER (11X25X3-MM THK)	
	12	1	**8T-4121**	4	WASHER-HARD (11X21X2.5-MM THK)	
M	13	1	**8T-4133**	6	NUT (M10X1.5-THD)	
M	14	1	**8T-4196**	9	BOLT (M10X1.5X35-MM)	
C	15	1	**6V-3251**	1	SEAL-O-RING	

C-CHANGE FROM PREVIOUS TYPE
M-METRIC PART

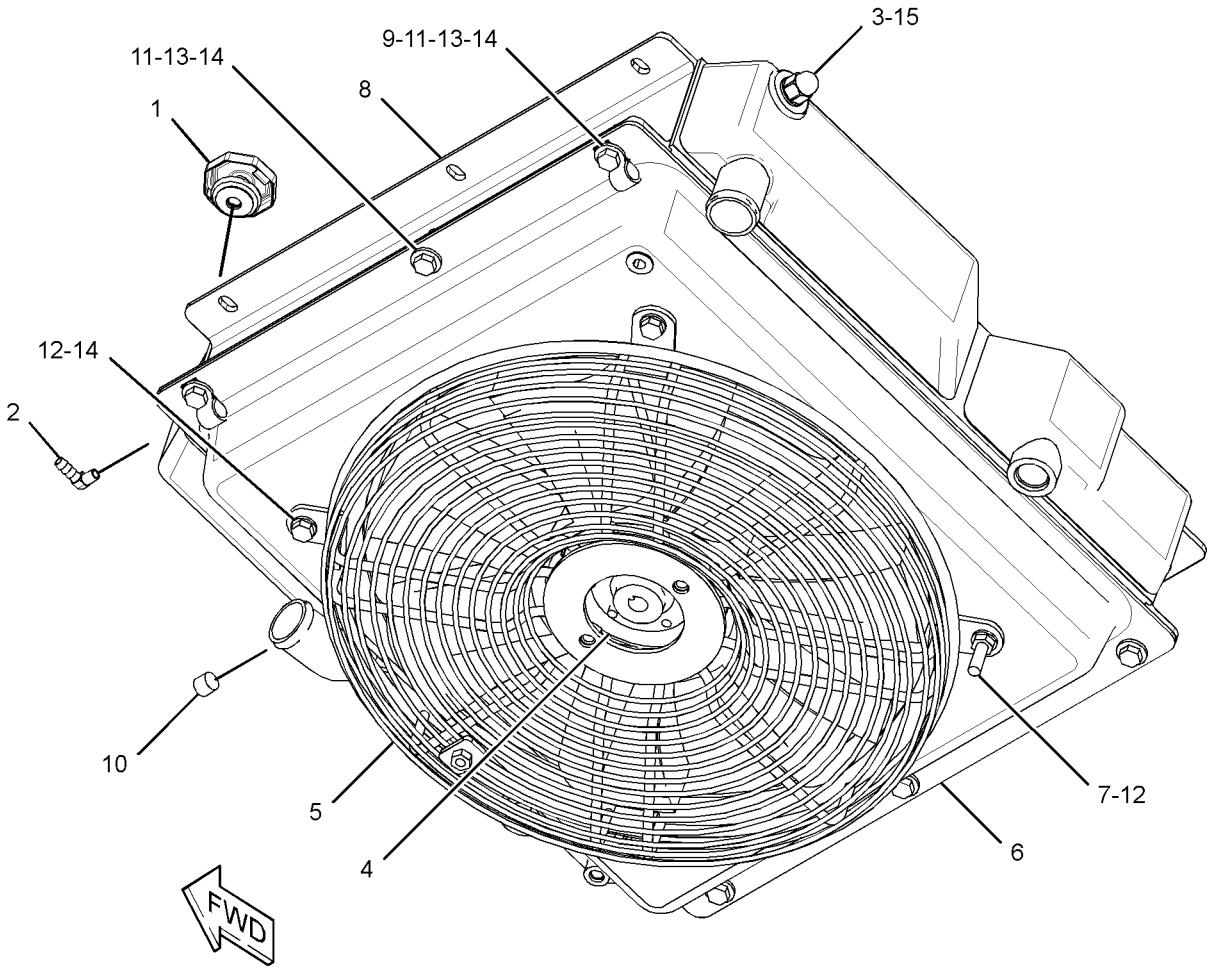

GRAPHIC #1 **<END>** g02793387

COOLING SYSTEM

218-0924 RADIATOR & OIL COOLER MTG GP

S/N: A9H1-UP

PART OF 326-5372 INSTALLATION AR-ENGINE

SMCS-1351, 1354 **i04156759**

NOTE	REF NO	GRAPHIC REF	PART NUMBER	QTY	PART NAME 1 2 3 4 5 6 (PRODUCT LEVEL)	SEE PAGE
	1	1	**1P-4278**	2	CLAMP-HOSE	
	2	1	**7X-1443**	4	PROTECTOR	
	4	1	**218-0935**	1	HOSE (WATER PUMP)	
	5	1	**218-0936**	1	HOSE (TEMPERATURE REGULATOR)	
Y	6	1	*221-9124*	1	RADIATOR & HYD OIL COOLER GP	50
	7	1	**222-1178**	4	CLAMP	
C	8	1	**285-5794**	1	RECOVERY GP-COOLANT	
		1	**169-6715**	1	CAP-VENTED (COOLANT RECOVERY)	
M	9	1	**131-3540**	2	LOCKNUT (M8X1.25-THD)	
	10	1	**4K-8864**	1	CLIP	
	11	1	**5P-7470**	1	CLIP (SLOT)	
	12	1	**5P-7471**	1	CLIP (TAB)	
	13	1	**5P-7703**	1	GROMMET	
	14	1	**7X-7729**	12	WASHER (11X25X3-MM THK)	
	15	1	**8T-4121**	2	WASHER-HARD (11X21X2.5-MM THK)	
M	16	1	**8T-4133**	6	NUT (M10X1.5-THD)	
M	17	1	**8T-4191**	1	BOLT (M10X1.5X16-MM)	
	18	1	**8T-4224**	2	WASHER-HARD (8.8X16X2-MM THK)	
M	19	1	**8T-5005**	1	BOLT (M10X1.5X70-MM)	
M	20	1	**8T-6466**	5	BOLT (M10X1.5X60-MM)	
M	21	1	**8T-4196**	1	BOLT (M10X1.5X35-MM)	
E	22	1	**5P-1420**		HOSE (146-CM)	
	23	1	**200-6345**	1	MOUNT (DUAL SWIVEL)	
	24	1	**204-2281**	2	STRAP-CABLE	

C-CHANGE FROM PREVIOUS TYPE
E-ORDER BY THE CENTIMETER
M-METRIC PART
Y-SEPARATE ILLUSTRATION

218-0924 **RADIATOR & OIL COOLER MTG GP** *(contd.)* **i04156759**

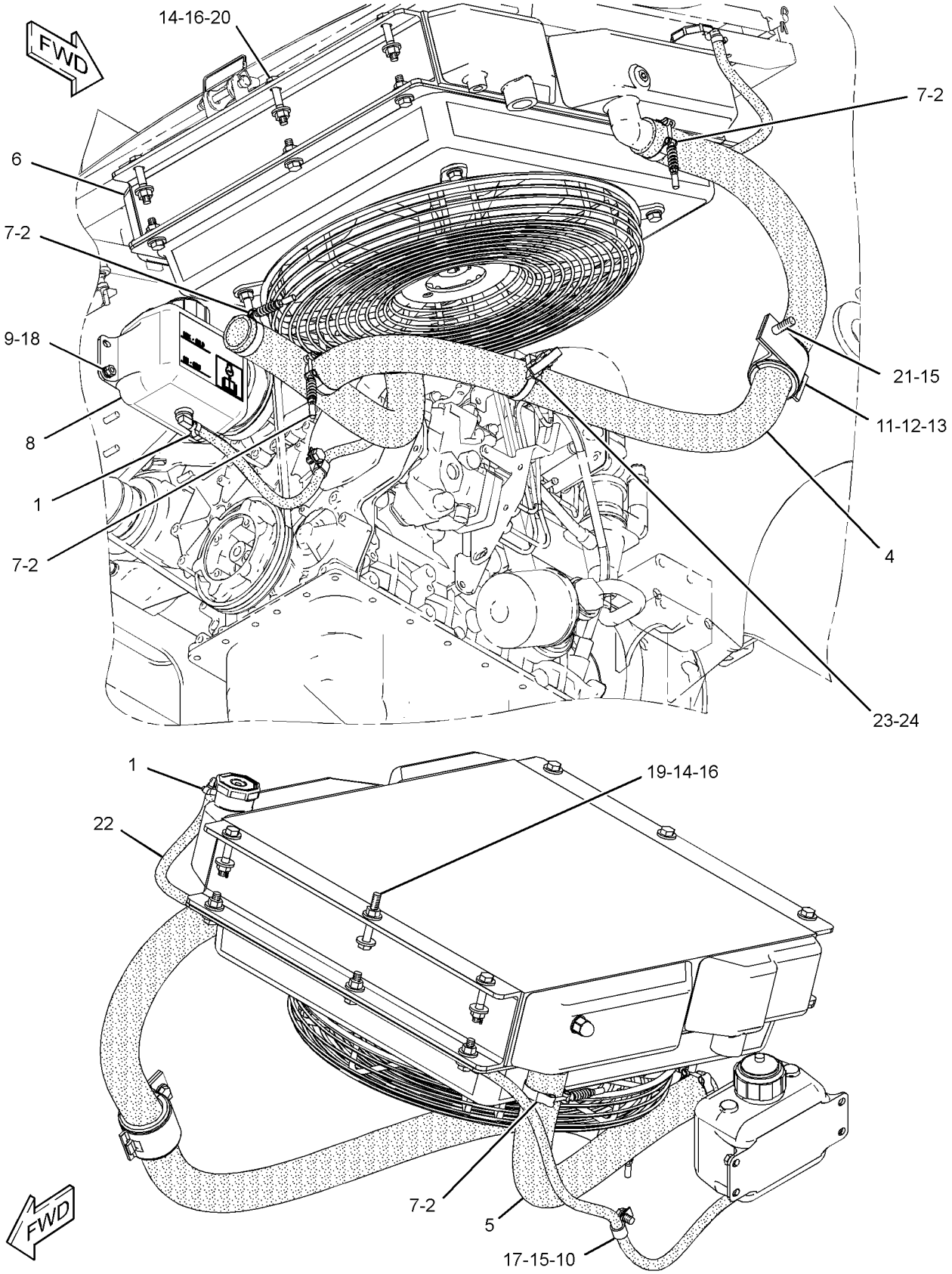

GRAPHIC #1 **<END>** g02351905

AIR INLET AND EXHAUST SYSTEM

222-9812 AIR CLEANER GP

S/N: A9H1-UP

PART OF 326-5372 INSTALLATION AR-ENGINE

SMCS-1051, 1054 **i01991441**

NOTE	REF NO	GRAPHIC REF	PART NUMBER	QTY	PART NAME 1 2 3 4 5 6 (PRODUCT LEVEL)	SEE PAGE
Y	1	1	*243-0405*	1	AIR CLEANER GP	55
M	2	1	**5C-7261**	2	NUT (M8X1.25-THD)	
	3	1	**5P-4116**	2	WASHER-HARD (8.8X20.5X2-MM THK)	

M-METRIC PART
Y-SEPARATE ILLUSTRATION

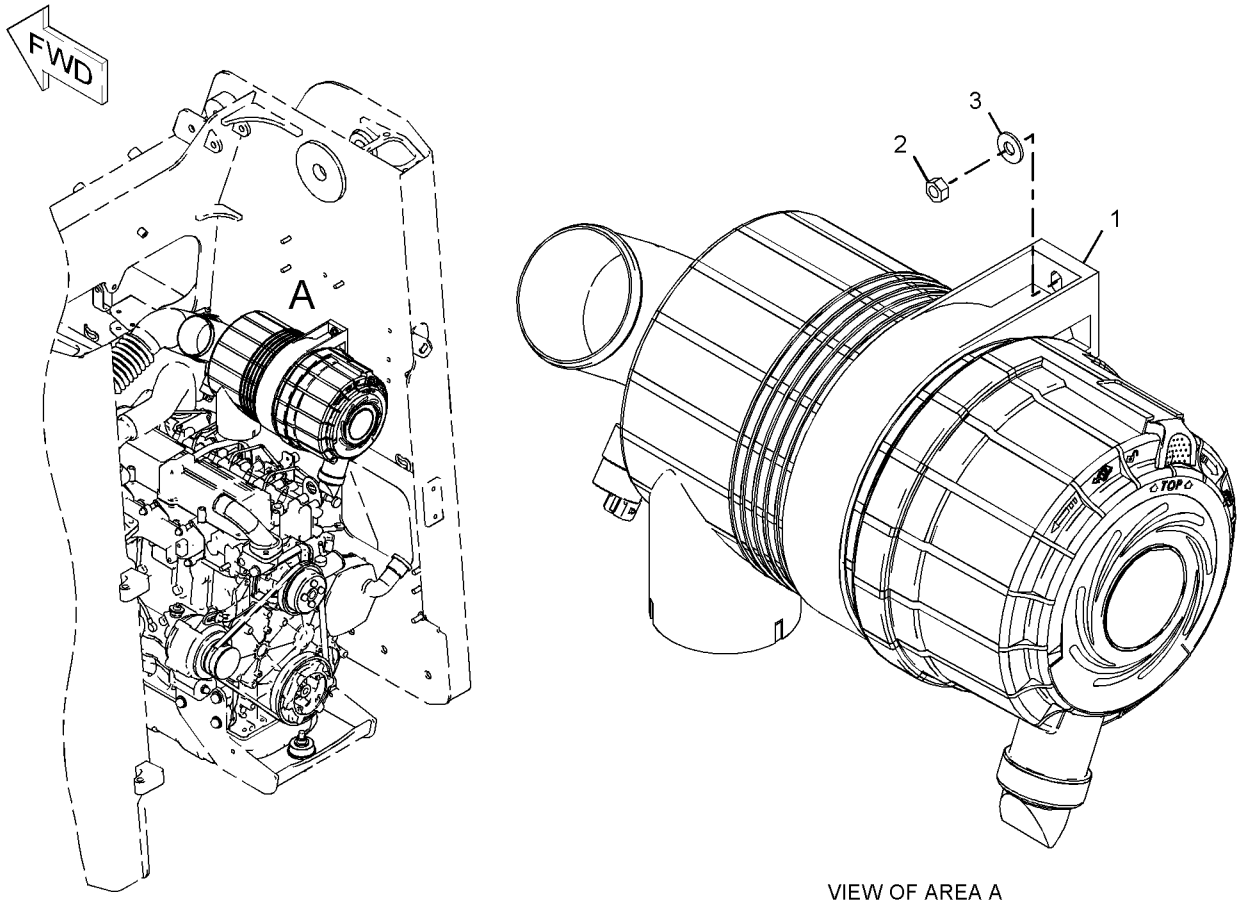

VIEW OF AREA A

GRAPHIC #1 **<END>** g01034818

243-0405 AIR CLEANER GP

S/N: A9H1-UP

PART OF 222-9812 AIR CLEANER GP

SMCS-1051, 1054 **i03969174**

NOTE	REF NO	GRAPHIC REF	PART NUMBER	QTY	PART NAME 1 2 3 4 5 6 (PRODUCT LEVEL)	SEE PAGE
	1	1	**152-4898**	1	BAND-MOUNTING	
	2	1	**237-7325**	1	INDICATOR (AIR CLEANER)	
	3	1	**243-0406**	1	AIR CLEANER GP	
		1	**110-6326**	1	FILTER ELEMENT AS-AIR (PRIMARY)	
		1	**110-6331**	1	FILTER ELEMENT AS-AIR (SECONDARY)	
		1	**112-9717**	1	VALVE-DUST (AIR CLEANER)	
		1	**243-0407**	1	COVER AS	
	4	1	**280-8298**	1	CLAMP	

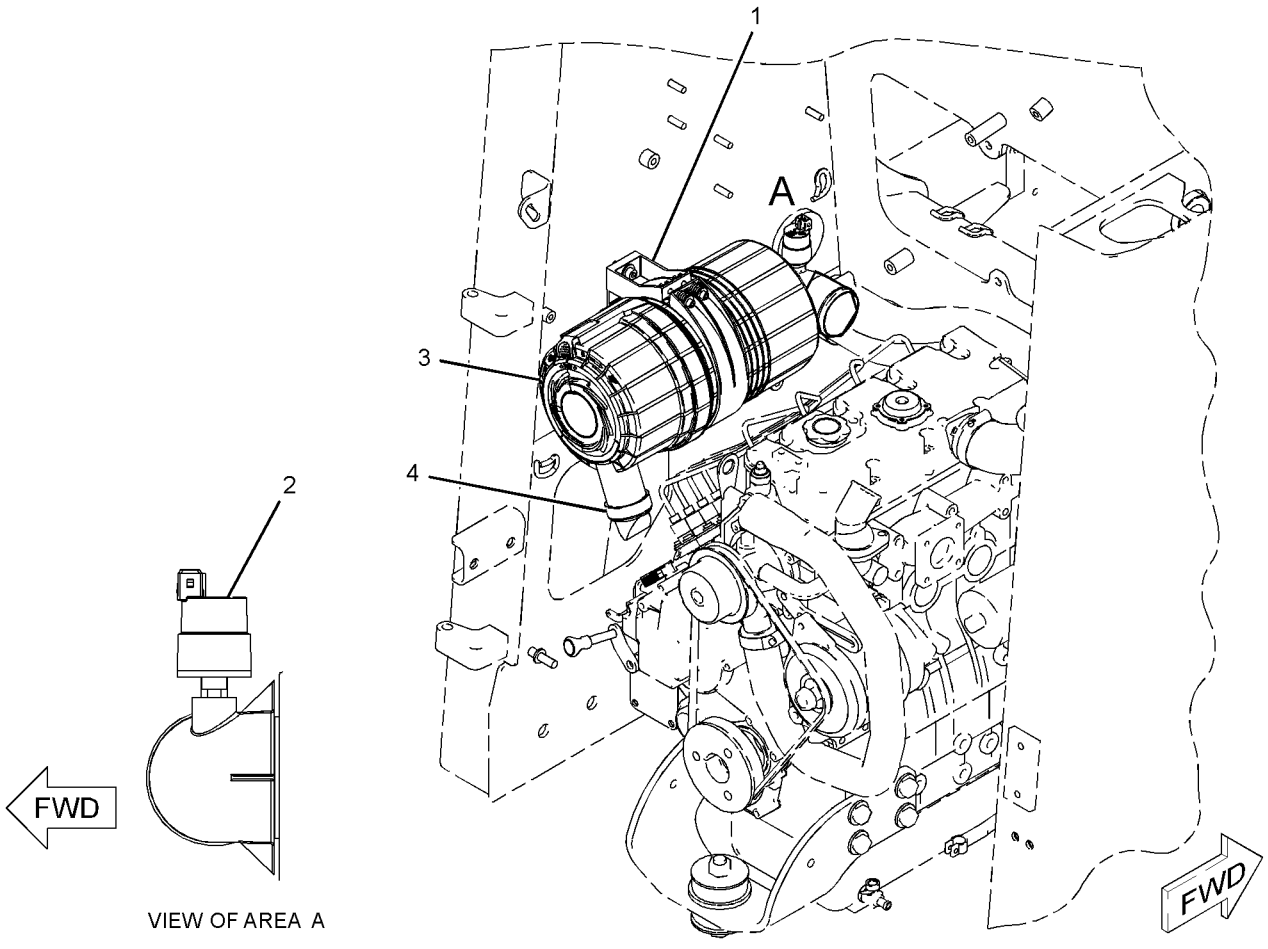

VIEW OF AREA A

GRAPHIC #1 **<END>** g01326594

AIR INLET AND EXHAUST SYSTEM

247-6317 LINES GP-AIR

S/N: CYM1-UP
PART OF 342-1219 ENGINE AR-PRIMARY
AN ATTACHMENT

SMCS-1071 **i02712952**

NOTE	REF NO	GRAPHIC REF	PART NUMBER	QTY	PART NAME 1 2 3 4 5 6 (PRODUCT LEVEL)	SEE PAGE
M	1	1	**6V-3940**	4	BOLT (M8X1.25X25-MM)	
	2	1	**9M-1974**	4	WASHER-HARD (8.8X16X2-MM THK)	
	3	1	**5I-7678**	1	GASKET	
	4	1	**5I-8021**	1	ELBOW AS	
		1	**5I-8023**	1	PLUG	

M-METRIC PART

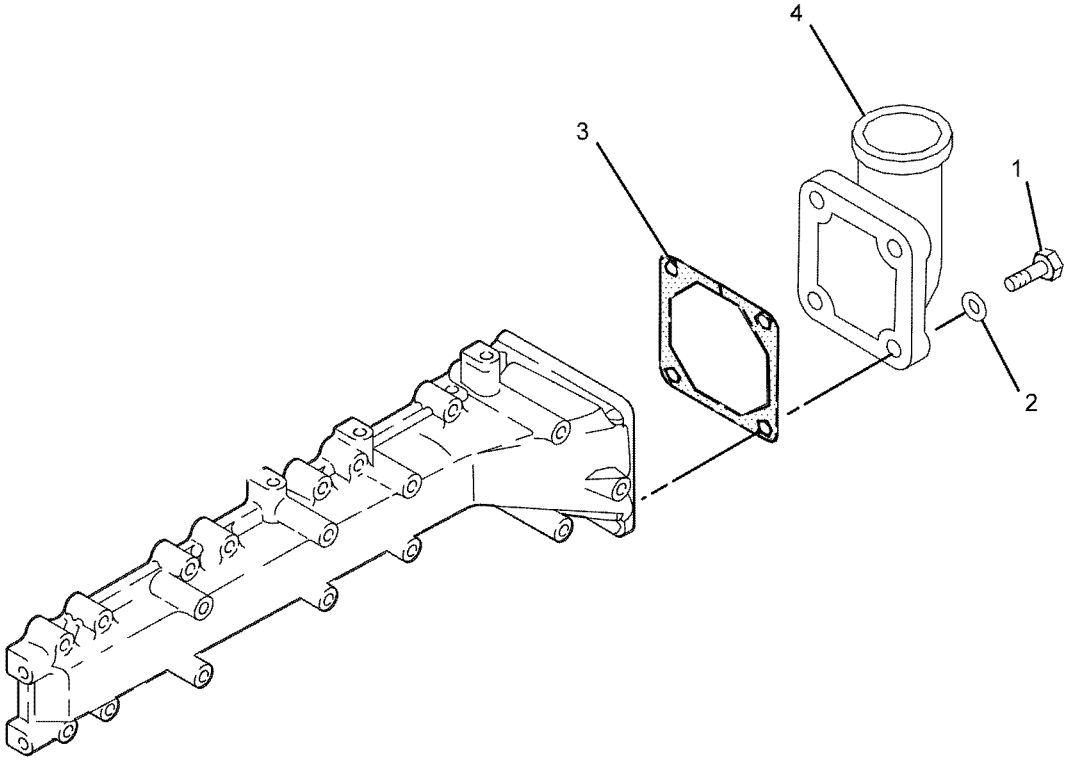

GRAPHIC #1 **<END>** g01048173

AIR INLET AND EXHAUST SYSTEM

315-7769 LINES GP-AIR

S/N: CYM1-UP

PART OF 342-1219 ENGINE AR-PRIMARY

AN ATTACHMENT

SMCS-1071 **i04373712**

NOTE	REF NO	GRAPHIC REF	PART NUMBER	QTY	PART NAME 1 2 3 4 5 6 (PRODUCT LEVEL)	SEE PAGE
	1	1	**373-9662**	1	HOSE-BREATHER	
	2	1	**330-7622**	2	CLIP	
M	3	1	**5C-9553**	2	BOLT (M6X1X16-MM)	
	4	1	**9X-8256**	2	WASHER (6.6X12X2-MM THK)	
	5	1	**315-8697**	1	CLIP HOSE	
	6	1	**253-5512**	1	CLIP	
	7	1	**315-7701**	2	SCREW	
	8	1	**315-8698**	2	RETAINER-WASHER	
	9	1	**373-9653**	1	CLIP-HOSE	
	10	1	**330-7620**	1	BRACKET-SUPPORT	
	11	1	**3B-4504**	2	LOCKWASHER	

M-METRIC PART

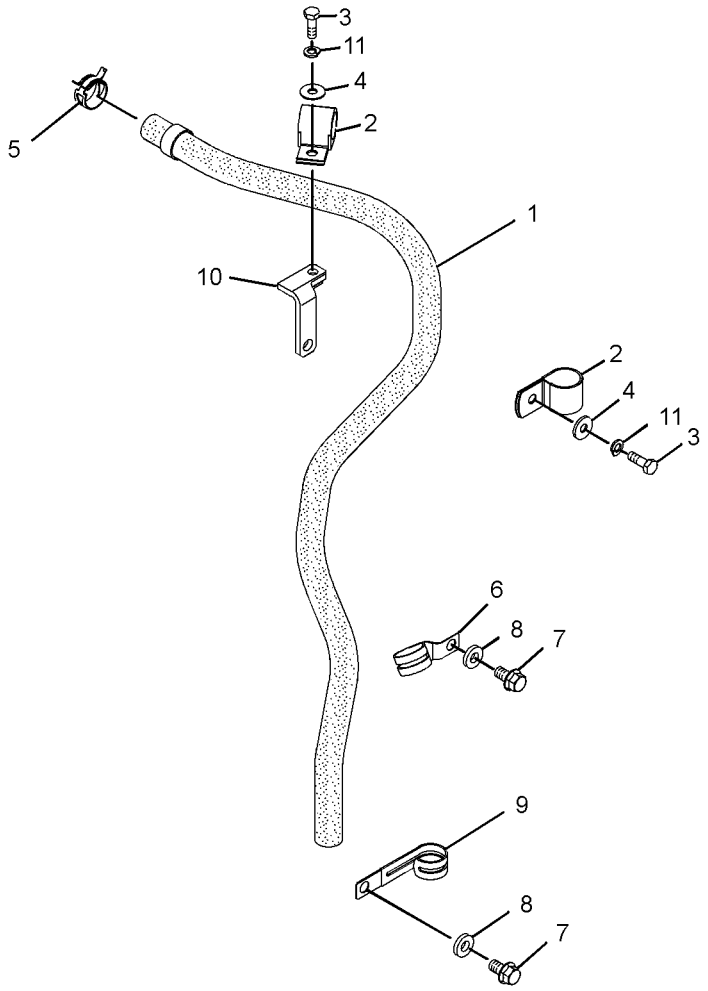

GRAPHIC #1 **<END>** g01802753

AIR INLET AND EXHAUST SYSTEM

326-5376 LINES GP-AIR

S/N: A9H1-UP

PART OF 326-5372 INSTALLATION AR-ENGINE

SMCS-1071 **i03902846**

NOTE	REF NO	GRAPHIC REF	PART NUMBER	QTY	PART NAME 1 2 3 4 5 6 (PRODUCT LEVEL)	SEE PAGE
	1	1	**5P-4868**	1	CLAMP - HOSE	
	2	1	**8T-6726**	1	CLAMP - HOSE	
	3	1	**280-8319**	1	HOSE	

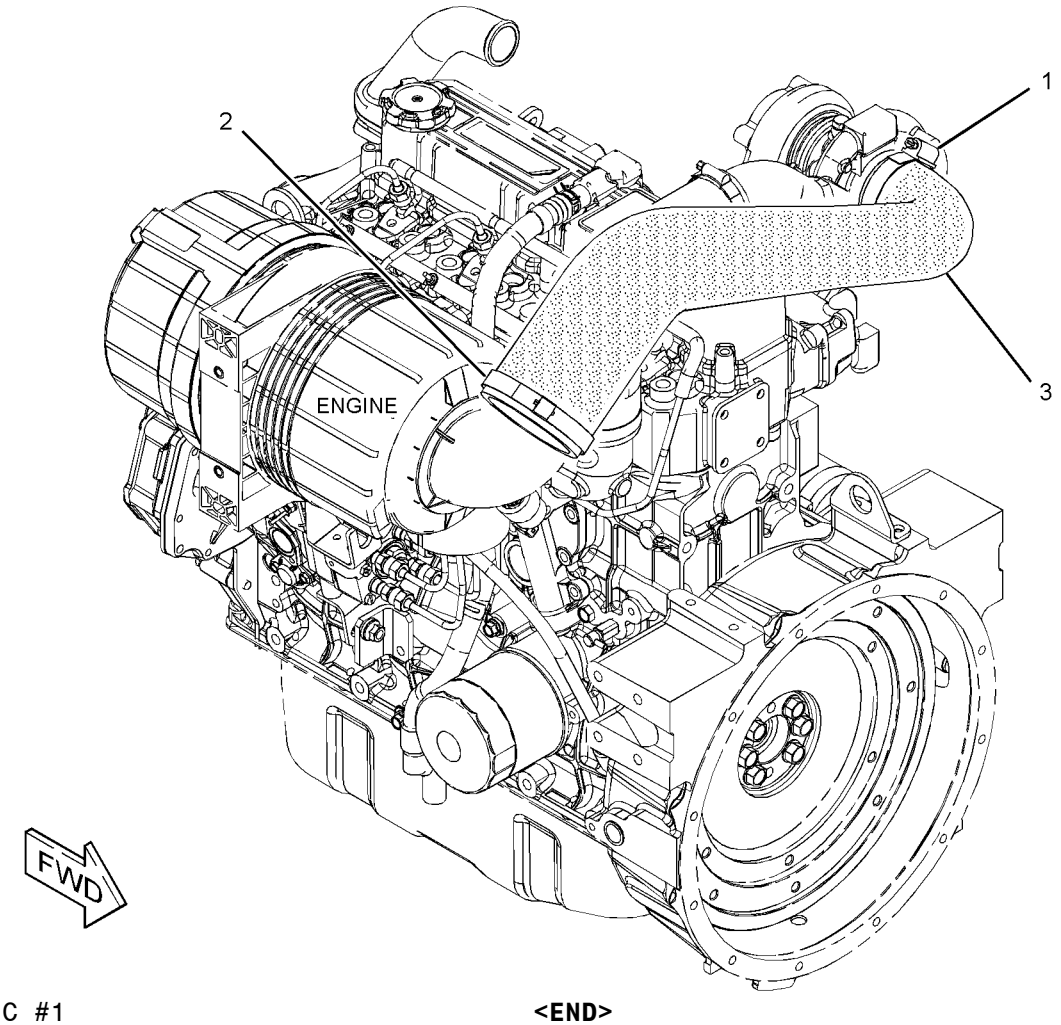

GRAPHIC #1 **<END>** g02146713

AIR INLET AND EXHAUST SYSTEM

287-5323 MANIFOLD GP-EXHAUST

S/N: CYM1-UP

PART OF 342-1219 ENGINE AR-PRIMARY

AN ATTACHMENT

SMCS-1059 **i03041710**

NOTE	REF NO	GRAPHIC REF	PART NUMBER	QTY	PART NAME 1 2 3 4 5 6 (PRODUCT LEVEL)	SEE PAGE
	1	1	**5I-7931**	4	STUD	
	2	1	**195-8260**	8	NUT (M8X1.25-THD)	
	3	1	**233-5460**	8	BOLT	
	4	1	**328-5192**	1	MANIFOLD-EXHAUST	
	5	1	**234-4824**	1	GASKET-MANIFOLD	

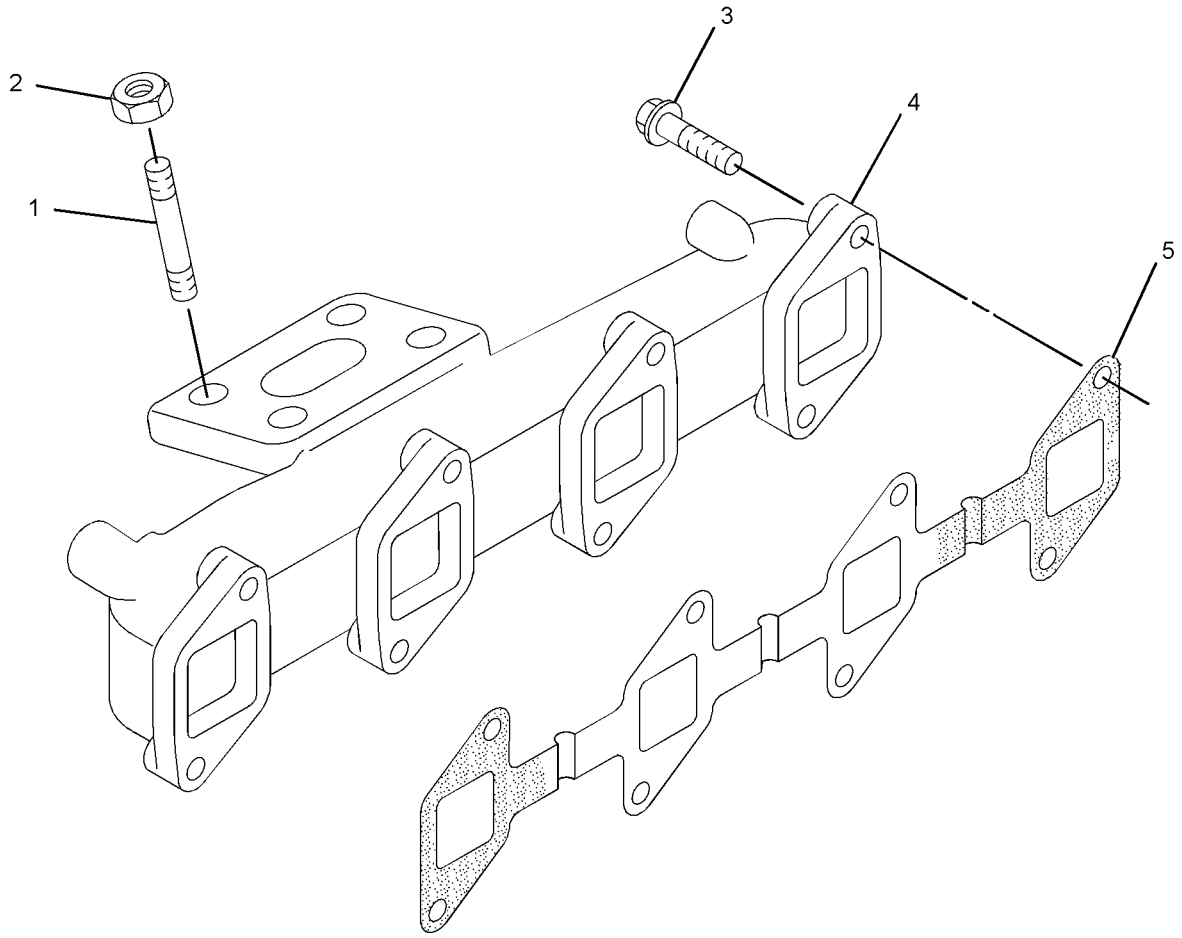

GRAPHIC #1 **<END>** g01327717

AIR INLET AND EXHAUST SYSTEM

335-5750 MANIFOLD GP-INLET

S/N: CYM1-UP
PART OF 342-1219 ENGINE AR-PRIMARY
AN ATTACHMENT

SMCS-1058 **i03254952**

NOTE	REF NO	GRAPHIC REF	PART NUMBER	QTY	PART NAME 1 2 3 4 5 6 (PRODUCT LEVEL)	SEE PAGE
	1	1	**3B-4505**	13	LOCKWASHER	
M	2	1	**7X-0818**	3	BOLT (M8X1.25X45-MM)	
M	3	1	**8T-4177**	2	BOLT (M8X1.25X90-MM)	
	4	1	**8T-4224**	3	WASHER-HARD (8.8X16X2-MM THK)	
M	5	1	**099-3649**	11	BOLT (M8X1.25X40-MM)	
	6	1	**234-4805**	1	MANIFOLD-INLET	
	7	1	**234-4806**	1	GASKET	

M-METRIC PART

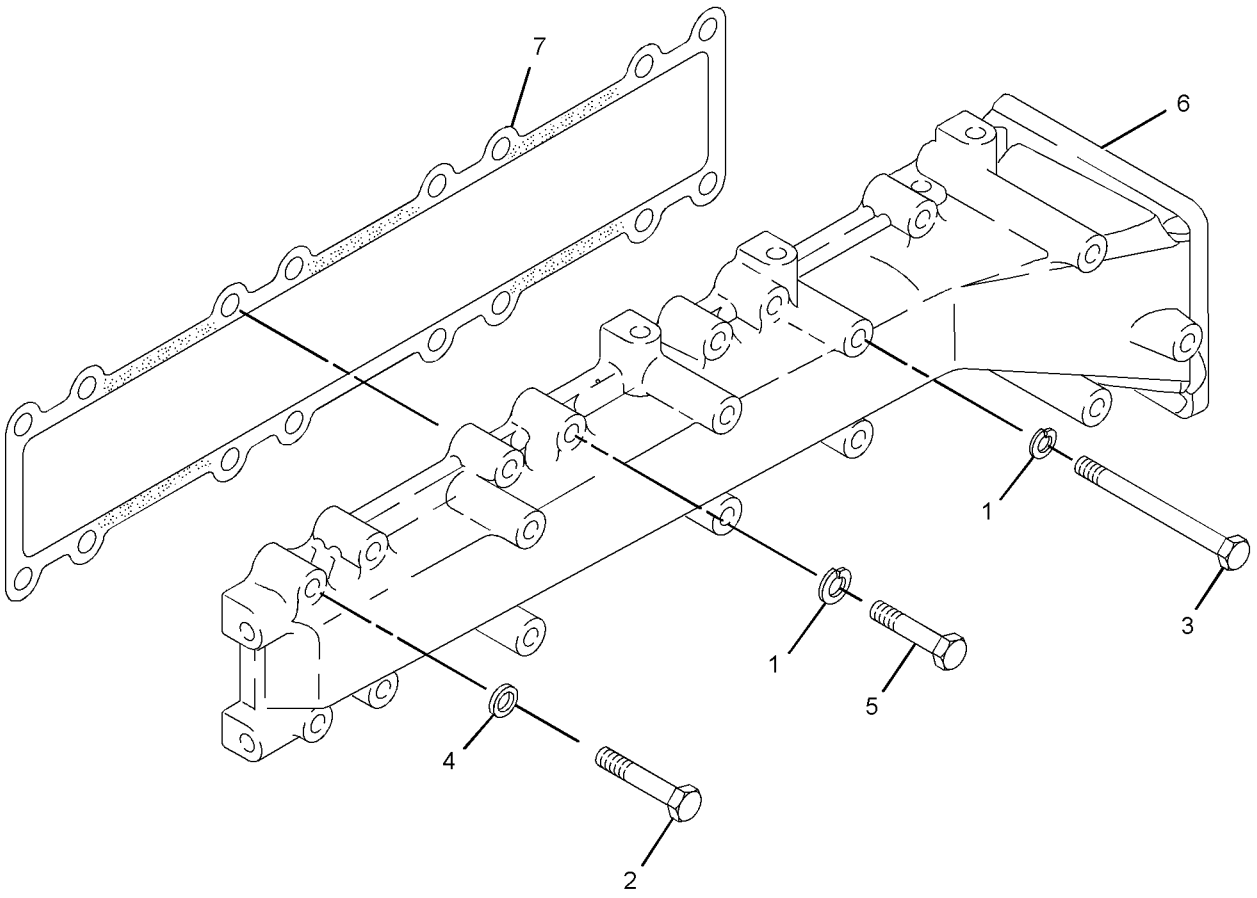

GRAPHIC #1 **<END>** g01664575

AIR INLET AND EXHAUST SYSTEM

258-2462 MUFFLER & MOUNTING GP

S/N: A9H1-UP
PART OF 326-5249 CONVERSION AR-MACHINE
AN ATTACHMENT

SMCS-1062 **i02930638**

NOTE	REF NO	GRAPHIC REF	PART NUMBER	QTY	PART NAME 1 2 3 4 5 6 (PRODUCT LEVEL)	SEE PAGE
	1	1	**5I-8111**	1	GASKET	
	2	1	**198-4776**	3	WASHER-HARD (8.8X20X8-MM THK)	
	3	1	**258-2419**	1	MUFFLER AS	
	4	1	**280-8240**	1	PLATE	
	5	1	**232-3121**	1	NUT (M10X1.25-THD)	
	6	1	**280-8341**	2	SPACER (8.7X15.8X21.1-MM THK)	
M	7	1	**8T-7547**	3	BOLT (M8X1.25X30-MM)	
	8	1	**280-8377**	1	SPACER (11.1X19.1X25-MM THK)	
M	9	1	**305-5385**	2	BOLT (M8X1.25X50-MM)	

M-METRIC PART

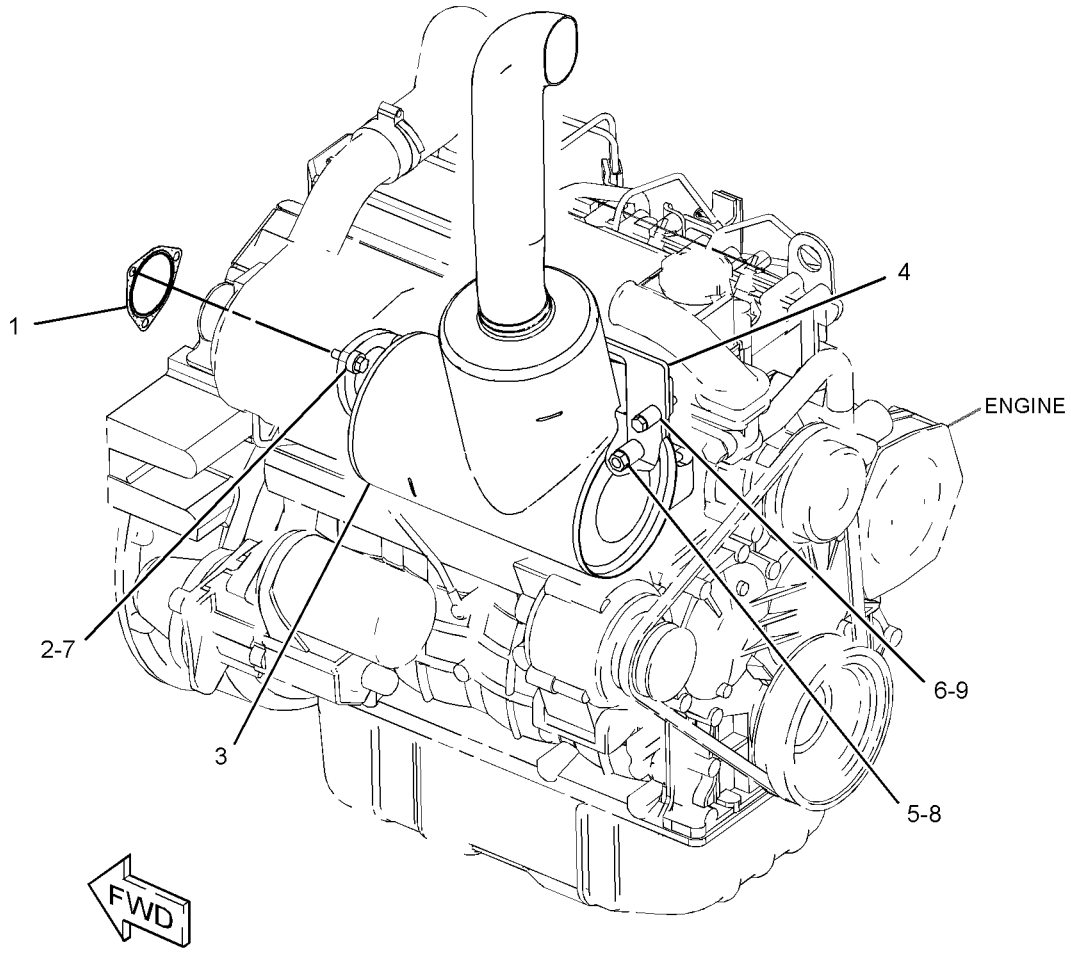

GRAPHIC #1 **<END>** g01457027

AIR INLET AND EXHAUST SYSTEM

280-8347 MUFFLER & MOUNTING GP

S/N: A9H1-UP
PART OF 326-5289, 326-5299, 326-5489 CONVERSION AR-MACHINE, 326-5529, 326-5559 CONVERSION AR-ROADING
AN ATTACHMENT

SMCS-1062 **i02948043**

NOTE	REF NO	GRAPHIC REF	PART NUMBER	QTY	PART NAME 1 2 3 4 5 6 (PRODUCT LEVEL)	SEE PAGE
	1	1	**5I-8111**	1	GASKET	
	2	1	**198-4776**	3	WASHER-HARD (8.8X20X8-MM THK)	
	3	1	**272-3050**	1	MUFFLER AS	
	4	1	**280-8240**	1	PLATE	
	5	1	**280-8341**	2	SPACER (8.7X15.8X21.1-MM THK)	
	6	1	**280-8377**	1	SPACER (11.1X19.1X25-MM THK)	
	7	1	**232-3121**	1	NUT (M10X1.25-THD)	
M	8	1	**305-5385**	2	BOLT (M8X1.25X50-MM)	
M	9	1	**8T-7547**	3	BOLT (M8X1.25X30-MM)	

M-METRIC PART

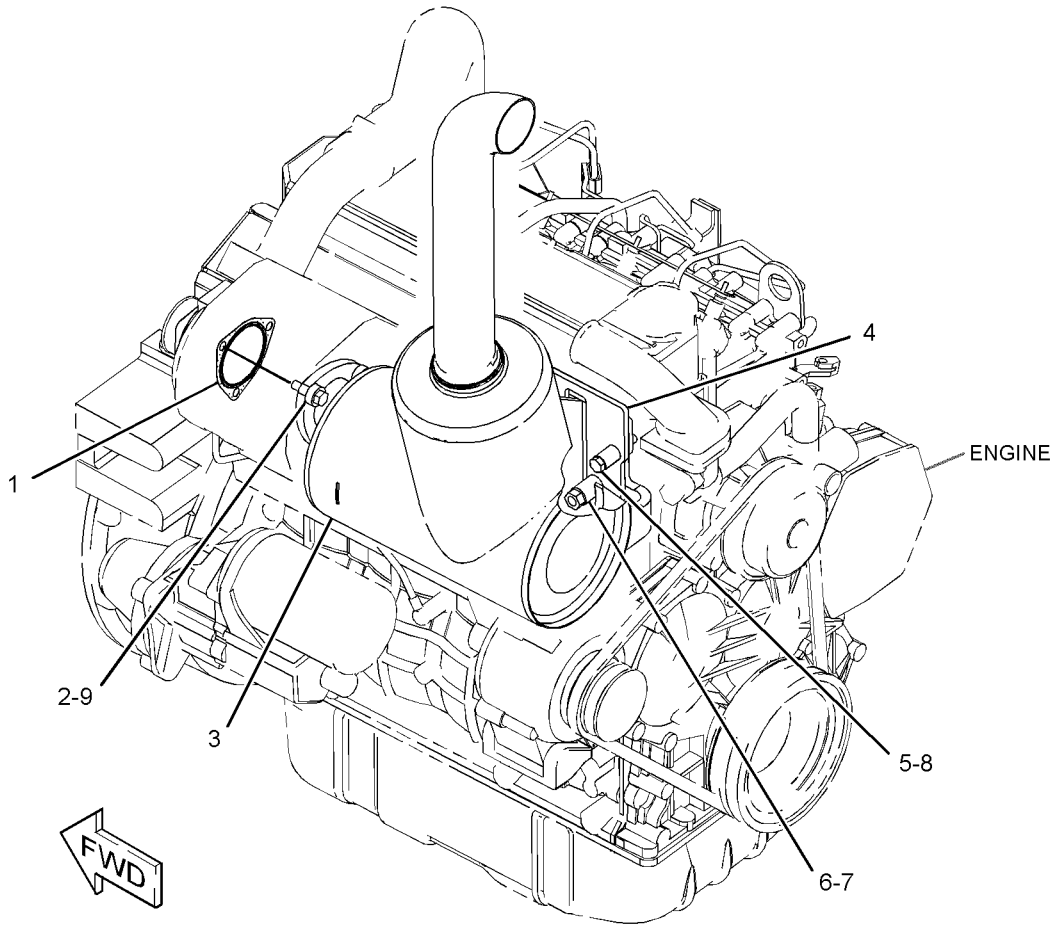

GRAPHIC #1 **<END>** g01556973

AIR INLET AND EXHAUST SYSTEM

315-7768 TURBOCHARGER GP

S/N: CYM1-UP

PART OF 342-1219 ENGINE AR-PRIMARY

AN ATTACHMENT

SMCS-1052, 1053 **i04204991**

NOTE	REF NO	GRAPHIC REF	PART NUMBER	QTY	PART NAME 1 2 3 4 5 6 (PRODUCT LEVEL)	SEE PAGE
M	1	1	**5C-2890**	1	NUT (M6X1-THD)	
M	2	1	**5C-9553**	2	BOLT (M6X1X16-MM)	
	3	1	**5I-5077**	2	CLAMP	
	4	1	**5I-7623**	1	BOLT (M10X1.25X20-MM)	
	5	1	**371-0907**	1	GASKET	
	6	1	**5I-7933**	1	GASKET	
	7	1	**5I-8109**	1	HOSE	
	8	1	**5I-8110**	1	ELBOW	
M	9	1	**6V-2317**	2	BOLT (M8X1.25X30-MM)	
M	10	1	**6V-7357**	1	BOLT (M6X1X25-MM)	
	11	1	**9M-1974**	2	WASHER-HARD (8.8X16X2-MM THK)	
	12	1	**096-2500**	3	LOCKWASHER	
	13	1	**191-3206**	4	GASKET	
	14	1	**5P-0597**	1	CLAMP-HOSE	
	15	1	**5P-4868**	1	CLAMP-HOSE (U.S. SOURCED)	
	16	1	**234-4818**	1	GASKET	
	17	1	**234-4820**	1	PIPE	
	18	1	**234-4821**	1	PIPE	
	19	1	**234-4822**	2	CLAMP	
	20	1	**296-4812**	1	BOLT	
	21	1	**235-4967**	1	CONNECTOR	
	22	1	**235-4968**	1	PIPE	
	23	1	**314-9972**	1	TURBOCHARGER AS	
	24	1	**314-9974**	1	HOSE-AIR	

M-METRIC PART

315-7768 **TURBOCHARGER GP** *(contd.)* **i04204991**

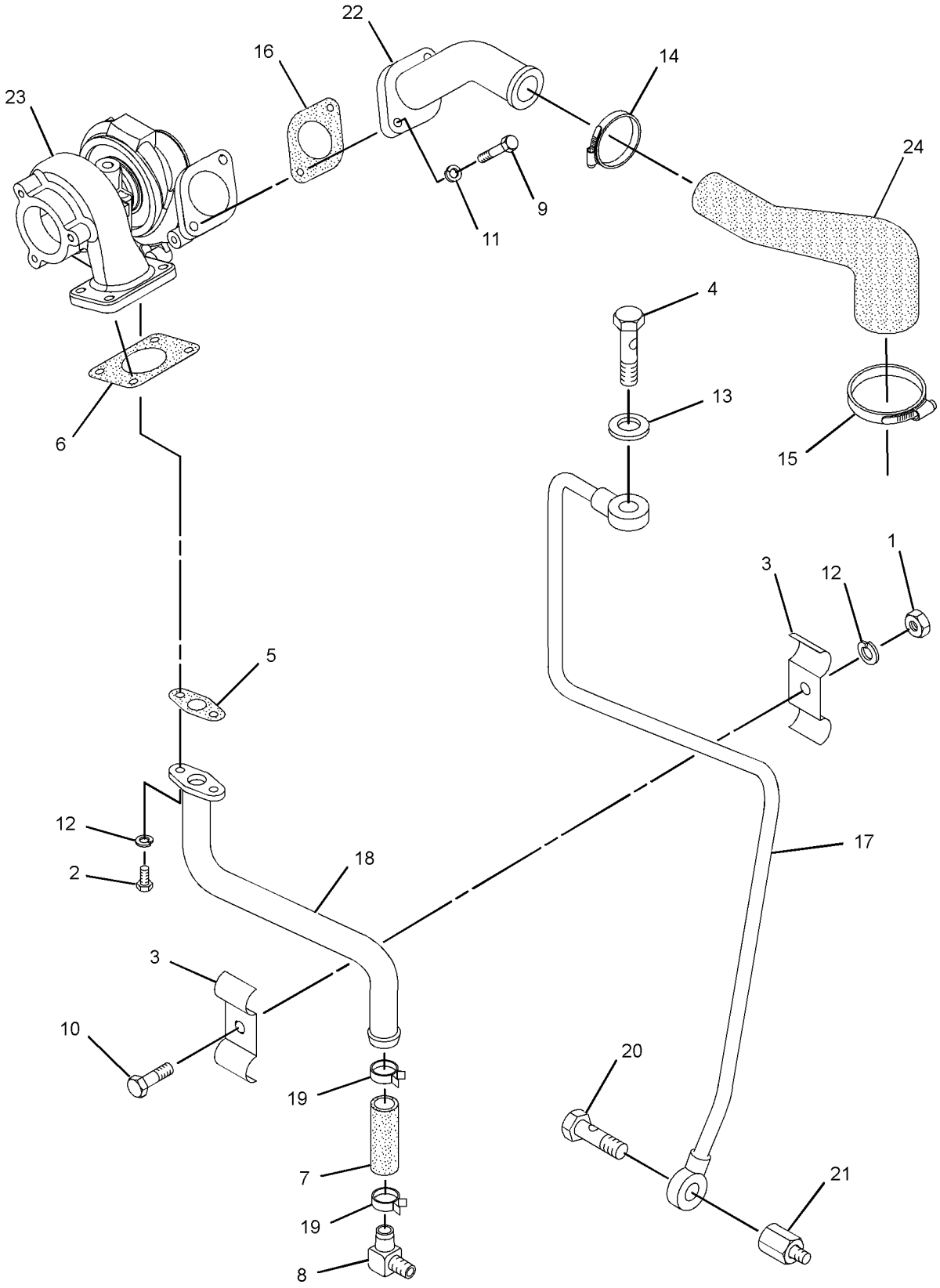

GRAPHIC #1 **<END>** g01445155

218-5602 CONTROL GP-GOVERNOR

S/N: A9H1-UP

PART OF 326-4785 CHASSIS AR

SMCS-1265, 1276 **i03809973**

NOTE	REF NO	GRAPHIC REF	PART NUMBER	QTY	PART NAME 1 2 3 4 5 6 (PRODUCT LEVEL)	SEE PAGE
	1	1	**7K-1181**	1	STRAP-CABLE	
	2	1	**262-6518**	1	BRACKET AS	
	3	1	**262-6480**	1	BRACKET-STOP	
CY	4	1	**327-8939**	1	PEDAL GP-GOVERNOR	558
	5	1	**237-7296**	4	SCREW-FLAT HEAD (M6X1X35-MM)	
	6	1	**8T-4205**	9	WASHER-HARD (7.2X14.5X2-MM THK)	
M	7	1	**5C-2890**	4	NUT (M6X1-THD)	
	8	1	**8T-3984**	1	KNOB	
M	9	1	**6V-5683**	2	BOLT (M6X1X16-MM)	
M	10	1	**8T-4138**	3	BOLT (M6X1X20-MM)	

C-CHANGE FROM PREVIOUS TYPE
M-METRIC PART
Y-SEPARATE ILLUSTRATION

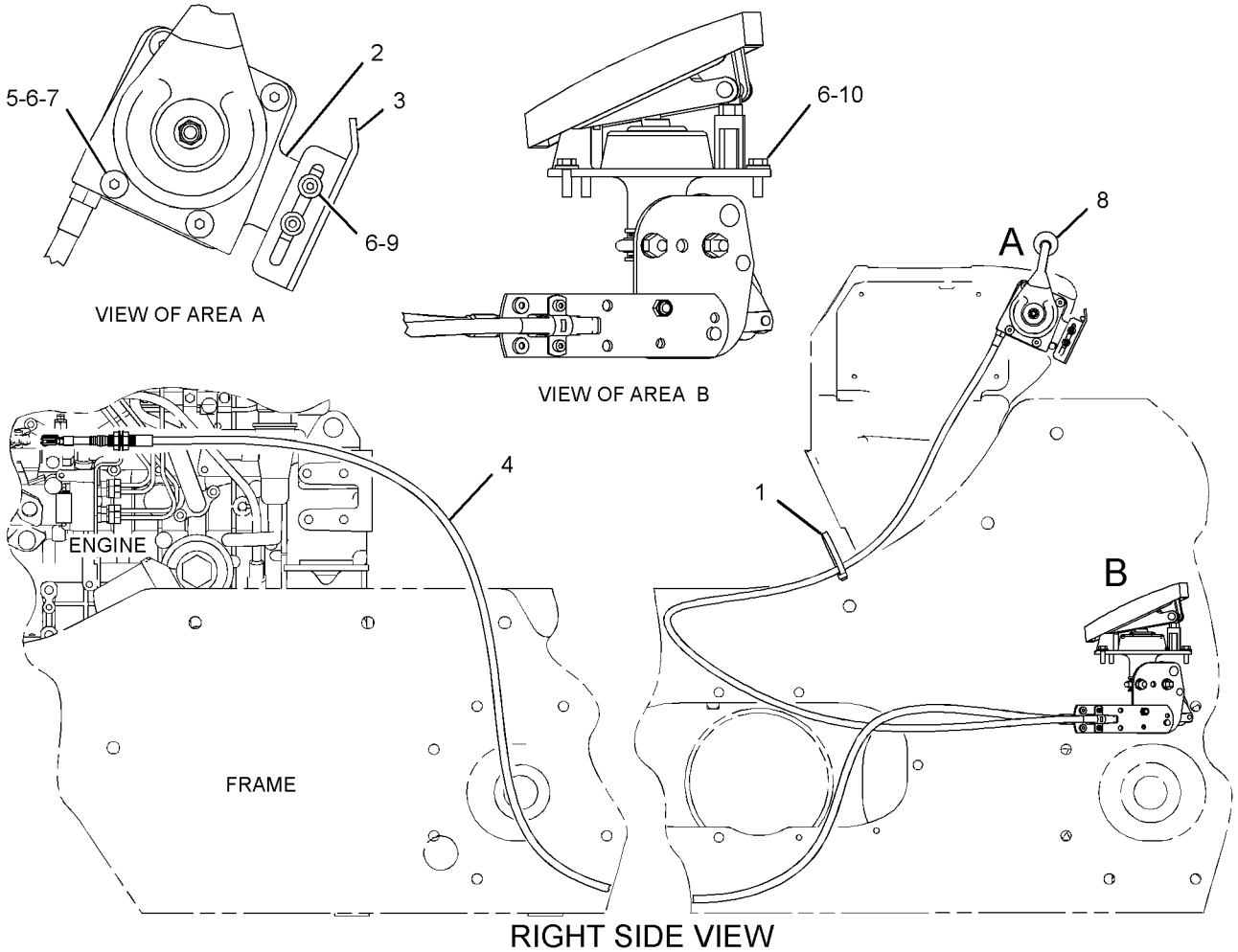

GRAPHIC #1

<END>

g01927600

FUEL SYSTEM

326-5365 LINES GP-FUEL

S/N: A9H1-654

PART OF 326-5372 INSTALLATION AR-ENGINE

SMCS-1274 **i04389524**

NOTE	REF NO	GRAPHIC REF	PART NUMBER	QTY	PART NAME 1 2 3 4 5 6 (PRODUCT LEVEL)	SEE PAGE
	1	1	**1P-4278**	10	CLAMP-HOSE	
	2	1	**3E-7404**	1	CLAMP-HOSE	
	3	1	**5P-4961**	2	CLAMP-HOSE	
	4	1	**069-4080**	1	FITTING	
	5	1	**152-4892**	1	HOSE	
	6	1	**178-3620**	2	STRAP-DUAL CLAMP	
	7	1	**180-3007**	1	CLAMP-HOSE	
	8	1	**195-8372**	1	CLIP	
	9	1	**246-2622**	2	ELBOW	
	10	1	**252-0368**	1	GUARD AS (FUEL FILLER)	
		1	**6W-5698**	1	GROMMET	
		1	**142-8928**	1	ELBOW	
	11	1	**256-2155**	1	TEE	
Y	12	1	**258-3442**	1	PUMP GP-FUEL PRM & PRIM FILTER (WATER SEPARATOR)	74
	14	1	**304-3885**	1	CAP-FUEL (FILLER) (FILTER)	
	15	1	**312-2179**	2	BRACKET AS	
E	16	1	**8C-6959**		HOSE (33-CM)	
E	17	1	**5P-1442**		HOSE (129-CM)	
	18	1	**326-5371**	1	BRACKET AS	
	19	1	**212-0431**	2	STUD (M10X1.5-THD)	
	20	1	**4B-9302**	2	CLIP	
	21	1	**4D-6466**	6	CLIP	
M	22	1	**5C-2890**	1	NUT (M6X1-THD)	
M	23	1	**5C-9553**	2	BOLT (M6X1X16-MM)	
	24	1	**5K-4778**	1	CLIP	
	25	1	**5P-4116**	4	WASHER-HARD (8.8X20.5X2-MM THK)	
	26	1	**6D-3479**	2	CLIP	
	27	1	**260-6688**	1	BOLT (M6X1X30-MM)	
	28	1	**8T-4121**	11	WASHER-HARD (11X21X2.5-MM THK)	
M	29	1	**8T-4133**	4	NUT (M10X1.5-THD)	
M	30	1	**8T-4136**	5	BOLT (M10X1.5X25-MM)	
M	31	1	**8T-4196**	2	BOLT (M10X1.5X35-MM)	
M	32	1	**8T-4908**	4	BOLT (M8X1.25X25-MM)	
	33	1	**9X-2038**	4	WASHER (7X19X2-MM THK)	
E	34	1	**5P-1420**		HOSE (66-CM)	
E	34A	1	**5P-1420**		HOSE (51.7-CM)	
E	34B	1	**5P-1420**		HOSE (15-CM)	
E	34C	1	**5P-1420**		HOSE (205-CM)	
E	34D	1	**5P-1420**		HOSE (128-CM)	

E-ORDER BY THE CENTIMETER
M-METRIC PART
Y-SEPARATE ILLUSTRATION

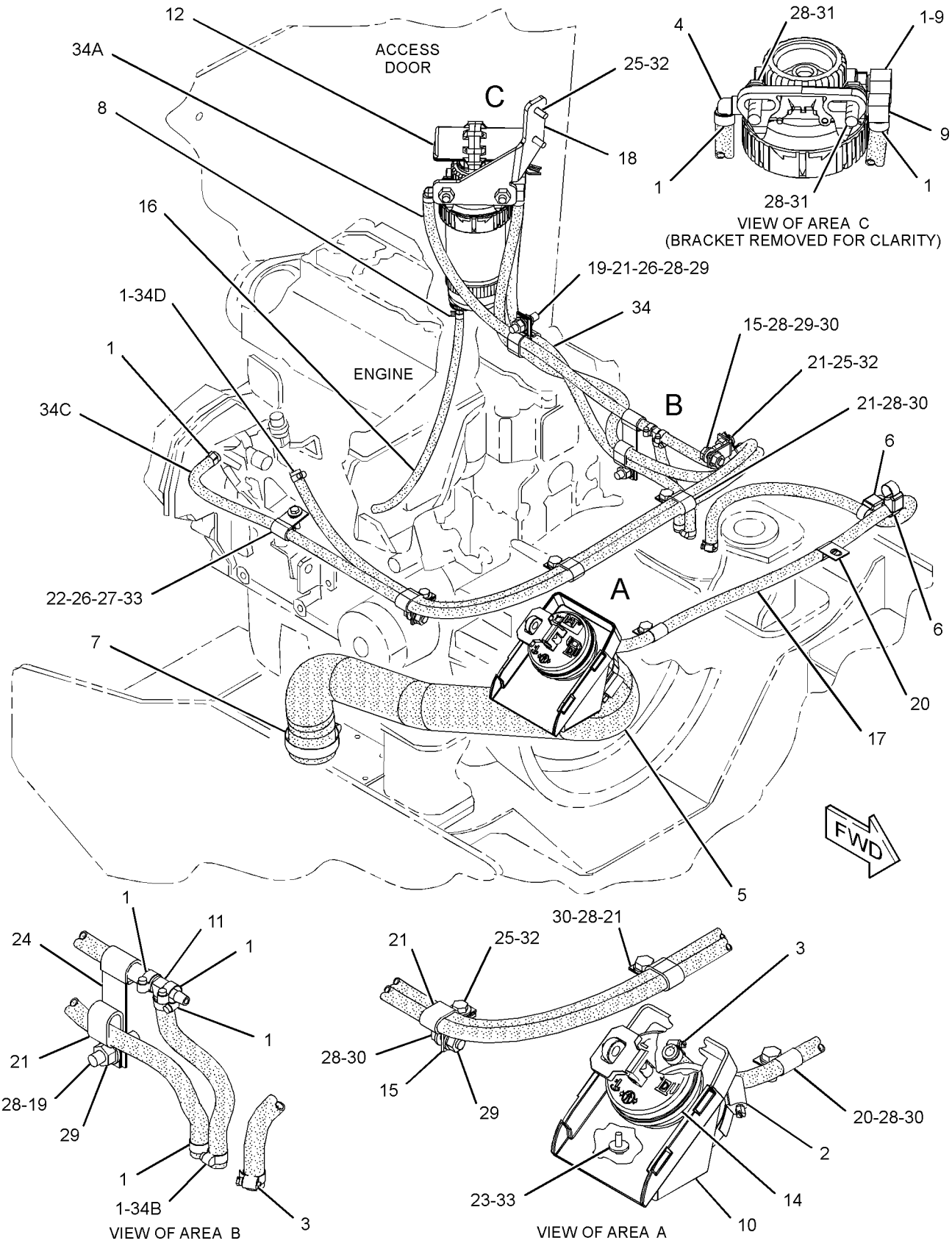

GRAPHIC #1 **<END>** g02559956

FUEL SYSTEM

326-5365 LINES GP-FUEL

S/N: A9H655-UP

PART OF 326-5372 INSTALLATION AR-ENGINE

SMCS-1274 **i04389521**

NOTE	REF NO	GRAPHIC REF	PART NUMBER	QTY	PART NAME 1 2 3 4 5 6 (PRODUCT LEVEL)	SEE PAGE
	1	1	**1P-4278**	10	CLAMP-HOSE	
	2	1	**3E-7404**	1	CLAMP-HOSE	
	3	1	**5P-4961**	2	CLAMP-HOSE	
	4	1	**069-4080**	1	FITTING	
	5	1	**152-4892**	1	HOSE	
	6	1	**178-3620**	2	STRAP-DUAL CLAMP	
	7	1	**180-3007**	1	CLAMP-HOSE	
	8	1	**195-8372**	1	CLIP	
	9	1	**246-2622**	2	ELBOW	
	10	1	**252-0368**	1	GUARD AS (FUEL FILLER)	
		1	**6W-5698**	1	GROMMET	
		1	**142-8928**	1	ELBOW	
	11	1	**256-2155**	1	TEE	
CY	12	1	**349-5327**	1	PUMP GP-FUEL PRM & PRIM FILTER (WATER SEPARATOR)	75
CM	13	1	**8T-4191**	1	BOLT (M10X1.5X16-MM)	
	14	1	**304-3885**	1	CAP-FUEL (FILLER) (FILTER)	
	15	1	**312-2179**	2	BRACKET AS	
E	16	1	**8C-6959**		HOSE (33-CM)	
E	17	1	**5P-1442**		HOSE (129-CM)	
	18	1	**326-5371**	1	BRACKET AS	
M		1	**159-9541**	2	NUT-WELD (M10X1.5-THD)	
	19	1	**212-0431**	2	STUD (M10X1.5-THD)	
	20	1	**4B-9302**	2	CLIP	
	21	1	**4D-6466**	6	CLIP	
M	22	1	**5C-2890**	1	NUT (M6X1-THD)	
M	23	1	**5C-9553**	2	BOLT (M6X1X16-MM)	
	24	1	**5K-4778**	1	CLIP	
	25	1	**5P-4116**	4	WASHER-HARD (8.8X20.5X2-MM THK)	
	26	1	**6D-3479**	2	CLIP	
	27	1	**260-6688**	1	BOLT (M6X1X30-MM)	
	28	1	**8T-4121**	11	WASHER-HARD (11X21X2.5-MM THK)	
M	29	1	**8T-4133**	4	NUT (M10X1.5-THD)	
CM	30	1	**8T-4136**	4	BOLT (M10X1.5X25-MM)	
M	31	1	**8T-4196**	2	BOLT (M10X1.5X35-MM)	
M	32	1	**8T-4908**	4	BOLT (M8X1.25X25-MM)	
	33	1	**9X-2038**	4	WASHER (7X19X2-MM THK)	
E	34	1	**5P-1420**		HOSE (66-CM)	
E	34A	1	**5P-1420**		HOSE (51.7-CM)	
E	34B	1	**5P-1420**		HOSE (15-CM)	
E	34C	1	**5P-1420**		HOSE (205-CM)	
E	34D	1	**5P-1420**		HOSE (128-CM)	

C-CHANGE FROM PREVIOUS TYPE
E-ORDER BY THE CENTIMETER
M-METRIC PART
Y-SEPARATE ILLUSTRATION

326-5365 **LINES GP-FUEL** *(contd.)* **i04389521**

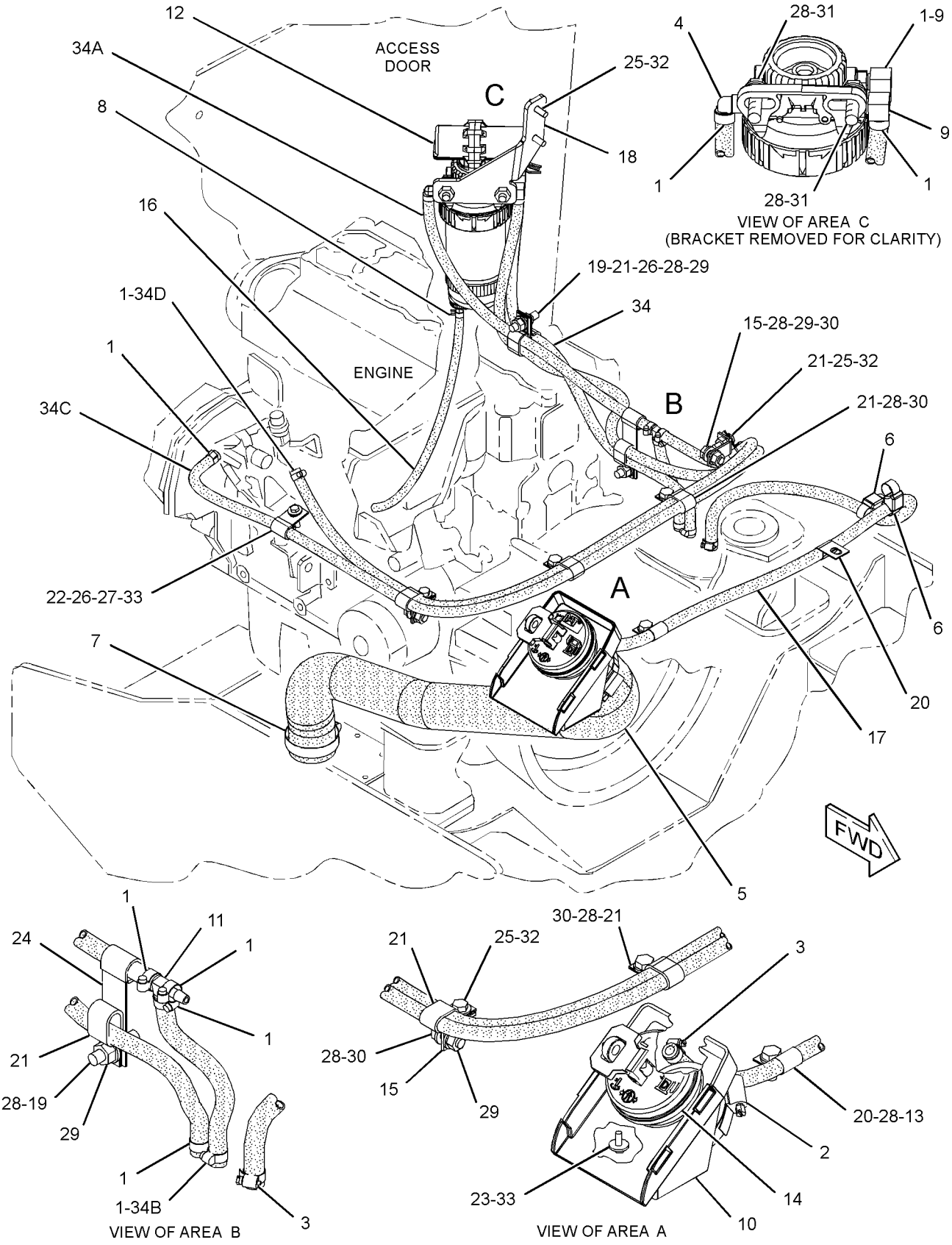

GRAPHIC #1 **<END>** g02360880

315-8350 LINES GP-FUEL INJECTION

S/N: CYM1-UP
PART OF 342-1219 ENGINE AR-PRIMARY
AN ATTACHMENT

SMCS-1252, 1254 **i02883793**

NOTE	REF NO	GRAPHIC REF	PART NUMBER	QTY	PART NAME 1 2 3 4 5 6 (PRODUCT LEVEL)	SEE PAGE
	1	1	**3B-4505**	2	LOCKWASHER	
M	2	1	**6V-2317**	4	BOLT (M8X1.25X30-MM)	
M	3	1	**8T-4200**	2	BOLT (M8X1.25X16-MM)	
	4	1	**9M-1974**	4	WASHER-HARD (8.8X16X2-MM THK)	
	5	1	**094-7235**	1	CAP	
	6	1	**113-0363**	4	SUPPORT	
	7	1	**113-0364**	4	HOSE	
	8	1	**122-8948**	6	CLAMP	
	9	1	**122-8949**	2	CLAMP	
M	10	1	**195-8364**	4	BOLT AS	
	11	1	**196-8356**	8	CLIP	
	12	1	**314-9980**	1	TUBE (CYL NO. 1)	
	13	1	**314-9981**	1	TUBE (CYL NO. 2)	
	14	1	**314-9982**	1	TUBE (CYL NO. 3)	
	15	1	**314-9983**	1	TUBE (CYL NO. 4)	
	16	1	**314-9984**	4	WASHER	
	17	1	**314-9985**	4	INJECTOR AS	
					(EACH INCLUDES)	
		1	**314-9986**	1	NOZZLE AS-FUEL INJECTION	
	18	1	**314-9987**	1	TUBE	
	19	1	**314-9988**	1	BRACKET	
	20	1	**314-9989**	1	HOSE	

M-METRIC PART

315-8350 **LINES GP-FUEL INJECTION** *(contd.)* **i02883793**

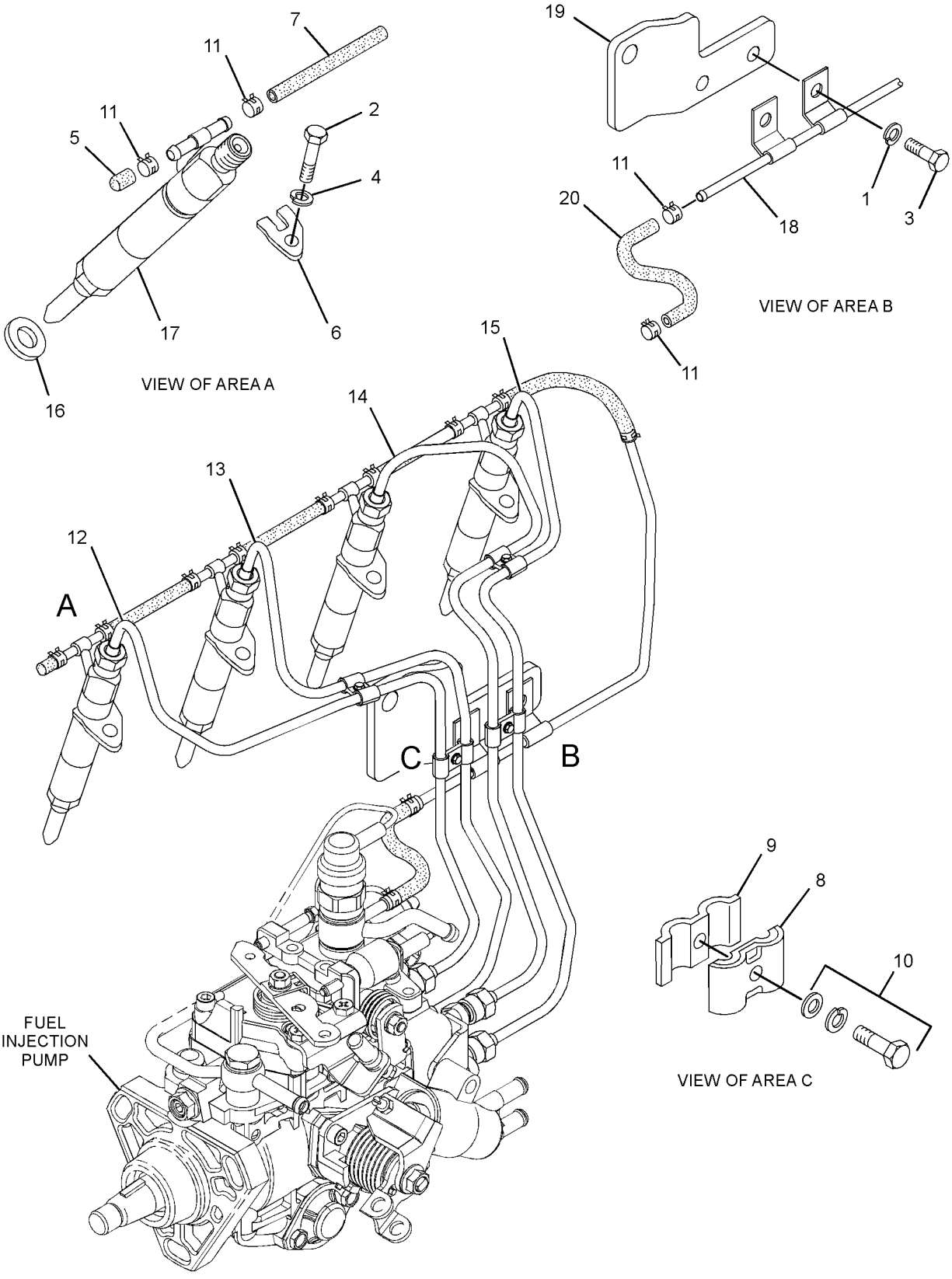

GRAPHIC #1 **<END>** g01395214

FUEL SYSTEM

315-8352 PUMP GP-FUEL INJECTION

S/N: CYM1-UP
PART OF 342-1219 ENGINE AR-PRIMARY
AN ATTACHMENT

SMCS-1251, 1290, 5479 **i04130135**

NOTE	REF NO	GRAPHIC REF	PART NUMBER	QTY	PART NAME 1 2 3 4 5 6 (PRODUCT LEVEL)	SEE PAGE
M	1	1	**6V-5217**	1	BOLT (M8X1.25X20-MM)	
	2	1	**7X-0796**	1	LOCKWASHER	
	3	1	**8T-4121**	2	WASHER-HARD (11X21X2.5-MM THK)	
M	4	1	**8T-4137**	1	BOLT (M10X1.5X20-MM)	
	5	1	**8T-4896**	1	WASHER-HARD (10.2X18.5X2.5-MM THK)	
	6	1	**9M-1974**	1	WASHER-HARD (8.8X16X2-MM THK)	
M	7	1	**140-5217**	1	BOLT (M10X1.25X25-MM)	
M	9	1	**212-8510**	1	NUT (M10X1.25-THD)	
	10	1	**225-5249**	1	RETAINER	
	11	1	**234-4835**	3	STUD	
	12	1	**241-6010**	1	BOLT (M8X1.25X18-MM)	
	13	1	**244-7127**	3	NUT-FLANGE (M8X1.25-THD)	
	14	1	**294-5060**	1	SEAL-O-RING	
	15	1	**300-3988**	1	SEAL-O-RING	
	16	1	**300-3867**	1	WASHER	
	17	1	**314-9991**	1	FLANGE	
	18	1	**314-9992**	1	BRACKET	
C	20	1	**336-9190**	1	PUMP GP-FUEL INJECTION	
	20A	1	**335-5735**	1	SOLENOID (FUEL SHUTOFF)	
	20B	1	**352-3694**	1	SOLENOID (COLD START ADVANCE)	
	21	1	**351-6835**	1	BRACKET	
	22	1	**314-9999**	1	NUT	
	23	1	**364-3919**	2	BOLT	

C-CHANGE FROM PREVIOUS TYPE
M-METRIC PART

315-8352 **PUMP GP-FUEL INJECTION** *(contd.)* **i04130135**

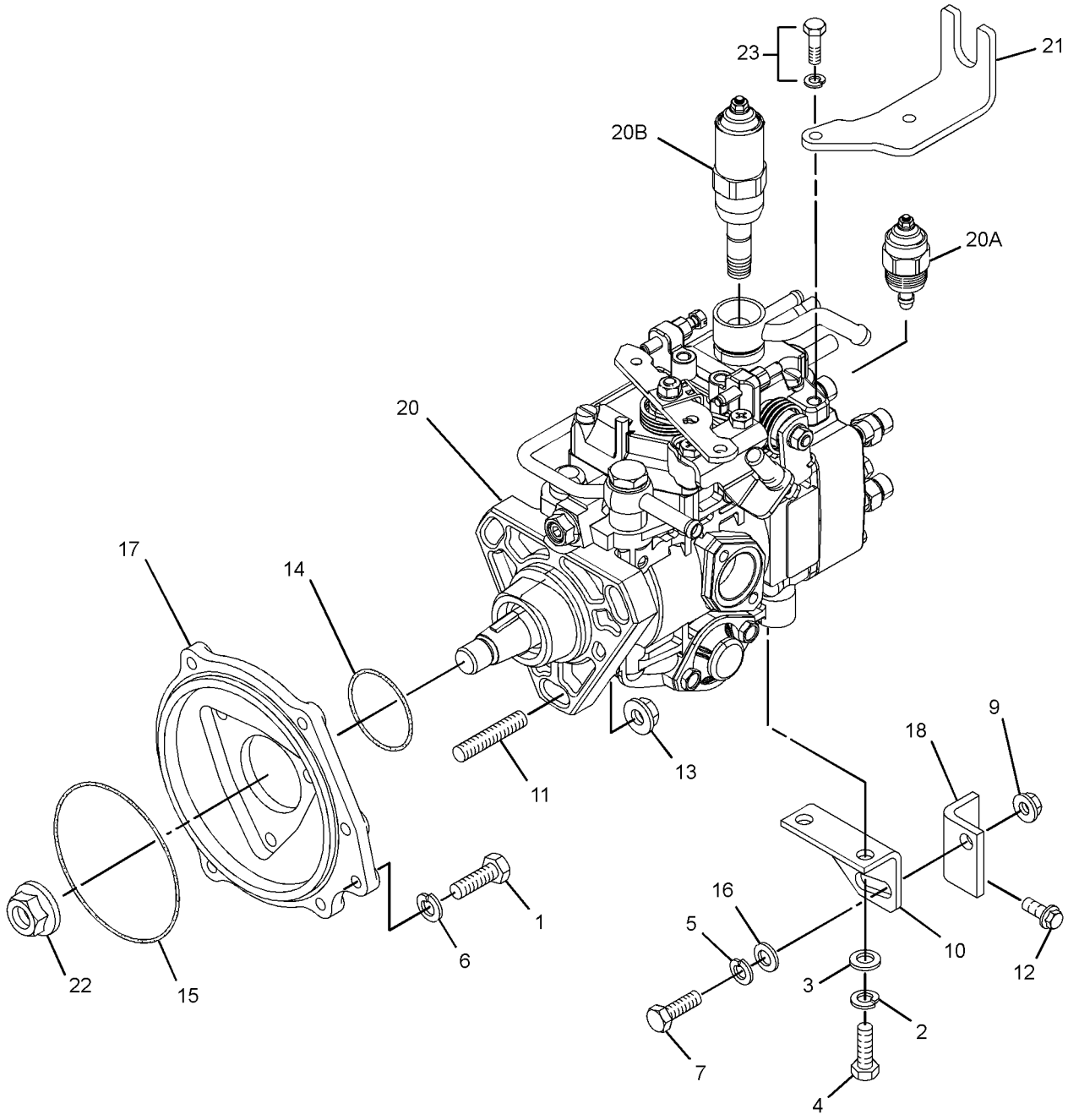

GRAPHIC #1 **<END>** g02153915

258-3442 PUMP GP-FUEL PRM & PRIM FILTER–WATER SEPARATOR

S/N: A9H1-654

PART OF 326-5365 LINES GP-FUEL

SMCS-1258, 1261, 1263 **i03911392**

NOTE	REF NO	GRAPHIC REF	PART NUMBER	QTY	PART NAME 1 2 3 4 5 6 (PRODUCT LEVEL)	SEE PAGE
J	1	1	**112-9401**	1	BOWL AS-WATER COLLECTION	
	2	1	**118-8118**	1	RING-RETAINING	
	3	1	**228-9132**	1	FITTING (FUEL PUMP)	
	4	1	**233-9856**	1	FILTER AS-WATER SEP & FUEL	
					PARTS SHOWN IN GRAPHIC(S) WITHOUT A REFERENCE NUMBER ARE NOT SERVICED SEPARATELY	
					AVAILABLE REPAIR KIT(S):	
J			**128-8614**	1	KIT-SEAL (WATER SEPARATOR)	
					(INCLUDES SEALS)	

J-KIT MARKED J SERVICES PARTS MARKED J

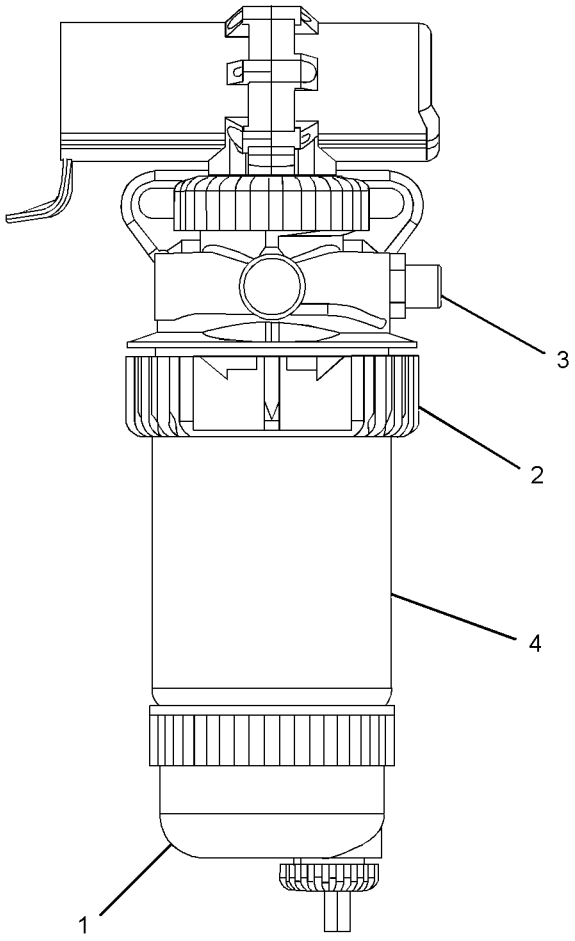

GRAPHIC #1 **<END>** g02151099

349-5327 PUMP GP-FUEL PRM & PRIM FILTER–WATER SEPARATOR

S/N: A9H655-UP

PART OF 326-5365 LINES GP-FUEL

SMCS-1258, 1261, 1263 **i04430822**

NOTE	REF NO	GRAPHIC REF	PART NUMBER	QTY	PART NAME 1 2 3 4 5 6 (PRODUCT LEVEL)	SEE PAGE
J	1	1	**112-9401**	1	BOWL AS-WATER COLLECTION	
	2	1	**118-8118**	1	RING-RETAINING	
	3	1	**228-9132**	1	FITTING (FUEL PUMP)	
	4	1	**361-9555**	1	FILTER ELEMENT-WTR SEP & FUEL	
					PARTS SHOWN IN GRAPHIC(S) WITHOUT A REFERENCE NUMBER ARE NOT SERVICED SEPARATELY	
					AVAILABLE REPAIR KIT(S):	
J			**128-8614**	1	KIT-SEAL (WATER SEPARATOR)	
					(INCLUDES SEALS)	

J-KIT MARKED J SERVICES PARTS MARKED J

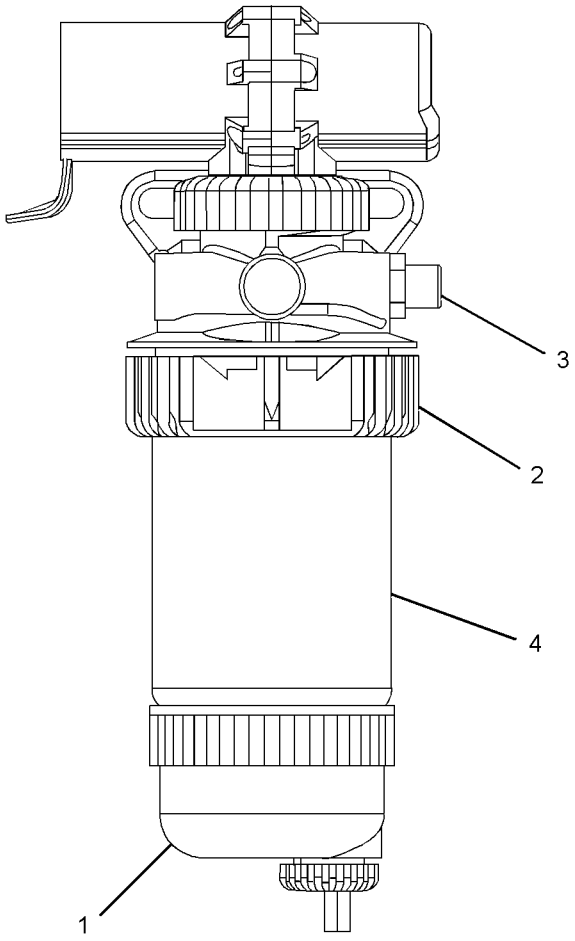

GRAPHIC #1 **<END>** g02151099

105-2814 ALTERNATOR GP-CHARGING*R

S/N: CYM1-UP
12 VOLT, 90 AMPERE
PART OF 315-8353 ALTERNATOR GP-CHARGING
AN ATTACHMENT

SMCS-1405 **i03552882**

NOTE	REF NO	GRAPHIC REF	PART NUMBER	QTY	PART NAME 1 2 3 4 5 6 (PRODUCT LEVEL)	SEE PAGE
	1	1	**113-4458**	1	PULLEY-ALTERNATOR (M14X1.5-THD) (2-GROOVE)	
	2	1	**113-4459**	1	FRAME AS-ALTERNATOR	
	3	1	**113-4460**	1	ROTOR AS-ALTERNATOR	
	4	1	**113-4461**	1	FRAME AS-ALTERNATOR	
	5	1	**113-4462**	1	REGULATOR AS-ALTERNATOR	
	6	1	**113-4463**	1	RECTIFIER AS-ALTERNATOR	
	7	1	**113-4464**	1	COVER-ALTERNATOR	
	8	1	**113-4469**	4	BUSHING-ALTERNATOR	
	9	1	**113-4470**	1	BUSHING-ALTERNATOR	
M	10	1	**5C-2890**	1	NUT (M6X1-THD)	
	11	1	**8T-4205**	1	WASHER-HARD (7.2X14.5X2-MM THK)	
	12	1	**1H-3244**	1	LOCKWASHER	
					AVAILABLE REPAIR KIT(S):	
			113-4465	1	KIT-ALTERNATOR BEARING	
					(INCLUDES COVERS, BEARINGS & WASHERS)	
			113-4466	1	KIT-REPAIR (ALTERNATOR BRUSHES)	
					(INCLUDES HOLDER ASSEMBLY & SEALS)	
			113-4467	1	KIT-ALTERNATOR TERMINAL	
					(INCLUDES SCREWS, PLATE & NUTS)	
			113-4468	1	KIT-ALTERNATOR HARDWARE	
					(INCLUDES SCREWS)	

M-METRIC PART

105-2814 **ALTERNATOR GP-CHARGING** *(contd.)* **i03552882**

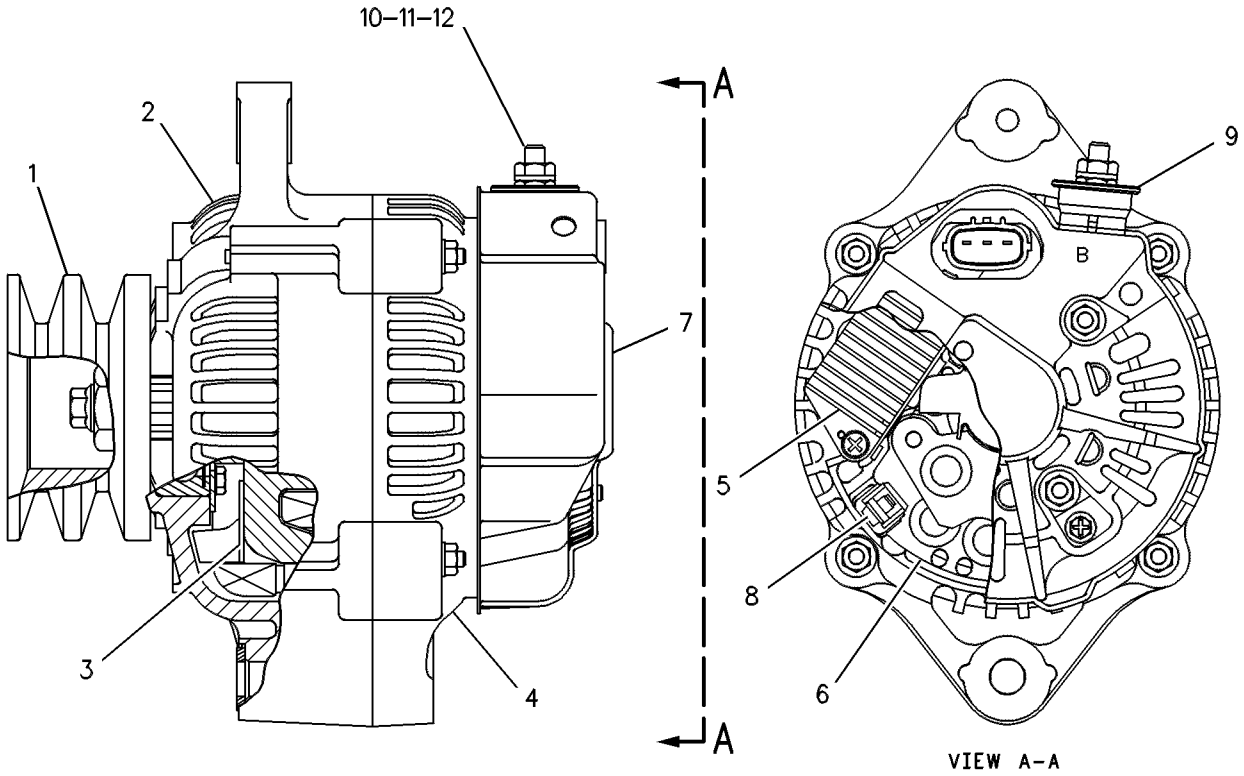

GRAPHIC #1 **<END>** g00128916

315-8353 ALTERNATOR GP-CHARGING

S/N: CYM1-UP
PART OF 342-1219 ENGINE AR-PRIMARY
AN ATTACHMENT

SMCS-1405 **i03077440**

NOTE	REF NO	GRAPHIC REF	PART NUMBER	QTY	PART NAME 1 2 3 4 5 6 (PRODUCT LEVEL)	SEE PAGE
	1	1	**294-7916**	1	BRACKET	
M	2	1	**6V-5217**	1	BOLT (M8X1.25X20-MM)	
C	3	1	**241-6010**	3	BOLT	
	4	1	**8T-4896**	1	WASHER-HARD (10.2X18.5X2.5-MM THK)	
	5	1	**9M-1974**	1	WASHER-HARD (8.8X16X2-MM THK)	
	6	1	**235-4962**	1	PLATE	
	7	1	**235-4973**	1	BOLT (M10X1.5X90-MM)	
YR	8	1	**105-2814**	1	ALTERNATOR GP-CHARGING	76

C-CHANGE FROM PREVIOUS TYPE
M-METRIC PART
R-REMFG PART MAY BE AVAILABLE
Y-SEPARATE ILLUSTRATION

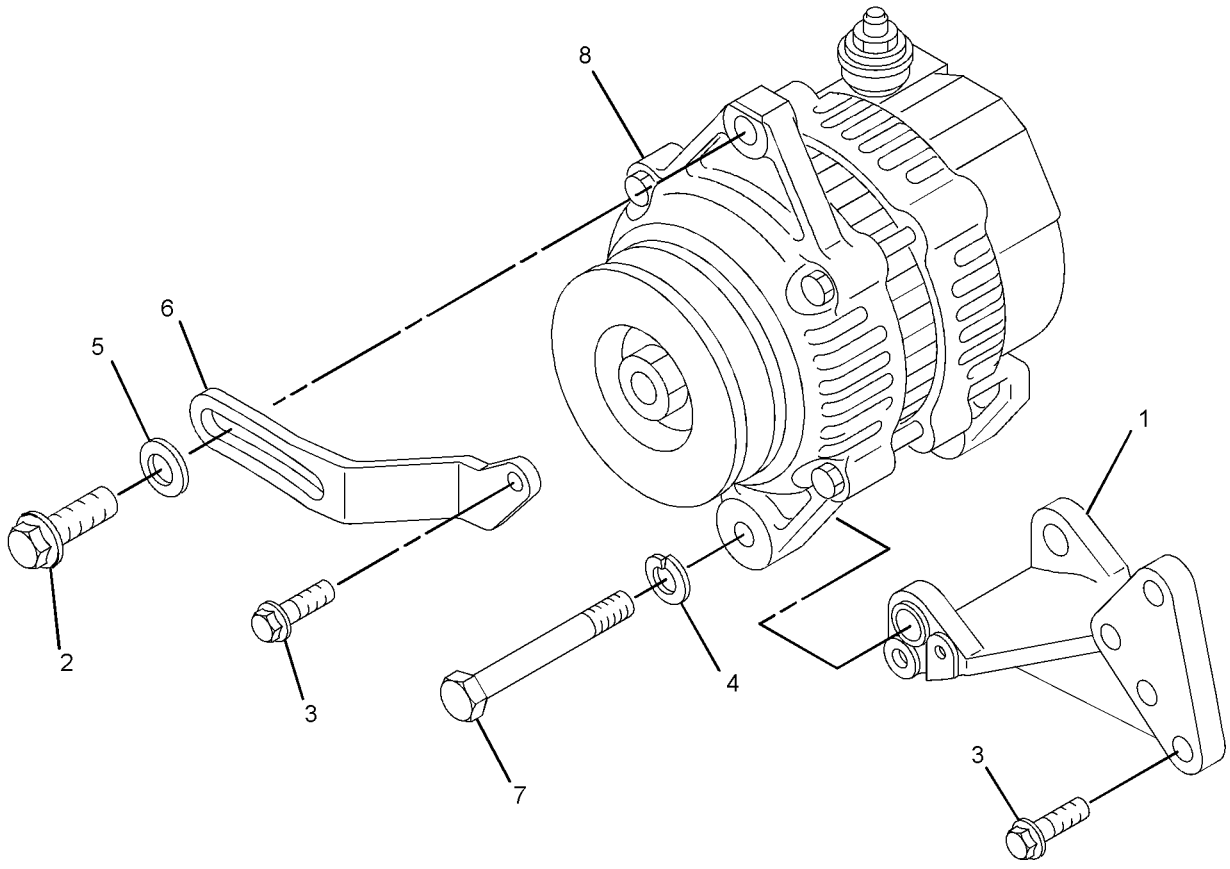

GRAPHIC #1 **<END>** g01567413

ELECTRICAL AND STARTING SYSTEM

328-2278 BATTERY & WIRING GP

S/N: A9H1-UP

PART OF 326-4785 CHASSIS AR

SMCS-1401, 1402 **i03969170**

NOTE	REF NO	GRAPHIC REF	PART NUMBER	QTY	PART NAME 1 2 3 4 5 6 (PRODUCT LEVEL)	SEE PAGE
	1	1	**7K-1181**	5	STRAP-CABLE	
	2	1	**178-3620**	2	STRAP-DUAL CLAMP	
	3	1	**193-8329**	1	CLAMP	
	4	1	**230-6368**	1	BATTERY (12-VOLT, MAINTENANCE FREE)	
	5	1	**328-2279**	1	CABLE AS-BATTERY (POSITIVE)	
E		1	**159-8049**		CABLE (00-GA, RED) (179-CM)	
		1	**8N-0869**	1	COVER-TERMINAL (RED)	
		1	**8N-1725**	1	COVER AS-TERMINAL (RED)	
		1	**3S-6049**	1	TERMINAL AS-BATTERY (POSITIVE)	
		1	**1M-6119**	1	BOLT (5/16-18X1.375-IN)	
		1	**1M-6120**	1	NUT (5/16-18-THD)	
		1	**276-7278**	1	TERMINAL-RING	
	6	1	**328-2280**	1	CABLE AS-BATTERY (GROUND)	
E		1	**159-8050**		CABLE (00-GA, BLACK) (61-CM)	
		1	**9G-0005**	1	COVER AS-TERMINAL (BLACK)	
		1	**8C-5918**	1	TERMINAL AS (NEGATIVE)	
		1	**1M-6119**	1	BOLT (5/16-18X1.375-IN)	
		1	**1M-6120**	1	NUT (5/16-18-THD)	
		1	**216-7790**	1	TERMINAL-CABLE (00-GA, 3/8-IN SCREW)	
	7	1	**328-2281**	2	BRACKET AS	
					(EACH INCLUDES)	
M		1	**159-9540**	1	NUT-WELD (M8X1.25-THD)	
	8	1	**328-2337**	1	CABLE AS-BATTERY (NEGATIVE)	
E		1	**159-8050**		CABLE (00-GA, BLACK) (26-CM)	
		1	**216-7790**	1	TERMINAL-CABLE (00-GA, 3/8-IN SCREW)	
		1	**315-0180**	1	TERMINAL-RING	
	9	1	**132-5789**	4	CLIP	
	10	1	**277-1873**	1	CLIP	
	11	1	**5P-4116**	4	WASHER-HARD (8.8X20.5X2-MM THK)	
	12	1	**8T-4121**	2	WASHER-HARD (11X21X2.5-MM THK)	
M	13	1	**8T-4133**	2	NUT (M10X1.5-THD)	
M	14	1	**8T-4189**	2	BOLT (M8X1.25X20-MM)	
M	15	1	**8T-4200**	2	BOLT (M8X1.25X16-MM)	
	16	1	**8X-5489**	5	SLEEVE	

E-ORDER BY THE CENTIMETER
M-METRIC PART

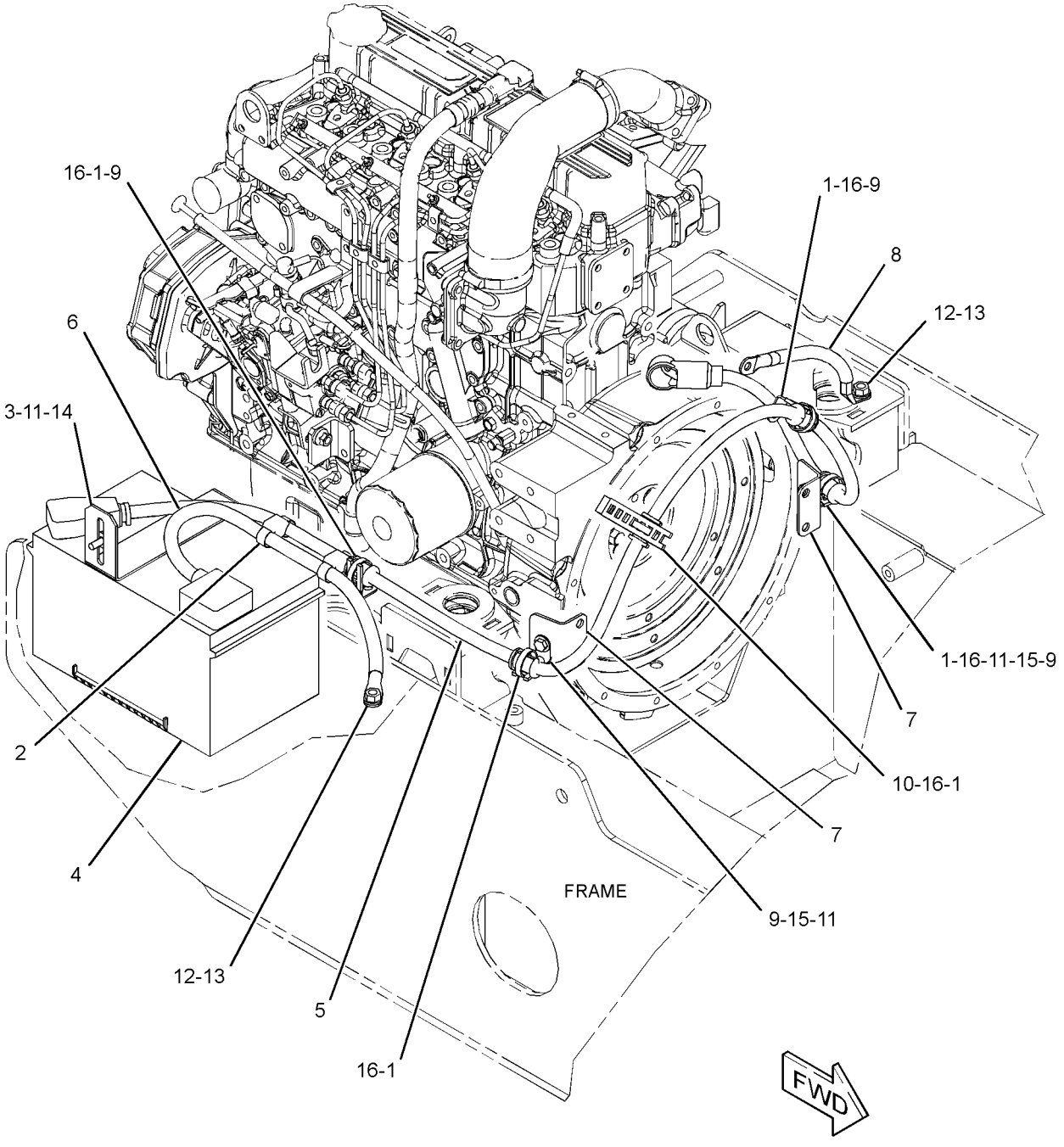

GRAPHIC #1 **<END>** g02148204

328-2345 ELECTRONICS GP-MACHINE

S/N: A9H1-UP

PART OF 328-2272 WIRING GP-CAB

SMCS-7610, 7620 **i04460686**

NOTE	PART NUMBER	QTY	PART NAME 1 2 3 4 5 6 (PRODUCT LEVEL)	SEE PAGE
	377-5261	1	SOFTWARE GP-MACHINE	
			—OR—	
	377-4710	1	CONTROL GP-UNPROGRAMMED (MACHINE)	
			—OR—	
	377-5262	1	SERVICE GP-MACHINE	
			(OPTIONAL SERVICE REPLACEMENT)(INCLUDES CONTROL GP & SOFTWARE)	

<END>

235-5904 GLOW PLUG GP

S/N: CYM1-UP
PART OF 342-1219 ENGINE AR-PRIMARY
AN ATTACHMENT

SMCS-1412 **i02162785**

NOTE	REF NO	GRAPHIC REF	PART NUMBER	QTY	PART NAME 1 2 3 4 5 6 (PRODUCT LEVEL)	SEE PAGE
	1	1	**107-3659**	4	GLOW PLUG	
	2	1	**257-8390**	1	PLATE-CONNECTION	

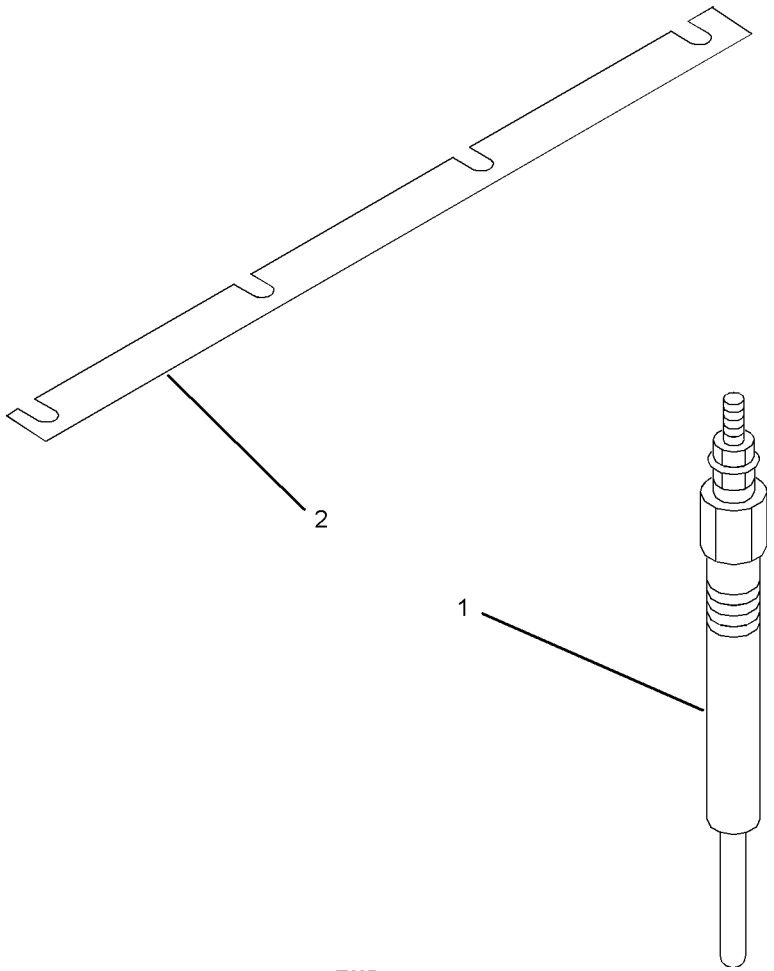

GRAPHIC #1 **<END>** g01011629

218-0942 HEATER GP-JACKET WATER

S/N: A9H1-UP
120-VOLT, 530-WATT
AN ATTACHMENT

SMCS-1383 **i03969178**

NOTE	REF NO	GRAPHIC REF	PART NUMBER	QTY	PART NAME 1 2 3 4 5 6 (PRODUCT LEVEL)	SEE PAGE
	1	1	**9X-6772**	2	STRAP-CABLE	
	2	1	*225-5642*	1	HEATER GP-JACKET WATER (120-VOLT, 530-WATT)	
	2A	1	**7X-6312**	1	CORD AS-HEATER ELEMENT (120-VOLT, 15-AMPERE)	
	2B	1	**225-5541**	1	ELEMENT AS-JACKET WATER HEATER (120-VOLT, 530-WATT)	
		1	**133-6517**	1	CAP AS-DUST	
	2C	1	**232-4703**	1	GASKET	

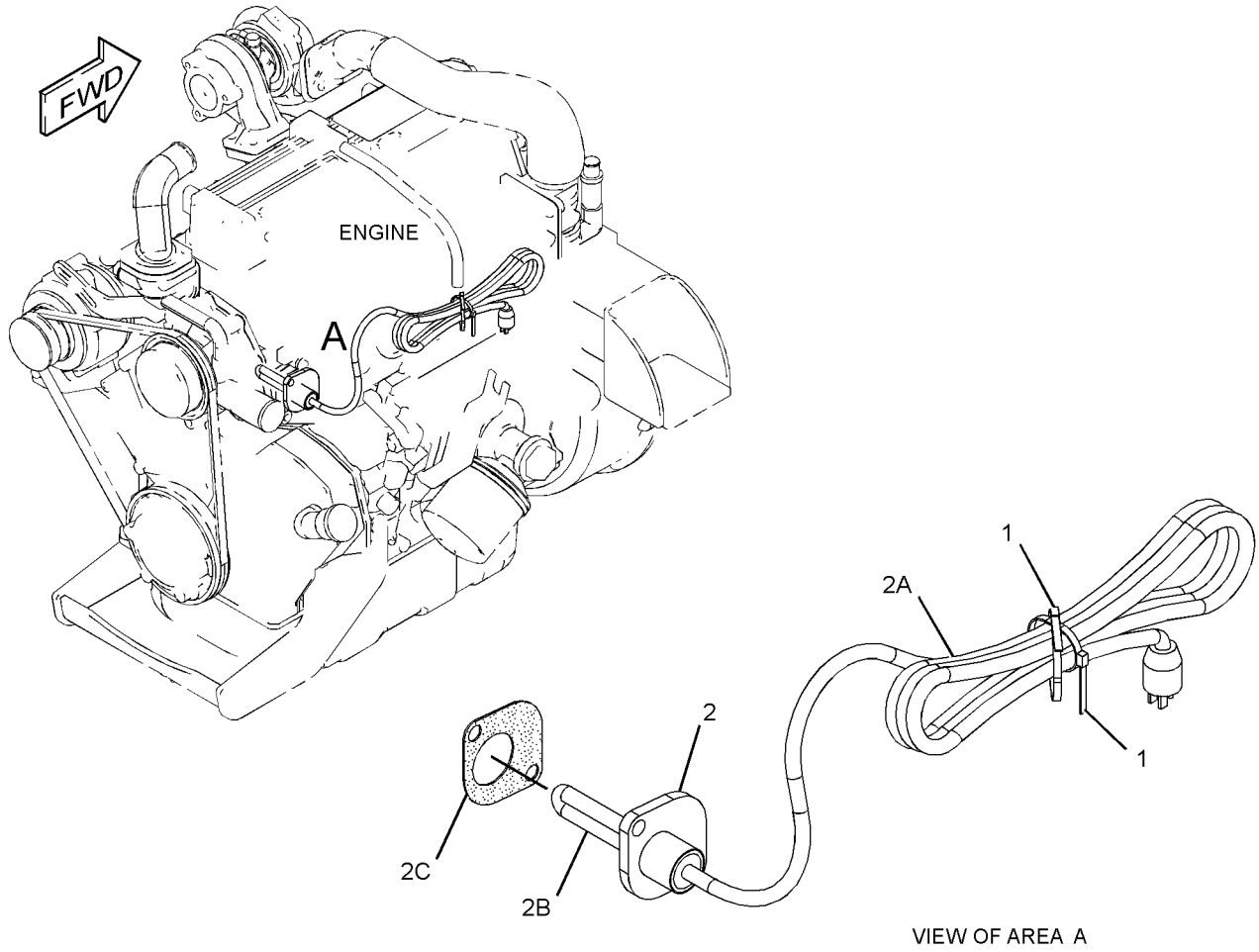

GRAPHIC #1 **<END>** g01335541

218-0943 HEATER GP-JACKET WATER

S/N: A9H1-UP
240-VOLT, 530-WATT
AN ATTACHMENT

SMCS-1383 **i03775170**

NOTE	REF NO	GRAPHIC REF	PART NUMBER	QTY	PART NAME 1 2 3 4 5 6 (PRODUCT LEVEL)	SEE PAGE
	1	1	**9X-6772**	2	STRAP-CABLE	
	2	1	*225-5644*	1	HEATER GP-JACKET WATER (240-VOLT, 530-WATT)	
	2A	1	**217-5912**	1	CORD AS	
	2B	1	**225-5535**	1	ELEMENT AS-JACKET WATER HEATER (240-VOLT, 530-WATT)	
		1	**133-6517**	1	CAP AS-DUST	
	2C	1	**232-4703**	1	GASKET	

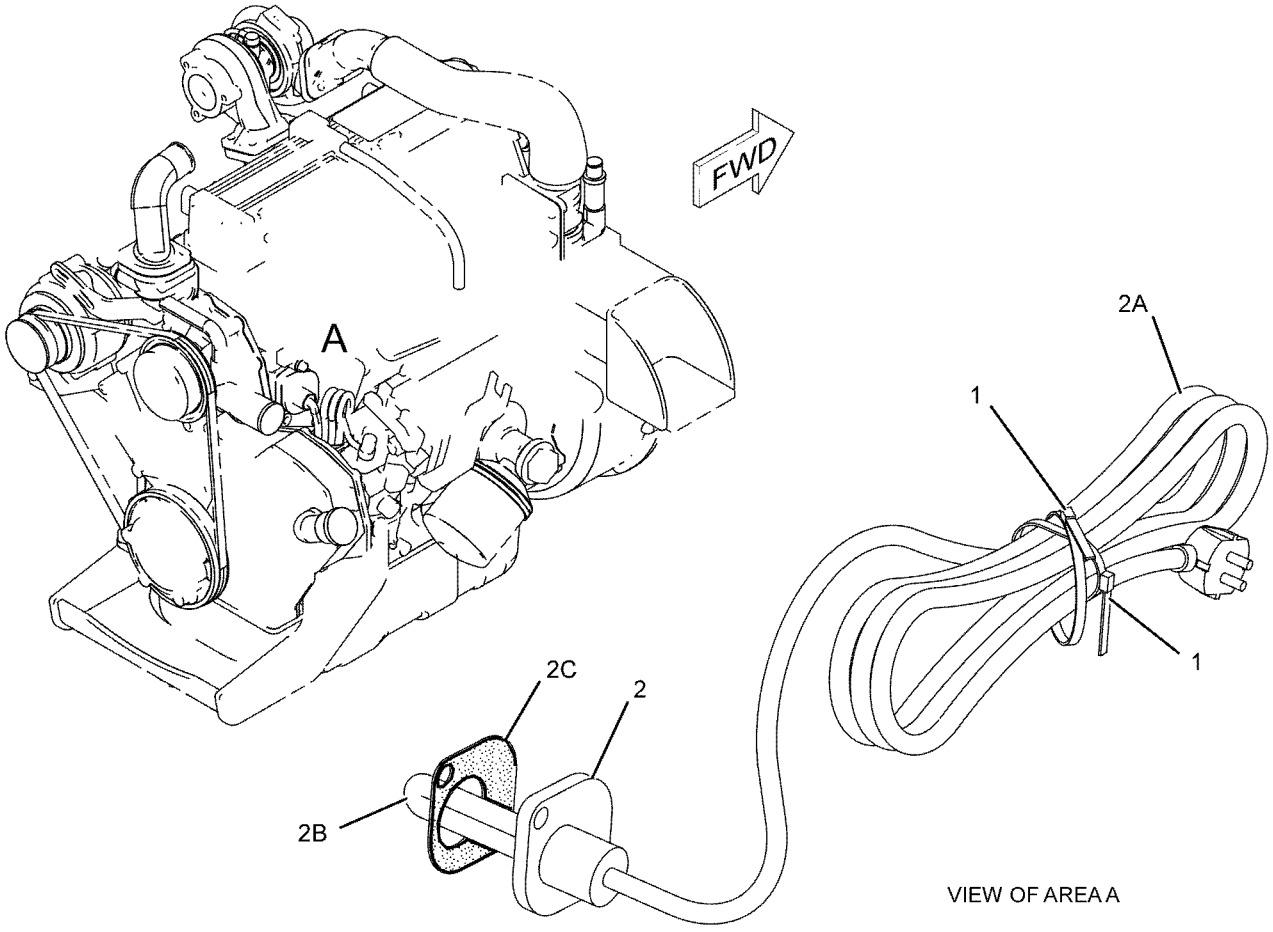

GRAPHIC #1 **<END>** g01108040

361-0452 KIT-WORK TOOL WIRING

S/N: A9H1-UP
AN ATTACHMENT

SMCS-1408 **i04041102**

NOTE	REF NO	GRAPHIC REF	PART NUMBER	QTY	PART NAME 1 2 3 4 5 6 (PRODUCT LEVEL)	SEE PAGE
	1	1	**216-4725**	1	HARNESS AS-WORK TOOL (LIFT ARM)	
		1	**156-1458**	1	COVER	
		1	**7T-0093**	8	PIN-CONNECTOR (12-GA TO 14-GA)	
		1	**9W-0852**	8	PIN-CONNECTOR (14-GA TO 16-GA)	
		1	**156-1460**	1	RECEPTACLE (8-PIN)	
		1	**1S-9593**	1	STRAP-CABLE	
	2	1	**146-9439**	5	RELAY AS (12-VOLT) (WORK TOOL)	
	3	1	**142-8633**	1	SWITCH AS-ROCKER (ELECTRIC POWER, WORK TOOL)	
		1	**111-7899**	1	GASKET	
	4	1	**110-8760**	1	STRAP	
	5	1	**3S-2093**	3	STRAP-CABLE	
	6	1	**178-3620**	1	STRAP-DUAL CLAMP	
	7	1	**102-8806**	1	KIT-RECEPTACLE (8-PIN)	
					(INCLUDES RECEPTACLE AS & WEDGE)	
	8	1	**159-9495**	1	NUT (1-1/2-18-THD)	
	9	1	**159-9496**	1	LOCKWASHER	

361-0452 KIT-WORK TOOL WIRING *(contd.)* i04041102

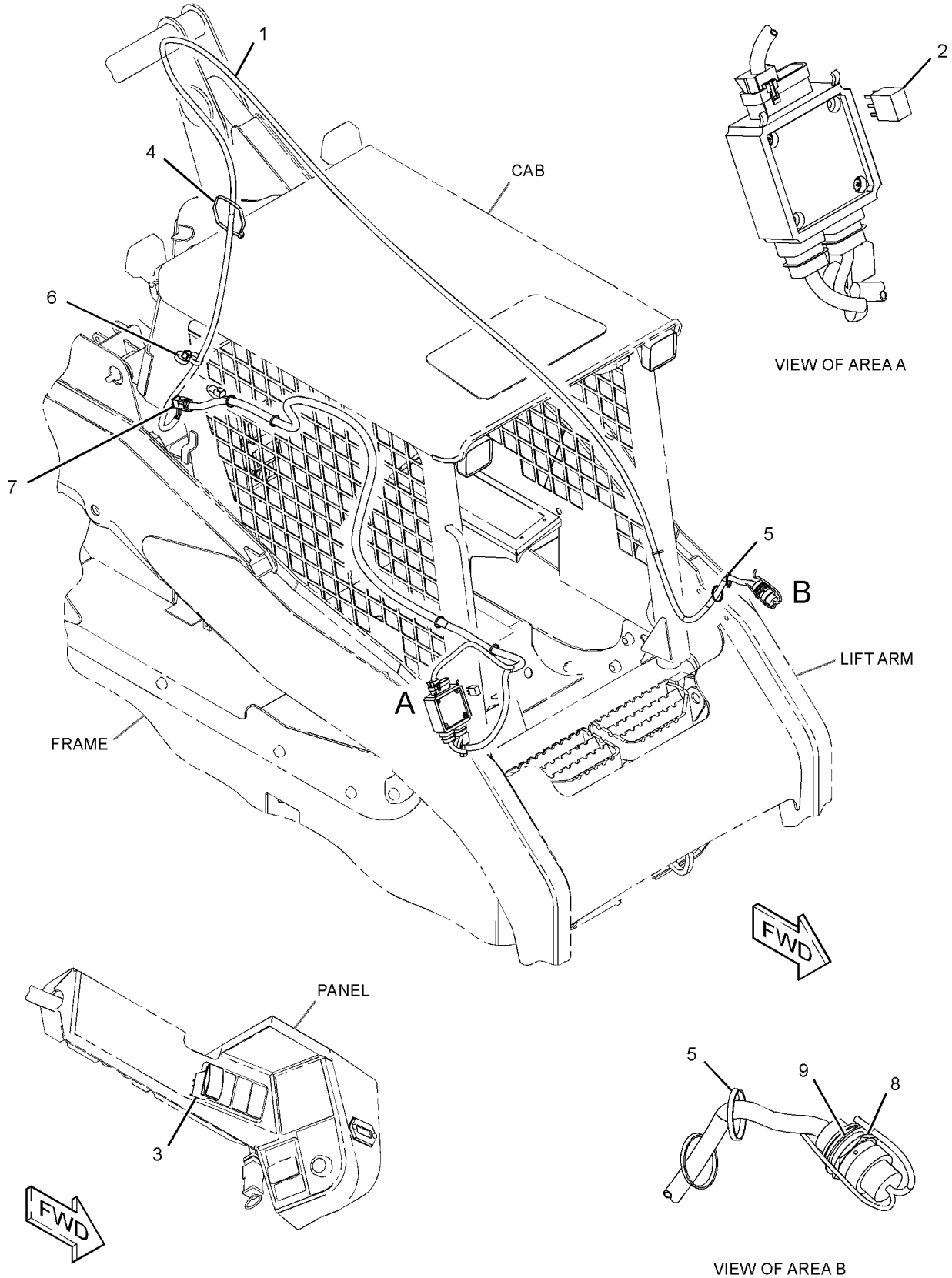

GRAPHIC #1 **<END>** g02471777

361-0454 KIT-WORK TOOL WIRING

S/N: A9H1-UP
AN ATTACHMENT

SMCS-1408 **i04041103**

NOTE	REF NO	GRAPHIC REF	PART NUMBER	QTY	PART NAME 1 2 3 4 5 6 (PRODUCT LEVEL)	SEE PAGE
	1	1	**216-4725**	1	HARNESS AS-WORK TOOL (LIFT ARM)	
		1	**156-1458**	1	COVER	
		1	**7T-0093**	8	PIN-CONNECTOR (12-GA TO 14-GA)	
		1	**9W-0852**	8	PIN-CONNECTOR (14-GA TO 16-GA)	
		1	**156-1460**	1	RECEPTACLE (8-PIN)	
		1	**1S-9593**	1	STRAP-CABLE	
	2	1	**146-9439**	5	RELAY AS (12-VOLT) (WORK TOOL)	
	3	1	**142-8633**	1	SWITCH AS-ROCKER (ELECTRIC POWER, WORK TOOL)	
		1	**111-7899**	1	GASKET	
	4	1	**110-8760**	1	STRAP	
	5	1	**3S-2093**	3	STRAP-CABLE	
	6	1	**178-3620**	1	STRAP-DUAL CLAMP	
	7	1	**102-8806**	1	KIT-RECEPTACLE (8-PIN)	
					(INCLUDES RECEPTACLE AS & WEDGE)	
	8	1	**159-9495**	1	NUT (1-1/2-18-THD)	
	9	1	**159-9496**	1	LOCKWASHER	
FY			**231-4258**	1	CONTROL GP-HANDLE (LH)	504

F-NOT SHOWN
Y-SEPARATE ILLUSTRATION

361-0454 KIT-WORK TOOL WIRING *(contd.)* i04041103

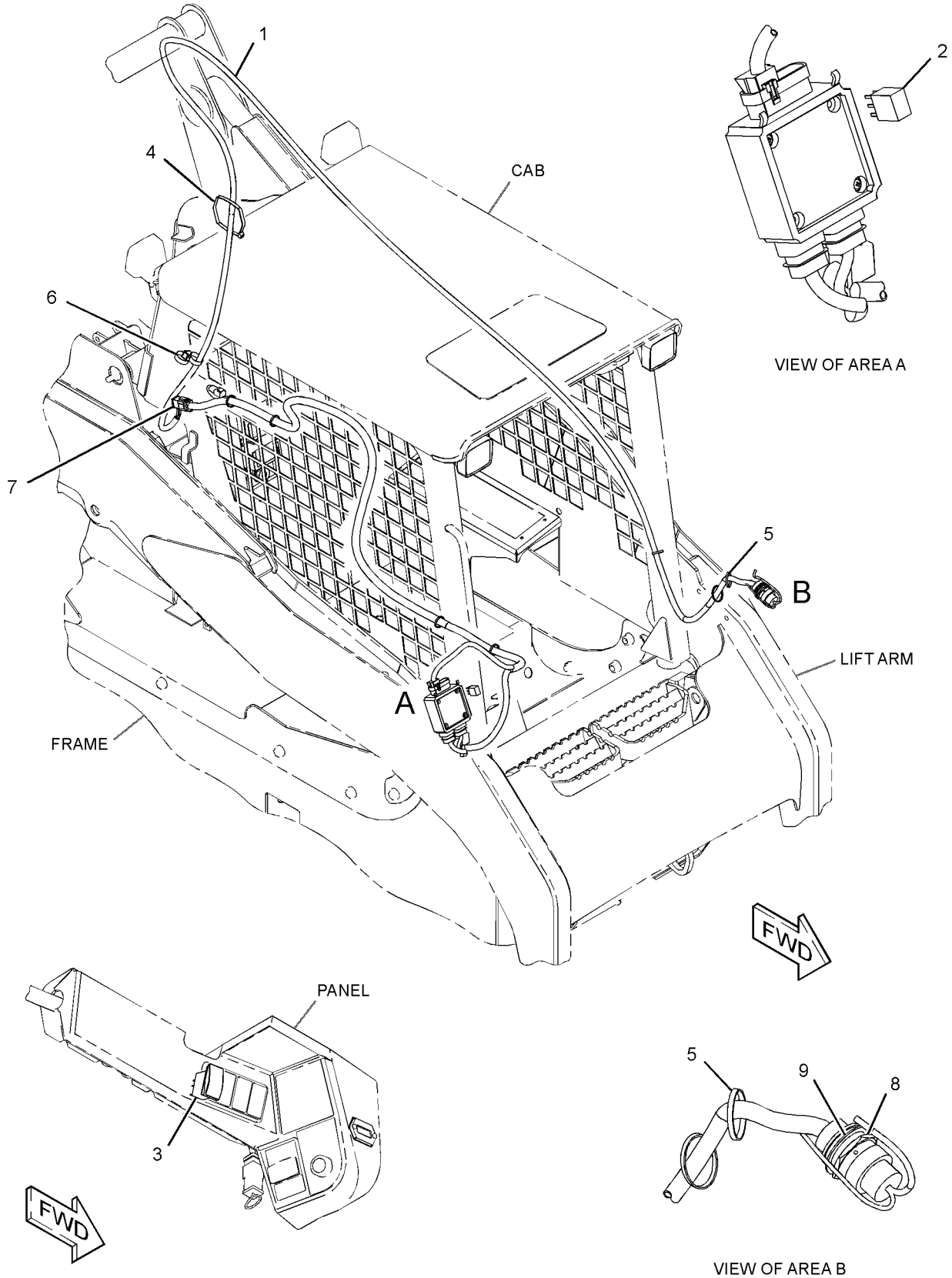

GRAPHIC #1 **<END>** g02471777

234-4328 LAMP GP-FLOOD

S/N: A9H1-UP
12-VOLT
PART OF 218-6425 LIGHTING GP-FLOOD

SMCS-1434 **i03969175**

NOTE	REF NO	GRAPHIC REF	PART NUMBER	QTY	PART NAME 1 2 3 4 5 6 (PRODUCT LEVEL)	SEE PAGE
	1	1	**9W-0607**	1	LAMP (12-VOLT, 55-WATT) (FLOODLIGHT)	
M	2	1	**8T-0389**	1	LOCKNUT (M10X1.5-THD)	
	3	1	**9X-4244**	2	SCREW-SPECIAL (M4X1.79X25-MM)	
	4	1	**202-6614**	1	LENS AS (FLOODLIGHT)	
	5	1	**234-7730**	1	BODY AS (FLOODLIGHT)	
	6	1	**164-7556**	1	BRACKET (LAMP RETAINING)	
	7	1	**234-7731**	1	BRACKET AS	
	8	1	**8T-4121**	1	WASHER-HARD (11X21X2.5-MM THK)	

M-METRIC PART

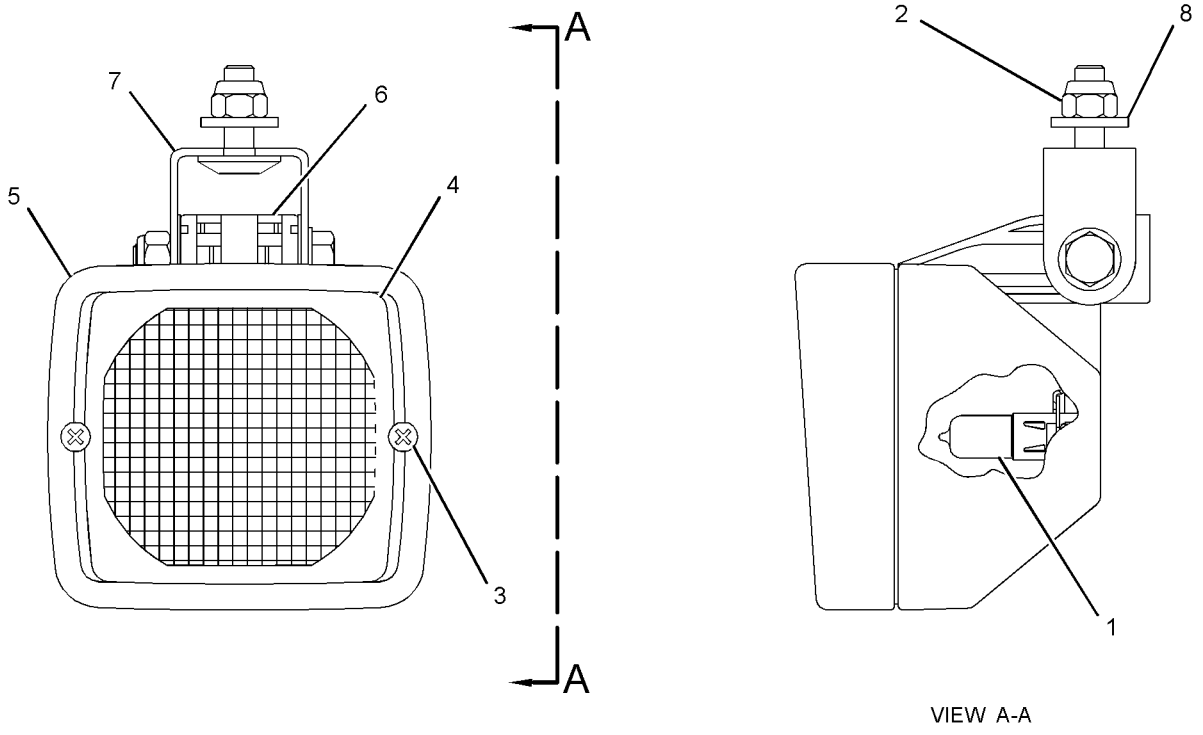

VIEW A-A

GRAPHIC #1 **<END>** g01283627

234-7727 LAMP GP-FLOOD

S/N: A9H1-UP
12-VOLT
PART OF 216-4746 LIGHTING GP-FLOOD

SMCS-1434 **i03686766**

NOTE	REF NO	GRAPHIC REF	PART NUMBER	QTY	PART NAME 1 2 3 4 5 6 (PRODUCT LEVEL)	SEE PAGE
	1	1	**9W-0607**	1	LAMP (12-VOLT, 55-WATT) (FLOODLIGHT)	
	2	1	**9X-4244**	2	SCREW-SPECIAL (M4X1.79X25-MM)	
	3	1	**202-6611**	1	LENS AS (FLOODLIGHT)	
	4	1	**234-7758**	1	BODY AS	
	5	1	**164-7556**	1	BRACKET (LAMP RETAINING)	
	6	1	**234-7756**	1	BRACKET-MOUNTING	

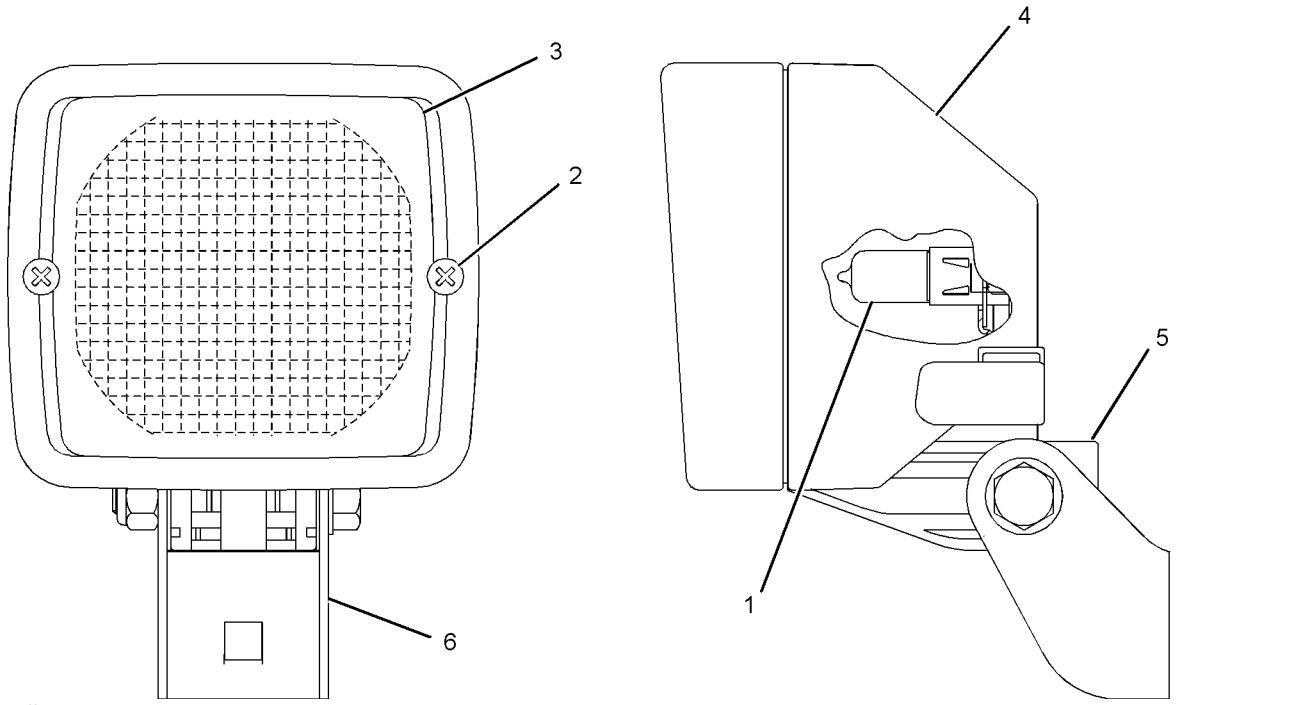

GRAPHIC #1 **<END>** g01017848

3E-7584 LAMP GP-HEAD & SIGNAL–RH

S/N: A9H1-UP
12-VOLT
PART OF 358-6921 KIT-ROADING CONVERSION, 328-2333 LIGHTING GP-ROADING AN ATTACHMENT

SMCS-1429, 1430 **i03971099**

NOTE	REF NO	GRAPHIC REF	PART NUMBER	QTY	PART NAME 1 2 3 4 5 6 (PRODUCT LEVEL)	SEE PAGE
	1	1	**9X-4244**	4	SCREW-SPECIAL (M4X1.79X25-MM)	
	2	1	**100-3251**	2	SCREW-LENS	
	3	1	**9X-9865**	1	SEAL	
	4	1	**100-3248**	1	LENS AS (HEADLIGHT) (HIGH, LOW BEAM)	
	5	1	**9W-3324**	1	LAMP-HEAD (12-VOLT, 60/55-WATT) (CLEAR)	
	6	1	**100-3247**	1	BODY AS-LAMP	
M	7	1	**8T-5005**	1	BOLT (M10X1.5X70-MM)	
M	8	1	**8T-0389**	1	LOCKNUT (M10X1.5-THD)	
	9	1	**100-3253**	1	SPACER (SPHERICAL)	
	10	1	**100-3254**	1	SPACER (SPHERICAL)	
	11	1	**100-3255**	1	WASHER (SPHERICAL)	
	12	1	**102-8805**	1	KIT-RECEPTACLE (6-PIN)	
					(INCLUDES RECEPTACLE AS & WEDGE)	
	13	1	**8T-8729**	5	PIN-CONNECTOR (16-GA TO 18-GA)	
	14	1	**100-3250**	1	LENS (AMBER) (FRONT TURN)	
	15	1	**8T-8737**	1	PLUG-SEAL	
	16	1	**100-3246**	1	LAMP (12-VOLT, 4-WATT)	
	17	1	**9W-3326**	1	LAMP (12-VOLT, 21-WATT) (TURN SIGNAL)	

M-METRIC PART

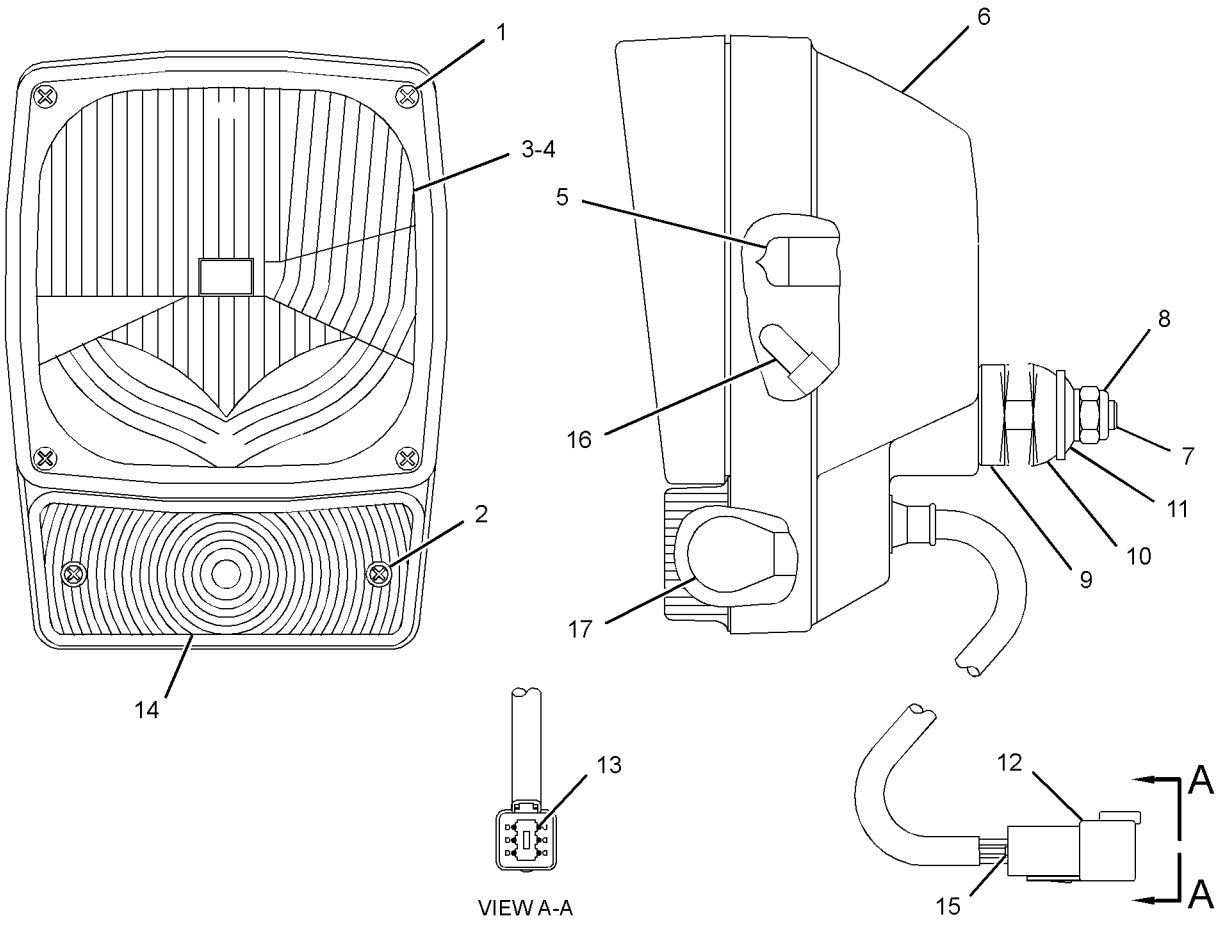

GRAPHIC #1 **<END>** g01953367

142-7503 LAMP GP-STOP & TAIL

S/N: A9H1-UP
12-VOLT
PART OF 328-2344 LAMP GP-STOP & TAIL
AN ATTACHMENT

SMCS-1432 **i04035778**

NOTE	REF NO	GRAPHIC REF	PART NUMBER	QTY	PART NAME 1 2 3 4 5 6 (PRODUCT LEVEL)	SEE PAGE
	1	1	**084-4348**	1	LAMP (12-VOLT, 5-WATT) (STOP, TAIL)	
	2	1	**102-8804**	1	KIT-RECEPTACLE (4-PIN)	
					(INCLUDES RECEPTACLE AS & WEDGE)	
	3	1	**165-4895**	1	LENS	
M	4	1	**5C-2890**	2	NUT (M6X1-THD)	
	5	1	**8T-0087**	2	LOCKWASHER	

M-METRIC PART

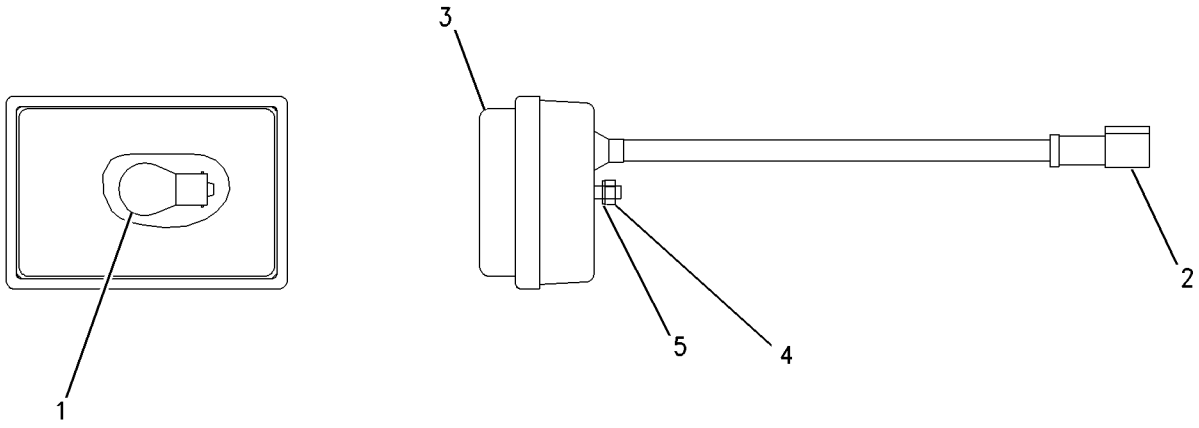

GRAPHIC #1 **<END>** g00669668

142-8634 LAMP GP-STOP & TAIL

S/N: A9H1-UP
12-VOLT
PART OF 328-2346 LAMP GP-STOP & TAIL, 328-2333 LIGHTING GP-ROADING AN ATTACHMENT

SMCS-1432 **i04368915**

NOTE	REF NO	GRAPHIC REF	PART NUMBER	QTY	PART NAME 1 2 3 4 5 6 (PRODUCT LEVEL)	SEE PAGE
	1	1	**9W-3326**	1	LAMP (12-VOLT, 21-WATT) (STOP LIGHT)	
	2	1	**084-4348**	1	LAMP (12-VOLT, 5-WATT) (STOP, TAIL)	
	3	1	**102-8804**	1	KIT-RECEPTACLE (4-PIN)	
					(INCLUDES RECEPTACLE AS & WEDGE)	
	4	1	**146-2438**	1	LENS (REAR)	
M	5	1	**5C-2890**	2	NUT (M6X1-THD)	
	6	1	**1H-3244**	2	LOCKWASHER	
	7	1	**8T-8729**	4	PIN-CONNECTOR (16-GA TO 18-GA)	

M-METRIC PART

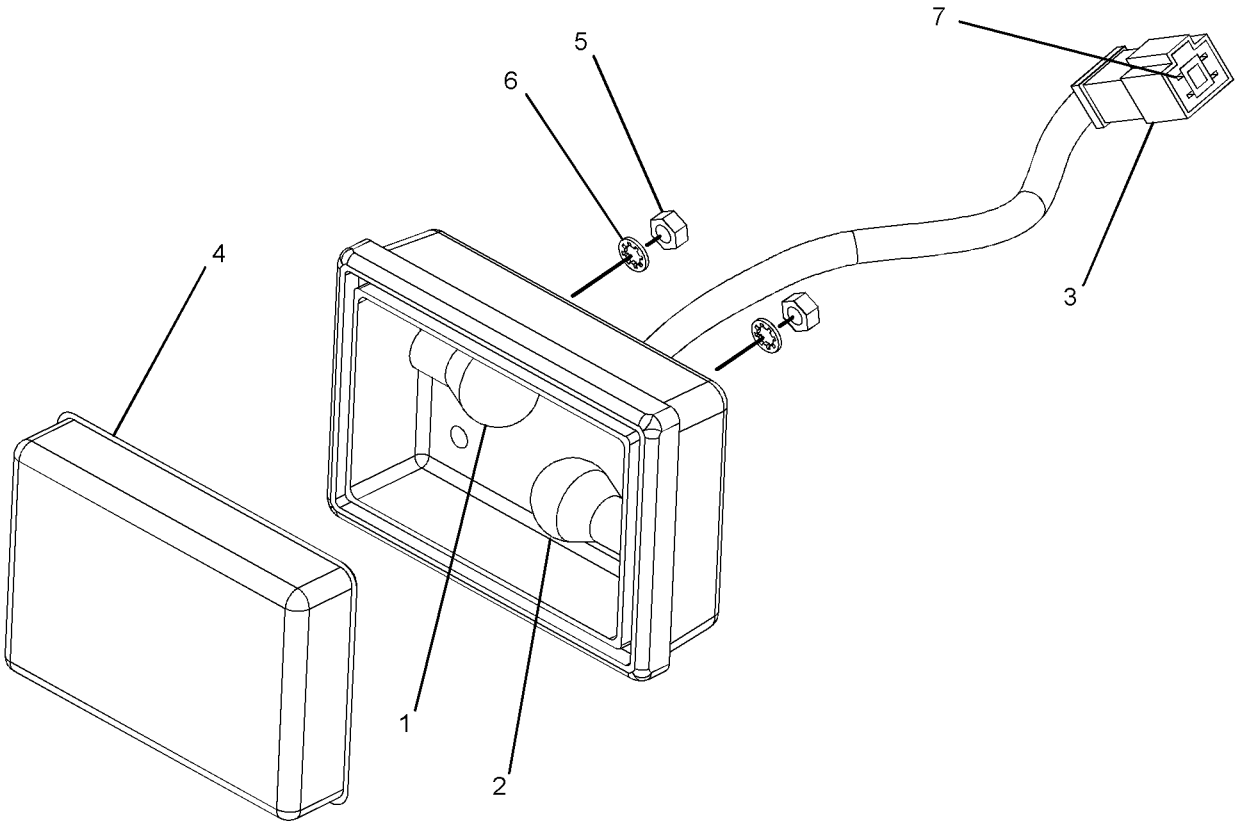

GRAPHIC #1 **<END>** g01212497

328-2344 LAMP GP-STOP & TAIL–REAR

S/N: A9H1-UP
PART OF 326-5249, 326-5289 CONVERSION AR-MACHINE
AN ATTACHMENT

SMCS-1432 **i04048549**

NOTE	REF NO	GRAPHIC REF	PART NUMBER	QTY	PART NAME 1 2 3 4 5 6 (PRODUCT LEVEL)	SEE PAGE
	1	1	**9R-1499**	2	REFLECTOR	
Y	2	1	**142-7503**	1	LAMP GP-STOP & TAIL (12-VOLT) (LH)	92
Y	2A	1	**142-7503**	1	LAMP GP-STOP & TAIL (12-VOLT) (RH)	92
	3	1	**8T-4205**	4	WASHER-HARD (7.2X14.5X2-MM THK)	
	4	1	**7K-1181**	1	STRAP-CABLE	

Y-SEPARATE ILLUSTRATION

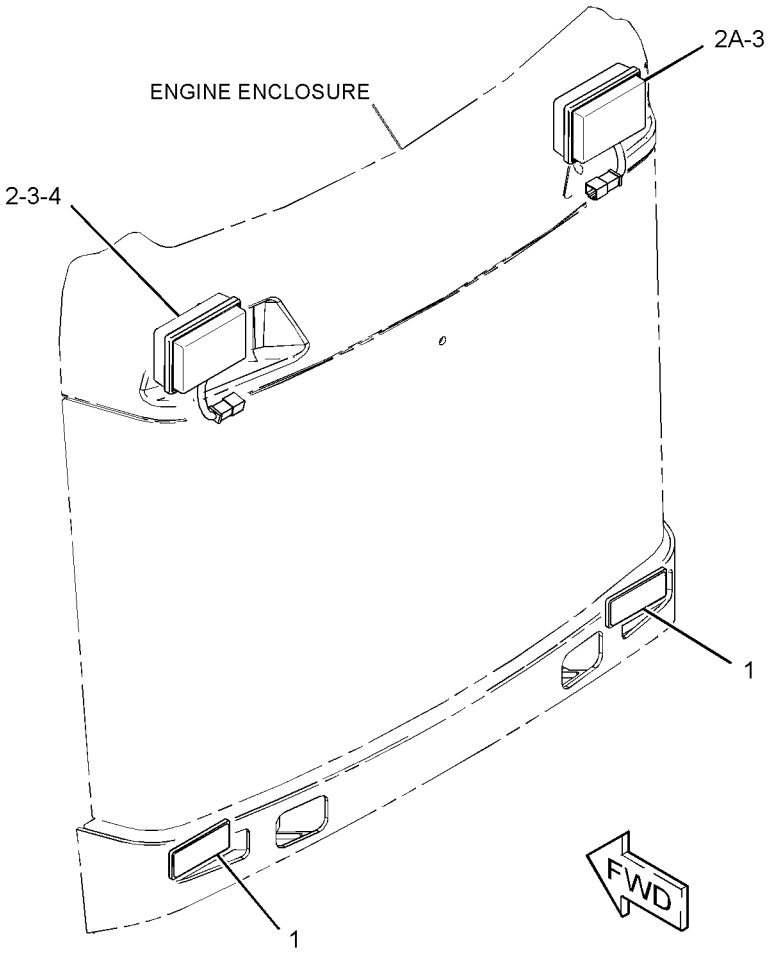

GRAPHIC #1 **<END>** g02471697

328-2346 LAMP GP-STOP & TAIL–REAR

S/N: A9H1-UP
PART OF 326-5299 CONVERSION AR-MACHINE
AN ATTACHMENT

SMCS-1432 **i04048550**

NOTE	REF NO	GRAPHIC REF	PART NUMBER	QTY	PART NAME 1 2 3 4 5 6 (PRODUCT LEVEL)	SEE PAGE
	1	1	**9R-1499**	2	REFLECTOR	
Y	2	1	**142-8634**	1	LAMP GP-STOP & TAIL (12-VOLT) (LH)	93
Y	2A	1	**142-8634**	1	LAMP GP-STOP & TAIL (12-VOLT) (RH)	93
	3	1	**142-9331**	1	SWITCH AS-ROCKER (HAZARD WARNING LIGHTS)	
	4	1	**226-5900**	1	SWITCH AS-ROCKER (TURN SIGNAL)	
					(EACH SWITCH AS-ROCKER INCLUDES)	
		1	**111-7899**	1	GASKET	
	5	1	**242-9000**	1	FLASHER AS (12-VOLT) (STOP LIGHT)	
	6	1	**328-2343**	1	HARNESS AS-SWITCH (REAR LIGHTS)	
		1	**8T-8729**	3	PIN-CONNECTOR (16-GA TO 18-GA)	
		1	**7R-2751**	3	PLUG-CONNECTOR	
		1	**102-8803**	1	KIT-RECEPTACLE (3-PIN)	
					(INCLUDES RECEPTACLE AS & WEDGE)	
		1	**7R-2750**	3	SEAL-CONNECTOR	
		1	**202-0314**	3	TERMINAL AS	
					(EACH INCLUDES)	
		1	**128-4123**	1	SEAL	
		1	**3S-2093**	1	STRAP-CABLE	
	7	1	**7K-1181**	2	STRAP-CABLE	

Y-SEPARATE ILLUSTRATION

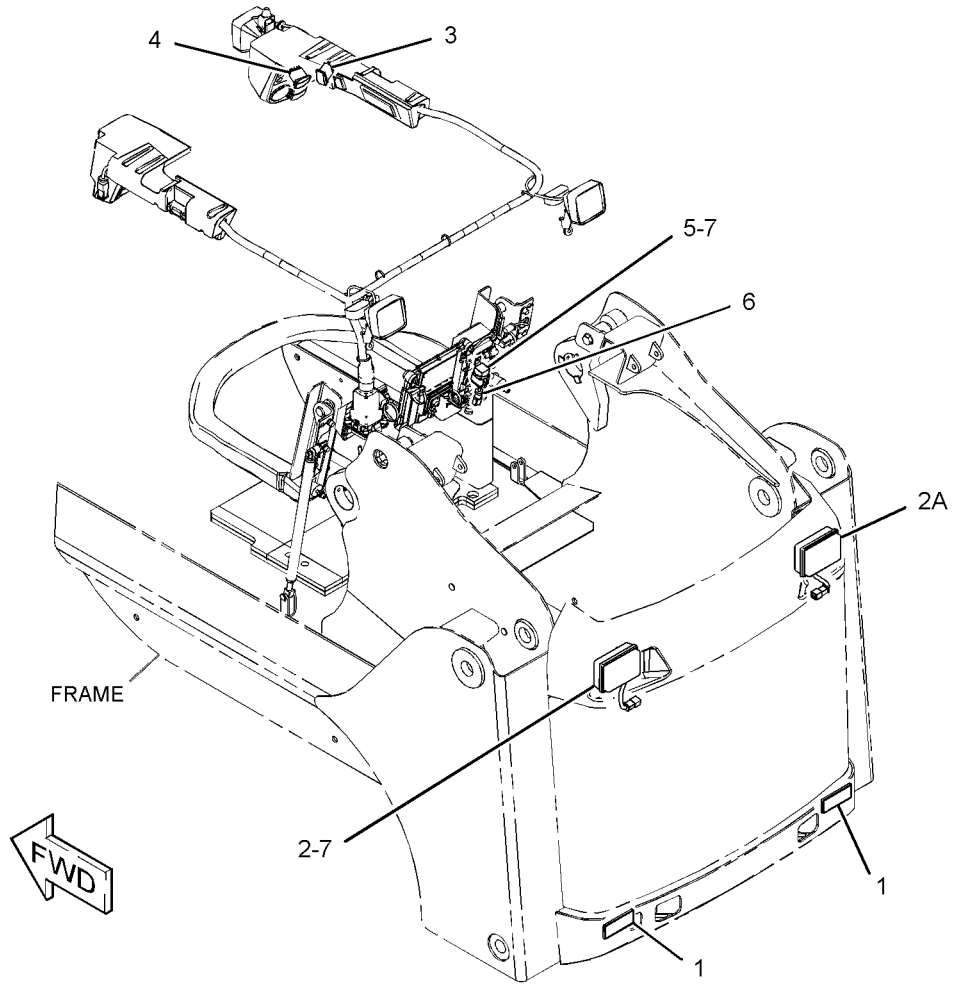

GRAPHIC #1 **<END>** g02494276

309-1325 LAMP GP-WARNING BEACON–AMBER

S/N: A9H1-UP
12-VOLT
PART OF 278-1293 CONVERSION GP-ROADING, 358-6919 KIT-ROADING CONVERSION AN ATTACHMENT

SMCS-1431 **i03686768**

NOTE	REF NO	GRAPHIC REF	PART NUMBER	QTY	PART NAME 1 2 3 4 5 6 (PRODUCT LEVEL)	SEE PAGE
	1	1	**272-9800**	1	LENS (AMBER) (WARNING BEACON)	
	2	1	**9X-8118**	1	LAMP (12-VOLT, 55-WATT) (WARNING BEACON)	
	3	1	**9X-8139**	1	BELT-DRIVE (WARNING BEACON)	
	4	1	**9R-7958**	1	CORD AS	
	4A	1	**9R-7942**	1	PLUG AS	

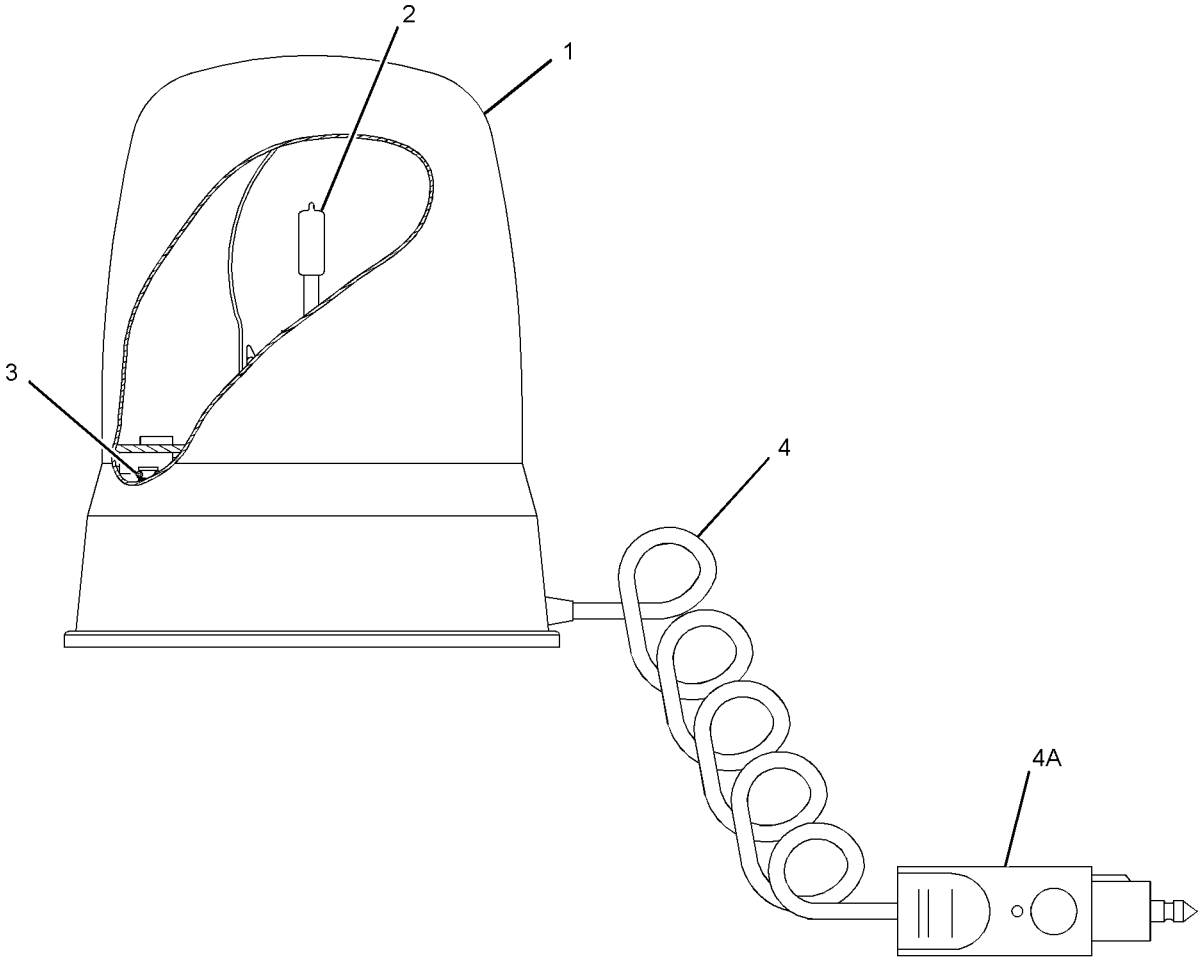

GRAPHIC #1 **<END>** g01382357

216-4746 LIGHTING GP-FLOOD–REAR

S/N: A9H1-UP

PART OF 326-5400 CAB AR

SMCS-1434 **i04369573**

NOTE	REF NO	GRAPHIC REF	PART NUMBER	QTY	PART NAME 1 2 3 4 5 6 (PRODUCT LEVEL)	SEE PAGE
	1	1	**142-9326**	1	SWITCH AS-ROCKER (REAR WORK LAMPS)	
		1	**111-7899**	1	GASKET	
Y	2	1	**234-7727**	2	LAMP GP-FLOOD (12-VOLT)	90
M	3	1	**195-0937**	2	INSERT-THREADED (M8X1.25-THD)	
	4	1	**5P-8439**	2	GROMMET	
M	5	1	**6V-2317**	2	BOLT (M8X1.25X30-MM)	
	6	1	**8T-4224**	4	WASHER-HARD (8.8X16X2-MM THK)	

M-METRIC PART
Y-SEPARATE ILLUSTRATION

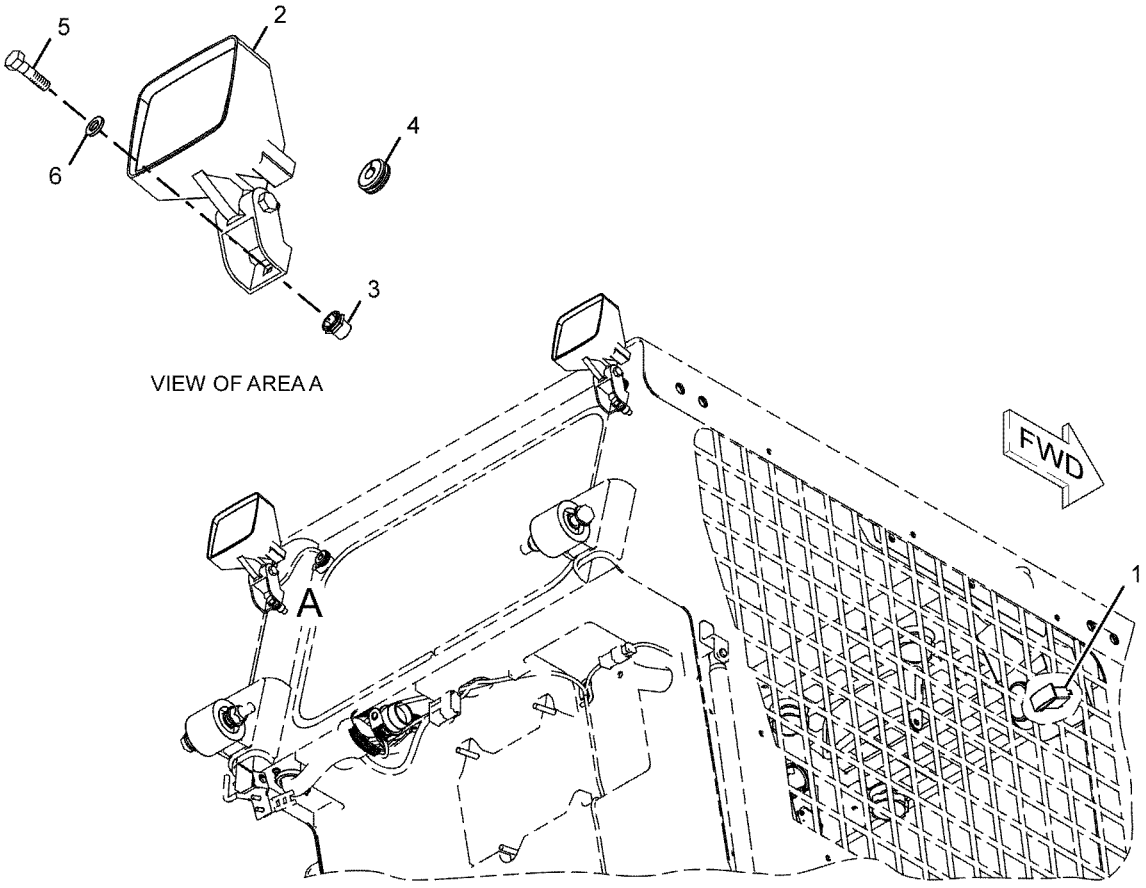

GRAPHIC #1 **<END>** g01136313

218-6425 LIGHTING GP-FLOOD—FRONT

S/N: A9H1-UP

PART OF 326-5400 CAB AR

SMCS-1434 **i03961871**

NOTE	REF NO	GRAPHIC REF	PART NUMBER	QTY	PART NAME 1 2 3 4 5 6 (PRODUCT LEVEL)	SEE PAGE
Y	1		**234-4328**	2	LAMP GP-FLOOD (12-VOLT)	89
	2		**5P-8439**	2	GROMMET	
	3		**8T-4121**	4	WASHER-HARD (11X21X2.5-MM THK)	

Y-SEPARATE ILLUSTRATION

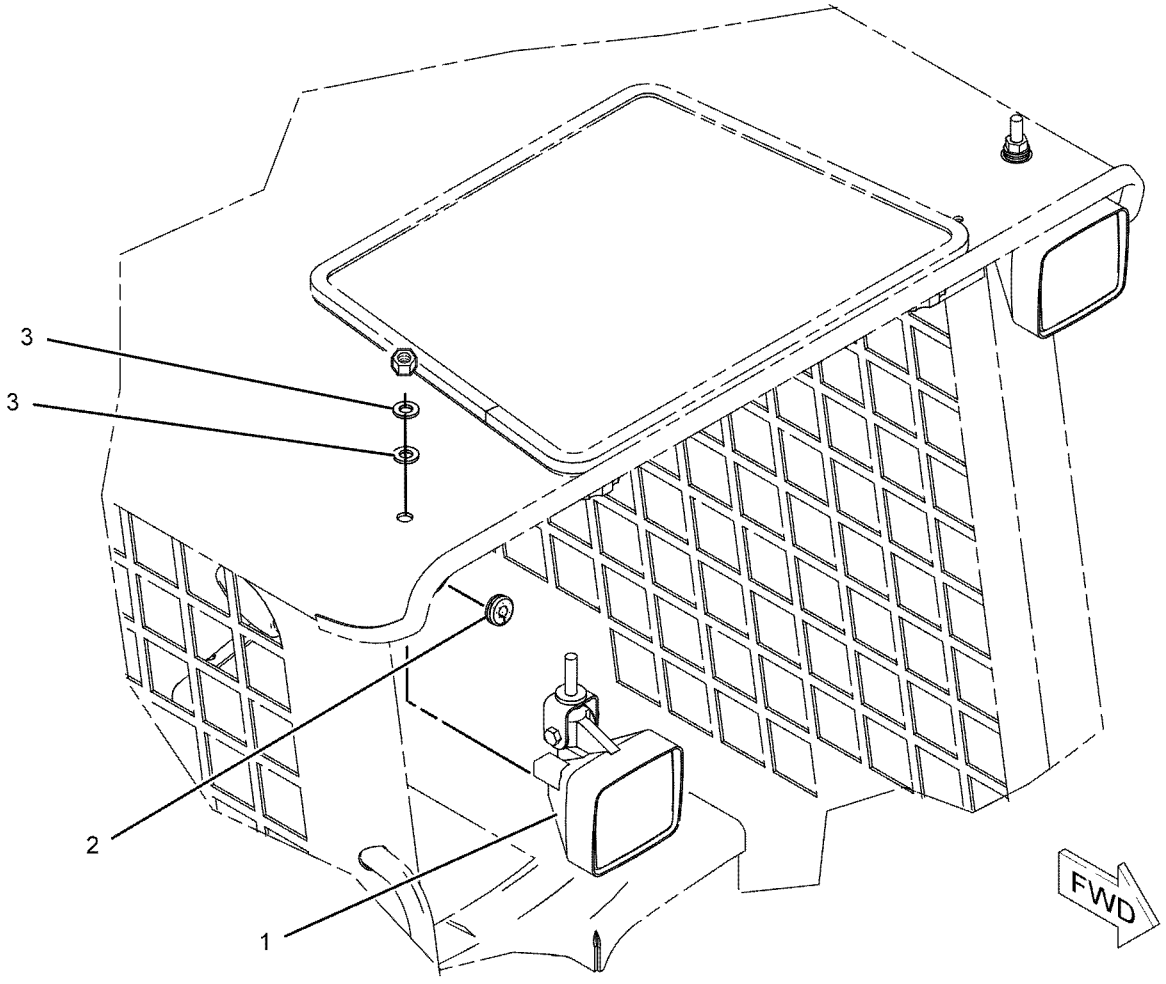

GRAPHIC #1 **<END>** g01040888

ELECTRICAL AND STARTING SYSTEM

328-2333 LIGHTING GP-ROADING

S/N: A9H1-UP

PART OF 326-5489 CONVERSION AR-MACHINE, 326-5529, 326-5559 CONVERSION AR-ROADING

AN ATTACHMENT

SMCS-1429 **i03973030**

NOTE	REF NO	GRAPHIC REF	PART NUMBER	QTY	PART NAME 1 2 3 4 5 6 (PRODUCT LEVEL)	SEE PAGE
Y	1	1	**3E-7584**	2	LAMP GP-HEAD & SIGNAL (12-VOLT)	91
	2	1	**7K-1181**	1	STRAP-CABLE	
	3	1	**9R-1499**	2	REFLECTOR	
Y	4	1	**142-8634**	2	LAMP GP-STOP & TAIL (12-VOLT)	93
	5	1	**142-9329**	1	SWITCH AS-ROCKER (ROADING LIGHTS)	
	6	1	**142-9331**	1	SWITCH AS-ROCKER (HAZARD WARNING LIGHTS)	
					(EACH SWITCH AS INCLUDES)	
		1	**111-7899**	1	GASKET	
	7	1	**146-9439**	1	RELAY AS (12-VOLT) (STOP LIGHT)	
	8	1	**226-5900**	1	SWITCH AS-ROCKER (TURN SIGNAL)	
		1	**111-7899**	1	GASKET	
	9	1	**242-9000**	1	FLASHER AS (12-VOLT) (STOP LIGHT)	
	10	1	**258-4134**	1	FUSE AS (ROADING)	
	11	1	**328-2334**	1	HARNESS AS-REAR LIGHTING	
		1	**186-3735**	7	PIN-CONNECTOR (16-GA TO 18-GA)	
		1	**9W-0852**	1	PIN-CONNECTOR (14-GA TO 16-GA)	
		1	**155-2265**	1	KIT-CONNECTING PLUG (8-PIN)	
		1	**155-2274**	2	KIT-CONNECTING PLUG (6-PIN)	
					(EACH PLUG KIT INCLUDES PLUG AS, WEDGE & INTERFACE SEAL)	
		1	**8T-8737**	5	PLUG-SEAL	
		1	**102-8806**	1	KIT-RECEPTACLE (8-PIN)	
					(INCLUDES RECEPTACLE AS & WEDEG)	
		1	**186-3736**	14	SOCKET-CONNECTOR (16-GA TO 18-GA)	
		1	**9W-0844**	1	SOCKET-CONNECTOR (14-GA TO 16-GA)	
		1	**3S-2093**	1	STRAP-CABLE	
E		1	**125-7874**		TUBE-HEAT SHRINK (5.72-MM DIA) (30-CM)	
	12	1	**328-2343**	1	HARNESS AS-SWITCH (REAR LIGHTS)	
		1	**186-3735**	3	PIN-CONNECTOR (16-GA TO 18-GA)	
		1	**7R-2751**	3	PLUG-CONNECTOR	
		1	**102-8803**	1	KIT-RECEPTACLE (3-PIN)	
					(INCLUDES RECEPTACLE AS & WEDEG)	
		1	**7R-2750**	3	SEAL-CONNECTOR	
		1	**202-0314**	3	TERMINAL AS	
					(EACH INCLUDES)	
		1	**128-4123**	1	SEAL	
		1	**3S-2093**	1	STRAP-CABLE	
	13	1	**206-1346**	2	STRAP-CABLE	
	14	1	**3S-2093**	18	STRAP-CABLE	
	15	1	**4P-7581**	1	CLIP	
	16	1	**8T-1887**	2	CLIP (SLOT)	
	17	1	**8T-1888**	2	CLIP (TAB)	
M	18	1	**8T-4201**	1	BOLT-LOCKING (M10X1.5X20-MM)	
	19	1	**8W-8909**	2	SLEEVE	

E-ORDER BY THE CENTIMETER
M-METRIC PART
Y-SEPARATE ILLUSTRATION

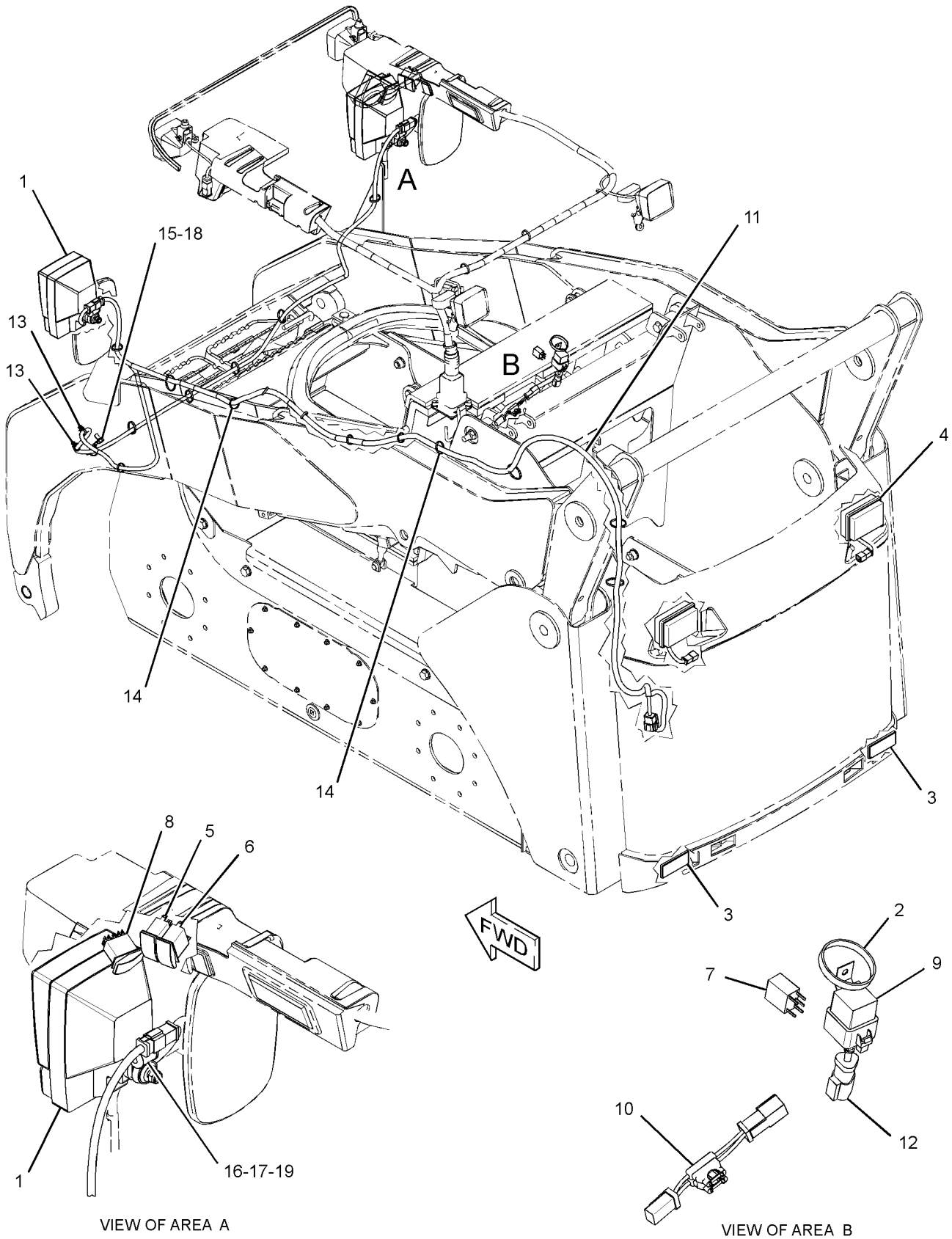

VIEW OF AREA A

VIEW OF AREA B

GRAPHIC #1 **<END>** g02147897

258-4135 RELAY GP–MAIN POWER

S/N: A9H1-UP
12-VOLT
PART OF 328-2272 WIRING GP-CAB

SMCS-1422, 4493 **i03959893**

NOTE	REF NO	GRAPHIC REF	PART NUMBER	QTY	PART NAME 1 2 3 4 5 6 (PRODUCT LEVEL)	SEE PAGE
M	1	1	**5C-2890**	2	NUT (M6X1-THD)	
	2	1	**8T-4205**	2	WASHER-HARD (7.2X14.5X2-MM THK)	
	3	1	**1H-3244**	2	LOCKWASHER	
M	4	1	**5C-7261**	1	NUT (M8X1.25-THD)	
	5	1	**8T-4224**	1	WASHER-HARD (8.8X16X2-MM THK)	
	6	1	**267-5213**	1	COVER (FUSE)	
	7	1	**267-5211**	1	SEAL	
	8	1	**267-2680**	1	FUSE (20-AMPERE)	
	9	1	**267-2701**	1	FUSE (60-AMPERE)	

M-METRIC PART

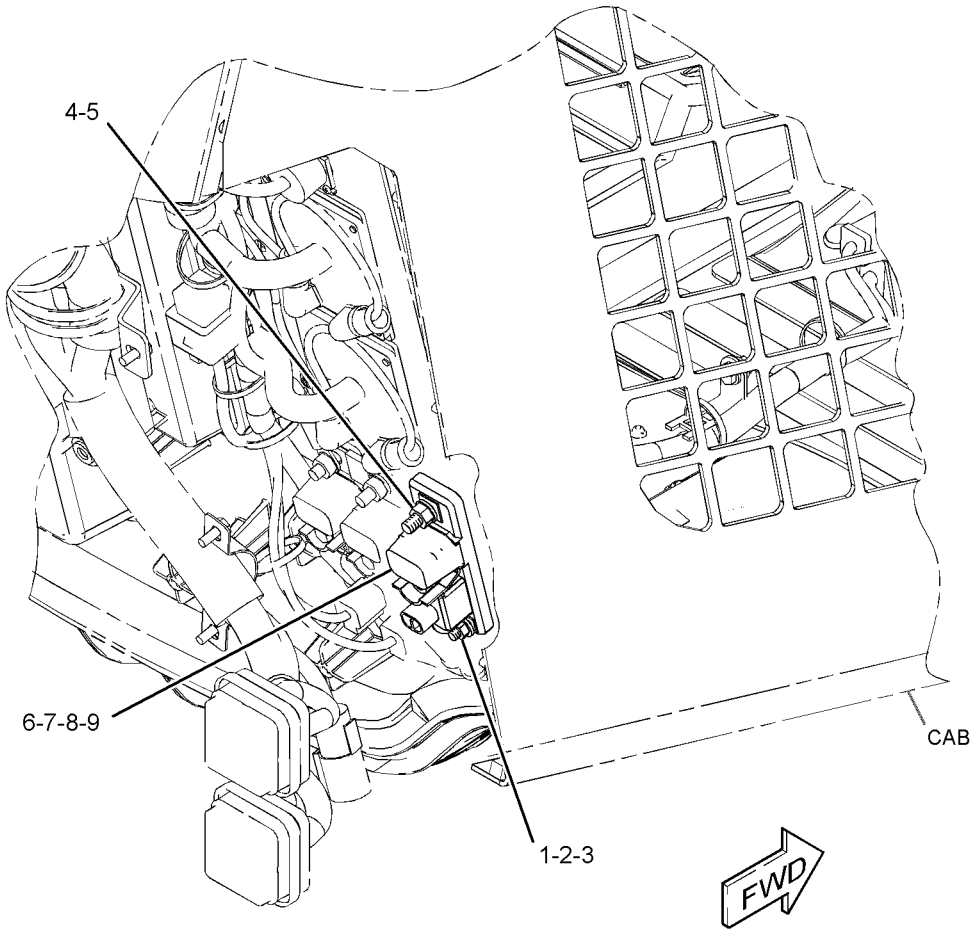

GRAPHIC #1 **<END>** g01328212

143-0539 STARTING MOTOR GP-ELECTRIC*R

S/N: CYM1-UP
12-VOLT
PART OF 287-6181 STARTING MOTOR GP-ELECTRIC
AN ATTACHMENT

SMCS-1453 **i02712964**

NOTE	REF NO	GRAPHIC REF	PART NUMBER	QTY	PART NAME 1 2 3 4 5 6 (PRODUCT LEVEL)	SEE PAGE
	1	1	**8C-9778**	1	PLUNGER AS	
	2	1	**8C-9783**	1	GASKET	
	3	1	**2P-8104**	1	BEARING	
	4	1	**7T-6092**	1	HOLDER AS-BRUSH	
M	5	1	**8T-4133**	2	NUT (M10X1.5-THD)	
	6	1	**7T-6088**	1	BEARING AS	
	7	1	**7T-6087**	1	WASHER (15.2X40X0.5-MM THK)	
	8	1	**7T-6093**	1	CLUTCH AS	
	9	1	**8J-4455**	1	BALL	
	10	1	**7T-6090**	1	SPRING	
	11	1	**8T-4121**	2	WASHER-HARD (11X21X2.5-MM THK)	
	12	1	**3E-5153**	1	COVER-STARTING MOTOR	
M	13	1	**9X-2036**	1	SCREW-PAN HEAD	
	14	1	**8F-1434**	1	LOCKWASHER	
	15	1	**100-4113**	1	SWITCH AS (STARTING MOTOR)(12-VOLT)	
	16	1	**100-4119**	1	ARMATURE AS	
	17	1	**100-4118**	1	CASE AS-STARTING MOTOR	
	18	1	**100-4115**	1	HOUSING-STARTING MOTOR	
	19	1	**143-1344**	1	FRAME-STARTER	
	20	1	**100-3685**	1	CAP	
	21	1	**3E-5154**	1	BUSHING-STARTING MOTOR	
					AVAILABLE REPAIR KIT(S):	
			7T-6099	1	KIT-GEAR (STARTING MOTOR)	
					(INCLUDES RETAINER, PINION & ROLLERS)	
			146-6729	1	KIT-HARDWARE (STARTING MOTOR)	
					(INCLUDES BOLTS, SCREWS, SCREW ASSEMBLIES & PLATE)	
			100-4112	1	KIT-CONTACT (STARTING MOTOR)	
					(INCLUDES NUT, WASHERS, SEAL, BUSHINGS, PLATE & BOLT)	

M-METRIC PART

143-0539 **STARTING MOTOR GP-ELECTRIC** *(contd.)* **i02712964**

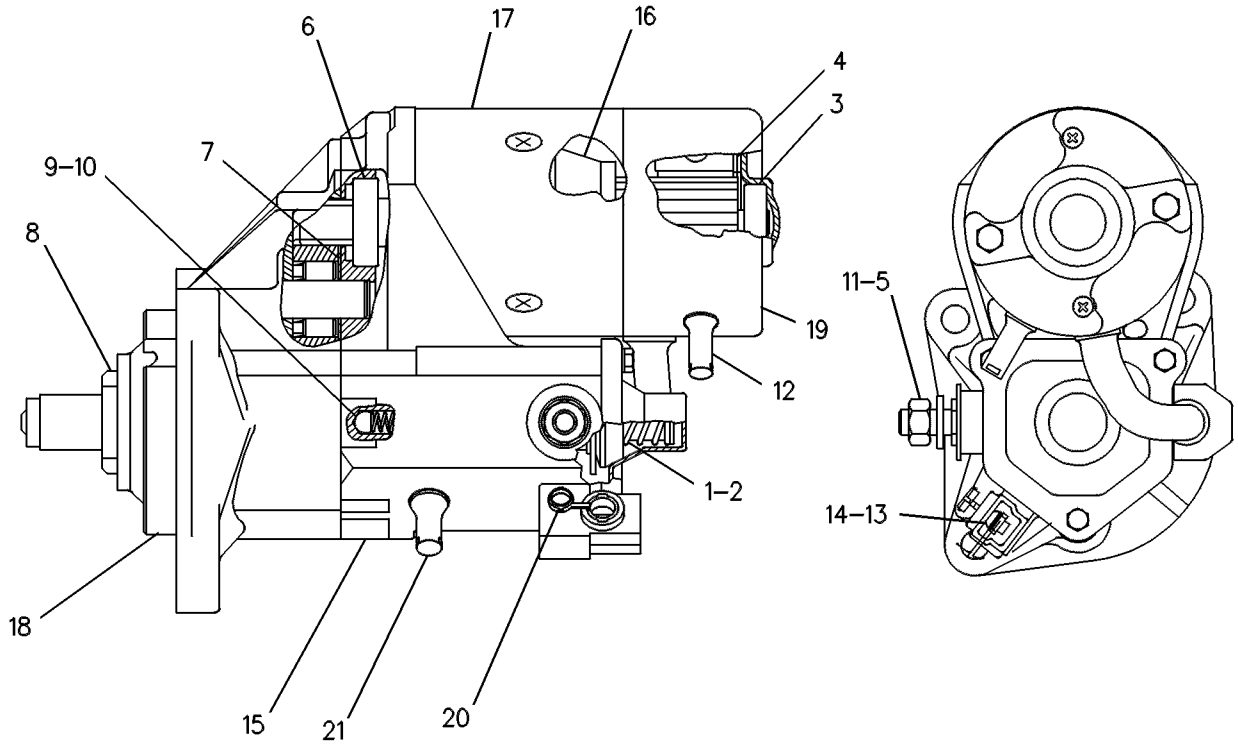

GRAPHIC #1 **<END>** g00131126

ELECTRICAL AND STARTING SYSTEM

287-6181 STARTING MOTOR GP-ELECTRIC

S/N: CYM1-UP
12-VOLT
PART OF 342-1219 ENGINE AR-PRIMARY
AN ATTACHMENT

SMCS-1453 **i02568571**

NOTE	REF NO	GRAPHIC REF	PART NUMBER	QTY	PART NAME 1 2 3 4 5 6 (PRODUCT LEVEL)	SEE PAGE
YR	1	1	**143-0539**	1	STARTING MOTOR GP-ELECTRIC	102

R-REMFG PART MAY BE AVAILABLE
Y-SEPARATE ILLUSTRATION

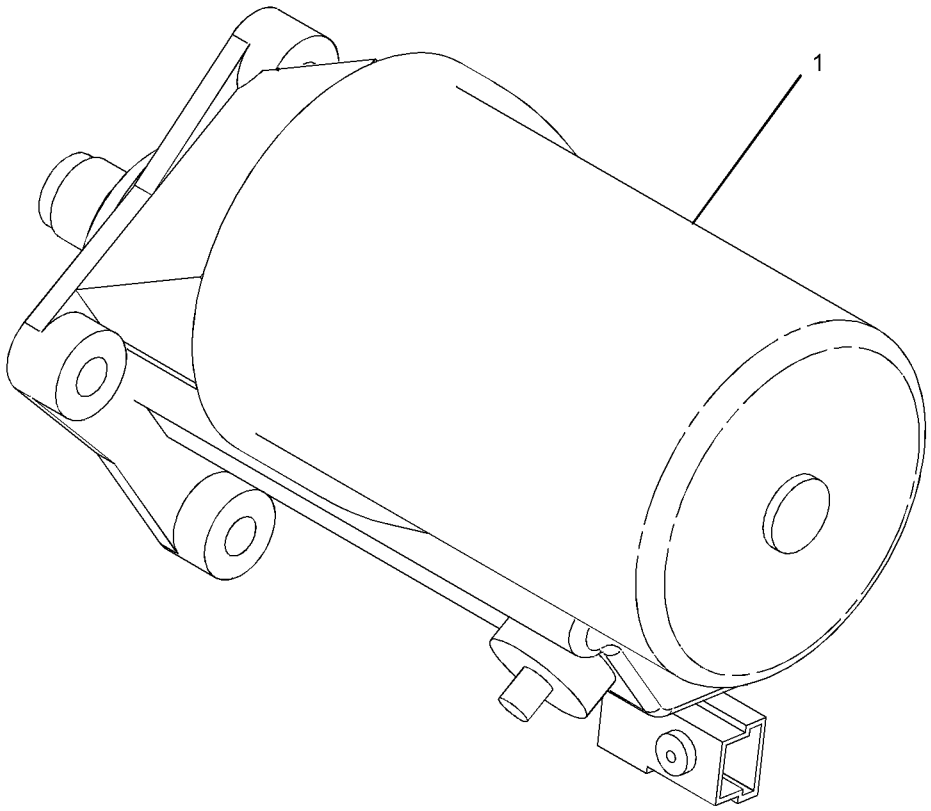

GRAPHIC #1 **<END>** g01345353

184-1564 SWITCH GP-PRESSURE–BRAKE LIGHT

S/N: A9H1-UP

PART OF 358-6919 KIT-ROADING CONVERSION, 328-2348 SWITCH GP-PRESSURE AN ATTACHMENT

SMCS-1435, 7400 **i03647947**

NOTE	REF NO	GRAPHIC REF	PART NUMBER	QTY	PART NAME 1 2 3 4 5 6 (PRODUCT LEVEL)	SEE PAGE
E	1	1	**9X-1813**		SLEEVE (19-CM)	
	2	1	**102-8802**	1	KIT-RECEPTACLE (2-PIN)	
					(INCLUDES RECECPTACLE AS & WEDGE)	
	3	1	**8T-8729**	2	PIN-CONNECTOR (16-GA TO 18-GA)	
	4	1	**3J-1907**	1	SEAL-O-RING	

E-ORDER BY THE CENTIMETER

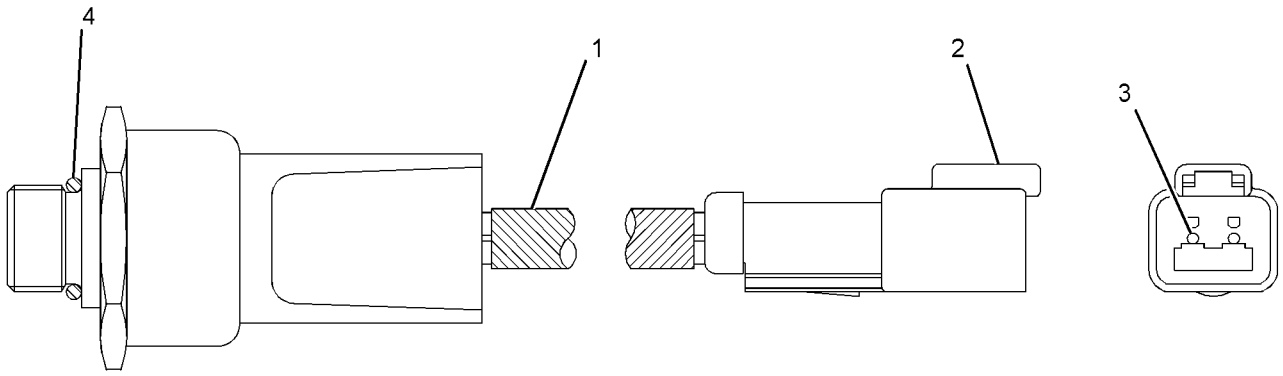

GRAPHIC #1 **<END>** g01957820

300-1071 SWITCH GP-PRESSURE

S/N: CYM1-UP
PART OF 342-1219 ENGINE AR-PRIMARY
AN ATTACHMENT

SMCS-1435, 7400 **i02974920**

NOTE	REF NO	GRAPHIC REF	PART NUMBER	QTY	PART NAME 1 2 3 4 5 6 (PRODUCT LEVEL)	SEE PAGE
	1	1	**327-0752**	1	SWITCH-OIL PRESS (ENGINE)	

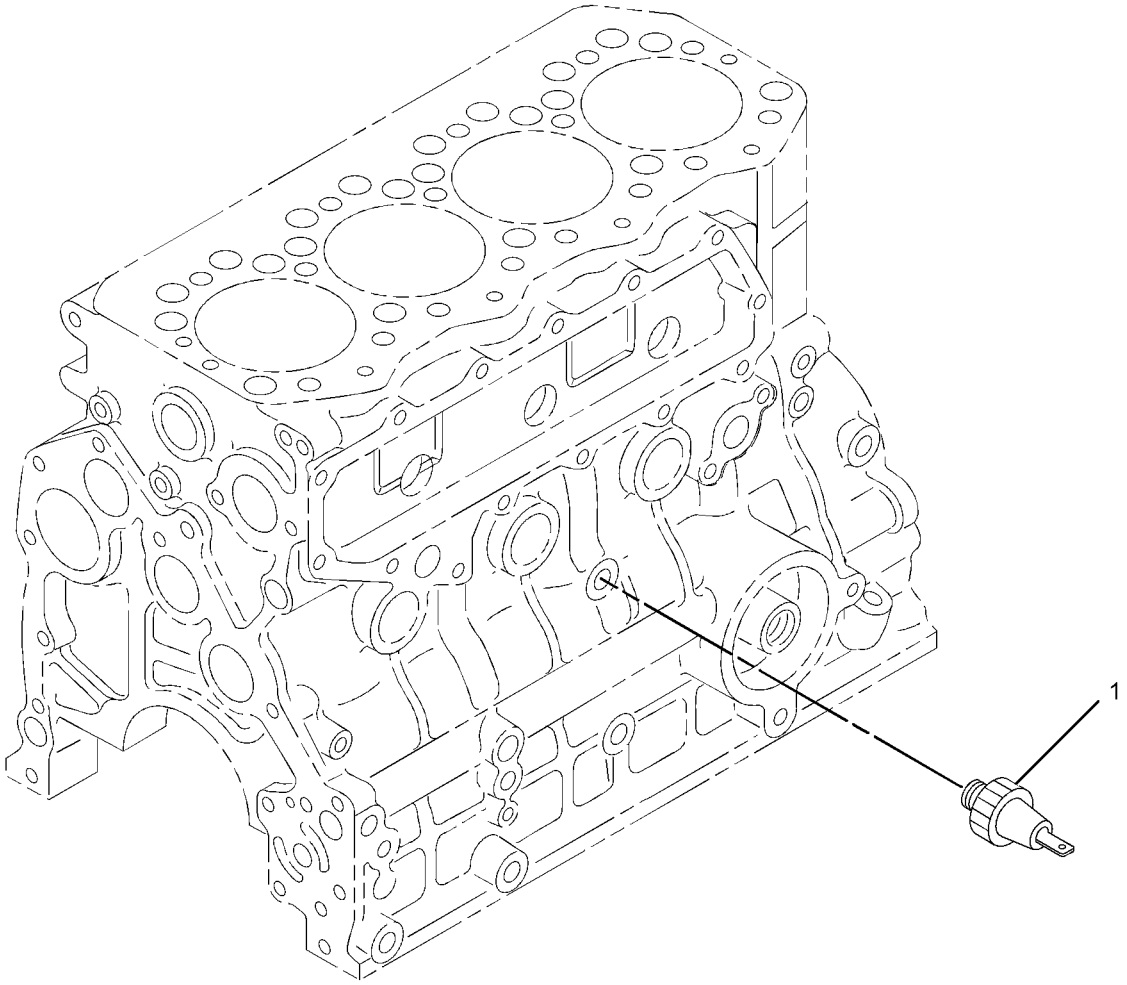

GRAPHIC #1 **<END>** g01345516

328-2348 SWITCH GP-PRESSURE

S/N: A9H1-UP
PART OF 326-5489 CONVERSION AR-MACHINE
AN ATTACHMENT

SMCS-1435, 7400 **i03971117**

NOTE	REF NO	GRAPHIC REF	PART NUMBER	QTY	PART NAME 1 2 3 4 5 6 (PRODUCT LEVEL)	SEE PAGE
	1	1	**146-9439**	1	RELAY AS (12-VOLT) (STOP LIGHT)	
	2	1	*166-2033*	2	TEE AS	
					(EACH INCLUDES)	
		1	**4J-5477**	1	SEAL-O-RING	
		1	**7X-2444**	1	TEE-SWIVEL	
Y	3	1	**184-1564**	2	SWITCH GP-PRESSURE (BRAKE LIGHT)	105
	4	1	**3S-2093**	2	STRAP-CABLE	

Y-SEPARATE ILLUSTRATION

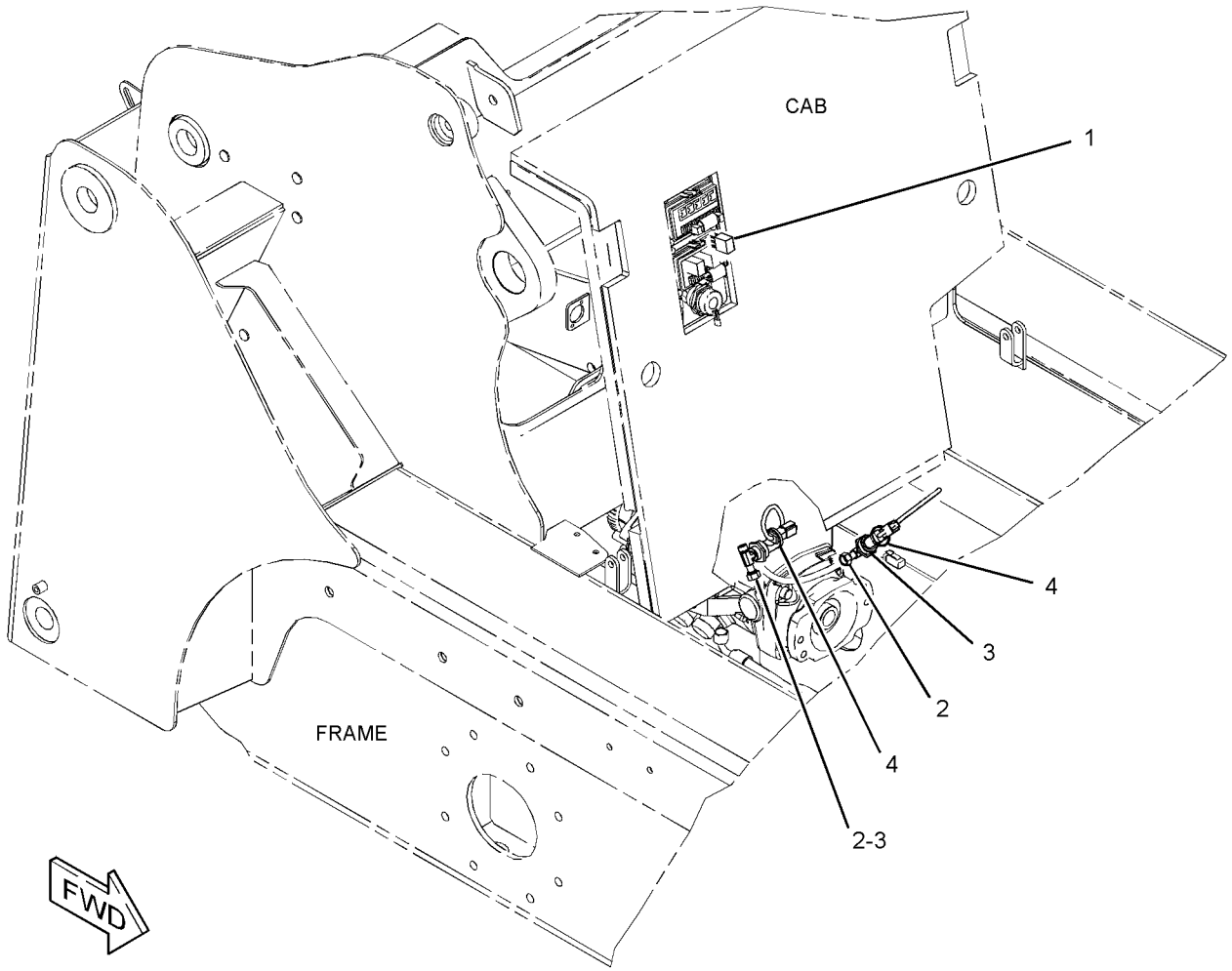

GRAPHIC #1 **<END>** g02149267

328-2272 WIRING GP-CAB

S/N: A9H1-1470

PART OF 326-5400 CAB AR

SMCS-1408, 7301 **i04159147**

NOTE	REF NO	GRAPHIC REF	PART NUMBER	QTY	PART NAME 1 2 3 4 5 6 (PRODUCT LEVEL)	SEE PAGE
	1	1	**6I-1418**	4	SPACER (8.2X12.7X28.7-MM THK)	
	2	1	**7G-1060**	1	STRAP AS-GROUND	
	3	1	**7K-1181**	11	STRAP-CABLE	
	4	1	**8T-9655**	8	MOUNT-ISOLATION	
	5	1	**116-7471**	1	PULLER-MINIFUSE	
	6	1	**180-9900**	1	CAP AS	
		1	**5P-7958**	1	SLEEVE-CABLE SPLICE	
		1	**8C-6354**	1	CAP-RECEPTACLE (ET CONNECTOR)	
		1	**179-9392**	1	LANYARD	
Y	7	1	**258-4135**	2	RELAY GP (12-VOLT) (MAIN POWER)	101
	8	1	**258-4136**	1	FUSE AS (MAIN POWER)	
		1	**267-2680**	2	FUSE (20-AMPERE)	
		1	**267-5211**	1	SEAL	
		1	**267-5213**	1	COVER	
	9	1	**258-4138**	1	FILM (POWER DISTRIBUTION)	
	10	1	**258-4143**	1	BAR-BUS	
	11	1	**258-4196**	2	WIRE AS	
	12	1	**267-2680**	2	FUSE (20-AMPERE)	
	13	1	**328-2273**	1	HARNESS AS-CAB (REAR)	
		1	**275-7878**	2	BLOCK AS-FUSE	
					(EACH INCLUDES)	
M		1	**5C-2890**	2	NUT (M6X1-THD)	
		1	**8C-3398**	2	LOCKWASHER	
		1	**8T-4205**	2	WASHER-HARD (7.2X14.5X2-MM THK)	
		1	**306-0350**	1	COVER	
		1	**306-0351**	1	SEAL-COVER	
		1	**8T-8799**	6	BOOT	
		1	**274-3775**	1	CAP-CONNECTOR	
E		1	**283-0632**		CONDUIT (112-CM)	
E		1	**283-4198**		CONDUIT (14-CM)	
		1	**126-1774**	1	COVER-CONNECTOR	
		1	**124-3548**	1	FUSE (30-AMPERE)	
		1	**113-8490**	7	FUSE (10-AMPERE)	
		1	**113-8491**	10	FUSE (15-AMPERE)	
		1	**113-8492**	2	FUSE (20-AMPERE)	
		1	**203-9007**	1	NUT (1-1/2-18-THD)	
		1	**213-0139**	11	PIN	
		1	**8N-1548**	1	PIN-CONNECTOR (4-GA)	
		1	**186-3735**	23	PIN-CONNECTOR (16-GA TO 18-GA)	
		1	**9X-3401**	17	PIN-CONNECTOR (16-GA TO 18-GA)	
		1	**155-2260**	3	KIT-CONNECTING PLUG (3-PIN)	
		1	**155-2270**	2	KIT-CONNECTING PLUG (2-PIN)	
					(EACH PLUG KIT INCLUDES PLUG AS, WEDGE & INTERFACE SEAL)	
		1	**160-7689**	1	PLUG AS-CONNECTOR (70-PIN)	
		1	**159-9322**	1	SEAL-O-RING	
		1	**230-4011**	2	PLUG AS-CONNECTOR (2-PIN)	
					(EACH INCLUDES)	
		1	**264-7029**	1	SEAL-CONNECTOR	
		1	**7R-2751**	25	PLUG-CONNECTOR	
		1	**8T-8737**	33	PLUG-SEAL	
		1	**102-8802**	1	KIT-RECEPTACLE (2-PIN)	
		1	**102-8804**	1	KIT-RECEPTACLE (4-PIN)	
					(EACH RECEPTACLE KIT INCLUDES RECEPTACLE AS & WEDGE)	
		1	**127-5484**	1	RECEPTACLE AS-CONNECTOR (1-PIN)	

328-2272 **WIRING GP-CAB** ***(contd.)*** **i04159147**

NOTE	REF NO	GRAPHIC REF	PART NUMBER	QTY	PART NAME 1 2 3 4 5 6 (PRODUCT LEVEL)	SEE PAGE
		1	**134-2540**	2	RESISTOR AS-CONNECTION (3-PIN)	
		1	**167-3692**	1	RECEPTACLE AS-CONNECTOR (31-PIN)	
		1	**225-3861**	1	RECEPTACLE AS (31-PIN)	
		1	**146-9439**	3	RELAY AS (12-VOLT) (CAB)	
		1	**128-5016**	25	SEAL-CABLE	
		1	**7R-2750**	19	SEAL-CONNECTOR	
		1	**186-3736**	27	SOCKET-CONNECTOR (16-GA TO 18-GA)	
		1	**9W-0844**	11	SOCKET-CONNECTOR (14-GA TO 16-GA)	
		1	**9X-3402**	54	SOCKET-CONNECTOR (16-GA TO 18-GA)	
		1	**180-9340**	16	SOCKET-CONNECTOR (14-GA TO 18-GA)	
		1	**202-0313**	26	TERMINAL AS	
					(EACH INCLUDES)	
		1	**128-5016**	1	SEAL-CABLE	
		1	**202-0314**	19	TERMINAL AS	
					(EACH INCLUDES)	
		1	**128-4123**	1	SEAL	
		1	**275-0601**	20	SOCKET-CONNECTOR	
		1	**3S-2093**	26	STRAP-CABLE	
		1	**9X-6772**	2	STRAP-CABLE	
		1	**2L-8069**	2	TERMINAL-RING (2-GA TO 10-GA, 3/8-IN SCREW)	
		1	**2L-8067**	6	TERMINAL-RING (10-GA TO 12-GA, 1/4-IN SCREW)	
		1	**2L-8077**	2	TERMINAL-RING (14-GA TO 16-GA, 1/4-IN SCREW)	
E		1	**125-7876**		TUBE-HEAT SHRINK (17.78-MM DIA) (4-CM)	
E		1	**119-3662**		TUBE-HEAT SHRINK (10.85-MM DIA) (20-CM)	
E		1	**125-7874**		TUBE-HEAT SHRINK (5.72-MM DIA) (70-CM)	
E		1	**125-7875**		TUBE-HEAT SHRINK (7.44-MM DIA) (20-CM)	
		1	**270-2679**	1	LOCKWASHER	
Y	14	1	*328-2345*	1	ELECTRONICS GP-MACHINE	81
	15	1	**343-6022**	1	FILM-IDENTIFICATION (FUSE, RELAY PANEL)	
	16	1	**343-6885**	1	FILM-IDENTIFICATION (FUSE, RELAY PANEL)	
	17	1	**4P-7581**	3	CLIP	
	18	1	**4P-8134**	2	CLIP	
M	19	1	**5C-2890**	10	NUT (M6X1-THD)	
M	20	1	**5C-7261**	7	NUT (M8X1.25-THD)	
	21	1	**5P-7162**	8	SCREW-MACHINE (10-32X0.5-IN)	
M	22	1	**6V-7728**	3	BOLT (M6X1X45-MM)	
	23	1	**7X-0579**	4	WASHER-HARD (8.8X25.5X2-MM THK)	
	24	1	**8C-3398**	6	LOCKWASHER	
	25	1	**8T-4205**	13	WASHER-HARD (7.2X14.5X2-MM THK)	
	26	1	**8T-4224**	3	WASHER-HARD (8.8X16X2-MM THK)	
E	27	1	**103-2543**		SEAL (3-CM EACH)	
M	28	1	**8T-4133**	1	NUT (M10X1.5-THD)	
	29	1	**8T-4122**	1	WASHER-HARD (17X32X3.5-MM THK)	
	30	1	**7G-7053**	1	GROMMET	
	31	1	**3S-2093**	3	STRAP-CABLE	
E	32	1	**9X-2092**		TRIM-EDGE (15-CM)	

E-ORDER BY THE CENTIMETER
M-METRIC PART
Y-SEPARATE ILLUSTRATION

328-2272 **WIRING GP-CAB** *(contd.)* **i04159147**

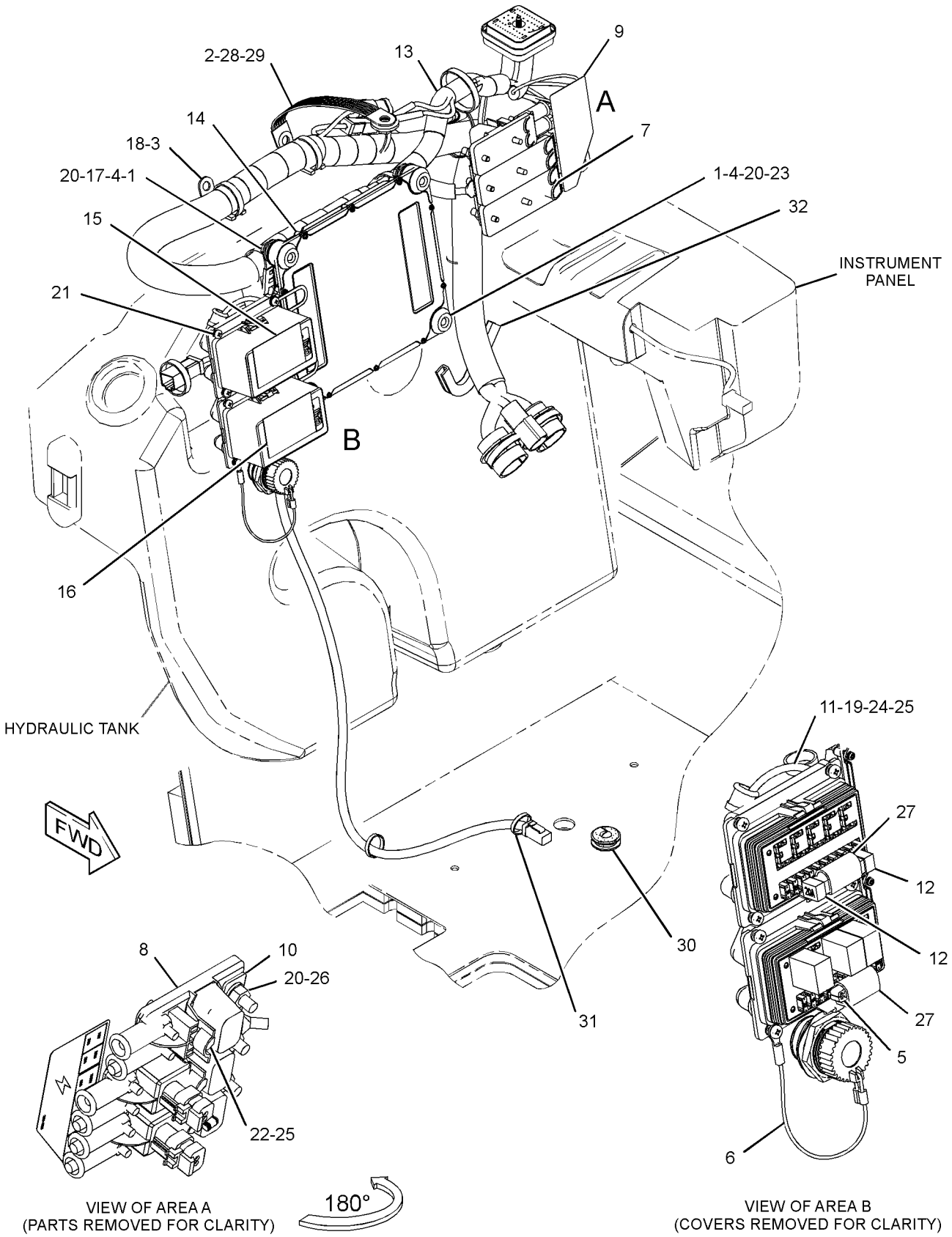

GRAPHIC #1 **<END>** g02470444

328-2272 WIRING GP-CAB

S/N: A9H1471-UP

PART OF 326-5400 CAB AR

SMCS-1408, 7301 **i04562810**

NOTE	REF NO	GRAPHIC REF	PART NUMBER	QTY	PART NAME 1 2 3 4 5 6 (PRODUCT LEVEL)	SEE PAGE
	1	1	**6I-1418**	4	SPACER (8.2X12.7X28.7-MM THK)	
	2	1	**7G-1060**	1	STRAP AS-GROUND	
	3	1	**7K-1181**	11	STRAP-CABLE	
	4	1	**8T-9655**	8	MOUNT-ISOLATION	
	5	1	**116-7471**	1	PULLER-MINIFUSE	
	6	1	**180-9900**	1	CAP AS	
		1	**5P-7958**	1	SLEEVE-CABLE SPLICE	
		1	**8C-6354**	1	CAP-RECEPTACLE (ET CONNECTOR)	
		1	**179-9392**	1	LANYARD	
Y	7	1	**258-4135**	2	RELAY GP (12-VOLT) (MAIN POWER)	101
	8	1	**258-4136**	1	FUSE AS (MAIN POWER)	
		1	**267-2680**	2	FUSE (20-AMPERE) (MAIN)	
		1	**267-5211**	1	SEAL	
		1	**267-5213**	1	COVER	
	9	1	**258-4138**	1	FILM (POWER DISTRIBUTION)	
	10	1	**258-4143**	1	BAR-BUS	
	11	1	**258-4196**	2	WIRE AS	
	12	1	**267-2680**	2	FUSE (20-AMPERE)	
C	13	1	**375-4009**	1	HARNESS AS-CAB (REAR)	
		1	**275-7878**	2	BLOCK AS-FUSE	
					(EACH INCLUDES)	
		1	**306-0350**	1	COVER	
		1	**8C-3398**	2	LOCKWASHER	
M		1	**5C-2890**	2	NUT (M6X1-THD)	
		1	**306-0351**	1	SEAL-COVER	
		1	**8T-4205**	2	WASHER-HARD (7.2X14.5X2-MM THK)	
		1	**8T-8799**	6	BOOT	
		1	**374-7464**	1	CAP-SEAL	
E		1	**283-4198**		CONDUIT (14-CM)	
		1	**126-1774**	1	COVER-CONNECTOR	
		1	**113-8490**	7	FUSE (10-AMPERE)	
		1	**113-8491**	10	FUSE (15-AMPERE)	
		1	**113-8492**	2	FUSE (20-AMPERE)	
		1	**124-3548**	2	FUSE (30-AMPERE)	
		1	**203-9007**	1	NUT (1-1/2-18-THD)	
		1	**213-0139**	11	PIN	
		1	**8N-1548**	1	PIN-CONNECTOR (4-GA)	
		1	**8T-8729**	24	PIN-CONNECTOR (16-GA TO 18-GA)	
		1	**9X-3401**	17	PIN-CONNECTOR (16-GA TO 18-GA)	
					—OR—	
		1	**126-1767**	17	PIN-CONNECTOR (14-GA TO 16-GA)	
		1	**258-4172**	1	PLUG AS-CONNECTOR	
		1	**155-2260**	3	KIT-CONNECTING PLUG (3-PIN)	
		1	**155-2270**	2	KIT-CONNECTING PLUG (2-PIN)	
					(EACH PLUG KIT INCLUDES PLUG AS, WEDGE & INTERFACE SEAL)	
		1	**160-7689**	1	PLUG AS-CONNECTOR (70-PIN)	
		1	**159-9322**	1	SEAL-O-RING	
		1	**230-4011**	2	PLUG AS-CONNECTOR (2-PIN)	
					(EACH INCLUDES)	
		1	**264-7029**	1	SEAL-CONNECTOR	
		1	**7R-2751**	25	PLUG-CONNECTOR	
		1	**8T-8737**	33	PLUG-SEAL	
		1	**102-8802**	2	KIT-RECEPTACLE (2-PIN)	

328-2272 **WIRING GP-CAB** *(contd.)* **i04562810**

NOTE	REF NO	GRAPHIC REF	PART NUMBER	QTY	PART NAME 1 2 3 4 5 6 (PRODUCT LEVEL)	SEE PAGE
		1	**102-8804**	1	KIT-RECEPTACLE (4-PIN)	
					(EACH RECEPTACLE KIT INCLUDES RECEPTACLE AS & WEDGE)	
		1	**127-5484**	1	RECEPTACLE AS-CONNECTOR (1-PIN)	
		1	**134-2540**	2	RESISTOR AS-CONNECTION (3-PIN)	
		1	**167-3692**	1	RECEPTACLE AS-CONNECTOR (31-PIN)	
		1	**225-3861**	1	RECEPTACLE AS (31-PIN)	
		1	**265-4123**	1	RECEPTACLE-CONN	
		1	**146-9439**	3	RELAY AS (12-VOLT) (CAB)	
		1	**128-5016**	25	SEAL-CABLE	
		1	**7R-2750**	19	SEAL-CONNECTOR	
		1	**8T-8730**	27	SOCKET-CONNECTOR (16-GA TO 18-GA)	
		1	**9W-0844**	11	SOCKET-CONNECTOR (14-GA TO 16-GA)	
		1	**9X-3402**	55	SOCKET-CONNECTOR (16-GA TO 18-GA)	
					-OR-	
		1	**126-1768**	55	SOCKET-CONNECTOR (14-GA TO 16-GA)	
		1	**180-9340**	16	SOCKET-CONNECTOR (14-GA TO 18-GA)	
		1	**202-0313**	26	TERMINAL AS	
					(EACH INCLUDES)	
		1	**128-5016**	1	SEAL-CABLE	
		1	**202-0314**	19	TERMINAL AS	
					(EACH INCLUDES)	
		1	**128-4123**	1	SEAL	
		1	**275-0601**	20	SOCKET-CONNECTOR	
		1	**3S-2093**	26	STRAP-CABLE	
		1	**9X-6772**	2	STRAP-CABLE	
B		1	**329-3734**		TAPE	
		1	**2L-8069**	2	TERMINAL-RING (2-GA TO 10-GA, 3/8-IN SCREW)	
		1	**2L-8067**	6	TERMINAL-RING (10-GA TO 12-GA, 1/4-IN SCREW)	
		1	**2L-8077**	2	TERMINAL-RING (14-GA TO 16-GA, 1/4-IN SCREW)	
		1	*289-1502*	1	TERMINAL AS-RING	
E		1	**125-7876**		TUBE-HEAT SHRINK (17.78-MM DIA) (4-CM)	
E		1	**119-3662**		TUBE-HEAT SHRINK (10.85-MM DIA) (20-CM)	
E		1	**125-7874**		TUBE-HEAT SHRINK (5.72-MM DIA) (70-CM)	
E		1	**125-7875**		TUBE-HEAT SHRINK (7.44-MM DIA) (20-CM)	
		1	**270-2679**	1	LOCKWASHER	
Y	14	1	*328-2345*	1	ELECTRONICS GP-MACHINE	81
	15	1	**343-6022**	1	FILM-IDENTIFICATION (FUSE, RELAY PANEL)	
	16	1	**343-6885**	1	FILM-IDENTIFICATION (FUSE, RELAY PANEL)	
	17	1	**4P-7581**	3	CLIP	
	18	1	**4P-8134**	2	CLIP	
M	19	1	**5C-2890**	10	NUT (M6X1-THD)	
M	20	1	**5C-7261**	7	NUT (M8X1.25-THD)	
	21	1	**5P-7162**	8	SCREW-MACHINE (10-32X0.5-IN)	
M	22	1	**6V-7728**	3	BOLT (M6X1X45-MM)	
	23	1	**7X-0579**	4	WASHER-HARD (8.8X25.5X2-MM THK)	
C	24	1	**8C-3398**	4	LOCKWASHER	
	25	1	**8T-4205**	13	WASHER-HARD (7.2X14.5X2-MM THK)	
	26	1	**8T-4224**	3	WASHER-HARD (8.8X16X2-MM THK)	
E	27	1	**103-2543**		SEAL (3-CM EACH)	
M	28	1	**8T-4133**	1	NUT (M10X1.5-THD)	
	29	1	**8T-4122**	1	WASHER-HARD (17X32X3.5-MM THK)	
	30	1	**7G-7053**	1	GROMMET	
	31	1	**3S-2093**	3	STRAP-CABLE	
E	32	1	**9X-2092**		TRIM-EDGE (15-CM)	
C	33	1	**9X-8256**	2	WASHER (6.6X12X2-MM THK)	

328-2272 **WIRING GP-CAB** ***(contd.)*** **i04562810**

B-USE AS REQUIRED
C-CHANGE FROM PREVIOUS TYPE
E-ORDER BY THE CENTIMETER
M-METRIC PART
Y-SEPARATE ILLUSTRATION

328-2272 **WIRING GP-CAB** *(contd.)* **i04562810**

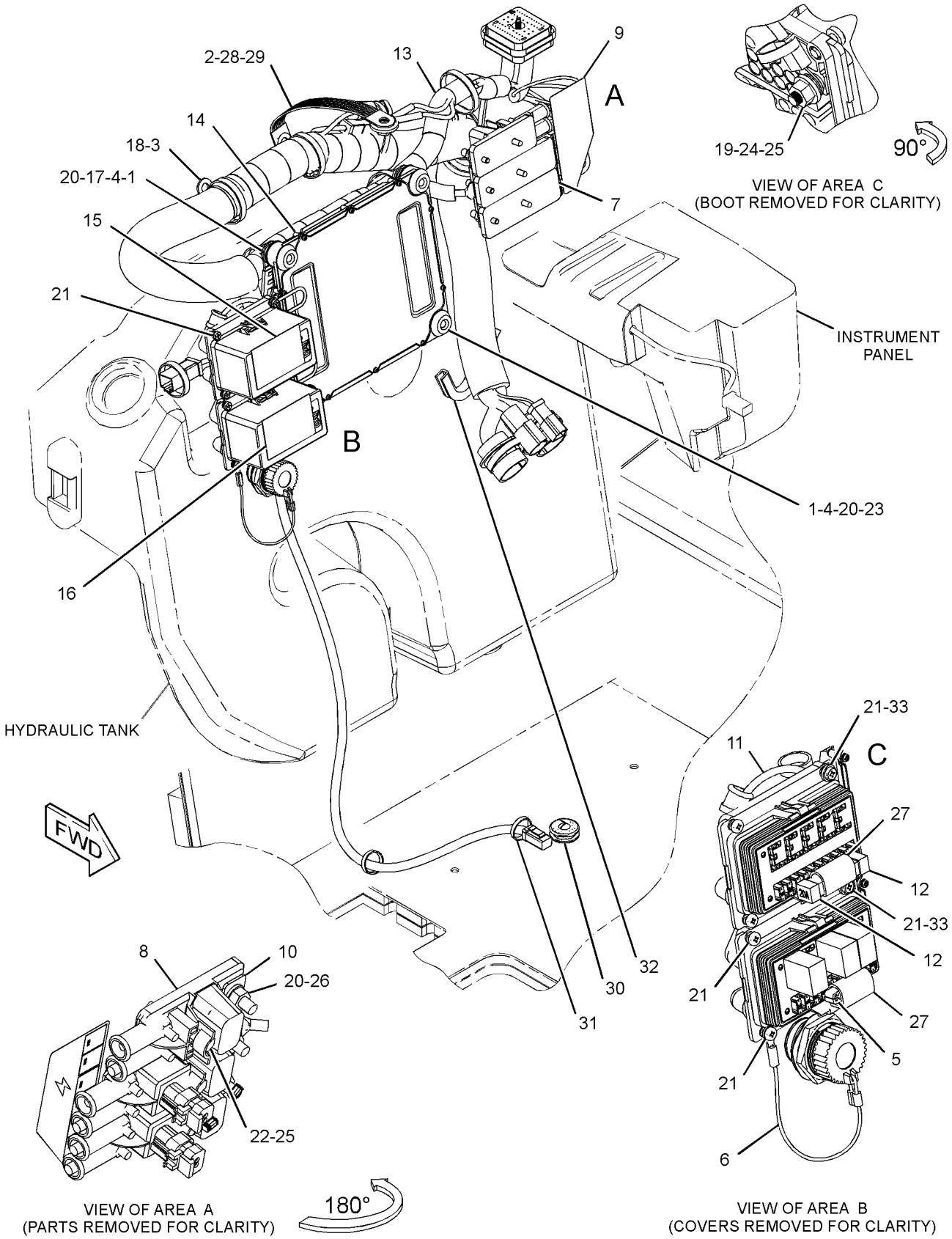

GRAPHIC #1 **<END>** g02732136

328-2276 WIRING GP-ENGINE

S/N: A9H1-UP

PART OF 326-5372 INSTALLATION AR-ENGINE

SMCS-1000, 1408, 1420 **i04394801**

NOTE	REF NO	GRAPHIC REF	PART NUMBER	QTY	PART NAME 1 2 3 4 5 6 (PRODUCT LEVEL)	SEE PAGE
	1	1	**7K-1181**	5	STRAP-CABLE	
	2	1	**238-0112**	1	SENSOR GP-TEMPERATURE (ENGINE COOLANT)	
B	3	1	**274-3774**	2	CAP-CONNECTOR	
	4	1	**328-2277**	1	HARNESS AS-ENGINE	
		1	**8T-8799**	1	BOOT	
E		1	**211-5358**		CONDUIT-FLEXIBLE (55-CM)	
		1	**107-3134**	1	HOUSING-CONNECTOR	
		1	**186-3735**	4	PIN-CONNECTOR (16-GA TO 18-GA)	
		1	**9X-3401**	9	PIN-CONNECTOR (16-GA TO 18-GA)	
		1	**176-1477**	1	PLUG AS (2-PIN)	
		1	**9X-1054**	2	PLUG AS-CONNECTOR (4-PIN)	
		1	**155-2270**	2	KIT-CONNECTING PLUG (2-PIN)	
					(EACH INCLUDES PLUG AS, WEDGE & INTERFACE SEAL)	
		1	**230-4011**	1	PLUG AS-CONNECTOR (2-PIN)	
		1	**264-7029**	1	SEAL-CONNECTOR	
		1	**8T-8737**	1	PLUG-SEAL	
		1	**107-3136**	5	PLUG-SEAL	
		1	**102-8801**	1	KIT-RECEPTACLE (12-PIN)	
		1	**102-8802**	1	KIT-RECEPTACLE (2-PIN)	
					(EACH RECEPTACLE KIT INCLUDES RECEPTACLE AS & WEDGE)	
		1	**185-1861**	2	SEAL-WIRE	
		1	**186-3736**	4	SOCKET-CONNECTOR (16-GA TO 18-GA)	
		1	**9X-3402**	2	SOCKET-CONNECTOR (16-GA TO 18-GA)	
		1	**3S-2093**	9	STRAP-CABLE	
		1	**030-1712**	1	TERMINAL-RING (2-GA, 1/4-IN SCREW)	
		1	**9G-4336**	1	TERMINAL-RING (4-GA, 3/8-IN SCREW)	
		1	**2L-8065**	1	TERMINAL-RING (10-GA TO 12-GA, NO. 8 SCREW)	
		1	**5P-4571**	1	TERMINAL-BLADE (14-GA TO 16-GA)	
		1	**5P-1478**	1	TERMINAL-FORK (10-GA TO 12-GA, NO. 10 SCREW)	
		1	**9G-4336**	2	TERMINAL-RING (4-GA, 3/8-IN SCREW)	
		1	**107-3135**	3	TERMINAL (16-GA TO 20-GA)	
		1	**9X-1055**	4	TERMINAL-RECEPTACLE (12-GA)	
		1	**9X-1056**	4	TERMINAL-RECEPTACLE (14-GA TO 16-GA)	
E		1	**119-3662**		TUBE-HEAT SHRINK (10.85-MM DIA) (7-CM)	
E		1	**125-7874**		TUBE-HEAT SHRINK (5.72-MM DIA) (10-CM)	
	5	1	**115-1615**	1	RELAY AS (12-VOLT) (COLD START)	
	5A	1	**115-1615**	1	RELAY AS (12-VOLT) (START)	
	6	1	**208-9277**	2	BOLT-FLANGE HEAD (M8X1X25-MM)	
	7	1	**3S-2093**	5	STRAP-CABLE	
	8	1	**4P-7429**	2	CLIP	
	9	1	**4P-7581**	1	CLIP	
	10	1	**4P-8134**	6	CLIP	
M	11	1	**5C-7261**	1	NUT (M8X1.25-THD)	
	12	1	**5P-4116**	2	WASHER-HARD (8.8X20.5X2-MM THK)	
	13	1	**6V-9028**	1	SEAL-O-RING	
	14	1	**7X-0608**	1	WASHER-HARD (10.2X16X2-MM THK)	
M	15	1	**7X-2548**	1	BOLT (M12X1.75X16-MM)	
	16	1	**8T-4121**	4	WASHER-HARD (11X21X2.5-MM THK)	
M	17	1	**8T-4136**	3	BOLT (M10X1.5X25-MM)	
M	18	1	**8T-4200**	2	BOLT (M8X1.25X16-MM)	
	20	1	**9F-5644**	1	LOCKWASHER	
M	21	1	**8T-4133**	1	NUT (M10X1.5-THD)	

328-2276 **WIRING GP-ENGINE** *(contd.)* **i04394801**

B-USE AS REQUIRED
E-ORDER BY THE CENTIMETER
M-METRIC PART

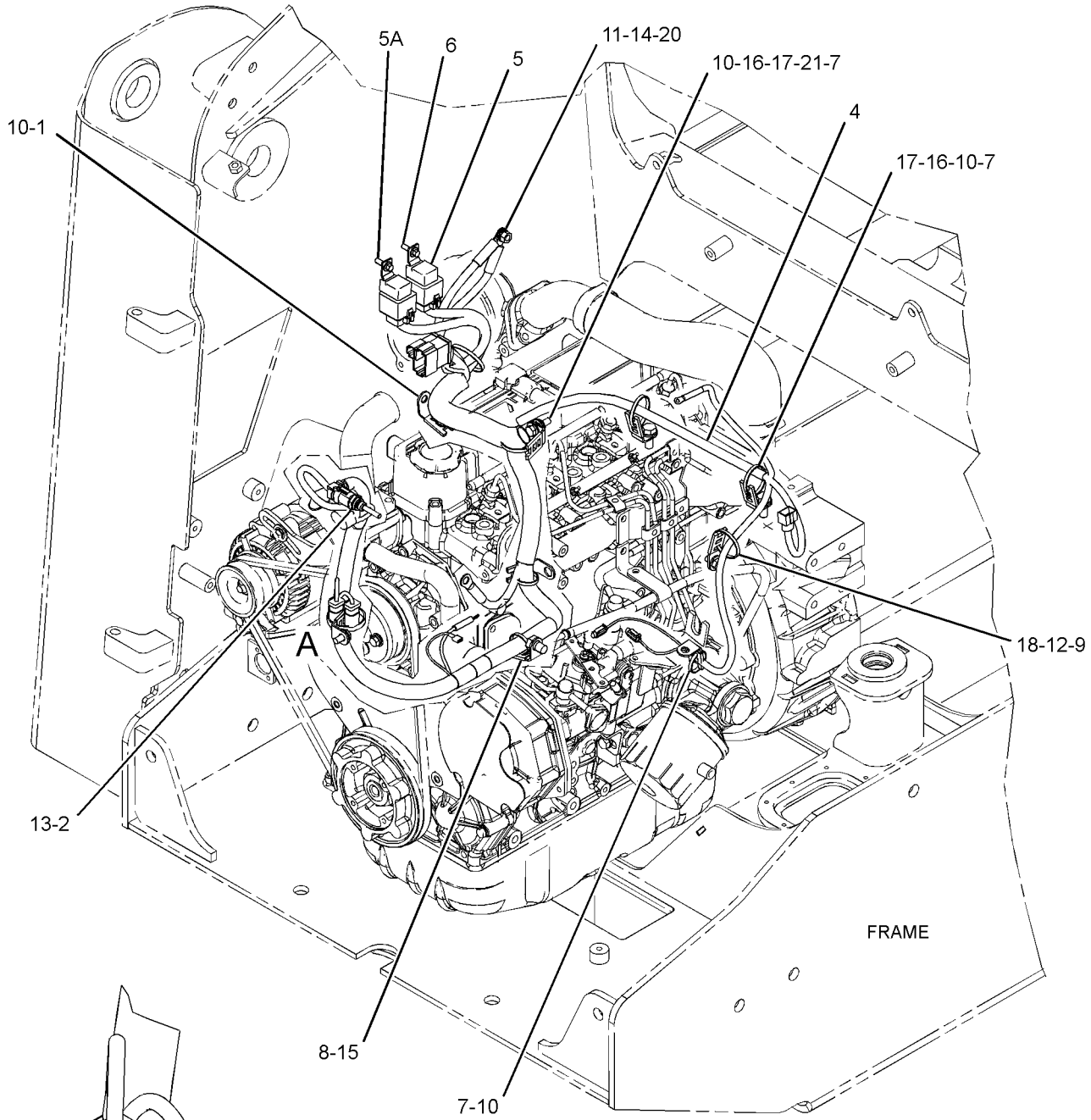

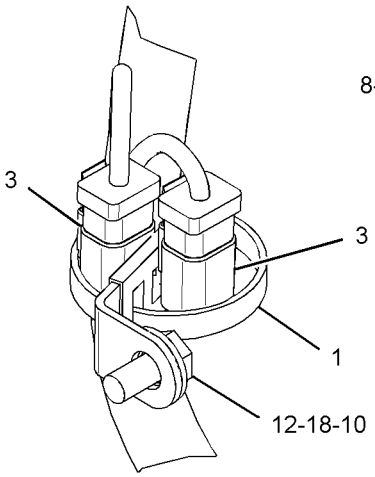

VIEW OF AREA A

GRAPHIC #1 **<END>** g02585038

230-3743 WIRING GP-HORN—WITH MOUNTING

S/N: A9H1-UP

PART OF 326-5289, 326-5299, 326-5489 CONVERSION AR-MACHINE, 326-5529, 326-5559 CONVERSION AR-ROADING AN ATTACHMENT

SMCS-1408, 7402 **i03971120**

NOTE	REF NO	GRAPHIC REF	PART NUMBER	QTY	PART NAME 1 2 3 4 5 6 (PRODUCT LEVEL)	SEE PAGE
	1	1	**3S-2093**	5	STRAP-CABLE	
M	2	1	**8T-4186**	1	BOLT (M10X1.5X40-MM)	
	3	1	**142-8833**	1	SPACER (11X14.3X9-MM THK)	
M	4	1	**8T-4133**	1	NUT (M10X1.5-THD)	
	5	1	**186-3362**	1	HARNESS AS-CHASSIS (HORN)	
		1	**144-1636**	2	PIN-CONNECTOR (14-GA TO 18-GA)	
		1	**126-1766**	2	SOCKET-CONNECTOR (14-GA TO 18-GA)	
		1	**102-8802**	1	KIT-RECEPTACLE (2-PIN)	
					(INCLUDES RECEPTACLE AS & WEDGE)	
		1	**155-2270**	1	KIT-CONNECTING PLUG (2-PIN)	
					(INCLUDES PLUG AS, WEDGE & INTERFACE SEAL)	
	6	1	**8T-4121**	3	WASHER-HARD (11X21X2.5-MM THK)	

M-METRIC PART

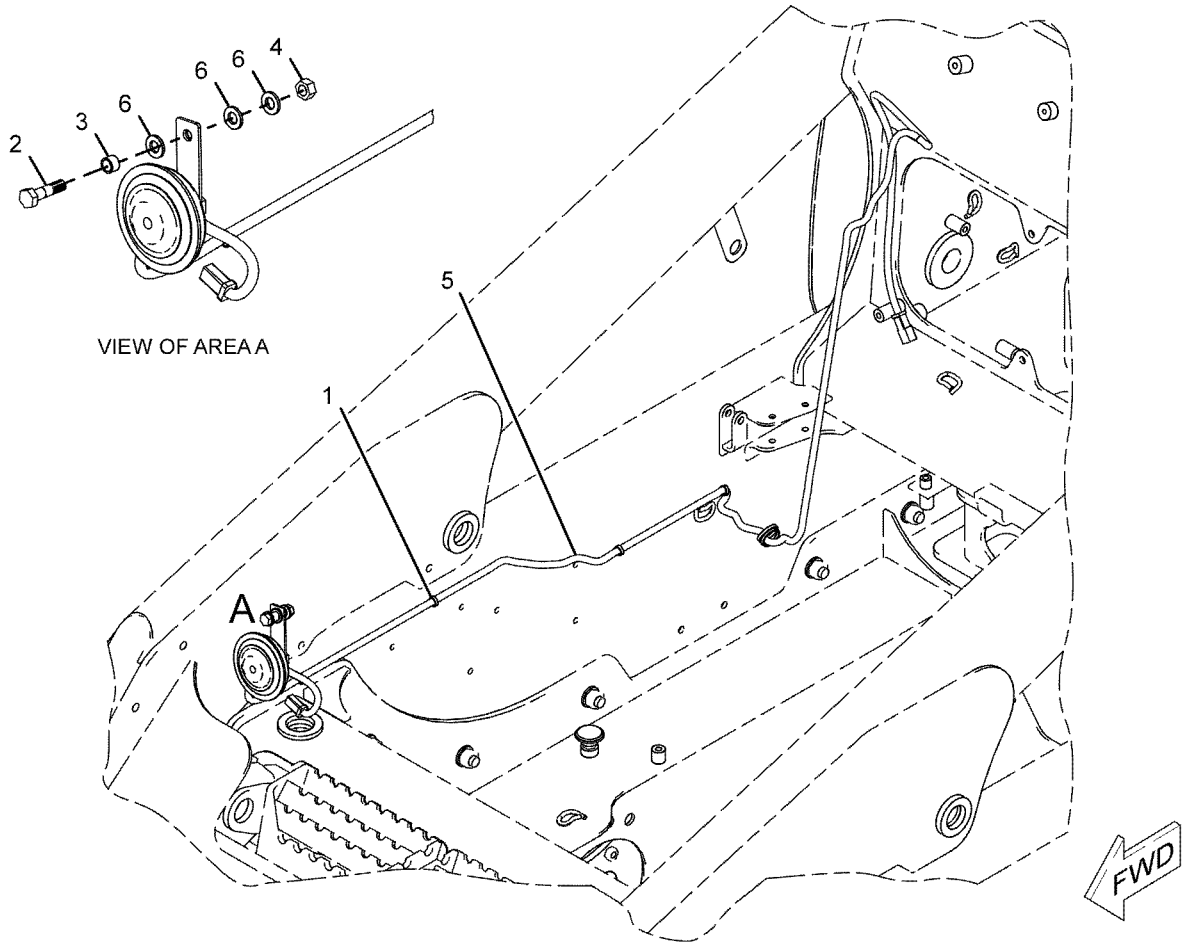

GRAPHIC #1 **<END>** g01037702

ELECTRICAL AND STARTING SYSTEM

328-2274 WIRING GP-MACHINE

S/N: A9H1-UP
PART OF 326-4785 CHASSIS AR
TYPE 1

SMCS-1408 **i04171436**

NOTE	REF NO	GRAPHIC REF	PART NUMBER	QTY	PART NAME 1 2 3 4 5 6 (PRODUCT LEVEL)	SEE PAGE
	1	1	**7K-1181**	23	STRAP-CABLE	
	2	1	**8M-4963**	1	STRAP AS-GROUND	
	3	1	**161-2539**	1	ALARM AS	
		1	**4B-2043**	2	NUT (8-32-THD)	
	4	1	**178-3620**	1	STRAP-DUAL CLAMP	
	5	1	**178-7539**	1	RECEPTACLE AS (POWER SUPPLY)	
	6	1	**192-0836**	1	SWITCH GP-PRESSURE (BACKUP ALARM)	
		1	**102-8802**	1	KIT-RECEPTACLE (2-PIN)	
					(INCLUDES RECEPTACLE AS & WEDGE)	
		1	**3J-1907**	1	SEAL-O-RING	
		1	**8T-8729**	2	PIN-CONNECTOR (16-GA TO 18-GA)	
	7	1	**235-1845**	1	FUSE (100-AMPERE)	
	8	1	**267-2744**	1	HOLDER AS-FUSE	
M		1	**5C-7261**	2	NUT (M8X1.25-THD)	
		1	**7X-0608**	2	WASHER-HARD (10.2X16X2-MM THK)	
		1	**9F-5644**	2	LOCKWASHER	
		1	**267-2746**	1	COVER AS	
B	9	1	**274-3774**	3	CAP-CONNECTOR	
B	10	1	**274-3776**	3	CAP-SEAL	
B	11	1	**274-3778**	1	CAP-SEAL	
	12	1	**328-2275**	1	HARNESS AS-PLATFORM	
		1	**102-8802**	2	KIT-RECEPTACLE (2-PIN)	
					(EACH INCLUDES RECEPTACLE AS & WEDGE)	
		1	**155-2265**	2	KIT-CONNECTING PLUG (8-PIN)	
		1	**155-2255**	3	KIT-CONNECTING PLUG (12-PIN)	
		1	**155-2270**	16	KIT-CONNECTING PLUG (2-PIN)	
		1	**155-2271**	3	KIT-CONNECTING PLUG (4-PIN)	
					(EACH PLUG KIT INCLUDES PLUG AS , WEDGE & INTERFACE SEAL)	
		1	**8T-8729**	16	PIN-CONNECTOR (16-GA TO 18-GA)	
		1	**180-9340**	61	SOCKET-CONNECTOR (14-GA TO 18-GA)	
		1	**8T-8730**	47	SOCKET-CONNECTOR (16-GA TO 18-GA)	
		1	**9W-0852**	7	PIN-CONNECTOR (14-GA TO 16-GA)	
		1	**9W-0844**	12	SOCKET-CONNECTOR (14-GA TO 16-GA)	
		1	**9X-3401**	8	PIN-CONNECTOR (16-GA TO 18-GA)	
		1	**274-3774**	2	CAP-CONNECTOR	
E		1	**283-0632**		CONDUIT (14-CM)	
		1	**127-5483**	1	PLUG AS-CONNECTOR (1-PIN)	
		1	**167-3693**	1	PLUG AS-CONNECTOR (31-PIN)	
		1	**225-3854**	1	PLUG AS-CONNECTOR (31-PIN)	
		1	**8T-8737**	11	PLUG-SEAL	
		1	**9W-0844**	12	SOCKET-CONNECTOR (14-GA TO 16-GA)	
		1	**8N-1549**	1	SOCKET-CONNECTOR (4-GA)	
		1	**3S-2093**	40	STRAP-CABLE	
		1	**2L-8069**	2	TERMINAL-RING (2-GA TO 10-GA, 3/8-IN SCREW)	
		1	**2L-8079**	2	TERMINAL-RING (14-GA TO 16-GA, 3/8-IN SCREW)	
		1	**5P-4571**	2	TERMINAL-BLADE (14-GA TO 16-GA)	
		1	**9G-4336**	1	TERMINAL-RING (4-GA, 3/8-IN SCREW)	
E		1	**119-3662**		TUBE-HEAT SHRINK (10.85-MM DIA) (20-CM)	
E		1	**125-7874**		TUBE-HEAT SHRINK (5.72-MM DIA) (35-CM)	
	13	1	**328-2340**	1	HARNESS AS-LIGHTING (REAR)	
		1	**8T-8729**	6	PIN-CONNECTOR (16-GA TO 18-GA)	
		1	**9W-0852**	1	PIN-CONNECTOR (14-GA TO 16-GA)	

328-2274 **WIRING GP-MACHINE** *(contd.)* **i04171436**

NOTE	REF NO	GRAPHIC REF	PART NUMBER	QTY	PART NAME 1 2 3 4 5 6 (PRODUCT LEVEL)	SEE PAGE
		1	**155-2271**	2	KIT-CONNECTING PLUG (4-PIN)	
					(EACH INCLUDES PLUG AS, WEDGE & INTERFACE SEAL)	
		1	**8T-8737**	1	PLUG-SEAL	
		1	**102-8806**	1	KIT-RECEPTACLE (8-PIN)	
					(INCLUDES RECEPTACLE AS & WEDGE)	
		1	**3S-2093**	2	STRAP-CABLE	
		1	**8T-8730**	8	SOCKET-CONNECTOR (16-GA TO 18-GA)	
E		1	**125-7874**		TUBE-HEAT SHRINK (5.72-MM DIA) (10-CM)	
		1	**7N-9017**	2	TERMINAL-RING (18-GA TO 22-GA, NO. 10 SCREW)	
	14	1	**132-5789**	3	CLIP	
	15	1	**155-2270**	1	KIT-CONNECTING PLUG (2-PIN)	
					(INCLUDES PLUG AS, WEDGE & INTERFACE SEAL)	
	16	1	**208-9277**	2	BOLT-FLANGE HEAD (M8X1X25-MM)	
	17	1	**3S-2093**	15	STRAP-CABLE	
	18	1	**4P-7581**	1	CLIP	
M	19	1	**5C-7261**	1	NUT (M8X1.25-THD)	
	20	1	**5P-4115**	2	WASHER-HARD (7.2X19X2-MM THK)	
M	21	1	**6V-7728**	2	BOLT (M6X1X45-MM)	
	22	1	**7X-0608**	1	WASHER-HARD (10.2X16X2-MM THK)	
	23	1	**8T-4121**	3	WASHER-HARD (11X21X2.5-MM THK)	
M	24	1	**8T-4133**	3	NUT (M10X1.5-THD)	
	25	1	**9F-5644**	1	LOCKWASHER	
	26	1	**189-0852**	2	HARNESS AS-WIRING (SPEED SENSOR)	
					(EACH INCLUDES)	
		1	**9X-3401**	2	PIN-CONNECTOR (16-GA TO 18-GA)	
		1	**155-2270**	1	KIT-CONNECTING PLUG (2-PIN)	
					(INCLUDES PLUG AS, WEDGE & INTERFACE SEAL)	
		1	**102-8802**	1	KIT-RECEPTACLE (2-PIN)	
					(INCLUDES RECEPTACLE AS & WEDGE)	
E		1	**9X-1813**		SLEEVE (16-CM)	
		1	**180-9340**	2	SOCKET-CONNECTOR (14-GA TO 18-GA)	

B-USE AS REQUIRED
E-ORDER BY THE CENTIMETER
M-METRIC PART

328-2274 **WIRING GP-MACHINE** *(contd.)* **i04171436**

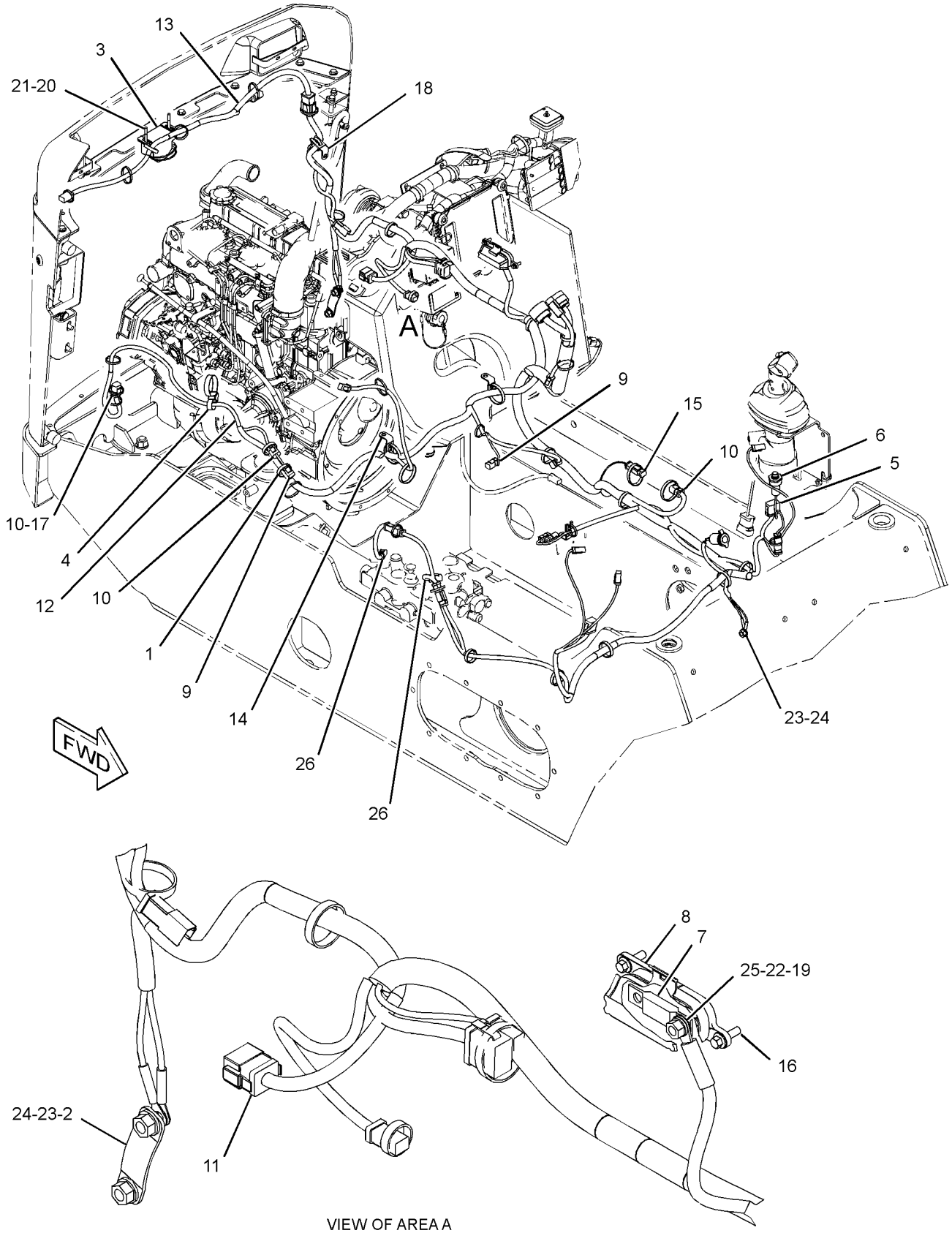

VIEW OF AREA A

GRAPHIC #1 **<END>** g02470979

ELECTRICAL AND STARTING SYSTEM

328-2274 WIRING GP-MACHINE

S/N: A9H1-UP
PART OF 326-4785 CHASSIS AR
TYPE 2

SMCS-1408 **i04519162**

NOTE	REF NO	GRAPHIC REF	PART NUMBER	QTY	PART NAME 1 2 3 4 5 6 (PRODUCT LEVEL)	SEE PAGE
C	1	1	**7K-1181**	24	STRAP-CABLE	
	2	1	**8M-4963**	1	STRAP AS-GROUND	
	3	1	**161-2539**	1	ALARM AS	
		1	**4B-2043**	2	NUT (8-32-THD)	
	4	1	**178-3620**	1	STRAP-DUAL CLAMP	
	5	1	**178-7539**	1	RECEPTACLE AS (POWER SUPPLY)	
	6	1	**192-0836**	1	SWITCH GP-PRESSURE (BACKUP ALARM)	
		1	**102-8802**	1	KIT-RECEPTACLE (2-PIN)	
					(INCLUDES RECEPTACLE AS & WEDGE)	
		1	**3J-1907**	1	SEAL-O-RING	
		1	**8T-8729**	2	PIN-CONNECTOR (16-GA TO 18-GA)	
	7	1	**235-1845**	1	FUSE (100-AMPERE)	
	8	1	**267-2744**	1	HOLDER AS-FUSE	
M		1	**5C-7261**	2	NUT (M8X1.25-THD)	
		1	**7X-0608**	2	WASHER-HARD (10.2X16X2-MM THK)	
		1	**9F-5644**	2	LOCKWASHER	
		1	**267-2746**	1	COVER AS	
BC	9	1	**374-7463**	1	CAP-SEAL	
BC	10	1	**374-7465**	3	CAP-SEAL	
BC	11	1	**374-7467**	1	CAP-SEAL	
C	12	1	**373-6258**	1	HARNESS AS-PLATFORM	
		1	**374-7463**	4	CAP-SEAL	
		1	**8T-8729**	18	PIN-CONNECTOR (16-GA TO 18-GA)	
		1	**9W-0852**	8	PIN-CONNECTOR (14-GA TO 16-GA)	
		1	**9X-3401**	8	PIN-CONNECTOR (16-GA TO 18-GA)	
		1	**127-5483**	1	PLUG AS-CONNECTOR (1-PIN)	
		1	**155-2255**	3	KIT-CONNECTING PLUG (12-PIN)	
		1	**155-2265**	2	KIT-CONNECTING PLUG (8-PIN)	
		1	**155-2270**	19	KIT-CONNECTING PLUG (2-PIN)	
		1	**155-2271**	3	KIT-CONNECTING PLUG (4-PIN)	
					(EACH PLUG KIT INCLUDES PLUG AS, WEDGE & INTERFACE SEAL)	
		1	**167-3693**	1	PLUG AS-CONNECTOR (31-PIN)	
		1	**225-3854**	1	PLUG AS-CONNECTOR (31-PIN)	
		1	**8T-8737**	9	PLUG-SEAL	
		1	**102-8802**	2	KIT-RECEPTACLE (2-PIN)	
					(EACH INCLUDES RECEPTACLE AS & WEDGE)	
		1	**8N-1549**	1	SOCKET-CONNECTOR (4-GA)	
		1	**8T-8730**	52	SOCKET-CONNECTOR (16-GA TO 18-GA)	
		1	**9W-0844**	12	SOCKET-CONNECTOR (14-GA TO 16-GA)	
		1	**180-9340**	61	SOCKET-CONNECTOR (14-GA TO 18-GA)	
		1	**3S-2093**	32	STRAP-CABLE	
		1	**2L-8069**	2	TERMINAL-RING (2-GA TO 10-GA, 3/8-IN SCREW)	
		1	**2L-8079**	2	TERMINAL-RING (14-GA TO 16-GA, 3/8-IN SCREW)	
		1	**5P-4571**	2	TERMINAL-BLADE (14-GA TO 16-GA)	
		1	**9G-4336**	1	TERMINAL-RING (4-GA, 3/8-IN SCREW)	
E		1	**119-3662**		TUBE-HEAT SHRINK (10.85-MM DIA) (20-CM)	
E		1	**125-7874**		TUBE-HEAT SHRINK (5.72-MM DIA) (40-CM)	
	13	1	**328-2340**	1	HARNESS AS-LIGHTING (REAR)	
		1	**8T-8729**	6	PIN-CONNECTOR (16-GA TO 18-GA)	
		1	**9W-0852**	1	PIN-CONNECTOR (14-GA TO 16-GA)	
		1	**155-2271**	2	KIT-CONNECTING PLUG (4-PIN)	
					(EACH INCLUDES PLUG AS, WEDGE & INTERFACE SEAL)	

328-2274 **WIRING GP-MACHINE** *(contd.)* **i04519162**

NOTE	REF NO	GRAPHIC REF	PART NUMBER	QTY	PART NAME 1 2 3 4 5 6 (PRODUCT LEVEL)	SEE PAGE
		1	**8T-8737**	1	PLUG-SEAL	
		1	**102-8806**	1	KIT-RECEPTACLE (8-PIN)	
					(INCLUDES RECEPTACLE AS & WEDGE)	
		1	**3S-2093**	2	STRAP-CABLE	
		1	**8T-8730**	8	SOCKET-CONNECTOR (16-GA TO 18-GA)	
E		1	**125-7874**		TUBE-HEAT SHRINK (5.72-MM DIA) (10-CM)	
		1	**7N-9017**	2	TERMINAL-RING (18-GA TO 22-GA, NO. 10 SCREW)	
	14	1	**132-5789**	3	CLIP	
	15	1	**155-2270**	1	KIT-CONNECTING PLUG (2-PIN)	
					(INCLUDES PLUG AS, WEDGE & INTERFACE SEAL)	
	16	1	**208-9277**	2	BOLT-FLANGE HEAD (M8X1X25-MM)	
	17	1	**3S-2093**	15	STRAP-CABLE	
	18	1	**4P-7581**	1	CLIP	
M	19	1	**5C-7261**	1	NUT (M8X1.25-THD)	
	20	1	**5P-4115**	2	WASHER-HARD (7.2X19X2-MM THK)	
M	21	1	**6V-7728**	2	BOLT (M6X1X45-MM)	
	22	1	**7X-0608**	1	WASHER-HARD (10.2X16X2-MM THK)	
	23	1	**8T-4121**	3	WASHER-HARD (11X21X2.5-MM THK)	
M	24	1	**8T-4133**	3	NUT (M10X1.5-THD)	
	25	1	**9F-5644**	1	LOCKWASHER	
	26	1	**189-0852**	2	HARNESS AS-WIRING (SPEED SENSOR)	
					(EACH INCLUDES)	
		1	**9X-3401**	2	PIN-CONNECTOR (16-GA TO 18-GA)	
		1	**155-2270**	1	KIT-CONNECTING PLUG (2-PIN)	
					(INCLUDES PLUG AS, WEDGE & INTERFACE SEAL)	
		1	**102-8802**	1	KIT-RECEPTACLE (2-PIN)	
					(INCLUDES RECEPTACLE AS & WEDGE)	
E		1	**9X-1813**		SLEEVE (16-CM)	
		1	**180-9340**	2	SOCKET-CONNECTOR (14-GA TO 18-GA)	

B-USE AS REQUIRED
C-CHANGE FROM PREVIOUS TYPE
E-ORDER BY THE CENTIMETER
M-METRIC PART

328-2274 **WIRING GP-MACHINE** *(contd.)* **i04519162**

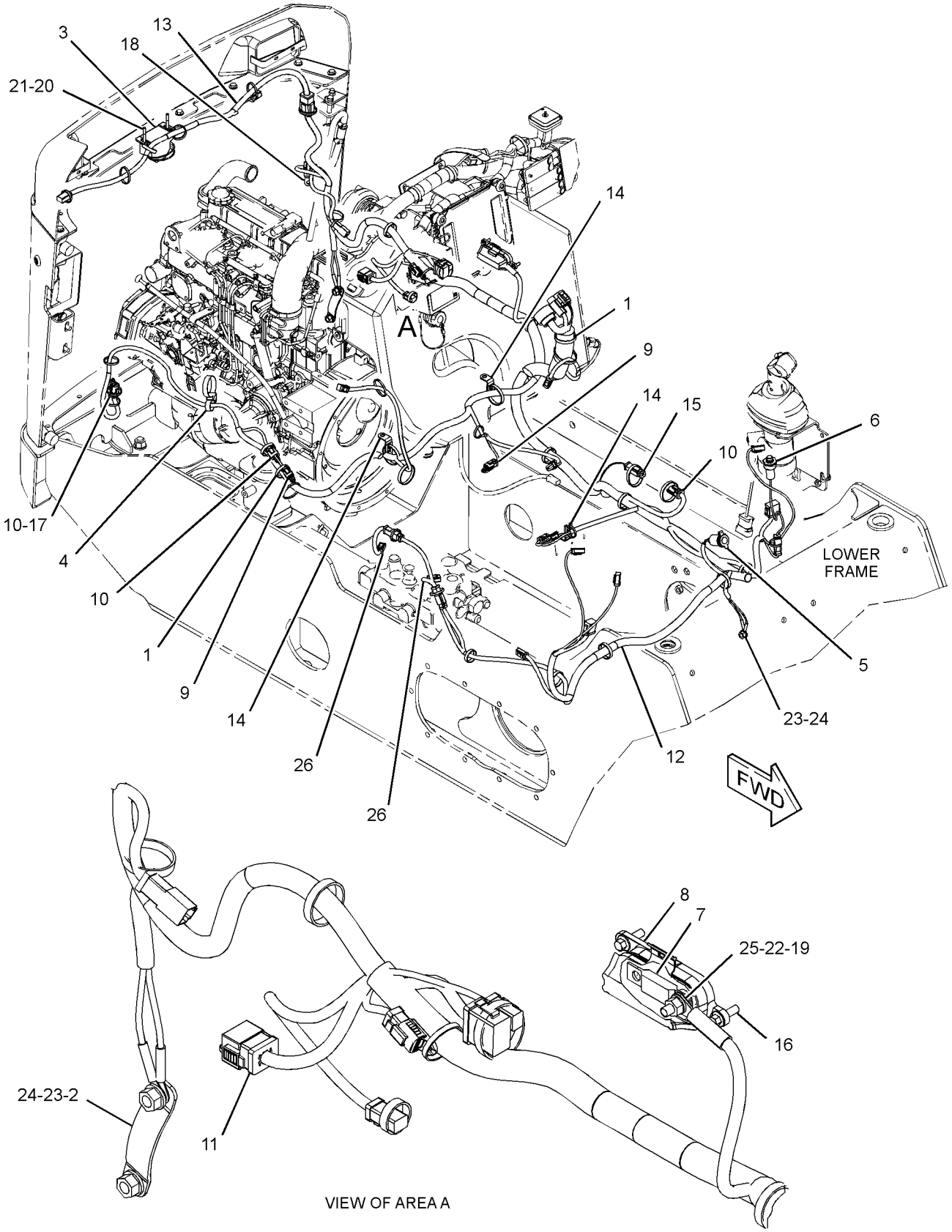

GRAPHIC #1 **<END>** g02708196

328-2342 WIRING GP-MACHINE–DEMAND FAN

S/N: A9H1-UP
PART OF 356-1901 MOTOR AR-HYDRAULIC FAN
AN ATTACHMENT

SMCS-1408 **i04048570**

NOTE	REF NO	GRAPHIC REF	PART NUMBER	QTY	PART NAME 1 2 3 4 5 6 (PRODUCT LEVEL)	SEE PAGE
	1	1	**328-2341**	1	HARNESS AS-SOLENOID (DEMAND FAN)	
		1	**8T-8729**	2	PIN-CONNECTOR (16-GA TO 18-GA)	
		1	**155-2270**	1	KIT-CONNECTING PLUG (2-PIN)	
					(INCLUDES PLUG AS, WEDGE & INTERFACE SEAL)	
		1	**102-8802**	1	KIT-RECEPTACLE (2-PIN)	
					(INCLUDES RECEPTACLE AS & WEDGE)	
		1	**8T-8730**	2	SOCKET-CONNECTOR (16-GA TO 18-GA)	
	2	1	**3S-2093**	5	STRAP-CABLE	
	3	1	**4P-8134**	1	CLIP	
	4	1	**8T-4121**	1	WASHER-HARD (11X21X2.5-MM THK)	
M	5	1	**8T-4133**	1	NUT (M10X1.5-THD)	

M-METRIC PART

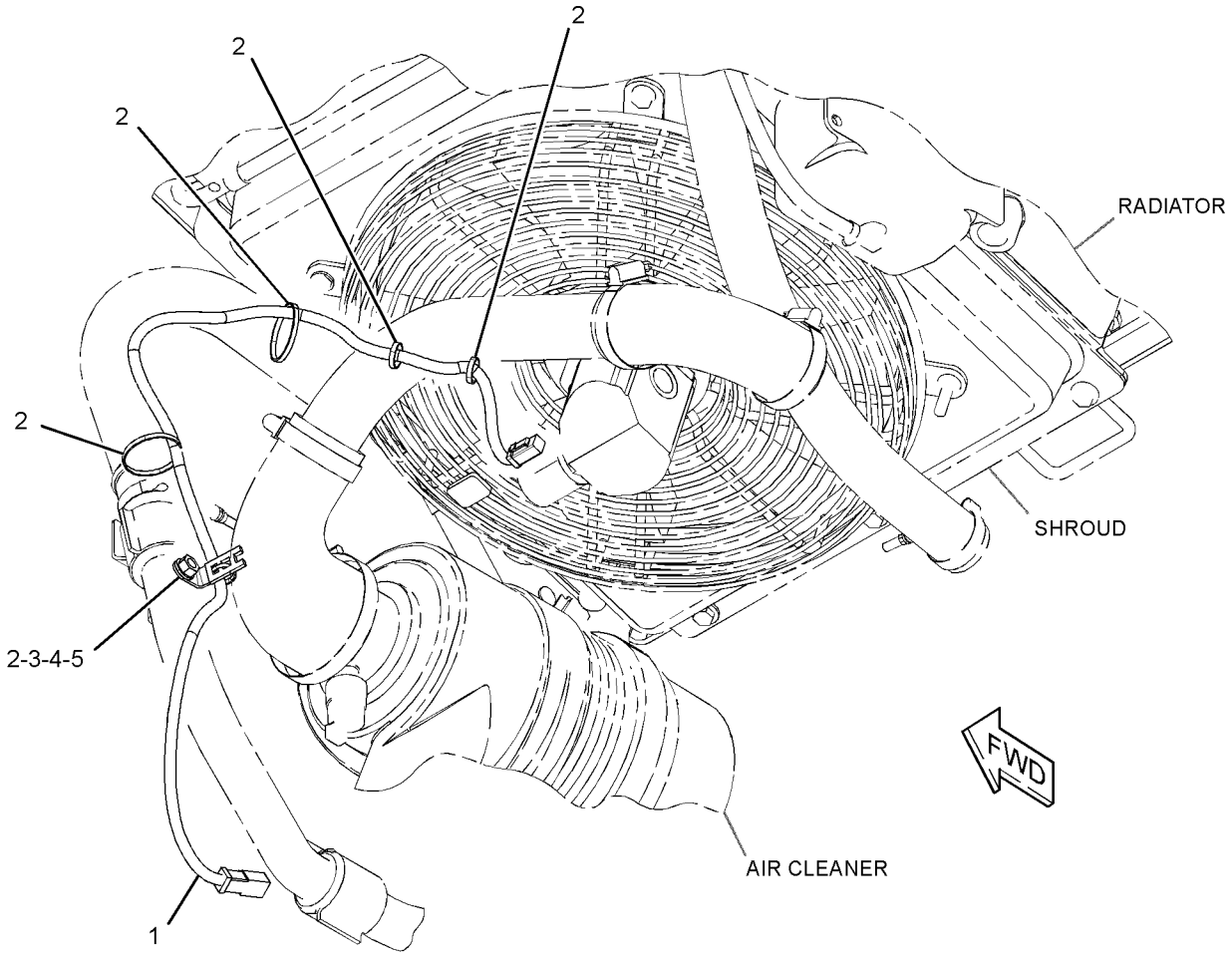

GRAPHIC #1 **<END>** g02470477

328-2335 WIRING GP-WORK TOOL

S/N: A9H1-1470
PART OF 326-5427, 326-5428 CONTROL AR-MACHINE
AN ATTACHMENT

SMCS-1408 **i03902930**

NOTE	REF NO	GRAPHIC REF	PART NUMBER	QTY	PART NAME 1 2 3 4 5 6 (PRODUCT LEVEL)	SEE PAGE
	1	1	**110-8760**	1	STRAP	
	2	1	**142-8633**	1	SWITCH AS-ROCKER (ELECTRIC POWER, WORK TOOL)	
		1	**111-7899**	1	GASKET	
	3	1	**146-9439**	5	RELAY AS (12-VOLT) (WORK TOOL)	
	4	1	**159-9495**	1	NUT (1-1/2-18-THD)	
	5	1	**178-3620**	1	STRAP-DUAL CLAMP	
	6	1	**216-4725**	1	HARNESS AS-WORK TOOL (LIFT ARM)	
		1	**1S-9593**	1	STRAP-CABLE	
		1	**7T-0093**	8	PIN-CONNECTOR (12-GA TO 14-GA)	
		1	**9W-0852**	8	PIN-CONNECTOR (14-GA TO 16-GA)	
		1	**156-1458**	1	COVER	
		1	**156-1460**	1	RECEPTACLE (8-PIN)	
	7	1	**159-9496**	1	LOCKWASHER	
	8	1	**102-8806**	1	KIT-RECEPTACLE (8-PIN)	
					(INCLUDES RECEPTACLE AS & WEDGE)	
	9	1	**3S-2093**	3	STRAP-CABLE	

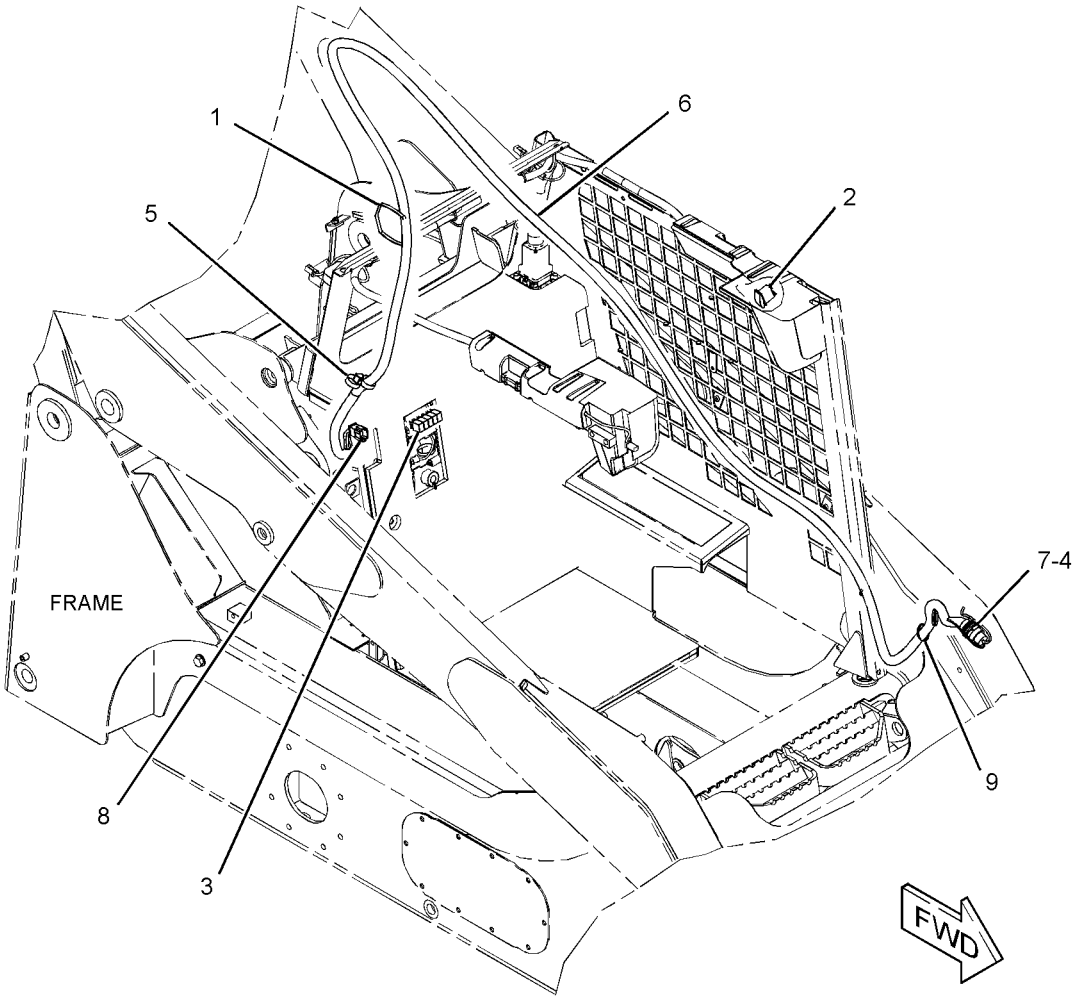

GRAPHIC #1 **<END>** g02150595

375-6446 WIRING GP-WORK TOOL–STANDARD FLOW

S/N: A9H1471-UP
PART OF 326-5427, 326-5428 CONTROL AR-MACHINE
AN ATTACHMENT

SMCS-1408 **i04507454**

NOTE	REF NO	GRAPHIC REF	PART NUMBER	QTY	PART NAME 1 2 3 4 5 6 (PRODUCT LEVEL)	SEE PAGE
	1	1	**3S-2093**	11	STRAP-CABLE	
	2	1	**142-8633**	1	SWITCH AS-ROCKER (ELECTRIC POWER, WORK TOOL)	
		1	**111-7899**	1	GASKET	
	3	1	**146-9439**	5	RELAY AS (12-VOLT) (WORK TOOL)	
	4	1	**159-9495**	1	NUT (1-1/2-18-THD)	
	5	1	**178-3620**	2	STRAP-DUAL CLAMP	
	6	1	**159-9496**	1	LOCKWASHER	
	7	1	**375-6444**	1	HARNESS AS-WORK TOOL	
		1	**156-1458**	1	COVER	
		1	**9W-0852**	5	PIN-CONNECTOR (14-GA TO 16-GA)	
		1	**262-9151**	8	PIN-CONNECTOR (12-GA TO 14-GA)	
		1	**8T-8737**	3	PLUG-SEAL	
		1	**102-8806**	1	KIT-RECEPTACLE (8-PIN) (INCLUDES RECETACLE AS & WEDGE)	
		1	**156-1460**	1	RECEPTACLE (8-PIN)	
E		1	**317-1204**		SLEEVE (193-CM)	
		1	**3S-2093**	8	STRAP-CABLE	
		1	**2L-8079**	1	TERMINAL-RING (14-GA TO 16-GA, 3/8-IN SCREW)	
E		1	**125-7874**		TUBE-HEAT SHRINK (5.72-MM DIA) (5-CM)	
E		1	**125-7875**		TUBE-HEAT SHRINK (7.44-MM DIA) (14-CM)	

E-ORDER BY THE CENTIMETER

375-6446 **WIRING GP-WORK TOOL** *(contd.)* **i04507454**

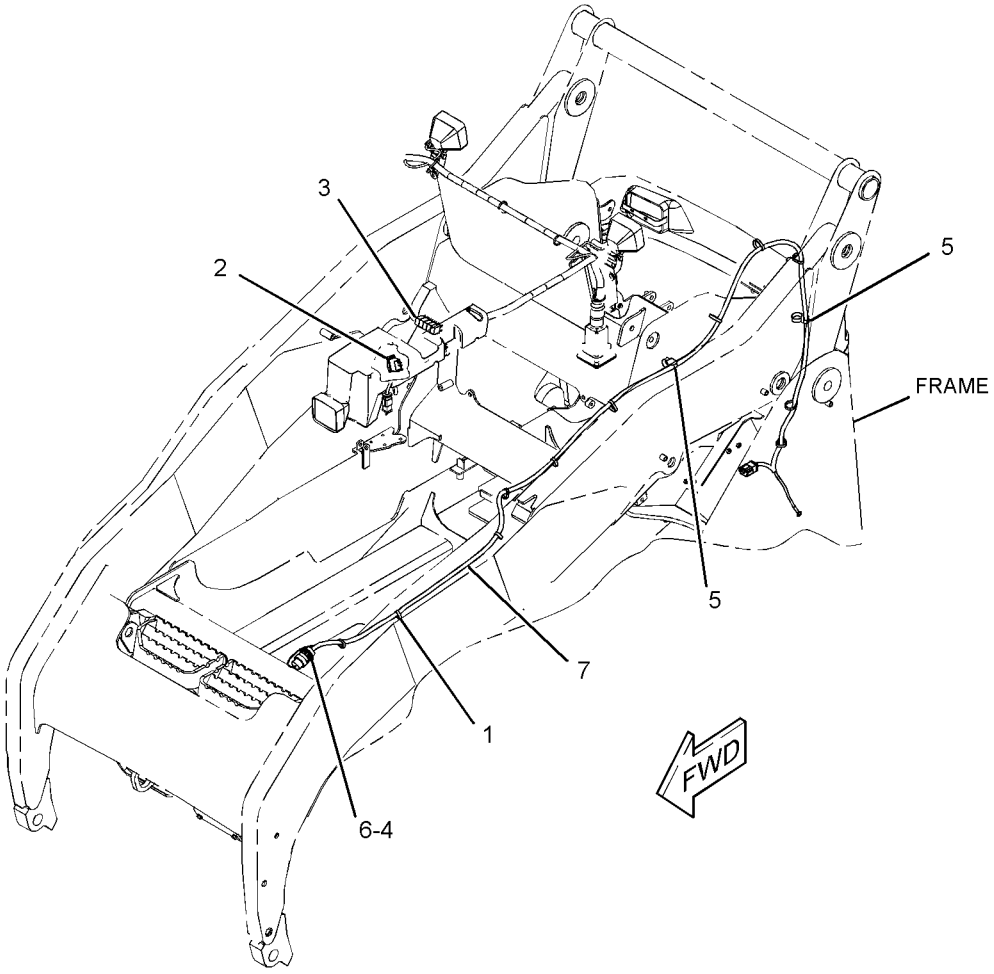

GRAPHIC #1 **<END>** g02699076

142-9058 AXLE GP–TANDEM

S/N: A9H1-UP

PART OF 261-6275 AXLE GP

SMCS-3278 **i01938931**

NOTE	REF NO	GRAPHIC REF	PART NUMBER	QTY	PART NAME 1 2 3 4 5 6 (PRODUCT LEVEL)	SEE PAGE
	1	1	**142-9023**	1	HOUSING-AXLE	
	2	1	**142-9024**	1	SPINDLE-WHEEL	
	3	1	**142-9029**	1	SPACER (57.16X69.85X27.54MM THK)	
	4	1	**155-5652**	1	SEAL-LIP TYPE	
	5	1	**155-9010**	1	CONE-BEARING	
	6	1	**155-9432**	1	CONE-BEARING	
	7	1	**155-9433**	2	CUP-BEARING	
	8	1	**159-5772**	8	STUD (9/16-18-2A THD)	
	9	1	**169-1679**	1	SEAL-LIP TYPE	

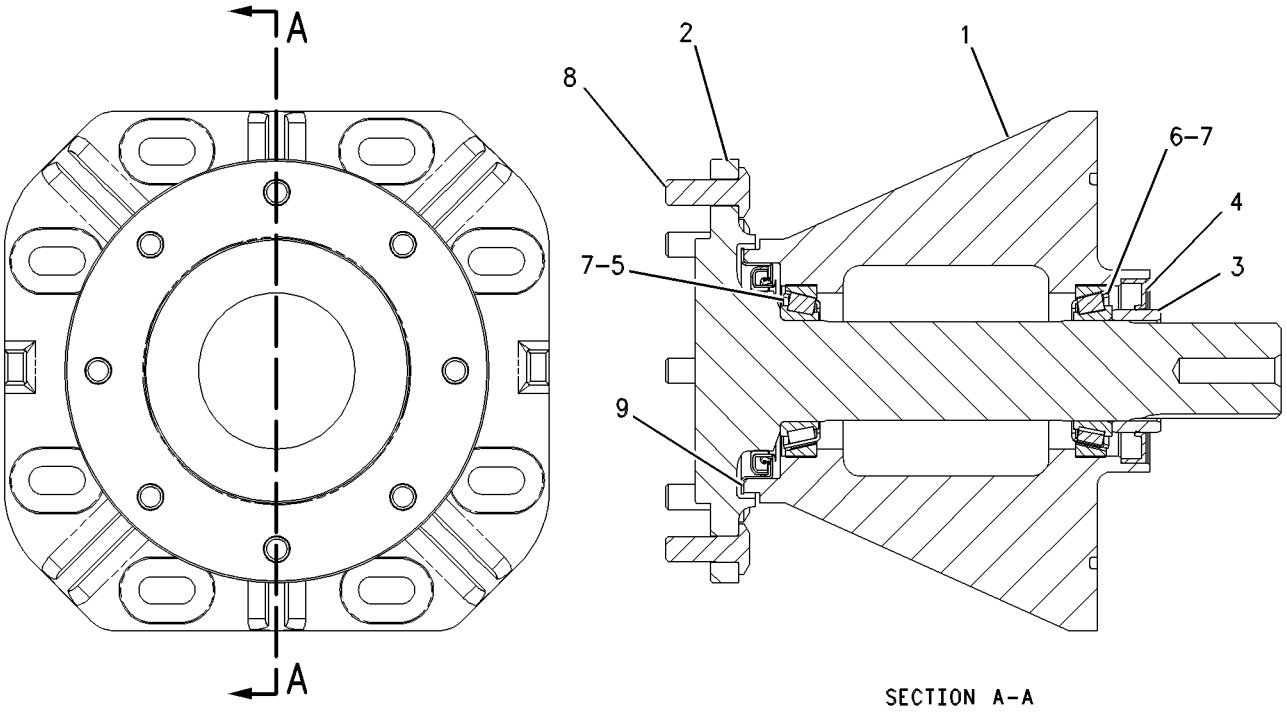

SECTION A-A

GRAPHIC #1 **<END>** g00592470

POWER TRAIN

261-6275 AXLE GP

S/N: A9H1-UP

PART OF 326-4785 CHASSIS AR

SMCS-3278 **i02476320**

NOTE	PART NUMBER	QTY	PART NAME 1 2 3 4 5 6 (PRODUCT LEVEL)	SEE PAGE
Y	**142-9058**	4	AXLE GP	128

Y-SEPARATE ILLUSTRATION

<END>

370-4207 CONTROL GP-PARKING BRAKE–2-SPEED

S/N: A9H1730-UP
PART OF 326-5428 CONTROL AR-MACHINE
AN ATTACHMENT

SMCS-4284 **i04561274**

NOTE	REF NO	GRAPHIC REF	PART NUMBER	QTY	PART NAME 1 2 3 4 5 6 (PRODUCT LEVEL)	SEE PAGE
I	1	1	**100-7530**	1	HOSE AS	
I	2	1	**218-5581**	1	HOSE AS	
	3	1	**218-6879**	1	TUBE AS	
Y	4	1	**293-6591**	1	MANIFOLD & SOLENOID GP-CONTROL (PARKING BRAKE, 2-SPEED)	150
I	5	1	**370-4185**	1	HOSE AS	
	6	1	*148-8336*	2	CONNECTOR AS	
					(EACH INCLUDES)	
		1	**3J-1907**	1	SEAL-O-RING	
		1	**6V-8397**	1	SEAL-O-RING	
		1	**6V-8636**	1	CONNECTOR	
	7	1	*148-8374*	3	ELBOW AS	
					(EACH INCLUDES)	
		1	**3K-0360**	1	SEAL-O-RING	
		1	**6V-8397**	1	SEAL-O-RING	
		1	**6V-8723**	1	ELBOW	
	8	1	*148-8428*	1	TEE AS	
		1	**3K-0360**	1	SEAL-O-RING	
		1	**6V-8398**	2	SEAL-O-RING	
		1	**6V-8782**	1	TEE	
	9	1	*148-8435*	1	TEE AS	
		1	**3J-1907**	1	SEAL-O-RING	
		1	**6V-8397**	2	SEAL-O-RING	
		1	**6V-8781**	1	TEE	
	10	1	*161-8560*	1	CONNECTOR AS	
		1	**3J-1907**	1	SEAL-O-RING	
		1	**7J-9108**	1	SEAL-O-RING	
		1	**8C-6758**	1	CONNECTOR	
I	11	1	**243-0564**	1	HOSE AS	
I	12	1	**370-5254**	1	HOSE AS	
M	13	1	**5C-7261**	2	NUT (M8X1.25-THD)	
	14	1	**6V-8398**	2	SEAL-O-RING	
M	15	1	**7X-2539**	2	BOLT (M8X1.25X110-MM)	
	16	1	**8T-4224**	4	WASHER-HARD (8.8X16X2-MM THK)	

I-REFER TO HYDRAULIC INFORMATION SYSTEM
M-METRIC PART
Y-SEPARATE ILLUSTRATION

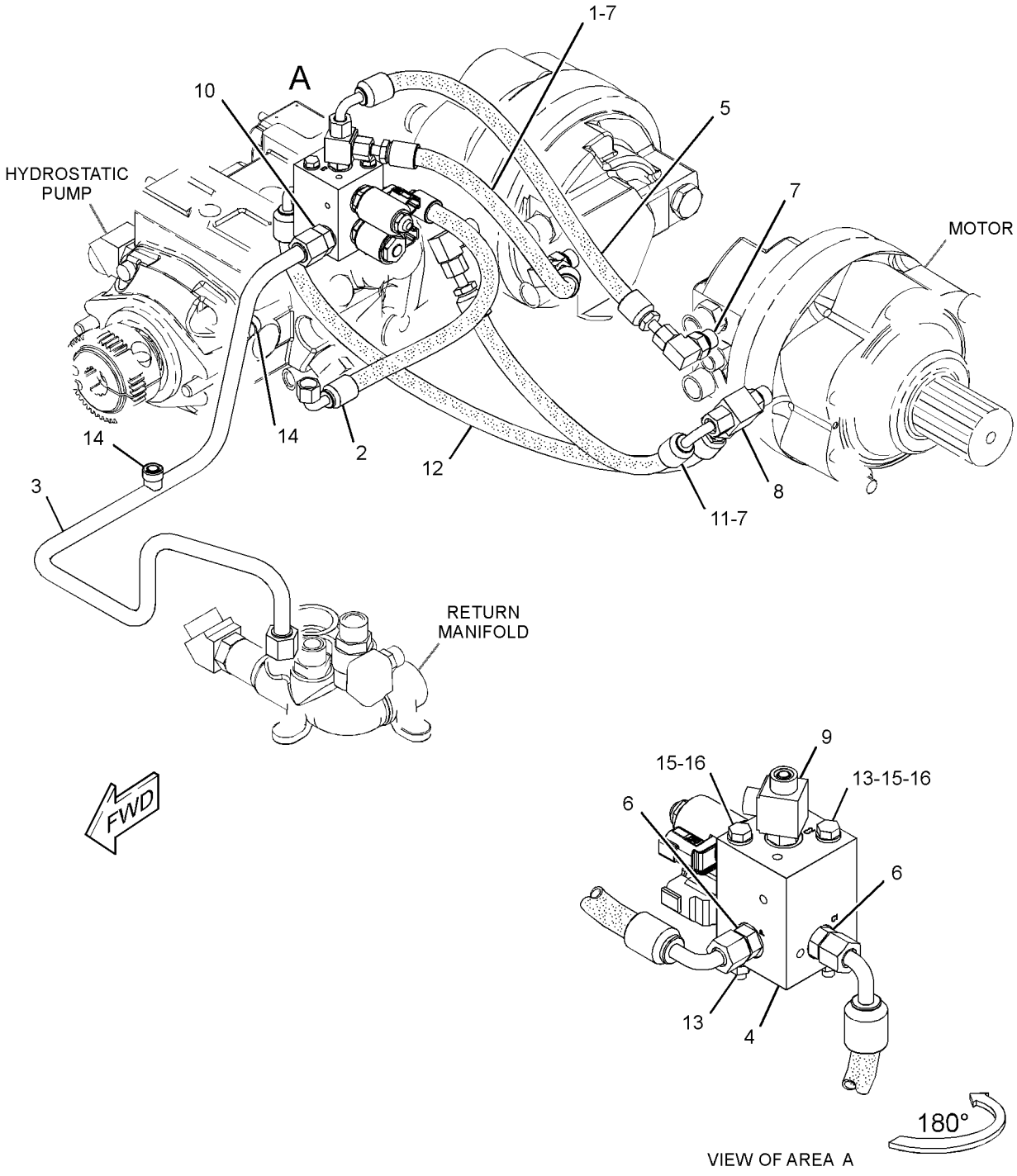

GRAPHIC #1 **<END>** g02727407

POWER TRAIN

142-9060 DRIVE GP-TANDEM

S/N: A9H1-1729

PART OF 326-5258 POWER TRAIN AR

SMCS-4062 **i02585294**

NOTE	REF NO	GRAPHIC REF	PART NUMBER	QTY	PART NAME 1 2 3 4 5 6 (PRODUCT LEVEL)	SEE PAGE
	1	1	**5P-3092**	4	SEAL-O-RING	
	2	1	**142-9032**	4	SPROCKET (13-TEETH) (MOTOR)	
	3	1	**142-9033**	2	RETAINER	
	4	1	**142-9034**	4	SPROCKET (27-TEETH) (AXLE)	
	5	1	**152-1157**	32	WASHER (15.5X32X8-MM THK)	
	6	1	**165-4892**	2	SPACER (60.6X72.1X11.87-MM THK)	
	7	1	**168-7571**	4	CHAIN AS	
	8	1	**200-0999**	32	STUD	
M	9	1	**100-3866**	4	BOLT-SELF-LOCKING (M16X2X40-MM)	
	10	1	**142-9036**	32	NUT (9/16-18-THD)	
	11	1	**7X-0610**	4	WASHER-HARD (20X75X6-MM THK)	
M	12	1	**8C-8992**	2	BOLT-LOCKING (M12X1.75X30-MM)	
	13	1	**8T-4122**	4	WASHER-HARD (17X32X3.5-MM THK)	

M-METRIC PART

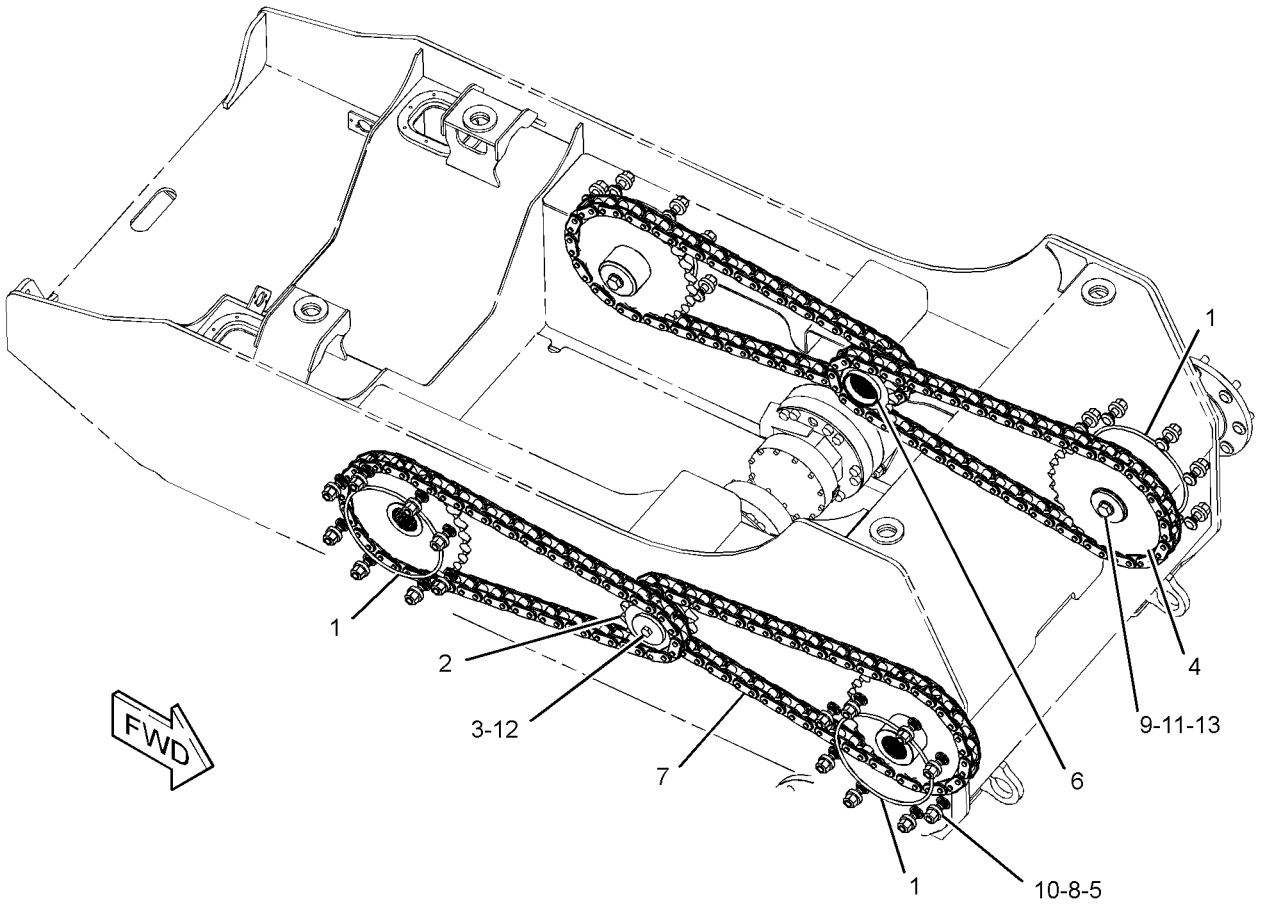

GRAPHIC #1 **<END>** g01230339

370-4187 DRIVE GP-TANDEM

S/N: A9H1730-UP

PART OF 326-5258 POWER TRAIN AR

SMCS-4062 **i04650211**

NOTE	REF NO	GRAPHIC REF	PART NUMBER	QTY	PART NAME 1 2 3 4 5 6 (PRODUCT LEVEL)	SEE PAGE
	1	1	**142-9033**	2	RETAINER	
	2	1	**152-1157**	32	WASHER (15.5X32X8-MM THK)	
	3	1	**200-0999**	32	STUD	
	4	1	**258-2858**	2	SPACER (63.9X75X13.13-MM THK)	
	5	1	**364-1360**	2	SPROCKET-MOTOR	
	6	1	**369-9122**	4	SPROCKET-AXLE	
	7	1	**369-9912**	4	CHAIN AS	
M	8	1	**100-3866**	4	BOLT-SELF-LOCKING (M16X2X40-MM)	
	9	1	**142-9036**	32	NUT (9/16-18-THD)	
	10	1	**5P-3092**	4	SEAL-O-RING	
	11	1	**6P-8269**	4	WASHER (20.5X88X6-MM THK)	
M	12	1	**8C-8992**	2	BOLT-LOCKING (M12X1.75X30-MM)	
	13	1	**8T-4122**	4	WASHER-HARD (17X32X3.5-MM THK)	

M-METRIC PART

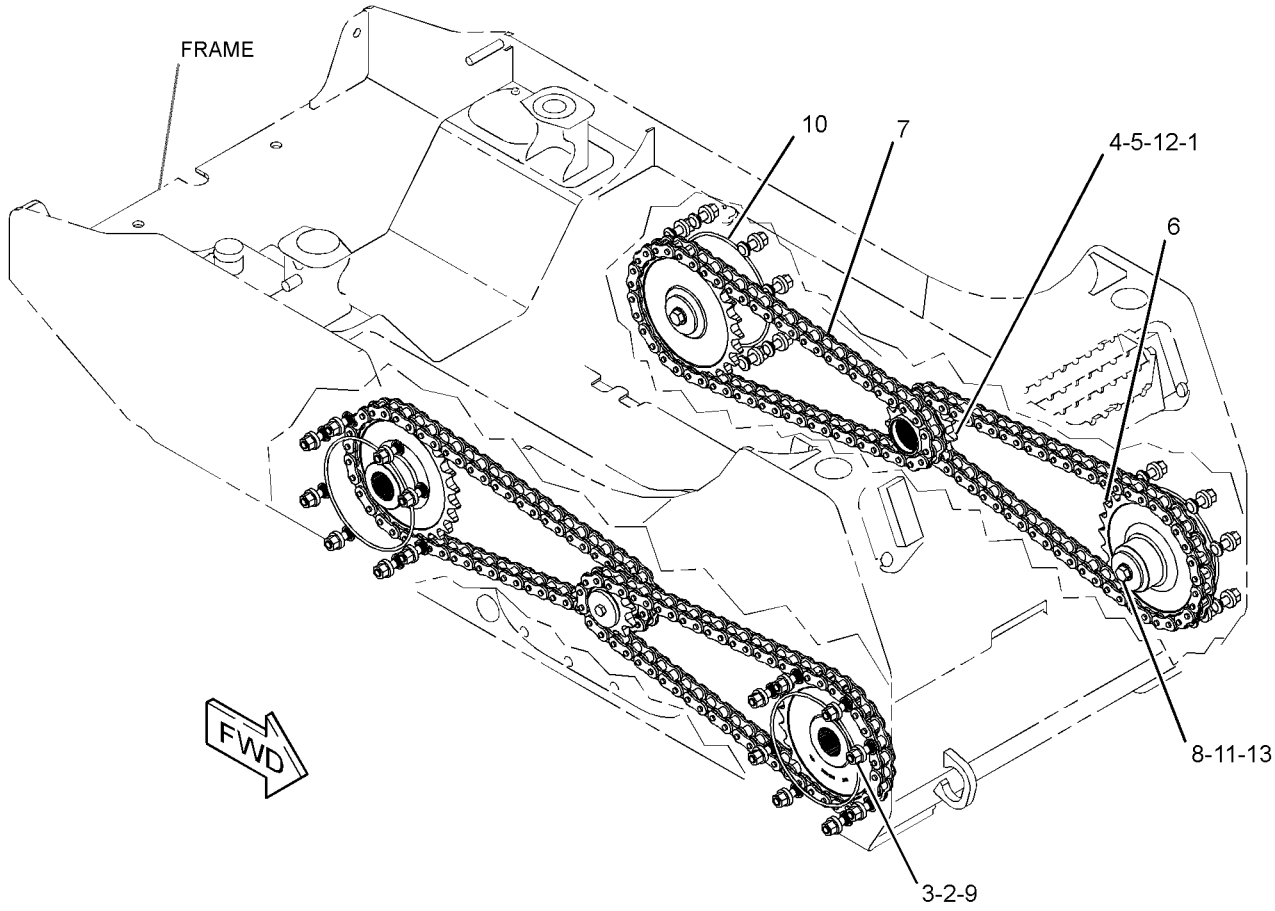

GRAPHIC #1 **<END>** g02791532

356-1916 FILTER & LINES GP-HYDRAULIC

S/N: A9H1-UP

PART OF 326-5435 HYDRAULIC AR

SMCS-5057, 5068 **i04557301**

NOTE	REF NO	GRAPHIC REF	PART NUMBER	QTY	PART NAME 1 2 3 4 5 6 (PRODUCT LEVEL)	SEE PAGE
	1	1	**178-3620**	1	STRAP-DUAL CLAMP	
I	2	1	**218-5588**	1	HOSE AS	
Y	3	1	**223-9974**	1	FILTER GP-OIL (HYDRAULIC)	136
I	4	1	**238-7736**	1	HOSE AS	
	5	1	**328-2353**	1	HARNESS AS-SWITCH (HYDRAULIC FILTER)	
		1	**155-2270**	1	KIT-CONNECTING PLUG (2-PIN)	
					(INCLUDES PLUG AS, WEDGE & INTERFACE SEAL)	
		1	**9W-0844**	1	SOCKET-CONNECTOR (14-GA TO 16-GA)	
		1	**180-9340**	1	SOCKET-CONNECTOR (14-GA TO 18-GA)	
		1	**2L-8069**	1	TERMINAL-RING (2-GA TO 10-GA, 3/8-IN SCREW)	
		1	**7N-9017**	1	TERMINAL-RING (18-GA TO 22-GA, NO. 10 SCREW)	
I	6	1	**328-7495**	1	HOSE AS	
I	7	1	**356-1936**	1	HOSE AS	
	8	1	*148-8315*	2	CONNECTOR AS	
					(EACH INCLUDES)	
		1	**2M-9780**	1	SEAL-O-RING	
		1	**6V-8642**	1	CONNECTOR	
		1	**7J-9108**	1	SEAL-O-RING	
	9	1	*148-8316*	1	CONNECTOR AS	
		1	**3J-7354**	1	SEAL-O-RING	
		1	**4J-5477**	1	SEAL-O-RING	
		1	**6V-8647**	1	CONNECTOR	
	10	1	*148-8328*	1	CONNECTOR AS	
		1	**3D-2824**	1	SEAL-O-RING	
		1	**6V-8398**	1	SEAL-O-RING	
		1	**6V-8633**	1	CONNECTOR	
	11	1	*148-8340*	1	CONNECTOR AS	
		1	**3K-0360**	1	SEAL-O-RING	
		1	**6V-8398**	1	SEAL-O-RING	
		1	**6V-8639**	1	CONNECTOR	
	12	1	*148-8341*	1	CONNECTOR AS	
		1	**3D-2824**	1	SEAL-O-RING	
		1	**6V-8713**	1	CONNECTOR	
		1	**7J-9108**	1	SEAL-O-RING	
	13	1	*148-8385*	1	ELBOW AS	
		1	**3J-7354**	1	SEAL-O-RING	
		1	**4J-5477**	1	SEAL-O-RING	
		1	**6V-9000**	1	ELBOW	
	14	1	*164-5590*	1	VALVE AS-FLUID SAMPLING (HYDRAULIC OIL)	
		1	**3J-7354**	1	SEAL-O-RING	
		1	**8C-3446**	1	VALVE-FLUID SAMPLING (HYDRAULIC OIL)	
	15	1	**3S-8665**	1	CLIP	
	16	1	**4S-1962**	1	CLIP	
	17	1	**6D-4244**	1	CLIP	
	18	1	**8C-3451**	1	CAP-DUST	
	19	1	**8T-4121**	6	WASHER-HARD (11X21X2.5-MM THK)	
M	20	1	**8T-4136**	2	BOLT (M10X1.5X25-MM)	
M	21	1	**8T-4137**	4	BOLT (M10X1.5X20-MM)	
	22	1	**9M-4972**	1	CLIP	
	23	1	**7K-1181**	4	STRAP-CABLE	
E	24	1	**9X-2092**		TRIM-EDGE (30-CM)	

E-ORDER BY THE CENTIMETER
I-REFER TO HYDRAULIC INFORMATION SYSTEM
M-METRIC PART
Y-SEPARATE ILLUSTRATION

356-1916 **FILTER & LINES GP-HYDRAULIC** *(contd.)* **i04557301**

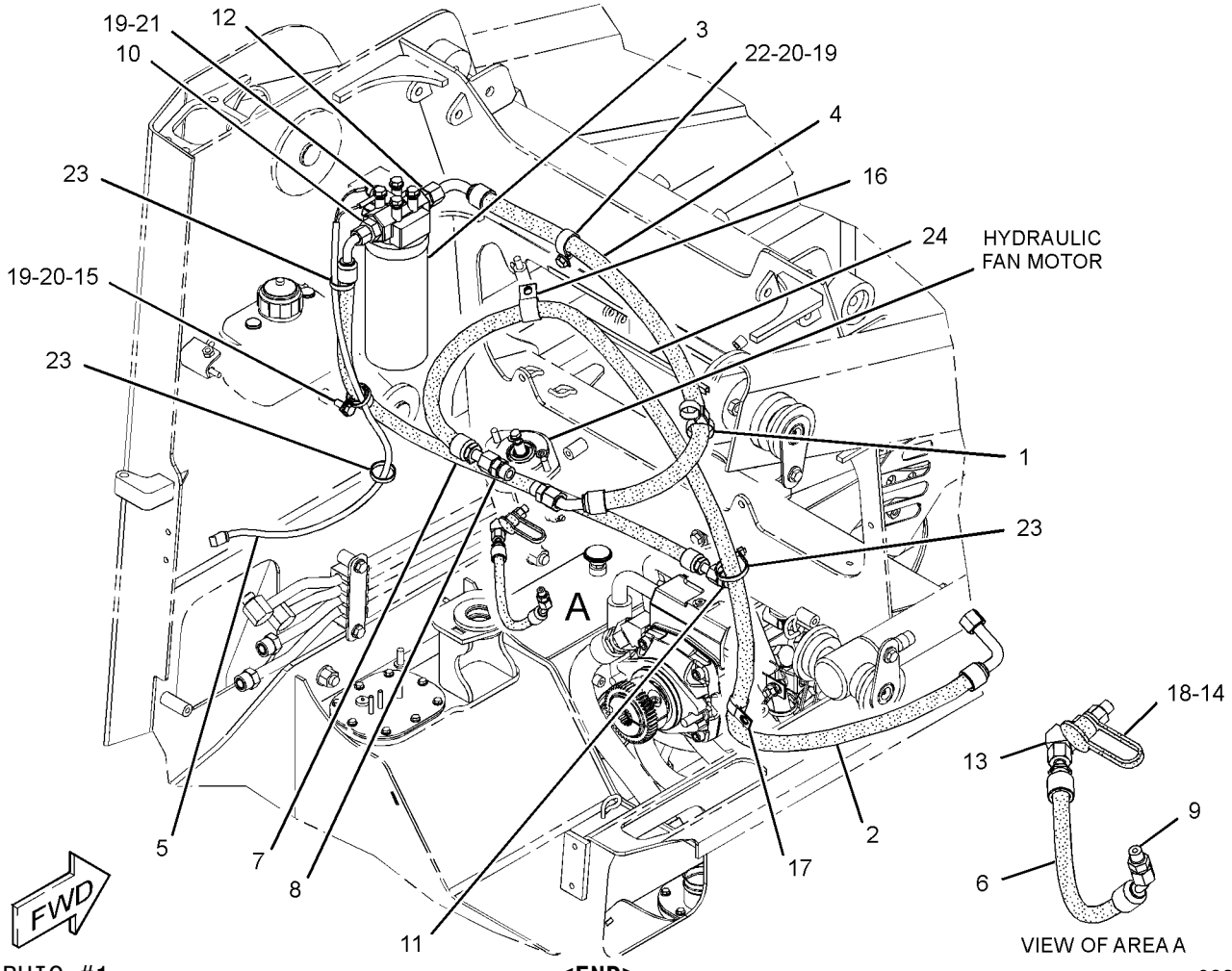

GRAPHIC #1

<END>

g02362616

223-9974 FILTER GP-OIL–HYDRAULIC

S/N: A9H1-UP

PART OF 356-1916 FILTER & LINES GP-HYDRAULIC

SMCS-5068 **i02469830**

NOTE	REF NO	GRAPHIC REF	PART NUMBER	QTY	PART NAME 1 2 3 4 5 6 (PRODUCT LEVEL)	SEE PAGE
	1	1	**3J-1907**	1	SEAL-O-RING	
	2	1	**134-0404**	1	SWITCH AS-PRESSURE (HYDRAULIC OIL)	
	3	1	**1G-8878**	1	FILTER-OIL (ADVANCED EFFICIENCY) (HYDRAULIC)	

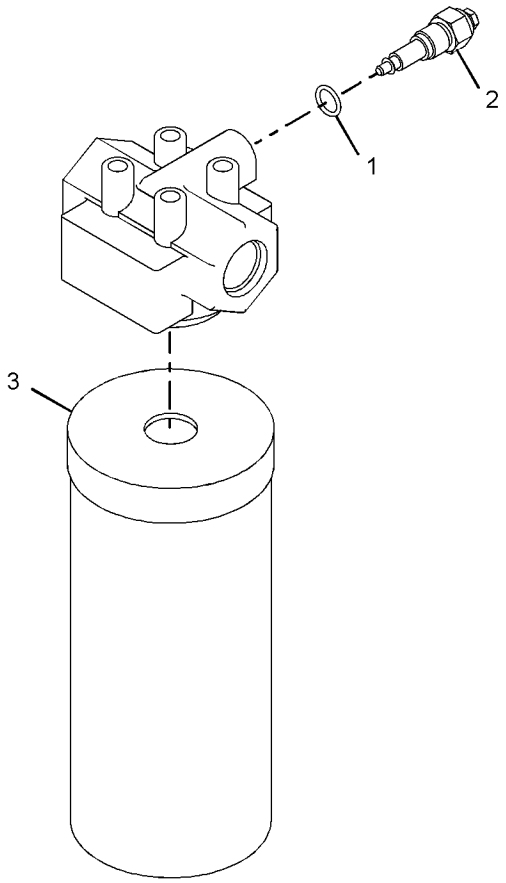

GRAPHIC #1 **<END>** g01035150

218-5621 LINES GP-HYDROSTATIC

S/N: A9H1-UP

PART OF 326-5435 HYDRAULIC AR

SMCS-3154 **i03695643**

NOTE	REF NO	GRAPHIC REF	PART NUMBER	QTY	PART NAME 1 2 3 4 5 6 (PRODUCT LEVEL)	SEE PAGE
	1	1	**5P-4116**	3	WASHER-HARD (8.8X20.5X2-MM THK)	
	2	1	**6V-0852**	3	CAP-DUST	
C	3	1	*188-2008*	2	ELBOW AS	
					(EACH INCLUDES)	
		1	**3D-2824**	1	SEAL-O-RING	
		1	**5K-9090**	1	SEAL-O-RING	
		1	**8T-7970**	1	ELBOW	
I	4	1	**218-6095**	2	HOSE AS	
I	5	1	**142-9241**	2	HOSE AS	
	6	1	*164-5567*	3	COUPLER AS-QUICK DISCONNECT (MALE)	
					(EACH INCLUDES)	
		1	**214-7568**	1	SEAL-O-RING	
		1	**6V-3965**	1	FITTING (QUICK DISCONNECT)	
	7	1	*164-5608*	2	CONNECTOR AS	
					(EACH INCLUDES)	
		1	**8T-1687**	1	CONNECTOR	
		1	**3K-0360**	1	SEAL-O-RING	
		1	**6V-8398**	1	SEAL-O-RING	
CY	8	1	*308-0421*	1	MANIFOLD GP-RETURN	151
C	9	1	**306-0175**	1	HOSE AS	
I	10	1	**218-5758**	2	HOSE AS	
	11	1	*148-8327*	8	CONNECTOR AS	
					(EACH INCLUDES)	
		1	**6V-8637**	1	CONNECTOR	
		1	**3D-2824**	1	SEAL-O-RING	
		1	**6V-9746**	1	SEAL-O-RING	
M	12	1	**5C-7261**	3	NUT (M8X1.25-THD)	

C-CHANGE FROM PREVIOUS TYPE
I-REFER TO HYDRAULIC INFORMATION SYSTEM
M-METRIC PART
Y-SEPARATE ILLUSTRATION

218-5621 **LINES GP-HYDROSTATIC** *(contd.)* **i03695643**

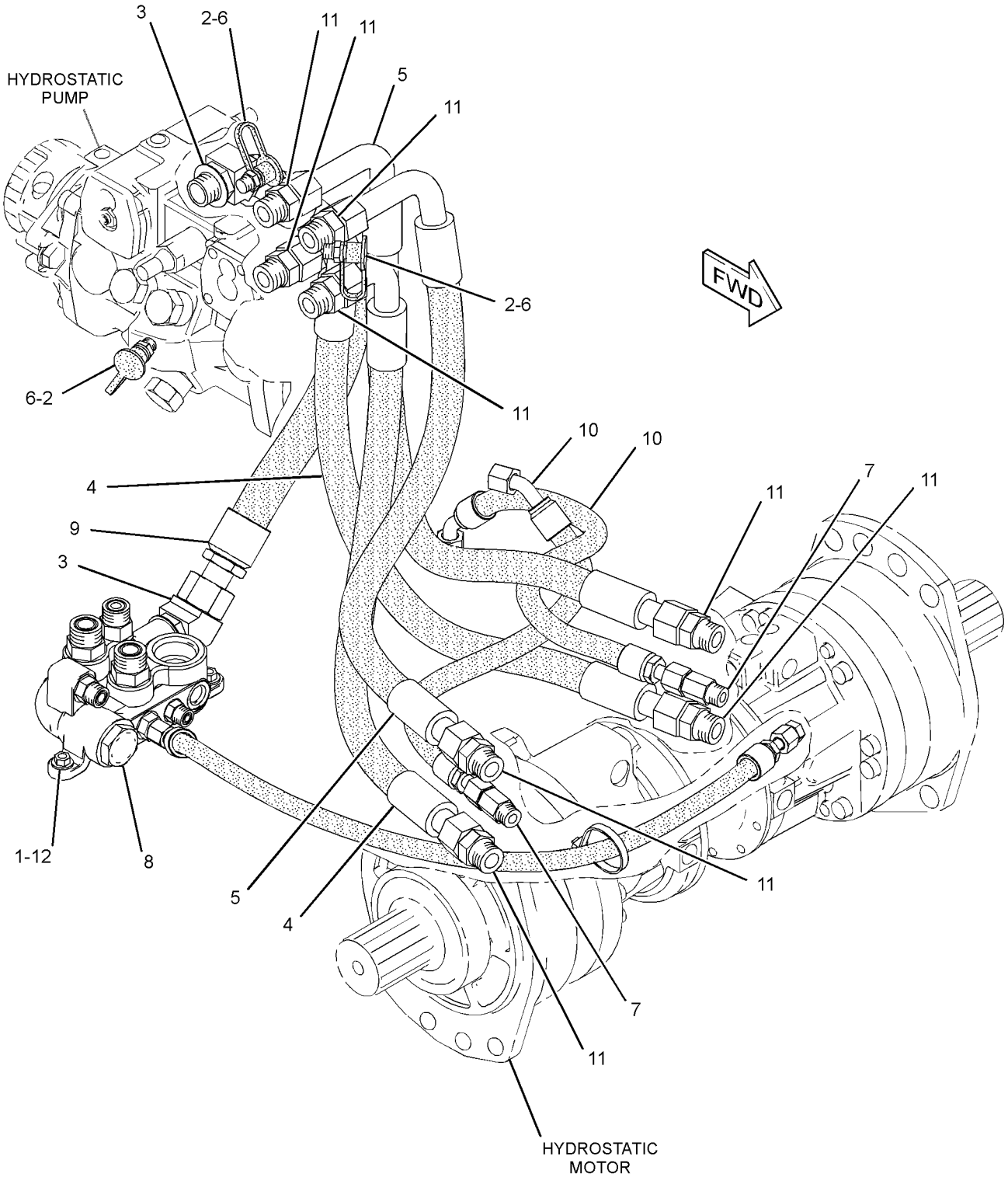

GRAPHIC #1 **<END>** g01932394

370-4182 LINES GP-HYDROSTATIC

S/N: A9H1730-UP

PART OF 326-5276, 326-5277, 326-5427 CONTROL AR-MACHINE

AN ATTACHMENT

SMCS-3154 **i04650175**

NOTE	REF NO	GRAPHIC REF	PART NUMBER	QTY	PART NAME 1 2 3 4 5 6 (PRODUCT LEVEL)	SEE PAGE
	1	1	**6V-0852**	3	CAP-DUST	
I	2	1	**142-9241**	2	HOSE AS	
I	3	1	**218-6095**	2	HOSE AS	
I	4	1	**306-0175**	1	HOSE AS	
Y	5	1	*308-0421*	1	MANIFOLD GP-RETURN (HYDROSTATIC PUMP)	151
I	6	1	**218-5758**	2	HOSE AS	
	7	1	*148-8327*	4	CONNECTOR AS	
					(EACH INCLUDES)	
		1	**3D-2824**	1	SEAL-O-RING	
		1	**6V-8637**	1	CONNECTOR	
		1	**6V-9746**	1	SEAL-O-RING	
	8	1	*148-8358*	1	ELBOW AS	
		1	**2M-9780**	1	SEAL-O-RING	
		1	**6V-8398**	1	SEAL-O-RING	
		1	**6V-8624**	1	ELBOW	
	9	1	*153-6237*	2	ELBOW AS	
					(EACH INCLUDES)	
		1	**3D-2824**	1	SEAL-O-RING	
		1	**6V-9004**	1	ELBOW	
		1	**6V-9746**	1	SEAL-O-RING	
	10	1	*164-5557*	1	CONNECTOR AS	
		1	**2M-9780**	1	SEAL-O-RING	
		1	**5I-4370**	1	CONNECTOR	
		1	**6V-8398**	1	SEAL-O-RING	
	11	1	*164-5567*	3	COUPLER AS-QUICK DISCONNECT (MALE)	
					(EACH INCLUDES)	
		1	**6V-3965**	1	FITTING (QUICK DISCONNECT)	
		1	**214-7568**	1	SEAL-O-RING	
	12	1	*164-5606*	2	CONNECTOR AS	
					(EACH INCLUDES)	
		1	**3D-2824**	1	SEAL-O-RING	
		1	**6V-9746**	1	SEAL-O-RING	
		1	**8T-0078**	1	CONNECTOR	
	13	1	*188-2008*	2	ELBOW AS	
					(EACH INCLUDES)	
		1	**3D-2824**	1	SEAL-O-RING	
		1	**5K-9090**	1	SEAL-O-RING	
		1	**8T-7970**	1	ELBOW	
M	14	1	**5C-7261**	3	NUT (M8X1.25-THD)	
	15	1	**5P-4116**	3	WASHER-HARD (8.8X20.5X2-MM THK)	

I-REFER TO HYDRAULIC INFORMATION SYSTEM
M-METRIC PART
Y-SEPARATE ILLUSTRATION

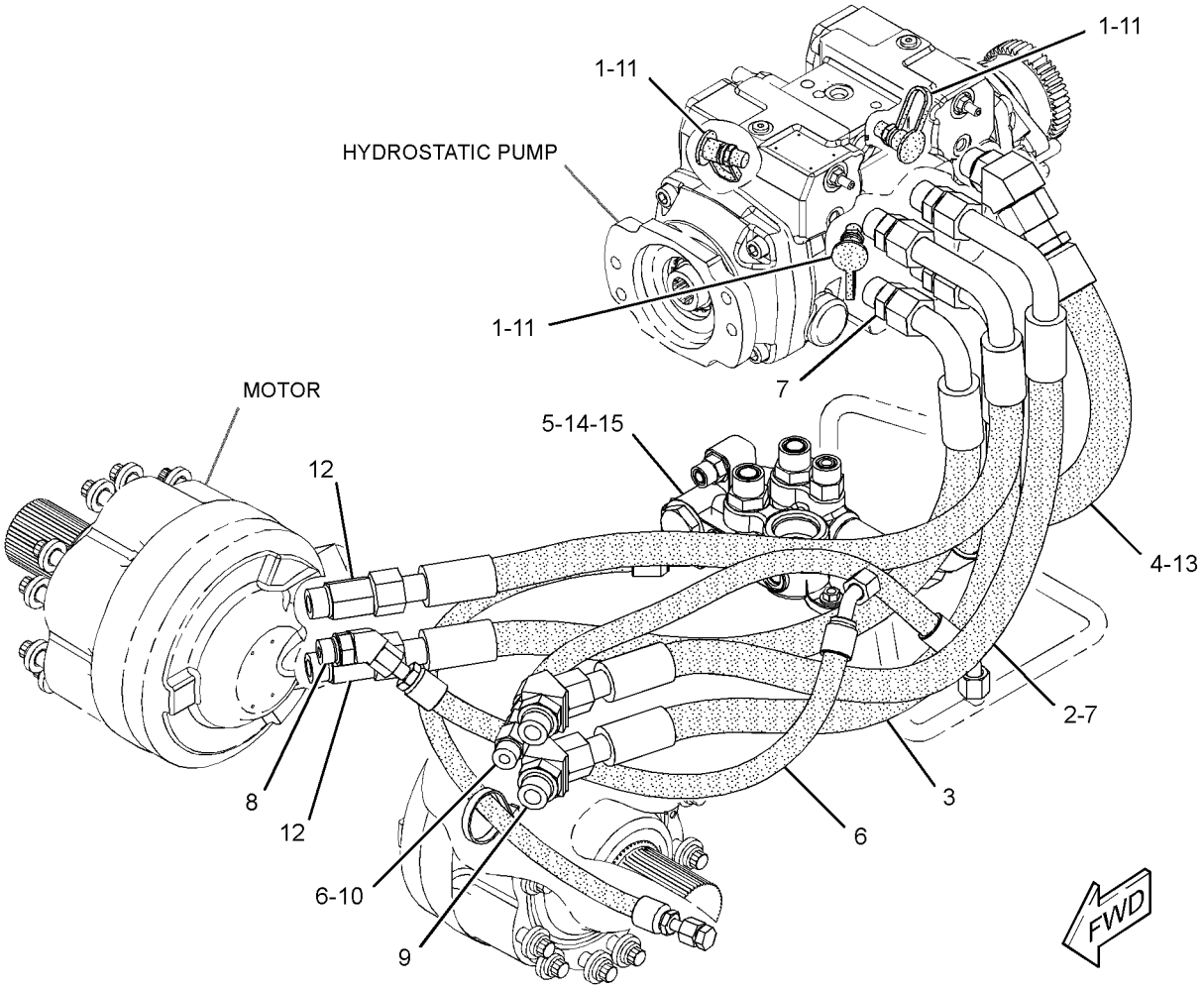

GRAPHIC #1

<END>

g02791864

370-4194 LINES GP-HYDROSTATIC

S/N: A9H1730-UP
PART OF 326-5428 CONTROL AR-MACHINE
AN ATTACHMENT

SMCS-3154 **i04564560**

NOTE	REF NO	GRAPHIC REF	PART NUMBER	QTY	PART NAME 1 2 3 4 5 6 (PRODUCT LEVEL)	SEE PAGE
	1	1	**6V-0852**	3	CAP-DUST	
I	2	1	**142-9241**	1	HOSE AS	
I	3	1	**218-5758**	2	HOSE AS	
I	4	1	**218-6095**	3	HOSE AS	
I	5	1	**306-0175**	1	HOSE AS	
Y	6	1	*308-0421*	1	MANIFOLD GP-RETURN (HYDROSTATIC PUMP)	151
	7	1	*148-8327*	6	CONNECTOR AS	
					(EACH INCLUDES)	
		1	**3D-2824**	1	SEAL-O-RING	
		1	**6V-8637**	1	CONNECTOR	
		1	**6V-9746**	1	SEAL-O-RING	
	8	1	*148-8345*	2	CONNECTOR AS	
					(EACH INCLUDES)	
		1	**2M-9780**	1	SEAL-O-RING	
		1	**6V-8398**	1	SEAL-O-RING	
		1	**6V-8638**	1	CONNECTOR	
	9	1	*164-5567*	3	COUPLER AS-QUICK DISCONNECT (MALE)	
					(EACH INCLUDES)	
		1	**6V-3965**	1	FITTING (QUICK DISCONNECT)	
		1	**214-7568**	1	SEAL-O-RING	
	10	1	*164-5606*	2	CONNECTOR AS	
					(EACH INCLUDES)	
		1	**3D-2824**	1	SEAL-O-RING	
		1	**6V-9746**	1	SEAL-O-RING	
		1	**8T-0078**	1	CONNECTOR	
	11	1	*188-2008*	2	ELBOW AS	
					(EACH INCLUDES)	
		1	**3D-2824**	1	SEAL-O-RING	
		1	**5K-9090**	1	SEAL-O-RING	
		1	**8T-7970**	1	ELBOW	
M	12	1	**5C-7261**	3	NUT (M8X1.25-THD)	
	13	1	**5P-4116**	3	WASHER-HARD (8.8X20.5X2-MM THK)	

I-REFER TO HYDRAULIC INFORMATION SYSTEM
M-METRIC PART
Y-SEPARATE ILLUSTRATION

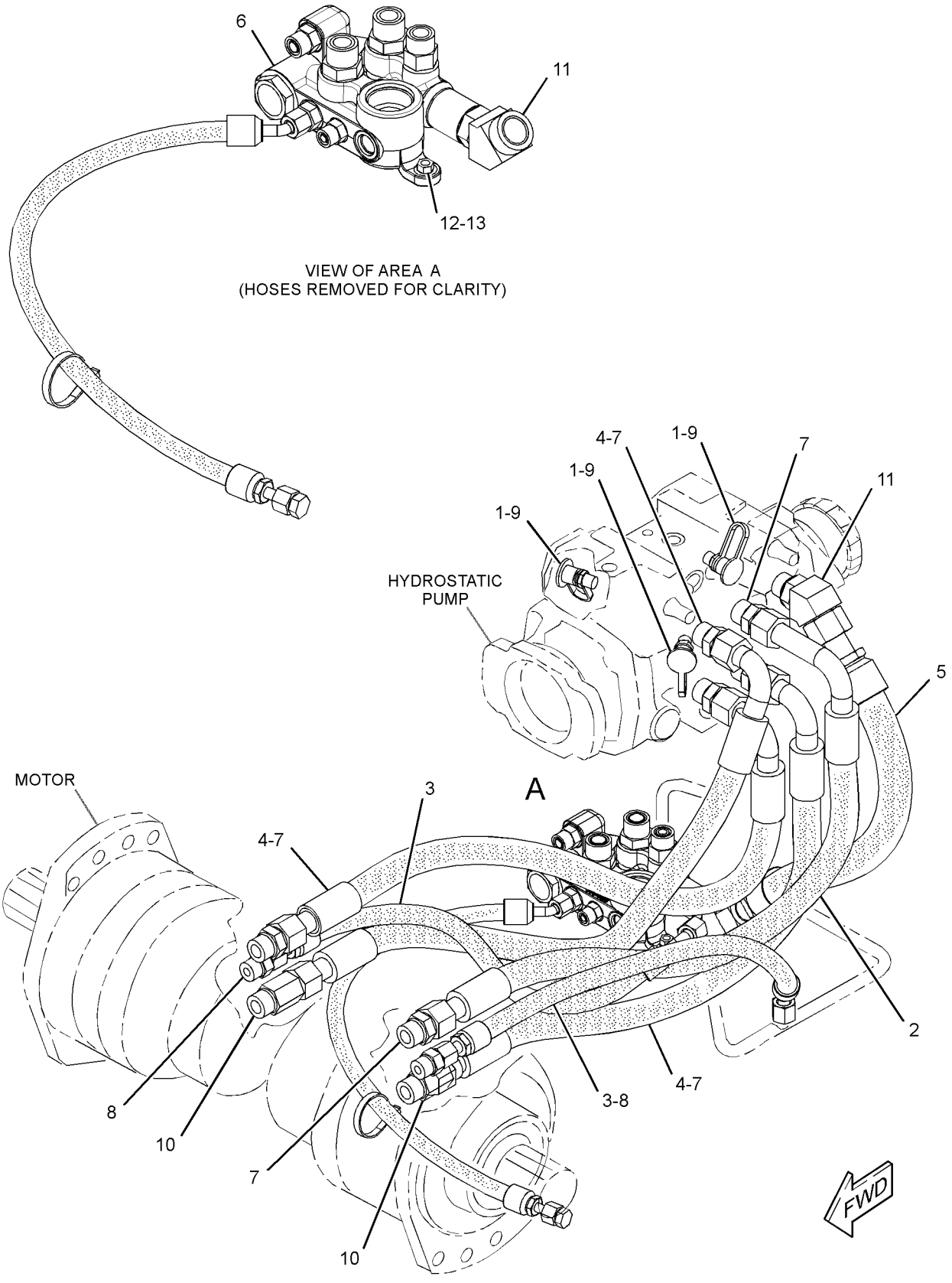

GRAPHIC #1 **<END>** g02729895

218-5635 MANIFOLD & LINES GP-CONTROL—PARKING BRAKE

S/N: A9H1-1729

PART OF 326-5276, 326-5277, 326-5427 CONTROL AR-MACHINE

AN ATTACHMENT

SMCS-5057, 5264, 5479 **i02595599**

NOTE	REF NO	GRAPHIC REF	PART NUMBER	QTY	PART NAME 1 2 3 4 5 6 (PRODUCT LEVEL)	SEE PAGE
I	1	1	**100-7530**	1	HOSE AS	
CY	2	1	**233-7131**	1	MANIFOLD & SOLENOID GP-CONTROL (PARKING BRAKE)	149
I	3	1	**218-5580**	1	HOSE AS	
I	4	1	**218-5581**	1	HOSE AS	
	5	1	**218-6879**	1	TUBE AS	
	6	1	*148-8336*	3	CONNECTOR AS	
					(EACH INCLUDES)	
		1	**3J-1907**	1	SEAL-O-RING	
		1	**6V-8397**	1	SEAL-O-RING	
		1	**6V-8636**	1	CONNECTOR	
	7	1	*148-8435*	1	TEE AS	
		1	**3J-1907**	1	SEAL-O-RING	
		1	**6V-8397**	2	SEAL-O-RING	
		1	**6V-8781**	1	TEE	
	8	1	*161-8560*	1	CONNECTOR AS	
		1	**3J-1907**	1	SEAL-O-RING	
		1	**7J-9108**	1	SEAL-O-RING	
		1	**8C-6758**	1	CONNECTOR	
M	9	1	**5C-7261**	2	NUT (M8X1.25-THD)	
	10	1	**6V-8398**	2	SEAL-O-RING	
	11	1	**8T-4224**	4	WASHER-HARD (8.8X16X2-MM THK)	
M	12	1	**8T-6870**	2	BOLT (M8X1.25X70-MM)	

C-CHANGE FROM PREVIOUS TYPE
I-REFER TO HYDRAULIC INFORMATION SYSTEM
M-METRIC PART
Y-SEPARATE ILLUSTRATION

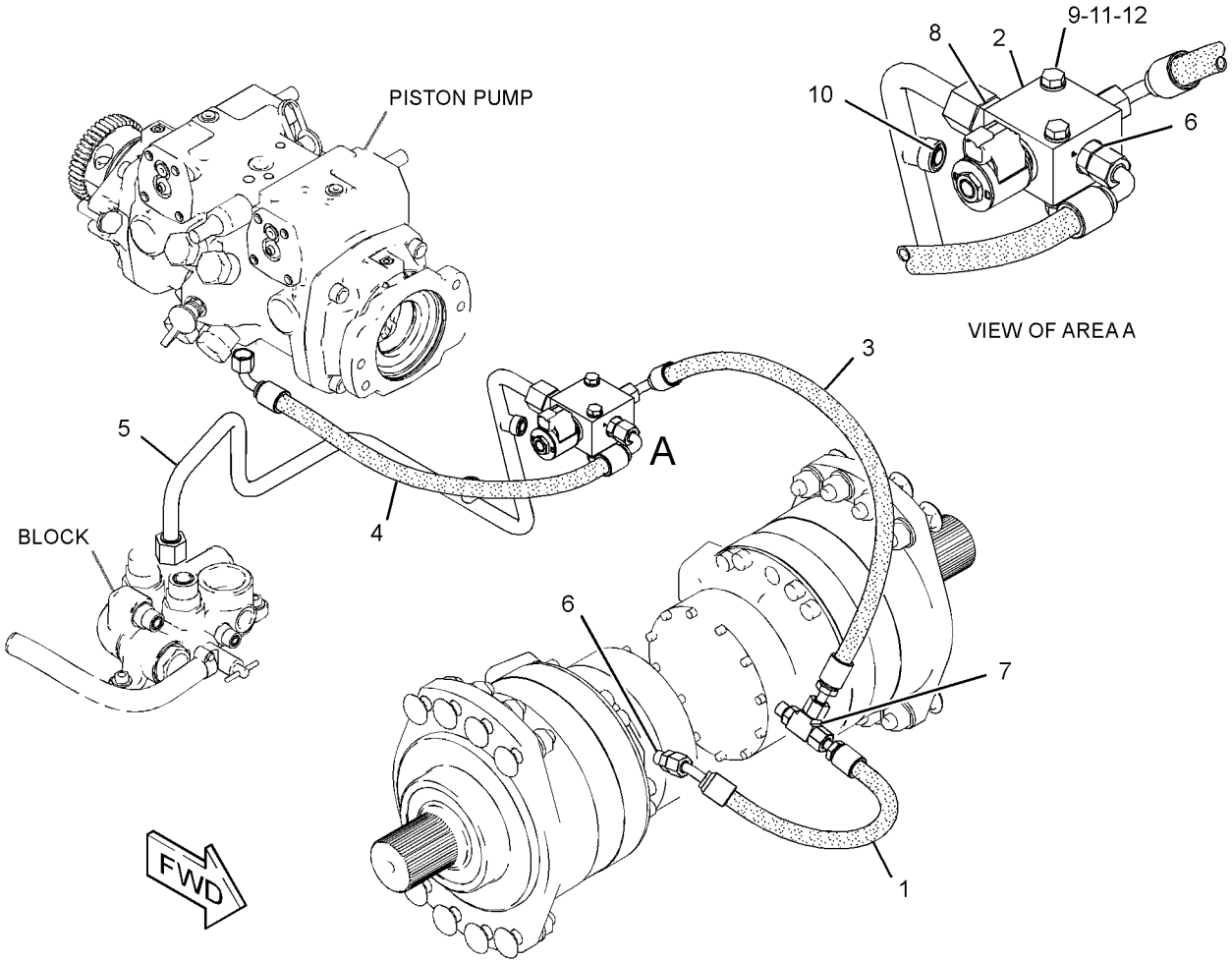

GRAPHIC #1 **<END>** g01299758

218-5636 MANIFOLD & LINES GP-CONTROL–
PARKING BRAKE, 2-SPEED
S/N: A9H1-UP
PART OF 326-5278, 326-5428 CONTROL AR-MACHINE
AN ATTACHMENT

SMCS-5057, 5264, 5479 **i02595688**

NOTE	REF NO	GRAPHIC REF	PART NUMBER	QTY	PART NAME 1 2 3 4 5 6 (PRODUCT LEVEL)	SEE PAGE
I	1	1	**100-7530**	2	HOSE AS	
I	2	1	**218-5580**	2	HOSE AS	
I	3	1	**218-5581**	1	HOSE AS	
	4	1	**218-6879**	1	TUBE AS	
CY	5	1	**293-6591**	1	MANIFOLD & SOLENOID GP-CONTROL (PARKING BRAKE, 2-SPEED)	150
	6	1	*148-8326*	1	CONNECTOR AS	
		1	**3J-7354**	1	SEAL-O-RING	
		1	**6V-8397**	1	SEAL-O-RING	
		1	**6V-9872**	1	CONNECTOR	
	7	1	*148-8336*	5	CONNECTOR AS	
					(EACH INCLUDES)	
		1	**3J-1907**	1	SEAL-O-RING	
		1	**6V-8397**	1	SEAL-O-RING	
		1	**6V-8636**	1	CONNECTOR	
	8	1	*148-8433*	1	TEE AS	
		1	**6V-8397**	2	SEAL-O-RING	
		1	**6V-9836**	1	TEE-SWIVEL	
	9	1	*161-8560*	1	CONNECTOR AS	
		1	**3J-1907**	1	SEAL-O-RING	
		1	**7J-9108**	1	SEAL-O-RING	
		1	**8C-6758**	1	CONNECTOR	
	10	1	*173-7225*	1	TEE AS	
		1	**3J-7354**	1	SEAL-O-RING	
		1	**6V-8397**	2	SEAL-O-RING	
		1	**6V-9161**	1	TEE	
M	11	1	**5C-7261**	2	NUT (M8X1.25-THD)	
M	12	1	**7X-2539**	2	BOLT (M8X1.25X110-MM)	
	13	1	**8T-4224**	4	WASHER-HARD (8.8X16X2-MM THK)	
	14	1	**6V-8398**	2	SEAL-O-RING	

C-CHANGE FROM PREVIOUS TYPE
I-REFER TO HYDRAULIC INFORMATION SYSTEM
M-METRIC PART
Y-SEPARATE ILLUSTRATION

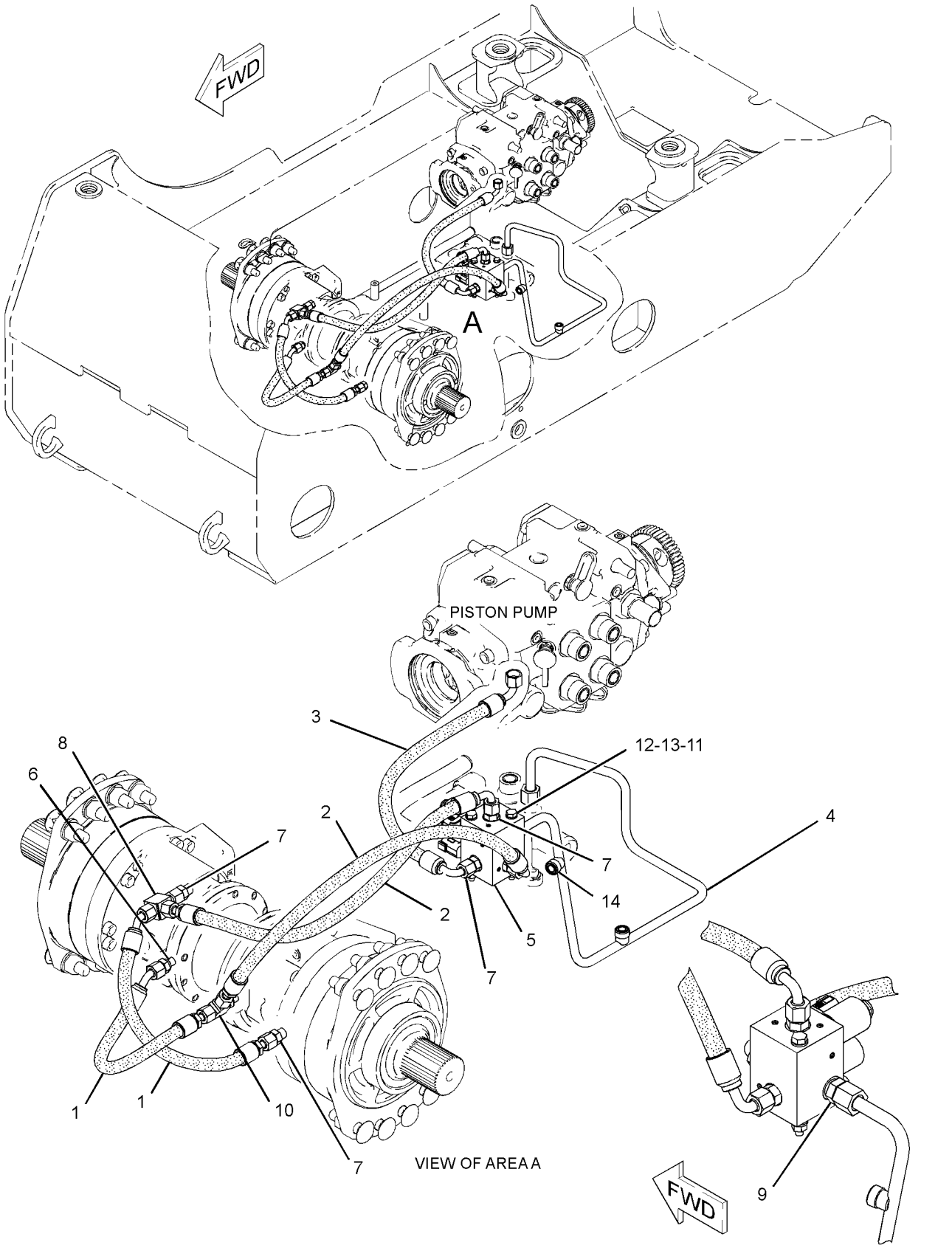

GRAPHIC #1 **<END>** g01172521

370-4192 MANIFOLD & LINES GP-CONTROL—PARKING BRAKE

S/N: A9H1730-UP

PART OF 326-5276, 326-5277, 326-5427 CONTROL AR-MACHINE

AN ATTACHMENT

SMCS-5057, 5264, 5479 **i04650177**

NOTE	REF NO	GRAPHIC REF	PART NUMBER	QTY	PART NAME 1 2 3 4 5 6 (PRODUCT LEVEL)	SEE PAGE
I	1	1	**218-5581**	1	HOSE AS	
	2	1	**218-6879**	1	TUBE AS	
Y	3	1	**233-7131**	1	MANIFOLD & SOLENOID GP-CONTROL (PARKING BRAKE)	149
I	4	1	**370-5254**	1	HOSE AS	
	5	1	*148-8336*	2	CONNECTOR AS	
					(EACH INCLUDES)	
		1	**3J-1907**	1	SEAL-O-RING	
		1	**6V-8397**	1	SEAL-O-RING	
		1	**6V-8636**	1	CONNECTOR	
	6	1	*148-8374*	1	ELBOW AS	
		1	**3K-0360**	1	SEAL-O-RING	
		1	**6V-8397**	1	SEAL-O-RING	
		1	**6V-8723**	1	ELBOW	
	7	1	*148-8428*	1	TEE AS	
		1	**3K-0360**	1	SEAL-O-RING	
		1	**6V-8398**	2	SEAL-O-RING	
		1	**6V-8782**	1	TEE	
	8	1	*161-8560*	1	CONNECTOR AS	
		1	**3J-1907**	1	SEAL-O-RING	
		1	**7J-9108**	1	SEAL-O-RING	
		1	**8C-6758**	1	CONNECTOR	
I	9	1	**243-0564**	1	HOSE AS	
M	10	1	**5C-7261**	2	NUT (M8X1.25-THD)	
	11	1	**6V-8398**	2	SEAL-O-RING	
	12	1	**8T-4224**	4	WASHER-HARD (8.8X16X2-MM THK)	
M	13	1	**8T-6870**	2	BOLT (M8X1.25X70-MM)	

I-REFER TO HYDRAULIC INFORMATION SYSTEM
M-METRIC PART
Y-SEPARATE ILLUSTRATION

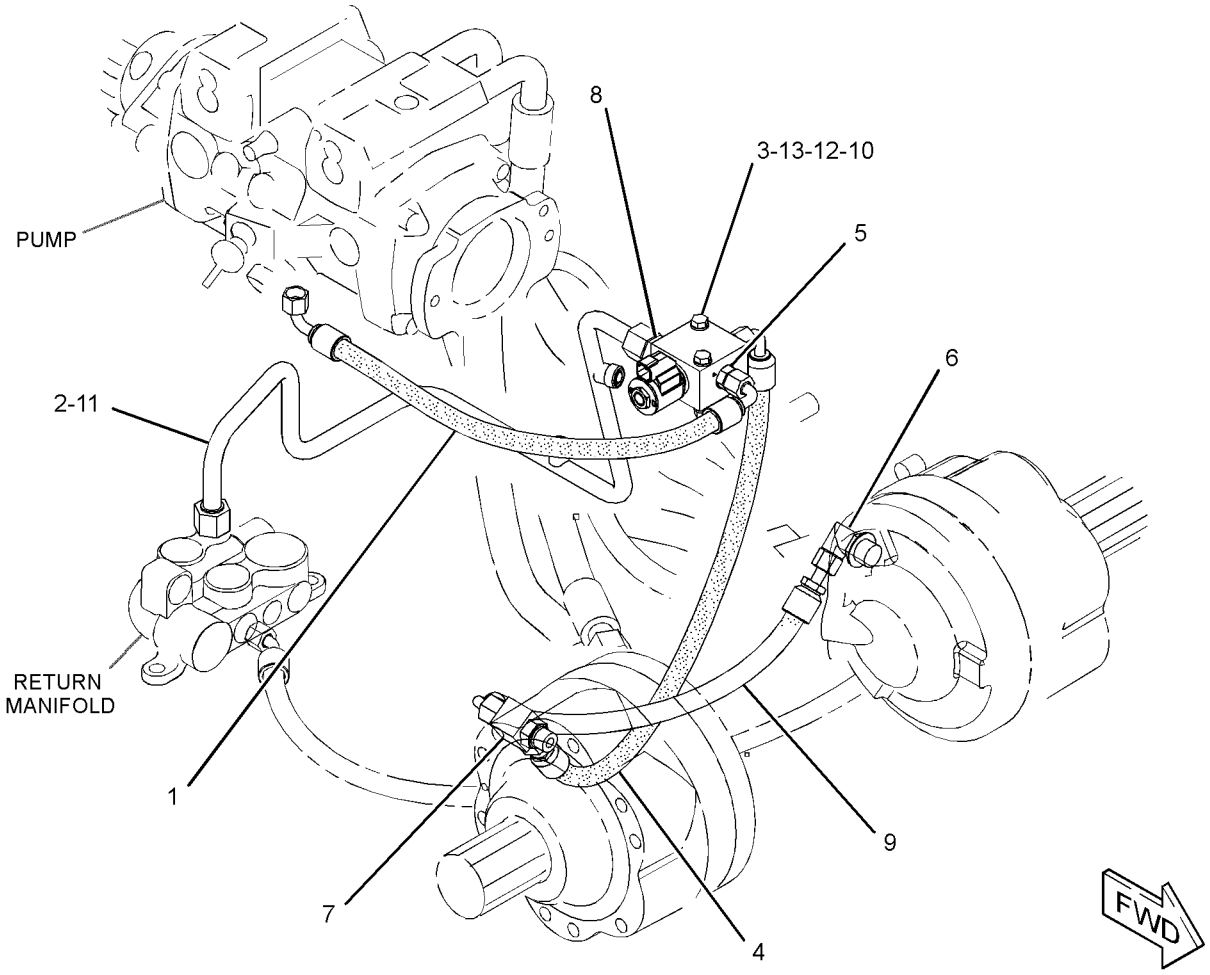

GRAPHIC #1 **<END>** g02791885

233-7131 MANIFOLD & SOLENOID GP-CONTROL–

PARKING BRAKE

S/N: A9H1-UP

PART OF 218-5635, 370-4192 MANIFOLD & LINES GP-CONTROL

AN ATTACHMENT

SMCS-5264, 5479 **i04368973**

NOTE	REF NO	GRAPHIC REF	PART NUMBER	QTY	PART NAME 1 2 3 4 5 6 (PRODUCT LEVEL)	SEE PAGE
Y	1	1	**259-8194**	1	VALVE GP-SOLENOID (PARKING BRAKE)	182
	2	1	**259-8195**	1	MANIFOLD	

Y-SEPARATE ILLUSTRATION

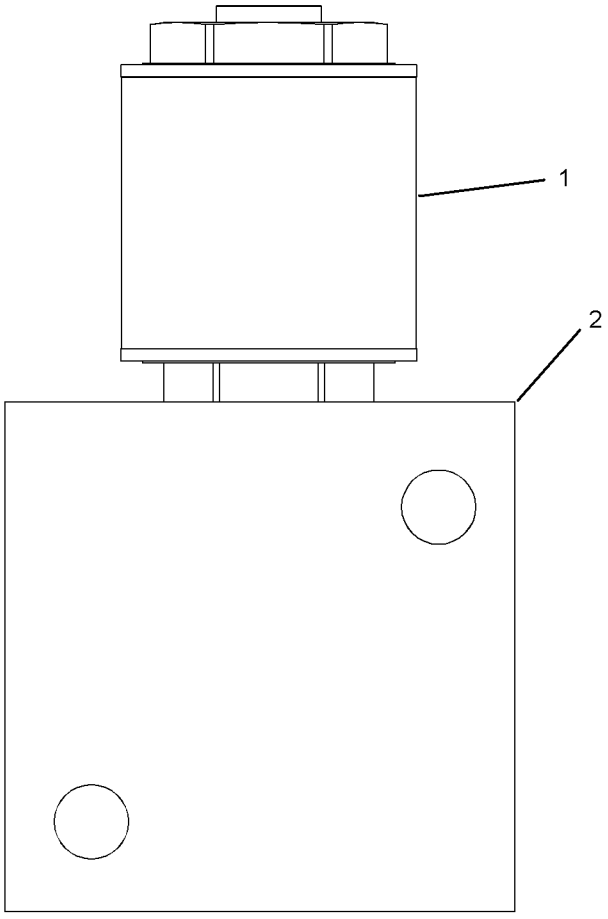

RIGHT SIDE VIEW

GRAPHIC #1

<END>

g01416438

293-6591 MANIFOLD & SOLENOID GP-CONTROL–

PARKING BRAKE, 2-SPEED
S/N: A9H1-UP
12-VOLT
PART OF 370-4207 CONTROL GP-PARKING BRAKE, 218-5636 MANIFOLD & LINES
GP-CONTROL
AN ATTACHMENT

SMCS-5264, 5479 **i03990953**

NOTE	REF NO	GRAPHIC REF	PART NUMBER	QTY	PART NAME 1 2 3 4 5 6 (PRODUCT LEVEL)	SEE PAGE
Y	1	1	**216-0610**	1	VALVE GP-SOLENOID (MOTOR, 2-SPEED)	181
Y	2	1	**259-8194**	1	VALVE GP-SOLENOID (PARKING BRAKE)	182

Y-SEPARATE ILLUSTRATION

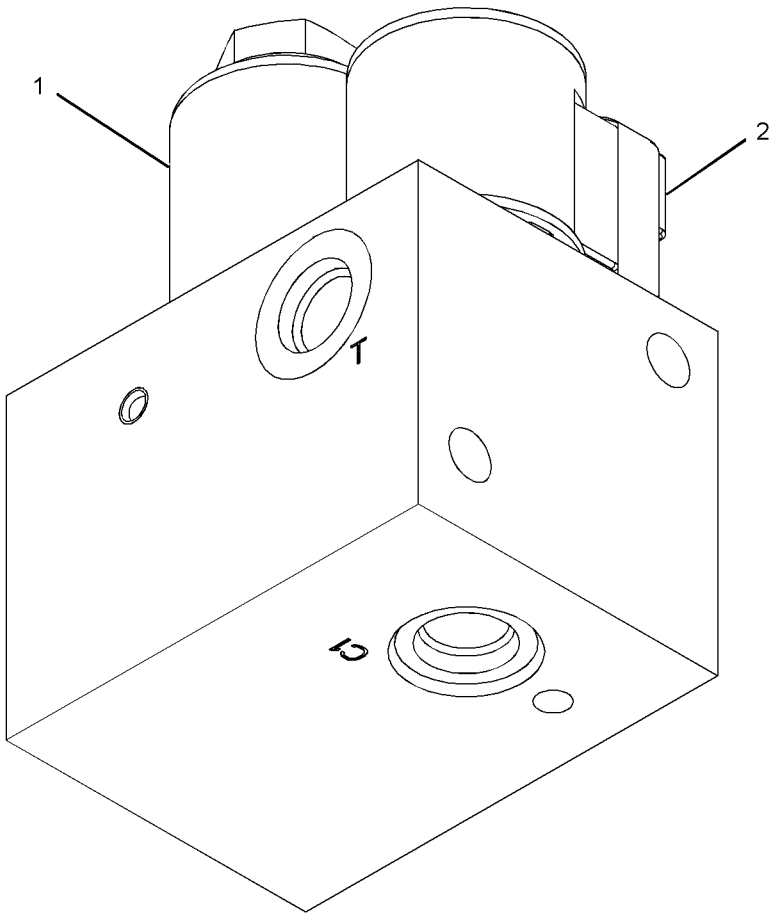

GRAPHIC #1 **<END>** g02174716

308-0421 MANIFOLD GP-RETURN

S/N: A9H1-UP

PART OF 218-5621, 370-4182, 370-4194 LINES GP-HYDROSTATIC

ALSO AN ATTACHMENT

SMCS-5264 **i02730543**

NOTE	REF NO	GRAPHIC REF	PART NUMBER	QTY	PART NAME 1 2 3 4 5 6 (PRODUCT LEVEL)	SEE PAGE
	1	1	**7K-1181**	1	STRAP-CABLE	
	2	1	**105-4593**	1	POPPET	
	3	1	**212-6603**	1	PLUG AS	
		1	**6V-8978**	1	SEAL-O-RING	
	4	1	**212-6604**	1	SPRING	
I	5	1	**233-5716**	1	HOSE AS	
	6	1	**305-4185**	1	BLOCK	
	7	1	*148-8318*	1	CONNECTOR AS	
		1	**3K-0360**	1	SEAL-O-RING	
		1	**6V-8397**	1	SEAL-O-RING	
		1	**6V-8634**	1	CONNECTOR	
	8	1	*148-8327*	2	CONNECTOR AS	
					(EACH INCLUDES)	
		1	**3D-2824**	1	SEAL-O-RING	
		1	**6V-8637**	1	CONNECTOR	
		1	**6V-9746**	1	SEAL-O-RING	
	9	1	*148-8336*	1	CONNECTOR AS	
		1	**3J-1907**	1	SEAL-O-RING	
		1	**6V-8397**	1	SEAL-O-RING	
		1	**6V-8636**	1	CONNECTOR	
	10	1	*148-8340*	1	CONNECTOR AS	
		1	**3K-0360**	1	SEAL-O-RING	
		1	**6V-8398**	1	SEAL-O-RING	
		1	**6V-8639**	1	CONNECTOR	
	11	1	*148-8342*	1	CONNECTOR AS	
		1	**3K-0360**	1	SEAL-O-RING	
		1	**6V-8632**	1	CONNECTOR	
		1	**7J-9108**	1	SEAL-O-RING	
	12	1	*165-4934*	1	PLUG AS	
		1	**6V-8397**	1	SEAL-O-RING	
		1	**6V-9508**	1	PLUG (11/16-16-THD)	

I-REFER TO HYDRAULIC INFORMATION SYSTEM

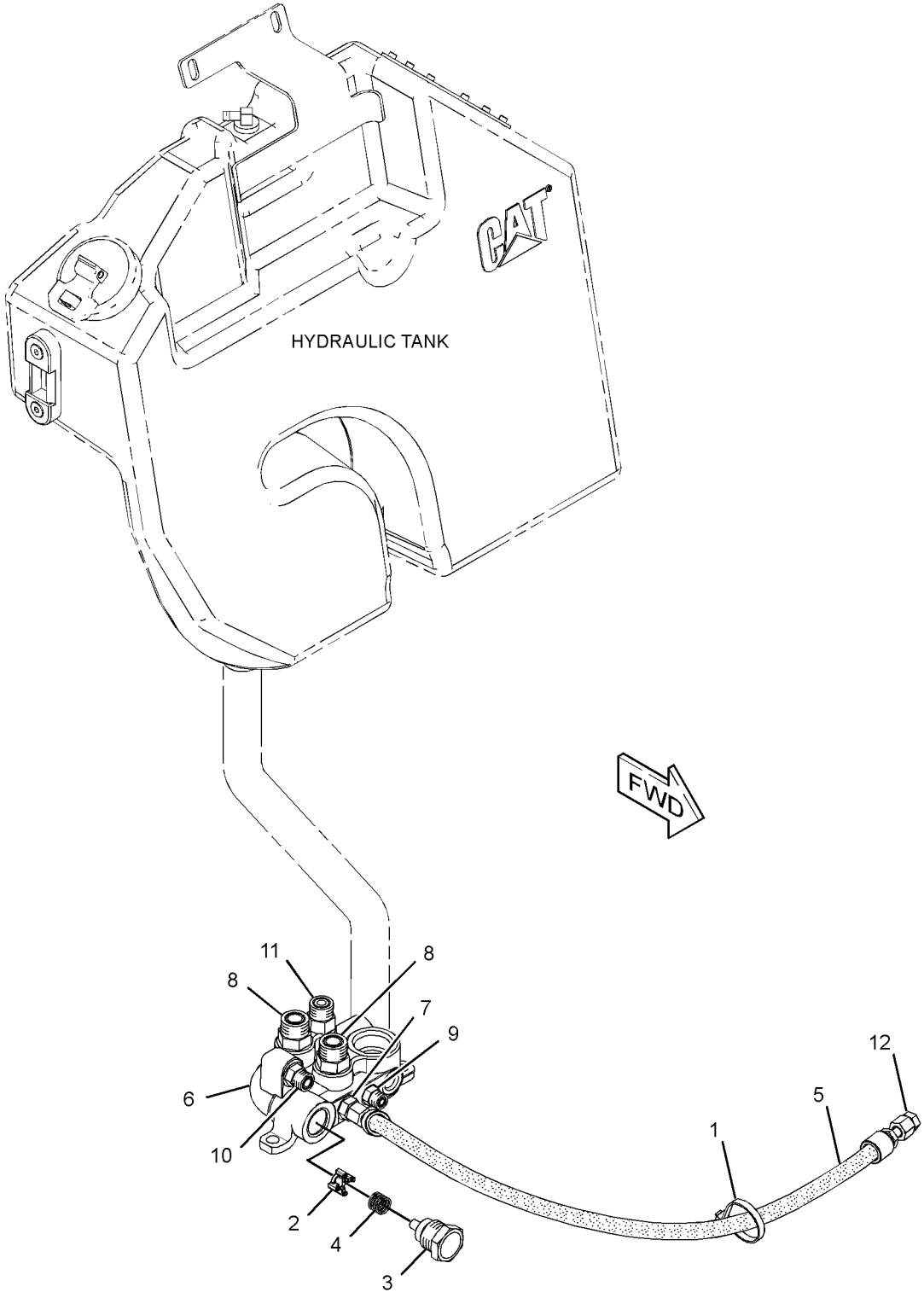

GRAPHIC #1 **<END>** g01380873

190-7457 MOTOR & MTG GP-HYDROSTATIC

S/N: A9H1-UP
PART OF 326-5278, 326-5428 CONTROL AR-MACHINE
AN ATTACHMENT

SMCS-5058 **i02637361**

NOTE	REF NO	GRAPHIC REF	PART NUMBER	QTY	PART NAME 1 2 3 4 5 6 (PRODUCT LEVEL)	SEE PAGE
M	1	1	**193-8340**	16	BOLT-CARRIAGE (M16X2X65-MM)	
CYR	2	1	**280-7858**	2	MOTOR GP-PISTON (2-SPEED)	159
	3	1	**8T-4122**	16	WASHER-HARD (17X32X3.5-MM THK)	
M	4	1	**8T-4132**	16	NUT (M16X2-THD)	

C-CHANGE FROM PREVIOUS TYPE
M-METRIC PART
R-REMFG PART MAY BE AVAILABLE
Y-SEPARATE ILLUSTRATION

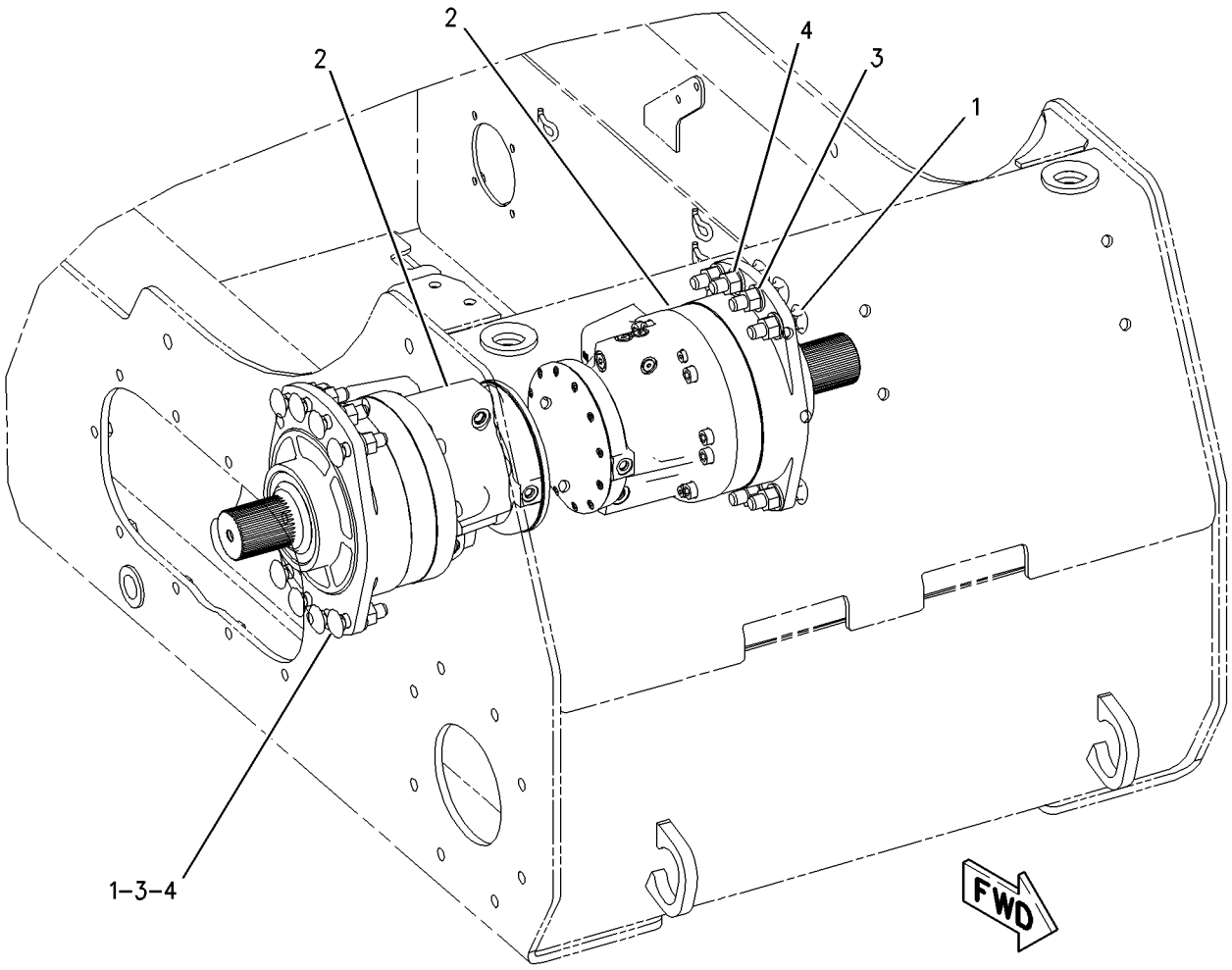

GRAPHIC #1 **<END>** g00933476

191-9780 MOTOR & MTG GP-HYDROSTATIC

S/N: A9H1-1729

PART OF 326-5276, 326-5277, 326-5427 CONTROL AR-MACHINE

AN ATTACHMENT

SMCS-5058 **i02639967**

NOTE	REF NO	GRAPHIC REF	PART NUMBER	QTY	PART NAME 1 2 3 4 5 6 (PRODUCT LEVEL)	SEE PAGE
M	1	1	**193-8340**	16	BOLT-CARRIAGE (M16X2X65-MM)	
CYR	2	1	**280-7856**	2	MOTOR GP-PISTON	157
	3	1	**8T-4122**	16	WASHER-HARD (17X32X3.5-MM THK)	
M	4	1	**8T-4132**	16	NUT (M16X2-THD)	

C-CHANGE FROM PREVIOUS TYPE
M-METRIC PART
R-REMFG PART MAY BE AVAILABLE
Y-SEPARATE ILLUSTRATION

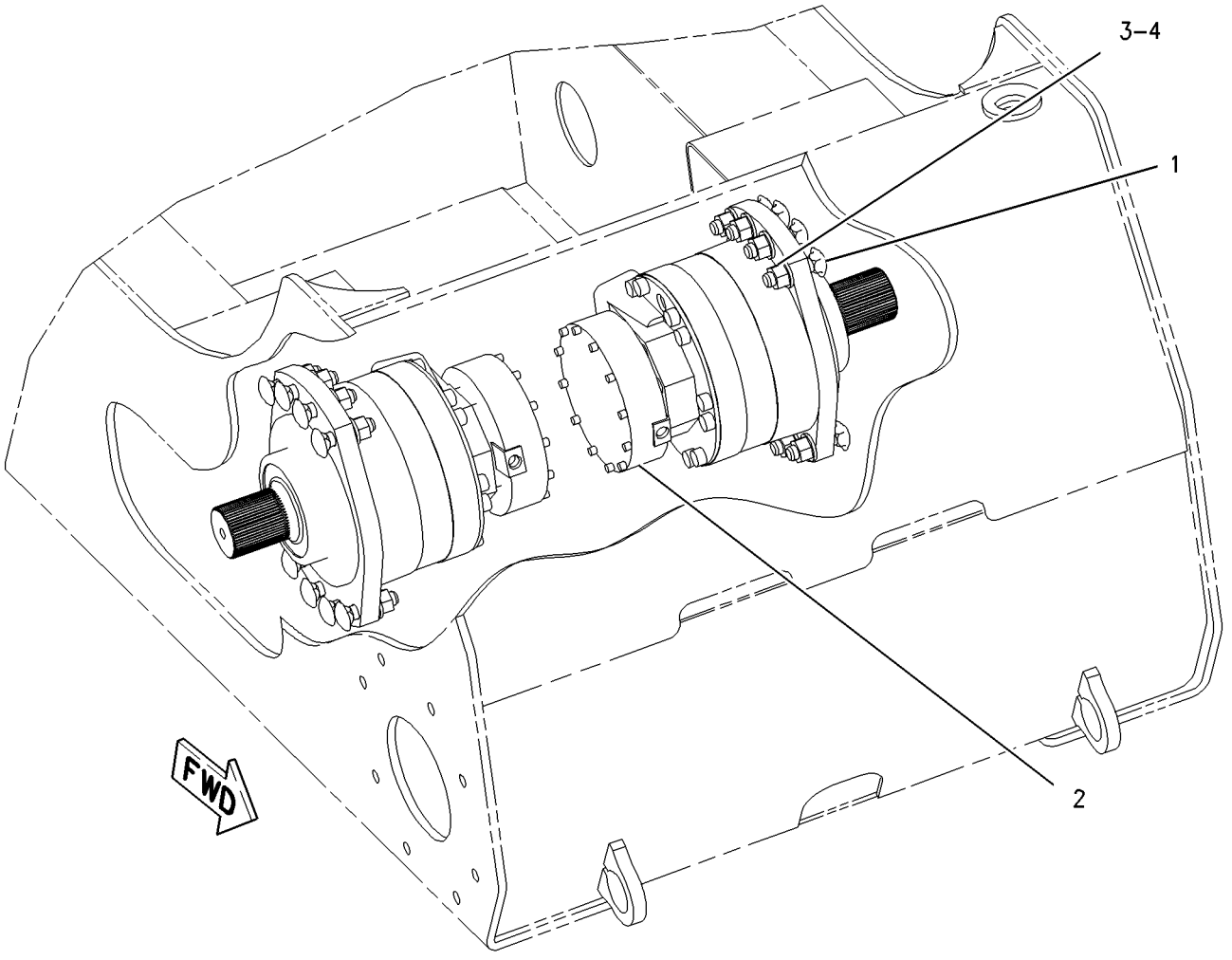

GRAPHIC #1 **<END>** g00913035

370-4197 MOTOR & MTG GP-HYDROSTATIC—HYDROSTATIC

S/N: A9H1730-UP

PART OF 326-5276, 326-5277, 326-5427 CONTROL AR-MACHINE

AN ATTACHMENT

SMCS-5058 **i04650178**

NOTE	REF NO	GRAPHIC REF	PART NUMBER	QTY	PART NAME 1 2 3 4 5 6 (PRODUCT LEVEL)	SEE PAGE
Y	1	1	**358-4982**	2	MOTOR GP-PISTON	161
	2	1	**361-2657**	24	BOLT-12 POINT HEAD (M14X2X40-MM)	
	3	1	**390-5018**	24	WASHER-HARD (15.5X30X12-MM THK)	
	4	1	**6F-4718**	2	SEAL-O-RING	

Y-SEPARATE ILLUSTRATION

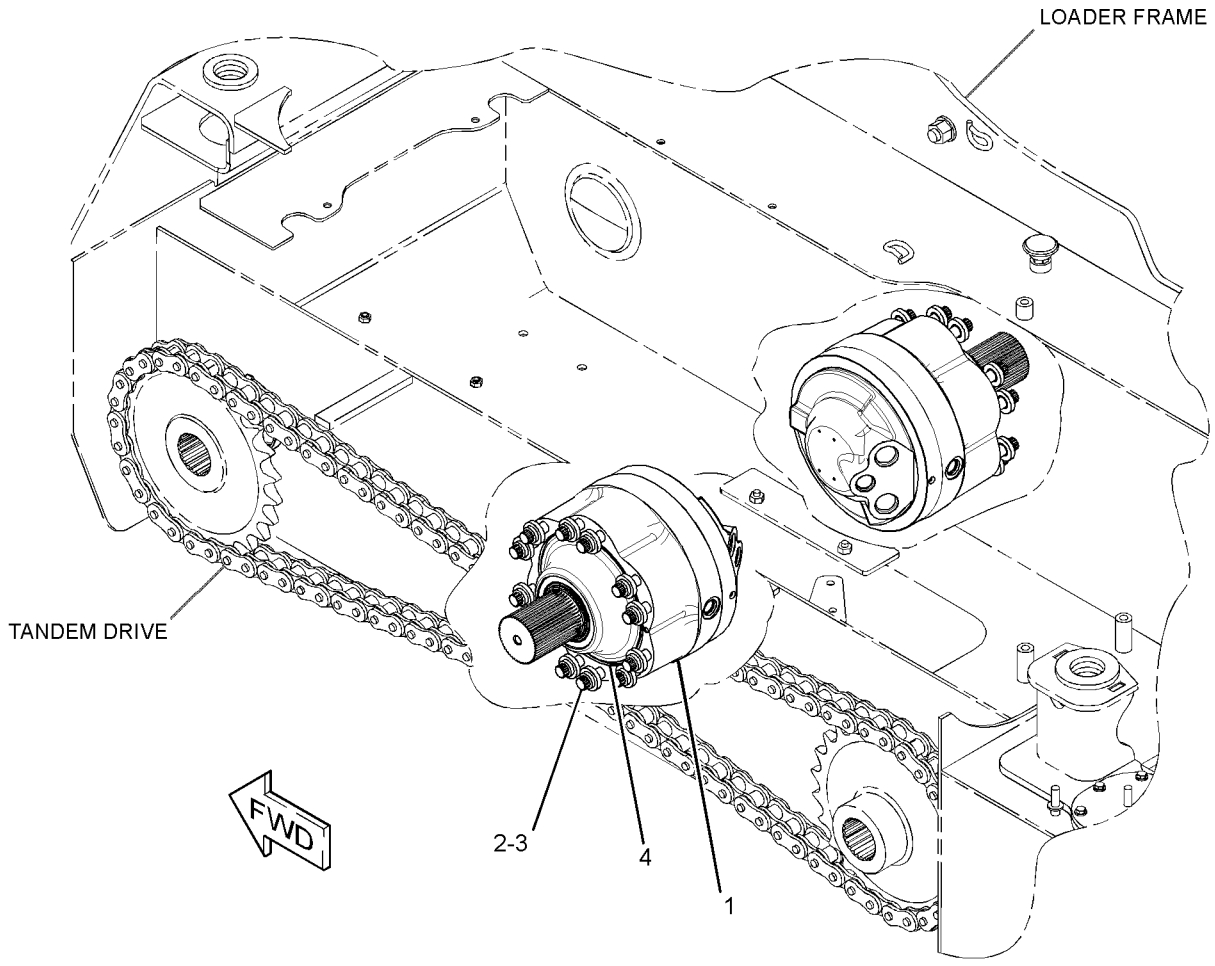

GRAPHIC #1 **<END>** g02794103

372-3916 MOTOR & MTG GP-HYDROSTATIC—HYDROSTATIC

S/N: A9H1730-UP
PART OF 326-5428 CONTROL AR-MACHINE
AN ATTACHMENT

SMCS-5058 **i04561273**

NOTE	REF NO	GRAPHIC REF	PART NUMBER	QTY	PART NAME 1 2 3 4 5 6 (PRODUCT LEVEL)	SEE PAGE
Y	1	1	**358-4984**	1	MOTOR GP-PISTON (2-SPEED, LH)	162
Y	2	1	**358-4986**	1	MOTOR GP-PISTON (2-SPEED, RH)	164
	3	1	**361-2657**	24	BOLT-12 POINT HEAD (M14X2X40-MM)	
	4	1	**9H-1024**	24	WASHER-HARD (17X30X6-MM THK)	

QUANTITIES SHOWN ARE THOSE REQUIRED FOR BOTH LH AND RH SIDES
Y-SEPARATE ILLUSTRATION

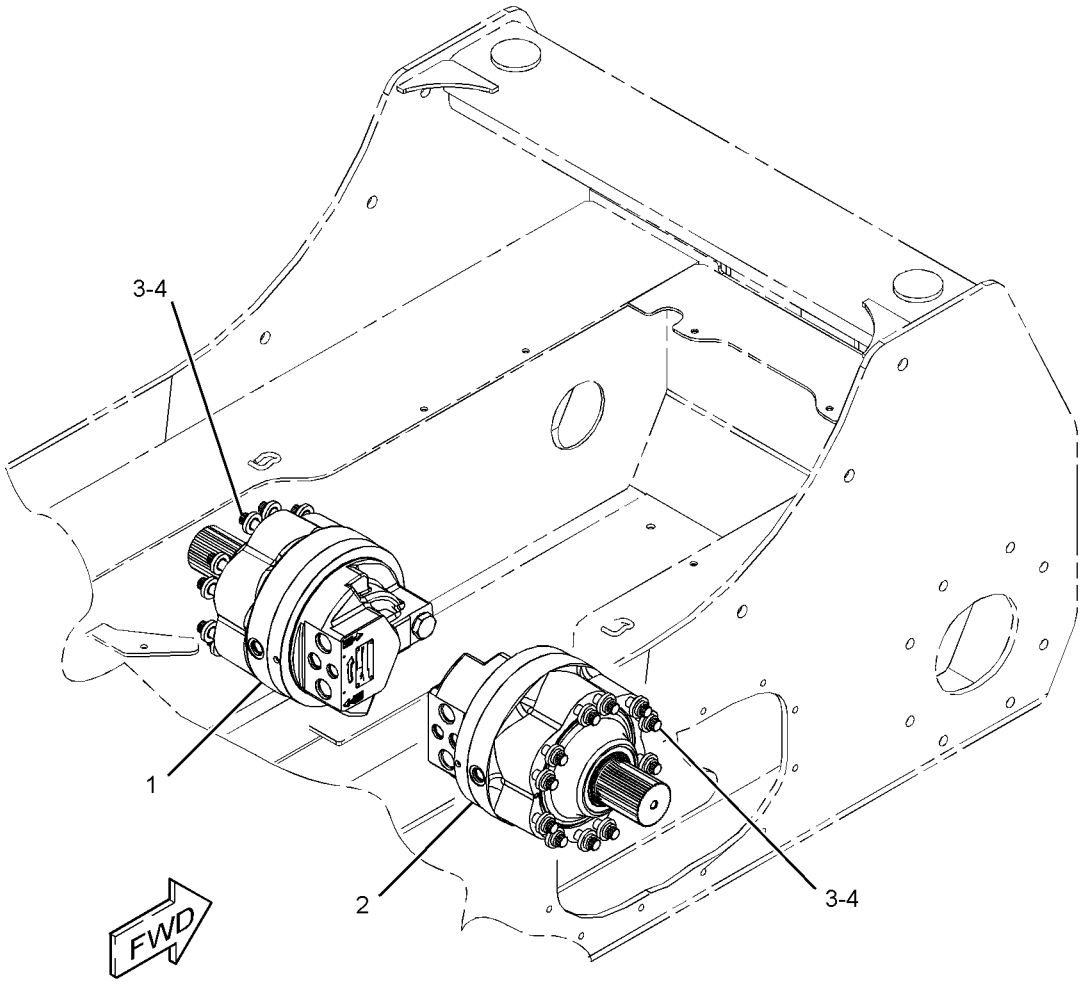

GRAPHIC #1 **<END>** g02729996

280-7856 MOTOR GP-PISTON–HYDROSTATIC*R

S/N: A9H1-1729

PART OF 191-9780 MOTOR & MTG GP-HYDROSTATIC

AN ATTACHMENT

SMCS-4351, 5058 **i04280457**

NOTE	REF NO	GRAPHIC REF	PART NUMBER	QTY	PART NAME 1 2 3 4 5 6 (PRODUCT LEVEL)	SEE PAGE
M	1	1	**160-8493**	12	BOLT-SOCKET HEAD (M14X2X80-MM)	
B	2	1	**140-2513**	1	SHIM (0.01-MM THK)	
B	3	1	**140-2514**	2	SHIM (0.3-MM THK)	
	4	1	**222-5693**	1	PLUG-O-RING	
J	5	1	**033-5853**	1	SEAL-O-RING	
	6	1	**190-6534**	1	RING-SPLIT	
	7	1	**289-6354**	1	PLUG-O-RING	
	8	1	**8T-5095**	5	WASHER-PLATED (11X16X2-MM THK)	
M	9	1	**5C-7883**	12	BOLT-SOCKET HEAD (M6X1X16-MM)	
	10	1	**268-1935**	1	BEARING-TAPERED ROLLER	
	11	1	**141-3049**	1	BEARING (INNER)	
	12	1	**172-8173**	15	DISC-BRAKE (OUTER)	
	13	1	**268-1923**	13	PLATE-INNER (BRAKE)	
	14	1	**141-3046**	1	KIT-SHIM (PISTON MOTOR)	
					(INCLUDES SHIMS)	
M	15	1	**8T-0271**	5	BOLT-SOCKET HEAD (M10X1.5X35-MM)	
J	16	1	**033-6042**	1	SEAL-O-RING	
	17	1	**320-0650**	1	RING-RETAINING	
	18	1	**307-3039**	1	RING-SEAL	
					AVAILABLE REPAIR KIT(S):	
J			**289-6337**	1	KIT-SEAL (PISTON MOTOR)	
					(INCUDES SEALS, SEAL RINGS & GASKET)	

B-USE AS REQUIRED
J-KIT MARKED J SERVICES PARTS MARKED J
M-METRIC PART

280-7856 MOTOR GP-PISTON *(contd.)* **i04280457**

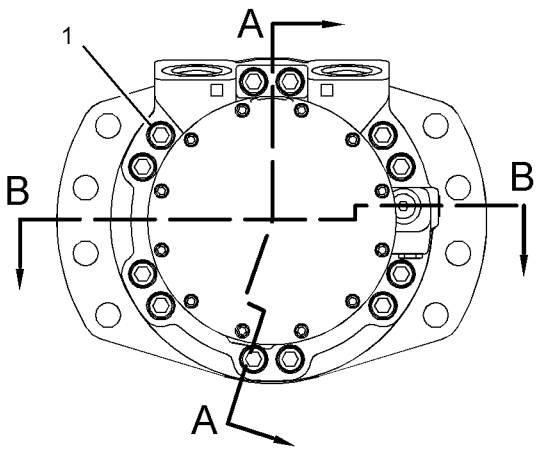

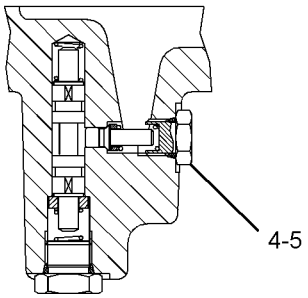

SECTION C-C

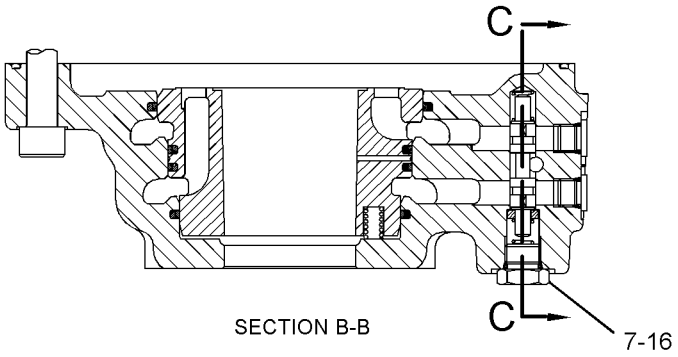

SECTION B-B

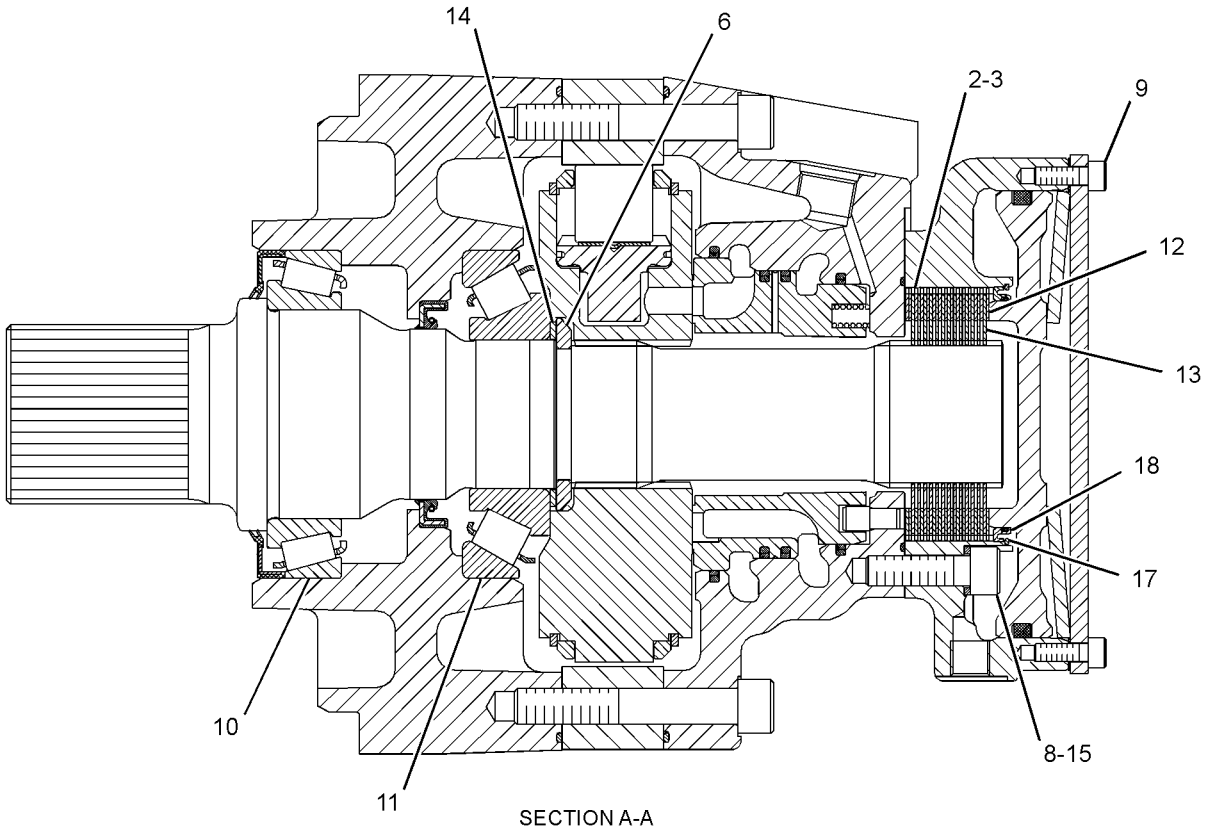

SECTION A-A

GRAPHIC #1 **<END>** g01727716

280-7858 MOTOR GP-PISTON–HYDROSTATIC*R

S/N: A9H1-UP
PART OF 190-7457 MOTOR & MTG GP-HYDROSTATIC
AN ATTACHMENT

SMCS-4351, 5058 **i04280460**

NOTE	REF NO	GRAPHIC REF	PART NUMBER	QTY	PART NAME 1 2 3 4 5 6 (PRODUCT LEVEL)	SEE PAGE
M	1	1	**8T-1159**	5	BOLT-SOCKET HEAD (M10X1.5X25-MM)	
B	2	1	**140-2514**	1	SHIM (0.3-MM THK)	
B	3	1	**140-2513**	1	SHIM (0.01-MM THK)	
	4	1	**190-6534**	1	RING-SPLIT	
M	5	1	**6V-5193**	2	BOLT-SOCKET HEAD (M8X1.25X40-MM)	
M	6	1	**160-8493**	10	BOLT-SOCKET HEAD (M14X2X80-MM)	
J	7	1	**033-6042**	1	SEAL-O-RING	
J	8	1	**033-5853**	1	SEAL-O-RING	
M	9	1	**6V-5683**	12	BOLT (M6X1X16-MM)	
	10	1	**222-5693**	1	PLUG-O-RING	
	11	1	**289-6354**	1	PLUG-O-RING	
	12	1	**268-1935**	1	BEARING-TAPERED ROLLER	
	13	1	**141-3049**	1	BEARING (INNER)	
	14	1	**172-8173**	10	DISC-BRAKE (OUTER)	
	15	1	**268-1923**	9	PLATE-INNER (BRAKE)	
	16	1	**141-3046**	1	KIT-SHIM (PISTON MOTOR)	
					(INCLUDES SHIMS)	
	17	1	**3K-0360**	1	SEAL-O-RING	
	18	1	**9S-8005**	1	PLUG-O-RING	
	19	1	**320-0650**	1	RING-RETAINING	
	20	1	**307-3039**	1	RING-SEAL	
					AVAILABLE REPAIR KIT(S):	
J			**289-6338**	1	KIT-SEAL (PISTON MOTOR)	
					(INCLUDES SEALS, SEAL RINGS & GASKET)	

B-USE AS REQUIRED
J-KIT MARKED J SERVICES PARTS MARKED J
M-METRIC PART

280-7858 MOTOR GP-PISTON *(contd.)* i04280460

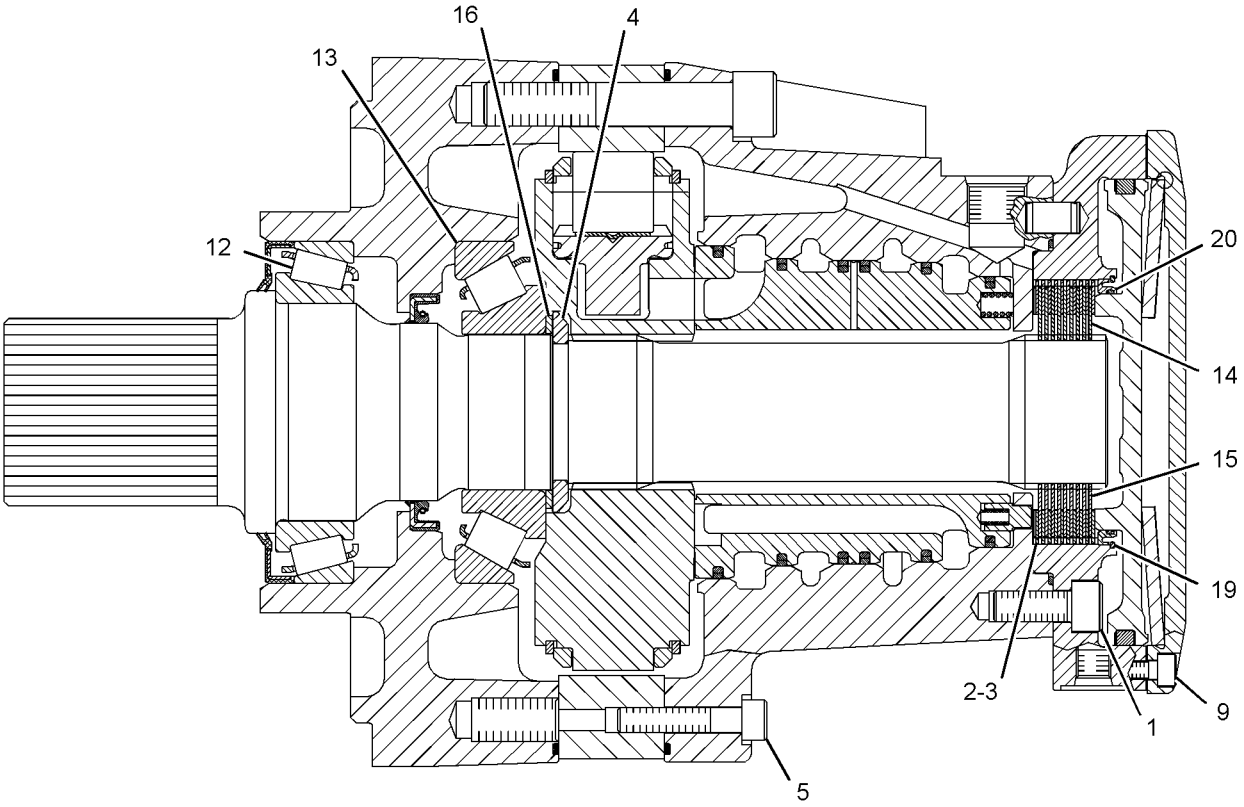

SECTION A-A

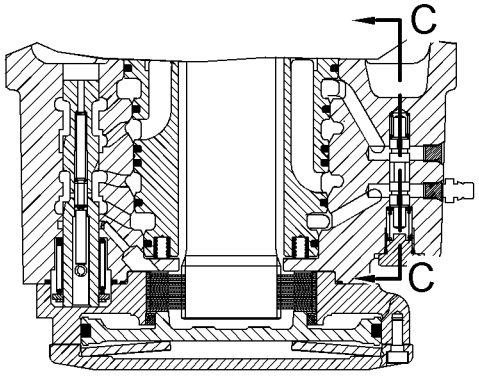

SECTION B-B

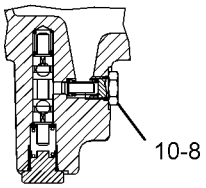

SECTION C-C

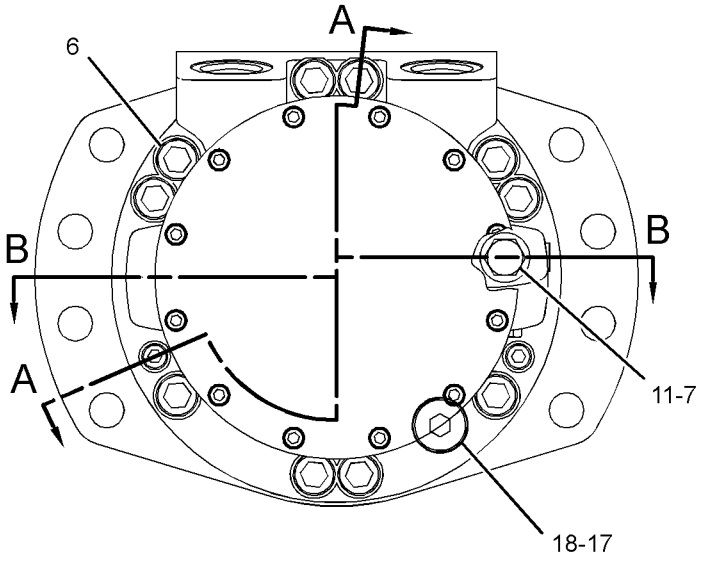

GRAPHIC #1 **<END>** g01807874

358-4982 MOTOR GP-PISTON

S/N: A9H1730-UP
PART OF 370-4197 MOTOR & MTG GP-HYDROSTATIC
AN ATTACHMENT

SMCS-4351, 5058 **i04650179**

NOTE	REF NO	GRAPHIC REF	PART NUMBER	QTY	PART NAME 1 2 3 4 5 6 (PRODUCT LEVEL)	SEE PAGE
	1	1	**280-7837**	1	KIT-VALVE (DISTRIBUTION)	
					(INCLUDES DISTRIBUTION VALVE BODY, PIN, RINGS & SPRINGS)	
	2	1	**280-7838**	1	KIT-BEARING (PISTON MOTOR)	
					(INCLUDES SEALS, TAPERED ROLLER BEARINGS, WASHER, RING & ALSO INCLUDES PARTS MARKED "K" IN GRAPHIC)	
	3	1	**280-7843**	1	VALVE GP-FLUSHING (PISTON MOTOR)	
	4	1	**280-7840**	1	KIT-BRAKE (PISTON MOTOR)	
					(INCLUDES STEEL BRAKE PISTON, SEALS & SPRINGS)	
	5	1	**280-7841**	1	SHAFT-DRIVE	
					PARTS SHOWN IN GRAPHIC(S) WITHOUT A REFERENCE NUMBER ARE NOT SERVICED SEPARATELY	
					AVAILABLE REPAIR KIT(S):	
			280-7842	1	KIT-VALVE (PISTON MOTOR)	
					(INCLUDES O-RINGS, DUST SEAL, SHAFT SEAL, PISTON SEAL RING SET, SINUS SEAL, BACKUP RINGS, RETAINING PIN, RETAINING RING	
					& DOWEL PIN)	

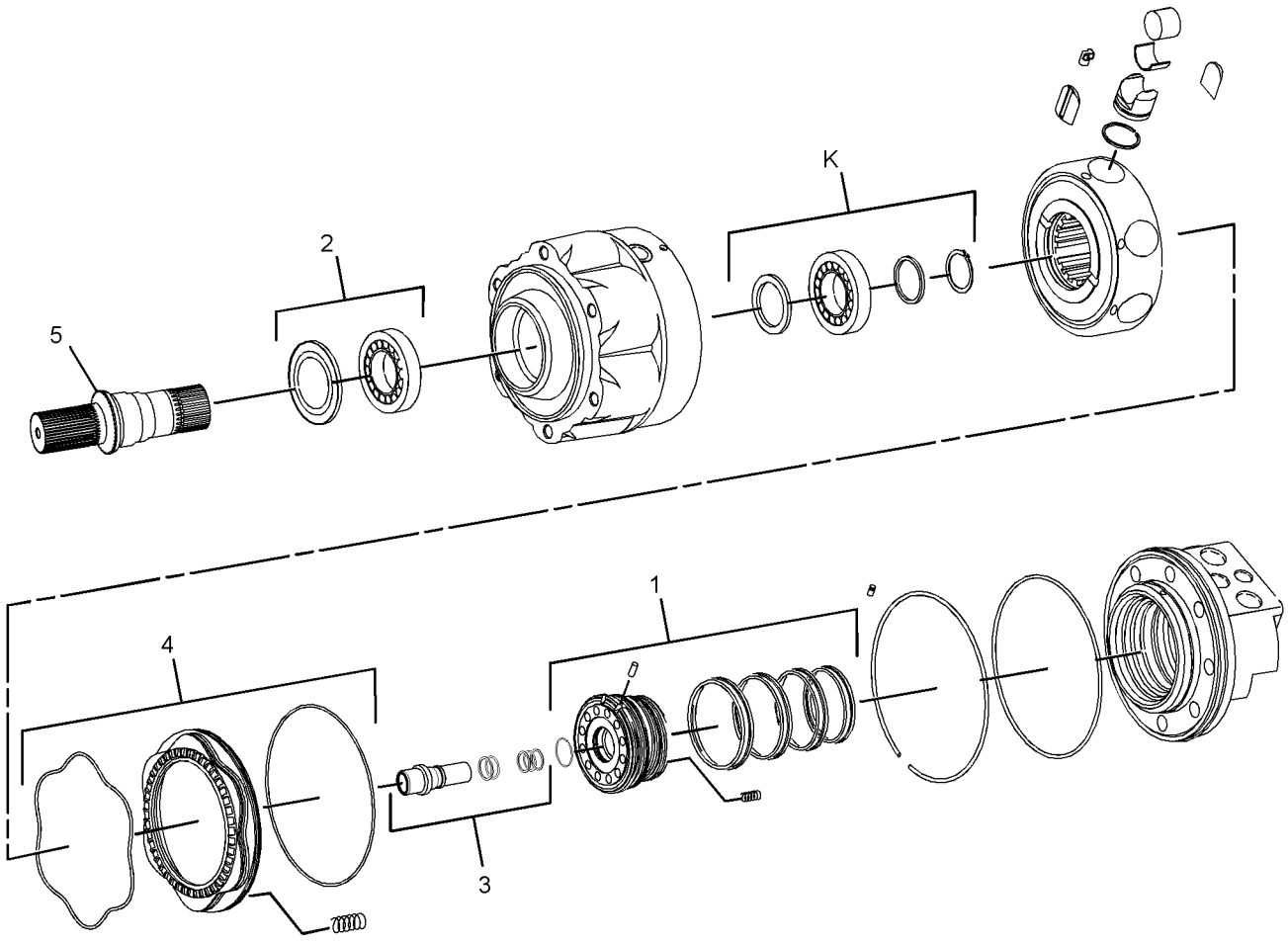

GRAPHIC #1 **<END>** g02791522

358-4984 MOTOR GP-PISTON–2-SPEED, LH

S/N: A9H1730-UP

PART OF 372-3916 MOTOR & MTG GP-HYDROSTATIC

AN ATTACHMENT

SMCS-4351, 5058 **i04561278**

NOTE	REF NO	GRAPHIC REF	PART NUMBER	QTY	PART NAME 1 2 3 4 5 6 (PRODUCT LEVEL)	SEE PAGE
	1	1	**341-7647**	1	VALVE GP-SPEED CONTROL (2-SPEED)	
	2	1	**280-7850**	1	KIT-VALVE (DISTRIBUTION)	
					(INCLUDES VALVE BODY, PIN, RINGS, SPRINGS & SEAL)	
	3	1	**280-7838**	1	KIT-BEARING (PISTON MOTOR)	
					(INCLUDES SEALS, TAPERED ROLLER BEARINGS, WASHER, RING & PARTS MARKED "K" IN GRAPHIC)	
	4	1	**280-7848**	1	VALVE GP-FLUSHING (PISTON MOTOR)	
	5	1	**280-7840**	1	KIT-BRAKE (PISTON MOTOR)	
					(INCLUDES STEEL BRAKE PISTON, SEALS & SPRINGS)	
	6	1	**280-7841**	1	SHAFT-DRIVE	
					PARTS SHOWN IN GRAPHIC(S) WITHOUT A REFERENCE NUMBER ARE NOT SERVICED SEPARATELY	
					AVAILABLE REPAIR KIT(S):	
			280-7849	1	KIT-VALVE (PISTON MOTOR)	
					(INCLUDES O-RINGS, DUST SEAL, SHAFT SEAL, SEAL RING SET, BACKUP RINGS, PLUG SEAL, RETAINING RINGS, DOWEL PINS	
					& RARTS MARKED "J" IN GRAPHIC)	

358-4984 **MOTOR GP-PISTON** *(contd.)* **i04561278**

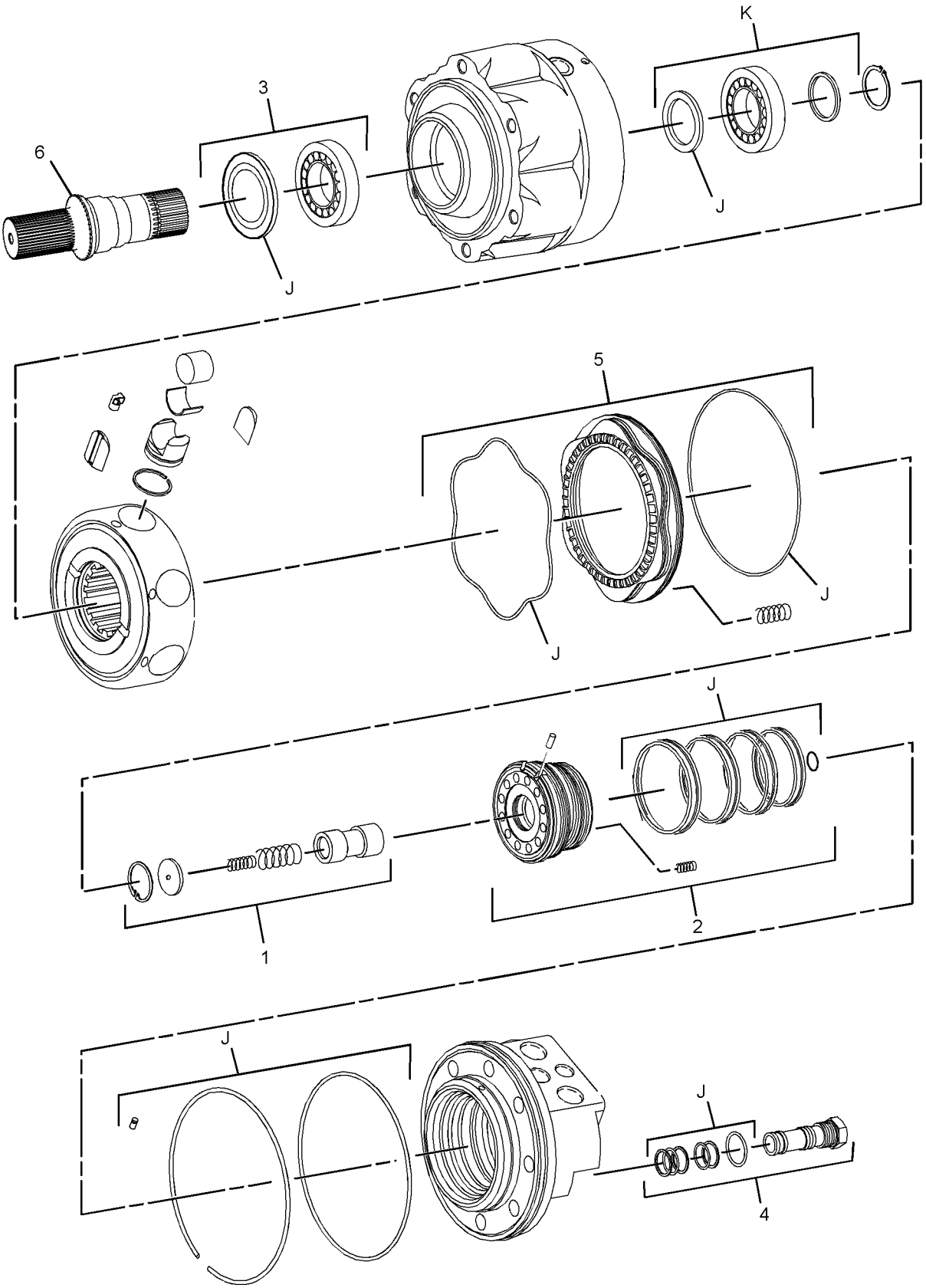

GRAPHIC #1 **<END>** g02727782

358-4986 MOTOR GP-PISTON–2-SPEED, RH

S/N: A9H1730-UP

PART OF 372-3916 MOTOR & MTG GP-HYDROSTATIC

AN ATTACHMENT

SMCS-4351, 5058 **i04561277**

NOTE	REF NO	GRAPHIC REF	PART NUMBER	QTY	PART NAME 1 2 3 4 5 6 (PRODUCT LEVEL)	SEE PAGE
	1	1	**341-7647**	1	VALVE GP-SPEED CONTROL (2-SPEED)	
	2	1	**280-7850**	1	KIT-VALVE (DISTRIBUTION)	
					(INCLUDES VALVE BODY, PIN, RINGS, SPRINGS & SEAL)	
	3	1	**280-7838**	1	KIT-BEARING (PISTON MOTOR)	
					(INCLUDES SEALS, TAPERED ROLLER BEARINGS, WASHER & RING)	
	4	1	**280-7848**	1	VALVE GP-FLUSHING (PISTON MOTOR)	
	5	1	**280-7840**	1	KIT-BRAKE (PISTON MOTOR)	
					(INCLUDES STEEL BRAKE PISTON, SEALS & SPRINGS)	
	6	1	**280-7841**	1	SHAFT-DRIVE	
					PARTS SHOWN IN GRAPHIC(S) WITHOUT A REFERENCE NUMBER ARE NOT SERVICED SEPARATELY	
					AVAILABLE REPAIR KIT(S):	
			280-7849	1	KIT-VALVE (PISTON MOTOR)	
					(INCLUDES DUST SEAL, SHAFT SEAL, O-RINGS, SINUS SEAL, BACKUP RINGS, PLUG SEAL, RETAINING PIN,	
					RETAINING RING, DOWEL PIN, SEAL RING SET & PARTS MARKED J IN GRAPHIC)	

358-4986 **MOTOR GP-PISTON** *(contd.)* **i04561277**

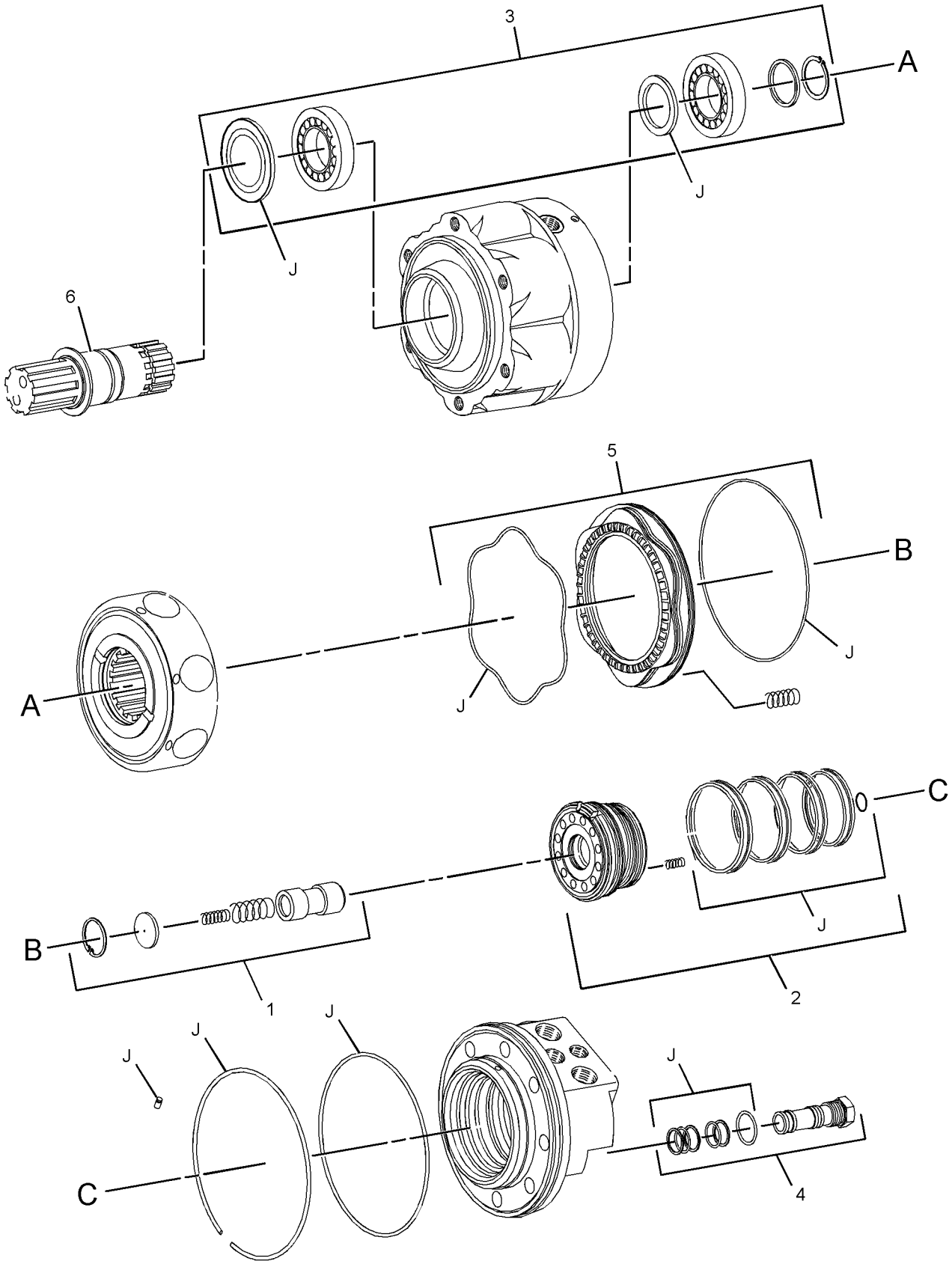

GRAPHIC #1 **<END>** g02728017

218-0918 MOUNTING GP-PUMP

S/N: A9H1-UP

PART OF 326-5372 INSTALLATION AR-ENGINE

SMCS-3203, 5062, 5070 **i01971011**

NOTE	REF NO	GRAPHIC REF	PART NUMBER	QTY	PART NAME 1 2 3 4 5 6 (PRODUCT LEVEL)	SEE PAGE
	1	1	**142-8719**	1	PLATE-ADAPTER	
	2	1	**226-7635**	1	FLANGE	
	3	1	**8T-4121**	12	WASHER-HARD (11X21X2.5-MM THK)	
M	4	1	**8T-4195**	8	BOLT (M10X1.5X30-MM)	
M	5	1	**8T-4196**	12	BOLT (M10X1.5X35-MM)	

M-METRIC PART

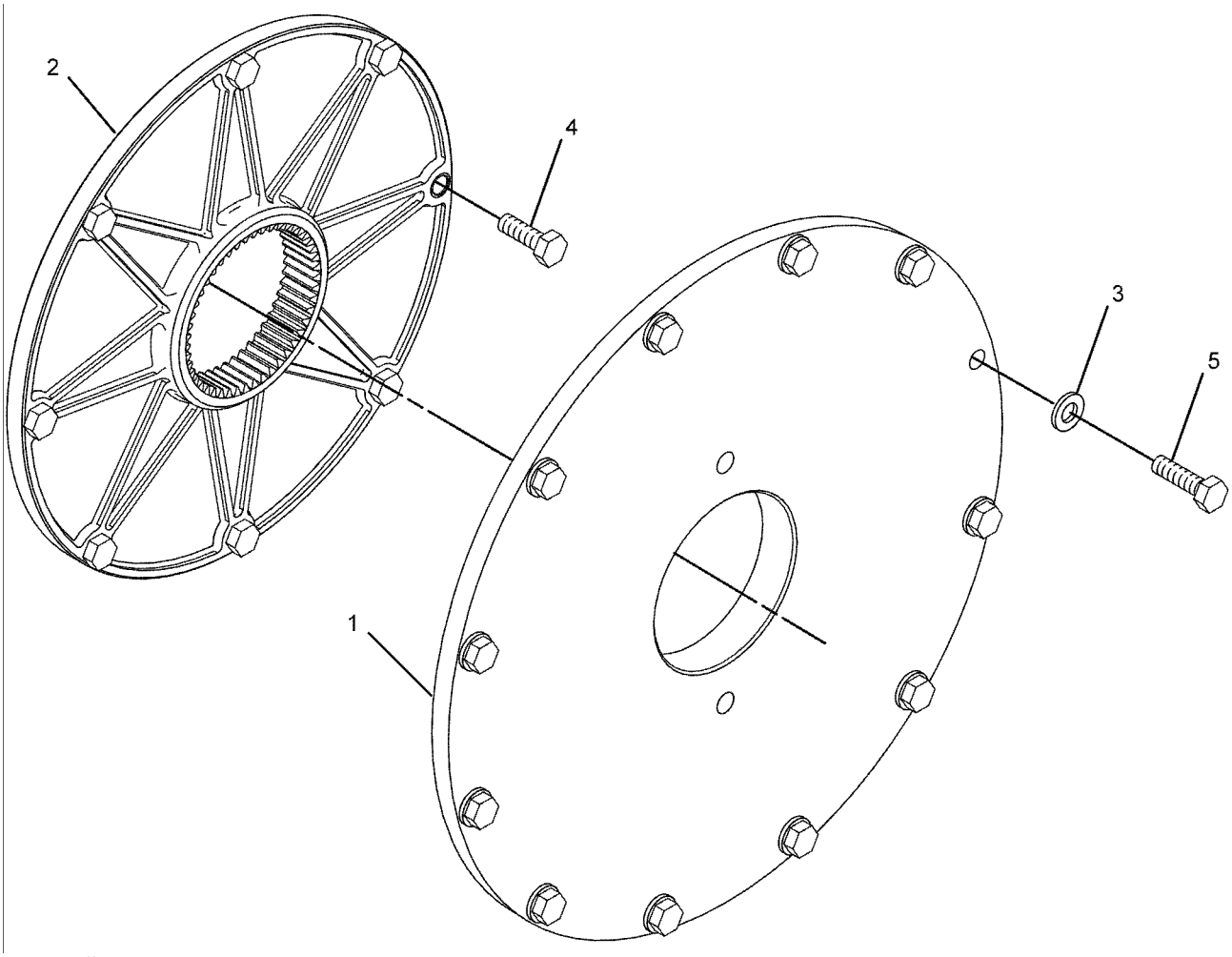

GRAPHIC #1 **<END>** g01024585

326-5258 POWER TRAIN AR

S/N: A9H1-UP

PART OF 326-5420 COMMON AR

SMCS-3203, 4062, 5058, 5070 **i04650210**

NOTE	PART NUMBER	QTY	PART NAME 1 2 3 4 5 6 (PRODUCT LEVEL)	SEE PAGE
Y	*142-9060*	1	DRIVE GP-TANDEM (WORK TOOL)	132
			S/N: A9H1-1729	
Y	*370-4187*	1	DRIVE GP-TANDEM (WORK TOOL)	133
			S/N: A9H1730-UP	

Y-SEPARATE ILLUSTRATION

<END>

218-0928 PUMP & MTG GP-HYDROSTATIC

S/N: A9H1-UP

PART OF 326-5276, 326-5277, 326-5427, 326-5428 CONTROL AR-MACHINE AN ATTACHMENT

SMCS-3203, 5070 **i04142673**

NOTE	REF NO	GRAPHIC REF	PART NUMBER	QTY	PART NAME 1 2 3 4 5 6 (PRODUCT LEVEL)	SEE PAGE
	1	1	**165-0142**	2	WASHER-HARD (14.8X27X3-MM THK)	
	2	1	**361-2657**	2	BOLT-12 POINT HEAD (M14X2X40-MM)	
CY	3	1	**307-3070**	1	PUMP GP-PISTON (HYDROSTATIC)	172
	4	1	**252-9197**	1	BOLT-SOCKET HEAD (M12X1.75X35-MM)	
	5	1	**263-4996**	1	HUB AS-COUPLING	
		1	**096-0194**	1	RING-RETAINING	

C-CHANGE FROM PREVIOUS TYPE
Y-SEPARATE ILLUSTRATION

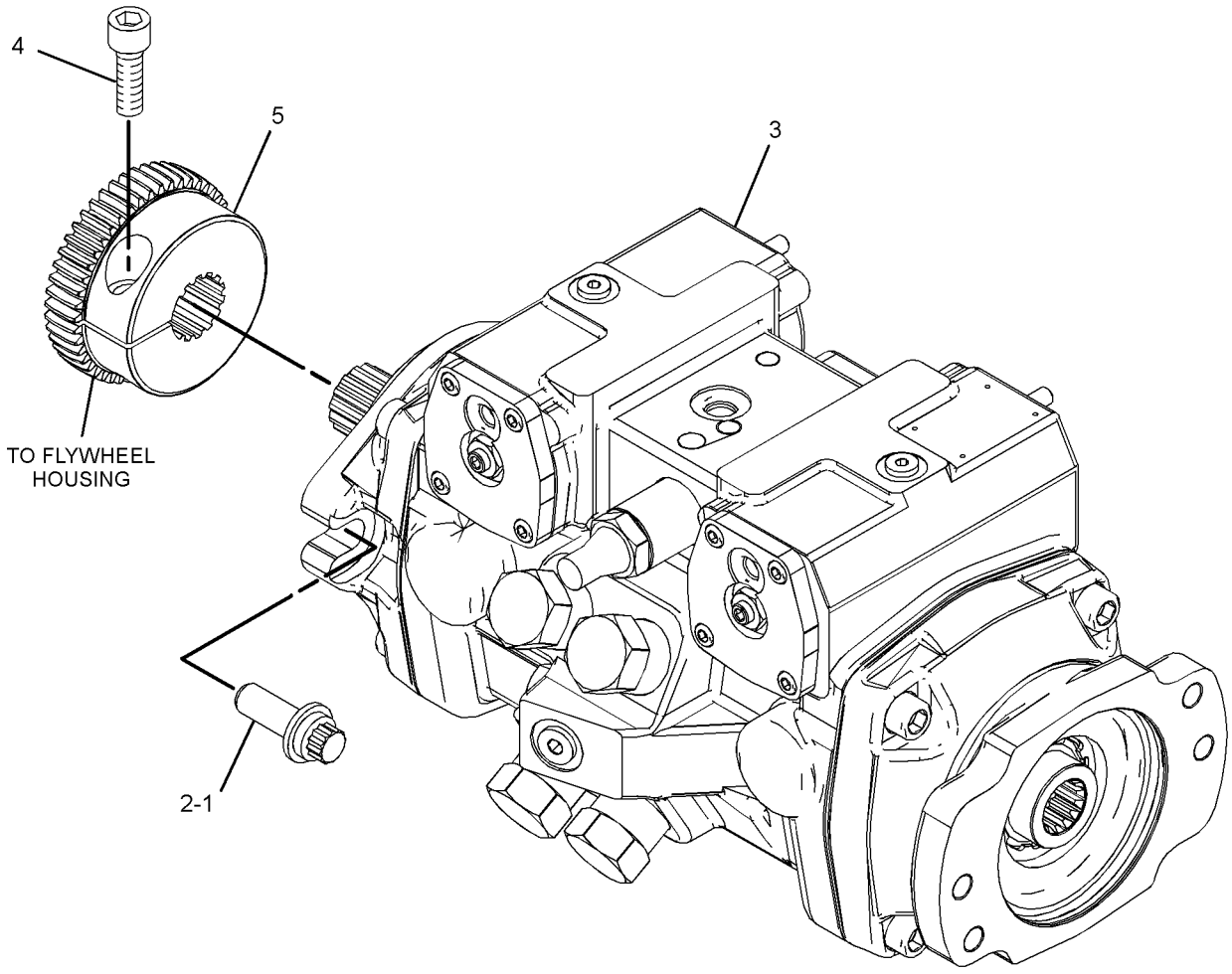

GRAPHIC #1 **<END>** g02345482

218-5928 PUMP & MTG GP-HYDROSTATIC

S/N: A9H1-UP

PART OF 326-5278, 326-5428 CONTROL AR-MACHINE

AN ATTACHMENT

SMCS-3203, 5070 **i04142675**

NOTE	REF NO	GRAPHIC REF	PART NUMBER	QTY	PART NAME 1 2 3 4 5 6 (PRODUCT LEVEL)	SEE PAGE
	1	1	**165-0142**	2	WASHER-HARD (14.8X27X3-MM THK)	
	2	1	**361-2657**	2	BOLT-12 POINT HEAD (M14X2X40-MM)	
CY	3	1	**307-3068**	1	PUMP GP-PISTON (HYDROSTATIC)	170
	4	1	**252-9197**	1	BOLT-SOCKET HEAD (M12X1.75X35-MM)	
	5	1	**263-4996**	1	HUB AS-COUPLING	
		1	**096-0194**	1	RING-RETAINING	

C-CHANGE FROM PREVIOUS TYPE
Y-SEPARATE ILLUSTRATION

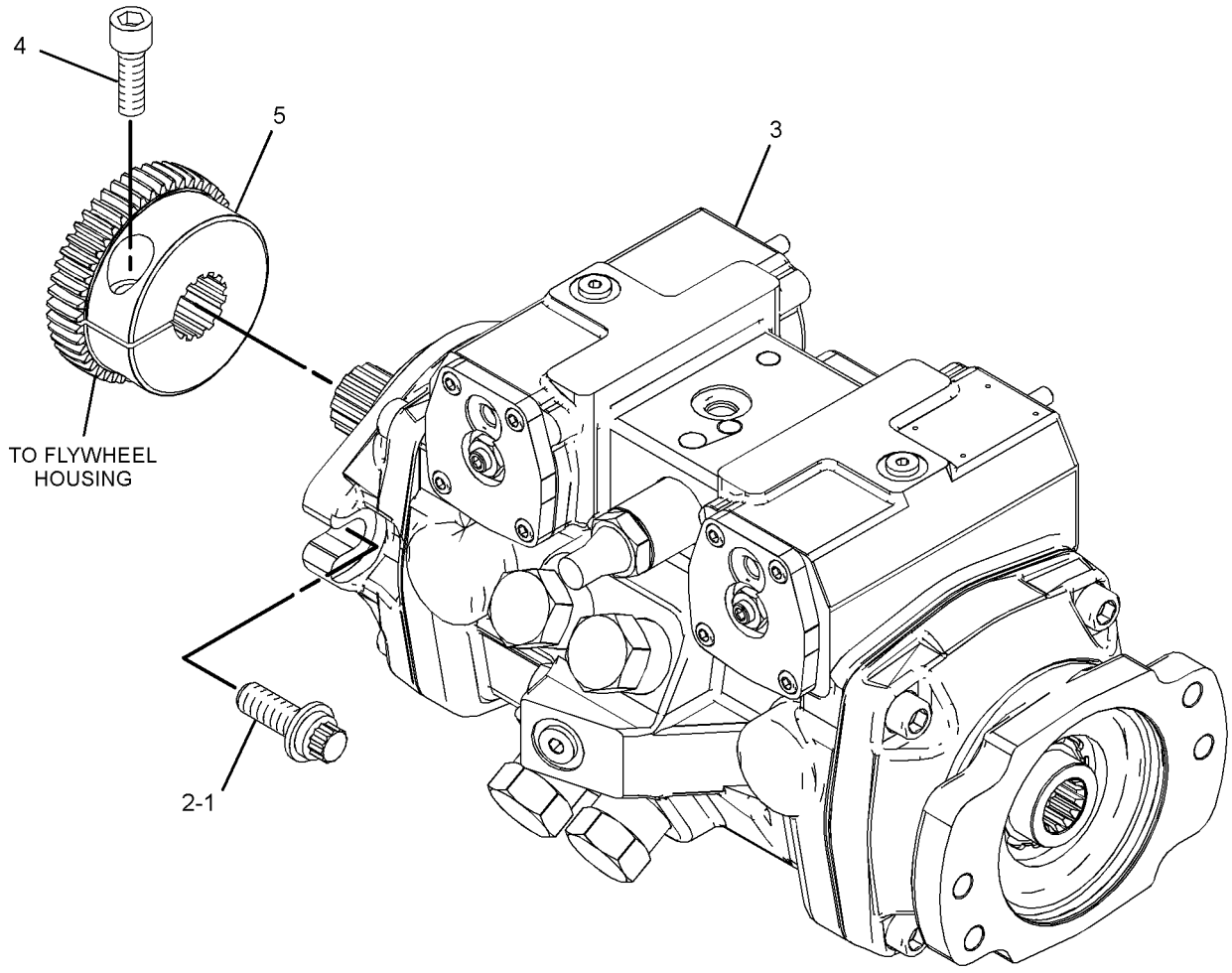

GRAPHIC #1 **<END>** g02345177

307-3068 PUMP GP-PISTON

S/N: A9H1-UP

PART OF 218-5928 PUMP & MTG GP-HYDROSTATIC

AN ATTACHMENT

SMCS-3203, 5070, 5117, 5455, 5479 **i03901102**

NOTE	REF NO	GRAPHIC REF	PART NUMBER	QTY	PART NAME 1 2 3 4 5 6 (PRODUCT LEVEL)	SEE PAGE
	1	1	**6E-5060**	3	CAP AS	
J	2	1	**112-4719**	4	RING-BACKUP	
	3	1	**121-4459**	2	BEARING-ROLLER	
	4	1	**108-3565**	2	CLIP	
	5	1	**204-1454**	2	PIN-THREADED	
JM	6	1	**9T-4817**	2	NUT (M8X1-THD)	
	7	1	**204-1456**	1	SHIM	
	8	1	**204-1457**	1	VALVE GP-SPEED SENSING (PISTON PUMP)	
	9	1	**204-1458**	4	VALVE GP-RELIEF (CROSSOVER)	
	10	1	**204-1459**	1	VALVE GP-RELIEF (CHARGE)	
J	11	1	**135-2655**	2	SEAL-O-RING	
	12	1	**3J-7354**	2	SEAL-O-RING	
J	13	1	**3K-0715**	1	SEAL-O-RING	
J	14	1	**6V-5326**	4	SEAL-O-RING	
J	15	1	**6V-5586**	2	SEAL-O-RING	
J	16	1	**6V-8352**	1	SEAL-O-RING	
M	17	1	**8T-0267**	8	BOLT-SOCKET HEAD (M6X1X12-MM)	
	18	1	**9S-8002**	2	PLUG-O-RING	
M	19	1	**9X-6606**	2	NUT-HEX (M10X1-THD)	
	20	1	**268-1929**	2	CRADLE	
	21	1	**081-3698**	2	BEARING	
	22	1	**204-1452**	3	RING-RETAINING	
J	23	1	**233-9744**	1	SEAL-LIP TYPE	
	24	1	**307-3075**	2	RACE-BEARING	
	25	1	**280-7865**	1	ROTATING GP-PUMP (LH)	
	26	1	**280-7863**	1	ROTATING GP-PUMP (RH)	
M	27	1	**8T-0273**	8	BOLT-SOCKET HEAD (M12X1.75X40-MM)	
	28	1	**307-3074**	2	BEARING-ROLLER	
					AVAILABLE REPAIR KIT(S):	
J			**268-9529**	1	KIT-SEAL	
					(ALSO INCLUDES SEAL-O-RING, SEAL LOCK NUT, RING DIN, SPACER & SEAL)	

J-KIT MARKED J SERVICES PARTS MARKED J
M-METRIC PART

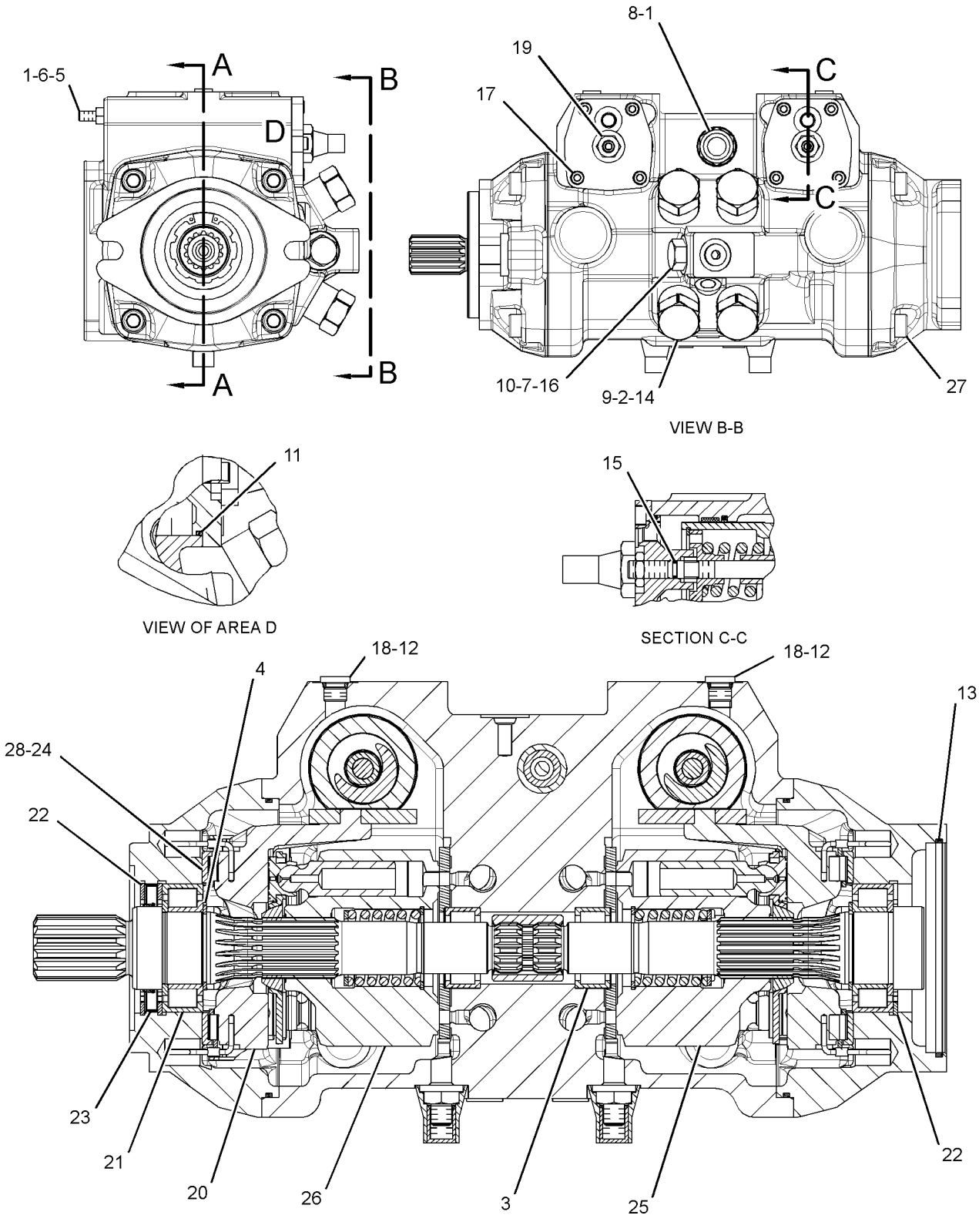

GRAPHIC #1 **<END>** g01792053

307-3070 PUMP GP-PISTON

S/N: A9H1-UP

PART OF 218-0928 PUMP & MTG GP-HYDROSTATIC

AN ATTACHMENT

SMCS-3203, 5070, 5117, 5455, 5479 **i03969171**

NOTE	REF NO	GRAPHIC REF	PART NUMBER	QTY	PART NAME 1 2 3 4 5 6 (PRODUCT LEVEL)	SEE PAGE
	1	1	**6E-5060**	3	CAP AS	
J	2	1	**112-4719**	4	RING-BACKUP	
	3	1	**121-4459**	2	BEARING-ROLLER	
	4	1	**108-3565**	2	CLIP	
	5	1	**204-1454**	2	PIN-THREADED	
JM	6	1	**9T-4817**	2	NUT (M8X1-THD)	
	7	1	**204-1456**	1	SHIM	
	8	1	**204-1457**	1	VALVE GP-SPEED SENSING (PISTON PUMP)	
	9	1	**204-1458**	4	VALVE GP-RELIEF (CROSSOVER)	
	10	1	**204-1459**	1	VALVE GP-RELIEF (CHARGE)	
J	11	1	**135-2655**	2	SEAL-O-RING	
	12	1	**3J-7354**	2	SEAL-O-RING	
J	13	1	**3K-0715**	1	SEAL-O-RING	
J	14	1	**6V-5326**	4	SEAL-O-RING	
J	15	1	**6V-5586**	2	SEAL-O-RING	
J	16	1	**6V-8352**	1	SEAL-O-RING	
M	17	1	**8T-0267**	8	BOLT-SOCKET HEAD (M6X1X12-MM)	
	18	1	**9S-8002**	2	PLUG-O-RING	
M	19	1	**9X-6606**	2	NUT-HEX (M10X1-THD)	
	20	1	**268-1929**	2	CRADLE	
	21	1	**081-3698**	1	BEARING	
	22	1	**204-1452**	3	RING-RETAINING	
J	23	1	**233-9744**	1	SEAL-LIP TYPE	
	24	1	**307-3075**	2	RACE-BEARING	
	25	1	**280-7865**	1	ROTATING GP-PUMP (LH)	
	26	1	**280-7863**	1	ROTATING GP-PUMP (RH)	
M	27	1	**8T-0273**	8	BOLT-SOCKET HEAD (M12X1.75X40-MM)	
	28	1	**307-3074**	2	BEARING-ROLLER	
					AVAILABLE REPAIR KIT(S):	
			268-9529	1	KIT-SEAL	
					(INCLUDES O-RINGS, SEAL LOCKNUTS, RING, SPACERS, SHAFTSEAL & SEALS)	

J-KIT MARKED J SERVICES PARTS MARKED J
M-METRIC PART

307-3070 PUMP GP-PISTON *(contd.)* **i03969171**

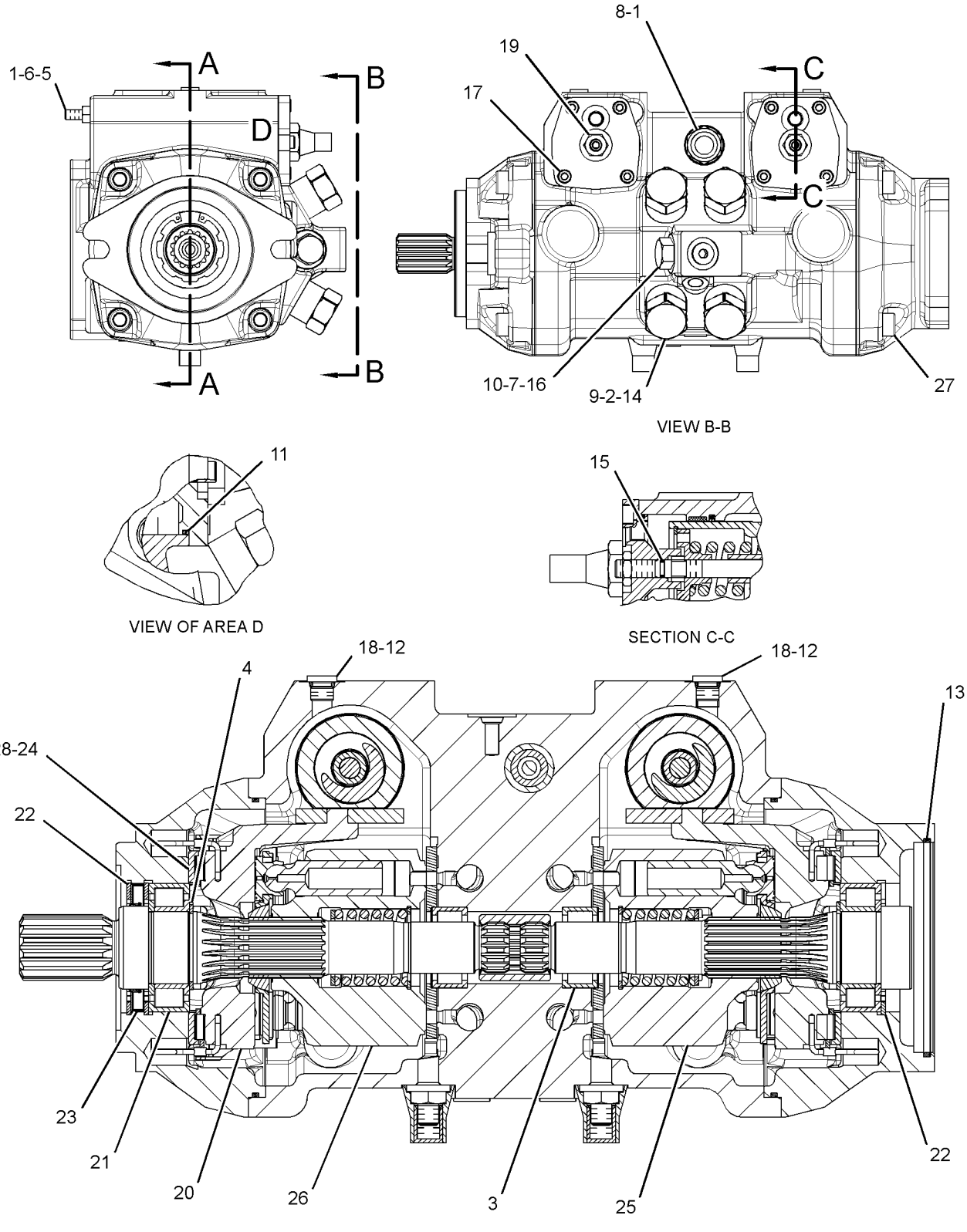

GRAPHIC #1 **<END>** g01792075

165-2609 TIRE & RIM GP–LH

S/N: A9H1-UP
(16.5X8.25). DIRECTIONAL TIRE
PART OF 165-4891 WHEEL & TIRE AR
AN ATTACHMENT

SMCS-4202 **i02362238**

NOTE	PART NUMBER	QTY	PART NAME 1 2 3 4 5 6 (PRODUCT LEVEL)	SEE PAGE
	150-8599	1	VALVE AS-TIRE	
	142-7485	1	WHEEL AS	
	165-4908	1	TIRE (10-16.5)	

<END>

165-2610 TIRE & RIM GP–RH

S/N: A9H1-UP
(16.5X8.25). DIRECTIONAL TIRE
PART OF 165-4891 WHEEL & TIRE AR
AN ATTACHMENT

SMCS-4202 **i02362235**

NOTE	PART NUMBER	QTY	PART NAME 1 2 3 4 5 6 (PRODUCT LEVEL)	SEE PAGE
	150-8599	1	VALVE AS-TIRE	
	142-7485	1	WHEEL AS	
	165-4908	1	TIRE (10-16.5)	

<END>

165-4901 TIRE & RIM GP–HEAVY-DUTY, LH

S/N: A9H1-UP
(16.5X9.75). DIRECTIONAL TIRE
PART OF 165-4898 WHEEL & TIRE AR
AN ATTACHMENT

SMCS-4202 **i02474449**

NOTE	PART NUMBER	QTY	PART NAME 1 2 3 4 5 6 (PRODUCT LEVEL)	SEE PAGE
	150-8599	1	VALVE AS-TIRE	
	142-8731	1	WHEEL AS	
	165-4909	1	TIRE (12-16.5)	

<END>

165-4902 TIRE & RIM GP—HEAVY-DUTY, RH

S/N: A9H1-UP
(16.5X9.75). DIRECTIONAL TIRE
PART OF 165-4898 WHEEL & TIRE AR
AN ATTACHMENT

SMCS-4202 **i02474458**

NOTE	PART NUMBER	QTY	PART NAME 1 2 3 4 5 6 (PRODUCT LEVEL)	SEE PAGE
	150-8599	1	VALVE AS-TIRE	
	142-8731	1	WHEEL AS	
	165-4909	1	TIRE (12-16.5)	

<END>

165-4906 TIRE & RIM GP—HEAVY-DUTY, LH

S/N: A9H1-UP
(16.5X9.75). DIRECTIONAL TIRE
PART OF 165-4903 WHEEL & TIRE AR
AN ATTACHMENT

SMCS-4202 **i02571051**

NOTE	PART NUMBER	QTY	PART NAME 1 2 3 4 5 6 (PRODUCT LEVEL)	SEE PAGE
	150-8599	1	VALVE AS-TIRE	
	142-8759	1	WHEEL AS	
	165-4909	1	TIRE (12-16.5)	

<END>

165-4907 TIRE & RIM GP—HEAVY-DUTY, RH

S/N: A9H1-UP
(16.5X9.75). DIRECTIONAL TIRE
PART OF 165-4903 WHEEL & TIRE AR
AN ATTACHMENT

SMCS-4202 **i02571052**

NOTE	PART NUMBER	QTY	PART NAME 1 2 3 4 5 6 (PRODUCT LEVEL)	SEE PAGE
	150-8599	1	VALVE AS-TIRE	
	142-8759	1	WHEEL AS	
	165-4909	1	TIRE (12-16.5)	

<END>

185-9928 TIRE & RIM GP–LH

S/N: A9H1-UP
(16.5X9.75). DIRECTIONAL TIRE
PART OF 185-8666 WHEEL & TIRE AR
AN ATTACHMENT

SMCS-4202 **i04285185**

NOTE	PART NUMBER	QTY	PART NAME 1 2 3 4 5 6 (PRODUCT LEVEL)	SEE PAGE
	150-8599	1	VALVE AS-TIRE	
	142-8759	1	WHEEL AS	
	185-9933	1	TIRE (12-16.5)	

<END>

185-9929 TIRE & RIM GP–RH

S/N: A9H1-UP
(16.5X9.75). DIRECTIONAL TIRE
PART OF 185-8666 WHEEL & TIRE AR
AN ATTACHMENT

SMCS-4202 **i04285792**

NOTE	PART NUMBER	QTY	PART NAME 1 2 3 4 5 6 (PRODUCT LEVEL)	SEE PAGE
	150-8599	1	VALVE AS-TIRE	
	142-8759	1	WHEEL AS	
	185-9933	1	TIRE (12-16.5)	

<END>

185-9930 TIRE & RIM GP–LH

S/N: A9H1-UP
(16.5X9.75). DIRECTIONAL TIRE
PART OF 185-8667 WHEEL & TIRE AR
AN ATTACHMENT

SMCS-4202 **i02362232**

NOTE	PART NUMBER	QTY	PART NAME 1 2 3 4 5 6 (PRODUCT LEVEL)	SEE PAGE
	150-8599	1	VALVE AS-TIRE	
	142-8731	1	WHEEL AS	
	185-9933	1	TIRE (12-16.5)	

<END>

185-9931 TIRE & RIM GP—RH

S/N: A9H1-UP
(16.5X9.75). DIRECTIONAL TIRE
PART OF 185-8667 WHEEL & TIRE AR
AN ATTACHMENT

SMCS-4202 **i02362236**

NOTE	PART NUMBER	QTY	PART NAME 1 2 3 4 5 6 (PRODUCT LEVEL)	SEE PAGE
	150-8599	1	VALVE AS-TIRE	
	142-8731	1	WHEEL AS	
	185-9933	1	TIRE (12-16.5)	

<END>

199-5438 TIRE & RIM GP—LH

S/N: A9H1-UP
(16.5X12). DIRECTIONAL TIRE
PART OF 178-2256 WHEEL & TIRE AR
AN ATTACHMENT

SMCS-4202 **i02362244**

NOTE	PART NUMBER	QTY	PART NAME 1 2 3 4 5 6 (PRODUCT LEVEL)	SEE PAGE
	150-8599	1	VALVE AS-TIRE	
	178-2270	1	WHEEL AS	
	199-5440	1	TIRE (33/15.5-16.5)	

<END>

199-5439 TIRE & RIM GP—RH

S/N: A9H1-UP
(16.5X12). DIRECTIONAL TIRE
PART OF 178-2256 WHEEL & TIRE AR
AN ATTACHMENT

SMCS-4202 **i02362243**

NOTE	PART NUMBER	QTY	PART NAME 1 2 3 4 5 6 (PRODUCT LEVEL)	SEE PAGE
	150-8599	1	VALVE AS-TIRE	
	178-2270	1	WHEEL AS	
	199-5440	1	TIRE (33/15.5-16.5)	

<END>

265-2898 TIRE & RIM GP–LH

S/N: A9H1-UP
(16.5X9.75)
PART OF 252-0346 WHEEL & TIRE AR
AN ATTACHMENT

SMCS-4202 **i04367600**

NOTE	PART NUMBER	QTY	PART NAME 1 2 3 4 5 6 (PRODUCT LEVEL)	SEE PAGE
	150-8599	1	VALVE AS-TIRE	
	142-8731	1	WHEEL AS	
	222-3963	1	TIRE (12-16.5)	

<END>

265-2899 TIRE & RIM GP–RH

S/N: A9H1-UP
(16.5X9.75)
PART OF 252-0346 WHEEL & TIRE AR
AN ATTACHMENT

SMCS-4202 **i04367601**

NOTE	PART NUMBER	QTY	PART NAME 1 2 3 4 5 6 (PRODUCT LEVEL)	SEE PAGE
	150-8599	1	VALVE AS-TIRE	
	142-8731	1	WHEEL AS	
	222-3963	1	TIRE (12-16.5)	

<END>

265-2900 TIRE & RIM GP–LH

S/N: A9H1-UP
(16.5X9.75)
PART OF 252-0347 WHEEL & TIRE AR
AN ATTACHMENT

SMCS-4202 **i02279760**

NOTE	PART NUMBER	QTY	PART NAME 1 2 3 4 5 6 (PRODUCT LEVEL)	SEE PAGE
	150-8599	1	VALVE AS-TIRE	
	142-8759	1	WHEEL AS	
	222-3963	1	TIRE (12-16.5)	

<END>

265-2901 TIRE & RIM GP–RH

S/N: A9H1-UP
(16.5X9.75)
PART OF 252-0347 WHEEL & TIRE AR
AN ATTACHMENT

SMCS-4202 **i02279766**

NOTE	PART NUMBER	QTY	PART NAME 1 2 3 4 5 6 (PRODUCT LEVEL)	SEE PAGE
	150-8599	1	VALVE AS-TIRE	
	142-8759	1	WHEEL AS	
	222-3963	1	TIRE (12-16.5)	

<END>

295-1799 VALVE GP-RELIEF–MAIN

S/N: A9H1-UP

PART OF 336-1319 VALVE GP-CONTROL

SMCS-5117 **i02605603**

NOTE	REF NO	GRAPHIC REF	PART NUMBER	QTY	PART NAME 1 2 3 4 5 6 (PRODUCT LEVEL)	SEE PAGE
	1	1	**130-1676**	1	SEAL-O-RING	

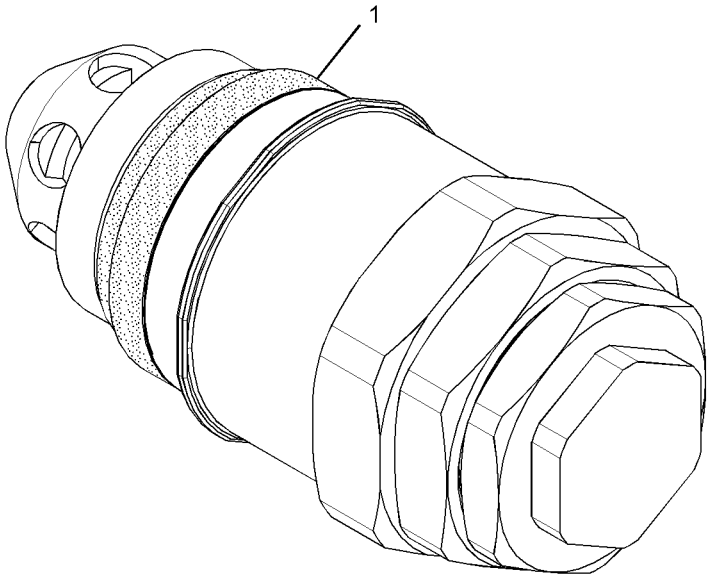

GRAPHIC #1 **<END>** g01304645

216-0610 VALVE GP-SOLENOID—MOTOR, 2-SPEED

S/N: A9H1-UP
12-VOLT
PART OF 293-6591 MANIFOLD & SOLENOID GP-CONTROL
AN ATTACHMENT

SMCS-5479 **i04464733**

NOTE	REF NO	GRAPHIC REF	PART NUMBER	QTY	PART NAME 1 2 3 4 5 6 (PRODUCT LEVEL)	SEE PAGE
	1	1	**226-9629**	1	COIL AS-SOLENOID (12-VOLT)	
	2	1	**164-2108**	1	WASHER (13.03X25.4X2.38-MM THK)	
	3	1	**218-2373**	1	NUT (1/2-28-THD)	
					AVAILABLE REPAIR KIT(S):	
			175-3892	1	KIT-SEAL (SOLENOID VALVE)	
					(INCLUDES SEAL-O-RINGS)	

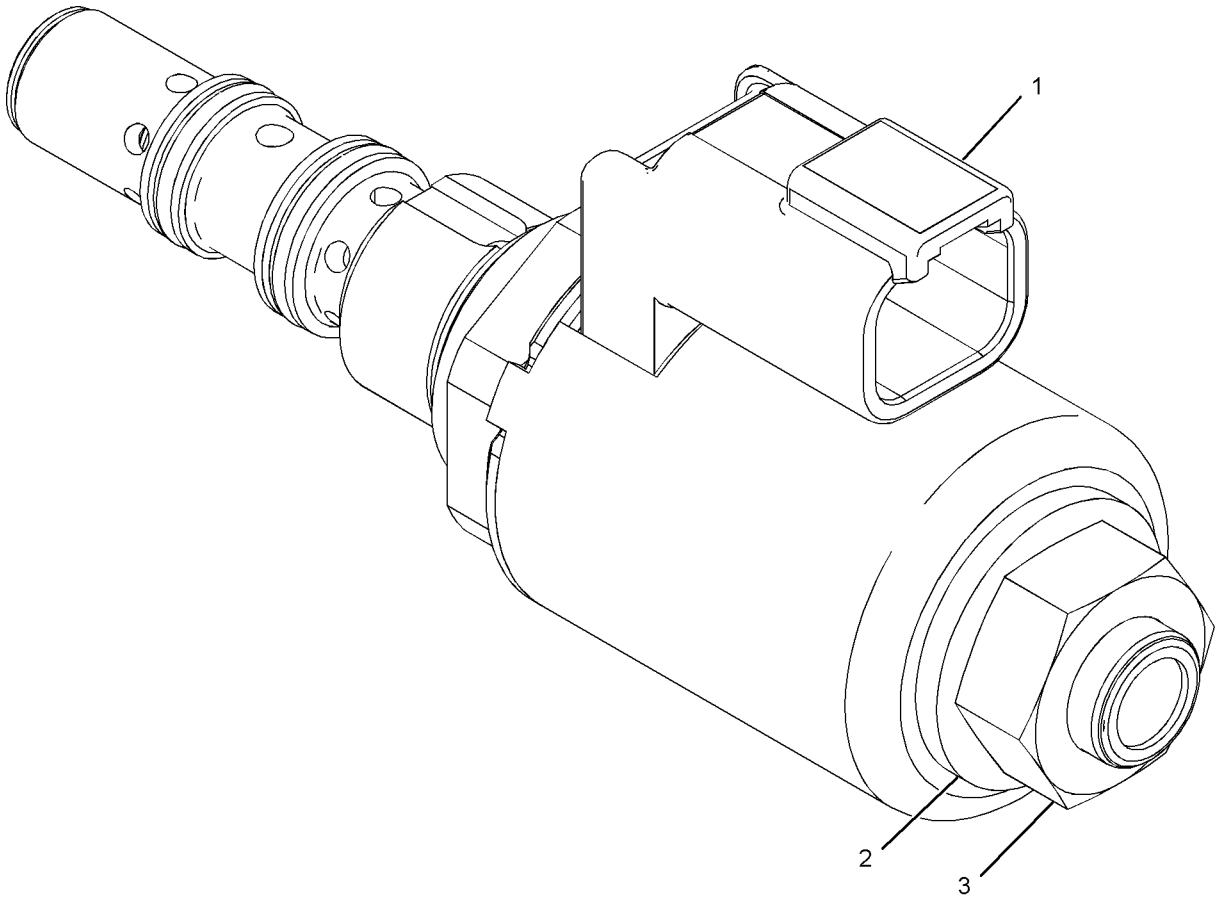

GRAPHIC #1 **<END>** g01112141

259-8194 VALVE GP-SOLENOID—PARKING BRAKE

S/N: A9H1-UP
12-VOLT
PART OF 233-7131, 293-6591 MANIFOLD & SOLENOID GP-CONTROL
AN ATTACHMENT

SMCS-5479 **i02485890**

NOTE	REF NO	GRAPHIC REF	PART NUMBER	QTY	PART NAME 1 2 3 4 5 6 (PRODUCT LEVEL)	SEE PAGE
	1	1	**238-4626**	1	COIL AS (AUXILIARY FLOW CONTROL)	

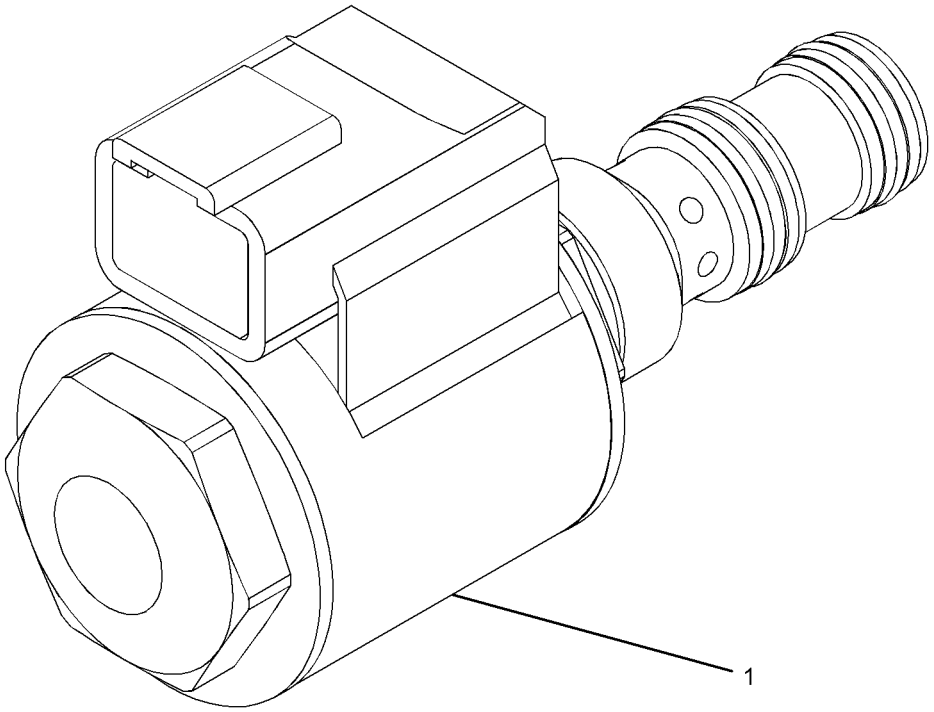

GRAPHIC #1 **<END>** g01121017

165-4891 WHEEL & TIRE AR—HEAVY DUTY

S/N: A9H1-UP
AN ATTACHMENT

SMCS-4200, 4201, 4203 **i02361179**

NOTE	PART NUMBER	QTY	PART NAME 1 2 3 4 5 6 (PRODUCT LEVEL)	SEE PAGE
Y	*165-2609*	2	TIRE & RIM GP (LH)	174
Y	*165-2610*	2	TIRE & RIM GP (RH)	174
	142-7493	32	NUT-LUG (9/16-18-2B THD)	

Y-SEPARATE ILLUSTRATION

<END>

165-4898 WHEEL & TIRE AR—HEAVY DUTY

S/N: A9H1-UP
AN ATTACHMENT

SMCS-4200, 4201, 4203 **i02361187**

NOTE	PART NUMBER	QTY	PART NAME 1 2 3 4 5 6 (PRODUCT LEVEL)	SEE PAGE
Y	*165-4901*	2	TIRE & RIM GP (LH)	174
Y	*165-4902*	2	TIRE & RIM GP (RH)	175
	142-7493	32	NUT-LUG (9/16-18-2B THD)	

Y-SEPARATE ILLUSTRATION

<END>

165-4903 WHEEL & TIRE AR—HEAVY DUTY

S/N: A9H1-UP
AN ATTACHMENT

SMCS-4200, 4201, 4203 **i02571050**

NOTE	PART NUMBER	QTY	PART NAME 1 2 3 4 5 6 (PRODUCT LEVEL)	SEE PAGE
Y	*165-4906*	2	TIRE & RIM GP (LH)	175
Y	*165-4907*	2	TIRE & RIM GP (RH)	175
	142-7493	32	NUT-LUG (9/16-18-2B-THD)	

Y-SEPARATE ILLUSTRATION

<END>

178-2256 WHEEL & TIRE AR—HEAVY DUTY

S/N: A9H1-UP
AN ATTACHMENT

SMCS-4200, 4201, 4203 **i02361189**

NOTE	PART NUMBER	QTY	PART NAME 1 2 3 4 5 6 (PRODUCT LEVEL)	SEE PAGE
Y	*199-5438*	2	TIRE & RIM GP (LH)	177
Y	*199-5439*	2	TIRE & RIM GP (RH)	177
	142-7493	32	NUT-LUG (9/16-18-2B THD)	

Y-SEPARATE ILLUSTRATION

<END>

185-8666 WHEEL & TIRE AR—HEAVY DUTY

S/N: A9H1-UP
AN ATTACHMENT

SMCS-4200, 4201, 4203 **i02571081**

NOTE	PART NUMBER	QTY	PART NAME 1 2 3 4 5 6 (PRODUCT LEVEL)	SEE PAGE
Y	*185-9928*	2	TIRE & RIM GP (LH)	176
Y	*185-9929*	2	TIRE & RIM GP (RH)	176
	142-7493	32	NUT-LUG (9/16-18-2B-THD)	

Y-SEPARATE ILLUSTRATION

<END>

185-8667 WHEEL & TIRE AR—HEAVY DUTY

S/N: A9H1-UP
AN ATTACHMENT

SMCS-4200, 4201, 4203 **i02361203**

NOTE	PART NUMBER	QTY	PART NAME 1 2 3 4 5 6 (PRODUCT LEVEL)	SEE PAGE
Y	*185-9930*	2	TIRE & RIM GP (LH)	176
Y	*185-9931*	2	TIRE & RIM GP (RH)	177
	142-7493	32	NUT-LUG (9/16-18-2B THD)	

Y-SEPARATE ILLUSTRATION

<END>

252-0346 WHEEL & TIRE AR

S/N: A9H1-UP
AN ATTACHMENT

SMCS-4200, 4201, 4203 **i02279611**

NOTE	PART NUMBER	QTY	PART NAME 1 2 3 4 5 6 (PRODUCT LEVEL)	SEE PAGE
Y	**265-2899**	2	TIRE & RIM GP (RH)	178
Y	**265-2898**	2	TIRE & RIM GP (LH)	178
	142-7493	32	NUT-LUG (9/16-18-2B THD)	

Y-SEPARATE ILLUSTRATION

<END>

252-0347 WHEEL & TIRE AR

S/N: A9H1-UP
AN ATTACHMENT

SMCS-4200, 4201, 4203 **i02279615**

NOTE	PART NUMBER	QTY	PART NAME 1 2 3 4 5 6 (PRODUCT LEVEL)	SEE PAGE
Y	**265-2900**	2	TIRE & RIM GP (LH)	178
Y	**265-2901**	2	TIRE & RIM GP (RH)	179
	142-7493	32	NUT-LUG (9/16-18-2B THD)	

Y-SEPARATE ILLUSTRATION

<END>

252-0377 WHEEL & TIRE AR—SOLID

S/N: A9H1-UP

AN ATTACHMENT

SMCS-4200, 4201, 4203 **i02233313**

NOTE	PART NUMBER	QTY	PART NAME 1 2 3 4 5 6 (PRODUCT LEVEL)	SEE PAGE
	142-7493	32	NUT-LUG (9/16-18-2B THD)	
	226-3734	2	TIRE-SOLID (33X6X11) (RH)	
	226-3735	2	TIRE-SOLID (33X6X11) (LH)	

<END>

218-5660 BUMPER GP–REAR

S/N: A9H1-UP

PART OF 326-4785 CHASSIS AR

SMCS-7156 **i01934911**

NOTE	REF NO	GRAPHIC REF	PART NUMBER	QTY	PART NAME 1 2 3 4 5 6 (PRODUCT LEVEL)	SEE PAGE
	1	1	**142-9021**	2	STUD	
	2	1	**154-4006**	2	BOSS	
	3	1	**218-5661**	1	BUMPER AS	
	4	1	**8T-4122**	6	WASHER-HARD (17X32X3.5-MM THK)	
M	5	1	**8T-4132**	4	NUT (M16X2-THD)	
M	6	1	**8T-7338**	2	BOLT (M16X2X45-MM)	

M-METRIC PART

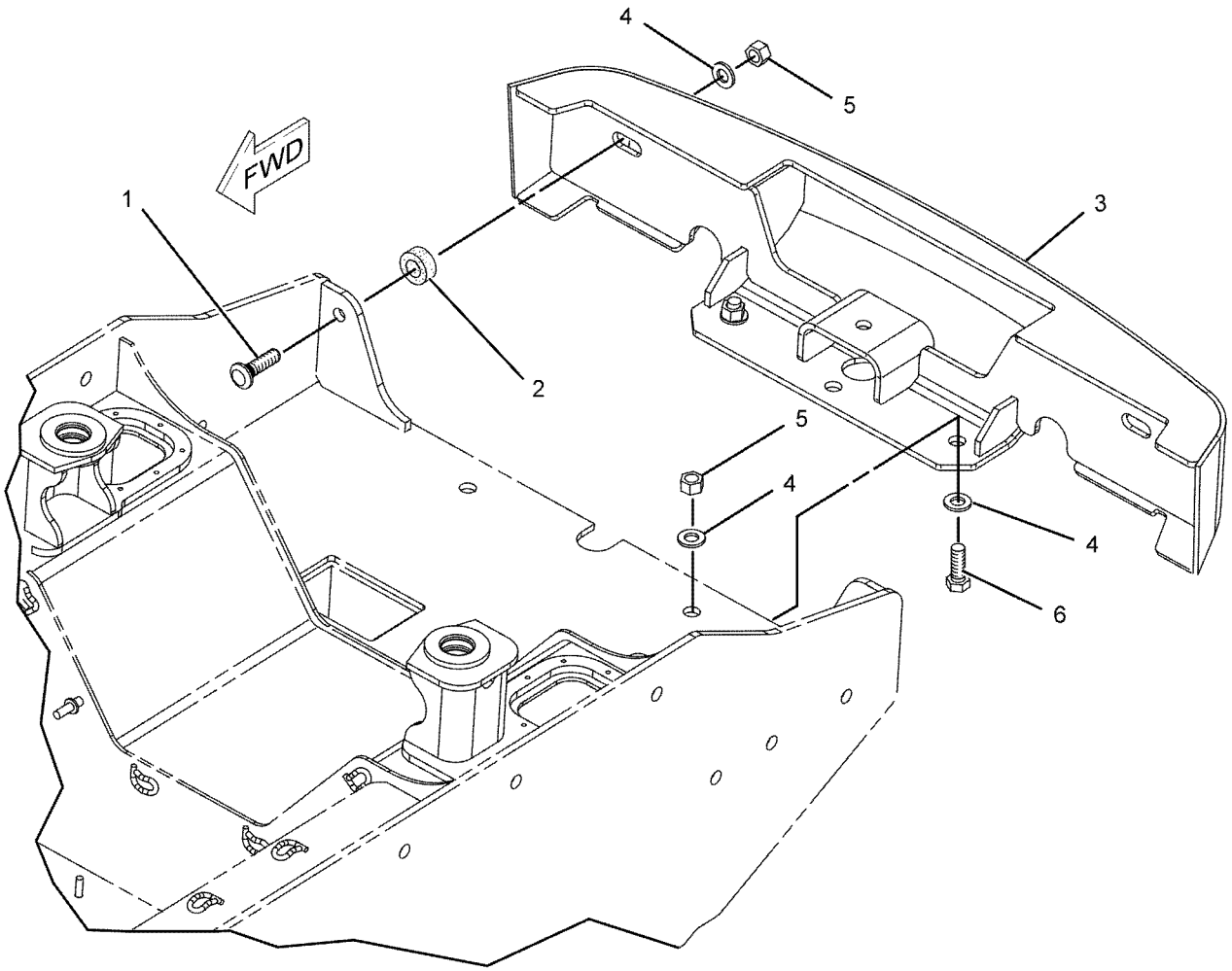

GRAPHIC #1 **<END>** g01019293

326-5529 CONVERSION AR-ROADING—STANDARD FLOW

S/N: A9H1-UP
GERMANY
CANNOT BE USED WITH 326-5289—PAGE 5, 326-5299—PAGE 5, 326-5489—PAGE 6, 326-5249—PAGE 4, 326-5559—PAGE 188
AN ATTACHMENT

SMCS-7000 **i04403704**

NOTE	PART NUMBER	QTY	PART NAME 1 2 3 4 5 6 (PRODUCT LEVEL)	SEE PAGE
Y	*216-6146*	1	BOX GP-STORAGE	492
Y	*222-5695*	1	BRACKET GP-SUPPORT	323
Y	*278-1292*	1	CONVERSION GP-ROADING (GERMANY)	189
Y	**319-9480**	1	KIT-ROADING PLATE & MOUNTING (BUCKET)	467
Y	*233-5991*	1	LIFTING GP-MACHINE (FOUR POINT)	209
Y	*328-2333*	1	LIGHTING GP-ROADING	99
Y	*175-4238*	1	LOCK GP-QUICK COUPLER (MECHANICAL)	469
Y	*236-5058*	1	MIRROR & MTG GP-REAR VIEW (WITH ROADING LIGHT MOUNT)	210
Y	*295-7221*	1	MOTOR & MTG GP-HYDRAULIC FAN	300
Y	*280-8347*	1	MUFFLER & MOUNTING GP	62
Y	*306-8137*	1	PUMP & MTG GP-WORK TOOL	308
Y	*261-6384*	1	SUPPRESSION GP-SOUND (MACHINE)	213
Y	*326-5394*	1	SUPPRESSION GP-SOUND (HOOD)	214
Y	*173-3022*	1	VISOR GP-CAB	571
Y	*230-3743*	1	WIRING GP-HORN (WITH MOUNTING)	117
	233-5680	3	FILM-IDENTIFICATION (13-KM/H)	
			(ON REAR OF MACHINE IN ENGINE ENCLOSURE)	
			(ON BOTH SIDES OF MACHINE AT FRONT LOWER FRAME ASSEMBLY)	

Y-SEPARATE ILLUSTRATION

<END>

326-5559 CONVERSION AR-ROADING—GERMANY, 2-SPEED

S/N: A9H1-UP

CANNOT BE USED WITH 326-5289—PAGE 5, 326-5299—PAGE 5, 326-5489—PAGE 6, 326-5529—PAGE 187, 326-5249—PAGE 4

AN ATTACHMENT

SMCS-7000 **i04403705**

NOTE	PART NUMBER	QTY	PART NAME 1 2 3 4 5 6 (PRODUCT LEVEL)	SEE PAGE
Y	*216-6146*	1	BOX GP-STORAGE	492
Y	*222-5695*	1	BRACKET GP-SUPPORT	323
Y	*278-1292*	1	CONVERSION GP-ROADING (GERMANY)	189
Y	**319-9480**	1	KIT-ROADING PLATE & MOUNTING (BUCKET)	467
Y	*233-5991*	1	LIFTING GP-MACHINE (FOUR POINT)	209
Y	*328-2333*	1	LIGHTING GP-ROADING	99
Y	*175-4238*	1	LOCK GP-QUICK COUPLER (MECHANICAL)	469
Y	*236-5058*	1	MIRROR & MTG GP-REAR VIEW (WITH ROADING LIGHT MOUNT)	210
Y	*295-7221*	1	MOTOR & MTG GP-HYDRAULIC FAN	300
Y	*280-8347*	1	MUFFLER & MOUNTING GP	62
Y	*306-8137*	1	PUMP & MTG GP-WORK TOOL	308
Y	*261-6384*	1	SUPPRESSION GP-SOUND (MACHINE)	213
Y	*326-5394*	1	SUPPRESSION GP-SOUND (HOOD)	214
Y	*173-3022*	1	VISOR GP-CAB	571
Y	*230-3743*	1	WIRING GP-HORN (WITH MOUNTING)	117
	117-6558	3	FILM-IDENTIFICATION (20-KM/H)	
			(ON REAR OF MACHINE IN ENGINE ENCLOSURE)	
			(ON BOTH SIDES OF MACHINE AT LOWER FRAME ASSEMBLY)	

Y-SEPARATE ILLUSTRATION

<END>

278-1292 CONVERSION GP-ROADING—GERMANY

S/N: A9H1-UP

PART OF 326-5529, 326-5559 CONVERSION AR-ROADING

AN ATTACHMENT

SMCS-7000 **i03971192**

NOTE	REF NO	GRAPHIC REF	PART NUMBER	QTY	PART NAME 1 2 3 4 5 6 (PRODUCT LEVEL)	SEE PAGE
	1	1	**246-2641**	1	PADLOCK GP	
		1	**5P-8500**	1	KEY	
	2	1	**113-7634**	1	FILM-WARNING (STEERING)	
	3	1	**258-3849**	1	PLATE-IDENTIFICATION (ENGLISH, GERMAN, ITALIAN)	
	4	1	**8T-4205**	5	WASHER-HARD (7.2X14.5X2-MM THK)	
	5	1	**173-3015**	1	BRACKET AS	
	6	1	**173-3016**	1	CHOCK	
	7	1	**173-3018**	1	BRACKET	
M	8	1	**8T-4171**	5	BOLT (M6X1X12-MM)	

M-METRIC PART

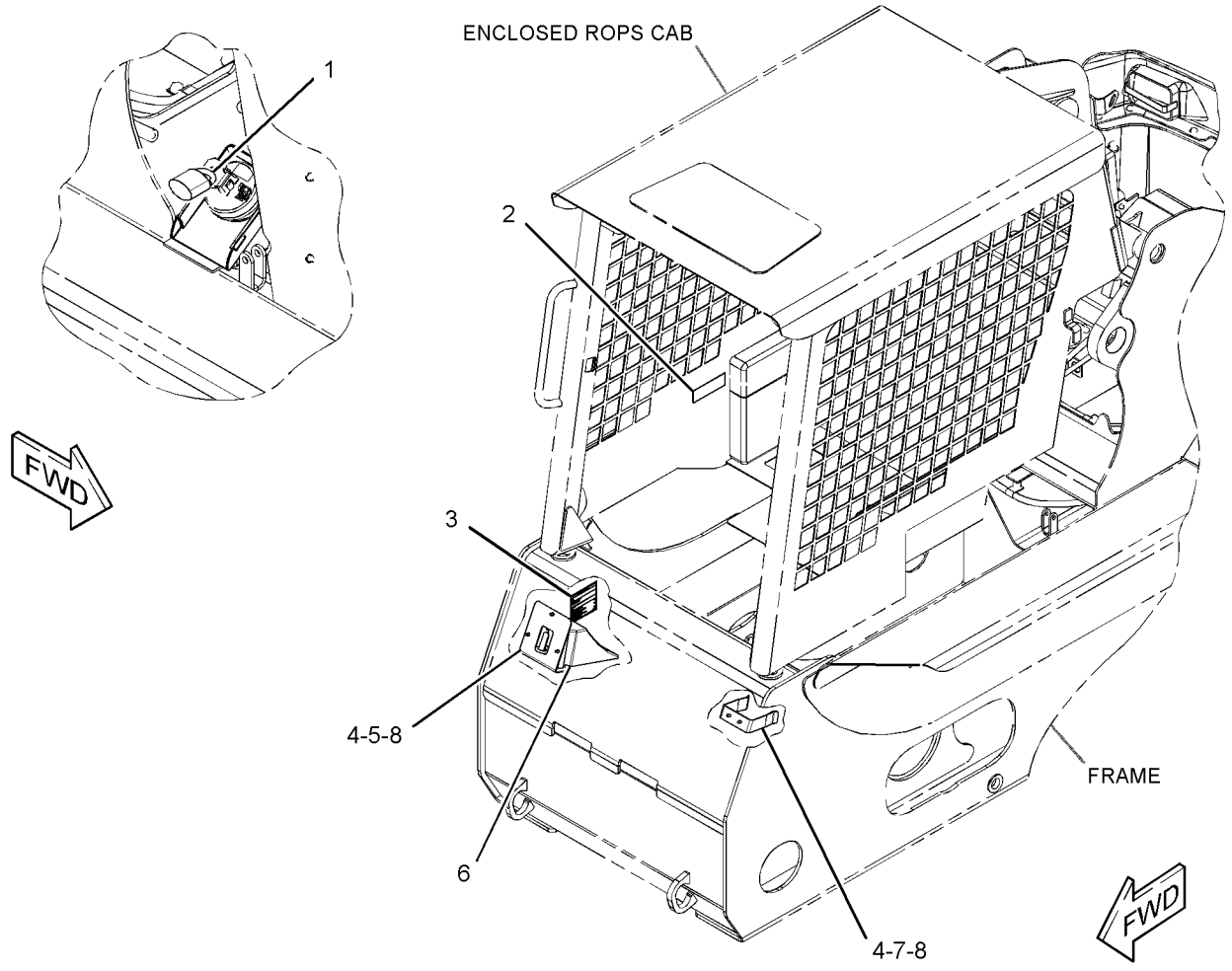

GRAPHIC #1 **<END>** g02162519

278-1293 CONVERSION GP-ROADING–ITALY

S/N: A9H1-338
PART OF 326-5489 CONVERSION AR-MACHINE
AN ATTACHMENT

SMCS-7000 **i03644781**

NOTE	REF NO	GRAPHIC REF	PART NUMBER	QTY	PART NAME 1 2 3 4 5 6 (PRODUCT LEVEL)	SEE PAGE
C	1	1	**142-9327**	1	SWITCH AS-ROCKER (WARNING BEACON)	
		1	**111-7899**	1	GASKET	
	2	1	**186-2360**	4	COVER AS	
					(EACH INCLUDES)	
E		1	**129-1854**		FASTENER-LOOP (10-CM)	
E		1	**129-1855**		FASTENER-HOOK (10-CM)	
	3	1	**258-3849**	1	PLATE-IDENTIFICATION (ENGLISH, GERMAN, ITALIAN)	
CY	4	1	**309-1325**	1	LAMP GP-WARNING BEACON (12-VOLT, AMBER)	96

C-CHANGE FROM PREVIOUS TYPE
E-ORDER BY THE CENTIMETER
Y-SEPARATE ILLUSTRATION

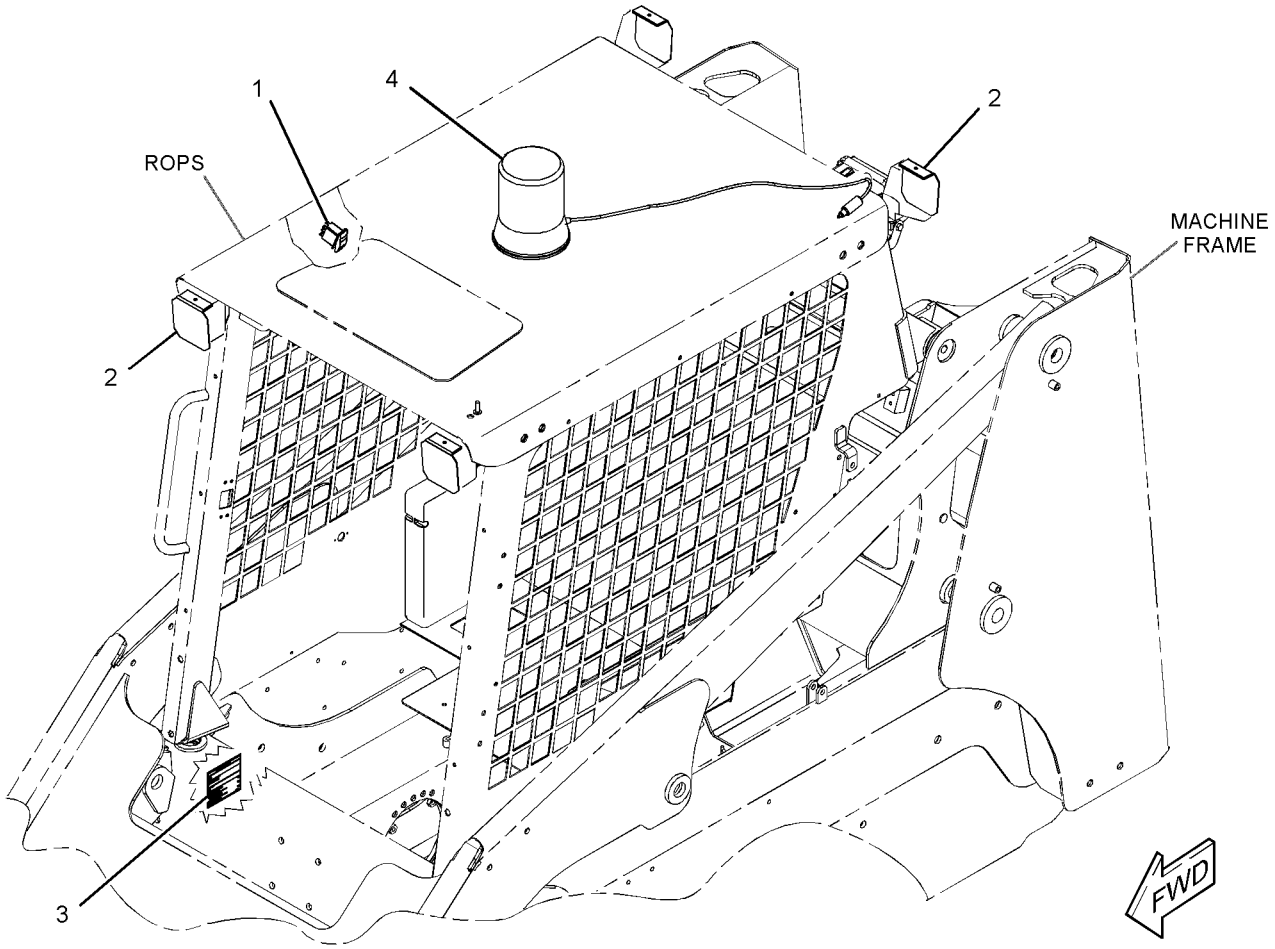

GRAPHIC #1 **<END>** g01956132

278-1293 CONVERSION GP-ROADING–ITALY

S/N: A9H339-UP
PART OF 326-5489 CONVERSION AR-MACHINE
AN ATTACHMENT

SMCS-7000 **i04029672**

NOTE	REF NO	GRAPHIC REF	PART NUMBER	QTY	PART NAME 1 2 3 4 5 6 (PRODUCT LEVEL)	SEE PAGE
	1	1	**258-3849**	1	PLATE-IDENTIFICATION (ENGLISH, GERMAN, ITALIAN)	
Y	2	1	**309-1325**	1	LAMP GP-WARNING BEACON (12-VOLT, AMBER)	96

Y-SEPARATE ILLUSTRATION

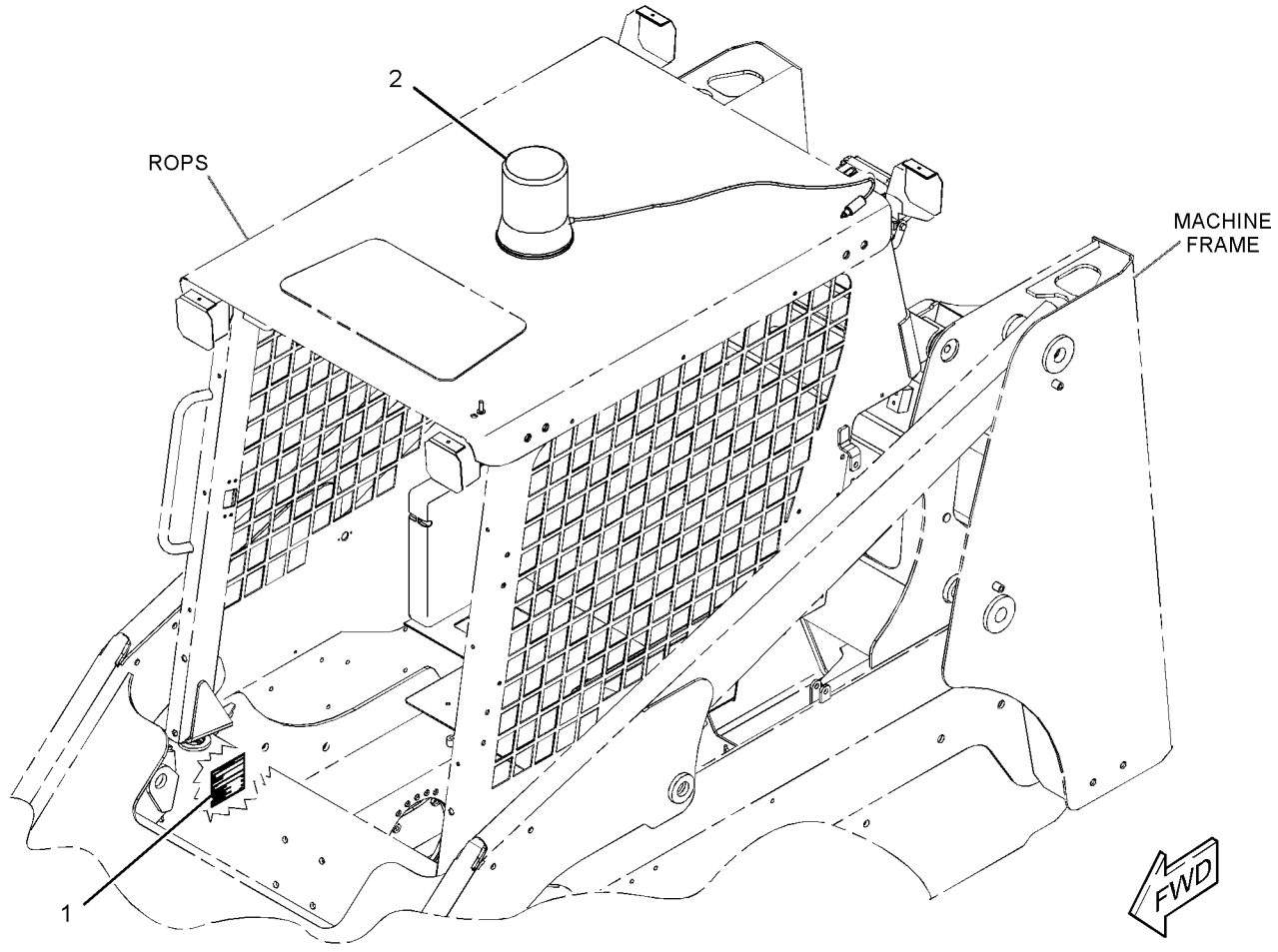

GRAPHIC #1 **<END>** g02282733

FRAME AND BODY

183-7132 COUNTERWEIGHT GP

S/N: A9H1-UP
16.19-KG (35.69-LB), 33.99-KG (74.94-LB)
AN ATTACHMENT

SMCS-7056 **i01793980**

NOTE	REF NO	GRAPHIC REF	PART NUMBER	QTY	PART NAME 1 2 3 4 5 6 (PRODUCT LEVEL)	SEE PAGE
	1	1	**183-7131**	2	BLOCK	
	2	1	**183-7133**	1	BLOCK	
	3	1	**183-7134**	1	BLOCK	
M	4	1	**8T-4189**	4	BOLT (M8X1.25X20-MM)	
	5	1	**8T-4223**	4	WASHER-HARD (13.5X25.5X3-MM THK)	
	6	1	**8T-4224**	4	WASHER-HARD (8.8X16X2-MM THK)	
M	7	1	**8T-4648**	4	BOLT (M12X1.75X70-MM)	

M-METRIC PART

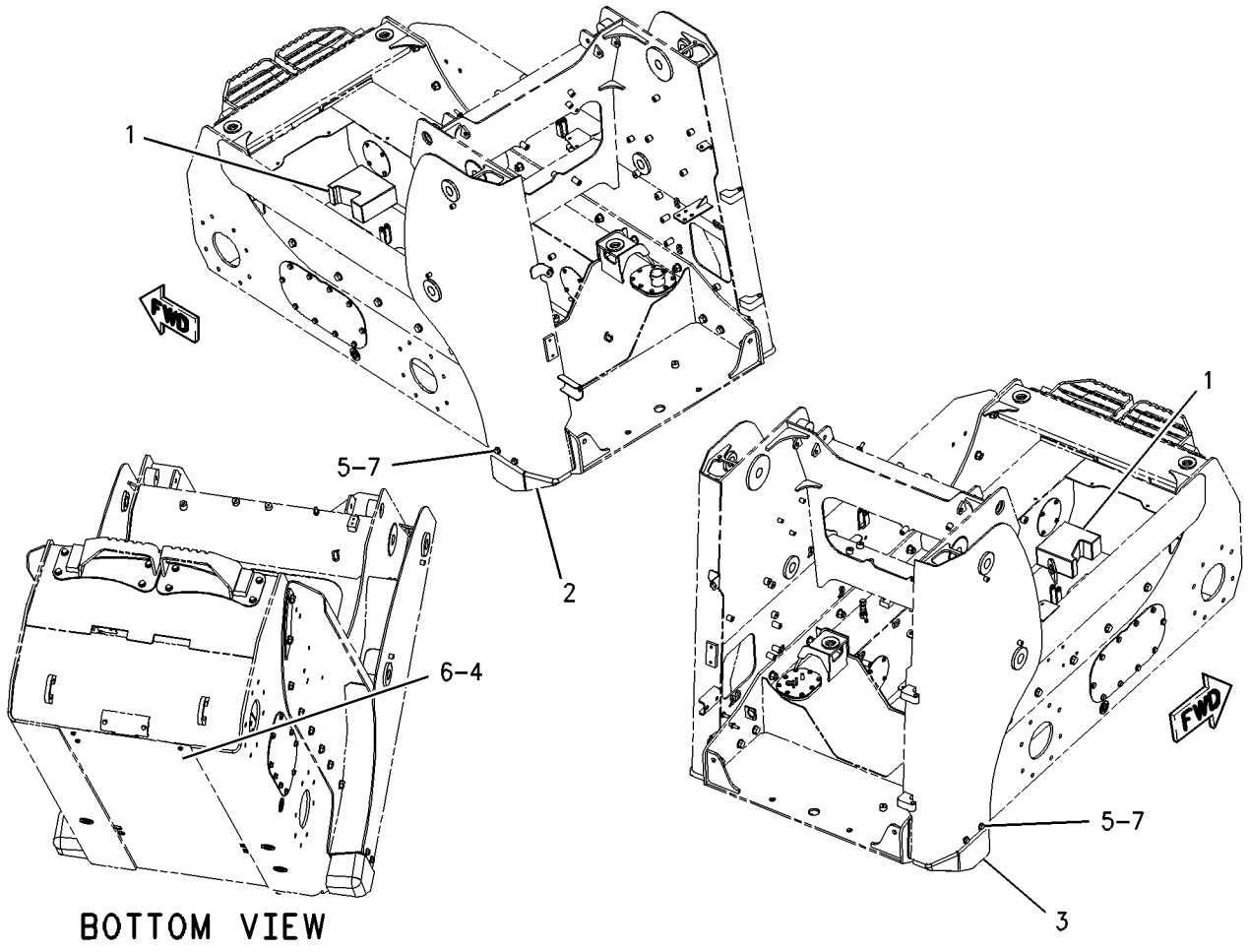

GRAPHIC #1 **<END>** g00918000

326-5609 ENCLOSURE GP-ENGINE

S/N: A9H1-UP

PART OF 326-4785 CHASSIS AR

SMCS-7263, 7273 **i03959950**

NOTE	REF NO	GRAPHIC REF	PART NUMBER	QTY	PART NAME 1 2 3 4 5 6 (PRODUCT LEVEL)	SEE PAGE
	1	1	**142-8801**	1	HOOD AS	
	2	1	**142-8831**	1	STRIKER AS	
	3	1	**142-8832**	1	PIN AS	
	4	1	**159-8405**	2	BOLT-SPECIAL	
	5	1	**223-4240**	1	LATCH AS	
	6	1	*224-3875*	1	LOCK GP (ENGINE)	
J		1	**226-0291**	1	LOCK AS	
		1	**233-4872**	1	CAM	
	7	1	**308-6767**	2	BUMPER AS	
	8	1	**326-5610**	1	DOOR AS-ACCESS	
M	9	1	**131-3540**	3	LOCKNUT (M8X1.25-THD)	
	10	1	**2K-4973**	2	LOCKNUT (3/8-16-THD)	
M	11	1	**5C-7261**	2	NUT (M8X1.25-THD)	
	12	1	**5P-4116**	11	WASHER-HARD (8.8X20.5X2-MM THK)	
M	13	1	**7X-2537**	3	BOLT (M8X1.25X35-MM)	
	14	1	**7X-7729**	2	WASHER (11X25X3-MM THK)	
M	15	1	**8T-4137**	2	BOLT (M10X1.5X20-MM)	
M	16	1	**8T-4181**	4	BOLT (M6X1X20-MM)	
	17	1	**8T-4205**	4	WASHER-HARD (7.2X14.5X2-MM THK)	
M	18	1	**8T-4908**	5	BOLT (M8X1.25X25-MM)	

J-REQUIRES CORPORATE KEY
M-METRIC PART

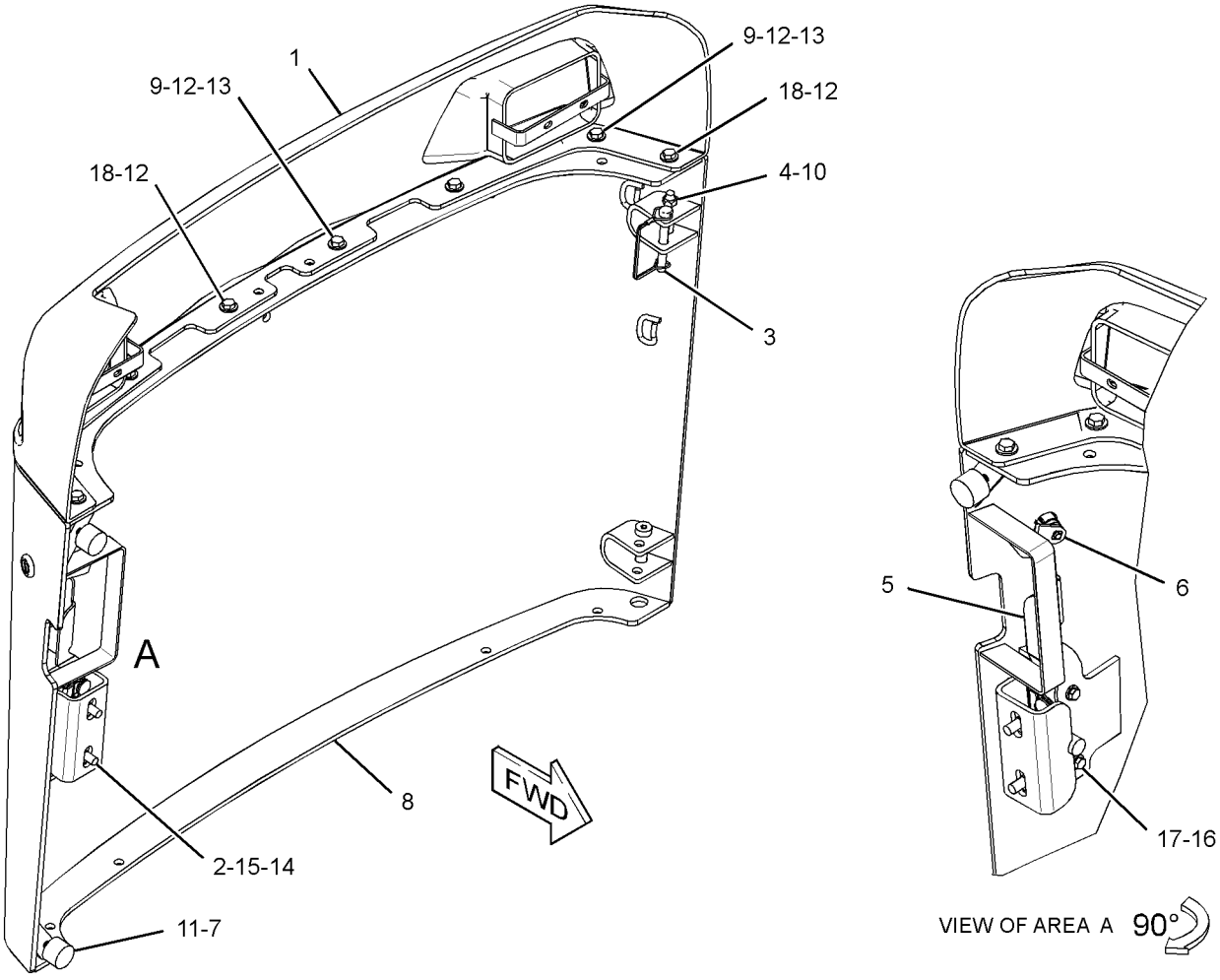

GRAPHIC #1 **<END>** g02146601

FRAME AND BODY

326-4676 FRAME AS-LOWER

S/N: A9H1-1729

PART OF 326-5436 FRAME GP-MACHINE

SMCS-7050 **i03902879**

NOTE	REF NO	GRAPHIC REF	PART NUMBER	QTY	PART NAME 1 2 3 4 5 6 (PRODUCT LEVEL)	SEE PAGE
	1	1	**2Y-5974**	2	BOSS	
	2	1	**238-7716**	5	BOSS	
M	3	1	**110-2023**	4	STUD-WELD (M10X1.5X25-MM)	
M	4	1	**6V-9632**	6	NUT-WELD (M6X1-THD)	
	5	1	**7T-1099**	6	LINK	
M	6	1	**8T-3490**	20	NUT-WELD (M10X1.5-THD)	
M	7	1	**8T-3612**	6	NUT-WELD (M8X1.25-THD)	
	8	1	**9R-1610**	2	BOSS-THREADED (M10X1.5-THD)	
M	9	1	**9R-2672**	3	BOSS-THREADED (M10X1.5-THD)	
	10	1	**9R-9282**	1	BOSS (M10X1.5-THD)	
M	11	1	**9R-9866**	3	BOSS-THREADED (M10X1.5-THD)	

M-METRIC PART

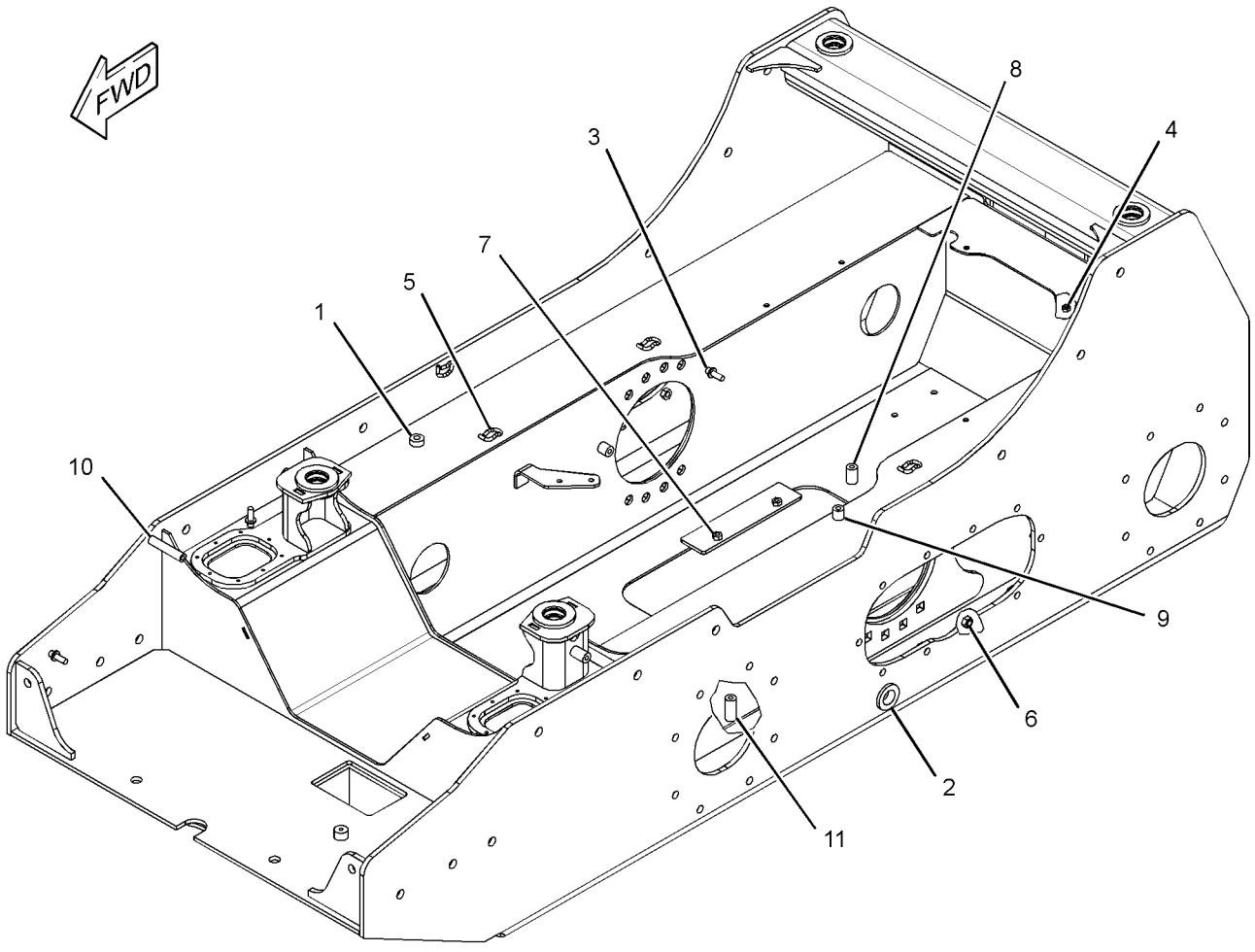

GRAPHIC #1 **<END>** g02149149

FRAME AND BODY

369-8253 FRAME AS-LOWER

S/N: A9H1730-UP

PART OF 370-4654 FRAME GP-MACHINE

SMCS-7050 **i04645194**

NOTE	REF NO	GRAPHIC REF	PART NUMBER	QTY	PART NAME 1 2 3 4 5 6 (PRODUCT LEVEL)	SEE PAGE
	1	1	**2Y-5974**	2	BOSS	
M	2	1	**110-2023**	4	STUD-WELD (M10X1.5X25-MM)	
M	3	1	**159-9539**	6	NUT-WELD (M6X1-THD)	
M	4	1	**159-9540**	6	NUT-WELD (M8X1.25-THD)	
	5	1	**7T-1099**	6	LINK	
	6	1	**9R-1610**	2	BOSS-THREADED (M10X1.5-THD)	
M	7	1	**9R-2672**	3	BOSS-THREADED (M10X1.5-THD)	
	8	1	**9R-9282**	1	BOSS (M10X1.5-THD)	
M	9	1	**9R-9866**	3	BOSS-THREADED (M10X1.5-THD)	
	10	1	**238-7716**	5	BOSS	

M-METRIC PART

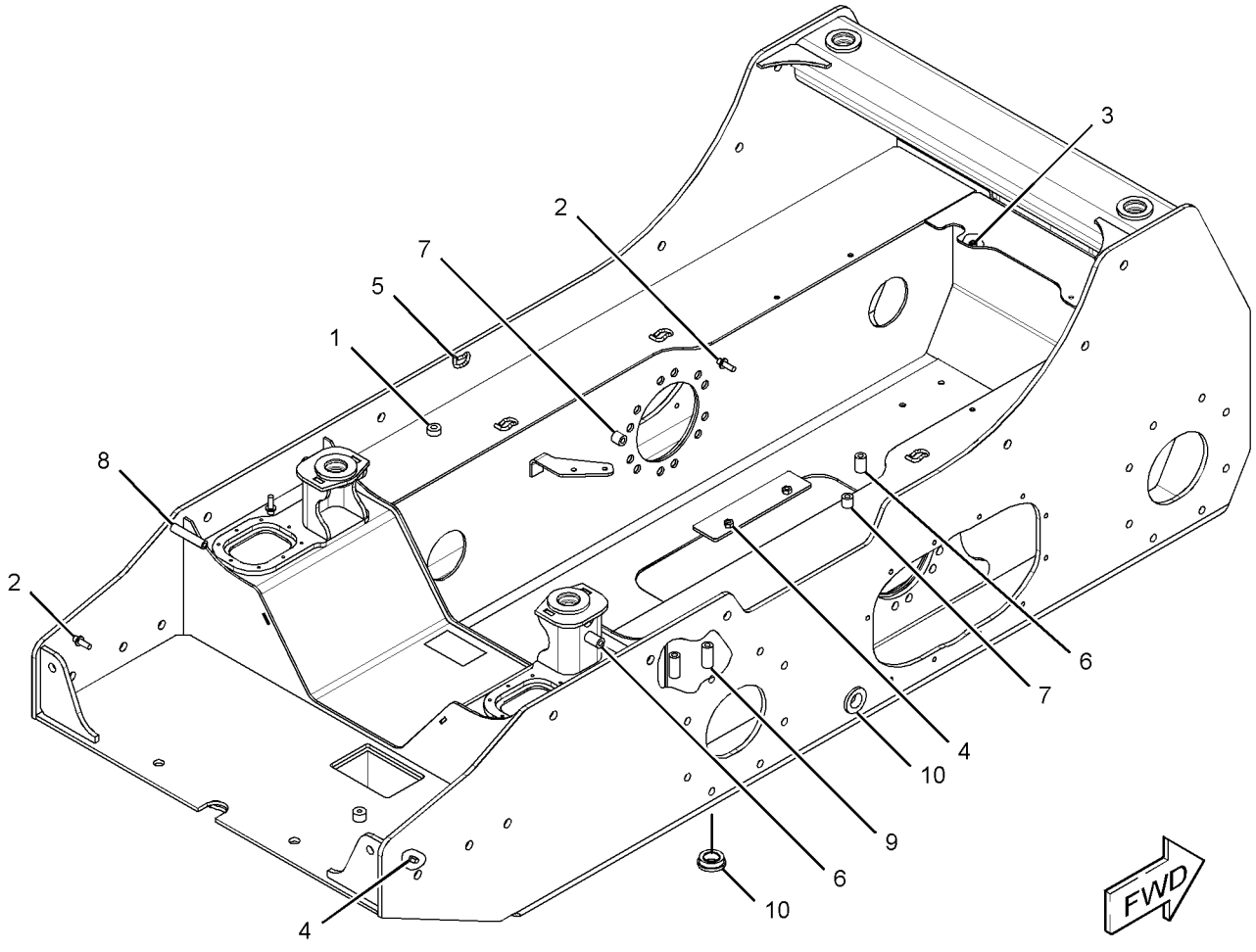

GRAPHIC #1 **<END>** g02790566

FRAME AND BODY

326-5937 FRAME AS-UPPER

S/N: A9H1-UP

PART OF 326-5436, 370-4654 FRAME GP-MACHINE

SMCS-7050 **i04408731**

NOTE	REF NO	GRAPHIC REF	PART NUMBER	QTY	PART NAME 1 2 3 4 5 6 (PRODUCT LEVEL)	SEE PAGE
	1	1	**142-9172**	6	BOSS	
	2	1	**150-8550**	2	BOSS	
M	3	1	**110-2023**	1	STUD-WELD (M10X1.5X25-MM)	
M	4	1	**111-0483**	3	BOSS (M10X1.5-THD)	
	5	1	**183-7602**	2	BOSS-THREADED (M10X1.5-THD)	
M	6	1	**6V-9632**	4	NUT-WELD (M6X1-THD)	
	7	1	**7T-1099**	14	LINK	
	8	1	**8R-3857**	1	BOSS (M8X1.25X12-MM)	
M	9	1	**8T-3597**	2	NUT-WELD (M12X1.75-THD)	
M	10	1	**8T-3612**	5	NUT-WELD (M8X1.25-THD)	
M	11	1	**9R-9866**	1	BOSS-THREADED (M10X1.5-THD)	
M	12	1	**9R-2672**	1	BOSS-THREADED (M10X1.5-THD)	

M-METRIC PART

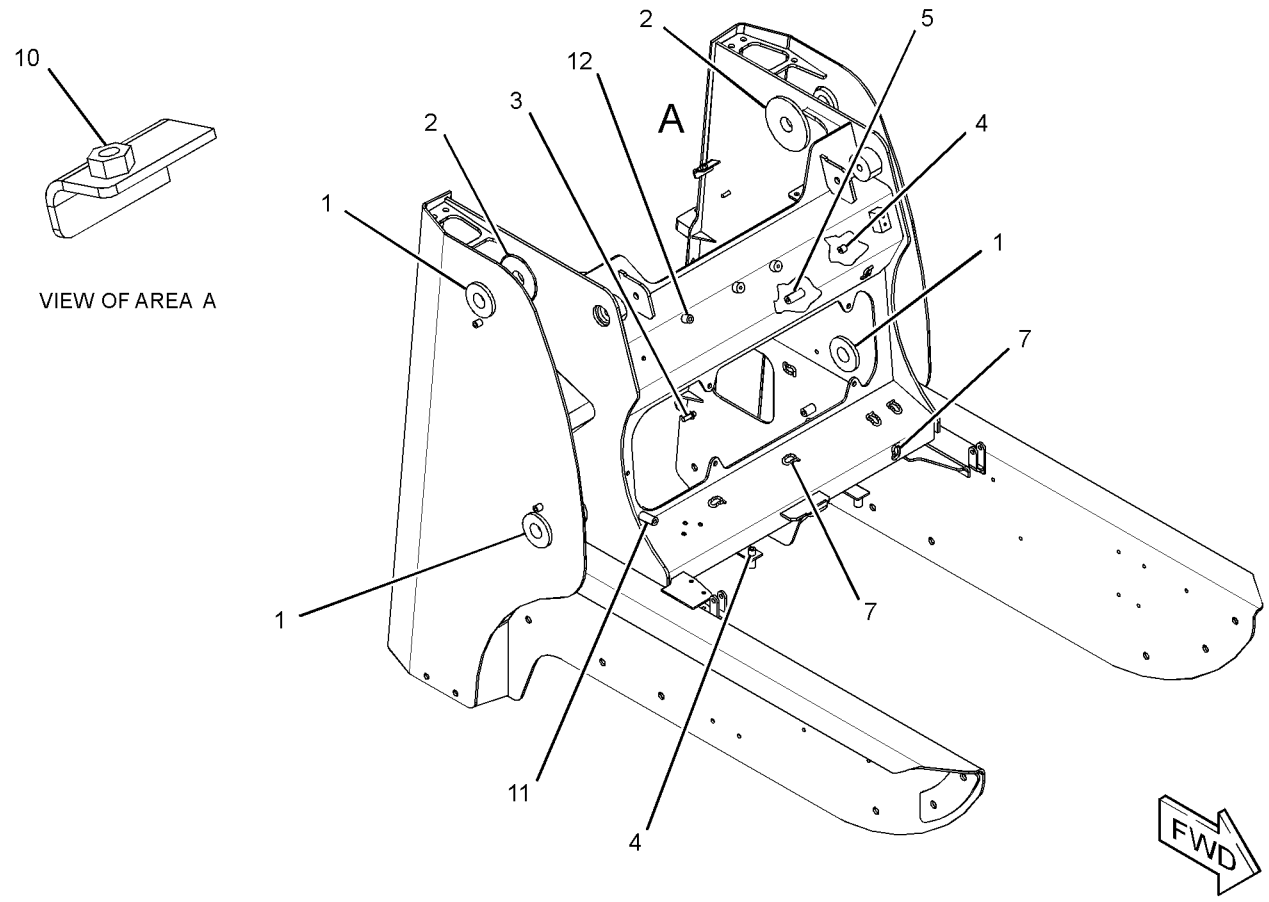

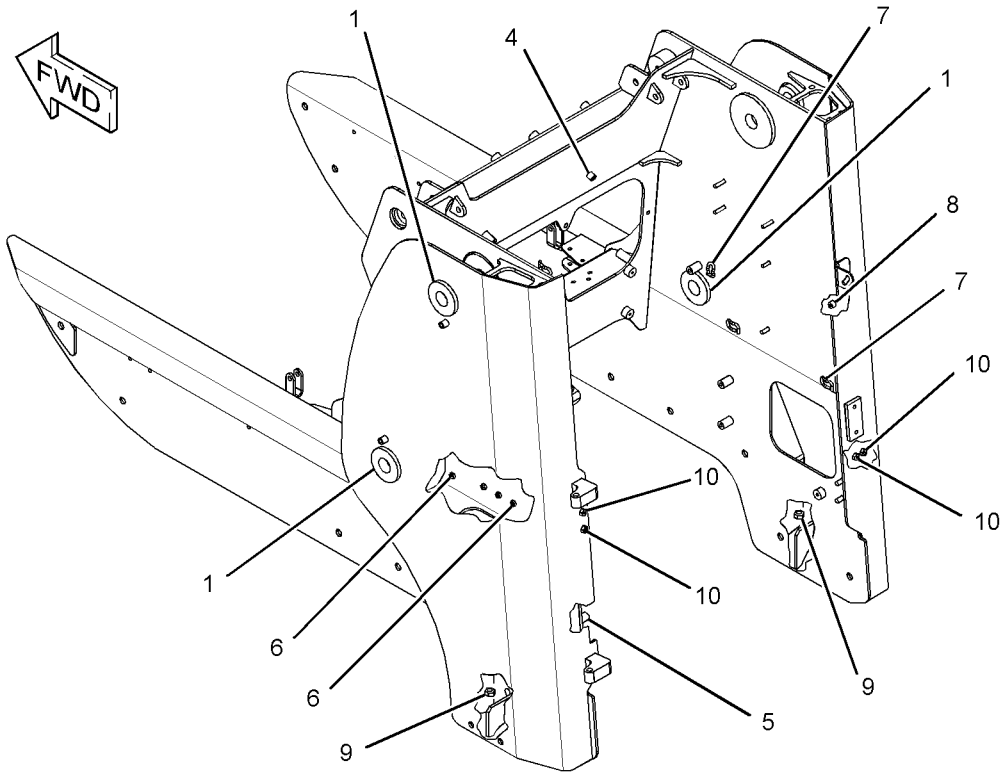

GRAPHIC #1 **<END>** g02673939

326-4792 FRAME GP-LOADER

S/N: A9H1-1729

PART OF 326-4785 CHASSIS AR

SMCS-7054 **i04077040**

NOTE	REF NO	GRAPHIC REF	PART NUMBER	QTY	PART NAME 1 2 3 4 5 6 (PRODUCT LEVEL)	SEE PAGE
	1	1	**3S-9182**	5	PLUG-MAGNETIC (FRAME)	
	2	1	**9G-5127**	2	BREATHER (EXHAUST BYPASS)	
	3	1	**142-8810**	1	PLATE AS	
	4	1	**142-8823**	2	GASKET	
	5	1	**142-8897**	2	COVER	
	6	1	**191-9576**	1	COVER AS	
	7	1	**207-9733**	1	STEP AS (LH)	
	8	1	**207-9734**	1	STEP AS (RH)	
	9	1	**218-6343**	1	PLATE	
	10	1	**224-8544**	1	SENDER AS-FUEL LEVEL	
		1	**102-8802**	1	KIT-RECEPTACLE (2-PIN)	
					(INCLUDES RECEPTACLE AS & WEDGE)	
		1	**186-3735**	2	PIN-CONNECTOR (16-GA TO 18-GA)	
	11	1	**261-6101**	4	COVER	
Y	12	1	*326-5436*	1	FRAME GP-MACHINE	203
	13	1	**5P-1076**	14	WASHER-HARD (13.5X30X4-MM THK)	
	14	1	**5P-4116**	4	WASHER-HARD (8.8X20.5X2-MM THK)	
	15	1	**8T-4121**	20	WASHER-HARD (11X21X2.5-MM THK)	
	16	1	**8T-4122**	36	WASHER-HARD (17X32X3.5-MM THK)	
M	17	1	**8T-4132**	18	NUT (M16X2-THD)	
M	18	1	**8T-4136**	20	BOLT (M10X1.5X25-MM)	
M	19	1	**8T-4189**	2	BOLT (M8X1.25X20-MM)	
M	20	1	**8T-4194**	6	BOLT (M12X1.75X50-MM)	
	21	1	**8T-4205**	16	WASHER-HARD (7.2X14.5X2-MM THK)	
	22	1	**8T-4224**	2	WASHER-HARD (8.8X16X2-MM THK)	
M	23	1	**8T-4244**	8	NUT (M12X1.75-THD)	
M	24	1	**8T-4908**	4	BOLT (M8X1.25X25-MM)	
M	25	1	**8T-4970**	16	BOLT (M6X1X14-MM)	
M	26	1	**8T-7338**	18	BOLT (M16X2X45-MM)	
	27	1	**206-5143**	2	BOLT (M12X1.75X42.5-MM)	
BF			**228-9222**	1	SHIM (3-MM THK)	

B-USE AS REQUIRED
F-NOT SHOWN
M-METRIC PART
Y-SEPARATE ILLUSTRATION

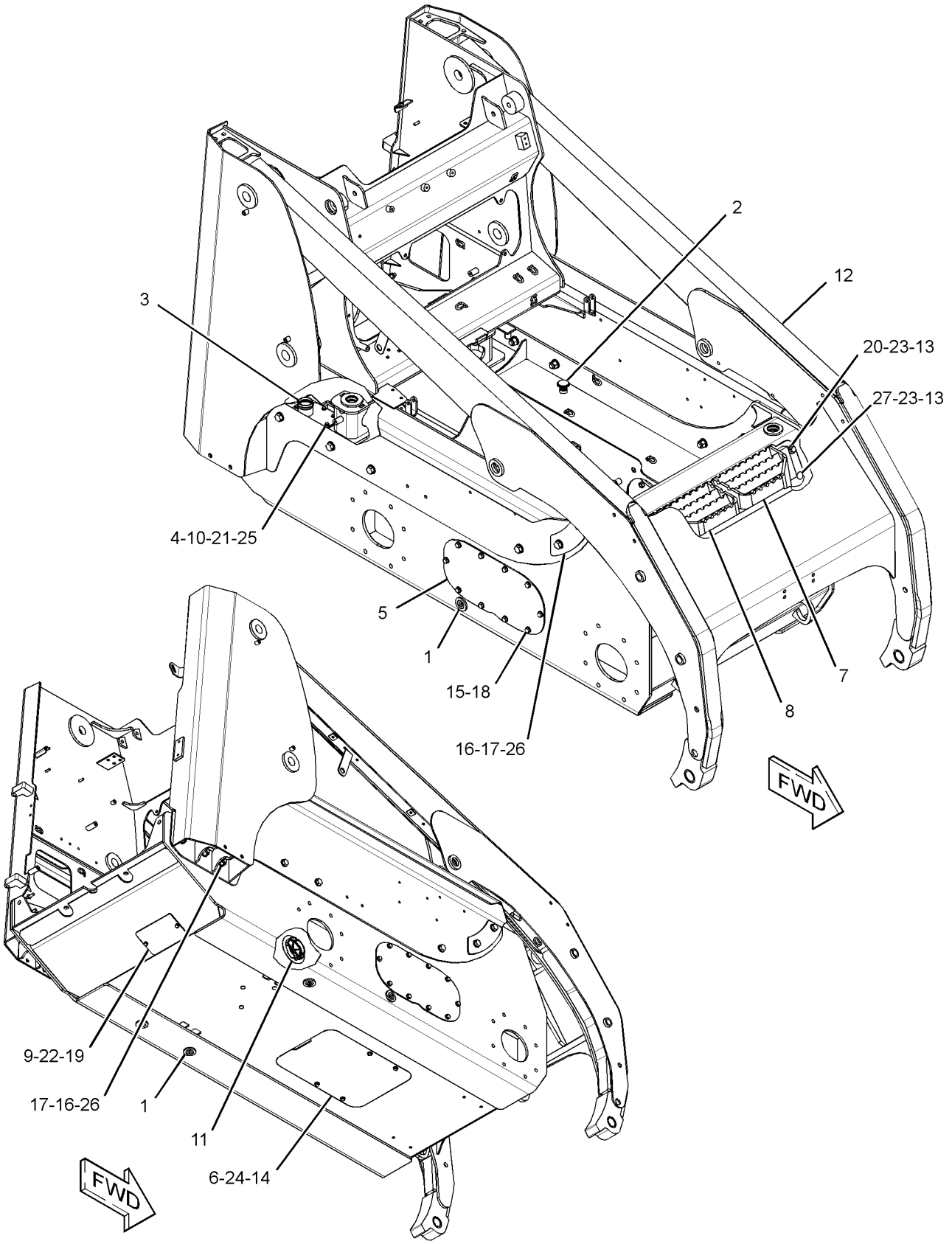

GRAPHIC #1 **<END>** g02309613

FRAME AND BODY

326-4792 FRAME GP-LOADER

S/N: A9H1730-UP

PART OF 326-4785 CHASSIS AR

SMCS-7054 **i04618178**

NOTE	REF NO	GRAPHIC REF	PART NUMBER	QTY	PART NAME 1 2 3 4 5 6 (PRODUCT LEVEL)	SEE PAGE
	1	1	**3S-9182**	5	PLUG-MAGNETIC (FRAME)	
	2	1	**9G-5127**	2	BREATHER (EXHAUST BYPASS)	
	3	1	**142-8810**	1	PLATE AS	
	4	1	**142-8823**	2	GASKET	
C	5	1	**258-3184**	2	COVER	
	6	1	**191-9576**	1	COVER AS	
	7	1	**207-9733**	1	STEP AS (LH)	
	8	1	**207-9734**	1	STEP AS (RH)	
	9	1	**218-6343**	1	PLATE	
	10	1	**224-8544**	1	SENDER AS-FUEL LEVEL	
		1	**102-8802**	1	KIT-RECEPTACLE (2-PIN)	
					(INCLUDES RECEPTACLE AS & WEDGE)	
		1	**8T-8729**	2	PIN-CONNECTOR (16-GA TO 18-GA)	
	11	1	**261-6101**	4	COVER	
CY	12	1	*370-4654*	1	FRAME GP-MACHINE	203
	13	1	**5P-1076**	14	WASHER-HARD (13.5X30X4-MM THK)	
	14	1	**5P-4116**	4	WASHER-HARD (8.8X20.5X2-MM THK)	
	16	1	**8T-4122**	36	WASHER-HARD (17X32X3.5-MM THK)	
M	17	1	**8T-4132**	18	NUT (M16X2-THD)	
C	18	1	**266-3316**	24	BOLT-FLANGE HEAD (M10X1.5X25-MM)	
M	19	1	**8T-4189**	2	BOLT (M8X1.25X20-MM)	
M	20	1	**8T-4194**	6	BOLT (M12X1.75X50-MM)	
	21	1	**8T-4205**	16	WASHER-HARD (7.2X14.5X2-MM THK)	
	22	1	**8T-4224**	2	WASHER-HARD (8.8X16X2-MM THK)	
M	23	1	**8T-4244**	8	NUT (M12X1.75-THD)	
M	24	1	**8T-4908**	4	BOLT (M8X1.25X25-MM)	
M	25	1	**8T-4970**	16	BOLT (M6X1X14-MM)	
M	26	1	**8T-7338**	18	BOLT (M16X2X45-MM)	
	27	1	**206-5143**	2	BOLT (M12X1.75X42.5-MM)	
BF			**228-9222**	1	SHIM (3-MM THK)	

B-USE AS REQUIRED
C-CHANGE FROM PREVIOUS TYPE
F-NOT SHOWN
M-METRIC PART
Y-SEPARATE ILLUSTRATION

326-4792 **FRAME GP-LOADER** *(contd.)* **i04618178**

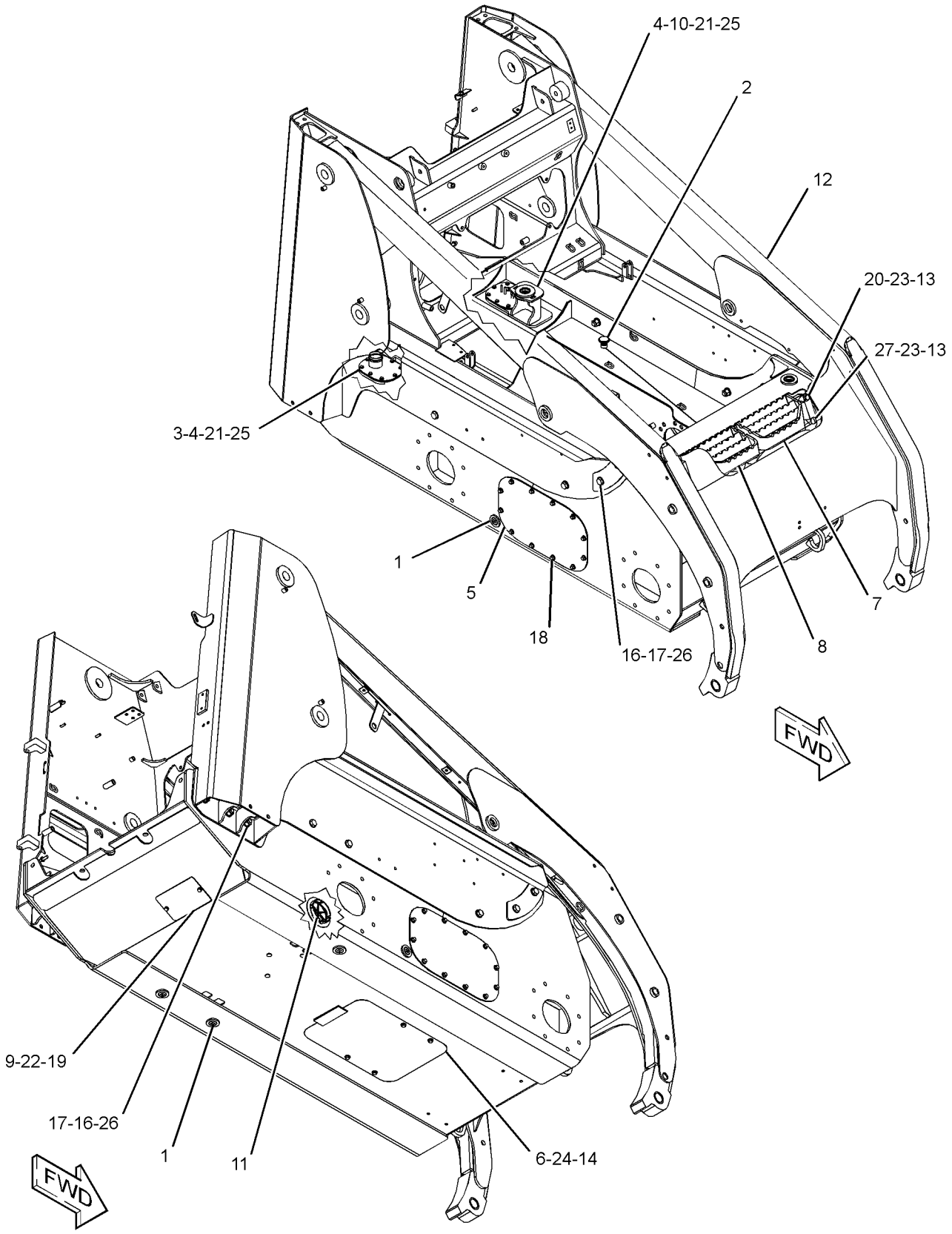

GRAPHIC #1 **<END>** g02790184

FRAME AND BODY

326-5436 FRAME GP-MACHINE

S/N: A9H1-1729

PART OF 326-4792 FRAME GP-LOADER

SMCS-6119, 7050 **i03902882**

NOTE	PART NUMBER	QTY	PART NAME 1 2 3 4 5 6 (PRODUCT LEVEL)	SEE PAGE
Y	**218-5798**	1	ARM AS-LIFT	322
Y	**326-4676**	1	FRAME AS-LOWER	195
Y	**326-5937**	1	FRAME AS-UPPER	197

Y-SEPARATE ILLUSTRATION

<END>

370-4654 FRAME GP-MACHINE

S/N: A9H1730-UP

PART OF 326-4792 FRAME GP-LOADER

SMCS-6119, 7050 **i04618269**

NOTE	PART NUMBER	QTY	PART NAME 1 2 3 4 5 6 (PRODUCT LEVEL)	SEE PAGE
Y	**218-5798**	1	ARM AS-LIFT	322
Y	**369-8253**	1	FRAME AS-LOWER	196
Y	**326-5937**	1	FRAME AS-UPPER	197

Y-SEPARATE ILLUSTRATION

<END>

FRAME AND BODY

150-8621 GUIDE GP-LINES

S/N: A9H1-UP

PART OF 326-4785 CHASSIS AR

SMCS-5057 **i04408709**

NOTE	REF NO	GRAPHIC REF	PART NUMBER	QTY	PART NAME 1 2 3 4 5 6 (PRODUCT LEVEL)	SEE PAGE
	1	1	**227-4315**	1	PLATE AS	
	2	1	**247-4877**	1	BOLT (M8X1.25X12-MM)	
M	3	1	**131-3540**	1	LOCKNUT (M8X1.25-THD)	
	4	1	**7X-0603**	2	WASHER-HARD (9.9X35X2.5-MM THK)	
M	5	1	**7X-2539**	1	BOLT (M8X1.25X110-MM)	
	6	1	**8T-4224**	1	WASHER-HARD (8.8X16X2-MM THK)	

M-METRIC PART

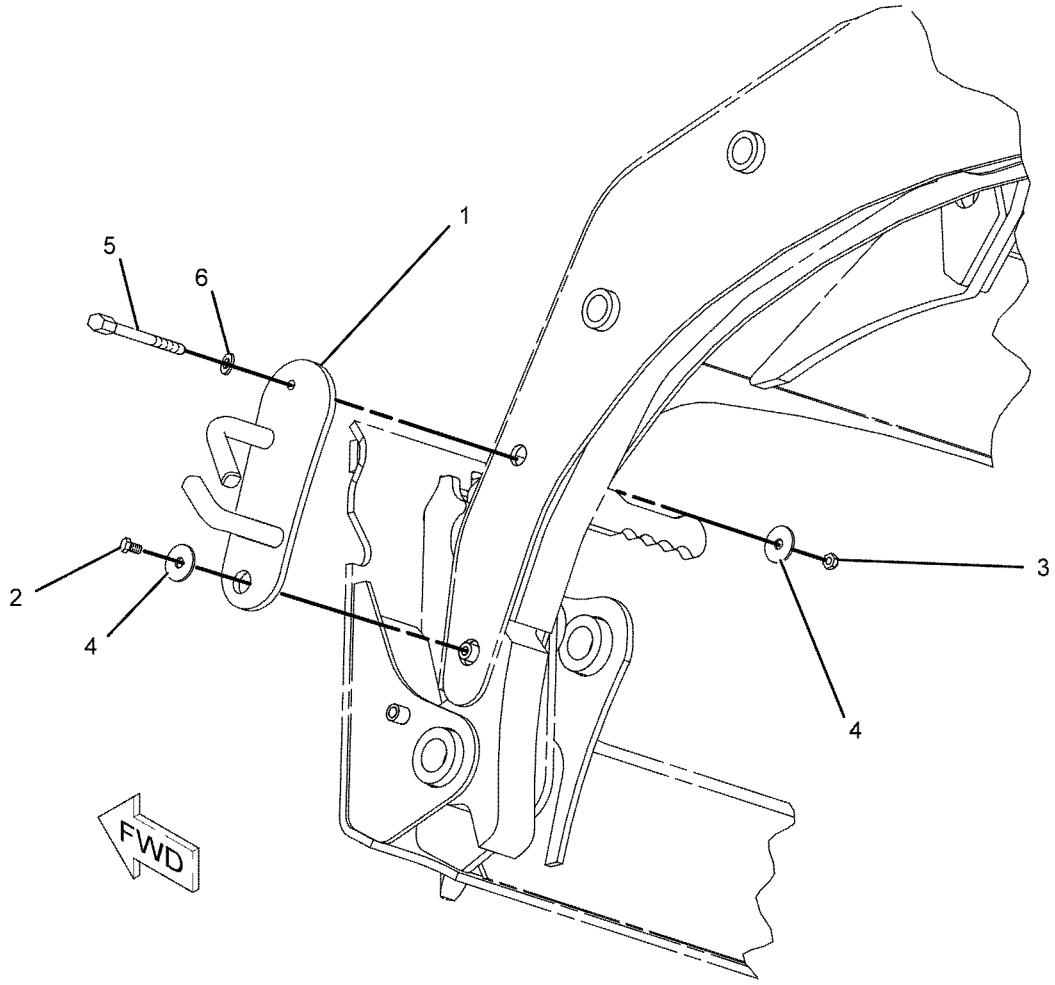

GRAPHIC #1 **<END>** g01056803

340-7724 KIT-ROADING CONVERSION—GERMANY

S/N: A9H1-UP

AN ATTACHMENT

SMCS-1408, 1429, 1430, 1432, 7000, 7319 **i04367463**

NOTE	PART NUMBER	QTY	PART NAME 1 2 3 4 5 6 (PRODUCT LEVEL)	SEE PAGE
Y	**166-2569**	1	VISOR GP-CAB	570
	246-2641	1	PADLOCK GP	
	5P-8500	1	KEY	
	175-4237	1	BLOCK AS	
	173-3015	1	BRACKET AS	
	216-6144	1	BRACKET AS	
	166-2562	1	PLATE AS	
M	**8T-4171**	5	BOLT (M6X1X12-MM)	
	173-3018	1	BRACKET	
	173-3016	1	CHOCK	
	117-6558	3	FILM-IDENTIFICATION (20-KM/H)	
	233-5680	3	FILM-IDENTIFICATION (13-KM/H)	
	113-7634	1	FILM-WARNING (STEERING)	
	195-0936	4	INSERT-THREADED (M6X1-THD)	
	178-2247	1	PIN	
	9R-5301	1	PIN-COTTER	
	258-3849	1	PLATE-IDENTIFICATION (ENGLISH, GERMAN, ITALIAN)	
M	**9X-2045**	4	SCREW-TRUSS HEAD (M6X1X20-MM)	
	9X-8257	1	WASHER (17.5X30X3.5-MM THK)	
	8T-4205	5	WASHER-HARD (7.2X14.5X2-MM THK)	

M-METRIC PART
Y-SEPARATE ILLUSTRATION

<END>

358-6919 KIT-ROADING CONVERSION–
ITALY, LIGHTS, SWITCHES
S/N: A9H1-UP
AN ATTACHMENT

SMCS-1408, 1429, 1430, 1432, 7000, 7319 **i04004363**

NOTE	PART NUMBER	QTY	PART NAME 1 2 3 4 5 6 (PRODUCT LEVEL)	SEE PAGE
Y	**309-1325**	1	LAMP GP-WARNING BEACON (12-VOLT, AMBER)	96
Y	**184-1564**	2	SWITCH GP-PRESSURE (BRAKE LIGHT)	105
	190-8962	1	LAMP GP-REGISTRATION PLATE	
	195-9712	1	LAMP (12-VOLT, 10-WATT)	
	175-4237	1	BLOCK AS	
	207-9780	1	BRACKET AS (REGISTRATION PLATE)	
	186-0239	1	HARNESS AS-REAR LIGHTING (RIGHT SIDE, LICENSE PLATE)	
	9X-3401	4	PIN-CONNECTOR (16-GA TO 18-GA)	
	155-2271	1	KIT-CONNECTING PLUG (4-PIN)	
			(INCLUDES PLUG AS, WEDGE & INTERFACE SEAL)	
	102-8804	1	KIT-RECEPTACLE (4-PIN)	
			(INCLUDES RECEPTACLE AS & WEDGE)	
	180-9340	4	SOCKET-CONNECTOR (14-GA TO 18-GA)	
E	**125-7874**		TUBE-HEAT SHRINK (5.72-MM DIA) (10-CM)	
	5P-4571	2	TERMINAL-BLADE (14-GA TO 16-GA)	
	146-9439	1	RELAY AS (12-VOLT) (BRAKE LIGHT)	
	166-2033	2	TEE AS	
			(EACH INCLUDES)	
	4J-5477	1	SEAL-O-RING	
	7X-2444	1	TEE-SWIVEL	
M	**8T-4171**	3	BOLT (M6X1X12-MM)	
M	**5C-8312**	2	NUT (M4X0.7-THD)	
	178-2247	1	PIN	
	9R-5301	1	PIN-COTTER	
	175-4236	1	PLATE	
	204-1365	1	PLATE	
	215-4001	1	PLATE	
	258-3849	1	PLATE-IDENTIFICATION (ENGLISH, GERMAN, ITALIAN)	
M	**6V-9672**	2	SCREW-MACHINE (M4X0.7X16-MM)	
	3S-2093	2	STRAP-CABLE	
	4B-4863	2	WASHER (4.7X11X1.2-MM THK)	
	9X-8257	1	WASHER (17.5X30X3.5-MM THK)	
	8T-4205	3	WASHER-HARD (7.2X14.5X2-MM THK)	

E-ORDER BY THE CENTIMETER
M-METRIC PART
Y-SEPARATE ILLUSTRATION

<END>

FRAME AND BODY

358-6921 KIT-ROADING CONVERSION—FRONT

S/N: A9H1-UP
AN ATTACHMENT

SMCS-1408, 1429, 1430, 1432, 7000, 7319 **i04004361**

NOTE	PART NUMBER	QTY	PART NAME 1 2 3 4 5 6 (PRODUCT LEVEL)	SEE PAGE
Y	**3E-7584**	2	LAMP GP-HEAD & SIGNAL (12-VOLT)	91
	132-5166	2	MIRROR GP-REAR VIEW	
			(EACH INCLUDES)	
	148-2371	1	CLAMP (TOP)	
	148-2372	1	CLAMP (BOTTOM)	
	175-4239	2	BRACKET AS	
B	**238-7676**	1	BRACKET AS	
	258-4134	1	FUSE AS (ROADING)	
	328-2334	1	HARNESS AS-REAR LIGHTING	
	186-3735	7	PIN-CONNECTOR (16-GA TO 18-GA)	
	9W-0852	1	PIN-CONNECTOR (14-GA TO 16-GA)	
	155-2265	1	KIT-CONNECTING PLUG (8-PIN)	
	155-2274	2	KIT-CONNECTING PLUG (6-PIN)	
			(EACH PLUG KIT INCLUDES PLUG AS, WEDGE & INTERFACE SEAL)	
	8T-8737	5	PLUG-SEAL	
	102-8806	1	KIT-RECEPTACLE (8-PIN)	
			(INCLUDES RECEPTACLE AS & WEDGE)	
	186-3736	14	SOCKET-CONNECTOR (16-GA TO 18-GA)	
	9W-0844	1	SOCKET-CONNECTOR (14-GA TO 16-GA)	
	3S-2093	1	STRAP-CABLE	
E	**125-7874**		TUBE-HEAT SHRINK (5.72-MM DIA) (30-CM)	
	146-9439	1	RELAY AS (12-VOLT) (ROADING LIGHTING)	
	142-9329	1	SWITCH AS-ROCKER (ROADING LIGHTS)	
	111-7899	1	GASKET	
M	**5C-9553**	4	BOLT (M6X1X16-MM)	
BM	**7X-0818**	1	BOLT (M8X1.25X45-MM)	
BM	**8T-4178**	2	BOLT (M10X1.5X90-MM)	
BM	**8T-6685**	4	BOLT (M10X1.5X110-MM)	
BM	**8T-7547**	1	BOLT (M8X1.25X30-MM)	
M	**8T-4201**	1	BOLT-LOCKING (M10X1.5X20-MM)	
	4P-7581	1	CLIP	
	8T-1887	2	CLIP (SLOT)	
	8T-1888	2	CLIP (TAB)	
M	**8T-4133**	2	NUT (M10X1.5-THD)	
B	**238-7637**	2	PLATE	
B	**238-7675**	2	PLATE	
	8W-8909	2	SLEEVE	
	3S-2093	18	STRAP-CABLE	
	206-1346	2	STRAP-CABLE	
	8T-4121	4	WASHER-HARD (11X21X2.5-MM THK)	
	8T-4205	4	WASHER-HARD (7.2X14.5X2-MM THK)	

B-USE AS REQUIRED
E-ORDER BY THE CENTIMETER
M-METRIC PART
Y-SEPARATE ILLUSTRATION

<END>

233-5990 LIFTING GP-MACHINE—SINGLE POINT

S/N: A9H1-UP

CANNOT BE USED WITH 233-5991—PAGE 209

AN ATTACHMENT

SMCS-1122, 6459, 7000 **i02771700**

NOTE	REF NO	GRAPHIC REF	PART NUMBER	QTY	PART NAME 1 2 3 4 5 6 (PRODUCT LEVEL)	SEE PAGE
	1	1	**5P-0372**	2	LOCK PIN	
	2	1	**7E-2700**	2	FILM-INFORMATION (LIFT EYE LOCATION)	
	3	1	**9C-5344**	1	SPACER (10.5X20X18-MM THK)	
	4	1	**095-1325**	1	PIN-CLEVIS	
	5	1	**152-1154**	1	BRACKET AS-LIFT	
	6	1	**152-1156**	4	PLATE	
	7	1	**153-2683**	1	SPRING AS-GAS (CAB)	
	8	1	**177-3405**	1	PIN	
	9	1	**233-5892**	1	PLATE AS	
	10	1	**233-5893**	1	PLATE AS	
M	11	1	**159-2953**	8	SCREW-FLAT HEAD (M16X2-THD)	
	12	1	**8T-4122**	4	WASHER-HARD (17X32X3.5-MM THK)	
M	13	1	**8T-4132**	4	NUT (M16X2-THD)	
	14	1	**8T-4224**	4	WASHER-HARD (8.8X16X2-MM THK)	
M	15	1	**8T-4908**	4	BOLT (M8X1.25X25-MM)	

M-METRIC PART

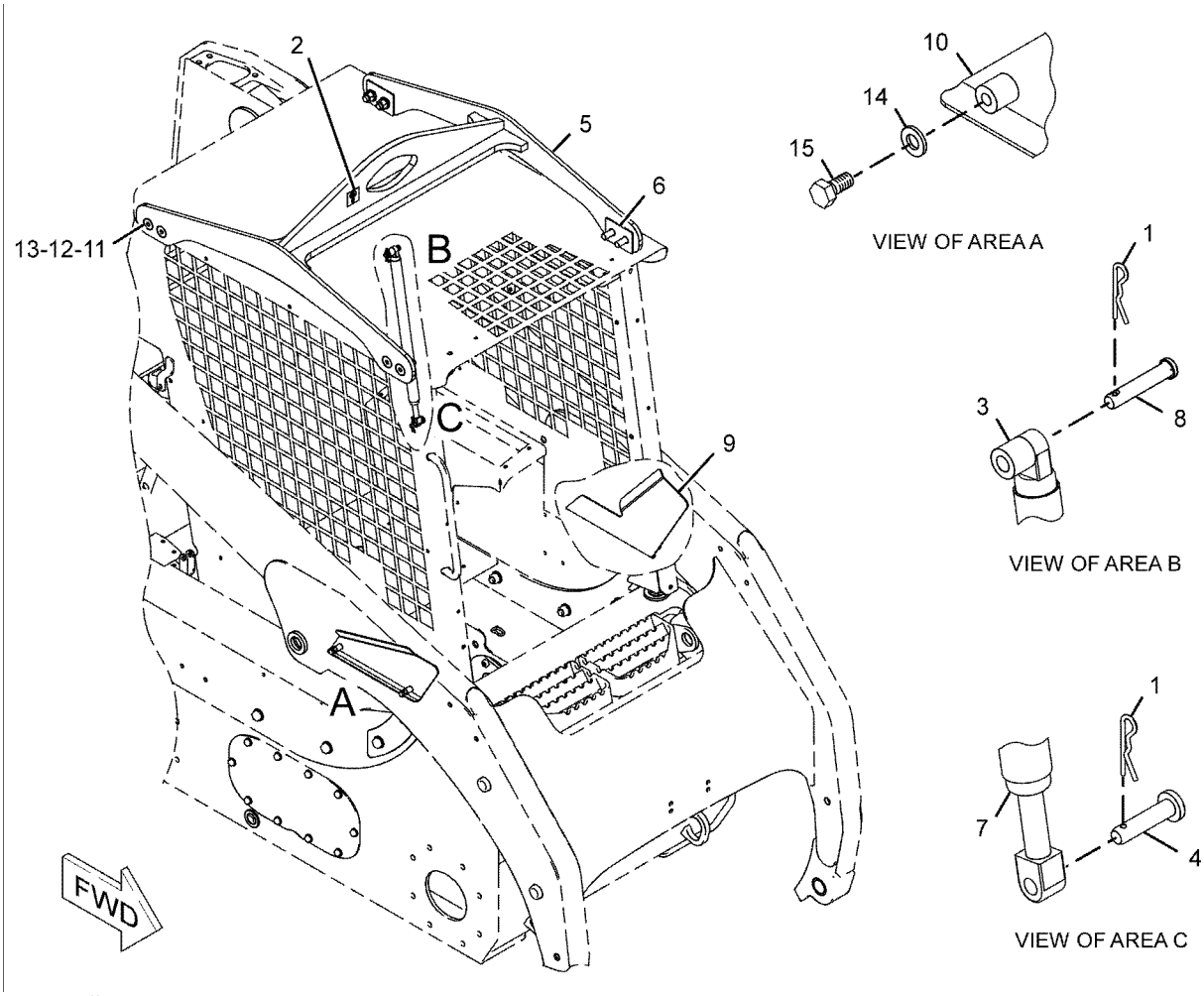

GRAPHIC #1 **<END>** g01034570

233-5991 LIFTING GP-MACHINE–4-POINT

S/N: A9H1-UP

PART OF 326-5289, 326-5299, 326-5489 CONVERSION AR-MACHINE, 326-5529, 326-5559 CONVERSION AR-ROADING

CANNOT BE USED WITH 233-5990–PAGE 208

AN ATTACHMENT

SMCS-1122, 6459, 7000 **i01994551**

NOTE	REF NO	GRAPHIC REF	PART NUMBER	QTY	PART NAME 1 2 3 4 5 6 (PRODUCT LEVEL)	SEE PAGE
	1	1	**7E-2700**	4	FILM-INFORMATION (LIFT EYE LOCATION)	
	2	1	**142-8826**	4	PLATE-LIFT	
	3	1	**233-5892**	1	PLATE AS	
	4	1	**233-5893**	1	PLATE AS	
M	5	1	**159-2953**	8	SCREW-FLAT HEAD (M16X2-THD)	
	6	1	**8T-4122**	4	WASHER-HARD (17X32X3.5-MM THK)	
M	7	1	**8T-4132**	4	NUT (M16X2-THD)	
	8	1	**8T-4224**	4	WASHER-HARD (8.8X16X2-MM THK)	
M	9	1	**8T-4908**	4	BOLT (M8X1.25X25-MM)	

M-METRIC PART

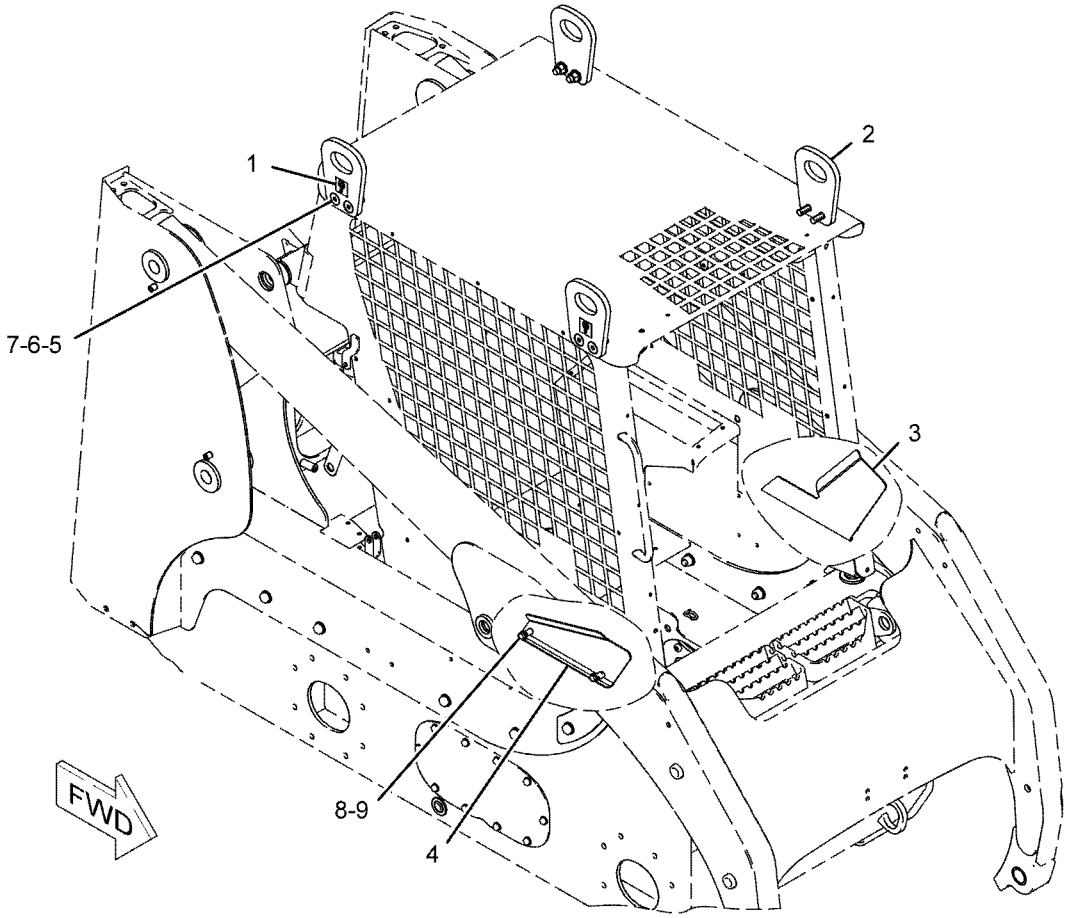

GRAPHIC #1 **<END>** g01034582

236-5058 MIRROR & MTG GP-REAR VIEW–

WITH ROADING LIGHT MOUNT

S/N: A9H1-UP

PART OF 326-5489 CONVERSION AR-MACHINE, 326-5529, 326-5559 CONVERSION AR-ROADING

AN ATTACHMENT

SMCS-7319 **i02262626**

NOTE	REF NO	GRAPHIC REF	PART NUMBER	QTY	PART NAME 1 2 3 4 5 6 (PRODUCT LEVEL)	SEE PAGE
	1	1	**132-5166**	2	MIRROR GP-REAR VIEW	
					(EACH INCLUDES)	
		1	**148-2371**	1	CLAMP (TOP)	
		1	**148-2372**	1	CLAMP (BOTTOM)	
	2	1	**175-4237**	1	BLOCK AS	
	3	1	**175-4239**	2	BRACKET AS	
	4	1	**238-7637**	2	PLATE	
M	5	1	**5C-9553**	4	BOLT (M6X1X16-MM)	
	6	1	**8T-4121**	4	WASHER-HARD (11X21X2.5-MM THK)	
M	7	1	**8T-4133**	2	NUT (M10X1.5-THD)	
	8	1	**8T-4205**	4	WASHER-HARD (7.2X14.5X2-MM THK)	
M	9	1	**8T-6685**	4	BOLT (M10X1.5X110-MM)	

M-METRIC PART

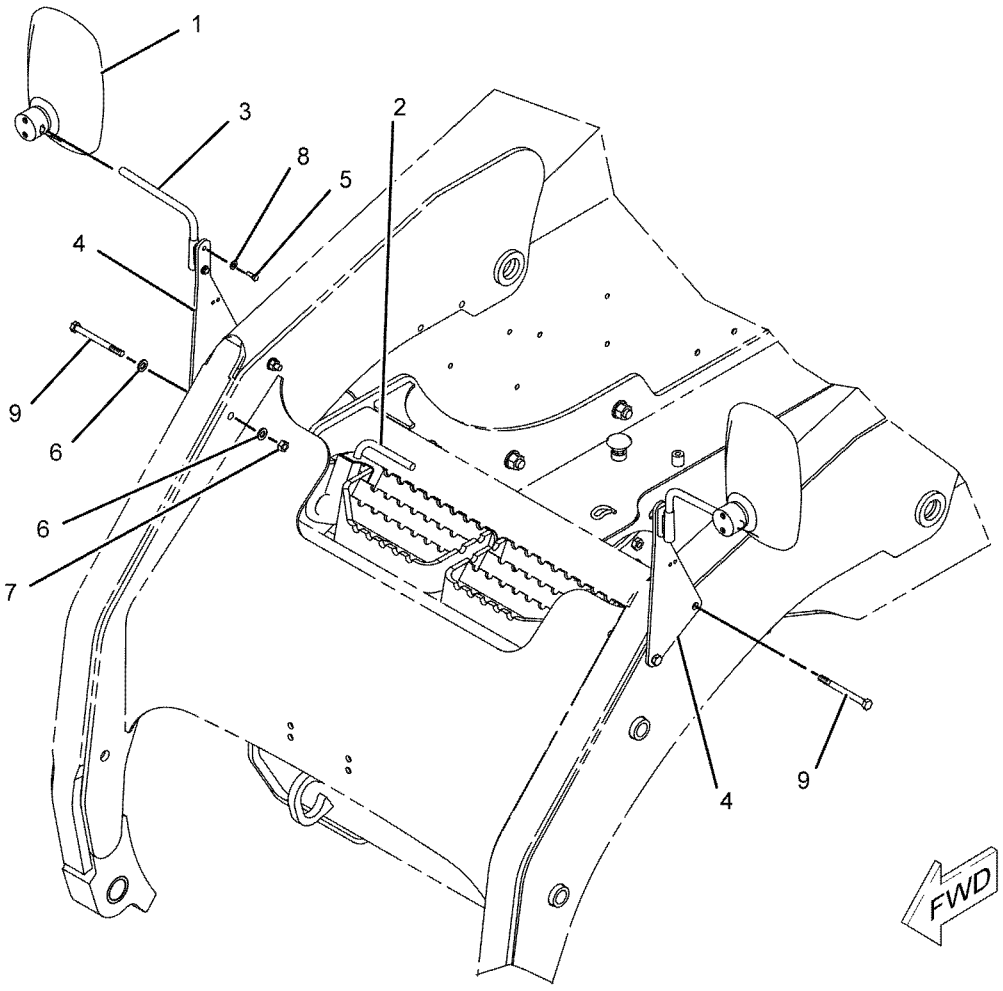

GRAPHIC #1 **<END>** g01017421

173-3021 MOUNTING GP-REGISTRATION–
WITH WIRING & LIGHTS
S/N: A9H1-UP
PART OF 225-7963 MOUNTING GP-REGISTRATION
AN ATTACHMENT

SMCS-1408, 1429, 7050 **i04358202**

NOTE	REF NO	GRAPHIC REF	PART NUMBER	QTY	PART NAME 1 2 3 4 5 6 (PRODUCT LEVEL)	SEE PAGE
	1	1	**175-4236**	1	PLATE	
	2	1	**190-8962**	1	LAMP GP-REGISTRATION PLATE	
		1	**195-9712**	1	LAMP (12-VOLT, 10-WATT) (REGISTRATION PLATE)	
	3	1	**204-1365**	1	PLATE	
	4	1	**207-9780**	1	BRACKET AS (REGISTRATION PLATE)	
	5	1	**215-4001**	1	PLATE	
	6	1	**4B-4863**	2	WASHER (4.7X11X1.2-MM THK)	
M	7	1	**5C-8312**	2	NUT (M4X0.7-THD)	
M	8	1	**6V-9672**	2	SCREW-MACHINE (M4X0.7X16-MM)	
M	9	1	**8T-4171**	3	BOLT (M6X1X12-MM)	
	10	1	**8T-4205**	3	WASHER-HARD (7.2X14.5X2-MM THK)	

M-METRIC PART

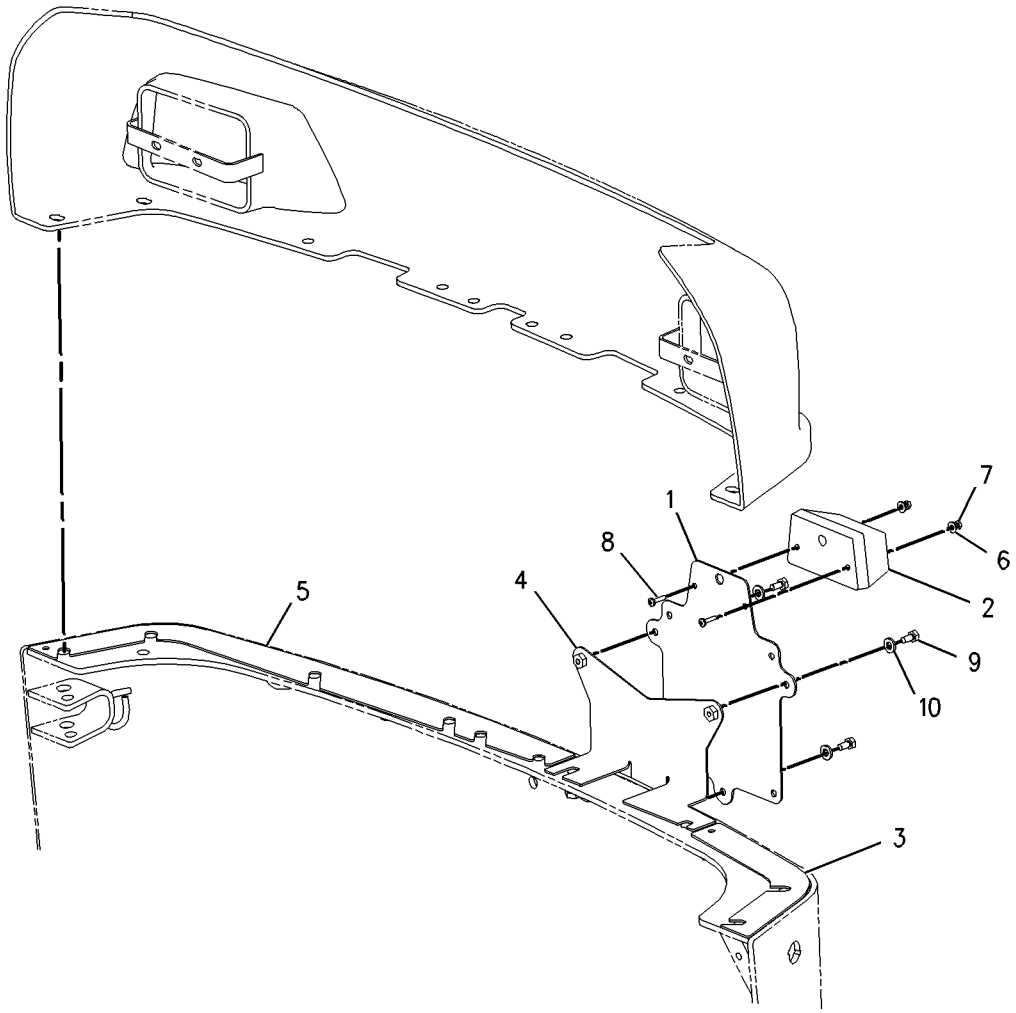

GRAPHIC #1 **<END>** g00874745

225-7963 MOUNTING GP-REGISTRATION

S/N: A9H1-UP
PART OF 326-5489 CONVERSION AR-MACHINE
AN ATTACHMENT

SMCS-1408, 1429, 7050 **i03613860**

NOTE	REF NO	GRAPHIC REF	PART NUMBER	QTY	PART NAME 1 2 3 4 5 6 (PRODUCT LEVEL)	SEE PAGE
Y	1	1	*173-3021*	1	MOUNTING GP-REGISTRATION (WITH WIRING, LIGHTS)	211
	2	1	**186-0239**	1	HARNESS AS-REAR LIGHTING (RIGHT SIDE, LICENSE PLATE) (INDICATOR)	
		1	**9X-3401**	4	PIN-CONNECTOR (16-GA TO 18-GA)	
		1	**126-1767**	4	PIN-CONNECTOR (14-GA TO 16-GA)	
		1	**180-9340**	4	SOCKET-CONNECTOR (14-GA TO 18-GA)	
		1	**5P-4571**	2	TERMINAL-BLADE (14-GA TO 16-GA)	
E		1	**125-7874**		TUBE-HEAT SHRINK (5.72-MM DIA) (10-CM)	
		1	**102-8804**	1	KIT-RECEPTACLE (4-PIN)	
					(INCLUDES RECEPTACLE AS & WEDGE)	
		1	**155-2271**	1	KIT-CONNECTING PLUG (4-PIN)	
					(INCLUDES PLUG AS, WEDGE & INTERFACE SEAL)	

E-ORDER BY THE CENTIMETER
Y-SEPARATE ILLUSTRATION

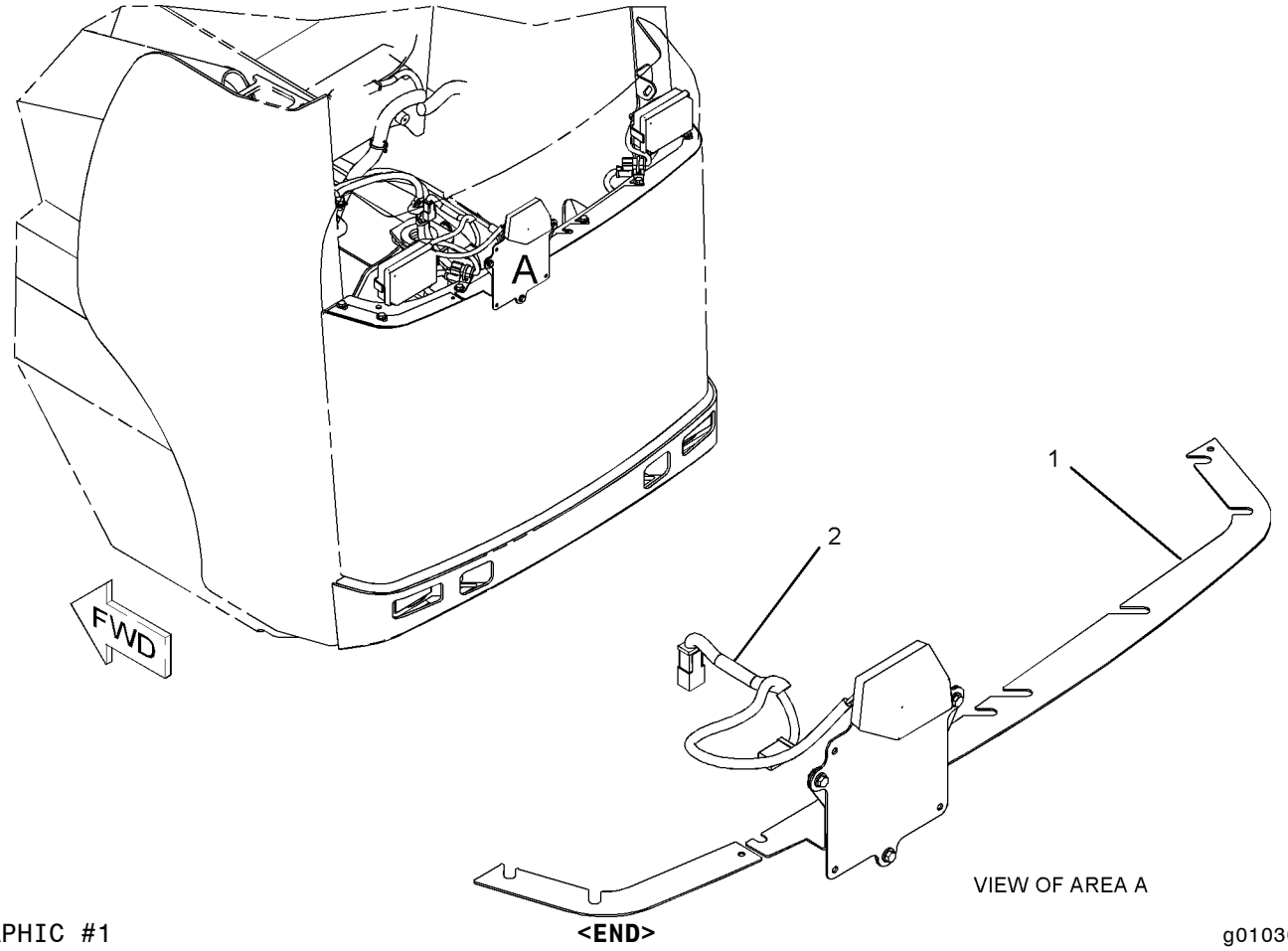

GRAPHIC #1

<END>

g01030726

261-6384 SUPPRESSION GP-SOUND–MACHINE

S/N: A9H1-UP

PART OF 326-5289, 326-5299, 326-5489 CONVERSION AR-MACHINE, 326-5529, 326-5559 CONVERSION AR-ROADING

AN ATTACHMENT

SMCS-1801, 7076 **i02857804**

NOTE	REF NO	GRAPHIC REF	PART NUMBER	QTY	PART NAME 1 2 3 4 5 6 (PRODUCT LEVEL)	SEE PAGE
	1	1	**176-4079**	6	INSULATION	
	2	1	**261-6371**	2	INSULATION	
	3	1	**261-6372**	1	INSULATION	
	4	1	**261-6373**	1	INSULATION	
	5	1	**261-6374**	1	INSULATION	
	6	1	**261-6375**	1	INSULATION	
	7	1	**261-6376**	2	INSULATION	
	8	1	**261-6377**	1	INSULATION	
	9	1	**261-6378**	2	INSULATION	
	10	1	**261-6379**	4	INSULATION	
	11	1	**261-6380**	1	INSULATION	

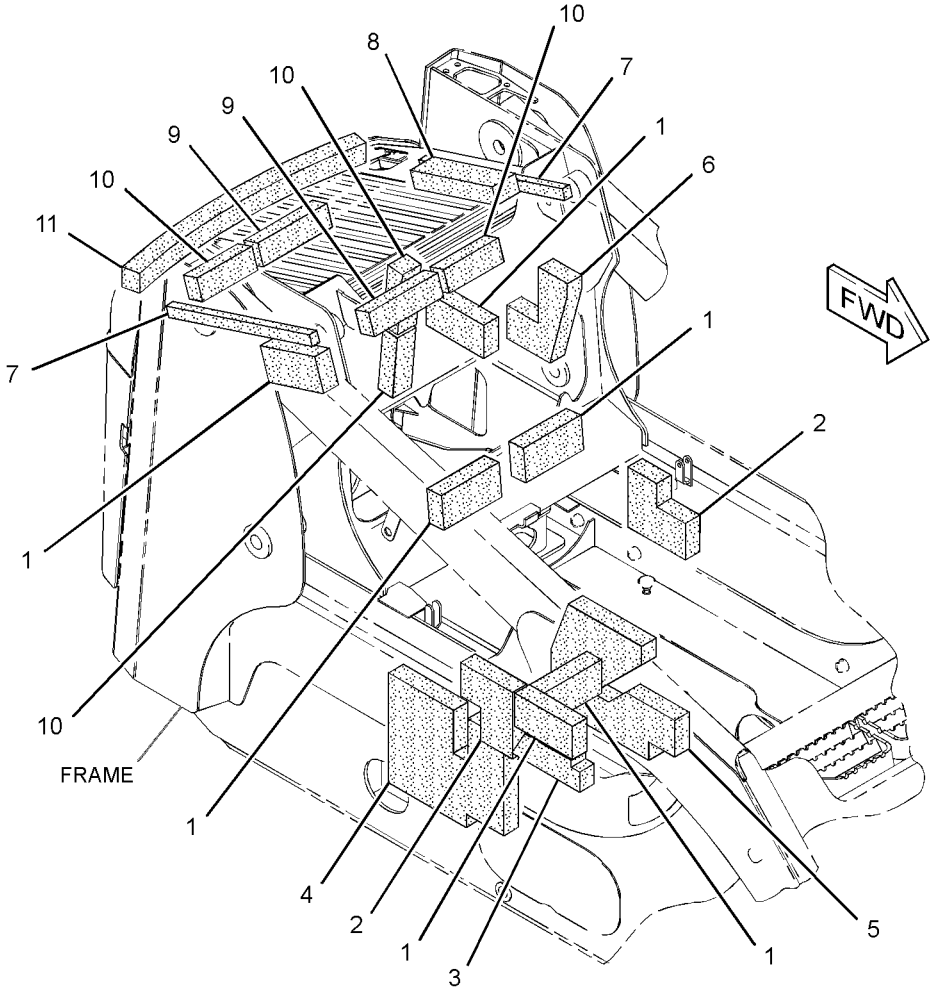

GRAPHIC #1 **<END>** g01448794

326-5394 SUPPRESSION GP-SOUND

S/N: A9H1-UP

PART OF 326-5289, 326-5299, 326-5489 CONVERSION AR-MACHINE, 326-5529, 326-5559 CONVERSION AR-ROADING

AN ATTACHMENT

SMCS-1801, 7076 **i03901822**

NOTE	REF NO	GRAPHIC REF	PART NUMBER	QTY	PART NAME 1 2 3 4 5 6 (PRODUCT LEVEL)	SEE PAGE
	1	1	**176-4079**	2	INSULATION	
	2	1	**236-5088**	1	INSULATION	
	3	1	**326-5395**	1	INSULATION	
	4	1	**326-5396**	1	INSULATION	

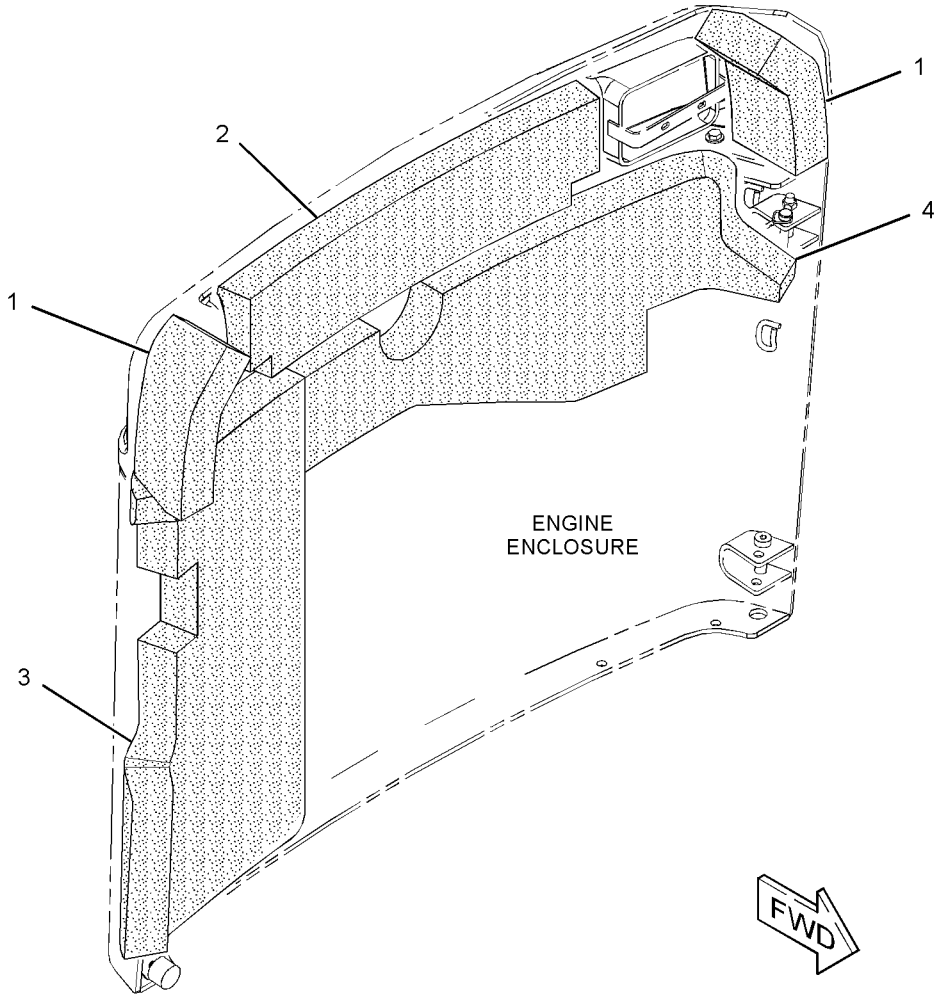

GRAPHIC #1 **<END>** g02146680

193-0447 ACCUMULATOR & MTG GP-HYDRAULIC

S/N: A9H1-UP

PART OF 326-5435 HYDRAULIC AR

SMCS-5077 **i03587742**

NOTE	REF NO	GRAPHIC REF	PART NUMBER	QTY	PART NAME 1 2 3 4 5 6 (PRODUCT LEVEL)	SEE PAGE
Y	1	1	*149-0686*	1	ACCUMULATOR GP-HYDRAULIC (CHARGED)	216
	2	1	*194-7632*	1	ELBOW AS	
		1	**3K-0360**	1	SEAL-O-RING	
		1	**194-7631**	1	ELBOW	
	3	1	**3K-0360**	1	SEAL-O-RING	

Y-SEPARATE ILLUSTRATION

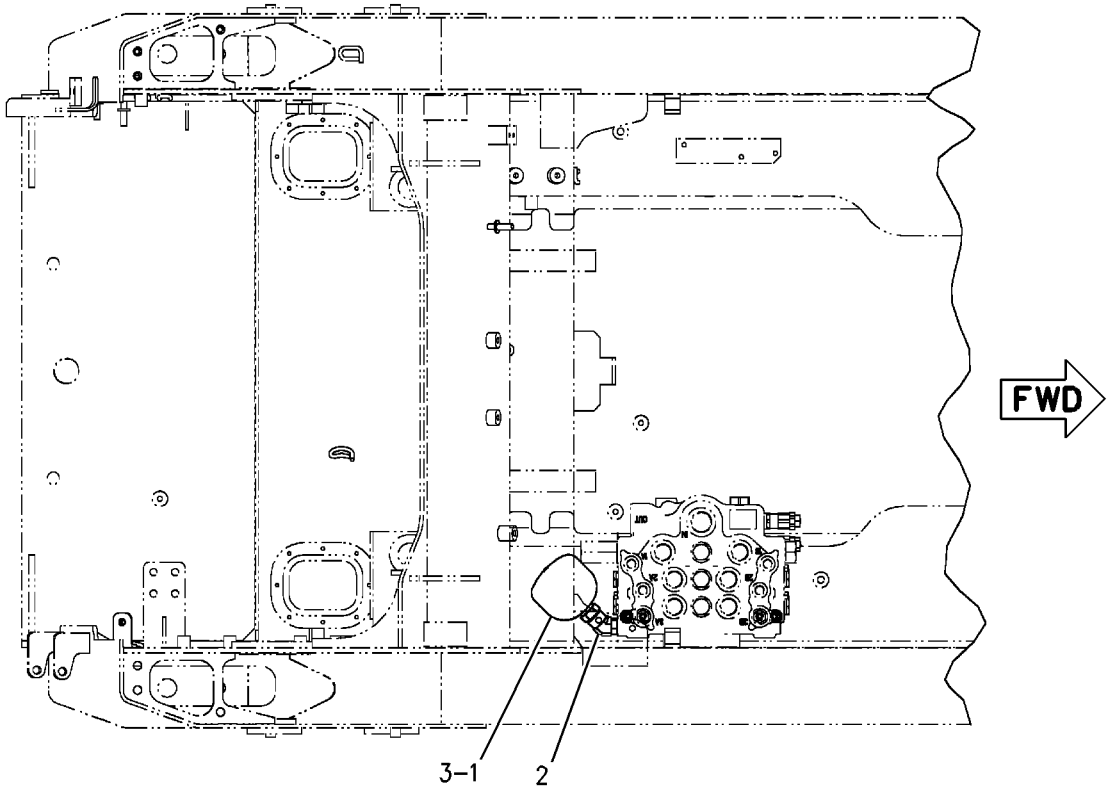

TOP VIEW

GRAPHIC #1 **<END>** g00902240

149-0686 ACCUMULATOR GP-HYDRAULIC—CHARGED

S/N: A9H1-UP

PART OF 193-0447 ACCUMULATOR & MTG GP-HYDRAULIC

FIELD REPLACEMENT ORDER 227-8807—PAGE 217

SMCS-5077 **i03971211**

NOTE	REF NO	GRAPHIC REF	PART NUMBER	QTY	PART NAME 1 2 3 4 5 6 (PRODUCT LEVEL)	SEE PAGE
					(NO SERVICED PARTS)	

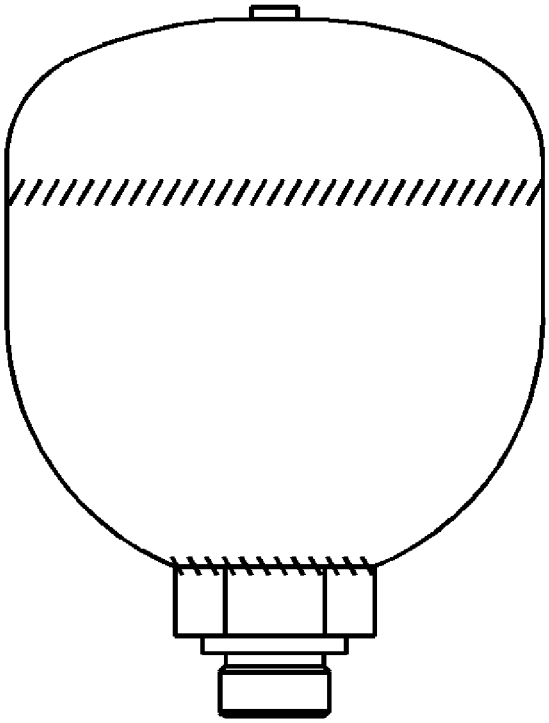

GRAPHIC #1 **<END>** g02162624

227-8807 ACCUMULATOR GP-HYDRAULIC—UNCHARGED

S/N: A9H1-UP

FIELD REPLACEMENT FOR 149-0686—PAGE 216

SMCS-5077 **i03971213**

NOTE	REF NO	GRAPHIC REF	PART NUMBER	QTY	PART NAME 1 2 3 4 5 6 (PRODUCT LEVEL)	SEE PAGE
					(NO SERVICED PARTS)	

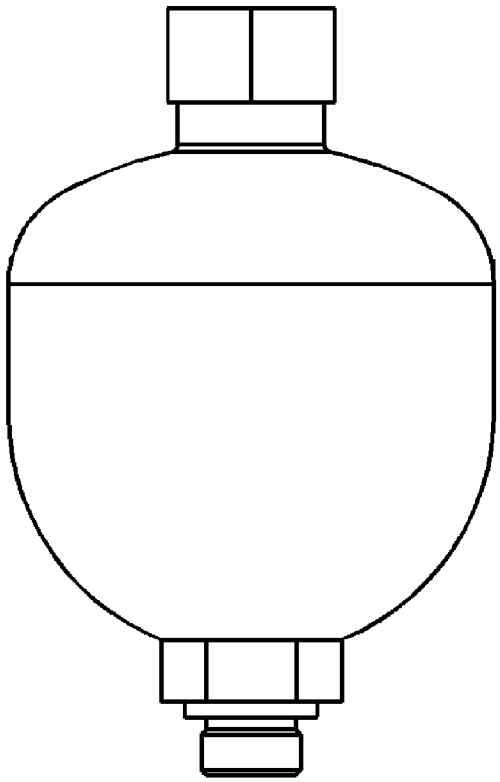

GRAPHIC #1 **<END>** g02162620

HYDRAULIC SYSTEM

179-7001 ADAPTER GP-OIL LINE

S/N: A9H1-UP

PART OF 218-5632 LINES GP-PILOT

SMCS-5057 **i01836385**

NOTE	REF NO	GRAPHIC REF	PART NUMBER	QTY	PART NAME 1 2 3 4 5 6 (PRODUCT LEVEL)	SEE PAGE
	1	1	**179-7002**	1	ADAPTER AS	
	2	1	**214-7568**	1	SEAL-O-RING	

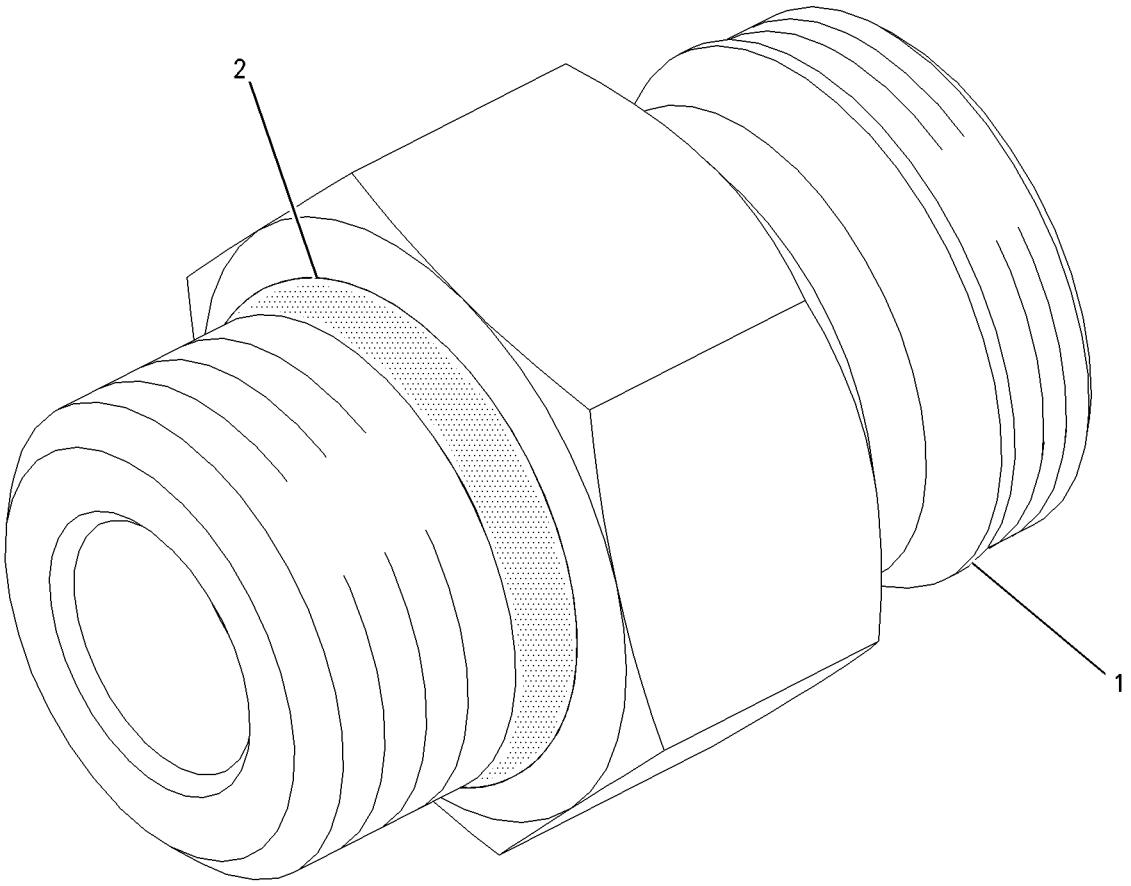

GRAPHIC #1 **<END>** g00938522

230-5406 CYLINDER & MTG GP-ANGLE BLADE

S/N: A9H1-UP
PART OF 177-1989, 177-1990 BLADE AR
AN ATTACHMENT

SMCS-6701 **i01860855**

NOTE	REF NO	GRAPHIC REF	PART NUMBER	QTY	PART NAME 1 2 3 4 5 6 (PRODUCT LEVEL)	SEE PAGE
	1	1	**064-3843**	1	RING-SNAP	
	2	1	**210-0855**	1	PIN AS	
	3	1	**213-3943**	1	BUSHING	
Y	4	1	**225-9521**	1	CYLINDER GP-HYDRAULIC (ANGLE BLADE)	229
	5	1	**3B-8489**	1	FITTING-GREASE	
	6	1	**7X-7729**	1	WASHER (11X25X3-MM THK)	
M	7	1	**8T-4137**	1	BOLT (M10X1.5X20-MM)	

M-METRIC PART
Y-SEPARATE ILLUSTRATION

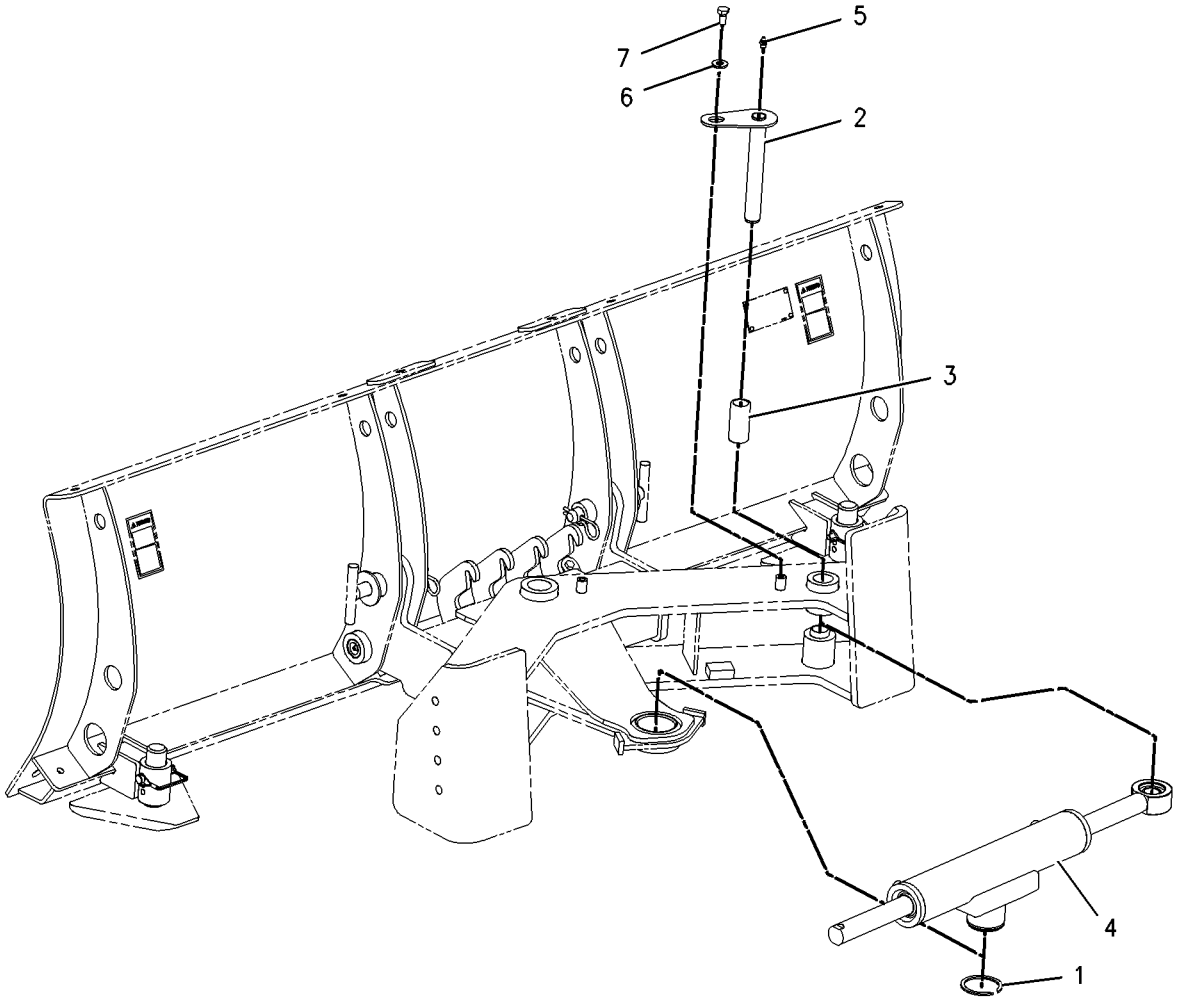

GRAPHIC #1 **<END>** g00978845

HYDRAULIC SYSTEM

231-5274 CYLINDER & MTG GP-ANGLE BLADE

S/N: A9H1-UP
PART OF 231-5275, 231-5277 BLADE AR
AN ATTACHMENT

SMCS-6701 **i04358472**

NOTE	REF NO	GRAPHIC REF	PART NUMBER	QTY	PART NAME 1 2 3 4 5 6 (PRODUCT LEVEL)	SEE PAGE
CY	1	1	**274-9930**	2	CYLINDER GP-HYDRAULIC (ANGLE BLADE)	230
CY	2	1	**274-9931**	1	CYLINDER GP-HYDRAULIC (TILT)	231
	3	1	**231-5266**	6	PIN AS	
	4	1	**238-0999**	12	SPACER (25.4X28.4X13-MM THK)	
M	5	1	**8T-4200**	6	BOLT (M8X1.25X16-MM)	
	6	1	**6V-8397**	6	SEAL-O-RING	
	7	1	**8T-4224**	6	WASHER-HARD (8.8X16X2-MM THK)	
	8	1	**244-1370**	6	SPACER (8.2X13X6-MM THK)	

C-CHANGE FROM PREVIOUS TYPE
M-METRIC PART
Y-SEPARATE ILLUSTRATION

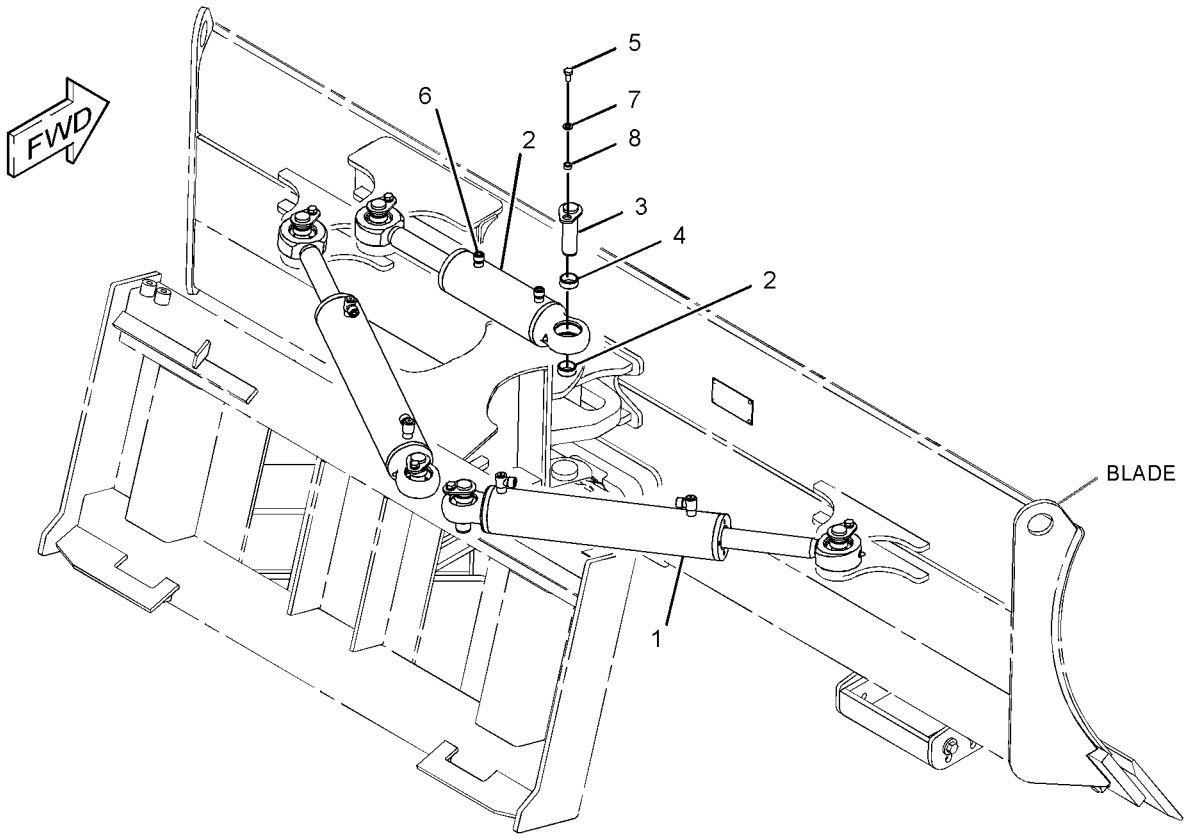

GRAPHIC #1 **<END>** g01270108

218-5799 CYLINDER & MTG GP-LIFT ARM

S/N: A9H1-UP

PART OF 326-4785 CHASSIS AR

SMCS-5102, 5104, 6118, 6119 **i04408710**

NOTE	REF NO	GRAPHIC REF	PART NUMBER	QTY	PART NAME 1 2 3 4 5 6 (PRODUCT LEVEL)	SEE PAGE
	1	2	**142-8832**	1	PIN AS	
	2	1	**142-8880**	1	LEVER	
	3	1	**142-8881**	1	BRACKET	
	4	1	**142-9089**	1	SUPPORT AS (LIFT ARM BRACE)	
	5	2	**142-9090**	4	PIN AS	
	6	2	**142-9091**	4	PIN AS	
	7	2	**142-9093**	2	PIN	
	8	1	**142-9094**	2	PIN	
	9	2	**142-9142**	2	SPACER (39X57X18-MM THK)	
	10	1	**169-6712**	1	STEP AS	
CY	11	1	**295-6952**	1	CYLINDER GP-LIFT (LH)	235
Y	12	2	**295-6954**	1	CYLINDER GP-TILT (LH)	239
CY	13	1	**295-6951**	1	CYLINDER GP-LIFT (RH)	233
Y	14	2	**295-6953**	1	CYLINDER GP-TILT (RH)	237
	15	1	**1H-8134**	4	RING-RETAINING (EXTERNAL)	
	16	2	**3B-8489**	10	FITTING-GREASE	
	17	1	**3S-8536**	1	SPACER (0.406X0.656X0.38-IN THK)	
	18	2	**5H-9743**	1	GROMMET	
M	19	2	**131-3540**	2	LOCKNUT (M8X1.25-THD)	
	20	2	**7X-7729**	8	WASHER (11X25X3-MM THK)	
M	21	2	**8T-3647**	2	BOLT (M8X1.25X80-MM)	
	22	1	**8T-4121**	5	WASHER-HARD (11X21X2.5-MM THK)	
M	23	1	**8T-4136**	1	BOLT (M10X1.5X25-MM)	
M	24	1	**8T-4189**	1	BOLT (M8X1.25X20-MM)	
M	25	2	**8T-4191**	8	BOLT (M10X1.5X16-MM)	
M	26	1	**8T-4196**	4	BOLT (M10X1.5X35-MM)	
	27	1	**8T-4224**	1	WASHER-HARD (8.8X16X2-MM THK)	
	28	1	**119-4594**	4	WASHER (41X64X1-MM THK)	

C-CHANGE FROM PREVIOUS TYPE
M-METRIC PART
Y-SEPARATE ILLUSTRATION

REFER TO ALL ILLUSTRATIONS OF
THIS GROUP FOR AUXILIARY VIEWS

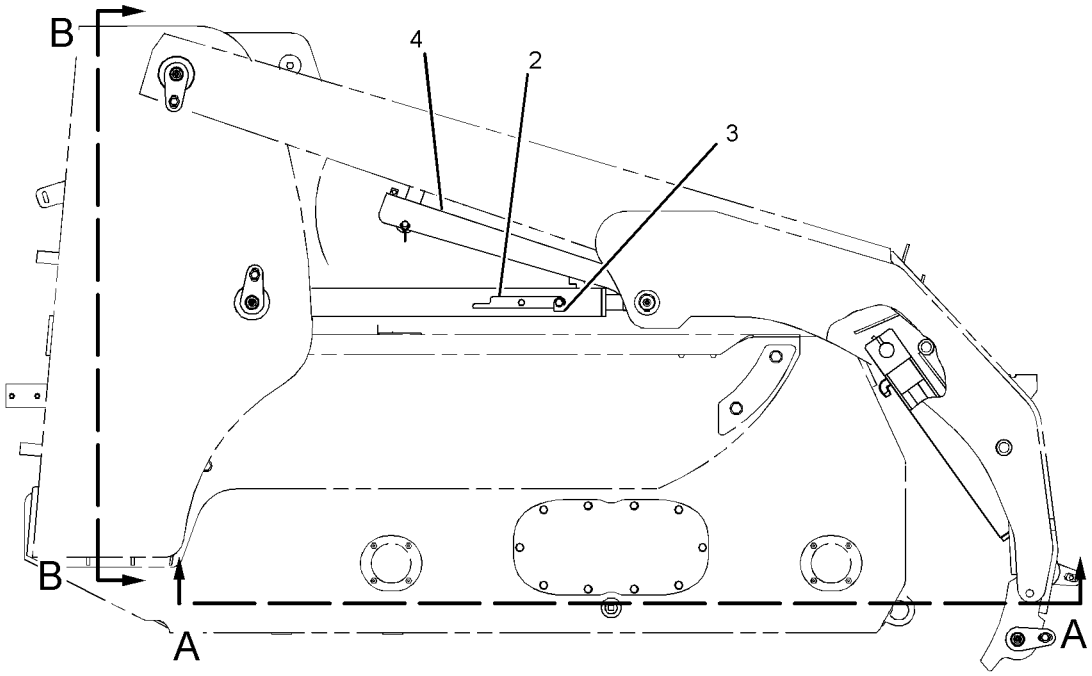

RIGHT SIDE VIEW

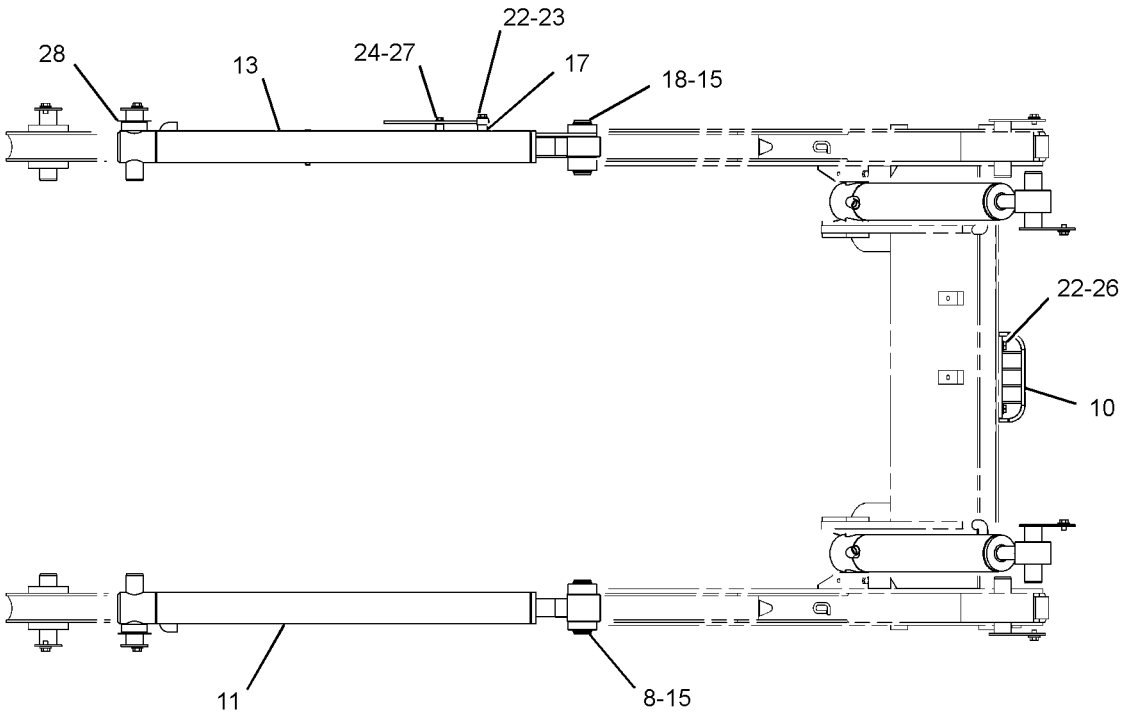

VIEW A-A

GRAPHIC #1

g02294718

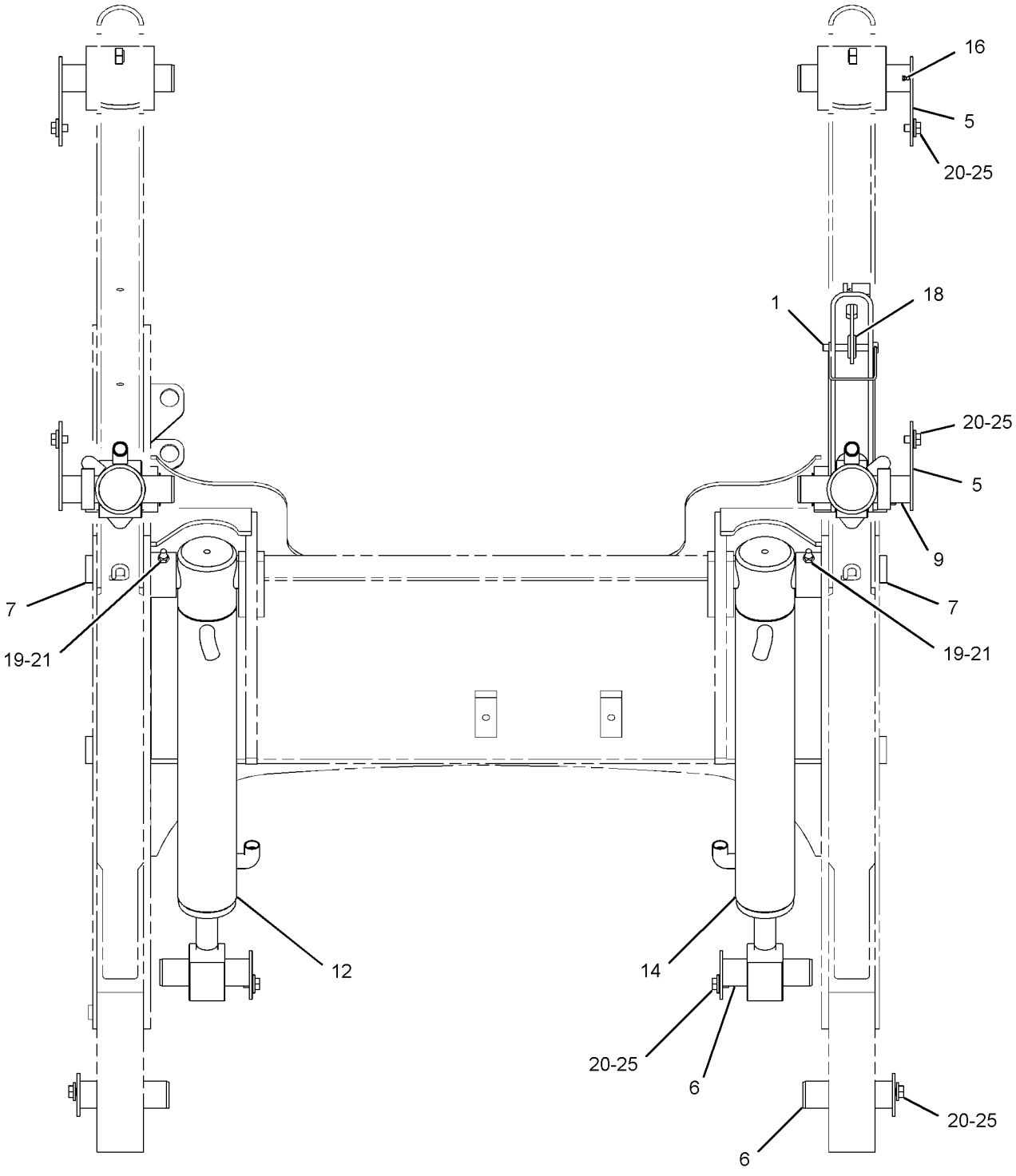

VIEW B-B

GRAPHIC #2 **<END>** g02294720

154-5018 CYLINDER GP-BUCKET

S/N: A9H1-UP
60-MM (2.4-IN) BORE X 200-MM (7.9-IN) STROKE
PART OF 279-5382 BUCKET AR-MULTIPURPOSE
AN ATTACHMENT

SMCS-5498 **i04038460**

NOTE	REF NO	GRAPHIC REF	PART NUMBER	QTY	PART NAME 1 2 3 4 5 6 (PRODUCT LEVEL)	SEE PAGE
	1	1	**3B-8489**	1	FITTING-GREASE	
					AVAILABLE REPAIR KIT(S):	
			164-3213	1	KIT-SEAL	
					(INCLUDES O-RINGS, SEAL, BACKUP RING, PISTON GUIDE RINGS, SET SCREW,PISTON SEAL & WIPER RING)	

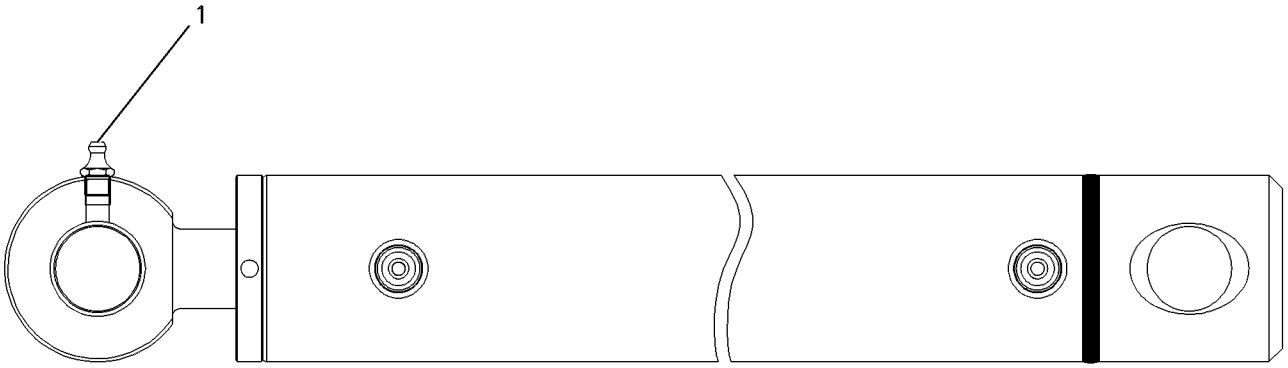

GRAPHIC #1 **<END>** g00564347

293-6264 CYLINDER GP-BUCKET

S/N: A9H1-UP
50-MM (2-IN) BORE X 225-MM (8.9-IN) STROKE
PART OF 286-9300, 286-9301 BUCKET AR-GRAPPLE
AN ATTACHMENT

SMCS-5498 **i04038470**

NOTE	REF NO	GRAPHIC REF	PART NUMBER	QTY	PART NAME 1 2 3 4 5 6 (PRODUCT LEVEL)	SEE PAGE
	1	1	**6B-6682**	1	NUT-FULL (3/4-16-THD)	
	2	1	**3B-8489**	1	FITTING-GREASE	
	3	1	**7J-0204**	2	SEAL-O-RING	
	4	1	**9S-8007**	2	PLUG	
					AVAILABLE REPAIR KIT(S):	
			262-0941	1	KIT-SEAL (BUCKET CYLINDER)	
					(INCLUDES PISTON SEAL, PISTON WEAR RING, ROD O-RING, O-RING, BACKUP RING, DUST RING, WIPER SEAL	
					& ROD SEAL)	

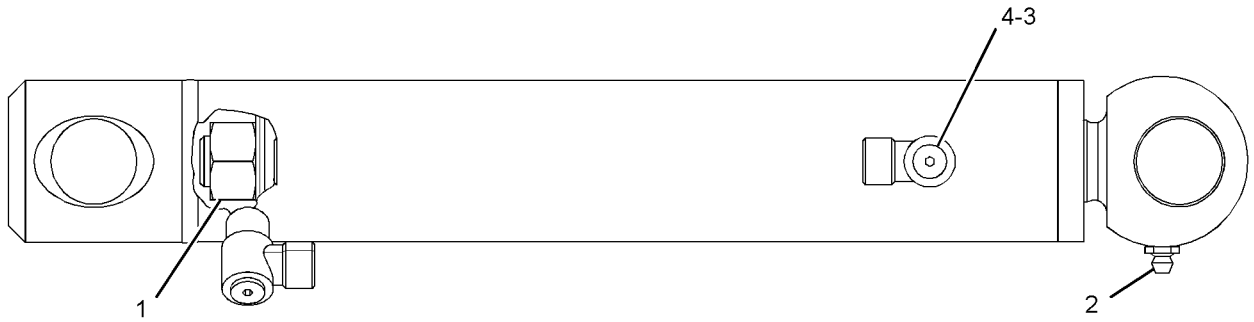

GRAPHIC #1 **<END>** g01373044

255-0943 CYLINDER GP-GRAPPLE–UTILITY

S/N: A9H1-UP
40-MM (1.6-IN) BORE X 200-MM (7.9-IN) STROKE
PART OF 285-6116 GRAPPLE & CYLINDER GP-UTILITY
AN ATTACHMENT

SMCS-5457 **i04362956**

NOTE	REF NO	GRAPHIC REF	PART NUMBER	QTY	PART NAME 1 2 3 4 5 6 (PRODUCT LEVEL)	SEE PAGE
	1	1	**254-9097**	1	BUSHING	
	2	1	**3B-8489**	2	FITTING-GREASE	
	3	1	**7J-0204**	2	SEAL-O-RING	
	4	1	**9S-8007**	2	PLUG	
	5	1	**2K-4821**	1	LOCKNUT (5/8-18-THD)	
					AVAILABLE REPAIR KIT(S):	
			286-3591	1	KIT-SEAL (HYDRAULIC CYLINDER)	
					(INCLUDES SEAL, O-RING SEALS, U-CUP SEAL, WIPER SEAL & BACKUP RING)	

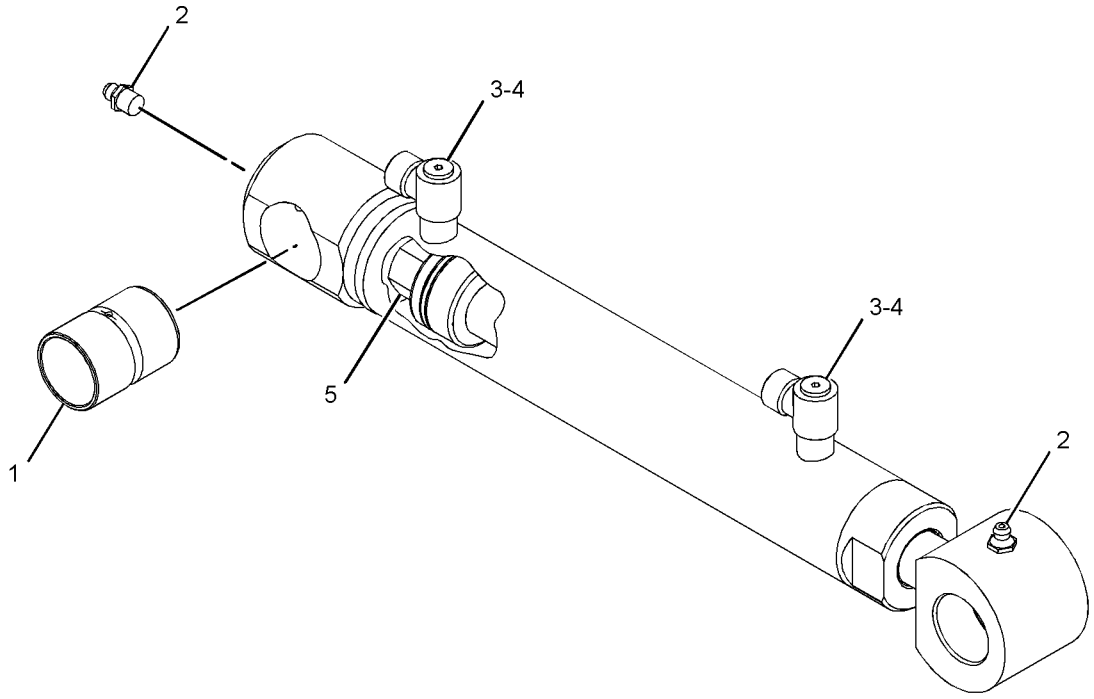

GRAPHIC #1 **<END>** g01439380

278-1975 CYLINDER GP-GRAPPLE–INDUSTRIAL

S/N: A9H1-UP
60-MM (2.4-IN) BORE X 200-MM (7.9-IN) STROKE
PART OF 157-7223, 157-7224, 157-7225, 217-6229 BUCKET AR-GRAPPLE, 279-5350, 279-5360 FORK AR-GRAPPLE
AN ATTACHMENT

SMCS-5457 **i04038469**

NOTE	REF NO	GRAPHIC REF	PART NUMBER	QTY	PART NAME 1 2 3 4 5 6 (PRODUCT LEVEL)	SEE PAGE
	1	1	**7D-8508**	1	NUT-FULL (7/8-14-THD)	
	2	1	**254-9097**	1	BUSHING	
	3	1	**255-0942**	1	BUSHING	
	4	1	**3B-8489**	1	FITTING-GREASE	
	5	1	**7J-0204**	2	SEAL-O-RING	
	6	1	**9S-8007**	2	PLUG	
					AVAILABLE REPAIR KIT(S):	
			278-1970	1	KIT-SEAL (HYDRAULIC CYLINDER)	
					(INCLUDES O-RINGS, WEAR RINGS, BACKUP RING, U-CUP SEAL & SEAL)	

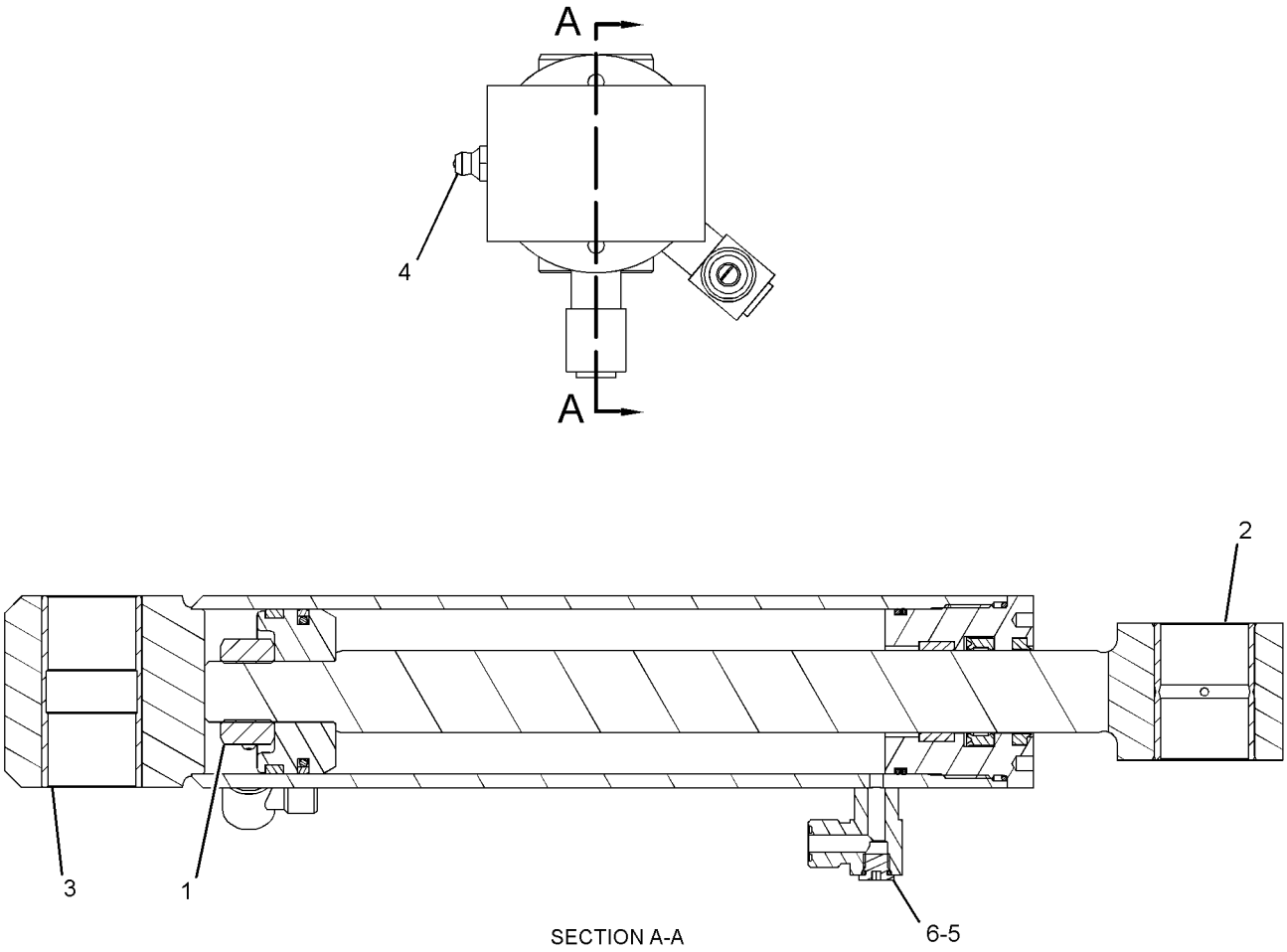

GRAPHIC #1 **<END>** g01280909

HYDRAULIC SYSTEM

192-2640 CYLINDER GP-HYDRAULIC—COUPLER

S/N: A9H1-UP
35-MM (1.4-IN) BORE X 103.5-MM (4.1-IN) STROKE
PART OF 215-3962, 215-3963 CYLINDER & LINK GP-COUPLER, 364-1355 KIT-QUICK COUPLER CONVERSION
AN ATTACHMENT

SMCS-5362, 7562 **i03435422**

NOTE	REF NO	GRAPHIC REF	PART NUMBER	QTY	PART NAME 1 2 3 4 5 6 (PRODUCT LEVEL)	SEE PAGE
					(NO SERVICED PARTS)	

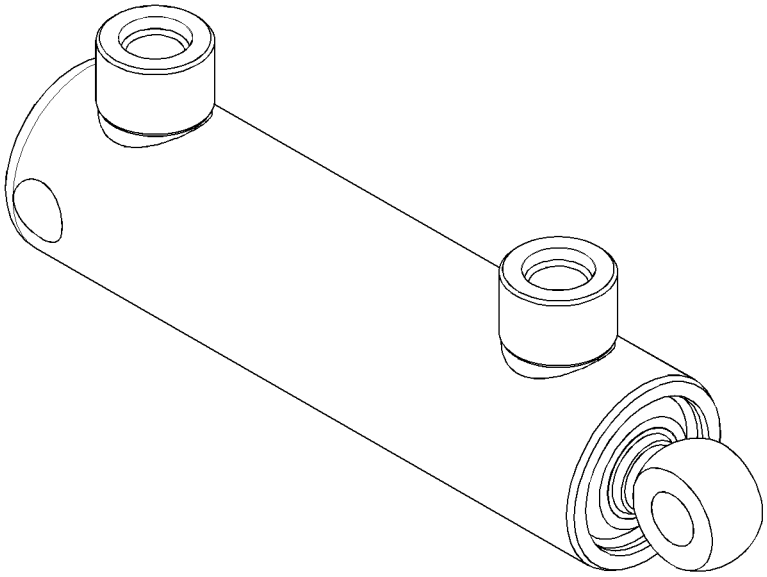

GRAPHIC #1 **<END>** g01787137

225-9521 CYLINDER GP-HYDRAULIC–ANGLE BLADE

S/N: A9H1-UP
63-MM (2.5-IN) BORE X 300-MM (11.8-IN) STROKE
PART OF 230-5406 CYLINDER & MTG GP-ANGLE BLADE
AN ATTACHMENT

SMCS-5362, 7562 **i04038465**

NOTE	REF NO	GRAPHIC REF	PART NUMBER	QTY	PART NAME 1 2 3 4 5 6 (PRODUCT LEVEL)	SEE PAGE
	1	1	**214-5555**	1	ROD END AS	
					AVAILABLE REPAIR KIT(S):	
			177-1958	1	KIT-SEAL	
					(INCLUDES O-RINGS, SEALS, BACKUP RINGS, PISTON SEAL, PISTON GUIDE RING, ROD GUIDE RING & WIPER RINGS)	

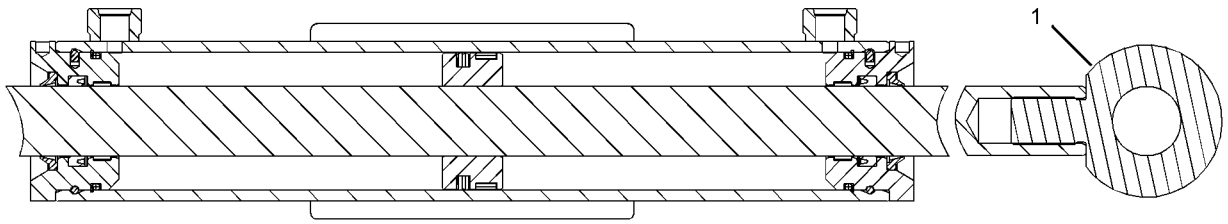

GRAPHIC #1 **<END>** g01282929

274-9930 CYLINDER GP-HYDRAULIC—ANGLE BLADE

S/N: A9H1-UP
70-MM (2.8-IN) BORE X 314-MM (12.4-IN) STROKE
PART OF 231-5274 CYLINDER & MTG GP-ANGLE BLADE
AN ATTACHMENT

SMCS-5362, 7562 **i03590840**

NOTE	REF NO	GRAPHIC REF	PART NUMBER	QTY	PART NAME 1 2 3 4 5 6 (PRODUCT LEVEL)	SEE PAGE
	1	1	**7D-8508**	1	NUT-FULL (7/8-14-THD)	
	2	1	**8Q-6027**	2	BEARING-SPHERICAL	
	3	1	**027-1287**	2	FITTING-GREASE	
	4	1	**278-4524**	1	ROD AS	
	5	1	**278-4875**	2	RING-RETAINING	
	6	1	**7J-0204**	2	SEAL-O-RING	
	7	1	**9S-8007**	2	PLUG	
					AVAILABLE REPAIR KIT(S):	
			266-6140	1	KIT-SEAL (SWING CYLINDER)	
					(INCLUDES SEAL-O-RINGS, WEAR RINGS, BACKUP RING, SEAL-U CUP, SEAL & SETSCREW)	

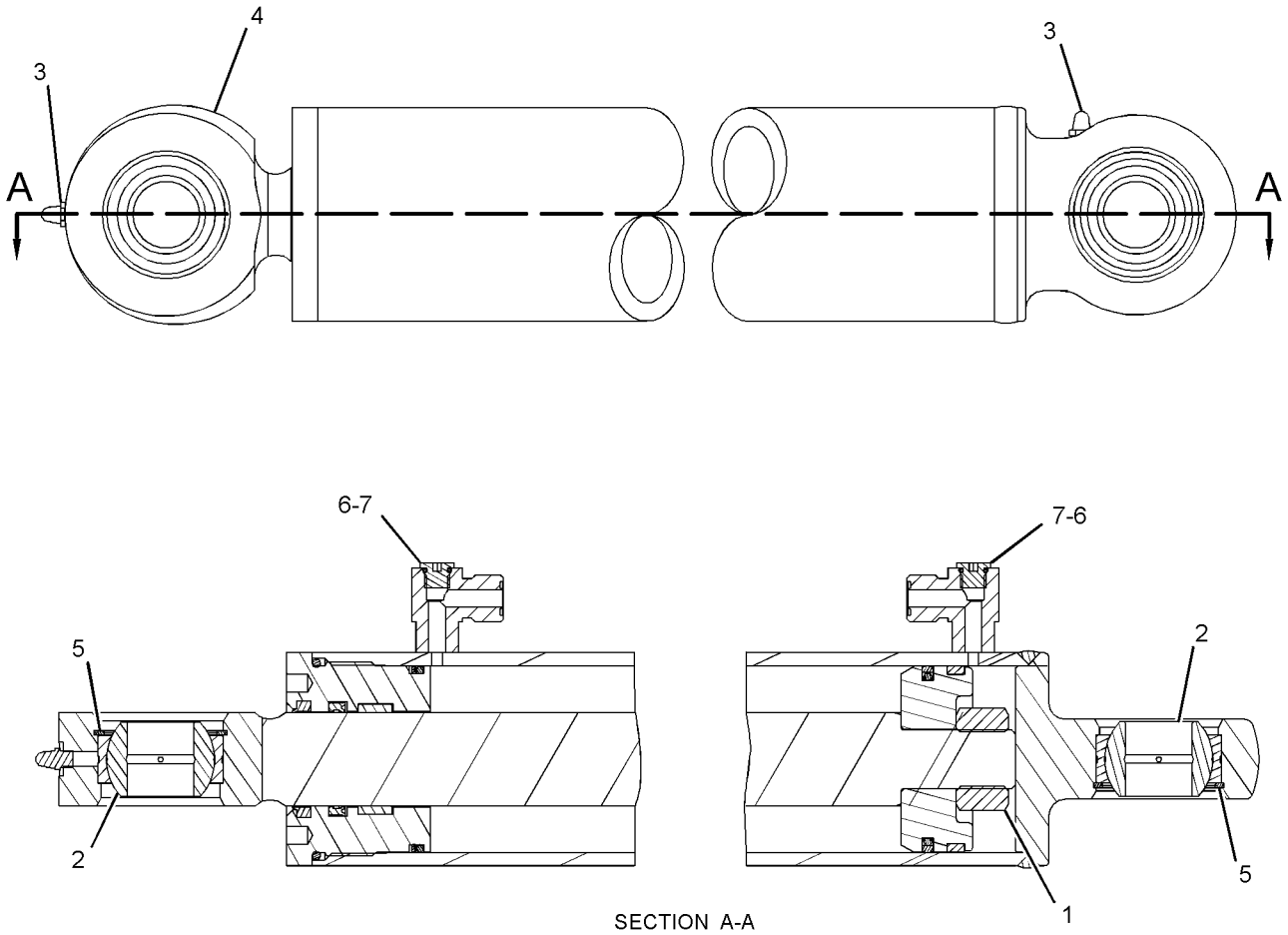

SECTION A-A

GRAPHIC #1 **<END>** g01305293

274-9931 CYLINDER GP-HYDRAULIC–TILT

S/N: A9H1-UP
70-MM (2.8-IN) BORE X 120-MM (4.7-IN) STROKE
PART OF 231-5274 CYLINDER & MTG GP-ANGLE BLADE
AN ATTACHMENT

SMCS-5362, 7562 **i03690346**

NOTE	REF NO	GRAPHIC REF	PART NUMBER	QTY	PART NAME 1 2 3 4 5 6 (PRODUCT LEVEL)	SEE PAGE
	1	1	**7D-8508**	1	NUT-FULL (7/8-14-THD)	
	2	1	**8Q-6027**	2	BEARING-SPHERICAL	
	3	1	**027-1287**	2	FITTING-GREASE	
	4	1	**278-4525**	1	ROD AS	
	5	1	**278-4875**	2	RING-RETAINING	
					AVAILABLE REPAIR KIT(S):	
			266-6140	1	KIT-SEAL (SWING CYLINDER)	
					(INCLUDES SEAL-O-RINGS, WEAR RINGS, BACKUP RING, SEAL-U CUP, SEAL & SETSCREW)	

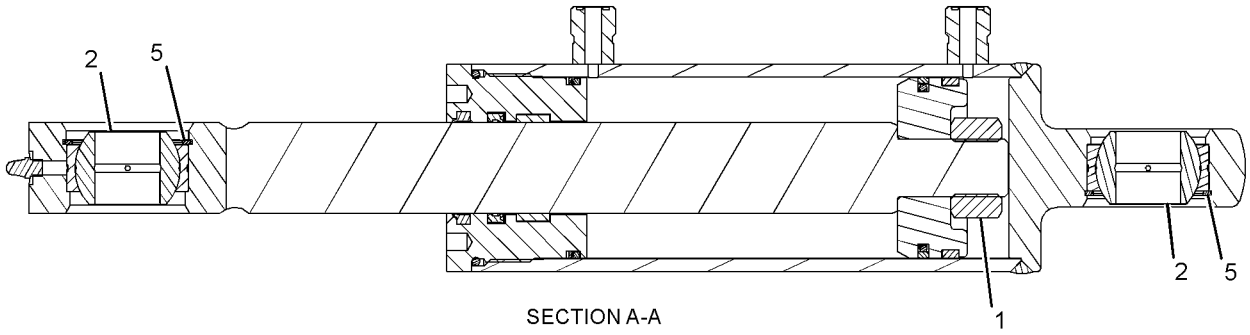

SECTION A-A

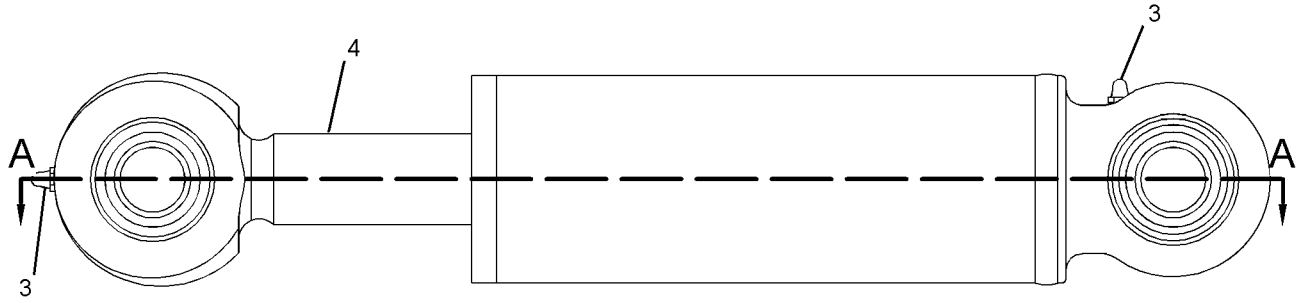

GRAPHIC #1 **<END>** g01270194

278-1969 CYLINDER GP-HYDRAULIC–BUCKET

S/N: A9H1-UP
60-MM (2.4-IN) BORE X 200-MM (7.9-IN) STROKE
PART OF 279-5390, 279-5398, 279-5403, 293-0139 BUCKET AR-MULTIPURPOSE AN ATTACHMENT

SMCS-5362, 7562 **i04038468**

NOTE	REF NO	GRAPHIC REF	PART NUMBER	QTY	PART NAME 1 2 3 4 5 6 (PRODUCT LEVEL)	SEE PAGE
	1	1	**7D-8508**	1	NUT-FULL (7/8-14-THD)	
	2	1	**254-9097**	1	BUSHING	
	3	1	**3B-8489**	1	FITTING-GREASE	
					AVAILABLE REPAIR KIT(S):	
			278-1970	1	KIT-SEAL (HYDRAULIC CYLINDER)	
					(INCLUDES O-RINGS, WEAR RINGS, BACKUP RING, U-CUP SEAL, WIPER SEAL & SEAL)	

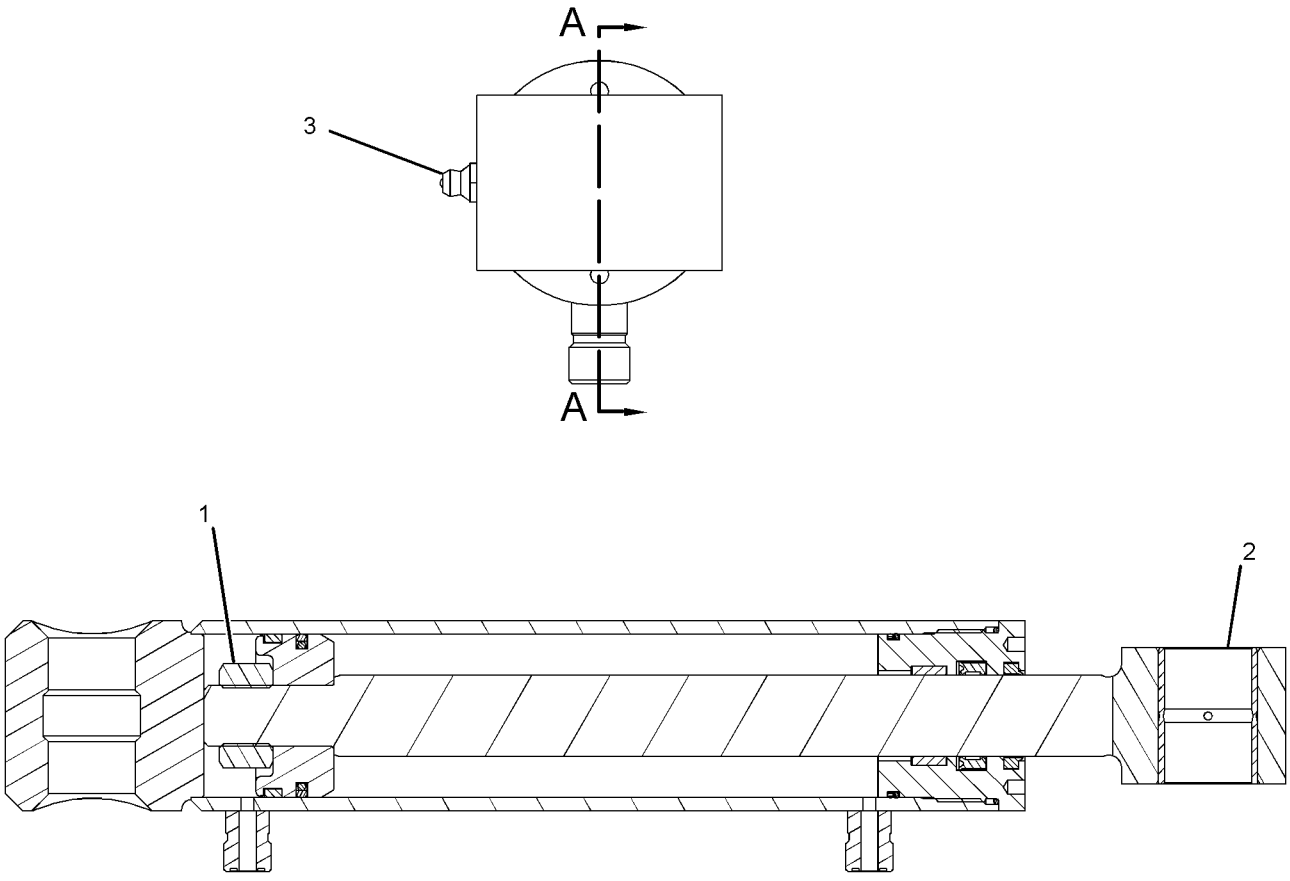

SECTION A-A

GRAPHIC #1 **<END>** g01281180

295-6951 CYLINDER GP-LIFT–RH

S/N: A9H1-UP
60-MM (2.4-IN) BORE X 715-MM (28.2-IN) STROKE
PART OF 218-5799 CYLINDER & MTG GP-LIFT ARM

SMCS-5102 **i04534881**

NOTE	REF NO	GRAPHIC REF	PART NUMBER	QTY	PART NAME 1 2 3 4 5 6 (PRODUCT LEVEL)	SEE PAGE
J	1	1	**144-9493**	1	SEAL-U-CUP	
	2	1	**297-4130**	1	RING-WEAR	
	3	1	**297-4407**	1	HEAD	
	4	1	**297-4408**	1	PISTON	
	5	1	**297-4411**	1	ROD AS	
	6	1	**297-4414**	1	CYLINDER AS	
J	7	1	**144-9486**	1	RING-WEAR	
J	8	1	**144-9485**	1	SEAL-PISTON	
J	9	1	**144-9492**	1	SEAL-LIP TYPE	
	10	1	*162-0177*	2	PLUG AS	
					(EACH INCLUDES)	
		1	**3J-1907**	1	SEAL-O-RING	
		1	**9S-8004**	1	PLUG-O-RING	
J	11	1	**329-2587**	1	RING-BACKUP	
J	12	1	**4J-0526**	1	SEAL-O-RING	
	13	1	**6V-8398**	2	SEAL-O-RING	
J	14	1	**7J-2036**	1	SEAL-O-RING	
M	15	1	**9X-6611**	1	SETSCREW-SOCKET (M10X1.5X16-MM)	
					PARTS SHOWN IN GRAPHIC(S) WITHOUT A REFERENCE NUMBER ARE NOT SERVICED SEPARATELY	
					AVAILABLE REPAIR KIT(S):	
J			**371-2756**	1	KIT-HYD CYLINDER SEAL	

J-KIT MARKED J SERVICES PARTS MARKED J
M-METRIC PART

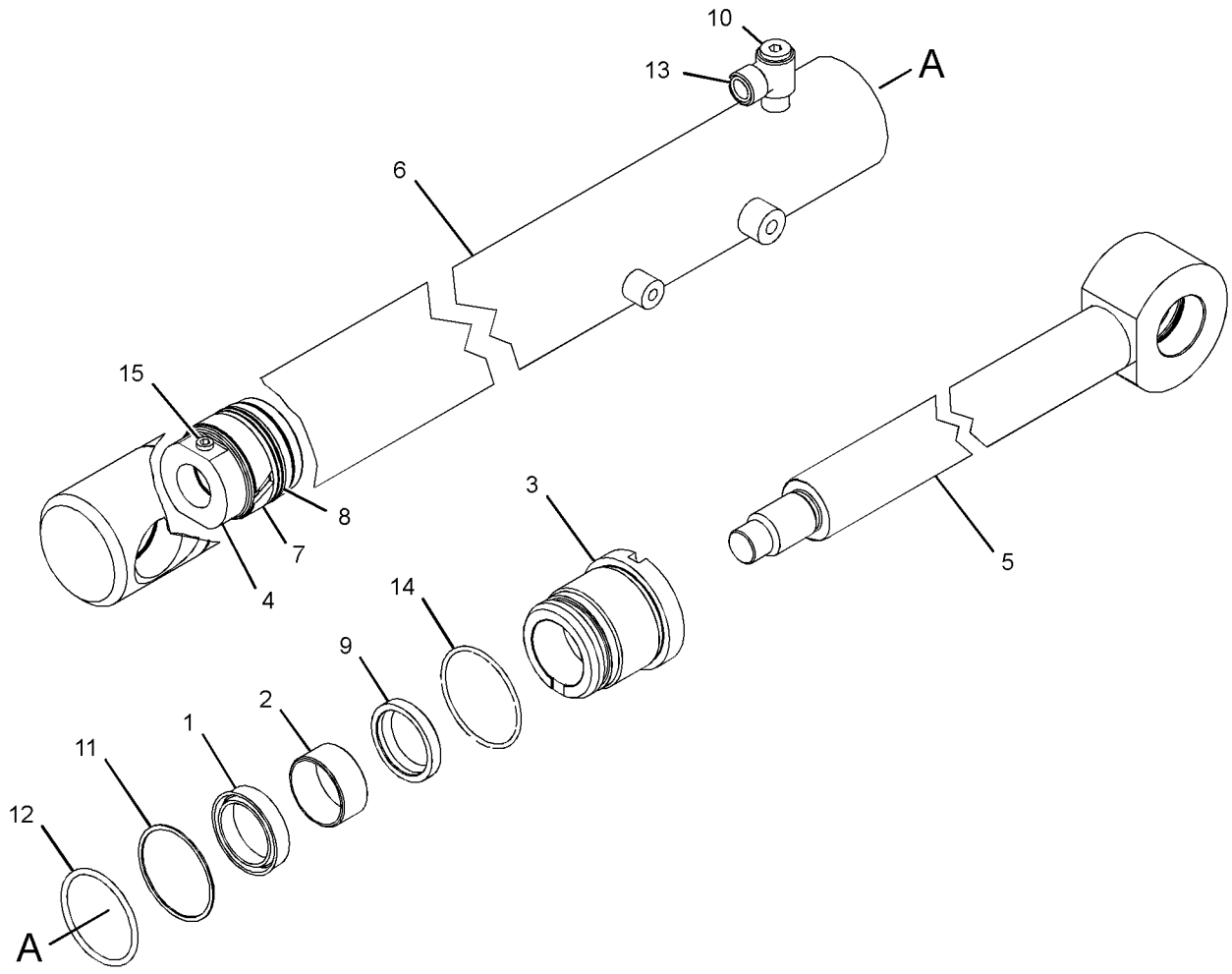

GRAPHIC #1 **<END>** g02161273

295-6952 CYLINDER GP-LIFT–LH

S/N: A9H1-UP
60-MM (2.4-IN) BORE X 715-MM (28.2-IN) STROKE
PART OF 218-5799 CYLINDER & MTG GP-LIFT ARM

SMCS-5102 **i04534882**

NOTE	REF NO	GRAPHIC REF	PART NUMBER	QTY	PART NAME 1 2 3 4 5 6 (PRODUCT LEVEL)	SEE PAGE
J	1	1	**144-9493**	1	SEAL-U-CUP	
	2	1	**297-4130**	1	RING-WEAR	
	3	1	**297-4407**	1	HEAD	
	4	1	**297-4408**	1	PISTON	
	5	1	**297-4752**	1	ROD AS	
	6	1	**297-4753**	1	CYLINDER AS	
J	7	1	**144-9486**	1	RING-WEAR	
J	8	1	**144-9485**	1	SEAL-PISTON	
J	9	1	**144-9492**	1	SEAL-LIP TYPE	
	10	1	*162-0177*	2	PLUG AS	
					(EACH INCLUDES)	
		1	**3J-1907**	1	SEAL-O-RING	
		1	**9S-8004**	1	PLUG-O-RING	
M	11	1	**9X-6611**	1	SETSCREW-SOCKET (M10X1.5X16-MM)	
J	12	1	**329-2587**	1	RING-BACKUP	
J	13	1	**4J-0526**	1	SEAL-O-RING	
	14	1	**6V-8398**	2	SEAL-O-RING	
J	15	1	**7J-2036**	1	SEAL-O-RING	
					PARTS SHOWN IN GRAPHIC(S) WITHOUT A REFERENCE NUMBER ARE NOT SERVICED SEPARATELY	
					AVAILABLE REPAIR KIT(S):	
J			**371-2756**	1	KIT-HYD CYLINDER SEAL	

J-KIT MARKED J SERVICES PARTS MARKED J
M-METRIC PART

295-6952 CYLINDER GP-LIFT *(contd.)* **i04534882**

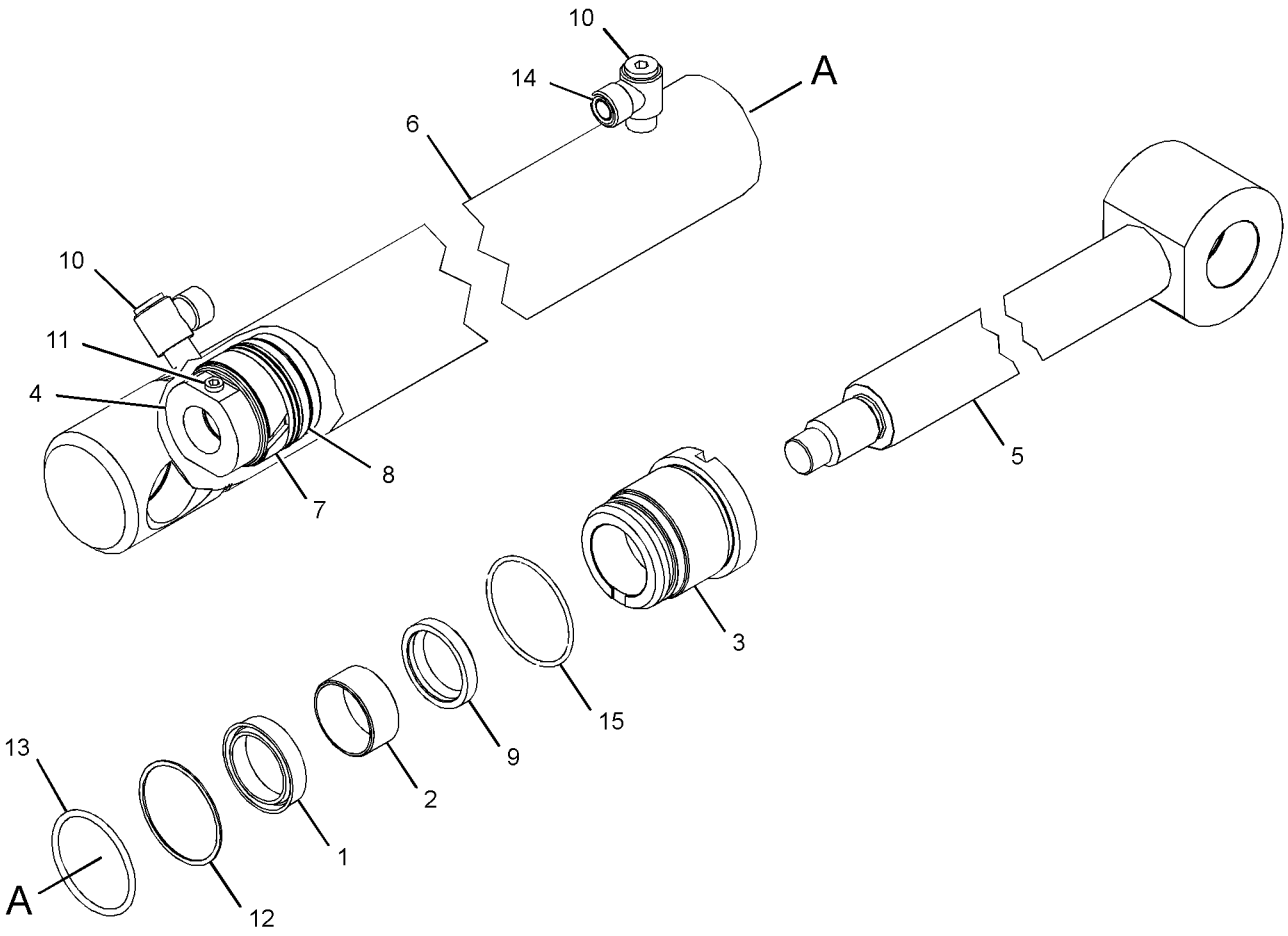

GRAPHIC #1 **<END>** g02161321

295-6953 CYLINDER GP-TILT–RH

S/N: A9H1-UP
70-MM (2.8-IN) BORE X 354-MM (14-IN) STROKE
PART OF 218-5799 CYLINDER & MTG GP-LIFT ARM

SMCS-5104 **i04559585**

NOTE	REF NO	GRAPHIC REF	PART NUMBER	QTY	PART NAME 1 2 3 4 5 6 (PRODUCT LEVEL)	SEE PAGE
	1	1	**3B-8489**	1	FITTING-GREASE	
J	2	1	**140-2392**	1	SEAL-LIP TYPE	
J	3	1	**161-7145**	1	SEAL-PISTON	
	4	1	**296-5140**	1	RING-WEAR	
J	5	1	**329-2589**	2	RING-BACKUP	
J	6	1	**3P-0439**	2	SEAL-O-RING	
	7	1	**6V-8398**	2	SEAL-O-RING	
M	8	1	**9X-6611**	1	SETSCREW-SOCKET (M10X1.5X16-MM)	
	9	1	**297-8522**	1	CYLINDER AS	
J	10	1	**107-4057**	1	SEAL-O-RING	
J	11	1	**151-2566**	1	RING-WEAR	
	12	1	*162-0177*	2	PLUG AS	
					(EACH INCLUDES)	
		1	**3J-1907**	1	SEAL-O-RING	
		1	**9S-8004**	1	PLUG-O-RING	
J	13	1	**299-1379**	1	SEAL-U-CUP	
	14	1	**297-8519**	1	ROD AS	
F			**3K-2151**	1	BUSHING	
					AVAILABLE REPAIR KIT(S):	
J			**371-2760**	1	KIT-HYD CYLINDER SEAL (TILT)	

F-NOT SHOWN
J-KIT MARKED J SERVICES PARTS MARKED J
M-METRIC PART

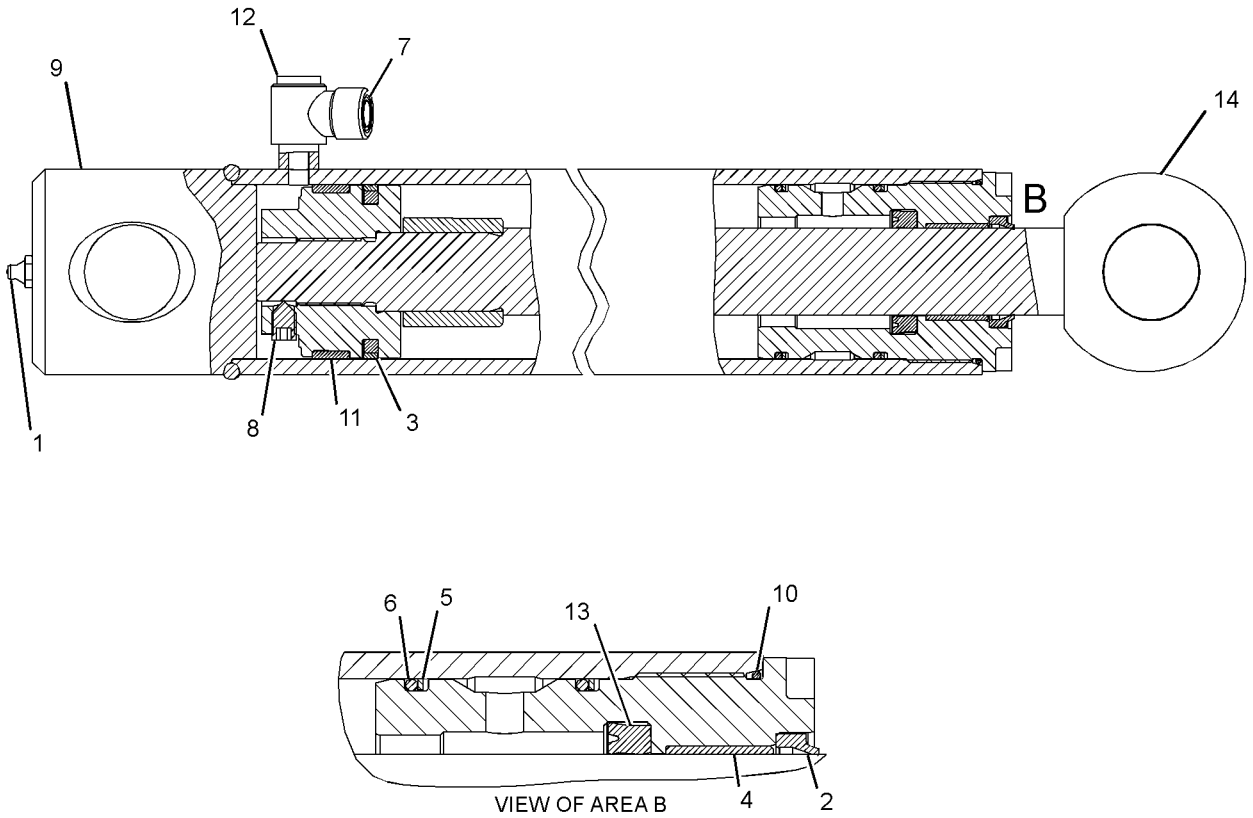

GRAPHIC #1 **<END>** g02727182

295-6954 CYLINDER GP-TILT–LH

S/N: A9H1-UP
70-MM (2.8-IN) BORE X 354-MM (14-IN) STROKE
PART OF 218-5799 CYLINDER & MTG GP-LIFT ARM

SMCS-5104 **i04559584**

NOTE	REF NO	GRAPHIC REF	PART NUMBER	QTY	PART NAME 1 2 3 4 5 6 (PRODUCT LEVEL)	SEE PAGE
	1	1	**3B-8489**	1	FITTING-GREASE	
J	2	1	**140-2392**	1	SEAL-LIP TYPE	
J	3	1	**161-7145**	1	SEAL-PISTON	
	4	1	**296-5140**	1	RING-WEAR	
J	5	1	**329-2589**	2	RING-BACKUP	
J	6	1	**3P-0439**	2	SEAL-O-RING	
	7	1	**6V-8398**	2	SEAL-O-RING	
M	8	1	**9X-6611**	1	SETSCREW-SOCKET (M10X1.5X16-MM)	
	9	1	**297-8524**	1	CYLINDER AS	
J	10	1	**107-4057**	1	SEAL-O-RING	
J	11	1	**151-2566**	1	RING-WEAR	
	12	1	*162-0177*	2	PLUG AS	
					(EACH INCLUDES)	
		1	**3J-1907**	1	SEAL-O-RING	
		1	**9S-8004**	1	PLUG-O-RING	
J	13	1	**299-1379**	1	SEAL-U-CUP	
	14	1	**297-8519**	1	ROD AS	
F			**3K-2151**	1	BUSHING	
					AVAILABLE REPAIR KIT(S):	
J			**371-2760**	1	KIT-HYD CYLINDER SEAL (TILT)	

F-NOT SHOWN
J-KIT MARKED J SERVICES PARTS MARKED J
M-METRIC PART

295-6954 CYLINDER GP-TILT *(contd.)* **i04559584**

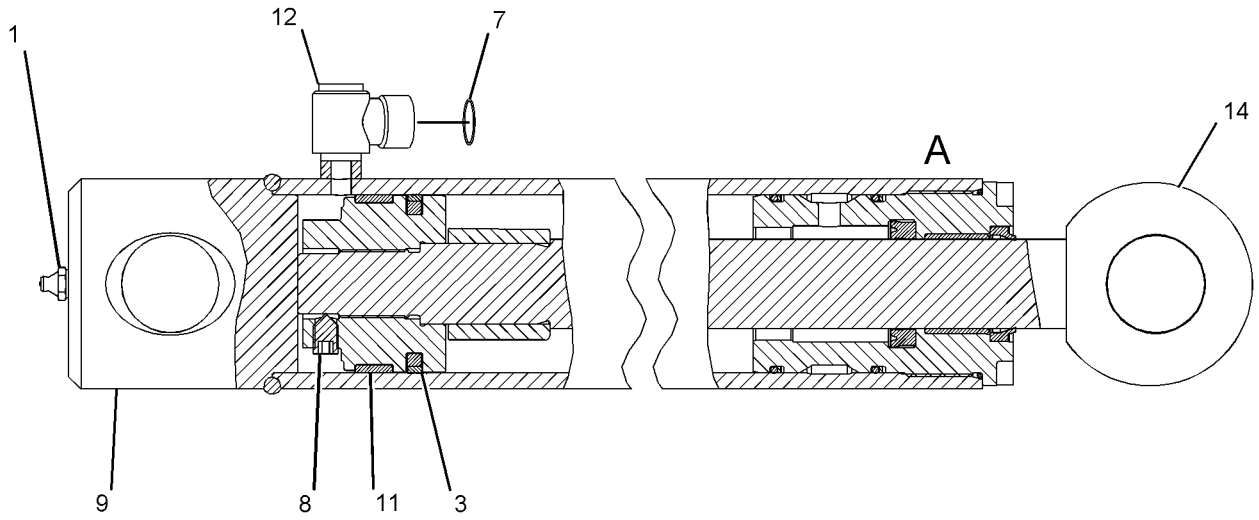

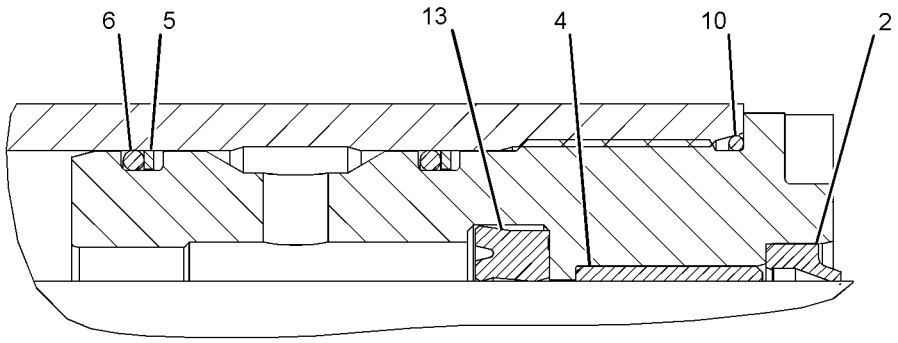

VIEW OF AREA A

GRAPHIC #1 **<END>** g02726786

326-5435 HYDRAULIC AR

S/N: A9H1-UP
PART OF 326-5420 COMMON AR

SMCS-5050 **i04330229**

NOTE	PART NUMBER	QTY	PART NAME 1 2 3 4 5 6 (PRODUCT LEVEL)	SEE PAGE
Y	*193-0447*	1	ACCUMULATOR & MTG GP-HYDRAULIC	215
Y	*356-1916*	1	FILTER & LINES GP-HYDRAULIC	134
Y	*218-5625*	1	LINES GP-HYDRAULIC OIL COOLER	272
			S/N: A9H1-937	
Y	*218-5621*	1	LINES GP-HYDROSTATIC	137
Y	*218-5631*	1	LINES GP-PILOT (DIRECTION, SPEED)	281
Y	*218-5632*	1	LINES GP-PILOT (WORK TOOL)	283
Y	*356-1910*	1	LINES GP-PUMP	285
Y	*218-5634*	1	LINES GP-WORK TOOL	291
Y	*326-5780*	1	TANK & MTG GP-HYDRAULIC	311
Y	*218-6275*	1	VALVE & MTG GP-CONTROL (WORK TOOL, 3-FUNCTION)	313

Y-SEPARATE ILLUSTRATION

<END>

326-5467 HYDRAULIC AR—WITHOUT WORK TOOL POSITIONER

S/N: A9H1-UP
CANNOT BE USED WITH 326-5480—PAGE 241
AN ATTACHMENT

SMCS-5050 **i03902979**

NOTE	PART NUMBER	QTY	PART NAME 1 2 3 4 5 6 (PRODUCT LEVEL)	SEE PAGE
Y	*332-6713*	1	LINES GP-LIFT CYLINDER	279
Y	*218-5732*	1	LINES GP-TILT CYLINDER	287

Y-SEPARATE ILLUSTRATION

<END>

326-5480 HYDRAULIC AR—WITH WORK TOOL POSITIONER

S/N: A9H1-UP
CANNOT BE USED WITH 326-5467—PAGE 241
AN ATTACHMENT

SMCS-5050 **i03902977**

NOTE	PART NUMBER	QTY	PART NAME 1 2 3 4 5 6 (PRODUCT LEVEL)	SEE PAGE
Y	*326-5676*	1	LINES GP-LIFT CYLINDER	276
Y	*218-5734*	1	LINES GP-TILT CYLINDER	289

Y-SEPARATE ILLUSTRATION

<END>

HYDRAULIC SYSTEM

364-1355 KIT-QUICK COUPLER CONVERSION—HYDRAULIC

S/N: A9H1-UP

AN ATTACHMENT

SMCS-5057, 5133, 5479, 6129 **i04423444**

NOTE	REF NO	GRAPHIC REF	PART NUMBER	QTY	PART NAME 1 2 3 4 5 6 (PRODUCT LEVEL)	SEE PAGE
	1	1	**7K-1181**	3	STRAP-CABLE	
	2	1	**9X-6581**	1	NUT-O-RING SEAL (1-14-THD)	
	3	1	**124-2456**	1	FILM-INSTRUCTION (NO STEP)	
Y	4	1	**192-2640**	2	CYLINDER GP-HYDRAULIC (QUICK COUPLER)	228
	5	1	**192-2645**	2	SPRING	
	6	1	**207-9737**	1	BRACKET AS	
I	7	1	**207-9756**	4	HOSE AS	
I	8	1	**207-9758**	2	HOSE AS	
	9	1	**207-9785**	2	PIN	
	10	1	**212-6521**	1	SWITCH AS-ROCKER (QUICK COUPLER)	
		1	**111-7899**	1	GASKET	
	11	1	**212-6690**	1	GUARD	
	12	1	**218-6332**	1	BRACKET AS	
	13	1	**218-6333**	1	BRACKET AS	
	14	1	**218-6511**	1	TUBE AS	
	15	1	**218-6512**	1	TUBE AS	
Y	16	1	**233-7128**	1	MANIFOLD GP-CONTROL (QUICK COUPLER)	296
	17	1	**303-8767**	2	PIN-SPRING	
	18	1	**303-8768**	4	PIN-SPRING	
	19	1	**310-6660**	2	PIN-SPRING	
	20	1	**311-9240**	2	PLATE	
M	21	1	**315-5493**	4	WASHER-HARD (22.5X35X4.5-MM THK)	
	22	1	**319-2137**	2	BRACKET	
I	23	1	**326-5583**	1	HOSE AS	
I	24	1	**326-5585**	2	HOSE AS	
	25	1	**326-5762**	1	BRACKET AS	
M		1	**8T-3490**	4	NUT-WELD (M10X1.5-THD)	
	26	1	**124-2113**	2	COUPLING-PERMANENT	
	27	1	*148-8325*	4	CONNECTOR AS	
					(EACH INCLUDES)	
		1	**3J-1907**	1	SEAL-O-RING	
		1	**4J-5477**	1	SEAL-O-RING	
		1	**6V-8641**	1	CONNECTOR	
	28	1	*148-8336*	2	CONNECTOR AS	
					(EACH INCLUDES)	
		1	**3J-1907**	1	SEAL-O-RING	
		1	**6V-8397**	1	SEAL-O-RING	
		1	**6V-8636**	1	CONNECTOR	
	29	1	*148-8353*	1	ELBOW AS	
		1	**3J-1907**	1	SEAL-O-RING	
		1	**6V-8397**	1	SEAL-O-RING	
		1	**6V-9001**	1	ELBOW	
	30	1	*148-8367*	1	ELBOW AS	
		1	**6V-8397**	1	SEAL-O-RING	
		1	**6V-9850**	1	ELBOW	
	31	1	*148-8378*	1	ELBOW AS	
		1	**3J-1907**	1	SEAL-O-RING	
		1	**6V-8397**	1	SEAL-O-RING	
		1	**6V-8724**	1	ELBOW	
	32	1	*148-8433*	1	TEE AS	
		1	**6V-8397**	2	SEAL-O-RING	
		1	**6V-9836**	1	TEE-SWIVEL	
	33	1	*148-8446*	1	TEE AS-SWIVEL	
		1	**6V-9838**	1	TEE-SWIVEL	
		1	**7J-9108**	2	SEAL-O-RING	

364-1355 KIT-QUICK COUPLER CONVERSION *(contd.)* i04423444

NOTE	REF NO	GRAPHIC REF	PART NUMBER	QTY	PART NAME 1 2 3 4 5 6 (PRODUCT LEVEL)	SEE PAGE
	34	1	*150-4034*	2	TEE AS	
					(EACH INCLUDES)	
		1	**6V-8397**	3	SEAL-O-RING	
		1	**8T-0379**	1	TEE-BULKHEAD	
	35	1	*156-4282*	1	REDUCER AS	
		1	**6V-8397**	1	SEAL-O-RING	
		1	**6V-8938**	1	REDUCER-O-RING	
	36	1	**1P-7009**	1	CLIP	
	37	1	**3B-4628**	2	PIN-COTTER	
	38	1	**4P-7581**	2	CLIP	
M	39	1	**5C-7261**	1	NUT (M8X1.25-THD)	
	40	1	**5P-0372**	2	LOCK PIN	
	41	1	**5P-4116**	2	WASHER-HARD (8.8X20.5X2-MM THK)	
	42	1	**6V-8397**	4	SEAL-O-RING	
	43	1	**6V-9168**	2	NUT (11/16-16-THD)	
	44	1	**7G-2950**	1	CLIP (SLOT)	
	45	1	**7G-2951**	1	CLIP (TAB)	
	46	1	**7H-7055**	8	CLIP	
	47	1	**7X-7729**	3	WASHER (11X25X3-MM THK)	
	48	1	**8L-5188**	2	PIN	
	49	1	**8T-4121**	14	WASHER-HARD (11X21X2.5-MM THK)	
M	50	1	**8T-4133**	4	NUT (M10X1.5-THD)	
M	51	1	**8T-4136**	1	BOLT (M10X1.5X25-MM)	
M	52	1	**8T-4137**	1	BOLT (M10X1.5X20-MM)	
M	53	1	**8T-4189**	4	BOLT (M8X1.25X20-MM)	
M	54	1	**8T-4191**	2	BOLT (M10X1.5X16-MM)	
M	55	1	**8T-4196**	4	BOLT (M10X1.5X35-MM)	
M	56	1	**8T-4201**	3	BOLT-LOCKING (M10X1.5X20-MM)	
	57	1	**8T-4224**	4	WASHER-HARD (8.8X16X2-MM THK)	
M	58	1	**8T-4908**	1	BOLT (M8X1.25X25-MM)	
M	59	1	**8T-5005**	2	BOLT (M10X1.5X70-MM)	
	60	1	**9M-8406**	4	CLIP	
	61	1	**9T-7303**	4	SPACER (16X28X1.5-MM THK)	
E	62	1	**213-8708**		HOSE-HYDRAULIC (120-CM)	

E-ORDER BY THE CENTIMETER
I-REFER TO HYDRAULIC INFORMATION SYSTEM
M-METRIC PART
Y-SEPARATE ILLUSTRATION

364-1355 KIT-QUICK COUPLER CONVERSION *(contd.)* i04423444

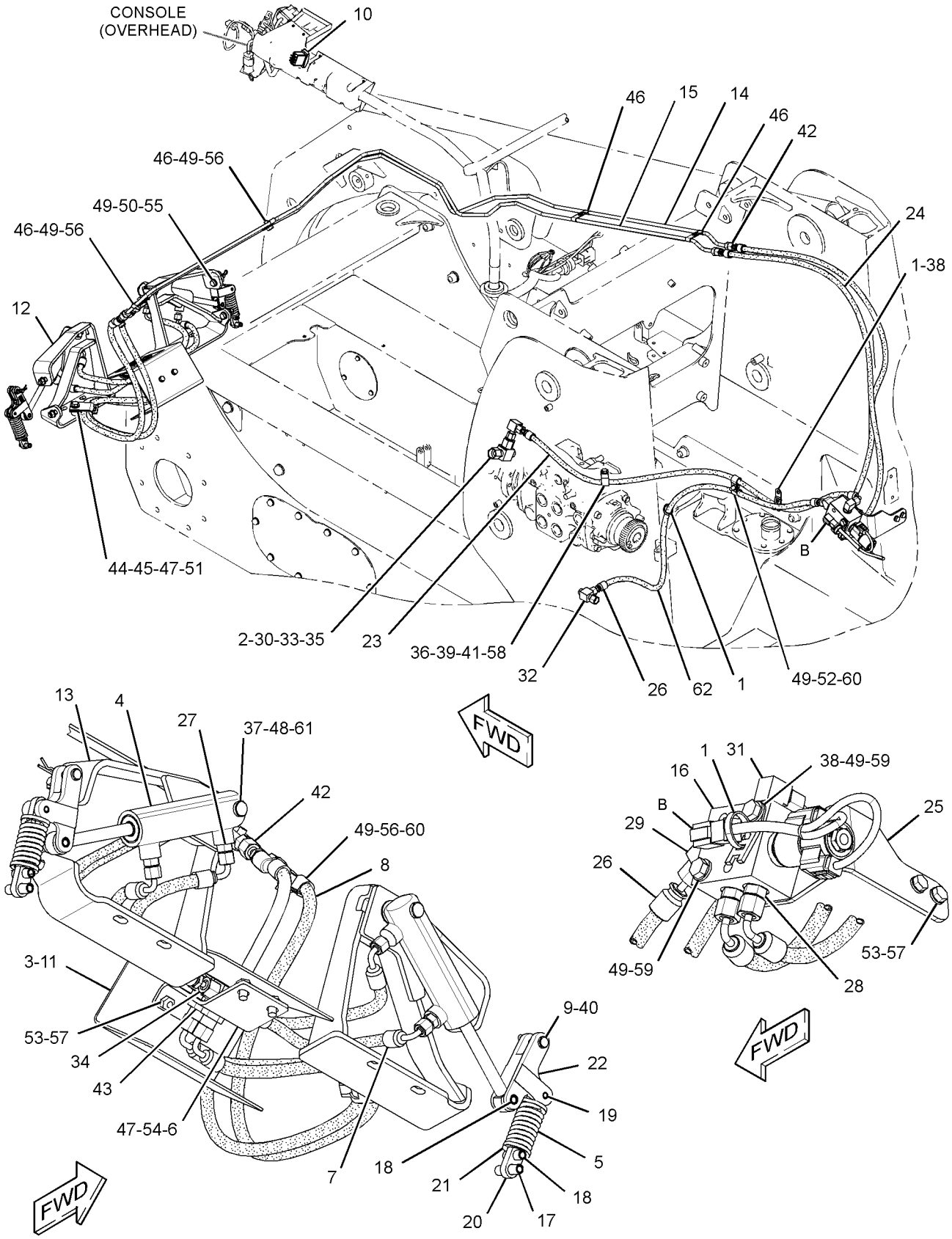

GRAPHIC #1 **<END>** g02646386

HYDRAULIC SYSTEM

279-5412 LINES GP-BUCKET—INDUSTRIAL

S/N: A9H1-UP

PART OF 279-5350, 279-5360 FORK AR-GRAPPLE

AN ATTACHMENT

SMCS-5057 **i02616554**

NOTE	REF NO	GRAPHIC REF	PART NUMBER	QTY	PART NAME 1 2 3 4 5 6 (PRODUCT LEVEL)	SEE PAGE
	1	1	**3E-7404**	2	CLAMP-HOSE	
I	2	1	**294-5503**	1	HOSE AS	
	3	1	**153-2994**	1	COUPLER AS-QUICK DISCONNECT (FEMALE)	
	4	1	**153-2995**	1	COUPLER AS-QUICK DISCONNECT (MALE)	
	5	1	**161-0185**	1	TUBE AS	
	6	1	**161-0186**	1	TUBE AS	
	7	1	**161-0188**	2	TUBE AS	
I	8	1	**161-0189**	2	HOSE AS	
I	9	1	**161-0190**	2	HOSE AS	
	10	1	**163-1385**	1	ELBOW	
I	11	1	**294-5502**	1	HOSE AS	
	12	1	*148-8319*	2	CONNECTOR AS	
					(EACH INCLUDES)	
		1	**2M-9780**	1	SEAL-O-RING	
		1	**6V-8397**	1	SEAL-O-RING	
		1	**6V-8715**	1	CONNECTOR	
	13	1	**2V-3216**	6	CLIP	
	14	1	**6V-8397**	13	SEAL-O-RING	
	15	1	**7S-3916**	2	CLIP (TAB)	
	16	1	**7S-3919**	2	CLIP (SLOT)	
	17	1	**8T-4121**	2	WASHER-HARD (11X21X2.5-MM THK)	
M	18	1	**8T-4136**	2	BOLT (M10X1.5X25-MM)	
M	19	1	**8T-4171**	4	BOLT (M6X1X12-MM)	
	20	1	**9R-2004**	2	BLOCK	

I-REFER TO HYDRAULIC INFORMATION SYSTEM
M-METRIC PART

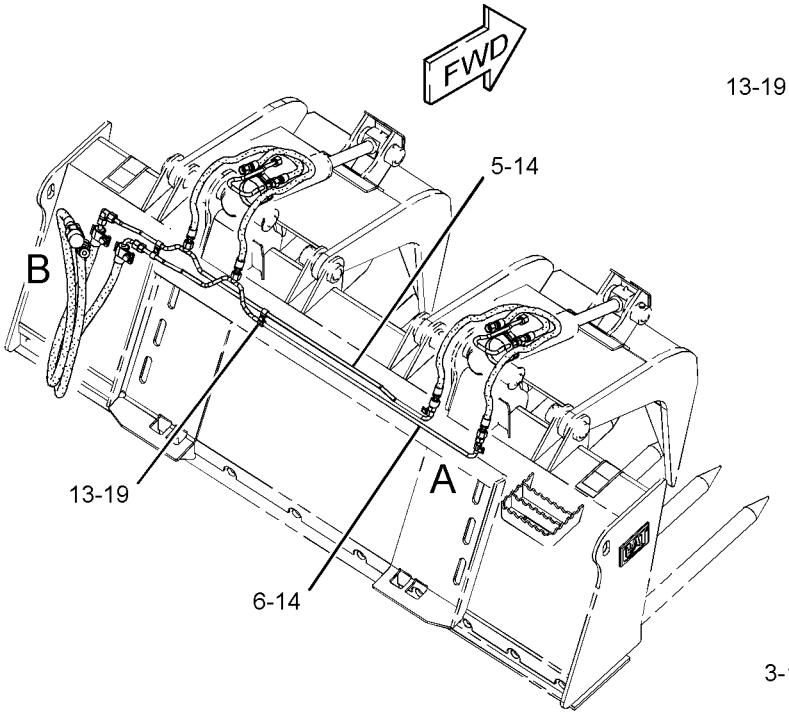

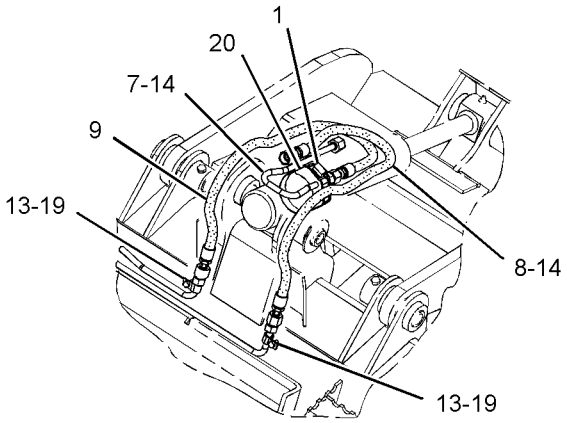

VIEW OF AREA A

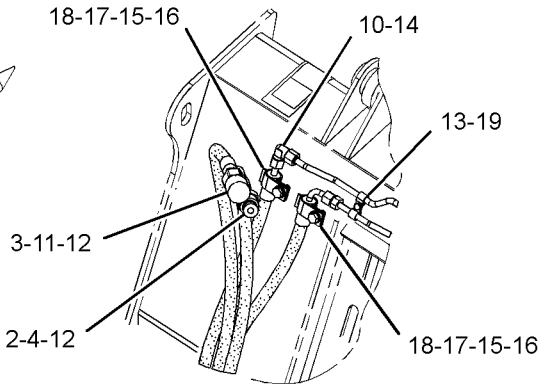

VIEW OF AREA B

GRAPHIC #1 **<END>** g01280859

279-5413 LINES GP-BUCKET—MULTIPURPOSE

S/N: A9H1-UP

PART OF 279-5382 BUCKET AR-MULTIPURPOSE

AN ATTACHMENT

SMCS-5057 **i03641721**

NOTE	REF NO	GRAPHIC REF	PART NUMBER	QTY	PART NAME 1 2 3 4 5 6 (PRODUCT LEVEL)	SEE PAGE
	1	1	**153-2994**	1	COUPLER AS-QUICK DISCONNECT (FEMALE)	
I	2	1	**154-5020**	2	HOSE AS	
I	3	1	**154-5021**	1	HOSE AS	
I	4	1	**154-5022**	1	HOSE AS	
	5	1	**163-1386**	1	TEE-UNION	
	6	1	**185-7887**	1	COUPLER AS-QUICK DISCONNECT (MALE)	
I	7	1	**279-5417**	1	HOSE AS	
I	8	1	**279-5418**	1	HOSE AS	
	9	1	*148-8319*	2	CONNECTOR AS	
					(EACH INCLUDES)	
		1	**2M-9780**	1	SEAL-O-RING	
		1	**6V-8397**	1	SEAL-O-RING	
		1	**6V-8715**	1	CONNECTOR	
	10	1	*150-3056*	1	TEE AS	
		1	**6V-8397**	3	SEAL-O-RING	
		1	**6V-8788**	1	TEE	
	11	1	**1S-0994**	1	CLIP	
	12	1	**6D-4247**	3	CLIP	
	13	1	**6V-8397**	7	SEAL-O-RING	
M	14	1	**8T-4189**	4	BOLT (M8X1.25X20-MM)	
	15	1	**8T-4224**	4	WASHER-HARD (8.8X16X2-MM THK)	
B	16	1	**9X-6273**	2	WASHER (32.5X50X0.8-MM THK)	
B	17	1	**9X-6274**	2	WASHER (32.5X50X1.6-MM THK)	

B-USE AS REQUIRED
I-REFER TO HYDRAULIC INFORMATION SYSTEM
M-METRIC PART

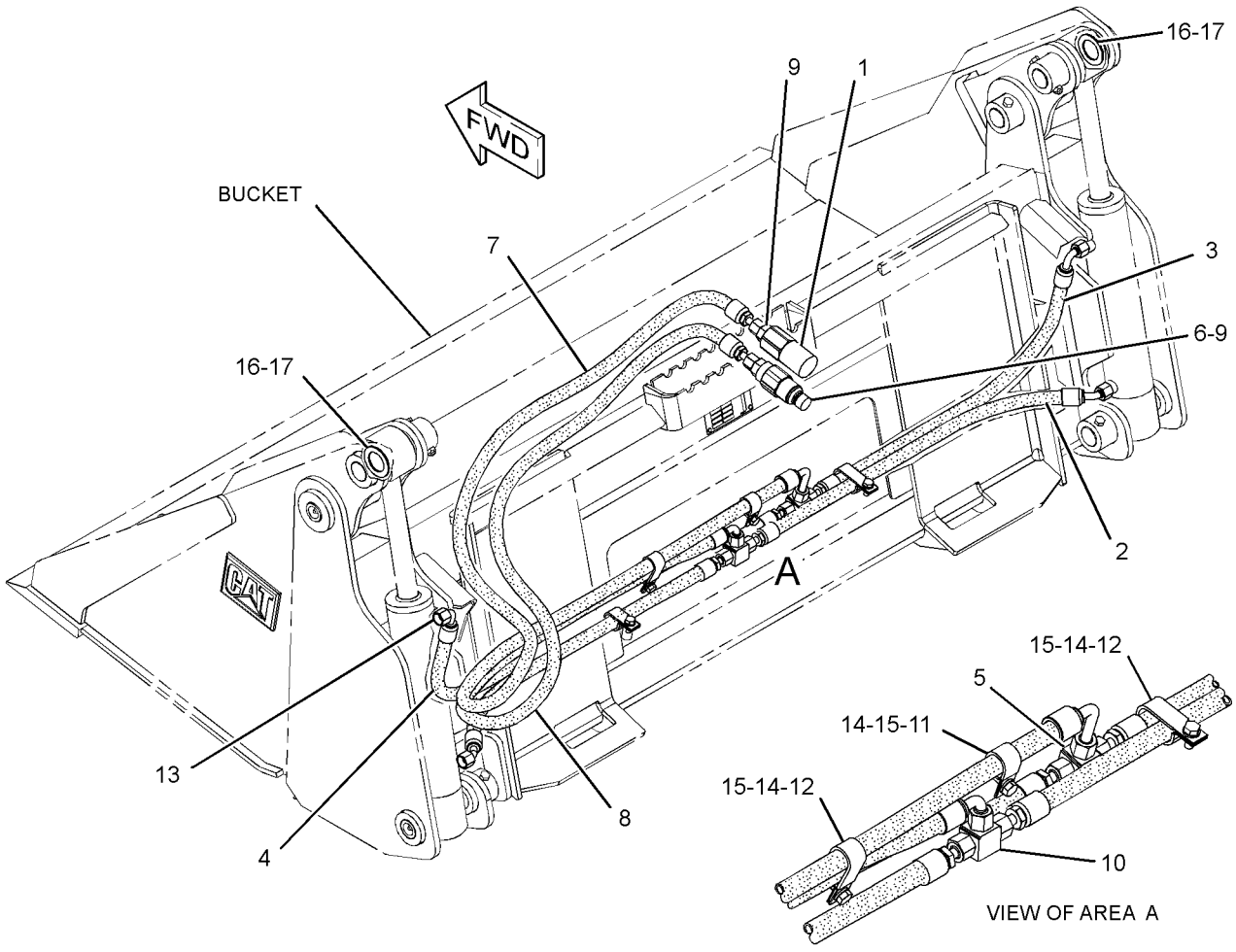

GRAPHIC #1 **<END>** g01278435

HYDRAULIC SYSTEM

279-5414 LINES GP-BUCKET—MULTIPURPOSE

S/N: A9H1-UP

PART OF 279-5390 BUCKET AR-MULTIPURPOSE

AN ATTACHMENT

SMCS-5057 **i02664837**

NOTE	REF NO	GRAPHIC REF	PART NUMBER	QTY	PART NAME 1 2 3 4 5 6 (PRODUCT LEVEL)	SEE PAGE
	1	1	**153-2994**	1	COUPLER AS-QUICK DISCONNECT (FEMALE)	
I	2	1	**156-5508**	1	HOSE AS	
I	3	1	**156-5509**	2	HOSE AS	
I	4	1	**156-5510**	1	HOSE AS	
	5	1	**163-1386**	1	TEE-UNION	
	6	1	**185-7887**	1	COUPLER AS-QUICK DISCONNECT (MALE)	
I	7	1	**279-5417**	1	HOSE AS	
I	8	1	**279-5418**	1	HOSE AS	
	9	1	*148-8319*	2	CONNECTOR AS	
					(EACH INCLUDES)	
		1	**2M-9780**	1	SEAL-O-RING	
		1	**6V-8397**	1	SEAL-O-RING	
		1	**6V-8715**	1	CONNECTOR	
	10	1	*150-3056*	1	TEE AS	
		1	**6V-8397**	3	SEAL-O-RING	
		1	**6V-8788**	1	TEE	
	11	1	**1S-0994**	1	CLIP	
	12	1	**6D-4247**	3	CLIP	
	13	1	**6V-8397**	7	SEAL-O-RING	
M	14	1	**8T-4189**	4	BOLT (M8X1.25X20-MM)	
	15	1	**8T-4224**	4	WASHER-HARD (8.8X16X2-MM THK)	
B	16	1	**9X-6273**	2	WASHER (32.5X50X0.8-MM THK)	
B	17	1	**9X-6274**	2	WASHER (32.5X50X1.6-MM THK)	

B-USE AS REQUIRED
I-REFER TO HYDRAULIC INFORMATION SYSTEM
M-METRIC PART

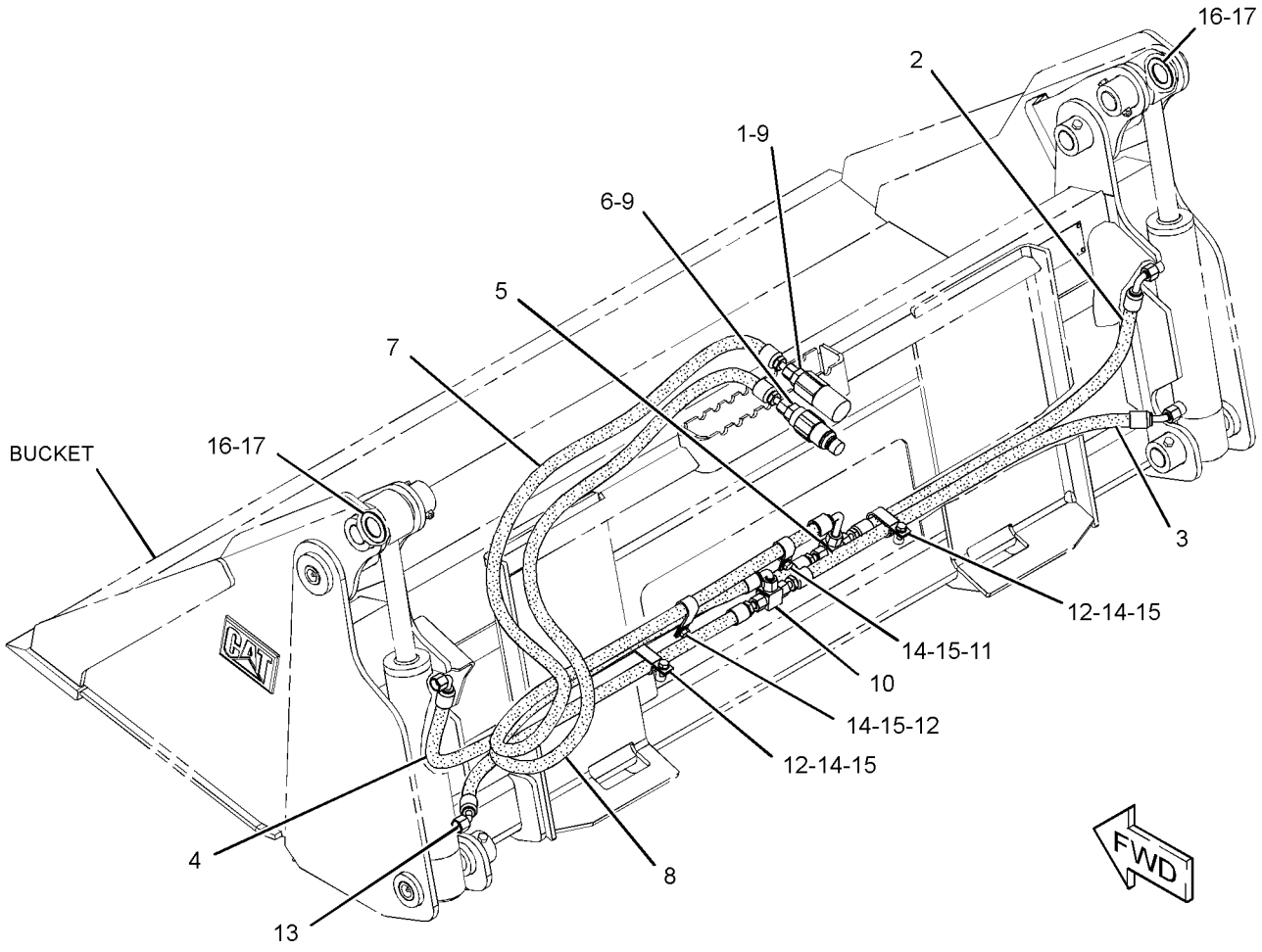

GRAPHIC #1 **<END>** g01339126

279-5415 LINES GP-BUCKET–MULTIPURPOSE

S/N: A9H1-UP
PART OF 279-5398 BUCKET AR-MULTIPURPOSE
AN ATTACHMENT

SMCS-5057 **i02552160**

NOTE	REF NO	GRAPHIC REF	PART NUMBER	QTY	PART NAME 1 2 3 4 5 6 (PRODUCT LEVEL)	SEE PAGE
	1	1	**153-2994**	1	COUPLER AS-QUICK DISCONNECT (FEMALE)	
I	2	1	**159-4535**	1	HOSE AS	
I	3	1	**159-4536**	2	HOSE AS	
I	4	1	**159-4537**	1	HOSE AS	
	5	1	**163-1386**	1	TEE-UNION	
	6	1	**185-7887**	1	COUPLER AS-QUICK DISCONNECT (MALE)	
I	7	1	**279-5417**	1	HOSE AS	
I	8	1	**279-5418**	1	HOSE AS	
	9	1	*148-8319*	2	CONNECTOR AS	
					(EACH INCLUDES)	
		1	**2M-9780**	1	SEAL-O-RING	
		1	**6V-8397**	1	SEAL-O-RING	
		1	**6V-8715**	1	CONNECTOR	
	10	1	*150-3056*	1	TEE AS	
		1	**6V-8397**	3	SEAL-O-RING	
		1	**6V-8788**	1	TEE	
	11	1	**1S-0994**	1	CLIP	
	12	1	**6D-4247**	3	CLIP	
	13	1	**6V-8397**	7	SEAL-O-RING	
M	14	1	**8T-4189**	4	BOLT (M8X1.25X20-MM)	
	15	1	**8T-4224**	4	WASHER-HARD (8.8X16X2-MM THK)	
B	16	1	**9X-6273**	2	WASHER (32.5X50X0.8-MM THK)	
B	17	1	**9X-6274**	2	WASHER (32.5X50X1.6-MM THK)	

B-USE AS REQUIRED
I-REFER TO HYDRAULIC INFORMATION SYSTEM
M-METRIC PART

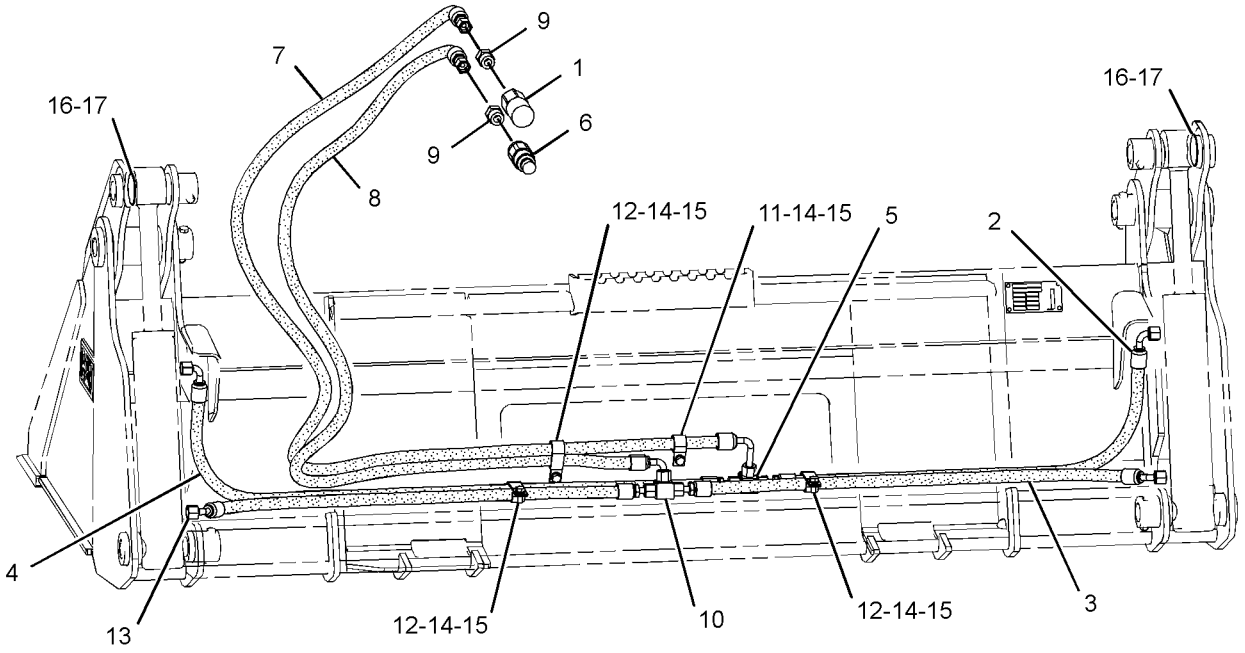

REAR VIEW
(UPPER LEFT)

GRAPHIC #1 **<END>** g01280163

279-5416 LINES GP-BUCKET—MULTIPURPOSE

S/N: A9H1-UP

PART OF 279-5403 BUCKET AR-MULTIPURPOSE

AN ATTACHMENT

SMCS-5057 **i02552257**

NOTE	REF NO	GRAPHIC REF	PART NUMBER	QTY	PART NAME 1 2 3 4 5 6 (PRODUCT LEVEL)	SEE PAGE
	1	1	**153-2994**	1	COUPLER AS-QUICK DISCONNECT (FEMALE)	
	2	1	**163-1386**	1	TEE-UNION	
	3	1	**185-7887**	1	COUPLER AS-QUICK DISCONNECT (MALE)	
I	4	1	**199-8309**	1	HOSE AS	
I	5	1	**199-8310**	2	HOSE AS	
I	6	1	**199-8311**	1	HOSE AS	
I	7	1	**279-5417**	1	HOSE AS	
I	8	1	**279-5418**	1	HOSE AS	
	9	1	*148-8319*	2	CONNECTOR AS	
					(EACH INCLUDES)	
		1	**2M-9780**	1	SEAL-O-RING	
		1	**6V-8397**	1	SEAL-O-RING	
		1	**6V-8715**	1	CONNECTOR	
	10	1	*150-3056*	1	TEE AS	
		1	**6V-8397**	3	SEAL-O-RING	
		1	**6V-8788**	1	TEE	
	11	1	**1S-0994**	1	CLIP	
	12	1	**6D-4247**	3	CLIP	
	13	1	**6V-8397**	7	SEAL-O-RING	
M	14	1	**8T-4189**	4	BOLT (M8X1.25X20-MM)	
	15	1	**8T-4224**	4	WASHER-HARD (8.8X16X2-MM THK)	
B	16	1	**9X-6273**	2	WASHER (32.5X50X0.8-MM THK)	
B	17	1	**9X-6274**	2	WASHER (32.5X50X1.6-MM THK)	

B-USE AS REQUIRED
I-REFER TO HYDRAULIC INFORMATION SYSTEM
M-METRIC PART

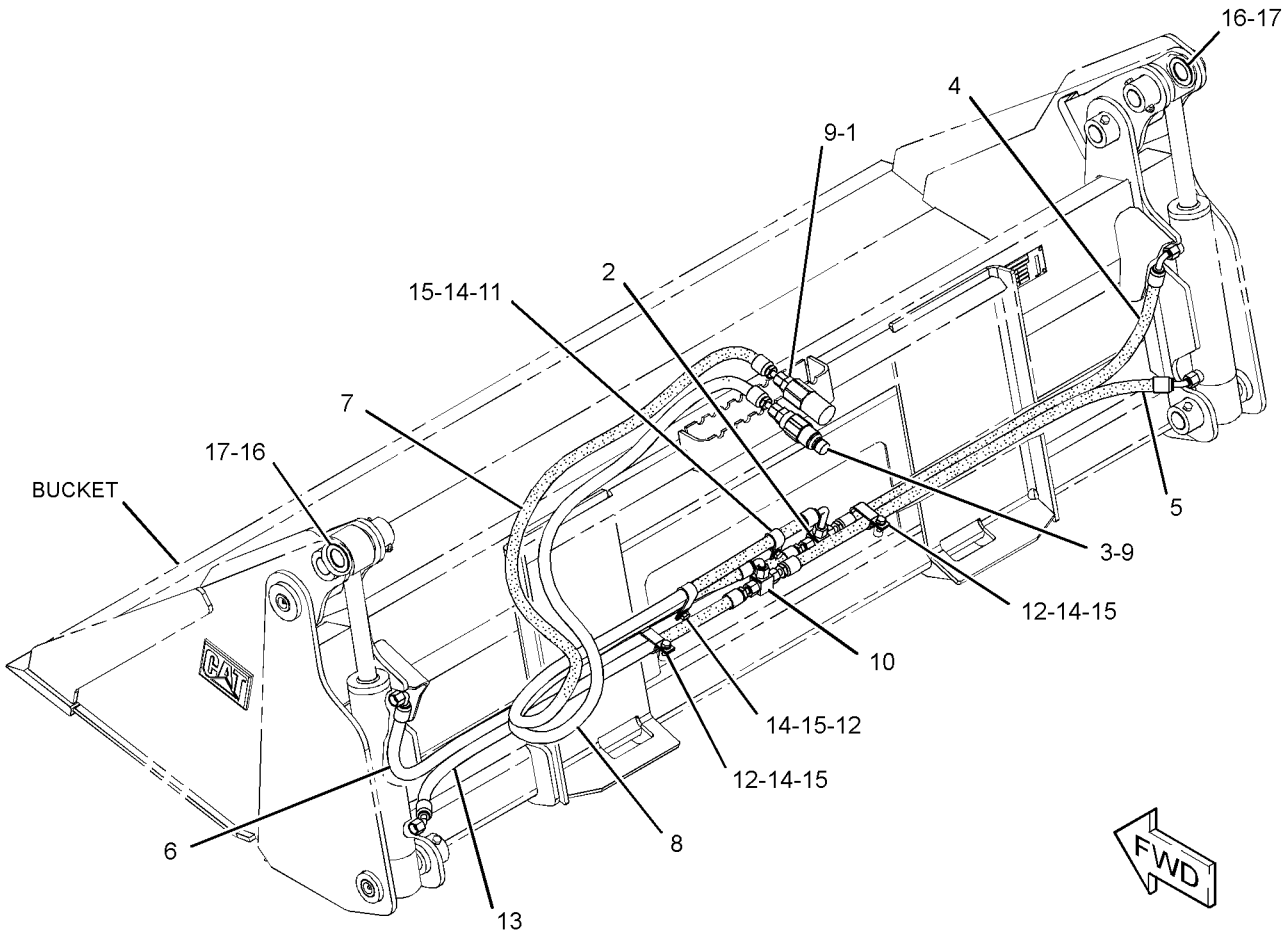

GRAPHIC #1 **<END>** g01278627

HYDRAULIC SYSTEM

285-6113 LINES GP-BUCKET—UTILITY

S/N: A9H1-UP

PART OF 285-6116 GRAPPLE & CYLINDER GP-UTILITY

AN ATTACHMENT

SMCS-5057 **i02890974**

NOTE	REF NO	GRAPHIC REF	PART NUMBER	QTY	PART NAME 1 2 3 4 5 6 (PRODUCT LEVEL)	SEE PAGE
	1	1	**153-2994**	1	COUPLER AS-QUICK DISCONNECT (FEMALE)	
	2	1	**153-2995**	1	COUPLER AS-QUICK DISCONNECT (MALE)	
	3	1	**174-2388**	1	TUBE AS	
	4	1	**174-2389**	1	TUBE AS	
CI	5	1	**174-2393**	1	HOSE AS	
	6	1	*183-4085*	1	ELBOW AS	
		1	**6V-8397**	2	SEAL-O-RING	
		1	**183-4084**	1	ELBOW	
I	7	1	**294-5504**	1	HOSE AS	
I	8	1	**294-5505**	1	HOSE AS	
CI	9	1	**307-3808**	1	HOSE AS	
	10	1	*148-8319*	2	CONNECTOR AS	
					(EACH INCLUDES)	
		1	**2M-9780**	1	SEAL-O-RING	
		1	**6V-8397**	1	SEAL-O-RING	
		1	**6V-8715**	1	CONNECTOR	
C	11	1	**6V-8397**	5	SEAL-O-RING	
	12	1	**7S-3912**	2	CLIP (TAB)	
	13	1	**7S-3913**	2	CLIP (SLOT)	
	14	1	**8T-1893**	2	CLIP (SLOT)	
	15	1	**8T-1894**	2	CLIP (TAB)	
	16	1	**8T-4121**	6	WASHER-HARD (11X21X2.5-MM THK)	
M	17	1	**8T-4137**	4	BOLT (M10X1.5X20-MM)	

C-CHANGE FROM PREVIOUS TYPE
I-REFER TO HYDRAULIC INFORMATION SYSTEM
M-METRIC PART

285-6113 **LINES GP-BUCKET** *(contd.)* **i02890974**

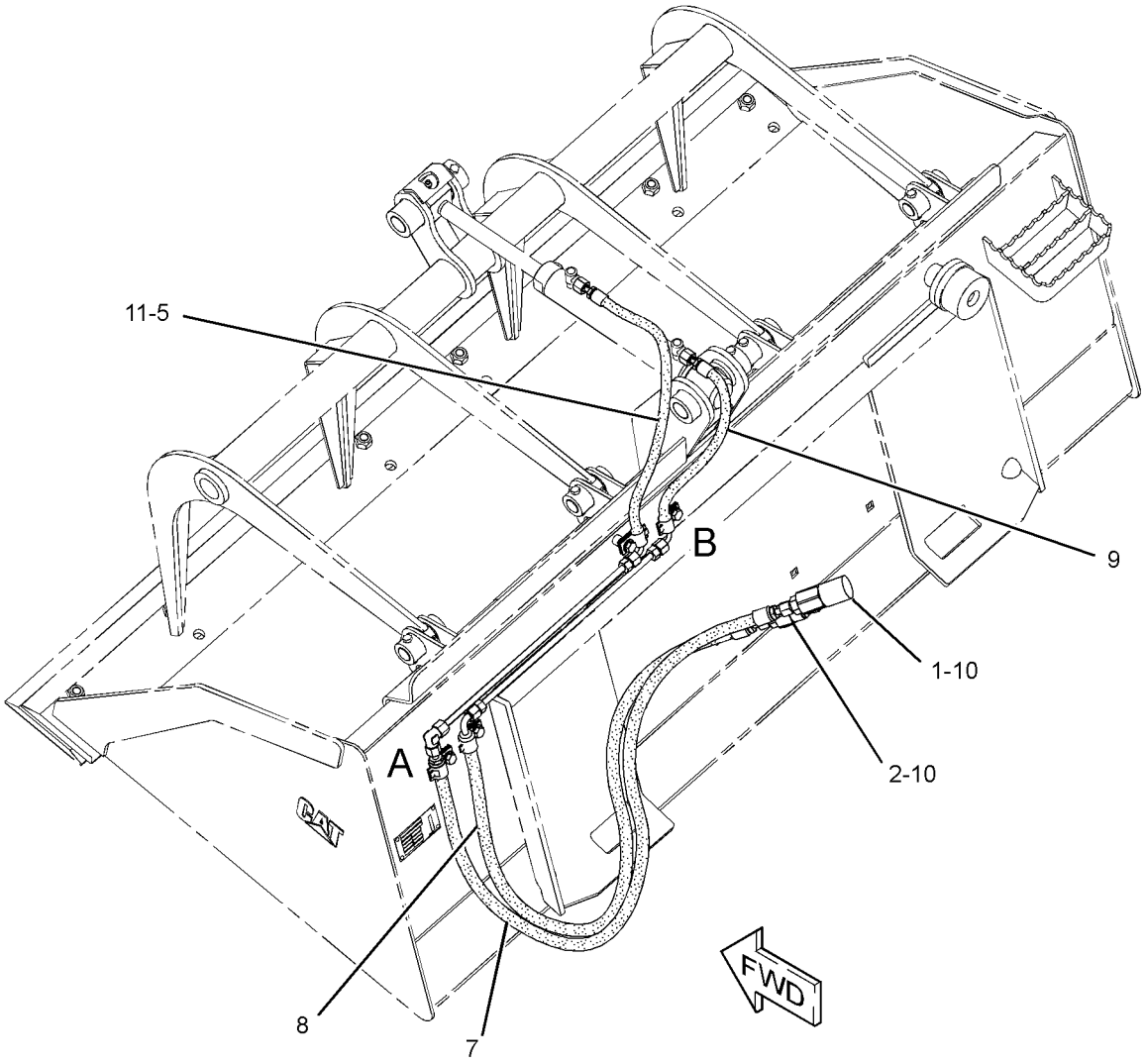

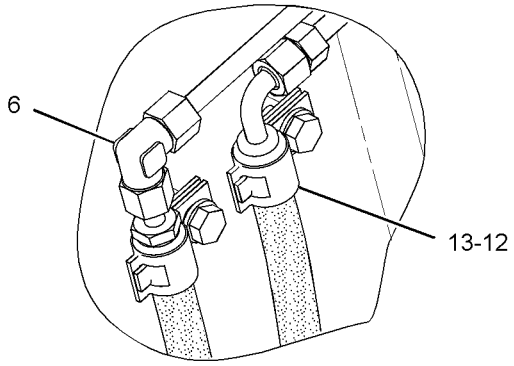

VIEW OF AREA A

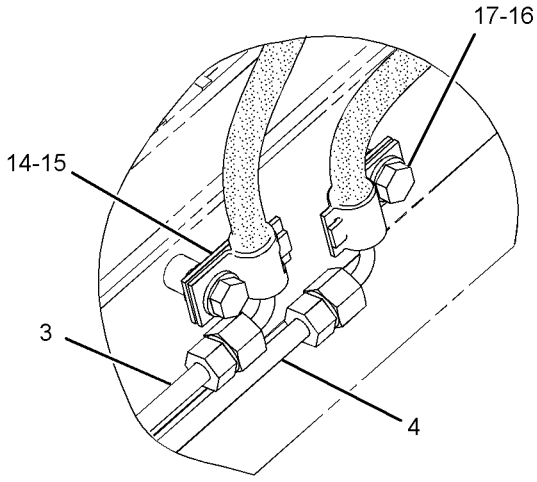

VIEW OF AREA B

GRAPHIC #1 **<END>** g01439824

293-0140 LINES GP-BUCKET—MULTIPURPOSE

S/N: A9H1-UP

PART OF 293-0139 BUCKET AR-MULTIPURPOSE

AN ATTACHMENT

SMCS-5057 **i02636472**

NOTE	REF NO	GRAPHIC REF	PART NUMBER	QTY	PART NAME 1 2 3 4 5 6 (PRODUCT LEVEL)	SEE PAGE
	1	1	**153-2994**	1	COUPLER AS-QUICK DISCONNECT (FEMALE)	
	2	1	**163-1386**	1	TEE-UNION	
	3	1	**185-7887**	1	COUPLER AS-QUICK DISCONNECT (MALE)	
I	4	1	**199-8309**	1	HOSE AS	
I	5	1	**199-8311**	1	HOSE AS	
I	6	1	**279-5417**	1	HOSE AS	
I	7	1	**279-5418**	1	HOSE AS	
I	8	1	**293-0152**	2	HOSE AS	
	9	1	*148-8319*	2	CONNECTOR AS	
					(EACH INCLUDES)	
		1	**2M-9780**	1	SEAL-O-RING	
		1	**6V-8397**	1	SEAL-O-RING	
		1	**6V-8715**	1	CONNECTOR	
	10	1	*150-3056*	1	TEE AS	
		1	**6V-8397**	3	SEAL-O-RING	
		1	**6V-8788**	1	TEE	
	11	1	**1S-0994**	1	CLIP	
	12	1	**6D-4247**	3	CLIP	
	13	1	**6V-8397**	7	SEAL-O-RING	
M	14	1	**8T-4189**	4	BOLT (M8X1.25X20-MM)	
	15	1	**8T-4224**	4	WASHER-HARD (8.8X16X2-MM THK)	
B	16	1	**9X-6273**	2	WASHER (32.5X50X0.8-MM THK)	
B	17	1	**9X-6274**	2	WASHER (32.5X50X1.6-MM THK)	

B-USE AS REQUIRED
I-REFER TO HYDRAULIC INFORMATION SYSTEM
M-METRIC PART

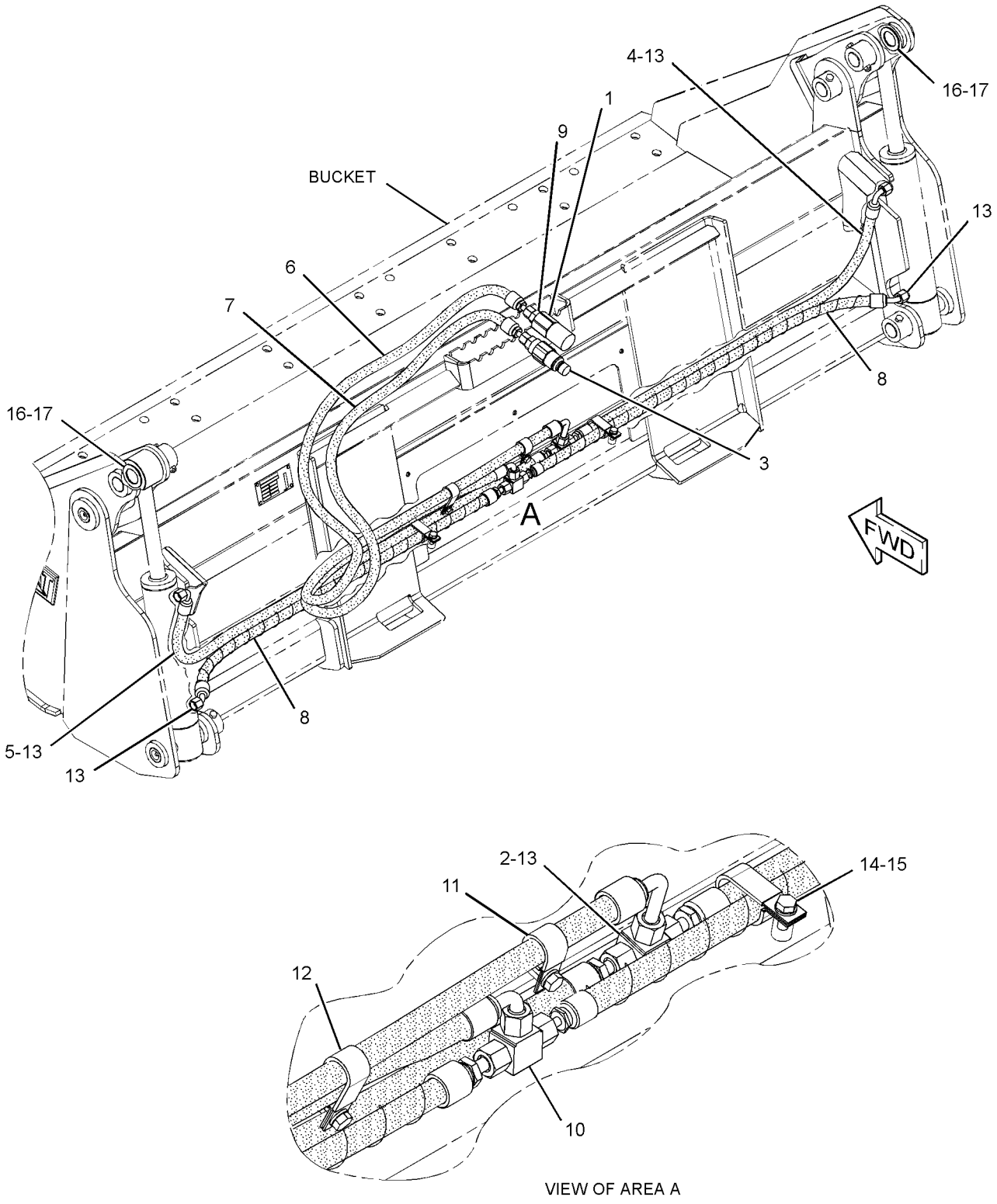

VIEW OF AREA A

GRAPHIC #1 **<END>** g01327736

HYDRAULIC SYSTEM

177-1986 LINES GP-CONNECTING

S/N: A9H1-UP

PART OF 177-1989, 177-1990 BLADE AR

AN ATTACHMENT

SMCS-5057 **i01928980**

NOTE	REF NO	GRAPHIC REF	PART NUMBER	QTY	PART NAME 1 2 3 4 5 6 (PRODUCT LEVEL)	SEE PAGE
	1	1	**153-2994**	1	COUPLER AS-QUICK DISCONNECT (FEMALE)	
	2	1	**153-2995**	1	COUPLER AS-QUICK DISCONNECT (MALE)	
	3	1	**163-1385**	2	ELBOW	
I	4	1	**177-1910**	2	HOSE AS	
I	5	1	**177-1911**	1	HOSE AS	
I	6	1	**177-1912**	1	HOSE AS	
	7	1	*148-8319*	2	CONNECTOR AS	
					(EACH INCLUDES)	
		1	**2M-9780**	1	SEAL-O-RING	
		1	**6V-8397**	1	SEAL-O-RING	
		1	**6V-8715**	1	CONNECTOR	
	8	1	**148-8378**	2	ELBOW AS	
					(EACH INCLUDES)	
		1	**3J-1907**	1	SEAL-O-RING	
		1	**6V-8397**	1	SEAL-O-RING	
		1	**6V-8724**	1	ELBOW	
	9	1	**6V-8397**	4	SEAL-O-RING	
	10	1	**8T-4121**	4	WASHER-HARD (11X21X2.5-MM THK)	
M	11	1	**8T-4133**	2	NUT (M10X1.5-THD)	
M	12	1	**8T-4185**	1	BOLT (M10X1.5X50-MM)	
M	13	1	**8T-4195**	1	BOLT (M10X1.5X30-MM)	
	14	1	**8T-8192**	2	CLIP (SLOT)	
	15	1	**8T-8193**	2	CLIP (TAB)	

I-REFER TO HYDRAULIC INFORMATION SYSTEM
M-METRIC PART

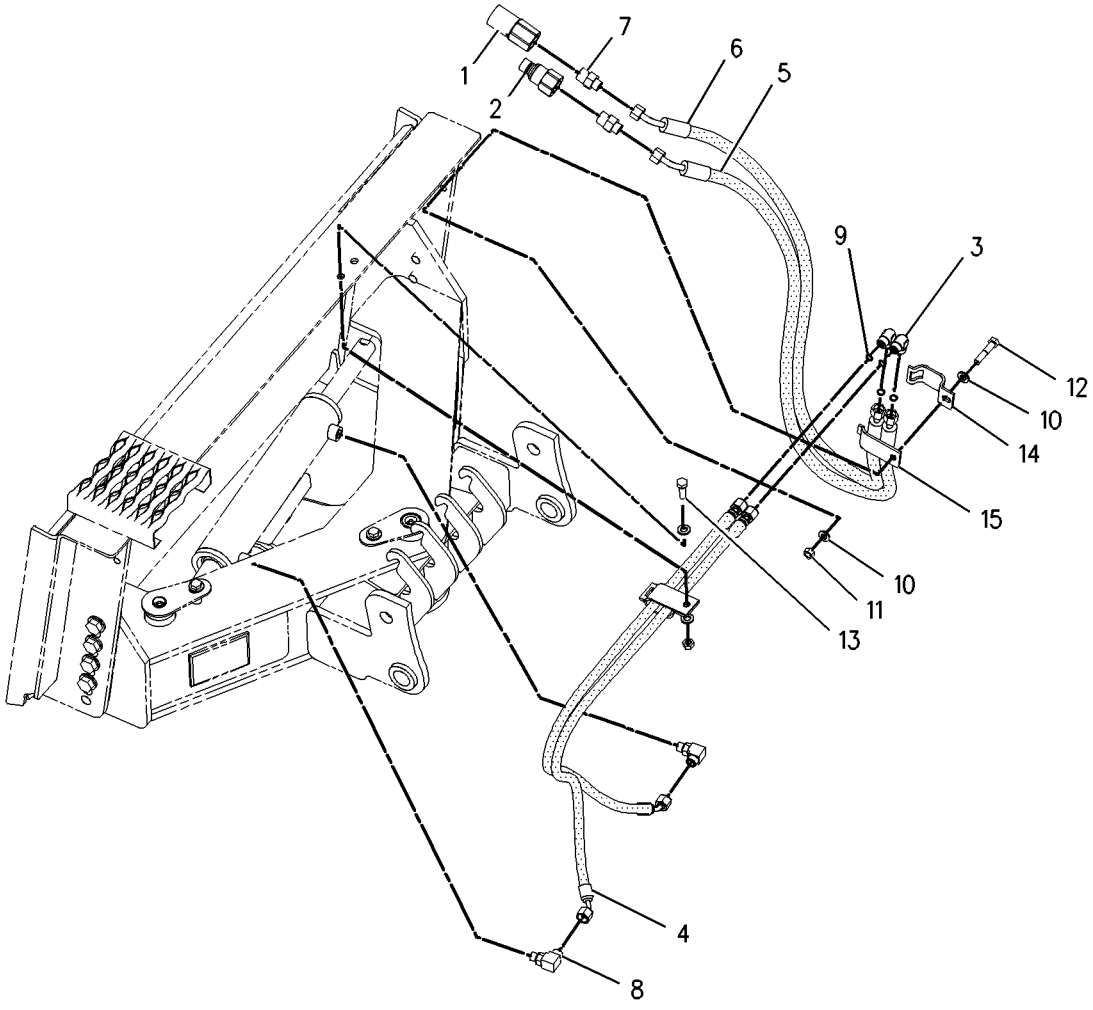

GRAPHIC #1 **<END>** g00978933

HYDRAULIC SYSTEM

231-5273 LINES GP-CONNECTING

S/N: A9H1-UP

PART OF 231-5275, 231-5277 BLADE AR

AN ATTACHMENT

SMCS-5057 **i01964116**

NOTE	REF NO	GRAPHIC REF	PART NUMBER	QTY	PART NAME 1 2 3 4 5 6 (PRODUCT LEVEL)	SEE PAGE
	1	1	**153-2994**	1	COUPLER AS-QUICK DISCONNECT (FEMALE)	
	2	1	**153-2995**	1	COUPLER AS-QUICK DISCONNECT (MALE)	
I	3	1	**231-0124**	2	HOSE AS	
I	4	1	**231-0125**	1	HOSE AS	
I	5	1	**231-0126**	2	HOSE AS	
I	6	1	**231-0127**	2	HOSE AS	
I	7	1	**238-1003**	1	HOSE AS	
	8	1	*148-8315*	2	CONNECTOR AS	
					(EACH INCLUDES)	
		1	**2M-9780**	1	SEAL-O-RING	
		1	**6V-8642**	1	CONNECTOR	
		1	**7J-9108**	1	SEAL-O-RING	
	9	1	*148-8336*	6	CONNECTOR AS	
					(EACH INCLUDES)	
		1	**3J-1907**	1	SEAL-O-RING	
		1	**6V-8397**	1	SEAL-O-RING	
		1	**6V-8636**	1	CONNECTOR	
	10	1	*148-8342*	2	CONNECTOR AS	
					(EACH INCLUDES)	
		1	**3K-0360**	1	SEAL-O-RING	
		1	**6V-8632**	1	CONNECTOR	
		1	**7J-9108**	1	SEAL-O-RING	
	11	1	**5P-1076**	2	WASHER-HARD (13.5X30X4-MM THK)	
	12	1	**7G-5984**	1	CLIP (TAB)	
	13	1	**7G-5985**	1	CLIP (SLOT)	
	14	1	**7G-5986**	1	GROMMET	
M	15	1	**8T-4139**	2	BOLT (M12X1.75X30-MM)	

I-REFER TO HYDRAULIC INFORMATION SYSTEM
M-METRIC PART

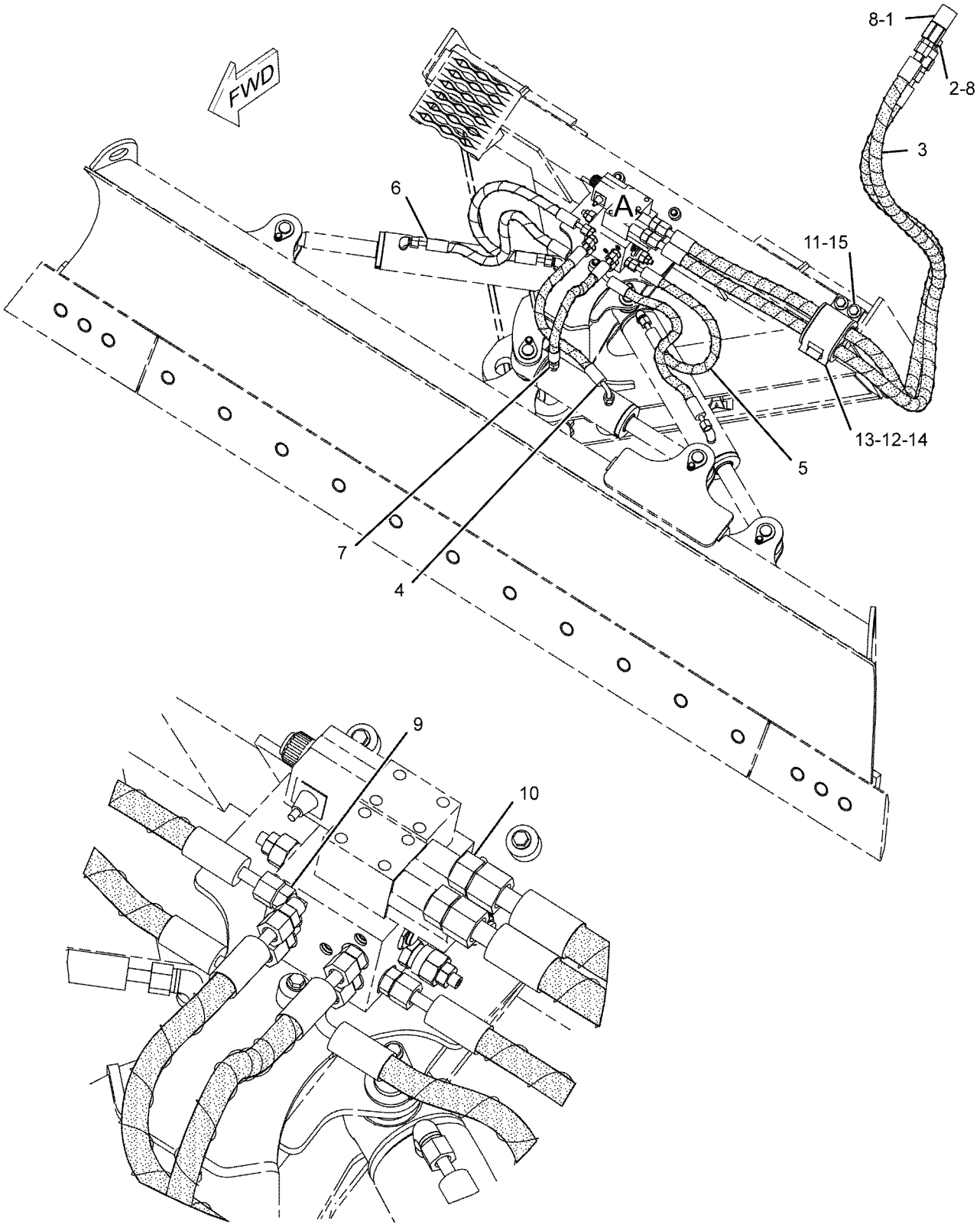

VIEW OF AREA A

GRAPHIC #1 **<END>** g01041993

HYDRAULIC SYSTEM

332-6714 LINES GP-COUPLER

S/N: A9H1-UP

PART OF 326-5578 COUPLER AR-QUICK

AN ATTACHMENT

SMCS-5057, 6129 **i04012480**

NOTE	REF NO	GRAPHIC REF	PART NUMBER	QTY	PART NAME 1 2 3 4 5 6 (PRODUCT LEVEL)	SEE PAGE
	1	1	**7K-1181**	2	STRAP-CABLE	
	2	1	**9X-6581**	1	NUT-O-RING SEAL (1-14-THD)	
	3	1	**124-2456**	1	FILM-INSTRUCTION (NO STEP)	
	4	1	**207-9737**	1	BRACKET AS	
I	5	1	**207-9756**	4	HOSE AS	
I	6	1	**207-9758**	2	HOSE AS	
	7	1	**212-6690**	1	GUARD	
	8	1	**218-6511**	1	TUBE AS	
	9	1	**218-6512**	1	TUBE AS	
Y	10	1	**233-7128**	1	MANIFOLD GP-CONTROL (QUICK COUPLER)	296
I	11	1	**326-5583**	1	HOSE AS	
	12	1	**326-5584**	1	TUBE AS	
I	13	1	**326-5585**	2	HOSE AS	
	14	1	**326-5762**	1	BRACKET AS	
M		1	**8T-3490**	4	NUT-WELD (M10X1.5-THD)	
	15	1	*148-8325*	4	CONNECTOR AS	
					(EACH INCLUDES)	
		1	**3J-1907**	1	SEAL-O-RING	
		1	**4J-5477**	1	SEAL-O-RING	
		1	**6V-8641**	1	CONNECTOR	
	16	1	*148-8336*	2	CONNECTOR AS	
					(EACH INCLUDES)	
		1	**3J-1907**	1	SEAL-O-RING	
		1	**6V-8397**	1	SEAL-O-RING	
		1	**6V-8636**	1	CONNECTOR	
	17	1	*148-8353*	1	ELBOW AS	
		1	**3J-1907**	1	SEAL-O-RING	
		1	**6V-8397**	1	SEAL-O-RING	
		1	**6V-9001**	1	ELBOW	
	18	1	*148-8367*	1	ELBOW AS	
		1	**6V-8397**	1	SEAL-O-RING	
		1	**6V-9850**	1	ELBOW	
	19	1	*148-8378*	1	ELBOW AS	
		1	**3J-1907**	1	SEAL-O-RING	
		1	**6V-8397**	1	SEAL-O-RING	
		1	**6V-8724**	1	ELBOW	
	20	1	*148-8433*	1	TEE AS	
		1	**6V-8397**	2	SEAL-O-RING	
		1	**6V-9836**	1	TEE-SWIVEL	
	21	1	*148-8446*	1	TEE AS-SWIVEL	
		1	**6V-9838**	1	TEE-SWIVEL	
		1	**7J-9108**	2	SEAL-O-RING	
	22	1	*150-4034*	2	TEE AS	
					(EACH INCLUDES)	
		1	**6V-8397**	3	SEAL-O-RING	
		1	**8T-0379**	1	TEE-BULKHEAD	
	23	1	*156-4282*	1	REDUCER AS	
		1	**6V-8397**	1	SEAL-O-RING	
		1	**6V-8938**	1	REDUCER-O-RING	
	24	1	**1P-7009**	1	CLIP	
	25	1	**4P-7581**	2	CLIP	
M	26	1	**5C-7261**	1	NUT (M8X1.25-THD)	
	27	1	**5P-4116**	2	WASHER-HARD (8.8X20.5X2-MM THK)	
	28	1	**5P-9297**	1	CLIP	
	29	1	**6V-8397**	4	SEAL-O-RING	

332-6714 **LINES GP-COUPLER** *(contd.)* **i04012480**

NOTE	REF NO	GRAPHIC REF	PART NUMBER	QTY	PART NAME 1 2 3 4 5 6 (PRODUCT LEVEL)	SEE PAGE
	30	1	**6V-9168**	2	NUT (11/16-16-THD)	
	31	1	**7G-2950**	1	CLIP (SLOT)	
	32	1	**7G-2951**	1	CLIP (TAB)	
	33	1	**7H-7055**	8	CLIP	
	34	1	**7X-7729**	3	WASHER (11X25X3-MM THK)	
	35	1	**8T-4121**	6	WASHER-HARD (11X21X2.5-MM THK)	
M	36	1	**8T-4136**	1	BOLT (M10X1.5X25-MM)	
M	37	1	**8T-4137**	1	BOLT (M10X1.5X20-MM)	
M	38	1	**8T-4189**	4	BOLT (M8X1.25X20-MM)	
M	39	1	**8T-4191**	2	BOLT (M10X1.5X16-MM)	
M	40	1	**8T-4201**	3	BOLT-LOCKING (M10X1.5X20-MM)	
	41	1	**8T-4224**	4	WASHER-HARD (8.8X16X2-MM THK)	
M	42	1	**8T-4908**	1	BOLT (M8X1.25X25-MM)	
M	43	1	**8T-5005**	2	BOLT (M10X1.5X70-MM)	
	44	1	**9M-8406**	3	CLIP	
	45	1	**212-6521**	1	SWITCH AS-ROCKER (QUICK COUPLER)	
		1	**111-7899**		GASKET	

I-REFER TO HYDRAULIC INFORMATION SYSTEM
M-METRIC PART
Y-SEPARATE ILLUSTRATION

332-6714 **LINES GP-COUPLER** *(contd.)* **i04012480**

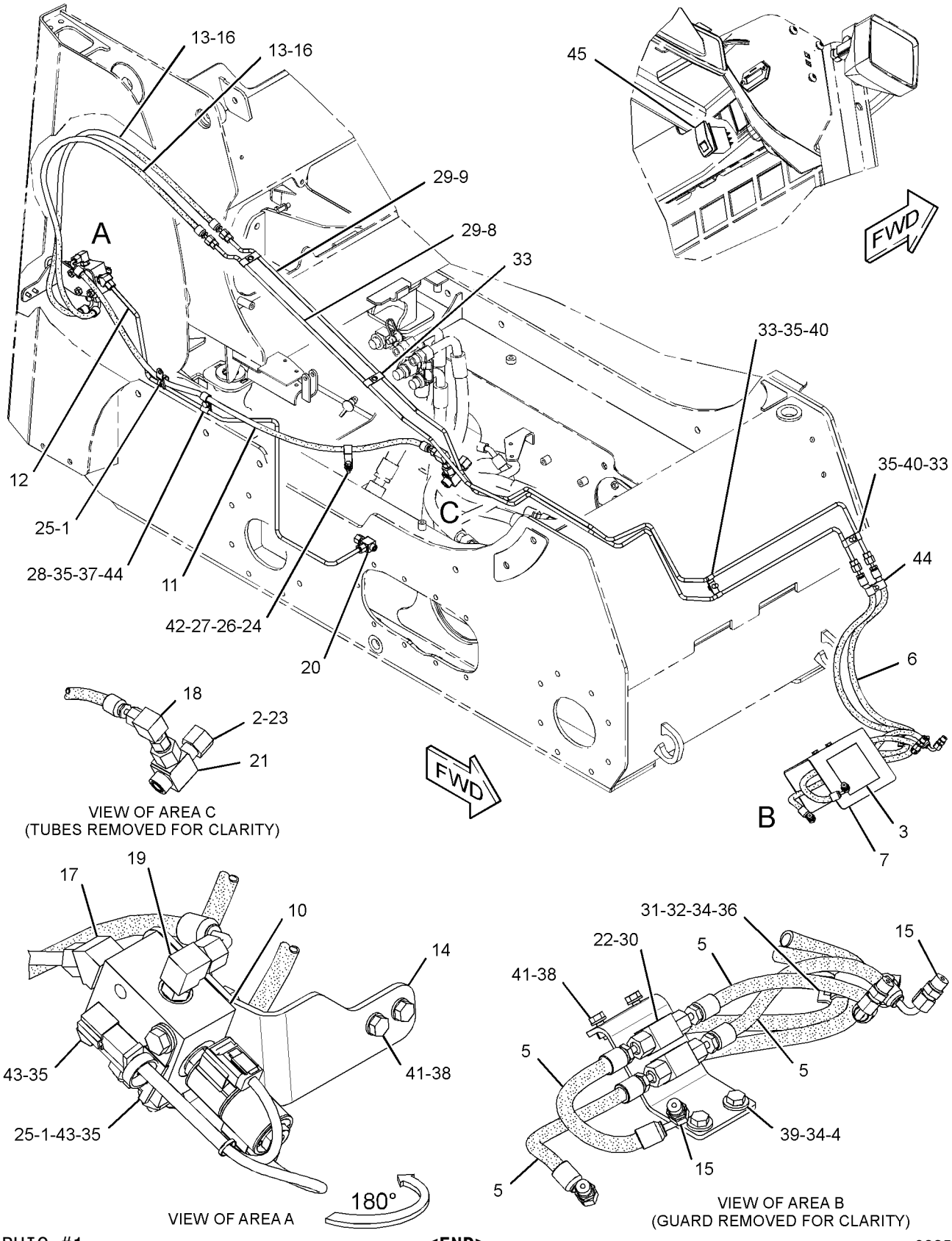

GRAPHIC #1 **<END>** g02352777

HYDRAULIC SYSTEM

161-0187 LINES GP-GRAPPLE

S/N: A9H1-UP

PART OF 157-7223, 157-7224, 157-7225, 217-6229 BUCKET AR-GRAPPLE

AN ATTACHMENT

SMCS-5057, 5555 **i01928983**

NOTE	REF NO	GRAPHIC REF	PART NUMBER	QTY	PART NAME 1 2 3 4 5 6 (PRODUCT LEVEL)	SEE PAGE
	1	1	**3E-7404**	2	CLAMP-HOSE	
	2	1	**153-2994**	1	COUPLER AS-QUICK DISCONNECT (FEMALE)	
	3	1	**153-2995**	1	COUPLER AS-QUICK DISCONNECT (MALE)	
	4	1	**161-0185**	1	TUBE AS	
	5	1	**161-0186**	1	TUBE AS	
	6	1	**161-0188**	2	TUBE AS	
I	7	1	**161-0189**	2	HOSE AS	
I	8	1	**161-0190**	2	HOSE AS	
	9	1	**163-1385**	1	ELBOW	
I	10	1	**163-9320**	1	HOSE AS	
I	11	1	**166-9312**	1	HOSE AS	
	12	1	*148-8319*	2	CONNECTOR AS	
					(EACH INCLUDES)	
		1	**2M-9780**	1	SEAL-O-RING	
		1	**6V-8397**	1	SEAL-O-RING	
		1	**6V-8715**	1	CONNECTOR	
	13	1	**2V-3216**	6	CLIP	
	14	1	**6V-8397**	13	SEAL-O-RING	
	15	1	**7S-3916**	2	CLIP (TAB)	
	16	1	**7S-3919**	2	CLIP (SLOT)	
	17	1	**8T-4121**	2	WASHER-HARD (11X21X2.5-MM THK)	
M	18	1	**8T-4136**	2	BOLT (M10X1.5X25-MM)	
M	19	1	**8T-4171**	4	BOLT (M6X1X12-MM)	
	20	1	**9R-2004**	2	BLOCK	

I-REFER TO HYDRAULIC INFORMATION SYSTEM
M-METRIC PART

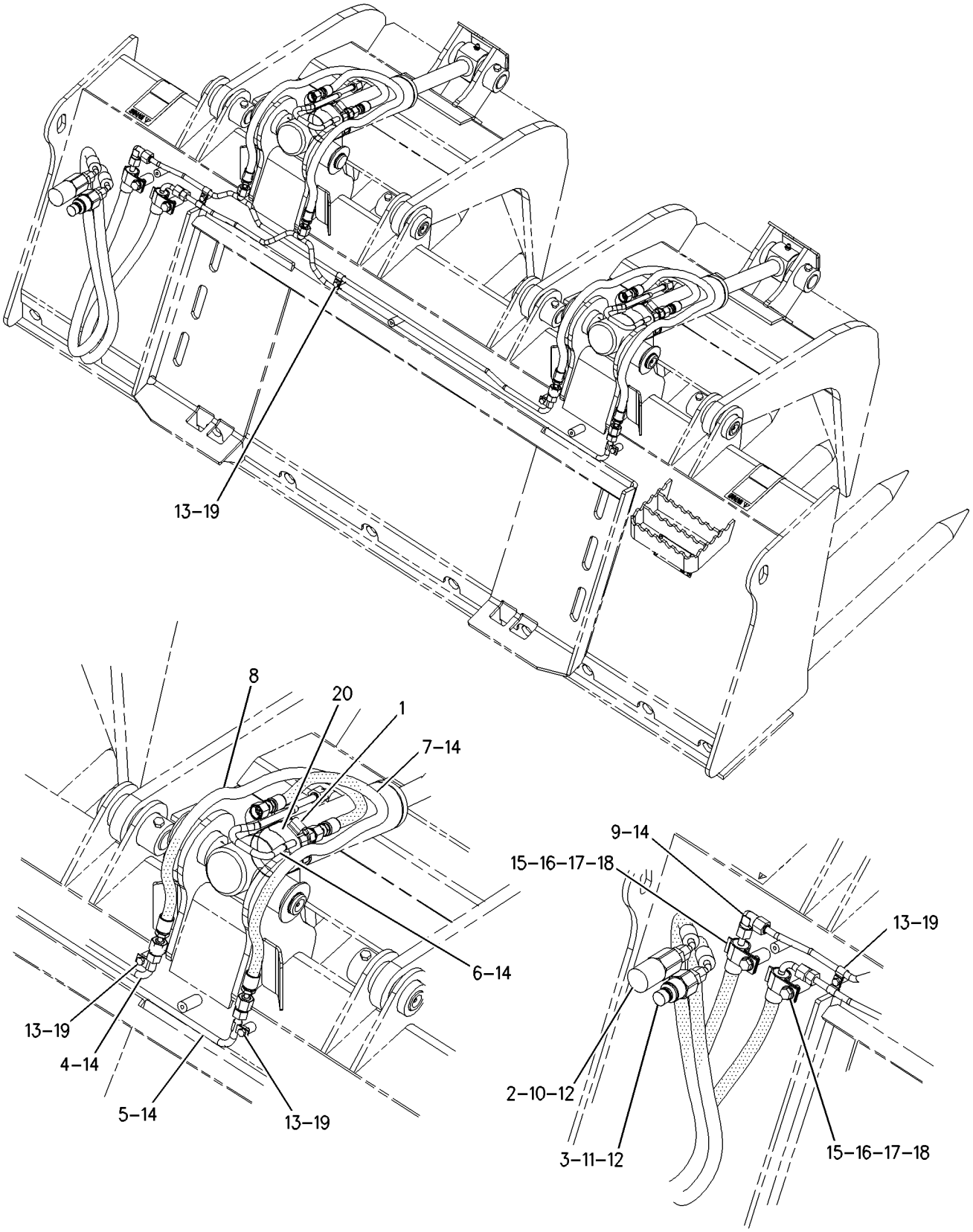

GRAPHIC #1 **<END>** g00733464

HYDRAULIC SYSTEM

286-9250 LINES GP-GRAPPLE

S/N: A9H1-UP
2134-MM (84-IN)
PART OF 286-9301 BUCKET AR-GRAPPLE
AN ATTACHMENT

SMCS-5057, 5555 **i02941543**

NOTE	REF NO	GRAPHIC REF	PART NUMBER	QTY	PART NAME 1 2 3 4 5 6 (PRODUCT LEVEL)	SEE PAGE
	1	1	**2H-7829**	10	CLIP	
	2	1	**9S-4200**	2	CLIP	
	3	1	**153-2994**	1	COUPLER AS-QUICK DISCONNECT (FEMALE)	
I	4	1	**161-0189**	2	HOSE AS	
	5	1	**163-1385**	1	ELBOW	
I	6	1	**177-1911**	2	HOSE AS	
	7	1	**185-7887**	1	COUPLER AS-QUICK DISCONNECT (MALE)	
I	8	1	**286-9263**	2	HOSE AS	
	9	1	**286-9265**	1	TUBE AS	
	10	1	**286-9266**	1	TUBE AS	
	11	1	**286-9267**	1	TUBE AS	
	12	1	**286-9268**	1	TUBE AS	
	13	1	**286-9271**	1	GUARD	
	14	1	*148-8319*	2	CONNECTOR AS	
					(EACH INCLUDES)	
		1	**2M-9780**	1	SEAL-O-RING	
		1	**6V-8397**	1	SEAL-O-RING	
		1	**6V-8715**	1	CONNECTOR	
	15	1	**8T-4224**	6	WASHER-HARD (8.8X16X2-MM THK)	
	16	1	**6V-8397**	13	SEAL-O-RING	
	17	1	**7S-3916**	2	CLIP (TAB)	
	18	1	**7S-3919**	2	CLIP (SLOT)	
	19	1	**7X-7729**	5	WASHER (11X25X3-MM THK)	
M	20	1	**8T-4195**	5	BOLT (M10X1.5X30-MM)	
M	21	1	**8T-4200**	6	BOLT (M8X1.25X16-MM)	
	22	1	**5P-5148**	2	STRAP-TIE	

I-REFER TO HYDRAULIC INFORMATION SYSTEM
M-METRIC PART

286-9250 **LINES GP-GRAPPLE** *(contd.)* **i02941543**

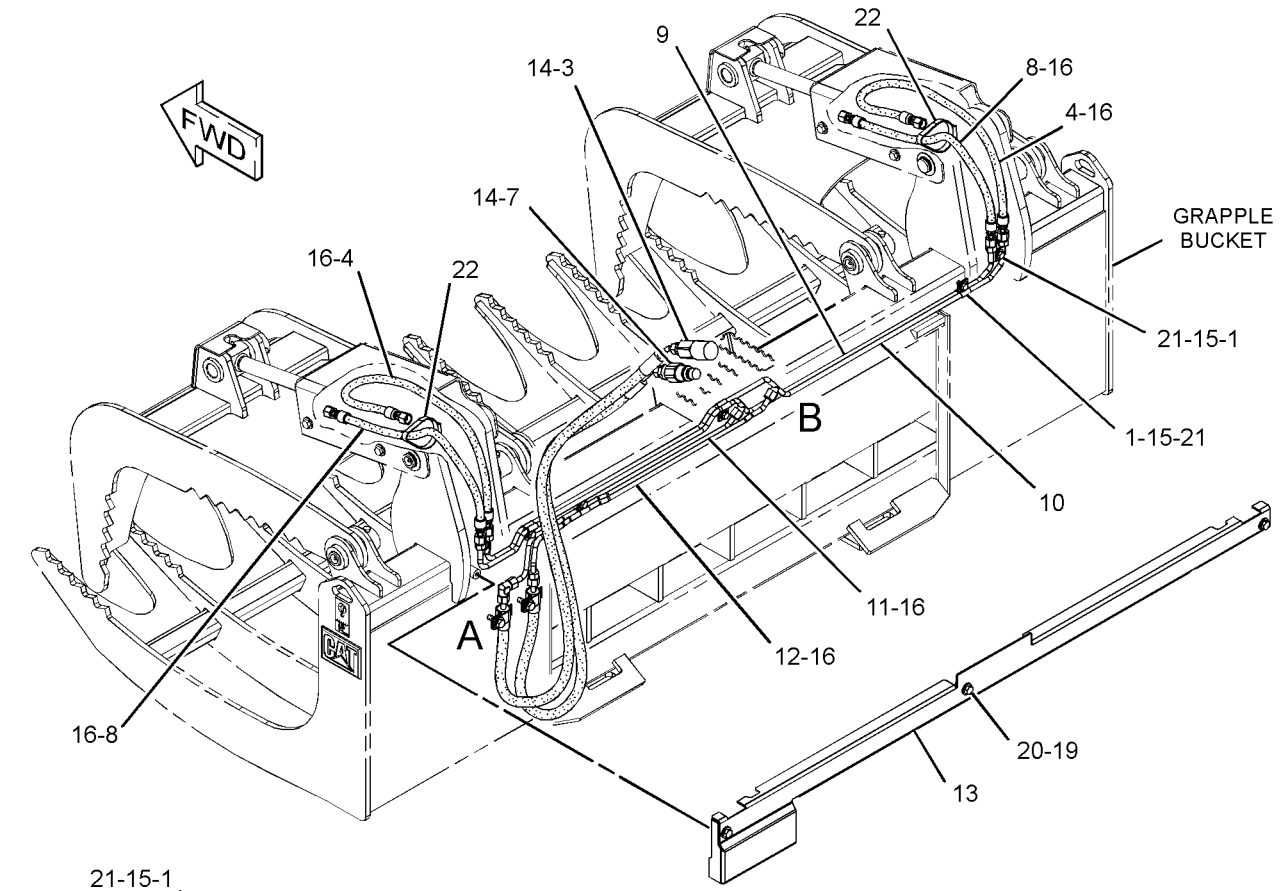

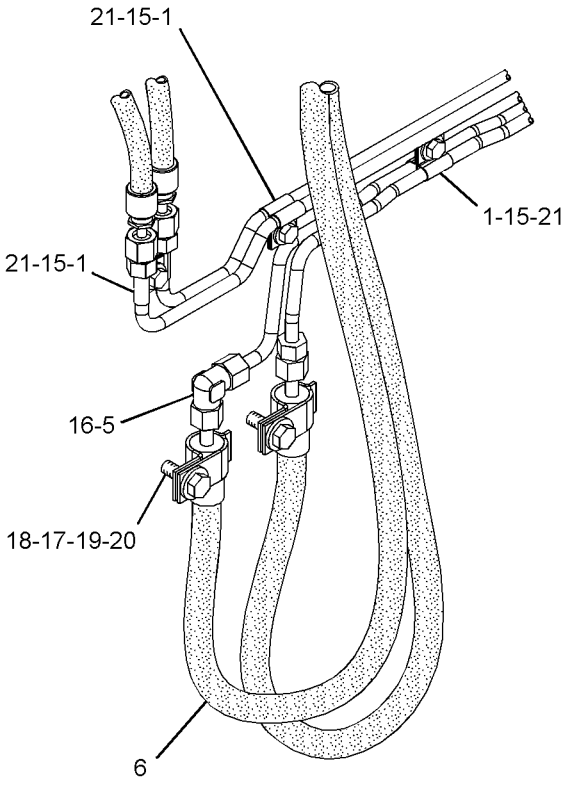

VIEW OF AREA A

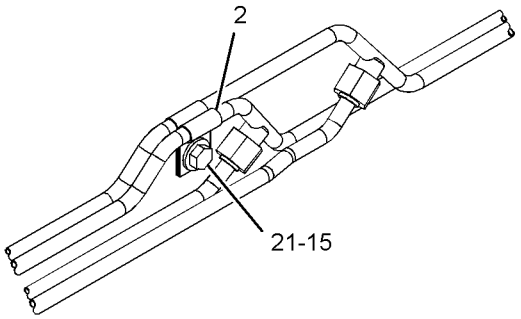

VIEW OF AREA B

GRAPHIC #1 **<END>** g01514424

HYDRAULIC SYSTEM

286-9279 LINES GP-GRAPPLE

S/N: A9H1-UP
1829-MM (72-IN)
PART OF 286-9300 BUCKET AR-GRAPPLE
AN ATTACHMENT

SMCS-5057, 5555 **i02914649**

NOTE	REF NO	GRAPHIC REF	PART NUMBER	QTY	PART NAME 1 2 3 4 5 6 (PRODUCT LEVEL)	SEE PAGE
	1	1	**2H-7829**	10	CLIP	
	2	1	**9S-4200**	2	CLIP	
	3	1	**153-2994**	1	COUPLER AS-QUICK DISCONNECT (FEMALE)	
I	4	1	**161-0189**	2	HOSE AS	
	5	1	**163-1385**	1	ELBOW	
I	6	1	**177-1911**	2	HOSE AS	
	7	1	**185-7887**	1	COUPLER AS-QUICK DISCONNECT (MALE)	
	8	1	**286-9249**	1	GUARD	
I	9	1	**286-9263**	2	HOSE AS	
	10	1	**286-9267**	1	TUBE AS	
	11	1	**286-9268**	1	TUBE AS	
	12	1	**286-9280**	1	TUBE AS	
	13	1	**286-9281**	1	TUBE AS	
	14	1	*148-8319*	2	CONNECTOR AS	
					(EACH INCLUDES)	
		1	**2M-9780**	1	SEAL-O-RING	
		1	**6V-8397**	1	SEAL-O-RING	
		1	**6V-8715**	1	CONNECTOR	
	15	1	**8T-4224**	6	WASHER-HARD (8.8X16X2-MM THK)	
	16	1	**6V-8397**	13	SEAL-O-RING	
	17	1	**7S-3916**	2	CLIP (TAB)	
	18	1	**7S-3919**	2	CLIP (SLOT)	
	19	1	**7X-7729**	5	WASHER (11X25X3-MM THK)	
M	20	1	**8T-4195**	5	BOLT (M10X1.5X30-MM)	
M	21	1	**8T-4200**	6	BOLT (M8X1.25X16-MM)	
	22	1	**5P-5148**	2	STRAP-TIE	

I-REFER TO HYDRAULIC INFORMATION SYSTEM
M-METRIC PART

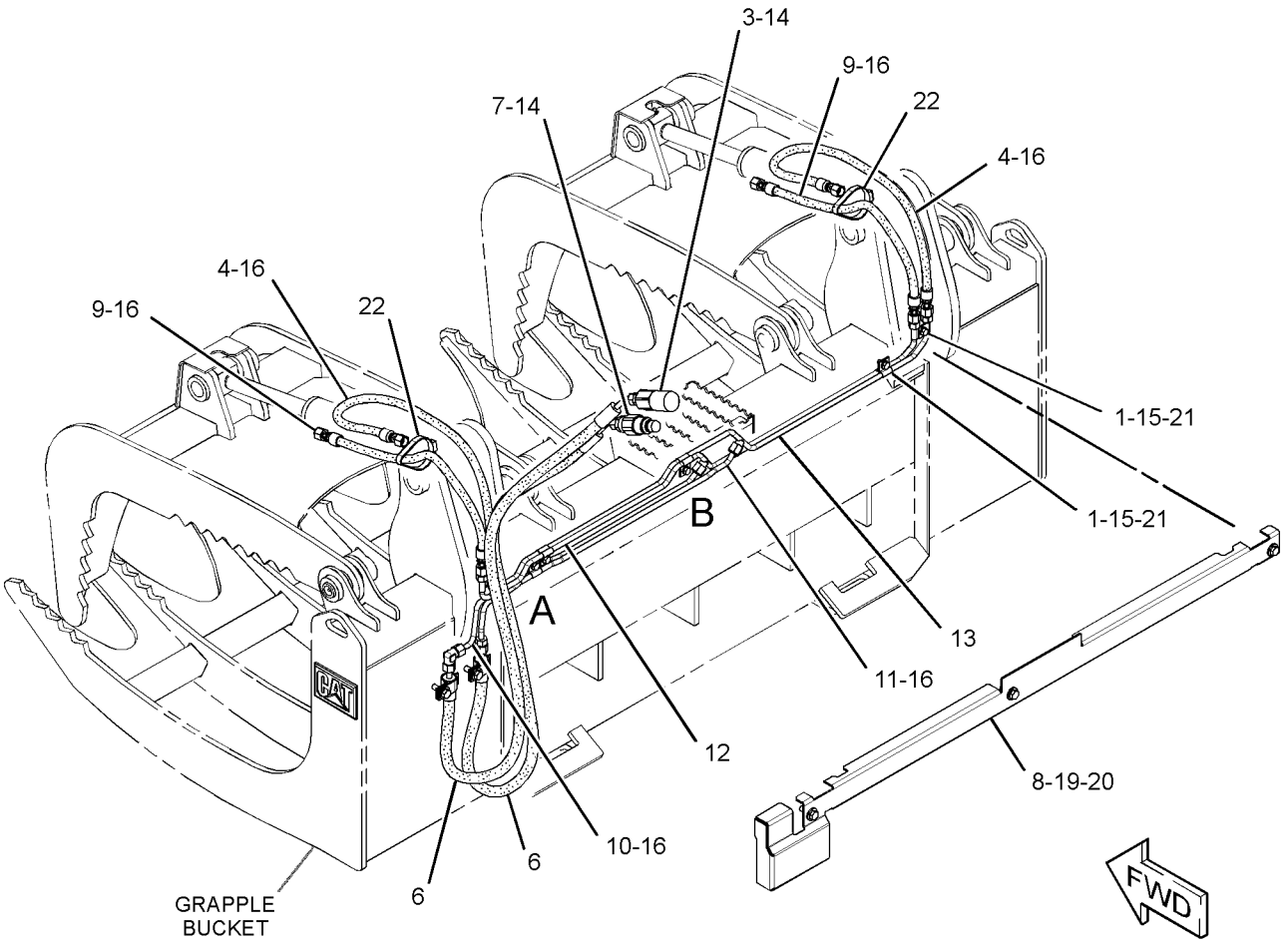

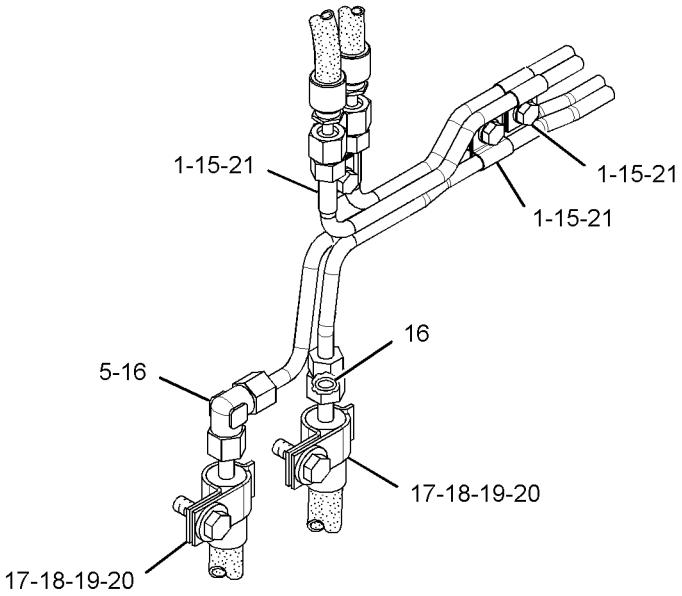

VIEW OF AREA A
(HOSES REMOVED FOR CLARITY)

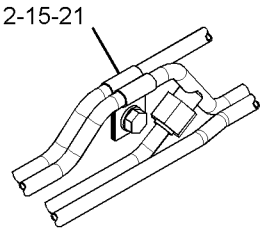

VIEW OF AREA B

GRAPHIC #1 **<END>** g01453768

HYDRAULIC SYSTEM

218-5625 LINES GP-HYDRAULIC OIL COOLER

S/N: A9H1-937

PART OF 326-5516 AIR CONDITIONER AR, 326-5435 HYDRAULIC AR

ALSO AN ATTACHMENT

SMCS-5057 **i03148502**

NOTE	REF NO	GRAPHIC REF	PART NUMBER	QTY	PART NAME 1 2 3 4 5 6 (PRODUCT LEVEL)	SEE PAGE
	1	1	**4P-7581**	1	CLIP	
	2	1	*106-8715*	1	ELBOW AS	
		1	**3D-2824**	1	SEAL-O-RING	
		1	**6V-9746**	1	SEAL-O-RING	
		1	**8C-8400**	1	ELBOW	
I	3	1	**218-5585**	1	HOSE AS	
I	4	1	**218-6304**	1	HOSE AS	
	5	1	*148-8347*	1	ELBOW AS	
		1	**3D-2824**	1	SEAL-O-RING	
		1	**6V-9007**	1	ELBOW	
		1	**6V-9746**	1	SEAL-O-RING	
	6	1	**5D-0718**	2	CLIP	
	7	1	**092-2467**	1	SPACER (10.5X2X45-MM THK)	
	8	1	**6V-1889**	1	CLIP	
	9	1	**7X-7729**	1	WASHER (11X25X3-MM THK)	
	10	1	**8T-4121**	4	WASHER-HARD (11X21X2.5-MM THK)	
M	11	1	**8T-4133**	3	NUT (M10X1.5-THD)	
	12	1	**234-9525**	1	STUD (M10X1.5-THD)	
M	13	1	**8T-4195**	2	BOLT (M10X1.5X30-MM)	
	14	1	**7K-1181**	2	STRAP-CABLE	
E	15	1	**9X-2092**		TRIM-EDGE (30-CM)	

E-ORDER BY THE CENTIMETER
I-REFER TO HYDRAULIC INFORMATION SYSTEM
M-METRIC PART

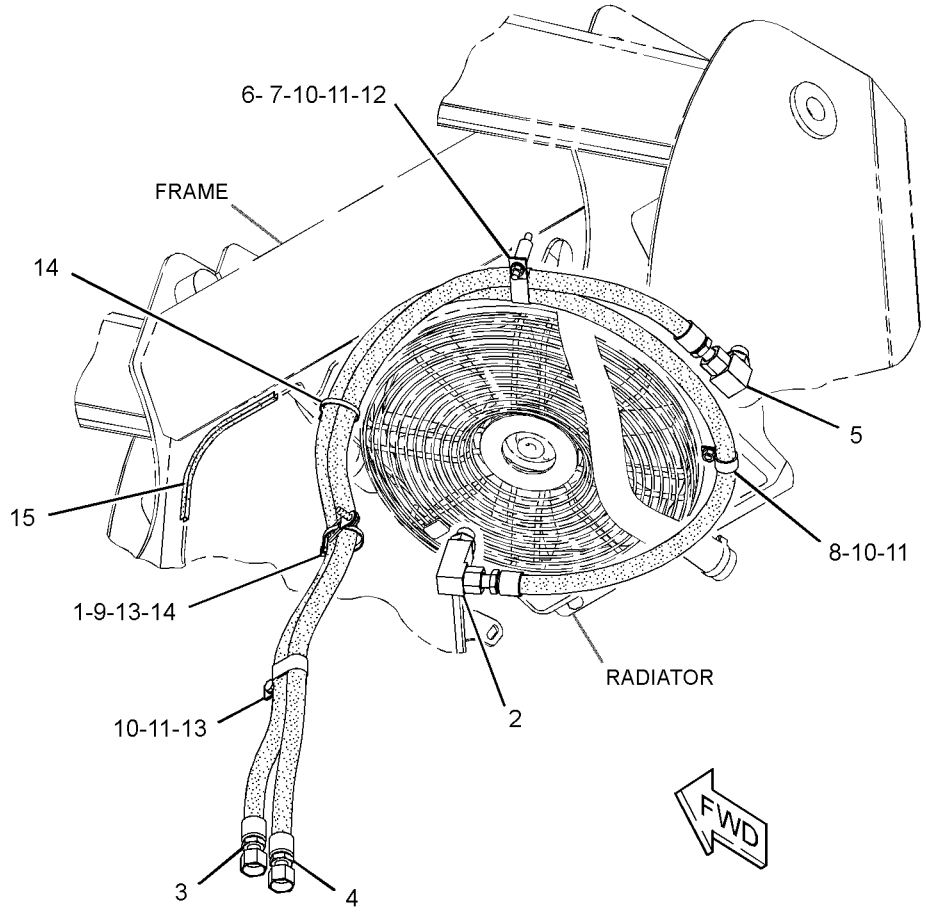

GRAPHIC #1 **<END>** g01621318

HYDRAULIC SYSTEM

374-3441 LINES GP-HYDRAULIC OIL COOLER

S/N: A9H1-UP

PART OF 326-5515 HEATER AR-CAB, 326-5514 INSTALLATION GP-COVER & LINES AN ATTACHMENT

SMCS-5057 **i04302709**

NOTE	REF NO	GRAPHIC REF	PART NUMBER	QTY	PART NAME 1 2 3 4 5 6 (PRODUCT LEVEL)	SEE PAGE
	1	1	**7K-1181**	2	STRAP-CABLE	
	2	1	**092-2467**	1	SPACER (10.5X2X45-MM THK)	
	3	1	*106-8715*	1	ELBOW AS	
		1	**3D-2824**	1	SEAL-O-RING	
		1	**6V-9746**	1	SEAL-O-RING	
		1	**8C-8400**	1	ELBOW	
I	4	1	**218-5585**	1	HOSE AS	
I	5	1	**218-6304**	1	HOSE AS	
	6	1	*148-8347*	1	ELBOW AS	
		1	**3D-2824**	1	SEAL-O-RING	
		1	**6V-9007**	1	ELBOW	
		1	**6V-9746**	1	SEAL-O-RING	
	7	1	**234-9525**	1	STUD (M10X1.5-THD)	
	8	1	**4P-7581**	1	CLIP	
	9	1	**5D-0718**	3	CLIP	
	10	1	**6V-1889**	1	CLIP	
	11	1	**7X-7729**	1	WASHER (11X25X3-MM THK)	
	12	1	**8T-4121**	6	WASHER-HARD (11X21X2.5-MM THK)	
M	13	1	**8T-4133**	4	NUT (M10X1.5-THD)	
M	14	1	**8T-4195**	2	BOLT (M10X1.5X30-MM)	
M	15	1	**8T-4196**	1	BOLT (M10X1.5X35-MM)	
E	16	1	**9X-2092**		TRIM-EDGE (30-CM)	

E-ORDER BY THE CENTIMETER
I-REFER TO HYDRAULIC INFORMATION SYSTEM
M-METRIC PART

374-3441 **LINES GP-HYDRAULIC OIL COOLER** *(contd.)* **i04302709**

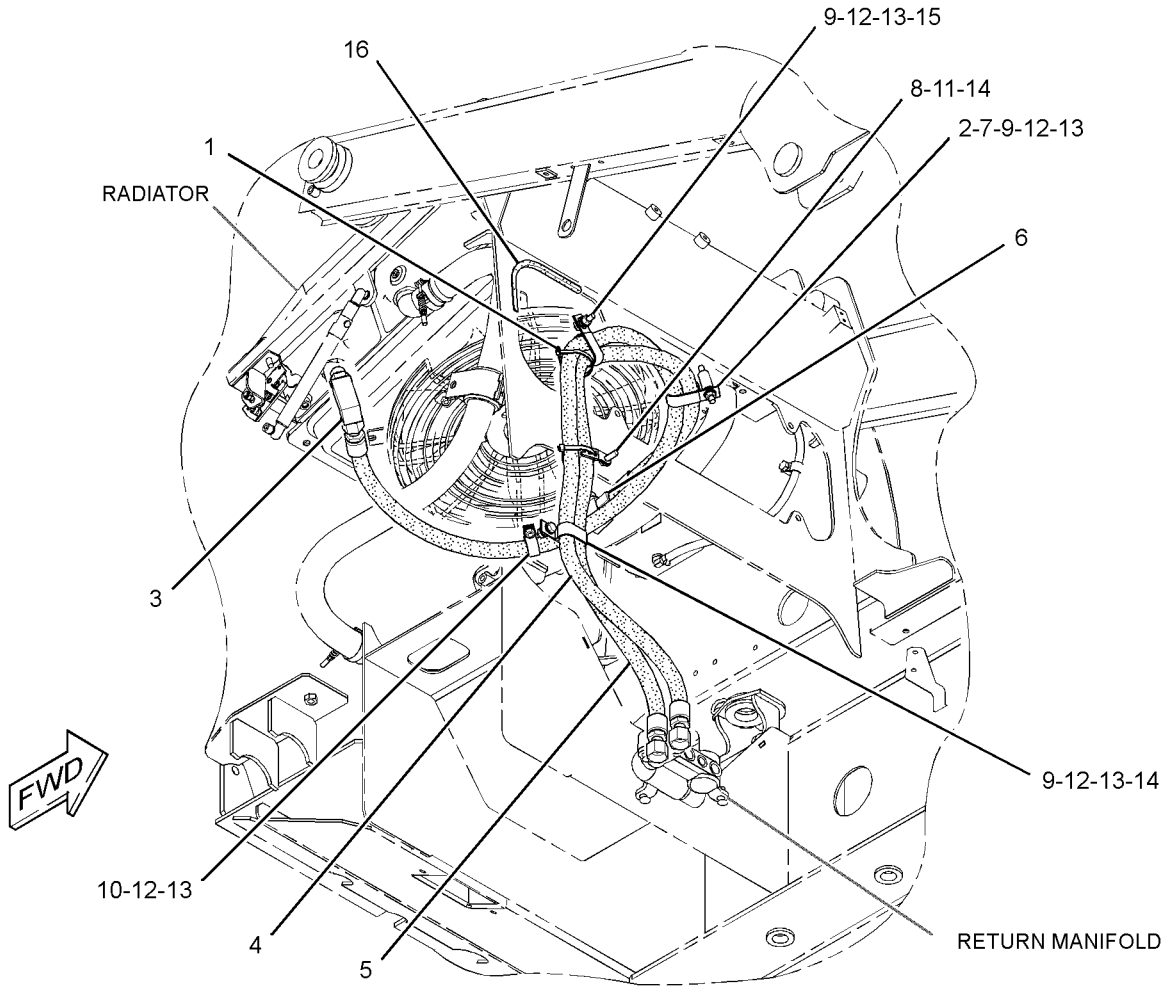

GRAPHIC #1 **<END>** g02600798

HYDRAULIC SYSTEM

326-5676 LINES GP-LIFT CYLINDER–

WITH WORK TOOL POSITIONER

S/N: A9H1-UP

PART OF 326-5480 HYDRAULIC AR

AN ATTACHMENT

SMCS-5057, 5102 **i04091754**

NOTE	REF NO	GRAPHIC REF	PART NUMBER	QTY	PART NAME 1 2 3 4 5 6 (PRODUCT LEVEL)	SEE PAGE
	1	1	**6V-3582**	2	CLAMP-HOSE	
J	2	2	**112-1817**	1	VALVE GP-MANUAL (LIFT CYLINDER)	
	3	1	**142-8997**	2	BLOCK	
	4	1	**142-9116**	1	SWITCH GP-ROCKER (WORK TOOL POSITIONER)	
		1	**111-7899**	1	GASKET	
	5	1	**187-1273**	2	TUBE AS	
	6	1	**187-1274**	1	TUBE AS	
	7	1	**187-1275**	1	TUBE AS	
Y	8	2	*218-5729*	1	MANIFOLD & MTG GP-CONTROL (WORK TOOL POSITIONER)	293
	9	1	**218-5764**	1	PLATE	
	10	2	**218-6438**	1	SEAL	
	11	1	**285-9286**	1	BLOCK	
	12	2	**289-3750**	1	TUBE AS	
	13	1	**289-3751**	1	TUBE AS	
	14	1	**289-3752**	1	TUBE AS	
	15	1	**289-3753**	1	TUBE AS	
	16	2	**289-3756**	1	TUBE AS	
I	17	1	**326-5581**	1	HOSE AS	
	18	1	**326-5589**	1	TUBE AS	
I	19	1	**326-5612**	1	HOSE AS	
	20	2	**326-5614**	1	HANDLE AS	
	21	2	**326-5634**	1	BRUSH AS	
	22	2	**326-5640**	1	BRACKET AS	
M		2	**6V-9632**	3	NUT-WELD (M6X1-THD)	
M		2	**8T-3612**	3	NUT-WELD (M8X1.25-THD)	
	23	2	**101-2867**	1	WASHER-HARD (7.2X25X2-MM THK)	
	24	2	*148-8315*	1	CONNECTOR AS	
		2	**2M-9780**	1	SEAL-O-RING	
		2	**6V-8642**	1	CONNECTOR	
		2	**7J-9108**	1	SEAL-O-RING	
	25	2	*148-8341*	2	CONNECTOR AS	
					(EACH INCLUDES)	
		2	**3D-2824**	1	SEAL-O-RING	
		2	**6V-8713**	1	CONNECTOR	
		2	**7J-9108**	1	SEAL-O-RING	
	26	2	*148-8378*	2	ELBOW AS	
					(EACH INCLUDES)	
		2	**3J-1907**	1	SEAL-O-RING	
		2	**6V-8397**	1	SEAL-O-RING	
		2	**6V-8724**	1	ELBOW	
	27	2	*148-8390*	1	ELBOW AS	
		2	**2M-9780**	1	SEAL-O-RING	
		2	**6V-8626**	1	ELBOW	
		2	**7J-9108**	1	SEAL-O-RING	
I	28	1	**218-5739**	4	HOSE AS	
M	29	2	**271-9408**	3	SCREW-TRUSS HEAD (M5X0.8X10-MM)	
	30	2	**4B-4863**	4	WASHER (4.7X11X1.2-MM THK)	
M	31	2	**5C-2874**	2	NUT (M5X0.8-THD)	
	32	1	**6V-8397**	1	SEAL-O-RING	
	33	1	**6V-8398**	12	SEAL-O-RING	
	34	1,2	**7J-9108**	3	SEAL-O-RING	
M	35	2	**8T-7852**	4	BOLT (M4X0.7X10-MM)	
	36	1	**8T-4121**	2	WASHER-HARD (11X21X2.5-MM THK)	

326-5676 **LINES GP-LIFT CYLINDER** *(contd.)* **i04091754**

NOTE	REF NO	GRAPHIC REF	PART NUMBER	QTY	PART NAME 1 2 3 4 5 6 (PRODUCT LEVEL)	SEE PAGE
M	37	1	**8T-4136**	2	BOLT (M10X1.5X25-MM)	
	38	2	**8T-4224**	3	WASHER-HARD (8.8X16X2-MM THK)	
M	39	2	**8T-4908**	3	BOLT (M8X1.25X25-MM)	
M	40	2	**9X-2043**	3	SCREW-TRUSS HEAD (M6X1X14-MM)	
					AVAILABLE REPAIR KIT(S):	
J			**112-9861**	1	KIT-SEAL	
					(INCLUDES SEALS, O-RINGS & THRUST RING)	

I-REFER TO HYDRAULIC INFORMATION SYSTEM
J-KIT MARKED J SERVICES PARTS MARKED J)
M-METRIC PART
Y-SEPARATE ILLUSTRATION

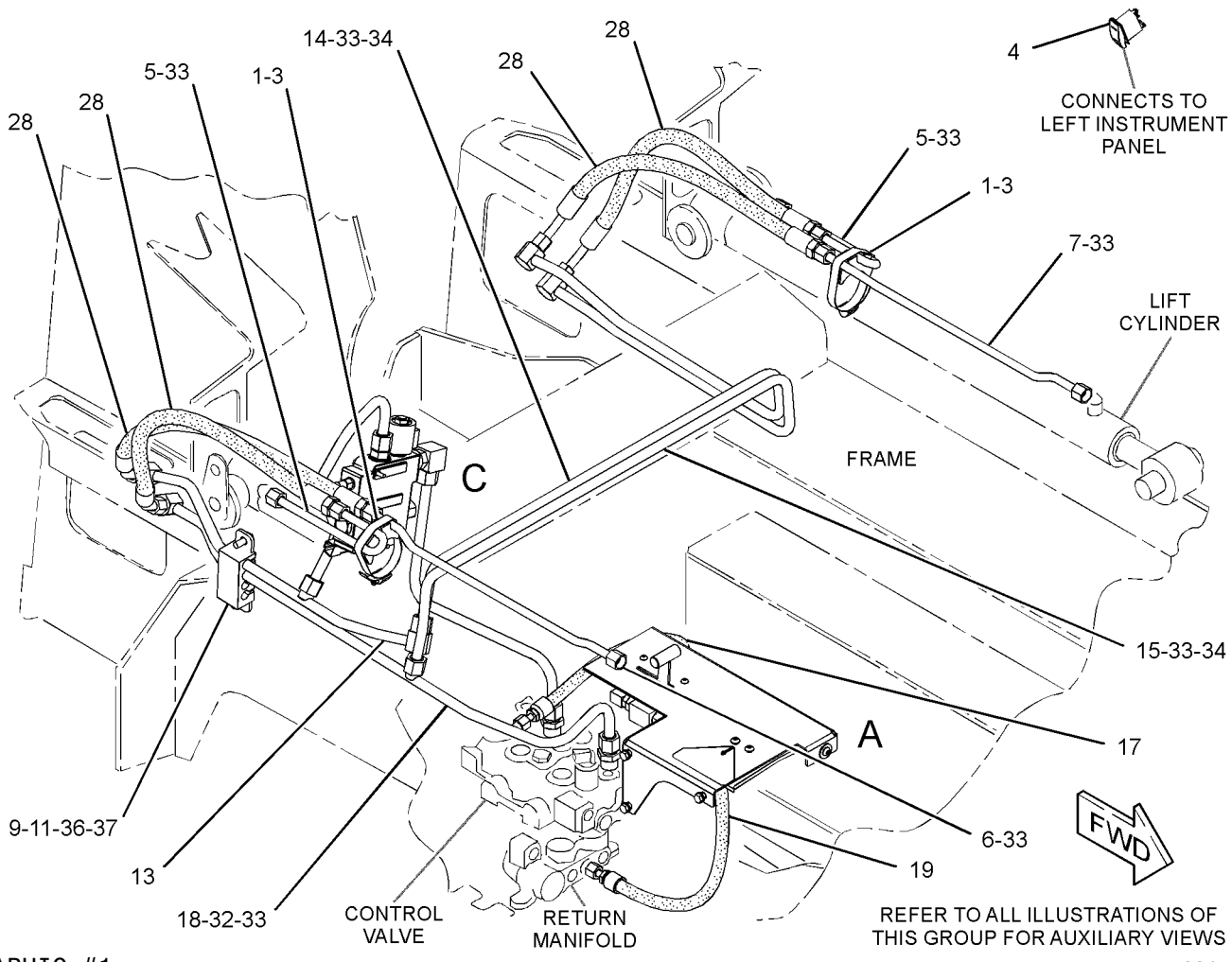

GRAPHIC #1 g02148197

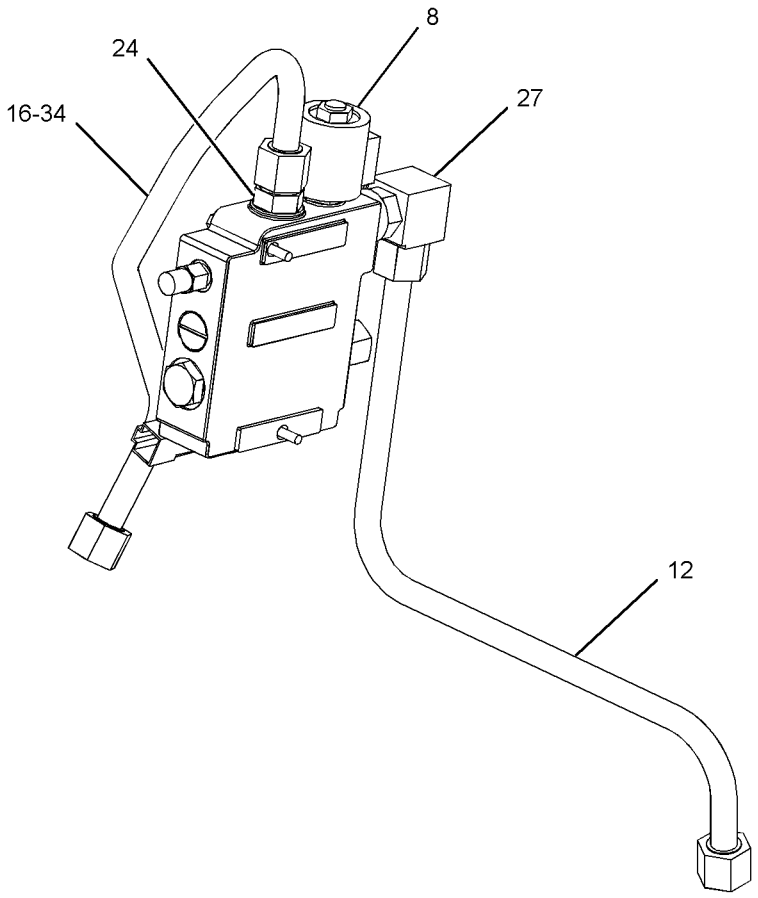

VIEW OF AREA C

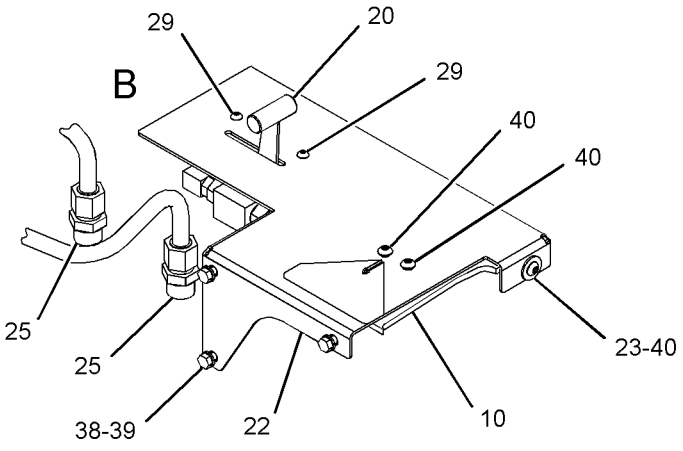

VIEW OF AREA A

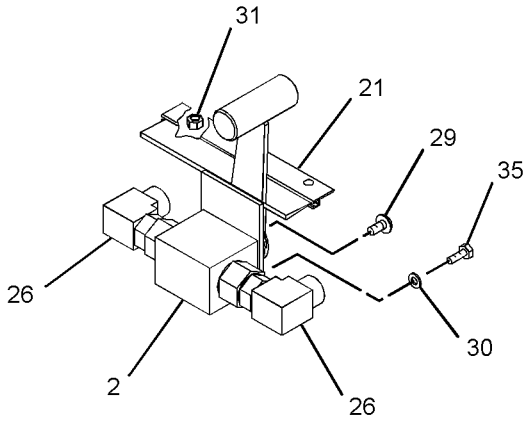

VIEW OF AREA B
(BRACKET REMOVED FOR CLARITY)

GRAPHIC #2 **<END>** g02148198

HYDRAULIC SYSTEM

332-6713 LINES GP-LIFT CYLINDER–
WITHOUT WORK TOOL POSITIONER
S/N: A9H1-UP
PART OF 326-5467 HYDRAULIC AR
AN ATTACHMENT

SMCS-5057, 5102 **i04092426**

NOTE	REF NO	GRAPHIC REF	PART NUMBER	QTY	PART NAME 1 2 3 4 5 6 (PRODUCT LEVEL)	SEE PAGE
	1	1	**6V-3582**	2	CLAMP-HOSE	
J	2	1	**112-1817**	1	VALVE GP-MANUAL (LIFT CYLINDER)	
	3	1	**142-8997**	2	BLOCK	
	4	1	**187-1273**	2	TUBE AS	
	5	1	**187-1274**	1	TUBE AS	
	6	1	**187-1275**	1	TUBE AS	
	7	1	**218-5764**	1	PLATE	
	8	1	**218-6438**	1	SEAL	
	9	1	**285-9286**	1	BLOCK	
	10	1	**289-3752**	1	TUBE AS	
	11	1	**289-3753**	1	TUBE AS	
	12	1	**289-3754**	1	TUBE AS	
I	13	1	**326-5581**	1	HOSE AS	
	14	1	**326-5589**	1	TUBE AS	
I	15	1	**326-5612**	1	HOSE AS	
	16	1	**326-5614**	1	HANDLE AS	
	17	1	**326-5634**	1	BRUSH AS	
	18	1	**326-5640**	1	BRACKET AS	
M		1	**6V-9632**	3	NUT-WELD (M6X1-THD)	
M		1	**8T-3612**	3	NUT-WELD (M8X1.25-THD)	
	19	1	**101-2867**	1	WASHER-HARD (7.2X25X2-MM THK)	
	20	1	*148-8341*	2	CONNECTOR AS	
					(EACH INCLUDES)	
		1	**3D-2824**	1	SEAL-O-RING	
		1	**6V-8713**	1	CONNECTOR	
		1	**7J-9108**	1	SEAL-O-RING	
	21	1	*148-8378*	2	ELBOW AS	
					(EACH INCLUDES)	
		1	**3J-1907**	1	SEAL-O-RING	
		1	**6V-8397**	1	SEAL-O-RING	
		1	**6V-8724**	1	ELBOW	
I	22	1	**218-5739**	4	HOSE AS	
M	23	1	**271-9408**	3	SCREW-TRUSS HEAD (M5X0.8X10-MM)	
	24	1	**4B-4863**	4	WASHER (4.7X11X1.2-MM THK)	
M	25	1	**5C-2874**	2	NUT (M5X0.8-THD)	
	26	1	**6V-8397**	1	SEAL-O-RING	
	27	1	**6V-8398**	12	SEAL-O-RING	
	28	1	**7J-9108**	2	SEAL-O-RING	
M	29	1	**8T-7852**	4	BOLT (M4X0.7X10-MM)	
	30	1	**8T-4121**	2	WASHER-HARD (11X21X2.5-MM THK)	
M	31	1	**8T-4136**	2	BOLT (M10X1.5X25-MM)	
	32	1	**8T-4224**	3	WASHER-HARD (8.8X16X2-MM THK)	
M	33	1	**8T-4908**	3	BOLT (M8X1.25X25-MM)	
M	34	1	**9X-2043**	3	SCREW-TRUSS HEAD (M6X1X14-MM)	
					AVAILABLE REPAIR KIT(S):	
J			**112-9861**	1	KIT-SEAL	
					(INCLUDES SEALS, O-RINGS & THRUST RING)	

I-REFER TO HYDRAULIC INFORMATION SYSTEM
J-KIT MARKED J SERVICES PARTS MARKED J
M-METRIC PART

332-6713 LINES GP-LIFT CYLINDER *(contd.)* i04092426

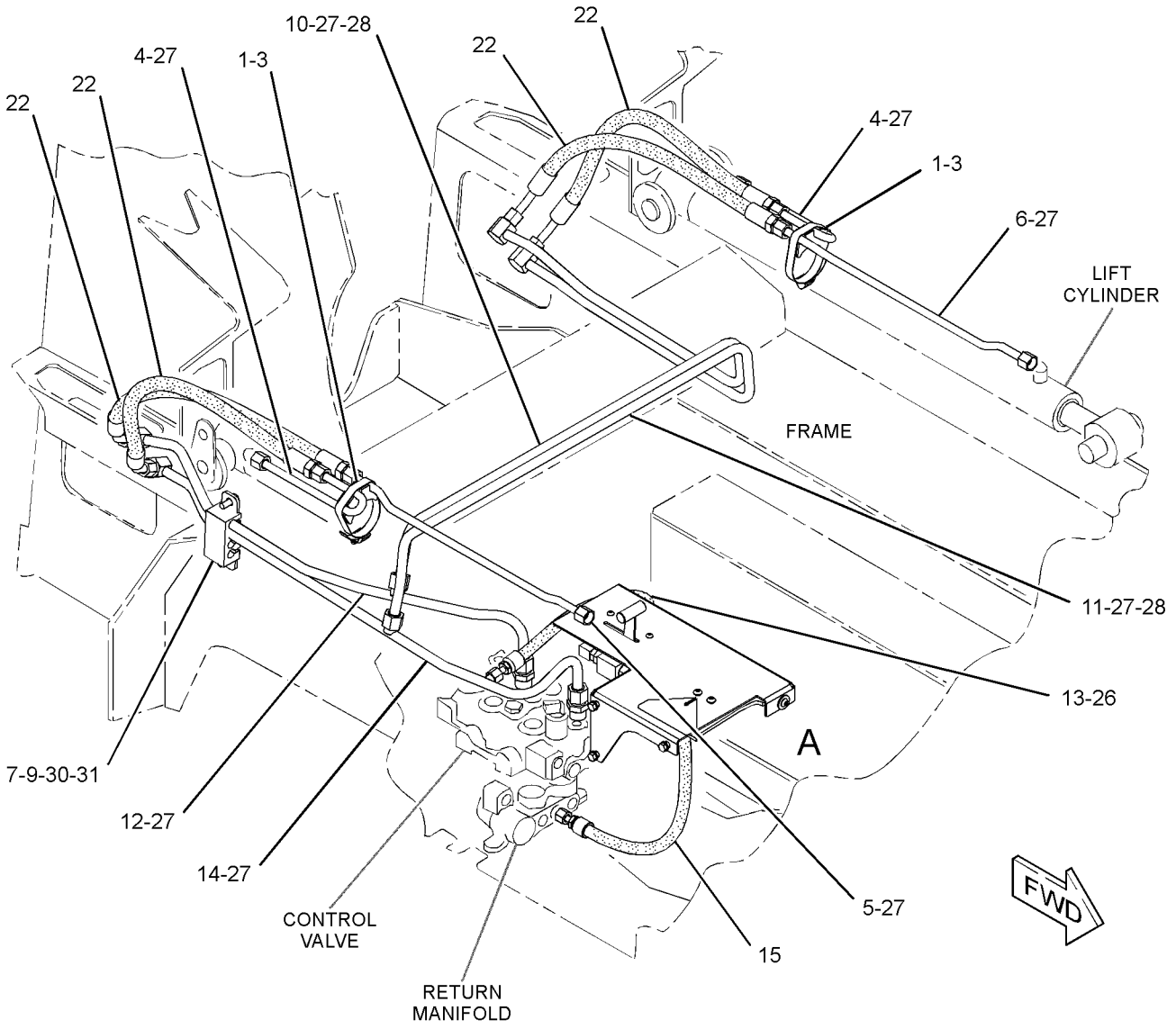

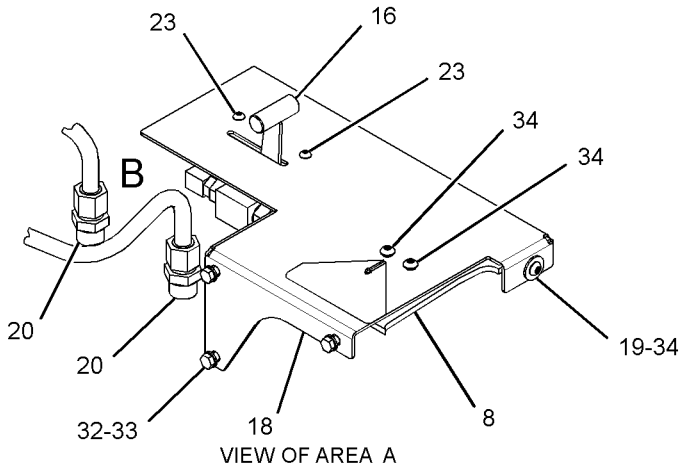

VIEW OF AREA A

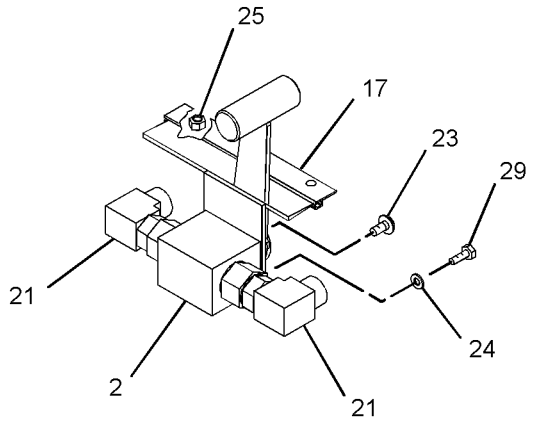

VIEW OF AREA B
(BRACKET REMOVED FOR CLARITY)

GRAPHIC #1 **<END>** g02148057

HYDRAULIC SYSTEM

218-5631 LINES GP-PILOT—DIRECTION, SPEED

S/N: A9H1-UP

PART OF 326-5435 HYDRAULIC AR

SMCS-5057, 5059 **i02757329**

NOTE	REF NO	GRAPHIC REF	PART NUMBER	QTY	PART NAME 1 2 3 4 5 6 (PRODUCT LEVEL)	SEE PAGE
	1	1	**6V-0852**	1	CAP-DUST	
	2	1	**7K-1181**	2	STRAP-CABLE	
	3	1	*148-8423*	1	TEE AS	
		1	**8T-3311**	1	TEE	
		1	**3J-1907**	1	SEAL-O-RING	
		1	**4J-5477**	1	SEAL-O-RING	
	4	1	*164-5567*	1	COUPLER AS-QUICK DISCONNECT (MALE)	
		1	**6V-3965**	1	FITTING (QUICK DISCONNECT)	
		1	**3J-1907**	1	SEAL-O-RING	
	5	1	**193-8392**	2	HOSE AS	
	6	1	**193-8393**	2	HOSE AS	
	7	1	**218-5770**	1	HOSE AS	
	8	1	**218-5968**	1	BRACKET	
	9	1	**218-6864**	1	HOSE AS	
	10	1	*148-8316*	2	CONNECTOR AS	
					(EACH INCLUDES)	
		1	**6V-8647**	1	CONNECTOR	
		1	**3J-7354**	1	SEAL-O-RING	
		1	**4J-5477**	1	SEAL-O-RING	
	11	1	*148-8325*	5	CONNECTOR AS	
					(EACH INCLUDES)	
		1	**6V-8641**	1	CONNECTOR	
		1	**3J-1907**	1	SEAL-O-RING	
		1	**4J-5477**	1	SEAL-O-RING	
	12	1	*148-8369*	2	ELBOW AS	
					(EACH INCLUDES)	
		1	**6V-8628**	1	ELBOW	
		1	**3J-7354**	1	SEAL-O-RING	
		1	**4J-5477**	1	SEAL-O-RING	
	13	1	*150-4043*	1	CONNECTOR AS	
		1	**6V-9873**	1	CONNECTOR	
		1	**3J-1907**	1	SEAL-O-RING	
		1	**6V-8398**	1	SEAL-O-RING	

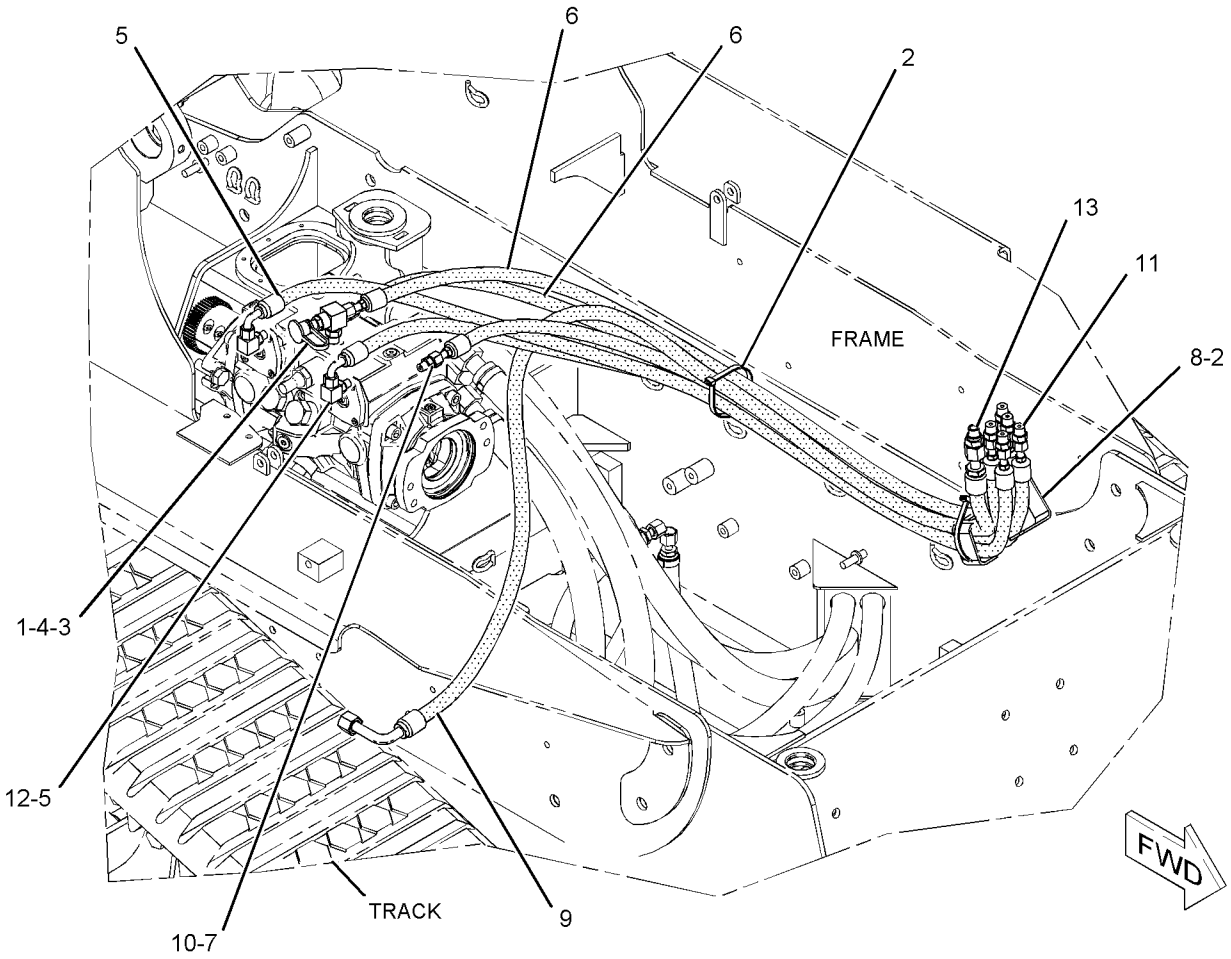

GRAPHIC #1 **<END>** g01066425

218-5632 LINES GP-PILOT—WORK TOOL

S/N: A9H1-UP

PART OF 326-5435 HYDRAULIC AR

SMCS-5057, 5059 **i04282163**

NOTE	REF NO	GRAPHIC REF	PART NUMBER	QTY	PART NAME 1 2 3 4 5 6 (PRODUCT LEVEL)	SEE PAGE
	1	1	*154-5232*	1	ADAPTER AS	
		1	**112-9783**	1	ADAPTER	
		1	**3K-0360**	1	SEAL-O-RING	
		1	**4J-5477**	1	SEAL-O-RING	
Y	2	1	*179-7001*	1	ADAPTER GP-OIL LINE	218
I	3	1	**190-7453**	1	HOSE AS	
	4	1	**195-6768**	1	SCREEN (HYDRAULIC)	
	5	1	**195-6769**	1	WASHER (6.99X12.7X5.46-MM THK)	
I	6	1	**218-5571**	2	HOSE AS	
I	7	1	**218-5572**	2	HOSE AS	
I	8	1	**218-6601**	1	HOSE AS	
	9	1	**123-4750**	1	VALVE-CHECK (HOIST PILOT OIL)	
	10	1	*148-8325*	9	CONNECTOR AS	
					(EACH INCLUDES)	
		1	**6V-8641**	1	CONNECTOR	
		1	**3J-1907**	1	SEAL-O-RING	
		1	**4J-5477**	1	SEAL-O-RING	
	11	1	*148-8435*	1	TEE AS	
		1	**6V-8781**	1	TEE	
		1	**3J-1907**	1	SEAL-O-RING	
		1	**6V-8397**	2	SEAL-O-RING	
	12	1	*150-4027*	1	TEE AS	
		1	**3E-2310**	1	TEE	
		1	**3J-1907**	1	SEAL-O-RING	
		1	**6V-8397**	1	SEAL-O-RING	
I	13	1	**193-8313**	1	HOSE AS	
	16	1	**6D-3479**	1	CLIP	
	17	1	**8T-4121**	1	WASHER-HARD (11X21X2.5-MM THK)	
M	18	1	**8T-4191**	1	BOLT (M10X1.5X16-MM)	

I-REFER TO HYDRAULIC INFORMATION SYSTEM
M-METRIC PART
Y-SEPARATE ILLUSTRATION

218-5632 **LINES GP-PILOT** *(contd.)* **i04282163**

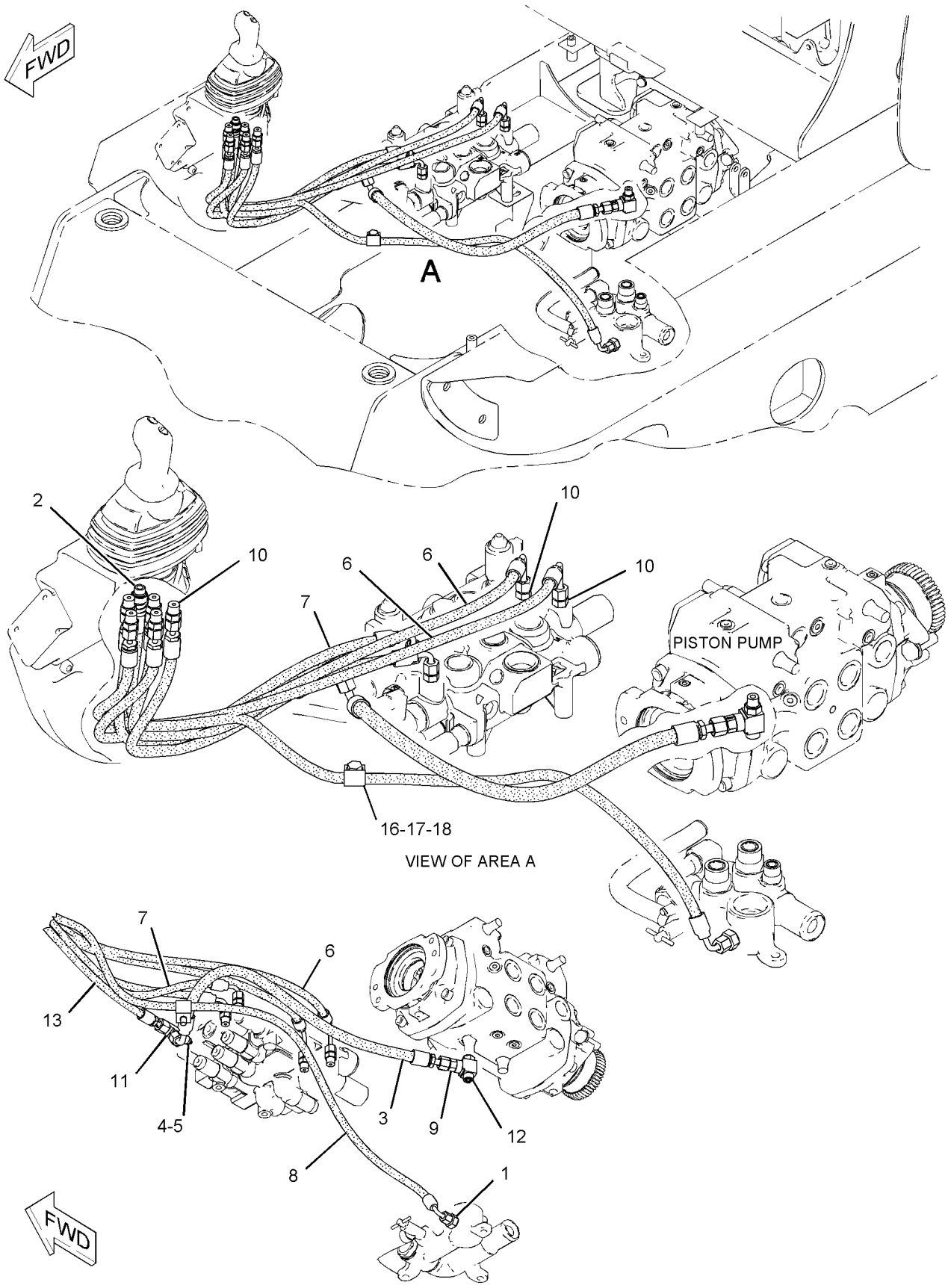

GRAPHIC #1 **<END>** g01127586

HYDRAULIC SYSTEM

356-1910 LINES GP-PUMP

S/N: A9H1-UP

PART OF 326-5435 HYDRAULIC AR

SMCS-5057 **i03902056**

NOTE	REF NO	GRAPHIC REF	PART NUMBER	QTY	PART NAME 1 2 3 4 5 6 (PRODUCT LEVEL)	SEE PAGE
D	1	1	**5P-9909**		SEAL (0.1-M)	
	2	1	**2S-3440**	2	CLAMP-HOSE	
	3	1	**5P-2230**	3	CLAMP-HOSE	
	4	1	**6V-0852**	1	CAP-DUST	
	5	1	*9U-6994*	1	FITTING GP	
		1	**5P-4362**	1	CONNECTOR	
		1	**7M-8485**	1	SEAL-O-RING	
	6	1	**9U-6995**	1	FITTING GP-HYDRAULIC	
		1	**034-2151**	1	CONNECTOR	
		1	**2S-4078**	1	SEAL-O-RING	
	7	1	**180-3007**	1	CLAMP-HOSE	
	8	1	**193-8308**	1	ADAPTER	
I	9	1	**193-8321**	1	HOSE AS	
	10	1	**218-5756**	1	HOSE	
	11	1	**283-9477**	1	HOSE	
	12	1	**347-4039**	1	HOSE	
	13	1	*148-8315*	1	CONNECTOR AS	
		1	**2M-9780**	1	SEAL-O-RING	
		1	**6V-8642**	1	CONNECTOR	
		1	**7J-9108**	1	SEAL-O-RING	
	14	1	*148-8360*	1	ELBOW AS	
		1	**6V-9182**	1	ELBOW	
		1	**6V-9746**	1	SEAL-O-RING	
		1	**7M-8485**	1	SEAL-O-RING	
	15	1	*164-5567*	1	COUPLER AS-QUICK DISCONNECT (MALE)	
		1	**6V-3965**	1	FITTING (QUICK DISCONNECT)	
		1	**214-7568**	1	SEAL-O-RING	
	16	1	**1P-4578**	2	FLANGE-HALF	
	17	1	**4J-0522**	1	SEAL-O-RING	
	18	1	**4J-5267**	1	SEAL-O-RING	
	19	1	**8C-3205**	2	FLANGE-HALF	
	20	1	**8T-4121**	8	WASHER-HARD (11X21X2.5-MM THK)	
M	21	1	**8T-4196**	8	BOLT (M10X1.5X35-MM)	

D-ORDER BY THE METER
I-REFER TO HYDRAULIC INFORMATION SYSTEM
M-METRIC PART

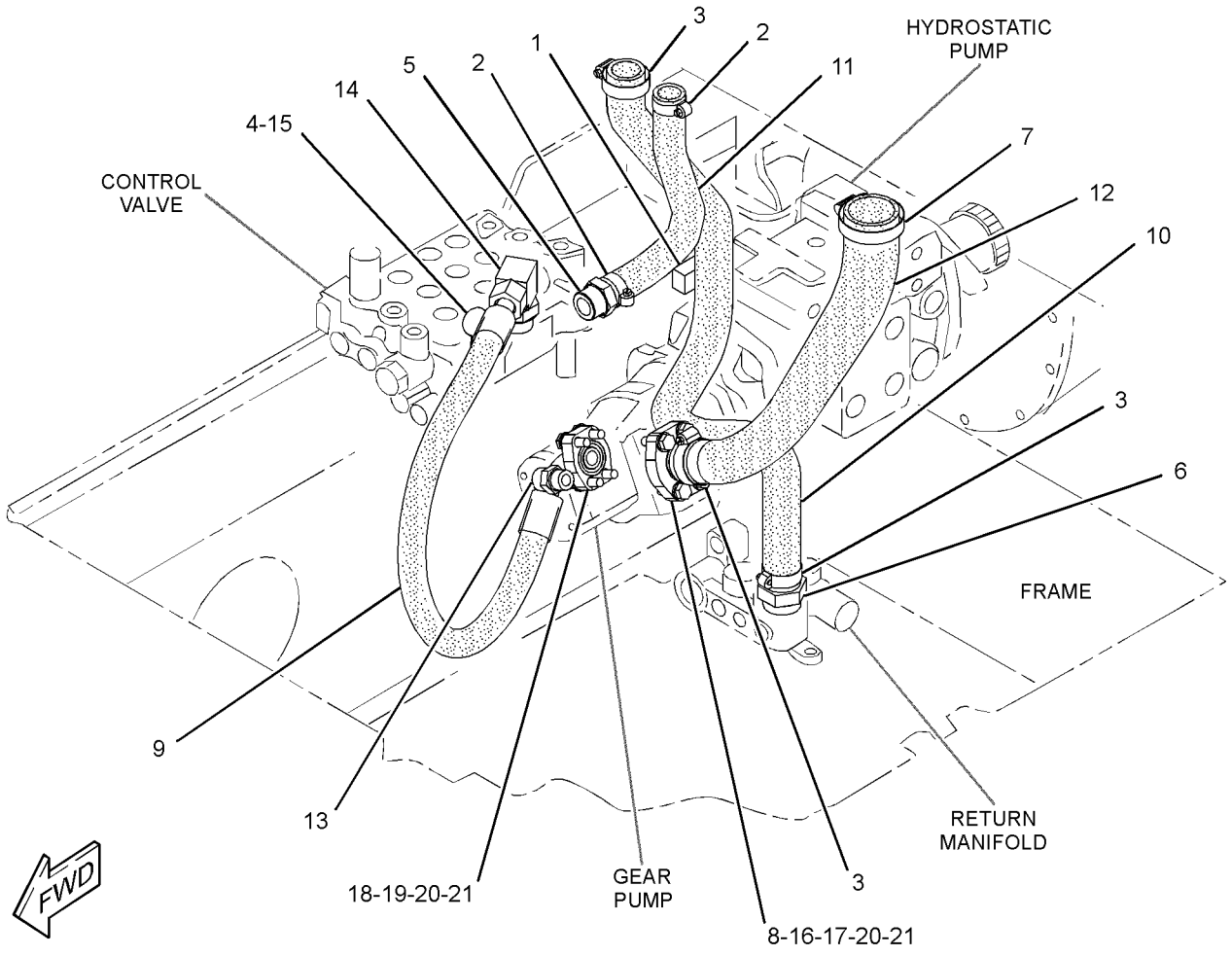

GRAPHIC #1 **<END>** g02148275

HYDRAULIC SYSTEM

218-5732 LINES GP-TILT CYLINDER

S/N: A9H1-UP
PART OF 326-5467 HYDRAULIC AR
AN ATTACHMENT

SMCS-5057, 5104 **i02545861**

NOTE	REF NO	GRAPHIC REF	PART NUMBER	QTY	PART NAME 1 2 3 4 5 6 (PRODUCT LEVEL)	SEE PAGE
	1	1	**116-4415**	2	PLATE-COVER	
	2	1	**142-8998**	2	CLIP	
I	3	1	**142-9234**	4	HOSE AS	
I	4	1	**218-5740**	2	HOSE AS	
	5	1	**289-3781**	1	TUBE AS	
	6	1	**218-5744**	1	TUBE AS	
	7	1	**218-6517**	1	TUBE AS	
	8	1	**289-3788**	1	TUBE AS	
	9	1	*148-8315*	2	CONNECTOR AS	
					(EACH INCLUDES)	
		1	**2M-9780**	1	SEAL-O-RING	
		1	**6V-8642**	1	CONNECTOR	
		1	**7J-9108**	1	SEAL-O-RING	
	10	1	**6V-8398**	8	SEAL-O-RING	
	11	1	**7J-9108**	4	SEAL-O-RING	
	12	1	**253-2121**	2	BOLT	
	13	1	**8T-4121**	2	WASHER-HARD (11X21X2.5-MM THK)	
M	14	1	**8T-4136**	2	BOLT (M10X1.5X25-MM)	
	15	1	**8T-4205**	2	WASHER-HARD (7.2X14.5X2-MM THK)	
	16	1	**9R-1005**	2	CLIP (SLOT)	
	17	1	**9R-7802**	2	CLIP (SLOT)	
	18	1	**9R-7803**	2	CLIP (TAB)	

I-REFER TO HYDRAULIC INFORMATION SYSTEM
M-METRIC PART

218-5732 **LINES GP-TILT CYLINDER** *(contd.)* **i02545861**

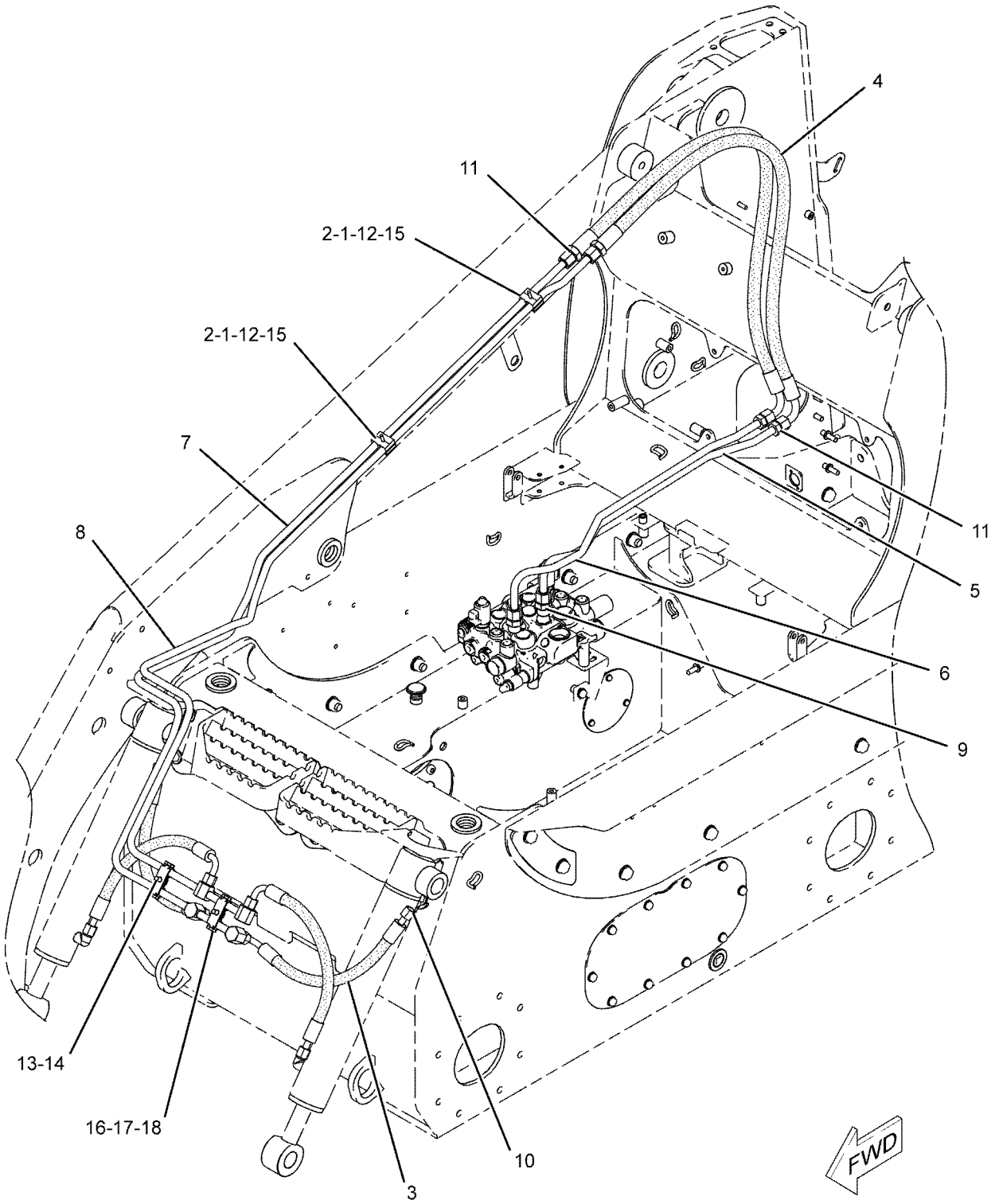

GRAPHIC #1 **<END>** g01031331

218-5734 LINES GP-TILT CYLINDER

S/N: A9H1-UP
PART OF 326-5480 HYDRAULIC AR
FOR USE WITH WORK TOOL POSITIONER
AN ATTACHMENT

SMCS-5057, 5104 **i02545862**

NOTE	REF NO	GRAPHIC REF	PART NUMBER	QTY	PART NAME 1 2 3 4 5 6 (PRODUCT LEVEL)	SEE PAGE
	1	1	**116-4415**	2	PLATE-COVER	
	2	1	**142-8998**	2	CLIP	
I	3	1	**142-9234**	4	HOSE AS	
	4	1	*205-3692*	1	ELBOW AS	
		1	**2M-9780**	1	SEAL-O-RING	
		1	**6V-8397**	1	SEAL-O-RING	
		1	**9X-2134**	1	ELBOW	
	5	1	**218-5735**	1	TUBE AS	
	6	1	**289-3780**	1	TUBE AS	
I	7	1	**218-5740**	2	HOSE AS	
	8	1	**218-5741**	1	TUBE AS	
	9	1	**218-5742**	1	TUBE AS	
	10	1	**218-6517**	1	TUBE AS	
	11	1	**289-3788**	1	TUBE AS	
	12	1	*148-8319*	1	CONNECTOR AS	
		1	**2M-9780**	1	SEAL-O-RING	
		1	**6V-8397**	1	SEAL-O-RING	
		1	**6V-8715**	1	CONNECTOR	
	13	1	*148-8315*	2	CONNECTOR AS	
					(EACH INCLUDES)	
		1	**2M-9780**	1	SEAL-O-RING	
		1	**6V-8642**	1	CONNECTOR	
		1	**7J-9108**	1	SEAL-O-RING	
	14	1	**6V-8397**	2	SEAL-O-RING	
	15	1	**6V-8398**	8	SEAL-O-RING	
	16	1	**7J-9108**	4	SEAL-O-RING	
	17	1	**253-2121**	2	BOLT	
	18	1	**8T-4121**	2	WASHER-HARD (11X21X2.5-MM THK)	
M	19	1	**8T-4136**	2	BOLT (M10X1.5X25-MM)	
	20	1	**8T-4205**	2	WASHER-HARD (7.2X14.5X2-MM THK)	
	21	1	**9R-1005**	2	CLIP (SLOT)	
	22	1	**9R-7802**	2	CLIP (SLOT)	
	23	1	**9R-7803**	2	CLIP (TAB)	

I-REFER TO HYDRAULIC INFORMATION SYSTEM
M-METRIC PART

218-5734 **LINES GP-TILT CYLINDER** *(contd.)* **i02545862**

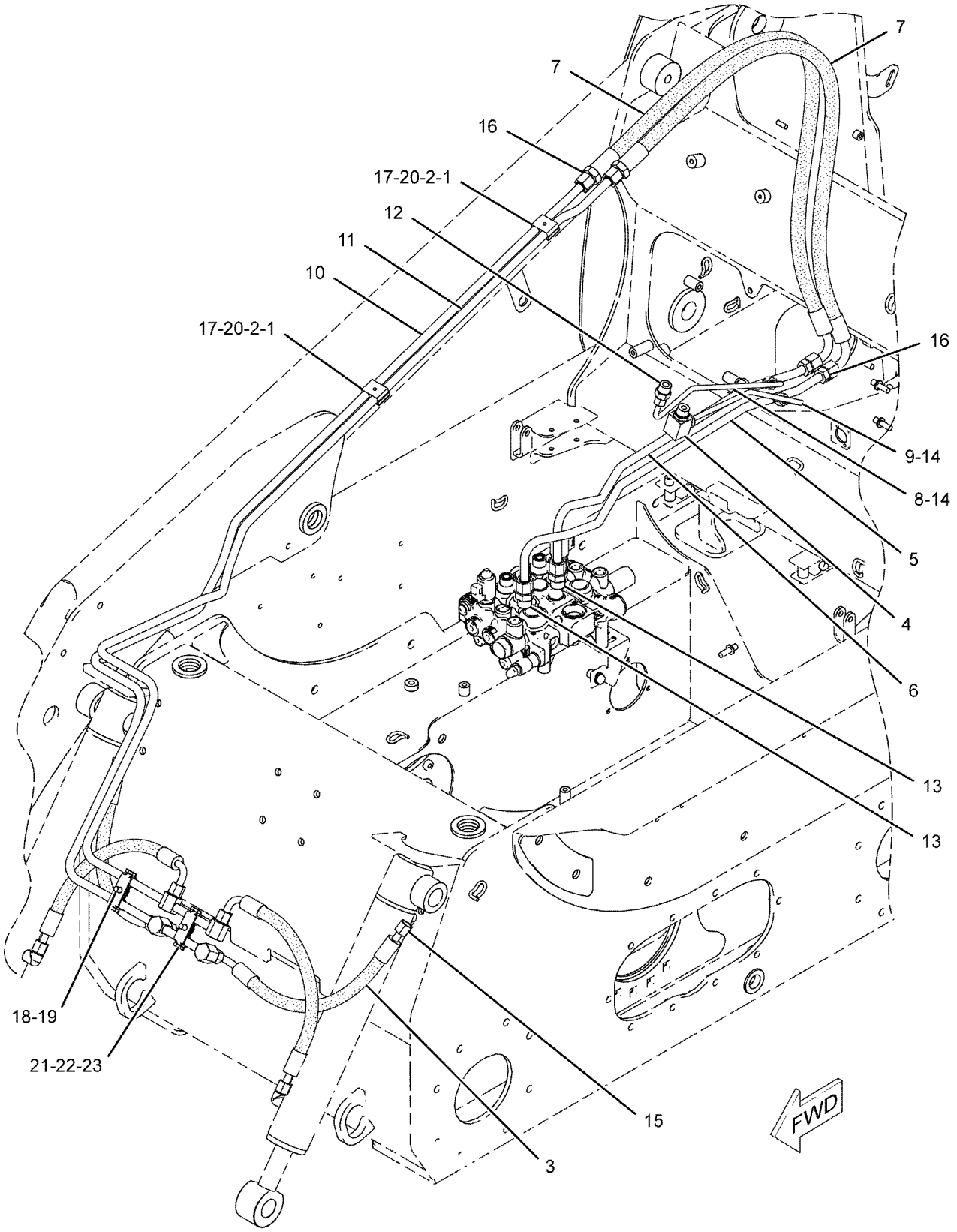

GRAPHIC #1 **<END>** g01031075

HYDRAULIC SYSTEM

218-5634 LINES GP-WORK TOOL

S/N: A9H1-UP

PART OF 326-5435 HYDRAULIC AR

SMCS-5057 **i04154101**

NOTE	REF NO	GRAPHIC REF	PART NUMBER	QTY	PART NAME 1 2 3 4 5 6 (PRODUCT LEVEL)	SEE PAGE
M	1	1	**101-3129**	1	STUD (M10X1.5-THD)	
	2	1	**102-8703**	2	PLATE-COVER	
	3	1	**347-4432**	1	COUPLER-QUICK DISCONNECT (MALE)	
	4	1	**347-4431**	1	COUPLER-QUICK DISCONNECT (FEMALE)	
	5	1	**195-6750**	4	CLAMP-DOUBLE	
	6	1	**291-5059**	1	TUBE AS	
	7	1	**291-5060**	1	TUBE AS	
C	8	1	**285-9286**	3	BLOCK	
	9	1	**291-5061**	1	TUBE AS	
	10	1	**291-5062**	1	TUBE AS	
I	11	1	**218-5740**	2	HOSE AS	
	12	1	**218-5764**	3	PLATE	
	13	1	**218-6006**	1	BRACKET AS	
	14	1	**218-6011**	2	BRACKET AS	
	15	1	**8T-4224**	2	WASHER-HARD (8.8X16X2-MM THK)	
	16	1	*148-8341*	2	CONNECTOR AS	
					(EACH INCLUDES)	
		1	**3D-2824**	1	SEAL-O-RING	
		1	**6V-8713**	1	CONNECTOR	
		1	**7J-9108**	1	SEAL-O-RING	
M	17	1	**5C-9553**	4	BOLT (M6X1X16-MM)	
	18	1	**6V-9170**	2	NUT-BULKHEAD (1-14-THD)	
	19	1	**7J-9108**	6	SEAL-O-RING	
	20	1	**8T-4121**	8	WASHER-HARD (11X21X2.5-MM THK)	
M	21	1	**8T-4136**	2	BOLT (M10X1.5X25-MM)	
M	22	1	**8T-4195**	3	BOLT (M10X1.5X30-MM)	
M	23	1	**8T-4198**	2	BOLT (M10X1.5X100-MM)	
	24	1	**8T-4205**	4	WASHER-HARD (7.2X14.5X2-MM THK)	
	25	1	**8T-4167**	2	WASHER-HARD (26X44X4-MM THK)	

C-CHANGE FROM PREVIOUS TYPE
I-REFER TO HYDRAULIC INFORMATION SYSTEM
M-METRIC PART

218-5634 **LINES GP-WORK TOOL** *(contd.)* **i04154101**

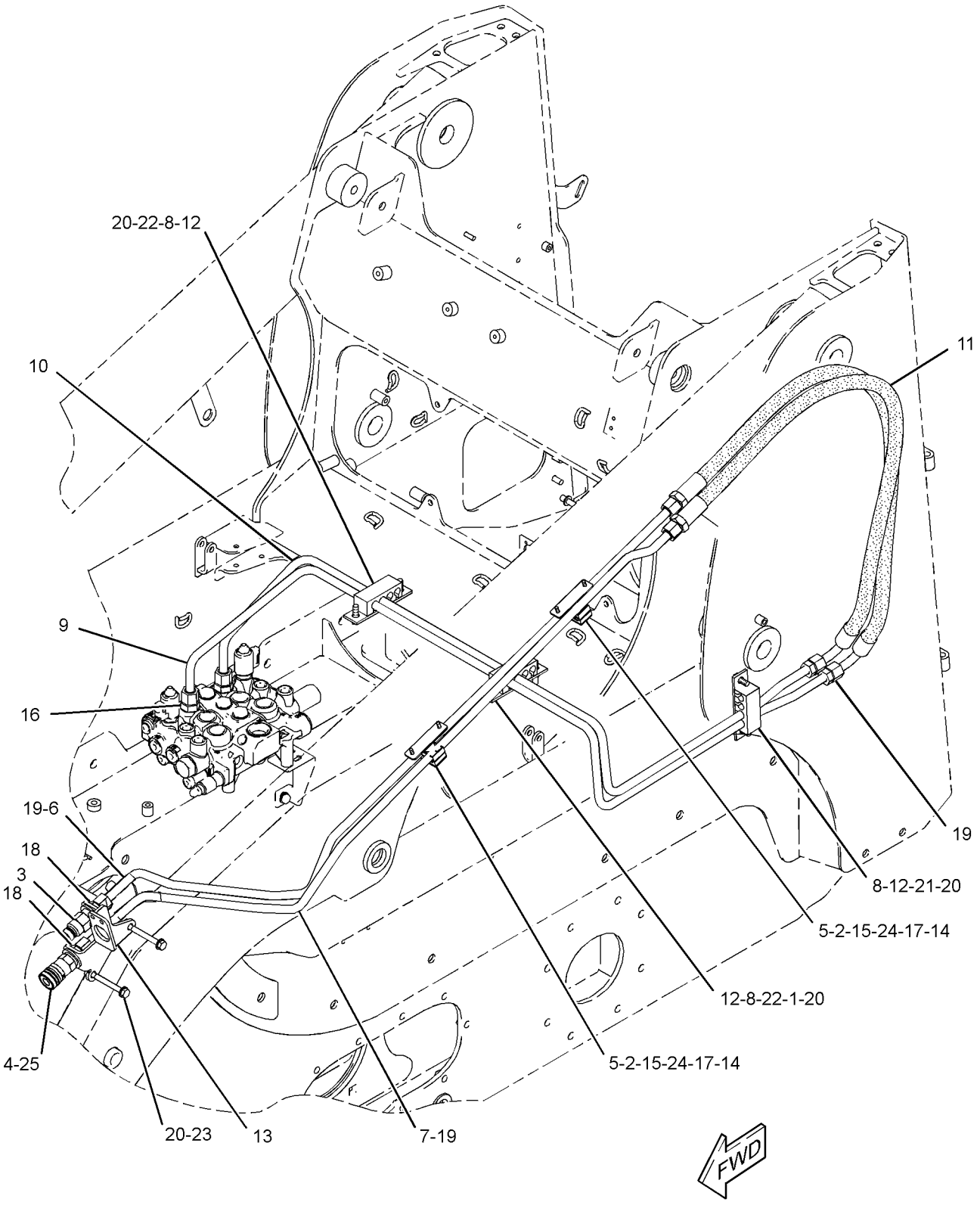

GRAPHIC #1 **<END>** g02369697

218-5729 MANIFOLD & MTG GP-CONTROL–

WORK TOOL POSITIONER

S/N: A9H1-UP

PART OF 326-5676 LINES GP-LIFT CYLINDER

AN ATTACHMENT

SMCS-5264 **i01999744**

NOTE	REF NO	GRAPHIC REF	PART NUMBER	QTY	PART NAME 1 2 3 4 5 6 (PRODUCT LEVEL)	SEE PAGE
Y	1	1	**224-9408**	1	MANIFOLD & SOLENOID GP-CONTROL	295
M	2	1	**7X-2535**	2	BOLT (M6X1X60-MM)	
	3	1	**8T-4205**	2	WASHER-HARD (7.2X14.5X2-MM THK)	

M-METRIC PART
Y-SEPARATE ILLUSTRATION

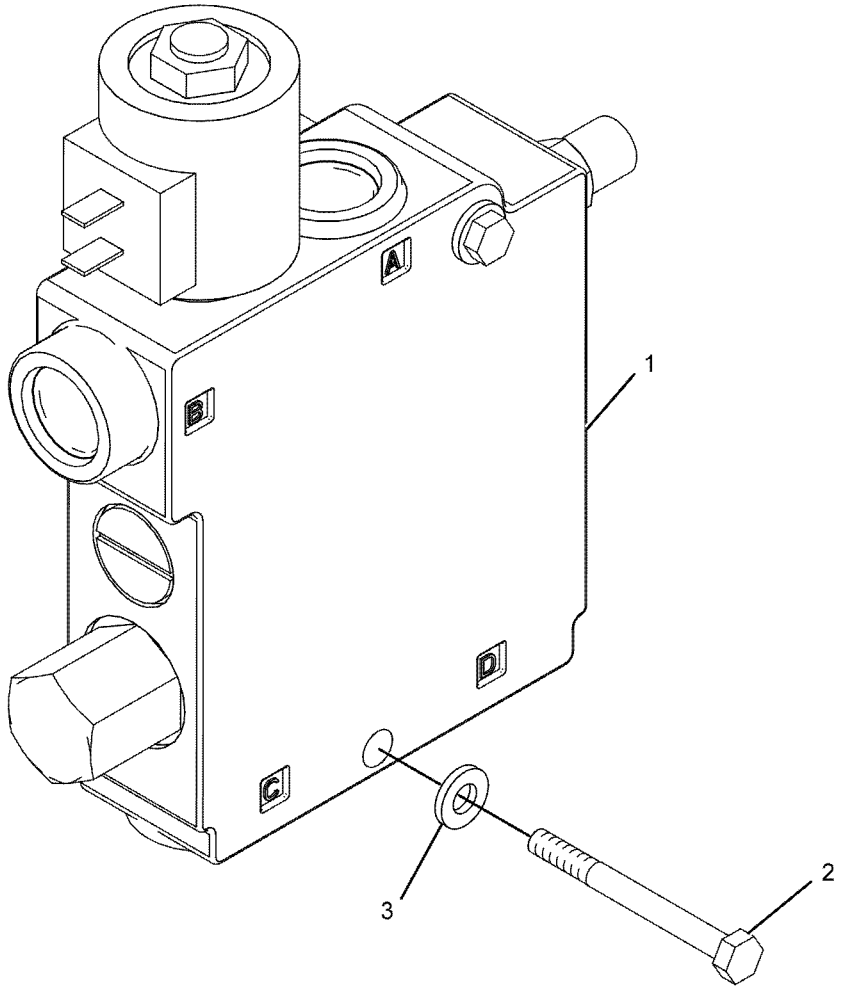

GRAPHIC #1 **<END>** g01014976

231-5278 MANIFOLD & MTG GP-CONTROL—ANGLING BLADE

S/N: A9H1-UP
PART OF 231-5275, 231-5277 BLADE AR
AN ATTACHMENT

SMCS-5264 **i02337085**

NOTE	REF NO	GRAPHIC REF	PART NUMBER	QTY	PART NAME 1 2 3 4 5 6 (PRODUCT LEVEL)	SEE PAGE
Y	1	1	**258-9011**	1	MANIFOLD GP-CONTROL (ANGLING BLADE)	297
	2	1	**231-5279**	1	COVER	
	3	1	**5P-4116**	3	WASHER-HARD (8.8X20.5X2-MM THK)	
M	4	1	**8T-4189**	2	BOLT (M8X1.25X20-MM)	
M	5	1	**8T-4200**	3	BOLT (M8X1.25X16-MM)	
	6	1	**8T-4224**	2	WASHER-HARD (8.8X16X2-MM THK)	

M-METRIC PART
Y-SEPARATE ILLUSTRATION

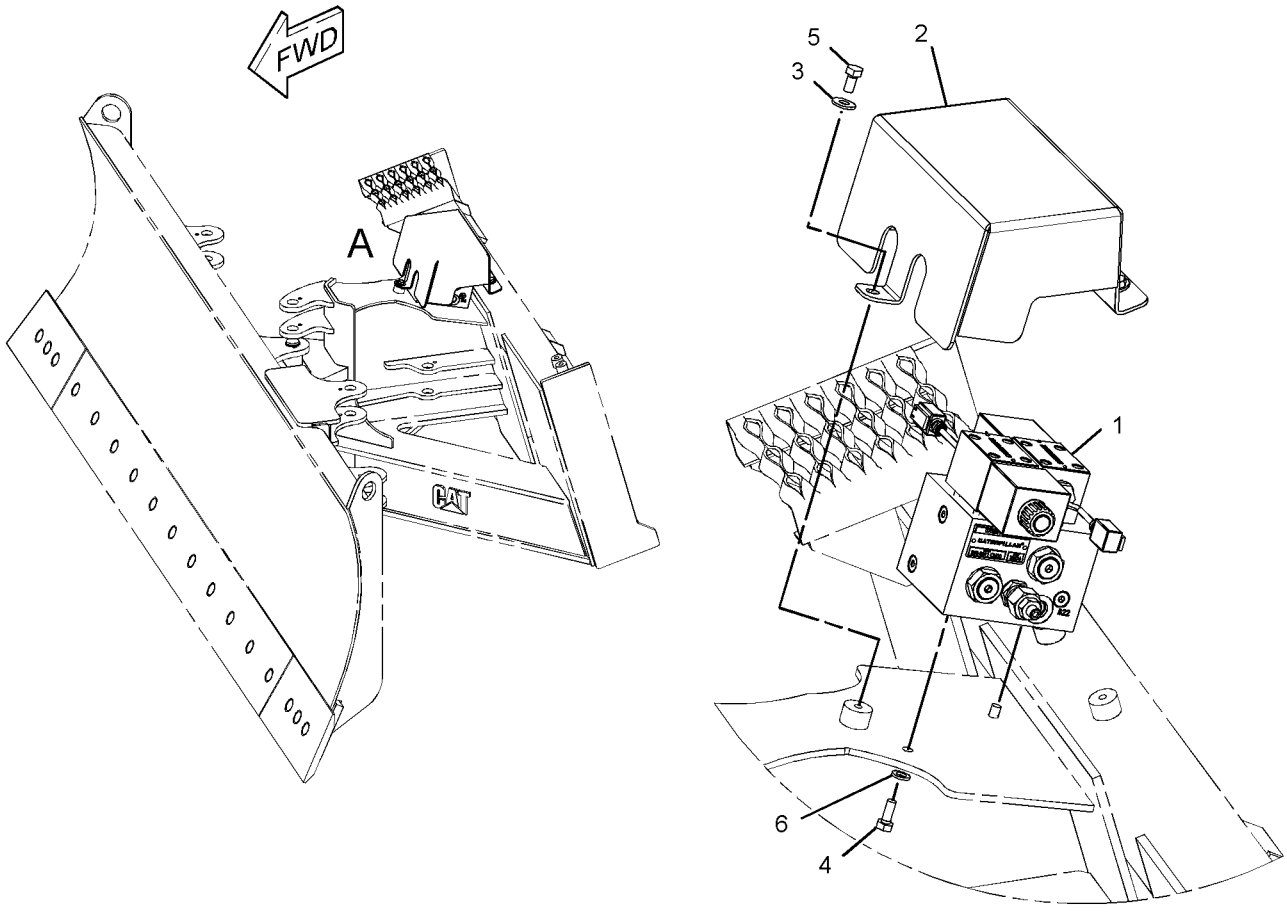

VIEW OF AREA A

GRAPHIC #1 **<END>** g01167422

224-9408 MANIFOLD & SOLENOID GP-CONTROL

S/N: A9H1-UP
PART OF 218-5729 MANIFOLD & MTG GP-CONTROL
AN ATTACHMENT

SMCS-5264, 5479 **i04285816**

NOTE	REF NO	GRAPHIC REF	PART NUMBER	QTY	PART NAME 1 2 3 4 5 6 (PRODUCT LEVEL)	SEE PAGE
	1	1	**102-8804**	1	KIT-RECEPTACLE (4-PIN)	
					(INCLUDES RECEPTACLE AS & WEDGE)	
J	2	1	**218-6857**	1	COIL AS	
	3	1	**186-3735**	2	PIN-CONNECTOR (16-GA TO 18-GA)	
	4	1	**9G-3695**	2	PLUG-SEAL	
J	5	1	**218-6858**	1	CARTRIDGE AS-VALVE	
					AVAILABLE REPAIR KIT(S):	
			218-6856	1	KIT-SEAL	
					(INCLUDES O-RINGS, COVER, & BACK-UP WASHER)	
J			**155-1279**	1	KIT-SEAL	
					(INCLUDES O-RING SEALS & BACKUP RING)	

J-KIT MARKED J SERVICES PARTS MARKED J

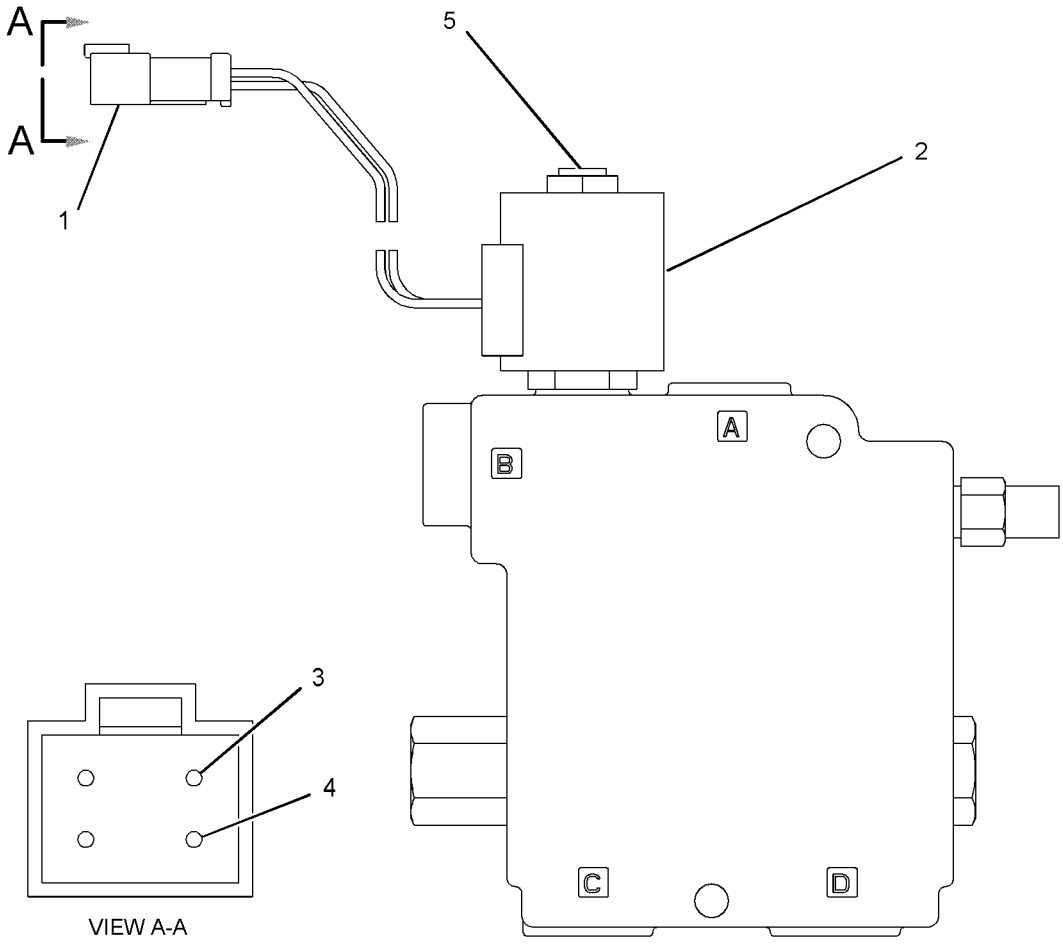

GRAPHIC #1 **<END>** g02452976

233-7128 MANIFOLD GP-CONTROL–QUICK COUPLER

S/N: A9H1-UP

PART OF 364-1355 KIT-QUICK COUPLER CONVERSION, 332-6714 LINES GP-COUPLER AN ATTACHMENT

SMCS-5117, 5264, 5479 **i04077324**

NOTE	REF NO	GRAPHIC REF	PART NUMBER	QTY	PART NAME 1 2 3 4 5 6 (PRODUCT LEVEL)	SEE PAGE
	1	1	**245-1911**	1	WIRE AS	
	2	1	**249-7160**	1	VALVE GP-SOLENOID (12-VOLT) (QUICK COUPLER)	
		1	**238-4626**	2	COIL AS	

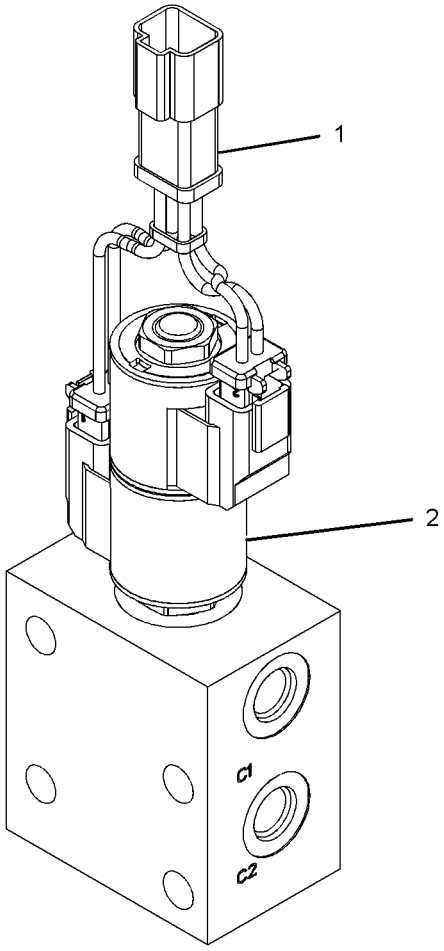

GRAPHIC #1 **<END>** g01132286

258-9011 MANIFOLD GP-CONTROL—ANGLING BLADE

S/N: A9H1-UP

PART OF 231-5278 MANIFOLD & MTG GP-CONTROL

AN ATTACHMENT

SMCS-5117, 5264, 5479 **i04280581**

NOTE	REF NO	GRAPHIC REF	PART NUMBER	QTY	PART NAME 1 2 3 4 5 6 (PRODUCT LEVEL)	SEE PAGE
M	1	1	**9X-6615**	8	BOLT (M5X0.8X30-MM)	
	2	1	**243-5601**	7	PLUG	
J	3	1	**244-1363**	1	VALVE GP-SOLENOID (12-VOLT) (ANGLE)	
		1	**227-7025**	1	SOLENOID AS (SWING BOOM, WORK TOOL)	
		1	**215-3273**	1	CARTRIDGE AS-VALVE	
		1	**6V-8399**	1	SEAL-O-RING	
		1	**215-3274**	1	SEAL & RETAINER AS	
		1	**217-3875**	1	SEAL-O-RING	
		1	**212-4114**	1	SEAL-O-RING	
J	4	1	**244-1364**	1	VALVE GP-SOLENOID (12-VOLT) (TILT)	
		1	**227-7025**	1	SOLENOID AS (SWING BOOM, WORK TOOL)	
		1	**215-3273**	1	CARTRIDGE AS-VALVE	
		1	**6V-8399**	1	SEAL-O-RING	
		1	**215-3274**	1	SEAL & RETAINER AS	
		1	**217-3875**	1	SEAL-O-RING	
		1	**212-4114**	1	SEAL-O-RING	
	5	1	**244-1365**	2	VALVE GP-RELIEF (SWING BOOM, WORK TOOL)	
					(EACH INCLUDES)	
		1	**192-7508**	1	SEAL-O-RING	
	6	1	**266-8903**	4	VALVE GP-CHECK	
					(EACH INCLUDES)	
		1	**2M-9780**	1	SEAL-O-RING	
		1	**7J-9108**	1	SEAL-O-RING	
	7	1	**180-7451**	8	WASHER-HARD (5.3X8.8X2-MM THK)	
					AVAILABLE REPAIR KIT(S):	
J			**215-3275**	1	KIT-SEAL	
					(INLCUDES O-RING SEALS)	

J-KIT MARKED J SERVICES PARTS MARKED J
M-METRIC PART

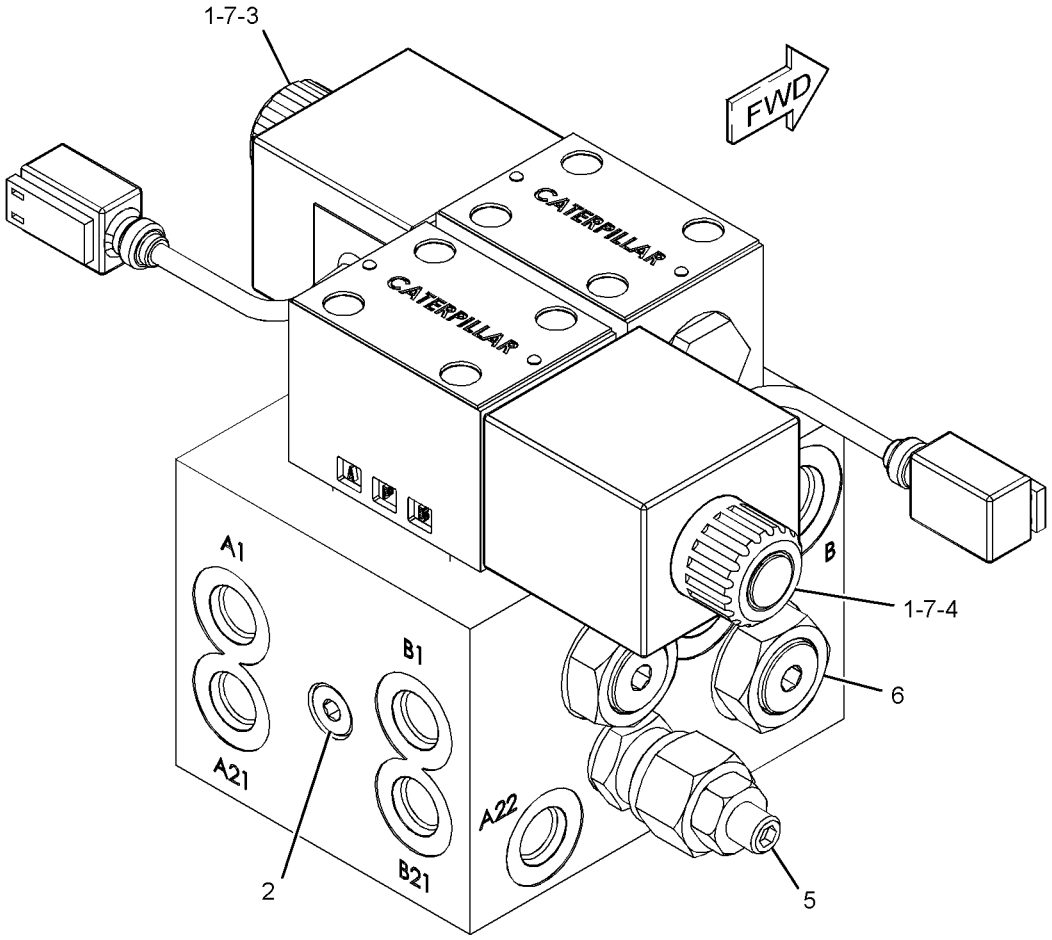

GRAPHIC #1 **<END>** g01178679

258-2579 MOTOR & MTG GP-HYDRAULIC FAN

S/N: A9H1-UP

PART OF 356-1901 MOTOR AR-HYDRAULIC FAN

AN ATTACHMENT

SMCS-1386 **i03970896**

NOTE	REF NO	GRAPHIC REF	PART NUMBER	QTY	PART NAME 1 2 3 4 5 6 (PRODUCT LEVEL)	SEE PAGE
J	1	1	**258-2577**	1	MOTOR GP-GEAR (FAN, DEMAND)	
M		1	**8T-0271**	2	BOLT-SOCKET HEAD (M10X1.5X35-MM)	
M		1	**9T-4884**	2	BOLT (M10X1.5X30-MM)	
	2	1	**277-8862**	1	VALVE GP-SOLENOID (REAR AXLE FAN UNLOADER)	
		1	**238-4628**	1	COIL AS (12-VOLT) (12-VOLT)	
	3	1	**8T-4121**	2	WASHER-HARD (11X21X2.5-MM THK)	
	4	1	**8T-4224**	1	WASHER-HARD (8.8X16X2-MM THK)	
M	5	1	**8T-7547**	1	BOLT (M8X1.25X30-MM)	
M	6	1	**9X-6032**	2	BOLT-SOCKET HEAD (M10X1.5X30-MM)	
					AVAILABLE REPAIR KIT(S):	
J			**278-8716**	1	KIT-SEAL	
					(INCLUDES E-SEALS, O-RINGS, SHAFT SEAL, SNAP RING, BACKUP SEALS, AXIAL SEAL KIT & SEALS)	

J-KIT MARKED J SERVICES PARTS MARKED J
M-METRIC PART

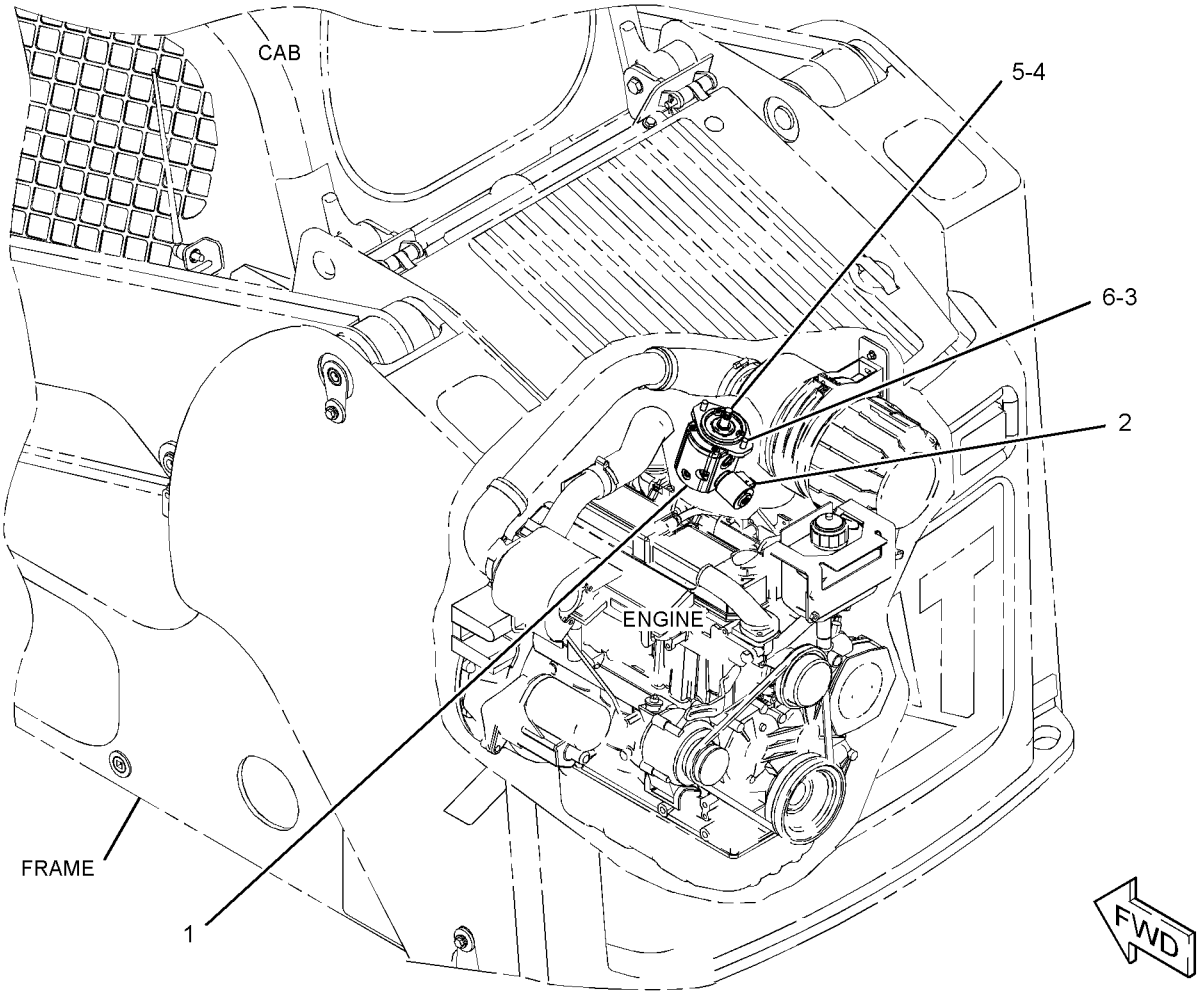

GRAPHIC #1 **<END>** g01315096

HYDRAULIC SYSTEM

295-7221 MOTOR & MTG GP-HYDRAULIC FAN

S/N: A9H1-UP

PART OF 326-5289, 326-5299, 326-5489 CONVERSION AR-MACHINE, 326-5529, 326-5559 CONVERSION AR-ROADING, 356-1900 MOTOR AR-HYDRAULIC FAN AN ATTACHMENT

SMCS-1386 **i03990789**

NOTE	REF NO	GRAPHIC REF	PART NUMBER	QTY	PART NAME 1 2 3 4 5 6 (PRODUCT LEVEL)	SEE PAGE
CY	1	1	**307-3036**	1	MOTOR GP-GEAR (HYDRAULIC FAN)	302
	2	1	**8T-4121**	2	WASHER-HARD (11X21X2.5-MM THK)	
	3	1	**8T-4224**	1	WASHER-HARD (8.8X16X2-MM THK)	
M	4	1	**8T-7547**	1	BOLT (M8X1.25X30-MM)	
M	5	1	**9X-6032**	2	BOLT-SOCKET HEAD (M10X1.5X30-MM)	

C-CHANGE FROM PREVIOUS TYPE
M-METRIC PART
Y-SEPARATE ILLUSTRATION

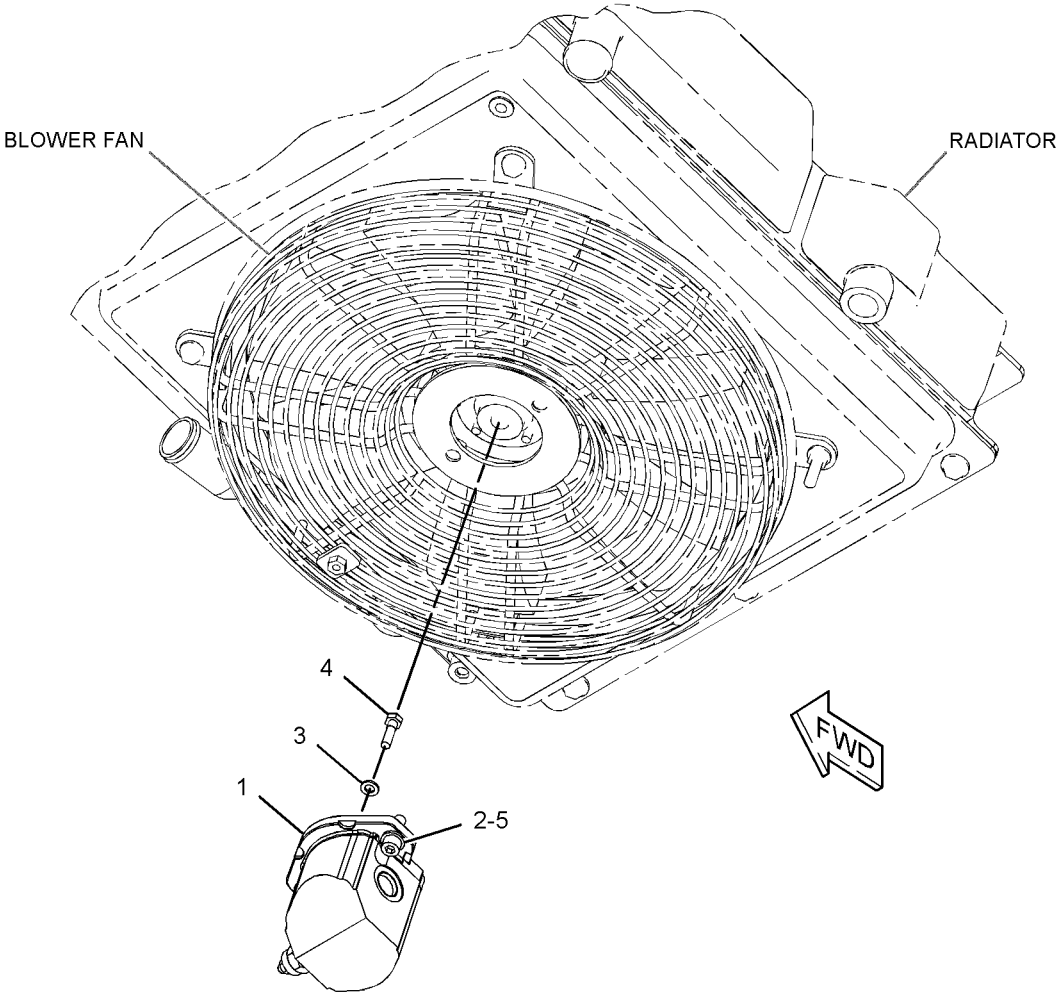

GRAPHIC #1 **<END>** g02174707

356-1900 MOTOR AR-HYDRAULIC FAN—STANDARD

S/N: A9H1-UP
AN ATTACHMENT

SMCS-1386 **i03901812**

NOTE	PART NUMBER	QTY	PART NAME 1 2 3 4 5 6 (PRODUCT LEVEL)	SEE PAGE
Y	*295-7221*	1	MOTOR & MTG GP-HYDRAULIC FAN	300
Y-SEPARATE ILLUSTRATION				

<END>

356-1901 MOTOR AR-HYDRAULIC FAN—NACD

S/N: A9H1-UP
AN ATTACHMENT

SMCS-1386 **i03901813**

NOTE	PART NUMBER	QTY	PART NAME 1 2 3 4 5 6 (PRODUCT LEVEL)	SEE PAGE
Y	*258-2579*	1	MOTOR & MTG GP-HYDRAULIC FAN	299
Y	*328-2342*	1	WIRING GP-MACHINE (DEMAND FAN)	124
Y-SEPARATE ILLUSTRATION				

<END>

HYDRAULIC SYSTEM

307-3036 MOTOR GP-GEAR–HYDRAULIC FAN

S/N: A9H1-UP

PART OF 295-7221 MOTOR & MTG GP-HYDRAULIC FAN

AN ATTACHMENT

SMCS-1386, 5061 **i03970898**

NOTE	REF NO	GRAPHIC REF	PART NUMBER	QTY	PART NAME 1 2 3 4 5 6 (PRODUCT LEVEL)	SEE PAGE
	1	1	**228-9240**	1	VALVE GP-RELIEF (GEAR MOTOR)	
		1	**6F-6672**	1	SEAL-O-RING	
		1	**215-3277**	1	SEAL-O-RING	
M	2	1	**9T-4884**	2	BOLT (M10X1.5X30-MM)	
M	3	1	**8T-0271**	2	BOLT-SOCKET HEAD (M10X1.5X35-MM)	
					PARTS SHOWN IN GRAPHIC(S) WITHOUT A REFERENCE NUMBER ARE NOT SERVICED SEPARATELY	
					AVAILABLE REPAIR KIT(S):	
			278-8716	1	KIT-SEAL (GEAR MOTOR)	
					(INCLUDES O-RINGS, E-SEALS, SHAFT SEAL, SNAP RING, BACKUP SEALS, AXIAL SEAL KIT & SEALS)	

M-METRIC PART

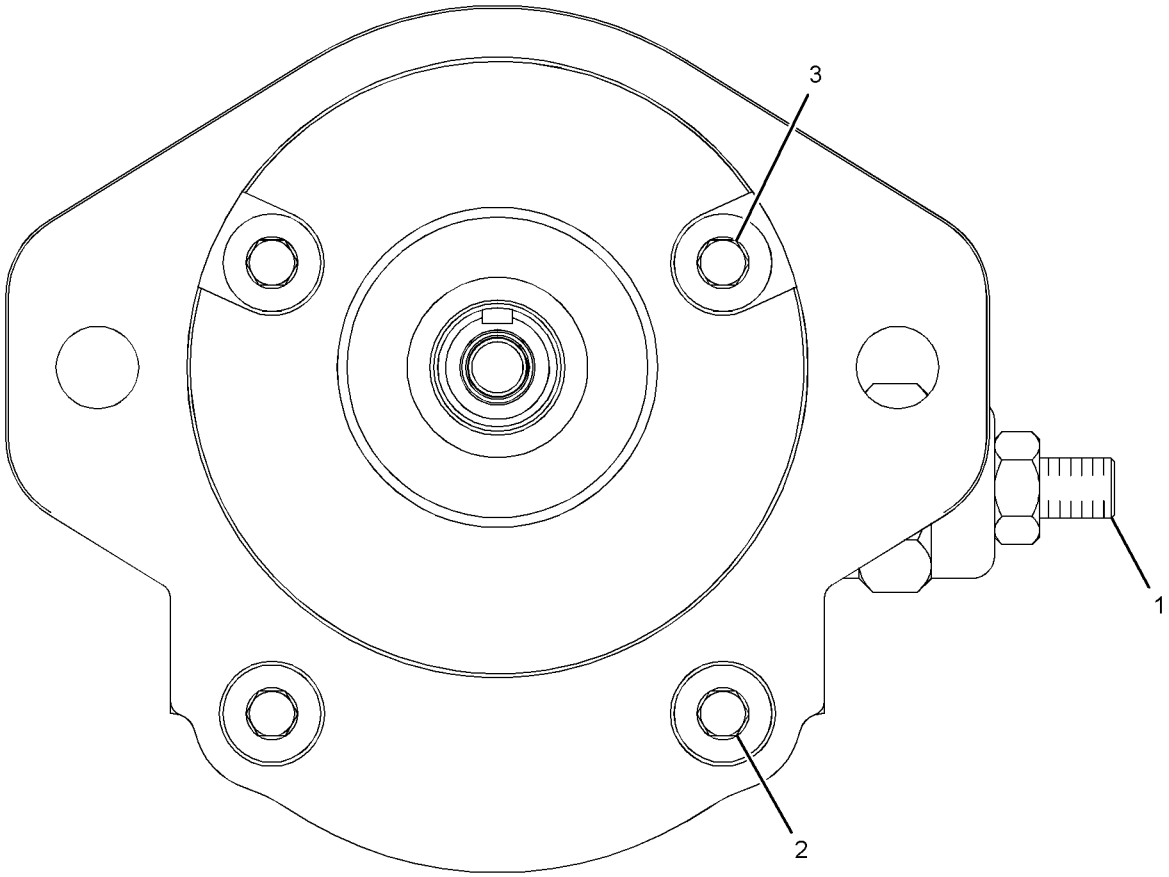

GRAPHIC #1 **<END>** g01761253

154-5011 MOUNTING GP-CYLINDER

S/N: A9H1-UP
PART OF 279-5382, 279-5390, 279-5398, 279-5403, 293-0139 BUCKET
AR-MULTIPURPOSE
AN ATTACHMENT

SMCS-5498 **i01066088**

NOTE	REF NO	GRAPHIC REF	PART NUMBER	QTY	PART NAME 1 2 3 4 5 6 (PRODUCT LEVEL)	SEE PAGE
	1	1	**154-5012**	2	PIN	
	2	1	**154-5013**	2	PIN	
	3	1	**3B-8489**	2	FITTING-GREASE	
M	4	1	**6V-9189**	4	LOCKNUT (M8X1.25-THD)	
M	5	1	**8T-6869**	4	BOLT (M8X1.25X60-MM)	

M-METRIC PART

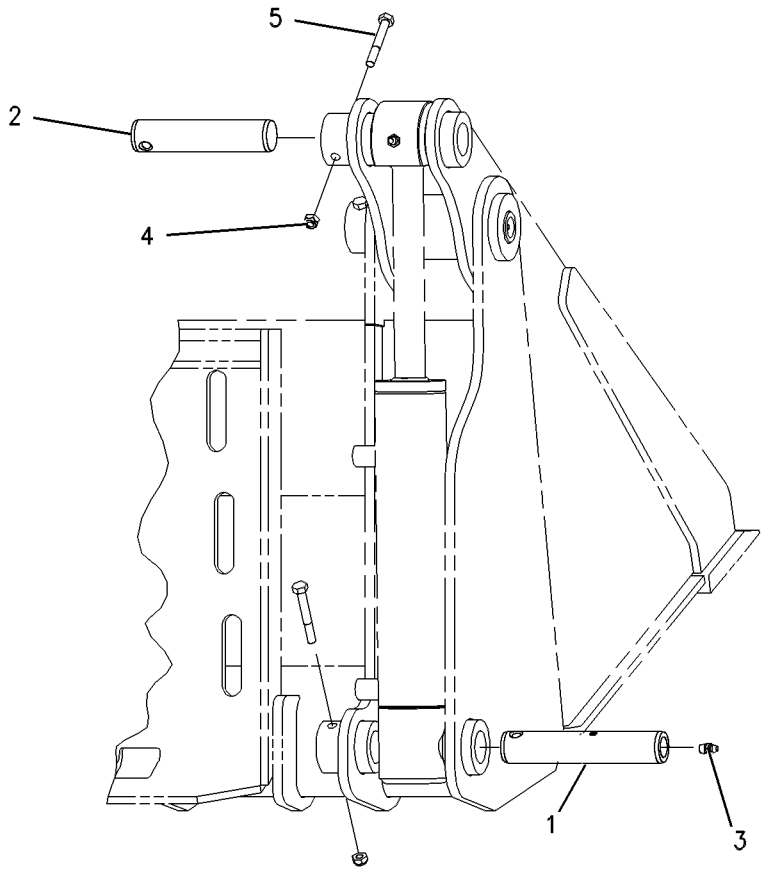

GRAPHIC #1 **<END>** g00560356

HYDRAULIC SYSTEM

156-0891 MOUNTING GP-CYLINDER

S/N: A9H1-UP

PART OF 157-7223, 157-7224, 157-7225, 217-6229 BUCKET AR-GRAPPLE, 279-5350, 279-5360 FORK AR-GRAPPLE

AN ATTACHMENT

SMCS-5498 **i02578037**

NOTE	REF NO	GRAPHIC REF	PART NUMBER	QTY	PART NAME 1 2 3 4 5 6 (PRODUCT LEVEL)	SEE PAGE
	1	1	**255-8058**	2	PLATE	
	2	1	**156-0913**	1	PLATE	
	3	1	**157-0941**	2	PIN	
	4	1	**157-0942**	2	PIN	
	5	1	**159-8035**	2	FILM-WARNING (CRUSH HAZARD, STAY BACK)	
	6	1	**3B-8489**	2	FITTING-GREASE	
	7	1	**4M-5285**	4	RING-RETAINING (EXTERNAL)	
M	8	1	**6V-9189**	2	LOCKNUT (M8X1.25-THD)	
M	9	1	**8T-4138**	3	BOLT (M6X1X20-MM)	
M	10	1	**8T-6869**	2	BOLT (M8X1.25X60-MM)	
	11	1	**9X-2026**	3	WASHER (6.5X17X1-MM THK)	
	12	1	**9X-6274**	4	WASHER (32.5X50X1.6-MM THK)	

M-METRIC PART

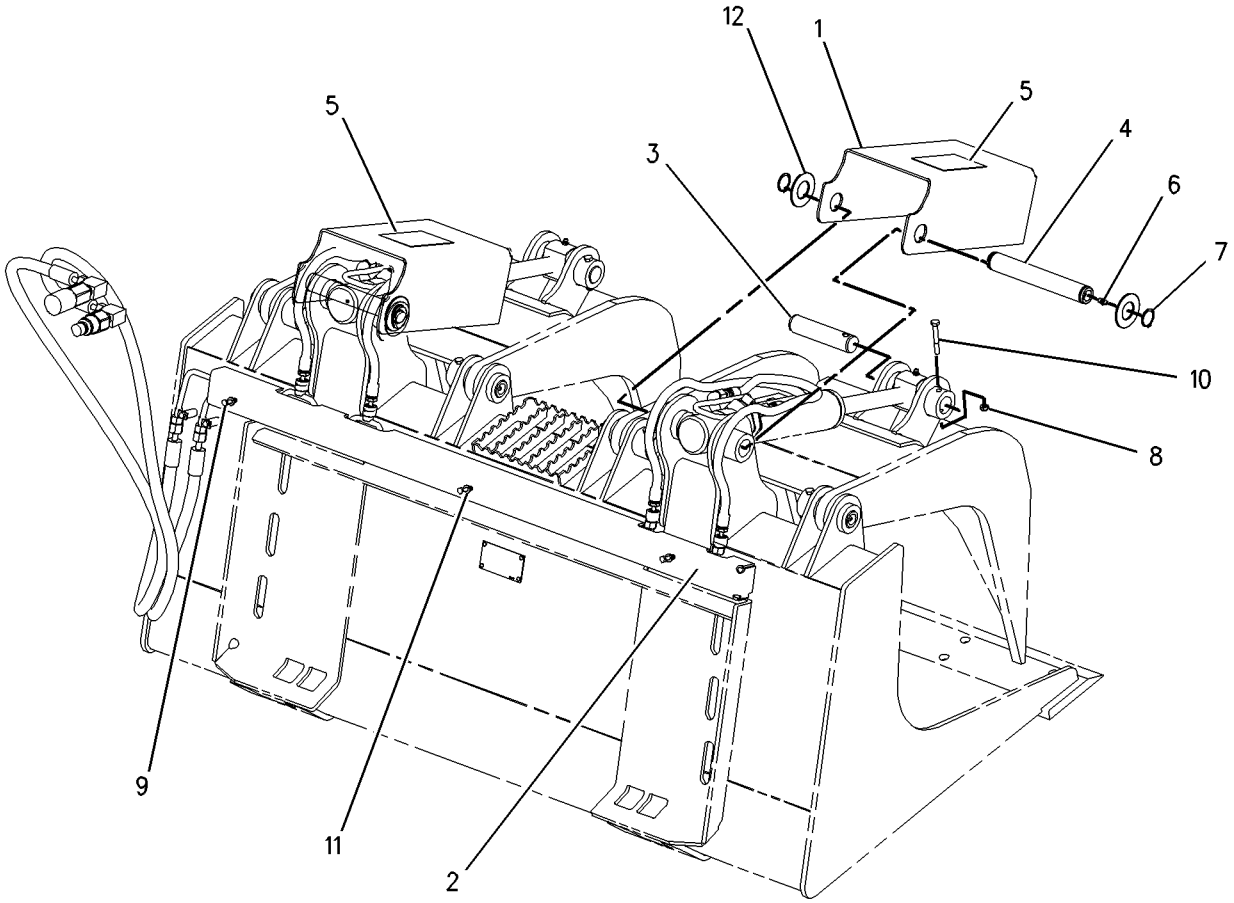

GRAPHIC #1 **<END>** g00777681

HYDRAULIC SYSTEM

165-8731 MOUNTING GP-CYLINDER

S/N: A9H1-UP

PART OF 285-6116 GRAPPLE & CYLINDER GP-UTILITY

AN ATTACHMENT

SMCS-5498 **i02017132**

NOTE	REF NO	GRAPHIC REF	PART NUMBER	QTY	PART NAME 1 2 3 4 5 6 (PRODUCT LEVEL)	SEE PAGE
	1	1	**154-5013**	2	PIN	
M	2	1	**6V-9189**	2	LOCKNUT (M8X1.25-THD)	
M	3	1	**8T-6869**	2	BOLT (M8X1.25X60-MM)	

M-METRIC PART

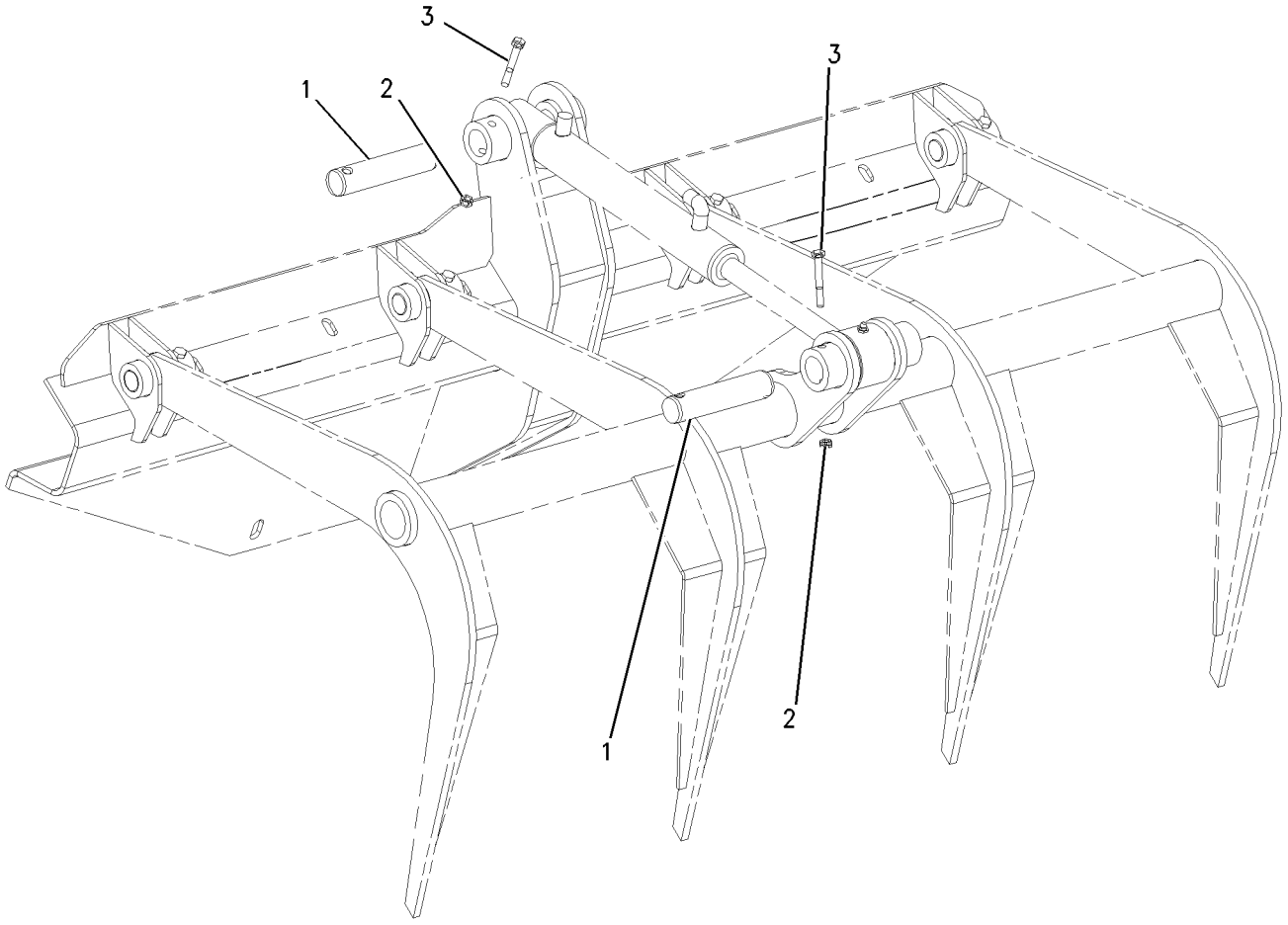

GRAPHIC #1 **<END>** g00652937

HYDRAULIC SYSTEM

286-9248 MOUNTING GP-CYLINDER—GRAPPLE BUCKET

S/N: A9H1-UP

PART OF 286-9300, 286-9301 BUCKET AR-GRAPPLE

AN ATTACHMENT

SMCS-5498 **i02723716**

NOTE	REF NO	GRAPHIC REF	PART NUMBER	QTY	PART NAME 1 2 3 4 5 6 (PRODUCT LEVEL)	SEE PAGE
	1	1	**157-0941**	2	PIN	
	2	1	**157-0942**	2	PIN	
	3	1	**286-9273**	2	PLATE	
	4	1	**286-9289**	2	PLATE AS	
	5	1	**3B-8489**	2	FITTING-GREASE	
	6	1	**4M-5285**	4	RING-RETAINING (EXTERNAL)	
M	7	1	**6V-9189**	2	LOCKNUT (M8X1.25-THD)	
	8	1	**7X-7729**	8	WASHER (11X25X3-MM THK)	
M	9	1	**8T-4195**	8	BOLT (M10X1.5X30-MM)	
M	10	1	**8T-6869**	2	BOLT (M8X1.25X60-MM)	
	11	1	**9X-6274**	4	WASHER (32.5X50X1.6-MM THK)	

M-METRIC PART

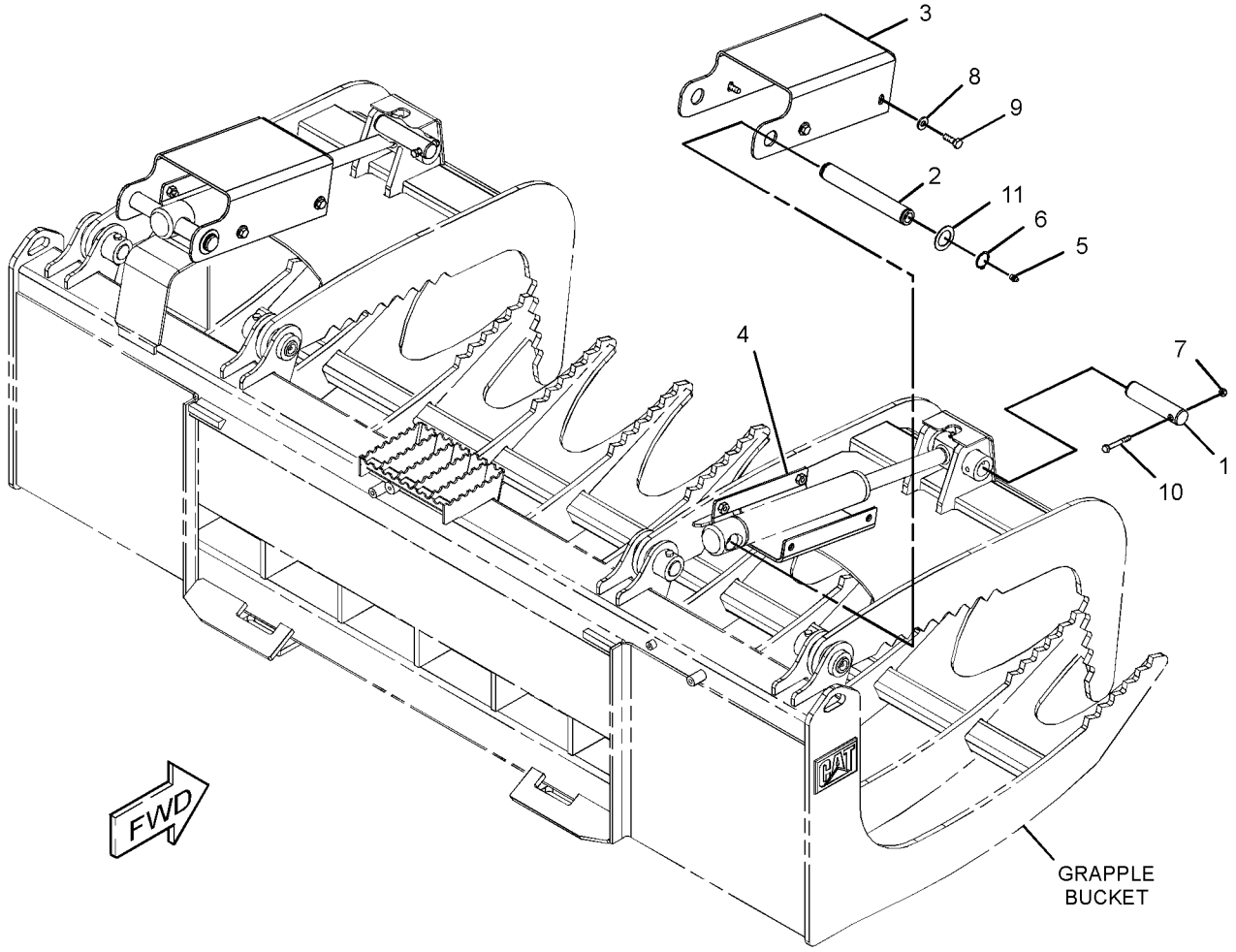

GRAPHIC #1 **<END>** g01372951

190-8084 PUMP & MTG GP-WORK TOOL

S/N: A9H1-UP
PART OF 326-5249 CONVERSION AR-MACHINE
AN ATTACHMENT

SMCS-6700 **i02212112**

NOTE	REF NO	GRAPHIC REF	PART NUMBER	QTY	PART NAME 1 2 3 4 5 6 (PRODUCT LEVEL)	SEE PAGE
CY	1	1	**238-7642**	1	PUMP GP-GEAR	309
	2	1	**8T-4223**	2	WASHER-HARD (13.5X25.5X3-MM THK)	
M	3	1	**8T-4956**	2	BOLT (M12X1.75X35-MM)	
	4	1	**8T-5049**	1	SEAL-O-RING	

C-CHANGE FROM PREVIOUS TYPE
M-METRIC PART
Y-SEPARATE ILLUSTRATION

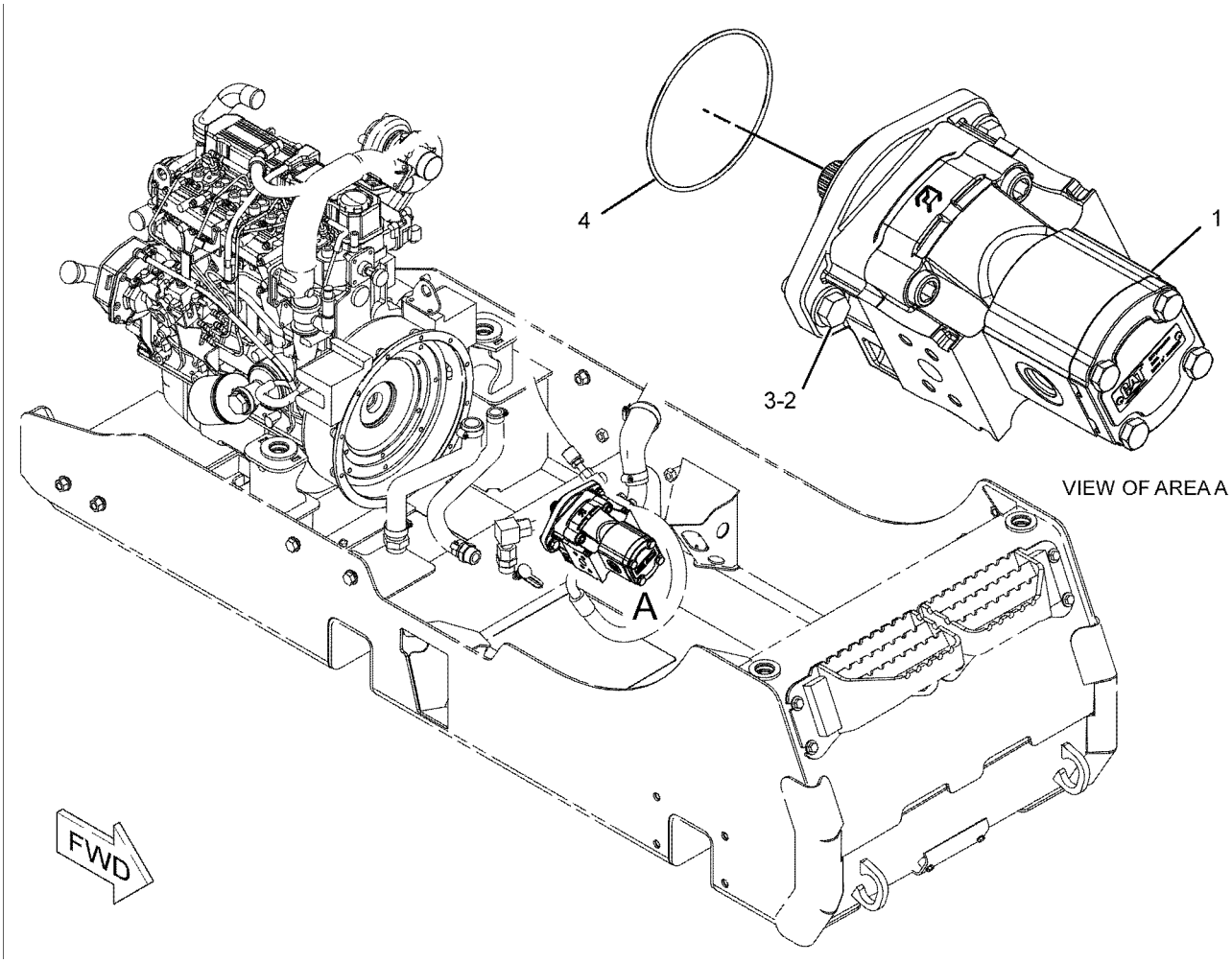

GRAPHIC #1 **<END>** g01131877

HYDRAULIC SYSTEM

306-8137 PUMP & MTG GP-WORK TOOL

S/N: A9H1-UP
PART OF 326-5289, 326-5299, 326-5489 CONVERSION AR-MACHINE, 326-5529, 326-5559 CONVERSION AR-ROADING
AN ATTACHMENT

SMCS-6700 **i02731045**

NOTE	REF NO	GRAPHIC REF	PART NUMBER	QTY	PART NAME 1 2 3 4 5 6 (PRODUCT LEVEL)	SEE PAGE
Y	1	1	**289-6358**	1	PUMP GP-GEAR	310
	2	1	**8T-4223**	2	WASHER-HARD (13.5X25.5X3-MM THK)	
M	3	1	**8T-4956**	2	BOLT (M12X1.75X35-MM)	
	4	1	**8T-5049**	1	SEAL-O-RING	

M-METRIC PART
Y-SEPARATE ILLUSTRATION

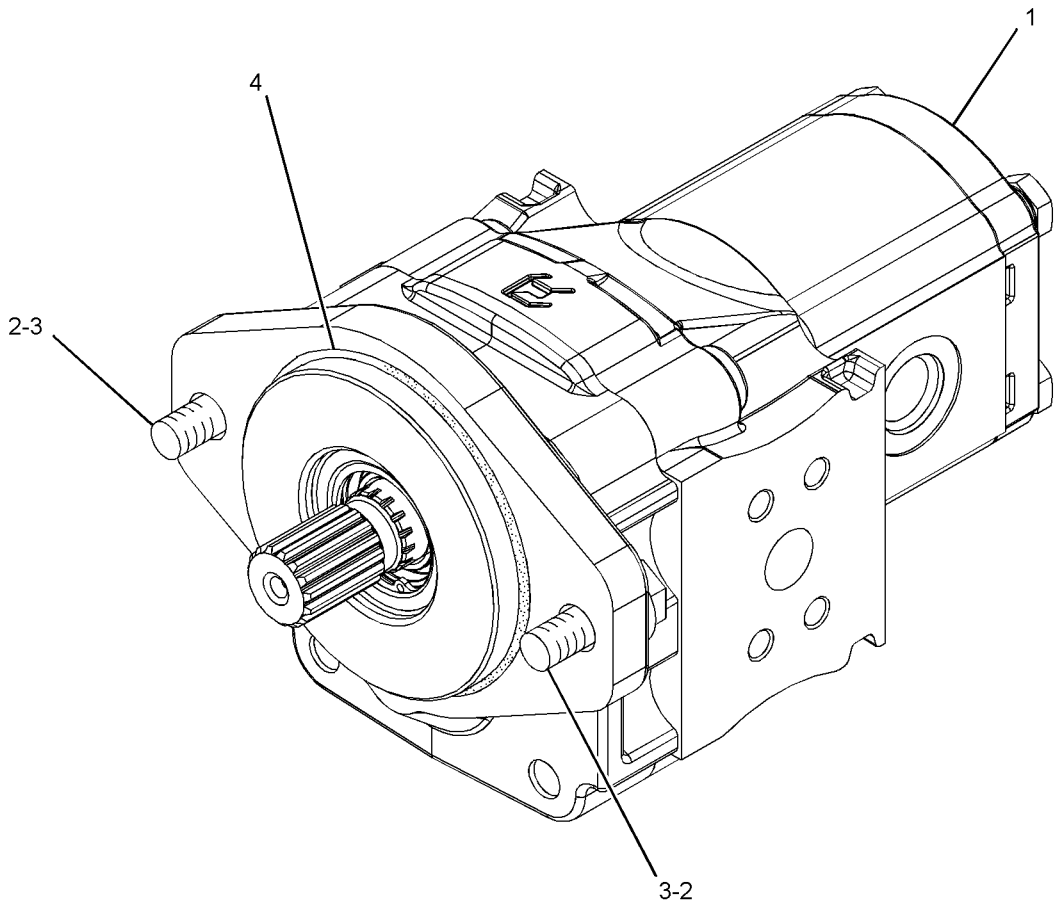

GRAPHIC #1 **<END>** g01372516

238-7642 PUMP GP-GEAR–WORK TOOL

S/N: A9H1-UP
PART OF 190-8084 PUMP & MTG GP-WORK TOOL
AN ATTACHMENT

SMCS-5073 **i03767049**

NOTE	REF NO	GRAPHIC REF	PART NUMBER	QTY	PART NAME 1 2 3 4 5 6 (PRODUCT LEVEL)	SEE PAGE
J	1	1	**230-3757**	2	SEAL-SHAFT	
	2	1	**8C-3110**	1	RING-RETAINING	
	3	1	**313-5646**	4	BOLT	
	4	1	**271-2360**	4	WASHER-HARD (15X22X2.5-MM THK)	
M	5	1	**8T-4198**	4	BOLT (M10X1.5X100-MM)	
	6	1	**8T-5095**	4	WASHER-PLATED (11X16X2-MM THK)	
					AVAILABLE REPAIR KIT(S):	
J			**278-8714**	1	KIT-SEAL	
					(INCLUDES E-SEALS, SEAL-O-RINGS, SNAP RING & BACKUP SEALS)	

J-KIT MARKED J SERVICES PARTS MARKED J
M-METRIC PART

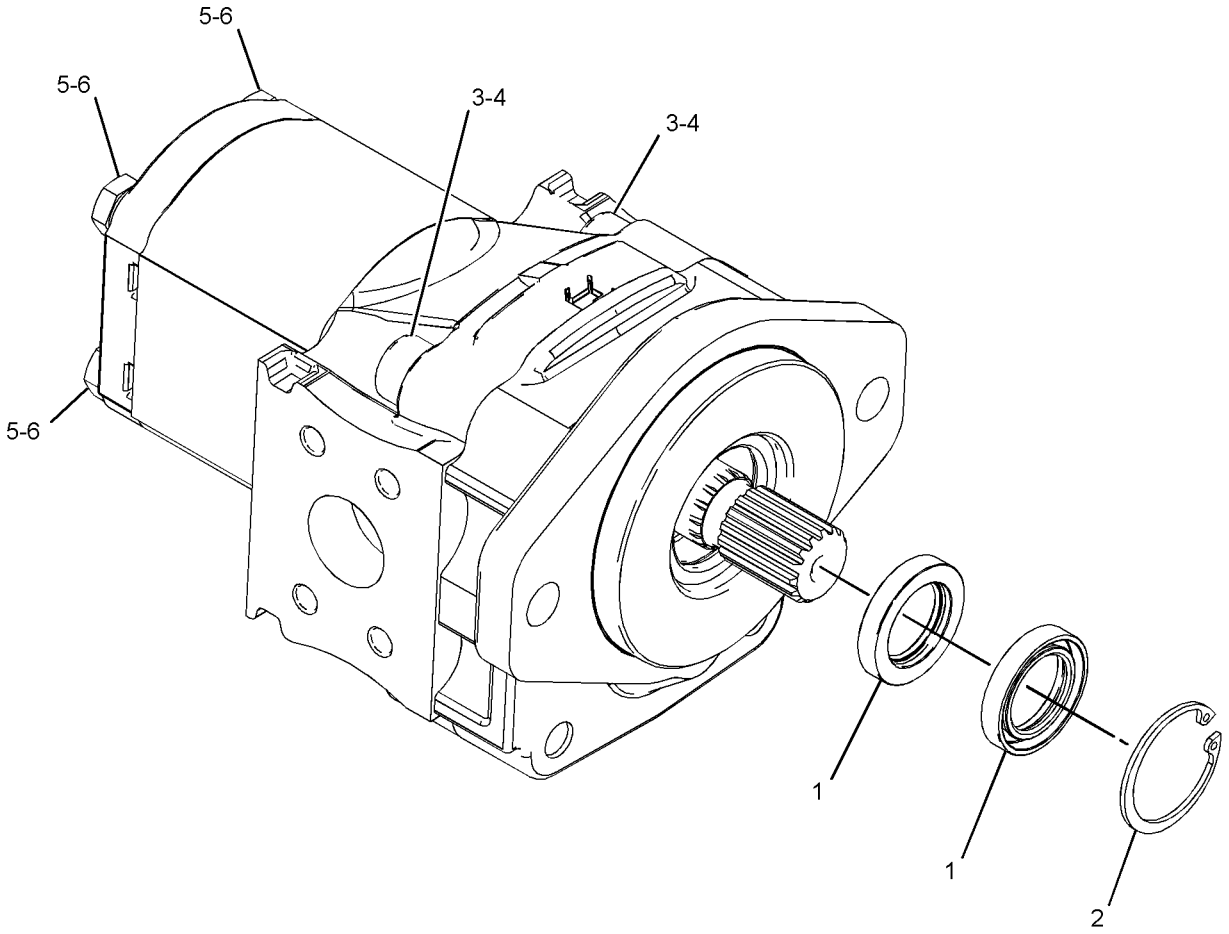

GRAPHIC #1 **<END>** g01442438

HYDRAULIC SYSTEM

289-6358 PUMP GP-GEAR

S/N: A9H1-UP
PART OF 306-8137 PUMP & MTG GP-WORK TOOL
AN ATTACHMENT

SMCS-5073 **i02731047**

NOTE	REF NO	GRAPHIC REF	PART NUMBER	QTY	PART NAME 1 2 3 4 5 6 (PRODUCT LEVEL)	SEE PAGE
J	1	1	**230-3757**	2	SEAL-SHAFT	
J	2	1	**8C-3110**	1	RING-RETAINING	
	3	1	**8T-5095**	4	WASHER-PLATED (11X16X2-MM THK)	
M	4	1	**8T-4198**	4	BOLT (M10X1.5X100-MM)	
	5	1	**271-2360**	4	WASHER-HARD (15X22X2.5-MM THK)	
M	6	1	**095-0690**	4	BOLT-SOCKET HEAD (M14X2X60-MM)	
					PARTS SHOWN IN GRAPHIC(S) WITHOUT A REFERENCE NUMBER ARE NOT SERVICED SEPARATELY	
					AVAILABLE REPAIR KIT(S):	
J			**278-8714**	1	KIT-SEAL (GEAR PUMP)	
					(INCLUDES E-SEALS, SEAL-O-RINGS, SHAFT SEALS, SNAP RING & SEAL BACKUP)	

J-`(KIT MARKED J SERVICES PART MARKED J)
M-METRIC PART

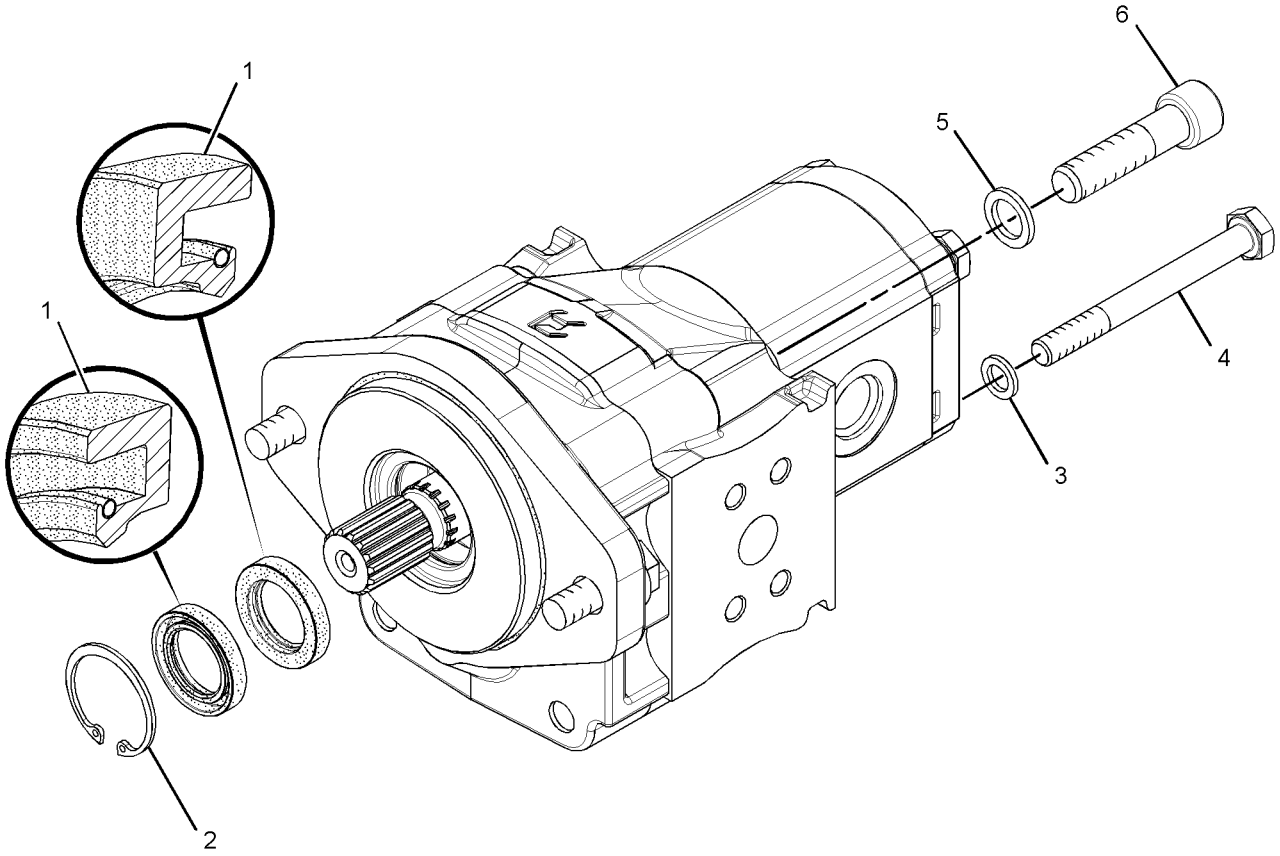

GRAPHIC #1 **<END>** g01372557

HYDRAULIC SYSTEM

326-5780 TANK & MTG GP-HYDRAULIC

S/N: A9H1-UP

PART OF 326-5435 HYDRAULIC AR

SMCS-5056 **i04397703**

NOTE	REF NO	GRAPHIC REF	PART NUMBER	QTY	PART NAME 1 2 3 4 5 6 (PRODUCT LEVEL)	SEE PAGE
	1	1	**5P-4961**	2	CLAMP-HOSE	
	2	1	**154-4014**	1	BRACKET	
	3	1	**207-9729**	1	BREATHER (INLINE) (HYDRAULIC OIL)	
	4	1	**233-5997**	1	HOSE	
Y	5	1	*326-5781*	1	TANK GP-HYDRAULIC	312
	6	1	**4P-7581**	1	CLIP	
	7	1	**8T-4121**	1	WASHER-HARD (11X21X2.5-MM THK)	
M	8	1	**8T-4137**	1	BOLT (M10X1.5X20-MM)	
M	9	1	**8T-4189**	2	BOLT (M8X1.25X20-MM)	
E	10	1	**5P-1442**		HOSE (65-CM)	
	11	1	**3S-2093**	1	STRAP-CABLE	

E-ORDER BY THE CENTIMETER
M-METRIC PART
Y-SEPARATE ILLUSTRATION

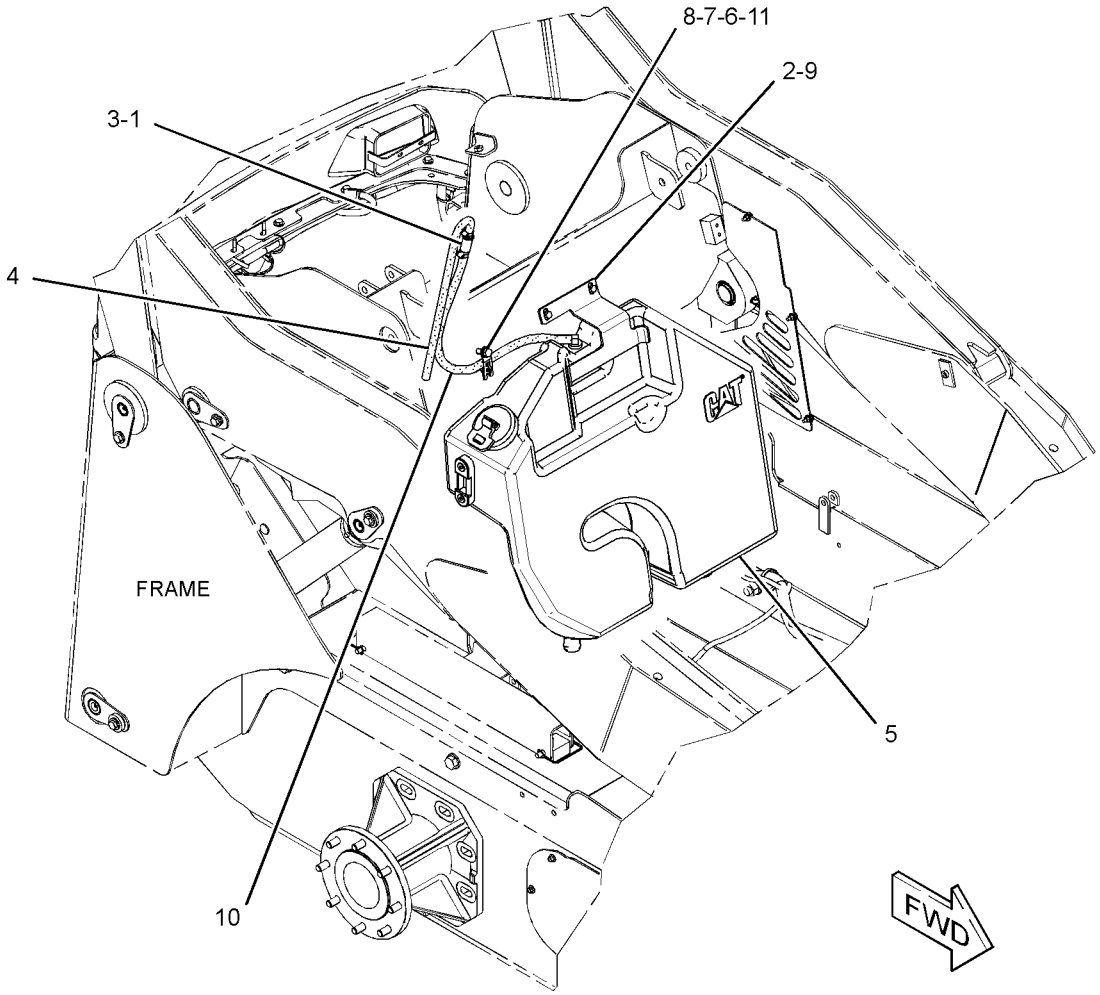

GRAPHIC #1 **<END>** g02327762

HYDRAULIC SYSTEM

326-5781 TANK GP-HYDRAULIC

S/N: A9H1-UP

PART OF 326-5780 TANK & MTG GP-HYDRAULIC

SMCS-5056 **i03902802**

NOTE	REF NO	GRAPHIC REF	PART NUMBER	QTY	PART NAME 1 2 3 4 5 6 (PRODUCT LEVEL)	SEE PAGE
	1	1	**6W-5698**	1	GROMMET	
	2	1	**142-8928**	1	ELBOW	
	3	1	**142-8937**	1	CAP AS-FILLER (HYDRAULIC TANK)	
	4	1	**264-4297**	1	SENSOR AS-TEMPERATURE (HYDRAULIC OIL)	
		1	**137-6645**	1	PAD-CONNECTOR	
	5	1	**347-5346**	1	TANK GP-HYDRAULIC	
		1	**317-3128**	1	GAUGE-SIGHT (HYDRAULIC TANK)	
		1	**348-4609**	1	SCREEN-SUCTION (HYDRAULIC TANK)	
		1	**5W-6388**	1	SEAL-O-RING	
	6	1	**3K-0360**	1	SEAL-O-RING	

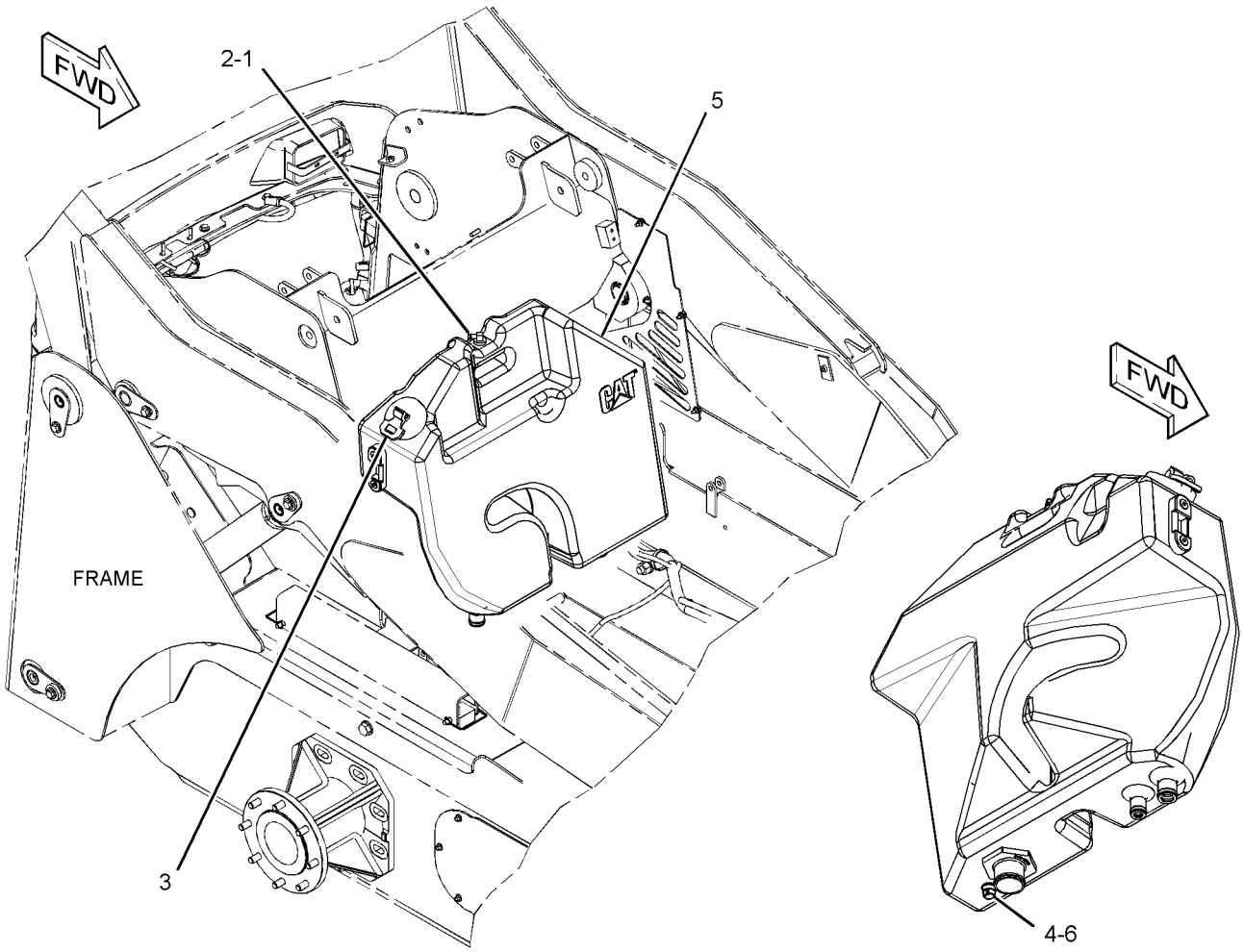

GRAPHIC #1 **<END>** g02146395

218-6275 VALVE & MTG GP-CONTROL—WORK TOOL, 3-FUNCTION

S/N: A9H1-UP

PART OF 326-5435 HYDRAULIC AR

SMCS-5051 **i03891449**

NOTE	REF NO	GRAPHIC REF	PART NUMBER	QTY	PART NAME 1 2 3 4 5 6 (PRODUCT LEVEL)	SEE PAGE
CY	1	1	**336-1319**	1	VALVE GP-CONTROL (WORK TOOL, 3-FUNCTION)	314
	2	1	**218-6561**	1	BRACKET	
	3	1	**8T-4121**	4	WASHER-HARD (11X21X2.5-MM THK)	
M	4	1	**8T-4136**	2	BOLT (M10X1.5X25-MM)	
M	5	1	**8T-4137**	2	BOLT (M10X1.5X20-MM)	

C-CHANGE FROM PREVIOUS TYPE
M-METRIC PART
Y-SEPARATE ILLUSTRATION

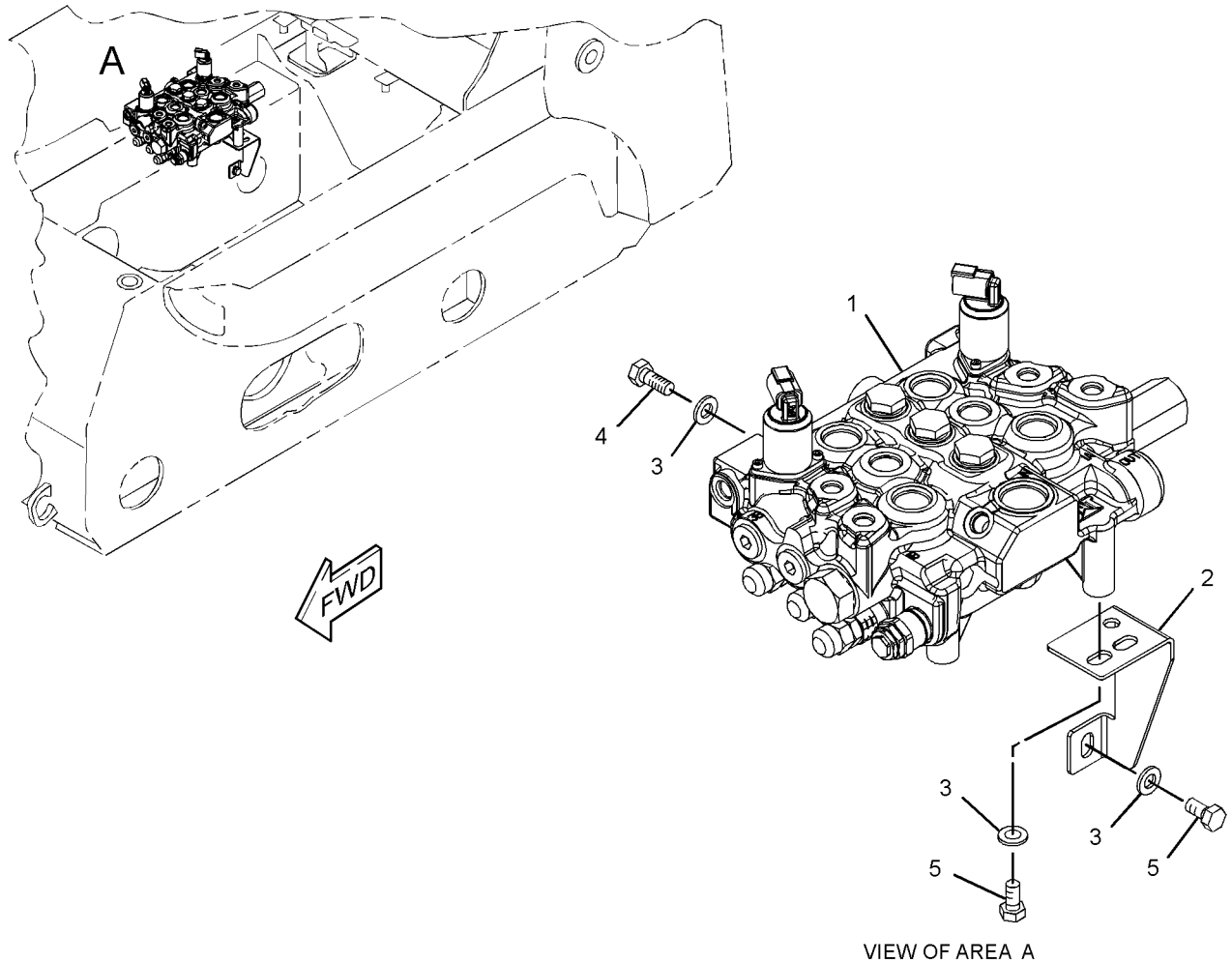

VIEW OF AREA A

GRAPHIC #1 **<END>** g02140036

HYDRAULIC SYSTEM

336-1319 VALVE GP-CONTROL—WORK TOOL, 3-FUNCTION

S/N: A9H1-UP

PART OF 218-6275 VALVE & MTG GP-CONTROL

SMCS-5051 **i03893510**

NOTE	REF NO	GRAPHIC REF	PART NUMBER	QTY	PART NAME 1 2 3 4 5 6 (PRODUCT LEVEL)	SEE PAGE
Y	1	1	**295-1799**	1	VALVE GP-RELIEF (MAIN)	180
	2	1	**216-6160**	2	VALVE GP-RELIEF (TILT)	
	3	1	**216-6161**	2	VALVE GP-RELIEF (LIFT)	
	4	1	**358-5951**	2	VALVE GP-SOLENOID (12-VOLT) (HYDRAULIC LOCKOUT)	
	5	1	**4J-7533**	1	SEAL-O-RING	
	6	1	**204-1485**	6	WASHER (0.47X0.75X0.02-MM THK)	
	7	1	**204-1482**	1	SPRING	
	8	1	**204-1488**	1	SPRING	
	9	1	**204-1489**	4	SPRING	
	10	1	**204-1486**	1	WASHER (0.32X0.74X0.02-MM THK)	
	11	1	**127-6316**	1	BOLT-SPECIAL	
	12	1	**180-8071**	4	PLUG-HEX SOCKET	
	13	1	**291-8148**	2	SEAL-O-RING	
	14	1	**204-1471**	1	CAP	
	15	1	**204-1481**	1	CAP	
	16	1	**144-4531**	3	VALVE-CHECK	
	17	1	**003-3082**	3	SPRING	
	18	1	**8I-5078**	3	SEAL-O-RING	
	19	1	**144-4532**	3	PLUG	
	20	1	**216-6156**	1	VALVE-CHECK	
	21	1	**216-6157**	1	SPRING	
	22	1	**3J-1907**	1	SEAL-O-RING	
	23	1	**216-6159**	1	PLUG	
	24	1	**2M-9780**	4	SEAL-O-RING	
M	25	1	**095-0641**	4	BOLT-SOCKET HEAD (M4X0.7X10-MM)	

M-METRIC PART
Y-SEPARATE ILLUSTRATION

336-1319 VALVE GP-CONTROL *(contd.)* **i03893510**

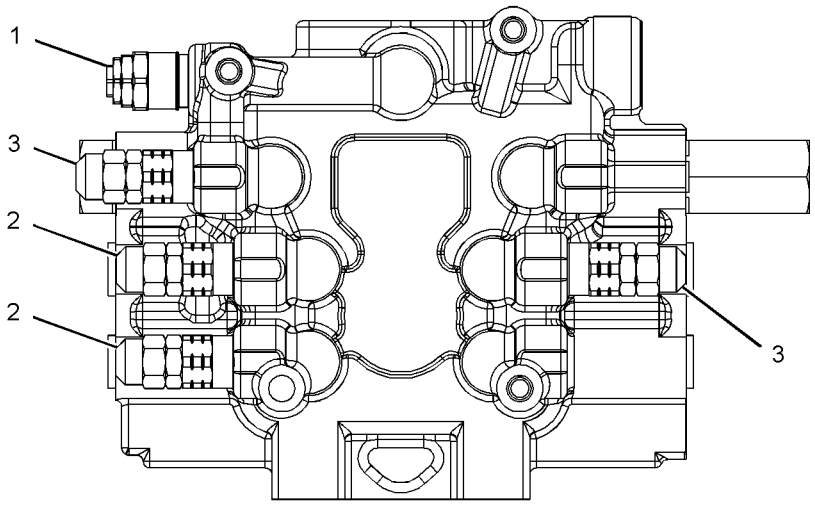

VIEW A-A

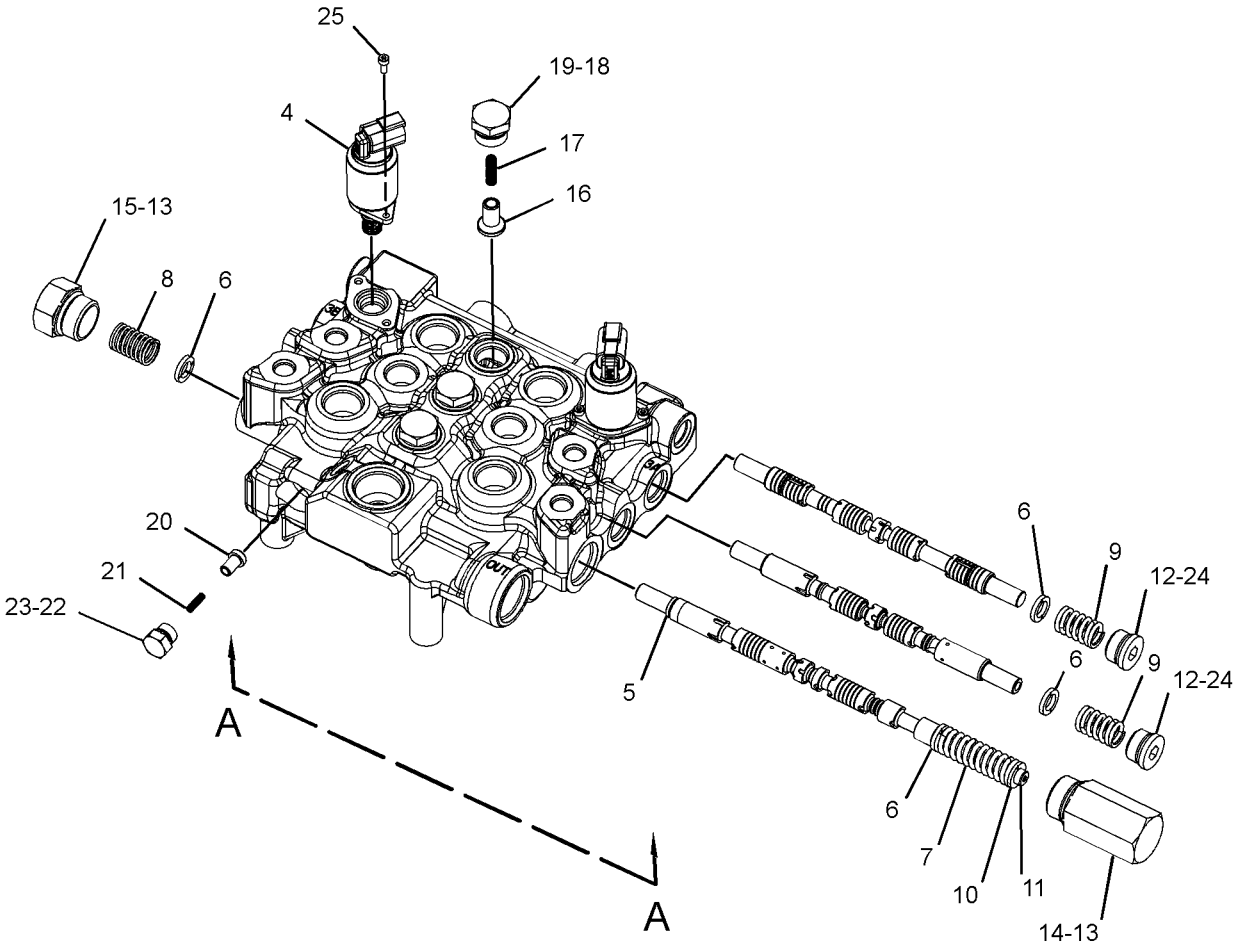

GRAPHIC #1 **<END>** g02139985

HYDRAULIC SYSTEM

299-9119 VALVE GP-PILOT—WORK TOOL

S/N: A9H1-UP

PART OF 326-5264, 326-5265 CONTROL GP-PILOT OPERATED HYD AN ATTACHMENT

SMCS-5059, 5705 **i04367467**

NOTE	REF NO	GRAPHIC REF	PART NUMBER	QTY	PART NAME 1 2 3 4 5 6 (PRODUCT LEVEL)	SEE PAGE
	1	1	**7K-1181**	1	STRAP-CABLE	
	2	1	**172-0970**	1	COIL AS (12-VDC)	
		1	**8T-8729**	2	PIN-CONNECTOR (16-GA TO 18-GA)	
		1	**102-8802**	1	KIT-RECEPTACLE (2-PIN)	
					(INCLUDES RECEPTACLE AS & WEDGE)	
Y	3	1	**195-9700**	1	VALVE GP-SOLENOID (12-VOLT) (WORK TOOL)	321
M	4	1	**8T-1158**	1	BOLT-SOCKET HEAD (M8X1.25X20-MM)	
M	5	1	**8T-9405**	1	BOLT-SOCKET HEAD (M4X0.7X16-MM)	
	6	1	**102-8802**	1	KIT-RECEPTACLE (2-PIN)	
					(INCLUDES RECEPTACLE AS & WEDGE)	
	7	1	**313-6251**	1	KIT-JOINT	
					(INCLUDES SHIMS, NUT, WASHER, DETENT ARM & CARDAN)	
	8	1	**299-9121**	1	PLATE	
	9	1	**198-1076**	3	KIT-PLUNGER (PILOT VALVE)	
					(INCLUDES PLUNGERS, SNAP RINGS, CAPS & WASHERS)	
	10	1	**203-1100**	1	KIT-PLUNGER (TILT BACK)	
					(INCLUDES PLUNGERS, SNAP RINGS & RETAINERS)	
	11	1	**160-6778**	1	KIT-PILOT VALVE (SPRING)	
					(INCLUDES SPRINGS)	
	12	1	**9T-2837**	1	KIT-SEAL (PILOT VALVE)	
					(INCLUDES PINS, O-RINGS & BOLT)	

M-METRIC PART
Y-SEPARATE ILLUSTRATION

299-9119 VALVE GP-PILOT *(contd.)* **i04367467**

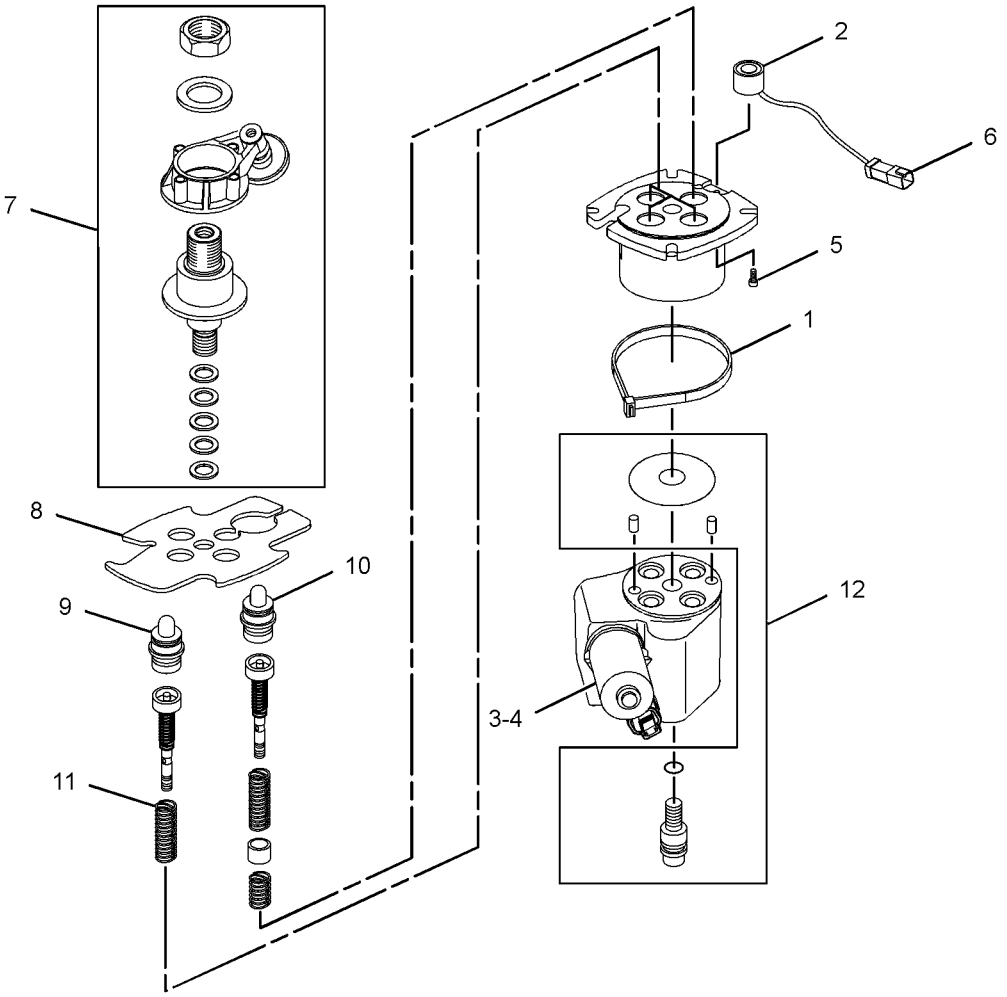

GRAPHIC #1 **<END>** g01417349

HYDRAULIC SYSTEM

343-0868 VALVE GP-PILOT–DIRECTION, SPEED

S/N: A9H1-UP

PART OF 326-5267, 343-5542, 343-5543 CONTROL GP-PILOT OPERATED HYD AN ATTACHMENT

SMCS-5059, 5705 **i03960217**

NOTE	REF NO	GRAPHIC REF	PART NUMBER	QTY	PART NAME 1 2 3 4 5 6 (PRODUCT LEVEL)	SEE PAGE
Y	1	1	**195-9700**	1	VALVE GP-SOLENOID (12-VOLT) (WORK TOOL)	321
M	2	1	**8T-1158**	1	BOLT-SOCKET HEAD (M8X1.25X20-MM)	
	3	1	**217-3850**	1	KIT-UNIVERSAL JOINT (PILOT VALVE)	
					(INCLUDES UNIVERSAL JOINT & SHIMS)	
	4	1	**299-9121**	1	PLATE	
	5	1	**198-1076**	2	KIT-PLUNGER (PILOT VALVE)	
					(EACH INCLUDES PLUNGERS, PLUNGER GUIDES, SNAP RINGS, CAPS & WASHERS)	
	6	1	**160-6778**	1	KIT-PILOT VALVE (SPRING)	
					(INCLUDE SPRINGS)	
	7	1	**289-9560**	1	KIT-SEAL (PILOT VALVE)	
					(INCLUDES O-RINGS, PINS & SCREW AS)	
	8	1	**151-4965**	1	KIT-SEAL (PILOT VALVE)	
					(INCLUDES O-RINGS, PIN & BOLT)	
	9	1	**343-0877**	1	VALVE GP-SHUTTLE (DIRECTION, SPEED)	
					PARTS SHOWN IN GRAPHIC(S) WITHOUT A REFERENCE NUMBER ARE NOT SERVICED SEPARATELY	

M-METRIC PART
Y-SEPARATE ILLUSTRATION

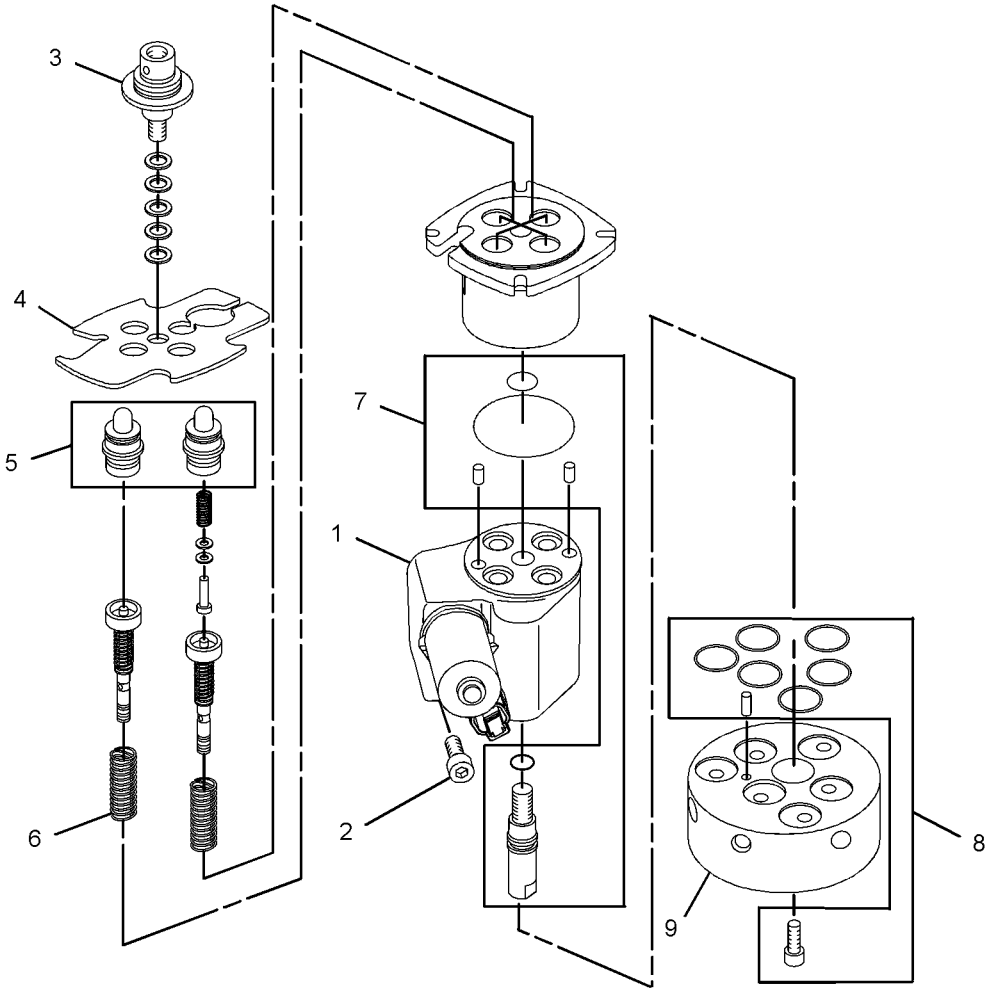

GRAPHIC #1 **<END>** g01943777

356-5008 VALVE GP-PILOT–DIRECTION, SPEED

S/N: A9H1-UP

PART OF 326-5267, 343-5542, 343-5543 CONTROL GP-PILOT OPERATED HYD AN ATTACHMENT

SMCS-5059, 5705 **i04185430**

NOTE	REF NO	GRAPHIC REF	PART NUMBER	QTY	PART NAME 1 2 3 4 5 6 (PRODUCT LEVEL)	SEE PAGE
Y	1	1	**195-9700**	1	VALVE GP-SOLENOID (12-VOLT) (WORK TOOL)	321
M	2	1	**8T-1158**	1	BOLT-SOCKET HEAD (M8X1.25X20-MM)	
	3	1	**217-3850**	1	KIT-UNIVERSAL JOINT (PILOT VALVE)	
					(INCLUDES SHIMS & UNIVERSAL JOINT)	
	4	1	**299-9121**	1	PLATE	
	5	1	**198-1076**	2	KIT-PLUNGER (PILOT VALVE)	
					(INCLUDES PLUNGERS, PLUNGER GUIDES, SNAP RINGS, CAPS & WASHERS)	
	6	1	**160-6778**	1	KIT-PILOT VALVE (SPRING)	
					(INCLUDES SPRINGS)	
	7	1	**289-9560**	1	KIT-SEAL (PILOT VALVE)	
					(INCLUDES O-RINGS, PINS & SCREW AS)	
	8	1	**151-4965**	1	KIT-SEAL (PILOT VALVE)	
					(INCLUDES O-RINGS, PIN & BOLT)	
	9	1	**356-5011**	1	VALVE GP-SHUTTLE (DIRECTION, SPEED)	
		1	**8C-3131**	8	SEAL-O-RING	
		1	**192-7116**	4	SEAL-O-RING	
					PARTS SHOWN IN GRAPHIC(S) WITHOUT A REFERENCE NUMBER ARE NOT SERVICED SEPARATELY	

M-METRIC PART
Y-SEPARATE ILLUSTRATION

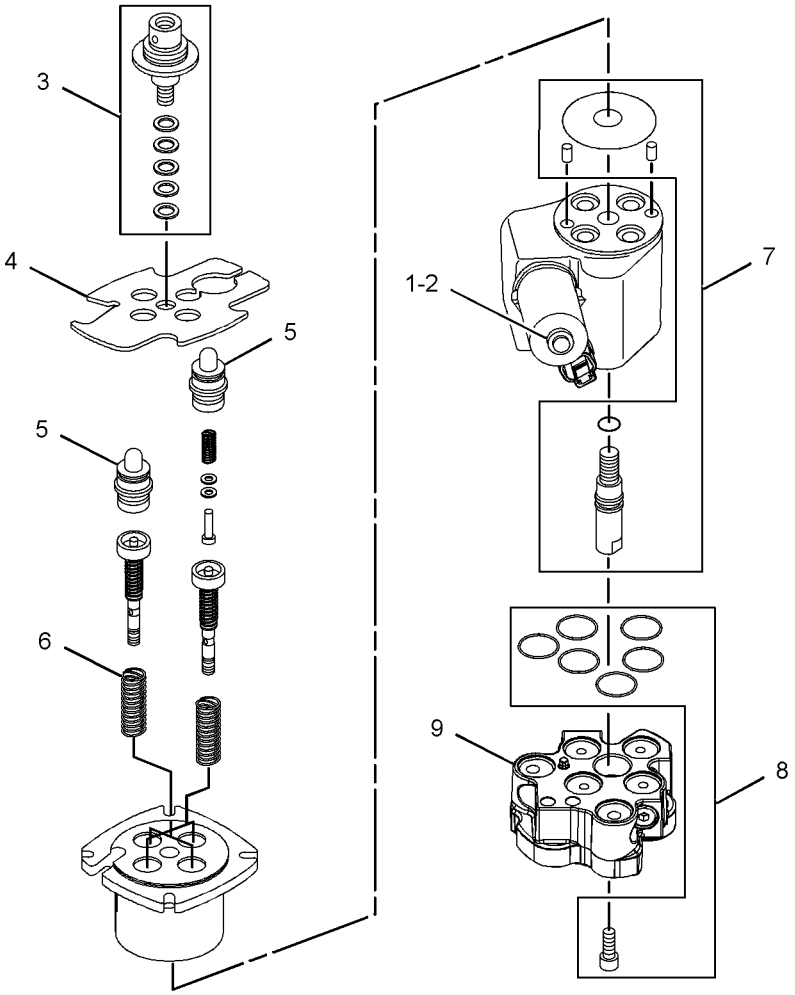

GRAPHIC #1 **<END>** g02459086

195-9700 VALVE GP-SOLENOID—WORK TOOL

S/N: A9H1-UP
12-VOLT
PART OF 299-9119, 343-0868, 356-5008 VALVE GP-PILOT
AN ATTACHMENT

SMCS-5479 **i04368906**

NOTE	REF NO	GRAPHIC REF	PART NUMBER	QTY	PART NAME 1 2 3 4 5 6 (PRODUCT LEVEL)	SEE PAGE
	1	1	**212-0061**	1	FLANGE	
					AVAILABLE REPAIR KIT(S):	
			200-2371	1	KIT-SEAL (SOLENOID VALVE)	
					(INCLUDES O-RING SEALS)	

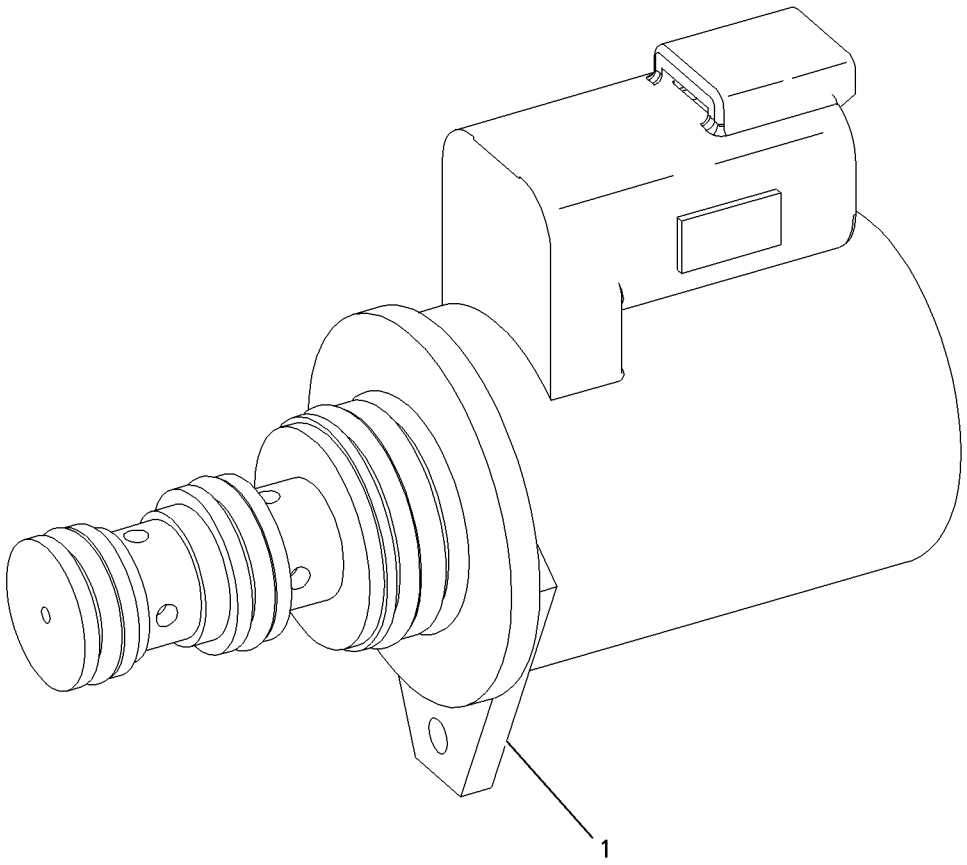

GRAPHIC #1 **<END>** g00947284

IMPLEMENTS

218-5798 ARM AS-LIFT

S/N: A9H1-UP

PART OF 326-5436, 370-4654 FRAME GP-MACHINE

SMCS-6119 **i03860298**

NOTE	REF NO	GRAPHIC REF	PART NUMBER	QTY	PART NAME 1 2 3 4 5 6 (PRODUCT LEVEL)	SEE PAGE
	1	1	**6K-4148**	4	BEARING-SLEEVE	
	2	1	**7T-1099**	2	LINK	
M	3	1	**8T-3597**	2	NUT-WELD (M12X1.75-THD)	

M-METRIC PART

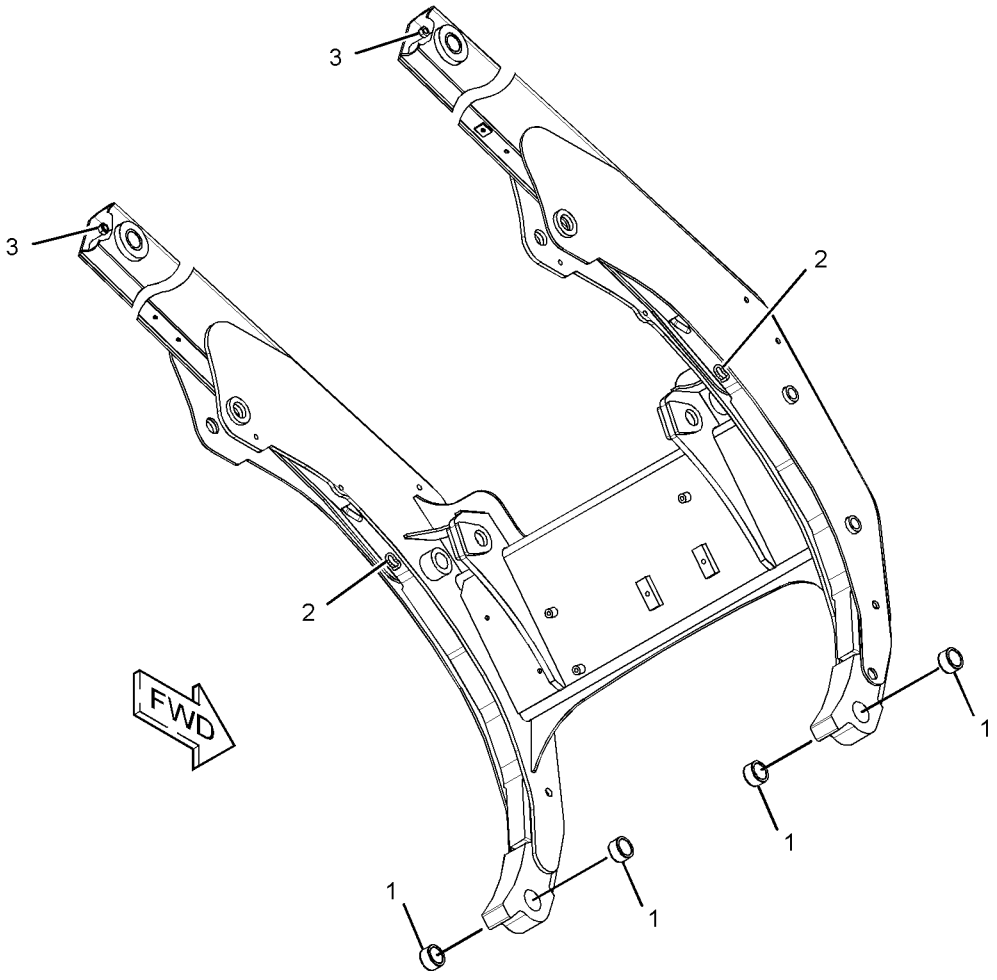

GRAPHIC #1 **<END>** g02105937

222-5695 BRACKET GP-SUPPORT

S/N: A9H1-UP
PART OF 326-5529, 326-5559 CONVERSION AR-ROADING AN ATTACHMENT

SMCS-1408, 6107 **i03620360**

NOTE	REF NO	GRAPHIC REF	PART NUMBER	QTY	PART NAME 1 2 3 4 5 6 (PRODUCT LEVEL)	SEE PAGE
	1	1	**216-6144**	1	BRACKET AS	

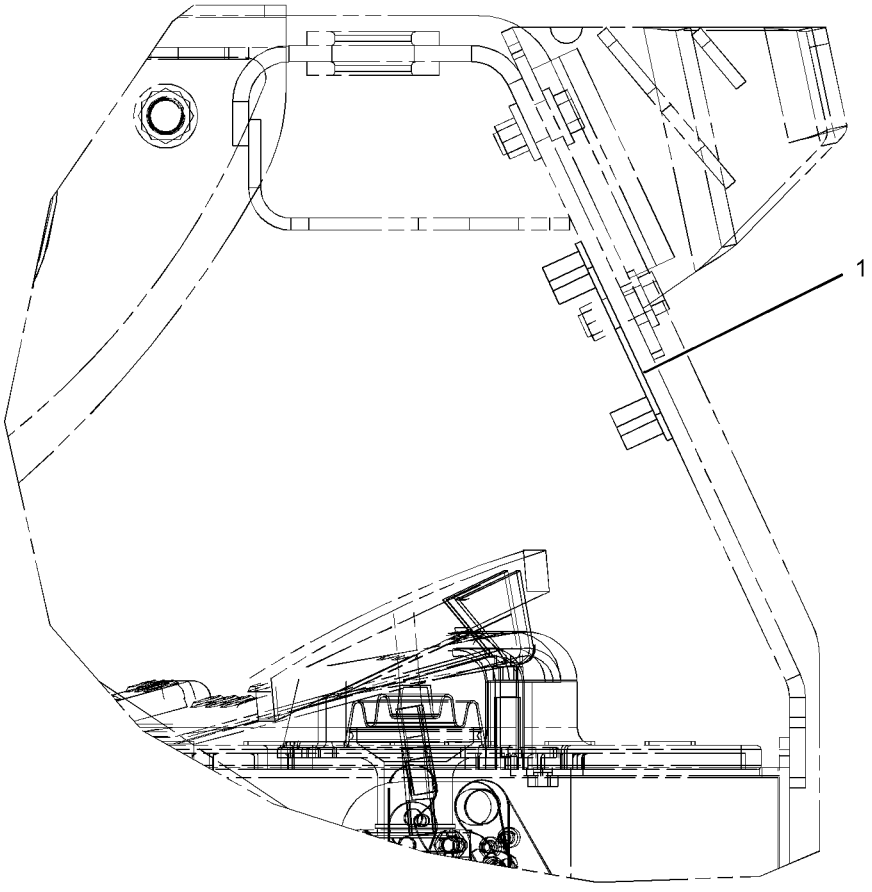

RIGHT SIDE VIEW

GRAPHIC #1 **<END>** g01944375

WORK TOOLS

216-8756 ARM GP-MATERIAL HANDLING

S/N: A9H1-UP

AN ATTACHMENT

SMCS-6542 **i04358453**

NOTE	REF NO	GRAPHIC REF	PART NUMBER	QTY	PART NAME 1 2 3 4 5 6 (PRODUCT LEVEL)	SEE PAGE
	1	1	**9V-2714**	1	HOOK	
	2	1	**9V-2715**	1	SHACKLE AS	
	3	1	**156-5762**	2	FILM-INFORMATION (TIE-DOWN LOCATION)	
Y	4	1	*188-7733*	1	STEP GP-MATERIAL HANDLING ARM	473
	5	1	**216-8850**	1	ARM AS	
M	6	1	**7X-2475**	1	BOLT (M16X2X130-MM)	
	7	1	**8T-4122**	1	WASHER-HARD (17X32X3.5-MM THK)	
M	8	1	**8T-1757**	1	NUT (M16X2-THD)	
	9	1	**358-4945**	1	PLATE-IDENTIFICATION	
	10	1	**168-8389**	4	TACK-FASTENER	

M-METRIC PART
Y-SEPARATE ILLUSTRATION

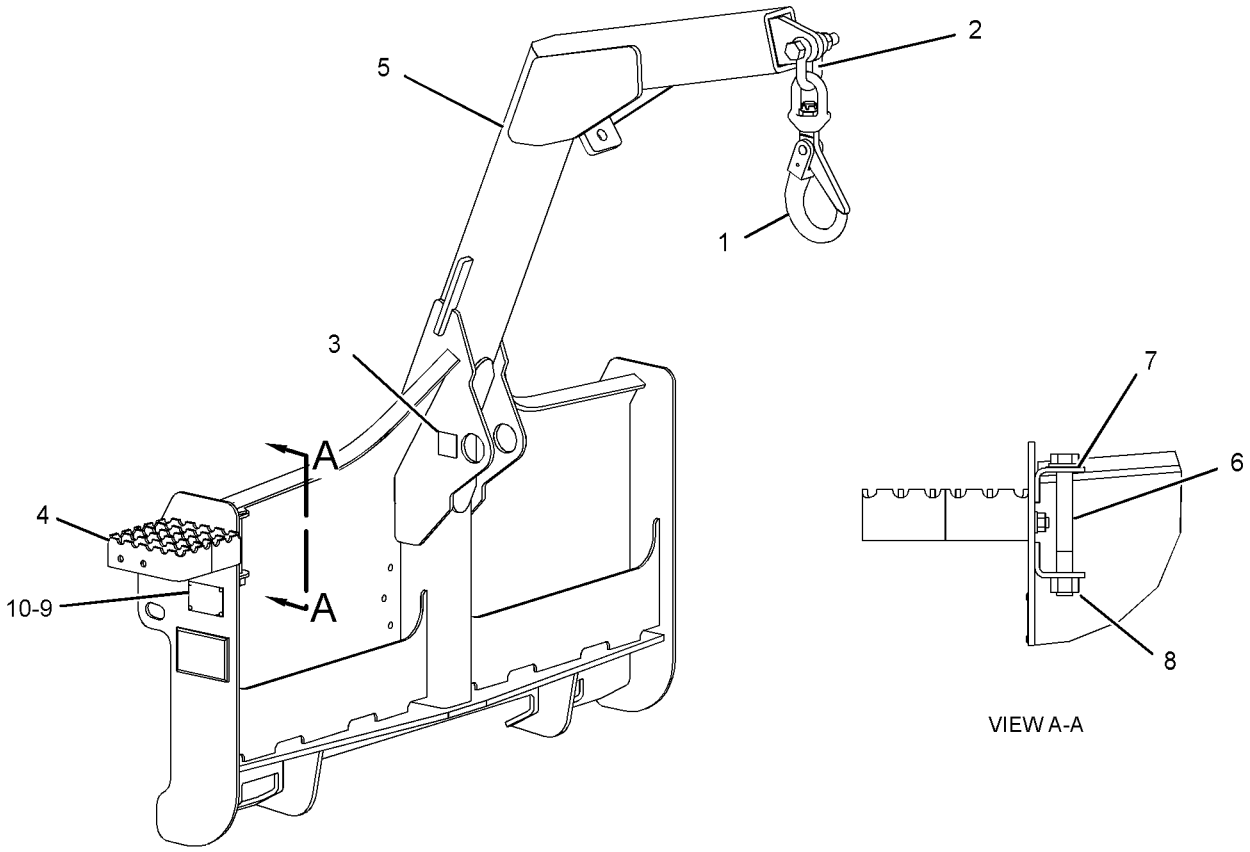

GRAPHIC #1 **<END>** g02511800

177-1989 BLADE AR–ANGLING

S/N: A9H1-UP

AN ATTACHMENT

SMCS-6060, 6701 **i01860746**

NOTE	PART NUMBER	QTY	PART NAME 1 2 3 4 5 6 (PRODUCT LEVEL)	SEE PAGE
Y	*177-1981*	1	BLADE GP-ANGLING	332
Y	*230-5406*	1	CYLINDER & MTG GP-ANGLE BLADE	219
Y	*135-9386*	1	EDGE GP-CUTTING	441
Y	*230-5670*	1	FRAME GP-BLADE	456
Y	*177-1986*	1	LINES GP-CONNECTING	259
Y	*177-1983*	1	SPRING GP-BLADE	472

Y-SEPARATE ILLUSTRATION

<END>

177-1990 BLADE AR–ANGLING

S/N: A9H1-UP

AN ATTACHMENT

SMCS-6060, 6701 **i01861063**

NOTE	PART NUMBER	QTY	PART NAME 1 2 3 4 5 6 (PRODUCT LEVEL)	SEE PAGE
Y	*177-1982*	1	BLADE GP-ANGLING	333
Y	*230-5406*	1	CYLINDER & MTG GP-ANGLE BLADE	219
Y	*149-5741*	1	EDGE GP-CUTTING	443
Y	*230-5670*	1	FRAME GP-BLADE	456
Y	*177-1986*	1	LINES GP-CONNECTING	259
Y	*177-1983*	1	SPRING GP-BLADE	472

Y-SEPARATE ILLUSTRATION

<END>

WORK TOOLS

231-5275 BLADE AR—ANGLING

S/N: A9H1-UP

AN ATTACHMENT

SMCS-6060, 6701 **i04040817**

NOTE	REF NO	GRAPHIC REF	PART NUMBER	QTY	PART NAME 1 2 3 4 5 6 (PRODUCT LEVEL)	SEE PAGE
	1	1	**7K-1181**	3	STRAP-CABLE	
Y	2	1	*222-7724*	1	BLADE GP-ANGLING	334
	3	1	**225-8015**	1	HARNESS AS-WORK TOOL (CONNECTING)	
		1	**213-0139**	6	PIN	
		1	**172-3998**	1	PLUG AS	
		1	**155-2270**	8	KIT-CONNECTING PLUG (2-PIN)	
					(EACH INCLUDES PLUG AS, WEDGE & INTERFACE SEAL)	
		1	**9W-0844**	9	SOCKET-CONNECTOR (14-GA TO 16-GA)	
		1	**180-9340**	7	SOCKET-CONNECTOR (14-GA TO 18-GA)	
		1	**8L-8413**	10	STRAP-CABLE	
		1	**189-3158**	2	SUPPRESSOR-ARC	
E		1	**119-3662**		TUBE-HEAT SHRINK (10.85-MM DIA) (13-CM)	
E		1	**125-7874**		TUBE-HEAT SHRINK (5.72-MM DIA) (5-CM)	
E		1	**125-7875**		TUBE-HEAT SHRINK (7.44-MM DIA) (10-CM)	
Y	4	1	*231-5273*	1	LINES GP-CONNECTING	261
Y	5	1	*231-5274*	1	CYLINDER & MTG GP-ANGLE BLADE	220
Y	6	1	*231-5278*	1	MANIFOLD & MTG GP-CONTROL (ANGLING BLADE)	294
Y	7	1	*247-0678*	1	PLATE & FILM GP	584

E-ORDER BY THE CENTIMETER
Y-SEPARATE ILLUSTRATION

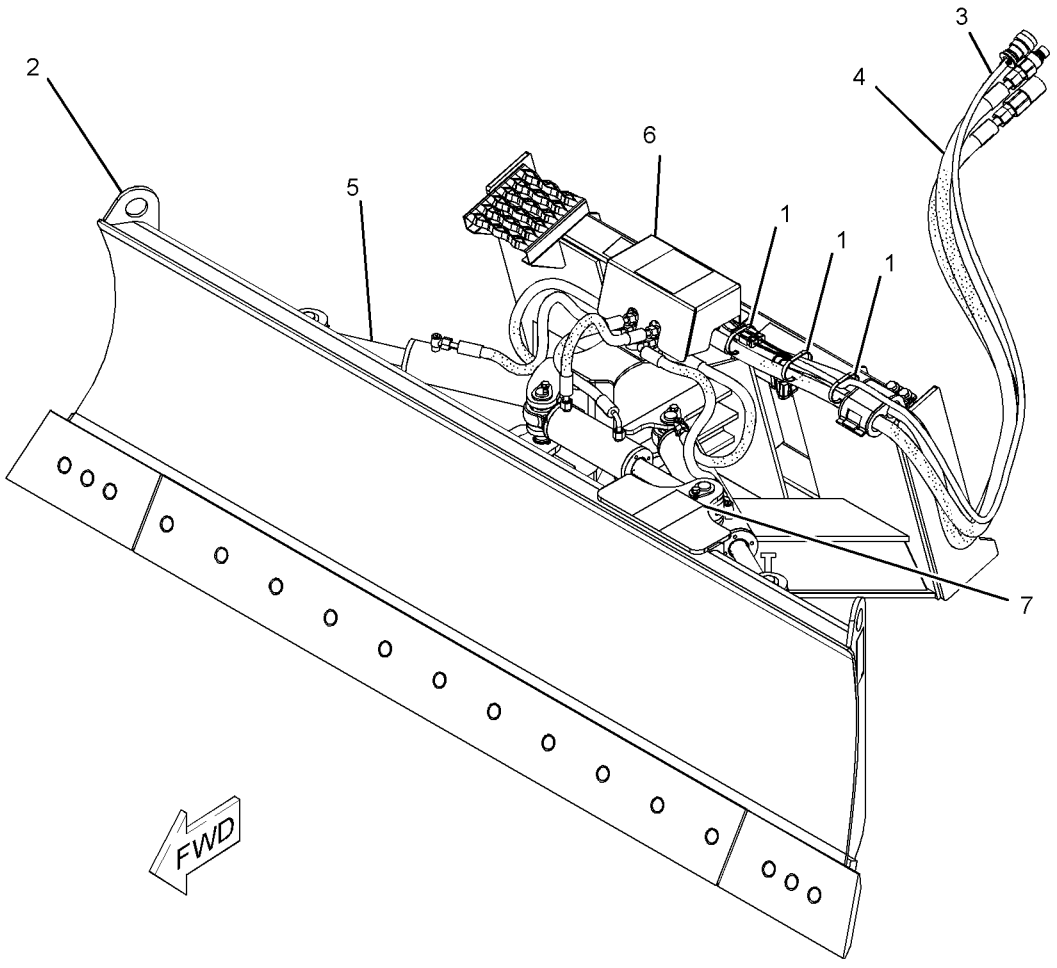

GRAPHIC #1 **<END>** g01381201

WORK TOOLS

231-5277 BLADE AR–ANGLING

S/N: A9H1-UP

AN ATTACHMENT

SMCS-6060, 6701 **i03571243**

NOTE	REF NO	GRAPHIC REF	PART NUMBER	QTY	PART NAME 1 2 3 4 5 6 (PRODUCT LEVEL)	SEE PAGE
	1	1	**7K-1181**	3	STRAP-CABLE	
	2	1	**225-8015**	1	HARNESS AS-WORK TOOL (CONNECTING)	
		1	**213-0139**	6	PIN	
		1	**172-3998**	1	PLUG AS	
		1	**155-2270**	8	KIT-CONNECTING PLUG (2-PIN)	
					(EACH INCLUDES PLUG AS, WEDGE & INTERFACE SEAL)	
		1	**9W-0844**	9	SOCKET-CONNECTOR (14-GA TO 16-GA)	
		1	**180-9340**	7	SOCKET-CONNECTOR (14-GA TO 18-GA)	
		1	**8L-8413**	10	STRAP-CABLE	
		1	**189-3158**	2	SUPPRESSOR-ARC	
E		1	**119-3662**		TUBE-HEAT SHRINK (10.85-MM DIA) (13-CM)	
E		1	**125-7874**		TUBE-HEAT SHRINK (5.72-MM DIA) (5-CM)	
E		1	**125-7875**		TUBE-HEAT SHRINK (7.44-MM DIA) (15-CM)	
Y	3	1	*231-5273*	1	LINES GP-CONNECTING	261
Y	4	1	*231-5274*	1	CYLINDER & MTG GP-ANGLE BLADE	220
Y	5	1	*231-5276*	1	BLADE GP-ANGLING	335
Y	6	1	*231-5278*	1	MANIFOLD & MTG GP-CONTROL (ANGLING BLADE)	294
Y	7	1	*247-0678*	1	PLATE & FILM GP	584

E-ORDER BY THE CENTIMETER
Y-SEPARATE ILLUSTRATION

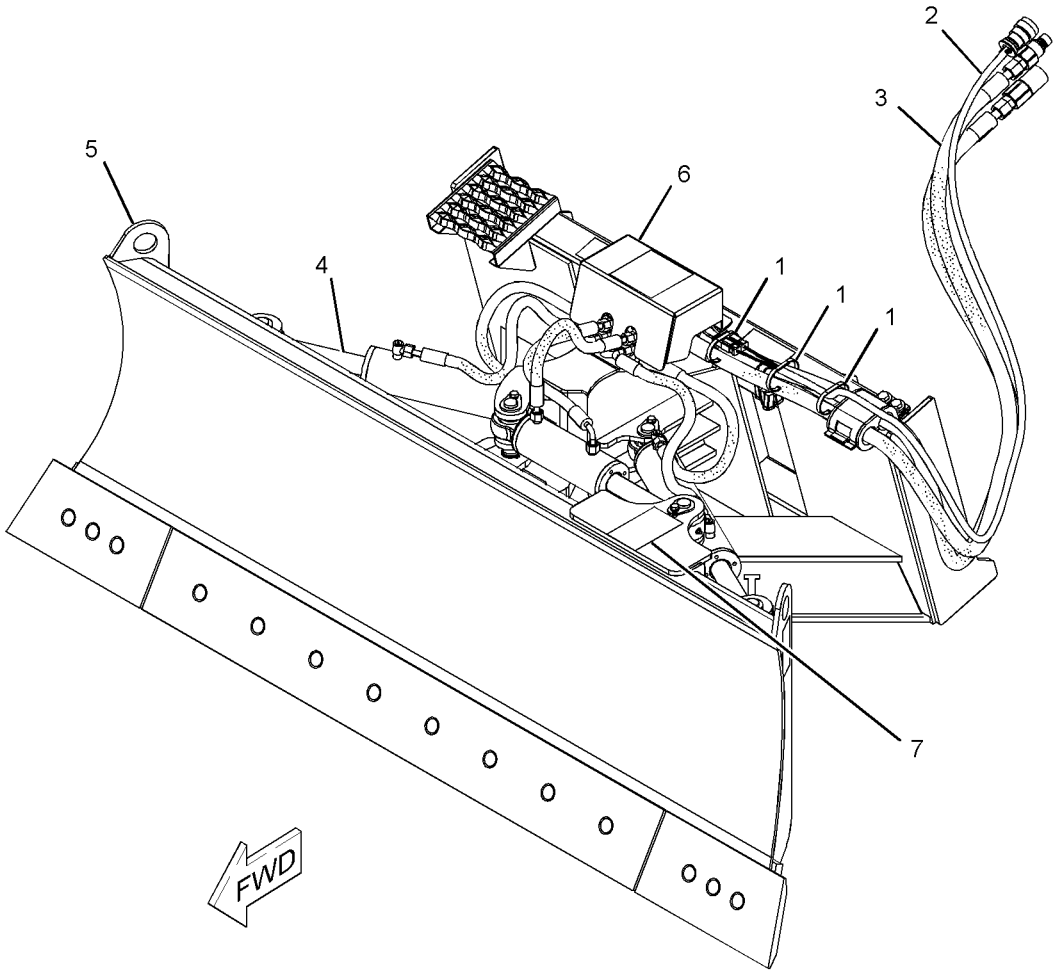

GRAPHIC #1 **<END>** g01381202

WORK TOOLS

177-1987 BLADE AS-ANGLING

S/N: A9H1-UP
1829-MM (72-IN)
PART OF 177-1981 BLADE GP-ANGLING
AN ATTACHMENT

SMCS-6052, 6060 **i04156267**

NOTE	REF NO	GRAPHIC REF	PART NUMBER	QTY	PART NAME 1 2 3 4 5 6 (PRODUCT LEVEL)	SEE PAGE
	1	1	**358-4944**	1	PLATE-IDENTIFICATION (BUCKET SPECIFICATIONS)	
	2	1	**168-8389**	4	TACK-FASTENER	

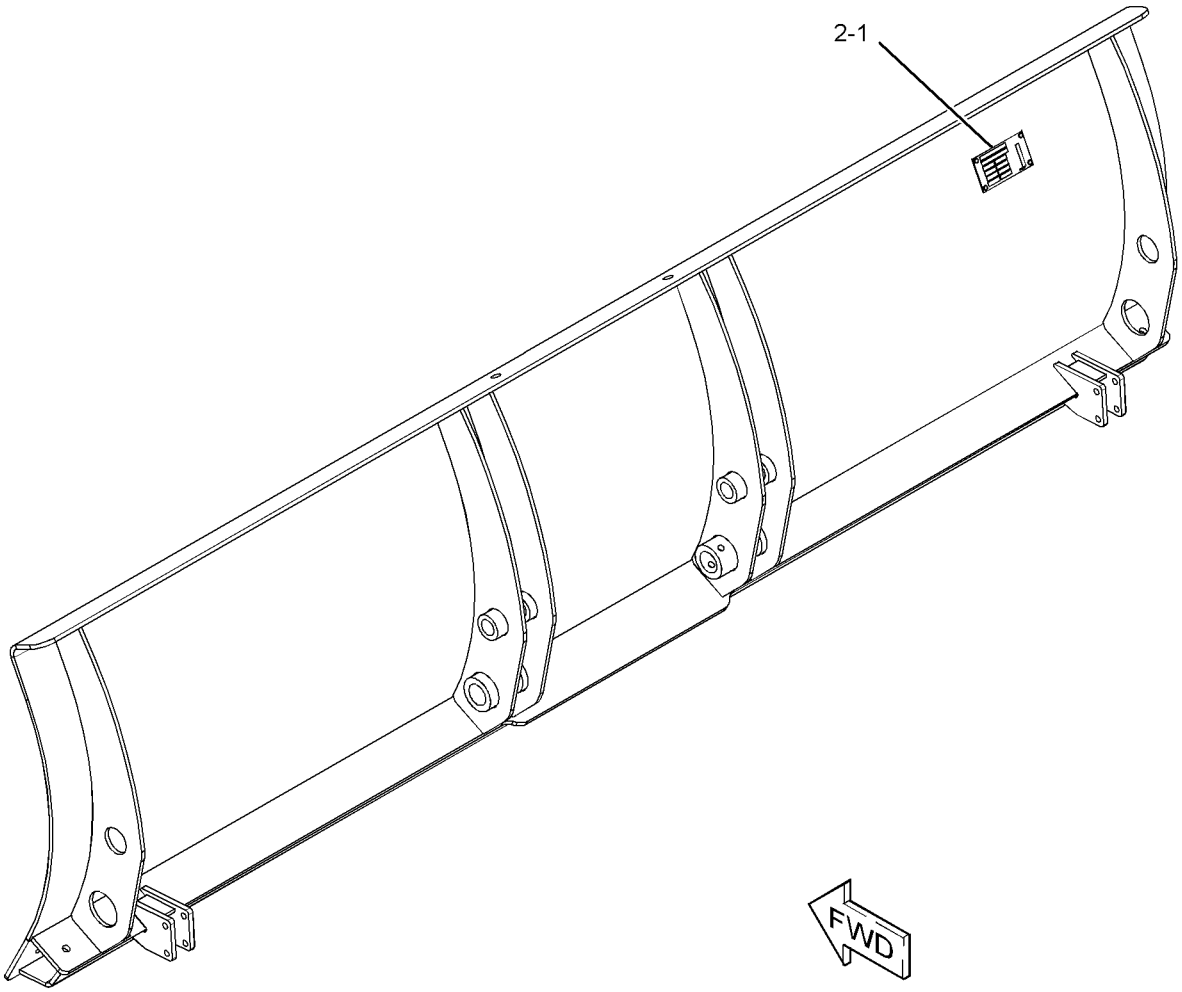

GRAPHIC #1 **<END>** g02351902

177-1988 BLADE AS-ANGLING

S/N: A9H1-UP
2134-MM (84-IN)
PART OF 177-1982 BLADE GP-ANGLING
AN ATTACHMENT

SMCS-6052, 6060 **i04154471**

NOTE	REF NO	GRAPHIC REF	PART NUMBER	QTY	PART NAME 1 2 3 4 5 6 (PRODUCT LEVEL)	SEE PAGE
	1	1	**358-4944**	1	PLATE-IDENTIFICATION (BUCKET SPECIFICATIONS)	
	2	1	**168-8389**	4	TACK-FASTENER	

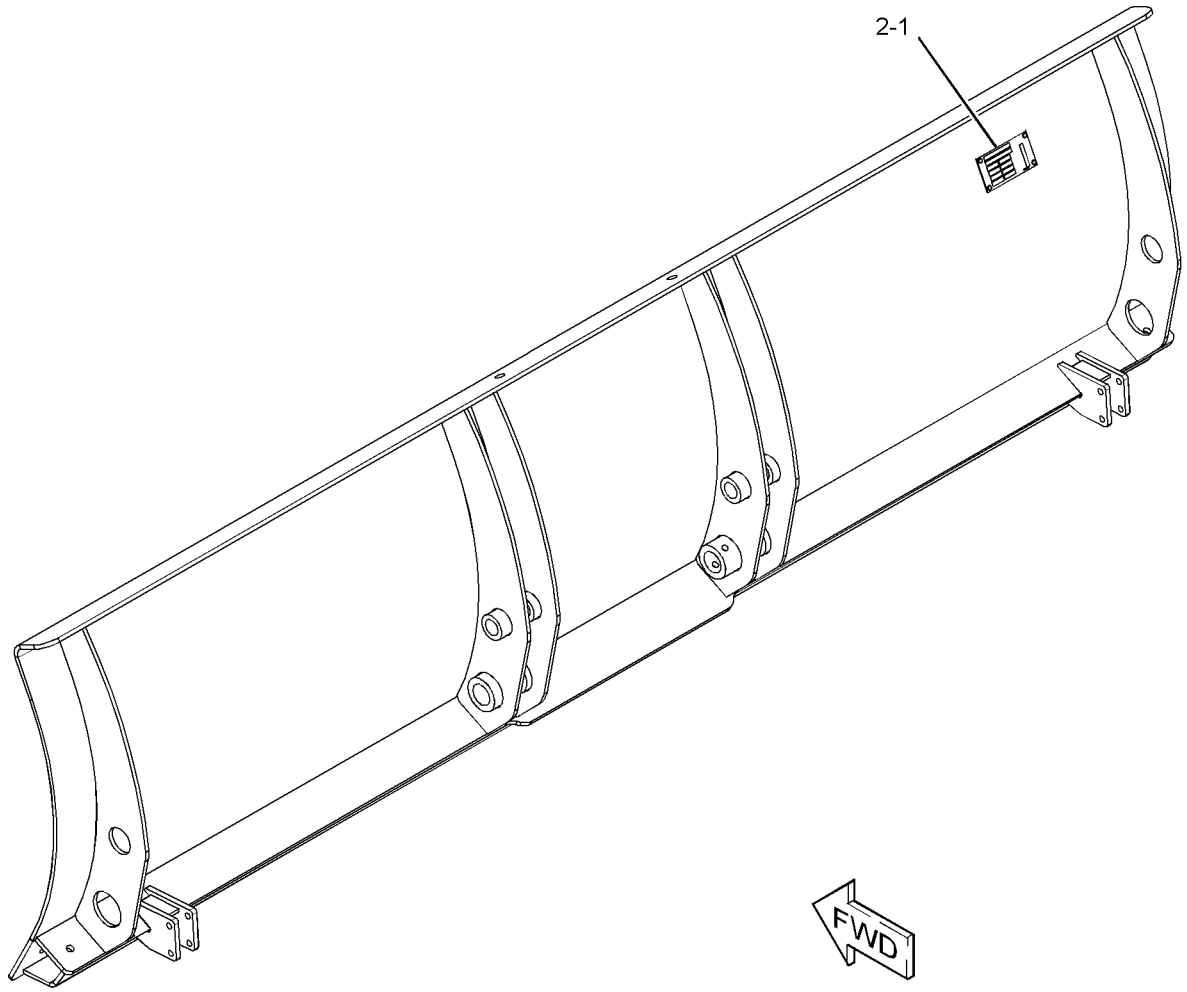

GRAPHIC #1 **<END>** g02351903

WORK TOOLS

222-7412 BLADE AS-ANGLING

S/N: A9H1-UP
2337-MM (92-IN)
PART OF 222-7724 BLADE GP-ANGLING
AN ATTACHMENT

SMCS-6052, 6060 **i03646971**

NOTE	REF NO	GRAPHIC REF	PART NUMBER	QTY	PART NAME 1 2 3 4 5 6 (PRODUCT LEVEL)	SEE PAGE
	1	1	**222-7421**	1	TRUNNION AS	
	2	1	**222-7479**	1	PLATE AS	
	3	1	**222-7728**	1	PLATE AS	

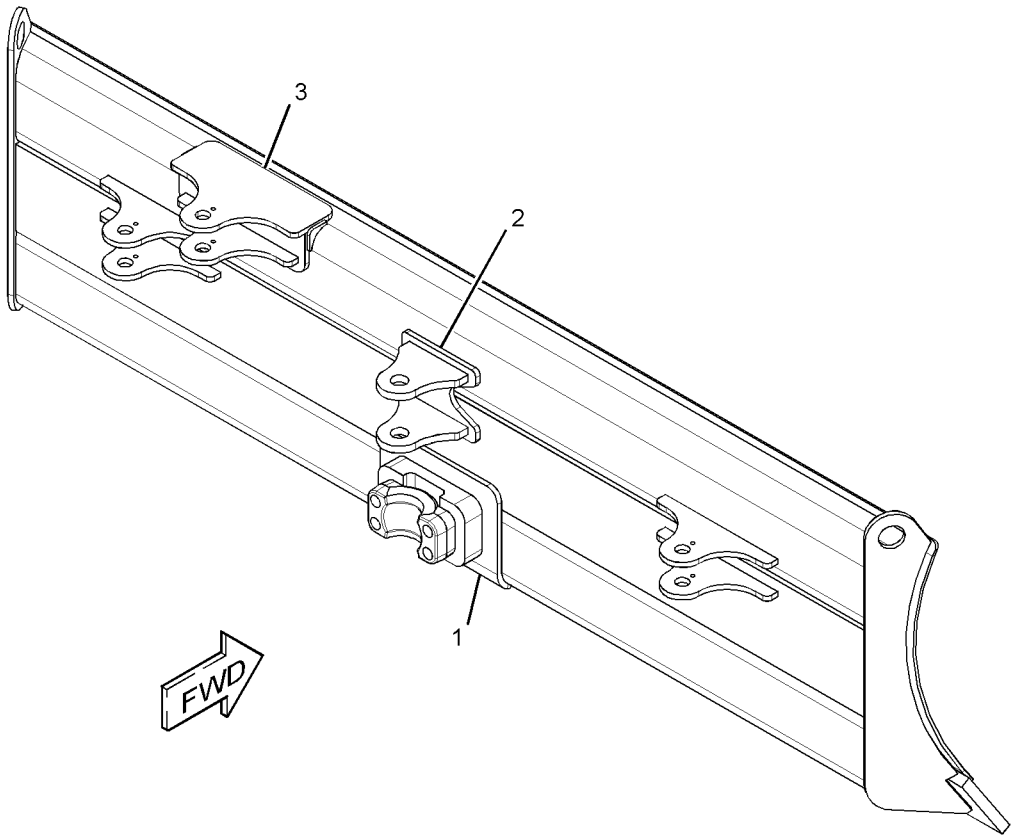

GRAPHIC #1 **<END>** g01960536

230-4596 BLADE AS-ANGLING

S/N: A9H1-UP
2007-MM (79-IN)
PART OF 231-5276 BLADE GP-ANGLING
AN ATTACHMENT

SMCS-6052, 6060 **i03646970**

NOTE	REF NO	GRAPHIC REF	PART NUMBER	QTY	PART NAME 1 2 3 4 5 6 (PRODUCT LEVEL)	SEE PAGE
	1	1	**222-7421**	1	TRUNNION AS	
	2	1	**222-7479**	1	PLATE AS	
	3	1	**222-7728**	1	PLATE AS	

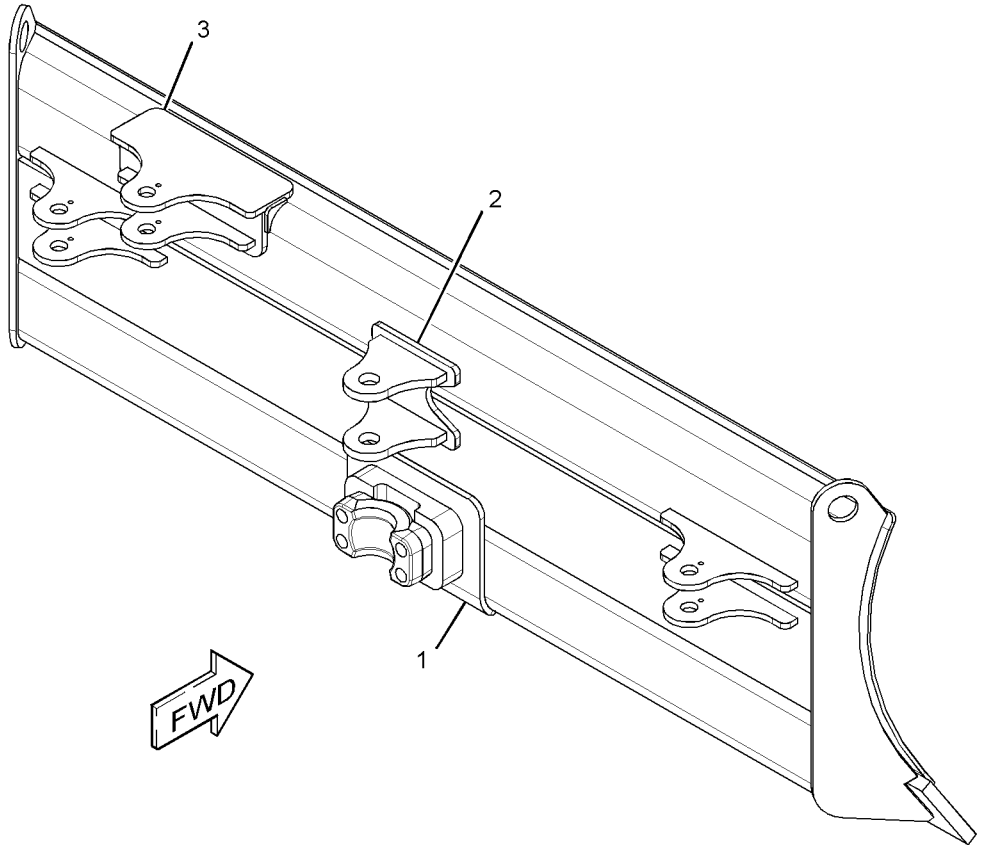

GRAPHIC #1 **<END>** g01960542

WORK TOOLS

177-1981 BLADE GP-ANGLING

S/N: A9H1-UP
PART OF 177-1989 BLADE AR
AN ATTACHMENT

SMCS-6060, 6701 **i03930872**

NOTE	REF NO	GRAPHIC REF	PART NUMBER	QTY	PART NAME 1 2 3 4 5 6 (PRODUCT LEVEL)	SEE PAGE
	1	1	**157-0940**	2	PIN	
	2	1	**166-0319**	2	PIN AS	
	3	1	**9R-2959**	2	CLIP	
	4	1	**177-1921**	2	PIN AS	
	5	1	**177-1972**	2	SKID AS	
Y	6	1	**177-1987**	1	BLADE AS-ANGLING	328
	7	1	**3B-8489**	2	FITTING-GREASE	
M	8	1	**6V-9189**	2	LOCKNUT (M8X1.25-THD)	
M	9	1	**8T-6869**	2	BOLT (M8X1.25X60-MM)	

M-METRIC PART
Y-SEPARATE ILLUSTRATION

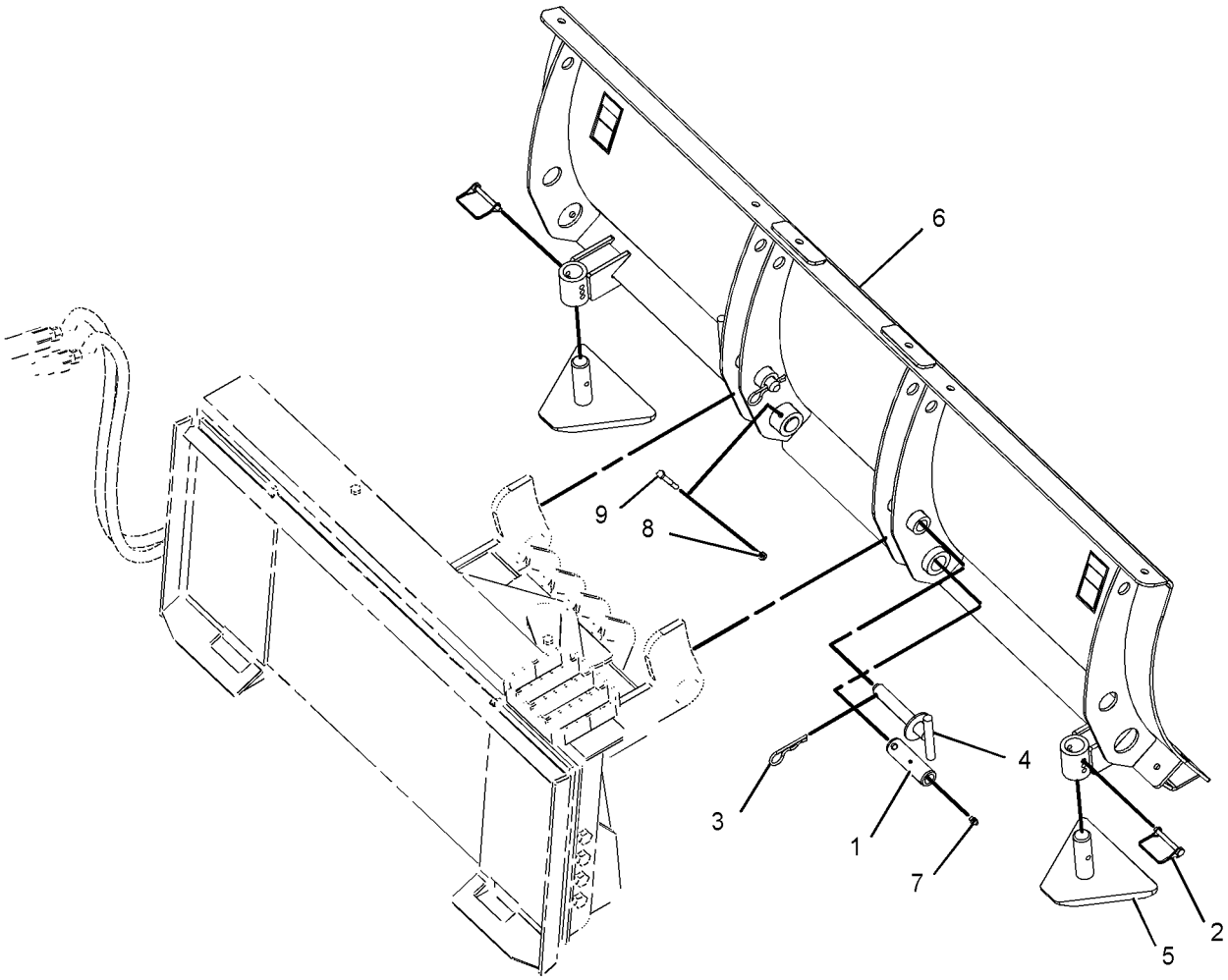

GRAPHIC #1 **<END>** g01960538

WORK TOOLS

177-1982 BLADE GP-ANGLING

S/N: A9H1-UP
PART OF 177-1990 BLADE AR
AN ATTACHMENT

SMCS-6060, 6701 **i03930949**

NOTE	REF NO	GRAPHIC REF	PART NUMBER	QTY	PART NAME 1 2 3 4 5 6 (PRODUCT LEVEL)	SEE PAGE
	1	1	**157-0940**	2	PIN	
	2	1	**166-0319**	2	PIN AS	
	3	1	**9R-2959**	2	CLIP	
	4	1	**177-1921**	2	PIN AS	
	5	1	**177-1972**	2	SKID AS	
Y	6	1	**177-1988**	1	BLADE AS-ANGLING	329
	7	1	**3B-8489**	2	FITTING-GREASE	
M	8	1	**6V-9189**	2	LOCKNUT (M8X1.25-THD)	
M	9	1	**8T-6869**	2	BOLT (M8X1.25X60-MM)	

M-METRIC PART
Y-SEPARATE ILLUSTRATION

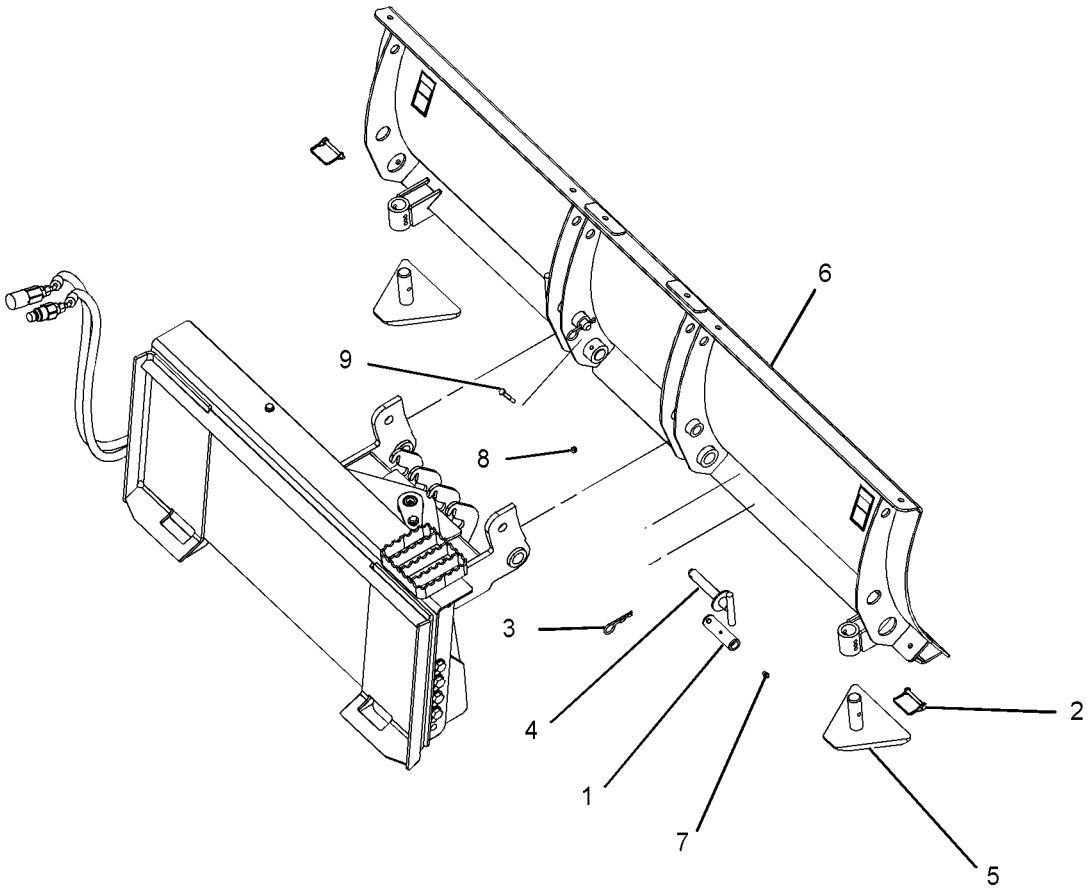

GRAPHIC #1 **<END>** g01960539

WORK TOOLS

222-7724 BLADE GP-ANGLING

S/N: A9H1-UP
PART OF 231-5275 BLADE AR
AN ATTACHMENT

SMCS-6060, 6701 **i04156826**

NOTE	REF NO	GRAPHIC REF	PART NUMBER	QTY	PART NAME 1 2 3 4 5 6 (PRODUCT LEVEL)	SEE PAGE
B	1	1	**8E-5702**	22	SHIM (0.8-MM THK)	
	2	1	**358-4944**	1	PLATE-IDENTIFICATION (BUCKET SPECIFICATIONS)	
	3	1	**168-8389**	4	TACK-FASTENER	
Y	4	1	**222-7412**	1	BLADE AS-ANGLING	330
	5	1	**222-7725**	1	FRAME GP-BLADE	
	6	1	**231-5271**	1	PIN	
	7	1	**238-1004**	2	MOUNT AS	
	8	1	**238-1005**	2	SKID AS	
	9	1	**244-1367**	1	BUSHING	
Y	10	1	*222-7546*	1	EDGE GP-BIT & CUTTING	438
	11	1	**5P-1076**	8	WASHER-HARD (13.5X30X4-MM THK)	
	12	1	**6V-7644**	2	RING-RETAINING	
M	13	1	**8C-8478**	4	BOLT (M20X2.5X140-MM)	
	14	1	**8J-2880**	1	CAP-BEARING	
	15	1	**8T-4123**	4	WASHER (22X35X3.5-MM THK)	
M	16	1	**8T-4139**	8	BOLT (M12X1.75X30-MM)	

B-USE AS REQUIRED
M-METRIC PART
Y-SEPARATE ILLUSTRATION

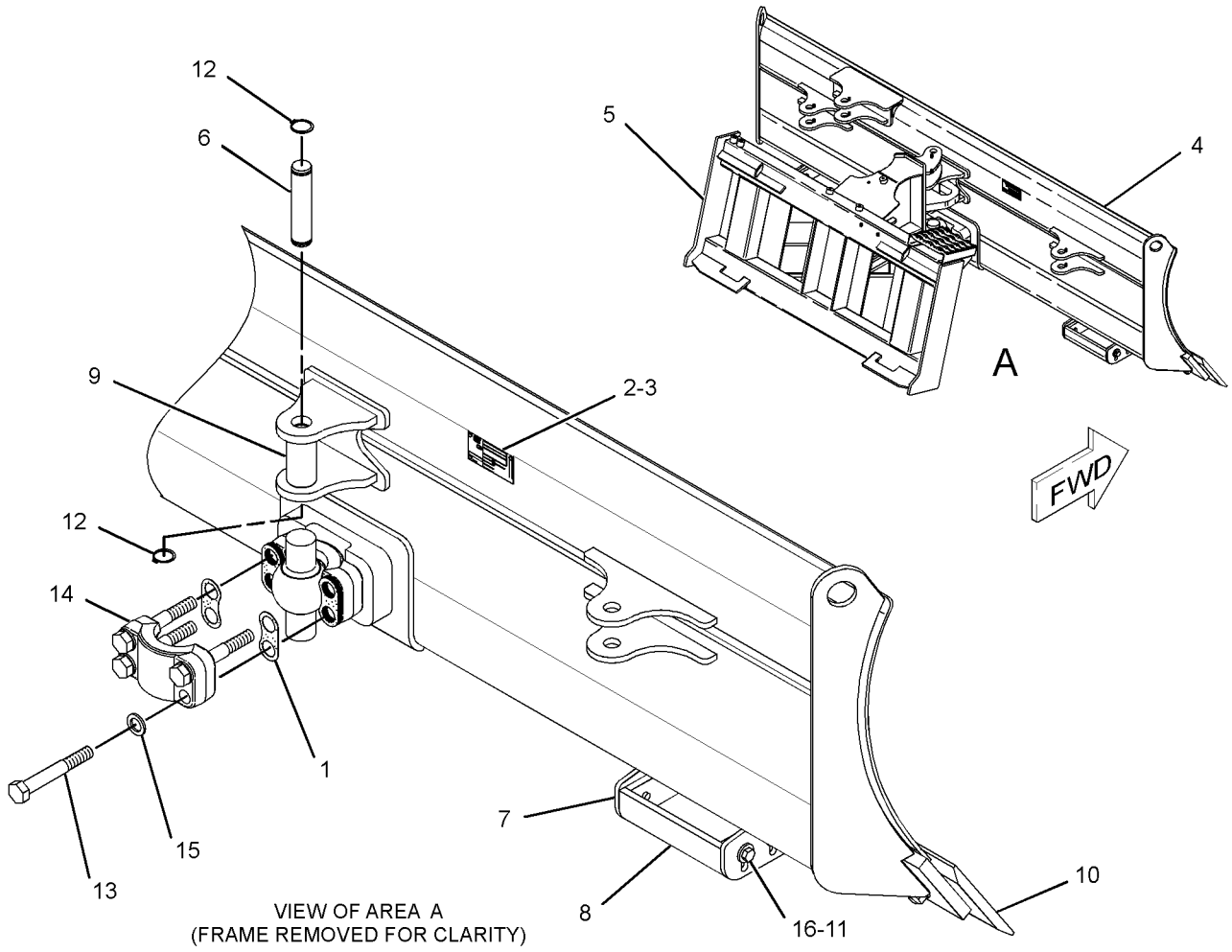

GRAPHIC #1 **<END>** g02379077

WORK TOOLS

231-5276 BLADE GP-ANGLING

S/N: A9H1-UP
PART OF 231-5277 BLADE AR
AN ATTACHMENT

SMCS-6060, 6701 **i04319649**

NOTE	REF NO	GRAPHIC REF	PART NUMBER	QTY	PART NAME 1 2 3 4 5 6 (PRODUCT LEVEL)	SEE PAGE
B	1	1	**8E-5702**	22	SHIM (0.8-MM THK)	
	2	1	**358-4944**	1	PLATE-IDENTIFICATION (BUCKET SPECIFICATIONS)	
	3	1	**168-8389**	4	TACK-FASTENER	
	4	1	**222-7725**	1	FRAME GP-BLADE (WORK TOOL)	
Y	5	1	**230-4596**	1	BLADE AS-ANGLING	331
	6	1	**231-5271**	1	PIN	
	7	1	**238-1004**	2	MOUNT AS	
	8	1	**238-1005**	2	SKID AS	
	9	1	**244-1367**	1	BUSHING	
Y	10	1	*222-7545*	1	EDGE GP-BIT & CUTTING	437
	11	1	**5P-1076**	8	WASHER-HARD (13.5X30X4-MM THK)	
	12	1	**6V-7644**	2	RING-RETAINING	
M	13	1	**8C-8478**	4	BOLT (M20X2.5X140-MM)	
	14	1	**8J-2880**	1	CAP-BEARING	
	15	1	**8T-4123**	4	WASHER (22X35X3.5-MM THK)	
M	16	1	**8T-4139**	8	BOLT (M12X1.75X30-MM)	

B-USE AS REQUIRED
M-METRIC PART
Y-SEPARATE ILLUSTRATION

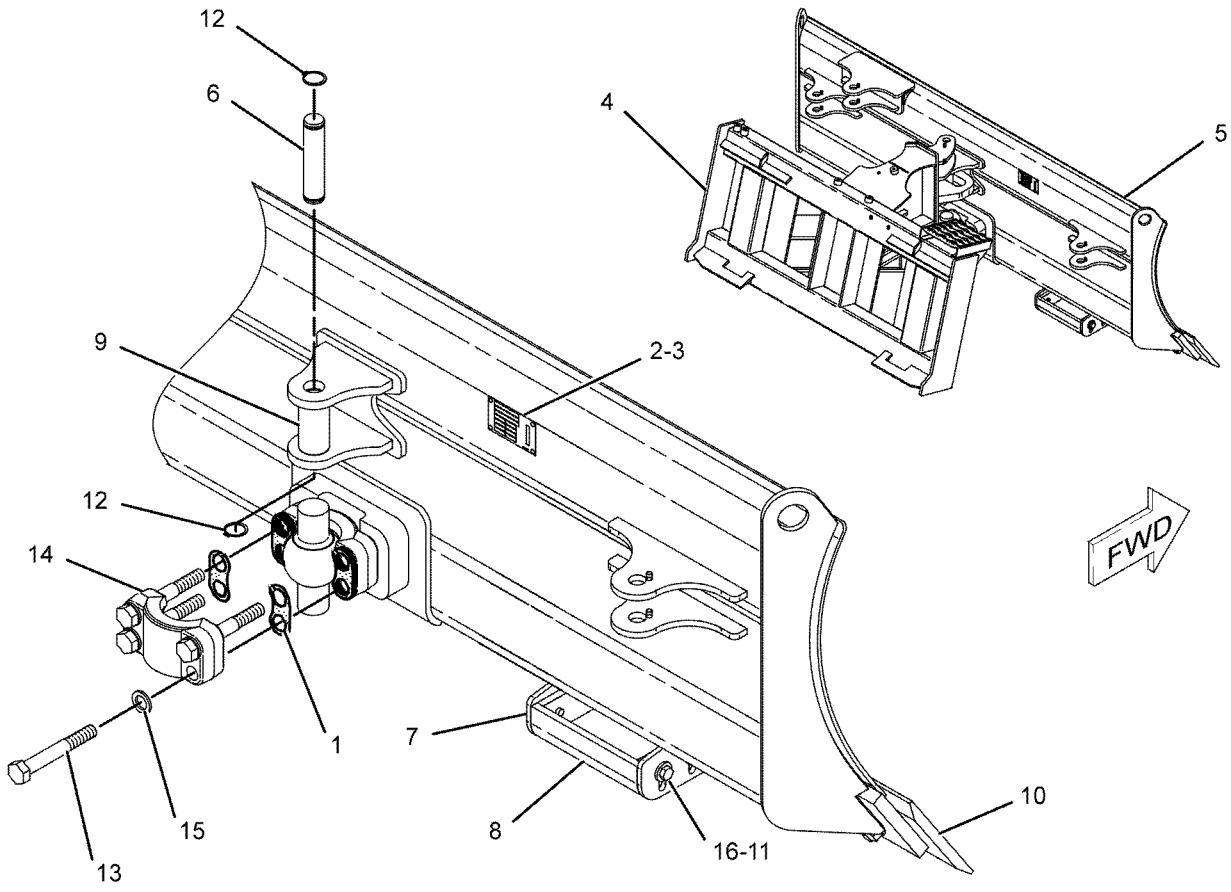

GRAPHIC #1 **<END>** g01020723

279-5384 BLADE GP-MULTIPURPOSE BUCKET

S/N: A9H1-UP

PART OF 279-5383 BUCKET GP-MULTIPURPOSE

AN ATTACHMENT

SMCS-6060, 6104 **i04156276**

NOTE	REF NO	GRAPHIC REF	PART NUMBER	QTY	PART NAME 1 2 3 4 5 6 (PRODUCT LEVEL)	SEE PAGE
	1	1	**358-4944**	1	PLATE-IDENTIFICATION (BUCKET SPECIFICATIONS)	
	2	1	**168-8389**	4	TACK-FASTENER	
Y	3	1	**279-5385**	1	BLADE GP-MULTIPURPOSE BUCKET (60-IN)	337

Y-SEPARATE ILLUSTRATION

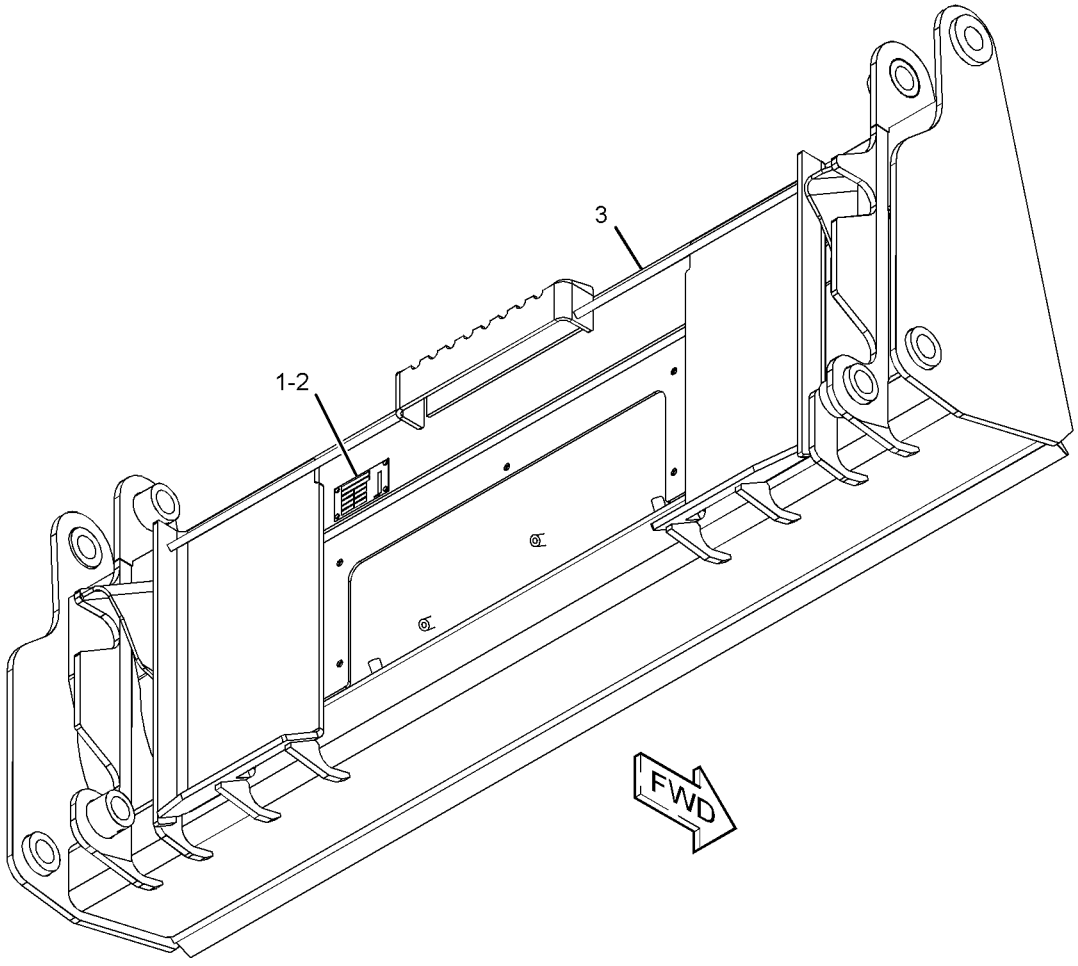

GRAPHIC #1 **<END>** g01278496

WORK TOOLS

279-5385 BLADE GP-MULTIPURPOSE BUCKET

S/N: A9H1-UP
1524-MM (60-IN)
PART OF 279-5384 BLADE GP-MULTIPURPOSE BUCKET
AN ATTACHMENT

SMCS-6060, 6104 **i03638431**

NOTE	REF NO	GRAPHIC REF	PART NUMBER	QTY	PART NAME 1 2 3 4 5 6 (PRODUCT LEVEL)	SEE PAGE
	1	1	**154-5037**	1	EDGE	

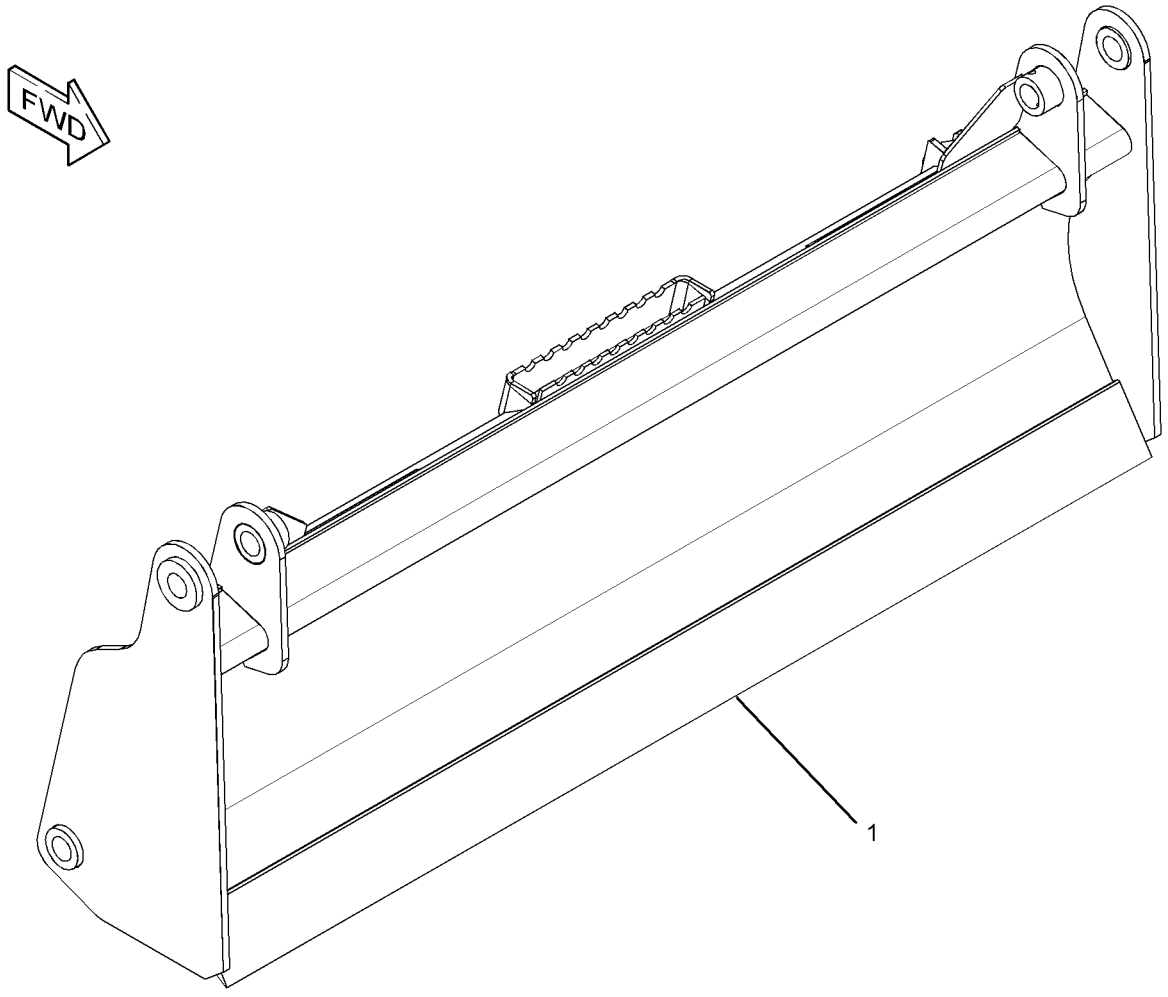

GRAPHIC #1 **<END>** g01953861

279-5387 BLADE GP-MULTIPURPOSE BUCKET

S/N: A9H1-UP
1676-MM (66-IN)
PART OF 279-5388 BLADE GP-MULTIPURPOSE BUCKET
AN ATTACHMENT

SMCS-6060, 6104 **i03646985**

NOTE	REF NO	GRAPHIC REF	PART NUMBER	QTY	PART NAME 1 2 3 4 5 6 (PRODUCT LEVEL)	SEE PAGE
	1	1	**154-5059**	1	EDGE	

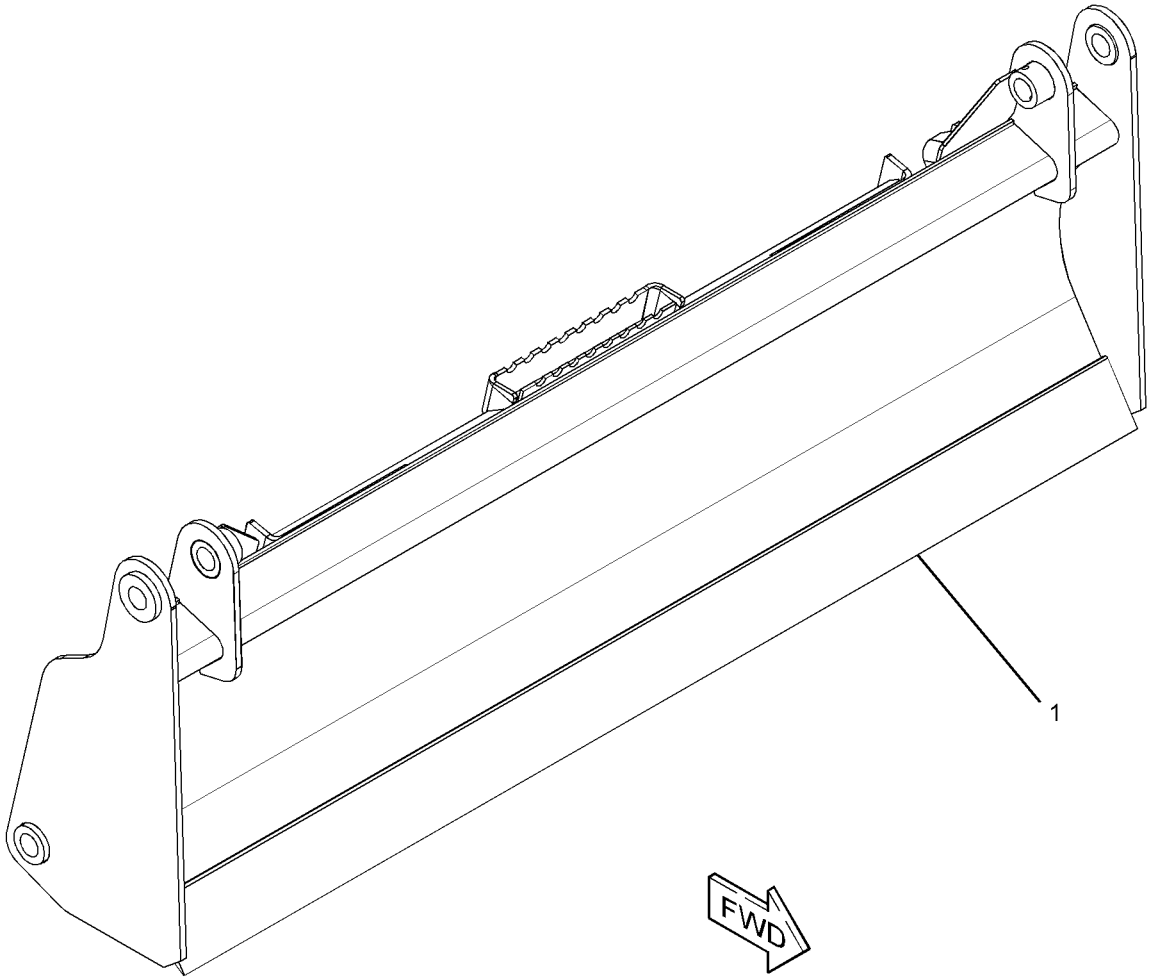

GRAPHIC #1 **<END>** g01960204

279-5388 BLADE GP-MULTIPURPOSE BUCKET

S/N: A9H1-UP
PART OF 279-5389 BUCKET GP-MULTIPURPOSE
AN ATTACHMENT

SMCS-6060, 6104 **i04156275**

NOTE	REF NO	GRAPHIC REF	PART NUMBER	QTY	PART NAME 1 2 3 4 5 6 (PRODUCT LEVEL)	SEE PAGE
	1	1	**358-4944**	1	PLATE-IDENTIFICATION (BUCKET SPECIFICATIONS)	
	2	1	**168-8389**	4	TACK-FASTENER	
Y	3	1	**279-5387**	1	BLADE GP-MULTIPURPOSE BUCKET (66-IN)	338

Y-SEPARATE ILLUSTRATION

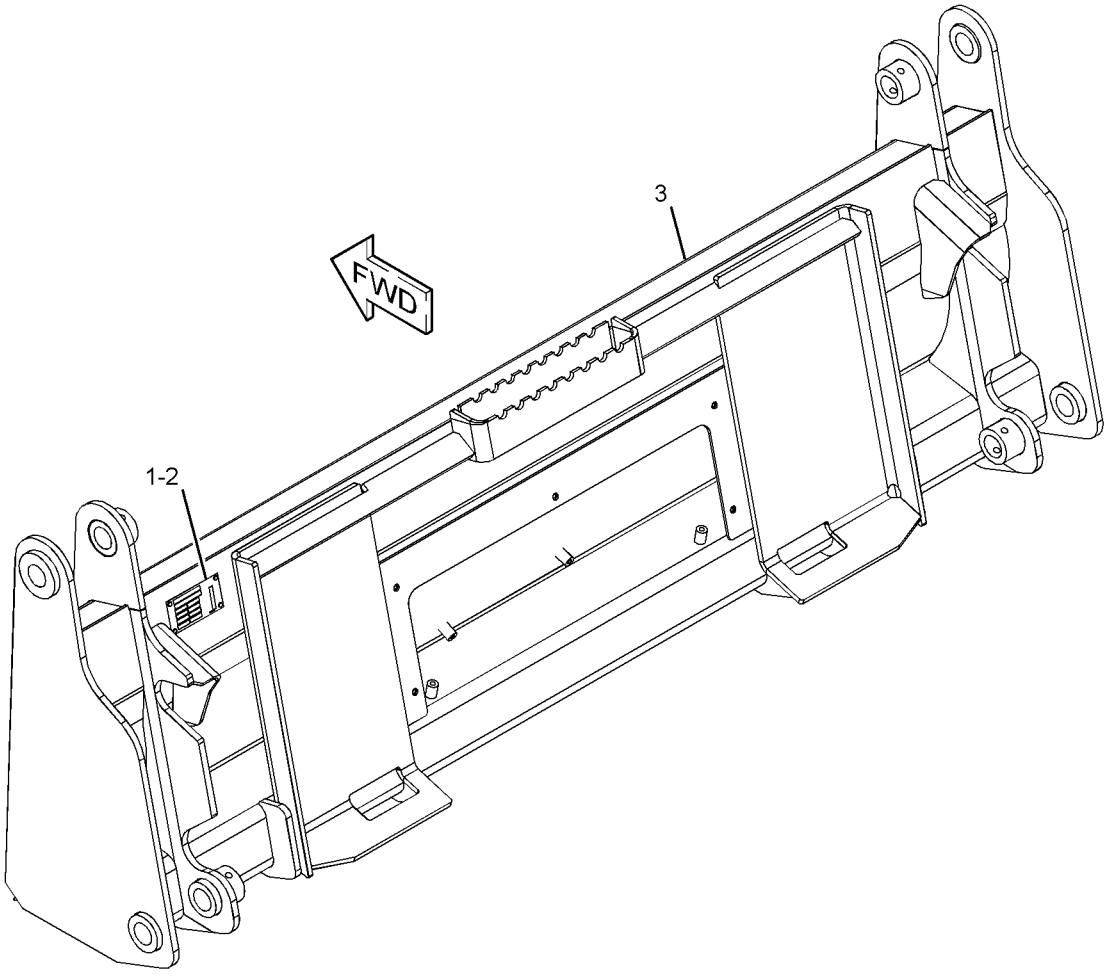

GRAPHIC #1 **<END>** g01279242

279-5395 BLADE GP-MULTIPURPOSE BUCKET

S/N: A9H1-UP
1829-MM (72-IN)
PART OF 279-5396 BLADE GP-MULTIPURPOSE BUCKET
AN ATTACHMENT

SMCS-6060, 6104 **i03646984**

NOTE	REF NO	GRAPHIC REF	PART NUMBER	QTY	PART NAME 1 2 3 4 5 6 (PRODUCT LEVEL)	SEE PAGE
	1	1	**154-5077**	1	EDGE	

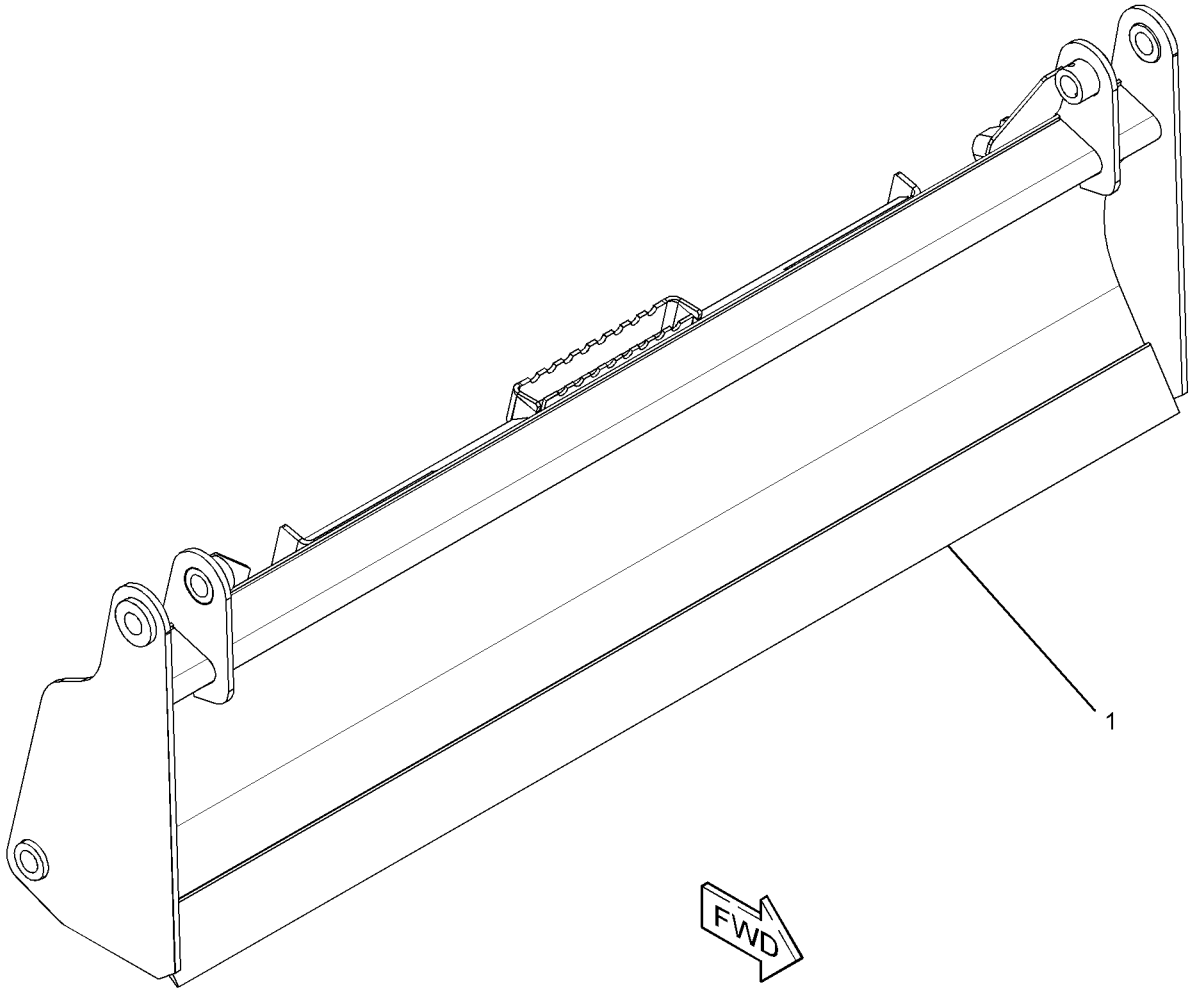

GRAPHIC #1 **<END>** g01960206

279-5396 BLADE GP-MULTIPURPOSE BUCKET

S/N: A9H1-UP

PART OF 279-5397 BUCKET GP-MULTIPURPOSE

AN ATTACHMENT

SMCS-6060, 6104 **i04156274**

NOTE	REF NO	GRAPHIC REF	PART NUMBER	QTY	PART NAME 1 2 3 4 5 6 (PRODUCT LEVEL)	SEE PAGE
	1	1	**358-4944**	1	PLATE-IDENTIFICATION (BUCKET SPECIFICATIONS)	
	2	1	**168-8389**	4	TACK-FASTENER	
Y	3	1	**279-5395**	1	BLADE GP-MULTIPURPOSE BUCKET (72-IN)	340

Y-SEPARATE ILLUSTRATION

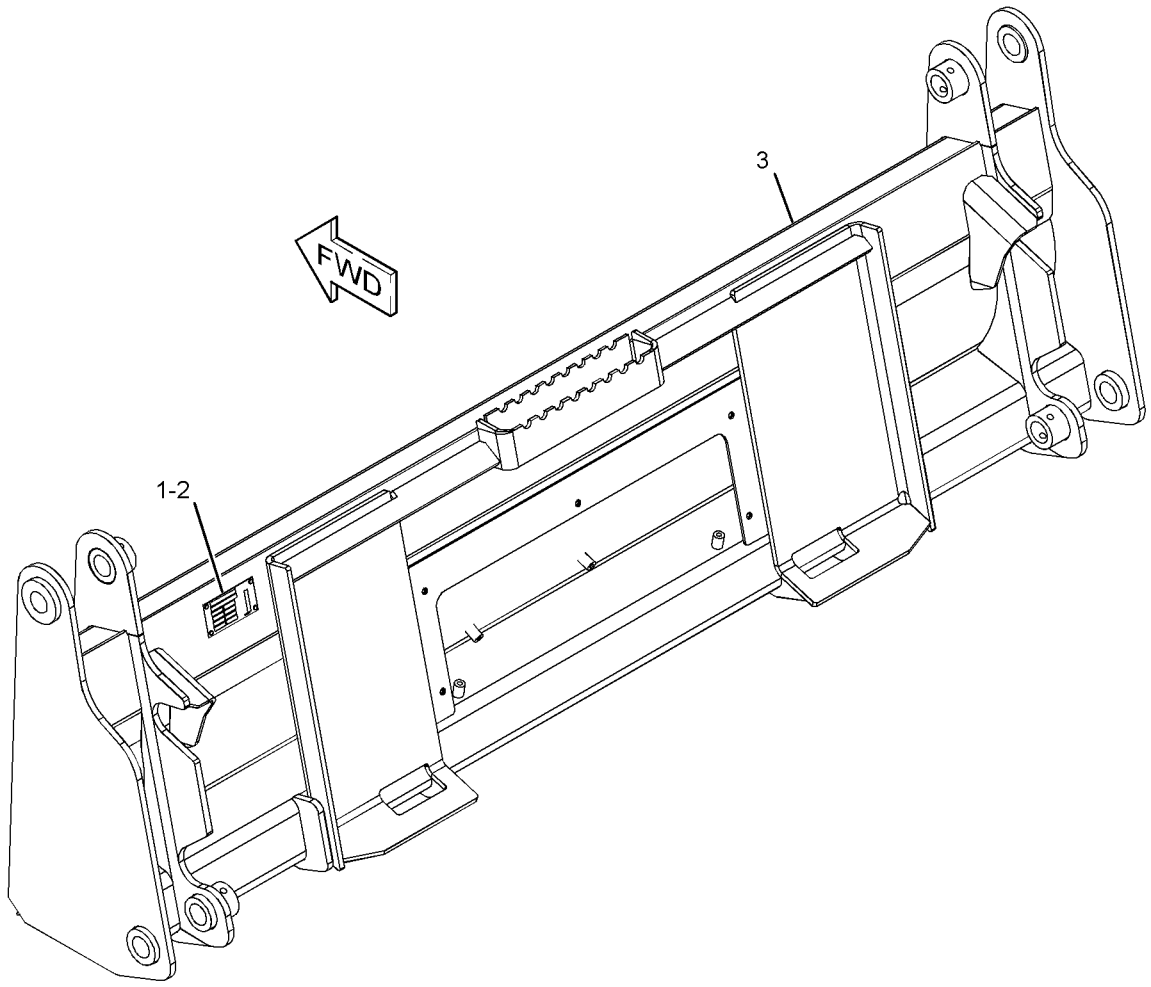

GRAPHIC #1 **<END>** g01279973

WORK TOOLS

279-5405 BLADE GP-MULTIPURPOSE BUCKET

S/N: A9H1-UP
PART OF 279-5404 BUCKET GP-MULTIPURPOSE
AN ATTACHMENT

SMCS-6060, 6104 **i04156277**

NOTE	REF NO	GRAPHIC REF	PART NUMBER	QTY	PART NAME 1 2 3 4 5 6 (PRODUCT LEVEL)	SEE PAGE
	1	1	**358-4944**	1	PLATE-IDENTIFICATION (BUCKET SPECIFICATIONS)	
	2	1	**168-8389**	4	TACK-FASTENER	
Y	3	1	**279-5406**	1	BLADE GP-MULTIPURPOSE BUCKET (78-IN)	343

Y-SEPARATE ILLUSTRATION

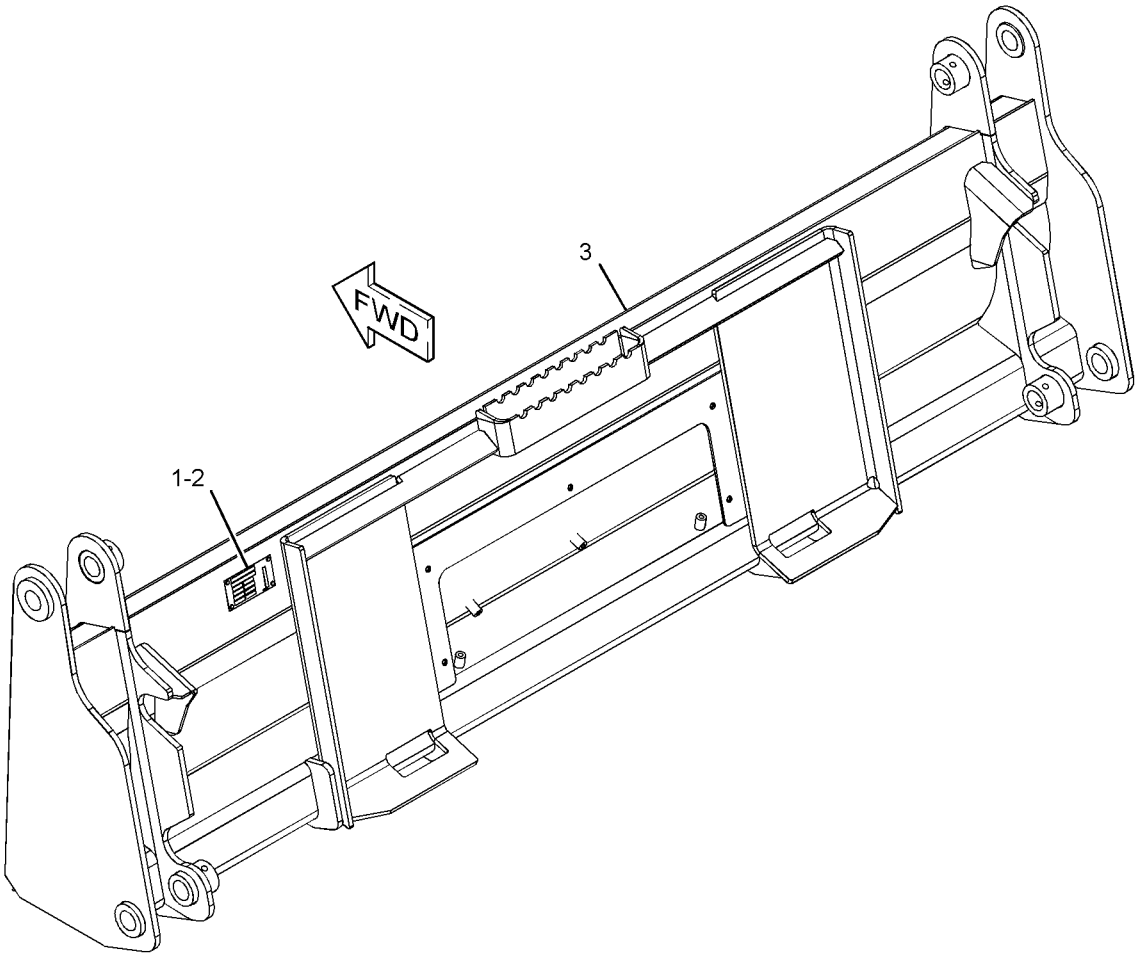

GRAPHIC #1 **<END>** g01278518

279-5406 BLADE GP-MULTIPURPOSE BUCKET

S/N: A9H1-UP
1981-MM (78-IN)
PART OF 279-5405 BLADE GP-MULTIPURPOSE BUCKET
AN ATTACHMENT

SMCS-6060, 6104 **i03638465**

NOTE	REF NO	GRAPHIC REF	PART NUMBER	QTY	PART NAME 1 2 3 4 5 6 (PRODUCT LEVEL)	SEE PAGE
	1	1	**199-8316**	1	EDGE	

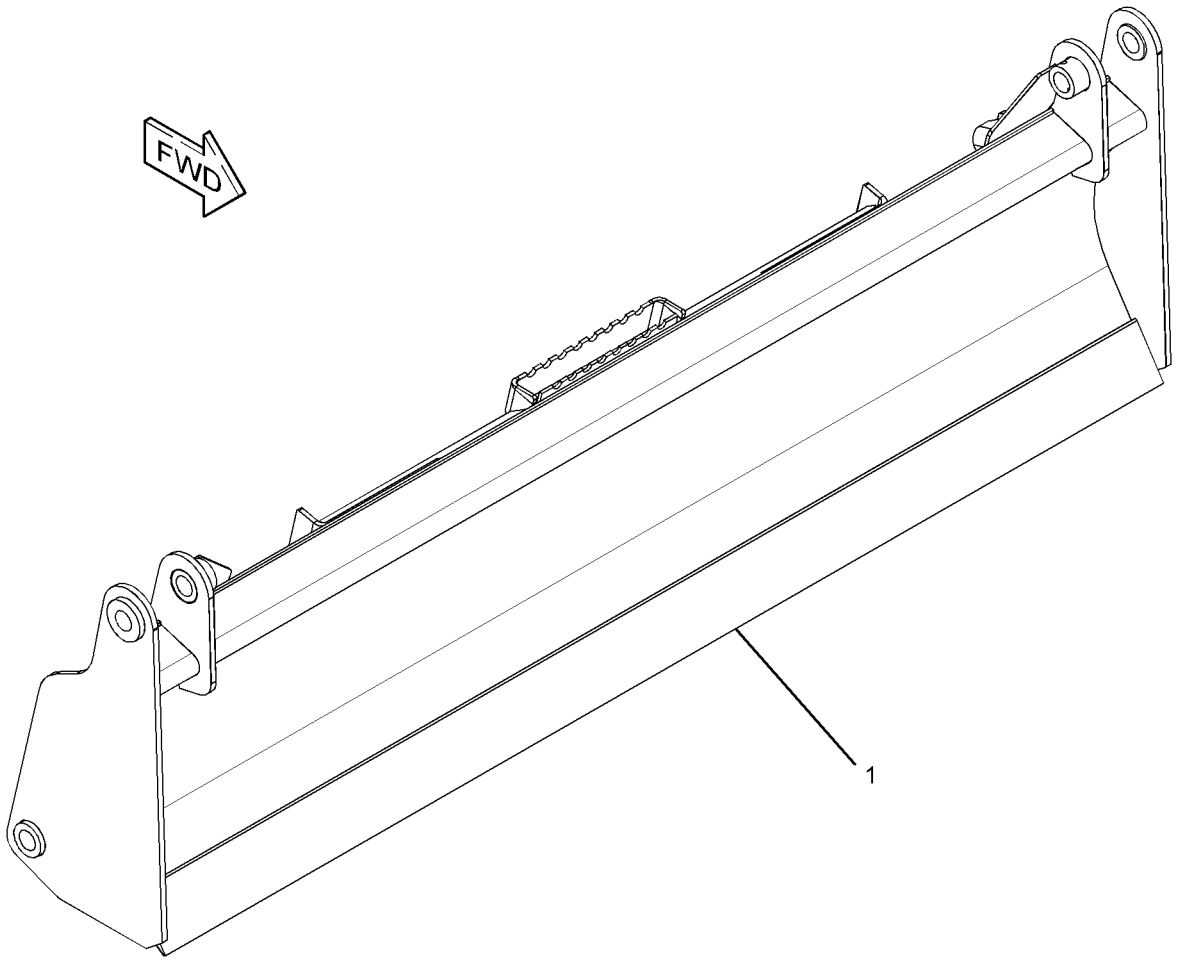

GRAPHIC #1 **<END>** g01954566

293-0142 BLADE GP-MULTIPURPOSE BUCKET

S/N: A9H1-UP

PART OF 293-0141 BUCKET GP-MULTIPURPOSE

AN ATTACHMENT

SMCS-6060, 6104 **i04276741**

NOTE	REF NO	GRAPHIC REF	PART NUMBER	QTY	PART NAME 1 2 3 4 5 6 (PRODUCT LEVEL)	SEE PAGE
	1	1	**358-4944**	1	PLATE-IDENTIFICATION (BUCKET SPECIFICATIONS)	
	2	1	**168-8389**	4	TACK-FASTENER	
Y	3	1	**293-0143**	1	BLADE GP-MULTIPURPOSE BUCKET (84-IN)	345

Y-SEPARATE ILLUSTRATION

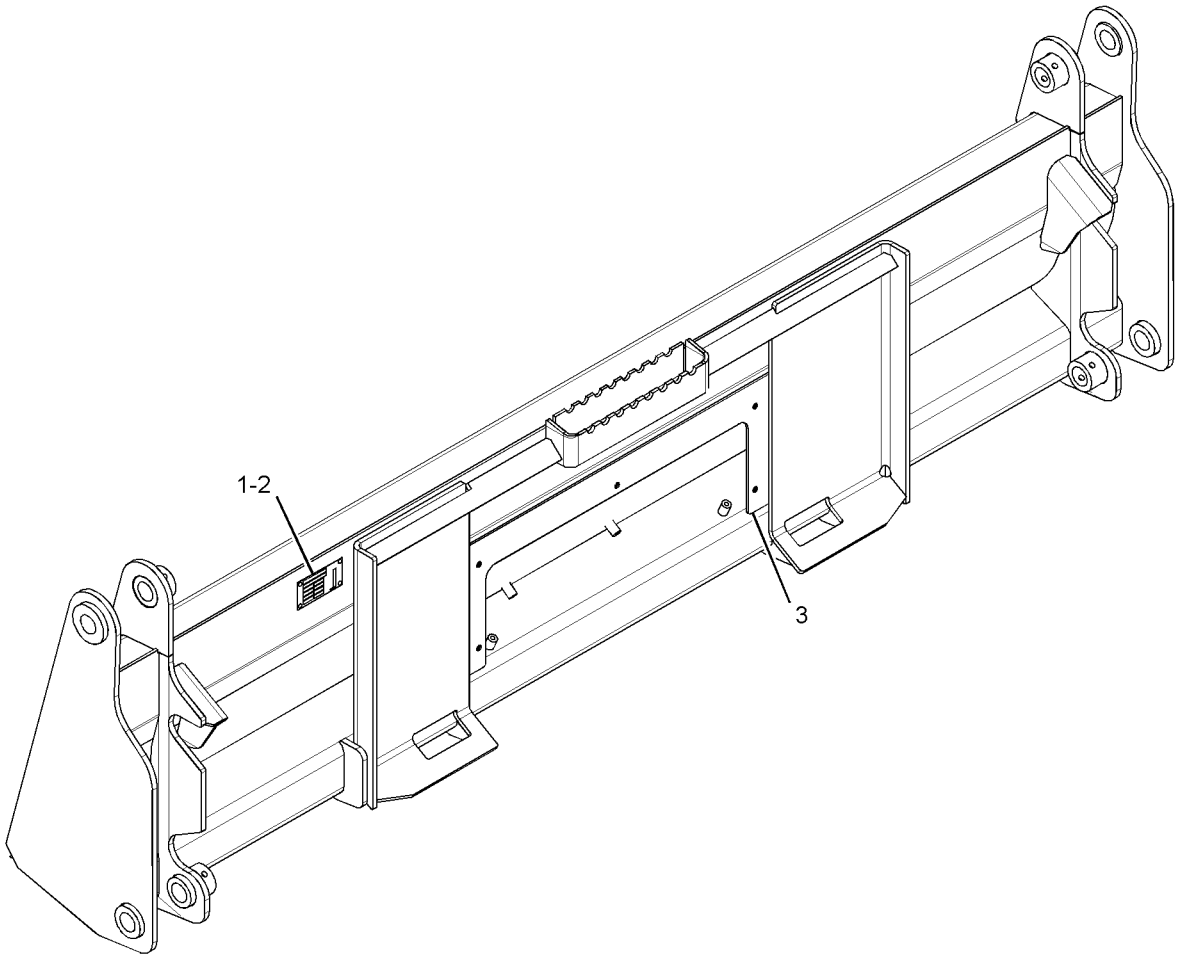

GRAPHIC #1 **<END>** g01327412

WORK TOOLS

293-0143 BLADE GP-MULTIPURPOSE BUCKET

S/N: A9H1-UP
2134-MM (84-IN)
PART OF 293-0142 BLADE GP-MULTIPURPOSE BUCKET
AN ATTACHMENT

SMCS-6060, 6104 **i04267991**

NOTE	REF NO	GRAPHIC REF	PART NUMBER	QTY	PART NAME 1 2 3 4 5 6 (PRODUCT LEVEL)	SEE PAGE
	1	1	**293-0144**	1	EDGE	

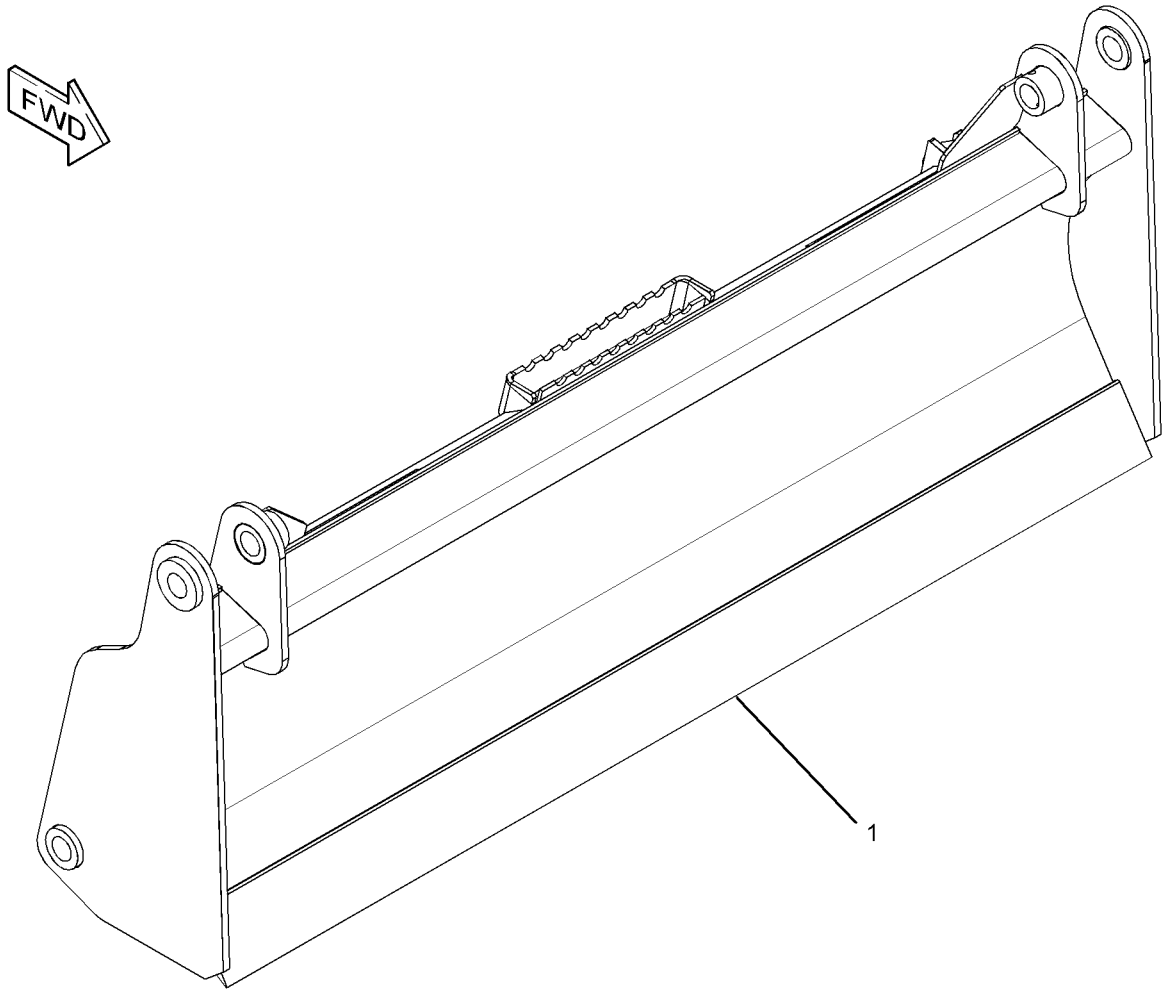

GRAPHIC #1 **<END>** g01953861

WORK TOOLS

268-4083 BUCKET AR-DIRT

S/N: A9H1-UP

AN ATTACHMENT

SMCS-6001 **i02539980**

NOTE	PART NUMBER	QTY	PART NAME 1 2 3 4 5 6 (PRODUCT LEVEL)	SEE PAGE
Y	**268-4084**	1	BUCKET GP-DIRT	405
Y	*135-9387*	1	EDGE GP-CUTTING	442
Y-SEPARATE ILLUSTRATION				

<END>

279-5435 BUCKET AR-DIRT

S/N: A9H1-UP

AN ATTACHMENT

SMCS-6001 **i02552331**

NOTE	PART NUMBER	QTY	PART NAME 1 2 3 4 5 6 (PRODUCT LEVEL)	SEE PAGE
Y	**279-5434**	1	BUCKET AS-DIRT	367
Y	*135-9383*	1	EDGE GP-CUTTING	438
Y-SEPARATE ILLUSTRATION				

<END>

279-5438 BUCKET AR-DIRT

S/N: A9H1-UP

AN ATTACHMENT

SMCS-6001 **i02571312**

NOTE	PART NUMBER	QTY	PART NAME 1 2 3 4 5 6 (PRODUCT LEVEL)	SEE PAGE
Y	**279-5437**	1	BUCKET AS-DIRT	369
Y	*135-9384*	1	EDGE GP-CUTTING	439
Y-SEPARATE ILLUSTRATION				

<END>

279-5441 BUCKET AR-DIRT

S/N: A9H1-UP

AN ATTACHMENT

SMCS-6001 **i02571314**

NOTE	PART NUMBER	QTY	PART NAME 1 2 3 4 5 6 (PRODUCT LEVEL)	SEE PAGE
Y	**279-5440**	1	BUCKET AS-DIRT	371
Y	*135-9385*	1	EDGE GP-CUTTING	440
Y-SEPARATE ILLUSTRATION				

<END>

WORK TOOLS

285-6090 BUCKET AR-DIRT

S/N: A9H1-UP
AN ATTACHMENT

SMCS-6001 **i02552446**

NOTE	PART NUMBER	QTY	PART NAME 1 2 3 4 5 6 (PRODUCT LEVEL)	SEE PAGE
Y	**285-6089**	1	BUCKET AS-DIRT	373
Y	*135-9386*	1	EDGE GP-CUTTING (DIRT)	441

Y-SEPARATE ILLUSTRATION

<END>

279-5365 BUCKET AR-GENERAL PURPOSE

S/N: A9H1-UP
AN ATTACHMENT

SMCS-6101 **i02550406**

NOTE	PART NUMBER	QTY	PART NAME 1 2 3 4 5 6 (PRODUCT LEVEL)	SEE PAGE
Y	**279-5364**	1	BUCKET AS-GENERAL PURPOSE	375
Y	*135-9384*	1	EDGE GP-CUTTING	439

Y-SEPARATE ILLUSTRATION

<END>

279-5366 BUCKET AR-GENERAL PURPOSE

S/N: A9H1-UP
AN ATTACHMENT

SMCS-6101 **i03922634**

NOTE	PART NUMBER	QTY	PART NAME 1 2 3 4 5 6 (PRODUCT LEVEL)	SEE PAGE
Y	**279-5364**	1	BUCKET AS-GENERAL PURPOSE	375
Y	*141-4999*	8	TOOTH GP-UNI	481

Y-SEPARATE ILLUSTRATION

<END>

279-5369 BUCKET AR-GENERAL PURPOSE

S/N: A9H1-UP
AN ATTACHMENT

SMCS-6101 **i02551081**

NOTE	PART NUMBER	QTY	PART NAME 1 2 3 4 5 6 (PRODUCT LEVEL)	SEE PAGE
Y	**279-5368**	1	BUCKET AS-GENERAL PURPOSE	377
Y	*135-9385*	1	EDGE GP-CUTTING	440

Y-SEPARATE ILLUSTRATION

<END>

WORK TOOLS

279-5370 BUCKET AR-GENERAL PURPOSE

S/N: A9H1-UP

AN ATTACHMENT

SMCS-6101 **i03922636**

NOTE	PART NUMBER	QTY	PART NAME 1 2 3 4 5 6 (PRODUCT LEVEL)	SEE PAGE
Y	**279-5368**	1	BUCKET AS-GENERAL PURPOSE	377
Y	*141-4999*	8	TOOTH GP-UNI	481
Y-SEPARATE ILLUSTRATION				

<END>

279-5373 BUCKET AR-GENERAL PURPOSE

S/N: A9H1-UP

AN ATTACHMENT

SMCS-6101 **i02552012**

NOTE	PART NUMBER	QTY	PART NAME 1 2 3 4 5 6 (PRODUCT LEVEL)	SEE PAGE
Y	**279-5372**	1	BUCKET AS-GENERAL PURPOSE	379
Y	*135-9386*	1	EDGE GP-CUTTING	441
Y-SEPARATE ILLUSTRATION				

<END>

279-5374 BUCKET AR-GENERAL PURPOSE

S/N: A9H1-UP

AN ATTACHMENT

SMCS-6101 **i03922635**

NOTE	PART NUMBER	QTY	PART NAME 1 2 3 4 5 6 (PRODUCT LEVEL)	SEE PAGE
Y	**279-5372**	1	BUCKET AS-GENERAL PURPOSE	379
Y	*141-4999*	8	TOOTH GP-UNI	481
Y-SEPARATE ILLUSTRATION				

<END>

279-5377 BUCKET AR-GENERAL PURPOSE

S/N: A9H1-UP

AN ATTACHMENT

SMCS-6101 **i02552020**

NOTE	PART NUMBER	QTY	PART NAME 1 2 3 4 5 6 (PRODUCT LEVEL)	SEE PAGE
Y	**279-5376**	1	BUCKET AS-GENERAL PURPOSE	381
Y	*135-9387*	1	EDGE GP-CUTTING	442
Y-SEPARATE ILLUSTRATION				

<END>

WORK TOOLS

279-5378 BUCKET AR-GENERAL PURPOSE

S/N: A9H1-UP

AN ATTACHMENT

SMCS-6101 **i03922637**

NOTE	PART NUMBER	QTY	PART NAME 1 2 3 4 5 6 (PRODUCT LEVEL)	SEE PAGE
Y	**279-5376**	1	BUCKET AS-GENERAL PURPOSE	381
Y	*141-4999*	9	TOOTH GP-UNI	481
Y-SEPARATE ILLUSTRATION				

<END>

296-8192 BUCKET AR-GENERAL PURPOSE

S/N: A9H1-UP

AN ATTACHMENT

SMCS-6101 **i02636478**

NOTE	PART NUMBER	QTY	PART NAME 1 2 3 4 5 6 (PRODUCT LEVEL)	SEE PAGE
Y	**292-9270**	1	BUCKET AS-GENERAL PURPOSE	382
Y	*195-7124*	1	EDGE GP-CUTTING	444
Y-SEPARATE ILLUSTRATION				

<END>

157-7223 BUCKET AR-GRAPPLE

S/N: A9H1-UP

PART OF 157-7226 BUCKET AR-GRAPPLE

AN ATTACHMENT

SMCS-6704 **i03636369**

NOTE	PART NUMBER	QTY	PART NAME 1 2 3 4 5 6 (PRODUCT LEVEL)	SEE PAGE
Y	*156-0884*	1	BUCKET GP-GRAPPLE (INDUSTRIAL)	407
Y	**278-1975**	2	CYLINDER GP-GRAPPLE (INDUSTRIAL)	227
Y	*161-0187*	1	LINES GP-GRAPPLE (INDUSTRIAL)	266
Y	*156-0891*	1	MOUNTING GP-CYLINDER (INDUSTRIAL)	304
Y-SEPARATE ILLUSTRATION				

<END>

157-7224 BUCKET AR-GRAPPLE

S/N: A9H1-UP

PART OF 157-7227 BUCKET AR-GRAPPLE

AN ATTACHMENT

SMCS-6704 **i03636379**

NOTE	PART NUMBER	QTY	PART NAME 1 2 3 4 5 6 (PRODUCT LEVEL)	SEE PAGE
Y	*156-0885*	1	BUCKET GP-GRAPPLE (INDUSTRIAL)	408
Y	*156-0891*	1	MOUNTING GP-CYLINDER (INDUSTRIAL)	304
Y	**278-1975**	2	CYLINDER GP-GRAPPLE (INDUSTRIAL)	227
Y	*161-0187*	1	LINES GP-GRAPPLE (INDUSTRIAL)	266
Y-SEPARATE ILLUSTRATION				

<END>

WORK TOOLS

157-7225 BUCKET AR-GRAPPLE—INDUSTRIAL

S/N: A9H1-UP
PART OF 158-6095 BUCKET AR-GRAPPLE
AN ATTACHMENT

SMCS-6704 **i03636381**

NOTE	PART NUMBER	QTY	PART NAME 1 2 3 4 5 6 (PRODUCT LEVEL)	SEE PAGE
Y	*156-0886*	1	BUCKET GP-GRAPPLE (INDUSTRIAL)	409
Y	**278-1975**	2	CYLINDER GP-GRAPPLE (INDUSTRIAL)	227
Y	*161-0187*	1	LINES GP-GRAPPLE (INDUSTRIAL)	266
Y	*156-0891*	1	MOUNTING GP-CYLINDER (INDUSTRIAL)	304

Y-SEPARATE ILLUSTRATION

<END>

157-7226 BUCKET AR-GRAPPLE

S/N: A9H1-UP
AN ATTACHMENT

SMCS-6704 **i01788957**

NOTE	PART NUMBER	QTY	PART NAME 1 2 3 4 5 6 (PRODUCT LEVEL)	SEE PAGE
Y	**157-7223**	1	BUCKET AR-GRAPPLE	349
Y	*135-9384*	1	EDGE GP-CUTTING	439

Y-SEPARATE ILLUSTRATION

<END>

157-7227 BUCKET AR-GRAPPLE

S/N: A9H1-UP
AN ATTACHMENT

SMCS-6704 **i01788965**

NOTE	PART NUMBER	QTY	PART NAME 1 2 3 4 5 6 (PRODUCT LEVEL)	SEE PAGE
Y	**157-7224**	1	BUCKET AR-GRAPPLE	349
Y	*135-9385*	1	EDGE GP-CUTTING	440

Y-SEPARATE ILLUSTRATION

<END>

158-6095 BUCKET AR-GRAPPLE

S/N: A9H1-UP
AN ATTACHMENT

SMCS-6704 **i01060288**

NOTE	PART NUMBER	QTY	PART NAME 1 2 3 4 5 6 (PRODUCT LEVEL)	SEE PAGE
Y	**157-7225**	1	BUCKET AR-GRAPPLE	350
Y	*135-9386*	1	EDGE GP-CUTTING	441

Y-SEPARATE ILLUSTRATION

<END>

217-6229 BUCKET AR-GRAPPLE–INDUSTRIAL

S/N: A9H1-UP
PART OF 217-6230 BUCKET AR-GRAPPLE
AN ATTACHMENT

SMCS-6704 **i03636392**

NOTE	REF NO	GRAPHIC REF	PART NUMBER	QTY	PART NAME 1 2 3 4 5 6 (PRODUCT LEVEL)	SEE PAGE
Y	1	1	*156-0891*	1	MOUNTING GP-CYLINDER (INDUSTRIAL)	304
Y	2	1	*161-0187*	1	LINES GP-GRAPPLE (INDUSTRIAL)	266
Y	3	1	*217-6228*	1	BUCKET GP-GRAPPLE (INDUSTRIAL)	410
CY	4	1	**278-1975**	2	CYLINDER GP-GRAPPLE (INDUSTRIAL)	227

C-CHANGE FROM PREVIOUS TYPE
Y-SEPARATE ILLUSTRATION

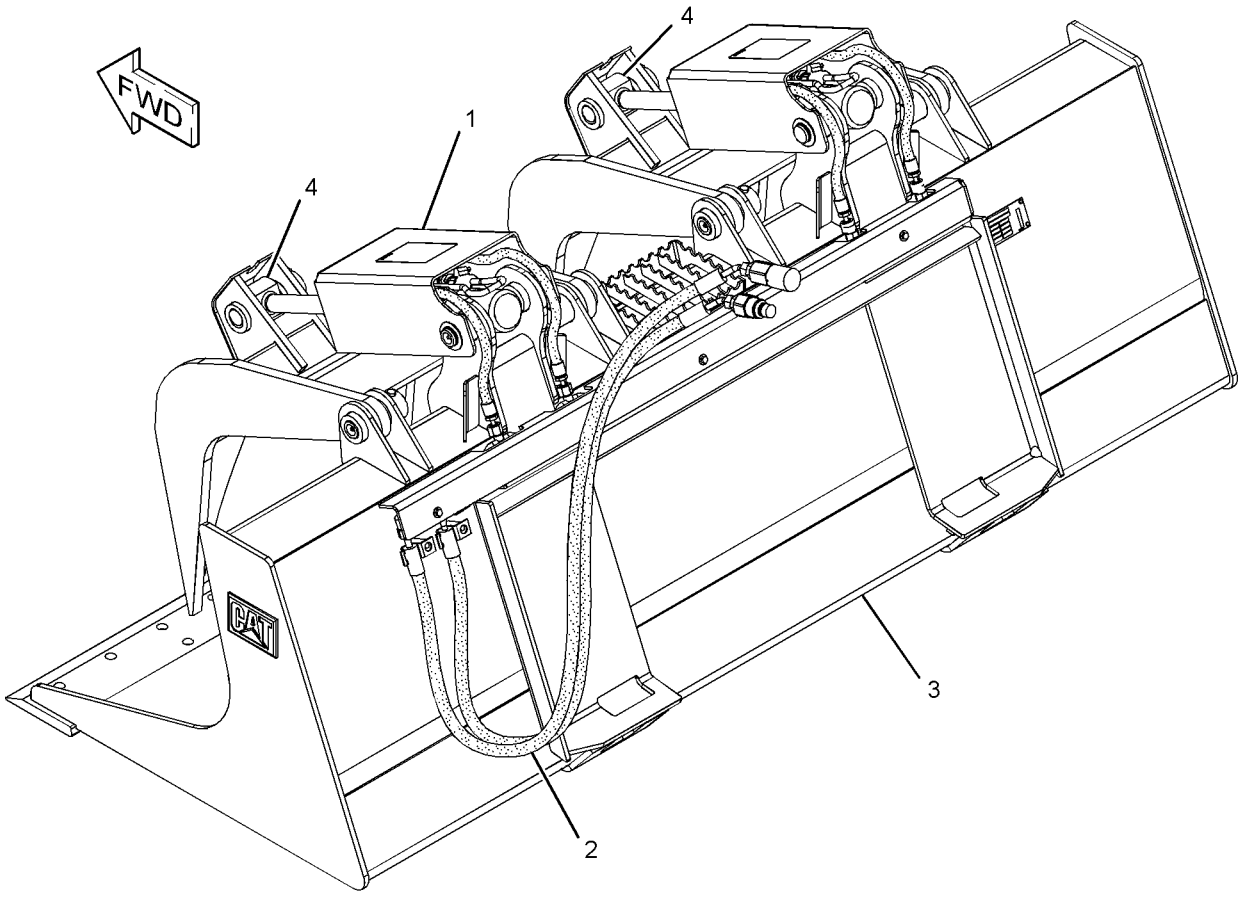

GRAPHIC #1 **<END>** g01281607

WORK TOOLS

217-6230 BUCKET AR-GRAPPLE

S/N: A9H1-UP

AN ATTACHMENT

SMCS-6704 **i01877714**

NOTE	PART NUMBER	QTY	PART NAME 1 2 3 4 5 6 (PRODUCT LEVEL)	SEE PAGE
Y	**217-6229**	1	BUCKET AR-GRAPPLE (INDUSTRIAL)	351
Y	*135-9387*	1	EDGE GP-CUTTING	442

Y-SEPARATE ILLUSTRATION

<END>

285-6111 BUCKET AR-GRAPPLE

S/N: A9H1-UP

AN ATTACHMENT

SMCS-6704 **i04041120**

NOTE	PART NUMBER	QTY	PART NAME 1 2 3 4 5 6 (PRODUCT LEVEL)	SEE PAGE
Y	**285-6100**	1	BUCKET AR-UTILITY	360
Y	**285-6116**	1	GRAPPLE & CYLINDER GP-UTILITY	459

Y-SEPARATE ILLUSTRATION

<END>

285-6112 BUCKET AR-GRAPPLE

S/N: A9H1-UP

AN ATTACHMENT

SMCS-6704 **i04041121**

NOTE	PART NUMBER	QTY	PART NAME 1 2 3 4 5 6 (PRODUCT LEVEL)	SEE PAGE
Y	**285-6101**	1	BUCKET AR-UTILITY	360
Y	**285-6116**	1	GRAPPLE & CYLINDER GP-UTILITY	459

Y-SEPARATE ILLUSTRATION

<END>

WORK TOOLS

286-9300 BUCKET AR-GRAPPLE

S/N: A9H1-UP

AN ATTACHMENT

SMCS-6704 **i04268010**

NOTE	REF NO	GRAPHIC REF	PART NUMBER	QTY	PART NAME 1 2 3 4 5 6 (PRODUCT LEVEL)	SEE PAGE
Y	1	1	*286-9248*	1	MOUNTING GP-CYLINDER (GRAPPLE BUCKET)	306
Y	2	1	*286-9251*	1	PLATE & FILM GP	586
Y	3	1	*286-9278*	1	BUCKET GP-GRAPPLE	413
Y	4	1	*286-9279*	1	LINES GP-GRAPPLE	270
Y	5	1	**293-6264**	2	CYLINDER GP-BUCKET	225

Y-SEPARATE ILLUSTRATION

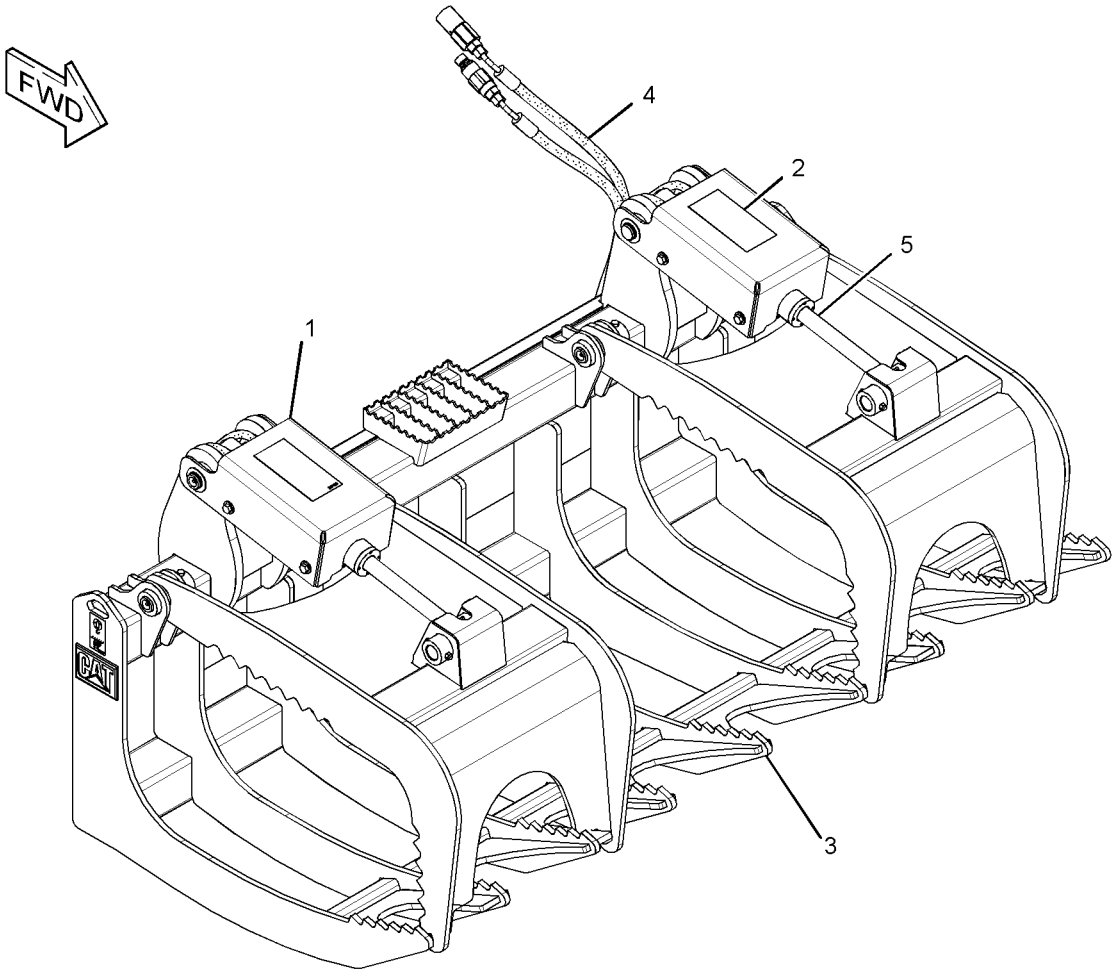

GRAPHIC #1 **<END>** g01372572

WORK TOOLS

286-9301 BUCKET AR-GRAPPLE

S/N: A9H1-UP

AN ATTACHMENT

SMCS-6704 **i02723700**

NOTE	REF NO	GRAPHIC REF	PART NUMBER	QTY	PART NAME 1 2 3 4 5 6 (PRODUCT LEVEL)	SEE PAGE
Y	1	1	*286-9244*	1	BUCKET GP-GRAPPLE	412
Y	2	1	*286-9248*	1	MOUNTING GP-CYLINDER (GRAPPLE BUCKET)	306
Y	3	1	*286-9250*	1	LINES GP-GRAPPLE	268
Y	4	1	*286-9251*	1	PLATE & FILM GP	586
Y	5	1	**293-6264**	2	CYLINDER GP-BUCKET	225

Y-SEPARATE ILLUSTRATION

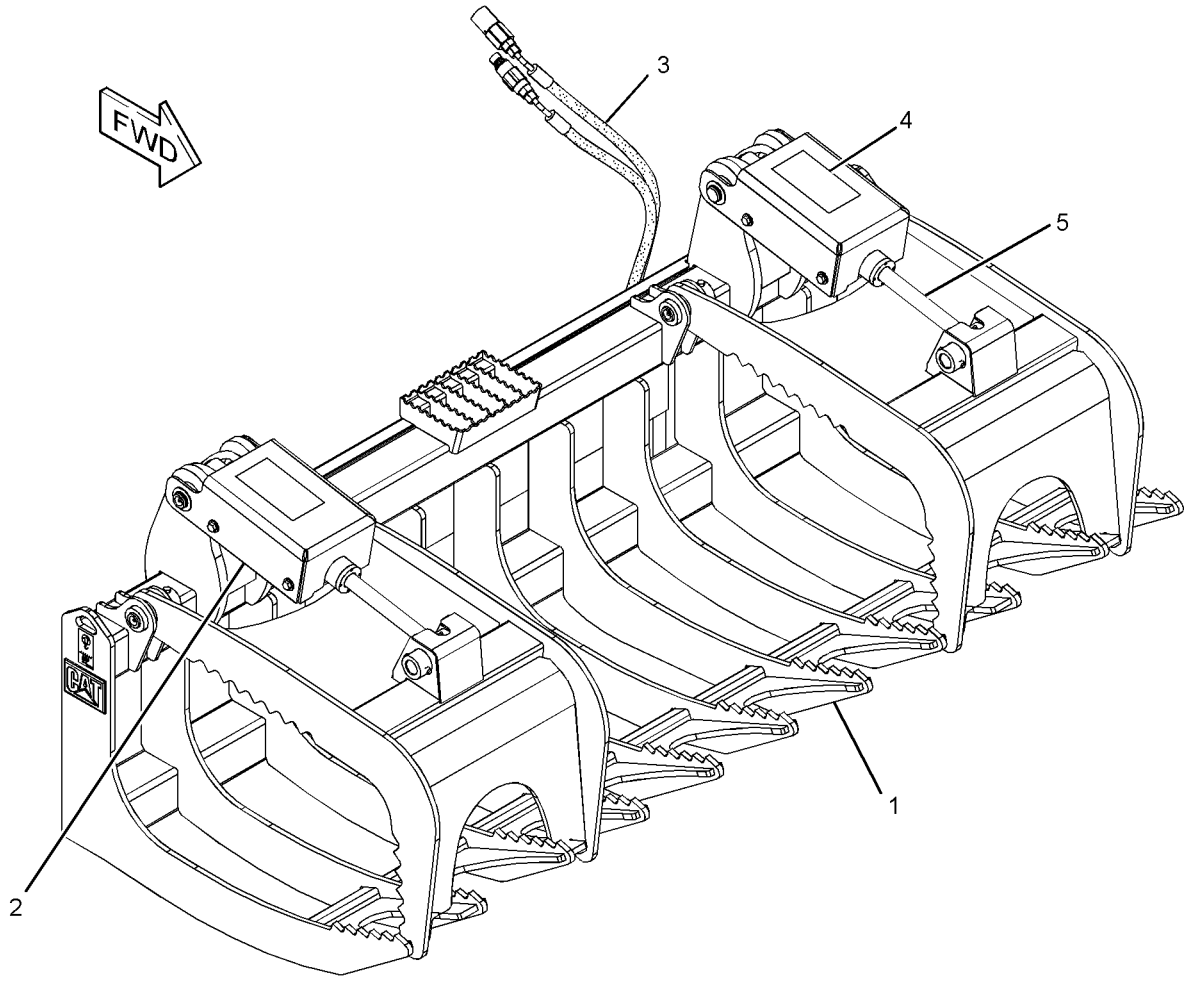

GRAPHIC #1 **<END>** g01372972

WORK TOOLS

279-5420 BUCKET AR-LIGHT MATERIAL

S/N: A9H1-UP
AN ATTACHMENT

SMCS-6103 **i02552302**

NOTE	PART NUMBER	QTY	PART NAME 1 2 3 4 5 6 (PRODUCT LEVEL)	SEE PAGE
Y	**279-5421**	1	BUCKET AS-LIGHT MATERIAL	392
Y	*135-9386*	1	EDGE GP-CUTTING	441
Y-SEPARATE ILLUSTRATION				

<END>

279-5425 BUCKET AR-LIGHT MATERIAL

S/N: A9H1-UP
AN ATTACHMENT

SMCS-6103 **i02552308**

NOTE	PART NUMBER	QTY	PART NAME 1 2 3 4 5 6 (PRODUCT LEVEL)	SEE PAGE
Y	**279-5424**	1	BUCKET AS-LIGHT MATERIAL	395
Y	*135-9387*	1	EDGE GP-CUTTING	442
Y-SEPARATE ILLUSTRATION				

<END>

279-5430 BUCKET AR-LIGHT MATERIAL

S/N: A9H1-UP
AN ATTACHMENT

SMCS-6103 **i02552313**

NOTE	PART NUMBER	QTY	PART NAME 1 2 3 4 5 6 (PRODUCT LEVEL)	SEE PAGE
Y	**279-5429**	1	BUCKET AS-LIGHT MATERIAL	397
Y	*195-7124*	1	EDGE GP-CUTTING	444
Y-SEPARATE ILLUSTRATION				

<END>

296-7597 BUCKET AR-LIGHT MATERIAL

S/N: A9H1-UP
AN ATTACHMENT

SMCS-6103 **i03624568**

NOTE	PART NUMBER	QTY	PART NAME 1 2 3 4 5 6 (PRODUCT LEVEL)	SEE PAGE
Y	*292-9223*	1	BUCKET AS-LIGHT MATERIAL	398
Y	*296-7680*	1	EDGE GP-CUTTING	445
Y-SEPARATE ILLUSTRATION				

<END>

WORK TOOLS

279-5380 BUCKET AR-MULTIPURPOSE

S/N: A9H1-UP

AN ATTACHMENT

SMCS-6104 **i03922638**

NOTE	PART NUMBER	QTY	PART NAME 1 2 3 4 5 6 (PRODUCT LEVEL)	SEE PAGE
Y	**279-5382**	1	BUCKET AR-MULTIPURPOSE	356
Y	*141-4999*	8	TOOTH GP-UNI	481
Y-SEPARATE ILLUSTRATION				

<END>

279-5381 BUCKET AR-MULTIPURPOSE

S/N: A9H1-UP

AN ATTACHMENT

SMCS-6104 **i02552030**

NOTE	PART NUMBER	QTY	PART NAME 1 2 3 4 5 6 (PRODUCT LEVEL)	SEE PAGE
Y	**279-5382**	1	BUCKET AR-MULTIPURPOSE	356
Y	*135-9384*	1	EDGE GP-CUTTING	439
Y-SEPARATE ILLUSTRATION				

<END>

279-5382 BUCKET AR-MULTIPURPOSE

S/N: A9H1-UP

PART OF 279-5380, 279-5381 BUCKET AR-MULTIPURPOSE

AN ATTACHMENT

SMCS-6104 **i02561093**

NOTE	PART NUMBER	QTY	PART NAME 1 2 3 4 5 6 (PRODUCT LEVEL)	SEE PAGE
Y	*279-5383*	1	BUCKET GP-MULTIPURPOSE (60-IN)	414
Y	*162-5236*	1	COVER GP-LINES	434
Y	**154-5018**	2	CYLINDER GP-BUCKET	224
Y	*279-5413*	1	LINES GP-BUCKET	247
Y	*154-5011*	1	MOUNTING GP-CYLINDER	303
Y-SEPARATE ILLUSTRATION				

<END>

279-5390 BUCKET AR-MULTIPURPOSE

S/N: A9H1-UP

PART OF 279-5391, 279-5392 BUCKET AR-MULTIPURPOSE

AN ATTACHMENT

SMCS-6104 **i03647000**

NOTE	PART NUMBER	QTY	PART NAME 1 2 3 4 5 6 (PRODUCT LEVEL)	SEE PAGE
Y	**279-5389**	1	BUCKET GP-MULTIPURPOSE	415
Y	*162-5236*	1	COVER GP-LINES	434
Y	**154-5018**	2	CYLINDER GP-BUCKET	224
			—OR—	
Y	**278-1969**	2	CYLINDER GP-HYDRAULIC	232
Y	*279-5414*	1	LINES GP-BUCKET	249
Y	*154-5011*	1	MOUNTING GP-CYLINDER	303
Y-SEPARATE ILLUSTRATION				

<END>

279-5391 BUCKET AR-MULTIPURPOSE

S/N: A9H1-UP
AN ATTACHMENT

SMCS-6104 **i02552078**

NOTE	PART NUMBER	QTY	PART NAME 1 2 3 4 5 6 (PRODUCT LEVEL)	SEE PAGE
Y	**279-5390**	1	BUCKET AR-MULTIPURPOSE	356
Y	*135-9385*	1	EDGE GP-CUTTING	440
Y-SEPARATE ILLUSTRATION				

<END>

279-5392 BUCKET AR-MULTIPURPOSE

S/N: A9H1-UP
AN ATTACHMENT

SMCS-6104 **i03922639**

NOTE	PART NUMBER	QTY	PART NAME 1 2 3 4 5 6 (PRODUCT LEVEL)	SEE PAGE
Y	**279-5390**	1	BUCKET AR-MULTIPURPOSE	356
Y	*141-4999*	8	TOOTH GP-UNI	481
Y-SEPARATE ILLUSTRATION				

<END>

279-5398 BUCKET AR-MULTIPURPOSE

S/N: A9H1-UP
PART OF 279-5399, 279-5400 BUCKET AR-MULTIPURPOSE
AN ATTACHMENT

SMCS-6104 **i03647001**

NOTE	PART NUMBER	QTY	PART NAME 1 2 3 4 5 6 (PRODUCT LEVEL)	SEE PAGE
Y	**279-5397**	1	BUCKET GP-MULTIPURPOSE	416
Y	*162-5236*	1	COVER GP-LINES	434
Y	**154-5018**	2	CYLINDER GP-BUCKET	224
			—OR—	
Y	**278-1969**	2	CYLINDER GP-HYDRAULIC	232
Y	*279-5415*	1	LINES GP-BUCKET	251
Y	*154-5011*	1	MOUNTING GP-CYLINDER	303
Y-SEPARATE ILLUSTRATION				

<END>

279-5399 BUCKET AR-MULTIPURPOSE

S/N: A9H1-UP
AN ATTACHMENT

SMCS-6104 **i02552131**

NOTE	PART NUMBER	QTY	PART NAME 1 2 3 4 5 6 (PRODUCT LEVEL)	SEE PAGE
Y	**279-5398**	1	BUCKET AR-MULTIPURPOSE	357
Y	*135-9386*	1	EDGE GP-CUTTING	441
Y-SEPARATE ILLUSTRATION				

<END>

WORK TOOLS

279-5400 BUCKET AR-MULTIPURPOSE

S/N: A9H1-UP

AN ATTACHMENT

SMCS-6104 **i03922640**

NOTE	PART NUMBER	QTY	PART NAME 1 2 3 4 5 6 (PRODUCT LEVEL)	SEE PAGE
Y	**279-5398**	1	BUCKET AR-MULTIPURPOSE	357
Y	*141-4999*	8	TOOTH GP-UNI	481
Y-SEPARATE ILLUSTRATION				

<END>

279-5401 BUCKET AR-MULTIPURPOSE

S/N: A9H1-UP

AN ATTACHMENT

SMCS-6104 **i03922641**

NOTE	PART NUMBER	QTY	PART NAME 1 2 3 4 5 6 (PRODUCT LEVEL)	SEE PAGE
Y	**279-5403**	1	BUCKET AR-MULTIPURPOSE	358
Y	*141-4999*	9	TOOTH GP-UNI	481
Y-SEPARATE ILLUSTRATION				

<END>

279-5402 BUCKET AR-MULTIPURPOSE

S/N: A9H1-UP

AN ATTACHMENT

SMCS-6104 **i02552200**

NOTE	PART NUMBER	QTY	PART NAME 1 2 3 4 5 6 (PRODUCT LEVEL)	SEE PAGE
Y	**279-5403**	1	BUCKET AR-MULTIPURPOSE	358
Y	*135-9387*	1	EDGE GP-CUTTING	442
Y-SEPARATE ILLUSTRATION				

<END>

279-5403 BUCKET AR-MULTIPURPOSE

S/N: A9H1-UP

PART OF 279-5401, 279-5402 BUCKET AR-MULTIPURPOSE

AN ATTACHMENT

SMCS-6104 **i03647004**

NOTE	PART NUMBER	QTY	PART NAME 1 2 3 4 5 6 (PRODUCT LEVEL)	SEE PAGE
Y	**279-5404**	1	BUCKET GP-MULTIPURPOSE (78-IN)	417
Y	*162-5236*	1	COVER GP-LINES	434
Y	**154-5018**	2	CYLINDER GP-BUCKET	224
			—OR—	
Y	**278-1969**	2	CYLINDER GP-HYDRAULIC	232
Y	*279-5416*	1	LINES GP-BUCKET	253
Y	*154-5011*	1	MOUNTING GP-CYLINDER	303
Y-SEPARATE ILLUSTRATION				

<END>

WORK TOOLS

293-0139 BUCKET AR-MULTIPURPOSE

S/N: A9H1-UP
PART OF 296-8055, 296-8057 BUCKET AR-MULTIPURPOSE
AN ATTACHMENT

SMCS-6104 **i04358203**

NOTE	PART NUMBER	QTY	PART NAME 1 2 3 4 5 6 (PRODUCT LEVEL)	SEE PAGE
Y	*293-0141*	1	BUCKET GP-MULTIPURPOSE	418
Y	*162-5236*	1	COVER GP-LINES	434
Y	**154-5018**	2	CYLINDER GP-BUCKET	224
			—OR—	
Y	**278-1969**	2	CYLINDER GP-HYDRAULIC	232
Y	*293-0140*	1	LINES GP-BUCKET	257
Y	*154-5011*	1	MOUNTING GP-CYLINDER	303
Y-SEPARATE ILLUSTRATION				

<END>

296-8055 BUCKET AR-MULTIPURPOSE

S/N: A9H1-UP
AN ATTACHMENT

SMCS-6104 **i03922643**

NOTE	PART NUMBER	QTY	PART NAME 1 2 3 4 5 6 (PRODUCT LEVEL)	SEE PAGE
Y	**293-0139**	1	BUCKET AR-MULTIPURPOSE	359
Y	*141-4999*	9	TOOTH GP-UNI	481
Y-SEPARATE ILLUSTRATION				

<END>

296-8057 BUCKET AR-MULTIPURPOSE

S/N: A9H1-UP
AN ATTACHMENT

SMCS-6104 **i03647006**

NOTE	PART NUMBER	QTY	PART NAME 1 2 3 4 5 6 (PRODUCT LEVEL)	SEE PAGE
Y	**293-0139**	1	BUCKET AR-MULTIPURPOSE	359
Y	*195-7124*	1	EDGE GP-CUTTING	444
Y-SEPARATE ILLUSTRATION				

<END>

285-6095 BUCKET AR-UTILITY

S/N: A9H1-UP
AN ATTACHMENT

i02552467

NOTE	PART NUMBER	QTY	PART NAME 1 2 3 4 5 6 (PRODUCT LEVEL)	SEE PAGE
Y	**285-6096**	1	BUCKET GP-UTILITY (60-IN)	419
Y	*135-9384*	1	EDGE GP-CUTTING	439
Y-SEPARATE ILLUSTRATION				

<END>

WORK TOOLS

285-6100 BUCKET AR-UTILITY

S/N: A9H1-UP
PART OF 285-6111 BUCKET AR-GRAPPLE
AN ATTACHMENT

i02552478

NOTE	PART NUMBER	QTY	PART NAME 1 2 3 4 5 6 (PRODUCT LEVEL)	SEE PAGE
Y	**285-6099**	1	BUCKET GP-UTILITY (66-IN)	420
Y	*135-9385*	1	EDGE GP-CUTTING	440

Y-SEPARATE ILLUSTRATION

<END>

285-6101 BUCKET AR-UTILITY

S/N: A9H1-UP
PART OF 285-6112 BUCKET AR-GRAPPLE
AN ATTACHMENT

i02552482

NOTE	PART NUMBER	QTY	PART NAME 1 2 3 4 5 6 (PRODUCT LEVEL)	SEE PAGE
Y	**285-6102**	1	BUCKET GP-UTILITY (72-IN)	421
Y	*135-9386*	1	EDGE GP-CUTTING	441

Y-SEPARATE ILLUSTRATION

<END>

WORK TOOLS

141-6704 BUCKET AS-DIRT

S/N: A9H1-UP
1676-MM (66-IN)
PART OF 165-6157 BUCKET AS-DIRT
AN ATTACHMENT

SMCS-6001 **i03638866**

NOTE	REF NO	GRAPHIC REF	PART NUMBER	QTY	PART NAME 1 2 3 4 5 6 (PRODUCT LEVEL)	SEE PAGE
	1	1	**149-5436**	1	EDGE	

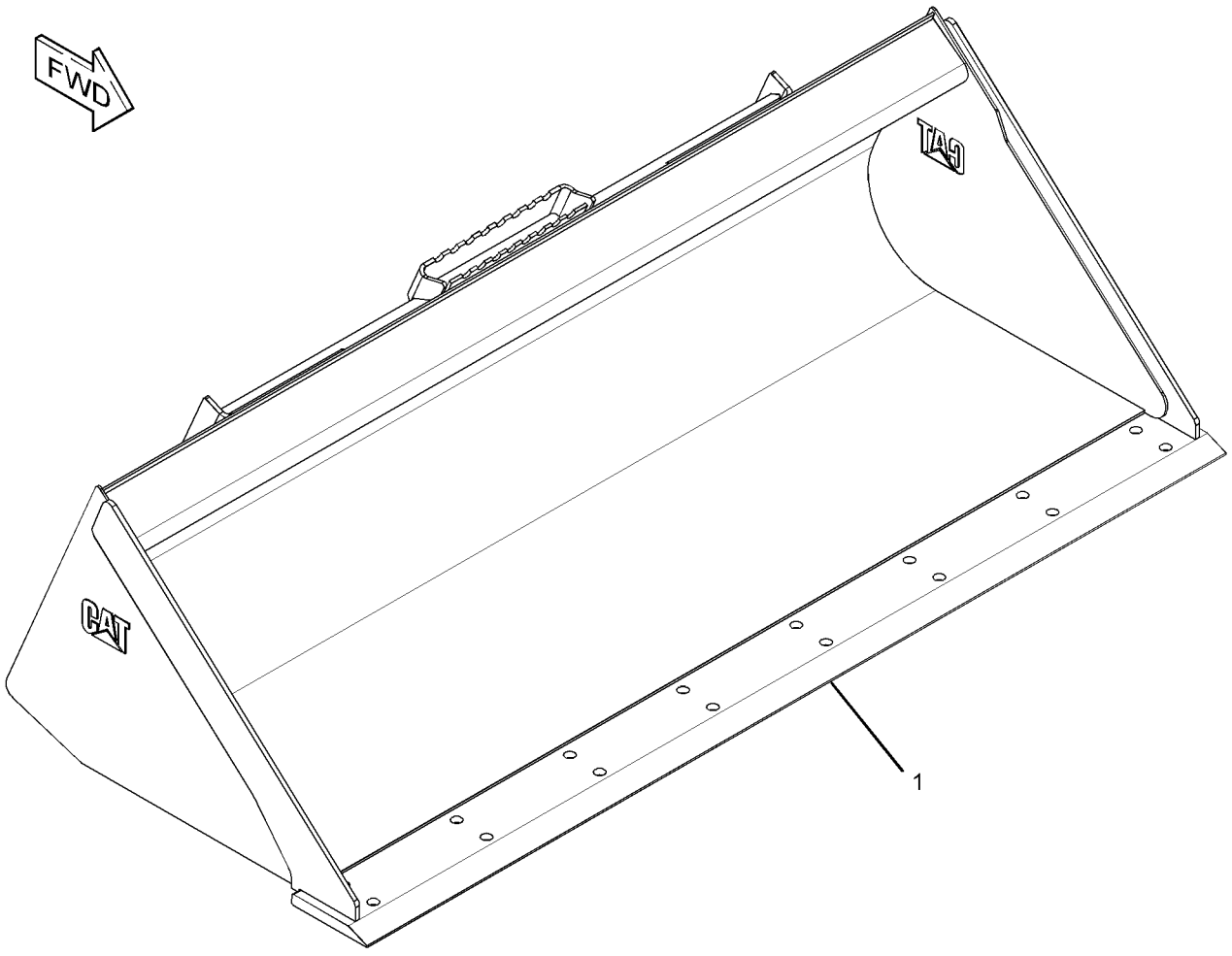

GRAPHIC #1 **<END>** g01953854

WORK TOOLS

152-0227 BUCKET AS-DIRT

S/N: A9H1-UP
1524-MM (60-IN)
PART OF 165-6156 BUCKET AS-DIRT
AN ATTACHMENT

SMCS-6001 **i03638850**

NOTE	REF NO	GRAPHIC REF	PART NUMBER	QTY	PART NAME 1 2 3 4 5 6 (PRODUCT LEVEL)	SEE PAGE
	1	1	**149-5435**	1	EDGE	

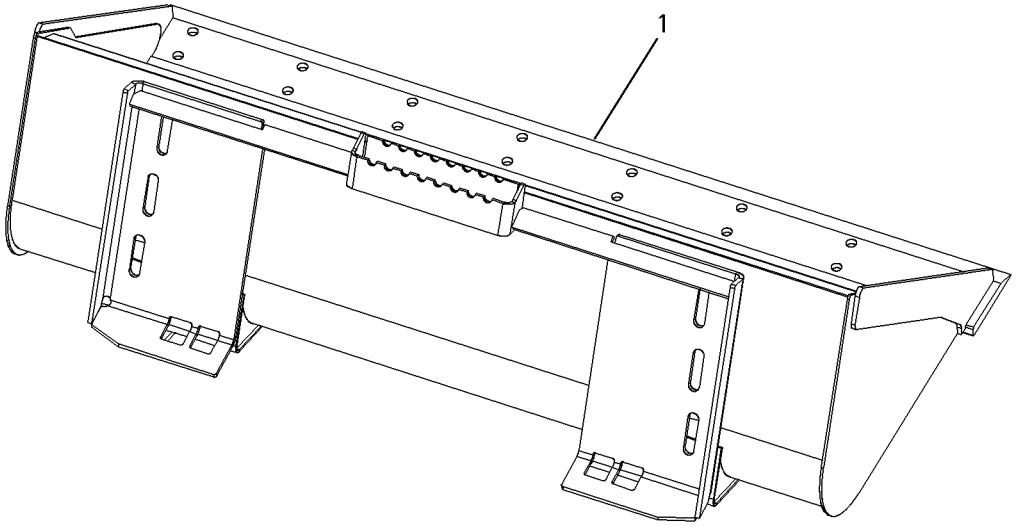

GRAPHIC #1 **<END>** g00651083

165-6156 BUCKET AS-DIRT

S/N: A9H1-UP
PART OF 152-0231 BUCKET GP-DIRT
AN ATTACHMENT

SMCS-6001 **i03638322**

NOTE	REF NO	GRAPHIC REF	PART NUMBER	QTY	PART NAME 1 2 3 4 5 6 (PRODUCT LEVEL)	SEE PAGE
Y	1	1	*152-0227*	1	BUCKET AS-DIRT (60-IN)	362
	2	1	**154-2704**	1	PLATE-INSTRUCTION (BUCKET SPECIFICATIONS)	
	3	1	**168-8389**	4	TACK-FASTENER	

Y-SEPARATE ILLUSTRATION

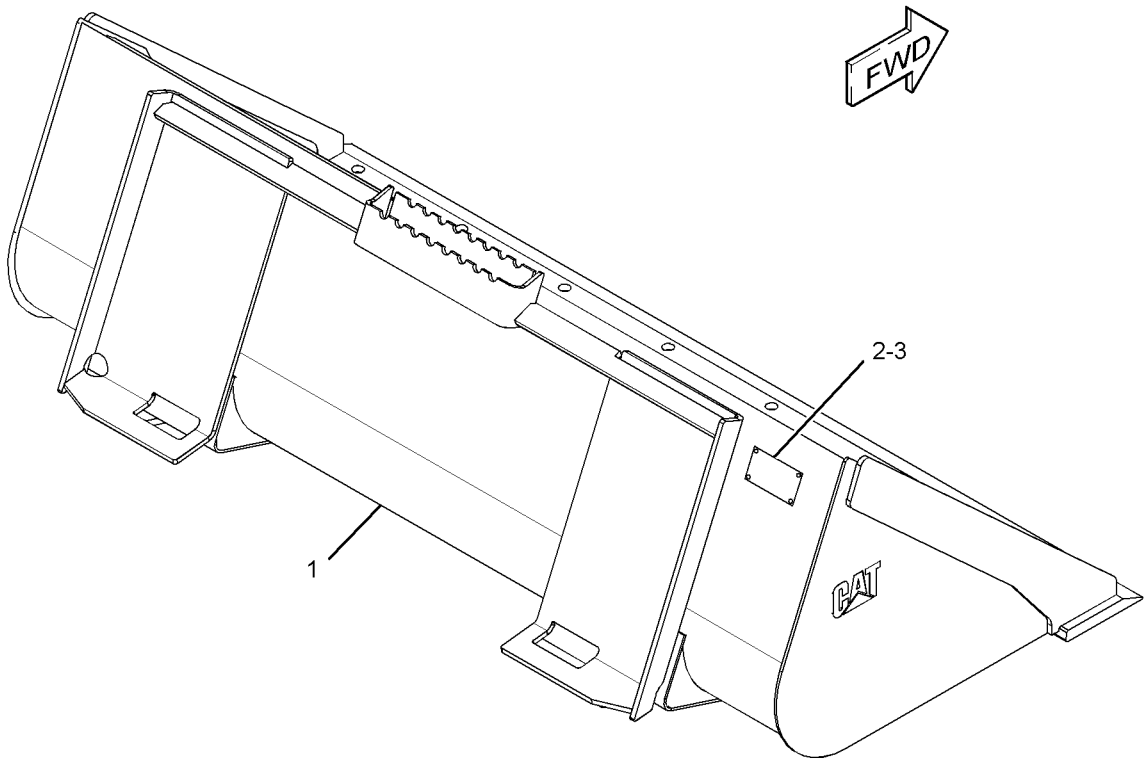

GRAPHIC #1 **<END>** g01954030

WORK TOOLS

165-6157 BUCKET AS-DIRT

S/N: A9H1-UP
PART OF 152-0232 BUCKET GP-DIRT
AN ATTACHMENT

SMCS-6001 **i03638323**

NOTE	REF NO	GRAPHIC REF	PART NUMBER	QTY	PART NAME 1 2 3 4 5 6 (PRODUCT LEVEL)	SEE PAGE
Y	1	1	*141-6704*	1	BUCKET AS-DIRT	361
	2	1	**154-2704**	1	PLATE-INSTRUCTION (BUCKET SPECIFICATIONS)	
	3	1	**168-8389**	4	TACK-FASTENER	

Y-SEPARATE ILLUSTRATION

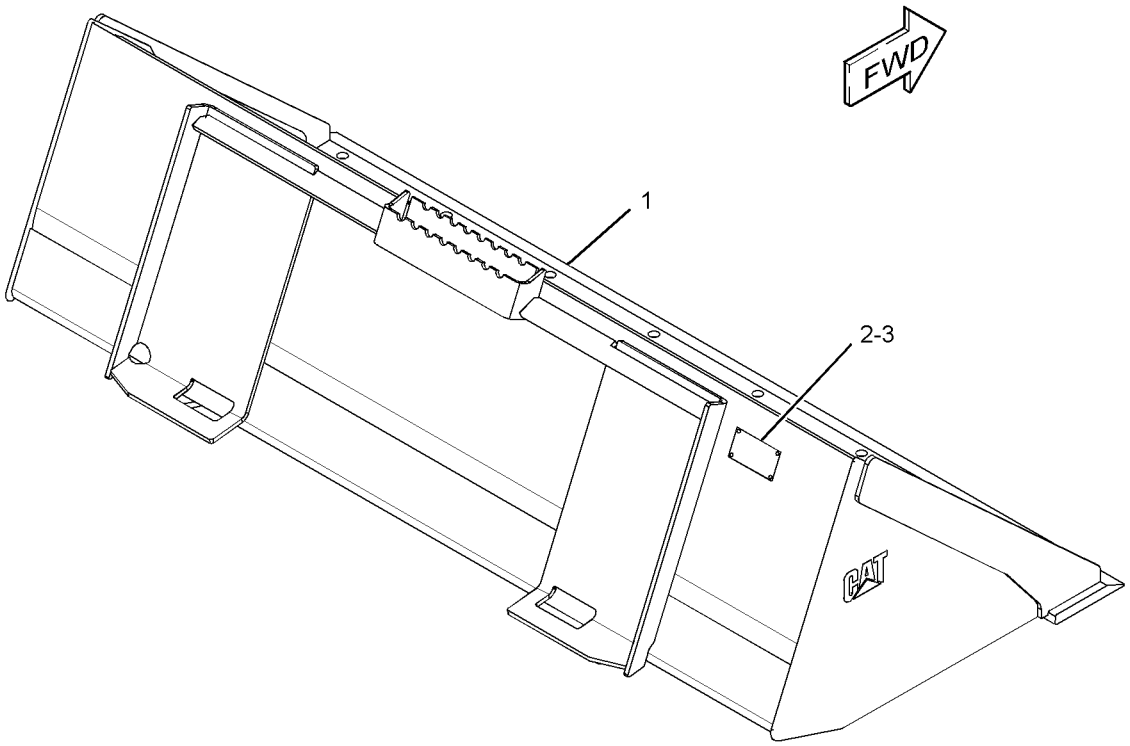

GRAPHIC #1 **<END>** g01953993

WORK TOOLS

268-4089 BUCKET AS-DIRT

S/N: A9H1-UP
1981-MM (78-IN)
PART OF 268-4084 BUCKET GP-DIRT
AN ATTACHMENT

SMCS-6001 **i03647015**

NOTE	REF NO	GRAPHIC REF	PART NUMBER	QTY	PART NAME 1 2 3 4 5 6 (PRODUCT LEVEL)	SEE PAGE
	1	1	**199-7722**	1	EDGE	

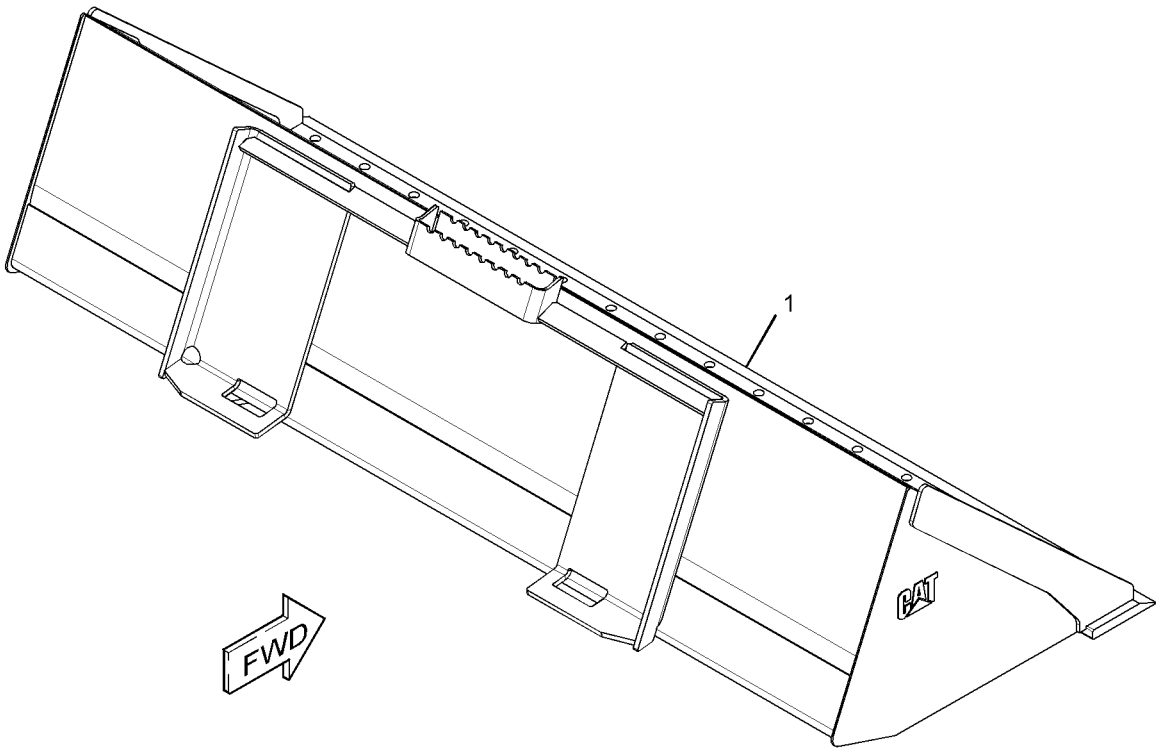

GRAPHIC #1 **<END>** g01958544

279-5433 BUCKET AS-DIRT

S/N: A9H1-UP
1372-MM (54-IN)
PART OF 279-5434 BUCKET AS-DIRT
AN ATTACHMENT

SMCS-6001 **i03635729**

NOTE	REF NO	GRAPHIC REF	PART NUMBER	QTY	PART NAME 1 2 3 4 5 6 (PRODUCT LEVEL)	SEE PAGE
	1	1	**149-5434**	1	EDGE	

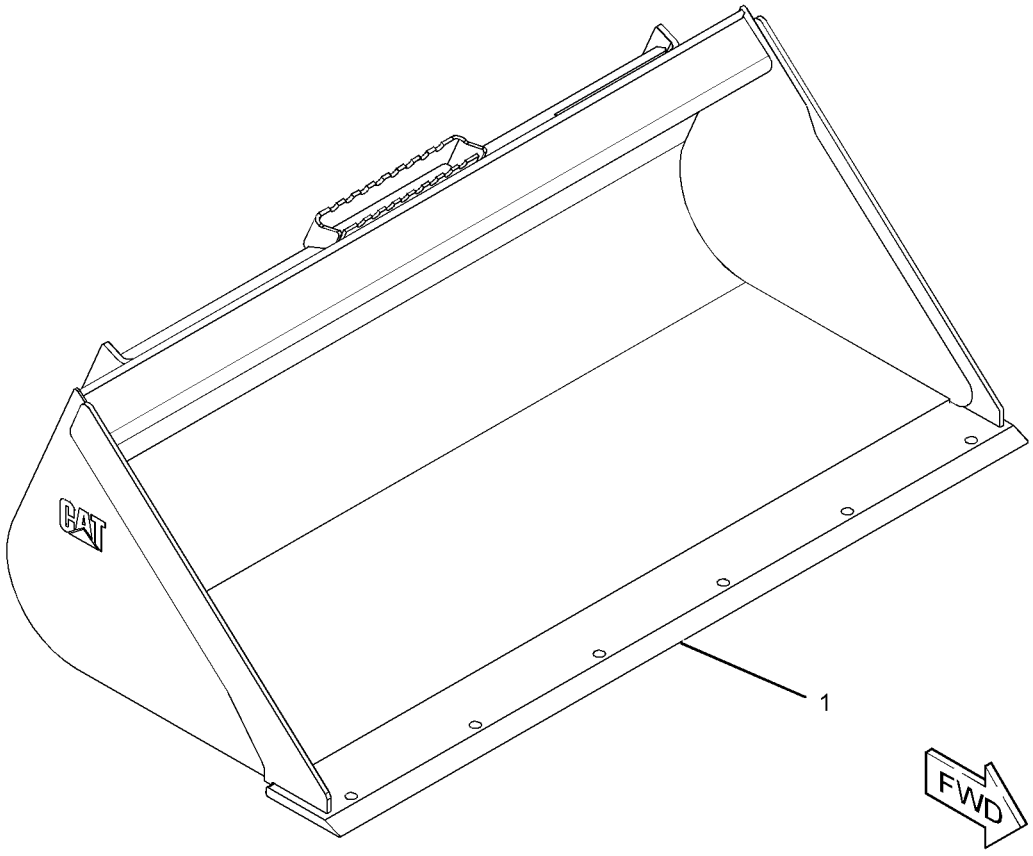

GRAPHIC #1 **<END>** g01953755

279-5434 BUCKET AS-DIRT

S/N: A9H1-UP
PART OF 279-5435 BUCKET AR-DIRT
AN ATTACHMENT

SMCS-6001 **i03636082**

NOTE	REF NO	GRAPHIC REF	PART NUMBER	QTY	PART NAME 1 2 3 4 5 6 (PRODUCT LEVEL)	SEE PAGE
	1	1	**154-2704**	1	PLATE-INSTRUCTION (BUCKET SPECIFICATIONS)	
	2	1	**168-8389**	4	TACK-FASTENER	
Y	3	1	*279-5433*	1	BUCKET AS-DIRT	366

Y-SEPARATE ILLUSTRATION

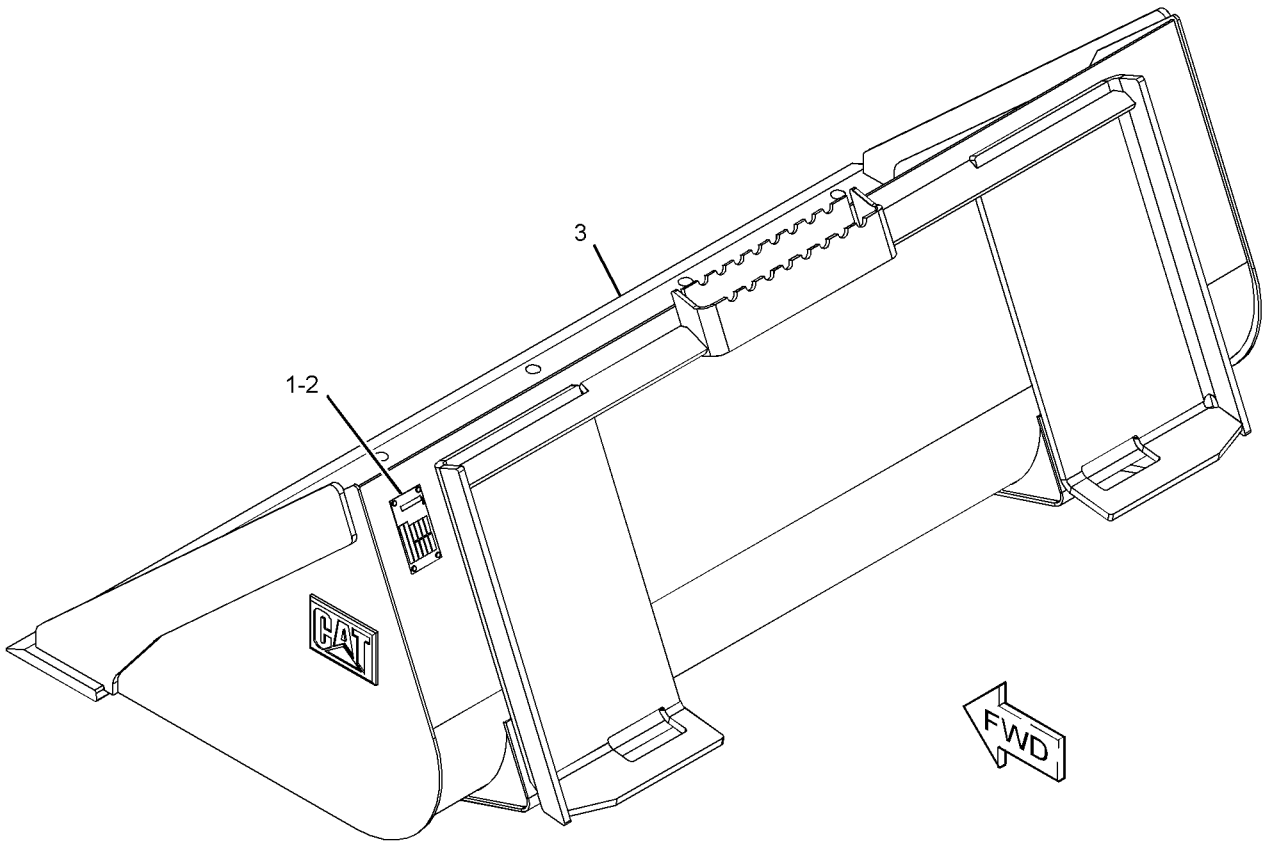

GRAPHIC #1 **<END>** g01951568

WORK TOOLS

279-5436 BUCKET AS-DIRT

S/N: A9H1-UP
1524-MM (60-IN)
PART OF 279-5437 BUCKET AS-DIRT
AN ATTACHMENT

SMCS-6001 **i03635731**

NOTE	REF NO	GRAPHIC REF	PART NUMBER	QTY	PART NAME 1 2 3 4 5 6 (PRODUCT LEVEL)	SEE PAGE
	1	1	**149-5435**	1	EDGE	

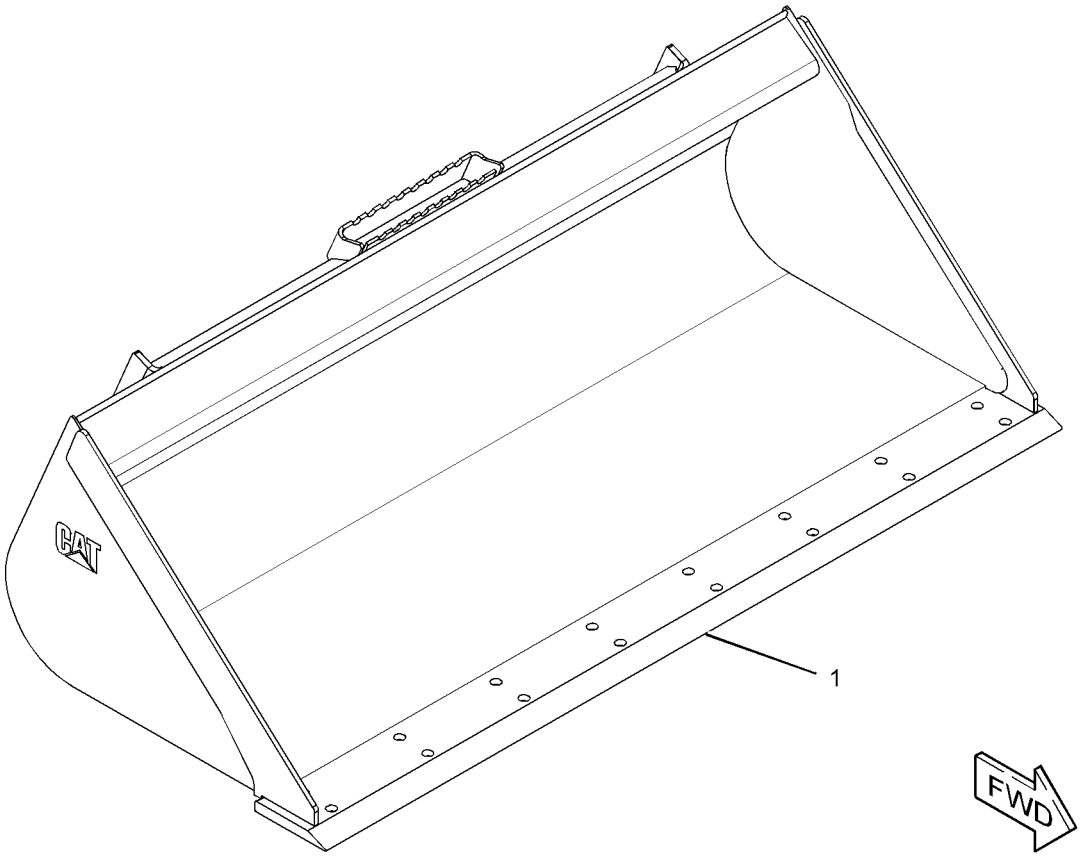

GRAPHIC #1 **<END>** g01953749

WORK TOOLS

279-5437 BUCKET AS-DIRT

S/N: A9H1-UP
PART OF 279-5438 BUCKET AR-DIRT
AN ATTACHMENT

SMCS-6001 **i03648372**

NOTE	REF NO	GRAPHIC REF	PART NUMBER	QTY	PART NAME 1 2 3 4 5 6 (PRODUCT LEVEL)	SEE PAGE
	1	1	**154-2704**	1	PLATE-INSTRUCTION (BUCKET SPECIFICATIONS)	
	2	1	**168-8389**	4	TACK-FASTENER	
Y	3	1	*279-5436*	1	BUCKET AS-DIRT (60-IN)	368

Y-SEPARATE ILLUSTRATION

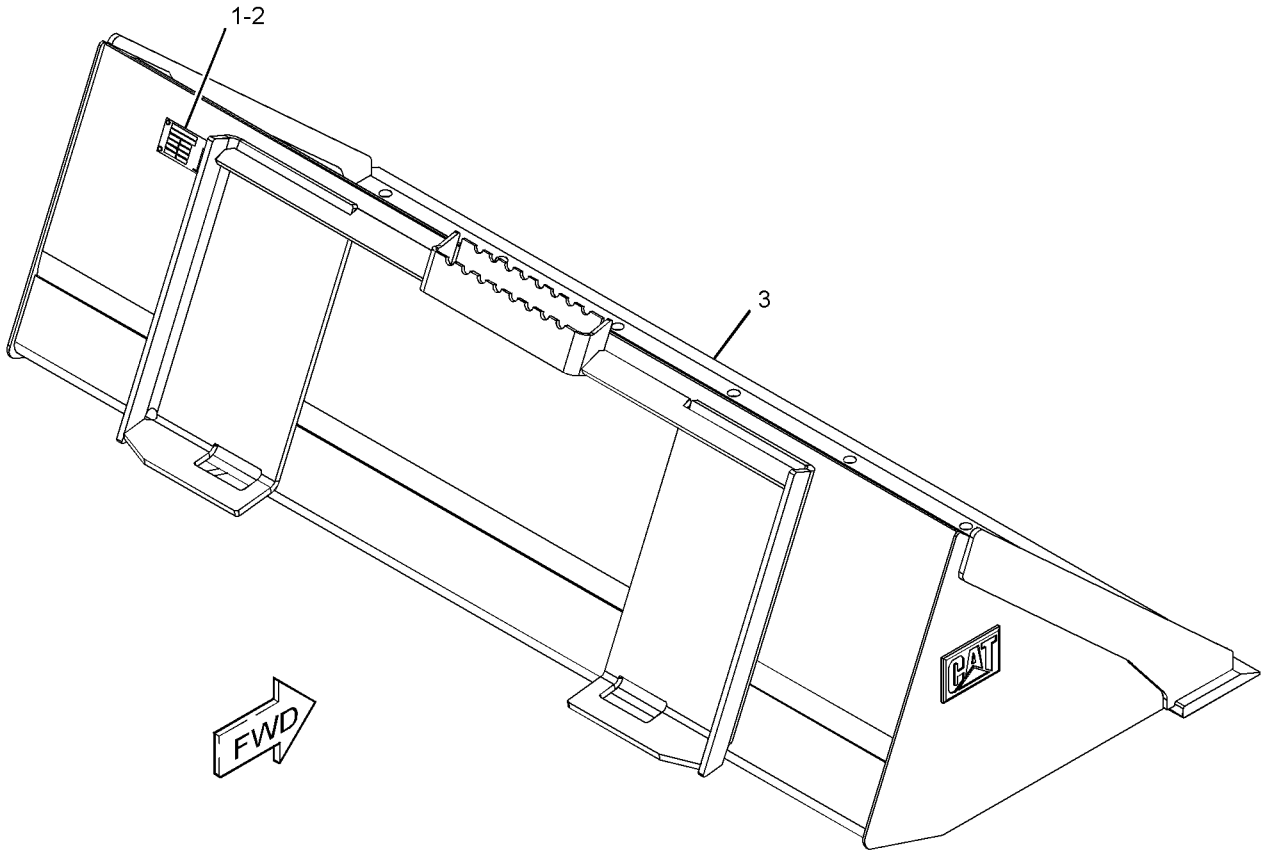

GRAPHIC #1 **<END>** g01951590

WORK TOOLS

279-5439 BUCKET AS-DIRT

S/N: A9H1-UP
1676-MM (66-IN)
PART OF 279-5440 BUCKET AS-DIRT
AN ATTACHMENT

SMCS-6001 **i03635763**

NOTE	REF NO	GRAPHIC REF	PART NUMBER	QTY	PART NAME 1 2 3 4 5 6 (PRODUCT LEVEL)	SEE PAGE
	1	1	**149-5436**	1	EDGE	

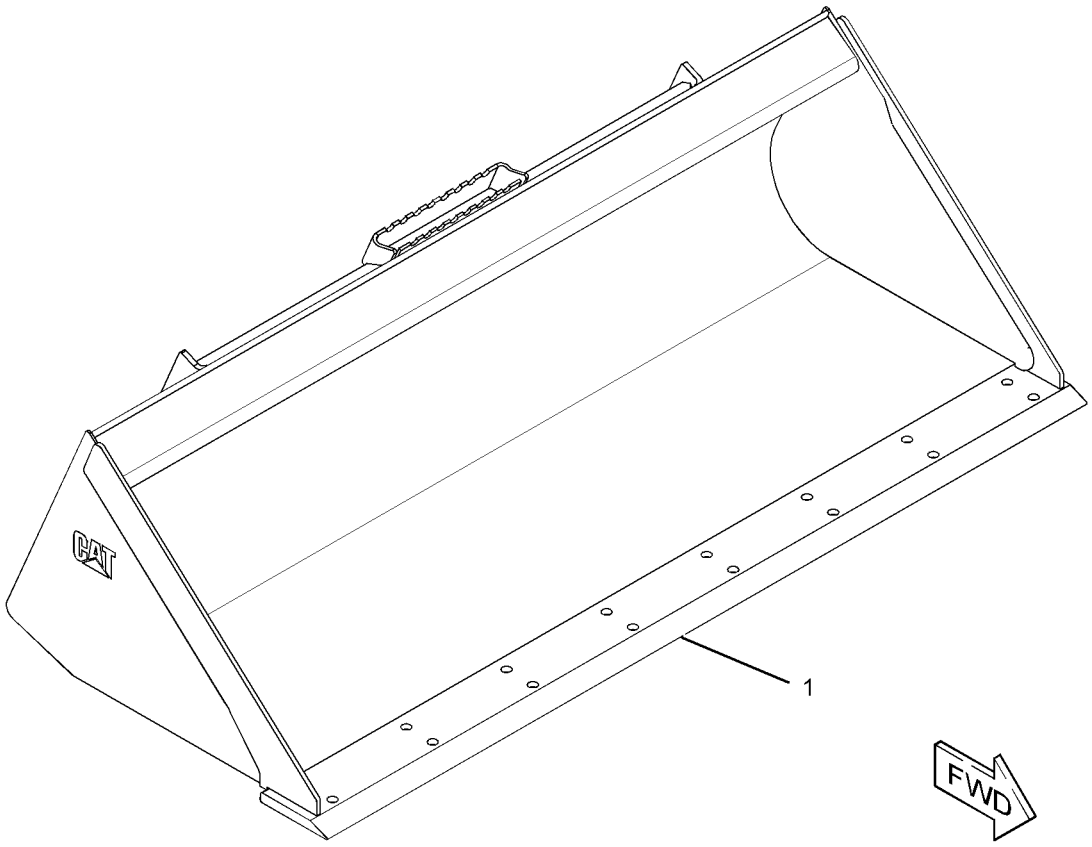

GRAPHIC #1 **<END>** g01953842

WORK TOOLS

279-5440 BUCKET AS-DIRT

S/N: A9H1-UP
PART OF 279-5441 BUCKET AR-DIRT
AN ATTACHMENT

SMCS-6001 **i03648373**

NOTE	REF NO	GRAPHIC REF	PART NUMBER	QTY	PART NAME 1 2 3 4 5 6 (PRODUCT LEVEL)	SEE PAGE
	1	1	**154-2704**	1	PLATE-INSTRUCTION (BUCKET SPECIFICATIONS)	
	2	1	**168-8389**	4	TACK-FASTENER	
Y	3	1	*279-5439*	1	BUCKET AS-DIRT (66-IN)	370

Y-SEPARATE ILLUSTRATION

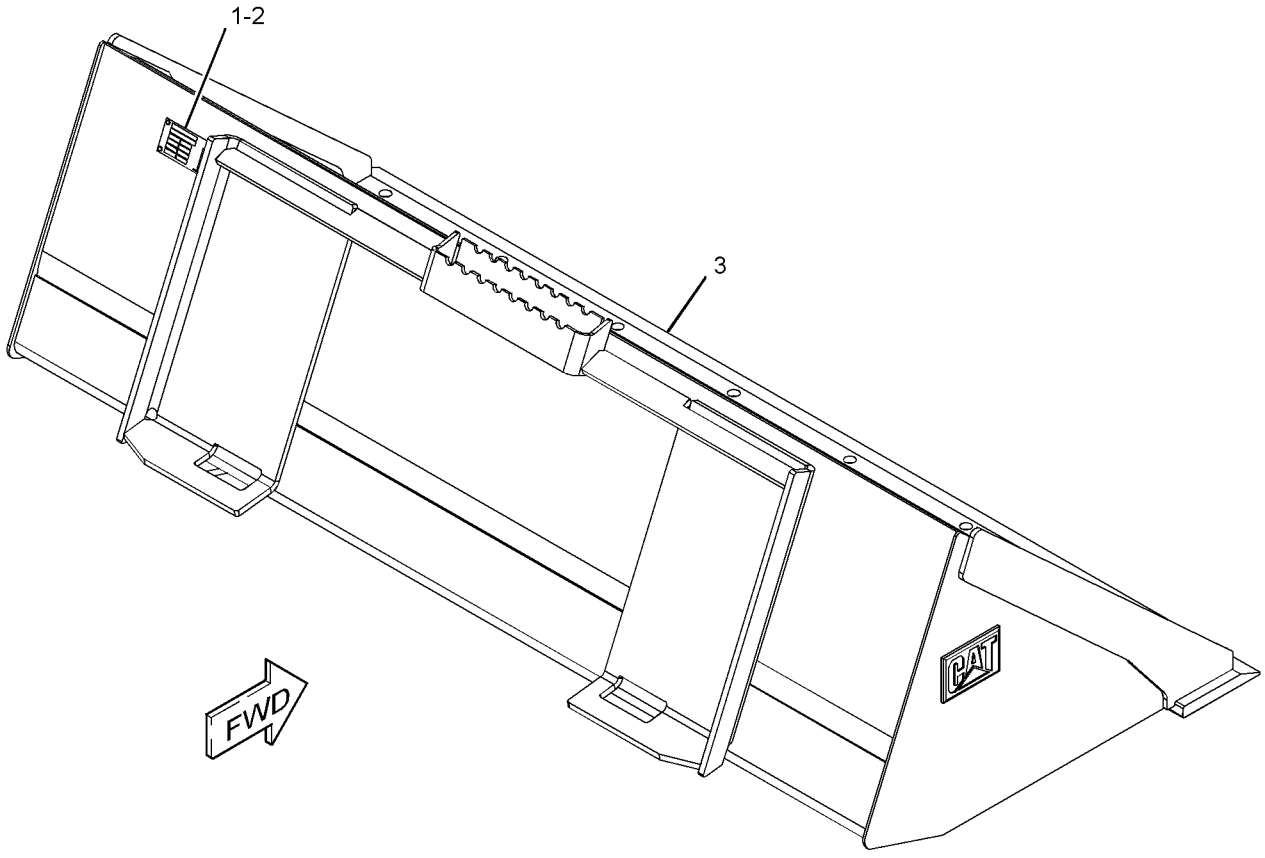

GRAPHIC #1 **<END>** g01951588

WORK TOOLS

285-6088 BUCKET AS-DIRT

S/N: A9H1-UP
1829-MM (72-IN)
PART OF 285-6089 BUCKET AS-DIRT
AN ATTACHMENT

SMCS-6001 **i03635778**

NOTE	REF NO	GRAPHIC REF	PART NUMBER	QTY	PART NAME 1 2 3 4 5 6 (PRODUCT LEVEL)	SEE PAGE
	1	1	**149-5437**	1	EDGE	

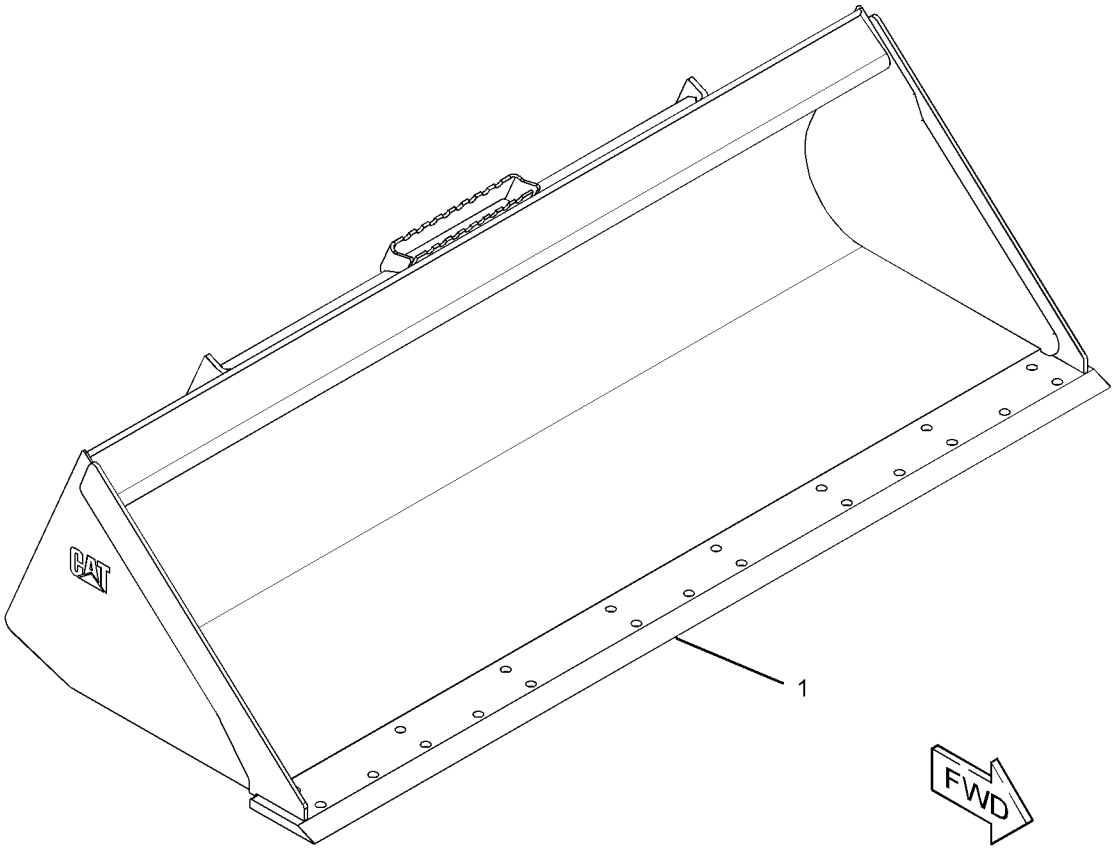

GRAPHIC #1 **<END>** g01953863

WORK TOOLS

285-6089 BUCKET AS-DIRT

S/N: A9H1-UP
PART OF 285-6090 BUCKET AR-DIRT
AN ATTACHMENT

SMCS-6001 **i03648374**

NOTE	REF NO	GRAPHIC REF	PART NUMBER	QTY	PART NAME 1 2 3 4 5 6 (PRODUCT LEVEL)	SEE PAGE
	1	1	**154-2704**	1	PLATE-INSTRUCTION (BUCKET SPECIFICATIONS)	
	2	1	**168-8389**	4	TACK-FASTENER	
Y	3	1	*285-6088*	1	BUCKET AS-DIRT (72-IN)	372

Y-SEPARATE ILLUSTRATION

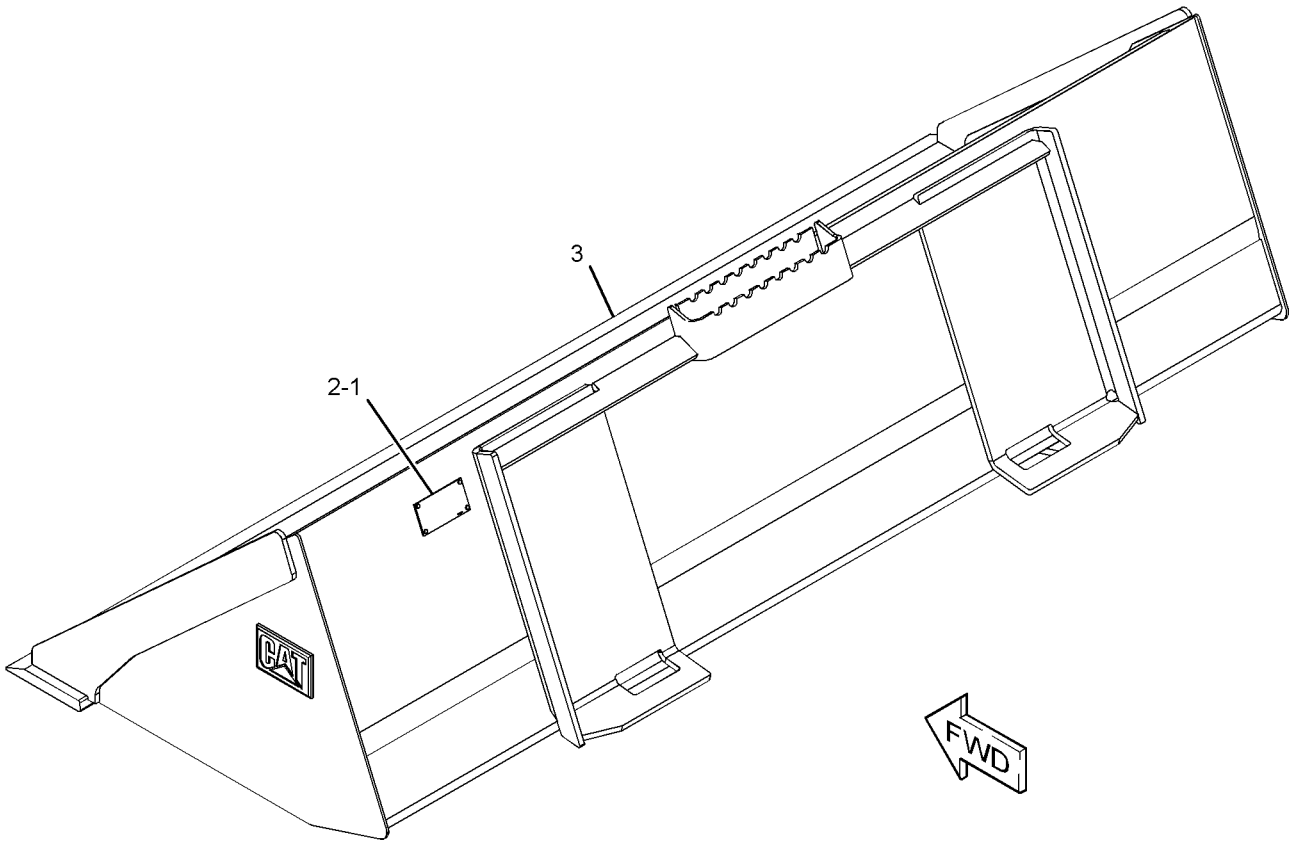

GRAPHIC #1 **<END>** g01951563

279-5363 BUCKET AS-GENERAL PURPOSE

S/N: A9H1-UP
1524-MM (60-IN)
PART OF 279-5364 BUCKET AS-GENERAL PURPOSE
AN ATTACHMENT

SMCS-6101 **i03635782**

NOTE	REF NO	GRAPHIC REF	PART NUMBER	QTY	PART NAME 1 2 3 4 5 6 (PRODUCT LEVEL)	SEE PAGE
	1	1	**149-5435**	1	EDGE	

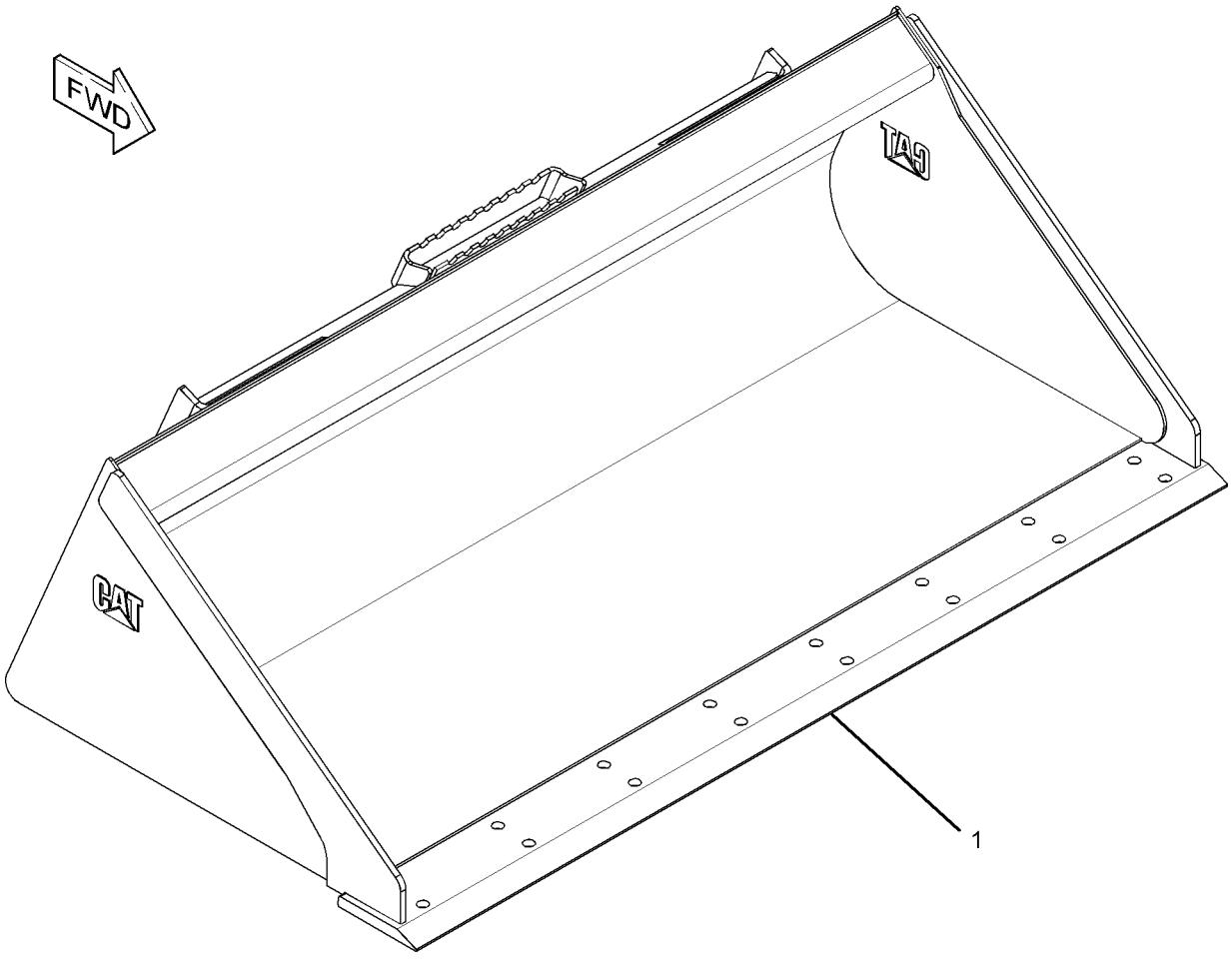

GRAPHIC #1 **<END>** g01951959

279-5364 BUCKET AS-GENERAL PURPOSE

S/N: A9H1-UP

PART OF 279-5365, 279-5366 BUCKET AR-GENERAL PURPOSE

AN ATTACHMENT

SMCS-6101 **i03648359**

NOTE	REF NO	GRAPHIC REF	PART NUMBER	QTY	PART NAME 1 2 3 4 5 6 (PRODUCT LEVEL)	SEE PAGE
	1	1	**154-2704**	1	PLATE-INSTRUCTION (BUCKET SPECIFICATIONS)	
	2	1	**168-8389**	4	TACK-FASTENER	
Y	3	1	*279-5363*	1	BUCKET AS-GENERAL PURPOSE (60-IN)	374

Y-SEPARATE ILLUSTRATION

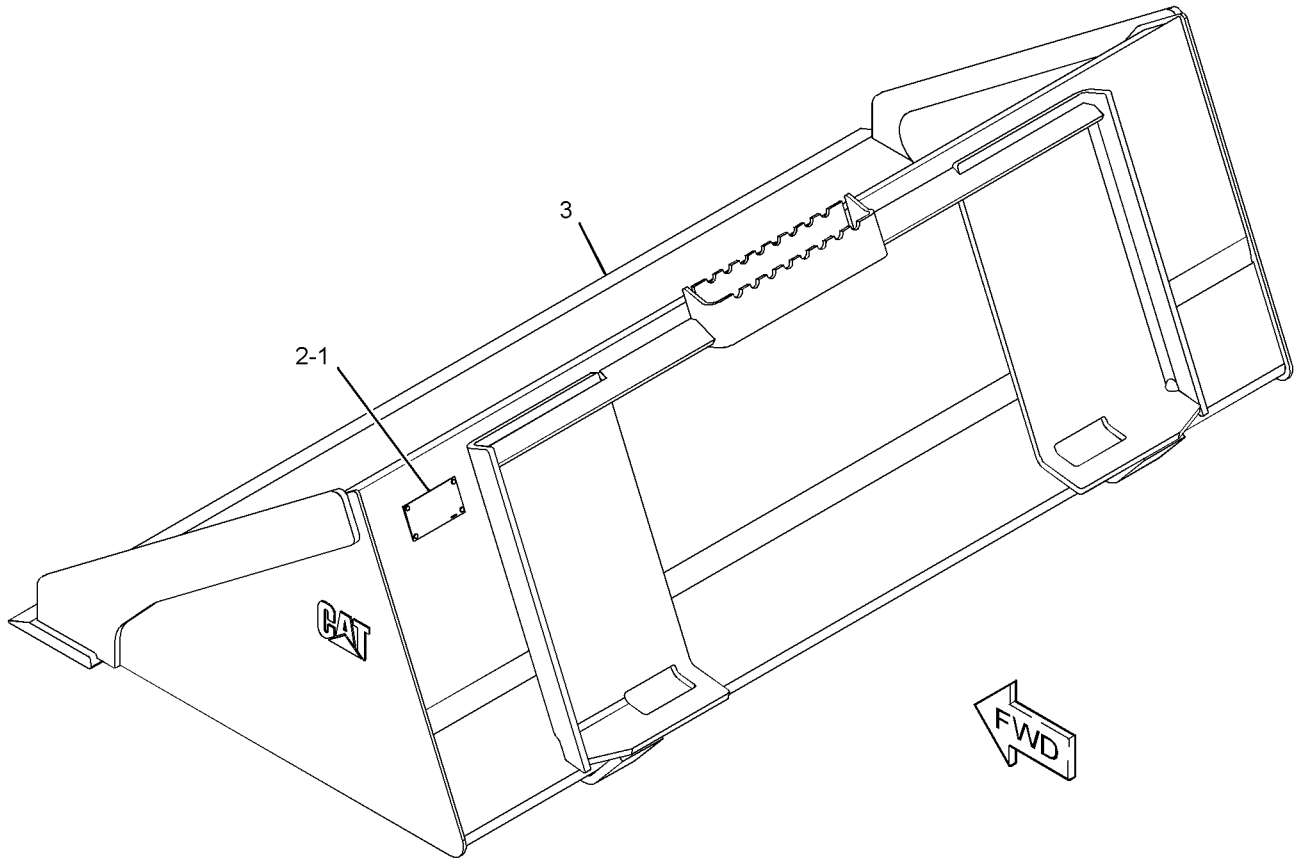

GRAPHIC #1 **<END>** g01951595

279-5367 BUCKET AS-GENERAL PURPOSE

S/N: A9H1-UP
1676-MM (66-IN)
PART OF 279-5368 BUCKET AS-GENERAL PURPOSE
AN ATTACHMENT

SMCS-6101 **i03635793**

NOTE	REF NO	GRAPHIC REF	PART NUMBER	QTY	PART NAME 1 2 3 4 5 6 (PRODUCT LEVEL)	SEE PAGE
	1	1	**149-5436**	1	EDGE	

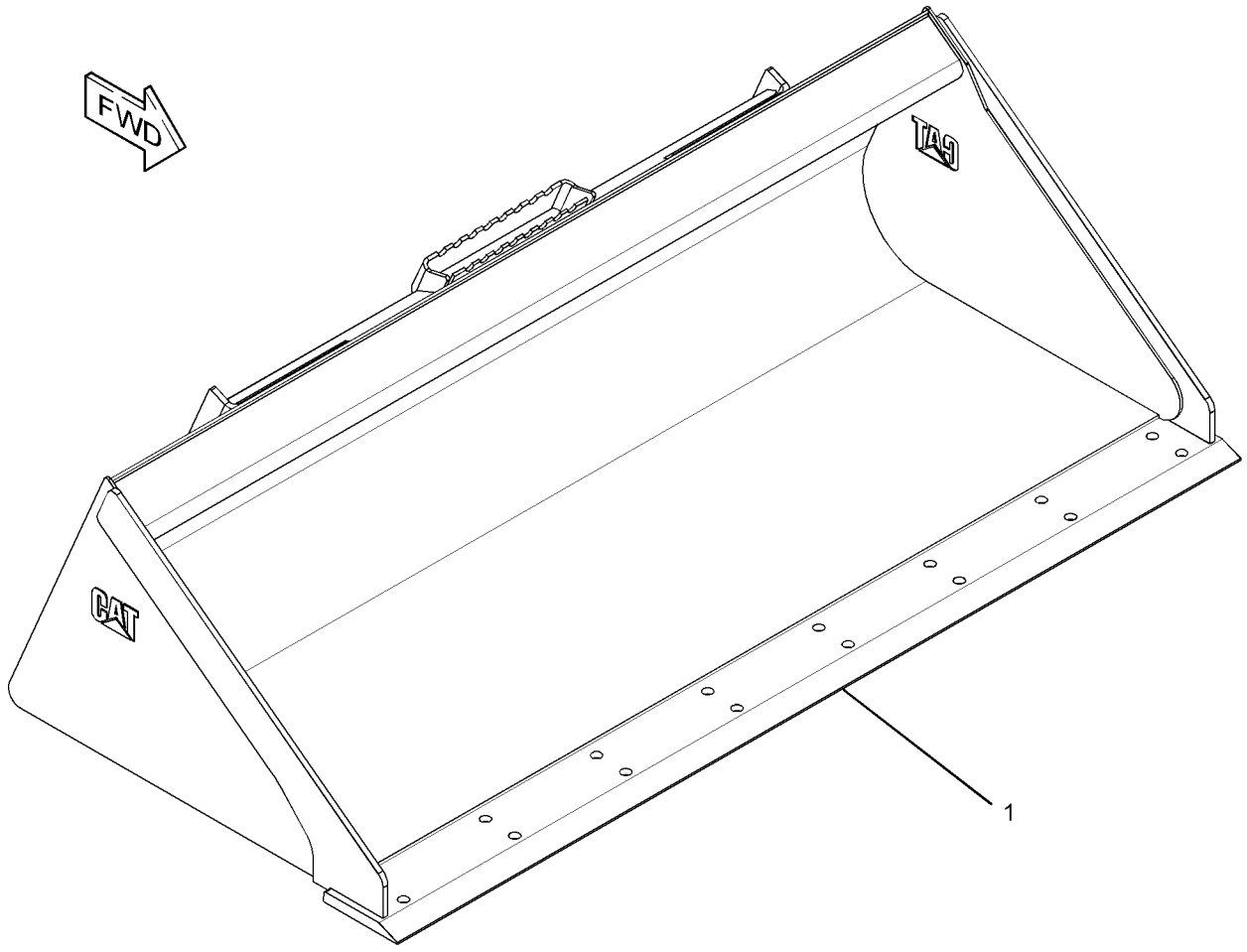

GRAPHIC #1 **<END>** g01951953

279-5368 BUCKET AS-GENERAL PURPOSE

S/N: A9H1-UP

PART OF 279-5369, 279-5370 BUCKET AR-GENERAL PURPOSE AN ATTACHMENT

SMCS-6101 **i03648360**

NOTE	REF NO	GRAPHIC REF	PART NUMBER	QTY	PART NAME 1 2 3 4 5 6 (PRODUCT LEVEL)	SEE PAGE
	1	1	**154-2704**	1	PLATE-INSTRUCTION (BUCKET SPECIFICATIONS)	
	2	1	**168-8389**	4	TACK-FASTENER	
Y	3	1	*279-5367*	1	BUCKET AS-GENERAL PURPOSE (66-IN)	376

Y-SEPARATE ILLUSTRATION

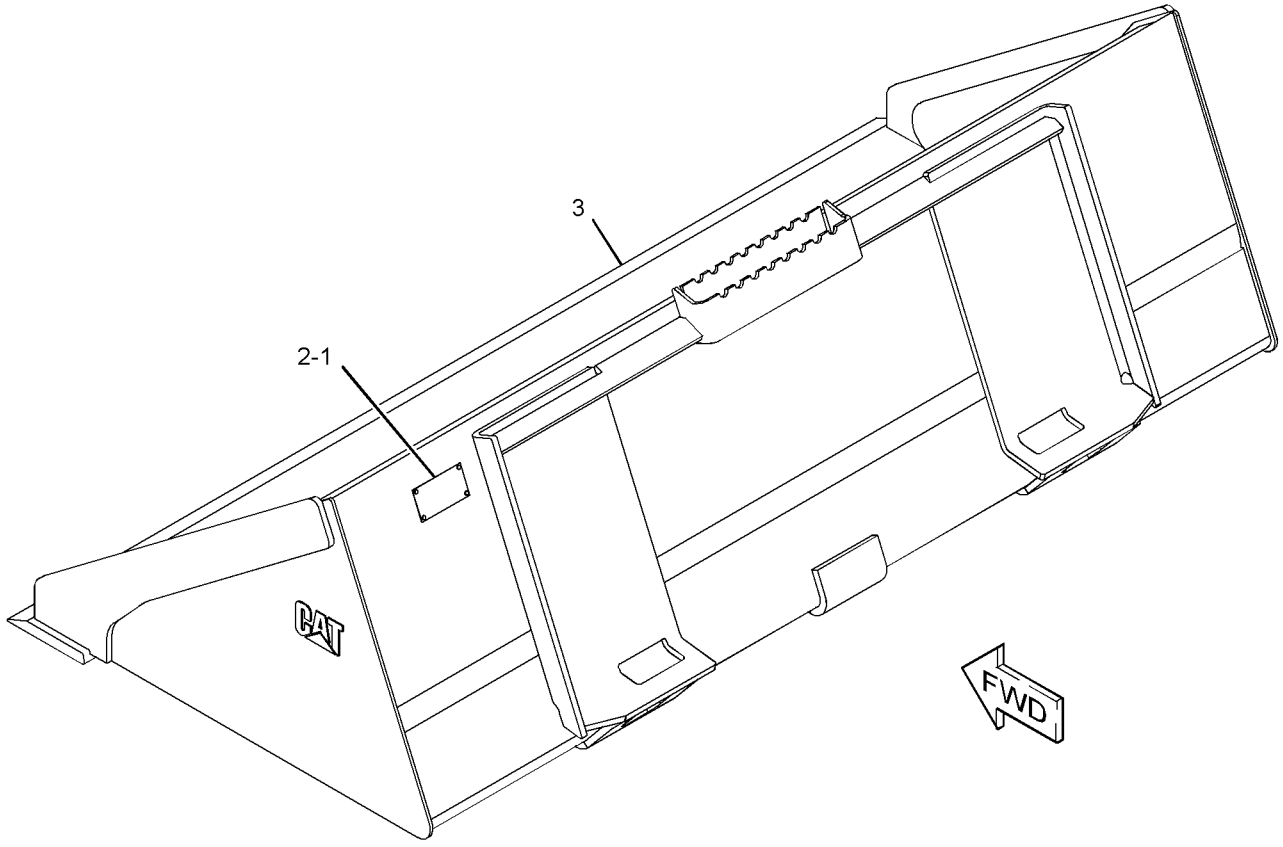

GRAPHIC #1 **<END>** g01951562

WORK TOOLS

279-5371 BUCKET AS-GENERAL PURPOSE

S/N: A9H1-UP
1829-MM (72-IN)
PART OF 279-5372 BUCKET AS-GENERAL PURPOSE
AN ATTACHMENT

SMCS-6101 **i03635988**

NOTE	REF NO	GRAPHIC REF	PART NUMBER	QTY	PART NAME 1 2 3 4 5 6 (PRODUCT LEVEL)	SEE PAGE
	1	1	**149-5437**	1	EDGE	

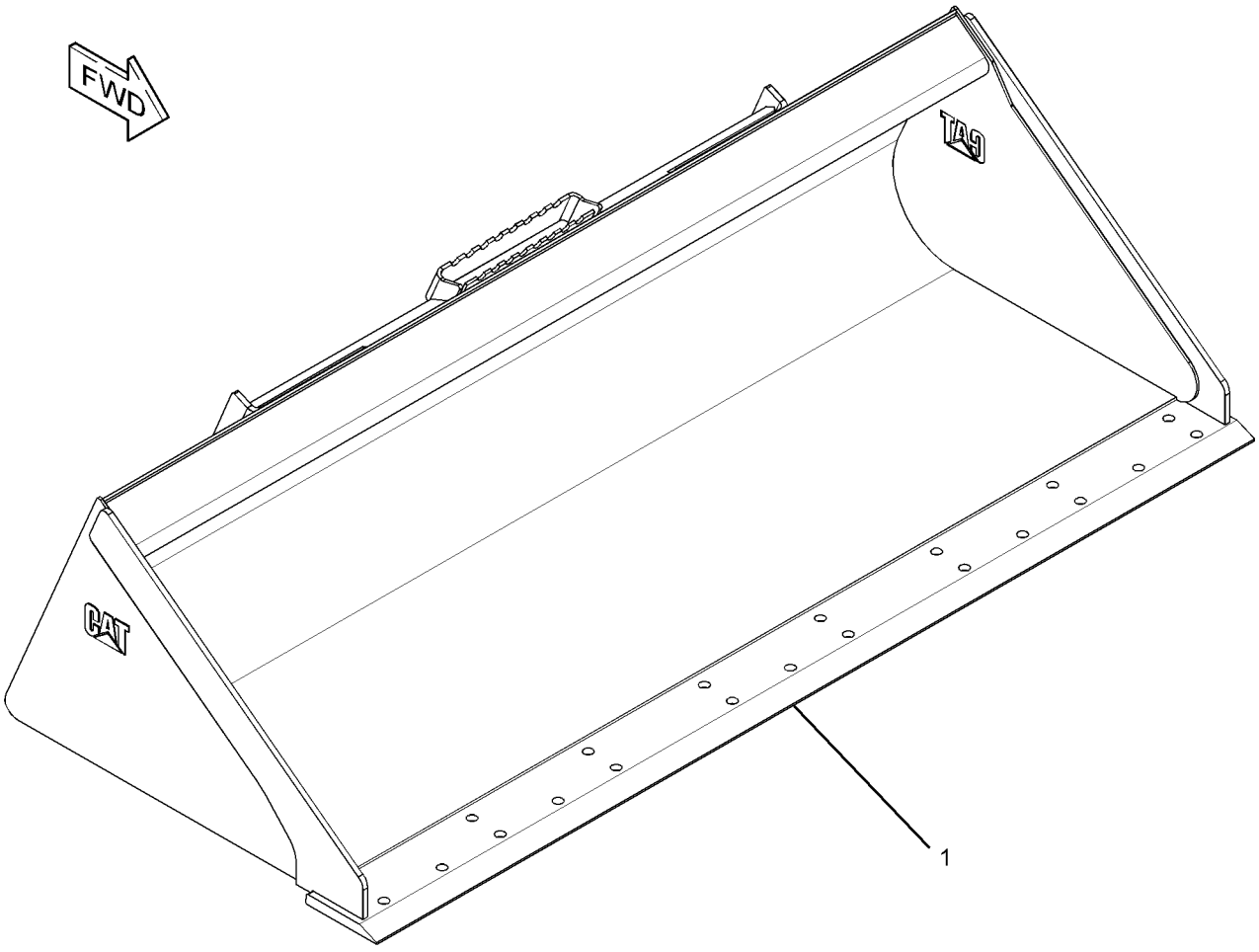

GRAPHIC #1 **<END>** g01952024

279-5372 BUCKET AS-GENERAL PURPOSE

S/N: A9H1-UP

PART OF 279-5373, 279-5374 BUCKET AR-GENERAL PURPOSE AN ATTACHMENT

SMCS-6101 **i03648361**

NOTE	REF NO	GRAPHIC REF	PART NUMBER	QTY	PART NAME 1 2 3 4 5 6 (PRODUCT LEVEL)	SEE PAGE
	1	1	**154-2704**	1	PLATE-INSTRUCTION (BUCKET SPECIFICATIONS)	
	2	1	**168-8389**	4	TACK-FASTENER	
Y	3	1	*279-5371*	1	BUCKET AS-GENERAL PURPOSE (72-IN)	378

Y-SEPARATE ILLUSTRATION

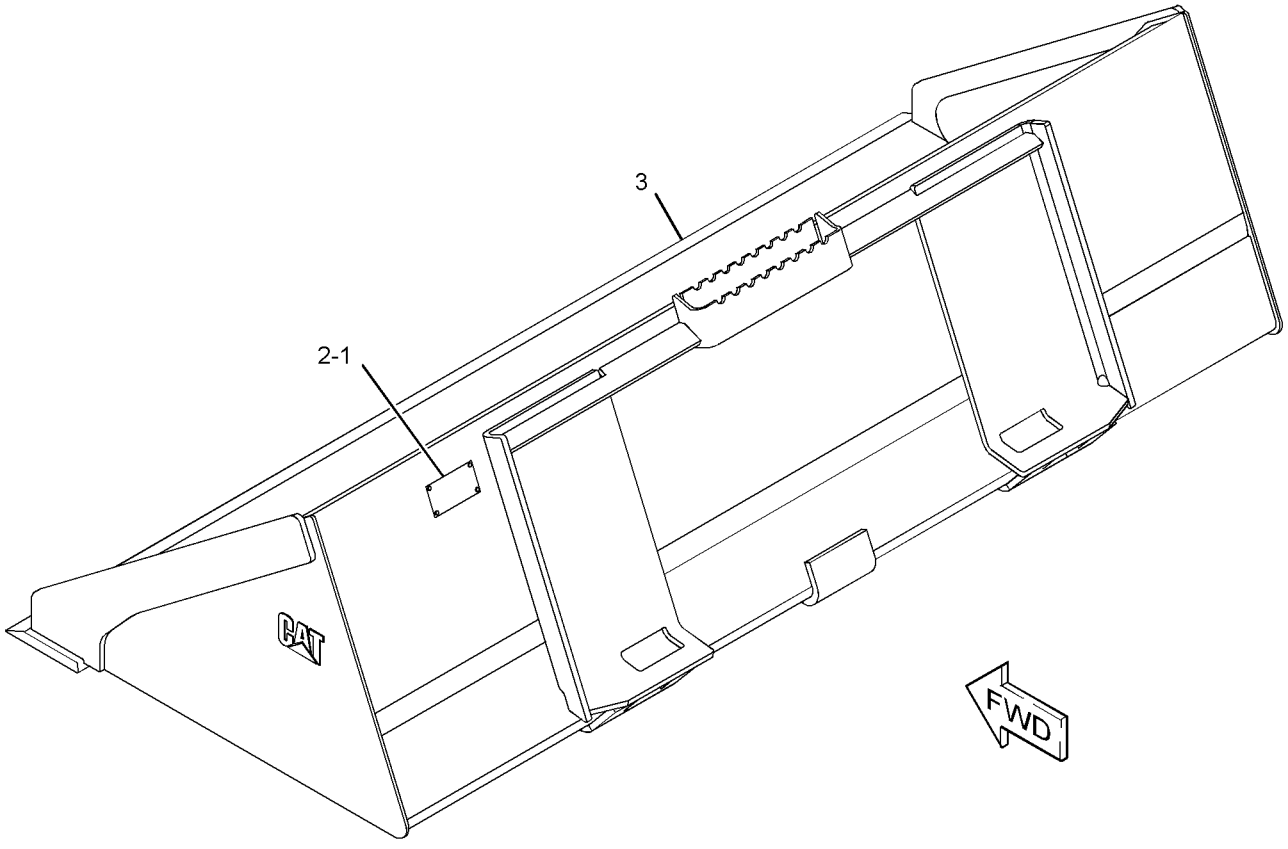

GRAPHIC #1 **<END>** g01951593

WORK TOOLS

279-5375 BUCKET AS-GENERAL PURPOSE

S/N: A9H1-UP
1981-MM (78-IN)
PART OF 279-5376 BUCKET AS-GENERAL PURPOSE
AN ATTACHMENT

SMCS-6101 **i03636000**

NOTE	REF NO	GRAPHIC REF	PART NUMBER	QTY	PART NAME 1 2 3 4 5 6 (PRODUCT LEVEL)	SEE PAGE
	1	1	**199-7722**	1	EDGE	

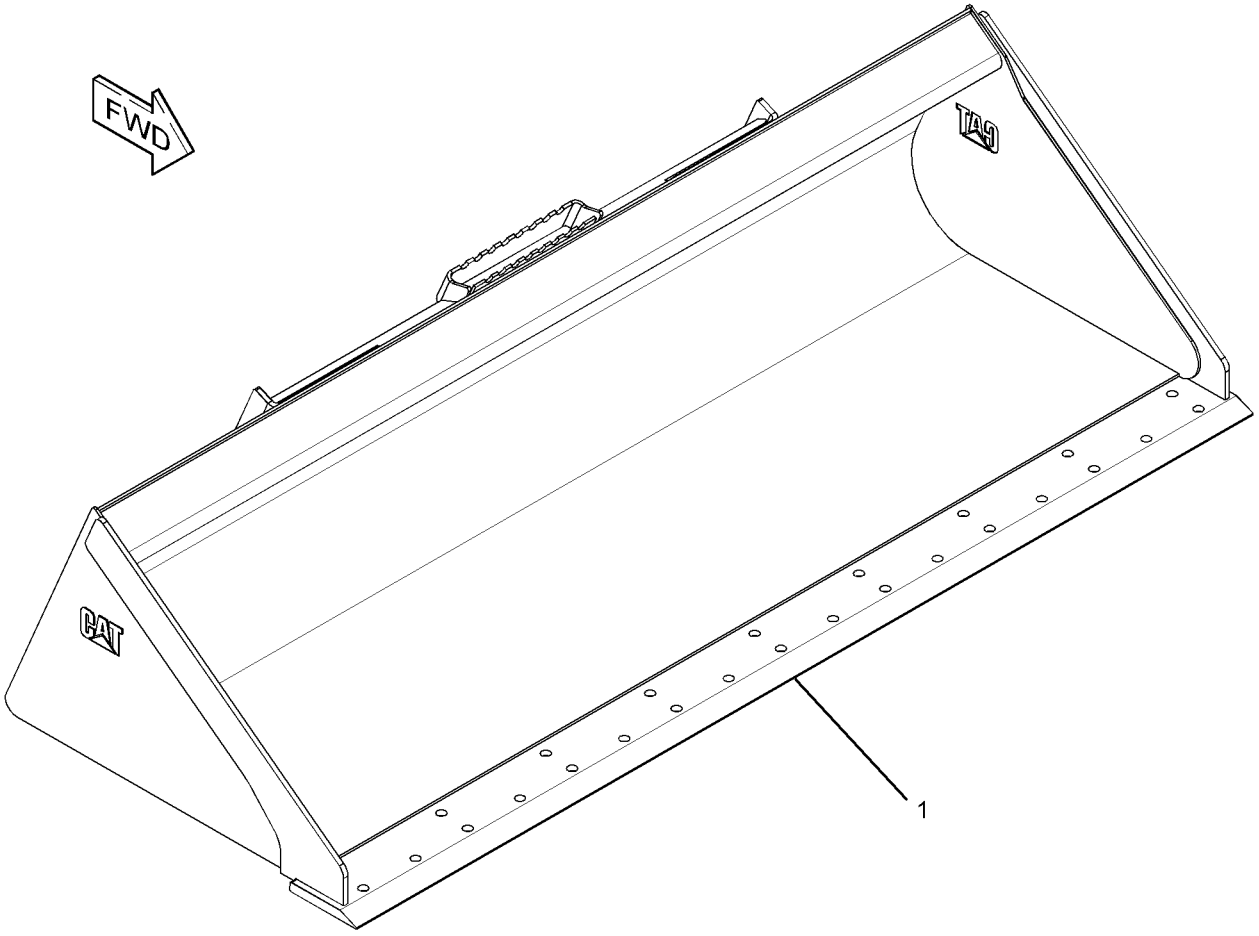

GRAPHIC #1 **<END>** g01952022

WORK TOOLS

279-5376 BUCKET AS-GENERAL PURPOSE

S/N: A9H1-UP

PART OF 279-5377, 279-5378 BUCKET AR-GENERAL PURPOSE

AN ATTACHMENT

SMCS-6101 **i03648369**

NOTE	REF NO	GRAPHIC REF	PART NUMBER	QTY	PART NAME 1 2 3 4 5 6 (PRODUCT LEVEL)	SEE PAGE
	1	1	**154-2704**	1	PLATE-INSTRUCTION (BUCKET SPECIFICATIONS)	
	2	1	**168-8389**	4	TACK-FASTENER	
Y	3	1	*279-5375*	1	BUCKET AS-GENERAL PURPOSE (78-IN)	380

Y-SEPARATE ILLUSTRATION

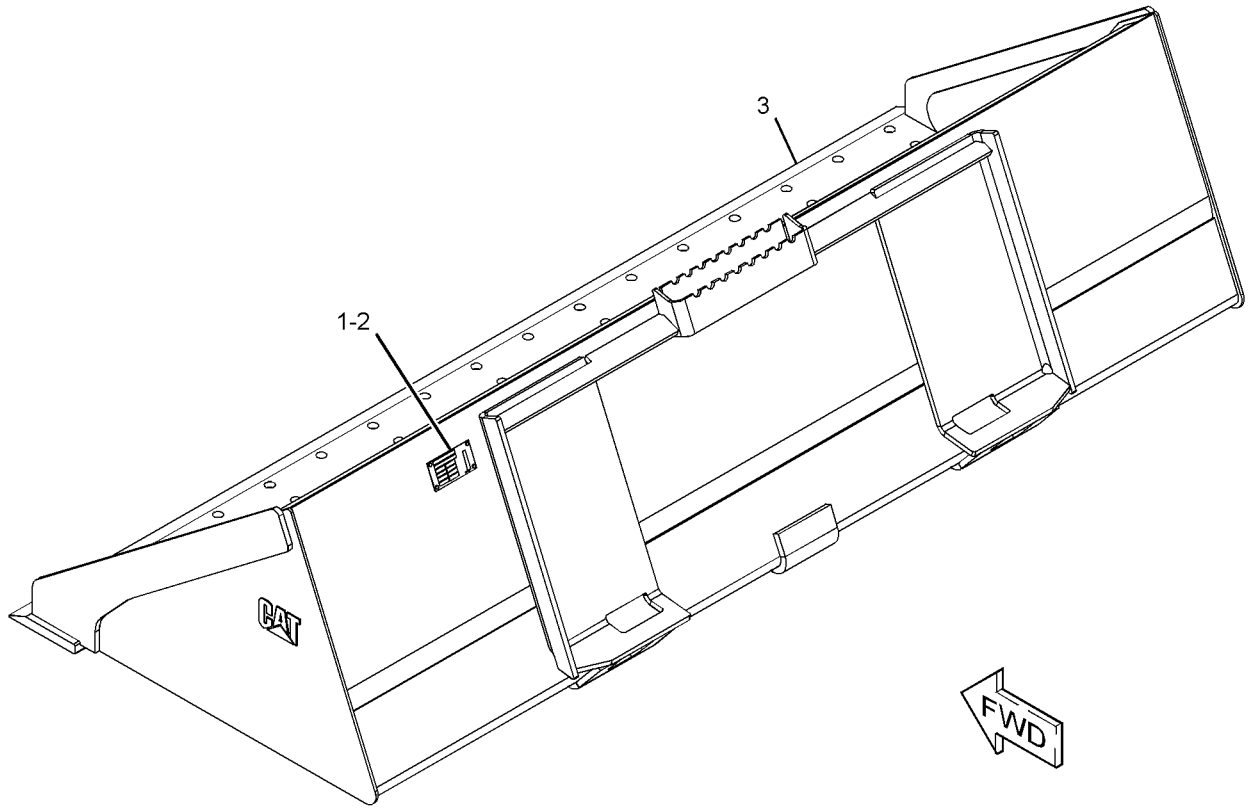

GRAPHIC #1 **<END>** g01951591

292-9270 BUCKET AS-GENERAL PURPOSE—HIGH CAPACITY

S/N: A9H1-UP

PART OF 296-8192 BUCKET AR-GENERAL PURPOSE, 296-8191 BUCKET GP-GENERAL PURPOSE

AN ATTACHMENT

SMCS-6101 **i03648482**

NOTE	REF NO	GRAPHIC REF	PART NUMBER	QTY	PART NAME 1 2 3 4 5 6 (PRODUCT LEVEL)	SEE PAGE
	1	1	**154-2704**	1	PLATE-INSTRUCTION (BUCKET SPECIFICATIONS)	
	2	1	**168-8389**	4	TACK-FASTENER	
Y	3	1	*292-9271*	1	BUCKET AS-GENERAL PURPOSE (84-IN)	383

Y-SEPARATE ILLUSTRATION

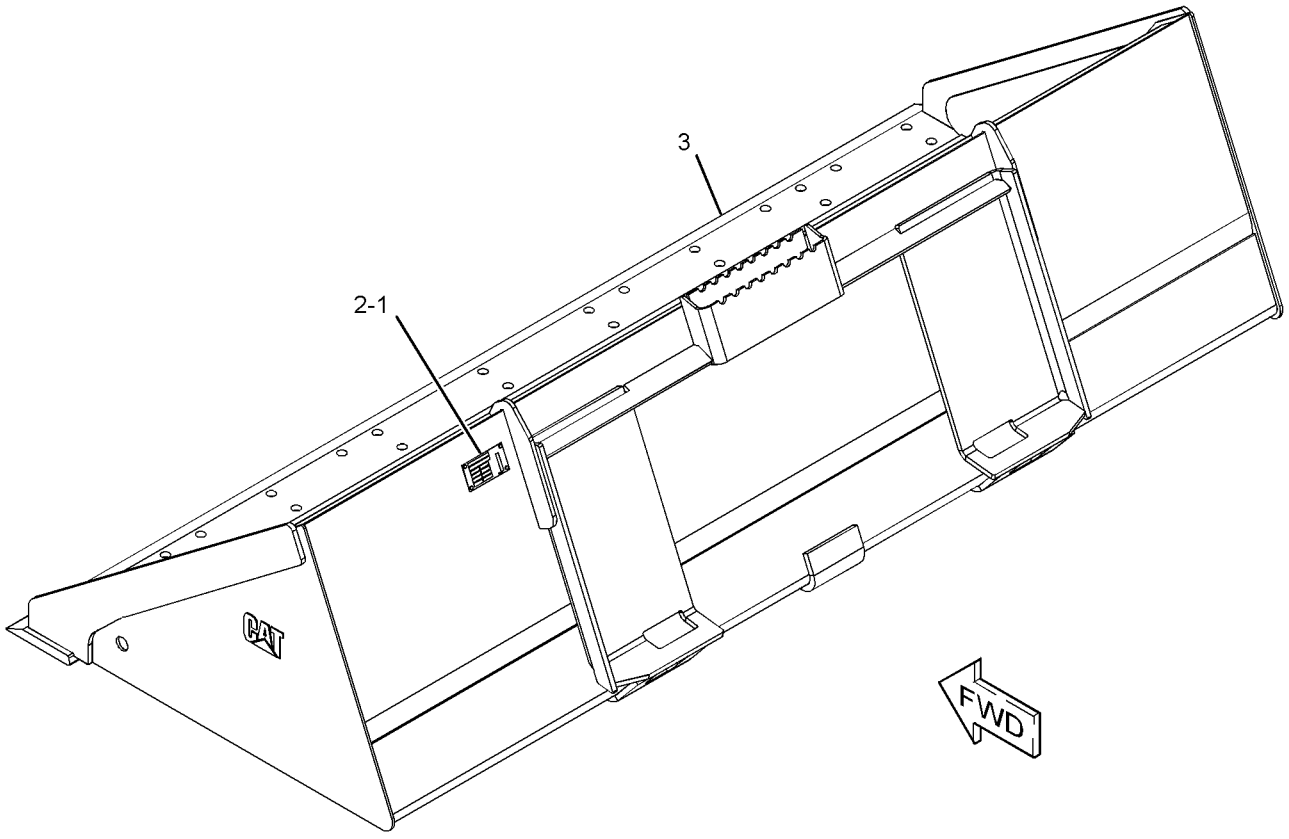

GRAPHIC #1 **<END>** g01951560

WORK TOOLS

292-9271 BUCKET AS-GENERAL PURPOSE—HIGH CAPACITY

S/N: A9H1-UP
2134-MM (84-IN)
PART OF 292-9270 BUCKET AS-GENERAL PURPOSE
AN ATTACHMENT

SMCS-6101 **i03636009**

NOTE	REF NO	GRAPHIC REF	PART NUMBER	QTY	PART NAME 1 2 3 4 5 6 (PRODUCT LEVEL)	SEE PAGE
	1	1	**229-3432**	1	EDGE	

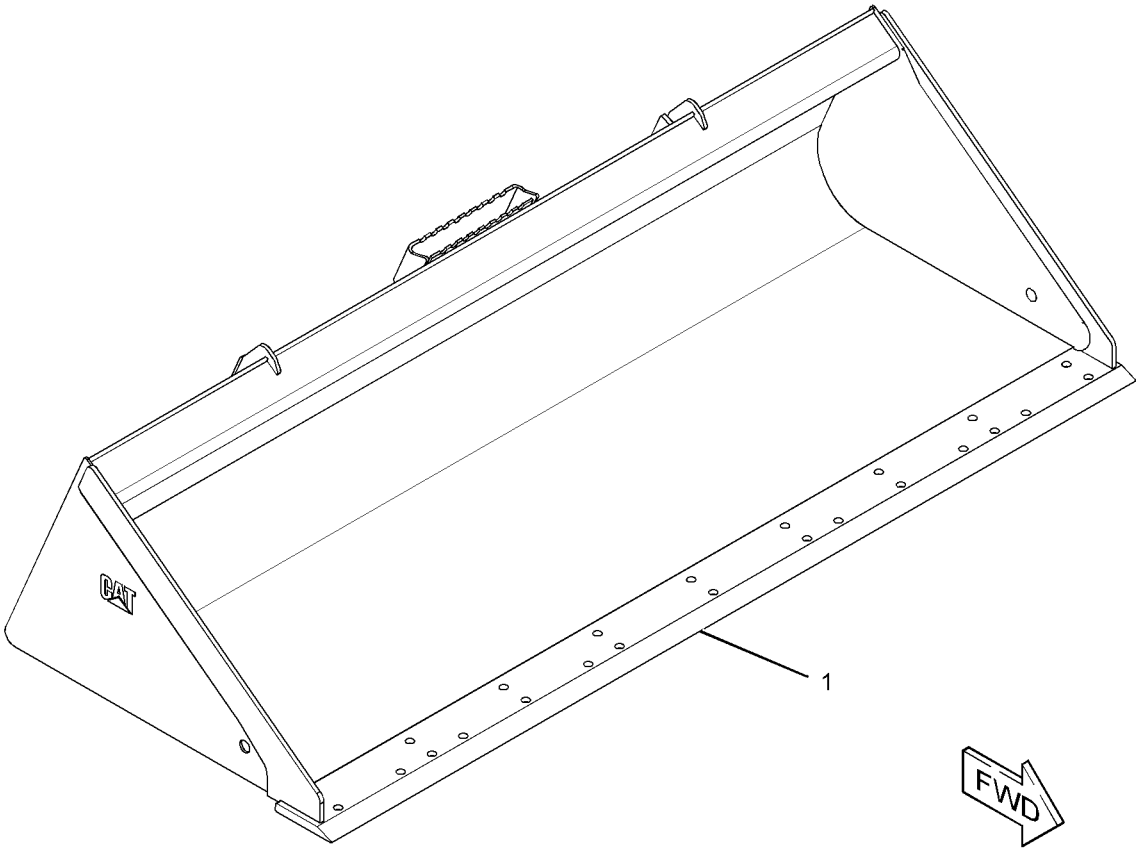

GRAPHIC #1 **<END>** g01953877

WORK TOOLS

156-0887 BUCKET AS-GRAPPLE

S/N: A9H1-UP
1524-MM (60-IN)
PART OF 169-8941 BUCKET AS-GRAPPLE
AN ATTACHMENT

SMCS-6704 **i04051089**

NOTE	REF NO	GRAPHIC REF	PART NUMBER	QTY	PART NAME 1 2 3 4 5 6 (PRODUCT LEVEL)	SEE PAGE
	1	1	**149-5435**	1	EDGE	
	2	1	**161-4130**	2	PLATE-IDENTIFICATION (CAT)	

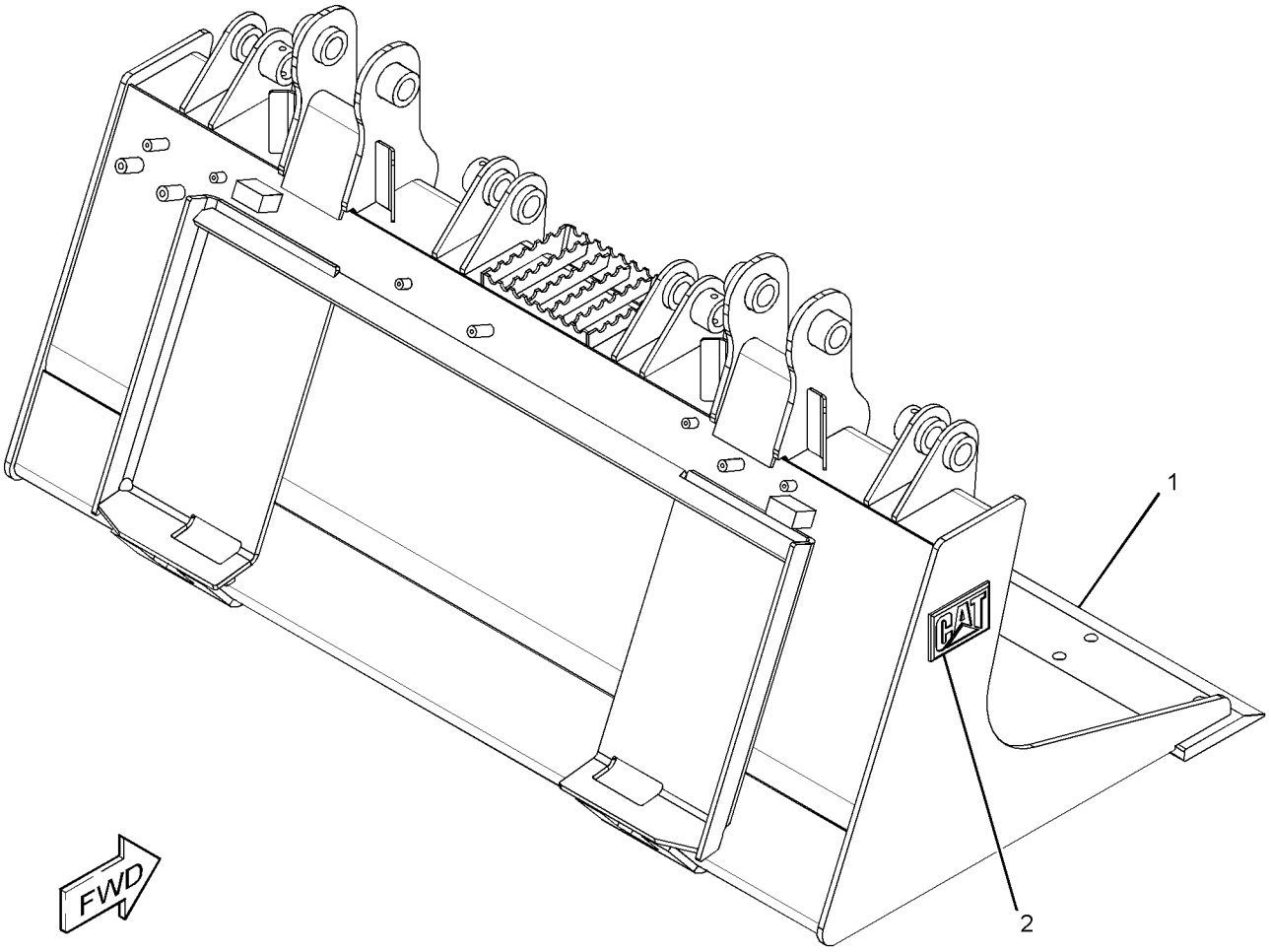

GRAPHIC #1 **<END>** g02266073

156-0888 BUCKET AS-GRAPPLE

S/N: A9H1-UP
1676-MM (66-IN)
PART OF 169-8942 BUCKET AS-GRAPPLE
AN ATTACHMENT

SMCS-6704 **i04045350**

NOTE	REF NO	GRAPHIC REF	PART NUMBER	QTY	PART NAME 1 2 3 4 5 6 (PRODUCT LEVEL)	SEE PAGE
	1	1	**149-5436**	1	EDGE	
	2	1	**161-4130**	2	PLATE-IDENTIFICATION (CAT)	

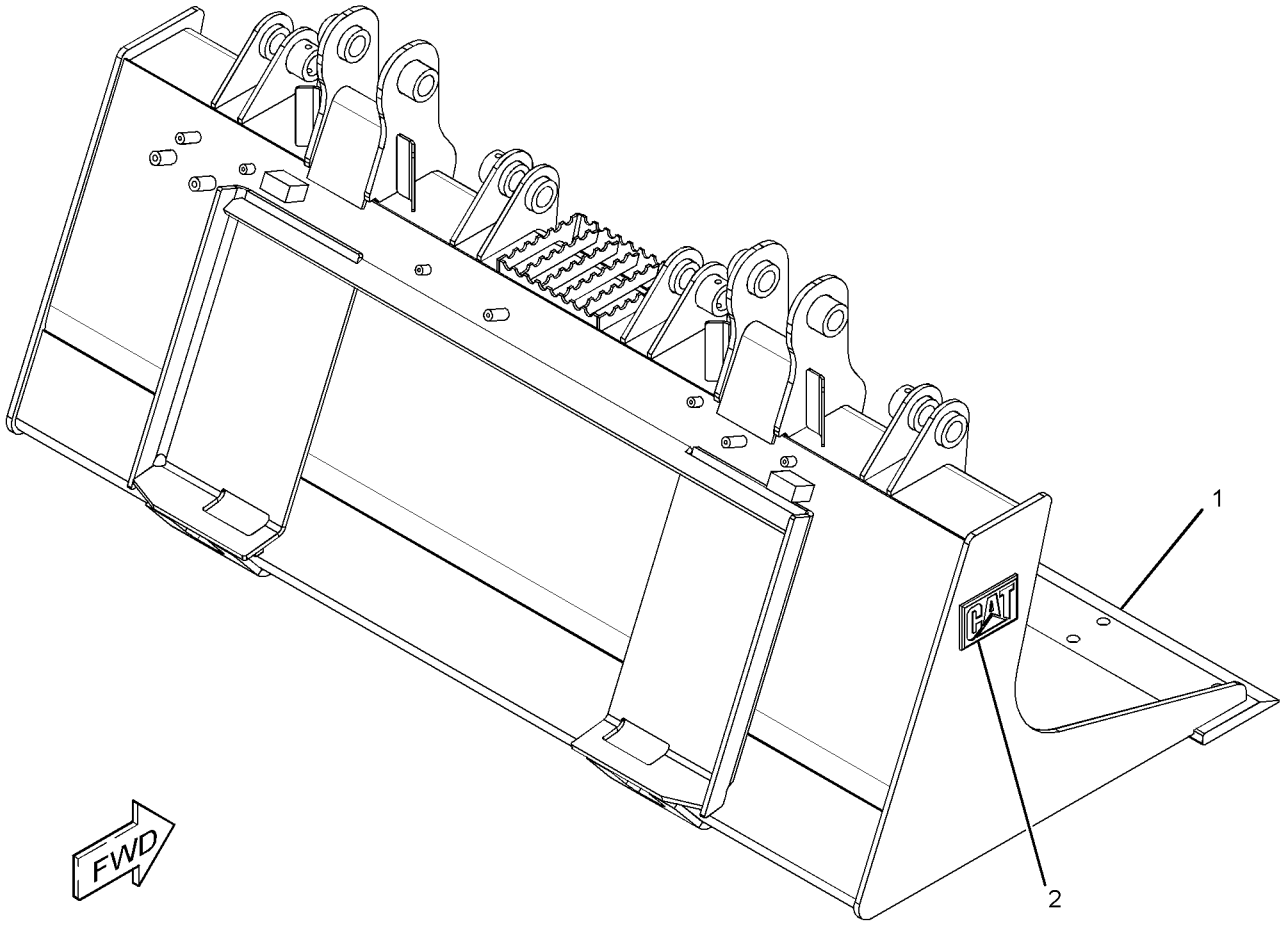

GRAPHIC #1 **<END>** g02254454

WORK TOOLS

156-0889 BUCKET AS-GRAPPLE

S/N: A9H1-UP
1829-MM (72-IN)
PART OF 169-8943 BUCKET AS-GRAPPLE
AN ATTACHMENT

SMCS-6704 **i04045408**

NOTE	REF NO	GRAPHIC REF	PART NUMBER	QTY	PART NAME 1 2 3 4 5 6 (PRODUCT LEVEL)	SEE PAGE
	1	1	**149-5437**	1	EDGE	
	2	1	**161-4130**	2	PLATE-IDENTIFICATION (CAT)	

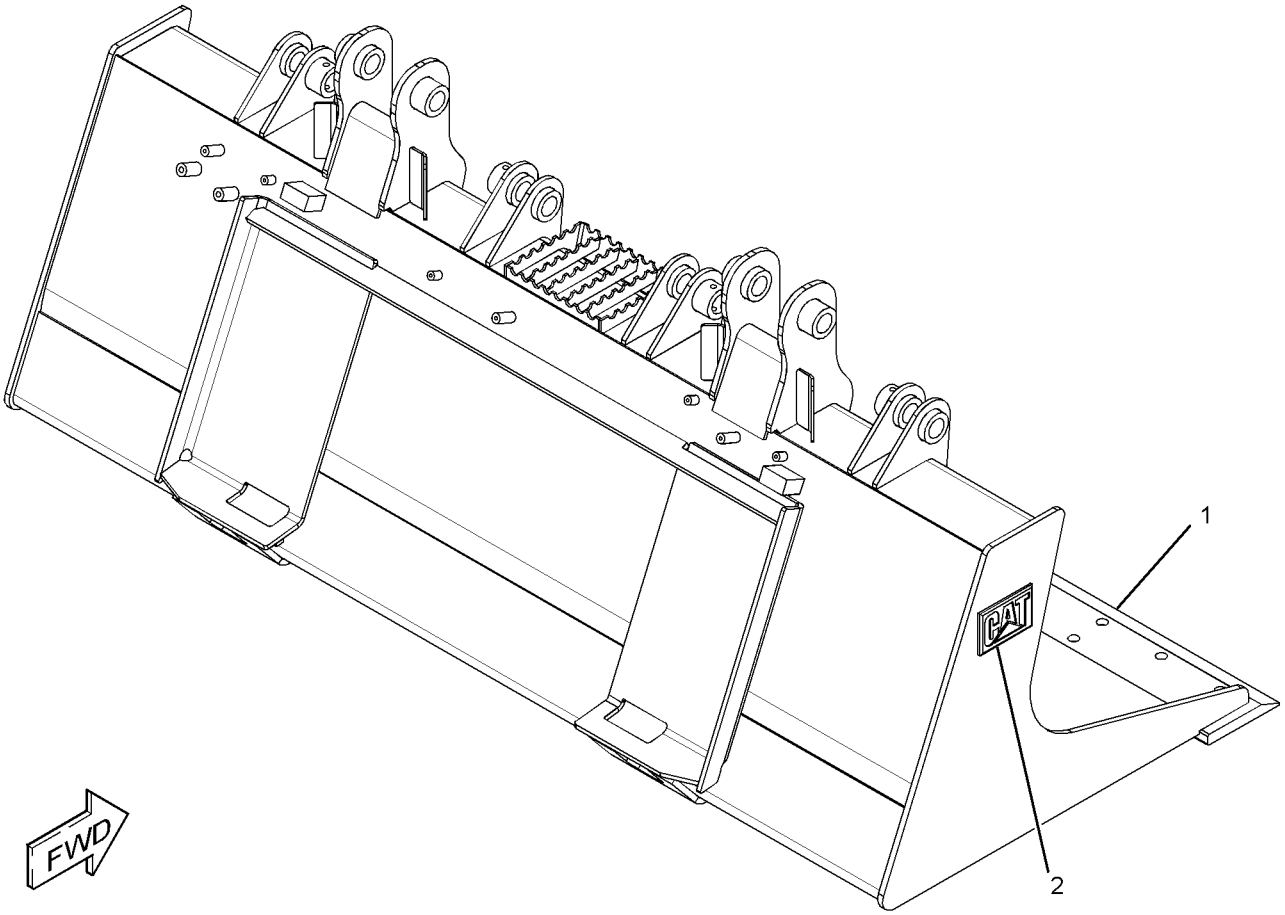

GRAPHIC #1 **<END>** g02258054

WORK TOOLS

169-8941 BUCKET AS-GRAPPLE

S/N: A9H1-UP
PART OF 156-0884 BUCKET GP-GRAPPLE
AN ATTACHMENT

SMCS-6704 **i04268089**

NOTE	REF NO	GRAPHIC REF	PART NUMBER	QTY	PART NAME 1 2 3 4 5 6 (PRODUCT LEVEL)	SEE PAGE
	1	1	**358-4944**	1	PLATE-IDENTIFICATION (BUCKET SPECIFICATIONS)	
Y	2	1	*156-0887*	1	BUCKET AS-GRAPPLE (60-IN) (INDUSTRIAL)	384
	3	1	**168-8389**	4	TACK-FASTENER	

Y-SEPARATE ILLUSTRATION

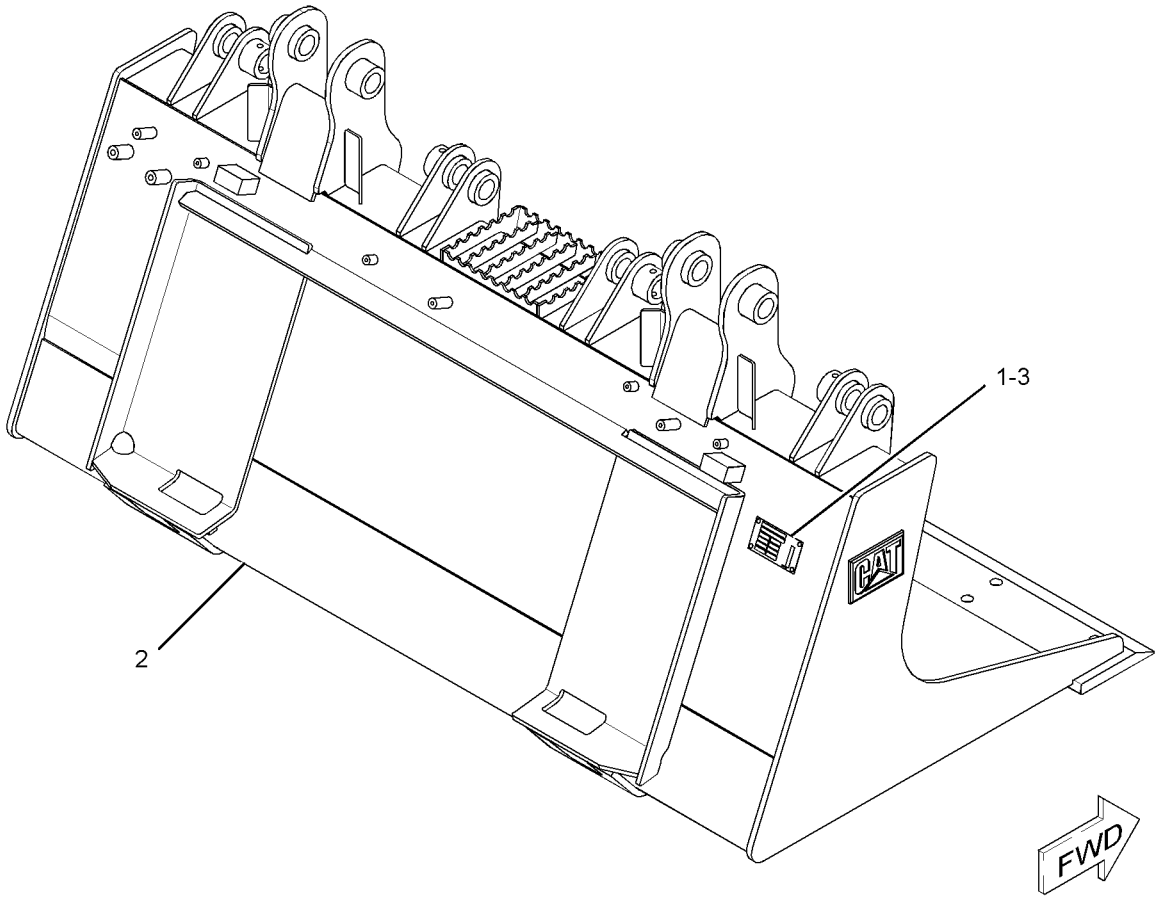

GRAPHIC #1 **<END>** g01941813

WORK TOOLS

169-8942 BUCKET AS-GRAPPLE

S/N: A9H1-UP
PART OF 156-0885 BUCKET GP-GRAPPLE
AN ATTACHMENT

SMCS-6704 **i04268090**

NOTE	REF NO	GRAPHIC REF	PART NUMBER	QTY	PART NAME 1 2 3 4 5 6 (PRODUCT LEVEL)	SEE PAGE
	1	1	**358-4944**	1	PLATE-IDENTIFICATION (BUCKET SPECIFICATIONS)	
Y	2	1	*156-0888*	1	BUCKET AS-GRAPPLE (INDUSTRIAL) (66-IN)	385
	3	1	**168-8389**	4	TACK-FASTENER	

Y-SEPARATE ILLUSTRATION

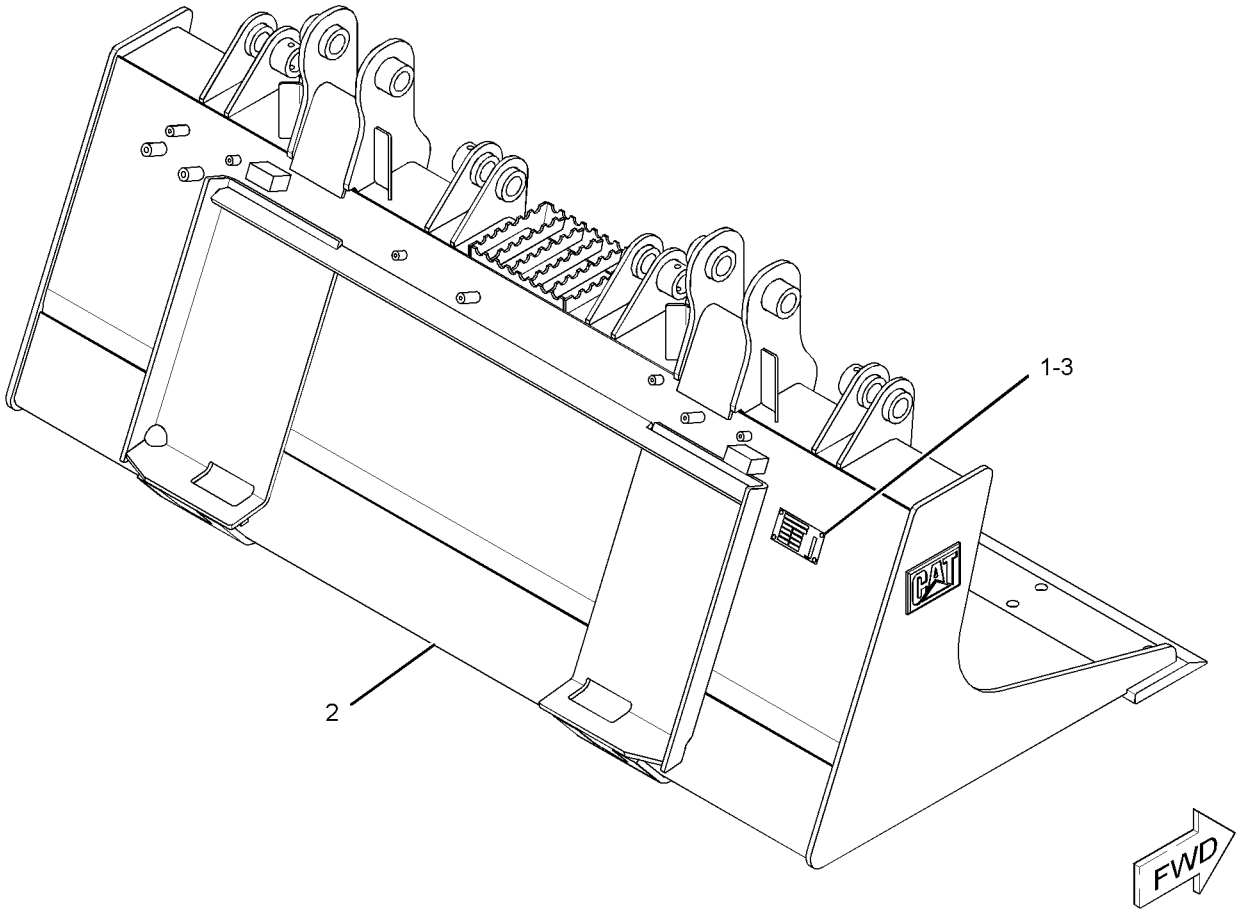

GRAPHIC #1 **<END>** g01941854

WORK TOOLS

169-8943 BUCKET AS-GRAPPLE

S/N: A9H1-UP
PART OF 156-0886 BUCKET GP-GRAPPLE
AN ATTACHMENT

SMCS-6704 **i04268091**

NOTE	REF NO	GRAPHIC REF	PART NUMBER	QTY	PART NAME 1 2 3 4 5 6 (PRODUCT LEVEL)	SEE PAGE
	1	1	**358-4944**	1	PLATE-IDENTIFICATION (BUCKET SPECIFICATIONS)	
Y	2	1	*156-0889*	1	BUCKET AS-GRAPPLE (INDUSTRIAL) (72-IN)	386
	3	1	**168-8389**	4	TACK-FASTENER	

Y-SEPARATE ILLUSTRATION

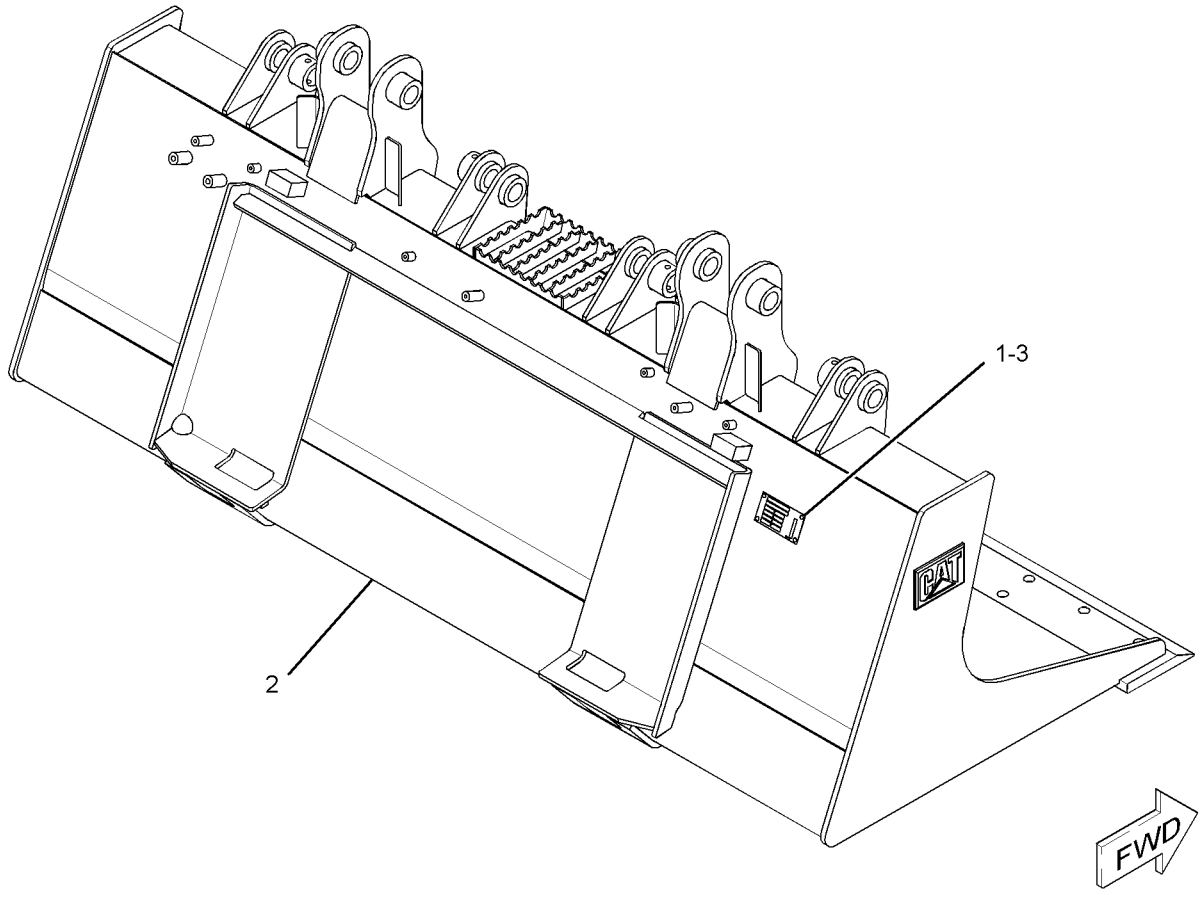

GRAPHIC #1 **<END>** g01941893

217-6226 BUCKET AS-GRAPPLE—INDUSTRIAL

S/N: A9H1-UP
1981-MM (78-IN)
PART OF 217-6227 BUCKET AS-GRAPPLE
AN ATTACHMENT

SMCS-6704 **i03638332**

NOTE	REF NO	GRAPHIC REF	PART NUMBER	QTY	PART NAME 1 2 3 4 5 6 (PRODUCT LEVEL)	SEE PAGE
	1	1	**199-7722**	1	EDGE	
	2	1	**161-4130**	2	PLATE-IDENTIFICATION (CAT)	

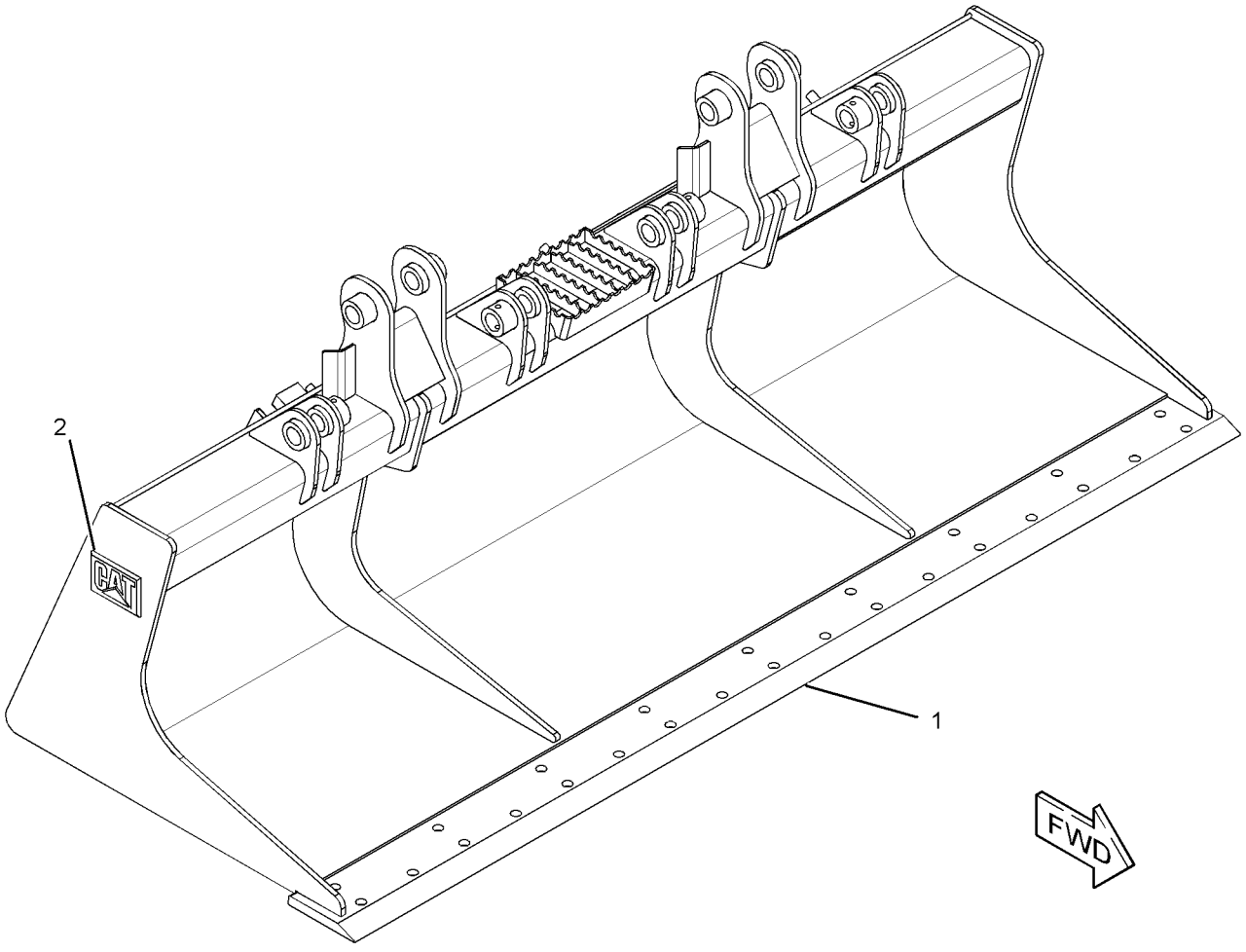

GRAPHIC #1 **<END>** g01953746

217-6227 BUCKET AS-GRAPPLE–INDUSTRIAL

S/N: A9H1-UP

PART OF 217-6228 BUCKET GP-GRAPPLE

AN ATTACHMENT

SMCS-6704 **i04156266**

NOTE	REF NO	GRAPHIC REF	PART NUMBER	QTY	PART NAME 1 2 3 4 5 6 (PRODUCT LEVEL)	SEE PAGE
	1	1	**358-4944**	1	PLATE-IDENTIFICATION (BUCKET SPECIFICATIONS)	
	2	1	**168-8389**	4	TACK-FASTENER	
Y	3	1	*217-6226*	1	BUCKET AS-GRAPPLE (INDUSTRIAL) (78-IN)	390

Y-SEPARATE ILLUSTRATION

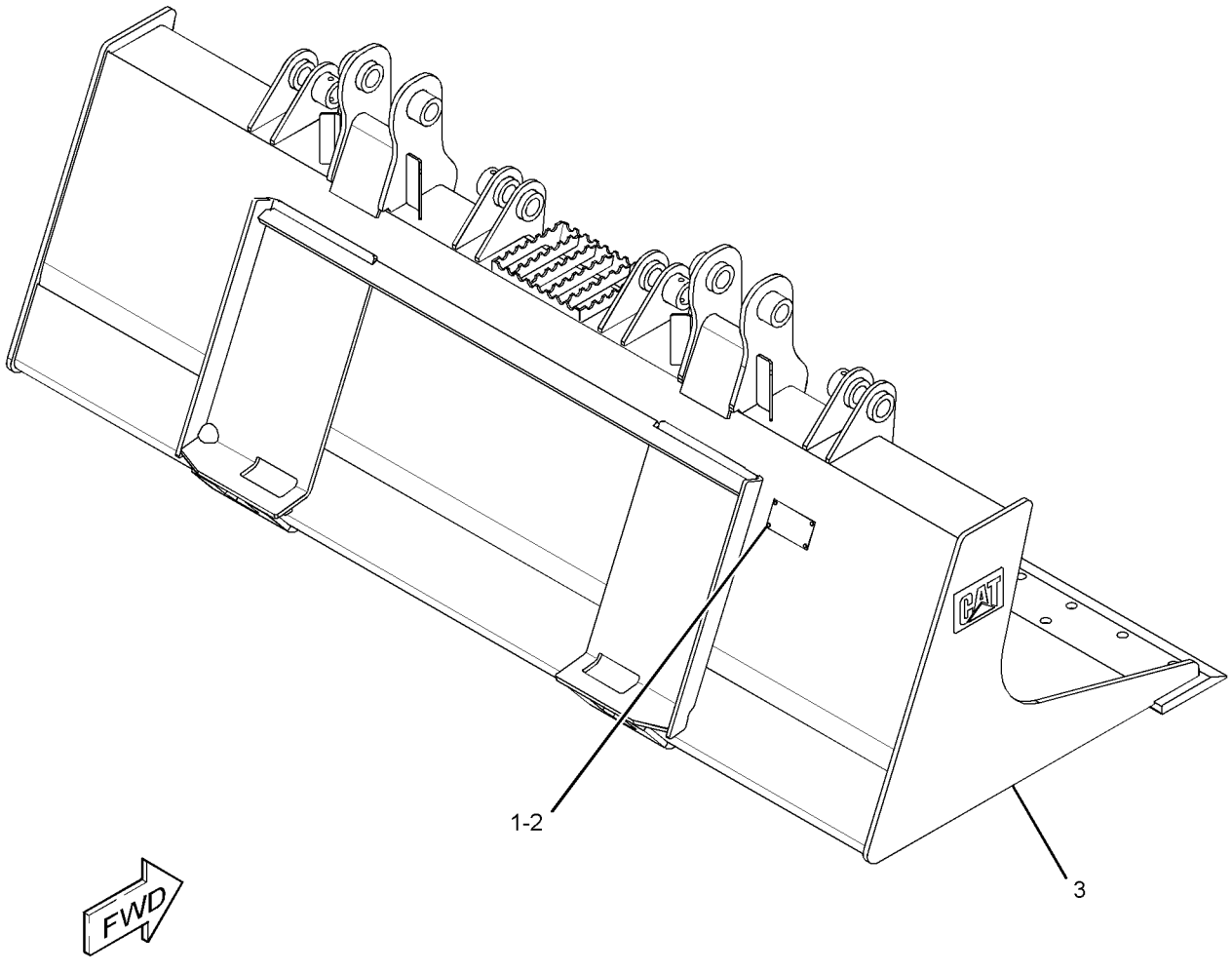

GRAPHIC #1 **<END>** g01945431

WORK TOOLS

279-5421 BUCKET AS-LIGHT MATERIAL

S/N: A9H1-UP

PART OF 279-5420 BUCKET AR-LIGHT MATERIAL

AN ATTACHMENT

SMCS-6103 **i03636045**

NOTE	REF NO	GRAPHIC REF	PART NUMBER	QTY	PART NAME 1 2 3 4 5 6 (PRODUCT LEVEL)	SEE PAGE
	1	1	**154-2704**	1	PLATE-INSTRUCTION (BUCKET SPECIFICATIONS)	
	2	1	**168-8389**	4	TACK-FASTENER	
Y	3	1	*279-5422*	1	BUCKET AS-LIGHT MATERIAL (72-IN)	393

Y-SEPARATE ILLUSTRATION

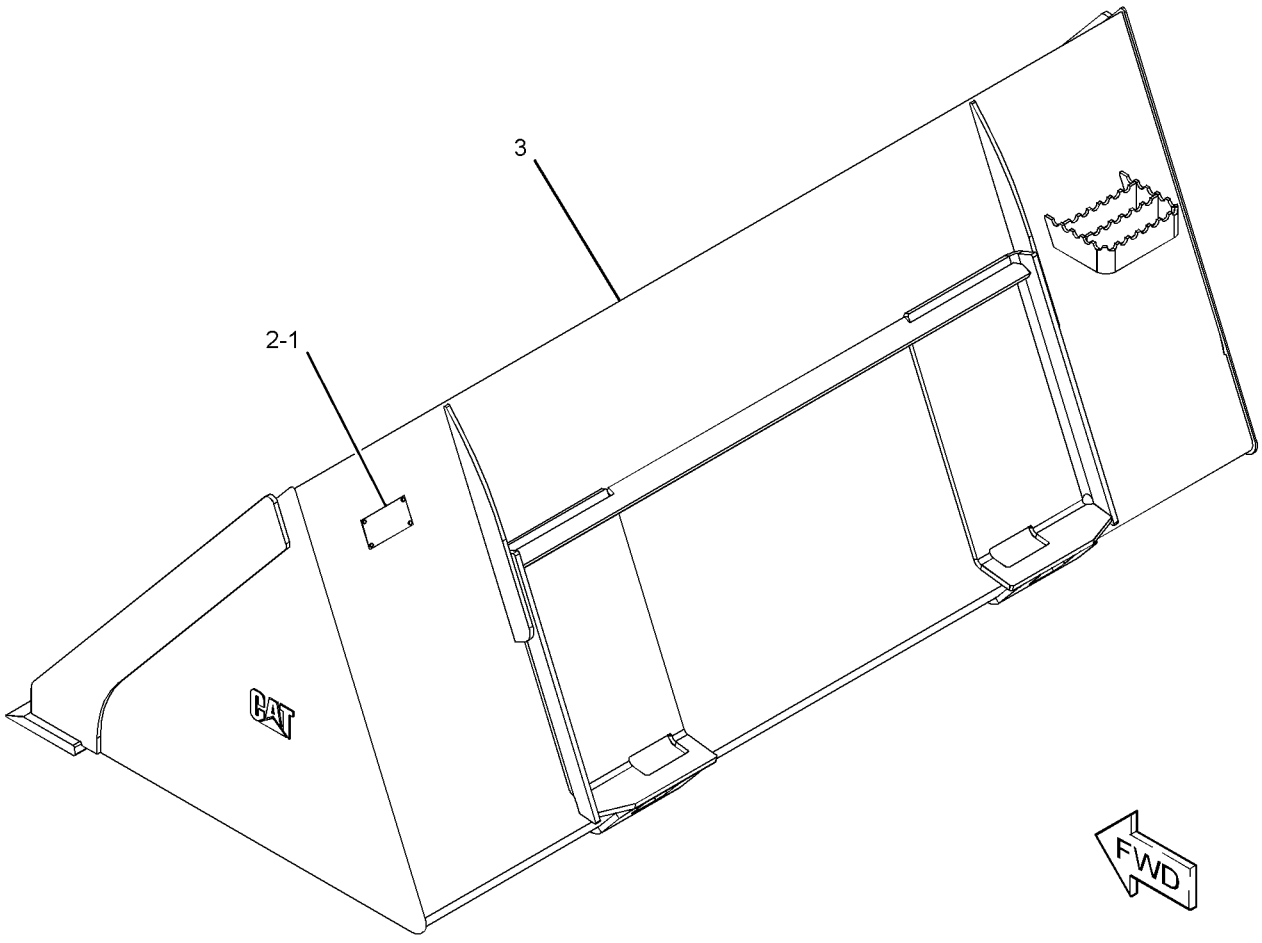

GRAPHIC #1 **<END>** g01951970

279-5422 BUCKET AS-LIGHT MATERIAL

S/N: A9H1-UP
1829-MM (72-IN)
PART OF 279-5421 BUCKET AS-LIGHT MATERIAL
AN ATTACHMENT

SMCS-6103 **i03636387**

NOTE	REF NO	GRAPHIC REF	PART NUMBER	QTY	PART NAME 1 2 3 4 5 6 (PRODUCT LEVEL)	SEE PAGE
	1	1	**149-5437**	1	EDGE	

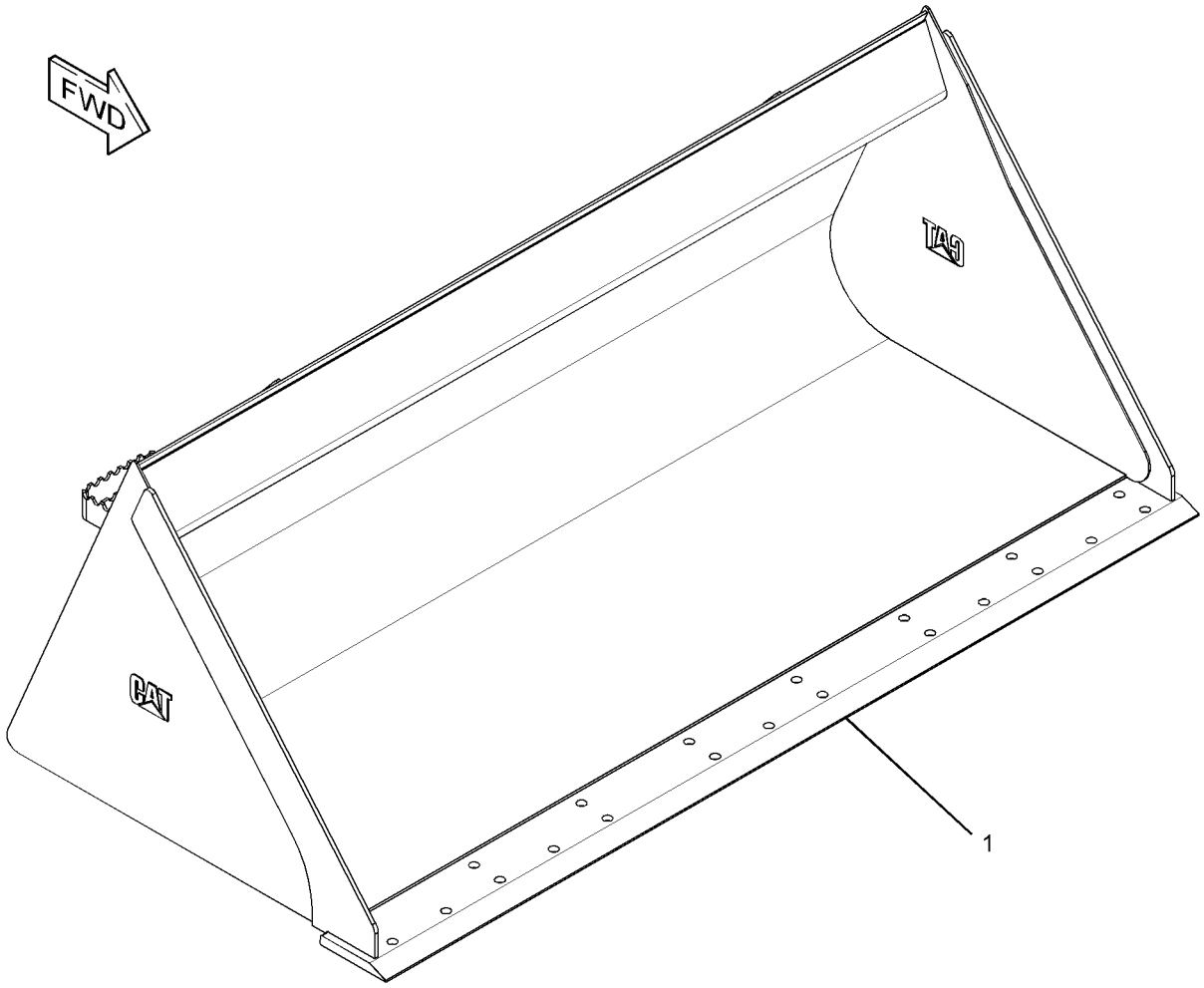

GRAPHIC #1 **<END>** g01952030

279-5423 BUCKET AS-LIGHT MATERIAL

S/N: A9H1-UP
1981-MM (78-IN)
PART OF 279-5424 BUCKET AS-LIGHT MATERIAL
AN ATTACHMENT

SMCS-6103 **i03636382**

NOTE	REF NO	GRAPHIC REF	PART NUMBER	QTY	PART NAME 1 2 3 4 5 6 (PRODUCT LEVEL)	SEE PAGE
	1	1	**199-7722**	1	EDGE	

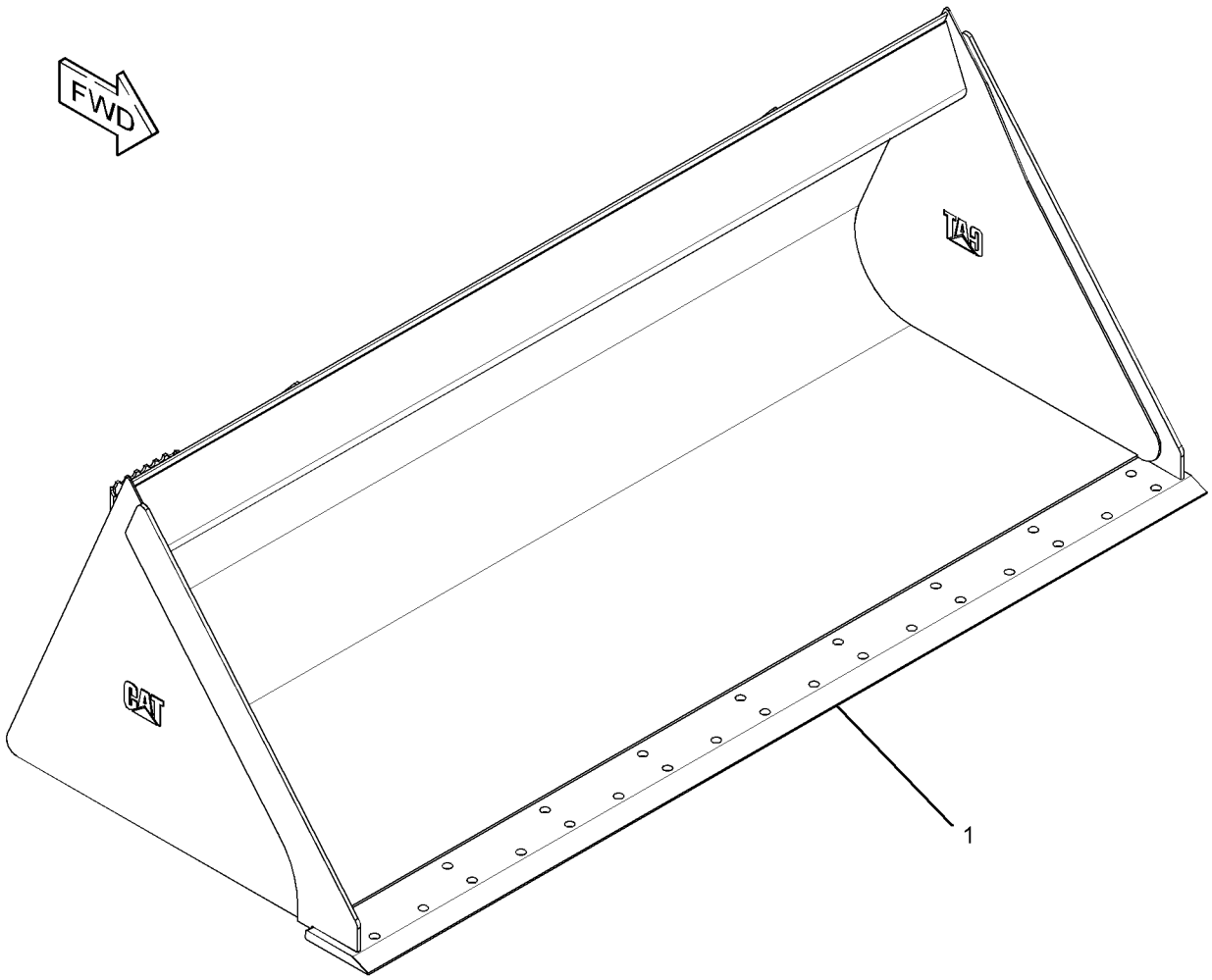

GRAPHIC #1 **<END>** g01952052

279-5424 BUCKET AS-LIGHT MATERIAL

S/N: A9H1-UP

PART OF 279-5425 BUCKET AR-LIGHT MATERIAL

AN ATTACHMENT

SMCS-6103 **i03648370**

NOTE	REF NO	GRAPHIC REF	PART NUMBER	QTY	PART NAME 1 2 3 4 5 6 (PRODUCT LEVEL)	SEE PAGE
	1	1	**154-2704**	1	PLATE-INSTRUCTION (BUCKET SPECIFICATIONS)	
	2	1	**168-8389**	4	TACK-FASTENER	
Y	3	1	*279-5423*	1	BUCKET AS-LIGHT MATERIAL (78-IN)	394

Y-SEPARATE ILLUSTRATION

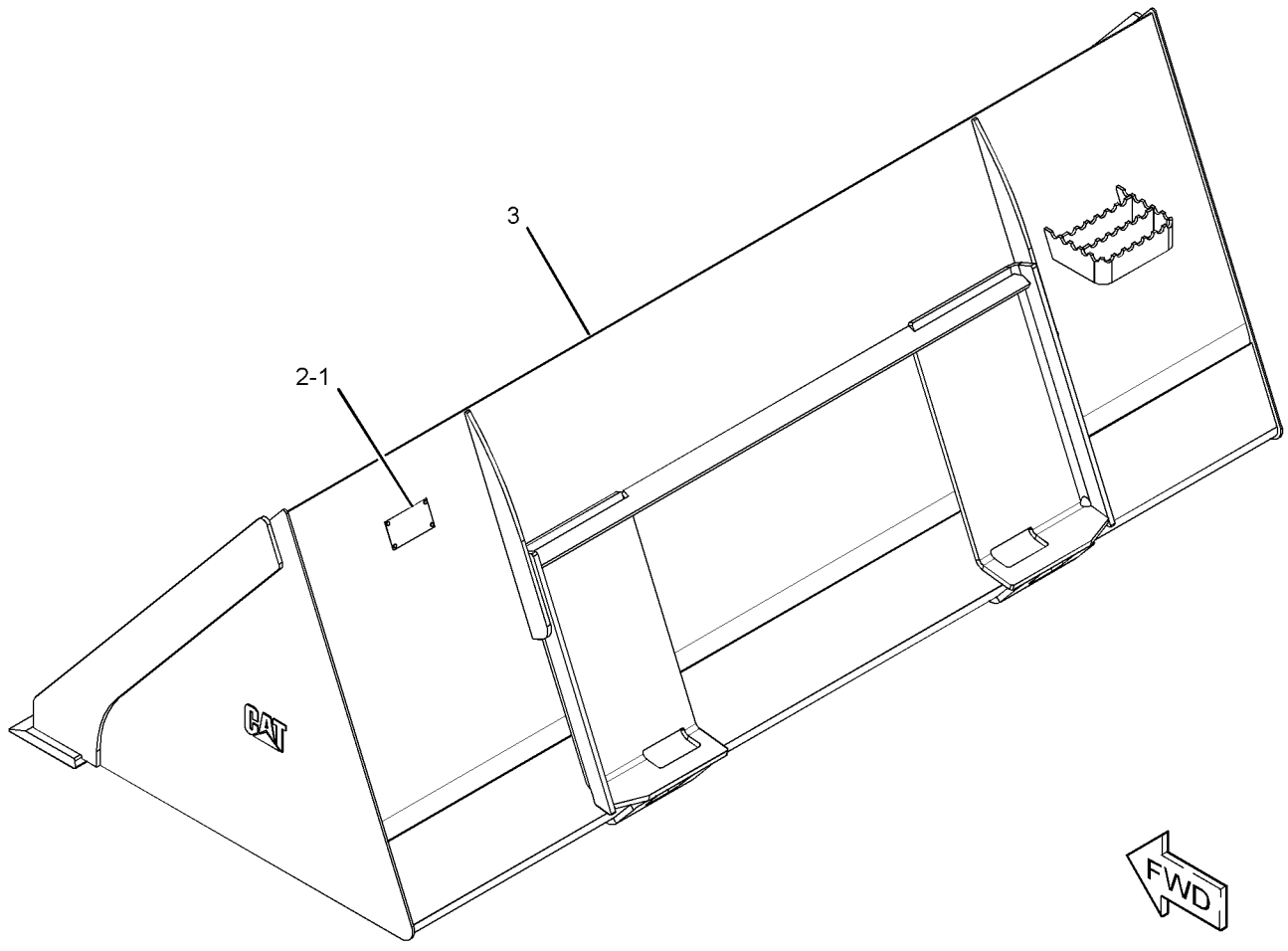

GRAPHIC #1 **<END>** g01951977

279-5428 BUCKET AS-LIGHT MATERIAL

S/N: A9H1-UP
2134-MM (84-IN)
PART OF 279-5429 BUCKET AS-LIGHT MATERIAL
AN ATTACHMENT

SMCS-6103 **i03636386**

NOTE	REF NO	GRAPHIC REF	PART NUMBER	QTY	PART NAME 1 2 3 4 5 6 (PRODUCT LEVEL)	SEE PAGE
	1	1	**220-4982**	1	EDGE	

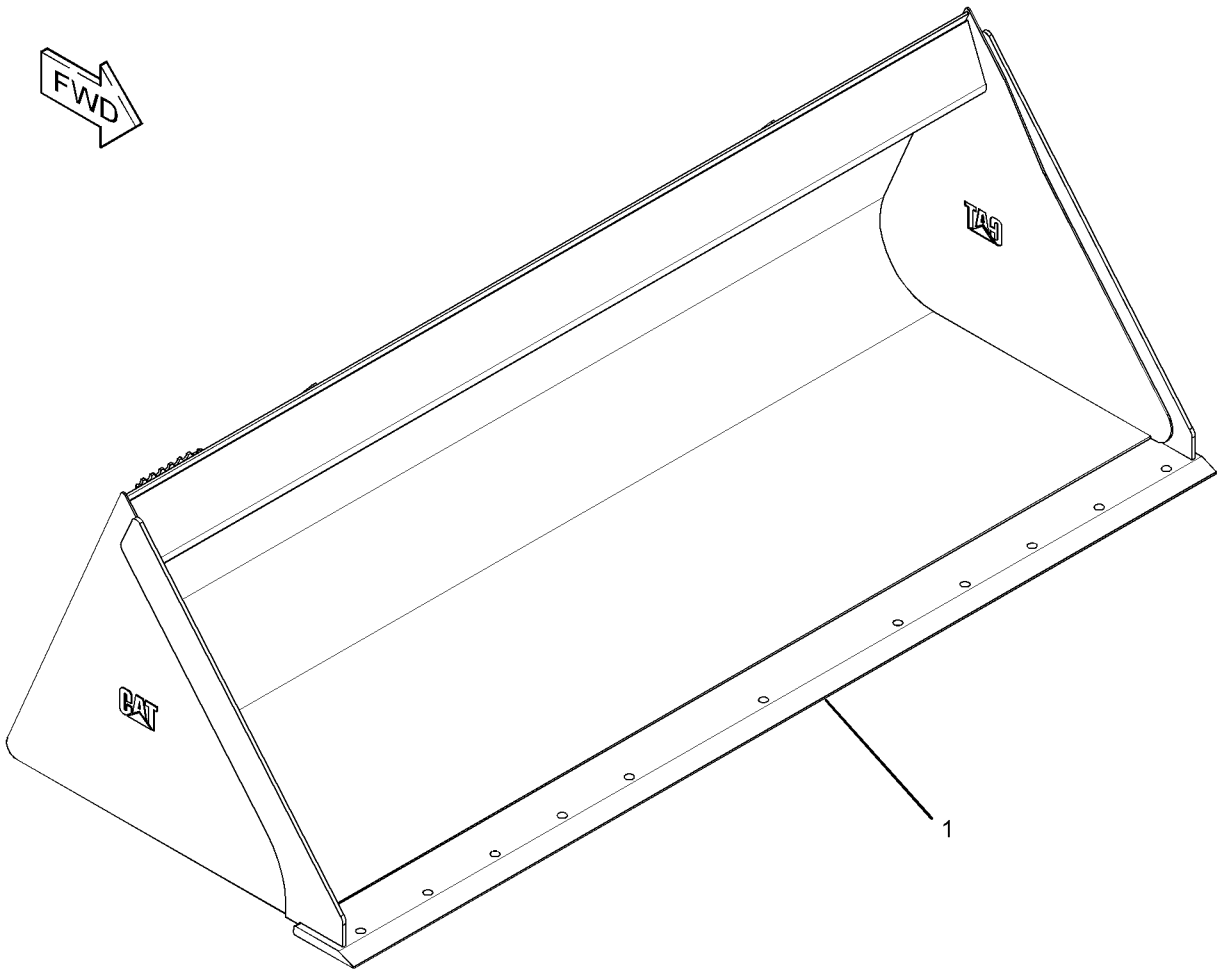

GRAPHIC #1 **<END>** g01952037

279-5429 BUCKET AS-LIGHT MATERIAL

S/N: A9H1-UP
PART OF 279-5430 BUCKET AR-LIGHT MATERIAL
AN ATTACHMENT

SMCS-6103 **i03648371**

NOTE	REF NO	GRAPHIC REF	PART NUMBER	QTY	PART NAME 1 2 3 4 5 6 (PRODUCT LEVEL)	SEE PAGE
	1	1	**154-2704**	1	PLATE-INSTRUCTION (BUCKET SPECIFICATIONS)	
	2	1	**168-8389**	4	TACK-FASTENER	
Y	3	1	*279-5428*	1	BUCKET AS-LIGHT MATERIAL (84-IN)	396

Y-SEPARATE ILLUSTRATION

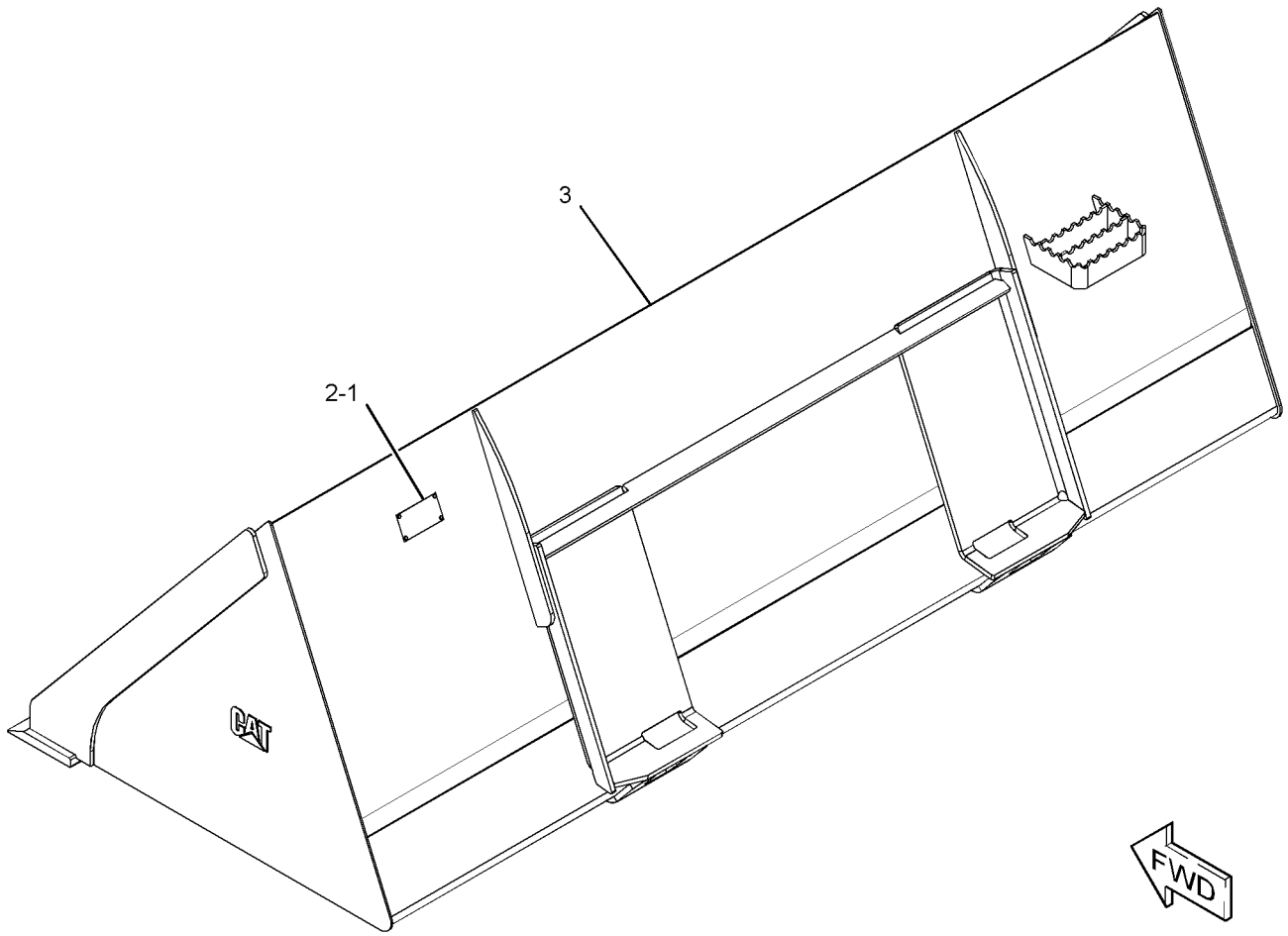

GRAPHIC #1 **<END>** g01951973

WORK TOOLS

292-9223 BUCKET AS-LIGHT MATERIAL

S/N: A9H1-UP

PART OF 296-7597 BUCKET AR-LIGHT MATERIAL

AN ATTACHMENT

SMCS-6103 **i03648378**

NOTE	REF NO	GRAPHIC REF	PART NUMBER	QTY	PART NAME 1 2 3 4 5 6 (PRODUCT LEVEL)	SEE PAGE
	1	1	**154-2704**	1	PLATE-INSTRUCTION (BUCKET SPECIFICATIONS)	
	2	1	**168-8389**	4	TACK-FASTENER	
Y	3	1	*292-9224*	1	BUCKET AS-LIGHT MATERIAL (96-IN)	399

Y-SEPARATE ILLUSTRATION

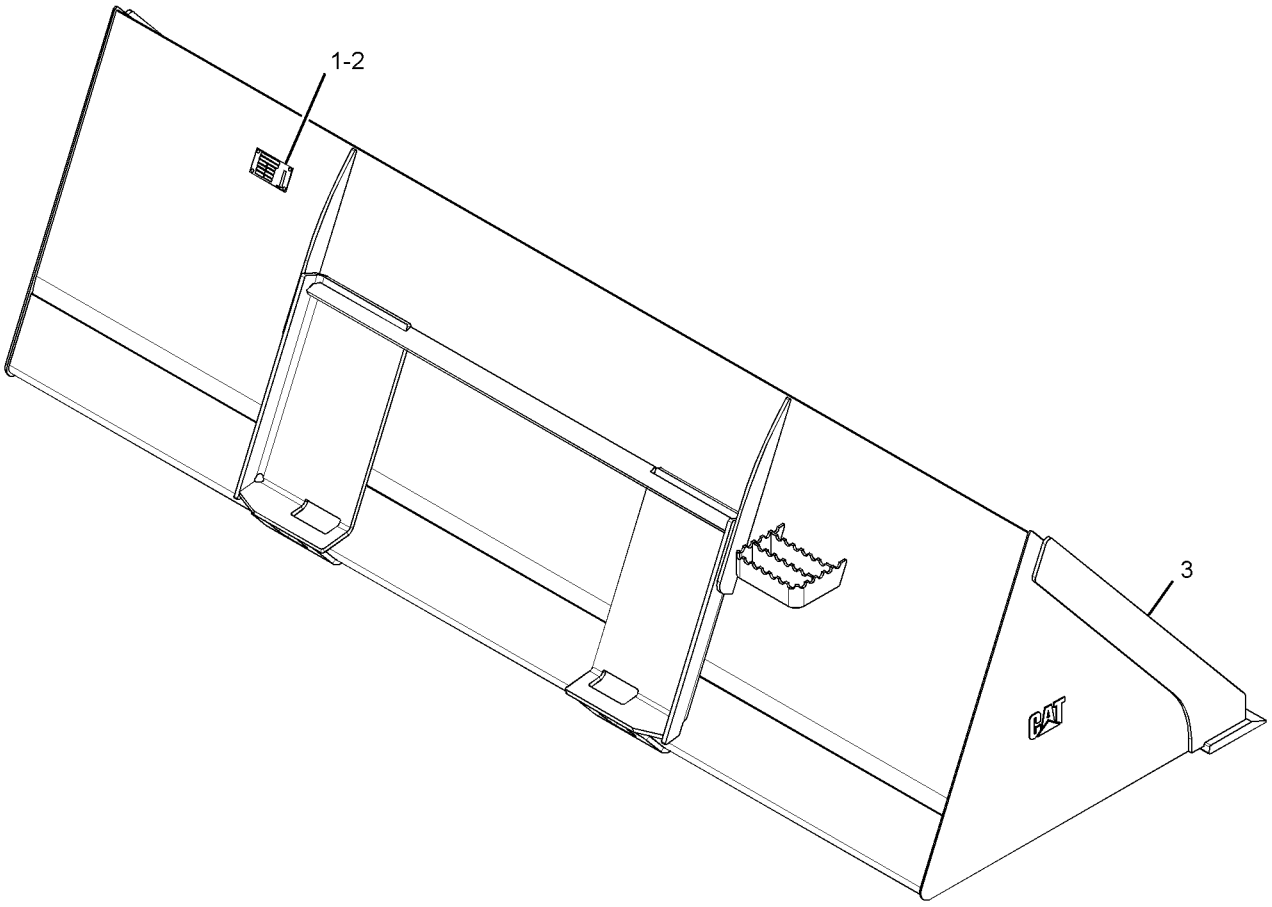

GRAPHIC #1 **<END>** g01322797

292-9224 BUCKET AS-LIGHT MATERIAL

S/N: A9H1-UP
2438-MM (96-IN)
PART OF 292-9223 BUCKET AS-LIGHT MATERIAL
AN ATTACHMENT

SMCS-6103 **i03611760**

NOTE	REF NO	GRAPHIC REF	PART NUMBER	QTY	PART NAME 1 2 3 4 5 6 (PRODUCT LEVEL)	SEE PAGE
	1	1	**292-9257**	1	EDGE	

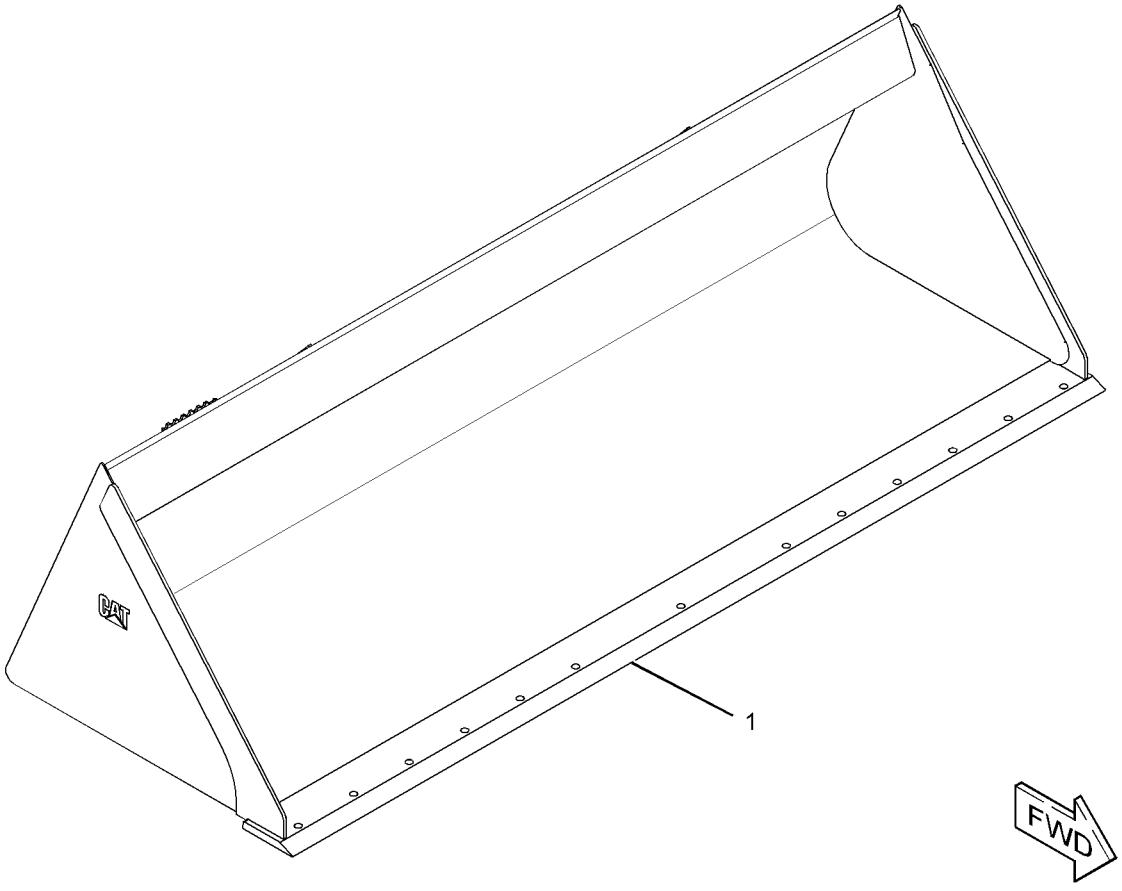

GRAPHIC #1 **<END>** g01938633

WORK TOOLS

285-6097 BUCKET AS-UTILITY

S/N: A9H1-UP
1524-MM (60-IN)
PART OF 285-6096 BUCKET GP-UTILITY
AN ATTACHMENT

SMCS-6101 **i03638905**

NOTE	REF NO	GRAPHIC REF	PART NUMBER	QTY	PART NAME 1 2 3 4 5 6 (PRODUCT LEVEL)	SEE PAGE
	1	1	**149-5435**	1	EDGE	

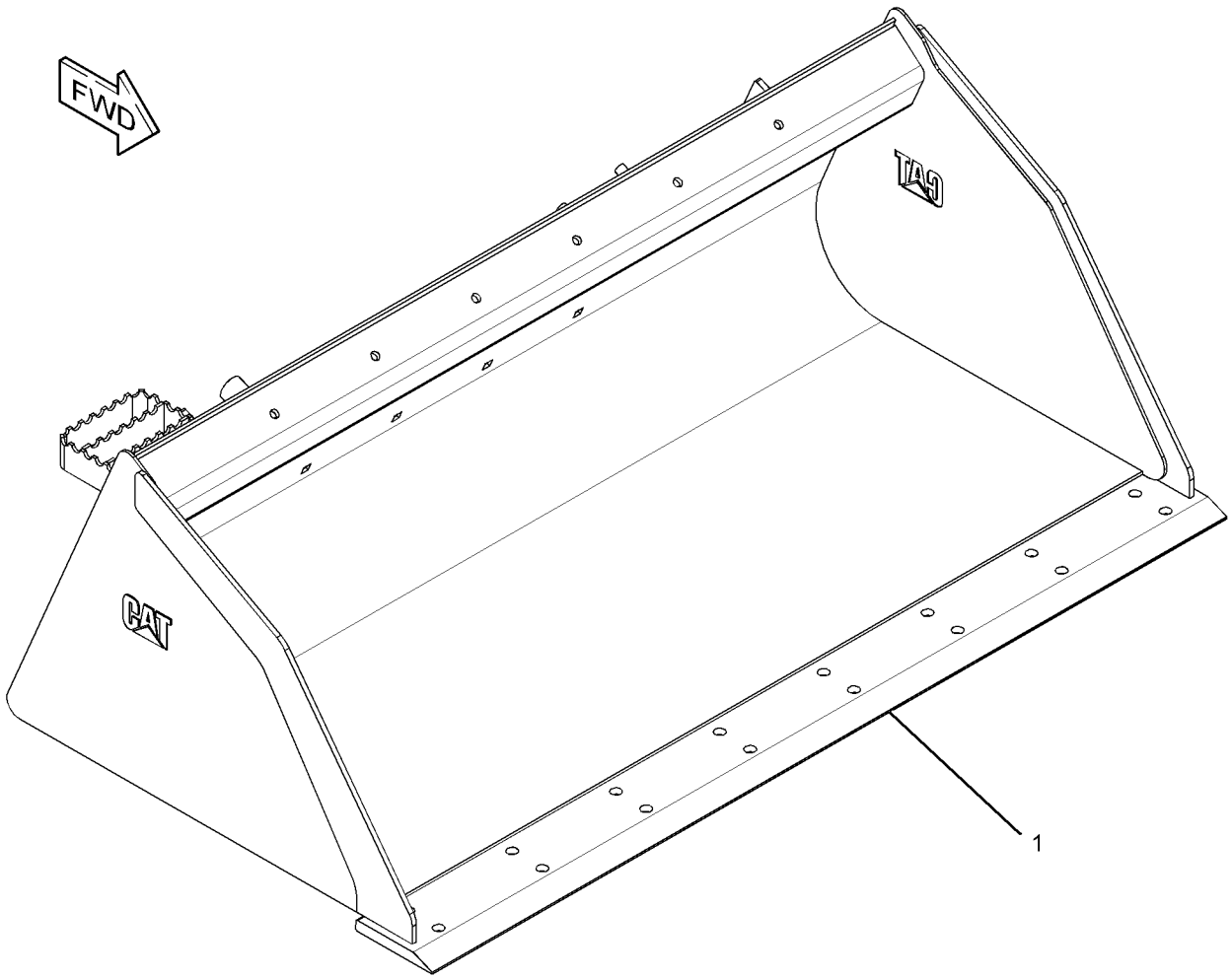

GRAPHIC #1 **<END>** g01953699

WORK TOOLS

285-6098 BUCKET AS-UTILITY

S/N: A9H1-UP
1676-MM (66-IN)
PART OF 285-6099 BUCKET GP-UTILITY
AN ATTACHMENT

SMCS-6101 **i03638906**

NOTE	REF NO	GRAPHIC REF	PART NUMBER	QTY	PART NAME 1 2 3 4 5 6 (PRODUCT LEVEL)	SEE PAGE
	1	1	**149-5436**	1	EDGE	

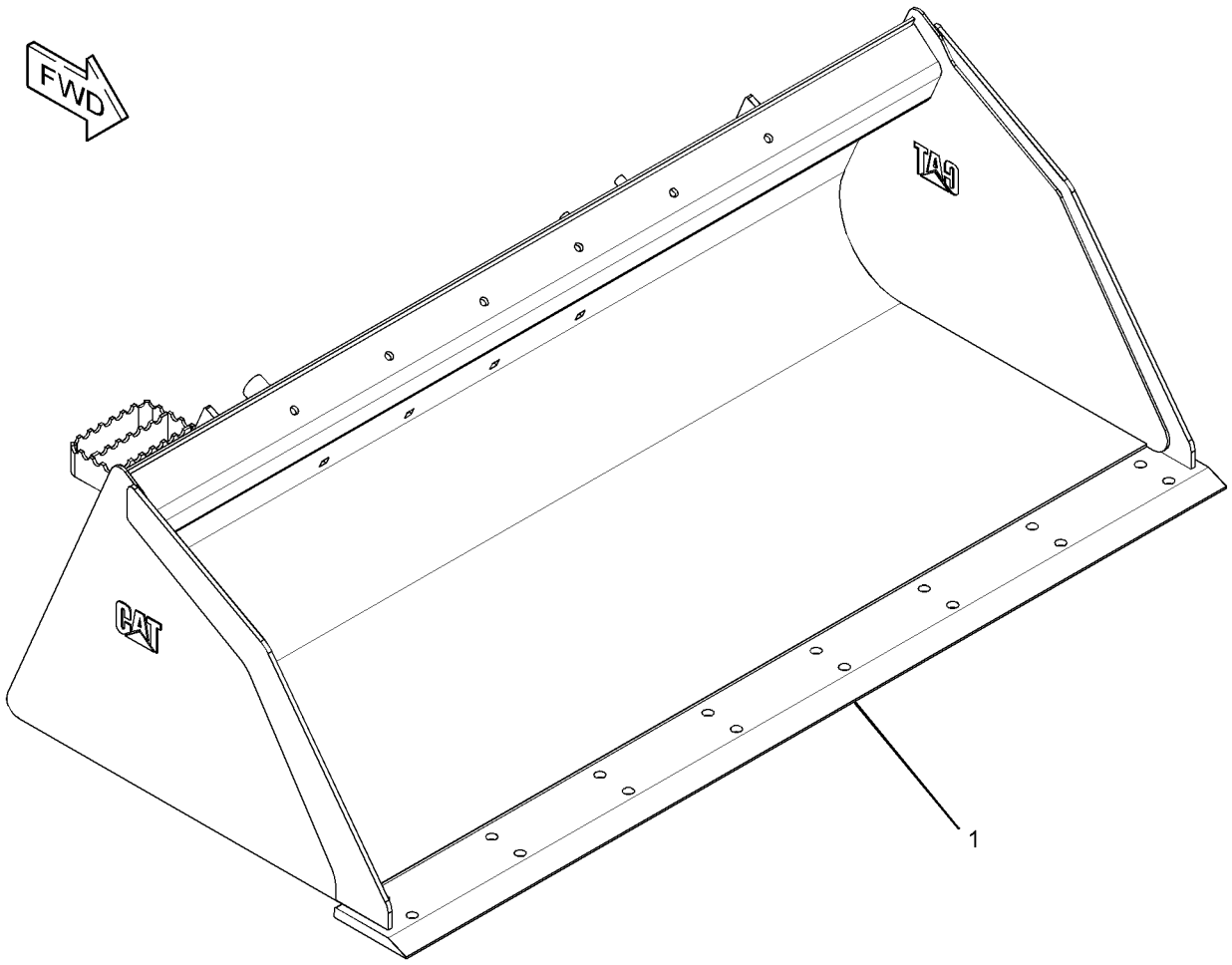

GRAPHIC #1 **<END>** g01953732

WORK TOOLS

285-6103 BUCKET AS-UTILITY

S/N: A9H1-UP
1829-MM (72-IN)
PART OF 285-6102 BUCKET GP-UTILITY
AN ATTACHMENT

SMCS-6101 **i03638909**

NOTE	REF NO	GRAPHIC REF	PART NUMBER	QTY	PART NAME 1 2 3 4 5 6 (PRODUCT LEVEL)	SEE PAGE
	1	1	**149-5437**	1	EDGE	

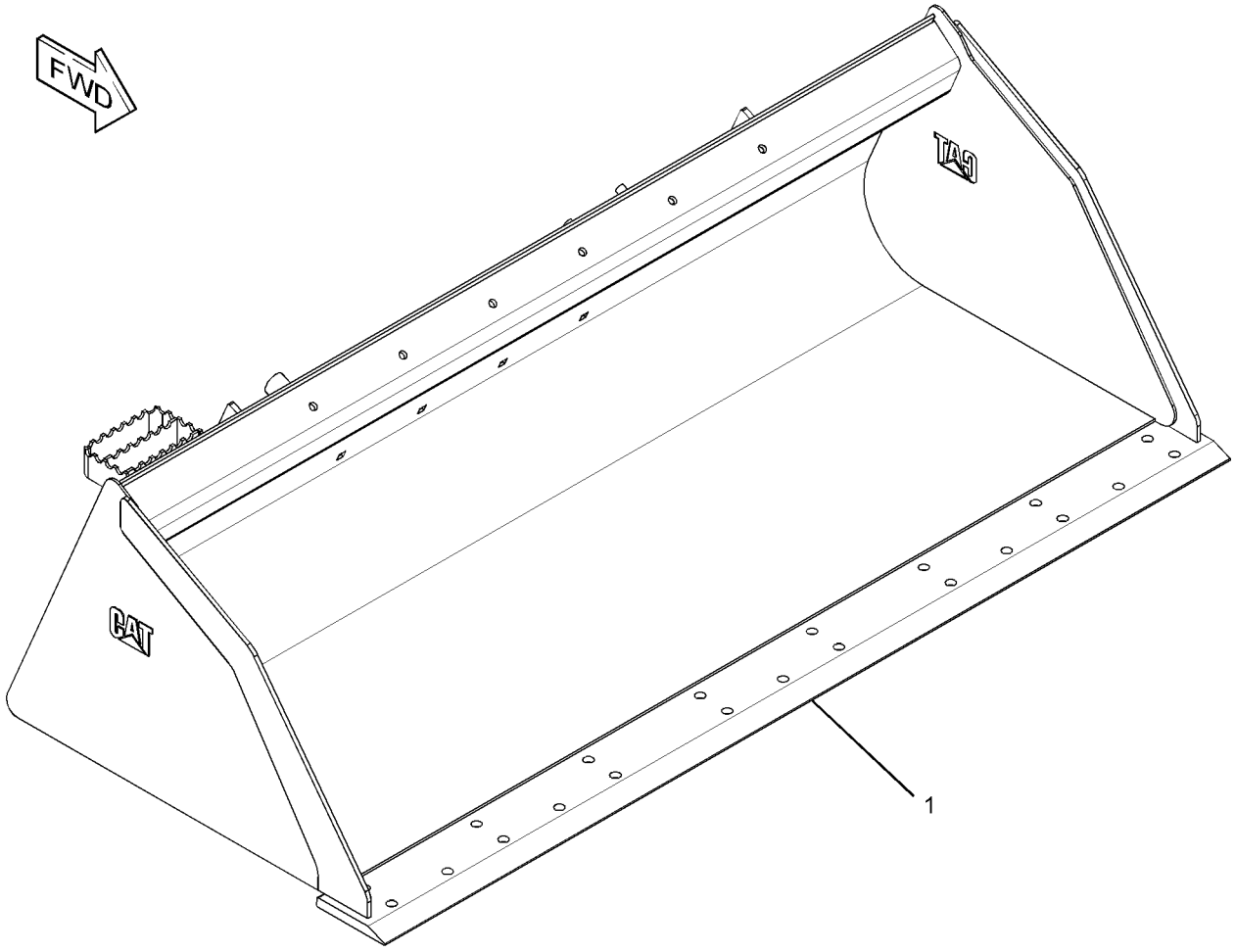

GRAPHIC #1 **<END>** g01953843

WORK TOOLS

152-0231 BUCKET GP-DIRT

S/N: A9H1-UP

FIELD REPLACEMENT FOR 165-6156—PAGE 363

AN ATTACHMENT

SMCS-6001 **i02962462**

NOTE	REF NO	GRAPHIC REF	PART NUMBER	QTY	PART NAME 1 2 3 4 5 6 (PRODUCT LEVEL)	SEE PAGE
Y	1	1	**165-6156**	1	BUCKET AS-DIRT	363
Y	2	1	*135-9384*	1	EDGE GP-CUTTING	439

Y-SEPARATE ILLUSTRATION

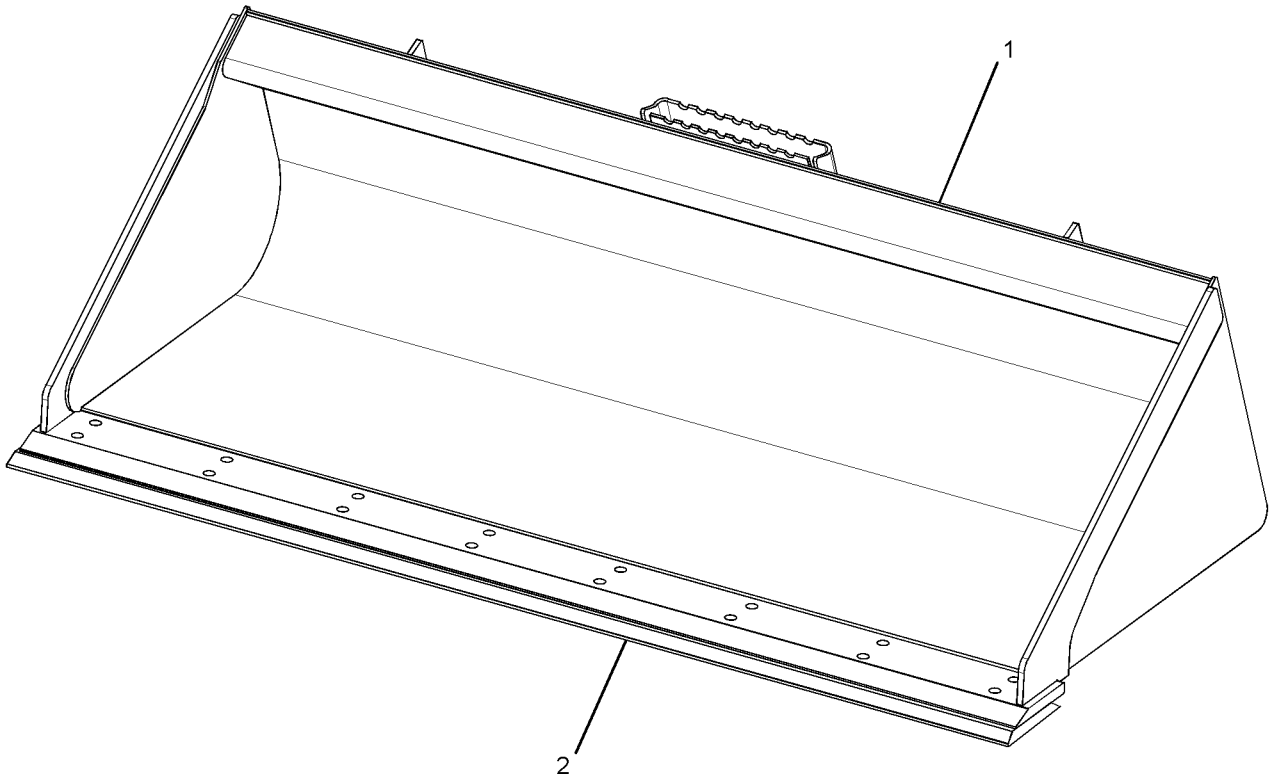

GRAPHIC #1 **<END>** g01481192

WORK TOOLS

152-0232 BUCKET GP-DIRT

S/N: A9H1-UP

FIELD REPLACEMENT FOR 165-6157—PAGE 364

AN ATTACHMENT

SMCS-6001 **i02961159**

NOTE	REF NO	GRAPHIC REF	PART NUMBER	QTY	PART NAME 1 2 3 4 5 6 (PRODUCT LEVEL)	SEE PAGE
Y	1	1	**165-6157**	1	BUCKET AS-DIRT	364
Y	2	1	*135-9385*	1	EDGE GP-CUTTING	440

Y-SEPARATE ILLUSTRATION

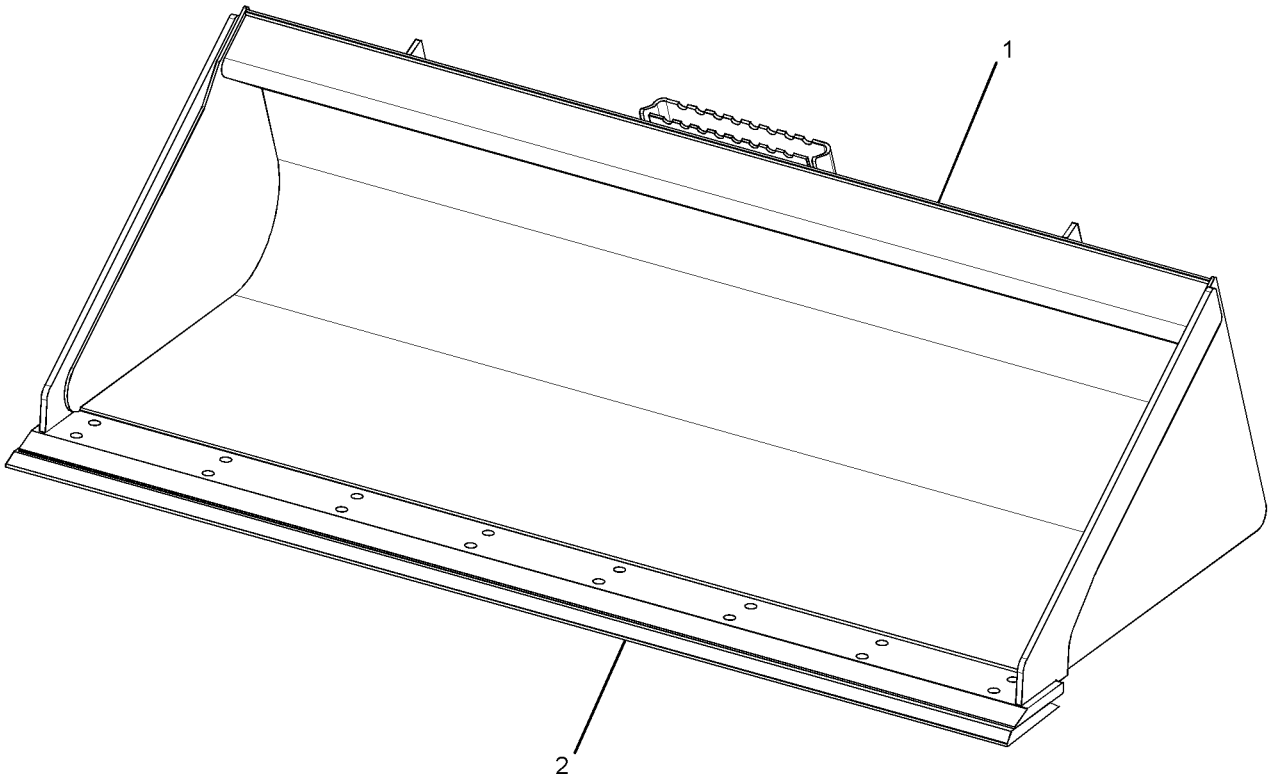

GRAPHIC #1 **<END>** g01481192

WORK TOOLS

268-4084 BUCKET GP-DIRT

S/N: A9H1-UP
PART OF 268-4083 BUCKET AR-DIRT
AN ATTACHMENT

SMCS-6001 **i03647009**

NOTE	REF NO	GRAPHIC REF	PART NUMBER	QTY	PART NAME 1 2 3 4 5 6 (PRODUCT LEVEL)	SEE PAGE
	1	1	**154-2704**	1	PLATE-INSTRUCTION (BUCKET SPECIFICATIONS)	
	2	1	**168-8389**	4	TACK-FASTENER	
Y	3	1	*268-4089*	1	BUCKET AS-DIRT	365

Y-SEPARATE ILLUSTRATION

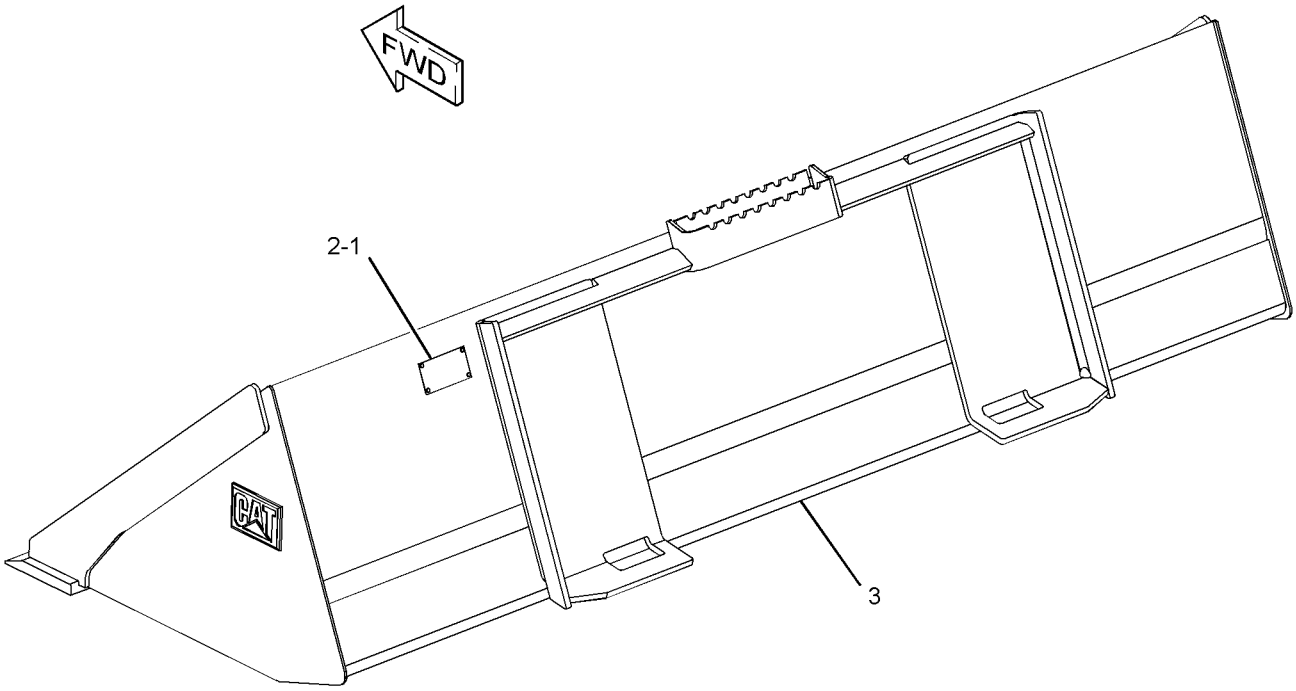

GRAPHIC #1 **<END>** g01957399

WORK TOOLS

296-8191 BUCKET GP-GENERAL PURPOSE

S/N: A9H1-UP

AN ATTACHMENT

SMCS-6101 **i03922644**

NOTE	PART NUMBER	QTY	PART NAME 1 2 3 4 5 6 (PRODUCT LEVEL)	SEE PAGE
Y	**292-9270**	1	BUCKET AS-GENERAL PURPOSE	382
Y	*141-4999*	9	TOOTH GP-UNI	481

Y-SEPARATE ILLUSTRATION

<END>

WORK TOOLS

156-0884 BUCKET GP-GRAPPLE

S/N: A9H1-UP
PART OF 157-7223 BUCKET AR-GRAPPLE
AN ATTACHMENT

SMCS-6704 **i03648335**

NOTE	REF NO	GRAPHIC REF	PART NUMBER	QTY	PART NAME 1 2 3 4 5 6 (PRODUCT LEVEL)	SEE PAGE
	1	1	**157-0940**	4	PIN	
Y	2	1	**169-8941**	1	BUCKET AS-GRAPPLE (60-IN) (INDUSTRIAL)	387
	3	1	**222-7467**	2	FORK AS	
					(EACH INCLUDES)	
		1	**158-5648**	2	BUSHING	
	4	1	**3B-8489**	4	FITTING-GREASE	
M	5	1	**6V-9189**	4	LOCKNUT (M8X1.25-THD)	
M	6	1	**8T-6869**	4	BOLT (M8X1.25X60-MM)	

M-METRIC PART
Y-SEPARATE ILLUSTRATION

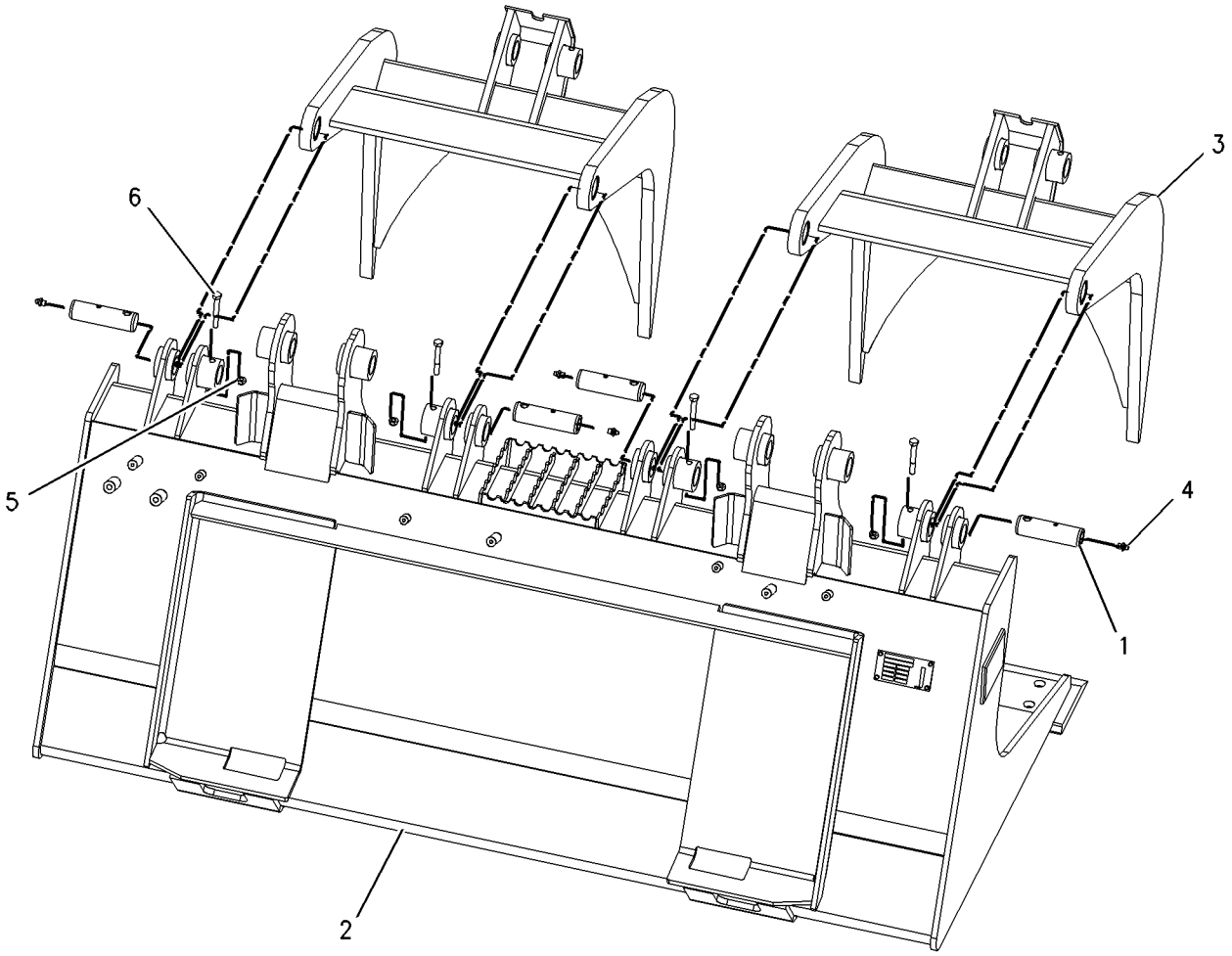

GRAPHIC #1 **<END>** g00978796

WORK TOOLS

156-0885 BUCKET GP-GRAPPLE

S/N: A9H1-UP
PART OF 157-7224 BUCKET AR-GRAPPLE
AN ATTACHMENT

SMCS-6704 **i03648337**

NOTE	REF NO	GRAPHIC REF	PART NUMBER	QTY	PART NAME 1 2 3 4 5 6 (PRODUCT LEVEL)	SEE PAGE
	1	1	**157-0940**	4	PIN	
Y	2	1	**169-8942**	1	BUCKET AS-GRAPPLE (66-IN) (INDUSTRIAL)	388
	3	1	**222-7467**	2	FORK AS	
					(EACH INCLUDES)	
		1	**158-5648**	2	BUSHING	
	4	1	**3B-8489**	4	FITTING-GREASE	
M	5	1	**6V-9189**	4	LOCKNUT (M8X1.25-THD)	
M	6	1	**8T-6869**	4	BOLT (M8X1.25X60-MM)	

M-METRIC PART
Y-SEPARATE ILLUSTRATION

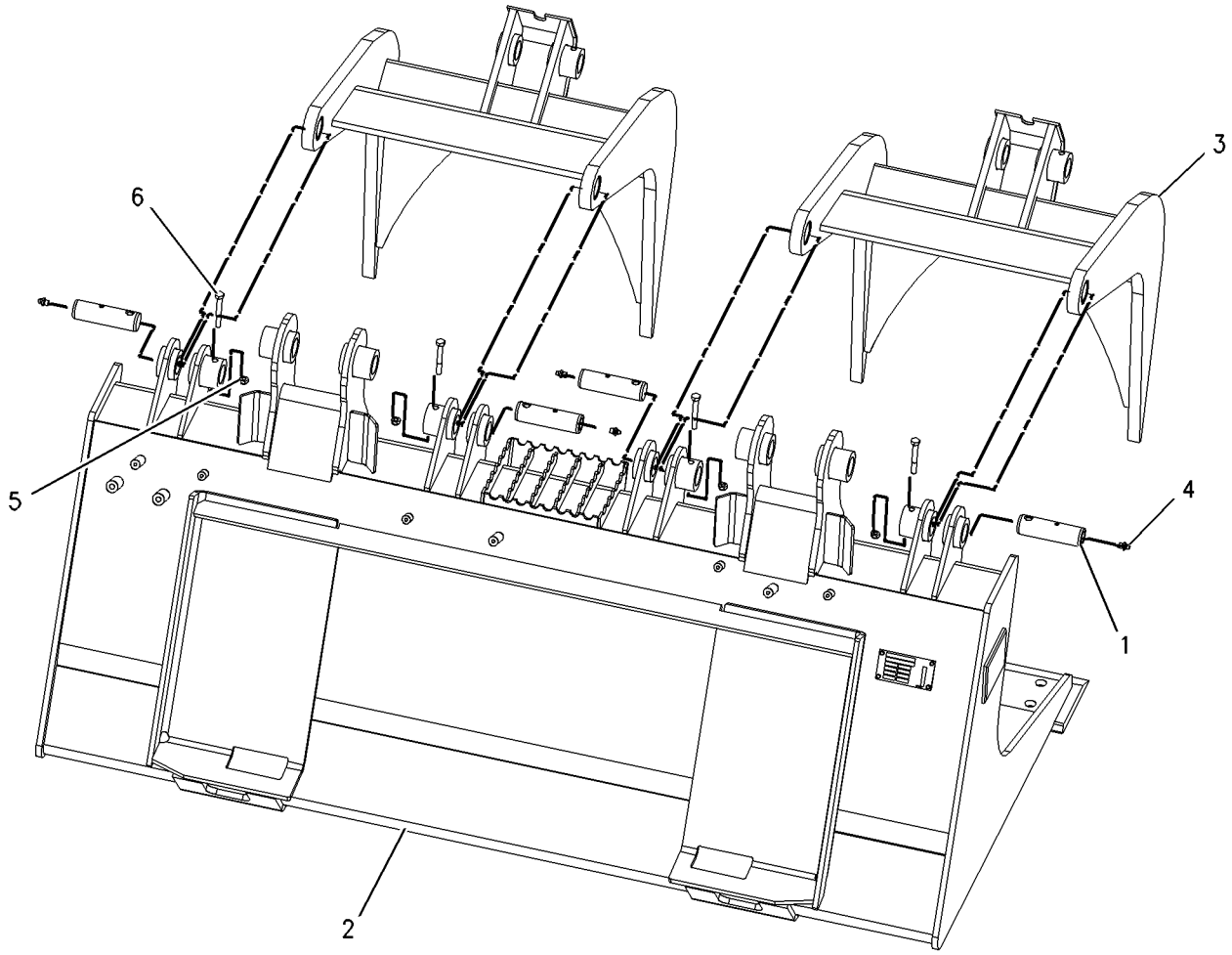

GRAPHIC #1 **<END>** g00978796

156-0886 BUCKET GP-GRAPPLE

S/N: A9H1-UP
PART OF 157-7225 BUCKET AR-GRAPPLE
AN ATTACHMENT

SMCS-6704 **i03648343**

NOTE	REF NO	GRAPHIC REF	PART NUMBER	QTY	PART NAME 1 2 3 4 5 6 (PRODUCT LEVEL)	SEE PAGE
	1	1	**157-0940**	4	PIN	
Y	2	1	**169-8943**	1	BUCKET AS-GRAPPLE (INDUSTRIAL) (72-IN)	389
	3	1	**222-7467**	2	FORK AS	
					(EACH INCLUDES)	
		1	**158-5648**	2	BUSHING	
	4	1	**3B-8489**	4	FITTING-GREASE	
M	5	1	**6V-9189**	4	LOCKNUT (M8X1.25-THD)	
M	6	1	**8T-6869**	4	BOLT (M8X1.25X60-MM)	

M-METRIC PART
Y-SEPARATE ILLUSTRATION

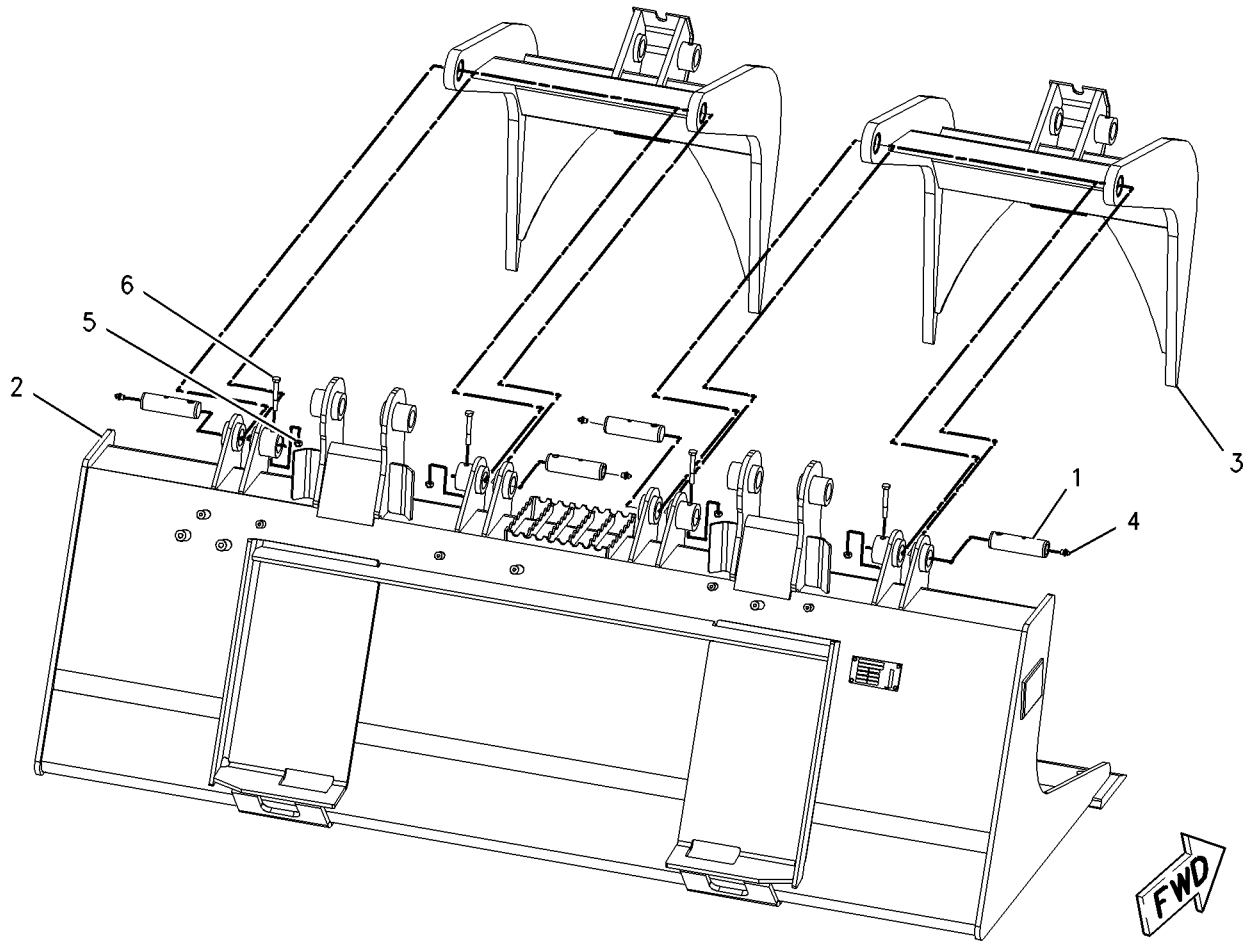

GRAPHIC #1 **<END>** g00993692

WORK TOOLS

217-6228 BUCKET GP-GRAPPLE–INDUSTRIAL

S/N: A9H1-UP
PART OF 217-6229 BUCKET AR-GRAPPLE
AN ATTACHMENT

SMCS-6704 **i03648354**

NOTE	REF NO	GRAPHIC REF	PART NUMBER	QTY	PART NAME 1 2 3 4 5 6 (PRODUCT LEVEL)	SEE PAGE
	1	1	**157-0940**	4	PIN	
Y	2	1	**217-6227**	1	BUCKET AS-GRAPPLE (INDUSTRIAL) (78-IN)	391
	3	1	**222-7467**	2	FORK AS	
					(EACH INCLUDES)	
		1	**158-5648**	2	BUSHING	
	4	1	**3B-8489**	4	FITTING-GREASE	
M	5	1	**6V-9189**	4	LOCKNUT (M8X1.25-THD)	
M	6	1	**8T-6869**	4	BOLT (M8X1.25X60-MM)	

M-METRIC PART
Y-SEPARATE ILLUSTRATION

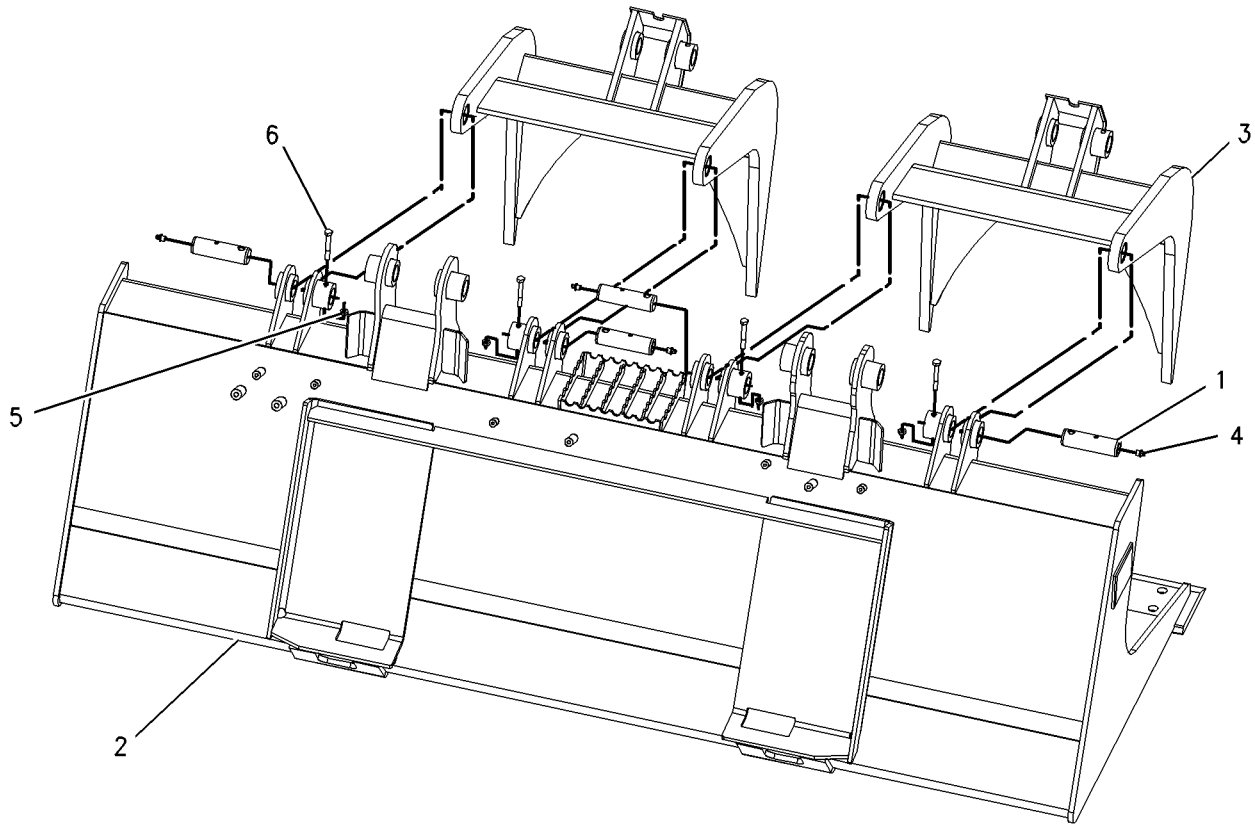

GRAPHIC #1 **<END>** g00992181

279-5359 BUCKET GP-GRAPPLE–INDUSTRIAL

S/N: A9H1-UP
PART OF 279-5360 FORK AR-GRAPPLE
AN ATTACHMENT

SMCS-6704 **i03690347**

NOTE	REF NO	GRAPHIC REF	PART NUMBER	QTY	PART NAME 1 2 3 4 5 6 (PRODUCT LEVEL)	SEE PAGE
	1	1	**157-0940**	4	PIN	
	2	1	**164-9989**	2	FILM-WARNING (CRUSH HAZARD)	
	3	1	**222-7467**	2	FORK AS	
					(EACH INCLUDES)	
		1	**158-5648**	2	BUSHING	
Y	4	1	*279-5358*	1	FRAME GP-FORK (72-IN, INDUSTRIAL)	458
	5	1	**3B-8489**	4	FITTING-GREASE	
M	6	1	**6V-9189**	4	LOCKNUT (M8X1.25-THD)	
M	7	1	**8T-6869**	4	BOLT (M8X1.25X60-MM)	

M-METRIC PART
Y-SEPARATE ILLUSTRATION

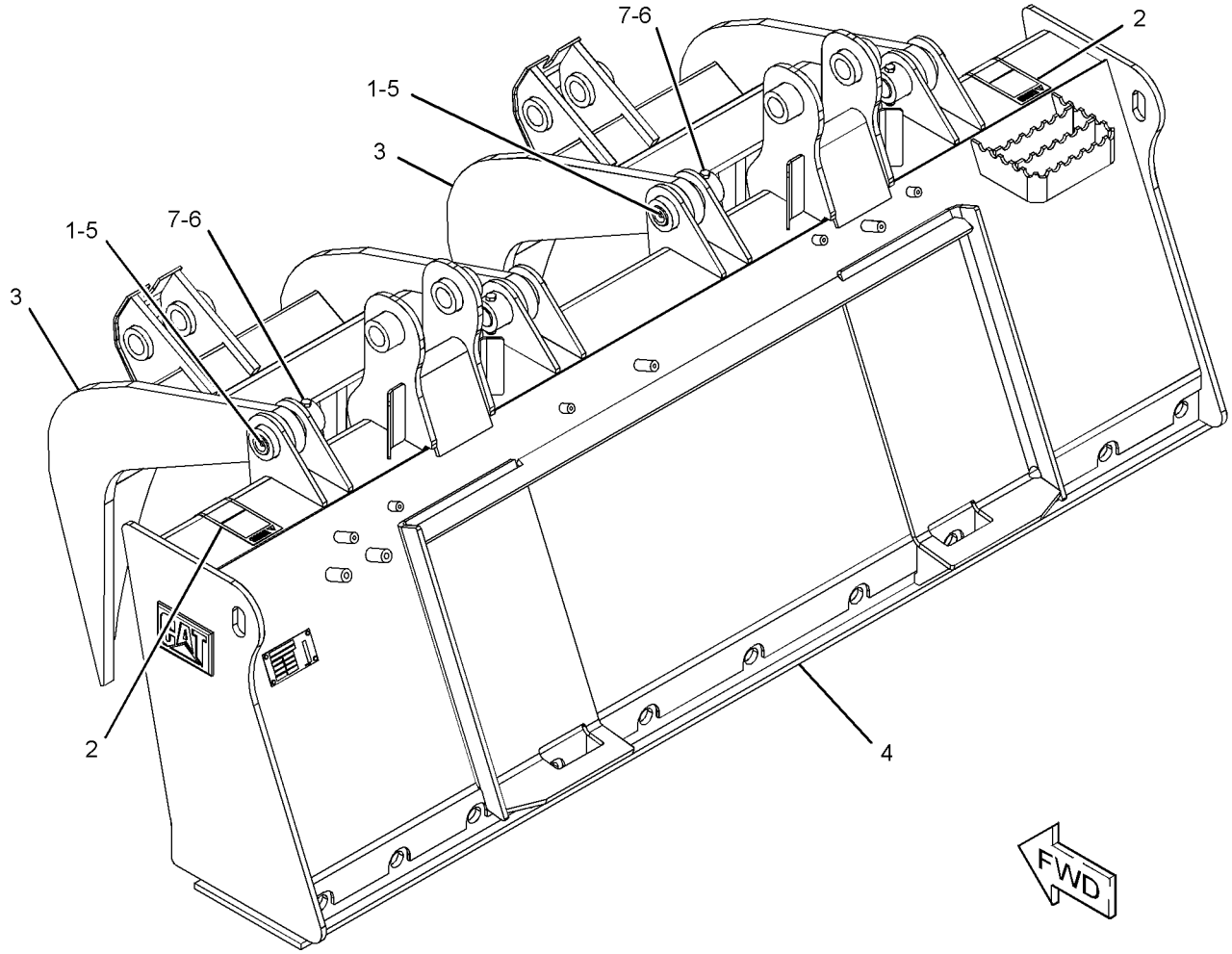

GRAPHIC #1 **<END>** g01280924

WORK TOOLS

286-9244 BUCKET GP-GRAPPLE

S/N: A9H1-UP
2136-MM (84-IN)
PART OF 286-9301 BUCKET AR-GRAPPLE
AN ATTACHMENT

SMCS-6704 **i02723701**

NOTE	REF NO	GRAPHIC REF	PART NUMBER	QTY	PART NAME 1 2 3 4 5 6 (PRODUCT LEVEL)	SEE PAGE
	1	1	**157-0940**	4	PIN	
	2	1	**286-9229**	1	TINE GP	
	3	1	**286-9243**	2	FORK AS	
					(EACH INCLUDES)	
		1	**158-5648**	2	BUSHING	
	4	1	**3B-8489**	4	FITTING-GREASE	
M	5	1	**6V-9189**	4	LOCKNUT (M8X1.25-THD)	
M	6	1	**8T-6869**	4	BOLT (M8X1.25X60-MM)	

M-METRIC PART

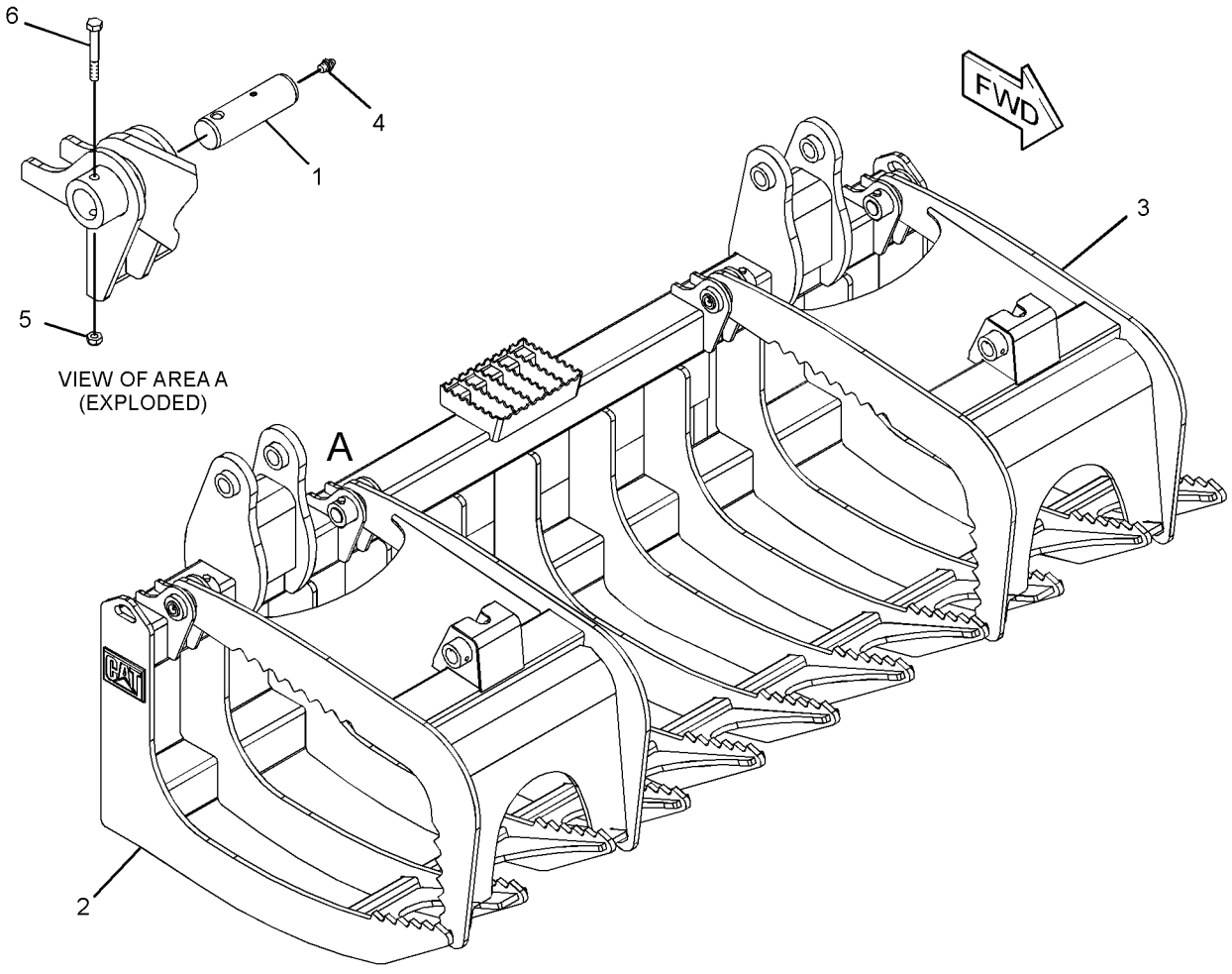

GRAPHIC #1 **<END>** g01372924

286-9278 BUCKET GP-GRAPPLE

S/N: A9H1-UP
1829-MM (72-IN)
PART OF 286-9300 BUCKET AR-GRAPPLE
AN ATTACHMENT

SMCS-6704 **i03635722**

NOTE	REF NO	GRAPHIC REF	PART NUMBER	QTY	PART NAME 1 2 3 4 5 6 (PRODUCT LEVEL)	SEE PAGE
	1	1	**157-0940**	4	PIN	
	2	1	**286-9243**	2	FORK AS	
					(EACH INCLUDES)	
		1	**158-5648**	2	BUSHING	
	3	1	**286-9274**	1	TINE GP	
	4	1	**3B-8489**	4	FITTING-GREASE	
M	5	1	**6V-9189**	4	LOCKNUT (M8X1.25-THD)	
M	6	1	**8T-6869**	4	BOLT (M8X1.25X60-MM)	

M-METRIC PART

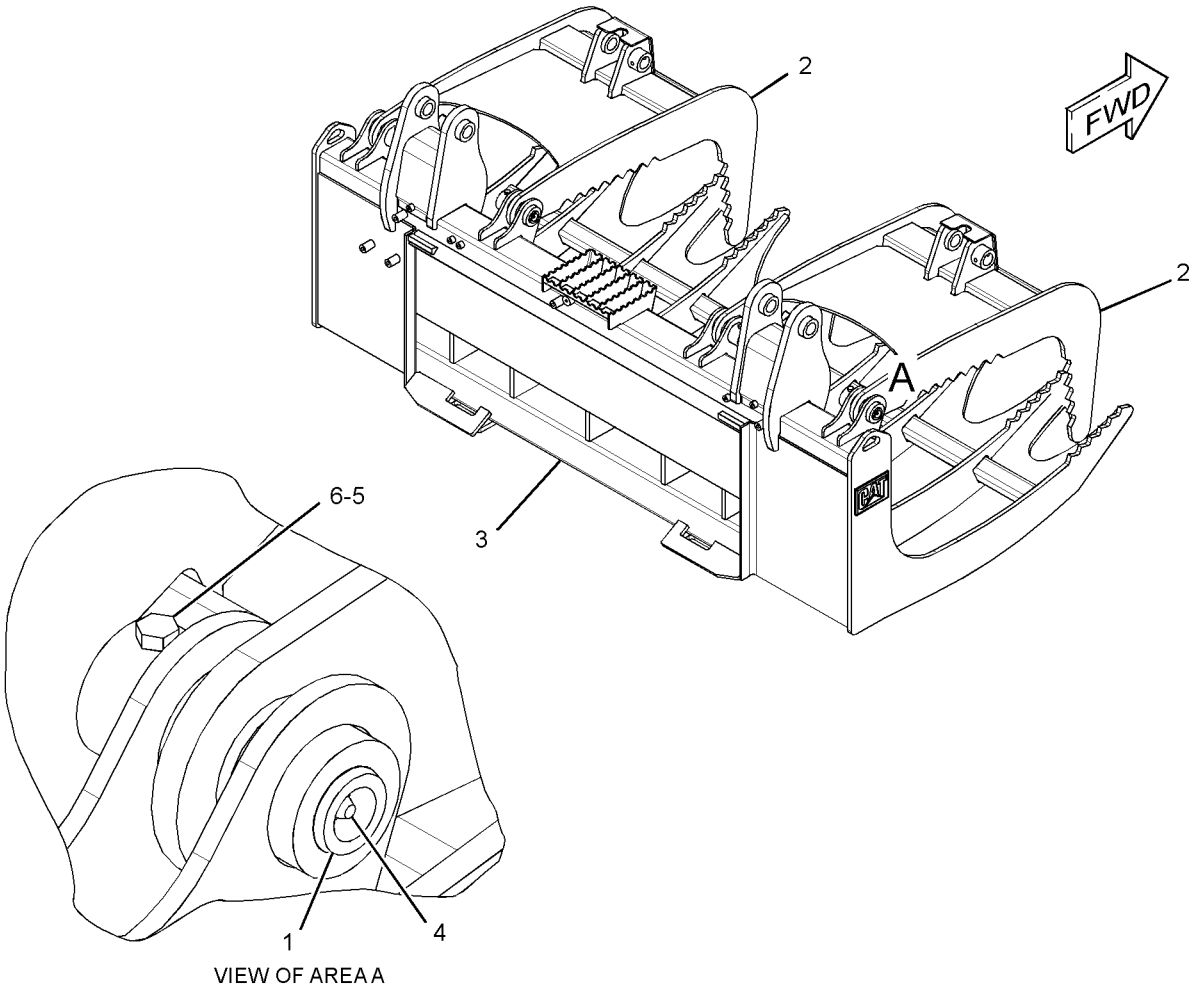

VIEW OF AREA A

GRAPHIC #1 **<END>** g01372568

WORK TOOLS

279-5383 BUCKET GP-MULTIPURPOSE

S/N: A9H1-UP
PART OF 279-5382 BUCKET AR-MULTIPURPOSE
AN ATTACHMENT

SMCS-6104 **i03622341**

NOTE	REF NO	GRAPHIC REF	PART NUMBER	QTY	PART NAME 1 2 3 4 5 6 (PRODUCT LEVEL)	SEE PAGE
Y	1	1	**149-4232**	1	CLAM AS-MULTIPURPOSE BUCKET	424
	2	1	**154-5012**	2	PIN	
M	3	1	**8T-6869**	2	BOLT (M8X1.25X60-MM)	
Y	4	1	*279-5384*	1	BLADE GP-MULTIPURPOSE BUCKET (60-IN)	336
	5	1	**3B-8489**	2	FITTING-GREASE	
M	6	1	**6V-9189**	2	LOCKNUT (M8X1.25-THD)	

M-METRIC PART
Y-SEPARATE ILLUSTRATION

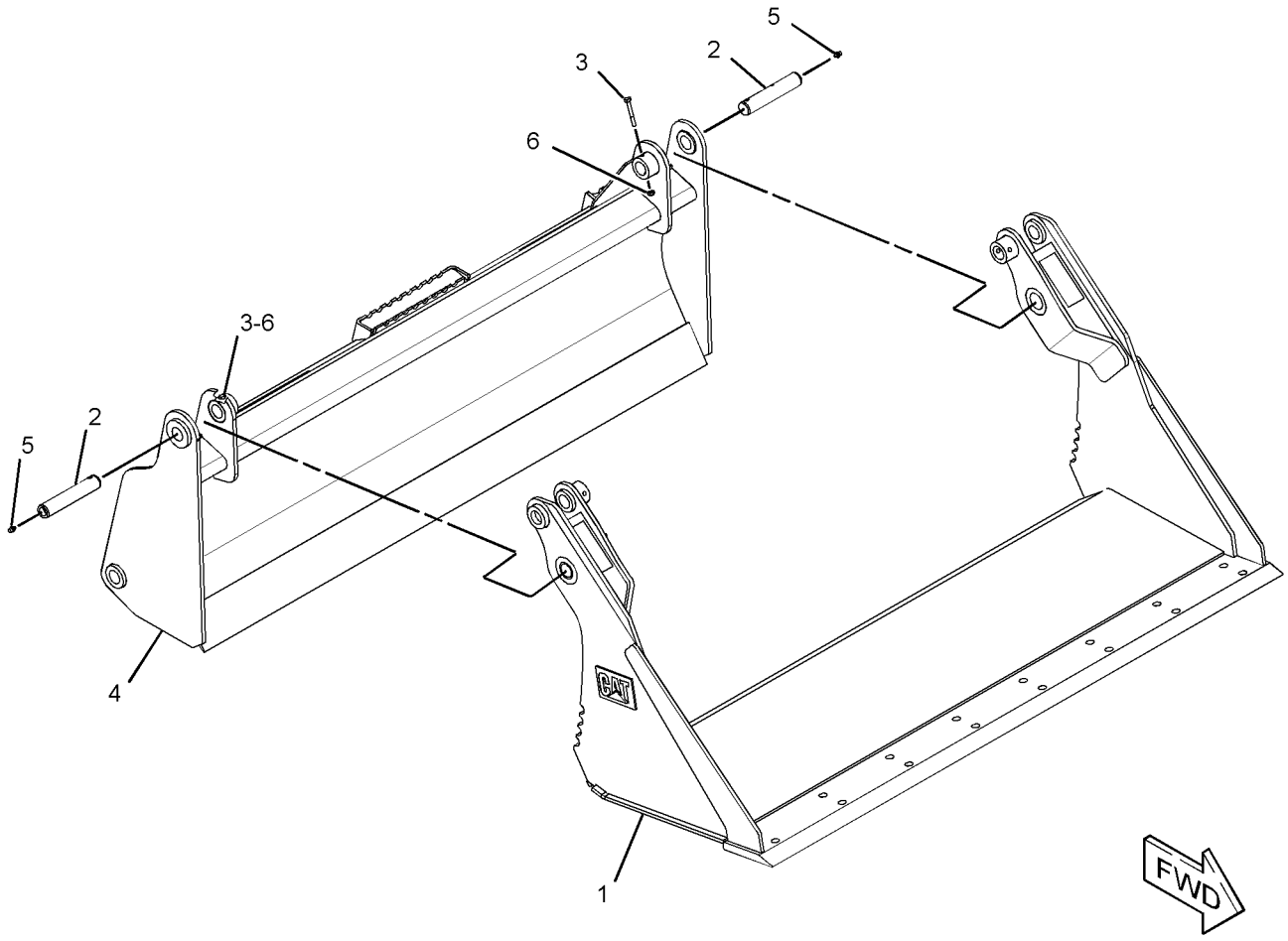

GRAPHIC #1 **<END>** g01945368

279-5389 BUCKET GP-MULTIPURPOSE

S/N: A9H1-UP

PART OF 279-5390 BUCKET AR-MULTIPURPOSE

AN ATTACHMENT

SMCS-6104 **i03635045**

NOTE	REF NO	GRAPHIC REF	PART NUMBER	QTY	PART NAME 1 2 3 4 5 6 (PRODUCT LEVEL)	SEE PAGE
	1	1	**154-5012**	2	PIN	
Y	2	1	**154-5053**	1	CLAM AS-MULTIPURPOSE BUCKET	425
Y	3	1	*279-5388*	1	BLADE GP-MULTIPURPOSE BUCKET (66-IN)	339
	4	1	**3B-8489**	2	FITTING-GREASE	
M	5	1	**6V-9189**	2	LOCKNUT (M8X1.25-THD)	
M	6	1	**8T-6869**	2	BOLT (M8X1.25X60-MM)	

M-METRIC PART
Y-SEPARATE ILLUSTRATION

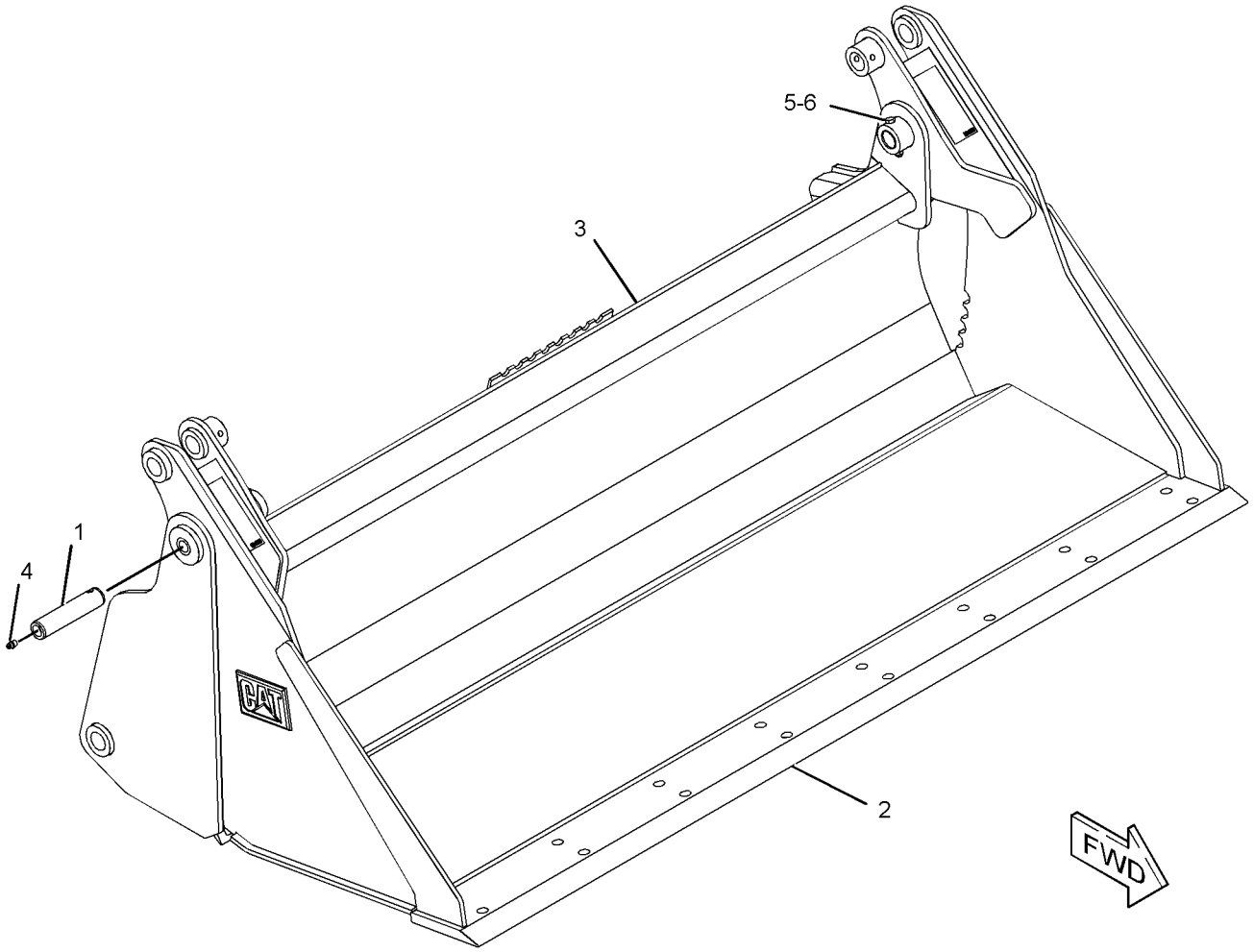

GRAPHIC #1 **<END>** g01952471

WORK TOOLS

279-5397 BUCKET GP-MULTIPURPOSE

S/N: A9H1-UP
PART OF 279-5398 BUCKET AR-MULTIPURPOSE
AN ATTACHMENT

SMCS-6104 **i03635046**

NOTE	REF NO	GRAPHIC REF	PART NUMBER	QTY	PART NAME 1 2 3 4 5 6 (PRODUCT LEVEL)	SEE PAGE
	1	1	**154-5012**	2	PIN	
Y	2	1	**154-5070**	1	CLAM AS-MULTIPURPOSE BUCKET	426
M	3	1	**8T-6869**	2	BOLT (M8X1.25X60-MM)	
Y	4	1	*279-5396*	1	BLADE GP-MULTIPURPOSE BUCKET (72-IN)	341
	5	1	**3B-8489**	2	FITTING-GREASE	
M	6	1	**6V-9189**	2	LOCKNUT (M8X1.25-THD)	

M-METRIC PART
Y-SEPARATE ILLUSTRATION

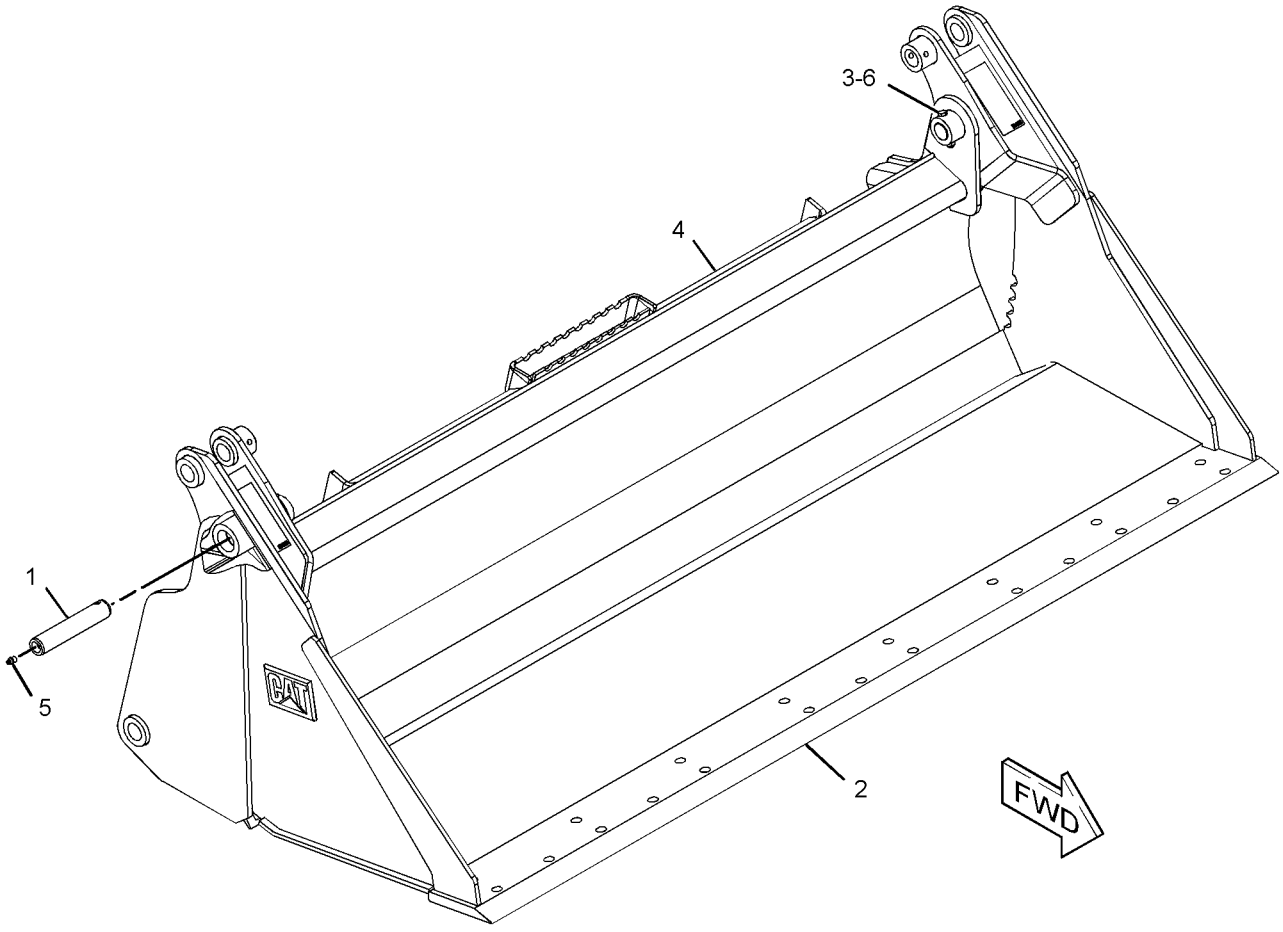

GRAPHIC #1 **<END>** g01952445

279-5404 BUCKET GP-MULTIPURPOSE

S/N: A9H1-UP
PART OF 279-5403 BUCKET AR-MULTIPURPOSE
AN ATTACHMENT

SMCS-6104 **i03635047**

NOTE	REF NO	GRAPHIC REF	PART NUMBER	QTY	PART NAME 1 2 3 4 5 6 (PRODUCT LEVEL)	SEE PAGE
	1	1	**154-5012**	2	PIN	
M	2	1	**8T-6869**	2	BOLT (M8X1.25X60-MM)	
Y	3	1	**199-8308**	1	CLAM AS-MULTIPURPOSE BUCKET	427
Y	4	1	*279-5405*	1	BLADE GP-MULTIPURPOSE BUCKET (78-IN)	342
	5	1	**3B-8489**	2	FITTING-GREASE	
M	6	1	**6V-9189**	2	LOCKNUT (M8X1.25-THD)	

M-METRIC PART
Y-SEPARATE ILLUSTRATION

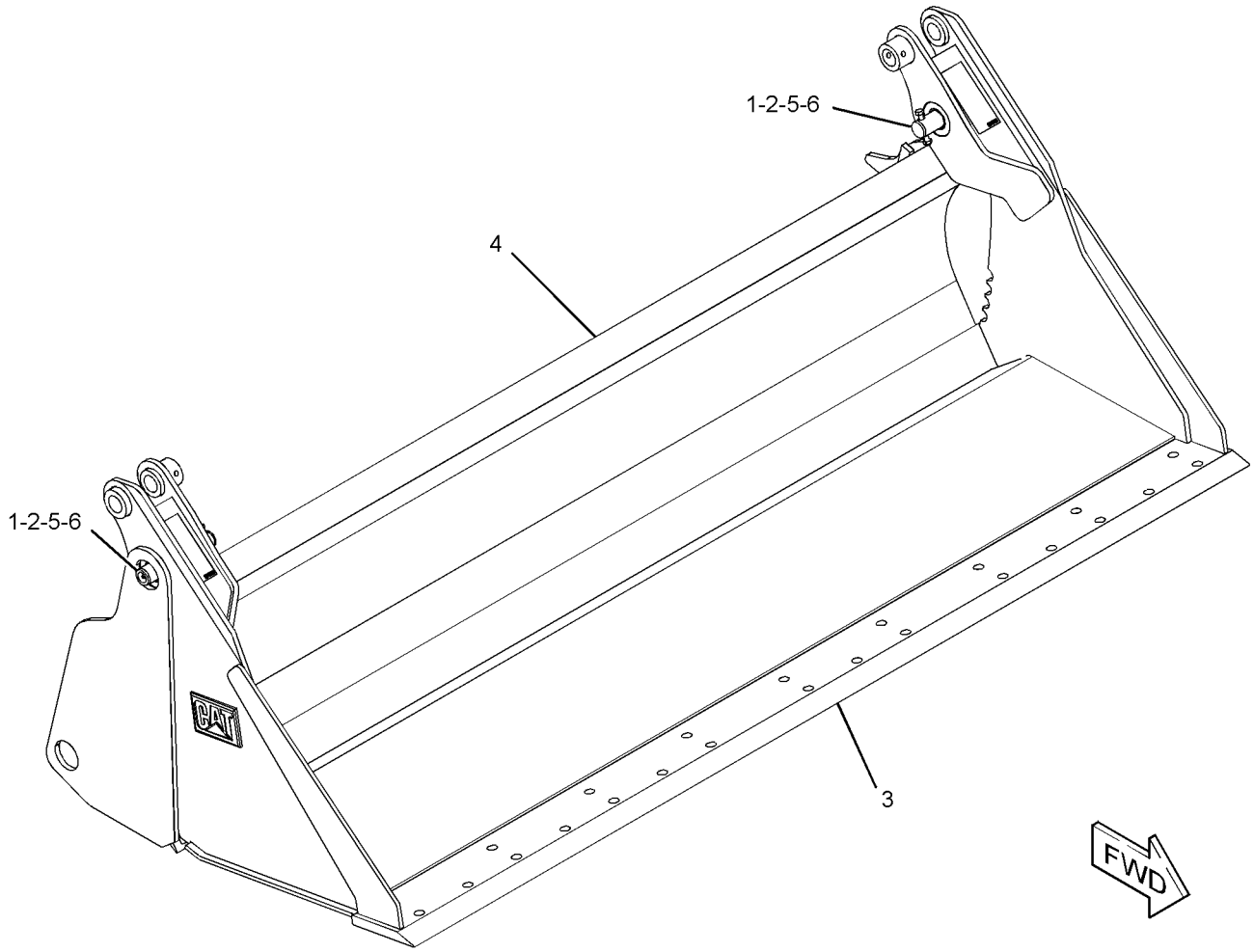

GRAPHIC #1 **<END>** g01920456

WORK TOOLS

293-0141 BUCKET GP-MULTIPURPOSE

S/N: A9H1-UP
PART OF 293-0139 BUCKET AR-MULTIPURPOSE
AN ATTACHMENT

SMCS-6104 **i03647948**

NOTE	REF NO	GRAPHIC REF	PART NUMBER	QTY	PART NAME 1 2 3 4 5 6 (PRODUCT LEVEL)	SEE PAGE
	1	1	**154-5012**	2	PIN	
Y	2	1	*293-0142*	1	BLADE GP-MULTIPURPOSE BUCKET (84-IN)	344
Y	3	1	**293-0148**	1	CLAM AS-MULTIPURPOSE BUCKET	428
	4	1	**3B-8489**	2	FITTING-GREASE	
M	5	1	**6V-9189**	2	LOCKNUT (M8X1.25-THD)	
M	6	1	**8T-6869**	2	BOLT (M8X1.25X60-MM)	

M-METRIC PART
Y-SEPARATE ILLUSTRATION

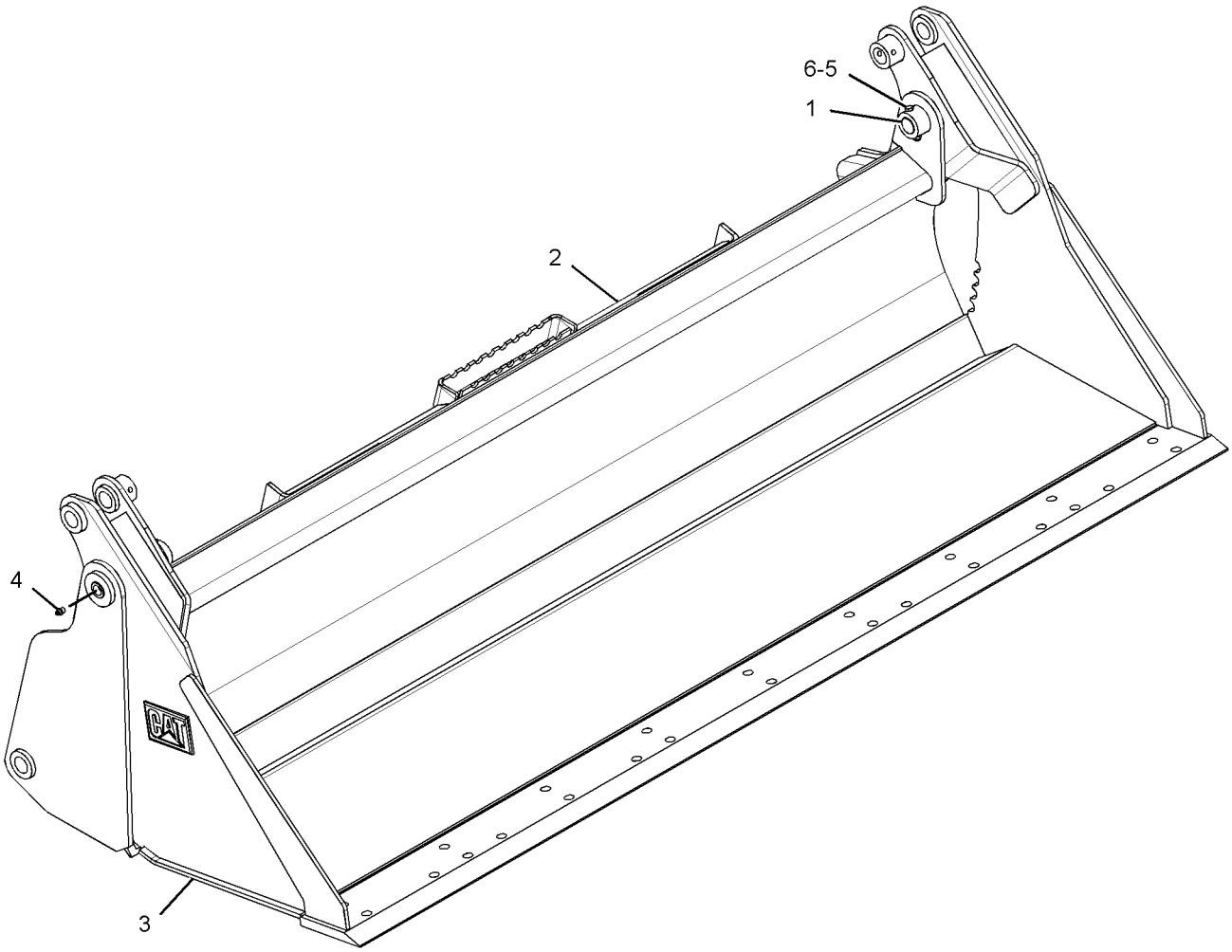

GRAPHIC #1 **<END>** g01327400

WORK TOOLS

285-6096 BUCKET GP-UTILITY

S/N: A9H1-UP
PART OF 285-6095 BUCKET AR-UTILITY
AN ATTACHMENT

SMCS-6101 **i04156280**

NOTE	REF NO	GRAPHIC REF	PART NUMBER	QTY	PART NAME 1 2 3 4 5 6 (PRODUCT LEVEL)	SEE PAGE
	1	1	**358-4944**	1	PLATE-IDENTIFICATION (BUCKET SPECIFICATIONS)	
	2	1	**168-8389**	4	TACK-FASTENER	
Y	3	1	*285-6097*	1	BUCKET AS-UTILITY	400

Y-SEPARATE ILLUSTRATION

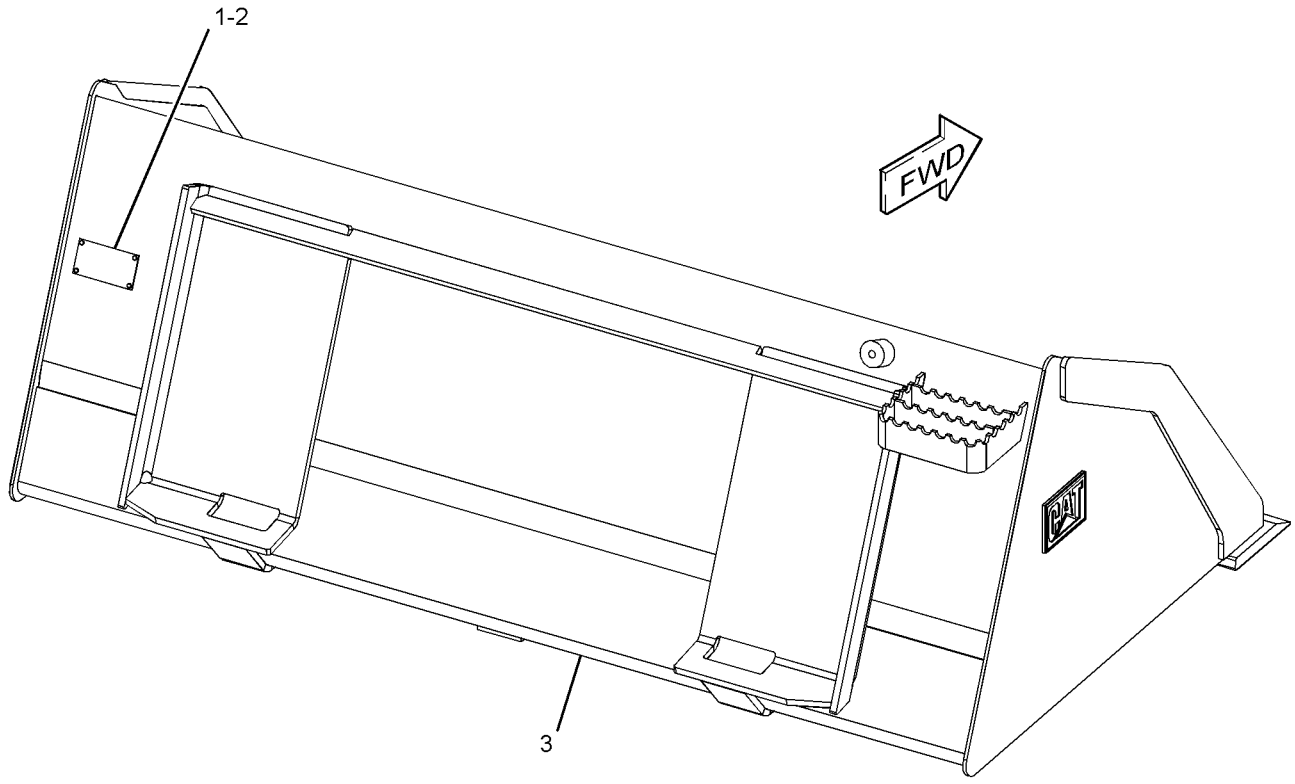

GRAPHIC #1 **<END>** g01957401

285-6099 BUCKET GP-UTILITY

S/N: A9H1-UP
PART OF 285-6100 BUCKET AR-UTILITY
AN ATTACHMENT

SMCS-6101 **i04157276**

NOTE	REF NO	GRAPHIC REF	PART NUMBER	QTY	PART NAME 1 2 3 4 5 6 (PRODUCT LEVEL)	SEE PAGE
	1	1	**358-4944**	1	PLATE-IDENTIFICATION (BUCKET SPECIFICATIONS)	
	2	1	**168-8389**	4	TACK-FASTENER	
Y	3	1	*285-6098*	1	BUCKET AS-UTILITY (66-IN)	401

Y-SEPARATE ILLUSTRATION

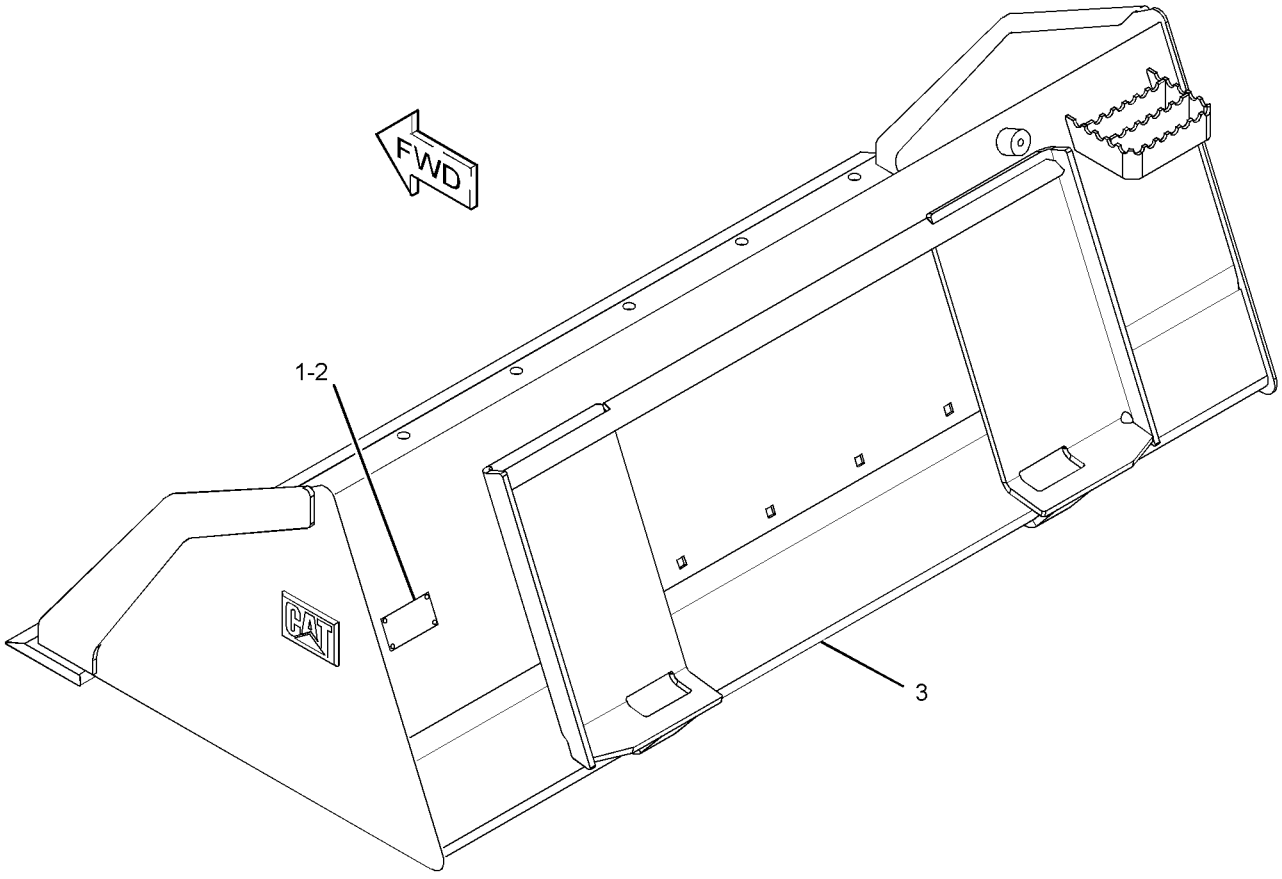

GRAPHIC #1 **<END>** g01954053

285-6102 BUCKET GP-UTILITY

S/N: A9H1-UP
PART OF 285-6101 BUCKET AR-UTILITY
AN ATTACHMENT

SMCS-6101 **i04157278**

NOTE	REF NO	GRAPHIC REF	PART NUMBER	QTY	PART NAME 1 2 3 4 5 6 (PRODUCT LEVEL)	SEE PAGE
	1	1	**358-4944**	1	PLATE-IDENTIFICATION (BUCKET SPECIFICATIONS)	
	2	1	**168-8389**	4	TACK-FASTENER	
Y	3	1	*285-6103*	1	BUCKET AS-UTILITY (72-IN)	402

Y-SEPARATE ILLUSTRATION

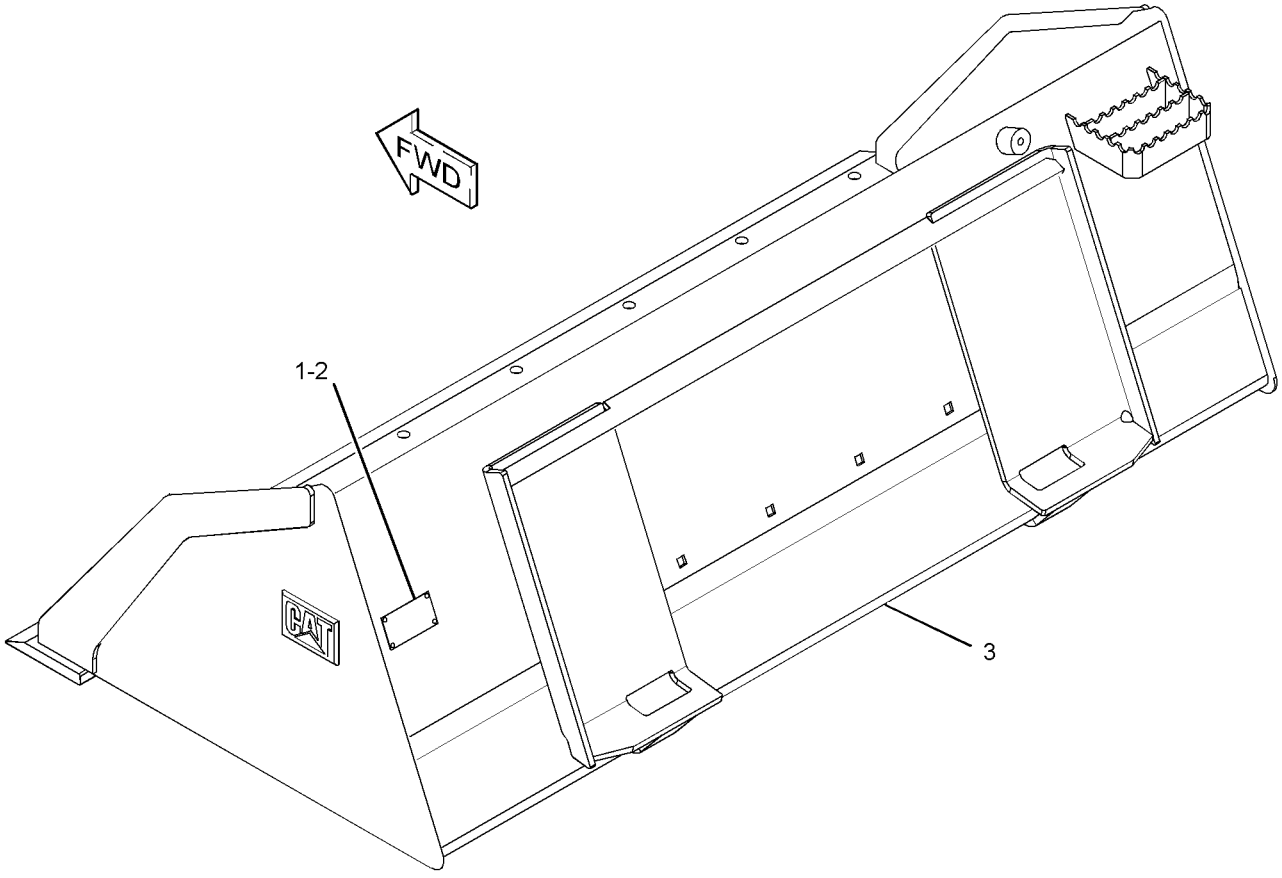

GRAPHIC #1 **<END>** g01954037

WORK TOOLS

353-1693 CARRIAGE & FORK AR

S/N: A9H1-UP

AN ATTACHMENT

SMCS-6136, 6402 **i03887511**

NOTE	PART NUMBER	QTY	PART NAME 1 2 3 4 5 6 (PRODUCT LEVEL)	SEE PAGE
Y	**351-9371**	6	CARRIAGE GP-FORK	423

Y-SEPARATE ILLUSTRATION

<END>

353-1694 CARRIAGE & FORK AR

S/N: A9H1-UP

AN ATTACHMENT

SMCS-6136, 6402 **i03887530**

NOTE	PART NUMBER	QTY	PART NAME 1 2 3 4 5 6 (PRODUCT LEVEL)	SEE PAGE
Y	**351-9371**	1	CARRIAGE GP-FORK	423
Y	**195-6943**	2	FORK GP-PALLET (36-IN)	451

Y-SEPARATE ILLUSTRATION

<END>

353-1696 CARRIAGE & FORK AR

S/N: A9H1-UP

AN ATTACHMENT

SMCS-6136, 6402 **i03887531**

NOTE	PART NUMBER	QTY	PART NAME 1 2 3 4 5 6 (PRODUCT LEVEL)	SEE PAGE
Y	**351-9371**	1	CARRIAGE GP-FORK	423
Y	**195-6942**	2	FORK GP-PALLET (42-IN)	450

Y-SEPARATE ILLUSTRATION

<END>

353-1697 CARRIAGE & FORK AR

S/N: A9H1-UP

AN ATTACHMENT

SMCS-6136, 6402 **i03887532**

NOTE	PART NUMBER	QTY	PART NAME 1 2 3 4 5 6 (PRODUCT LEVEL)	SEE PAGE
Y	**351-9371**	1	CARRIAGE GP-FORK	423
Y	**195-8545**	2	FORK GP-PALLET (48-IN)	452

Y-SEPARATE ILLUSTRATION

<END>

WORK TOOLS

351-9371 CARRIAGE GP-FORK

S/N: A9H1-UP

PART OF 353-1693, 353-1694, 353-1696, 353-1697 CARRIAGE & FORK AR

AN ATTACHMENT

SMCS-6402 **i03887529**

NOTE	REF NO	GRAPHIC REF	PART NUMBER	QTY	PART NAME 1 2 3 4 5 6 (PRODUCT LEVEL)	SEE PAGE
	1	1	**157-4835**	1	PLATE-INSTRUCTION	
	2	1	**168-8389**	4	TACK-FASTENER	
	3	1	**252-8595**	1	STEP AS	
M	4	1	**8T-4136**	2	BOLT (M10X1.5X25-MM)	
	5	1	**8T-4121**	2	WASHER-HARD (11X21X2.5-MM THK)	
M	6	1	**8T-4133**	2	NUT (M10X1.5-THD)	

M-METRIC PART

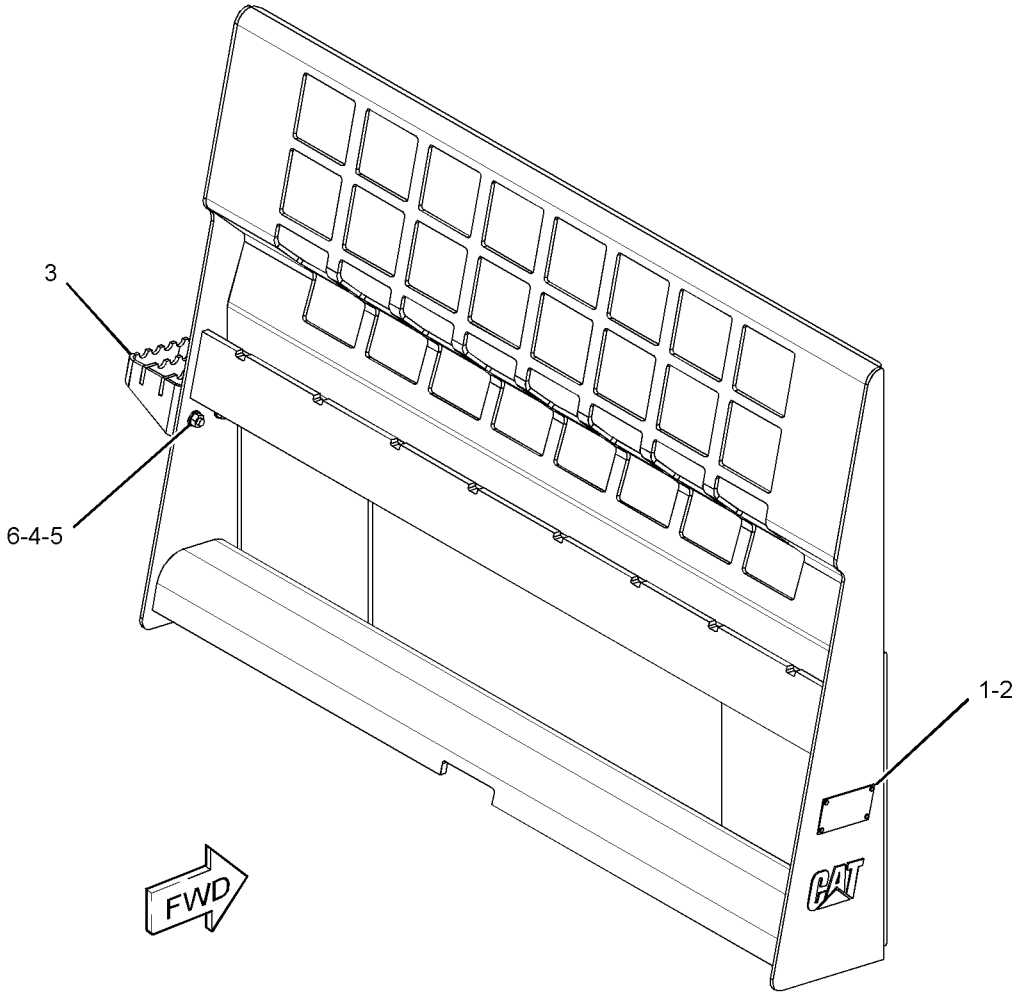

GRAPHIC #1 **<END>** g02133957

149-4232 CLAM AS-MULTIPURPOSE BUCKET

S/N: A9H1-UP
1524-MM (60-IN)
PART OF 279-5383 BUCKET GP-MULTIPURPOSE
AN ATTACHMENT

SMCS-6104 **i03622320**

NOTE	REF NO	GRAPHIC REF	PART NUMBER	QTY	PART NAME 1 2 3 4 5 6 (PRODUCT LEVEL)	SEE PAGE
	1	1	**142-8805**	4	BEARING-SLEEVE	
	2	1	**161-4130**	2	PLATE-IDENTIFICATION (CAT)	
	3	1	**149-5435**	1	EDGE	
	4	1	**159-8038**	2	FILM-WARNING (CRUSH HAZARD, STAY BACK)	

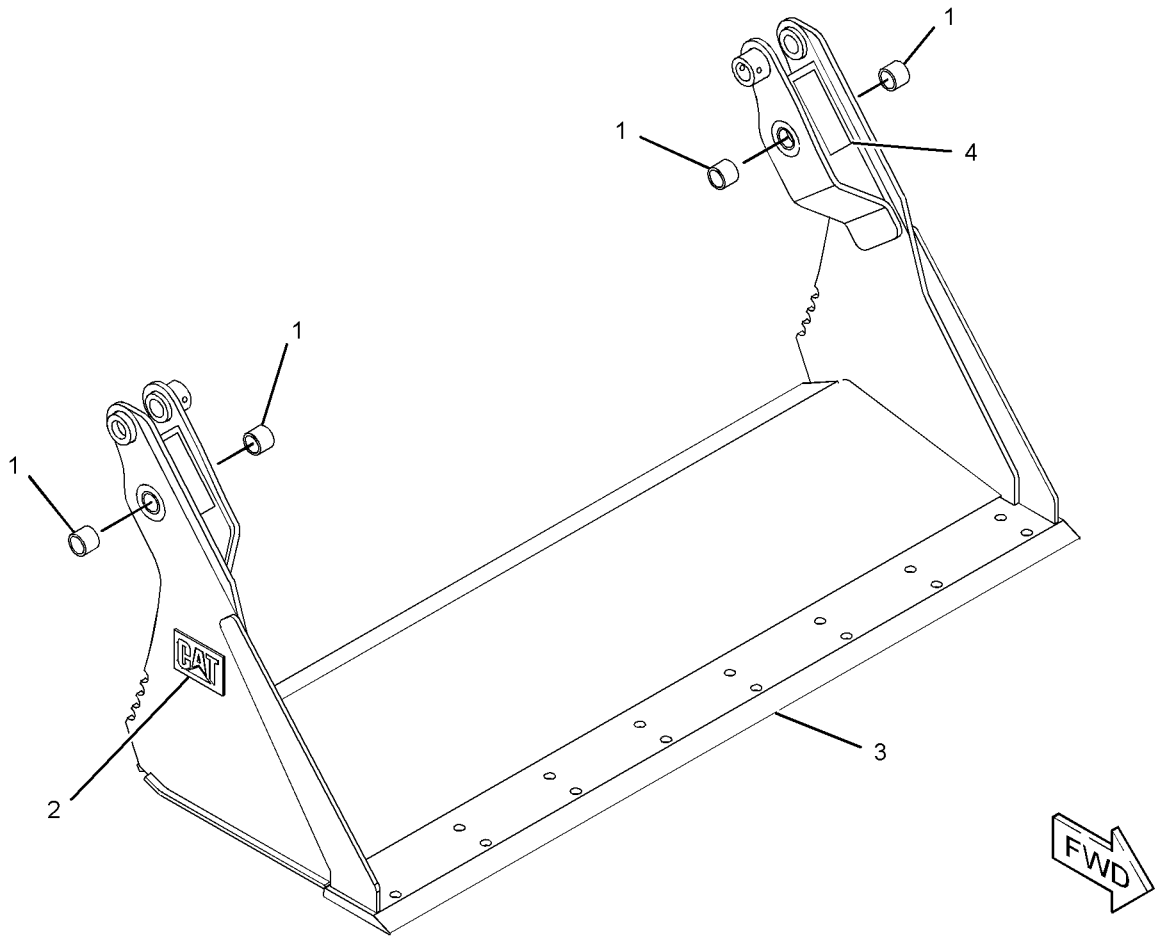

GRAPHIC #1 **<END>** g01945759

WORK TOOLS

154-5053 CLAM AS-MULTIPURPOSE BUCKET

S/N: A9H1-UP
1676-MM (66-IN)
PART OF 279-5389 BUCKET GP-MULTIPURPOSE
AN ATTACHMENT

SMCS-6104 **i03621236**

NOTE	REF NO	GRAPHIC REF	PART NUMBER	QTY	PART NAME 1 2 3 4 5 6 (PRODUCT LEVEL)	SEE PAGE
	1	1	**142-8805**	4	BEARING-SLEEVE	
	2	1	**161-4130**	2	PLATE-IDENTIFICATION (CAT)	
	3	1	**149-5436**	1	EDGE	
	4	1	**159-8038**	2	FILM-WARNING (CRUSH HAZARD, STAY BACK)	

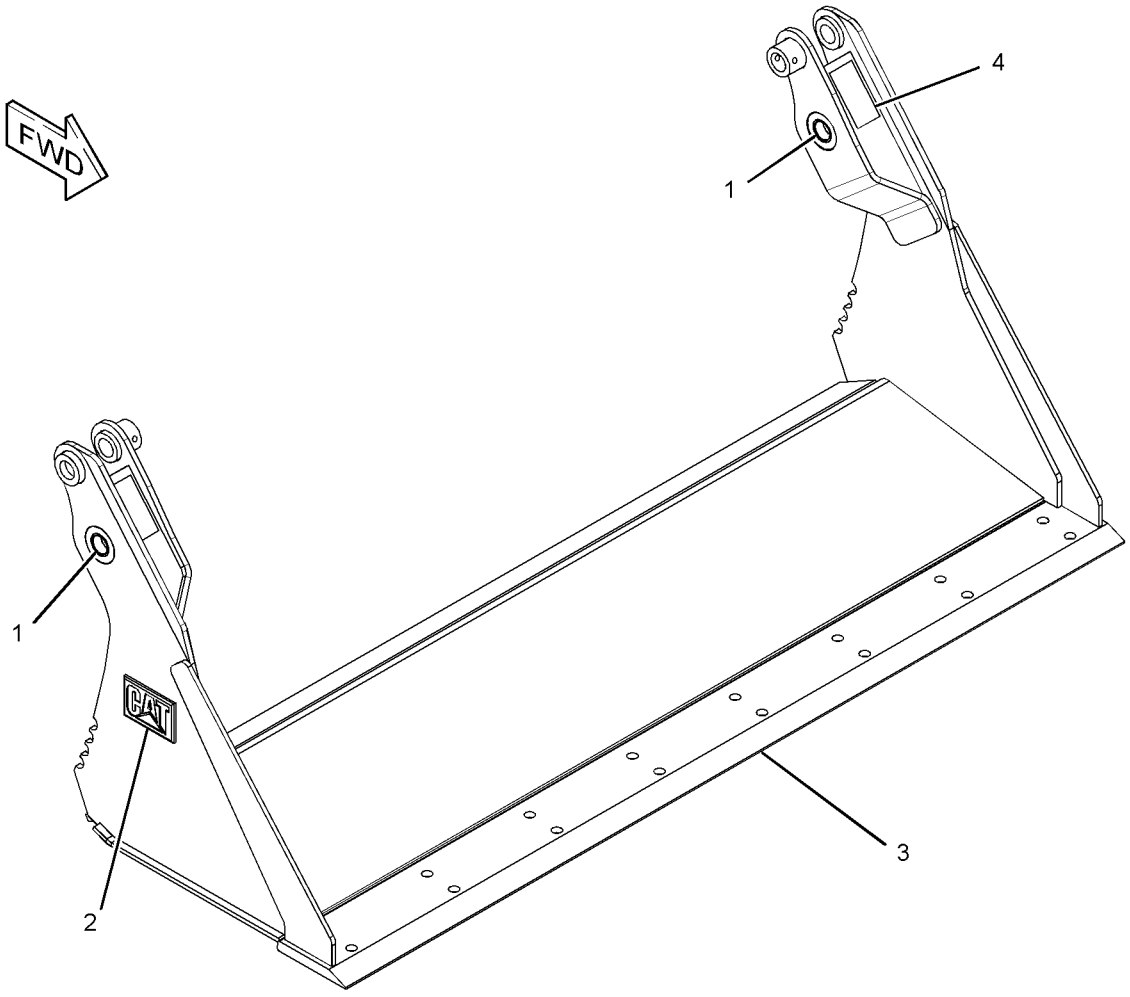

GRAPHIC #1 **<END>** g01945550

154-5070 CLAM AS-MULTIPURPOSE BUCKET

S/N: A9H1-UP
1829-MM (72-IN)
PART OF 279-5397 BUCKET GP-MULTIPURPOSE
AN ATTACHMENT

SMCS-6104 **i03621205**

NOTE	REF NO	GRAPHIC REF	PART NUMBER	QTY	PART NAME 1 2 3 4 5 6 (PRODUCT LEVEL)	SEE PAGE
	1	1	**142-8805**	4	BEARING-SLEEVE	
	2	1	**161-4130**	2	PLATE-IDENTIFICATION (CAT)	
	3	1	**149-5437**	1	EDGE	
	4	1	**159-8038**	2	FILM-WARNING (CRUSH HAZARD, STAY BACK)	

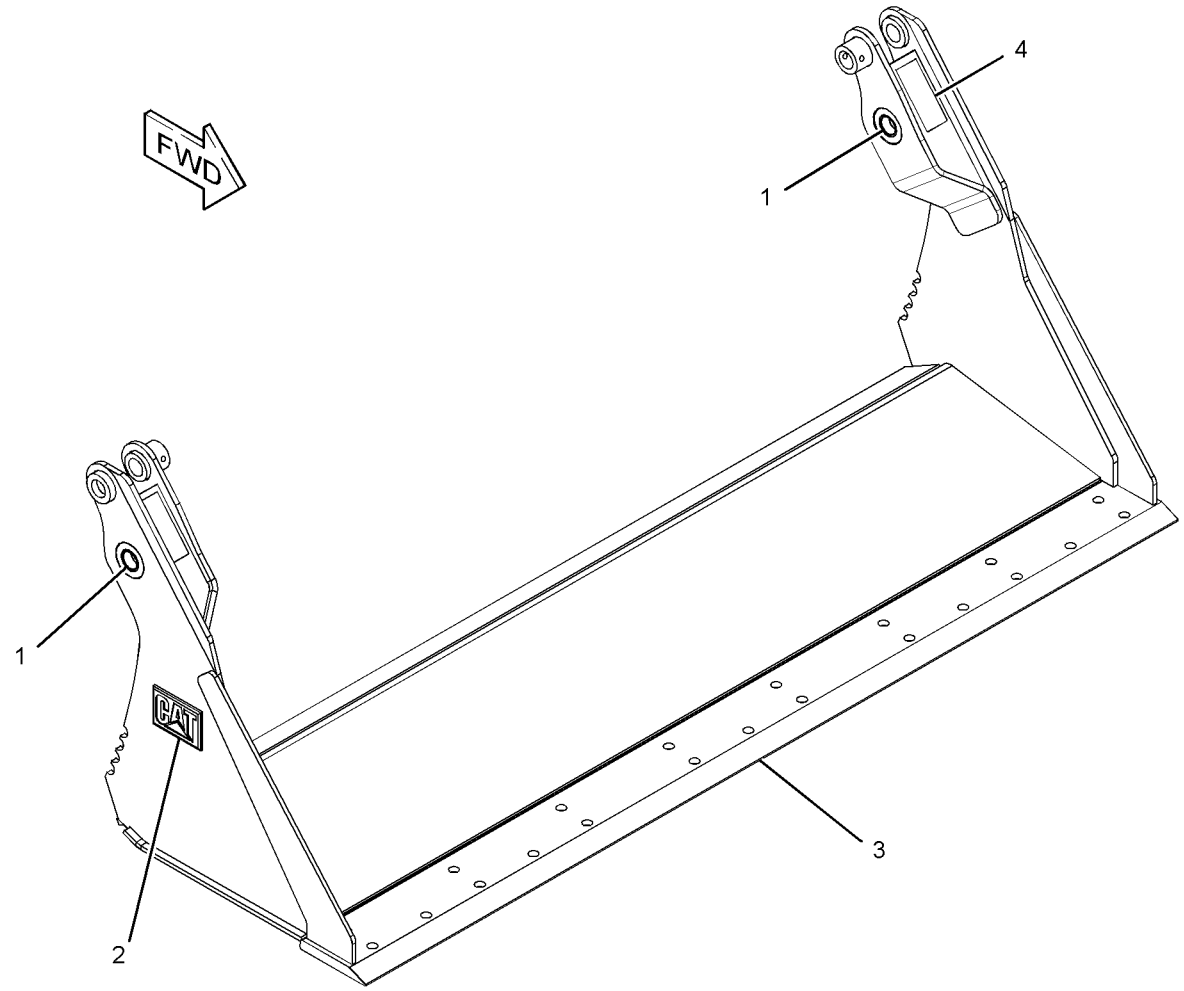

GRAPHIC #1 **<END>** g01945555

WORK TOOLS

199-8308 CLAM AS-MULTIPURPOSE BUCKET

S/N: A9H1-UP
1981-MM (78-IN)
PART OF 279-5404 BUCKET GP-MULTIPURPOSE
AN ATTACHMENT

SMCS-6104 **i03621225**

NOTE	REF NO	GRAPHIC REF	PART NUMBER	QTY	PART NAME 1 2 3 4 5 6 (PRODUCT LEVEL)	SEE PAGE
	1	1	**142-8805**	4	BEARING-SLEEVE	
	2	1	**161-4130**	2	PLATE-IDENTIFICATION (CAT)	
	3	1	**199-7722**	1	EDGE	
	4	1	**199-8317**	1	EDGE	
	5	1	**159-8038**	2	FILM-WARNING (CRUSH HAZARD, STAY BACK)	

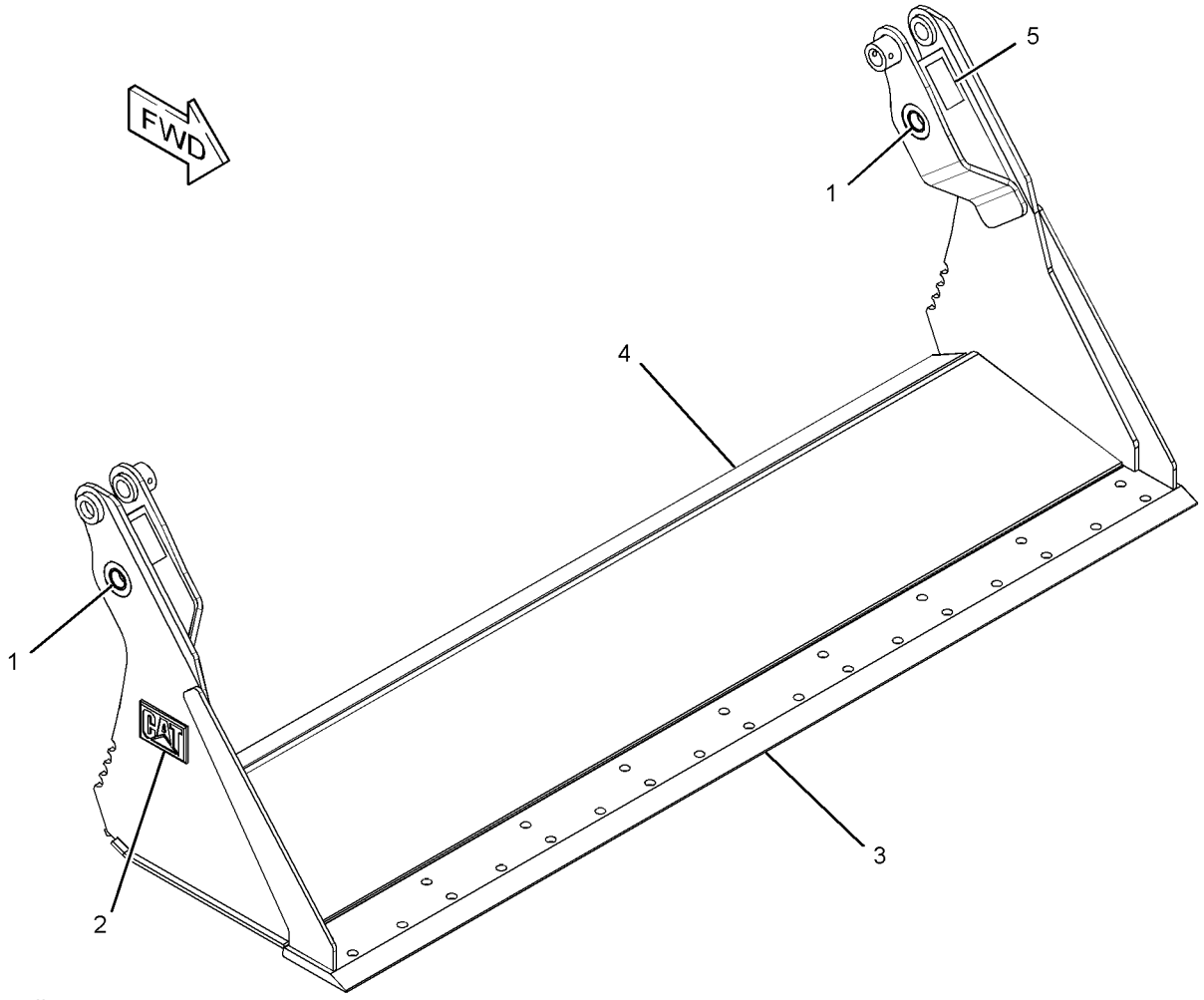

GRAPHIC #1 **<END>** g01945620

293-0148 CLAM AS-MULTIPURPOSE BUCKET

S/N: A9H1-UP
2134-MM (84-IN)
PART OF 293-0141 BUCKET GP-MULTIPURPOSE
AN ATTACHMENT

SMCS-6104 **i03621201**

NOTE	REF NO	GRAPHIC REF	PART NUMBER	QTY	PART NAME 1 2 3 4 5 6 (PRODUCT LEVEL)	SEE PAGE
	1	1	**142-8805**	4	BEARING-SLEEVE	
	2	1	**161-4130**	2	PLATE-IDENTIFICATION (CAT)	
	3	1	**229-3432**	1	EDGE	

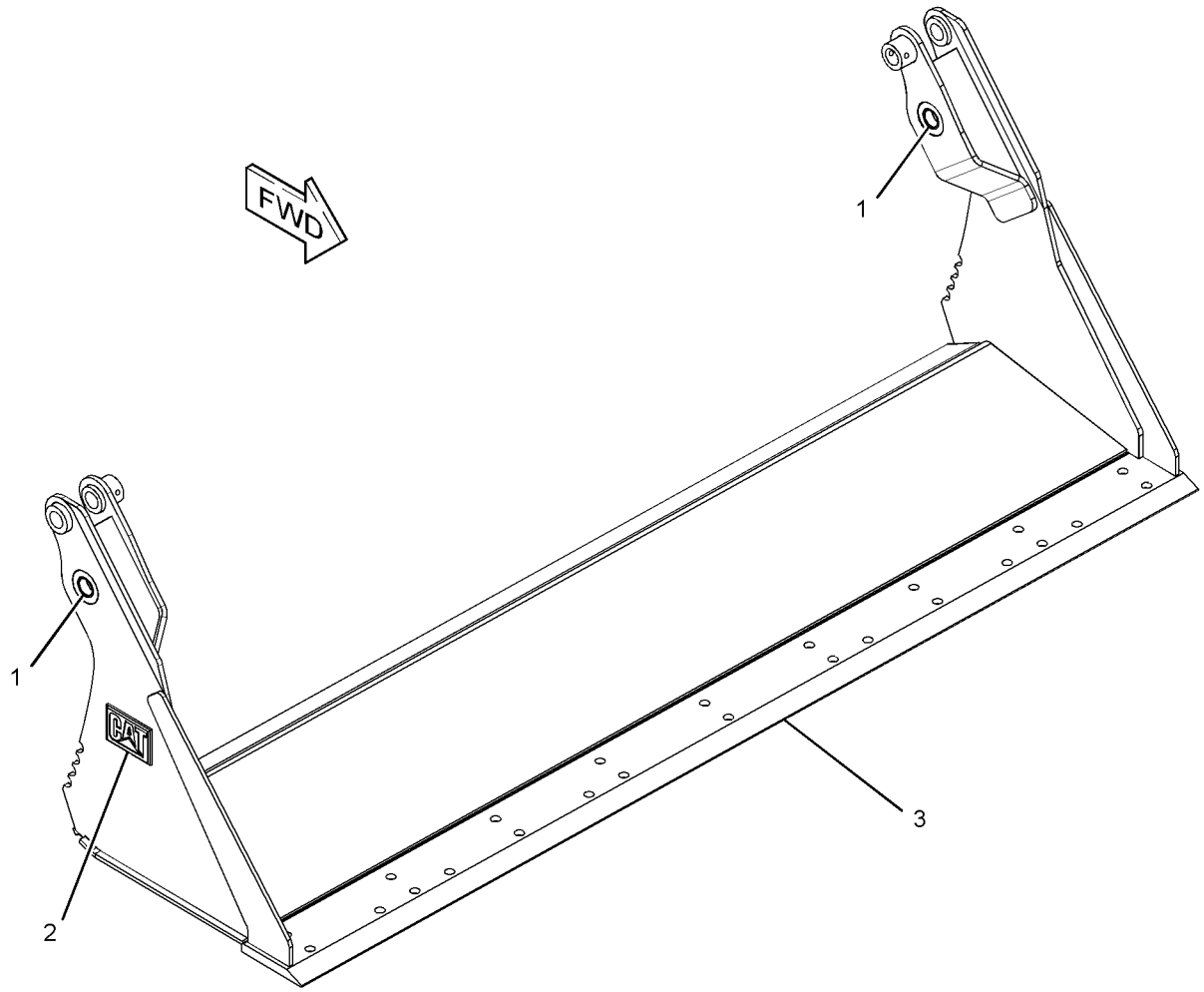

GRAPHIC #1 **<END>** g01945653

WORK TOOLS

296-0582 CONVERSION GP-WORK TOOL–KIT, HIGH FLOW

S/N: A9H1-UP

AN ATTACHMENT

SMCS-1408, 4283, 5057, 7553 **i04041660**

NOTE	REF NO	GRAPHIC REF	PART NUMBER	QTY	PART NAME 1 2 3 4 5 6 (PRODUCT LEVEL)	SEE PAGE
	1	1	**258-4198**	1	HARNESS AS-WORK TOOL	
		1	**8T-8737**	5	PLUG-SEAL	
		1	**9W-0844**	2	SOCKET-CONNECTOR (14-GA TO 16-GA)	
		1	**155-2260**	1	KIT-CONNECTING PLUG (3-PIN)	
					(INCLUDES PLUG AS, WEDGE & INTERFACE SEAL)	
		1	**156-1460**	1	RECEPTACLE (8-PIN)	
		1	**179-5434**	1	PLUG AS	
		1	**3K-8782**	1	FUSE (10-AMPERE)	
		1	**180-9340**	1	SOCKET-CONNECTOR (14-GA TO 18-GA)	
	2	1	**259-1107**	1	SWITCH AS-TOGGLE (IDLE SPEED)	
		1	**102-8803**	1	KIT-RECEPTACLE (3-PIN)	
					(INCLUDES RECEPTACLE AS & WEDGE)	
		1	**8T-8729**	3	PIN-CONNECTOR (16-GA TO 18-GA)	
	3	1	**296-0583**	1	BRACKET	
	4	1	**296-0584**	1	MAGNET	
	5	1	**096-6166**	4	WASHER-HARD (4.5X9X1-MM THK)	
M	6	1	**6V-9671**	2	SCREW-MACHINE (M3X0.5X12-MM)	
M	7	1	**8T-2658**	2	LOCKNUT (M3X0.5-THD)	

M-METRIC PART

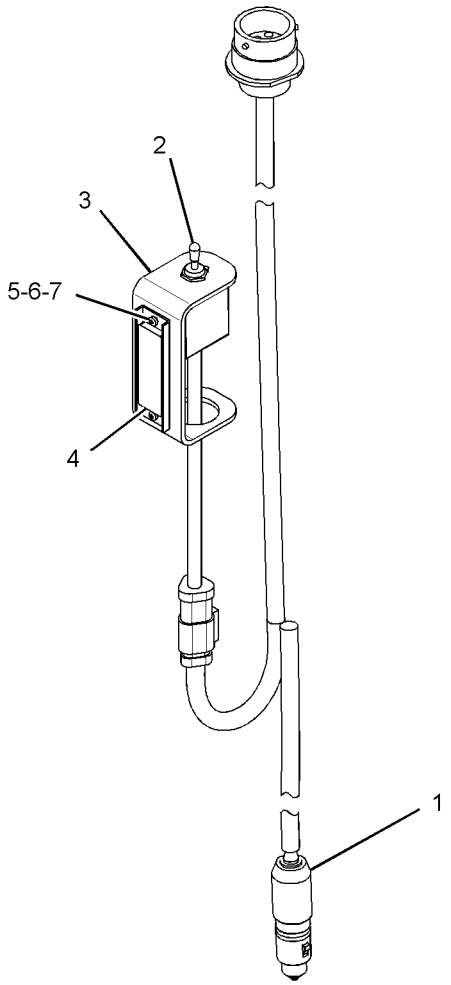

GRAPHIC #1 **<END>** g01894540

WORK TOOLS

326-5569 COUPLER AR-QUICK—MANUAL

S/N: A9H1-UP

CANNOT BE USED WITH 326-5578—PAGE 430

AN ATTACHMENT

SMCS-6129 **i03903862**

NOTE	PART NUMBER	QTY	PART NAME 1 2 3 4 5 6 (PRODUCT LEVEL)	SEE PAGE
Y	*196-8870*	1	COUPLER GP-QUICK	433
Y-SEPARATE ILLUSTRATION				

<END>

326-5578 COUPLER AR-QUICK—HYDRAULIC

S/N: A9H1-UP

CANNOT BE USED WITH 326-5569—PAGE 430

AN ATTACHMENT

SMCS-6129 **i03903861**

NOTE	PART NUMBER	QTY	PART NAME 1 2 3 4 5 6 (PRODUCT LEVEL)	SEE PAGE
Y	*192-2655*	1	COUPLER GP-QUICK (HYDRAULIC)	431
Y	*332-6714*	1	LINES GP-COUPLER	263
Y-SEPARATE ILLUSTRATION				

<END>

WORK TOOLS

192-2655 COUPLER GP-QUICK

S/N: A9H1-UP

PART OF 326-5578 COUPLER AR-QUICK

AN ATTACHMENT

SMCS-6129 **i02235744**

NOTE	REF NO	GRAPHIC REF	PART NUMBER	QTY	PART NAME 1 2 3 4 5 6 (PRODUCT LEVEL)	SEE PAGE
	1	1	**5B-0651**	2	FITTING-STRAIGHT	
	2	1	**5P-0372**	2	LOCK PIN	
C	3	1	**252-0426**	1	COUPLER AS	
		1	**126-5701**	2	PLATE-RETAINER	
	4	1	**207-9785**	2	PIN	
Y	5	1	*215-3962*	1	CYLINDER & LINK GP-COUPLER (LH)	435
Y	6	1	*215-3963*	1	CYLINDER & LINK GP-COUPLER (RH)	436
	7	1	**218-6332**	1	BRACKET AS (LH)	
M		1	**9R-2672**	1	BOSS-THREADED (M10X1.5-THD)	
	8	1	**218-6333**	1	BRACKET AS (RH)	
	9	1	**3B-4628**	2	PIN-COTTER	
	10	1	**8L-5188**	2	PIN	
	11	1	**8T-4121**	12	WASHER-HARD (11X21X2.5-MM THK)	
M	12	1	**8T-4133**	4	NUT (M10X1.5-THD)	
M	13	1	**8T-4196**	8	BOLT (M10X1.5X35-MM)	
	14	1	**9T-7303**	4	SPACER (16X28X1.5-MM THK)	

C-CHANGE FROM PREVIOUS TYPE
M-METRIC PART
Y-SEPARATE ILLUSTRATION

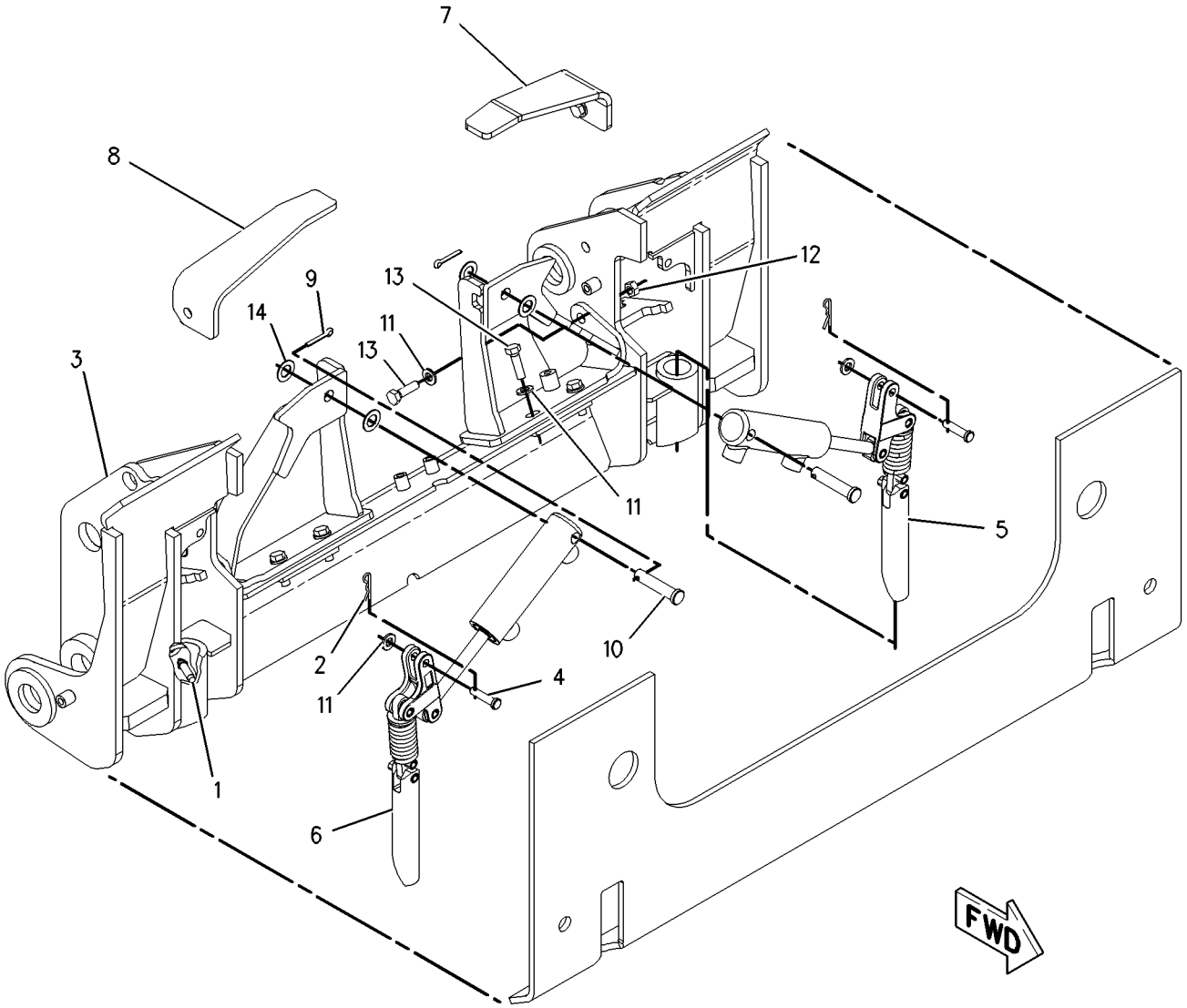

GRAPHIC #1 **<END>** g00983789

WORK TOOLS

196-8870 COUPLER GP-QUICK

S/N: A9H1-UP
MANUAL
PART OF 326-5569 COUPLER AR-QUICK
AN ATTACHMENT

SMCS-6129 **i02998703**

NOTE	REF NO	GRAPHIC REF	PART NUMBER	QTY	PART NAME 1 2 3 4 5 6 (PRODUCT LEVEL)	SEE PAGE
	1	1	**5B-0651**	2	FITTING-STRAIGHT	
	2	1	**159-5797**	2	SPRING	
	3	1	**252-0426**	1	COUPLER AS	
CY	4	1	*258-2537*	1	LOCK GP-QUICK COUPLER (LH)	471
CY	5	1	*258-2535*	1	LOCK GP-QUICK COUPLER (RH)	470
	6	1	**131-5879**	2	WASHER (11X32X3-MM THK)	
	7	1	**132-7551**	2	SPACER (11X19X6-MM THK)	
M	8	1	**6V-7744**	2	LOCKNUT (M10X1.5-THD)	
M	9	1	**7X-2621**	2	BOLT (M10X1.5X12-MM)	
	10	1	**7X-7729**	4	WASHER (11X25X3-MM THK)	
	11	1	**8T-4121**	6	WASHER-HARD (11X21X2.5-MM THK)	
M	12	1	**8T-4172**	2	BOLT (M10X1.5X80-MM)	
M	13	1	**8T-4196**	4	BOLT (M10X1.5X35-MM)	

C-CHANGE FROM PREVIOUS TYPE
M-METRIC PART
Y-SEPARATE ILLUSTRATION

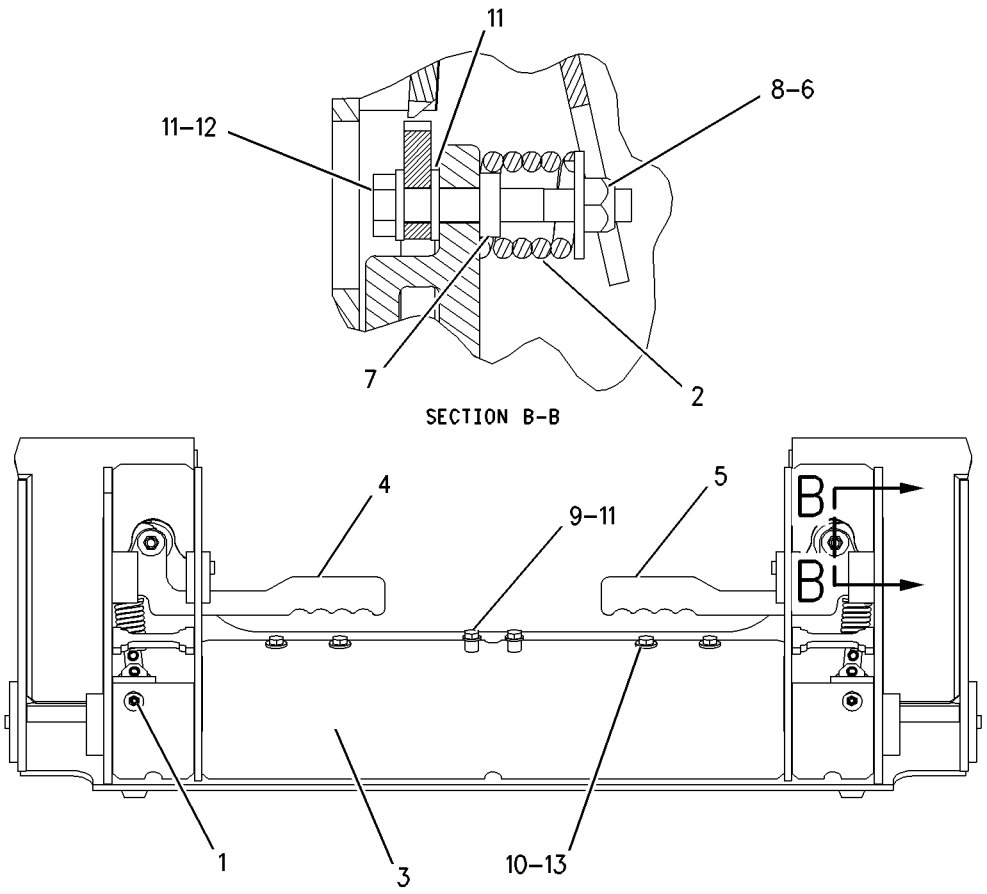

GRAPHIC #1 **<END>** g00858646

162-5236 COVER GP-LINES

S/N: A9H1-UP
PART OF 279-5382, 279-5390, 279-5398, 279-5403, 293-0139 BUCKET
AR-MULTIPURPOSE
AN ATTACHMENT

i04358198

NOTE	REF NO	GRAPHIC REF	PART NUMBER	QTY	PART NAME 1 2 3 4 5 6 (PRODUCT LEVEL)	SEE PAGE
	1	1	**161-4128**	1	PLATE	
M	2	1	**5C-9553**	5	BOLT (M6X1X16-MM)	
	3	1	**9X-2026**	5	WASHER (6.5X17X1-MM THK)	

M-METRIC PART

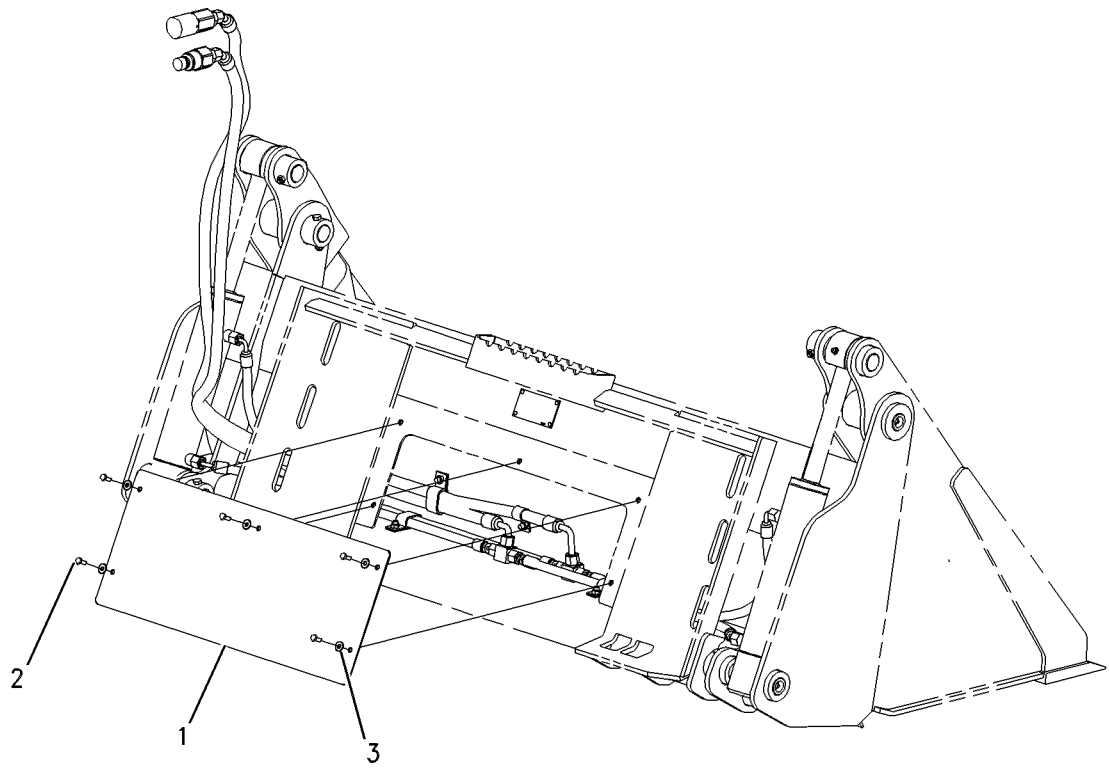

GRAPHIC #1 **<END>** g00560360

215-3962 CYLINDER & LINK GP-COUPLER—LH

S/N: A9H1-UP
PART OF 192-2655 COUPLER GP-QUICK
AN ATTACHMENT

SMCS-5133, 6129 **i02960140**

NOTE	REF NO	GRAPHIC REF	PART NUMBER	QTY	PART NAME 1 2 3 4 5 6 (PRODUCT LEVEL)	SEE PAGE
	1	1	**303-8767**	1	PIN-SPRING	
Y	2	1	**192-2640**	1	CYLINDER GP-HYDRAULIC (COUPLER)	228
	3	1	**192-2642**	1	PIN	
	4	1	**303-8768**	1	PIN-SPRING	
Y	5	1	*215-3957*	1	LINK GP-COUPLER	468

Y-SEPARATE ILLUSTRATION

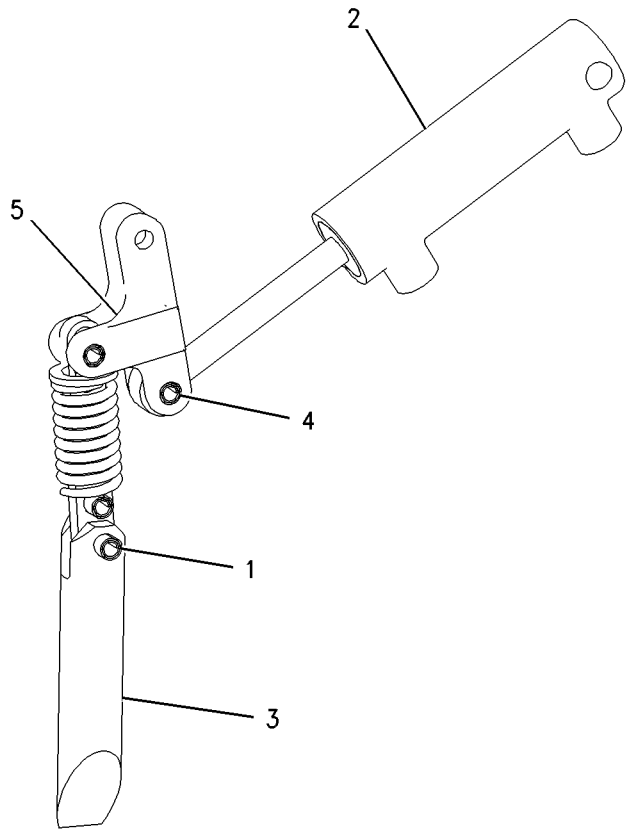

GRAPHIC #1 **<END>** g00871294

215-3963 CYLINDER & LINK GP-COUPLER—RH

S/N: A9H1-UP
PART OF 192-2655 COUPLER GP-QUICK
AN ATTACHMENT

SMCS-5133, 6129 **i02960142**

NOTE	REF NO	GRAPHIC REF	PART NUMBER	QTY	PART NAME 1 2 3 4 5 6 (PRODUCT LEVEL)	SEE PAGE
	1	1	**303-8767**	1	PIN-SPRING	
Y	2	1	**192-2640**	1	CYLINDER GP-HYDRAULIC (COUPLER)	228
	3	1	**192-2642**	1	PIN	
	4	1	**303-8768**	1	PIN-SPRING	
Y	5	1	*215-3957*	1	LINK GP-COUPLER	468

Y-SEPARATE ILLUSTRATION

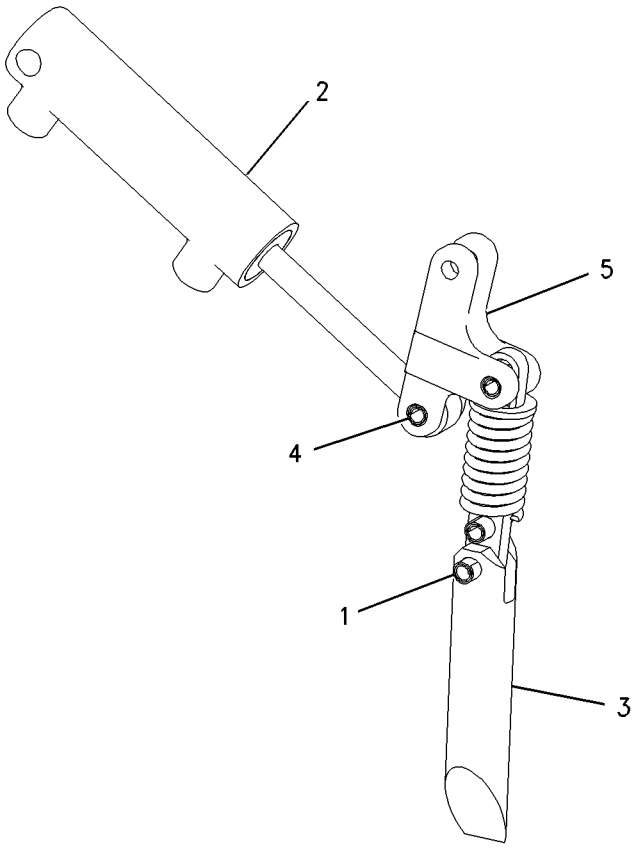

GRAPHIC #1 **<END>** g00871299

222-7545 EDGE GP-BIT & CUTTING

S/N: A9H1-UP
PART OF 231-5276 BLADE GP-ANGLING
FOR USE WITH 2007-MM (79-IN) BUCKET
AN ATTACHMENT

SMCS-6801, 6804 **i04411305**

NOTE	REF NO	GRAPHIC REF	PART NUMBER	QTY	PART NAME 1 2 3 4 5 6 (PRODUCT LEVEL)	SEE PAGE
	1	1	**6Y-5839**	1	BIT-END (RH)	
	2	1	**6Y-5840**	1	BIT-END (LH)	
	3	1	**142-4914**	1	EDGE-CUTTING	
	4	1	**3F-5108**	10	BOLT-PLOW (5/8-11X2.25-IN)	
	5	1	**4F-3658**	4	BOLT-PLOW (5/8-11X3-IN)	
	6	1	**4K-0367**	14	NUT-FULL (5/8-11-THD)	
	7	1	**5P-8247**	14	WASHER-HARD (17X32X3.5-MM THK)	

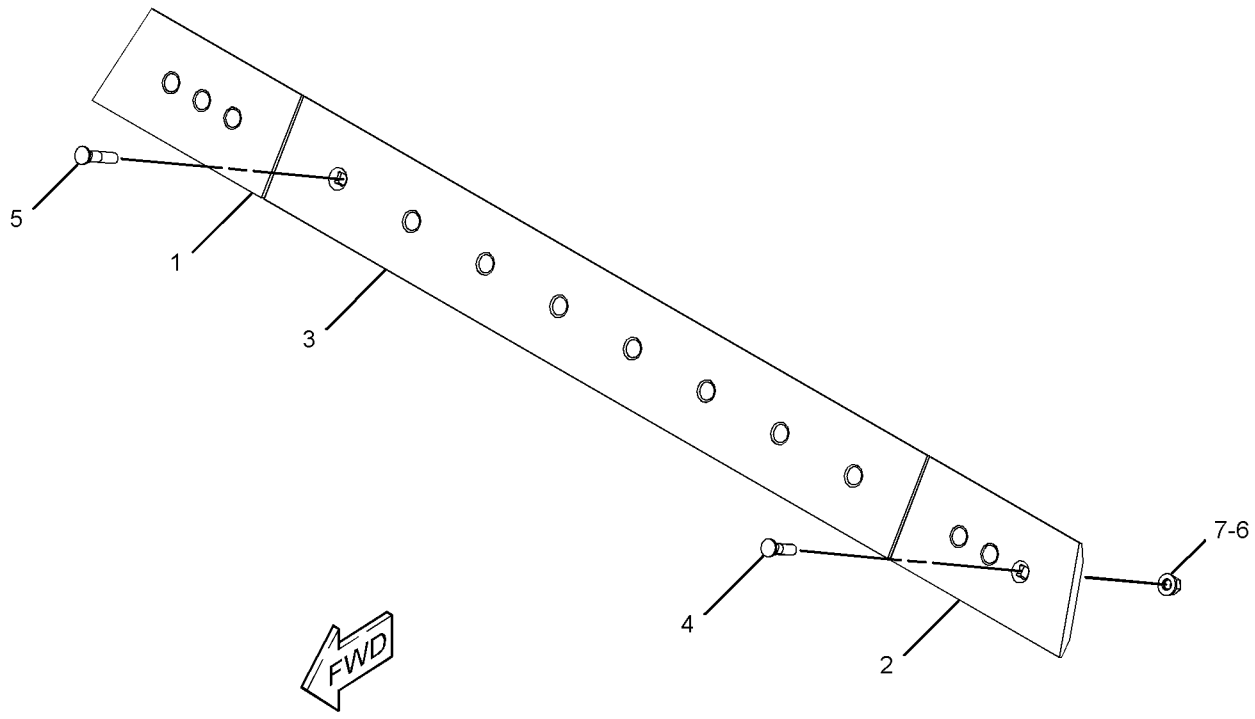

GRAPHIC #1 **<END>** g02615958

222-7546 EDGE GP-BIT & CUTTING

S/N: A9H1-UP
PART OF 222-7724 BLADE GP-ANGLING
FOR USE WITH 2337-MM (92-IN) BUCKET
AN ATTACHMENT

SMCS-6801, 6804 **i03647019**

NOTE	PART NUMBER	QTY	PART NAME 1 2 3 4 5 6 (PRODUCT LEVEL)	SEE PAGE
	6Y-5839	1	BIT-END (RH)	
	6Y-5840	1	BIT-END (LH)	
	3F-5108	13	BOLT-PLOW (5/8-11X2.25-IN)	
	4F-3658	4	BOLT-PLOW (5/8-11X3-IN)	
	143-3088	1	EDGE-CUTTING	
	4K-0367	17	NUT-FULL (5/8-11-THD)	
	5P-8247	17	WASHER-HARD (17X32X3.5-MM THK)	

<END>

135-9383 EDGE GP-CUTTING

S/N: A9H1-UP
PART OF 279-5435 BUCKET AR-DIRT
FOR USE WITH 1372-MM (54-IN) BUCKET
AN ATTACHMENT

SMCS-6801 **i02571125**

NOTE	PART NUMBER	QTY	PART NAME 1 2 3 4 5 6 (PRODUCT LEVEL)	SEE PAGE
	135-9393	1	EDGE-CUTTING	
M	**8T-4778**	6	LOCKNUT (M16X2-THD)	
M	**159-2953**	6	SCREW-FLAT HEAD (M16X2-THD)	

M-METRIC PART

<END>

WORK TOOLS

135-9384 EDGE GP-CUTTING

S/N: A9H1-UP

PART OF 279-5438 BUCKET AR-DIRT, 279-5365 BUCKET AR-GENERAL PURPOSE, 157-7226 BUCKET AR-GRAPPLE, 279-5381 BUCKET AR-MULTIPURPOSE, 285-6095 BUCKET AR-UTILITY, 152-0231 BUCKET GP-DIRT

FOR USE WITH 1524-MM (60-IN) BUCKET

AN ATTACHMENT

SMCS-6801 **i01372033**

NOTE	REF NO	GRAPHIC REF	PART NUMBER	QTY	PART NAME 1 2 3 4 5 6 (PRODUCT LEVEL)	SEE PAGE
	1	1	**135-9394**	1	EDGE-CUTTING	
M	2	1	**8T-4778**	8	LOCKNUT (M16X2.00 THD)	
M	3	1	**159-2953**	8	SCREW-FLAT HEAD (M16X2.00 THD)	

M-METRIC PART

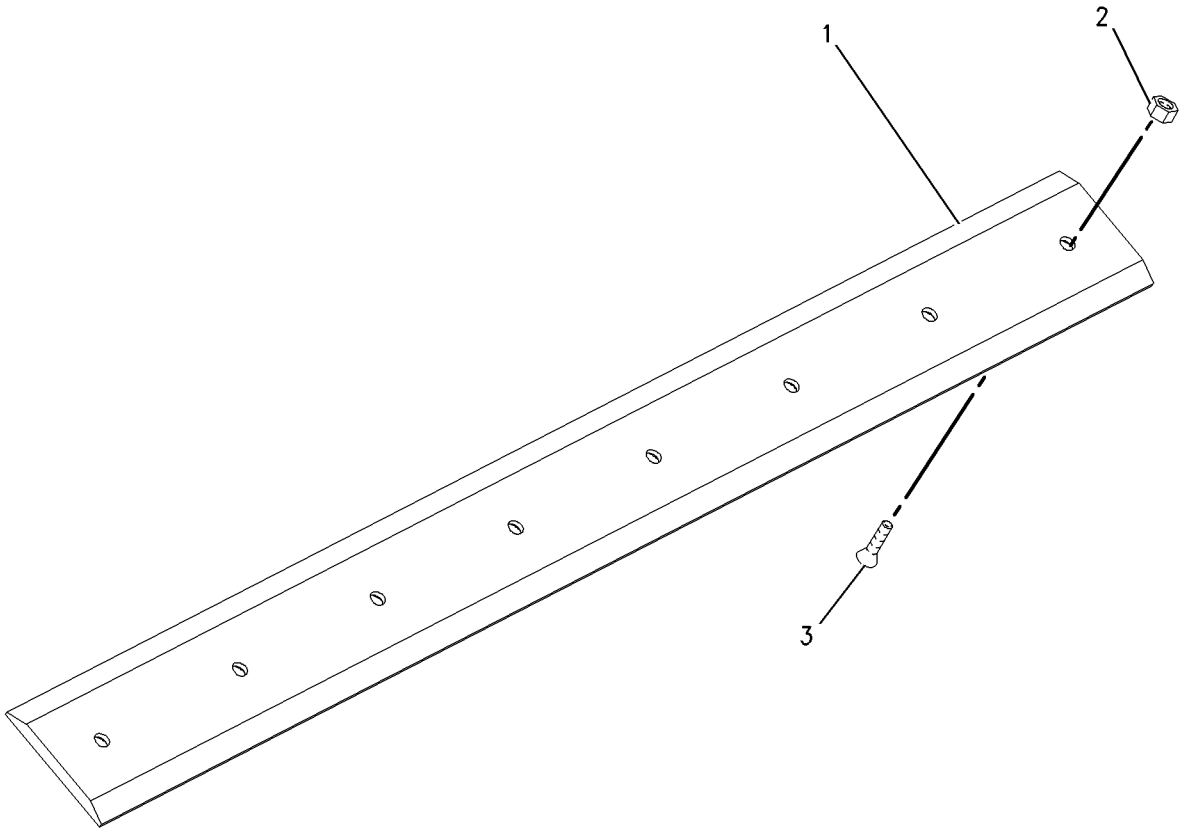

GRAPHIC #1 **<END>** g00724087

WORK TOOLS

135-9385 EDGE GP-CUTTING

S/N: A9H1-UP

PART OF 279-5441 BUCKET AR-DIRT, 279-5369 BUCKET AR-GENERAL PURPOSE, 157-7227 BUCKET AR-GRAPPLE, 279-5391 BUCKET AR-MULTIPURPOSE, 285-6100 BUCKET AR-UTILITY, 152-0232 BUCKET GP-DIRT

FOR USE WITH 1676-MM (66-IN) BUCKET

AN ATTACHMENT

SMCS-6801 **i01228508**

NOTE	REF NO	GRAPHIC REF	PART NUMBER	QTY	PART NAME 1 2 3 4 5 6 (PRODUCT LEVEL)	SEE PAGE
	1	1	**135-9395**	1	EDGE-CUTTING	
M	2	1	**8T-4778**	8	LOCKNUT (M16X2.00 THD)	
M	3	1	**159-2953**	8	SCREW-FLAT HEAD (M16X2.00 THD)	

M-METRIC PART

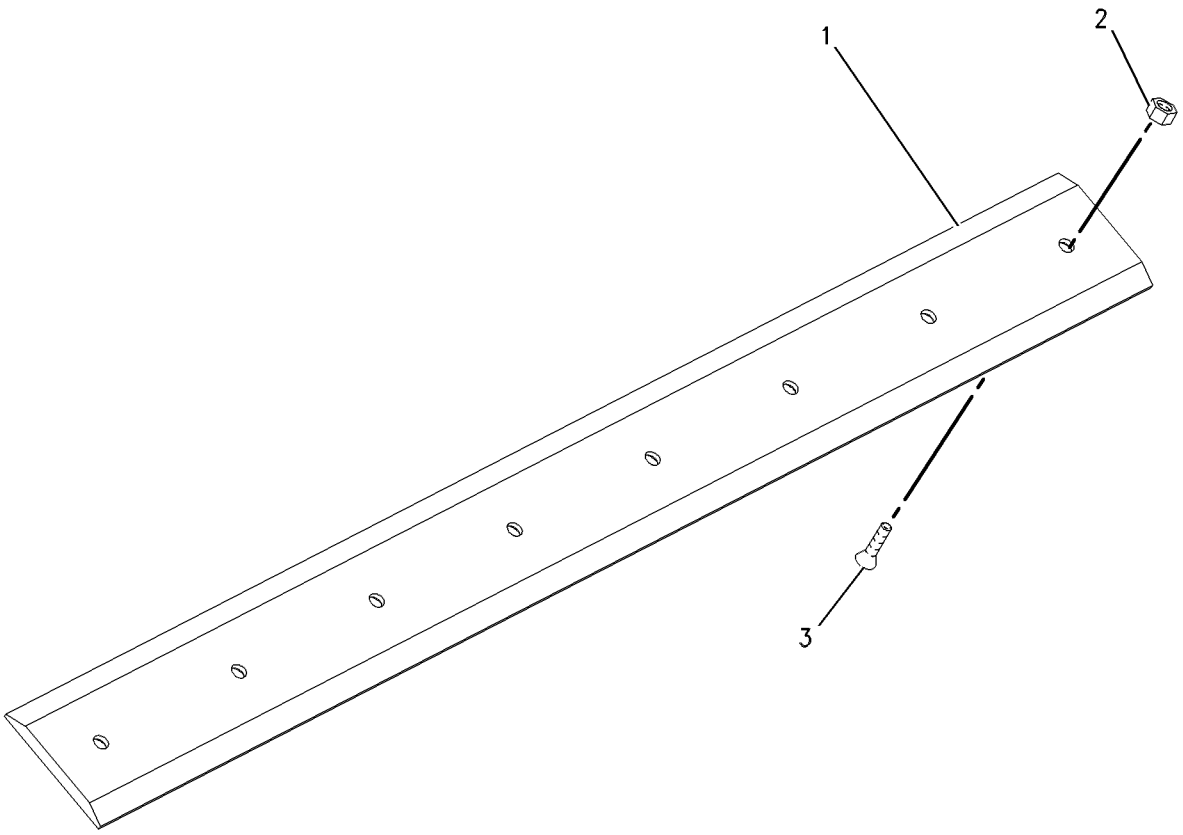

GRAPHIC #1 **<END>** g00657004

WORK TOOLS

135-9386 EDGE GP-CUTTING

S/N: A9H1-UP

PART OF 177-1989 BLADE AR, 285-6090 BUCKET AR-DIRT, 279-5373 BUCKET AR-GENERAL PURPOSE, 158-6095 BUCKET AR-GRAPPLE, 279-5420 BUCKET AR-LIGHT MATERIAL, 279-5399 BUCKET AR-MULTIPURPOSE, 285-6101 BUCKET AR-UTILITY FOR USE WITH 1829-MM (72-IN) BUCKET AN ATTACHMENT

SMCS-6801 **i01372498**

NOTE	REF NO	GRAPHIC REF	PART NUMBER	QTY	PART NAME 1 2 3 4 5 6 (PRODUCT LEVEL)	SEE PAGE
	1	1	**135-9396**	1	EDGE-CUTTING	
M	2	1	**8T-4778**	11	LOCKNUT (M16X2.00 THD)	
M	3	1	**159-2953**	11	SCREW-FLAT HEAD (M16X2.00 THD)	

M-METRIC PART

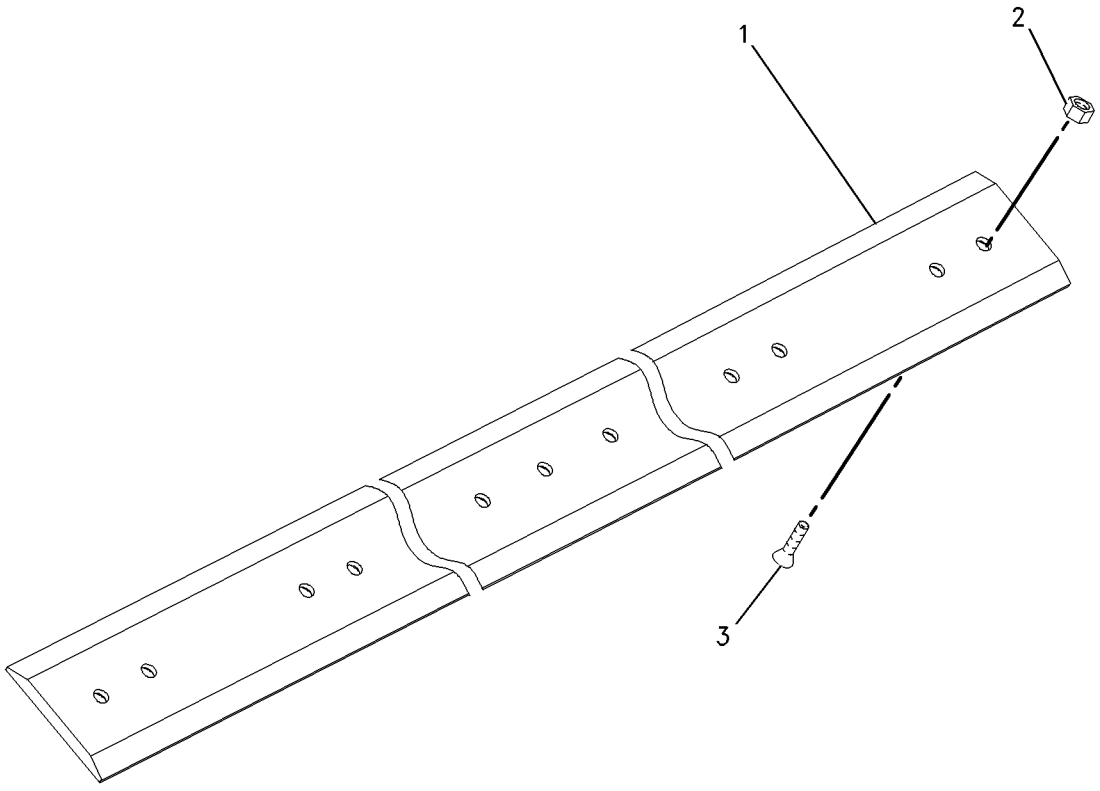

GRAPHIC #1 **<END>** g00724435

WORK TOOLS

135-9387 EDGE GP-CUTTING

S/N: A9H1-UP

PART OF 268-4083 BUCKET AR-DIRT, 279-5377 BUCKET AR-GENERAL PURPOSE, 217-6230 BUCKET AR-GRAPPLE, 279-5425 BUCKET AR-LIGHT MATERIAL, 279-5402 BUCKET AR-MULTIPURPOSE

FOR USE WITH 1981-MM (78-IN) BUCKET

AN ATTACHMENT

SMCS-6801 **i01755490**

NOTE	REF NO	GRAPHIC REF	PART NUMBER	QTY	PART NAME 1 2 3 4 5 6 (PRODUCT LEVEL)	SEE PAGE
	1	1	**135-9397**	1	EDGE-CUTTING	
M	2	1	**8T-4778**	11	LOCKNUT (M16X2 THD)	
M	3	1	**159-2953**	11	SCREW-FLAT HEAD (M16X2.00 THD)	

M-METRIC PART

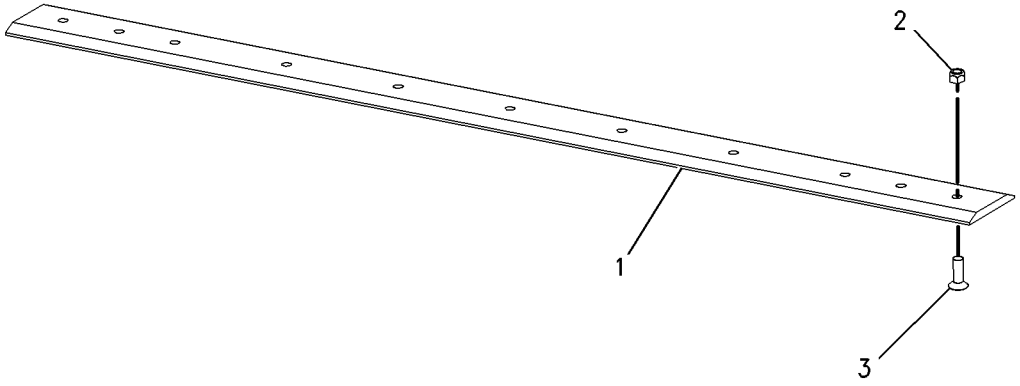

GRAPHIC #1 **<END>** g00898154

WORK TOOLS

149-5741 EDGE GP-CUTTING

S/N: A9H1-UP
PART OF 177-1990 BLADE AR
FOR USE WITH 2159-MM (85-IN) BUCKET
AN ATTACHMENT

SMCS-6801 **i01832720**

NOTE	REF NO	GRAPHIC REF	PART NUMBER	QTY	PART NAME 1 2 3 4 5 6 (PRODUCT LEVEL)	SEE PAGE
	1	1	**195-5124**	1	EDGE-CUTTING	
M	2	1	**8T-4778**	7	LOCKNUT (M16X2 THD)	
M	3	1	**159-2953**	7	SCREW-FLAT HEAD (M16X2.00 THD)	

M-METRIC PART

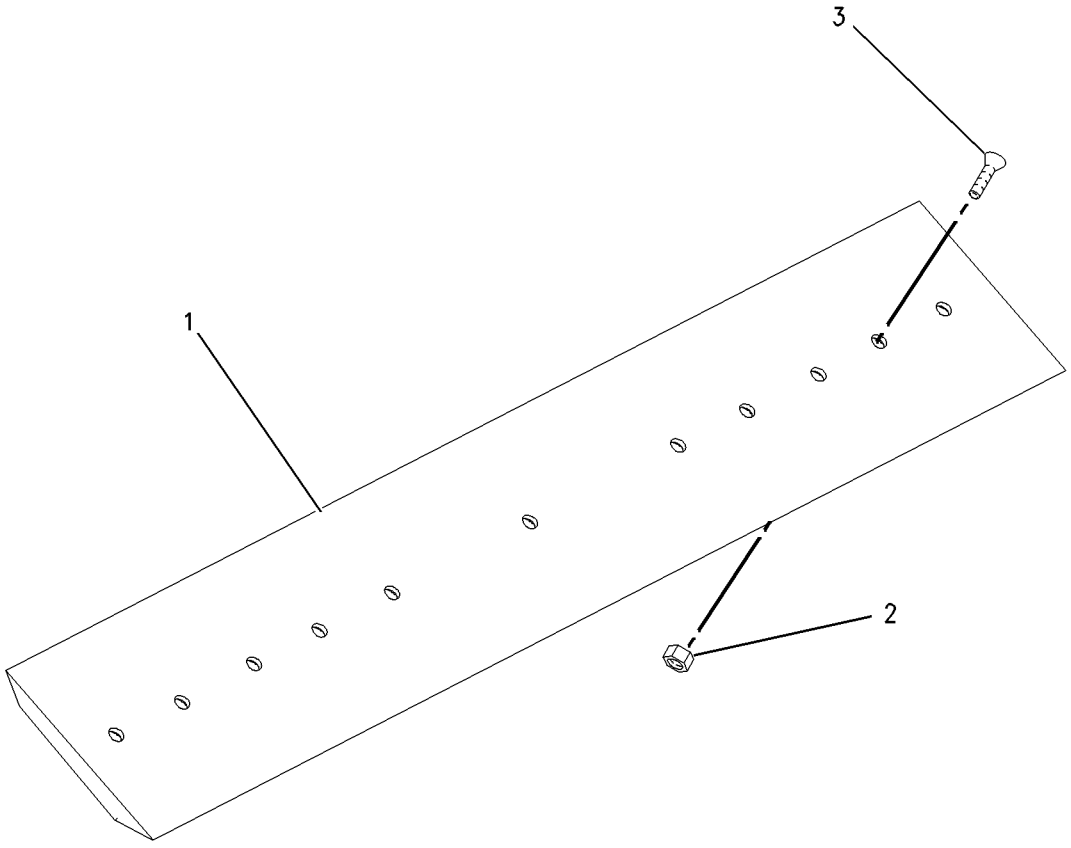

GRAPHIC #1 **<END>** g00936281

WORK TOOLS

195-7124 EDGE GP-CUTTING

S/N: A9H1-UP
PART OF 296-8192 BUCKET AR-GENERAL PURPOSE, 279-5430 BUCKET AR-LIGHT MATERIAL, 296-8057 BUCKET AR-MULTIPURPOSE
FOR USE WITH 2134-MM (84-IN) BUCKET
AN ATTACHMENT

SMCS-6801 **i01859534**

NOTE	PART NUMBER	QTY	PART NAME 1 2 3 4 5 6 (PRODUCT LEVEL)	SEE PAGE
	195-5124	1	EDGE-CUTTING	
M	**8T-4778**	11	LOCKNUT (M16X2 THD)	
M	**159-2953**	11	SCREW-FLAT HEAD (M16X2.00 THD)	

M-METRIC PART

<END>

296-7680 EDGE GP-CUTTING

S/N: A9H1-UP
PART OF 296-7597 BUCKET AR-LIGHT MATERIAL
FOR USE WITH 2438.5-MM (96-IN) BUCKET
AN ATTACHMENT

SMCS-6801 **i03508403**

NOTE	REF NO	GRAPHIC REF	PART NUMBER	QTY	PART NAME 1 2 3 4 5 6 (PRODUCT LEVEL)	SEE PAGE
	1	1	**296-7602**	1	EDGE-CUTTING	
M	2	1	**159-2953**	13	SCREW-FLAT HEAD (M16X2-THD)	
M	3	1	**8T-4778**	13	LOCKNUT (M16X2-THD)	

M-METRIC PART

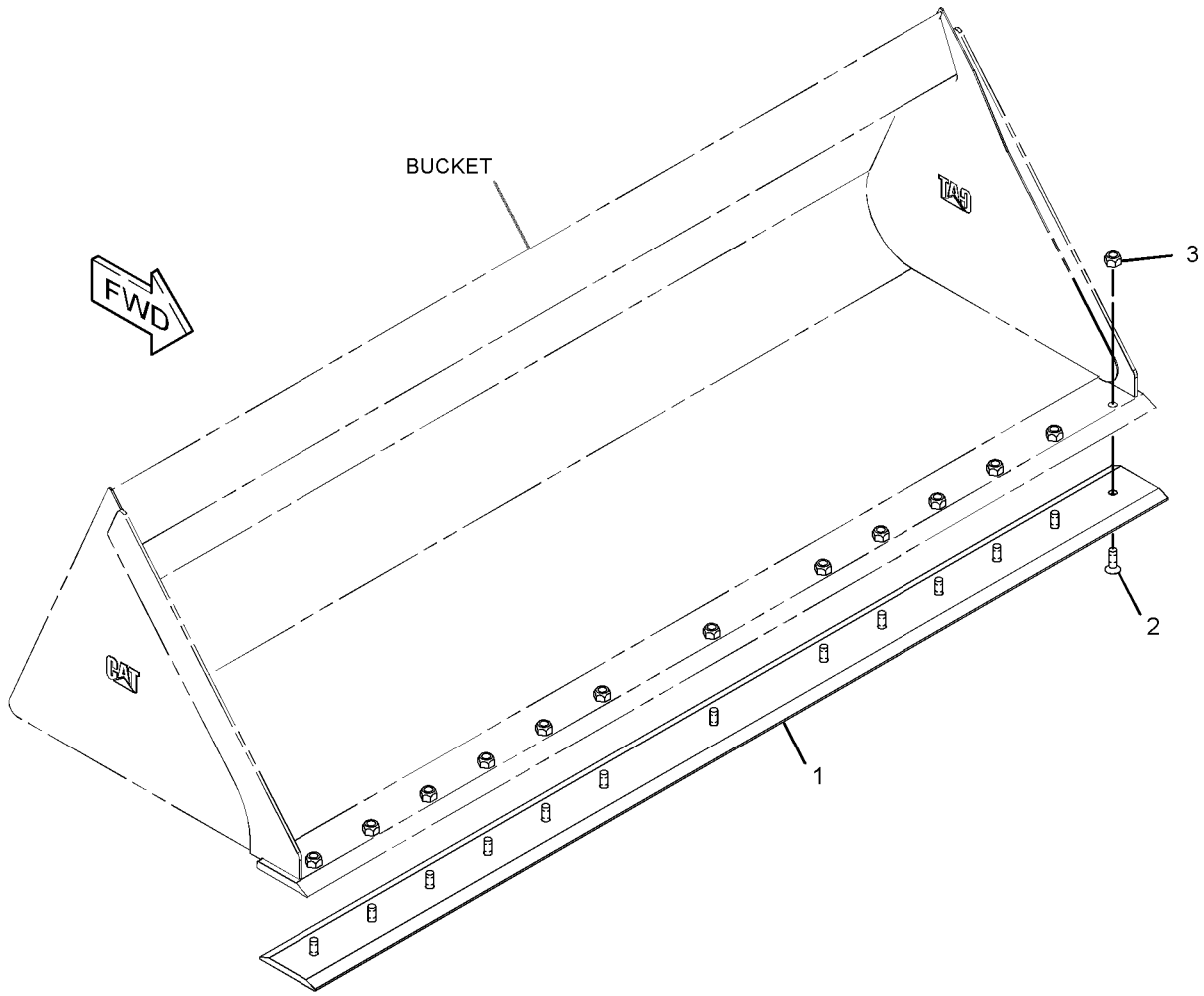

GRAPHIC #1 **<END>** g01845076

WORK TOOLS

279-5350 FORK AR-GRAPPLE—INDUSTRIAL

S/N: A9H1-UP

AN ATTACHMENT

SMCS-6705 **i02715580**

NOTE	PART NUMBER	QTY	PART NAME 1 2 3 4 5 6 (PRODUCT LEVEL)	SEE PAGE
Y	**278-1975**	2	CYLINDER GP-GRAPPLE (INDUSTRIAL)	227
Y	*164-9614*	9	FORK GP-GRAPPLE (INDUSTRIAL)	447
Y	*279-5351*	1	FORK GP-GRAPPLE (66-IN, INDUSTRIAL)	448
Y	*279-5412*	1	LINES GP-BUCKET (INDUSTRIAL)	245
Y	*156-0891*	1	MOUNTING GP-CYLINDER (INDUSTRIAL)	304

Y-SEPARATE ILLUSTRATION

<END>

279-5360 FORK AR-GRAPPLE—INDUSTRIAL

S/N: A9H1-UP

AN ATTACHMENT

SMCS-6705 **i02715593**

NOTE	PART NUMBER	QTY	PART NAME 1 2 3 4 5 6 (PRODUCT LEVEL)	SEE PAGE
Y	**278-1975**	2	CYLINDER GP-GRAPPLE (INDUSTRIAL)	227
Y	*164-9614*	2	FORK GP-GRAPPLE (INDUSTRIAL)	447
Y	*279-5359*	1	BUCKET GP-GRAPPLE (72-IN, INDUSTRIAL)	411
Y	*279-5412*	1	LINES GP-BUCKET (INDUSTRIAL)	245
Y	*156-0891*	1	MOUNTING GP-CYLINDER (INDUSTRIAL)	304

Y-SEPARATE ILLUSTRATION

<END>

285-6114 FORK AR-GRAPPLE—UTILITY

S/N: A9H1-UP

AN ATTACHMENT

SMCS-6705 **i02552497**

NOTE	PART NUMBER	QTY	PART NAME 1 2 3 4 5 6 (PRODUCT LEVEL)	SEE PAGE
Y	**285-6105**	1	FORK GP-UTILITY (66-IN)	455
Y	*285-6116*	1	GRAPPLE & CYLINDER GP-UTILITY	459

Y-SEPARATE ILLUSTRATION

<END>

285-6115 FORK AR-GRAPPLE—UTILITY

S/N: A9H1-UP

AN ATTACHMENT

SMCS-6705 **i02552699**

NOTE	PART NUMBER	QTY	PART NAME 1 2 3 4 5 6 (PRODUCT LEVEL)	SEE PAGE
Y	**285-6110**	1	FORK GP-GRAPPLE	449
Y	*285-6116*	1	GRAPPLE & CYLINDER GP-UTILITY	459

Y-SEPARATE ILLUSTRATION

<END>

WORK TOOLS

164-9614 FORK GP-GRAPPLE

S/N: A9H1-UP
PART OF 279-5350, 279-5360 FORK AR-GRAPPLE
AN ATTACHMENT

SMCS-6705 **i01075196**

NOTE	REF NO	GRAPHIC REF	PART NUMBER	QTY	PART NAME 1 2 3 4 5 6 (PRODUCT LEVEL)	SEE PAGE
	1	1	**3E-4370**	1	PIN-SPRING	
	2	1	**162-8154**	1	TINE	

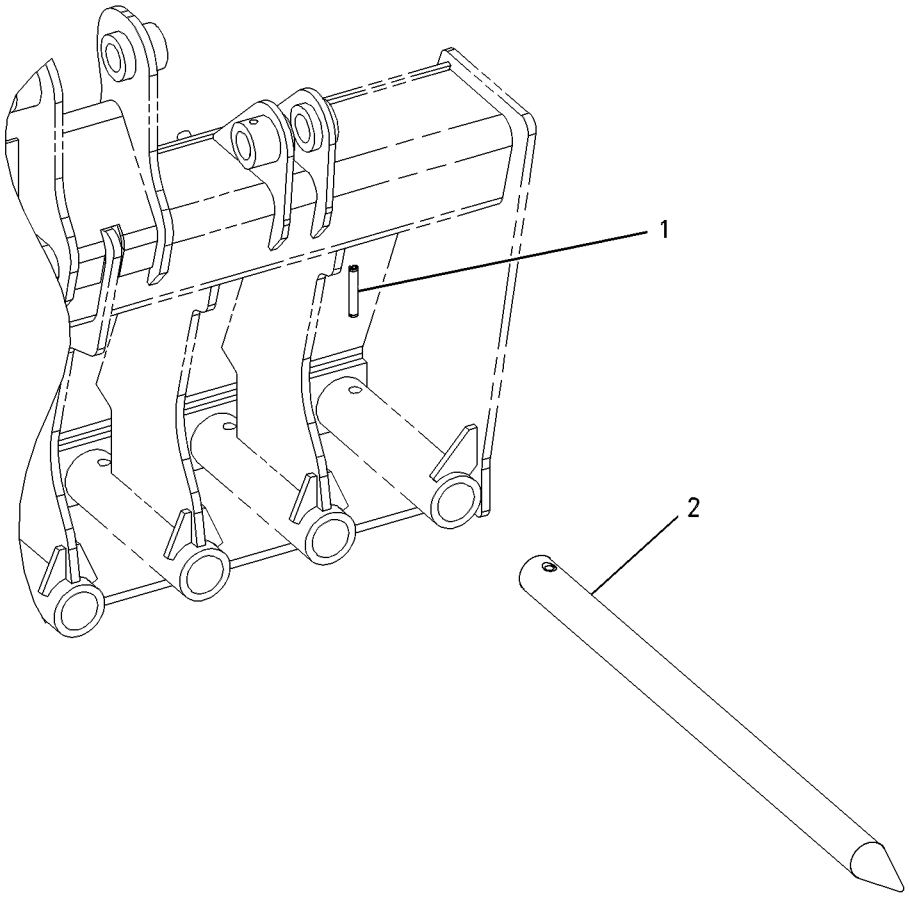

GRAPHIC #1 **<END>** g00559648

279-5351 FORK GP-GRAPPLE–INDUSTRIAL

S/N: A9H1-UP
1676-MM (66-IN)
PART OF 279-5350 FORK AR-GRAPPLE
AN ATTACHMENT

SMCS-6705 **i03647022**

NOTE	REF NO	GRAPHIC REF	PART NUMBER	QTY	PART NAME 1 2 3 4 5 6 (PRODUCT LEVEL)	SEE PAGE
	1	1	**157-0940**	4	PIN	
	2	1	**164-9989**	2	FILM-WARNING (CRUSH HAZARD)	
	3	1	**222-7467**	2	FORK AS	
					(EACH INCLUDES)	
		1	**158-5648**	2	BUSHING	
Y	4	1	**279-5352**	1	FRAME GP-FORK (66-IN, INDUSTRIAL)	457
	5	1	**3B-8489**	4	FITTING-GREASE	
M	6	1	**6V-9189**	4	LOCKNUT (M8X1.25-THD)	
M	7	1	**8T-6869**	4	BOLT (M8X1.25X60-MM)	

M-METRIC PART
Y-SEPARATE ILLUSTRATION

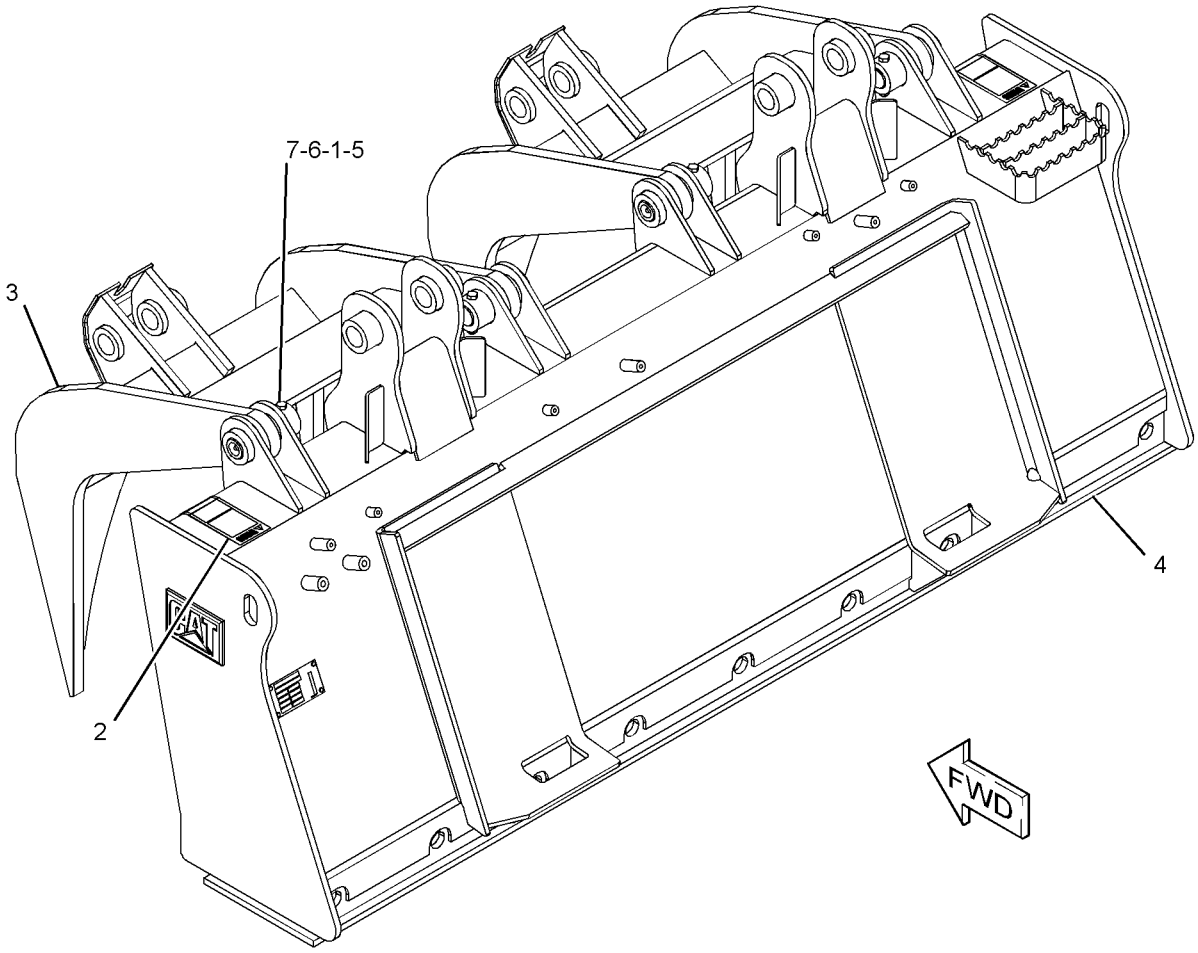

GRAPHIC #1 **<END>** g01279797

285-6110 FORK GP-GRAPPLE–UTILITY

S/N: A9H1-UP
1828.8-MM (72-IN)
PART OF 285-6115 FORK AR-GRAPPLE
AN ATTACHMENT

SMCS-6705 **i04045395**

NOTE	REF NO	GRAPHIC REF	PART NUMBER	QTY	PART NAME 1 2 3 4 5 6 (PRODUCT LEVEL)	SEE PAGE
	1	1	**164-9989**	2	FILM-WARNING (CRUSH HAZARD)	
Y	2	1	*165-8732*	9	FORK GP-UTILITY	454
	3	1	**154-2704**	1	PLATE-INSTRUCTION (BUCKET SPECIFICATIONS)	
	4	1	**168-8389**	4	TACK-FASTENER	

Y-SEPARATE ILLUSTRATION

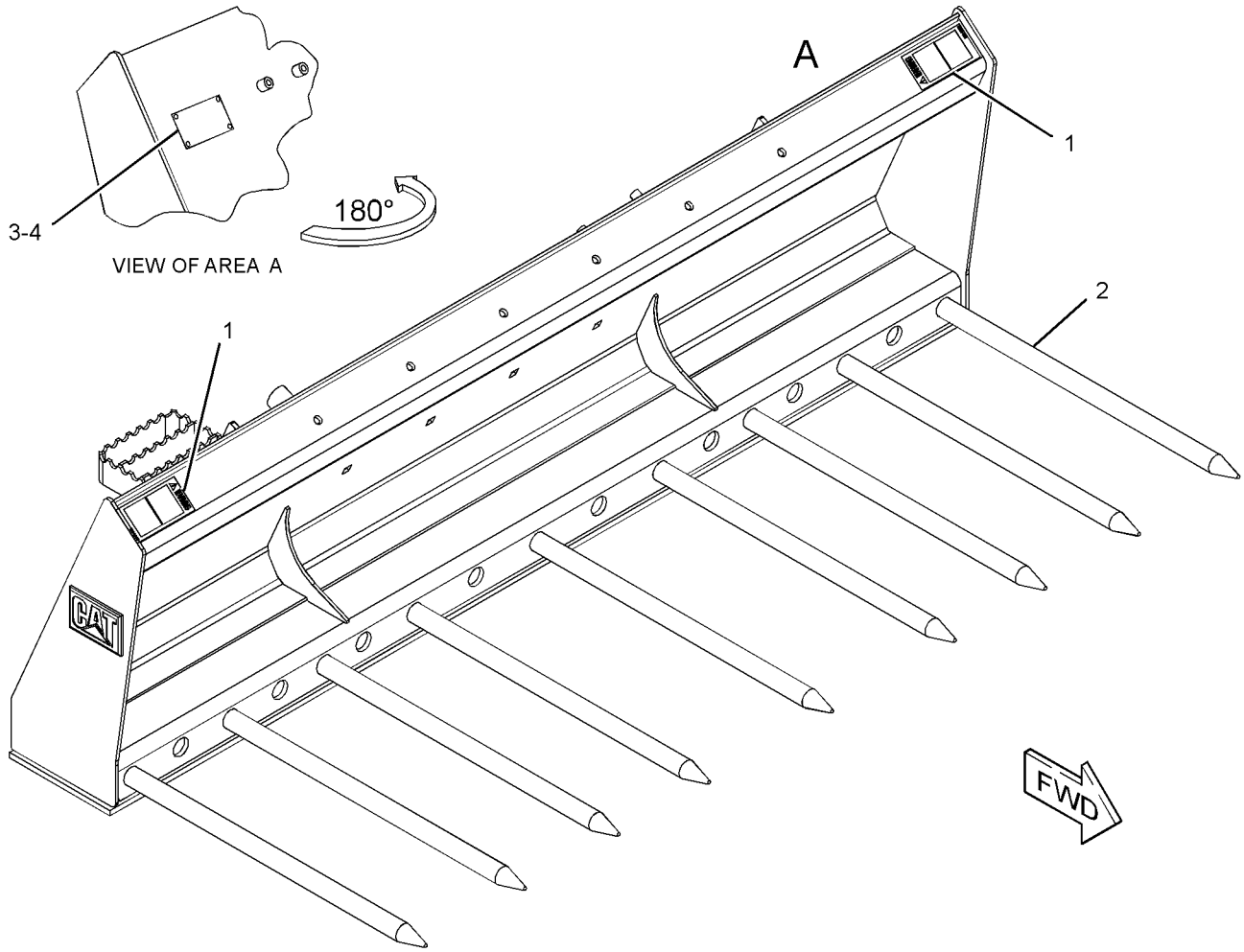

GRAPHIC #1 **<END>** g02265514

WORK TOOLS

195-6942 FORK GP-PALLET

S/N: A9H1-UP
1067-MM (42-IN)
PART OF 353-1696 CARRIAGE & FORK AR, 243-0002 FORK GP-PALLET
AN ATTACHMENT

SMCS-6136 **i04045404**

NOTE	REF NO	GRAPHIC REF	PART NUMBER	QTY	PART NAME 1 2 3 4 5 6 (PRODUCT LEVEL)	SEE PAGE
	1	1	**221-3429**	1	POSITIONER GP-FORK	

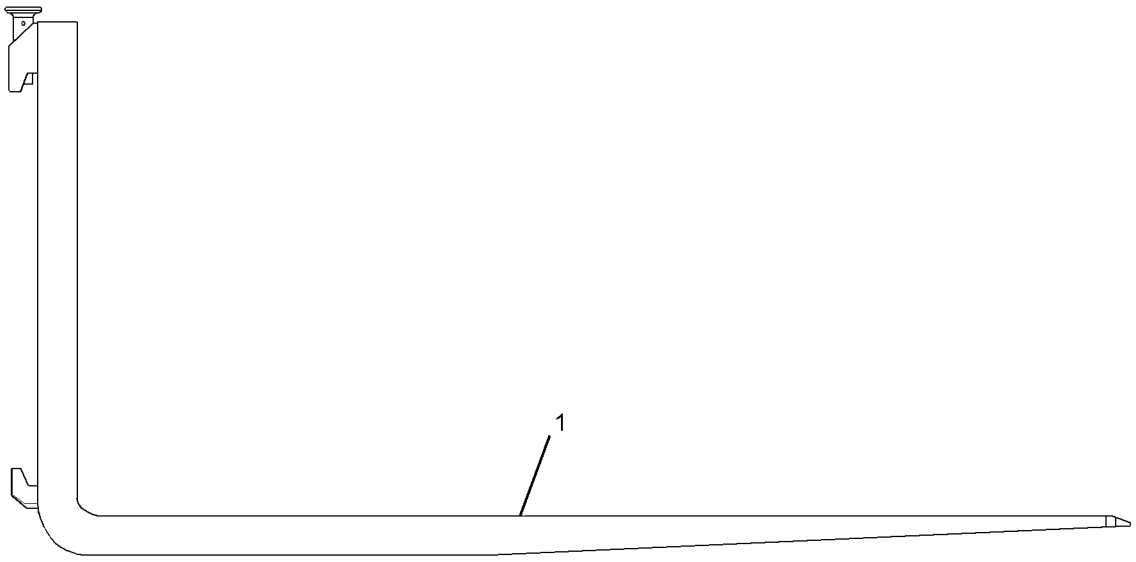

GRAPHIC #1 **<END>** g02265054

195-6943 FORK GP-PALLET

S/N: A9H1-UP
914-MM (36-IN)
PART OF 353-1694 CARRIAGE & FORK AR, 243-0001 FORK GP-PALLET
AN ATTACHMENT

SMCS-6136 **i04045403**

NOTE	REF NO	GRAPHIC REF	PART NUMBER	QTY	PART NAME 1 2 3 4 5 6 (PRODUCT LEVEL)	SEE PAGE
	1	1	**221-3429**	1	POSITIONER GP-FORK	

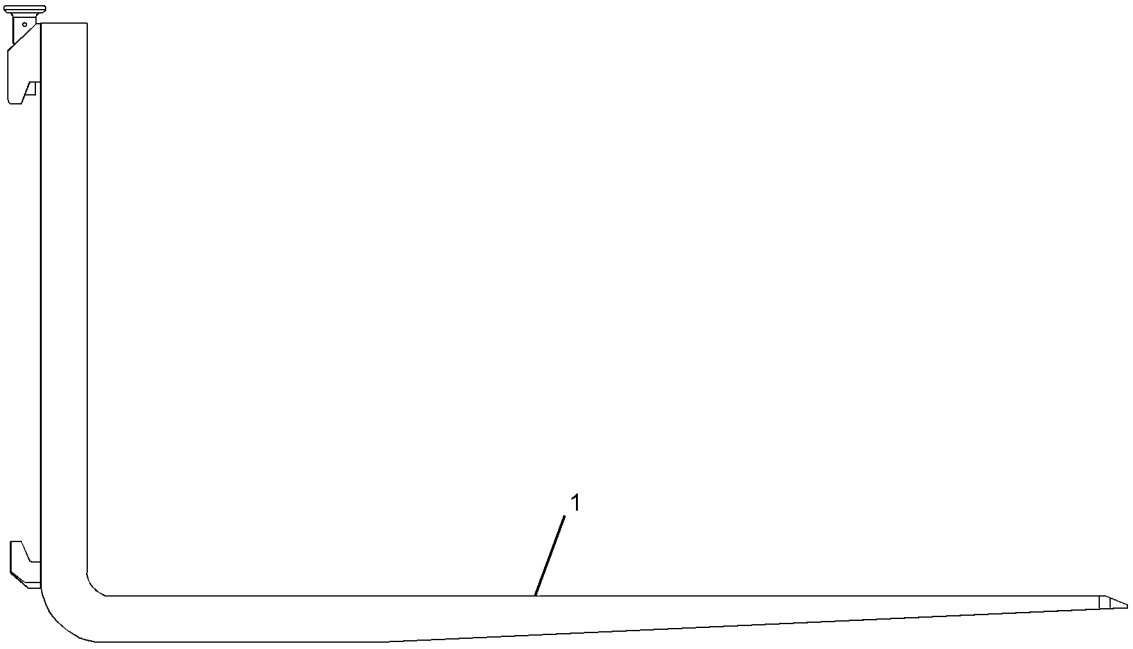

GRAPHIC #1 **<END>** g02265095

WORK TOOLS

195-8545 FORK GP-PALLET

S/N: A9H1-UP
1219-MM (48-IN)
PART OF 353-1697 CARRIAGE & FORK AR, 243-0003 FORK GP-PALLET
AN ATTACHMENT

SMCS-6136 **i04045402**

NOTE	REF NO	GRAPHIC REF	PART NUMBER	QTY	PART NAME 1 2 3 4 5 6 (PRODUCT LEVEL)	SEE PAGE
	1	1	**221-3429**	1	POSITIONER GP-FORK	

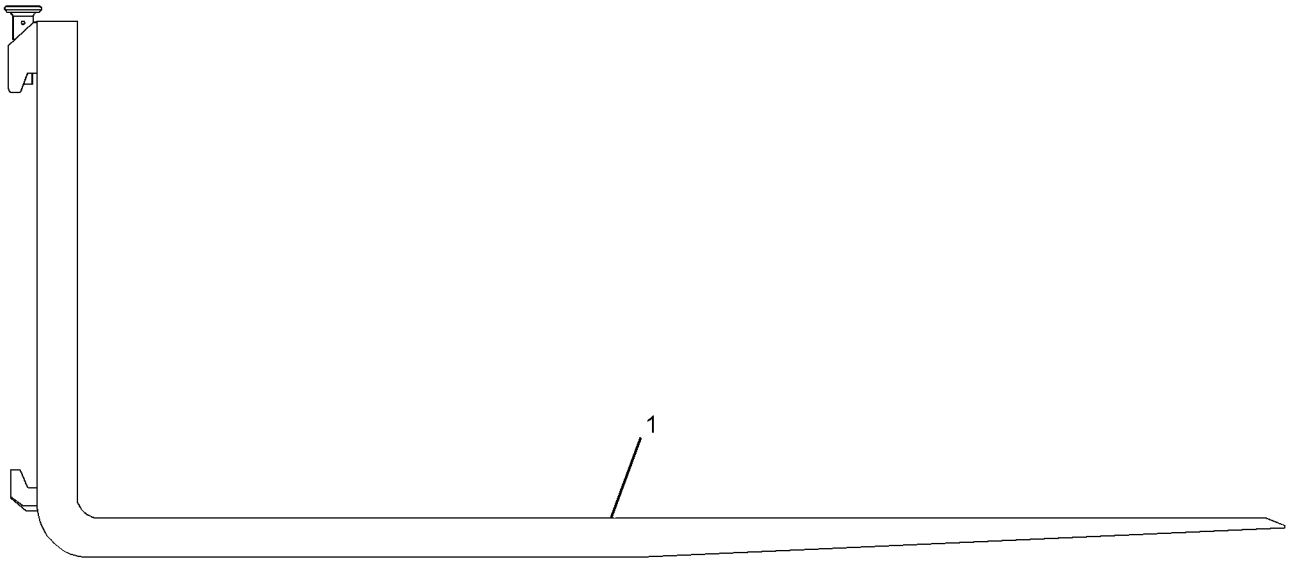

GRAPHIC #1 **<END>** g02265213

WORK TOOLS

243-0001 FORK GP-PALLET–KIT

S/N: A9H1-UP

AN ATTACHMENT

SMCS-6136 **i04358351**

NOTE	PART NUMBER	QTY	PART NAME 1 2 3 4 5 6 (PRODUCT LEVEL)	SEE PAGE
Y	**195-6943**	12	FORK GP-PALLET (36-IN)	451

Y-SEPARATE ILLUSTRATION

<END>

243-0002 FORK GP-PALLET–KIT

S/N: A9H1-UP

AN ATTACHMENT

SMCS-6136 **i04358352**

NOTE	PART NUMBER	QTY	PART NAME 1 2 3 4 5 6 (PRODUCT LEVEL)	SEE PAGE
Y	**195-6942**	12	FORK GP-PALLET (42-IN)	450

Y-SEPARATE ILLUSTRATION

<END>

243-0003 FORK GP-PALLET–KIT

S/N: A9H1-UP

AN ATTACHMENT

SMCS-6136 **i04358353**

NOTE	PART NUMBER	QTY	PART NAME 1 2 3 4 5 6 (PRODUCT LEVEL)	SEE PAGE
Y	**195-8545**	12	FORK GP-PALLET (48-IN)	452

Y-SEPARATE ILLUSTRATION

<END>

WORK TOOLS

165-8732 FORK GP-UTILITY

S/N: A9H1-UP
1676-MM (66-IN)
PART OF 285-6110 FORK GP-GRAPPLE, 285-6105 FORK GP-UTILITY
AN ATTACHMENT

SMCS-6458 **i01204324**

NOTE	REF NO	GRAPHIC REF	PART NUMBER	QTY	PART NAME 1 2 3 4 5 6 (PRODUCT LEVEL)	SEE PAGE
	1	1	**9R-2959**	1	CLIP	
	2	1	**166-4041**	1	TINE	

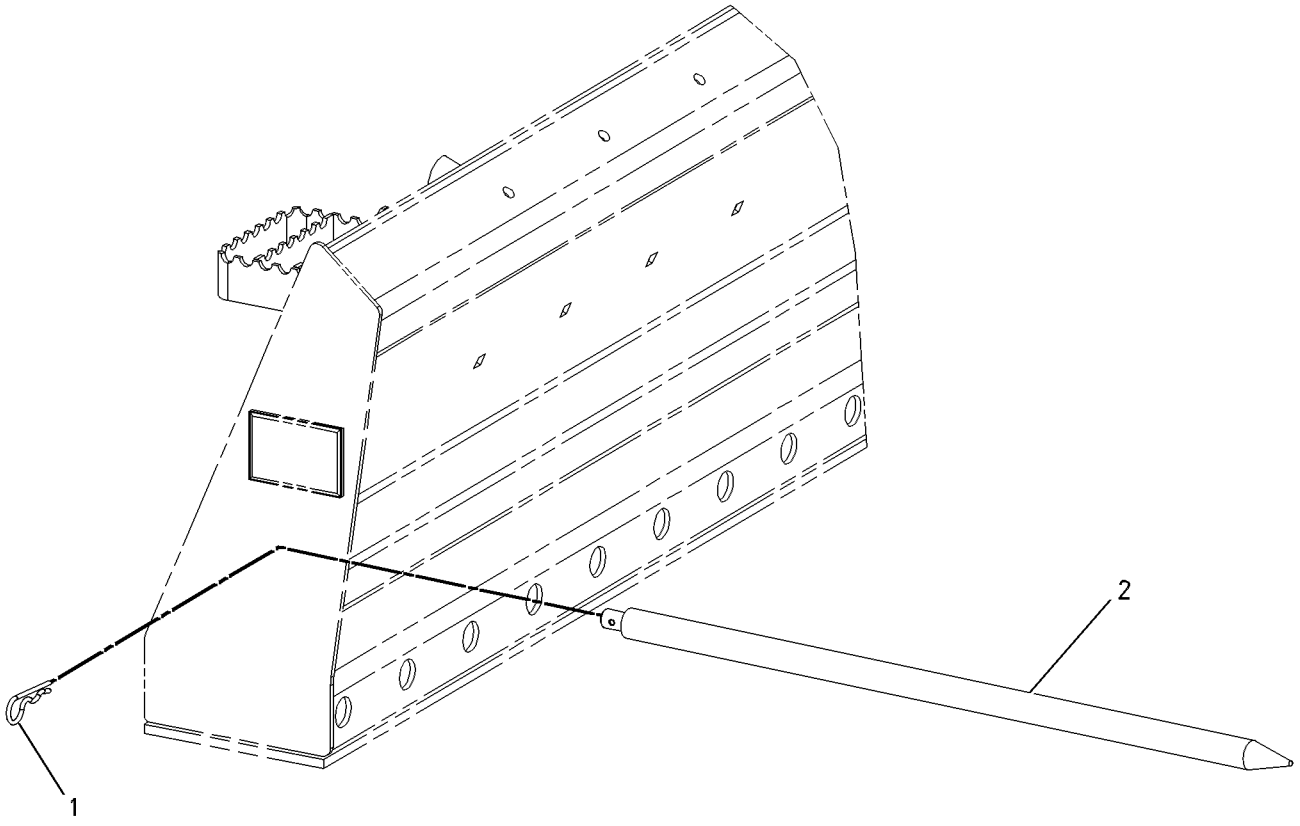

GRAPHIC #1 **<END>** g00639778

WORK TOOLS

285-6105 FORK GP-UTILITY

S/N: A9H1-UP
PART OF 285-6114 FORK AR-GRAPPLE
AN ATTACHMENT

SMCS-6458 **i04269752**

NOTE	REF NO	GRAPHIC REF	PART NUMBER	QTY	PART NAME 1 2 3 4 5 6 (PRODUCT LEVEL)	SEE PAGE
	1	1	**164-9989**	2	FILM-WARNING (CRUSH HAZARD)	
Y	2	1	*165-8732*	7	FORK GP-UTILITY	454

Y-SEPARATE ILLUSTRATION

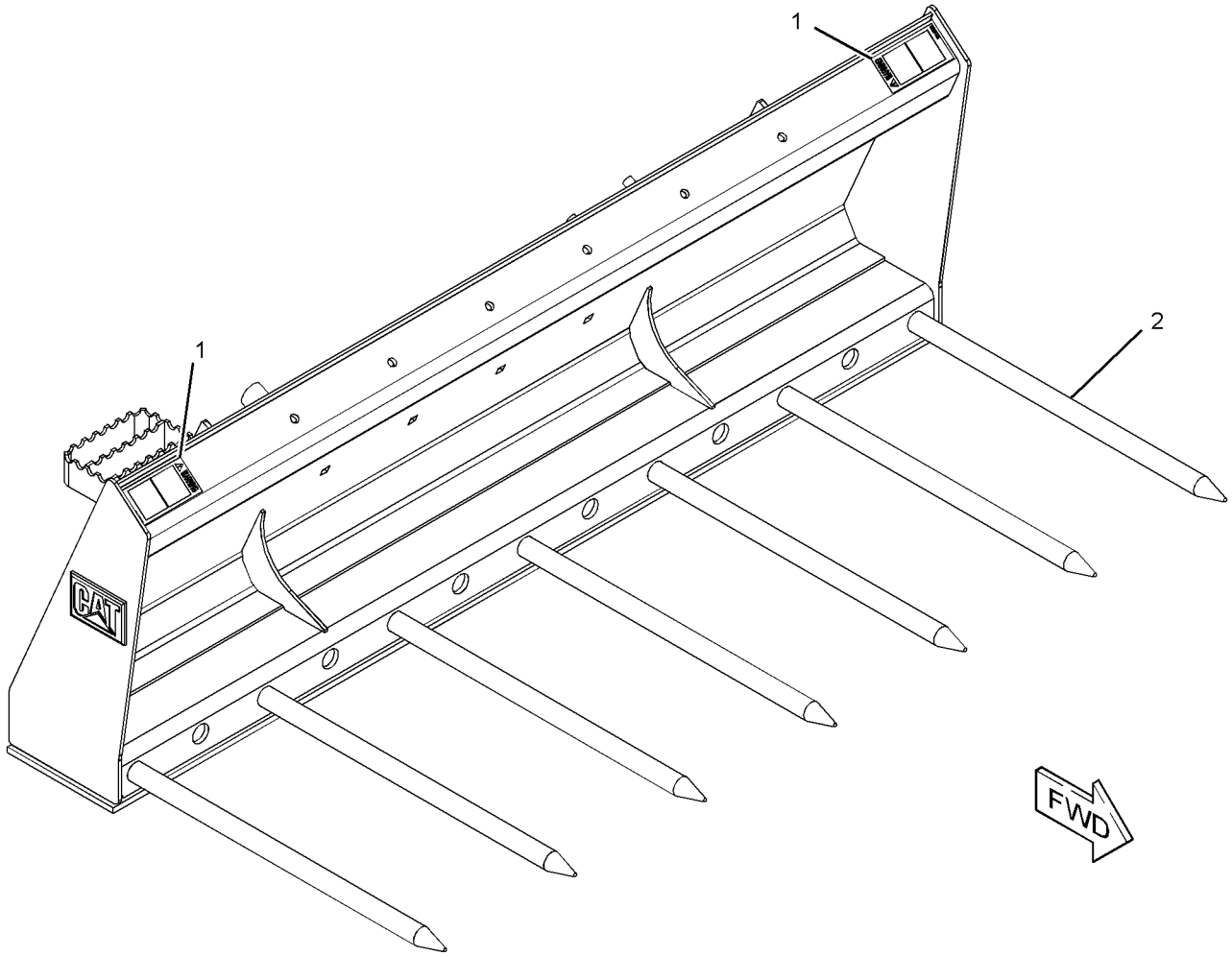

GRAPHIC #1 **<END>** g01280417

WORK TOOLS

230-5670 FRAME GP-BLADE

S/N: A9H1-UP
PART OF 177-1989, 177-1990 BLADE AR
AN ATTACHMENT

SMCS-6060 **i03637977**

NOTE	REF NO	GRAPHIC REF	PART NUMBER	QTY	PART NAME 1 2 3 4 5 6 (PRODUCT LEVEL)	SEE PAGE
	1	1	**177-1914**	1	PIN AS	
B	2	1	**177-1955**	1	SHIM (1-MM THK)	
B	3	1	**177-1956**	1	SHIM (2-MM THK)	
B	4	1	**177-1957**	1	SHIM (3-MM THK)	
	5	1	**177-1971**	1	FRAME AS	
	6	1	**177-1975**	1	FRAME AS	
	7	1	**230-5407**	1	FRAME AS	
	8	1	**3B-8489**	1	FITTING-GREASE	
	9	1	**5B-0935**	1	FITTING-GREASE	
M	10	1	**7X-2553**	8	BOLT (M16X2X40-MM)	
	11	1	**7X-7729**	1	WASHER (11X25X3-MM THK)	
	12	1	**8T-4122**	8	WASHER-HARD (17X32X3.5-MM THK)	
M	13	1	**8T-4137**	1	BOLT (M10X1.5X20-MM)	

B-USE AS REQUIRED
M-METRIC PART

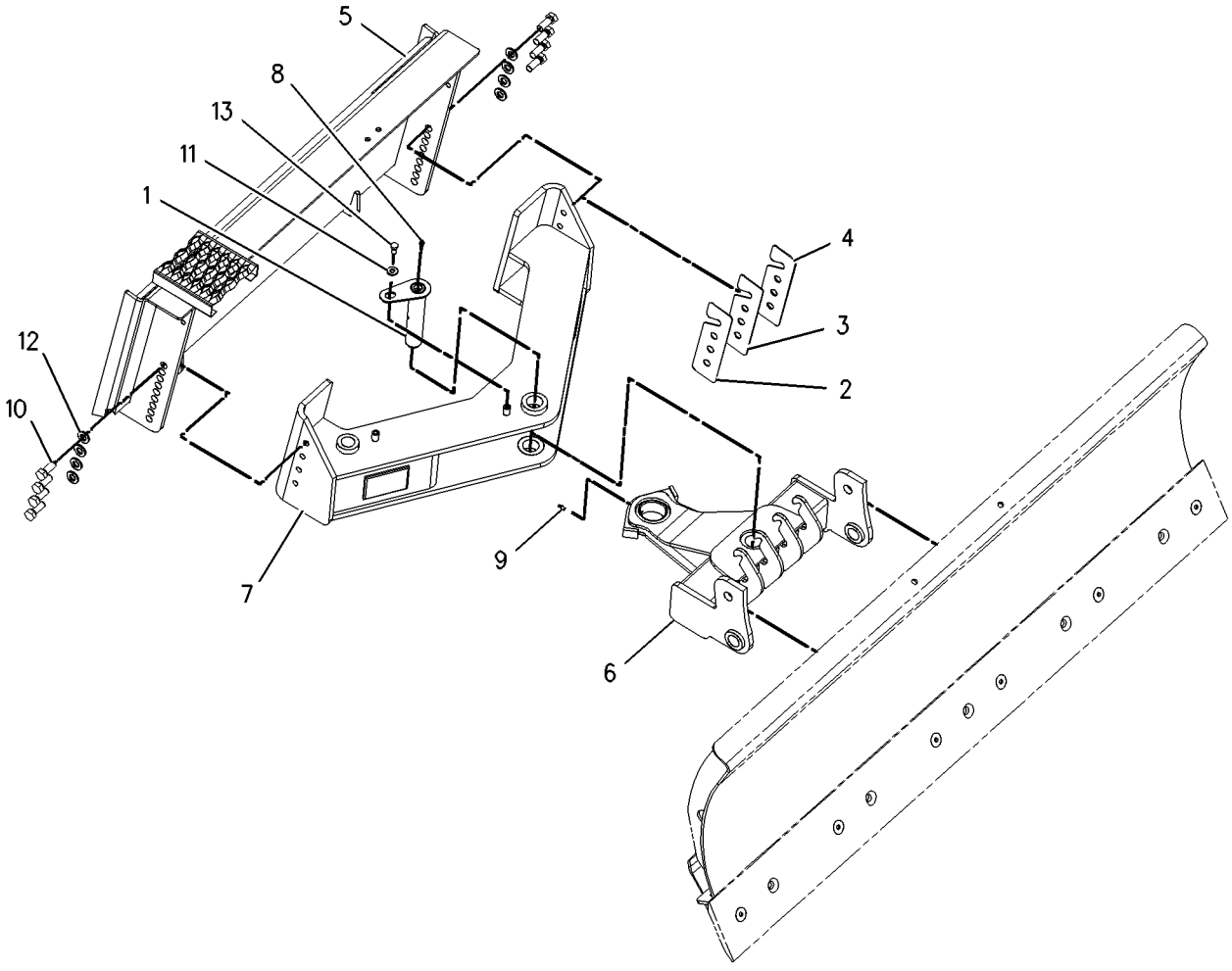

GRAPHIC #1 **<END>** g00978893

279-5352 FRAME GP-FORK–INDUSTRIAL

S/N: A9H1-UP
1676-MM (66-IN)
PART OF 279-5351 FORK GP-GRAPPLE
AN ATTACHMENT

SMCS-6705 **i04157287**

NOTE	REF NO	GRAPHIC REF	PART NUMBER	QTY	PART NAME 1 2 3 4 5 6 (PRODUCT LEVEL)	SEE PAGE
	1	1	**358-4944**	1	PLATE-IDENTIFICATION (BUCKET SPECIFICATIONS)	
	2	1	**168-8389**	4	TACK-FASTENER	
	3	1	**279-5353**	1	FORK AS	
		1	**161-4130**	2	PLATE-IDENTIFICATION (CAT)	
F			**164-9989**	2	FILM-WARNING (CRUSH HAZARD)	

F-NOT SHOWN

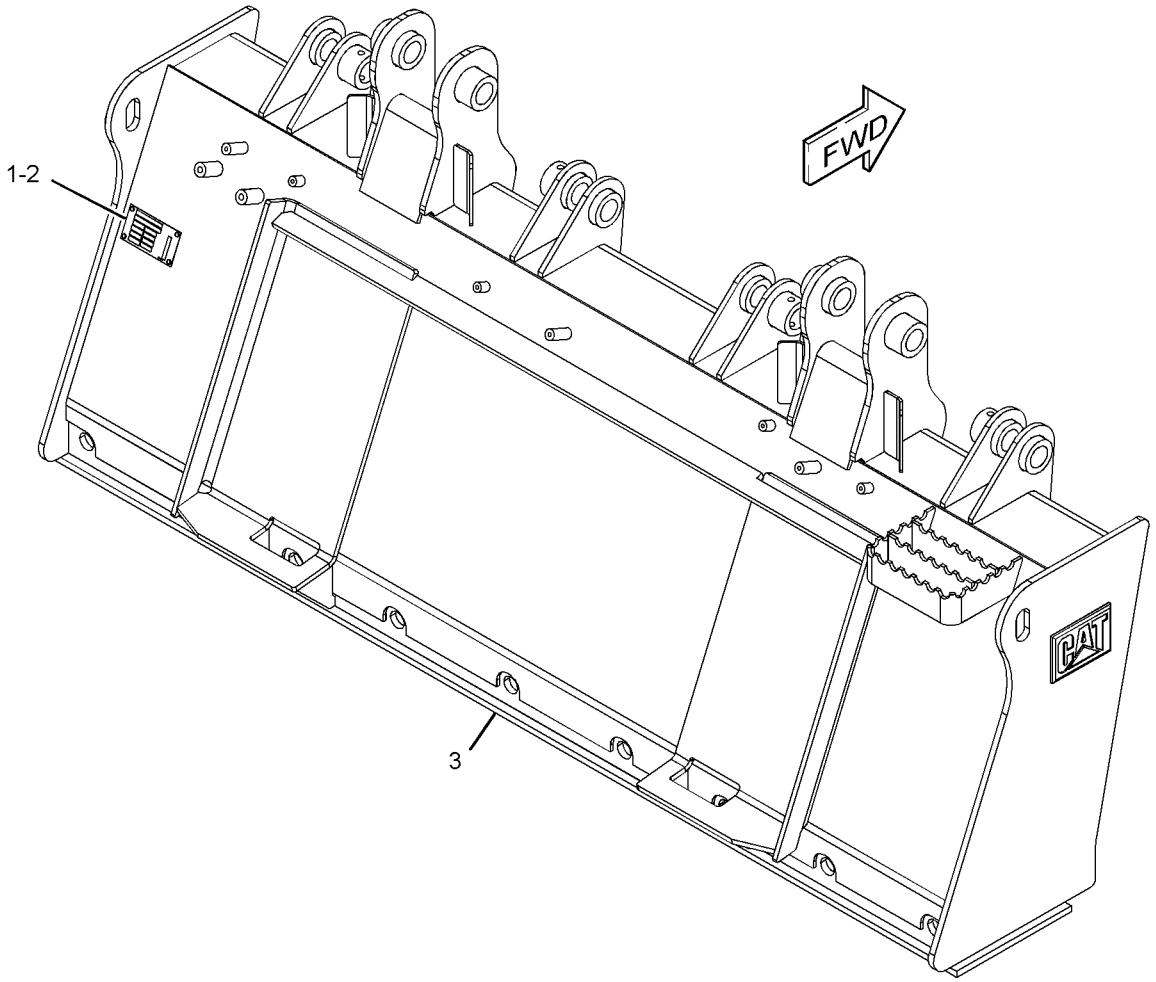

GRAPHIC #1 **<END>** g01280687

279-5358 FRAME GP-FORK–INDUSTRIAL

S/N: A9H1-UP
1829-MM (72-IN)
PART OF 279-5359 BUCKET GP-GRAPPLE
AN ATTACHMENT

SMCS-6705 **i04157292**

NOTE	REF NO	GRAPHIC REF	PART NUMBER	QTY	PART NAME 1 2 3 4 5 6 (PRODUCT LEVEL)	SEE PAGE
	1	1	**358-4944**	1	PLATE-IDENTIFICATION (BUCKET SPECIFICATIONS)	
	2	1	**168-8389**	4	TACK-FASTENER	
	3	1	**279-5357**	1	FORK AS	
		1	**161-4130**	2	PLATE-IDENTIFICATION (CAT)	
F			**164-9989**	2	FILM-WARNING (CRUSH HAZARD)	

F-NOT SHOWN

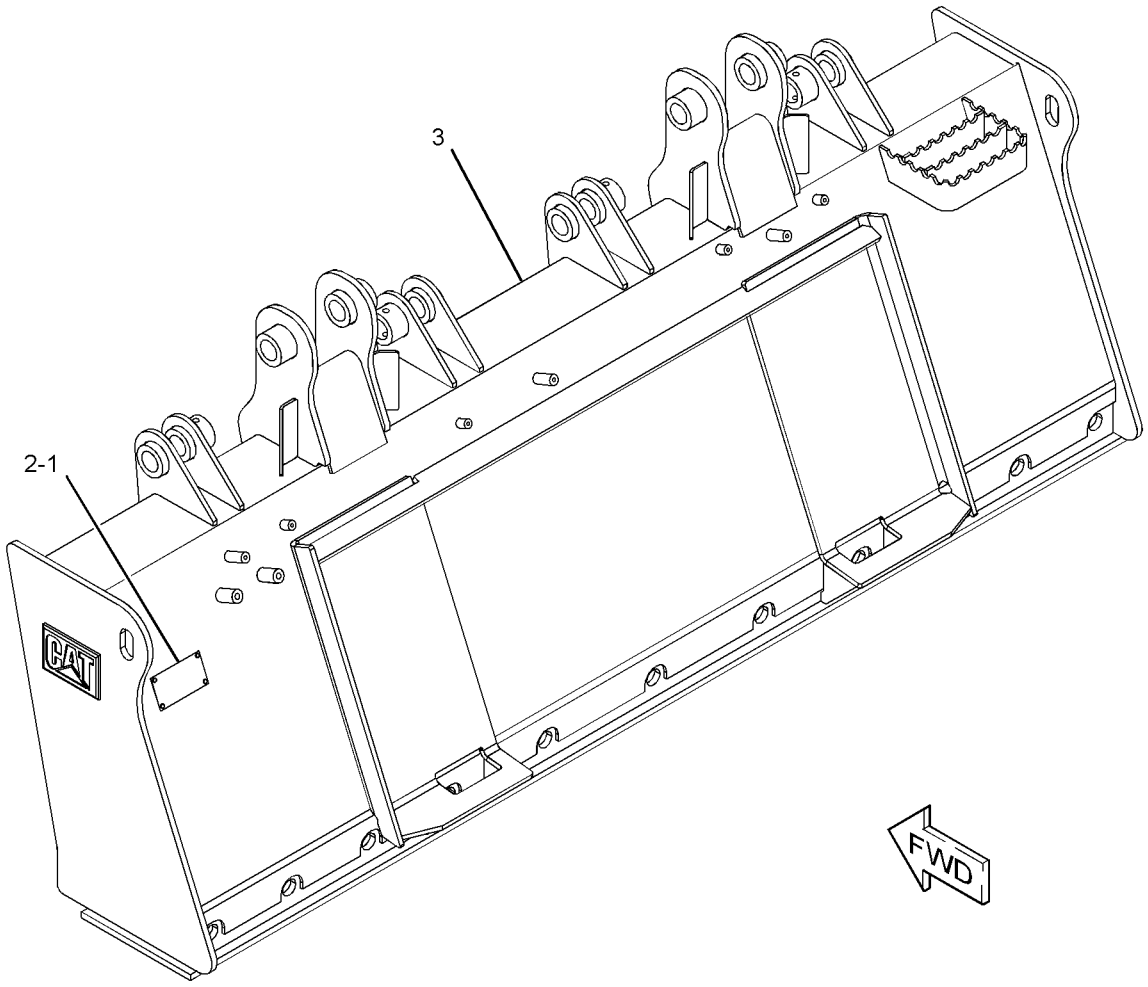

GRAPHIC #1 **<END>** g01279388

285-6116 GRAPPLE & CYLINDER GP-UTILITY

S/N: A9H1-UP
PART OF 285-6111, 285-6112 BUCKET AR-GRAPPLE, 285-6114, 285-6115 FORK AR-GRAPPLE
AN ATTACHMENT

SMCS-5057, 5555, 6307 **i04358357**

NOTE	REF NO	GRAPHIC REF	PART NUMBER	QTY	PART NAME 1 2 3 4 5 6 (PRODUCT LEVEL)	SEE PAGE
CY	1	1	**255-0943**	1	CYLINDER GP-GRAPPLE (UTILITY)	226
Y	2	1	*165-8731*	1	MOUNTING GP-CYLINDER (UTILITY)	305
Y	3	1	*165-8740*	1	GRAPPLE GP-UTILITY	460
M	4	1	**170-5836**	4	BOLT (M12X1.75X35-MM)	
Y	5	1	*173-7407*	1	STOP GP-BUCKET (UTILITY)	474
	6	1	**239-5029**	1	GUARD	
Y	7	1	*285-6113*	1	LINES GP-BUCKET	255
	8	1	**5P-1076**	4	WASHER-HARD (13.5X30X4-MM THK)	
M	9	1	**8T-4139**	6	BOLT (M12X1.75X30-MM)	
	10	1	**8T-4223**	6	WASHER-HARD (13.5X25.5X3-MM THK)	
M	11	1	**8T-4244**	10	NUT (M12X1.75-THD)	

C-CHANGE FROM PREVIOUS TYPE
M-METRIC PART
Y-SEPARATE ILLUSTRATION

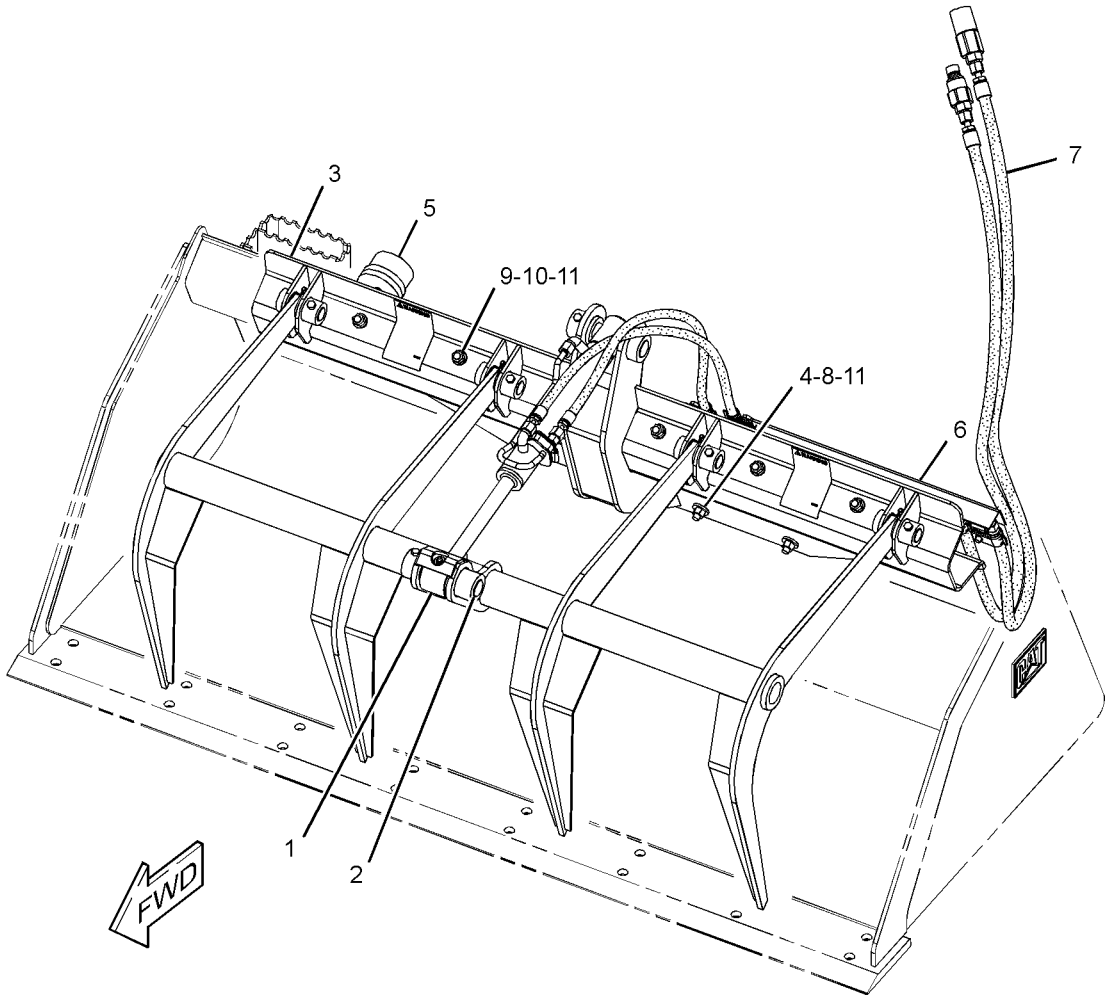

GRAPHIC #1 **<END>** g01278678

WORK TOOLS

165-8740 GRAPPLE GP-UTILITY

S/N: A9H1-UP
PART OF 285-6116 GRAPPLE & CYLINDER GP-UTILITY
AN ATTACHMENT

SMCS-6307 **i04269754**

NOTE	REF NO	GRAPHIC REF	PART NUMBER	QTY	PART NAME 1 2 3 4 5 6 (PRODUCT LEVEL)	SEE PAGE
	1	1	**3B-8488**	4	FITTING-GREASE	
	2	1	**159-5411**	4	PIN	
	3	1	**165-8743**	1	ARM AS	
	4	1	**169-3569**	1	BRACKET AS	
		1	**159-8035**	2	FILM-WARNING (CRUSH HAZARD, STAY BACK)	
M	5	1	**6V-9189**	4	LOCKNUT (M8X1.25-THD)	
M	6	1	**8T-6912**	4	BOLT (M8X1.25X50-MM)	

M-METRIC PART

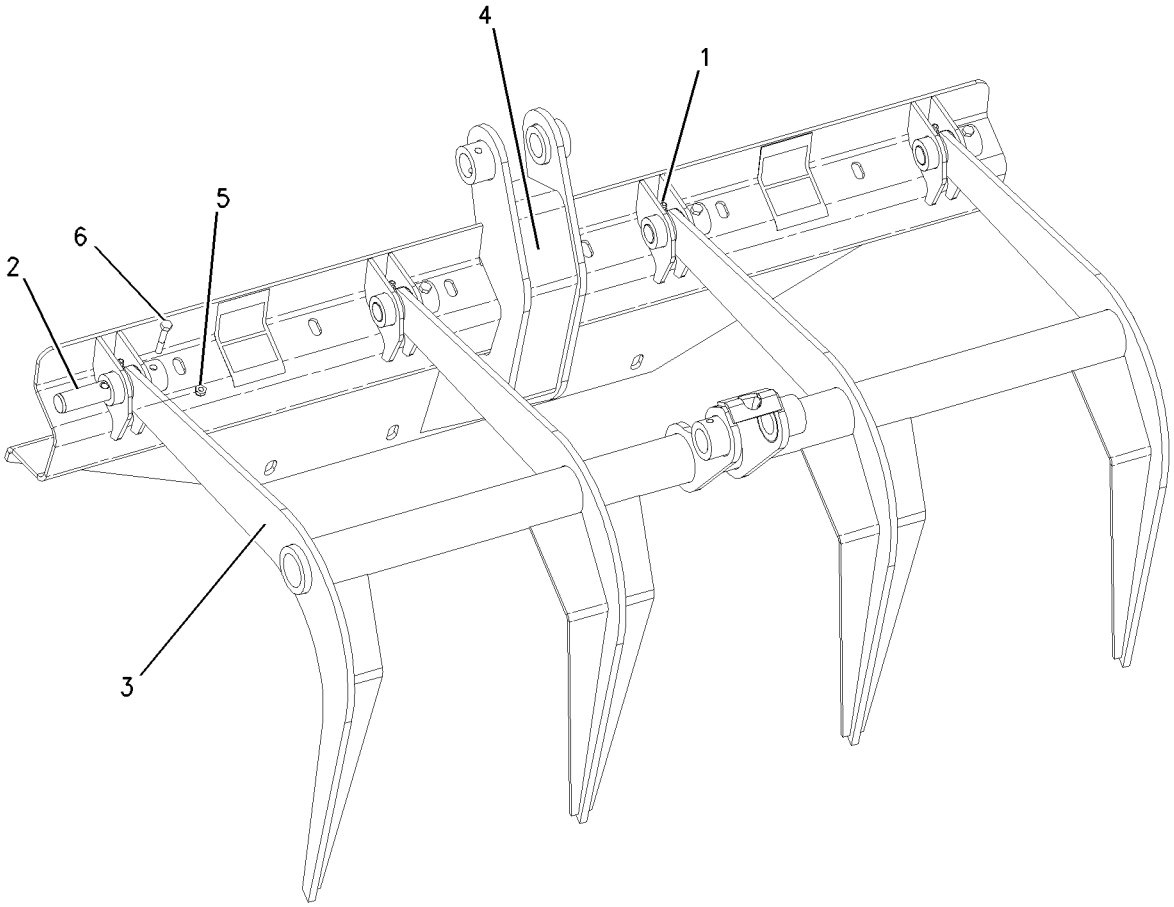

GRAPHIC #1 **<END>** g00777325

258-2536 HANDLE & PIN GP-COUPLER–RH

S/N: A9H1-UP
PART OF 258-2535 LOCK GP-QUICK COUPLER
AN ATTACHMENT

SMCS-6129 **i02960198**

NOTE	REF NO	GRAPHIC REF	PART NUMBER	QTY	PART NAME 1 2 3 4 5 6 (PRODUCT LEVEL)	SEE PAGE
	1	1	**192-2637**	1	PLATE	
	2	1	**195-6754**	2	PIN-SPRING	
	3	1	**192-2645**	1	SPRING	
	4	1	**258-2534**	1	HANDLE-RH	
M	5	1	**315-5493**	2	WASHER-HARD (22.5X35X4.5-MM THK)	

M-METRIC PART

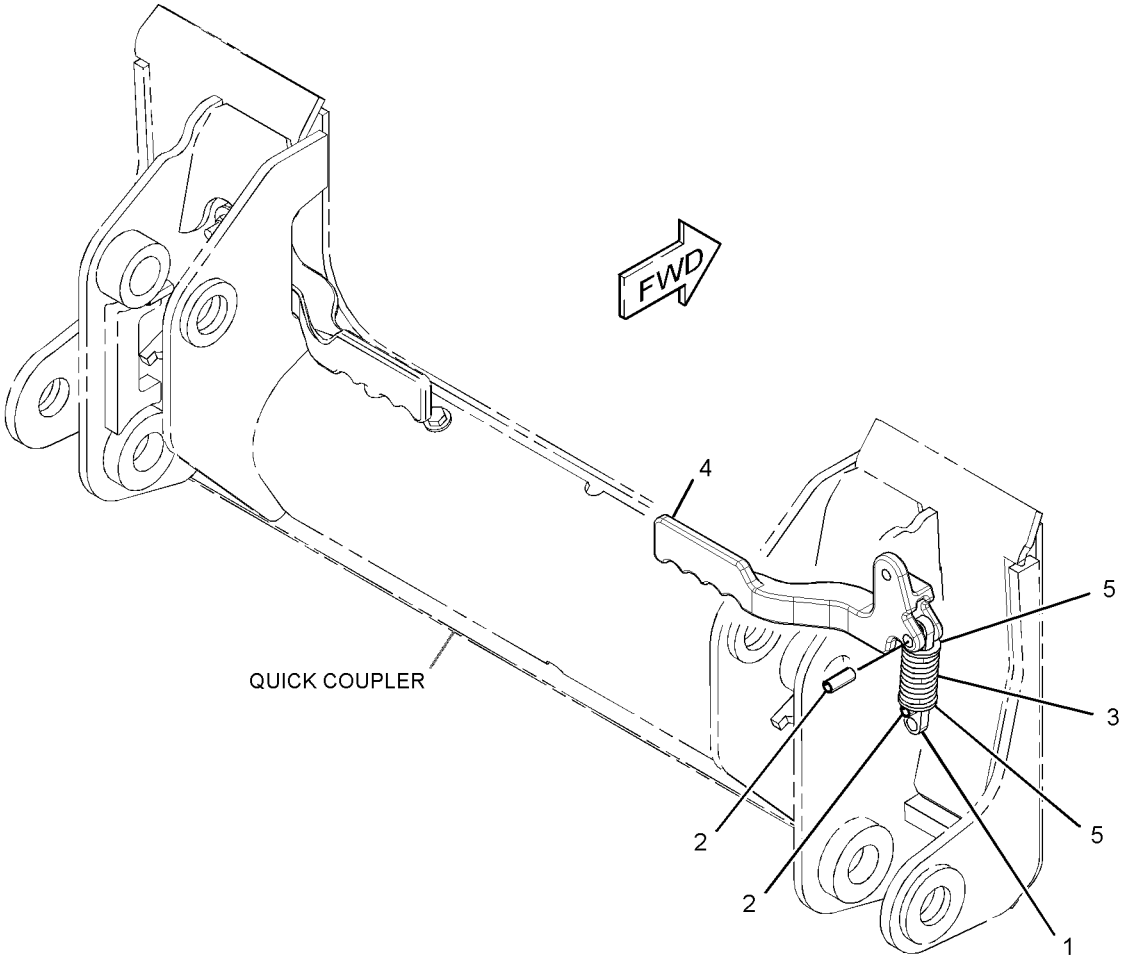

GRAPHIC #1 **<END>** g01335572

258-2538 HANDLE & PIN GP-COUPLER–LH

S/N: A9H1-UP
PART OF 258-2537 LOCK GP-QUICK COUPLER
AN ATTACHMENT

SMCS-6129 **i02960209**

NOTE	REF NO	GRAPHIC REF	PART NUMBER	QTY	PART NAME 1 2 3 4 5 6 (PRODUCT LEVEL)	SEE PAGE
	1	1	**192-2637**	1	PLATE	
	2	1	**195-6754**	2	PIN-SPRING	
	3	1	**192-2645**	1	SPRING	
	4	1	**258-2533**	1	HANDLE-LH	
M	5	1	**315-5493**	2	WASHER-HARD (22.5X35X4.5-MM THK)	

M-METRIC PART

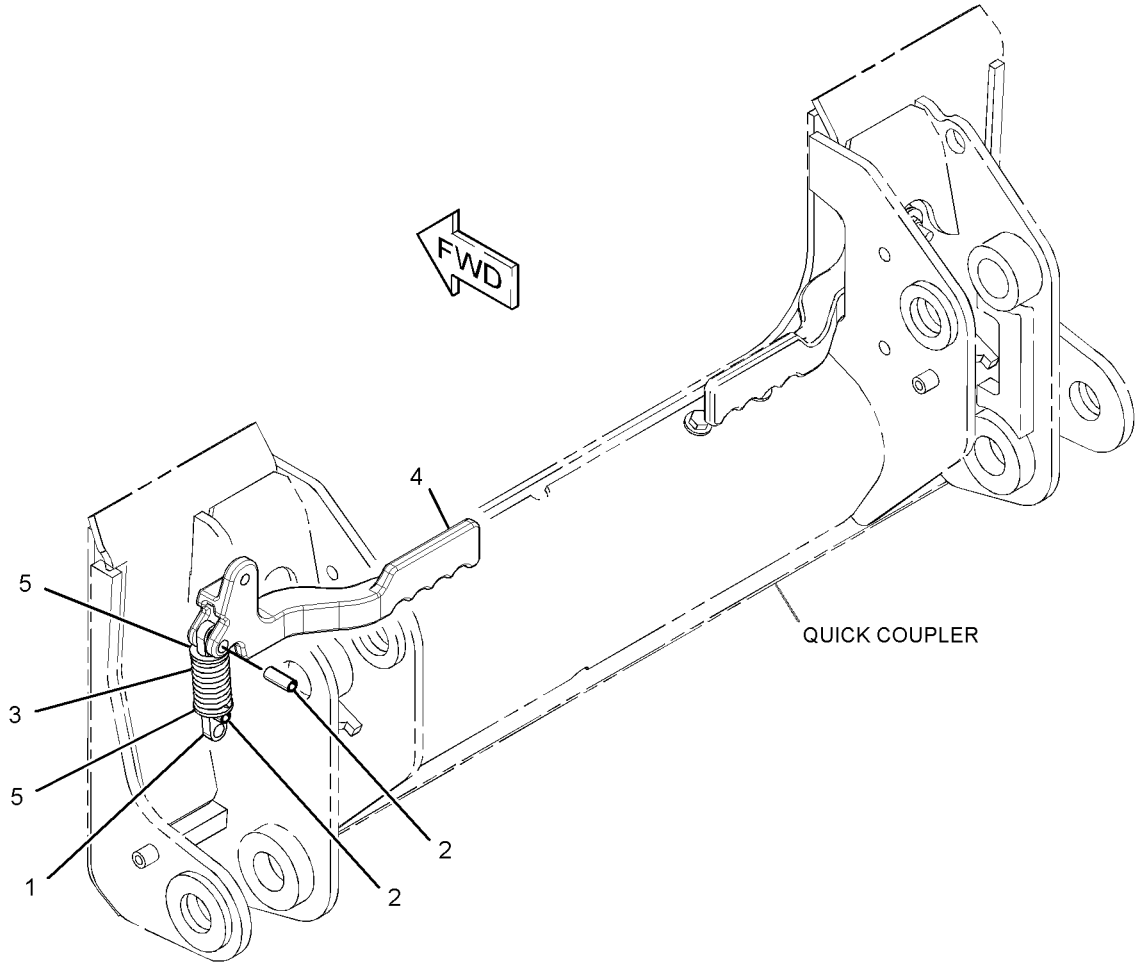

GRAPHIC #1 **<END>** g01335567

WORK TOOLS

225-9522 KIT-ANGLE BLADE

S/N: A9H1-UP
1829-MM (72-IN). SNOW AND IMPACT
FOR USE WITH 177-1989—PAGE 325
AN ATTACHMENT

SMCS-6701 **i04269769**

NOTE	REF NO	GRAPHIC REF	PART NUMBER	QTY	PART NAME 1 2 3 4 5 6 (PRODUCT LEVEL)	SEE PAGE
	1	1	**197-0882**	2	MARKER-TERMINAL	
	2	1	**197-0883**	1	GUARD AS	
	3	1	**210-0852**	1	VALVE GP-RELIEF (ANGLE BLADE)	
I	4	1	**214-5560**	2	HOSE AS	
	5	1	**3J-1907**	4	SEAL-O-RING	
M	6	1	**5C-2890**	2	NUT (M6X1-THD)	
M	7	1	**5C-7261**	4	NUT (M8X1.25-THD)	
	8	1	**6V-8397**	4	SEAL-O-RING	
	9	1	**7E-9898**	4	CONNECTOR	
M	10	1	**7X-2535**	2	BOLT (M6X1X60-MM)	
M	11	1	**8T-4139**	4	BOLT (M12X1.75X30-MM)	
	12	1	**8T-4205**	4	WASHER-HARD (7.2X14.5X2-MM THK)	
	13	1	**8T-4223**	8	WASHER-HARD (13.5X25.5X3-MM THK)	
	14	1	**8T-4224**	8	WASHER-HARD (8.8X16X2-MM THK)	
M	15	1	**8T-4244**	4	NUT (M12X1.75-THD)	
M	16	1	**8T-4908**	4	BOLT (M8X1.25X25-MM)	

I-REFER TO HYDRAULIC INFORMATION SYSTEM
M-METRIC PART

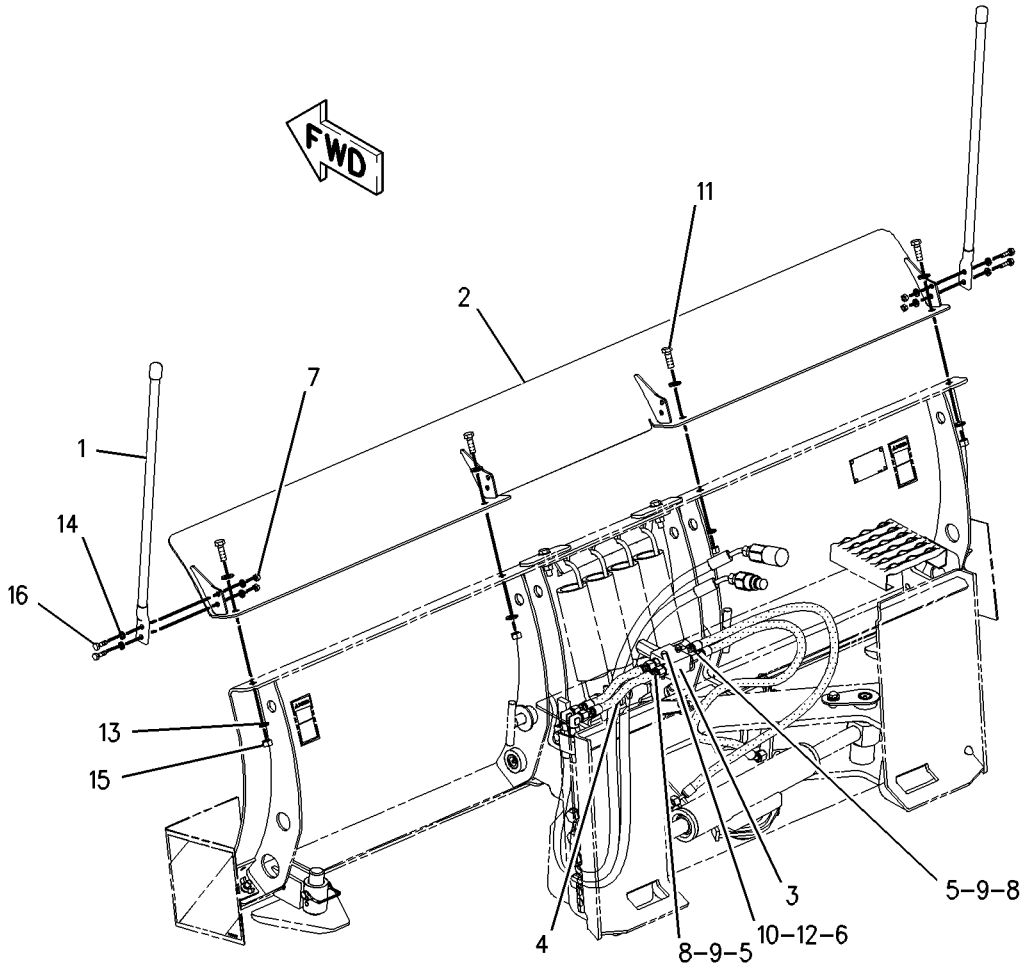

GRAPHIC #1 **<END>** g01003407

225-9523 KIT-ANGLE BLADE

S/N: A9H1-UP
2134-MM (84-IN). SNOW REMOVAL CONVERSION
FOR USE WITH 177-1990—PAGE 325
AN ATTACHMENT

SMCS-6701 **i04269789**

NOTE	REF NO	GRAPHIC REF	PART NUMBER	QTY	PART NAME 1 2 3 4 5 6 (PRODUCT LEVEL)	SEE PAGE
	1	1	**197-0882**	2	MARKER-TERMINAL	
	2	1	**197-0884**	1	GUARD AS	
	3	1	**210-0852**	1	VALVE GP-RELIEF (ANGLE BLADE)	
I	4	1	**214-5560**	2	HOSE AS	
	5	1	**3J-1907**	4	SEAL-O-RING	
M	6	1	**5C-2890**	2	NUT (M6X1-THD)	
M	7	1	**5C-7261**	4	NUT (M8X1.25-THD)	
	8	1	**6V-8397**	4	SEAL-O-RING	
	9	1	**7E-9898**	4	CONNECTOR	
M	10	1	**7X-2535**	2	BOLT (M6X1X60-MM)	
	11	1	**8T-4205**	4	WASHER-HARD (7.2X14.5X2-MM THK)	
	12	1	**8T-4223**	8	WASHER-HARD (13.5X25.5X3-MM THK)	
	13	1	**8T-4224**	8	WASHER-HARD (8.8X16X2-MM THK)	
M	14	1	**8T-4244**	4	NUT (M12X1.75-THD)	
M	15	1	**8T-4908**	4	BOLT (M8X1.25X25-MM)	
M	16	1	**8T-4956**	4	BOLT (M12X1.75X35-MM)	

I-REFER TO HYDRAULIC INFORMATION SYSTEM
M-METRIC PART

225-9523 **KIT-ANGLE BLADE** *(contd.)* **i04269789**

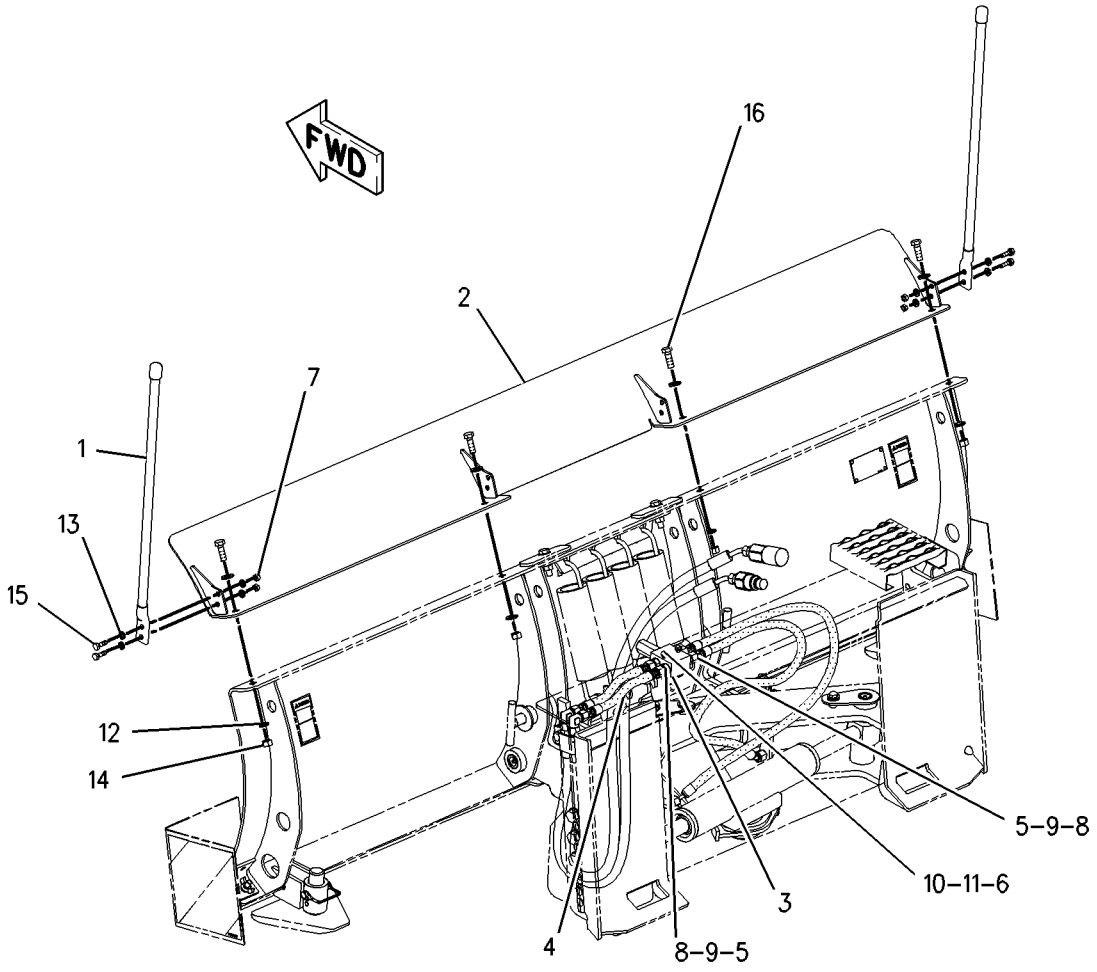

GRAPHIC #1 **<END>** g01003398

319-9480 KIT-ROADING PLATE & MOUNTING—BUCKET

S/N: A9H1-UP
PART OF 326-5489 CONVERSION AR-MACHINE, 326-5529, 326-5559 CONVERSION AR-ROADING
AN ATTACHMENT

SMCS-7405, 7557 **i03648540**

NOTE	PART NUMBER	QTY	PART NAME 1 2 3 4 5 6 (PRODUCT LEVEL)	SEE PAGE
	319-9481	1	PLATE AS (LH)	
	177-7414	1	FILM-STRIPE (REFLECTIVE, RED, WHITE)	
	177-7415	1	FILM (REFLECTIVE)	
	319-9483	1	PLATE AS	
	319-9482	1	PLATE AS (RH)	
	177-7414	1	FILM-STRIPE (REFLECTIVE, RED, WHITE)	
	177-7415	1	FILM (REFLECTIVE)	
	319-9484	1	PLATE AS	
	319-9490	2	STRAP AS	
M	**8T-4136**	8	BOLT (M10X1.5X25-MM)	
M	**8T-4186**	2	BOLT (M10X1.5X40-MM)	
M	**6V-8949**	8	NUT (M10X1.5-THD)	
	319-9489	2	PLATE	
	039-8557	4	WASHER (13X26X6-MM THK)	
	8T-4121	16	WASHER-HARD (11X21X2.5-MM THK)	

M-METRIC PART

<END>

WORK TOOLS

215-3957 LINK GP-COUPLER

S/N: A9H1-UP

PART OF 215-3962, 215-3963 CYLINDER & LINK GP-COUPLER

AN ATTACHMENT

SMCS-6129 **i02999956**

NOTE	REF NO	GRAPHIC REF	PART NUMBER	QTY	PART NAME 1 2 3 4 5 6 (PRODUCT LEVEL)	SEE PAGE
C	1	1	**192-2645**	1	SPRING	
C	2	1	**303-8768**	1	PIN-SPRING	
C	3	1	**310-6660**	1	PIN-SPRING	
C	4	1	**311-9240**	1	PLATE	
CM	5	1	**315-5493**	2	WASHER-HARD (22.5X35X4.5-MM THK)	
C	6	1	**319-2137**	1	BRACKET	

C-CHANGE FROM PREVIOUS TYPE
M-METRIC PART

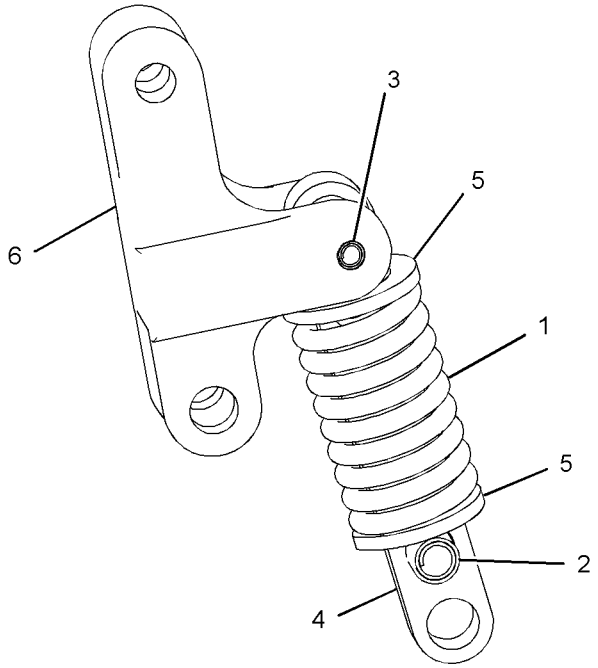

GRAPHIC #1 **<END>** g01523779

175-4238 LOCK GP-QUICK COUPLER—MECHANICAL

S/N: A9H1-UP
PART OF 326-5489 CONVERSION AR-MACHINE, 326-5529, 326-5559 CONVERSION AR-ROADING
AN ATTACHMENT

SMCS-6129 **i01408856**

NOTE	REF NO	GRAPHIC REF	PART NUMBER	QTY	PART NAME 1 2 3 4 5 6 (PRODUCT LEVEL)	SEE PAGE
	1	1	**9R-5301**	1	PIN-COTTER	
	2	1	**178-2247**	1	PIN	
	3	1	**9X-8257**	1	WASHER (17.5X30X3.5-MM THK)	

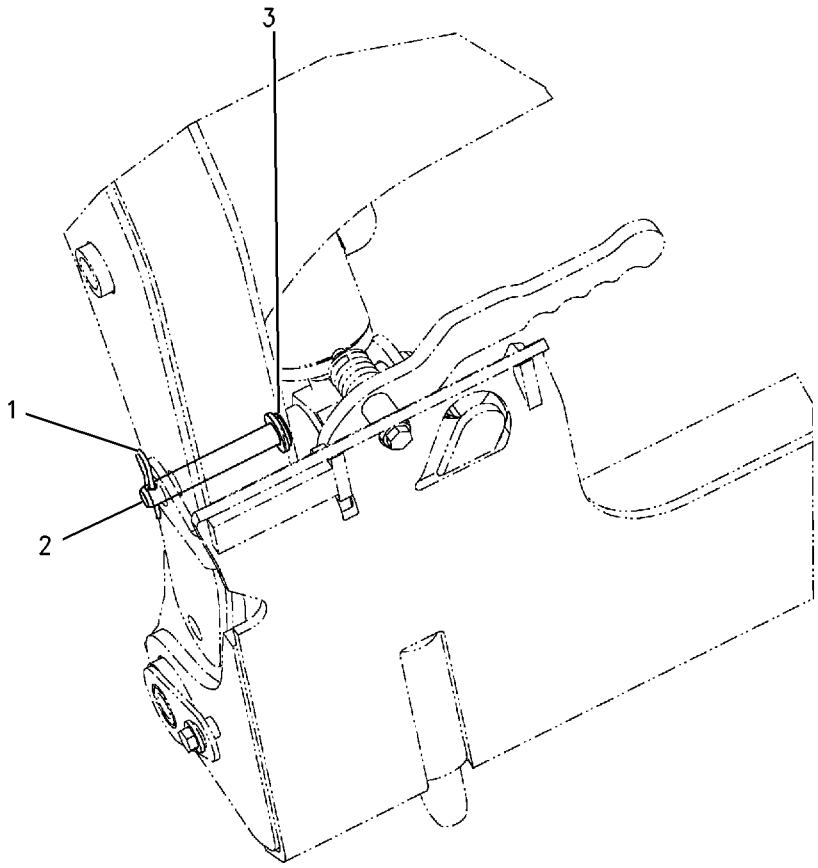

GRAPHIC #1 **<END>** g00741828

258-2535 LOCK GP-QUICK COUPLER–RH

S/N: A9H1-UP
PART OF 196-8870 COUPLER GP-QUICK
AN ATTACHMENT

SMCS-6129 **i02655596**

NOTE	REF NO	GRAPHIC REF	PART NUMBER	QTY	PART NAME 1 2 3 4 5 6 (PRODUCT LEVEL)	SEE PAGE
	1	1	**166-2560**	1	PIN-SPRING	
	2	1	**192-2642**	1	PIN	
Y	3	1	*258-2536*	1	HANDLE & PIN GP-COUPLER (RH)	461

Y-SEPARATE ILLUSTRATION

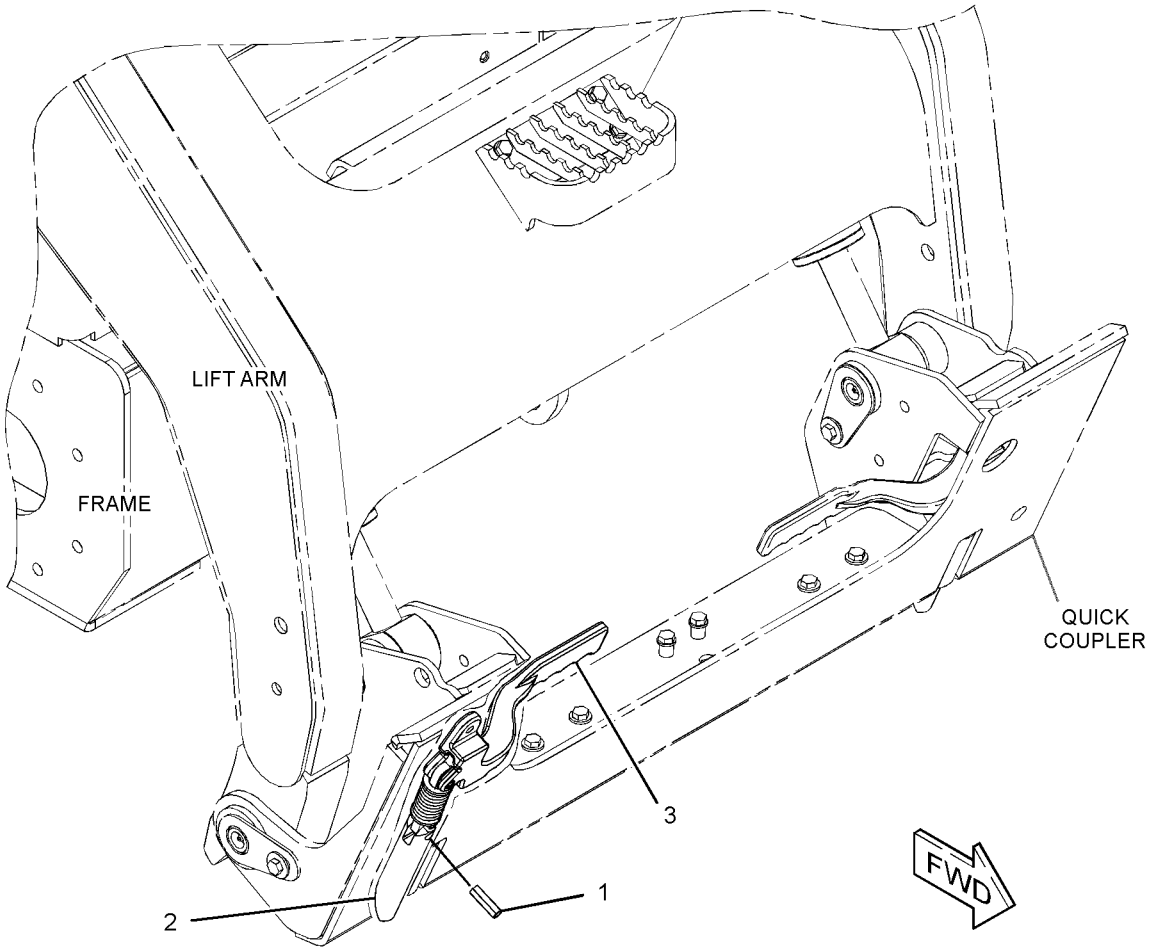

GRAPHIC #1 **<END>** g01335585

258-2537 LOCK GP-QUICK COUPLER—LH

S/N: A9H1-UP

PART OF 196-8870 COUPLER GP-QUICK

AN ATTACHMENT

SMCS-6129 **i02655597**

NOTE	REF NO	GRAPHIC REF	PART NUMBER	QTY	PART NAME 1 2 3 4 5 6 (PRODUCT LEVEL)	SEE PAGE
	1	1	**166-2560**	1	PIN-SPRING	
	2	1	**192-2642**	1	PIN	
Y	3	1	*258-2538*	1	HANDLE & PIN GP-COUPLER (LH)	462

Y-SEPARATE ILLUSTRATION

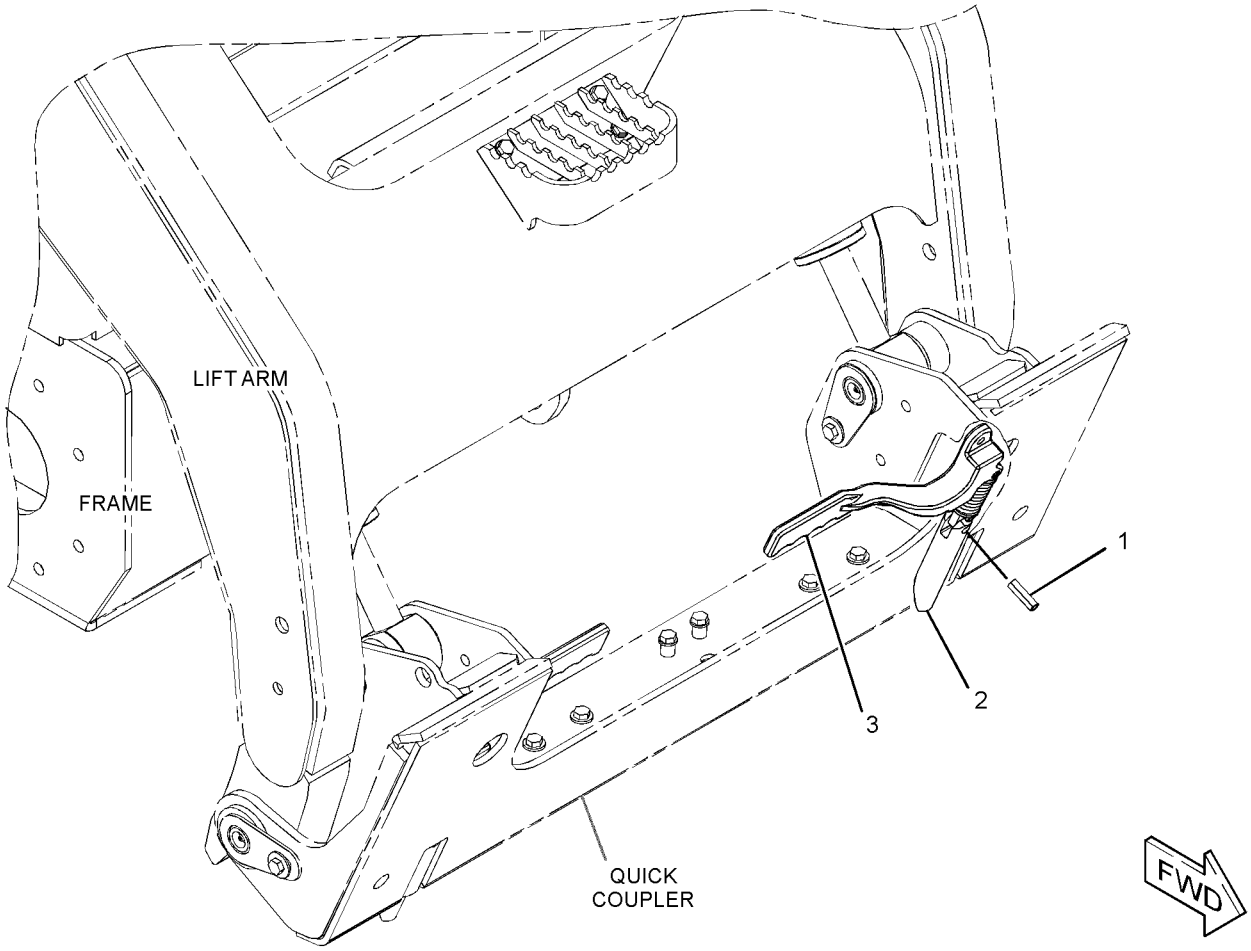

GRAPHIC #1 **<END>** g01335566

WORK TOOLS

177-1983 SPRING GP-BLADE

S/N: A9H1-UP

PART OF 177-1989, 177-1990 BLADE AR

AN ATTACHMENT

SMCS-6060 **i01497986**

NOTE	REF NO	GRAPHIC REF	PART NUMBER	QTY	PART NAME 1 2 3 4 5 6 (PRODUCT LEVEL)	SEE PAGE
	1	1	**177-1941**	4	SPRING	
	2	1	**177-1973**	1	PLATE AS	
M	3	1	**8T-4194**	2	BOLT (M12X1.75X50-MM)	
	4	1	**8T-4223**	4	WASHER-HARD (13.5X25.5X3-MM THK)	
M	5	1	**8T-4244**	2	NUT (M12X1.75-THD)	

M-METRIC PART

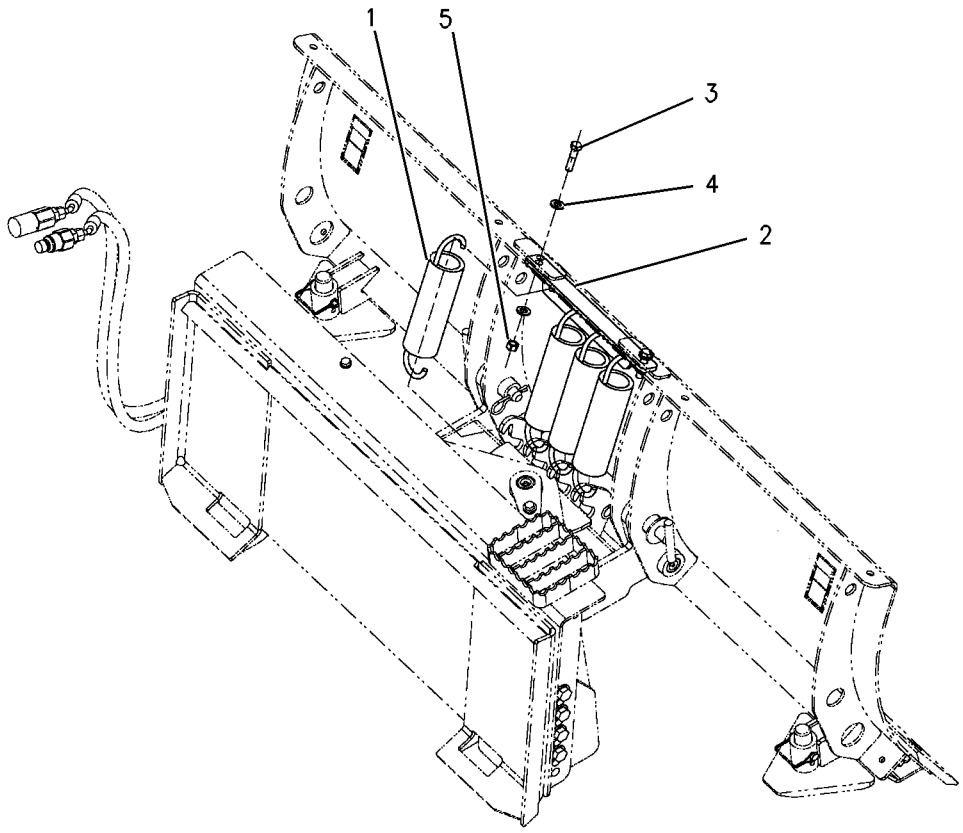

GRAPHIC #1 **<END>** g00777337

WORK TOOLS

188-7733 STEP GP-MATERIAL HANDLING ARM

S/N: A9H1-UP

PART OF 216-8756 ARM GP-MATERIAL HANDLING

AN ATTACHMENT

SMCS-6542 **i01498007**

NOTE	REF NO	GRAPHIC REF	PART NUMBER	QTY	PART NAME 1 2 3 4 5 6 (PRODUCT LEVEL)	SEE PAGE
	1	1	**186-5186**	1	STEP AS	
	2	1	**8T-4121**	2	WASHER-HARD (11X21X2.5-MM THK)	
M	3	1	**8T-4133**	2	NUT (M10X1.5-THD)	
M	4	1	**8T-4136**	2	BOLT (M10X1.5X25-MM)	

M-METRIC PART

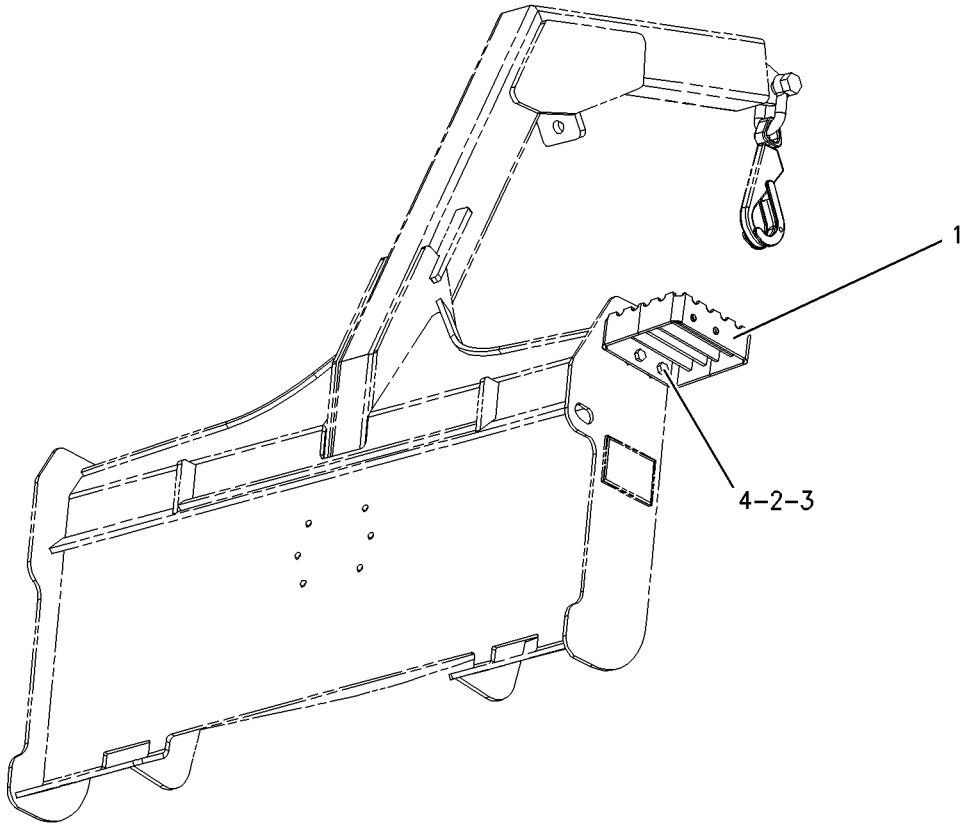

GRAPHIC #1 **<END>** g00777345

WORK TOOLS

173-7407 STOP GP-BUCKET—UTILITY

S/N: A9H1-UP

PART OF 285-6116 GRAPPLE & CYLINDER GP-UTILITY

AN ATTACHMENT

SMCS-6001, 6307 **i01218895**

NOTE	REF NO	GRAPHIC REF	PART NUMBER	QTY	PART NAME 1 2 3 4 5 6 (PRODUCT LEVEL)	SEE PAGE
	1	1	**8Y-7386**	1	SPACER (12.5X17.1X16.5-MM THK)	
	2	1	**2S-6408**	2	WASHER-RETAINING (0.531X3.25X0.438-IN THK)	
	3	1	**8T-4223**	1	WASHER-HARD (13.5X25.5X3-MM THK)	
M	4	1	**8T-4910**	1	BOLT (M12X1.75X60-MM)	
	5	1	**8Y-7385**	1	STOP	

M-METRIC PART

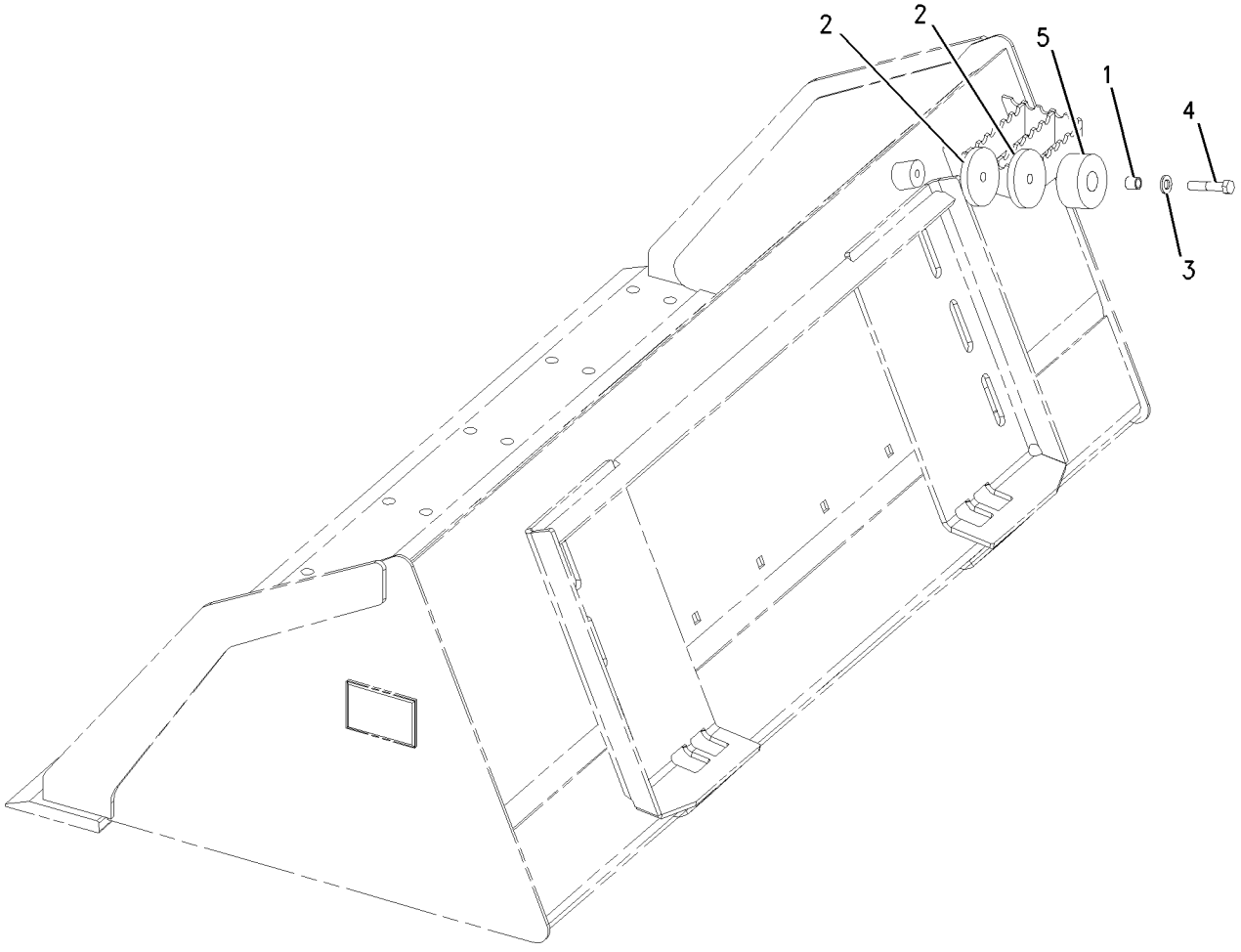

GRAPHIC #1 **<END>** g00651574

116-2001 STRAINER GP-WATER

S/N: A9H1-UP
PART OF 346-1834 TANK & MTG GP-WATER
AN ATTACHMENT

SMCS-5612 **i02571404**

NOTE	REF NO	GRAPHIC REF	PART NUMBER	QTY	PART NAME 1 2 3 4 5 6 (PRODUCT LEVEL)	SEE PAGE
	1	1	**119-1415**	1	GASKET	
	2	1	**119-1414**	1	SCREEN (WATER TANK)	

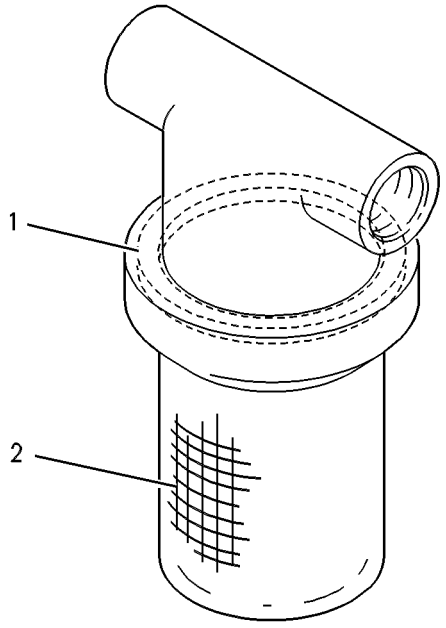

GRAPHIC #1 **<END>** g00293866

WORK TOOLS

346-1834 TANK & MTG GP-WATER—KIT

S/N: A9H1-UP

AN ATTACHMENT

SMCS-5613 **i04042230**

NOTE	REF NO	GRAPHIC REF	PART NUMBER	QTY	PART NAME 1 2 3 4 5 6 (PRODUCT LEVEL)	SEE PAGE
	1	1	**3B-7255**	1	BUSHING-REDUCING	
	2	1	**3S-2093**	4	STRAP-CABLE	
	3	1	**4E-0724**	1	SPACER (9X20X28-MM THK)	
	4	1	**7X-0495**	1	ADAPTER	
	5	1	**8T-0737**	1	VALVE-SHUTOFF (WATER TANK)	
Y	6	1	**116-2001**	1	STRAINER GP-WATER	475
	7	1	**124-1916**	1	COUPLING-PERMANENT	
	8	1	**124-1917**	1	COUPLING-PERMANENT	
	9	1	**165-4894**	1	HARNESS AS-WORK TOOL (WATER TANK)	
		1	**126-1767**	8	PIN-CONNECTOR (14-GA TO 16-GA)	
		1	**155-2270**	1	KIT-CONNECTING PLUG (2-PIN)	
		1	**155-2265**	1	KIT-CONNECTING PLUG (8-PIN)	
					(EACH PLUG KIT INCLUDES PLUG AS, WEDGE & INTERFACE SEAL)	
		1	**102-8806**	1	KIT-RECEPTACLE (8-PIN)	
					(INCLUDES RECEPTACLE AS & WEDGE)	
		1	**126-1768**	10	SOCKET-CONNECTOR (14-GA TO 16-GA)	
E		1	**119-3662**		TUBE-HEAT SHRINK (10.85-MM DIA) (13-CM)	
Y	10	1	**166-2551**	1	TANK GP-WATER	480
I	11	1	**166-2552**	1	HOSE AS	
	12	1	**166-2557**	1	PLATE	
	13	1	**166-2558**	1	COUPLING	
	14	1	**166-2559**	2	BRACKET	
	15	1	**218-5847**	1	PLATE	
	16	1	**233-5892**	1	PLATE AS	
	17	1	**233-5893**	1	PLATE AS	
	18	1	**346-1832**	1	PUMP GP-DIAPHRAGM (WATER TANK)	
	19	1	**346-1836**	1	BRACKET AS	
	20	1	**003-2143**	1	ELBOW	
	21	1	**067-2551**	2	CLIP	
	22	1	**095-0912**	2	CLIP	
	23	1	**101-2867**	4	WASHER-HARD (7.2X25X2-MM THK)	
M	24	1	**111-4627**	4	SCREW-MACHINE (M6X1X30-MM)	
	25	1	**119-3859**	6	SCREW-PAN HEAD (10-16X0.75-IN)	
M	26	1	**129-3178**	4	LOCKNUT (M6X1-THD)	
	27	1	**1L-2279**	1	ELBOW	
M	28	1	**5C-7261**	3	NUT (M8X1.25-THD)	
	29	1	**5P-4116**	1	WASHER-HARD (8.8X20.5X2-MM THK)	
	30	1	**5P-8246**	2	WASHER-HARD (15.5X29X3-MM THK)	
	31	1	**8T-4122**	16	WASHER-HARD (17X32X3.5-MM THK)	
M	32	1	**8T-4132**	4	NUT (M16X2-THD)	
	33	1	**8T-4205**	2	WASHER-HARD (7.2X14.5X2-MM THK)	
	34	1	**8T-4224**	8	WASHER-HARD (8.8X16X2-MM THK)	
M	35	1	**8T-4779**	12	BOLT (M16X2X35-MM)	
M	36	1	**8T-4908**	6	BOLT (M8X1.25X25-MM)	
M	37	1	**8T-6869**	1	BOLT (M8X1.25X60-MM)	
BG	38	1	**122-6869**		HOSE-HYDRAULIC (140.2-IN)	
					—OR—	
BG		1	**122-6869**		HOSE-HYDRAULIC (113-IN)	
					—OR—	
BG		1	**122-6869**		HOSE-HYDRAULIC (120.1-IN)	
E	39	1	**167-0608**		SEAL (82-CM)	
	40	1	**7K-1181**	2	STRAP-CABLE	
	41	1,2	**8T-4121**	7	WASHER-HARD (11X21X2.5-MM THK)	
M	42	1	**8T-4133**	2	NUT (M10X1.5-THD)	
M	43	1	**8T-4136**	2	BOLT (M10X1.5X25-MM)	

346-1834 **TANK & MTG GP-WATER** *(contd.)* **i04042230**

NOTE	REF NO	GRAPHIC REF	PART NUMBER	QTY	PART NAME 1 2 3 4 5 6 (PRODUCT LEVEL)	SEE PAGE
	44	2	**195-6696**	1	PLATE	
	45	2	**142-7505**	2	PLATE AS	
	46	2	**166-2556**	1	BRACKET	
M	47	2	**8T-4191**	2	BOLT (M10X1.5X16-MM)	
M	48	2	**8T-4137**	5	BOLT (M10X1.5X20-MM)	

B-USE AS REQUIRED
E-ORDER BY THE CENTIMETER
G-ORDER BY THE INCH
I-REFER TO HYDRAULIC INFORMATION SYSTEM
M-METRIC PART
Y-SEPARATE ILLUSTRATION

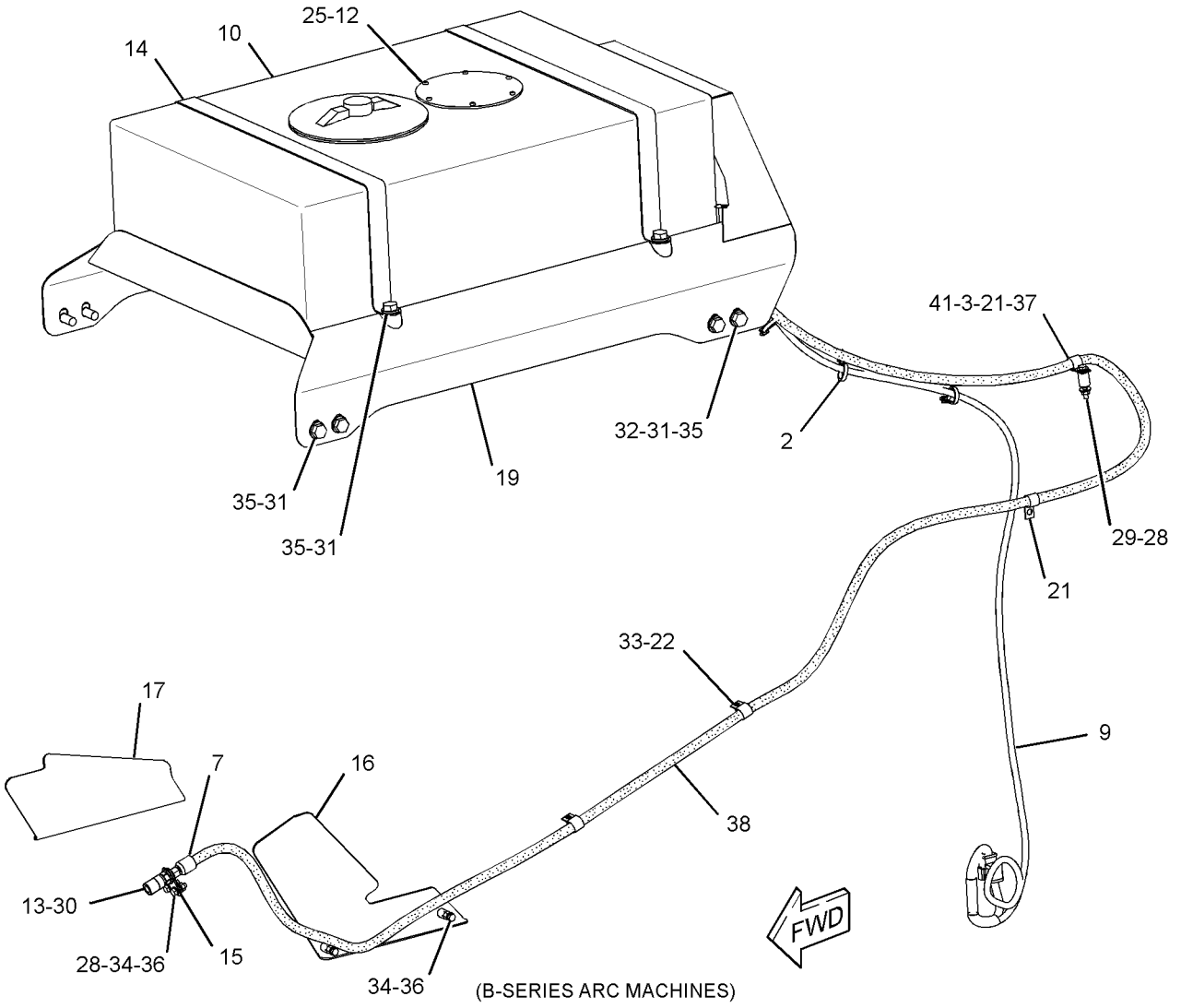

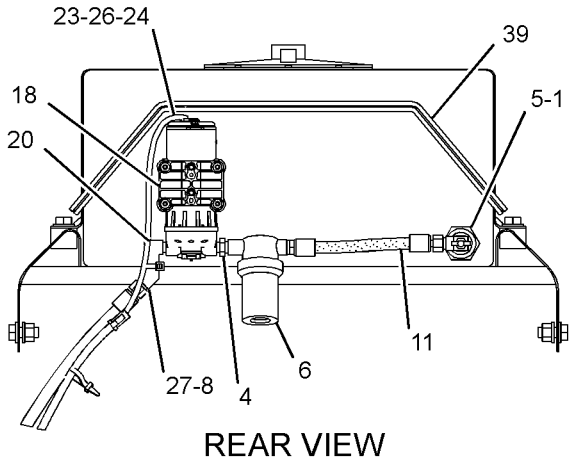

REAR VIEW

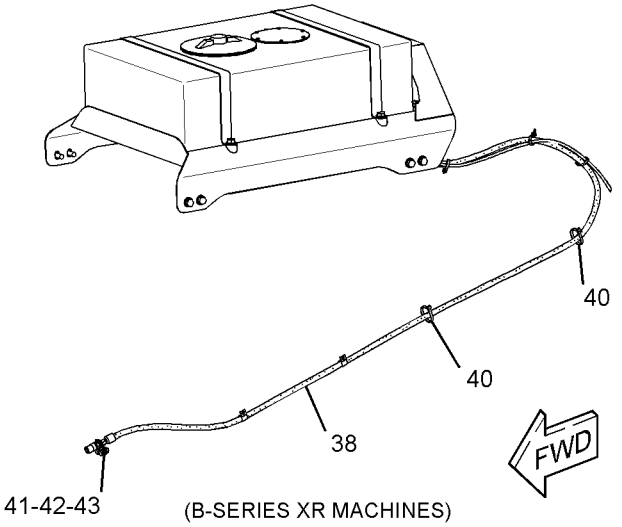

GRAPHIC #1 g02068053

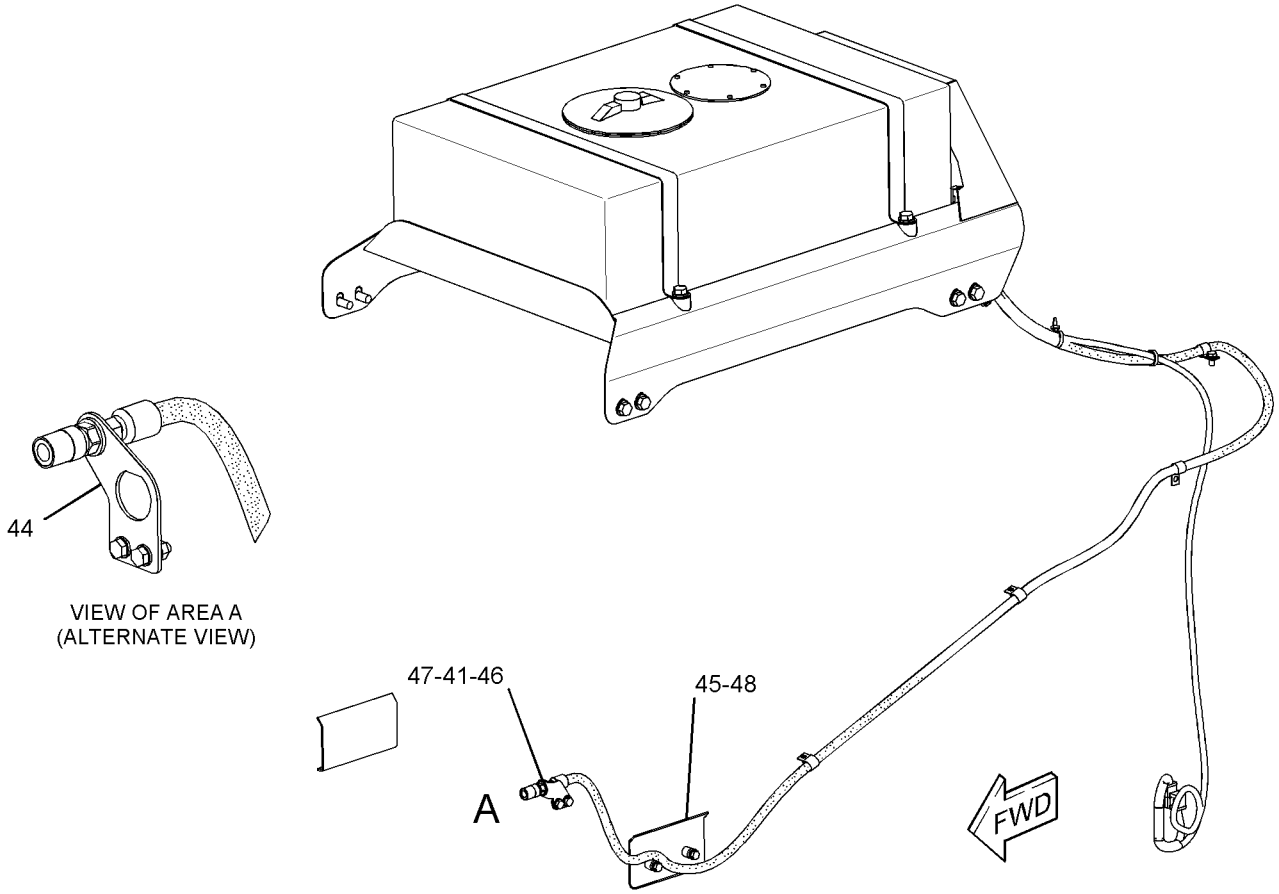

VIEW OF AREA A
(ALTERNATE VIEW)

(A-SERIES ARC MACHINES)

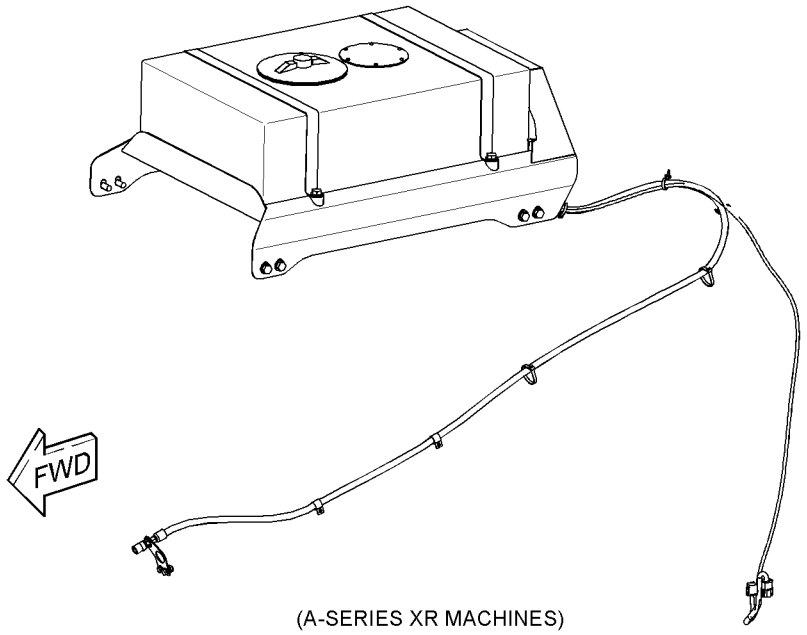

(A-SERIES XR MACHINES)

GRAPHIC #2

<END>

g02169473

WORK TOOLS

166-2551 TANK GP-WATER

S/N: A9H1-UP
PART OF 346-1834 TANK & MTG GP-WATER
AN ATTACHMENT

SMCS-5613 **i02571400**

NOTE	REF NO	GRAPHIC REF	PART NUMBER	QTY	PART NAME 1 2 3 4 5 6 (PRODUCT LEVEL)	SEE PAGE
	1	1	**192-2606**	1	CAP AS (WATER TANK)	
	2	1	**192-2607**	1	FITTING-DRAIN	

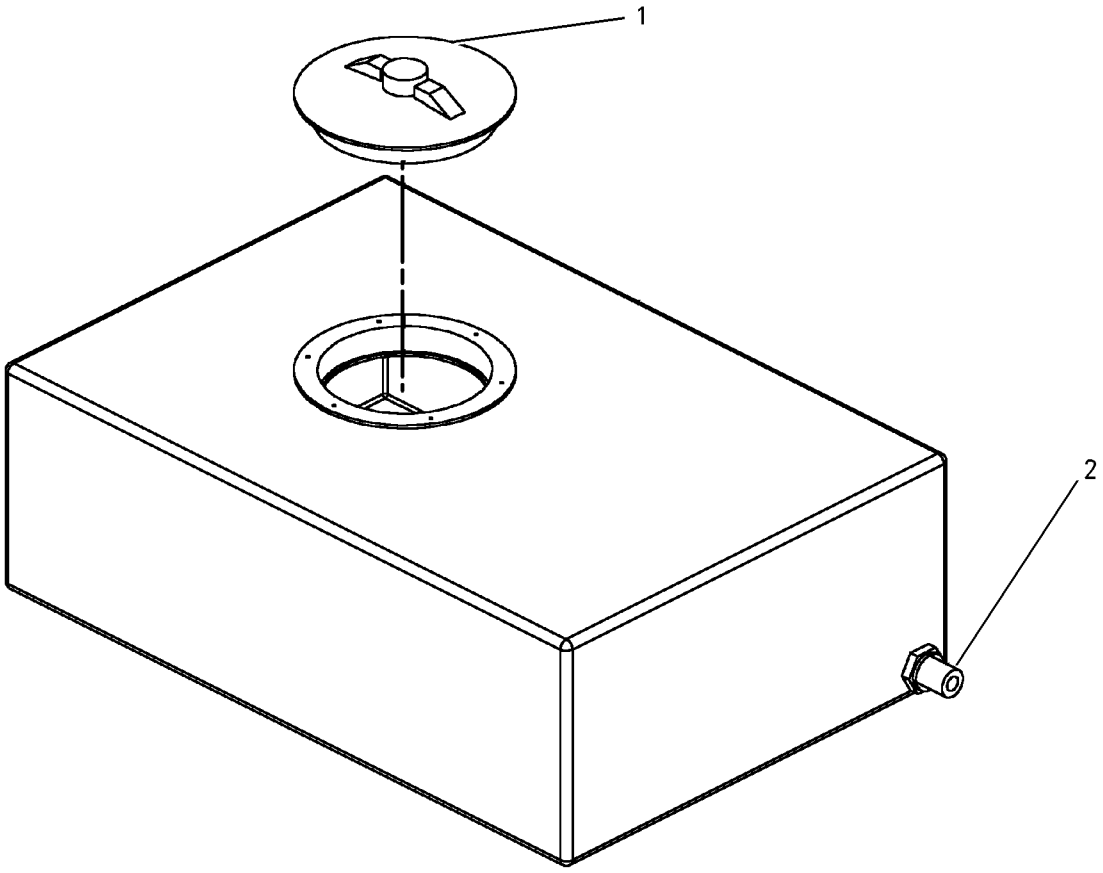

GRAPHIC #1 **<END>** g00742953

141-4999 TOOTH GP-UNI

S/N: A9H1-UP

PART OF 279-5366, 279-5370, 279-5374, 279-5378 BUCKET AR-GENERAL PURPOSE, 279-5380, 279-5392, 279-5400, 279-5401, 296-8055 BUCKET AR-MULTIPURPOSE, 296-8191 BUCKET GP-GENERAL PURPOSE

AN ATTACHMENT

SMCS-6822 **i02163942**

NOTE	REF NO	GRAPHIC REF	PART NUMBER	QTY	PART NAME 1 2 3 4 5 6 (PRODUCT LEVEL)	SEE PAGE
	1	1	**132-4720**	1	TOOTH-UNI-SINGLE STRAP	
	2	1	**246-4349**	2	SCREW-FLAT HEAD (M16X2-THD)	
M	3	1	**8T-4778**	2	LOCKNUT (M16X2-THD)	

M-METRIC PART

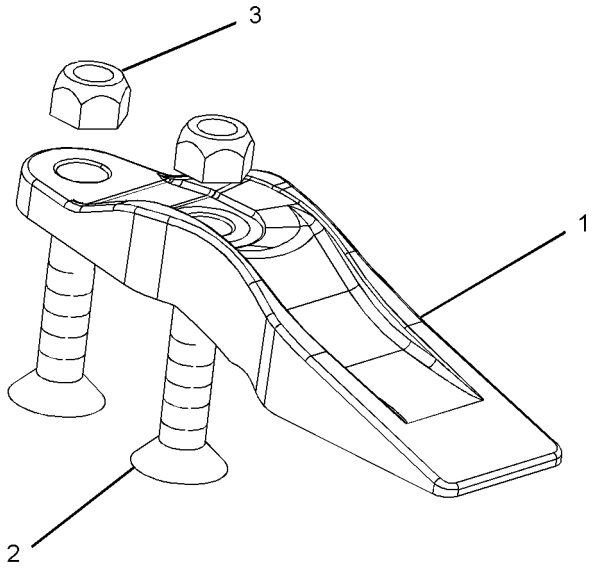

GRAPHIC #1 **<END>** g01097424

OPERATOR STATION

176-3900 ACCUMULATOR GP-REFRIGERANT—UNCHARGED

S/N: A9H1-UP

SMCS-7320 **i02195254**

NOTE	REF NO	GRAPHIC REF	PART NUMBER	QTY	PART NAME 1 2 3 4 5 6 (PRODUCT LEVEL)	SEE PAGE
					(NO SERVICED PARTS)	

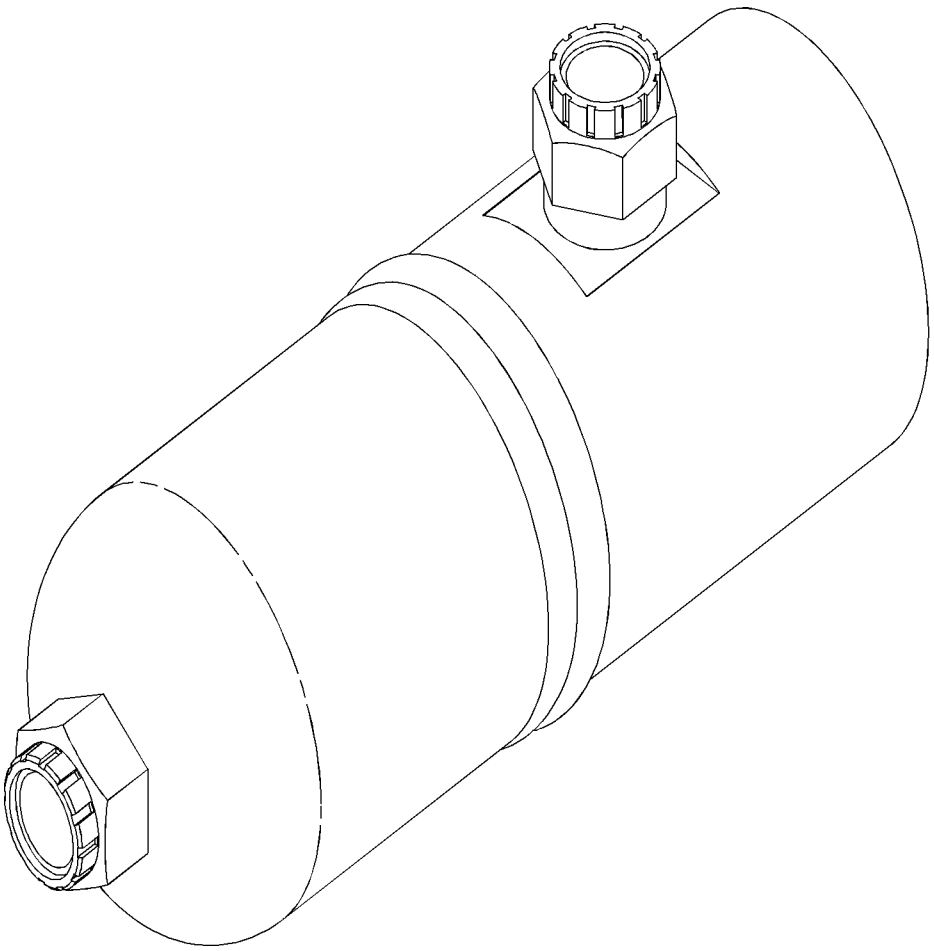

GRAPHIC #1 **<END>** g01035076

OPERATOR STATION

186-6190 ACCUMULATOR GP-REFRIGERANT–CHARGED

S/N: A9H1-UP

PART OF 326-5377 LINES GP-AIR CONDITIONER

AN ATTACHMENT

SMCS-7320 **i02306357**

NOTE	REF NO	GRAPHIC REF	PART NUMBER	QTY	PART NAME 1 2 3 4 5 6 (PRODUCT LEVEL)	SEE PAGE
					(NO SERVICED PARTS)	

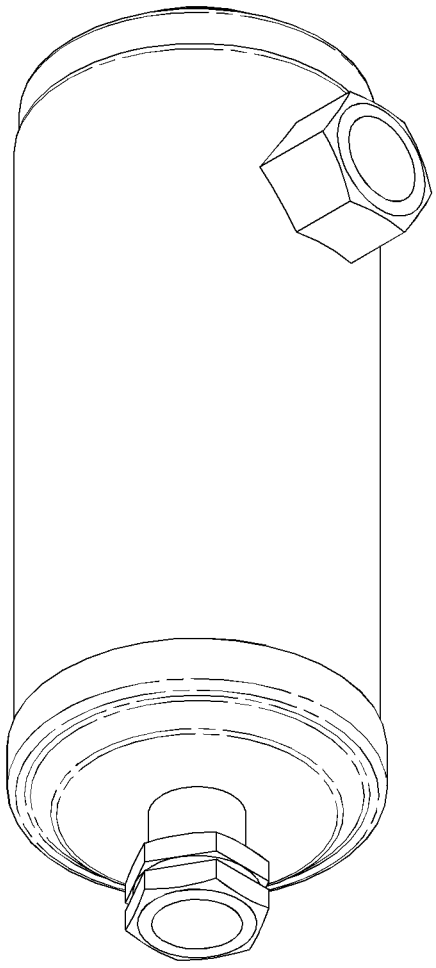

GRAPHIC #1 **<END>** g01155244

OPERATOR STATION

326-5516 AIR CONDITIONER AR

S/N: A9H1-UP

PART OF 326-5513 CAB AR-ENCLOSED ROPS

CANNOT BE USED WITH 326-5514—PAGE 540, 326-5515—PAGE 535

AN ATTACHMENT

SMCS-7320 **i04302732**

NOTE	PART NUMBER	QTY	PART NAME 1 2 3 4 5 6 (PRODUCT LEVEL)	SEE PAGE
Y	*218-6404*	1	AIR CONDITIONER GP	485
Y	*258-2468*	1	COMPRESSOR & MTG GP-REFRIG	498
Y	*218-6148*	1	CONDENSER & MTG GP-REFRIGERANT	500
Y	*218-6394*	1	DUCT GP-CAB AIR	527
Y	*326-5377*	1	LINES GP-AIR CONDITIONER	544
Y	*218-5619*	1	LINES GP-HEATER	546
Y	*218-5625*	1	LINES GP-HYDRAULIC OIL COOLER	272

Y-SEPARATE ILLUSTRATION

<END>

OPERATOR STATION

218-6404 AIR CONDITIONER GP

S/N: A9H1-UP

PART OF 326-5516 AIR CONDITIONER AR

AN ATTACHMENT

SMCS-7320, 7342 **i02010224**

NOTE	REF NO	GRAPHIC REF	PART NUMBER	QTY	PART NAME 1 2 3 4 5 6 (PRODUCT LEVEL)	SEE PAGE
	1	1	**218-6402**	1	INSULATION AS	
Y	2	1	*218-6405*	1	AIR CONDITIONER GP	486
	3	1	**8T-4224**	4	WASHER-HARD (8.8X16X2MM THK)	
M	4	1	**8T-6869**	4	BOLT (M8X1.25X60MM)	

M-METRIC PART
Y-SEPARATE ILLUSTRATION

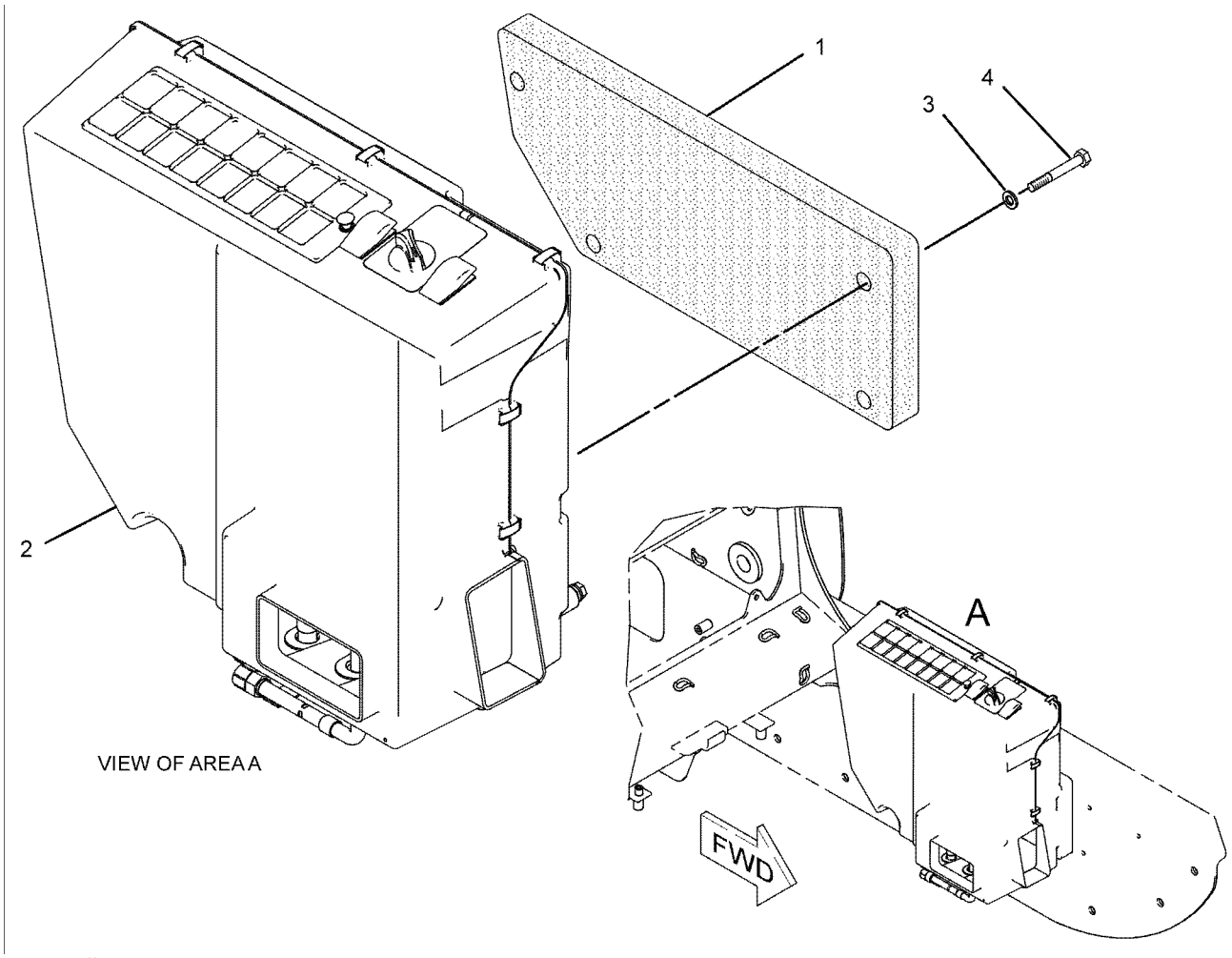

GRAPHIC #1 **<END>** g01036189

OPERATOR STATION

218-6405 AIR CONDITIONER GP

S/N: A9H1-UP
PART OF 218-6404 AIR CONDITIONER GP
AN ATTACHMENT

SMCS-7320, 7342 **i04358410**

NOTE	REF NO	GRAPHIC REF	PART NUMBER	QTY	PART NAME 1 2 3 4 5 6 (PRODUCT LEVEL)	SEE PAGE
	1	1	**185-4015**	10	CLIP	
	2	1	**202-2284**	1	SWITCH AS-ROCKER (AIR CONDITIONER)	
		1	**111-7899**	1	GASKET	
	3	1	**218-6399**	1	SEAL	
	4	1	**206-7398**	1	KNOB-CONTROL (TEMPERATURE SELECT)	
	5	1	**119-9631**	1	SWITCH-TEMPERATURE (HVAC) (AIR CONDITIONER)	
	6	1	**305-2969**	2	SCREW-THUMB	
	7	1	**231-8123**	1	COIL AS-EVAPORATOR	
	8	1	**231-8124**	1	COIL AS-HEATER	
	9	1	**295-5440**	1	MOTOR	
	10	1	**236-5067**	1	SWITCH-ROCKER (HEATER)	
	11	1	**231-8127**	2	GROMMET	
C	12	1	**312-2635**	1	COVER GP-ACCESS	
		1	**231-8129**	2	PIN	
		1	**231-8142**	2	RETAINER	
	14	1	**303-6658**	1	FILTER ELEMENT-CAB AIR	
	16	1	**231-8132**	1	FILTER ELEMENT-CAB AIR	
	17	1	**231-8133**	1	PANEL	
	18	1	**231-8137**	1	FILM (TEMPERATURE CONTROL)	
	19	1	**231-8141**	1	GROMMET	
	21	1	**236-5069**	3	RELAY AS (12-VOLT) (AIR CONDITIONER, HEATER)	
C	22	1	**312-1683**	1	HOUSING-COVER	
Y	23	1	**231-8122**	1	HOUSING AS-SIDE (AIR CONDITIONER, HEATER)	539
	24	1	**231-8126**	1	VALVE AS-WATER (AIR CONDITIONER)	
	25	1	**232-1384**	1	ORIFICE AS-AIR CONDITIONER	
	26	1	**218-6948**	1	HARNESS AS-HEATER & AIR COND	

C-CHANGE FROM PREVIOUS TYPE
Y-SEPARATE ILLUSTRATION

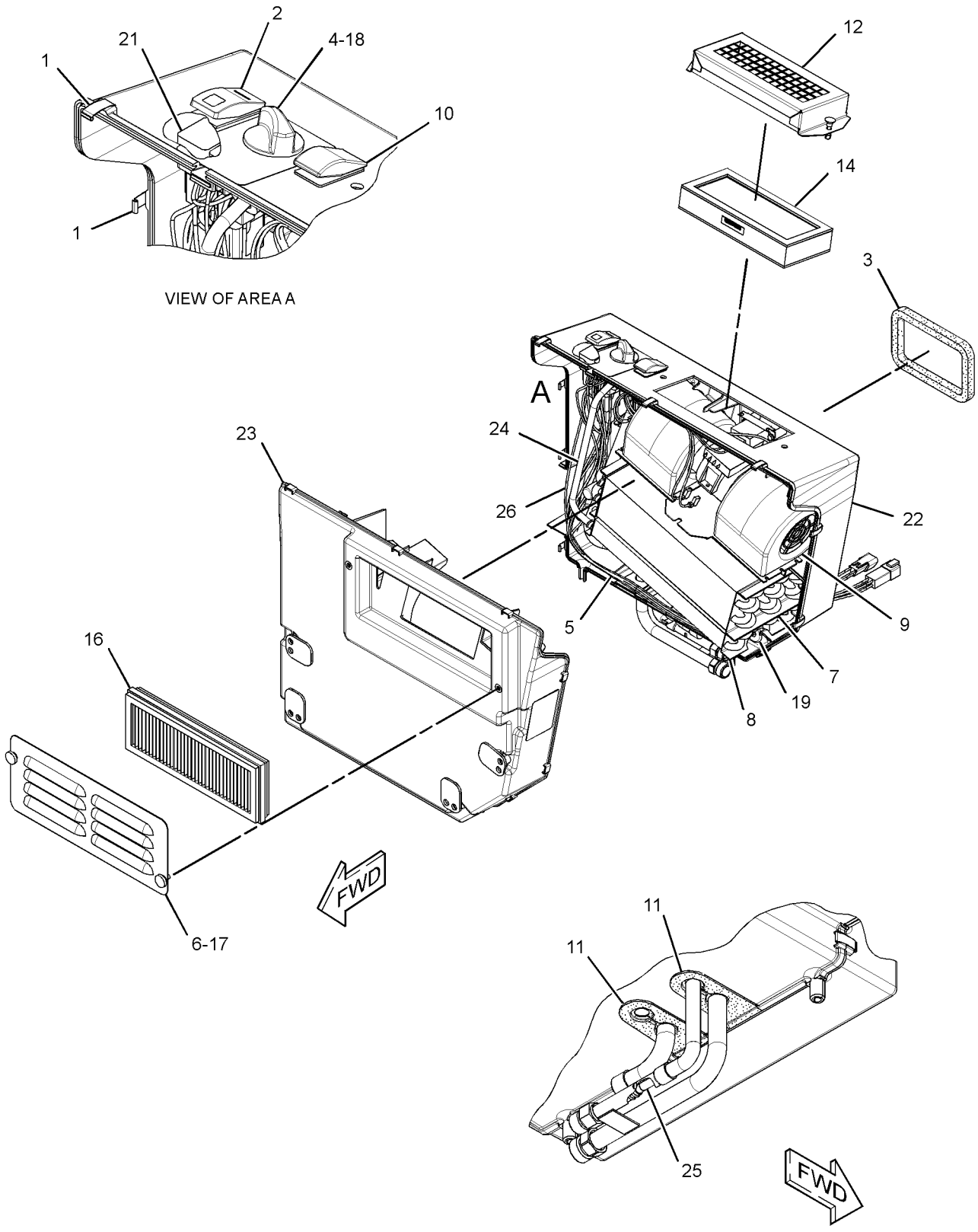

GRAPHIC #1 **<END>** g01594158

OPERATOR STATION

320-1389 ARM GP-WINDOW WIPER

S/N: A9H1-UP
PART OF 223-0616, 276-3440 DOOR GP-CAB
AN ATTACHMENT

SMCS-7305 **i03434603**

NOTE	REF NO	GRAPHIC REF	PART NUMBER	QTY	PART NAME 1 2 3 4 5 6 (PRODUCT LEVEL)	SEE PAGE
	1	1	**240-8666**	2	CLIP	
	2	1	**136-3191**	1	NOZZLE AS-WASHER	
E	3	1	**194-5171**		HOSE (60-CM)	

E-ORDER BY THE CENTIMETER

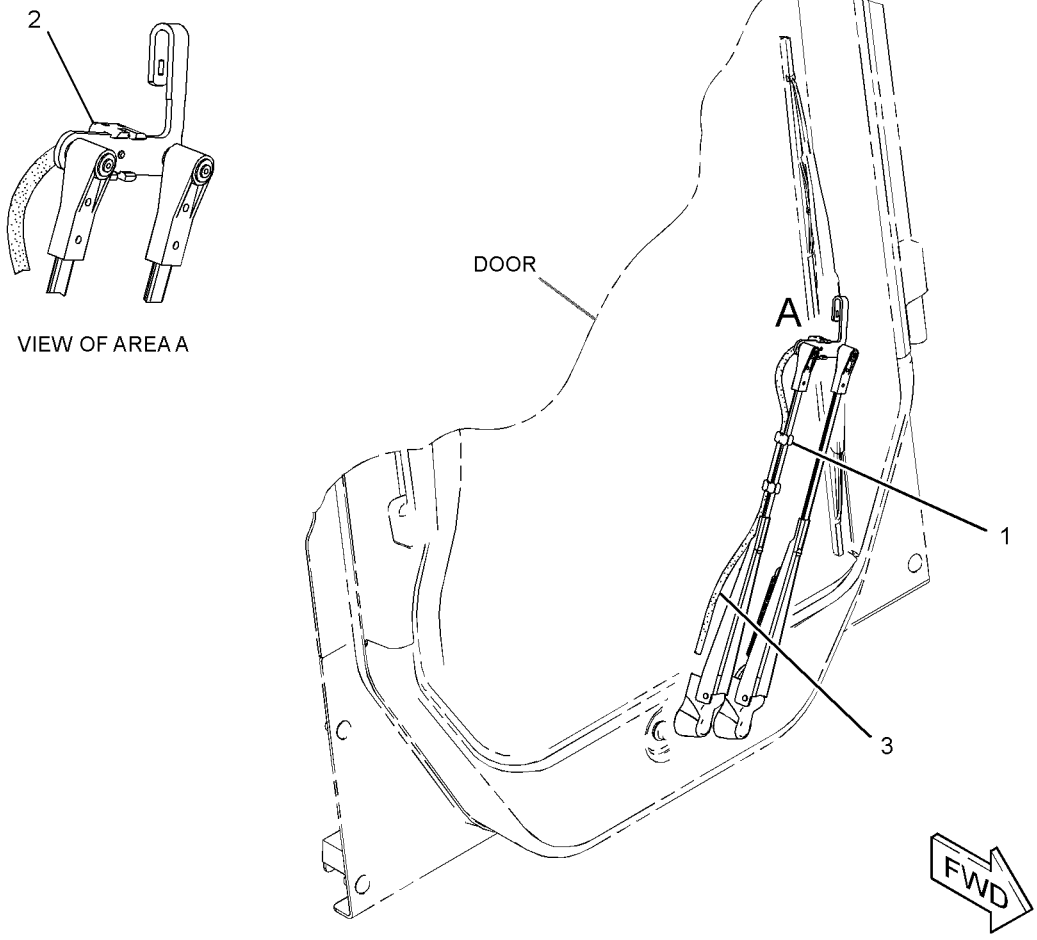

GRAPHIC #1 **<END>** g01788004

OPERATOR STATION

236-4830 ARMREST & MOUNTING GP

S/N: A9H1-UP

PART OF 326-5400 CAB AR

SMCS-7307 **i01955195**

NOTE	REF NO	GRAPHIC REF	PART NUMBER	QTY	PART NAME 1 2 3 4 5 6 (PRODUCT LEVEL)	SEE PAGE
	1	1	**4E-1384**	2	BUMPER-CONICAL	
	2	1	**195-0939**	4	STUD	
	3	1	**218-6442**	2	PLATE	
Y	4	1	**236-4833**	1	ARMREST GP	490
M	5	1	**195-0937**	2	INSERT-THREADED (M8X1.25-THD)	
M	6	1	**5C-7261**	2	NUT (M8X1.25-THD)	
	7	1	**8T-4121**	4	WASHER-HARD (11X21X2.5-MM THK)	
M	8	1	**8T-4133**	4	NUT (M10X1.5-THD)	

M-METRIC PART
Y-SEPARATE ILLUSTRATION

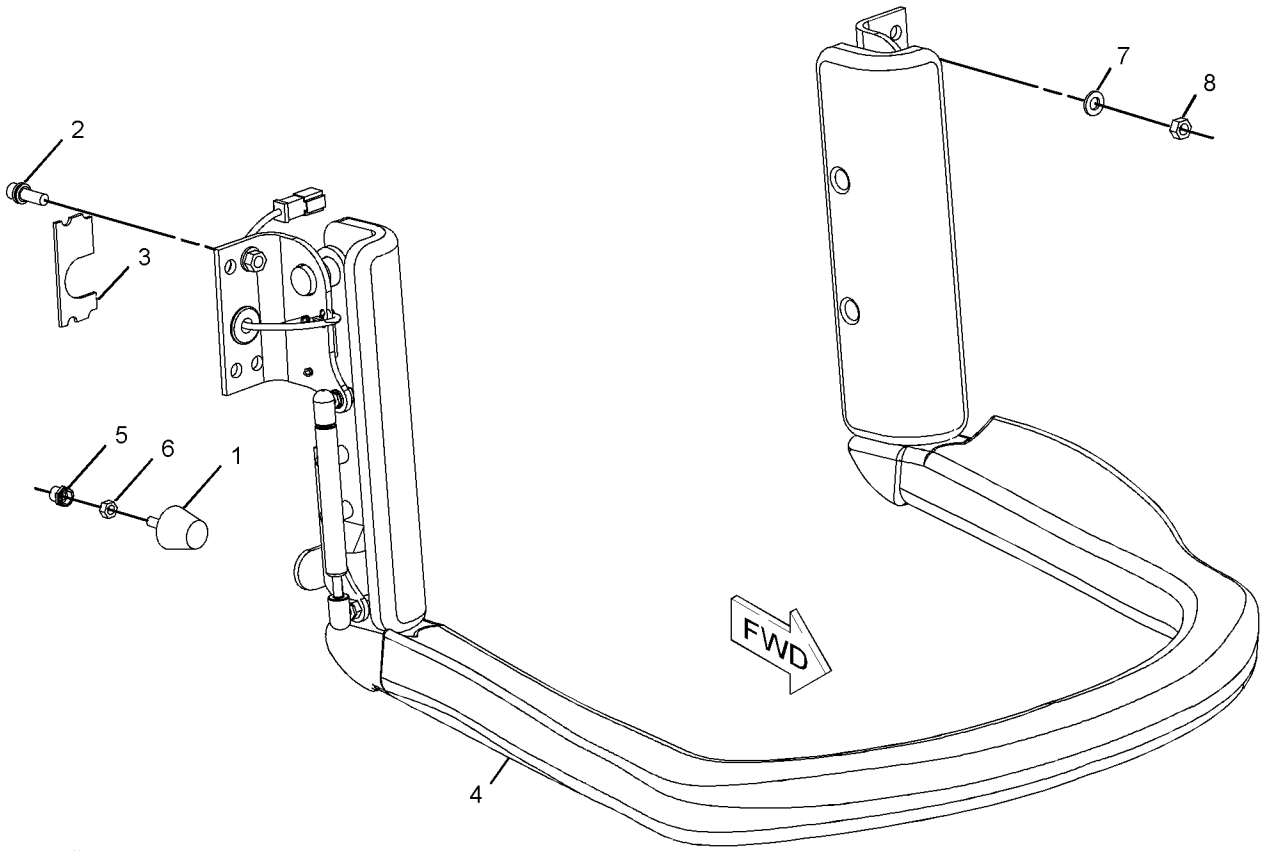

GRAPHIC #1 **<END>** g01016683

OPERATOR STATION

236-4833 ARMREST GP

S/N: A9H1-UP

PART OF 236-4830 ARMREST & MOUNTING GP

SMCS-7307 **i03647962**

NOTE	REF NO	GRAPHIC REF	PART NUMBER	QTY	PART NAME 1 2 3 4 5 6 (PRODUCT LEVEL)	SEE PAGE
	1	1	**3S-2093**	1	STRAP-CABLE	
	2	1	**7D-8431**	2	RING-RETAINING	
	3	1	**7G-7053**	1	GROMMET	
	4	1	**9P-4609**	1	PLATE (MAGNETIC)	
	5	1	**9S-0285**	2	BUSHING	
	6	1	**130-1916**	2	STUD-BALL	
	7	1	**142-9278**	1	BRACKET AS (RH)	
	8	1	**142-9279**	1	BRACKET AS (LH)	
	9	1	**142-9287**	1	SPRING AS-GAS	
	10	1	**142-9386**	1	BRACKET AS (LH)	
	11	1	**152-4875**	2	COVER AS	
	12	1	**152-4884**	1	BRACKET AS (RH)	
	13	1	**162-0223**	1	SWITCH AS-MAGNETIC (INTERLOCK)	
		1	**155-2271**	1	KIT-CONNECTING PLUG (4-PIN)	
		1	**176-2947**	1	KIT-CONNECTING PLUG (4-PIN)	
					(EACH PLUG KIT INCLUDES PLUG AS, WEDGE & INTERFACE SEAL)	
		1	**186-3736**	3	SOCKET-CONNECTOR (16-GA TO 18-GA)	
		1	**9G-3695**	1	PLUG-SEAL	
E		1	**9X-1813**		SLEEVE (24-CM)	
	14	1	**236-4832**	1	ARMREST AS	
	15	1	**103-6262**	4	SCREW-MACHINE (4-40X0.63-IN)	
	16	1	**142-2928**	4	LOCKNUT (4-40-THD)	
M	17	1	**5C-9553**	4	BOLT (M6X1X16-MM)	
	18	1	**8T-4205**	4	WASHER-HARD (7.2X14.5X2-MM THK)	
	19	1	**8T-4224**	1	WASHER-HARD (8.8X16X2-MM THK)	
M	20	1	**9X-2042**	4	SCREW-TRUSS HEAD (M6X1X12-MM)	

E-ORDER BY THE CENTIMETER
M-METRIC PART

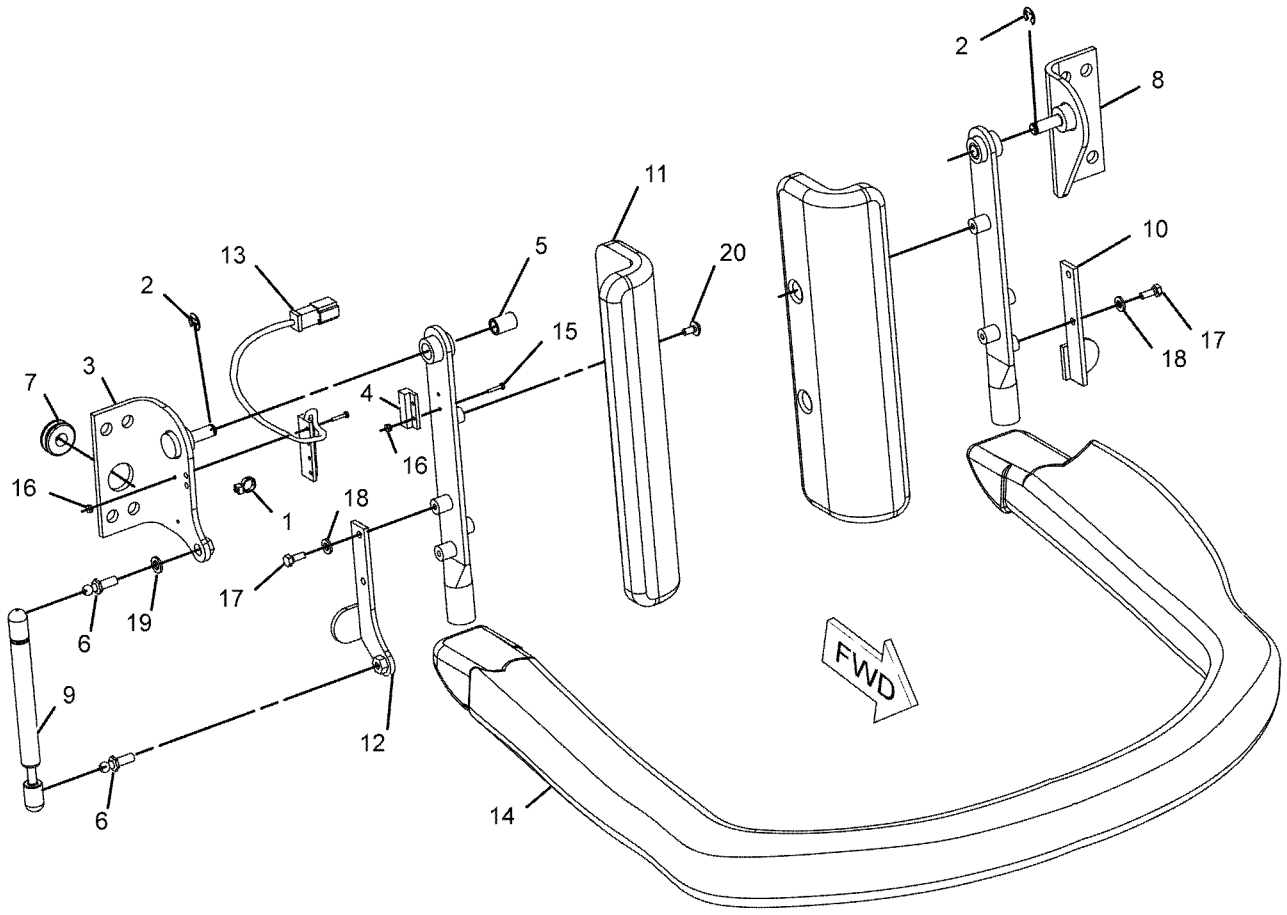

GRAPHIC #1 **<END>** g01016724

OPERATOR STATION

216-6146 BOX GP-STORAGE

S/N: A9H1-UP
PART OF 326-5289, 326-5299, 326-5489 CONVERSION AR-MACHINE, 326-5529, 326-5559 CONVERSION AR-ROADING
AN ATTACHMENT

SMCS-7268 **i04272834**

NOTE	REF NO	GRAPHIC REF	PART NUMBER	QTY	PART NAME 1 2 3 4 5 6 (PRODUCT LEVEL)	SEE PAGE
	1	1	**8T-2895**	1	LOCK GP-CYLINDER	
		1	**226-0323**	1	CAM-LOCK	
J		1	**226-0291**	1	LOCK AS	
	2	1	**216-6145**	1	BOX AS-STORAGE	
D	3	1	**6V-1392**		SEAL (0.3-M)	

D-ORDER BY THE METER
J-REQUIRES CORPORATE KEY

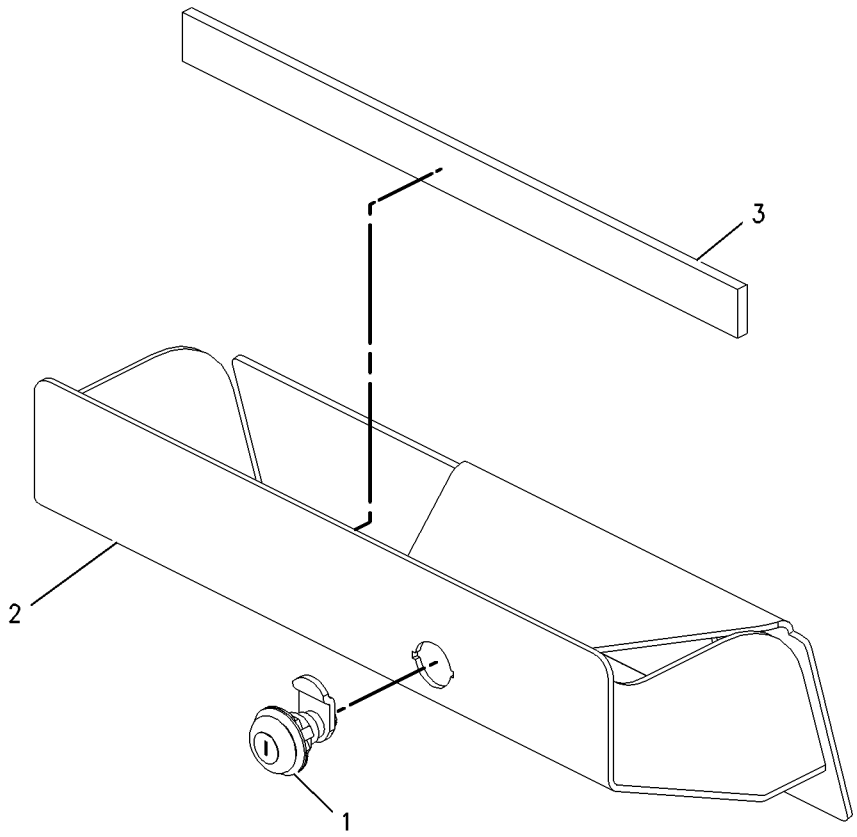

GRAPHIC #1 **<END>** g00932357

OPERATOR STATION

218-6420 BOX GP-STORAGE—LITERATURE

S/N: A9H1-UP

PART OF 326-5400 CAB AR

SMCS-7268 **i03291842**

NOTE	REF NO	GRAPHIC REF	PART NUMBER	QTY	PART NAME 1 2 3 4 5 6 (PRODUCT LEVEL)	SEE PAGE
	1	1	**5P-7957**	1	LANYARD	
	2	1	**152-4871**	1	BOX-STORAGE	
	3	1	**195-0935**	4	INSERT-THREADED (M6X1-THD)	
M	4	1	**9X-2042**	4	SCREW-TRUSS HEAD (M6X1X12-MM)	

M-METRIC PART

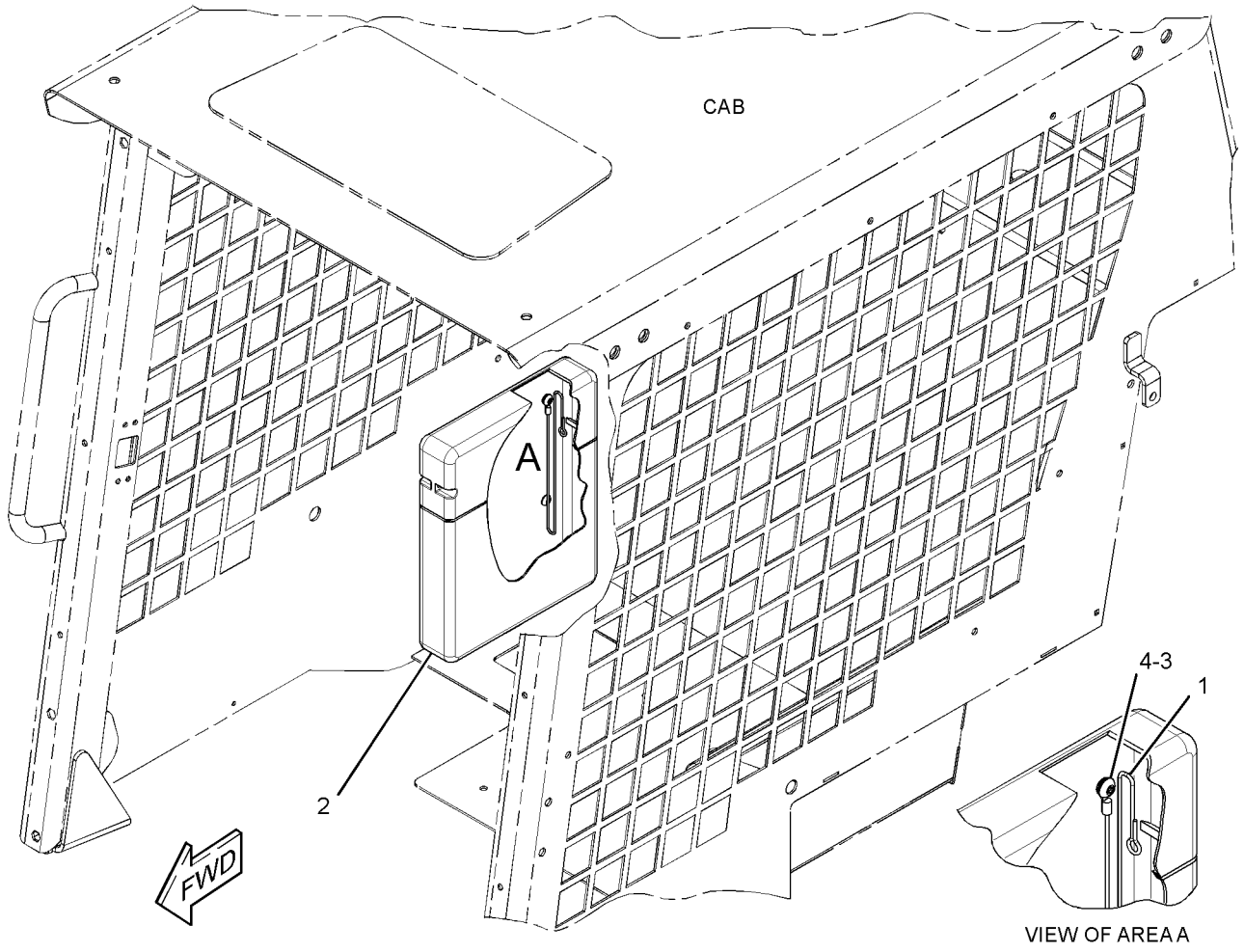

GRAPHIC #1 **<END>** g01716516

OPERATOR STATION

326-5400 CAB AR

S/N: A9H1-UP

PART OF 326-5420 COMMON AR

SMCS-7301, 7325 **i03902031**

NOTE	PART NUMBER	QTY	PART NAME 1 2 3 4 5 6 (PRODUCT LEVEL)	SEE PAGE
Y	*236-4830*	1	ARMREST & MOUNTING GP	489
Y	*218-6420*	1	BOX GP-STORAGE (LITERATURE)	493
Y	*326-5401*	1	CAB GP-ENCLOSED ROPS	497
Y	*216-4746*	1	LIGHTING GP-FLOOD (REAR)	97
Y	*218-6425*	1	LIGHTING GP-FLOOD (FRONT)	98
Y	*326-5406*	1	LINER GP-CAB	542
Y	*258-4230*	1	MIRROR GP-REAR VIEW	548
Y	*218-6370*	1	MOUNTING GP-ROPS	552
Y	*328-2270*	1	PANEL GP-INSTRUMENT	553
Y	*218-6380*	1	SPRING GP-GAS (CAB)	569
Y	*195-6723*	1	WINDOW GP-CAB	572
Y	*328-2272*	1	WIRING GP-CAB	108

Y-SEPARATE ILLUSTRATION

<END>

326-5512 CAB AR-ENCLOSED ROPS

S/N: A9H1-UP

AN ATTACHMENT

SMCS-7301 **i03975111**

NOTE	PART NUMBER	QTY	PART NAME 1 2 3 4 5 6 (PRODUCT LEVEL)	SEE PAGE
Y	*326-5515*	1	HEATER AR-CAB	535
Y	*218-6406*	1	SEAL GP-CAB	560
Y	*142-9305*	1	SEAT GP (SUSPENSION)	566
Y	*218-6411*	1	WINDOW GP-CAB (SIDE)	573
	245-6811	1	HOLDER-CUP	
	142-9311	1	LINER-CAB (GRAY)	

Y-SEPARATE ILLUSTRATION

<END>

326-5513 CAB AR-ENCLOSED ROPS

S/N: A9H1-UP

AN ATTACHMENT

SMCS-7301 **i03975109**

NOTE	PART NUMBER	QTY	PART NAME 1 2 3 4 5 6 (PRODUCT LEVEL)	SEE PAGE
Y	*326-5516*	1	AIR CONDITIONER AR	484
Y	*218-6406*	1	SEAL GP-CAB	560
Y	*142-9305*	1	SEAT GP (SUSPENSION)	566
Y	*218-6411*	1	WINDOW GP-CAB (SIDE)	573
	245-6811	1	HOLDER-CUP	
	142-9311	1	LINER-CAB (GRAY)	

Y-SEPARATE ILLUSTRATION

<END>

OPERATOR STATION

326-5510 CAB AR-OPEN ROPS

S/N: A9H1-UP

AN ATTACHMENT

SMCS-7301, 7325 **i03903052**

NOTE	PART NUMBER	QTY	PART NAME 1 2 3 4 5 6 (PRODUCT LEVEL)	SEE PAGE
Y	*218-6400*	1	HANDHOLD GP	532
Y	*326-5514*	1	INSTALLATION GP-COVER & LINES (WITHOUT A/C, HEATER)	540
Y	*218-5562*	1	SEAT GP (STATIC)	567

Y-SEPARATE ILLUSTRATION

<END>

326-5511 CAB AR-OPEN ROPS—MECH SUSP SEAT

S/N: A9H1-UP

AN ATTACHMENT

SMCS-7301, 7325 **i03975110**

NOTE	PART NUMBER	QTY	PART NAME 1 2 3 4 5 6 (PRODUCT LEVEL)	SEE PAGE
Y	*218-6400*	1	HANDHOLD GP	532
Y	*326-5514*	1	INSTALLATION GP-COVER & LINES (WITHOUT A/C, HEATER)	540
Y	*142-9305*	1	SEAT GP (SUSPENSION)	566
	142-9311	1	LINER-CAB (GRAY)	

Y-SEPARATE ILLUSTRATION

<END>

OPERATOR STATION

326-5404 CAB AS

S/N: A9H1-UP

SMCS-7301 **i03907015**

NOTE	REF NO	GRAPHIC REF	PART NUMBER	QTY	PART NAME 1 2 3 4 5 6 (PRODUCT LEVEL)	SEE PAGE
	1	1	**195-0939**	4	STUD	
	2	1	**214-9186**	7	BUTTON	
	3	1	**280-6072**	1	WINDOW	
	4	1	*326-5402*	1	CANOPY AS	
M		1	**6V-3918**	4	BOLT (M8X1.25X50-MM)	
M		1	**6V-9632**	3	NUT-WELD (M6X1-THD)	
M		1	**8T-5413**	1	STUD-WELD (M10X1.5X25-MM OAL)	
	5	1	**195-0935**	4	INSERT-THREADED (M6X1-THD)	
	6	1	**195-0936**	8	INSERT-THREADED (M6X1-THD)	
M	7	1	**195-0937**	8	INSERT-THREADED (M8X1.25-THD)	

M-METRIC PART

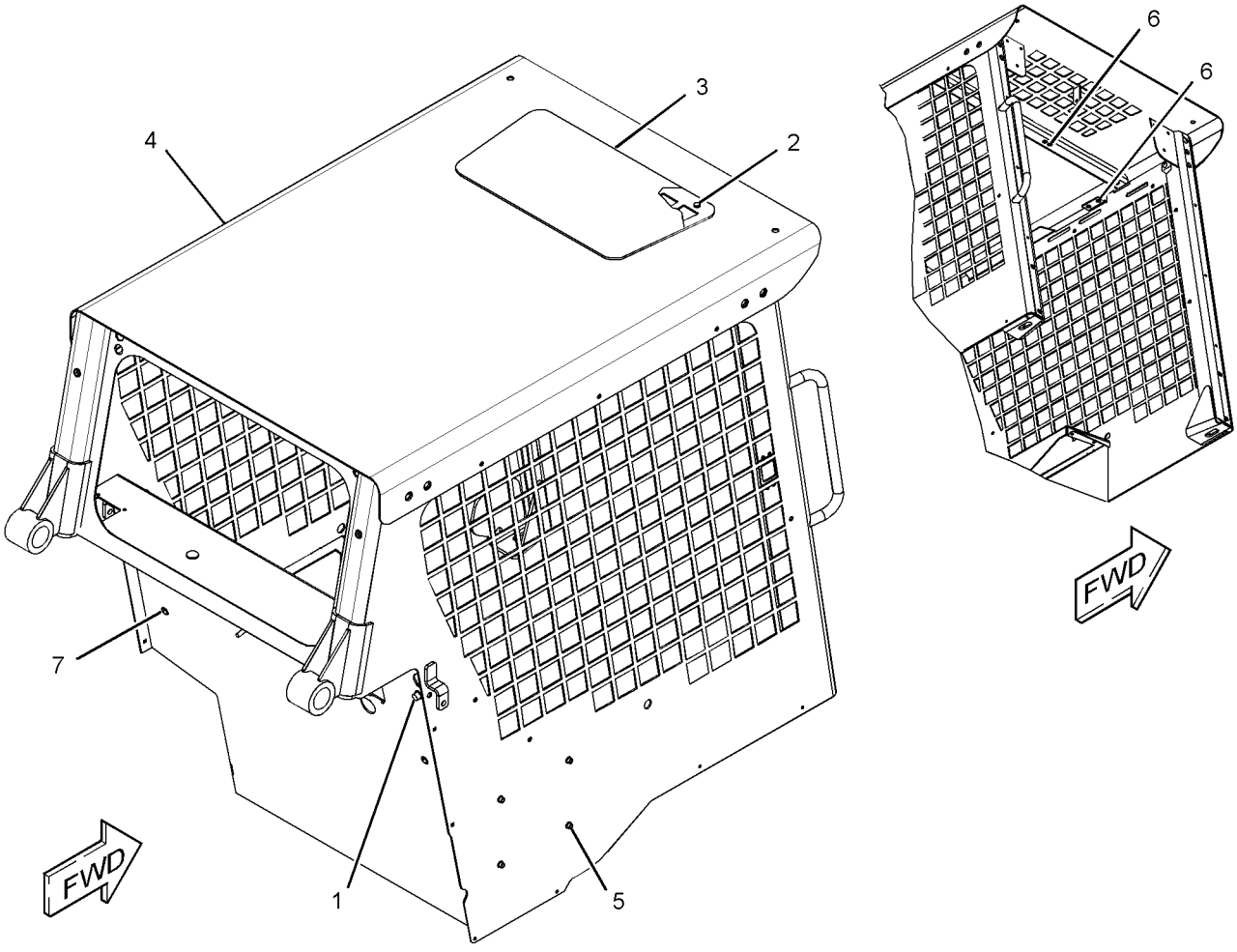

GRAPHIC #1 **<END>** g02149330

OPERATOR STATION

326-5401 CAB GP-ENCLOSED ROPS

S/N: A9H1-UP

PART OF 326-5400 CAB AR

FIELD REPLACEMENT ORDER 326-5404—PAGE 496

SMCS-7301 **i03902808**

NOTE	REF NO	GRAPHIC REF	PART NUMBER	QTY	PART NAME 1 2 3 4 5 6 (PRODUCT LEVEL)	SEE PAGE
	1	1	**214-9186**	7	BUTTON	
	2	1	**280-6072**	1	WINDOW	
	3	1	*326-5402*	1	CANOPY AS	
M		1	**6V-3918**	4	BOLT (M8X1.25X50-MM)	
M		1	**6V-9632**	3	NUT-WELD (M6X1-THD)	
M		1	**8T-5413**	1	STUD-WELD (M10X1.5X25-MM OAL)	

M-METRIC PART

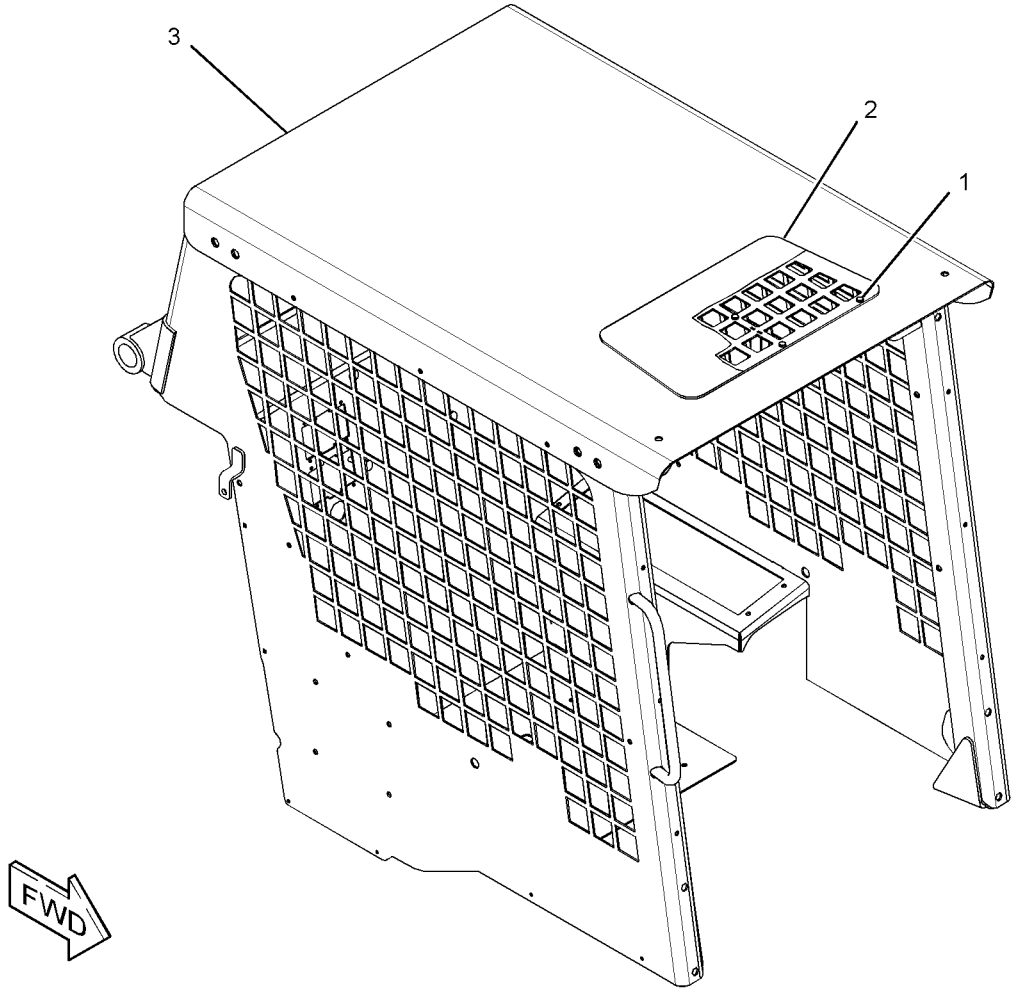

GRAPHIC #1 **<END>** g02146674

OPERATOR STATION

258-2468 COMPRESSOR & MTG GP-REFRIG

S/N: A9H1-UP
PART OF 326-5516 AIR CONDITIONER AR
AN ATTACHMENT

SMCS-1802 **i04351254**

NOTE	REF NO	GRAPHIC REF	PART NUMBER	QTY	PART NAME 1 2 3 4 5 6 (PRODUCT LEVEL)	SEE PAGE
	1	1	**258-2466**	1	BRACKET	
	2	1	**280-8395**	1	BRACKET	
	3	1	**258-3539**	1	V-BELT (COMPRESSOR)	
Y	4	1	**276-9875**	1	COMPRESSOR GP-REFRIGERANT (AIR CONDITIONER)	499
	5	1	**113-0693**	1	LOCKWASHER	
	6	1	**8T-4121**	8	WASHER-HARD (11X21X2.5-MM THK)	
M	7	1	**8T-4133**	3	NUT (M10X1.5-THD)	
M	8	1	**8T-4196**	3	BOLT (M10X1.5X35-MM)	
	9	1	**8T-4223**	3	WASHER-HARD (13.5X25.5X3-MM THK)	
M	10	1	**8T-4183**	3	BOLT (M12X1.75X40-MM)	
M	11	1	**8T-6685**	1	BOLT (M10X1.5X110-MM)	
	12	1	**4P-7429**	1	CLIP	
	13	1	**7K-1181**	1	STRAP-CABLE	

M-METRIC PART
Y-SEPARATE ILLUSTRATION

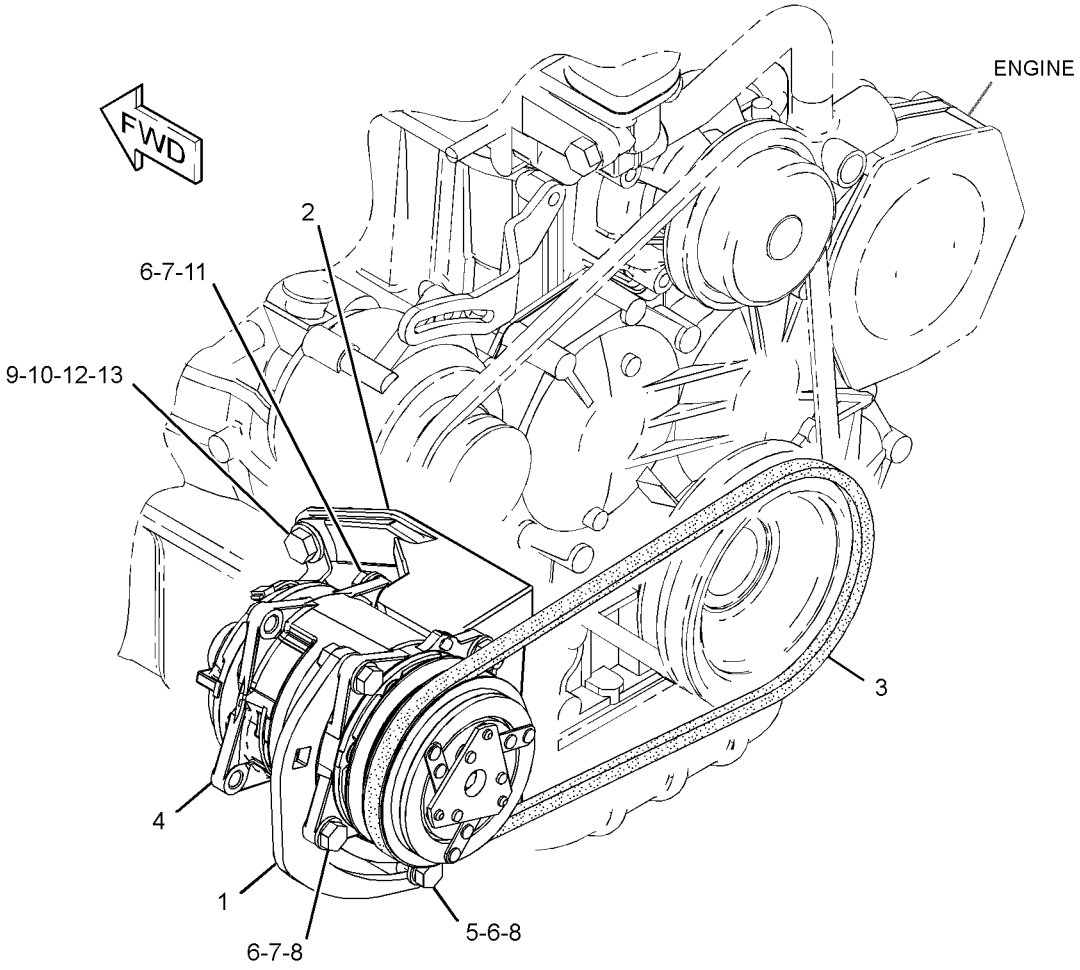

GRAPHIC #1 **<END>** g01964995

276-9875 COMPRESSOR GP-REFRIGERANT—AIR CONDITIONER

S/N: A9H1-UP

PART OF 258-2468 COMPRESSOR & MTG GP-REFRIG

AN ATTACHMENT

SMCS-1802 **i04167819**

NOTE	REF NO	GRAPHIC REF	PART NUMBER	QTY	PART NAME 1 2 3 4 5 6 (PRODUCT LEVEL)	SEE PAGE
	1	1	**102-8802**	1	KIT-RECEPTACLE (2-PIN)	
					(INCLUDES RECEPTACLE AS & WEDGE)	
	2	1	**229-4896**	2	SEAL-O-RING	
	3	1	**229-7356**	1	VALVE AS-RELIEF (REFRIGERANT COMPRESSOR)	
		1	**9X-7378**	1	SEAL-O-RING	

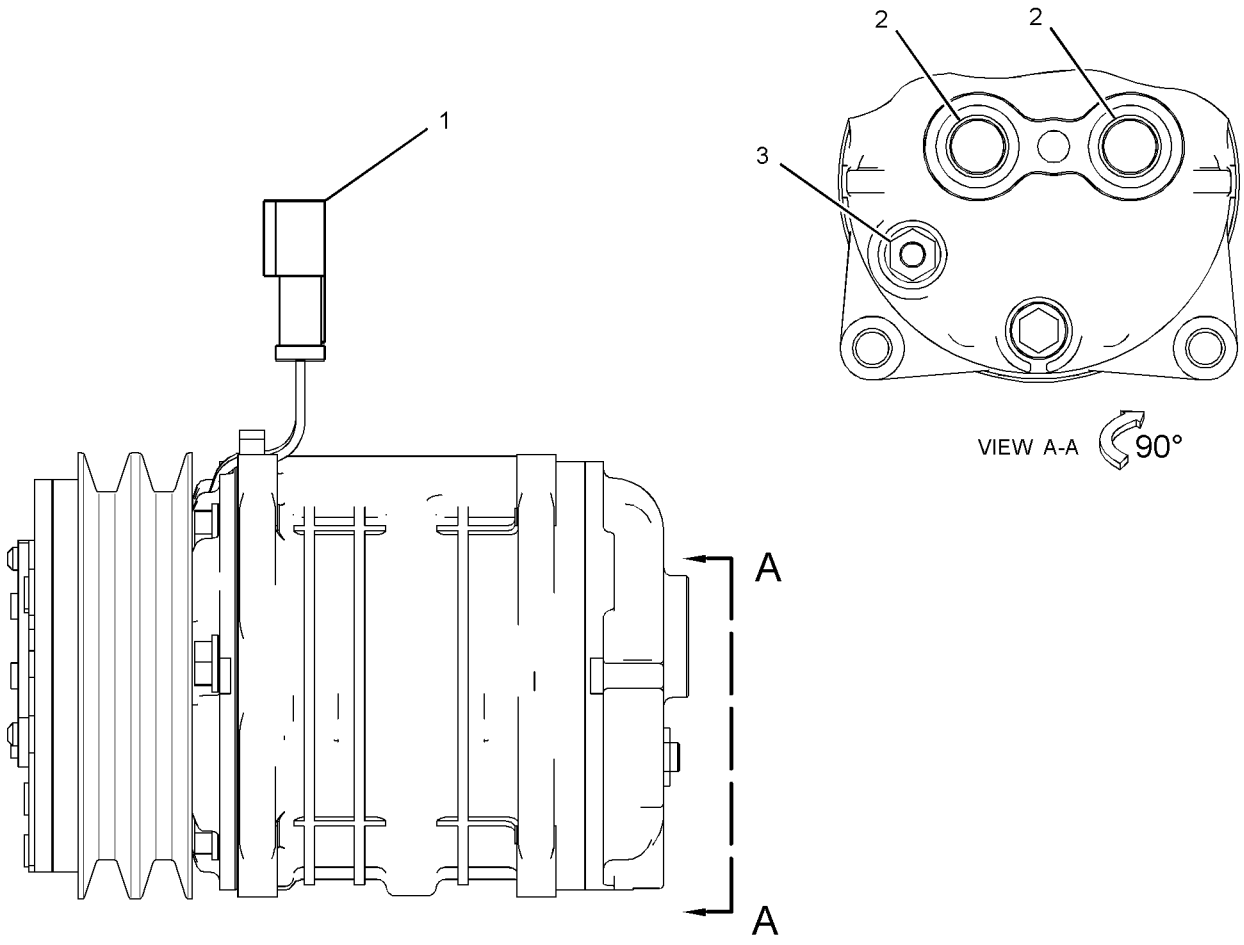

GRAPHIC #1 **<END>** g02489676

OPERATOR STATION

218-6148 CONDENSER & MTG GP-REFRIGERANT

S/N: A9H1-UP
PART OF 326-5516 AIR CONDITIONER AR
AN ATTACHMENT

SMCS-1805 **i02449992**

NOTE	REF NO	GRAPHIC REF	PART NUMBER	QTY	PART NAME 1 2 3 4 5 6 (PRODUCT LEVEL)	SEE PAGE
	1	1	**116-5763**	3	CLIP-SPRING	
	2	1	**218-6060**	1	SHROUD AS	
	3	1	**218-6250**	2	FAN AS	
C	4	1	**252-0348**	1	COIL AS	
M	5	1	**5C-7261**	14	NUT (M8X1.25-THD)	
	6	1	**5P-4116**	3	WASHER-HARD (8.8X20.5X2-MM THK)	
	7	1	**6B-2882**	4	SPACER (0.406X0.75X0.312-IN THK)	
	8	1	**8T-4121**	4	WASHER-HARD (11X21X2.5-MM THK)	
M	9	1	**8T-4133**	4	NUT (M10X1.5-THD)	
M	10	1	**8T-4189**	14	BOLT (M8X1.25X20-MM)	
	11	1	**8T-4224**	20	WASHER-HARD (8.8X16X2-MM THK)	
M	12	1	**8T-4908**	3	BOLT (M8X1.25X25-MM)	

C-CHANGE FROM PREVIOUS TYPE
M-METRIC PART

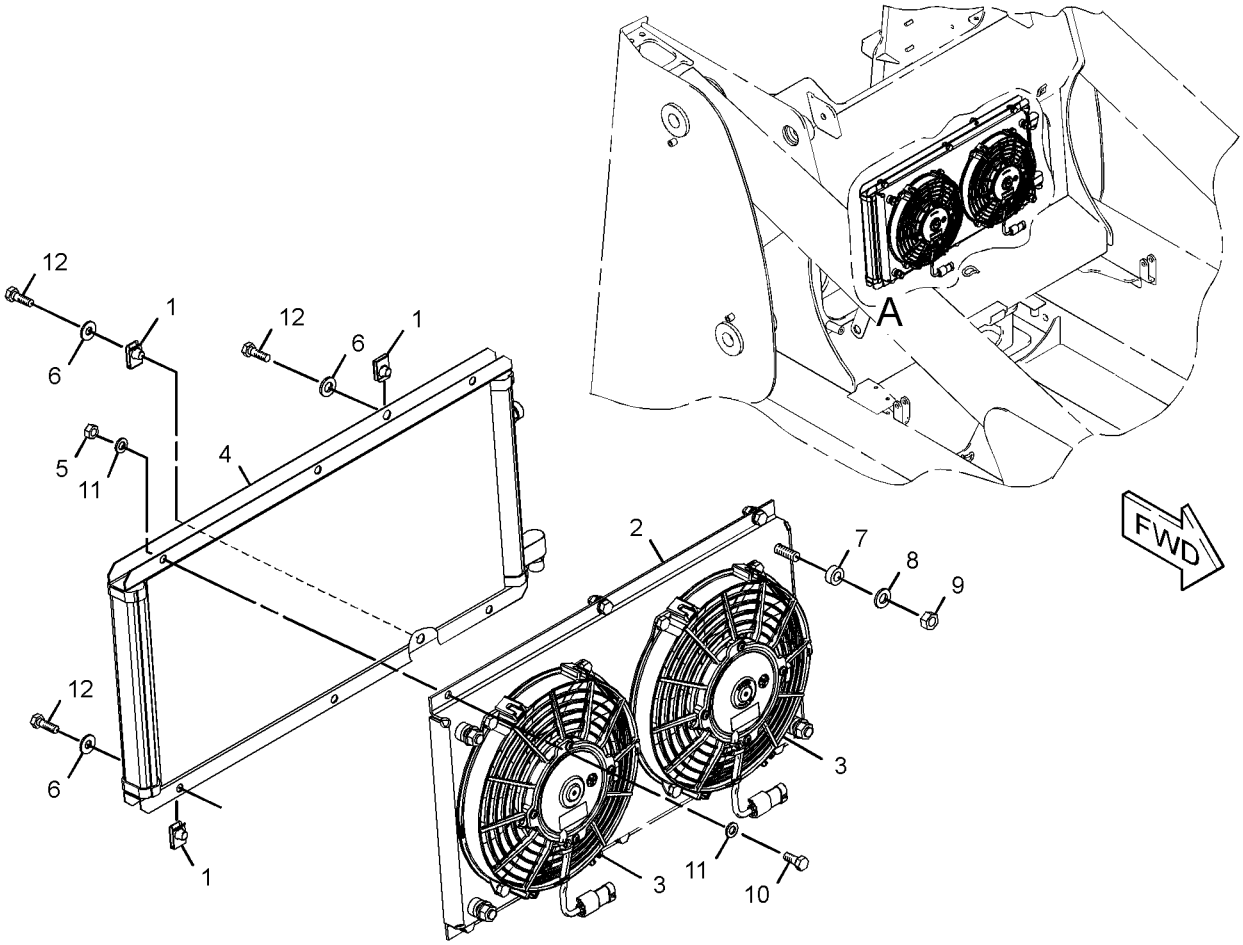

VIEW OF AREA A

GRAPHIC #1 **<END>** g01229749

OPERATOR STATION

218-6485 CONTROL GP-HANDLE—DIRECTION, SPEED

S/N: A9H1-UP

PART OF 343-5543 CONTROL GP-PILOT OPERATED HYD

AN ATTACHMENT

SMCS-5705 **i02545868**

NOTE	REF NO	GRAPHIC REF	PART NUMBER	QTY	PART NAME 1 2 3 4 5 6 (PRODUCT LEVEL)	SEE PAGE
	1	1	**173-0702**	1	BOOT	
Y	2	1	**218-6118**	1	HANDLE GP-MODULAR	533
	3	1	**158-3770**	1	KIT-PILOT VALVE (LEVER)	
					(INCLUDES NUT, LEVER & PIN)	

Y-SEPARATE ILLUSTRATION

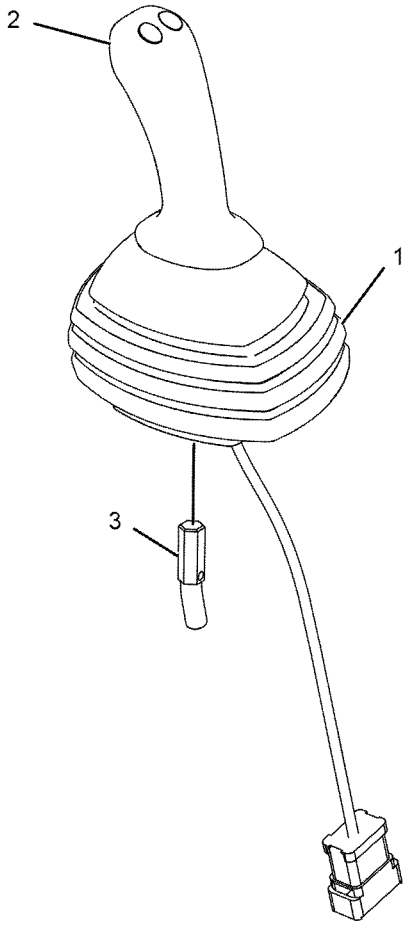

GRAPHIC #1 **<END>** g01111214

OPERATOR STATION

218-6490 CONTROL GP-HANDLE—WORK TOOL

S/N: A9H1-UP
PART OF 326-5264 CONTROL GP-PILOT OPERATED HYD
AN ATTACHMENT

SMCS-5705 **i02545869**

NOTE	REF NO	GRAPHIC REF	PART NUMBER	QTY	PART NAME 1 2 3 4 5 6 (PRODUCT LEVEL)	SEE PAGE
	1	1	**173-0703**	1	BOOT	
Y	2	1	**218-6118**	1	HANDLE GP-MODULAR	533
	3	1	**158-3770**	1	KIT-PILOT VALVE (LEVER)	
					(INCLUDES NUT, LEVER & PIN)	

Y-SEPARATE ILLUSTRATION

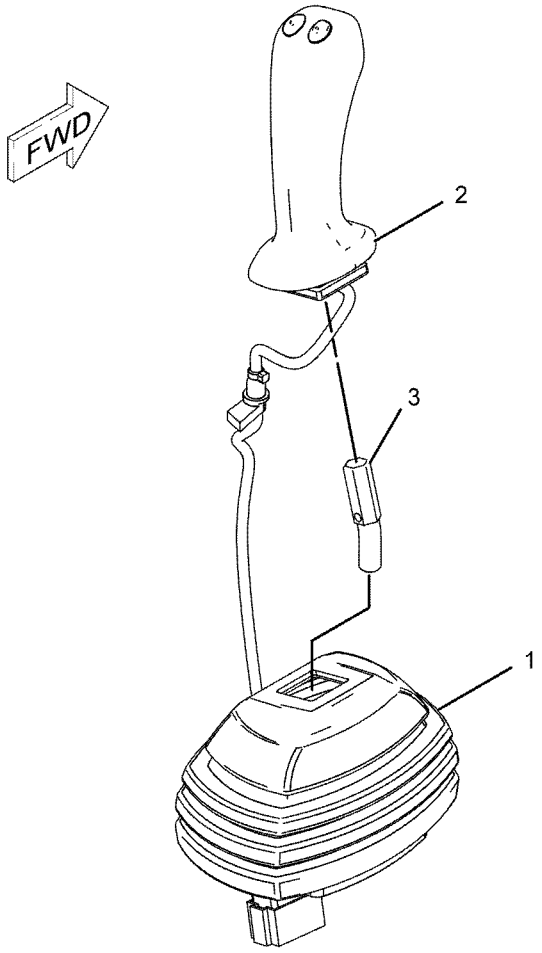

GRAPHIC #1 **<END>** g01111213

231-4256 CONTROL GP-HANDLE–LH

S/N: A9H1-UP

PART OF 343-5542 CONTROL GP-PILOT OPERATED HYD

AN ATTACHMENT

SMCS-5705 **i04358456**

NOTE	REF NO	GRAPHIC REF	PART NUMBER	QTY	PART NAME 1 2 3 4 5 6 (PRODUCT LEVEL)	SEE PAGE
	1	1	**223-3725**	1	HANDLE GP-MODULAR	
	1A	1	**8T-8729**	4	PIN-CONNECTOR (16-GA TO 18-GA)	
	1B	1	**174-3091**	1	KIT-RECEPTACLE (12-PIN)	
					(INCLUDES RECEPTACLE AS & WEDGE)	
	2	1	**223-3728**	1	BOOT	
	3	1	**231-4261**	1	ADAPTER (LH)	
M	4	1	**213-7489**	3	SCREW (M4X0.7X25-MM)	
M	5	1	**178-9983**	3	LOCKNUT (M4X0.7-THD)	
	6	1	**1S-9593**	1	STRAP-CABLE	
	7	1	**8T-8737**	8	PLUG-SEAL	
	8	1	**252-6934**	1	GROMMET	

M-METRIC PART

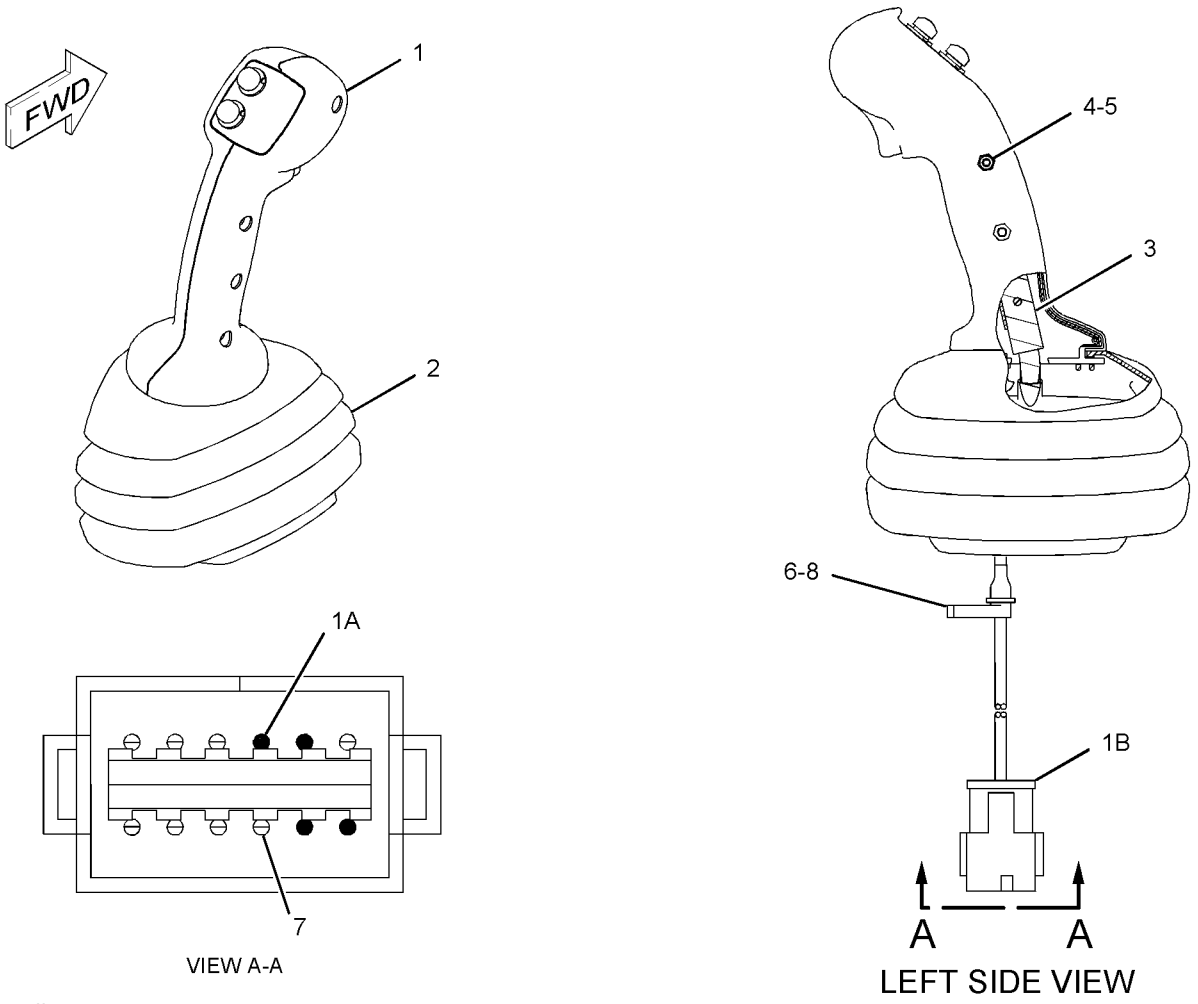

GRAPHIC #1 **<END>** g01132335

OPERATOR STATION

231-4258 CONTROL GP-HANDLE–LH

S/N: A9H1-UP
PART OF 326-5267 CONTROL GP-PILOT OPERATED HYD, 361-0454 KIT-WORK TOOL WIRING AN ATTACHMENT

SMCS-5705 **i04358458**

NOTE	REF NO	GRAPHIC REF	PART NUMBER	QTY	PART NAME 1 2 3 4 5 6 (PRODUCT LEVEL)	SEE PAGE
	1	1	**223-3726**	1	HANDLE GP-MODULAR	
	1A	1	**8T-8729**	7	PIN-CONNECTOR (16-GA TO 18-GA)	
	1B	1	**174-3091**	1	KIT-RECEPTACLE (12-PIN)	
					(INCLUDES RECEPTACLE AS & WEDGE)	
	2	1	**223-3728**	1	BOOT	
	3	1	**231-4261**	1	ADAPTER (LH)	
M	4	1	**213-7489**	3	SCREW (M4X0.7X25-MM)	
M	5	1	**178-9983**	3	LOCKNUT (M4X0.7-THD)	
	6	1	**1S-9593**	1	STRAP-CABLE	
	7	1	**8T-8737**	3	PLUG-SEAL	
	8	1	**252-6934**	1	GROMMET	

M-METRIC PART

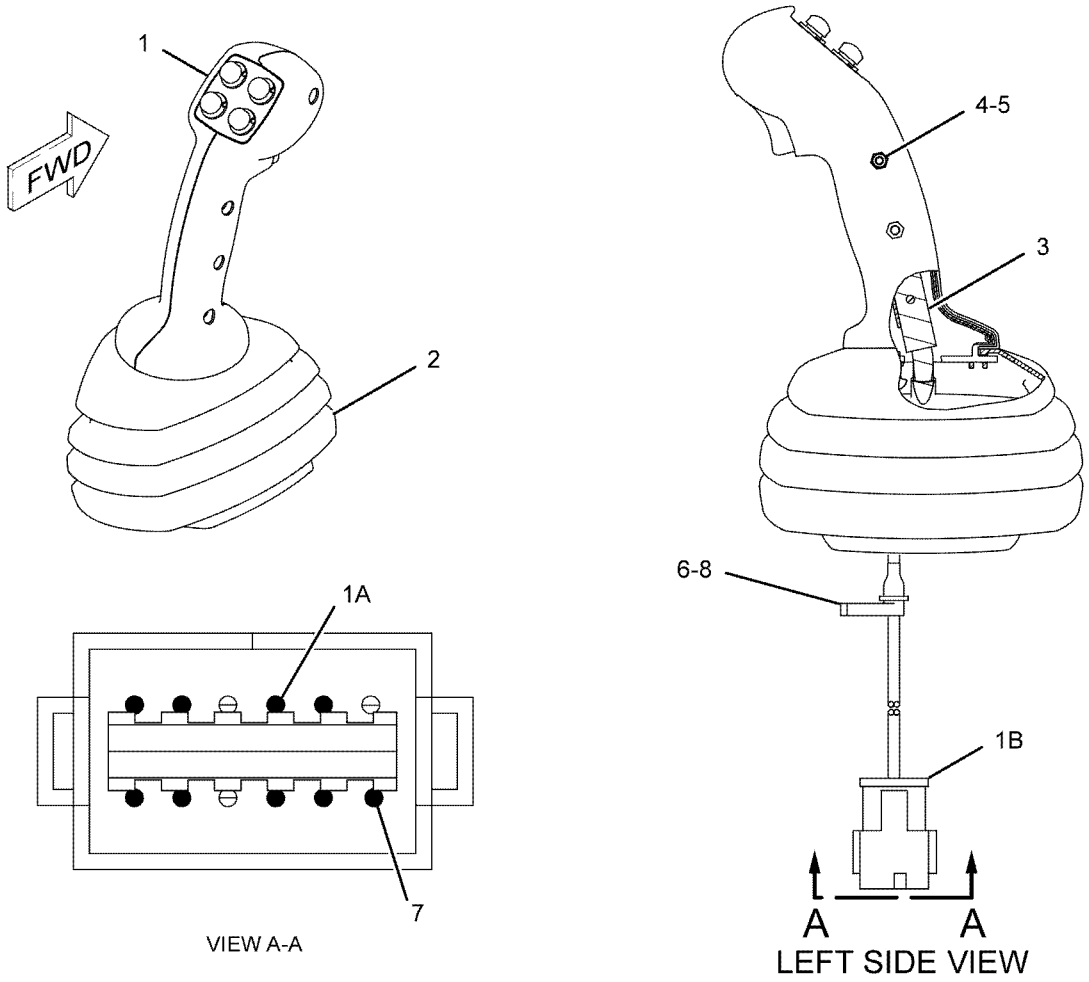

GRAPHIC #1 **<END>** g01132255

231-4260 CONTROL GP-HANDLE–RH

S/N: A9H1-UP

PART OF 326-5265 CONTROL GP-PILOT OPERATED HYD

AN ATTACHMENT

SMCS-5705 **i04358470**

NOTE	REF NO	GRAPHIC REF	PART NUMBER	QTY	PART NAME 1 2 3 4 5 6 (PRODUCT LEVEL)	SEE PAGE
	1	1	**215-8307**	1	CONTROL GP-HANDLE	
	1A	1	**8T-8729**	7	PIN-CONNECTOR (16-GA TO 18-GA)	
	1B	1	**174-3091**	1	KIT-RECEPTACLE (12-PIN)	
					(INCLUDES RECEPTACLE AS & WEDGE)	
	2	1	**223-3728**	1	BOOT	
	3	1	**231-4262**	1	ADAPTER (RH)	
M	4	1	**213-7489**	3	SCREW (M4X0.7X25-MM)	
M	5	1	**178-9983**	3	LOCKNUT (M4X0.7-THD)	
	6	1	**1S-9593**	1	STRAP-CABLE	
	7	1	**8T-8737**	5	PLUG-SEAL	
	8	1	**252-6934**	1	GROMMET	

M-METRIC PART

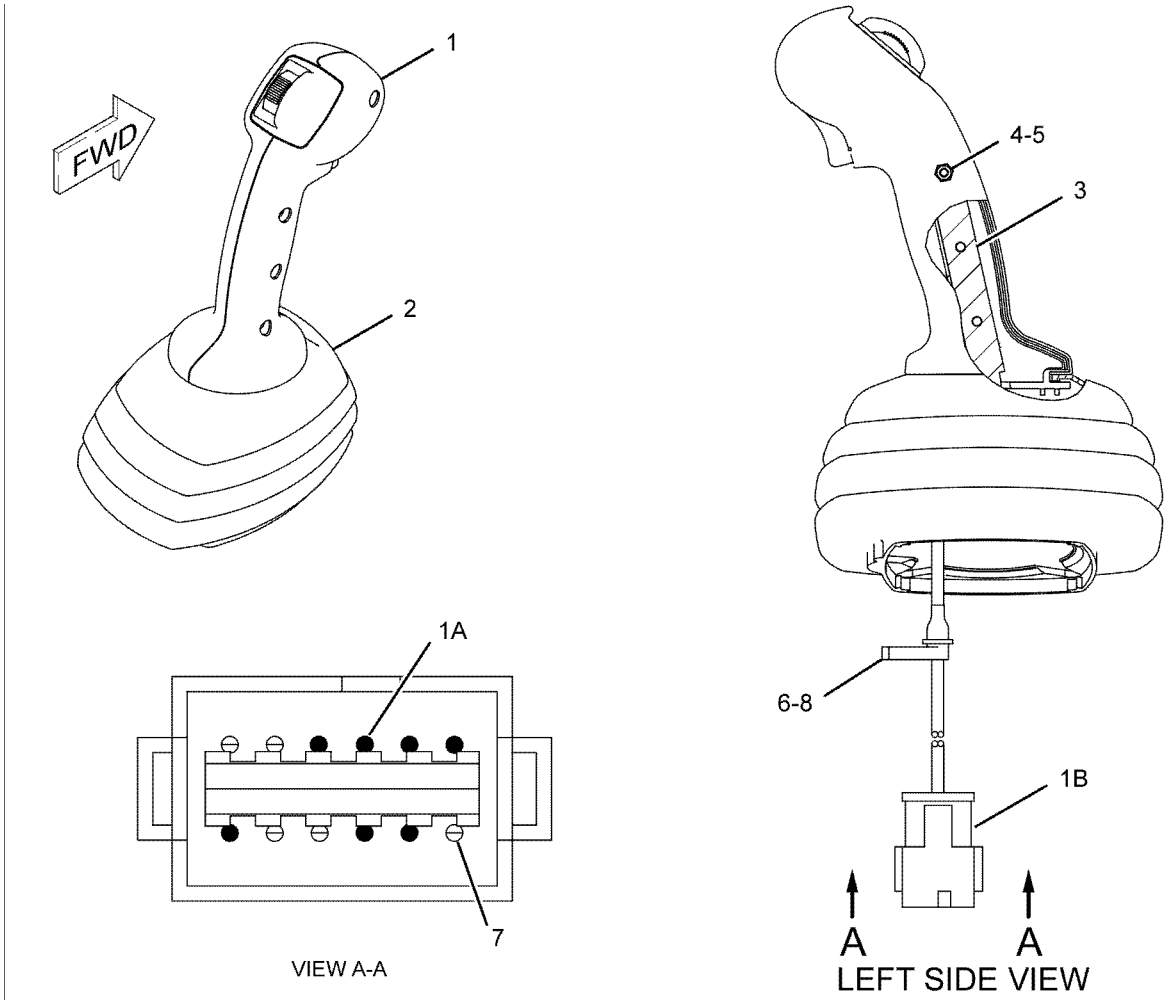

GRAPHIC #1 **<END>** g01132271

OPERATOR STATION

326-5264 CONTROL GP-PILOT OPERATED HYD—WORK TOOL

S/N: A9H1-UP
PART OF 326-5276 CONTROL AR-MACHINE
AN ATTACHMENT

SMCS-5059, 5705 **i03901799**

NOTE	REF NO	GRAPHIC REF	PART NUMBER	QTY	PART NAME 1 2 3 4 5 6 (PRODUCT LEVEL)	SEE PAGE
	1	1	**218-6421**	1	BRACKET AS	
Y	2	1	**218-6490**	1	CONTROL GP-HANDLE (WORK TOOL)	502
	3	1	**237-5332**	1	FILM-INSTRUCTION (MACHINE CONTROLS)	
Y	4	1	**299-9119**	1	VALVE GP-PILOT (WORK TOOL)	316
M	5	1	**8T-0269**	3	BOLT-SOCKET HEAD (M6X1X20-MM)	
	6	1	**8T-4205**	3	WASHER-HARD (7.2X14.5X2-MM THK)	

M-METRIC PART
Y-SEPARATE ILLUSTRATION

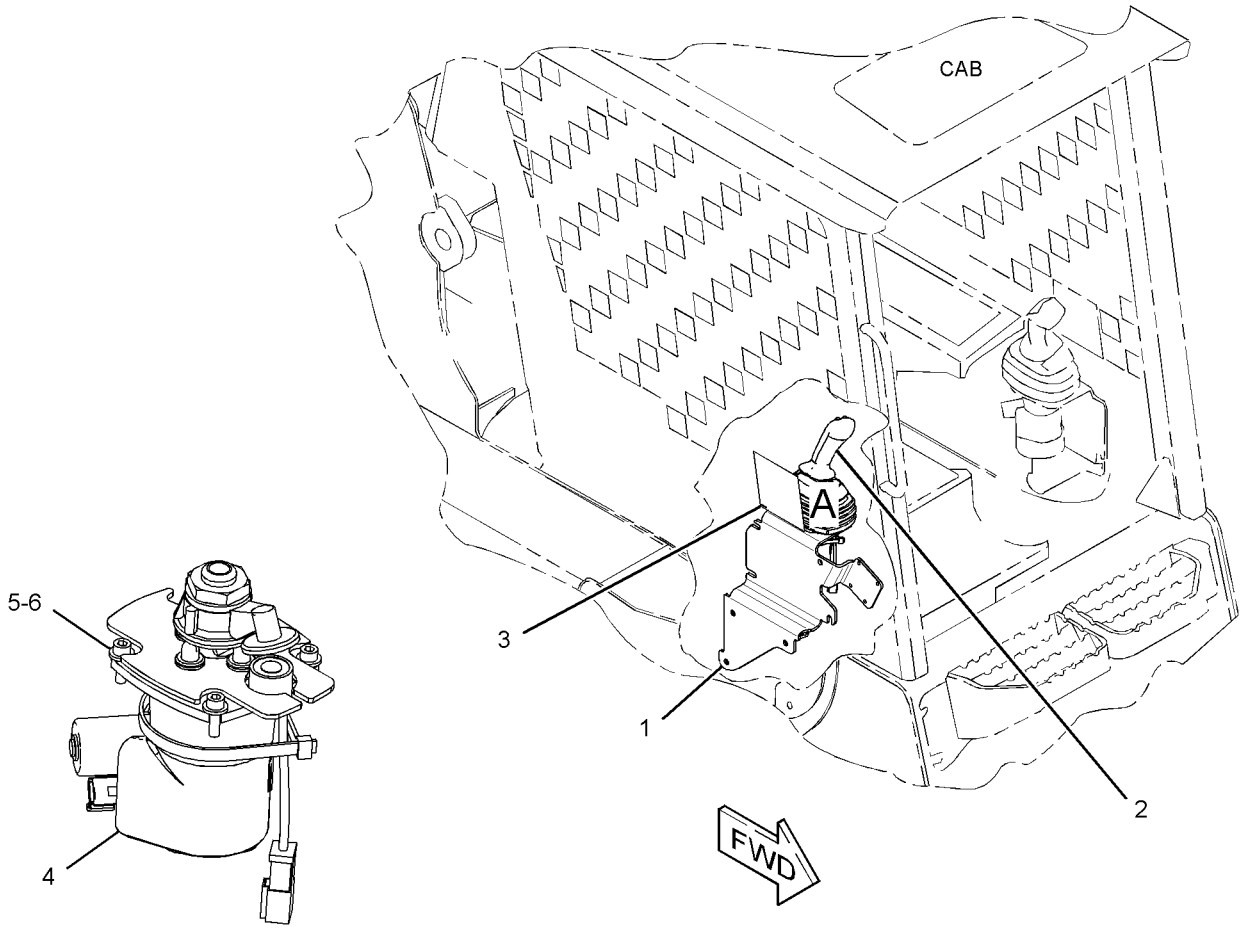

VIEW OF AREA A
(HANDLE AND BRACKET REMOVED FOR CLARITY)

GRAPHIC #1 **<END>** g02148360

OPERATOR STATION

326-5265 CONTROL GP-PILOT OPERATED HYD—AUXILIARY

S/N: A9H1-UP

PART OF 326-5277, 326-5278, 326-5427, 326-5428 CONTROL AR-MACHINE AN ATTACHMENT

SMCS-5059, 5705 **i04464748**

NOTE	REF NO	GRAPHIC REF	PART NUMBER	QTY	PART NAME 1 2 3 4 5 6 (PRODUCT LEVEL)	SEE PAGE
	1	1	**218-6421**	1	BRACKET AS	
Y	2	1	**231-4260**	1	CONTROL GP-HANDLE (RH)	505
	3	1	**235-5243**	1	FILM-INSTRUCTION (MACHINE CONTROLS)	
Y	4	1	**299-9119**	1	VALVE GP-PILOT (WORK TOOL)	316
M	5	1	**095-1207**	1	NUT (M12X1.75-THD)	
M	6	1	**8T-0269**	3	BOLT-SOCKET HEAD (M6X1X20-MM)	
	7	1	**8T-4205**	3	WASHER-HARD (7.2X14.5X2-MM THK)	

M-METRIC PART
Y-SEPARATE ILLUSTRATION

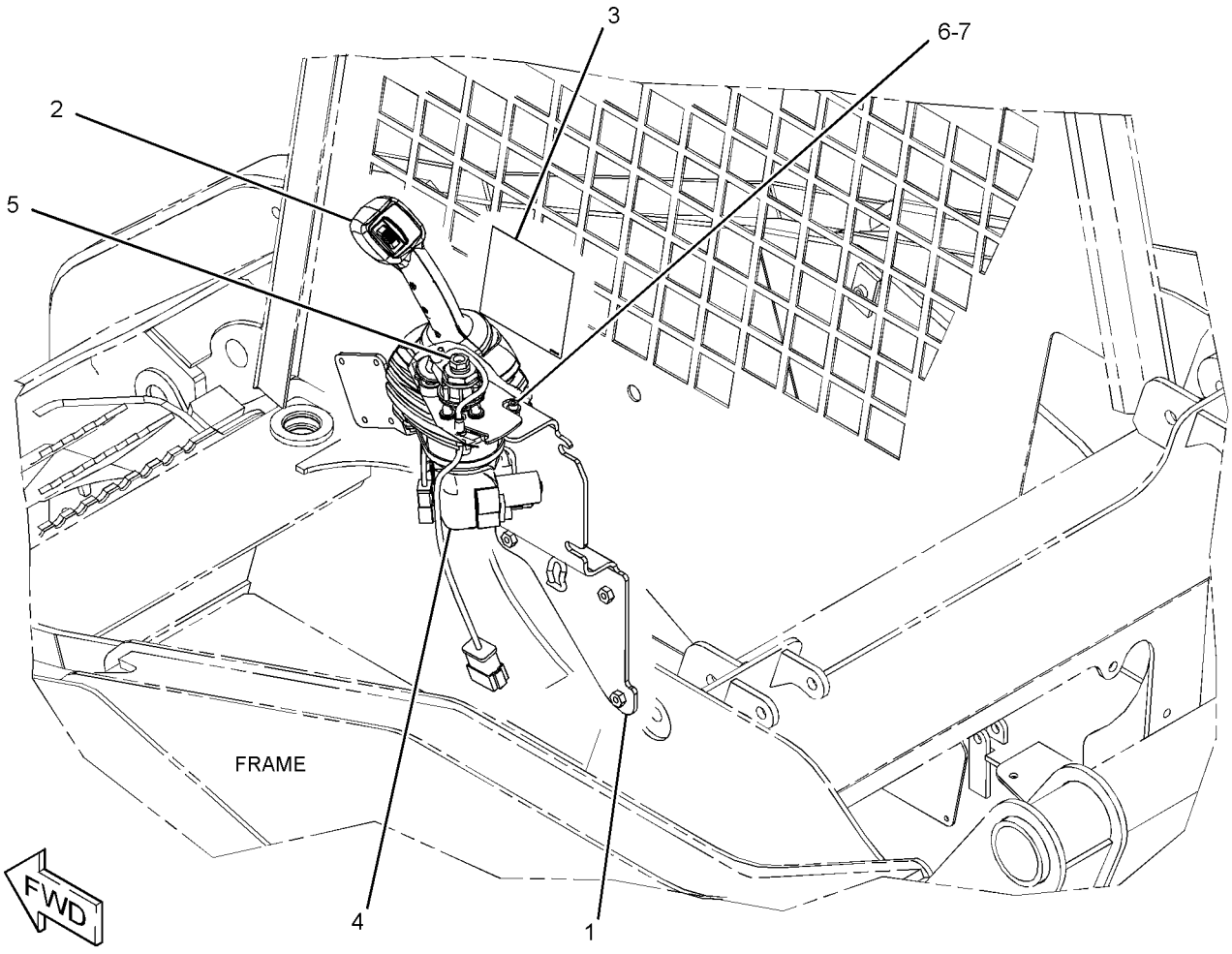

GRAPHIC #1 **<END>** g02145324

326-5267 CONTROL GP-PILOT OPERATED HYD–HYDROSTATIC

S/N: A9H1-UP

PART OF 326-5278, 326-5427, 326-5428 CONTROL AR-MACHINE

AN ATTACHMENT

TYPE 1

SMCS-5059, 5705 **i03901807**

NOTE	REF NO	GRAPHIC REF	PART NUMBER	QTY	PART NAME 1 2 3 4 5 6 (PRODUCT LEVEL)	SEE PAGE
	1	1	**218-6422**	1	BRACKET AS	
	2	1	**235-5246**	1	FILM-INSTRUCTION (MACHINE CONTROL, READ OMM)	
Y	3	1	**343-0868**	1	VALVE GP-PILOT (DIRECTION, SPEED)	318
M	4	1	**095-1207**	1	NUT (M12X1.75-THD)	
	5	1	**164-9425**	1	HORN AS (12-VOLT, LOW TONE)	
Y	6	1	**231-4258**	1	CONTROL GP-HANDLE (LH)	504
M	7	1	**8T-0269**	3	BOLT-SOCKET HEAD (M6X1X20-MM)	
	8	1	**8T-4121**	1	WASHER-HARD (11X21X2.5-MM THK)	
M	9	1	**8T-4137**	1	BOLT (M10X1.5X20-MM)	
	10	1	**8T-4205**	3	WASHER-HARD (7.2X14.5X2-MM THK)	

M-METRIC PART
Y-SEPARATE ILLUSTRATION

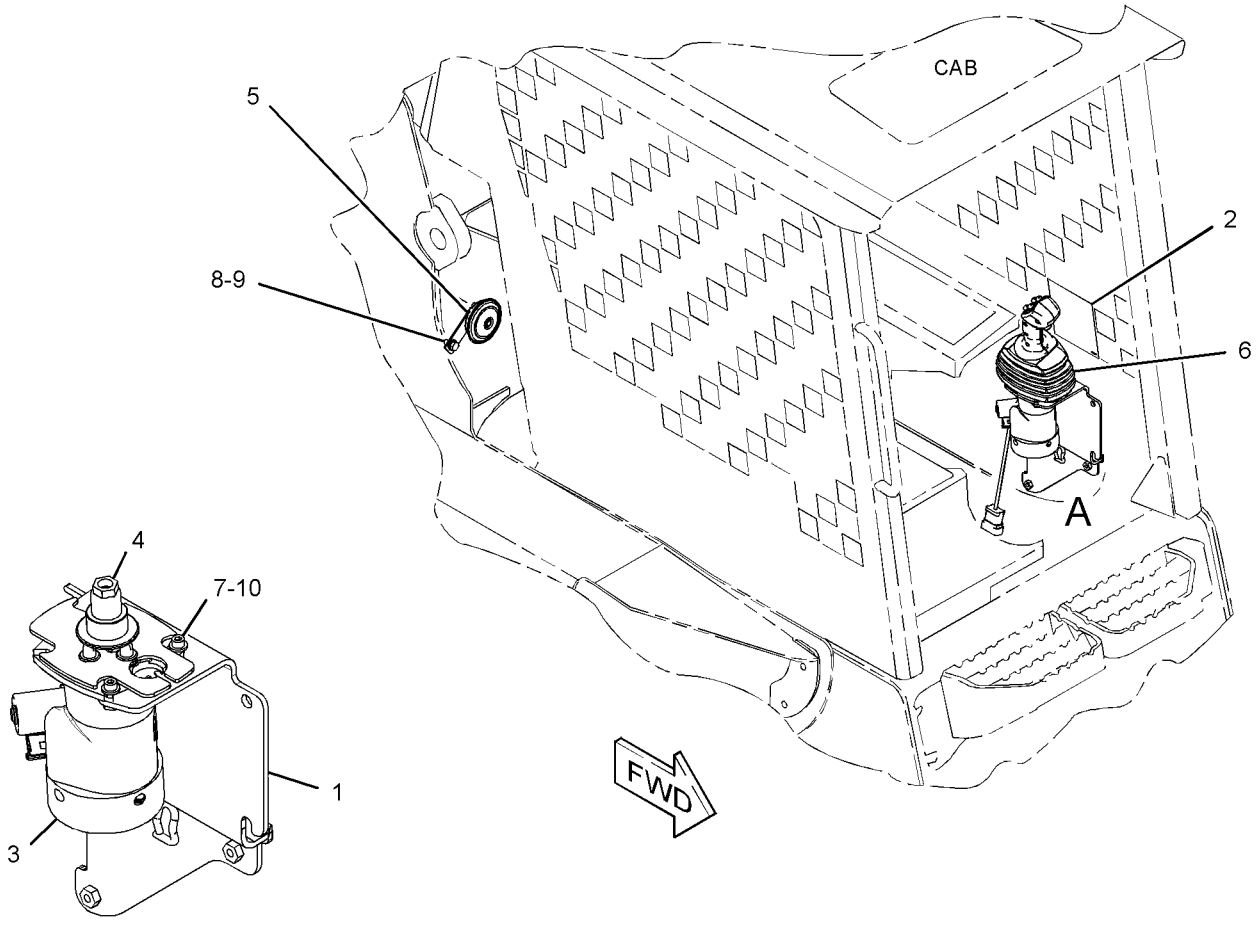

VIEW OF AREA A
(HANDLE REMOVED FOR CLARITY)

GRAPHIC #1 **<END>** g02148358

326-5267 CONTROL GP-PILOT OPERATED HYD–HYDROSTATIC

S/N: A9H1-UP
PART OF 326-5278, 326-5427, 326-5428 CONTROL AR-MACHINE
AN ATTACHMENT
TYPE 2

SMCS-5059, 5705 **i04197029**

NOTE	REF NO	GRAPHIC REF	PART NUMBER	QTY	PART NAME 1 2 3 4 5 6 (PRODUCT LEVEL)	SEE PAGE
	1	1	**218-6422**	1	BRACKET AS	
	2	1	**235-5246**	1	FILM-INSTRUCTION (MACHINE CONTROL, READ OMM)	
CY	3	1	**356-5008**	1	VALVE GP-PILOT (DIRECTION, SPEED)	319
M	4	1	**095-1207**	1	NUT (M12X1.75-THD)	
	5	1	**164-9425**	1	HORN AS (12-VOLT, LOW TONE)	
Y	6	1	**231-4258**	1	CONTROL GP-HANDLE (LH)	504
M	7	1	**8T-0269**	3	BOLT-SOCKET HEAD (M6X1X20-MM)	
	8	1	**8T-4121**	1	WASHER-HARD (11X21X2.5-MM THK)	
M	9	1	**8T-4137**	1	BOLT (M10X1.5X20-MM)	
	10	1	**8T-4205**	3	WASHER-HARD (7.2X14.5X2-MM THK)	

C-CHANGE FROM PREVIOUS TYPE
M-METRIC PART
Y-SEPARATE ILLUSTRATION

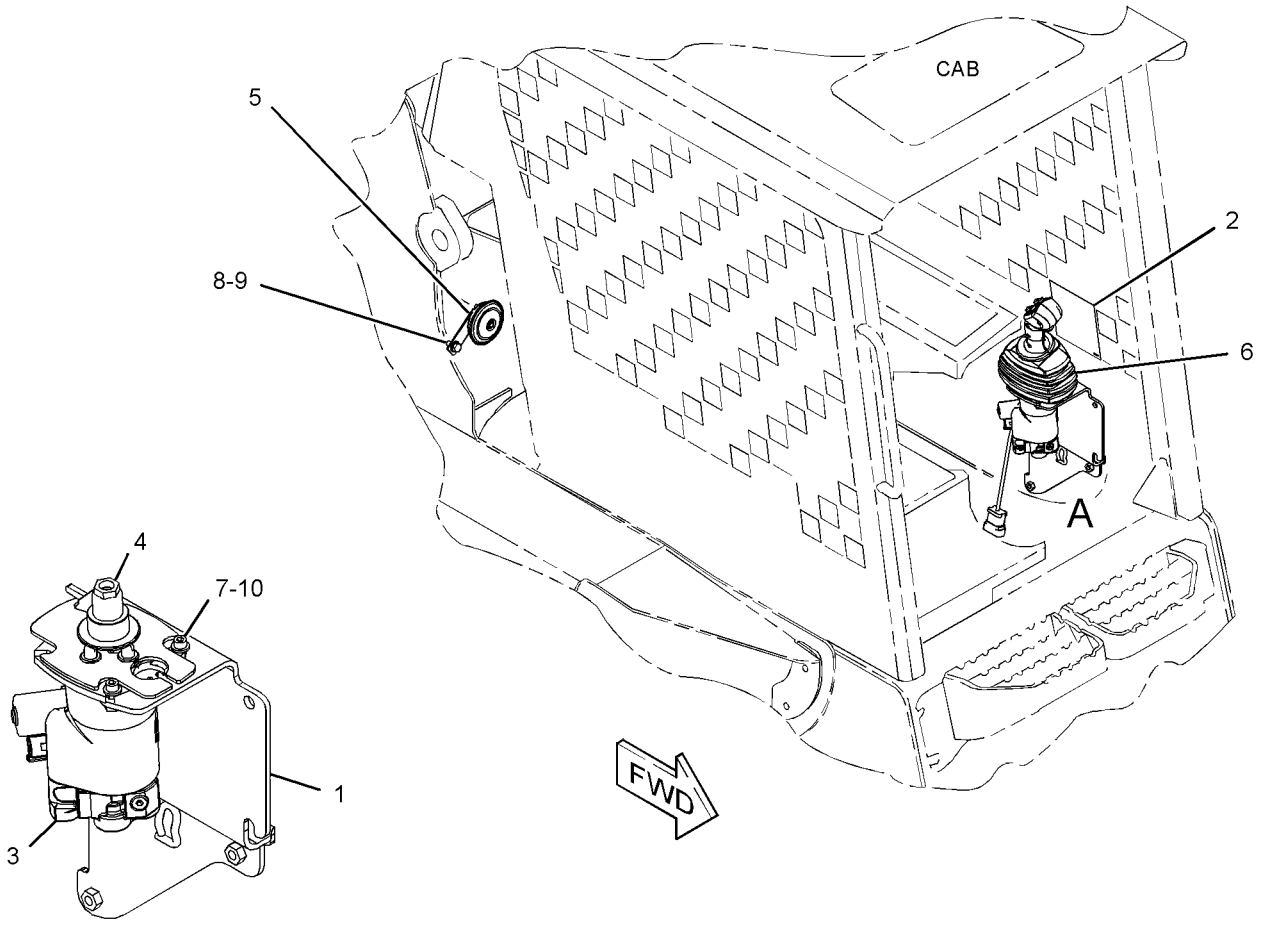

VIEW OF AREA A
(HANDLE REMOVED FOR CLARITY)

GRAPHIC #1 **<END>** g02475438

OPERATOR STATION

343-5542 CONTROL GP-PILOT OPERATED HYD

S/N: A9H1-651
PART OF 326-5277 CONTROL AR-MACHINE
AN ATTACHMENT

SMCS-5059, 5705 **i04557221**

NOTE	REF NO	GRAPHIC REF	PART NUMBER	QTY	PART NAME 1 2 3 4 5 6 (PRODUCT LEVEL)	SEE PAGE
M	1	1	**095-1207**	1	NUT (M12X1.75-THD)	
	2	1	**218-6422**	1	BRACKET AS	
Y	3	1	**343-0868**	1	VALVE GP-PILOT (DIRECTION, SPEED)	318
	4	1	**164-9425**	1	HORN AS (12-VOLT, LOW TONE)	
Y	5	1	**231-4256**	1	CONTROL GP-HANDLE (LH)	503
	6	1	**235-5246**	1	FILM-INSTRUCTION (MACHINE CONTROL, READ OMM)	
M	7	1	**8T-0269**	3	BOLT-SOCKET HEAD (M6X1X20-MM)	
	8	1	**8T-4121**	1	WASHER-HARD (11X21X2.5-MM THK)	
M	9	1	**8T-4137**	1	BOLT (M10X1.5X20-MM)	
	10	1	**8T-4205**	3	WASHER-HARD (7.2X14.5X2-MM THK)	

M-METRIC PART
Y-SEPARATE ILLUSTRATION

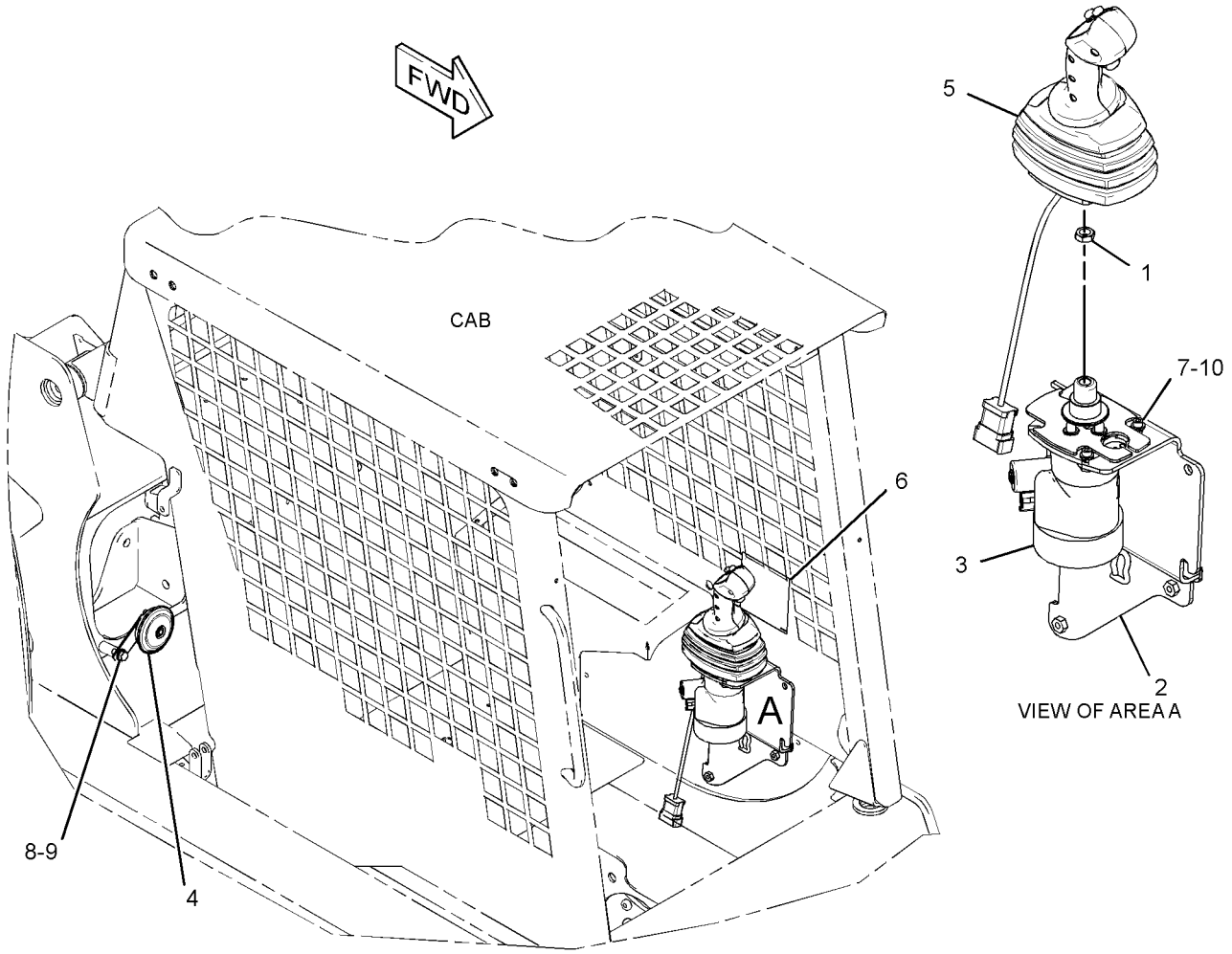

GRAPHIC #1 **<END>** g01455640

OPERATOR STATION

343-5542 CONTROL GP-PILOT OPERATED HYD

S/N: A9H652-UP
PART OF 326-5277 CONTROL AR-MACHINE
AN ATTACHMENT

SMCS-5059, 5705 **i04185493**

NOTE	REF NO	GRAPHIC REF	PART NUMBER	QTY	PART NAME 1 2 3 4 5 6 (PRODUCT LEVEL)	SEE PAGE
M	1	1	**095-1207**	1	NUT (M12X1.75-THD)	
	2	1	**218-6422**	1	BRACKET AS	
CY	3	1	**356-5008**	1	VALVE GP-PILOT (DIRECTION, SPEED)	319
	4	1	**164-9425**	1	HORN AS (12-VOLT, LOW TONE)	
Y	5	1	**231-4256**	1	CONTROL GP-HANDLE (LH)	503
	6	1	**235-5246**	1	FILM-INSTRUCTION (MACHINE CONTROL, READ OMM)	
M	7	1	**8T-0269**	3	BOLT-SOCKET HEAD (M6X1X20-MM)	
	8	1	**8T-4121**	1	WASHER-HARD (11X21X2.5-MM THK)	
M	9	1	**8T-4137**	1	BOLT (M10X1.5X20-MM)	
	10	1	**8T-4205**	3	WASHER-HARD (7.2X14.5X2-MM THK)	

C-CHANGE FROM PREVIOUS TYPE
M-METRIC PART
Y-SEPARATE ILLUSTRATION

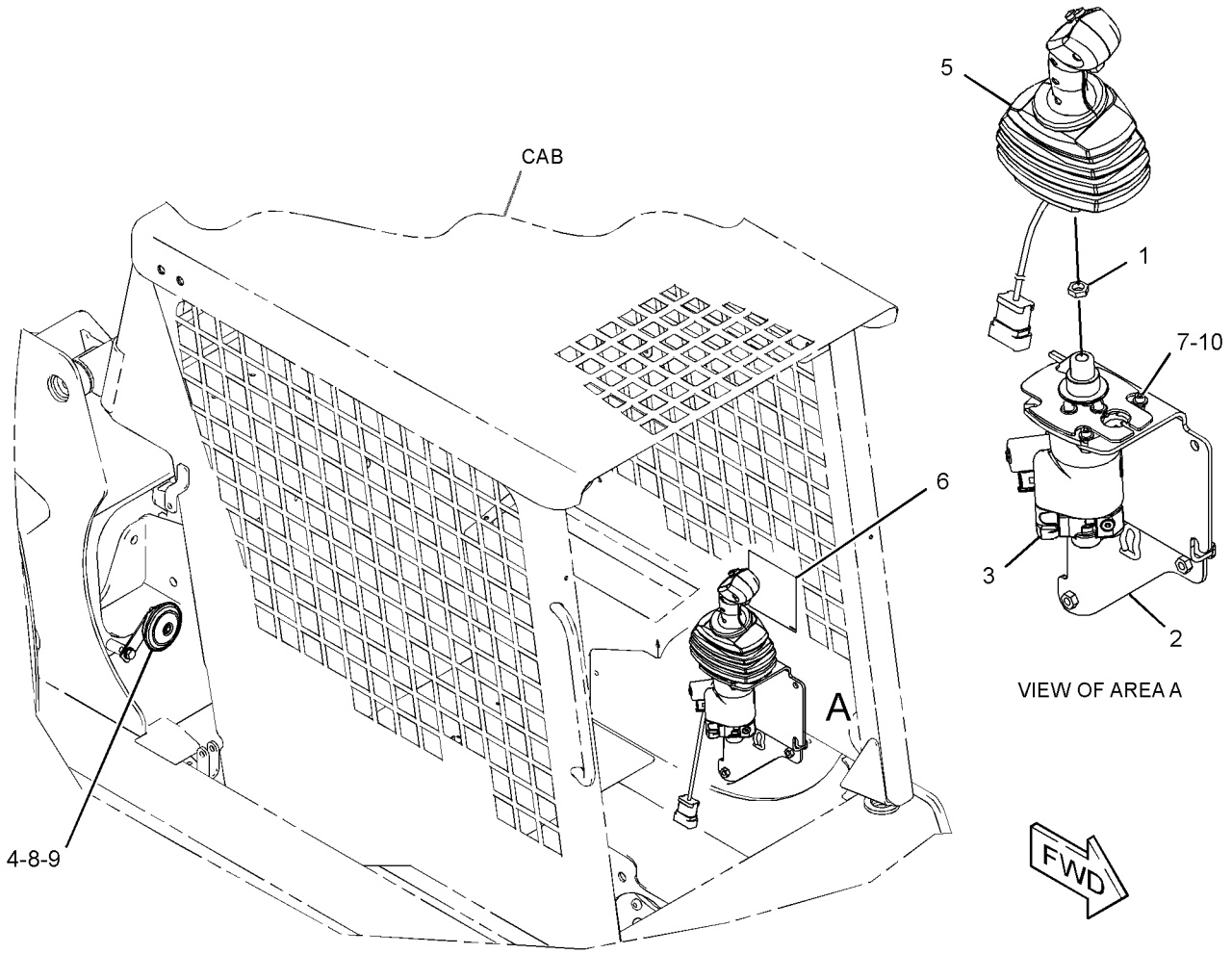

GRAPHIC #1 **<END>** g02471616

OPERATOR STATION

343-5543 CONTROL GP-PILOT OPERATED HYD

S/N: A9H1-651
PART OF 326-5276 CONTROL AR-MACHINE
AN ATTACHMENT

SMCS-5059, 5705 **i04557220**

NOTE	REF NO	GRAPHIC REF	PART NUMBER	QTY	PART NAME 1 2 3 4 5 6 (PRODUCT LEVEL)	SEE PAGE
	1	1	**218-6422**	1	BRACKET AS	
Y	2	1	**218-6485**	1	CONTROL GP-HANDLE (LH)	501
Y	3	1	**343-0868**	1	VALVE GP-PILOT (DIRECTION, SPEED)	318
	4	1	**164-9425**	1	HORN AS (12-VOLT, LOW TONE)	
	5	1	**237-5331**	1	FILM-INSTRUCTION (MACHINE CONTROL, READ OMM)	
M	6	1	**8T-0269**	3	BOLT-SOCKET HEAD (M6X1X20-MM)	
	7	1	**8T-4121**	1	WASHER-HARD (11X21X2.5-MM THK)	
M	8	1	**8T-4137**	1	BOLT (M10X1.5X20-MM)	
	9	1	**8T-4205**	3	WASHER-HARD (7.2X14.5X2-MM THK)	

M-METRIC PART
Y-SEPARATE ILLUSTRATION

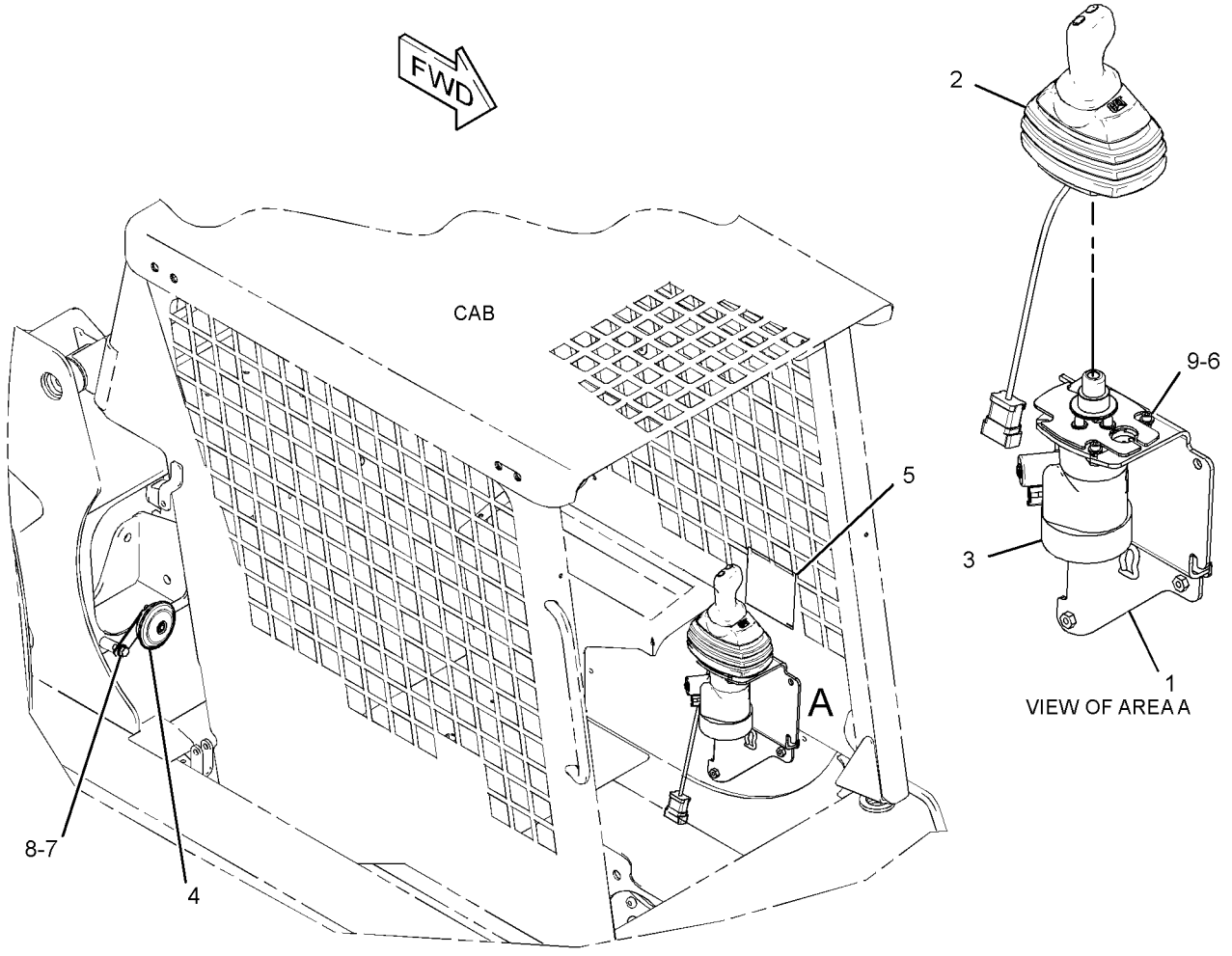

GRAPHIC #1 **<END>** g01455653

OPERATOR STATION

343-5543 CONTROL GP-PILOT OPERATED HYD

S/N: A9H652-UP
PART OF 326-5276 CONTROL AR-MACHINE
AN ATTACHMENT

SMCS-5059, 5705 **i04185426**

NOTE	REF NO	GRAPHIC REF	PART NUMBER	QTY	PART NAME 1 2 3 4 5 6 (PRODUCT LEVEL)	SEE PAGE
	1	1	**218-6422**	1	BRACKET AS	
Y	2	1	**218-6485**	1	CONTROL GP-HANDLE (LH)	501
CY	3	1	**356-5008**	1	VALVE GP-PILOT (DIRECTION, SPEED)	319
	4	1	**164-9425**	1	HORN AS (12-VOLT, LOW TONE)	
	5	1	**237-5331**	1	FILM-INSTRUCTION (MACHINE CONTROL, READ OMM)	
M	6	1	**8T-0269**	3	BOLT-SOCKET HEAD (M6X1X20-MM)	
	7	1	**8T-4121**	1	WASHER-HARD (11X21X2.5-MM THK)	
M	8	1	**8T-4137**	1	BOLT (M10X1.5X20-MM)	
	9	1	**8T-4205**	3	WASHER-HARD (7.2X14.5X2-MM THK)	

C-CHANGE FROM PREVIOUS TYPE
M-METRIC PART
Y-SEPARATE ILLUSTRATION

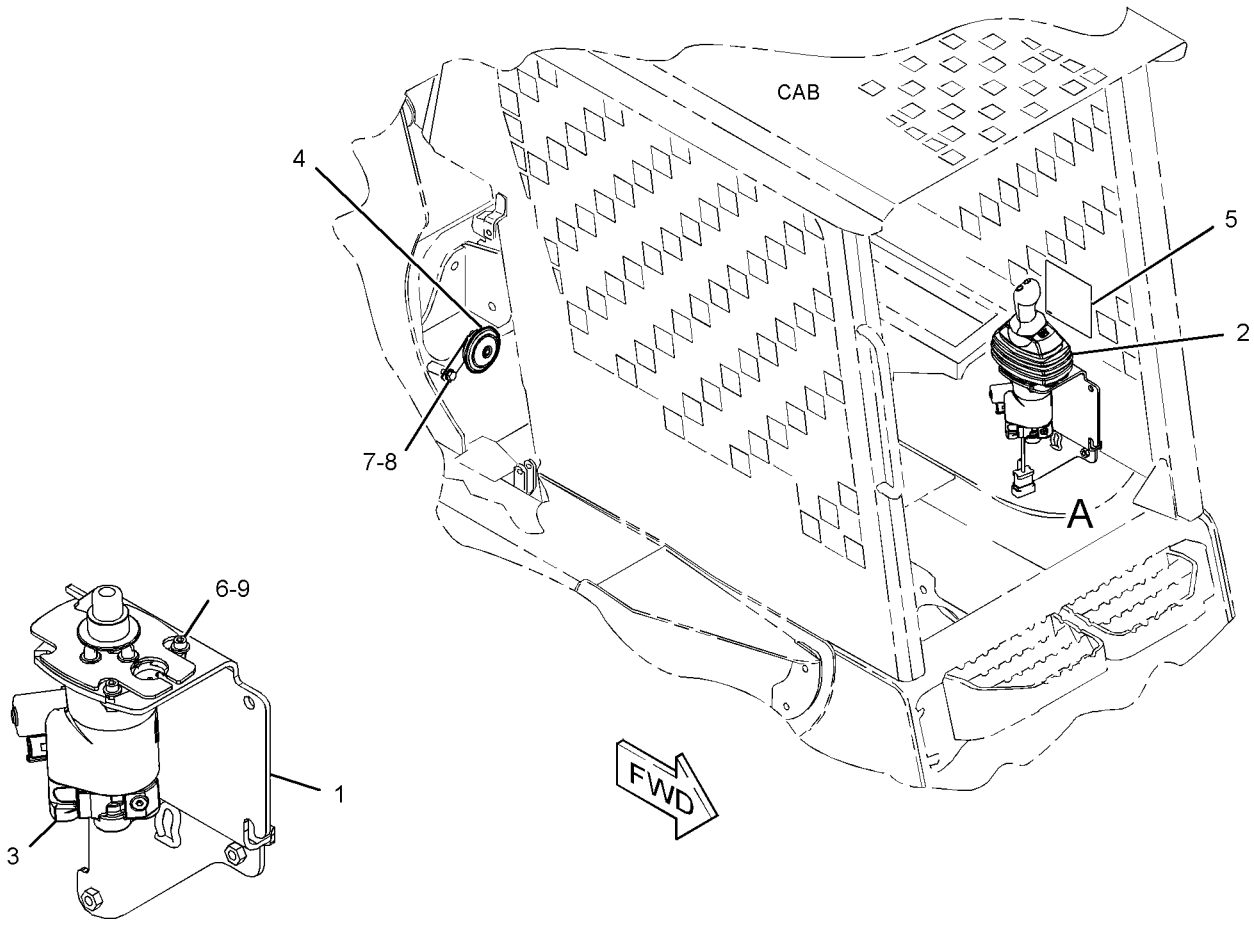

VIEW OF AREA A
(HANDLE REMOVED FOR CLARITY)

GRAPHIC #1 **<END>** g02475452

OPERATOR STATION

218-6418 COVER GP-CONSOLE—WITH AIR CONDITIONER, HEATER

S/N: A9H1-UP

PART OF 326-5514 INSTALLATION GP-COVER & LINES

AN ATTACHMENT

SMCS-5258 **i02602678**

NOTE	REF NO	GRAPHIC REF	PART NUMBER	QTY	PART NAME 1 2 3 4 5 6 (PRODUCT LEVEL)	SEE PAGE
E	1	1	**124-3243**		SEAL (52-CM)	
	2	1	**114-6658**	6	WASHER (6.5X17X1-MM THK)	
	3	1	**218-6386**	1	COVER AS	
	4	1	**218-6387**	1	COVER AS	
	5	1	**218-6388**	1	COVER AS	
	6	1	**218-6435**	2	SPACER (16.6X21.8X25.4-MM THK)	
	7	1	**8T-4224**	2	WASHER-HARD (8.8X16X2-MM THK)	
M	8	1	**8T-6912**	2	BOLT (M8X1.25X50-MM)	
M	9	1	**9X-2044**	7	SCREW-TRUSS HEAD (M6X1X16-MM)	
	10	1	**9X-6165**	1	WASHER (6.5X22X2.5-MM THK)	

E-ORDER BY THE CENTIMETER
M-METRIC PART

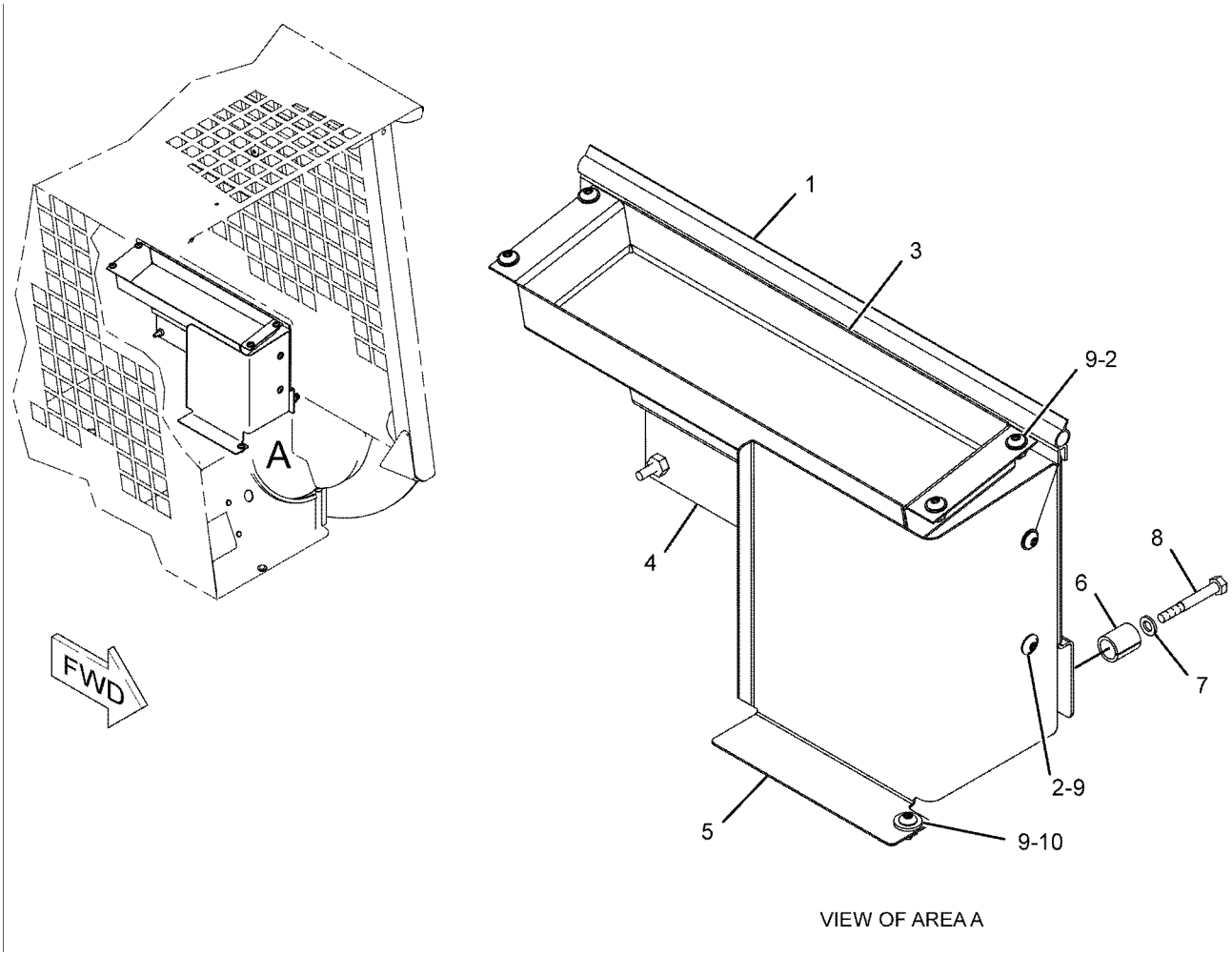

VIEW OF AREA A

GRAPHIC #1 **<END>** g01132491

218-6419 COVER GP-CONSOLE–
WITHOUT AIR CONDITIONER, HEATER
S/N: A9H1-UP
PART OF 326-5514 INSTALLATION GP-COVER & LINES
AN ATTACHMENT

SMCS-5258 **i02392269**

NOTE	REF NO	GRAPHIC REF	PART NUMBER	QTY	PART NAME 1 2 3 4 5 6 (PRODUCT LEVEL)	SEE PAGE
	1	1	**218-6389**	1	CONSOLE (RH)	
	2	1	**218-6391**	1	CONSOLE (LH)	
M	3	1	**175-0005**	8	SCREW-BUTTON HEAD (M6X1X25-MM)	

M-METRIC PART

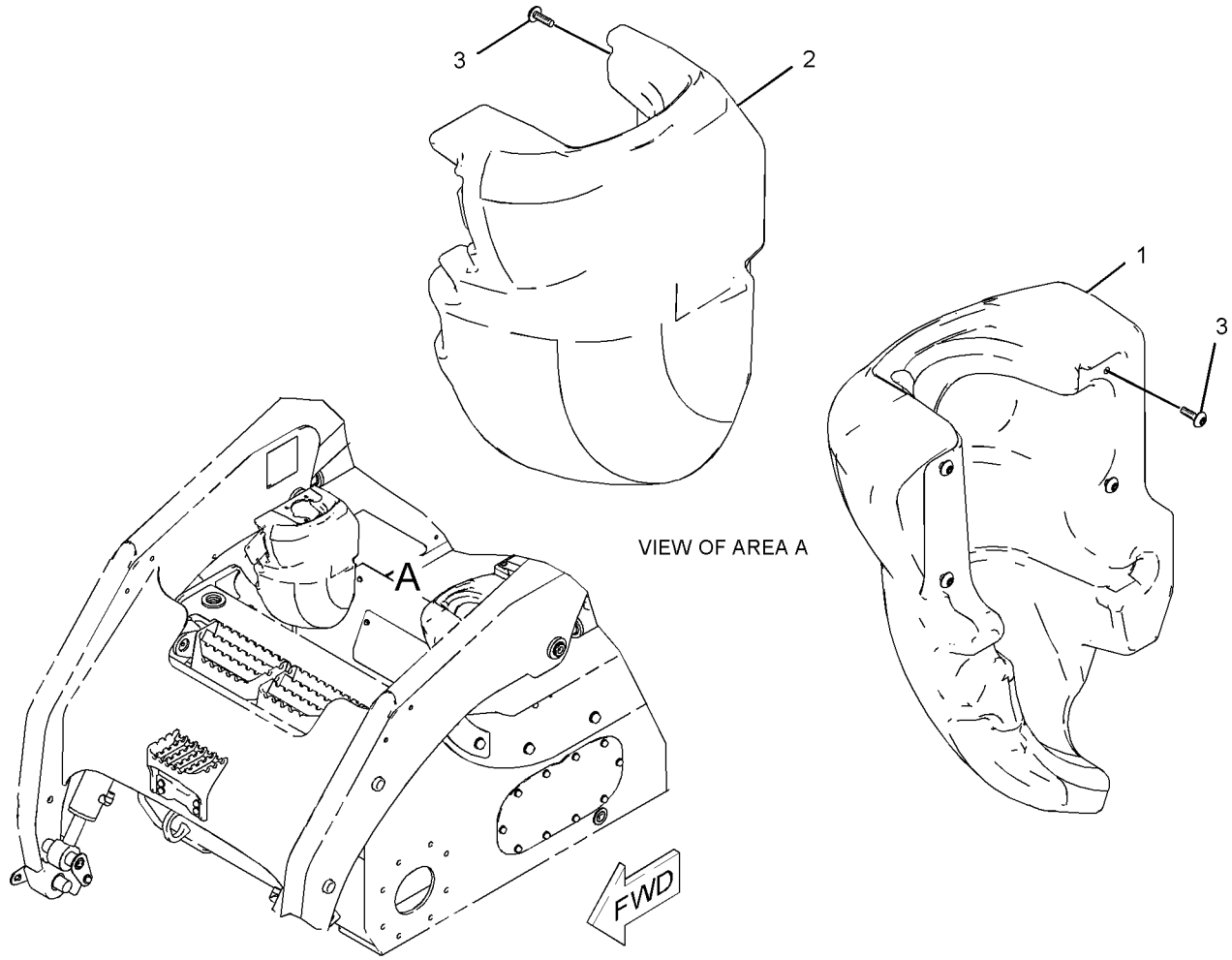

GRAPHIC #1 **<END>** g01019449

OPERATOR STATION

218-6440 DOOR & MTG GP-CAB—POLYCARBONATE

S/N: A9H1-UP

CANNOT BE USED WITH 218-6400—PAGE 532, 223-0600—PAGE 519

AN ATTACHMENT

SMCS-7308 **i03973430**

NOTE	REF NO	GRAPHIC REF	PART NUMBER	QTY	PART NAME 1 2 3 4 5 6 (PRODUCT LEVEL)	SEE PAGE
E	1	2	**125-3518**		SEAL (6-CM EACH)	
E	1A	2	**125-3518**		SEAL (65-CM)	
E	3	2	**144-0195**		HOSE (40-CM)	
D	4	2	**5P-9909**		SEAL (0.05-M EACH)	
	5	1	**5P-0372**	2	LOCK PIN	
	6	2	**8T-2444**	2	STUD-BALL	
	7	2	**8T-3848**	1	STRIKER AS-LATCH	
		2	**6V-4270**	1	LOCKWASHER	
	8	1	**9C-5344**	1	SPACER (10.5X20X18-MM THK)	
	9	1	**095-1325**	1	PIN-CLEVIS	
	10	1	**153-2683**	1	SPRING AS-GAS (LOCKING)	
	11	1	**177-3405**	1	PIN	
	12	2	**218-0728**	2	SPRING	
CY	13	2	*276-3440*	1	DOOR GP-CAB (POLYCARBONATE)	524
	14	2	**219-9739**	1	TANK AS-WINDOW WASHER	
	15	2	**221-3877**	1	HARNESS AS-WINDOW WIPER	
		2	**102-8805**	1	KIT-RECEPTACLE (6-PIN)	
					(INCLUDES RECEPTACLE AS & WEDGE)	
		2	**123-7615**	1	CONNECTOR	
		2	**8T-8737**	1	PLUG-SEAL	
		2	**5W-1987**	2	TERMINAL-BLADE (12-GA TO 16-GA)	
E		2	**125-7875**		TUBE-HEAT SHRINK (7.44-MM DIA) (5-CM)	
		2	**9X-3401**	5	PIN-CONNECTOR (16-GA TO 18-GA)	
					—OR—	
		2	**126-1767**	5	PIN-CONNECTOR (14-GA TO 16-GA)	
		2	**180-9340**	6	SOCKET-CONNECTOR (14-GA TO 18-GA)	
		2	**155-2274**	1	KIT-CONNECTING PLUG (6-PIN)	
					(INCLUDES PLUG AS, WEDGE & INTERFACE SEAL)	
	16	2	**280-1575**	1	PLATE AS	
	17	2	**223-0591**	1	PLATE AS	
	18	2	**223-0601**	2	PLATE AS	
	19	2	**223-0608**	1	HINGE AS	
	20	2	**223-0617**	1	MOUNT	
	21	2	**230-3214**	1	SPRING AS-GAS (CAB DOOR)	
M	22	2	**127-2170**	8	SCREW-TRUSS HEAD (M8X1.25X20-MM)	
	23	2	**142-9356**	1	BLOCK	
M	24	2	**195-0937**	8	INSERT-THREADED (M8X1.25-THD)	
	25	2	**3S-2093**	3	STRAP-CABLE	
M	26	2	**5C-2890**	13	NUT (M6X1-THD)	
D	27	2	**5P-5969**		SEAL (1.1-M EACH)	
	28	2	**8T-4121**	4	WASHER-HARD (11X21X2.5-MM THK)	
M	29	2	**8T-4133**	4	NUT (M10X1.5-THD)	
	30	2	**8T-4205**	13	WASHER-HARD (7.2X14.5X2-MM THK)	
	31	2	**8T-4222**	1	WASHER-PLATED (11X32X2.5-MM THK)	
	32	2	**8T-4224**	2	WASHER-HARD (8.8X16X2-MM THK)	
M	33	2	**9X-2041**	4	SCREW-TRUSS HEAD (M10X1.5X20-MM)	
M	34	2	**9X-2044**	3	SCREW-TRUSS HEAD (M6X1X16-MM)	
M	35	2	**9X-2045**	4	SCREW-TRUSS HEAD (M6X1X20-MM)	
D	36	2	**5P-8309**		SEAL (0.8-M)	

C-CHANGE FROM PREVIOUS TYPE
D-ORDER BY THE METER
E-ORDER BY THE CENTIMETER
M-METRIC PART
Y-SEPARATE ILLUSTRATION

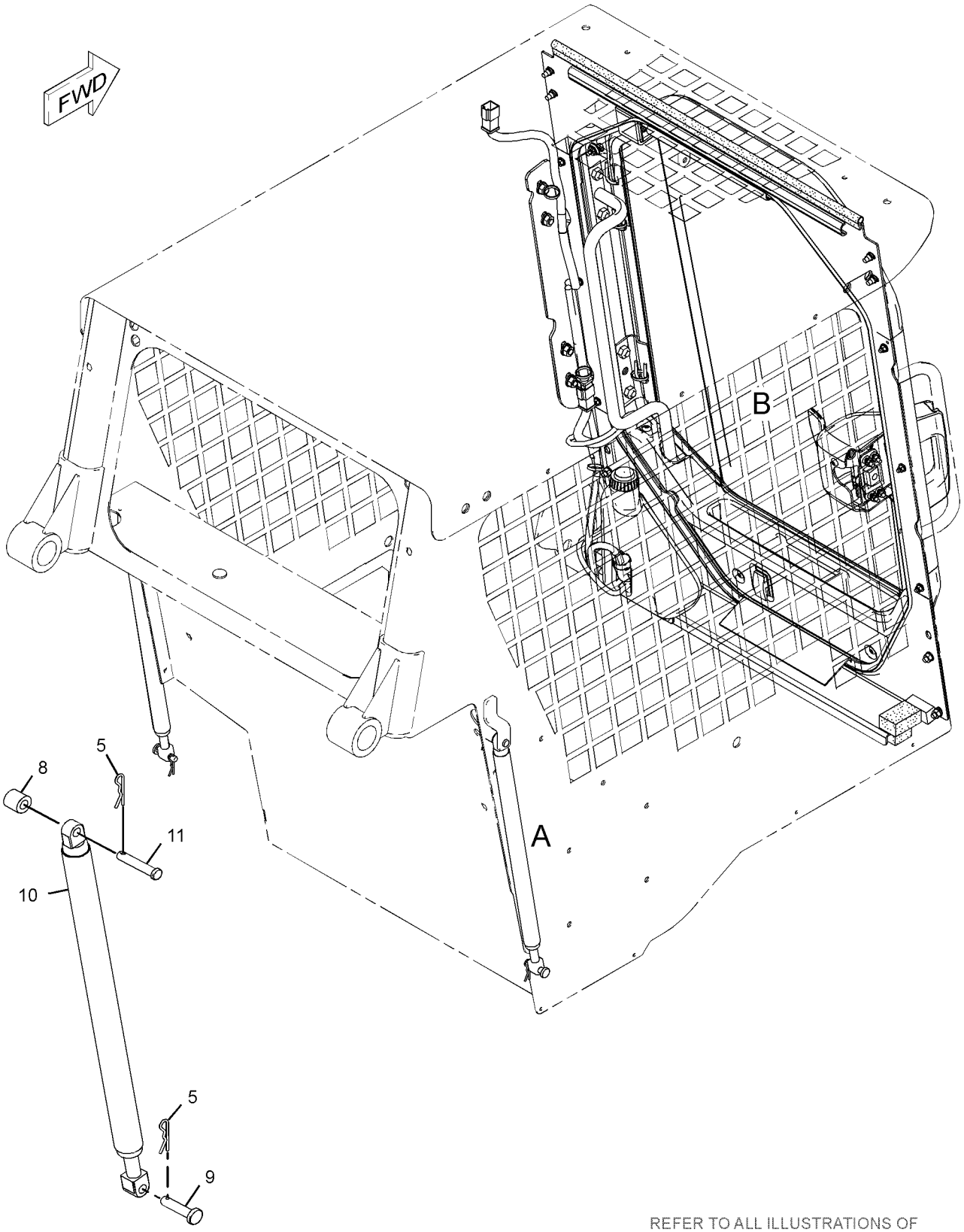

VIEW OF AREA A

REFER TO ALL ILLUSTRATIONS OF THIS GROUP FOR AUXILIARY VIEWS

GRAPHIC #1

g01249527

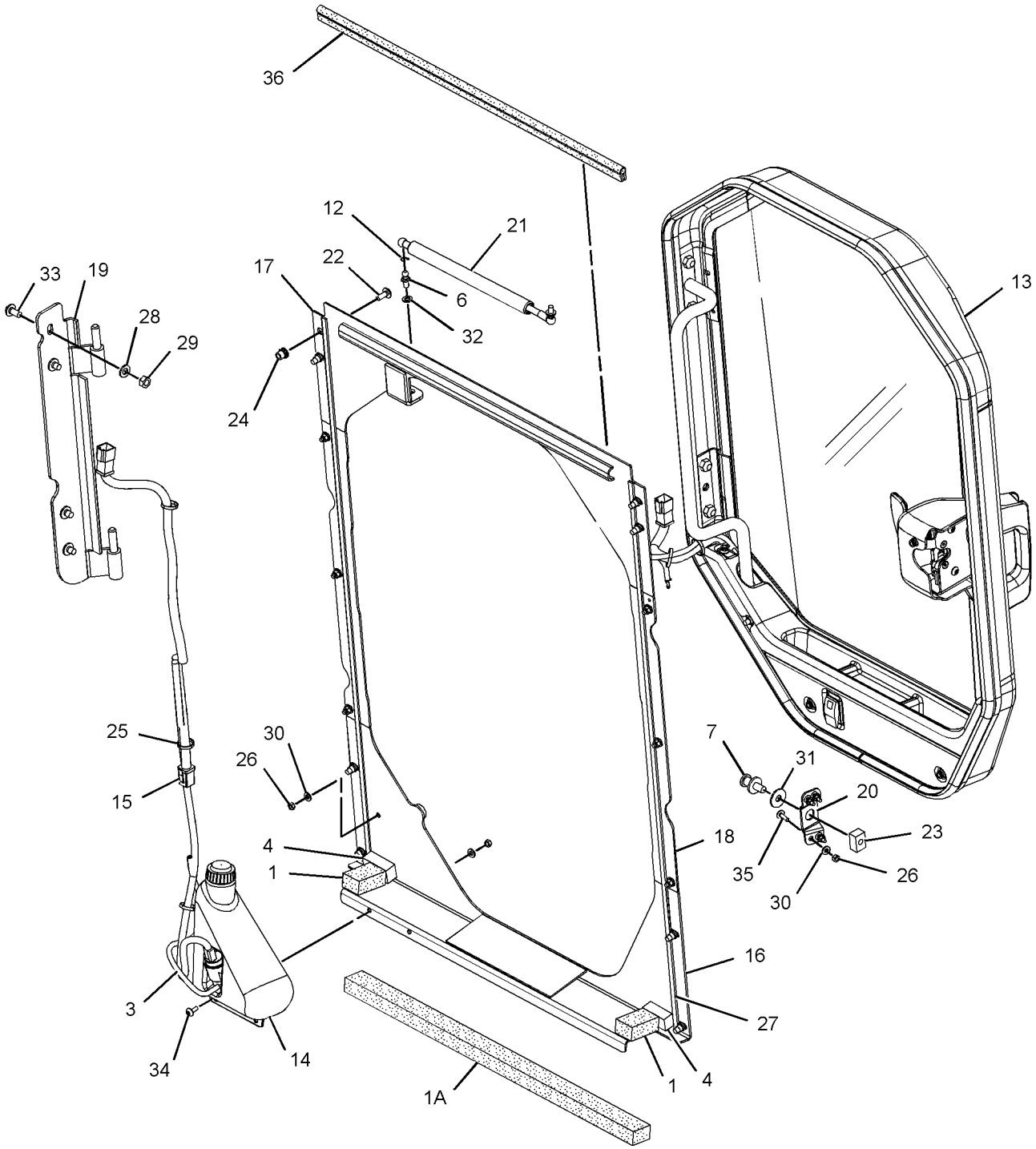

VIEW OF AREA B
(EXPLODED)

GRAPHIC #2 **<END>** g01944445

OPERATOR STATION

223-0600 DOOR & MTG GP-CAB—GLASS

S/N: A9H1-UP

CANNOT BE USED WITH 218-6400—PAGE 532, 218-6440—PAGE 516

AN ATTACHMENT

SMCS-7308 **i03973431**

NOTE	REF NO	GRAPHIC REF	PART NUMBER	QTY	PART NAME 1 2 3 4 5 6 (PRODUCT LEVEL)	SEE PAGE
D	1	1	**5P-8309**		SEAL (0.72-M)	
E	2	1	**125-3518**		SEAL (65-CM)	
E	3	1	**144-0195**		HOSE (40-CM)	
D	4	1	**5P-9909**		SEAL (0.05-M EACH)	
	5	1	**5P-0372**	2	LOCK PIN	
	6	1	**8T-2444**	2	STUD-BALL	
	7	1	**8T-3848**	1	STRIKER AS-LATCH	
		1	**6V-4270**	1	LOCKWASHER	
	8	1	**9C-5344**	1	SPACER (10.5X20X18-MM THK)	
	9	1	**095-1325**	1	PIN-CLEVIS	
	10	1	**153-2683**	1	SPRING AS-GAS (LOCKING)	
	11	1	**177-3405**	1	PIN	
	12	1	**218-0728**	2	SPRING	
	13	1	**219-9739**	1	TANK AS-WINDOW WASHER	
	14	1	**221-3877**	1	HARNESS AS-WINDOW WIPER	
		1	**9X-3401**	5	PIN-CONNECTOR (16-GA TO 18-GA)	
					—OR—	
		1	**126-1767**	5	PIN-CONNECTOR (14-GA TO 16-GA)	
		1	**123-7615**	1	CONNECTOR	
		1	**155-2274**	1	KIT-CONNECTING PLUG (6-PIN)	
					(INCLUDES PLUG AS, WEDGE & INTERFACE SEAL)	
		1	**8T-8737**	1	PLUG-SEAL	
		1	**102-8805**	1	KIT-RECEPTACLE (6-PIN)	
					(INCLUDES RECEPTACLE AS & WEDGE)	
		1	**180-9340**	6	SOCKET-CONNECTOR (14-GA TO 18-GA)	
E		1	**125-7875**		TUBE-HEAT SHRINK (7.44-MM DIA) (5-CM)	
		1	**5W-1987**	2	TERMINAL-BLADE (12-GA TO 16-GA)	
C	15	1	**280-1575**	1	PLATE AS	
	16	1	**223-0591**	1	PLATE AS	
	17	1	**223-0601**	2	PLATE AS	
	18	1	**223-0608**	1	HINGE AS	
Y	19	1	*223-0616*	1	DOOR GP-CAB (GLASS)	522
	20	1	**223-0617**	1	MOUNT	
	21	1	**230-3214**	1	SPRING AS-GAS (CAB DOOR)	
M	22	1	**127-2170**	8	SCREW-TRUSS HEAD (M8X1.25X20-MM)	
	23	1	**142-9356**	1	BLOCK	
CM	24	1	**195-0937**	8	INSERT-THREADED (M8X1.25-THD)	
	25	1	**3S-2093**	3	STRAP-CABLE	
M	26	1	**5C-2890**	13	NUT (M6X1-THD)	
	28	1	**8T-4121**	4	WASHER-HARD (11X21X2.5-MM THK)	
M	29	1	**8T-4133**	4	NUT (M10X1.5-THD)	
	30	1	**8T-4205**	13	WASHER-HARD (7.2X14.5X2-MM THK)	
B	31	1	**8T-4222**	1	WASHER-PLATED (11X32X2.5-MM THK)	
C	32	1	**8T-4224**	2	WASHER-HARD (8.8X16X2-MM THK)	
M	33	1	**9X-2041**	4	SCREW-TRUSS HEAD (M10X1.5X20-MM)	
M	34	1	**9X-2044**	3	SCREW-TRUSS HEAD (M6X1X16-MM)	
M	35	1	**9X-2045**	4	SCREW-TRUSS HEAD (M6X1X20-MM)	
E	36	1	**125-3518**		SEAL (6-CM EACH)	
CD	37	1	**5P-5969**		SEAL (1.1-M EACH)	

B-USE AS REQUIRED
C-CHANGE FROM PREVIOUS TYPE
D-ORDER BY THE METER
E-ORDER BY THE CENTIMETER
M-METRIC PART
Y-SEPARATE ILLUSTRATION

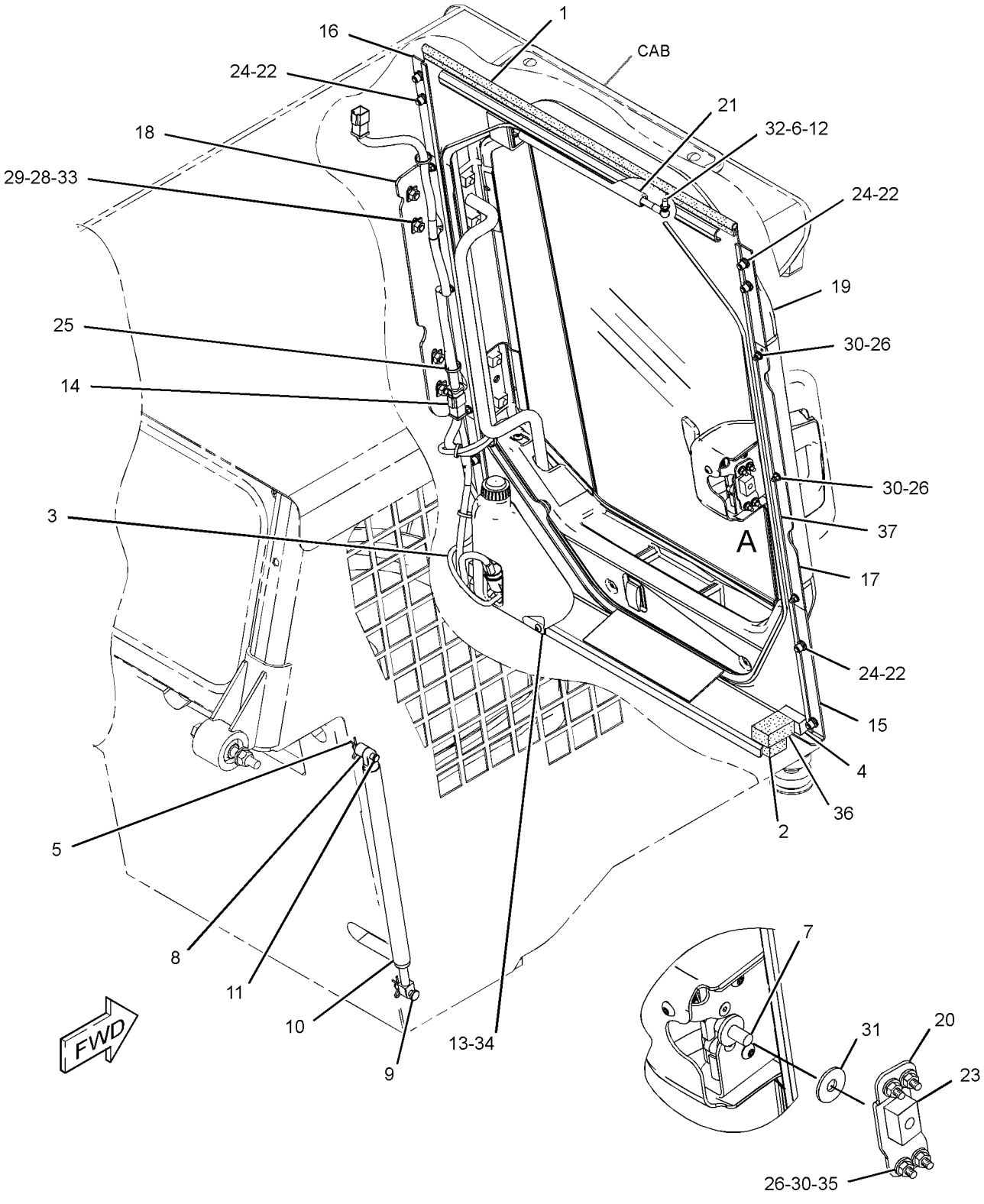

GRAPHIC #1 **<END>** g01258688

218-6431 DOOR GP-CAB–GLASS

S/N: A9H1-UP
PART OF 223-0616 DOOR GP-CAB
AN ATTACHMENT

SMCS-7308 **i02619575**

NOTE	REF NO	GRAPHIC REF	PART NUMBER	QTY	PART NAME 1 2 3 4 5 6 (PRODUCT LEVEL)	SEE PAGE
	1	1	**223-0609**	1	GLASS-CAB (DOOR)	
	2	1	**223-0610**	1	GLASS-CAB (DOOR)	
	3	1	**223-0612**	1	GLASS-CAB (DOOR)	
	4	1	**282-9059**	1	FRAME AS	

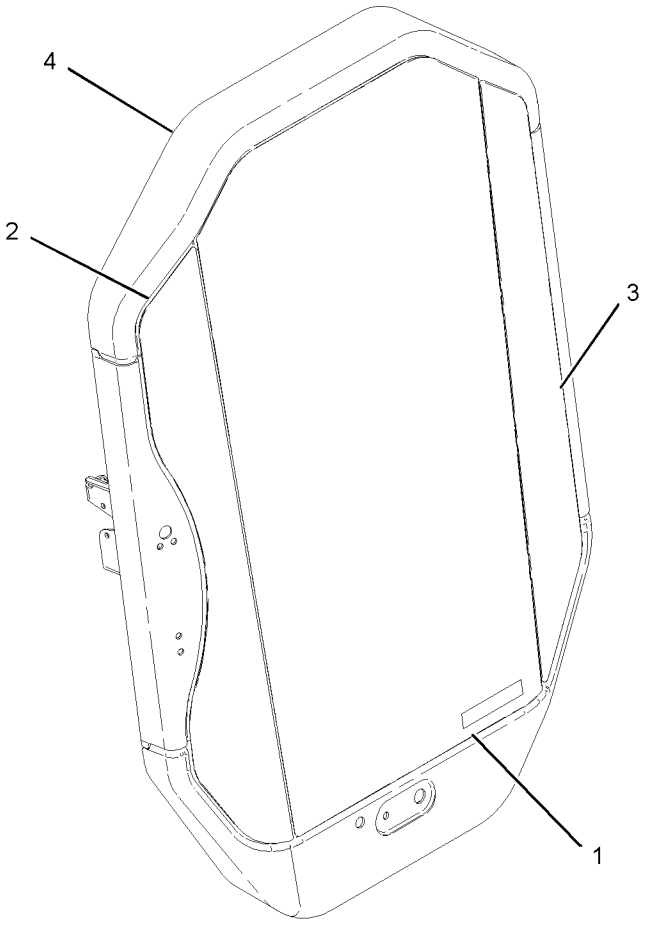

GRAPHIC #1 **<END>** g01010846

OPERATOR STATION

223-0616 DOOR GP-CAB—GLASS

S/N: A9H1-UP
PART OF 223-0600 DOOR & MTG GP-CAB
AN ATTACHMENT

SMCS-7308 **i04557217**

NOTE	REF NO	GRAPHIC REF	PART NUMBER	QTY	PART NAME 1 2 3 4 5 6 (PRODUCT LEVEL)	SEE PAGE
E	1	1	**124-3243**		SEAL (306-CM)	
E	2	1	**144-0195**		HOSE (73-CM)	
	3	1	**8G-1151**	2	CONNECTOR	
C	4	1	**320-1390**	1	BLADE-WIPER (558-MM) (FRONT, REAR)	
	6	1	**138-4883**	1	SWITCH AS-ROCKER (REAR WINDOW WASHER, WIPER)	
		1	**111-7899**	1	GASKET	
M	7	1	**260-6695**	2	SCREW-FLAT HEAD (M6X1X25-MM)	
Y	8	1	*218-6431*	1	DOOR GP-CAB (GLASS)	521
	9	1	**221-3876**	1	HARNESS AS-WINDOW WIPER	
		1	**111-7898**	1	CONNECTOR	
		1	**9X-3401**	6	PIN-CONNECTOR (16-GA TO 18-GA)	
		1	**155-2260**	1	KIT-CONNECTING PLUG (3-PIN)	
		1	**155-2271**	1	KIT-CONNECTING PLUG (4-PIN)	
					(EACH PLUG KIT INCLUDES PLUG AS, WEDGE & INTERFACE SEAL)	
		1	**102-8805**	1	KIT-RECEPTACLE (6-PIN)	
					(INCLUDES RECEPTACLE AS & WEDGE)	
		1	**9X-3402**	7	SOCKET-CONNECTOR (16-GA TO 18-GA)	
		1	**8L-8413**	8	STRAP-CABLE	
		1	**122-4406**	3	TERMINAL	
		1	**112-9611**	1	TERMINAL-BLADE	
		1	**3E-9179**	3	TERMINAL-RECEPTACLE (14-GA TO 18-GA)	
E		1	**119-3662**		TUBE-HEAT SHRINK (10.85-MM DIA) (7-CM)	
CY	10	1	**320-1389**	1	ARM GP-WINDOW WIPER (FRONT)	488
C	11	1	**313-9185**	1	COVER AS	
	12	1	**223-8488**	1	COVER-LATCH	
	13	1	**223-8495**	1	HANDLE AS (LH)	
M		1	**6V-9632**	1	NUT-WELD (M6X1-THD)	
	14	1	**225-3187**	1	LATCH AS	
	15	1	**229-8757**	1	SWITCH AS-LIMIT (ENGINE START, HYD LOCKOUT)	
		1	**102-8803**	1	KIT-RECEPTACLE (3-PIN)	
					(INCLUDES RECEPTACLE AS & WEDGE)	
		1	**186-3735**	3	PIN-CONNECTOR (16-GA TO 18-GA)	
	17	1	**235-4768**	2	HINGE	
	18	1	**248-2171**	1	HANDLE AS (PUSH BUTTON)	
Y	19	1	**330-5012**	1	MOTOR GP-WINDOW WIPER	551
	20	1	**032-9828**	1	GROMMET	
M	21	1	**134-8273**	4	SCREW-FLAT HEAD (M10X1.5X25-MM)	
	22	1	**3S-2093**	3	STRAP-CABLE	
M	23	1	**9X-2044**	14	SCREW-TRUSS HEAD (M6X1X16-MM)	
M	24	1	**9X-2045**	2	SCREW-TRUSS HEAD (M6X1X20-MM)	

C-CHANGE FROM PREVIOUS TYPE
E-ORDER BY THE CENTIMETER
M-METRIC PART
Y-SEPARATE ILLUSTRATION

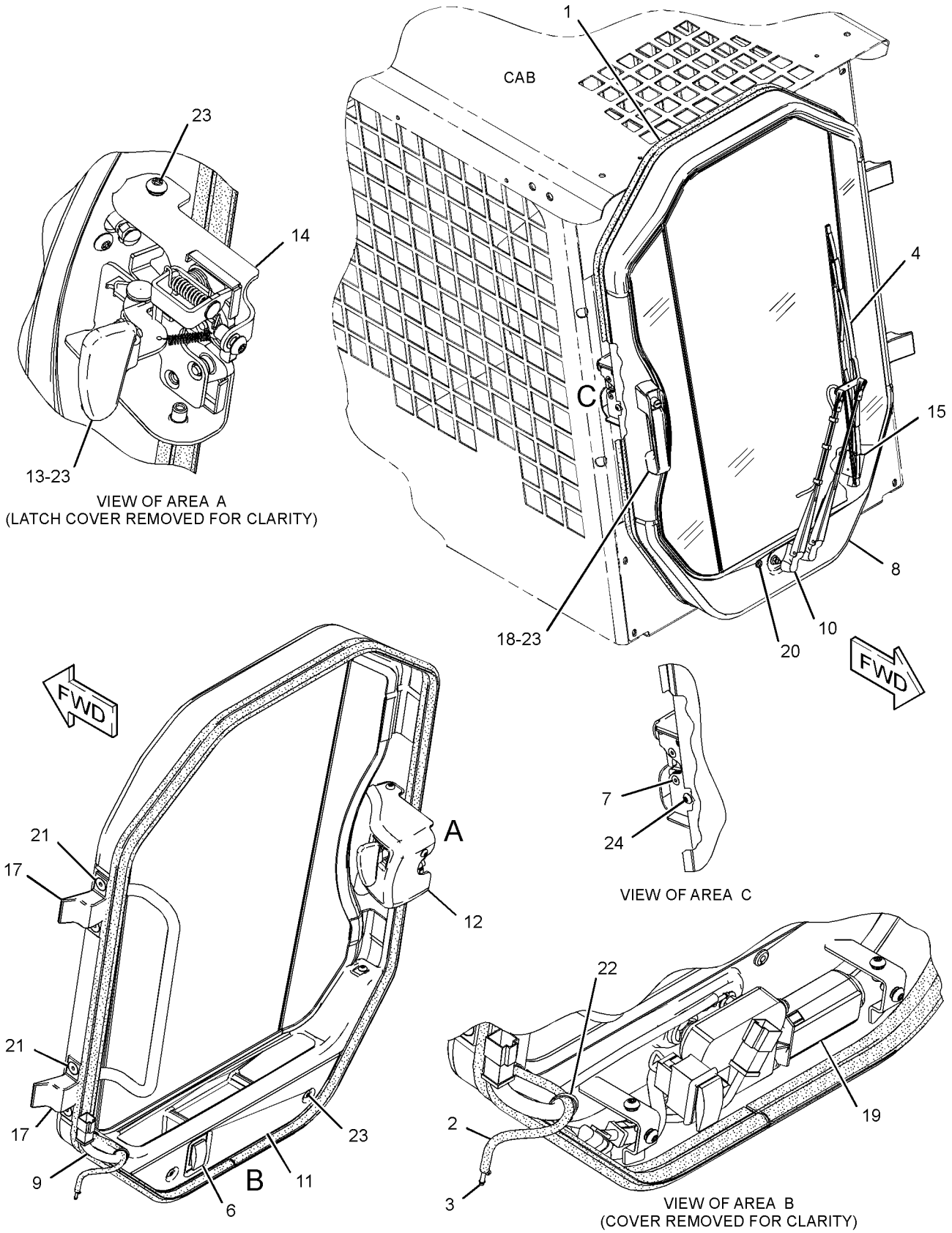

GRAPHIC #1 **<END>** g01431673

OPERATOR STATION

276-3440 DOOR GP-CAB—POLYCARBONATE

S/N: A9H1-UP

PART OF 218-6440 DOOR & MTG GP-CAB

AN ATTACHMENT

SMCS-7308 **i04557218**

NOTE	REF NO	GRAPHIC REF	PART NUMBER	QTY	PART NAME 1 2 3 4 5 6 (PRODUCT LEVEL)	SEE PAGE
	1	1	**8G-1151**	2	CONNECTOR	
C	2	1	**320-1390**	1	BLADE-WIPER (558-MM) (CAB DOOR)	
	4	1	**138-4883**	1	SWITCH AS-ROCKER (REAR WINDOW WASHER, WIPER)	
		1	**111-7899**	1	GASKET	
	5	1	**205-5148**	2	SCREW-FLAT HEAD (M6X1X25-MM)	
	6	1	**221-3876**	1	HARNESS AS-WINDOW WIPER	
		1	**111-7898**	1	CONNECTOR	
		1	**9X-3401**	6	PIN-CONNECTOR (16-GA TO 18-GA)	
		1	**155-2260**	1	KIT-CONNECTING PLUG (3-PIN)	
		1	**155-2271**	1	KIT-CONNECTING PLUG (4-PIN)	
					(EACH PLUG KIT INCLUDES PLUG AS, WEDGE & INTERFACE SEAL)	
		1	**102-8805**	1	KIT-RECEPTACLE (6-PIN)	
					(INCLUDES RECEPTACLE AS & WEDGE)	
		1	**9X-3402**	7	SOCKET-CONNECTOR (16-GA TO 18-GA)	
		1	**8L-8413**	8	STRAP-CABLE	
		1	**122-4406**	3	TERMINAL	
		1	**112-9611**	1	TERMINAL-BLADE	
		1	**3E-9179**	3	TERMINAL-RECEPTACLE (14-GA TO 18-GA)	
E		1	**119-3662**		TUBE-HEAT SHRINK (10.85-MM DIA) (7-CM)	
	7	1	**223-8488**	1	COVER-LATCH	
	8	1	**223-8495**	1	HANDLE AS (LH)	
M		1	**6V-9632**	1	NUT-WELD (M6X1-THD)	
	9	1	**225-3187**	1	LATCH AS	
	10	1	**229-8757**	1	SWITCH AS-LIMIT	
		1	**102-8803**	1	KIT-RECEPTACLE (3-PIN)	
					(INCLUDES RECEPTACLE AS & WEDGE)	
		1	**186-3735**	3	PIN-CONNECTOR (16-GA TO 18-GA)	
	11	1	**235-4768**	2	HINGE	
	12	1	**248-2171**	1	HANDLE AS (PUSH BUTTON)	
Y	13	1	**330-5012**	1	MOTOR GP-WINDOW WIPER	551
CY	14	1	**320-1389**	1	ARM GP-WINDOW WIPER (FRONT)	488
Y	15	1	*276-3615*	1	DOOR GP-CAB (POLYCARBONATE)	526
	16	1	**313-9185**	1	COVER AS	
	17	1	**032-9828**	1	GROMMET	
M	18	1	**134-8273**	4	SCREW-FLAT HEAD (M10X1.5X25-MM)	
	19	1	**3S-2093**	3	STRAP-CABLE	
M	20	1	**9X-2044**	14	SCREW-TRUSS HEAD (M6X1X16-MM)	
M	21	1	**9X-2045**	2	SCREW-TRUSS HEAD (M6X1X20-MM)	
E	22	1	**144-0195**		HOSE (73-CM)	
E	23	1	**124-3243**		SEAL (306-CM)	

C-CHANGE FROM PREVIOUS TYPE
E-ORDER BY THE CENTIMETER
M-METRIC PART
Y-SEPARATE ILLUSTRATION

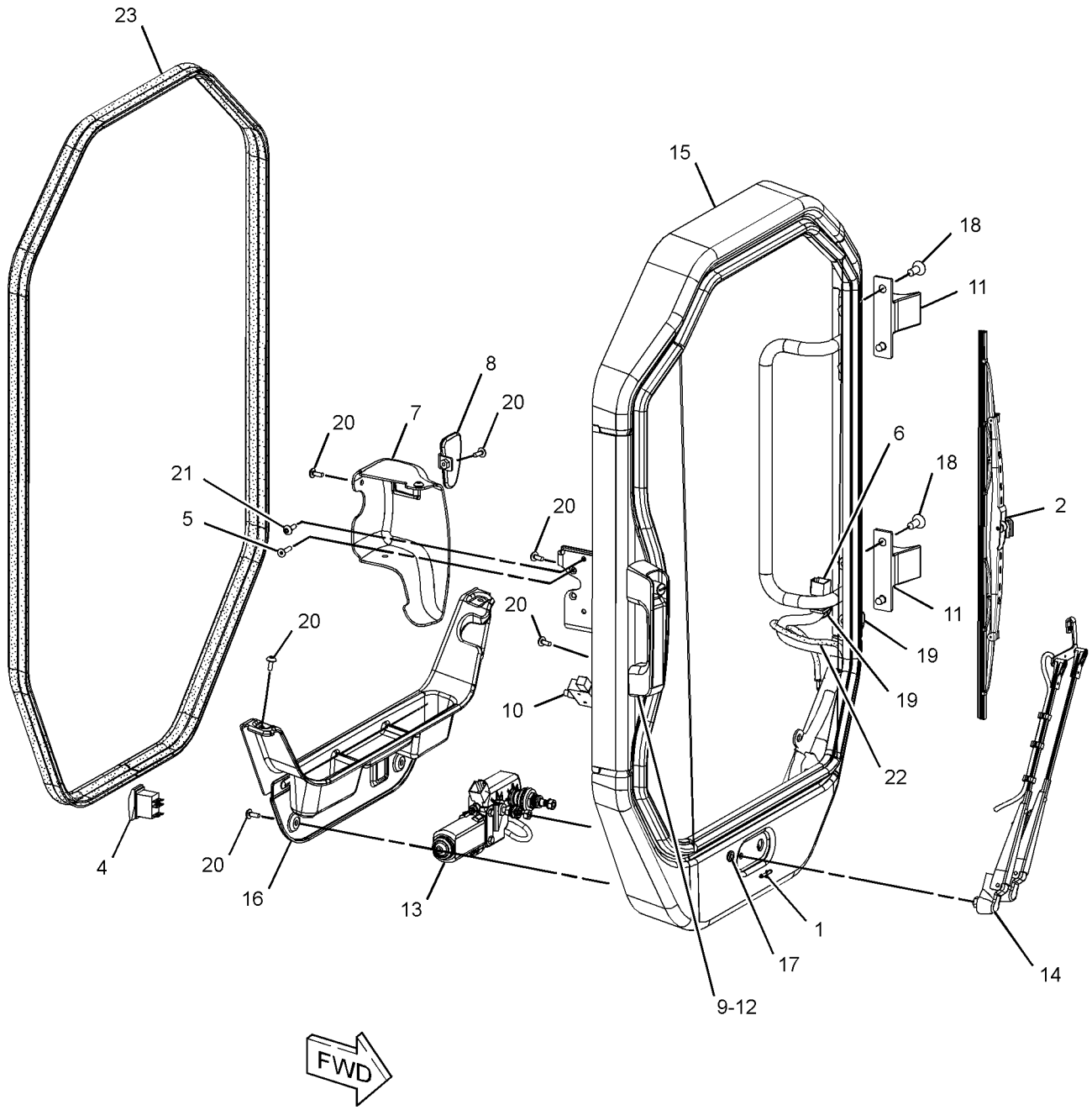

GRAPHIC #1 **<END>** g01792833

OPERATOR STATION

276-3615 DOOR GP-CAB—POLYCARBONATE

S/N: A9H1-UP
PART OF 276-3440 DOOR GP-CAB
AN ATTACHMENT

SMCS-7308 **i03076920**

NOTE	REF NO	GRAPHIC REF	PART NUMBER	QTY	PART NAME 1 2 3 4 5 6 (PRODUCT LEVEL)	SEE PAGE
	1	1	**5C-8310**	1	BRACKET-RING	
	2	1	**5C-8311**	1	RING	
	3	1	**8T-6842**	1	FILM-INSTRUCTION (PULL RING, ALTERNATE EXIT)	
	4	1	**316-1698**	1	WINDOW	
	5	1	**279-3232**	1	SEAL	
	6	1	**282-9059**	1	FRAME AS	
	7	1	**283-7554**	1	STRIP-LOCKING	

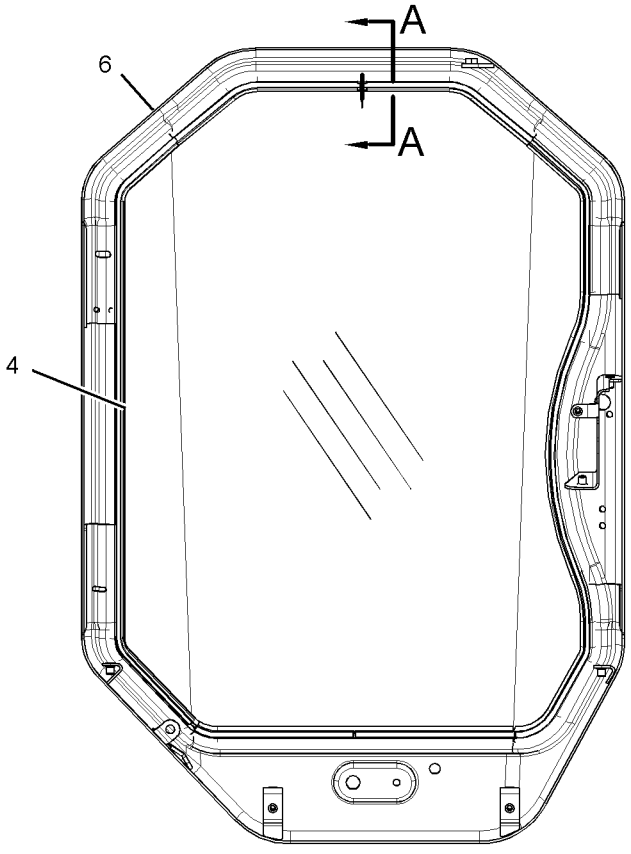

REAR VIEW

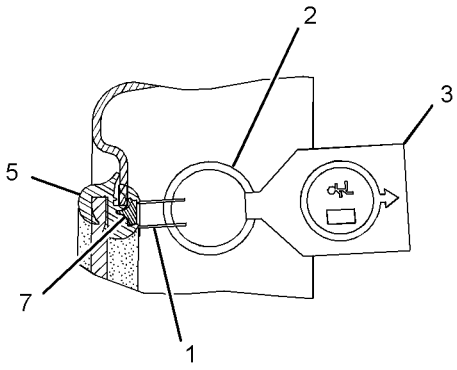

SECTION A-A

GRAPHIC #1 **<END>** g01327089

OPERATOR STATION

218-6394 DUCT GP-CAB AIR

S/N: A9H1-UP
PART OF 326-5516 AIR CONDITIONER AR, 326-5515 HEATER AR-CAB
AN ATTACHMENT

SMCS-734D **i02541254**

NOTE	REF NO	GRAPHIC REF	PART NUMBER	QTY	PART NAME 1 2 3 4 5 6 (PRODUCT LEVEL)	SEE PAGE
CD	1	1	**5P-5969**		SEAL (0.2-M EACH)	
	2	1	**146-6371**	6	LOUVER AS	
	3	1	**218-6396**	1	DUCT	
	4	1	**218-6397**	1	CONSOLE (RH)	
	5	1	**218-6398**	1	CONSOLE (LH)	
CD	6	1	**5P-7070**		INSULATION-STRIP (0.5-M)	
	7	1	**218-6414**	1	SEAL	
	8	1	**285-9133**	1	INSULATION	
M	9	1	**175-0005**	8	SCREW-BUTTON HEAD (M6X1X25-MM)	
	10	1	**285-8570**	1	INSULATION	
	11	1	**240-6877**	1	SEAL	
	12	1	**240-6878**	1	SEAL	
	13	1	**240-6879**	2	SEAL	
	14	1	**6V-6689**	2	SCREW-SELF-TAPPING (10-16X.625-IN)	
	15	1	**285-8565**	1	INSULATION	

C-CHANGE FROM PREVIOUS TYPE
D-ORDER BY THE METER
M-METRIC PART

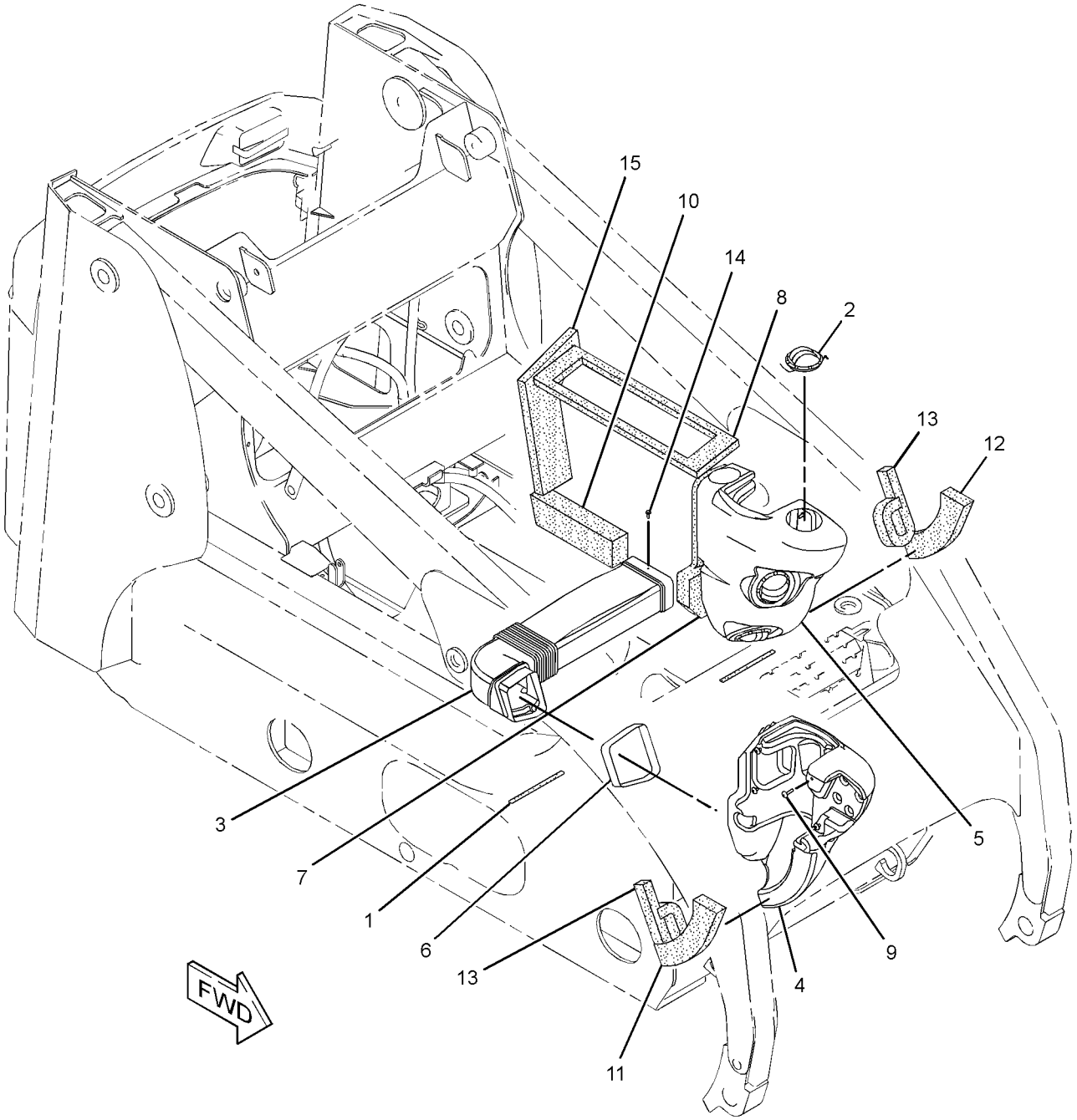

GRAPHIC #1 **<END>** g01293158

OPERATOR STATION

231-7325 FRAME GP-WINDOW—RH

S/N: A9H1-UP
PART OF 224-7058 WINDOW GP-CAB
AN ATTACHMENT

SMCS-7310 **i03971269**

NOTE	REF NO	GRAPHIC REF	PART NUMBER	QTY	PART NAME 1 2 3 4 5 6 (PRODUCT LEVEL)	SEE PAGE
	1	1	**231-7326**	1	FRAME AS-WINDOW (RH)	
	2	1	**231-7401**	1	HINGE	
	3	1	**239-6138**	1	BRACKET AS	
	4	1	**231-7329**	1	KIT-LATCH (RH)	
					(INCLUDES BOLT, LATCH, SCREW, SPRING, CLIPS & WASHERS)	
	5	1	**5C-7682**	3	SCREW (8-32X0.25-IN)	

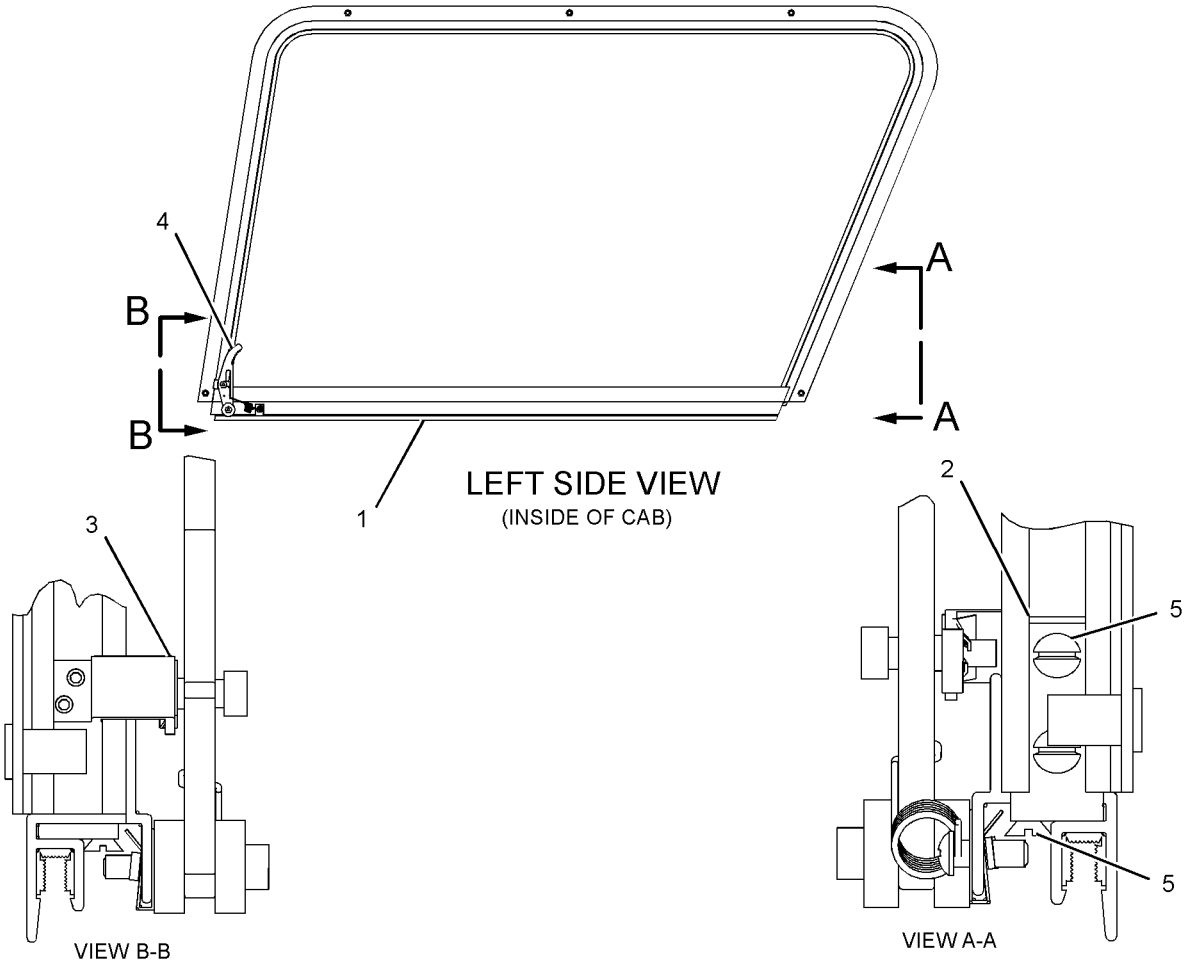

GRAPHIC #1 **<END>** g01487014

OPERATOR STATION

231-7327 FRAME GP-WINDOW–LH

S/N: A9H1-UP
PART OF 224-7057 WINDOW GP-CAB
AN ATTACHMENT

SMCS-7310 **i03971270**

NOTE	REF NO	GRAPHIC REF	PART NUMBER	QTY	PART NAME 1 2 3 4 5 6 (PRODUCT LEVEL)	SEE PAGE
	1	1	**231-7328**	1	FRAME AS-WINDOW (LH)	
	2	1	**231-7401**	1	HINGE	
	3	1	**239-6138**	1	BRACKET AS	
	4	1	**231-7329**	1	KIT-LATCH (LH)	
					(INCLUDES BOLT, LATCH, SCREW, SPRING, CLIPS & WASHERS)	
	5	1	**5C-7682**	3	SCREW (8-32X0.25-IN)	

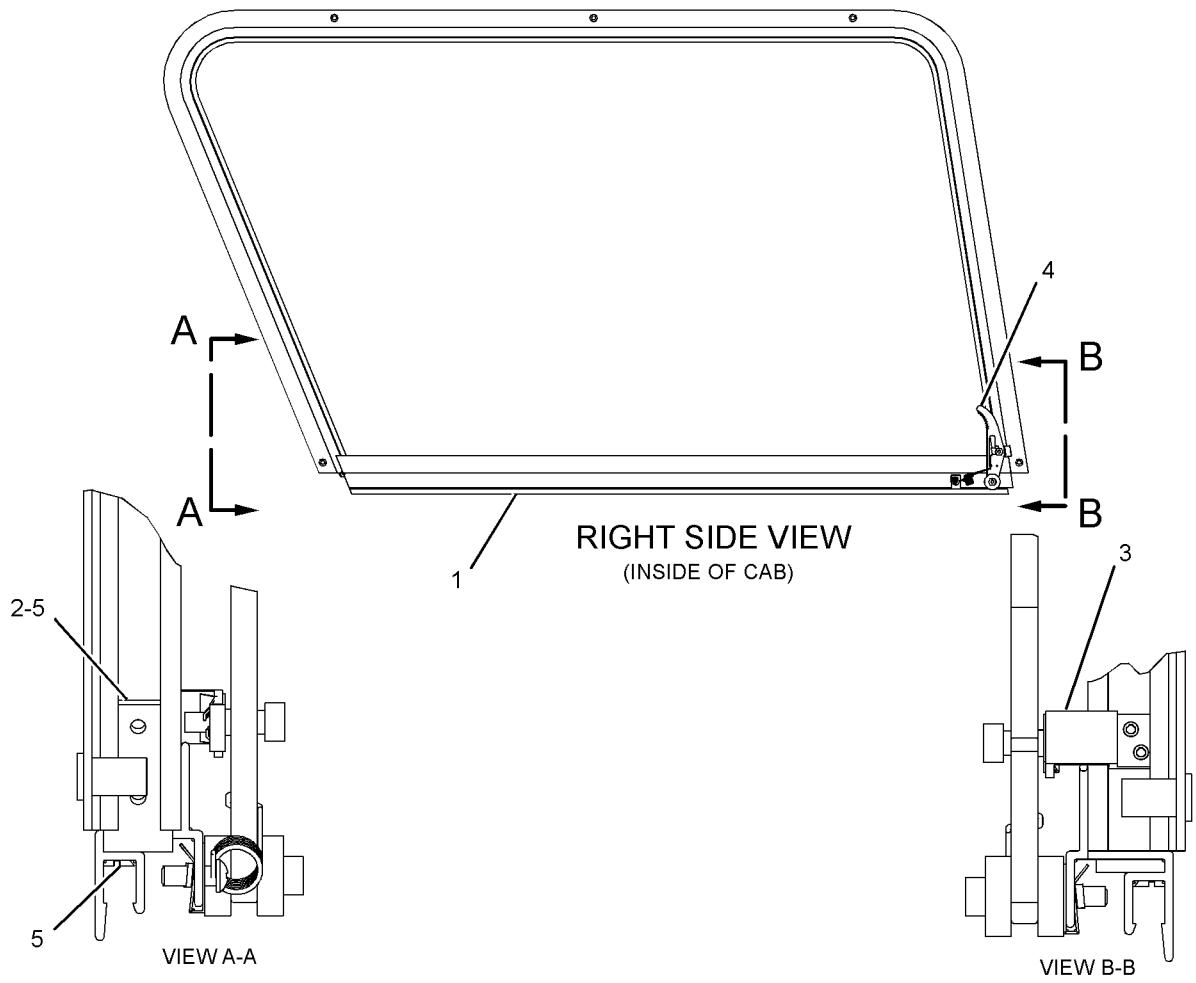

GRAPHIC #1 **<END>** g01487373

OPERATOR STATION

233-5632 GUARD GP-ROPS/FOPS

S/N: A9H1-UP

AN ATTACHMENT

SMCS-7323 **i03973432**

NOTE	REF NO	GRAPHIC REF	PART NUMBER	QTY	PART NAME 1 2 3 4 5 6 (PRODUCT LEVEL)	SEE PAGE
	1	1	**152-1161**	1	PLATE AS-FOPS	
	2	1	**153-2683**	1	SPRING AS-GAS	
	4	1	**247-7182**	1	FILM (FOPS)	
M	5	1	**7X-2553**	8	BOLT (M16X2X40-MM)	
	6	1	**8T-4122**	12	WASHER-HARD (17X32X3.5-MM THK)	
M	7	1	**8T-4132**	4	NUT (M16X2-THD)	
D	8	1	**8T-5372**		SEAL (1.4-M)	

D-ORDER BY THE METER
M-METRIC PART

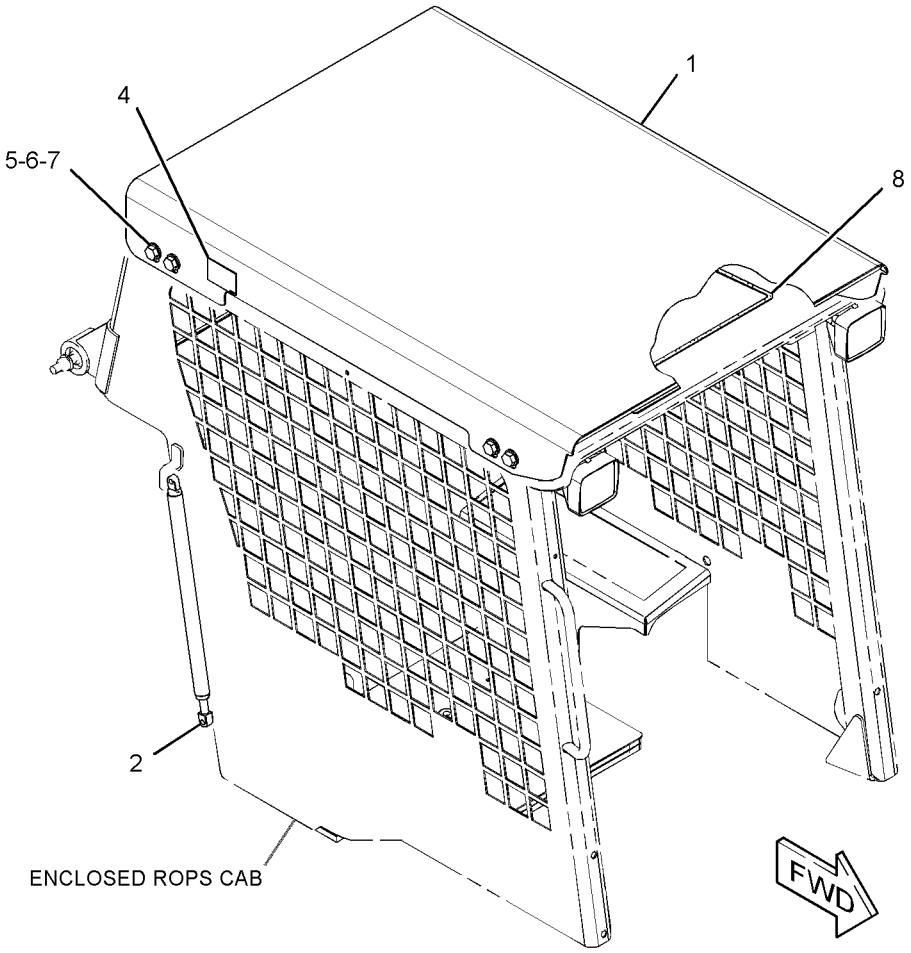

GRAPHIC #1 **<END>** g01437181

OPERATOR STATION

218-6400 HANDHOLD GP

S/N: A9H1-UP
PART OF 326-5510, 326-5511 CAB AR-OPEN ROPS
CANNOT BE USED WITH 218-6440—PAGE 516, 223-0600—PAGE 519
AN ATTACHMENT

SMCS-7256 **i01908092**

NOTE	REF NO	GRAPHIC REF	PART NUMBER	QTY	PART NAME 1 2 3 4 5 6 (PRODUCT LEVEL)	SEE PAGE
	1	1	**218-6377**	1	HANDLE	
	2	1	**8T-4121**	2	WASHER-HARD (11X21X2.5-MM THK)	
M	3	1	**8T-4133**	2	NUT (M10X1.5-THD)	
M	4	1	**9X-2041**	2	SCREW-TRUSS HEAD (M10X1.5X20-MM)	

M-METRIC PART

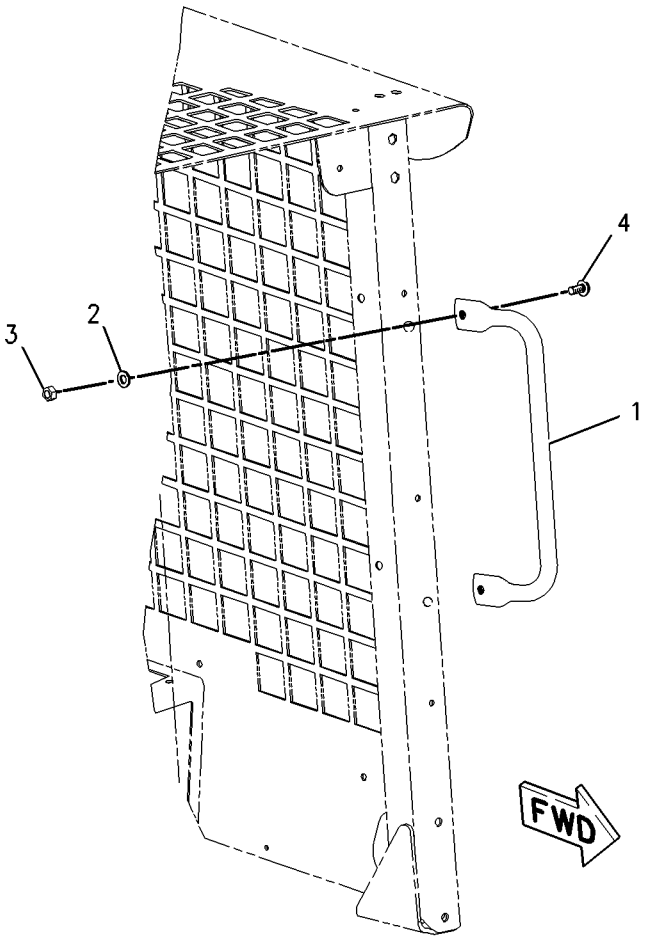

GRAPHIC #1 **<END>** g01002446

218-6118 HANDLE GP-MODULAR—WORK TOOL

S/N: A9H1-UP

PART OF 218-6485, 218-6490 CONTROL GP-HANDLE

AN ATTACHMENT

SMCS-5705 **i04045400**

NOTE	REF NO	GRAPHIC REF	PART NUMBER	QTY	PART NAME 1 2 3 4 5 6 (PRODUCT LEVEL)	SEE PAGE
	1	1	**8L-8413**	1	STRAP-CABLE	
	2	1	**159-9853**	1	GROMMET	
	3	1	**174-3091**	1	KIT-RECEPTACLE (12-PIN)	
					(INCLUDES RECEPTACLE AS & WEDGE)	
	4	1	**8T-8729**	4	PIN-CONNECTOR (16-GA TO 18-GA)	
	5	1	**8T-8737**	8	PLUG-SEAL	

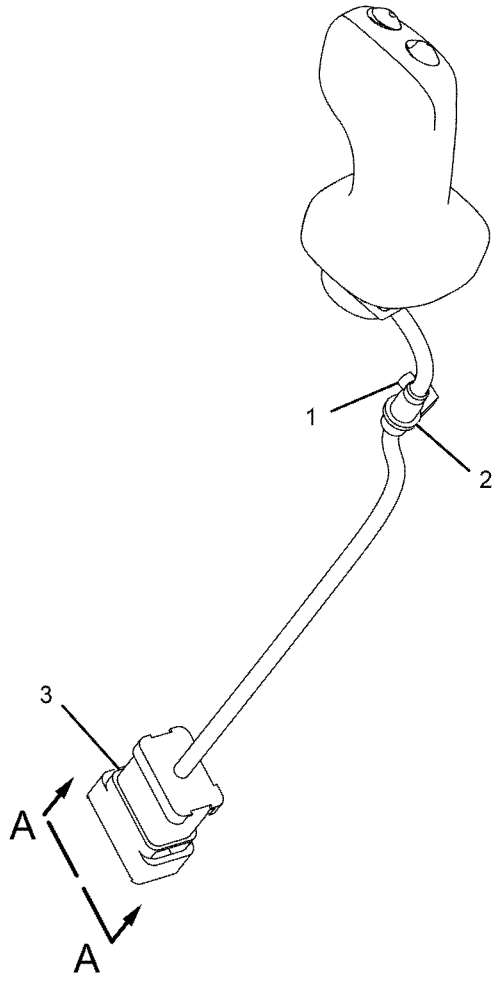

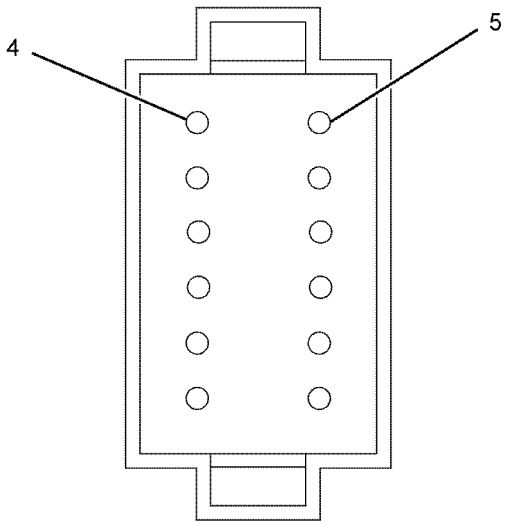

VIEW A-A

GRAPHIC #1 **<END>** g01113888

OPERATOR STATION

218-6392 HEATER & MTG GP-CAB

S/N: A9H1-UP
PART OF 326-5515 HEATER AR-CAB
AN ATTACHMENT

SMCS-7304 **i02014370**

NOTE	REF NO	GRAPHIC REF	PART NUMBER	QTY	PART NAME 1 2 3 4 5 6 (PRODUCT LEVEL)	SEE PAGE
Y	1	1	*218-6393*	1	HEATER GP-CAB	536
	2	1	**218-6402**	1	INSULATION AS	
	3	1	**8T-4224**	4	WASHER-HARD (8.8X16X2-MM THK)	
M	4	1	**8T-6869**	4	BOLT (M8X1.25X60-MM)	

M-METRIC PART
Y-SEPARATE ILLUSTRATION

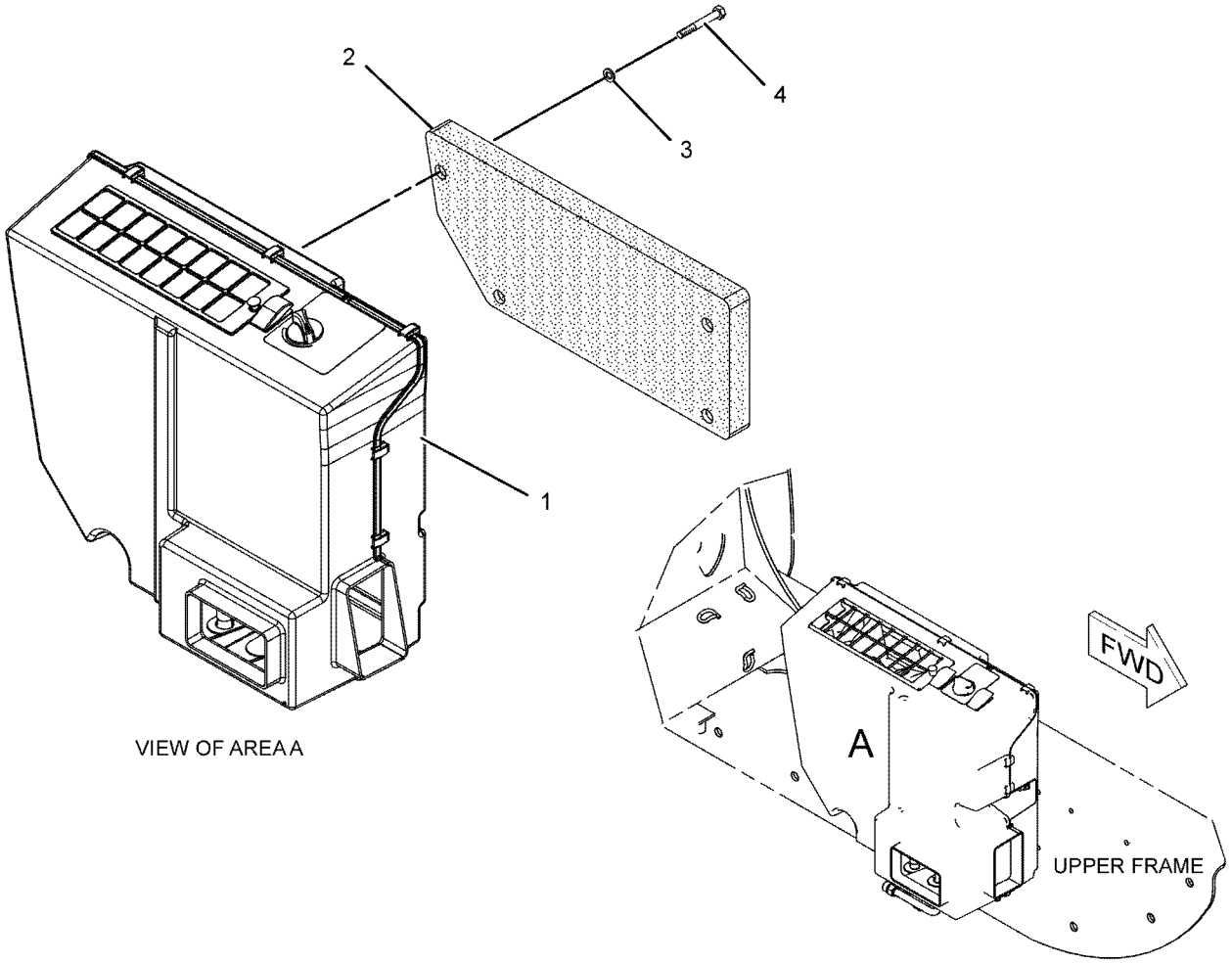

GRAPHIC #1 **<END>** g01036187

OPERATOR STATION

326-5515 HEATER AR-CAB

S/N: A9H1-UP
PART OF 326-5512 CAB AR-ENCLOSED ROPS
CANNOT BE USED WITH 326-5514—PAGE 540, 326-5516—PAGE 484
AN ATTACHMENT

SMCS-7304 **i04302731**

NOTE	PART NUMBER	QTY	PART NAME 1 2 3 4 5 6 (PRODUCT LEVEL)	SEE PAGE
Y	*218-6394*	1	DUCT GP-CAB AIR	527
Y	*218-6392*	1	HEATER & MTG GP-CAB	534
Y	*218-5619*	1	LINES GP-HEATER	546
Y	*374-3441*	1	LINES GP-HYDRAULIC OIL COOLER	274
M	**8T-4191**	1	BOLT (M10X1.5X16-MM)	
	8T-4121	1	WASHER-HARD (11X21X2.5-MM THK)	

M-METRIC PART
Y-SEPARATE ILLUSTRATION

<END>

OPERATOR STATION

218-6393 HEATER GP-CAB

S/N: A9H1-UP

PART OF 218-6392 HEATER & MTG GP-CAB, 218-6746 HEATER GP-CAB

AN ATTACHMENT

SMCS-7304, 7342 **i04362801**

NOTE	REF NO	GRAPHIC REF	PART NUMBER	QTY	PART NAME 1 2 3 4 5 6 (PRODUCT LEVEL)	SEE PAGE
	1	1	**185-4015**	10	CLIP	
	2	1	**218-6399**	1	SEAL	
C	3	1	**312-1683**	1	HOUSING-COVER	
Y	4	1	**231-8122**	1	HOUSING AS-SIDE (AIR CONDITIONER, HEATER)	539
	5	1	**231-8124**	1	COIL AS-HEATER	
	6	1	**295-5440**	1	MOTOR	
	7	1	**231-8126**	1	VALVE AS-WATER (HEATER)	
	8	1	**231-8127**	1	GROMMET	
C	9	1	**312-2635**	1	COVER GP-ACCESS	
		1	**231-8129**	2	PIN	
		1	**231-8142**	2	RETAINER	
C	11	1	**303-6658**	1	FILTER ELEMENT-CAB AIR	
	13	1	**231-8132**	1	FILTER ELEMENT-CAB AIR	
	14	1	**231-8133**	1	PANEL	
	15	1	**231-8141**	1	GROMMET	
	17	1	**231-8143**	1	FILM (TEMPERATURE CONTROL)	
	18	1	**231-8144**	1	BAFFLE	
	19	1	**231-8145**	1	GROMMET	
	20	1	**206-7398**	1	KNOB-CONTROL (TEMPERATURE SELECT)	
	21	1	**305-2969**	2	SCREW-THUMB	
	22	1	**218-6947**	1	HARNESS AS-HEATER & AIR COND	
	23	1	**236-5067**	1	SWITCH-ROCKER (HEATER)	
	24	1	**236-5069**	1	RELAY AS (12-VOLT) (HEATER)	

C-CHANGE FROM PREVIOUS TYPE
Y-SEPARATE ILLUSTRATION

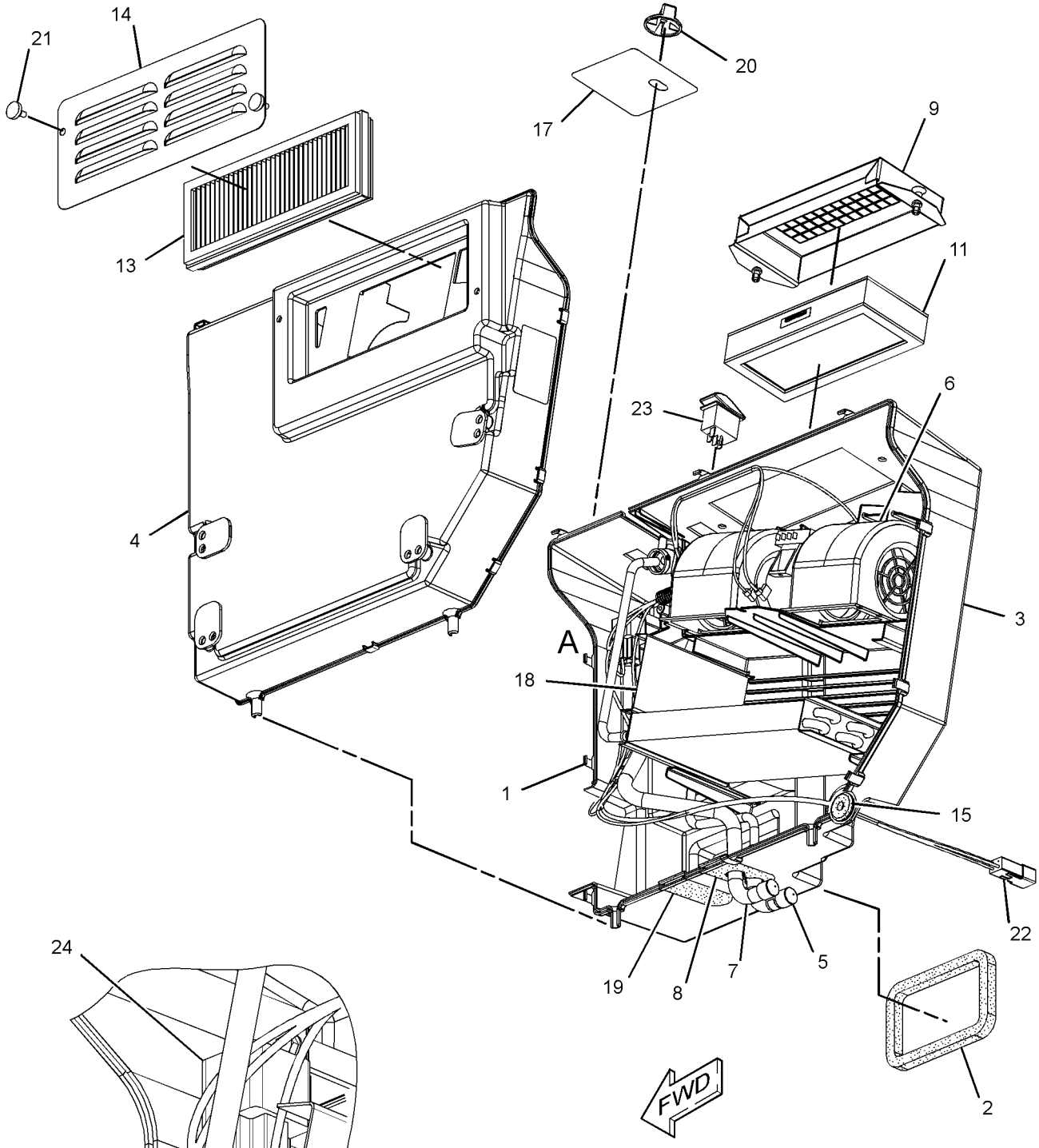

VIEW OF AREA A

GRAPHIC #1 **<END>** g01416774

OPERATOR STATION

218-6746 HEATER GP-CAB–KIT

S/N: A9H1-UP

AN ATTACHMENT

SMCS-7304, 7342 **i04156757**

NOTE	PART NUMBER	QTY	PART NAME 1 2 3 4 5 6 (PRODUCT LEVEL)	SEE PAGE
Y	*218-6393*	1	HEATER GP-CAB	536
	218-6402	1	INSULATION AS	
	146-6371	6	LOUVER AS	
	150-7568	1	ADAPTER	
M	**7X-2537**	4	BOLT (M8X1.25X35-MM)	
M	**8T-4136**	2	BOLT (M10X1.5X25-MM)	
M	**8T-4137**	1	BOLT (M10X1.5X20-MM)	
M	**8T-4189**	1	BOLT (M8X1.25X20-MM)	
M	**8T-4191**	1	BOLT (M10X1.5X16-MM)	
M	**8T-4200**	1	BOLT (M8X1.25X16-MM)	
M	**8T-6869**	4	BOLT (M8X1.25X60-MM)	
	8T-0154	4	CLAMP-HOSE	
	6D-4636	2	CLIP	
	3S-8665	1	CLIP	
	6D-1641	1	CLIP	
	9X-8250	3	CLIP	
	218-6398	1	CONSOLE (LH)	
	218-6397	1	CONSOLE (RH)	
	218-6396	1	DUCT (CROSSOVER)	
	004-6810	1	ELBOW	
	218-6645	1	ELBOW	
	250-1493	1	ELBOW	
E	**206-2724**		GUARD (110-CM)	
E	**136-1953**		HOSE (382-CM)	
	176-4079	1	INSULATION	
	285-9133	1	INSULATION	
	285-8570	1	INSULATION	
	285-8565	1	INSULATION	
M	**8T-4133**	1	NUT (M10X1.5-THD)	
M	**175-0005**	8	SCREW-BUTTON HEAD (M6X1X25-MM)	
	6V-6689	2	SCREW-SELF-TAPPING (10-16X.625-IN)	
	240-6879	2	SEAL	
	240-6878	1	SEAL	
	240-6877	1	SEAL	
	218-6414	1	SEAL	
	218-6401	1	SEAL	
D	**8T-5372**		SEAL (0.4-M)	
	7K-1181	1	STRAP-CABLE	
	178-3620	3	STRAP-DUAL CLAMP (DUAL CLAMP)	
E	**9X-2092**		TRIM-EDGE (30-CM)	
	8F-8151	1	VALVE-SHUTOFF (WATER)	
	5P-4116	1	WASHER-HARD (8.8X20.5X2-MM THK)	
	8T-4121	4	WASHER-HARD (11X21X2.5-MM THK)	
	8T-4224	5	WASHER-HARD (8.8X16X2-MM THK)	

D-ORDER BY THE METER
E-ORDER BY THE CENTIMETER
M-METRIC PART
Y-SEPARATE ILLUSTRATION

<END>

231-8122 HOUSING AS-SIDE—AIR CONDITIONER, HEATER

S/N: A9H1-UP

PART OF 218-6405 AIR CONDITIONER GP, 218-6393 HEATER GP-CAB

AN ATTACHMENT

SMCS-7320 **i02014573**

NOTE	REF NO	GRAPHIC REF	PART NUMBER	QTY	PART NAME 1 2 3 4 5 6 (PRODUCT LEVEL)	SEE PAGE
	1	1	**233-5929**	2	LOCKWASHER	
	2	1	**233-5931**	4	LOCKWASHER	
M	3	1	**131-3540**	4	LOCKNUT (M8X1.25 THD)	
	4	1	**233-5934**	4	MOUNT	
M	5	1	**129-3178**	2	LOCKNUT (M6X1 THD)	

M-METRIC PART

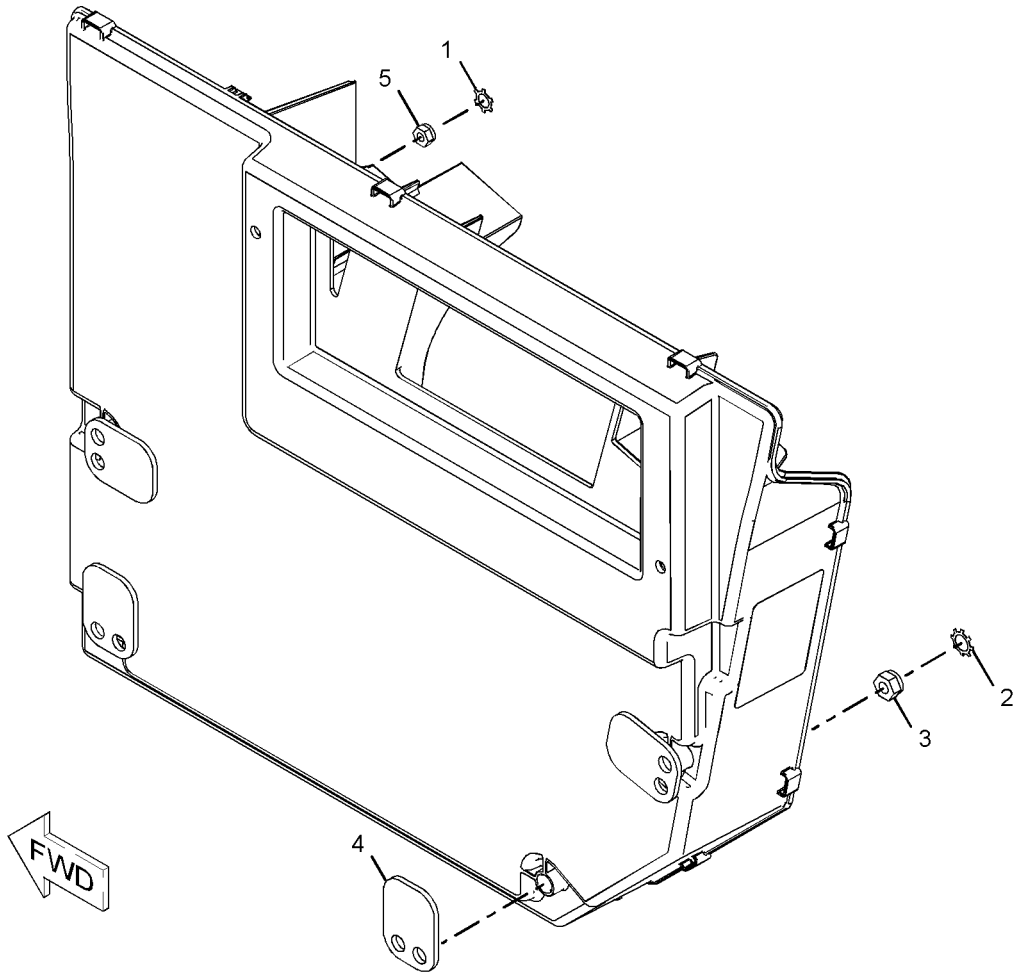

GRAPHIC #1 **<END>** g01041727

OPERATOR STATION

326-5514 INSTALLATION GP-COVER & LINES–

WITHOUT A/C, HEATER

S/N: A9H1-UP

PART OF 326-5510, 326-5511 CAB AR-OPEN ROPS

CANNOT BE USED WITH 326-5515–PAGE 535, 326-5516–PAGE 484

AN ATTACHMENT

SMCS-5057, 5258 **i04302729**

NOTE	PART NUMBER	QTY	PART NAME 1 2 3 4 5 6 (PRODUCT LEVEL)	SEE PAGE
Y	*218-6418*	1	COVER GP-CONSOLE	514
Y	*218-6419*	1	COVER GP-CONSOLE (WITHOUT A/C, HEATER)	515
Y	*374-3441*	1	LINES GP-HYDRAULIC OIL COOLER	274

Y-SEPARATE ILLUSTRATION

<END>

OPERATOR STATION

234-0774 LEVER GP-GOVERNOR

S/N: A9H1-UP

PART OF 327-8939 PEDAL GP-GOVERNOR

SMCS-1265, 1276 **i03809932**

NOTE	REF NO	GRAPHIC REF	PART NUMBER	QTY	PART NAME 1 2 3 4 5 6 (PRODUCT LEVEL)	SEE PAGE
	1	1	**192-2663**	1	LEVER GP-HAND CONTROL (GOVERNOR)	
M		1	**8T-4971**	1	BOLT (M6X1X30-MM)	
M		1	**129-3178**	1	LOCKNUT (M6X1-THD)	
	2	1	**234-0732**	1	CABLE AS	
	3	1	**8T-4742**	1	END-YOKE ROD	
	4	1	**8T-4744**	1	PIN AS-SPRING	
M	5	1	**5C-2890**	1	NUT (M6X1-THD)	

M-METRIC PART

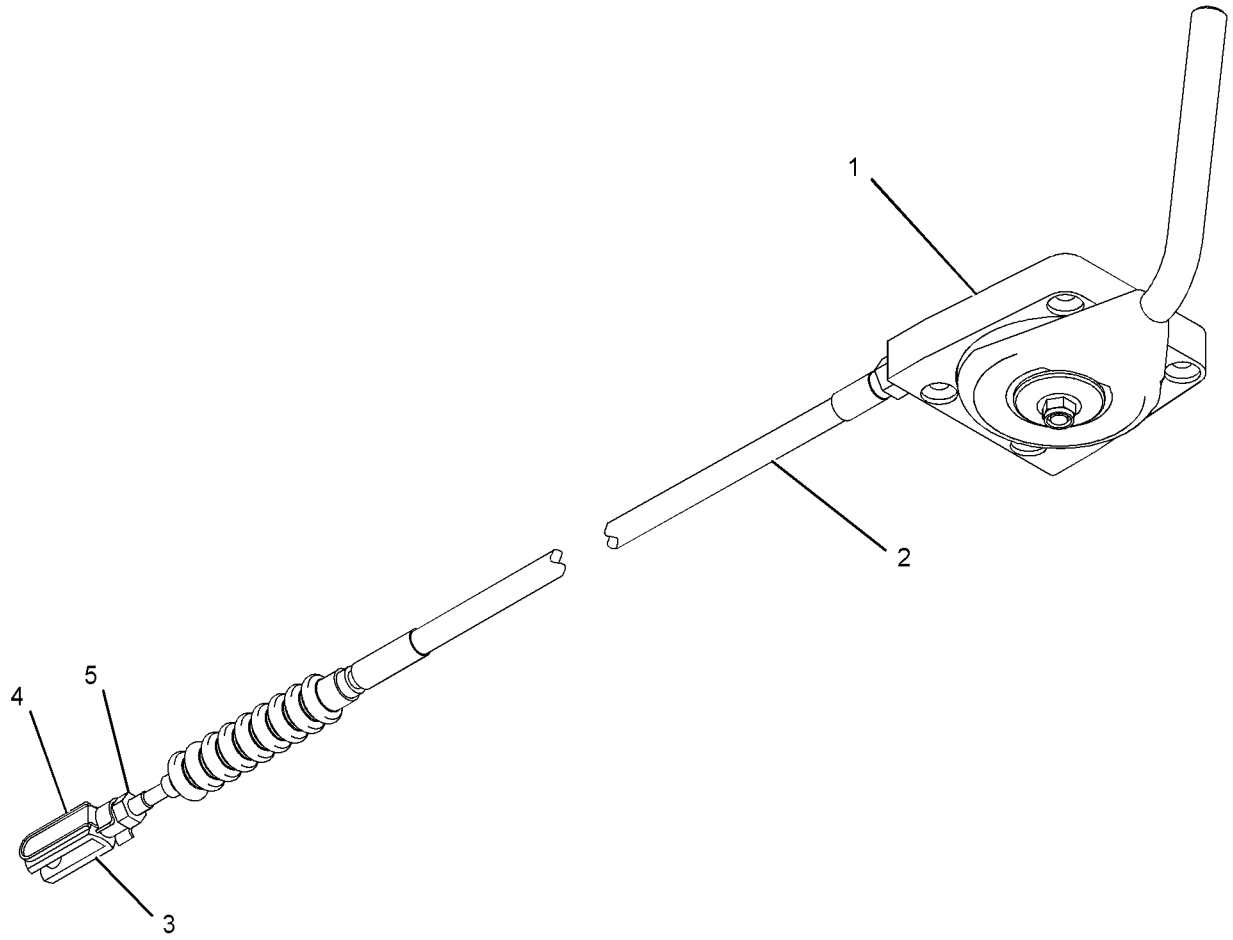

GRAPHIC #1 **<END>** g02064773

OPERATOR STATION

326-5406 LINER GP-CAB

S/N: A9H1-UP

PART OF 326-5400 CAB AR

SMCS-7268, 7329 **i03970899**

NOTE	REF NO	GRAPHIC REF	PART NUMBER	QTY	PART NAME 1 2 3 4 5 6 (PRODUCT LEVEL)	SEE PAGE
	1	1	**218-6357**	1	INSULATION	
	2	1	**292-3114**	2	SEAL	
	3	1	**326-5407**	1	LINER	
	4	1	**326-5408**	1	INSULATION	
E	5	1	**9X-2092**		TRIM-EDGE (113-CM)	

E-ORDER BY THE CENTIMETER

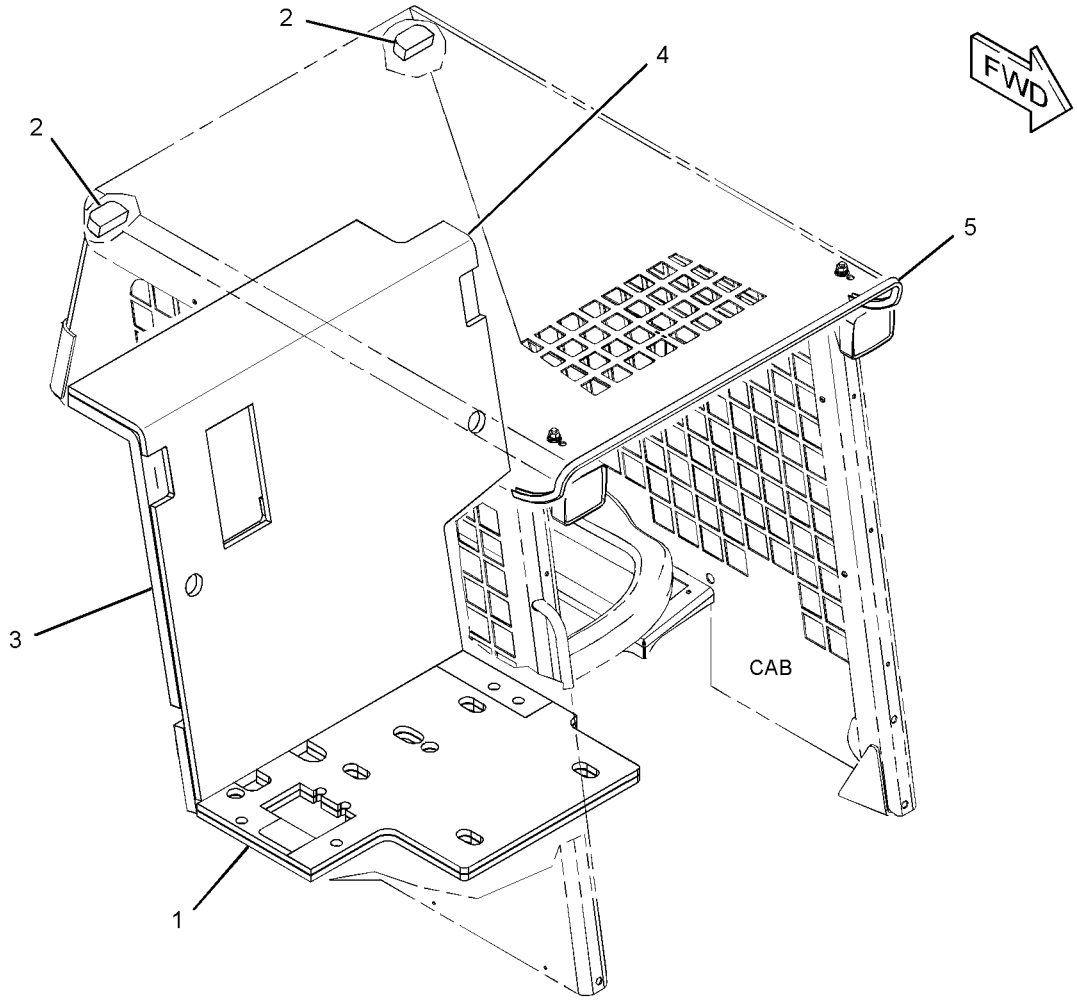

GRAPHIC #1 **<END>** g02146633

OPERATOR STATION

142-9311 LINER-CAB—GRAY

S/N: A9H1-UP

AN ATTACHMENT

SMCS-7329 **i02016735**

NOTE	REF NO	GRAPHIC REF	PART NUMBER	QTY	PART NAME 1 2 3 4 5 6 (PRODUCT LEVEL)	SEE PAGE
					(NO SERVICED PARTS)	

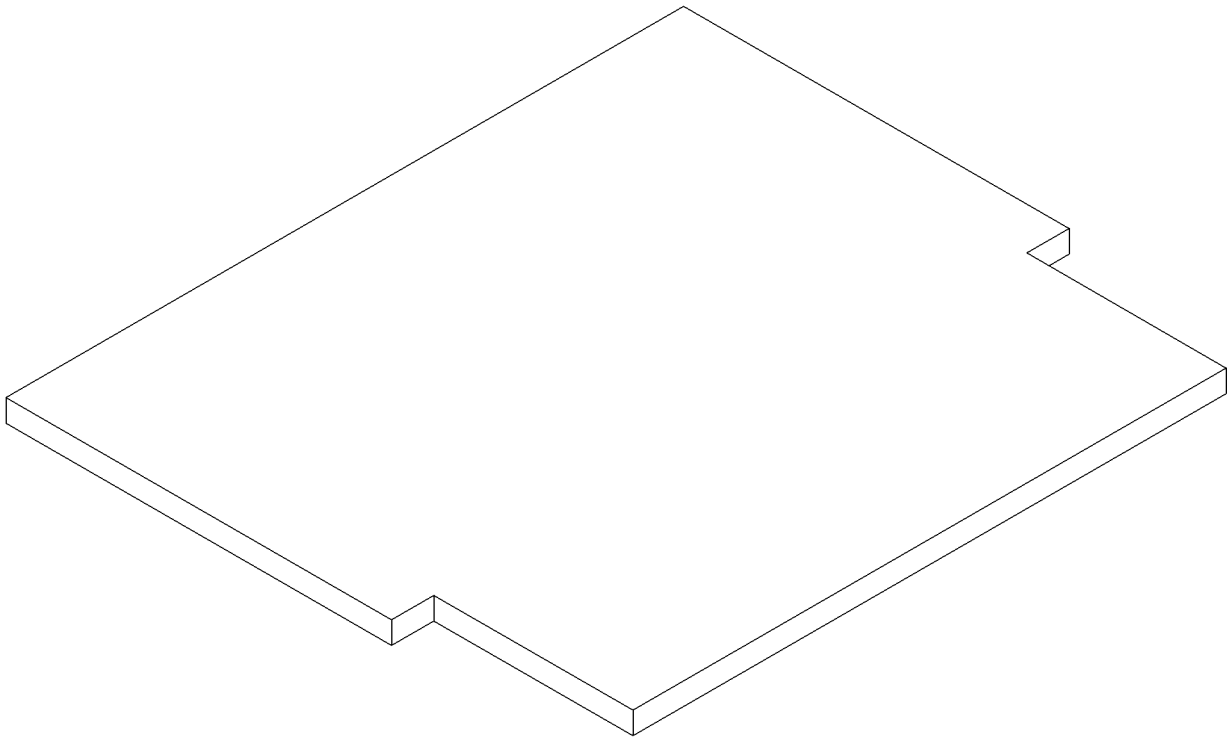

GRAPHIC #1 **<END>** g00782727

OPERATOR STATION

326-5377 LINES GP-AIR CONDITIONER

S/N: A9H1-UP
PART OF 326-5516 AIR CONDITIONER AR
AN ATTACHMENT

SMCS-1808, 7320 **i04557219**

NOTE	REF NO	GRAPHIC REF	PART NUMBER	QTY	PART NAME 1 2 3 4 5 6 (PRODUCT LEVEL)	SEE PAGE
	1	1	**7K-1181**	4	STRAP-CABLE	
	2	1	**315-7790**	1	PLATE	
	3	1	**178-3620**	1	STRAP-DUAL CLAMP	
Y	4	1	*186-6190*	1	ACCUMULATOR GP-REFRIGERANT (CHARGED)	483
	5	1	**189-3158**	1	SUPPRESSOR-ARC	
	6	1	**200-6345**	2	MOUNT (DUAL SWIVEL)	
I	7	1	**218-5685**	1	HOSE AS	
I	8	1	**218-5686**	1	HOSE AS	
	9	1	**221-3879**	1	HARNESS AS-HEATER & AIR COND	
		1	**155-2260**	1	KIT-CONNECTING PLUG (3-PIN)	
		1	**155-2270**	3	KIT-CONNECTING PLUG (2-PIN)	
					(EACH PLUG KIT INCLUDES PLUG AS, WEDGE & INTERFACE SEAL)	
		1	**100-6674**	2	SEAL-CONNECTOR	
		1	**9W-0844**	5	SOCKET-CONNECTOR (14-GA TO 16-GA)	
		1	**180-9340**	4	SOCKET-CONNECTOR (14-GA TO 18-GA)	
		1	**124-5640**	2	TERMINAL-SOCKET	
		1	**2L-8069**	1	TERMINAL-RING (2-GA TO 10-GA, 3/8-IN SCREW)	
E		1	**119-3662**		TUBE-HEAT SHRINK (10.85-MM DIA) (13-CM)	
	10	1	**236-6923**	1	SWITCH AS-PRESSURE (REFRIGERANT COMPR, HIGH SIDE)	
	11	1	**312-2179**	2	BRACKET AS	
	12	1	**326-5378**	1	HOSE AS	
	13	1	**326-5379**	1	HOSE AS	
M	14	1	**085-8091**	2	BOLT (M10X1.5X55-MM)	
	15	1	**095-0913**	1	CLIP	
	16	1	**101-8296**	2	CLIP	
	17	1	**234-0566**	1	FITTING AS	
		1	**3E-4051**	1	CAP-SEAL (LOW SIDE CHARGE PORT)	
		1	**3E-4057**	1	VALVE AS (REFRIGERANT, LOW SIDE)	
	18	1	**246-9039**	1	PLATE-INFORMATION (AIR CONDITIONER REFRIGERANT)	
	19	1	**3S-2093**	7	STRAP-CABLE	
	20	1	**6D-4246**	1	CLIP	
	21	1	**8T-4121**	3	WASHER-HARD (11X21X2.5-MM THK)	
M	22	1	**8T-4196**	1	BOLT (M10X1.5X35-MM)	
M	23	1	**8T-4189**	2	BOLT (M8X1.25X20-MM)	
	24	1	**8T-4224**	2	WASHER-HARD (8.8X16X2-MM THK)	
	25	1	**9C-2741**	2	SPACER (13.94X17.14X34-MM THK)	
	26	1	**9X-7378**	1	SEAL-O-RING	
	27	1	**9X-7380**	1	SEAL-O-RING	
	28	1	**9X-7381**	2	SEAL-O-RING	
	29	1	**9X-7382**	1	SEAL-O-RING	
	30	1	**9X-7383**	3	SEAL-O-RING	
D	31	1	**5P-5924**		SEAL (0.2-M EACH)	

D-ORDER BY THE METER
E-ORDER BY THE CENTIMETER
I-REFER TO HYDRAULIC INFORMATION SYSTEM
M-METRIC PART
Y-SEPARATE ILLUSTRATION

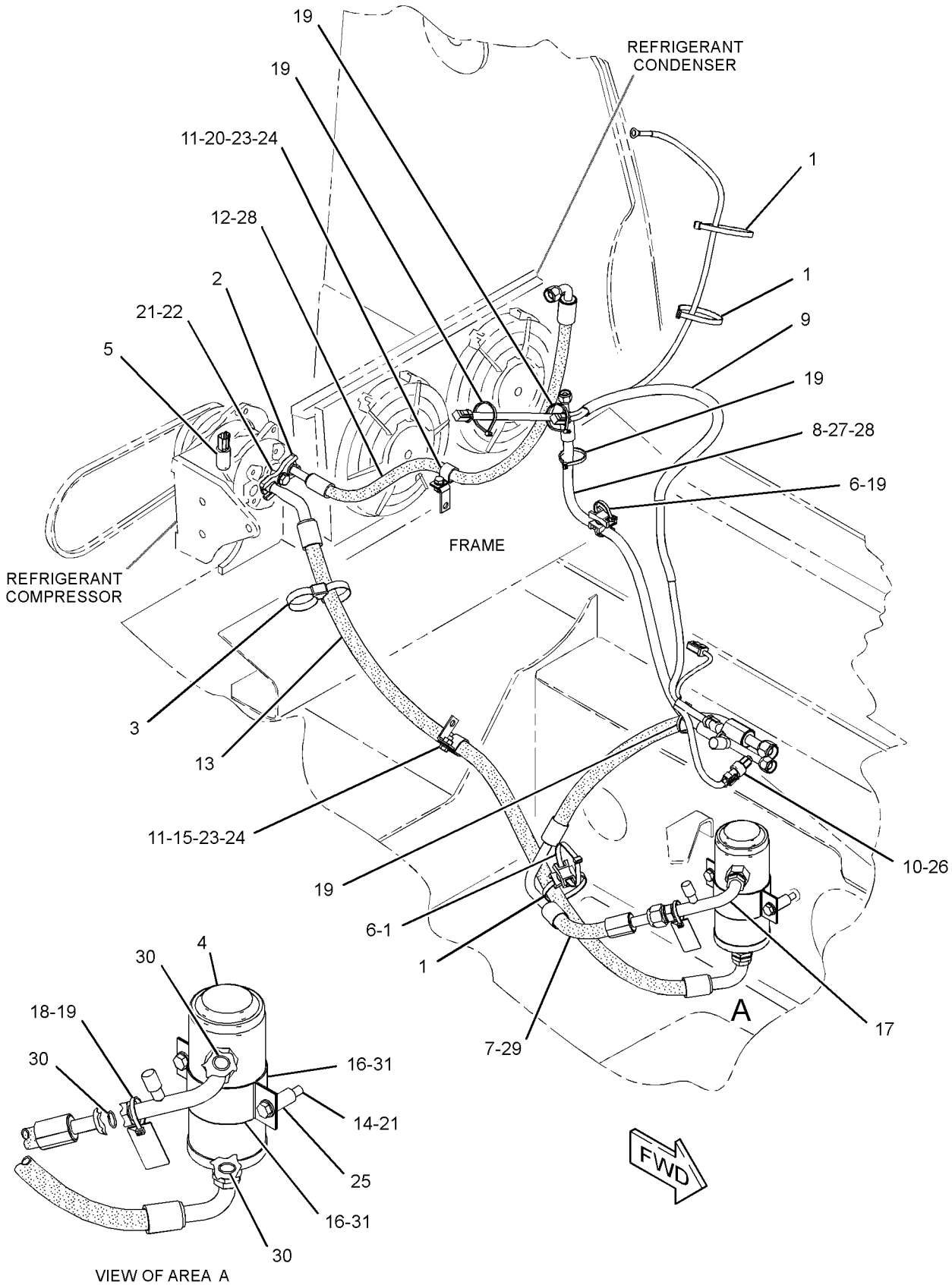

GRAPHIC #1 **<END>** g02349858

OPERATOR STATION

218-5619 LINES GP-HEATER

S/N: A9H1-UP

PART OF 326-5516 AIR CONDITIONER AR, 326-5515 HEATER AR-CAB

AN ATTACHMENT

SMCS-1812, 7304 **i04031013**

NOTE	REF NO	GRAPHIC REF	PART NUMBER	QTY	PART NAME 1 2 3 4 5 6 (PRODUCT LEVEL)	SEE PAGE
C	1	1	**7K-1181**	1	STRAP-CABLE	
	2	1	**8T-0154**	4	CLAMP-HOSE	
	3	1	**004-6810**	1	ELBOW	
C	4	1	**178-3620**	1	STRAP-DUAL CLAMP	
	5	1	**218-6645**	1	ELBOW	
	6	1	**5P-4116**	1	WASHER-HARD (8.8X20.5X2-MM THK)	
C	7	1	**6D-1641**	1	CLIP	
C	8	1	**8T-4121**	3	WASHER-HARD (11X21X2.5-MM THK)	
CM	9	1	**8T-4133**	1	NUT (M10X1.5-THD)	
M	10	1	**8T-4191**	1	BOLT (M10X1.5X16-MM)	
M	11	1	**8T-4908**	1	BOLT (M8X1.25X25-MM)	
C	12	1	**9X-8250**	3	CLIP	
CE	13	1	**136-1953**		HOSE (164-CM)	
E	13A	1	**136-1953**		HOSE (217-CM)	
CE	14	1	**9X-2092**		TRIM-EDGE (30-CM)	

C-CHANGE FROM PREVIOUS TYPE
E-ORDER BY THE CENTIMETER
M-METRIC PART

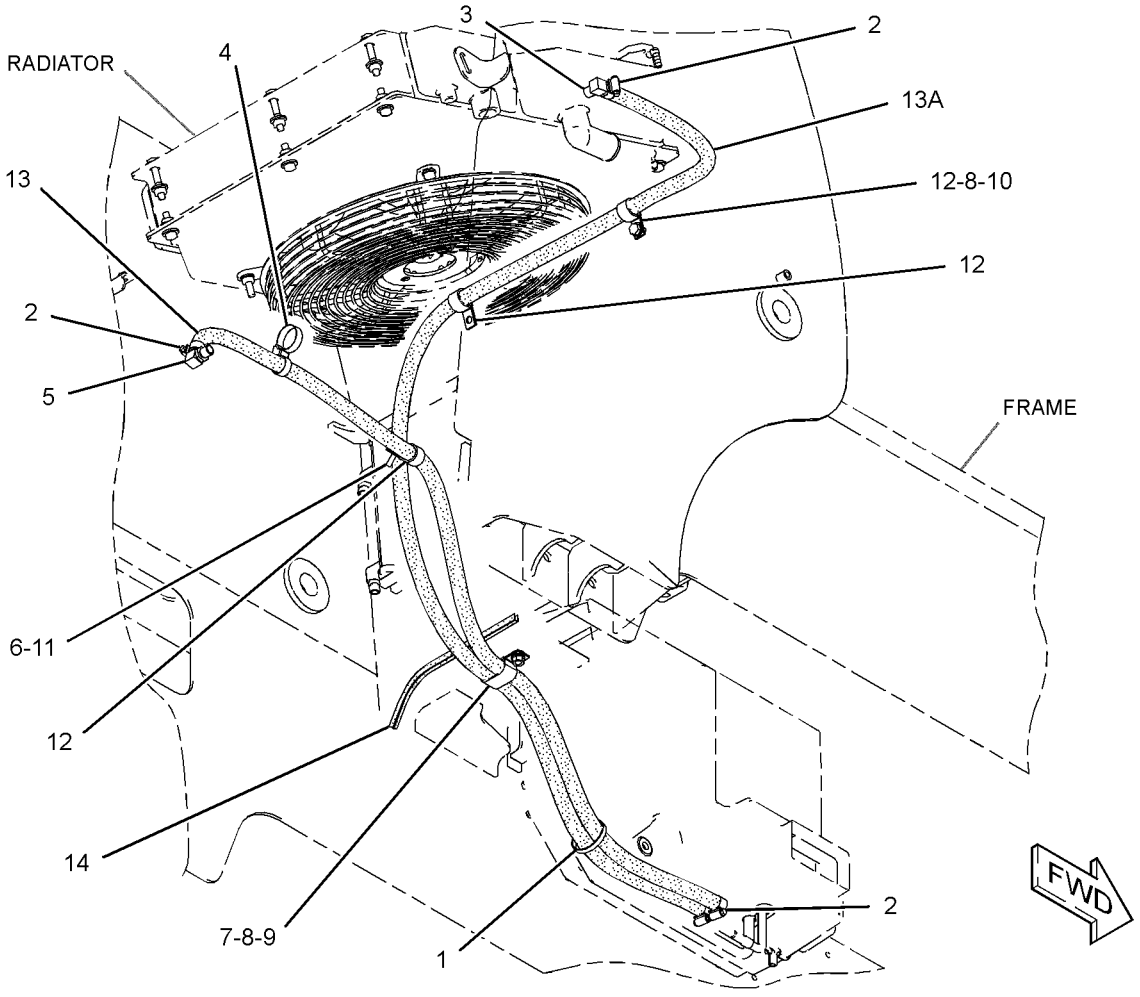

GRAPHIC #1 **<END>** g02397636

OPERATOR STATION

6V-1970 LITERATURE GP

S/N: A9H1-UP

PART OF 326-5420 COMMON AR

SMCS-0374, 0375, 7300 **i02831417**

NOTE	PART NUMBER	QTY	PART NAME 1 2 3 4 5 6 (PRODUCT LEVEL)	SEE PAGE
	5P-8500	2	KEY (LITERATURE COMPARTMENT)	
	5P-7958	1	SLEEVE-CABLE SPLICE	

<END>

OPERATOR STATION

258-4230 MIRROR GP-REAR VIEW

S/N: A9H1-UP

PART OF 326-5400 CAB AR

SMCS-7319 **i03505726**

NOTE	REF NO	GRAPHIC REF	PART NUMBER	QTY	PART NAME 1 2 3 4 5 6 (PRODUCT LEVEL)	SEE PAGE
	1	1	**280-6070**	1	MIRROR AS (REAR VIEW)	
	2	1	**3B-4505**	1	LOCKWASHER	
M	3	1	**5C-7261**	1	NUT (M8X1.25-THD)	
	4	1	**8T-4224**	1	WASHER-HARD (8.8X16X2-MM THK)	

M-METRIC PART

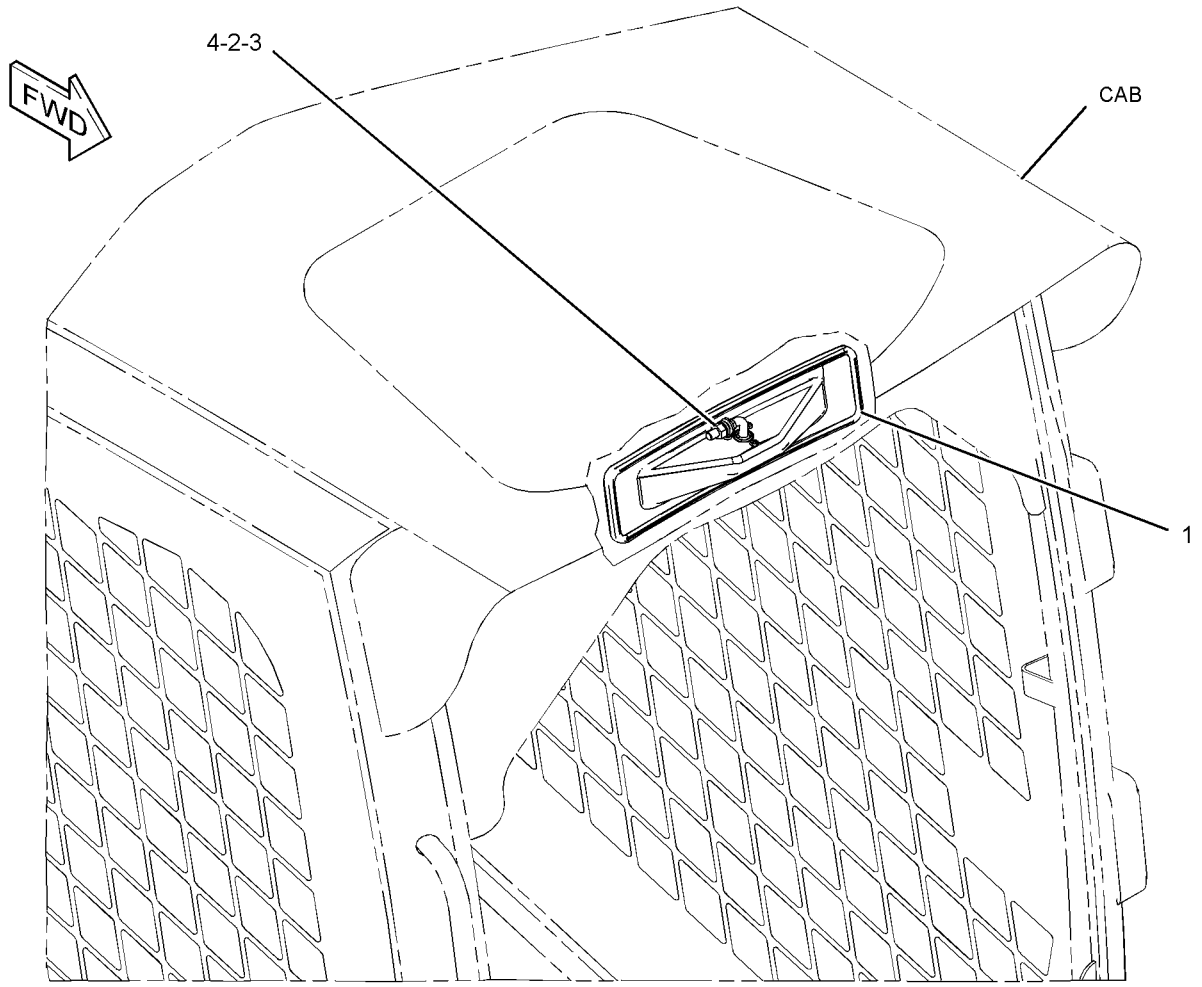

GRAPHIC #1 **<END>** g01316638

223-6537 MODULE GP-WARNING INDICATOR

S/N: A9H1-UP
12-VOLT
PART OF 328-2270 PANEL GP-INSTRUMENT

SMCS-7407, 7431 **i04362929**

NOTE	REF NO	GRAPHIC REF	PART NUMBER	QTY	PART NAME 1 2 3 4 5 6 (PRODUCT LEVEL)	SEE PAGE
	1	1	**102-8801**	1	KIT-RECEPTACLE (12-PIN)	
					(INCLUDES RECEPTACLE AS & WEDGE)	
	2	1	**232-4706**	1	GASKET	
	4	1	**8T-8729**	10	PIN-CONNECTOR (16-GA TO 18-GA)	
	5	1	**8T-8737**	2	PLUG-SEAL	

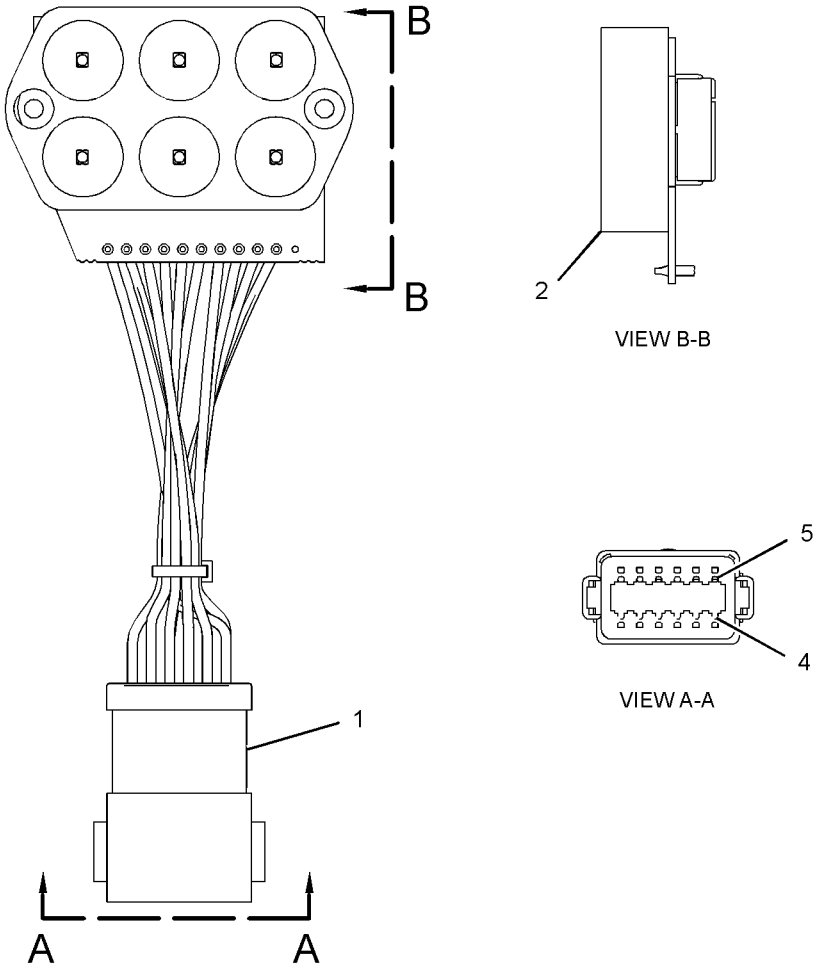

GRAPHIC #1 **<END>** g01839133

OPERATOR STATION

249-2910 MODULE GP-WARNING INDICATOR

S/N: A9H1-UP
12-VOLT
PART OF 328-2270 PANEL GP-INSTRUMENT

SMCS-7407, 7431 **i04385381**

NOTE	REF NO	GRAPHIC REF	PART NUMBER	QTY	PART NAME 1 2 3 4 5 6 (PRODUCT LEVEL)	SEE PAGE
	1	1	**8T-8737**	3	PLUG-SEAL	
	2	1	**232-4706**	1	GASKET	
	3	1	**8T-8729**	9	PIN-CONNECTOR (16-GA TO 18-GA)	
	4	1	**102-8801**	1	KIT-RECEPTACLE (12-PIN)	
					(INCLUDES RECEPTACLE AS & WEDGE)	

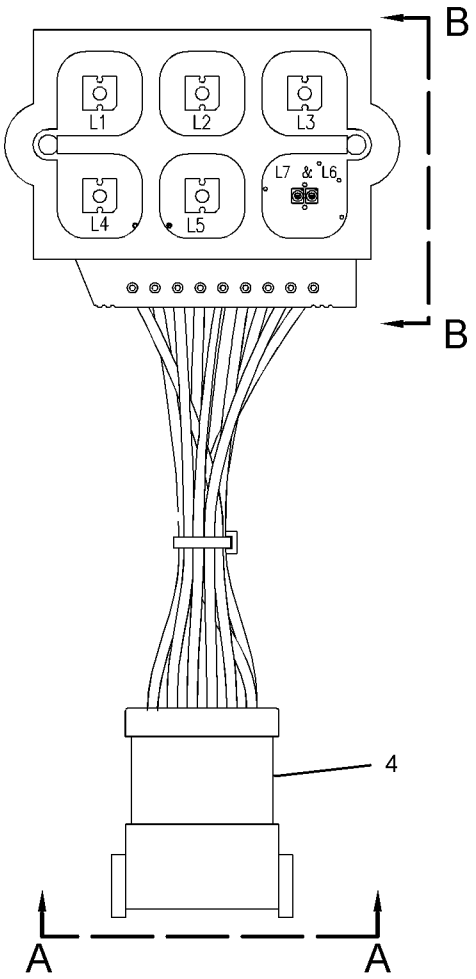

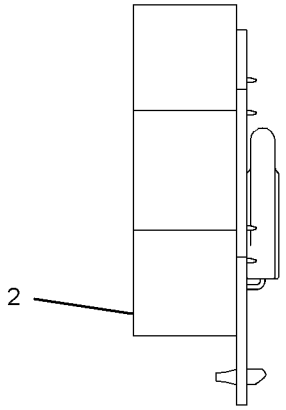

VIEW B-B

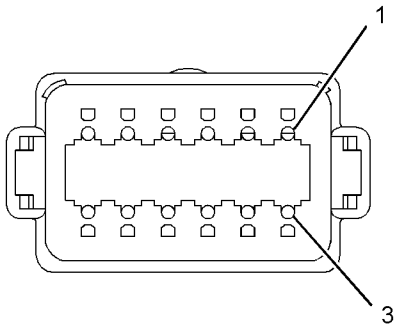

VIEW A-A

GRAPHIC #1 **<END>** g01152784

OPERATOR STATION

330-5012 MOTOR GP-WINDOW WIPER

S/N: A9H1-UP
12-VOLT
PART OF 223-0616, 276-3440 DOOR GP-CAB
AN ATTACHMENT

SMCS-7305 **i03644764**

NOTE	REF NO	GRAPHIC REF	PART NUMBER	QTY	PART NAME 1 2 3 4 5 6 (PRODUCT LEVEL)	SEE PAGE
	1	1	**102-8804**	1	KIT-RECEPTACLE (4-PIN)	
					(INCLUDES RECEPTACLE AS & WEDGE)	
	2	1	**186-3735**	4	PIN-CONNECTOR (16-GA TO 18-GA)	
	3	1	**263-3823**	1	CAP-WIPER	
	4	1	**3F-9556**	1	LOCKWASHER	
M	5	1	**5C-7261**	1	NUT (M8X1.25-THD)	

M-METRIC PART

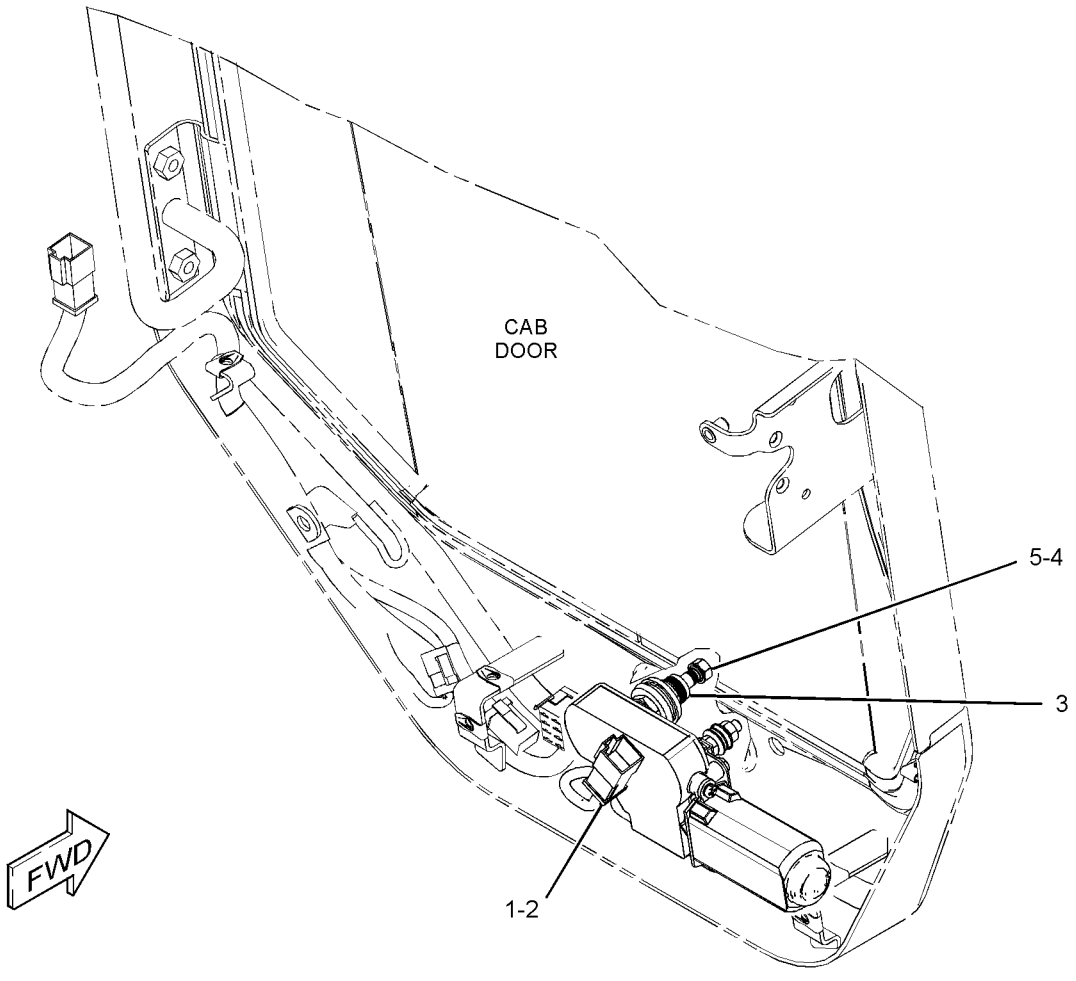

GRAPHIC #1 **<END>** g01956124

OPERATOR STATION

218-6370 MOUNTING GP-ROPS

S/N: A9H1-UP

PART OF 326-5400 CAB AR

SMCS-7266, 7325 **i01955254**

NOTE	REF NO	GRAPHIC REF	PART NUMBER	QTY	PART NAME 1 2 3 4 5 6 (PRODUCT LEVEL)	SEE PAGE
	1	1	**152-5878**	2	MOUNT AS	
	2	1	**153-6981**	2	MOUNT	
	3	1	**159-5790**	1	BRACKET	
	4	1	**159-5792**	1	BAR AS	
	5	1	**159-5794**	1	SPRING	
	6	1	**218-6381**	2	SPACER	
	7	1	**165-7095**	4	WASHER (16.5X71.5X3-MM THK)	
	8	1	**4P-7581**	1	CLIP	
M	9	1	**6V-9805**	2	BOLT (M6X1X20-MM)	
M	10	1	**7X-2475**	2	BOLT (M16X2X130-MM)	
	11	1	**8T-4122**	4	WASHER-HARD (17X32X3.5-MM THK)	
M	12	1	**8T-4173**	2	BOLT (M16X2X110-MM)	
	13	1	**8T-4205**	2	WASHER-HARD (7.2X14.5X2-MM THK)	
M	14	1	**8T-4778**	4	LOCKNUT (M16X2-THD)	

M-METRIC PART

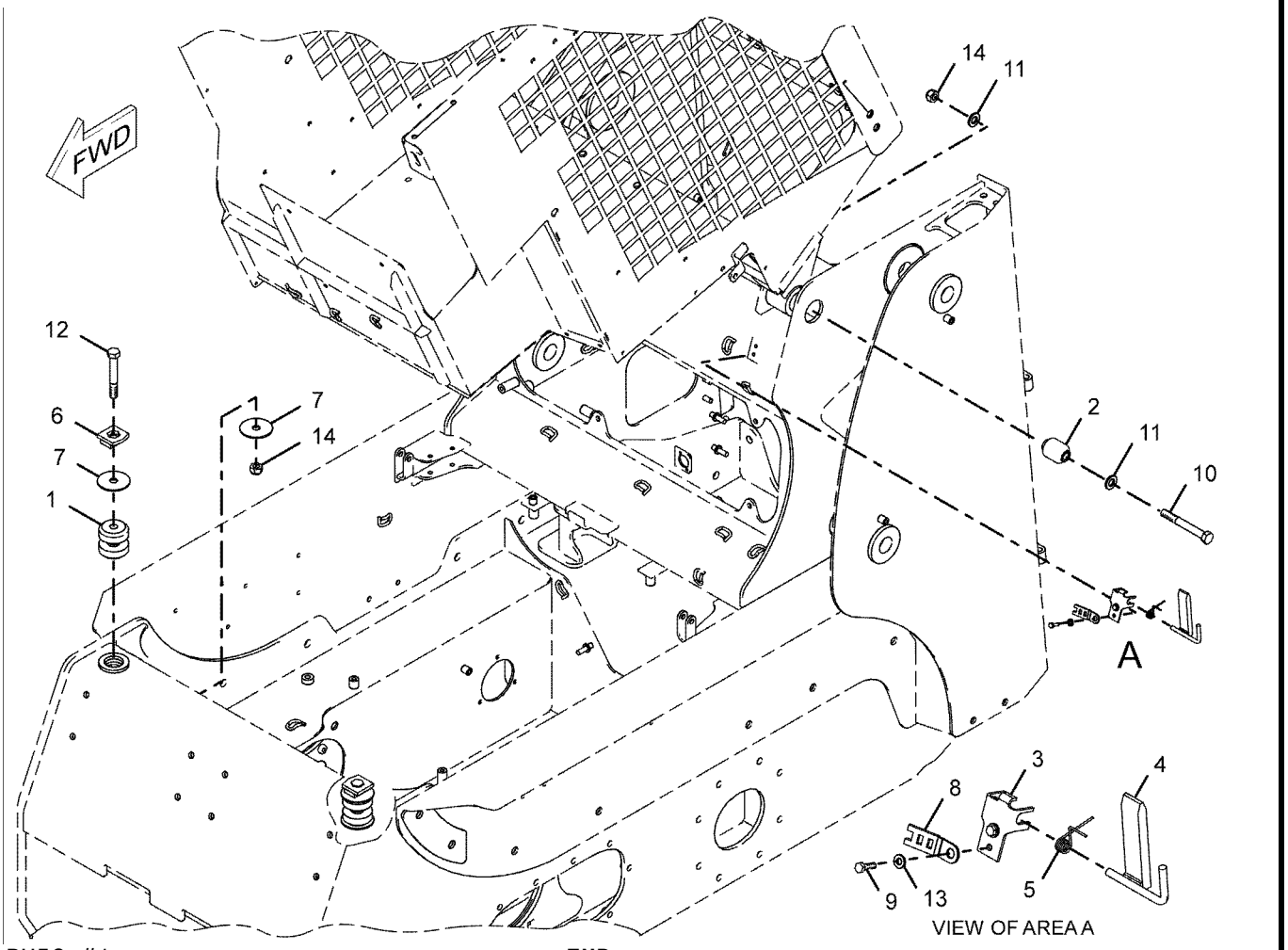

GRAPHIC #1 **<END>** g01018977

OPERATOR STATION

328-2270 PANEL GP-INSTRUMENT

S/N: A9H1-UP

PART OF 326-5400 CAB AR

SMCS-7451 **i04087650**

NOTE	REF NO	GRAPHIC REF	PART NUMBER	QTY	PART NAME 1 2 3 4 5 6 (PRODUCT LEVEL)	SEE PAGE
	1	1	**9R-7941**	1	SOCKET AS	
		1	**9R-7980**	1	COVER	
	2	2	**084-4277**	1	LAMP GP-DOME (12-VOLT)	
		2	**210-8754**	1	LAMP (12-VOLT) (DOME)	
	3	2	**109-2356**	9	PLUG	
	4	2	**110-7887**	1	SWITCH AS-START (KEY)	
		2	**7T-6799**	1	NUT-MOUNTING (1-32-THD)	
		2	**102-8804**	1	KIT-RECEPTACLE (4-PIN)	
					(INCLUDES RECEPTACLE AS & WEDGE)	
		2	**186-3735**	4	PIN-CONNECTOR (16-GA TO 18-GA)	
	5	2	**142-9320**	1	SWITCH AS-ROCKER (PARKING BRAKE)	
	6	2	**142-9328**	1	SWITCH AS-ROCKER (FRONT WORK LIGHT)	
					(EACH SWITCH AS INCLUDES)	
		2	**111-7899**	1	GASKET	
	7	2	**158-6694**	1	PANEL	
	8	1	**158-6695**	1	COVER	
	9	1	**158-6696**	1	COVER	
	10	2	**158-6697**	1	PANEL	
	11	1	**158-6698**	1	COVER	
	12	1	**158-6699**	1	COVER	
	13	2	**223-5941**	1	SWITCH AS-ROCKER (WORK TOOL HYD PRESS RELEASE)	
		2	**111-7899**	1	GASKET	
Y	14	2	**223-6537**	1	MODULE GP-WARNING INDICATOR	549
	15	2	**226-5901**	1	SWITCH AS-ROCKER (INTERLOCK OVERRIDE)	
		2	**111-7899**	1	GASKET	
Y	16	2	**249-2910**	1	MODULE GP-WARNING INDICATOR	550
	17	1	**258-4178**	1	FLANGE-MOUNTING	
	18	1	**301-7293**	1	KIT-SERVICE METER	
					(INCLUDES SERVICE METER, FILM, BOLTS & LOCK NUTS)	
	19	1	**328-2271**	1	HARNESS AS-PANEL	
		1	**123-7615**	1	CONNECTOR	
		1	**228-5856**	6	CONNECTOR	
		1	**186-3735**	11	PIN-CONNECTOR (16-GA TO 18-GA)	
		1	**9X-3401**	3	PIN-CONNECTOR (16-GA TO 18-GA)	
		1	**155-2255**	2	KIT-CONNECTING PLUG (12-PIN)	
		1	**155-2270**	5	KIT-CONNECTING PLUG (2-PIN)	
		1	**155-2271**	1	KIT-CONNECTING PLUG (4-PIN)	
		1	**155-2274**	1	KIT-CONNECTING PLUG (6-PIN)	
					(EACH PLUG KIT INCLUDES PLUG AS, WEDGE & INTERFACE SEAL)	
		1	**8T-8737**	18	PLUG-SEAL	
		1	**102-8805**	1	KIT-RECEPTACLE (6-PIN)	
					(INCLUDES RECEPTACLE AS & WEDGE)	
		1	**186-3736**	19	SOCKET-CONNECTOR (16-GA TO 18-GA)	
		1	**9W-0844**	1	SOCKET-CONNECTOR (14-GA TO 16-GA)	
		1	**180-9340**	15	SOCKET-CONNECTOR (14-GA TO 18-GA)	
		1	**3S-2093**	15	STRAP-CABLE	
		1	**189-3158**	1	SUPPRESSOR-ARC	
		1	**097-7234**	5	TERMINAL-BLADE (18-GA TO 22-GA)	
		1	**7N-7221**	1	TERMINAL-BLADE (18-GA TO 22-GA)	
		1	**091-2436**	45	TERMINAL-BLADE (18-GA TO 22-GA)	
		1	**104-1995**	20	TERMINAL-BLADE (14-GA TO 18-GA)	
E		1	**119-3662**		TUBE-HEAT SHRINK (10.85-MM DIA) (13-CM)	
E		1	**125-7874**		TUBE-HEAT SHRINK (5.72-MM DIA) (75-CM)	

328-2270 **PANEL GP-INSTRUMENT** *(contd.)* **i04087650**

NOTE	REF NO	GRAPHIC REF	PART NUMBER	QTY	PART NAME 1 2 3 4 5 6 (PRODUCT LEVEL)	SEE PAGE
E		1	**125-7875**		TUBE-HEAT SHRINK (7.44-MM DIA) (10-CM)	
E		1	**125-7876**		TUBE-HEAT SHRINK (17.78-MM DIA) (8-CM)	
	20	2	**328-2352**	1	FILM-INSTRUCTION (DASH)	
	21	2	**330-8684**	1	LAMP AS (12-VOLT) (FLOODLIGHT)	
	22	1,2	**101-2867**	4	WASHER-HARD (7.2X25X2-MM THK)	
	23	1,2	**103-2006**	22	SCREW-PAN HEAD (6-19X0.37-IN)	
	24	2	**170-6305**	1	GAUGE GP-FUEL LEVEL	
		2	**4B-2043**	3	NUT (8-32-THD)	
		2	**7X-9065**	1	LAMP (12-VOLT) (FUEL LEVEL INDICATOR)	
		2	**9B-7233**	3	LOCKWASHER	
	25	1,2	**195-0936**	4	INSERT-THREADED (M6X1-THD)	
	26	2	**197-6894**	1	FILM-INSTRUCTION (INSTRUMENT PANEL)	
	27	1,2	**198-9707**	4	SCREW-TRUSS HEAD (M6X1X35-MM)	
	28	2	**216-4753**	1	FILM-INSTRUCTION (KEY SWITCH)	
	29	1,2	**3S-2093**	7	STRAP-CABLE	
	30	1	**6V-5834**	4	SCREW-HEAD (10-14X0.75-IN)	
M	31	1	**9X-2042**	6	SCREW-TRUSS HEAD (M6X1X12-MM)	
	32	1	**9X-8256**	4	WASHER (6.6X12X2-MM THK)	

E-ORDER BY THE CENTIMETER
M-METRIC PART
Y-SEPARATE ILLUSTRATION

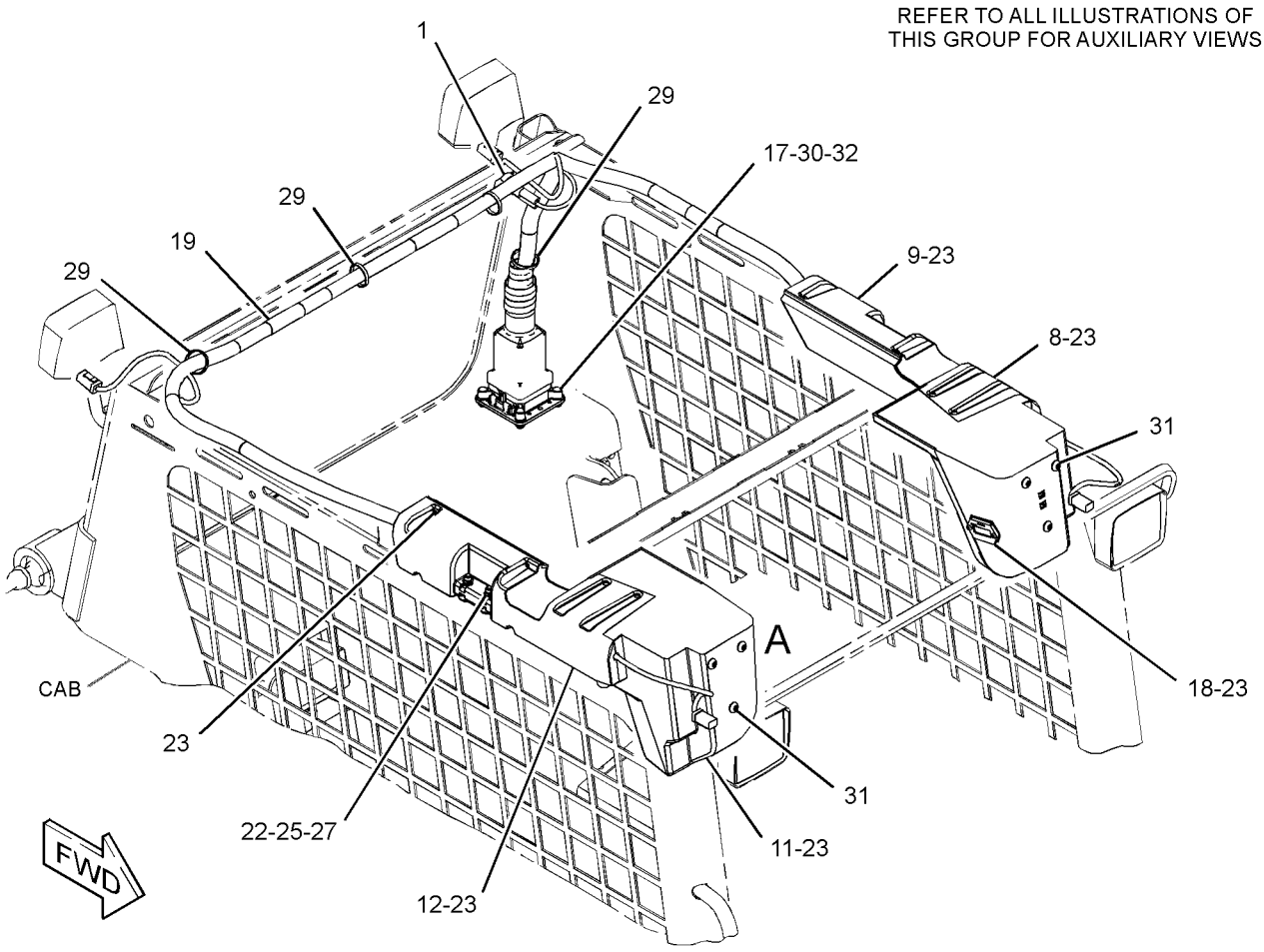

GRAPHIC #1 g02471159

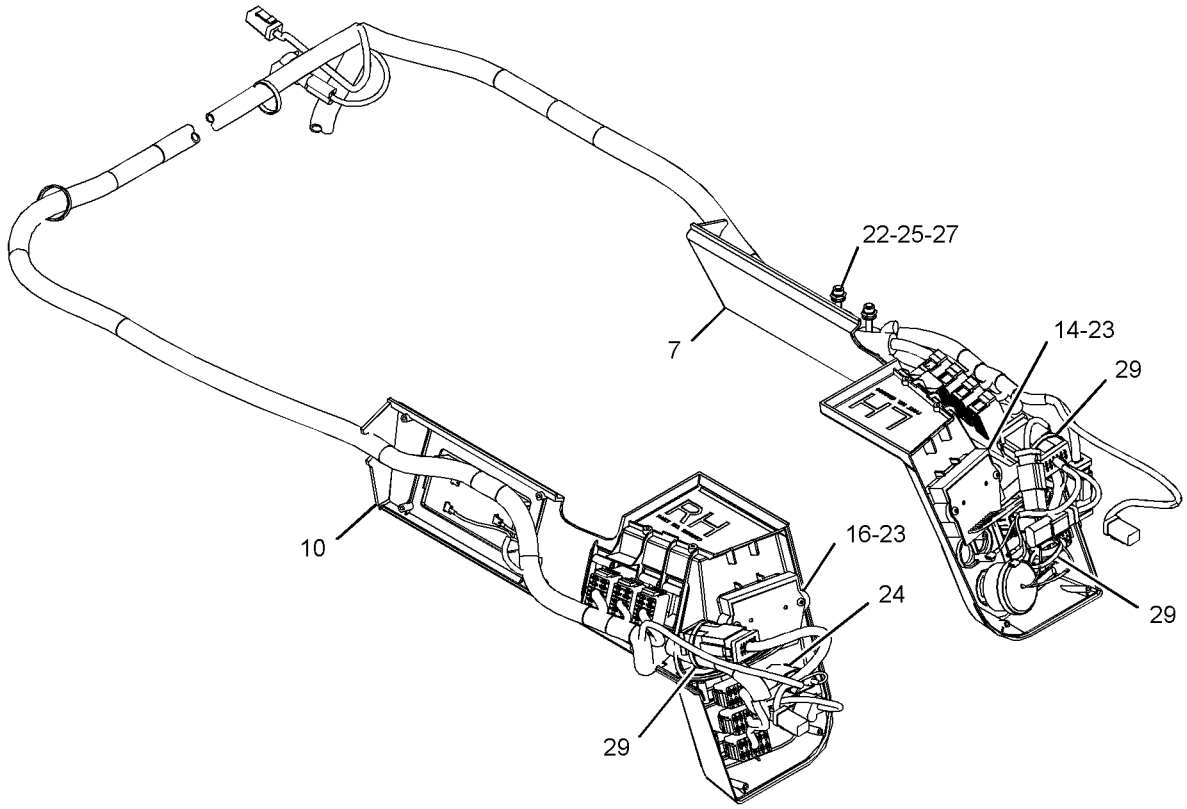

VIEW OF AREA A
(COVERS REMOVED FOR CLARITY)

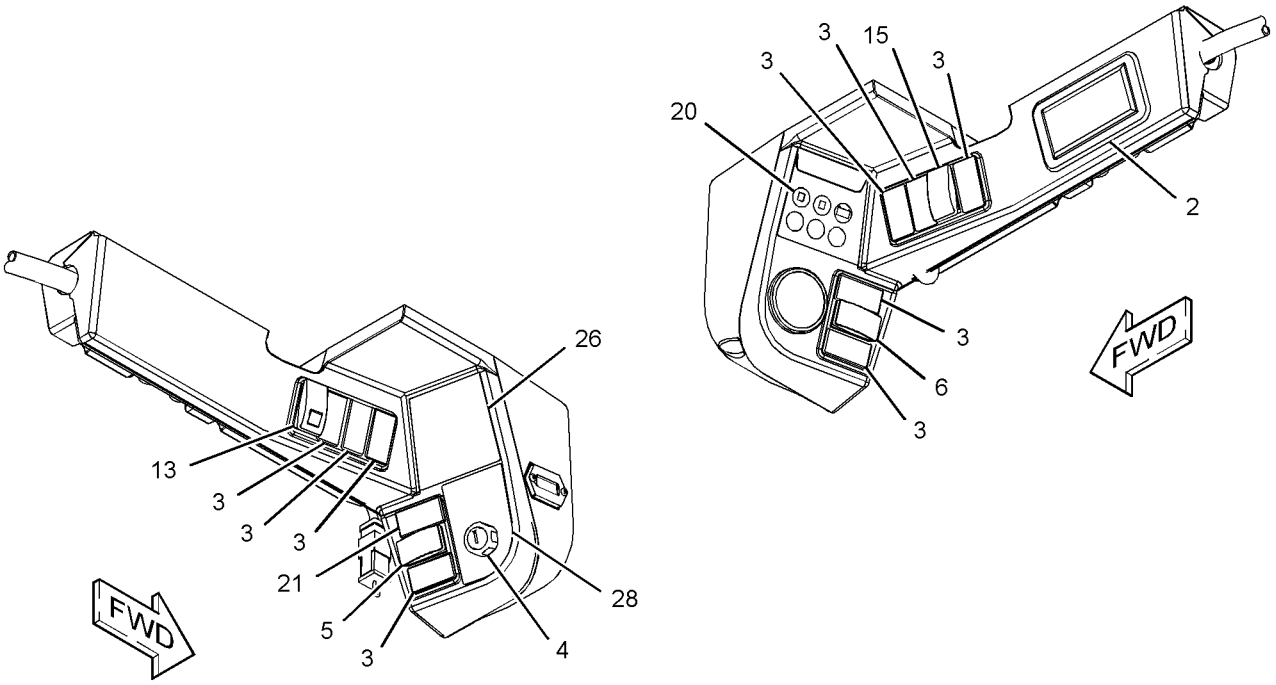

GRAPHIC #2 **<END>** g02471160

OPERATOR STATION

218-6430 PANEL GP-SIDE

S/N: A9H1-UP

PART OF 326-4785 CHASSIS AR

SMCS-7267 **i01955463**

NOTE	REF NO	GRAPHIC REF	PART NUMBER	QTY	PART NAME 1 2 3 4 5 6 (PRODUCT LEVEL)	SEE PAGE
	1	1	**193-8385**	1	PLATE (RH)	
	2	1	**218-6423**	1	PLATE (LH)	
M	3	1	**131-3543**	5	BOLT-ROUND HEAD (M6X1-6G-THD)	
M	4	1	**5C-2890**	5	NUT (M6X1-THD)	
	5	1	**8T-4205**	5	WASHER-HARD (7.2X14.5X2-MM THK)	

M-METRIC PART

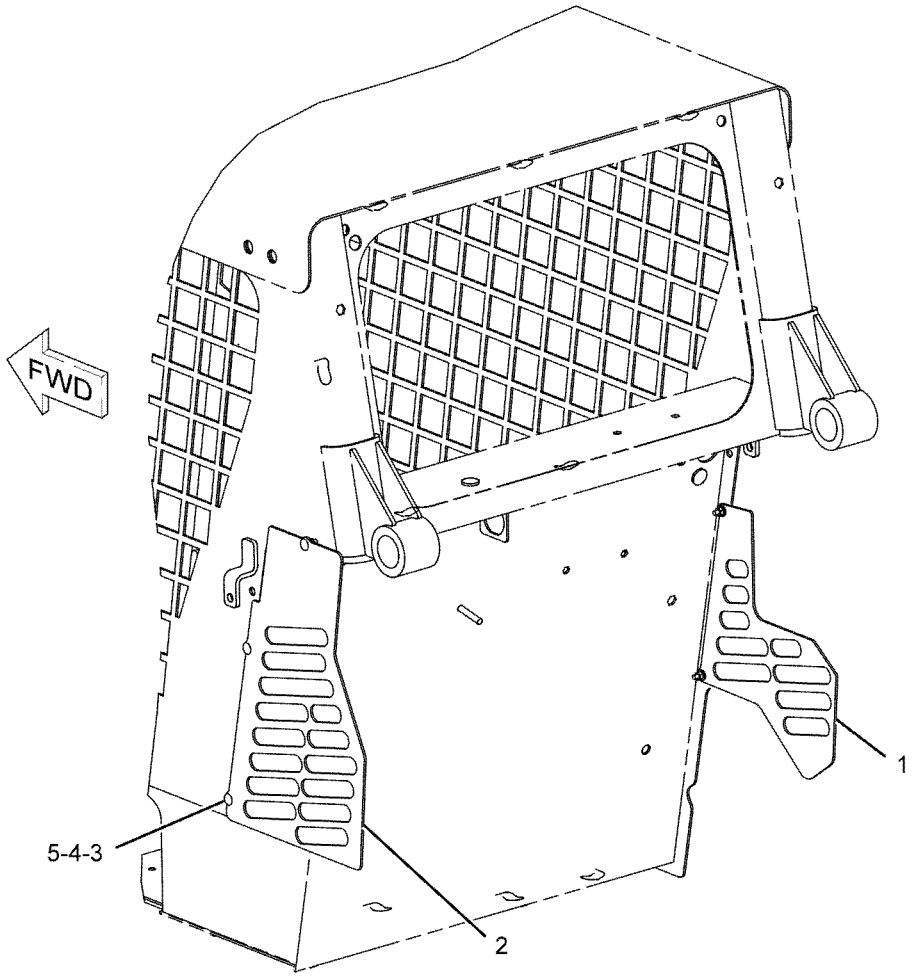

GRAPHIC #1 **<END>** g01017460

OPERATOR STATION

325-8382 PEDAL GP-GOVERNOR

S/N: A9H1-UP

PART OF 327-8939 PEDAL GP-GOVERNOR

SMCS-1265, 1276 **i03755302**

NOTE	REF NO	GRAPHIC REF	PART NUMBER	QTY	PART NAME 1 2 3 4 5 6 (PRODUCT LEVEL)	SEE PAGE
M	1	1	**095-0641**	4	BOLT-SOCKET HEAD (M4X0.7X10-MM)	
M	2	1	**129-3178**	1	LOCKNUT (M6X1-THD)	
	3	1	**3F-9556**	2	LOCKWASHER	
M	4	1	**5C-7261**	1	NUT (M8X1.25-THD)	
M	5	1	**5C-9553**	1	BOLT (M6X1X16-MM)	
	6	1	**6V-8186**	2	NUT-FULL (5/16-24-THD)	
M	7	1	**8T-4197**	1	BOLT (M8X1.25X40-MM)	
	8	1	**8T-4205**	1	WASHER-HARD (7.2X14.5X2-MM THK)	
	9	1	**8T-6902**	1	CLIP	
					AVAILABLE REPAIR KIT(S):	
			164-1154	1	KIT-SERVICE (PEDAL)	
					(INCLUDES CLAMPS & SCREWS)	

M-METRIC PART

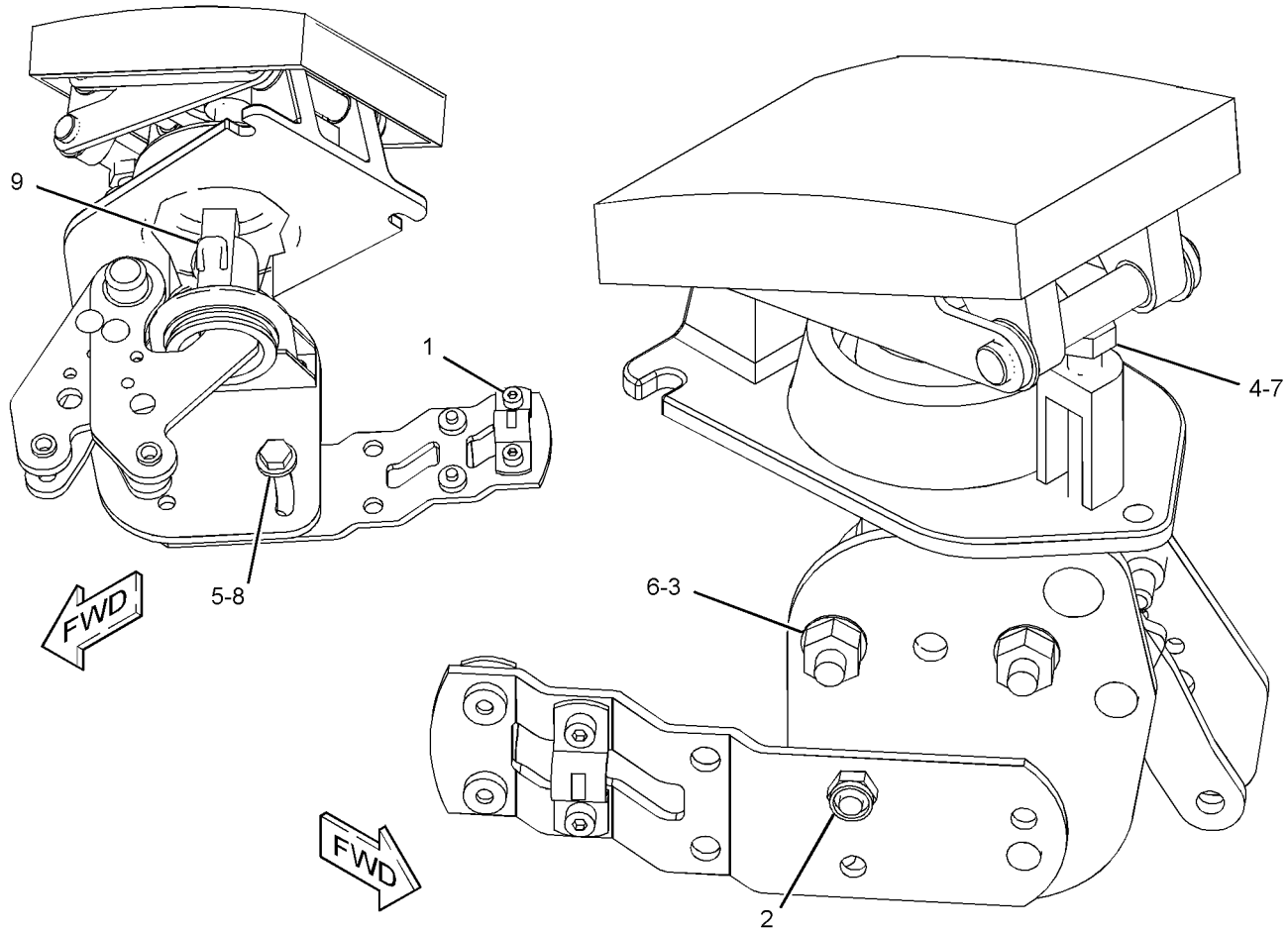

GRAPHIC #1 **<END>** g01164366

OPERATOR STATION

327-8939 PEDAL GP-GOVERNOR

S/N: A9H1-UP

PART OF 218-5602 CONTROL GP-GOVERNOR

SMCS-1265, 1276 **i04491655**

NOTE	REF NO	GRAPHIC REF	PART NUMBER	QTY	PART NAME 1 2 3 4 5 6 (PRODUCT LEVEL)	SEE PAGE
Y	1	1	**234-0774**	1	LEVER GP-GOVERNOR	541
Y	2	1	**325-8382**	1	PEDAL GP-GOVERNOR	557
	3	1	**327-8945**	1	CABLE AS	
		1	**2R-0364**	1	RING-RETAINING	
M		1	**5C-2890**	2	NUT (M6X1-THD)	
		1	**8T-4742**	2	END-YOKE ROD	
		1	**8T-4744**	2	PIN AS-SPRING	
	4	1	**8T-3984**	1	KNOB	

M-METRIC PART
Y-SEPARATE ILLUSTRATION

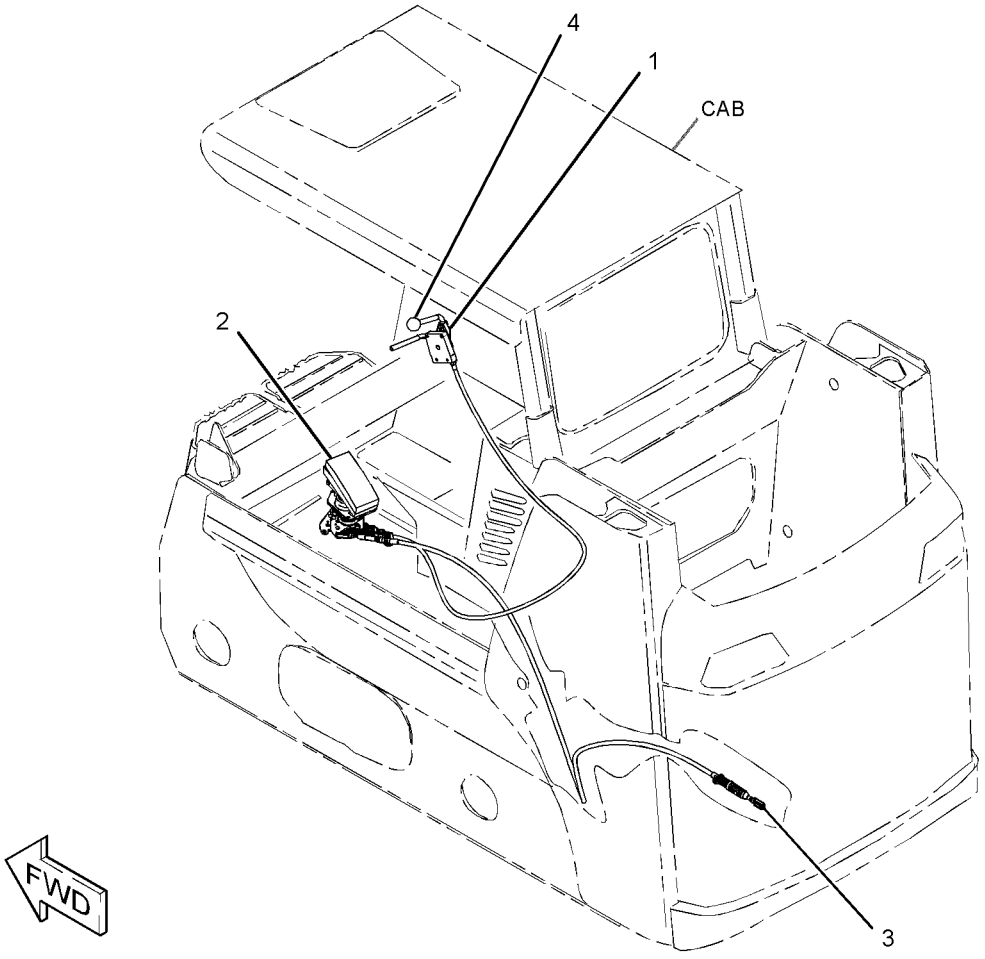

GRAPHIC #1 **<END>** g02705687

OPERATOR STATION

326-5572 PLATFORM GP-OPERATOR

S/N: A9H1-UP

PART OF 326-4785 CHASSIS AR

SMCS-7253 **i03970900**

NOTE	REF NO	GRAPHIC REF	PART NUMBER	QTY	PART NAME 1 2 3 4 5 6 (PRODUCT LEVEL)	SEE PAGE
	1	1	**218-6362**	2	INSULATION AS	
					(EACH INCLUDES)	
		1	**218-6435**	3	SPACER (16.6X21.8X25.4-MM THK)	
	2	1	**218-6417**	1	FLOORPLATE AS	
	3	1	**326-5594**	1	PLATE AS	
		1	**7T-1099**	2	LINK	
M	4	1	**5C-7261**	1	NUT (M8X1.25-THD)	
M	5	1	**8T-4138**	8	BOLT (M6X1X20-MM)	
	6	1	**8T-4205**	6	WASHER-HARD (7.2X14.5X2-MM THK)	
	7	1	**8T-4224**	7	WASHER-HARD (8.8X16X2-MM THK)	
M	8	1	**8T-6912**	5	BOLT (M8X1.25X50-MM)	
	9	1	**9X-6165**	2	WASHER (6.5X22X2.5-MM THK)	
M	10	1	**9X-6277**	1	BOLT (M8X1.25X60-MM)	
D	11	1	**5P-5927**		SEAL (0.4-M EACH)	
E	12	1	**124-3243**		SEAL (19.5-CM)	
E	12A	1	**124-3243**		SEAL (11-CM EACH)	

D-ORDER BY THE METER
E-ORDER BY THE CENTIMETER
M-METRIC PART

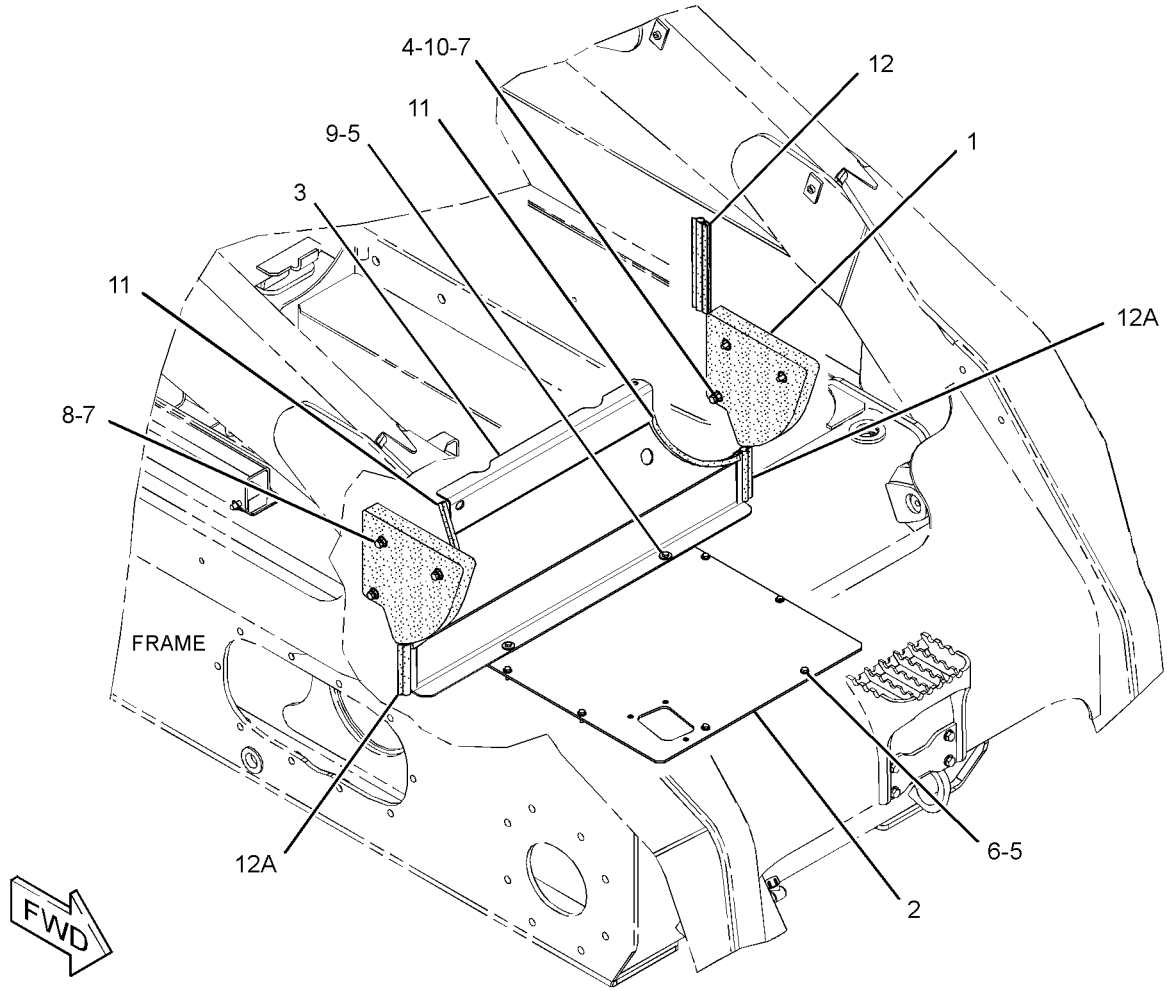

GRAPHIC #1 **<END>** g02148373

OPERATOR STATION

218-6406 SEAL GP-CAB

S/N: A9H1-UP
PART OF 326-5512, 326-5513 CAB AR-ENCLOSED ROPS
AN ATTACHMENT

SMCS-7301 **i02891531**

NOTE	REF NO	GRAPHIC REF	PART NUMBER	QTY	PART NAME 1 2 3 4 5 6 (PRODUCT LEVEL)	SEE PAGE
E	1	1	**124-3243**		SEAL (59-CM)	
E	1A	1	**124-3243**		SEAL (39-CM)	
	2	1	**187-3211**	1	PLATE AS	
M		1	**8T-3612**	2	NUT-WELD (M8X1.25-THD)	
	3	1	**187-3212**	1	PLATE	
	4	1	**218-6036**	1	BRACKET AS (LH)	
	5	1	**218-6037**	1	BRACKET AS (RH)	
	6	1	**284-3743**	2	SEAL-RUBBER	
	7	1	**284-3744**	1	SEAL-RUBBER	
	8	1	**287-6603**	2	PLUG-BUTTON	
	9	1	**288-5767**	8	PLUG-BUTTON	
	10	1	**189-4523**	2	BOSS	
M	11	1	**7X-2537**	2	BOLT (M8X1.25X35-MM)	
	12	1	**8T-4224**	2	WASHER-HARD (8.8X16X2-MM THK)	

E-ORDER BY THE CENTIMETER
M-METRIC PART

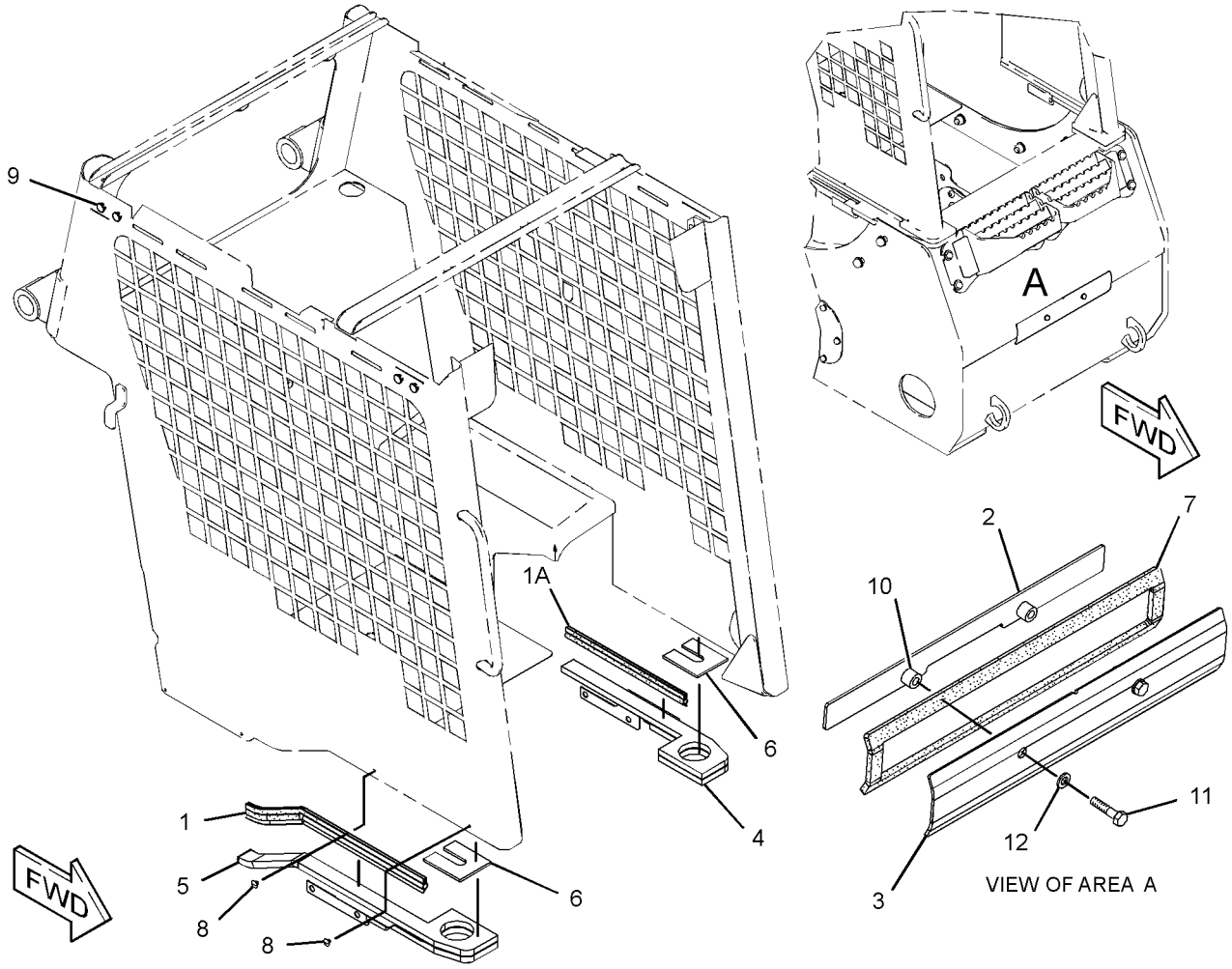

GRAPHIC #1 **<END>** g01441642

OPERATOR STATION

276-6019 SEAT BELT GP–RETRACTABLE, 3-IN

S/N: A9H1-UP

FOR USE WITH IN CALIFORNIA, WASHINGTON AND OREGON, SUSPENSION SEAT AN ATTACHMENT

SMCS-7327 **i03584623**

NOTE	REF NO	GRAPHIC REF	PART NUMBER	QTY	PART NAME 1 2 3 4 5 6 (PRODUCT LEVEL)	SEE PAGE
	1	1	**2D-6412**	2	WASHER (7/16X15/16X1/4-IN THK)	
	2	1	**0T-0244**	2	BOLT (7/16-20X1.25-IN)	
	3	1	**8S-0934**	2	LOCKNUT-FLANGE (7/16-20-THD)	
	4	1	**8T-4223**	2	WASHER-HARD (13.5X25.5X3-MM THK)	

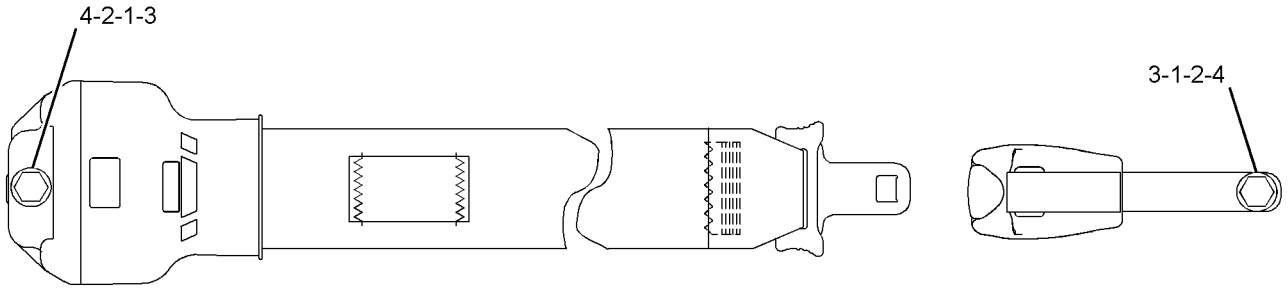

GRAPHIC #1 **<END>** g01230176

276-6020 SEAT BELT GP–RETRACTABLE, 3-IN

S/N: A9H1-UP
FOR USE WITH STATIC SEAT
AN ATTACHMENT

SMCS-7327 **i02718272**

NOTE	REF NO	GRAPHIC REF	PART NUMBER	QTY	PART NAME 1 2 3 4 5 6 (PRODUCT LEVEL)	SEE PAGE
	1	1	**2D-6412**	2	WASHER (7/16X15/16X1/4-IN THK)	
	2	1	**0T-0244**	2	BOLT (7/16-20X1.25-IN)	
	3	1	**8S-0934**	2	LOCKNUT-FLANGE (7/16-20-THD)	
	4	1	**8T-4223**	2	WASHER-HARD (13.5X25.5X3-MM THK)	

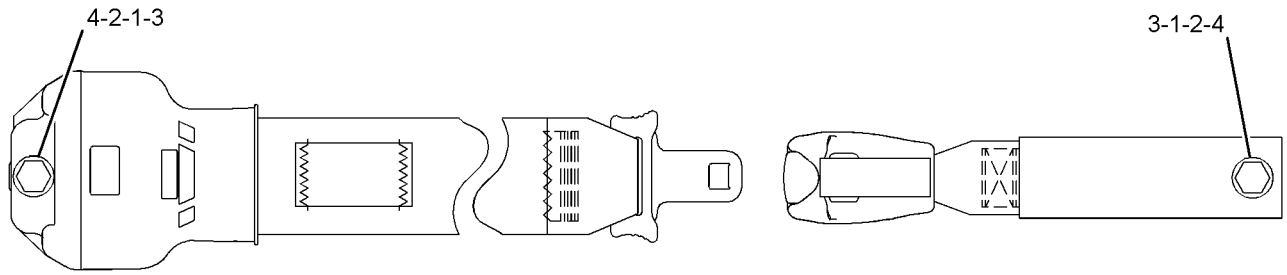

GRAPHIC #1 **<END>** g01230231

276-7276 SEAT BELT GP—RETRACTABLE, 2-IN

S/N: A9H1-UP

FOR USE WITH SUSPENSION SEAT. CANNOT BE USED WITH IN CALIFORNIA, OREGON, AND WASHINGTON, 276-6019—PAGE 562, 276-7277—PAGE 565

AN ATTACHMENT

SMCS-7327 **i02738465**

NOTE	REF NO	GRAPHIC REF	PART NUMBER	QTY	PART NAME 1 2 3 4 5 6 (PRODUCT LEVEL)	SEE PAGE
	1	1	**2D-6412**	2	WASHER (7/16X15/16X1/4-IN THK)	
	2	1	**0T-0244**	2	BOLT (7/16-20X1.25-IN)	
	3	1	**8S-0934**	2	LOCKNUT-FLANGE (7/16-20-THD)	
	4	1	**8T-4223**	2	WASHER-HARD (13.5X25.5X3-MM THK)	

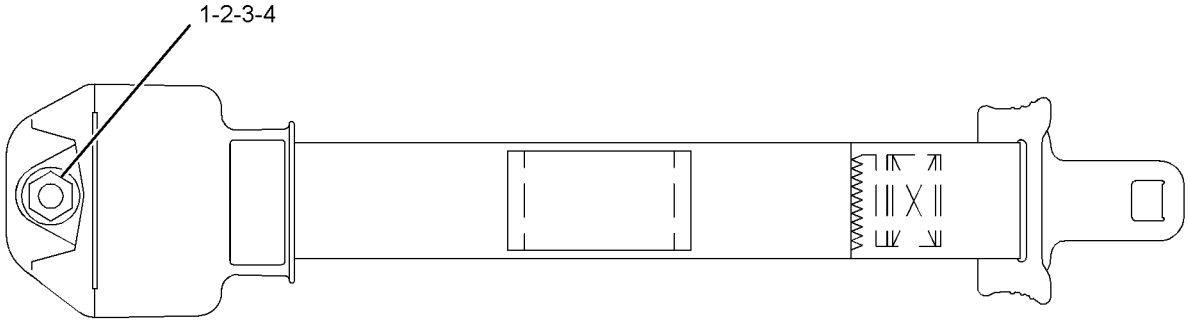

GRAPHIC #1 **<END>** g01230125

276-7277 SEAT BELT GP—RETRACTABLE, 2-IN

S/N: A9H1-UP

FOR USE WITH STATIC SEAT. CANNOT BE USED WITH 276-6019—PAGE 562, 276-7276—PAGE 564

AN ATTACHMENT

SMCS-7327 **i02712903**

NOTE	REF NO	GRAPHIC REF	PART NUMBER	QTY	PART NAME 1 2 3 4 5 6 (PRODUCT LEVEL)	SEE PAGE
	1	1	**2D-6412**	2	WASHER (7/16X15/16X1/4-IN THK)	
	2	1	**0T-0244**	2	BOLT (7/16-20X1.25-IN)	
	3	1	**8S-0934**	2	LOCKNUT-FLANGE (7/16-20-THD)	
	4	1	**8T-4223**	2	WASHER-HARD (13.5X25.5X3-MM THK)	

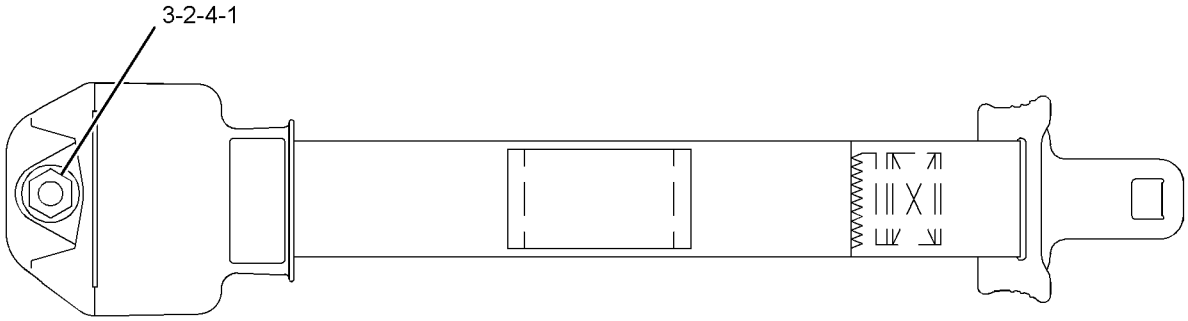

GRAPHIC #1 **<END>** g01230239

OPERATOR STATION

142-9305 SEAT GP–SUSPENSION

S/N: A9H1-UP

PART OF 326-5512, 326-5513 CAB AR-ENCLOSED ROPS, 326-5511 CAB AR-OPEN ROPS

CANNOT BE USED WITH 218-5562–PAGE 567

AN ATTACHMENT

SMCS-7312, 7324 **i02571422**

NOTE	REF NO	GRAPHIC REF	PART NUMBER	QTY	PART NAME 1 2 3 4 5 6 (PRODUCT LEVEL)	SEE PAGE
CY	1	1	**219-4380**	1	SEAT GP-ADJUSTABLE	568
M	2	1	**5C-7261**	4	NUT (M8X1.25-THD)	
	3	1	**8T-4224**	4	WASHER-HARD (8.8X16X2-MM THK)	

C-CHANGE FROM PREVIOUS TYPE
M-METRIC PART
Y-SEPARATE ILLUSTRATION

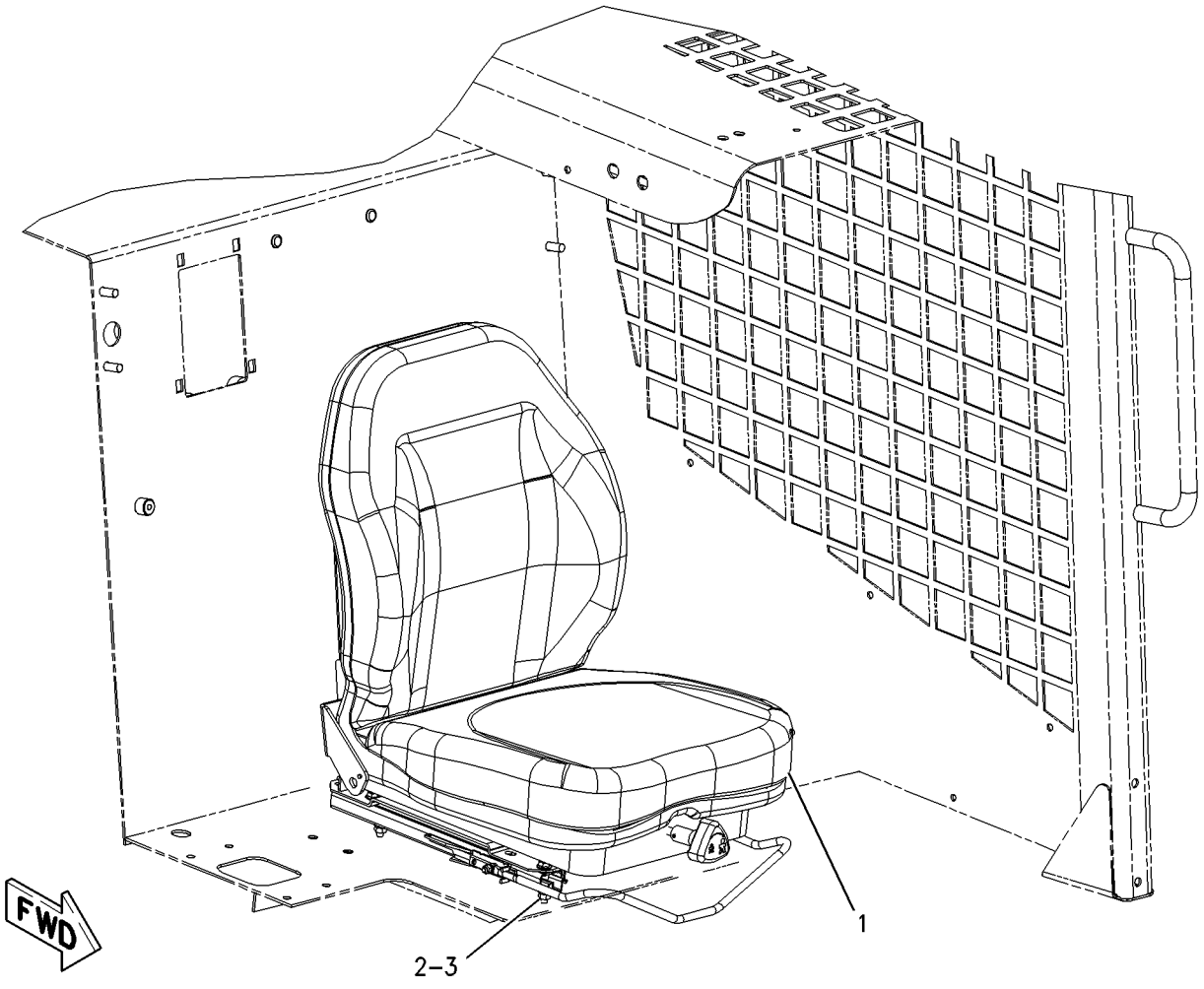

GRAPHIC #1 **<END>** g00914893

218-5562 SEAT GP–STATIC

S/N: A9H1-UP
PART OF 326-5510 CAB AR-OPEN ROPS
CANNOT BE USED WITH 142-9305–PAGE 566
AN ATTACHMENT

SMCS-7312, 7324 **i02757222**

NOTE	REF NO	GRAPHIC REF	PART NUMBER	QTY	PART NAME 1 2 3 4 5 6 (PRODUCT LEVEL)	SEE PAGE
	1	1	**218-6662**	1	SEAT GP (STATIC)	
		1	**153-1260**	1	SWITCH (SEAT)	
		1	**154-3985**	1	WIRE AS	
		1	**219-4379**	1	HANDLE (SEAT ADJUSTMENT)	
M	2	1	**5C-7261**	4	NUT (M8X1.25-THD)	
	3	1	**8T-4224**	4	WASHER-HARD (8.8X16X2-MM THK)	

M-METRIC PART

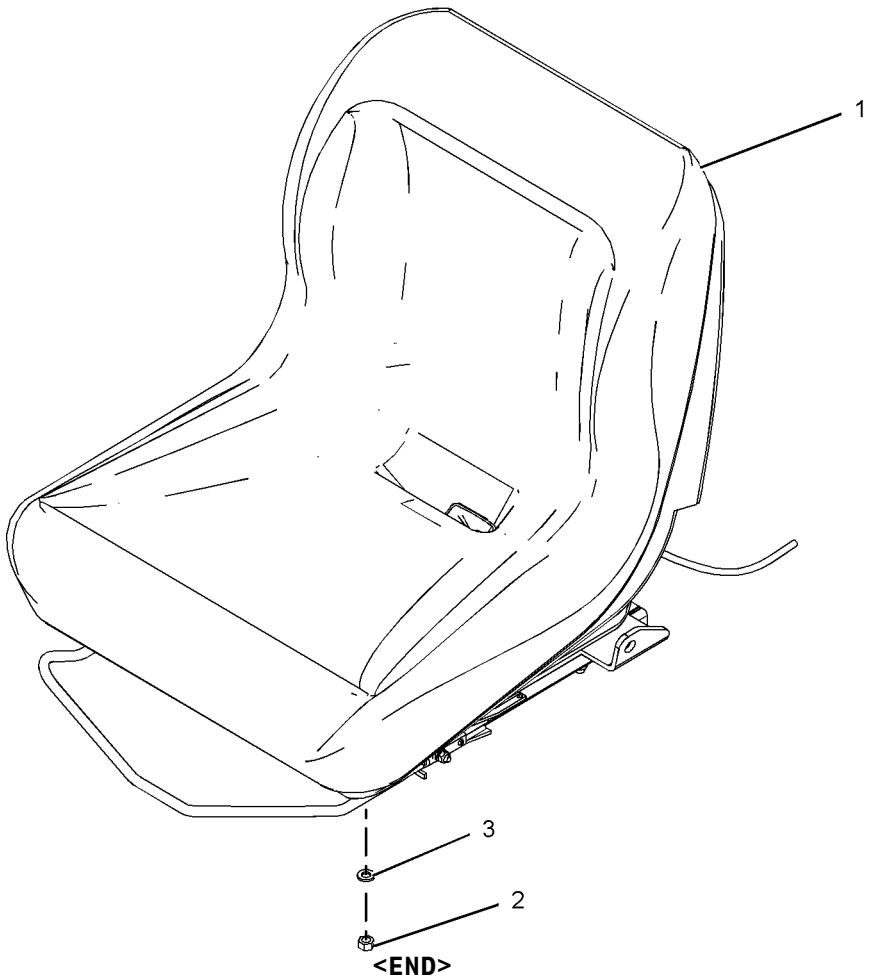

GRAPHIC #1 **<END>** g01018112

OPERATOR STATION

219-4380 SEAT GP-ADJUSTABLE

S/N: A9H1-UP
PART OF 142-9305 SEAT GP
AN ATTACHMENT

SMCS-7312, 7321 **i04045377**

NOTE	REF NO	GRAPHIC REF	PART NUMBER	QTY	PART NAME 1 2 3 4 5 6 (PRODUCT LEVEL)	SEE PAGE
	1	1	**154-3985**	1	WIRE AS	
	2	1	**154-3986**	1	SWITCH AS (SEAT)	
	3	1	**154-8711**	1	KIT-SPRING (ADJUSTABLE SEAT)	
					(INCLUDES SPRINGS, CABLE AS & PUSH NUTS)	
	4	1	**154-8715**	1	KIT-DAMPER (ADJUSTABLE SEAT)	
					(INCLUDES DAMPER, LOCK NUTS, WASHER & SPACER)	
	5	1	**173-2543**	1	KIT-CUSHION (SEAT CUSHION, BACK)	
	6	1	**219-4379**	1	HANDLE (SEAT ADJUSTMENT)	
	7	1	**219-4388**	1	KIT-HANDLE (KNOB)	
					(INCLUDES KNOB, SHAFT, SPRING PINS, HANGER SPRING, PUSH NUTS & SPACERS)	

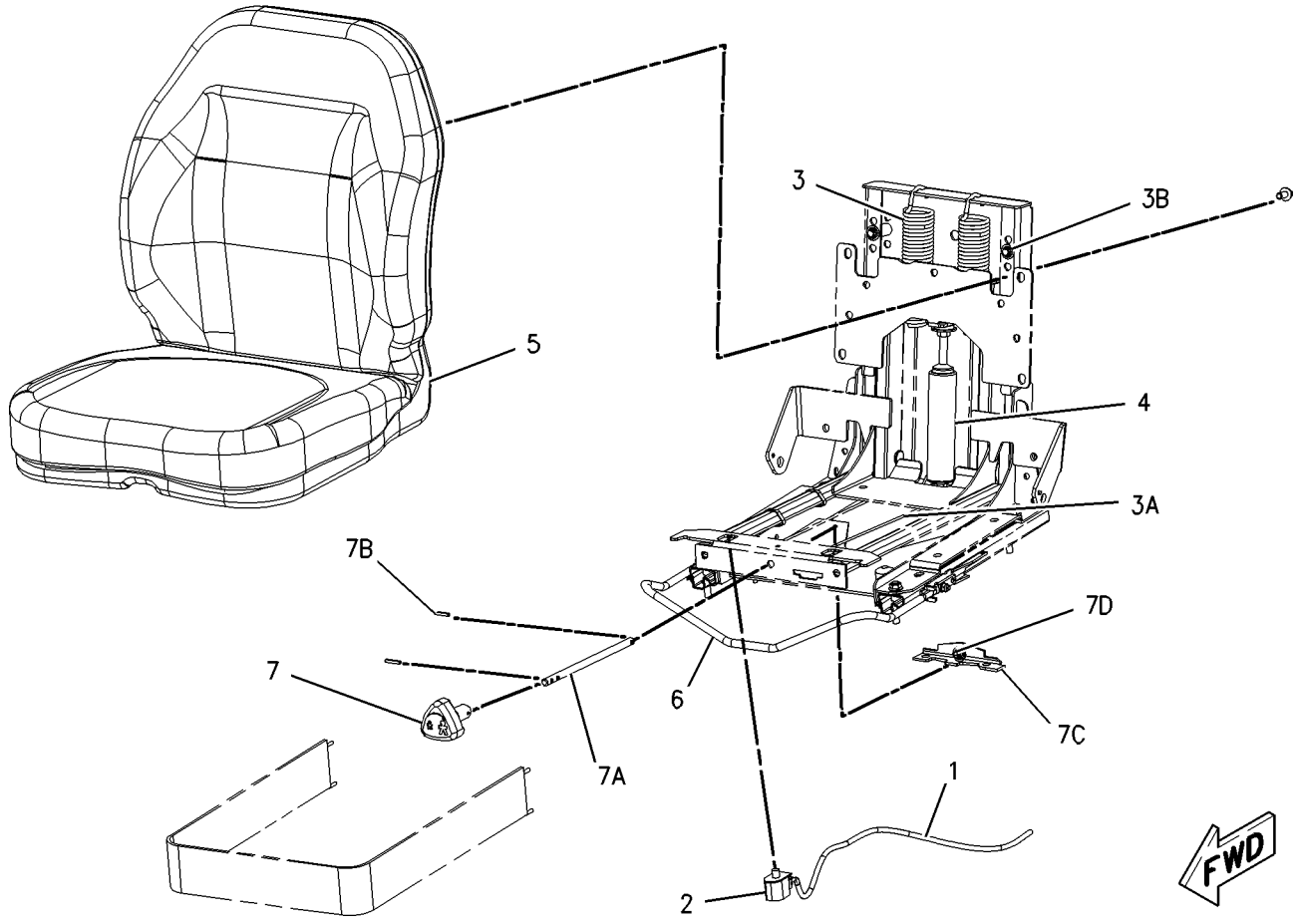

GRAPHIC #1 **<END>** g00915009

OPERATOR STATION

218-6380 SPRING GP-GAS–CAB, DOOR

S/N: A9H1-UP

PART OF 326-5400 CAB AR

SMCS-7301 **i03973391**

NOTE	REF NO	GRAPHIC REF	PART NUMBER	QTY	PART NAME 1 2 3 4 5 6 (PRODUCT LEVEL)	SEE PAGE
	1	1	**5P-0372**	2	LOCK PIN	
	2	1	**9C-5344**	1	SPACER (10.5X20X18-MM THK)	
	3	1	**095-1325**	1	PIN-CLEVIS	
	4	1	**153-2682**	1	SPRING AS-GAS (CAB)	
	5	1	**177-3405**	1	PIN	

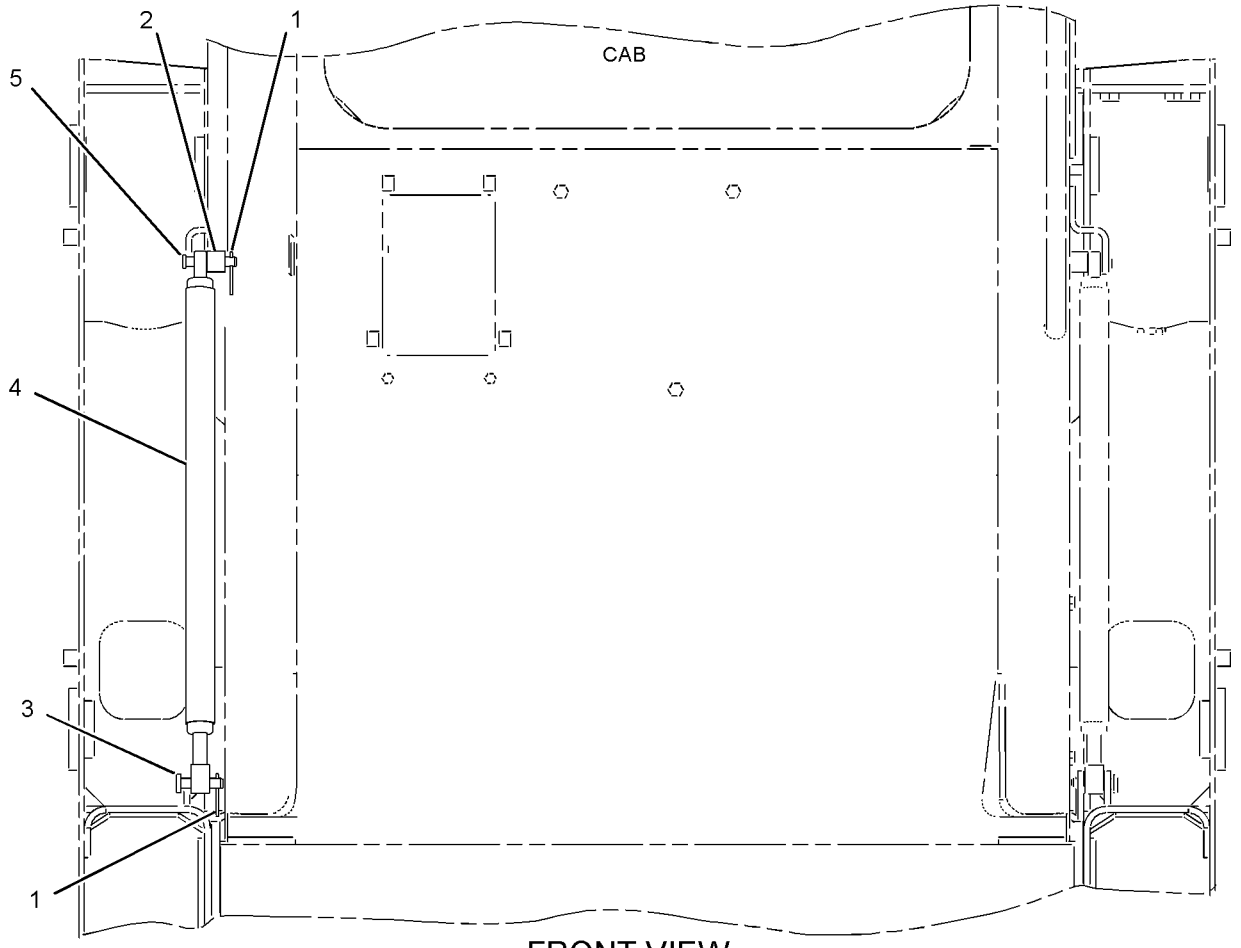

FRONT VIEW

GRAPHIC #1

<END>

g01031997

OPERATOR STATION

166-2569 VISOR GP-CAB

S/N: A9H1-UP
PART OF 340-7724 KIT-ROADING CONVERSION, 173-3022 VISOR GP-CAB
AN ATTACHMENT

SMCS-7301 **i04464732**

NOTE	REF NO	GRAPHIC REF	PART NUMBER	QTY	PART NAME 1 2 3 4 5 6 (PRODUCT LEVEL)	SEE PAGE
	1	1	**2S-5717**	1	LOCKNUT (3/8-16-THD)	
	2	1	**5T-7869**	2	CLAMP	
	3	1	**5T-7870**	1	KNOB (ARMREST ADJUSTMENT)	
	4	1	**1D-4677**	2	BOLT-ROUND HEAD (3/8-16X1-IN)	
M	5	1	**9X-2042**	4	SCREW-TRUSS HEAD (M6X1X12-MM)	

M-METRIC PART

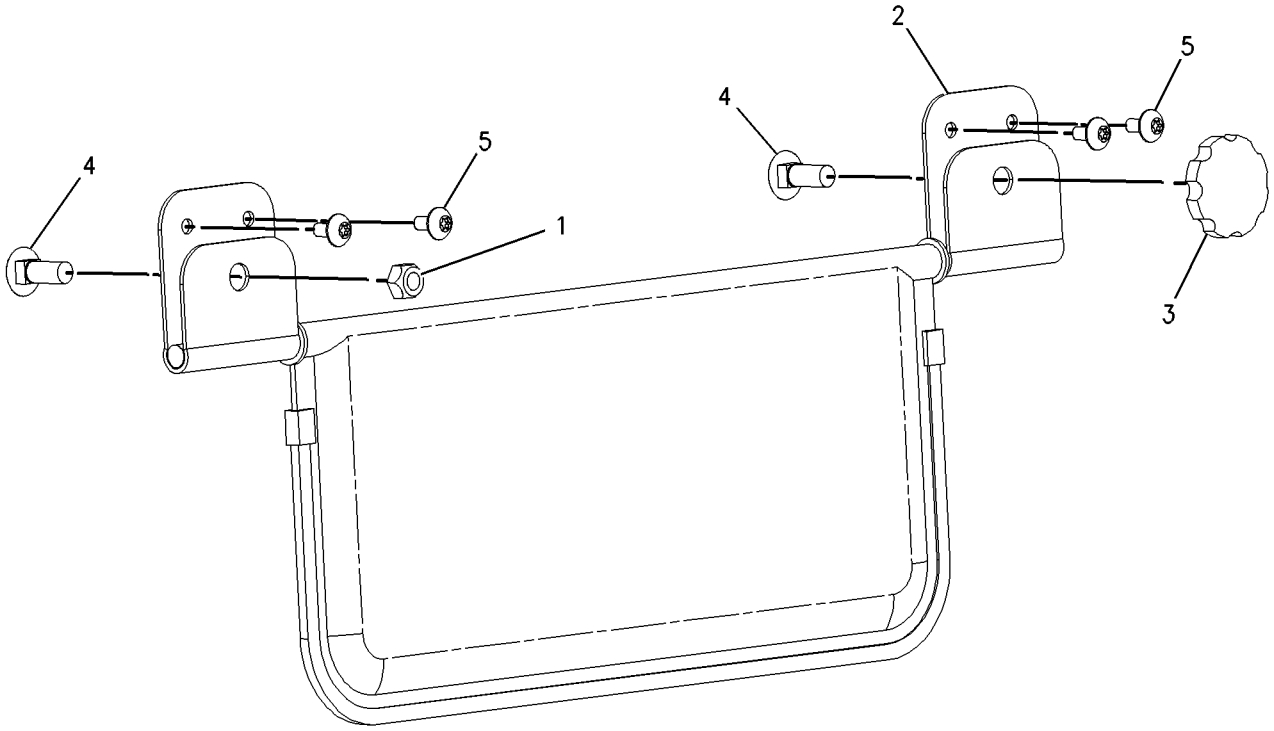

GRAPHIC #1 **<END>** g00695703

173-3022 VISOR GP-CAB

S/N: A9H1-UP
PART OF 326-5529, 326-5559 CONVERSION AR-ROADING AN ATTACHMENT

SMCS-7301 **i01486233**

NOTE	REF NO	GRAPHIC REF	PART NUMBER	QTY	PART NAME 1 2 3 4 5 6 (PRODUCT LEVEL)	SEE PAGE
	1	1	**166-2562**	1	PLATE AS	
Y	2	1	**166-2569**	1	VISOR GP-CAB	570
	3	1	**195-0936**	4	INSERT-THREADED (M6X1)	
M	4	1	**9X-2045**	4	SCREW-TRUSS HEAD (M6X1X20-MM)	

M-METRIC PART
Y-SEPARATE ILLUSTRATION

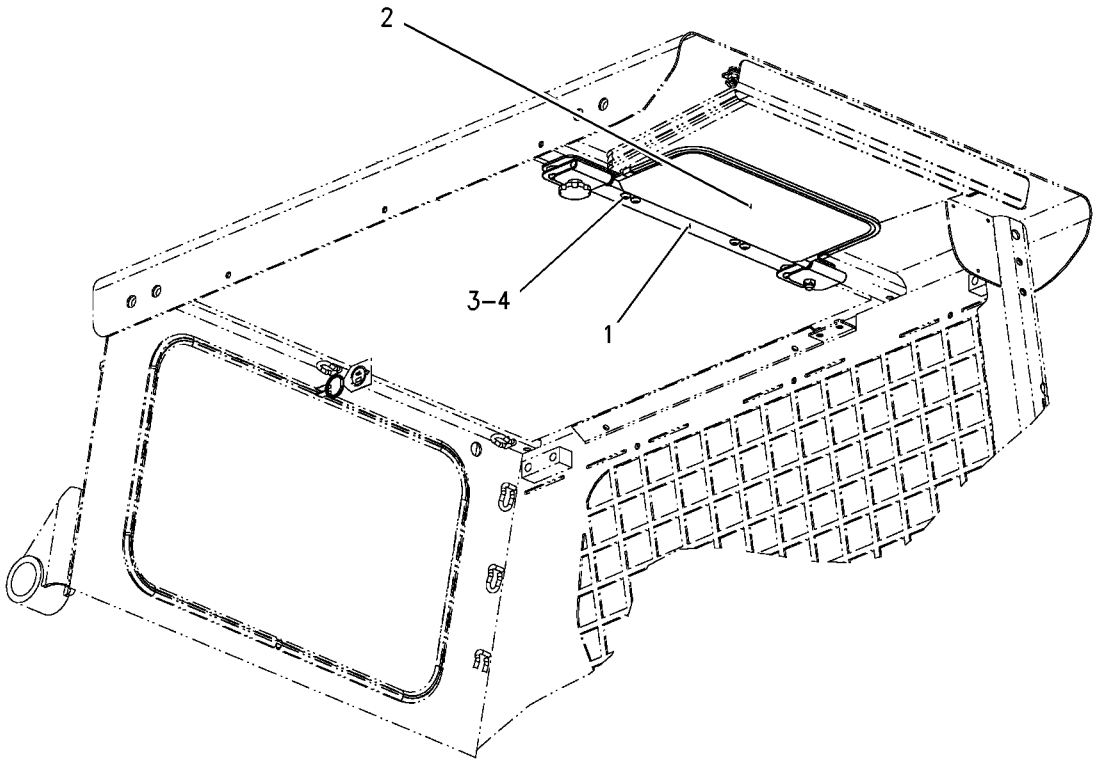

GRAPHIC #1 **<END>** g00772669

OPERATOR STATION

195-6723 WINDOW GP-CAB

S/N: A9H1-UP

PART OF 326-5400 CAB AR

SMCS-7310 **i04368940**

NOTE	REF NO	GRAPHIC REF	PART NUMBER	QTY	PART NAME 1 2 3 4 5 6 (PRODUCT LEVEL)	SEE PAGE
	1	1	**5C-8310**	1	BRACKET-RING	
	2	1	**5C-8311**	1	RING	
	3	1	**8T-6842**	1	FILM-INSTRUCTION (PULL RING, ALTERNATE EXIT)	
	4	1	**142-9319**	1	WINDOW	
CE	5	1	**108-0656**		SEAL (192-CM)	
CE	6	1	**104-5957**		STRIP-LOCKING (186-CM)	

C-CHANGE FROM PREVIOUS TYPE
E-ORDER BY THE CENTIMETER

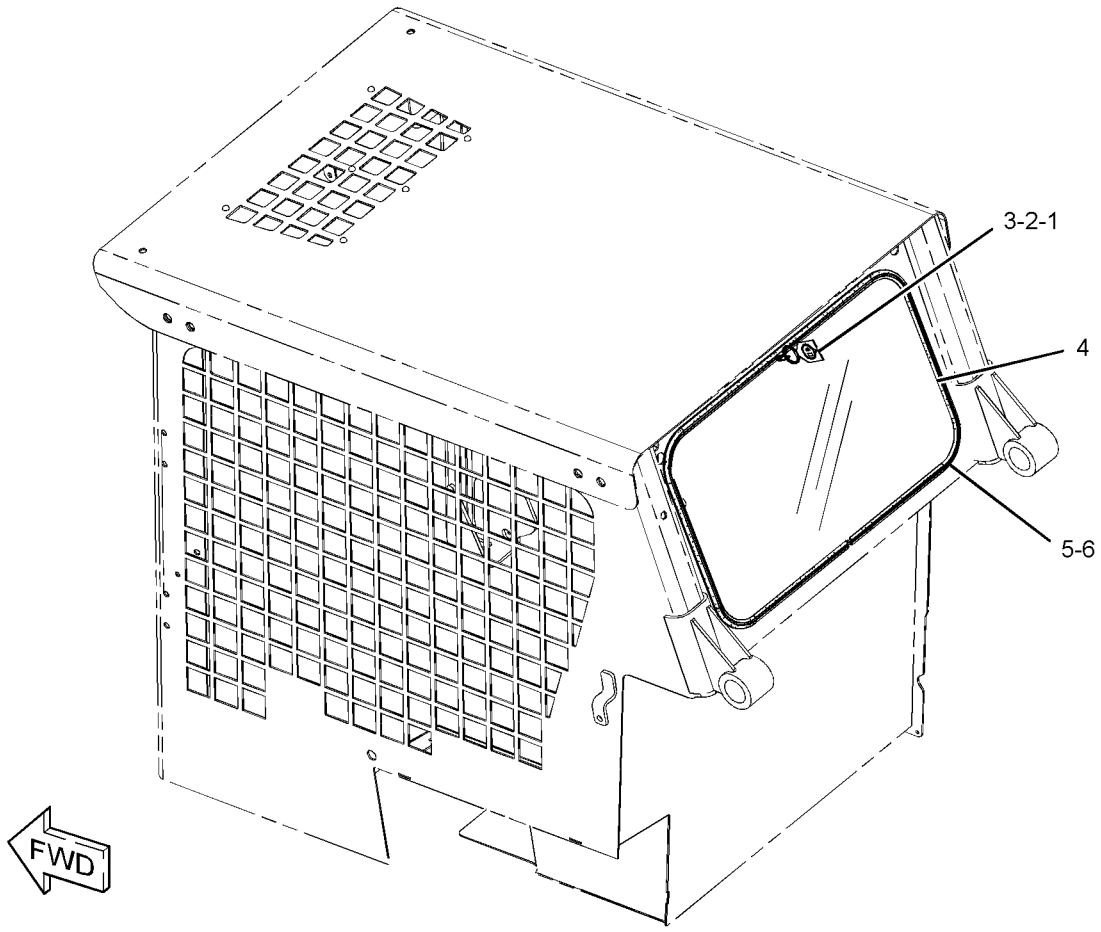

GRAPHIC #1 **<END>** g01268492

OPERATOR STATION

218-6411 WINDOW GP-CAB—SIDE

S/N: A9H1-UP

PART OF 326-5512, 326-5513 CAB AR-ENCLOSED ROPS

AN ATTACHMENT

SMCS-7310 **i04368945**

NOTE	REF NO	GRAPHIC REF	PART NUMBER	QTY	PART NAME 1 2 3 4 5 6 (PRODUCT LEVEL)	SEE PAGE
Y	1	1	**224-7057**	1	WINDOW GP-CAB (UPPER, LH)	574
Y	2	1	**224-7058**	1	WINDOW GP-CAB (UPPER, RH)	576
	3	1	**231-7321**	1	WINDOW AS-CAB (LOWER, RH)	
	4	1	**231-7324**	1	WINDOW AS-CAB (LOWER, LH)	
					(EACH WINDOW AS INCLUDES)	
		1	**239-6109**	1	LATCH AS	
E		1	**282-6961**		SEAL (122-CM)	
M	5	1	**9X-2045**	10	SCREW-TRUSS HEAD (M6X1X20-MM)	

E-ORDER BY THE CENTIMETER
M-METRIC PART
Y-SEPARATE ILLUSTRATION

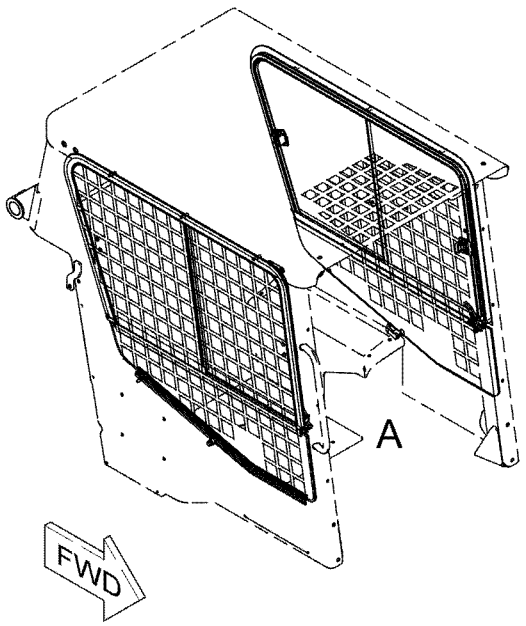

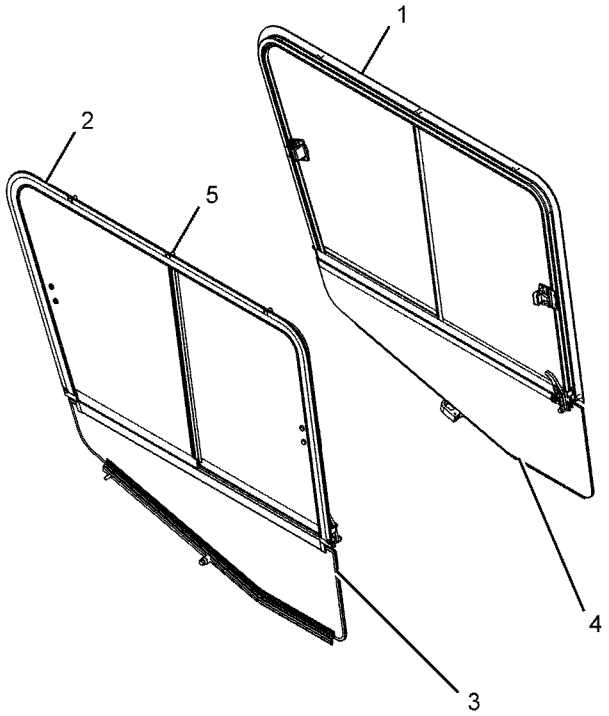

VIEW OF AREA A

GRAPHIC #1 **<END>** g01057739

OPERATOR STATION

224-7057 WINDOW GP-CAB—UPPER,LH

S/N: A9H1-UP

PART OF 218-6411 WINDOW GP-CAB

AN ATTACHMENT

SMCS-7310 **i03648870**

NOTE	REF NO	GRAPHIC REF	PART NUMBER	QTY	PART NAME 1 2 3 4 5 6 (PRODUCT LEVEL)	SEE PAGE
	1	1	**231-7322**	1	WINDOW AS-CAB (SLIDING, REAR)	
E		1	**207-0573**		SEAL (76-CM)	
		1	**231-7331**	1	LATCH AS	
	2	1	**231-7323**	1	WINDOW AS-CAB (SLIDING, FRONT)	
E		1	**207-0573**		SEAL (41-CM)	
		1	**231-7331**	1	LATCH AS	
Y	3	1	**231-7327**	1	FRAME GP-WINDOW (LH)	530
	4	1	**231-7372**	1	CATCH	
	5	1	**243-1323**	1	CATCH	
	6	1	**6D-5797**	2	SCREW-SOCKET	
	7	1	**9X-8918**	2	SCREW-FLAT HEAD (8-32X0.5-IN)	
E	8	1	**207-0539**		SEAL (125-CM)	
E	8A	1	**207-0539**		SEAL (138-CM)	
E	8B	1	**207-0539**		SEAL (81-CM)	
E	9	1	**207-0573**		SEAL (62-CM)	
E	9A	1	**207-0573**		SEAL (80-CM)	
E	10	1	**3E-3892**		SEAL (31-CM EACH)	
E	10A	1	**3E-3892**		SEAL (75-CM)	
E	10B	1	**3E-3892**		SEAL (65-CM)	
E	10C	1	**3E-3892**		SEAL (4-CM EACH)	

E-ORDER BY THE CENTIMETER
Y-SEPARATE ILLUSTRATION

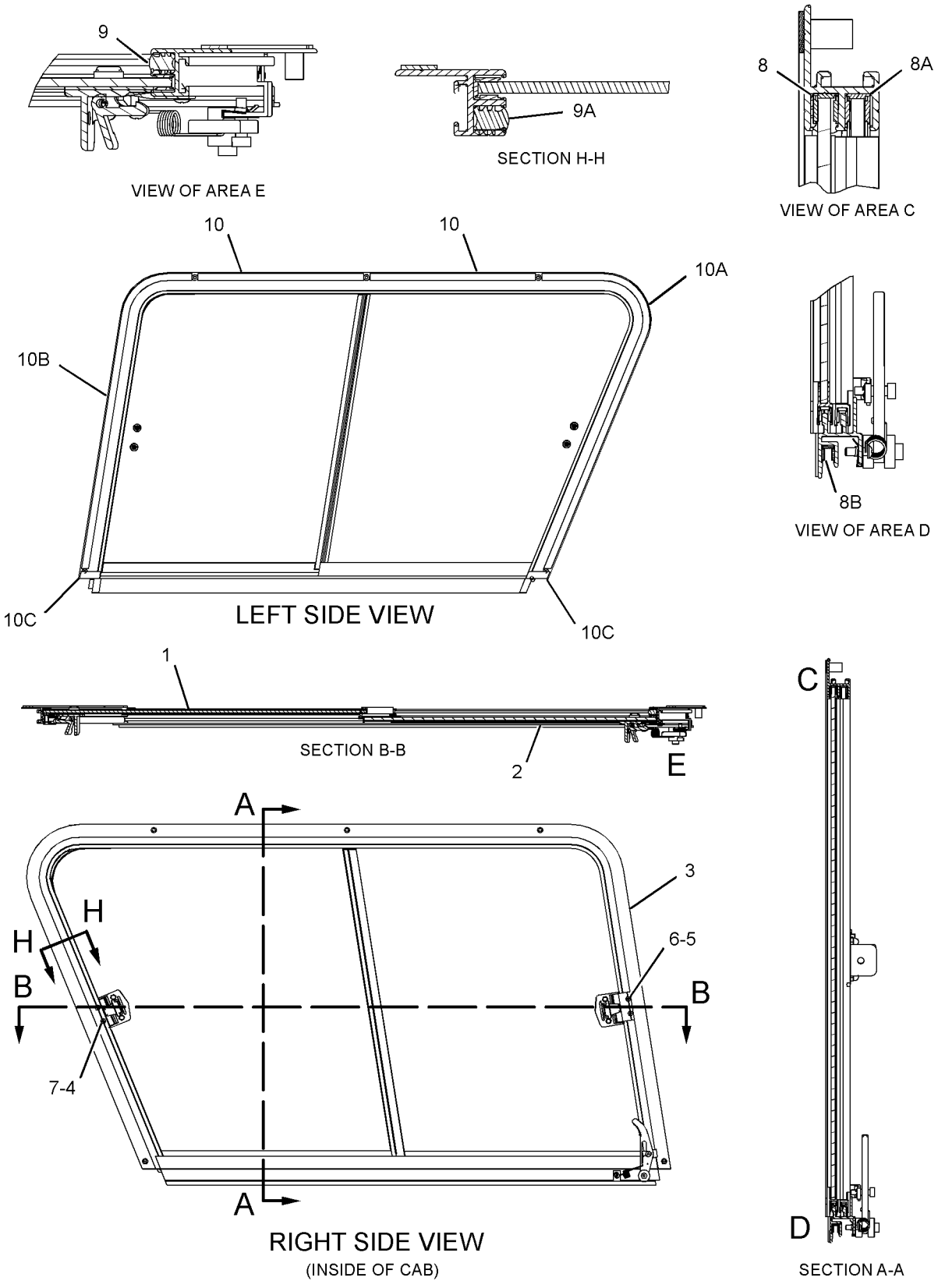

GRAPHIC #1 **<END>** g01958440

OPERATOR STATION

224-7058 WINDOW GP-CAB—UPPER, RH

S/N: A9H1-UP

PART OF 218-6411 WINDOW GP-CAB

AN ATTACHMENT

SMCS-7310 **i03648873**

NOTE	REF NO	GRAPHIC REF	PART NUMBER	QTY	PART NAME 1 2 3 4 5 6 (PRODUCT LEVEL)	SEE PAGE
	1	1	**231-7319**	1	WINDOW AS-CAB (SLIDING, REAR)	
E			**207-0573**		SEAL (76-CM)	
			231-7331	1	LATCH AS	
	2	1	**231-7320**	1	WINDOW AS-CAB (SLIDING, FRONT)	
E		1	**207-0573**		SEAL (41-CM)	
		1	**231-7331**	1	LATCH AS	
Y	3	1	**231-7325**	1	FRAME GP-WINDOW (RH)	529
	4	1	**231-7372**	1	CATCH	
	5	1	**243-1323**	1	CATCH	
	6	1	**6D-5797**	2	SCREW-SOCKET	
	7	1	**9X-8918**	2	SCREW-FLAT HEAD (8-32X0.5-IN)	
E	8	1	**3E-3892**		SEAL (4-CM EACH)	
E	8A	1	**3E-3892**		SEAL (31-CM EACH)	
E	8B	1	**3E-3892**		SEAL (75-CM)	
E	8C	1	**3E-3892**		SEAL (65-CM)	
E	9	1	**207-0539**		SEAL (81-CM)	
E	9A	1	**207-0539**		SEAL (138-CM)	
E	9B	1	**207-0539**		SEAL (125-CM)	
E	10	1	**207-0573**		SEAL (80-CM)	
E	10A	1	**207-0573**		SEAL (62-CM)	

E-ORDER BY THE CENTIMETER
Y-SEPARATE ILLUSTRATION

224-7058 WINDOW GP-CAB *(contd.)* **i03648873**

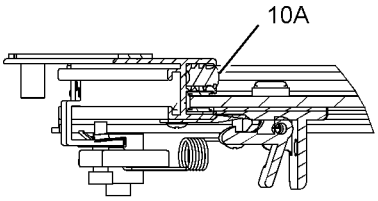

VIEW OF AREA E

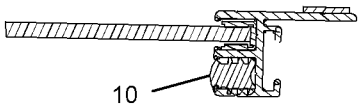

SECTION H-H

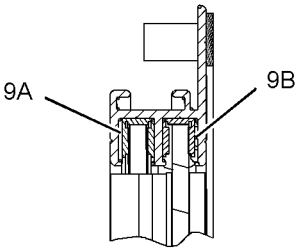

VIEW OF AREA C

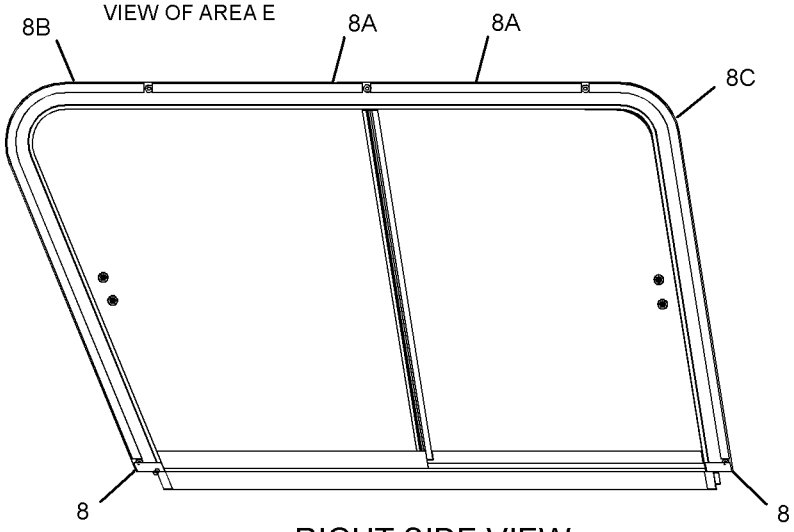

RIGHT SIDE VIEW

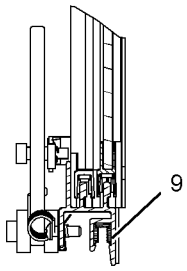

VIEW OF AREA D

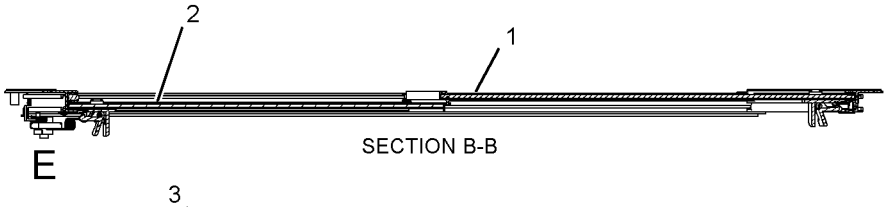

SECTION B-B

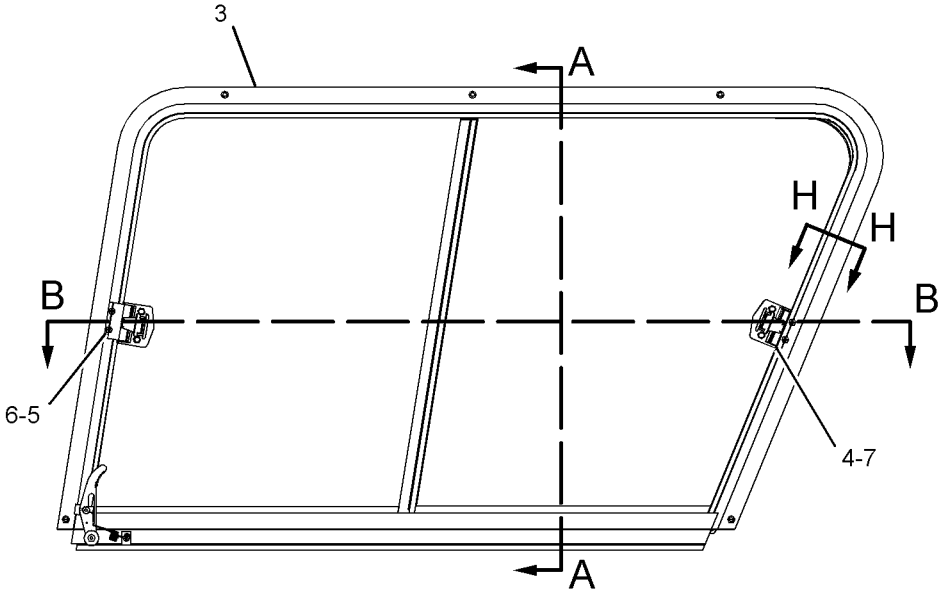

LEFT SIDE VIEW
(INSIDE OF CAB)

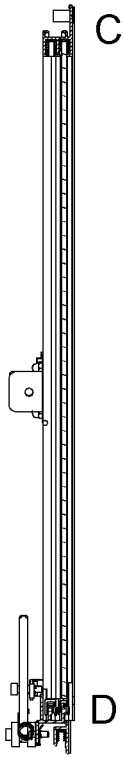

SECTION A-A

GRAPHIC #1 **<END>** g01958448

SERVICE EQUIPMENT AND SUPPLIES

238-7734 FILM GP–UN

S/N: A9H1-UP

AN ATTACHMENT

SMCS-7557 **i03775033**

NOTE	REF NO	GRAPHIC REF	PART NUMBER	QTY	PART NAME 1 2 3 4 5 6 (PRODUCT LEVEL)	SEE PAGE
	1	1	**252-9015**	1	FILM-IDENTIFICATION (UN) (FRONT)	
	2	1	**252-9016**	2	FILM-IDENTIFICATION (UN) (SIDE)	
	3	1	**252-9017**	2	FILM-IDENTIFICATION (UN) (REAR)	

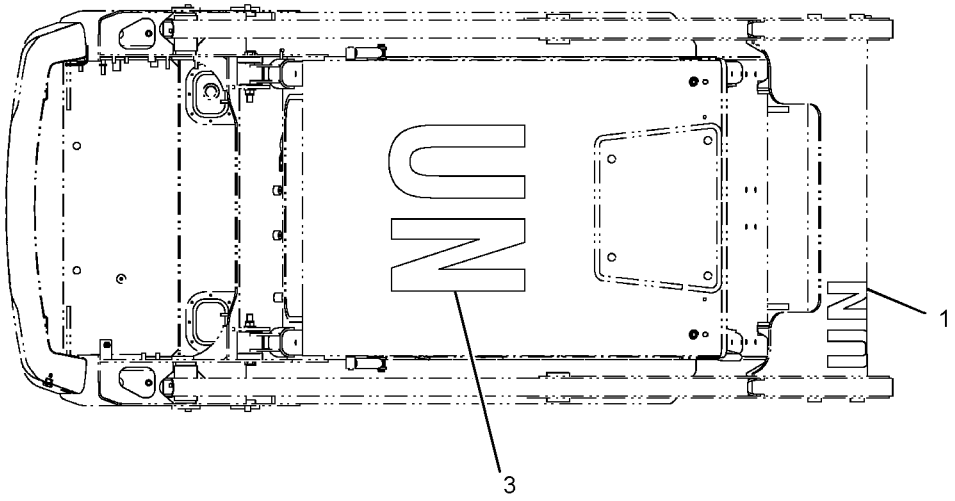

TOP VIEW FWD

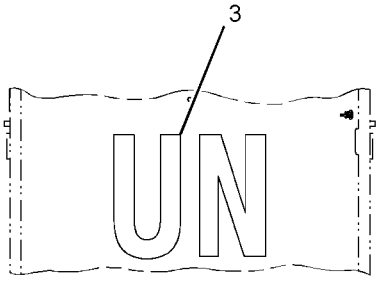

VIEW A-A

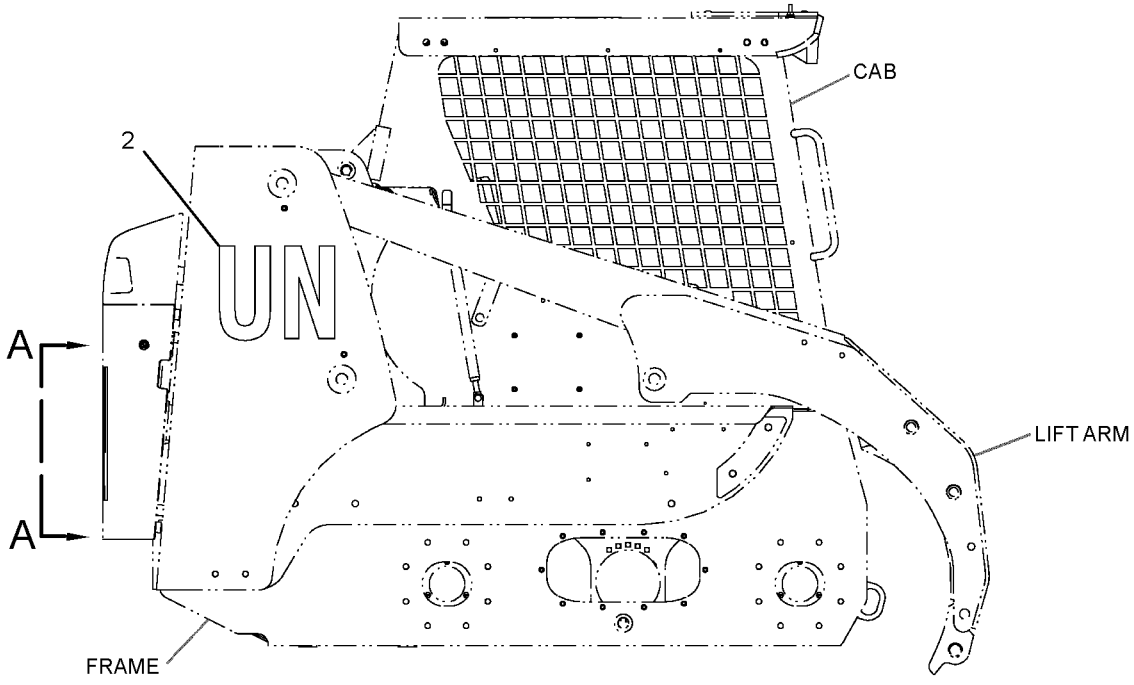

RIGHT SIDE VIEW

GRAPHIC #1 **<END>** g01397986

SERVICE EQUIPMENT AND SUPPLIES

354-6568 FILM GP

S/N: A9H1-UP

PART OF 326-5420 COMMON AR

SMCS-7557 **i03902033**

NOTE	REF NO	GRAPHIC REF	PART NUMBER	QTY	PART NAME 1 2 3 4 5 6 (PRODUCT LEVEL)	SEE PAGE
	1	1	**258-3423**	1	FILM-IDENTIFICATION (CATERPILLAR)	
	2	1	**258-3424**	1	FILM-IDENTIFICATION (CAT, LH)	
	3	1	**258-3425**	1	FILM-IDENTIFICATION (CAT, RH)	
	4	1	**258-3427**	1	FILM-IDENTIFICATION (CAT)	
	5	1	**354-6569**	1	FILM-IDENTIFICATION (236B3, LH)	
	6	1	**354-6570**	1	FILM-IDENTIFICATION (236B3, RH)	

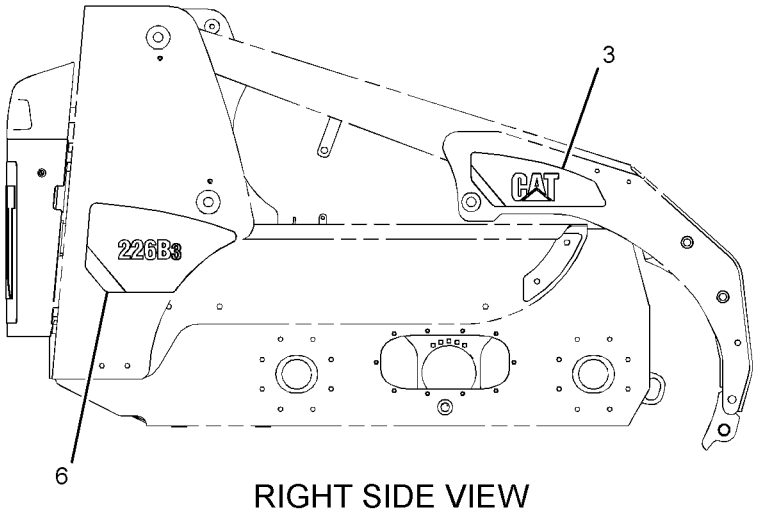

RIGHT SIDE VIEW

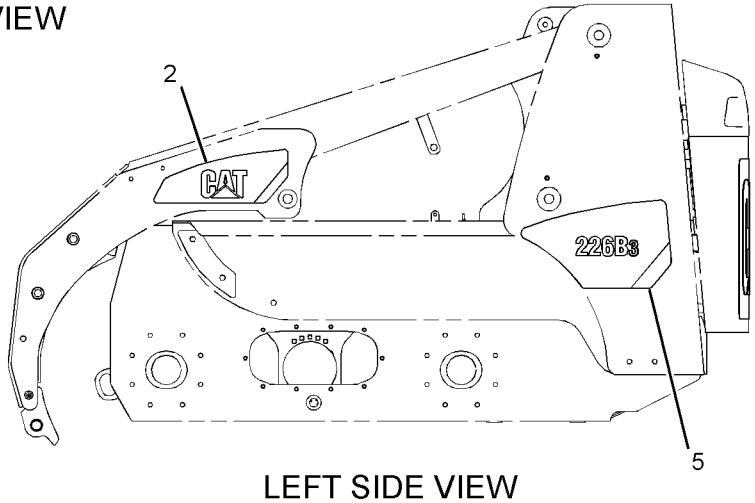

LEFT SIDE VIEW

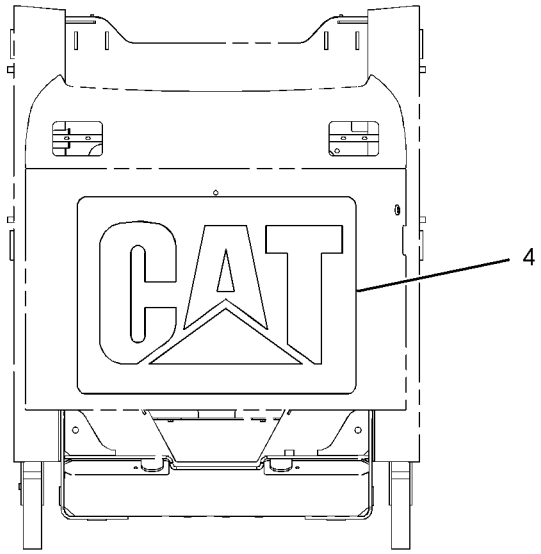

REAR VIEW

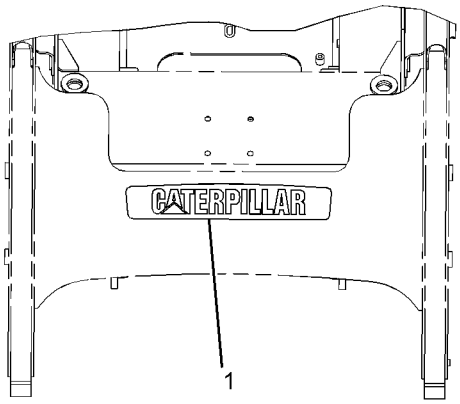

FRONT VIEW

GRAPHIC #1 **<END>** g02147975

SERVICE EQUIPMENT AND SUPPLIES

356-1897 FILM GP—TWO SPEED

S/N: A9H1-UP
PART OF 326-5278, 326-5428 CONTROL AR-MACHINE
AN ATTACHMENT

SMCS-7557 **i03905410**

NOTE	REF NO	GRAPHIC REF	PART NUMBER	QTY	PART NAME 1 2 3 4 5 6 (PRODUCT LEVEL)	SEE PAGE
	1	1	**290-2110**	2	FILM-IDENTIFICATION (TWO SPEED)	

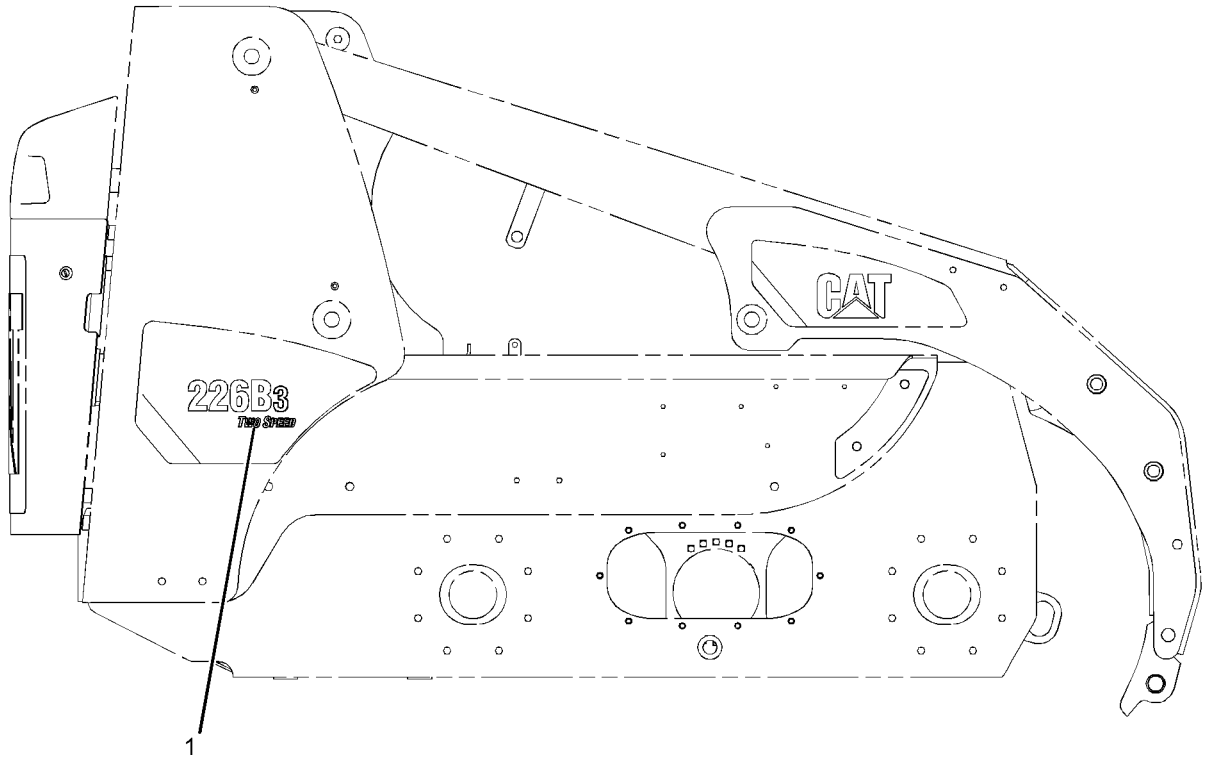

RIGHT SIDE VIEW

GRAPHIC #1 **<END>** g02147978

SERVICE EQUIPMENT AND SUPPLIES

195-6740 PLATE & FILM GP

S/N: A9H1-UP
AN ATTACHMENT

SMCS-7405, 7557 **i02890284**

NOTE	REF NO	GRAPHIC REF	PART NUMBER	QTY	PART NAME 1 2 3 4 5 6 (PRODUCT LEVEL)	SEE PAGE
	1	1	**199-3410**	1	FILM-IDENTIFICATION (SYNTHETIC HYD OIL, READ OMM)	

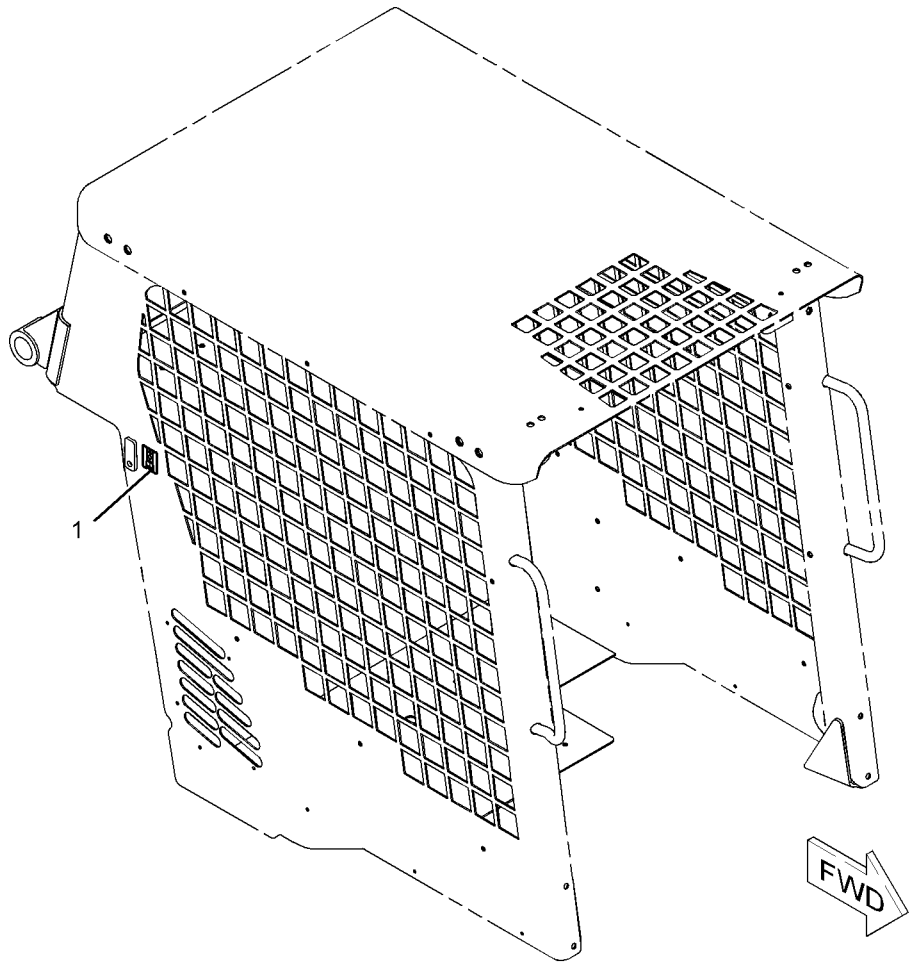

GRAPHIC #1 **<END>** g01086583

SERVICE EQUIPMENT AND SUPPLIES

247-0678 PLATE & FILM GP

S/N: A9H1-UP
PART OF 231-5275, 231-5277 BLADE AR
AN ATTACHMENT

SMCS-7405, 7557 **i02469823**

NOTE	REF NO	GRAPHIC REF	PART NUMBER	QTY	PART NAME 1 2 3 4 5 6 (PRODUCT LEVEL)	SEE PAGE
	1	1	**7X-3229**	4	FILM-INSTRUCTION (LIFT EYE, TIE-DOWN LOCATION)	
	2	1	**226-1242**	2	FILM-WARNING (CRUSH HAZARD, STAY BACK, U.S.)	
	3	1	**228-3581**	1	FILM-WARNING (DO NOT OPERATE, READ OMM)	
	4	1	**159-8035**	1	FILM-WARNING (CRUSH HAZARD, STAY BACK)	
	5	1	**124-2456**	1	FILM-INSTRUCTION (NO STEP)	

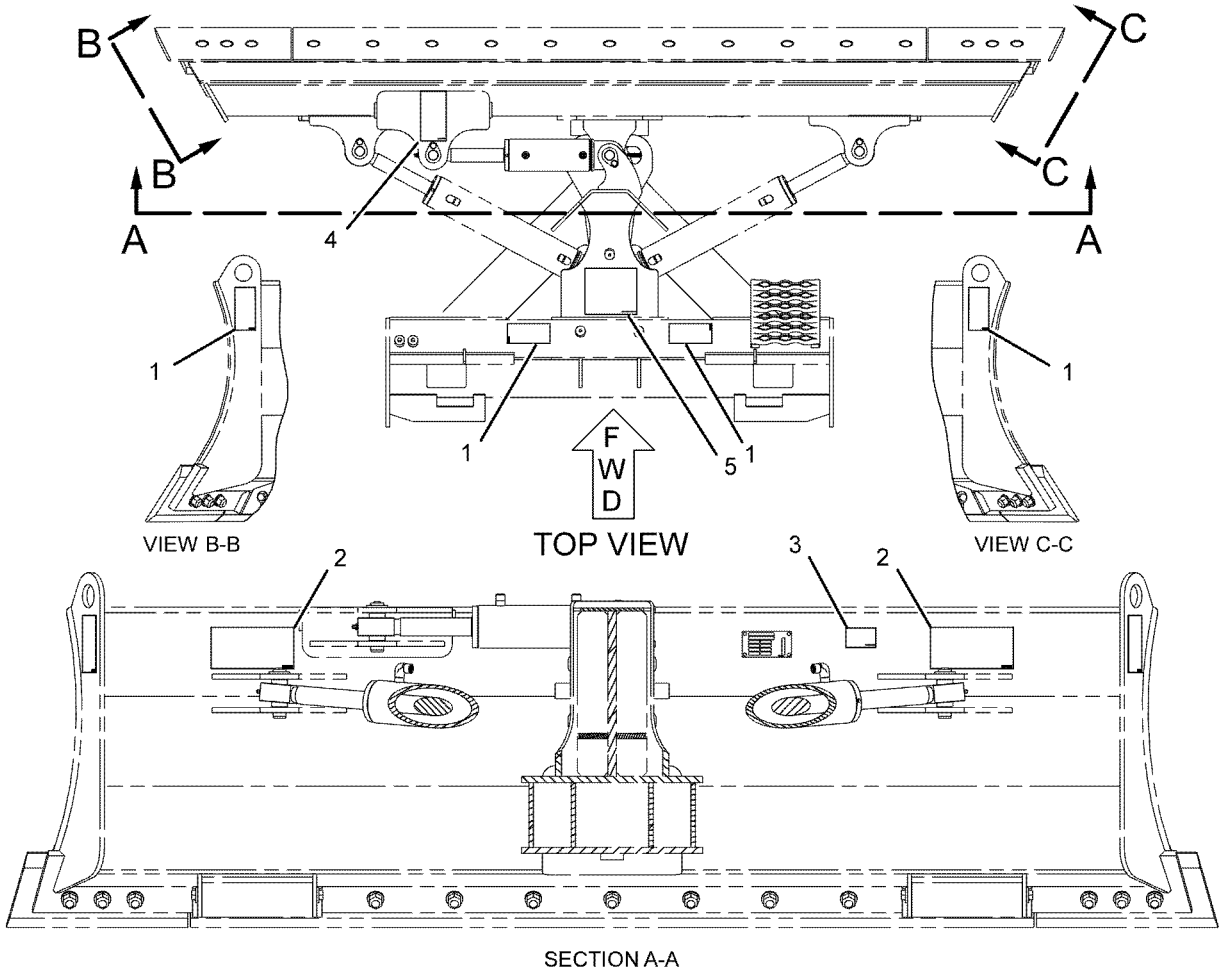

GRAPHIC #1 **<END>** g01120449

SERVICE EQUIPMENT AND SUPPLIES

286-9251 PLATE & FILM GP

S/N: A9H1-UP

PART OF 286-9300, 286-9301 BUCKET AR-GRAPPLE

AN ATTACHMENT

SMCS-7405, 7557 **i04157320**

NOTE	REF NO	GRAPHIC REF	PART NUMBER	QTY	PART NAME 1 2 3 4 5 6 (PRODUCT LEVEL)	SEE PAGE
	1	1	**168-8389**	4	TACK-FASTENER	
	2	1	**228-3369**	1	FILM-WARNING (DO NOT OPERATE, READ OMM)	
	3	1	**247-6118**	2	FILM-WARNING (CRUSH HAZARD, STAY BACK)	
	4	1	**248-5245**	2	FILM-INFORMATION (LIFT EYE, TIE-DOWN LOCATION)	
	5	1	**358-4944**	1	PLATE-IDENTIFICATION (BUCKET SPECIFICATIONS)	

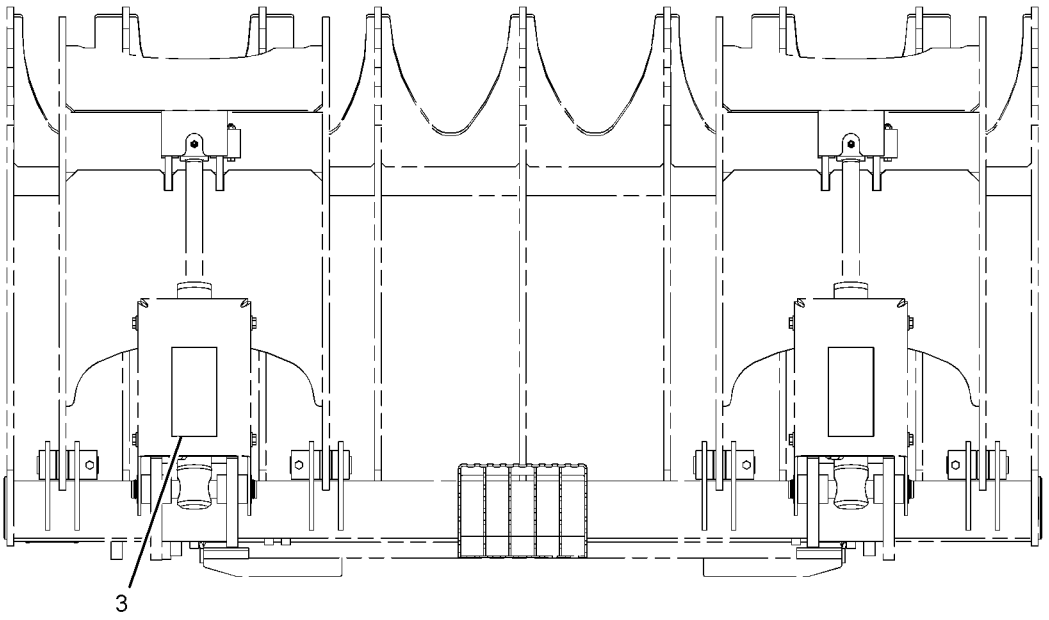

TOP VIEW

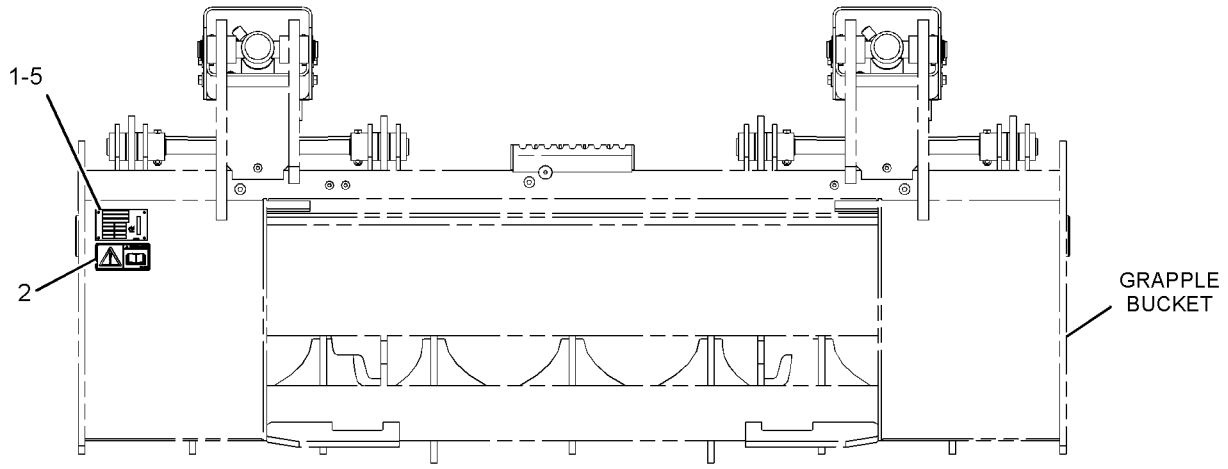

REAR VIEW

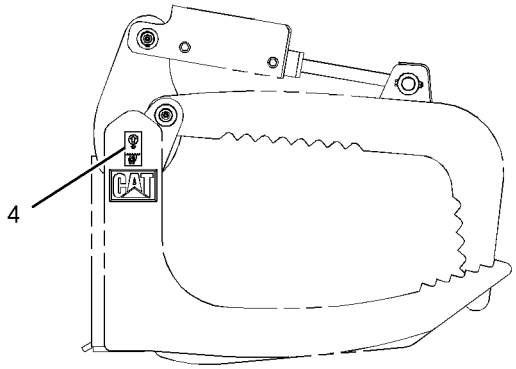

RIGHT SIDE VIEW

GRAPHIC #1

<END>

g01373367

SERVICE EQUIPMENT AND SUPPLIES

326-5460 PLATE & FILM GP

S/N: A9H1-UP

AN ATTACHMENT

SMCS-7405, 7557 **i03996954**

NOTE	REF NO	GRAPHIC REF	PART NUMBER	QTY	PART NAME 1 2 3 4 5 6 (PRODUCT LEVEL)	SEE PAGE
	1	1	**157-2853**	1	FILM-INFORMATION (READ OMM)	
	3	2	**169-2876**	1	FILM-IDENTIFICATION (POWER RECEPTACLE, 12-VOLT)	
	4	1	**219-0302**	1	FILM-WARNING (NO WELD, NO DRILL, READ OMM)	
	5	1	**239-4990**	1	FILM-WARNING (HIGH PRESSURE CYLINDER)	
	6	2	**224-8945**	1	FILM-WARNING (DO NOT USE ETHER, U.S.)	
	7	1	**224-9021**	1	FILM-WARNING (SEAT BELT)	
	8	1	**225-3305**	1	FILM-WARNING (UNIVERSAL, READ OMM)	
	9	1	**361-0435**	1	FILM-CERTIFICATION (OPS, READ OMM)	
	10	2	**295-7317**	1	FILM-WARNING (CRUSH HAZARD, CAB, READ OMM)	
	11	1	**295-7318**	1	FILM-WARNING (FALL/CRUSH HAZARD, NO ACCESS)	
	12	1	**295-7319**	1	FILM-WARNING (CRUSH HAZARD, READ OMM)	
	14	2	**235-1365**	1	FILM-WARNING (HOT FLUID UNDER PRESSURE)	
	15	1	**239-6986**	1	PLATE-SERIAL NUMBER (MACHINE)	
	16	1	**263-4836**	4	FILM-SYMBOL (TIE-DOWN)	
	17	2	**356-1905**	1	FILM-INSTRUCTION (BUCKET LOWER)	
	18	2	**295-7199**	1	FILM-INSTRUCTION (SERVICE CHART)	
	20	2	**225-0313**	1	FILM-WARNING (JUMP START, READ OMM, U.S.)	
	22	1,2	**295-7315**	2	FILM-WARNING (CRUSH HAZARD, CAB, READ OMM)	
	23	1	**295-7320**	1	FILM-WARNING (CRUSH HAZARD, READ OMM)	
	24	1	**234-9575**	1	FILM-INSTRUCTION (GOVERNOR CONTROL)	
	25	2	**312-7747**	1	PLATE-WARNING (UNIVERSAL)	

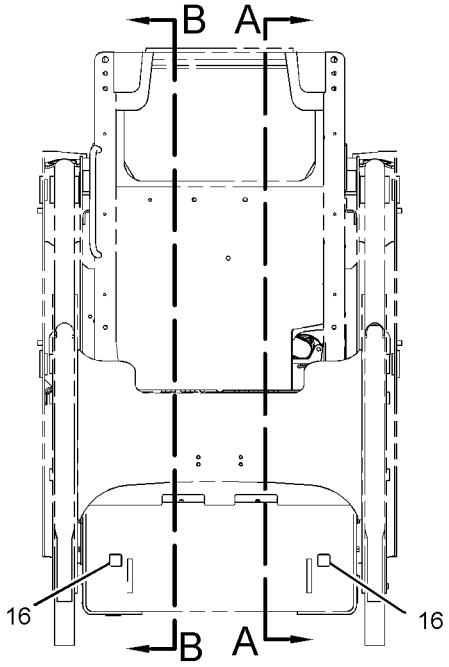

FRONT VIEW

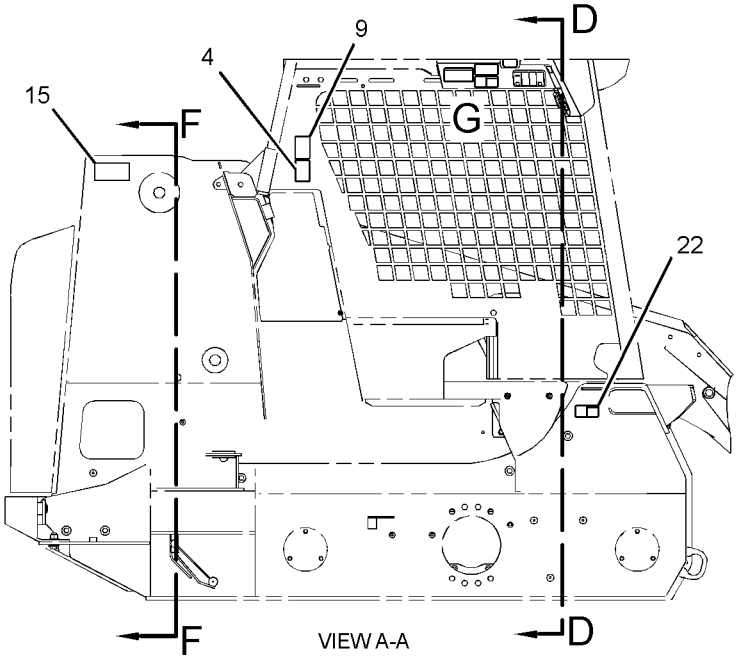

VIEW A-A

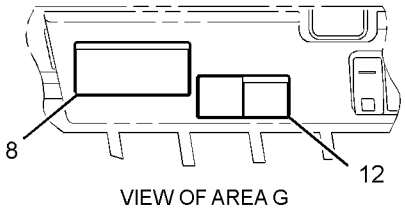

VIEW OF AREA G

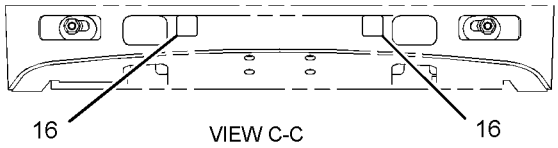

VIEW C-C

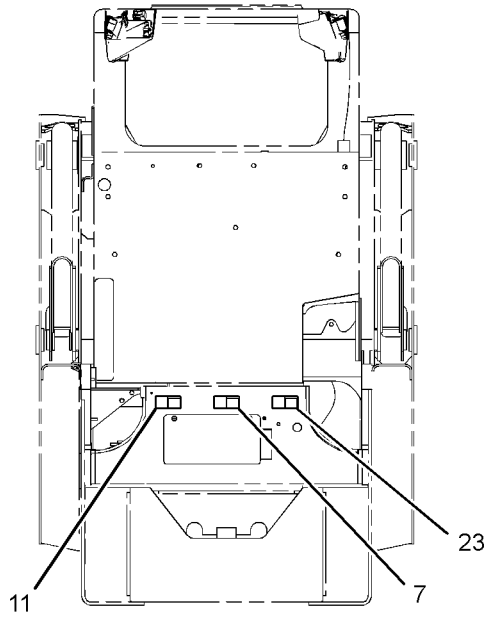

VIEW D-D

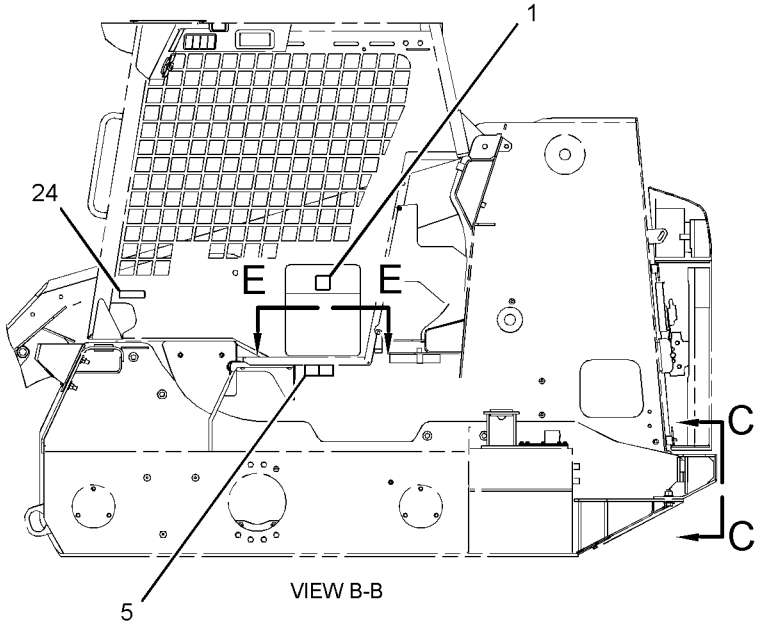

VIEW B-B

REFER TO ALL ILLUSTRATIONS OF THIS GROUP FOR AUXILIARY VIEWS

GRAPHIC #1

g02148925

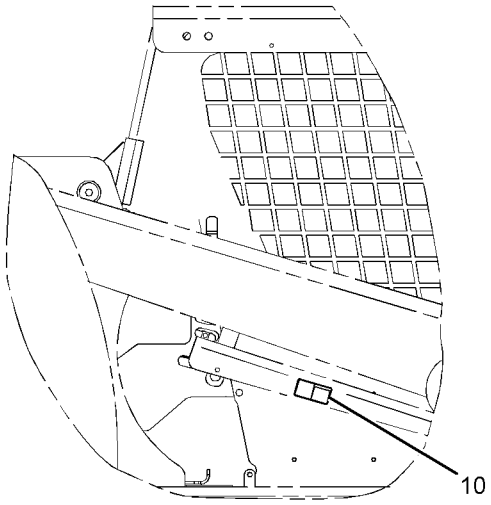

RIGHT SIDE VIEW

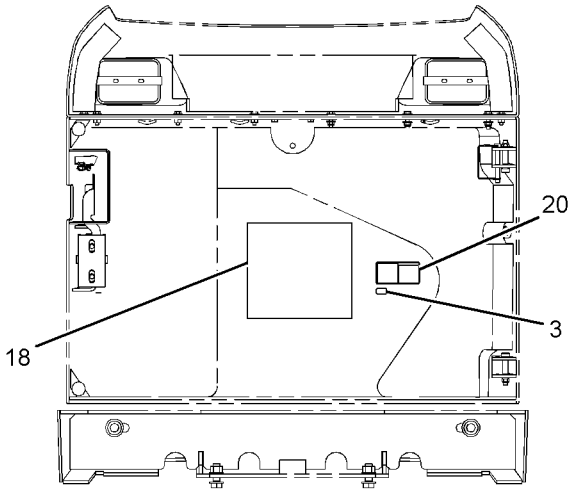

VIEW F-F

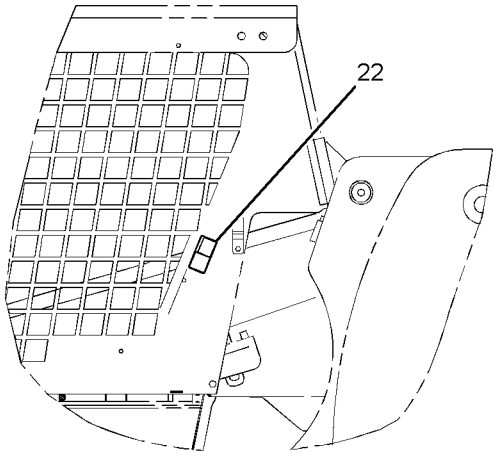

LEFT SIDE VIEW

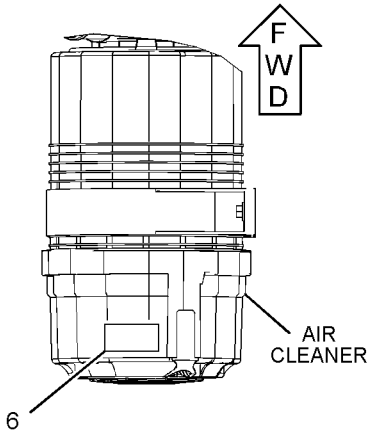

TOP VIEW

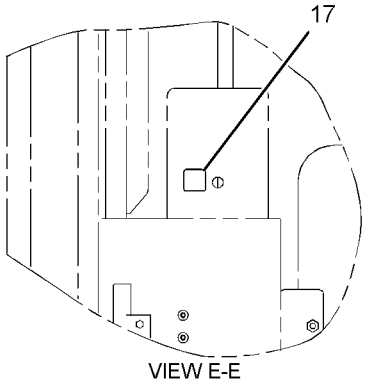

VIEW E-E

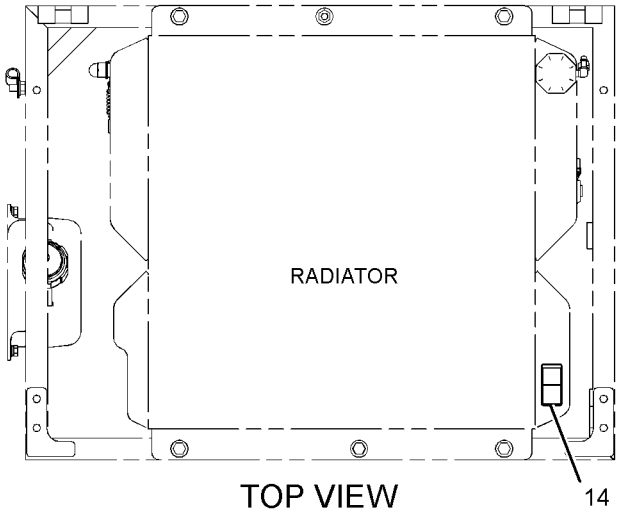

TOP VIEW

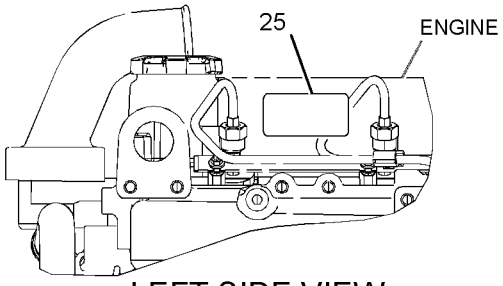

LEFT SIDE VIEW

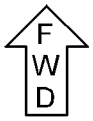

GRAPHIC #2 **<END>** g02148938

SERVICE EQUIPMENT AND SUPPLIES

326-5560 PLATE & FILM GP

S/N: A9H1-UP

AN ATTACHMENT

SMCS-7405, 7557 **i03996956**

NOTE	REF NO	GRAPHIC REF	PART NUMBER	QTY	PART NAME 1 2 3 4 5 6 (PRODUCT LEVEL)	SEE PAGE
	1	1	**157-2853**	1	FILM-INFORMATION (READ OMM)	
	2	2	**356-1905**	1	FILM-INSTRUCTION (BUCKET LOWER)	
	3	2	**169-2876**	1	FILM-IDENTIFICATION (POWER RECEPTACLE, 12-VOLT)	
	4	1	**219-0302**	1	FILM-WARNING (NO WELD, NO DRILL, READ OMM)	
	5	1	**234-9575**	1	FILM-INSTRUCTION (GOVERNOR CONTROL)	
	6	1	**361-0435**	1	FILM-CERTIFICATION (OPS, READ OMM)	
	7	1	**239-6986**	1	PLATE-SERIAL NUMBER (MACHINE)	
	8	1	**224-0554**	1	FILM-WARNING (UNIVERSAL, READ OMM)	
	9	2	**295-7199**	1	FILM-INSTRUCTION (SERVICE CHART)	
	10	1	**239-4991**	1	FILM-WARNING (HIGH PRESSURE CYLINDER)	
	11	2	**224-8946**	1	FILM-WARNING (NO ETHER SPRAY/AIR INTK, INTL)	
	12	1	**224-9022**	1	FILM-WARNING (SEAT BELT)	
	13	2	**235-1368**	1	FILM-WARNING (RADIATOR)	
	14	2	**225-0312**	1	FILM-WARNING (JUMP START, READ OMM, INTL)	
	15	1	**263-4836**	4	FILM-SYMBOL (TIE-DOWN)	
	16	1	**295-7330**	1	FILM-WARNING (CRUSH HAZARD, READ OMM)	
	17	2	**295-7327**	1	FILM-WARNING (CRUSH HAZARD, READ OMM)	
	18	1	**295-7328**	1	FILM-WARNING (FALL/CRUSH HAZARD, NO ACCESS)	
	19	1,2	**295-7325**	2	FILM-WARNING (CRUSH HAZARD, CAB, READ OMM)	
	20	1	**295-7329**	1	FILM-WARNING (CRUSH HAZARD, READ OMM)	
F			**312-7748**	1	PLATE-WARNING (UNIVERSAL, READ OMM)	
F			**295-7340**	1	FILM-INSTRUCTION (FUEL, READ OMM)	

F-NOT SHOWN

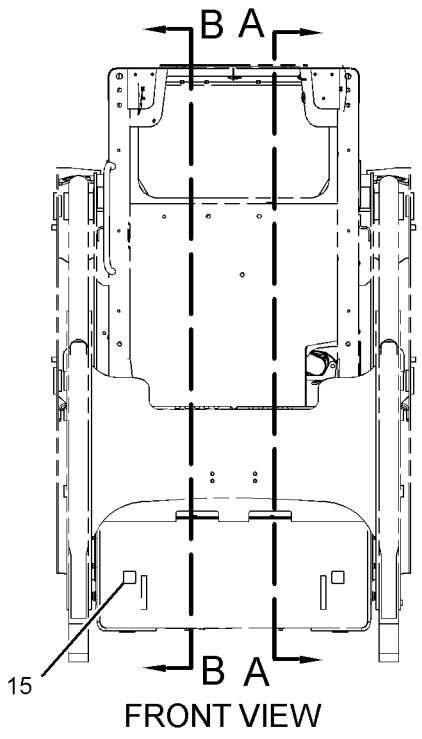

FRONT VIEW

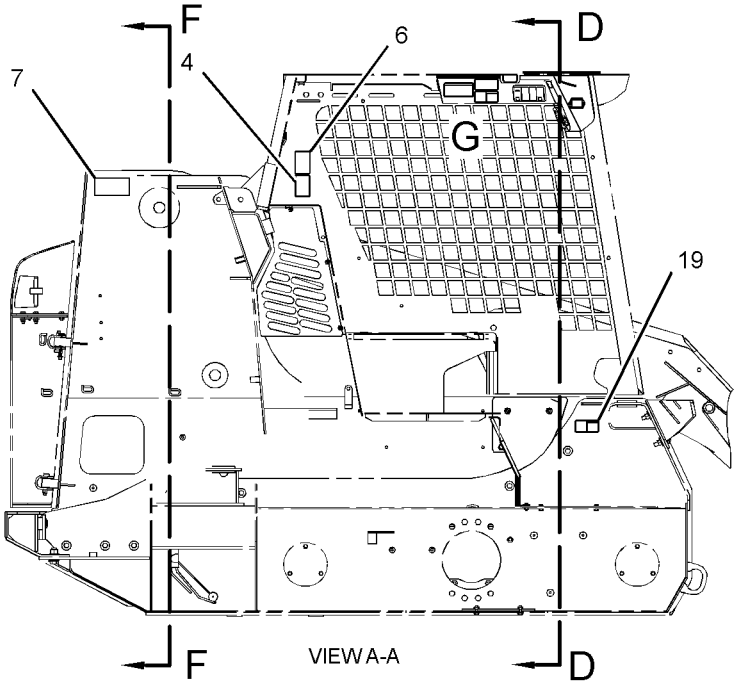

VIEW A-A

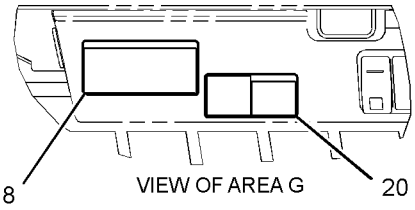

VIEW OF AREA G

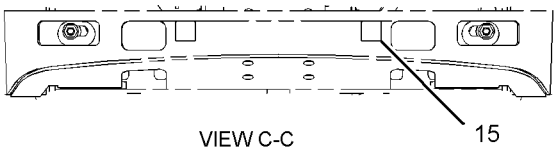

VIEW C-C

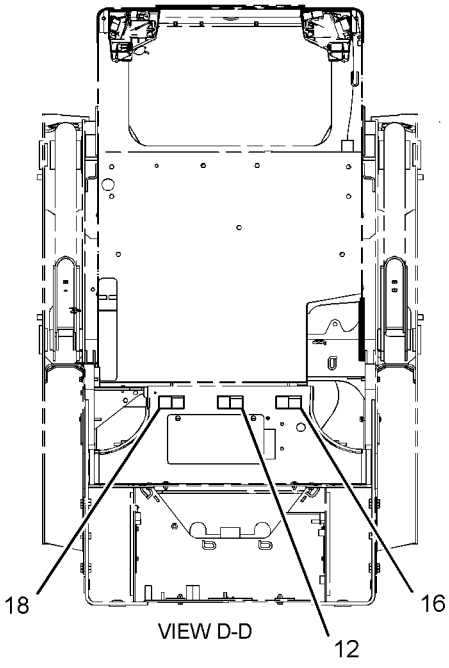

VIEW D-D

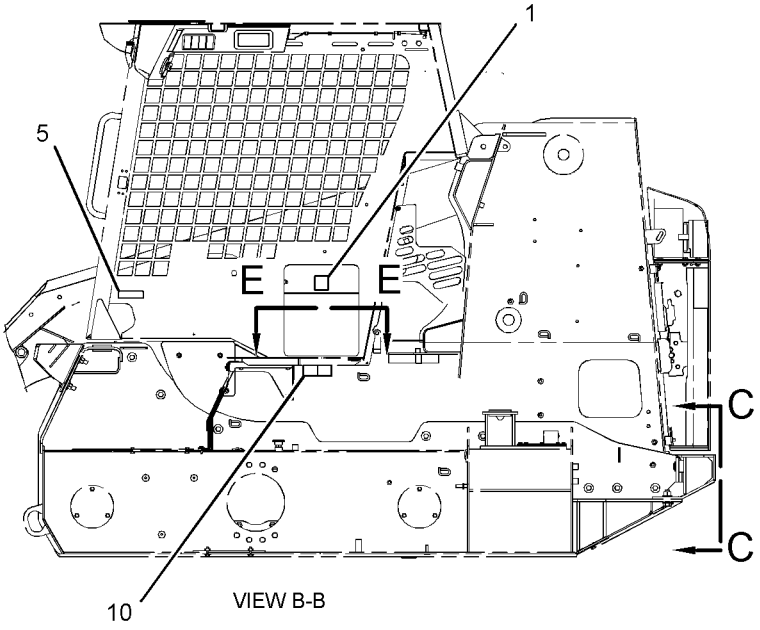

VIEW B-B

REFER TO ALL ILLUSTRATIONS OF THIS GROUP FOR AUXILIARY VIEWS

GRAPHIC #1

g02155397

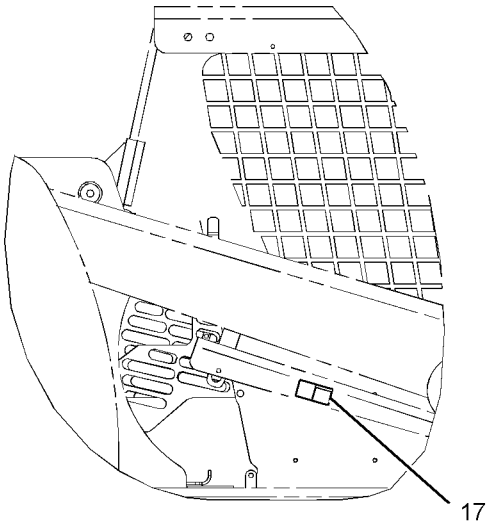

RIGHT SIDE VIEW

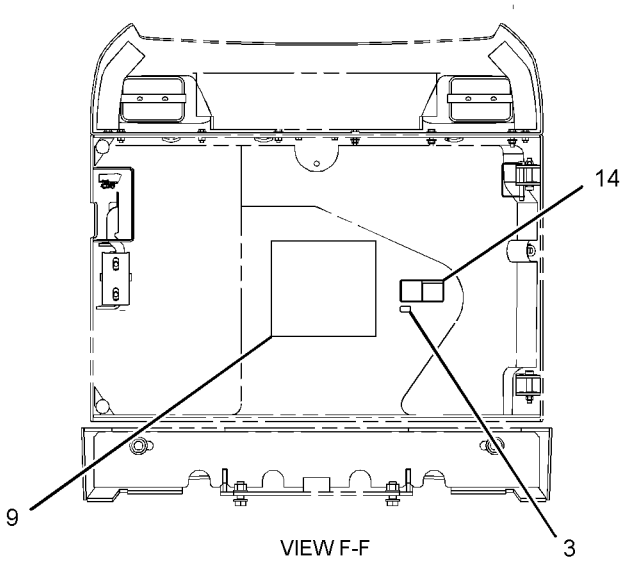

VIEW F-F

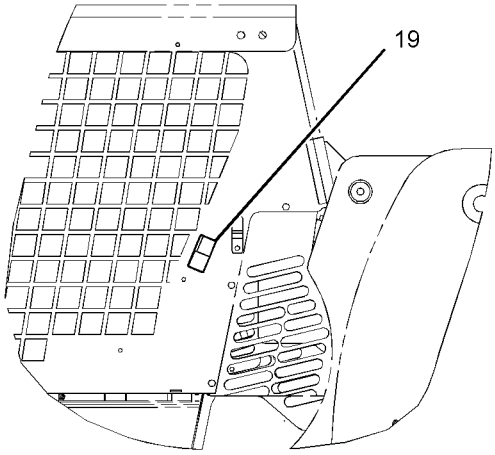

LEFT SIDE VIEW

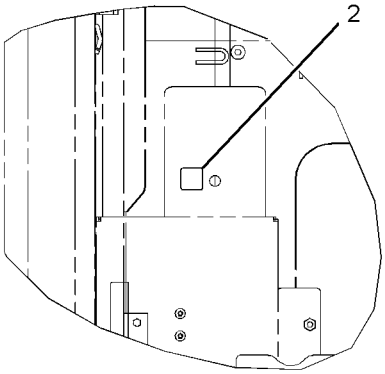

VIEW E-E

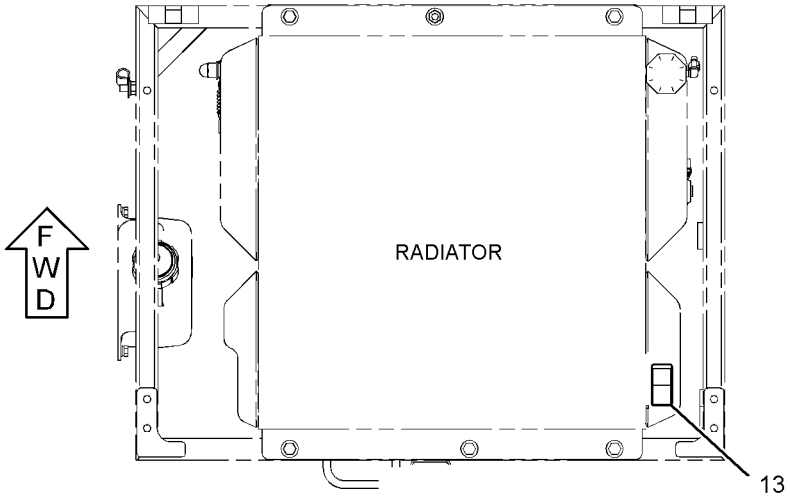

TOP VIEW

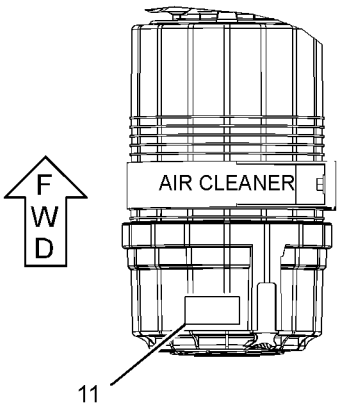

TOP VIEW

GRAPHIC #2 **<END>** g02155398

MEMORANDA

PART NUMBER INDEX

Part	Page
0	
0T-0244	562
	563
	564
	565
1	
1D-4677	570
1G-8878	136
1H-3244	76
	93
	101
1H-8134	221
1L-2279	476
1M-6119	79
1M-6120	79
1P-4278	19
	52
	66
	68
1P-4578	285
1P-7009	243
	263
1S-0994	247
	249
	251
	253
	257
1S-9593	85
	87
	125
	503
	504
	505
2	
2D-6412	562
	563
	564
	565
2H-7829	268
	270
2K-4821	226
2K-4973	46
	193
2L-8065	115
2L-8067	109
	112
2L-8069	109
	112
	118
	121
	134
	544
2L-8077	109
	112
2L-8079	118
	121
	126
2M-9780	134
	139
	141
	245
	247
	249
	251
	253
	255
	257
	259
	261
	266
	268
	270
	276
	285
	287
	289
	297
	314
2P-8104	102
2R-0364	558
2S-3440	285
2S-4078	285
2S-5717	570
2S-6408	474
2V-3216	245
	266
2Y-5974	195
	196
3	
3B-4504	57
3B-4505	12
	14
	25
	27
	29
	60
	70
	548
3B-4628	243
	431
3B-7255	476
3B-8488	460
3B-8489	219
	221
	224
	225
	226
	227
	232
	237
	239
	303
	304
	306
	332
	333
	407
	408
	409
	410
	411
	412
	413
	414
	415
	416
	417
	418
	448
	456
3D-2824	134
	137
	139
	141
	151
	272
	274
	276
	279
	291
3E-2310	283
3E-3892	574
	576
3E-4051	544
3E-4057	544
3E-4370	447
3E-5153	102
3E-5154	102
3E-7404	66
	68
	245
	266
3E-7584	▶91
	99
	207
3E-9179	522
	524
3F-5108	437
	438
3F-9556	551
	557
3J-1907	105
	118
	121
	130
	136
	143
	145
	147
	151
	233
	235
	237
	239
	242
	259
	261
	263
	276
	279
	281
	283
	314
	463
	465
3J-7354	134
3K-0360	130
	134
	137
	147
	151
	159
	215
	261
	283
	312
3K-0715	170
	172
3K-2151	237
	239
3K-8782	429
3P-0439	237
	239
3P-1896	16
3S-2093	85
	87
	95
	99
	107
	109
	112
	115
	117
	118
	119
	121
	122
	124
	125
	126
	206
	207
	311
	476
	490
	516
	519
	522
	524
	544
	553
	554
3S-6049	79
3S-8536	221
3S-8665	134
	538
3S-9182	199
	201
4	
4B-2043	118
	121
	554
4B-4863	206
	211

▶ **PRIMARY REFERENCE**

PART NUMBER INDEX

Part	Page
	276
	279
4B-9302	66
	68
4D-6466	66
	68
4E-0724	476
4E-1384	489
4F-3658	437
	438
4I-9404	42
4J-0522	285
4J-0526	233
	235
4J-5267	285
4J-5477	107
	134
	206
	242
	263
	281
	283
4J-7533	314
4K-0367	437
	438
4K-8864	50
	51
	52
4M-5285	304
	306
4P-7429	115
	498
4P-7581	99
	109
	112
	115
	119
	122
	207
	243
	263
	272
	274
	311
	552
4P-8134	109
	112
	115
	124
4S-1962	134
5	
5B-0651	431
	433
5B-0935	456
5C-2874	276
	279
5C-2890	63
	65
	66
	68
	76
	92
	93
	101
	108
	109
	111
	112
	463
	465
	516
	519
	541
	556
	558
5C-7261	46
	54
	101
	109
	112
	115
	118
	119
	121
	122
	130
	137
	139
	141
	143
	145
	147
	193
	243
	263
	463
	465
	476
	489
	500
	548
	551
	557
	559
	566
	567
5C-7682	529
	530
5C-7883	157
5C-8310	526
	572
5C-8311	526
	572
5C-8312	206
	211
5C-9553	57
	63
	66
	68
	207
	210
	291
	434
	490
	557
5D-0718	272
	274
5H-9743	221
5I-4370	139
5I-4936	21
5I-4993	29
5I-5077	63
5I-7505	32
5I-7525	16
5I-7543	21
5I-7623	63
5I-7625	37
5I-7628	23
	24
	44
	45
5I-7630	37
5I-7678	56
5I-7719	37
5I-7728	45
5I-7931	59
5I-7933	63
5I-8021	56
5I-8023	56
5I-8056	23
	24
	44
	45
5I-8109	63
5I-8110	63
5I-8111	61
	62
5K-4778	66
	68
5K-9090	137
	139
	141
5P-0372	46
	208
	243
	431
	516
	519
	569
5P-0597	63
5P-1076	28
	199
	201
	261
	334
	335
	459
5P-1420	52
	66
	68
5P-1442	19
	66
	68
	311
5P-1478	115
5P-2230	285
5P-3092	132
	133
5P-4115	119
	122
5P-4116	22
	54
	66
	68
	79
	115
	137
	139
	141
	193
	199
	201
	243
	263
	294
	476
	500
	538
	546
5P-4362	285
5P-4571	115
	118
	121
	206
	212
5P-4868	58
	63
5P-4961	66
	68
	311
5P-5148	268
	270
5P-5924	544
5P-5927	559
5P-5969	516
	519
	527
5P-7070	527
5P-7162	109
	112
5P-7470	52
5P-7471	52
5P-7703	52
5P-7957	493
5P-7958	108
	111
	547
5P-8246	476
5P-8247	437
	438
5P-8309	46
	516
	519
5P-8439	97
	98
5P-8500	189
	205
	547
5P-9297	263
5P-9909	285
	516
	519
5T-7869	570
5T-7870	570
5V-8309	46
5W-1987	516
	519

► **PRIMARY REFERENCE**

PART NUMBER INDEX

Part	Page
5W-6388	312
6B-2882	500
6B-6682	225
6D-1641	538
	546
6D-3479	66
	68
	283
6D-4244	134
6D-4246	544
6D-4247	247
	249
	251
	253
	257
6D-4636	538
6D-5797	574
	576
6E-5060	170
	172
6F-4718	155
6F-6672	302
6I-1418	108
	111
6K-4148	322
6P-8269	133
6V-0852	137
	139
	141
	281
	285
6V-1392	492
6V-1889	272
	274
6V-1970	1
	▶547
6V-2317	63
	70
	97
6V-3251	51
6V-3582	276
	279
6V-3918	496
	497
6V-3940	37
	49
	56
6V-3965	137
	139
	141
	281
	285
6V-4270	516
	519
6V-5193	159
6V-5215	39
6V-5217	40
	72
	78
6V-5221	44
	45
6V-5326	170
	172
6V-5586	170
	172
6V-5683	65
	159
6V-5834	554
6V-5839	40
6V-6689	527
	538
6V-7357	22
	25
	63
6V-7644	334
	335
6V-7728	109
	112
	119
	122
6V-7744	433
6V-8186	557
6V-8352	170
	172
6V-8397	130
	143
	145
	147
	151
	220
	242
	243
	245
	247
	249
	251
	253
	255
	257
	259
	261
	263
	266
	268
	270
	276
	279
6V-8398	130
	134
	137
	139
	141
	143
	145
	147
	151
	233
	235
	237
	239
	276
	279
	281
	287
	289
6V-8399	297
6V-8624	139
6V-8626	276
6V-8628	281
6V-8632	151
	261
6V-8633	134
6V-8634	151
6V-8636	130
	143
	145
	147
	151
	242
	261
	263
6V-8637	137
	139
	141
	151
6V-8638	141
6V-8639	134
	151
6V-8641	242
	263
	281
	283
6V-8642	134
	261
	276
	285
	287
	289
6V-8647	134
	281
6V-8713	134
	276
	279
	291
6V-8715	245
	247
	249
	251
	253
	255
	257
	259
	266
	268
	270
	289
6V-8723	130
	147
6V-8724	242
	259
	263
	276
	279
6V-8781	130
	143
	283
6V-8782	130
6V-8788	247
	249
	251
	253
	257
6V-8938	243
	263
6V-8949	467
6V-8978	151
6V-9000	134
6V-9001	242
	263
6V-9004	139
6V-9007	272
	274
6V-9028	115
6V-9161	145
6V-9168	243
	264
6V-9170	291
6V-9182	285
6V-9189	303
	304
	305
	306
	332
	333
	407
	408
	409
	410
	411
	412
	413
	414
	415
	416
	417
	418
	448
	460
6V-9508	151
6V-9632	22
	195
	197
	276
	279
	496
	497
	522
	524
6V-9671	429
6V-9672	206
	211
6V-9746	137
	139
	141
	151
	272
	274
	285
6V-9805	552
6V-9836	145
	242

6

▶ **PRIMARY REFERENCE**

PART NUMBER INDEX

Part	Page
	263
6V-9838	242
	263
6V-9850	242
	263
6V-9872	145
6V-9873	281
6W-5698	66
	68
	312
6Y-5839	437
	438
6Y-5840	437
	438
7	
7D-8431	490
7D-8508	227
	230
	231
	232
7E-2700	208
	209
7E-9898	463
	465
7G-1060	108
	111
7G-2950	243
	264
7G-2951	243
	264
7G-5984	261
7G-5985	261
7G-5986	261
7G-7053	109
	112
	490
7H-7055	243
	264
7J-0204	225
	226
	227
	230
7J-2036	233
	235
7J-9108	130
	134
	143
	145
	147
	151
	242
	261
	263
	276
	279
	285
	287
	289
	291
	297
7K-1181	65
	79
	94
	95
	99
	108
	111
	115
	118
	121
	134
	151
	242
	263
	272
	274
	281
	316
	326
	327
	476
	498
	538
	544
	546
7M-7410	50
	51
7M-8485	285
7N-7221	553
7N-9017	119
	122
	134
7R-2750	95
	99
	109
	112
7R-2751	95
	99
	108
	111
7S-3912	255
7S-3913	255
7S-3916	245
	266
	268
	270
7S-3919	245
	266
	268
	270
7T-0093	85
	87
	125
7T-1099	195
	196
	197
	322
	559
7T-6087	102
7T-6088	102
7T-6090	102
7T-6092	102
7T-6093	102
7T-6099	102
7T-6799	553
7X-0495	476
7X-0579	109
	112
7X-0603	204
7X-0608	115
	118
	119
	121
	122
7X-0610	132
7X-0796	72
7X-0818	48
	60
	207
7X-1443	52
7X-2444	107
	206
7X-2475	324
	552
7X-2535	293
	463
	465
7X-2537	49
	193
	538
	560
7X-2539	130
	145
	204
7X-2548	115
7X-2553	456
	531
7X-2556	28
7X-2621	433
7X-3229	584
7X-6312	83
7X-7729	46
	50
	51
	52
	193
	219
	221
	243
	264
	268
	270
	272
	274
	306
	433
	456
7X-9065	554
8	
8C-3110	309
	310
8C-3131	319
8C-3205	285
8C-3398	108
	109
	111
	112
8C-3446	134
8C-3451	134
8C-5918	79
8C-6354	108
	111
8C-6758	130
	143
	145
	147
8C-6959	66
	68
8C-8400	272
	274
8C-8478	334
	335
8C-8992	132
	133
8C-9778	102
8C-9783	102
8E-5702	334
	335
8F-1434	102
8F-8151	538
8G-1151	522
	524
8I-5078	314
8J-2880	334
	335
8J-4455	102
8L-5188	243
	431
8L-8413	326
	327
	522
	524
	533
8M-4963	118
	121
8N-0869	79
8N-1548	108
	111
8N-1549	118
	121
8N-1725	79
8Q-6027	230
	231
8R-3857	197
8S-0934	562
	563
	564
	565
8T-0078	139
	141
8T-0087	92
8T-0154	538
	546
8T-0267	170
	172
8T-0269	506
	507
	508
	509
	510
	511
	512
	513
8T-0271	157

PART NUMBER INDEX

Part	Page	Part	Page	Part	Page	Part	Page
	299		199		153		134
	302		207		154		193
8T-0273	170		210		186		219
	172		221		199		243
8T-0276	44		243		201		255
	45		245		208		264
8T-0318	46		255		209		311
8T-0379	243		259		476		313
	263		264		531		456
8T-0389	89		266	8T-4133	46		477
	91		272		50		508
8T-0642	35		274		51		509
8T-0737	476		276		52		510
8T-1158	316		279		66		511
	318		283		68		512
	319		285		79		513
8T-1159	159		287		102		538
8T-1687	137		289		109	8T-4138	65
8T-1757	324		291		112		304
8T-1887	99		299		115		559
	207		300		117	8T-4139	261
8T-1888	99		311		119		334
	207		313		122		335
8T-1893	255		423		124		459
8T-1894	255		431		207		463
8T-2444	516		433		210	8T-4159	46
	519		467		243	8T-4167	291
8T-2658	429		473		259	8T-4171	189
8T-2895	492		476		272		205
8T-3311	281		489		274		206
8T-3490	195		498		423		211
	242		500		431		245
	263		508		473		266
8T-3597	197		509		476	8T-4172	433
	322		510		489	8T-4173	552
8T-3612	22		511		498	8T-4176	28
	195		512		500	8T-4177	60
	197		513		516	8T-4178	207
	276		516		519	8T-4179	19
	279		519		532	8T-4181	46
	560		532		538		193
8T-3647	221		535		546	8T-4183	498
8T-3848	516		538	8T-4136	66	8T-4185	259
	519		544		68	8T-4186	117
8T-3984	65		546		115		467
	558	8T-4122	28		134	8T-4189	19
8T-4121	21		109		199		79
	46		112		221		192
	50		132		243		199
	51		133		245		201
	52		153		264		221
	66		154		266		243
	68		186		277		247
	72		199		279		249
	79		201		287		251
	89		208		289		253
	98		209		291		257
	102		324		313		264
	115		456		423		294
	117		476		467		311
	119		531		473		500
	122		552		476		538
	124	8T-4123	334		538		544
	134		335	8T-4137	24	8T-4191	52
	166	8T-4132	28		72		68

► **PRIMARY REFERENCE**

PART NUMBER INDEX

Part	Page
	221
	243
	264
	283
	477
	535
	538
	546
8T-4192	28
8T-4194	199
	201
	472
8T-4195	24
	166
	259
	268
	270
	272
	274
	291
	306
8T-4196	50
	51
	52
	66
	68
	166
	221
	243
	274
	285
	431
	433
	498
	544
8T-4197	557
8T-4198	291
	309
	310
8T-4200	12
	25
	27
	29
	70
	79
	115
	220
	268
	270
	294
	538
8T-4201	99
	207
	243
	264
8T-4205	46
	65
	76
	94
	101
	108
	109
	111
	112
	189
	193
	199
	201
	205
	206
	207
	210
	211
	287
	289
	291
	293
	463
	465
	476
	490
	506
	507
	508
	509
	510
	511
	512
	513
	516
	519
	552
	556
	557
	559
8T-4222	516
	519
8T-4223	19
	28
	192
	307
	308
	459
	463
	465
	472
	474
	498
	562
	563
	564
	565
8T-4224	19
	25
	48
	50
	51
	52
	60
	97
	101
	109
	112
	130
	143
	145
	147
	192
	199
	201
	204
	208
	209
	220
	221
	243
	247
	249
	251
	253
	257
	264
	268
	270
	277
	279
	291
	294
	299
	300
	463
	465
	476
	485
	490
	500
	514
	516
	519
	534
	538
	544
	548
	559
	560
	566
	567
8T-4244	199
	201
	459
	463
	465
	472
8T-4648	192
8T-4742	541
	558
8T-4744	541
	558
8T-4778	438
	439
	440
	441
	442
	443
	444
	445
	481
	552
8T-4779	476
8T-4896	24
	72
	78
8T-4908	22
	37
	50
	51
	66
	68
	193
	199
	201
	205
	208
	209
	243
	264
	277
	279
	463
	465
	476
	500
	546
8T-4910	474
8T-4956	307
	308
	465
8T-4970	199
	201
8T-4971	541
8T-5005	52
	91
	243
	264
8T-5049	307
	308
8T-5095	157
	309
	310
8T-5372	531
	538
8T-5413	496
	497
8T-6466	46
	52
8T-6685	207
	210
	498
8T-6726	58
8T-6842	526
	572
8T-6869	303
	304
	305
	306
	332
	333
	407
	408
	409
	410
	411
	412
	413
	414
	415
	416
	417
	418
	448
	476

PART NUMBER INDEX

Part	Page
	485
	534
	538
8T-6870	143
	147
8T-6902	557
8T-6912	460
	514
	559
8T-7329	25
8T-7338	186
	199
	201
8T-7547	61
	62
	207
	299
	300
8T-7852	276
	279
8T-7934	22
8T-7970	137
	139
	141
8T-8192	259
8T-8193	259
8T-8729	91
	93
	95
	105
	111
	118
	121
	124
	201
	316
	429
	503
	504
	505
	533
	549
	550
8T-8730	112
	118
	119
	121
	122
	124
8T-8737	91
	99
	108
	111
	115
	118
	119
	121
	122
	126
	207
	429
	503
	504
	505
	516
	519
	533
	549
	550
	553
8T-8799	108
	111
	115
8T-9405	316
8T-9655	108
	111
8W-8909	99
	207
8X-5489	79
8Y-7385	474
8Y-7386	474

9

Part	Page
9B-7233	554
9C-2741	544
9C-5344	208
	516
	519
	569
9F-5644	115
	118
	119
	121
	122
9G-0005	79
9G-3695	295
	490
9G-4336	115
	118
	121
9G-5127	199
	201
9H-1024	156
9M-1974	35
	37
	39
	40
	44
	45
	49
	56
	63
	70
	72
	78
9M-4972	134
9M-8406	243
	264
9P-4609	490
9R-1005	287
	289
9R-1499	94
	95
	99
9R-1610	195
	196
9R-2004	245
	266
9R-2672	195
	196
	197
	431
9R-2959	332
	333
	454
9R-5301	205
	206
	469
9R-7802	287
	289
9R-7803	287
	289
9R-7941	553
9R-7942	96
9R-7958	96
9R-7980	553
9R-9282	195
	196
9R-9866	195
	196
	197
9S-0285	490
9S-4200	268
	270
9S-8002	170
	172
9S-8004	233
	235
	237
	239
9S-8005	159
9S-8007	225
	226
	227
	230
9T-2837	316
9T-4817	170
	172
9T-4884	299
	302
9T-7303	243
	431
9U-6994	285
9U-6995	285
9V-2714	324
9V-2715	324
9W-0607	89
	90
9W-0844	99
	109
	112
	118
	121
	134
	207
	326
	327
	429
	544
	553
9W-0852	85
	87
	99
9W-3324	91
9W-3326	91
	93
9X-1054	115
9X-1055	115
9X-1056	115
9X-1813	105
	119
	122
	490
9X-2026	304
	434
9X-2036	102
9X-2038	66
	68
9X-2041	516
	519
	532
9X-2042	490
	493
	554
	570
9X-2043	277
	279
9X-2044	514
	516
	519
	522
	524
9X-2045	205
	516
	519
	522
	524
	571
	573
9X-2092	109
	112
	134
	272
	274
	538
	542
	546
9X-2134	289
9X-3401	108
	111
	115
	118
	119
	121
	122
	206
	212
	516
	519
	522
	524
	553
9X-3402	109

► **PRIMARY REFERENCE**

PART NUMBER INDEX

Part	Page
	112
	115
	522
	524
9X-4244	89
	90
	91
9X-6032	299
	300
9X-6165	514
	559
9X-6273	247
	249
	251
	253
	257
9X-6274	247
	249
	251
	253
	257
	304
	306
9X-6277	559
9X-6581	242
	263
9X-6606	170
	172
9X-6611	233
	235
	237
	239
9X-6615	297
9X-6772	83
	84
	109
	112
9X-7378	499
	544
9X-7380	544
9X-7381	544
9X-7382	544
9X-7383	544
9X-8118	96
9X-8139	96
9X-8250	538
	546
9X-8256	25
	57
	112
	554
9X-8257	205
	206
	469
9X-8912	23
9X-8918	574
	576
9X-9865	91

0

Part	Page
003-2143	476
003-3082	314
004-6810	538
	546
027-1287	230
	231
030-1712	115
032-8139	20
032-9828	522
	524
033-5853	157
	159
033-6042	157
	159
034-2151	285
036-1865	50
	51
039-8557	467
064-3843	219
067-2551	476
069-4080	50
	51
	66
	68
081-3698	170
	172
084-4277	553
084-4348	92
	93
085-8091	544
085-9513	15
091-2436	553
092-2467	272
	274
094-4628	12
	15
094-7235	70
095-0641	314
	557
095-0690	310
095-0912	476
095-0913	544
095-1207	507
	508
	509
	510
	511
095-1325	208
	516
	519
	569
095-1513	42
095-2005	37
096-0194	168
	169
096-2500	25
	63
096-3741	16
096-4415	23
096-6166	429
096-8475	44
	45
096-8482	29
096-9529	25
097-7234	553
099-3649	14
	60
099-4420	16

1

Part	Page
100-3246	91
100-3247	91
100-3248	91
100-3250	91
100-3251	91
100-3253	91
100-3254	91
100-3255	91
100-3685	102
100-3866	132
	133
100-4112	102
100-4113	102
100-4115	102
100-4118	102
100-4119	102
100-6674	544
100-7530	130
	143
	145
101-2867	276
	279
	476
	554
101-3129	291
101-6544	40
101-8296	544
102-8703	291
102-8801	115
	549
	550
102-8802	105
	108
	111
	115
	117
	118
	119
	121
	122
	124
	199
	201
	316
	499
102-8803	95
	99
	429
	522
	524
102-8804	92
	93
	108
	112
	206
	212
	295
	551
	553
102-8805	91
	516
	519
	522
	524
	553
102-8806	85
	87
	99
	119
	122
	125
	126
	207
	476
103-2006	554
103-2543	109
	112
103-2782	37
103-6262	490
103-9083	40
103-9246	18
103-9247	18
103-9252	18
103-9253	18
103-9260	37
103-9268	37
103-9272	12
103-9273	12
103-9276	16
103-9279	16
103-9280	23
	24
103-9288	11
103-9289	11
103-9290	11
103-9680	13
103-9703	16
103-9725	41
103-9747	49
104-1218	16
104-1995	553
104-5957	572
105-2814	▶76
	78
105-4593	151
106-8715	272
	274
107-3134	115
107-3135	115
107-3136	115
107-3659	82
107-4057	237
	239
108-0656	572
108-3565	170
	172
109-2356	553
110-2023	195
	196
	197
110-2570	19
110-6326	55
110-6331	55
110-7887	553
110-8760	85
	87
	125
111-0483	197

▶ **PRIMARY REFERENCE**

PART NUMBER INDEX

Part	Page	Part	Page	Part	Page	Part	Page
111-4627	476	117-2827	21		212		119
111-7898	522	117-2829	21		326		122
	524	117-3285	21		327	132-7551	433
111-7899	85	117-5015	23		553	133-6517	83
	87		24	125-7875	109		84
	95	117-6558	188		112	134-0404	136
	97		205		126	134-2540	109
	99	118-2990	28		326		112
	125	118-8118	74		327	134-7722	22
	126		75		516	134-8273	522
	190	119-1414	475		519		524
	207	119-1415	475		554	135-2655	170
	242	119-3662	109	125-7876	109		172
	264		112		112	135-8432	29
	276		115		554	135-9383	346
	486		118	126-1766	117		▶438
	522		121	126-1767	111	135-9384	346
	524		326		212		347
	553		327		476		350
112-1817	276		476		516		356
	279		522		519		359
112-4719	170		524	126-1768	112		403
	172		544		476		▶439
112-9401	74		553	126-1774	108	135-9385	346
	75	119-3859	476		111		347
112-9611	522	119-4594	221	126-5701	431		350
	524	119-9631	486	127-2170	516		357
112-9717	55	121-4459	170		519		360
112-9783	283		172	127-5483	118		404
112-9861	277	122-4406	522		121		▶440
	279		524	127-5484	108	135-9386	325
113-0363	70	122-6869	476		112		347
113-0364	70	122-8948	70	127-6316	314		348
113-0693	498	122-8949	70	128-2955	13		350
113-1141	40	123-4750	283	128-2956	13		355
113-4458	76	123-7615	516	128-2958	13		357
113-4459	76		519	128-4123	95		360
113-4460	76		553		99		▶441
113-4461	76	124-1916	476		109	135-9387	346
113-4462	76	124-1917	476		112		348
113-4463	76	124-2113	242	128-5016	109		352
113-4464	76	124-2456	242		112		355
113-4465	76		263	128-8614	74		358
113-4466	76		584		75		▶442
113-4467	76	124-3243	514	129-1854	190	135-9393	438
113-4468	76		522	129-1855	190	135-9394	439
113-4469	76		524	129-3178	476	135-9395	440
113-4470	76		559		539	135-9396	441
113-7634	189		560		541	135-9397	442
	205	124-3548	108		557	136-1953	538
113-8490	108		111	129-3180	28		546
	111	124-5640	544	130-1676	180	136-3191	488
113-8491	108	125-3518	516	130-1916	490	137-6645	312
	111		519	130-7596	15	138-4883	522
113-8492	108	125-7874	99	131-3540	52		524
	111		109		193	140-2392	237
114-6658	514		112		204		239
115-1615	115		115		221	140-2513	157
116-2001	▶475		118		539		159
	476		119	131-3543	556	140-2514	157
116-4415	287		121	131-5879	433		159
	289		122	132-4720	481	140-5217	24
116-5763	500		126	132-5166	207		72
116-7471	108		206		210	141-3046	157
	111		207	132-5789	79		159

▶ **PRIMARY REFERENCE**

PART NUMBER INDEX

Part	Page
141-3049	157
	159
141-4999	347
	348
	349
	356
	357
	358
	359
	406
	▶481
141-6704	▶361
	364
142-2928	490
142-4914	437
142-7485	174
142-7493	183
	184
	185
142-7503	▶92
	94
142-7505	477
142-8633	85
	87
	125
	126
142-8634	▶93
	95
	99
142-8719	166
142-8731	174
	175
	176
	177
	178
142-8759	175
	176
	178
	179
142-8801	193
142-8805	424
	425
	426
	427
	428
142-8810	199
	201
142-8823	199
	201
142-8826	209
142-8831	193
142-8832	46
	193
	221
142-8833	117
142-8880	221
142-8881	221
142-8897	199
142-8928	66
	68
	312
142-8937	312
142-8997	276
	279
142-8998	287
	289
142-9021	186
142-9023	128
142-9024	128
142-9029	128
142-9032	132
142-9033	132
	133
142-9034	132
142-9036	132
	133
142-9058	▶128
	129
142-9060	▶132
	167
142-9089	221
142-9090	221
142-9091	221
142-9093	221
142-9094	221
142-9116	276
142-9142	221
142-9172	197
142-9234	287
	289
142-9241	137
	139
	141
142-9278	490
142-9279	490
142-9287	490
142-9305	494
	495
	▶566
142-9311	494
	495
	▶543
142-9319	572
142-9320	553
142-9326	97
142-9327	190
142-9328	553
142-9329	99
	207
142-9331	95
	99
142-9356	516
	519
142-9386	490
143-0539	▶102
	104
143-1344	102
143-3088	438
144-0195	516
	519
	522
	524
144-1636	117
144-4531	314
144-4532	314
144-9485	233
	235
144-9486	233
	235
144-9492	233
	235
144-9493	233
	235
146-2438	93
146-6371	527
	538
146-6729	102
146-9439	85
	87
	99
	107
	109
	112
	125
	126
	206
	207
148-2371	207
	210
148-2372	207
	210
148-8315	134
	261
	276
	285
	287
	289
148-8316	134
	281
148-8318	151
148-8319	245
	247
	249
	251
	253
	255
	257
	259
	266
	268
	270
	289
148-8325	242
	263
	281
	283
148-8326	145
148-8327	137
	139
	141
	151
148-8328	134
148-8336	130
	143
	145
	147
	151
	242
	261
	263
148-8340	134
	151
148-8341	134
	276
	279
148-8342	151
	261
148-8345	141
148-8347	272
	274
148-8353	242
	263
148-8358	139
148-8360	285
148-8367	242
	263
148-8369	281
148-8374	130
	147
148-8378	242
	259
	263
	276
	279
148-8385	134
148-8390	276
148-8423	281
148-8428	130
	147
148-8433	145
	242
	263
148-8435	130
	143
	283
148-8446	242
	263
149-0686	215
	▶216
149-3488	28
149-4232	414
	▶424
149-5434	366
149-5435	362
	368
	374
	384
	400
	424
149-5436	361
	370
	376
	385
	401
	425
149-5437	372
	378
	386
	393
	402
	426
149-5741	325
	▶443
150-3056	247
	249
	251
	253
	257
150-4027	283

▶ **PRIMARY REFERENCE**

PART NUMBER INDEX

Part	Page	Part	Page	Part	Page	Part	Page
150-4034	243		377		118		408
	263		379		119		409
150-4043	281		381		121		410
150-7568	538		382		122		411
150-8550	197		392		124		412
150-8599	174		395		134		413
	175		397		326		448
	176		398		327	157-0941	304
	177		405		476		306
	178		449		544	157-0942	304
	179	154-3985	567		553		306
150-8621	1		568	155-2271	118	157-2853	588
	▶204	154-3986	568		119		591
151-2566	237	154-4006	186		121	157-4835	423
	239	154-4014	311		206	157-7223	▶349
151-4965	318	154-5011	▶303		212		350
	319		356		490	157-7224	▶349
152-0227	▶362		357		522		350
	363		358		524	157-7225	350
152-0231	▶403		359		553	157-7226	▶350
152-0232	▶404	154-5012	303	155-2274	99	157-7227	▶350
152-1154	208		414		207	158-3770	501
152-1156	208		415		516		502
152-1157	132		416		519	158-5648	407
	133		417		553		408
152-1161	531		418	155-5652	128		409
152-4871	493	154-5013	303	155-9010	128		410
152-4875	490		305	155-9432	128		411
152-4884	490	154-5018	▶224	155-9433	128		412
152-4892	66		356	156-0884	349		413
	68		357		▶407		448
152-4898	55		358	156-0885	349	158-6095	▶350
152-5878	552		359		▶408	158-6694	553
153-1260	567	154-5020	247	156-0886	350	158-6695	553
153-2682	569	154-5021	247		▶409	158-6696	553
153-2683	208	154-5022	247	156-0887	▶384	158-6697	553
	516	154-5037	337		387	158-6698	553
	519	154-5053	415	156-0888	▶385	158-6699	553
	531		▶425		388	159-2953	208
153-2994	245	154-5059	338	156-0889	▶386		209
	247	154-5070	416		389		438
	249		▶426	156-0891	▶304		439
	251	154-5077	340		349		440
	253	154-5232	283		350		441
	255	154-8711	568		351		442
	257	154-8715	568		446		443
	259	155-1279	295	156-0913	304		444
	261	155-2255	118	156-1458	85		445
	266		121		87	159-4535	251
	268		553		125	159-4536	251
	270	155-2260	108		126	159-4537	251
153-2995	245		111	156-1460	85	159-5411	460
	255		429		87	159-5772	128
	259		522		125	159-5790	552
	261		524		126	159-5792	552
	266		544		429	159-5794	552
153-6237	139	155-2265	99	156-4282	243	159-5797	433
153-6981	552		118		263	159-8035	304
154-2704	363		121	156-5508	249		460
	364		207	156-5509	249		584
	367		476	156-5510	249	159-8038	424
	369	155-2270	108	156-5762	324		425
	371		111	157-0940	332		426
	373		115		333		427
	375		117		407	159-8049	79

▶ **PRIMARY REFERENCE**

PART NUMBER INDEX

Part	Page	Part	Page	Part	Page	Part	Page
159-8050	79	162-0223	490		183		379
159-8405	193	162-5236	356	165-4907	▶175		381
159-9322	108		357		183		382
	111		358	165-4908	174		387
159-9495	85		359	165-4909	174		388
	87		▶434		175		389
	125	162-8154	447	165-4934	151		391
	126	163-1385	245	165-6156	▶363		392
159-9496	85		259		403		395
	87		266	165-6157	▶364		397
	125		268		404		398
	126		270	165-7095	28		405
159-9539	196	163-1386	247		552		419
159-9540	79		249	165-8731	▶305		420
	196		251		459		421
159-9541	68		253	165-8732	449		423
159-9853	533		257		▶454		449
160-6778	316	163-9320	266		455		457
	318	164-1154	557	165-8740	459		458
	319	164-2108	181		▶460		586
160-7689	108	164-3213	224	165-8743	460	169-1679	128
	111	164-5557	139	166-0319	332	169-2876	588
160-8493	157	164-5567	137		333		591
	159		139	166-2033	107	169-3569	460
160-8500	37		141		206	169-6712	221
161-0185	245		281	166-2551	476	169-6715	52
	266		285		▶480	169-8941	▶387
161-0186	245	164-5590	134	166-2552	476		407
	266	164-5606	139	166-2556	477	169-8942	▶388
161-0187	▶266		141	166-2557	476		408
	349	164-5608	137	166-2558	476	169-8943	▶389
	350	164-7556	89	166-2559	476		409
	351		90	166-2560	470	170-5836	459
161-0188	245	164-9425	508		471	170-6305	554
	266		509	166-2562	205	172-0970	316
161-0189	245		510		571	172-3998	326
	266		511	166-2569	205		327
	268		512		▶570	172-8173	157
	270		513		571		159
161-0190	245	164-9614	446	166-4041	454	173-0702	501
	266		▶447	166-9312	266	173-0703	502
161-2539	118	164-9989	411	167-0608	476	173-2543	568
	121		448	167-3692	109	173-3015	189
161-4128	434		449		112		205
161-4130	384		455	167-3693	118	173-3016	189
	385		457		121		205
	386		458	168-7571	132	173-3018	189
	390	165-0142	168	168-8389	324		205
	424		169		328	173-3021	▶211
	425	165-2601	29		329		212
	426	165-2609	▶174		334	173-3022	187
	427		183		335		188
	428	165-2610	▶174		336		▶571
	457		183		339	173-7225	145
	458	165-4891	▶183		341	173-7407	459
161-7145	237	165-4892	132		342		▶474
	239	165-4894	476		344	174-2388	255
161-8560	130	165-4895	92		363	174-2389	255
	143	165-4898	▶183		364	174-2393	255
	145	165-4901	▶174		367	174-3091	503
	147		183		369		504
162-0177	233	165-4902	▶175		371		505
	235		183		373		533
	237	165-4903	▶183		375	175-0005	515
	239	165-4906	▶175		377		527

▶ **PRIMARY REFERENCE**

PART NUMBER INDEX

Part	Page
	538
175-3892	181
175-4236	206
	211
175-4237	205
	206
	210
175-4238	6
	187
	188
	▶469
175-4239	207
	210
176-1477	115
176-2947	490
176-3900	▶482
176-4079	213
	214
	538
177-1910	259
177-1911	259
	268
	270
177-1912	259
177-1914	456
177-1921	332
	333
177-1941	472
177-1955	456
177-1956	456
177-1957	456
177-1958	229
177-1971	456
177-1972	332
	333
177-1973	472
177-1975	456
177-1981	325
	▶332
177-1982	325
	▶333
177-1983	325
	▶472
177-1986	▶259
	325
177-1987	▶328
	332
177-1988	▶329
	333
177-1989	▶325
177-1990	▶325
177-3405	208
	516
	519
	569
177-7414	467
177-7415	467
178-2247	205
	206
	469
178-2255	46
178-2256	▶183
178-2270	177
178-3336	42
178-3620	66
	68
	79
	85
	87
	118
	121
	125
	126
	134
	538
	544
	546
178-7539	118
	121
178-9983	503
	504
	505
179-5434	429
179-7001	▶218
	283
179-7002	218
179-9392	108
	111
180-3007	66
	68
	285
180-7451	297
180-8071	314
180-9340	109
	112
	118
	119
	121
	122
	134
	206
	212
	326
	327
	429
	516
	519
	544
	553
180-9900	108
	111
183-4084	255
183-4085	255
183-5916	16
183-7131	192
183-7132	▶192
183-7133	192
183-7134	192
183-7602	197
184-1564	▶105
	107
	206
185-1861	115
185-4015	486
	536
185-7887	247
	249
	251
	253
	257
	268
	270
185-8182	23
185-8666	▶184
185-8667	▶184
185-9928	▶176
	184
185-9929	▶176
	184
185-9930	▶176
	184
185-9931	▶177
	184
185-9933	176
	177
186-0239	206
	212
186-2360	190
186-3362	117
186-3735	99
	108
	115
	199
	207
	295
	522
	524
	551
	553
186-3736	99
	109
	115
	207
	490
	553
186-5186	473
186-6190	▶483
	544
187-1273	276
	279
187-1274	276
	279
187-1275	276
	279
187-3211	560
187-3212	560
188-2008	137
	139
	141
188-7733	324
	▶473
189-0852	119
	122
189-3158	326
	327
	544
	553
189-4523	560
190-6534	157
	159
190-7453	283
190-7457	3
	4
	▶153
190-8084	4
	▶307
190-8962	206
	211
191-3206	63
191-9576	199
	201
191-9780	2
	3
	▶154
192-0836	118
	121
192-2606	480
192-2607	480
192-2637	461
	462
192-2640	▶228
	242
	435
	436
192-2642	435
	436
	470
	471
192-2645	242
	461
	462
	468
192-2655	430
	▶431
192-2663	541
192-7116	319
192-7508	297
193-0447	▶215
	241
193-8308	285
193-8313	283
193-8321	285
193-8329	79
193-8340	153
	154
193-8345	46
193-8385	556
193-8392	281
193-8393	281
194-5171	488
194-7631	215
194-7632	215
195-0935	493
	496
195-0936	205
	496
	554
	571
195-0937	97
	489
	496
	516
	519
195-0939	489
	496
195-5124	443
	444
195-6696	477
195-6723	494
	▶572

▶ **PRIMARY REFERENCE**

PART NUMBER INDEX

Part	Page
195-6740	▶583
195-6750	291
195-6754	461
	462
195-6768	283
195-6769	283
195-6942	422
	▶450
	453
195-6943	422
	▶451
	453
195-7124	349
	355
	359
	▶444
195-8211	33
195-8260	59
195-8324	37
195-8356	42
195-8364	70
195-8372	66
	68
195-8403	29
195-8460	49
195-8545	422
	▶452
	453
195-9700	316
	318
	319
	▶321
195-9712	206
	211
196-8356	70
196-8870	430
	▶433
197-0882	463
	465
197-0883	463
197-0884	465
197-6894	554
198-1076	316
	318
	319
198-4776	61
	62
198-9707	554
199-2212	25
199-2354	23
199-3410	583
199-5438	▶177
	183
199-5439	▶177
	183
199-5440	177
199-7722	365
	380
	390
	394
	427
199-8308	417
	▶427
199-8309	253
	257
199-8310	253
199-8311	253
	257
199-8316	343
199-8317	427

2

Part	Page
200-0999	132
	133
200-2371	321
200-6345	52
	544
202-0313	109
	112
202-0314	95
	99
	109
	112
202-2284	486
202-6611	90
202-6614	89
203-1100	316
203-4827	50
	51
203-9007	108
	111
204-1365	206
	211
204-1452	170
	172
204-1454	170
	172
204-1456	170
	172
204-1457	170
	172
204-1458	170
	172
204-1459	170
	172
204-1471	314
204-1481	314
204-1482	314
204-1485	314
204-1486	314
204-1488	314
204-1489	314
204-2281	52
205-3692	289
205-5148	524
206-1346	99
	207
206-2724	538
206-5143	199
	201
206-7398	486
	536
207-0539	574
	576
207-0573	574
	576
207-6154	50
207-9729	311
207-9733	199
	201
207-9734	199
	201
207-9737	242
	263
207-9756	242
	263
207-9758	242
	263
207-9780	206
	211
207-9785	242
	431
208-6176	46
208-9277	115
	119
	122
210-0852	463
	465
210-0855	219
210-8754	553
211-5358	115
212-0061	321
212-0431	66
	68
212-4114	297
212-6521	242
	264
212-6603	151
212-6604	151
212-6690	242
	263
212-8499	23
	24
212-8510	23
	24
	72
212-8597	31
213-0139	108
	111
	326
	327
213-3943	219
213-7489	503
	504
	505
213-8708	243
214-5555	229
214-5560	463
	465
214-7568	137
	139
	141
	218
	285
214-9186	496
	497
215-3273	297
215-3274	297
215-3275	297
215-3277	302
215-3957	435
	436
	▶468
215-3962	431
	▶435
215-3963	431
	▶436
215-4001	206
	211
215-8307	505
216-0610	150
	▶181
216-4725	85
	87
	125
216-4746	▶97
	494
216-4753	554
216-6144	205
	323
216-6145	492
216-6146	5
	6
	187
	188
	▶492
216-6156	314
216-6157	314
216-6159	314
216-6160	314
216-6161	314
216-7790	79
216-8756	▶324
216-8850	324
217-3572	50
	51
217-3850	318
	319
217-3875	297
217-5912	84
217-6226	▶390
	391
217-6227	▶391
	410
217-6228	351
	▶410
217-6229	▶351
	352
217-6230	▶352
218-0728	516
	519
218-0918	9
	▶166
218-0924	9
	▶52
218-0926	50
	51
218-0928	2
	3
	4
	▶168
218-0935	52
218-0936	52
218-0938	9
	▶46
218-0942	▶83
218-0943	▶84
218-2373	181

▶ **PRIMARY REFERENCE**

PART NUMBER INDEX

Part	Page	Part	Page	Part	Page	Part	Page
218-5562	495	218-5799	1		538	218-6948	486
	▶567		▶221	218-6404	484	219-0302	588
218-5571	283	218-5847	476		▶485		591
218-5572	283	218-5928	3	218-6405	485	219-4379	567
218-5580	143		4		▶486		568
	145		▶169	218-6406	494	219-4380	566
218-5581	130	218-5968	281		▶560		▶568
	143	218-6006	291	218-6411	494	219-4388	568
	145	218-6011	291		▶573	219-9739	516
	147	218-6036	560	218-6414	527		519
218-5585	272	218-6037	560		538	220-1043	50
	274	218-6060	500	218-6417	559		51
218-5588	134	218-6095	137	218-6418	▶514	220-4982	396
218-5602	1		139		540	220-8586	46
	▶65		141	218-6419	▶515	220-8587	46
218-5619	484	218-6118	501		540	220-8588	46
	535		502	218-6420	▶493	221-3429	450
	▶546		▶533		494		451
218-5621	▶137	218-6148	484	218-6421	506		452
	241		▶500		507	221-3876	522
218-5625	241	218-6250	500	218-6422	508		524
	▶272	218-6275	241		509	221-3877	516
	484		▶313		510		519
218-5631	241	218-6304	272		511	221-3879	544
	▶281		274		512	221-5245	37
218-5632	241	218-6332	242		513	221-5250	37
	▶283		431	218-6423	556	221-9124	▶50
218-5634	241	218-6333	242	218-6425	▶98		▶51
	▶291		431		494		52
218-5635	2	218-6343	199	218-6430	1	222-1178	52
	3		201		▶556	222-3963	178
	▶143	218-6357	542	218-6431	▶521		179
218-5636	3	218-6362	559		522	222-5693	157
	4	218-6370	494	218-6435	514		159
	▶145		▶552		559	222-5695	187
218-5660	1	218-6377	532	218-6438	276		188
	▶186	218-6380	494		279		▶323
218-5661	186		▶569	218-6440	▶516	222-7412	▶330
218-5685	544	218-6381	552	218-6442	489		334
218-5686	544	218-6386	514	218-6485	▶501	222-7421	330
218-5729	276	218-6387	514		512		331
	▶293	218-6388	514		513	222-7467	407
218-5732	241	218-6389	515	218-6490	▶502		408
	▶287	218-6391	515		506		409
218-5734	241	218-6392	▶534	218-6511	242		410
	▶289		535		263		411
218-5735	289	218-6393	534	218-6512	242		448
218-5739	276		▶536		263	222-7479	330
	279		538	218-6517	287		331
218-5740	287	218-6394	484		289	222-7545	335
	289		▶527	218-6561	313		▶437
	291		535	218-6601	283	222-7546	334
218-5741	289	218-6396	527	218-6645	538		▶438
218-5742	289		538		546	222-7724	326
218-5744	287	218-6397	527	218-6662	567		▶334
218-5756	285		538	218-6746	▶538	222-7725	334
218-5758	137	218-6398	527	218-6856	295		335
	139		538	218-6857	295	222-7728	330
	141	218-6399	486	218-6858	295		331
218-5764	276		536	218-6864	281	222-9812	9
	279	218-6400	495	218-6879	130		▶54
	291		▶532		143	223-0591	516
218-5770	281	218-6401	538		145		519
218-5798	203	218-6402	485		147	223-0600	▶519
	▶322		534	218-6947	536	223-0601	516

▶ **PRIMARY REFERENCE**

PART NUMBER INDEX

Part	Page	Part	Page	Part	Page	Part	Page
	519	226-1242	584		504	232-3121	61
223-0608	516	226-3734	185	231-4262	505		62
	519	226-3735	185	231-5266	220	232-4703	83
223-0609	521	226-5900	95	231-5271	334		84
223-0610	521		99		335	232-4706	549
223-0612	521	226-5901	553	231-5273	▶261		550
223-0616	519	226-7635	166		326	233-4872	193
	▶522	226-9629	181		327	233-5457	16
223-0617	516	227-4315	204	231-5274	▶220	233-5460	59
	519	227-6715	50		326	233-5466	27
223-3725	503		51		327	233-5468	27
223-3726	504	227-7025	297	231-5275	▶326	233-5469	37
223-3728	503	227-8807	▶217	231-5276	327	233-5470	37
	504	228-3369	586		▶335	233-5476	37
	505	228-3581	584	231-5277	▶327	233-5477	37
223-4240	193	228-5856	553	231-5278	▶294	233-5482	23
223-4275	46	228-9132	74		326		24
223-5941	553		75		327	233-5483	14
223-6537	▶549	228-9222	199	231-5279	294	233-5485	12
	553		201	231-7319	576	233-5486	11
223-8488	522	228-9240	302	231-7320	576	233-5488	16
	524	229-3432	383	231-7321	573	233-5494	39
223-8495	522		428	231-7322	574	233-5496	41
	524	229-4896	499	231-7323	574	233-5500	8
223-9974	134	229-7356	499	231-7324	573		▶18
	▶136	229-8752	1	231-7325	▶529	233-5632	▶531
224-0554	591	229-8757	522		576	233-5680	187
224-3875	193		524	231-7326	529		205
224-7057	573	229-8796	50	231-7327	▶530	233-5716	151
	▶574		51		574	233-5892	208
224-7058	573	230-3214	516	231-7328	530		209
	▶576		519	231-7329	529		476
224-8544	199	230-3621	28		530	233-5893	208
	201	230-3743	5	231-7331	574		209
224-8945	588		6		576		476
224-8946	591		▶117	231-7372	574	233-5929	539
224-9021	588		187		576	233-5931	539
224-9022	591		188	231-7401	529	233-5934	539
224-9408	293	230-3757	309		530	233-5990	▶208
	▶295		310	231-8122	486	233-5991	5
225-0312	591	230-4011	108		536		6
225-0313	588		111		▶539		187
225-3187	522		115	231-8123	486		188
	524	230-4596	▶331	231-8124	486		▶209
225-3305	588		335		536	233-5997	311
225-3854	118	230-5406	▶219	231-8126	486	233-7128	242
	121		325		536		263
225-3861	109	230-5407	456	231-8127	486		▶296
	112	230-5670	325		536	233-7131	143
225-5249	72		▶456	231-8129	486		147
225-5535	84	230-6368	79		536		▶149
225-5541	83	231-0124	261	231-8132	486	233-9744	170
225-5642	83	231-0125	261		536		172
225-5644	84	231-0126	261	231-8133	486	233-9856	74
225-7963	6	231-0127	261		536	234-0566	544
	▶212	231-4256	▶503	231-8137	486	234-0732	541
225-8015	326		510	231-8141	486	234-0774	▶541
	327		511		536		558
225-9521	219	231-4258	87	231-8142	486	234-4328	▶89
	▶229		▶504		536		98
225-9522	▶463		508	231-8143	536	234-4791	20
225-9523	▶465		509	231-8144	536	234-4796	41
226-0291	193	231-4260	▶505	231-8145	536	234-4798	42
	492		507	232-1384	486	234-4800	42
226-0323	492	231-4261	503	232-1789	46	234-4801	42

PART NUMBER INDEX

Part	Page	Part	Page	Part	Page	Part	Page
234-4802	42		536		147		459
234-4803	42	236-5088	214	243-1323	574	255-8058	304
234-4805	60	236-6923	544		576	256-2155	66
234-4806	60	237-5331	512	243-5601	297		68
234-4807	35		513	244-1363	297	257-8390	82
234-4809	44	237-5332	506	244-1364	297	257-8739	44
234-4812	29	237-7296	65	244-1365	297		45
234-4815	31	237-7325	55	244-1367	334	258-2419	61
234-4818	63	238-0112	115		335	258-2448	28
234-4820	63	238-0999	220	244-1370	220	258-2462	4
234-4821	63	238-1003	261	244-7127	72		▶61
234-4822	63	238-1004	334	245-1911	296	258-2466	498
234-4824	59		335	245-6811	494	258-2468	484
234-4831	44	238-1005	334	246-1259	25		▶498
	45		335	246-1260	25	258-2533	462
234-4835	72	238-4626	182	246-2622	66	258-2534	461
234-7727	▶90		296		68	258-2535	433
	97	238-4628	299	246-2641	189		▶470
234-7730	89	238-7637	207		205	258-2536	▶461
234-7731	89		210	246-4349	481		470
234-7756	90	238-7642	307	246-8314	45	258-2537	433
234-7758	90		▶309	246-8315	44		▶471
234-9525	272	238-7675	207		45	258-2538	▶462
	274	238-7676	207	246-9039	544		471
234-9575	588	238-7716	195	247-0678	326	258-2577	299
	591		196		327	258-2579	▶299
235-1365	588	238-7734	▶578		▶584		301
235-1368	591	238-7736	134	247-4877	204	258-2858	133
235-1845	118	238-8278	43	247-6118	586	258-3184	201
	121	238-8282	13	247-6317	8	258-3423	580
235-4768	522	238-8283	13		▶56	258-3424	580
	524	238-8284	13	247-7182	531	258-3425	580
235-4959	44	238-8285	13	248-2171	522	258-3427	580
	45	239-4292	21		524	258-3442	66
235-4960	44	239-4990	588	248-5245	586		▶74
	45	239-4991	591	249-2910	▶550	258-3539	498
235-4962	78	239-5029	459		553	258-3849	189
235-4967	63	239-6109	573	249-7160	296		190
235-4968	63	239-6138	529	250-1493	538		191
235-4973	78		530	252-0346	▶184		205
235-5243	507	239-6986	588	252-0347	▶184		206
235-5246	508		591	252-0348	500	258-4134	99
	509	239-8429	25	252-0368	66		207
	510	239-8513	39		68	258-4135	▶101
	511		42	252-0377	▶185		108
235-5880	8	240-6877	527	252-0426	431		111
	▶37		538		433	258-4136	108
235-5895	8	240-6878	527	252-6934	503		111
	▶40		538		504	258-4138	108
235-5900	8	240-6879	527		505		111
	▶45		538	252-8595	423	258-4143	108
235-5904	8	240-8666	488	252-9015	578		111
	▶82	241-6010	72	252-9016	578	258-4172	111
236-4830	▶489		78	252-9017	578	258-4178	553
	494	241-6397	28	252-9197	168	258-4196	108
236-4832	490	242-9000	95		169		111
236-4833	489		99	253-0244	38	258-4198	429
	▶490	243-0001	▶453	253-2121	287	258-4230	494
236-5058	6	243-0002	▶453		289		▶548
	187	243-0003	▶453	253-5512	57	258-9011	294
	188	243-0405	54	254-9097	226		▶297
	▶210		▶55		227	259-1107	429
236-5067	486	243-0406	55		232	259-8194	149
	536	243-0407	55	255-0942	227		150
236-5069	486	243-0564	130	255-0943	▶226		▶182

▶ **PRIMARY REFERENCE**

PART NUMBER INDEX

Part	Page
259-8195	149
260-6688	66
	68
260-6695	522
261-6101	199
	201
261-6275	1
	▶129
261-6371	213
261-6372	213
261-6373	213
261-6374	213
261-6375	213
261-6376	213
261-6377	213
261-6378	213
261-6379	213
261-6380	213
261-6384	5
	6
	187
	188
	▶213
262-0941	225
262-6480	65
262-6518	65
262-9151	126
263-3823	551
263-4836	588
	591
263-4996	168
	169
264-4297	312
264-7029	108
	111
	115
265-2898	▶178
	184
265-2899	▶178
	184
265-2900	▶178
	184
265-2901	▶179
	184
265-4123	112
266-3316	201
266-6140	230
	231
266-8903	297
267-2528	38
267-2680	101
	108
	111
267-2701	101
267-2744	118
	121
267-2746	118
	121
267-5211	101
	108
	111
267-5213	101
	108
	111
268-1923	157
	159
268-1929	170
	172
268-1935	157
	159
268-4083	▶346
268-4084	346
	▶405
268-4089	▶365
	405
268-9529	170
	172
270-2679	109
	112
271-2360	309
	310
271-9408	276
	279
272-3050	62
272-9800	96
274-3774	115
	118
274-3775	108
274-3776	118
274-3778	118
274-9930	220
	▶230
274-9931	220
	▶231
275-0601	109
	112
275-7878	108
	111
276-3440	516
	▶524
276-3615	524
	▶526
276-6019	▶562
276-6020	▶563
276-7276	▶564
276-7277	▶565
276-7278	79
276-9875	498
	▶499
277-1873	79
277-8862	299
278-1292	187
	188
	▶189
278-1293	6
	▶190
	▶191
278-1969	▶232
	356
	357
	358
278-1970	227
	232
278-1975	▶227
	349
	350
	351
	446
278-4524	230
278-4525	231
278-4875	230
	231
278-8714	309
	310
278-8716	299
	302
279-3232	526
279-5350	▶446
279-5351	446
	▶448
279-5352	448
	▶457
279-5353	457
279-5357	458
279-5358	411
	▶458
279-5359	▶411
	446
279-5360	▶446
279-5363	▶374
	375
279-5364	347
	▶375
279-5365	▶347
279-5366	▶347
279-5367	▶376
	377
279-5368	347
	348
	▶377
279-5369	▶347
279-5370	▶348
279-5371	▶378
	379
279-5372	348
	▶379
279-5373	▶348
279-5374	▶348
279-5375	▶380
	381
279-5376	348
	349
	▶381
279-5377	▶348
279-5378	▶349
279-5380	▶356
279-5381	▶356
279-5382	356
279-5383	356
	▶414
279-5384	▶336
	414
279-5385	336
	▶337
279-5387	▶338
	339
279-5388	▶339
	415
279-5389	356
	▶415
279-5390	▶356
	357
279-5391	▶357
279-5392	▶357
279-5395	▶340
	341
279-5396	▶341
	416
279-5397	357
	▶416
279-5398	357
	358
279-5399	▶357
279-5400	▶358
279-5401	▶358
279-5402	▶358
279-5403	358
279-5404	358
	▶417
279-5405	▶342
	417
279-5406	342
	▶343
279-5412	▶245
	446
279-5413	▶247
	356
279-5414	▶249
	356
279-5415	▶251
	357
279-5416	▶253
	358
279-5417	247
	249
	251
	253
	257
279-5418	247
	249
	251
	253
	257
279-5420	▶355
279-5421	355
	▶392
279-5422	392
	▶393
279-5423	▶394
	395
279-5424	355
	▶395
279-5425	▶355
279-5428	▶396
	397
279-5429	355
	▶397
279-5430	▶355
279-5433	▶366
	367
279-5434	346
	▶367
279-5435	▶346
279-5436	▶368
	369
279-5437	346
	▶369
279-5438	▶346
279-5439	▶370

▶ **PRIMARY REFERENCE**

PART NUMBER INDEX

Part	Page
	371
279-5440	346
	▶371
279-5441	▶346
280-1575	516
	519
280-6070	548
280-6072	496
	497
280-7837	161
280-7838	161
	162
	164
280-7840	161
	162
	164
280-7841	161
	162
	164
280-7842	161
280-7843	161
280-7848	162
	164
280-7849	162
	164
280-7850	162
	164
280-7856	154
	▶157
280-7858	153
	▶159
280-7863	170
	172
280-7865	170
	172
280-8240	61
	62
280-8298	55
280-8307	22
280-8312	50
280-8314	22
280-8319	58
280-8335	22
280-8341	61
	62
280-8347	5
	6
	▶62
	187
	188
280-8377	61
	62
280-8395	498
280-8407	9
	▶22
280-8408	22
280-8409	22
280-8417	22
282-6961	573
282-9059	521
	526
283-0632	108
	118
283-4198	108
	111
283-7554	526
283-9477	285
284-3743	560
284-3744	560
285-5794	52
285-6088	▶372
	373
285-6089	347
	▶373
285-6090	▶347
285-6095	▶359
285-6096	359
	▶419
285-6097	▶400
	419
285-6098	▶401
	420
285-6099	360
	▶420
285-6100	352
	▶360
285-6101	352
	▶360
285-6102	360
	▶421
285-6103	▶402
	421
285-6105	446
	▶455
285-6110	446
	▶449
285-6111	▶352
285-6112	▶352
285-6113	▶255
	459
285-6114	▶446
285-6115	▶446
285-6116	352
	446
	▶459
285-8565	527
	538
285-8570	527
	538
285-9066	25
	48
285-9133	527
	538
285-9286	276
	279
	291
286-3591	226
286-9229	412
286-9243	412
	413
286-9244	354
	▶412
286-9248	▶306
	353
	354
286-9249	270
286-9250	▶268
	354
286-9251	353
	354
	▶586
286-9263	268
	270
286-9265	268
286-9266	268
286-9267	268
	270
286-9268	268
	270
286-9271	268
286-9273	306
286-9274	413
286-9278	353
	▶413
286-9279	▶270
	353
286-9280	270
286-9281	270
286-9289	306
286-9300	▶353
286-9301	▶354
287-2922	8
	▶32
287-2983	8
	▶33
287-3357	8
	▶23
287-4033	8
	▶13
287-5323	8
	▶59
287-5377	8
	▶39
287-5665	8
	▶41
287-6056	8
	▶48
287-6114	8
	▶35
287-6138	8
	▶36
287-6181	8
	▶104
287-6603	560
288-5767	560
289-1502	112
289-3750	276
289-3751	276
289-3752	276
	279
289-3753	276
	279
289-3754	279
289-3756	276
289-3780	289
289-3781	287
289-3788	287
	289
289-6337	157
289-6338	159
289-6354	157
	159
289-6358	308
	▶310
289-9560	318
290-2110	582
291-5059	291
291-5060	291
291-5061	291
291-5062	291
291-8148	314
292-3114	542
292-4040	8
	▶43
292-4041	8
	▶11
292-9223	355
	▶398
292-9224	398
	▶399
292-9257	399
292-9270	349
	▶382
	406
292-9271	382
	▶383
293-0139	359
293-0140	▶257
	359
293-0141	359
	▶418
293-0142	▶344
	418
293-0143	344
	▶345
293-0144	345
293-0148	418
	▶428
293-0152	257
293-6264	▶225
	353
	354
293-6591	130
	145
	▶150
294-1767	41
294-4890	11
294-4891	11
294-4892	11
294-5060	72
294-5502	245
294-5503	245
294-5504	255
294-5505	255
294-7915	44
294-7916	78
294-7922	15
295-1799	▶180
	314
295-5440	486
	536
295-6951	221
	▶233
295-6952	221
	▶235
295-6953	221
	▶237
295-6954	221
	▶239

▶ **PRIMARY REFERENCE**

PART NUMBER INDEX

Part	Page
295-7199	588
	591
295-7221	5
	6
	187
	188
	▶300
	301
295-7315	588
295-7317	588
295-7318	588
295-7319	588
295-7320	588
295-7325	591
295-7327	591
295-7328	591
295-7329	591
295-7330	591
295-7340	591
296-0582	▶429
296-0583	429
296-0584	429
296-4812	63
296-5140	237
	239
296-7597	▶355
296-7602	445
296-7680	355
	▶445
296-8055	▶359
296-8057	▶359
296-8191	▶406
296-8192	▶349
297-4130	233
	235
297-4407	233
	235
297-4408	233
	235
297-4411	233
297-4414	233
297-4752	235
297-4753	235
297-8519	237
	239
297-8522	237
297-8524	239
299-1379	237
	239
299-4645	18
299-9119	▶316
	506
	507
299-9121	316
	318
	319

3

Part	Page
300-1071	8
	▶106
300-3867	72
300-3988	72
300-9449	29
301-3396	8
	▶34
301-3397	34
301-7293	553
303-6257	44
303-6658	486
	536
303-8767	242
	435
	436
303-8768	242
	435
	436
	468
304-3885	66
	68
305-2969	486
	536
305-4185	151
305-5385	61
	62
306-0175	137
	139
	141
306-0350	108
	111
306-0351	108
	111
306-8137	5
	6
	187
	188
	▶308
307-3036	300
	▶302
307-3039	157
	159
307-3068	169
	▶170
307-3070	168
	▶172
307-3074	170
	172
307-3075	170
	172
307-3808	255
308-0421	137
	139
	141
308-6767	193
309-1325	▶96
	190
	191
	206
309-8909	29
310-2682	16
310-6660	242
	468
310-8798	14
311-9240	242
	468
312-1683	486
	536
312-2179	66
	68
312-2635	486
	536
312-7747	588
312-7748	591
313-5646	309
313-6251	316
313-9185	522
	524
314-9860	8
	▶15
314-9861	8
	▶20
314-9938	16
314-9947	25
314-9948	25
314-9962	31
314-9963	31
314-9964	31
314-9972	63
314-9974	63
314-9980	70
314-9981	70
314-9982	70
314-9983	70
314-9984	70
314-9985	70
314-9986	70
314-9987	70
314-9988	70
314-9989	70
314-9991	72
314-9992	72
314-9999	72
315-0180	79
315-2356	29
315-4664	12
315-4667	25
315-4669	31
315-4670	31
315-4671	31
315-4686	25
315-4687	25
315-5493	242
	461
	462
	468
315-7700	44
315-7701	57
315-7703	23
315-7704	27
315-7761	8
	▶27
315-7762	8
	▶14
315-7765	8
	▶29
315-7766	8
	▶21
315-7768	8
	▶63
315-7769	8
	▶57
315-7790	544
315-8329	8
	▶12
315-8336	8
	▶25
315-8348	8
	▶31
315-8350	8
	▶70
315-8352	8
	▶72
315-8353	8
	▶78
315-8355	8
	▶44
315-8697	57
315-8698	57
316-1698	526
317-1204	126
317-3128	312
319-2137	242
	468
319-7262	18
319-7263	18
319-9480	6
	187
	188
	▶467
319-9481	467
319-9482	467
319-9483	467
319-9484	467
319-9489	467
319-9490	467
320-0650	157
	159
320-1389	▶488
	522
	524
320-1390	522
	524
322-3150	21
323-2009	8
	▶10
325-5905	29
325-8382	▶557
	558
326-4676	▶195
	203
326-4785	▶1
326-4792	1
	▶199
	▶201
326-5239	▶7
326-5249	▶4
326-5258	1
	▶167
326-5264	2
	▶506
326-5265	2
	3
	4
	▶507
326-5267	3
	4
	▶508

▶ **PRIMARY REFERENCE**

PART NUMBER INDEX

Part	Page
	▶509
326-5276	▶2
326-5277	▶2
326-5278	▶3
326-5289	▶5
326-5299	▶5
326-5329	9
	▶28
326-5336	19
326-5358	28
326-5365	9
	▶66
	▶68
326-5368	9
	▶19
326-5371	66
	68
326-5372	1
	▶9
326-5376	9
	▶58
326-5377	484
	▶544
326-5378	544
326-5379	544
326-5394	5
	6
	187
	188
	▶214
326-5395	214
326-5396	214
326-5400	1
	▶494
326-5401	494
	▶497
326-5402	496
	497
326-5404	▶496
326-5406	494
	▶542
326-5407	542
326-5408	542
326-5420	▶1
326-5427	▶3
326-5428	▶4
326-5435	1
	▶241
326-5436	199
	▶203
326-5460	▶588
326-5467	▶241
326-5480	▶241
326-5489	▶6
326-5510	▶495
326-5511	▶495
326-5512	▶494
326-5513	▶494
326-5514	495
	▶540
326-5515	494
	▶535
326-5516	▶484
	494
326-5529	▶187
326-5559	▶188
326-5560	▶591
326-5569	▶430
326-5572	1
	▶559
326-5578	▶430
326-5581	276
	279
326-5583	242
	263
326-5584	263
326-5585	242
	263
326-5589	276
	279
326-5594	559
326-5609	1
	▶193
326-5610	193
326-5612	276
	279
326-5614	276
	279
326-5634	276
	279
326-5640	276
	279
326-5676	241
	▶276
326-5762	242
	263
326-5780	241
	▶311
326-5781	311
	▶312
326-5937	▶197
	203
327-0752	106
327-8939	65
	▶558
327-8945	558
328-2270	494
	▶553
328-2271	553
328-2272	▶108
	▶111
	494
328-2273	108
328-2274	1
	▶118
	▶121
328-2275	118
328-2276	9
	▶115
328-2277	115
328-2278	1
	▶79
328-2279	79
328-2280	79
328-2281	79
328-2333	6
	▶99
	187
	188
328-2334	99
	207
328-2335	3
	4
	▶125
328-2337	79
328-2340	118
	121
328-2341	124
328-2342	▶124
	301
328-2343	95
	99
328-2344	4
	5
	▶94
328-2345	▶81
	109
	112
328-2346	5
	▶95
328-2348	6
	▶107
328-2352	554
328-2353	134
328-5192	59
328-7495	134
329-2587	233
	235
329-2589	237
	239
329-3734	112
330-5012	522
	524
	▶551
330-7620	57
330-7622	57
330-7633	8
	▶16
330-7634	16
330-8684	554
332-6713	241
	▶279
332-6714	▶263
	430
335-5735	72
335-5750	8
	▶60
335-9117	48
	▶49
335-9124	49
335-9125	48
336-1319	313
	▶314
336-9190	72
336-9856	42
336-9857	42
340-7724	▶205
341-3561	10
341-7647	162
	164
342-1219	7
	▶8
343-0868	▶318
	508
	510
	512
343-0877	318
343-5542	2
	▶510
	▶511
343-5543	2
	▶512
	▶513
343-6022	109
	112
343-6885	109
	112
346-1832	476
346-1834	▶476
346-1836	476
347-4039	285
347-4431	291
347-4432	291
347-5346	312
348-4609	312
348-7676	14
349-5327	68
	▶75
351-6835	72
351-9371	422
	▶423
352-3694	72
352-4169	36
353-1693	▶422
353-1694	▶422
353-1696	▶422
353-1697	▶422
354-6568	1
	▶580
354-6569	580
354-6570	580
354-6574	22
356-1897	3
	4
	▶582
356-1900	▶301
356-1901	▶301
356-1905	588
	591
356-1910	241
	▶285
356-1916	▶134
	241
356-1936	134
356-5008	▶319
	509
	511
	513
356-5011	319
358-4944	328
	329
	334
	335
	336
	339
	341
	342
	344
	387
	388

▶ **PRIMARY REFERENCE**

PART NUMBER INDEX

Part	Page	Part	Page	Part	Page	Part	Page
	389		235				
	391	371-2760	237				
	419		239				
	420	372-3916	4				
	421		▶156				
	457	373-6258	121				
	458	373-9551	20				
	586	373-9653	57				
358-4945	324	373-9662	57				
358-4982	155	374-3441	▶274				
	▶161		535				
358-4984	156		540				
	▶162	374-7463	121				
358-4986	156	374-7464	111				
	▶164	374-7465	121				
358-5951	314	374-7467	121				
358-6919	▶206	375-4009	111				
358-6921	▶207	375-6444	126				
360-2177	25	375-6446	3				
361-0435	588		4				
	591		▶126				
361-0452	▶85	377-4710	81				
361-0454	▶87	377-5261	81				
361-2657	155	377-5262	81				
	156	390-5018	155				
	168						
	169						
361-2874	8						
	▶24						
361-2880	8						
	▶42						
361-3334	8						
	▶38						
361-4665	51						
361-9555	75						
362-2973	51						
364-1355	▶242						
364-1360	133						
364-3919	72						
369-8253	▶196						
	203						
369-9122	133						
369-9912	133						
370-4182	2						
	3						
	▶139						
370-4185	130						
370-4187	▶133						
	167						
370-4192	2						
	3						
	▶147						
370-4194	4						
	▶141						
370-4197	2						
	3						
	▶155						
370-4207	4						
	▶130						
370-4654	201						
	▶203						
370-5254	130						
	147						
371-0907	63						
371-2756	233						

▶ **PRIMARY REFERENCE**



© 2011 CATERPILLAR
ALL RIGHTS
RESERVED

CAT, CATERPILLAR, THEIR RESPECTIVE LOGOS, “CATERPILLAR YELLOW” AND THE POWER EDGE TRADE DRESS, AS WELL AS CORPORATE AND PRODUCT IDENTITY USED HEREIN, ARE TRADEMARKS OF CATERPILLAR AND MAY NOT BE USED WITHOUT PERMISSION.