SEBP6425
July 2013

RUTHZIL TRATOR COMERCIAL DE PEÇAS LTDA 11 97083-6812 ROLANDO

Parts Manual

236D Skid Steer Loader

MPW1-Up (Machine)
SEN1-Up (Machine)

Product and Dealer Information

Note: For product identification plate locations, see the section “Product Identification Information” in the Operation and Maintenance Manual.

Delivery Date: _____

Product Information

Model: _____

Product Identification Number: _____

Engine Serial Number: _____

Transmission Serial Number: _____

Generator Serial Number: _____

Attachment Serial Numbers: _____

Attachment Information: _____

Customer Equipment Number: _____

Dealer Equipment Number: _____

Dealer Information

Name: _____ Branch: _____

Address: _____

_____

_____

	Dealer Contact	Phone Number	Hours
Sales:	_____	_____	_____
Parts:	_____	_____	_____
Service:	_____	_____	_____

MEMORANDA

TABLE OF CONTENTS

NAME	PAGE
GENERAL INFORMATION	**A4**
REPAIR ALTERNATIVES	**A7**
SUPPLEMENTAL COOLANT ADDITIVES	A8
MAINTENANCE PARTS	**A9**
INDEX	**A12**
MACHINE ARRANGEMENT	**1**
CHASSIS AR	1
COMMON AR	1
CONFIGURATION AR	2
CONVERSION AR-MACHINE	3
ENGINE ARRANGEMENT	**4**
ENGINE AR-COMPLETE	4
ENGINE AR-PRIMARY	5
INSTALLATION AR-ENGINE	6
BASIC ENGINE	**8**
CAMSHAFT GP	8
COVER GP-VALVE MECHANISM	9
CRANKSHAFT GP	13
CYLINDER BLOCK AS	15
CYLINDER BLOCK GP	16
CYLINDER HEAD AS	17
CYLINDER HEAD GP	21
DRAIN GP-ENGINE OIL	23
FLYWHEEL GP	24
GUARD GP-BELT	25
HOUSING GP-FRONT	26
LIFTING GP-ENGINE	28
MOUNTING GP-ENGINE	29
PAN GP-OIL	30
PISTON & ROD GP	31
PULLEY GP	33
VALVE MECHANISM GP	34
LUBRICATION SYSTEM	**36**
FILLER GP-ENGINE OIL	36
GAUGE GP-OIL LEVEL (DIPSTICK)	37
LINES GP-ENGINE OIL	38
COOLING SYSTEM	**39**
LINES GP-OIL COOLER	39
LINES GP-WATER	41
PUMP GP-WATER	43
RADIATOR & HYD OIL COOLER GP	44
AIR INLET AND EXHAUST SYSTEM	**46**
AIR CLEANER GP	46
COOLER GP-EXHAUST	49
EXTENSION GP-EXHAUST	51
LINES GP-AIR	52
LINES GP-COOLING	54
MANIFOLD GP-EXHAUST	55
MANIFOLD GP-INLET	56
MUFFLER & MOUNTING GP	58
MUFFLER AS	59
PRECLEANER GP	60
TURBOCHARGER GP	62
FUEL SYSTEM	**65**
CONTROL GP-GOVERNOR	65
FILTER GP-FUEL	67
GOVERNOR GP	68
HOUSING GP-FUEL PUMP	70
LINES GP-FUEL	71
LINES GP-FUEL INJECTION	74
NOZZLE GP-UNIT INJECTOR	75
PUMP AS-FUEL INJECTION	76
PUMP GP-FUEL INJECTION	77
PUMP GP-FUEL TRANSFER	83
TANK & MTG GP-FUEL	84
TANK GP-FUEL	85
ELECTRICAL AND STARTING SYSTEM	86
ALTERNATOR GP-CHARGING	86
BATTERY & WIRING GP	87
CAMERA GP	89
CONVERSION GP-MACHINE	90
COVER GP-FUSE PANEL	91
ELECTRONICS GP-MACHINE	92
ELECTRONICS GP-MONITOR	92
GLOW PLUG GP	93
HARNESS AS-CAB	94
HARNESS AS-CHASSIS	98
HARNESS AS-ENGINE	99
HARNESS AS-FRONT	100
HARNESS AS-HEATER & AIR COND	100
HARNESS AS-LIGHTING	102
HARNESS AS-PANEL	103
HARNESS AS-PLATFORM	104
HARNESS AS-QUICK COUPLER	106
HARNESS AS-RADIO	107
HARNESS AS-REAR LIGHTING	107
HARNESS AS-RIDE CONTROL	107
HARNESS AS-SENSOR	108
HARNESS AS-SOLENOID	108
HARNESS AS-WIRING	109
HARNESS AS-WORK TOOL	109
HEATER GP-JACKET WATER	110
INSTALLATION GP-COMMUNICATION	111
KIT-CAMERA	112
KIT-WORK TOOL WIRING	113
LAMP GP-FLOOD	115

TABLE OF CONTENTS

NAME	PAGE
LAMP GP-HEAD & SIGNAL	117
LAMP GP-ROADING	119
LAMP GP-STOP & TAIL	121
LAMP GP-WARNING BEACON	122
LIGHTING GP-FLOOD	123
LIGHTING GP-ROADING	124
LIGHTING GP-STOP & TAIL	126
RELAY GP	127
SENSOR GP-SPEED	129
SOFTWARE GP-MACHINE	131
STARTING MOTOR GP-ELECTRIC	132
WIRING GP-AIR CONDITIONER	133
WIRING GP-CAB	135
WIRING GP-CAMERA	137
WIRING GP-ENGINE	138
WIRING GP-FRONT	139
WIRING GP-HEATER	141
WIRING GP-PLATFORM	142
WIRING GP-QUICK COUPLER	144
WIRING GP-RIDE CONTROL	145
WIRING GP-WORK TOOL	146
POWER TRAIN	**150**
AXLE GP	150
DRIVE GP-TANDEM	152
FILTER GP-OIL	153
LINES GP-HYDROSTATIC	155
MOTOR & MTG GP-HYDROSTATIC	160
MOTOR GP-PISTON	162
MOUNTING GP-PUMP	165
POWER TRAIN AR	166
PUMP & MTG GP-HYDROSTATIC	167
PUMP GP-PISTON	168
TIRE & RIM GP	170
WHEEL & TIRE AR	176
FRAME AND BODY	**183**
CONVERSION AR-ROADING	183
CONVERSION GP-ROADING	184
COUNTERWEIGHT GP	185
ENCLOSURE GP-ENGINE	186
FRAME GP-LOADER	189
GRILL GP-RADIATOR	191
KIT-COUNTERWEIGHT	192
KIT-GUARD	193
KIT-ROADING CONVERSION	194
LIFTING GP-MACHINE	197
MIRROR & MTG GP-REAR VIEW	198
MOUNTING GP-REGISTRATION	199
MOUNTING GP-ROADING LIGHTS	200
SPACER GP	202
HYDRAULIC SYSTEM	**203**
ACCUMULATOR GP-HYDRAULIC	203
ACCUMULATOR GP-RIDE CONTROL	205
CONTROL AR-HYDRAULIC	207
CYLINDER & MTG GP-ANGLE BLADE	208
CYLINDER & MTG GP-LIFT ARM	210
CYLINDER GP-BUCKET	211
CYLINDER GP-GRAPPLE	212
CYLINDER GP-HYDRAULIC	214
CYLINDER GP-LIFT	218
CYLINDER GP-LIFT ARM	219
CYLINDER GP-TILT	220
HYDRAULIC AR	224
KIT-COVER	226
LINES GP-AUXILIARY HYDRAULIC	227
LINES GP-BUCKET	231
LINES GP-CONNECTING	245
LINES GP-GRAPPLE	249
LINES GP-HYDRAULIC	255
LINES GP-LIFT CYLINDER	261
LINES GP-PUMP	263
LINES GP-TILT CYLINDER	268
MANIFOLD & MTG GP-CONTROL	270
MANIFOLD GP-CONTROL	271
MANIFOLD GP-RIDE CONTROL	274
MOTOR & MTG GP-HYDRAULIC FAN	275
MOTOR GP-GEAR	277
MOUNTING GP-CYLINDER	278
PUMP & MTG GP-GEAR	282
PUMP & MTG GP-WORK TOOL	283
PUMP GP-GEAR	284
PUMP GP-PISTON	286
TANK & MTG GP-HYDRAULIC	287
VALVE & MTG GP-CONTROL	289
WORK TOOLS	**290**
ARM GP-MATERIAL HANDLING	290
BLADE AR	291
BLADE AS-ANGLING	298
BLADE GP-ANGLING	302
BLADE GP-MULTIPURPOSE BUCKET	306
BLADE GP-SNOW	325
BUCKET AR-DIRT	326
BUCKET AR-GENERAL PURPOSE	327
BUCKET AR-GRAPPLE	328
BUCKET AR-LIGHT MATERIAL	335
BUCKET AR-MULTIPURPOSE	335
BUCKET AR-UTILITY	344
BUCKET AS-DIRT	345
BUCKET AS-GENERAL PURPOSE	354
BUCKET AS-GRAPPLE	364
BUCKET AS-LIGHT MATERIAL	372
BUCKET AS-UTILITY	380
BUCKET GP-DIRT	383
BUCKET GP-GENERAL PURPOSE	384
BUCKET GP-GRAPPLE	385

TABLE OF CONTENTS

NAME	PAGE
BUCKET GP-MULTIPURPOSE	392
BUCKET GP-UTILITY	401
CARRIAGE & FORK AR	404
CARRIAGE GP-FORK	405
CLAM AS-MULTIPURPOSE BUCKET	406
CONVERSION GP-WORK TOOL	411
COUPLER AR-QUICK	412
COUPLER AS	413
COUPLER GP-QUICK	414
COVER GP-LINES	418
EDGE GP-BIT & CUTTING	419
EDGE GP-CUTTING	420
FORK AR-GRAPPLE	428
FORK GP-GRAPPLE	429
FORK GP-PALLET	432
FORK GP-UTILITY	436
FRAME GP-BLADE	442
FRAME GP-FORK	443
GRAPPLE & CYLINDER GP-UTILITY	445
GRAPPLE GP-UTILITY	446
KIT-ROADING PLATE & MOUNTING	447
LINK GP-COUPLER	448
LOCK GP-QUICK COUPLER	452
PLATE GP-SIDE	453
PUMP GP-DIAPHRAGM	455
SPRING GP-BLADE	456
STEP GP-MATERIAL HANDLING ARM	457
STOP GP-BUCKET	458
STRAINER GP-WATER	459
TANK & MTG GP-WATER	460
TANK GP-WATER	462
TOOTH GP-UNI	463
OPERATOR STATION	**464**
ACCESSORY GP-CAB	464
ACCUMULATOR GP-REFRIGERANT	466
AIR CONDITIONER & MOUNTING GP	467
AIR CONDITIONER AR	469
ARMREST & MOUNTING GP	470
ARMREST GP	472
BLOWER GP-CAB	474
CAB AR	475
CAB AR-ENCLOSED ROPS	475
CAB AR-OPEN ROPS	475
CABLE GP-CONTROL	477
COMPRESSOR GP-REFRIGERANT	478
CONDENSER & MTG GP-REFRIGERANT	479
CONTROL GP-AIR & TEMPERATURE	480
CONTROL GP-ELECTROHYDRAULIC	482
CONTROL GP-HANDLE	488
CONTROL GP-JOYSTICK	492
COVER GP-CAB	497
COVER GP-CONSOLE	498
DOOR GP-CAB	500
GUARD GP-ROPS/FOPS	508
HANDHOLD GP	509
HANDLE GP	510
HEATER AR-CAB	511
HEATER GP-CAB	512
INSTALLATION GP-RADIO	514
KIT-AIR CONDITIONER BREATHER	515
KIT-CAB DOOR & MOUNTING	516
KIT-CAB WINDOW	520
KIT-INSTRUMENT PANEL	521
KIT-PEDAL	522
KIT-RADIO	523
LINER GP-CAB	525
LINES GP-AIR CONDITIONER	527
LINES GP-HEATER	529
LITERATURE GP	530
MOTOR GP-WINDOW WIPER	531
MOUNTING GP-ARMREST	532
MOUNTING GP-ROPS	534
PANEL GP-INSTRUMENT	536
PEDAL GP-GOVERNOR	542
RADIO GP	543
SEAT & ARMREST GP	545
SEAT & MOUNTING GP	547
SEAT AR-SUSPENSION	554
SEAT BELT GP	555
SEAT GP-SUSPENSION	557
SUSPENSION GP-SEAT	561
WINDOW GP-CAB	563
SERVICE EQUIPMENT AND SUPPLIES	567
FILM GP	567
PLATE & FILM GP	573
PART NUMBER INDEX	**B1**

1. MACHINE IDENTIFICATION

Cat machines are identified by Product Identification Numbers (PIN). Some components included in a machine may be identified by Serial Numbers (S/N). Typical components that will be serialized include engines, transmissions, bulldozers, and rippers. The machine and engine are further identified by arrangement numbers and in some cases modification numbers. These numbers are shown on the product identification plate(s) and on the master plate in the operator's compartment.

Cat dealers need all of these numbers to determine accurate parts identification.

Effective First Quarter 2001 the Cat Product Identification Number (PIN) changed from 8 to 17 characters. In an effort to provide uniform equipment identification, Caterpillar and other construction equipment manufacturers are moving to comply with the latest version of the product identification numbering standard. Non-road machine PINs are defined by ISO 10261. The new PIN format will apply to all Cat machines and generator sets. The PIN plates and frame marking will display the 17 character PIN. The new format will look like the following:

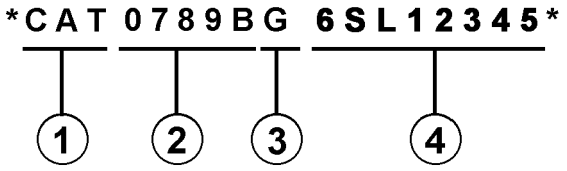

Where:

1. Caterpillar's World Manufacturing Code (characters 1-3)

2. Machine Descriptor (characters 4-8)

3. Check Character (character 9)

4. Machine Indicator Section (MIS) or Product Sequence Number (characters 10-17). These were previously referred to as the Serial Number.

Machines and generator sets produced before First Quarter 2001 will maintain their 8 character PIN format.

Components such as engines, transmissions, axles, etc. and work tools will continue to use an 8 character Serial Number (S/N).

2. ORDERING PARTS

⚠ WARNING

When replacement parts are required for this product Caterpillar recommends using Caterpillar replacement parts or parts with equivalent specifications including, but not limited to, physical dimensions, type, strength and material.

Failure to heed this warning can lead to premature failures, product damage, personal injury or death.

Quality Cat replacement parts are available from Cat dealers throughout the world. Their parts inventories are up to date and include all parts normally required to protect your investment in Cat machines. Dealers may offer repair kits or remanufactured parts to allow selection of the most effective repair alternative for a particular situation. When ordering parts, your order should specify the quantity, part number, part name, and the serial number/product identification number of the machine for which the parts are needed.

3. PARTS MANUAL ORGANIZATION

Product information in this manual is presented as "information elements" that represent all of the components for the specific model. Engine Arrangement and Seat Group are examples of information elements. The information elements are organized alphabetically by part name and secondarily by part number within each major section of the manual.

4. TABLE OF CONTENTS

A table of contents (TOC) is found at the beginning of the manual. The TOC lists each section of the manual with a complete list of all information elements organized as they appear in the manual. Page numbers are provided for quick reference to detailed parts identification illustrations and serviceable consist lists.

5. MAINTENANCE PARTS INDEX

The Maintenance Parts Index, located near the beginning of the manual, references most frequently used maintenance part numbers, providing description, quantity, usage and page number. This information is organized alphabetically by part description.

6. INDEX

The index located near the front of the manual is an alphabetical listing of all information elements included in the manual. Page numbers are provided for quick reference to detailed parts identification illustrations and serviceable consist lists.

7. PART NUMBER INDEX

A numerical index listing all part numbers and the corresponding page number(s) appears at the back of the manual.

8. CAPTIONS

Captions located at the beginning of each information element identify the part number and part name along with additional descriptive information. PIN and S/N information found in each caption should be used to select correct information for a specific machine. Field replacement options, identification of optional attachment components, and where used ("part of") information is also provided.

The first line of a caption is shown in larger type font to indicate the beginning of an information element. Captions for additional pages that may be required to illustrate an information element will be shown in standard type font and will include the term *(contd.)* .

9. NON-SERVICED PARTS

In some instances it is necessary to display non-serviced parts that are a link to a lower level serviceable consist lists. These non-serviced part numbers are shown in *italic* type indicating that they are not available.

10. PARTS LIST REFERENCE NUMBERS

Numbers shown in the Ref No column correspond to numbers used in the associated graphic(s). An alphabetic suffix may be added to a reference number to identify lower level consist items. Numbers shown in the Graphic Ref column refer to the graphic number identifier displayed in the lower left corner of each illustration. The Graphic Ref number may be used in combination with the item Ref No to determine the correct part number. There may be intentional omission of a Ref No in a consist list as information is updated to reflect the latest serviceable part numbers.

11. INDENTED PART NAMES

When a part name is indented in a parts list, it is part of (included in) the group or assembly under which it is indented.

12. ILLUSTRATION REFERENCE LETTERS

When necessary, illustrations contain reference letters (A, B, C etc.) that are intended to track lines and harnesses from one point to another. They are also used to show where to reconnect illustrations that have been separated.

13. ABBREVIATIONS AND SYMBOLS

O.D. – Outside Diameter
I.D. – Inside Diameter
A – Not Part Of This Group
B – Use As Required
C – Change From Previous Type
D – Order By The Meter
E – Order By The Centimeter
F – Not Shown
G – Order By The Inch
I – Refer To Hydraulic Information System
M – Metric Part
R – Remfg Part May Be Available
Y – Separate Illustration
Z – Not Serviced Separately

14. DESCRIPTION OF TYPE CHANGES

Type - A type is defined as any configuration change that requires an additional Information Element for an Arrangement, Group, or Assembly. If serial number breaks for types are not available, a type # (Type 1, Type 2, etc.) will be displayed in the caption. These "type" changes are identified with a "C" note (change from previous type) in the Parts List. Only the "types" that apply to this Parts Manual will be included. Additional types may exist causing "C" notes to appear on an Information Element when no other types are shown.

15.<END>

This symbol indicates the end of an information element.

NOTE:

Continuing improvement and advancement of product design may cause changes to your machine which may not be included in this publication. Whenever a question arises regarding your Cat product or this publication, please consult your Cat dealer for the latest available information.

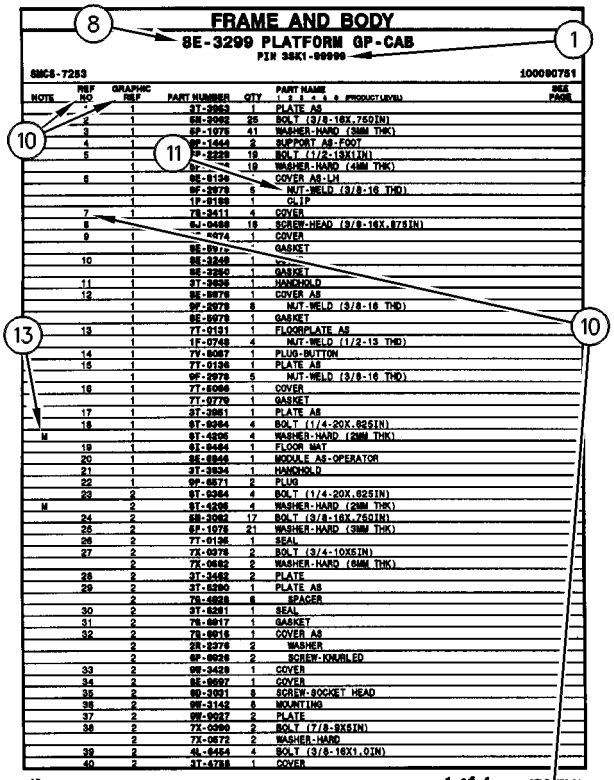

FRAME AND BODY

8E-3299 PLATFORM GP-CAB

PIN 3SK1-99999

SMCS-7283 100090751

NOTE	REF NO	GRAPHIC REF	PART NUMBER	QTY	PART NAME (1 2 3 4 5 6 PRODUCT LEVEL)	SEE PAGE
	1	1	3T-3963	1	PLATE AS	
	2	1	6M-3982	25	BOLT (3/8-16X.75DIN)	
	3	1	5P-1978	41	WASHER-HARD (3MM THK)	
	4	1	9F-1444	2	SUPPORT AS-FOOT	
	5	1	7P-2229	19	BOLT (1/2-13X1IN)	
		1	5P-[illegible]	19	WASHER-HARD (4MM THK)	
	6	1	8E-8136	1	COVER AS-LH	
		1	9F-2979	5	NUT-WELD (3/8-16 THD)	
		1	1F-8188	1	CLIP	
	7	1	7S-3411	4	COVER	
	8		5J-0488	19	SCREW-HEAD (3/8-16X.875IN)	
	9	1	[illegible]474	1	COVER	
		1	8E-8[illegible]	1	GASKET	
	10	1	8E-3249	1	[illegible]	
		1	8E-3250	1	GASKET	
	11	1	3T-3935	1	HANDHOLD	
	12	1	8E-8078	1	COVER AS	
		1	9F-2979	8	NUT-WELD (3/8-16 THD)	
		1	8E-8079	1	GASKET	
	13	1	7T-0131	1	FLOORPLATE AS	
		1	1F-0748	4	NUT-WELD (1/2-13 THD)	
	14	1	7V-8067	1	PLUG-BUTTON	
	15	1	7T-0136	1	PLATE AS	
		1	9F-2979	5	NUT-WELD (3/8-16 THD)	
	16	1	7T-8066	1	COVER	
		1	7T-0779	1	GASKET	
	17	1	3T-3951	1	PLATE AS	
	18	1	6T-8364	4	BOLT (1/4-20X.625IN)	
M		1	6T-4236	4	WASHER-HARD (2MM THK)	
	19	1	6T-8494	1	FLOOR MAT	
	20	1	8E-8946	1	MODULE AS-OPERATOR	
	21	1	3T-3934	1	HANDHOLD	
	22	1	9F-8571	2	PLUG	
	23	2	6T-8364	4	BOLT (1/4-20X.625IN)	
M		2	6T-4236	4	WASHER-HARD (2MM THK)	
	24	2	6M-3982	17	BOLT (3/8-16X.75DIN)	
	25	2	5P-1978	21	WASHER-HARD (3MM THK)	
	26	2	7T-0136	1	SEAL	
	27	2	7X-0378	2	BOLT (3/4-10X5IN)	
		2	7X-0682	2	WASHER-HARD (6MM THK)	
	28	2	3T-3482	2	PLATE	
	29	2	3T-8280	1	PLATE AS	
		2	7S-4828	6	SPACER	
	30	2	3T-8281	1	SEAL	
	31	2	7S-8817	1	GASKET	
	32	2	7S-8816	1	COVER AS	
		2	2S-2376	2	WASHER	
		2	9F-8628	2	SCREW-KNURLED	
	33	2	9W-3429	1	COVER	
	34	2	8E-8697	1	COVER	
	35	2	9D-3931	8	SCREW-SOCKET HEAD	
	36	2	9W-3142	8	MOUNTING	
	37	2	9W-8927	2	PLATE	
	38	2	7X-0290	2	BOLT (7/8-9X5IN)	
		2	7X-0572	2	WASHER-HARD	
	39	2	4L-6454	4	BOLT (3/8-16X1.0IN)	
	40	2	3T-4788	1	COVER	

12 FRAME AND BODY 1 of 4 SELP[illegible]70-01

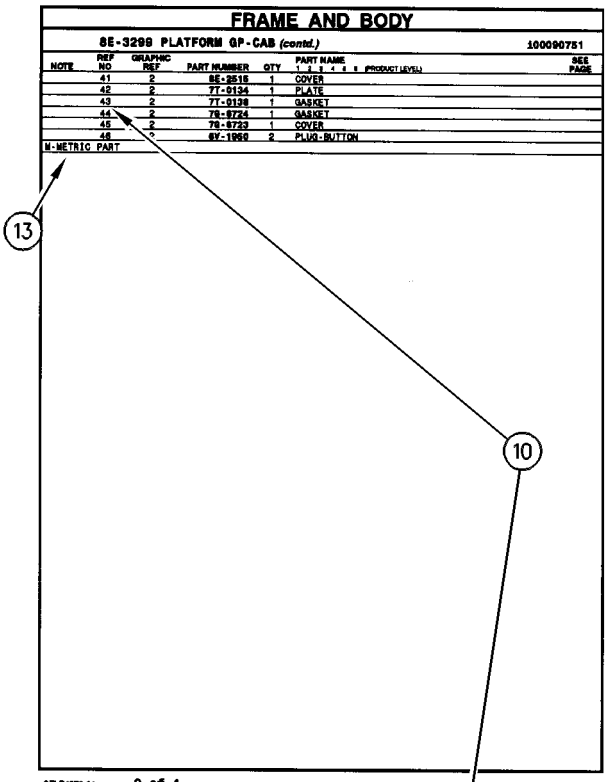

FRAME AND BODY

8E-3299 PLATFORM GP-CAB (contd.) 100090751

NOTE	REF NO	GRAPHIC REF	PART NUMBER	QTY	PART NAME (1 2 3 4 5 6 PRODUCT LEVEL)	SEE PAGE
	41	2	8E-2516	1	COVER	
	42	2	7T-0134	1	PLATE	
	43	2	7T-0138	1	GASKET	
	44	2	7S-8724	1	GASKET	
	45	2	7S-8723	1	COVER	
	46	2	6V-1960	2	PLUG-BUTTON	

M-METRIC PART

SELP4570-01 2 of 4 FRAME AND BODY 13

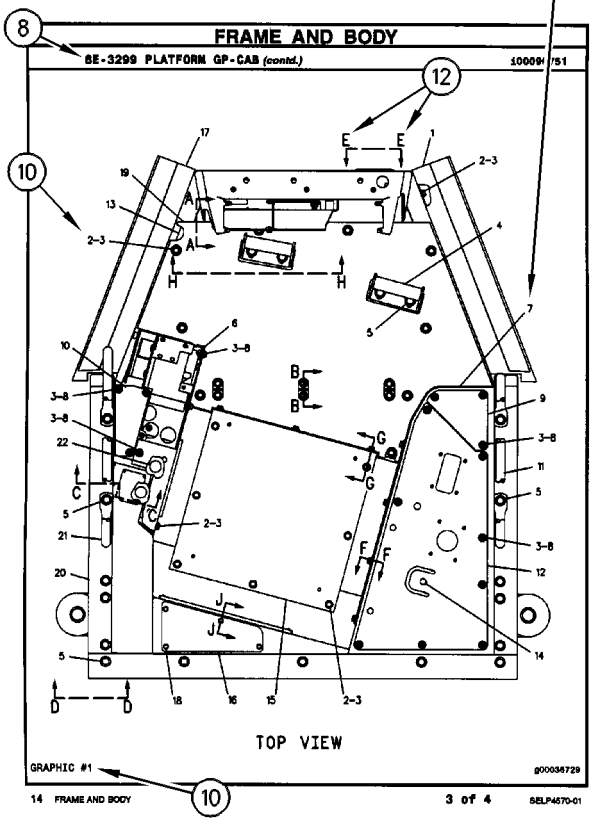

FRAME AND BODY

8E-3299 PLATFORM GP-CAB (contd.) 100090751

TOP VIEW

GRAPHIC #1 g00036729

14 FRAME AND BODY 3 of 4 SELP4570-01

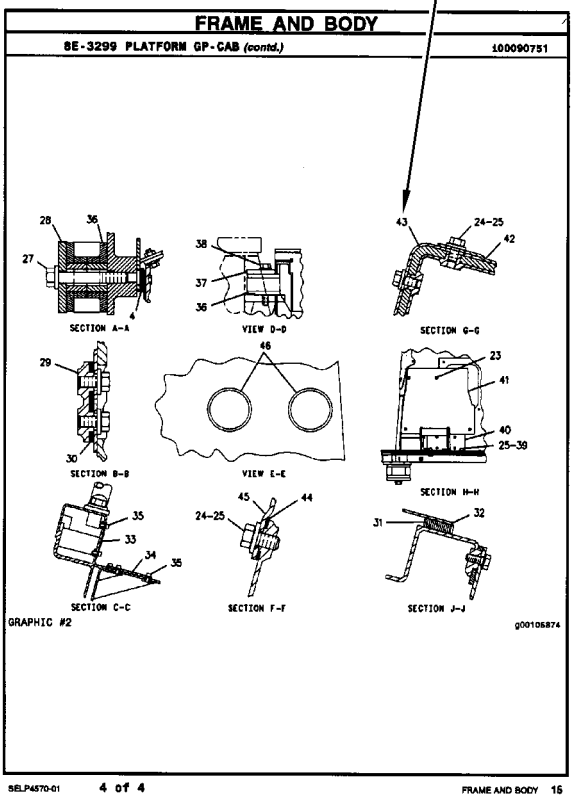

FRAME AND BODY

8E-3299 PLATFORM GP-CAB (contd.) 100090751

SECTION A-A

VIEW D-D

SECTION G-G

SECTION B-B

VIEW E-E

SECTION H-H

SECTION C-C

SECTION F-F

SECTION J-J

GRAPHIC #2 g00105874

SELP4570-01 4 of 4 FRAME AND BODY 15

REMANUFACTURED COMPONENTS

As an option when making repairs consider Cat Remanufactured Components. Components that are available through the Cat Remanufactured Program are identified three ways in the parts book:

- with the letter R in the note field of the parts list
- with an R* at the beginning of the first line of the caption
- with an *R at the end of the first line of the caption

Typical components included in the Remanufacturing Program include:

ALTERNATORS
CONNECTING RODS
CRANKSHAFTS - UNDERSIZE
CRANKSHAFTS - UPGRADE TO NEW
CYLINDER HEADS
ELECTRONIC CONTROL MODULES (ECM)
ELECTRONIC SENSORS
FUEL INJECTORS
FUEL NOZZLES
FUEL PUMPS
GOVERNORS
OIL PUMPS
PISTONS
SHORT BLOCKS
STARTERS
TURBOCHARGERS - COMPLETE
TURBOCHARGER CARTRIDGES
WATER PUMPS

Cat Remanufactured engines for many engine arrangements are also available.

SUPPLEMENTAL COOLANT ADDITIVES

CUSTOMER BENEFITS:

Protects against cavitation, foam, erosion, corrosion, and scale buildup in cooling systems.

- Provides measured coolant conditioner.

DESCRIPTION:

Additives deplete from the coolant with normal operation. For this reason, Supplemental Coolant Additives (SCA) must be added to all heavy duty coolants at regular intervals. In addition, when not using a fully formulated, pre-charged antifreeze, like Cat DEAC, an initial charge of SCA must be added to the cooling system. The amount of SCA added to the system is dependent on the capacity of the system.

The SCA for initial fill is provided as a liquid. SCA's for maintenance intervals are available in liquid form and as a spin-on element. (No Spin-on available for 3600 Family of Engines)

NOTE:

The amount of SCA added at initial fill is not the same as the amount added at maintenance intervals.

The coolant additive elements can be used with any ethylene or propylene glycol type antifreeze which meets ASTM D4985 or ASTM D5345 Specifications.

NOTE:

For use with standard heavy duty coolant only, not for use with Extended Life Coolant.

PARTS NEEDED:

Cooling System Capacity		Liquid SCA at Initial Fill	Liquid SCA at Maintenance*	Spin-on SCA Maintenance Element*
Liters	Gallons			
22-30	(6-8)	3P-2044 (1)	6V-3542 (1)	111-2370 (1)
30-38	(8-10)	3P-2044 (1) 6V-3542 (1)	111-2372 (1)	111-2369 (1)
38-49	(10-13)	3P-2044 (1) 8T-1589 (1)	111-2372 (1)	111-2369 (1)
49-64	(13-17)	3P-2044 (2)	8T-1589 (1)	9N-3368 (1)
64-83	(17-22)	3P-2044 (2) 8T-1589 (1)	111-2372 (1) 6V-3542 (1)	111-2371 (1)
83-114	(22-30)	3P-2044 (3) 8T-1589 (1)	3P-2044 (1)	9N-3718 (1)
114-163	(30-43)	3P-2044 (5)	3P-2044 (1) 6V-3542 (1)	111-2371 (2)
163-242	(43-64)	3P-2044 (8)	3P-2044 (2)	9N-3718 (2)

** Normal maintenance period is 250 hrs. See your Operation and Maintenance Manual for complete coolant maintenance instructions.*

( ) Indicates quantity required.

MAINTENANCE PARTS

DESCRIPTION	PART NUMBER	QTY	WHERE USED	PAGE
AIR INLET AND EXHAUST SYSTEM				
CAP AS-VENTED (COOLANT RECOVERY)	229-3469	1	LINES GP-COOLING	54
FILTER ELEMENT AS-AIR (PRIMARY)	110-6326	1	AIR CLEANER GP	47
FILTER ELEMENT AS-AIR (SECONDARY)	110-6331	1	AIR CLEANER GP	47
		1	AIR CLEANER GP	48
BASIC ENGINE				
ELEMENT (BREATHER)	388-7488	4	COVER GP-VALVE MECHANISM	10
		4	COVER GP-VALVE MECHANISM	12
V-BELT (FAN DRIVE PULLEY)	437-2564	1	PULLEY GP	33
COOLING SYSTEM				
CAP AS-RADIATOR	036-1865	1	RADIATOR & HYD OIL COOLER GP	44
REGULATOR AS	389-5308	1	LINES GP-WATER	42
REGULATOR AS (WATER TEMPERATURE)	389-5308	1	LINES GP-WATER	41
ELECTRICAL AND STARTING SYSTEM				
BATTERY (12-VOLT, 880-CCA)	230-6368	1	BATTERY & WIRING GP	87
BELT-DRIVE (WARNING BEACON)	9X-8139	1	LAMP GP-WARNING BEACON	122
CIRCUIT BREAKER AS	373-1592	1	HARNESS AS-QUICK COUPLER	106
FLASHER AS (12-VOLT) (STOP LIGHT)	242-9000	1	LAMP GP-ROADING	119
		1	LIGHTING GP-ROADING	124
FUSE (10-AMPERE)	113-8490	6	HARNESS AS-CAB	95
	3K-8782	1	HARNESS AS-CHASSIS	98
FUSE (100-AMPERE)	378-1012	1	WIRING GP-PLATFORM	142
FUSE (15-AMPERE)	113-8491	10	HARNESS AS-CAB	95
	9W-1441	1	HARNESS AS-CAB	95
FUSE (20-AMPERE)	113-8492	4	HARNESS AS-CAB	95
	267-2680	2	COVER GP-FUSE PANEL	91
		1	RELAY GP	127
		1	RELAY GP	128
FUSE (30-AMPERE)	274-9872	1	RELAY GP	128
FUSE (50-AMPERE)	396-8366	1	WIRING GP-PLATFORM	142
FUSE (60-AMPERE)	267-2701	1	RELAY GP	127
FUSE AS (ROADING)	258-4134	1	LAMP GP-ROADING	119
		1	LIGHTING GP-ROADING	124
GLOW PLUG	387-9899	4	GLOW PLUG GP	93
LAMP (12-VOLT, 21-WATT) (AMBER)	226-4560	1	LAMP GP-HEAD & SIGNAL	117
		1	LAMP GP-HEAD & SIGNAL	118
LAMP (12-VOLT, 21-WATT) (TURN SIGNAL)	9W-3326	1	LAMP GP-ROADING	119
		1	LIGHTING GP-ROADING	124
LAMP (12-VOLT, 5-WATT) (CLEAR)	226-4561	1	LAMP GP-HEAD & SIGNAL	117

MAINTENANCE PARTS

DESCRIPTION	PART NUMBER	QTY	WHERE USED	PAGE
		1	LAMP GP-HEAD & SIGNAL	118
LAMP (12-VOLT, 5-WATT) (STOP, TAIL)	084-4348	1	LAMP GP-ROADING	119
		1	LIGHTING GP-ROADING	124
LAMP (12-VOLT, 55-WATT) (FLOODLIGHT)	9W-0607	1	LAMP GP-FLOOD	115
		1	LAMP GP-FLOOD	116
LAMP (12-VOLT, 55-WATT) (WARNING BEACON)	9X-8118	1	LAMP GP-WARNING BEACON	122
LAMP (12-VOLT) (STOP, TAIL)	9W-2471	1	LAMP GP-STOP & TAIL	121
LAMP-HEAD (12-VOLT, 60/55-WATT) (CLEAR)	9W-3324	1	LAMP GP-HEAD & SIGNAL	117
		1	LAMP GP-HEAD & SIGNAL	118
FRAME AND BODY				
LAMP (12-VOLT, 10-WATT)	195-9712	1	KIT-ROADING CONVERSION	196
		1	MOUNTING GP-REGISTRATION	199
PLUG-MAGNETIC (FRAME)	3S-9182	4	FRAME GP-LOADER	189
FUEL SYSTEM				
CAP-FUEL (FILLER)	304-3885	1	TANK GP-FUEL	85
FILTER AS-FUEL (FUEL TRANSFER PUMP)	363-5823	1	PUMP GP-FUEL TRANSFER	83
FILTER AS-WATER SEP & FUEL (FUEL, WATER SEPARATOR)	363-5819	1	FILTER GP-FUEL	67
KEY (FUEL INJECTION PUMP)	388-7517	1	PUMP GP-FUEL INJECTION	77
		1	PUMP GP-FUEL INJECTION	79
HYDRAULIC SYSTEM				
BREATHER (HYDRAULIC TANK)	258-2829	1	TANK & MTG GP-HYDRAULIC	287
CAP (GAS VALVE)	224-5132	1	ACCUMULATOR GP-RIDE CONTROL	205
		1	ACCUMULATOR GP-RIDE CONTROL	206
CAP AS-FILLER (HYDRAULIC TANK)	142-8937	1	TANK & MTG GP-HYDRAULIC	287
STRAINER AS (HYDRAULIC TANK)	262-5689	1	TANK & MTG GP-HYDRAULIC	287
LUBRICATION SYSTEM				
FILTER-ENGINE OIL	377-6969	1	LINES GP-ENGINE OIL	38
OPERATOR STATION				
BLADE AS-WIPER (500-MM)	146-6433	1	DOOR GP-CAB	504
		1	KIT-CAB DOOR & MOUNTING	518
BLADE AS-WIPER (500-MM) (FRONT)	146-6433	1	DOOR GP-CAB	500
		1	KIT-CAB DOOR & MOUNTING	516
CAP-VENTED (WASHER)	258-3296	1	KIT-CAB DOOR & MOUNTING	516
		1	KIT-CAB DOOR & MOUNTING	518
CAP-VENTED (WINDOW WASHER TANK)	258-3296	1	DOOR GP-CAB	502

MAINTENANCE PARTS

DESCRIPTION	PART NUMBER	QTY	WHERE USED	PAGE
		1	DOOR GP-CAB	506
FILTER ELEMENT-CAB AIR (FRESH AIR)	265-6619	1	AIR CONDITIONER & MOUNTING GP	467
FILTER ELEMENT-CAB AIR (RECIRCULATION)	265-6618	1	AIR CONDITIONER & MOUNTING GP	467
LAMP (12-VOLT)	210-8754	1	PANEL GP-INSTRUMENT	536
V-BELT	198-8354	1	COMPRESSOR GP-REFRIGERANT	478
POWER TRAIN				
FILTER ELEMENT AS-OIL (HYDRAULIC)	348-1862	1	FILTER GP-OIL	153
		1	FILTER GP-OIL	154
WORK TOOLS				
CAP AS (WATER TANK)	192-2606	1	TANK GP-WATER	462
SCREEN (WATER TANK)	119-1414	1	STRAINER GP-WATER	459

INDEX

NAME PAGE

A

ACCESSORY GP-CAB 464
465
ACCUMULATOR GP-HYDRAULIC–CHARGED . . . 203
ACCUMULATOR GP-HYDRAULIC–
UNCHARGED 204
ACCUMULATOR GP-REFRIGERANT–
CHARGED 466
ACCUMULATOR GP-RIDE CONTROL–
CHARGED 205
ACCUMULATOR GP-RIDE CONTROL–
UNCHARGED 206
ACTUATOR GP (GOVERNOR CONTROL) 65
ACTUATOR GP (QUICK COUPLER) 144
AIR CLEANER GP 46
47
48
AIR CONDITIONER & MOUNTING GP 467
AIR CONDITIONER AR–ENCLOSED CAB 469
ALTERNATOR GP-CHARGING 86
ARM GP-MATERIAL HANDLING 290
ARM GP-WINDOW WIPER (CAB DOOR) 500
504
516
518
ARMREST & MOUNTING GP 470
471
ARMREST GP–LH 473
ARMREST GP–RH 472
AXLE GP 150
151

B

BATTERY (12-VOLT, 880-CCA) 87
BATTERY & WIRING GP 87
BELT-DRIVE (WARNING BEACON) 122
BLADE AR–ANGLING 291
293
296
297
BLADE AR–SNOW 294
BLADE AR–STANDARD 292
295
BLADE AS-ANGLING 298
299
300
301
BLADE AS-WIPER (500-MM) 504
518
BLADE AS-WIPER (500-MM) (FRONT) 500
516
BLADE GP-ANGLING 302
303
304
305

NAME PAGE

BLADE GP-MULTIPURPOSE BUCKET 306
307
308
309
310
311
312
313
314
315
316
317
318
319
320
321
322
323
324
392
BLADE GP-SNOW 325
BLOWER GP-CAB 474
BREATHER (HYDRAULIC TANK) 287
BUCKET AR-DIRT 326
BUCKET AR-GENERAL PURPOSE 327
328
BUCKET AR-GRAPPLE 328
329
330
332
333
334
BUCKET AR-GRAPPLE–INDUSTRIAL 329
331
BUCKET AR-LIGHT MATERIAL 335
BUCKET AR-MULTIPURPOSE 335
336
337
338
339
340
341
342
343
344
BUCKET AR-UTILITY 344
BUCKET AS-DIRT 345
346
347
348
349
350
351
352
353

INDEX

NAME	PAGE
BUCKET AS-GENERAL PURPOSE	354 355 356 357 358 359 360 361
BUCKET AS-GENERAL PURPOSE–HIGH CAPACITY	362 363
BUCKET AS-GRAPPLE	364 365 366 367 368 369
BUCKET AS-GRAPPLE–INDUSTRIAL	370 371
BUCKET AS-LIGHT MATERIAL	372 373 374 375 376 377 378 379
BUCKET AS-UTILITY	380 381 382
BUCKET GP-DIRT	383
BUCKET GP-GENERAL PURPOSE	384
BUCKET GP-GRAPPLE	386 390 391
BUCKET GP-GRAPPLE–INDUSTRIAL	385 387 388 389
BUCKET GP-MULTIPURPOSE	392 393 394 395 396 397 398 399 400
BUCKET GP-UTILITY	401 402 403
CAB AR	475
CAB AR-ENCLOSED ROPS–AIR CONDITIONER	475
CAB AR-ENCLOSED ROPS–HEATER	475
CAB AR-OPEN ROPS	475 476
CABLE GP-CONTROL	477
CAMERA GP (12-VOLT, 24-VOLT)	137
CAMERA GP (12-VOLT, 24-VOLT) (WORK AREA VISUAL SYSTEM, REAR)	112
CAMERA GP–WORK AREA VISUAL SYSTEM, REAR	89
CAMSHAFT GP	8
CAP (GAS VALVE)	205 206
CAP AS (WATER TANK)	462
CAP AS-FILLER (HYDRAULIC TANK)	287
CAP AS-RADIATOR	44
CAP AS-VENTED (COOLANT RECOVERY)	54
CAP-FUEL (FILLER)	85
CAP-VENTED (WASHER)	516 518
CAP-VENTED (WINDOW WASHER TANK)	502 506
CARRIAGE & FORK AR	404
CARRIAGE GP-FORK	405
CHASSIS AR	1
CIRCUIT BREAKER AS	106
CLAM AS-MULTIPURPOSE BUCKET	406 407 408 409 410
COMMON AR	1
COMPRESSOR GP-REFRIGERANT	478
CONDENSER & MTG GP-REFRIGERANT	479
CONFIGURATION AR	2
CONFIGURATION AR–RIDE CONTROL	2 3
CONTROL AR-HYDRAULIC	207
CONTROL GP-AIR & TEMPERATURE	480 481
CONTROL GP-COMMUNICATION (PL421)	111
CONTROL GP-ELECTROHYDRAULIC	482 483
CONTROL GP-ELECTROHYDRAULIC–LH	487
CONTROL GP-ELECTROHYDRAULIC–LH, HIGH FLOW	486
CONTROL GP-ELECTROHYDRAULIC–ON, OFF AUXILIARY CONTROL	482
CONTROL GP-ELECTROHYDRAULIC–RH	485
CONTROL GP-ELECTROHYDRAULIC–RH, HIGH FLOW	484
CONTROL GP-GOVERNOR	65
CONTROL GP-HANDLE	491
CONTROL GP-HANDLE (RH)	492
CONTROL GP-HANDLE–JOYSTICK	488
CONTROL GP-HANDLE–LH	489
CONTROL GP-HANDLE–RH–JOYSTICK	490
CONTROL GP-JOYSTICK	494
CONTROL GP-JOYSTICK–LH	496
CONTROL GP-JOYSTICK–LH, HIGH FLOW	495
CONTROL GP-JOYSTICK–RH	492
CONTROL GP-JOYSTICK–RH, HIGH FLOW	493
CONTROL GP-UNPRGMED MONITOR (OPTIONAL)	521

C

INDEX

NAME PAGE

CONTROL GP-UNPROGRAMMED (MACHINE)... 92
CONTROL GP-UNPROGRAMMED (MONITOR)... 92
CONVERSION AR-MACHINE 3
CONVERSION AR-MACHINE–NACD 3
CONVERSION AR-ROADING 183
CONVERSION GP-MACHINE 90
CONVERSION GP-ROADING 184
CONVERSION GP-WORK TOOL 411
COOLER GP-EXHAUST 49
COOLER GP-NRS 49
COUNTERWEIGHT GP 185
COUPLER AR-QUICK 412
COUPLER AR-QUICK–ELECTRIC 412
COUPLER AS 413
COUPLER GP-QUICK 414
417
COUPLER GP-QUICK–ELECTRIC 415
COUPLER GP-QUICK–MANUAL 416
COVER GP-CAB 497
COVER GP-CONSOLE 498
COVER GP-CONSOLE–RH, LH 499
COVER GP-FUSE PANEL 91
COVER GP-LINES 418
COVER GP-VALVE MECHANISM 9
10
11
12
CRANKSHAFT GP 13
CYLINDER & MTG GP-ANGLE BLADE 208
209
CYLINDER & MTG GP-LIFT ARM 210
CYLINDER BLOCK AS 15
CYLINDER BLOCK GP 16
CYLINDER GP-BUCKET 211
CYLINDER GP-GRAPPLE–INDUSTRIAL 213
CYLINDER GP-GRAPPLE–UTILITY 212
CYLINDER GP-HYDRAULIC–ANGLE BLADE 214
215
CYLINDER GP-HYDRAULIC–BUCKET 217
CYLINDER GP-HYDRAULIC–TILT 216
CYLINDER GP-LIFT ARM 219
CYLINDER GP-LIFT–RH 218
CYLINDER GP-TILT–LH 222
CYLINDER GP-TILT–RH 220
CYLINDER HEAD AS 17
19
CYLINDER HEAD GP 21
22

D

DOOR GP-CAB–BASIC-POLY 504
DOOR GP-CAB–GLASS 500
502
DOOR GP-CAB–POLY 506
DRAIN GP-ENGINE OIL 23
DRIVE GP-TANDEM 152

NAME PAGE

E

EDGE GP-BIT & CUTTING 419
420
EDGE GP-CUTTING 335
420
421
422
423
424
425
426
427
ELECTRONICS GP-MACHINE 92
ELECTRONICS GP-MONITOR 92
ELEMENT (BREATHER) 10
12
ENCLOSURE GP-ENGINE 186
ENCLOSURE GP-ENGINE–SEAL 187
ENGINE AR-COMPLETE 4
ENGINE AR-PRIMARY 5
6
EXTENSION GP-EXHAUST 51

F

FAN GP-BLOWER (RADIATOR, HYD OIL COOLING) 44
FILLER GP-ENGINE OIL 36
FILM (REFLECTIVE) 447
FILM GP 295
567
568
FILM GP (BLADE) 294
FILM GP–2-SPEED 570
FILM GP–HIGH FLOW 569
FILM GP–RIDE CONTROL ANSI 571
FILM GP–RIDE CONTROL ISO 572
FILM-FUSE/RELAY 91
FILM-IDENTIFICATION (ALTERNATE EXIT, READ OMM) 502
506
516
518
FILM-IDENTIFICATION (HYDRAULIC OIL FILL) 582
585
FILM-IDENTIFICATION (POWER DISTRIBUTION) 135
FILM-IDENTIFICATION (POWER RECEPTACLE, 12-VOLT) 582
585
588
591
FILM-IDENTIFICATION (THROTTLE) 536
FILM-INFORMATION (LIFT EYE LOCATION) ... 197
295
FILM-INSTRUCTION (ALTERNATE EXIT) 563

INDEX

NAME PAGE

FILM-INSTRUCTION (EGRESS SYSTEM, READ OMM). 500 504 516 518
FILM-PANEL (BLOWER, TEMPERATURE CONTROL). 480
FILM-STRIPE (REFLECTIVE, RED, WHITE) 447
FILM-STRIPE (ROUND RED REFLECTIVE). 126
FILM-WARNING (CRUSH HAZARD, STAY BACK) 279 392 393 394 395 396 397 398 399 400 406 407 408 409 410 446 573
FILM-WARNING (CRUSH HAZARD). 389 430 431 437 438 441 443 444
FILM-WARNING (DIESEL FUEL). 582 585
FILM-WARNING (DO NOT OPERATE, READ OMM). 573
FILM-WARNING (FOPS, READ OMM). 508
FILM-WARNING (HIGH PRESSURE, READ OMM). 205 206
FILM-WARNING (IMPALED POINT) 439 440
FILM-WARNING (NO WELD, NO DRILL, READ OMM). 588 591
FILM-WARNING (UNIVERSAL WARNING) 582 585
FILTER AS-FUEL (FUEL TRANSFER PUMP) 83
FILTER AS-WATER SEP & FUEL (FUEL, WATER SEPARATOR) 67
FILTER ELEMENT AS-AIR (PRIMARY). 47
FILTER ELEMENT AS-AIR (SECONDARY) 47 48
FILTER ELEMENT AS-OIL (HYDRAULIC) 153 154
FILTER ELEMENT-CAB AIR (FRESH AIR) 467
FILTER ELEMENT-CAB AIR (RECIRCULATION). 467
FILTER GP-FUEL. 67
FILTER GP-OIL–HYDRAULIC 154
FILTER GP-OIL–HYDRAULIC, TRANSMISSION 153
FILTER-ENGINE OIL. 38
FITTING GP-ELBOW. 263 265
FITTING GP-HYDRAULIC (QUICK DISCONNECT, MALE) 227
FLASHER AS (12-VOLT) (STOP LIGHT) 119 124
FLOOR MAT 525
FLYWHEEL GP 24
FORK AR-GRAPPLE–INDUSTRIAL. 428
FORK AR-GRAPPLE–UTILITY 428
FORK GP-GRAPPLE. 429
FORK GP-GRAPPLE–INDUSTRIAL. 430
FORK GP-GRAPPLE–UTILITY 431
FORK GP-PALLET. 432 433 434
FORK GP-PALLET–KIT. 435
FORK GP-UTILITY. 436 437 438 439 440 441
FRAME GP-BLADE 304 442
FRAME GP-BLADE (WORK TOOL) 305
FRAME GP-FORK–INDUSTRIAL 443 444
FRAME GP-LOADER 189
FUSE (10-AMPERE) 95 98
FUSE (100-AMPERE) 142
FUSE (15-AMPERE) 95
FUSE (20-AMPERE) 91 95 127 128
FUSE (30-AMPERE) 128
FUSE (50-AMPERE) 142
FUSE (60-AMPERE) 127
FUSE AS (ROADING). 119 124

G

GAUGE GP-OIL LEVEL (DIPSTICK) 37
GAUGE-OIL LEVEL (DIPSTICK, ENGINE) 37
GAUGE-SIGHT (HYDRAULIC OIL) 44
GAUGE-SIGHT (HYDRAULIC TANK) 287
GLOW PLUG. 93
GLOW PLUG GP. 93
GOVERNOR GP. 68
GRAPPLE & CYLINDER GP-UTILITY 445

INDEX

NAME PAGE

GRAPPLE GP-UTILITY 446
GRILL GP-RADIATOR 191
GUARD GP-BELT 25
GUARD GP-ROPS/FOPS 508

H

HANDHOLD GP 509
HANDLE GP 510
HARDWARE GP-PROTECTION 2
HARNESS AS-CAB–AUXILIARY 97
HARNESS AS-CAB–BACK 95
HARNESS AS-CAB–CAMERA 98
HARNESS AS-CAB–SEAT 94
HARNESS AS-CAB–WIPER, WASHER 97
HARNESS AS-CHASSIS–WORK TOOL 98
HARNESS AS-CONTROL (PRODUCT LINK) 111
HARNESS AS-ENGINE 99
HARNESS AS-FRONT–IMPLEMENT VALVE 100
HARNESS AS-HEATER 559
HARNESS AS-HEATER & AIR COND–BLOWER MOTOR 100
HARNESS AS-HEATER & AIR COND–FRONT 101
HARNESS AS-HEATER & AIR COND–REAR . . . 101
HARNESS AS-LIGHTING 102
HARNESS AS-LIGHTING–PANEL 102
HARNESS AS-MOTOR 474
HARNESS AS-PANEL 103
HARNESS AS-PLATFORM–FRONT 105
HARNESS AS-PLATFORM–REAR 104
HARNESS AS-PLATFORM–REAR, RH 105
HARNESS AS-QUICK COUPLER 106
HARNESS AS-QUICK COUPLER–LIFT 106
HARNESS AS-RADIO 107
514
523
524
HARNESS AS-RADIO (BLUETOOTH) 543
HARNESS AS-RADIO (FLANGE) 543
HARNESS AS-REAR LIGHTING (STOP, TAIL, TURN) 196
199
HARNESS AS-REAR LIGHTING–STOP, TAIL, TURN 107
HARNESS AS-RIDE CONTROL 107
HARNESS AS-SENSOR–SELF LEVEL 108
HARNESS AS-SOLENOID–IMPLEMENT VALVE 108
HARNESS AS-THERMOSTAT 512
HARNESS AS-WIRING 542
561
HARNESS AS-WIRING (PEDAL) 522
HARNESS AS-WIRING–PEDAL 109
HARNESS AS-WORK TOOL 109
460
HARNESS AS-WORK TOOL–CONNECTING 109
HEATER AR-CAB–ENCLOSED 511
HEATER GP-CAB 512
HEATER GP-JACKET WATER 110

NAME PAGE

HOUSING GP-FRONT 26
27
HOUSING GP-FUEL PUMP 70
HYDRAULIC AR 224
225

I

INDICATOR-RESTRICTION 48
INDICATOR-RESTRICTION (AIR CLEANER) 47
INSTALLATION AR-ENGINE 6
7
INSTALLATION GP-COMMUNICATION–PRODUCT LINK 421 111
INSTALLATION GP-RADIO 514

K

KEY (FUEL INJECTION PUMP) 77
79
KIT-AIR CONDITIONER BREATHER 515
KIT-CAB DOOR & MOUNTING–GLASS 516
KIT-CAB DOOR & MOUNTING–POLYCARBONATE 518
KIT-CAB WINDOW 520
KIT-CAMERA–REAR VIEW 112
KIT-COUNTERWEIGHT–COUNTERWEIGHT 192
KIT-COVER–HYDRAULIC 226
KIT-FLUSHING VALVE 162
163
164
KIT-GUARD–TURBOCHARGER 193
KIT-INSTRUMENT PANEL–ADVANCED DISPLAY 521
KIT-PEDAL–THROTTLE 522
KIT-RADIO–AM/FM 523
KIT-RADIO–AM/FM/WB/CD/XM/USB/BLUETOOTH 524
KIT-ROADING CONVERSION–ROADING LIGHTS, FRONT 194
196
KIT-ROADING PLATE & MOUNTING–BUCKET 447
KIT-WORK TOOL WIRING–ELECTRICAL 113
KIT-WORK TOOL WIRING–JOYSTICK, LH 114

L

LAMP (12-VOLT, 10-WATT) 196
199
LAMP (12-VOLT, 21-WATT) (AMBER) 117
118
LAMP (12-VOLT, 21-WATT) (TURN SIGNAL) . . . 119
124
LAMP (12-VOLT, 5-WATT) (CLEAR) 117
118
LAMP (12-VOLT, 5-WATT) (STOP, TAIL) 119
124

INDEX

NAME PAGE

LAMP (12-VOLT, 55-WATT) (FLOODLIGHT) 115
116
LAMP (12-VOLT, 55-WATT) (WARNING BEACON) 122
LAMP (12-VOLT) 536
LAMP (12-VOLT) (STOP, TAIL) 121
LAMP GP-DOME (12-VOLT) (CAB) 536
LAMP GP-FLOOD 115
116
LAMP GP-FLOOD (12-VOLT) 142
LAMP GP-HEAD & SIGNAL–FRONT, LH 118
LAMP GP-HEAD & SIGNAL–FRONT, RH 117
LAMP GP-REGISTRATION PLATE 196
199
LAMP GP-ROADING–REAR 119
LAMP GP-SIGNAL (REAR, LH) 119
124
LAMP GP-SIGNAL (REAR, RH) 119
124
LAMP GP-STOP & TAIL 121
LAMP GP-WARNING BEACON–AMBER 122
LAMP-HEAD (12-VOLT, 60/55-WATT) (CLEAR) 117
118
LIFTING GP-ENGINE 28
LIFTING GP-MACHINE–FOUR POINT 197
LIGHTING GP-FLOOD–WORK LIGHTS, FRONT 123
LIGHTING GP-ROADING 124
LIGHTING GP-STOP & TAIL 126
LINER GP-CAB 525
526
LINES GP-AIR 52
53
LINES GP-AIR CONDITIONER 527
LINES GP-AUXILIARY HYDRAULIC 227
229
LINES GP-BUCKET–INDUSTRIAL 231
LINES GP-BUCKET–MULTIPURPOSE 233
235
237
239
243
LINES GP-BUCKET–UTILITY 241
LINES GP-CONNECTING 245
247
LINES GP-COOLING 54
LINES GP-ENGINE OIL 38
LINES GP-FUEL 71
73
LINES GP-FUEL INJECTION 74
LINES GP-GRAPPLE 249
251
253
LINES GP-HEATER 529
LINES GP-HYDRAULIC–CHARGE 257
259
LINES GP-HYDRAULIC–RIDE CONTROL 255
LINES GP-HYDROSTATIC 155
157
LINES GP-LIFT CYLINDER 261

NAME PAGE

LINES GP-OIL COOLER 39
LINES GP-PUMP–IMPLEMENT 263
265
LINES GP-TILT CYLINDER 268
LINES GP-WATER 41
42
LINK GP-COUPLER–LH 449
451
LINK GP-COUPLER–RH 448
450
LITERATURE GP 1
530
LOCK GP 186
LOCK GP-QUICK COUPLER–MECHANICAL 452

M

MANIFOLD & MTG GP-CONTROL–ANGLING BLADE 270
MANIFOLD GP-CONTROL (PILOT SHUTOFF) 155
MANIFOLD GP-CONTROL–ANGLING BLADE 271
MANIFOLD GP-CONTROL–MOTOR, 2-SPEED 273
MANIFOLD GP-EXHAUST 55
MANIFOLD GP-INLET 56
57
MANIFOLD GP-RIDE CONTROL–RIDE 274
MIRROR & MTG GP-REAR VIEW 198
MIRROR GP-REAR VIEW 194
200
MOTOR & MTG GP-HYDRAULIC FAN 275
276
MOTOR & MTG GP-HYDROSTATIC–1-SPEED 160
MOTOR & MTG GP-HYDROSTATIC–2-SPEED 161
MOTOR GP-GEAR (FAN, DEMAND) 275
MOTOR GP-GEAR–HYDRAULIC FAN 277
MOTOR GP-PISTON–2-SPEED, LH 163
MOTOR GP-PISTON–2-SPEED, RH 164
MOTOR GP-PISTON–RADIAL 162
MOTOR GP-WINDOW WIPER 531
MOUNTING GP-ARMREST–LEFT 533
MOUNTING GP-ARMREST–RIGHT 532
MOUNTING GP-CYLINDER 278
MOUNTING GP-CYLINDER–GRAPPLE BUCKET 281
MOUNTING GP-CYLINDER–INDUSTRIAL 279
MOUNTING GP-CYLINDER–UTILITY 280
MOUNTING GP-ENGINE 29
MOUNTING GP-LICENSE PLATE 199
MOUNTING GP-PUMP 165
MOUNTING GP-REGISTRATION 199
MOUNTING GP-ROADING LIGHTS 200
MOUNTING GP-ROADING LIGHTS–NACD 201
MOUNTING GP-ROPS 534
MUFFLER & MOUNTING GP 58
MUFFLER AS 59

INDEX

NAME PAGE

N

NOZZLE GP-UNIT INJECTOR 75
NUT (M10X1.5-THD) 229

O

ORIFICE AS-AIR CONDITIONER 512

P

PAN GP-OIL 30
PANEL GP-INSTRUMENT 536
PANEL GP-INSTRUMENT–ADVANCED DISPLAY 540
PANEL GP-INSTRUMENT–BASE DISPLAY 539
PANEL GP-INSTRUMENT–RH 541
PEDAL GP-GOVERNOR 542
PISTON & ROD GP 31
PLATE & FILM GP 573 575 577 578 579 580 581 582 585 588 591
PLATE GP-SIDE–LH 454
PLATE GP-SIDE–RH 453
PLUG-MAGNETIC (FRAME) 189
POSITIONER GP-FORK 432 433 434
POWER TRAIN AR 166
PRECLEANER GP 61
PRECLEANER GP–TURBINE 60
PULLEY GP 33
PUMP & MTG GP-GEAR 282
PUMP & MTG GP-HYDROSTATIC 167
PUMP & MTG GP-WORK TOOL–HIGH FLOW 283
PUMP AS-FUEL INJECTION 76
PUMP GP-DIAPHRAGM–WATER TANK 455
PUMP GP-FUEL INJECTION 77 79 81 82
PUMP GP-FUEL TRANSFER 83
PUMP GP-GEAR 284 285
PUMP GP-PISTON–HYDROSTATIC 168
PUMP GP-PISTON–WORK TOOL, HIGH FLOW 286
PUMP GP-WATER 43

NAME PAGE

R

RADIATOR & HYD OIL COOLER GP 44
RADIO GP (AM/FM/WB/CD/XM/USB/ BLUETOOTH) 524 543
RADIO GP–AM/FM 543
RECOVERY GP-COOLANT 54
REGULATOR AS 42
REGULATOR AS (WATER TEMPERATURE) 41
RELAY AS (12-VOLT) 124 146
RELAY AS (12-VOLT) (AIR CONDITIONER) 133
RELAY AS (12-VOLT) (FUSE BLOCK) 135 140 145
RELAY AS (12-VOLT) (GLOW PLUG) 142
RELAY AS (12-VOLT) (QUICK COUPLER) 144
RELAY AS (12-VOLT) (START) 142
RELAY AS (12-VOLT) (STOP LIGHT) 119
RELAY AS (12-VOLT) (WORK TOOL) 113 114
RELAY GP (12-VOLT) (MAIN POWER) 135
RELAY GP–MAIN POWER 127 128
ROTATING GP-PUMP 168

S

SCREEN (WATER TANK) 459
SEAT & ARMREST GP–SUSPENSION 545 546
SEAT & MOUNTING GP–SUSPENSION 547 548 549 550 551 553
SEAT AR-SUSPENSION 554
SEAT BELT GP–RETRACTABLE 555
SEAT BELT GP–RETRACTABLE, 76-MM (3-IN) 556
SEAT GP-SUSPENSION 545
SEAT GP-SUSPENSION–AIR 557
SEAT GP-SUSPENSION–VINYL 559
SENDER AS-FUEL LEVEL 84
SENSOR (WATER TEMPERATURE) 38
SENSOR AS-POSITION (BOOM RETRACTED) 148
SENSOR AS-POSITION (QUICK COUPLER) 148
SENSOR AS-TEMPERATURE (HYDRAULIC OIL) 287
SENSOR GP-POSITION (ROTARY) 536
SENSOR GP-PRESSURE (LIFT CYLINDER) 148
SENSOR GP-SPEED 129
SENSOR GP-SPEED (MOTOR) 160 161
SENSOR GP-SPEED–MOTOR 130
SENSOR-SPEED (ENGINE) 38
SERVICE GP-MACHINE 92

INDEX

NAME	PAGE
SERVICE GP-MONITOR	92
SOFTWARE GP-MACHINE	92
SOFTWARE GP-MACHINE–BUCKET POSITION	131
SOFTWARE GP-MONITOR	92, 521
SOLENOID AS (GOVERNOR CONTROL)	68
SOLENOID AS (SWING BOOM, WORK TOOL)	271
SPACER GP	202
SPRING AS-GAS	191
SPRING AS-GAS (CAB)	502, 509
SPRING AS-GAS (DOOR)	506, 516, 518
SPRING AS-GAS (LOCKING)	509
SPRING GP-BLADE	456
SPRING-GAS	191
STARTING MOTOR GP-ELECTRIC	132
STEP GP-MATERIAL HANDLING ARM	457
STOP GP-BUCKET–UTILITY	458
STRAINER AS (HYDRAULIC TANK)	287
STRAINER GP-WATER	459
SUSPENSION GP-SEAT–AIR	561
SWITCH (12-VOLT) (SEAT BELT)	551, 553
SWITCH AS (BLOWER FAN SPEED)	480
SWITCH AS (SEAT)	559
SWITCH AS (TEMPERATURE CONTROL)	480
SWITCH AS-MAGNETIC (LOAD CONTROL)	470, 473, 502, 506, 516, 518
SWITCH AS-PRESSURE (AIR CONDITIONER)	527
SWITCH AS-PRESSURE (HYDRAULIC OIL)	153
SWITCH AS-PRESSURE (REFRIGERANT)	527
SWITCH AS-ROCKER (AIR CONDITIONER)	133
SWITCH AS-ROCKER (CONTINUOUS FLOW)	536
SWITCH AS-ROCKER (FRONT WASHER, WIPER)	502
SWITCH AS-ROCKER (FRONT WIPER, WASHER)	506, 518
SWITCH AS-ROCKER (HAZARD WARNING LIGHTS)	119, 124
SWITCH AS-ROCKER (MOTOR, 2-SPEED, AUXILIARY)	157
SWITCH AS-ROCKER (OVERRIDE, HYDRAULIC LOCKOUT)	536
SWITCH AS-ROCKER (PARKING BRAKE)	536
SWITCH AS-ROCKER (QUICK COUPLER)	144
SWITCH AS-ROCKER (RIDE CONTROL)	145
SWITCH AS-ROCKER (ROADING LIGHTS)	124, 194
SWITCH AS-ROCKER (TURN SIGNAL)	119, 124
SWITCH AS-ROCKER (WIPER)	516
SWITCH AS-ROCKER (WORK LIGHTS, FRONT)	536
SWITCH AS-ROCKER (WORK LIGHTS, REAR)	536
SWITCH AS-ROCKER (WORK TOOL POSITIONER)	148
SWITCH AS-ROCKER (WORK TOOL)	113, 114, 146
SWITCH AS-START (KEY)	536
SWITCH AS-TOGGLE (IDLE SPEED)	411
SWITCH-OIL PRESSURE	38
SWITCH-ROCKER (HEATED SEAT)	559
SWITCH-TEMPERATURE (HVAC) (CAB HEATER)	512

T

NAME	PAGE
TANK & MTG GP-FUEL	84
TANK & MTG GP-HYDRAULIC	287
TANK & MTG GP-WATER–KIT	460
TANK GP-FUEL	85
TANK GP-HYDRAULIC	287
TANK GP-WATER	462
TIRE & RIM GP–HEAVY-DUTY, LH	171, 172
TIRE & RIM GP–HEAVY-DUTY, RH	171, 172
TIRE & RIM GP–LH	170, 171, 172, 173, 174, 175, 176
TIRE & RIM GP–RH	170, 171, 172, 173, 174, 175, 176
TOOTH GP-UNI	335, 336, 337, 338, 339, 340, 341, 342, 463
TURBOCHARGER GP	62

V

NAME	PAGE
V-BELT	478

INDEX

NAME	PAGE
V-BELT (FAN DRIVE PULLEY)	33
VALVE & MTG GP-CONTROL–IMPLEMENT	289
VALVE AS-RELIEF (FUEL LINES)	71
VALVE GP-CHECK	271
VALVE GP-CHECK (PUMP CASE DRAIN)	263 265
VALVE GP-CHECK (RIDE CONTROL)	255
VALVE GP-CONTROL	274
VALVE GP-CONTROL (IMPLEMENT)	289
VALVE GP-MANUAL (LIFT CYLINDER)	261
VALVE GP-PUMP CONTROL	168
VALVE GP-RELIEF (CHARGE)	168
VALVE GP-RELIEF (GEAR MOTOR)	277
VALVE GP-RELIEF (SWING BOOM, WORK TOOL)	271
VALVE GP-SOLENOID (12 VDC)	155
VALVE GP-SOLENOID (12 VDC) (SPEED)	273
VALVE GP-SOLENOID (12-VOLT) (ANGLE)	271
VALVE GP-SOLENOID (12-VOLT) (TILT)	271
VALVE GP-SOLENOID (REAR AXLE FAN UNLOADER)	275
VALVE GP-SPEED CONTROL	163 164
VALVE MECHANISM GP	34

W

NAME	PAGE
WHEEL & TIRE AR	176 178 179 180 181 182
WHEEL & TIRE AR–HEAVY DUTY	176 177 178
WHEEL & TIRE AR–SOLID	179 180
WINDOW GP-CAB	563 564
WINDOW GP-CAB–LH	565
WINDOW GP-CAB–RH	566
WIRING GP-AIR CONDITIONER	133
WIRING GP-CAB	135
WIRING GP-CAMERA–REAR VIEW	137
WIRING GP-COMMUNICATION	111
WIRING GP-ENGINE	138
WIRING GP-FRONT–HIGH FLOW	140
WIRING GP-FRONT–IMPLEMENT VALVE	139
WIRING GP-HEATER	141
WIRING GP-PLATFORM	142
WIRING GP-QUICK COUPLER	144
WIRING GP-RIDE CONTROL	145
WIRING GP-WORK TOOL–HIGH FLOW	146
WIRING GP-WORK TOOL–SELF LEVEL	148

MACHINE ARRANGEMENT

388-8180 CHASSIS AR

PART OF 388-8237, 388-8238 COMMON AR

SMCS-7000 **i05380635**

NOTE	PART NUMBER	QTY	PART NAME 1 2 3 4 5 6 (PRODUCT LEVEL)	SEE PAGE
Y	*261-6255*	1	AXLE GP	151
Y	*361-6386*	1	BATTERY & WIRING GP	87
Y	*436-1605*	1	COUPLER GP-QUICK	417
Y	*345-4899*	1	CYLINDER & MTG GP-LIFT ARM	210
Y	*375-0712*	1	CYLINDER GP-LIFT ARM	219
Y	*345-5803*	1	ENCLOSURE GP-ENGINE (DOOR)	186
Y	*435-9010*	1	ENCLOSURE GP-ENGINE (SEAL)	187
Y	*345-4875*	1	FRAME GP-LOADER	189
Y	*345-6222*	1	MOUNTING GP-ROPS (INCLUDES STEP)	534
Y	*345-5400*	1	TANK & MTG GP-FUEL	84
Y	*388-1435*	1	WIRING GP-PLATFORM	142

Y - SEPARATE ILLUSTRATION

<END>

388-8237 COMMON AR

S/N: SEN1-UP

SMCS-7000 **i05300016**

NOTE	PART NUMBER	QTY	PART NAME 1 2 3 4 5 6 (PRODUCT LEVEL)	SEE PAGE
Y	*345-5454*	1	CAB AR	475
Y	*388-8180*	1	CHASSIS AR	1
Y	*393-7338*	1	ENGINE AR-COMPLETE	4
Y	*345-5928*	1	FILM GP	567
Y	*345-5925*	1	HYDRAULIC AR	224
Y	*378-6690*	1	INSTALLATION AR-ENGINE	6
Y	*6V-1970*	1	LITERATURE GP	530

Y - SEPARATE ILLUSTRATION

<END>

388-8238 COMMON AR

S/N: MPW1-UP

SMCS-7000 **i05300017**

NOTE	PART NUMBER	QTY	PART NAME 1 2 3 4 5 6 (PRODUCT LEVEL)	SEE PAGE
Y	*345-5454*	1	CAB AR	475
Y	*388-8180*	1	CHASSIS AR	1
Y	*393-7339*	1	ENGINE AR-COMPLETE	4
Y	*345-5928*	1	FILM GP	567
Y	*345-5925*	1	HYDRAULIC AR	224
Y	*393-7340*	1	INSTALLATION AR-ENGINE	7
Y	*6V-1970*	1	LITERATURE GP	530

Y - SEPARATE ILLUSTRATION

<END>

MACHINE ARRANGEMENT

388-8126 CONFIGURATION AR

1-SPEED

AN ATTACHMENT

SMCS-0645, 1433, 7000, 7405, 7431, 7557 **i05156829**

NOTE	PART NUMBER	QTY	PART NAME 1 2 3 4 5 6 (PRODUCT LEVEL)	SEE PAGE
Y	*345-5742*	1	LINES GP-HYDRAULIC	257
Y	*388-7940*	1	POWER TRAIN AR	166
	345-4761	1	HARDWARE GP-PROTECTION	
M	**266-3315**	3	BOLT-FLANGE HEAD (M8X1.25X25.5-MM)	

M - METRIC PART
Y - SEPARATE ILLUSTRATION

<END>

388-8127 CONFIGURATION AR—RIDE CONTROL

1-SPEED

AN ATTACHMENT

SMCS-0645, 1433, 7000, 7405, 7431, 7557 **i05402398**

NOTE	PART NUMBER	QTY	PART NAME 1 2 3 4 5 6 (PRODUCT LEVEL)	SEE PAGE
Y	*345-5743*	1	LINES GP-HYDRAULIC (CHARGE)	259
Y	*345-5740*	1	LINES GP-HYDRAULIC (RIDE CONTROL)	255
Y	*388-7940*	1	POWER TRAIN AR	166
Y	*356-6096*	1	WIRING GP-RIDE CONTROL	145

Y - SEPARATE ILLUSTRATION

<END>

388-8128 CONFIGURATION AR

2-SPEED

AN ATTACHMENT

SMCS-0645, 1433, 7000, 7405, 7431, 7557 **i05402399**

NOTE	PART NUMBER	QTY	PART NAME 1 2 3 4 5 6 (PRODUCT LEVEL)	SEE PAGE
Y	*388-8113*	1	FILM GP (2-SPEED)	570
Y	*345-5742*	1	LINES GP-HYDRAULIC (CHARGE)	257
Y	*388-7910*	1	POWER TRAIN AR	166
	345-4761	1	HARDWARE GP-PROTECTION	
M	**266-3315**	3	BOLT-FLANGE HEAD (M8X1.25X25.5-MM)	

M - METRIC PART
Y - SEPARATE ILLUSTRATION

<END>

MACHINE ARRANGEMENT

388-8129 CONFIGURATION AR—RIDE CONTROL
2-SPEED
AN ATTACHMENT

SMCS-0645, 1433, 7000, 7405, 7431, 7557 **i05402400**

NOTE	PART NUMBER	QTY	PART NAME 1 2 3 4 5 6 (PRODUCT LEVEL)	SEE PAGE
Y	*388-8113*	1	FILM GP (2-SPEED)	570
Y	*345-5743*	1	LINES GP-HYDRAULIC (CHARGE)	259
Y	*345-5740*	1	LINES GP-HYDRAULIC (RIDE CONTROL)	255
Y	*388-7910*	1	POWER TRAIN AR	166
Y	*356-6096*	1	WIRING GP-RIDE CONTROL	145

Y - SEPARATE ILLUSTRATION

<END>

388-7756 CONVERSION AR-MACHINE—NACD
AN ATTACHMENT

SMCS-7000 **i05156564**

NOTE	PART NUMBER	QTY	PART NAME 1 2 3 4 5 6 (PRODUCT LEVEL)	SEE PAGE
Y	*356-6082*	1	LIGHTING GP-STOP & TAIL	126
Y	*422-7656*	1	MOUNTING GP-ROADING LIGHTS (REAR LIGHTS)	201

Y - SEPARATE ILLUSTRATION

<END>

435-8760 CONVERSION AR-MACHINE
AN ATTACHMENT

SMCS-7000 **i05401576**

NOTE	PART NUMBER	QTY	PART NAME 1 2 3 4 5 6 (PRODUCT LEVEL)	SEE PAGE
Y	*444-5039*	1	LAMP GP-ROADING (REAR)	119
Y	*417-4606*	1	LIFTING GP-MACHINE (FOUR POINT)	197
Y	*258-2579*	1	MOTOR & MTG GP-HYDRAULIC FAN	275

Y - SEPARATE ILLUSTRATION

<END>

ENGINE ARRANGEMENT

393-7338 ENGINE AR-COMPLETE

S/N: SEN1-UP

PART OF 388-8237 COMMON AR

SMCS-1000 **i05299986**

NOTE	PART NUMBER	QTY	PART NAME 1 2 3 4 5 6 (PRODUCT LEVEL)	SEE PAGE
Y	**380-1768**	1	ENGINE AR-PRIMARY	5
Y	*416-5688*	1	PLATE & FILM GP	577

Y - SEPARATE ILLUSTRATION

<END>

393-7339 ENGINE AR-COMPLETE

S/N: MPW1-UP

PART OF 388-8238 COMMON AR

SMCS-1000 **i05299982**

NOTE	PART NUMBER	QTY	PART NAME 1 2 3 4 5 6 (PRODUCT LEVEL)	SEE PAGE
Y	**380-1769**	1	ENGINE AR-PRIMARY	6
Y	*416-5689*	1	PLATE & FILM GP	578

Y - SEPARATE ILLUSTRATION

<END>

ENGINE ARRANGEMENT

380-1768 ENGINE AR-PRIMARY

S/N: SEN1-UP
55 BRAKE KW (74 BHP) AT 2400 RPM
PART OF 393-7338 ENGINE AR-COMPLETE
ALSO AN ATTACHMENT

SMCS-1000 **i05341856**

NOTE	PART NUMBER	QTY	PART NAME 1 2 3 4 5 6 (PRODUCT LEVEL)	SEE PAGE
Y	*396-0901*	1	ALTERNATOR GP-CHARGING	86
Y	*387-9068*	1	CAMSHAFT GP	8
Y	*396-0902*	1	COOLER GP-EXHAUST	49
Y	*396-0903*	1	COVER GP-VALVE MECHANISM	9
Y	*387-9070*	1	CRANKSHAFT GP	13
Y	*420-8851*	1	CYLINDER BLOCK GP	16
Y	*396-0908*	1	CYLINDER HEAD GP	21
Y	*396-0905*	1	FILLER GP-ENGINE OIL	36
Y	*437-2562*	1	FLYWHEEL GP	24
Y	*437-5953*	1	GAUGE GP-OIL LEVEL (DIPSTICK)	37
Y	*387-9089*	1	GLOW PLUG GP	93
Y	*396-0909*	1	HOUSING GP-FRONT	26
Y	*396-0910*	1	LIFTING GP-ENGINE	28
Y	*396-0912*	1	LINES GP-ENGINE OIL	38
Y	*396-0911*	1	LINES GP-FUEL	73
Y	*387-9078*	1	LINES GP-FUEL INJECTION	74
Y	*396-0913*	1	LINES GP-WATER	41
Y	*396-0914*	1	MANIFOLD GP-EXHAUST	55
Y	*387-9083*	1	MANIFOLD GP-INLET	56
Y	*396-0916*	1	NOZZLE GP-UNIT INJECTOR	75
Y	*387-9087*	1	PAN GP-OIL	30
Y	*387-9088*	1	PISTON & ROD GP	31
Y	*437-2566*	1	PULLEY GP	33
Y	*438-1290*	1	PUMP GP-FUEL INJECTION	82
Y	*387-9091*	1	PUMP GP-WATER	43
Y	*396-0915*	1	STARTING MOTOR GP-ELECTRIC	132
Y	*437-5955*	1	TURBOCHARGER GP	62
Y	*387-9084*	1	VALVE MECHANISM GP	34

Y - SEPARATE ILLUSTRATION

<END>

ENGINE ARRANGEMENT

380-1769 ENGINE AR-PRIMARY

S/N: MPW1-UP
55 BRAKE KW (74 BHP) AT 2400 RPM
PART OF 393-7339 ENGINE AR-COMPLETE

SMCS-1000 **i05341857**

NOTE	PART NUMBER	QTY	PART NAME 1 2 3 4 5 6 (PRODUCT LEVEL)	SEE PAGE
Y	*396-0901*	1	ALTERNATOR GP-CHARGING	86
Y	*387-9068*	1	CAMSHAFT GP	8
Y	*420-8852*	1	COVER GP-VALVE MECHANISM	11
Y	*387-9070*	1	CRANKSHAFT GP	13
Y	*420-8851*	1	CYLINDER BLOCK GP	16
Y	*420-8853*	1	CYLINDER HEAD GP	22
Y	*437-2562*	1	FLYWHEEL GP	24
Y	*437-5953*	1	GAUGE GP-OIL LEVEL (DIPSTICK)	37
Y	*387-9089*	1	GLOW PLUG GP	93
Y	*396-0909*	1	HOUSING GP-FRONT	26
Y	*396-0910*	1	LIFTING GP-ENGINE	28
Y	*396-0912*	1	LINES GP-ENGINE OIL	38
Y	*396-0911*	1	LINES GP-FUEL	73
Y	*387-9078*	1	LINES GP-FUEL INJECTION	74
Y	*420-8855*	1	LINES GP-WATER	42
Y	*396-0914*	1	MANIFOLD GP-EXHAUST	55
Y	*420-8856*	1	MANIFOLD GP-INLET	57
Y	*396-0916*	1	NOZZLE GP-UNIT INJECTOR	75
Y	*387-9087*	1	PAN GP-OIL	30
Y	*387-9088*	1	PISTON & ROD GP	31
Y	*437-2566*	1	PULLEY GP	33
Y	*437-5954*	1	PUMP GP-FUEL INJECTION	81
Y	*387-9091*	1	PUMP GP-WATER	43
Y	*396-0915*	1	STARTING MOTOR GP-ELECTRIC	132
Y	*437-5955*	1	TURBOCHARGER GP	62
Y	*387-9084*	1	VALVE MECHANISM GP	34

Y - SEPARATE ILLUSTRATION

<END>

378-6690 INSTALLATION AR-ENGINE

S/N: SEN1-UP
PART OF 388-8237 COMMON AR

SMCS-1000 **i05300049**

NOTE	PART NUMBER	QTY	PART NAME 1 2 3 4 5 6 (PRODUCT LEVEL)	SEE PAGE
Y	*345-3498*	1	AIR CLEANER GP	46
Y	*378-6812*	1	CONTROL GP-GOVERNOR	65
Y	*345-3495*	1	DRAIN GP-ENGINE OIL	23
Y	*383-0793*	1	EXTENSION GP-EXHAUST	51
Y	*345-3620*	1	GUARD GP-BELT	25
Y	*393-7334*	1	LINES GP-AIR	52
Y	*345-3576*	1	LINES GP-COOLING	54
Y	*378-6682*	1	LINES GP-FUEL	71
Y	*345-3605*	1	MOUNTING GP-ENGINE	29
Y	*345-3602*	1	MOUNTING GP-PUMP	165
Y	*378-6751*	1	MUFFLER & MOUNTING GP	58
Y	*345-3610*	1	RADIATOR & HYD OIL COOLER GP	44
Y	*378-1022*	1	WIRING GP-ENGINE	138

Y - SEPARATE ILLUSTRATION

<END>

ENGINE ARRANGEMENT

393-7340 INSTALLATION AR-ENGINE

S/N: MPW1-UP

PART OF 388-8238 COMMON AR

SMCS-1000 **i05300051**

NOTE	PART NUMBER	QTY	PART NAME 1 2 3 4 5 6 (PRODUCT LEVEL)	SEE PAGE
Y	*345-3498*	1	AIR CLEANER GP	46
Y	*378-6812*	1	CONTROL GP-GOVERNOR	65
Y	*345-3495*	1	DRAIN GP-ENGINE OIL	23
Y	*383-0793*	1	EXTENSION GP-EXHAUST	51
Y	*345-3620*	1	GUARD GP-BELT	25
Y	*393-7335*	1	LINES GP-AIR	53
Y	*345-3576*	1	LINES GP-COOLING	54
Y	*378-6682*	1	LINES GP-FUEL	71
Y	*345-3605*	1	MOUNTING GP-ENGINE	29
Y	*345-3602*	1	MOUNTING GP-PUMP	165
Y	*378-6751*	1	MUFFLER & MOUNTING GP	58
Y	*345-3610*	1	RADIATOR & HYD OIL COOLER GP	44
Y	*378-1022*	1	WIRING GP-ENGINE	138

Y - SEPARATE ILLUSTRATION

<END>

387-9068 CAMSHAFT GP

PART OF 380-1768, 380-1769 ENGINE AR-PRIMARY
ALSO AN ATTACHMENT

SMCS-1210, 1211, 1212 **i05341878**

NOTE	REF NO	GRAPHIC REF	PART NUMBER	QTY	PART NAME 1 2 3 4 5 6 (PRODUCT LEVEL)	SEE PAGE
	1	1	**387-9780**	1	CUP-SEAL	
	2	1	**387-9785**	3	BOLT-FLANGE HEAD	
	3	1	**387-9798**	2	BOLT-FLANGE HEAD	
	4	1	**387-9830**	8	TAPPET	
	5	1	**387-9831**	8	PUSHROD	
	6	1	**387-9832**	1	CAMSHAFT AS	
		1	**388-7493**	1	CAMSHAFT	
	6A	1	**388-7494**	1	BEARING	
	6B	1	**388-7495**	1	GEAR	
	6C	1	**383-0227**	1	KEY-FEATHER	
	6D	1	**388-7496**	1	STOP	
	7	1	**387-9847**	1	SHAFT-GEAR	
	8	1	**387-9848**	1	COLLAR	
	9	1	**387-9849**	1	COLLAR	
	10	1	**387-9850**	1	GEAR AS-IDLER	
	10A	1	**388-7507**	1	BUSHING	

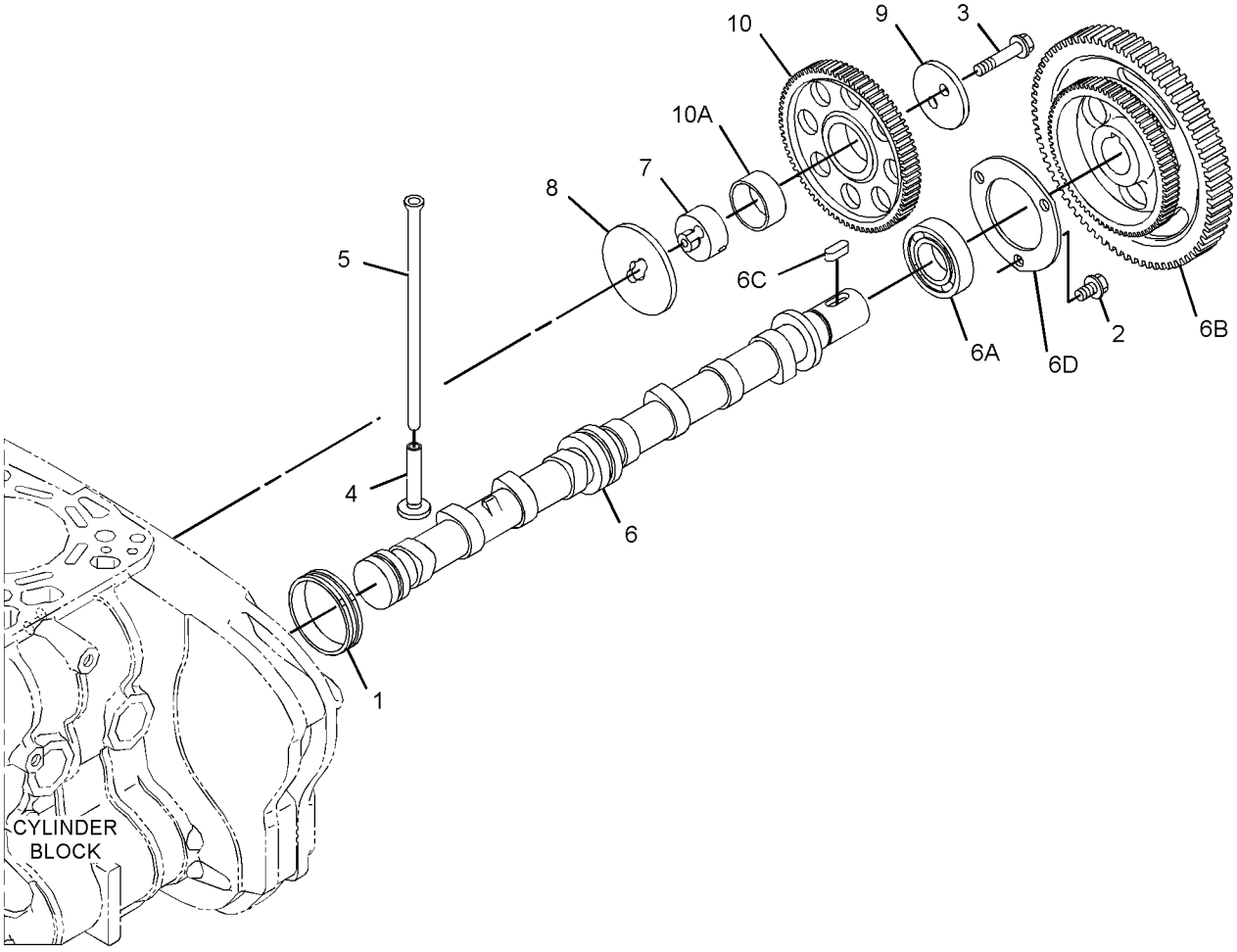

GRAPHIC #1 **<END>** g02882649

396-0903 COVER GP-VALVE MECHANISM

S/N: SEN1-UP
PART OF 380-1768 ENGINE AR-PRIMARY
ALSO AN ATTACHMENT

SMCS-1107 **i05341884**

NOTE	REF NO	GRAPHIC REF	PART NUMBER	QTY	PART NAME 1 2 3 4 5 6 (PRODUCT LEVEL)	SEE PAGE
	1	1	**383-0574**	10	BOLT	
	2	1	**438-5693**	1	PIPE-BREATHER	
	3	1	**438-1313**	1	HOSE-BREATHER	
	4	1	**387-9802**	2	CLAMP-HOSE	
Y	5	1	**398-1476**	1	COVER GP-VALVE MECHANISM	10
	6	1	**393-2882**	1	CONDUIT	
	7	1	**387-9829**	1	GASKET	
	8	1	**388-7474**	2	CLAMP	
	9	1	**393-2881**	1	HOSE-BREATHER	
	10	1	**383-0187**	1	BOLT	
	11	1	**397-9056**	1	CLAMP	

Y - SEPARATE ILLUSTRATION

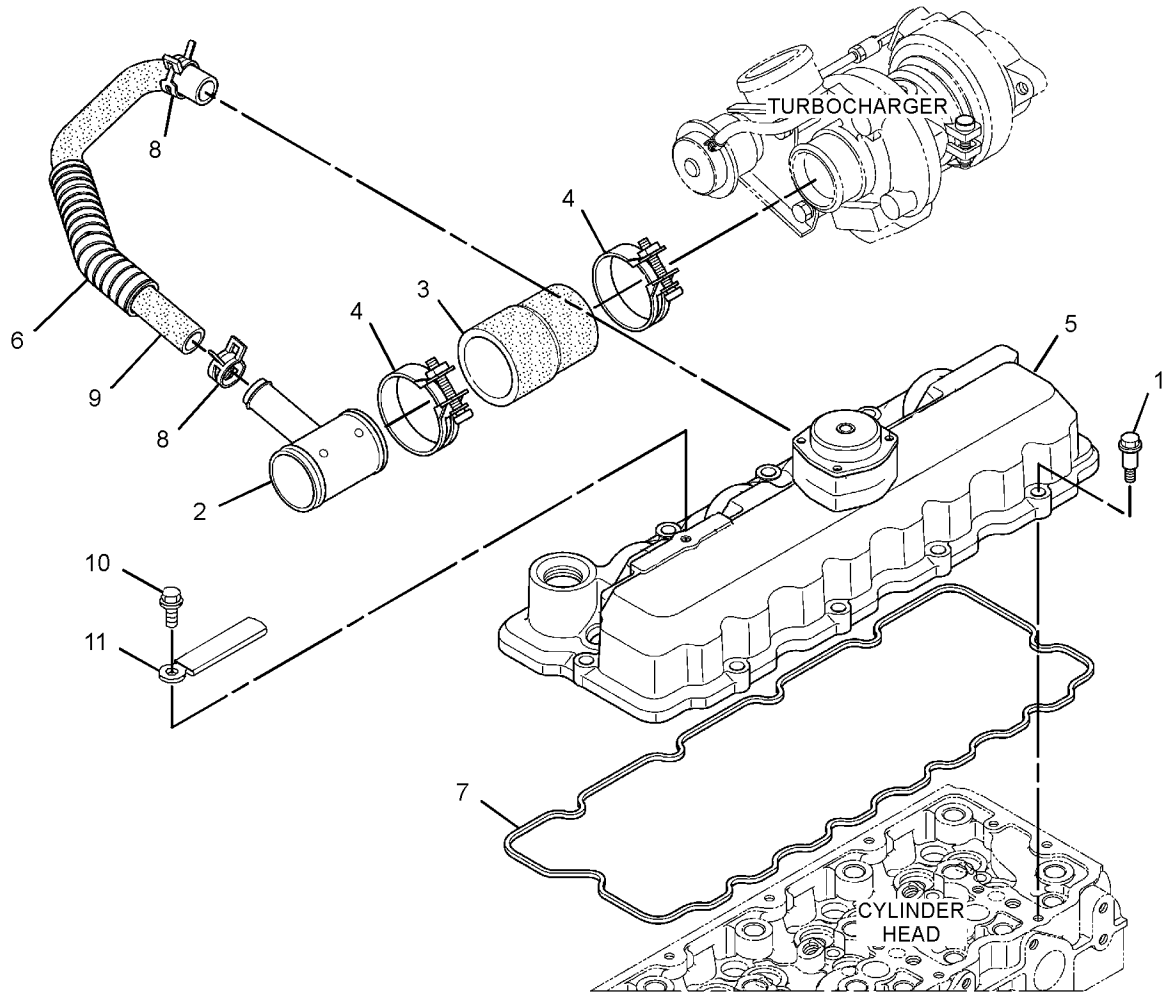

GRAPHIC #1 **<END>** g02948720

398-1476 COVER GP-VALVE MECHANISM

S/N: SEN1-UP

PART OF 396-0903 COVER GP-VALVE MECHANISM

ALSO AN ATTACHMENT

SMCS-1107 **i05342502**

NOTE	REF NO	GRAPHIC REF	PART NUMBER	QTY	PART NAME 1 2 3 4 5 6 (PRODUCT LEVEL)	SEE PAGE
	1	1	**388-7488**	4	ELEMENT (BREATHER)	
	2	1	**383-0524**	1	COVER	
	3	1	**383-0563**	1	VALVE-BREATHER	
	4	1	**388-7489**	1	CONNECTOR AS	
	5	1	**388-7490**	1	SEAL-O-RING	
	6	1	**388-7491**	4	SCREW	
	7	1	**388-7492**	4	SEAL	

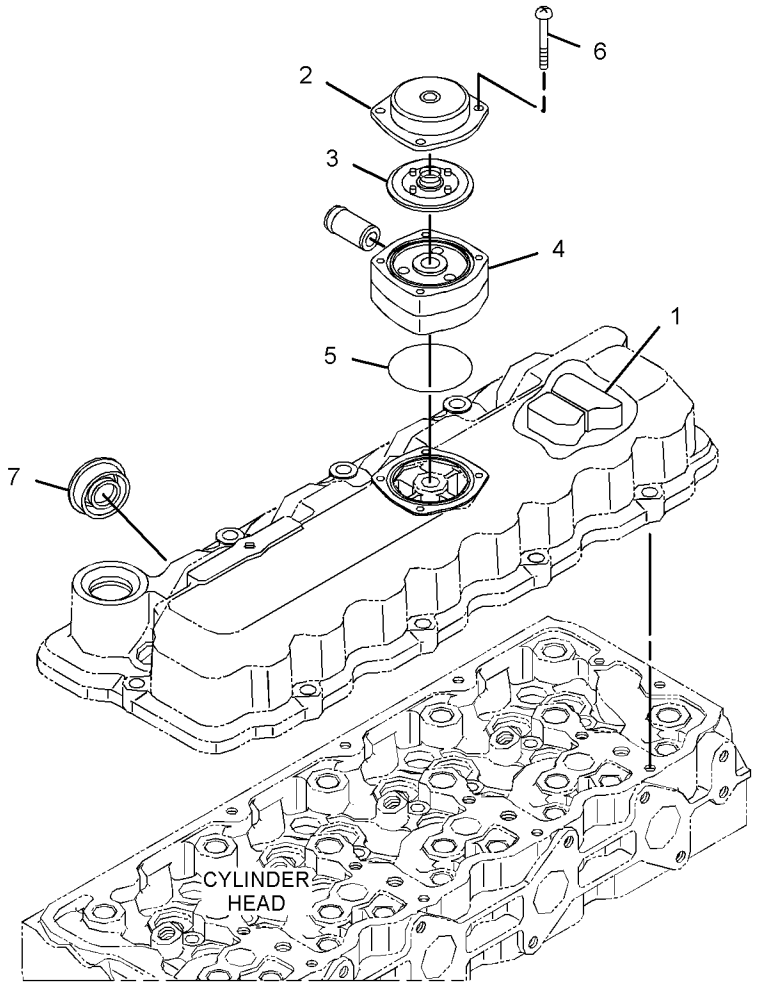

GRAPHIC #1 **<END>** g02948623

420-8852 COVER GP-VALVE MECHANISM

S/N: MPW1-UP

PART OF 380-1769 ENGINE AR-PRIMARY

SMCS-1107 **i05342118**

NOTE	REF NO	GRAPHIC REF	PART NUMBER	QTY	PART NAME 1 2 3 4 5 6 (PRODUCT LEVEL)	SEE PAGE
	1	1	**383-0213**	1	SEAL-O-RING	
	2	1	**383-0217**	1	SEAL-O-RING	
	3	1	**383-0245**	1	PLUG-FILLER	
	4	1	**383-0574**	10	BOLT	
	5	1	**387-9829**	1	GASKET	
	6	1	**388-7474**	1	CLAMP	
	7	1	**397-9988**	1	FLANGE-OIL FILLER	
	8	1	**421-1876**	1	HOSE-BREATHER	
Y	9	1	**421-1877**	1	COVER GP-VALVE MECHANISM	12

Y - SEPARATE ILLUSTRATION

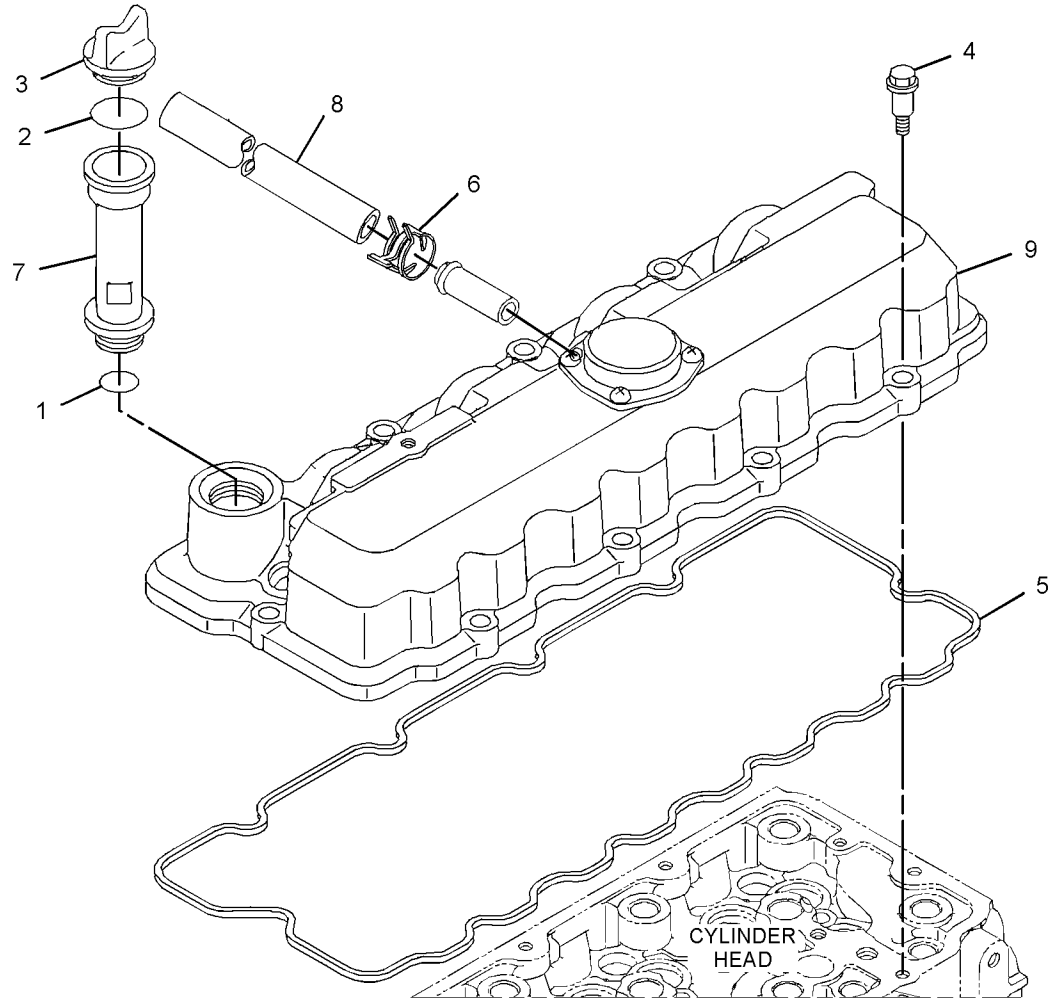

GRAPHIC #1 **<END>** g03267436

421-1877 COVER GP-VALVE MECHANISM

S/N: MPW1-UP

PART OF 420-8852 COVER GP-VALVE MECHANISM

SMCS-1107 **i05342498**

NOTE	REF NO	GRAPHIC REF	PART NUMBER	QTY	PART NAME 1 2 3 4 5 6 (PRODUCT LEVEL)	SEE PAGE
	1	1	**388-7488**	4	ELEMENT (BREATHER)	
	2	1	**388-7490**	1	SEAL-O-RING	
	3	1	**388-7492**	4	SEAL	
	4	1	**389-5153**	1	ADAPTER	
	5	1	**389-5154**	4	SCREW	
	6	1	**418-0969**	1	COVER-BREATHER	

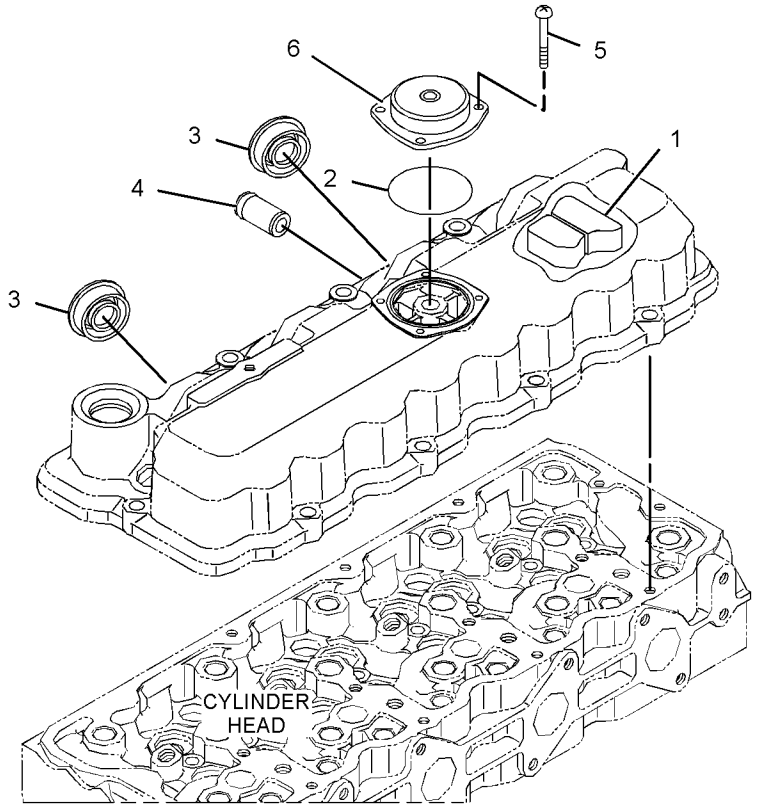

GRAPHIC #1 **<END>** g03262277

387-9070 CRANKSHAFT GP

PART OF 380-1768, 380-1769 ENGINE AR-PRIMARY
ALSO AN ATTACHMENT

SMCS-1202 **i05299148**

NOTE	REF NO	GRAPHIC REF	PART NUMBER	QTY	PART NAME 1 2 3 4 5 6 (PRODUCT LEVEL)	SEE PAGE
	1	1	**387-9840**	1	CRANKSHAFT AS	
	1A	1	**388-7502**	1	GEAR	
	2	1	**387-9841**	1	GEAR AS-CRANKSHAFT	
	2A	1	**383-0220**	1	PIN	
	3	1	**387-9842**	1	KEY (STRAIGHT)	
JO	4	1	**387-9843**	5	BEARING (STANDARD)	
JO	5	1	**387-9844**	5	BEARING (STANDARD)	
J	6	1	**387-9845**	2	BEARING (STANDARD)	
J	7	1	**387-9846**	2	BEARING (STANDARD)	
ABLQ		1	**393-2897**		BEARING (0.20-MM US)	
ABNT		1	**393-2898**		BEARING (0.40-MM US)	
ABLQ		1	**393-2899**		BEARING (0.20-MM US)	
ABNT		1	**393-2900**		BEARING (0.40-MM US)	
ABL		1	**393-2901**		BEARING (0.20-MM OS)	
ABN		1	**393-2902**		BEARING (0.40-MM OS)	
ABL		1	**393-2903**		BEARING (0.20-MM OS)	
ABN		1	**393-2904**		BEARING (0.40-MM OS)	
					AVAILABLE REPAIR KIT(S):	
J			**393-2911**	1	KIT-BEARING	
L			**393-2912**	1	KIT-BEARING	
N			**393-2913**	1	KIT-BEARING	
O			**393-2914**	5	KIT-CRANKSHAFT BEARING	
Q			**393-2915**	5	KIT-CRANKSHAFT BEARING	
T			**393-2916**	5	KIT-CRANKSHAFT BEARING	

A - NOT PART OF THIS GROUP
B - USE AS REQUIRED
J - KIT MARKED J SERVICES PARTS MARKED J
L - KIT MARKED L SERVICES PARTS MARKED L
N - KIT MARKED N SERVICES PARTS MARKED N
O - KIT MARKED O SERVICES PARTS MARKED O
Q - KIT MARKED Q SERVICES PARTS MARKED Q
T - KIT MARKED T SERVICES PARTS MARKED T

387-9070 **CRANKSHAFT GP (*contd.*)** **i05299148**

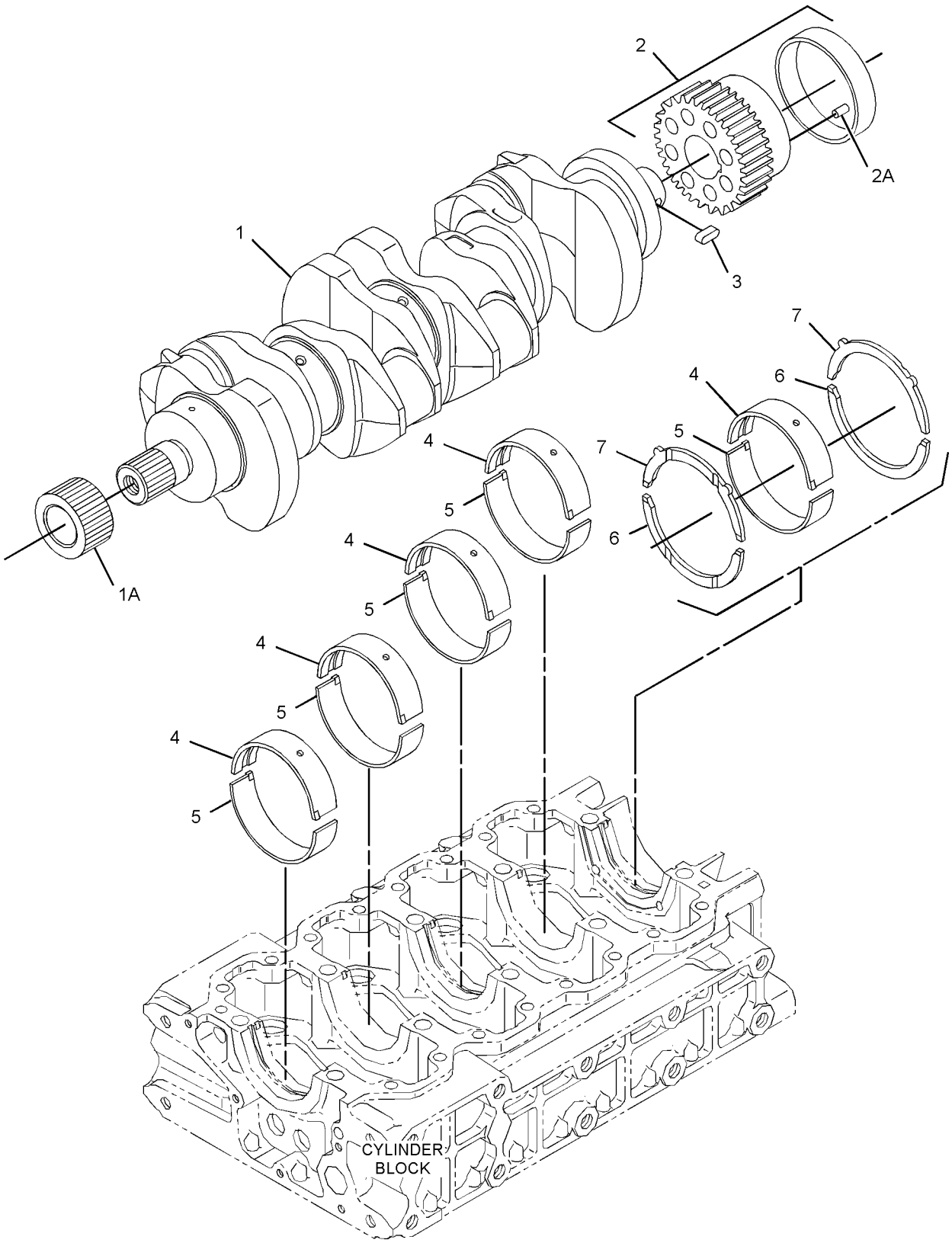

GRAPHIC #1 **<END>** g02882759

421-1883 CYLINDER BLOCK AS

PART OF 420-8851 CYLINDER BLOCK GP
ALSO AN ATTACHMENT

SMCS-1117, 1200, 1201, 1203, 1211, 1216, 1217, 1221, 1222, 1223, 1224, 1238, 1239, 1240, 1331

i05342493

NOTE	REF NO	GRAPHIC REF	PART NUMBER	QTY	PART NAME 1 2 3 4 5 6 (PRODUCT LEVEL)	SEE PAGE
	1	1	**418-0931**	3	CAP	
	2	1	**398-5520**	1	BALL	
	4	1	**383-0303**	1	PLUG	
	7	1	**388-7434**	9	CAP	
	8	1	**388-7435**	1	PLUG	
	9	1	**389-5106**	2	PIN	
	10	1	**393-7577**	10	BOLT	
	11	1	**393-7582**	16	BOLT-FLANGE HEAD	

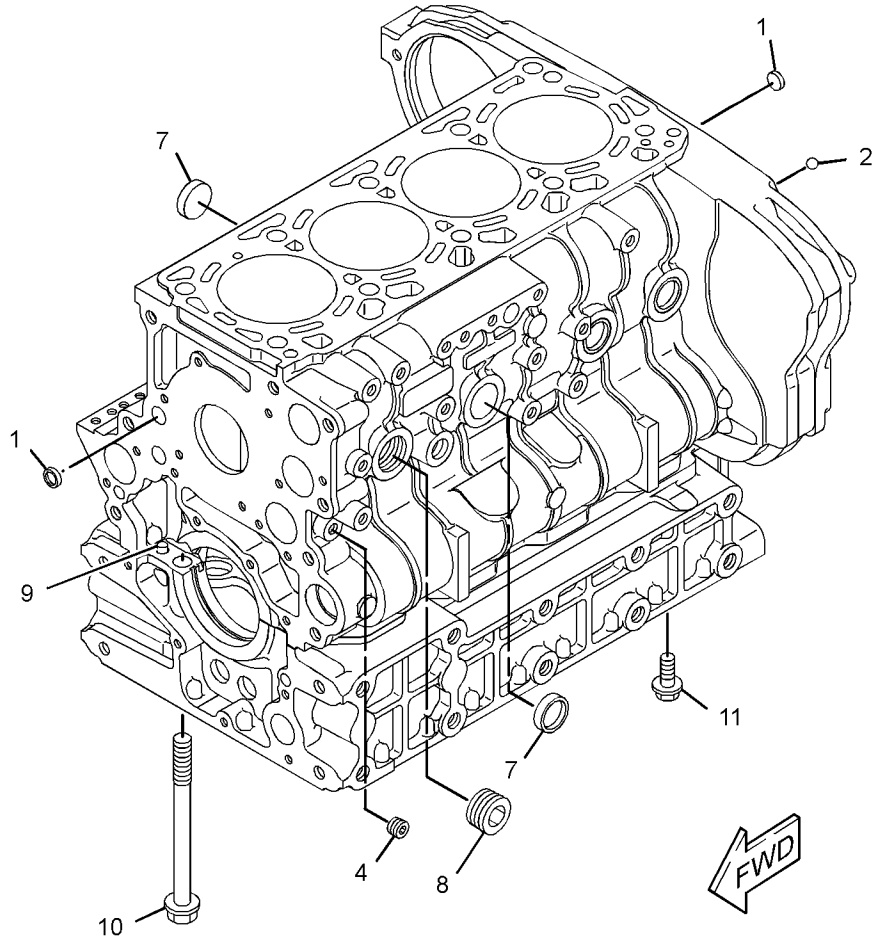

GRAPHIC #1

<END>

g03242296

420-8851 CYLINDER BLOCK GP

PART OF 380-1768, 380-1769 ENGINE AR-PRIMARY
ALSO AN ATTACHMENT

SMCS-1201 **i05341887**

NOTE	REF NO	GRAPHIC REF	PART NUMBER	QTY	PART NAME 1 2 3 4 5 6 (PRODUCT LEVEL)	SEE PAGE
	1	1	**383-0262**	4	CAP	
Y	2	1	**421-1883**	1	CYLINDER BLOCK AS	15
	3	1	**387-9779**	4	PIN	
	4	1	**389-5106**	2	PIN	
	5	1	**389-5111**	1	VALVE	

Y - SEPARATE ILLUSTRATION

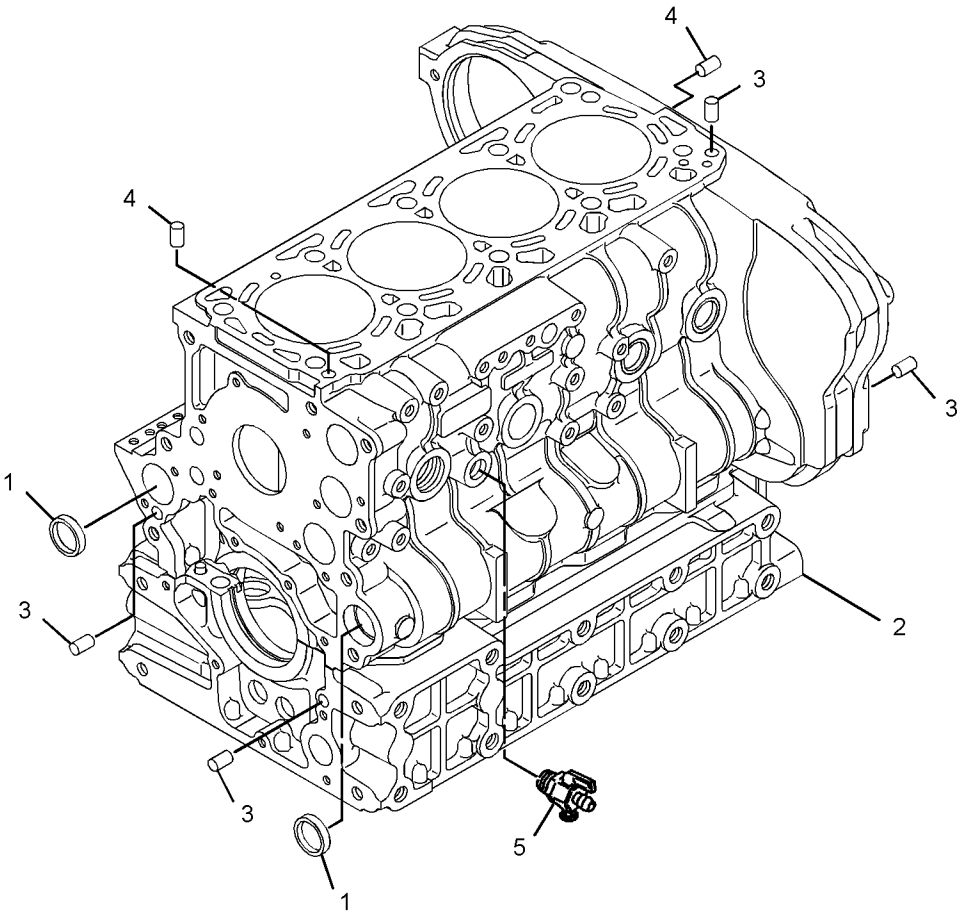

GRAPHIC #1 **<END>** g02929681

387-9788 CYLINDER HEAD AS

S/N: SEN1-UP

PART OF 396-0908 CYLINDER HEAD GP

ALSO AN ATTACHMENT

SMCS-1100 **i05342503**

NOTE	REF NO	GRAPHIC REF	PART NUMBER	QTY	PART NAME 1 2 3 4 5 6 (PRODUCT LEVEL)	SEE PAGE
	1	1	**383-0262**	2	CAP	
	2	1	**383-0358**	8	CAP	
	3	1	**388-7434**	1	CAP	
	4	1	**389-0691**	8	GUIDE-VALVE	
	5	1	**389-0692**	8	GUIDE-VALVE	
	6	1	**389-0695**	8	VALVE-INLET	
	7	1	**389-0696**	8	VALVE-EXHAUST	
	8	1	**389-0697**	16	SPRING-VALVE	
	9	1	**389-0698**	16	RETAINER	
	10	1	**389-0699**	16	GUIDE-SPRING	
	11	1	**389-0700**	16	SEAL	
	12	1	**389-0701**	8	SHAFT	

387-9788 **CYLINDER HEAD AS (*contd.*)** **i05342503**

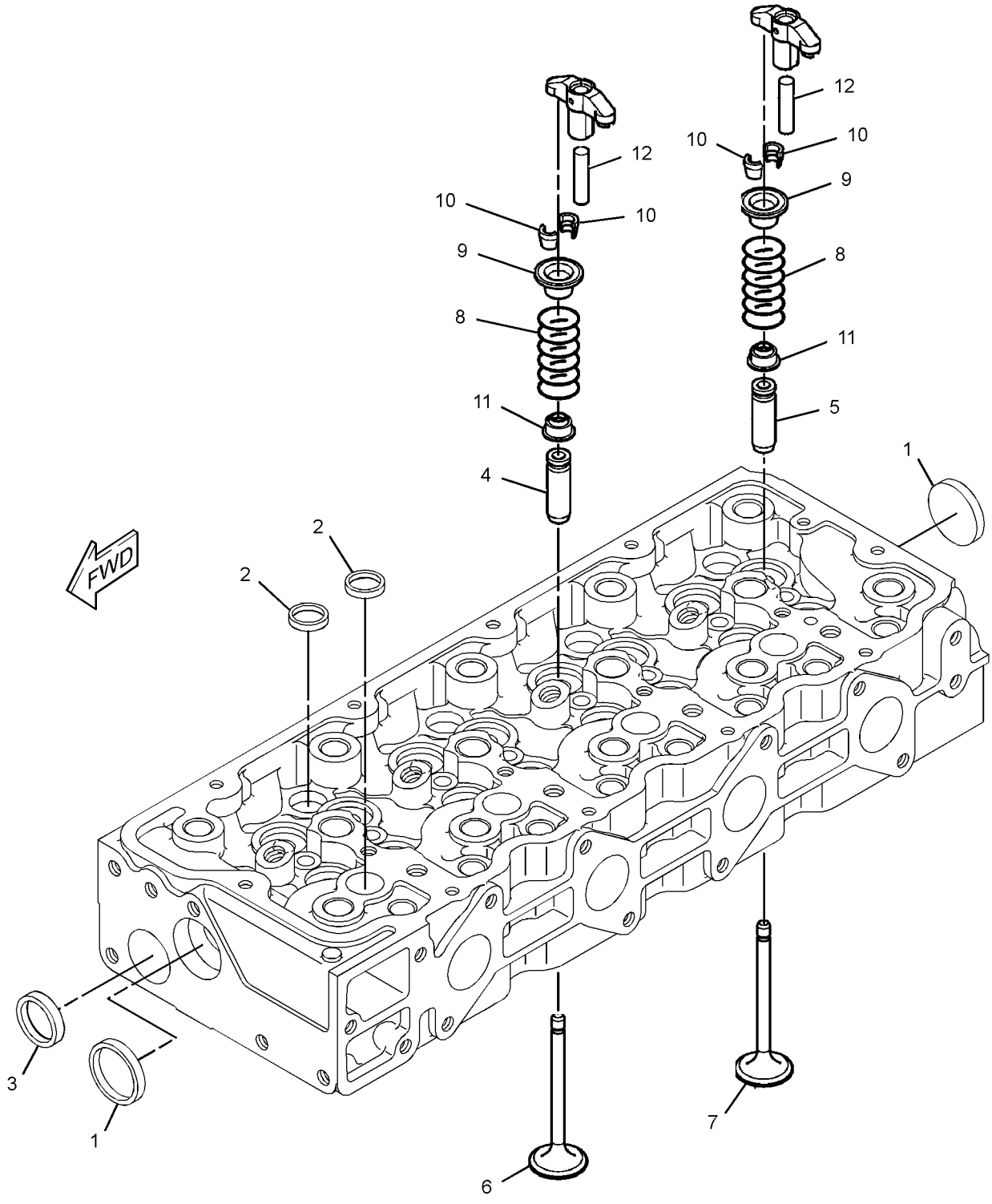

GRAPHIC #1 **<END>** g02925236

421-1881 CYLINDER HEAD AS

S/N: MPW1-UP

PART OF 420-8853 CYLINDER HEAD GP

SMCS-1100 **i05342500**

NOTE	REF NO	GRAPHIC REF	PART NUMBER	QTY	PART NAME 1 2 3 4 5 6 (PRODUCT LEVEL)	SEE PAGE
	1	1	**389-0701**	8	SHAFT	
	2	1	**383-0358**	8	CAP	
	3	1	**388-7434**	2	CAP	
	4	1	**389-0691**	8	GUIDE-VALVE	
	5	1	**389-0692**	8	GUIDE-VALVE	
	6	1	**389-0695**	8	VALVE-INLET	
	7	1	**389-0696**	8	VALVE-EXHAUST	
	8	1	**389-0697**	16	SPRING-VALVE	
	9	1	**389-0698**	16	RETAINER	
	10	1	**389-5137**	16	GUIDE	
	11	1	**389-0700**	16	SEAL	

421-1881 **CYLINDER HEAD AS (*contd.*)** **i05342500**

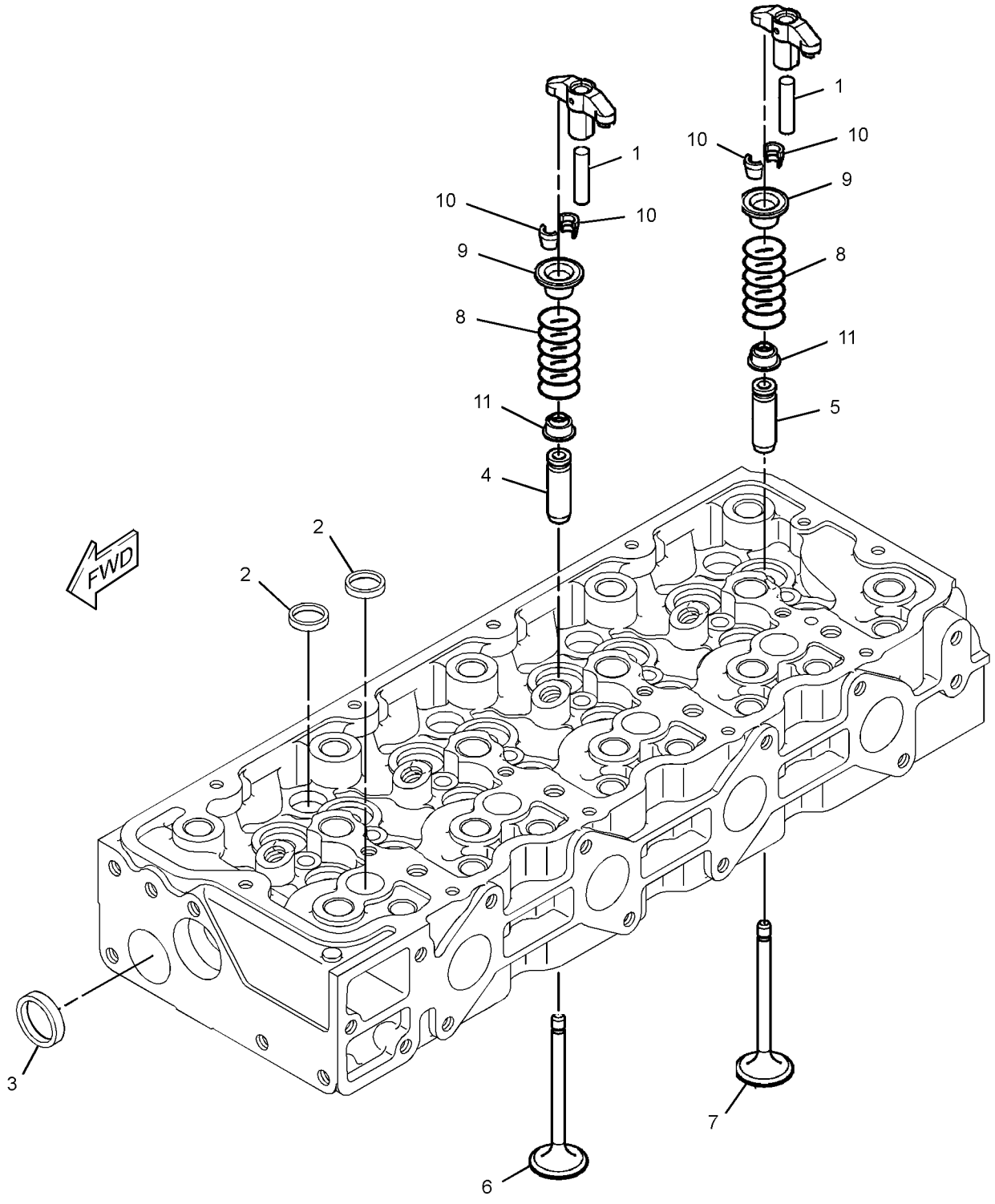

GRAPHIC #1 **<END>** g03244637

396-0908 CYLINDER HEAD GP

S/N: SEN1-UP
PART OF 380-1768 ENGINE AR-PRIMARY
ALSO AN ATTACHMENT

SMCS-1100, 1101, 1103, 1104, 1105, 1108, 1109, 1115, 1117, 1121, 1124, 1125

i05341915

NOTE	REF NO	GRAPHIC REF	PART NUMBER	QTY	PART NAME 1 2 3 4 5 6 (PRODUCT LEVEL)	SEE PAGE
	1	1	**383-0303**	1	PLUG	
Y	2	1	**387-9788**	1	CYLINDER HEAD AS	17
B	3	1	**387-9790**	1	GASKET	
B		1	**387-9791**	1	GASKET	
B		1	**387-9792**	1	GASKET	
	4	1	**387-9827**	8	PAD	
	5	1	**393-7577**	10	BOLT	
	6	1	**387-9826**	8	ARM (CYLINDER HEAD)	
					PARTS SHOWN IN GRAPHIC(S) WITHOUT A REFERENCE NUMBER ARE NOT SERVICED SEPARATELY	

B - USE AS REQUIRED
Y - SEPARATE ILLUSTRATION

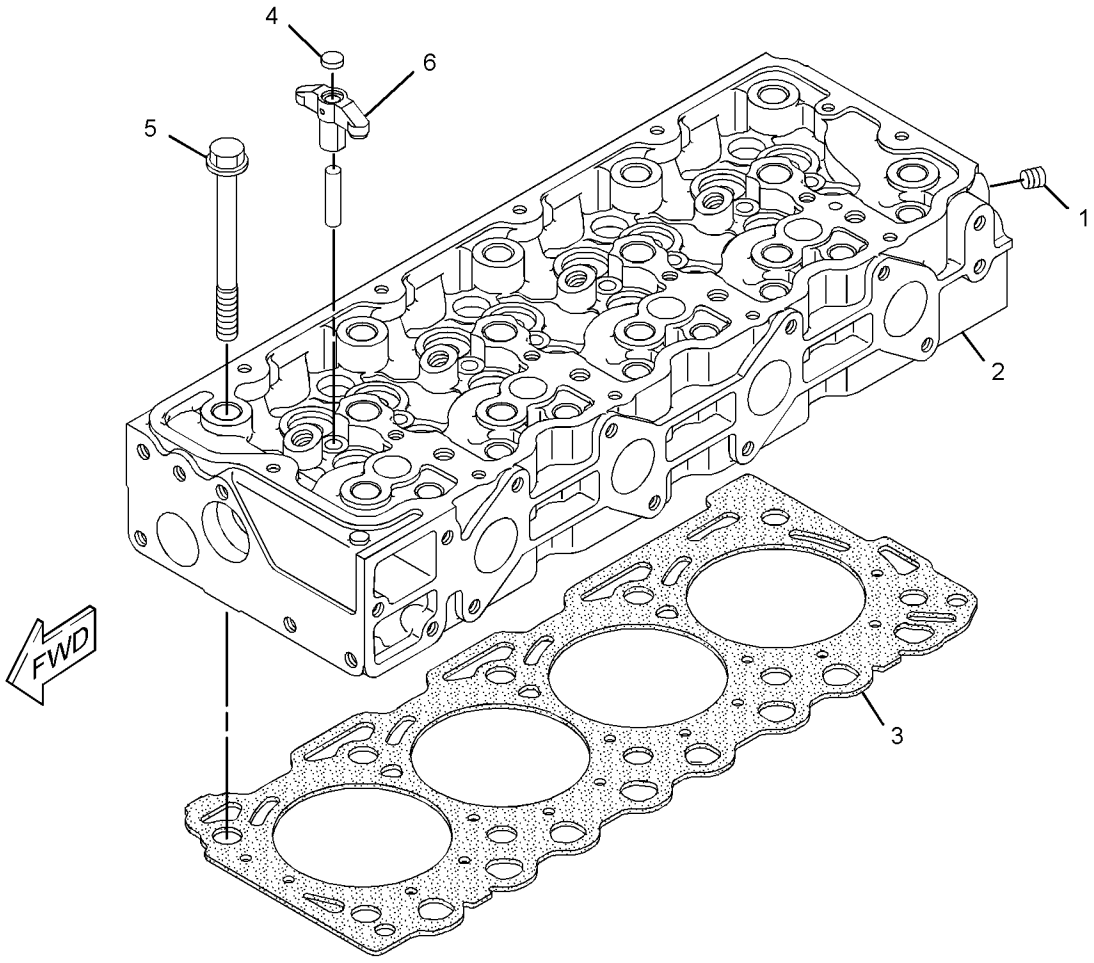

GRAPHIC #1

<END>

g02929439

420-8853 CYLINDER HEAD GP

S/N: MPW1-UP

PART OF 380-1769 ENGINE AR-PRIMARY

SMCS-1100, 1101, 1103, 1104, 1105, 1108, 1109, 1115, 1117, 1121, 1124, 1125

i05342122

NOTE	REF NO	GRAPHIC REF	PART NUMBER	QTY	PART NAME 1 2 3 4 5 6 (PRODUCT LEVEL)	SEE PAGE
	1	1	**383-0303**	1	PLUG	
B	2	1	**387-9790**	1	GASKET	
B		1	**387-9791**	1	GASKET	
B		1	**387-9792**	1	GASKET	
	3	1	**393-7577**	10	BOLT	
Y	4	1	**421-1881**	1	CYLINDER HEAD AS	19

B - USE AS REQUIRED
Y - SEPARATE ILLUSTRATION

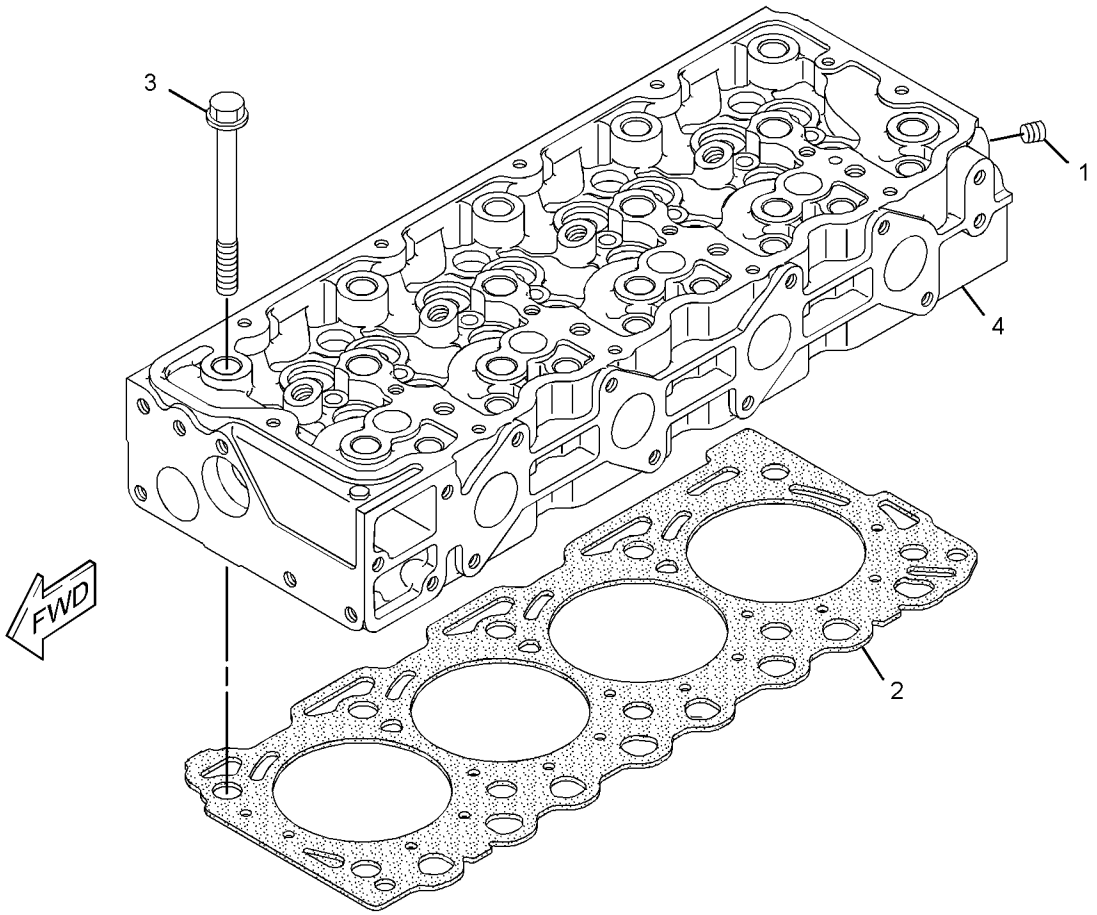

GRAPHIC #1 **<END>** g03239816

345-3495 DRAIN GP-ENGINE OIL

PART OF 378-6690, 393-7340 INSTALLATION AR-ENGINE

SMCS-1302 **i04765964**

NOTE	REF NO	GRAPHIC REF	PART NUMBER	QTY	PART NAME 1 2 3 4 5 6 (PRODUCT LEVEL)	SEE PAGE
	1	1	**1P-4278**	1	CLAMP-HOSE	
E	2	1	**5P-1442**		HOSE (70-CM)	
	3	1	**110-2570**	1	CAP	

E - ORDER BY THE CENTIMETER

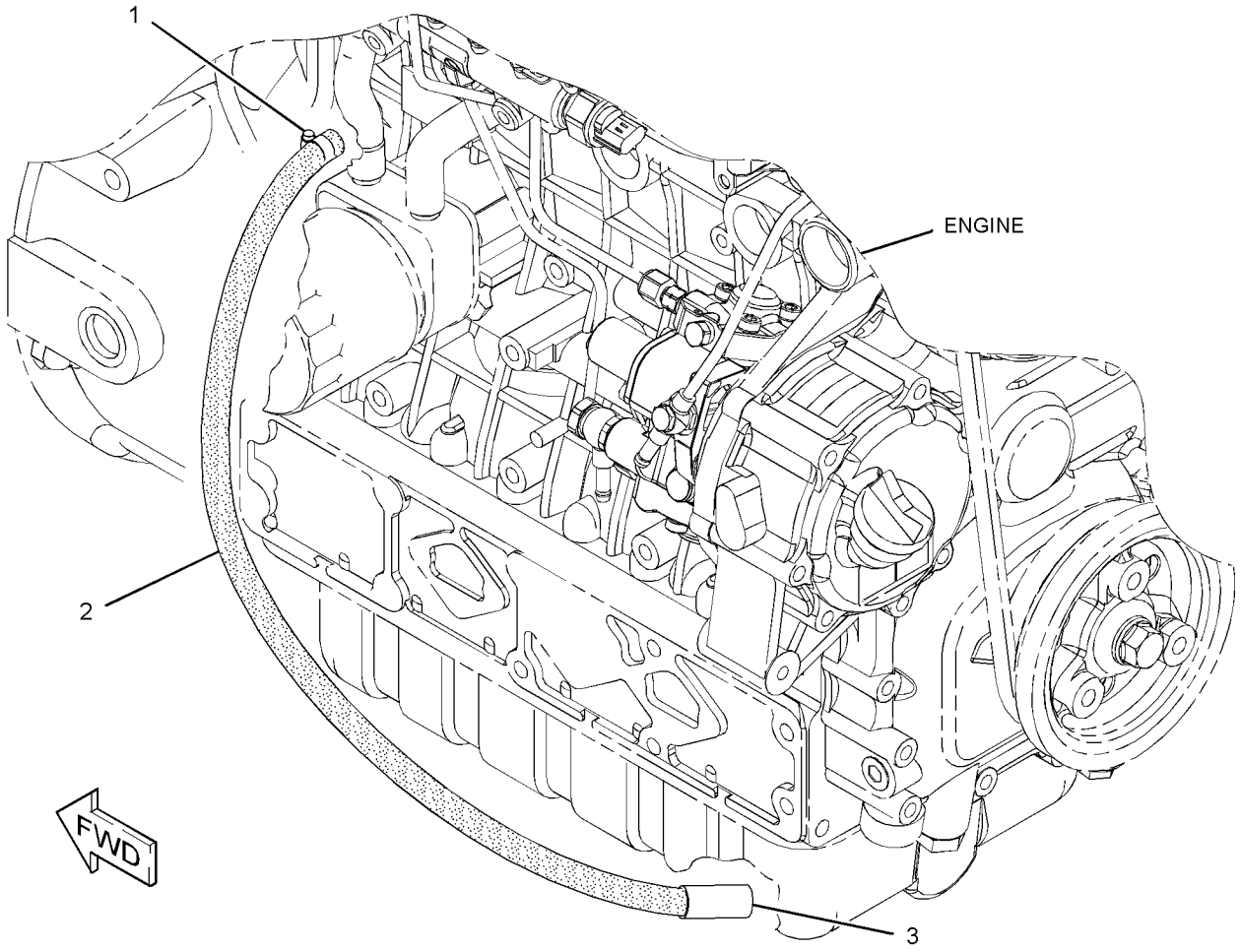

GRAPHIC #1 **<END>** g02877398

437-2562 FLYWHEEL GP

PART OF 380-1768, 380-1769 ENGINE AR-PRIMARY
ALSO AN ATTACHMENT

SMCS-1156, 1158 **i05330914**

NOTE	REF NO	GRAPHIC REF	PART NUMBER	QTY	PART NAME 1 2 3 4 5 6 (PRODUCT LEVEL)	SEE PAGE
	1	1	**397-9944**	1	FLYWHEEL AS	
		1	**388-7508**	1	GEAR	
	2	1	**393-7583**	8	BOLT-FLANGE HEAD	
	3	1	**387-9854**	1	SEAL	
	4	1	**387-9855**	1	COVER	
	5	1	**436-0817**	1	PLUG AS (ENGINE OIL FILLER)	
		1	**383-0217**	1	SEAL-O-RING	
	6	1	**387-9857**	1	PLUG	
	7	1	**387-9858**	1	GASKET	
	8	1	**387-9859**	8	BOLT-FLANGE HEAD	
	9	1	**393-7579**	8	BOLT-SPECIAL	

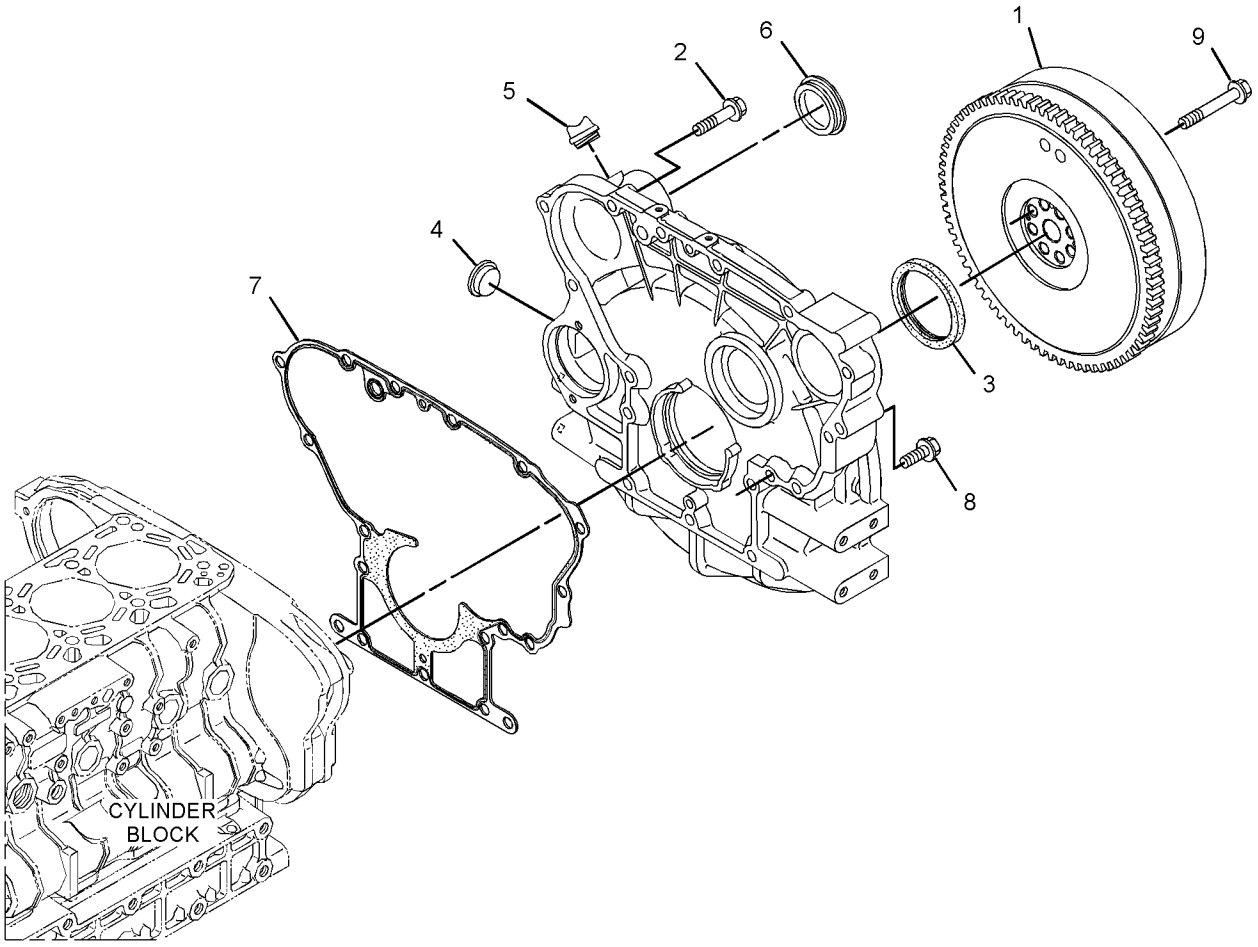

GRAPHIC #1 **<END>** g03379369

345-3620 GUARD GP-BELT

PART OF 378-6690, 393-7340 INSTALLATION AR-ENGINE

SMCS-7174 **i05295516**

NOTE	REF NO	GRAPHIC REF	PART NUMBER	QTY	PART NAME 1 2 3 4 5 6 (PRODUCT LEVEL)	SEE PAGE
	1	1	**345-3621**	1	GUARD-BELT	
	2	1	**388-6646**	5	FASTENER	
	3	1	**388-6647**	5	RETAINER	
	4	1	**388-6648**	5	CLIP	
	5	1	**416-5690**	1	BRACKET AS	
M		1	**159-9540**	2	NUT-WELD (M8X1.25-THD)	
	6	1	**416-5691**	1	BRACKET	
	7	1	**416-5692**	1	BRACKET	
M	8	1	**174-9194**	7	BOLT (M8X1.25X16-MM)	

M - METRIC PART

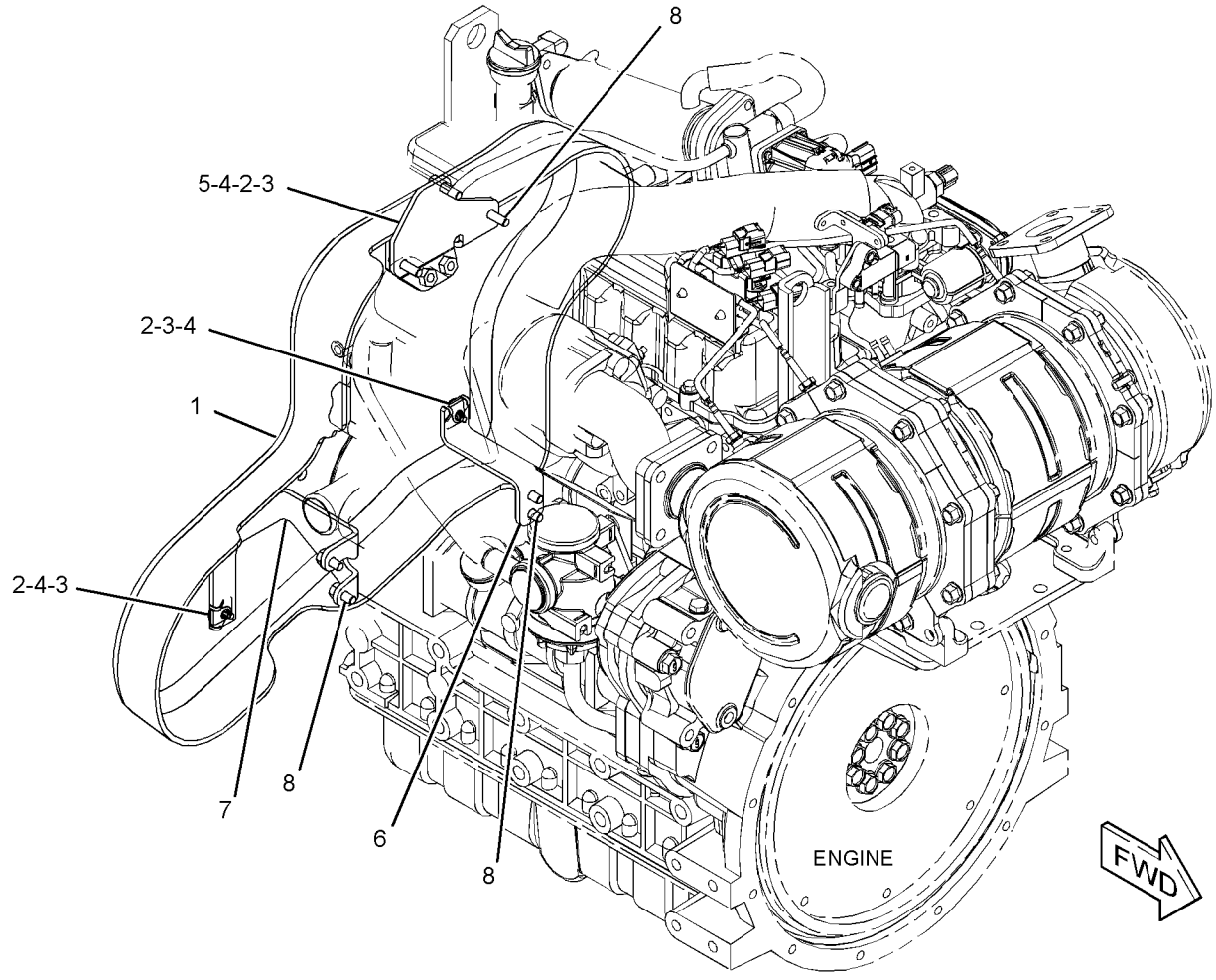

GRAPHIC #1 **<END>** g03365164

396-0909 HOUSING GP-FRONT

PART OF 380-1768, 380-1769 ENGINE AR-PRIMARY
ALSO AN ATTACHMENT

SMCS-1151, 1160, 1162, 1166, 3108 **i05330863**

NOTE	REF NO	GRAPHIC REF	PART NUMBER	QTY	PART NAME 1 2 3 4 5 6 (PRODUCT LEVEL)	SEE PAGE
Y	1	1	**397-9057**	1	HOUSING GP-FRONT	27
	2	1	**387-9796**	1	SEAL	
	3	1	**387-9797**	1	GASKET	
	4	1	**387-9798**	13	BOLT-FLANGE HEAD	

Y - SEPARATE ILLUSTRATION

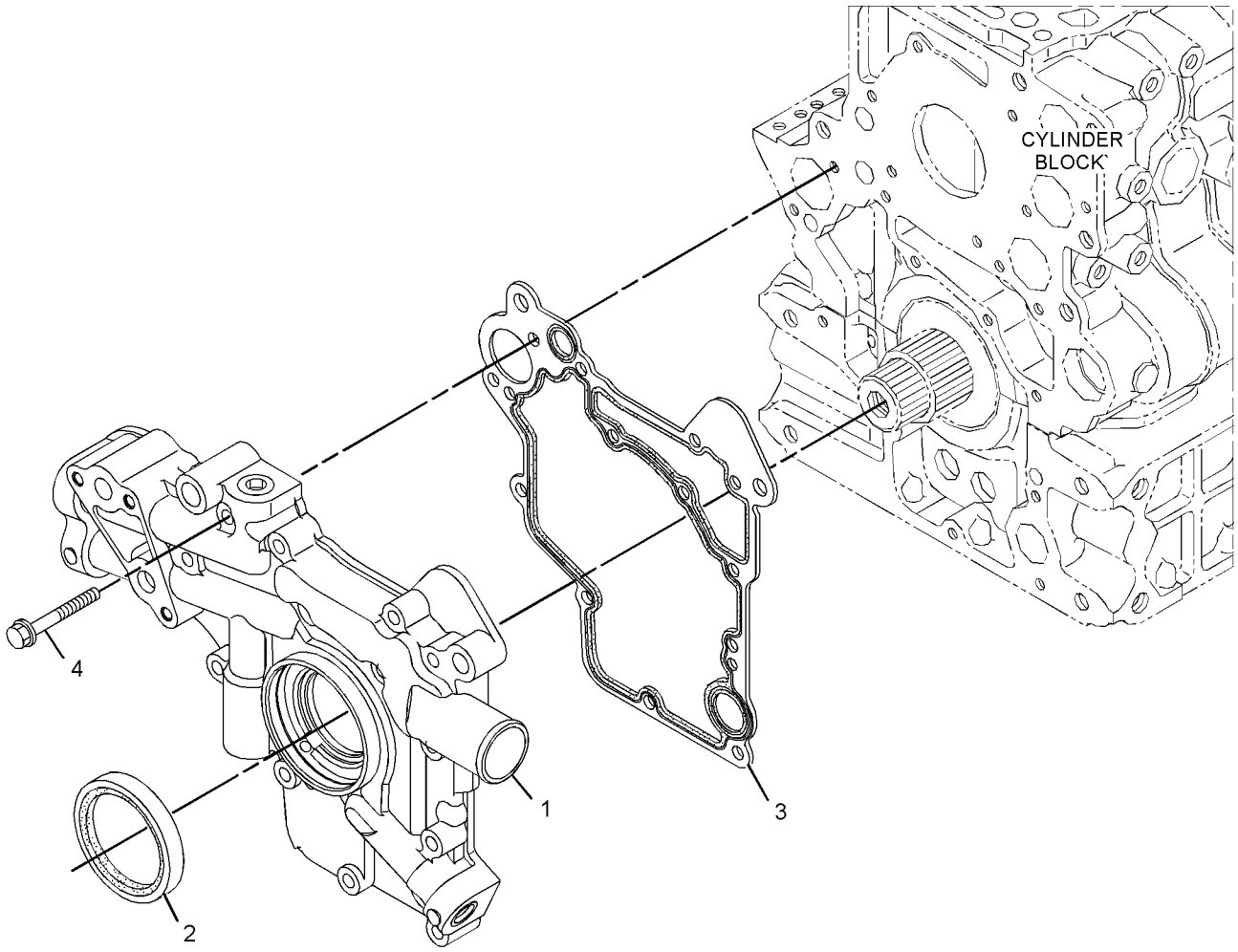

GRAPHIC #1 **<END>** g02902976

397-9057 HOUSING GP-FRONT

PART OF 396-0909 HOUSING GP-FRONT

ALSO AN ATTACHMENT

SMCS-1151, 1160, 1162, 1166, 3108 **i05333904**

NOTE	REF NO	GRAPHIC REF	PART NUMBER	QTY	PART NAME 1 2 3 4 5 6 (PRODUCT LEVEL)	SEE PAGE
	1	1	**383-0291**	1	GASKET	
	2	1	**383-0358**	1	CAP	
	3	1	**389-5159**	1	SPRING	
	4	1	**388-7440**	1	VALVE (FRONT HOUSING)	
	5	1	**389-5160**	1	PLUG	
	6	1	**388-7442**	1	GEAR AS	
	7	1	**388-7443**	1	COVER	
	8	1	**388-7444**	7	SCREW	
	9	1	**388-7445**	3	PLUG	

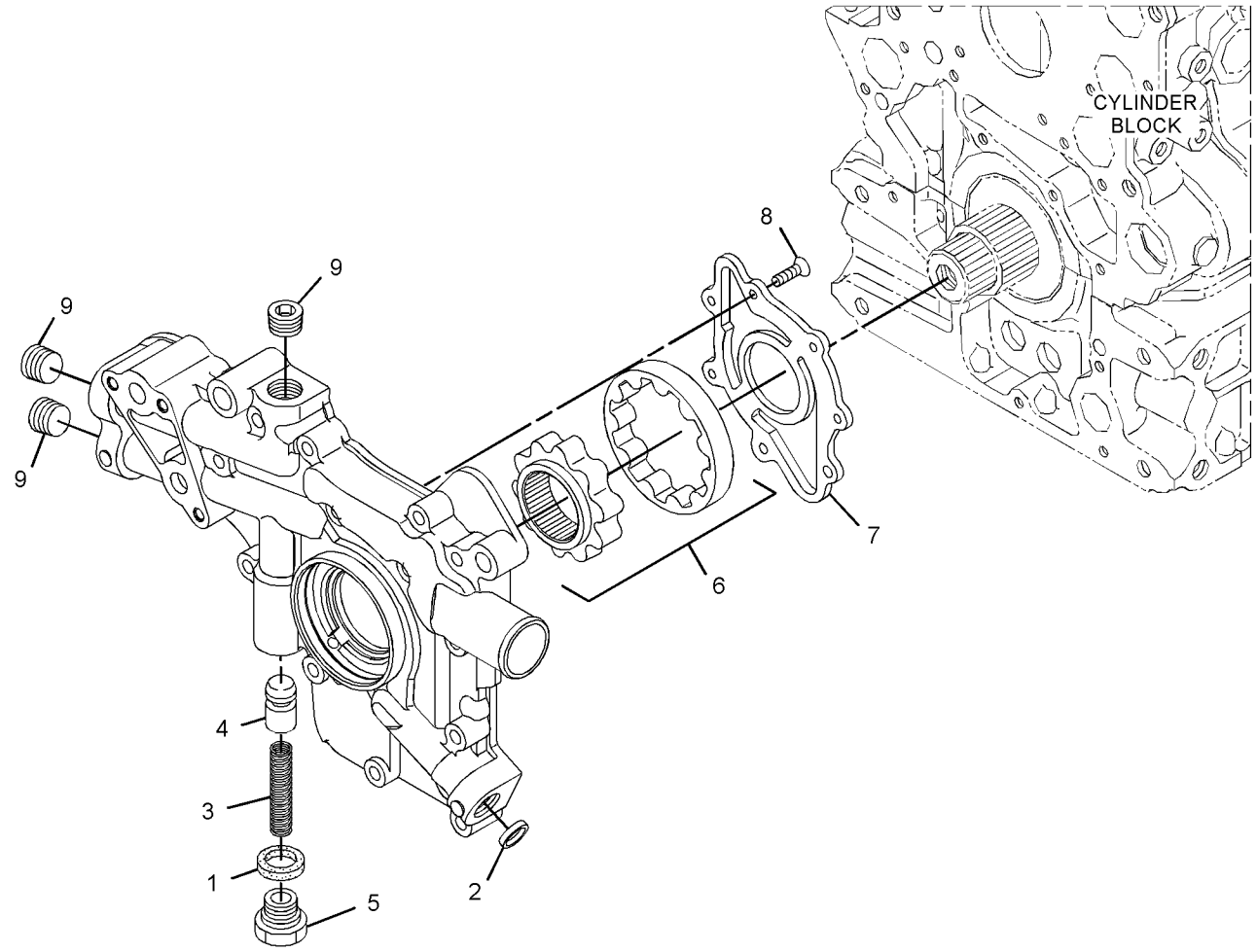

GRAPHIC #1 **<END>** g02902897

396-0910 LIFTING GP-ENGINE

PART OF 380-1768, 380-1769 ENGINE AR-PRIMARY
ALSO AN ATTACHMENT

SMCS-1122 **i05341944**

NOTE	REF NO	GRAPHIC REF	PART NUMBER	QTY	PART NAME 1 2 3 4 5 6 (PRODUCT LEVEL)	SEE PAGE
	1	1	**397-9054**	1	PLATE-LIFTING	
	2	1	**397-9055**	1	PLATE-LIFTING	
	3	1	**393-7573**	4	BOLT-FLANGE HEAD	

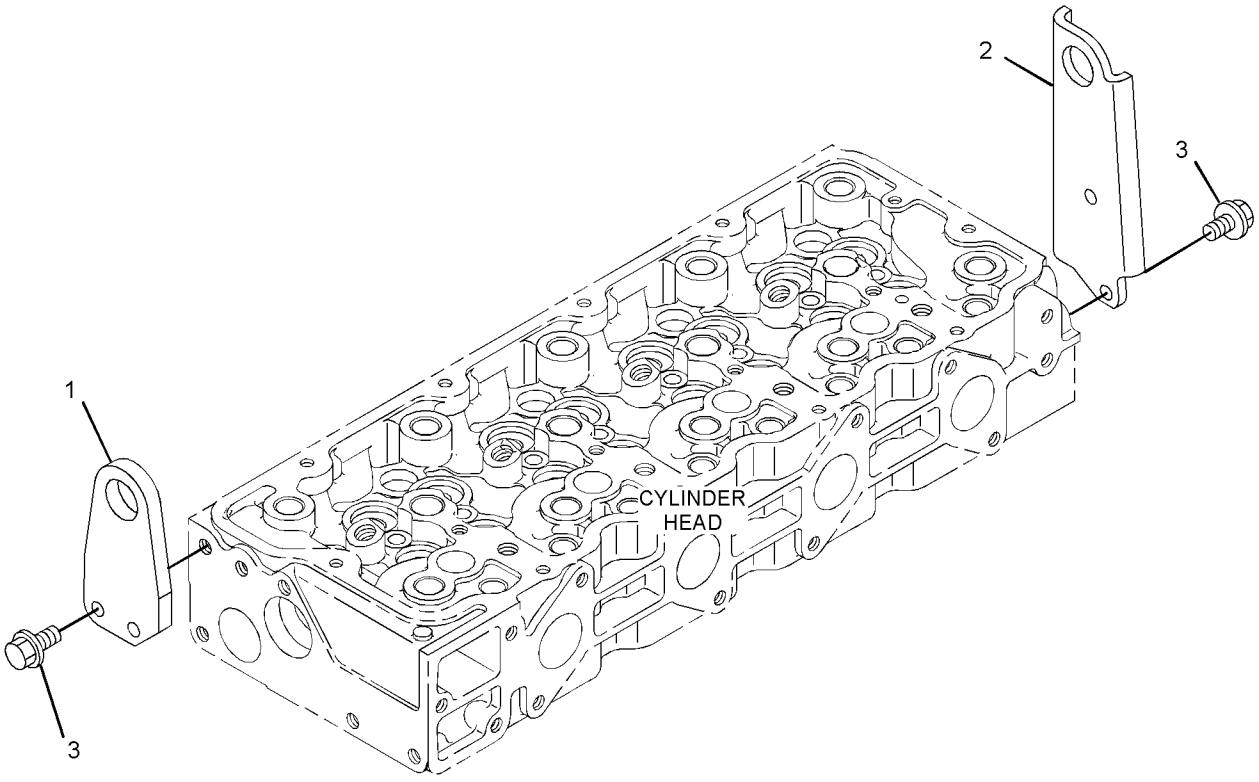

GRAPHIC #1 **<END>** g02882720

345-3605 MOUNTING GP-ENGINE

PART OF 378-6690, 393-7340 INSTALLATION AR-ENGINE

SMCS-1152, 1153, 1154 **i05156650**

NOTE	REF NO	GRAPHIC REF	PART NUMBER	QTY	PART NAME 1 2 3 4 5 6 (PRODUCT LEVEL)	SEE PAGE
	1	1	**152-5878**	2	MOUNT AS	
	2	1	**230-3621**	1	MOUNT AS	
		1	**149-3488**	2	MOUNT-ENGINE	
		1	**241-6397**	1	SLEEVE	
	3	1	**258-3447**	2	BOLT AS	
	4	1	**345-3565**	1	BRACKET	
	5	1	**396-3352**	4	BOLT-FLANGE HEAD (M12X1.25X35-MM)	
M	6	1	**129-3180**	1	LOCKNUT (M12X1.75-THD)	
	7	1	**165-7095**	4	WASHER (16.5X71.5X3-MM THK)	
	8	1	**5P-1076**	2	WASHER-HARD (13.5X30X4-MM THK)	
	9	1	**8T-4122**	2	WASHER-HARD (17X32X3.5-MM THK)	
M	10	1	**8T-4132**	2	NUT (M16X2-THD)	
M	11	1	**8T-4176**	1	BOLT (M12X1.75X90-MM)	

M - METRIC PART

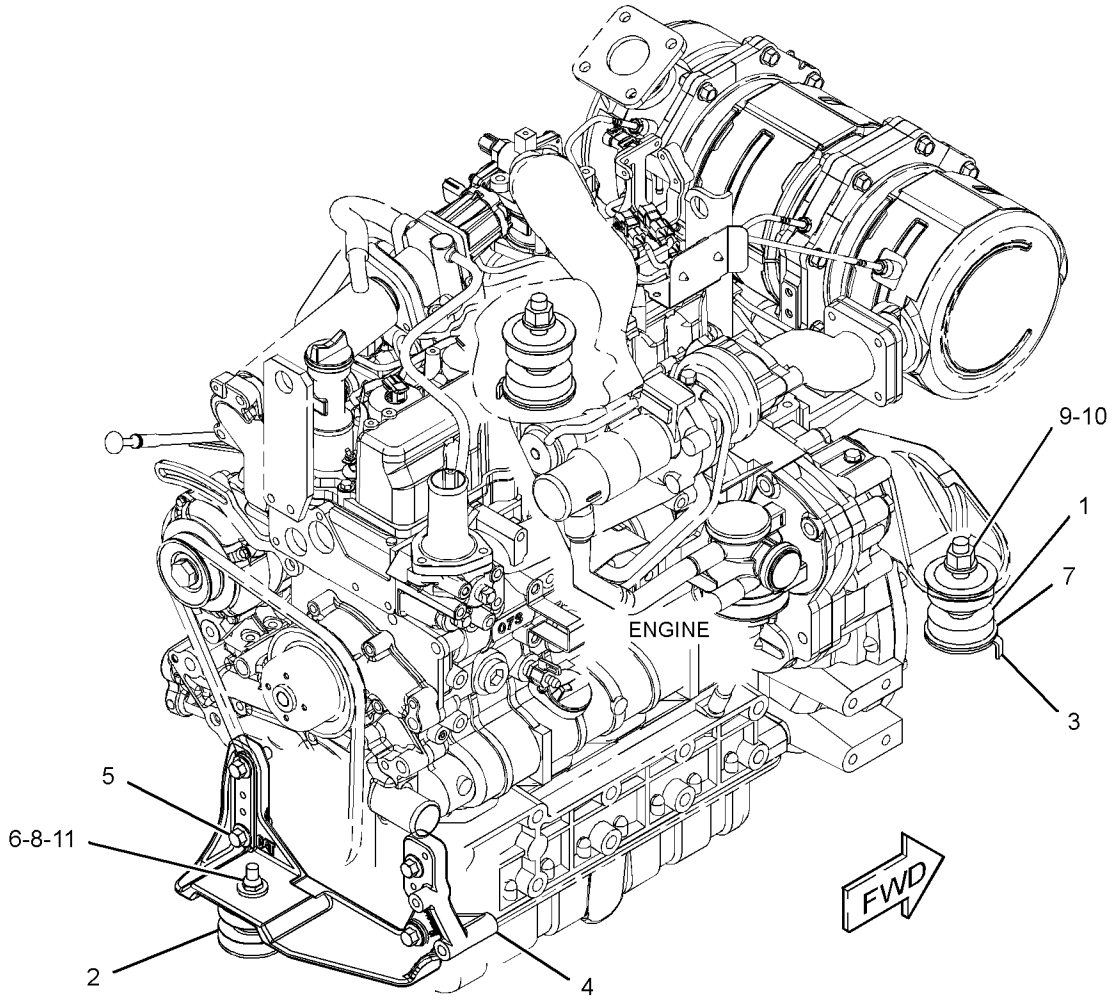

GRAPHIC #1 **<END>** g03322980

387-9087 PAN GP-OIL

PART OF 380-1768, 380-1769 ENGINE AR-PRIMARY
ALSO AN ATTACHMENT

SMCS-1302 **i05391583**

NOTE	REF NO	GRAPHIC REF	PART NUMBER	QTY	PART NAME 1 2 3 4 5 6 (PRODUCT LEVEL)	SEE PAGE
	1	1	**389-5163**	1	PLUG	
	2	1	**387-9785**	26	BOLT-FLANGE HEAD	
	3	1	**387-9861**	1	STRAINER-OIL (PAN)	
	4	1	**388-7436**	1	PAN-OIL	
	5	1	**430-8499**	1	GASKET	
	6	1	**393-2878**	1	SEAL-O-RING	

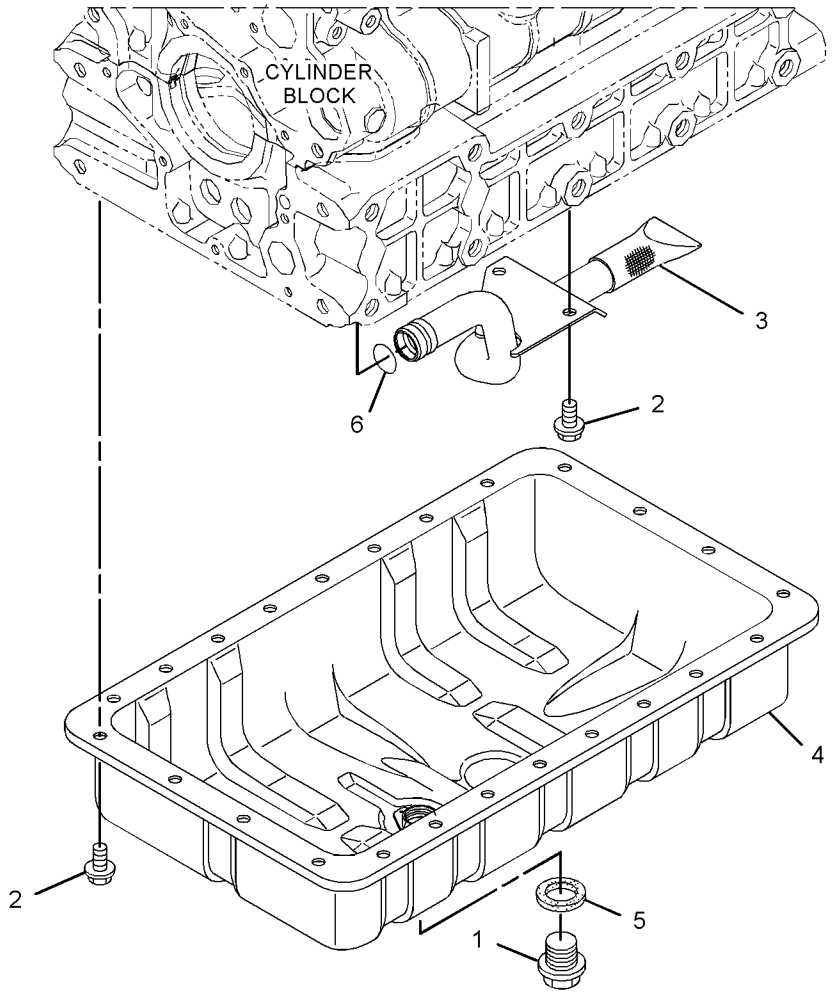

GRAPHIC #1 **<END>** g02848708

387-9088 PISTON & ROD GP

PART OF 380-1768, 380-1769 ENGINE AR-PRIMARY
ALSO AN ATTACHMENT

SMCS-1225 **i05342477**

NOTE	REF NO	GRAPHIC REF	PART NUMBER	QTY	PART NAME 1 2 3 4 5 6 (PRODUCT LEVEL)	SEE PAGE
Q	1	1	**387-9833**	4	PISTON (STANDARD, H05)	
ABJ		1	**387-9834**		PISTON (STANDARD, H00)	
ABN		1	**387-9835**		PISTON (STANDARD, H10)	
ABT		1	**393-2885**		PISTON (0.50-MM OS, H05)	
ABL		1	**393-2886**		PISTON (0.50-MM OS, H00)	
ABO		1	**393-2887**		PISTON (0.50-MM OS, H10)	
JNQ	2	1	**387-9836**	4	RING AS-PISTON (STANDARD)	
ABLOT		1	**393-2889**		RING AS-PISTON (0.50-MM OS)	
JLNOQT	3	1	**387-9838**	8	CLIP	
	4	1	**387-9839**	4	ROD AS-CONNECTING	
					(EACH INCLUDES)	
JLNOQT		1	**393-2894**	1	BEARING	
		1	**393-7578**	2	BOLT	
	5	1	**388-7501**	4	BEARING (STANDARD) (STANDARD)	
AB		1	**388-7500**		BEARING (BLUE)	
AB		1	**393-2895**		BEARING (0.20-MM US)	
AB		1	**393-2896**		BEARING (0.40-MM US)	
JLNOQT	6	1	**393-2891**	4	PIN-PISTON	
					AVAILABLE REPAIR KIT(S):	
J			**393-2907**	4	KIT-PISTON (STANDARD, H00)	
L			**393-2908**	4	KIT-PISTON (0.50-MM OS, H00)	
N			**393-2909**	4	KIT-PISTON (STANDARD, H10)	
O			**393-2910**	4	KIT-PISTON (0.50-MM OS, H10)	
Q			**393-2905**	4	KIT-PISTON (STANDARD, H05)	
T			**393-2906**	4	KIT-PISTON (0.50-MM OS, H05)	

A - NOT PART OF THIS GROUP
B - USE AS REQUIRED
J - KIT MARKED J SERVICES PARTS MARKED J
L - KIT MARKED L SERVICES PARTS MARKED L
N - KIT MARKED N SERVICES PARTS MARKED N
O - KIT MARKED O SERVICES PARTS MARKED O
Q - KIT MARKED Q SERVICES PARTS MARKED Q
T - KIT MARKED T SERVICES PARTS MARKED T

387-9088 **PISTON & ROD GP (*contd.*)** **i05342477**

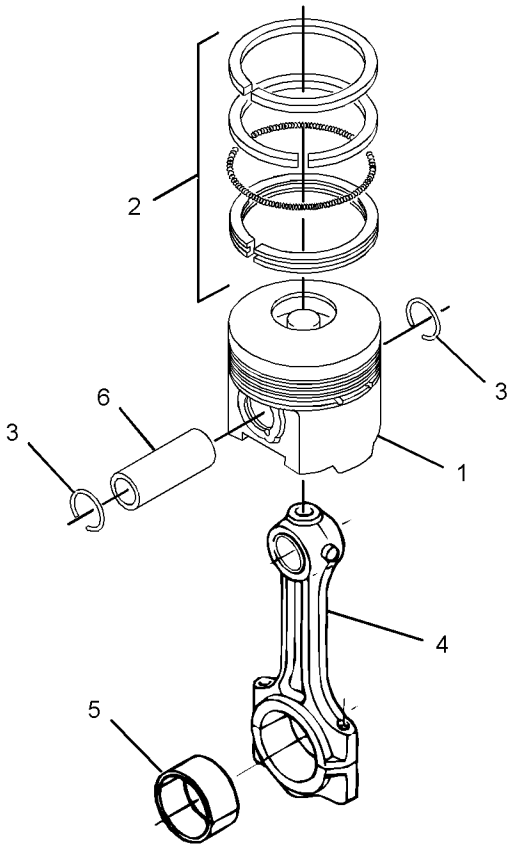

GRAPHIC #1 **<END>** g02848709

437-2566 PULLEY GP

PART OF 380-1768, 380-1769 ENGINE AR-PRIMARY
ALSO AN ATTACHMENT

SMCS-1205, 1207, 1357, 1358, 1359, 1384, 1425 **i05307389**

NOTE	REF NO	GRAPHIC REF	PART NUMBER	QTY	PART NAME 1 2 3 4 5 6 (PRODUCT LEVEL)	SEE PAGE
	1	1	**383-0383**	1	PULLEY-FAN	
	2	1	**393-7570**	4	BOLT-FLANGE HEAD	
	3	1	**397-9968**	1	PULLEY-FAN DRIVE	
	4	1	**393-7584**	1	BOLT	
	5	1	**437-2564**	1	V-BELT (FAN DRIVE PULLEY)	

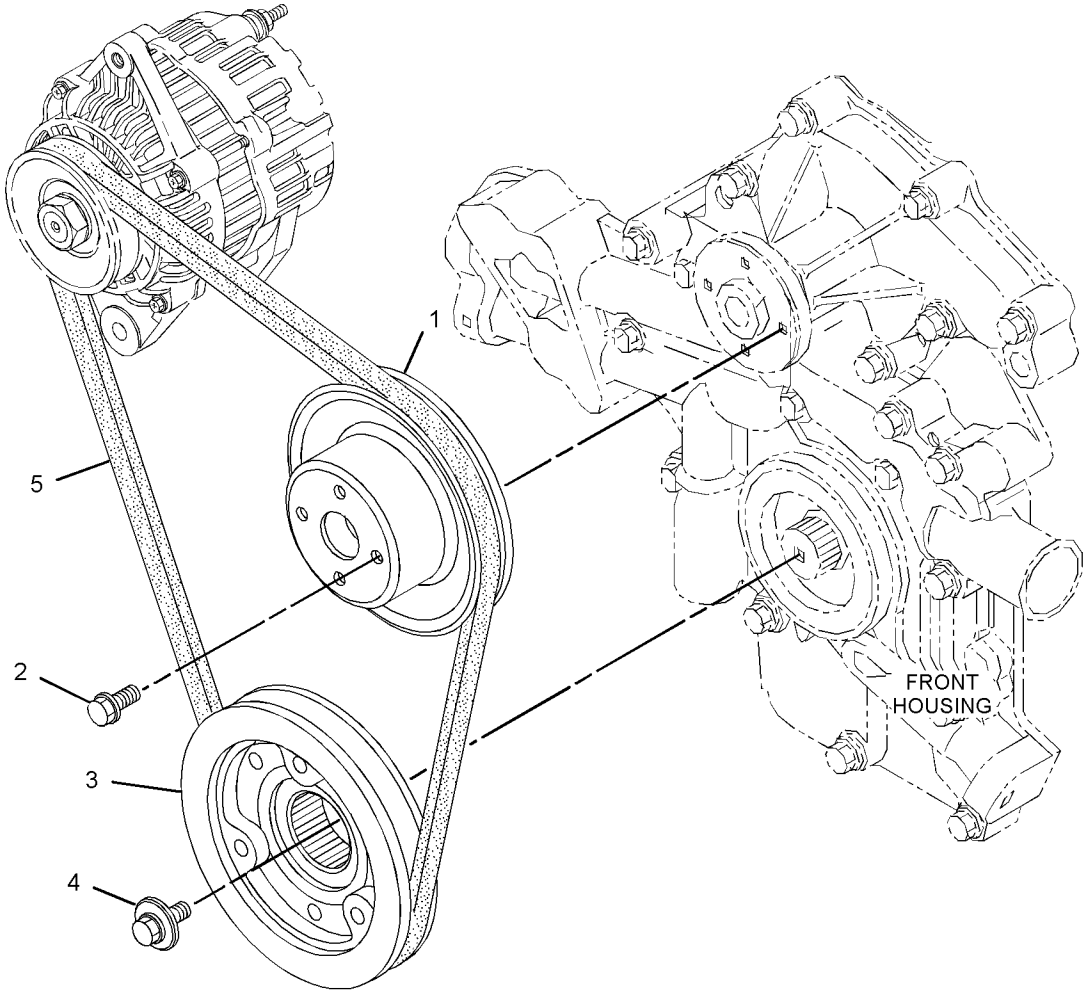

GRAPHIC #1 **<END>** g02957517

387-9084 VALVE MECHANISM GP

PART OF 380-1768, 380-1769 ENGINE AR-PRIMARY
ALSO AN ATTACHMENT

SMCS-1102, 1112, 1121, 1123, 1208, 1209 **i05342113**

NOTE	REF NO	GRAPHIC REF	PART NUMBER	QTY	PART NAME 1 2 3 4 5 6 (PRODUCT LEVEL)	SEE PAGE
	1	1	**383-0180**	2	BOLT	
	2	1	**383-0205**	2	WASHER	
	3	1	**383-0207**	2	WASHER	
	4	1	**398-5522**	1	SPRING	
	5	1	**387-9825**	4	BOLT-FLANGE HEAD	
	6	1	**388-7479**	1	SHAFT	
	7	1	**388-7480**	4	BRACKET	
	8	1	**388-7481**	2	WASHER	
	9	1	**388-7482**	3	SPRING	
	10	1	**388-7483**	4	ARM AS (INTAKE)	
	11	1	**388-7484**	4	ARM AS (EXHAUST)	
	12	1	**388-7485**	4	PIN	

387-9084 **VALVE MECHANISM GP (*contd.*)** **i05342113**

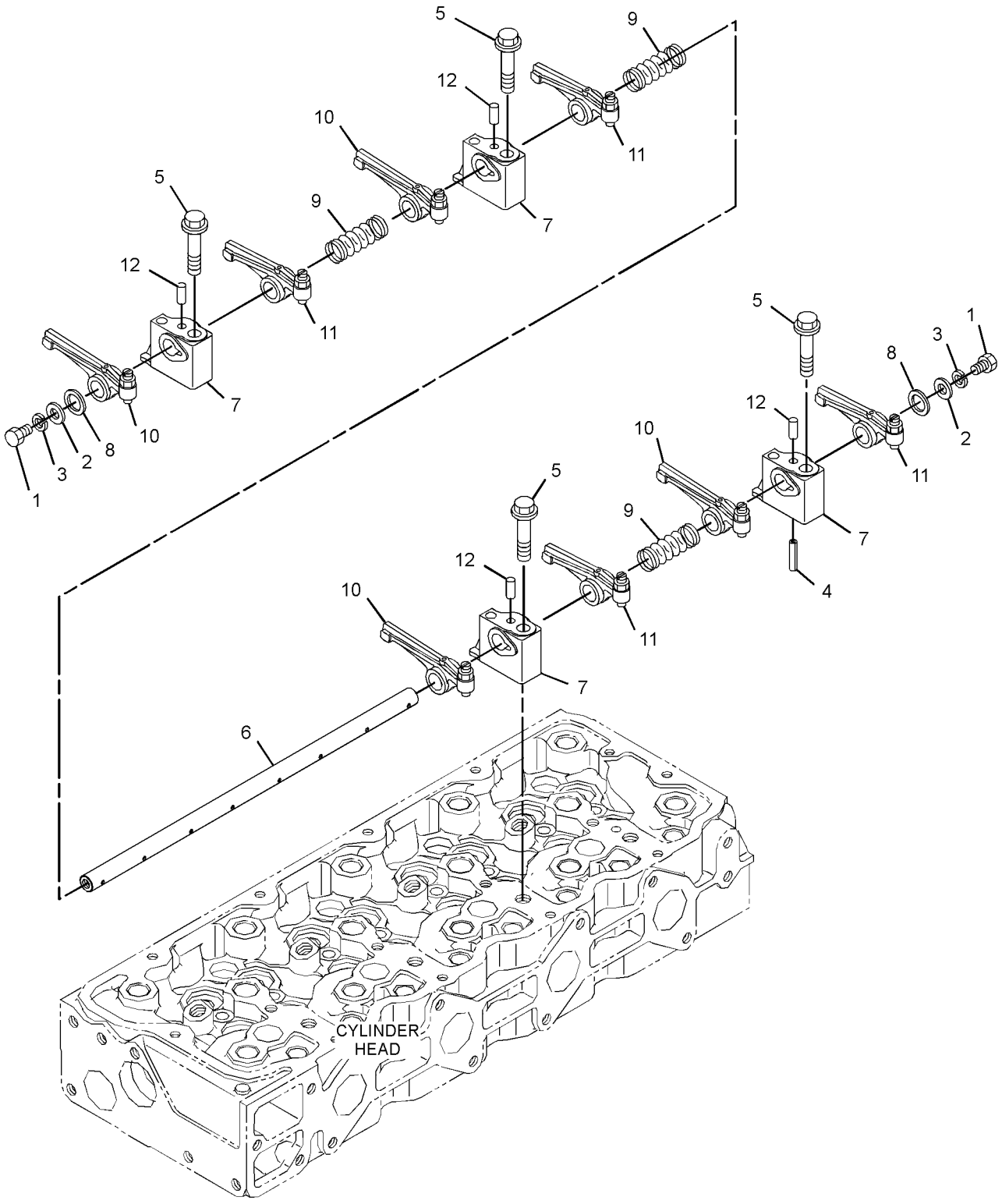

GRAPHIC #1 **<END>** g02904997

396-0905 FILLER GP-ENGINE OIL

S/N: SEN1-UP
PART OF 380-1768 ENGINE AR-PRIMARY
ALSO AN ATTACHMENT

SMCS-1316 **i05330780**

NOTE	REF NO	GRAPHIC REF	PART NUMBER	QTY	PART NAME 1 2 3 4 5 6 (PRODUCT LEVEL)	SEE PAGE
	1	1	**383-0213**	1	SEAL-O-RING	
	2	1	**387-9856**	1	PLUG AS	
		1	**383-0217**	1	SEAL-O-RING	
		1	**389-5156**	1	PLUG	
	3	1	**397-9988**	1	FLANGE-OIL FILLER	

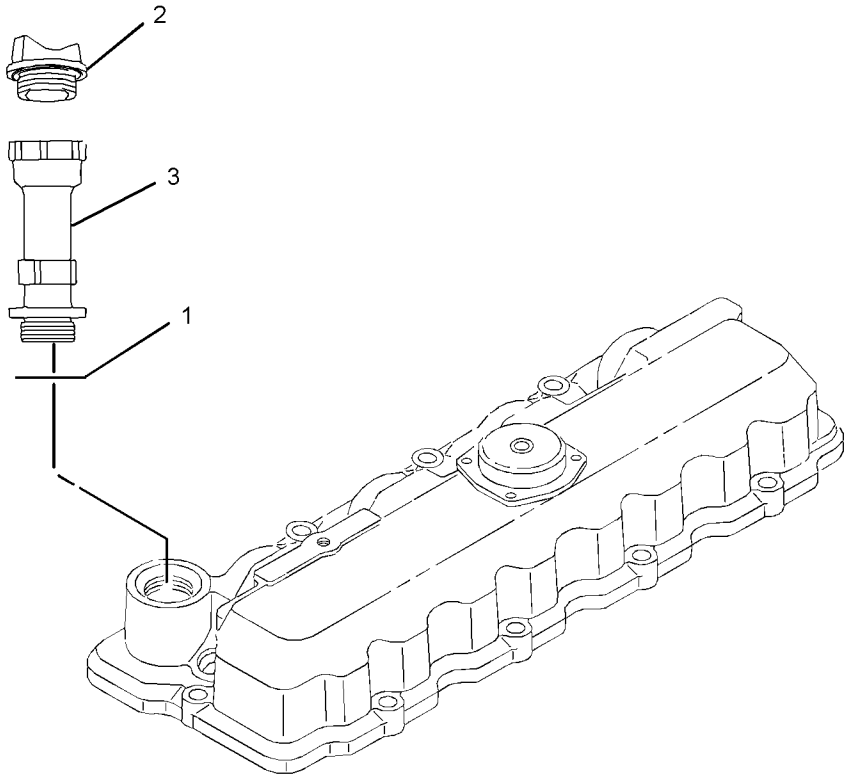

GRAPHIC #1 **<END>** g02948696

437-5953 GAUGE GP-OIL LEVEL (DIPSTICK)

PART OF 380-1768, 380-1769 ENGINE AR-PRIMARY
ALSO AN ATTACHMENT

SMCS-1326 **i05341906**

NOTE	REF NO	GRAPHIC REF	PART NUMBER	QTY	PART NAME 1 2 3 4 5 6 (PRODUCT LEVEL)	SEE PAGE
	1	1	**393-7573**	1	BOLT-FLANGE HEAD	
	2	1	**437-3432**	1	GAUGE-OIL LEVEL (DIPSTICK, ENGINE)	
	3	1	**437-5968**	1	TUBE AS	

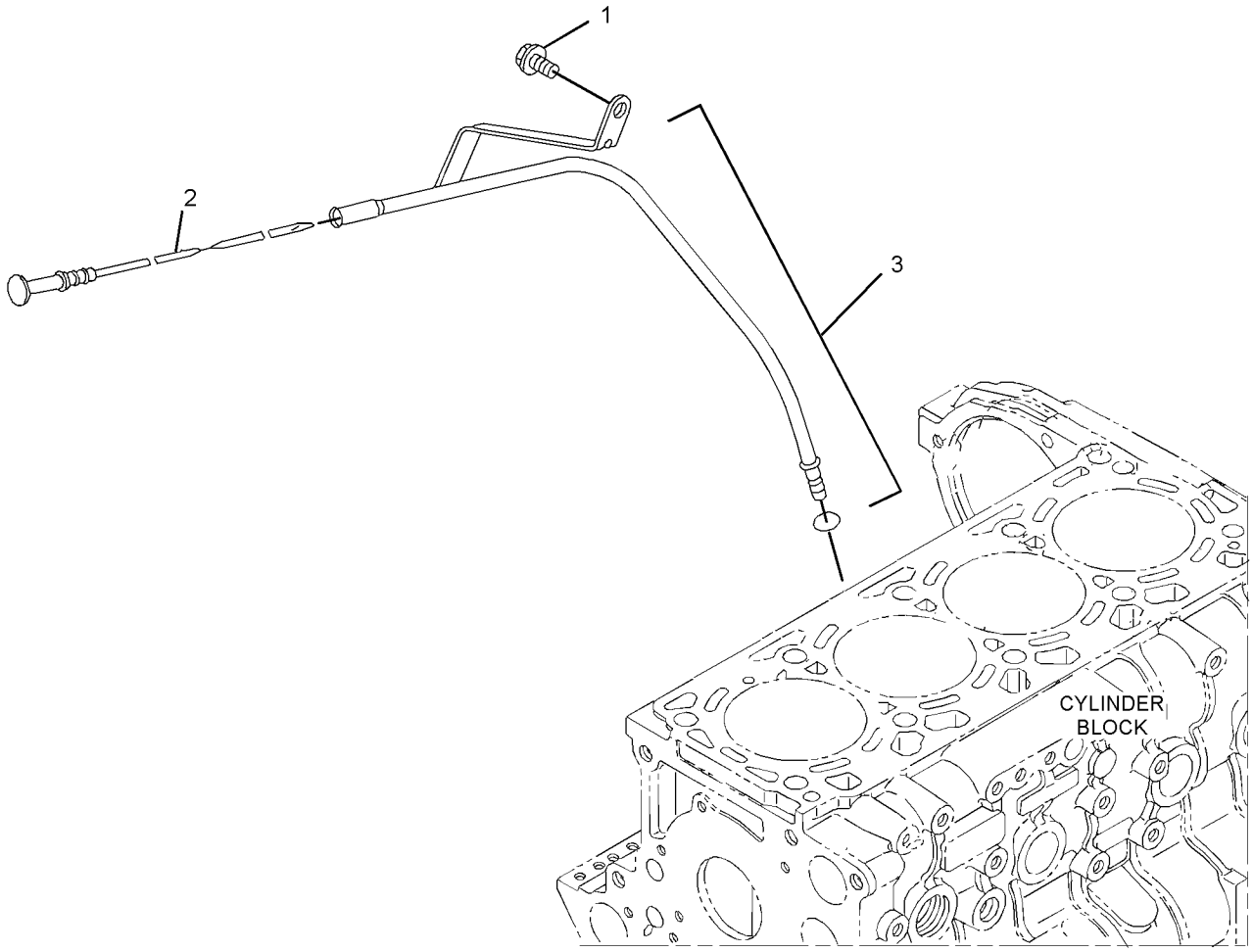

GRAPHIC #1 **<END>** g03374002

396-0912 LINES GP-ENGINE OIL

PART OF 380-1768, 380-1769 ENGINE AR-PRIMARY
ALSO AN ATTACHMENT

SMCS-1307 **i05341953**

NOTE	REF NO	GRAPHIC REF	PART NUMBER	QTY	PART NAME 1 2 3 4 5 6 (PRODUCT LEVEL)	SEE PAGE
	1	1	**377-6954**	1	SENSOR (WATER TEMPERATURE)	
	2	1	**389-5292**	1	WASHER	
	3	1	**377-6965**	1	SWITCH-OIL PRESSURE	
	4	1	**397-9960**	1	BOLT	
	5	1	**398-0826**	1	SENSOR-SPEED (ENGINE)	
	6	1	**388-7473**	1	CLAMP	
	7	1	**388-7474**	1	CLAMP	
	8	1	**387-9872**	1	COOLER AS-ENGINE OIL	
	8A	1	**388-7509**	1	SEAL-O-RING	
	9	1	**393-2948**	1	HOSE	
	10	1	**387-9783**	2	PIPE	
	11	1	**377-6969**	1	FILTER-ENGINE OIL	
	12	1	**387-9873**	1	JOINT	
	13	1	**436-0817**	1	PLUG AS (ENGINE OIL FILLER)	
	13A	1	**383-0217**	1	SEAL-O-RING	

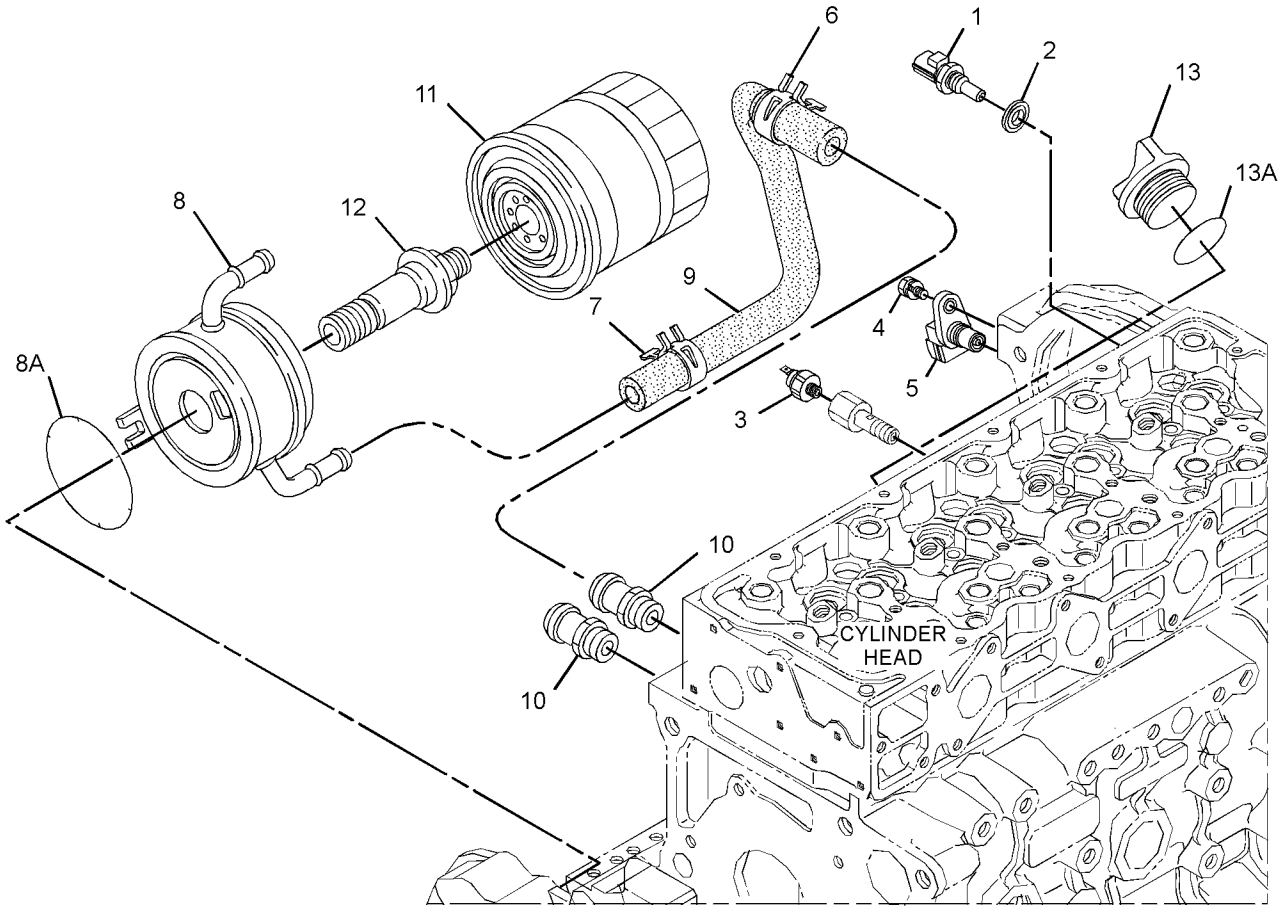

GRAPHIC #1 **<END>** g02955817

345-5741 LINES GP-OIL COOLER

PART OF 345-5925 HYDRAULIC AR

SMCS-1307, 1365, 1368, 1374, 1375, 1378, 1380, 5057 **i05380576**

NOTE	REF NO	GRAPHIC REF	PART NUMBER	QTY	PART NAME 1 2 3 4 5 6 (PRODUCT LEVEL)	SEE PAGE
	1	1	*153-9909*	1	FITTING AS	
		1	**3D-2824**	1	SEAL-O-RING	
		1	**3E-4075**	1	FITTING	
	2	1	**373-7622**	2	CLAMP-BAND	
I	3	1	**388-8058**	1	HOSE AS	
	4	1	**435-8860**	1	TUBE AS	
	5	1	**119-6764**	1	CLIP	
	6	1	*148-8347*	1	ELBOW AS	
		1	**3D-2824**	1	SEAL-O-RING	
		1	**6V-9007**	1	ELBOW	
		1	**6V-9746**	1	SEAL-O-RING	
	7	1	*164-5574*	1	TEE AS	
		1	**3D-2824**	1	SEAL-O-RING	
		1	**6V-8784**	1	TEE-FACE SEAL	
		1	**6V-9746**	2	SEAL-O-RING	
	8	1	*164-6862*	1	TEE AS	
		1	**6V-9160**	1	TEE-FACE SEAL	
		1	**6V-9746**	3	SEAL-O-RING	
	9	1	**204-8000**	1	MOUNTING-CABLE TIE	
M	10	1	**266-3315**	2	BOLT-FLANGE HEAD (M8X1.25X25.5-MM)	
	11	1	**296-5724**	1	TEE	
	12	1	**2P-1293**	1	LOCKNUT (1-3/16-12-THD)	
	13	1	**313-3499**	1	ELBOW	
	14	1	**6V-8398**	2	SEAL-O-RING	
	15	1	**7K-1181**	1	STRAP-CABLE	
E	16	1	**136-1955**		HOSE (45-CM)	

E - ORDER BY THE CENTIMETER
I - REFER TO HYDRAULIC INFORMATION SYSTEM
M - METRIC PART

345-5741 **LINES GP-OIL COOLER (*contd.*)** **i05380576**

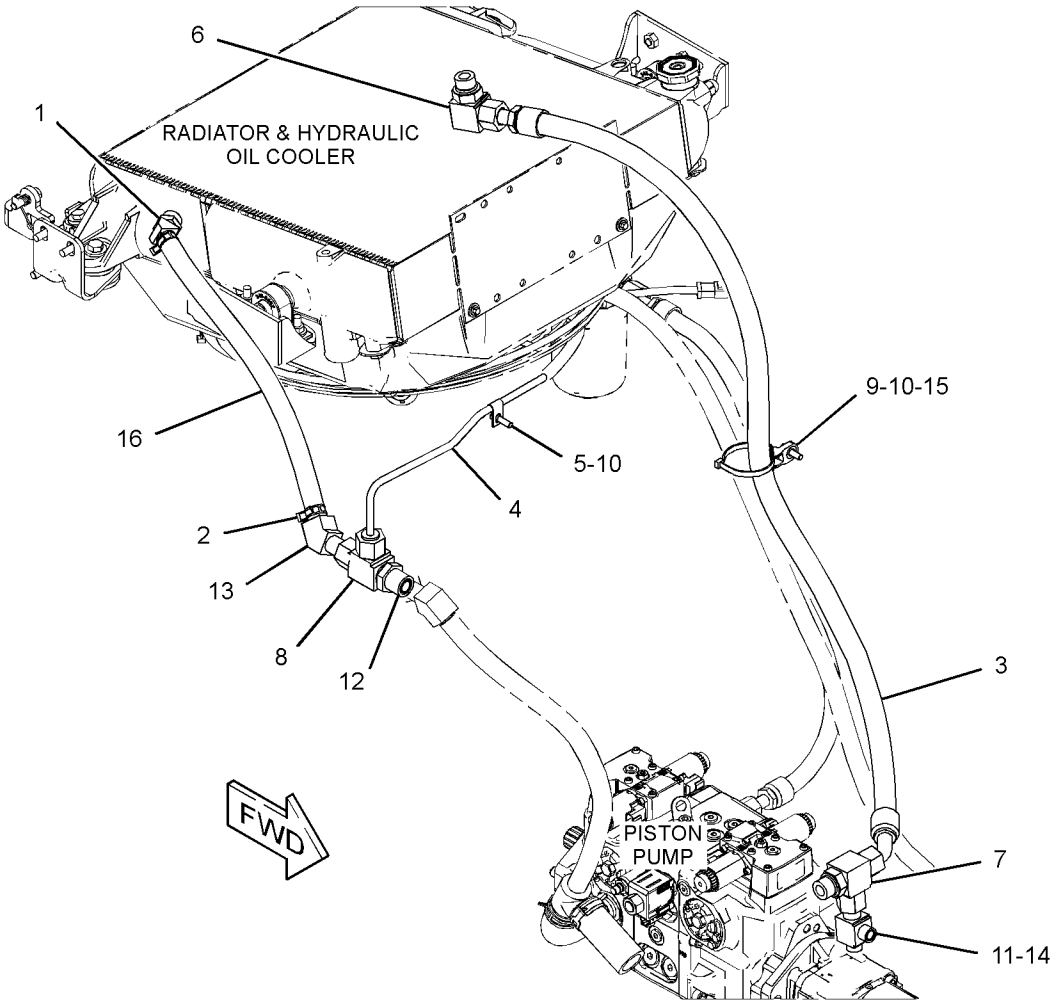

GRAPHIC #1 **<END>** g03407410

396-0913 LINES GP-WATER

S/N: SEN1-UP
PART OF 380-1768 ENGINE AR-PRIMARY
ALSO AN ATTACHMENT

SMCS-1355, 1380, 1393

i05300052

NOTE	REF NO	GRAPHIC REF	PART NUMBER	QTY	PART NAME 1 2 3 4 5 6 (PRODUCT LEVEL)	SEE PAGE
	1	1	**387-9906**	1	GASKET	
	2	1	**387-9907**	3	BOLT-FLANGE HEAD	
	3	1	**393-7574**	3	BOLT-FLANGE HEAD	
	4	1	**397-9961**	1	COVER AS	
		1	**383-0233**	1	BALL	
		1	**397-9962**	1	PIPE	
	5	1	**388-7547**	1	GASKET	
	6	1	**397-9963**	1	FLANGE AS	
		1	**397-9964**	1	FLANGE	
		1	**397-9965**	2	PLUG	
	7	1	**389-5308**	1	REGULATOR AS (WATER TEMPERATURE)	

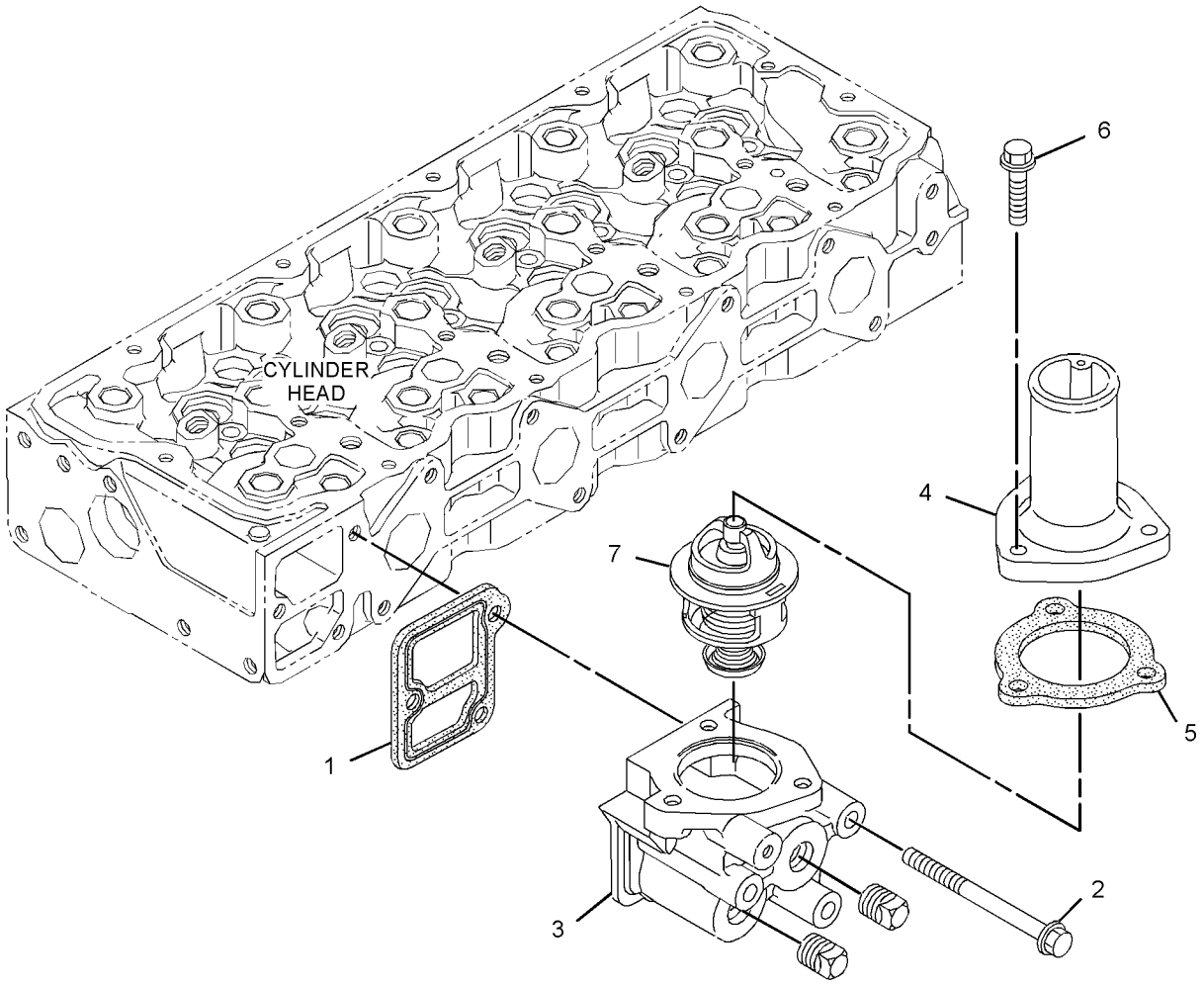

GRAPHIC #1

<END>

g02948496

420-8855 LINES GP-WATER

S/N: MPW1-UP

PART OF 380-1769 ENGINE AR-PRIMARY

SMCS-1355, 1380, 1393

i05342462

NOTE	REF NO	GRAPHIC REF	PART NUMBER	QTY	PART NAME 1 2 3 4 5 6 (PRODUCT LEVEL)	SEE PAGE
	1	1	**387-9906**	1	GASKET	
	2	1	**387-9907**	3	BOLT-FLANGE HEAD	
	3	1	**421-1879**	1	FLANGE AS	
	3A	1	**389-5308**	1	REGULATOR AS	
	3B	1	**388-7547**	1	GASKET	
	3C	1	**421-1880**	1	COVER-THERMOSTAT	
	3D	1	**397-9963**	1	FLANGE AS	
	3E	1	**393-7574**	3	BOLT-FLANGE HEAD	

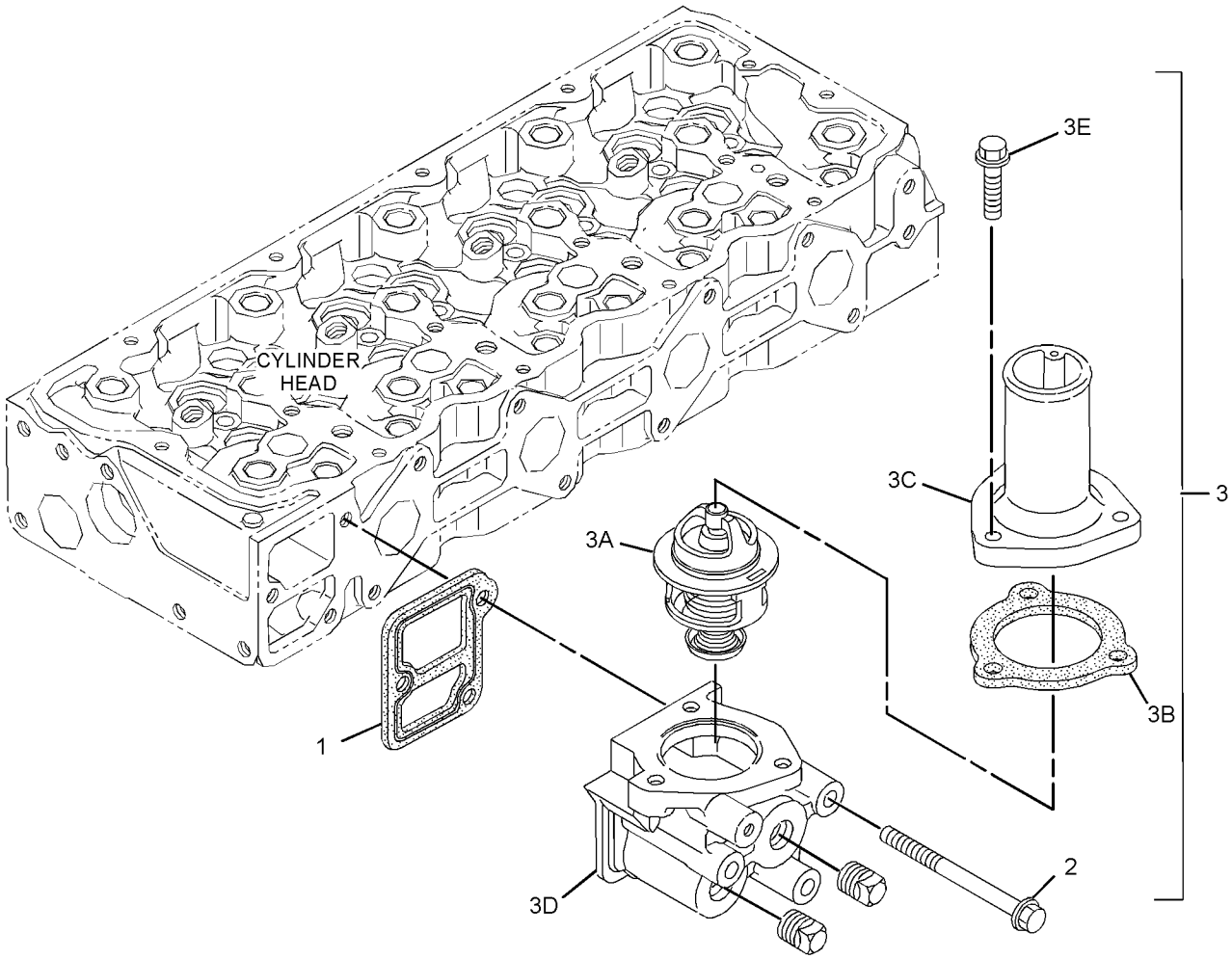

GRAPHIC #1

<END>

g03241336

387-9091 PUMP GP-WATER

PART OF 380-1768, 380-1769 ENGINE AR-PRIMARY
ALSO AN ATTACHMENT

SMCS-1355, 1361 **i05300031**

NOTE	REF NO	GRAPHIC REF	PART NUMBER	QTY	PART NAME 1 2 3 4 5 6 (PRODUCT LEVEL)	SEE PAGE
	1		**383-0190**	7	BOLT	
	2		**387-9903**	1	PUMP AS-WATER	
	3		**387-9904**	1	GASKET	

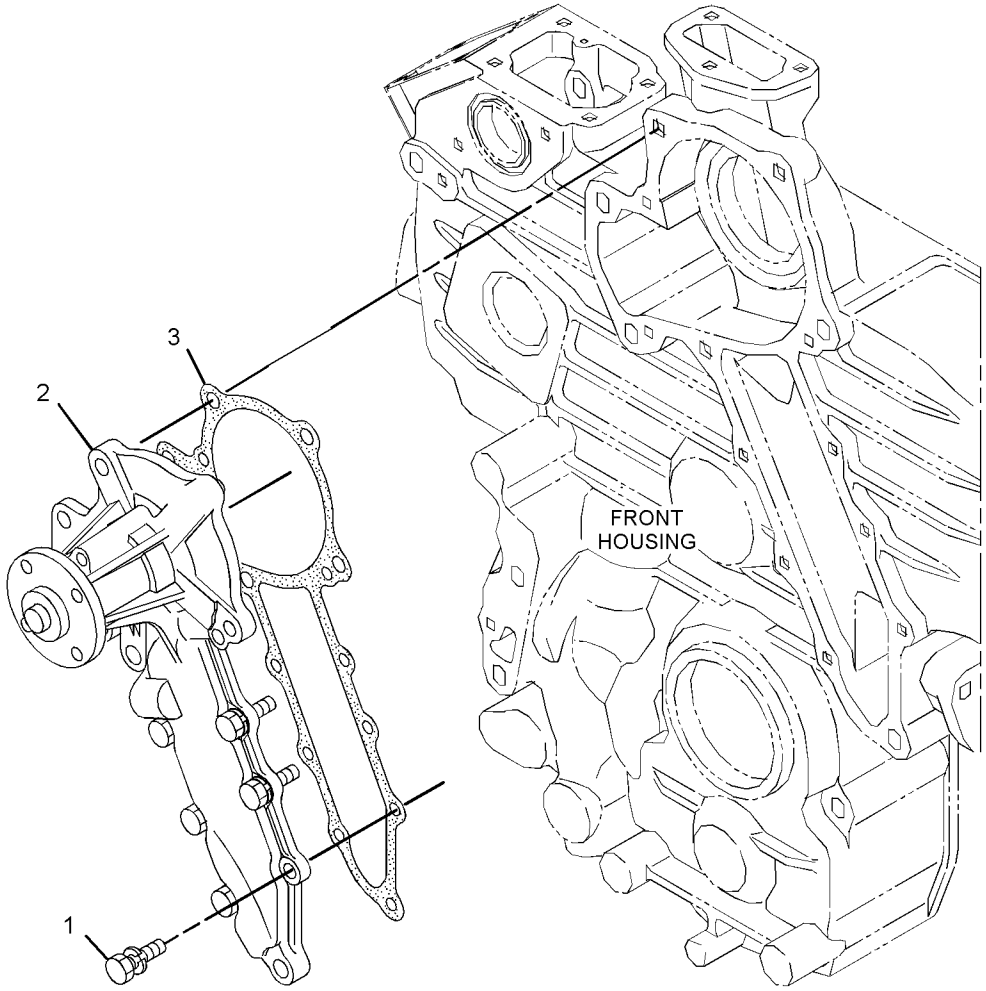

GRAPHIC #1 **<END>** g02840757

345-3610 RADIATOR & HYD OIL COOLER GP

PART OF 378-6690, 393-7340 INSTALLATION AR-ENGINE

SMCS-1351, 1356, 1386 **i05380568**

NOTE	REF NO	GRAPHIC REF	PART NUMBER	QTY	PART NAME 1 2 3 4 5 6 (PRODUCT LEVEL)	SEE PAGE
	1	1	**9M-1853**	2	MOUNTING	
	2	1	**036-1865**	1	CAP AS-RADIATOR	
	3	1	**069-4080**	1	FITTING	
	4	1	**159-5794**	1	SPRING	
	5	1	*217-3572*	1	FAN GP-BLOWER (RADIATOR, HYD OIL COOLING)	
		1	**8T-4224**	4	WASHER-HARD (8.8X16X2-MM THK)	
M		1	**8T-4908**	4	BOLT (M8X1.25X25-MM)	
		1	**203-4827**	1	FAN AS (7-BLADE)	
		1	**229-8796**	1	ADAPTER	
	6	1	**345-3462**	1	SHROUD AS	
	7	1	**345-3463**	1	GUARD AS-FAN	
	8	1	**345-3537**	2	MOUNTING	
	9	1	**345-3609**	1	RADIATOR & HYD OIL COOLER GP	
	10	1	**362-2973**	1	GAUGE-SIGHT (HYDRAULIC OIL)	
	11	1	**376-8659**	1	PLATE AS	
	12	1	**376-8660**	1	PLATE AS	
					(EACH PLATE AS INCLUDES)	
M		1	**159-9541**	2	NUT-WELD (M10X1.5-THD)	
		1	**364-6428**	2	STUD-WELD	
	13	1	**376-8677**	1	BRACKET	
	14	1	**383-6642**	1	PLATE	
Y	15	1	*386-2440*	1	GRILL GP	191
	18	1	**389-9020**	1	BRACKET AS	
M	19	1	**105-3478**	1	BOLT-SOCKET HEAD (M10X1.5X35-MM)	
	21	1	**343-4072**	2	BOLT-FLANGE HEAD (M6X1X25-MM)	
	22	1	**5P-1076**	2	WASHER-HARD (13.5X30X4-MM THK)	
	23	1	**5P-4115**	2	WASHER-HARD (7.2X19X2-MM THK)	
	24	1	**5R-5927**	4	WASHER (14X65X6-MM THK)	
	25	1	**6V-3251**	1	SEAL-O-RING	
	26	1	**7X-7729**	20	WASHER (11X25X3-MM THK)	
	27	1	**8T-2561**	2	WASHER-HARD (10.5X28.5X5-MM THK)	
M	28	1	**8T-4133**	4	NUT (M10X1.5-THD)	
M	29	1	**8T-4136**	12	BOLT (M10X1.5X25-MM)	
M	30	1	**8T-4186**	1	BOLT (M10X1.5X40-MM)	
M	31	1	**8T-4196**	4	BOLT (M10X1.5X35-MM)	
M	32	1	**8T-4244**	2	NUT (M12X1.75-THD)	
M	33	1	**8T-4648**	2	BOLT (M12X1.75X70-MM)	
E	35	1	**3E-3892**		SEAL (58.5-CM EACH)	

E - ORDER BY THE CENTIMETER
M - METRIC PART
Y - SEPARATE ILLUSTRATION

345-3610 **RADIATOR & HYD OIL COOLER GP (*contd.*)** **i05380568**

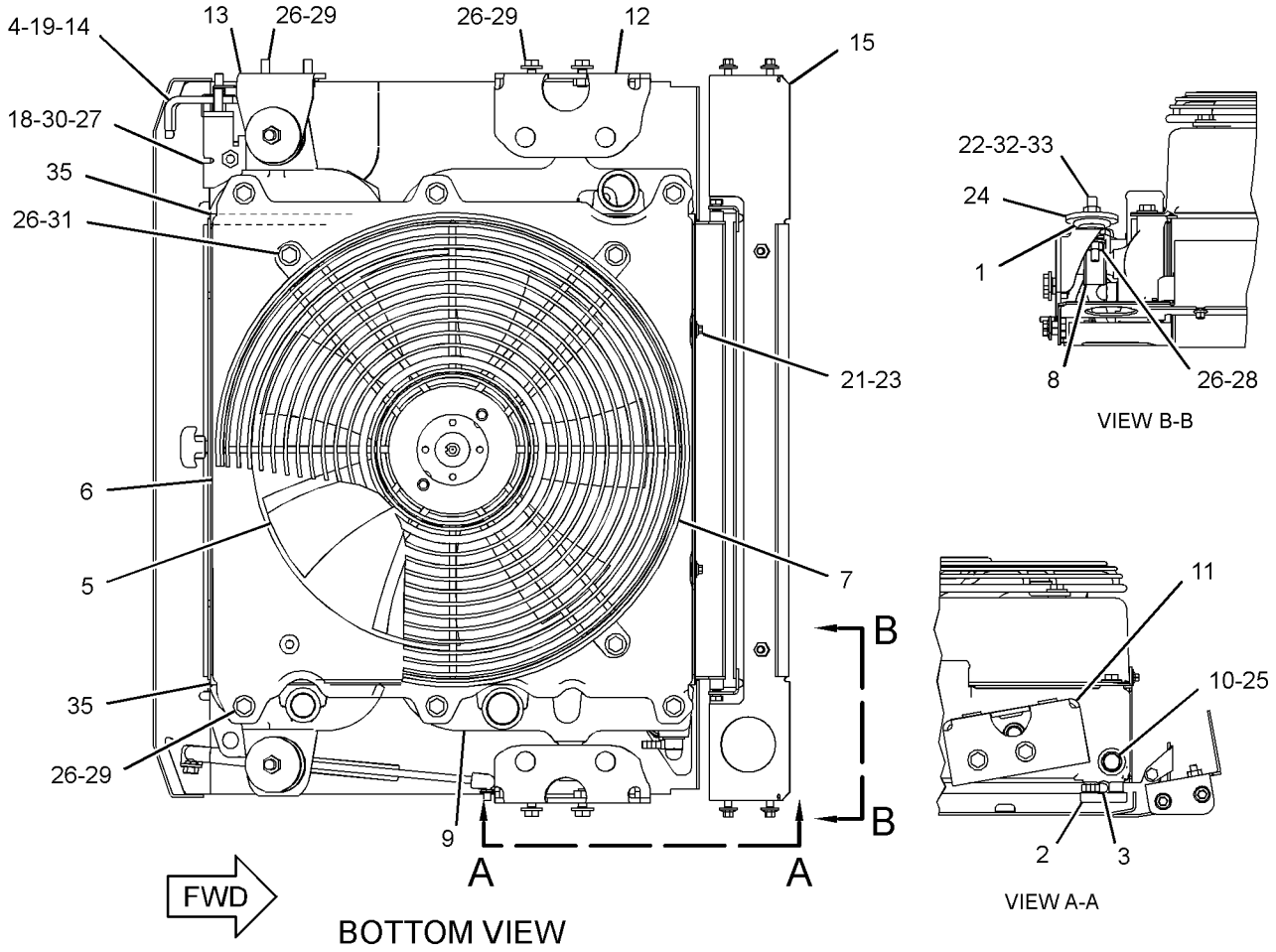

GRAPHIC #1 **<END>** g03407309

345-3498 AIR CLEANER GP

PART OF 378-6690, 393-7340 INSTALLATION AR-ENGINE

SMCS-1051, 1054 **i04765956**

NOTE	REF NO	GRAPHIC REF	PART NUMBER	QTY	PART NAME 1 2 3 4 5 6 (PRODUCT LEVEL)	SEE PAGE
Y	1	1	**345-3499**	1	AIR CLEANER GP	47
M	2	1	**266-3315**	2	BOLT-FLANGE HEAD (M8X1.25X25.5-MM)	

M - METRIC PART
Y - SEPARATE ILLUSTRATION

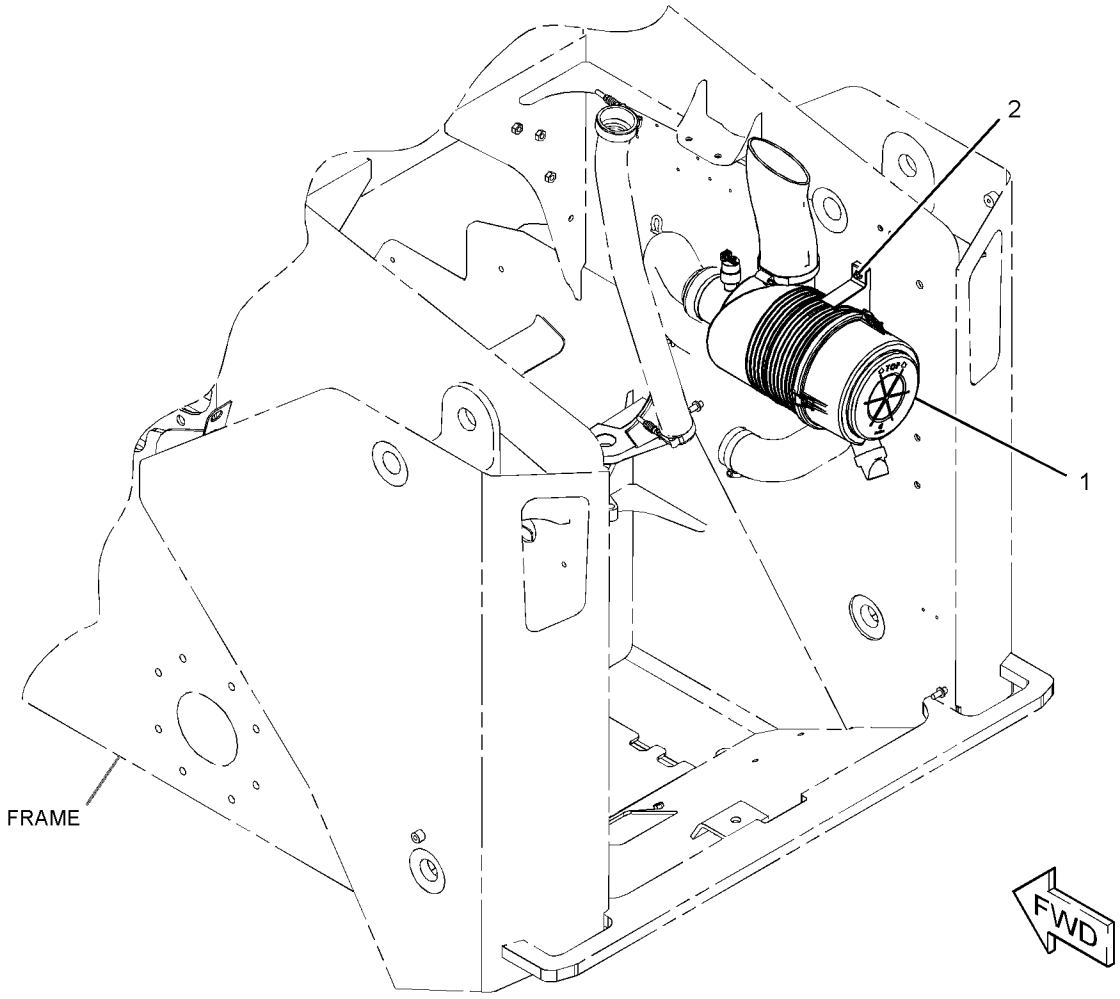

GRAPHIC #1 **<END>** g02877656

345-3499 AIR CLEANER GP

PART OF 345-3498 AIR CLEANER GP

SMCS-1051, 1054 **i04769366**

NOTE	REF NO	GRAPHIC REF	PART NUMBER	QTY	PART NAME 1 2 3 4 5 6 (PRODUCT LEVEL)	SEE PAGE
	1	1	**5L-3233**	1	FITTING-CONNECTOR	
	2	1	**110-6326**	1	FILTER ELEMENT AS-AIR (PRIMARY)	
	3	1	**110-6331**	1	FILTER ELEMENT AS-AIR (SECONDARY)	
	4	1	**112-9717**	1	VALVE-DUST (AIR CLEANER)	
	5	1	**211-3499**	1	COVER	
	6	1	**387-9572**	1	INDICATOR-RESTRICTION (AIR CLEANER)	

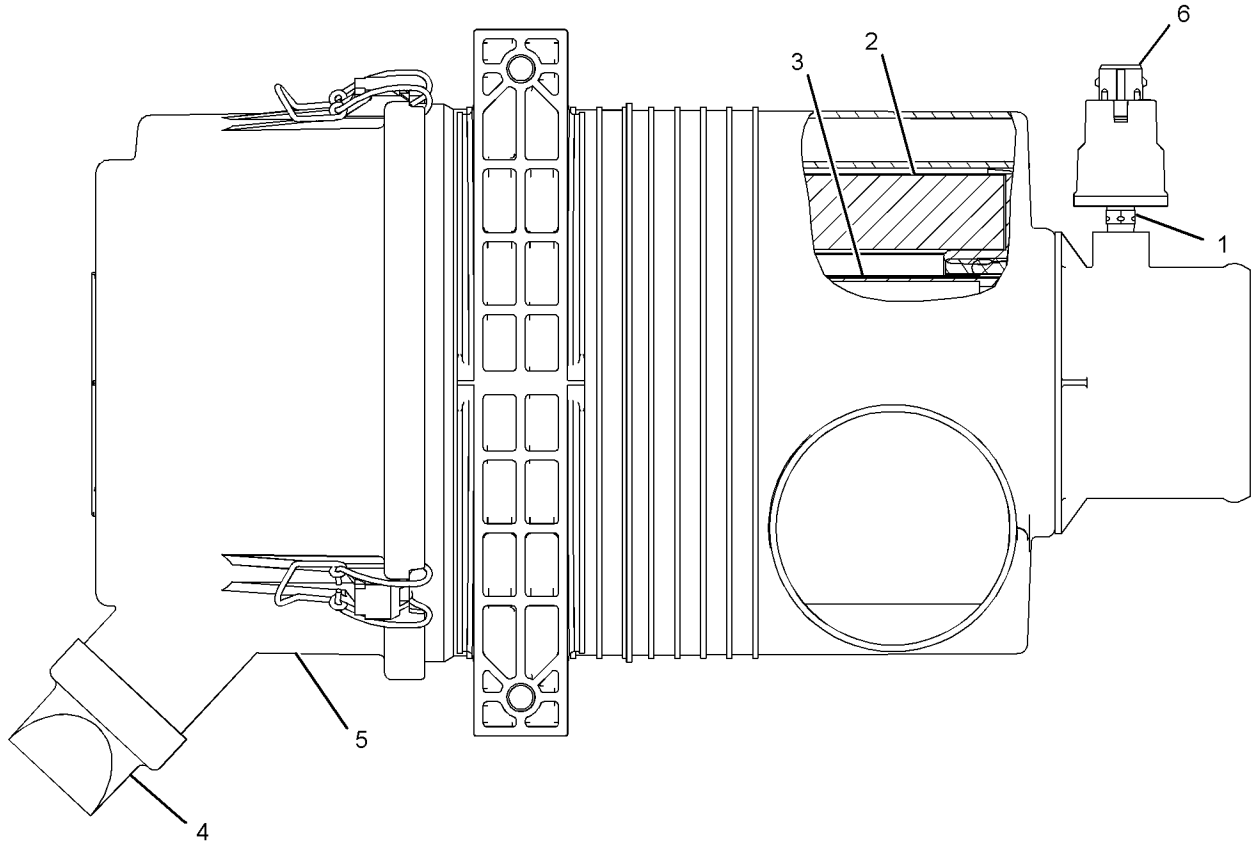

GRAPHIC #1 **<END>** g02878740

392-8074 AIR CLEANER GP

PART OF 388-6641 PRECLEANER GP

AN ATTACHMENT

SMCS-1051, 1054

i05302443

NOTE	REF NO	GRAPHIC REF	PART NUMBER	QTY	PART NAME 1 2 3 4 5 6 (PRODUCT LEVEL)	SEE PAGE
	1	1	**5L-3233**	1	FITTING-CONNECTOR	
	2	1	**110-6331**	1	FILTER ELEMENT AS-AIR (SECONDARY)	
	3	1	**112-9717**	1	VALVE-DUST (AIR CLEANER)	
	4	1	**211-3499**	1	COVER	
	5	1	**361-3532**	1	FILTER ELEMENT AS-AIR (PRIMARY)	
	6	1	**387-9572**	1	INDICATOR-RESTRICTION	

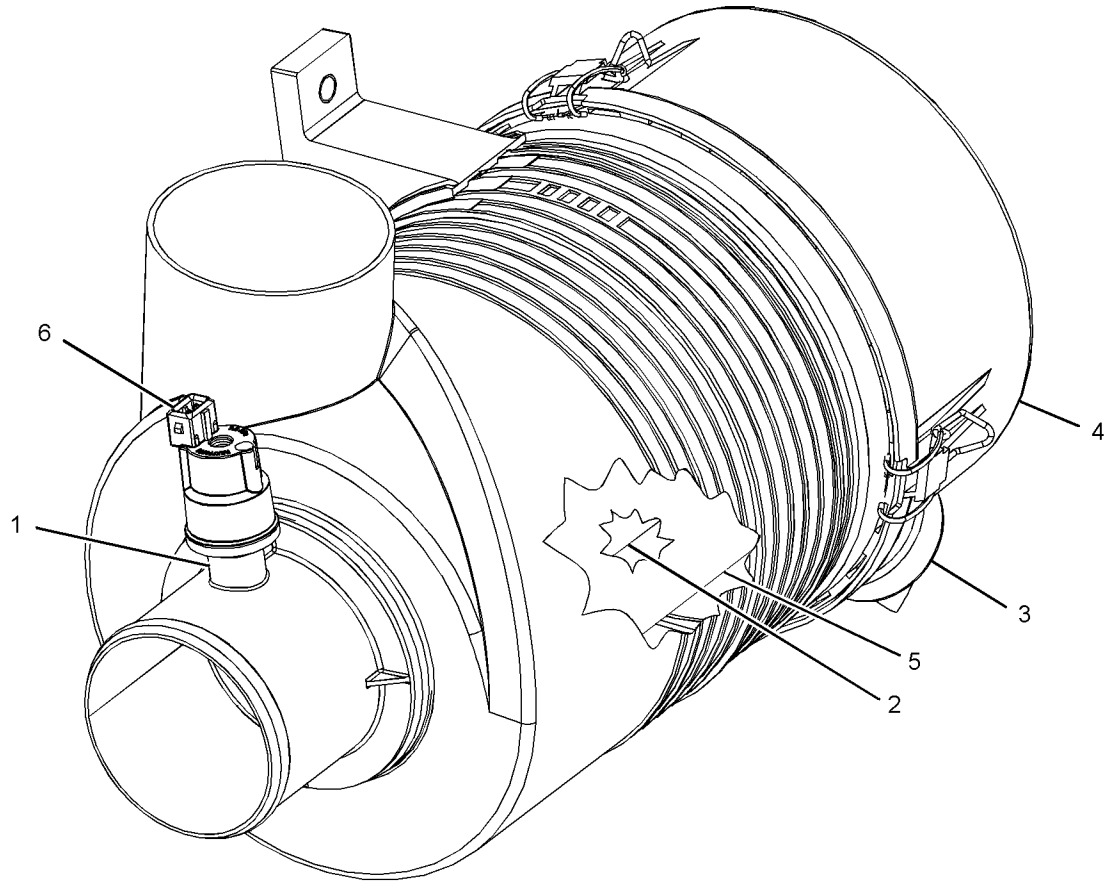

GRAPHIC #1

<END>

g03386372

396-0902 COOLER GP-EXHAUST

S/N: SEN1-UP
PART OF 380-1768 ENGINE AR-PRIMARY
ALSO AN ATTACHMENT

SMCS-108G **i05341879**

NOTE	REF NO	GRAPHIC REF	PART NUMBER	QTY	PART NAME 1 2 3 4 5 6 (PRODUCT LEVEL)	SEE PAGE
	1	1	**383-0188**	6	BOLT	
	2	1	**398-5550**	4	CLAMP-HOSE	
	3	1	**383-0396**	2	CLAMP-HOSE	
	4	1	**387-9819**	1	GASKET	
	5	1	**387-9820**	2	BOLT-FLANGE HEAD	
	6	1	**387-9821**	1	GASKET	
	7	1	**387-9822**	1	COVER-EGR	
	8	1	**397-9975**	1	VALVE AS (EGR)	
	9	1	**388-7464**	1	COOLER AS (EGR)	
	10	1	**388-7465**	1	GASKET	
	11	1	**388-7466**	1	VALVE	
	12	1	**388-7467**	1	GASKET	
	13	1	**397-9974**	1	HOUSING	
	14	1	**388-7469**	1	GASKET	
	15	1	**388-7471**	1	GASKET	
	16	1	**388-7472**	1	HOSE	
	17	1	**388-7473**	3	CLAMP	
	18	1	**388-7474**	1	CLAMP	
	19	1	**388-7476**	1	HOSE	
	20	1	**388-7477**	1	VALVE	
	21	1	**393-2944**	1	HOSE	
	22	1	**397-9976**	1	BASE (EGR)	
	23	1	**393-2946**	1	HOSE-WATER	
	24	1	**393-2947**	1	HOSE	
	25	1	**393-7571**	2	BOLT	
	26	1	**393-7573**	3	BOLT-FLANGE HEAD	
	27	1	**393-7574**	2	BOLT-FLANGE HEAD	
	28	1	**393-7575**	2	BOLT-FLANGE HEAD	
	29	1	**389-5383**	2	CLAMP	
	30	1	**397-9966**	1	PIPE	
	31	1	**397-9967**	1	TUBE	
	32	1	**397-9977**	1	CLAMP	
	33	1	**418-0967**	1	BOLT-FLANGE HEAD	

396-0902 **COOLER GP-EXHAUST (*contd.*)** **i05341879**

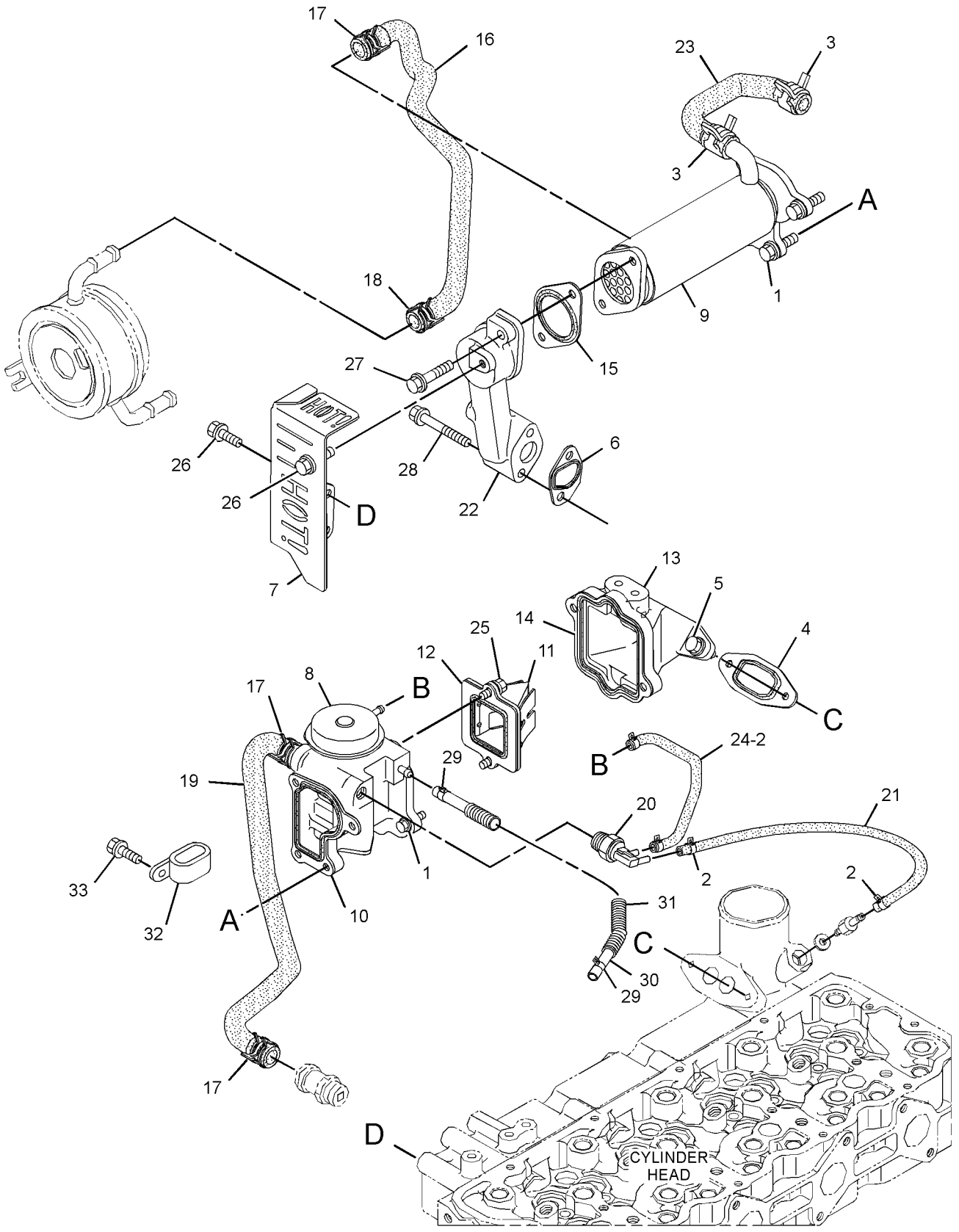

GRAPHIC #1 **<END>** g02954562

383-0793 EXTENSION GP-EXHAUST

PART OF 378-6690, 393-7340 INSTALLATION AR-ENGINE

SMCS-1061 **i05380582**

NOTE	REF NO	GRAPHIC REF	PART NUMBER	QTY	PART NAME 1 2 3 4 5 6 (PRODUCT LEVEL)	SEE PAGE
	1	1	**345-3579**	1	GASKET-EXHAUST	
	2	1	**383-0792**	1	PIPE AS	
	3	1	**383-0794**	1	PIPE AS	
	4	1	**342-9920**	2	BOLT-FLANGE HEAD (M8X1.25X20-MM)	
M	5	1	**8T-4196**	4	BOLT (M10X1.5X35-MM)	
	6	1	**5P-4116**	1	WASHER-HARD (8.8X20.5X2-MM THK)	
	7	1	**8T-4121**	8	WASHER-HARD (11X21X2.5-MM THK)	
M	8	1	**8T-4133**	4	NUT (M10X1.5-THD)	

M - METRIC PART

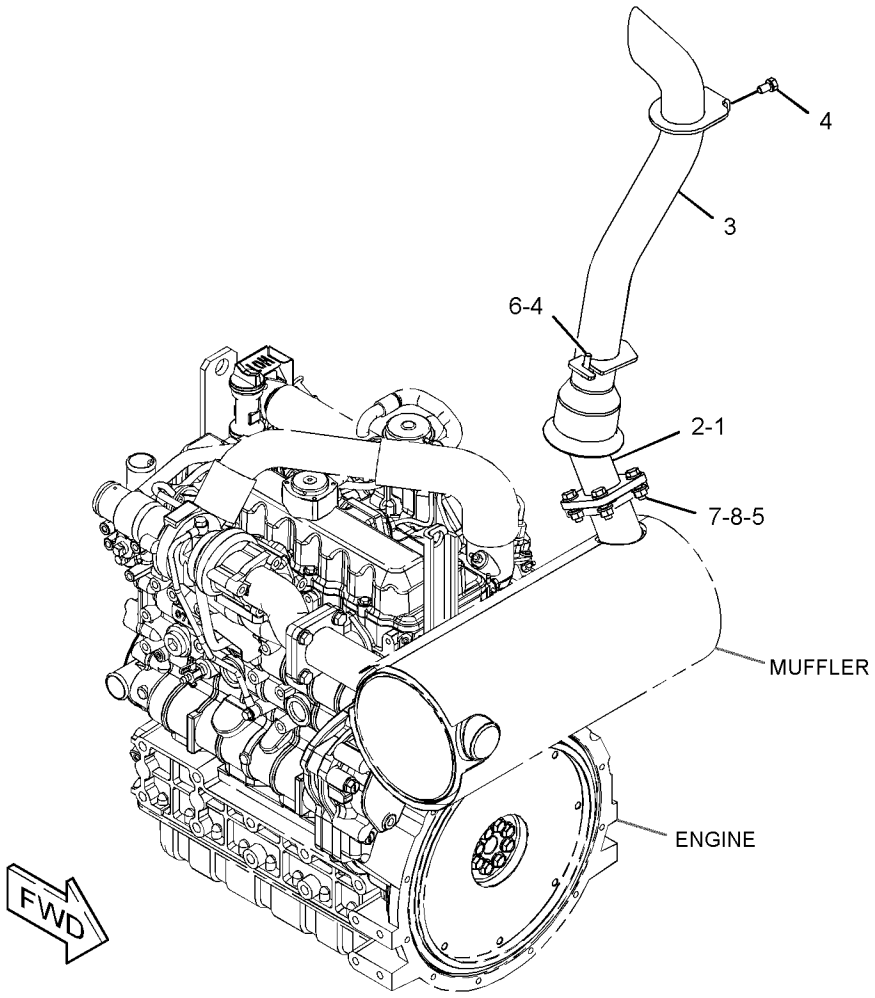

GRAPHIC #1 **<END>** g03405732

AIR INLET AND EXHAUST SYSTEM

393-7334 LINES GP-AIR

S/N: SEN1-UP

PART OF 378-6690 INSTALLATION AR-ENGINE

SMCS-1071 **i05300063**

NOTE	REF NO	GRAPHIC REF	PART NUMBER	QTY	PART NAME 1 2 3 4 5 6 (PRODUCT LEVEL)	SEE PAGE
	1	1	**180-3007**	1	CLAMP-HOSE	
	2	1	**345-3514**	1	HOSE	
	3	1	**378-6697**	1	PIPE	
	4	1	**393-7328**	1	HOSE	
	5	1	**122-3606**	2	CLIP	
M	6	1	**266-3315**	2	BOLT-FLANGE HEAD (M8X1.25X25.5-MM)	
	7	1	**5P-4868**	2	CLAMP-HOSE	
	8	1	**8T-6726**	1	CLAMP-HOSE	

M - METRIC PART

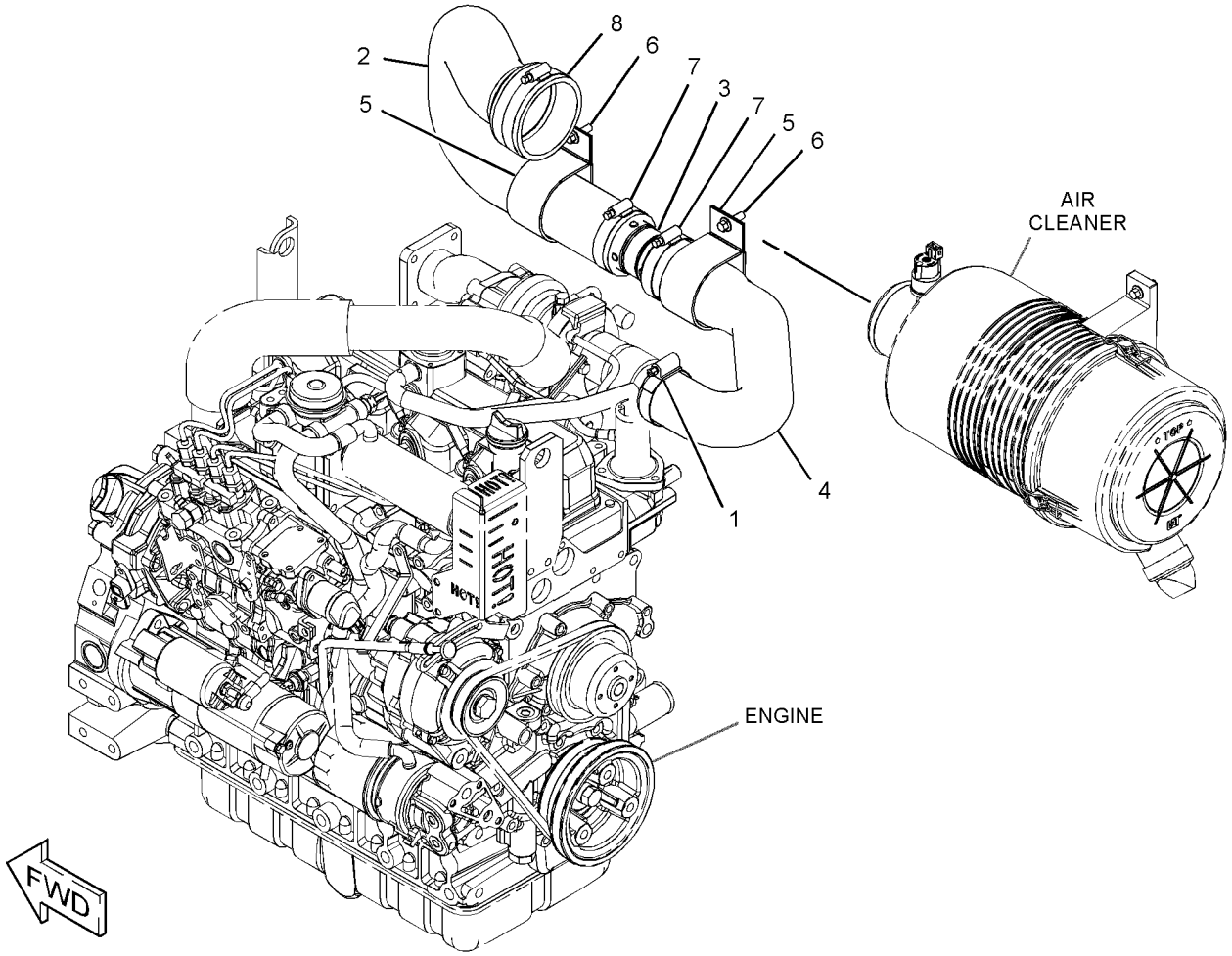

GRAPHIC #1 **<END>** g03375220

393-7335 LINES GP-AIR

S/N: MPW1-UP

PART OF 393-7340 INSTALLATION AR-ENGINE

SMCS-1071 **i05300064**

NOTE	REF NO	GRAPHIC REF	PART NUMBER	QTY	PART NAME 1 2 3 4 5 6 (PRODUCT LEVEL)	SEE PAGE
	1	1	**180-3007**	1	CLAMP-HOSE	
	2	1	**345-3514**	1	HOSE	
	3	1	**378-6697**	1	PIPE	
	4	1	**393-7329**	1	HOSE	
	5	1	**122-3606**	2	CLIP	
M	6	1	**266-3315**	2	BOLT-FLANGE HEAD (M8X1.25X25.5-MM)	
	7	1	**5P-4868**	2	CLAMP-HOSE	
	8	1	**8T-6726**	1	CLAMP-HOSE	

M - METRIC PART

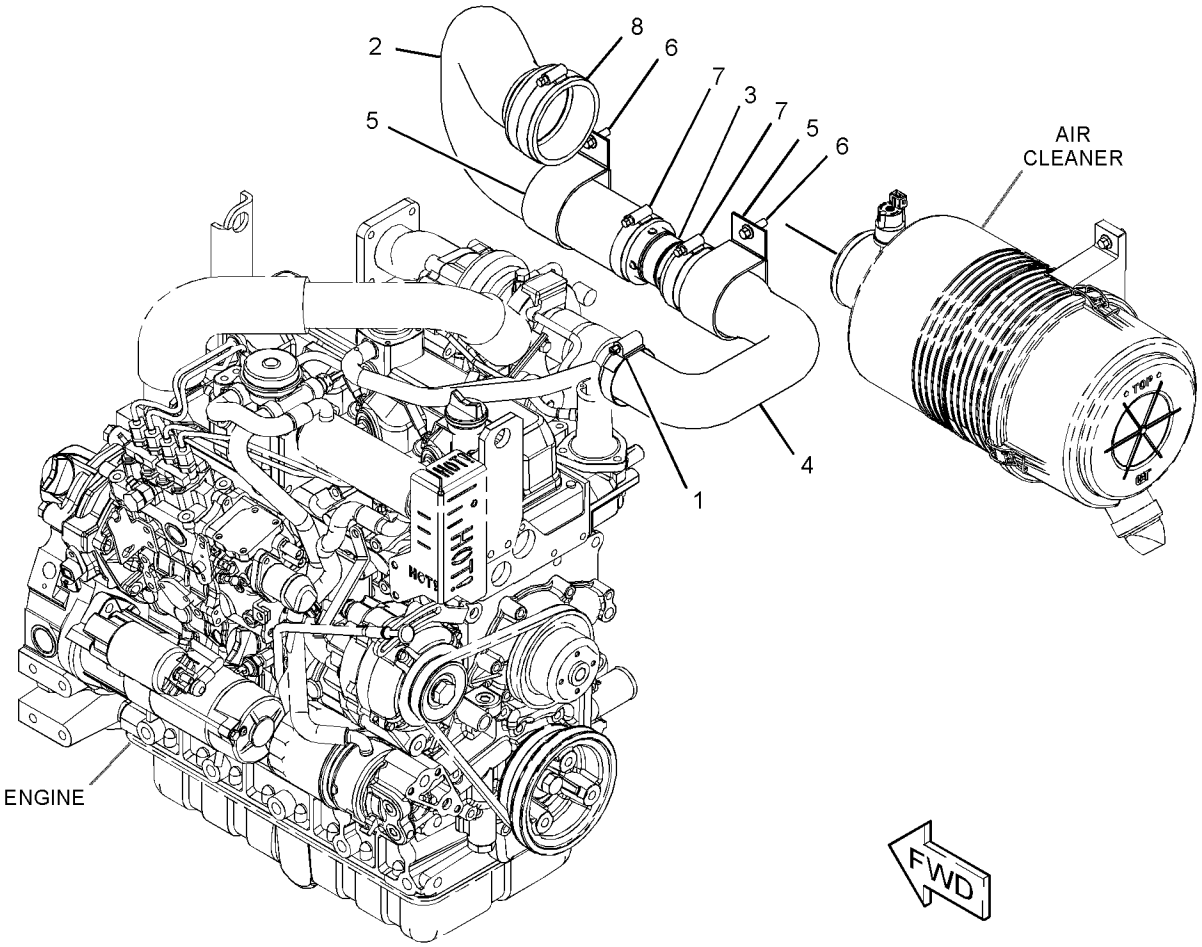

GRAPHIC #1 **<END>** g03375241

345-3576 LINES GP-COOLING

PART OF 378-6690, 393-7340 INSTALLATION AR-ENGINE

SMCS-1087, 1380 **i05156649**

NOTE	REF NO	GRAPHIC REF	PART NUMBER	QTY	PART NAME 1 2 3 4 5 6 (PRODUCT LEVEL)	SEE PAGE
	1	1	**7K-1181**	3	STRAP-CABLE	
	2	1	**206-2423**	1	SADDLE	
	3	1	**314-7599**	2	CLAMP-BAND	
	4	1	**345-3480**	1	RECOVERY GP-COOLANT	
		1	**229-3469**	1	CAP AS-VENTED (COOLANT RECOVERY)	
	5	1	**345-3577**	1	HOSE	
	6	1	**345-3578**	1	HOSE	
	7	1	**345-3588**	1	TUBE	
	8	1	**153-8462**	1	CLIP (SLOT)	
	9	1	**153-8463**	1	CLIP (TAB)	
	10	1	**1P-4278**	2	CLAMP-HOSE	
M	11	1	**266-3315**	4	BOLT-FLANGE HEAD (M8X1.25X25.5-MM)	
	12	1	**300-6036**	4	CLAMP-BAND	
	13	1	**342-9922**	2	BOLT-FLANGE HEAD (M8X1.25X25-MM)	
	14	1	**5P-8444**	1	GROMMET	
	15	1	**123-7971**	1	HOSE	
E	16	1	**5P-1420**		HOSE (87-CM)	

E - ORDER BY THE CENTIMETER
M - METRIC PART

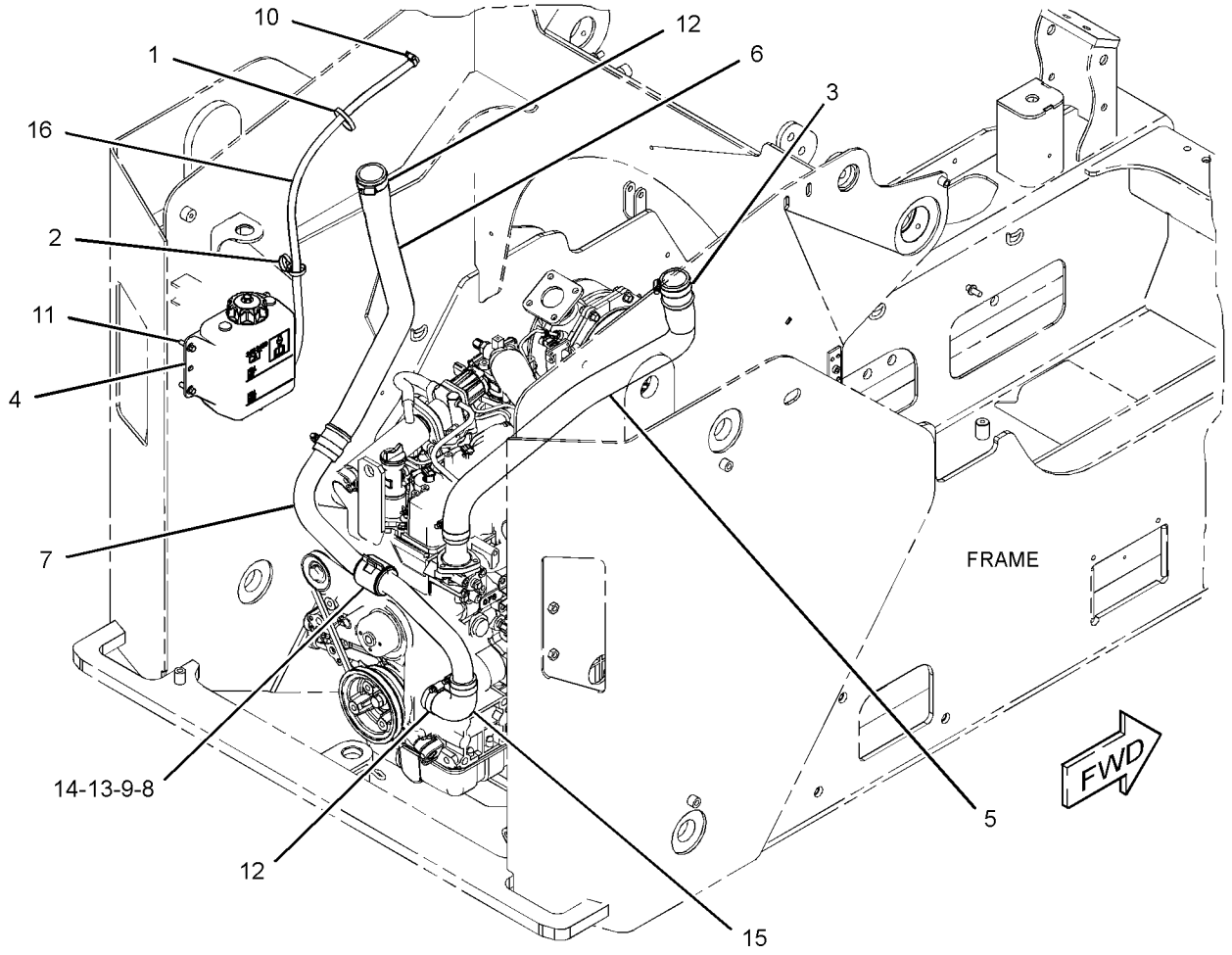

GRAPHIC #1 **<END>** g03322942

396-0914 MANIFOLD GP-EXHAUST

PART OF 380-1768, 380-1769 ENGINE AR-PRIMARY
ALSO AN ATTACHMENT

SMCS-1059 **i05342029**

NOTE	REF NO	GRAPHIC REF	PART NUMBER	QTY	PART NAME 1 2 3 4 5 6 (PRODUCT LEVEL)	SEE PAGE
	1	1	**397-9973**	1	MANIFOLD-EXHAUST	
	2	1	**387-9815**	1	GASKET	
	3	1	**393-7585**	4	BOLT-FLANGE HEAD	
	4	1	**387-9817**	2	STUD	
	5	1	**398-2306**	4	NUT	
	6	1	**387-9813**	1	SHIELD-EXHAUST	
	7	1	**387-9814**	1	BOLT-FLANGE HEAD	
	8	1	**397-9982**	2	STUD	

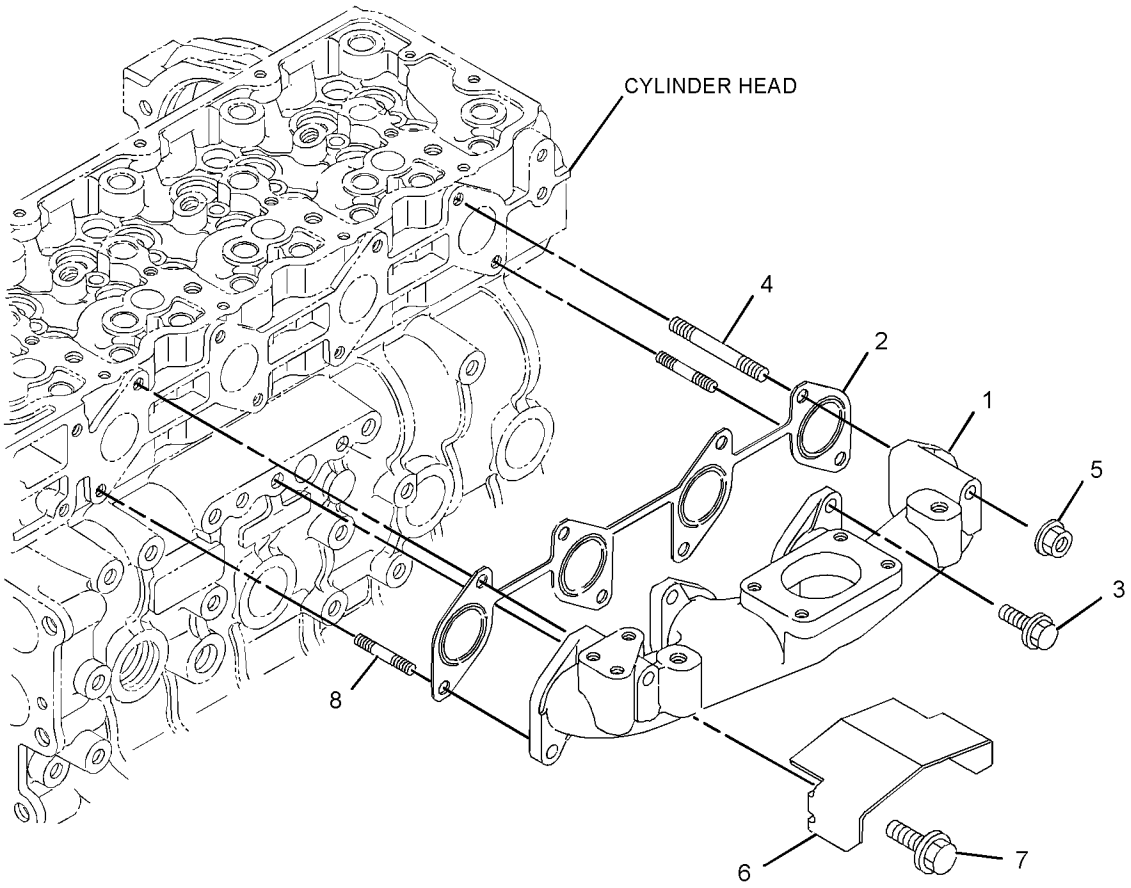

GRAPHIC #1 **<END>** g02948576

387-9083 MANIFOLD GP-INLET

S/N: SEN1-UP
PART OF 380-1768 ENGINE AR-PRIMARY
ALSO AN ATTACHMENT

SMCS-1058 **i05342066**

NOTE	REF NO	GRAPHIC REF	PART NUMBER	QTY	PART NAME 1 2 3 4 5 6 (PRODUCT LEVEL)	SEE PAGE
	1	1	**383-0190**	7	BOLT	
	2	1	**383-0308**	1	GASKET	
	3	1	**387-9804**	1	MANIFOLD AS-INLET	
		1	**388-7446**	1	MANIFOLD-INLET	
		1	**383-0308**	1	GASKET	
		1	**388-7447**	1	ADAPTER	
	4	1	**387-9805**	1	GASKET	
	5	1	**387-9806**	2	BOLT-FLANGE HEAD	
	6	1	**388-7447**	1	ADAPTER	

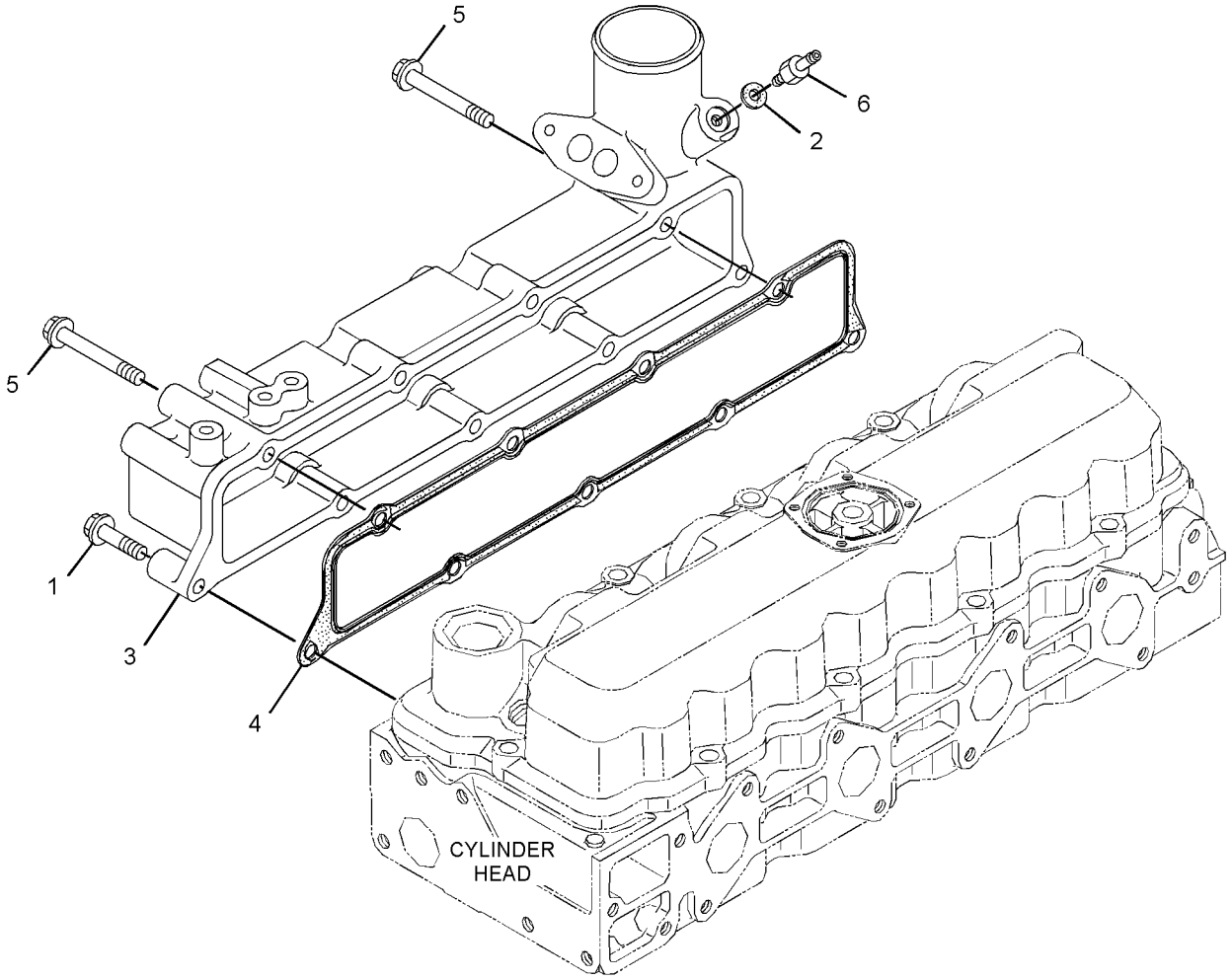

GRAPHIC #1 **<END>** g02894676

420-8856 MANIFOLD GP-INLET

S/N: MPW1-UP

PART OF 380-1769 ENGINE AR-PRIMARY

SMCS-1058 **i05342475**

NOTE	REF NO	GRAPHIC REF	PART NUMBER	QTY	PART NAME 1 2 3 4 5 6 (PRODUCT LEVEL)	SEE PAGE
	1	1	**383-0190**	7	BOLT	
	2	1	**387-9806**	2	BOLT-FLANGE HEAD	
	3	1	**421-1882**	1	MANIFOLD-INLET	
	4	1	**387-9805**	1	GASKET	

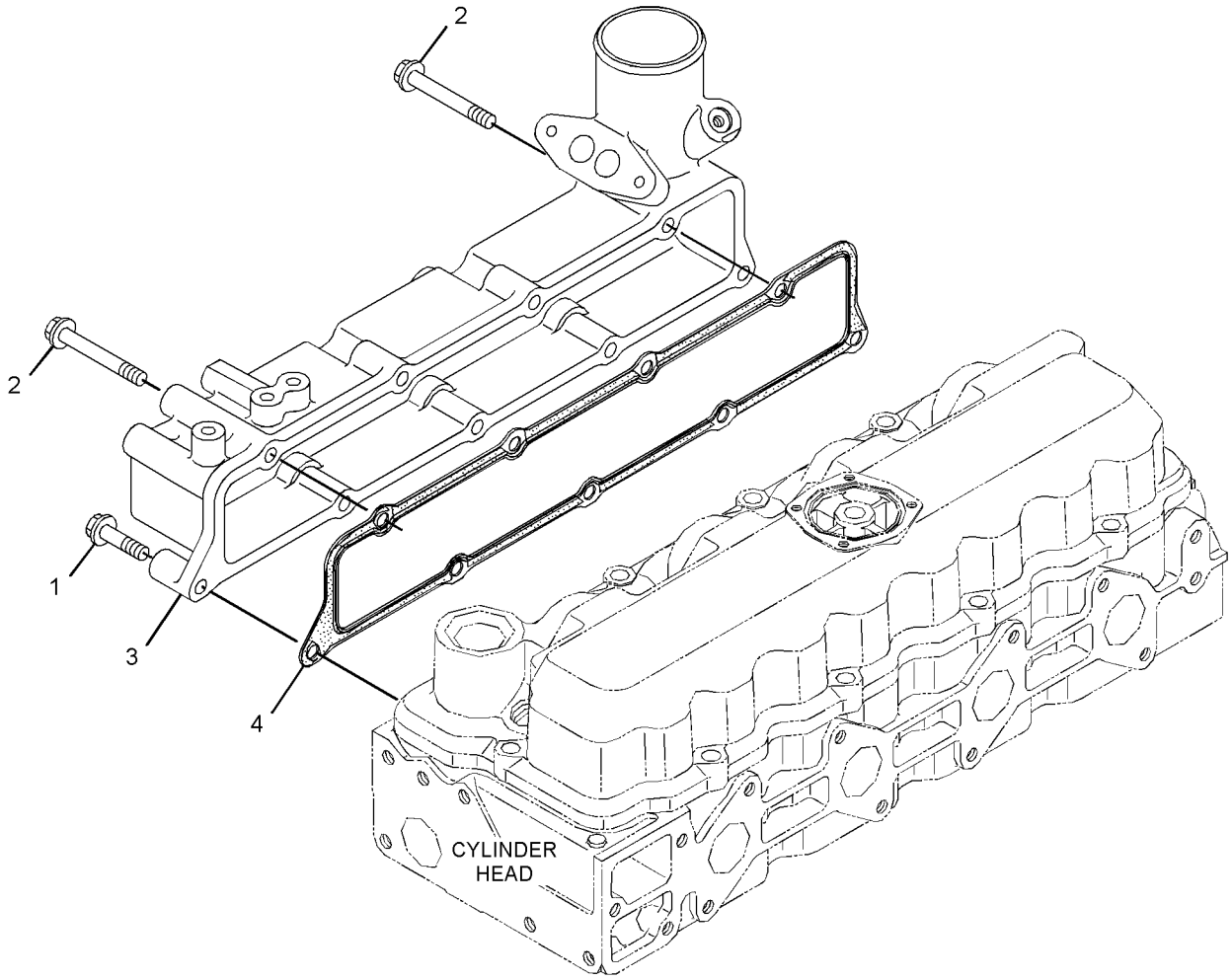

GRAPHIC #1 **<END>** g03241161

AIR INLET AND EXHAUST SYSTEM

378-6751 MUFFLER & MOUNTING GP

PART OF 378-6690, 393-7340 INSTALLATION AR-ENGINE

SMCS-1062 **i05162955**

NOTE	REF NO	GRAPHIC REF	PART NUMBER	QTY	PART NAME 1 2 3 4 5 6 (PRODUCT LEVEL)	SEE PAGE
	1	1	**232-3121**	4	NUT (M10X1.25-THD)	
	2	1	**345-3579**	1	GASKET-EXHAUST	
	3	1	**378-6752**	1	MUFFLER AS	
	4	1	**396-3352**	4	BOLT-FLANGE HEAD (M12X1.25X35-MM)	
	5	1	**415-2810**	1	PLATE	
	6	1	**8T-4121**	4	WASHER-HARD (11X21X2.5-MM THK)	

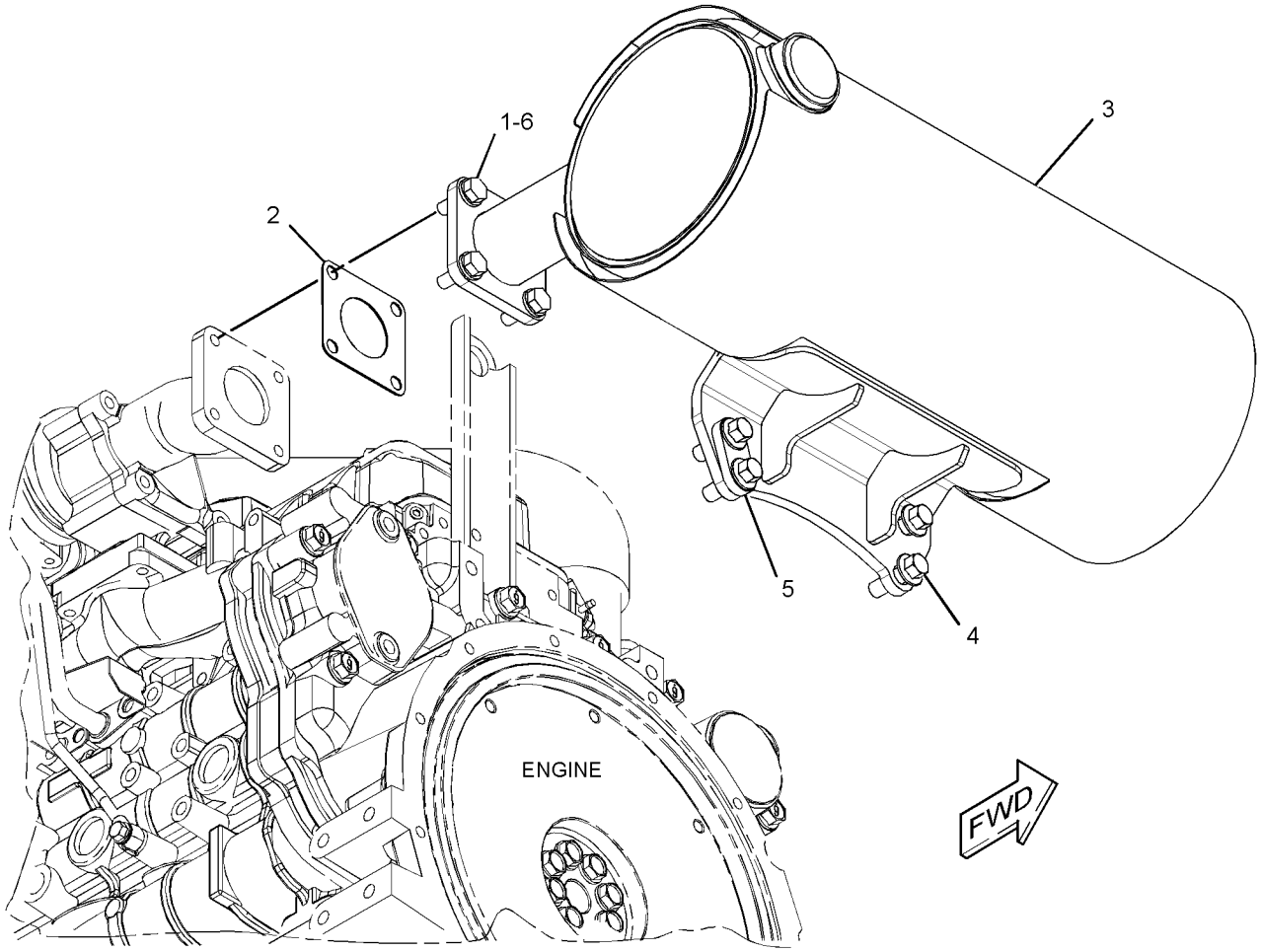

GRAPHIC #1 **<END>** g03320563

415-2790 MUFFLER AS

AN ATTACHMENT

SMCS-1062 **i05395332**

NOTE	REF NO	GRAPHIC REF	PART NUMBER	QTY	PART NAME 1 2 3 4 5 6 (PRODUCT LEVEL)	SEE PAGE
					(NO SERVICED PARTS)	

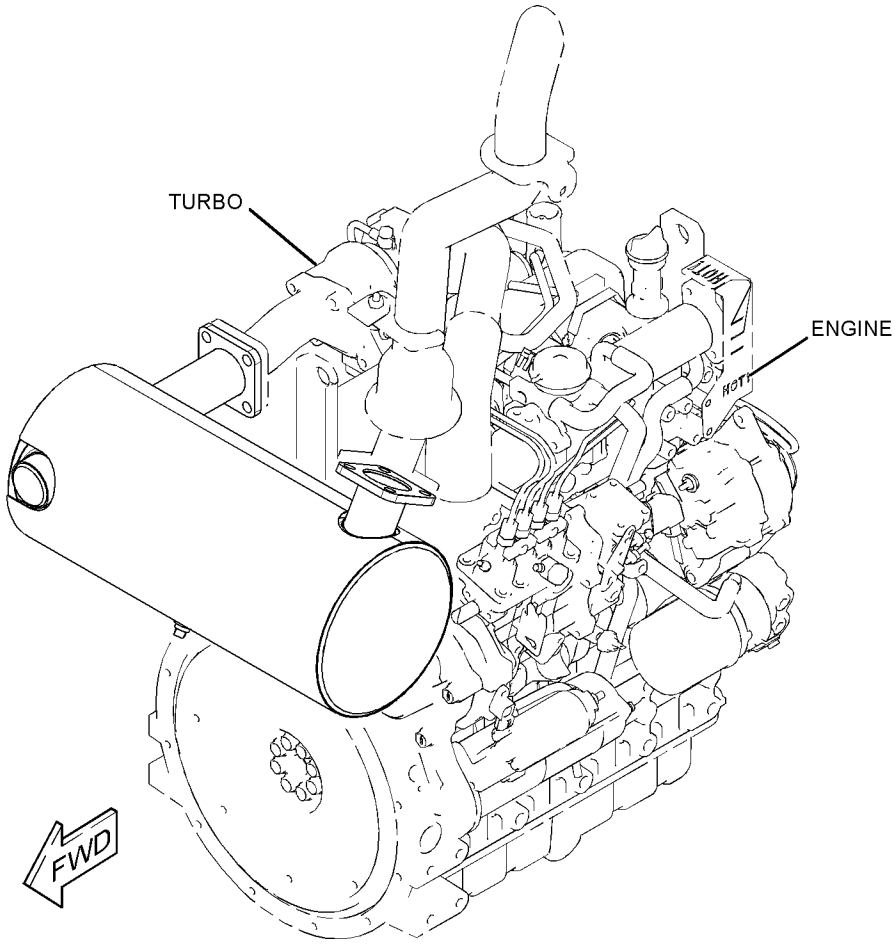

GRAPHIC #1 **<END>** g03410439

130-3279 PRECLEANER GP–TURBINE

PART OF 388-6641 PRECLEANER GP

AN ATTACHMENT

SMCS-1055 **i03620661**

NOTE	REF NO	GRAPHIC REF	PART NUMBER	QTY	PART NAME 1 2 3 4 5 6 (PRODUCT LEVEL)	SEE PAGE
	1	1	**174-5414**	1	CLAMP	

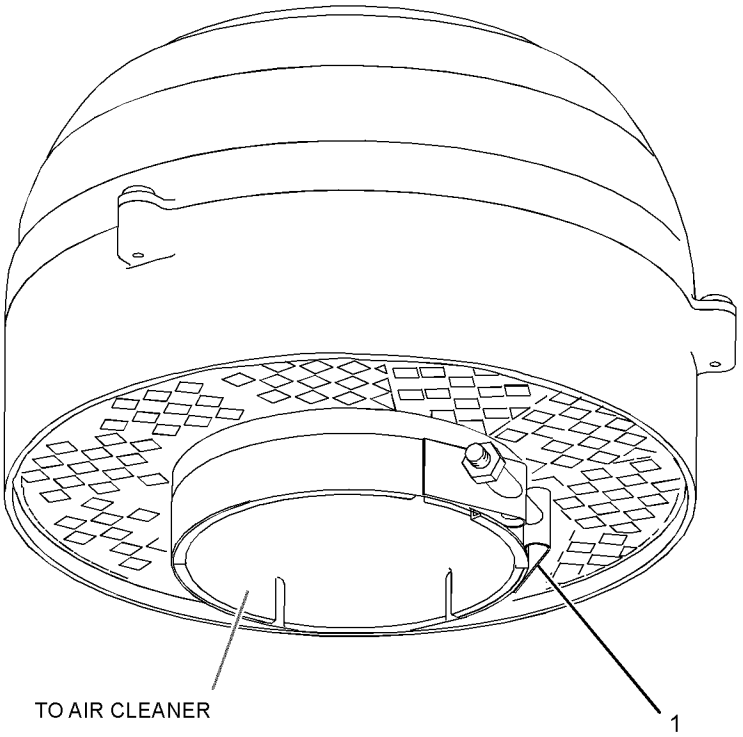

GRAPHIC #1 **<END>** g01945409

388-6641 PRECLEANER GP

AN ATTACHMENT

SMCS-1055 **i05302410**

NOTE	REF NO	GRAPHIC REF	PART NUMBER	QTY	PART NAME 1 2 3 4 5 6 (PRODUCT LEVEL)	SEE PAGE
	1	1	**116-0400**	1	KIT-INSTALLATION (TURBINE PRECLEANER)	
					(INCLUDES RUBBER INSERTS VACULATOR PLUG & INSTALLATION INSTRUCTIONS)	
Y	2	1	**130-3279**	1	PRECLEANER GP (TURBINE)	60
	3	1	**261-6101**	1	COVER	
	4	1	**376-8670**	1	CLAMP AS	
	5	1	**376-8678**	1	SHIELD	
	6	1	**388-6650**	1	HOSE	
	7	1	**388-6653**	1	PIPE AS	
M		1	**159-9540**	2	NUT-WELD (M8X1.25-THD)	
Y	8	1	*392-8074*	1	AIR CLEANER GP	48
M	9	1	**5C-7261**	3	NUT (M8X1.25-THD)	
	10	1	**6V-3582**	1	CLAMP-HOSE	
	11	1	**7X-0613**	2	WASHER-HARD (8.8X25.5X5-MM THK)	
	12	1	**8T-4224**	6	WASHER-HARD (8.8X16X2-MM THK)	
M	13	1	**8T-4908**	5	BOLT (M8X1.25X25-MM)	
	14	1	**8T-6726**	1	CLAMP-HOSE	

M - METRIC PART
Y - SEPARATE ILLUSTRATION

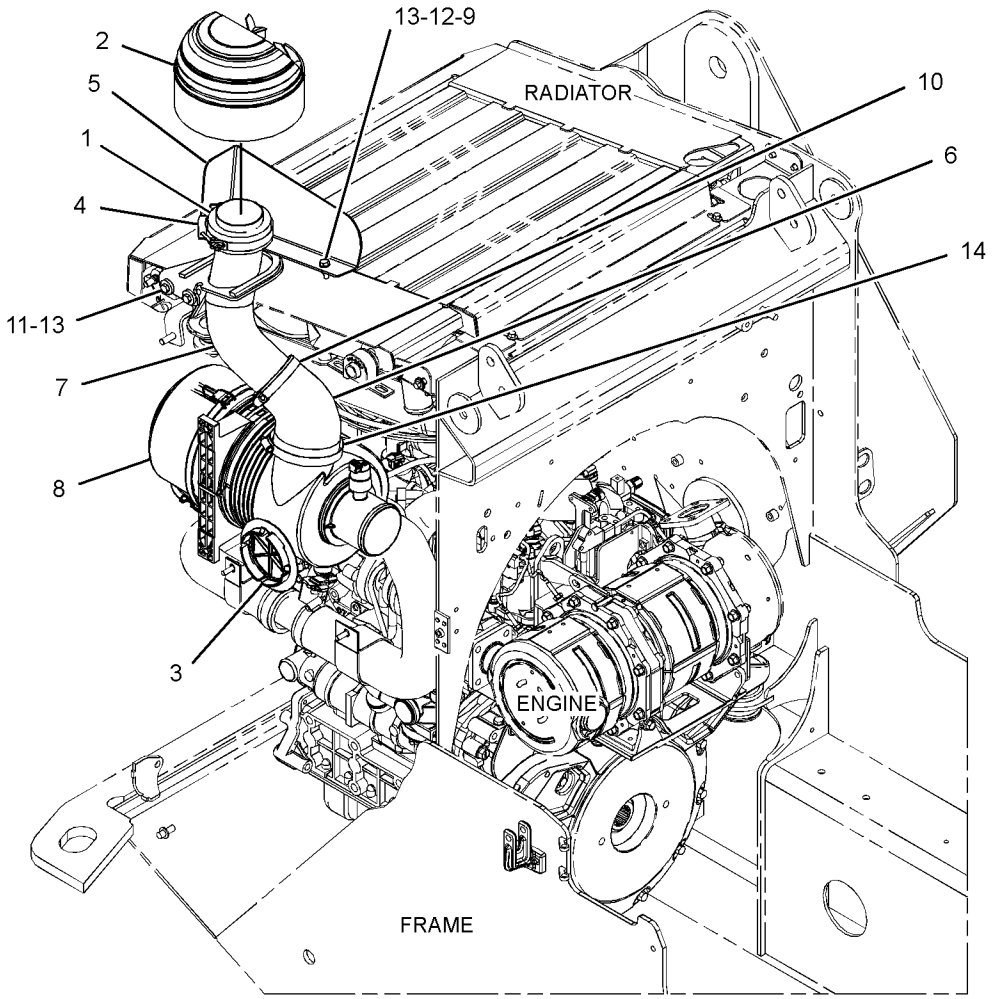

GRAPHIC #1

<END>

g03370045

437-5955 TURBOCHARGER GP

PART OF 380-1768, 380-1769 ENGINE AR-PRIMARY
ALSO AN ATTACHMENT

SMCS-1052, 1053 **i05342110**

NOTE	REF NO	GRAPHIC REF	PART NUMBER	QTY	PART NAME 1 2 3 4 5 6 (PRODUCT LEVEL)	SEE PAGE
	1	2	**383-0199**	4	NUT-FLANGE	
	2	2	**387-9802**	3	CLAMP-HOSE	
	3	2	**387-9811**	1	CLAMP-HOSE	
	4	1	**387-9814**	1	BOLT-FLANGE HEAD	
	5	1	**387-9865**	1	EYEBOLT	
	6	1	**387-9870**	1	GASKET	
	7	1	**388-7456**	1	GASKET	
	8	1	**388-7458**	1	GASKET	
	9	1	**388-7461**	1	SEAL-O-RING	
	10	2	**389-5353**	1	GASKET	
	11	1	**393-7570**	2	BOLT-FLANGE HEAD	
	12	2	**393-7586**	1	BOLT	
	13	2	**393-7587**	4	BOLT	
	14	1	**393-7588**	1	BOLT	
	15	2	**397-9970**	1	PIPE	
	16	2	**397-9971**	1	HOSE	
	17	2	**397-9972**	1	HOSE	
	18	2	**397-9979**	1	TURBOCHARGER AS	
	18A	2	**397-9980**	1	HOSE AS	
	18B	2	**397-9981**	2	CLAMP-HOSE	
	19	2	**397-9982**	4	STUD	
	20	2	**397-9984**	1	GASKET	
	21	2	**397-9985**	4	STUD	
	22	1	**397-9986**	1	TUBE AS-OIL	
	23	1	**397-9987**	1	TUBE AS-OIL	
	24	1	**421-1884**	1	CLAMP	
	25	2	**436-0822**	1	PIPE-EXHAUST	

437-5955 **TURBOCHARGER GP (*contd.*)** **i05342110**

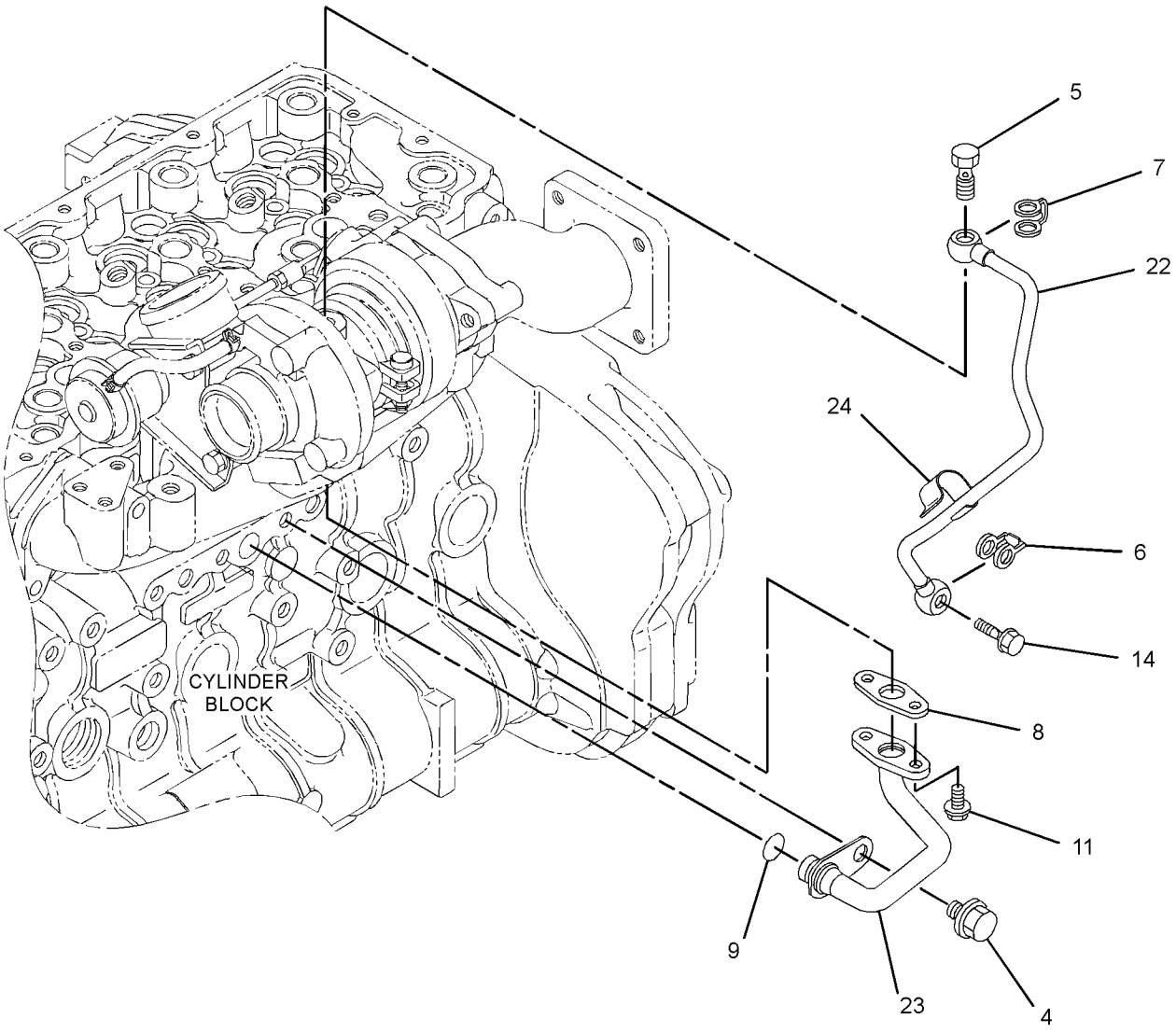

GRAPHIC #1 g03374084

437-5955 **TURBOCHARGER GP (*contd.*)** **i05342110**

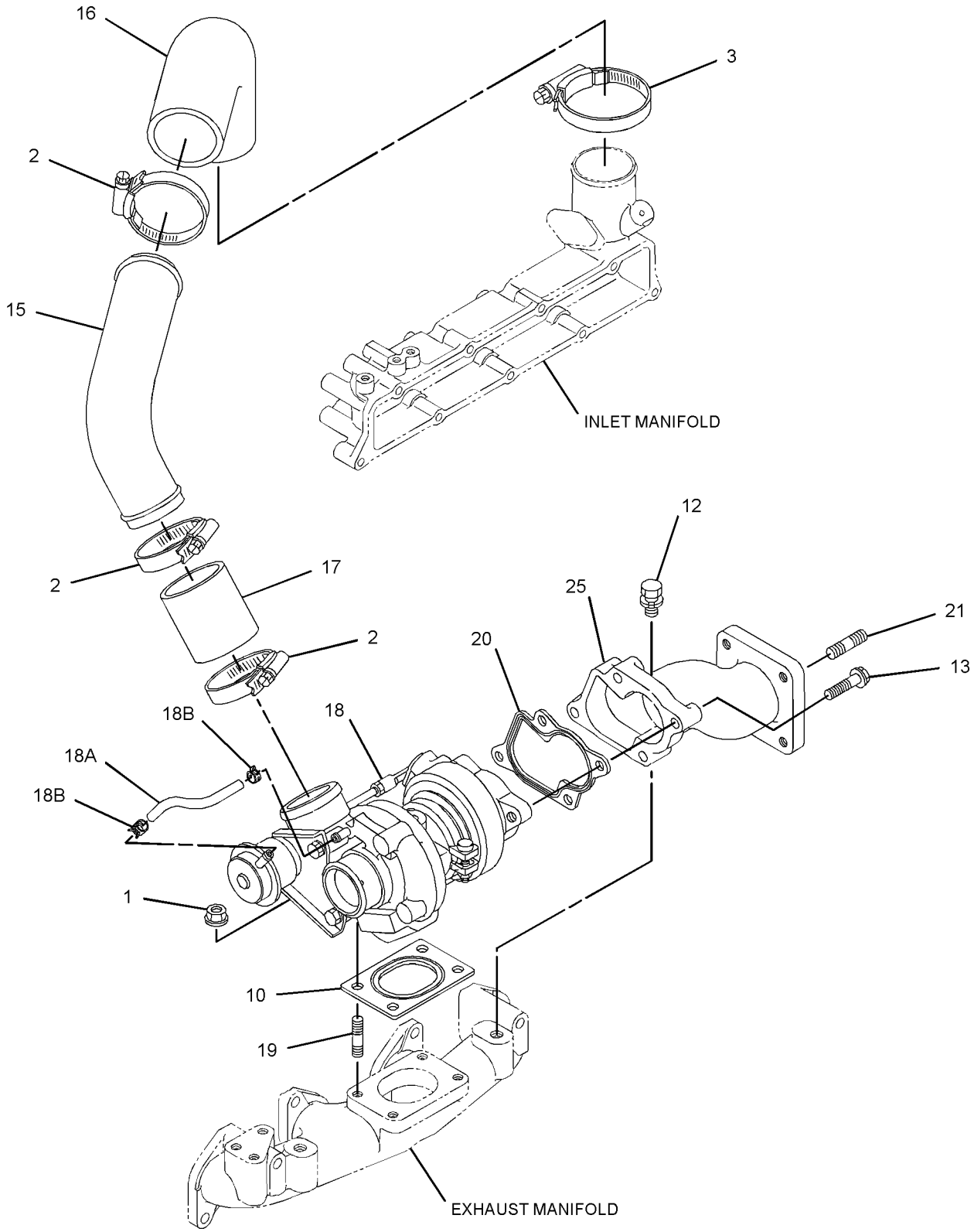

GRAPHIC #2 **<END>** g03374275

378-6812 CONTROL GP-GOVERNOR

PART OF 378-6690, 393-7340 INSTALLATION AR-ENGINE

SMCS-1265, 1276 **i05380450**

NOTE	REF NO	GRAPHIC REF	PART NUMBER	QTY	PART NAME 1 2 3 4 5 6 (PRODUCT LEVEL)	SEE PAGE
	1	1	**378-1020**	1	ACTUATOR GP (GOVERNOR CONTROL)	
	2	1	**378-6802**	1	LINK	
	3	1	**378-6804**	1	MOUNT AS	
	4	1	**378-6805**	1	BRACKET	
	5	1	**378-6807**	1	ROD AS	
	6	1	**378-6814**	1	BRACKET AS	
	7	1	**388-8015**	1	END-JOINT	
	8	1	**388-8016**	1	END-JOINT	
M	9	1	**129-3178**	2	LOCKNUT (M6X1-THD)	
M	10	1	**5C-2890**	1	NUT (M6X1-THD)	
M	11	1	**7X-2534**	3	BOLT (M6X1X50-MM)	
M	12	1	**8T-0389**	1	LOCKNUT (M10X1.5-THD)	
M	13	1	**8T-4139**	1	BOLT (M12X1.75X30-MM)	
M	14	1	**8T-4189**	2	BOLT (M8X1.25X20-MM)	
M	15	1	**6V-8210**	2	BOLT (M8X1.25X16-MM)	
	16	1	**8T-4223**	3	WASHER-HARD (13.5X25.5X3-MM THK)	
	17	1	**8T-4224**	6	WASHER-HARD (8.8X16X2-MM THK)	
M	18	1	**8T-4244**	1	NUT (M12X1.75-THD)	
M	19	1	**8T-4956**	1	BOLT (M12X1.75X35-MM)	
	20	1	**9X-8256**	3	WASHER (6.6X12X2-MM THK)	

M - METRIC PART

378-6812 **CONTROL GP-GOVERNOR (*contd.*)** **i05380450**

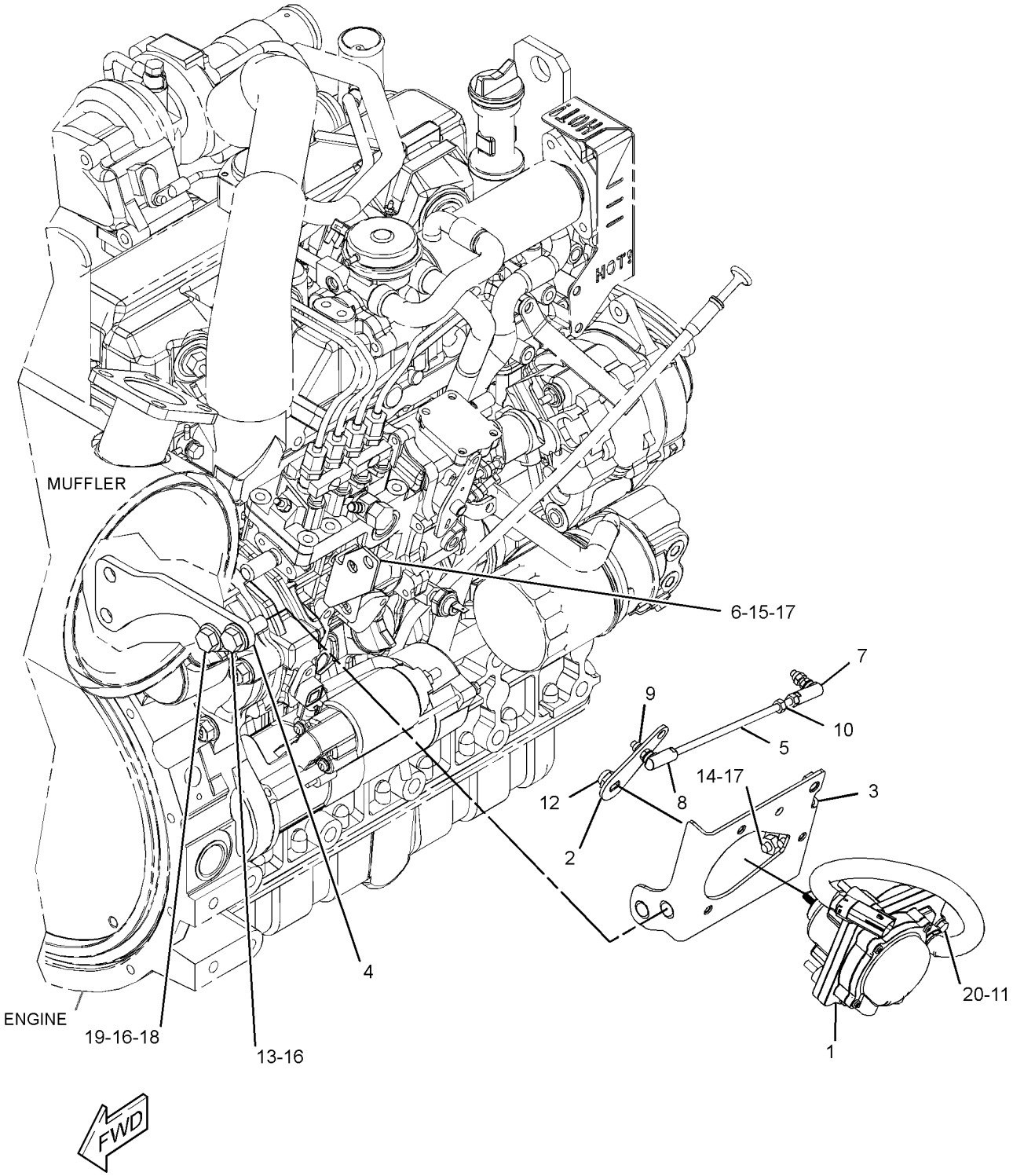

GRAPHIC #1 **<END>** g03320633

363-5818 FILTER GP-FUEL

PART OF 378-6682 LINES GP-FUEL

SMCS-1261 **i05156704**

NOTE	REF NO	GRAPHIC REF	PART NUMBER	QTY	PART NAME 1 2 3 4 5 6 (PRODUCT LEVEL)	SEE PAGE
	1	1	**151-1975**	1	CONNECTOR	
	2	1	**246-2622**	2	ELBOW AS	
					(EACH INCLUDES)	
		1	**214-7567**	1	SEAL-O-RING	
	3	1	**345-3623**	1	VALVE AS-CHECK (FUEL FILTER)	
		1	**5P-7814**	1	SEAL-O-RING	
J	4	1	**363-5819**	1	FILTER AS-WATER SEP & FUEL (FUEL, WATER SEPARATOR)	
		1	**4L-7711**	1	SEAL-O-RING	
		1	**5P-3863**	1	SEAL-O-RING	
	5	1	**5P-7814**	1	SEAL-O-RING	
					AVAILABLE REPAIR KIT(S):	
J			**345-3624**	1	KIT-FILTER (FUEL)	
					(ALSO INCLUDES BOWL & SENSOR AS)	

J - KIT MARKED J SERVICES PART MARKED J

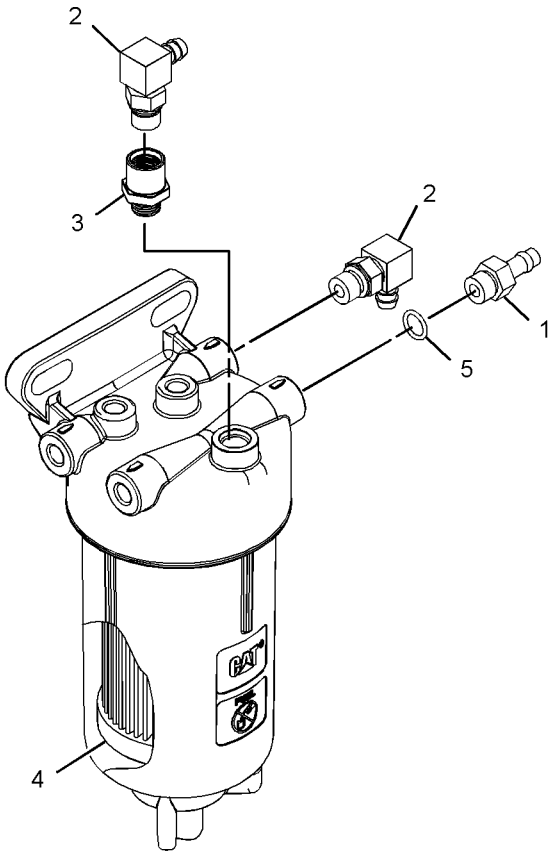

VIEW OF AREA A
(EXPLODED)

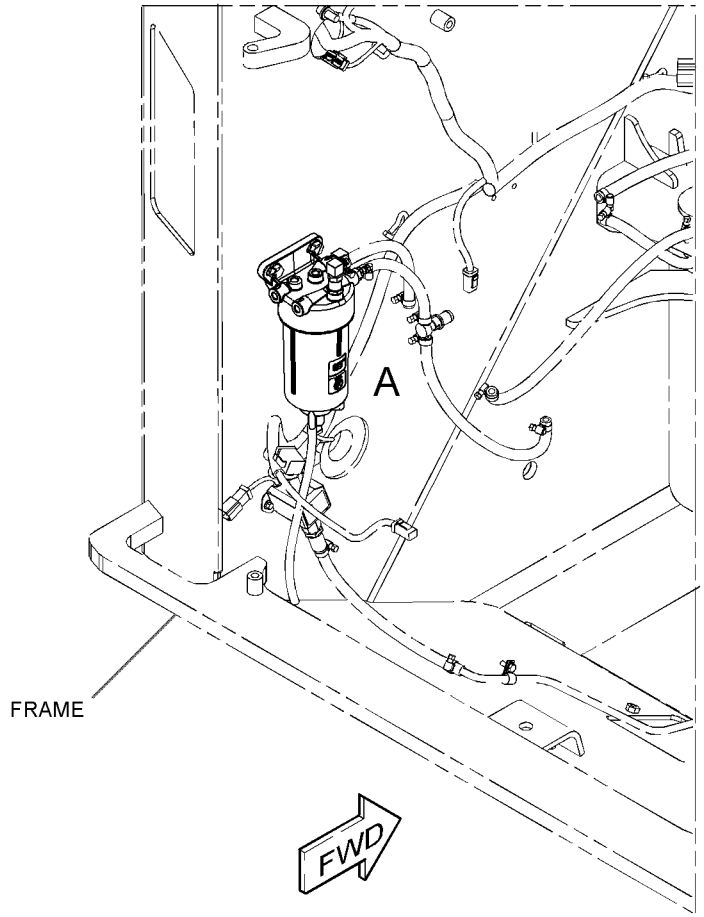

GRAPHIC #1 **<END>** g03323386

396-0907 GOVERNOR GP

S/N: MPW1-UP

PART OF 437-5954 PUMP GP-FUEL INJECTION

SMCS-1264, 1908 **i05342509**

NOTE	REF NO	GRAPHIC REF	PART NUMBER	QTY	PART NAME 1 2 3 4 5 6 (PRODUCT LEVEL)	SEE PAGE
	1	1	**383-0195**	2	NUT-HEX	
	2	1	**383-0198**	1	NUT-FLANGE	
	3	1	**383-0214**	1	SEAL-O-RING	
	4	1	**383-0222**	1	PIN-SPRING	
	5	1	**383-0256**	4	GASKET	
	6	1	**383-0308**	4	GASKET	
	7	1	**383-0317**	2	CAP	
	8	1	**383-0416**	1	GASKET	
	9	1	**387-9886**	1	SOLENOID AS (GOVERNOR CONTROL)	
	10	1	**387-9887**	2	BOLT-SOCKET HEAD	
	11	1	**397-9950**	1	BOLT-ADJUSTMENT	
	12	1	**388-7526**	1	COVER	
	13	1	**388-7527**	1	BLOCK AS	
	14	1	**388-7528**	1	NUT-FLANGE	
	15	1	**388-7530**	1	LEVER AS	
	16	1	**397-9949**	1	SHAFT	
	17	1	**388-7532**	1	SPRING	
	18	1	**388-7533**	1	SPRING	
	19	1	**388-7534**	1	GASKET	
	20	1	**388-7535**	6	BOLT-FLANGE HEAD	
	21	1	**388-7536**	1	NUT	
	22	1	**388-7540**	1	COVER	
	23	1	**393-2923**	1	SLEEVE	
	24	1	**397-9948**	1	HOUSING	
	25	1	**393-2925**	1	LEVER AS	
	26	1	**393-2926**	1	SPRING	
	27	1	**393-2927**	1	LEVER AS	
	28	1	**387-9884**	1	NUT	
	29	1	**393-7572**	2	BOLT	
	30	1	**387-9885**	1	CAP	
	31	1	**393-2932**	1	PIN	
	32	1	**393-2933**	1	PIN	
	33	1	**393-2934**	1	STUD	
	34	1	**393-2935**	1	BOLT-ADJUSTMENT	
	35	1	**393-2936**	1	BOLT-ADJUSTMENT	
	36	1	**393-2950**	2	SEAL-O-RING	
	37	1	**393-2951**	2	NUT	
	38	1	**393-7569**	2	STUD	
	39	1	**393-7570**	3	BOLT-FLANGE HEAD	
	40	1	**393-7581**	2	BOLT	

396-0907 **GOVERNOR GP (*contd.*)** **i05342509**

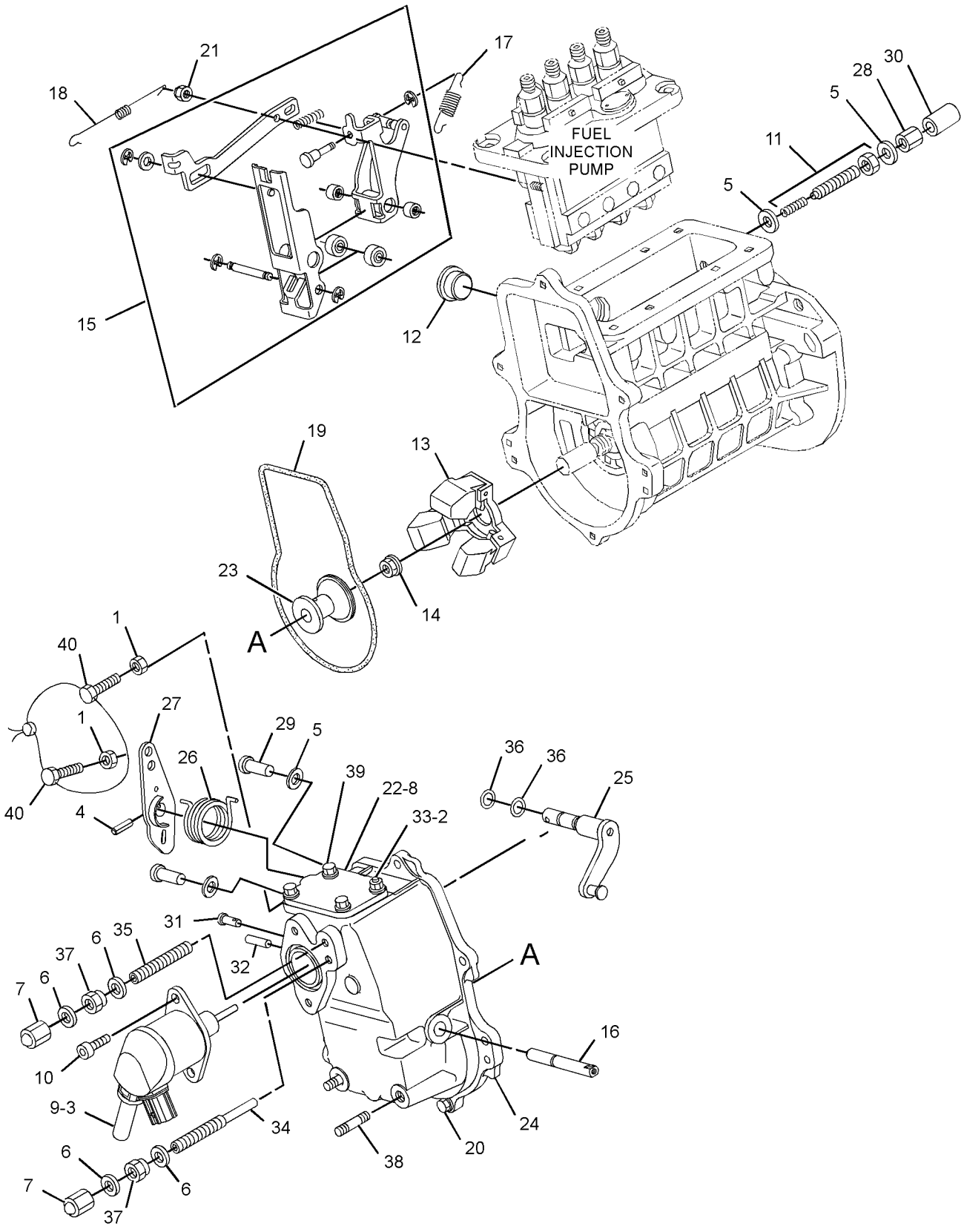

GRAPHIC #1 **<END>** g02949536

388-7510 HOUSING GP-FUEL PUMP

S/N: SEN1-UP

PART OF 397-9945 PUMP GP-FUEL INJECTION

ALSO AN ATTACHMENT

SMCS-1253 **i05342511**

NOTE	REF NO	GRAPHIC REF	PART NUMBER	QTY	PART NAME 1 2 3 4 5 6 (PRODUCT LEVEL)	SEE PAGE
	1	1	**393-2917**	2	STUD	
	2	1	**383-0279**	2	STUD	
	3	1	**393-2918**	2	STUD	
	4	1	**393-2919**	2	PIN	
	5	1	**383-0219**	2	PIN	

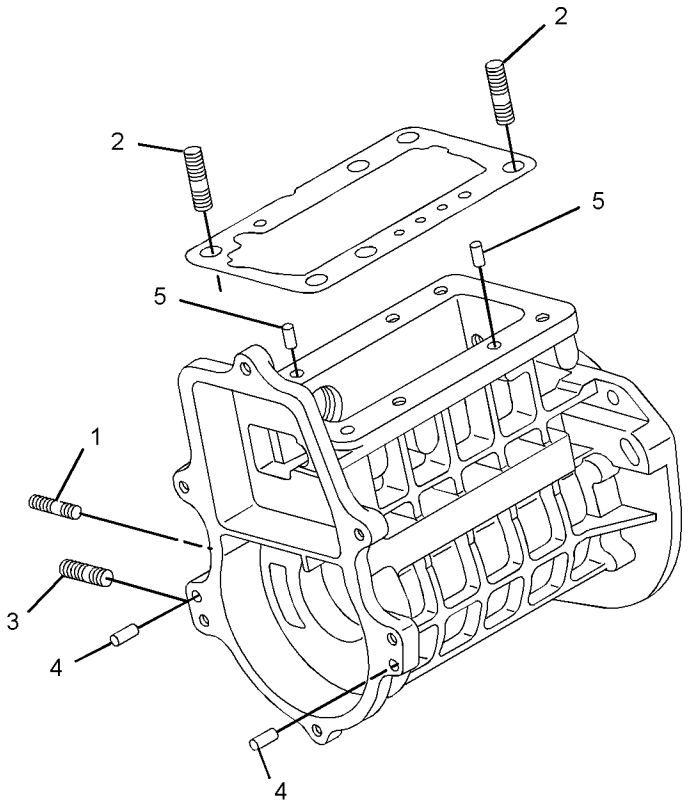

GRAPHIC #1 **<END>** g03375324

378-6682 LINES GP-FUEL

PART OF 378-6690, 393-7340 INSTALLATION AR-ENGINE

SMCS-1274 **i05380449**

NOTE	REF NO	GRAPHIC REF	PART NUMBER	QTY	PART NAME 1 2 3 4 5 6 (PRODUCT LEVEL)	SEE PAGE
	1	1	**178-3620**	1	STRAP-DUAL CLAMP	
	2	1	**335-6983**	2	CLAMP-BAND	
	3	1	**345-3516**	1	VALVE AS-RELIEF (FUEL LINES)	
Y	4	1	**345-3520**	1	PUMP GP-FUEL TRANSFER (WATER SEPARATOR)	83
Y	5	1	**363-5818**	1	FILTER GP-FUEL (ENGINE)	67
	6	1	**376-8666**	1	HOSE	
	7	1	**376-8676**	1	TUBE AS	
	8	1	**386-7013**	1	VALVE AS-CHECK (FUEL)	
	9	1	**415-2785**	1	TUBE AS	
M	10	1	**174-9194**	1	BOLT (M8X1.25X16-MM)	
	11	1	**1P-4278**	16	CLAMP-HOSE	
	12	1	**266-3314**	2	BOLT-FLANGE HEAD (M6X1X20.5-MM)	
M	13	1	**266-3315**	2	BOLT-FLANGE HEAD (M8X1.25X25.5-MM)	
	14	1	**2V-3216**	2	CLIP	
M	15	1	**5C-9553**	2	BOLT (M6X1X16-MM)	
	16	1	**6K-8178**	1	CLIP	
	17	1	**8M-2770**	1	CLIP	
	18	1	**8T-2173**	1	CONNECTOR-HOSE	
	19	1	**8T-4121**	2	WASHER-HARD (11X21X2.5-MM THK)	
M	20	1	**8T-4137**	2	BOLT (M10X1.5X20-MM)	
	21	1	**8T-4205**	2	WASHER-HARD (7.2X14.5X2-MM THK)	
	22	1	**9M-8406**	2	CLIP	
E	23	1	**8C-3681**		HOSE (27.5-CM)	
E	24	1	**263-0768**		HOSE (53.2-CM)	
E	24A	1	**263-0768**		HOSE (7-CM EACH)	
E	25	1	**103-2529**		HOSE (90-CM)	
E	26	1	**5P-1507**		HOSE (44.5-CM)	
E	26A	1	**5P-1507**		HOSE (33-CM)	
E	26B	1	**5P-1507**		HOSE (8.2-CM)	
E	26C	1	**5P-1507**		HOSE (15.7-CM)	
	27	1	**5P-4116**	2	WASHER-HARD (8.8X20.5X2-MM THK)	

E - ORDER BY THE CENTIMETER
M - METRIC PART
Y - SEPARATE ILLUSTRATION

378-6682 **LINES GP-FUEL (*contd.*)** **i05380449**

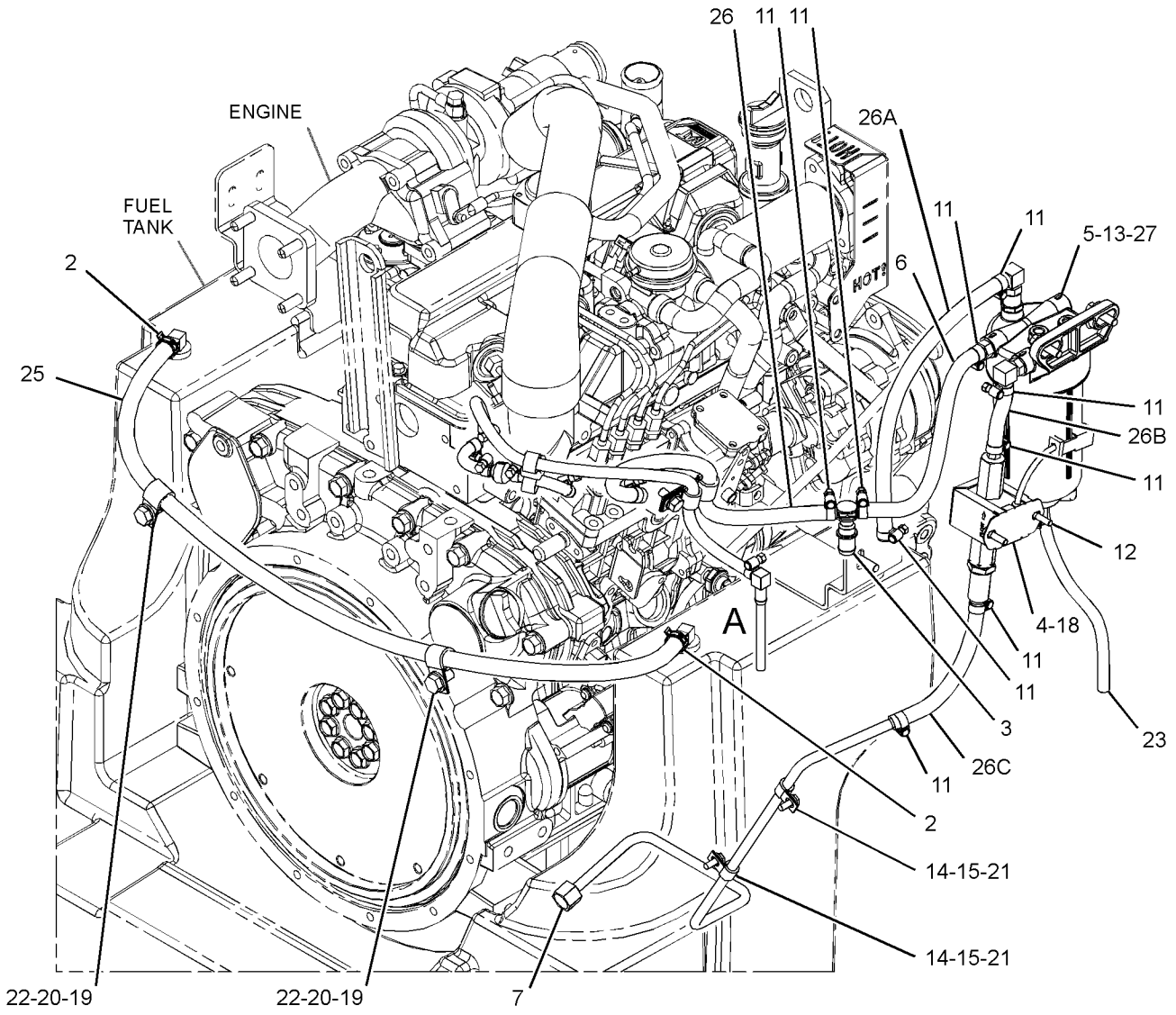

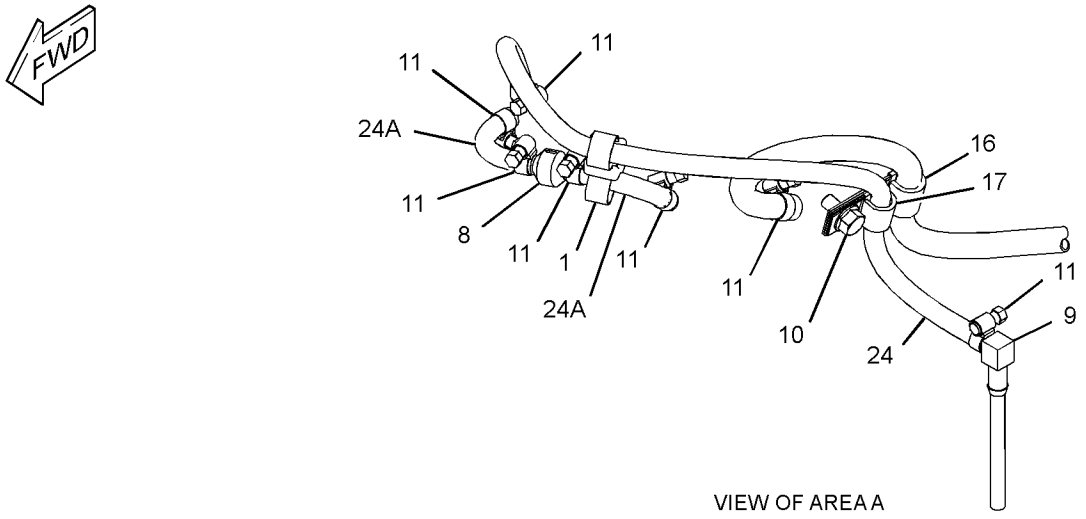

VIEW OF AREA A

GRAPHIC #1 **<END>** g03405765

396-0911 LINES GP-FUEL

PART OF 380-1768, 380-1769 ENGINE AR-PRIMARY
ALSO AN ATTACHMENT

SMCS-1274 **i05341958**

NOTE	REF NO	GRAPHIC REF	PART NUMBER	QTY	PART NAME 1 2 3 4 5 6 (PRODUCT LEVEL)	SEE PAGE
	1	1	**387-9874**	1	TUBE AS	
	2	1	**383-0474**	5	BOLT	
	3	1	**383-0475**	5	GASKET	
	4	1	**393-7589**	1	BOLT	
	5	1	**387-9875**	1	CONNECTOR	
	6	1	**383-0256**	2	GASKET	

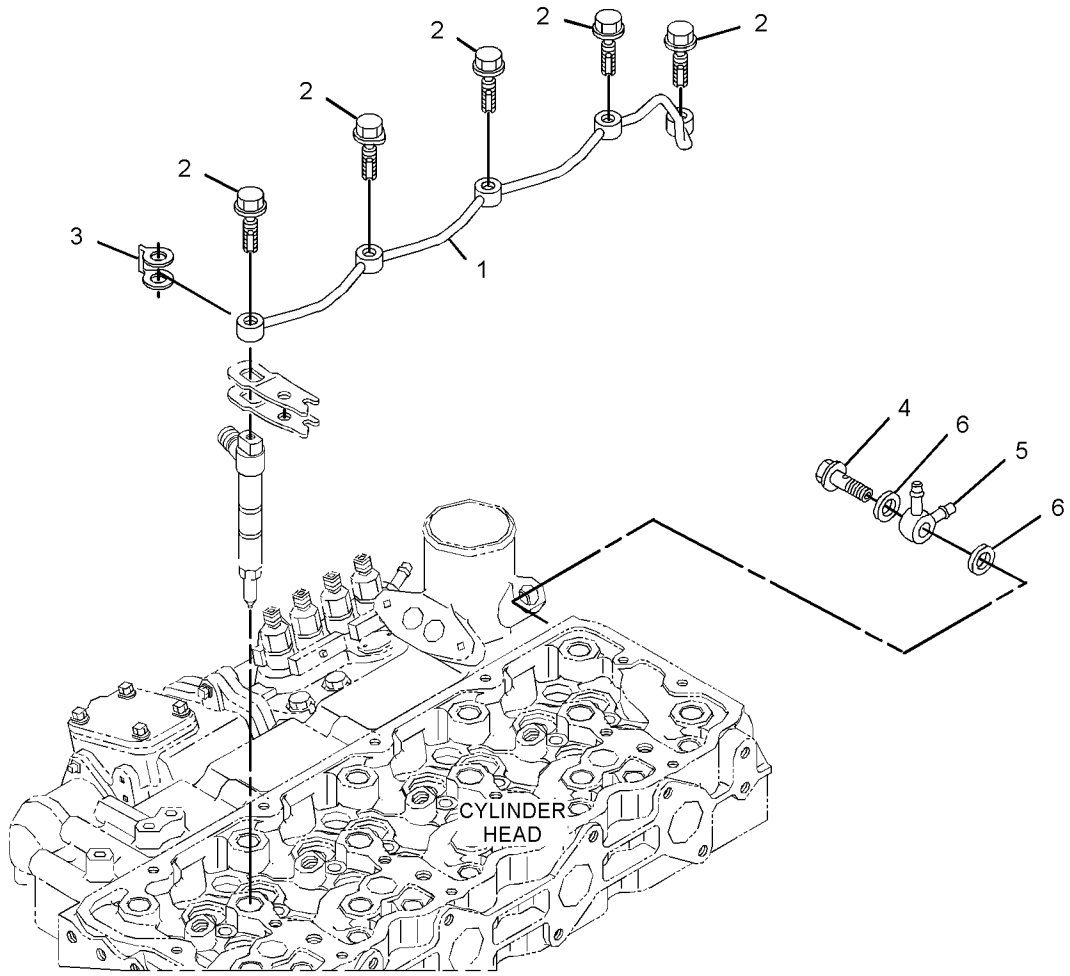

GRAPHIC #1 **<END>** g03373024

387-9078 LINES GP-FUEL INJECTION

PART OF 380-1768, 380-1769 ENGINE AR-PRIMARY
ALSO AN ATTACHMENT

SMCS-1252, 1254 **i05341968**

NOTE	REF NO	GRAPHIC REF	PART NUMBER	QTY	PART NAME 1 2 3 4 5 6 (PRODUCT LEVEL)	SEE PAGE
	1	1	**383-0202**	2	SCREW	
	2	1	**383-0319**	2	CLAMP-PIPE	
	3	1	**383-0320**	2	CLAMP-PIPE	
	4	1	**388-7542**	1	PIPE-INJECTION	
	5	1	**388-7543**	1	PIPE-INJECTION	
	6	1	**388-7544**	1	PIPE-INJECTION	
	7	1	**388-7545**	1	PIPE-INJECTION	

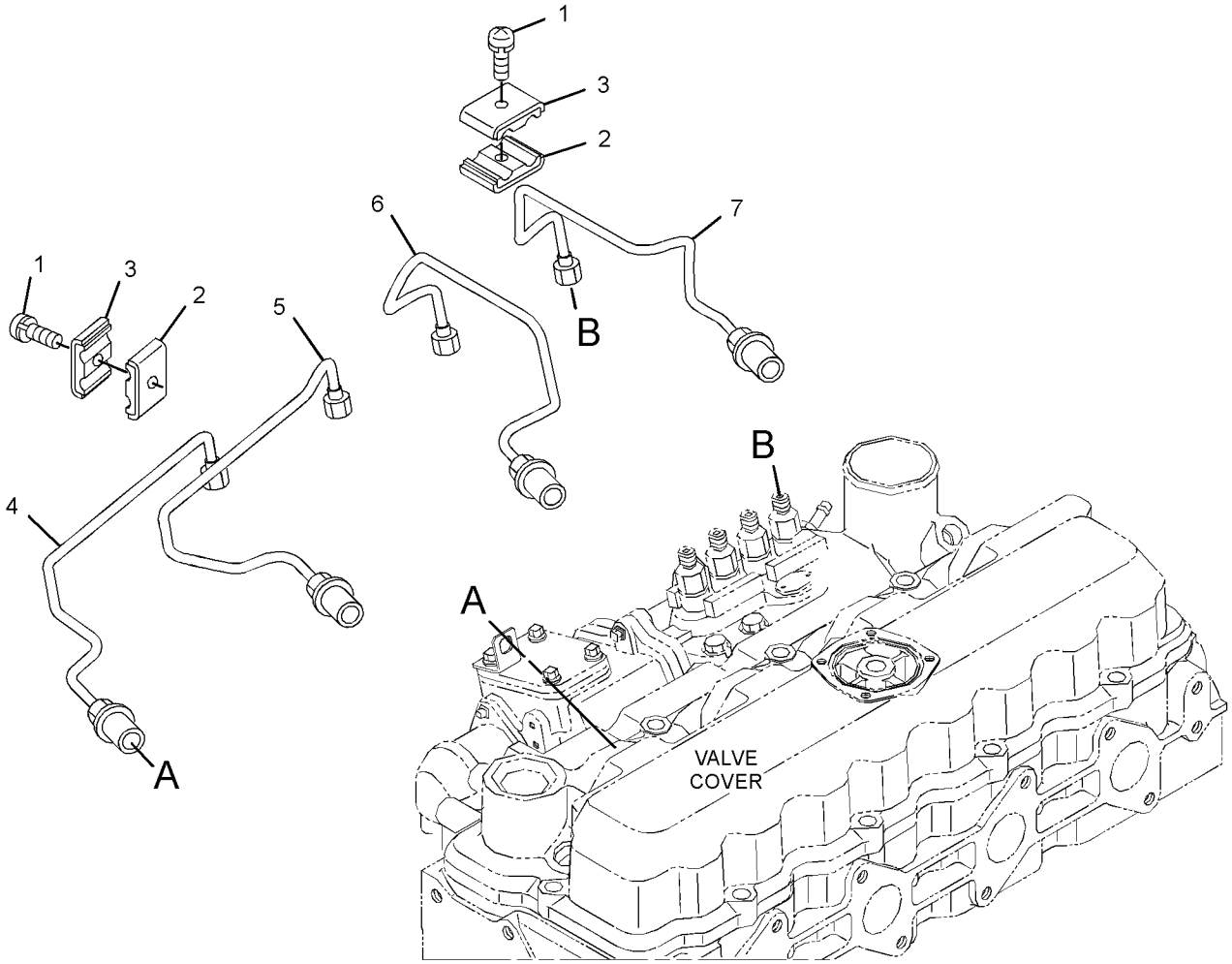

GRAPHIC #1 **<END>** g02896620

396-0916 NOZZLE GP-UNIT INJECTOR

PART OF 380-1768, 380-1769 ENGINE AR-PRIMARY
ALSO AN ATTACHMENT

SMCS-1254, 1290 **i05342094**

NOTE	REF NO	GRAPHIC REF	PART NUMBER	QTY	PART NAME 1 2 3 4 5 6 (PRODUCT LEVEL)	SEE PAGE
	1	1	**383-0519**	4	PACKING	
	2	1	**387-9889**	8	CLAMP	
	3	1	**387-9890**	4	BOLT-FLANGE HEAD	
	4	1	**389-5234**	4	SEAL-O-RING	
	5	1	**397-9952**	4	NOZZLE AS	
	6	1	**393-2942**	4	SEAL-O-RING	

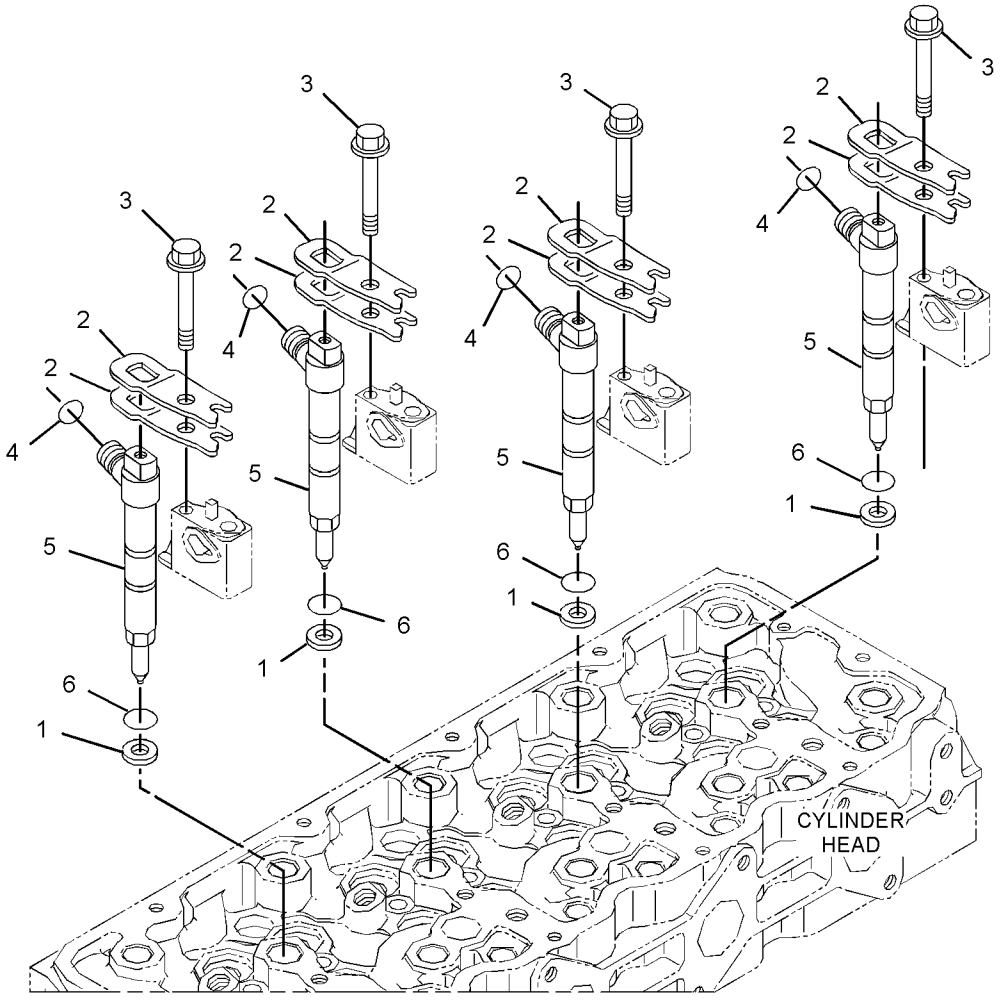

GRAPHIC #1 **<END>** g02901923

387-9878 PUMP AS-FUEL INJECTION

S/N: SEN1-UP

PART OF 397-9945 PUMP GP-FUEL INJECTION

ALSO AN ATTACHMENT

SMCS-1251 **i05342510**

NOTE	REF NO	GRAPHIC REF	PART NUMBER	QTY	PART NAME 1 2 3 4 5 6 (PRODUCT LEVEL)	SEE PAGE
	1	1	**393-2921**	1	BOLT	
	2	1	**393-2922**	2	GASKET	

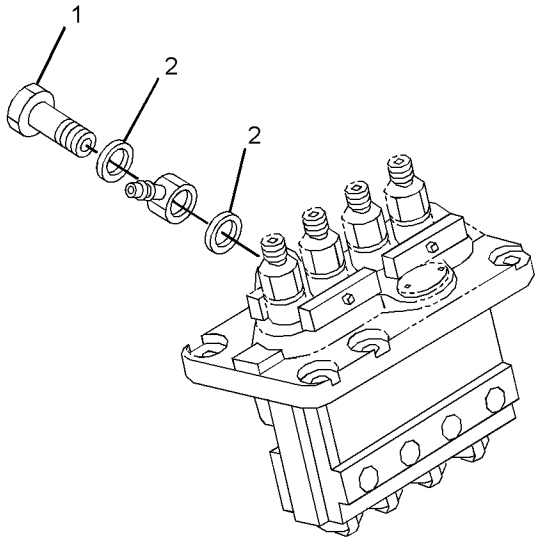

GRAPHIC #1 **<END>** g03375376

397-9945 PUMP GP-FUEL INJECTION

S/N: SEN1-UP

PART OF 438-1290 PUMP GP-FUEL INJECTION

ALSO AN ATTACHMENT

SMCS-1251, 1290, 5479

i05342507

NOTE	REF NO	GRAPHIC REF	PART NUMBER	QTY	PART NAME 1 2 3 4 5 6 (PRODUCT LEVEL)	SEE PAGE
Y	1	1	**388-7510**	1	HOUSING GP-FUEL PUMP	70
Y	2	1	**387-9878**	1	PUMP AS-FUEL INJECTION	76
	3	1	**388-7522**	1	SCREW	
	4	1	**383-0256**	1	GASKET	
	5	1	**393-7574**	4	BOLT-FLANGE HEAD	
	6	1	**383-0199**	2	NUT-FLANGE	
	7	1	**383-0252**	1	JOINT	
	8	1	**383-0507**	1	SHIM (0.35-MM THK)	
	9	1	**393-2920**	1	COVER	
	10	1	**388-7524**	1	GASKET	
	11	1	**383-0198**	2	NUT-FLANGE	
	12	1	**388-7511**	1	CAMSHAFT AS	
	13	1	**388-7512**	1	COLLAR	
	14	1	**388-7513**	1	BEARING	
	15	1	**388-7514**	1	BEARING	
	16	1	**388-7515**	1	STOP	
	17	1	**388-7516**	6	SCREW	
	18	1	**388-7517**	1	KEY (FUEL INJECTION PUMP)	
	19	1	**388-7518**	1	STOP	
	20	1	**393-7570**	6	BOLT-FLANGE HEAD	
	21	1	**387-9879**	1	GASKET	

Y - SEPARATE ILLUSTRATION

397-9945 **PUMP GP-FUEL INJECTION (*contd.*)** **i05342507**

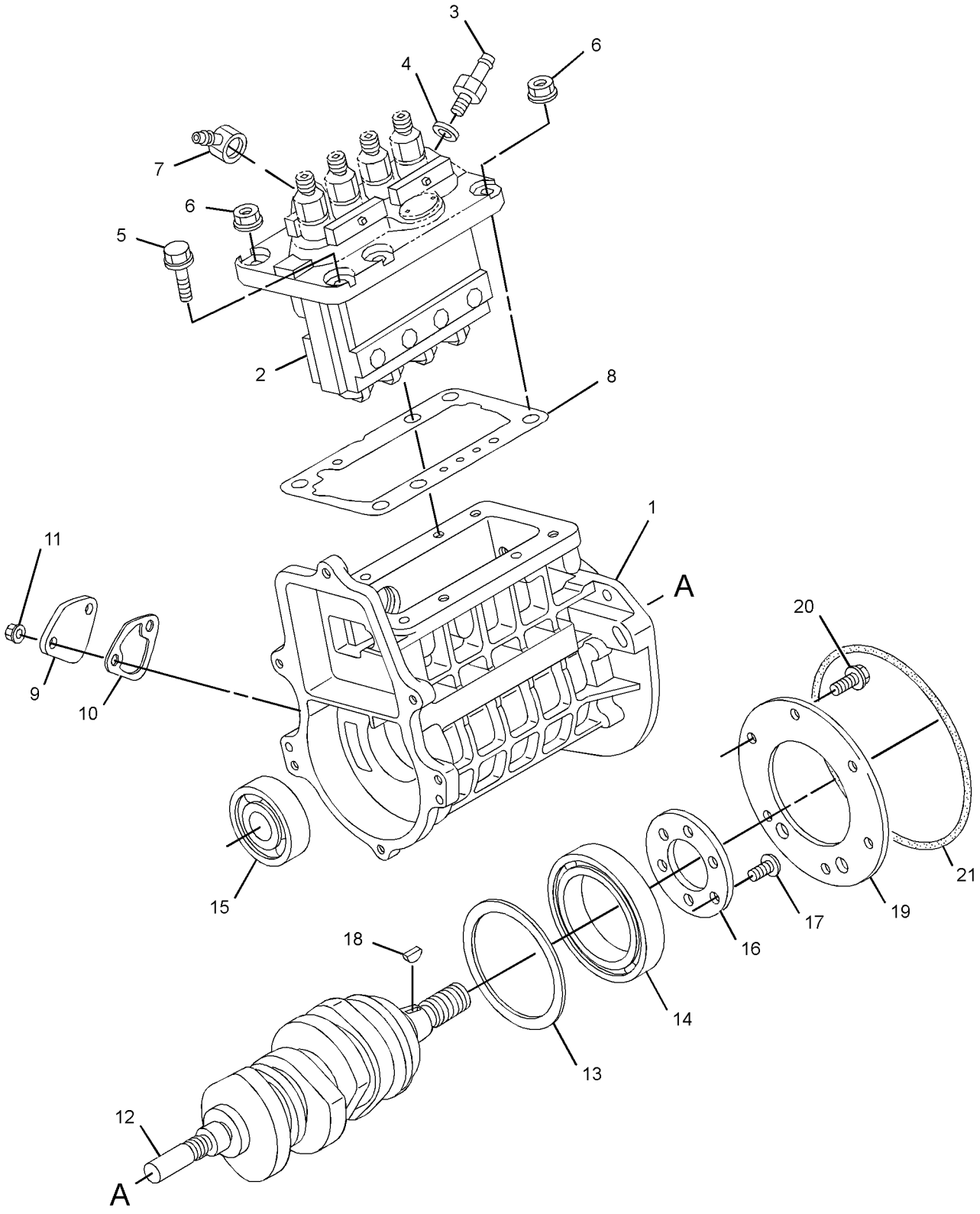

GRAPHIC #1 **<END>** g03372999

421-1878 PUMP GP-FUEL INJECTION

S/N: MPW1-UP

PART OF 437-5954 PUMP GP-FUEL INJECTION

SMCS-1251, 1290, 5479

i05307529

NOTE	REF NO	GRAPHIC REF	PART NUMBER	QTY	PART NAME 1 2 3 4 5 6 (PRODUCT LEVEL)	SEE PAGE
	1	1	**388-7510**	1	HOUSING AS-PUMP	
	1A	1	**383-0219**	2	PIN	
	1B	1	**383-0279**	2	STUD	
	1C	1	**393-2917**	2	STUD	
	1D	1	**393-2918**	2	STUD	
	1E	1	**393-2919**	2	PIN	
	2	1	**387-9878**	1	PUMP AS-FUEL INJECTION	
	2A	1	**393-2921**	1	BOLT	
	2B	1	**393-2922**	2	GASKET	
	3	1	**388-7522**	1	SCREW	
	4	1	**383-0256**	1	GASKET	
	5	1	**393-7574**	4	BOLT-FLANGE HEAD	
	6	1	**383-0199**	2	NUT-FLANGE	
	7	1	**383-0252**	1	JOINT	
	8	1	**383-0507**	1	SHIM	
	9	1	**393-2920**	1	COVER	
	10	1	**388-7524**	1	GASKET	
	11	1	**383-0198**	2	NUT-FLANGE	
	12	1	**388-7511**	1	CAMSHAFT AS	
	13	1	**388-7512**	1	COLLAR	
	14	1	**388-7513**	1	BEARING	
	15	1	**388-7514**	1	BEARING	
	16	1	**388-7515**	1	STOP	
	17	1	**388-7516**	6	SCREW	
	18	1	**388-7517**	1	KEY (FUEL INJECTION PUMP)	
	19	1	**388-7518**	1	STOP	
	20	1	**393-7570**	6	BOLT-FLANGE HEAD	
	21	1	**387-9879**	1	GASKET	

421-1878 **PUMP GP-FUEL INJECTION (*contd.*)** **i05307529**

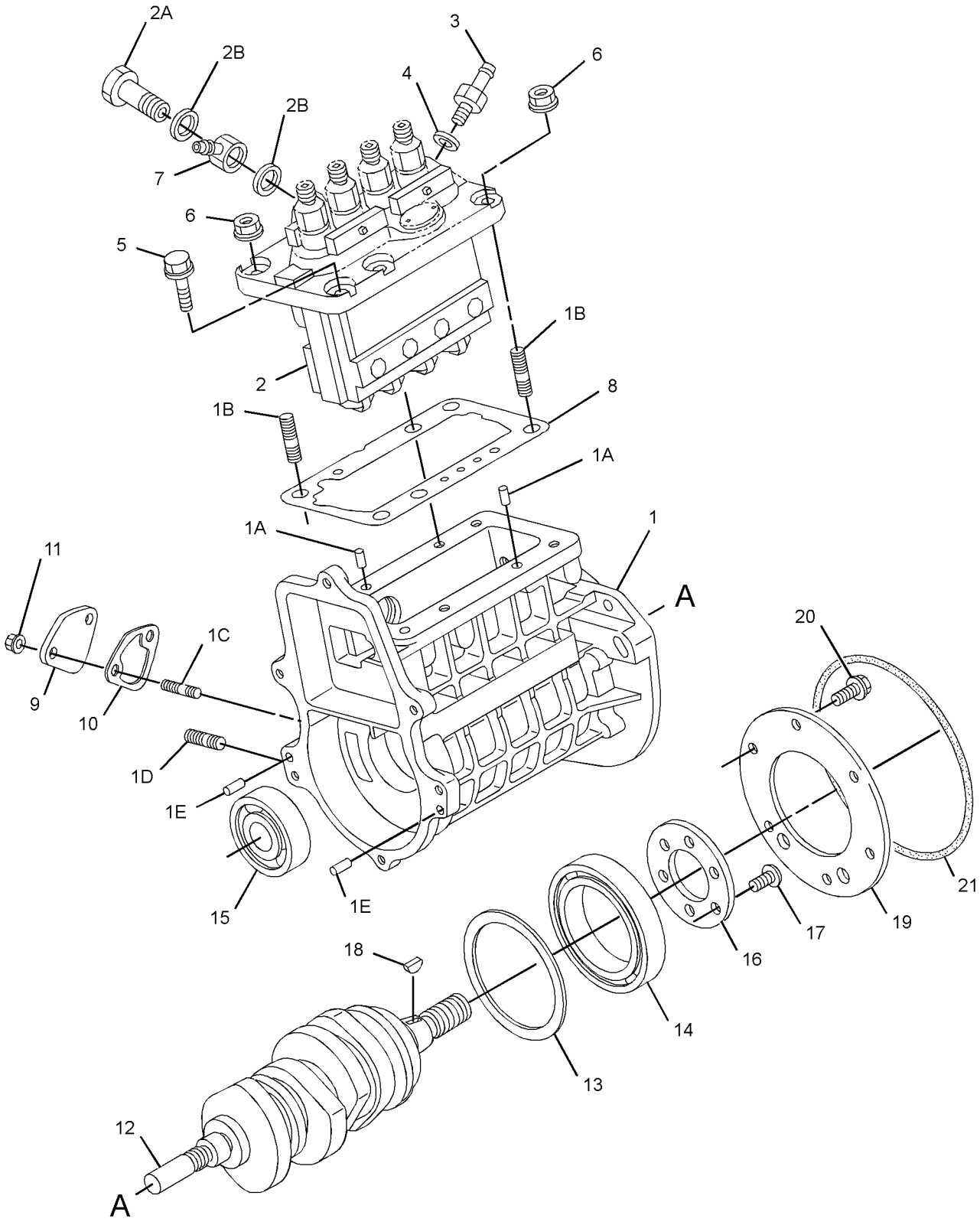

GRAPHIC #1 **<END>** g02957837

437-5954 PUMP GP-FUEL INJECTION

S/N: MPW1-UP

PART OF 380-1769 ENGINE AR-PRIMARY

SMCS-1251, 1290, 5479 **i05307471**

NOTE	REF NO	GRAPHIC REF	PART NUMBER	QTY	PART NAME 1 2 3 4 5 6 (PRODUCT LEVEL)	SEE PAGE
	1	1	**387-9781**	3	STUD	
	2	1	**387-9864**	1	TUBE AS	
	3	1	**387-9865**	1	EYEBOLT	
	4	1	**387-9866**	1	GASKET	
	5	1	**393-7580**	1	BOLT	
	6	1	**387-9868**	1	GASKET	
Y	7	1	**421-1878**	1	PUMP GP-FUEL INJECTION	79
	8	1	**387-9880**	1	GEAR-PUMP	
	9	1	**387-9881**	1	NUT	
	10	1	**383-0199**	5	NUT-FLANGE	
	11	1	**387-9882**	1	BRACKET	
Y	12	1	**396-0907**	1	GOVERNOR GP	68
	13	1	**393-7572**	4	BOLT	

Y - SEPARATE ILLUSTRATION

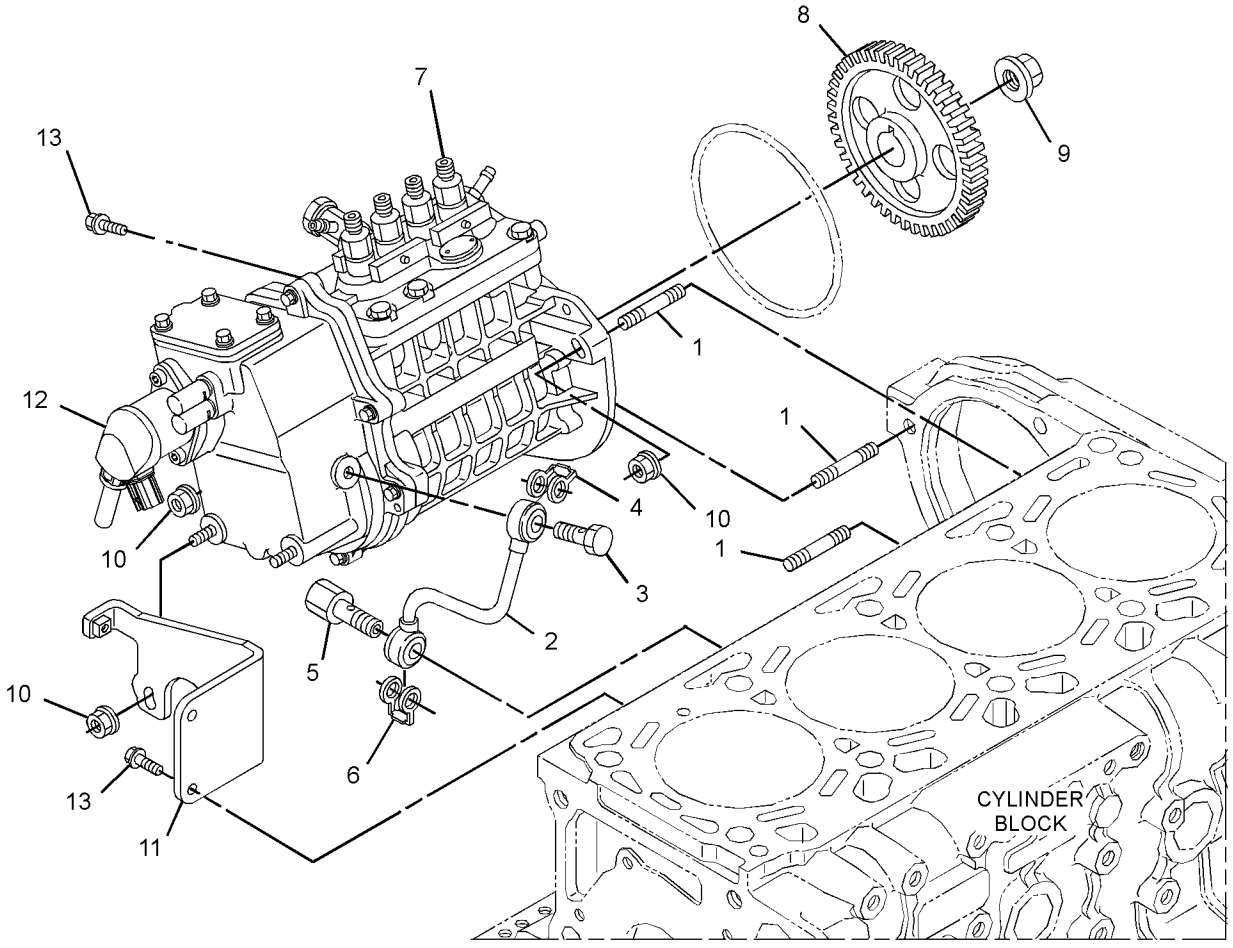

GRAPHIC #1 **<END>** g03367383

438-1290 PUMP GP-FUEL INJECTION

S/N: SEN1-UP
PART OF 380-1768 ENGINE AR-PRIMARY
ALSO AN ATTACHMENT

SMCS-1251, 1290, 5479 **i05342105**

NOTE	REF NO	GRAPHIC REF	PART NUMBER	QTY	PART NAME 1 2 3 4 5 6 (PRODUCT LEVEL)	SEE PAGE
	1	1	**383-0199**	5	NUT-FLANGE	
	2	1	**387-9781**	3	STUD	
	3	1	**387-9864**	1	TUBE AS	
	4	1	**387-9865**	1	EYEBOLT	
	5	1	**387-9866**	1	GASKET	
	6	1	**387-9868**	1	GASKET	
	7	1	**387-9881**	1	NUT	
	8	1	**387-9882**	1	BRACKET	
	9	1	**393-7572**	2	BOLT	
	10	1	**393-7580**	1	BOLT	
Y	11	1	**397-9945**	1	PUMP GP-FUEL INJECTION	77
	12	1	**397-9946**	1	GEAR-PUMP	

Y - SEPARATE ILLUSTRATION

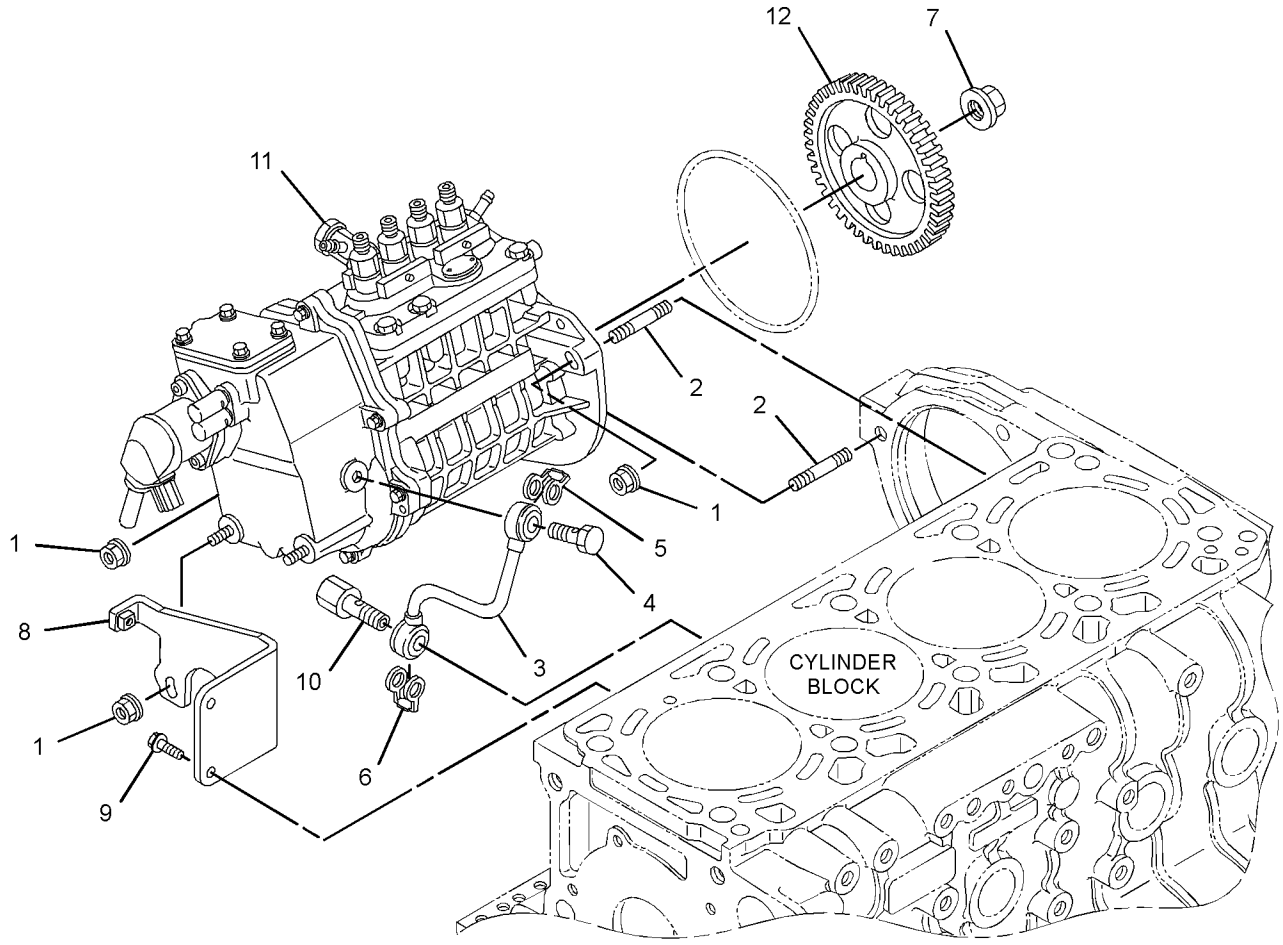

GRAPHIC #1 **<END>** g03373986

345-3520 PUMP GP-FUEL TRANSFER

PART OF 378-6682 LINES GP-FUEL

SMCS-1256 **i05162996**

NOTE	REF NO	GRAPHIC REF	PART NUMBER	QTY	PART NAME 1 2 3 4 5 6 (PRODUCT LEVEL)	SEE PAGE
F			**363-5823**	1	FILTER AS-FUEL (FUEL TRANSFER PUMP)	
F			**5P-7814**	1	SEAL-O-RING	
					AVAILABLE REPAIR KIT(S):	
			102-8802	1	KIT-RECEPTACLE (2-PIN)	
					(INCLUDES RECEPTACLE AS & WEDGE)	

F - NOT SHOWN

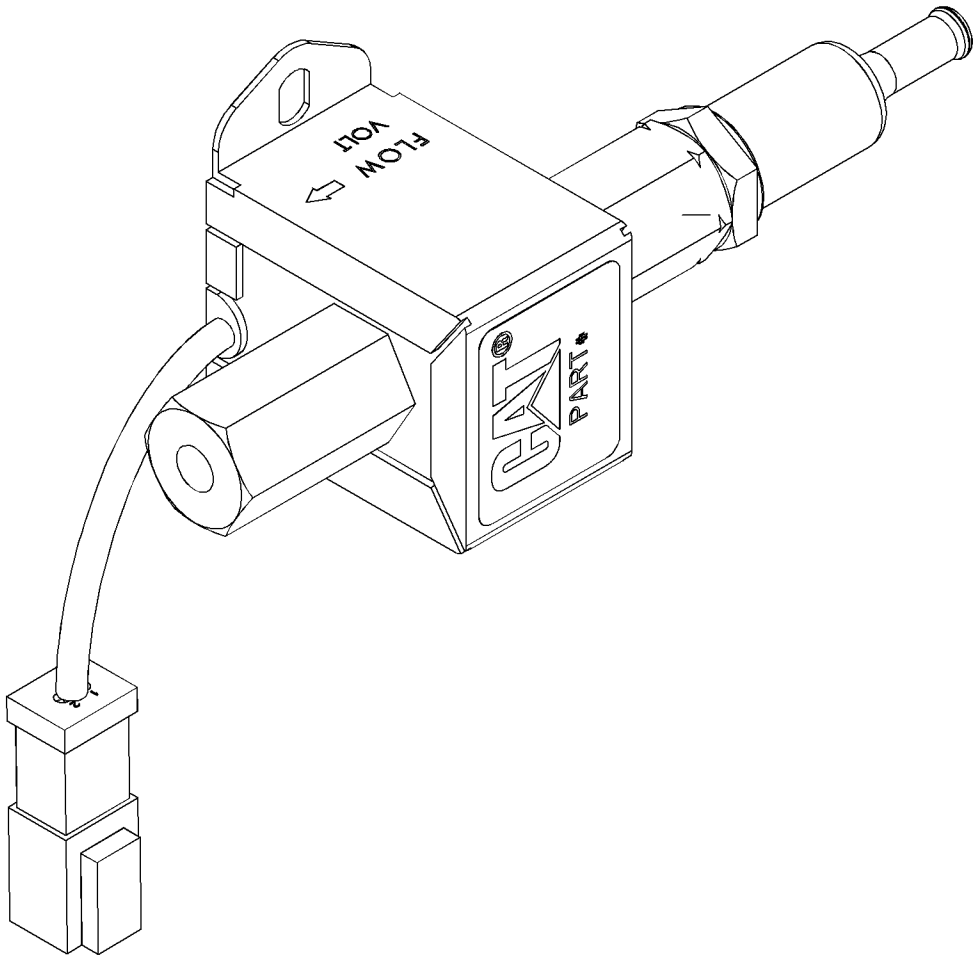

GRAPHIC #1 **<END>** g03319603

345-5400 TANK & MTG GP-FUEL

PART OF 388-8180 CHASSIS AR

SMCS-1273 **i05163004**

NOTE	REF NO	GRAPHIC REF	PART NUMBER	QTY	PART NAME 1 2 3 4 5 6 (PRODUCT LEVEL)	SEE PAGE
	1	1	**345-4703**	1	SENDER AS-FUEL LEVEL	
		1	**9X-3401**	2	PIN-CONNECTOR (16-GA TO 18-GA)	
		1	**102-8802**	1	KIT-RECEPTACLE (2-PIN)	
					(INCLUDES RECEPTACLE AS & WEDGE)	
M	2	1	**7X-7920**	5	BOLT (M5X0.8X14-MM)	
	3	1	**9R-7240**	1	GASKET	
Y	4	1	*345-5401*	1	TANK GP-FUEL	85
	5	1	**387-1159**	2	BRACKET	
M	6	1	**266-3315**	4	BOLT-FLANGE HEAD (M8X1.25X25.5-MM)	
	7	1	**6V-7699**	5	WASHER-HARD (5.5X13X1.6-MM THK)	

M - METRIC PART
Y - SEPARATE ILLUSTRATION

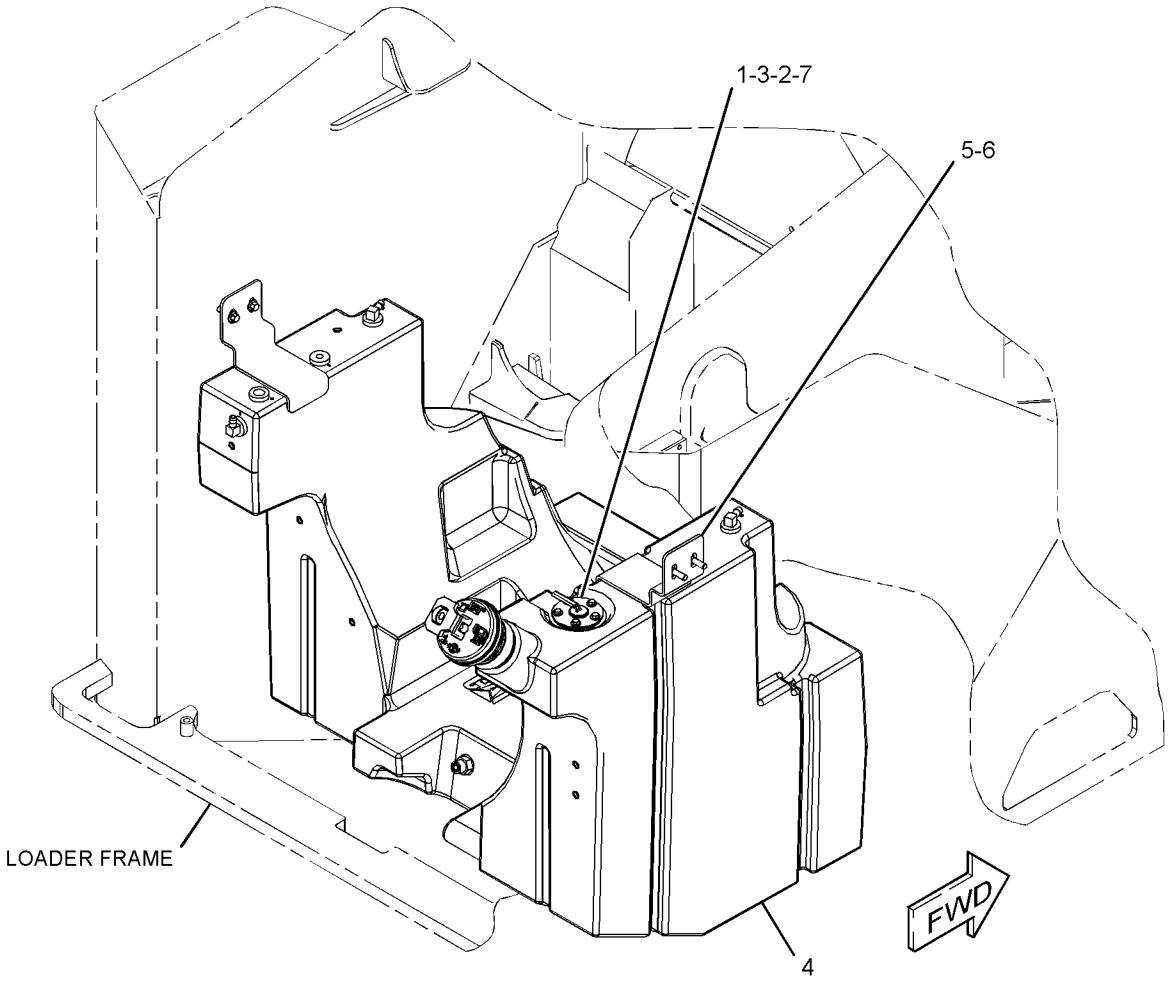

GRAPHIC #1 **<END>** g03332698

345-5401 TANK GP-FUEL

94-L (25-US GAL)

PART OF 345-5400 TANK & MTG GP-FUEL

SMCS-1273 **i05378214**

NOTE	REF NO	GRAPHIC REF	PART NUMBER	QTY	PART NAME 1 2 3 4 5 6 (PRODUCT LEVEL)	SEE PAGE
	1	1	**6W-5698**	4	GROMMET	
	2	1	**142-8928**	2	ELBOW	
	3	1	**258-2983**	1	TUBE AS	
		1	**3K-0360**	1	SEAL-O-RING	
		1	**6V-8397**	1	SEAL-O-RING	
	4	1	**304-3885**	1	CAP-FUEL (FILLER)	
	5	1	**3K-0360**	1	SEAL-O-RING	
	6	1	**9S-4185**	1	PLUG-O-RING	
	7	1	**345-5402**	1	TANK AS-FUEL	
	8	1	**385-5360**	1	ADAPTER-FUEL CAP	
	9	1	**385-5361**	1	GROMMET	

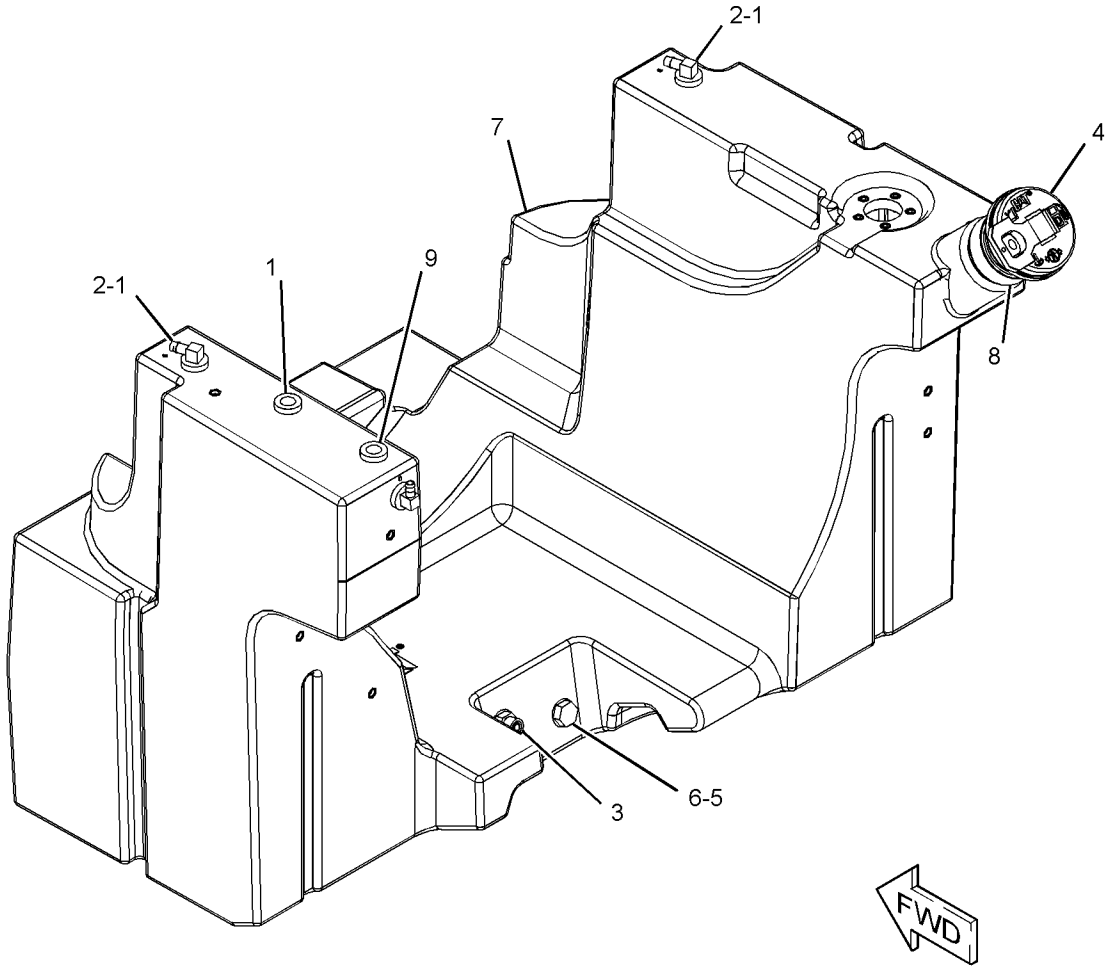

GRAPHIC #1 **<END>** g03407141

396-0901 ALTERNATOR GP-CHARGING

12-VOLT, 80-AMPERE
PART OF 380-1768, 380-1769 ENGINE AR-PRIMARY
ALSO AN ATTACHMENT

SMCS-1405 **i05350846**

NOTE	REF NO	GRAPHIC REF	PART NUMBER	QTY	PART NAME 1 2 3 4 5 6 (PRODUCT LEVEL)	SEE PAGE
	1	1	**397-9953**	1	ALTERNATOR AS (12-VOLT, 80-AMPERE)	
	2	1	**397-9954**	1	BRACKET	
	3	1	**397-9955**	1	SUPPORT	
	4	1	**393-7574**	1	BOLT-FLANGE HEAD	
	5	1	**389-5248**	1	WASHER	
	6	1	**387-9897**	1	BOLT-FLANGE HEAD	
	7	1	**387-9820**	2	BOLT-FLANGE HEAD	
	8	1	**397-9956**	1	BOLT	
	9	1	**397-9957**	1	WASHER	
	10	1	**397-9958**	1	WASHER	
	11	1	**397-9959**	1	NUT	

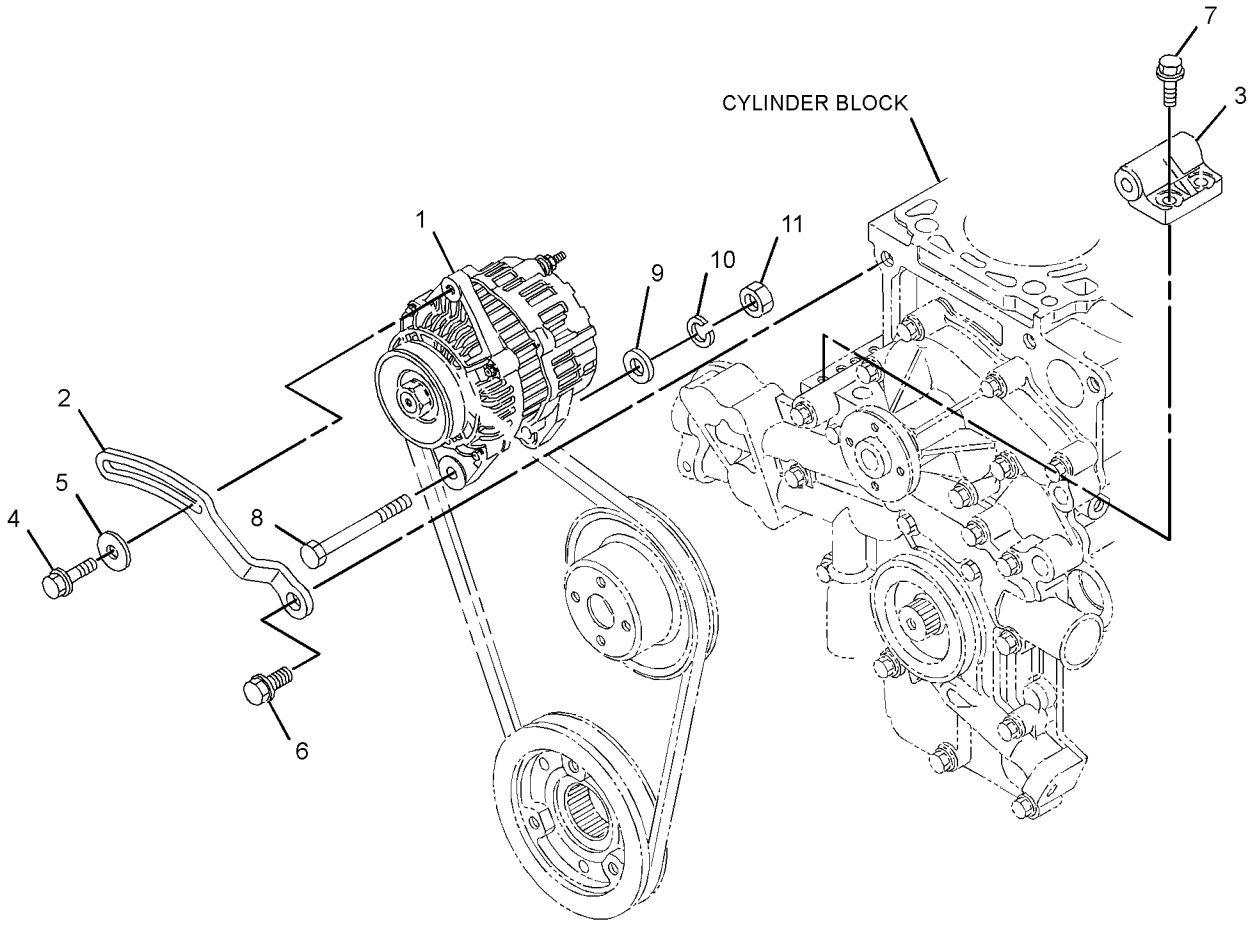

GRAPHIC #1 **<END>** g02948336

361-6386 BATTERY & WIRING GP

PART OF 388-8180 CHASSIS AR

SMCS-1401, 1402 **i05380440**

NOTE	REF NO	GRAPHIC REF	PART NUMBER	QTY	PART NAME 1 2 3 4 5 6 (PRODUCT LEVEL)	SEE PAGE
	1	1	**7K-1181**	2	STRAP-CABLE	
	2	1	**178-3620**	1	STRAP-DUAL CLAMP	
	3	1	**230-6368**	1	BATTERY (12-VOLT, 880-CCA)	
	4	1	**361-6387**	1	CABLE AS-GROUND	
		1	**1S-7252**	1	TERMINAL-CABLE (00-GA, 3/8-IN SCREW)	
E		1	**090-2151**		CABLE-WELDING (00-GA) (37-CM)	
		1	**391-7091**	1	COVER-TERMINAL	
		1	*391-7092*	1	TERMINAL AS-BATTERY (NEGATIVE)	
		1	**1M-6120**	2	NUT (5/16-18-THD)	
		1	**3T-3349**	1	STUD (5/16-18X0.5-IN, 5/16-18X1.5-IN)	
	5	1	**361-6388**	1	CABLE AS-POWER	
D		1	**6V-2369**		CABLE (4-GA, BLACK) (0.5-M)	
		1	**5P-3454**	1	TERMINAL-RING (4-GA, 5/16-IN SCREW)	
		1	**135-2543**	1	BOOT (RED)	
E		1	**159-8047**		CABLE-ELECTRICAL (0-GA, RED) (37-CM)	
		1	**195-3253**	1	TERMINAL-RING	
		1	**276-1786**	1	COVER-TERMINAL (RED)	
		1	*391-7093*	1	TERMINAL AS-BATTERY (POSITIVE)	
		1	**1M-6120**	2	NUT (5/16-18-THD)	
		1	**3T-3349**	1	STUD (5/16-18X0.5-IN, 5/16-18X1.5-IN)	
	6	1	**436-1612**	1	STRAP AS-GROUND	
E		1	**030-1705**		TERMINAL-CABLE (00-GA, 5/16-IN SCREW) (28-CM)	
		1	**276-7278**	1	TERMINAL-RING	
	7	1	**378-1032**	1	WIRE AS	
	8	1	**383-6245**	1	PLATE AS	
	9	1	**396-7206**	1	CLAMP	
	10	1	**232-3121**	1	NUT (M10X1.25-THD)	
M	11	1	**266-3315**	1	BOLT-FLANGE HEAD (M8X1.25X25.5-MM)	
	12	1	**3S-2093**	2	STRAP-CABLE	
	13	1	**4P-7581**	2	CLIP	
M	14	1	**5C-2890**	1	NUT (M6X1-THD)	
M	15	1	**5C-7261**	2	NUT (M8X1.25-THD)	
M	16	1	**5C-9553**	1	BOLT (M6X1X16-MM)	
	17	1	**5P-4115**	1	WASHER-HARD (7.2X19X2-MM THK)	
	18	1	**5P-4116**	3	WASHER-HARD (8.8X20.5X2-MM THK)	
	19	1	**6V-0826**	2	GROMMET	
M	20	1	**7X-2537**	1	BOLT (M8X1.25X35-MM)	
	21	1	**7P-1695**	2	WASHER (10.5X19X3-MM THK)	
M	22	1	**8T-4133**	1	NUT (M10X1.5-THD)	
M	23	1	**8T-4200**	2	BOLT (M8X1.25X16-MM)	
	24	1	**1A-8912**	1	WASHER (6.7X12.7X1.6-MM THK)	
	25	1	**8F-7242**	2	WASHER (8.7X15.9X1.6-MM THK)	
	26	1	**436-1607**	1	PLATE AS	
	27	1	**7X-0510**	2	WASHER-HARD (15.5X29X3-MM THK)	
	28	1	**4P-8134**	1	CLIP	
	29	1	**038-9317**	1	TREAD-NONSKID	
M	30	1	**8T-4189**	1	BOLT (M8X1.25X20-MM)	
M	31	1	**141-5453**	2	BOLT (M14X1.5X30-MM)	
	32	1	**8T-4224**	1	WASHER-HARD (8.8X16X2-MM THK)	

D - ORDER BY THE METER
E - ORDER BY THE CENTIMETER
M - METRIC PART

361-6386 **BATTERY & WIRING GP (*contd.*)** **i05380440**

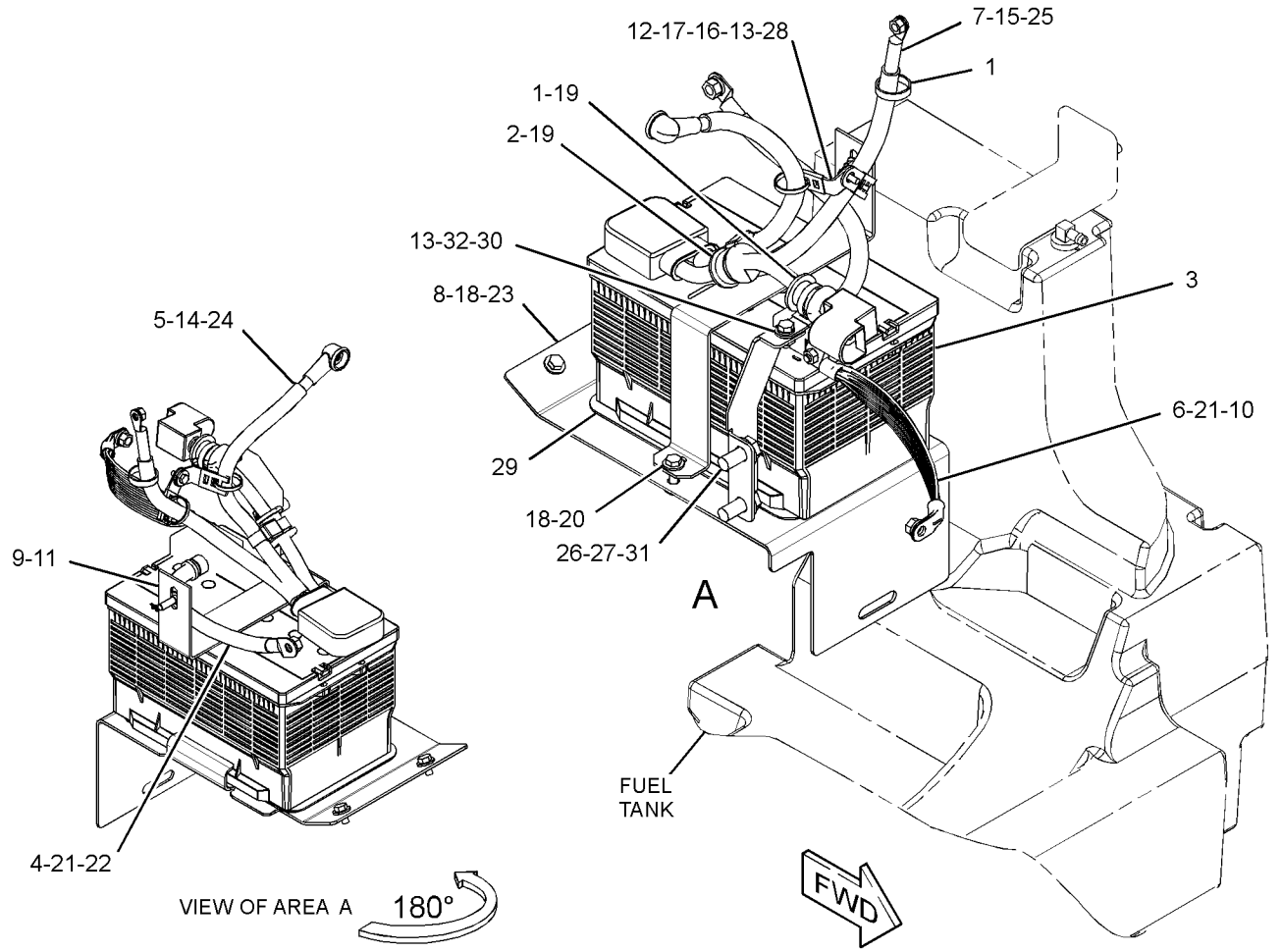

GRAPHIC #1 **<END>** g03407576

336-6684 CAMERA GP—WORK AREA VISUAL SYSTEM, REAR

12-VOLT/24-VOLT. COLOR

PART OF 388-8284 KIT-CAMERA, 396-7209 WIRING GP-CAMERA

AN ATTACHMENT

SMCS-7348 **i03756452**

NOTE	REF NO	GRAPHIC REF	PART NUMBER	QTY	PART NAME 1 2 3 4 5 6 (PRODUCT LEVEL)	SEE PAGE
					AVAILABLE REPAIR KIT(S):	
			251-4162	1	KIT-BRACKET (CAMERA)	
					(INCLUDES BRACKET, BOLTS, LOCK NUTS, GASKET & ALLEN KEY)	

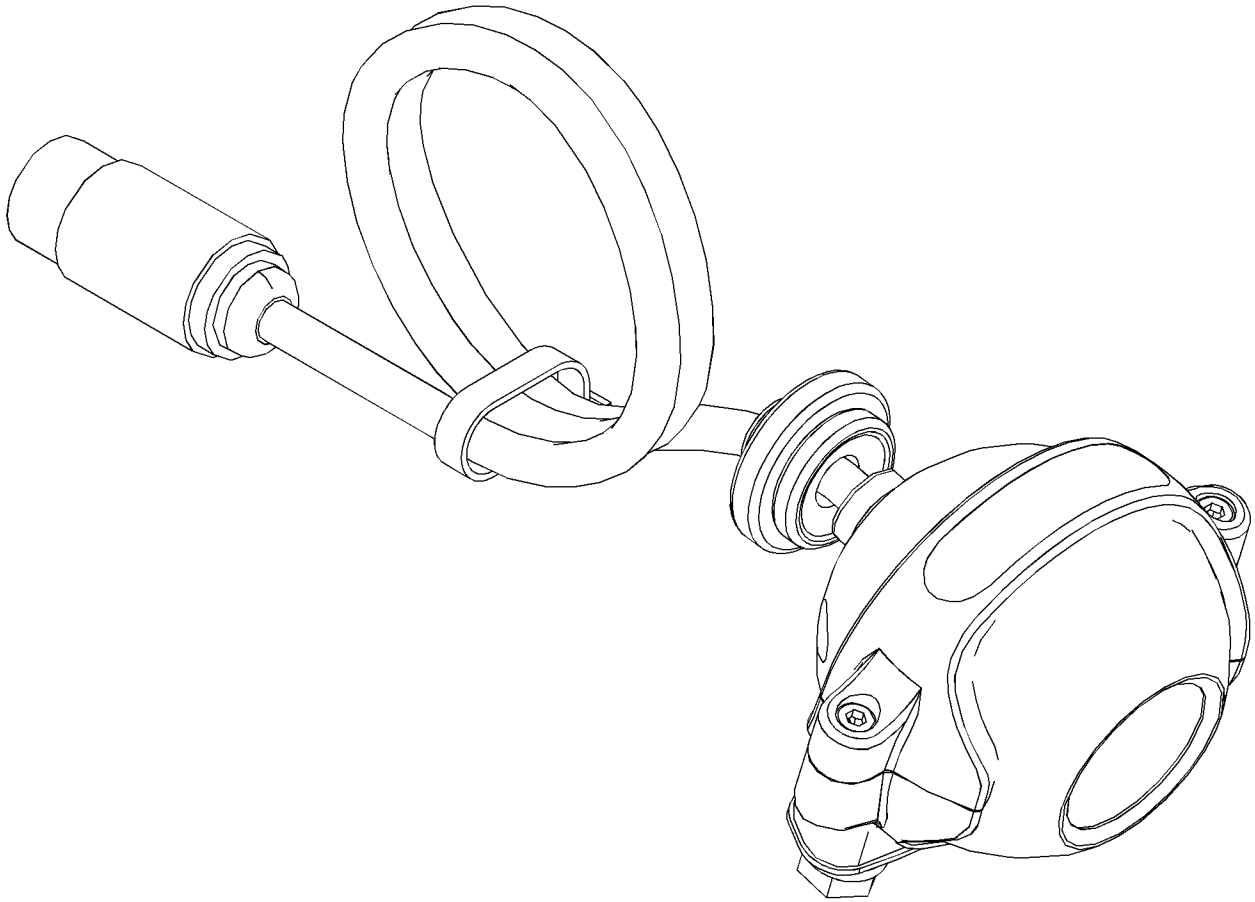

GRAPHIC #1 **<END>** g02034339

388-7758 CONVERSION GP-MACHINE

AN ATTACHMENT

SMCS-7631 **i05302411**

NOTE	PART NUMBER	QTY	PART NAME 1 2 3 4 5 6 (PRODUCT LEVEL)	SEE PAGE
Y	*417-4606*	1	LIFTING GP-MACHINE (FOUR POINT)	197
Y	*356-6082*	1	LIGHTING GP-STOP & TAIL (REAR)	126
Y	*258-2579*	1	MOTOR & MTG GP-HYDRAULIC FAN	275

Y - SEPARATE ILLUSTRATION

<END>

383-6243 COVER GP-FUSE PANEL

PART OF 345-5454 CAB AR

SMCS-1417 **i05156961**

NOTE	REF NO	GRAPHIC REF	PART NUMBER	QTY	PART NAME 1 2 3 4 5 6 (PRODUCT LEVEL)	SEE PAGE
	1	1	**8R-9654**	1	LANYARD	
	2	1	**116-7471**	1	PULLER-MINIFUSE	
	3	1	**258-3727**	2	SCREW-TRUSS HEAD (SPECIAL)	
	4	1	**267-2680**	2	FUSE (20-AMPERE)	
	5	1	**383-6244**	1	FILM-FUSE/RELAY	
	6	1	**8T-4205**	3	WASHER-HARD (7.2X14.5X2-MM THK)	

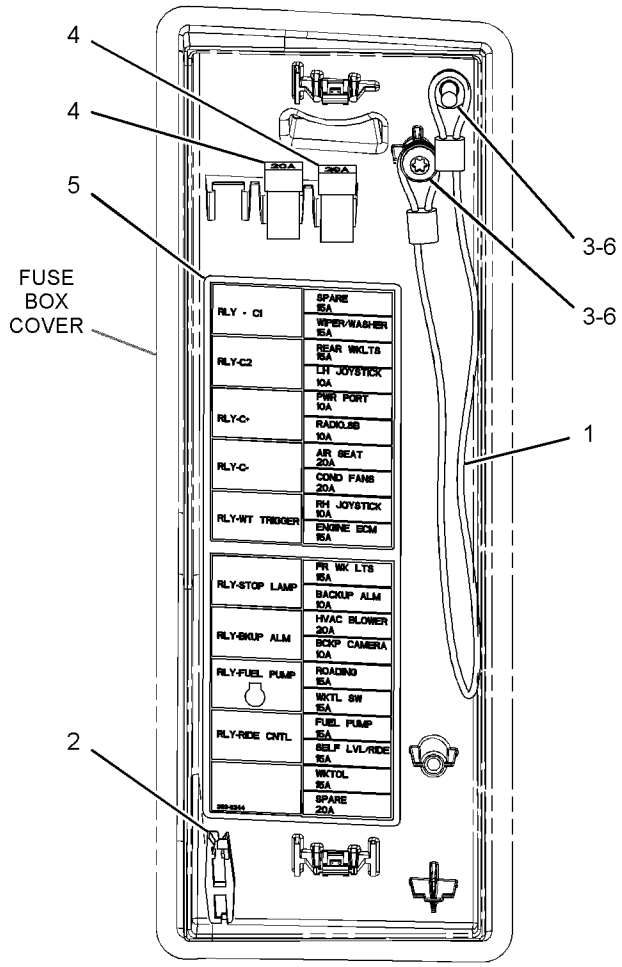

REAR VIEW

GRAPHIC #1 **<END>** g03323508

361-6395 ELECTRONICS GP-MACHINE

PART OF 361-6400 WIRING GP-CAB

SMCS-7610, 7620 **i05162969**

NOTE	PART NUMBER	QTY	PART NAME 1 2 3 4 5 6 (PRODUCT LEVEL)	SEE PAGE
	383-7621	1	SOFTWARE GP-MACHINE	
			—OR—	
	369-3556	1	CONTROL GP-UNPROGRAMMED (MACHINE)	
			—OR—	
	383-7622	1	SERVICE GP-MACHINE	
			(OPTIONAL SERVICE REPLACEMENT)(INCLUDES CONTROL GP & SOFTWARE)	
			<END>	

378-1035 ELECTRONICS GP-MONITOR

PART OF 378-1033 PANEL GP-INSTRUMENT

AN ATTACHMENT

SMCS-7490, 7494, 7601, 7603, 7610, 7620 **i05401776**

NOTE	PART NUMBER	QTY	PART NAME 1 2 3 4 5 6 (PRODUCT LEVEL)	SEE PAGE
	383-7615	1	SOFTWARE GP-MONITOR	
			—OR—	
	378-1005	1	CONTROL GP-UNPROGRAMMED (MONITOR)	
			—OR—	
	383-7616	1	SERVICE GP-MONITOR	
			(OPTIONAL SERVICE REPLACEMENT)(INCLUDES CONTROL GP & SOFTWARE)	
			<END>	

378-1036 ELECTRONICS GP-MONITOR

PART OF 378-1034, 416-9265 PANEL GP-INSTRUMENT

AN ATTACHMENT

SMCS-7490, 7494, 7601, 7603, 7610, 7620 **i05401779**

NOTE	PART NUMBER	QTY	PART NAME 1 2 3 4 5 6 (PRODUCT LEVEL)	SEE PAGE
	383-7619	1	SOFTWARE GP-MONITOR	
			—OR—	
	378-1006	1	CONTROL GP-UNPROGRAMMED (MONITOR)	
			—OR—	
	383-7620	1	SERVICE GP-MONITOR	
			(OPTIONAL SERVICE REPLACEMENT)(INCLUDES CONTROL GP & SOFTWARE)	
			<END>	

387-9089 GLOW PLUG GP

PART OF 380-1768, 380-1769 ENGINE AR-PRIMARY
ALSO AN ATTACHMENT

SMCS-1412 **i05341941**

NOTE	REF NO	GRAPHIC REF	PART NUMBER	QTY	PART NAME 1 2 3 4 5 6 (PRODUCT LEVEL)	SEE PAGE
	1	1	**383-0200**	4	NUT-FLANGE	
	2	1	**387-9899**	4	GLOW PLUG	
	3	1	**387-9900**	4	GASKET	
	4	1	**387-9901**	1	WIRE-GLOW PLUG	

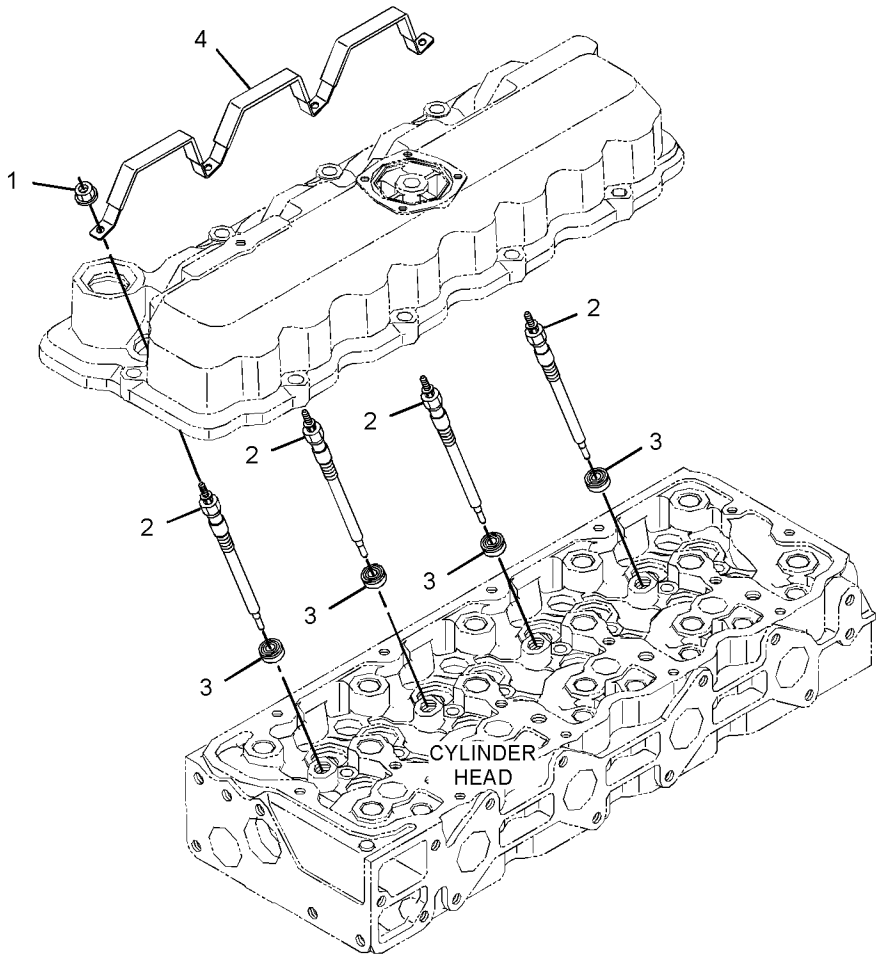

GRAPHIC #1 **<END>** g02882598

361-6397 HARNESS AS-CAB–SEAT

PART OF 361-6400 WIRING GP-CAB

SMCS-1408 **i05162968**

NOTE	PART NUMBER	QTY	PART NAME 1 2 3 4 5 6 (PRODUCT LEVEL)	SEE PAGE
E	**211-5358**		CONDUIT-FLEXIBLE (19-CM)	
E	**201-3304**		CONDUIT (138-CM)	
E	**232-0893**		CONDUIT-FLEXIBLE (6.2-MM ID) (25-CM)	
	8T-8729	3	PIN-CONNECTOR (16-GA TO 18-GA)	
	9W-0852	4	PIN-CONNECTOR (14-GA TO 16-GA)	
	9X-3401	3	PIN-CONNECTOR (16-GA TO 18-GA)	
			–OR–	
	126-1767	3	PIN-CONNECTOR (14-GA TO 16-GA)	
	262-9151	3	PIN-CONNECTOR (12-GA TO 14-GA)	
	275-0600	19	PIN-CONNECTOR (16-GA TO 18-GA)	
	155-2255	2	KIT-CONNECTING PLUG (12-PIN)	
	155-2260	1	KIT-CONNECTING PLUG (3-PIN)	
	155-2271	1	KIT-CONNECTING PLUG (4-PIN)	
	155-2274	3	KIT-CONNECTING PLUG (6-PIN)	
			(EACH PLUG KIT INCLUDES PLUG AS, WEDGE & INTERFACE SEAL)	
	8T-8737	26	PLUG-SEAL	
	102-8805	1	KIT-RECEPTACLE (6-PIN)	
			(INCLUDES RECEPTACLE AS & WEDGE)	
	258-4170	1	RECEPTACLE AS	
	169-0705	5	SEAL	
	8T-8730	14	SOCKET-CONNECTOR (16-GA TO 18-GA)	
	9W-0844	6	SOCKET-CONNECTOR (14-GA TO 16-GA)	
	194-5226	20	WIRE AS (16-GA)	
			–OR–	
	194-5227	20	WIRE AS (14-GA)	
	3S-2093	10	STRAP-CABLE	
E	**119-3662**		TUBE-HEAT SHRINK (10.85-MM DIA) (7-CM)	
E	**125-7874**		TUBE-HEAT SHRINK (5.72-MM DIA) (10-CM)	

E - ORDER BY THE CENTIMETER

<END>

361-6399 HARNESS AS-CAB–BACK

PART OF 361-6400 WIRING GP-CAB

SMCS-1408 **i05341674**

NOTE	PART NUMBER	QTY	PART NAME 1 2 3 4 5 6 (PRODUCT LEVEL)	SEE PAGE
	313-9053	2	BLOCK AS-FUSE	
			(EACH INCLUDES)	
	1H-3244	2	LOCKWASHER	
M	**5C-2890**	2	NUT (M6X1-THD)	
	8T-4205	2	WASHER-HARD (7.2X14.5X2-MM THK)	
	8T-8799	8	BOOT (RED)	
	374-7468	1	CAP-SEAL	
E	**283-0632**		CONDUIT (104-CM)	
E	**283-4198**		CONDUIT (185-CM)	
	9W-1441	1	FUSE (15-AMPERE)	
	113-8490	6	FUSE (10-AMPERE)	
	113-8491	10	FUSE (15-AMPERE)	
	113-8492	4	FUSE (20-AMPERE)	
	203-9007	1	NUT (1-1/2-18-THD)	
	213-0139	15	PIN	
	8T-8729	12	PIN-CONNECTOR (16-GA TO 18-GA)	
	9W-0852	1	PIN-CONNECTOR (14-GA TO 16-GA)	
	9X-3401	13	PIN-CONNECTOR (16-GA TO 18-GA)	
			–OR–	
	126-1767	13	PIN-CONNECTOR (14-GA TO 16-GA)	
	258-4172	2	PLUG AS-CONNECTOR	
	127-5483	1	PLUG AS-CONNECTOR (1-PIN)	
	155-2255	1	KIT-CONNECTING PLUG (12-PIN)	
	155-2265	2	KIT-CONNECTING PLUG (8-PIN)	
	155-2260	1	KIT-CONNECTING PLUG (3-PIN)	
	155-2270	2	KIT-CONNECTING PLUG (2-PIN)	
	155-2274	2	KIT-CONNECTING PLUG (6-PIN)	
			(EACH PLUG KIT INCLUDES PLUG AS, WEDGE & INTERFACE SEAL)	
	167-3693	1	PLUG AS-CONNECTOR (31-PIN)	
	230-4011	3	PLUG AS-CONNECTOR (2-PIN)	
			(EACH INCLUDES)	
	264-7029	1	SEAL-CONNECTOR	
	344-1682	1	PLUG AS-CONNECTOR	
	374-8331	1	PLUG AS-CONNECTOR	
	374-8333	1	PLUG AS-CONNECTOR	
			(EACH PLUG AS INCLUDES)	
	435-5221		BOLT AS	
	225-3854	1	PLUG AS-CONNECTOR (31-PIN)	
	7R-2751	22	PLUG-CONNECTOR	
	8T-8737	50	PLUG-SEAL	
	7G-7917	1	PLUG-SEAL	
	102-8802	1	KIT-RECEPTACLE (2-PIN)	
			(INCLUDES RECEPTACLE AS & WEDGE)	
	265-4123	1	RECEPTACLE-CONNECTOR	
	169-0705	77	SEAL	
	128-4123	17	SEAL	
	128-5016	26	SEAL-CABLE	
	7R-2750	5	SEAL-CONNECTOR	
	7T-0094	4	SOCKET-CONNECTOR (12-GA TO 14-GA)	
	8N-1549	1	SOCKET-CONNECTOR (4-GA)	
	8T-8730	48	SOCKET-CONNECTOR (16-GA TO 18-GA)	
	9W-0844	13	SOCKET-CONNECTOR (14-GA TO 16-GA)	
	9X-3402	6	SOCKET-CONNECTOR (16-GA TO 18-GA)	
			–OR–	
	126-1768	6	SOCKET-CONNECTOR (14-GA TO 16-GA)	
	194-5226	25	WIRE AS (16-GA)	
			–OR–	

361-6399 **HARNESS AS-CAB (*contd.*)** **i05341674**

NOTE	PART NUMBER	QTY	PART NAME 1 2 3 4 5 6 (PRODUCT LEVEL)	SEE PAGE
	194-5227	25	WIRE AS (14-GA)	
	202-0313	26	TERMINAL AS	
	202-0314	22	TERMINAL AS	
			(EACH TERMINAL AS INCLUDES)	
	128-4123	1	SEAL	
	374-8372	40	SOCKET-CONNECTOR (16-GA TO 18-GA)	
			—OR—	
	283-8106	40	SOCKET-CONNECTOR (20-GA)	
	3S-2093	38	STRAP-CABLE	
	189-3158	1	SUPPRESSOR-ARC	
B	**329-3734**		TAPE	
	2L-8069	2	TERMINAL-RING (2-GA TO 10-GA, 3/8-IN SCREW)	
	2L-8079	2	TERMINAL-RING (14-GA TO 16-GA, 3/8-IN SCREW)	
	2L-8078	2	TERMINAL-RING (14-GA TO 16-GA, 5/16-IN SCREW)	
	5P-3454	1	TERMINAL-RING (4-GA, 5/16-IN SCREW)	
	2L-8050	4	TERMINAL-RING (6-GA, 1/4-IN SCREW)	
			—OR—	
	2L-8058	4	TERMINAL-RING (8-GA, 1/4-IN SCREW)	
	2L-8067	3	TERMINAL-RING (10-GA TO 12-GA, 1/4-IN SCREW)	
	2L-8077	1	TERMINAL-RING (14-GA TO 16-GA, 1/4-IN SCREW)	
	204-6466	1	TERMINAL AS-RING	
E	**119-3662**		TUBE-HEAT SHRINK (10.85-MM DIA) (33-CM)	
E	**125-7874**		TUBE-HEAT SHRINK (5.72-MM DIA) (105-CM)	
E	**125-7875**		TUBE-HEAT SHRINK (7.44-MM DIA) (20-CM)	
	270-2679	1	LOCKWASHER	

B - USE AS REQUIRED
E - ORDER BY THE CENTIMETER
M - METRIC PART

<END>

378-1028 HARNESS AS-CAB—AUXILIARY

FRONT

PART OF 345-6240, 345-6260 DOOR GP-CAB, 388-8276, 388-8281 KIT-CAB DOOR & MOUNTING AN ATTACHMENT

SMCS-1408 **i05166116**

NOTE	PART NUMBER	QTY	PART NAME 1 2 3 4 5 6 (PRODUCT LEVEL)	SEE PAGE
E	**232-0895**		CONDUIT-FLEXIBLE (9.6-MM ID) (40-CM)	
	123-7615	1	CONNECTOR	
	8T-8729	2	PIN-CONNECTOR (16-GA TO 18-GA)	
	9W-0852	1	PIN-CONNECTOR (14-GA TO 16-GA)	
	9X-3401	2	PIN-CONNECTOR (16-GA TO 18-GA)	
			—OR—	
	126-1767	2	PIN-CONNECTOR (14-GA TO 16-GA)	
	155-2260	1	KIT-CONNECTING PLUG (3-PIN)	
	155-2271	1	KIT-CONNECTING PLUG (4-PIN)	
			(EACH PLUG KIT INCLUDES PLUG AS, WEDGE & INTERFACE SEAL)	
	8T-8737	1	PLUG-SEAL	
	102-8805	1	KIT-RECEPTACLE (6-PIN)	
			(INCLUDES RECEPTACLE AS & WEDGE)	
	8T-8730	4	SOCKET-CONNECTOR (16-GA TO 18-GA)	
	194-5226	3	WIRE AS (16-GA)	
			—OR—	
	194-5227	3	WIRE AS (14-GA)	
	3S-2093	3	STRAP-CABLE	
	091-2436	2	TERMINAL-BLADE (18-GA TO 22-GA)	
E	**125-7874**		TUBE-HEAT SHRINK (5.72-MM DIA) (5-CM)	

E - ORDER BY THE CENTIMETER

<END>

388-1436 HARNESS AS-CAB—WIPER, WASHER

PART OF 345-6240, 345-6260 DOOR GP-CAB, 388-8276, 388-8281 KIT-CAB DOOR & MOUNTING AN ATTACHMENT

SMCS-1408 **i05166115**

NOTE	PART NUMBER	QTY	PART NAME 1 2 3 4 5 6 (PRODUCT LEVEL)	SEE PAGE
	8T-8729	2	PIN-CONNECTOR (16-GA TO 18-GA)	
	9W-0852	2	PIN-CONNECTOR (14-GA TO 16-GA)	
	155-2271	1	KIT-CONNECTING PLUG (4-PIN)	
			(INCLUDES PLUG AS, WEDGE & INTERFACE SEAL)	
	102-8804	1	KIT-RECEPTACLE (4-PIN)	
			(INCLUDES RECEPTACLE AS & WEDGE)	
	8T-8730	2	SOCKET-CONNECTOR (16-GA TO 18-GA)	
	9W-0844	2	SOCKET-CONNECTOR (14-GA TO 16-GA)	
	3S-2093	4	STRAP-CABLE	
	091-2436	4	TERMINAL-BLADE (18-GA TO 22-GA)	
	104-1995	3	TERMINAL-BLADE (14-GA TO 18-GA)	
E	**125-7874**		TUBE-HEAT SHRINK (5.72-MM DIA) (5-CM)	
E	**125-7875**		TUBE-HEAT SHRINK (7.44-MM DIA) (5-CM)	

E - ORDER BY THE CENTIMETER

<END>

396-7210 HARNESS AS-CAB—CAMERA

PART OF 388-8284 KIT-CAMERA, 396-7209 WIRING GP-CAMERA

AN ATTACHMENT

SMCS-1408 **i05156467**

NOTE	PART NUMBER	QTY	PART NAME 1 2 3 4 5 6 (PRODUCT LEVEL)	SEE PAGE
	8T-8729	4	PIN-CONNECTOR (16-GA TO 18-GA)	
	102-8804	1	KIT-RECEPTACLE (4-PIN)	
			(INCLUDES RECEPTACLE AS & WEDGE)	
E	**125-7874**		TUBE-HEAT SHRINK (5.72-MM DIA) (20-CM)	
D	**6V-2689**		TUBE-HEAT SHRINK (6.35-MM DIA) (3-M)	

D - ORDER BY THE METER
E - ORDER BY THE CENTIMETER

<END>

421-4209 HARNESS AS-CHASSIS—WORK TOOL

PART OF 423-8296 CONVERSION GP-WORK TOOL

AN ATTACHMENT

SMCS-1408 **i05289968**

NOTE	PART NUMBER	QTY	PART NAME 1 2 3 4 5 6 (PRODUCT LEVEL)	SEE PAGE
	9W-0852	3	PIN-CONNECTOR (14-GA TO 16-GA)	
	179-5434	1	PLUG AS	
	3K-8782	1	FUSE (10-AMPERE)	
	155-2260	1	KIT-CONNECTING PLUG (3-PIN)	
			(INCLUDES PLUG AS, WEDGE & INTERFACE SEAL)	
	8T-8737	11	PLUG-SEAL	
	344-6145	1	RECEPTACLE AS	
	9W-0844	3	SOCKET-CONNECTOR (14-GA TO 16-GA)	
	194-5226	2	WIRE AS (16-GA)	
			—OR—	
	194-5227	2	WIRE AS (14-GA)	

<END>

378-1023 HARNESS AS-ENGINE

PART OF 378-1022 WIRING GP-ENGINE

SMCS-1403, 1408 **i05380447**

NOTE	PART NUMBER	QTY	PART NAME 1 2 3 4 5 6 (PRODUCT LEVEL)	SEE PAGE
	131-3201	1	BOOT	
	7Y-3995	1	CONNECTOR-PLUG	
	125-4791	1	CONNECTOR-RECEPTACLE	
	8T-8729	4	PIN-CONNECTOR (16-GA TO 18-GA)	
	9X-3401	3	PIN-CONNECTOR (16-GA TO 18-GA)	
			—OR—	
	126-1767	3	PIN-CONNECTOR (14-GA TO 16-GA)	
	262-9151	2	PIN-CONNECTOR (12-GA TO 14-GA)	
	155-2255	1	KIT-CONNECTING PLUG (12-PIN)	
	155-2260	1	KIT-CONNECTING PLUG (3-PIN)	
			(EACH PLUG KIT INCLUDES PLUG AS, WEDGE & INTERFACE SEAL)	
	396-8364	1	PLUG AS-CONNECTOR	
	8T-8737	7	PLUG-SEAL	
	102-8806	1	KIT-RECEPTACLE (8-PIN)	
	177-9645	1	KIT-RECEPTACLE (2-PIN)	
			(EACH RECEPTACLE KIT INCLUDES RECEPTACLE AS & WEDGE)	
	134-2540	1	RESISTOR AS-CONNECTION (3-PIN)	
	125-4794	1	SEAL	
	314-7328	1	SEAL	
	383-0805	3	SEAL	
E	**307-2338**		SLEEVE (22-CM)	
	8T-8730	5	SOCKET-CONNECTOR (16-GA TO 18-GA)	
	194-5226	4	WIRE AS (16-GA)	
			—OR—	
	194-5227	4	WIRE AS (14-GA)	
	366-6036	4	SOCKET-CONNECTOR	
	3S-2093	7	STRAP-CABLE	
	2L-8081	1	TERMINAL-RING (14-GA TO 16-GA, 1/2-IN SCREW)	
	7N-7221	1	TERMINAL-BLADE (18-GA TO 22-GA)	
	2L-8067	1	TERMINAL-RING (10-GA TO 12-GA, 1/4-IN SCREW)	
	7Y-3996	1	TERMINAL-BLADE (14-GA TO 20-GA)	
	125-4793	1	TERMINAL (FEMALE)	
	383-0806	3	TERMINAL (FEMALE)	
E	**125-7874**		TUBE-HEAT SHRINK (5.72-MM DIA) (30-CM)	

E - ORDER BY THE CENTIMETER

<END>

378-1029 HARNESS AS-FRONT—IMPLEMENT VALVE

PART OF 416-9270 WIRING GP-FRONT

AN ATTACHMENT

SMCS-1408 **i05166866**

NOTE	PART NUMBER	QTY	PART NAME 1 2 3 4 5 6 (PRODUCT LEVEL)	SEE PAGE
	155-2270	6	KIT-CONNECTING PLUG (2-PIN)	
			(EACH INCLUDES PLUG AS, WEDGE & INTERFACE SEAL)	
	344-1678	1	PLUG AS-CONNECTOR	
	344-1690	2	PLUG-SEAL	
	8T-8730	12	SOCKET-CONNECTOR (16-GA TO 18-GA)	
	3S-2093	6	STRAP-CABLE	
E	**125-7874**		TUBE-HEAT SHRINK (5.72-MM DIA) (5-CM)	
E	**125-7875**		TUBE-HEAT SHRINK (7.44-MM DIA) (5-CM)	

E - ORDER BY THE CENTIMETER

<END>

356-6106 HARNESS AS-HEATER & AIR COND—BLOWER MOTOR

PART OF 356-6113 CONTROL GP-AIR & TEMPERATURE

AN ATTACHMENT

SMCS-1408 **i05163088**

NOTE	PART NUMBER	QTY	PART NAME 1 2 3 4 5 6 (PRODUCT LEVEL)	SEE PAGE
	228-5856	1	CONNECTOR	
	8T-8729	2	PIN-CONNECTOR (16-GA TO 18-GA)	
	9W-0852	5	PIN-CONNECTOR (14-GA TO 16-GA)	
	8T-8737	5	PLUG-SEAL	
	103-8134	1	KIT-RECEPTACLE (12-PIN)	
			(INCLUDES RECEPTACLE AS & WEDGE)	
	3S-2093	21	STRAP-CABLE	
	091-2436	2	TERMINAL-BLADE (18-GA TO 22-GA)	
	104-1995	2	TERMINAL-BLADE (14-GA TO 18-GA)	
	128-7714	5	TERMINAL	
E	**125-7874**		TUBE-HEAT SHRINK (5.72-MM DIA) (15-CM)	

E - ORDER BY THE CENTIMETER

<END>

361-6398 HARNESS AS-HEATER & AIR COND–REAR

PART OF 361-6396 WIRING GP-AIR CONDITIONER
AN ATTACHMENT

SMCS-1408 **i05303620**

NOTE	PART NUMBER	QTY	PART NAME 1 2 3 4 5 6 (PRODUCT LEVEL)	SEE PAGE
	8T-8729	2	PIN-CONNECTOR (16-GA TO 18-GA)	
	9X-3401	2	PIN-CONNECTOR (16-GA TO 18-GA)	
			–OR–	
	126-1767	2	PIN-CONNECTOR (14-GA TO 16-GA)	
	9X-1054	1	PLUG AS-CONNECTOR (4-PIN)	
	155-2270	3	KIT-CONNECTING PLUG (2-PIN)	
			(EACH INCLUDES PLUG AS, WEDGE & INTERFACE SEAL)	
	8T-8737	2	PLUG-SEAL	
	102-8805	1	KIT-RECEPTACLE (6-PIN)	
			(INCLUDES RECEPTACLE AS & WEDGE)	
	100-6674	2	SEAL-CONNECTOR	
	8T-8730	6	SOCKET-CONNECTOR (16-GA TO 18-GA)	
	124-5640	2	TERMINAL-SOCKET	
	3S-2093	4	STRAP-CABLE	
	189-3158	1	SUPPRESSOR-ARC	
	2L-8069	1	TERMINAL-RING (2-GA TO 10-GA, 3/8-IN SCREW)	
	9X-1056	3	TERMINAL-RECEPTACLE (14-GA TO 16-GA)	
	100-5041	1	TERMINAL-RECEPTACLE (18-GA TO 20-GA)	
E	**125-7874**		TUBE-HEAT SHRINK (5.72-MM DIA) (10-CM)	
E	**125-7875**		TUBE-HEAT SHRINK (7.44-MM DIA) (5-CM)	

E - ORDER BY THE CENTIMETER

<END>

378-1024 HARNESS AS-HEATER & AIR COND–FRONT

PART OF 361-6396 WIRING GP-AIR CONDITIONER, 361-6384 WIRING GP-HEATER
AN ATTACHMENT

SMCS-1408 **i05163091**

NOTE	PART NUMBER	QTY	PART NAME 1 2 3 4 5 6 (PRODUCT LEVEL)	SEE PAGE
	8T-8729	2	PIN-CONNECTOR (16-GA TO 18-GA)	
	9W-0852	1	PIN-CONNECTOR (14-GA TO 16-GA)	
	155-2255	1	KIT-CONNECTING PLUG (12-PIN)	
	155-2270	1	KIT-CONNECTING PLUG (2-PIN)	
	155-2271	2	KIT-CONNECTING PLUG (4-PIN)	
			(EACH PLUG KIT INCLUDES PLUG AS, WEDGE & INTERFACE SEAL)	
	8T-8737	6	PLUG-SEAL	
	102-8803	1	KIT-RECEPTACLE (3-PIN)	
			(INCLUDES RECEPTACLE AS & WEDGE)	
	8T-8730	5	SOCKET-CONNECTOR (16-GA TO 18-GA)	
	9W-0844	10	SOCKET-CONNECTOR (14-GA TO 16-GA)	
	194-5226	1	WIRE AS (16-GA)	
			–OR–	
	194-5227	1	WIRE AS (14-GA)	
	3S-2093	2	STRAP-CABLE	
	2L-8069	1	TERMINAL-RING (2-GA TO 10-GA, 3/8-IN SCREW)	
E	**125-7874**		TUBE-HEAT SHRINK (5.72-MM DIA) (10-CM)	
E	**125-7875**		TUBE-HEAT SHRINK (7.44-MM DIA) (5-CM)	

E - ORDER BY THE CENTIMETER

<END>

356-6075 HARNESS AS-LIGHTING

PART OF 422-3323 KIT-ROADING CONVERSION, 356-6074 LIGHTING GP-ROADING
AN ATTACHMENT

SMCS-1408 **i05256754**

NOTE	PART NUMBER	QTY	PART NAME 1 2 3 4 5 6 (PRODUCT LEVEL)	SEE PAGE
	8T-8729	4	PIN-CONNECTOR (16-GA TO 18-GA)	
	9W-0852	1	PIN-CONNECTOR (14-GA TO 16-GA)	
	155-2271	1	KIT-CONNECTING PLUG (4-PIN)	
	155-2274	1	KIT-CONNECTING PLUG (6-PIN)	
			(EACH PLUG KIT INCLUDES PLUG AS, WEDGE & INTERFACE SEAL)	
	8T-8737	3	PLUG-SEAL	
	102-8802	1	KIT-RECEPTACLE (2-PIN)	
	102-8804	1	KIT-RECEPTACLE (4-PIN)	
			(EACH RECEPTACLE KIT INCLUDES RECEPTACLE AS & WEDGE)	
	8T-8730	8	SOCKET-CONNECTOR (16-GA TO 18-GA)	
E	**125-7874**		TUBE-HEAT SHRINK (5.72-MM DIA) (15-CM)	

E - ORDER BY THE CENTIMETER

<END>

356-6077 HARNESS AS-LIGHTING—PANEL

PART OF 444-5039 LAMP GP-ROADING, 356-6074 LIGHTING GP-ROADING
AN ATTACHMENT

SMCS-1408 **i05256755**

NOTE	PART NUMBER	QTY	PART NAME 1 2 3 4 5 6 (PRODUCT LEVEL)	SEE PAGE
	228-5856	1	CONNECTOR	
	8T-8729	3	PIN-CONNECTOR (16-GA TO 18-GA)	
	9W-0852	4	PIN-CONNECTOR (14-GA TO 16-GA)	
	7R-2751	3	PLUG-CONNECTOR	
	8T-8737	1	PLUG-SEAL	
	102-8806	1	KIT-RECEPTACLE (8-PIN)	
			(INCLUDES RECEPTACLE AS & WEDGE)	
	128-5016	3	SEAL-CABLE	
	202-0313	2	TERMINAL AS	
			(EACH INCLUDES)	
	128-5016	1	SEAL-CABLE	
	202-0314	1	TERMINAL AS	
	128-4123	1	SEAL	
	3S-2093	24	STRAP-CABLE	
	091-2436	8	TERMINAL-BLADE (18-GA TO 22-GA)	
	104-1995	12	TERMINAL-BLADE (14-GA TO 18-GA)	
E	**125-7874**		TUBE-HEAT SHRINK (5.72-MM DIA) (30-CM)	
E	**125-7875**		TUBE-HEAT SHRINK (7.44-MM DIA) (5-CM)	

E - ORDER BY THE CENTIMETER

<END>

378-1026 HARNESS AS-PANEL

PART OF 378-1025 PANEL GP-INSTRUMENT

SMCS-1408, 7451 **i05341675**

NOTE	PART NUMBER	QTY	PART NAME 1 2 3 4 5 6 (PRODUCT LEVEL)	SEE PAGE
	374-7465	1	CAP-SEAL	
	374-7467	1	CAP-SEAL	
	123-7615	1	CONNECTOR	
	142-9117	2	CONNECTOR	
	228-5856	3	CONNECTOR	
	8T-8729	1	PIN-CONNECTOR (16-GA TO 18-GA)	
	9W-0852	4	PIN-CONNECTOR (14-GA TO 16-GA)	
	9X-3401	7	PIN-CONNECTOR (16-GA TO 18-GA)	
			—OR—	
	126-1767	7	PIN-CONNECTOR (14-GA TO 16-GA)	
	262-9151	12	PIN-CONNECTOR (12-GA TO 14-GA)	
	275-0600	21	PIN-CONNECTOR (16-GA TO 18-GA)	
	155-2265	1	KIT-CONNECTING PLUG (8-PIN)	
	155-2260	1	KIT-CONNECTING PLUG (3-PIN)	
	155-2270	2	KIT-CONNECTING PLUG (2-PIN)	
	155-2271	2	KIT-CONNECTING PLUG (4-PIN)	
			(EACH PLUG KIT INCLUDES PLUG AS, WEDGE & INTERFACE SEAL)	
	230-4009	1	PLUG AS-CONNECTOR (12-PIN)	
	264-7034	1	SEAL-CONNECTOR	
	8T-8737	4	PLUG-SEAL	
	258-4170	1	RECEPTACLE AS	
	169-0705	3	SEAL	
	8T-8730	13	SOCKET-CONNECTOR (16-GA TO 18-GA)	
	9W-0844	6	SOCKET-CONNECTOR (14-GA TO 16-GA)	
	9X-3402	10	SOCKET-CONNECTOR (16-GA TO 18-GA)	
			—OR—	
	126-1768	10	SOCKET-CONNECTOR (14-GA TO 16-GA)	
	194-5226	2	WIRE AS (16-GA)	
			—OR—	
	194-5227	2	WIRE AS (14-GA)	
	3S-2093	27	STRAP-CABLE	
B	**329-3734**		TAPE	
	122-4401	6	TERMINAL	
	5P-4571	4	TERMINAL-BLADE (14-GA TO 16-GA)	
	097-7234	4	TERMINAL-BLADE (18-GA TO 22-GA)	
	7N-7221	2	TERMINAL-BLADE (18-GA TO 22-GA)	
	091-2436	33	TERMINAL-BLADE (18-GA TO 22-GA)	
	112-9611	26	TERMINAL-BLADE	
	3E-9179	1	TERMINAL-RECEPTACLE (14-GA TO 18-GA)	
E	**119-3662**		TUBE-HEAT SHRINK (10.85-MM DIA) (26-CM)	
E	**125-7874**		TUBE-HEAT SHRINK (5.72-MM DIA) (30-CM)	
E	**125-7875**		TUBE-HEAT SHRINK (7.44-MM DIA) (10-CM)	

B - USE AS REQUIRED
E - ORDER BY THE CENTIMETER

<END>

361-6391 HARNESS AS-PLATFORM–REAR

PART OF 388-1435 WIRING GP-PLATFORM

SMCS-1408 **i05341062**

NOTE	PART NUMBER	QTY	PART NAME 1 2 3 4 5 6 (PRODUCT LEVEL)	SEE PAGE
	374-7463	2	CAP-SEAL	
	211-0052	1	NUT (1-11/16-18-THD)	
	213-0139	2	PIN	
	8N-1548	1	PIN-CONNECTOR (4-GA)	
	8T-8729	26	PIN-CONNECTOR (16-GA TO 18-GA)	
	9W-0852	5	PIN-CONNECTOR (14-GA TO 16-GA)	
	9X-3401	5	PIN-CONNECTOR (16-GA TO 18-GA)	
	9X-1054	2	PLUG AS-CONNECTOR (4-PIN)	
	155-2265	1	KIT-CONNECTING PLUG (8-PIN)	
	155-2270	7	KIT-CONNECTING PLUG (2-PIN)	
	155-2271	1	KIT-CONNECTING PLUG (4-PIN)	
	177-9648	1	KIT-CONNECTING PLUG (2-PIN)	
			(EACH PLUG KIT INCLUDES PLUG AS, WEDGE & INTERFACE SEAL)	
	8T-8737	8	PLUG-SEAL	
	102-8801	1	KIT-RECEPTACLE (12-PIN)	
			(INCLUDES RECEPTACLE AS & WEDGE)	
	167-3692	1	RECEPTACLE AS-CONNECTOR (31-PIN)	
	188-6210	1	RECEPTACLE AS-CONNECTOR (1-PIN)	
	8T-8730	20	SOCKET-CONNECTOR (16-GA TO 18-GA)	
	9W-0844	5	SOCKET-CONNECTOR (14-GA TO 16-GA)	
	3S-2093	5	STRAP-CABLE	
B	**329-3734**		TAPE	
	2L-8069	1	TERMINAL-RING (2-GA TO 10-GA, 3/8-IN SCREW)	
	2L-8066	2	TERMINAL-RING (10-GA TO 12-GA, NO. 10 SCREW)	
	378-1015	1	TERMINAL AS	
	378-1014	1	TERMINAL-RING	
E	**125-7876**		TUBE-HEAT SHRINK (17.78-MM DIA) (4-CM)	
	9X-1055	4	TERMINAL-RECEPTACLE (12-GA)	
	100-5041	4	TERMINAL-RECEPTACLE (18-GA TO 20-GA)	
E	**119-3662**		TUBE-HEAT SHRINK (10.85-MM DIA) (7-CM)	
E	**125-7874**		TUBE-HEAT SHRINK (5.72-MM DIA) (10-CM)	
	128-4249	1	LOCKWASHER	

B - USE AS REQUIRED
E - ORDER BY THE CENTIMETER

<END>

361-6393 HARNESS AS-PLATFORM–FRONT

PART OF 388-1435 WIRING GP-PLATFORM

SMCS-1408 **i05163075**

NOTE	PART NUMBER	QTY	PART NAME 1 2 3 4 5 6 (PRODUCT LEVEL)	SEE PAGE
	374-7463	4	CAP-SEAL	
	211-0052	1	NUT (1-11/16-18-THD)	
	155-2270	11	KIT-CONNECTING PLUG (2-PIN)	
	155-2271	2	KIT-CONNECTING PLUG (4-PIN)	
			(EACH PLUG KIT INCLUDES PLUG AS, WEDGE & INTERFACE SEAL)	
	8T-8737	12	PLUG-SEAL	
	225-3861	1	RECEPTACLE AS (31-PIN)	
	8T-8730	29	SOCKET-CONNECTOR (16-GA TO 18-GA)	
	9W-0844	3	SOCKET-CONNECTOR (14-GA TO 16-GA)	
	194-5226	17	WIRE AS (16-GA)	
			–OR–	
	194-5227	17	WIRE AS (14-GA)	
	2L-8079	1	TERMINAL-RING (14-GA TO 16-GA, 3/8-IN SCREW)	
E	**125-7874**		TUBE-HEAT SHRINK (5.72-MM DIA) (15-CM)	
E	**125-7875**		TUBE-HEAT SHRINK (7.44-MM DIA) (10-CM)	
	128-4249	1	LOCKWASHER	

E - ORDER BY THE CENTIMETER

<END>

383-6247 HARNESS AS-PLATFORM–REAR, RH

PART OF 388-1435 WIRING GP-PLATFORM

SMCS-1408 **i05162952**

NOTE	PART NUMBER	QTY	PART NAME 1 2 3 4 5 6 (PRODUCT LEVEL)	SEE PAGE
	374-7463	1	CAP-SEAL	
	176-1477	1	PLUG AS (2-PIN)	
	155-2260	1	KIT-CONNECTING PLUG (3-PIN)	
	155-2270	4	KIT-CONNECTING PLUG (2-PIN)	
	155-2271	1	KIT-CONNECTING PLUG (4-PIN)	
			(EACH PLUG KIT INCLUDES PLUG AS, WEDGE & INTERFACE SEAL)	
	8T-8737	1	PLUG-SEAL	
	7G-7917	2	PLUG-SEAL	
	185-1861	2	SEAL-WIRE	
	8T-8730	14	SOCKET-CONNECTOR (16-GA TO 18-GA)	
	3S-2093	6	STRAP-CABLE	
	176-1521	2	TERMINAL	
	2L-8071	1	TERMINAL-RING (10-GA TO 12-GA, 1/2-IN SCREW)	
E	**125-7875**		TUBE-HEAT SHRINK (7.44-MM DIA) (5-CM)	

E - ORDER BY THE CENTIMETER

<END>

383-6246 HARNESS AS-QUICK COUPLER–LIFT

PART OF 361-6378 WIRING GP-QUICK COUPLER
AN ATTACHMENT

SMCS-1408, 6129 **i05322267**

NOTE	PART NUMBER	QTY	PART NAME 1 2 3 4 5 6 (PRODUCT LEVEL)	SEE PAGE
	1S-0178	2	CONNECTOR-HOSE	
G	**122-6870**		HOSE-HYDRAULIC (26-IN)	
	213-0139	2	PIN	
	262-9151	2	PIN-CONNECTOR (12-GA TO 14-GA)	
	177-9648	1	KIT-CONNECTING PLUG (2-PIN)	
			(INCLUDES PLUG AS, WEDGE & INTERFACE SEAL)	
	177-9645	1	KIT-RECEPTACLE (2-PIN)	
			(INCLUDES RECEPTACLE AS & WEDGE)	
E	**317-1204**		SLEEVE (150-CM)	
	3S-2093	2	STRAP-CABLE	
B	**329-3734**		TAPE	
E	**8T-2225**		TUBE-HEAT SHRINK (25.4-MM DIA) (15-CM)	

B - USE AS REQUIRED
E - ORDER BY THE CENTIMETER
G - ORDER BY THE INCH

<END>

436-1609 HARNESS AS-QUICK COUPLER

PART OF 361-6378 WIRING GP-QUICK COUPLER
AN ATTACHMENT

SMCS-1408, 6129 **i05401570**

NOTE	PART NUMBER	QTY	PART NAME 1 2 3 4 5 6 (PRODUCT LEVEL)	SEE PAGE
	373-1592	1	CIRCUIT BREAKER AS	
	373-1587	1	CONNECTOR AS	
	373-1589	1	SEAL	
	177-9648	1	KIT-CONNECTING PLUG (2-PIN)	
			(INCLUDES PLUG AS, WEDGE & INTERFACE SEAL)	
	102-8803	1	KIT-RECEPTACLE (3-PIN)	
			(INCLUDES RECEPTACLE AS & WEDGE)	
	213-0139	2	PIN	
	8T-8729	3	PIN-CONNECTOR (16-GA TO 18-GA)	
	360-7527	2	PLUG AS-CONNECTOR	
	173-8919	2	SEAL-CONNECTOR	
	3S-2093	5	STRAP-CABLE	
	196-2414	2	TERMINAL AS	
			(EACH INCLUDES)	
	173-8919	1	SEAL-CONNECTOR	
	9X-1055	6	TERMINAL-RECEPTACLE (12-GA)	
	100-5041	4	TERMINAL-RECEPTACLE (18-GA TO 20-GA)	
	2L-8071	1	TERMINAL-RING (10-GA TO 12-GA, 1/2-IN SCREW)	
	2L-8066	1	TERMINAL-RING (10-GA TO 12-GA, NO. 10 SCREW)	
E	**125-7874**		TUBE-HEAT SHRINK (5.72-MM DIA) (5-CM)	
E	**125-7875**		TUBE-HEAT SHRINK (7.44-MM DIA) (10-CM)	

E - ORDER BY THE CENTIMETER

<END>

200-5728 HARNESS AS-RADIO

PART OF 345-6175 INSTALLATION GP-RADIO, 388-8283 KIT-RADIO
AN ATTACHMENT

SMCS-1408 **i05346149**

NOTE	PART NUMBER	QTY	PART NAME 1 2 3 4 5 6 (PRODUCT LEVEL)	SEE PAGE
	172-8037	1	CONNECTOR (RADIO)	
	160-3518	1	KIT-RECEPTACLE (8-PIN)	
			(INCLUDES RECEPTACLE AS & WEDGE)	
	8T-8729	7	PIN-CONNECTOR (16-GA TO 18-GA)	
	8T-8737	1	PLUG-SEAL	
	172-8039	11	TERMINAL (RADIO)	

<END>

293-9044 HARNESS AS-REAR LIGHTING—STOP, TAIL, TURN

PART OF 422-3324 KIT-ROADING CONVERSION
AN ATTACHMENT

SMCS-1408 **i05347115**

NOTE	PART NUMBER	QTY	PART NAME 1 2 3 4 5 6 (PRODUCT LEVEL)	SEE PAGE
	155-2271	1	KIT-CONNECTING PLUG (4-PIN)	
			(INCLUDES PLUG AS, WEDGE & INTERFACE SEAL)	
	102-8804	1	KIT-RECEPTACLE (4-PIN)	
			(INCLUDES RECEPTACLE AS & WEDGE)	
	8T-8729	4	PIN-CONNECTOR (16-GA TO 18-GA)	
	8T-8730	4	SOCKET-CONNECTOR (16-GA TO 18-GA)	
	5P-4571	2	TERMINAL-BLADE (14-GA TO 16-GA)	
E	**125-7874**		TUBE-HEAT SHRINK (5.72-MM DIA) (10-CM)	

E - ORDER BY THE CENTIMETER

<END>

356-6095 HARNESS AS-RIDE CONTROL

PART OF 356-6096 WIRING GP-RIDE CONTROL
AN ATTACHMENT

SMCS-1408 **i05348568**

NOTE	PART NUMBER	QTY	PART NAME 1 2 3 4 5 6 (PRODUCT LEVEL)	SEE PAGE
	155-2270	4	KIT-CONNECTING PLUG (2-PIN)	
			(EACH INCLUDES PLUG AS,WEDGE & INTERFACE SEAL)	
	102-8802	1	KIT-RECEPTACLE (2-PIN)	
			(INCLUDES RECEPTACLE AS & WEDGE)	
	8T-8729	2	PIN-CONNECTOR (16-GA TO 18-GA)	
	8T-8730	8	SOCKET-CONNECTOR (16-GA TO 18-GA)	
	189-3158	1	SUPPRESSOR-ARC	
E	**125-7875**		TUBE-HEAT SHRINK (7.44-MM DIA) (10-CM)	

E - ORDER BY THE CENTIMETER

<END>

421-4206 HARNESS AS-SENSOR—SELF LEVEL

PART OF 421-4219 WIRING GP-WORK TOOL
AN ATTACHMENT

SMCS-1408, 1901 **i05322266**

NOTE	PART NUMBER	QTY	PART NAME 1 2 3 4 5 6 (PRODUCT LEVEL)	SEE PAGE
	1S-0178	2	CONNECTOR-HOSE	
G	**122-6870**		HOSE-HYDRAULIC (26.8-IN)	
	9X-3401	6	PIN-CONNECTOR (16-GA TO 18-GA)	
			—OR—	
	126-1767	6	PIN-CONNECTOR (14-GA TO 16-GA)	
	155-2271	2	KIT-CONNECTING PLUG (4-PIN)	
			(EACH INCLUDES PLUG AS, WEDGE & INTERFACE SEAL)	
	230-4013	1	PLUG AS-CONNECTOR (3-PIN)	
	264-7030	1	SEAL-CONNECTOR	
	8T-8737	1	PLUG-SEAL	
	102-8805	1	KIT-RECEPTACLE (6-PIN)	
			(INLUDES RECEPTACLE AS & WEDGE)	
E	**317-1204**		SLEEVE (110-CM)	
	9X-3402	3	SOCKET-CONNECTOR (16-GA TO 18-GA)	
			—OR—	
	126-1768	3	SOCKET-CONNECTOR (14-GA TO 16-GA)	
	194-5226	7	WIRE AS (16-GA)	
			—OR—	
	194-5227	7	WIRE AS (14-GA)	
	3S-2093	2	STRAP-CABLE	
B	**329-3734**		TAPE	
E	**8T-2225**		TUBE-HEAT SHRINK (25.4-MM DIA) (15-CM)	
E	**125-7874**		TUBE-HEAT SHRINK (5.72-MM DIA) (10-CM)	

B - USE AS REQUIRED
E - ORDER BY THE CENTIMETER
G - ORDER BY THE INCH

<END>

378-1030 HARNESS AS-SOLENOID—IMPLEMENT VALVE

PART OF 421-4224 WIRING GP-FRONT
AN ATTACHMENT

SMCS-1408, 1467 **i05160114**

NOTE	PART NUMBER	QTY	PART NAME 1 2 3 4 5 6 (PRODUCT LEVEL)	SEE PAGE
	155-2270	7	KIT-CONNECTING PLUG (2-PIN)	
			(EACH INCLUDES PLUG AS, WEDGE & INTERFACE SEAL)	
	344-1678	1	PLUG AS-CONNECTOR	
	8T-8730	14	SOCKET-CONNECTOR (16-GA TO 18-GA)	
	3S-2093	3	STRAP-CABLE	
E	**125-7874**		TUBE-HEAT SHRINK (5.72-MM DIA) (5-CM)	
E	**125-7875**		TUBE-HEAT SHRINK (7.44-MM DIA) (5-CM)	

E - ORDER BY THE CENTIMETER

<END>

378-1027 HARNESS AS-WIRING—PEDAL

PART OF 388-8285 KIT-PEDAL
AN ATTACHMENT

SMCS-1408 **i05401571**

NOTE	PART NUMBER	QTY	PART NAME 1 2 3 4 5 6 (PRODUCT LEVEL)	SEE PAGE
E	**289-3195**		CONDUIT (98-CM)	
	102-8803	1	KIT-RECEPTACLE (3-PIN)	
			(INCLUDES RECEPTACLE AS, & WEDGE)	
	8T-8729	3	PIN-CONNECTOR (16-GA TO 18-GA)	

E - ORDER BY THE CENTIMETER

<END>

356-6115 HARNESS AS-WORK TOOL

PART OF 388-8265, 388-8273 KIT-WORK TOOL WIRING, 421-4207 WIRING GP-WORK TOOL
AN ATTACHMENT

SMCS-1408 **i05370028**

NOTE	PART NUMBER	QTY	PART NAME 1 2 3 4 5 6 (PRODUCT LEVEL)	SEE PAGE
	156-1458	1	COVER	
	102-8806	1	KIT-RECEPTACLE (8-PIN)	
			(INCLUDES RECEPTACLE AS & WEDGE)	
	8T-8729	6	PIN-CONNECTOR (16-GA TO 18-GA)	
	9W-0852	11	PIN-CONNECTOR (14-GA TO 16-GA)	
	8T-8737	5	PLUG-SEAL	
	344-6145	1	RECEPTACLE AS	
E	**317-1204**		SLEEVE (149-CM)	
	3S-2093	1	STRAP-CABLE	
	2L-8079	1	TERMINAL-RING (14-GA TO 16-GA, 3/8-IN SCREW)	
E	**125-7876**		TUBE-HEAT SHRINK (17.78-MM DIA) (14-CM)	

E - ORDER BY THE CENTIMETER

<END>

378-3722 HARNESS AS-WORK TOOL—CONNECTING

PART OF 424-0450, 424-0451 BLADE AR
AN ATTACHMENT

SMCS-1408 **i05292896**

NOTE	PART NUMBER	QTY	PART NAME 1 2 3 4 5 6 (PRODUCT LEVEL)	SEE PAGE
	155-2270	8	KIT-CONNECTING PLUG (2-PIN)	
			(EACH INCLUDES PLUG AS, WEDGE & INTERFACE SEAL)	
	344-6144	1	PLUG AS-CONNECTOR (14-PIN)	
	8T-8737	9	PLUG-SEAL	
	8T-8730	7	SOCKET-CONNECTOR (16-GA TO 18-GA)	
	9W-0844	14	SOCKET-CONNECTOR (14-GA TO 16-GA)	
	3S-2093	12	STRAP-CABLE	
	189-3158	2	SUPPRESSOR-ARC	
E	**119-3662**		TUBE-HEAT SHRINK (10.85-MM DIA) (7-CM)	
E	**125-7874**		TUBE-HEAT SHRINK (5.72-MM DIA) (20-CM)	

E - ORDER BY THE CENTIMETER

<END>

345-3556 HEATER GP-JACKET WATER

115-VOLT, 400-WATT

AN ATTACHMENT

SMCS-1383 **i05172938**

NOTE	REF NO	GRAPHIC REF	PART NUMBER	QTY	PART NAME 1 2 3 4 5 6 (PRODUCT LEVEL)	SEE PAGE
	1	1	**345-3557**	1	ELEMENT AS-JACKET WATER HEATER	
	2	1	**345-3567**	1	CORD AS-HEATER ELEMENT (115-VOLT, 10-AMPERE)	
	3	1	**3S-2093**	1	STRAP-CABLE	

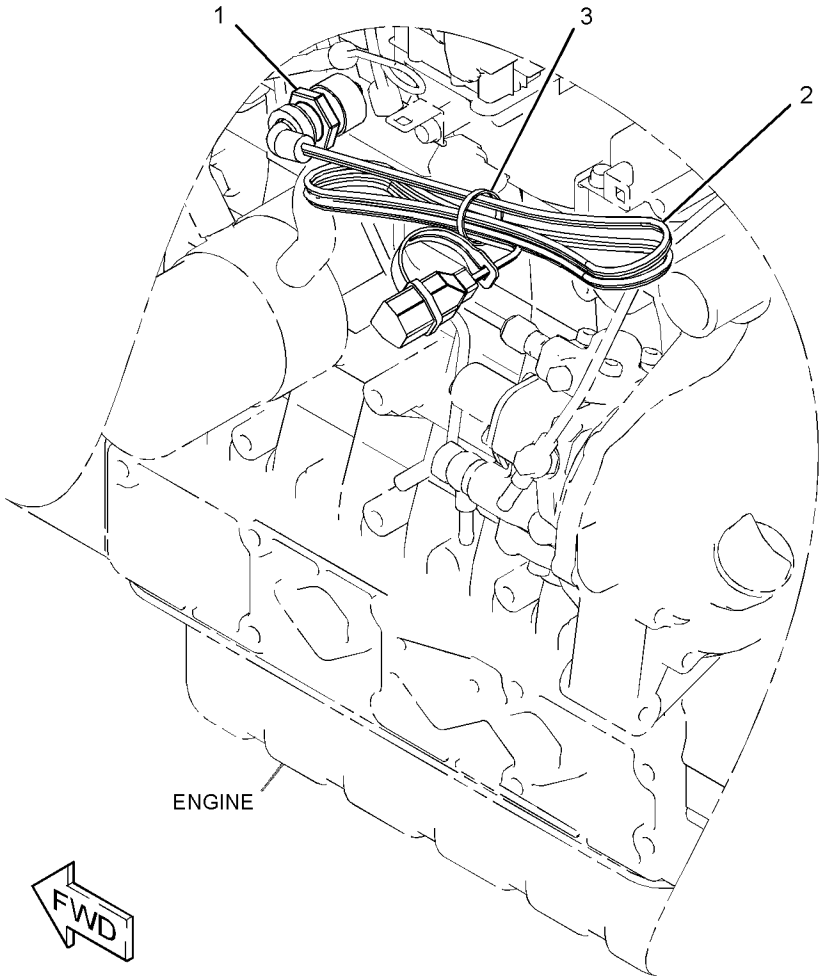

GRAPHIC #1 **<END>** g03162718

380-2437 INSTALLATION GP-COMMUNICATION–PRODUCT LINK 421

AN ATTACHMENT

SMCS-1408, 1901, 1902, 5267, 7602, 7606, 7610, 7620 **i05228090**

NOTE	REF NO	GRAPHIC REF	PART NUMBER	QTY	PART NAME 1 2 3 4 5 6 (PRODUCT LEVEL)	SEE PAGE
	1	1	**3E-0105**	2	MOUNT	
	2	1	**258-3727**	4	SCREW-TRUSS HEAD (SPECIAL)	
	3	1	**386-3004**	1	CONTROL GP-COMMUNICATION (PL421)	
		1	**390-2764**	1	BRACKET	
	4	1	**389-0463**	1	ANTENNA AS	
	5	1	*399-5841*	1	WIRING GP-COMMUNICATION	
		1	**392-4904**	1	HARNESS AS-CONTROL (PRODUCT LINK)	
E		1	**317-1204**		SLEEVE (300-CM)	
		1	**9X-3401**	6	PIN-CONNECTOR (16-GA TO 18-GA)	
					–OR–	
		1	**126-1767**	1	PIN-CONNECTOR (14-GA TO 16-GA)	
		1	**8T-8737**	6	PLUG-SEAL	
		1	**102-8801**	1	KIT-RECEPTACLE (12-PIN)	
					(INCLUDES RECEPTACLE AS & WEDGE)	
	6	1	**416-9266**	1	PLATE AS	
M		1	**159-9539**	2	NUT-WELD (M6X1-THD)	
	7	1	**3S-2093**	9	STRAP-CABLE	
M	8	1	**8C-8451**	2	BOLT (M6X1X40-MM)	
	9	1	**8T-4205**	2	WASHER-HARD (7.2X14.5X2-MM THK)	
B	10	1	**9G-1307**	1	GROMMET	

B - USE AS REQUIRED
E - ORDER BY THE CENTIMETER
M - METRIC PART

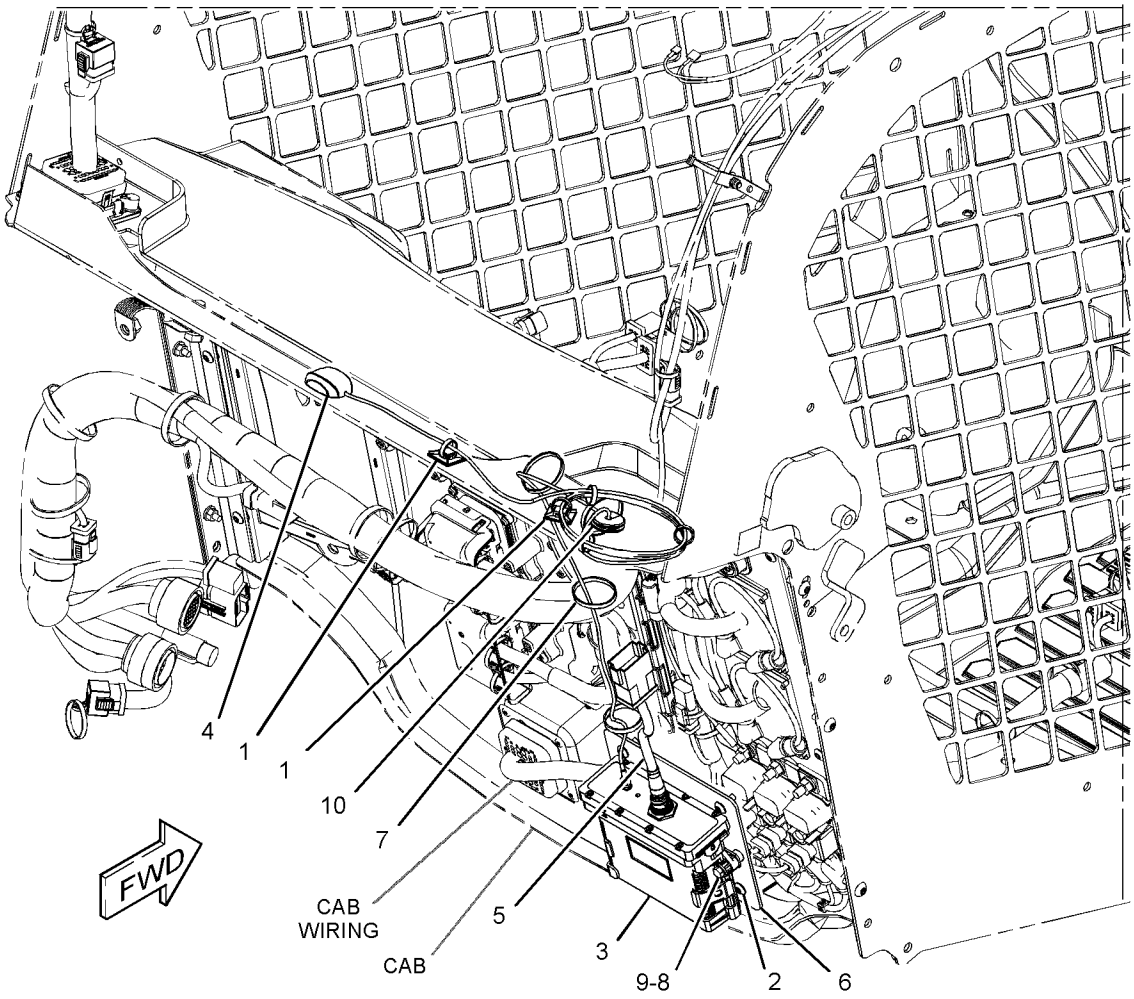

GRAPHIC #1 **<END>** g03349746

388-8284 KIT-CAMERA—REAR VIEW

FOR USE WITH 388-8274—PAGE: 521

AN ATTACHMENT

SMCS-7348 **i05401799**

NOTE	REF NO	GRAPHIC REF	PART NUMBER	QTY	PART NAME 1 2 3 4 5 6 (PRODUCT LEVEL)	SEE PAGE
D	1	1	**5P-9909**		SEAL (0.1-M)	
	2	1	**7K-1181**	13	STRAP-CABLE	
	3	1	**8Y-5947**	1	FASTENER	
Y	4	1	**336-6684**	1	CAMERA GP (12-VOLT, 24-VOLT) (WORK AREA VISUAL SYSTEM, REAR)	89
Y	5	1	**396-7210**	1	HARNESS AS-CAB (CAMERA)	98
	6	1	**3S-2093**	1	STRAP-CABLE	
	7	1	**9G-1307**	1	GROMMET	

D - ORDER BY THE METER
Y - SEPARATE ILLUSTRATION

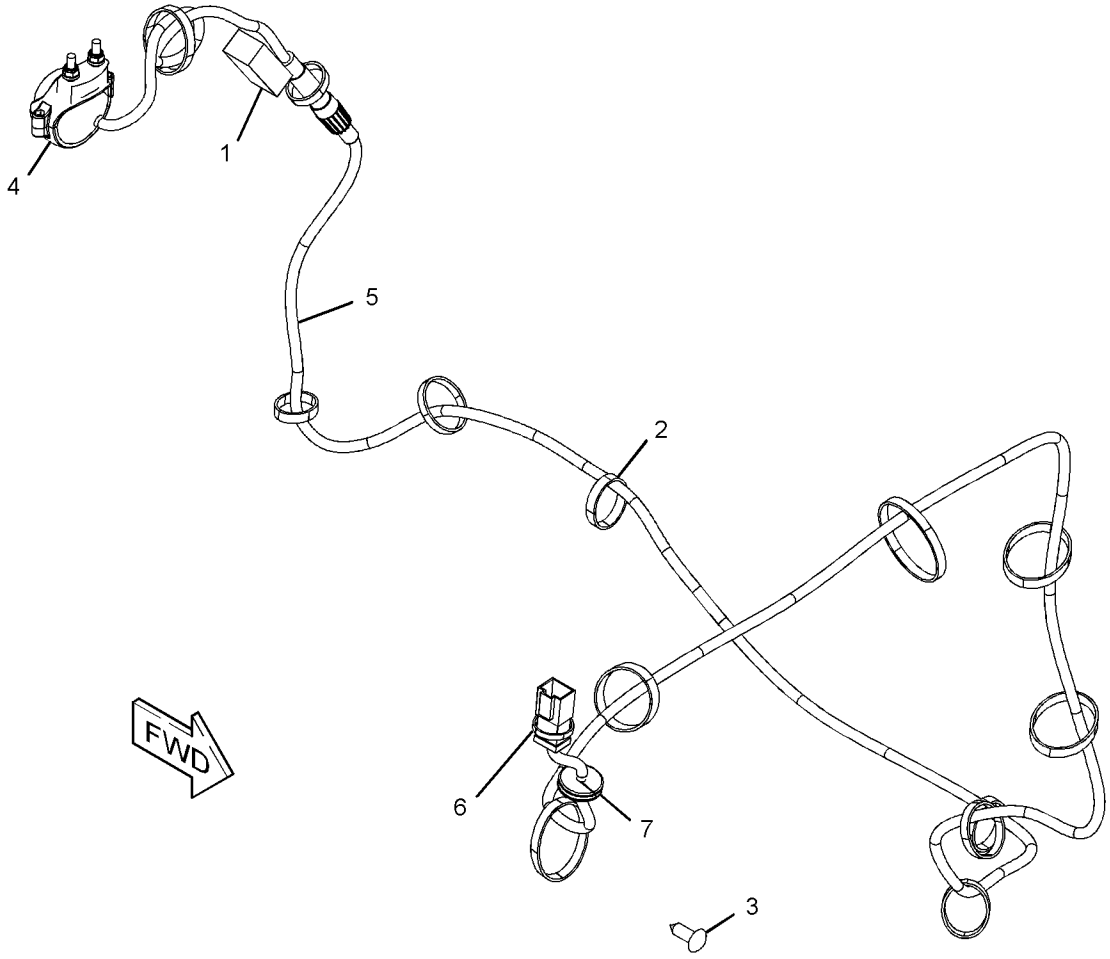

GRAPHIC #1 **<END>** g03384475

388-8265 KIT-WORK TOOL WIRING—ELECTRICAL
AN ATTACHMENT

SMCS-1408 **i05327135**

NOTE	REF NO	GRAPHIC REF	PART NUMBER	QTY	PART NAME 1 2 3 4 5 6 (PRODUCT LEVEL)	SEE PAGE
	1	1	**7K-1181**	5	STRAP-CABLE	
	2	1	**146-9439**	5	RELAY AS (12-VOLT) (WORK TOOL)	
	3	1	**159-9495**	1	NUT (1-1/2-18-THD)	
	4	1	**178-3620**	5	STRAP-DUAL CLAMP	
	5	1	**263-5418**	1	SWITCH AS-ROCKER (WORK TOOL)	
		1	**111-7899**	1	GASKET	
Y	6	1	**356-6115**	1	HARNESS AS-WORK TOOL	109
	7	1	**396-7208**	1	BRACKET	
	8	1	**159-9496**	1	LOCKWASHER	
	9	1	**266-3316**	2	BOLT-FLANGE HEAD (M10X1.5X25-MM)	
	10	1	**7P-1695**	1	WASHER (10.5X19X3-MM THK)	
	11	1	**8T-4121**	1	WASHER-HARD (11X21X2.5-MM THK)	
M	12	1	**8T-4133**	1	NUT (M10X1.5-THD)	

M - METRIC PART
Y - SEPARATE ILLUSTRATION

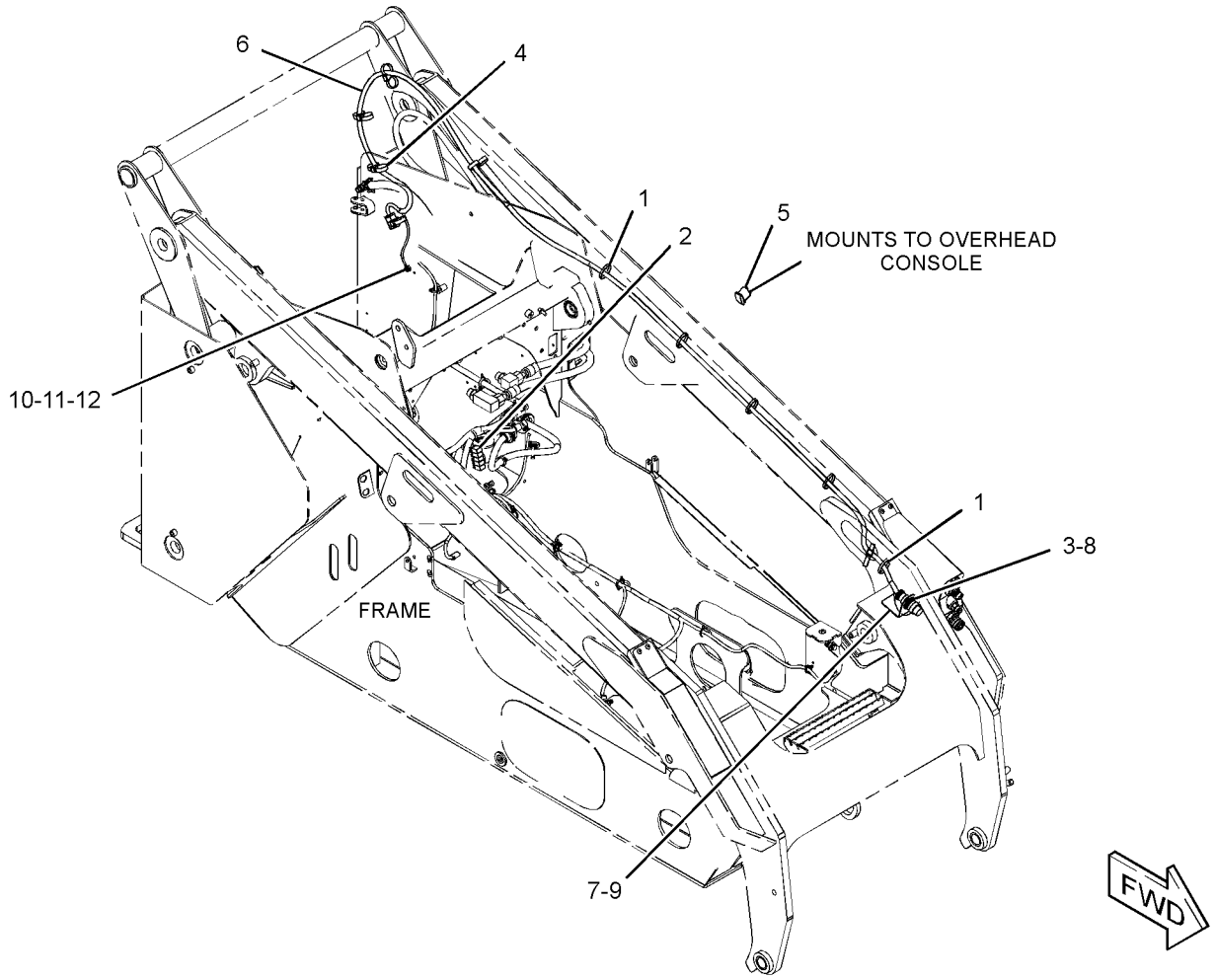

GRAPHIC #1 **<END>** g03385155

388-8273 KIT-WORK TOOL WIRING—JOYSTICK, LH

AN ATTACHMENT

SMCS-1408 **i05327159**

NOTE	REF NO	GRAPHIC REF	PART NUMBER	QTY	PART NAME 1 2 3 4 5 6 (PRODUCT LEVEL)	SEE PAGE
	1	1	**7K-1181**	5	STRAP-CABLE	
M	2	1	**9X-2546**	4	BOLT (M6X1X20-MM)	
	3	1	**146-9439**	5	RELAY AS (12-VOLT) (WORK TOOL)	
	4	1	**159-9495**	1	NUT (1-1/2-18-THD)	
	5	1	**178-3620**	5	STRAP-DUAL CLAMP	
	6	1	**263-5418**	1	SWITCH AS-ROCKER (WORK TOOL)	
		1	**111-7899**	1	GASKET	
Y	7	1	**356-6115**	1	HARNESS AS-WORK TOOL	109
Y	8	1	**379-1615**	1	CONTROL GP-JOYSTICK (LH)	495
	9	1	**396-7208**	1	BRACKET	
	10	1	**159-9496**	1	LOCKWASHER	
	11	1	**266-3316**	2	BOLT-FLANGE HEAD (M10X1.5X25-MM)	
	12	1	**3S-2093**	4	STRAP-CABLE	
B	13	1	**7P-1695**	1	WASHER (10.5X19X3-MM THK)	
B	14	1	**8T-4121**	1	WASHER-HARD (11X21X2.5-MM THK)	
M	15	1	**8T-4133**	1	NUT (M10X1.5-THD)	

B - USE AS REQUIRED
M - METRIC PART
Y - SEPARATE ILLUSTRATION

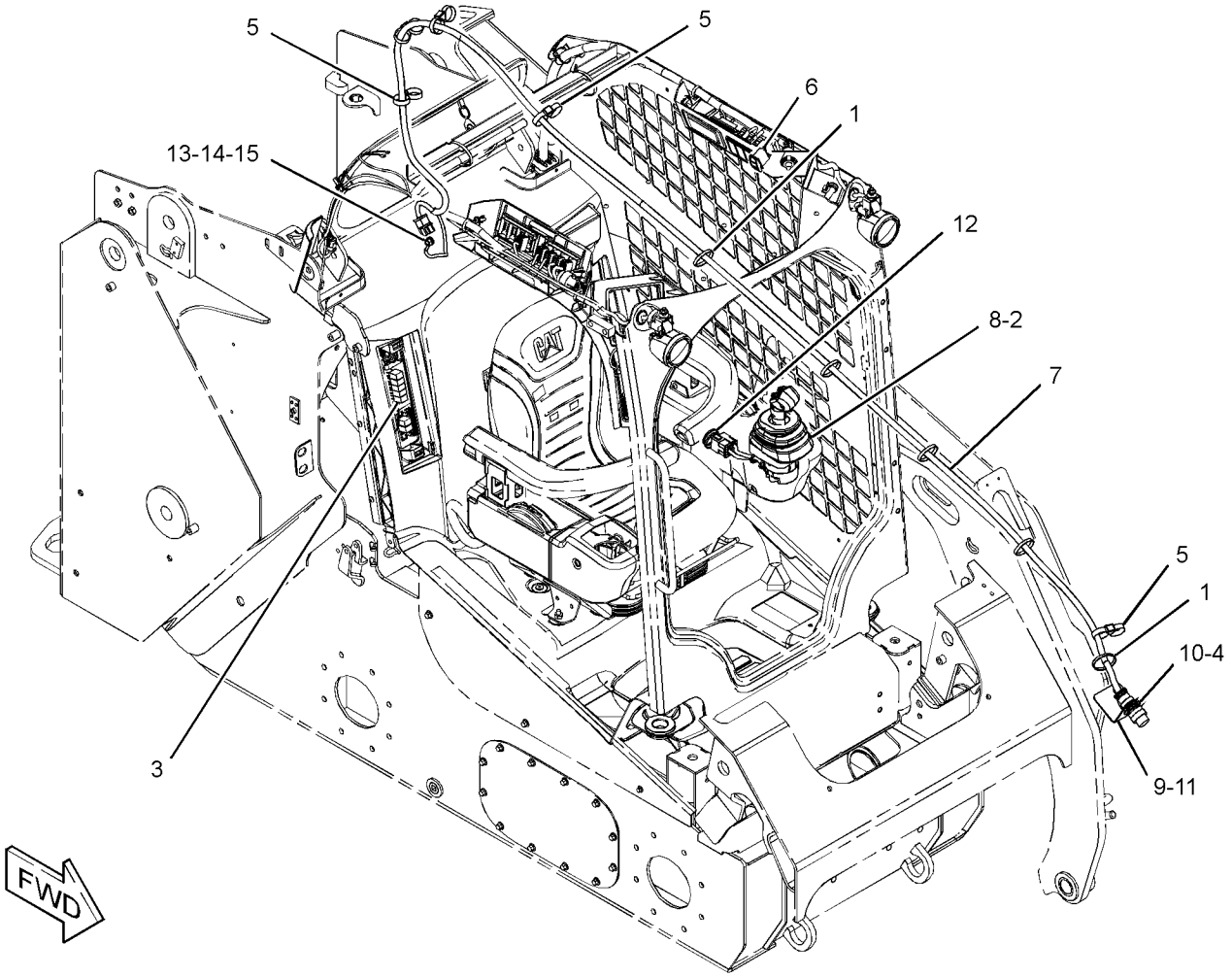

GRAPHIC #1 **<END>** g03384618

268-4071 LAMP GP-FLOOD

12-VOLT

PART OF 388-1435 WIRING GP-PLATFORM

SMCS-1434 **i05041394**

NOTE	REF NO	GRAPHIC REF	PART NUMBER	QTY	PART NAME 1 2 3 4 5 6 (PRODUCT LEVEL)	SEE PAGE
	1	1	**9W-0607**	1	LAMP (12-VOLT, 55-WATT) (FLOODLIGHT)	
	2	1	**102-8802**	1	KIT-RECEPTACLE (2-PIN)	
					(INCLUDES RECEPTACLE AS & WEDGE)	
	3	1	**8T-8729**	2	PIN-CONNECTOR (16-GA TO 18-GA)	
	4	1	**383-6901**	1	LENS AS (FLOODLIGHT)	

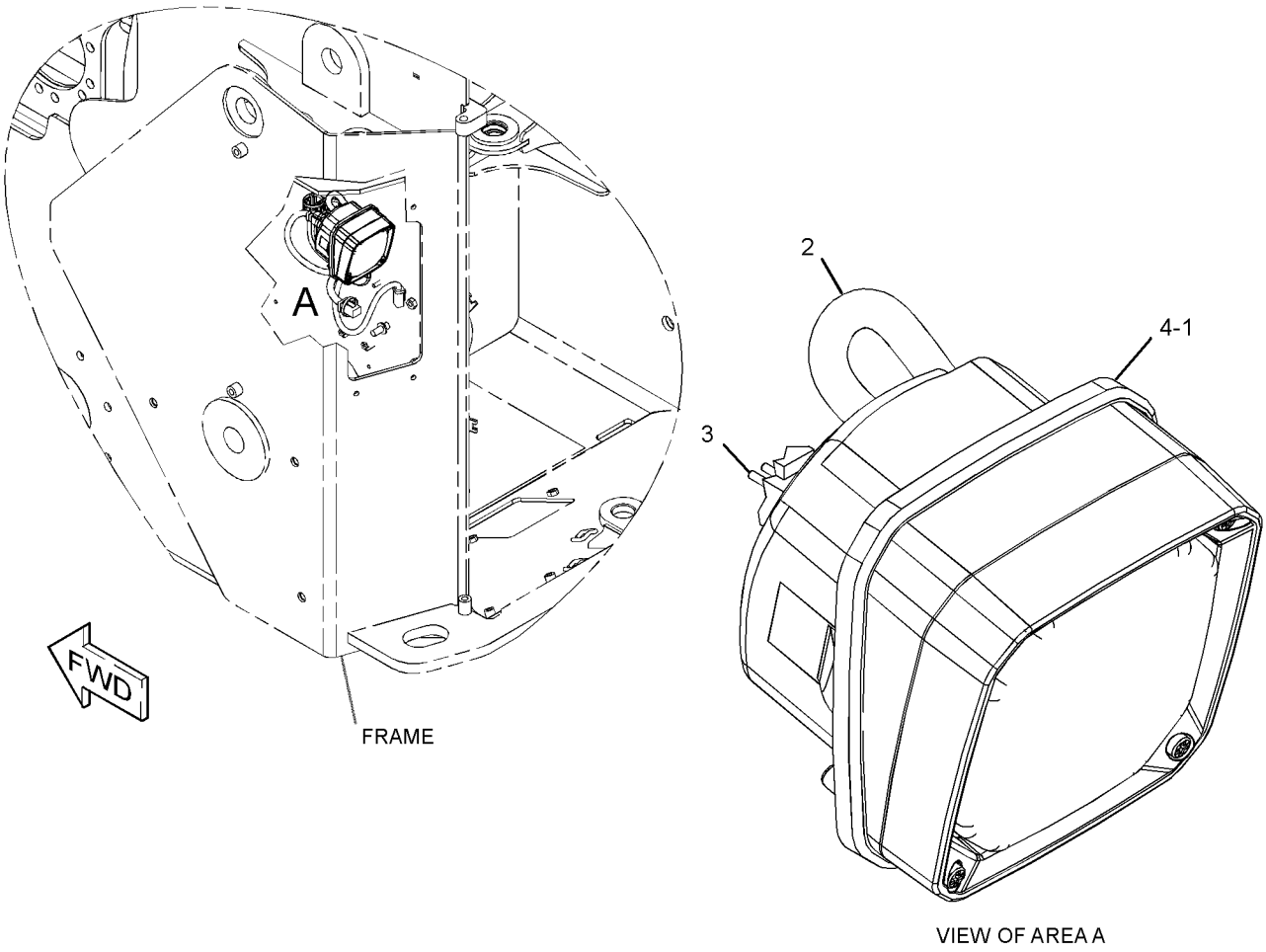

GRAPHIC #1 **<END>** g03211957

388-3782 LAMP GP-FLOOD

24-VOLT, 70-WATT

PART OF 394-5387 LIGHTING GP-FLOOD

SMCS-1434 **i05162951**

NOTE	REF NO	GRAPHIC REF	PART NUMBER	QTY	PART NAME 1 2 3 4 5 6 (PRODUCT LEVEL)	SEE PAGE
	1	1	**175-4291**	1	BRACKET AS	
	2	1	**9X-4244**	2	SCREW-SPECIAL (M4X1.79X25-MM)	
	3	1	**9W-0607**	1	LAMP (12-VOLT, 55-WATT) (FLOODLIGHT)	
	4	1	**8T-4224**	1	WASHER-HARD (8.8X16X2-MM THK)	
M	5	1	**8T-7547**	1	BOLT (M8X1.25X30-MM)	
M	6	1	**5C-7261**	1	NUT (M8X1.25-THD)	

M - METRIC PART

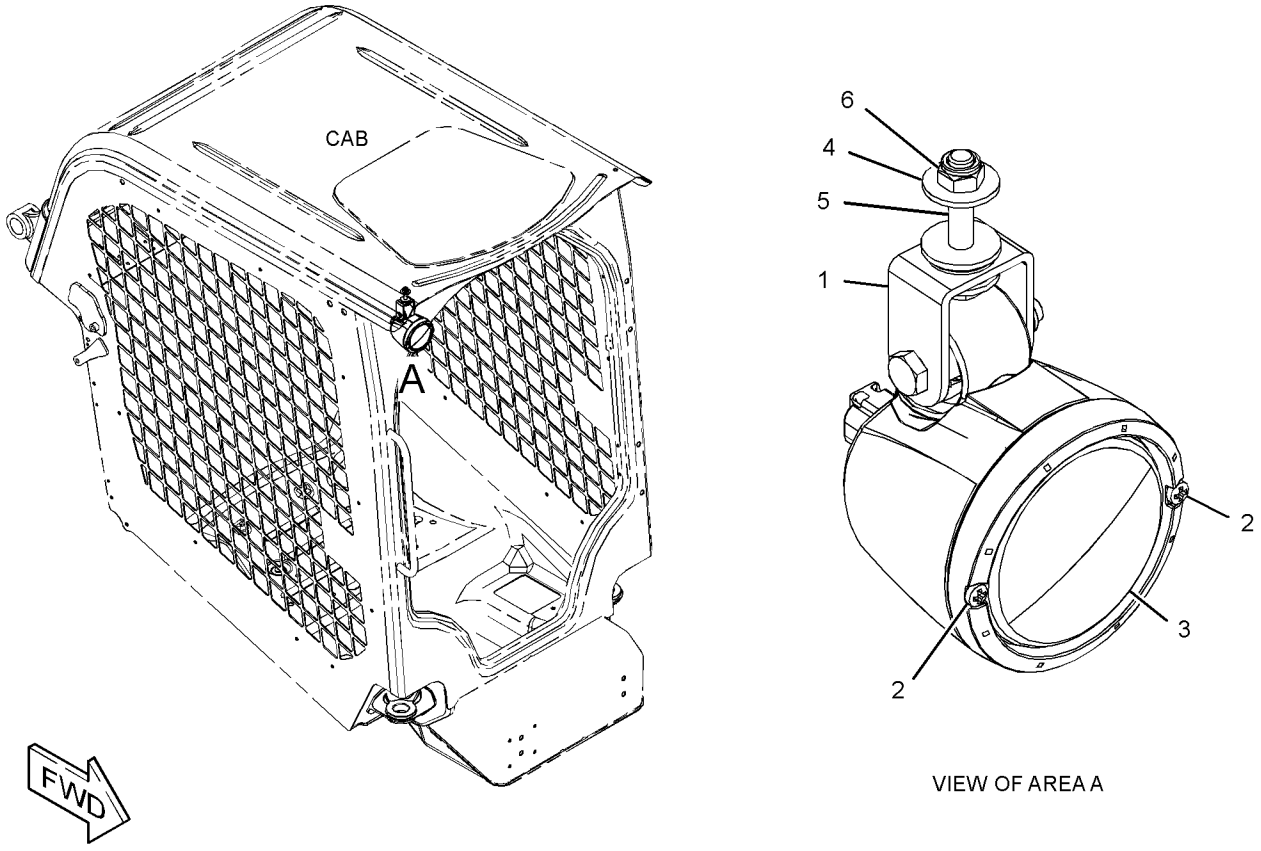

GRAPHIC #1 **<END>** g03320357

195-0189 LAMP GP-HEAD & SIGNAL–FRONT, RH

12-VOLT

PART OF 422-3323 KIT-ROADING CONVERSION, 356-6074 LIGHTING GP-ROADING AN ATTACHMENT

SMCS-1429, 1430 **i03877491**

NOTE	REF NO	GRAPHIC REF	PART NUMBER	QTY	PART NAME 1 2 3 4 5 6 (PRODUCT LEVEL)	SEE PAGE
	1	1	**228-6053**	1	BODY AS	
	2	1	**228-6054**	1	BEZEL	
	3	1	**348-7240**	1	LENS AS (HEADLIGHT)	
	4	1	**228-6052**	1	LENS AS (TURN SIGNAL)	
	5	1	**228-6056**	6	SCREW (4-32X1.26-IN)	
	6	1	**9W-3324**	1	LAMP-HEAD (12-VOLT, 60/55-WATT) (CLEAR)	
	7	1	**226-4560**	1	LAMP (12-VOLT, 21-WATT) (AMBER)	
	8	1	**226-4561**	1	LAMP (12-VOLT, 5-WATT) (CLEAR)	
M	9	1	**8T-0389**	1	LOCKNUT (M10X1.5-THD)	
	10	1	**100-3253**	1	SPACER (SPHERICAL)	
	11	1	**100-3254**	1	SPACER (SPHERICAL)	
	12	1	**100-3255**	2	WASHER (SPHERICAL)	
	13	1	**102-8805**	1	KIT-RECEPTACLE (6-PIN)	
					(INCLUDES RECEPTACLE AS & WEDGE)	
	14	1	**8T-8729**	5	PIN-CONNECTOR (16-GA TO 18-GA)	
	15	1	**8T-8737**	1	PLUG-SEAL	

M - METRIC PART

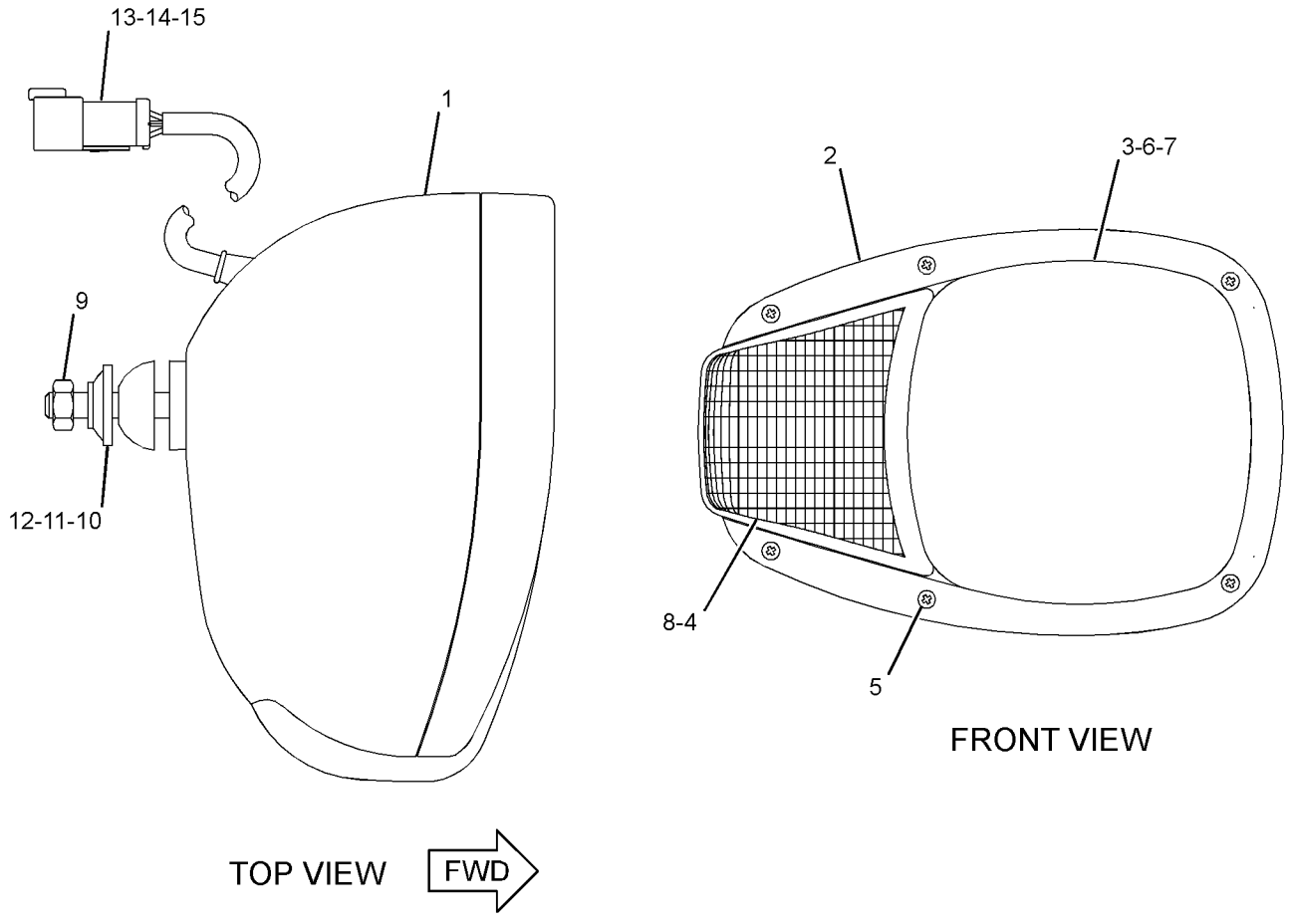

GRAPHIC #1 **<END>** g02157912

195-0190 LAMP GP-HEAD & SIGNAL–FRONT, LH

12-VOLT

PART OF 422-3323 KIT-ROADING CONVERSION, 356-6074 LIGHTING GP-ROADING AN ATTACHMENT

SMCS-1429, 1430 **i05401861**

NOTE	REF NO	GRAPHIC REF	PART NUMBER	QTY	PART NAME 1 2 3 4 5 6 (PRODUCT LEVEL)	SEE PAGE
	1	1	**228-6053**	1	BODY AS	
	2	1	**228-6054**	1	BEZEL	
	3	1	**348-7240**	1	LENS AS (HEADLIGHT)	
	4	1	**228-6052**	1	LENS AS (TURN SIGNAL)	
	5	1	**228-6056**	6	SCREW (4-32X1.26-IN)	
	6	1	**9W-3324**	1	LAMP-HEAD (12-VOLT, 60/55-WATT) (CLEAR)	
	7	1	**226-4560**	1	LAMP (12-VOLT, 21-WATT) (AMBER)	
	8	1	**226-4561**	1	LAMP (12-VOLT, 5-WATT) (CLEAR)	
M	9	1	**8T-0389**	1	LOCKNUT (M10X1.5-THD)	
	10	1	**100-3253**	1	SPACER (SPHERICAL)	
	11	1	**100-3254**	1	SPACER (SPHERICAL)	
	12	1	**100-3255**	2	WASHER (SPHERICAL)	
	13	1	**102-8805**	1	KIT-RECEPTACLE (6-PIN)	
					(INCLUDES RECEPTACLE AS & WEDGE)	
	14	1	**8T-8729**	5	PIN-CONNECTOR (16-GA TO 18-GA)	
	15	1	**8T-8737**	1	PLUG-SEAL	

M - METRIC PART

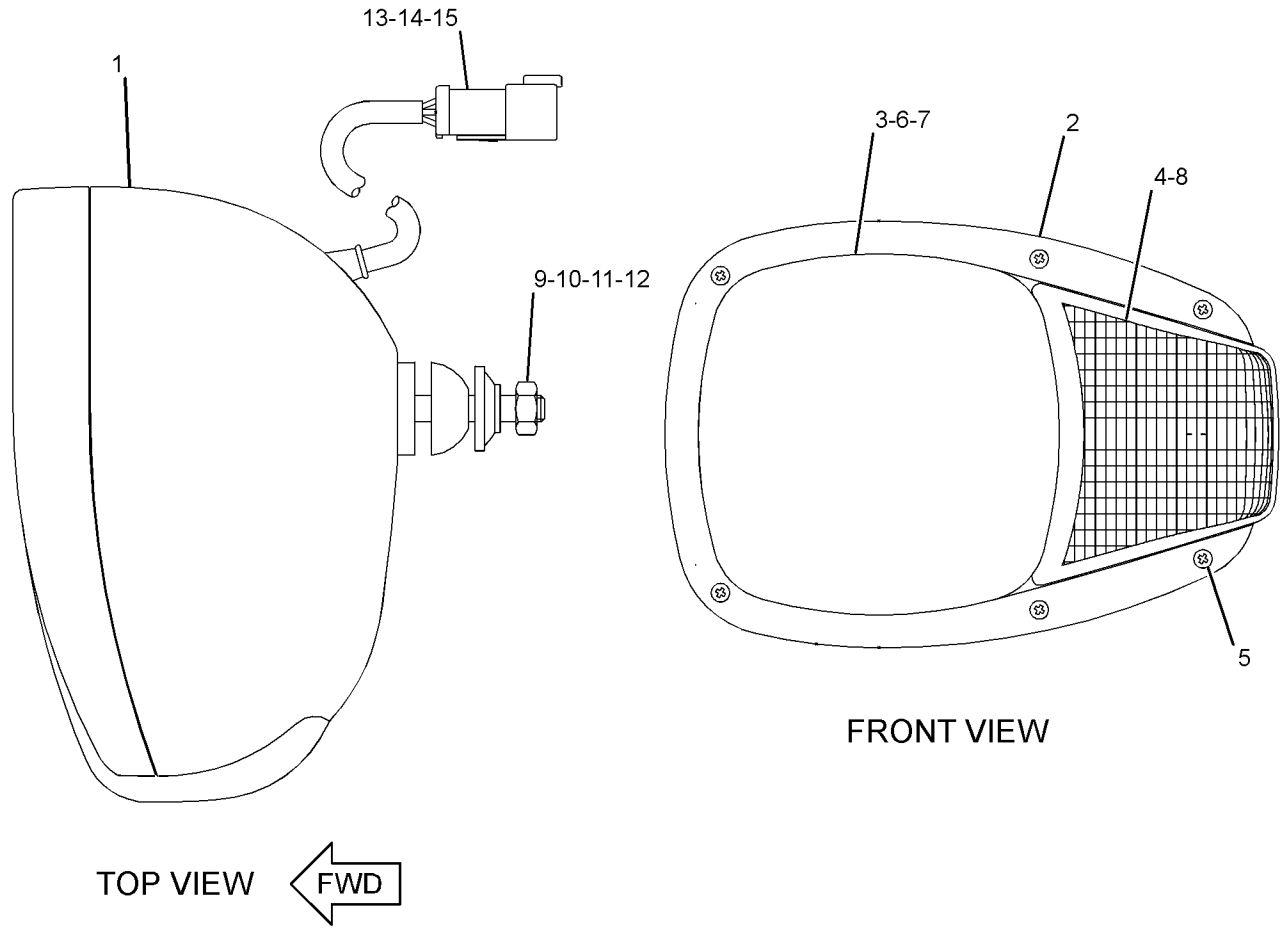

GRAPHIC #1 **<END>** g02157921

444-5039 LAMP GP-ROADING—REAR

PART OF 435-8760 CONVERSION AR-MACHINE

AN ATTACHMENT

SMCS-1429, 1430 **i05378972**

NOTE	REF NO	GRAPHIC REF	PART NUMBER	QTY	PART NAME 1 2 3 4 5 6 (PRODUCT LEVEL)	SEE PAGE
	1	1	**9R-1499**	2	REFLECTOR (RED)	
	2	1	**146-9439**	1	RELAY AS (12-VOLT) (STOP LIGHT)	
	3	1	**172-6490**	1	LAMP GP-SIGNAL (REAR, RH)	
	3A	1	**172-6490**	1	LAMP GP-SIGNAL (REAR, LH)	
					(EACH LAMP GP INCLUDES)	
		1	**8T-8729**	4	PIN-CONNECTOR (16-GA TO 18-GA)	
		1	**9W-3326**	1	LAMP (12-VOLT, 21-WATT) (TURN SIGNAL)	
		1	**084-4348**	1	LAMP (12-VOLT, 5-WATT) (STOP, TAIL)	
		1	**102-8804**	1	KIT-RECEPTACLE (4-PIN)	
					(INCLUDES RECEPTACLE AS & WEDGE)	
		1	**363-8597**	1	LENS	
	4	1	**242-9000**	1	FLASHER AS (12-VOLT) (STOP LIGHT)	
	5	1	**258-4134**	1	FUSE AS (ROADING)	
		1	**9W-0852**	2	PIN-CONNECTOR (14-GA TO 16-GA)	
		1	**155-2270**	1	KIT-CONNECTING PLUG (2-PIN)	
					(INCLUDES PLUG AS, WEDGE & INTERFACE SEAL)	
		1	**102-8802**	1	KIT-RECEPTACLE (2-PIN)	
					(INCLUDES RECEPTACLE AS & WEDGE)	
		1	**9W-0844**	2	SOCKET-CONNECTOR (14-GA TO 16-GA)	
	6	1	**263-5422**	1	SWITCH AS-ROCKER (TURN SIGNAL)	
	7	1	**265-9543**	1	SWITCH AS-ROCKER (HAZARD WARNING LIGHTS)	
					(EACH SWITCH AS INCLUDES)	
		1	**111-7899**	1	GASKET	
Y	8	1	**356-6077**	1	HARNESS AS-LIGHTING	102
	9	1	**388-8223**	1	BRACKET (LH)	
	10	1	**388-8224**	1	BRACKET (RH)	
	11	1	**3S-2093**	1	STRAP-CABLE	
	12	1	**7K-1181**	7	STRAP-CABLE	

Y - SEPARATE ILLUSTRATION

444-5039 **LAMP GP-ROADING (*contd.*)** **i05378972**

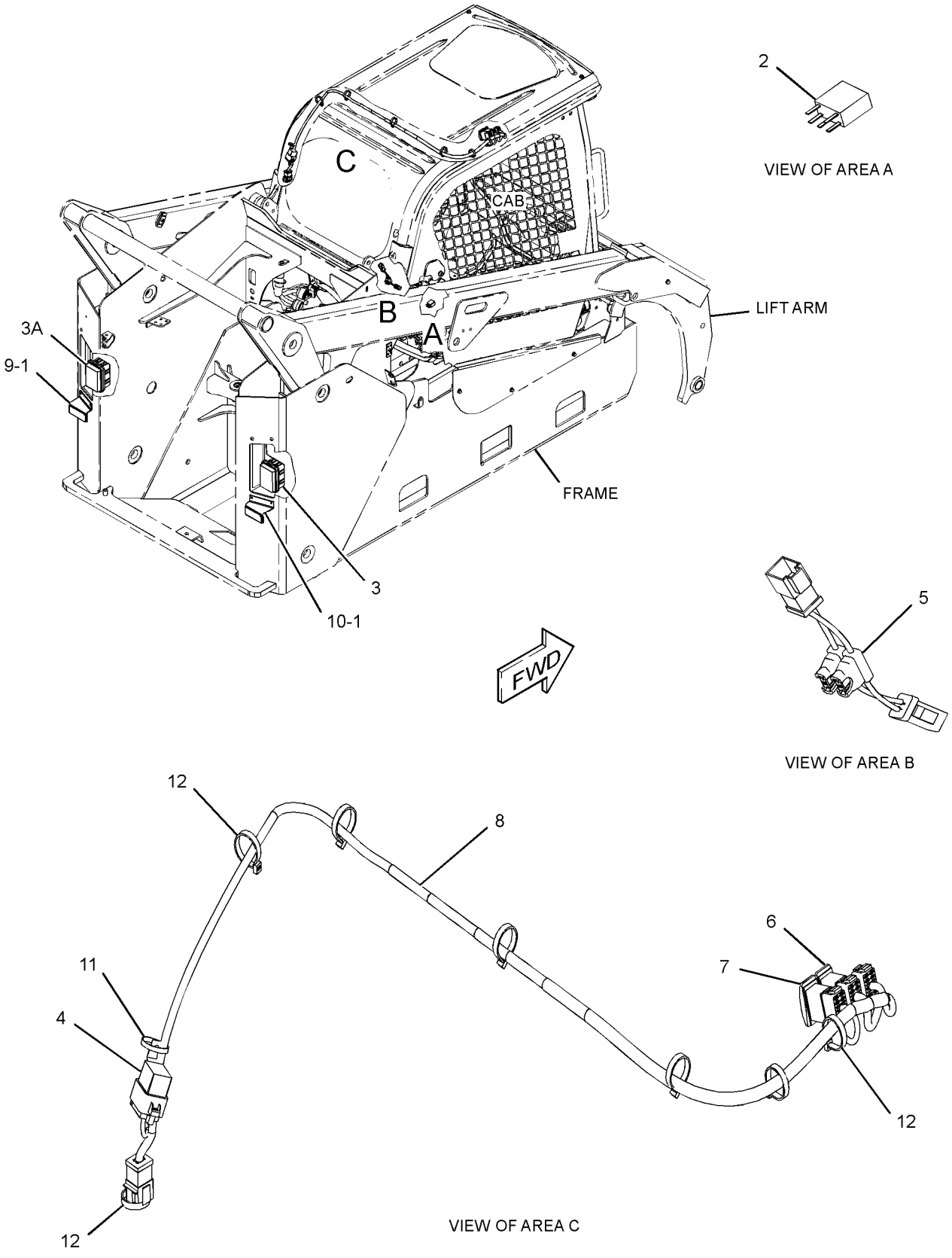

GRAPHIC #1 **<END>** g03403797

258-0930 LAMP GP-STOP & TAIL

PART OF 356-6082 LIGHTING GP-STOP & TAIL

AN ATTACHMENT

SMCS-1432 **i05337687**

NOTE	REF NO	GRAPHIC REF	PART NUMBER	QTY	PART NAME 1 2 3 4 5 6 (PRODUCT LEVEL)	SEE PAGE
F		1	**8T-8737**	1	PLUG-SEAL	
F		1	**9W-2471**	1	LAMP (12-VOLT) (STOP, TAIL)	
F		1	**102-8804**	1	KIT-RECEPTACLE (4-PIN)	
					(INCLUDES RECEPTACLE AS & WEDGE)	
F		1	**165-4895**	1	LENS	
F		1	**8T-8729**	2	PIN-CONNECTOR (16-GA TO 18-GA)	

F - NOT SHOWN

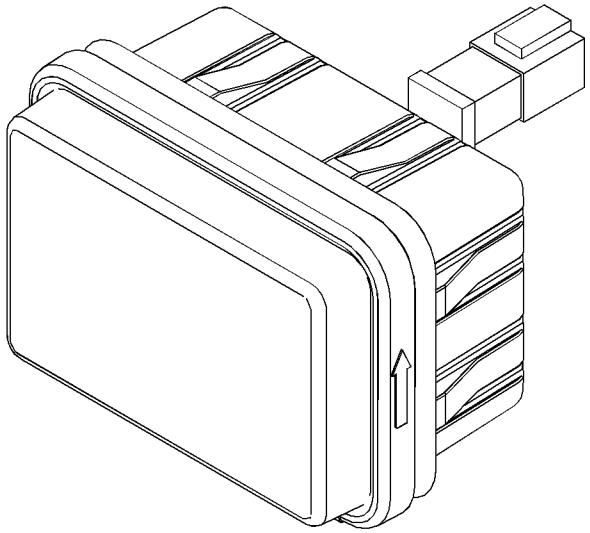

GRAPHIC #1 **<END>** g03383516

309-1325 LAMP GP-WARNING BEACON–AMBER

12-VOLT

PART OF 422-3400 CONVERSION GP-ROADING, 422-3324 KIT-ROADING CONVERSION

AN ATTACHMENT

SMCS-1431 **i05090816**

NOTE	REF NO	GRAPHIC REF	PART NUMBER	QTY	PART NAME 1 2 3 4 5 6 (PRODUCT LEVEL)	SEE PAGE
	1	1	**272-9800**	1	LENS (AMBER) (WARNING BEACON)	
	2	1	**9X-8118**	1	LAMP (12-VOLT, 55-WATT) (WARNING BEACON)	
	3	1	**9X-8139**	1	BELT-DRIVE (WARNING BEACON)	
	4	1	**9R-7958**	1	CORD AS	
	4A	1	**9R-7942**	1	PLUG AS	

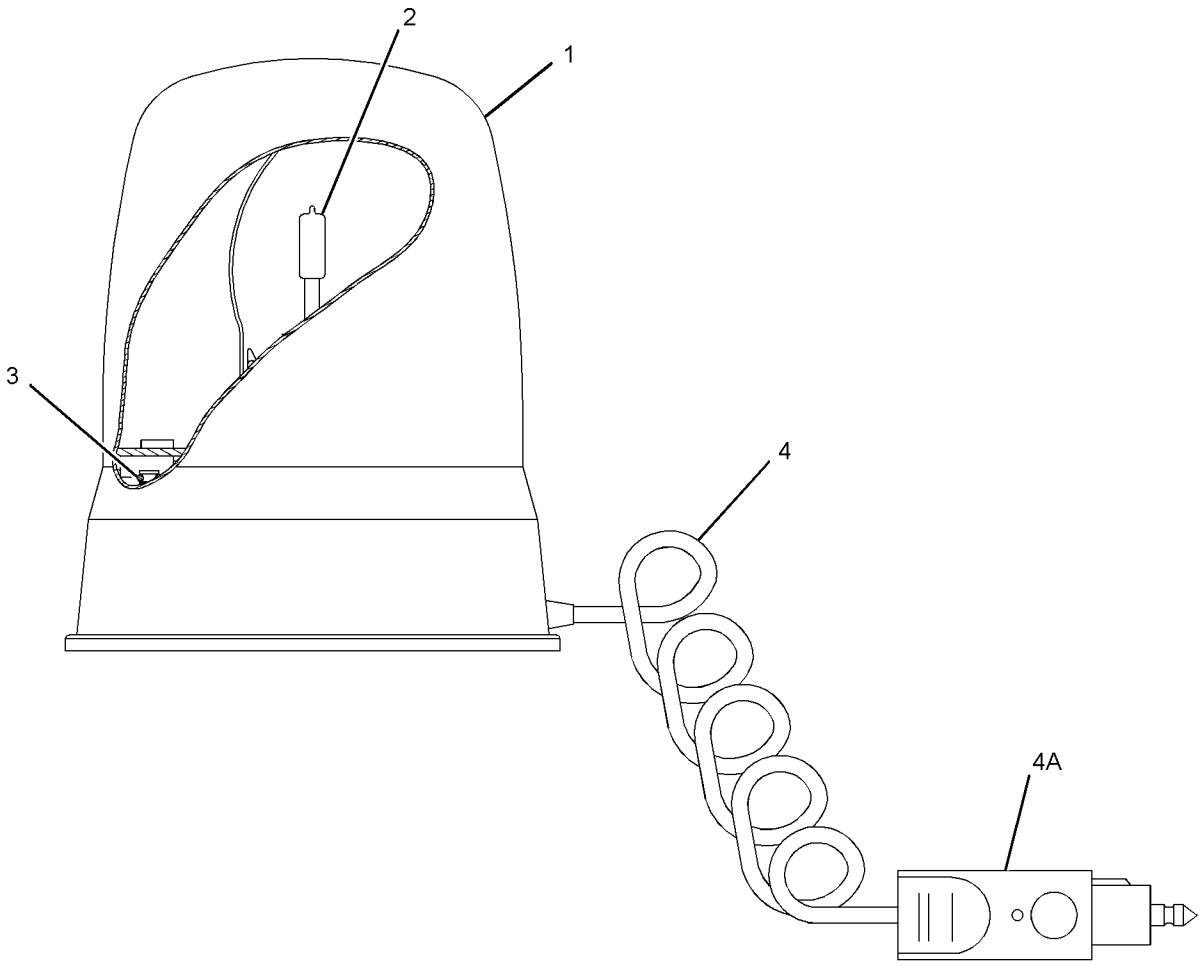

GRAPHIC #1 **<END>** g01382357

394-5387 LIGHTING GP-FLOOD—WORK LIGHTS, FRONT

PART OF 345-5454 CAB AR

SMCS-1434 **i05295451**

NOTE	REF NO	GRAPHIC REF	PART NUMBER	QTY	PART NAME 1 2 3 4 5 6 (PRODUCT LEVEL)	SEE PAGE
Y	1	1	**388-3782**	2	LAMP GP-FLOOD	116

Y - SEPARATE ILLUSTRATION

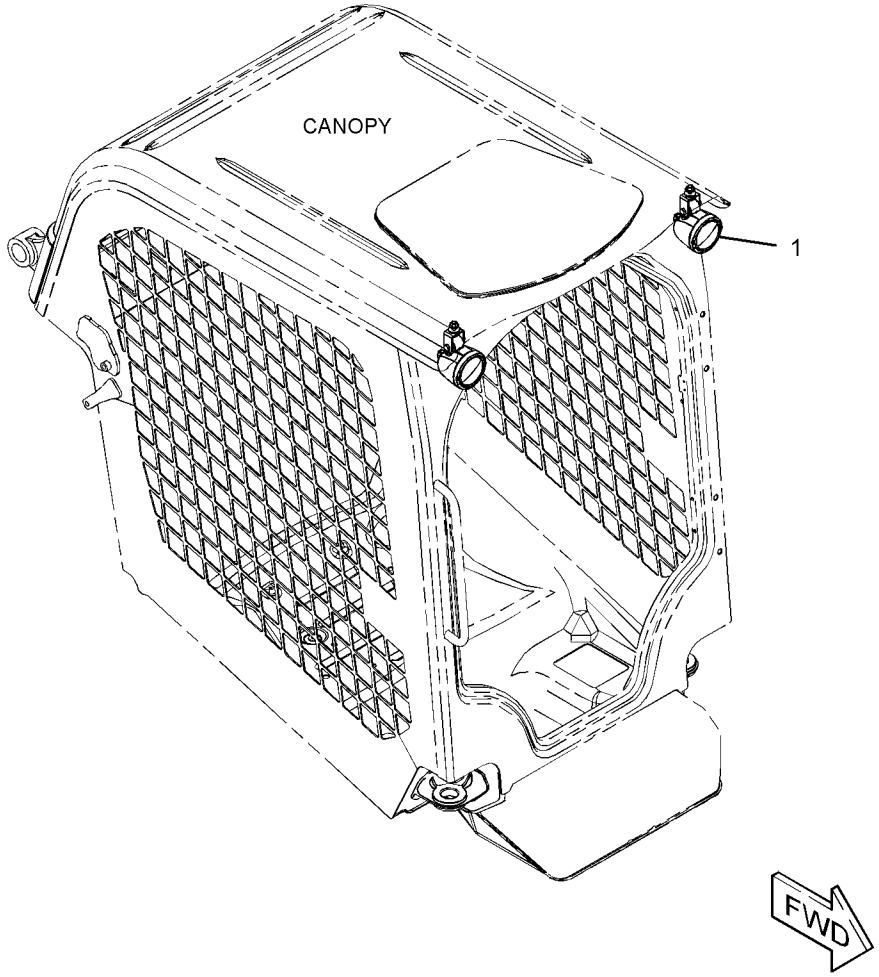

GRAPHIC #1 **<END>** g03366020

356-6074 LIGHTING GP-ROADING

PART OF 422-3401 CONVERSION AR-ROADING

AN ATTACHMENT

SMCS-1429 **i05401947**

NOTE	REF NO	GRAPHIC REF	PART NUMBER	QTY	PART NAME 1 2 3 4 5 6 (PRODUCT LEVEL)	SEE PAGE
	1	1	**9R-1499**	2	REFLECTOR (RED)	
	2	1	**146-9439**	1	RELAY AS (12-VOLT)	
	3	1	**172-6490**	1	LAMP GP-SIGNAL (REAR, RH)	
	3A	1	**172-6490**	1	LAMP GP-SIGNAL (REAR, LH)	
					(EACH INCLUDES)	
		1	**8T-8729**	4	PIN-CONNECTOR (16-GA TO 18-GA)	
		1	**9W-3326**	1	LAMP (12-VOLT, 21-WATT) (TURN SIGNAL)	
		1	**084-4348**	1	LAMP (12-VOLT, 5-WATT) (STOP, TAIL)	
		1	**102-8804**	1	KIT-RECEPTACLE (4-PIN)	
					(INCLUDES RECEPTACLE AS & WEDGE)	
		1	**363-8597**	1	LENS	
Y	4	1	**195-0189**	1	LAMP GP-HEAD & SIGNAL (FRONT, RH)	117
Y	5	1	**195-0190**	1	LAMP GP-HEAD & SIGNAL (FRONT, LH)	118
	6	1	**242-9000**	1	FLASHER AS (12-VOLT) (STOP LIGHT)	
	7	1	**258-4134**	1	FUSE AS (ROADING)	
	8	1	**263-5421**	1	SWITCH AS-ROCKER (ROADING LIGHTS)	
	9	1	**263-5422**	1	SWITCH AS-ROCKER (TURN SIGNAL)	
	10	1	**265-9543**	1	SWITCH AS-ROCKER (HAZARD WARNING LIGHTS)	
					(EACH SWITCH AS INCLUDES)	
		1	**111-7899**	1	GASKET	
Y	11	1	**356-6075**	2	HARNESS AS-LIGHTING (FRONT, REAR)	102
Y	12	1	**356-6077**	1	HARNESS AS-LIGHTING (PANEL)	102
	13	1	**388-8223**	1	BRACKET (LH)	
	14	1	**388-8224**	1	BRACKET (RH)	
	15	1	**132-5789**	2	CLIP	
	16	1	**3S-2093**	7	STRAP-CABLE	
	17	1	**4P-7581**	2	CLIP	
	18	1	**7K-1181**	22	STRAP-CABLE	

Y - SEPARATE ILLUSTRATION

356-6074 **LIGHTING GP-ROADING (*contd.*)** **i05401947**

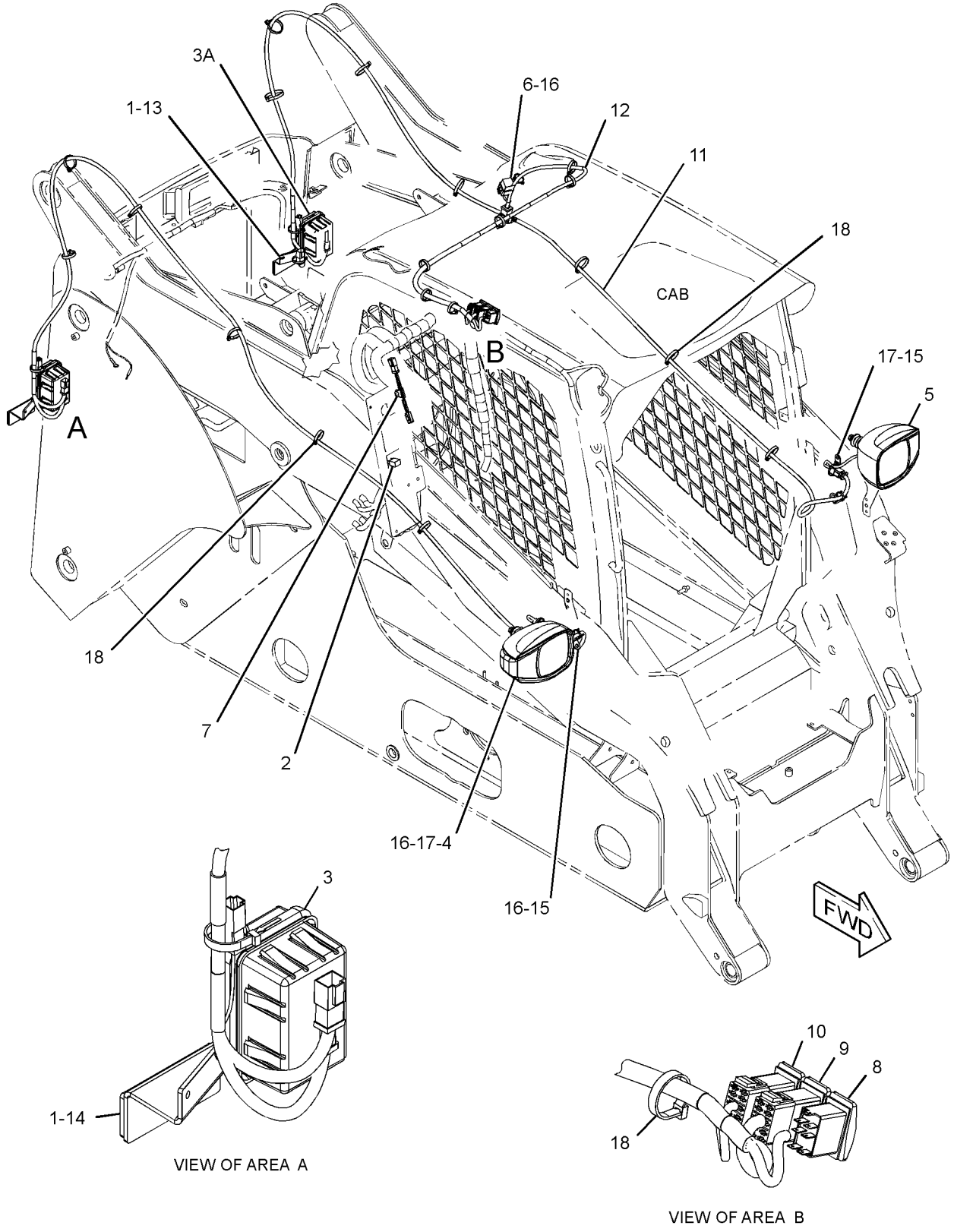

GRAPHIC #1 **<END>** g03350041

356-6082 LIGHTING GP-STOP & TAIL

PART OF 388-7756 CONVERSION AR-MACHINE, 388-7758 CONVERSION GP-MACHINE
AN ATTACHMENT

SMCS-1432 **i04758931**

NOTE	REF NO	GRAPHIC REF	PART NUMBER	QTY	PART NAME 1 2 3 4 5 6 (PRODUCT LEVEL)	SEE PAGE
	1	1	**190-5386**	2	FILM-STRIPE (ROUND RED REFLECTIVE)	
Y	2	1	**258-0930**	2	LAMP GP-STOP & TAIL	121

Y - SEPARATE ILLUSTRATION

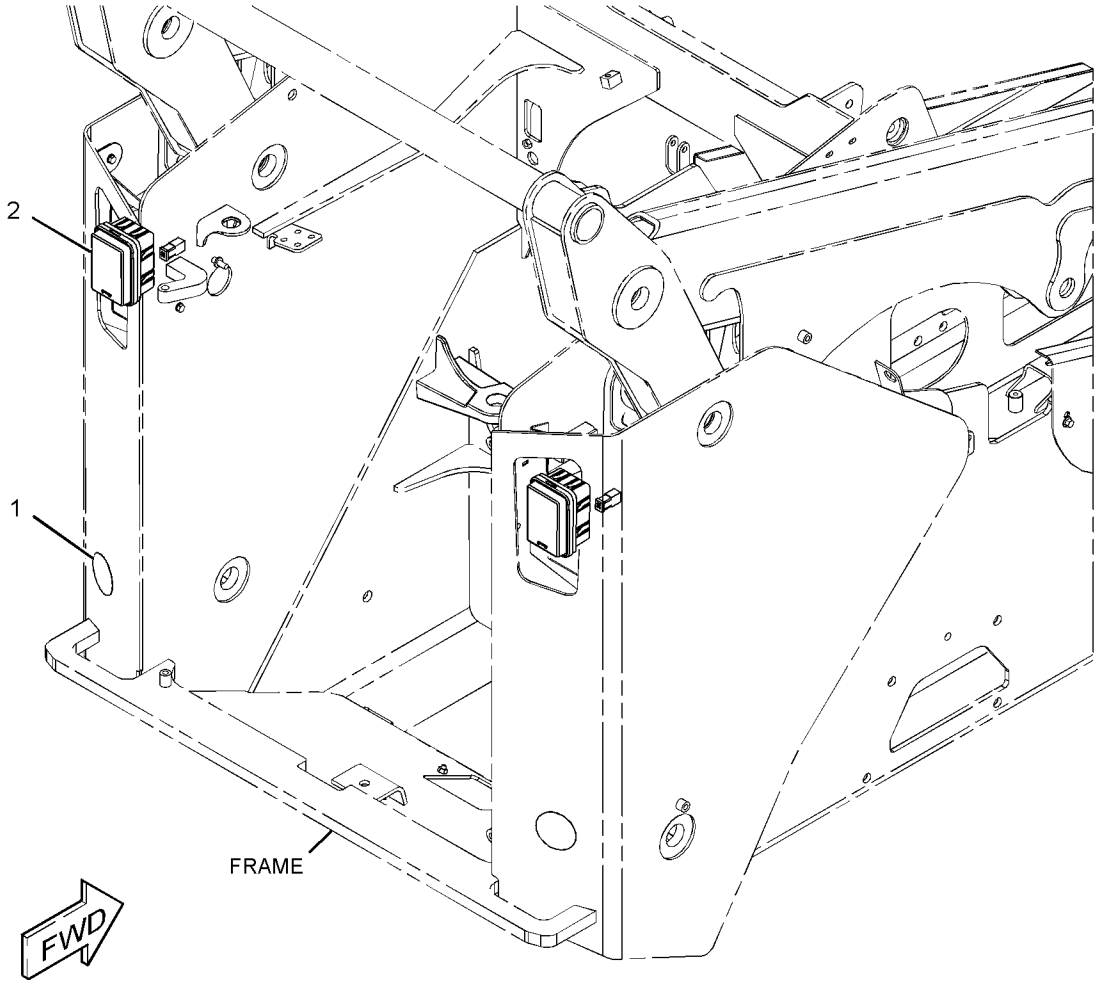

GRAPHIC #1 **<END>** g02872697

258-4135 RELAY GP–MAIN POWER

12-VOLT

PART OF 361-6400 WIRING GP-CAB

SMCS-1422, 4493 **i03959893**

NOTE	REF NO	GRAPHIC REF	PART NUMBER	QTY	PART NAME 1 2 3 4 5 6 (PRODUCT LEVEL)	SEE PAGE
M	1	1	**5C-2890**	2	NUT (M6X1-THD)	
	2	1	**8T-4205**	2	WASHER-HARD (7.2X14.5X2-MM THK)	
	3	1	**1H-3244**	2	LOCKWASHER	
M	4	1	**5C-7261**	1	NUT (M8X1.25-THD)	
	5	1	**8T-4224**	1	WASHER-HARD (8.8X16X2-MM THK)	
	6	1	**267-5213**	1	COVER (FUSE)	
	7	1	**267-5211**	1	SEAL	
	8	1	**267-2680**	1	FUSE (20-AMPERE)	
	9	1	**267-2701**	1	FUSE (60-AMPERE)	

M - METRIC PART

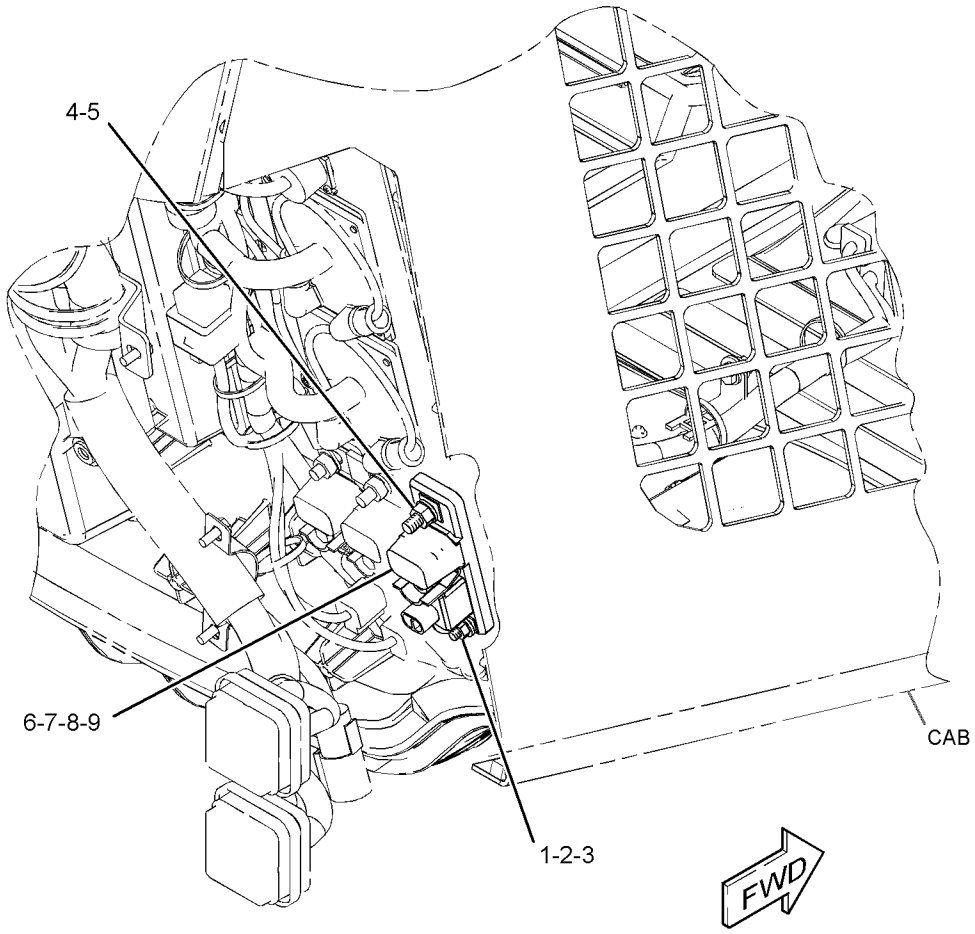

GRAPHIC #1 **<END>** g01328212

386-9954 RELAY GP–MAIN POWER

12-VOLT. 34-KG (75-LBS) WEIGHT
PART OF 361-6400 WIRING GP-CAB

SMCS-1422, 4493 **i05401864**

NOTE	REF NO	GRAPHIC REF	PART NUMBER	QTY	PART NAME 1 2 3 4 5 6 (PRODUCT LEVEL)	SEE PAGE
	1	1	**267-2680**	1	FUSE (20-AMPERE)	
	2	1	**274-9872**	1	FUSE (30-AMPERE)	
	3	1	**267-5213**	1	COVER (FUSE)	
	4	1	**267-5211**	1	SEAL	
M	5	1	**5C-2890**	2	NUT (M6X1-THD)	
	6	1	**8T-4205**	2	WASHER-HARD (7.2X14.5X2-MM THK)	
	7	1	**1H-3244**	2	LOCKWASHER	
M	8	1	**5C-7261**	1	NUT (M8X1.25-THD)	
	9	1	**8T-4224**	1	WASHER-HARD (8.8X16X2-MM THK)	
	10	1	**9F-5644**	1	LOCKWASHER	

M - METRIC PART

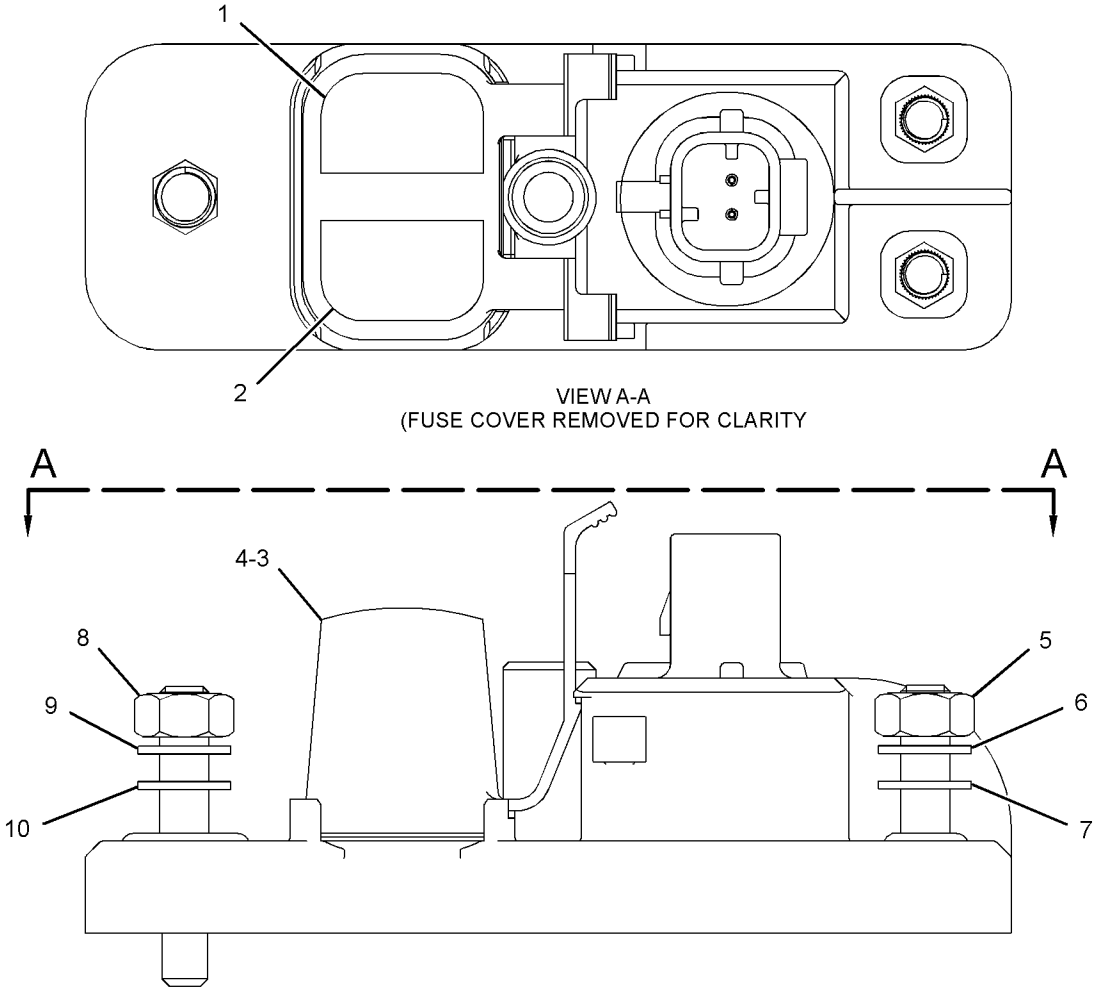

GRAPHIC #1 **<END>** g02958476

262-3764 SENSOR GP-SPEED

PART OF 345-6402 MOTOR & MTG GP-HYDROSTATIC
AN ATTACHMENT

SMCS-4803 **i02635720**

NOTE	REF NO	GRAPHIC REF	PART NUMBER	QTY	PART NAME 1 2 3 4 5 6 (PRODUCT LEVEL)	SEE PAGE
	1	1	**102-8804**	1	KIT-RECEPTACLE (4-PIN)	
					(INCLUDES RECEPTACLE AS & WEDGE)	
	2	1	**9X-3401**	4	PIN-CONNECTOR (16-GA TO 18-GA)	
E	3	1	**9X-1813**		SLEEVE (28-CM)	
	4	1	**9X-7408**	1	SEAL-O-RING	
B	5	1	**171-5349**	1	STRAP-MARKER	

B - USE AS REQUIRED
E - ORDER BY THE CENTIMETER

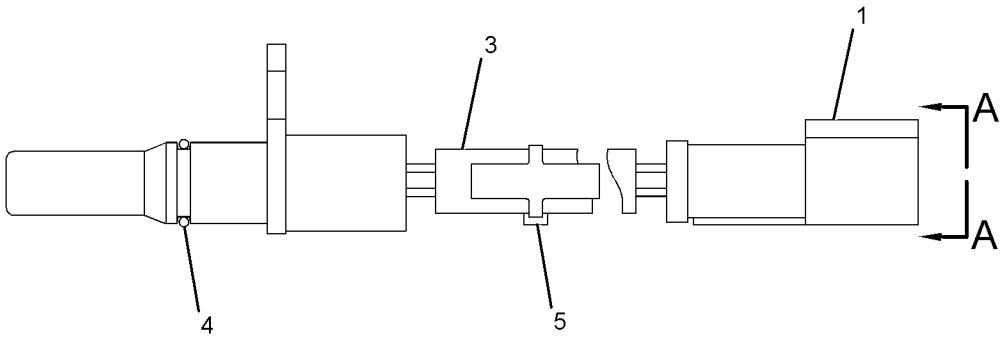

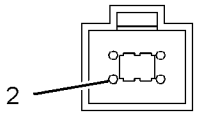

VIEW A-A

GRAPHIC #1 **<END>** g01326248

383-6830 SENSOR GP-SPEED—MOTOR

PART OF 345-6401 MOTOR & MTG GP-HYDROSTATIC

AN ATTACHMENT

SMCS-4803 **i05197194**

NOTE	REF NO	GRAPHIC REF	PART NUMBER	QTY	PART NAME 1 2 3 4 5 6 (PRODUCT LEVEL)	SEE PAGE
	1	1	**171-5349**	1	STRAP-MARKER	
	2	1	**102-8804**	1	KIT-RECEPTACLE (4-PIN)	
					(INCLUDES RECEPTACLE AS & WEDGE)	
	3	1	**9X-7408**	1	SEAL-O-RING	
	4	1	**9X-3401**	4	PIN-CONNECTOR (16-GA TO 18-GA)	
E	5	1	**9X-1813**		SLEEVE (22-CM)	

E - ORDER BY THE CENTIMETER

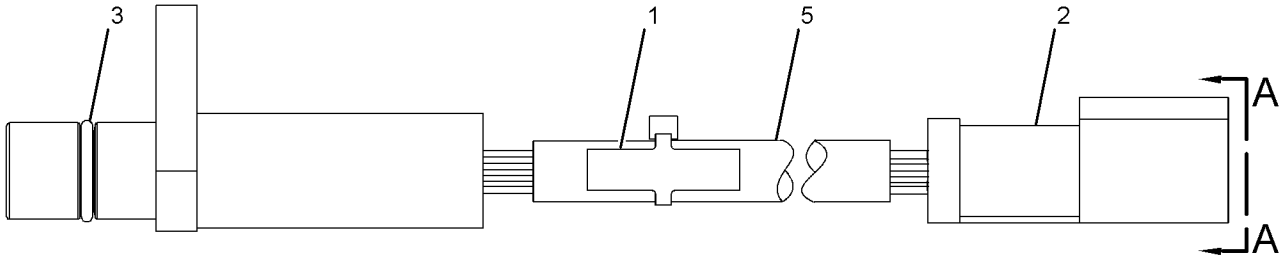

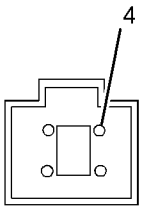

VIEW A-A

GRAPHIC #1 **<END>** g03338063

345-5234 SOFTWARE GP-MACHINE–BUCKET POSITION AN ATTACHMENT

SMCS-7620 **i05269457**

NOTE	PART NUMBER	QTY	PART NAME 1 2 3 4 5 6 (PRODUCT LEVEL)	SEE PAGE
			(NO SERVICED PARTS)	

<END>

396-0915 STARTING MOTOR GP-ELECTRIC

PART OF 380-1768, 380-1769 ENGINE AR-PRIMARY
ALSO AN ATTACHMENT

SMCS-1453 **i05330874**

NOTE	REF NO	GRAPHIC REF	PART NUMBER	QTY	PART NAME 1 2 3 4 5 6 (PRODUCT LEVEL)	SEE PAGE
	1	1	**383-0196**	1	NUT-HEX	
	2	1	**383-0201**	1	NUT-FLANGE	
	3	1	**383-0207**	1	WASHER	
	4	1	**385-5044**	1	STARTING MOTOR AS	
	5	1	**389-5256**	1	BOLT	
	6	1	**387-9894**	1	STUD	

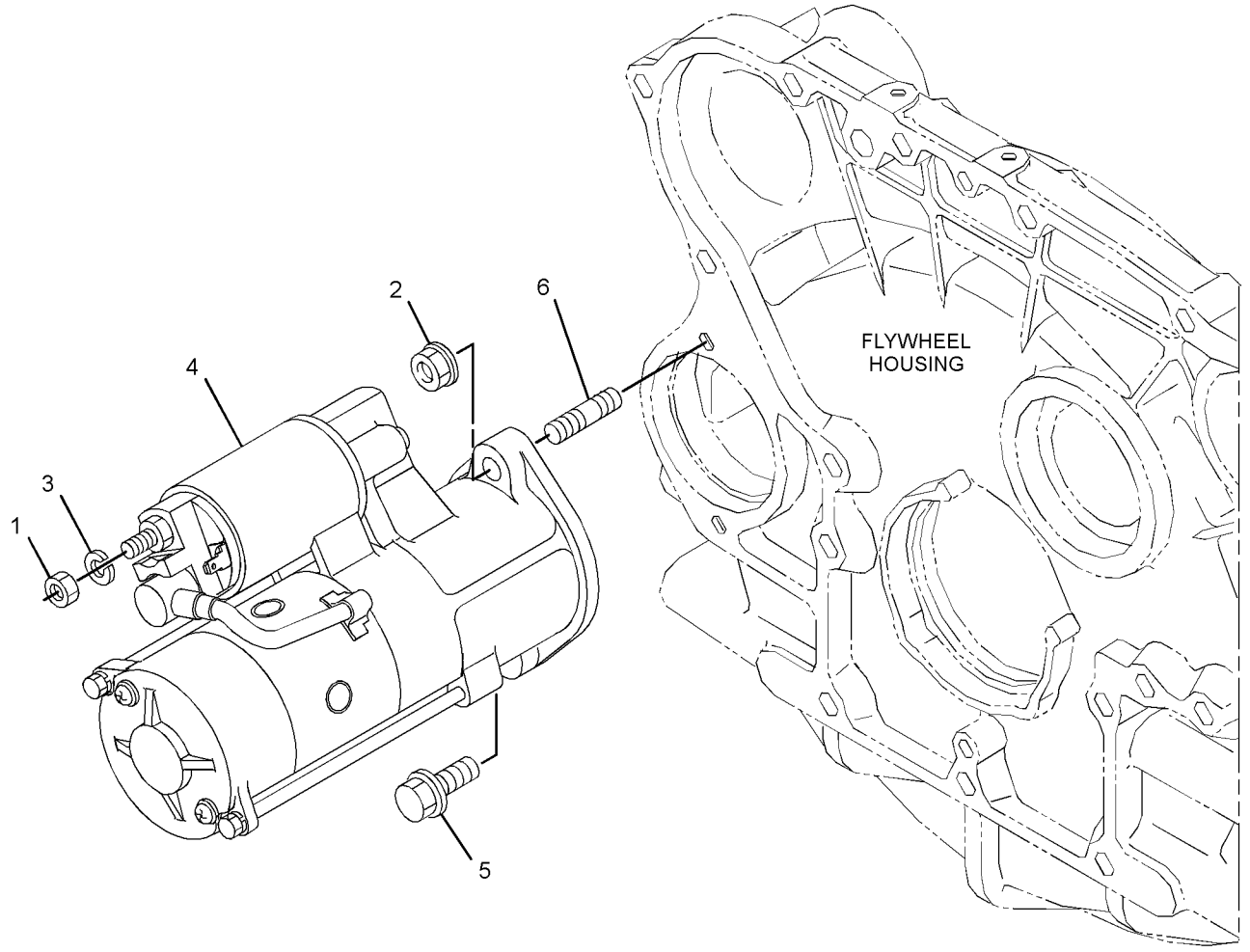

GRAPHIC #1 **<END>** g02895060

361-6396 WIRING GP-AIR CONDITIONER

PART OF 345-6163 AIR CONDITIONER AR
AN ATTACHMENT

SMCS-1408, 7320

i05401077

NOTE	REF NO	GRAPHIC REF	PART NUMBER	QTY	PART NAME 1 2 3 4 5 6 (PRODUCT LEVEL)	SEE PAGE
	1	1	**266-0299**	1	SWITCH AS-ROCKER (AIR CONDITIONER)	
		1	**111-7899**	1	GASKET	
Y	2	1	*356-6113*	1	CONTROL GP-AIR & TEMPERATURE	481
Y	3	1	**361-6398**	1	HARNESS AS-HEATER & AIR COND (REAR)	101
Y	4	1	**378-1024**	1	HARNESS AS-HEATER & AIR COND (FRONT)	101
	5	1	**115-1615**	1	RELAY AS (12-VOLT) (AIR CONDITIONER)	
	6	1	**132-5789**	1	CLIP	
	7	1	**266-3314**	2	BOLT-FLANGE HEAD (M6X1X20.5-MM)	
	8	1	**3S-2093**	19	STRAP-CABLE	
	9	1	**8T-4121**	2	WASHER-HARD (11X21X2.5-MM THK)	
M	10	1	**8T-4133**	1	NUT (M10X1.5-THD)	
M	11	1	**8T-4171**	1	BOLT (M6X1X12-MM)	
M	12	1	**8T-4195**	1	BOLT (M10X1.5X30-MM)	
	13	1	**8T-4205**	1	WASHER-HARD (7.2X14.5X2-MM THK)	

M - METRIC PART
Y - SEPARATE ILLUSTRATION

361-6396 **WIRING GP-AIR CONDITIONER (*contd.*)** **i05401077**

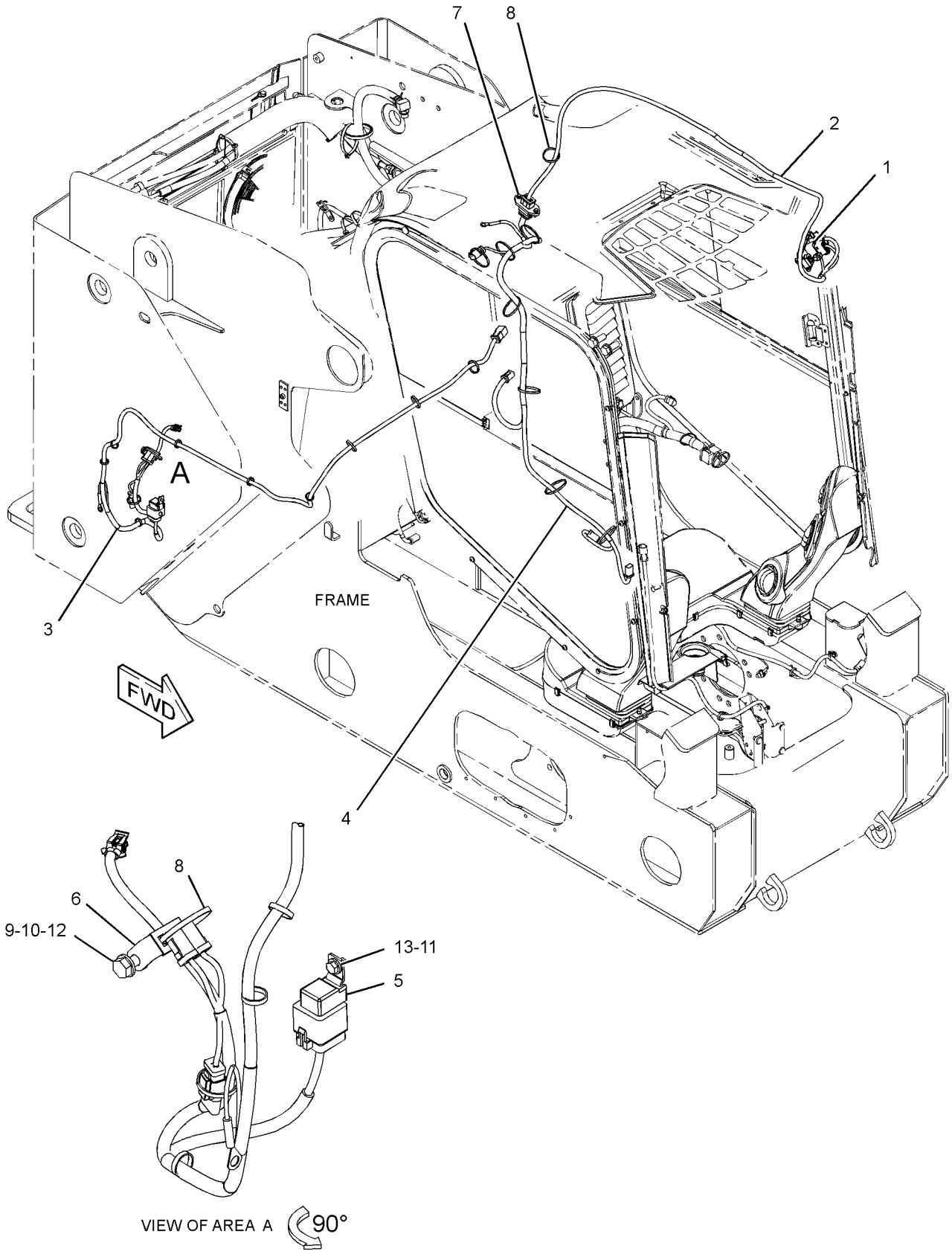

GRAPHIC #1 **<END>** g03405597

361-6400 WIRING GP-CAB

PART OF 345-5454 CAB AR

SMCS-1408, 7301 **i05401072**

NOTE	REF NO	GRAPHIC REF	PART NUMBER	QTY	PART NAME 1 2 3 4 5 6 (PRODUCT LEVEL)	SEE PAGE
	1	1	**7G-1060**	1	STRAP AS-GROUND	
	2	1	**7K-1181**	11	STRAP-CABLE	
	3	1	**8F-7242**	9	WASHER (8.7X15.9X1.6-MM THK)	
	4	1	**146-9439**	2	RELAY AS (12-VOLT) (FUSE BLOCK)	
	5	1	**258-3727**	6	SCREW-TRUSS HEAD (SPECIAL)	
Y	6	1	**258-4135**	2	RELAY GP (12-VOLT) (MAIN POWER)	127
	7	1	**258-4143**	1	BAR-BUS	
	8	1	**258-4178**	1	FLANGE-MOUNTING	
	9	1	**258-4196**	1	WIRE AS	
	10	1	**356-6067**	1	PLATE AS	
M		1	**159-9539**	3	NUT-WELD (M6X1-THD)	
	11	1	**356-6092**	1	FILM-IDENTIFICATION (POWER DISTRIBUTION)	
Y	12	1	*361-6395*	1	ELECTRONICS GP-MACHINE	92
Y	13	1	**361-6397**	1	HARNESS AS-CAB (SEAT)	94
Y	14	1	**361-6399**	1	HARNESS AS-CAB (BACK)	95
B	15	1	**374-7464**	1	CAP-SEAL	
B	16	1	**374-7466**	2	CAP-SEAL	
B	17	1	**374-7467**	2	CAP-SEAL	
Y	18	1	**386-9954**	1	RELAY GP (12-VOLT) (MAIN POWER)	128
	19	1	**110-2028**	4	SCREW-PAN HEAD (10-14X0.75-IN)	
	20	1	**1A-8912**	10	WASHER (6.7X12.7X1.6-MM THK)	
	21	1	**3S-2093**	26	STRAP-CABLE	
	22	1	**4P-8134**	4	CLIP	
M	23	1	**5C-2890**	12	NUT (M6X1-THD)	
M	24	1	**5C-7261**	3	NUT (M8X1.25-THD)	
M	25	1	**5C-9553**	2	BOLT (M6X1X16-MM)	
	26	1	**5P-4115**	4	WASHER-HARD (7.2X19X2-MM THK)	
	28	1	**5P-7162**	8	SCREW-MACHINE (10-32X0.5-IN)	
	29	1	**7P-1695**	2	WASHER (10.5X19X3-MM THK)	
M	30	1	**7X-2534**	3	BOLT (M6X1X50-MM)	
M	31	1	**7X-2537**	4	BOLT (M8X1.25X35-MM)	
	32	1	**8T-0328**	4	WASHER-HARD (5.5X10X1-MM THK)	
M	33	1	**8T-4133**	2	NUT (M10X1.5-THD)	
	34	1	**8T-4205**	3	WASHER-HARD (7.2X14.5X2-MM THK)	

B - USE AS REQUIRED
M - METRIC PART
Y - SEPARATE ILLUSTRATION

361-6400 **WIRING GP-CAB (*contd.*)** **i05401072**

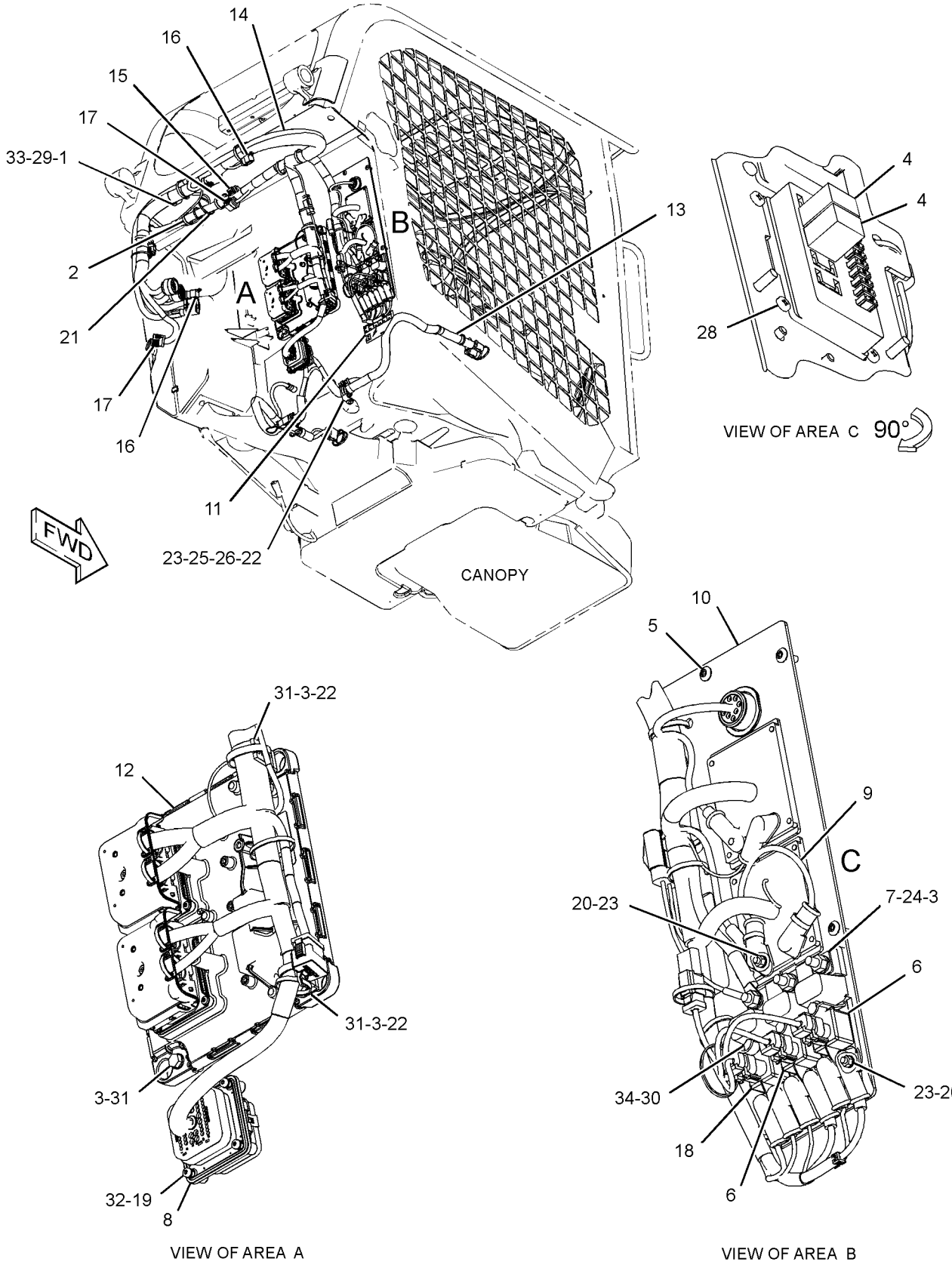

GRAPHIC #1 **<END>** g03405253

396-7209 WIRING GP-CAMERA—REAR VIEW

PART OF 416-9265 PANEL GP-INSTRUMENT

AN ATTACHMENT

SMCS-1408, 7348 **i05402401**

NOTE	REF NO	GRAPHIC REF	PART NUMBER	QTY	PART NAME 1 2 3 4 5 6 (PRODUCT LEVEL)	SEE PAGE
D	1	1	**5P-9909**		SEAL (0.1-M)	
	2	1	**7K-1181**	13	STRAP-CABLE	
Y	3	1	**336-6684**	1	CAMERA GP (12-VOLT, 24-VOLT)	89
Y	4	1	**396-7210**	1	HARNESS AS-CAB (CAMERA)	98
	5	1	**9G-1307**	1	GROMMET	

D - ORDER BY THE METER
Y - SEPARATE ILLUSTRATION

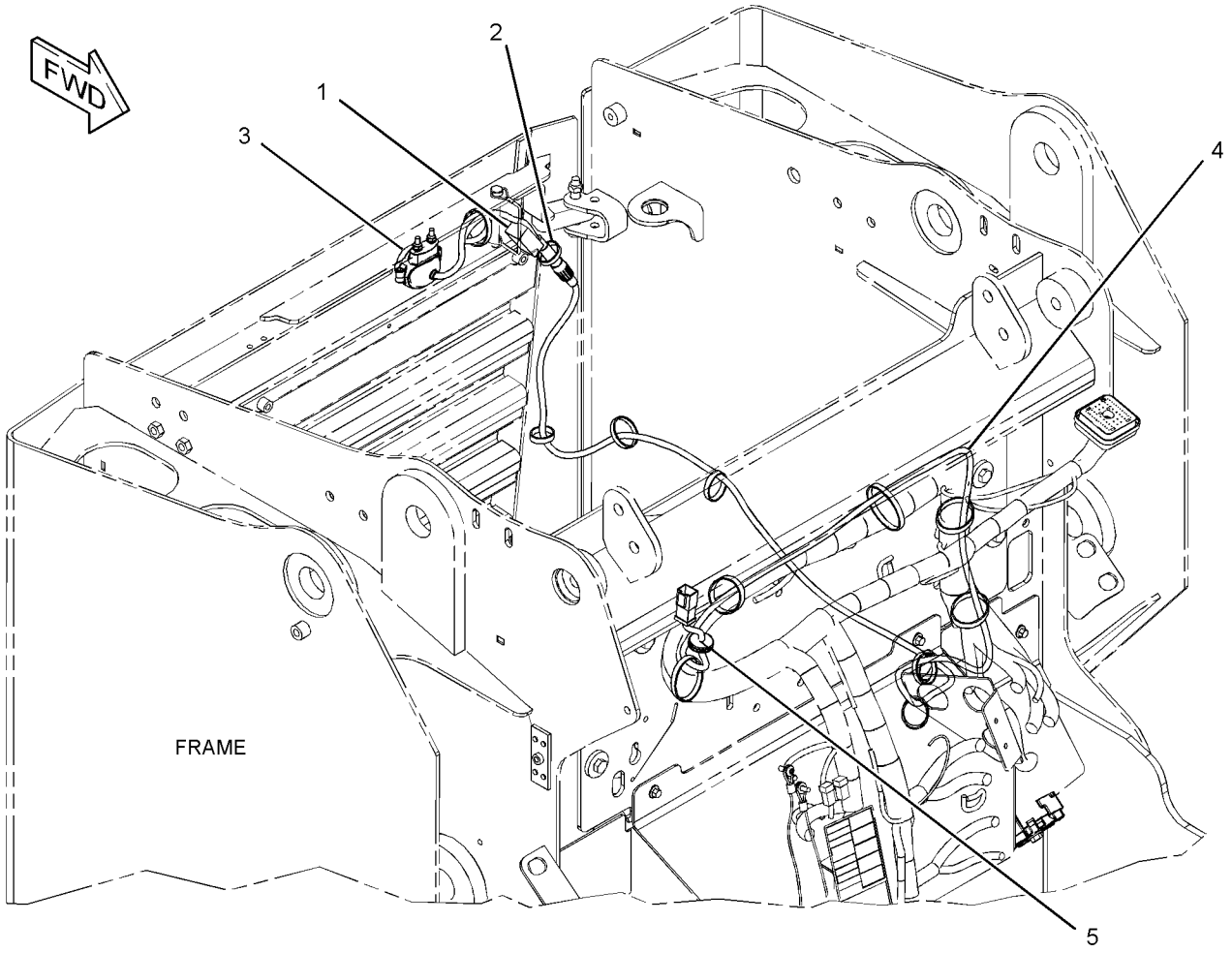

GRAPHIC #1 **<END>** g03323586

378-1022 WIRING GP-ENGINE

PART OF 378-6690, 393-7340 INSTALLATION AR-ENGINE

SMCS-1000, 1408, 1420 **i05380445**

NOTE	REF NO	GRAPHIC REF	PART NUMBER	QTY	PART NAME 1 2 3 4 5 6 (PRODUCT LEVEL)	SEE PAGE
Y	1	1	**378-1023**	1	HARNESS AS-ENGINE	99
	2	1	**352-3965**	1	CLIP	
	3	1	**132-5789**	3	CLIP	
M	4	1	**150-3715**	1	BOLT (M12X1.25X25-MM)	
	5	1	**350-5720**	1	CLIP	
	6	1	**3S-2093**	14	STRAP-CABLE	
M	7	1	**5C-7261**	1	NUT (M8X1.25-THD)	
	8	1	**4B-4280**	1	WASHER (13.5X27X2.5-MM THK)	
M	9	1	**8T-4200**	2	BOLT (M8X1.25X16-MM)	
	10	1	**8T-4224**	3	WASHER-HARD (8.8X16X2-MM THK)	

M - METRIC PART
Y - SEPARATE ILLUSTRATION

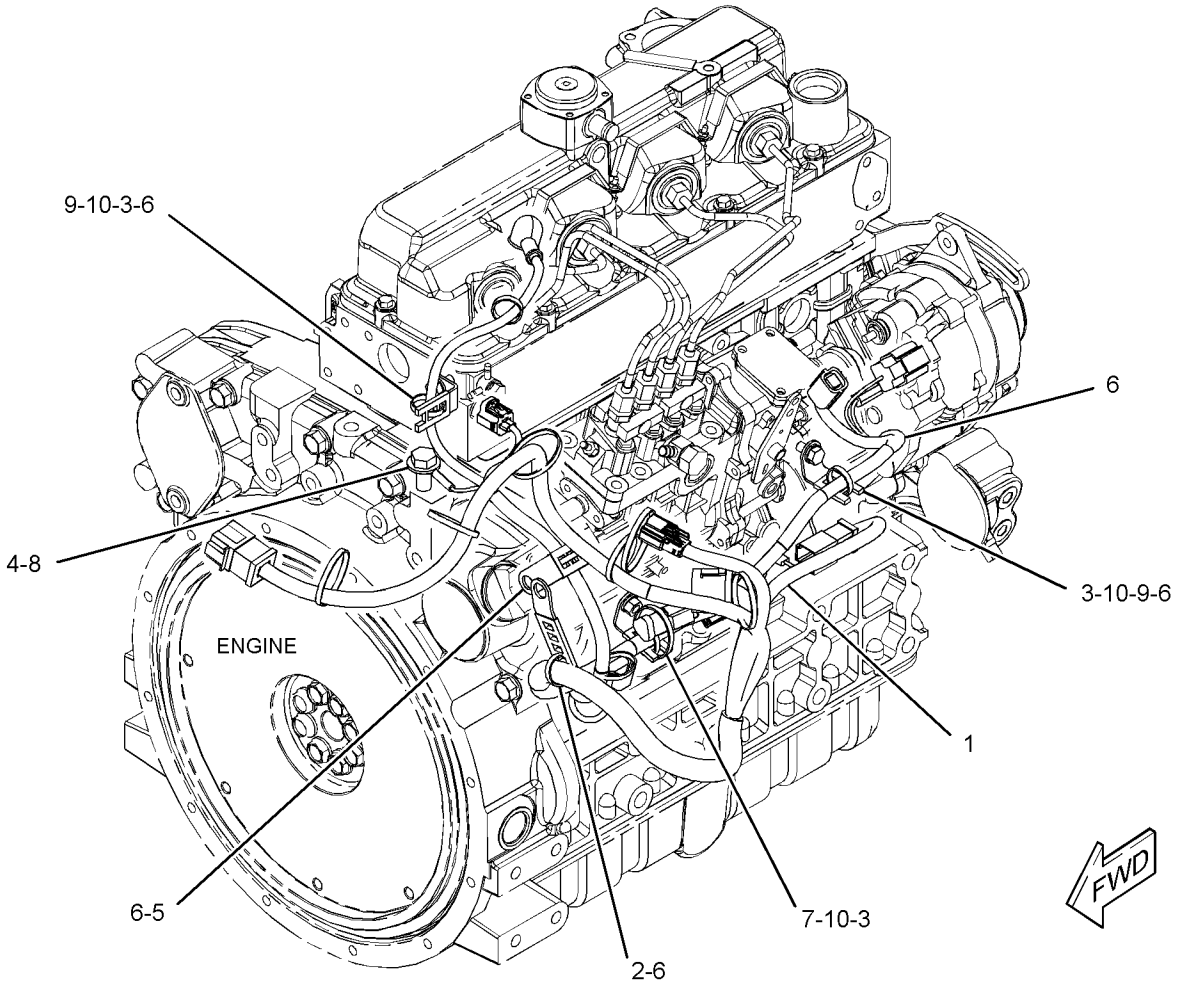

GRAPHIC #1 **<END>** g03406879

416-9270 WIRING GP-FRONT–IMPLEMENT VALVE

PART OF 388-8035, 388-8036 HYDRAULIC AR
AN ATTACHMENT

SMCS-1408, 4334, 5734 **i05401768**

NOTE	REF NO	GRAPHIC REF	PART NUMBER	QTY	PART NAME 1 2 3 4 5 6 (PRODUCT LEVEL)	SEE PAGE
	1	1	**7K-1181**	2	STRAP-CABLE	
Y	2	1	**378-1029**	1	HARNESS AS-FRONT (IMPLEMENT VALVE)	100
	3	1	**3S-2093**	1	STRAP-CABLE	
	4	1	**4P-8134**	1	CLIP	

Y - SEPARATE ILLUSTRATION

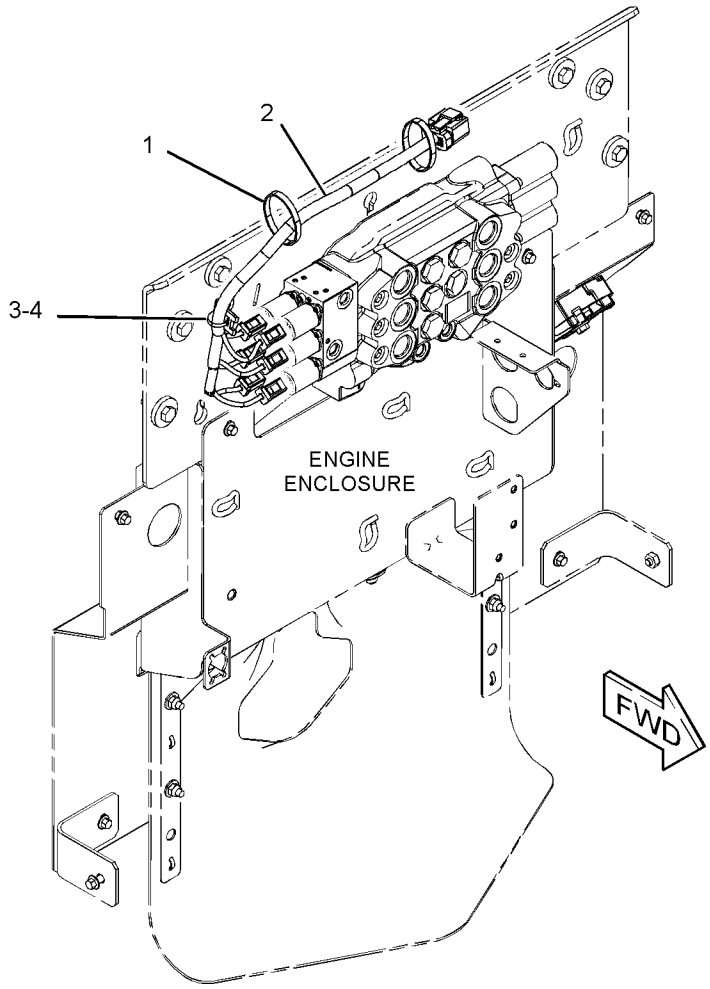

GRAPHIC #1 **<END>** g03395850

421-4224 WIRING GP-FRONT–HIGH FLOW

PART OF 388-8038 HYDRAULIC AR
AN ATTACHMENT

SMCS-1408, 4334, 5734 **i05401767**

NOTE	REF NO	GRAPHIC REF	PART NUMBER	QTY	PART NAME 1 2 3 4 5 6 (PRODUCT LEVEL)	SEE PAGE
	1	1	**146-9439**	1	RELAY AS (12-VOLT) (FUSE BLOCK)	
Y	2	1	**378-1030**	1	HARNESS AS-SOLENOID (IMPLEMENT VALVE)	108
	3	1	**3S-2093**	4	STRAP-CABLE	
	4	1	**7K-1181**	3	STRAP-CABLE	
	5	1	**4P-8134**	1	CLIP	

Y - SEPARATE ILLUSTRATION

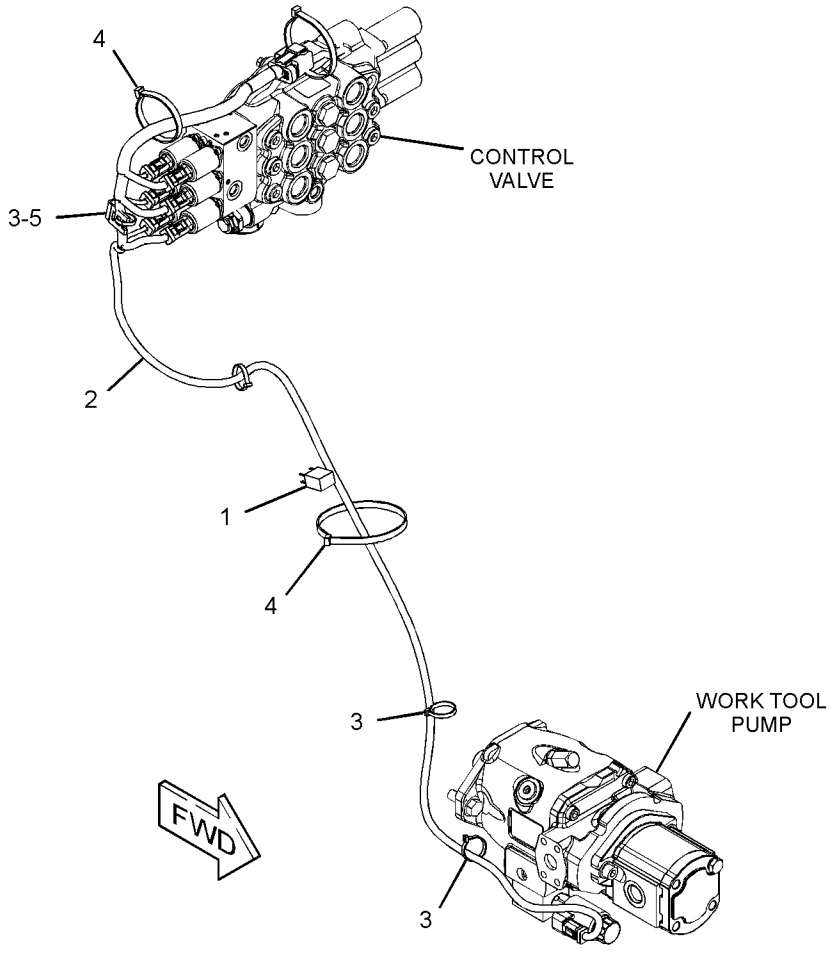

GRAPHIC #1 **<END>** g03407559

361-6384 WIRING GP-HEATER

PART OF 345-6161 HEATER AR-CAB

AN ATTACHMENT

SMCS-1090, 1408, 1900, 7304 **i05295540**

NOTE	REF NO	GRAPHIC REF	PART NUMBER	QTY	PART NAME 1 2 3 4 5 6 (PRODUCT LEVEL)	SEE PAGE
	1	1	**109-2356**	1	PLUG	
Y	2	1	*356-6113*	1	CONTROL GP-AIR & TEMPERATURE	481
	3	1	**374-7463**	1	CAP-SEAL	
Y	4	1	**378-1024**	1	HARNESS AS-HEATER & AIR COND	101
	5	1	**266-3314**	2	BOLT-FLANGE HEAD (M6X1X20.5-MM)	
	6	1	**3S-2093**	8	STRAP-CABLE	

Y - SEPARATE ILLUSTRATION

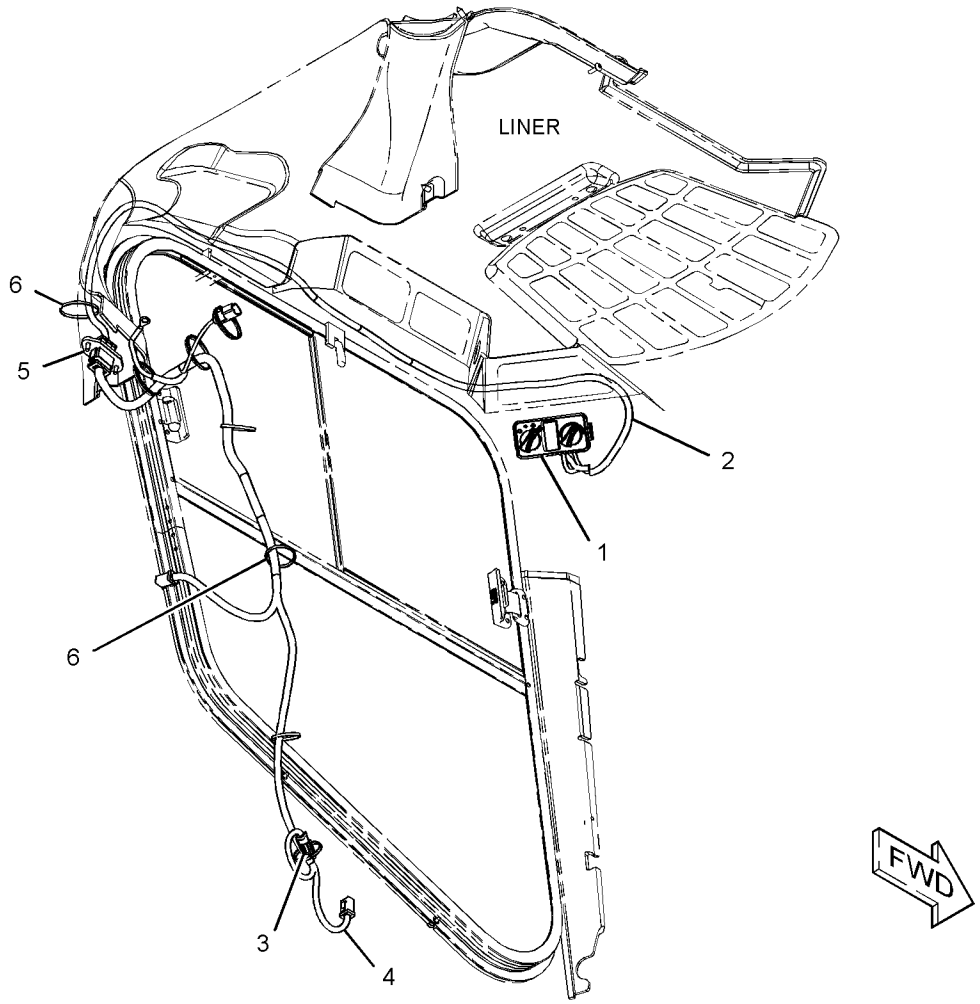

GRAPHIC #1 **<END>** g03384941

388-1435 WIRING GP-PLATFORM

PART OF 388-8180 CHASSIS AR

SMCS-1408, 1429 **i05380988**

NOTE	REF NO	GRAPHIC REF	PART NUMBER	QTY	PART NAME 1 2 3 4 5 6 (PRODUCT LEVEL)	SEE PAGE
	1	1	**7K-1181**	14	STRAP-CABLE	
	2	1	**164-9425**	1	HORN AS (12-VOLT, LOW TONE)	
	3	1	**178-3620**	2	STRAP-DUAL CLAMP	
	4	1	**206-1345**	1	STRAP-CABLE	
Y	5	1	**268-4071**	2	LAMP GP-FLOOD (12-VOLT)	115
	6	1	**290-5562**	1	MOUNT (DUAL SWIVEL)	
	7	1	**300-9546**	1	ALARM AS	
		1	**8T-8729**	2	PIN-CONNECTOR (16-GA TO 18-GA)	
E		1	**9X-1813**		SLEEVE (31-CM)	
D		1	**5P-5623**		WIRE-ELECTRICAL (16-GA, BLACK) (0.4-M EACH)	
		1	**102-8802**	1	KIT-RECEPTACLE (2-PIN)	
					(INCLUDES RECEPTACLE AS & WEDGE)	
Y	8	1	**361-6391**	1	HARNESS AS-PLATFORM (REAR)	104
Y	9	1	**361-6393**	1	HARNESS AS-PLATFORM (FRONT)	105
B	10	1	**374-7463**	1	CAP-SEAL	
B	11	1	**374-7464**	1	CAP-SEAL	
B	12	1	**374-7467**	1	CAP-SEAL	
	13	1	**378-1011**	1	HOLDER AS-FUSE	
		1	**378-1012**	1	FUSE (100-AMPERE)	
		1	**378-1013**	3	COVER	
		1	**396-8366**	1	FUSE (50-AMPERE)	
Y	14	1	**383-6247**	1	HARNESS AS-PLATFORM (REAR, RH)	105
M	16	1	**113-8694**	1	BOLT (M6X1X20-MM)	
	17	1	**115-1615**	1	RELAY AS (12-VOLT) (START)	
	17A	1	**115-1615**	1	RELAY AS (12-VOLT) (GLOW PLUG)	
	18	1	**132-5789**	5	CLIP	
	19	1	**161-3357**	1	SPACER (12X20X10-MM THK)	
	20	1	**266-3314**	1	BOLT-FLANGE HEAD (M6X1X20.5-MM)	
M	21	1	**266-3315**	2	BOLT-FLANGE HEAD (M8X1.25X25.5-MM)	
	22	1	**3K-5178**	2	GROMMET	
	23	1	**3S-2093**	32	STRAP-CABLE	
	24	1	**4B-4863**	4	WASHER (4.7X11X1.2-MM THK)	
	25	1	**4P-7581**	3	CLIP	
	26	1	**4P-8134**	1	CLIP	
M	27	1	**5C-2874**	3	NUT (M5X0.8-THD)	
M	28	1	**5C-2890**	3	NUT (M6X1-THD)	
	29	1	**6D-5729**	2	GROMMET	
M	30	1	**8C-4982**	4	BOLT-SOCKET HEAD (M4X0.7X20-MM)	
	31	1	**8T-0328**	3	WASHER-HARD (5.5X10X1-MM THK)	
	32	1	**8T-4121**	2	WASHER-HARD (11X21X2.5-MM THK)	
M	33	1	**8T-4133**	3	NUT (M10X1.5-THD)	
M	34	1	**8T-4171**	3	BOLT (M6X1X12-MM)	
M	35	1	**8T-4196**	1	BOLT (M10X1.5X35-MM)	
M	36	1	**8T-4199**	2	BOLT (M8X1.25X12-MM)	
	37	1	**8T-4205**	6	WASHER-HARD (7.2X14.5X2-MM THK)	
	38	1	**8T-4224**	2	WASHER-HARD (8.8X16X2-MM THK)	
	39	1	**5P-4116**	1	WASHER-HARD (8.8X20.5X2-MM THK)	
M	40	1	**8T-4200**	1	BOLT (M8X1.25X16-MM)	
	41	1	**5P-4115**	2	WASHER-HARD (7.2X19X2-MM THK)	
	42	1	**7P-1695**	2	WASHER (10.5X19X3-MM THK)	
M	43	1	**8T-4971**	2	BOLT (M6X1X30-MM)	

B - USE AS REQUIRED
D - ORDER BY THE METER
E - ORDER BY THE CENTIMETER
M - METRIC PART
Y - SEPARATE ILLUSTRATION

388-1435 **WIRING GP-PLATFORM (*contd.*)** **i05380988**

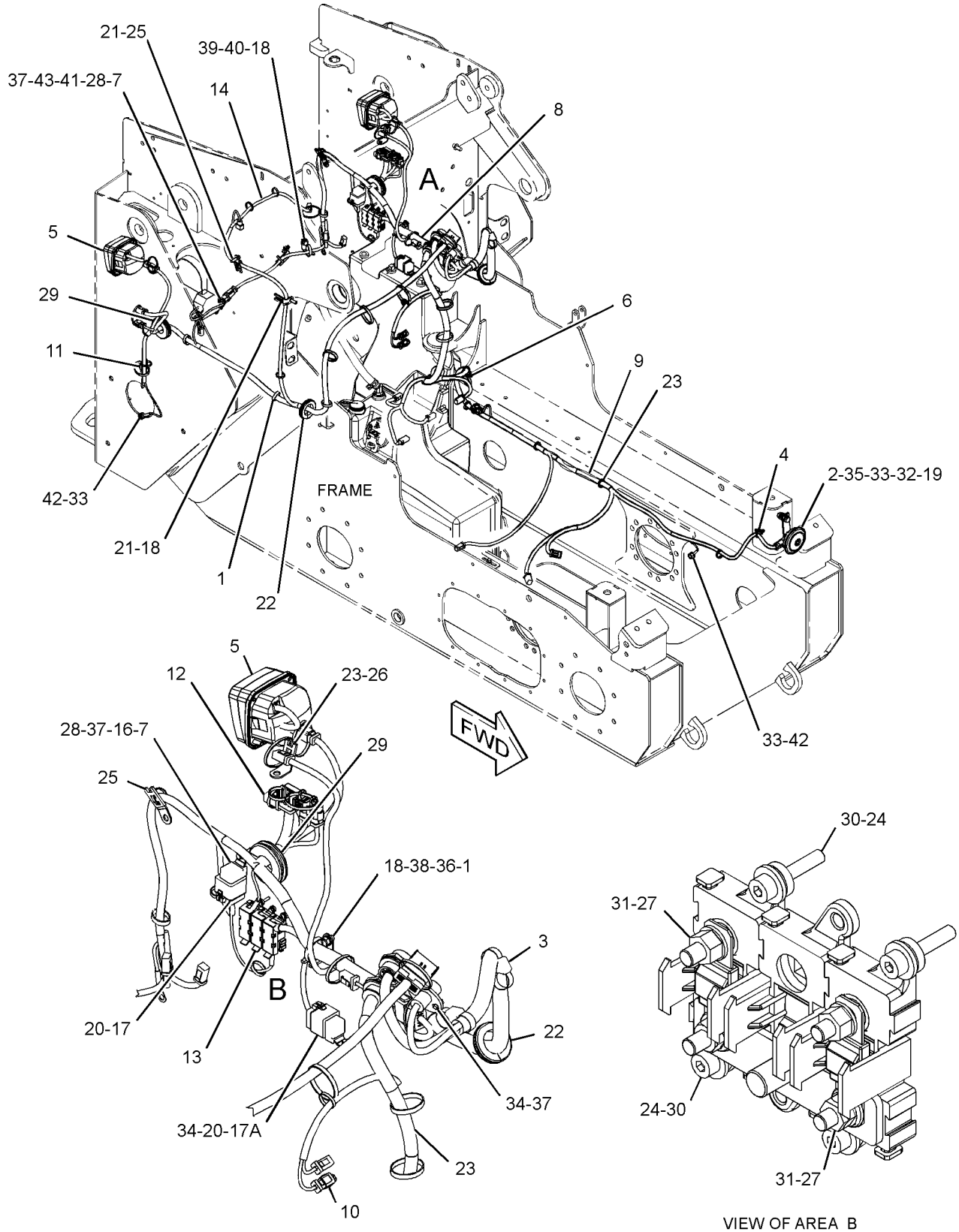

VIEW OF AREA A

VIEW OF AREA B
(PARTS REMOVED FOR CLARITY)

GRAPHIC #1 **<END>** g03410391

361-6378 WIRING GP-QUICK COUPLER

PART OF 388-8300 COUPLER AR-QUICK

AN ATTACHMENT

SMCS-1408, 6129 **i05380894**

NOTE	REF NO	GRAPHIC REF	PART NUMBER	QTY	PART NAME 1 2 3 4 5 6 (PRODUCT LEVEL)	SEE PAGE
	1	1	**7K-1181**	3	STRAP-CABLE	
	2	1	**178-3620**	8	STRAP-DUAL CLAMP	
	3	1	**265-9513**	1	SWITCH AS-ROCKER (QUICK COUPLER)	
		1	**111-7899**	1	GASKET	
Y	4	1	**383-6246**	1	HARNESS AS-QUICK COUPLER (LIFT)	106
	5	1	**396-7201**	1	BRACKET	
	6	1	**419-0088**	1	ACTUATOR GP (QUICK COUPLER)	
Y	7	1	**436-1609**	1	HARNESS AS-QUICK COUPLER	106
	8	1	**115-1615**	2	RELAY AS (12-VOLT) (QUICK COUPLER)	
	9	1	**3S-2093**	10	STRAP-CABLE	
M	10	1	**5C-2874**	1	NUT (M5X0.8-THD)	
M	11	1	**5C-2890**	2	NUT (M6X1-THD)	
M	12	1	**5C-9553**	2	BOLT (M6X1X16-MM)	
	13	1	**8T-0328**	1	WASHER-HARD (5.5X10X1-MM THK)	
M	14	1	**8T-4171**	2	BOLT (M6X1X12-MM)	
	15	1	**8T-4205**	6	WASHER-HARD (7.2X14.5X2-MM THK)	

M - METRIC PART
Y - SEPARATE ILLUSTRATION

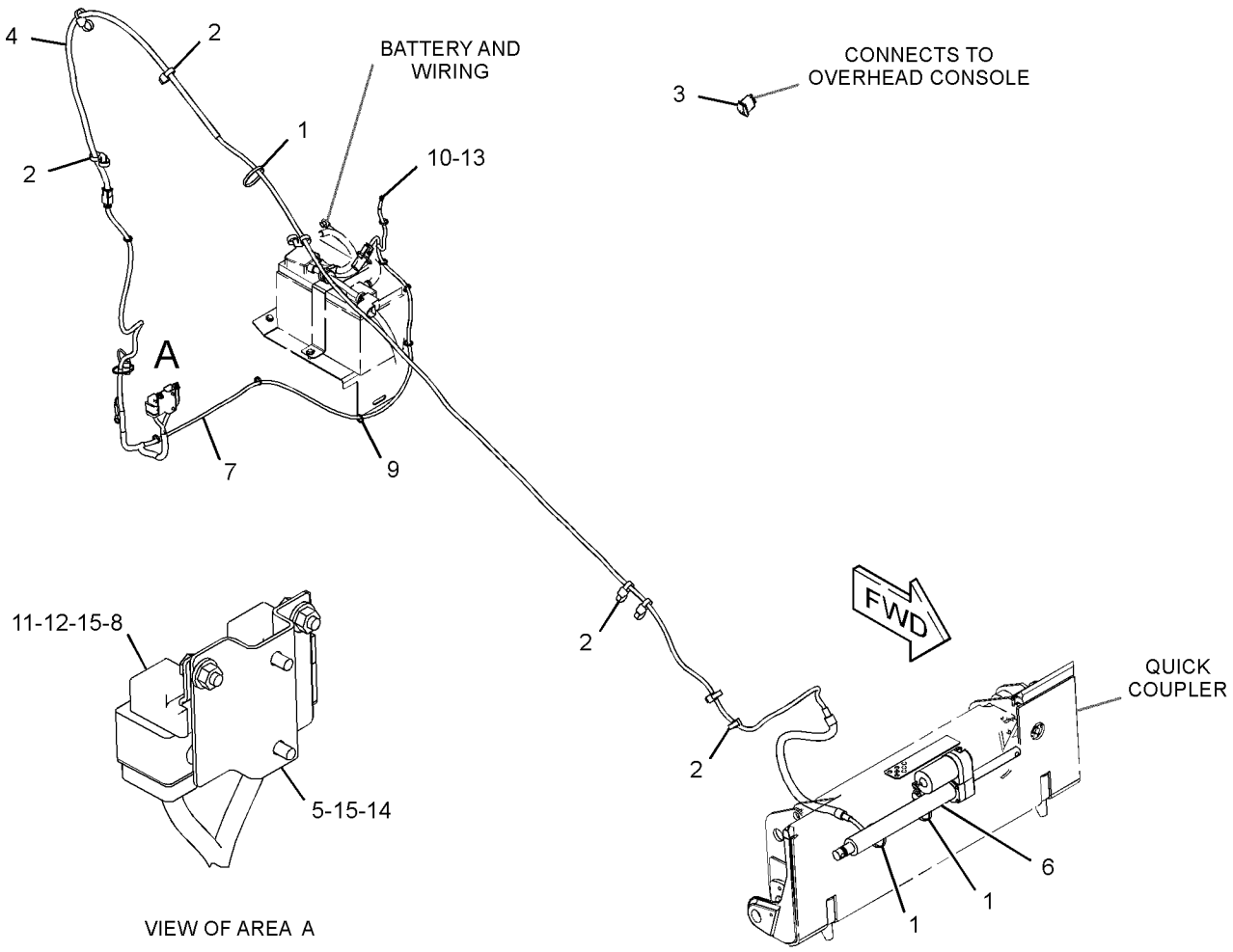

GRAPHIC #1 **<END>** g03406529

356-6096 WIRING GP-RIDE CONTROL

PART OF 388-8127, 388-8129 CONFIGURATION AR
AN ATTACHMENT

SMCS-1408, 5004, 5734 **i05402402**

NOTE	REF NO	GRAPHIC REF	PART NUMBER	QTY	PART NAME 1 2 3 4 5 6 (PRODUCT LEVEL)	SEE PAGE
	1	1	**146-9439**	1	RELAY AS (12-VOLT) (FUSE BLOCK)	
	2	1	**265-9526**	1	SWITCH AS-ROCKER (RIDE CONTROL)	
		1	**111-7899**	1	GASKET	
	3	1	**290-5562**	2	MOUNT (DUAL SWIVEL)	
Y	4	1	**356-6095**	1	HARNESS AS-RIDE CONTROL	107
	5	1	**3S-2093**	5	STRAP-CABLE	

Y - SEPARATE ILLUSTRATION

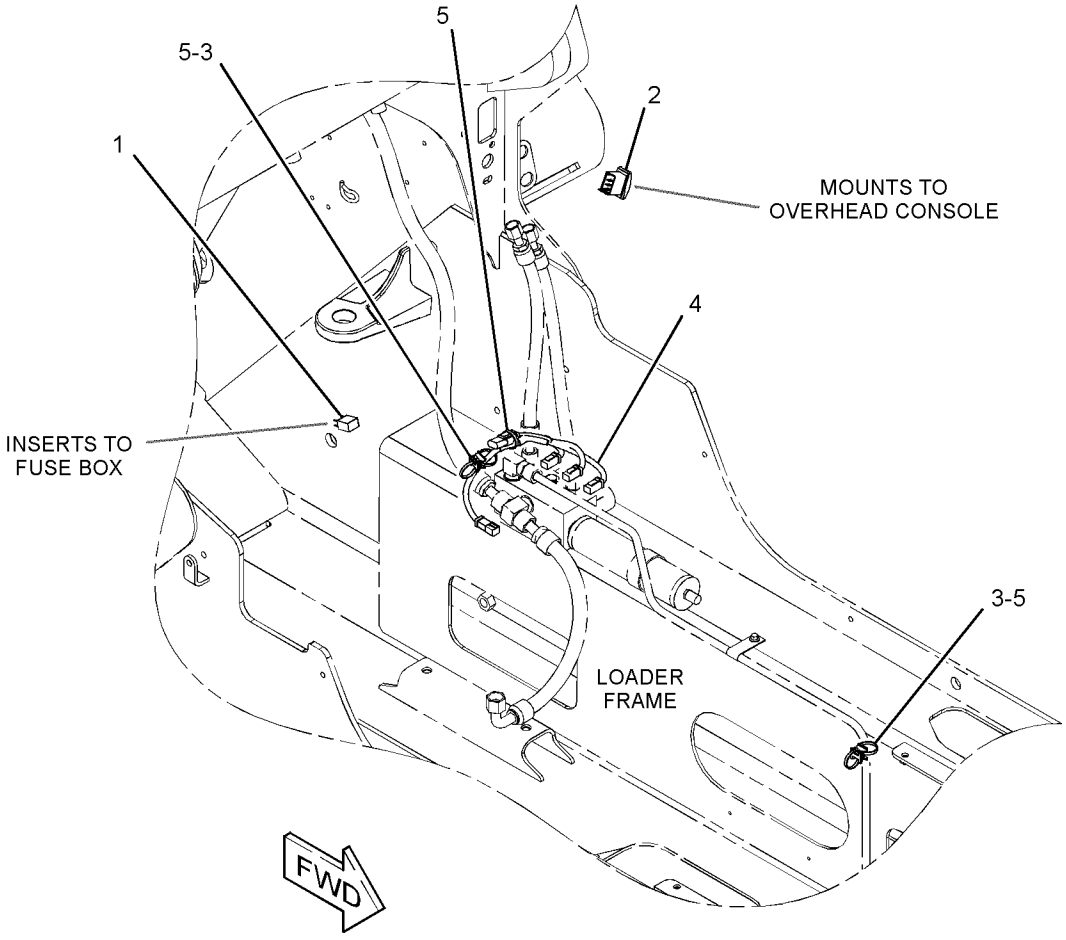

GRAPHIC #1 **<END>** g02884976

421-4207 WIRING GP-WORK TOOL—HIGH FLOW

PART OF 387-5383 CONTROL AR-HYDRAULIC, 388-8038 HYDRAULIC AR AN ATTACHMENT

SMCS-1408 **i05160110**

NOTE	REF NO	GRAPHIC REF	PART NUMBER	QTY	PART NAME 1 2 3 4 5 6 (PRODUCT LEVEL)	SEE PAGE
	1	1	**146-9439**	5	RELAY AS (12-VOLT)	
	2	1	**159-9495**	1	NUT (1-1/2-18-THD)	
	3	1	**178-3620**	5	STRAP-DUAL CLAMP	
	4	1	**263-5418**	1	SWITCH AS-ROCKER (WORK TOOL)	
		1	**111-7899**	1	GASKET	
Y	5	1	**356-6115**	1	HARNESS AS-WORK TOOL	109
	6	1	**396-7208**	1	BRACKET	
	7	1	**159-9496**	1	LOCKWASHER	
	8	1	**266-3316**	2	BOLT-FLANGE HEAD (M10X1.5X25-MM)	
	9	1	**8T-4121**	1	WASHER-HARD (11X21X2.5-MM THK)	
M	10	1	**8T-4133**	1	NUT (M10X1.5-THD)	

M - METRIC PART
Y - SEPARATE ILLUSTRATION

421-4207 **WIRING GP-WORK TOOL (*contd.*)** **i05160110**

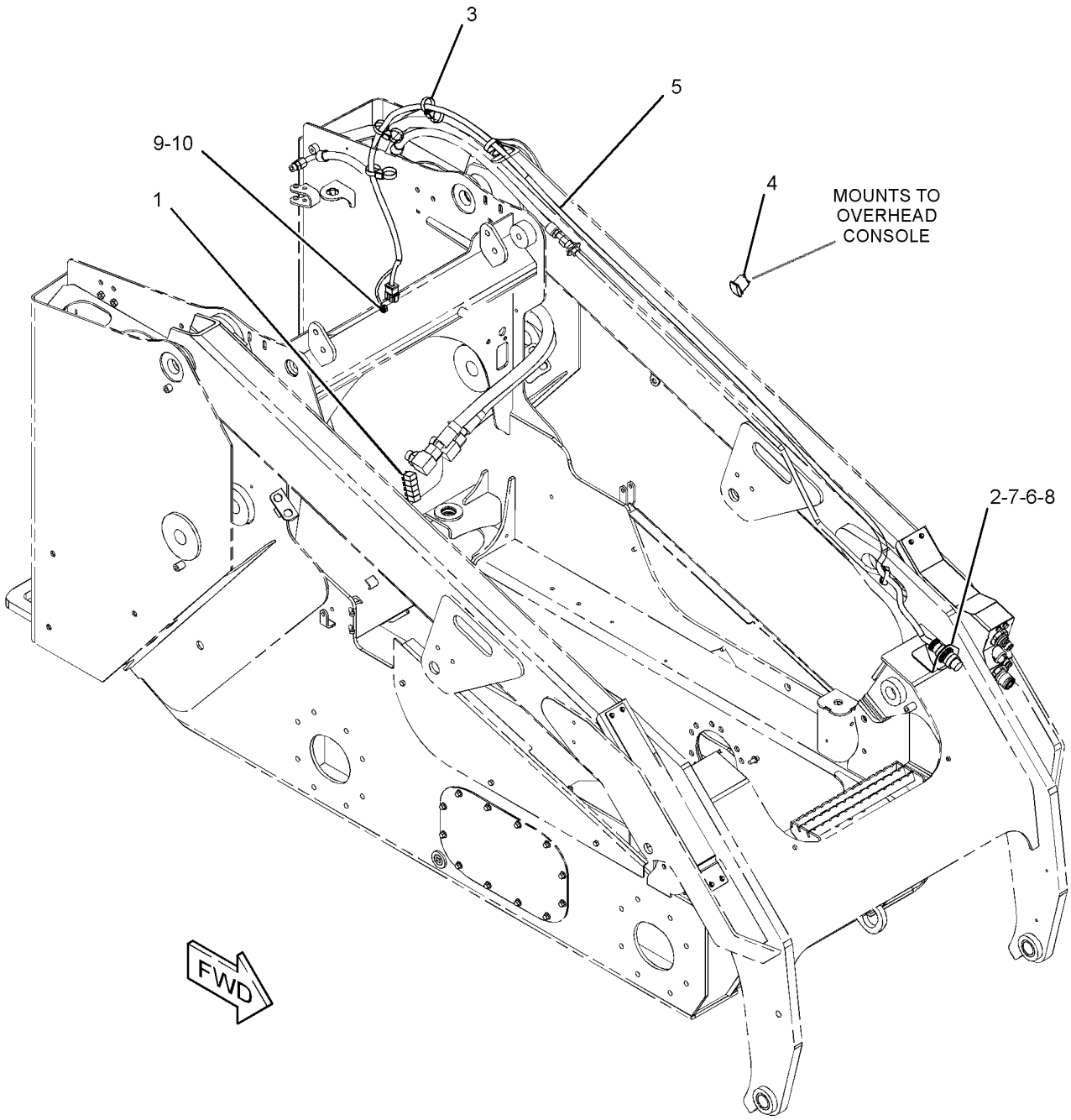

GRAPHIC #1 **<END>** g03350144

421-4219 WIRING GP-WORK TOOL—SELF LEVEL

PART OF 388-8036, 388-8038 HYDRAULIC AR
AN ATTACHMENT

SMCS-1408 **i05380611**

NOTE	REF NO	GRAPHIC REF	PART NUMBER	QTY	PART NAME 1 2 3 4 5 6 (PRODUCT LEVEL)	SEE PAGE
	1	1	**7K-1181**	7	STRAP-CABLE	
	2	1	**178-3620**	10	STRAP-DUAL CLAMP	
	3	1	**247-4818**	1	SENSOR AS-POSITION (BOOM RETRACTED)	
		1	**102-8804**	1	KIT-RECEPTACLE (4-PIN)	
					(INCLUDES RECEPTACLE AS & WEDGE)	
E		1	**8Y-8080**		TUBE-CONVOLUTED (23-CM)	
		1	**9X-3401**	4	PIN-CONNECTOR (16-GA TO 18-GA)	
					—OR—	
		1	**126-1767**	4	PIN-CONNECTOR (14-GA TO 16-GA)	
	4	1	**263-5417**	1	SWITCH AS-ROCKER (WORK TOOL POSITIONER)	
		1	**111-7899**	1	GASKET	
	5	1	**344-7391**	1	SENSOR GP-PRESSURE (LIFT CYLINDER)	
	6	1	**356-6119**	1	SENSOR AS-POSITION (QUICK COUPLER)	
Y	7	1	**421-4206**	1	HARNESS AS-SENSOR	108
	8	1	**421-4212**	1	PLATE AS	
	9	1	**421-4213**	1	PLATE	
	10	1	**436-1608**	1	BRACKET AS	
M		1	**159-9540**	2	NUT-WELD (M8X1.25-THD)	
	11	1	**266-3316**	2	BOLT-FLANGE HEAD (M10X1.5X25-MM)	
	12	1	**3J-1907**	1	SEAL-O-RING	
	13	1	**4B-4863**	2	WASHER (4.7X11X1.2-MM THK)	
M	14	1	**5C-8312**	2	NUT (M4X0.7-THD)	
M	15	1	**7X-2537**	2	BOLT (M8X1.25X35-MM)	
M	16	1	**8C-4982**	2	BOLT-SOCKET HEAD (M4X0.7X20-MM)	
M	17	1	**8T-4171**	2	BOLT (M6X1X12-MM)	
	18	1	**8T-4205**	2	WASHER-HARD (7.2X14.5X2-MM THK)	
	19	1	**8T-4224**	2	WASHER-HARD (8.8X16X2-MM THK)	

E - ORDER BY THE CENTIMETER
M - METRIC PART
Y - SEPARATE ILLUSTRATION

421-4219 **WIRING GP-WORK TOOL (*contd.*)** **i05380611**

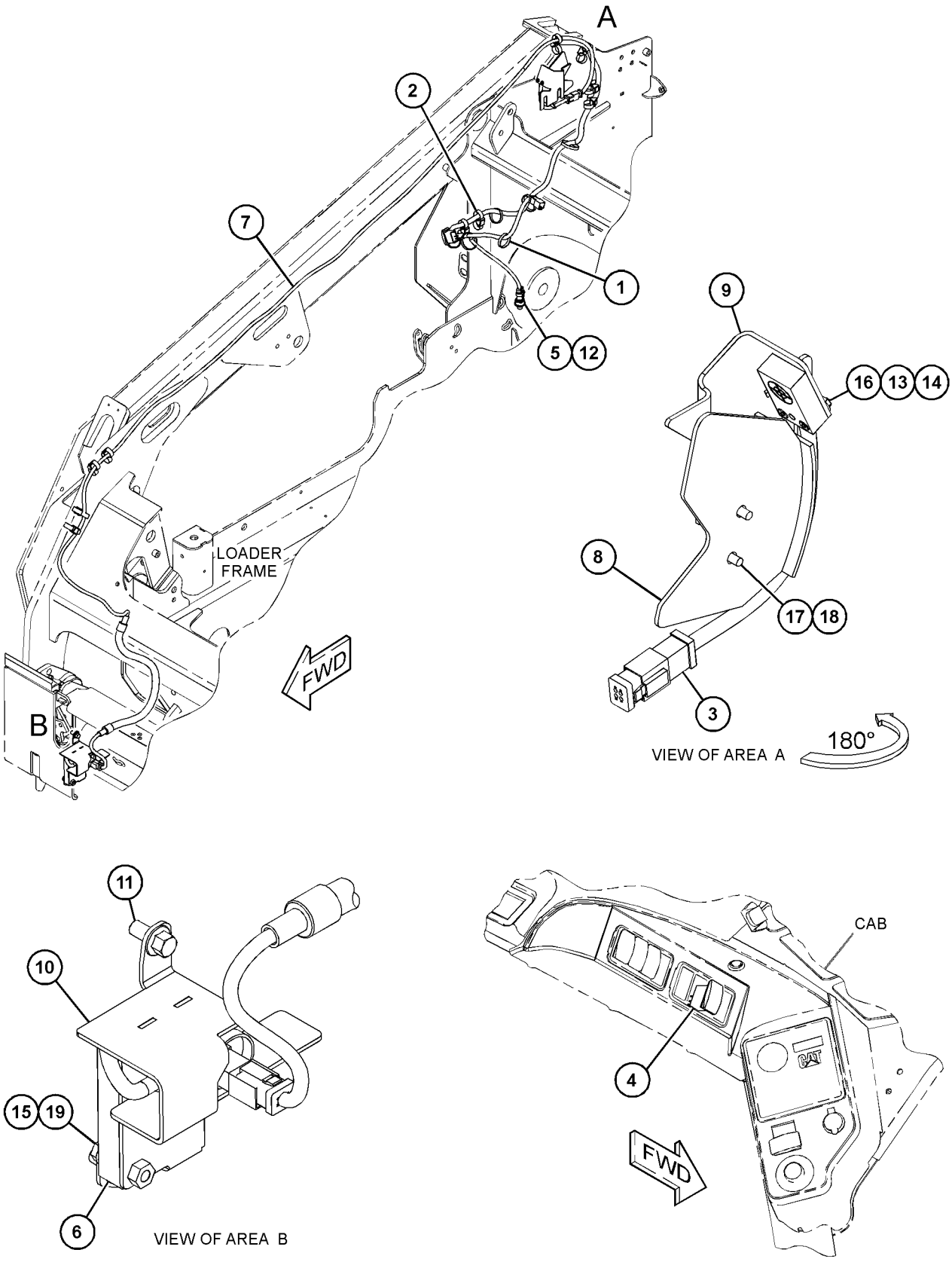

GRAPHIC #1 **<END>** g03405466

142-8758 AXLE GP

PART OF 261-6255 AXLE GP

SMCS-3278 **i01790260**

NOTE	REF NO	GRAPHIC REF	PART NUMBER	QTY	PART NAME 1 2 3 4 5 6 (PRODUCT LEVEL)	SEE PAGE
	1	1	**142-8723**	1	HOUSING-AXLE	
	2	1	**142-8724**	1	SPINDLE-WHEEL	
	3	1	**142-8729**	1	SPACER (32.045 MM THK)	
	4	1	**150-4385**	2	CONE	
	5	1	**150-4386**	2	CUP	
	6	1	**150-5472**	1	SEAL-LIP TYPE	
	7	1	**159-5772**	8	STUD (9/16-18-2A THD)	
	8	1	**166-3678**	1	SEAL-LIP TYPE	

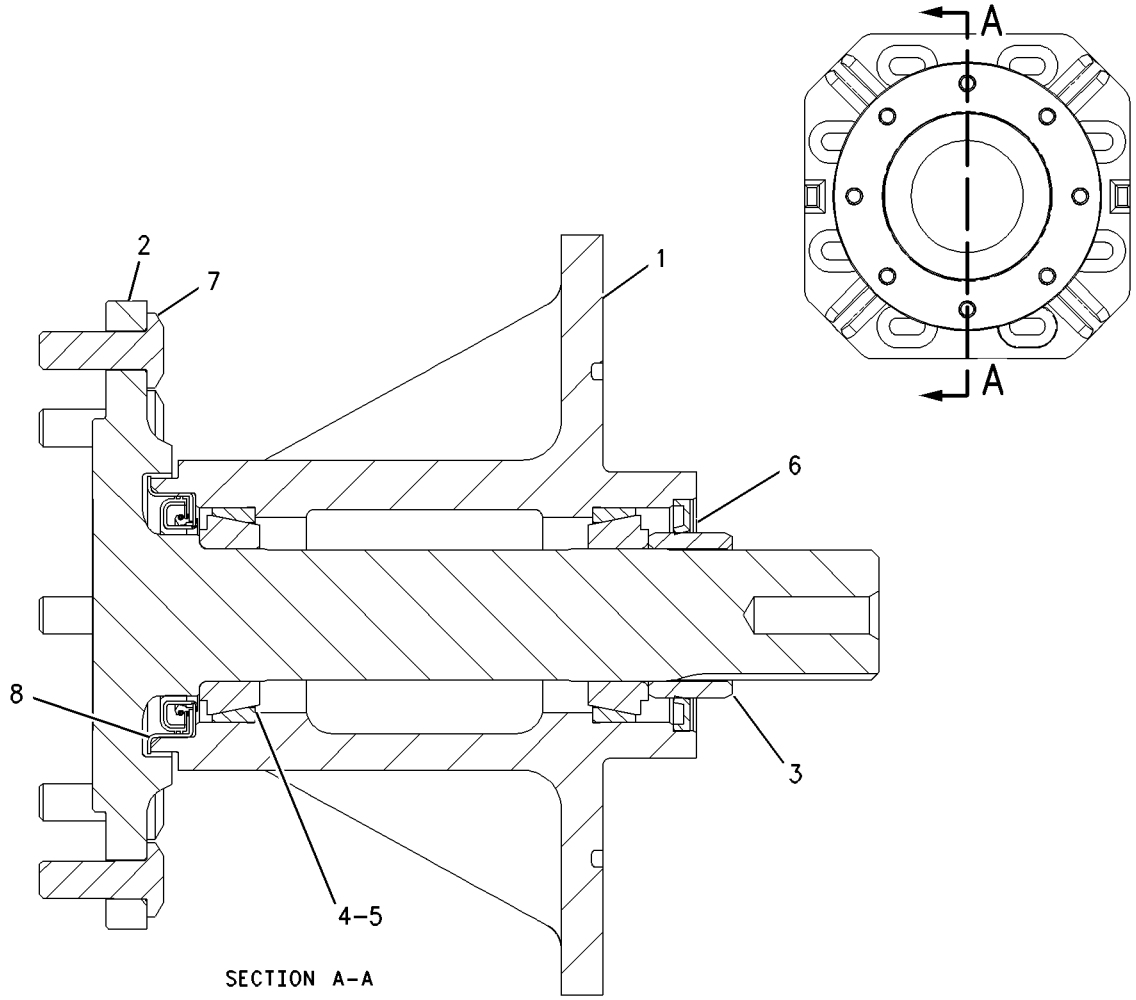

GRAPHIC #1 **<END>** g00916188

261-6255 AXLE GP

PART OF 388-8180 CHASSIS AR

SMCS-3278 **i02476310**

NOTE	PART NUMBER	QTY	PART NAME 1 2 3 4 5 6 (PRODUCT LEVEL)	SEE PAGE
Y	**142-8758**	4	AXLE GP	150

Y - SEPARATE ILLUSTRATION

<END>

345-5050 DRIVE GP-TANDEM

PART OF 388-7910, 388-7940 POWER TRAIN AR
AN ATTACHMENT

SMCS-4062 **i05194984**

NOTE	REF NO	GRAPHIC REF	PART NUMBER	QTY	PART NAME 1 2 3 4 5 6 (PRODUCT LEVEL)	SEE PAGE
	1	1	**152-1157**	32	WASHER (15.5X32X8-MM THK)	
	2	1	**200-0999**	32	STUD	
	3	1	**345-5512**	2	SPROCKET-MOTOR	
	4	1	**345-5536**	4	SPROCKET-AXLE	
	5	1	**345-5656**	2	CHAIN AS	
	6	1	**345-5680**	2	CHAIN AS	
	7	1	**345-6627**	2	SPACER	
M	8	1	**099-4691**	2	BOLT-LOCKING (M12X1.75X25-MM)	
M	9	1	**100-3866**	4	BOLT-SELF-LOCKING (M16X2X40-MM)	
	10	1	**142-9036**	32	NUT (9/16-18-THD)	
	11	1	**5K-1787**	4	SEAL-O-RING	
	12	1	**7G-8839**	2	SPACER (13.5X57X6-MM THK)	
	13	1	**7X-0610**	4	WASHER-HARD (20X75X6-MM THK)	
	14	1	**8T-4122**	4	WASHER-HARD (17X32X3.5-MM THK)	

M - METRIC PART

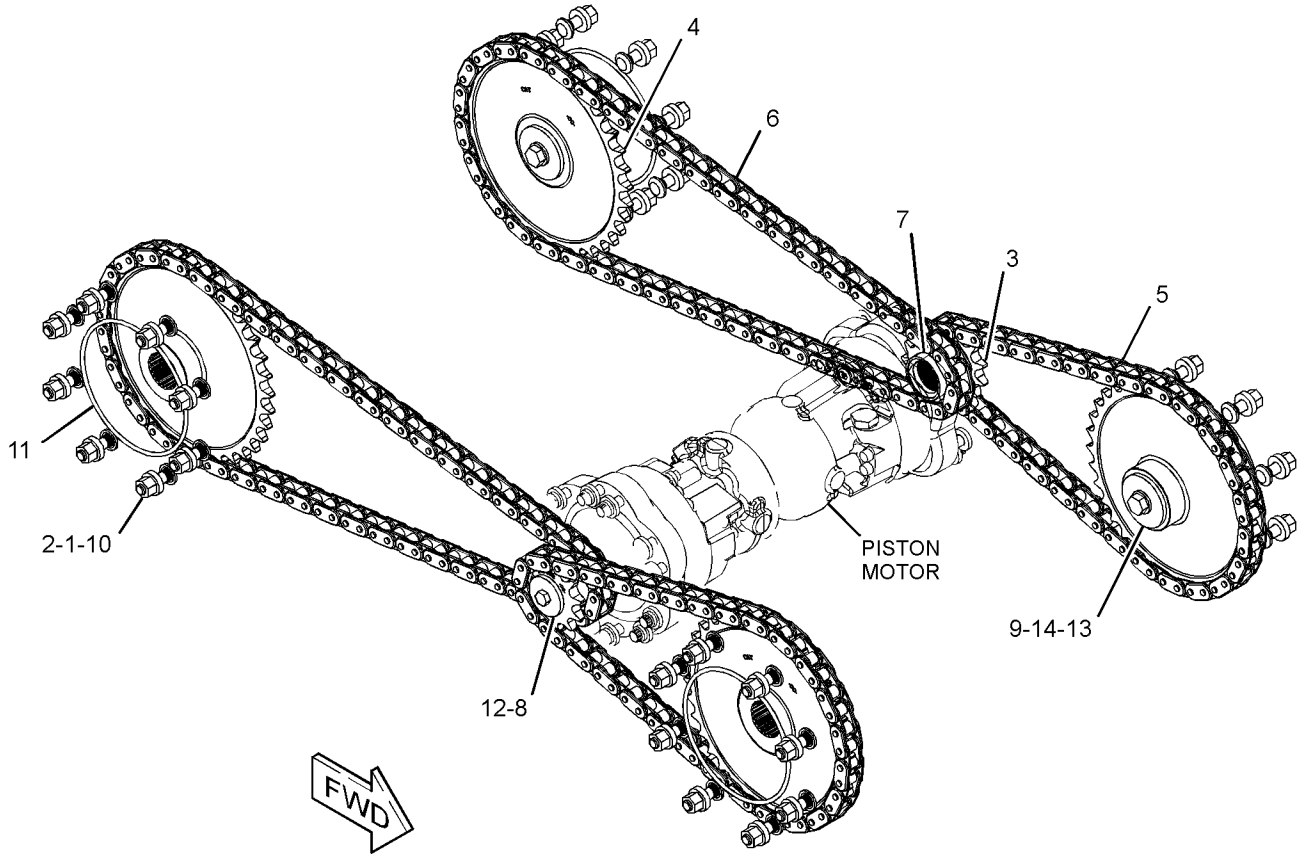

GRAPHIC #1 **<END>** g03336454

346-5576 FILTER GP-OIL—HYDRAULIC, TRANSMISSION

PART OF 345-5742, 345-5743 LINES GP-HYDRAULIC
AN ATTACHMENT

SMCS-5068 **i05164923**

NOTE	REF NO	GRAPHIC REF	PART NUMBER	QTY	PART NAME 1 2 3 4 5 6 (PRODUCT LEVEL)	SEE PAGE
	1	1	**346-5577**	1	BASE AS-FILTER (HYDRAULIC OIL)	
		1	**6V-5048**	1	SEAL-O-RING	
		1	**9S-4182**	1	PLUG-O-RING	
		1	**9S-4191**	1	PLUG-O-RING	
		1	**214-7568**	1	SEAL-O-RING	
Y	2	1	**349-6096**	1	FILTER GP-OIL (HYDRAULIC)	154
	3	1	**349-6097**	1	SWITCH AS-PRESSURE (HYDRAULIC OIL)	
		1	**033-6033**	1	SEAL-O-RING	
		1	**206-9295**	1	SEAL-O-RING	
	4	1	**348-1862**	1	FILTER ELEMENT AS-OIL (HYDRAULIC)	
	4A	1	**095-1671**	1	SEAL-O-RING	

Y - SEPARATE ILLUSTRATION

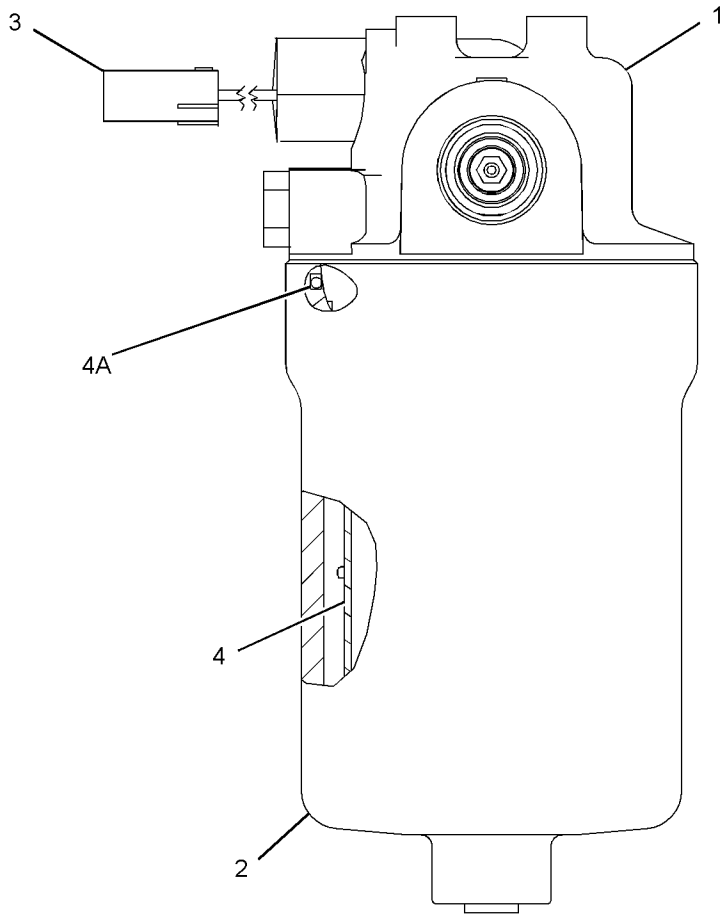

GRAPHIC #1 **<END>** g03319613

349-6096 FILTER GP-OIL—HYDRAULIC

PART OF 346-5576 FILTER GP-OIL

AN ATTACHMENT

SMCS-5068 **i05401862**

NOTE	REF NO	GRAPHIC REF	PART NUMBER	QTY	PART NAME 1 2 3 4 5 6 (PRODUCT LEVEL)	SEE PAGE
	1	1	**348-1862**	1	FILTER ELEMENT AS-OIL (HYDRAULIC)	
		1	**095-1671**	1	SEAL-O-RING	
	2	1	**352-1756**	1	TUBE-CENTER	
	3	1	**9S-8002**	1	PLUG-O-RING	
	4	1	**6V-5048**	1	SEAL-O-RING	

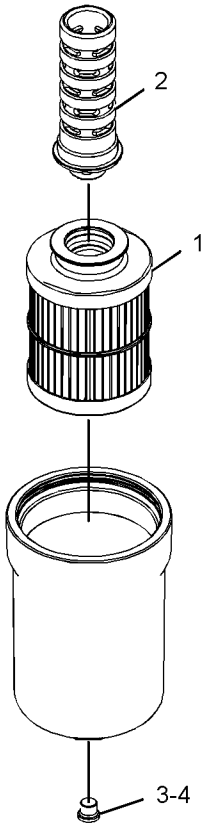

GRAPHIC #1 **<END>** g02794098

345-4690 LINES GP-HYDROSTATIC

PART OF 388-7940 POWER TRAIN AR

AN ATTACHMENT

SMCS-3154 **i05380569**

NOTE	REF NO	GRAPHIC REF	PART NUMBER	QTY	PART NAME 1 2 3 4 5 6 (PRODUCT LEVEL)	SEE PAGE
	1	1	**6V-0852**	2	CAP-DUST	
Y	2	1	*149-0686*	1	ACCUMULATOR GP-HYDRAULIC (CHARGED)	203
	3	1	**238-1844**	1	ELBOW	
	4	1	**290-5562**	1	MOUNT (DUAL SWIVEL)	
	5	1	**335-6983**	2	CLAMP-BAND	
I	6	1	**345-4596**	2	HOSE AS	
I	7	1	**345-4646**	2	HOSE AS	
I	8	1	**345-4651**	1	HOSE AS	
I	9	1	**345-4652**	1	HOSE AS	
I	10	1	**345-4653**	1	HOSE AS	
I	11	1	**345-4654**	1	HOSE AS	
I	12	1	**345-5496**	1	HOSE AS	
	13	1	**359-7220**	1	MANIFOLD GP-CONTROL (PILOT SHUTOFF)	
M		1	**095-0641**	2	BOLT-SOCKET HEAD (M4X0.7X10-MM)	
		1	**362-3212**	1	VALVE GP-SOLENOID (12 VDC)	
	14	1	**435-8854**	1	TUBE AS	
I	15	1	**435-8855**	1	HOSE AS	
	16	1	*148-8327*	2	CONNECTOR AS	
					(EACH INCLUDES)	
		1	**3D-2824**	1	SEAL-O-RING	
		1	**6V-8637**	1	CONNECTOR	
		1	**6V-9746**	1	SEAL-O-RING	
	17	1	*148-8336*	2	CONNECTOR AS	
					(EACH INCLUDES)	
		1	**3J-1907**	1	SEAL-O-RING	
		1	**6V-8397**	1	SEAL-O-RING	
		1	**6V-8636**	1	CONNECTOR	
	18	1	*148-8339*	2	CONNECTOR AS	
					(EACH INCLUDES)	
		1	**6V-8716**	1	CONNECTOR (STRAIGHT)	
		1	**6V-9746**	1	SEAL-O-RING	
		1	**7M-8485**	1	SEAL-O-RING	
	19	1	*148-8340*	2	CONNECTOR AS	
					(EACH INCLUDES)	
		1	**3K-0360**	1	SEAL-O-RING	
		1	**6V-8398**	1	SEAL-O-RING	
		1	**6V-8639**	1	CONNECTOR	
	20	1	*148-8378*	3	ELBOW AS	
					(EACH INCLUDES)	
		1	**3J-1907**	1	SEAL-O-RING	
		1	**6V-8397**	1	SEAL-O-RING	
		1	**6V-8724**	1	ELBOW	
	21	1	*148-8435*	1	TEE AS	
		1	**3J-1907**	1	SEAL-O-RING	
		1	**6V-8397**	2	SEAL-O-RING	
		1	**6V-8781**	1	TEE	
	22	1	*150-3036*	1	ELBOW AS	
		1	**3J-1907**	1	SEAL-O-RING	
		1	**6V-8397**	1	SEAL-O-RING	
		1	**8T-1905**	1	ELBOW	
	23	1	*153-6237*	2	ELBOW AS	
					(EACH INCLUDES)	
		1	**3D-2824**	1	SEAL-O-RING	
		1	**6V-9004**	1	ELBOW	
		1	**6V-9746**	1	SEAL-O-RING	
	24	1	*153-6242*	2	CONNECTOR AS	
					(EACH INCLUDES)	
		1	**6V-9746**	1	SEAL-O-RING	
		1	**7M-8485**	1	SEAL-O-RING	

345-4690 **LINES GP-HYDROSTATIC (*contd.*)** **i05380569**

NOTE	REF NO	GRAPHIC REF	PART NUMBER	QTY	PART NAME 1 2 3 4 5 6 (PRODUCT LEVEL)	SEE PAGE
		1	**8T-0197**	1	CONNECTOR	
	25	1	*164-5567*	2	COUPLER AS-QUICK DISCONNECT (MALE)	
					(EACH INCLUDES)	
		1	**6V-3965**	1	FITTING (QUICK DISCONNECT)	
		1	**3J-1907**	1	SEAL-O-RING	
	26	1	*297-7927*	1	CONNECTOR AS	
		1	**3K-0360**	1	SEAL-O-RING	
		1	**6V-8398**	1	SEAL-O-RING	
		1	**123-1904**	1	CONNECTOR	
	27	1	**3K-0360**	1	SEAL-O-RING	
	28	1	**7K-1181**	3	STRAP-CABLE	
	29	1	**8T-4205**	2	WASHER-HARD (7.2X14.5X2-MM THK)	
M	30	1	**8T-6974**	2	BOLT (M6X1X80-MM)	
E	31	1	**5P-1442**		HOSE (32-CM)	

E - ORDER BY THE CENTIMETER
I - REFER TO HYDRAULIC INFORMATION SYSTEM
M - METRIC PART
Y - SEPARATE ILLUSTRATION

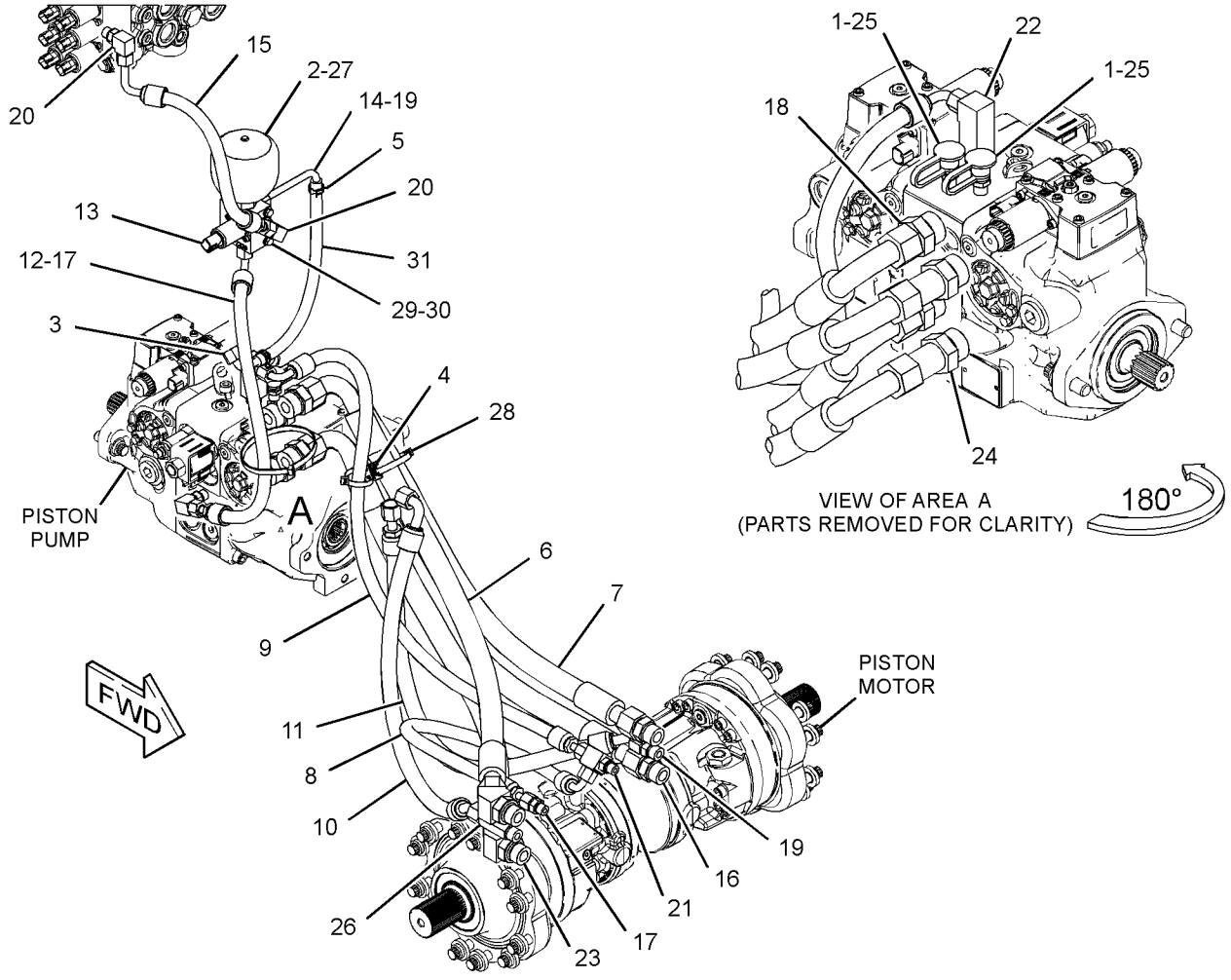

GRAPHIC #1

<END>

g03407321

345-4691 LINES GP-HYDROSTATIC

PART OF 388-7910 POWER TRAIN AR

AN ATTACHMENT

SMCS-3154 **i05380570**

NOTE	REF NO	GRAPHIC REF	PART NUMBER	QTY	PART NAME 1 2 3 4 5 6 (PRODUCT LEVEL)	SEE PAGE
	1	1	**6V-0852**	2	CAP-DUST	
Y	2	1	*149-0686*	1	ACCUMULATOR GP-HYDRAULIC (CHARGED)	203
	3	1	**238-1844**	1	ELBOW	
	4	1	**263-5419**	1	SWITCH AS-ROCKER (MOTOR, 2-SPEED, AUXILIARY)	
		1	**111-7899**	1	GASKET	
	5	1	**290-5562**	2	MOUNT (DUAL SWIVEL)	
	6	1	**335-6983**	2	CLAMP-BAND	
I	7	1	**345-4641**	1	HOSE AS	
I	8	1	**345-4648**	2	HOSE AS	
I	9	1	**345-4654**	1	HOSE AS	
I	10	1	**345-4655**	1	HOSE AS	
I	11	1	**345-4657**	1	HOSE AS	
I	12	1	**345-5496**	1	HOSE AS	
Y	13	1	**359-7222**	1	MANIFOLD GP-CONTROL (MOTOR, 2-SPEED)	273
I	14	1	**388-3305**	1	HOSE AS	
I	15	1	**388-5551**	1	HOSE AS	
I	16	1	**399-3775**	2	HOSE AS	
	17	1	**435-8854**	1	TUBE AS	
I	18	1	**435-8855**	1	HOSE AS	
	19	1	*148-8318*	2	CONNECTOR AS	
					(EACH INCLUDES)	
		1	**3K-0360**	1	SEAL-O-RING	
		1	**6V-8397**	1	SEAL-O-RING	
		1	**6V-8634**	1	CONNECTOR	
	20	1	*148-8327*	2	CONNECTOR AS	
					(EACH INCLUDES)	
		1	**3D-2824**	1	SEAL-O-RING	
		1	**6V-8637**	1	CONNECTOR	
		1	**6V-9746**	1	SEAL-O-RING	
	21	1	*148-8336*	1	CONNECTOR AS	
		1	**3J-1907**	1	SEAL-O-RING	
		1	**6V-8397**	1	SEAL-O-RING	
		1	**6V-8636**	1	CONNECTOR	
	22	1	*148-8339*	2	CONNECTOR AS	
					(EACH INCLUDES)	
		1	**6V-8716**	1	CONNECTOR (STRAIGHT)	
		1	**6V-9746**	1	SEAL-O-RING	
		1	**7M-8485**	1	SEAL-O-RING	
	23	1	*148-8340*	2	CONNECTOR AS	
					(EACH INCLUDES)	
		1	**3K-0360**	1	SEAL-O-RING	
		1	**6V-8398**	1	SEAL-O-RING	
		1	**6V-8639**	1	CONNECTOR	
	24	1	*148-8345*	2	CONNECTOR AS	
					(EACH INCLUDES)	
		1	**2M-9780**	1	SEAL-O-RING	
		1	**6V-8398**	1	SEAL-O-RING	
		1	**6V-8638**	1	CONNECTOR	
	25	1	*148-8378*	4	ELBOW AS	
					(EACH INCLUDES)	
		1	**3J-1907**	1	SEAL-O-RING	
		1	**6V-8397**	1	SEAL-O-RING	
		1	**6V-8724**	1	ELBOW	
	26	1	*148-8428*	1	TEE AS	
		1	**3K-0360**	1	SEAL-O-RING	
		1	**6V-8398**	2	SEAL-O-RING	
		1	**6V-8782**	1	TEE	
	27	1	*148-8433*	1	TEE AS	
		1	**6V-8397**	2	SEAL-O-RING	

345-4691 **LINES GP-HYDROSTATIC (*contd.*)** **i05380570**

NOTE	REF NO	GRAPHIC REF	PART NUMBER	QTY	PART NAME 1 2 3 4 5 6 (PRODUCT LEVEL)	SEE PAGE
		1	**6V-9836**	1	TEE-SWIVEL	
	28	1	*150-3036*	1	ELBOW AS	
		1	**3J-1907**	1	SEAL-O-RING	
		1	**6V-8397**	1	SEAL-O-RING	
		1	**8T-1905**	1	ELBOW	
	29	1	*153-6237*	2	ELBOW AS	
					(EACH INCLUDES)	
		1	**3D-2824**	1	SEAL-O-RING	
		1	**6V-9004**	1	ELBOW	
		1	**6V-9746**	1	SEAL-O-RING	
	30	1	*153-6242*	2	CONNECTOR AS	
					(EACH INCLUDES)	
		1	**6V-9746**	1	SEAL-O-RING	
		1	**7M-8485**	1	SEAL-O-RING	
		1	**8T-0197**	1	CONNECTOR	
	31	1	*164-5567*	2	COUPLER AS-QUICK DISCONNECT (MALE)	
					(EACH INCLUDES)	
		1	**6V-3965**	1	FITTING (QUICK DISCONNECT)	
		1	**214-7568**	1	SEAL-O-RING	
	32	1	**3K-0360**	1	SEAL-O-RING	
	33	1	**7K-1181**	6	STRAP-CABLE	
M	34	1	**7X-2535**	2	BOLT (M6X1X60-MM)	
	35	1	**8T-4205**	2	WASHER-HARD (7.2X14.5X2-MM THK)	
E	36	1	**5P-1442**		HOSE (29-CM)	

E - ORDER BY THE CENTIMETER
I - REFER TO HYDRAULIC INFORMATION SYSTEM
M - METRIC PART
Y - SEPARATE ILLUSTRATION

345-4691 **LINES GP-HYDROSTATIC (*contd.*)** **i05380570**

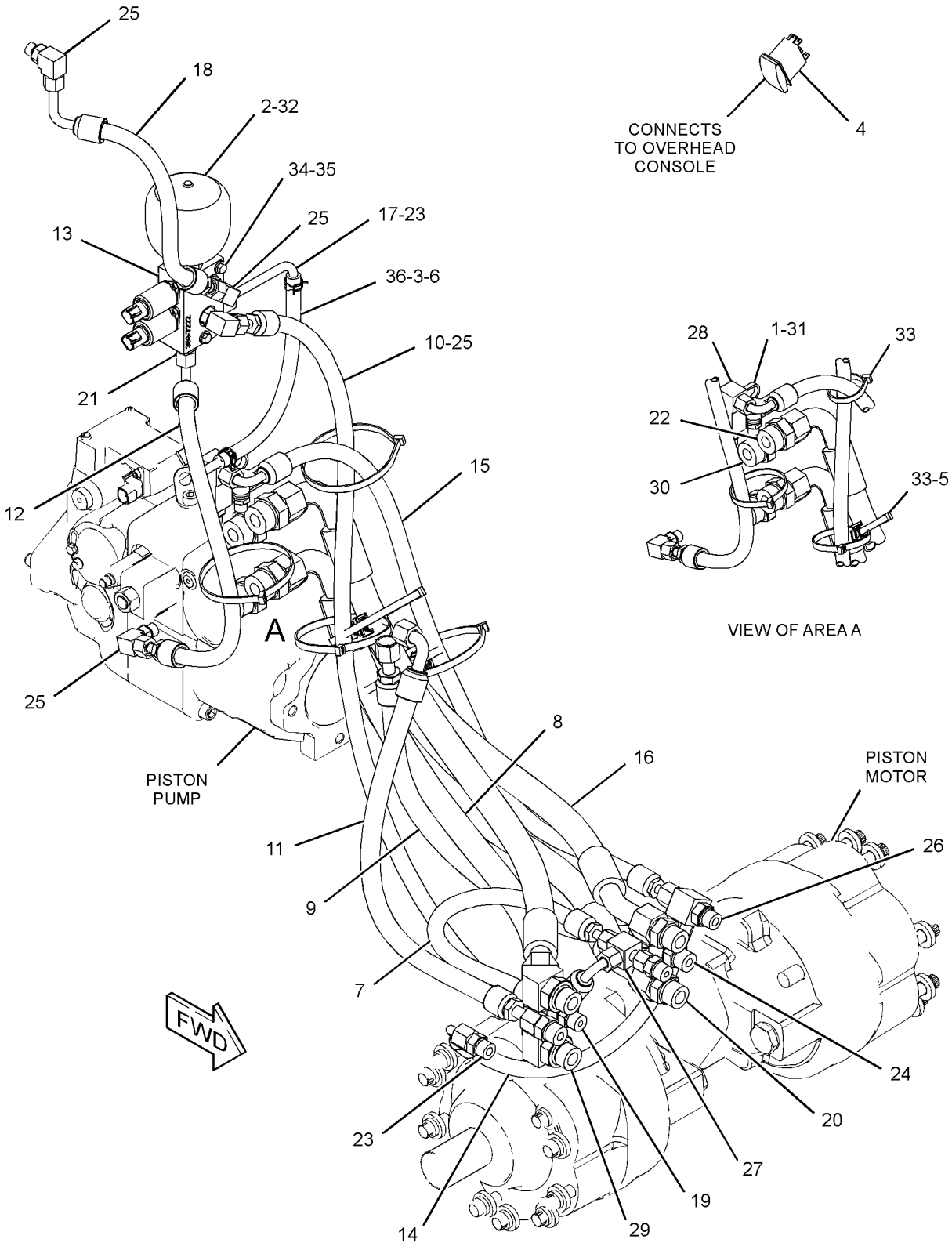

GRAPHIC #1 **<END>** g03407538

345-6401 MOTOR & MTG GP-HYDROSTATIC—1-SPEED

PART OF 388-7940 POWER TRAIN AR
AN ATTACHMENT

SMCS-5058 **i05401580**

NOTE	REF NO	GRAPHIC REF	PART NUMBER	QTY	PART NAME 1 2 3 4 5 6 (PRODUCT LEVEL)	SEE PAGE
Y	1	1	**358-5009**	2	MOTOR GP-PISTON (RADIAL)	162
Y	2	1	**383-6830**	2	SENSOR GP-SPEED (MOTOR)	130
	3	1	**439-2323**	24	WASHER-HARD	
M	4	1	**105-3482**	2	BOLT-SOCKET HEAD (M8X1.25X16-MM)	
	5	1	**285-6125**	24	BOLT (M14X2-THD)	
	6	1	**6F-4718**	2	SEAL-O-RING	

M - METRIC PART
Y - SEPARATE ILLUSTRATION

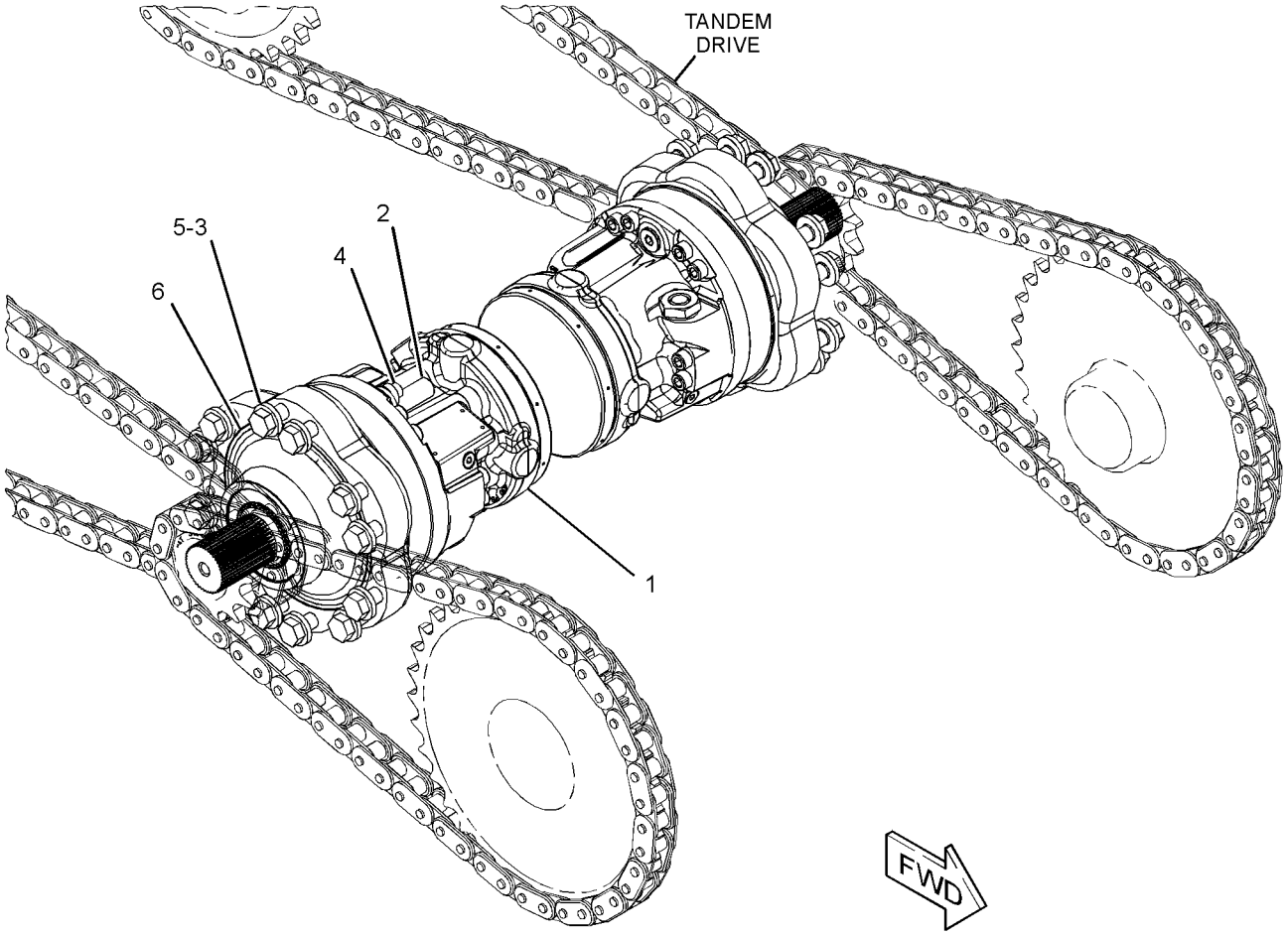

GRAPHIC #1 **<END>** g03405543

345-6402 MOTOR & MTG GP-HYDROSTATIC—2-SPEED

PART OF 388-7910 POWER TRAIN AR
AN ATTACHMENT

SMCS-5058 **i05380593**

NOTE	REF NO	GRAPHIC REF	PART NUMBER	QTY	PART NAME 1 2 3 4 5 6 (PRODUCT LEVEL)	SEE PAGE
Y	1	1	**262-3764**	2	SENSOR GP-SPEED (MOTOR)	129
Y	2	1	**358-5011**	1	MOTOR GP-PISTON (2-SPEED, LH)	163
Y	3	1	**358-5013**	1	MOTOR GP-PISTON (2-SPEED, RH)	164
	4	1	**439-2323**	24	WASHER-HARD	
M	5	1	**170-6705**	2	BOLT-SOCKET HEAD (M8X1.25X12-MM)	
	6	1	**285-6125**	24	BOLT (M14X2-THD)	
	7	1	**6F-4718**	2	SEAL-O-RING	

M - METRIC PART
Y - SEPARATE ILLUSTRATION

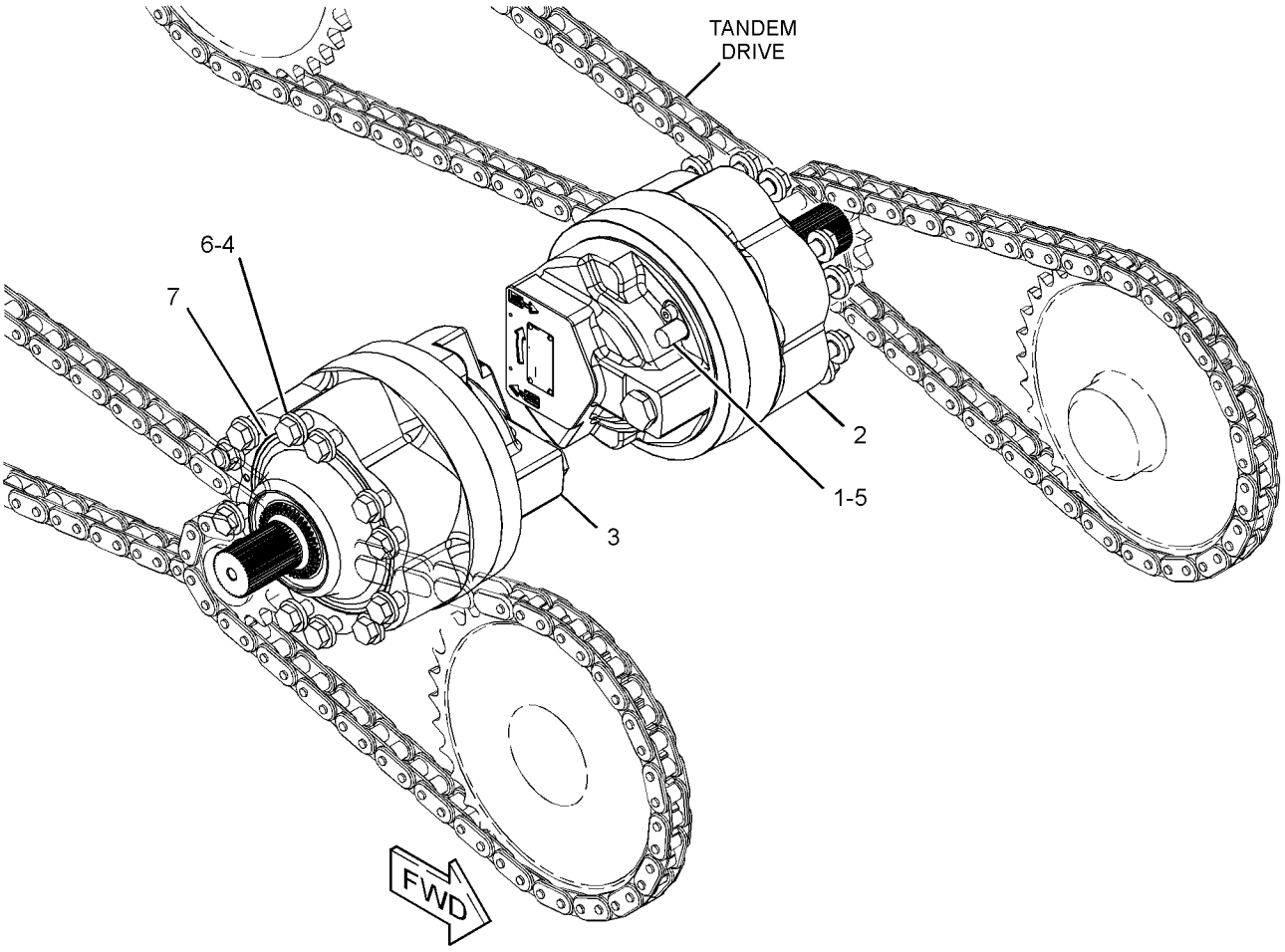

GRAPHIC #1 **<END>** g03404812

358-5009 MOTOR GP-PISTON–RADIAL

PART OF 345-6401 MOTOR & MTG GP-HYDROSTATIC

AN ATTACHMENT

SMCS-4351, 5058 **i05401066**

NOTE	REF NO	GRAPHIC REF	PART NUMBER	QTY	PART NAME 1 2 3 4 5 6 (PRODUCT LEVEL)	SEE PAGE
	1	1	**280-7848**	1	KIT-FLUSHING VALVE	
					(INCLUDES RUBBER SEALS)	
	2	1	**386-6607**	1	KIT-BEARING	
					(INCLUDES PARTS MARKED "J" IN GRAPHIC)	
	3	1	**386-6608**	1	KIT-BRAKE	
	4	1	**3K-0360**	1	SEAL-O-RING	
M	5	1	**8T-0341**	10	BOLT-SOCKET HEAD (M10X1.5X60-MM)	
M	6	1	**101-7400**	2	BOLT-SOCKET HEAD (M10X1.5X110-MM)	
M	7	1	**108-1781**	10	BOLT-SOCKET HEAD (M12X1.75X35-MM)	
	8	1	**9S-8005**	1	PLUG-O-RING	
					PARTS SHOWN IN GRAPHIC(S) WITHOUT A REFERENCE NUMBER ARE NOT SERVICED SEPARATELY	
					AVAILABLE REPAIR KIT(S):	
			386-6609	1	KIT-SEAL	
					(INCLUDES SEALS, SNAP RING, SHIMS, PLUG, BRAKE COVER, BACKUP RINGS, BUSHING & O-RING SEALS)	

M - METRIC PART

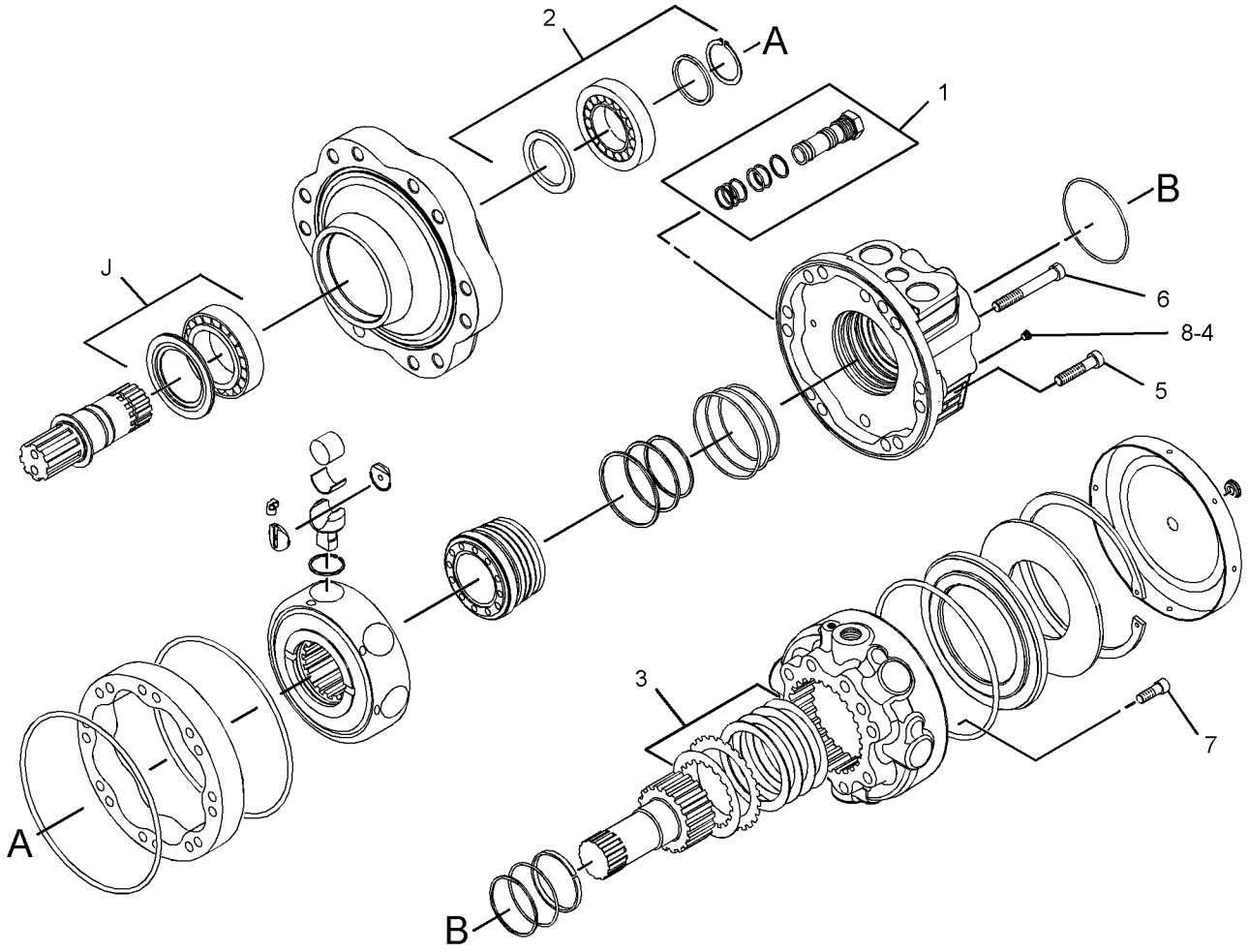

GRAPHIC #1 **<END>** g03318551

358-5011 MOTOR GP-PISTON–2-SPEED, LH

PART OF 345-6402 MOTOR & MTG GP-HYDROSTATIC

AN ATTACHMENT

SMCS-4351, 5058 **i05197196**

NOTE	REF NO	GRAPHIC REF	PART NUMBER	QTY	PART NAME 1 2 3 4 5 6 (PRODUCT LEVEL)	SEE PAGE
	1	1	**280-7838**	1	KIT-BEARING	
					(INCLUDES SEALS, TAPERED ROLLER BEARINGS, WASHER & RING)	
	2	1	**280-7848**	1	KIT-FLUSHING VALVE	
					(INCLUDES BOLT, WAHSER & SEALS)	
	3	1	**280-7840**	1	KIT-BRAKE	
					(INCLUDES SPRING, WASHERS & SEALS)	
	4	1	**341-7647**	1	VALVE GP-SPEED CONTROL	
					(INCLUDES SLEEVE, SPRINGS, SPACER & SEAL)	
					PARTS SHOWN IN GRAPHIC(S) WITHOUT A REFERENCE NUMBER ARE NOT SERVICED SEPARATELY	
					AVAILABLE REPAIR KIT(S):	
			280-7849	1	KIT-SEAL	
					(INCLUDES O-RING SEALS, SEALS, BACKUP RINGS, PLUG SEAL, RETAINING PIN, RETAINING RING & DOWEL PIN)	

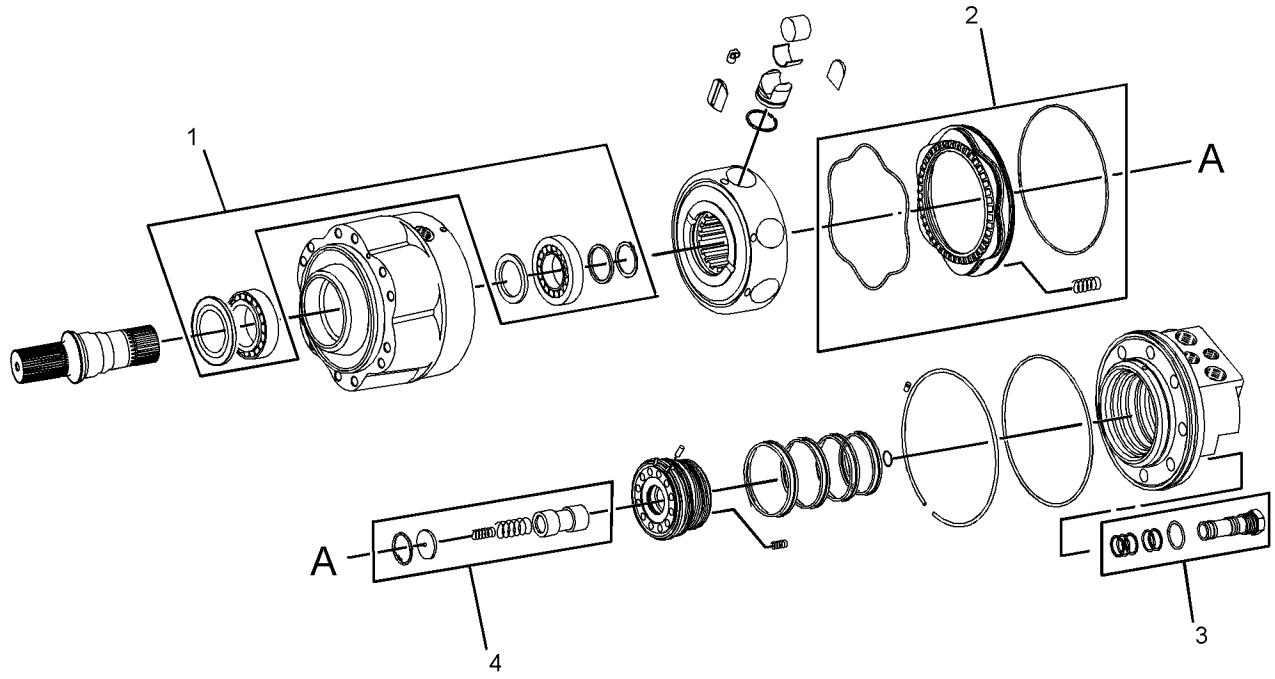

GRAPHIC #1 **<END>** g03334645

358-5013 MOTOR GP-PISTON—2-SPEED, RH

PART OF 345-6402 MOTOR & MTG GP-HYDROSTATIC

AN ATTACHMENT

SMCS-4351, 5058 **i05197195**

NOTE	REF NO	GRAPHIC REF	PART NUMBER	QTY	PART NAME 1 2 3 4 5 6 (PRODUCT LEVEL)	SEE PAGE
	1	1	**280-7838**	1	KIT-BEARING	
					(INCLUDES SEALS, TAPERED ROLLER BEARINGS, WASHER & RING)	
	2	1	**280-7848**	1	KIT-FLUSHING VALVE	
					(INCLUDES BOLT, WAHSER & SEALS)	
	3	1	**280-7840**	1	KIT-BRAKE	
					(INCLUDES SPRING, WASHERS & SEALS)	
	4	1	**341-7647**	1	VALVE GP-SPEED CONTROL	
					(INCLUDES SLEEVE, SPRINGS, SPACER & SEAL)	
					PARTS SHOWN IN GRAPHIC(S) WITHOUT A REFERENCE NUMBER ARE NOT SERVICED SEPARATELY	
					AVAILABLE REPAIR KIT(S):	
			280-7849	1	KIT-SEAL	
					(INCLUDES O-RING SEALS, SEALS, BACKUP RINGS, PLUG SEAL, RETAINING PIN, RETAINING RING & DOWEL PIN))	

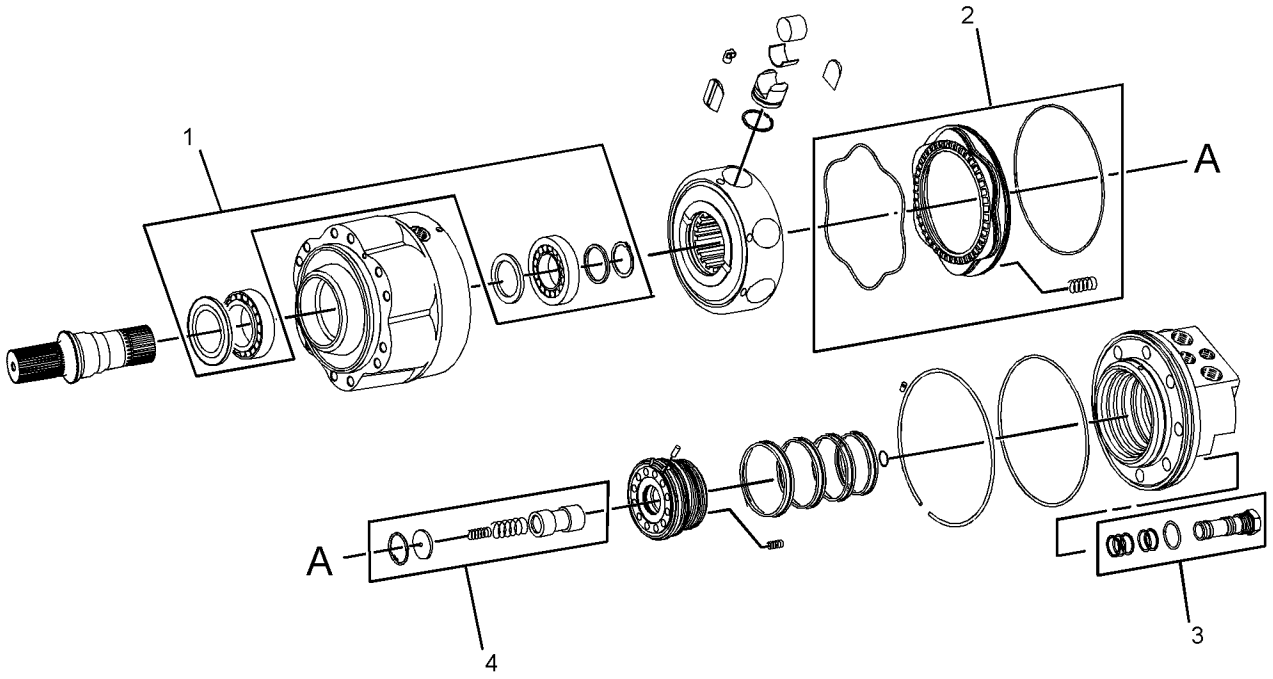

GRAPHIC #1 **<END>** g03334645

345-3602 MOUNTING GP-PUMP

PART OF 378-6690, 393-7340 INSTALLATION AR-ENGINE

SMCS-3203, 5062, 5070 **i05162992**

NOTE	REF NO	GRAPHIC REF	PART NUMBER	QTY	PART NAME 1 2 3 4 5 6 (PRODUCT LEVEL)	SEE PAGE
	1	1	**345-3548**	1	COUPLING	
	2	1	**345-3601**	1	PLATE-ADAPTER	
	3	1	**362-0154**	20	BOLT-FLANGE HEAD (M10X1.25X40-MM)	

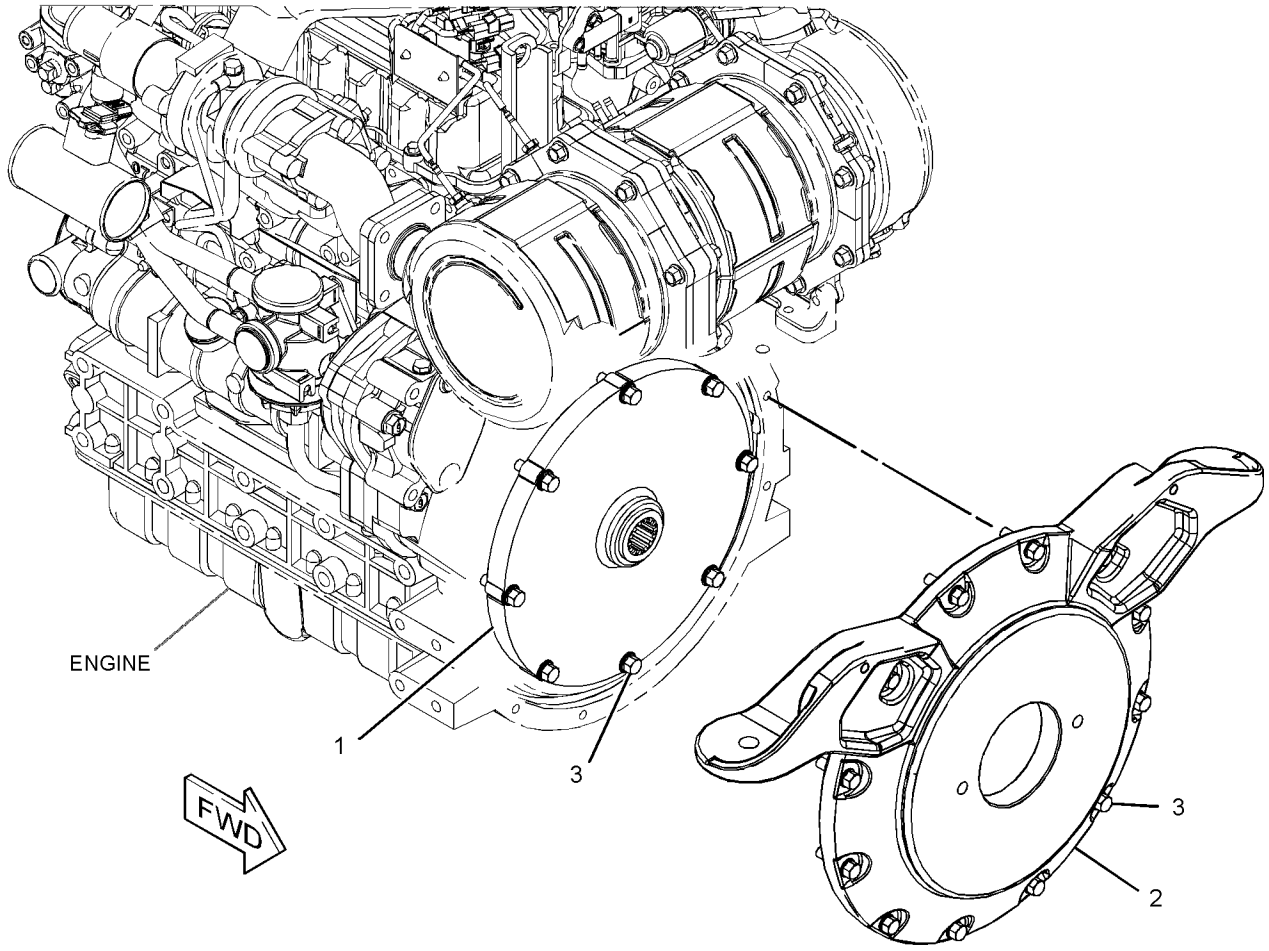

GRAPHIC #1 **<END>** g03319600

388-7910 POWER TRAIN AR

PART OF 388-8128, 388-8129 CONFIGURATION AR

AN ATTACHMENT

SMCS-3203, 4062, 5058, 5070 **i05167004**

NOTE	PART NUMBER	QTY	PART NAME 1 2 3 4 5 6 (PRODUCT LEVEL)	SEE PAGE
Y	*345-5050*	1	DRIVE GP-TANDEM	152
Y	*345-4691*	1	LINES GP-HYDROSTATIC	157
Y	*345-6402*	1	MOTOR & MTG GP-HYDROSTATIC	161

Y - SEPARATE ILLUSTRATION

<END>

388-7940 POWER TRAIN AR

PART OF 388-8126, 388-8127 CONFIGURATION AR

AN ATTACHMENT

SMCS-3203, 4062, 5058, 5070 **i05166990**

NOTE	PART NUMBER	QTY	PART NAME 1 2 3 4 5 6 (PRODUCT LEVEL)	SEE PAGE
Y	*345-5050*	1	DRIVE GP-TANDEM	152
Y	*345-4690*	1	LINES GP-HYDROSTATIC	155
Y	*345-6401*	1	MOTOR & MTG GP-HYDROSTATIC	160

Y - SEPARATE ILLUSTRATION

<END>

358-4975 PUMP & MTG GP-HYDROSTATIC

PART OF 345-5925 HYDRAULIC AR

SMCS-3203, 5070 **i04764171**

NOTE	REF NO	GRAPHIC REF	PART NUMBER	QTY	PART NAME 1 2 3 4 5 6 (PRODUCT LEVEL)	SEE PAGE
	1	1	**165-0142**	2	WASHER-HARD (14.8X27X3-MM THK)	
YR	2	1	**258-2405**	1	PUMP GP-PISTON (HYDROSTATIC)	168
	3	1	**361-2657**	2	BOLT-12 POINT HEAD (M14X2X40-MM)	

R - REMFG PART MAY BE AVAILABLE
Y - SEPARATE ILLUSTRATION

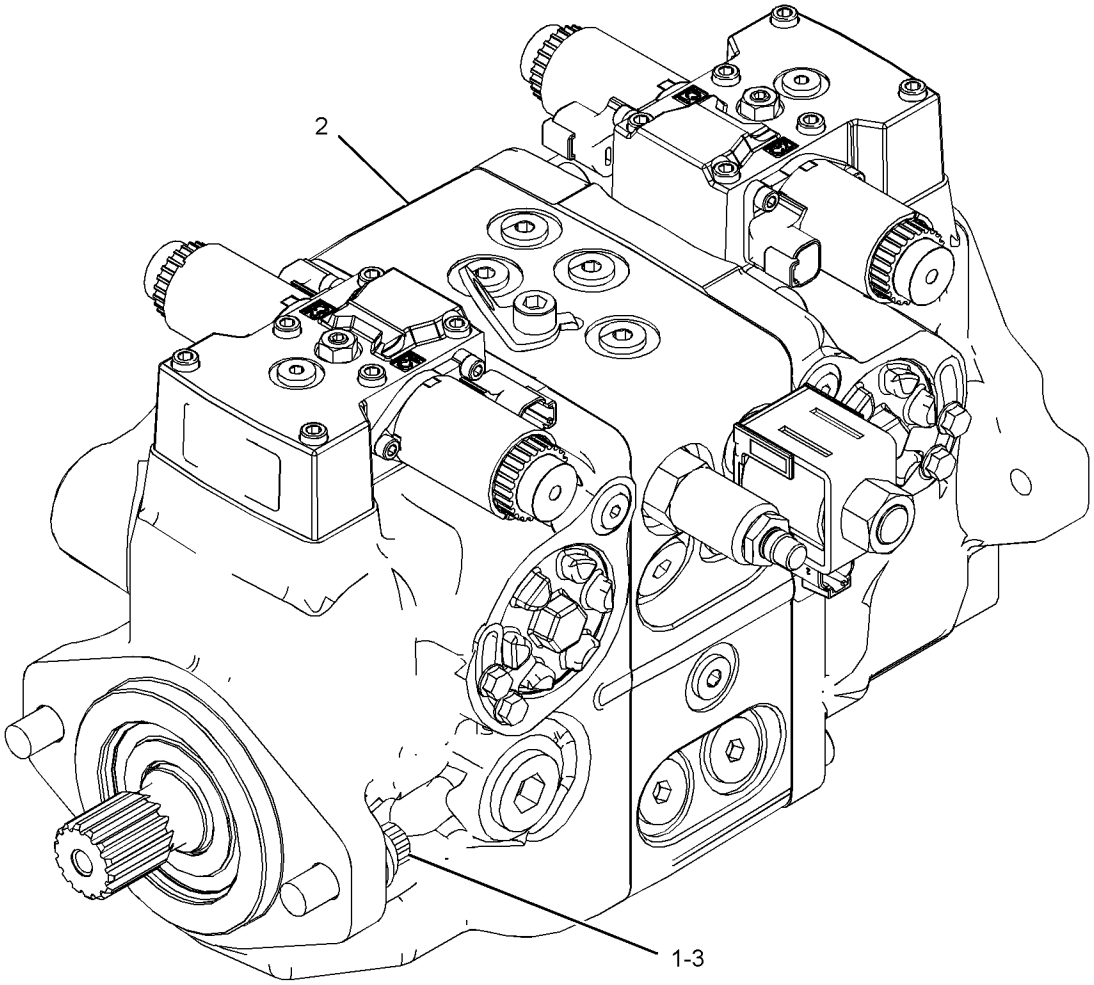

GRAPHIC #1 **<END>** g02883033

258-2405 PUMP GP-PISTON—HYDROSTATIC*R

PART OF 358-4975 PUMP & MTG GP-HYDROSTATIC

SMCS-3203, 5070, 5117, 5455, 5479 **i05401064**

NOTE	REF NO	GRAPHIC REF	PART NUMBER	QTY	PART NAME 1 2 3 4 5 6 (PRODUCT LEVEL)	SEE PAGE
	1	1	**278-8737**	2	VALVE GP-PUMP CONTROL	
	2	1	**278-8740**	2	SWASHPLATE	
	3	1	**278-8748**	1	SHAFT-DRIVE	
J	4	1	**280-7860**	2	BLOCK-SLIDER	
J	5	1	**278-8751**	4	SPRING	
	6	1	**278-8746**	1	VALVE GP-RELIEF (CHARGE)	
	7	1	**278-8743**	1	VALVE GP-SOLENOID (PARKING BRAKE)	
	8	1	**278-8745**	4	KIT-RELIEF VALVE (CROSSOVER)	
					(EACH INCLUDES RELIEF VALVES, O-RING SEALS & SPRING)	
	9	1	**278-8750**	1	PLATE (CCW)	
	10	1	**278-8749**	1	PLATE (CW)	
	11	1	**278-8747**	1	SHAFT-DRIVE	
	12	1	**9S-8002**	4	PLUG-O-RING	
	13	1	**9S-8004**	1	PLUG-O-RING	
	14	1	**9S-8008**	2	PLUG-O-RING	
	15	1	**341-7637**	2	KIT-BEARING (PISTON PUMP)	
					(EACH INCLUDES BEARING)	
	16	1	**278-8739**	2	ROTATING GP-PUMP	
M	17	1	**8C-3413**	6	BOLT-SOCKET HEAD (M12X1.75X120-MM)	
					PARTS SHOWN IN GRAPHIC(S) WITHOUT A REFERENCE NUMBER ARE NOT SERVICED SEPARATELY	
					AVAILABLE REPAIR KIT(S):	
J			**278-8738**	2	KIT-PISTON	
			278-8736	1	KIT-SEAL (PISTON PUMP)	
					(INCLUDES O-RINGS, PISTON SEAL RING, BACKUP RINGS, RETAINING RING, DOWEL PIN, SLOTTED PIN, GASKETS, SHAFT SEAL	
					& RETAINER)	
			278-8742	1	KIT-BEARING (PISTON PUMP)	
					(INCLUDES COUPLING, BEARING SLEEVE, RETAINING RING & BEARING SHAFT)	
			278-8744	4	KIT-SOLENOID	

J - KIT MARKED J SERVICES PARTS MARKED J
M - METRIC PART

258-2405 **PUMP GP-PISTON (*contd.*)** **i05401064**

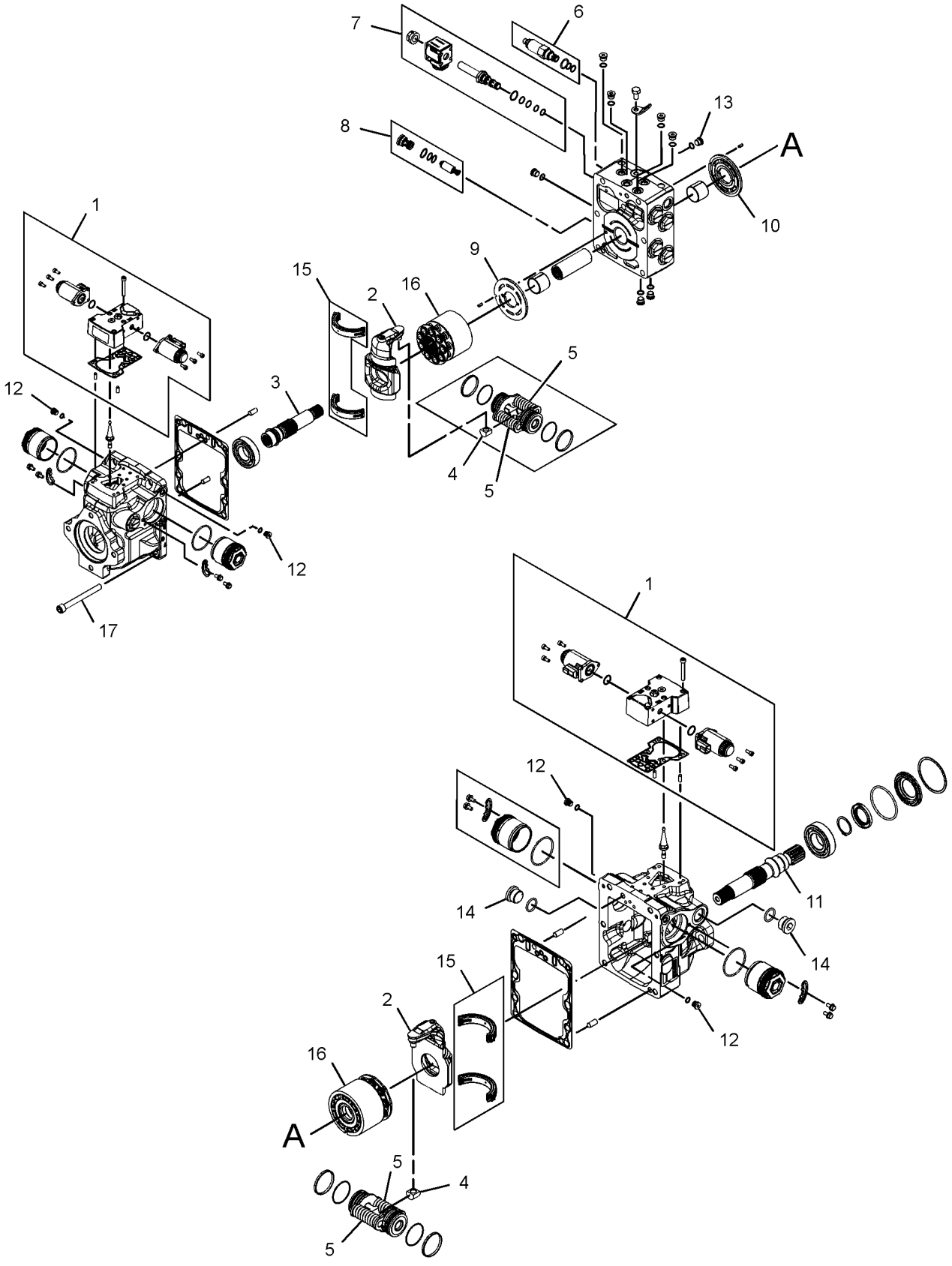

GRAPHIC #1 **<END>** g01321774

142-7484 TIRE & RIM GP–LH

(16.5X8.25). DIRECTIONAL TIRE
PART OF 142-8666, 422-3339 WHEEL & TIRE AR
AN ATTACHMENT

SMCS-4202 **i02578088**

NOTE	PART NUMBER	QTY	PART NAME 1 2 3 4 5 6 (PRODUCT LEVEL)	SEE PAGE
	150-8599	1	VALVE AS-TIRE	
	142-7485	1	WHEEL AS	
	142-7486	1	TIRE (10-16.5)	

<END>

150-8592 TIRE & RIM GP–RH

(16.5X8.25). DIRECTIONAL TIRE
PART OF 142-8666, 422-3339 WHEEL & TIRE AR
AN ATTACHMENT

SMCS-4202 **i02578156**

NOTE	PART NUMBER	QTY	PART NAME 1 2 3 4 5 6 (PRODUCT LEVEL)	SEE PAGE
	150-8599	1	VALVE AS-TIRE	
	142-7485	1	WHEEL AS	
	142-7486	1	TIRE (10-16.5)	

<END>

165-2605 TIRE & RIM GP–LH

(16.5X8.25). DIRECTIONAL TIRE
PART OF 165-2602, 422-3343 WHEEL & TIRE AR
AN ATTACHMENT

SMCS-4202 **i02362220**

NOTE	PART NUMBER	QTY	PART NAME 1 2 3 4 5 6 (PRODUCT LEVEL)	SEE PAGE
	150-8599	1	VALVE AS-TIRE	
	142-7490	1	WHEEL AS	
	165-4908	1	TIRE (10-16.5)	

<END>

165-2606 TIRE & RIM GP–RH

(16.5X8.25). DIRECTIONAL TIRE
PART OF 165-2602, 422-3343 WHEEL & TIRE AR
AN ATTACHMENT

SMCS-4202 **i02362218**

NOTE	PART NUMBER	QTY	PART NAME 1 2 3 4 5 6 (PRODUCT LEVEL)	SEE PAGE
	150-8599	1	VALVE AS-TIRE	
	142-7490	1	WHEEL AS	
	165-4908	1	TIRE (10-16.5)	

<END>

165-2609 TIRE & RIM GP–LH

(16.5X8.25). DIRECTIONAL TIRE
PART OF 165-4891, 422-3338 WHEEL & TIRE AR
AN ATTACHMENT

SMCS-4202 **i02362238**

NOTE	PART NUMBER	QTY	PART NAME 1 2 3 4 5 6 (PRODUCT LEVEL)	SEE PAGE
	150-8599	1	VALVE AS-TIRE	
	142-7485	1	WHEEL AS	
	165-4908	1	TIRE (10-16.5)	

<END>

165-2610 TIRE & RIM GP–RH

(16.5X8.25). DIRECTIONAL TIRE
PART OF 165-4891, 422-3338 WHEEL & TIRE AR
AN ATTACHMENT

SMCS-4202 **i02362235**

NOTE	PART NUMBER	QTY	PART NAME 1 2 3 4 5 6 (PRODUCT LEVEL)	SEE PAGE
	150-8599	1	VALVE AS-TIRE	
	142-7485	1	WHEEL AS	
	165-4908	1	TIRE (10-16.5)	

<END>

165-4901 TIRE & RIM GP–HEAVY-DUTY, LH

(16.5X9.75). DIRECTIONAL TIRE
PART OF 165-4898 WHEEL & TIRE AR
AN ATTACHMENT

SMCS-4202 **i02474449**

NOTE	PART NUMBER	QTY	PART NAME 1 2 3 4 5 6 (PRODUCT LEVEL)	SEE PAGE
	150-8599	1	VALVE AS-TIRE	
	142-8731	1	WHEEL AS	
	165-4909	1	TIRE (12-16.5)	

<END>

165-4902 TIRE & RIM GP–HEAVY-DUTY, RH

(16.5X9.75). DIRECTIONAL TIRE
PART OF 165-4898 WHEEL & TIRE AR
AN ATTACHMENT

SMCS-4202 **i02474458**

NOTE	PART NUMBER	QTY	PART NAME 1 2 3 4 5 6 (PRODUCT LEVEL)	SEE PAGE
	150-8599	1	VALVE AS-TIRE	
	142-8731	1	WHEEL AS	
	165-4909	1	TIRE (12-16.5)	

<END>

165-4906 TIRE & RIM GP—HEAVY-DUTY, LH

(16.5X9.75). DIRECTIONAL TIRE
PART OF 165-4903 WHEEL & TIRE AR
AN ATTACHMENT

SMCS-4202 **i02571051**

NOTE	PART NUMBER	QTY	PART NAME 1 2 3 4 5 6 (PRODUCT LEVEL)	SEE PAGE
	150-8599	1	VALVE AS-TIRE	
	142-8759	1	WHEEL AS	
	165-4909	1	TIRE (12-16.5)	

<END>

165-4907 TIRE & RIM GP—HEAVY-DUTY, RH

(16.5X9.75). DIRECTIONAL TIRE
PART OF 165-4903 WHEEL & TIRE AR
AN ATTACHMENT

SMCS-4202 **i02571052**

NOTE	PART NUMBER	QTY	PART NAME 1 2 3 4 5 6 (PRODUCT LEVEL)	SEE PAGE
	150-8599	1	VALVE AS-TIRE	
	142-8759	1	WHEEL AS	
	165-4909	1	TIRE (12-16.5)	

<END>

185-8678 TIRE & RIM GP—LH

(16.5X8.25). DIRECTIONAL TIRE
PART OF 185-8664, 422-3337 WHEEL & TIRE AR
AN ATTACHMENT

SMCS-4202 **i02361343**

NOTE	PART NUMBER	QTY	PART NAME 1 2 3 4 5 6 (PRODUCT LEVEL)	SEE PAGE
	150-8599	1	VALVE AS-TIRE	
	142-7485	1	WHEEL AS	
	185-9932	1	TIRE (10-16.5)	

<END>

185-8679 TIRE & RIM GP—RH

(16.5X8.25). DIRECTIONAL TIRE
PART OF 185-8664, 422-3337 WHEEL & TIRE AR
AN ATTACHMENT

SMCS-4202 **i02361345**

NOTE	PART NUMBER	QTY	PART NAME 1 2 3 4 5 6 (PRODUCT LEVEL)	SEE PAGE
	150-8599	1	VALVE AS-TIRE	
	142-7485	1	WHEEL AS	
	185-9932	1	TIRE (10-16.5)	

<END>

185-9926 TIRE & RIM GP–LH

(16.5X8.25). DIRECTIONAL TIRE
PART OF 185-8665, 422-3342 WHEEL & TIRE AR
AN ATTACHMENT

SMCS-4202 **i02362228**

NOTE	PART NUMBER	QTY	PART NAME 1 2 3 4 5 6 (PRODUCT LEVEL)	SEE PAGE
	150-8599	1	VALVE AS-TIRE	
	142-7490	1	WHEEL AS	
	185-9932	1	TIRE (10-16.5)	

<END>

185-9927 TIRE & RIM GP–RH

(16.5X8.25). DIRECTIONAL TIRE
PART OF 185-8665, 422-3342 WHEEL & TIRE AR
AN ATTACHMENT

SMCS-4202 **i02362230**

NOTE	PART NUMBER	QTY	PART NAME 1 2 3 4 5 6 (PRODUCT LEVEL)	SEE PAGE
	150-8599	1	VALVE AS-TIRE	
	142-7490	1	WHEEL AS	
	185-9932	1	TIRE (10-16.5)	

<END>

185-9928 TIRE & RIM GP–LH

(16.5X9.75). DIRECTIONAL TIRE
PART OF 185-8666 WHEEL & TIRE AR
AN ATTACHMENT

SMCS-4202 **i04285185**

NOTE	PART NUMBER	QTY	PART NAME 1 2 3 4 5 6 (PRODUCT LEVEL)	SEE PAGE
	150-8599	1	VALVE AS-TIRE	
	142-8759	1	WHEEL AS	
	185-9933	1	TIRE (12-16.5)	

<END>

185-9929 TIRE & RIM GP–RH

(16.5X9.75). DIRECTIONAL TIRE
PART OF 185-8666 WHEEL & TIRE AR
AN ATTACHMENT

SMCS-4202 **i04285792**

NOTE	PART NUMBER	QTY	PART NAME 1 2 3 4 5 6 (PRODUCT LEVEL)	SEE PAGE
	150-8599	1	VALVE AS-TIRE	
	142-8759	1	WHEEL AS	
	185-9933	1	TIRE (12-16.5)	

<END>

185-9930 TIRE & RIM GP–LH

(16.5X9.75). DIRECTIONAL TIRE
PART OF 185-8667 WHEEL & TIRE AR
AN ATTACHMENT

SMCS-4202 **i02362232**

NOTE	PART NUMBER	QTY	PART NAME 1 2 3 4 5 6 (PRODUCT LEVEL)	SEE PAGE
	150-8599	1	VALVE AS-TIRE	
	142-8731	1	WHEEL AS	
	185-9933	1	TIRE (12-16.5)	

<END>

185-9931 TIRE & RIM GP–RH

(16.5X9.75). DIRECTIONAL TIRE
PART OF 185-8667 WHEEL & TIRE AR
AN ATTACHMENT

SMCS-4202 **i02362236**

NOTE	PART NUMBER	QTY	PART NAME 1 2 3 4 5 6 (PRODUCT LEVEL)	SEE PAGE
	150-8599	1	VALVE AS-TIRE	
	142-8731	1	WHEEL AS	
	185-9933	1	TIRE (12-16.5)	

<END>

265-2894 TIRE & RIM GP–LH

(10X16.5)
PART OF 252-0344, 422-3344 WHEEL & TIRE AR
AN ATTACHMENT

SMCS-4202 **i02279688**

NOTE	PART NUMBER	QTY	PART NAME 1 2 3 4 5 6 (PRODUCT LEVEL)	SEE PAGE
	150-8599	1	VALVE AS-TIRE	
	142-7490	1	WHEEL AS	
	222-3962	1	TIRE (10-16.5)	

<END>

265-2895 TIRE & RIM GP–RH

(10X16.5)
PART OF 252-0344, 422-3344 WHEEL & TIRE AR
AN ATTACHMENT

SMCS-4202 **i02279722**

NOTE	PART NUMBER	QTY	PART NAME 1 2 3 4 5 6 (PRODUCT LEVEL)	SEE PAGE
	150-8599	1	VALVE AS-TIRE	
	142-7490	1	WHEEL AS	
	222-3962	1	TIRE (10-16.5)	

<END>

265-2896 TIRE & RIM GP–LH

(10X16.5)
PART OF 252-0345, 422-3340 WHEEL & TIRE AR
AN ATTACHMENT

SMCS-4202 **i02279732**

NOTE	PART NUMBER	QTY	PART NAME 1 2 3 4 5 6 (PRODUCT LEVEL)	SEE PAGE
	150-8599	1	VALVE AS-TIRE	
	142-7485	1	WHEEL AS	
	222-3962	1	TIRE (10-16.5)	

<END>

265-2897 TIRE & RIM GP–RH

(10X16.5)
PART OF 252-0345, 422-3340 WHEEL & TIRE AR
AN ATTACHMENT

SMCS-4202 **i04367598**

NOTE	PART NUMBER	QTY	PART NAME 1 2 3 4 5 6 (PRODUCT LEVEL)	SEE PAGE
	150-8599	1	VALVE AS-TIRE	
	142-7485	1	WHEEL AS	
	222-3962	1	TIRE (10-16.5)	

<END>

265-2898 TIRE & RIM GP–LH

(16.5X9.75)
PART OF 252-0346 WHEEL & TIRE AR
AN ATTACHMENT

SMCS-4202 **i04367600**

NOTE	PART NUMBER	QTY	PART NAME 1 2 3 4 5 6 (PRODUCT LEVEL)	SEE PAGE
	150-8599	1	VALVE AS-TIRE	
	142-8731	1	WHEEL AS	
	222-3963	1	TIRE (12-16.5)	

<END>

265-2899 TIRE & RIM GP–RH

(16.5X9.75)
PART OF 252-0346 WHEEL & TIRE AR
AN ATTACHMENT

SMCS-4202 **i04367601**

NOTE	PART NUMBER	QTY	PART NAME 1 2 3 4 5 6 (PRODUCT LEVEL)	SEE PAGE
	150-8599	1	VALVE AS-TIRE	
	142-8731	1	WHEEL AS	
	222-3963	1	TIRE (12-16.5)	

<END>

265-2900 TIRE & RIM GP—LH

(16.5X9.75)
PART OF 252-0347 WHEEL & TIRE AR
AN ATTACHMENT

SMCS-4202 **i02279760**

NOTE	PART NUMBER	QTY	PART NAME 1 2 3 4 5 6 (PRODUCT LEVEL)	SEE PAGE
	150-8599	1	VALVE AS-TIRE	
	142-8759	1	WHEEL AS	
	222-3963	1	TIRE (12-16.5)	

<END>

265-2901 TIRE & RIM GP—RH

(16.5X9.75)
PART OF 252-0347 WHEEL & TIRE AR
AN ATTACHMENT

SMCS-4202 **i02279766**

NOTE	PART NUMBER	QTY	PART NAME 1 2 3 4 5 6 (PRODUCT LEVEL)	SEE PAGE
	150-8599	1	VALVE AS-TIRE	
	142-8759	1	WHEEL AS	
	222-3963	1	TIRE (12-16.5)	

<END>

142-8666 WHEEL & TIRE AR

AN ATTACHMENT

SMCS-4200, 4201, 4203 **i02361114**

NOTE	PART NUMBER	QTY	PART NAME 1 2 3 4 5 6 (PRODUCT LEVEL)	SEE PAGE
Y	*142-7484*	2	TIRE & RIM GP (LH)	170
Y	*150-8592*	2	TIRE & RIM GP (RH)	170
	142-7493	32	NUT-LUG (9/16-18-2B THD)	

Y - SEPARATE ILLUSTRATION

<END>

165-2602 WHEEL & TIRE AR—HEAVY DUTY

AN ATTACHMENT

SMCS-4200, 4201, 4203 **i02361177**

NOTE	PART NUMBER	QTY	PART NAME 1 2 3 4 5 6 (PRODUCT LEVEL)	SEE PAGE
Y	*165-2605*	2	TIRE & RIM GP (LH)	170
Y	*165-2606*	2	TIRE & RIM GP (RH)	170
	142-7493	32	NUT-LUG (9/16-18-2B THD)	

Y - SEPARATE ILLUSTRATION

<END>

165-4891 WHEEL & TIRE AR—HEAVY DUTY

AN ATTACHMENT

SMCS-4200, 4201, 4203 **i02361179**

NOTE	PART NUMBER	QTY	PART NAME 1 2 3 4 5 6 (PRODUCT LEVEL)	SEE PAGE
Y	*165-2609*	2	TIRE & RIM GP (LH)	171
Y	*165-2610*	2	TIRE & RIM GP (RH)	171
	142-7493	32	NUT-LUG (9/16-18-2B THD)	

Y - SEPARATE ILLUSTRATION

<END>

165-4898 WHEEL & TIRE AR—HEAVY DUTY

AN ATTACHMENT

SMCS-4200, 4201, 4203 **i04889636**

NOTE	PART NUMBER	QTY	PART NAME 1 2 3 4 5 6 (PRODUCT LEVEL)	SEE PAGE
Y	*165-4901*	2	TIRE & RIM GP (LH)	171
Y	*165-4902*	2	TIRE & RIM GP (RH)	171
	142-7493	32	NUT-LUG (9/16-18-THD)	

Y - SEPARATE ILLUSTRATION

<END>

165-4903 WHEEL & TIRE AR—HEAVY DUTY

AN ATTACHMENT

SMCS-4200, 4201, 4203 **i04889740**

NOTE	PART NUMBER	QTY	PART NAME 1 2 3 4 5 6 (PRODUCT LEVEL)	SEE PAGE
Y	*165-4906*	2	TIRE & RIM GP (LH)	172
Y	*165-4907*	2	TIRE & RIM GP (RH)	172
	142-7493	32	NUT-LUG (9/16-18-THD)	

Y - SEPARATE ILLUSTRATION

<END>

185-8664 WHEEL & TIRE AR—HEAVY DUTY

AN ATTACHMENT

SMCS-4200, 4201, 4203 **i02361199**

NOTE	PART NUMBER	QTY	PART NAME 1 2 3 4 5 6 (PRODUCT LEVEL)	SEE PAGE
Y	*185-8678*	2	TIRE & RIM GP (LH)	172
Y	*185-8679*	2	TIRE & RIM GP (RH)	172
	142-7493	32	NUT-LUG (9/16-18-2B THD)	

Y - SEPARATE ILLUSTRATION

<END>

185-8665 WHEEL & TIRE AR–HEAVY DUTY

AN ATTACHMENT

SMCS-4200, 4201, 4203 **i02361201**

NOTE	PART NUMBER	QTY	PART NAME 1 2 3 4 5 6 (PRODUCT LEVEL)	SEE PAGE
Y	*185-9926*	2	TIRE & RIM GP (LH)	173
Y	*185-9927*	2	TIRE & RIM GP (RH)	173
	142-7493	32	NUT-LUG (9/16-18-2B THD)	

Y - SEPARATE ILLUSTRATION

<END>

185-8666 WHEEL & TIRE AR–HEAVY DUTY

AN ATTACHMENT

SMCS-4200, 4201, 4203 **i04881496**

NOTE	PART NUMBER	QTY	PART NAME 1 2 3 4 5 6 (PRODUCT LEVEL)	SEE PAGE
Y	*185-9928*	2	TIRE & RIM GP (LH)	173
Y	*185-9929*	2	TIRE & RIM GP (RH)	173
	142-7493	32	NUT-LUG (9/16-18-THD)	

Y - SEPARATE ILLUSTRATION

<END>

185-8667 WHEEL & TIRE AR–HEAVY DUTY

AN ATTACHMENT

SMCS-4200, 4201, 4203 **i02361203**

NOTE	PART NUMBER	QTY	PART NAME 1 2 3 4 5 6 (PRODUCT LEVEL)	SEE PAGE
Y	*185-9930*	2	TIRE & RIM GP (LH)	174
Y	*185-9931*	2	TIRE & RIM GP (RH)	174
	142-7493	32	NUT-LUG (9/16-18-2B THD)	

Y - SEPARATE ILLUSTRATION

<END>

252-0344 WHEEL & TIRE AR

AN ATTACHMENT

SMCS-4200, 4201, 4203 **i02279641**

NOTE	PART NUMBER	QTY	PART NAME 1 2 3 4 5 6 (PRODUCT LEVEL)	SEE PAGE
Y	**265-2895**	2	TIRE & RIM GP (RH)	174
Y	**265-2894**	2	TIRE & RIM GP (LH)	174
	142-7493	32	NUT-LUG (9/16-18-2B THD)	

Y - SEPARATE ILLUSTRATION

<END>

252-0345 WHEEL & TIRE AR

AN ATTACHMENT

SMCS-4200, 4201, 4203 **i02279670**

NOTE	PART NUMBER	QTY	PART NAME 1 2 3 4 5 6 (PRODUCT LEVEL)	SEE PAGE
Y	**265-2896**	2	TIRE & RIM GP (LH)	175
Y	**265-2897**	2	TIRE & RIM GP (RH)	175
	142-7493	32	NUT-LUG (9/16-18-2B THD)	

Y - SEPARATE ILLUSTRATION

<END>

252-0346 WHEEL & TIRE AR

AN ATTACHMENT

SMCS-4200, 4201, 4203 **i02279611**

NOTE	PART NUMBER	QTY	PART NAME 1 2 3 4 5 6 (PRODUCT LEVEL)	SEE PAGE
Y	**265-2899**	2	TIRE & RIM GP (RH)	175
Y	**265-2898**	2	TIRE & RIM GP (LH)	175
	142-7493	32	NUT-LUG (9/16-18-2B THD)	

Y - SEPARATE ILLUSTRATION

<END>

252-0347 WHEEL & TIRE AR

AN ATTACHMENT

SMCS-4200, 4201, 4203 **i02279615**

NOTE	PART NUMBER	QTY	PART NAME 1 2 3 4 5 6 (PRODUCT LEVEL)	SEE PAGE
Y	**265-2900**	2	TIRE & RIM GP (LH)	176
Y	**265-2901**	2	TIRE & RIM GP (RH)	176
	142-7493	32	NUT-LUG (9/16-18-2B THD)	

Y - SEPARATE ILLUSTRATION

<END>

252-0367 WHEEL & TIRE AR–SOLID

AN ATTACHMENT

SMCS-4200, 4201, 4203 **i05306013**

NOTE	PART NUMBER	QTY	PART NAME 1 2 3 4 5 6 (PRODUCT LEVEL)	SEE PAGE
	142-7493	32	NUT-LUG (9/16-18-THD)	
	329-6989	2	TIRE-SOLID (10X16.5, LH)	
	329-6990	2	TIRE-SOLID (10X16.5, RH)	

<END>

252-0378 WHEEL & TIRE AR—SOLID

AN ATTACHMENT

SMCS-4200, 4201, 4203 **i04732109**

NOTE	PART NUMBER	QTY	PART NAME 1 2 3 4 5 6 (PRODUCT LEVEL)	SEE PAGE
	142-7493	32	NUT-LUG (9/16-18-THD)	
	329-6989	2	TIRE-SOLID (10X16.5, LH)	
	329-6990	2	TIRE-SOLID (10X16.5, RH)	

<END>

422-3337 WHEEL & TIRE AR

AN ATTACHMENT

SMCS-4200, 4201, 4203 **i05343521**

NOTE	PART NUMBER	QTY	PART NAME 1 2 3 4 5 6 (PRODUCT LEVEL)	SEE PAGE
Y	*345-5430*	1	SPACER GP (LIFT ARM)	202
Y	**185-8678**	2	TIRE & RIM GP (LH)	172
Y	**185-8679**	2	TIRE & RIM GP (RH)	172
	142-7493	32	NUT-LUG (9/16-18-THD)	

Y - SEPARATE ILLUSTRATION

<END>

422-3338 WHEEL & TIRE AR

AN ATTACHMENT

SMCS-4200, 4201, 4203 **i05344318**

NOTE	PART NUMBER	QTY	PART NAME 1 2 3 4 5 6 (PRODUCT LEVEL)	SEE PAGE
Y	*345-5430*	1	SPACER GP (LIFT ARM)	202
Y	*165-2609*	2	TIRE & RIM GP (LH)	171
Y	*165-2610*	2	TIRE & RIM GP (RH)	171
	142-7493	32	NUT-LUG (9/16-18-THD)	

Y - SEPARATE ILLUSTRATION

<END>

422-3339 WHEEL & TIRE AR

AN ATTACHMENT

SMCS-4200, 4201, 4203 **i05343515**

NOTE	PART NUMBER	QTY	PART NAME 1 2 3 4 5 6 (PRODUCT LEVEL)	SEE PAGE
Y	*345-5430*	1	SPACER GP (LIFT ARM)	202
Y	*142-7484*	2	TIRE & RIM GP (LH)	170
Y	*150-8592*	2	TIRE & RIM GP (RH)	170
	142-7493	32	NUT-LUG (9/16-18-THD)	

Y - SEPARATE ILLUSTRATION

<END>

422-3340 WHEEL & TIRE AR

AN ATTACHMENT

SMCS-4200, 4201, 4203 **i05343519**

NOTE	PART NUMBER	QTY	PART NAME 1 2 3 4 5 6 (PRODUCT LEVEL)	SEE PAGE
Y	*345-5430*	1	SPACER GP (LIFT ARM)	202
Y	**265-2896**	2	TIRE & RIM GP (LH)	175
Y	**265-2897**	2	TIRE & RIM GP (RH)	175
	142-7493	32	NUT-LUG (9/16-18-THD)	

Y - SEPARATE ILLUSTRATION

<END>

422-3341 WHEEL & TIRE AR

31X6X10

AN ATTACHMENT

SMCS-4200, 4201, 4203 **i05342607**

NOTE	PART NUMBER	QTY	PART NAME 1 2 3 4 5 6 (PRODUCT LEVEL)	SEE PAGE
Y	*345-5430*	1	SPACER GP (LIFT ARM)	202
	142-7493	32	NUT-LUG (9/16-18-THD)	
	329-6989	2	TIRE-SOLID (10X16.5, LH)	
	329-6990	2	TIRE-SOLID (10X16.5, RH)	

Y - SEPARATE ILLUSTRATION

<END>

422-3342 WHEEL & TIRE AR

AN ATTACHMENT

SMCS-4200, 4201, 4203 **i05343518**

NOTE	PART NUMBER	QTY	PART NAME 1 2 3 4 5 6 (PRODUCT LEVEL)	SEE PAGE
Y	*345-5430*	1	SPACER GP (LIFT ARM)	202
Y	**185-9926**	2	TIRE & RIM GP (LH)	173
Y	**185-9927**	2	TIRE & RIM GP (RH)	173
	142-7493	32	NUT-LUG (9/16-18-THD)	

Y - SEPARATE ILLUSTRATION

<END>

422-3343 WHEEL & TIRE AR

AN ATTACHMENT

SMCS-4200, 4201, 4203 **i05343520**

NOTE	PART NUMBER	QTY	PART NAME 1 2 3 4 5 6 (PRODUCT LEVEL)	SEE PAGE
Y	*345-5430*	1	SPACER GP (LIFT ARM)	202
Y	*165-2605*	2	TIRE & RIM GP (LH)	170
Y	*165-2606*	2	TIRE & RIM GP (RH)	170
	142-7493	32	NUT-LUG (9/16-18-THD)	

Y - SEPARATE ILLUSTRATION

<END>

422-3344 WHEEL & TIRE AR

AN ATTACHMENT

SMCS-4200, 4201, 4203 **i05343517**

NOTE	PART NUMBER	QTY	PART NAME 1 2 3 4 5 6 (PRODUCT LEVEL)	SEE PAGE
Y	*345-5430*	1	SPACER GP (LIFT ARM)	202
Y	**265-2894**	2	TIRE & RIM GP (LH)	174
Y	**265-2895**	2	TIRE & RIM GP (RH)	174
	142-7493	32	NUT-LUG (9/16-18-THD)	

Y - SEPARATE ILLUSTRATION

<END>

422-3345 WHEEL & TIRE AR

31X6X10

AN ATTACHMENT

SMCS-4200, 4201, 4203 **i05343514**

NOTE	PART NUMBER	QTY	PART NAME 1 2 3 4 5 6 (PRODUCT LEVEL)	SEE PAGE
Y	*345-5430*	1	SPACER GP (LIFT ARM)	202
	142-7493	32	NUT-LUG (9/16-18-THD)	
	329-6989	2	TIRE-SOLID (10X16.5, LH)	
	329-6990	2	TIRE-SOLID (10X16.5, RH)	

Y - SEPARATE ILLUSTRATION

<END>

422-3401 CONVERSION AR-ROADING

AN ATTACHMENT

SMCS-7000 **i05256761**

NOTE	PART NUMBER	QTY	PART NAME 1 2 3 4 5 6 (PRODUCT LEVEL)	SEE PAGE
Y	*422-3400*	1	CONVERSION GP-ROADING	184
Y	**319-9480**	1	KIT-ROADING PLATE & MOUNTING (BUCKET)	447
Y	*417-4606*	1	LIFTING GP-MACHINE	197
Y	*356-6074*	1	LIGHTING GP-ROADING	124
Y	*175-4238*	1	LOCK GP-QUICK COUPLER (MECHANICAL)	452
Y	*422-3333*	1	MOUNTING GP-REGISTRATION	199
Y	*422-3334*	1	MOUNTING GP-ROADING LIGHTS	200

Y - SEPARATE ILLUSTRATION

<END>

422-3400 CONVERSION GP-ROADING

ITALY

PART OF 422-3401 CONVERSION AR-ROADING

AN ATTACHMENT

SMCS-7000 **i05358557**

NOTE	REF NO	GRAPHIC REF	PART NUMBER	QTY	PART NAME 1 2 3 4 5 6 (PRODUCT LEVEL)	SEE PAGE
	1	1	**258-3849**	1	PLATE-IDENTIFICATION (ENGLISH, GERMAN, ITALIAN)	
Y	2	1	**309-1325**	1	LAMP GP-WARNING BEACON (12-VOLT, AMBER)	122
	3	1	**442-5904**	1	BLOCK AS	
	4	1	**3S-2093**	2	STRAP-CABLE	

Y - SEPARATE ILLUSTRATION

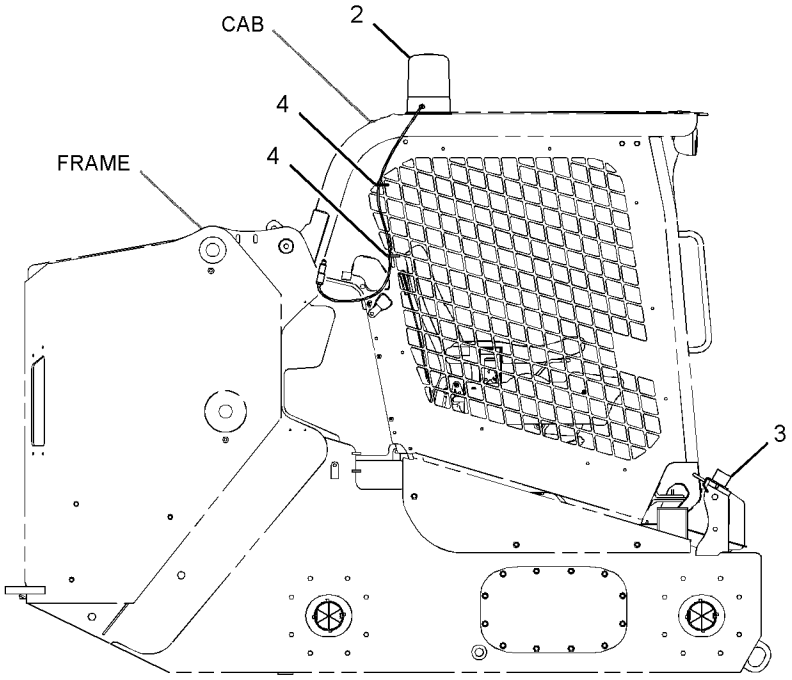

RIGHT SIDE VIEW

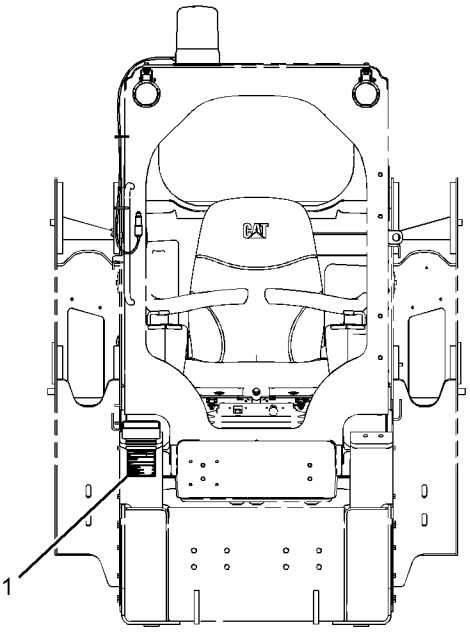

FRONT VIEW

GRAPHIC #1 **<END>** g03349702

345-5148 COUNTERWEIGHT GP

34-KG (2.5-LBS)
AN ATTACHMENT

SMCS-7056 **i05401867**

NOTE	REF NO	GRAPHIC REF	PART NUMBER	QTY	PART NAME 1 2 3 4 5 6 (PRODUCT LEVEL)	SEE PAGE
	1	1	**345-5147**	4	COUNTERWEIGHT	
	2	1	**5P-1076**	6	WASHER-HARD (13.5X30X4-MM THK)	
M	3	1	**8T-5001**	6	BOLT (M12X1.75X130-MM)	

M - METRIC PART

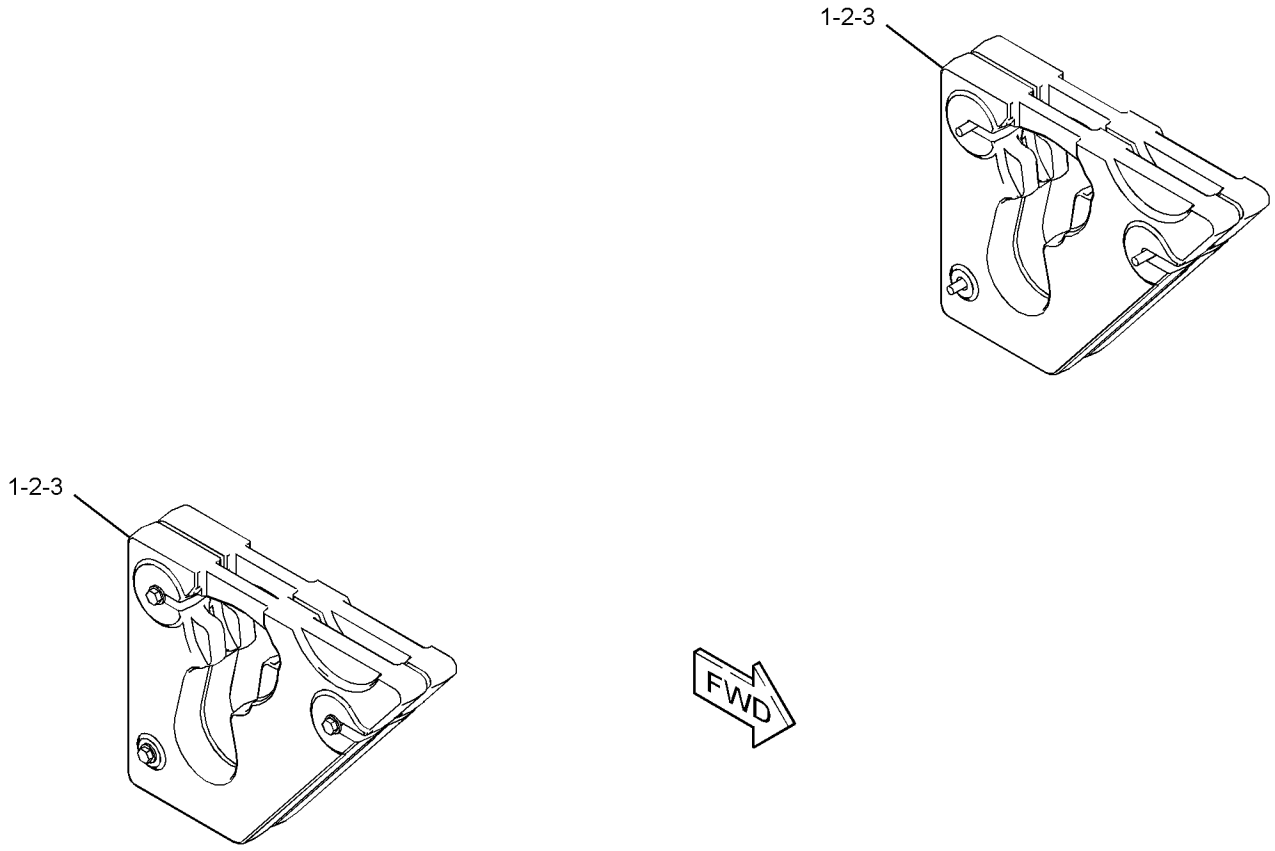

GRAPHIC #1 **<END>** g02817579

345-5803 ENCLOSURE GP-ENGINE

PART OF 388-8180 CHASSIS AR

SMCS-7263, 7273 **i05380578**

NOTE	REF NO	GRAPHIC REF	PART NUMBER	QTY	PART NAME 1 2 3 4 5 6 (PRODUCT LEVEL)	SEE PAGE
	1	1	**178-2593**	2	BUMPER	
	2	1	**142-8832**	1	PIN AS	
	3	1	**345-5520**	1	STRIKER AS	
	4	1	**345-5640**	1	LATCH AS	
	5	1	*345-5645*	1	LOCK GP	
J		1	**226-0294**	1	LOCK AS	
		1	**418-8096**	1	CAM	
	6	1	**345-5802**	1	DOOR AS-ACCESS	
M	7	1	**160-8500**	2	NUT (M8X1.25-THD)	
	8	1	**221-8058**	1	BOLT-SPECIAL	
	9	1	**343-4076**	1	BOLT-SPECIAL	
M	10	1	**6V-7744**	1	LOCKNUT (M10X1.5-THD)	
	11	1	**8T-4121**	2	WASHER-HARD (11X21X2.5-MM THK)	
M	12	1	**8T-4181**	4	BOLT (M6X1X20-MM)	
M	13	1	**8T-4196**	2	BOLT (M10X1.5X35-MM)	
	14	1	**8T-4205**	4	WASHER-HARD (7.2X14.5X2-MM THK)	

J - REQUIRES CORPORATE KEY
M - METRIC PART

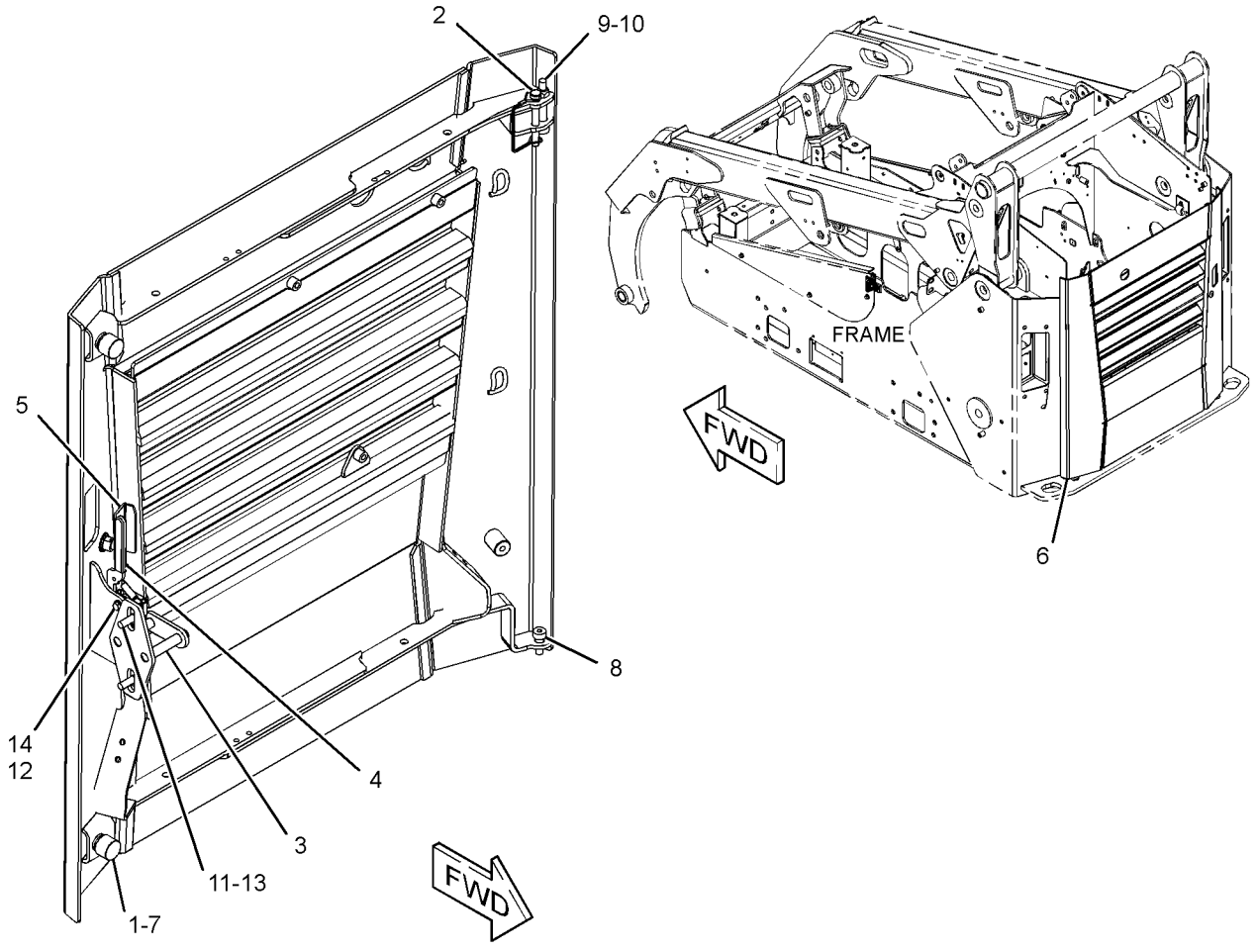

GRAPHIC #1 **<END>** g03324744

435-9010 ENCLOSURE GP-ENGINE–SEAL

PART OF 388-8180 CHASSIS AR

SMCS-7263, 7273 **i05380634**

NOTE	REF NO	GRAPHIC REF	PART NUMBER	QTY	PART NAME 1 2 3 4 5 6 (PRODUCT LEVEL)	SEE PAGE
	1	1	**227-7474**	6	SPACER (13X20X7-MM THK)	
	2	1	**345-4719**	1	BLOCK	
	3	1	**345-4807**	2	PLATE	
	4	1	**345-4813**	1	SEAL	
	5	1	**345-4814**	1	BRACKET AS	
	6	1	**345-6515**	1	BRACKET AS	
					(EACH BRACKET AS INCLUDES)	
M		1	**8C-8778**	3	STUD-WELD (M8X1.25X25-MM)	
	7	1	**345-6519**	1	BLOCK AS	
	8	1	**435-9007**	1	BRACKET	
	9	1	**435-9008**	1	PLATE AS	
	10	1	**435-9011**	1	BRACKET AS	
	11	1	**435-9012**	1	COVER AS	
	12	1	**156-0283**	2	WASHER-HARD (8.4X35X2.5-MM THK)	
	13	1	**190-7979**	1	BOLT (M8X1.25X80-MM)	
	14	1	**208-9276**	5	BOLT-FLANGE HEAD	
M	15	1	**266-3315**	4	BOLT-FLANGE HEAD (M8X1.25X25.5-MM)	
	16	1	**342-9920**	2	BOLT-FLANGE HEAD (M8X1.25X20-MM)	
	17	1	**3S-2093**	6	STRAP-CABLE	
M	18	1	**3T-0852**	6	LOCKNUT (M8X1.25-THD)	
	19	1	**5P-4116**	5	WASHER-HARD (8.8X20.5X2-MM THK)	
	20	1	**7X-0632**	6	WASHER-HARD (11X36X6-MM THK)	
M	21	1	**8T-4196**	6	BOLT (M10X1.5X35-MM)	

M - METRIC PART

435-9010 **ENCLOSURE GP-ENGINE (*contd.*)** **i05380634**

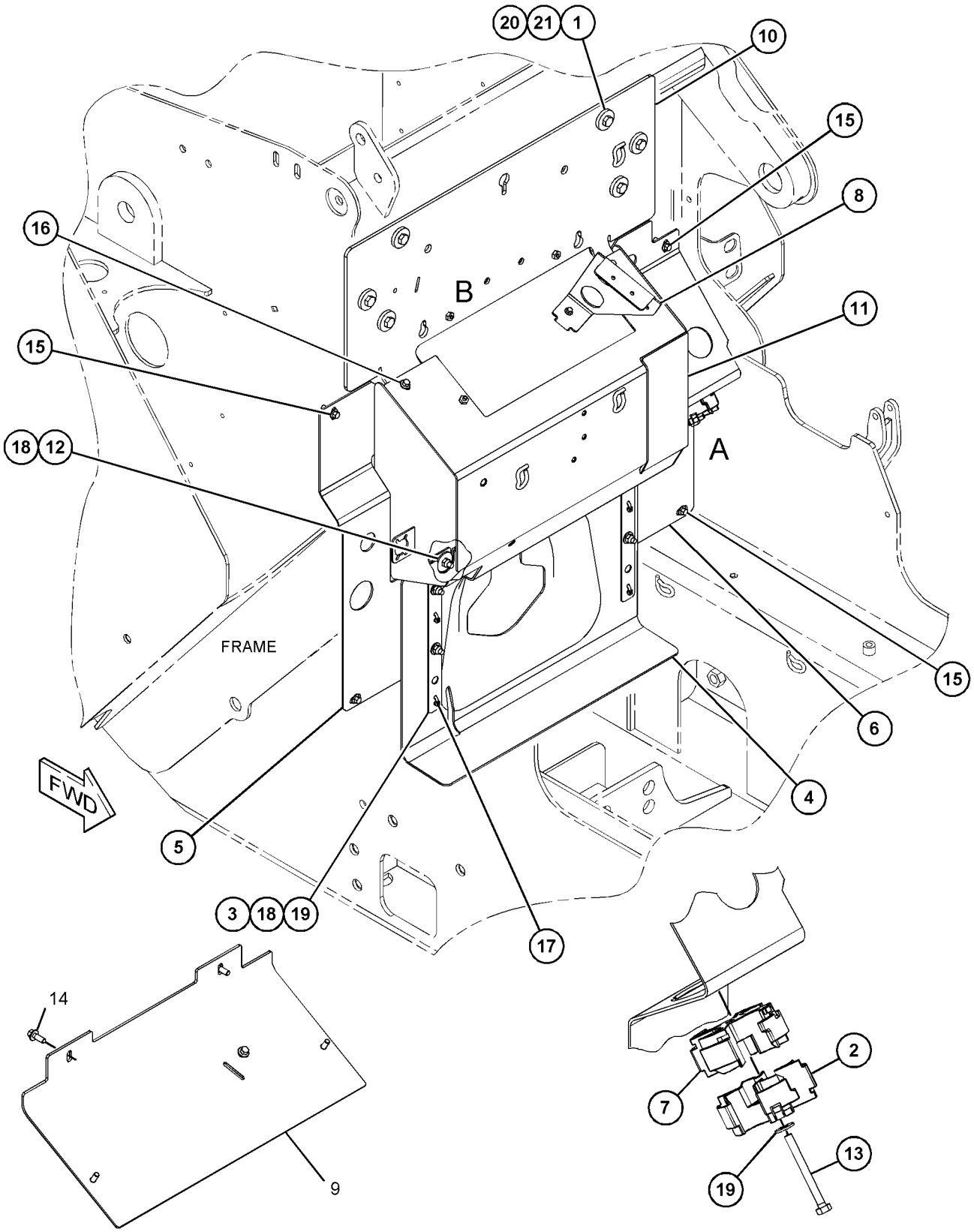

VIEW OF AREA B
(PARTS REMOVED FOR CLARITY)

VIEW OF AREA A
(PARTS REMOVED FOR CLARITY)

GRAPHIC #1 **<END>** g03407273

345-4875 FRAME GP-LOADER

PART OF 388-8180 CHASSIS AR

SMCS-7054 **i05401579**

NOTE	REF NO	GRAPHIC REF	PART NUMBER	QTY	PART NAME 1 2 3 4 5 6 (PRODUCT LEVEL)	SEE PAGE
	1	1	**3S-9182**	4	PLUG-MAGNETIC (FRAME)	
	2	1	**258-3184**	2	COVER	
	3	1	**258-3186**	1	PLATE AS	
	4	1	**258-3312**	1	PLATE	
	5	1	**261-6101**	4	COVER	
	6	1	**287-4218**	2	PLATE	
	8	1	**345-4873**	1	FRAME AS	
	9	1	**345-4898**	2	ARM AS-LIFT	
					(EACH INCLUDES)	
	9A	1	**6K-4148**	8	BUSHING	
	10	1	*345-6403*	1	PLATE AS	
	11	1	*345-6404*	1	PLATE AS	
					(EACH PLATE AS INCLUDES)	
M		1	**159-9539**	4	NUT-WELD (M6X1-THD)	
	12	1	**388-8106**	1	COVER AS	
	13	1	**388-8118**	1	PLATE	
	14	1	**388-8119**	1	PLATE	
	15	1	**266-3314**	2	BOLT-FLANGE HEAD (M6X1X20.5-MM)	
	16	1	**266-3316**	28	BOLT-FLANGE HEAD (M10X1.5X25-MM)	
	17	1	**342-9920**	2	BOLT-FLANGE HEAD (M8X1.25X20-MM)	
	18	1	**342-9922**	6	BOLT-FLANGE HEAD (M8X1.25X25-MM)	
	19	1	**7X-7729**	8	WASHER (11X25X3-MM THK)	
M	20	1	**8T-3991**	8	SCREW-BUTTON HEAD (M6X1X20-MM)	
M	21	1	**8T-4196**	1	BOLT (M10X1.5X35-MM)	
	22	1	**8T-4121**	1	WASHER-HARD (11X21X2.5-MM THK)	
M	23	1	**246-7853**	2	NUT-SPECIAL (M8X1.25-THD)	
M	24	1	**2Y-5829**	4	NUT (M10X1.5-THD)	
M	25	1	**8T-4185**	4	BOLT (M10X1.5X50-MM)	
B	26	1	**287-4220**	6	SHIM (2-MM THK)	
E	27	1	**386-6028**		SEAL (69-CM)	

B - USE AS REQUIRED
E - ORDER BY THE CENTIMETER
M - METRIC PART

345-4875 **FRAME GP-LOADER (*contd.*)** **i05401579**

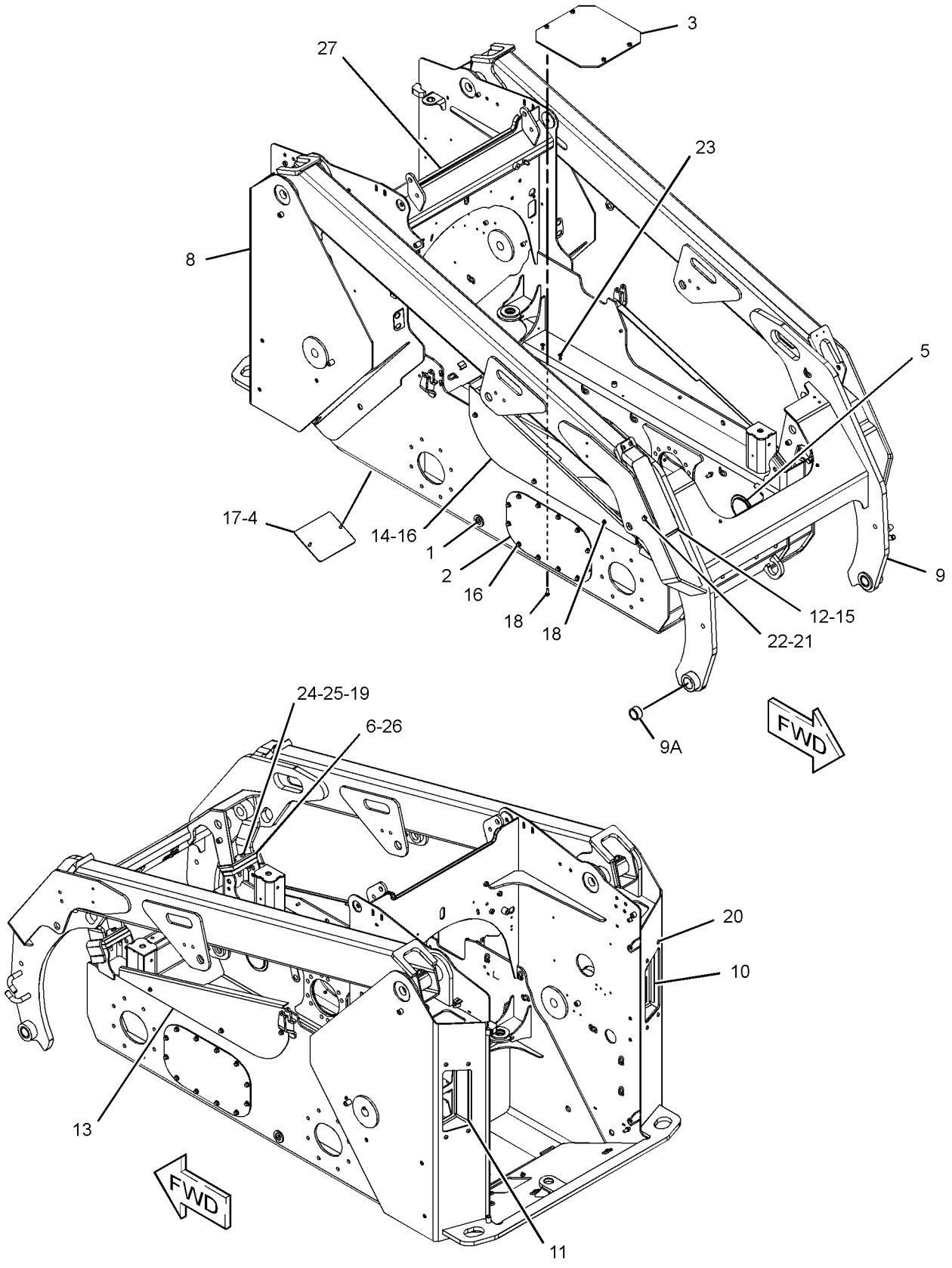

GRAPHIC #1 **<END>** g03407399

386-2440 GRILL GP-RADIATOR

PART OF 345-3610 RADIATOR & HYD OIL COOLER GP

SMCS-7170 **i05401775**

NOTE	REF NO	GRAPHIC REF	PART NUMBER	QTY	PART NAME 1 2 3 4 5 6 (PRODUCT LEVEL)	SEE PAGE
	1	1	**345-3540**	1	LATCH AS	
	2	1	**386-2432**	1	GRILL AS	
		1	**8R-3857**	2	BOSS (M8X1.25X12-MM)	
M		1	**159-9540**	1	NUT-WELD (M8X1.25-THD)	
	3	1	**386-2438**	1	COVER AS	
M		1	**159-9540**	6	NUT-WELD (M8X1.25-THD)	
	4	1	**386-2439**	1	COVER AS	
	5	1	**415-2789**	1	SPRING AS-GAS	
		1	**208-6176**	2	STUD-BALL	
		1	**258-3562**	1	SPRING-GAS	
M	6	1	**135-7242**	2	SCREW-SELF-TAPPING (M5X2.3X18.8-MM)	
M	7	1	**192-1329**	2	BOLT-SPECIAL	
	8	1	**342-9920**	6	BOLT-FLANGE HEAD (M8X1.25X20-MM)	
	9	1	**5P-4116**	4	WASHER-HARD (8.8X20.5X2-MM THK)	
D	10	1	**5P-8309**		SEAL (0.25-M)	
D	10A	1	**5P-8309**		SEAL (0.57-M EACH)	
D	10B	1	**5P-8309**		SEAL (0.26-M)	
D	10C	1	**5P-8309**		SEAL (0.52-M)	

D - ORDER BY THE METER
M - METRIC PART

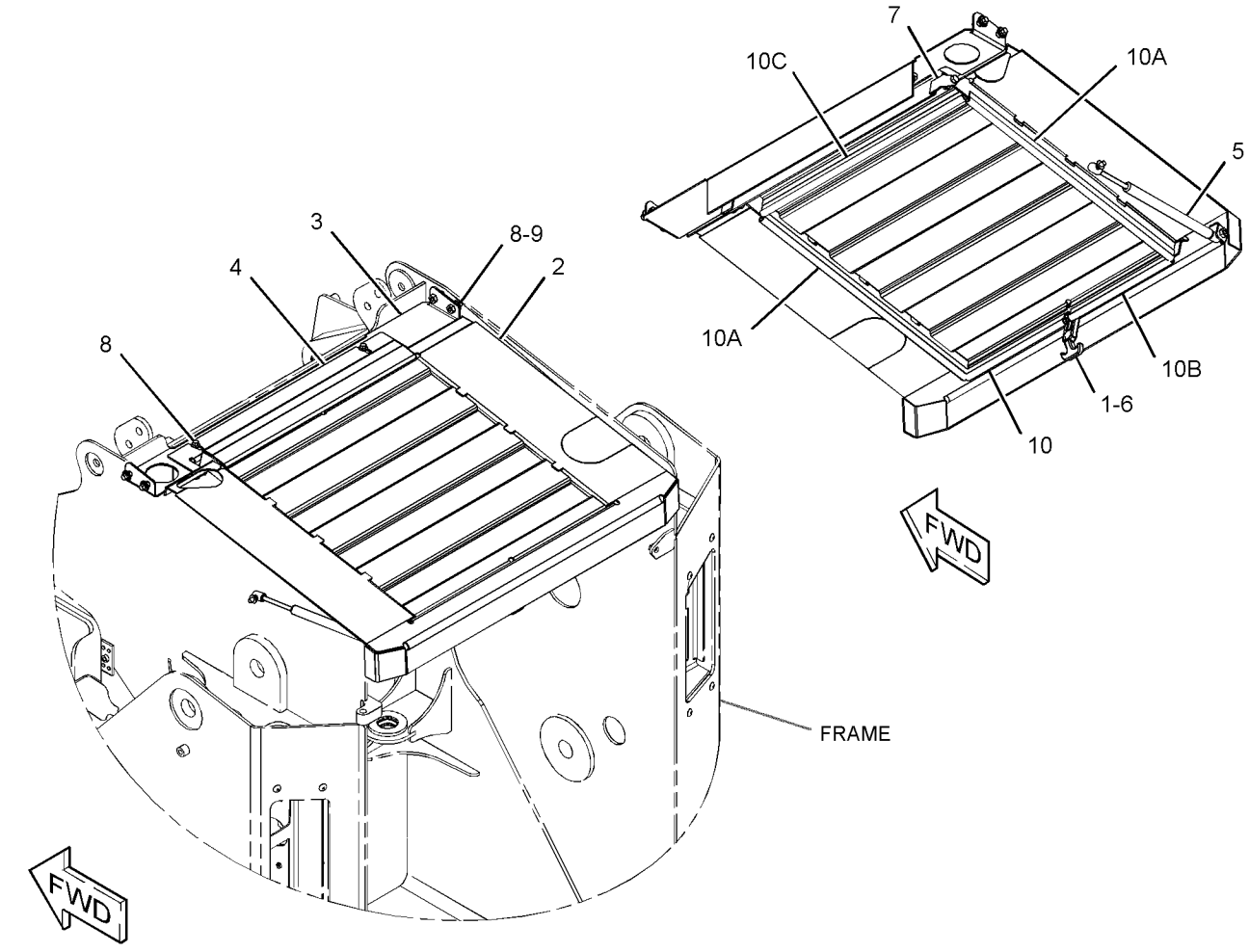

GRAPHIC #1

<END>

g03323466

388-7875 KIT-COUNTERWEIGHT–COUNTERWEIGHT AN ATTACHMENT

SMCS-7056 **i04803481**

NOTE	REF NO	GRAPHIC REF	PART NUMBER	QTY	PART NAME 1 2 3 4 5 6 (PRODUCT LEVEL)	SEE PAGE
	1	1	**345-5147**	2	COUNTERWEIGHT	
	2	1	**8T-4223**	6	WASHER-HARD (13.5X25.5X3-MM THK)	

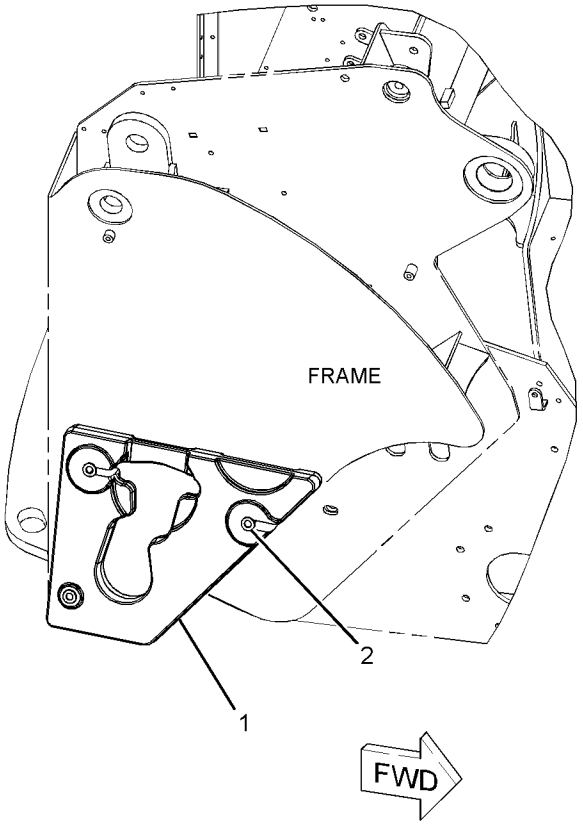

GRAPHIC #1 **<END>** g02925600

416-5705 KIT-GUARD–TURBOCHARGER
AN ATTACHMENT

SMCS-7150, 7153, 715L **i05401572**

NOTE	REF NO	GRAPHIC REF	PART NUMBER	QTY	PART NAME 1 2 3 4 5 6 (PRODUCT LEVEL)	SEE PAGE
	1	1	**416-5706**	1	PLATE AS	
	2	1	**416-5707**	1	BRACKET AS	
	3	1	**416-5708**	1	BRACKET AS	
	4	1	**416-5709**	1	BRACKET AS	
	5	1	**119-9868**	2	BOLT (M10X1.25X20-MM)	
	6	1	**4P-8134**	2	CLIP	
	7	1	**8T-4121**	2	WASHER-HARD (11X21X2.5-MM THK)	
M	8	1	**8T-4189**	2	BOLT (M8X1.25X20-MM)	
	9	1	**8T-4224**	7	WASHER-HARD (8.8X16X2-MM THK)	
M	10	1	**8T-4908**	5	BOLT (M8X1.25X25-MM)	

M - METRIC PART

NO GRAPHIC AVAILABLE AT TIME OF PUBLICATION

GRAPHIC #1 **<END>** g01269539

422-3323 KIT-ROADING CONVERSION—ROADING LIGHTS, FRONT

FOR USE WITH 422-3324—PAGE: 196, 319-9480—PAGE: 447

AN ATTACHMENT

SMCS-1408, 1429, 1430, 1432, 7000, 7319 **i05342662**

NOTE	REF NO	GRAPHIC REF	PART NUMBER	QTY	PART NAME 1 2 3 4 5 6 (PRODUCT LEVEL)	SEE PAGE
	1	1	**9R-1499**	2	REFLECTOR (RED)	
	2	1	**132-5166**	2	MIRROR GP-REAR VIEW	
					(EACH INCLUDES)	
		1	**148-2371**	1	CLAMP (TOP)	
		1	**148-2372**	1	CLAMP (BOTTOM)	
	3	1	**175-4239**	2	BRACKET AS	
Y	4	1	**195-0189**	1	LAMP GP-HEAD & SIGNAL (FRONT, RH)	117
Y	5	1	**195-0190**	1	LAMP GP-HEAD & SIGNAL (FRONT, LH)	118
	6	1	**263-5421**	1	SWITCH AS-ROCKER (ROADING LIGHTS)	
		1	**111-7899**	1	GASKET	
Y	7	1	**356-6075**	2	HARNESS AS-LIGHTING	102
	8	1	**388-8222**	2	BRACKET	
	9	1	**388-8223**	1	BRACKET (LH)	
	10	1	**388-8224**	1	BRACKET (RH)	
	11	1	**132-5789**	2	CLIP	
	12	1	**266-3316**	4	BOLT-FLANGE HEAD (M10X1.5X25-MM)	
	13	1	**3S-2093**	8	STRAP-CABLE	
	14	1	**4P-7581**	2	CLIP	
M	15	1	**5C-9553**	4	BOLT (M6X1X16-MM)	
	16	1	**7K-1181**	14	STRAP-CABLE	
	17	1	**8T-4205**	4	WASHER-HARD (7.2X14.5X2-MM THK)	

M - METRIC PART
Y - SEPARATE ILLUSTRATION

422-3323 **KIT-ROADING CONVERSION (*contd.*)** **i05342662**

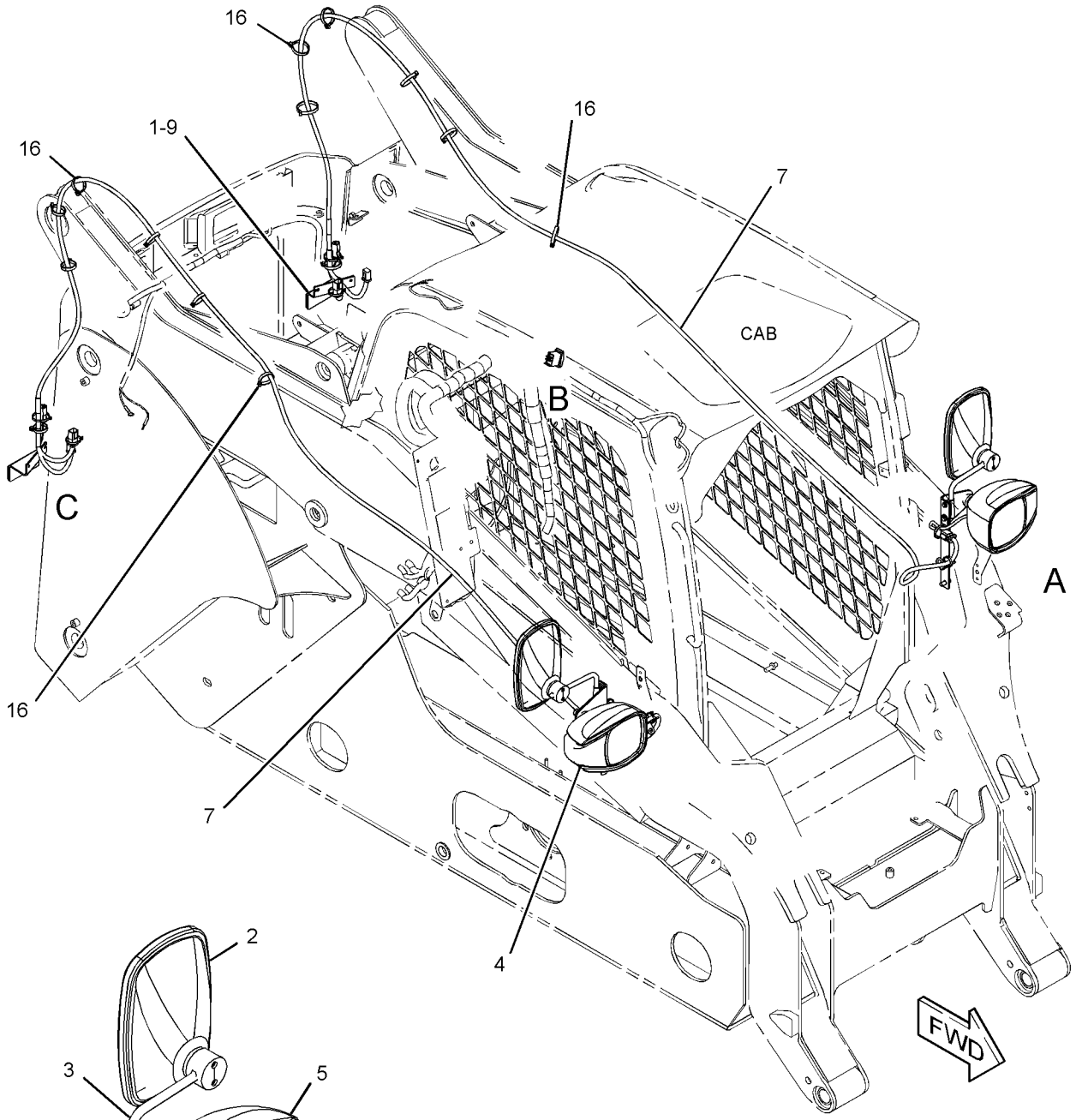

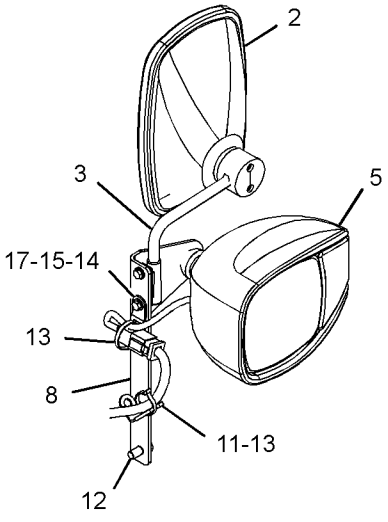

VIEW OF AREA A

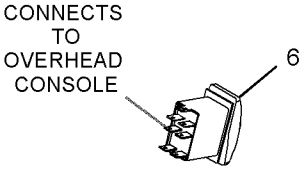

VIEW OF AREA B

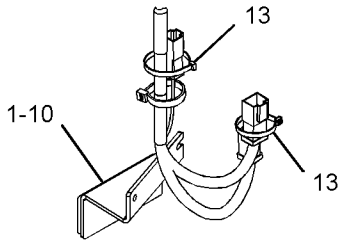

VIEW OF AREA C

GRAPHIC #1 **<END>** g03385742

422-3324 KIT-ROADING CONVERSION—ROADING LIGHTS, FRONT

FOR USE WITH 422-3323—PAGE: 194, 319-9480—PAGE: 447

AN ATTACHMENT

SMCS-1408, 1429, 1430, 1432, 7000, 7319 **i05342663**

NOTE	REF NO	GRAPHIC REF	PART NUMBER	QTY	PART NAME 1 2 3 4 5 6 (PRODUCT LEVEL)	SEE PAGE
	1	1	**9R-5301**	1	PIN-COTTER	
	2	1	**190-8962**	1	LAMP GP-REGISTRATION PLATE	
		1	**195-9712**	1	LAMP (12-VOLT, 10-WATT)	
	3	1	**258-3849**	1	PLATE-IDENTIFICATION (ENGLISH, GERMAN, ITALIAN)	
Y	4	1	**293-9044**	1	HARNESS AS-REAR LIGHTING (STOP, TAIL, TURN)	107
Y	5	1	**309-1325**	1	LAMP GP-WARNING BEACON (12-VOLT, AMBER)	122
	6	1	**422-3232**	1	BRACKET AS	
	7	1	**442-5904**	1	BLOCK AS	
	8	1	**178-2247**	1	PIN	
M	9	1	**266-3315**	1	BOLT-FLANGE HEAD (M8X1.25X25.5-MM)	
	10	1	**3S-2093**	2	STRAP-CABLE	
	11	1	**4B-4863**	2	WASHER (4.7X11X1.2-MM THK)	
M	12	1	**5C-8312**	2	NUT (M4X0.7-THD)	
M	13	1	**6V-9672**	2	SCREW-MACHINE (M4X0.7X16-MM)	
	14	1	**9X-8257**	1	WASHER (17.5X30X3.5-MM THK)	

M - METRIC PART
Y - SEPARATE ILLUSTRATION

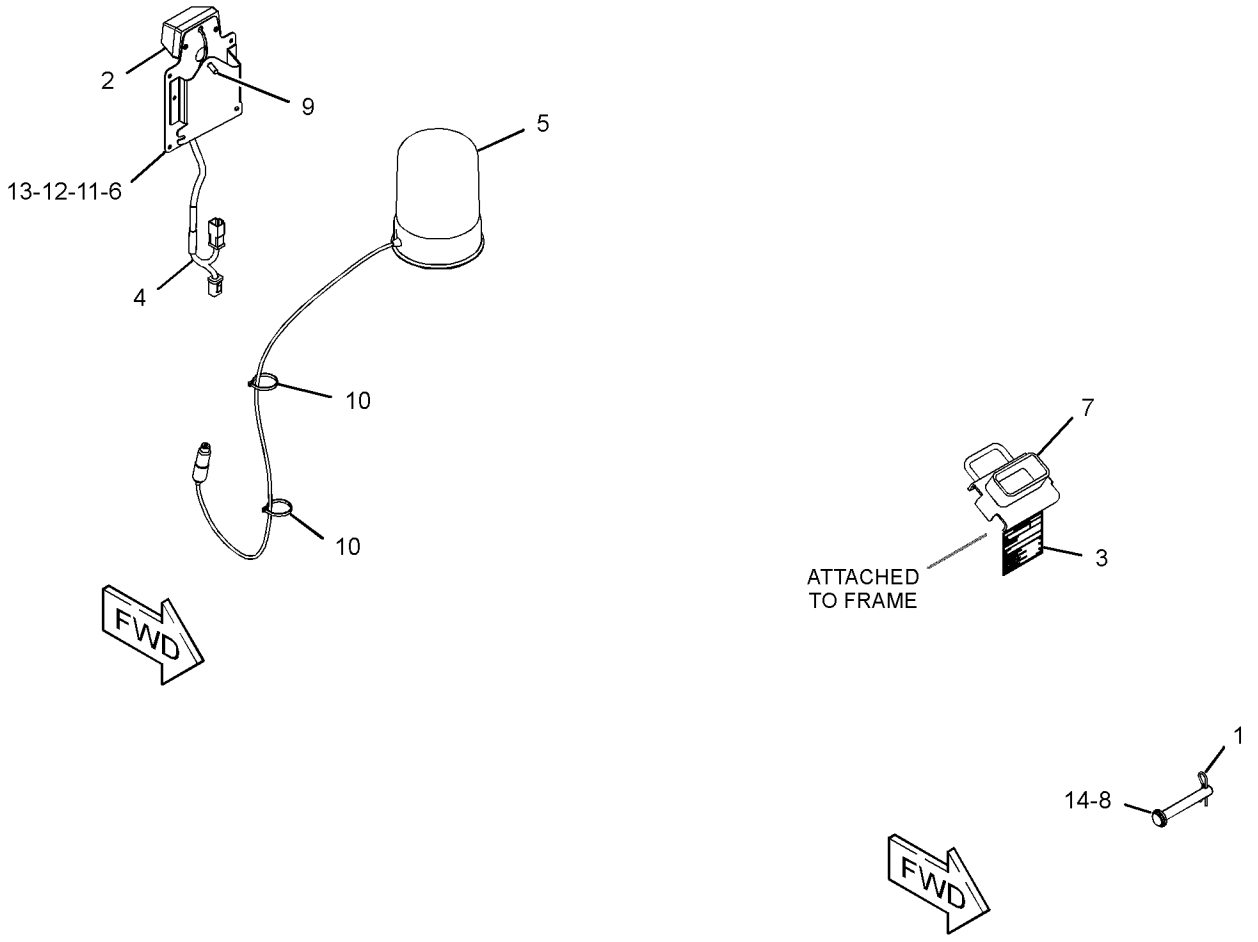

GRAPHIC #1 **<END>** g03385943

417-4606 LIFTING GP-MACHINE—FOUR POINT

PART OF 435-8760 CONVERSION AR-MACHINE, 422-3401 CONVERSION AR-ROADING, 388-7758 CONVERSION GP-MACHINE
AN ATTACHMENT

SMCS-1122, 6459, 7000 **i05245120**

NOTE	REF NO	GRAPHIC REF	PART NUMBER	QTY	PART NAME 1 2 3 4 5 6 (PRODUCT LEVEL)	SEE PAGE
	1	1	**7E-2700**	2	FILM-INFORMATION (LIFT EYE LOCATION)	
	2	1	**345-6073**	2	PLATE	
	3	1	**388-7936**	2	PLATE	
	4	1	**417-4607**	2	PLATE-LIFT	
	5	1	**418-8763**	2	FILM-IDENTIFICATION (LIFT POINT)	
M	6	1	**159-2953**	4	SCREW-FLAT HEAD (M16X2-THD)	
M	7	1	**6V-5845**	2	BOLT (M20X2.5X70-MM)	
M	8	1	**6V-7688**	2	LOCKNUT (M20X2.5-THD)	
	9	1	**7X-0521**	4	WASHER-HARD (20X36.5X5-MM THK)	
M	10	1	**7X-2559**	2	BOLT (M16X2X160-MM)	
	11	1	**8T-4122**	8	WASHER-HARD (17X32X3.5-MM THK)	
M	12	1	**8T-4190**	4	BOLT (M16X2X25-MM)	
M	13	1	**8T-4778**	2	LOCKNUT (M16X2-THD)	

M - METRIC PART

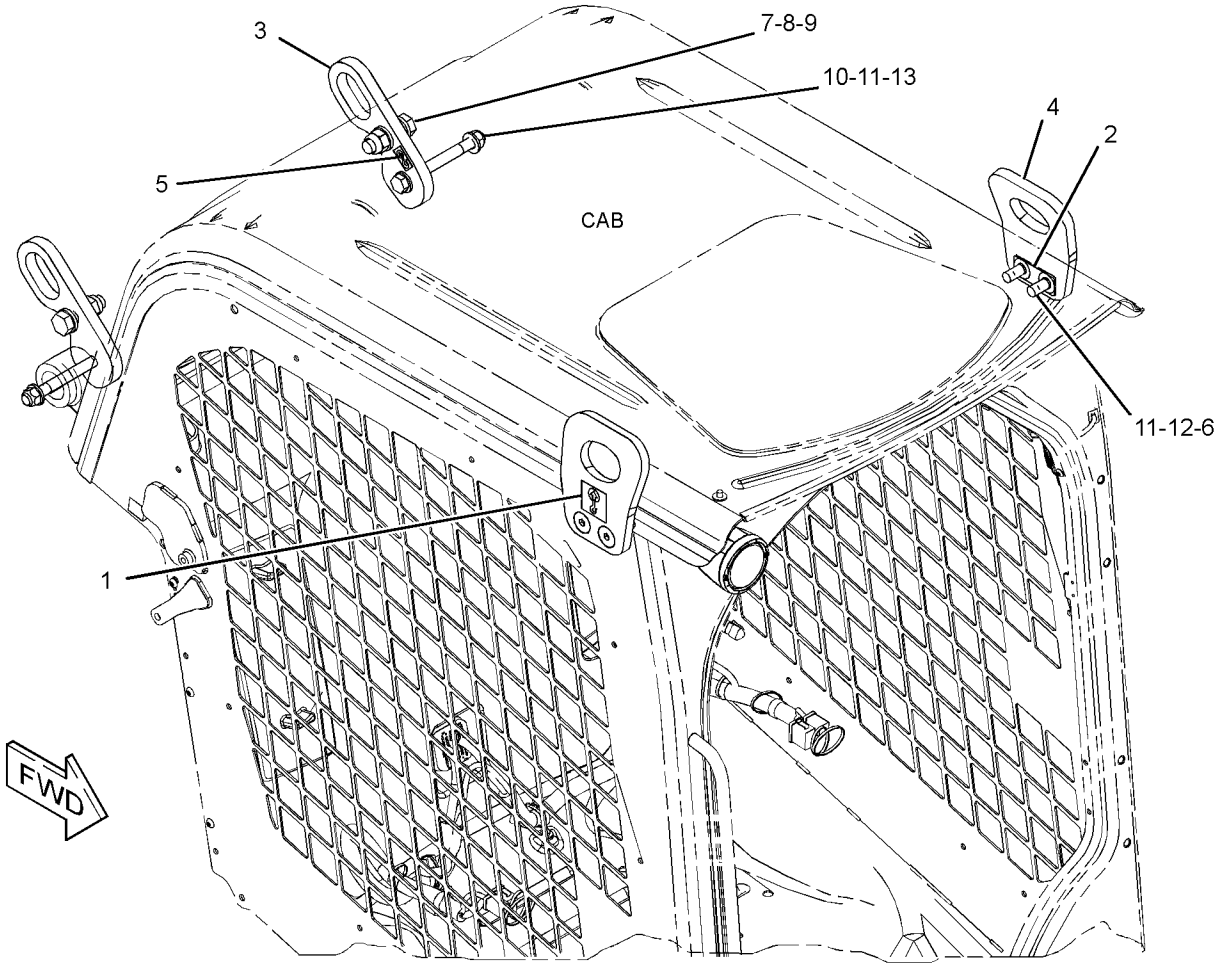

GRAPHIC #1 **<END>** g03364471

345-6130 MIRROR & MTG GP-REAR VIEW

PART OF 345-5454 CAB AR

SMCS-7319 **i04758930**

NOTE	REF NO	GRAPHIC REF	PART NUMBER	QTY	PART NAME 1 2 3 4 5 6 (PRODUCT LEVEL)	SEE PAGE
	1	1	**345-6131**	1	MIRROR AS (REAR VIEW)	
	2	1	**3B-4505**	1	LOCKWASHER	
M	3	1	**5C-7261**	1	NUT (M8X1.25-THD)	
	4	1	**8T-4224**	1	WASHER-HARD (8.8X16X2-MM THK)	

M - METRIC PART

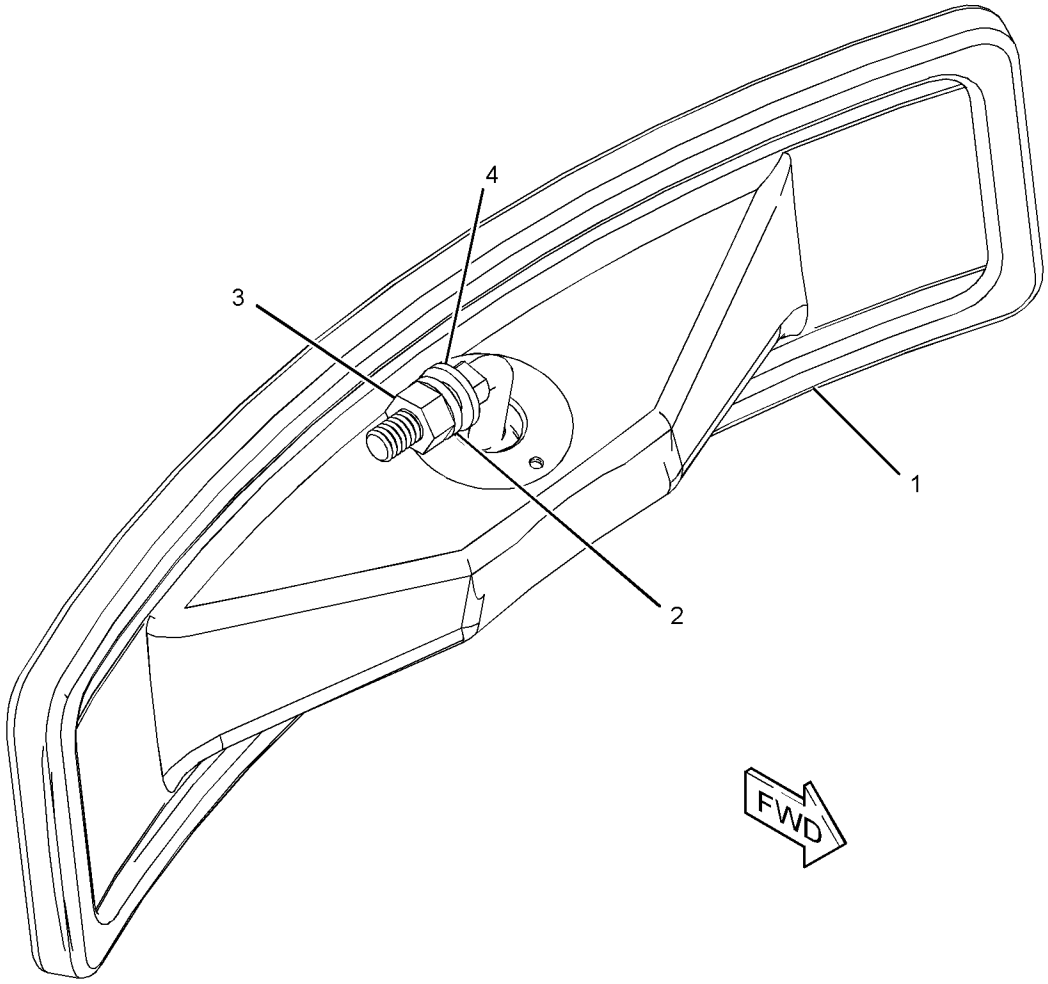

GRAPHIC #1 **<END>** g02873037

422-3333 MOUNTING GP-REGISTRATION

PART OF 422-3401 CONVERSION AR-ROADING
AN ATTACHMENT

SMCS-1408, 1429, 7050 **i05256757**

NOTE	REF NO	GRAPHIC REF	PART NUMBER	QTY	PART NAME 1 2 3 4 5 6 (PRODUCT LEVEL)	SEE PAGE
	1	1	**190-8962**	1	LAMP GP-REGISTRATION PLATE	
		1	**195-9712**	1	LAMP (12-VOLT, 10-WATT)	
	2	1	**293-9044**	1	HARNESS AS-REAR LIGHTING (STOP, TAIL, TURN)	
		1	**8T-8729**	4	PIN-CONNECTOR (16-GA TO 18-GA)	
		1	**155-2271**	1	KIT-CONNECTING PLUG (4-PIN)	
					(INCLUDES PLUG AS, WEDGE & INTERFACE SEAL)	
		1	**102-8804**	1	KIT-RECEPTACLE (4-PIN)	
					(INCLUDES RECEPTACLE AS & WEDGE)	
		1	**8T-8730**	4	SOCKET-CONNECTOR (16-GA TO 18-GA)	
		1	**5P-4571**	2	TERMINAL-BLADE (14-GA TO 16-GA)	
E		1	**125-7874**		TUBE-HEAT SHRINK (5.72-MM DIA) (10-CM)	
	3	1	**422-3232**	1	BRACKET AS	
M	4	1	**266-3315**	1	BOLT-FLANGE HEAD (M8X1.25X25.5-MM)	
	5	1	**4B-4863**	2	WASHER (4.7X11X1.2-MM THK)	
M	6	1	**5C-8312**	2	NUT (M4X0.7-THD)	
M	7	1	**6V-9672**	2	SCREW-MACHINE (M4X0.7X16-MM)	

E - ORDER BY THE CENTIMETER
M - METRIC PART

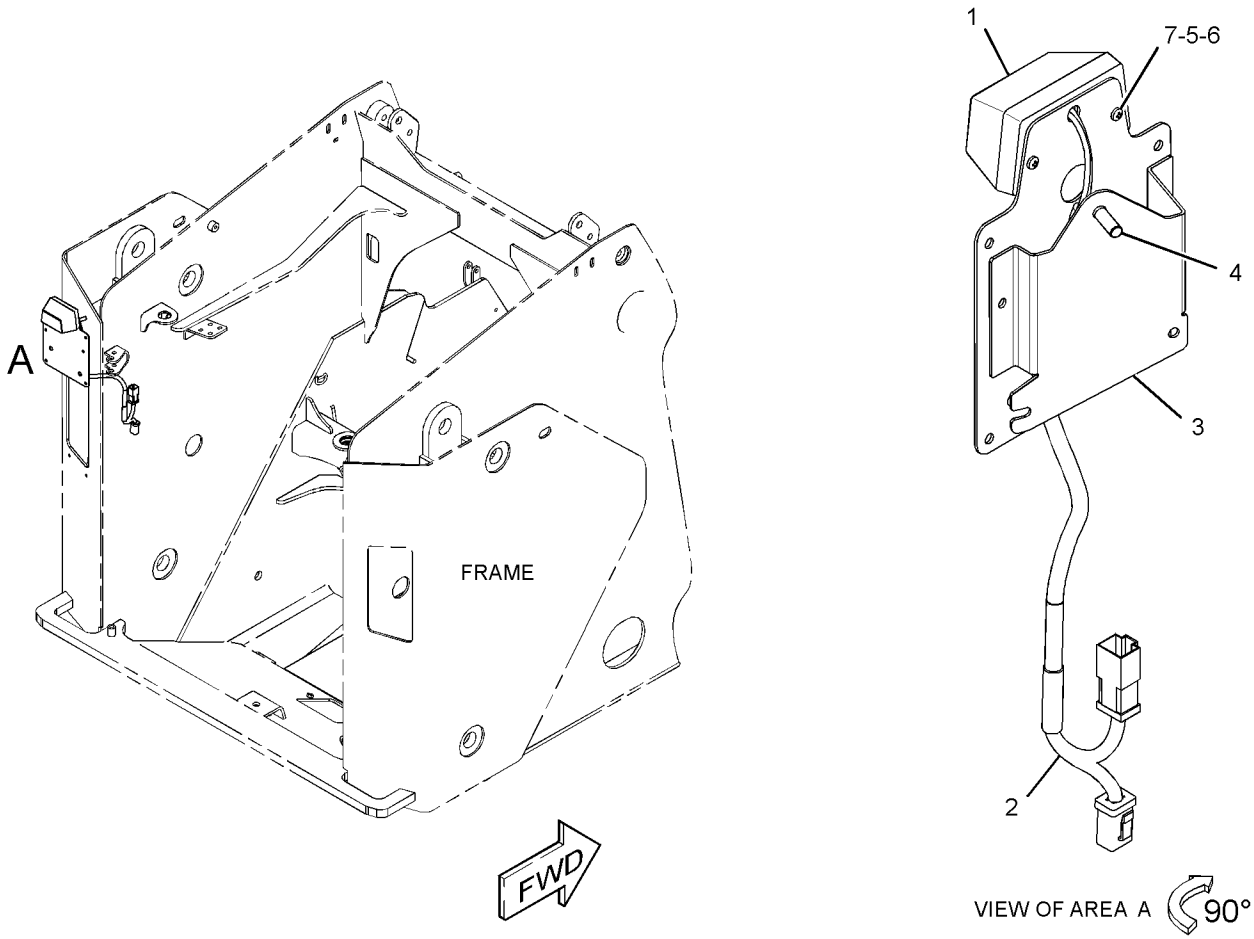

GRAPHIC #1 **<END>** g03350178

422-3334 MOUNTING GP-ROADING LIGHTS

PART OF 422-3401 CONVERSION AR-ROADING
AN ATTACHMENT

SMCS-1429 **i05335948**

NOTE	REF NO	GRAPHIC REF	PART NUMBER	QTY	PART NAME 1 2 3 4 5 6 (PRODUCT LEVEL)	SEE PAGE
	1	1	**132-5166**	2	MIRROR GP-REAR VIEW	
					(EACH INCLUDES)	
		1	**148-2371**	1	CLAMP (TOP)	
		1	**148-2372**	1	CLAMP (BOTTOM)	
	2	1	**175-4239**	2	BRACKET AS	
	3	1	**388-8222**	2	BRACKET	
	4	1	**266-3316**	4	BOLT-FLANGE HEAD (M10X1.5X25-MM)	
M	5	1	**5C-9553**	4	BOLT (M6X1X16-MM)	
	6	1	**8T-4205**	4	WASHER-HARD (7.2X14.5X2-MM THK)	

M - METRIC PART

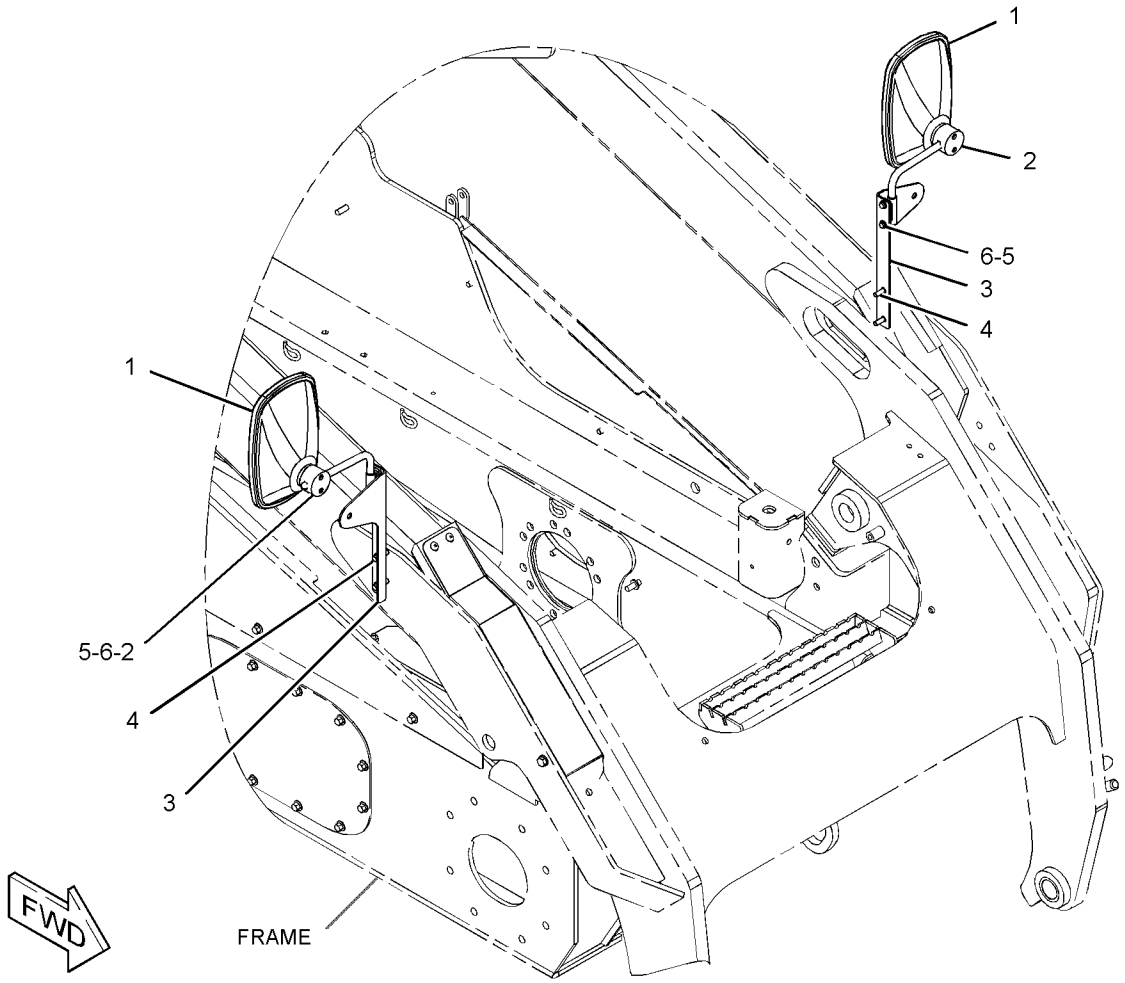

GRAPHIC #1 **<END>** g03349697

422-7656 MOUNTING GP-ROADING LIGHTS—NACD

PART OF 388-7756 CONVERSION AR-MACHINE

AN ATTACHMENT

SMCS-1429 **i05222669**

NOTE	REF NO	GRAPHIC REF	PART NUMBER	QTY	PART NAME 1 2 3 4 5 6 (PRODUCT LEVEL)	SEE PAGE
M	1	1	**7X-2557**	2	BOLT (M16X2X140-MM)	
	2	1	**8T-4122**	4	WASHER-HARD (17X32X3.5-MM THK)	
M	3	1	**8T-4190**	4	BOLT (M16X2X25-MM)	

M - METRIC PART

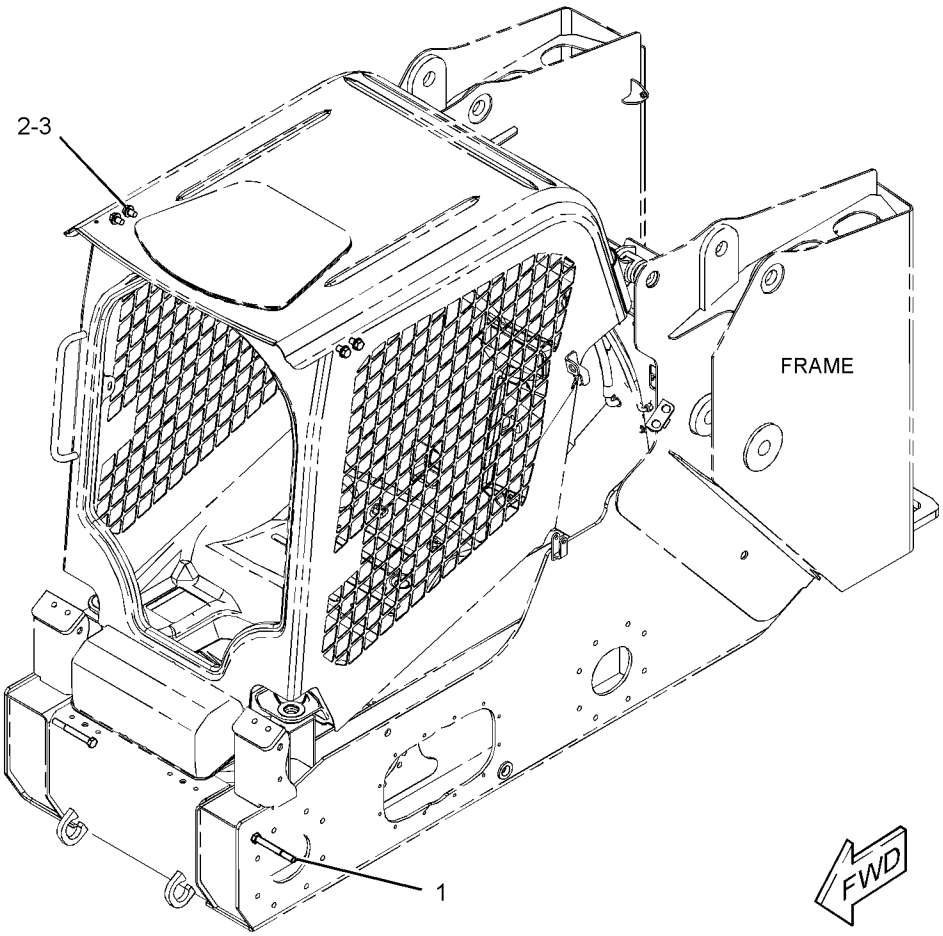

GRAPHIC #1 **<END>** g03350355

345-5430 SPACER GP

PART OF 422-3337, 422-3338, 422-3339, 422-3340, 422-3341, 422-3342, 422-3343, 422-3344, 422-3345 WHEEL & TIRE AR
AN ATTACHMENT

SMCS-4151, 7158, 7256 **i05382952**

NOTE	REF NO	GRAPHIC REF	PART NUMBER	QTY	PART NAME 1 2 3 4 5 6 (PRODUCT LEVEL)	SEE PAGE
	1	1	**287-4218**	4	PLATE	
	2	1	**7X-7729**	8	WASHER (11X25X3-MM THK)	
M	3	1	**2Y-5829**	4	NUT (M10X1.5-THD)	
M	4	1	**8T-4172**	4	BOLT (M10X1.5X80-MM)	

M - METRIC PART

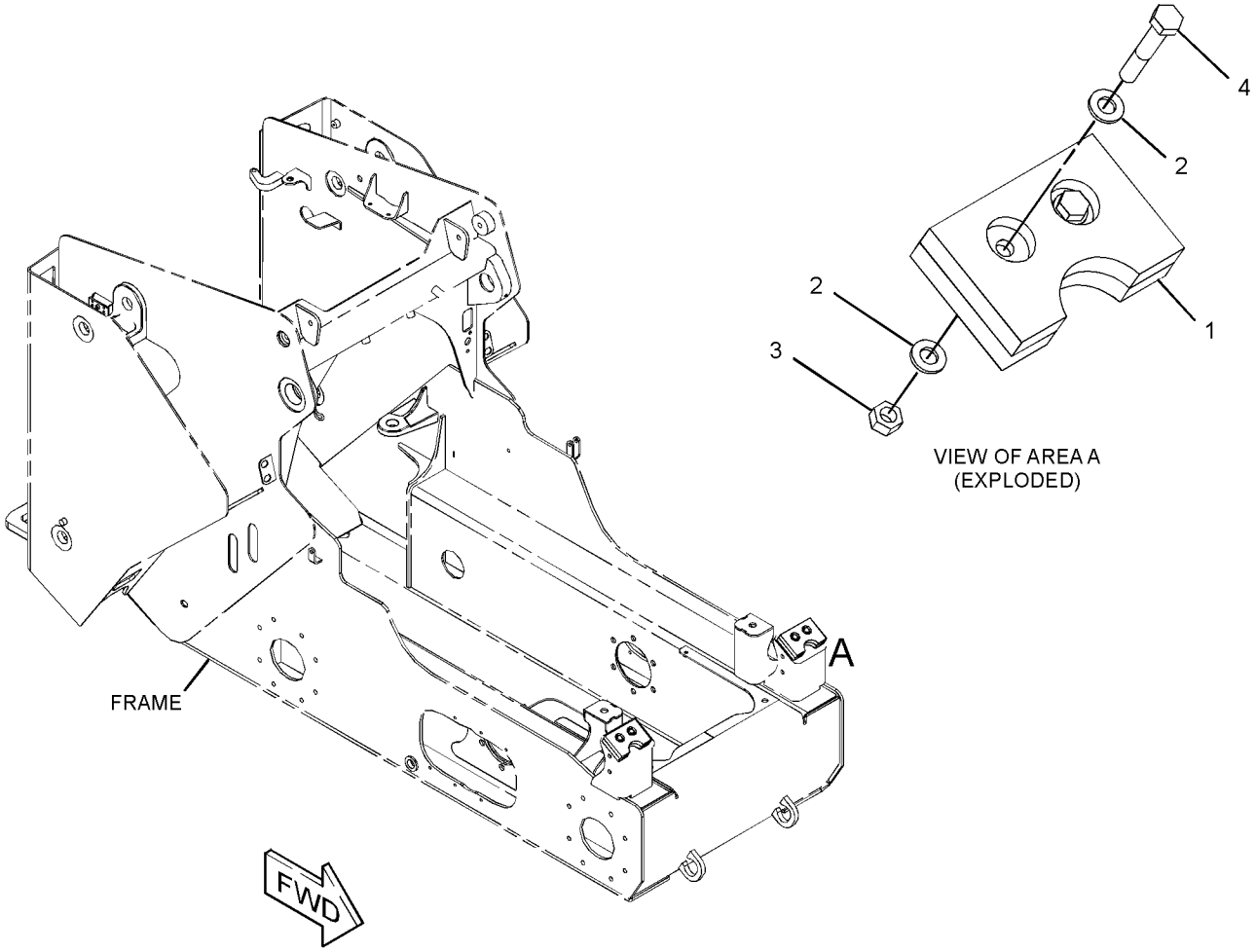

GRAPHIC #1 **<END>** g02854217

149-0686 ACCUMULATOR GP-HYDRAULIC–CHARGED

FIELD REPLACEMENT ORDER 227-8807–PAGE: 204
PART OF 345-4690, 345-4691 LINES GP-HYDROSTATIC
AN ATTACHMENT

SMCS-5077 **i03971211**

NOTE	REF NO	GRAPHIC REF	PART NUMBER	QTY	PART NAME 1 2 3 4 5 6 (PRODUCT LEVEL)	SEE PAGE
					(NO SERVICED PARTS)	

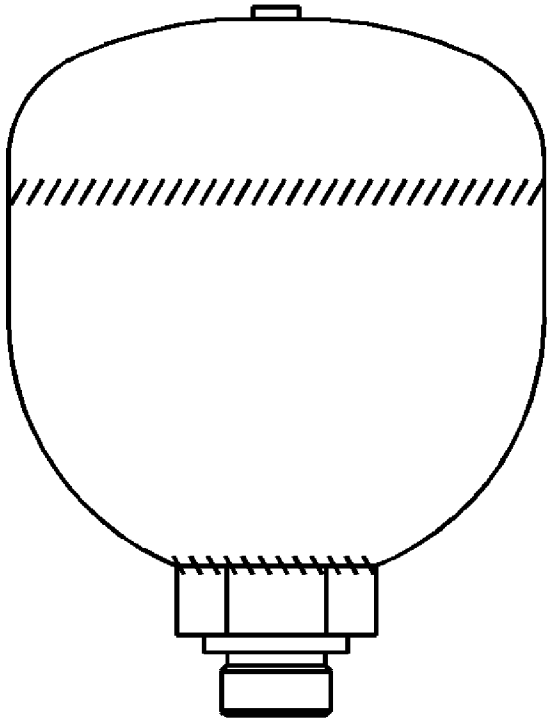

GRAPHIC #1 **<END>** g02162624

227-8807 ACCUMULATOR GP-HYDRAULIC—UNCHARGED

FIELD REPLACEMENT FOR 149-0686—PAGE: 203

SMCS-5077 **i03971213**

NOTE	REF NO	GRAPHIC REF	PART NUMBER	QTY	PART NAME 1 2 3 4 5 6 (PRODUCT LEVEL)	SEE PAGE
					(NO SERVICED PARTS)	

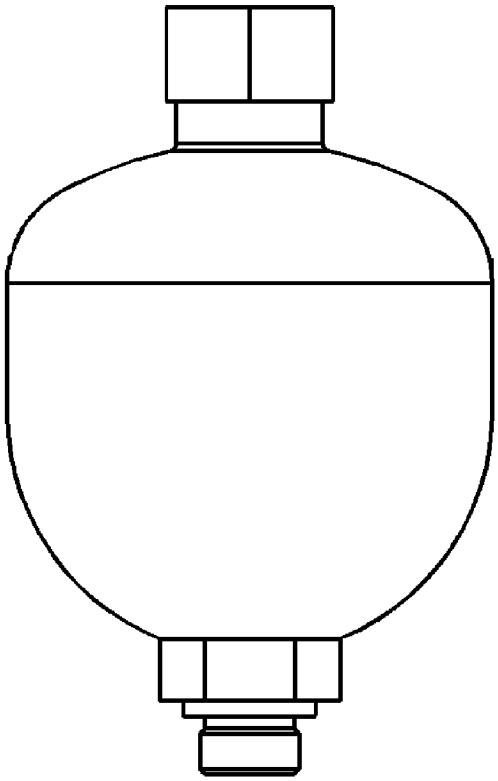

GRAPHIC #1 **<END>** g02162620

310-8460 ACCUMULATOR GP-RIDE CONTROL–CHARGED

FIELD REPLACEMENT ORDER 310-8461–PAGE: 206
PART OF 345-5740 LINES GP-HYDRAULIC
AN ATTACHMENT

SMCS-5077 **i05401045**

NOTE	REF NO	GRAPHIC REF	PART NUMBER	QTY	PART NAME 1 2 3 4 5 6 (PRODUCT LEVEL)	SEE PAGE
	1	1	**224-5132**	1	CAP (GAS VALVE)	
	2	1	**224-5152**	1	VALVE-GAS (HYDRAULIC ACCUMULATOR)	
	3	1	**3J-7354**	1	SEAL-O-RING	
	4	1	**1J-9671**	1	SEAL-O-RING	
	5	1	**241-0037**	1	FILM-WARNING (HIGH PRESSURE, READ OMM)	
	6	1	**312-4965**	1	LABEL	

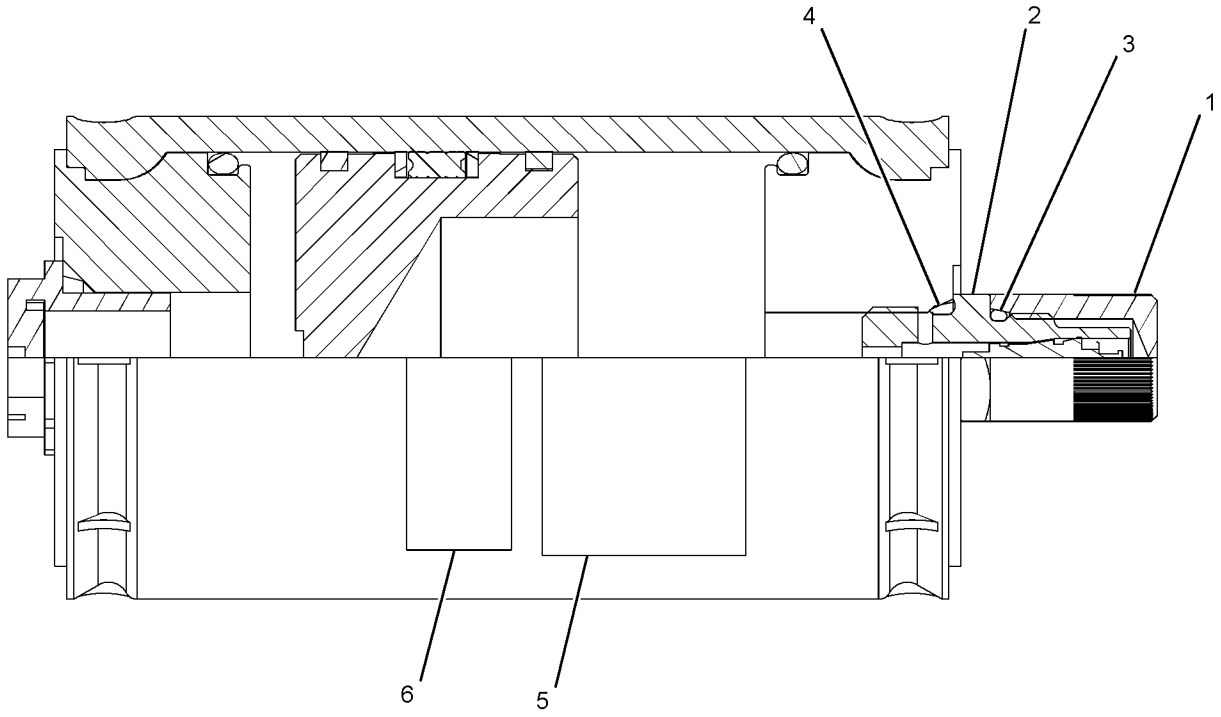

GRAPHIC #1 **<END>** g01417908

310-8461 ACCUMULATOR GP-RIDE CONTROL–UNCHARGED

FIELD REPLACEMENT FOR 310-8460–PAGE: 205

SMCS-5077 **i05401031**

NOTE	REF NO	GRAPHIC REF	PART NUMBER	QTY	PART NAME 1 2 3 4 5 6 (PRODUCT LEVEL)	SEE PAGE
	1	1	**224-5132**	1	CAP (GAS VALVE)	
	2	1	**224-5152**	1	VALVE-GAS (HYDRAULIC ACCUMULATOR)	
	3	1	**3J-7354**	1	SEAL-O-RING	
	4	1	**1J-9671**	1	SEAL-O-RING	
	5	1	**241-0037**	1	FILM-WARNING (HIGH PRESSURE, READ OMM)	

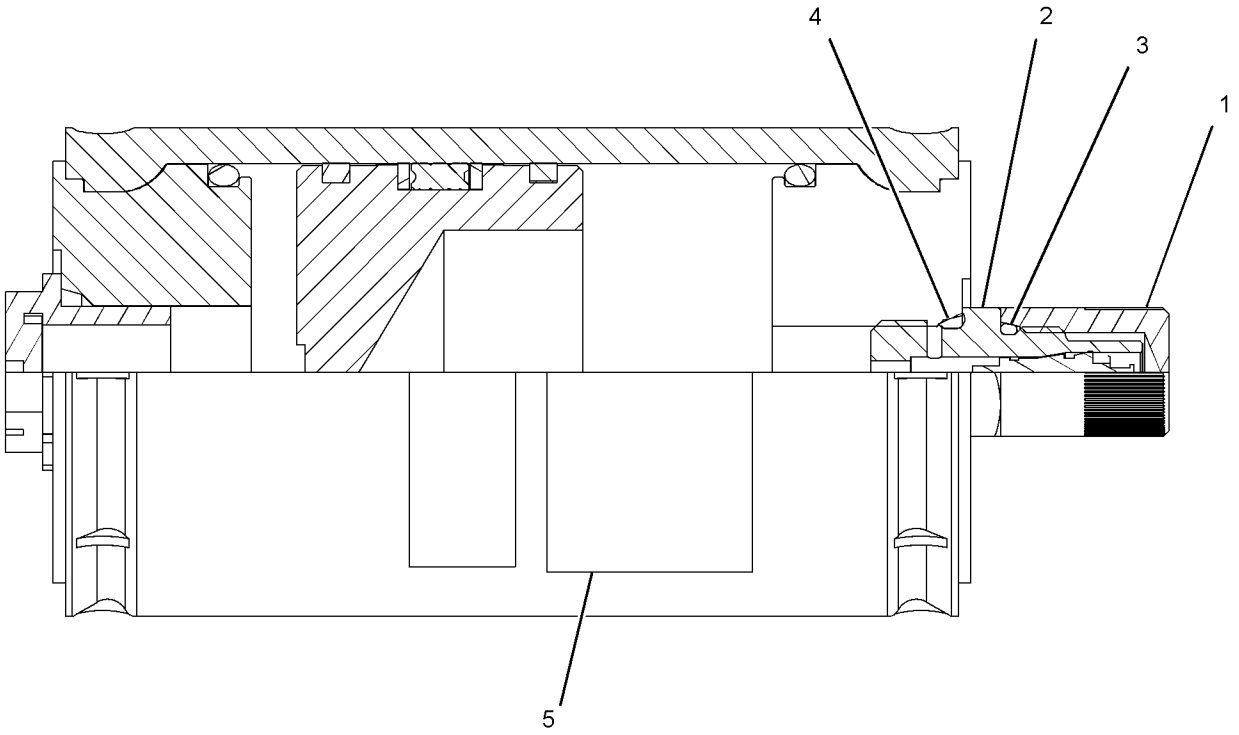

GRAPHIC #1 **<END>** g01417987

387-5383 CONTROL AR-HYDRAULIC

AN ATTACHMENT

SMCS-5057, 5063

i05378228

NOTE	PART NUMBER	QTY	PART NAME 1 2 3 4 5 6 (PRODUCT LEVEL)	SEE PAGE
Y	*345-6580*	1	CONTROL GP-ELECTROHYDRAULIC (RH, HIGH FLOW)	483
Y	*345-6583*	1	CONTROL GP-ELECTROHYDRAULIC (LH, HIGH FLOW)	486
Y	*421-4207*	1	WIRING GP-WORK TOOL	146

Y - SEPARATE ILLUSTRATION

<END>

230-5406 CYLINDER & MTG GP-ANGLE BLADE

PART OF 177-1989, 177-1990 BLADE AR

AN ATTACHMENT

SMCS-6701 **i01860855**

NOTE	REF NO	GRAPHIC REF	PART NUMBER	QTY	PART NAME 1 2 3 4 5 6 (PRODUCT LEVEL)	SEE PAGE
	1	1	**064-3843**	1	RING-SNAP	
	2	1	**210-0855**	1	PIN AS	
	3	1	**213-3943**	1	BUSHING	
Y	4	1	**225-9521**	1	CYLINDER GP-HYDRAULIC (ANGLE BLADE)	214
	5	1	**3B-8489**	1	FITTING-GREASE	
	6	1	**7X-7729**	1	WASHER (11X25X3-MM THK)	
M	7	1	**8T-4137**	1	BOLT (M10X1.5X20-MM)	

M - METRIC PART
Y - SEPARATE ILLUSTRATION

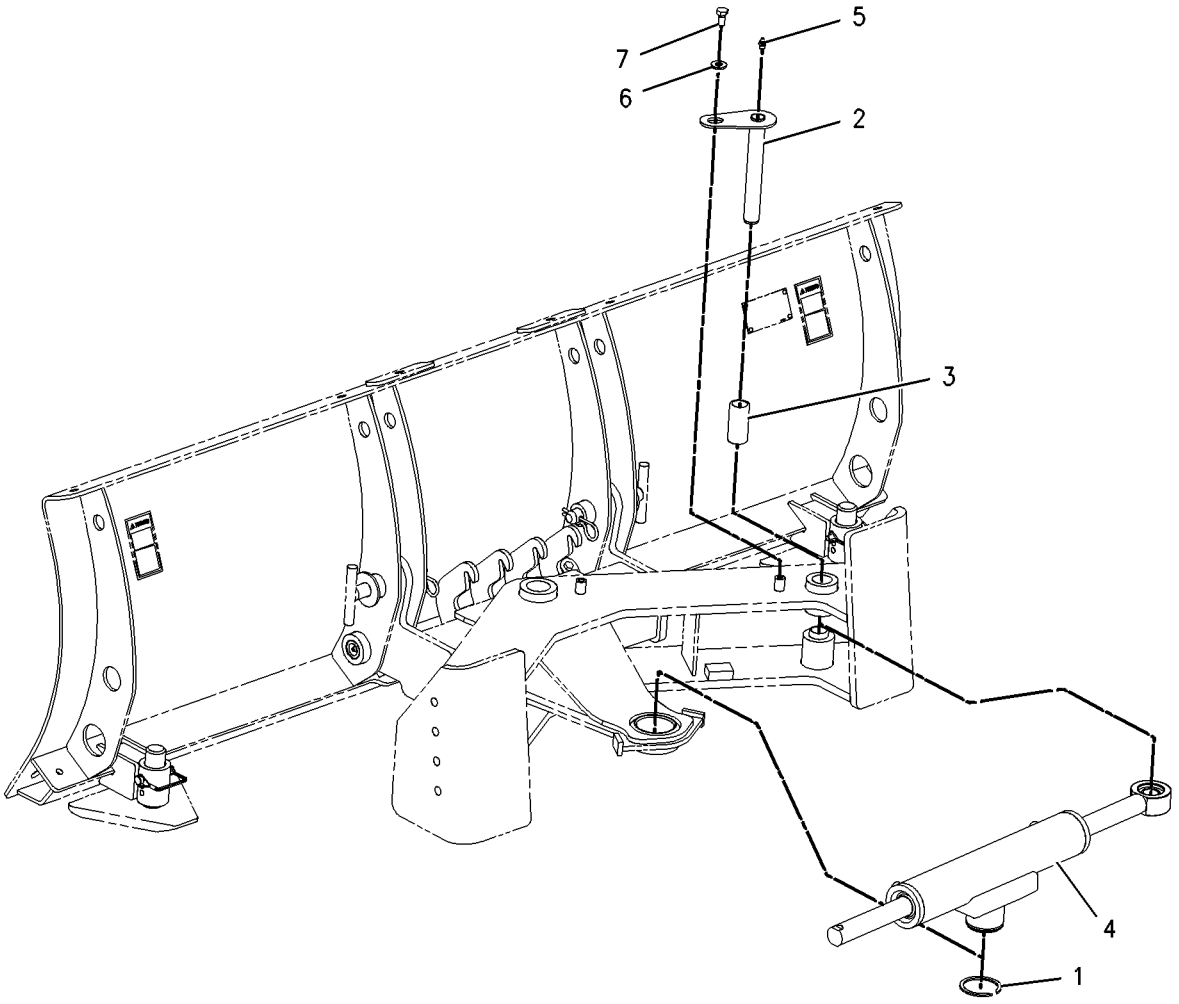

GRAPHIC #1 **<END>** g00978845

231-5274 CYLINDER & MTG GP-ANGLE BLADE

PART OF 424-0450, 424-0451 BLADE AR
AN ATTACHMENT

SMCS-6701 **i04358472**

NOTE	REF NO	GRAPHIC REF	PART NUMBER	QTY	PART NAME 1 2 3 4 5 6 (PRODUCT LEVEL)	SEE PAGE
CY	1	1	**274-9930**	2	CYLINDER GP-HYDRAULIC (ANGLE BLADE)	215
CY	2	1	**274-9931**	1	CYLINDER GP-HYDRAULIC (TILT)	216
	3	1	**231-5266**	6	PIN AS	
	4	1	**238-0999**	12	SPACER (25.4X28.4X13-MM THK)	
M	5	1	**8T-4200**	6	BOLT (M8X1.25X16-MM)	
	6	1	**6V-8397**	6	SEAL-O-RING	
	7	1	**8T-4224**	6	WASHER-HARD (8.8X16X2-MM THK)	
	8	1	**244-1370**	6	SPACER (8.2X13X6-MM THK)	

C - CHANGE FROM PREVIOUS TYPE
M - METRIC PART
Y - SEPARATE ILLUSTRATION

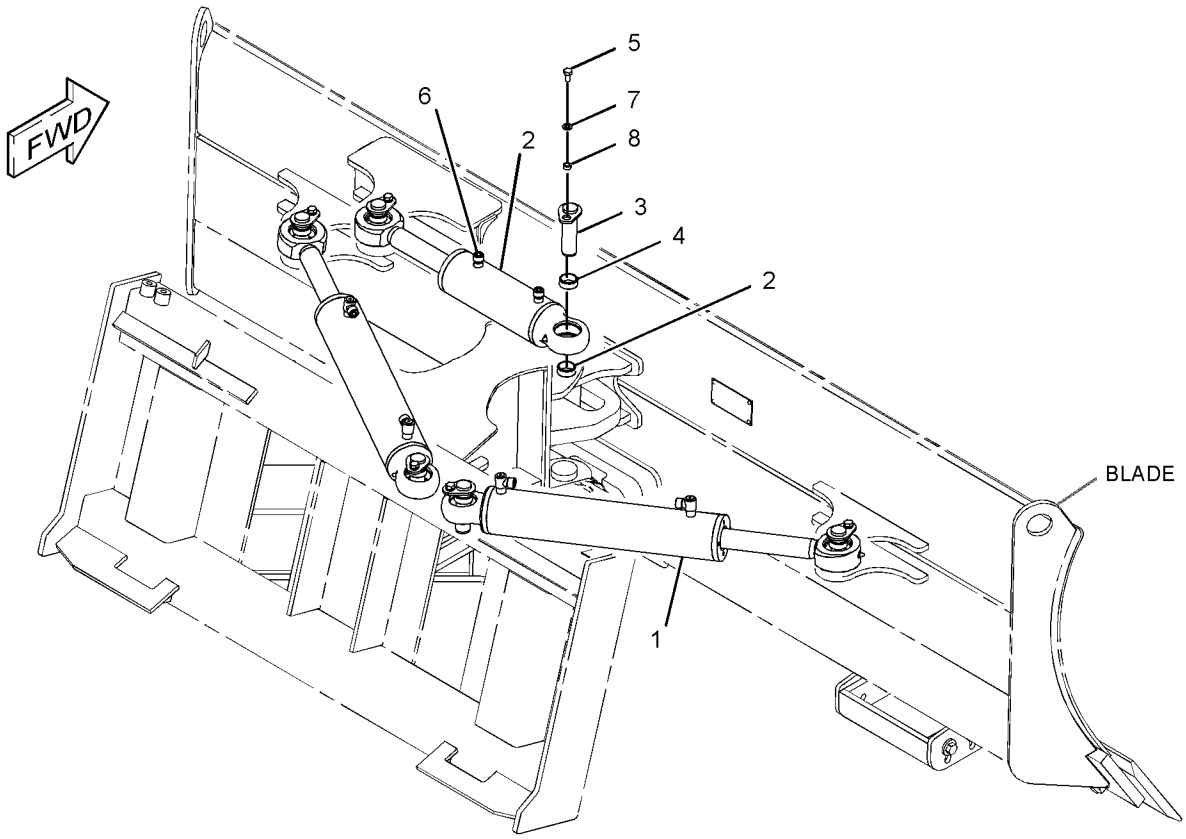

GRAPHIC #1 **<END>** g01270108

345-4899 CYLINDER & MTG GP-LIFT ARM

PART OF 388-8180 CHASSIS AR

SMCS-5102, 5104, 6118, 6119 **i05380602**

NOTE	REF NO	GRAPHIC REF	PART NUMBER	QTY	PART NAME 1 2 3 4 5 6 (PRODUCT LEVEL)	SEE PAGE
	1	1	**142-8832**	1	PIN AS	
	2	1	**3S-8536**	2	SPACER (0.406X0.656X0.38-IN THK)	
	3	1	**142-9091**	2	PIN AS	
	4	1	**142-9142**	2	SPACER (39X57X18-MM THK)	
	5	1	**258-3451**	2	PIN	
	6	1	**345-6511**	2	PIN AS	
	7	1	**388-7776**	2	PIN AS	
	8	1	**388-7780**	2	PIN AS	
	9	1	**388-8291**	2	PIN AS	
	10	1	**422-4667**	1	SUPPORT AS	
		1	**096-4837**	1	PIN-SPRING	
	11	1	**1H-8134**	4	RING-RETAINING (EXTERNAL)	
	12	1	**3B-8489**	6	FITTING-GREASE	
	13	1	**5B-0651**	2	FITTING-STRAIGHT	
	14	1	**5H-9743**	1	GROMMET	
	15	1	**6N-8863**	6	WASHER (10.2X32X2.5-MM THK)	
	16	1	**7X-7729**	4	WASHER (11X25X3-MM THK)	
M	17	1	**8T-4136**	2	BOLT (M10X1.5X25-MM)	
M	18	1	**8T-4191**	8	BOLT (M10X1.5X16-MM)	
	19	1	**8T-5439**	4	WASHER-HARD (21.5X45X6-MM THK)	

M - METRIC PART

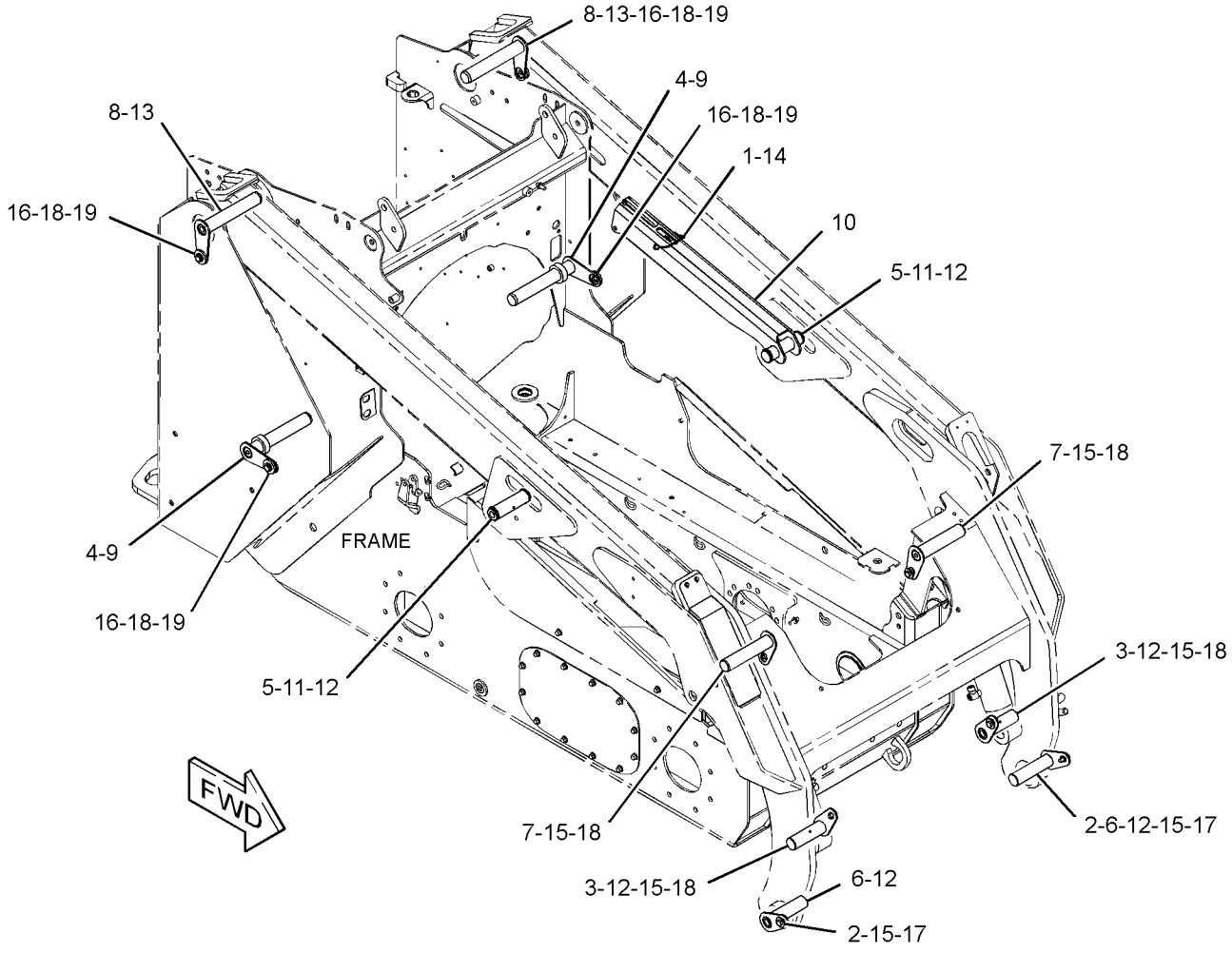

GRAPHIC #1 **<END>** g03407956

293-6264 CYLINDER GP-BUCKET

50-MM (2-IN) BORE X 225-MM (8.9-IN) STROKE
PART OF 286-9300, 286-9301 BUCKET AR-GRAPPLE
AN ATTACHMENT

SMCS-5498 **i04038470**

NOTE	REF NO	GRAPHIC REF	PART NUMBER	QTY	PART NAME 1 2 3 4 5 6 (PRODUCT LEVEL)	SEE PAGE
	1	1	**6B-6682**	1	NUT-FULL (3/4-16-THD)	
	2	1	**3B-8489**	1	FITTING-GREASE	
	3	1	**7J-0204**	2	SEAL-O-RING	
	4	1	**9S-8007**	2	PLUG	
					AVAILABLE REPAIR KIT(S):	
			262-0941	1	KIT-SEAL (BUCKET CYLINDER)	
					(INCLUDES PISTON SEAL, PISTON WEAR RING, ROD O-RING, O-RING, BACKUP RING, DUST RING, WIPER SEAL	
					& ROD SEAL)	

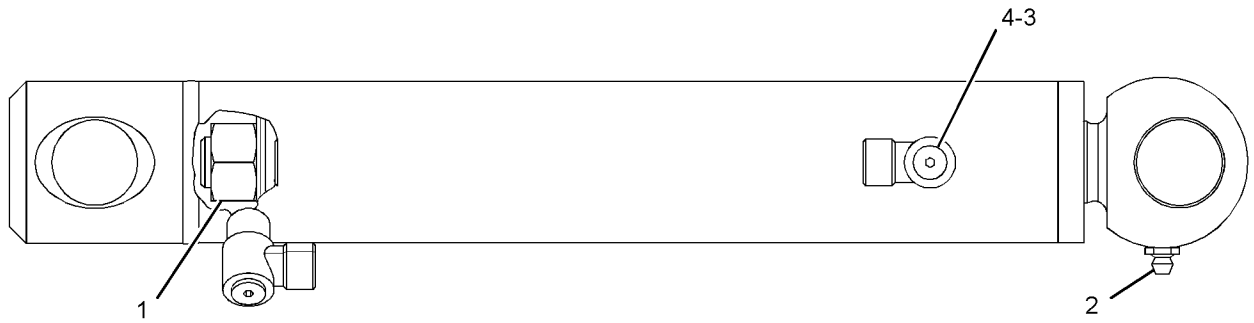

GRAPHIC #1 **<END>** g01373044

255-0943 CYLINDER GP-GRAPPLE–UTILITY

40-MM (1.6-IN) BORE X 200-MM (7.9-IN) STROKE
PART OF 285-6116 GRAPPLE & CYLINDER GP-UTILITY
AN ATTACHMENT

SMCS-5457 **i04362956**

NOTE	REF NO	GRAPHIC REF	PART NUMBER	QTY	PART NAME 1 2 3 4 5 6 (PRODUCT LEVEL)	SEE PAGE
	1	1	**254-9097**	1	BUSHING	
	2	1	**3B-8489**	2	FITTING-GREASE	
	3	1	**7J-0204**	2	SEAL-O-RING	
	4	1	**9S-8007**	2	PLUG	
	5	1	**2K-4821**	1	LOCKNUT (5/8-18-THD)	
					AVAILABLE REPAIR KIT(S):	
			286-3591	1	KIT-SEAL (HYDRAULIC CYLINDER)	
					(INCLUDES SEAL, O-RING SEALS, U-CUP SEAL, WIPER SEAL & BACKUP RING)	

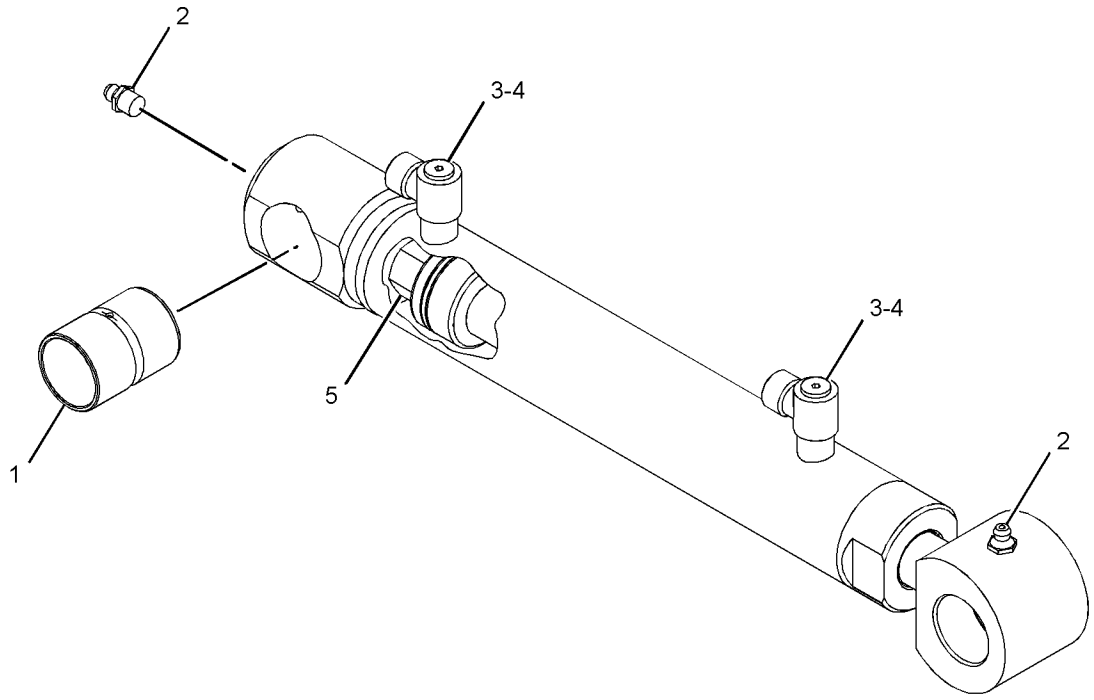

GRAPHIC #1 **<END>** g01439380

278-1975 CYLINDER GP-GRAPPLE—INDUSTRIAL

60-MM (2.4-IN) BORE X 200-MM (7.9-IN) STROKE
PART OF 157-7223, 157-7224, 157-7225, 217-6229 BUCKET AR-GRAPPLE, 279-5350, 279-5360 FORK AR-GRAPPLE
AN ATTACHMENT

SMCS-5457 **i04038469**

NOTE	REF NO	GRAPHIC REF	PART NUMBER	QTY	PART NAME 1 2 3 4 5 6 (PRODUCT LEVEL)	SEE PAGE
	1	1	**7D-8508**	1	NUT-FULL (7/8-14-THD)	
	2	1	**254-9097**	1	BUSHING	
	3	1	**255-0942**	1	BUSHING	
	4	1	**3B-8489**	1	FITTING-GREASE	
	5	1	**7J-0204**	2	SEAL-O-RING	
	6	1	**9S-8007**	2	PLUG	
					AVAILABLE REPAIR KIT(S):	
			278-1970	1	KIT-SEAL (HYDRAULIC CYLINDER)	
					(INCLUDES O-RINGS, WEAR RINGS, BACKUP RING, U-CUP SEAL & SEAL)	

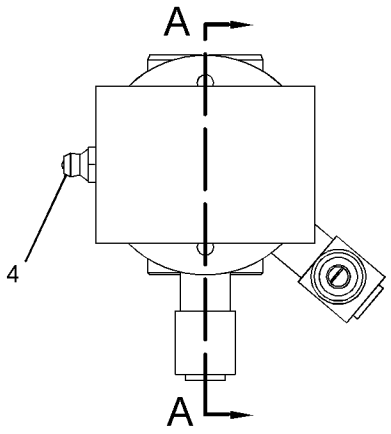

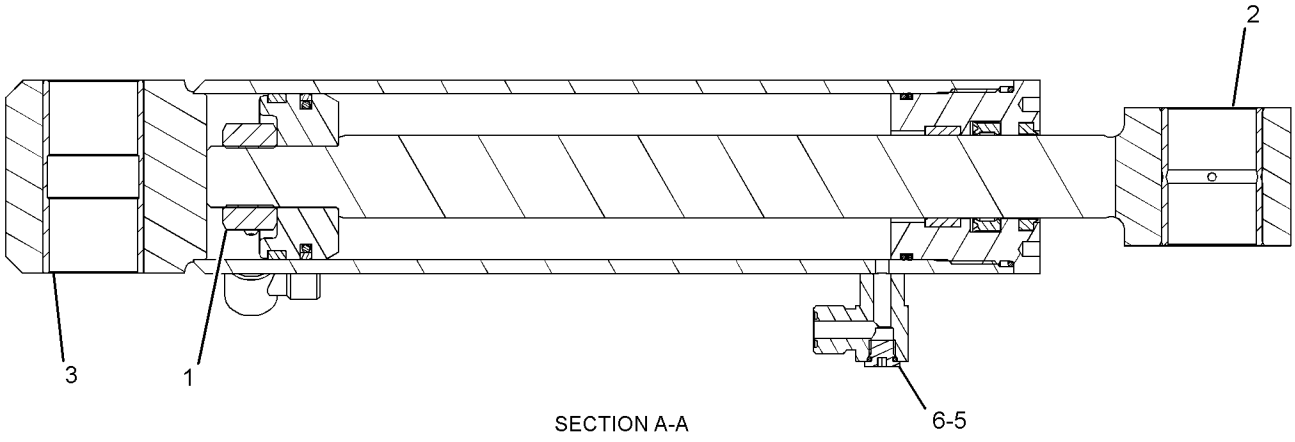

SECTION A-A

GRAPHIC #1 **<END>** g01280909

225-9521 CYLINDER GP-HYDRAULIC–ANGLE BLADE

63-MM (2.5-IN) BORE X 300-MM (11.8-IN) STROKE
PART OF 230-5406 CYLINDER & MTG GP-ANGLE BLADE
AN ATTACHMENT

SMCS-5362, 7562

i04038465

NOTE	REF NO	GRAPHIC REF	PART NUMBER	QTY	PART NAME 1 2 3 4 5 6 (PRODUCT LEVEL)	SEE PAGE
	1	1	**214-5555**	1	ROD END AS	
					AVAILABLE REPAIR KIT(S):	
			177-1958	1	KIT-SEAL	
					(INCLUDES O-RINGS, SEALS, BACKUP RINGS, PISTON SEAL, PISTON GUIDE RING, ROD GUIDE RING & WIPER RINGS)	

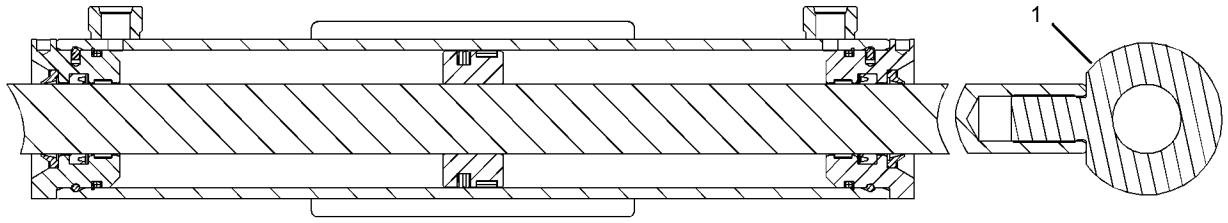

GRAPHIC #1

<END>

g01282929

274-9930 CYLINDER GP-HYDRAULIC–ANGLE BLADE

70-MM (2.8-IN) BORE X 314-MM (12.4-IN) STROKE
PART OF 231-5274 CYLINDER & MTG GP-ANGLE BLADE
AN ATTACHMENT

SMCS-5362, 7562

i03590840

NOTE	REF NO	GRAPHIC REF	PART NUMBER	QTY	PART NAME 1 2 3 4 5 6 (PRODUCT LEVEL)	SEE PAGE
	1	1	**7D-8508**	1	NUT-FULL (7/8-14-THD)	
	2	1	**8Q-6027**	2	BEARING-SPHERICAL	
	3	1	**027-1287**	2	FITTING-GREASE	
	4	1	**278-4524**	1	ROD AS	
	5	1	**278-4875**	2	RING-RETAINING	
	6	1	**7J-0204**	2	SEAL-O-RING	
	7	1	**9S-8007**	2	PLUG	
					AVAILABLE REPAIR KIT(S):	
			266-6140	1	KIT-SEAL (SWING CYLINDER)	
					(INCLUDES SEAL-O-RINGS, WEAR RINGS, BACKUP RING, SEAL-U CUP, SEAL & SETSCREW)	

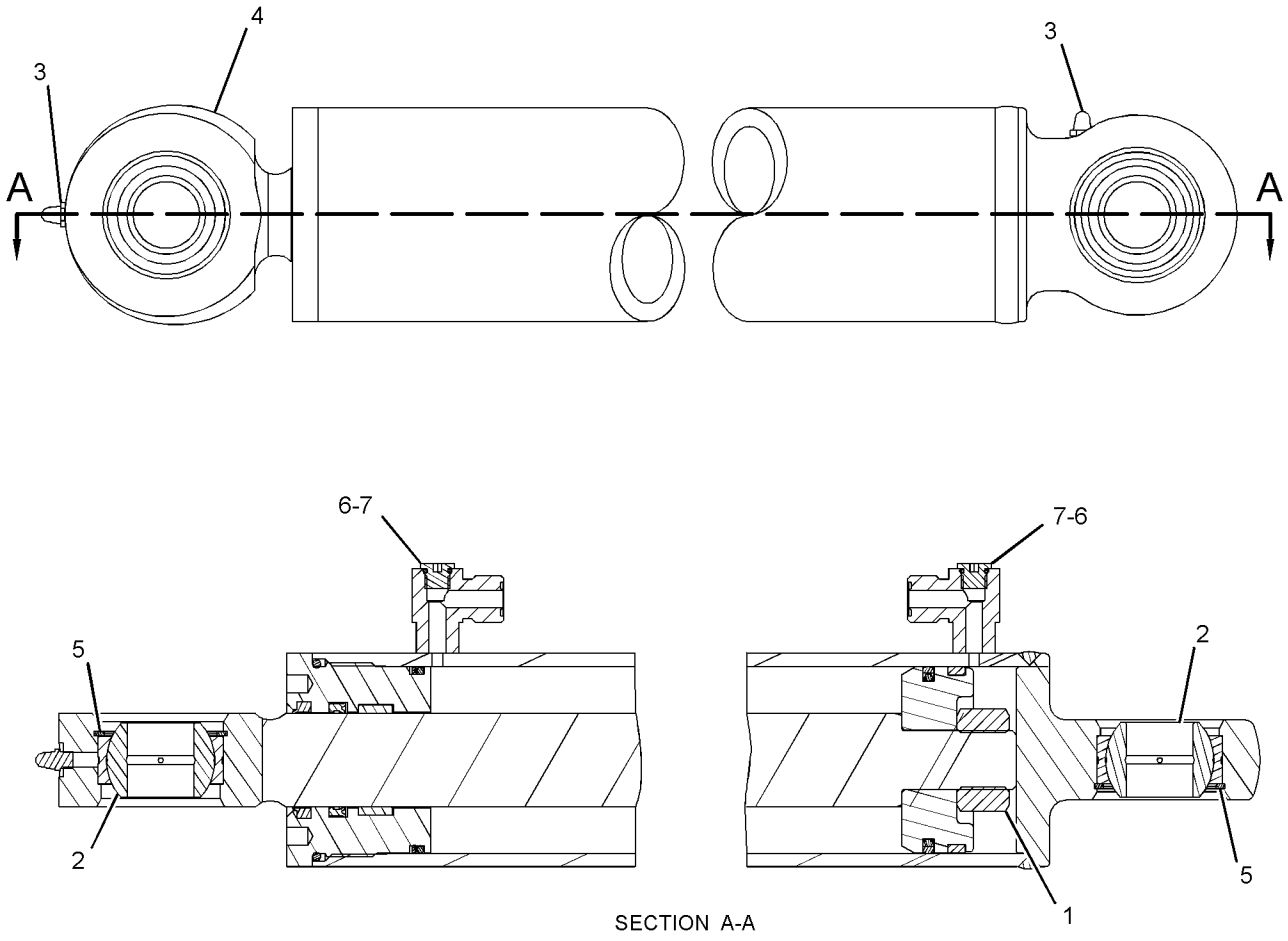

SECTION A-A

GRAPHIC #1

<END>

g01305293

274-9931 CYLINDER GP-HYDRAULIC–TILT

70-MM (2.8-IN) BORE X 120-MM (4.7-IN) STROKE
PART OF 231-5274 CYLINDER & MTG GP-ANGLE BLADE
AN ATTACHMENT

SMCS-5362, 7562

i03690346

NOTE	REF NO	GRAPHIC REF	PART NUMBER	QTY	PART NAME 1 2 3 4 5 6 (PRODUCT LEVEL)	SEE PAGE
	1	1	**7D-8508**	1	NUT-FULL (7/8-14-THD)	
	2	1	**8Q-6027**	2	BEARING-SPHERICAL	
	3	1	**027-1287**	2	FITTING-GREASE	
	4	1	**278-4525**	1	ROD AS	
	5	1	**278-4875**	2	RING-RETAINING	
					AVAILABLE REPAIR KIT(S):	
			266-6140	1	KIT-SEAL (SWING CYLINDER)	
					(INCLUDES SEAL-O-RINGS, WEAR RINGS, BACKUP RING, SEAL-U CUP, SEAL & SETSCREW)	

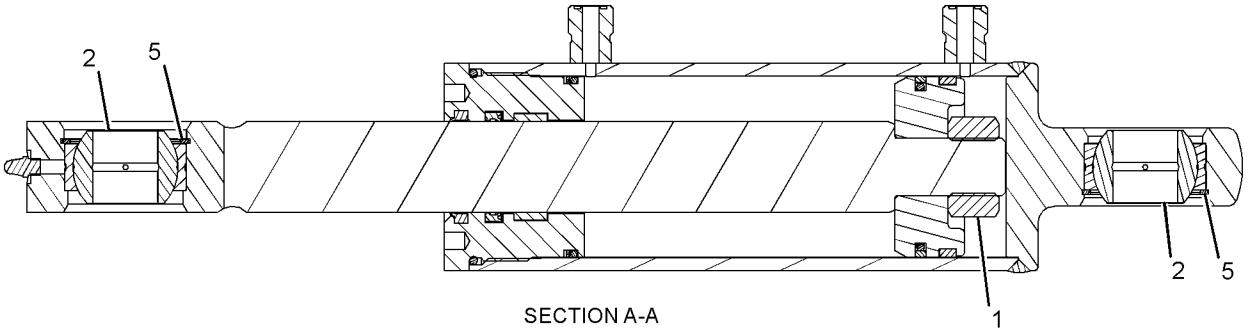

SECTION A-A

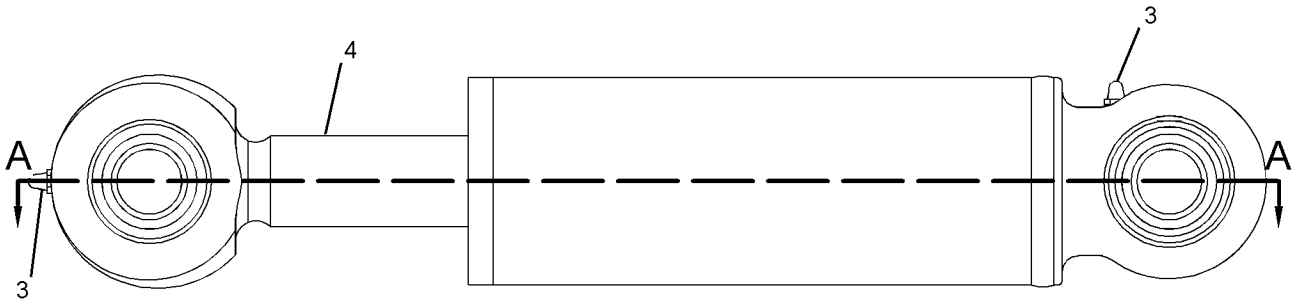

GRAPHIC #1

<END>

g01270194

278-1969 CYLINDER GP-HYDRAULIC—BUCKET

60-MM (2.4-IN) BORE X 200-MM (7.9-IN) STROKE
PART OF 423-4291, 426-6492, 426-6537, 426-6549, 426-6559, 426-6933, 426-6940, 426-6947, 426-6970, 426-6992 BUCKET AR-MULTIPURPOSE
AN ATTACHMENT

SMCS-5362, 7562

i04038468

NOTE	REF NO	GRAPHIC REF	PART NUMBER	QTY	PART NAME 1 2 3 4 5 6 (PRODUCT LEVEL)	SEE PAGE
	1	1	**7D-8508**	1	NUT-FULL (7/8-14-THD)	
	2	1	**254-9097**	1	BUSHING	
	3	1	**3B-8489**	1	FITTING-GREASE	
					AVAILABLE REPAIR KIT(S):	
			278-1970	1	KIT-SEAL (HYDRAULIC CYLINDER)	
					(INCLUDES O-RINGS, WEAR RINGS, BACKUP RING, U-CUP SEAL, WIPER SEAL & SEAL)	

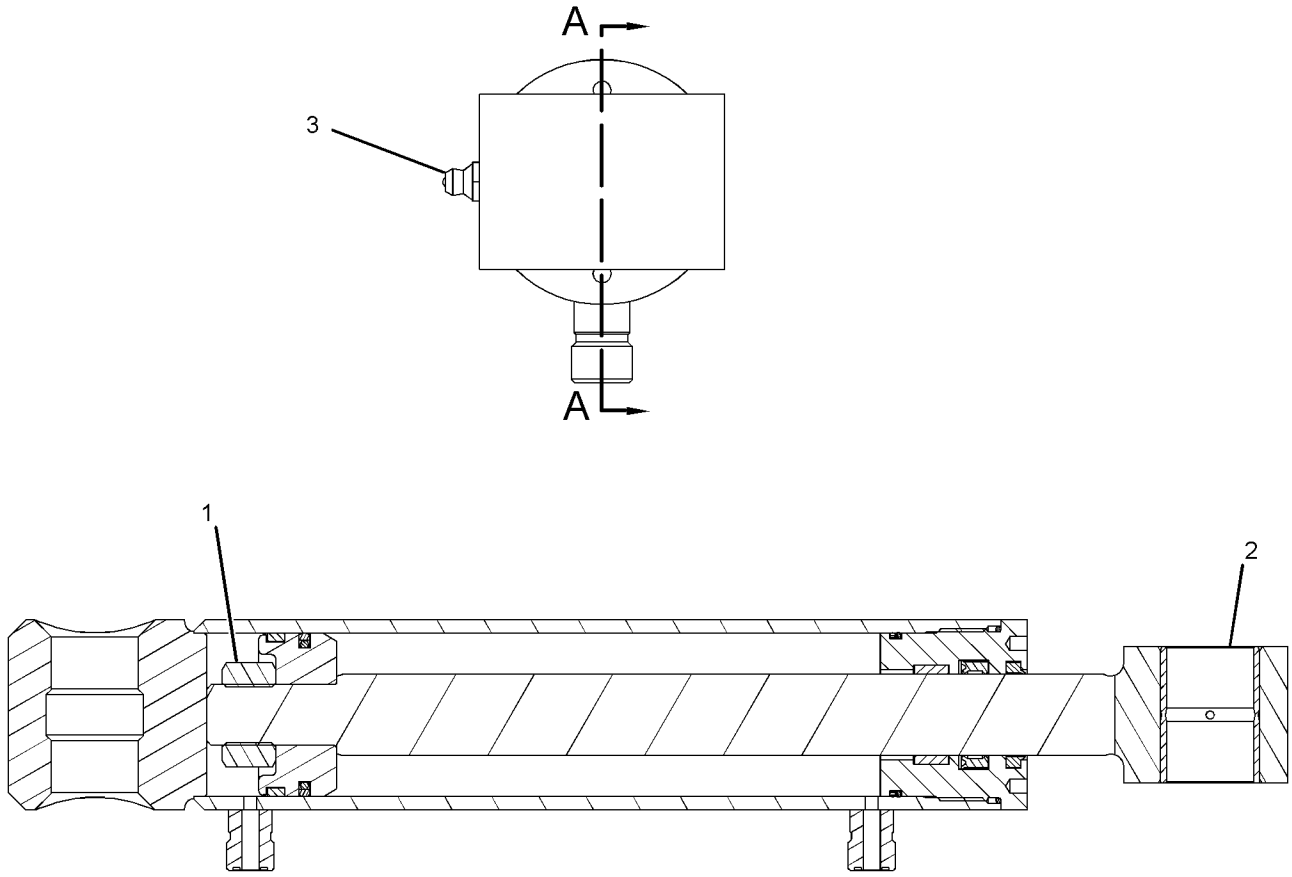

SECTION A-A

GRAPHIC #1

<END>

g01281180

378-0891 CYLINDER GP-LIFT–RH

55-MM (2.2-IN) BORE X 741.7-MM (29.2-IN) STROKE

PART OF 375-0712 CYLINDER GP-LIFT ARM

SMCS-5102 **i05166081**

NOTE	REF NO	GRAPHIC REF	PART NUMBER	QTY	PART NAME 1 2 3 4 5 6 (PRODUCT LEVEL)	SEE PAGE
	1	1	**144-9483**	1	SEAL-PISTON	
	2	1	**144-9493**	1	SEAL-U-CUP	
	3	1	**297-4130**	1	RING-WEAR	
	4	1	**378-0892**	1	CYLINDER AS	
	5	1	**378-0895**	1	ROD AS	
	6	1	**378-0897**	1	HEAD	
	7	1	**378-0898**	1	PISTON	
	8	1	**390-9099**	1	RING-BACKUP	
	9	1	**144-9484**	1	RING-WEAR	
	10	1	**144-9492**	1	SEAL-LIP TYPE	
	11	1	*162-0177*	2	PLUG AS	
					(EACH INCLUDES)	
		1	**3J-1907**	1	SEAL-O-RING	
		1	**9S-8004**	1	PLUG-O-RING	
	12	1	**3D-7805**	1	SEAL-O-RING	
	13	1	**4J-0524**	1	SEAL-O-RING	
	14	1	**6V-8398**	2	SEAL-O-RING	
M	15	1	**9X-6611**	1	SETSCREW-SOCKET (M10X1.5X16-MM)	

M - METRIC PART

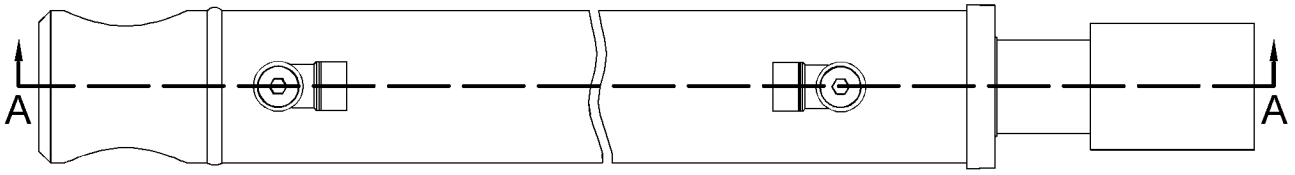

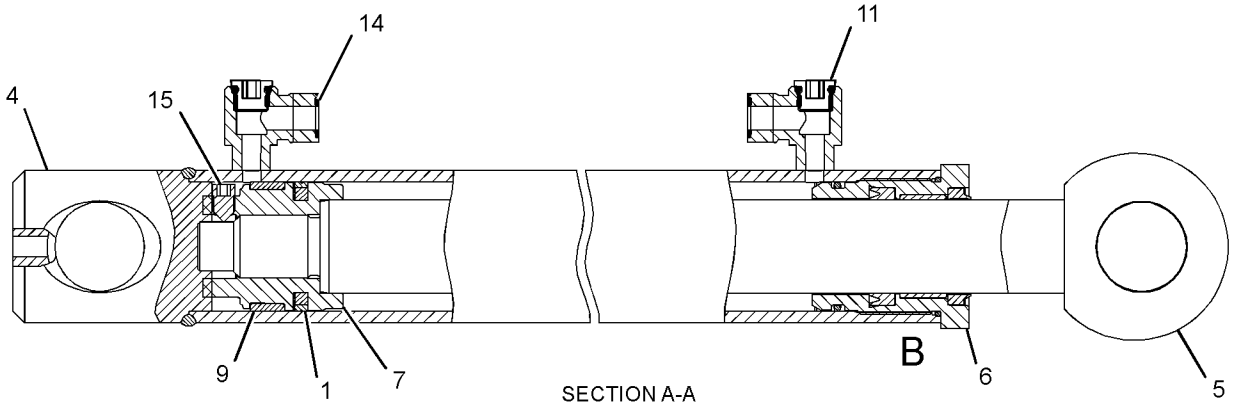

SECTION A-A

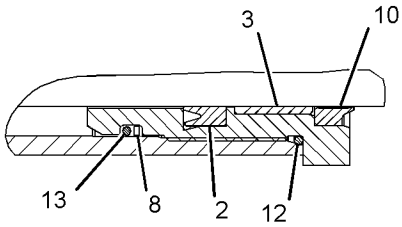

VIEW OF AREA B

GRAPHIC #1 **<END>** g03324762

375-0712 CYLINDER GP-LIFT ARM

PART OF 388-8180 CHASSIS AR

SMCS-5102, 5104 **i05166082**

NOTE	REF NO	GRAPHIC REF	PART NUMBER	QTY	PART NAME 1 2 3 4 5 6 (PRODUCT LEVEL)	SEE PAGE
Y	1	1	**378-0891**	2	CYLINDER GP-LIFT (RH)	218
Y	2	1	**378-7963**	1	CYLINDER GP-TILT (RH)	220
Y	3	1	**378-7964**	1	CYLINDER GP-TILT (LH)	222

Y - SEPARATE ILLUSTRATION

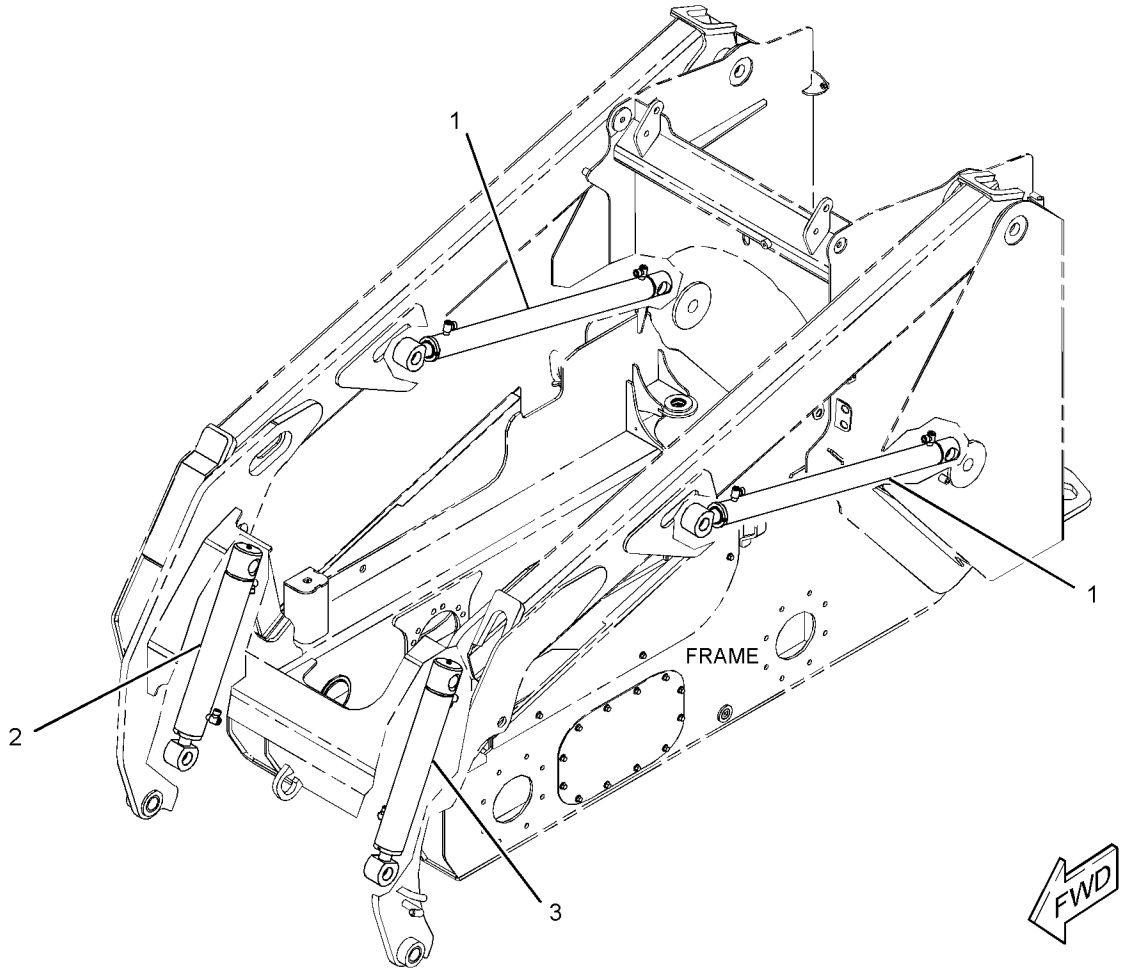

GRAPHIC #1 **<END>** g03324673

378-7963 CYLINDER GP-TILT–RH

70-MM (2.8-IN) BORE X 354-MM (13.9-IN) STROKE
PART OF 375-0712 CYLINDER GP-LIFT ARM

SMCS-5104 **i05380987**

NOTE	REF NO	GRAPHIC REF	PART NUMBER	QTY	PART NAME 1 2 3 4 5 6 (PRODUCT LEVEL)	SEE PAGE
	1	1	**140-2392**	1	SEAL-LIP TYPE	
	2	1	**161-7145**	1	SEAL-PISTON	
	3	1	*376-3916*	1	CYLINDER AS	
		1	**379-4975**	1	CAP	
	4	1	**376-3921**	1	ROD AS	
	5	1	**376-3927**	1	HEAD	
	6	1	**376-3931**	1	PISTON	
	7	1	**107-4057**	1	SEAL-O-RING	
	8	1	**151-2566**	1	RING-WEAR	
	9	1	*162-0177*	2	PLUG AS	
					(EACH INCLUDES)	
		1	**3J-1907**	1	SEAL-O-RING	
		1	**9S-8004**	1	PLUG-O-RING	
	10	1	**296-5140**	1	RING-WEAR	
	11	1	**299-1379**	1	SEAL-U-CUP	
	12	1	**329-2589**	1	RING-BACKUP	
	13	1	**3B-8489**	1	FITTING-GREASE	
	14	1	**3P-0439**	1	SEAL-O-RING	
	15	1	**6V-8398**	2	SEAL-O-RING	
M	16	1	**9X-6611**	1	SETSCREW-SOCKET (M10X1.5X16-MM)	
F			**3K-2151**	1	BUSHING	

F - NOT SHOWN
M - METRIC PART

378-7963 **CYLINDER GP-TILT (*contd.*)** **i05380987**

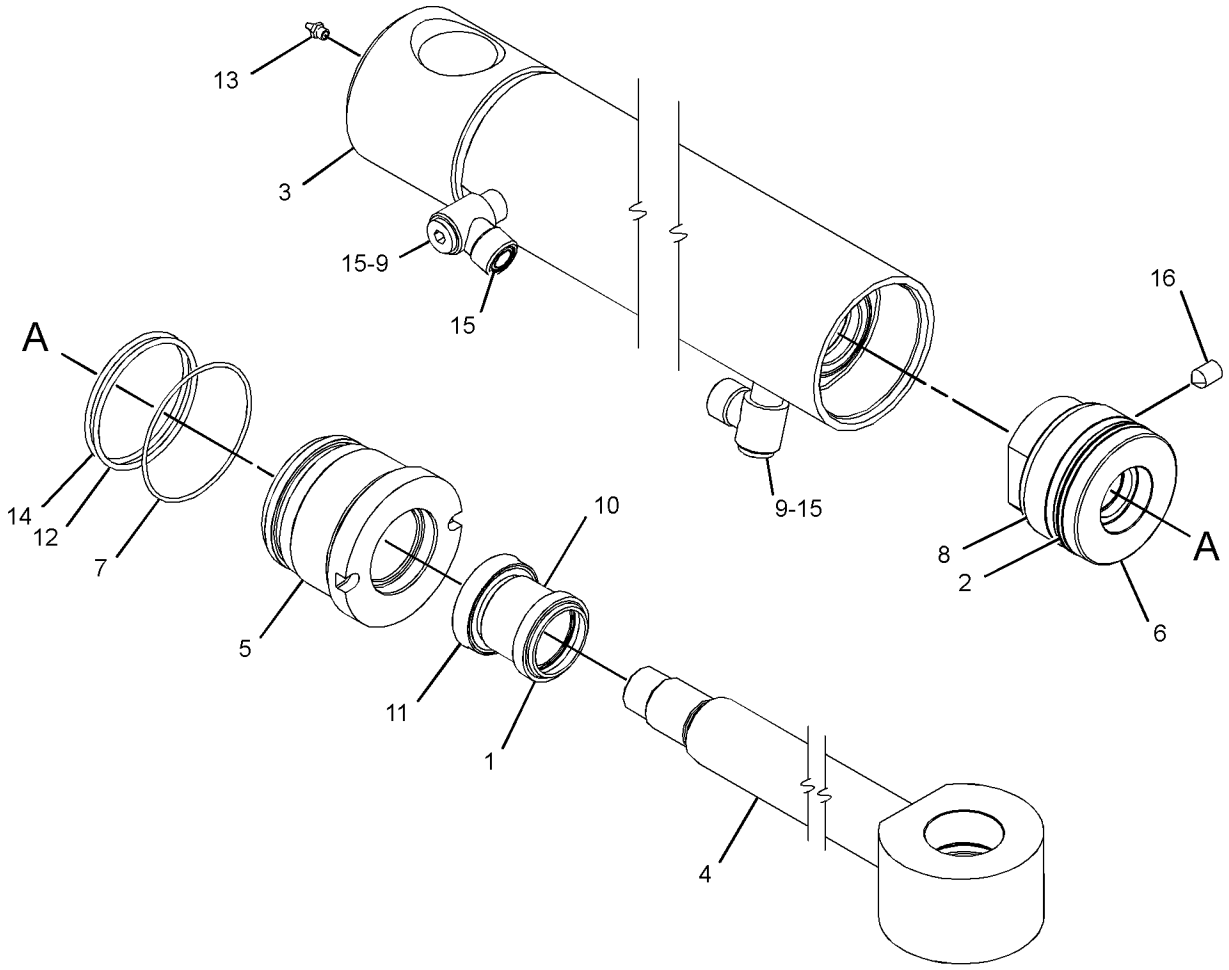

GRAPHIC #1 **<END>** g03317626

378-7964 CYLINDER GP-TILT–LH

70-MM (2.8-IN) BORE X 354-MM (13.9-IN) STROKE
PART OF 375-0712 CYLINDER GP-LIFT ARM

SMCS-5104 **i05380896**

NOTE	REF NO	GRAPHIC REF	PART NUMBER	QTY	PART NAME 1 2 3 4 5 6 (PRODUCT LEVEL)	SEE PAGE
	1	1	**3B-8489**	1	FITTING-GREASE	
	2	1	**140-2392**	1	SEAL-LIP TYPE	
	3	1	**161-7145**	1	SEAL-PISTON	
	4	1	**296-5140**	1	RING-WEAR	
	5	1	**376-3921**	1	ROD AS	
	6	1	**376-3927**	1	HEAD	
	7	1	**376-3931**	1	PISTON	
	8	1	*379-3396*	1	CYLINDER AS	
		1	**379-4975**	1	CAP	
	9	1	**107-4057**	1	SEAL-O-RING	
	10	1	**151-2566**	1	RING-WEAR	
	11	1	*162-0177*	2	PLUG AS	
					(EACH INCLUDES)	
		1	**3J-1907**	1	SEAL-O-RING	
		1	**9S-8004**	1	PLUG-O-RING	
	12	1	**299-1379**	1	SEAL-U-CUP	
	13	1	**329-2589**	1	RING-BACKUP	
	14	1	**3P-0439**	1	SEAL-O-RING	
	15	1	**6V-8398**	2	SEAL-O-RING	
M	16	1	**9X-6611**	1	SETSCREW-SOCKET (M10X1.5X16-MM)	
F			**3K-2151**	1	BUSHING	

F - NOT SHOWN
M - METRIC PART

378-7964 **CYLINDER GP-TILT (*contd.*)** **i05380896**

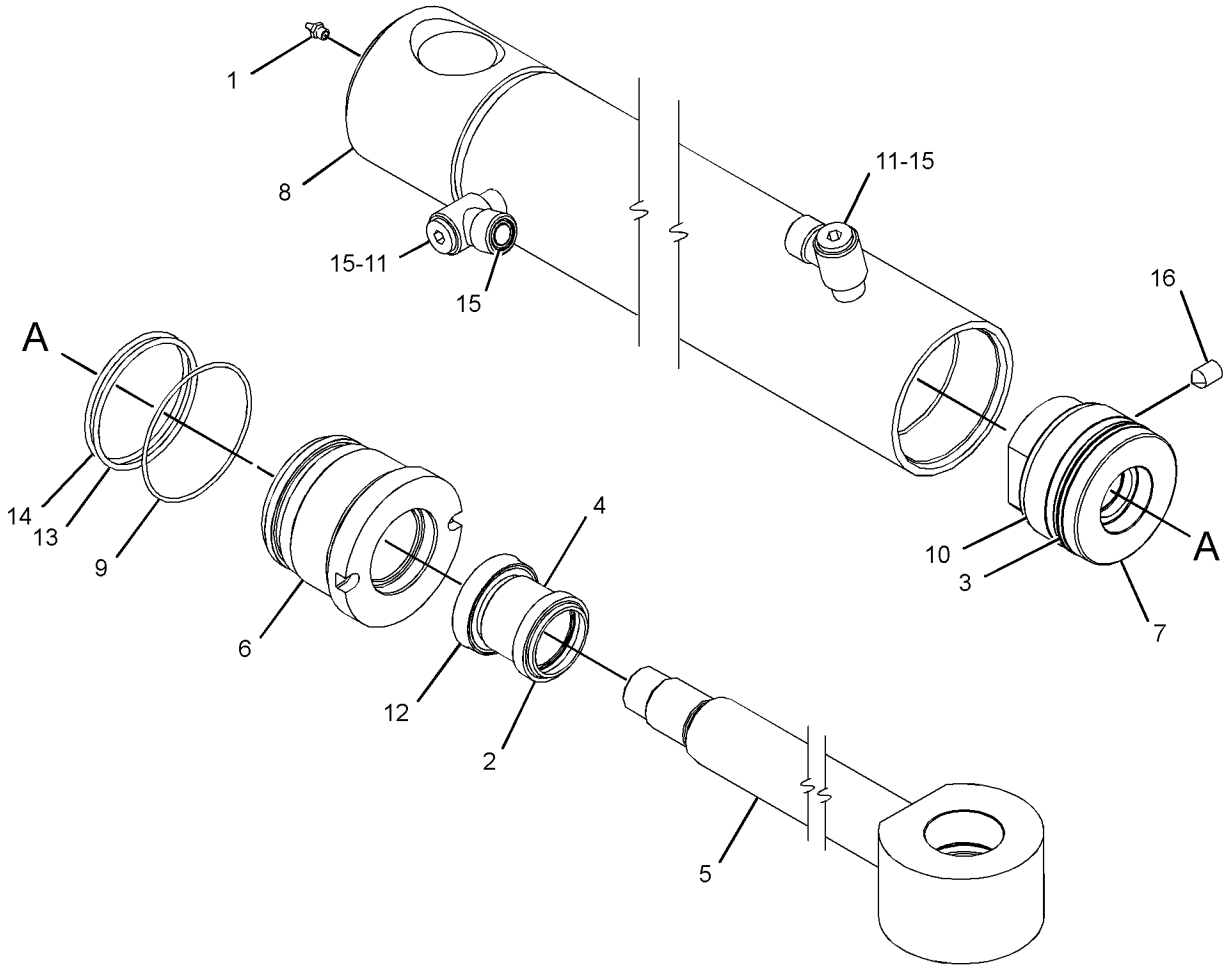

GRAPHIC #1 **<END>** g03317576

345-5925 HYDRAULIC AR

PART OF 388-8237, 388-8238 COMMON AR

SMCS-5050 **i05373386**

NOTE	PART NUMBER	QTY	PART NAME 1 2 3 4 5 6 (PRODUCT LEVEL)	SEE PAGE
Y	*345-5741*	1	LINES GP-OIL COOLER	39
Y	*358-4975*	1	PUMP & MTG GP-HYDROSTATIC	167
Y	*345-4980*	1	TANK & MTG GP-HYDRAULIC	287
Y - SEPARATE ILLUSTRATION				

<END>

388-8035 HYDRAULIC AR

AN ATTACHMENT

SMCS-5050 **i05380615**

NOTE	PART NUMBER	QTY	PART NAME 1 2 3 4 5 6 (PRODUCT LEVEL)	SEE PAGE
Y	*388-8164*	1	LINES GP-AUXILIARY HYDRAULIC	229
Y	*345-5751*	1	LINES GP-LIFT CYLINDER	261
Y	*345-5728*	1	LINES GP-PUMP (IMPLEMENT)	263
Y	*388-7760*	1	LINES GP-TILT CYLINDER	268
Y	*378-2849*	1	PUMP & MTG GP-GEAR	282
Y	*373-7033*	1	VALVE & MTG GP-CONTROL	289
Y	*416-9270*	1	WIRING GP-FRONT	139
	148-8407	1	PLUG AS	
	3J-1907	1	SEAL-O-RING	
	9S-4191	1	PLUG-O-RING	
Y - SEPARATE ILLUSTRATION				

<END>

388-8036 HYDRAULIC AR

AN ATTACHMENT

SMCS-5050 **i05380642**

NOTE	PART NUMBER	QTY	PART NAME 1 2 3 4 5 6 (PRODUCT LEVEL)	SEE PAGE
Y	*388-8164*	1	LINES GP-AUXILIARY HYDRAULIC	229
Y	*345-5751*	1	LINES GP-LIFT CYLINDER	261
Y	*345-5728*	1	LINES GP-PUMP (IMPLEMENT)	263
Y	*388-7760*	1	LINES GP-TILT CYLINDER	268
Y	*378-2849*	1	PUMP & MTG GP-GEAR	282
Y	*373-7033*	1	VALVE & MTG GP-CONTROL	289
Y	*416-9270*	1	WIRING GP-FRONT	139
Y	*421-4219*	1	WIRING GP-WORK TOOL (SELF LEVEL)	148
Y - SEPARATE ILLUSTRATION				

<END>

388-8038 HYDRAULIC AR

AN ATTACHMENT

SMCS-5050 **i05380609**

NOTE	PART NUMBER	QTY	PART NAME 1 2 3 4 5 6 (PRODUCT LEVEL)	SEE PAGE
Y	*345-6581*	1	CONTROL GP-ELECTROHYDRAULIC (RH, HIGH FLOW)	484
Y	*345-6583*	1	CONTROL GP-ELECTROHYDRAULIC (LH, HIGH FLOW)	486
Y	*388-8111*	1	FILM GP (HIGH FLOW)	569
Y	*345-5739*	1	LINES GP-AUXILIARY HYDRAULIC	227
Y	*345-5751*	1	LINES GP-LIFT CYLINDER	261
Y	*345-5730*	1	LINES GP-PUMP	265
Y	*388-7760*	1	LINES GP-TILT CYLINDER	268
Y	*378-2851*	1	PUMP & MTG GP-WORK TOOL (HIGH FLOW)	283
Y	*373-7033*	1	VALVE & MTG GP-CONTROL	289
Y	*421-4224*	1	WIRING GP-FRONT (HIGH FLOW)	140
Y	*421-4219*	1	WIRING GP-WORK TOOL (SELF LEVEL)	148
Y	*421-4207*	1	WIRING GP-WORK TOOL (HIGH FLOW)	146

Y - SEPARATE ILLUSTRATION

<END>

345-5504 KIT-COVER-HYDRAULIC
AN ATTACHMENT

SMCS-7315 **i04972249**

NOTE	REF NO	GRAPHIC REF	PART NUMBER	QTY	PART NAME 1 2 3 4 5 6 (PRODUCT LEVEL)	SEE PAGE
J	1	1	**275-0572**	1	LATCH AS	
	2	1	**345-5505**	1	PLATE	
	3	1	**345-5506**	1	COVER AS	
	4	1	**345-5508**	1	GASKET	
	5	1	**345-5509**	1	CAM	
M	6	1	**6V-7743**	2	LOCKNUT (M6X1-THD)	
M	7	1	**6V-9189**	1	LOCKNUT (M8X1.25-THD)	
M	8	1	**8T-3647**	1	BOLT (M8X1.25X80-MM)	
	9	1	**8T-4205**	2	WASHER-HARD (7.2X14.5X2-MM THK)	
M	10	1	**9X-2045**	2	SCREW-TRUSS HEAD (M6X1X20-MM)	

J - REQUIRES CORPORATE KEY
M - METRIC PART

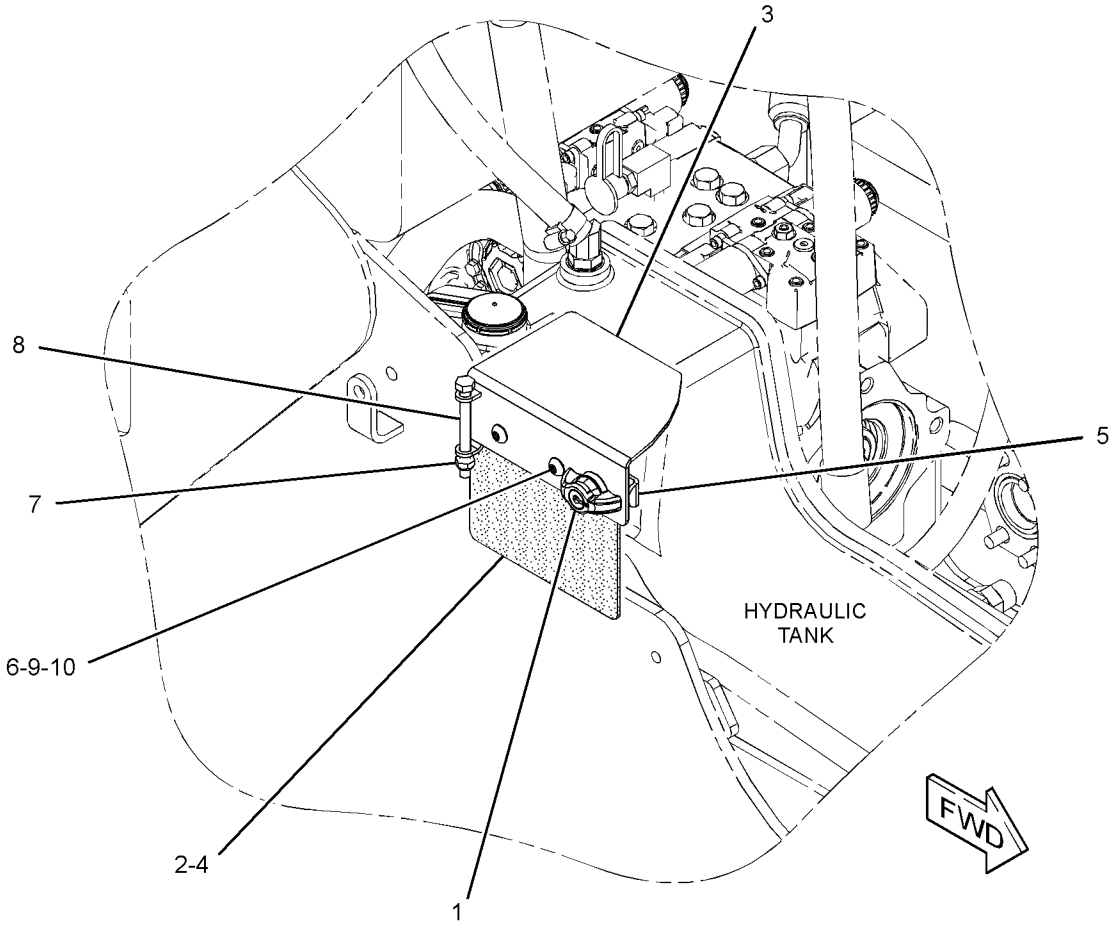

GRAPHIC #1 **<END>** g02848457

345-5739 LINES GP-AUXILIARY HYDRAULIC

PART OF 388-8038 HYDRAULIC AR

AN ATTACHMENT

SMCS-5057 **i05380960**

NOTE	REF NO	GRAPHIC REF	PART NUMBER	QTY	PART NAME 1 2 3 4 5 6 (PRODUCT LEVEL)	SEE PAGE
	1	1	**4V-0612**	3	PLATE	
	2	1	*106-8715*	1	ELBOW AS	
		1	**3D-2824**	1	SEAL-O-RING	
		1	**6V-9746**	1	SEAL-O-RING	
		1	**8C-8400**	1	ELBOW	
	3	1	**345-5754**	1	BRACKET AS	
		1	**239-8534**	1	PLATE-WELD	
	4	1	**388-7927**	1	PLATE	
I	5	1	**388-7948**	1	HOSE AS	
	6	1	**388-7960**	1	FITTING GP-HYDRAULIC (QUICK DISCONNECT, MALE)	
	7	1	**388-8105**	1	COVER AS	
	8	1	**388-8160**	6	CLAMP-HALF	
	9	1	**419-0648**	1	BRACKET AS	
M		1	**159-9541**	2	NUT-WELD (M10X1.5-THD)	
	10	1	**422-3178**	1	HOSE AS	
	11	1	**422-3179**	1	HOSE AS	
I	12	1	**435-8849**	1	HOSE AS	
	13	1	**095-0912**	1	CLIP	
	14	1	*148-8336*	1	CONNECTOR AS	
		1	**3J-1907**	1	SEAL-O-RING	
		1	**6V-8397**	1	SEAL-O-RING	
		1	**6V-8636**	1	CONNECTOR	
	15	1	*148-8347*	1	ELBOW AS	
		1	**3D-2824**	1	SEAL-O-RING	
		1	**6V-9007**	1	ELBOW	
		1	**6V-9746**	1	SEAL-O-RING	
	16	1	*148-8375*	1	ELBOW AS	
		1	**6V-8398**	2	SEAL-O-RING	
		1	**6V-8981**	1	ELBOW	
	17	1	**178-3620**	5	STRAP-DUAL CLAMP	
	18	1	**190-7979**	1	BOLT (M8X1.25X80-MM)	
	19	1	**266-3314**	1	BOLT-FLANGE HEAD (M6X1X20.5-MM)	
M	20	1	**266-3315**	2	BOLT-FLANGE HEAD (M8X1.25X25.5-MM)	
	21	1	**266-3316**	2	BOLT-FLANGE HEAD (M10X1.5X25-MM)	
	22	1	**2H-3755**	2	BOLT (5/16-18X0.43-IN)	
M	23	1	**303-8205**	1	BOLT (M8X1.25X60-MM)	
	24	1	**6V-9169**	1	NUT (13/16-16-THD)	
M	25	1	**7X-0818**	1	BOLT (M8X1.25X45-MM)	
M	26	1	**8T-3991**	2	SCREW-BUTTON HEAD (M6X1X20-MM)	
	27	1	**8T-4121**	2	WASHER-HARD (11X21X2.5-MM THK)	
M	28	1	**8T-4133**	2	NUT (M10X1.5-THD)	
M	29	1	**8T-4172**	2	BOLT (M10X1.5X80-MM)	
M	30	1	**8T-4196**	2	BOLT (M10X1.5X35-MM)	
	31	1	**8T-4224**	2	WASHER-HARD (8.8X16X2-MM THK)	

I - REFER TO HYDRAULIC INFORMATION SYSTEM
M - METRIC PART

345-5739 **LINES GP-AUXILIARY HYDRAULIC (*contd.*)** **i05380960**

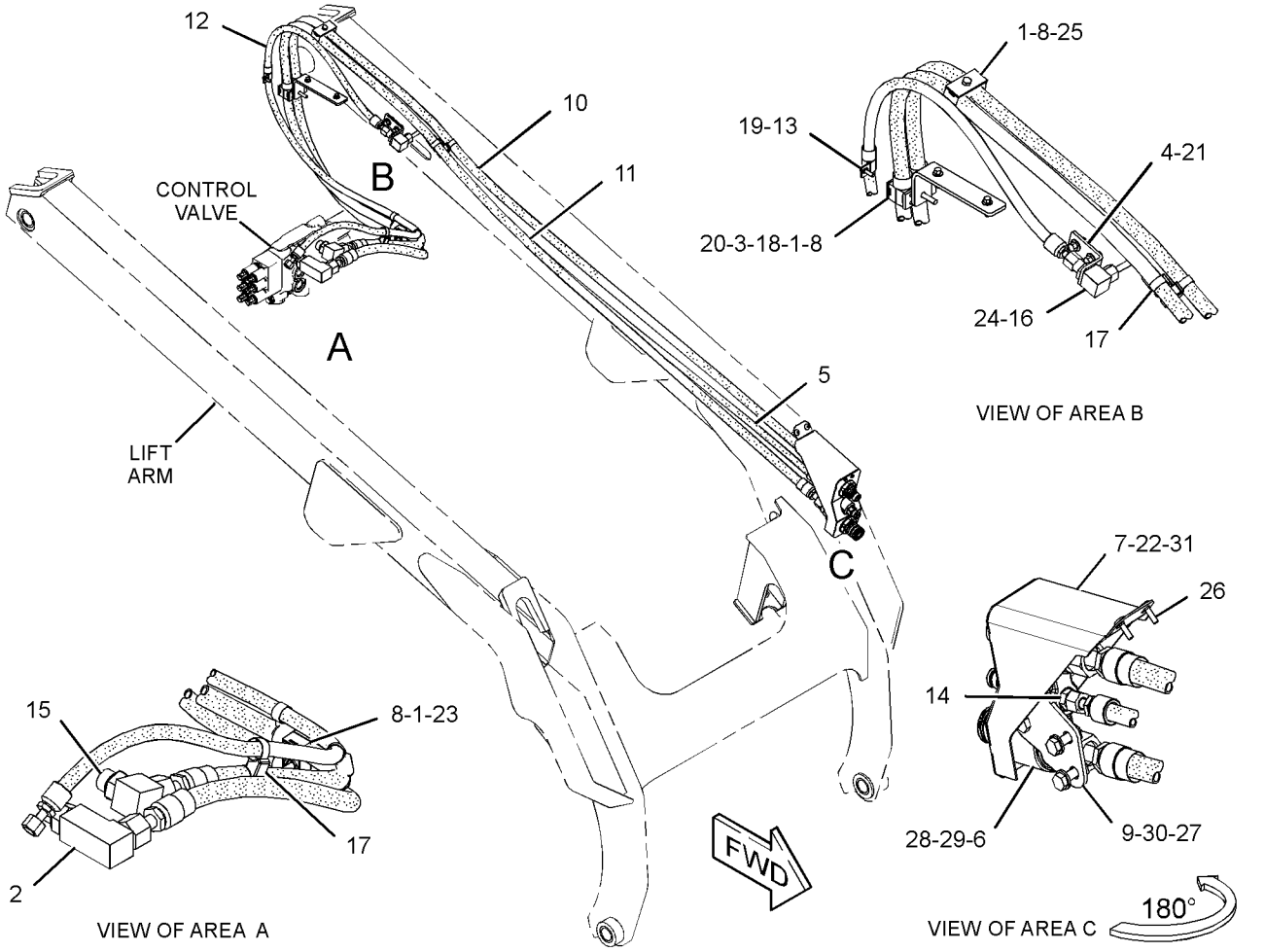

GRAPHIC #1 **<END>** g03405855

388-8164 LINES GP-AUXILIARY HYDRAULIC

PART OF 388-8035, 388-8036 HYDRAULIC AR
AN ATTACHMENT

SMCS-5057 **i05194994**

NOTE	REF NO	GRAPHIC REF	PART NUMBER	QTY	PART NAME 1 2 3 4 5 6 (PRODUCT LEVEL)	SEE PAGE
	1	1	**4V-0612**	3	PLATE	
	2	1	*106-8715*	1	ELBOW AS	
		1	**3D-2824**	1	SEAL-O-RING	
		1	**6V-9746**	1	SEAL-O-RING	
		1	**8C-8400**	1	ELBOW	
	3	1	**178-3620**	4	STRAP-DUAL CLAMP	
	4	1	**204-2281**	2	STRAP-CABLE	
	5	1	**290-5562**	1	MOUNT (DUAL SWIVEL)	
	6	1	**345-5754**	1	BRACKET AS	
		1	**239-8534**	1	PLATE-WELD	
I	7	1	**345-5769**	1	HOSE AS	
I	8	1	**388-7948**	1	HOSE AS	
	9	1	**388-7960**	1	FITTING GP-HYDRAULIC (QUICK DISCONNECT, MALE)	
	10	1	**388-8105**	1	COVER AS	
	11	1	**388-8158**	6	CLAMP-HALF	
	12	1	**388-8159**	1	HOSE AS	
	13	1	**388-8161**	1	HOSE AS	
	14	1	**419-0648**	1	BRACKET AS	
M		1	**159-9541**	2	NUT-WELD (M10X1.5-THD)	
	15	1	*148-8336*	1	CONNECTOR AS	
		1	**3J-1907**	1	SEAL-O-RING	
		1	**6V-8397**	1	SEAL-O-RING	
		1	**6V-8636**	1	CONNECTOR	
	16	1	*148-8347*	1	ELBOW AS	
		1	**3D-2824**	1	SEAL-O-RING	
		1	**6V-9007**	1	ELBOW	
		1	**6V-9746**	1	SEAL-O-RING	
	17	1	*148-8375*	1	ELBOW AS	
		1	**6V-8398**	2	SEAL-O-RING	
		1	**6V-8981**	1	ELBOW	
	18	1	**190-7979**	1	BOLT (M8X1.25X80-MM)	
M	19	1	**266-3315**	2	BOLT-FLANGE HEAD (M8X1.25X25.5-MM)	
M	20	1	**303-8205**	1	BOLT (M8X1.25X60-MM)	
	21	1	**6V-9169**	1	NUT (13/16-16-THD)	
M	22	1	**7X-0818**	1	BOLT (M8X1.25X45-MM)	
	23	1	**8D-9671**	1	CLIP	
	24	1	**8T-4121**	2	WASHER-HARD (11X21X2.5-MM THK)	
M	25	1	**8T-4133**	2	NUT (M10X1.5-THD)	
M	26	1	**8T-4172**	2	BOLT (M10X1.5X80-MM)	
M	27	1	**8T-4196**	2	BOLT (M10X1.5X35-MM)	
	28	1	**8T-4224**	1	WASHER-HARD (8.8X16X2-MM THK)	
M	29	1	**9X-2045**	2	SCREW-TRUSS HEAD (M6X1X20-MM)	

I - REFER TO HYDRAULIC INFORMATION SYSTEM
M - METRIC PART

388-8164 **LINES GP-AUXILIARY HYDRAULIC (*contd.*)** **i05194994**

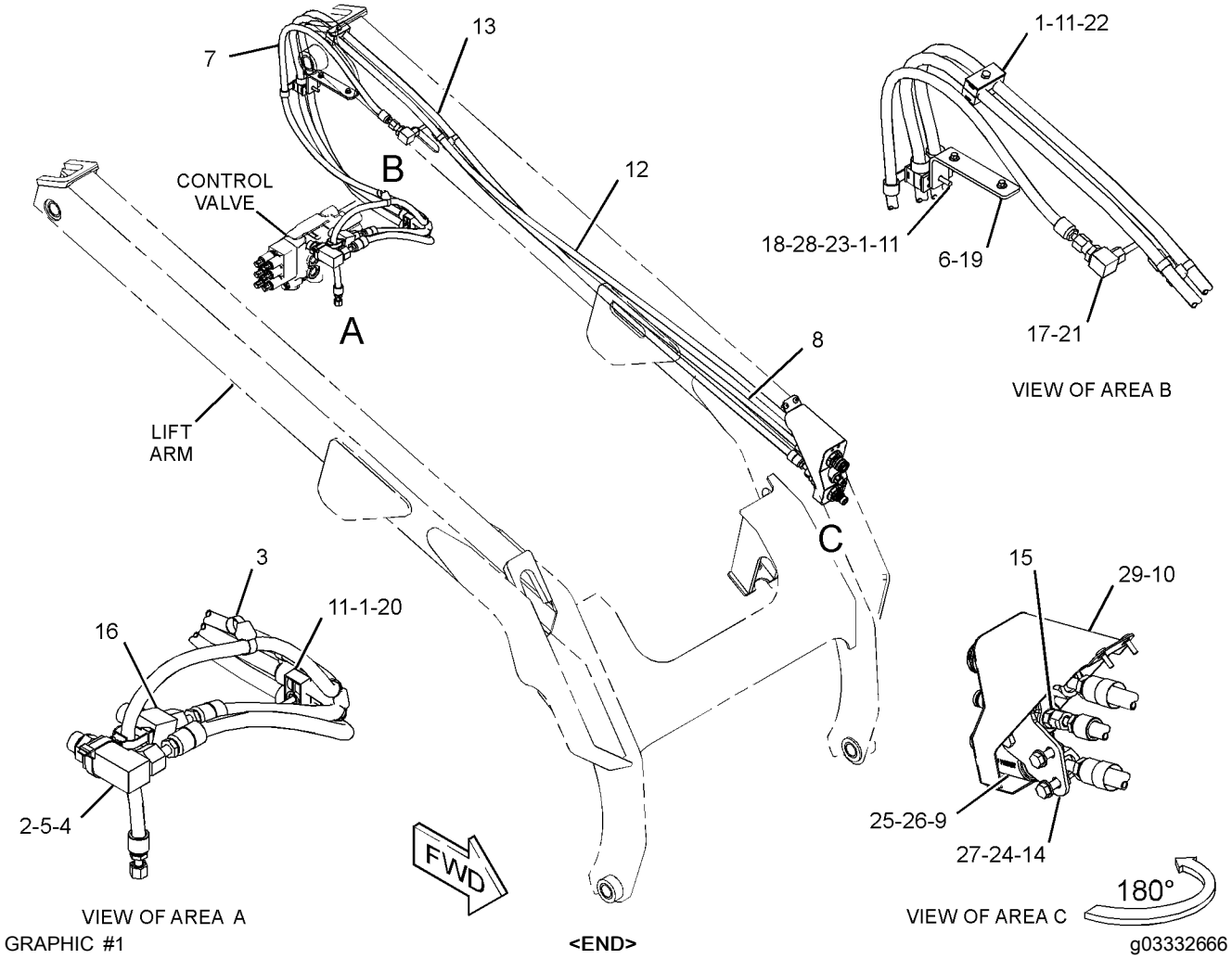

GRAPHIC #1

<END>

g03332666

279-5412 LINES GP-BUCKET—INDUSTRIAL

PART OF 279-5350, 279-5360 FORK AR-GRAPPLE

AN ATTACHMENT

SMCS-5057 **i02616554**

NOTE	REF NO	GRAPHIC REF	PART NUMBER	QTY	PART NAME 1 2 3 4 5 6 (PRODUCT LEVEL)	SEE PAGE
	1	1	**3E-7404**	2	CLAMP-HOSE	
I	2	1	**294-5503**	1	HOSE AS	
	3	1	**153-2994**	1	COUPLING (FEMALE)	
	4	1	**153-2995**	1	COUPLING (MALE)	
	5	1	**161-0185**	1	TUBE AS	
	6	1	**161-0186**	1	TUBE AS	
	7	1	**161-0188**	2	TUBE AS	
I	8	1	**161-0189**	2	HOSE AS	
I	9	1	**161-0190**	2	HOSE AS	
	10	1	**163-1385**	1	ELBOW	
I	11	1	**294-5502**	1	HOSE AS	
	12	1	*148-8319*	2	CONNECTOR AS	
					(EACH INCLUDES)	
		1	**2M-9780**	1	SEAL-O-RING	
		1	**6V-8397**	1	SEAL-O-RING	
		1	**6V-8715**	1	CONNECTOR	
	13	1	**2V-3216**	6	CLIP	
	14	1	**6V-8397**	13	SEAL-O-RING	
	15	1	**7S-3916**	2	CLIP (TAB)	
	16	1	**7S-3919**	2	CLIP (SLOT)	
	17	1	**8T-4121**	2	WASHER-HARD (11X21X2.5-MM THK)	
M	18	1	**8T-4136**	2	BOLT (M10X1.5X25-MM)	
M	19	1	**8T-4171**	4	BOLT (M6X1X12-MM)	
	20	1	**9R-2004**	2	BLOCK	

I - REFER TO HYDRAULIC INFORMATION SYSTEM
M - METRIC PART

279-5412 **LINES GP-BUCKET (*contd.*)** **i02616554**

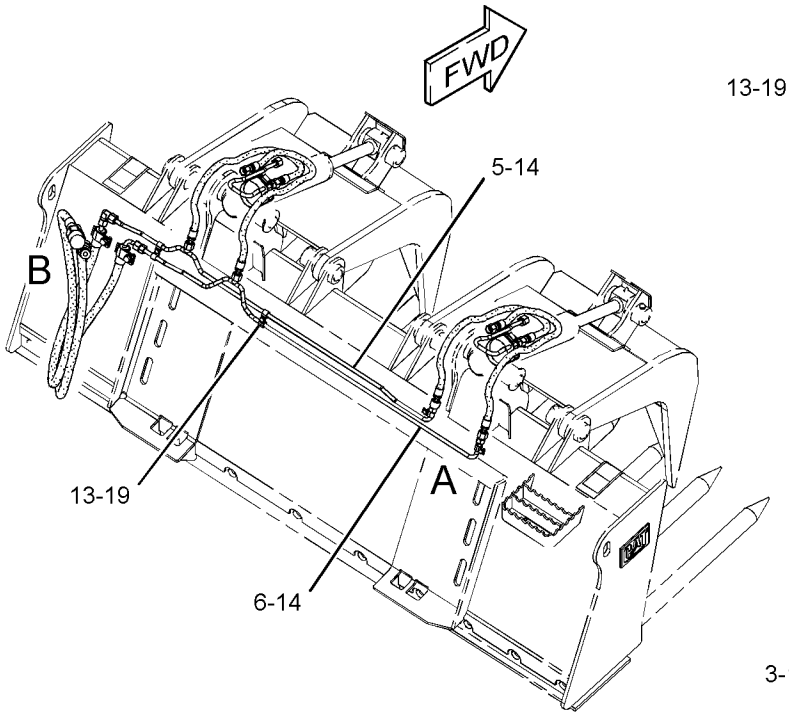

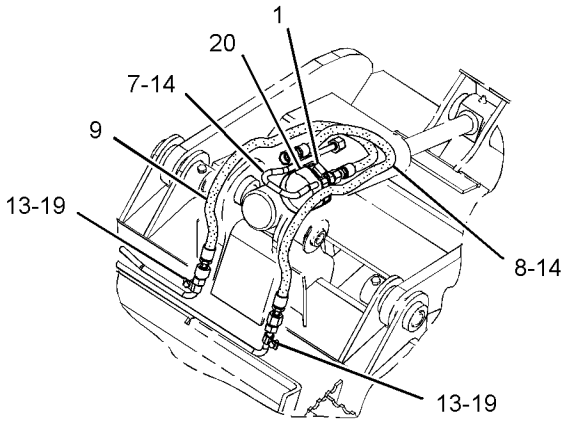

VIEW OF AREA A

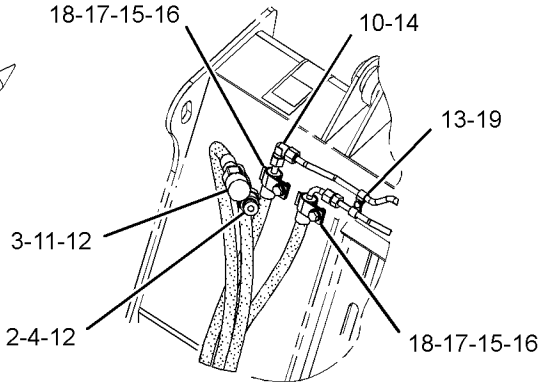

VIEW OF AREA B

GRAPHIC #1 **<END>** g01280859

279-5413 LINES GP-BUCKET—MULTIPURPOSE

PART OF 423-4291, 426-6933 BUCKET AR-MULTIPURPOSE
AN ATTACHMENT

SMCS-5057 **i05296426**

NOTE	REF NO	GRAPHIC REF	PART NUMBER	QTY	PART NAME 1 2 3 4 5 6 (PRODUCT LEVEL)	SEE PAGE
	1	1	**153-2994**	1	COUPLING (FEMALE)	
I	2	1	**154-5020**	2	HOSE AS	
I	3	1	**154-5021**	1	HOSE AS	
I	4	1	**154-5022**	1	HOSE AS	
	5	1	**163-1386**	1	TEE-UNION	
	6	1	**421-6171**	1	COUPLER AS-QUICK DISCONNECT (MALE)	
I	7	1	**279-5417**	1	HOSE AS	
I	8	1	**279-5418**	1	HOSE AS	
	9	1	*148-8319*	2	CONNECTOR AS	
					(EACH INCLUDES)	
		1	**2M-9780**	1	SEAL-O-RING	
		1	**6V-8397**	1	SEAL-O-RING	
		1	**6V-8715**	1	CONNECTOR	
	10	1	*150-3056*	1	TEE AS	
		1	**6V-8397**	3	SEAL-O-RING	
		1	**6V-8788**	1	TEE	
	11	1	**1S-0994**	1	CLIP	
	12	1	**6D-4247**	3	CLIP	
	13	1	**6V-8397**	7	SEAL-O-RING	
M	14	1	**8T-4189**	4	BOLT (M8X1.25X20-MM)	
	15	1	**8T-4224**	4	WASHER-HARD (8.8X16X2-MM THK)	
B	16	1	**9X-6273**	2	WASHER (32.5X50X0.8-MM THK)	
B	17	1	**9X-6274**	2	WASHER (32.5X50X1.6-MM THK)	

B - USE AS REQUIRED
I - REFER TO HYDRAULIC INFORMATION SYSTEM
M - METRIC PART

279-5413 **LINES GP-BUCKET (*contd.*)** **i05296426**

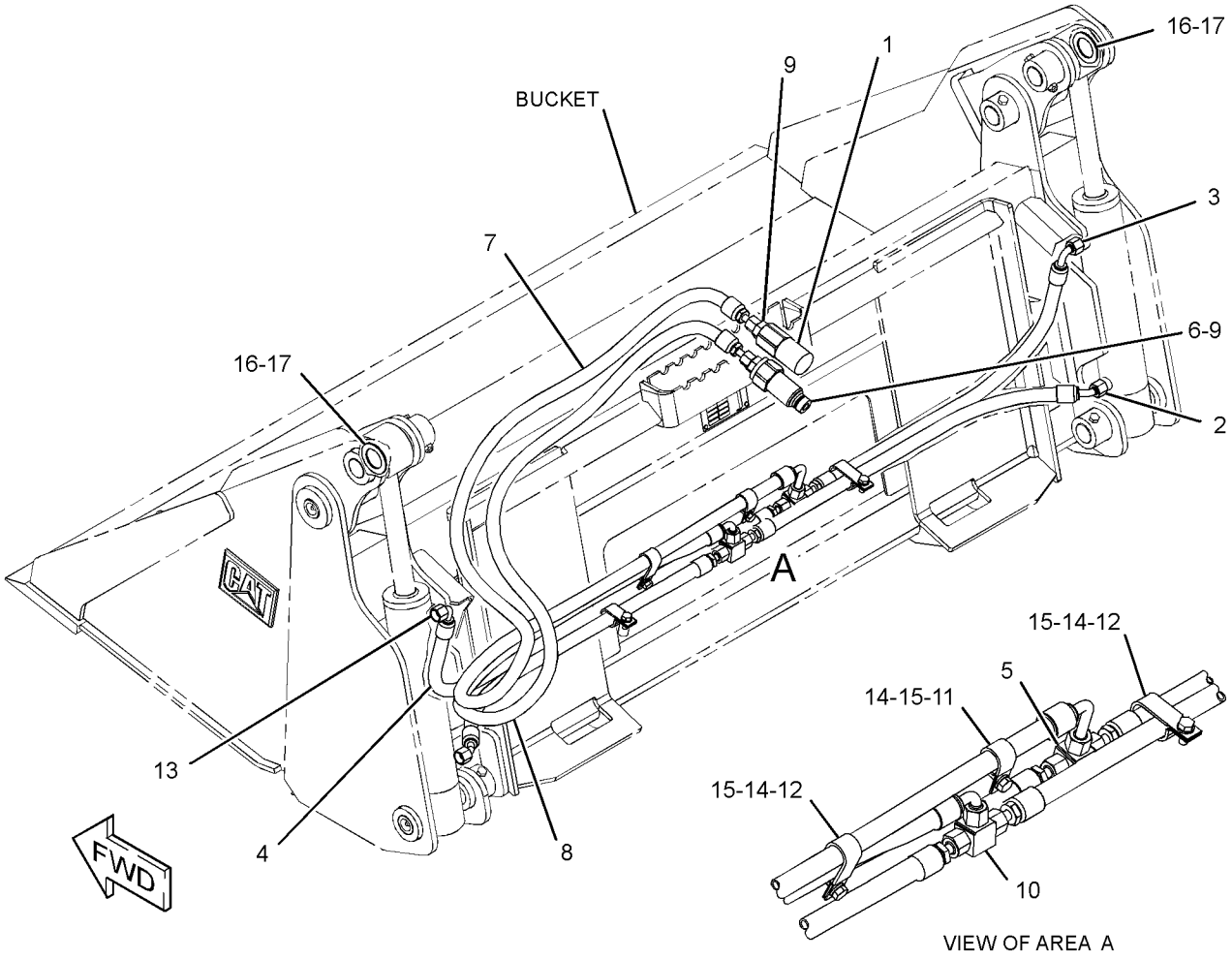

GRAPHIC #1 **<END>** g03363875

279-5414 LINES GP-BUCKET—MULTIPURPOSE

PART OF 426-6492, 426-6940 BUCKET AR-MULTIPURPOSE
AN ATTACHMENT

SMCS-5057 **i05296447**

NOTE	REF NO	GRAPHIC REF	PART NUMBER	QTY	PART NAME 1 2 3 4 5 6 (PRODUCT LEVEL)	SEE PAGE
	1	1	**153-2994**	1	COUPLING (FEMALE)	
I	2	1	**156-5508**	1	HOSE AS	
I	3	1	**156-5509**	2	HOSE AS	
I	4	1	**156-5510**	1	HOSE AS	
	5	1	**163-1386**	1	TEE-UNION	
	6	1	**421-6171**	1	COUPLER AS-QUICK DISCONNECT (MALE)	
I	7	1	**279-5417**	1	HOSE AS	
I	8	1	**279-5418**	1	HOSE AS	
	9	1	*148-8319*	2	CONNECTOR AS	
					(EACH INCLUDES)	
		1	**2M-9780**	1	SEAL-O-RING	
		1	**6V-8397**	1	SEAL-O-RING	
		1	**6V-8715**	1	CONNECTOR	
	10	1	*150-3056*	1	TEE AS	
		1	**6V-8397**	3	SEAL-O-RING	
		1	**6V-8788**	1	TEE	
	11	1	**1S-0994**	1	CLIP	
	12	1	**6D-4247**	3	CLIP	
	13	1	**6V-8397**	7	SEAL-O-RING	
M	14	1	**8T-4189**	4	BOLT (M8X1.25X20-MM)	
	15	1	**8T-4224**	4	WASHER-HARD (8.8X16X2-MM THK)	
B	16	1	**9X-6273**	2	WASHER (32.5X50X0.8-MM THK)	
B	17	1	**9X-6274**	2	WASHER (32.5X50X1.6-MM THK)	

B - USE AS REQUIRED
I - REFER TO HYDRAULIC INFORMATION SYSTEM
M - METRIC PART

279-5414 **LINES GP-BUCKET (*contd.*)** **i05296447**

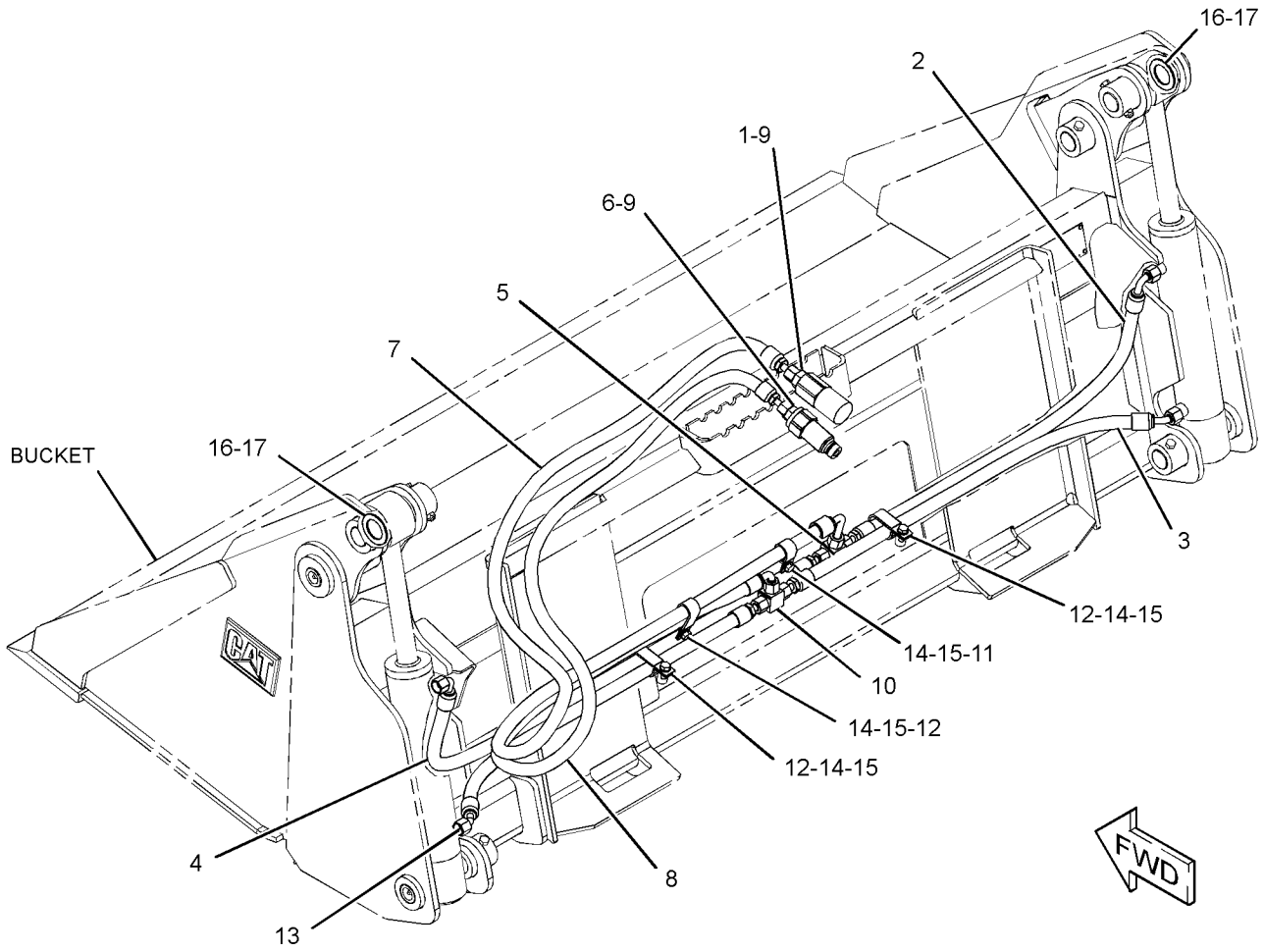

GRAPHIC #1 **<END>** g03364244

279-5415 LINES GP-BUCKET—MULTIPURPOSE

PART OF 426-6537, 426-6947 BUCKET AR-MULTIPURPOSE
AN ATTACHMENT

SMCS-5057 **i05295475**

NOTE	REF NO	GRAPHIC REF	PART NUMBER	QTY	PART NAME 1 2 3 4 5 6 (PRODUCT LEVEL)	SEE PAGE
	1	1	**153-2994**	1	COUPLING (FEMALE)	
I	2	1	**159-4535**	1	HOSE AS	
I	3	1	**159-4536**	2	HOSE AS	
I	4	1	**159-4537**	1	HOSE AS	
	5	1	**163-1386**	1	TEE-UNION	
	6	1	**421-6171**	1	COUPLER AS-QUICK DISCONNECT (MALE)	
I	7	1	**279-5417**	1	HOSE AS	
I	8	1	**279-5418**	1	HOSE AS	
	9	1	*148-8319*	2	CONNECTOR AS	
					(EACH INCLUDES)	
		1	**2M-9780**	1	SEAL-O-RING	
		1	**6V-8397**	1	SEAL-O-RING	
		1	**6V-8715**	1	CONNECTOR	
	10	1	*150-3056*	1	TEE AS	
		1	**6V-8397**	3	SEAL-O-RING	
		1	**6V-8788**	1	TEE	
	11	1	**1S-0994**	1	CLIP	
	12	1	**6D-4247**	3	CLIP	
	13	1	**6V-8397**	7	SEAL-O-RING	
M	14	1	**8T-4189**	4	BOLT (M8X1.25X20-MM)	
	15	1	**8T-4224**	4	WASHER-HARD (8.8X16X2-MM THK)	
B	16	1	**9X-6273**	2	WASHER (32.5X50X0.8-MM THK)	
B	17	1	**9X-6274**	2	WASHER (32.5X50X1.6-MM THK)	

B - USE AS REQUIRED
I - REFER TO HYDRAULIC INFORMATION SYSTEM
M - METRIC PART

279-5415 **LINES GP-BUCKET (*contd.*)** **i05295475**

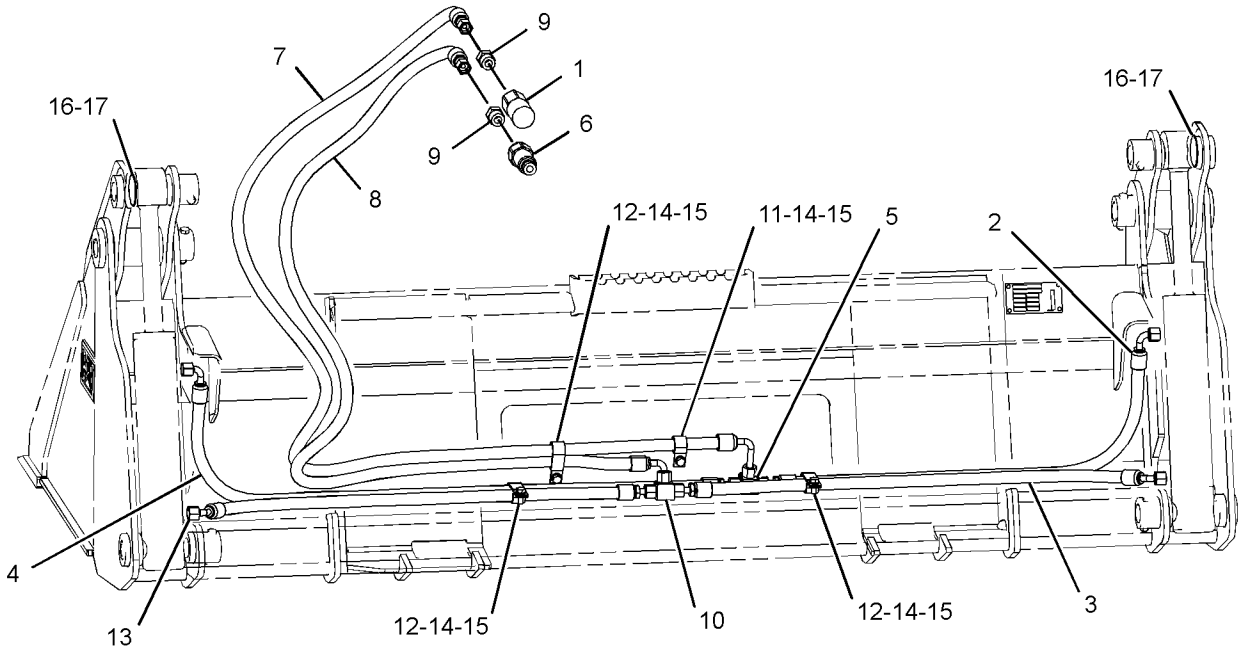

REAR VIEW
(UPPER LEFT)

GRAPHIC #1 **<END>** g03364246

279-5416 LINES GP-BUCKET—MULTIPURPOSE

PART OF 426-6549, 426-6970 BUCKET AR-MULTIPURPOSE
AN ATTACHMENT

SMCS-5057 **i05295474**

NOTE	REF NO	GRAPHIC REF	PART NUMBER	QTY	PART NAME 1 2 3 4 5 6 (PRODUCT LEVEL)	SEE PAGE
	1	1	**153-2994**	1	COUPLING (FEMALE)	
	2	1	**163-1386**	1	TEE-UNION	
	3	1	**421-6171**	1	COUPLER AS-QUICK DISCONNECT (MALE)	
I	4	1	**199-8309**	1	HOSE AS	
I	5	1	**199-8310**	2	HOSE AS	
I	6	1	**199-8311**	1	HOSE AS	
I	7	1	**279-5417**	1	HOSE AS	
I	8	1	**279-5418**	1	HOSE AS	
	9	1	*148-8319*	2	CONNECTOR AS	
					(EACH INCLUDES)	
		1	**2M-9780**	1	SEAL-O-RING	
		1	**6V-8397**	1	SEAL-O-RING	
		1	**6V-8715**	1	CONNECTOR	
	10	1	*150-3056*	1	TEE AS	
		1	**6V-8397**	3	SEAL-O-RING	
		1	**6V-8788**	1	TEE	
	11	1	**1S-0994**	1	CLIP	
	12	1	**6D-4247**	3	CLIP	
	13	1	**6V-8397**	7	SEAL-O-RING	
M	14	1	**8T-4189**	4	BOLT (M8X1.25X20-MM)	
	15	1	**8T-4224**	4	WASHER-HARD (8.8X16X2-MM THK)	
B	16	1	**9X-6273**	2	WASHER (32.5X50X0.8-MM THK)	
B	17	1	**9X-6274**	2	WASHER (32.5X50X1.6-MM THK)	

B - USE AS REQUIRED
I - REFER TO HYDRAULIC INFORMATION SYSTEM
M - METRIC PART

279-5416 **LINES GP-BUCKET (*contd.*)** **i05295474**

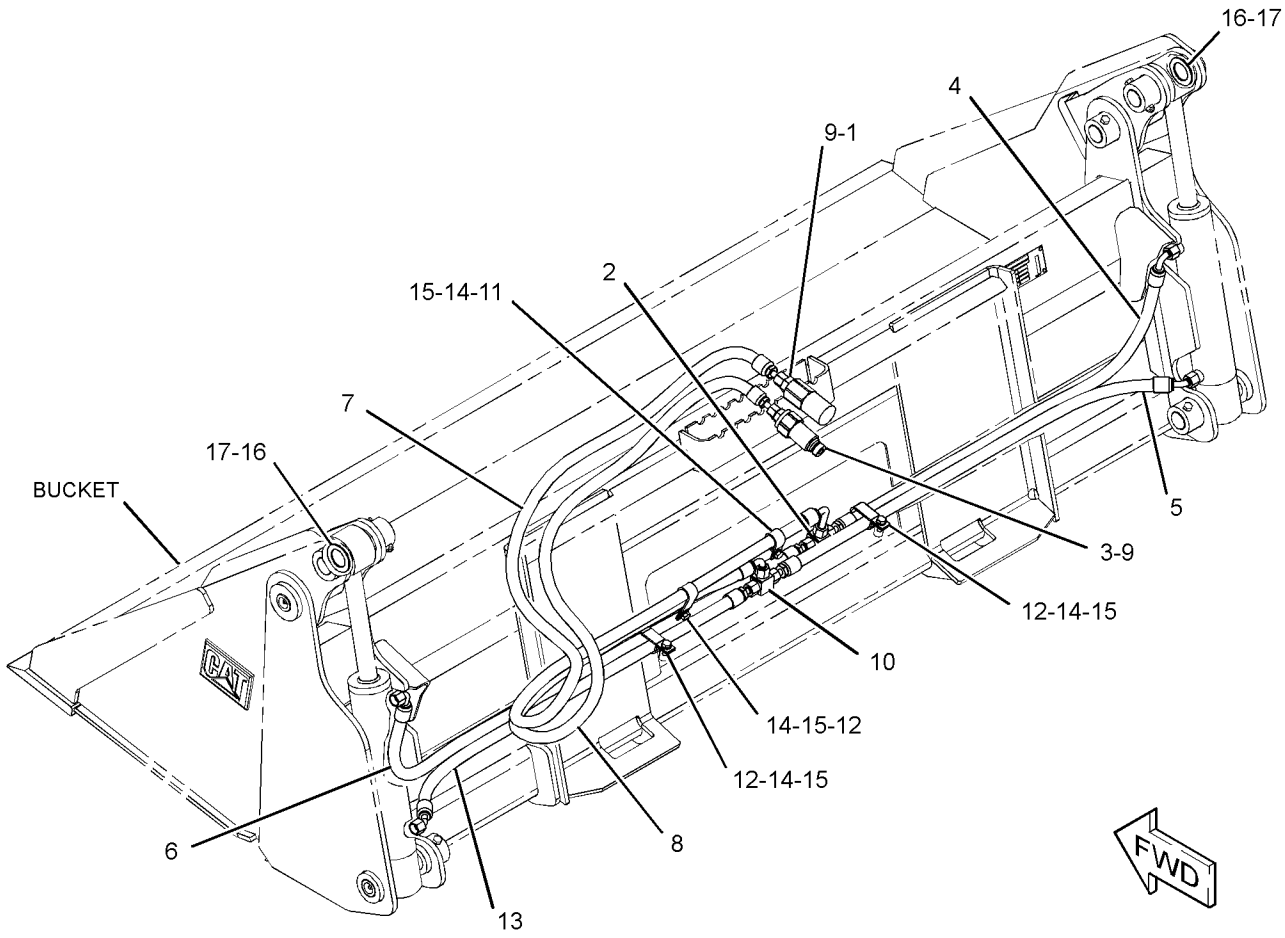

GRAPHIC #1 **<END>** g03364209

285-6113 LINES GP-BUCKET–UTILITY

PART OF 285-6116 GRAPPLE & CYLINDER GP-UTILITY

AN ATTACHMENT

SMCS-5057 **i02890974**

NOTE	REF NO	GRAPHIC REF	PART NUMBER	QTY	PART NAME 1 2 3 4 5 6 (PRODUCT LEVEL)	SEE PAGE
	1	1	**153-2994**	1	COUPLING (FEMALE)	
	2	1	**153-2995**	1	COUPLING (MALE)	
	3	1	**174-2388**	1	TUBE AS	
	4	1	**174-2389**	1	TUBE AS	
CI	5	1	**174-2393**	1	HOSE AS	
	6	1	*183-4085*	1	ELBOW AS	
		1	**6V-8397**	2	SEAL-O-RING	
		1	**183-4084**	1	ELBOW	
I	7	1	**294-5504**	1	HOSE AS	
I	8	1	**294-5505**	1	HOSE AS	
CI	9	1	**307-3808**	1	HOSE AS	
	10	1	*148-8319*	2	CONNECTOR AS	
					(EACH INCLUDES)	
		1	**2M-9780**	1	SEAL-O-RING	
		1	**6V-8397**	1	SEAL-O-RING	
		1	**6V-8715**	1	CONNECTOR	
C	11	1	**6V-8397**	5	SEAL-O-RING	
	12	1	**7S-3912**	2	CLIP (TAB)	
	13	1	**7S-3913**	2	CLIP (SLOT)	
	14	1	**8T-1893**	2	CLIP (SLOT)	
	15	1	**8T-1894**	2	CLIP (TAB)	
	16	1	**8T-4121**	6	WASHER-HARD (11X21X2.5-MM THK)	
M	17	1	**8T-4137**	4	BOLT (M10X1.5X20-MM)	

C - CHANGE FROM PREVIOUS TYPE
I - REFER TO HYDRAULIC INFORMATION SYSTEM
M - METRIC PART

285-6113 **LINES GP-BUCKET (*contd.*)** **i02890974**

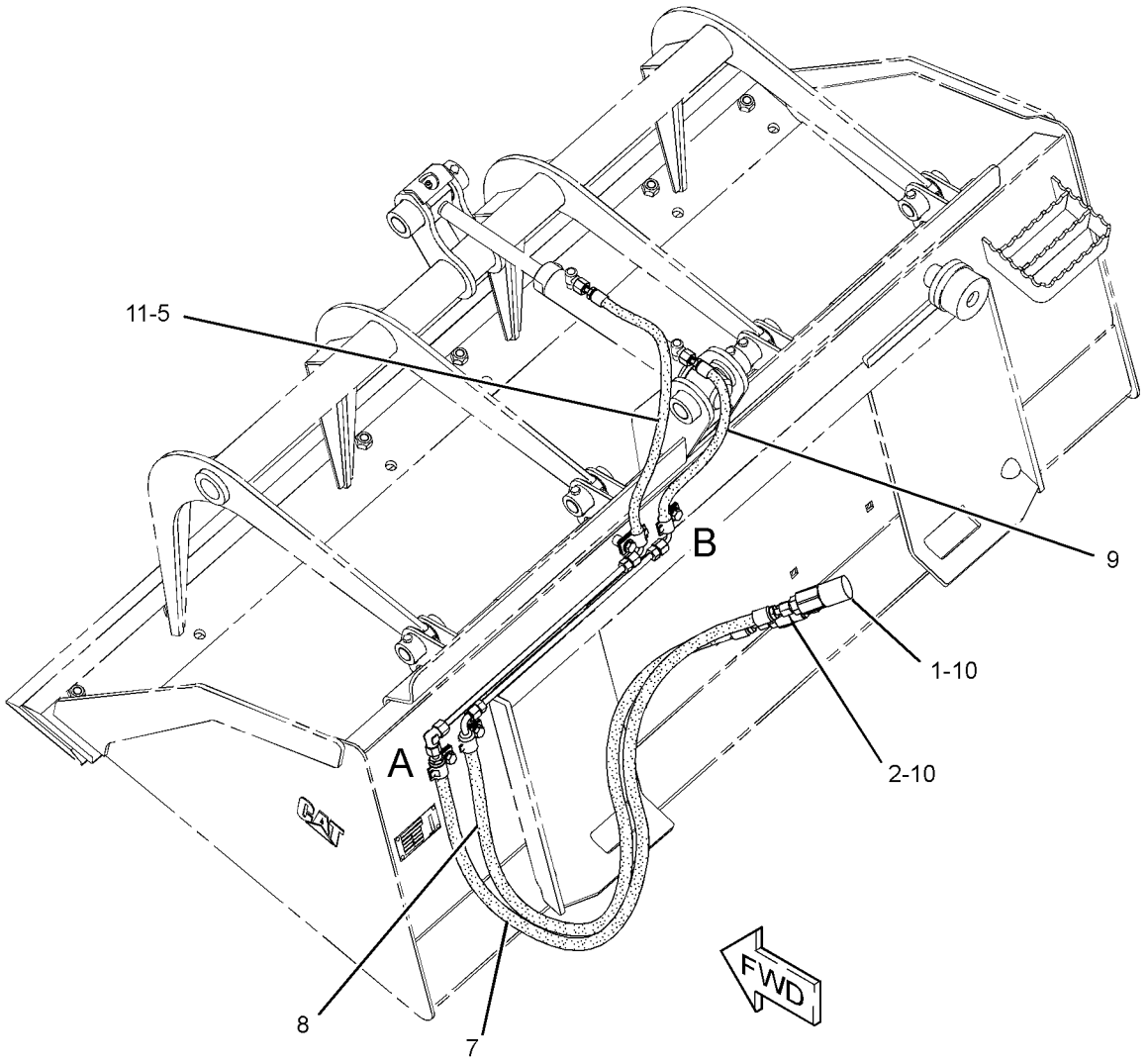

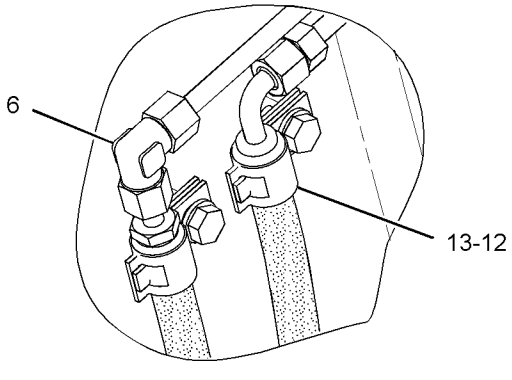

VIEW OF AREA A

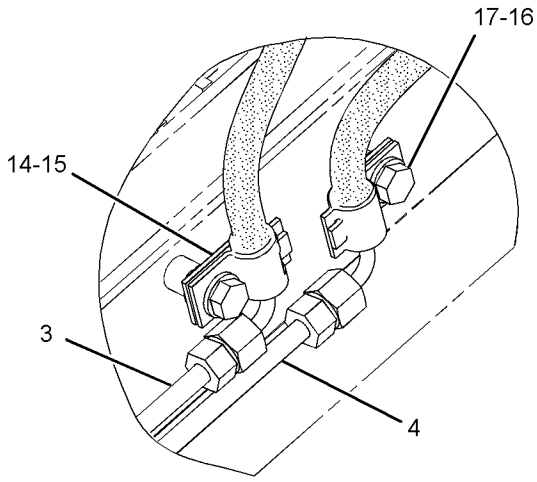

VIEW OF AREA B

GRAPHIC #1 **<END>** g01439824

293-0140 LINES GP-BUCKET—MULTIPURPOSE

PART OF 426-6559, 426-6992 BUCKET AR-MULTIPURPOSE
AN ATTACHMENT

SMCS-5057 **i05295473**

NOTE	REF NO	GRAPHIC REF	PART NUMBER	QTY	PART NAME 1 2 3 4 5 6 (PRODUCT LEVEL)	SEE PAGE
	1	1	**153-2994**	1	COUPLING (FEMALE)	
	2	1	**163-1386**	1	TEE-UNION	
	3	1	**421-6171**	1	COUPLER AS-QUICK DISCONNECT (MALE)	
I	4	1	**199-8309**	1	HOSE AS	
I	5	1	**199-8311**	1	HOSE AS	
I	6	1	**279-5417**	1	HOSE AS	
I	7	1	**279-5418**	1	HOSE AS	
I	8	1	**293-0152**	2	HOSE AS	
	9	1	*148-8319*	2	CONNECTOR AS	
					(EACH INCLUDES)	
		1	**2M-9780**	1	SEAL-O-RING	
		1	**6V-8397**	1	SEAL-O-RING	
		1	**6V-8715**	1	CONNECTOR	
	10	1	*150-3056*	1	TEE AS	
		1	**6V-8397**	3	SEAL-O-RING	
		1	**6V-8788**	1	TEE	
	11	1	**1S-0994**	1	CLIP	
	12	1	**6D-4247**	3	CLIP	
	13	1	**6V-8397**	7	SEAL-O-RING	
M	14	1	**8T-4189**	4	BOLT (M8X1.25X20-MM)	
	15	1	**8T-4224**	4	WASHER-HARD (8.8X16X2-MM THK)	
B	16	1	**9X-6273**	2	WASHER (32.5X50X0.8-MM THK)	
B	17	1	**9X-6274**	2	WASHER (32.5X50X1.6-MM THK)	

B - USE AS REQUIRED
I - REFER TO HYDRAULIC INFORMATION SYSTEM
M - METRIC PART

293-0140 **LINES GP-BUCKET (*contd.*)** **i05295473**

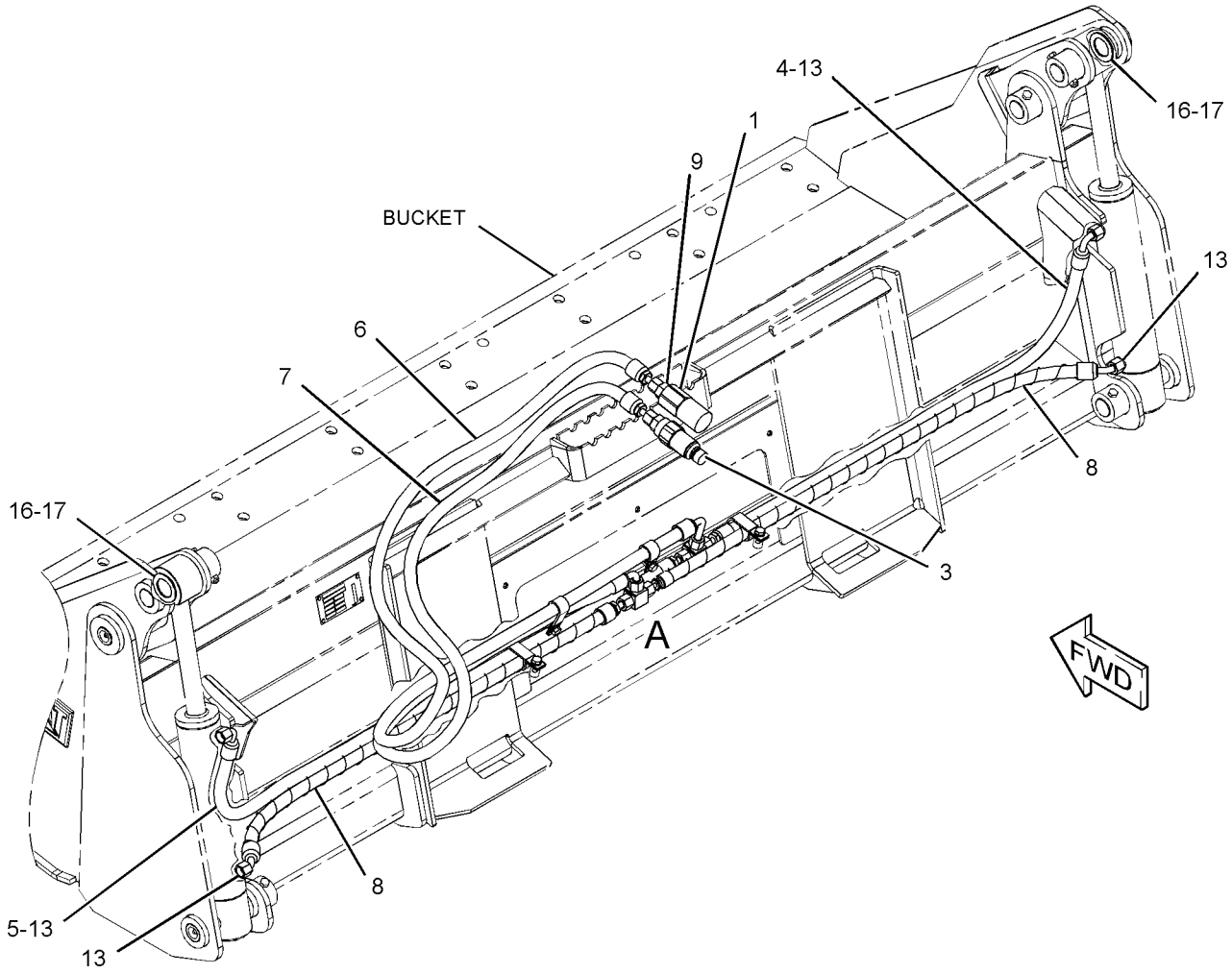

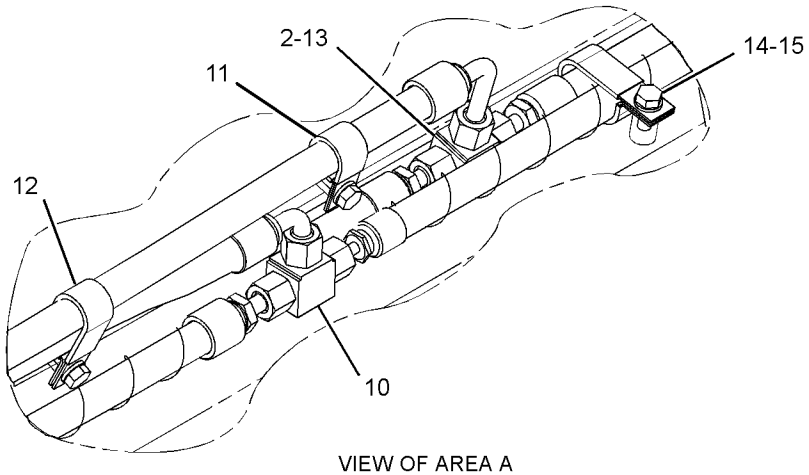

VIEW OF AREA A

GRAPHIC #1 **<END>** g03364224

177-1986 LINES GP-CONNECTING

PART OF 177-1989, 177-1990 BLADE AR
AN ATTACHMENT

SMCS-5057 **i01928980**

NOTE	REF NO	GRAPHIC REF	PART NUMBER	QTY	PART NAME 1 2 3 4 5 6 (PRODUCT LEVEL)	SEE PAGE
	1	1	**153-2994**	1	COUPLING (FEMALE)	
	2	1	**153-2995**	1	COUPLING (MALE)	
	3	1	**163-1385**	2	ELBOW	
I	4	1	**177-1910**	2	HOSE AS	
I	5	1	**177-1911**	1	HOSE AS	
I	6	1	**177-1912**	1	HOSE AS	
	7	1	*148-8319*	2	CONNECTOR AS	
					(EACH INCLUDES)	
		1	**2M-9780**	1	SEAL-O-RING	
		1	**6V-8397**	1	SEAL-O-RING	
		1	**6V-8715**	1	CONNECTOR	
	8	1	**148-8378**	2	ELBOW AS	
					(EACH INCLUDES)	
		1	**3J-1907**	1	SEAL-O-RING	
		1	**6V-8397**	1	SEAL-O-RING	
		1	**6V-8724**	1	ELBOW	
	9	1	**6V-8397**	4	SEAL-O-RING	
	10	1	**8T-4121**	4	WASHER-HARD (11X21X2.5-MM THK)	
M	11	1	**8T-4133**	2	NUT (M10X1.5-THD)	
M	12	1	**8T-4185**	1	BOLT (M10X1.5X50-MM)	
M	13	1	**8T-4195**	1	BOLT (M10X1.5X30-MM)	
	14	1	**8T-8192**	2	CLIP (SLOT)	
	15	1	**8T-8193**	2	CLIP (TAB)	

I - REFER TO HYDRAULIC INFORMATION SYSTEM
M - METRIC PART

177-1986 **LINES GP-CONNECTING (*contd.*)** **i01928980**

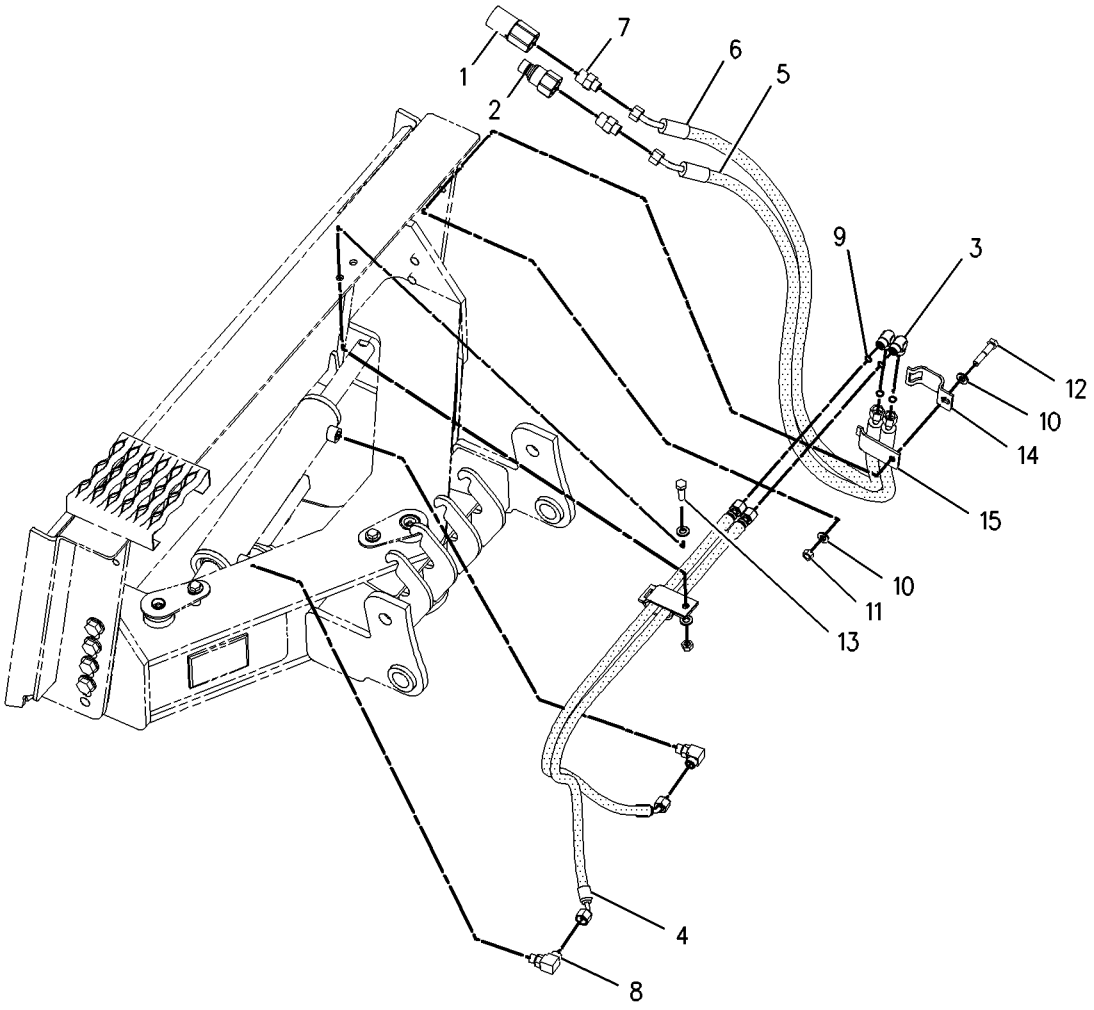

GRAPHIC #1 **<END>** g00978933

231-5273 LINES GP-CONNECTING

PART OF 424-0450, 424-0451 BLADE AR
AN ATTACHMENT

SMCS-5057 **i01964116**

NOTE	REF NO	GRAPHIC REF	PART NUMBER	QTY	PART NAME 1 2 3 4 5 6 (PRODUCT LEVEL)	SEE PAGE
	1	1	**153-2994**	1	COUPLING (FEMALE)	
	2	1	**153-2995**	1	COUPLING (MALE)	
I	3	1	**231-0124**	2	HOSE AS	
I	4	1	**231-0125**	1	HOSE AS	
I	5	1	**231-0126**	2	HOSE AS	
I	6	1	**231-0127**	2	HOSE AS	
I	7	1	**238-1003**	1	HOSE AS	
	8	1	*148-8315*	2	CONNECTOR AS	
					(EACH INCLUDES)	
		1	**2M-9780**	1	SEAL-O-RING	
		1	**6V-8642**	1	CONNECTOR	
		1	**7J-9108**	1	SEAL-O-RING	
	9	1	*148-8336*	6	CONNECTOR AS	
					(EACH INCLUDES)	
		1	**3J-1907**	1	SEAL-O-RING	
		1	**6V-8397**	1	SEAL-O-RING	
		1	**6V-8636**	1	CONNECTOR	
	10	1	*148-8342*	2	CONNECTOR AS	
					(EACH INCLUDES)	
		1	**3K-0360**	1	SEAL-O-RING	
		1	**6V-8632**	1	CONNECTOR	
		1	**7J-9108**	1	SEAL-O-RING	
	11	1	**5P-1076**	2	WASHER-HARD (13.5X30X4-MM THK)	
	12	1	**7G-5984**	1	CLIP (TAB)	
	13	1	**7G-5985**	1	CLIP (SLOT)	
	14	1	**7G-5986**	1	GROMMET	
M	15	1	**8T-4139**	2	BOLT (M12X1.75X30-MM)	

I - REFER TO HYDRAULIC INFORMATION SYSTEM
M - METRIC PART

231-5273 **LINES GP-CONNECTING (*contd.*)** **i01964116**

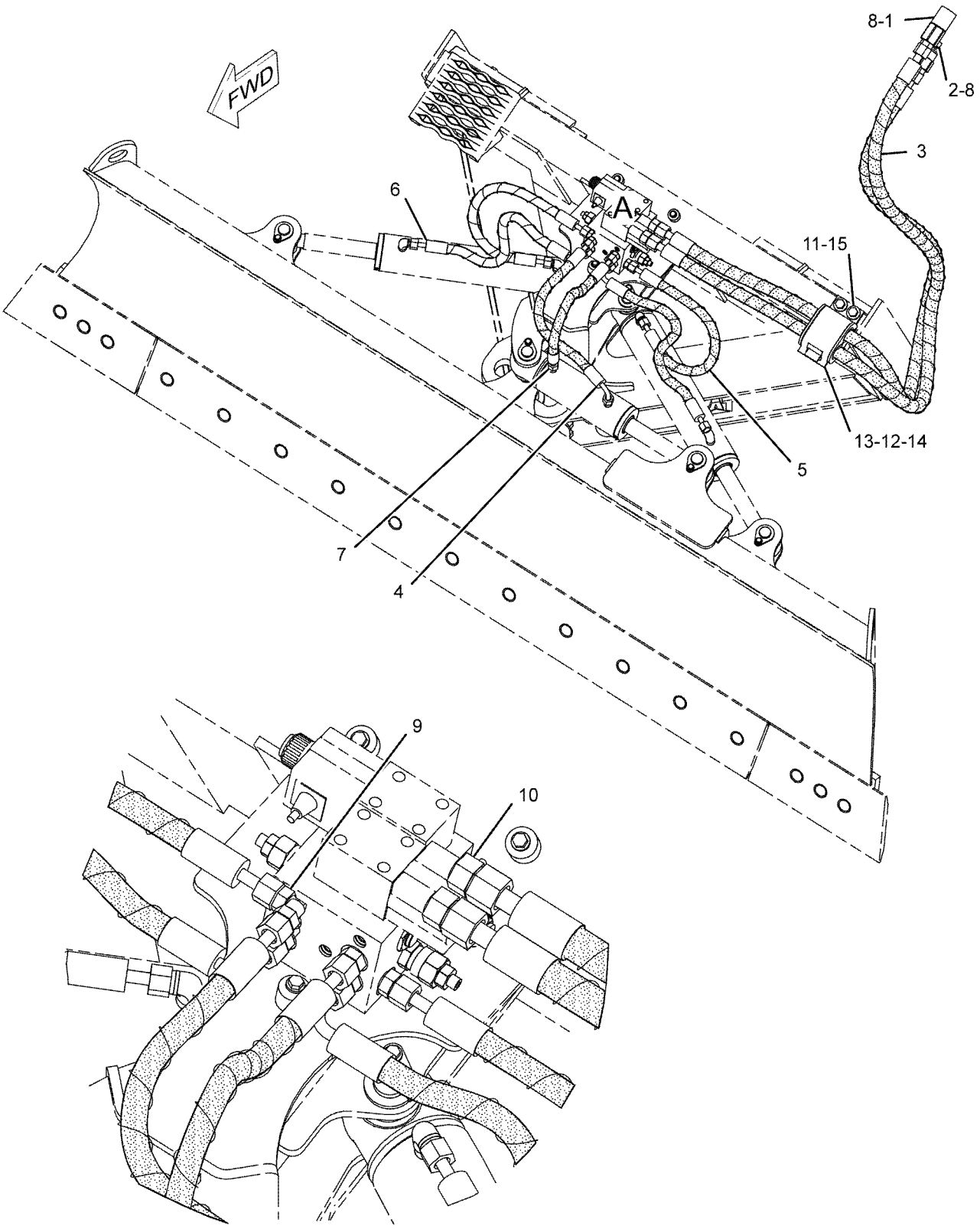

VIEW OF AREA A

GRAPHIC #1 **<END>** g01041993

161-0187 LINES GP-GRAPPLE

PART OF 157-7223, 157-7224, 157-7225, 217-6229 BUCKET AR-GRAPPLE
AN ATTACHMENT

SMCS-5057, 5555 **i01928983**

NOTE	REF NO	GRAPHIC REF	PART NUMBER	QTY	PART NAME 1 2 3 4 5 6 (PRODUCT LEVEL)	SEE PAGE
	1	1	**3E-7404**	2	CLAMP-HOSE	
	2	1	**153-2994**	1	COUPLING (FEMALE)	
	3	1	**153-2995**	1	COUPLING (MALE)	
	4	1	**161-0185**	1	TUBE AS	
	5	1	**161-0186**	1	TUBE AS	
	6	1	**161-0188**	2	TUBE AS	
I	7	1	**161-0189**	2	HOSE AS	
I	8	1	**161-0190**	2	HOSE AS	
	9	1	**163-1385**	1	ELBOW	
I	10	1	**163-9320**	1	HOSE AS	
I	11	1	**166-9312**	1	HOSE AS	
	12	1	*148-8319*	2	CONNECTOR AS	
					(EACH INCLUDES)	
		1	**2M-9780**	1	SEAL-O-RING	
		1	**6V-8397**	1	SEAL-O-RING	
		1	**6V-8715**	1	CONNECTOR	
	13	1	**2V-3216**	6	CLIP	
	14	1	**6V-8397**	13	SEAL-O-RING	
	15	1	**7S-3916**	2	CLIP (TAB)	
	16	1	**7S-3919**	2	CLIP (SLOT)	
	17	1	**8T-4121**	2	WASHER-HARD (11X21X2.5-MM THK)	
M	18	1	**8T-4136**	2	BOLT (M10X1.5X25-MM)	
M	19	1	**8T-4171**	4	BOLT (M6X1X12-MM)	
	20	1	**9R-2004**	2	BLOCK	

I - REFER TO HYDRAULIC INFORMATION SYSTEM
M - METRIC PART

161-0187 **LINES GP-GRAPPLE (*contd.*)** **i01928983**

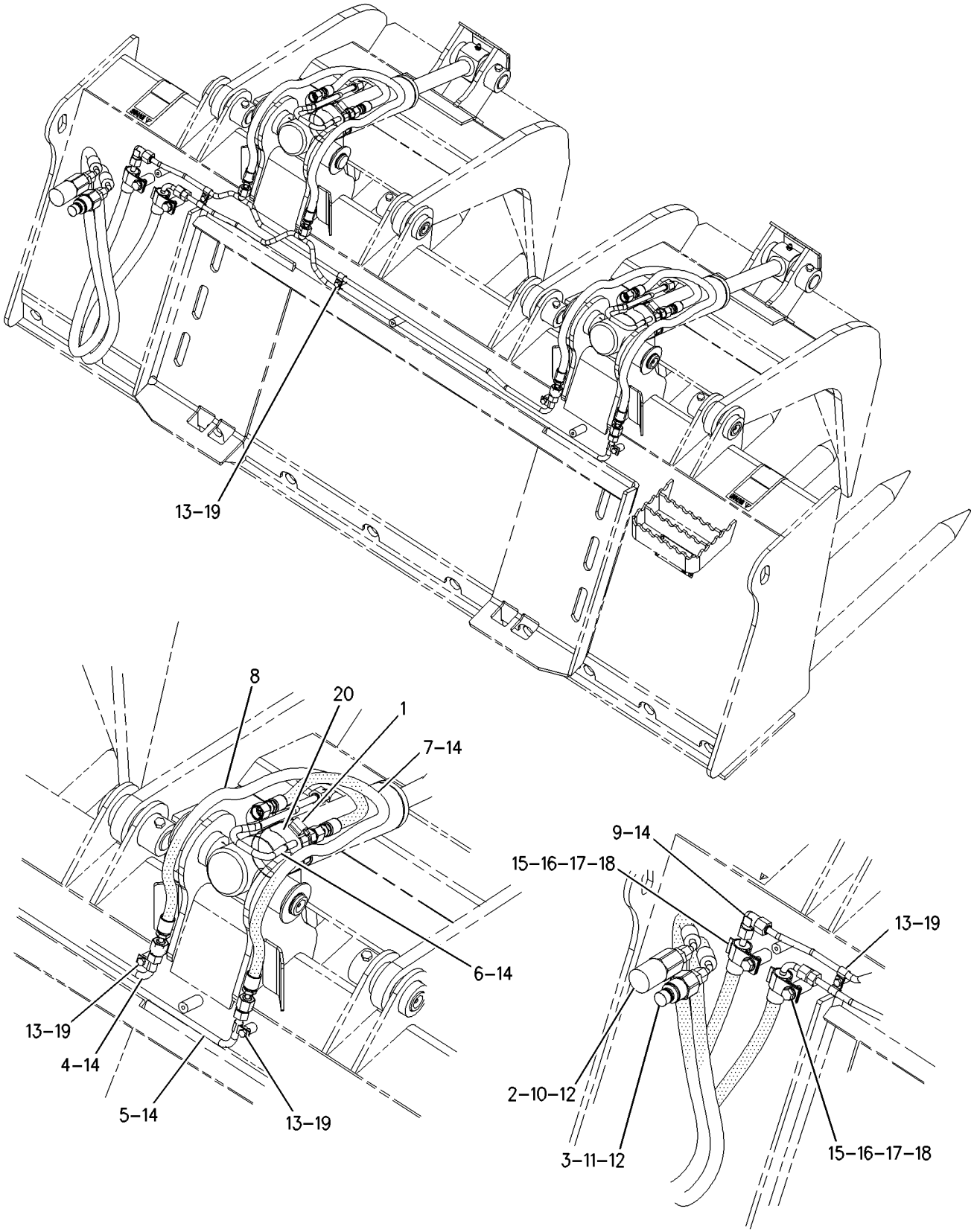

GRAPHIC #1 **<END>** g00733464

286-9250 LINES GP-GRAPPLE

2134-MM (84-IN)
PART OF 286-9301 BUCKET AR-GRAPPLE
AN ATTACHMENT

SMCS-5057, 5555

i02941543

NOTE	REF NO	GRAPHIC REF	PART NUMBER	QTY	PART NAME 1 2 3 4 5 6 (PRODUCT LEVEL)	SEE PAGE
	1	1	**2H-7829**	10	CLIP	
	2	1	**9S-4200**	2	CLIP	
	3	1	**153-2994**	1	COUPLING (FEMALE)	
I	4	1	**161-0189**	2	HOSE AS	
	5	1	**163-1385**	1	ELBOW	
I	6	1	**177-1911**	2	HOSE AS	
	7	1	**185-7887**	1	COUPLER AS-QUICK DISCONNECT (MALE)	
I	8	1	**286-9263**	2	HOSE AS	
	9	1	**286-9265**	1	TUBE AS	
	10	1	**286-9266**	1	TUBE AS	
	11	1	**286-9267**	1	TUBE AS	
	12	1	**286-9268**	1	TUBE AS	
	13	1	**286-9271**	1	GUARD	
	14	1	*148-8319*	2	CONNECTOR AS	
					(EACH INCLUDES)	
		1	**2M-9780**	1	SEAL-O-RING	
		1	**6V-8397**	1	SEAL-O-RING	
		1	**6V-8715**	1	CONNECTOR	
	15	1	**8T-4224**	6	WASHER-HARD (8.8X16X2-MM THK)	
	16	1	**6V-8397**	13	SEAL-O-RING	
	17	1	**7S-3916**	2	CLIP (TAB)	
	18	1	**7S-3919**	2	CLIP (SLOT)	
	19	1	**7X-7729**	5	WASHER (11X25X3-MM THK)	
M	20	1	**8T-4195**	5	BOLT (M10X1.5X30-MM)	
M	21	1	**8T-4200**	6	BOLT (M8X1.25X16-MM)	
	22	1	**5P-5148**	2	STRAP-CABLE	

I - REFER TO HYDRAULIC INFORMATION SYSTEM
M - METRIC PART

286-9250 **LINES GP-GRAPPLE (*contd.*)** **i02941543**

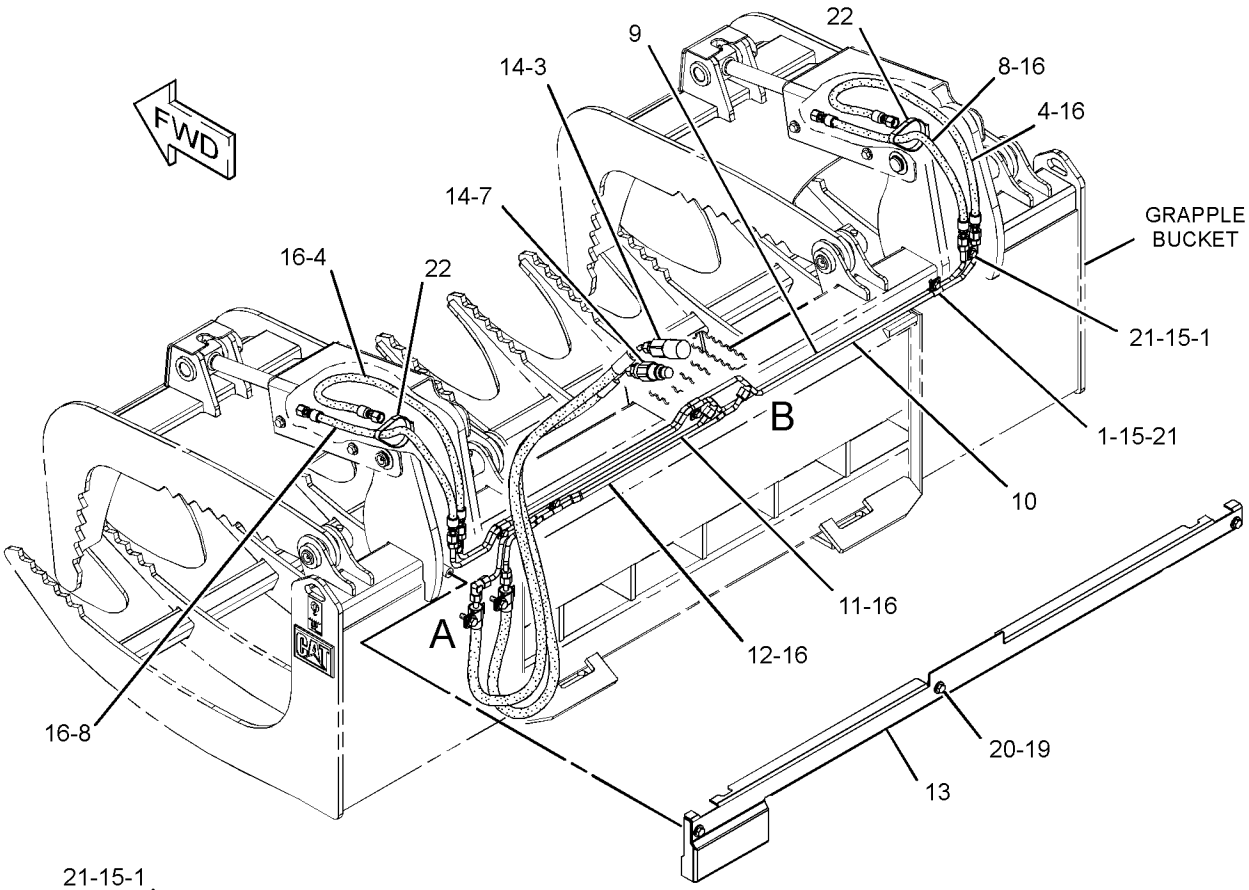

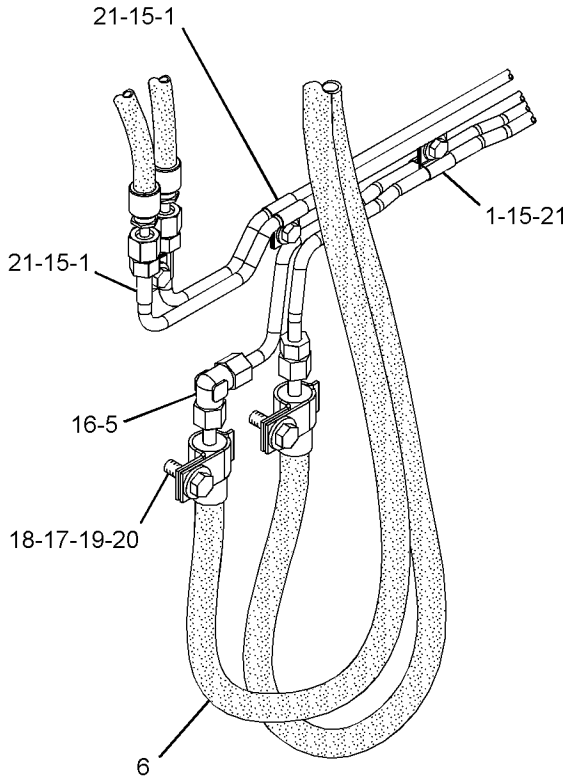

VIEW OF AREA A

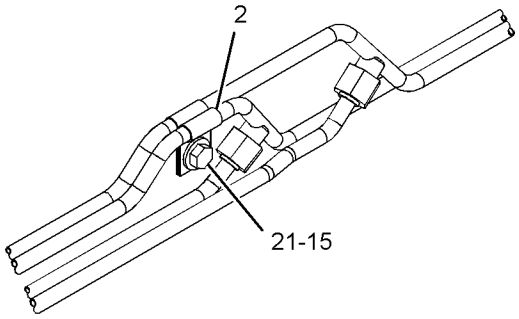

VIEW OF AREA B

GRAPHIC #1 **<END>** g01514424

286-9279 LINES GP-GRAPPLE

1829-MM (72-IN)
PART OF 286-9300 BUCKET AR-GRAPPLE
AN ATTACHMENT

SMCS-5057, 5555 **i02914649**

NOTE	REF NO	GRAPHIC REF	PART NUMBER	QTY	PART NAME 1 2 3 4 5 6 (PRODUCT LEVEL)	SEE PAGE
	1	1	**2H-7829**	10	CLIP	
	2	1	**9S-4200**	2	CLIP	
	3	1	**153-2994**	1	COUPLING (FEMALE)	
I	4	1	**161-0189**	2	HOSE AS	
	5	1	**163-1385**	1	ELBOW	
I	6	1	**177-1911**	2	HOSE AS	
	7	1	**185-7887**	1	COUPLER AS-QUICK DISCONNECT (MALE)	
	8	1	**286-9249**	1	GUARD	
I	9	1	**286-9263**	2	HOSE AS	
	10	1	**286-9267**	1	TUBE AS	
	11	1	**286-9268**	1	TUBE AS	
	12	1	**286-9280**	1	TUBE AS	
	13	1	**286-9281**	1	TUBE AS	
	14	1	*148-8319*	2	CONNECTOR AS	
					(EACH INCLUDES)	
		1	**2M-9780**	1	SEAL-O-RING	
		1	**6V-8397**	1	SEAL-O-RING	
		1	**6V-8715**	1	CONNECTOR	
	15	1	**8T-4224**	6	WASHER-HARD (8.8X16X2-MM THK)	
	16	1	**6V-8397**	13	SEAL-O-RING	
	17	1	**7S-3916**	2	CLIP (TAB)	
	18	1	**7S-3919**	2	CLIP (SLOT)	
	19	1	**7X-7729**	5	WASHER (11X25X3-MM THK)	
M	20	1	**8T-4195**	5	BOLT (M10X1.5X30-MM)	
M	21	1	**8T-4200**	6	BOLT (M8X1.25X16-MM)	
	22	1	**5P-5148**	2	STRAP-CABLE	

I - REFER TO HYDRAULIC INFORMATION SYSTEM
M - METRIC PART

286-9279 **LINES GP-GRAPPLE (*contd.*)** **i02914649**

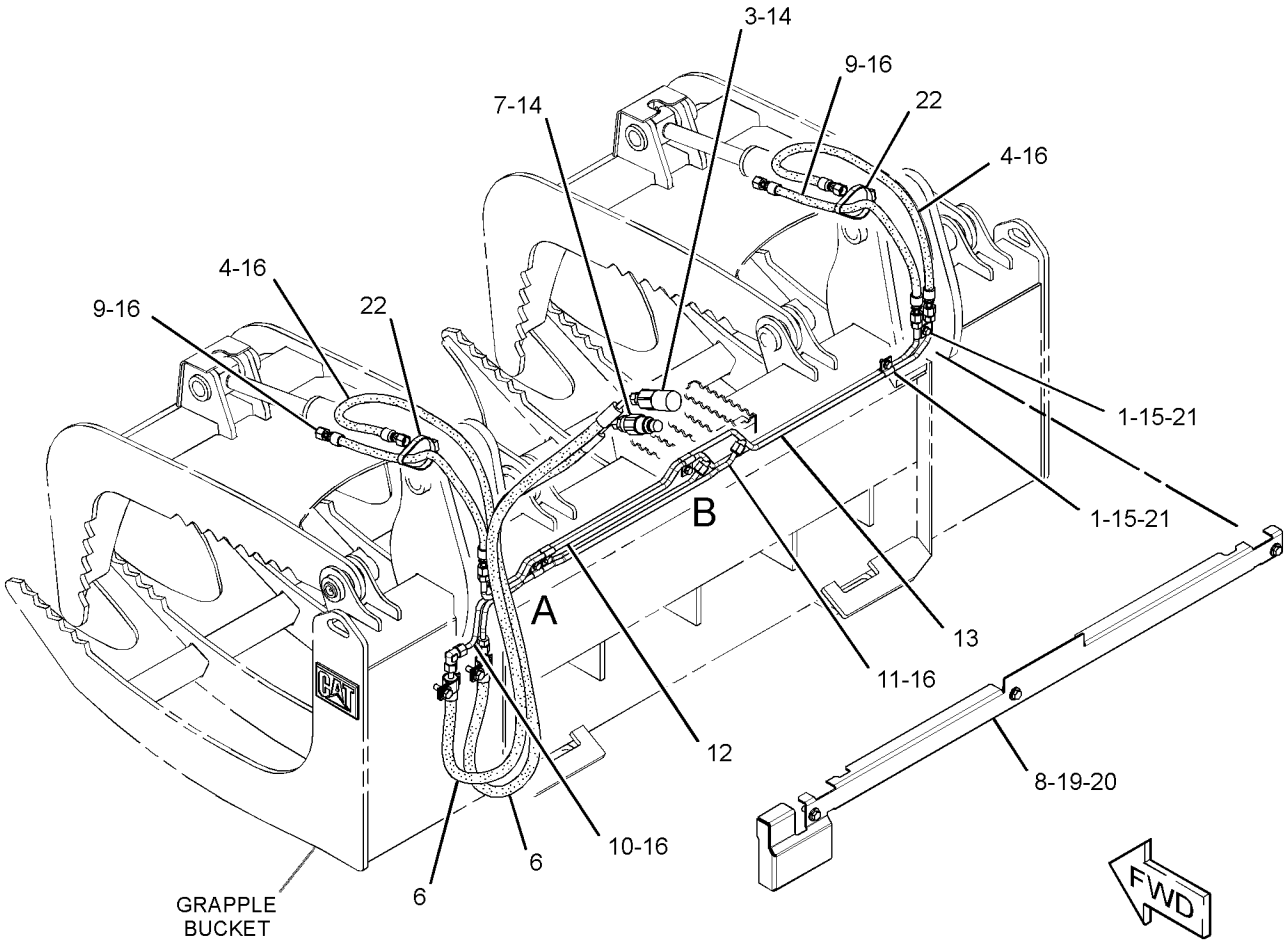

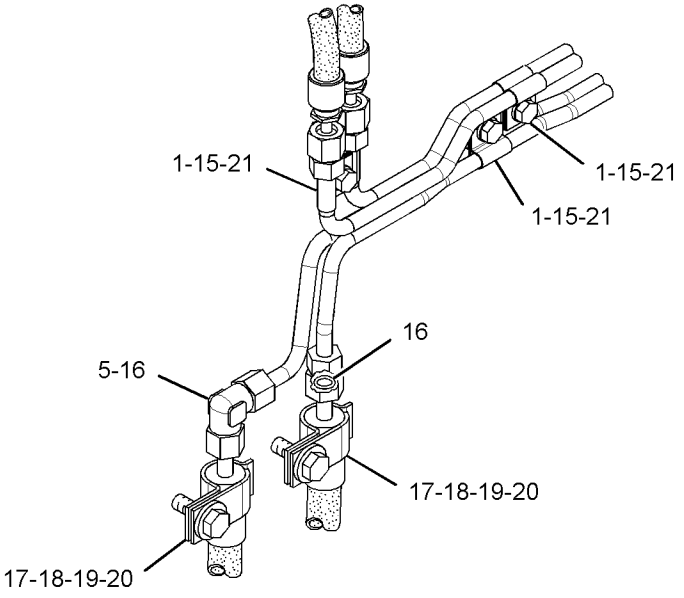

VIEW OF AREA A
(HOSES REMOVED FOR CLARITY)

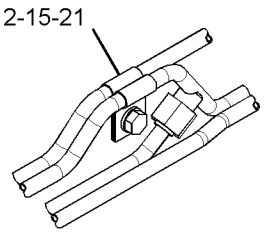

VIEW OF AREA B

GRAPHIC #1 **<END>** g01453768

345-5740 LINES GP-HYDRAULIC–RIDE CONTROL

PART OF 388-8127, 388-8129 CONFIGURATION AR
AN ATTACHMENT

SMCS-5057 **i05378209**

NOTE	REF NO	GRAPHIC REF	PART NUMBER	QTY	PART NAME 1 2 3 4 5 6 (PRODUCT LEVEL)	SEE PAGE
Y	1	1	**345-4755**	1	MANIFOLD GP-RIDE CONTROL	274
	2	1	*189-5719*	1	ADAPTER AS	
		1	**3K-0360**	2	SEAL-O-RING	
		1	**6V-0467**	1	CONNECTOR	
	3	1	**304-6756**	1	VALVE GP-CHECK (RIDE CONTROL)	
		1	**3K-0360**	1	SEAL-O-RING	
		1	**6V-8398**	1	SEAL-O-RING	
	4	1	**309-5146**	1	ADAPTER	
Y	5	1	*310-8460*	1	ACCUMULATOR GP-RIDE CONTROL (CHARGED)	205
I	6	1	**345-5786**	1	HOSE AS	
	7	1	**422-3386**	1	TUBE AS	
I	8	1	**345-5789**	1	HOSE AS	
I	9	1	**345-5790**	1	HOSE AS	
I	10	1	**422-3387**	1	HOSE AS	
	11	1	*148-8340*	1	CONNECTOR AS	
		1	**3K-0360**	1	SEAL-O-RING	
		1	**6V-8398**	1	SEAL-O-RING	
		1	**6V-8639**	1	CONNECTOR	
	12	1	*148-8364*	2	ELBOW AS	
					(EACH INCLUDES)	
		1	**3K-0360**	1	SEAL-O-RING	
		1	**6V-8398**	1	SEAL-O-RING	
		1	**6V-8625**	1	ELBOW	
	15	1	**1B-3057**	2	CLIP	
	16	1	**246-0581**	1	BOLT (M10X1.5X16-MM)	
	17	1	*296-5725*	1	TEE AS	
		1	**3K-0360**	1	SEAL-O-RING	
		1	**7J-9108**	2	SEAL-O-RING	
		1	**109-5811**	1	TEE-O-RING PORT	
	18	1	**3K-0360**	1	SEAL-O-RING	
	19	1	**6V-8398**	1	SEAL-O-RING	
M	20	1	**7X-2538**	2	BOLT (M8X1.25X100-MM)	
	21	1	**8T-4224**	2	WASHER-HARD (8.8X16X2-MM THK)	
	22	1	**8T-4122**	2	WASHER-HARD (17X32X3.5-MM THK)	

I - REFER TO HYDRAULIC INFORMATION SYSTEM
M - METRIC PART
Y - SEPARATE ILLUSTRATION

345-5740 **LINES GP-HYDRAULIC (*contd.*)** **i05378209**

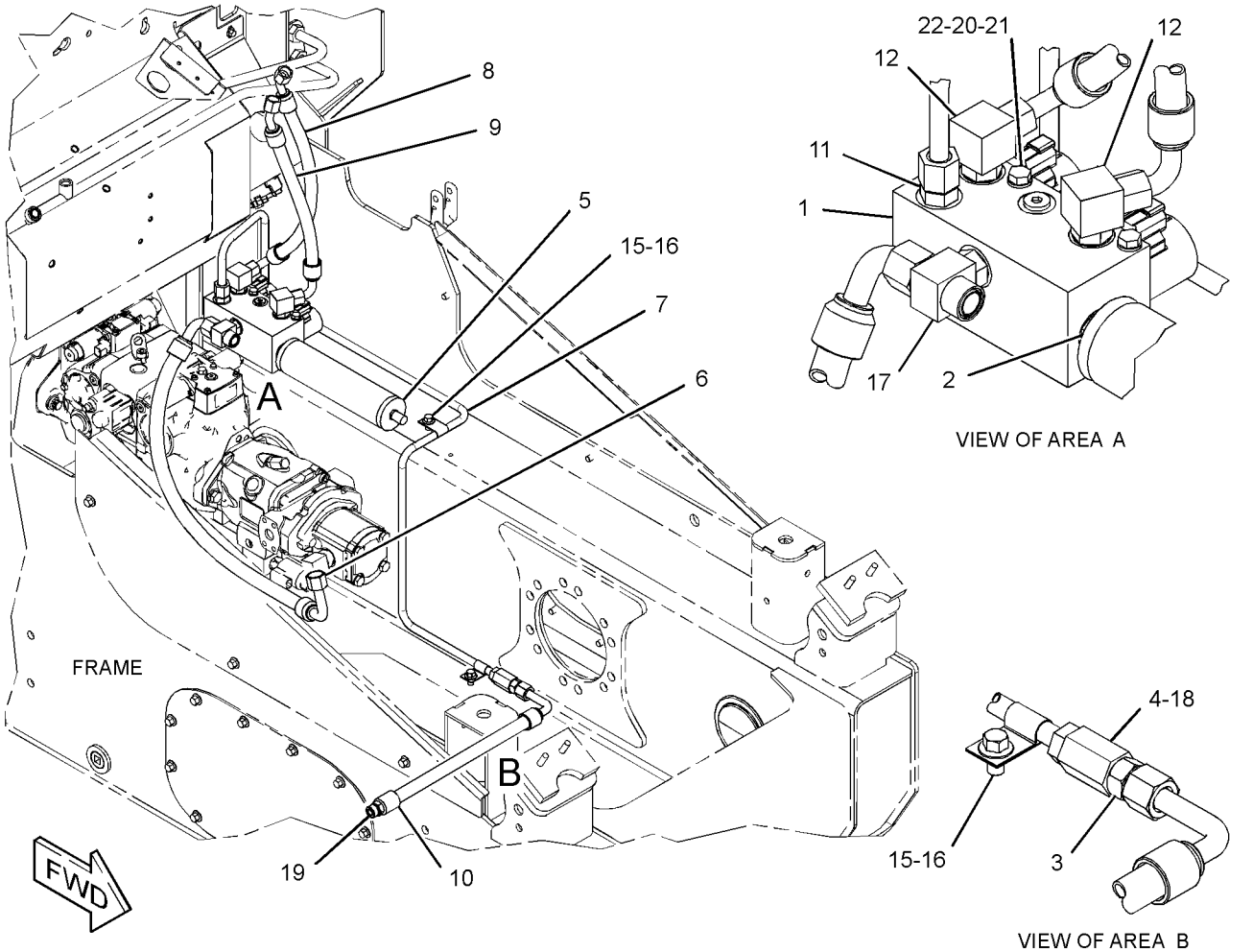

GRAPHIC #1 **<END>** g03407519

345-5742 LINES GP-HYDRAULIC–CHARGE

PART OF 388-8126, 388-8128 CONFIGURATION AR
AN ATTACHMENT

SMCS-5057 **i05380990**

NOTE	REF NO	GRAPHIC REF	PART NUMBER	QTY	PART NAME 1 2 3 4 5 6 (PRODUCT LEVEL)	SEE PAGE
	1	1	**3E-4091**	1	ELBOW	
	2	1	**178-3620**	1	STRAP-DUAL CLAMP	
	3	1	**335-6983**	2	CLAMP-BAND	
I	4	1	**345-4862**	1	HOSE AS	
Y	5	1	*346-5576*	1	FILTER GP-OIL (HYDRAULIC, TRANSMISSION)	153
I	6	1	**388-8050**	1	HOSE AS	
I	7	1	**388-8051**	1	HOSE AS	
	9	1	*148-8315*	3	CONNECTOR AS	
					(EACH INCLUDES)	
		1	**2M-9780**	1	SEAL-O-RING	
		1	**6V-8642**	1	CONNECTOR	
		1	**7J-9108**	1	SEAL-O-RING	
	10	1	*148-8327*	1	CONNECTOR AS	
		1	**3D-2824**	1	SEAL-O-RING	
		1	**6V-8637**	1	CONNECTOR	
		1	**6V-9746**	1	SEAL-O-RING	
	11	1	*148-8347*	1	ELBOW AS	
		1	**3D-2824**	1	SEAL-O-RING	
		1	**6V-9007**	1	ELBOW	
		1	**6V-9746**	1	SEAL-O-RING	
	12	1	*148-8390*	1	ELBOW AS	
		1	**2M-9780**	1	SEAL-O-RING	
		1	**6V-8626**	1	ELBOW	
		1	**7J-9108**	1	SEAL-O-RING	
	13	1	*148-8393*	1	ELBOW AS	
		1	**6V-9852**	1	ELBOW	
		1	**7J-9108**	1	SEAL-O-RING	
	14	1	*150-3072*	1	PLUG AS	
		1	**6V-8398**	1	SEAL-O-RING	
		1	**6V-9509**	1	PLUG (13/16-16-THD)	
	15	1	**154-9023**	1	VALVE-SAMPLING (HYDRAULIC OIL)	
	16	1	**223-3490**	1	CLIP	
M	17	1	**266-3315**	1	BOLT-FLANGE HEAD (M8X1.25X25.5-MM)	
	18	1	**3J-7354**	2	SEAL-O-RING	
	20	1	**6V-9830**	2	CAP AS (HYDRAULIC OIL)	
	21	1	**7K-1181**	2	STRAP-CABLE	
	22	1	**8C-3451**	1	CAP-DUST	
	23	1	**8T-4121**	4	WASHER-HARD (11X21X2.5-MM THK)	
M	24	1	**8T-4136**	4	BOLT (M10X1.5X25-MM)	
E	25	1	**5P-1442**		HOSE (71-CM)	

E - ORDER BY THE CENTIMETER
I - REFER TO HYDRAULIC INFORMATION SYSTEM
M - METRIC PART
Y - SEPARATE ILLUSTRATION

345-5742 **LINES GP-HYDRAULIC (*contd.*)** **i05380990**

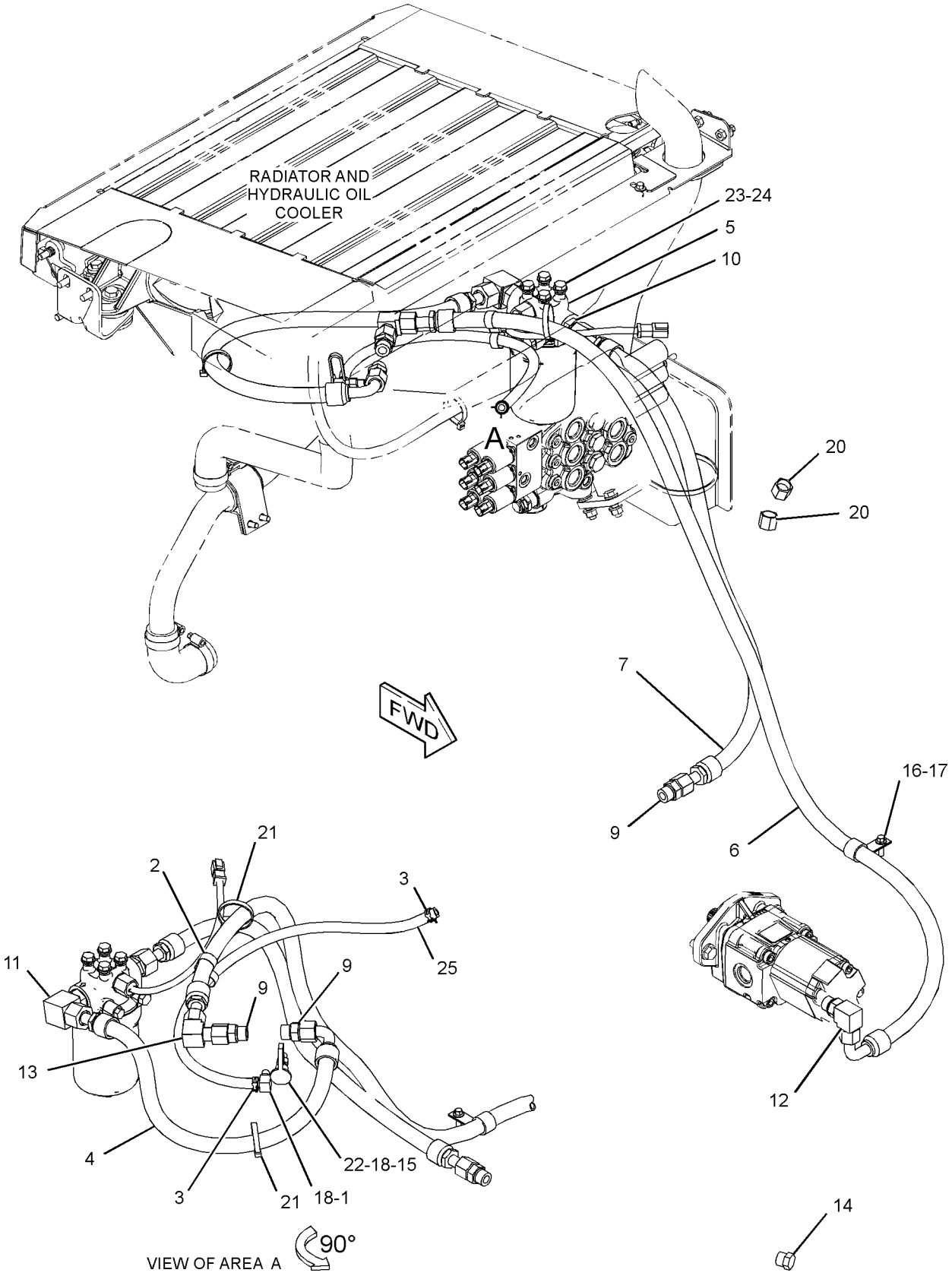

GRAPHIC #1 **<END>** g03405118

345-5743 LINES GP-HYDRAULIC–CHARGE

PART OF 388-8127, 388-8129 CONFIGURATION AR
AN ATTACHMENT

SMCS-5057 **i05381073**

NOTE	REF NO	GRAPHIC REF	PART NUMBER	QTY	PART NAME 1 2 3 4 5 6 (PRODUCT LEVEL)	SEE PAGE
	1	1	**3E-4091**	1	ELBOW	
	2	1	**178-3620**	1	STRAP-DUAL CLAMP	
	3	1	**335-6983**	2	CLAMP-BAND	
I	4	1	**345-4862**	1	HOSE AS	
Y	5	1	*346-5576*	1	FILTER GP-OIL (HYDRAULIC, TRANSMISSION)	153
I	6	1	**388-8051**	1	HOSE AS	
I	7	1	**388-8055**	1	HOSE AS	
	9	1	*148-8315*	3	CONNECTOR AS	
					(EACH INCLUDES)	
		1	**2M-9780**	1	SEAL-O-RING	
		1	**6V-8642**	1	CONNECTOR	
		1	**7J-9108**	1	SEAL-O-RING	
	10	1	*148-8327*	1	CONNECTOR AS	
		1	**3D-2824**	1	SEAL-O-RING	
		1	**6V-8637**	1	CONNECTOR	
		1	**6V-9746**	1	SEAL-O-RING	
	11	1	*148-8347*	1	ELBOW AS	
		1	**3D-2824**	1	SEAL-O-RING	
		1	**6V-9007**	1	ELBOW	
		1	**6V-9746**	1	SEAL-O-RING	
	12	1	*148-8390*	1	ELBOW AS	
		1	**2M-9780**	1	SEAL-O-RING	
		1	**6V-8626**	1	ELBOW	
		1	**7J-9108**	1	SEAL-O-RING	
	13	1	*148-8393*	1	ELBOW AS	
		1	**6V-9852**	1	ELBOW	
		1	**7J-9108**	1	SEAL-O-RING	
	14	1	**154-9023**	1	VALVE-SAMPLING (HYDRAULIC OIL)	
M	15	1	**266-3315**	1	BOLT-FLANGE HEAD (M8X1.25X25.5-MM)	
	16	1	**3J-7354**	2	SEAL-O-RING	
	18	1	**7K-1181**	2	STRAP-CABLE	
	19	1	**8C-3451**	1	CAP-DUST	
	20	1	**8T-4121**	4	WASHER-HARD (11X21X2.5-MM THK)	
M	21	1	**8T-4136**	4	BOLT (M10X1.5X25-MM)	
E	22	1	**5P-1442**		HOSE (70-CM)	

E - ORDER BY THE CENTIMETER
I - REFER TO HYDRAULIC INFORMATION SYSTEM
M - METRIC PART
Y - SEPARATE ILLUSTRATION

345-5743 **LINES GP-HYDRAULIC (*contd.*)** **i05381073**

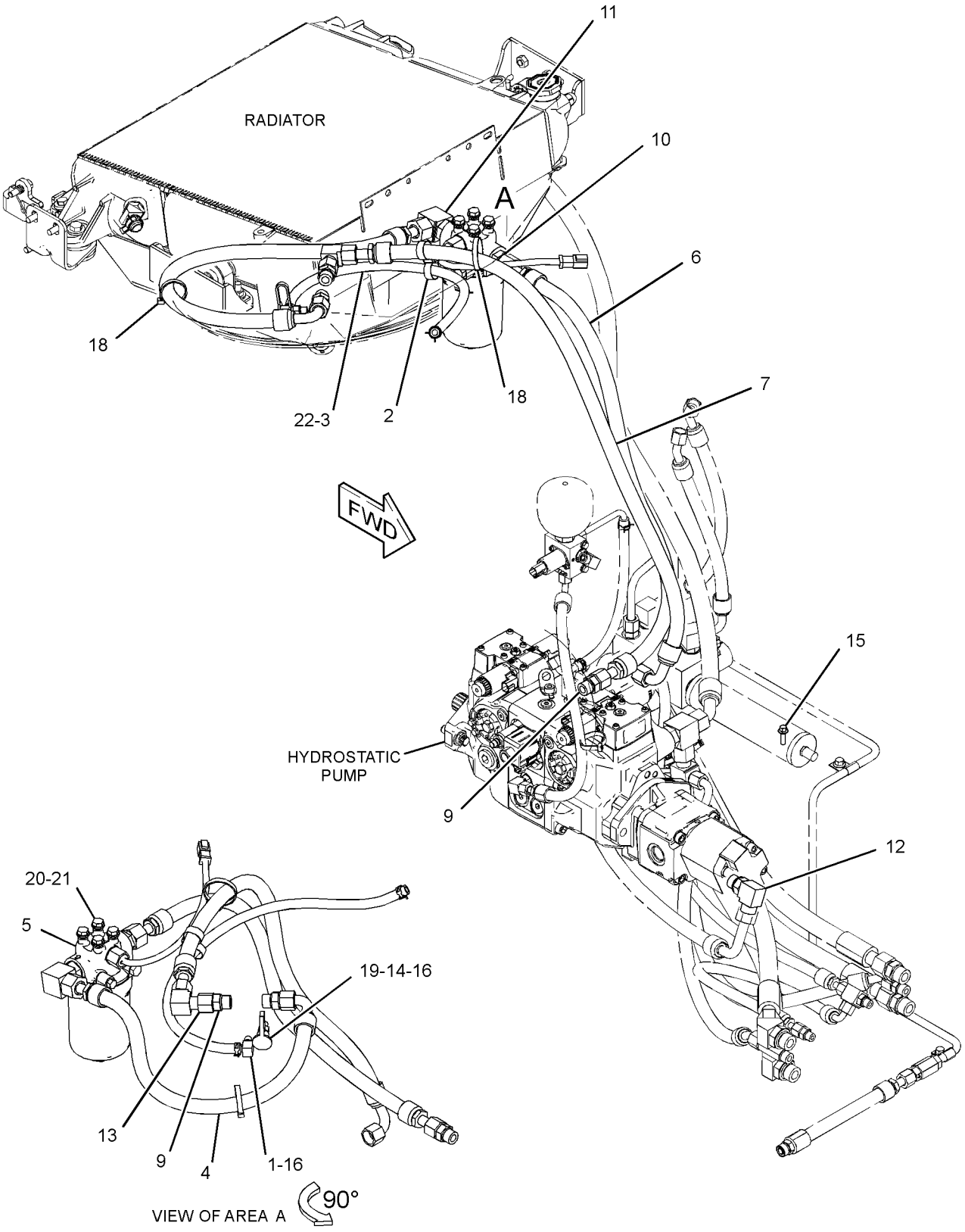

GRAPHIC #1 **<END>** g03406866

345-5751 LINES GP-LIFT CYLINDER

PART OF 388-8035, 388-8036, 388-8038 HYDRAULIC AR
AN ATTACHMENT

SMCS-5057, 5102 **i05192232**

NOTE	REF NO	GRAPHIC REF	PART NUMBER	QTY	PART NAME 1 2 3 4 5 6 (PRODUCT LEVEL)	SEE PAGE
	1	1	**6V-3582**	2	CLAMP-HOSE	
	2	1	**112-1817**	1	VALVE GP-MANUAL (LIFT CYLINDER)	
	3	1	**142-8997**	2	BLOCK	
	4	1	**178-3620**	4	STRAP-DUAL CLAMP	
	5	1	**187-1273**	2	TUBE AS	
	6	1	**269-9404**	1	BRACKET	
I	7	1	**345-4821**	1	HOSE AS	
I	8	1	**345-4822**	1	HOSE AS	
	9	1	**345-4824**	1	TUBE AS	
	10	1	**345-4825**	1	TUBE AS	
I	11	1	**345-5694**	1	HOSE AS	
Y	12	1	**345-5703**	1	CABLE GP-CONTROL	477
I	13	1	**345-5752**	2	HOSE AS	
I	14	1	**345-6491**	2	HOSE AS	
	15	1	**370-8008**	1	LEVER AS	
		1	**270-0216**	1	BRACKET	
	16	1	*148-8328*	2	CONNECTOR AS	
					(EACH INCLUDES)	
		1	**3D-2824**	1	SEAL-O-RING	
		1	**6V-8398**	1	SEAL-O-RING	
		1	**6V-8633**	1	CONNECTOR	
	17	1	*148-8378*	1	ELBOW AS	
		1	**3J-1907**	1	SEAL-O-RING	
		1	**6V-8397**	1	SEAL-O-RING	
		1	**6V-8724**	1	ELBOW	
	18	1	*161-8560*	1	CONNECTOR AS	
		1	**3J-1907**	1	SEAL-O-RING	
		1	**7J-9108**	1	SEAL-O-RING	
		1	**8C-6758**	1	CONNECTOR	
	19	1	**206-9185**	1	BOLT (M8X1.25X35-MM)	
M	20	1	**271-9408**	1	SCREW-TRUSS HEAD (M5X0.8X10-MM)	
	21	1	**4P-7581**	1	CLIP	
	22	1	**5P-4116**	1	WASHER-HARD (8.8X20.5X2-MM THK)	
	23	1	**6V-8397**	1	SEAL-O-RING	
	24	1	**6V-8398**	14	SEAL-O-RING	
	25	1	**6V-9169**	4	NUT (13/16-16-THD)	
	26	1	**7K-1181**	1	STRAP-CABLE	
M	27	1	**8T-0337**	4	SCREW-MACHINE (M4X0.7X12-MM)	

I - REFER TO HYDRAULIC INFORMATION SYSTEM
M - METRIC PART
Y - SEPARATE ILLUSTRATION

345-5751 **LINES GP-LIFT CYLINDER (*contd.*)** **i05192232**

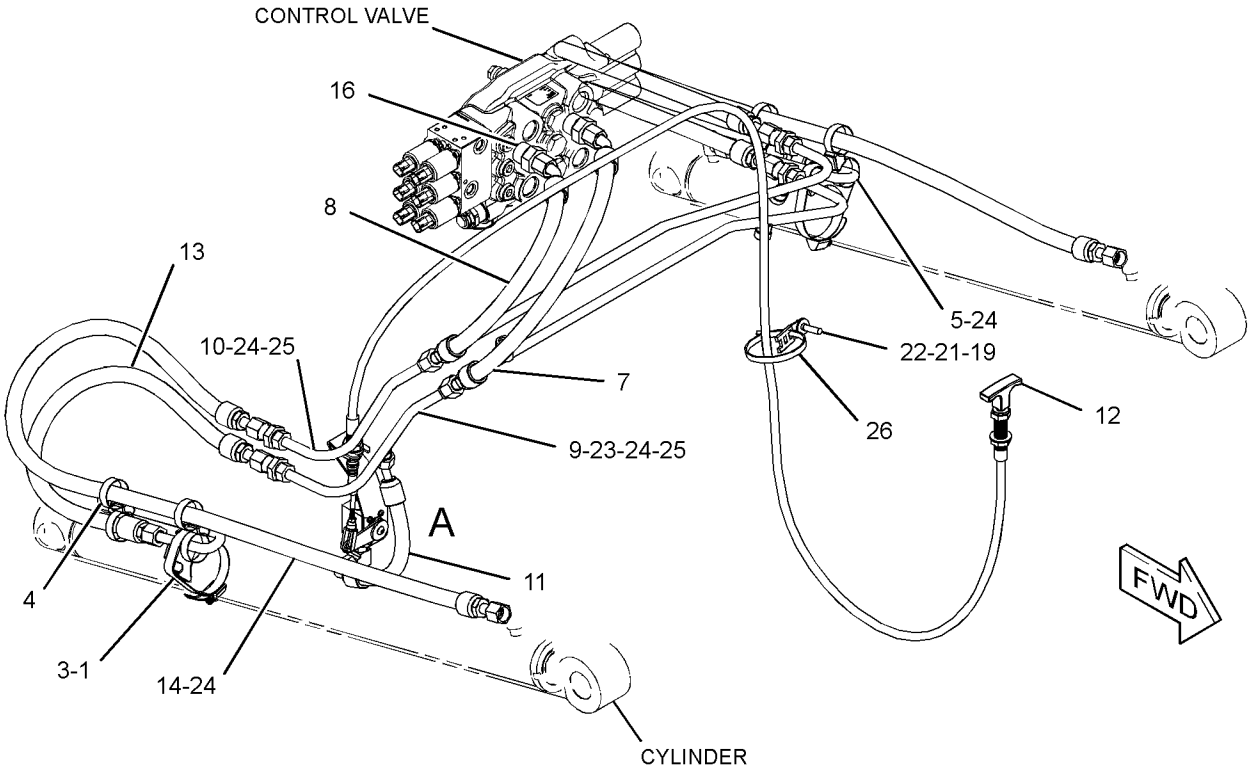

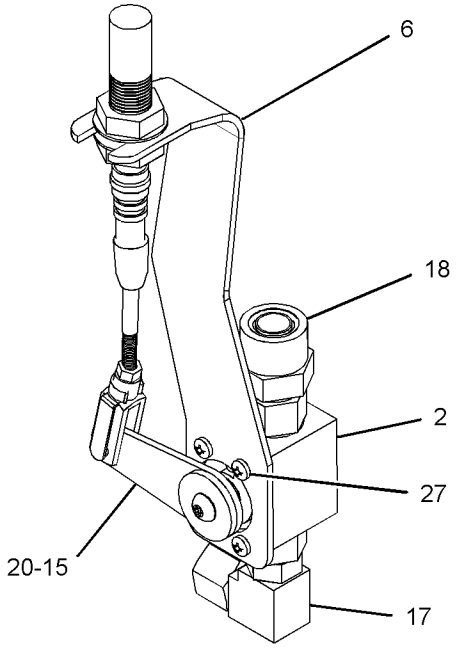

VIEW OF AREA A
PARTS REMOVED FOR CLARITY 90°

GRAPHIC #1 **<END>** g03351215

345-5728 LINES GP-PUMP–IMPLEMENT

PART OF 388-8035, 388-8036 HYDRAULIC AR
AN ATTACHMENT

SMCS-5057 **i05401578**

NOTE	REF NO	GRAPHIC REF	PART NUMBER	QTY	PART NAME 1 2 3 4 5 6 (PRODUCT LEVEL)	SEE PAGE
	1	1	**9U-6999**	1	FITTING GP-ELBOW	
		1	**7M-8485**	1	SEAL-O-RING	
		1	**034-4202**	1	ELBOW	
	2	1	**204-2281**	3	STRAP-CABLE	
	3	1	**238-1844**	2	ELBOW	
	4	1	*241-6215*	1	ELBOW AS	
		1	**3J-1907**	1	SEAL-O-RING	
		1	**6V-8076**	1	ELBOW	
	5	1	**323-3308**	5	CAP	
	6	1	**335-6983**	2	CLAMP-BAND	
	7	1	**345-3753**	1	MOUNTING-CABLE TIE	
	8	1	**345-4792**	1	BRACKET AS	
M		1	**159-9539**	2	NUT-WELD (M6X1-THD)	
	9	1	**345-5716**	1	HOSE	
I	10	1	**345-5726**	1	HOSE AS	
	11	1	**345-5729**	1	HOSE AS	
	12	1	**373-7039**	1	VALVE GP-CHECK (PUMP CASE DRAIN)	
		1	**3D-2824**	1	SEAL-O-RING	
	13	1	**423-0437**	1	ADAPTER AS	
		1	**422-3148**	1	SEAL-O-RING	
	14	1	**435-8853**	1	TUBE AS	
	15	1	**435-8881**	1	HOSE	
	16	1	*148-8347*	2	ELBOW AS	
					(EACH INCLUDES)	
		1	**3D-2824**	1	SEAL-O-RING	
		1	**6V-9007**	1	ELBOW	
		1	**6V-9746**	1	SEAL-O-RING	
	17	1	*148-8435*	2	TEE AS	
					(EACH INCLUDES)	
		1	**3J-1907**	1	SEAL-O-RING	
		1	**6V-8397**	2	SEAL-O-RING	
		1	**6V-8781**	1	TEE	
	18	1	*164-5567*	2	COUPLER AS-QUICK DISCONNECT (MALE)	
					(EACH INCLUDES)	
		1	**6V-3965**	1	FITTING (QUICK DISCONNECT)	
		1	**214-7568**	1	SEAL-O-RING	
	19	1	**204-8000**	1	MOUNTING-CABLE TIE	
M	20	1	**266-3315**	1	BOLT-FLANGE HEAD (M8X1.25X25.5-MM)	
	21	1	**280-8911**	1	CLAMP-BAND	
	22	1	**313-3499**	1	ELBOW	
	23	1	**343-6821**	1	CLAMP-BAND	
	24	1	**347-4163**	3	CLAMP-BAND	
	25	1	**373-7621**	2	CLAMP-BAND	
	26	1	**373-7622**	2	CLAMP-BAND	
	27	1	**373-7623**	1	CLAMP-BAND	
	28	1	**4B-9302**	2	CLIP	
	29	1	**6V-0852**	2	CAP-DUST	
	30	1	**8T-4121**	6	WASHER-HARD (11X21X2.5-MM THK)	
M	31	1	**8T-4136**	4	BOLT (M10X1.5X25-MM)	
M	32	1	**8T-4195**	4	BOLT (M10X1.5X30-MM)	
E	33	1	**5P-0743**		HOSE (44-CM)	
E	34	1	**5P-1442**		HOSE (57-CM)	
E	35	1	**136-1955**		HOSE (61-CM)	

E - ORDER BY THE CENTIMETER
I - REFER TO HYDRAULIC INFORMATION SYSTEM
M - METRIC PART

345-5728 **LINES GP-PUMP (*contd.*)** **i05401578**

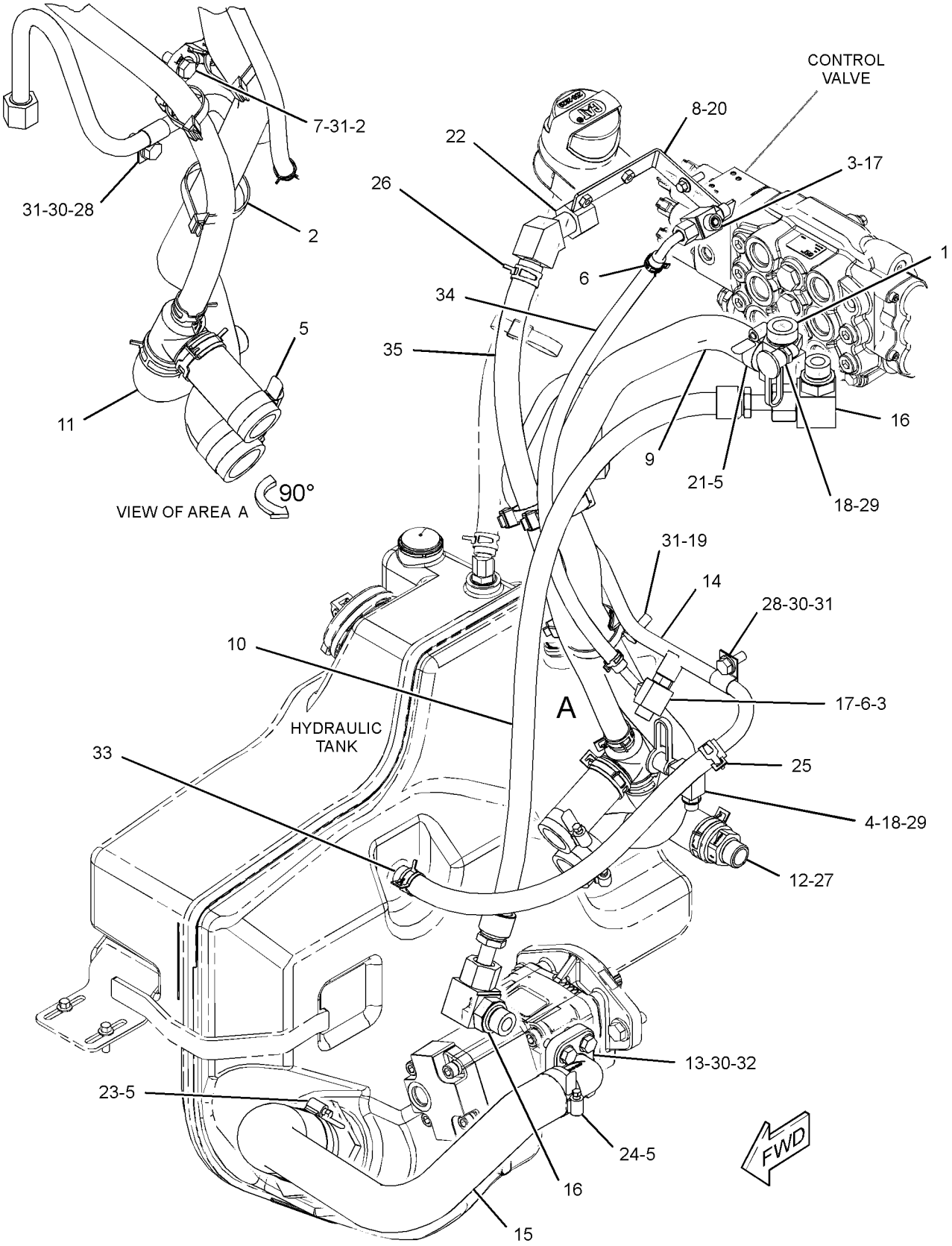

GRAPHIC #1 **<END>** g03405518

345-5730 LINES GP-PUMP–IMPLEMENT

PART OF 388-8038 HYDRAULIC AR
AN ATTACHMENT

SMCS-5057 **i05401581**

NOTE	REF NO	GRAPHIC REF	PART NUMBER	QTY	PART NAME 1 2 3 4 5 6 (PRODUCT LEVEL)	SEE PAGE
	1	1	**9U-6999**	1	FITTING GP-ELBOW	
		1	**7M-8485**	1	SEAL-O-RING	
		1	**034-4202**	1	ELBOW	
	2	1	**204-2281**	3	STRAP-CABLE	
	3	1	**238-1844**	2	ELBOW	
	4	1	*241-6215*	1	ELBOW AS	
		1	**3J-1907**	1	SEAL-O-RING	
		1	**6V-8076**	1	ELBOW	
	5	1	**323-3308**	5	CAP	
	6	1	**335-6983**	2	CLAMP-BAND	
	7	1	**345-3753**	1	MOUNTING-CABLE TIE	
	8	1	**345-4792**	1	BRACKET AS	
M		1	**159-9539**	2	NUT-WELD (M6X1-THD)	
I	9	1	**345-4835**	1	HOSE AS	
	10	1	**345-5716**	1	HOSE	
	11	1	**345-5729**	1	HOSE AS	
	12	1	**373-7039**	1	VALVE GP-CHECK (PUMP CASE DRAIN)	
		1	**3D-2824**	1	SEAL-O-RING	
	13	1	*385-5779*	1	FLANGE AS	
		1	**4J-5267**	1	SEAL-O-RING	
		1	**6V-9746**	1	SEAL-O-RING	
		1	**109-5816**	1	ELBOW	
	14	1	**423-0437**	1	ADAPTER AS	
		1	**422-3148**	1	SEAL-O-RING	
	15	1	**435-8853**	1	TUBE AS	
	16	1	**435-8880**	1	HOSE	
	17	1	*148-8347*	1	ELBOW AS	
		1	**3D-2824**	1	SEAL-O-RING	
		1	**6V-9007**	1	ELBOW	
		1	**6V-9746**	1	SEAL-O-RING	
	18	1	*148-8435*	2	TEE AS	
					(EACH INCLUDES)	
		1	**3J-1907**	1	SEAL-O-RING	
		1	**6V-8397**	2	SEAL-O-RING	
		1	**6V-8781**	1	TEE	
	19	1	*164-5567*	2	COUPLER AS-QUICK DISCONNECT (MALE)	
					(EACH INCLUDES)	
		1	**6V-3965**	1	FITTING (QUICK DISCONNECT)	
		1	**3J-1907**	1	SEAL-O-RING	
	20	1	**204-8000**	1	MOUNTING-CABLE TIE	
M	21	1	**266-3315**	1	BOLT-FLANGE HEAD (M8X1.25X25.5-MM)	
	22	1	**280-8911**	1	CLAMP-BAND	
	23	1	**313-3499**	1	ELBOW	
	24	1	**343-6821**	1	CLAMP-BAND	
	25	1	**347-4163**	3	CLAMP-BAND	
	26	1	**373-7621**	2	CLAMP-BAND	
	27	1	**373-7622**	2	CLAMP-BAND	
	28	1	**373-7623**	1	CLAMP-BAND	
	29	1	**4B-9302**	2	CLIP	
	30	1	**6V-0852**	2	CAP-DUST	
	31	1	**8T-4121**	10	WASHER-HARD (11X21X2.5-MM THK)	
M	32	1	**8T-4136**	4	BOLT (M10X1.5X25-MM)	
M	33	1	**8T-4195**	4	BOLT (M10X1.5X30-MM)	
M	34	1	**8T-6466**	4	BOLT (M10X1.5X60-MM)	
E	35	1	**5P-0743**		HOSE (44-CM)	
E	36	1	**5P-1442**		HOSE (57-CM)	
E	37	1	**136-1955**		HOSE (61-CM)	

345-5730 **LINES GP-PUMP (*contd.*)** **i05401581**

NOTE	REF NO	GRAPHIC REF	PART NUMBER	QTY	PART NAME 1 2 3 4 5 6 (PRODUCT LEVEL)	SEE PAGE

E - ORDER BY THE CENTIMETER
I - REFER TO HYDRAULIC INFORMATION SYSTEM
M - METRIC PART

345-5730 **LINES GP-PUMP (*contd.*)** **i05401581**

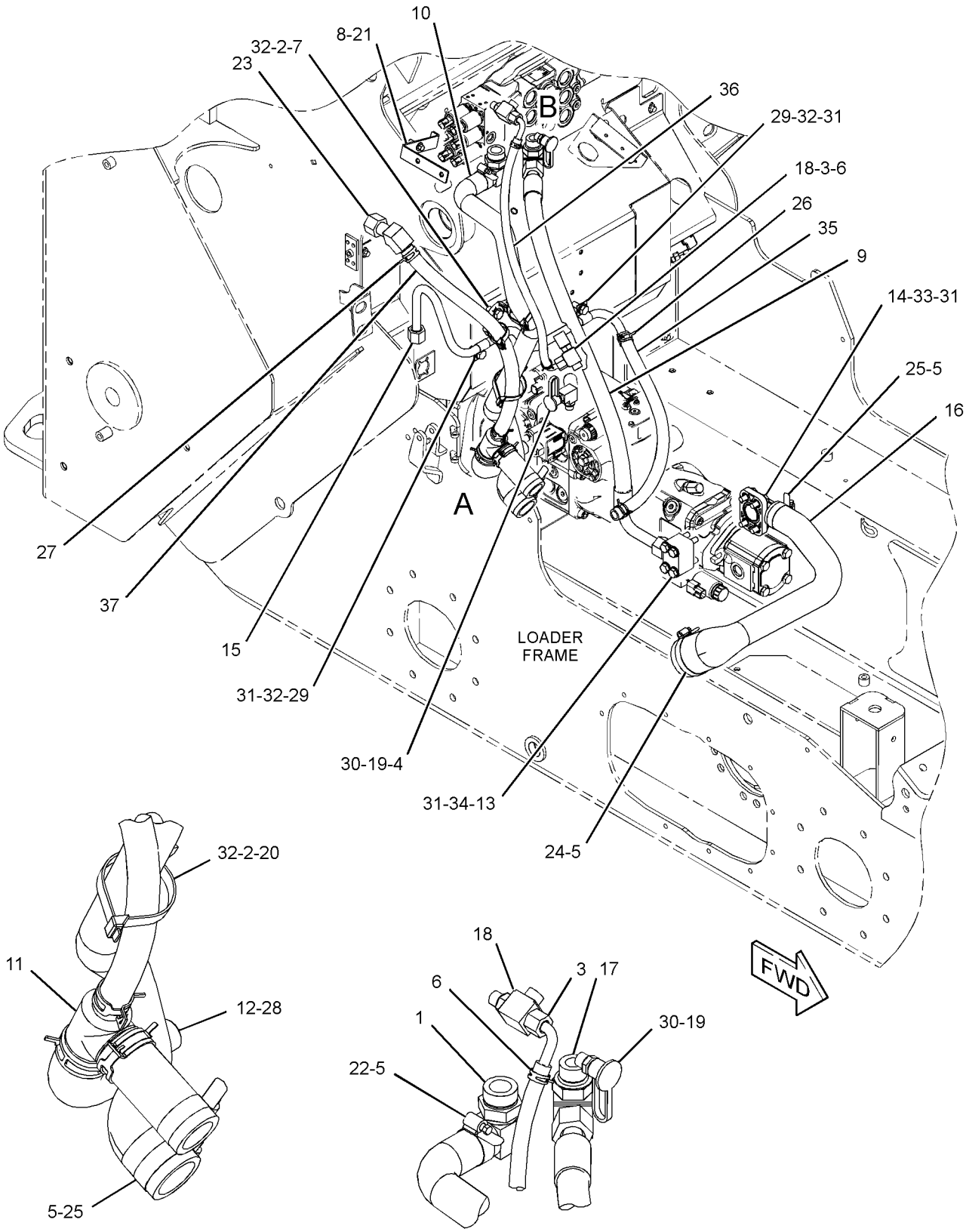

VIEW OF AREA A

VIEW OF AREA B

GRAPHIC #1

<END>

g03405503

388-7760 LINES GP-TILT CYLINDER

PART OF 388-8035, 388-8036, 388-8038 HYDRAULIC AR
AN ATTACHMENT

SMCS-5057, 5104 **i05380583**

NOTE	REF NO	GRAPHIC REF	PART NUMBER	QTY	PART NAME 1 2 3 4 5 6 (PRODUCT LEVEL)	SEE PAGE
	1	1	**4V-0612**	5	PLATE	
	2	1	*106-8715*	1	ELBOW AS	
		1	**3D-2824**	1	SEAL-O-RING	
		1	**6V-9746**	1	SEAL-O-RING	
		1	**8C-8400**	1	ELBOW	
	3	1	**345-4798**	1	BRACKET	
	4	1	**345-5754**	1	BRACKET AS	
		1	**239-8534**	1	PLATE-WELD	
	5	1	*377-9543*	2	TEE AS	
					(EACH INCLUDES)	
		1	**6V-8398**	2	SEAL-O-RING	
		1	**7J-9108**	1	SEAL-O-RING	
		1	**148-6757**	1	TEE-UNION	
	6	1	**388-7950**	1	HOSE AS	
	7	1	**388-7951**	1	HOSE AS	
M	8	1	**7X-0818**	1	BOLT (M8X1.25X45-MM)	
	9	1	**388-8158**	10	CLAMP-HALF	
I	10	1	**422-9871**	4	HOSE AS	
	11	1	*148-8347*	1	ELBOW AS	
		1	**3D-2824**	1	SEAL-O-RING	
		1	**6V-9007**	1	ELBOW	
		1	**6V-9746**	1	SEAL-O-RING	
	12	1	**190-7979**	1	BOLT (M8X1.25X80-MM)	
M	13	1	**266-3315**	2	BOLT-FLANGE HEAD (M8X1.25X25.5-MM)	
	14	1	**266-3316**	2	BOLT-FLANGE HEAD (M10X1.5X25-MM)	
M	15	1	**303-8205**	3	BOLT (M8X1.25X60-MM)	
	16	1	**6V-8398**	4	SEAL-O-RING	
	17	1	**6V-9169**	2	NUT (13/16-16-THD)	

I - REFER TO HYDRAULIC INFORMATION SYSTEM
M - METRIC PART

388-7760 **LINES GP-TILT CYLINDER (*contd.*)** **i05380583**

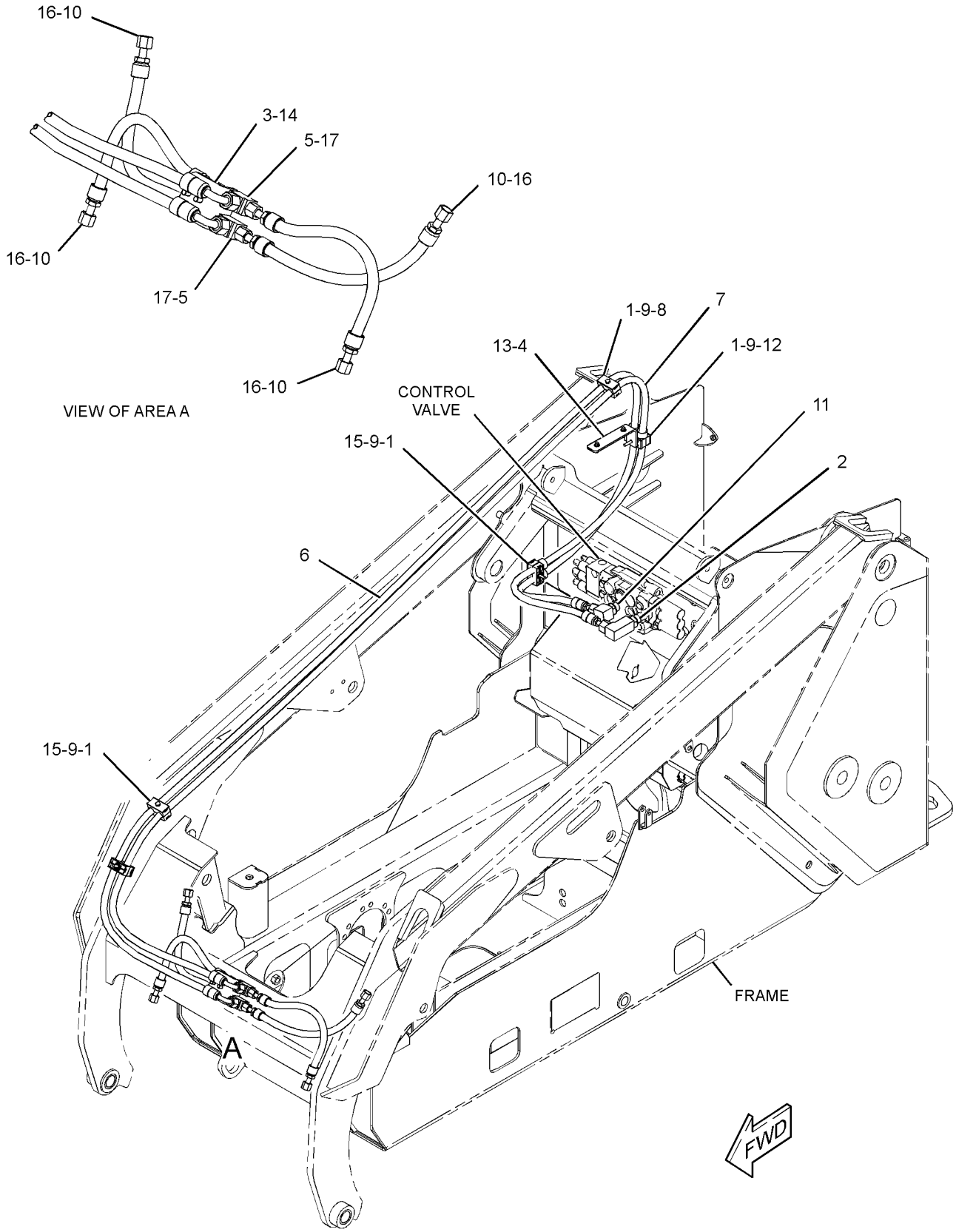

GRAPHIC #1 **<END>** g03406418

231-5278 MANIFOLD & MTG GP-CONTROL–ANGLING BLADE

PART OF 424-0450, 424-0451 BLADE AR
AN ATTACHMENT

SMCS-5264 **i02337085**

NOTE	REF NO	GRAPHIC REF	PART NUMBER	QTY	PART NAME 1 2 3 4 5 6 (PRODUCT LEVEL)	SEE PAGE
Y	1	1	**258-9011**	1	MANIFOLD GP-CONTROL (ANGLING BLADE)	271
	2	1	**231-5279**	1	COVER	
	3	1	**5P-4116**	3	WASHER-HARD (8.8X20.5X2-MM THK)	
M	4	1	**8T-4189**	2	BOLT (M8X1.25X20-MM)	
M	5	1	**8T-4200**	3	BOLT (M8X1.25X16-MM)	
	6	1	**8T-4224**	2	WASHER-HARD (8.8X16X2-MM THK)	

M - METRIC PART
Y - SEPARATE ILLUSTRATION

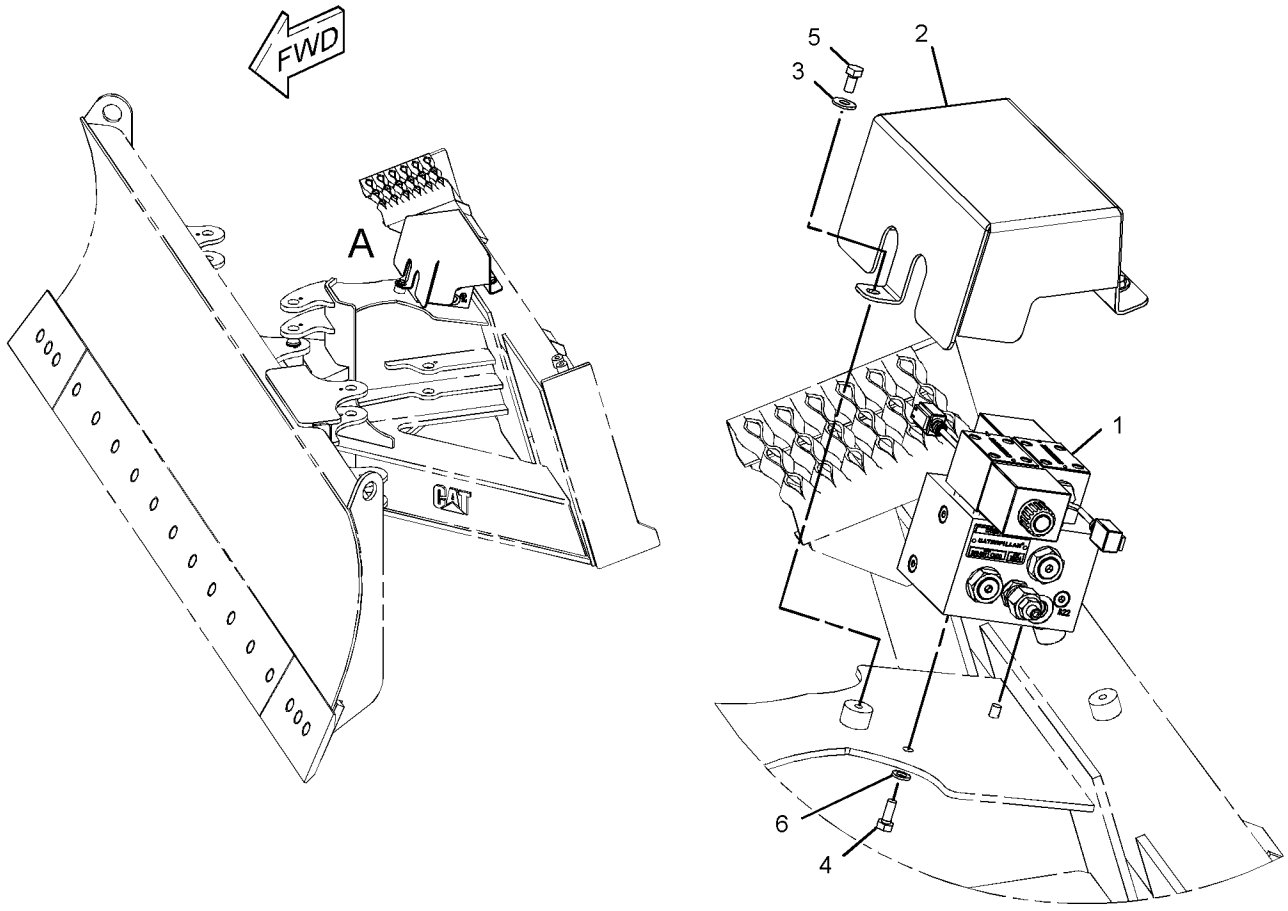

VIEW OF AREA A

GRAPHIC #1 **<END>** g01167422

258-9011 MANIFOLD GP-CONTROL—ANGLING BLADE

PART OF 231-5278 MANIFOLD & MTG GP-CONTROL

AN ATTACHMENT

SMCS-5117, 5264, 5479 **i04280581**

NOTE	REF NO	GRAPHIC REF	PART NUMBER	QTY	PART NAME 1 2 3 4 5 6 (PRODUCT LEVEL)	SEE PAGE
M	1	1	**9X-6615**	8	BOLT (M5X0.8X30-MM)	
	2	1	**243-5601**	7	PLUG	
J	3	1	**244-1363**	1	VALVE GP-SOLENOID (12-VOLT) (ANGLE)	
		1	**227-7025**	1	SOLENOID AS (SWING BOOM, WORK TOOL)	
		1	**215-3273**	1	CARTRIDGE AS-VALVE	
		1	**6V-8399**	1	SEAL-O-RING	
		1	**215-3274**	1	SEAL & RETAINER AS	
		1	**217-3875**	1	SEAL-O-RING	
		1	**212-4114**	1	SEAL-O-RING	
J	4	1	**244-1364**	1	VALVE GP-SOLENOID (12-VOLT) (TILT)	
		1	**227-7025**	1	SOLENOID AS (SWING BOOM, WORK TOOL)	
		1	**215-3273**	1	CARTRIDGE AS-VALVE	
		1	**6V-8399**	1	SEAL-O-RING	
		1	**215-3274**	1	SEAL & RETAINER AS	
		1	**217-3875**	1	SEAL-O-RING	
		1	**212-4114**	1	SEAL-O-RING	
	5	1	**244-1365**	2	VALVE GP-RELIEF (SWING BOOM, WORK TOOL)	
					(EACH INCLUDES)	
		1	**192-7508**	1	SEAL-O-RING	
	6	1	**266-8903**	4	VALVE GP-CHECK	
					(EACH INCLUDES)	
		1	**2M-9780**	1	SEAL-O-RING	
		1	**7J-9108**	1	SEAL-O-RING	
	7	1	**180-7451**	8	WASHER-HARD (5.3X8.8X2-MM THK)	
					AVAILABLE REPAIR KIT(S):	
J			**215-3275**	1	KIT-SEAL	
					(INLCUDES O-RING SEALS)	

J - KIT MARKED J SERVICES PARTS MARKED J
M - METRIC PART

258-9011 **MANIFOLD GP-CONTROL (*contd.*)** **i04280581**

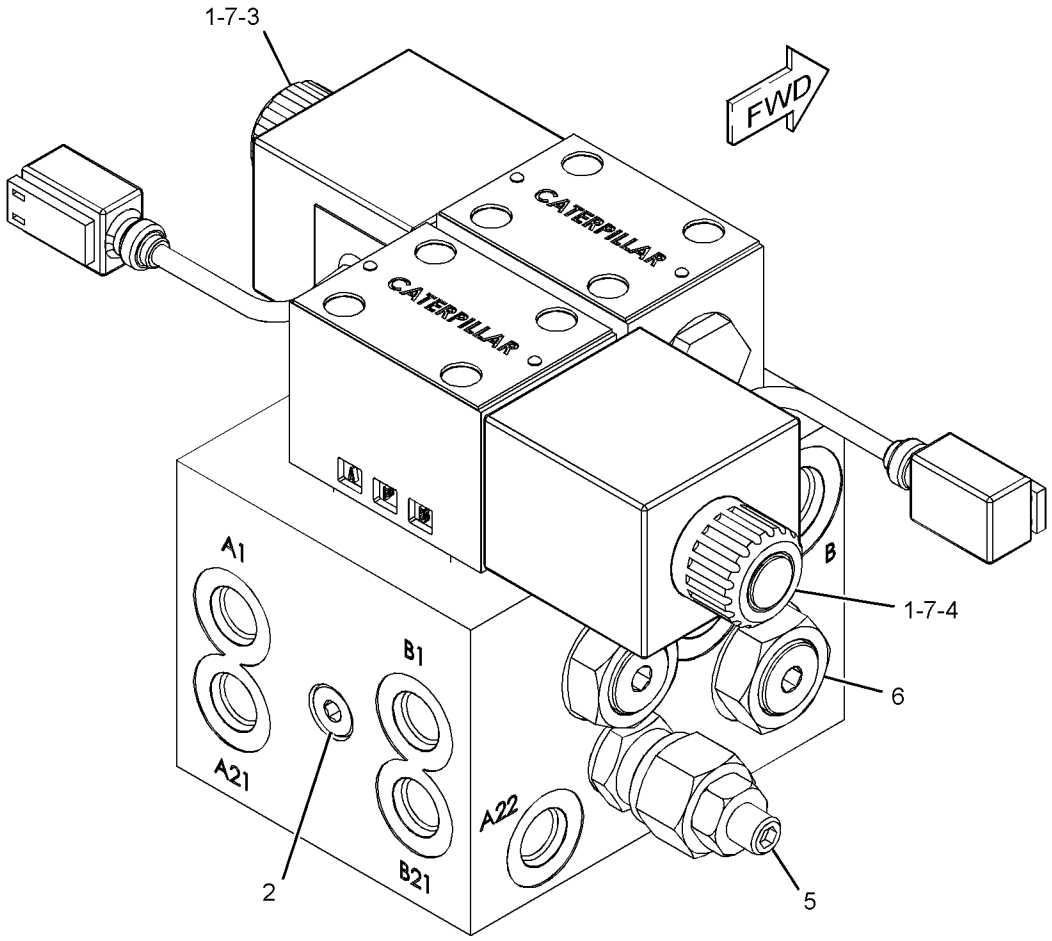

GRAPHIC #1 **<END>** g01178679

359-7222 MANIFOLD GP-CONTROL–MOTOR, 2-SPEED

PART OF 345-4691 LINES GP-HYDROSTATIC

AN ATTACHMENT

SMCS-5117, 5264, 5479 **i04762484**

NOTE	REF NO	GRAPHIC REF	PART NUMBER	QTY	PART NAME 1 2 3 4 5 6 (PRODUCT LEVEL)	SEE PAGE
	1	1	**362-3212**	2	VALVE GP-SOLENOID (12 VDC) (SPEED)	
M	2	1	**095-0641**	4	BOLT-SOCKET HEAD (M4X0.7X10-MM)	

M - METRIC PART

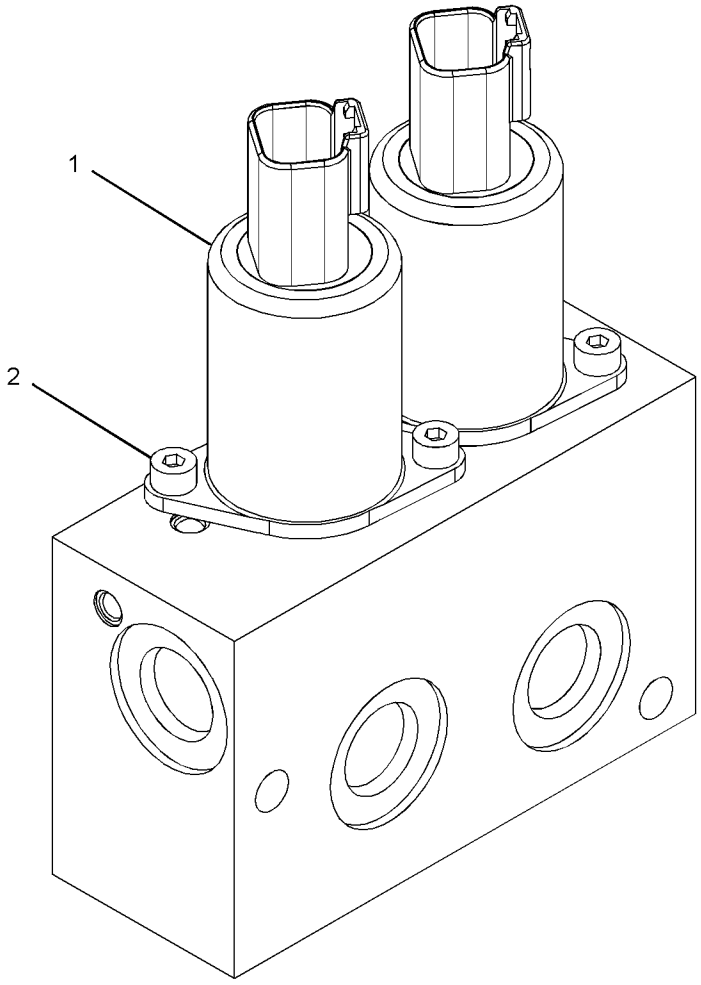

GRAPHIC #1 **<END>** g02877322

345-4755 MANIFOLD GP-RIDE CONTROL–RIDE

PART OF 345-5740 LINES GP-HYDRAULIC
AN ATTACHMENT

SMCS-5264 **i04762444**

NOTE	REF NO	GRAPHIC REF	PART NUMBER	QTY	PART NAME 1 2 3 4 5 6 (PRODUCT LEVEL)	SEE PAGE
	1	1	**238-4628**	3	COIL AS (12-VOLT)	
	2	1	**359-7229**	1	VALVE GP-CONTROL	
	3	1	**359-7230**	2	VALVE GP-CONTROL	
	4	1	**359-7231**	3	KIT-SEAL (RIDE CONTROL)	
					(EACH INCLUDES O-RING SEALS)	

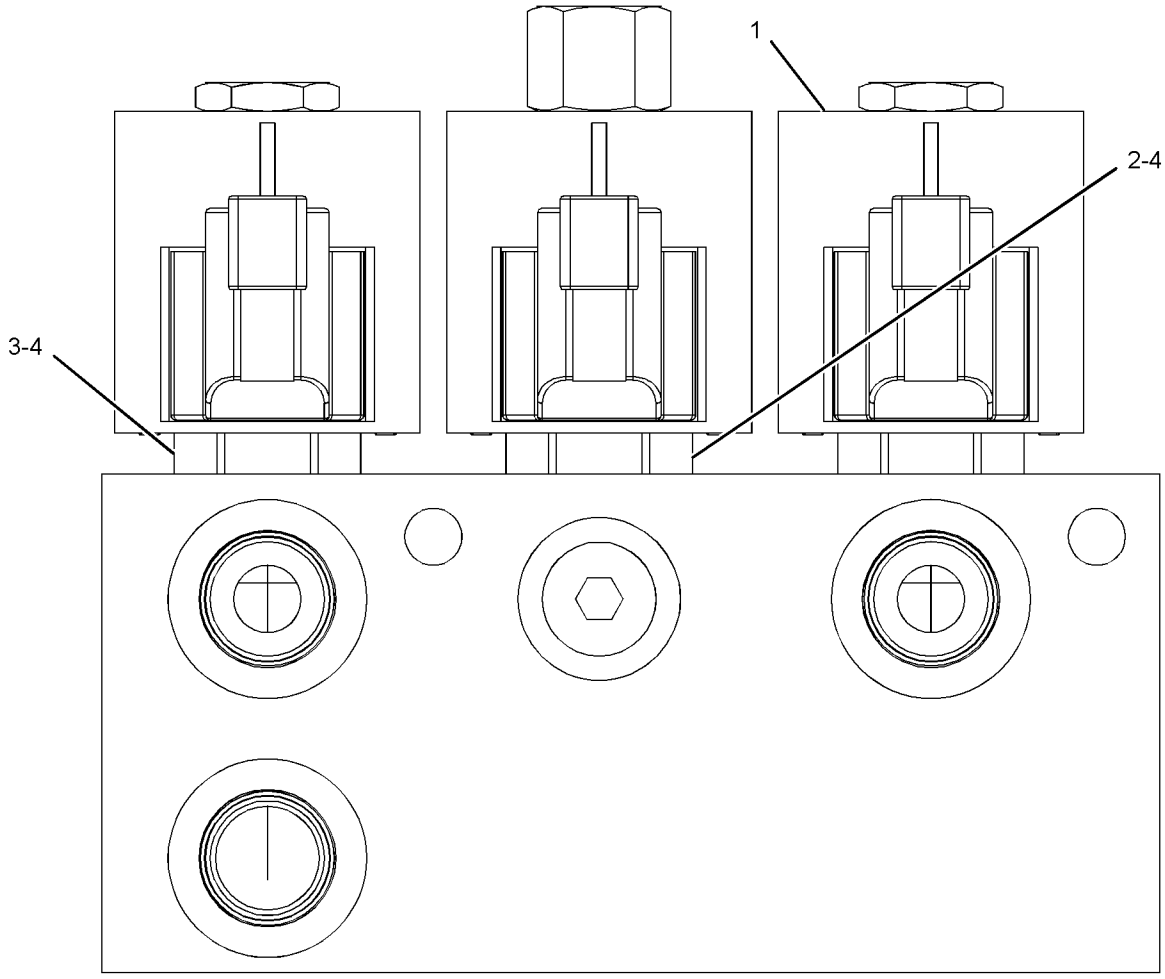

GRAPHIC #1 **<END>** g02875117

258-2579 MOTOR & MTG GP-HYDRAULIC FAN

PART OF 435-8760 CONVERSION AR-MACHINE, 388-7758 CONVERSION GP-MACHINE AN ATTACHMENT

SMCS-1386 **i05282532**

NOTE	REF NO	GRAPHIC REF	PART NUMBER	QTY	PART NAME 1 2 3 4 5 6 (PRODUCT LEVEL)	SEE PAGE
J	1	1	**258-2577**	1	MOTOR GP-GEAR (FAN, DEMAND)	
M		1	**8T-0271**	2	BOLT-SOCKET HEAD (M10X1.5X35-MM)	
M		1	**9T-4884**	2	BOLT (M10X1.5X30-MM)	
	2	1	**277-8862**	1	VALVE GP-SOLENOID (REAR AXLE FAN UNLOADER)	
		1	**238-4628**	1	COIL AS (12-VOLT) (12-VOLT)	
	3	1	**8T-4121**	2	WASHER-HARD (11X21X2.5-MM THK)	
	4	1	**8T-4224**	1	WASHER-HARD (8.8X16X2-MM THK)	
M	5	1	**8T-7547**	1	BOLT (M8X1.25X30-MM)	
M	6	1	**9X-6032**	2	BOLT-SOCKET HEAD (M10X1.5X30-MM)	
					AVAILABLE REPAIR KIT(S):	
J			**278-8716**	1	KIT-SEAL	
					(INCLUDES E-SEALS, O-RINGS, SHAFT SEAL, SNAP RING, BACKUP SEALS, AXIAL SEAL KIT & SEALS)	

J - KIT MARKED J SERVICES PARTS MARKED J
M - METRIC PART

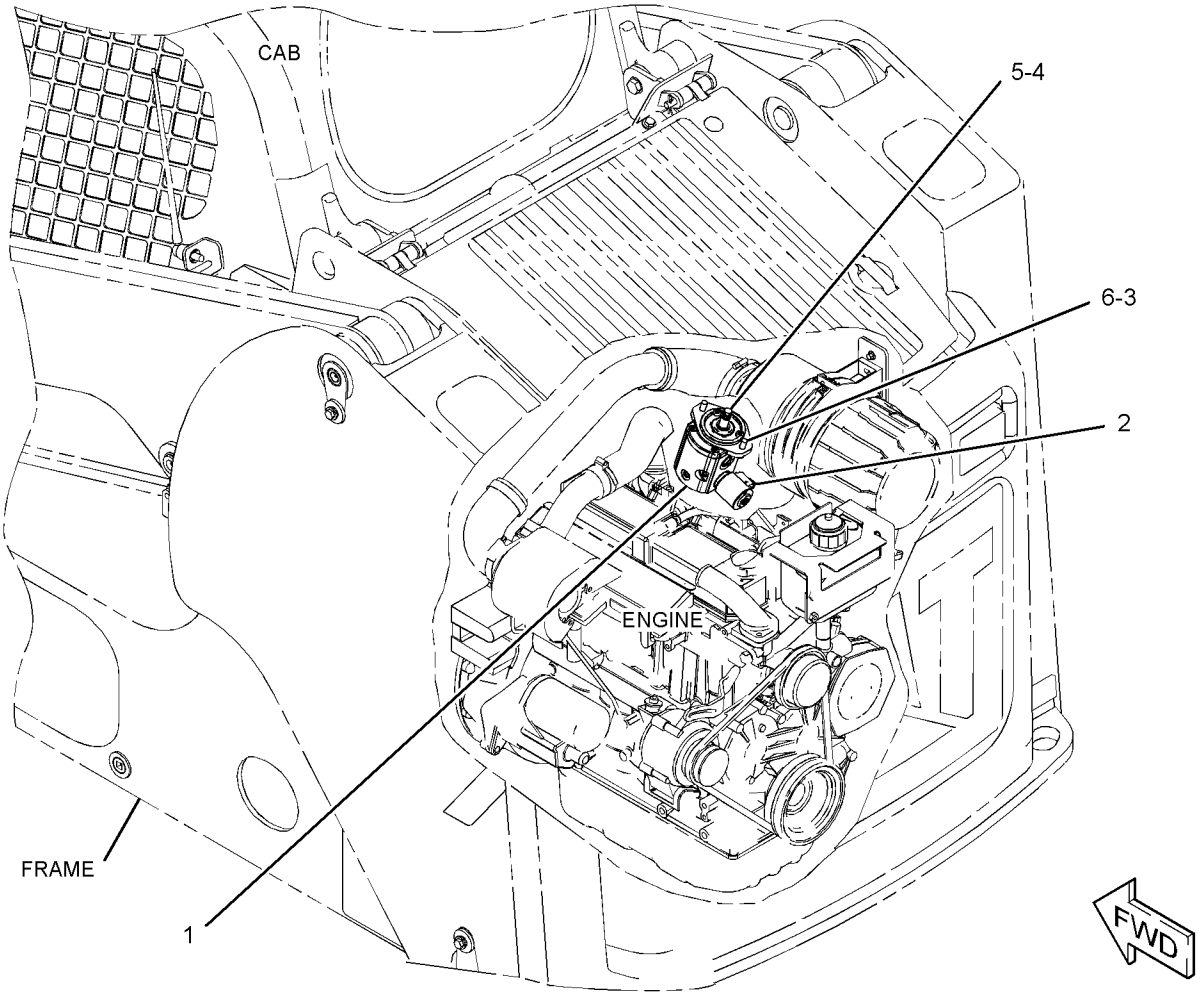

GRAPHIC #1 **<END>** g01315096

295-7221 MOTOR & MTG GP-HYDRAULIC FAN

AN ATTACHMENT

SMCS-1386 **i03990789**

NOTE	REF NO	GRAPHIC REF	PART NUMBER	QTY	PART NAME 1 2 3 4 5 6 (PRODUCT LEVEL)	SEE PAGE
CY	1	1	**307-3036**	1	MOTOR GP-GEAR (HYDRAULIC FAN)	277
	2	1	**8T-4121**	2	WASHER-HARD (11X21X2.5-MM THK)	
	3	1	**8T-4224**	1	WASHER-HARD (8.8X16X2-MM THK)	
M	4	1	**8T-7547**	1	BOLT (M8X1.25X30-MM)	
M	5	1	**9X-6032**	2	BOLT-SOCKET HEAD (M10X1.5X30-MM)	

C - CHANGE FROM PREVIOUS TYPE
M - METRIC PART
Y - SEPARATE ILLUSTRATION

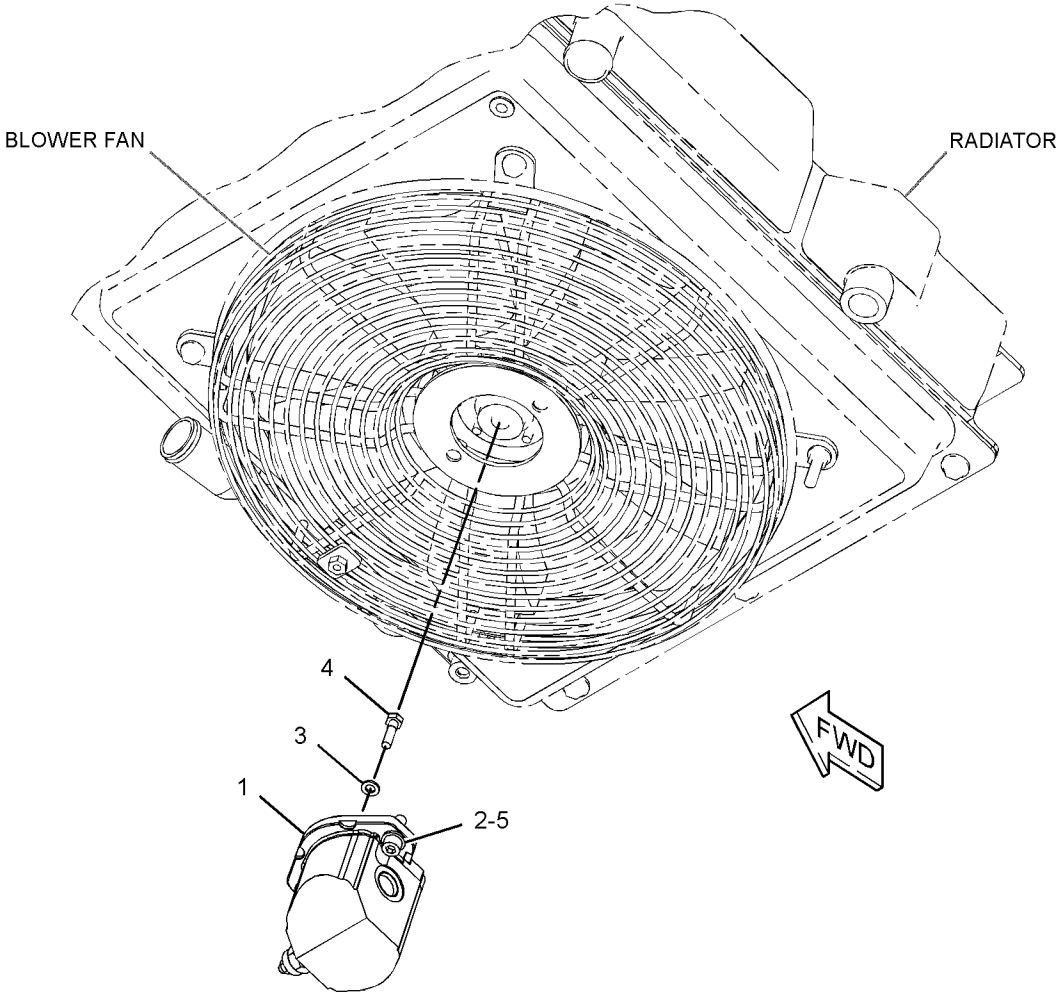

GRAPHIC #1 **<END>** g02174707

307-3036 MOTOR GP-GEAR–HYDRAULIC FAN

PART OF 295-7221 MOTOR & MTG GP-HYDRAULIC FAN

AN ATTACHMENT

SMCS-1386, 5061 **i03970898**

NOTE	REF NO	GRAPHIC REF	PART NUMBER	QTY	PART NAME 1 2 3 4 5 6 (PRODUCT LEVEL)	SEE PAGE
	1	1	**228-9240**	1	VALVE GP-RELIEF (GEAR MOTOR)	
		1	**6F-6672**	1	SEAL-O-RING	
		1	**215-3277**	1	SEAL-O-RING	
M	2	1	**9T-4884**	2	BOLT (M10X1.5X30-MM)	
M	3	1	**8T-0271**	2	BOLT-SOCKET HEAD (M10X1.5X35-MM)	
					PARTS SHOWN IN GRAPHIC(S) WITHOUT A REFERENCE NUMBER ARE NOT SERVICED SEPARATELY	
					AVAILABLE REPAIR KIT(S):	
			278-8716	1	KIT-SEAL (GEAR MOTOR)	
					(INCLUDES O-RINGS, E-SEALS, SHAFT SEAL, SNAP RING, BACKUP SEALS, AXIAL SEAL KIT & SEALS)	

M - METRIC PART

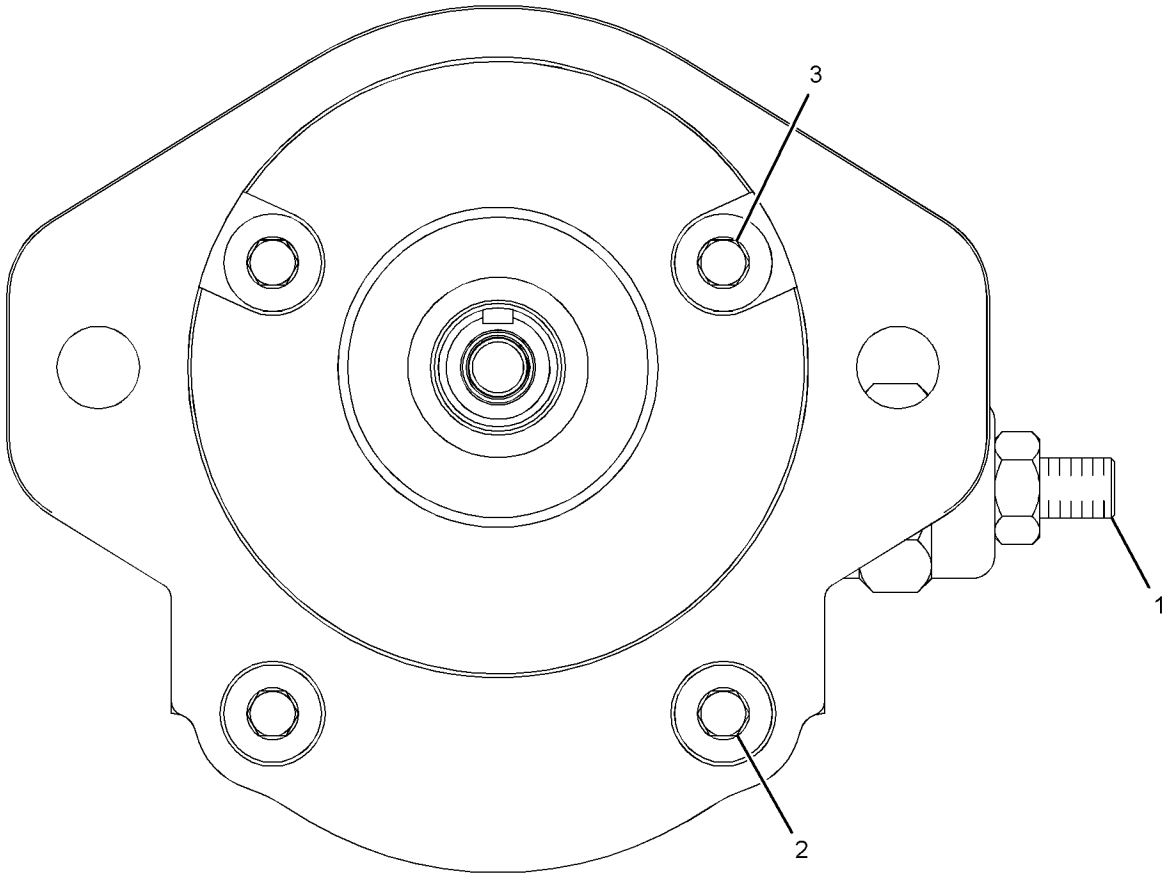

GRAPHIC #1 **<END>** g01761253

154-5011 MOUNTING GP-CYLINDER

PART OF 423-4291, 426-6492, 426-6537, 426-6549, 426-6559, 426-6933, 426-6940, 426-6947, 426-6970, 426-6992 BUCKET AR-MULTIPURPOSE
AN ATTACHMENT

SMCS-5498 **i01066088**

NOTE	REF NO	GRAPHIC REF	PART NUMBER	QTY	PART NAME 1 2 3 4 5 6 (PRODUCT LEVEL)	SEE PAGE
	1	1	**154-5012**	2	PIN	
	2	1	**154-5013**	2	PIN	
	3	1	**3B-8489**	2	FITTING-GREASE	
M	4	1	**6V-9189**	4	LOCKNUT (M8X1.25-THD)	
M	5	1	**8T-6869**	4	BOLT (M8X1.25X60-MM)	

M - METRIC PART

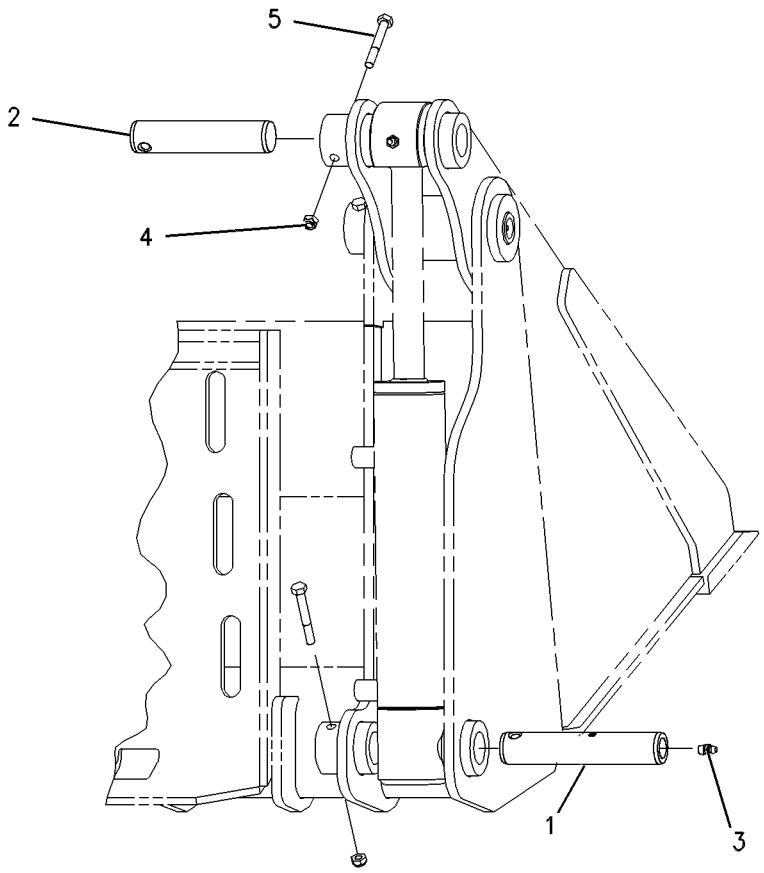

GRAPHIC #1 **<END>** g00560356

156-0891 MOUNTING GP-CYLINDER—INDUSTRIAL

PART OF 157-7223, 157-7224, 157-7225, 217-6229 BUCKET AR-GRAPPLE, 279-5350, 279-5360 FORK AR-GRAPPLE
AN ATTACHMENT

SMCS-5498 **i02578037**

NOTE	REF NO	GRAPHIC REF	PART NUMBER	QTY	PART NAME 1 2 3 4 5 6 (PRODUCT LEVEL)	SEE PAGE
	1	1	**255-8058**	2	PLATE	
	2	1	**156-0913**	1	PLATE	
	3	1	**157-0941**	2	PIN	
	4	1	**157-0942**	2	PIN	
	5	1	**159-8035**	2	FILM-WARNING (CRUSH HAZARD, STAY BACK)	
	6	1	**3B-8489**	2	FITTING-GREASE	
	7	1	**4M-5285**	4	RING-RETAINING (EXTERNAL)	
M	8	1	**6V-9189**	2	LOCKNUT (M8X1.25-THD)	
M	9	1	**8T-4138**	3	BOLT (M6X1X20-MM)	
M	10	1	**8T-6869**	2	BOLT (M8X1.25X60-MM)	
	11	1	**9X-2026**	3	WASHER (6.5X17X1-MM THK)	
	12	1	**9X-6274**	4	WASHER (32.5X50X1.6-MM THK)	

M - METRIC PART

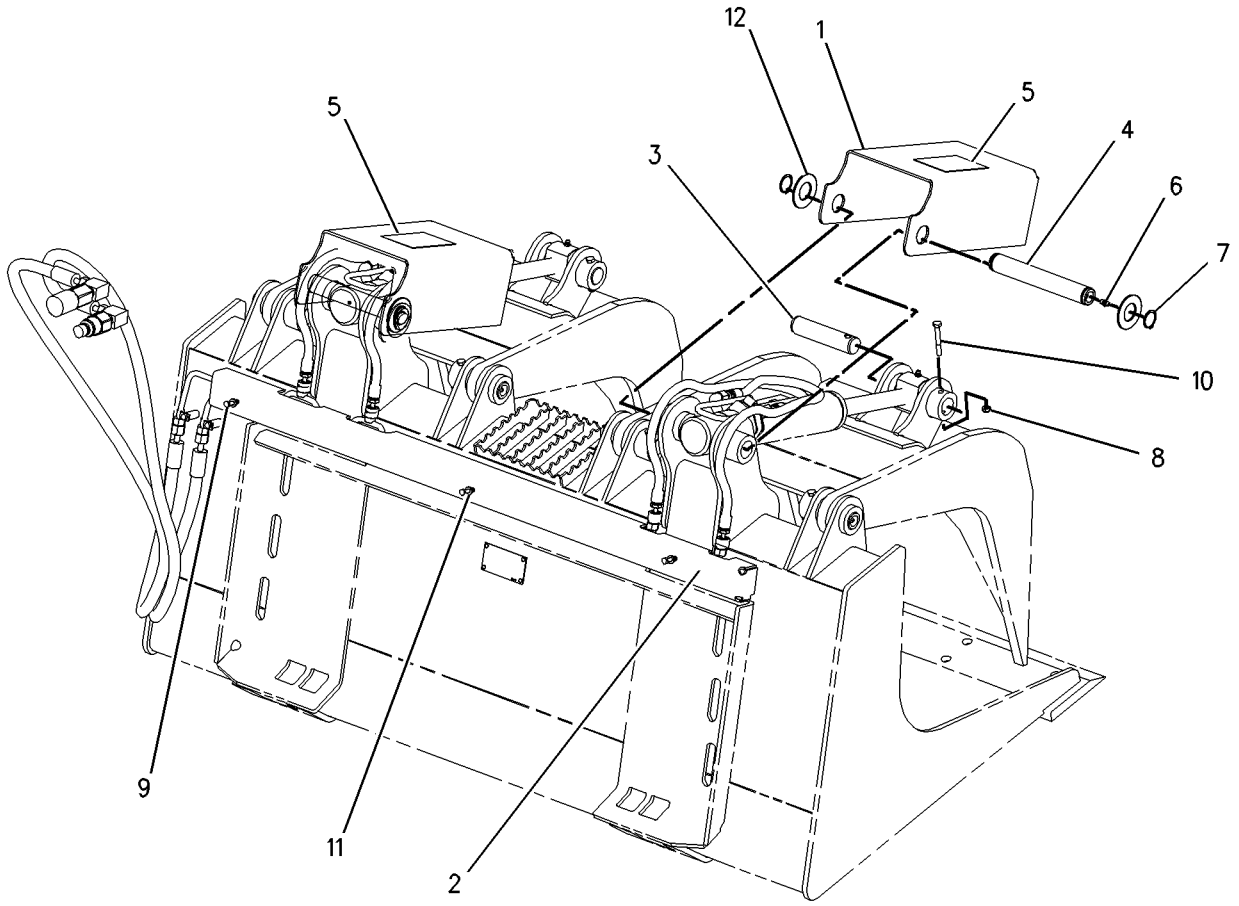

GRAPHIC #1 **<END>** g00777681

165-8731 MOUNTING GP-CYLINDER—UTILITY

PART OF 285-6116 GRAPPLE & CYLINDER GP-UTILITY

AN ATTACHMENT

SMCS-5498 **i02017132**

NOTE	REF NO	GRAPHIC REF	PART NUMBER	QTY	PART NAME 1 2 3 4 5 6 (PRODUCT LEVEL)	SEE PAGE
	1	1	**154-5013**	2	PIN	
M	2	1	**6V-9189**	2	LOCKNUT (M8X1.25-THD)	
M	3	1	**8T-6869**	2	BOLT (M8X1.25X60-MM)	

M - METRIC PART

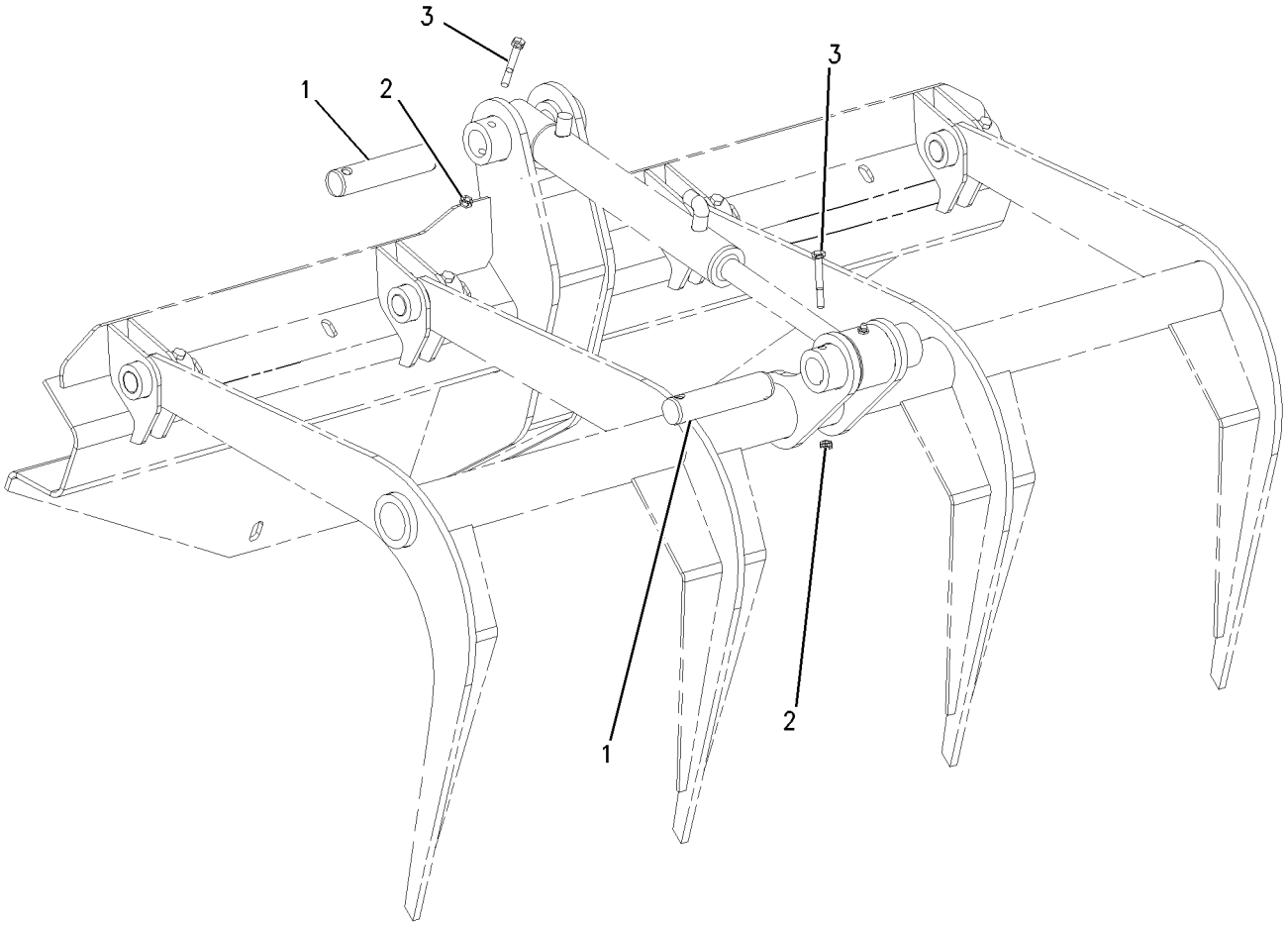

GRAPHIC #1 **<END>** g00652937

286-9248 MOUNTING GP-CYLINDER—GRAPPLE BUCKET

PART OF 286-9300, 286-9301 BUCKET AR-GRAPPLE
AN ATTACHMENT

SMCS-5498 **i02723716**

NOTE	REF NO	GRAPHIC REF	PART NUMBER	QTY	PART NAME 1 2 3 4 5 6 (PRODUCT LEVEL)	SEE PAGE
	1	1	**157-0941**	2	PIN	
	2	1	**157-0942**	2	PIN	
	3	1	**286-9273**	2	PLATE	
	4	1	**286-9289**	2	PLATE AS	
	5	1	**3B-8489**	2	FITTING-GREASE	
	6	1	**4M-5285**	4	RING-RETAINING (EXTERNAL)	
M	7	1	**6V-9189**	2	LOCKNUT (M8X1.25-THD)	
	8	1	**7X-7729**	8	WASHER (11X25X3-MM THK)	
M	9	1	**8T-4195**	8	BOLT (M10X1.5X30-MM)	
M	10	1	**8T-6869**	2	BOLT (M8X1.25X60-MM)	
	11	1	**9X-6274**	4	WASHER (32.5X50X1.6-MM THK)	

M - METRIC PART

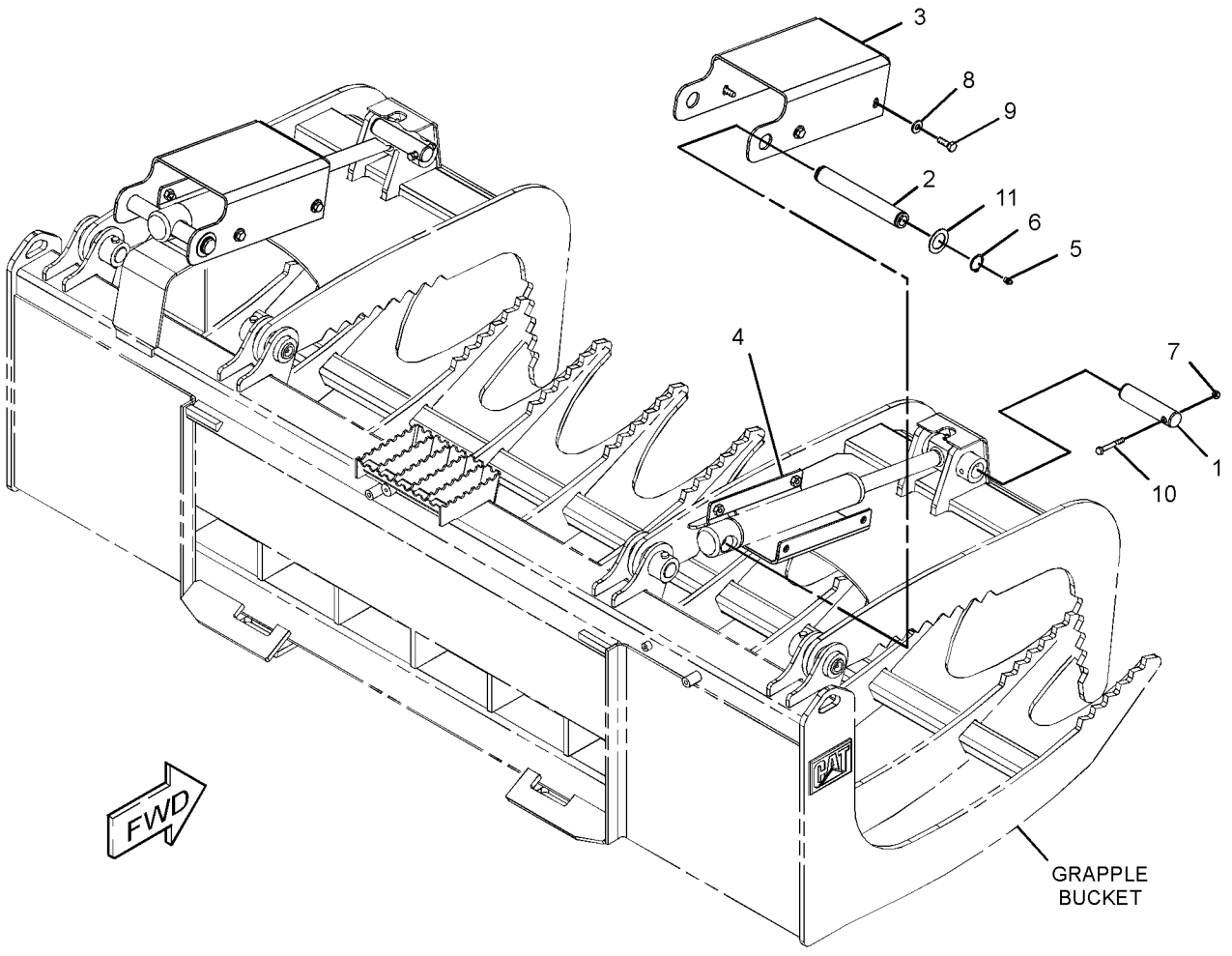

GRAPHIC #1 **<END>** g01372951

378-2849 PUMP & MTG GP-GEAR

PART OF 388-8035, 388-8036 HYDRAULIC AR
AN ATTACHMENT

SMCS-5073 **i05172982**

NOTE	REF NO	GRAPHIC REF	PART NUMBER	QTY	PART NAME 1 2 3 4 5 6 (PRODUCT LEVEL)	SEE PAGE
Y	1	1	**373-8426**	1	PUMP GP-GEAR	285
	2	1	**8T-4223**	2	WASHER-HARD (13.5X25.5X3-MM THK)	
M	3	1	**8T-4956**	2	BOLT (M12X1.75X35-MM)	
	4	1	**8T-5049**	1	SEAL-O-RING	

M - METRIC PART
Y - SEPARATE ILLUSTRATION

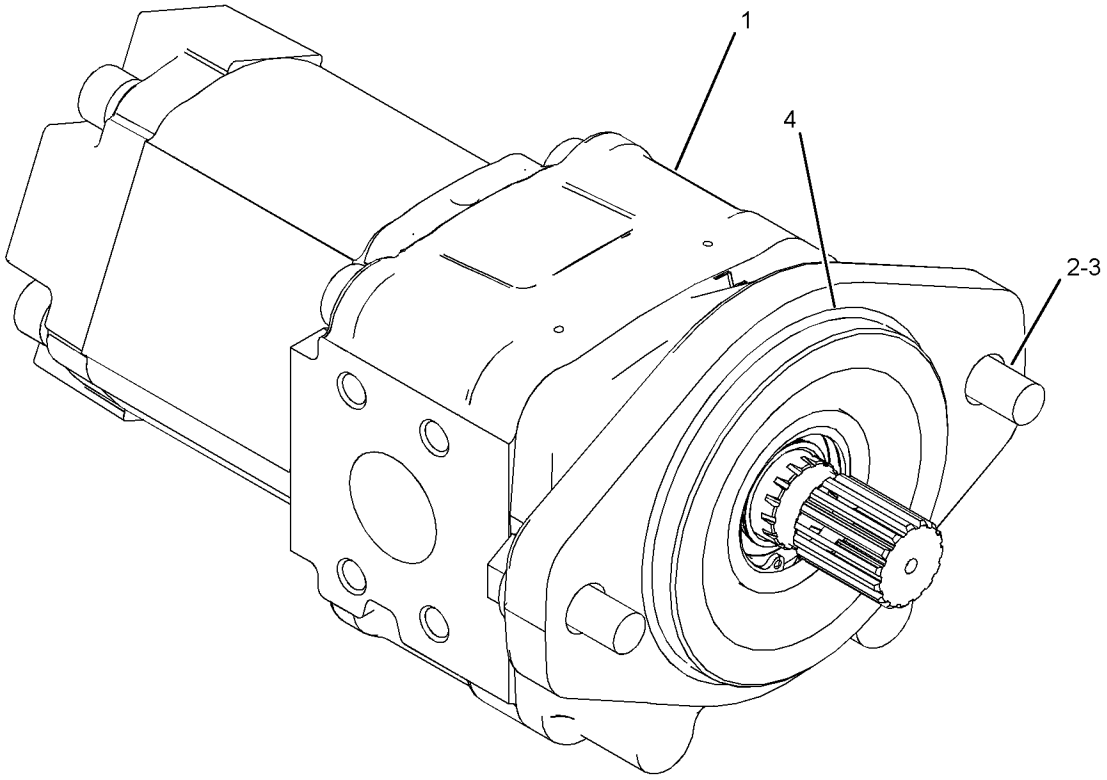

GRAPHIC #1 **<END>** g03323574

378-2851 PUMP & MTG GP-WORK TOOL—HIGH FLOW

PART OF 388-8038 HYDRAULIC AR
AN ATTACHMENT

SMCS-6700 **i05160112**

NOTE	REF NO	GRAPHIC REF	PART NUMBER	QTY	PART NAME 1 2 3 4 5 6 (PRODUCT LEVEL)	SEE PAGE
Y	1	1	**258-2555**	1	PUMP GP-GEAR (HIGH FLOW)	284
Y	2	1	**358-5002**	1	PUMP GP-PISTON (WORK TOOL, HIGH FLOW)	286
M	3	1	**101-7404**	2	BOLT-SOCKET HEAD (M10X1.5X30-MM)	
	4	1	**5P-3863**	1	SEAL-O-RING	
	5	1	**8T-4121**	2	WASHER-HARD (11X21X2.5-MM THK)	
	6	1	**8T-4223**	2	WASHER-HARD (13.5X25.5X3-MM THK)	
M	7	1	**8T-4956**	2	BOLT (M12X1.75X35-MM)	
	8	1	**8T-5049**	1	SEAL-O-RING	

M - METRIC PART
Y - SEPARATE ILLUSTRATION

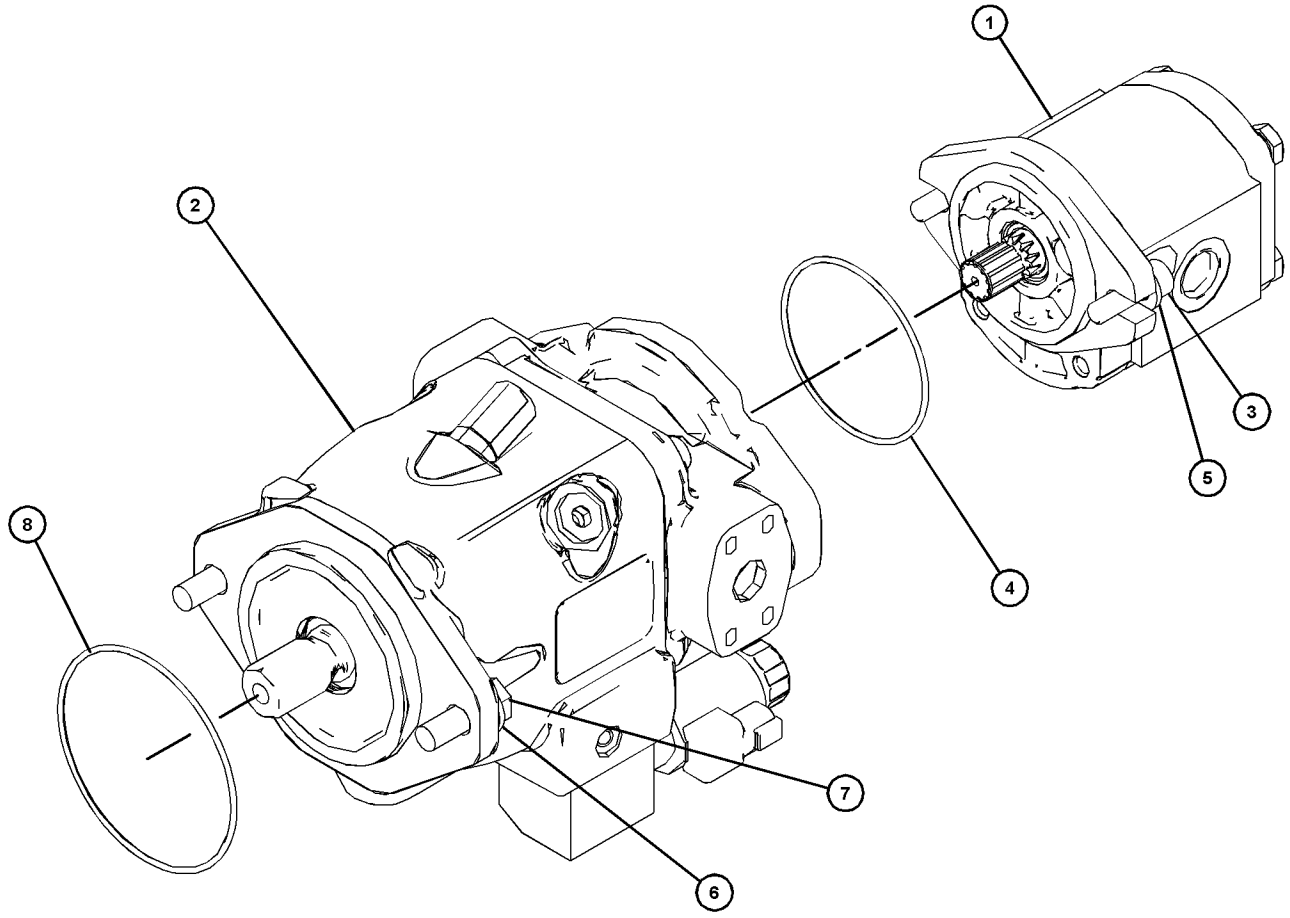

GRAPHIC #1 **<END>** g03322533

258-2555 PUMP GP-GEAR

PART OF 378-2851 PUMP & MTG GP-WORK TOOL
AN ATTACHMENT

SMCS-5073 **i04528049**

NOTE	REF NO	GRAPHIC REF	PART NUMBER	QTY	PART NAME 1 2 3 4 5 6 (PRODUCT LEVEL)	SEE PAGE
M	1	1	**8T-6685**	4	BOLT (M10X1.5X110-MM)	
	2	1	**8T-5095**	4	WASHER-PLATED (11X16X2-MM THK)	
					PARTS SHOWN IN GRAPHIC(S) WITHOUT A REFERENCE NUMBER ARE NOT SERVICED SEPARATELY	
					AVAILABLE REPAIR KIT(S):	
			278-8715	1	KIT-SEAL	
					(INCLUDES PARTS MARKED "J" IN GRAPHIC)	

M - METRIC PART

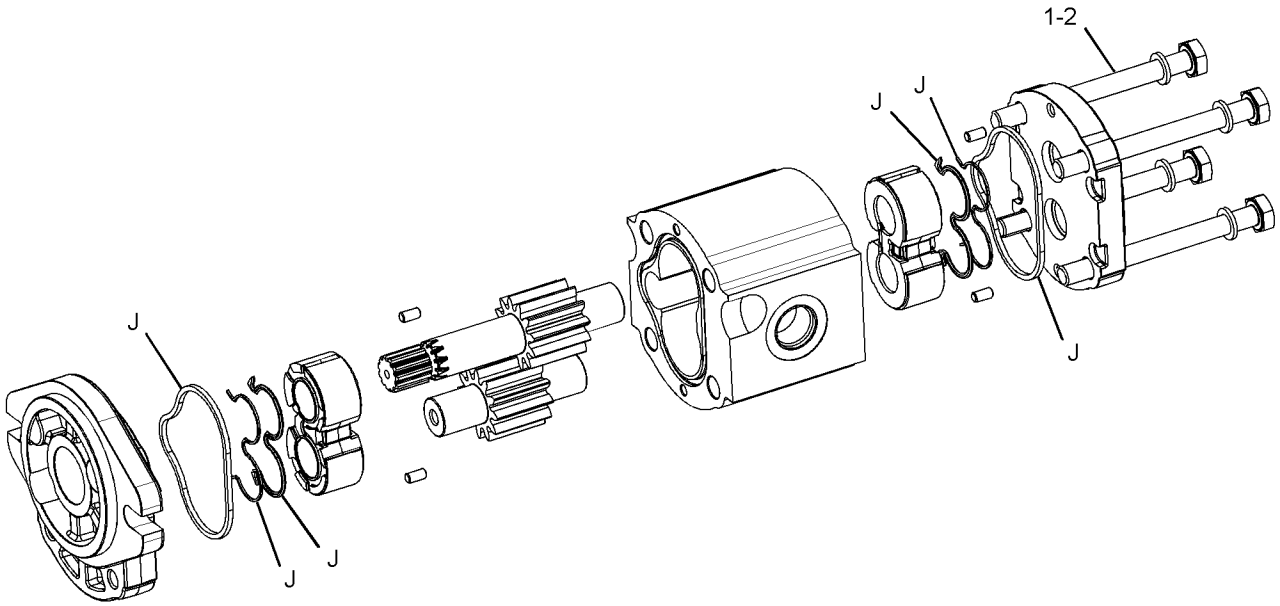

GRAPHIC #1 **<END>** g02798814

373-8426 PUMP GP-GEAR

PART OF 378-2849 PUMP & MTG GP-GEAR

AN ATTACHMENT

SMCS-5073 **i05172991**

NOTE	REF NO	GRAPHIC REF	PART NUMBER	QTY	PART NAME 1 2 3 4 5 6 (PRODUCT LEVEL)	SEE PAGE
M	1	1	**095-9232**	4	BOLT-SOCKET HEAD (M12X1.75X95-MM)	
	2	1	**7X-0599**	4	WASHER-HARD (13X20X2-MM THK)	
M	3	1	**101-7400**	4	BOLT-SOCKET HEAD (M10X1.5X110-MM)	
	4	1	**8T-5095**	4	WASHER-PLATED (11X16X2-MM THK)	
					AVAILABLE REPAIR KIT(S):	
			358-5015	1	KIT-SEAL	
					(INCLUDES SEALS, O-RING SEALS, SHAFT SEALS, SNAP RING & BACKUP SEALS)	

M - METRIC PART

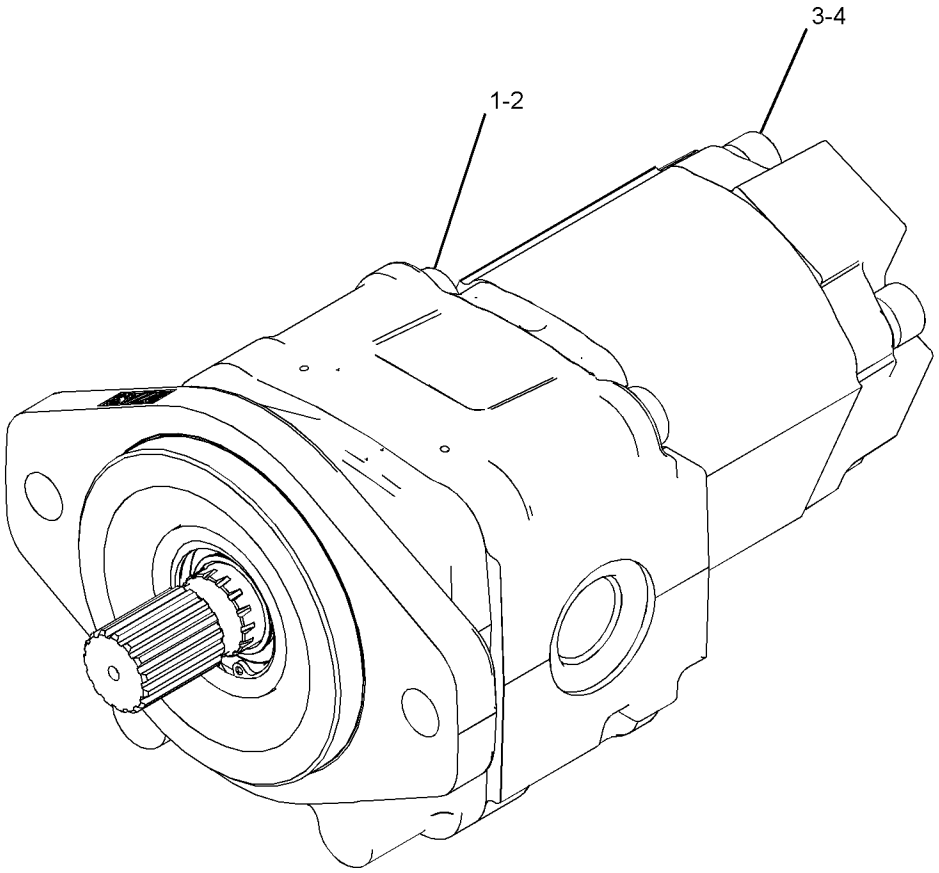

GRAPHIC #1 **<END>** g03323519

358-5002 PUMP GP-PISTON—WORK TOOL, HIGH FLOW

PART OF 378-2851 PUMP & MTG GP-WORK TOOL

AN ATTACHMENT

SMCS-5070 **i05160124**

NOTE	REF NO	GRAPHIC REF	PART NUMBER	QTY	PART NAME 1 2 3 4 5 6 (PRODUCT LEVEL)	SEE PAGE
					(NO BREAKDOWN OF SERVICEABLE PARTS AVAILABLE AT TIME OF PUBLICATION)	

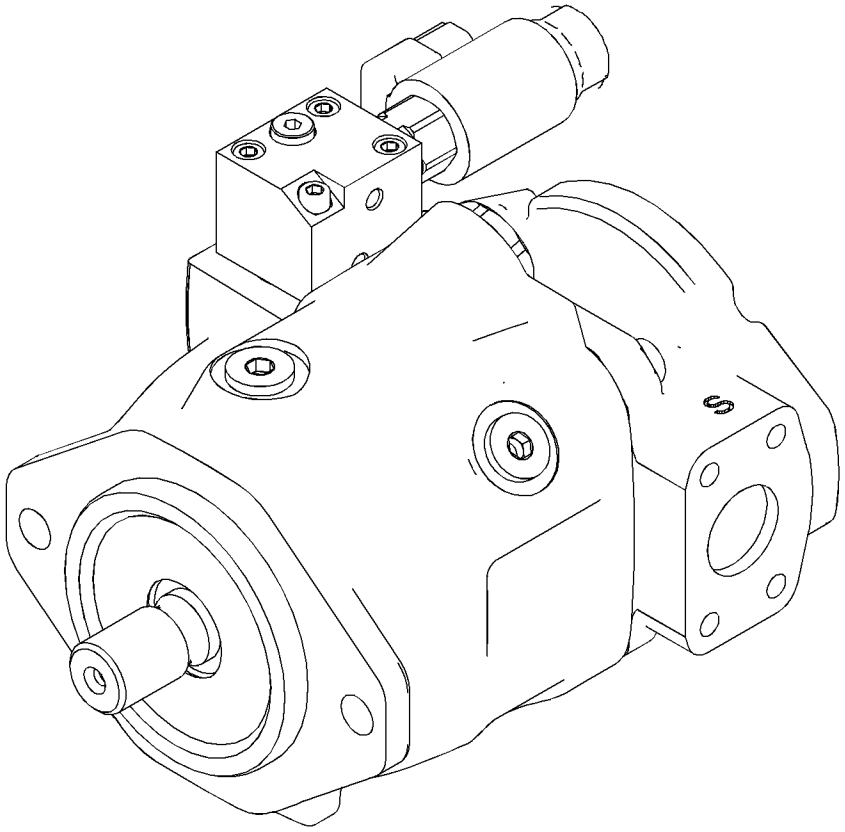

GRAPHIC #1 **<END>** g03322594

345-4980 TANK & MTG GP-HYDRAULIC

PART OF 345-5925 HYDRAULIC AR

SMCS-5056 **i05172881**

NOTE	REF NO	GRAPHIC REF	PART NUMBER	QTY	PART NAME 1 2 3 4 5 6 (PRODUCT LEVEL)	SEE PAGE
I	1	1	**345-4585**	1	HOSE AS	
	2	1	**345-4791**	1	ADAPTER	
	3	1	**142-8937**	1	CAP AS-FILLER (HYDRAULIC TANK)	
	4	1	**178-3620**	1	STRAP-DUAL CLAMP	
	5	1	*250-1482*	1	CONNECTOR AS	
		1	**3K-0360**	1	SEAL-O-RING	
		1	**5P-9615**	1	CONNECTOR	
	6	1	**258-2829**	1	BREATHER (HYDRAULIC TANK)	
	7	1	**262-5689**	1	STRAINER AS (HYDRAULIC TANK)	
	8	1	**264-4297**	1	SENSOR AS-TEMPERATURE (HYDRAULIC OIL)	
		1	**137-6645**	1	PAD-CONNECTOR	
	9	1	**345-4581**	1	TANK GP-HYDRAULIC	
		1	**345-4583**	1	GAUGE-SIGHT (HYDRAULIC TANK)	
	10	1	**345-4589**	1	INSULATION	
	11	1	**345-4981**	1	BRACKET AS	
	12	1	*148-8340*	1	CONNECTOR AS	
		1	**3K-0360**	1	SEAL-O-RING	
		1	**6V-8398**	1	SEAL-O-RING	
		1	**6V-8639**	1	CONNECTOR	
M	13	1	**266-3315**	2	BOLT-FLANGE HEAD (M8X1.25X25.5-MM)	
	14	1	**373-7621**	2	CLAMP-BAND	
	15	1	**3K-0360**	1	SEAL-O-RING	
M	16	1	**7X-2534**	2	BOLT (M6X1X50-MM)	
	17	1	**8T-4205**	2	WASHER-HARD (7.2X14.5X2-MM THK)	
G	18	1	**423-1984**		HOSE (18-IN)	

G - ORDER BY THE INCH
I - REFER TO HYDRAULIC INFORMATION SYSTEM
M - METRIC PART

345-4980 **TANK & MTG GP-HYDRAULIC (*contd.*)** **i05172881**

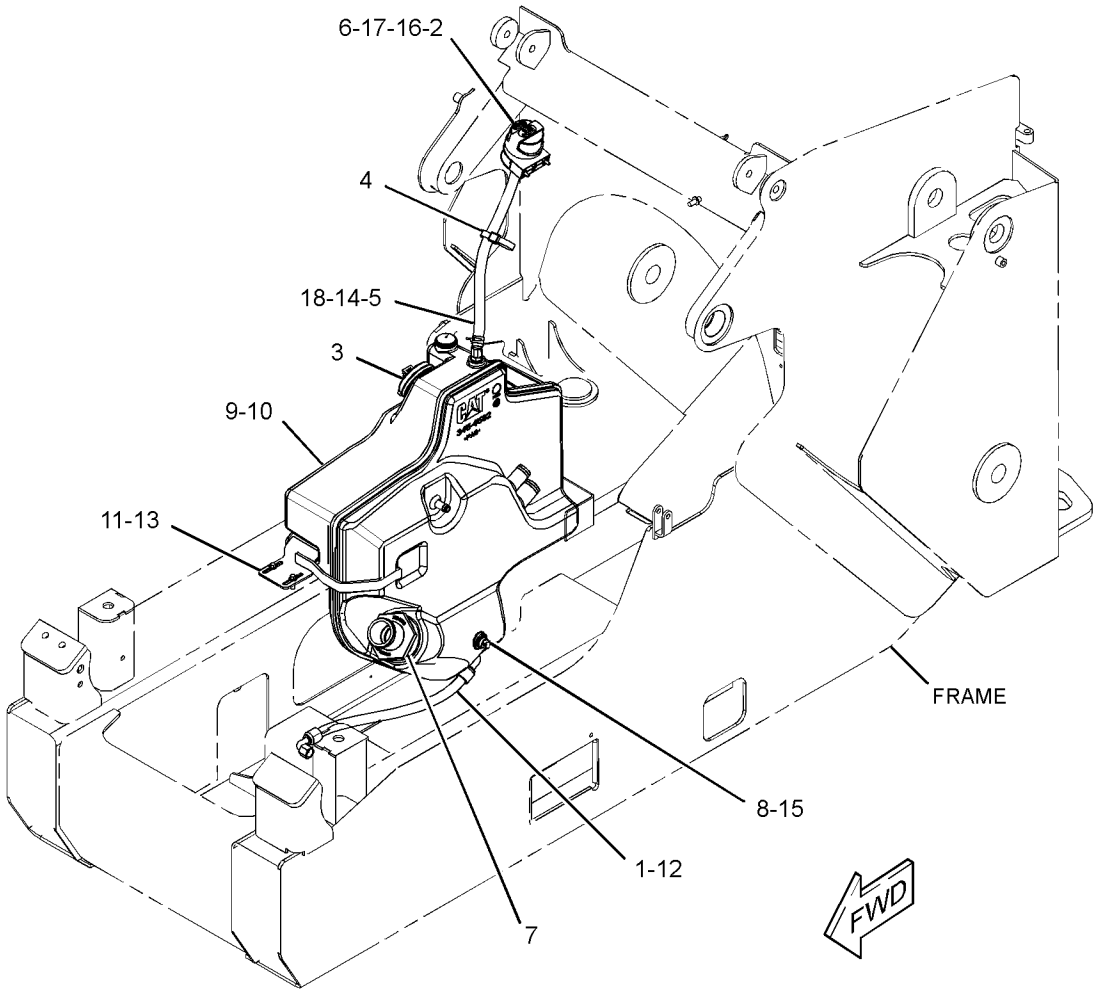

GRAPHIC #1 **<END>** g03334850

373-7033 VALVE & MTG GP-CONTROL–IMPLEMENT

PART OF 388-8035, 388-8036, 388-8038 HYDRAULIC AR
AN ATTACHMENT

SMCS-5051 **i05166019**

NOTE	REF NO	GRAPHIC REF	PART NUMBER	QTY	PART NAME 1 2 3 4 5 6 (PRODUCT LEVEL)	SEE PAGE
	1	1	**373-6954**	1	VALVE GP-CONTROL (IMPLEMENT)	
	2	1	**208-9281**	1	BOLT-FLANGE HEAD (M8X1.25X20-MM)	
	3	1	**3E-4352**	2	WASHER-HARD (8.8X20.5X2.5-MM THK)	
M	4	1	**8T-6869**	2	BOLT (M8X1.25X60-MM)	

M - METRIC PART

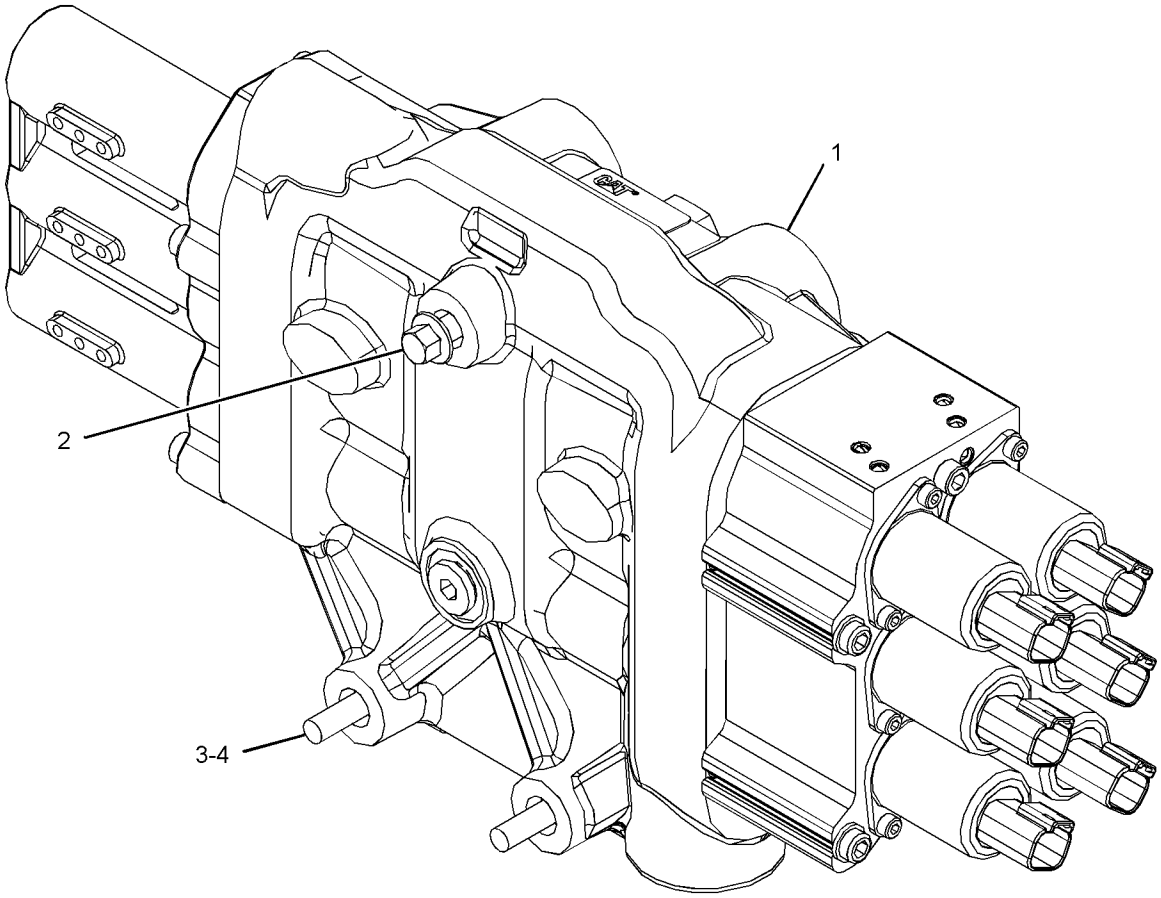

GRAPHIC #1 **<END>** g03334012

216-8756 ARM GP-MATERIAL HANDLING

AN ATTACHMENT

SMCS-6542 **i05203241**

NOTE	REF NO	GRAPHIC REF	PART NUMBER	QTY	PART NAME 1 2 3 4 5 6 (PRODUCT LEVEL)	SEE PAGE
	1	1	**9V-2714**	1	HOOK	
	2	1	**9V-2715**	1	SHACKLE AS	
	3	1	**156-5762**	2	FILM-INFORMATION (TIE-DOWN LOCATION)	
Y	4	1	*188-7733*	1	STEP GP-MATERIAL HANDLING ARM	457
	5	1	**216-8850**	1	ARM AS	
M	6	1	**7X-2475**	1	BOLT (M16X2X130-MM)	
	7	1	**8T-4122**	1	WASHER-HARD (17X32X3.5-MM THK)	
M	8	1	**8T-1757**	1	NUT (M16X2-THD)	
	9	1	**358-4945**	1	PLATE-IDENTIFICATION (WORK TOOL)	
	10	1	**168-8389**	4	TACK-FASTENER	

M - METRIC PART
Y - SEPARATE ILLUSTRATION

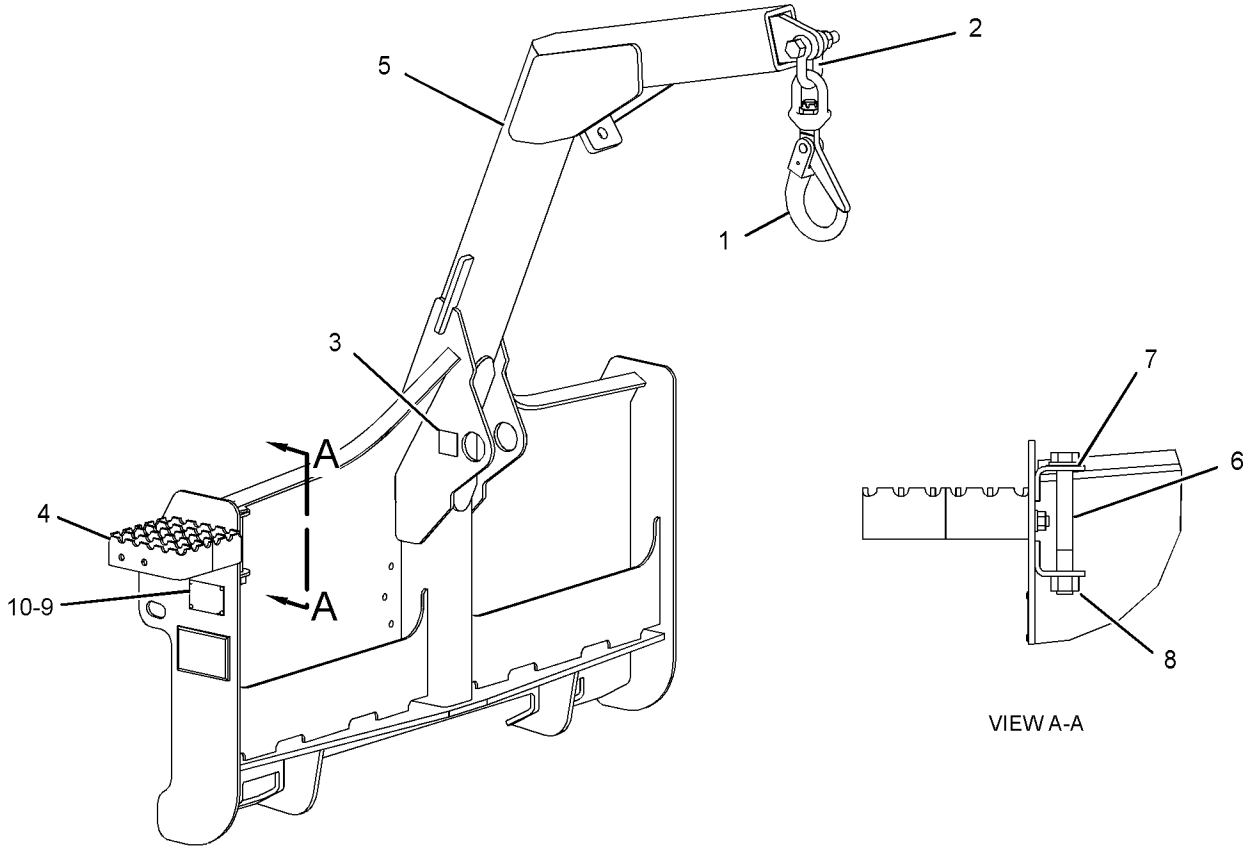

GRAPHIC #1 **<END>** g02511800

177-1989 BLADE AR–ANGLING

AN ATTACHMENT

SMCS-6060, 6701 **i05395330**

NOTE	PART NUMBER	QTY	PART NAME 1 2 3 4 5 6 (PRODUCT LEVEL)	SEE PAGE
Y	*177-1981*	1	BLADE GP-ANGLING	302
Y	*230-5406*	1	CYLINDER & MTG GP-ANGLE BLADE	208
Y	*135-9386*	1	EDGE GP-CUTTING	423
Y	*230-5670*	1	FRAME GP-BLADE	442
Y	*177-1986*	1	LINES GP-CONNECTING	245
Y	*177-1983*	1	SPRING GP-BLADE	456

Y - SEPARATE ILLUSTRATION

<END>

177-1990 BLADE AR–ANGLING

AN ATTACHMENT

SMCS-6060, 6701 **i05395329**

NOTE	PART NUMBER	QTY	PART NAME 1 2 3 4 5 6 (PRODUCT LEVEL)	SEE PAGE
Y	*177-1982*	1	BLADE GP-ANGLING	303
Y	*230-5406*	1	CYLINDER & MTG GP-ANGLE BLADE	208
Y	*149-5741*	1	EDGE GP-CUTTING	425
Y	*230-5670*	1	FRAME GP-BLADE	442
Y	*177-1986*	1	LINES GP-CONNECTING	245
Y	*177-1983*	1	SPRING GP-BLADE	456

Y - SEPARATE ILLUSTRATION

<END>

385-6400 BLADE AR–STANDARD

AN ATTACHMENT

SMCS-6060, 6701 **i05144877**

NOTE	REF NO	GRAPHIC REF	PART NUMBER	QTY	PART NAME 1 2 3 4 5 6 (PRODUCT LEVEL)	SEE PAGE
Y	1	1	*385-6372*	1	COUPLER GP-QUICK	414
Y	2	1	*417-4914*	1	BLADE AR	295

Y - SEPARATE ILLUSTRATION

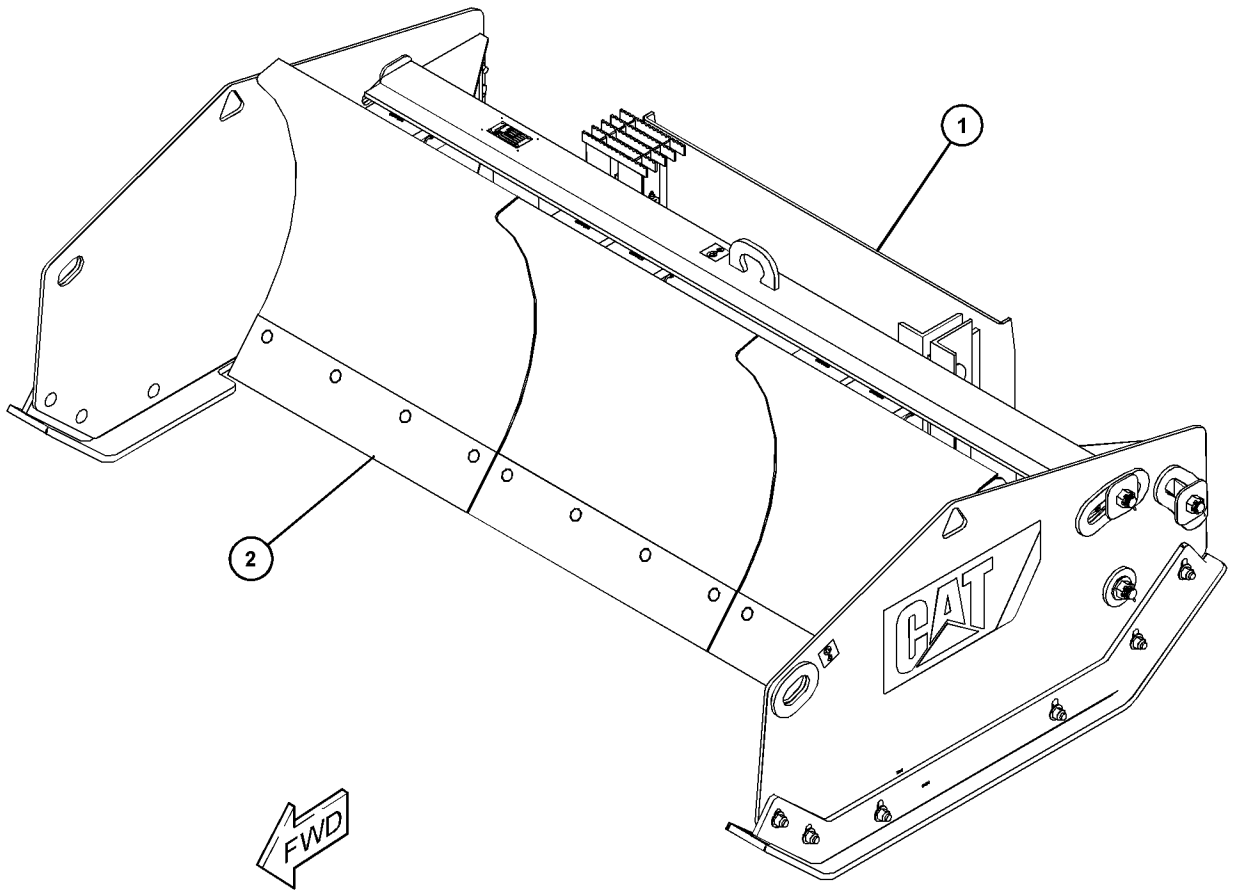

GRAPHIC #1 **<END>** g03319014

385-6401 BLADE AR—ANGLING

AN ATTACHMENT

SMCS-6060, 6701 **i05270749**

NOTE	REF NO	GRAPHIC REF	PART NUMBER	QTY	PART NAME 1 2 3 4 5 6 (PRODUCT LEVEL)	SEE PAGE
Y	1	1	*385-6372*	1	COUPLER GP-QUICK	414
Y	2	1	*385-6444*	1	BLADE AR	294

Y - SEPARATE ILLUSTRATION

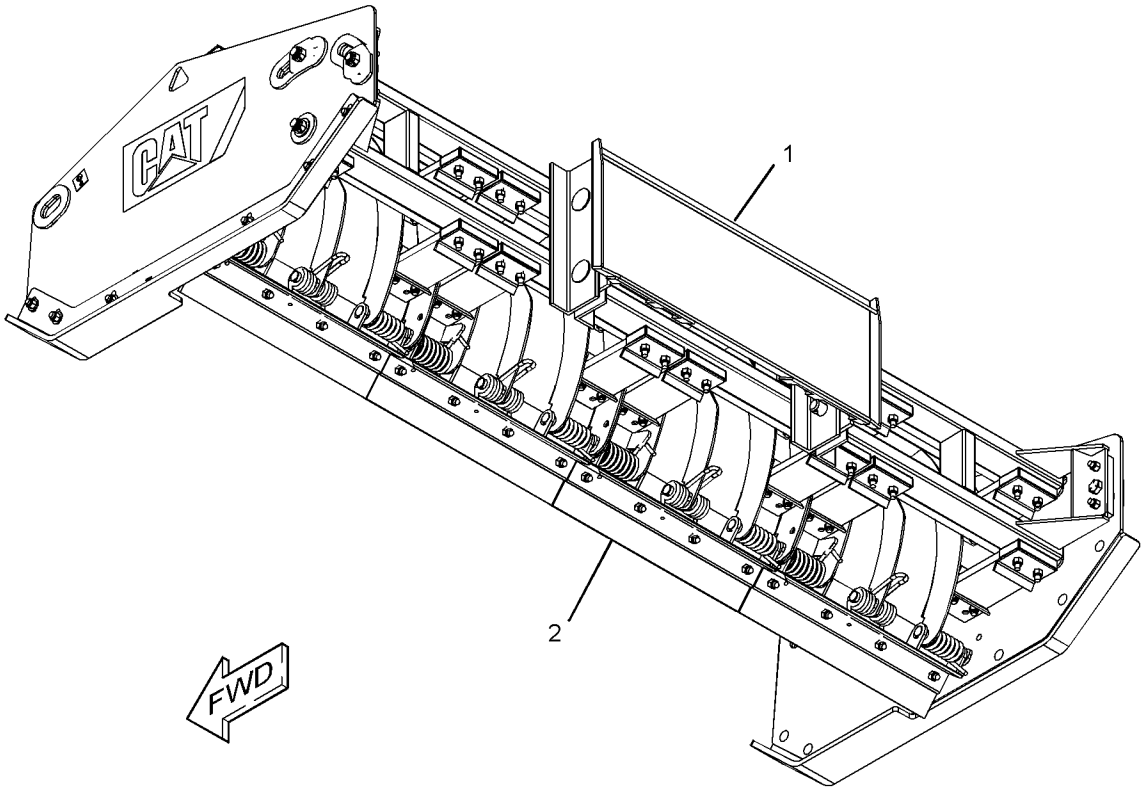

GRAPHIC #1 **<END>** g03360044

WORK TOOLS

385-6444 BLADE AR–SNOW

PART OF 385-6401 BLADE AR
AN ATTACHMENT

SMCS-6060, 6701 **i05270752**

NOTE	REF NO	GRAPHIC REF	PART NUMBER	QTY	PART NAME 1 2 3 4 5 6 (PRODUCT LEVEL)	SEE PAGE
	1	1	**154-2704**	1	PLATE-INSTRUCTION (BUCKET SPECIFICATIONS)	
	2	1	**168-8389**	4	TACK-FASTENER	
Y	3	1	*385-6368*	1	PLATE GP-SIDE (RH)	453
Y	4	1	*385-6370*	4	BLADE GP-SNOW	325
Y	5	1	*385-6371*	1	PLATE GP-SIDE (LH)	454
Y	6	1	*385-6373*	1	FILM GP (BLADE)	568
	7	1	*385-6375*	1	FRAME AS	
		1	**385-6393**	1	PLATE	
		1	**385-6396**	16	PLATE AS	
					(EACH INCLUDES)	
		1	**5S-2457**	2	BOLT-SOCKET HEAD (5/8-11X2-IN)	
		1	**385-6397**	4	STUD AS	
		1	**385-6398**	4	PLATE	

Y - SEPARATE ILLUSTRATION

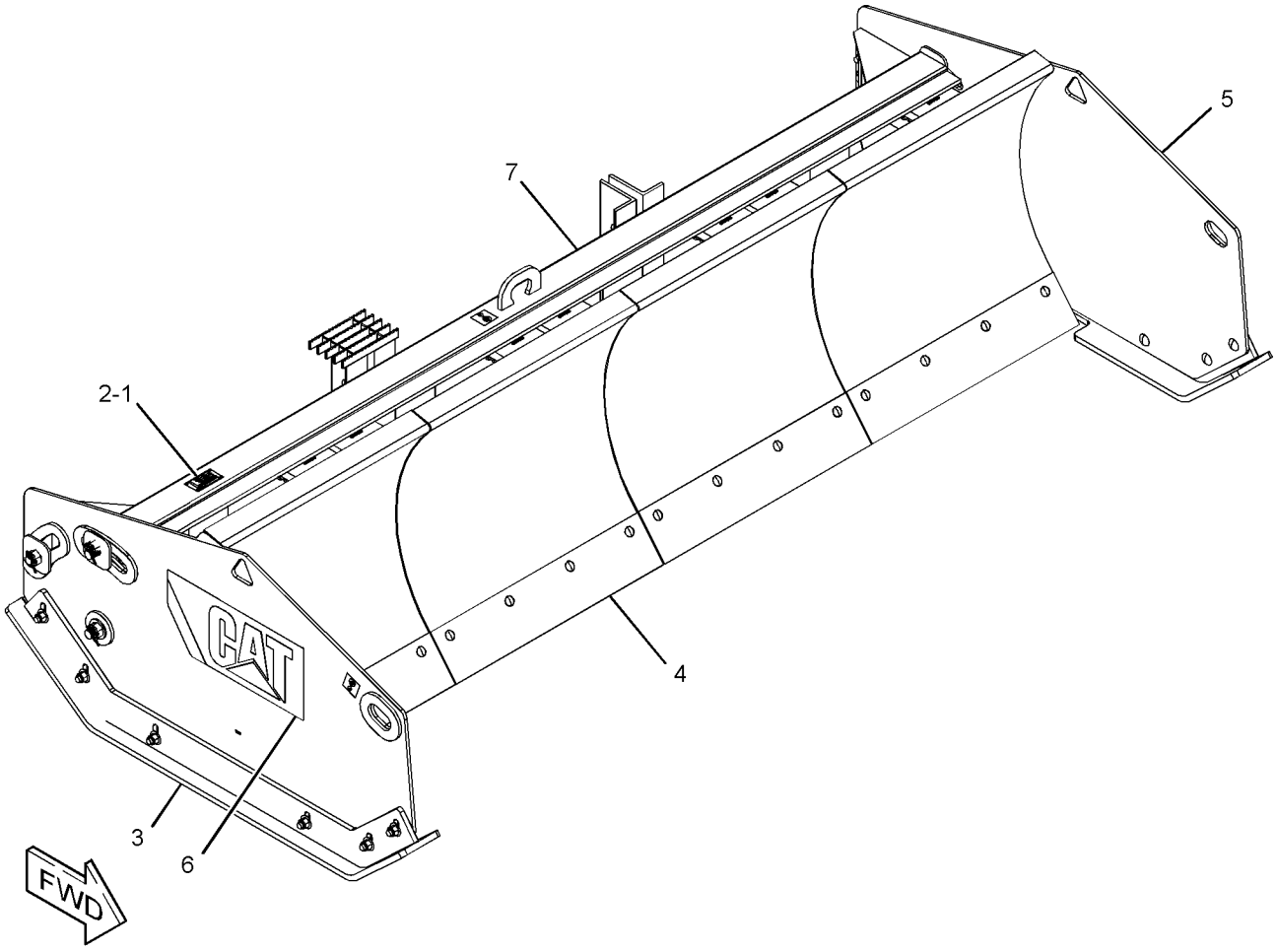

GRAPHIC #1 **<END>** g03366007

417-4914 BLADE AR–STANDARD

PART OF 385-6400 BLADE AR
AN ATTACHMENT

SMCS-6060, 6701 **i05231807**

NOTE	REF NO	GRAPHIC REF	PART NUMBER	QTY	PART NAME 1 2 3 4 5 6 (PRODUCT LEVEL)	SEE PAGE
	1	1	**154-2704**	1	PLATE-INSTRUCTION (BUCKET SPECIFICATIONS)	
	2	1	**168-8389**	4	TACK-FASTENER	
Y	3	1	*385-6368*	1	PLATE GP-SIDE	453
Y	4	1	*385-6370*	3	BLADE GP-SNOW	325
Y	5	1	*385-6371*	1	PLATE GP-SIDE	454
	6	1	*385-6373*	1	FILM GP	
		1	**7E-2700**	3	FILM-INFORMATION (LIFT EYE LOCATION)	
		1	**385-6416**	1	FILM-IDENTIFICATION (CAT, STRIPE, LH)	
		1	**385-6417**	1	FILM-IDENTIFICATION (CAT, STRIPE, RH)	
	7	1	*417-4915*	1	FRAME AS	
		1	**385-6393**	1	PLATE	
		1	**385-6396**	12	PLATE AS	
		1	**5S-2457**	2	BOLT-SOCKET HEAD (5/8-11X2-IN)	
		1	**385-6397**	4	STUD AS	
		1	**385-6398**	4	PLATE	

Y - SEPARATE ILLUSTRATION

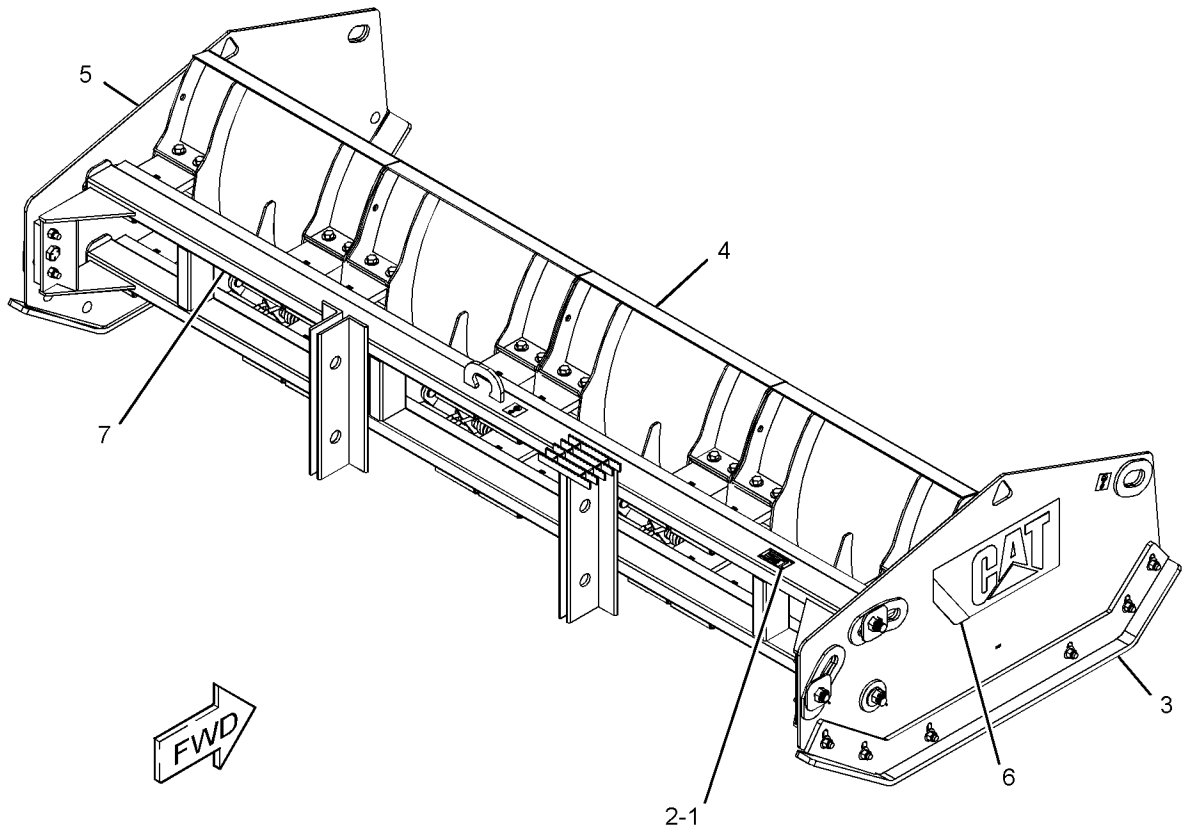

GRAPHIC #1 **<END>** g03318553

424-0450 BLADE AR–ANGLING
AN ATTACHMENT

SMCS-6060, 6701 **i05292892**

NOTE	REF NO	GRAPHIC REF	PART NUMBER	QTY	PART NAME 1 2 3 4 5 6 (PRODUCT LEVEL)	SEE PAGE
	1	1	**7K-1181**	3	STRAP-CABLE	
Y	2	1	*231-5273*	1	LINES GP-CONNECTING	247
Y	3	1	*231-5274*	1	CYLINDER & MTG GP-ANGLE BLADE	209
Y	4	1	*231-5276*	1	BLADE GP-ANGLING	305
Y	5	1	*231-5278*	1	MANIFOLD & MTG GP-CONTROL (ANGLING BLADE)	270
Y	6	1	*247-0678*	1	PLATE & FILM GP	573
Y	7	1	**378-3722**	1	HARNESS AS-WORK TOOL	109

Y - SEPARATE ILLUSTRATION

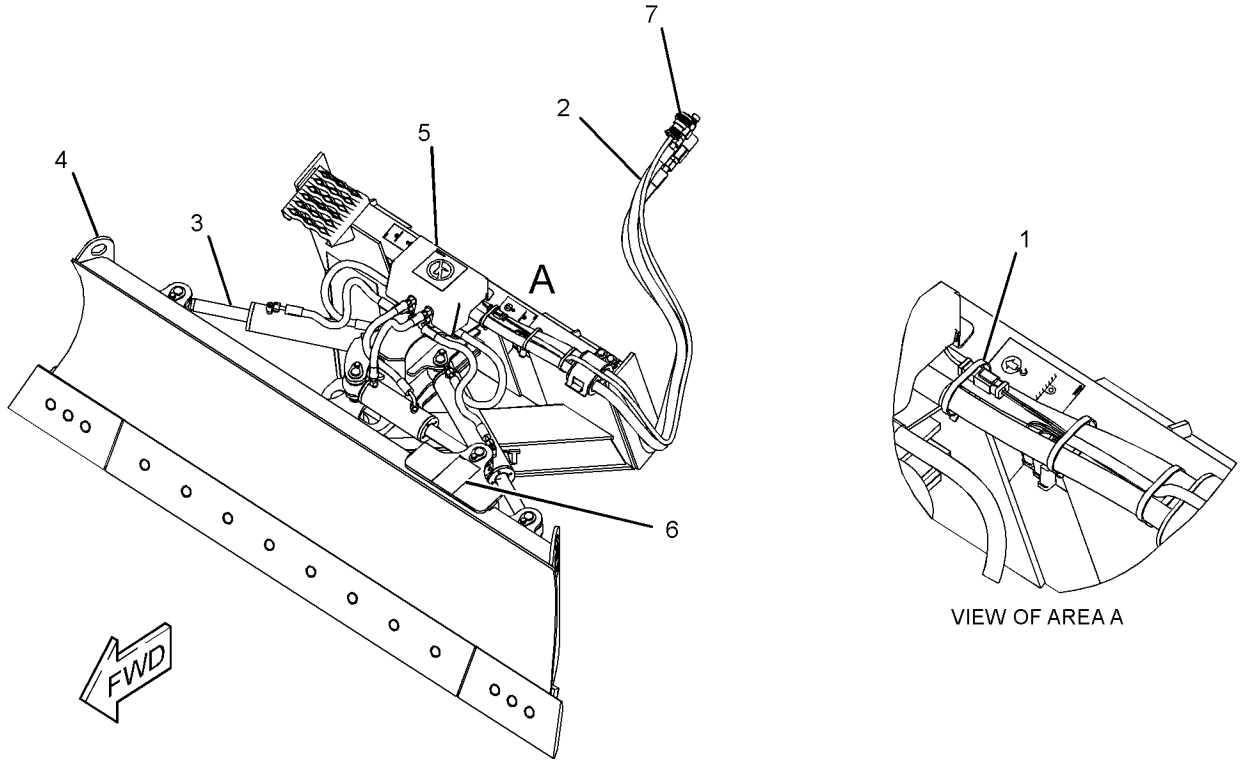

GRAPHIC #1 **<END>** g03363910

424-0451 BLADE AR–ANGLING
AN ATTACHMENT

SMCS-6060, 6701 **i05292891**

NOTE	REF NO	GRAPHIC REF	PART NUMBER	QTY	PART NAME 1 2 3 4 5 6 (PRODUCT LEVEL)	SEE PAGE
	1	1	**7K-1181**	3	STRAP-CABLE	
Y	2	1	*222-7724*	1	BLADE GP-ANGLING	304
Y	3	1	*231-5273*	1	LINES GP-CONNECTING	247
Y	4	1	*231-5274*	1	CYLINDER & MTG GP-ANGLE BLADE	209
Y	5	1	*231-5278*	1	MANIFOLD & MTG GP-CONTROL (ANGLING BLADE)	270
Y	6	1	*247-0678*	1	PLATE & FILM GP	573
Y	7	1	**378-3722**	1	HARNESS AS-WORK TOOL	109

Y - SEPARATE ILLUSTRATION

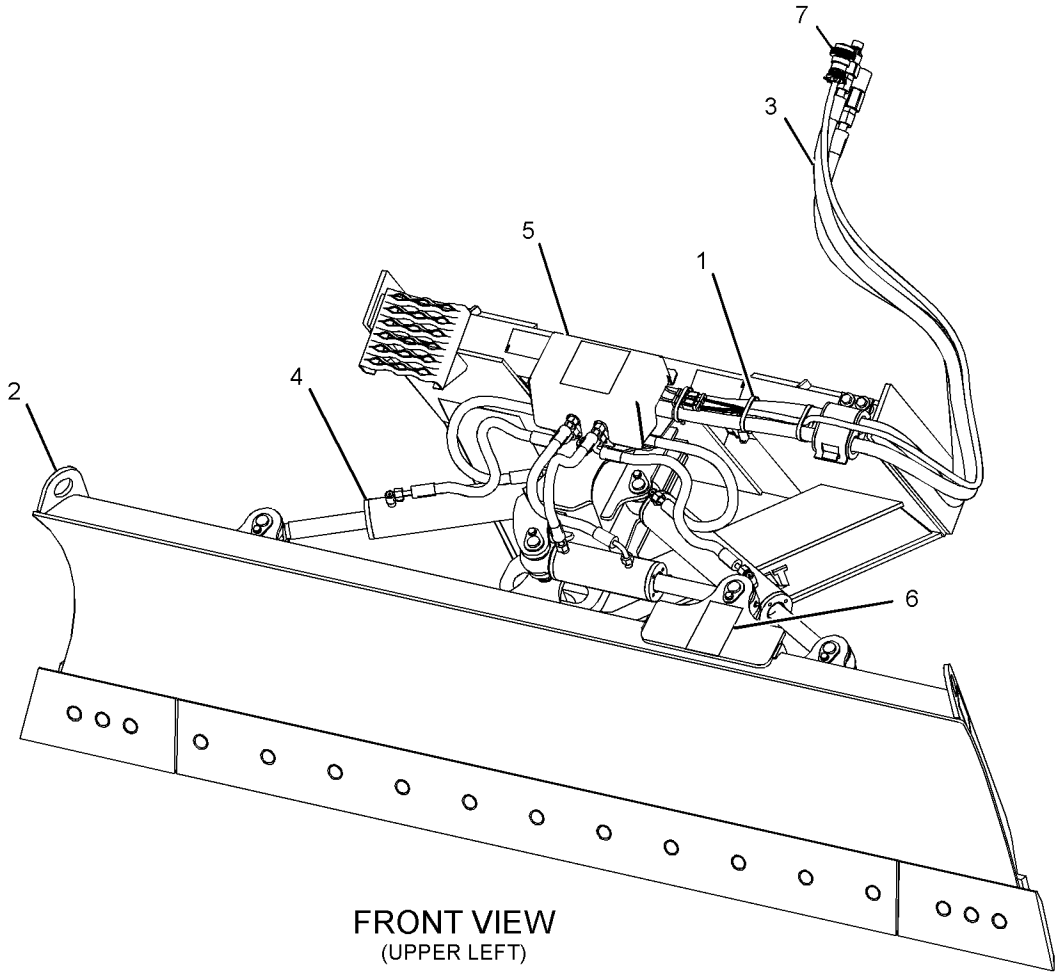

FRONT VIEW
(UPPER LEFT)

GRAPHIC #1 **<END>** g03370076

177-1987 BLADE AS-ANGLING

1829-MM (72-IN)
PART OF 177-1981 BLADE GP-ANGLING
AN ATTACHMENT

SMCS-6052, 6060

i04156267

NOTE	REF NO	GRAPHIC REF	PART NUMBER	QTY	PART NAME 1 2 3 4 5 6 (PRODUCT LEVEL)	SEE PAGE
	1	1	**358-4944**	1	PLATE-IDENTIFICATION (BUCKET SPECIFICATIONS)	
	2	1	**168-8389**	4	TACK-FASTENER	

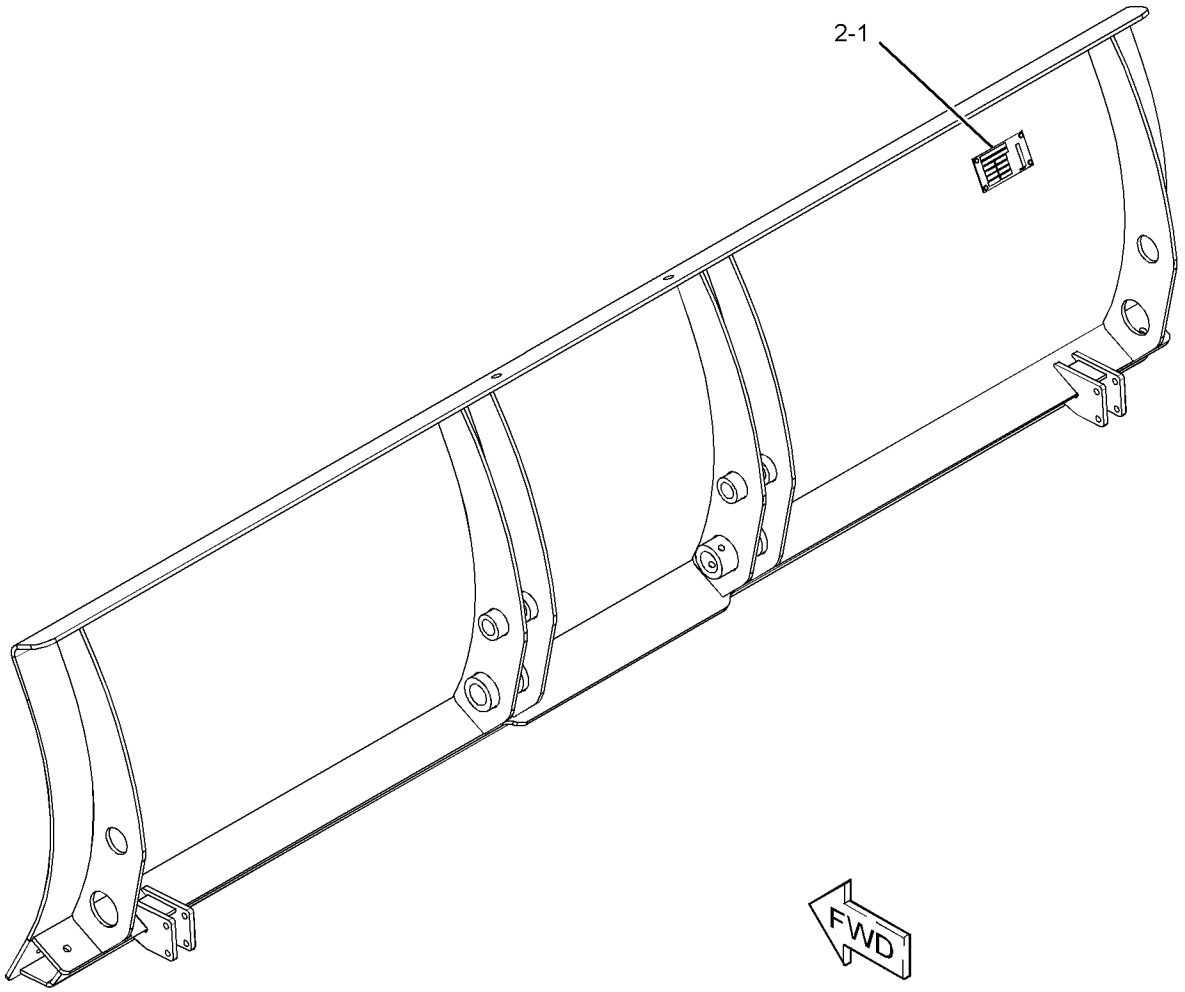

GRAPHIC #1

<END>

g02351902

177-1988 BLADE AS-ANGLING

2134-MM (84-IN)
PART OF 177-1982 BLADE GP-ANGLING
AN ATTACHMENT

SMCS-6052, 6060

i04154471

NOTE	REF NO	GRAPHIC REF	PART NUMBER	QTY	PART NAME 1 2 3 4 5 6 (PRODUCT LEVEL)	SEE PAGE
	1	1	**358-4944**	1	PLATE-IDENTIFICATION (BUCKET SPECIFICATIONS)	
	2	1	**168-8389**	4	TACK-FASTENER	

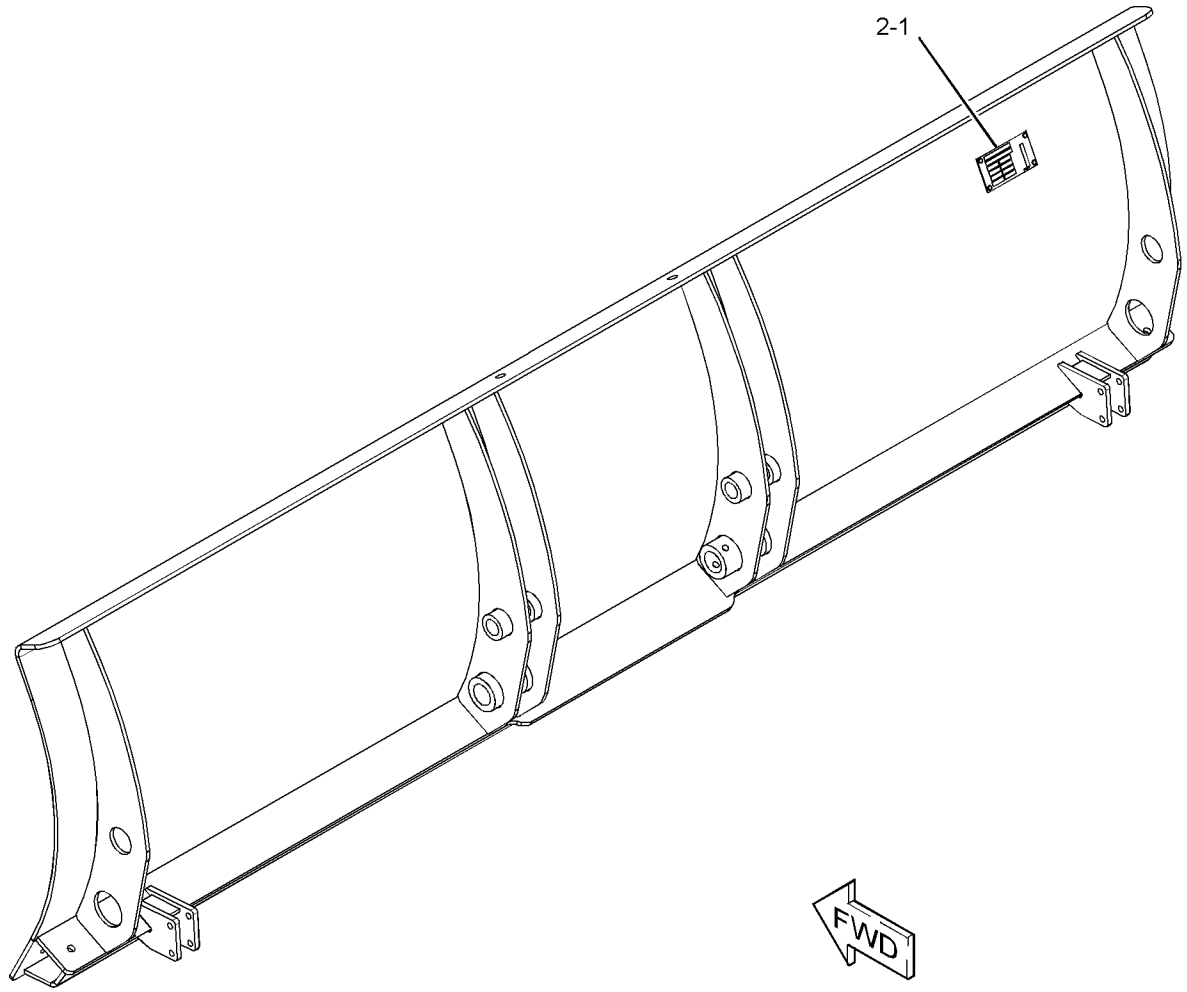

GRAPHIC #1

<END>

g02351903

222-7412 BLADE AS-ANGLING

2337-MM (92-IN)
PART OF 222-7724 BLADE GP-ANGLING
AN ATTACHMENT

SMCS-6052, 6060

i03646971

NOTE	REF NO	GRAPHIC REF	PART NUMBER	QTY	PART NAME 1 2 3 4 5 6 (PRODUCT LEVEL)	SEE PAGE
	1	1	**222-7421**	1	TRUNNION AS	
	2	1	**222-7479**	1	PLATE AS	
	3	1	**222-7728**	1	PLATE AS	

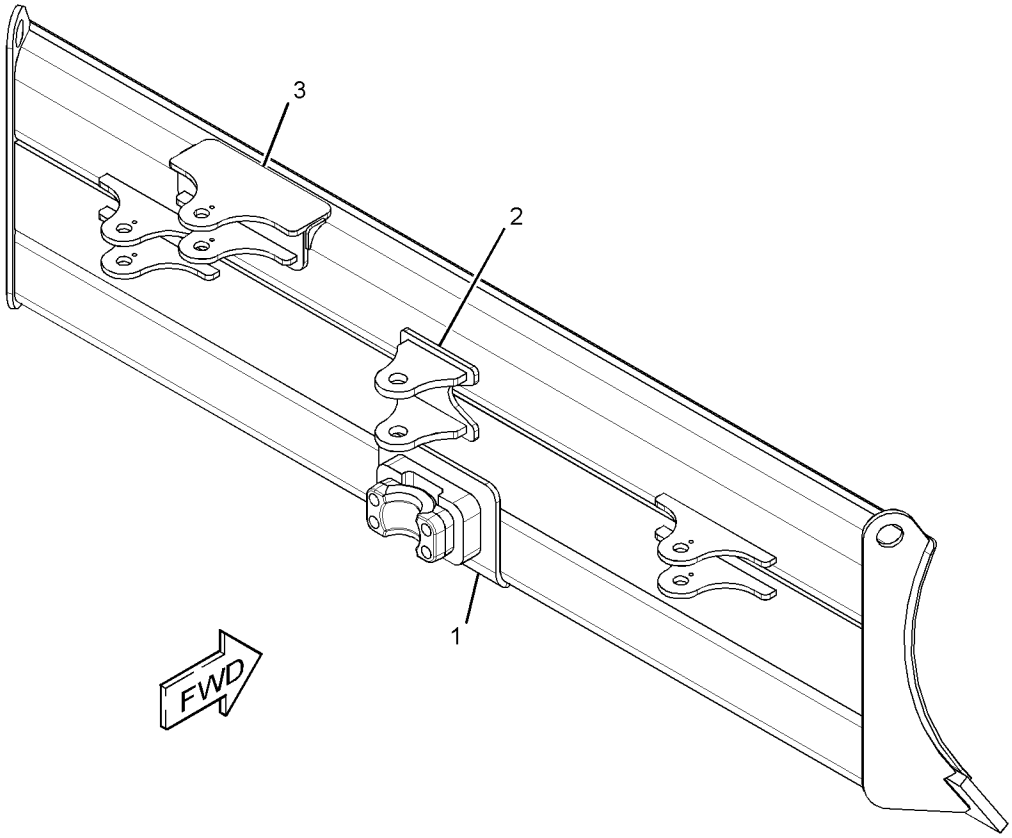

GRAPHIC #1

<END>

g01960536

230-4596 BLADE AS-ANGLING

2007-MM (79-IN)
PART OF 231-5276 BLADE GP-ANGLING
AN ATTACHMENT

SMCS-6052, 6060

i03646970

NOTE	REF NO	GRAPHIC REF	PART NUMBER	QTY	PART NAME 1 2 3 4 5 6 (PRODUCT LEVEL)	SEE PAGE
	1	1	**222-7421**	1	TRUNNION AS	
	2	1	**222-7479**	1	PLATE AS	
	3	1	**222-7728**	1	PLATE AS	

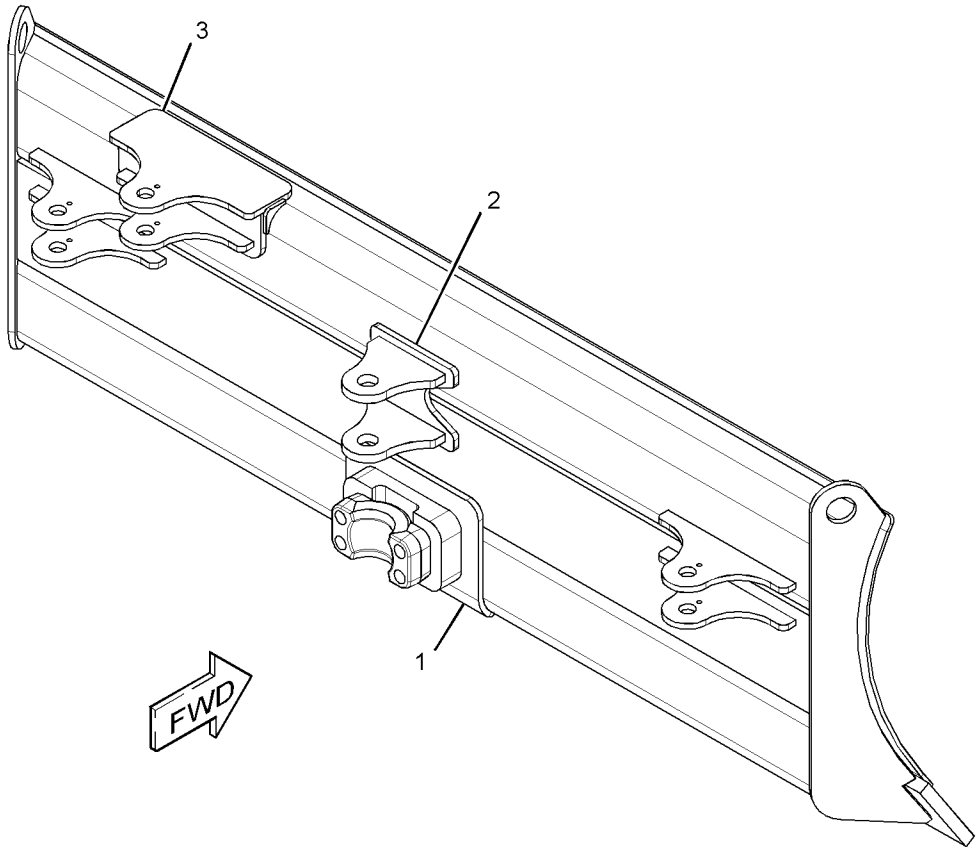

GRAPHIC #1

<END>

g01960542

177-1981 BLADE GP-ANGLING

PART OF 177-1989 BLADE AR

AN ATTACHMENT

SMCS-6060, 6701 **i03930872**

NOTE	REF NO	GRAPHIC REF	PART NUMBER	QTY	PART NAME 1 2 3 4 5 6 (PRODUCT LEVEL)	SEE PAGE
	1	1	**157-0940**	2	PIN	
	2	1	**166-0319**	2	PIN AS	
	3	1	**9R-2959**	2	CLIP	
	4	1	**177-1921**	2	PIN AS	
	5	1	**177-1972**	2	SKID AS	
Y	6	1	**177-1987**	1	BLADE AS-ANGLING	298
	7	1	**3B-8489**	2	FITTING-GREASE	
M	8	1	**6V-9189**	2	LOCKNUT (M8X1.25-THD)	
M	9	1	**8T-6869**	2	BOLT (M8X1.25X60-MM)	

M - METRIC PART
Y - SEPARATE ILLUSTRATION

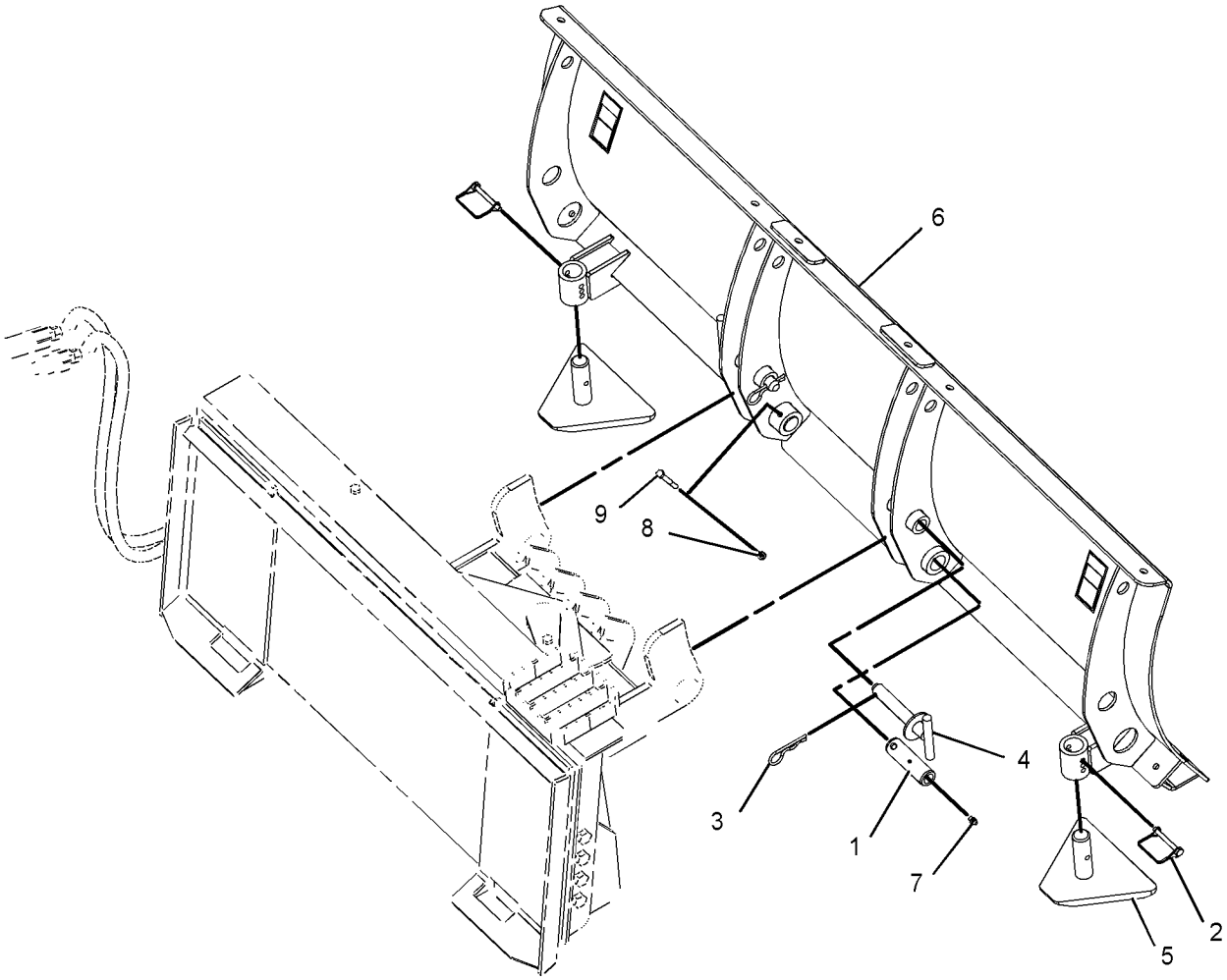

GRAPHIC #1 **<END>** g01960538

177-1982 BLADE GP-ANGLING

PART OF 177-1990 BLADE AR

AN ATTACHMENT

SMCS-6060, 6701 **i03930949**

NOTE	REF NO	GRAPHIC REF	PART NUMBER	QTY	PART NAME 1 2 3 4 5 6 (PRODUCT LEVEL)	SEE PAGE
	1	1	**157-0940**	2	PIN	
	2	1	**166-0319**	2	PIN AS	
	3	1	**9R-2959**	2	CLIP	
	4	1	**177-1921**	2	PIN AS	
	5	1	**177-1972**	2	SKID AS	
Y	6	1	**177-1988**	1	BLADE AS-ANGLING	299
	7	1	**3B-8489**	2	FITTING-GREASE	
M	8	1	**6V-9189**	2	LOCKNUT (M8X1.25-THD)	
M	9	1	**8T-6869**	2	BOLT (M8X1.25X60-MM)	

M - METRIC PART
Y - SEPARATE ILLUSTRATION

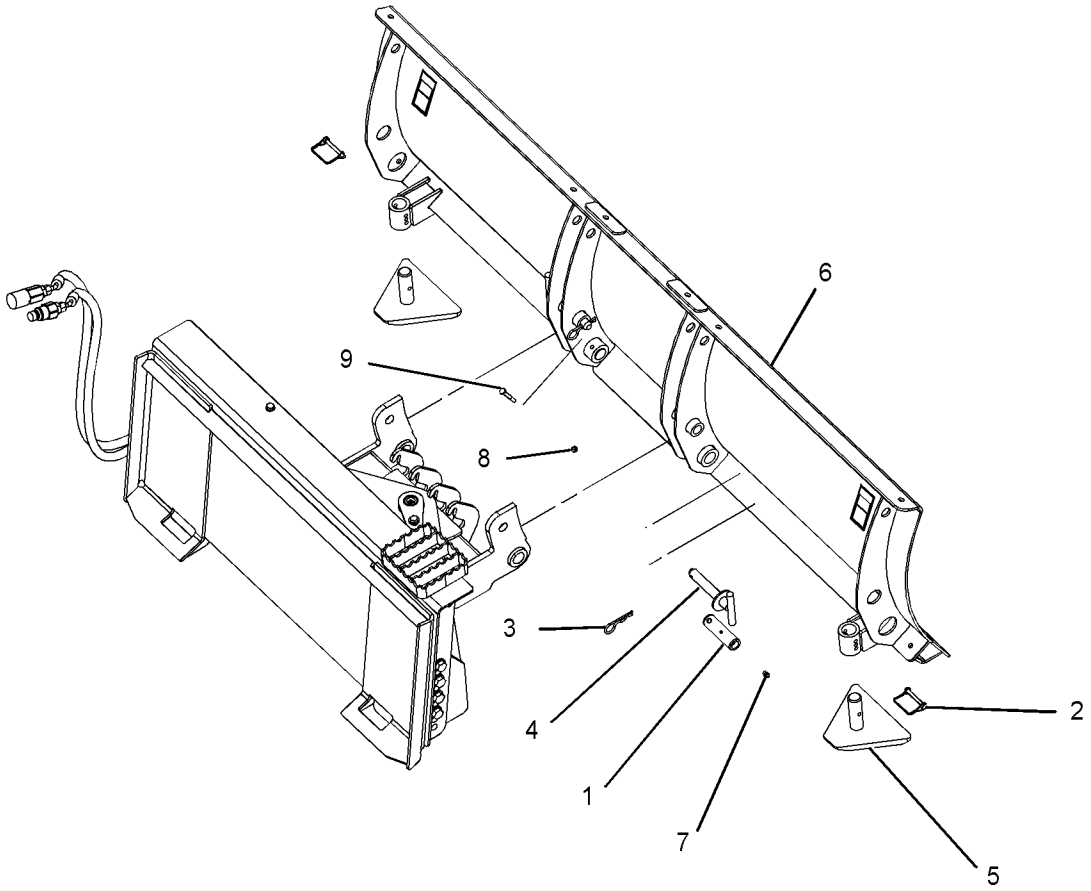

GRAPHIC #1 **<END>** g01960539

222-7724 BLADE GP-ANGLING

PART OF 424-0451 BLADE AR

AN ATTACHMENT

SMCS-6060, 6701 **i04156826**

NOTE	REF NO	GRAPHIC REF	PART NUMBER	QTY	PART NAME 1 2 3 4 5 6 (PRODUCT LEVEL)	SEE PAGE
B	1	1	**8E-5702**	22	SHIM (0.8-MM THK)	
	2	1	**358-4944**	1	PLATE-IDENTIFICATION (BUCKET SPECIFICATIONS)	
	3	1	**168-8389**	4	TACK-FASTENER (METAL)	
Y	4	1	**222-7412**	1	BLADE AS-ANGLING	300
	5	1	**222-7725**	1	FRAME GP-BLADE	
	6	1	**231-5271**	1	PIN	
	7	1	**238-1004**	2	MOUNT AS	
	8	1	**238-1005**	2	SKID AS	
	9	1	**244-1367**	1	BUSHING	
Y	10	1	*222-7546*	1	EDGE GP-BIT & CUTTING	420
	11	1	**5P-1076**	8	WASHER-HARD (13.5X30X4-MM THK)	
	12	1	**6V-7644**	2	RING-RETAINING	
M	13	1	**8C-8478**	4	BOLT (M20X2.5X140-MM)	
	14	1	**8J-2880**	1	CAP-BEARING	
	15	1	**8T-4123**	4	WASHER (3.62X5.75X0.375-MM THK)	
M	16	1	**8T-4139**	8	BOLT (M12X1.75X30-MM)	

B - USE AS REQUIRED
M - METRIC PART
Y - SEPARATE ILLUSTRATION

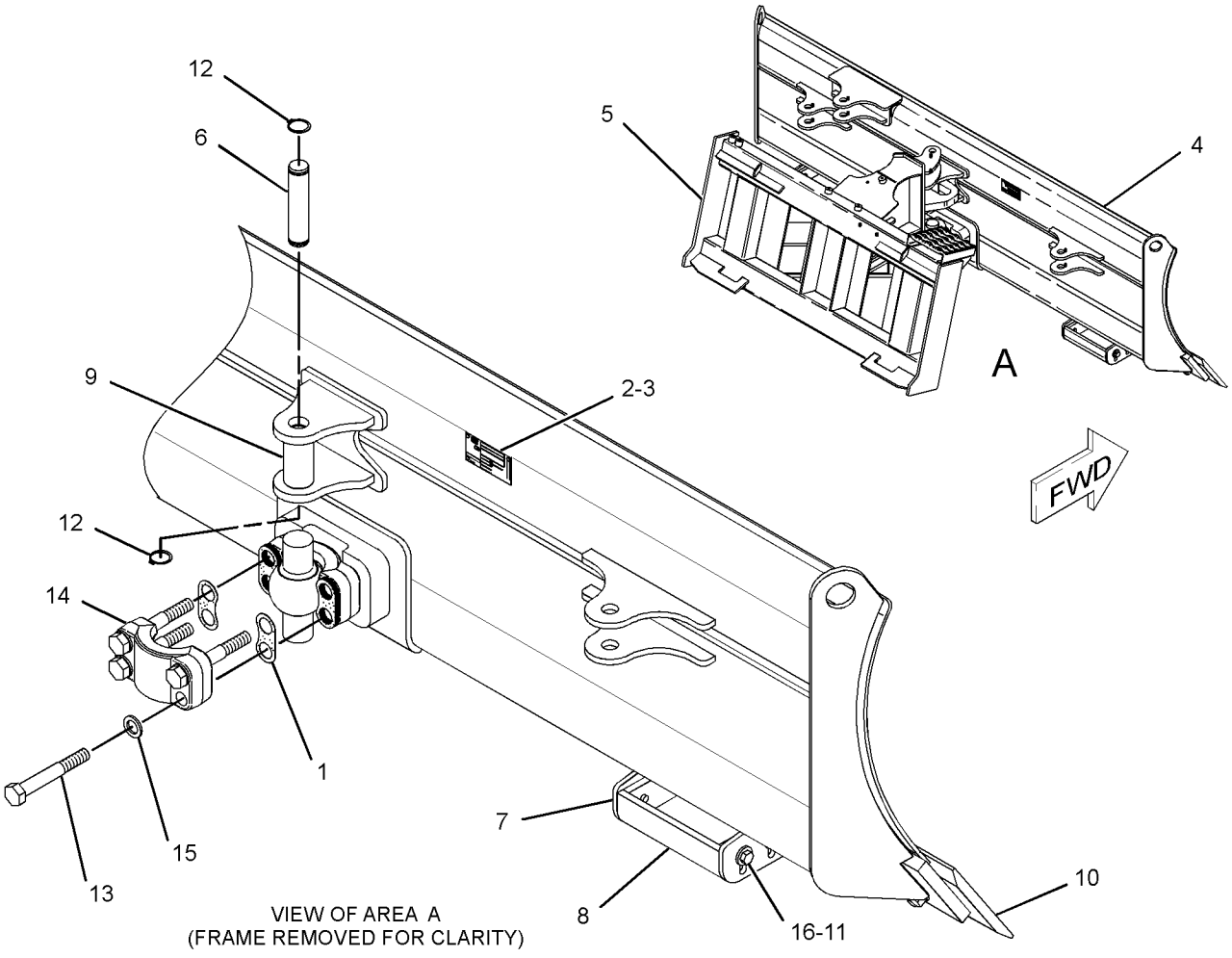

GRAPHIC #1 **<END>** g02379077

231-5276 BLADE GP-ANGLING

PART OF 424-0450 BLADE AR
AN ATTACHMENT

SMCS-6060, 6701 **i04319649**

NOTE	REF NO	GRAPHIC REF	PART NUMBER	QTY	PART NAME 1 2 3 4 5 6 (PRODUCT LEVEL)	SEE PAGE
B	1	1	**8E-5702**	22	SHIM (0.8-MM THK)	
	2	1	**358-4944**	1	PLATE-IDENTIFICATION (BUCKET SPECIFICATIONS)	
	3	1	**168-8389**	4	TACK-FASTENER (METAL)	
	4	1	**222-7725**	1	FRAME GP-BLADE (WORK TOOL)	
Y	5	1	**230-4596**	1	BLADE AS-ANGLING	301
	6	1	**231-5271**	1	PIN	
	7	1	**238-1004**	2	MOUNT AS	
	8	1	**238-1005**	2	SKID AS	
	9	1	**244-1367**	1	BUSHING	
Y	10	1	*222-7545*	1	EDGE GP-BIT & CUTTING	419
	11	1	**5P-1076**	8	WASHER-HARD (13.5X30X4-MM THK)	
	12	1	**6V-7644**	2	RING-RETAINING	
M	13	1	**8C-8478**	4	BOLT (M20X2.5X140-MM)	
	14	1	**8J-2880**	1	CAP-BEARING	
	15	1	**8T-4123**	4	WASHER (3.62X5.75X0.375-MM THK)	
M	16	1	**8T-4139**	8	BOLT (M12X1.75X30-MM)	

B - USE AS REQUIRED
M - METRIC PART
Y - SEPARATE ILLUSTRATION

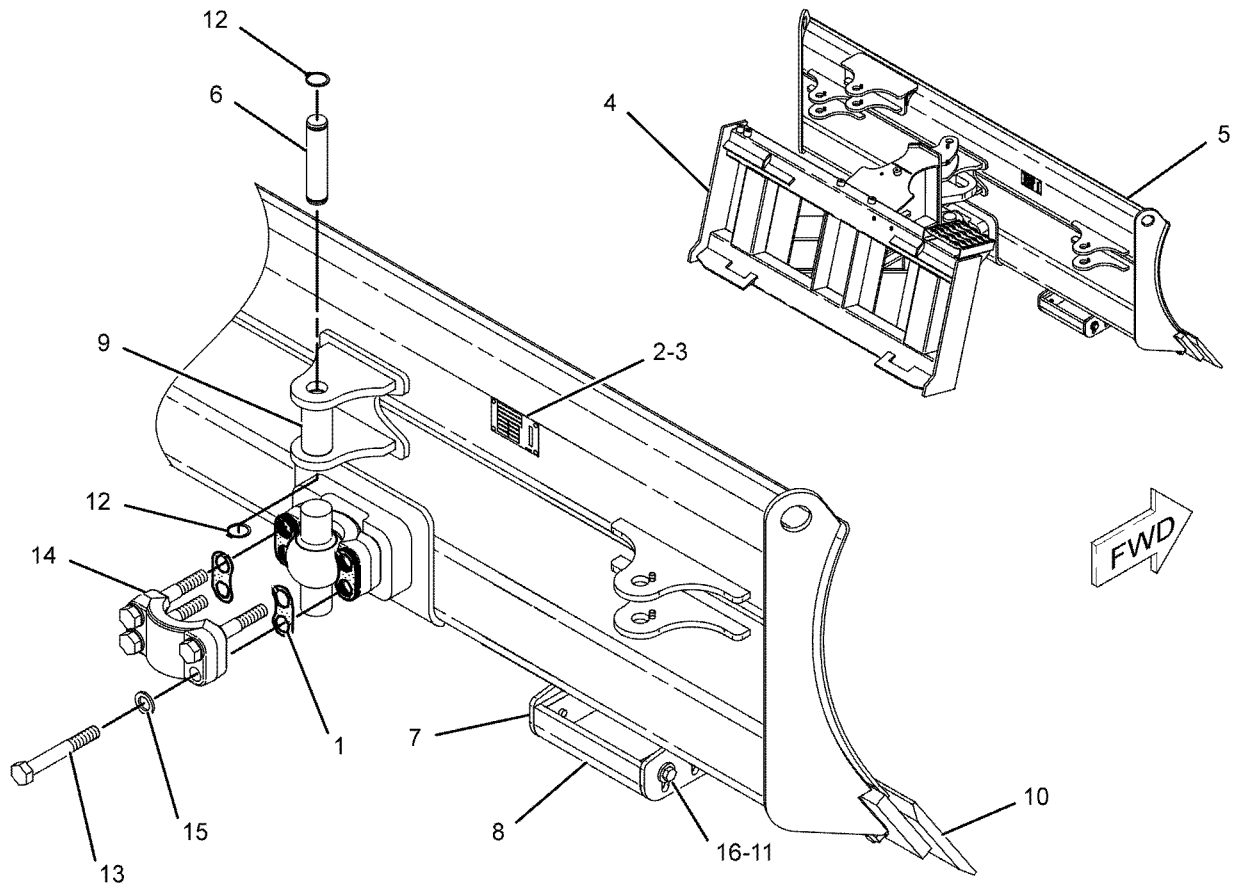

GRAPHIC #1 **<END>** g01020723

423-4298 BLADE GP-MULTIPURPOSE BUCKET

PART OF 423-4294 BUCKET GP-MULTIPURPOSE

AN ATTACHMENT

SMCS-6060, 6104 **i05288709**

NOTE	REF NO	GRAPHIC REF	PART NUMBER	QTY	PART NAME 1 2 3 4 5 6 (PRODUCT LEVEL)	SEE PAGE
	1	1	**168-8389**	4	TACK-FASTENER	
Y	2	1	**423-4300**	1	BLADE GP-MULTIPURPOSE BUCKET	307
	3	1	**358-4944**	1	PLATE-IDENTIFICATION (BUCKET SPECIFICATIONS)	

Y - SEPARATE ILLUSTRATION

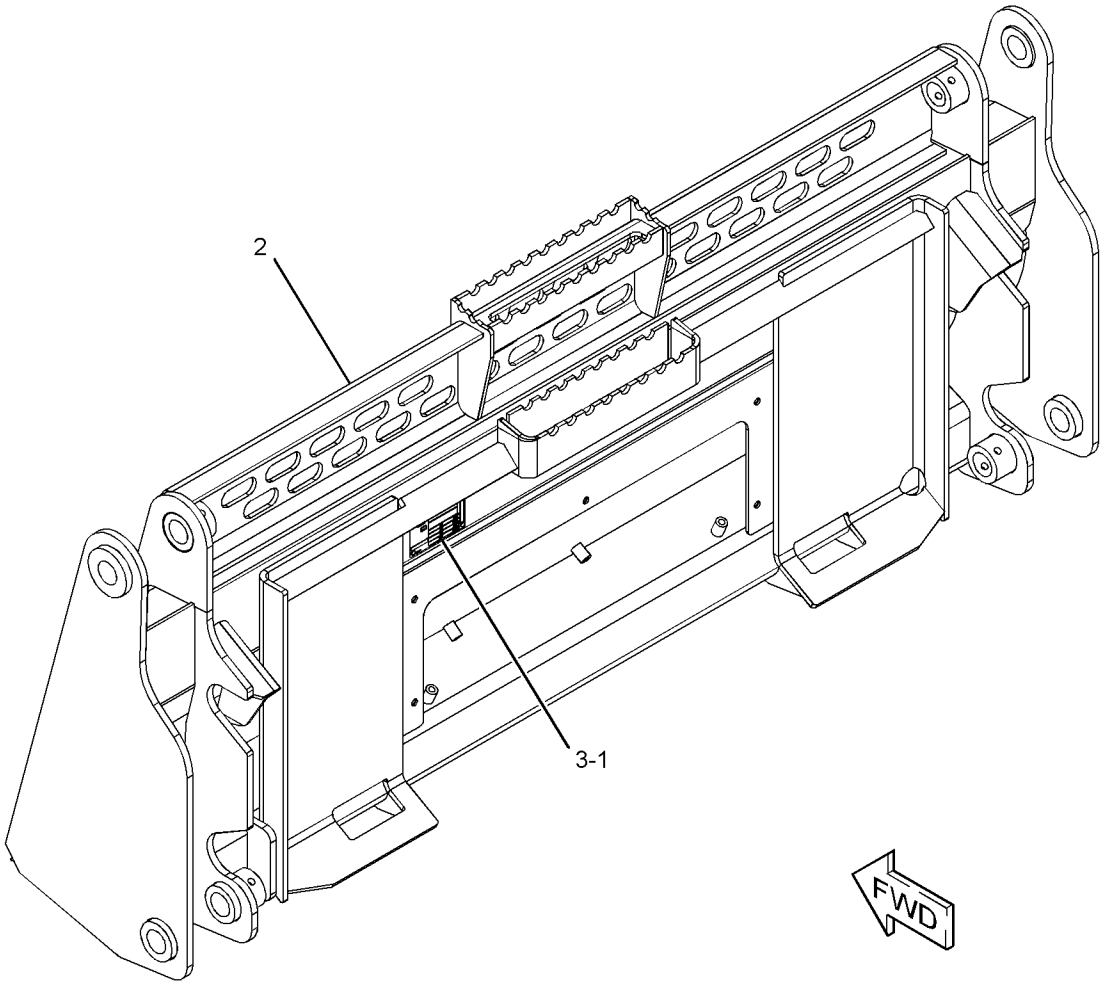

GRAPHIC #1 **<END>** g03363398

423-4300 BLADE GP-MULTIPURPOSE BUCKET

1524-MM (60-IN)
PART OF 423-4298 BLADE GP-MULTIPURPOSE BUCKET
AN ATTACHMENT

SMCS-6060, 6104

i05295834

NOTE	REF NO	GRAPHIC REF	PART NUMBER	QTY	PART NAME 1 2 3 4 5 6 (PRODUCT LEVEL)	SEE PAGE
	1	1	**154-5037**	1	EDGE	
	2	1	**325-7034**	1	GUARD AS (60-IN)	

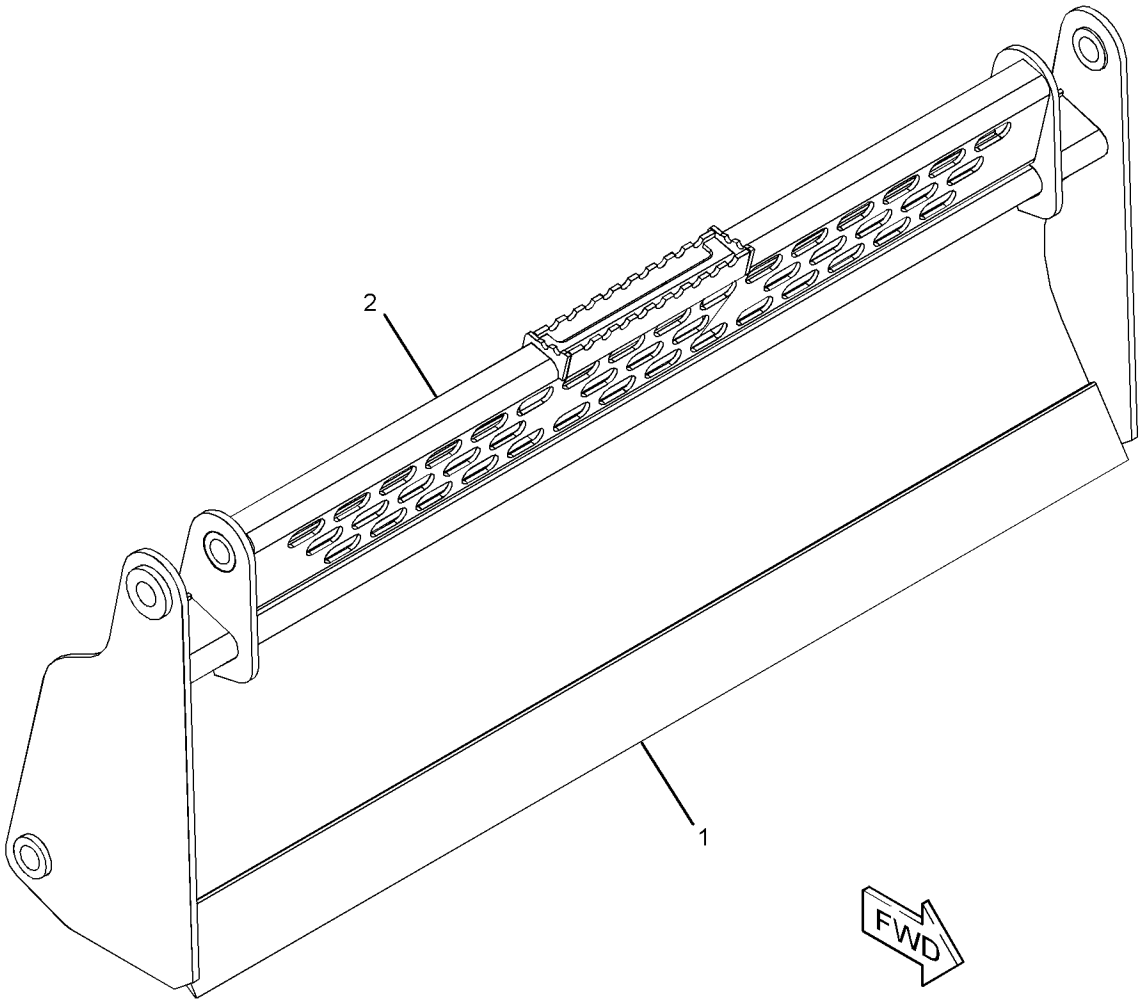

GRAPHIC #1

<END>

g03363412

426-6503 BLADE GP-MULTIPURPOSE BUCKET

PART OF 426-6495 BUCKET GP-MULTIPURPOSE

AN ATTACHMENT

SMCS-6060, 6104 **i05288621**

NOTE	REF NO	GRAPHIC REF	PART NUMBER	QTY	PART NAME 1 2 3 4 5 6 (PRODUCT LEVEL)	SEE PAGE
	1	1	**168-8389**	4	TACK-FASTENER	
Y	2	1	**426-6505**	1	BLADE GP-MULTIPURPOSE BUCKET	309
	3	1	**358-4944**	1	PLATE-IDENTIFICATION (BUCKET SPECIFICATIONS)	

Y - SEPARATE ILLUSTRATION

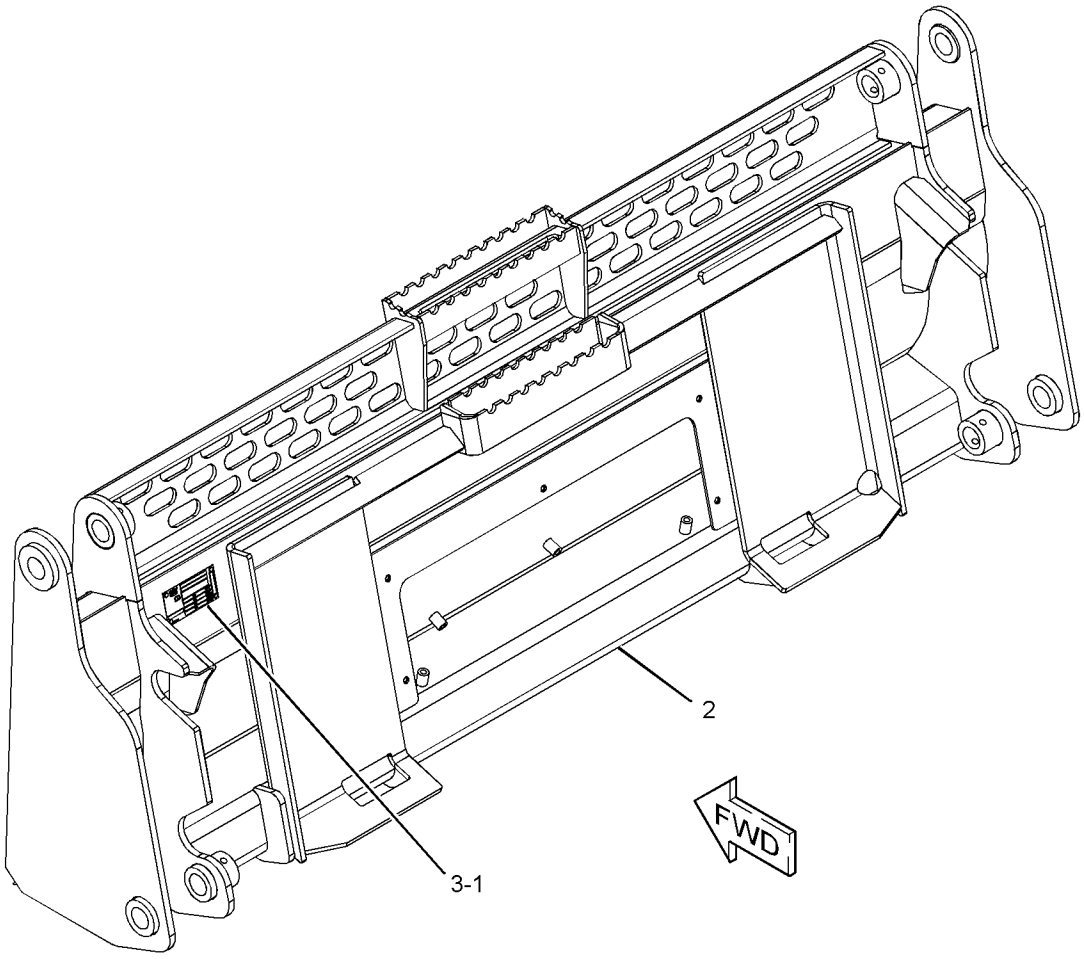

GRAPHIC #1 **<END>** g03362637

426-6505 BLADE GP-MULTIPURPOSE BUCKET

1676.4-MM (66-IN)

PART OF 426-6503 BLADE GP-MULTIPURPOSE BUCKET

AN ATTACHMENT

SMCS-6060, 6104

i05295420

NOTE	REF NO	GRAPHIC REF	PART NUMBER	QTY	PART NAME 1 2 3 4 5 6 (PRODUCT LEVEL)	SEE PAGE
	1	1	**154-5059**	1	EDGE	
	2	1	**325-7044**	1	GUARD AS (66-IN)	

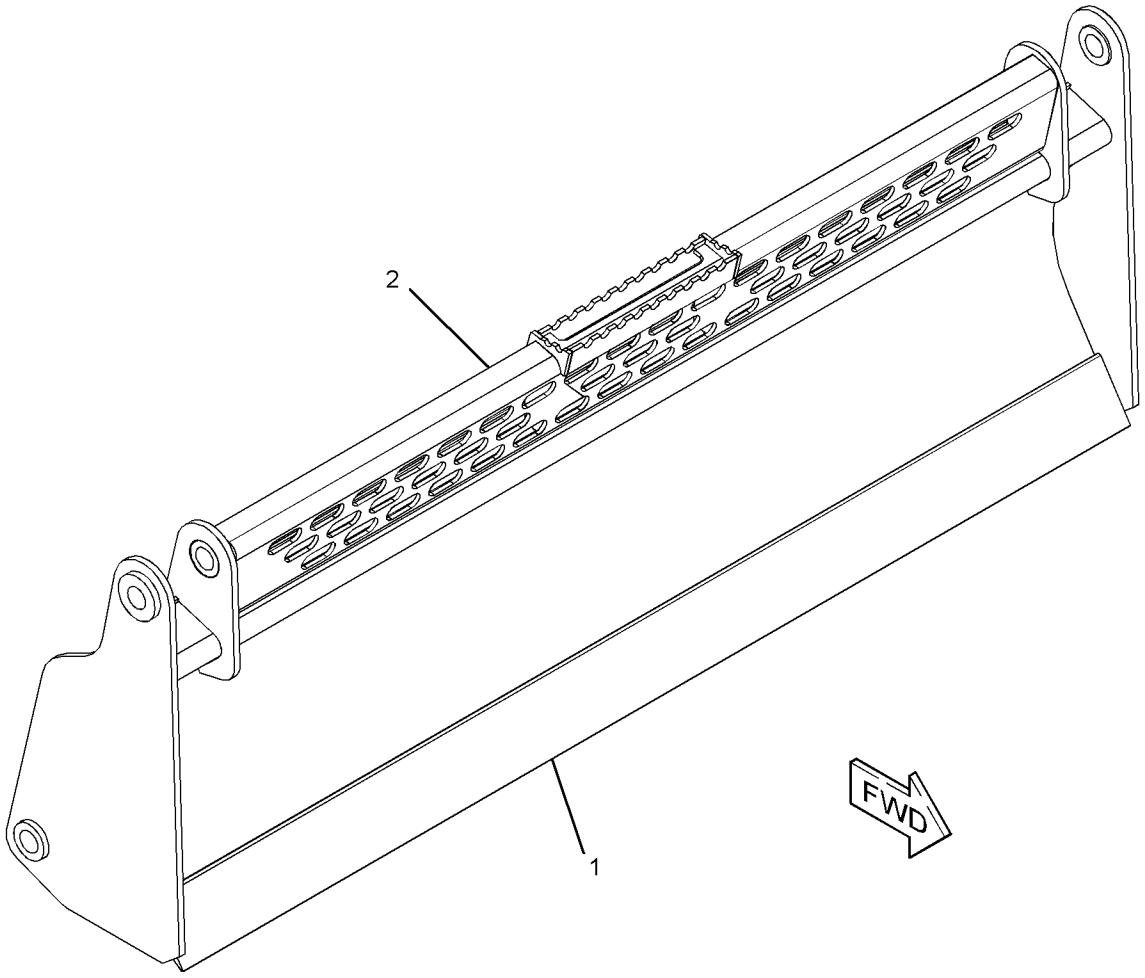

GRAPHIC #1

<END>

g03365348

426-6544 BLADE GP-MULTIPURPOSE BUCKET

PART OF 426-6538 BUCKET GP-MULTIPURPOSE

AN ATTACHMENT

SMCS-6060, 6104 **i05288702**

NOTE	REF NO	GRAPHIC REF	PART NUMBER	QTY	PART NAME 1 2 3 4 5 6 (PRODUCT LEVEL)	SEE PAGE
	1	1	**168-8389**	4	TACK-FASTENER	
Y	2	1	**426-6545**	1	BLADE GP-MULTIPURPOSE BUCKET	311
	3	1	**358-4944**	1	PLATE-IDENTIFICATION (BUCKET SPECIFICATIONS)	

Y - SEPARATE ILLUSTRATION

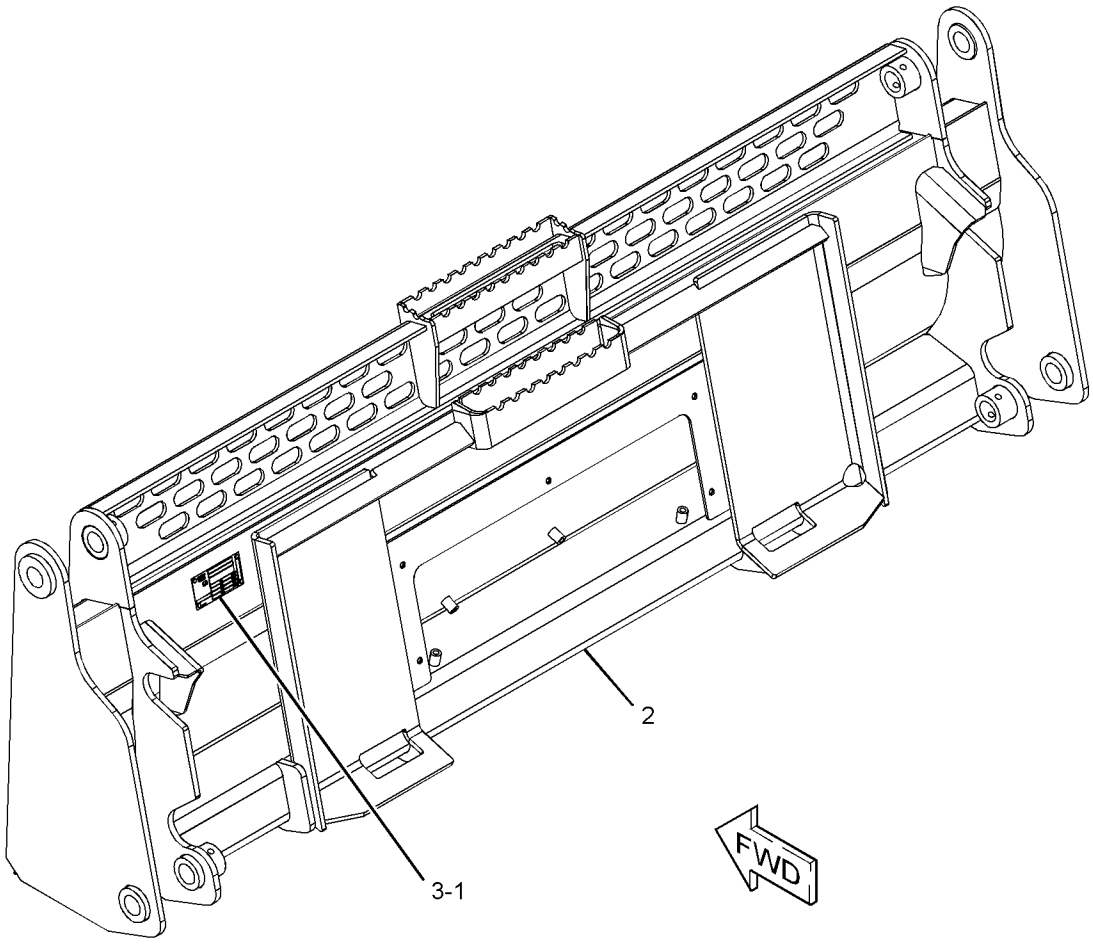

GRAPHIC #1 **<END>** g03365159

426-6545 BLADE GP-MULTIPURPOSE BUCKET

1828.8-MM (72-IN)
PART OF 426-6544 BLADE GP-MULTIPURPOSE BUCKET
AN ATTACHMENT

SMCS-6060, 6104

i05295631

NOTE	REF NO	GRAPHIC REF	PART NUMBER	QTY	PART NAME 1 2 3 4 5 6 (PRODUCT LEVEL)	SEE PAGE
	1	1	**154-5077**	1	EDGE	
	2	1	**325-7054**	1	GUARD AS (72-IN)	

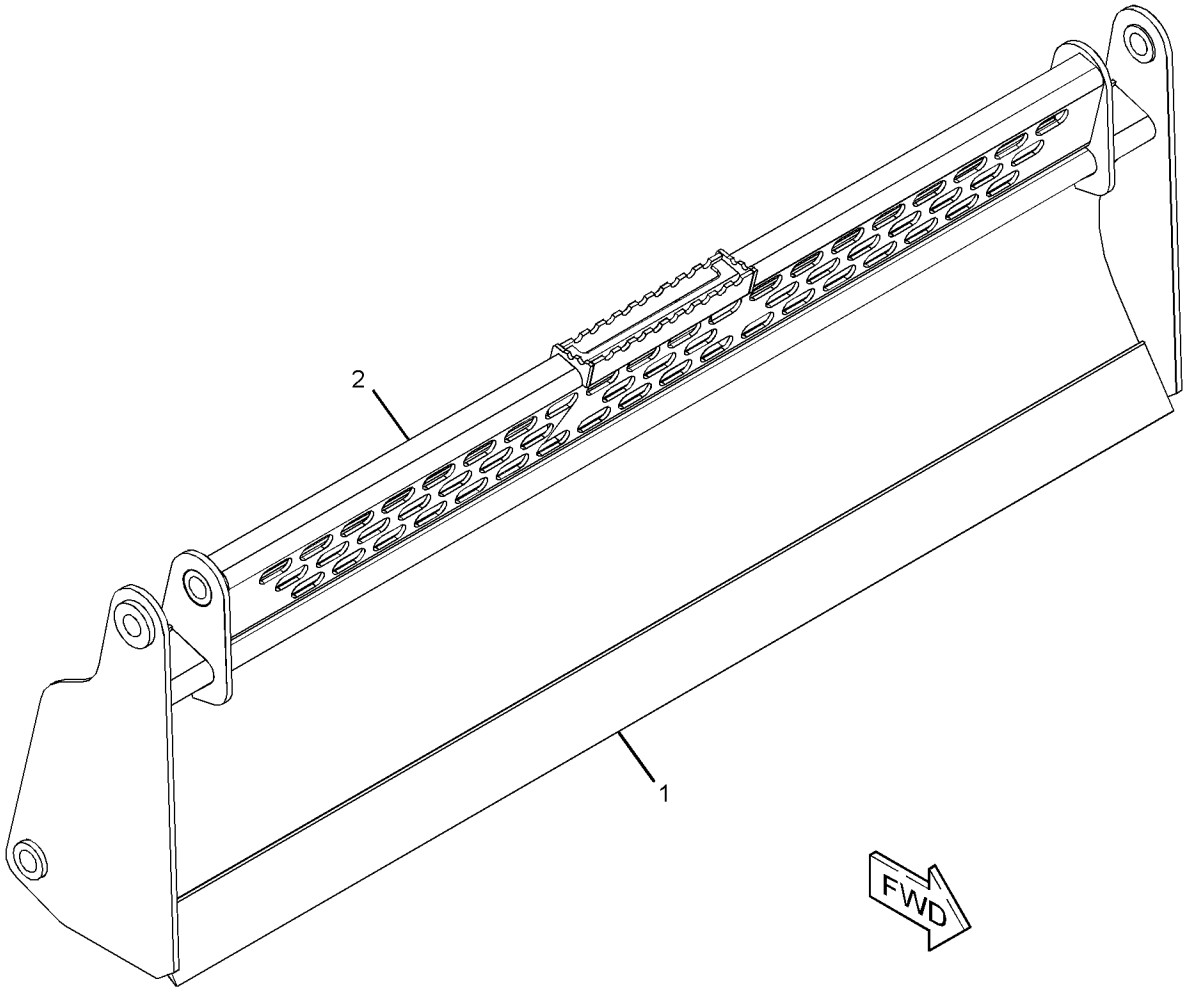

GRAPHIC #1

<END>

g03363415

426-6554 BLADE GP-MULTIPURPOSE BUCKET

PART OF 426-6550 BUCKET GP-MULTIPURPOSE

AN ATTACHMENT

SMCS-6060, 6104 **i05284510**

NOTE	REF NO	GRAPHIC REF	PART NUMBER	QTY	PART NAME 1 2 3 4 5 6 (PRODUCT LEVEL)	SEE PAGE
	1	1	**168-8389**	4	TACK-FASTENER	
	2	1	**358-4944**	1	PLATE-IDENTIFICATION (BUCKET SPECIFICATIONS)	
Y	3	1	**426-6555**	1	BLADE GP-MULTIPURPOSE BUCKET	313

Y - SEPARATE ILLUSTRATION

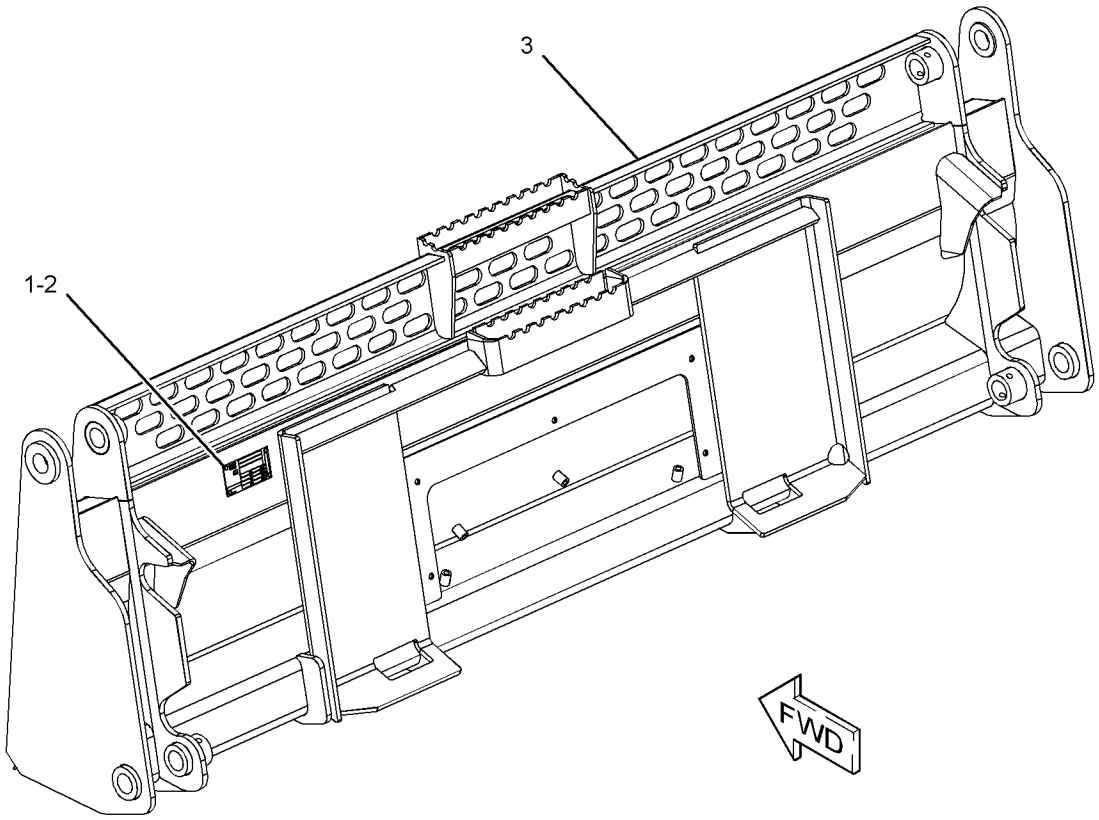

GRAPHIC #1 **<END>** g03358953

426-6555 BLADE GP-MULTIPURPOSE BUCKET

78-IN (1981.2-MM)

PART OF 426-6554 BLADE GP-MULTIPURPOSE BUCKET

AN ATTACHMENT

SMCS-6060, 6104

i05292061

NOTE	REF NO	GRAPHIC REF	PART NUMBER	QTY	PART NAME 1 2 3 4 5 6 (PRODUCT LEVEL)	SEE PAGE
	1	1	**199-8316**	1	EDGE	
	2	1	**325-7064**	1	GUARD AS (78-IN)	

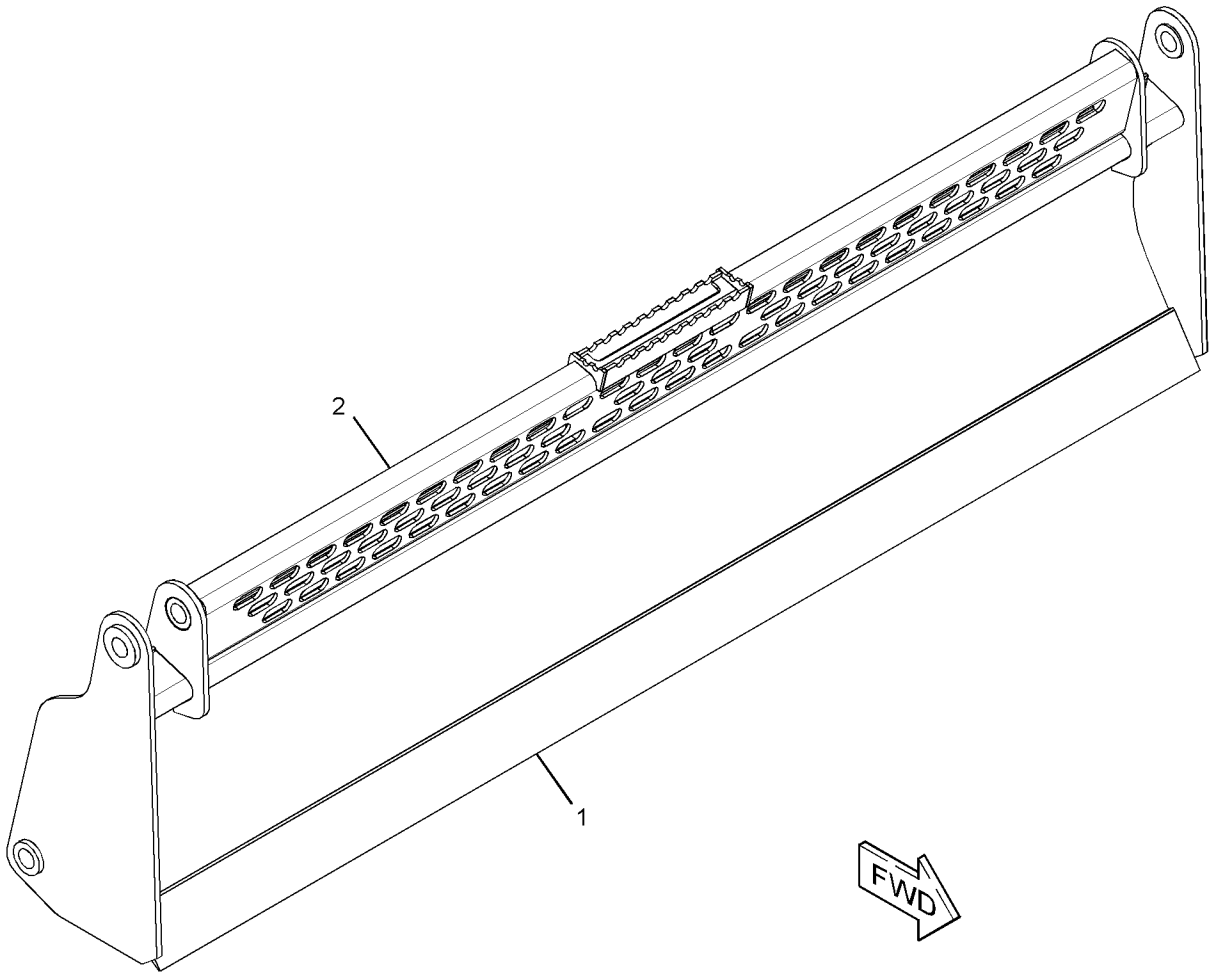

GRAPHIC #1

<END>

g03362202

426-6564 BLADE GP-MULTIPURPOSE BUCKET

PART OF 426-6560 BUCKET GP-MULTIPURPOSE

AN ATTACHMENT

SMCS-6060, 6104 **i05284601**

NOTE	REF NO	GRAPHIC REF	PART NUMBER	QTY	PART NAME 1 2 3 4 5 6 (PRODUCT LEVEL)	SEE PAGE
	1	1	**168-8389**	4	TACK-FASTENER	
	2	1	**358-4944**	1	PLATE-IDENTIFICATION (BUCKET SPECIFICATIONS)	
Y	3	1	**426-6565**	1	BLADE GP-MULTIPURPOSE BUCKET	315

Y - SEPARATE ILLUSTRATION

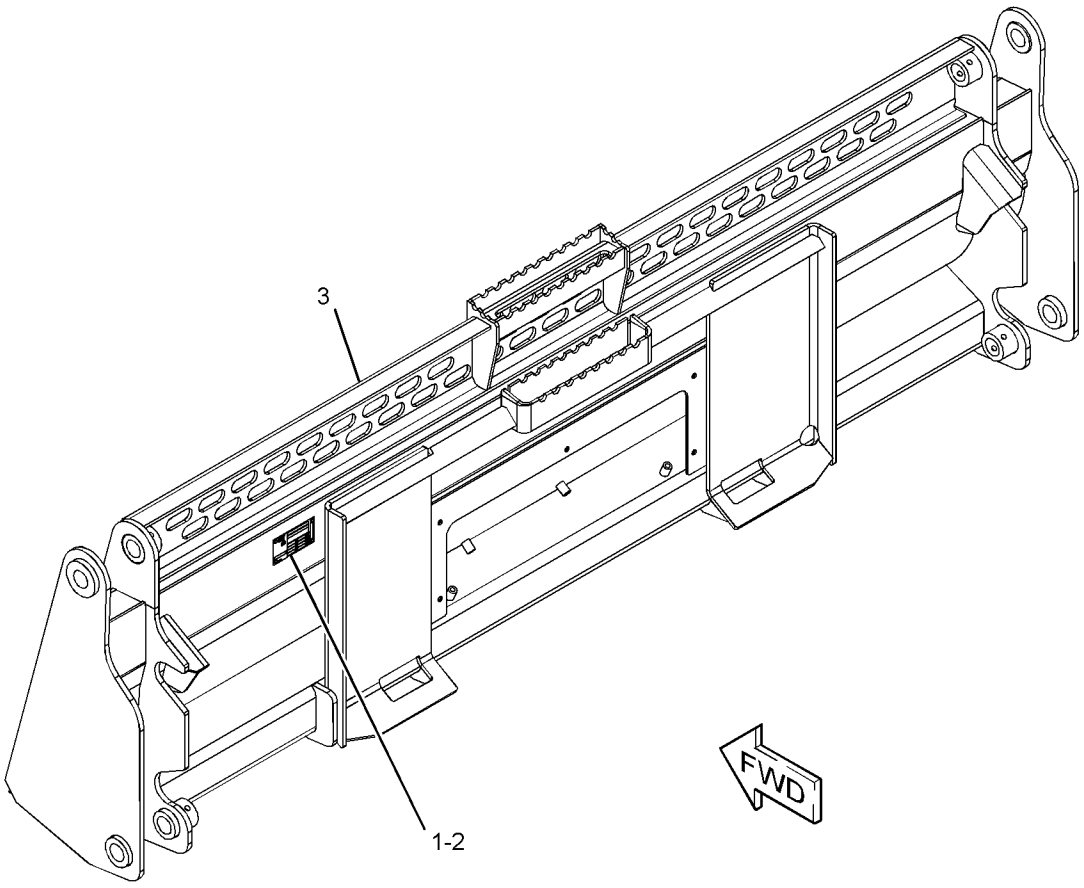

GRAPHIC #1 **<END>** g03358665

426-6565 BLADE GP-MULTIPURPOSE BUCKET

84-IN (2133.6-MM)

PART OF 426-6564 BLADE GP-MULTIPURPOSE BUCKET

AN ATTACHMENT

SMCS-6060, 6104

i05291363

NOTE	REF NO	GRAPHIC REF	PART NUMBER	QTY	PART NAME 1 2 3 4 5 6 (PRODUCT LEVEL)	SEE PAGE
	1	1	**293-0144**	1	EDGE	
	2	1	**325-7074**	1	GUARD AS (84-IN)	

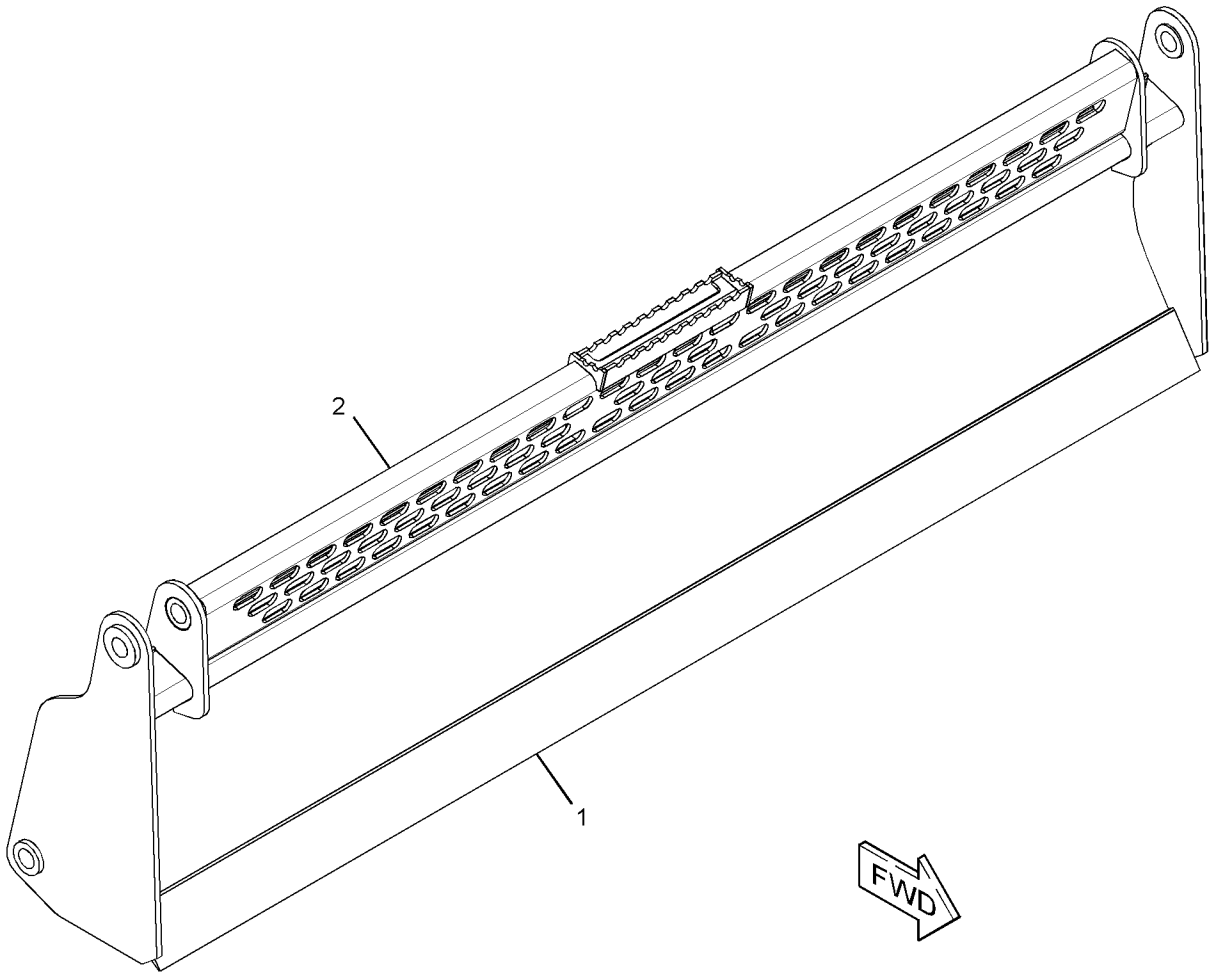

GRAPHIC #1

<END>

g03362202

426-6935 BLADE GP-MULTIPURPOSE BUCKET

PART OF 426-6934 BUCKET GP-MULTIPURPOSE

AN ATTACHMENT

SMCS-6060, 6104 **i05284449**

NOTE	REF NO	GRAPHIC REF	PART NUMBER	QTY	PART NAME 1 2 3 4 5 6 (PRODUCT LEVEL)	SEE PAGE
	1	1	**168-8389**	4	TACK-FASTENER	
Y	2	1	**426-6937**	1	BLADE GP-MULTIPURPOSE BUCKET (60-IN)	317
	3	1	**358-4944**	1	PLATE-IDENTIFICATION (BUCKET SPECIFICATIONS)	

Y - SEPARATE ILLUSTRATION

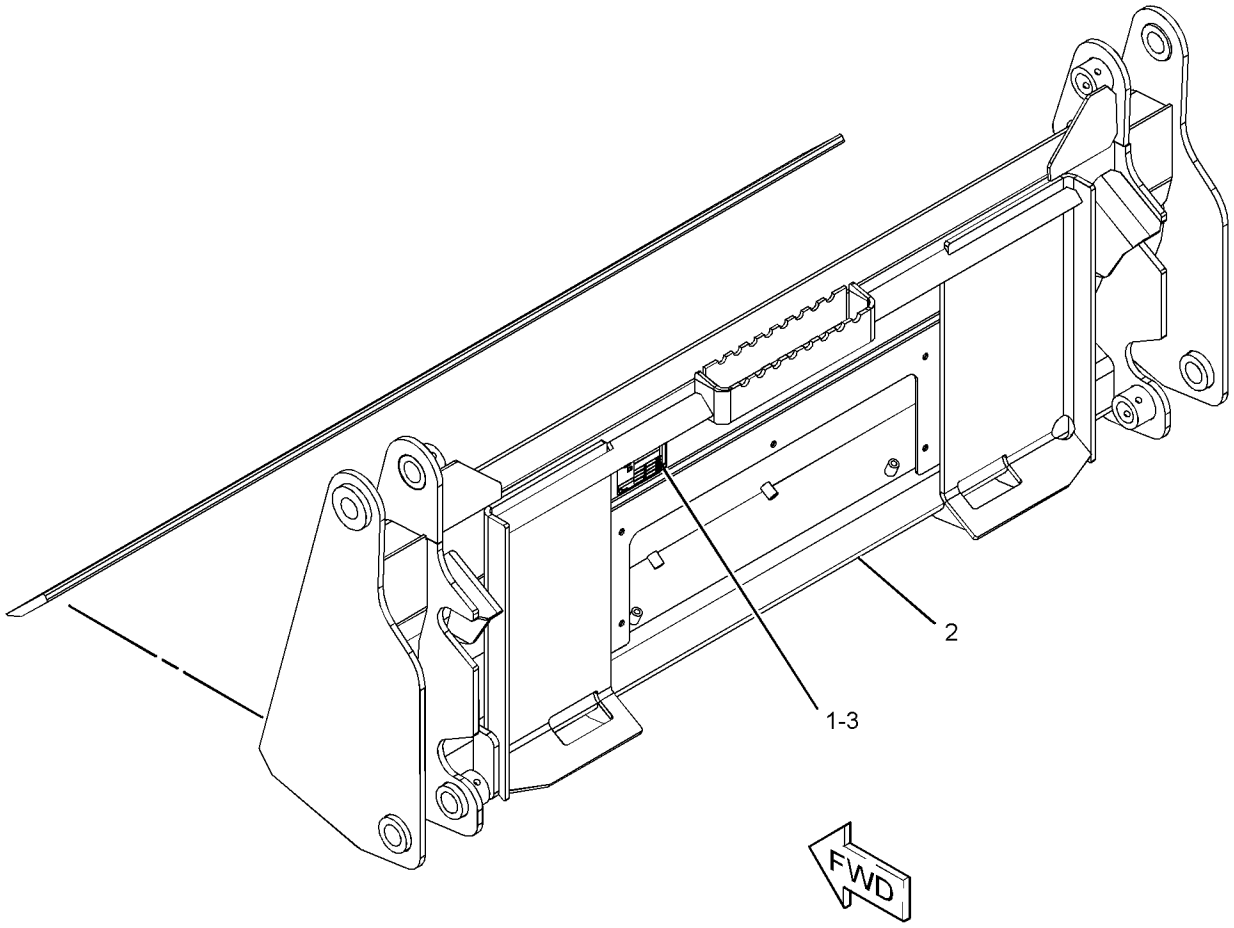

GRAPHIC #1 **<END>** g03360255

426-6937 BLADE GP-MULTIPURPOSE BUCKET

60-IN (1524-MM)

PART OF 426-6935 BLADE GP-MULTIPURPOSE BUCKET

AN ATTACHMENT

SMCS-6060, 6104

i05291364

NOTE	REF NO	GRAPHIC REF	PART NUMBER	QTY	PART NAME 1 2 3 4 5 6 (PRODUCT LEVEL)	SEE PAGE
	1	1	**154-5037**	1	EDGE	

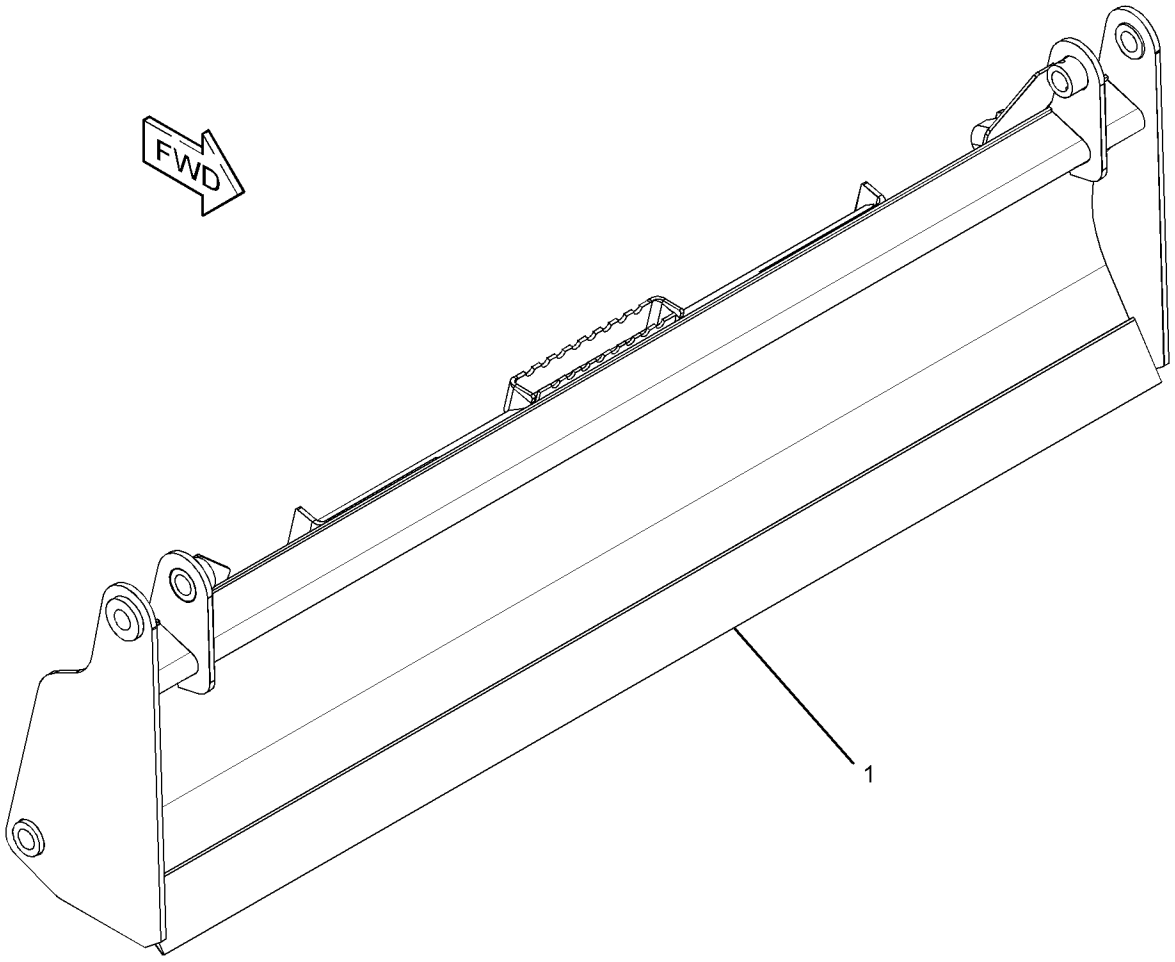

GRAPHIC #1 **<END>** g01954566

426-6943 BLADE GP-MULTIPURPOSE BUCKET

1676.4-MM (66-IN)
PART OF 426-6941 BUCKET GP-MULTIPURPOSE
AN ATTACHMENT

SMCS-6060, 6104 **i05295861**

NOTE	REF NO	GRAPHIC REF	PART NUMBER	QTY	PART NAME 1 2 3 4 5 6 (PRODUCT LEVEL)	SEE PAGE
	1	1	**154-5059**	1	EDGE	

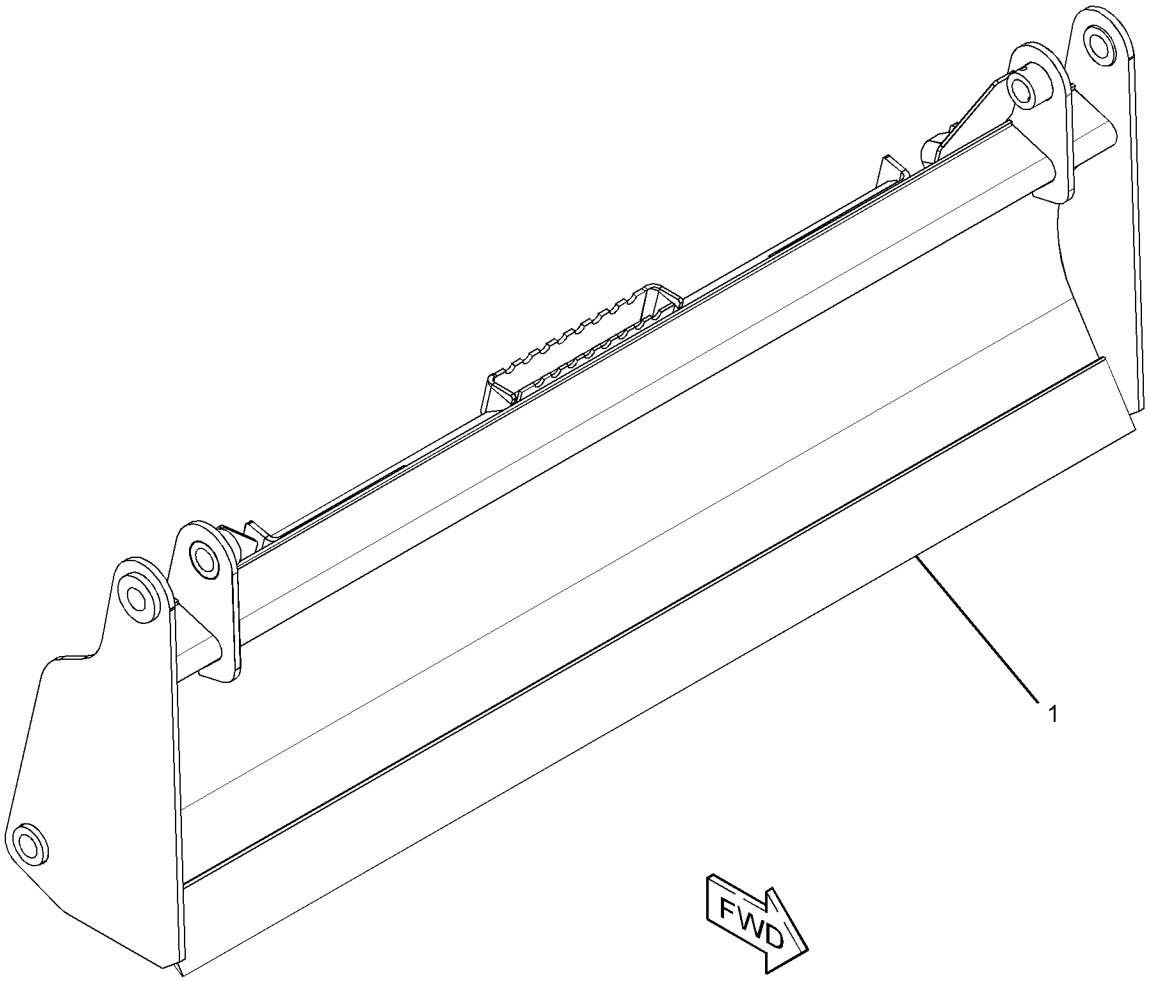

GRAPHIC #1 **<END>** g01960204

426-6957 BLADE GP-MULTIPURPOSE BUCKET

PART OF 426-6951 BUCKET GP-MULTIPURPOSE

AN ATTACHMENT

SMCS-6060, 6104 **i05288631**

NOTE	REF NO	GRAPHIC REF	PART NUMBER	QTY	PART NAME 1 2 3 4 5 6 (PRODUCT LEVEL)	SEE PAGE
	1	1	**168-8389**	4	TACK-FASTENER	
Y	2	1	**426-6959**	1	BLADE GP-MULTIPURPOSE BUCKET	320
	3	1	**358-4944**	1	PLATE-IDENTIFICATION (BUCKET SPECIFICATIONS)	

Y - SEPARATE ILLUSTRATION

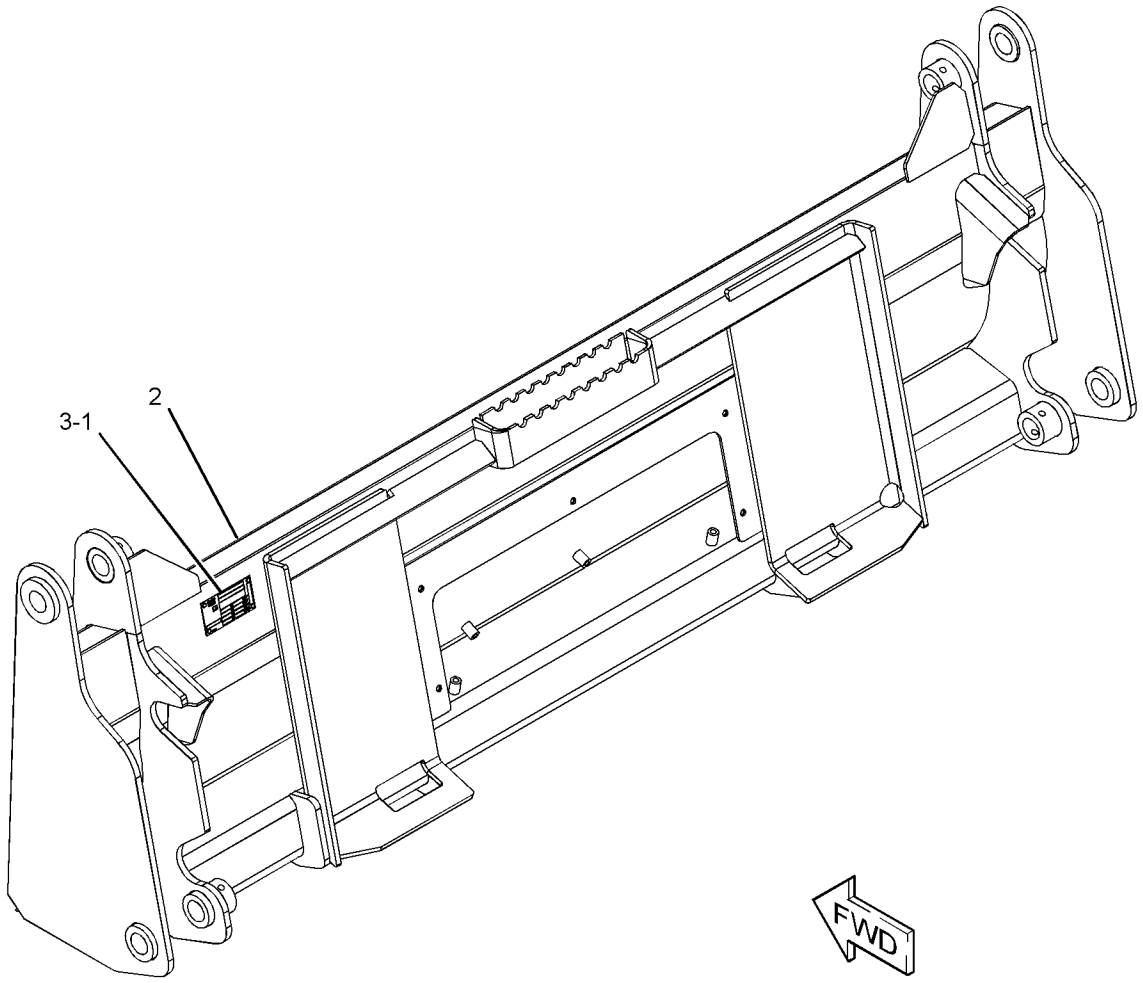

GRAPHIC #1 **<END>** g03365162

426-6959 BLADE GP-MULTIPURPOSE BUCKET

1828.8-MM (72-IN)
PART OF 426-6957 BLADE GP-MULTIPURPOSE BUCKET
AN ATTACHMENT

SMCS-6060, 6104 **i05295541**

NOTE	REF NO	GRAPHIC REF	PART NUMBER	QTY	PART NAME 1 2 3 4 5 6 (PRODUCT LEVEL)	SEE PAGE
	1	1	**154-5077**	1	EDGE	

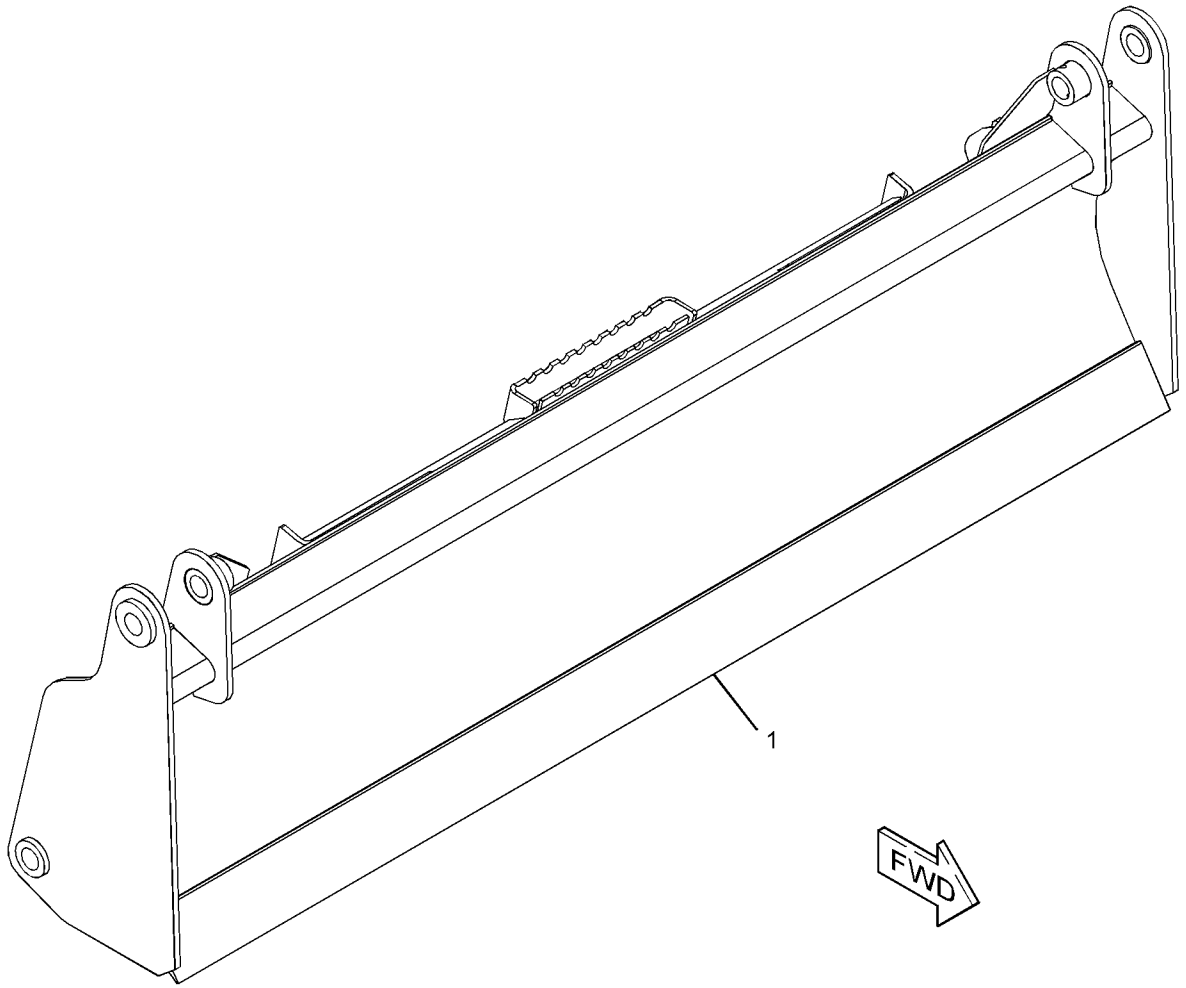

GRAPHIC #1 **<END>** g03363409

426-6978 BLADE GP-MULTIPURPOSE BUCKET

PART OF 426-7102 BUCKET GP-MULTIPURPOSE

AN ATTACHMENT

SMCS-6060, 6104 **i05284600**

NOTE	REF NO	GRAPHIC REF	PART NUMBER	QTY	PART NAME 1 2 3 4 5 6 (PRODUCT LEVEL)	SEE PAGE
	1	1	**168-8389**	4	TACK-FASTENER	
	2	1	**358-4944**	1	PLATE-IDENTIFICATION (BUCKET SPECIFICATIONS)	
Y	3	1	**426-6981**	1	BLADE GP-MULTIPURPOSE BUCKET (78-IN)	322

Y - SEPARATE ILLUSTRATION

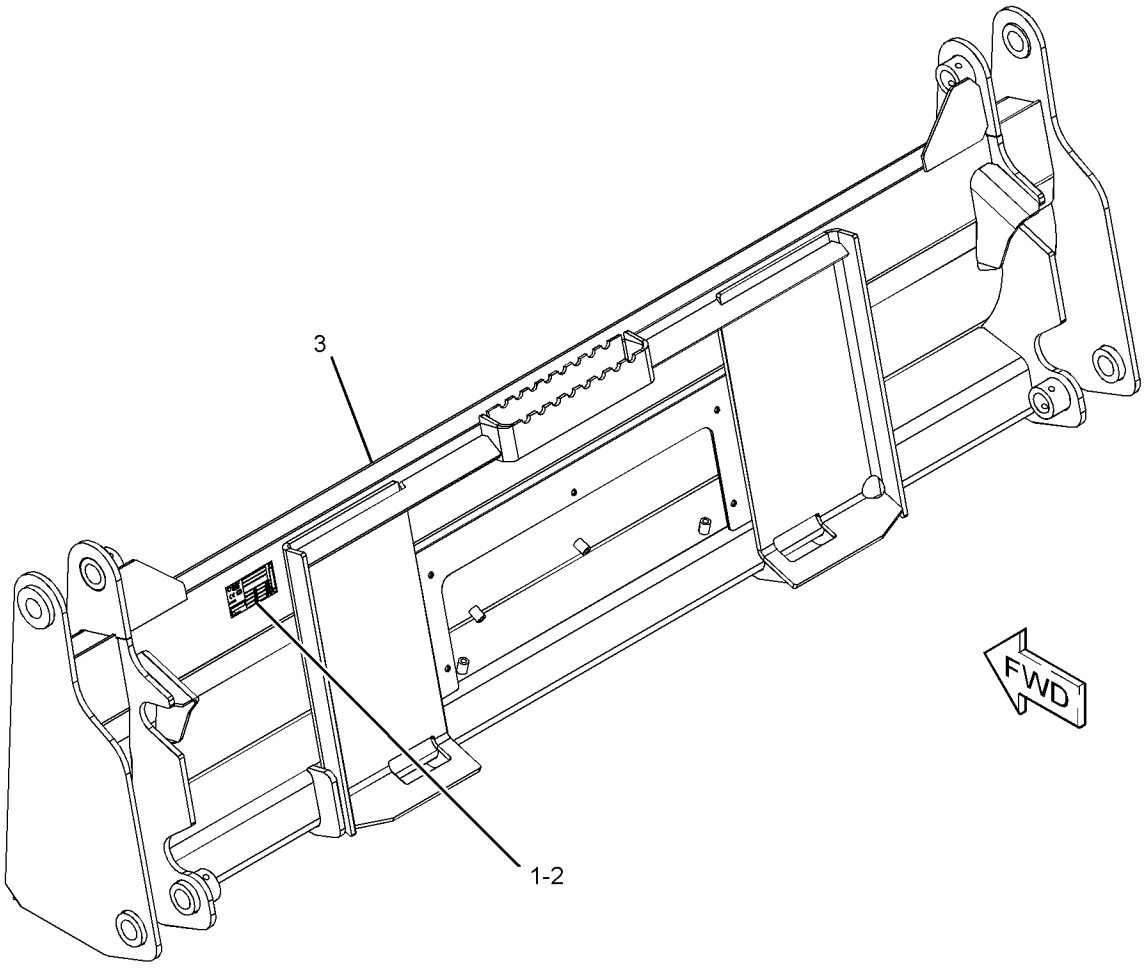

GRAPHIC #1 **<END>** g03358673

426-6981 BLADE GP-MULTIPURPOSE BUCKET

78-IN (1981.2-MM)

PART OF 426-6978 BLADE GP-MULTIPURPOSE BUCKET

AN ATTACHMENT

SMCS-6060, 6104 **i05291366**

NOTE	REF NO	GRAPHIC REF	PART NUMBER	QTY	PART NAME 1 2 3 4 5 6 (PRODUCT LEVEL)	SEE PAGE
	1	1	**199-8316**	1	EDGE	

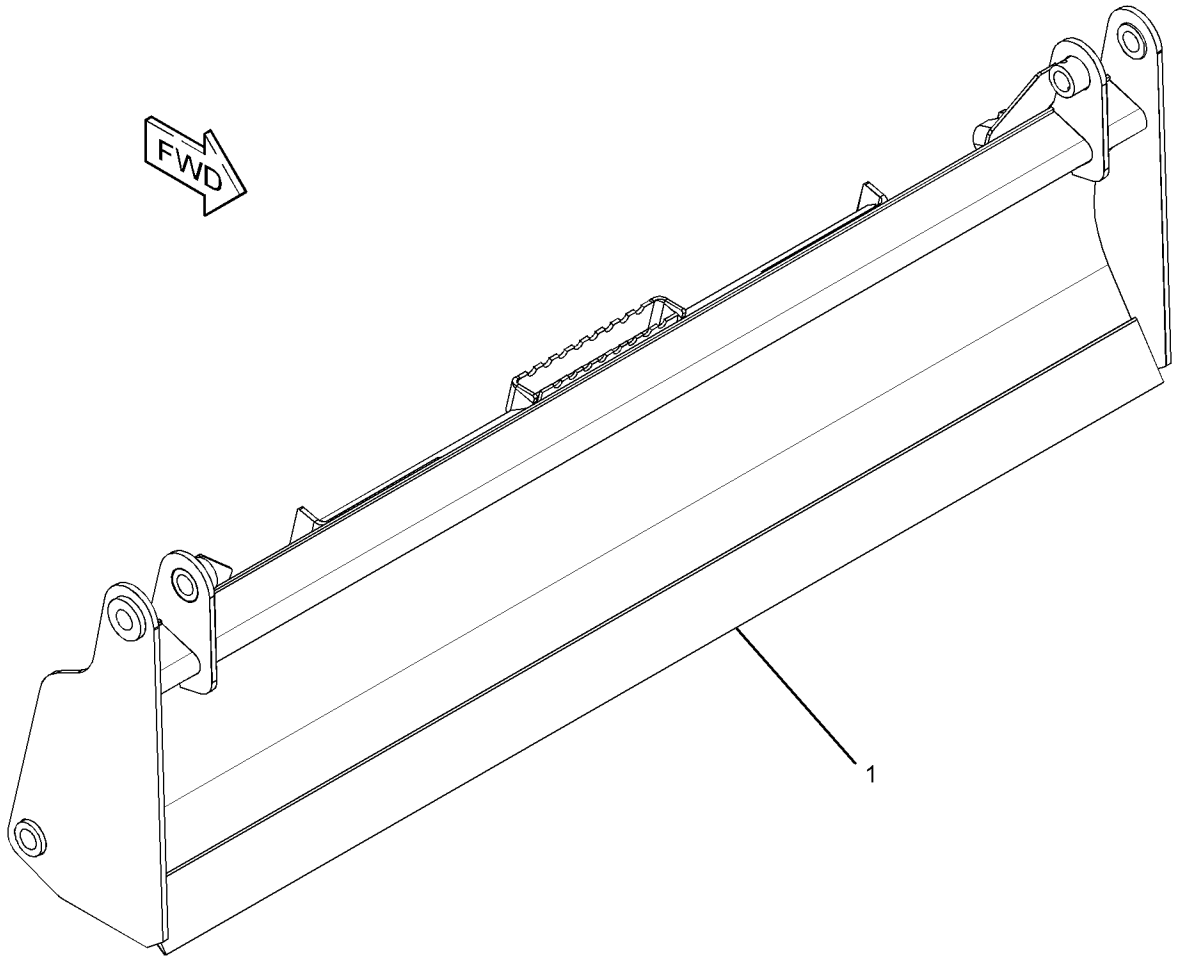

GRAPHIC #1 **<END>** g01954566

426-7001 BLADE GP-MULTIPURPOSE BUCKET

PART OF 426-6995 BUCKET AR-MULTIPURPOSE

AN ATTACHMENT

SMCS-6060, 6104 **i05277419**

NOTE	REF NO	GRAPHIC REF	PART NUMBER	QTY	PART NAME 1 2 3 4 5 6 (PRODUCT LEVEL)	SEE PAGE
	1	1	**168-8389**	4	TACK-FASTENER	
	2	1	**358-4944**	1	PLATE-IDENTIFICATION (BUCKET SPECIFICATIONS)	
Y	3	1	**426-7003**	1	BLADE GP-MULTIPURPOSE BUCKET (84-IN)	324

Y - SEPARATE ILLUSTRATION

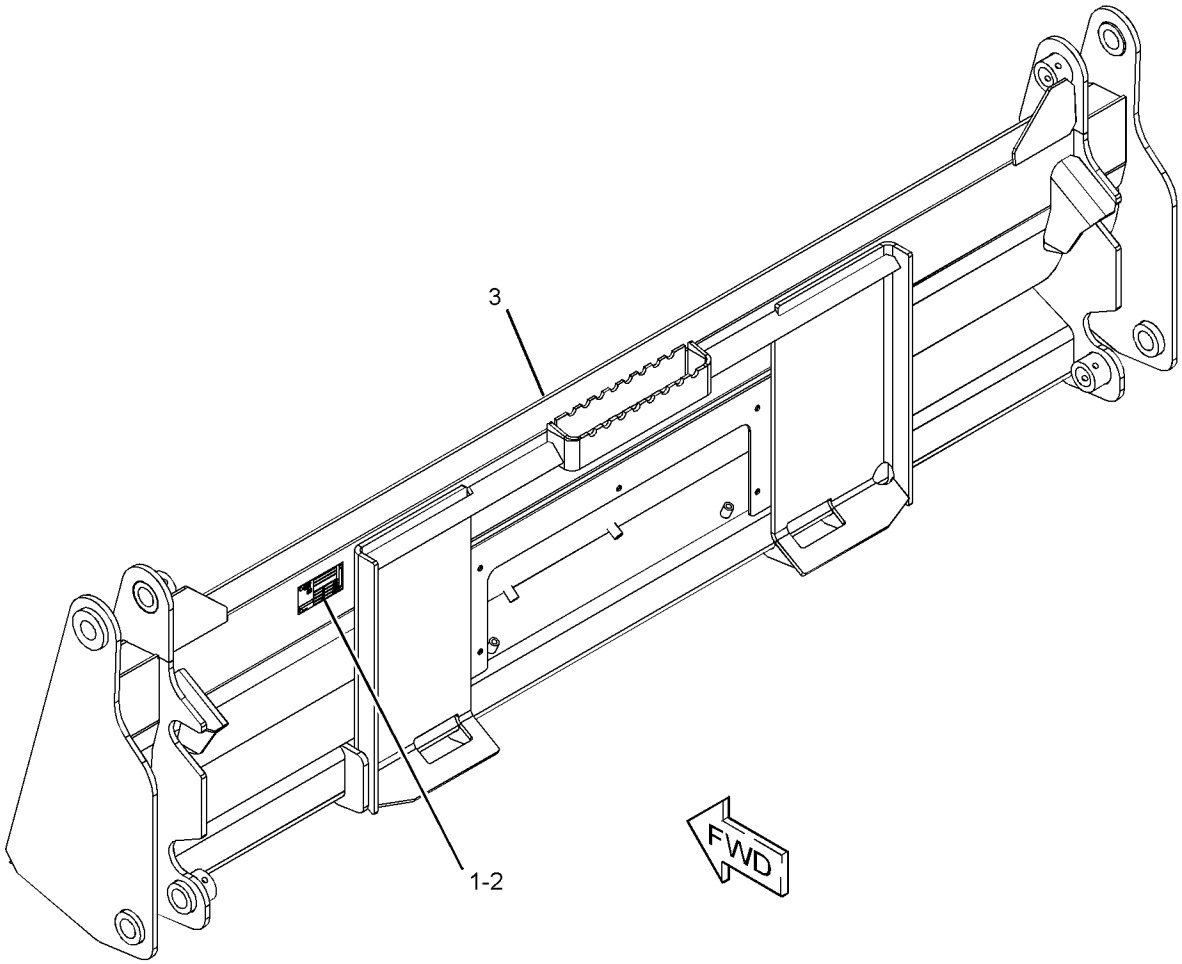

GRAPHIC #1 **<END>** g03358660

426-7003 BLADE GP-MULTIPURPOSE BUCKET

84-IN (2133.6-MM)
PART OF 426-7001 BLADE GP-MULTIPURPOSE BUCKET
AN ATTACHMENT

SMCS-6060, 6104 **i05291368**

NOTE	REF NO	GRAPHIC REF	PART NUMBER	QTY	PART NAME 1 2 3 4 5 6 (PRODUCT LEVEL)	SEE PAGE
	1	1	**293-0144**	1	EDGE	

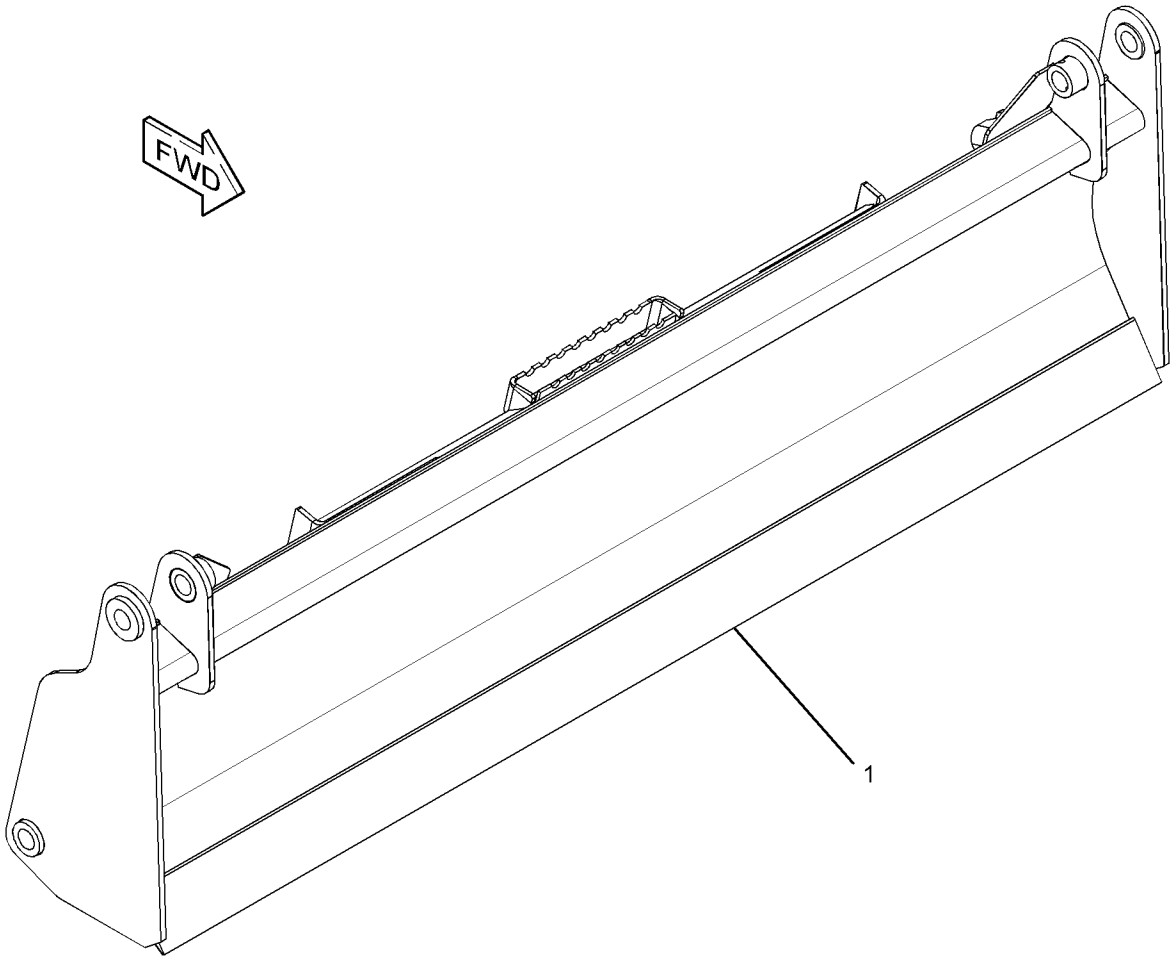

GRAPHIC #1 **<END>** g01954566

385-6370 BLADE GP-SNOW

PART OF 385-6444, 417-4914 BLADE AR

AN ATTACHMENT

SMCS-6158, 6159 **i05270867**

NOTE	REF NO	GRAPHIC REF	PART NUMBER	QTY	PART NAME 1 2 3 4 5 6 (PRODUCT LEVEL)	SEE PAGE
	1	1	**385-6389**	1	MOLDBOARD AS	
		1	**385-6390**	1	TRIP AS	
		1	**385-6413**	1	SPRING-TORSION	
		1	**385-6414**	1	SPRING-TORSION	
		1	**385-6415**	1	SPRING-TORSION	
	2	1	**385-6405**	4	PLATE	
	3	1	**385-6408**	1	EDGE-CUTTING	
	4	1	**3E-9861**	20	LOCKNUT (5/8-11-THD)	
	5	1	**4F-3654**	4	BOLT-PLOW (5/8-11X2-IN)	
	6	1	**7X-0517**	8	WASHER-HARD (17X38X2.5-MM THK)	
	7	1	**8T-6871**	8	BOLT (5/8-11X2.5-IN)	

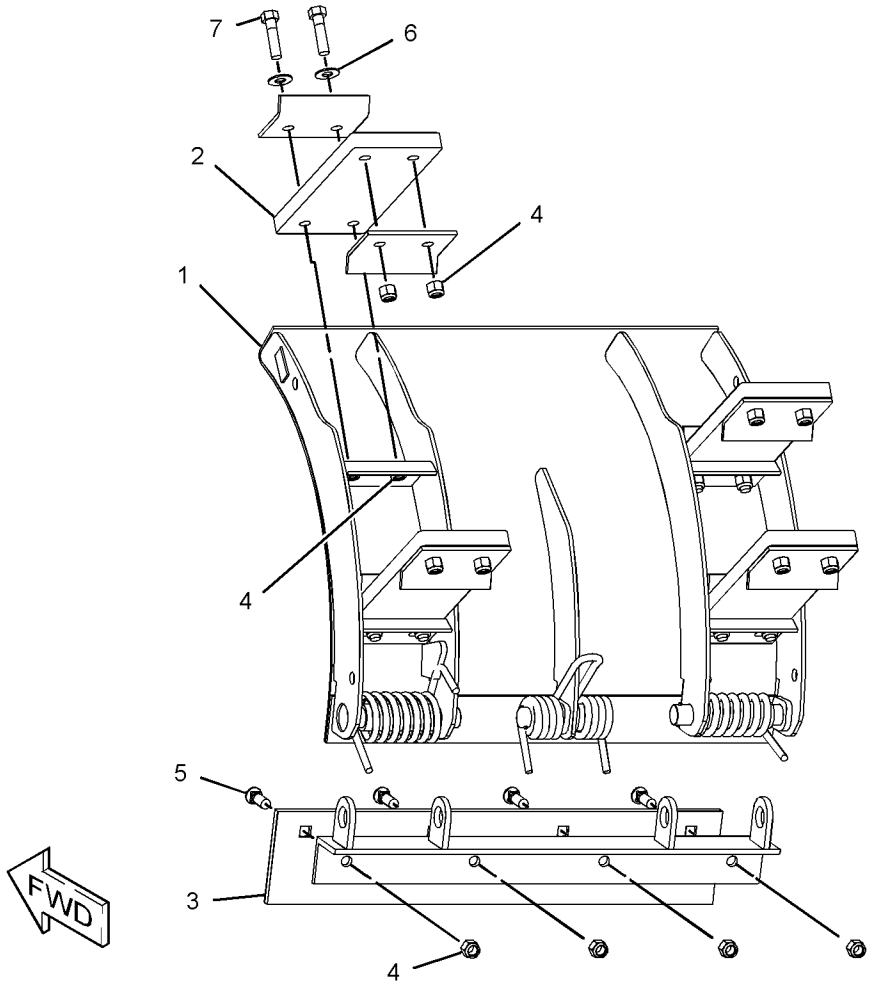

GRAPHIC #1 **<END>** g03360985

268-4083 BUCKET AR-DIRT

AN ATTACHMENT

SMCS-6001 **i02539980**

NOTE	PART NUMBER	QTY	PART NAME 1 2 3 4 5 6 (PRODUCT LEVEL)	SEE PAGE
Y	**268-4084**	1	BUCKET GP-DIRT	383
Y	*135-9387*	1	EDGE GP-CUTTING	424

Y - SEPARATE ILLUSTRATION

<END>

279-5435 BUCKET AR-DIRT

AN ATTACHMENT

SMCS-6001 **i02552331**

NOTE	PART NUMBER	QTY	PART NAME 1 2 3 4 5 6 (PRODUCT LEVEL)	SEE PAGE
Y	**279-5434**	1	BUCKET AS-DIRT	347
Y	*135-9383*	1	EDGE GP-CUTTING	420

Y - SEPARATE ILLUSTRATION

<END>

279-5438 BUCKET AR-DIRT

AN ATTACHMENT

SMCS-6001 **i02571312**

NOTE	PART NUMBER	QTY	PART NAME 1 2 3 4 5 6 (PRODUCT LEVEL)	SEE PAGE
Y	**279-5437**	1	BUCKET AS-DIRT	349
Y	*135-9384*	1	EDGE GP-CUTTING	421

Y - SEPARATE ILLUSTRATION

<END>

279-5441 BUCKET AR-DIRT

AN ATTACHMENT

SMCS-6001 **i02571314**

NOTE	PART NUMBER	QTY	PART NAME 1 2 3 4 5 6 (PRODUCT LEVEL)	SEE PAGE
Y	**279-5440**	1	BUCKET AS-DIRT	351
Y	*135-9385*	1	EDGE GP-CUTTING	422

Y - SEPARATE ILLUSTRATION

<END>

285-6090 BUCKET AR-DIRT

AN ATTACHMENT

SMCS-6001 **i02552446**

NOTE	PART NUMBER	QTY	PART NAME 1 2 3 4 5 6 (PRODUCT LEVEL)	SEE PAGE
Y	**285-6089**	1	BUCKET AS-DIRT	353
Y	*135-9386*	1	EDGE GP-CUTTING (DIRT)	423

Y - SEPARATE ILLUSTRATION

<END>

279-5365 BUCKET AR-GENERAL PURPOSE

AN ATTACHMENT

SMCS-6101 **i02550406**

NOTE	PART NUMBER	QTY	PART NAME 1 2 3 4 5 6 (PRODUCT LEVEL)	SEE PAGE
Y	**279-5364**	1	BUCKET AS-GENERAL PURPOSE	355
Y	*135-9384*	1	EDGE GP-CUTTING	421

Y - SEPARATE ILLUSTRATION

<END>

279-5366 BUCKET AR-GENERAL PURPOSE

AN ATTACHMENT

SMCS-6101 **i03922634**

NOTE	PART NUMBER	QTY	PART NAME 1 2 3 4 5 6 (PRODUCT LEVEL)	SEE PAGE
Y	**279-5364**	1	BUCKET AS-GENERAL PURPOSE	355
Y	*141-4999*	8	TOOTH GP-UNI	463

Y - SEPARATE ILLUSTRATION

<END>

279-5369 BUCKET AR-GENERAL PURPOSE

AN ATTACHMENT

SMCS-6101 **i02551081**

NOTE	PART NUMBER	QTY	PART NAME 1 2 3 4 5 6 (PRODUCT LEVEL)	SEE PAGE
Y	**279-5368**	1	BUCKET AS-GENERAL PURPOSE	357
Y	*135-9385*	1	EDGE GP-CUTTING	422

Y - SEPARATE ILLUSTRATION

<END>

279-5370 BUCKET AR-GENERAL PURPOSE

AN ATTACHMENT

SMCS-6101 **i03922636**

NOTE	PART NUMBER	QTY	PART NAME 1 2 3 4 5 6 (PRODUCT LEVEL)	SEE PAGE
Y	**279-5368**	1	BUCKET AS-GENERAL PURPOSE	357
Y	*141-4999*	8	TOOTH GP-UNI	463

Y - SEPARATE ILLUSTRATION

<END>

279-5373 BUCKET AR-GENERAL PURPOSE

AN ATTACHMENT

SMCS-6101 **i02552012**

NOTE	PART NUMBER	QTY	PART NAME 1 2 3 4 5 6 (PRODUCT LEVEL)	SEE PAGE
Y	**279-5372**	1	BUCKET AS-GENERAL PURPOSE	359
Y	*135-9386*	1	EDGE GP-CUTTING	423

Y - SEPARATE ILLUSTRATION

<END>

279-5374 BUCKET AR-GENERAL PURPOSE

AN ATTACHMENT

SMCS-6101 **i03922635**

NOTE	PART NUMBER	QTY	PART NAME 1 2 3 4 5 6 (PRODUCT LEVEL)	SEE PAGE
Y	**279-5372**	1	BUCKET AS-GENERAL PURPOSE	359
Y	*141-4999*	8	TOOTH GP-UNI	463

Y - SEPARATE ILLUSTRATION

<END>

279-5377 BUCKET AR-GENERAL PURPOSE

AN ATTACHMENT

SMCS-6101 **i02552020**

NOTE	PART NUMBER	QTY	PART NAME 1 2 3 4 5 6 (PRODUCT LEVEL)	SEE PAGE
Y	**279-5376**	1	BUCKET AS-GENERAL PURPOSE	361
Y	*135-9387*	1	EDGE GP-CUTTING	424

Y - SEPARATE ILLUSTRATION

<END>

279-5378 BUCKET AR-GENERAL PURPOSE

AN ATTACHMENT

SMCS-6101 **i03922637**

NOTE	PART NUMBER	QTY	PART NAME 1 2 3 4 5 6 (PRODUCT LEVEL)	SEE PAGE
Y	**279-5376**	1	BUCKET AS-GENERAL PURPOSE	361
Y	*141-4999*	9	TOOTH GP-UNI	463

Y - SEPARATE ILLUSTRATION

<END>

296-8192 BUCKET AR-GENERAL PURPOSE

AN ATTACHMENT

SMCS-6101 **i02636478**

NOTE	PART NUMBER	QTY	PART NAME 1 2 3 4 5 6 (PRODUCT LEVEL)	SEE PAGE
Y	**292-9270**	1	BUCKET AS-GENERAL PURPOSE	362
Y	*195-7124*	1	EDGE GP-CUTTING	426

Y - SEPARATE ILLUSTRATION

<END>

157-7223 BUCKET AR-GRAPPLE

PART OF 157-7226 BUCKET AR-GRAPPLE

AN ATTACHMENT

SMCS-6704 **i05202350**

NOTE	PART NUMBER	QTY	PART NAME 1 2 3 4 5 6 (PRODUCT LEVEL)	SEE PAGE
Y	*156-0884*	1	BUCKET GP-GRAPPLE (INDUSTRIAL)	385
Y	**278-1975**	2	CYLINDER GP-GRAPPLE (INDUSTRIAL)	213
Y	*161-0187*	1	LINES GP-GRAPPLE (INDUSTRIAL)	249
Y	*156-0891*	1	MOUNTING GP-CYLINDER (INDUSTRIAL)	279

Y - SEPARATE ILLUSTRATION

<END>

157-7224 BUCKET AR-GRAPPLE

PART OF 157-7227 BUCKET AR-GRAPPLE

AN ATTACHMENT

SMCS-6704 **i05203231**

NOTE	PART NUMBER	QTY	PART NAME 1 2 3 4 5 6 (PRODUCT LEVEL)	SEE PAGE
Y	*156-0885*	1	BUCKET GP-GRAPPLE (INDUSTRIAL)	386
Y	*156-0891*	1	MOUNTING GP-CYLINDER (INDUSTRIAL)	279
Y	**278-1975**	2	CYLINDER GP-GRAPPLE (INDUSTRIAL)	213
Y	*161-0187*	1	LINES GP-GRAPPLE (INDUSTRIAL)	249

Y - SEPARATE ILLUSTRATION

<END>

157-7225 BUCKET AR-GRAPPLE—INDUSTRIAL

PART OF 158-6095 BUCKET AR-GRAPPLE

AN ATTACHMENT

SMCS-6704 **i05203232**

NOTE	PART NUMBER	QTY	PART NAME 1 2 3 4 5 6 (PRODUCT LEVEL)	SEE PAGE
Y	*156-0886*	1	BUCKET GP-GRAPPLE (INDUSTRIAL)	387
Y	**278-1975**	2	CYLINDER GP-GRAPPLE (INDUSTRIAL)	213
Y	*161-0187*	1	LINES GP-GRAPPLE (INDUSTRIAL)	249
Y	*156-0891*	1	MOUNTING GP-CYLINDER (INDUSTRIAL)	279

Y - SEPARATE ILLUSTRATION

<END>

157-7226 BUCKET AR-GRAPPLE

AN ATTACHMENT

SMCS-6704 **i05203233**

NOTE	PART NUMBER	QTY	PART NAME 1 2 3 4 5 6 (PRODUCT LEVEL)	SEE PAGE
Y	**157-7223**	1	BUCKET AR-GRAPPLE	328
Y	*135-9384*	1	EDGE GP-CUTTING	421

Y - SEPARATE ILLUSTRATION

<END>

157-7227 BUCKET AR-GRAPPLE

AN ATTACHMENT

SMCS-6704 **i05203234**

NOTE	PART NUMBER	QTY	PART NAME 1 2 3 4 5 6 (PRODUCT LEVEL)	SEE PAGE
Y	**157-7224**	1	BUCKET AR-GRAPPLE	329
Y	*135-9385*	1	EDGE GP-CUTTING	422

Y - SEPARATE ILLUSTRATION

<END>

158-6095 BUCKET AR-GRAPPLE

AN ATTACHMENT

SMCS-6704 **i05203235**

NOTE	PART NUMBER	QTY	PART NAME 1 2 3 4 5 6 (PRODUCT LEVEL)	SEE PAGE
Y	**157-7225**	1	BUCKET AR-GRAPPLE	329
Y	*135-9386*	1	EDGE GP-CUTTING	423

Y - SEPARATE ILLUSTRATION

<END>

217-6229 BUCKET AR-GRAPPLE–INDUSTRIAL

PART OF 217-6230 BUCKET AR-GRAPPLE

AN ATTACHMENT

SMCS-6704 **i05203242**

NOTE	REF NO	GRAPHIC REF	PART NUMBER	QTY	PART NAME 1 2 3 4 5 6 (PRODUCT LEVEL)	SEE PAGE
Y	1	1	*156-0891*	1	MOUNTING GP-CYLINDER (INDUSTRIAL)	279
Y	2	1	*161-0187*	1	LINES GP-GRAPPLE (INDUSTRIAL)	249
Y	3	1	*217-6228*	1	BUCKET GP-GRAPPLE (INDUSTRIAL)	388
CY	4	1	**278-1975**	2	CYLINDER GP-GRAPPLE (INDUSTRIAL)	213

C - CHANGE FROM PREVIOUS TYPE
Y - SEPARATE ILLUSTRATION

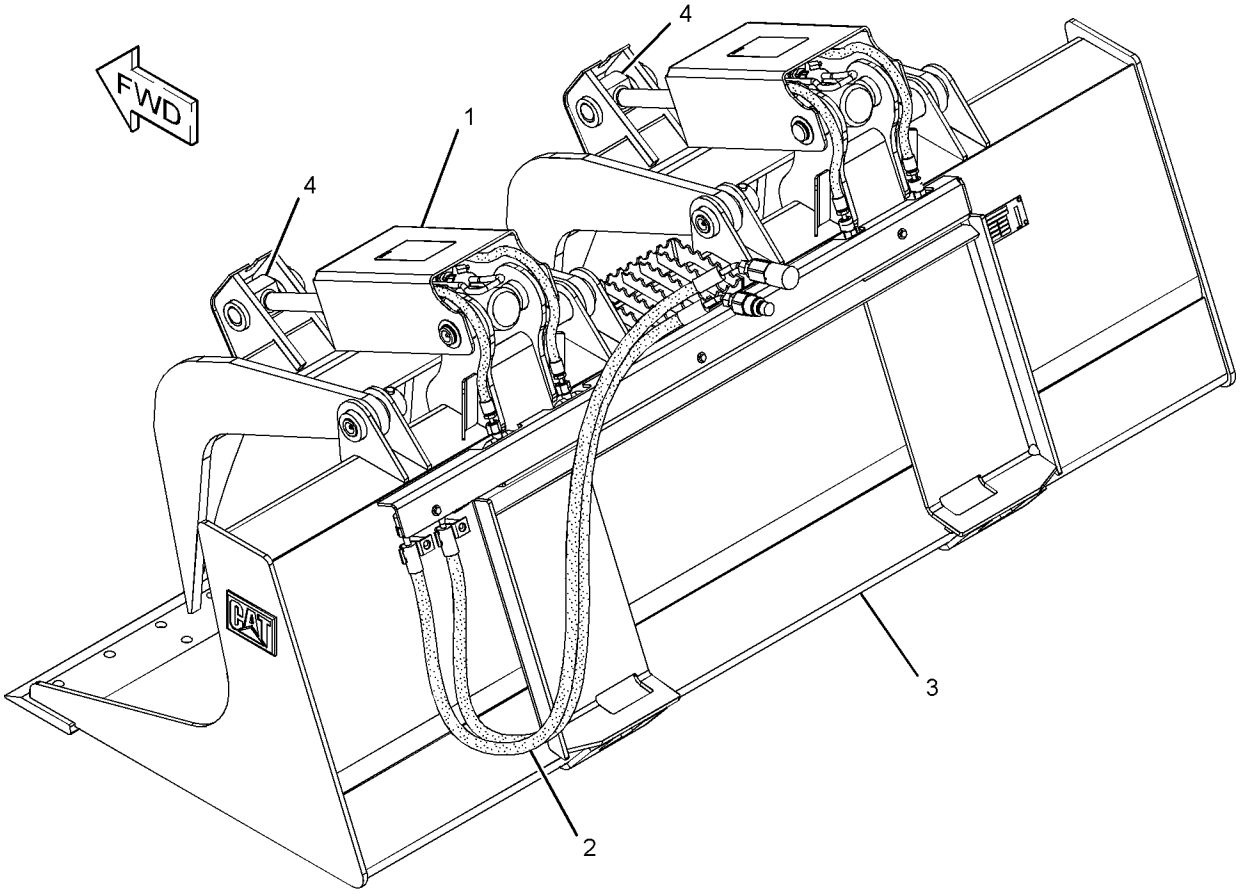

GRAPHIC #1 **<END>** g01281607

217-6230 BUCKET AR-GRAPPLE

AN ATTACHMENT

SMCS-6704 **i05203243**

NOTE	PART NUMBER	QTY	PART NAME 1 2 3 4 5 6 (PRODUCT LEVEL)	SEE PAGE
Y	**217-6229**	1	BUCKET AR-GRAPPLE (INDUSTRIAL)	331
Y	*135-9387*	1	EDGE GP-CUTTING	424

Y - SEPARATE ILLUSTRATION

<END>

285-6111 BUCKET AR-GRAPPLE

AN ATTACHMENT

SMCS-6704 **i05239173**

NOTE	PART NUMBER	QTY	PART NAME 1 2 3 4 5 6 (PRODUCT LEVEL)	SEE PAGE
Y	**285-6100**	1	BUCKET AR-UTILITY	344
Y	**285-6116**	1	GRAPPLE & CYLINDER GP-UTILITY	445

Y - SEPARATE ILLUSTRATION

<END>

285-6112 BUCKET AR-GRAPPLE

AN ATTACHMENT

SMCS-6704 **i04041121**

NOTE	PART NUMBER	QTY	PART NAME 1 2 3 4 5 6 (PRODUCT LEVEL)	SEE PAGE
Y	**285-6101**	1	BUCKET AR-UTILITY	344
Y	**285-6116**	1	GRAPPLE & CYLINDER GP-UTILITY	445

Y - SEPARATE ILLUSTRATION

<END>

286-9300 BUCKET AR-GRAPPLE

AN ATTACHMENT

SMCS-6704 **i04268010**

NOTE	REF NO	GRAPHIC REF	PART NUMBER	QTY	PART NAME 1 2 3 4 5 6 (PRODUCT LEVEL)	SEE PAGE
Y	1	1	*286-9248*	1	MOUNTING GP-CYLINDER (GRAPPLE BUCKET)	281
Y	2	1	*286-9251*	1	PLATE & FILM GP	575
Y	3	1	*286-9278*	1	BUCKET GP-GRAPPLE	391
Y	4	1	*286-9279*	1	LINES GP-GRAPPLE	253
Y	5	1	**293-6264**	2	CYLINDER GP-BUCKET	211

Y - SEPARATE ILLUSTRATION

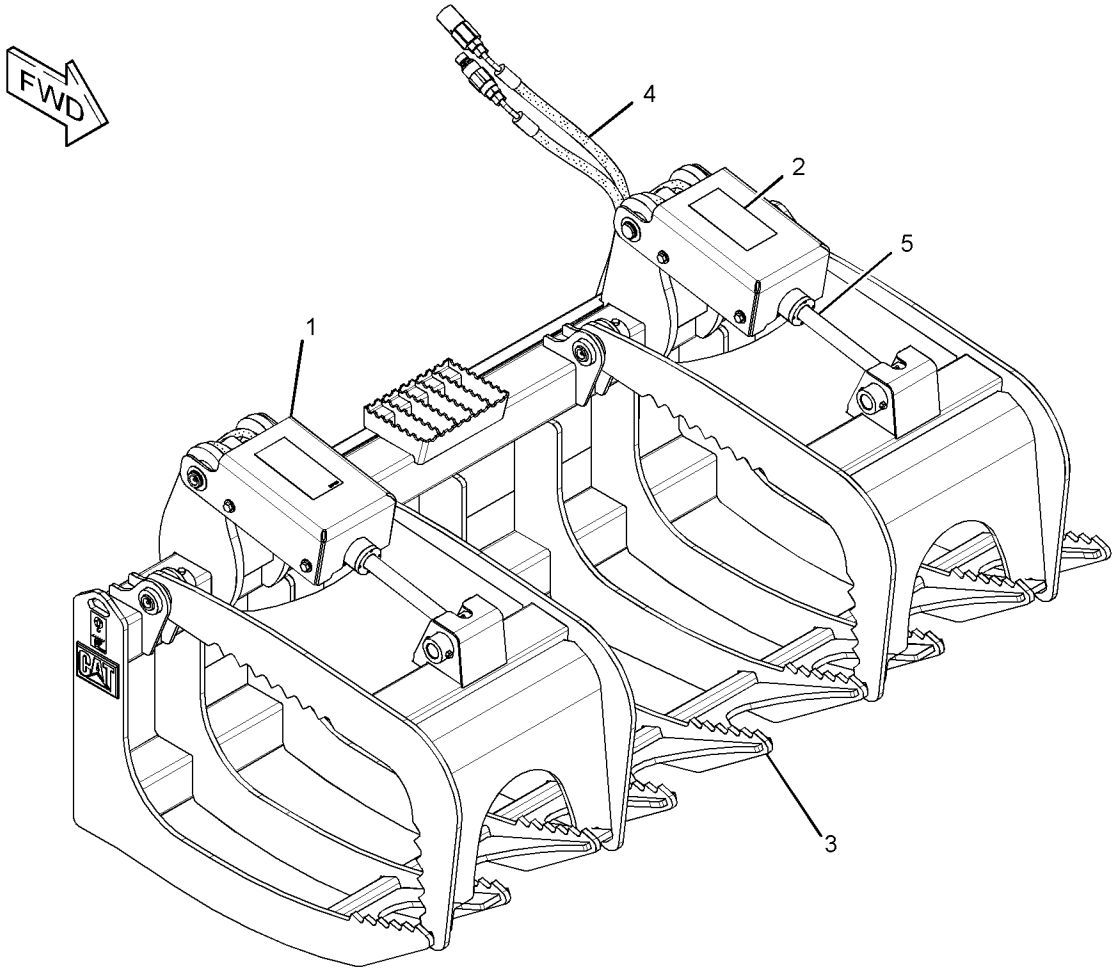

GRAPHIC #1 **<END>** g01372572

286-9301 BUCKET AR-GRAPPLE

AN ATTACHMENT

SMCS-6704 **i02723700**

NOTE	REF NO	GRAPHIC REF	PART NUMBER	QTY	PART NAME 1 2 3 4 5 6 (PRODUCT LEVEL)	SEE PAGE
Y	1	1	*286-9244*	1	BUCKET GP-GRAPPLE	390
Y	2	1	*286-9248*	1	MOUNTING GP-CYLINDER (GRAPPLE BUCKET)	281
Y	3	1	*286-9250*	1	LINES GP-GRAPPLE	251
Y	4	1	*286-9251*	1	PLATE & FILM GP	575
Y	5	1	**293-6264**	2	CYLINDER GP-BUCKET	211

Y - SEPARATE ILLUSTRATION

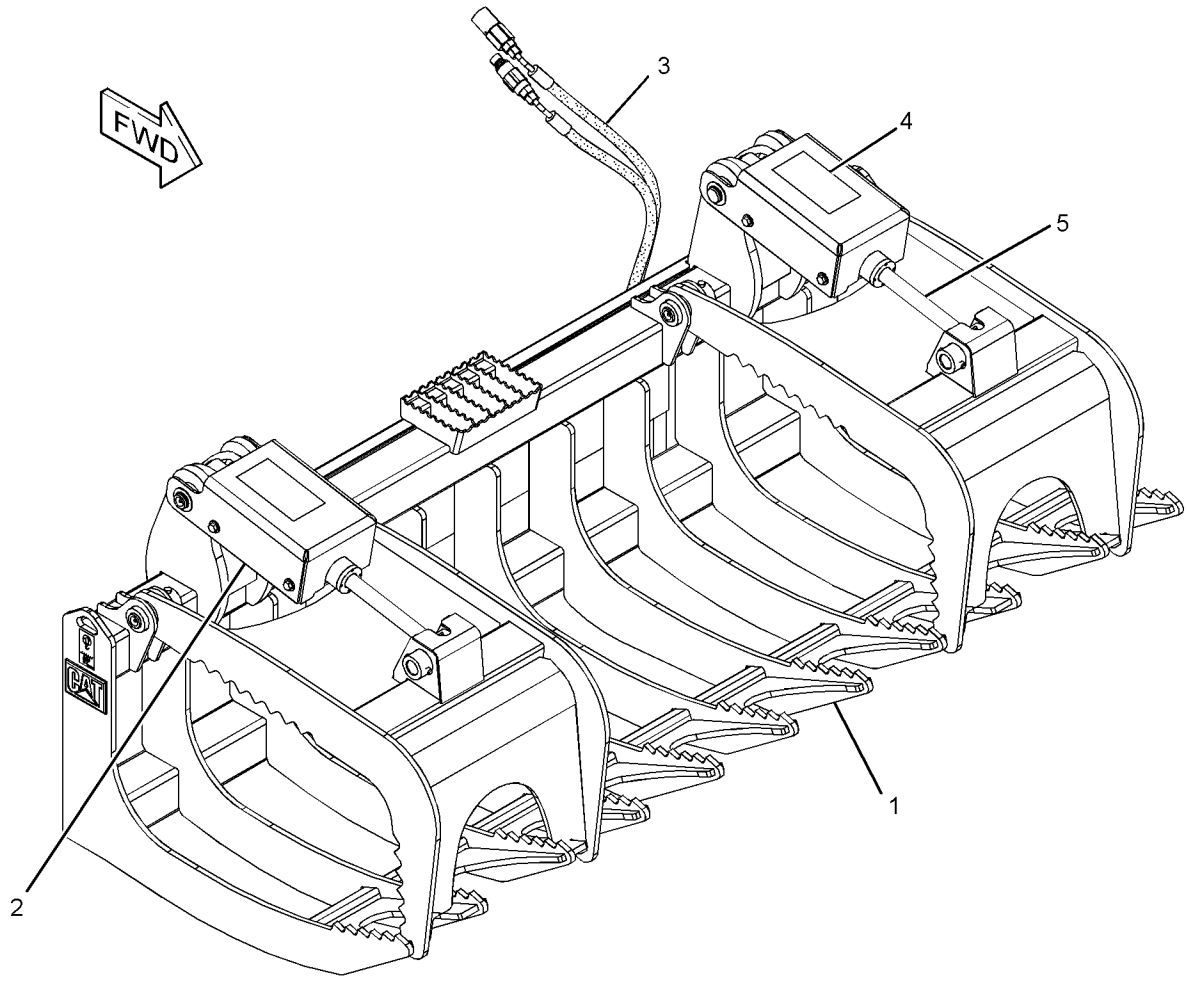

GRAPHIC #1 **<END>** g01372972

279-5420 BUCKET AR-LIGHT MATERIAL

AN ATTACHMENT

SMCS-6103 **i02552302**

NOTE	PART NUMBER	QTY	PART NAME 1 2 3 4 5 6 (PRODUCT LEVEL)	SEE PAGE
Y	**279-5421**	1	BUCKET AS-LIGHT MATERIAL	372
Y	*135-9386*	1	EDGE GP-CUTTING	423

Y - SEPARATE ILLUSTRATION

<END>

279-5425 BUCKET AR-LIGHT MATERIAL

AN ATTACHMENT

SMCS-6103 **i02552308**

NOTE	PART NUMBER	QTY	PART NAME 1 2 3 4 5 6 (PRODUCT LEVEL)	SEE PAGE
Y	**279-5424**	1	BUCKET AS-LIGHT MATERIAL	375
Y	*135-9387*	1	EDGE GP-CUTTING	424

Y - SEPARATE ILLUSTRATION

<END>

279-5430 BUCKET AR-LIGHT MATERIAL

AN ATTACHMENT

SMCS-6103 **i02552313**

NOTE	PART NUMBER	QTY	PART NAME 1 2 3 4 5 6 (PRODUCT LEVEL)	SEE PAGE
Y	**279-5429**	1	BUCKET AS-LIGHT MATERIAL	377
Y	*195-7124*	1	EDGE GP-CUTTING	426

Y - SEPARATE ILLUSTRATION

<END>

296-7597 BUCKET AR-LIGHT MATERIAL

AN ATTACHMENT

SMCS-6103 **i03624568**

NOTE	PART NUMBER	QTY	PART NAME 1 2 3 4 5 6 (PRODUCT LEVEL)	SEE PAGE
Y	*292-9223*	1	BUCKET AS-LIGHT MATERIAL	378
Y	*296-7680*	1	EDGE GP-CUTTING	427

Y - SEPARATE ILLUSTRATION

<END>

423-4287 BUCKET AR-MULTIPURPOSE

AN ATTACHMENT

SMCS-6104 **i05275300**

NOTE	PART NUMBER	QTY	PART NAME 1 2 3 4 5 6 (PRODUCT LEVEL)	SEE PAGE
Y	*423-4291*	1	BUCKET AR-MULTIPURPOSE	336
Y	*141-4999*	8	TOOTH GP-UNI	463

Y - SEPARATE ILLUSTRATION

<END>

423-4291 BUCKET AR-MULTIPURPOSE

PART OF 423-4287, 431-5570 BUCKET AR-MULTIPURPOSE

AN ATTACHMENT

SMCS-6104 **i05277297**

NOTE	PART NUMBER	QTY	PART NAME 1 2 3 4 5 6 (PRODUCT LEVEL)	SEE PAGE
Y	*423-4294*	1	BUCKET GP-MULTIPURPOSE (60-IN)	392
Y	*162-5236*	1	COVER GP-LINES	418
Y	**278-1969**	2	CYLINDER GP-HYDRAULIC	217
Y	*279-5413*	1	LINES GP-BUCKET	233
Y	*154-5011*	1	MOUNTING GP-CYLINDER	278

Y - SEPARATE ILLUSTRATION

<END>

426-6487 BUCKET AR-MULTIPURPOSE

AN ATTACHMENT

SMCS-6104 **i05275299**

NOTE	PART NUMBER	QTY	PART NAME 1 2 3 4 5 6 (PRODUCT LEVEL)	SEE PAGE
Y	*426-6492*	1	BUCKET AR-MULTIPURPOSE (66-IN)	336
Y	*141-4999*	8	TOOTH GP-UNI	463

Y - SEPARATE ILLUSTRATION

<END>

426-6490 BUCKET AR-MULTIPURPOSE

AN ATTACHMENT

SMCS-6104 **i05275298**

NOTE	PART NUMBER	QTY	PART NAME 1 2 3 4 5 6 (PRODUCT LEVEL)	SEE PAGE
Y	*426-6492*	1	BUCKET AR-MULTIPURPOSE (66-IN)	336
Y	*135-9385*	1	EDGE GP-CUTTING	422

Y - SEPARATE ILLUSTRATION

<END>

426-6492 BUCKET AR-MULTIPURPOSE

PART OF 426-6487, 426-6490 BUCKET AR-MULTIPURPOSE

AN ATTACHMENT

SMCS-6104 **i05277432**

NOTE	PART NUMBER	QTY	PART NAME 1 2 3 4 5 6 (PRODUCT LEVEL)	SEE PAGE
Y	*426-6495*	1	BUCKET GP-MULTIPURPOSE (66-IN)	393
Y	*162-5236*	1	COVER GP-LINES	418
Y	**278-1969**	2	CYLINDER GP-HYDRAULIC	217
Y	*279-5414*	1	LINES GP-BUCKET	235
Y	*154-5011*	1	MOUNTING GP-CYLINDER	278

Y - SEPARATE ILLUSTRATION

<END>

426-6535 BUCKET AR-MULTIPURPOSE

AN ATTACHMENT

SMCS-6104 **i05275297**

NOTE	PART NUMBER	QTY	PART NAME 1 2 3 4 5 6 (PRODUCT LEVEL)	SEE PAGE
Y	*426-6537*	1	BUCKET AR-MULTIPURPOSE (72-IN)	337
Y	*141-4999*	8	TOOTH GP-UNI	463

Y - SEPARATE ILLUSTRATION

<END>

426-6536 BUCKET AR-MULTIPURPOSE

AN ATTACHMENT

SMCS-6104 **i05275296**

NOTE	PART NUMBER	QTY	PART NAME 1 2 3 4 5 6 (PRODUCT LEVEL)	SEE PAGE
Y	*426-6537*	1	BUCKET AR-MULTIPURPOSE (72-IN)	337
Y	*135-9386*	1	EDGE GP-CUTTING	423

Y - SEPARATE ILLUSTRATION

<END>

426-6537 BUCKET AR-MULTIPURPOSE

PART OF 426-6535, 426-6536 BUCKET AR-MULTIPURPOSE

AN ATTACHMENT

SMCS-6104 **i05277431**

NOTE	PART NUMBER	QTY	PART NAME 1 2 3 4 5 6 (PRODUCT LEVEL)	SEE PAGE
Y	*426-6538*	1	BUCKET GP-MULTIPURPOSE (72-IN)	394
Y	*162-5236*	1	COVER GP-LINES	418
Y	**278-1969**	2	CYLINDER GP-HYDRAULIC	217
Y	*279-5415*	1	LINES GP-BUCKET	237
Y	*154-5011*	1	MOUNTING GP-CYLINDER	278

Y - SEPARATE ILLUSTRATION

<END>

426-6547 BUCKET AR-MULTIPURPOSE

AN ATTACHMENT

SMCS-6104 **i05275295**

NOTE	PART NUMBER	QTY	PART NAME 1 2 3 4 5 6 (PRODUCT LEVEL)	SEE PAGE
Y	*426-6549*	1	BUCKET AR-MULTIPURPOSE (78-IN)	338
Y	*141-4999*	9	TOOTH GP-UNI	463

Y - SEPARATE ILLUSTRATION

<END>

426-6548 BUCKET AR-MULTIPURPOSE

AN ATTACHMENT

SMCS-6104 **i05275294**

NOTE	PART NUMBER	QTY	PART NAME 1 2 3 4 5 6 (PRODUCT LEVEL)	SEE PAGE
Y	*426-6549*	1	BUCKET AR-MULTIPURPOSE (78-IN)	338
Y	*135-9387*	1	EDGE GP-CUTTING	424

Y - SEPARATE ILLUSTRATION

<END>

426-6549 BUCKET AR-MULTIPURPOSE

PART OF 426-6547, 426-6548 BUCKET AR-MULTIPURPOSE

AN ATTACHMENT

SMCS-6104 **i05277430**

NOTE	PART NUMBER	QTY	PART NAME 1 2 3 4 5 6 (PRODUCT LEVEL)	SEE PAGE
Y	*426-6550*	1	BUCKET GP-MULTIPURPOSE (78-IN)	395
Y	*162-5236*	1	COVER GP-LINES	418
Y	**278-1969**	2	CYLINDER GP-HYDRAULIC	217
Y	*279-5416*	1	LINES GP-BUCKET	239
Y	*154-5011*	1	MOUNTING GP-CYLINDER	278

Y - SEPARATE ILLUSTRATION

<END>

426-6557 BUCKET AR-MULTIPURPOSE

AN ATTACHMENT

SMCS-6104 **i05275293**

NOTE	PART NUMBER	QTY	PART NAME 1 2 3 4 5 6 (PRODUCT LEVEL)	SEE PAGE
Y	*426-6559*	1	BUCKET AR-MULTIPURPOSE	339
Y	*141-4999*	9	TOOTH GP-UNI	463

Y - SEPARATE ILLUSTRATION

<END>

426-6558 BUCKET AR-MULTIPURPOSE

AN ATTACHMENT

SMCS-6104 **i05281189**

NOTE	PART NUMBER	QTY	PART NAME 1 2 3 4 5 6 (PRODUCT LEVEL)	SEE PAGE
Y	*426-6559*	1	BUCKET AR-MULTIPURPOSE (84-IN)	339
Y	*195-7124*	1	EDGE GP-CUTTING	426

Y - SEPARATE ILLUSTRATION

<END>

426-6559 BUCKET AR-MULTIPURPOSE

PART OF 426-6557, 426-6558 BUCKET AR-MULTIPURPOSE
AN ATTACHMENT

SMCS-6104 **i05277429**

NOTE	PART NUMBER	QTY	PART NAME 1 2 3 4 5 6 (PRODUCT LEVEL)	SEE PAGE
Y	*426-6560*	1	BUCKET GP-MULTIPURPOSE (84-IN)	396
Y	*162-5236*	1	COVER GP-LINES	418
Y	**278-1969**	2	CYLINDER GP-HYDRAULIC	217
Y	*293-0140*	1	LINES GP-BUCKET	243
Y	*154-5011*	1	MOUNTING GP-CYLINDER	278

Y - SEPARATE ILLUSTRATION

<END>

426-6931 BUCKET AR-MULTIPURPOSE

AN ATTACHMENT

SMCS-6104 **i05275291**

NOTE	PART NUMBER	QTY	PART NAME 1 2 3 4 5 6 (PRODUCT LEVEL)	SEE PAGE
Y	*426-6933*	1	BUCKET AR-MULTIPURPOSE (60-IN)	339
Y	*141-4999*	8	TOOTH GP-UNI	463

Y - SEPARATE ILLUSTRATION

<END>

426-6932 BUCKET AR-MULTIPURPOSE

AN ATTACHMENT

SMCS-6104 **i05275290**

NOTE	PART NUMBER	QTY	PART NAME 1 2 3 4 5 6 (PRODUCT LEVEL)	SEE PAGE
Y	*426-6933*	1	BUCKET AR-MULTIPURPOSE (60-IN)	339
Y	*135-9384*	1	EDGE GP-CUTTING	421

Y - SEPARATE ILLUSTRATION

<END>

426-6933 BUCKET AR-MULTIPURPOSE

PART OF 426-6931, 426-6932 BUCKET AR-MULTIPURPOSE
AN ATTACHMENT

SMCS-6104 **i05277428**

NOTE	PART NUMBER	QTY	PART NAME 1 2 3 4 5 6 (PRODUCT LEVEL)	SEE PAGE
Y	*426-6934*	1	BUCKET GP-MULTIPURPOSE (60-IN)	397
Y	*162-5236*	1	COVER GP-LINES	418
Y	**278-1969**	2	CYLINDER GP-HYDRAULIC	217
Y	*279-5413*	1	LINES GP-BUCKET	233
Y	*154-5011*	1	MOUNTING GP-CYLINDER	278

Y - SEPARATE ILLUSTRATION

<END>

426-6938 BUCKET AR-MULTIPURPOSE

AN ATTACHMENT

SMCS-6104 **i05275288**

NOTE	PART NUMBER	QTY	PART NAME 1 2 3 4 5 6 (PRODUCT LEVEL)	SEE PAGE
Y	*426-6940*	1	BUCKET AR-MULTIPURPOSE (66-IN)	340
Y	*141-4999*	8	TOOTH GP-UNI	463

Y - SEPARATE ILLUSTRATION

<END>

426-6939 BUCKET AR-MULTIPURPOSE

AN ATTACHMENT

SMCS-6104 **i05275287**

NOTE	PART NUMBER	QTY	PART NAME 1 2 3 4 5 6 (PRODUCT LEVEL)	SEE PAGE
Y	*426-6940*	1	BUCKET AR-MULTIPURPOSE (66-IN)	340
Y	*135-9385*	1	EDGE GP-CUTTING	422

Y - SEPARATE ILLUSTRATION

<END>

426-6940 BUCKET AR-MULTIPURPOSE

PART OF 426-6938, 426-6939 BUCKET AR-MULTIPURPOSE

AN ATTACHMENT

SMCS-6104 **i05277426**

NOTE	PART NUMBER	QTY	PART NAME 1 2 3 4 5 6 (PRODUCT LEVEL)	SEE PAGE
Y	*426-6941*	1	BUCKET GP-MULTIPURPOSE (66-IN)	398
Y	*162-5236*	1	COVER GP-LINES	418
Y	**278-1969**	2	CYLINDER GP-HYDRAULIC	217
Y	*279-5414*	1	LINES GP-BUCKET	235
Y	*154-5011*	1	MOUNTING GP-CYLINDER	278

Y - SEPARATE ILLUSTRATION

<END>

426-6944 BUCKET AR-MULTIPURPOSE

AN ATTACHMENT

SMCS-6104 **i05275286**

NOTE	PART NUMBER	QTY	PART NAME 1 2 3 4 5 6 (PRODUCT LEVEL)	SEE PAGE
Y	*426-6947*	1	BUCKET AR-MULTIPURPOSE (72-IN)	341
Y	*141-4999*	8	TOOTH GP-UNI	463

Y - SEPARATE ILLUSTRATION

<END>

426-6945 BUCKET AR-MULTIPURPOSE

AN ATTACHMENT

SMCS-6104 **i05275284**

NOTE	PART NUMBER	QTY	PART NAME 1 2 3 4 5 6 (PRODUCT LEVEL)	SEE PAGE
Y	*426-6947*	1	BUCKET AR-MULTIPURPOSE (72-IN)	341
Y	*135-9386*	1	EDGE GP-CUTTING	423

Y - SEPARATE ILLUSTRATION

<END>

426-6947 BUCKET AR-MULTIPURPOSE

PART OF 426-6944, 426-6945 BUCKET AR-MULTIPURPOSE

AN ATTACHMENT

SMCS-6104 **i05277425**

NOTE	PART NUMBER	QTY	PART NAME 1 2 3 4 5 6 (PRODUCT LEVEL)	SEE PAGE
Y	*426-6951*	1	BUCKET GP-MULTIPURPOSE (72-IN)	399
Y	*162-5236*	1	COVER GP-LINES	418
Y	**278-1969**	2	CYLINDER GP-HYDRAULIC	217
Y	*279-5415*	1	LINES GP-BUCKET	237
Y	*154-5011*	1	MOUNTING GP-CYLINDER	278

Y - SEPARATE ILLUSTRATION

<END>

426-6965 BUCKET AR-MULTIPURPOSE

AN ATTACHMENT

SMCS-6104 **i05275283**

NOTE	PART NUMBER	QTY	PART NAME 1 2 3 4 5 6 (PRODUCT LEVEL)	SEE PAGE
Y	*426-6970*	1	BUCKET AR-MULTIPURPOSE (78-IN)	342
Y	*141-4999*	9	TOOTH GP-UNI	463

Y - SEPARATE ILLUSTRATION

<END>

426-6967 BUCKET AR-MULTIPURPOSE

AN ATTACHMENT

SMCS-6104 **i05275281**

NOTE	PART NUMBER	QTY	PART NAME 1 2 3 4 5 6 (PRODUCT LEVEL)	SEE PAGE
Y	*426-6970*	1	BUCKET AR-MULTIPURPOSE (78-IN)	342
Y	*135-9387*	1	EDGE GP-CUTTING	424

Y - SEPARATE ILLUSTRATION

<END>

426-6970 BUCKET AR-MULTIPURPOSE

PART OF 426-6965, 426-6967 BUCKET AR-MULTIPURPOSE

AN ATTACHMENT

SMCS-6104 **i05277424**

NOTE	PART NUMBER	QTY	PART NAME 1 2 3 4 5 6 (PRODUCT LEVEL)	SEE PAGE
Y	*426-7102*	1	BUCKET GP-MULTIPURPOSE (78-IN)	400
Y	*162-5236*	1	COVER GP-LINES	418
Y	**278-1969**	2	CYLINDER GP-HYDRAULIC	217
Y	*279-5416*	1	LINES GP-BUCKET	239
Y	*154-5011*	1	MOUNTING GP-CYLINDER	278

Y - SEPARATE ILLUSTRATION

<END>

426-6985 BUCKET AR-MULTIPURPOSE

AN ATTACHMENT

SMCS-6104 **i05278849**

NOTE	PART NUMBER	QTY	PART NAME 1 2 3 4 5 6 (PRODUCT LEVEL)	SEE PAGE
Y	*426-6992*	1	BUCKET AR-MULTIPURPOSE	342
Y	*141-4999*	9	TOOTH GP-UNI	463

Y - SEPARATE ILLUSTRATION

<END>

426-6989 BUCKET AR-MULTIPURPOSE

AN ATTACHMENT

SMCS-6104 **i05275279**

NOTE	PART NUMBER	QTY	PART NAME 1 2 3 4 5 6 (PRODUCT LEVEL)	SEE PAGE
Y	*426-6992*	1	BUCKET AR-MULTIPURPOSE	342
Y	*195-7124*	1	EDGE GP-CUTTING	426

Y - SEPARATE ILLUSTRATION

<END>

426-6992 BUCKET AR-MULTIPURPOSE

PART OF 426-6985, 426-6989 BUCKET AR-MULTIPURPOSE

AN ATTACHMENT

SMCS-6104 **i05277298**

NOTE	PART NUMBER	QTY	PART NAME 1 2 3 4 5 6 (PRODUCT LEVEL)	SEE PAGE
Y	*426-6995*	1	BUCKET AR-MULTIPURPOSE (84-IN)	343
Y	*162-5236*	1	COVER GP-LINES	418
Y	**278-1969**	2	CYLINDER GP-HYDRAULIC	217
Y	*293-0140*	1	LINES GP-BUCKET	243
Y	*154-5011*	1	MOUNTING GP-CYLINDER	278

Y - SEPARATE ILLUSTRATION

<END>

426-6995 BUCKET AR-MULTIPURPOSE

PART OF 426-6992 BUCKET AR-MULTIPURPOSE
AN ATTACHMENT

SMCS-6104 **i05277422**

NOTE	REF NO	GRAPHIC REF	PART NUMBER	QTY	PART NAME 1 2 3 4 5 6 (PRODUCT LEVEL)	SEE PAGE
	1	1	**154-5012**	2	PIN	
Y	2	1	**426-6561**	1	CLAM AS-MULTIPURPOSE BUCKET	410
Y	3	1	*426-7001*	1	BLADE GP-MULTIPURPOSE BUCKET	323
	4	1	**3B-8489**	2	FITTING-GREASE	
M	5	1	**6V-9189**	2	LOCKNUT (M8X1.25-THD)	
M	6	1	**8T-6869**	2	BOLT (M8X1.25X60-MM)	

M - METRIC PART
Y - SEPARATE ILLUSTRATION

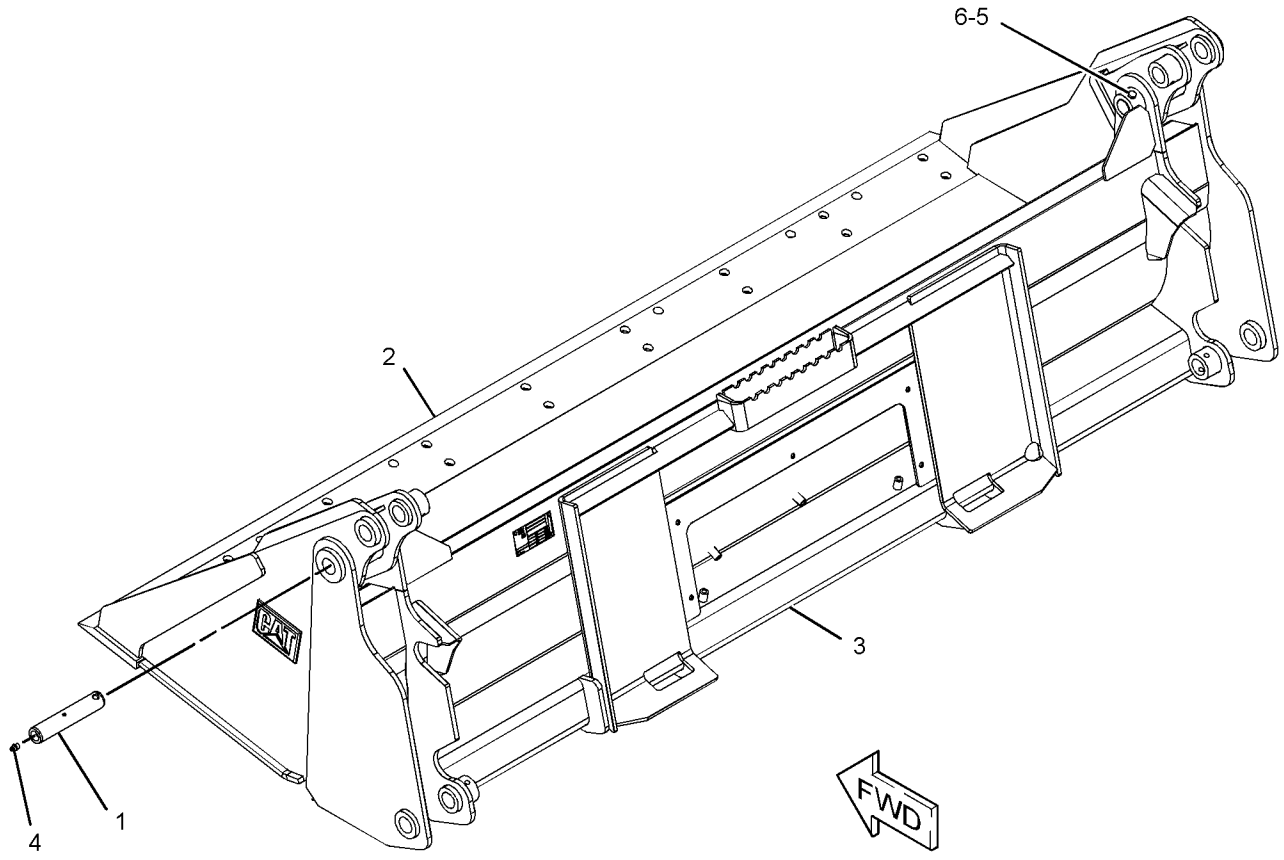

GRAPHIC #1 **<END>** g03359069

431-5570 BUCKET AR-MULTIPURPOSE

AN ATTACHMENT

SMCS-6104 **i05275276**

NOTE	PART NUMBER	QTY	PART NAME 1 2 3 4 5 6 (PRODUCT LEVEL)	SEE PAGE
Y	*423-4291*	1	BUCKET AR-MULTIPURPOSE	336
Y	*135-9384*	1	EDGE GP-CUTTING	421

Y - SEPARATE ILLUSTRATION

<END>

285-6095 BUCKET AR-UTILITY

AN ATTACHMENT

SMCS- **i02552467**

NOTE	PART NUMBER	QTY	PART NAME 1 2 3 4 5 6 (PRODUCT LEVEL)	SEE PAGE
Y	**285-6096**	1	BUCKET GP-UTILITY (60-IN)	401
Y	*135-9384*	1	EDGE GP-CUTTING	421

Y - SEPARATE ILLUSTRATION

<END>

285-6100 BUCKET AR-UTILITY

PART OF 285-6111 BUCKET AR-GRAPPLE

AN ATTACHMENT

SMCS- **i05239170**

NOTE	PART NUMBER	QTY	PART NAME 1 2 3 4 5 6 (PRODUCT LEVEL)	SEE PAGE
Y	**285-6099**	1	BUCKET GP-UTILITY (66-IN)	402
Y	*135-9385*	1	EDGE GP-CUTTING	422

Y - SEPARATE ILLUSTRATION

<END>

285-6101 BUCKET AR-UTILITY

PART OF 285-6112 BUCKET AR-GRAPPLE

AN ATTACHMENT

SMCS- **i05239171**

NOTE	PART NUMBER	QTY	PART NAME 1 2 3 4 5 6 (PRODUCT LEVEL)	SEE PAGE
Y	**285-6102**	1	BUCKET GP-UTILITY (72-IN)	403
Y	*135-9386*	1	EDGE GP-CUTTING	423

Y - SEPARATE ILLUSTRATION

<END>

268-4089 BUCKET AS-DIRT

1981-MM (78-IN)
PART OF 268-4084 BUCKET GP-DIRT
AN ATTACHMENT

SMCS-6001 **i03647015**

NOTE	REF NO	GRAPHIC REF	PART NUMBER	QTY	PART NAME 1 2 3 4 5 6 (PRODUCT LEVEL)	SEE PAGE
	1	1	**199-7722**	1	EDGE	

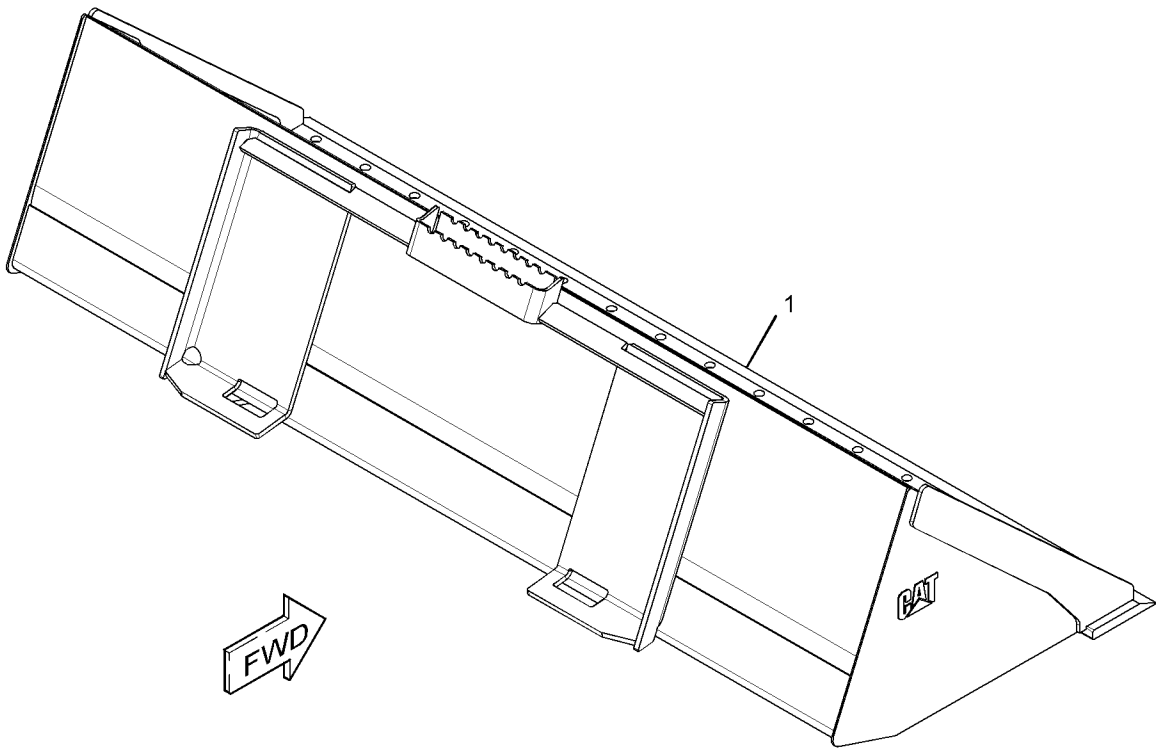

GRAPHIC #1 **<END>** g01958544

279-5433 BUCKET AS-DIRT

1372-MM (54-IN)
PART OF 279-5434 BUCKET AS-DIRT
AN ATTACHMENT

SMCS-6001 **i03635729**

NOTE	REF NO	GRAPHIC REF	PART NUMBER	QTY	PART NAME 1 2 3 4 5 6 (PRODUCT LEVEL)	SEE PAGE
	1	1	**149-5434**	1	EDGE	

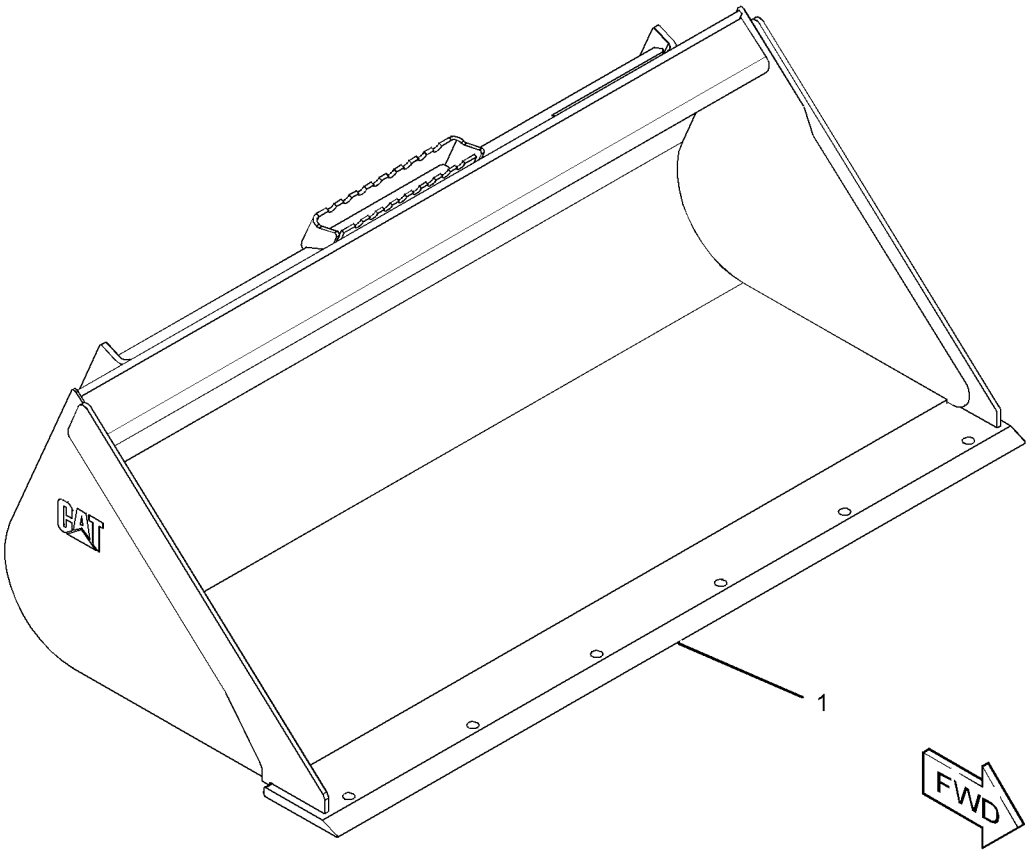

GRAPHIC #1 **<END>** g01953755

279-5434 BUCKET AS-DIRT

PART OF 279-5435 BUCKET AR-DIRT

AN ATTACHMENT

SMCS-6001 **i03636082**

NOTE	REF NO	GRAPHIC REF	PART NUMBER	QTY	PART NAME 1 2 3 4 5 6 (PRODUCT LEVEL)	SEE PAGE
	1	1	**154-2704**	1	PLATE-INSTRUCTION (BUCKET SPECIFICATIONS)	
	2	1	**168-8389**	4	TACK-FASTENER	
Y	3	1	*279-5433*	1	BUCKET AS-DIRT	346

Y - SEPARATE ILLUSTRATION

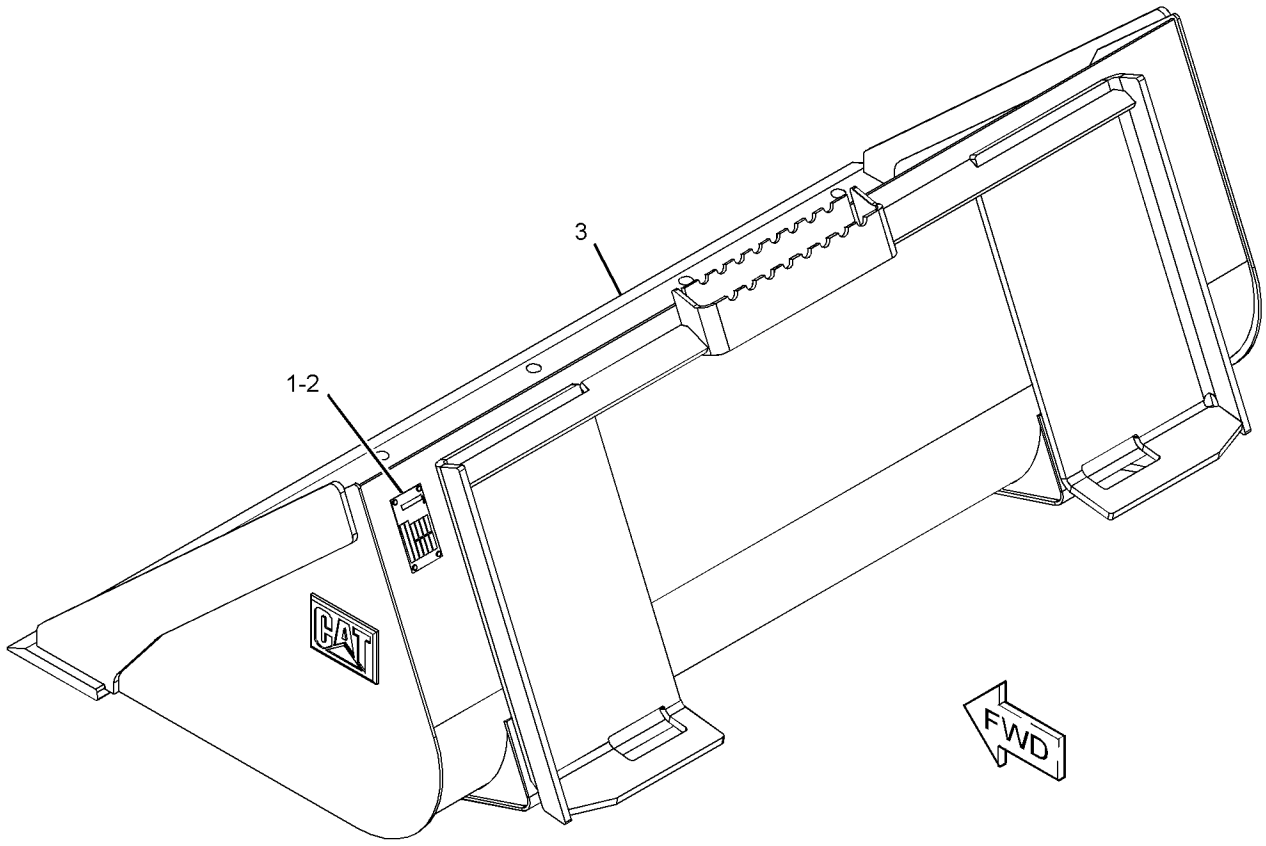

GRAPHIC #1 **<END>** g01951568

279-5436 BUCKET AS-DIRT

1524-MM (60-IN)
PART OF 279-5437 BUCKET AS-DIRT
AN ATTACHMENT

SMCS-6001 **i03635731**

NOTE	REF NO	GRAPHIC REF	PART NUMBER	QTY	PART NAME 1 2 3 4 5 6 (PRODUCT LEVEL)	SEE PAGE
	1	1	**149-5435**	1	EDGE	

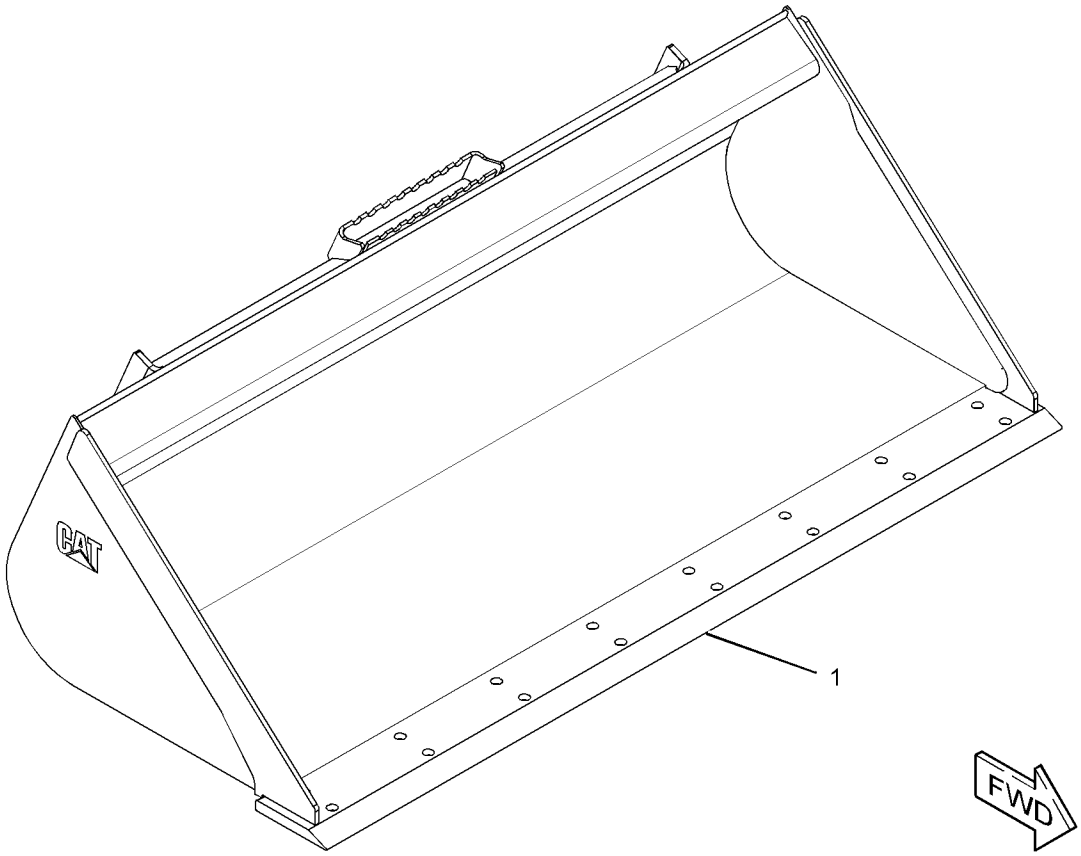

GRAPHIC #1 **<END>** g01953749

279-5437 BUCKET AS-DIRT

PART OF 279-5438 BUCKET AR-DIRT

AN ATTACHMENT

SMCS-6001 **i03648372**

NOTE	REF NO	GRAPHIC REF	PART NUMBER	QTY	PART NAME 1 2 3 4 5 6 (PRODUCT LEVEL)	SEE PAGE
	1	1	**154-2704**	1	PLATE-INSTRUCTION (BUCKET SPECIFICATIONS)	
	2	1	**168-8389**	4	TACK-FASTENER	
Y	3	1	*279-5436*	1	BUCKET AS-DIRT (60-IN)	348

Y - SEPARATE ILLUSTRATION

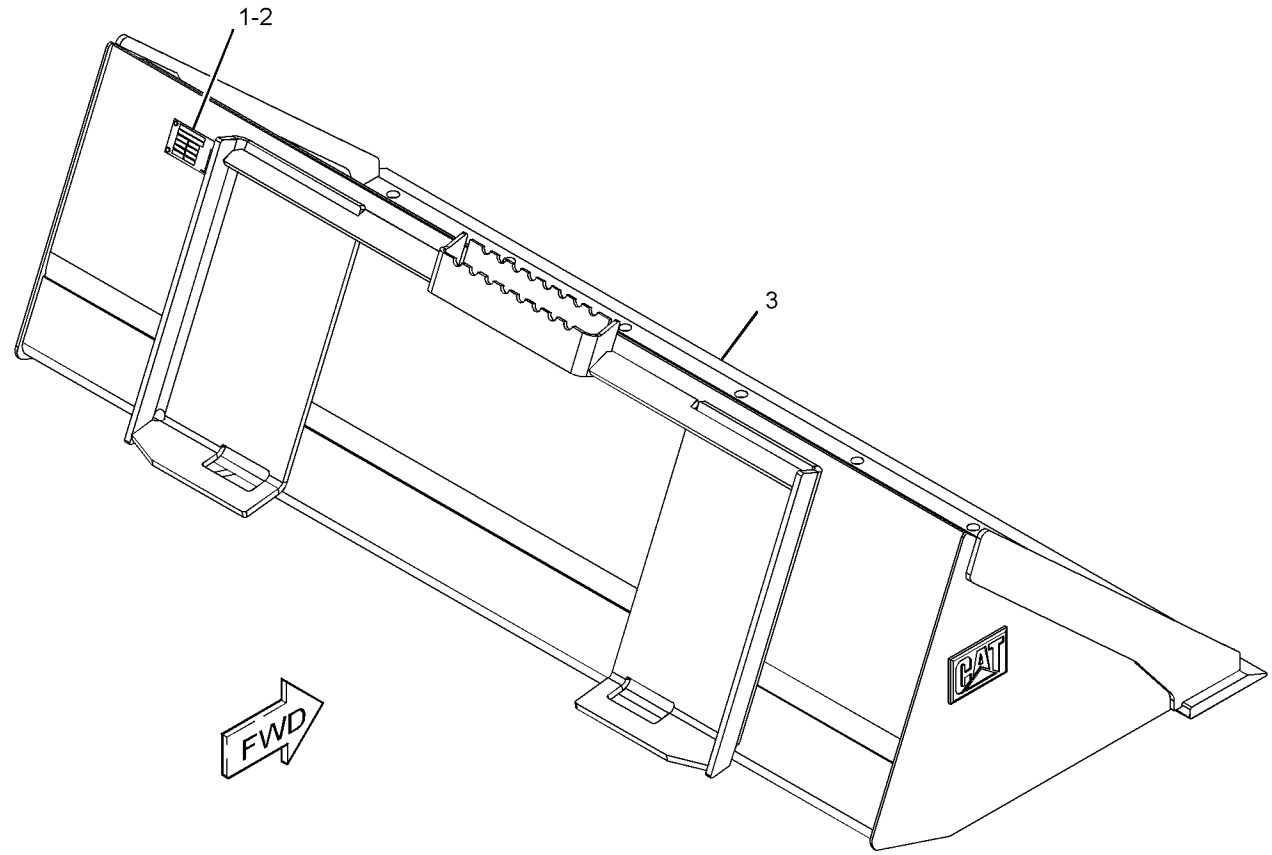

GRAPHIC #1 **<END>** g01951590

279-5439 BUCKET AS-DIRT

1676-MM (66-IN)
PART OF 279-5440 BUCKET AS-DIRT
AN ATTACHMENT

SMCS-6001 **i03635763**

NOTE	REF NO	GRAPHIC REF	PART NUMBER	QTY	PART NAME 1 2 3 4 5 6 (PRODUCT LEVEL)	SEE PAGE
	1	1	**149-5436**	1	EDGE	

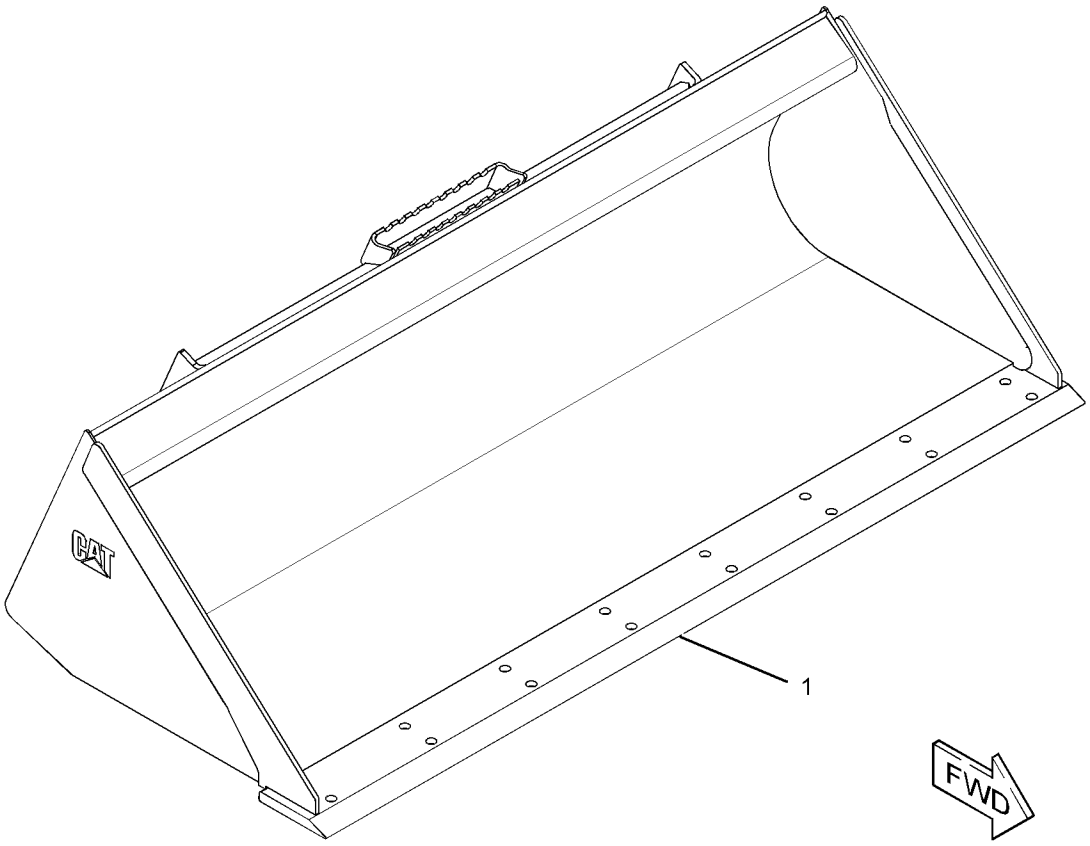

GRAPHIC #1 **<END>** g01953842

279-5440 BUCKET AS-DIRT

PART OF 279-5441 BUCKET AR-DIRT

AN ATTACHMENT

SMCS-6001 **i03648373**

NOTE	REF NO	GRAPHIC REF	PART NUMBER	QTY	PART NAME 1 2 3 4 5 6 (PRODUCT LEVEL)	SEE PAGE
	1	1	**154-2704**	1	PLATE-INSTRUCTION (BUCKET SPECIFICATIONS)	
	2	1	**168-8389**	4	TACK-FASTENER	
Y	3	1	*279-5439*	1	BUCKET AS-DIRT (66-IN)	350

Y - SEPARATE ILLUSTRATION

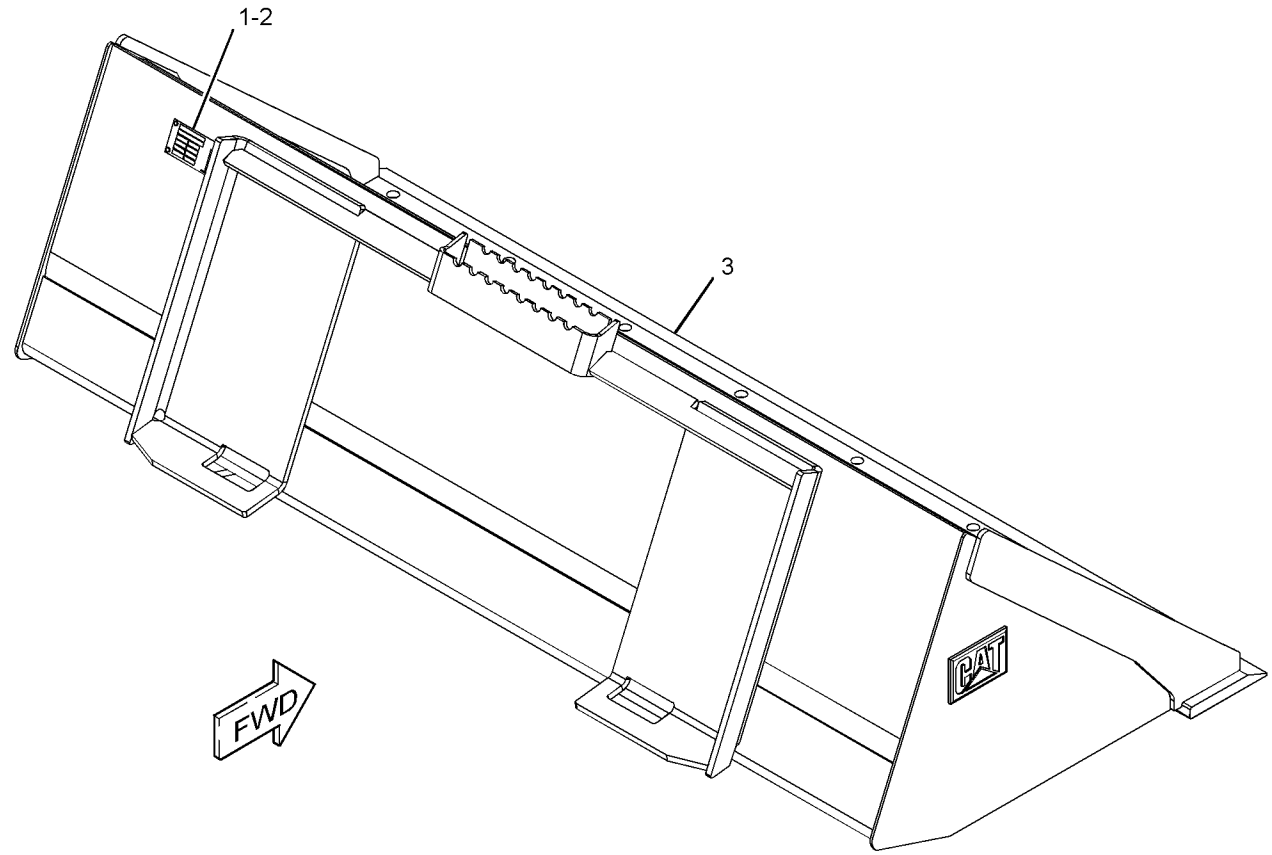

GRAPHIC #1 **<END>** g01951588

285-6088 BUCKET AS-DIRT

1829-MM (72-IN)
PART OF 285-6089 BUCKET AS-DIRT
AN ATTACHMENT

SMCS-6001 **i03635778**

NOTE	REF NO	GRAPHIC REF	PART NUMBER	QTY	PART NAME 1 2 3 4 5 6 (PRODUCT LEVEL)	SEE PAGE
	1	1	**149-5437**	1	EDGE	

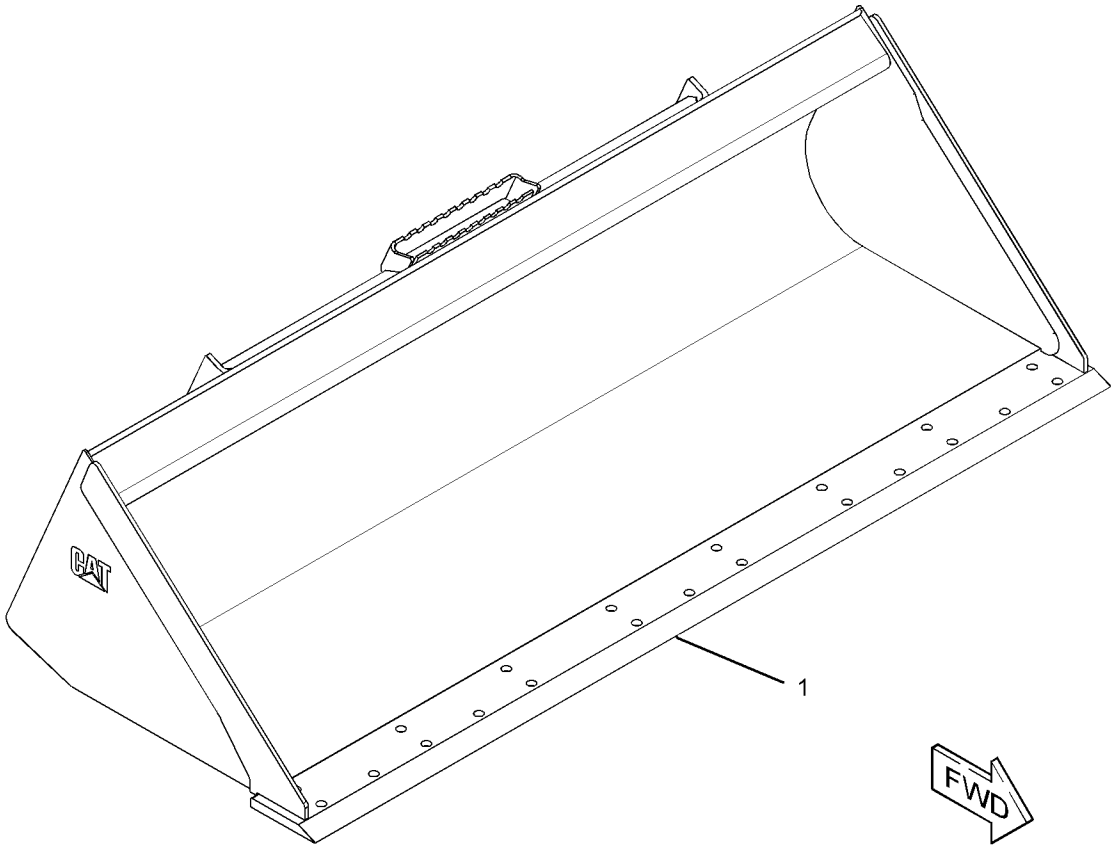

GRAPHIC #1 **<END>** g01953863

285-6089 BUCKET AS-DIRT

PART OF 285-6090 BUCKET AR-DIRT

AN ATTACHMENT

SMCS-6001 **i03648374**

NOTE	REF NO	GRAPHIC REF	PART NUMBER	QTY	PART NAME 1 2 3 4 5 6 (PRODUCT LEVEL)	SEE PAGE
	1	1	**154-2704**	1	PLATE-INSTRUCTION (BUCKET SPECIFICATIONS)	
	2	1	**168-8389**	4	TACK-FASTENER	
Y	3	1	*285-6088*	1	BUCKET AS-DIRT (72-IN)	352

Y - SEPARATE ILLUSTRATION

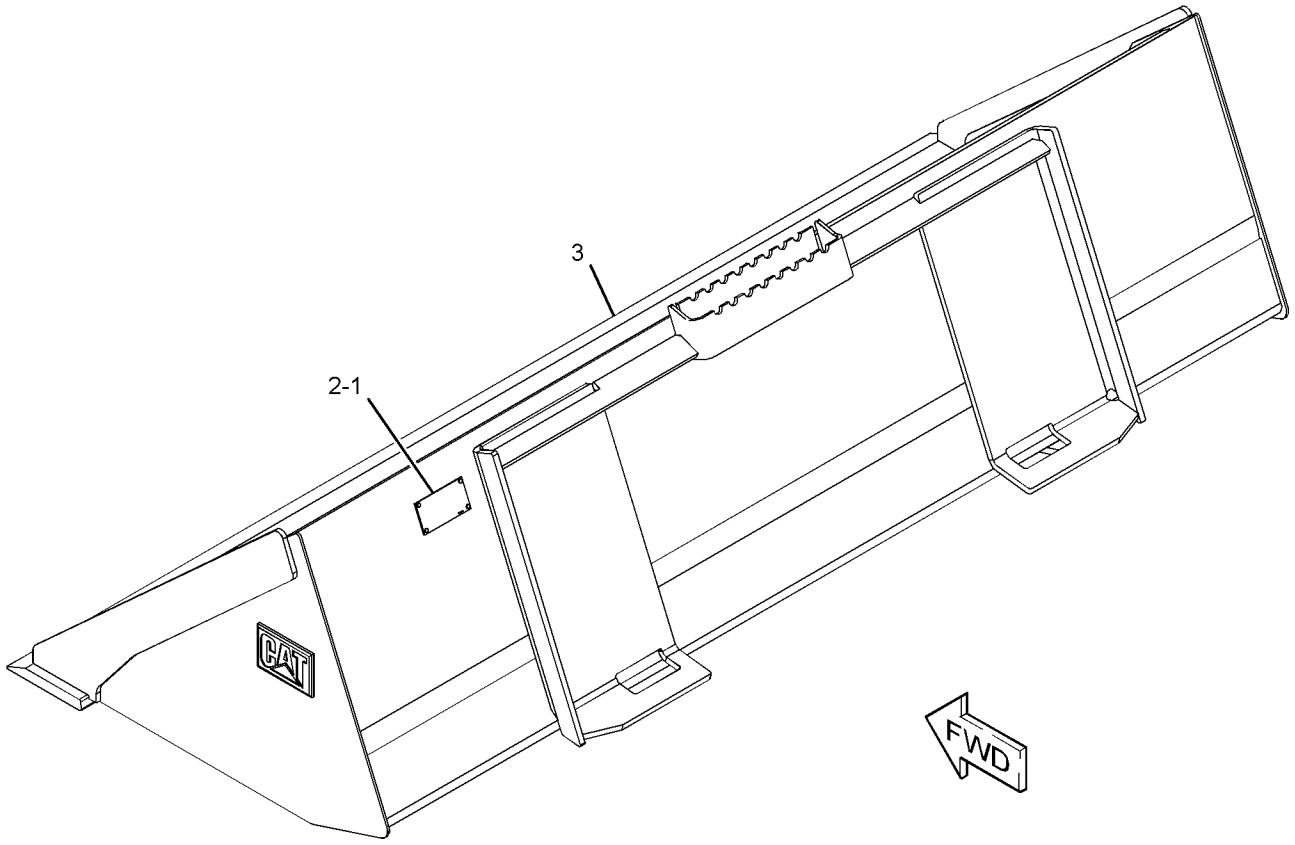

GRAPHIC #1 **<END>** g01951563

279-5363 BUCKET AS-GENERAL PURPOSE

1524-MM (60-IN)
PART OF 279-5364 BUCKET AS-GENERAL PURPOSE
AN ATTACHMENT

SMCS-6101 **i03635782**

NOTE	REF NO	GRAPHIC REF	PART NUMBER	QTY	PART NAME 1 2 3 4 5 6 (PRODUCT LEVEL)	SEE PAGE
	1	1	**149-5435**	1	EDGE	

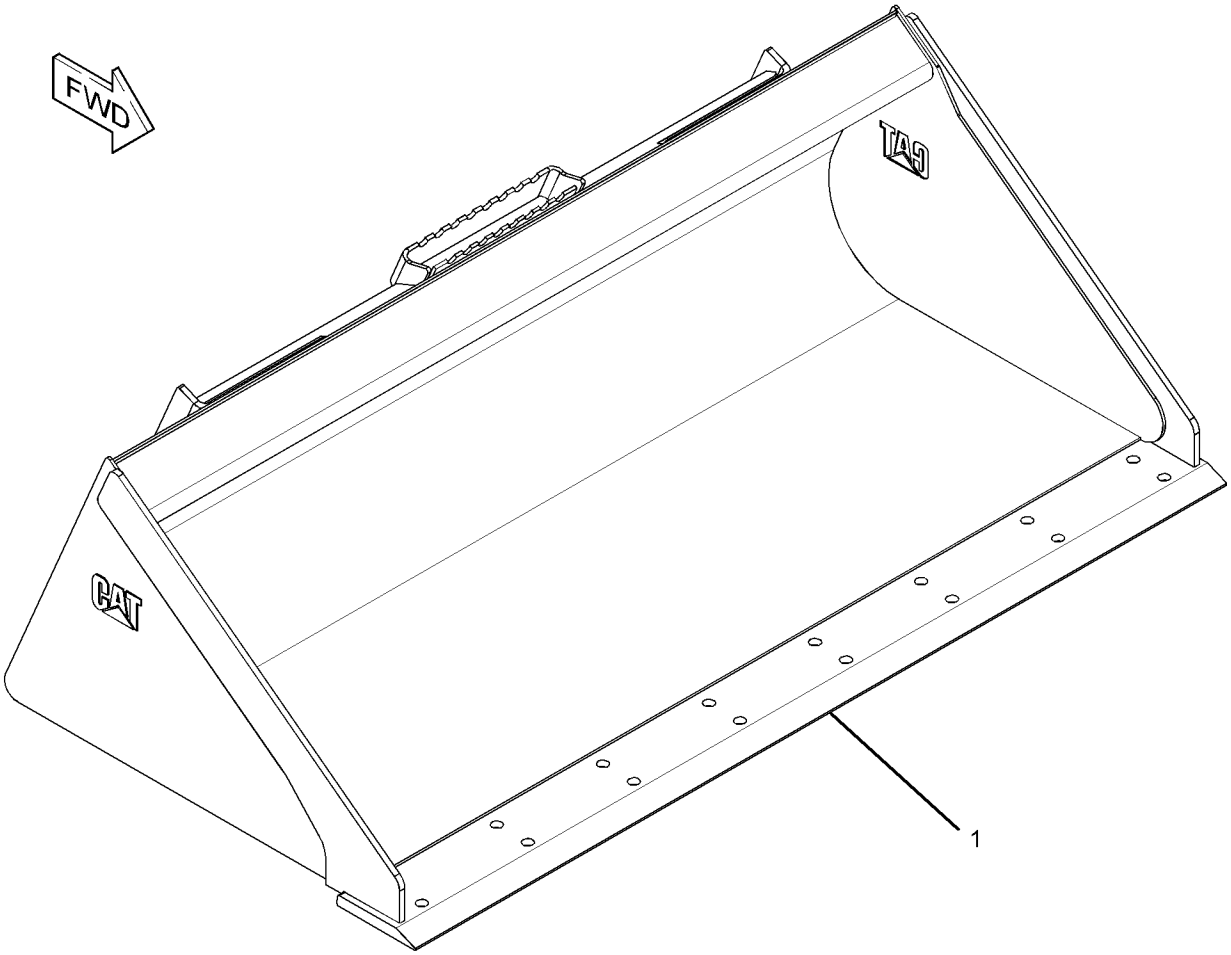

GRAPHIC #1 **<END>** g01951959

279-5364 BUCKET AS-GENERAL PURPOSE

PART OF 279-5365, 279-5366 BUCKET AR-GENERAL PURPOSE
AN ATTACHMENT

SMCS-6101 **i03648359**

NOTE	REF NO	GRAPHIC REF	PART NUMBER	QTY	PART NAME 1 2 3 4 5 6 (PRODUCT LEVEL)	SEE PAGE
	1	1	**154-2704**	1	PLATE-INSTRUCTION (BUCKET SPECIFICATIONS)	
	2	1	**168-8389**	4	TACK-FASTENER	
Y	3	1	*279-5363*	1	BUCKET AS-GENERAL PURPOSE (60-IN)	354

Y - SEPARATE ILLUSTRATION

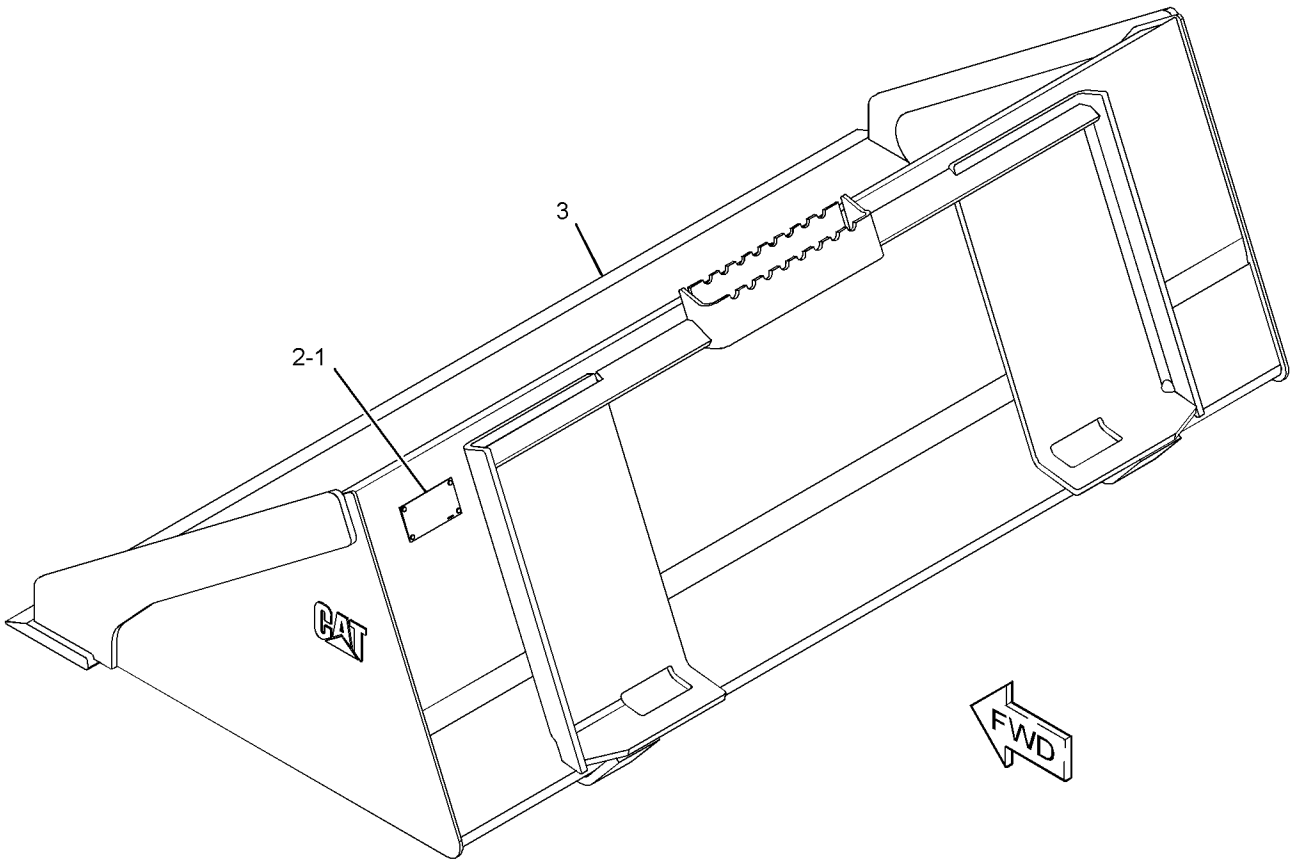

GRAPHIC #1 **<END>** g01951595

279-5367 BUCKET AS-GENERAL PURPOSE

1676-MM (66-IN)

PART OF 279-5368 BUCKET AS-GENERAL PURPOSE

AN ATTACHMENT

SMCS-6101 **i03635793**

NOTE	REF NO	GRAPHIC REF	PART NUMBER	QTY	PART NAME 1 2 3 4 5 6 (PRODUCT LEVEL)	SEE PAGE
	1	1	**149-5436**	1	EDGE	

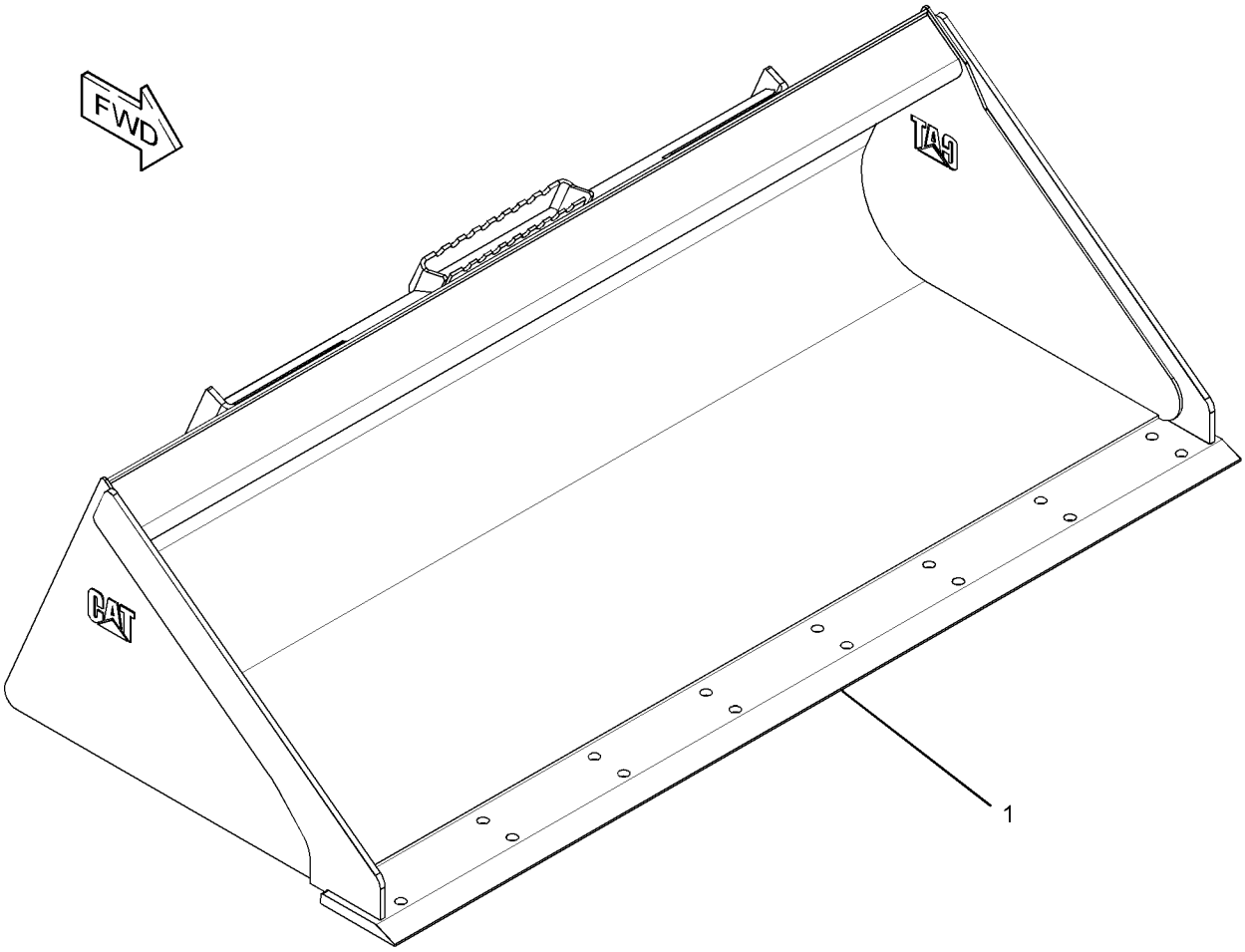

GRAPHIC #1 **<END>** g01951953

279-5368 BUCKET AS-GENERAL PURPOSE

PART OF 279-5369, 279-5370 BUCKET AR-GENERAL PURPOSE
AN ATTACHMENT

SMCS-6101 **i03648360**

NOTE	REF NO	GRAPHIC REF	PART NUMBER	QTY	PART NAME 1 2 3 4 5 6 (PRODUCT LEVEL)	SEE PAGE
	1	1	**154-2704**	1	PLATE-INSTRUCTION (BUCKET SPECIFICATIONS)	
	2	1	**168-8389**	4	TACK-FASTENER	
Y	3	1	*279-5367*	1	BUCKET AS-GENERAL PURPOSE (66-IN)	356

Y - SEPARATE ILLUSTRATION

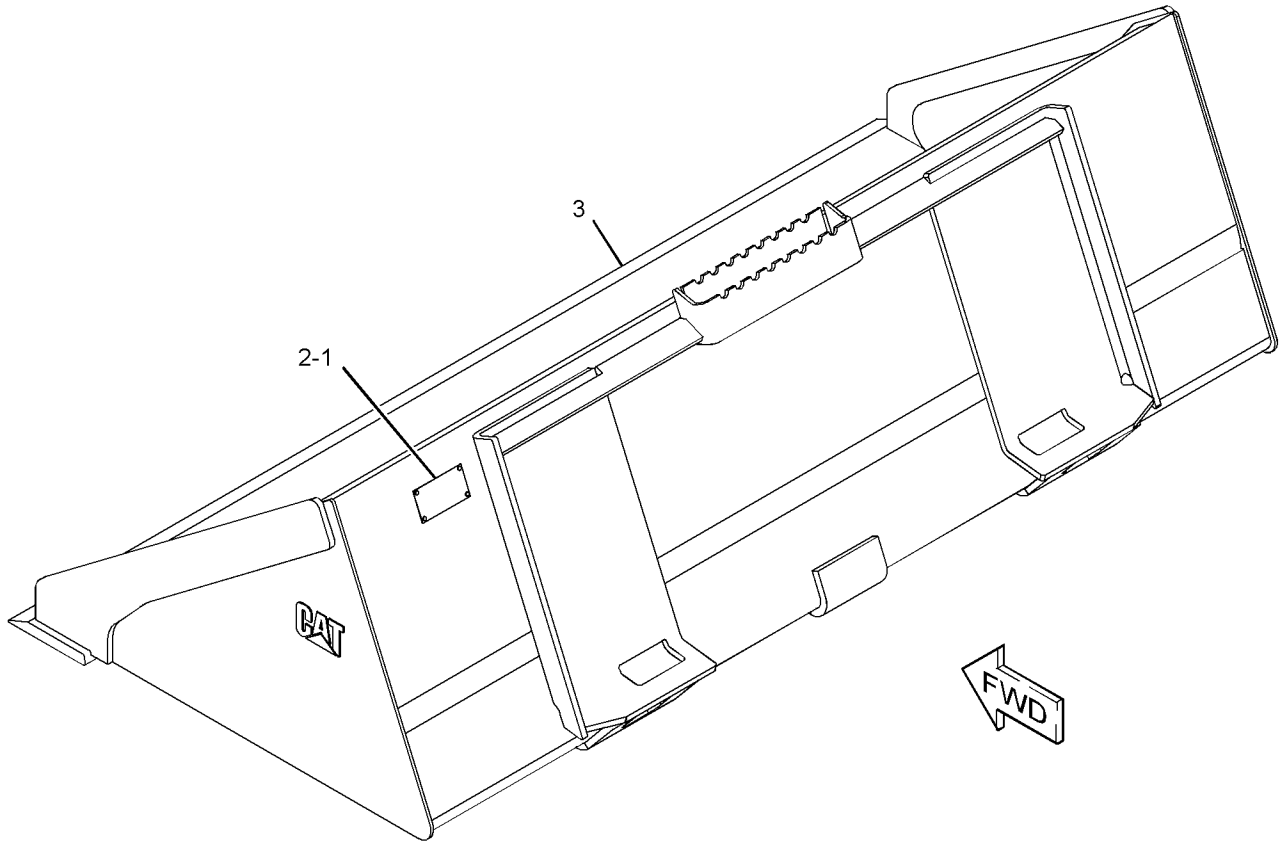

GRAPHIC #1 **<END>** g01951562

279-5371 BUCKET AS-GENERAL PURPOSE

1829-MM (72-IN)
PART OF 279-5372 BUCKET AS-GENERAL PURPOSE
AN ATTACHMENT

SMCS-6101 **i03635988**

NOTE	REF NO	GRAPHIC REF	PART NUMBER	QTY	PART NAME 1 2 3 4 5 6 (PRODUCT LEVEL)	SEE PAGE
	1	1	**149-5437**	1	EDGE	

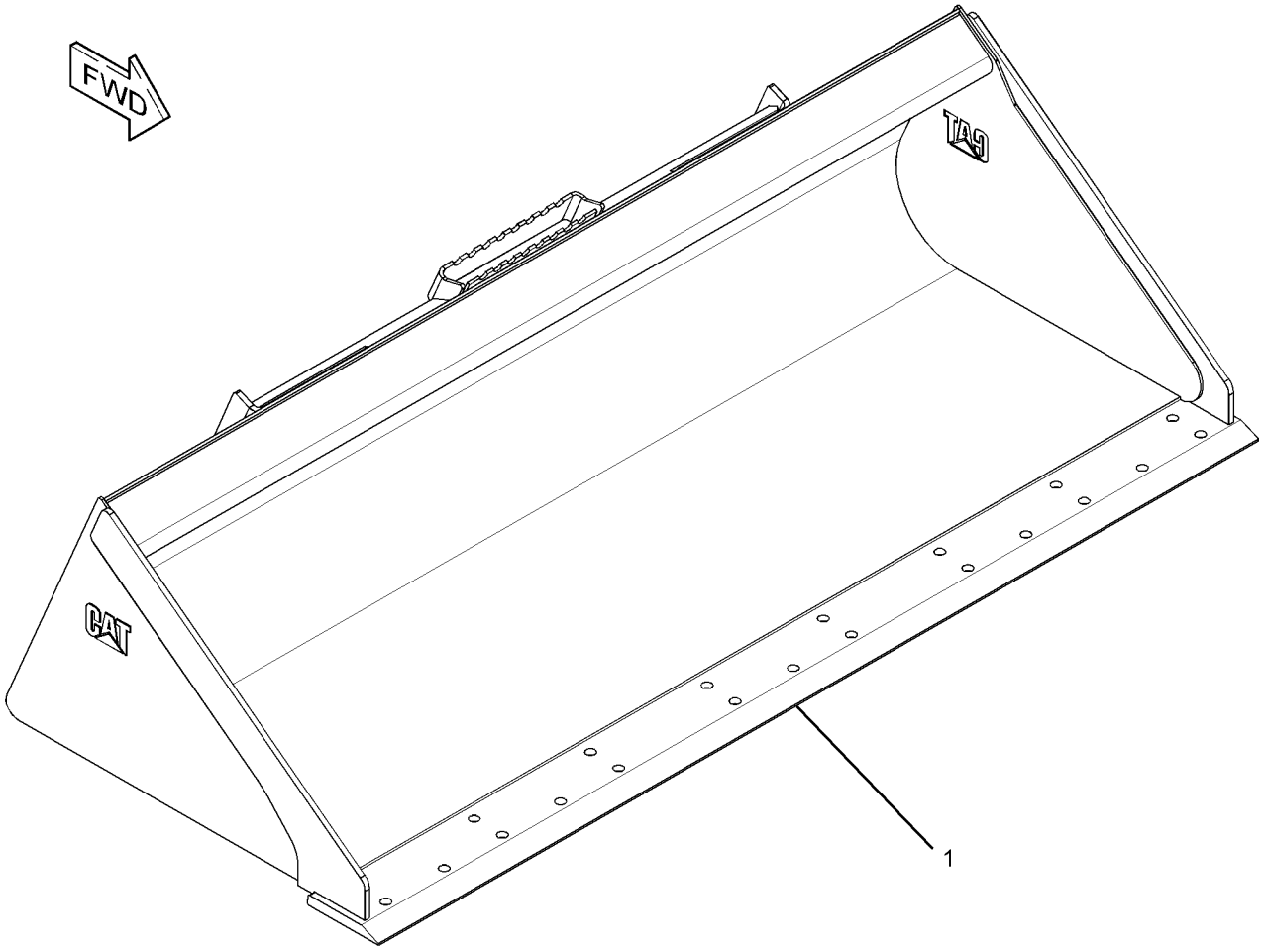

GRAPHIC #1 **<END>** g01952024

279-5372 BUCKET AS-GENERAL PURPOSE

PART OF 279-5373, 279-5374 BUCKET AR-GENERAL PURPOSE

AN ATTACHMENT

SMCS-6101 **i03648361**

NOTE	REF NO	GRAPHIC REF	PART NUMBER	QTY	PART NAME 1 2 3 4 5 6 (PRODUCT LEVEL)	SEE PAGE
	1	1	**154-2704**	1	PLATE-INSTRUCTION (BUCKET SPECIFICATIONS)	
	2	1	**168-8389**	4	TACK-FASTENER	
Y	3	1	*279-5371*	1	BUCKET AS-GENERAL PURPOSE (72-IN)	358

Y - SEPARATE ILLUSTRATION

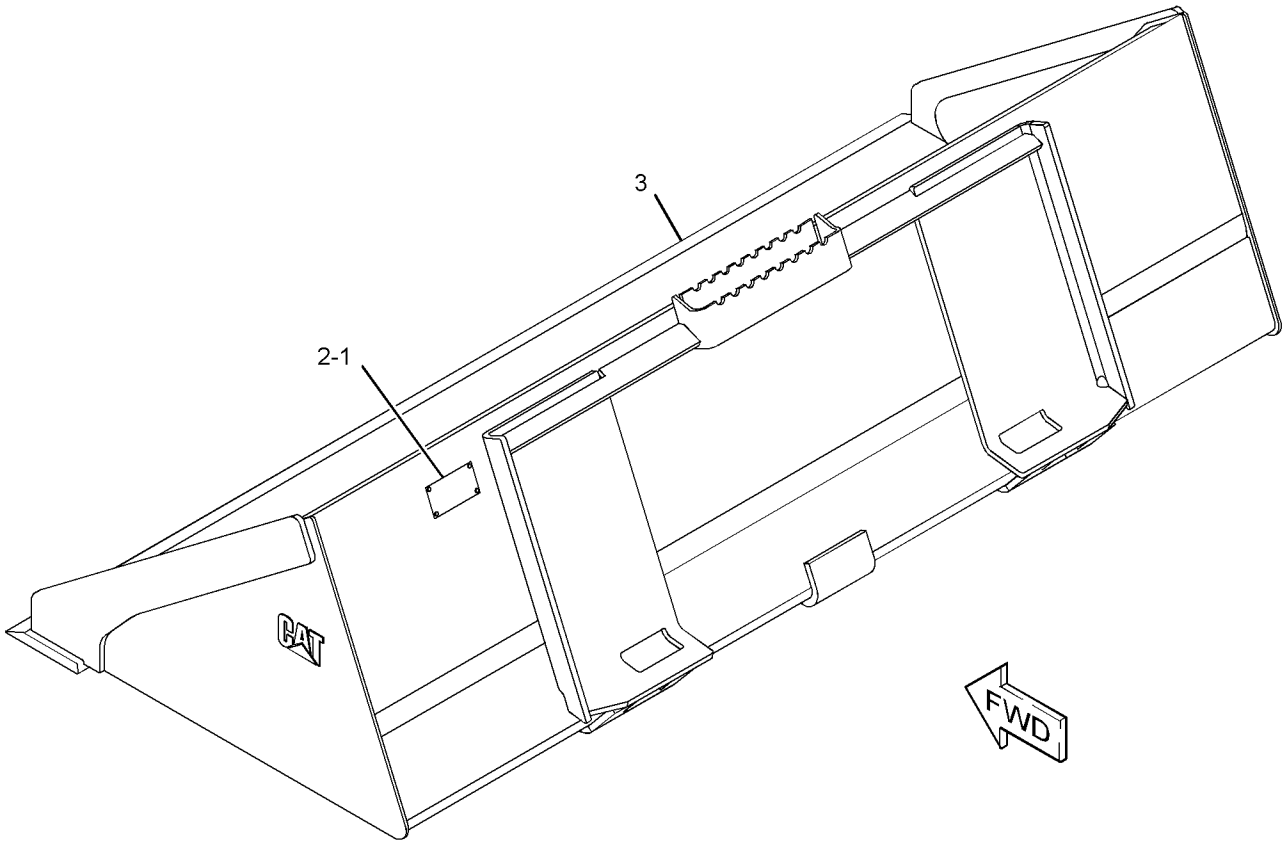

GRAPHIC #1 **<END>** g01951593

279-5375 BUCKET AS-GENERAL PURPOSE

1981-MM (78-IN)
PART OF 279-5376 BUCKET AS-GENERAL PURPOSE
AN ATTACHMENT

SMCS-6101 **i03636000**

NOTE	REF NO	GRAPHIC REF	PART NUMBER	QTY	PART NAME 1 2 3 4 5 6 (PRODUCT LEVEL)	SEE PAGE
	1	1	**199-7722**	1	EDGE	

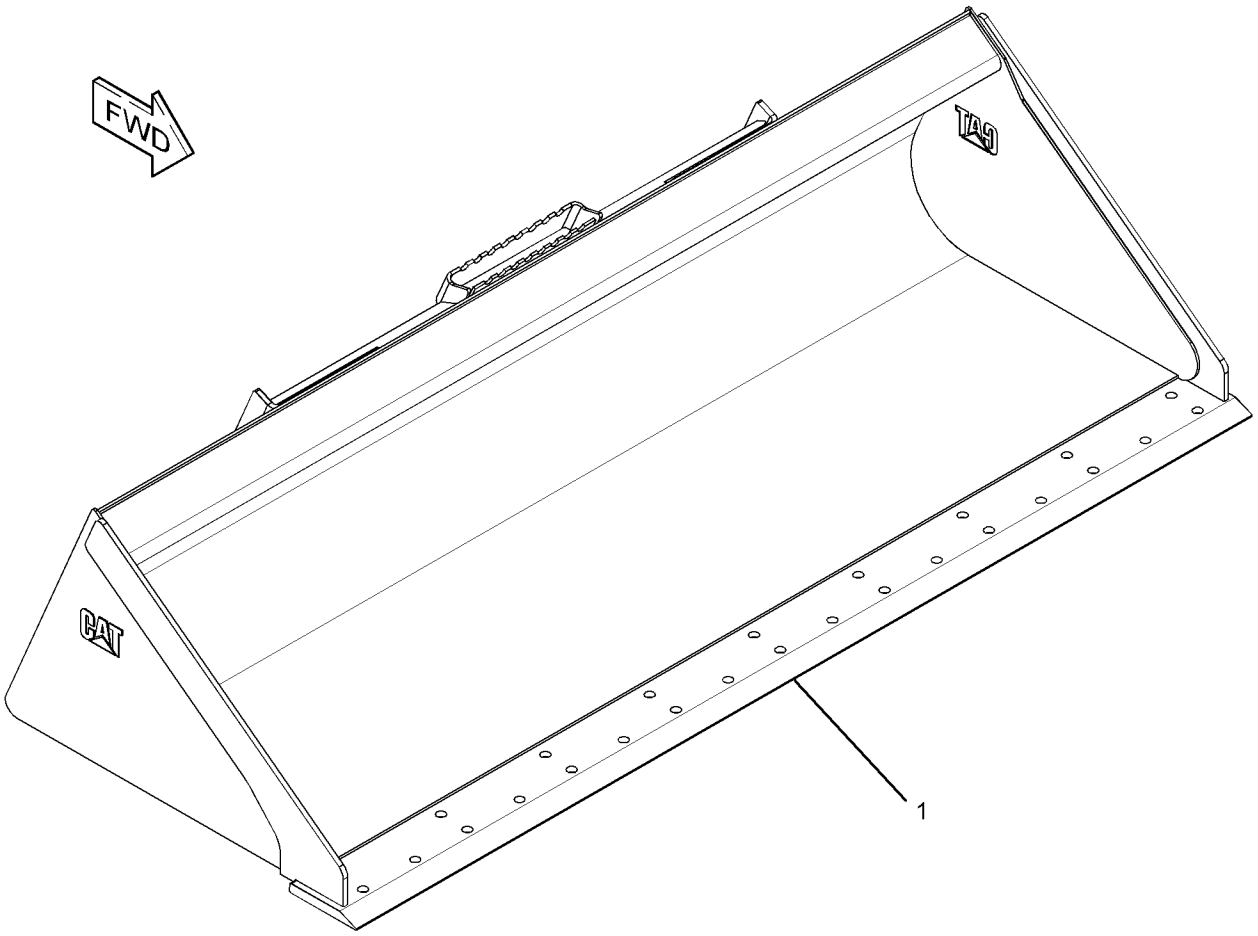

GRAPHIC #1 **<END>** g01952022

279-5376 BUCKET AS-GENERAL PURPOSE

PART OF 279-5377, 279-5378 BUCKET AR-GENERAL PURPOSE
AN ATTACHMENT

SMCS-6101 **i03648369**

NOTE	REF NO	GRAPHIC REF	PART NUMBER	QTY	PART NAME 1 2 3 4 5 6 (PRODUCT LEVEL)	SEE PAGE
	1	1	**154-2704**	1	PLATE-INSTRUCTION (BUCKET SPECIFICATIONS)	
	2	1	**168-8389**	4	TACK-FASTENER	
Y	3	1	*279-5375*	1	BUCKET AS-GENERAL PURPOSE (78-IN)	360

Y - SEPARATE ILLUSTRATION

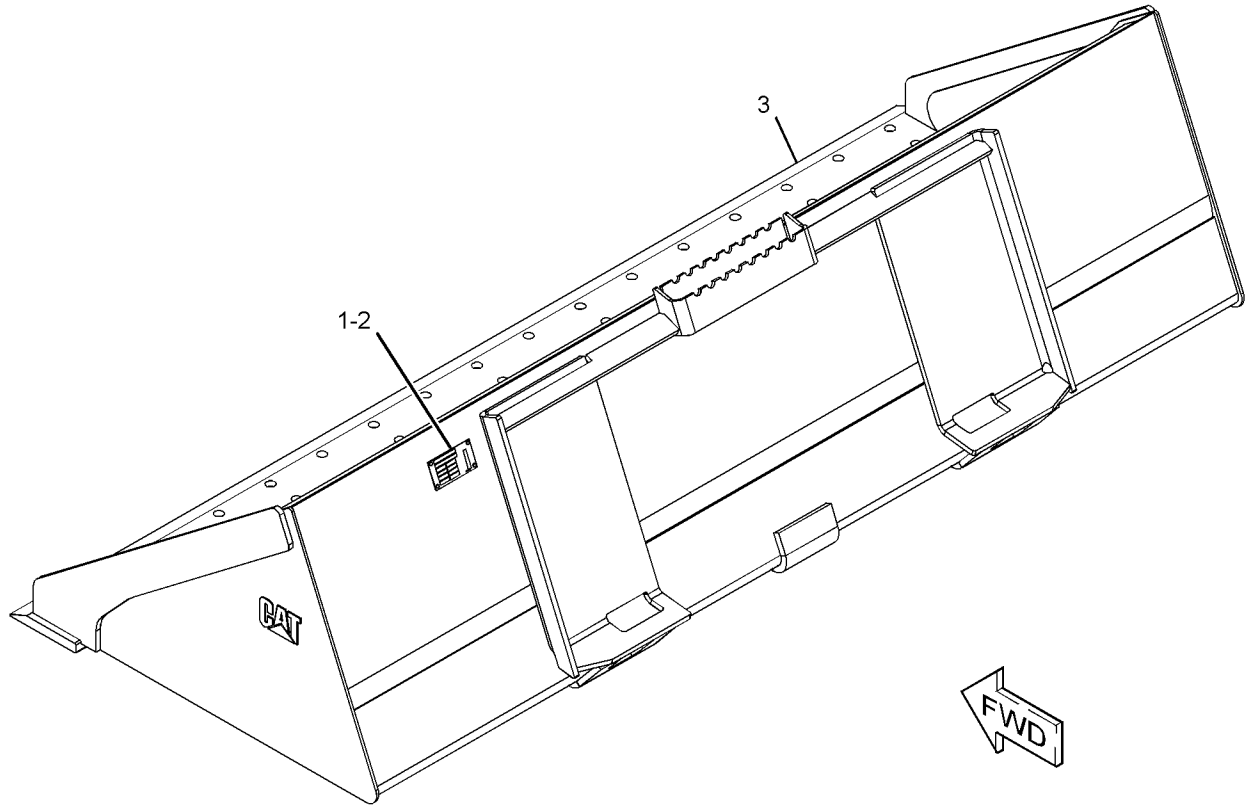

GRAPHIC #1 **<END>** g01951591

292-9270 BUCKET AS-GENERAL PURPOSE–HIGH CAPACITY

PART OF 296-8192 BUCKET AR-GENERAL PURPOSE, 296-8191 BUCKET GP-GENERAL PURPOSE AN ATTACHMENT

SMCS-6101 **i03648482**

NOTE	REF NO	GRAPHIC REF	PART NUMBER	QTY	PART NAME 1 2 3 4 5 6 (PRODUCT LEVEL)	SEE PAGE
	1	1	**154-2704**	1	PLATE-INSTRUCTION (BUCKET SPECIFICATIONS)	
	2	1	**168-8389**	4	TACK-FASTENER	
Y	3	1	*292-9271*	1	BUCKET AS-GENERAL PURPOSE (84-IN)	363

Y - SEPARATE ILLUSTRATION

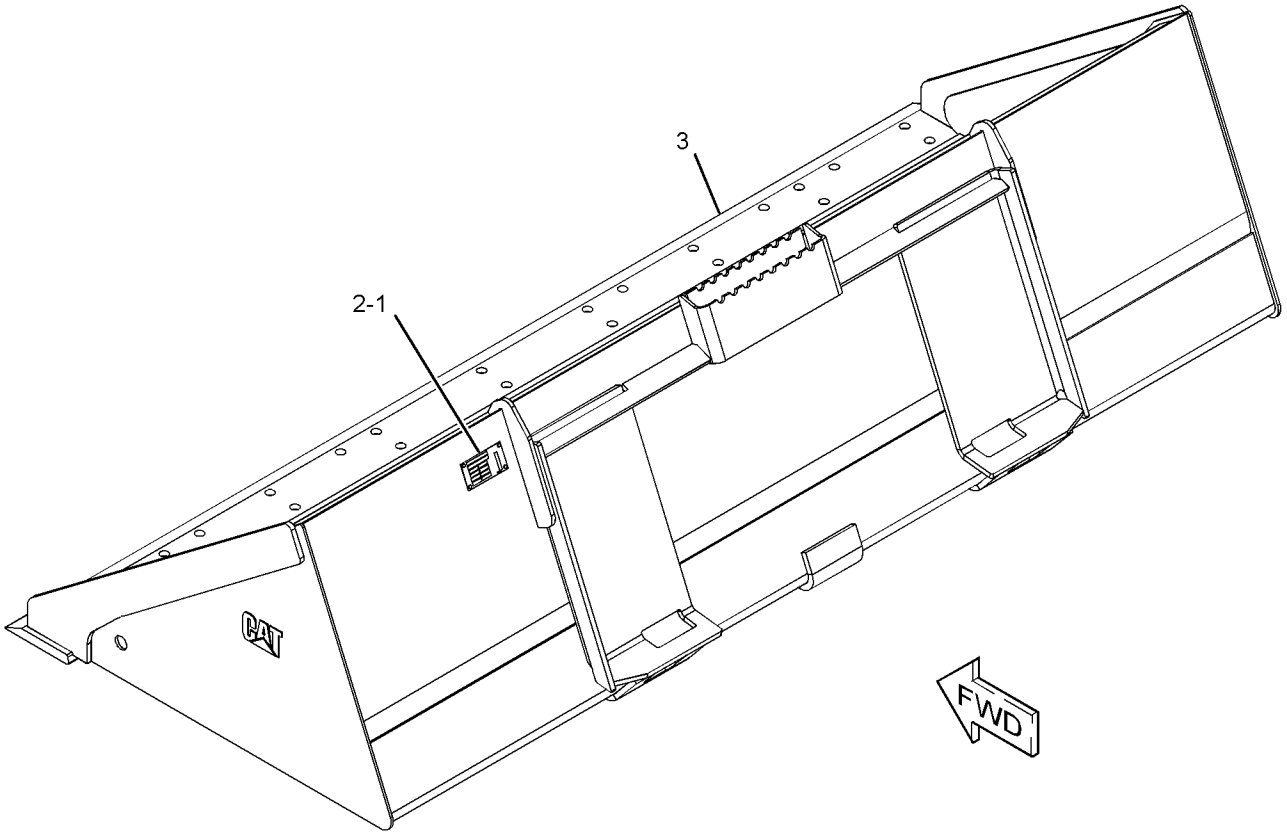

GRAPHIC #1 **<END>** g01951560

292-9271 BUCKET AS-GENERAL PURPOSE–HIGH CAPACITY

2134-MM (84-IN)

PART OF 292-9270 BUCKET AS-GENERAL PURPOSE

AN ATTACHMENT

SMCS-6101 **i03636009**

NOTE	REF NO	GRAPHIC REF	PART NUMBER	QTY	PART NAME 1 2 3 4 5 6 (PRODUCT LEVEL)	SEE PAGE
	1	1	**229-3432**	1	EDGE	

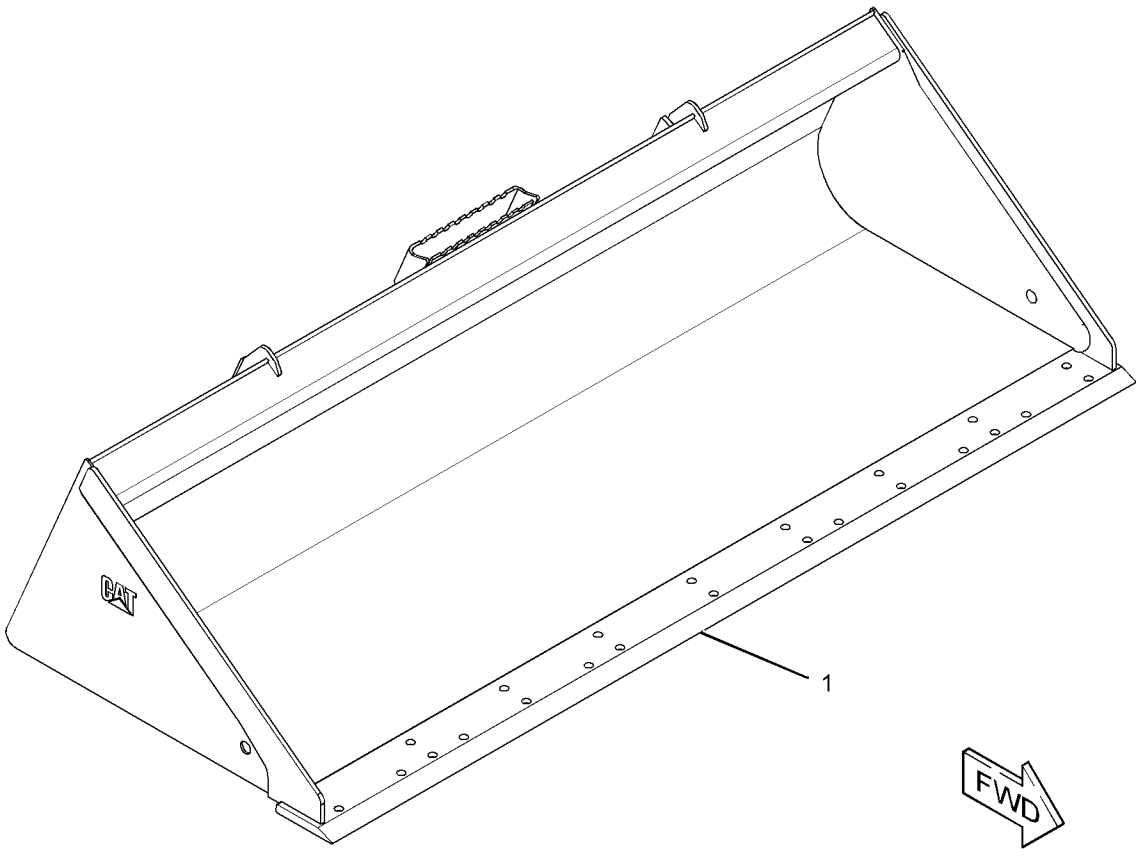

GRAPHIC #1 **<END>** g01953877

156-0887 BUCKET AS-GRAPPLE

1524-MM (60-IN)
PART OF 169-8941 BUCKET AS-GRAPPLE
AN ATTACHMENT

SMCS-6704 **i04051089**

NOTE	REF NO	GRAPHIC REF	PART NUMBER	QTY	PART NAME 1 2 3 4 5 6 (PRODUCT LEVEL)	SEE PAGE
	1	1	**149-5435**	1	EDGE	
	2	1	**161-4130**	2	PLATE-IDENTIFICATION (CAT)	

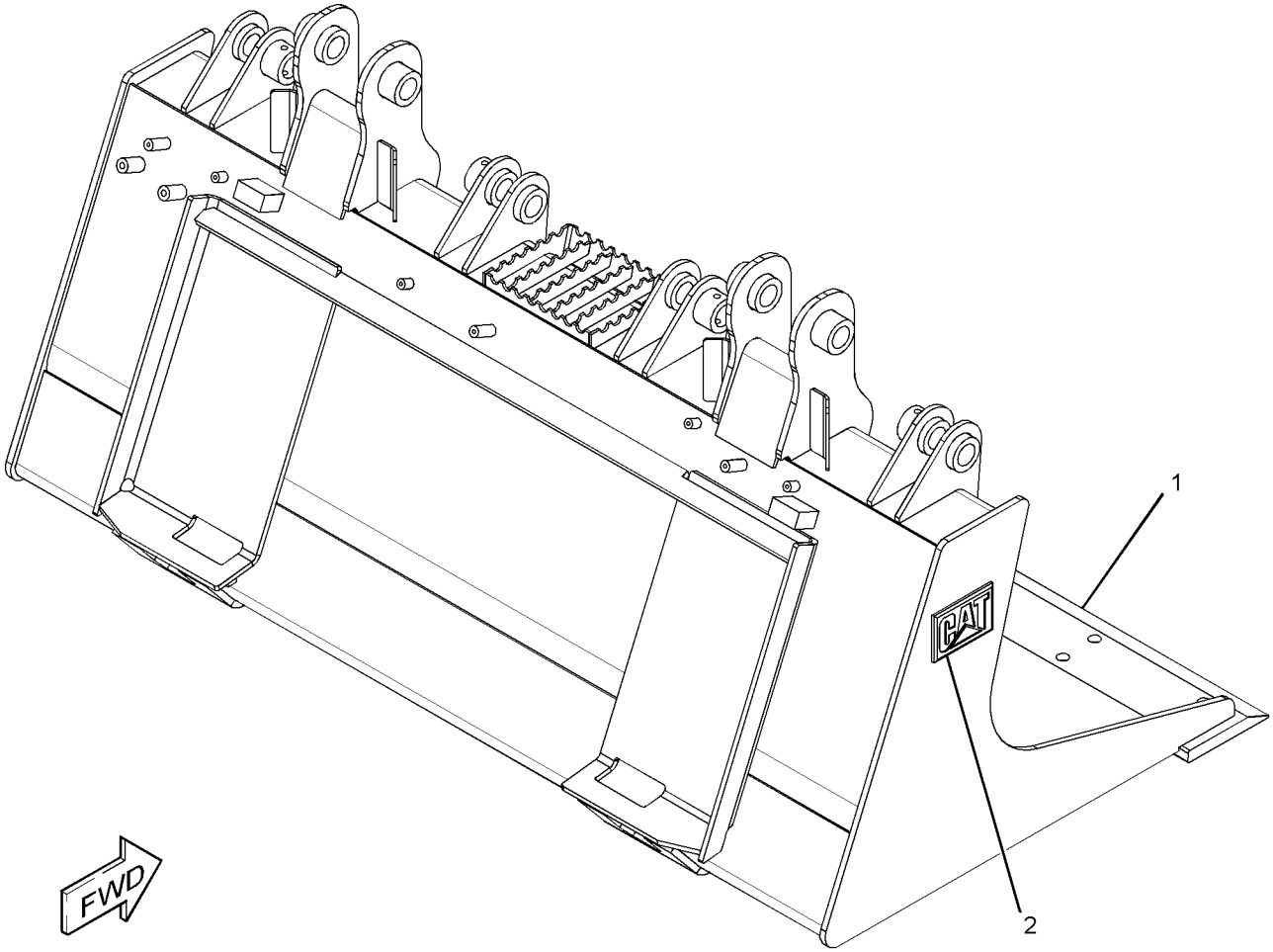

GRAPHIC #1 **<END>** g02266073

156-0888 BUCKET AS-GRAPPLE

1676-MM (66-IN)
PART OF 169-8942 BUCKET AS-GRAPPLE
AN ATTACHMENT

SMCS-6704 **i04045350**

NOTE	REF NO	GRAPHIC REF	PART NUMBER	QTY	PART NAME 1 2 3 4 5 6 (PRODUCT LEVEL)	SEE PAGE
	1	1	**149-5436**	1	EDGE	
	2	1	**161-4130**	2	PLATE-IDENTIFICATION (CAT)	

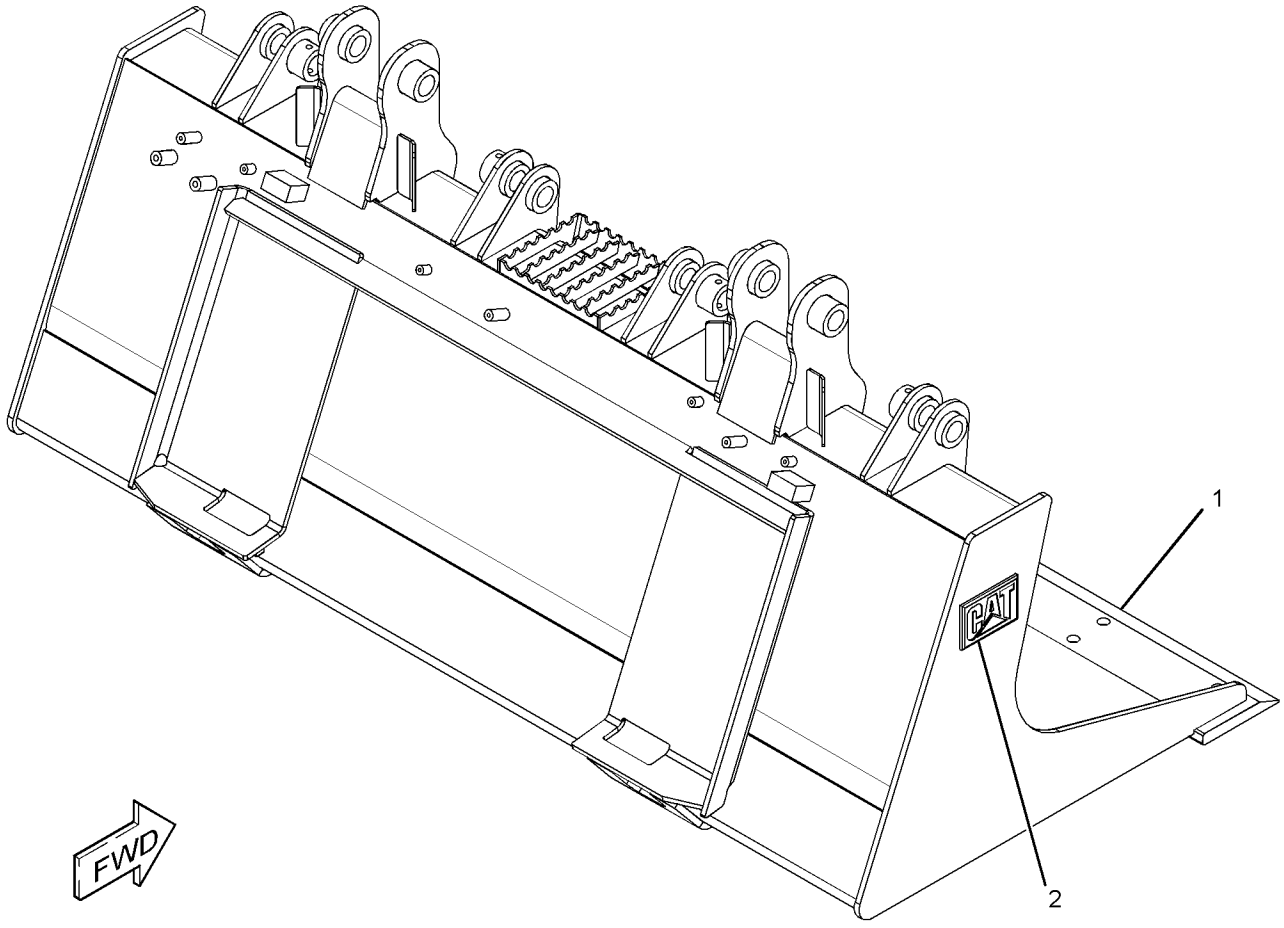

GRAPHIC #1 **<END>** g02254454

156-0889 BUCKET AS-GRAPPLE

1829-MM (72-IN)
PART OF 169-8943 BUCKET AS-GRAPPLE
AN ATTACHMENT

SMCS-6704 **i04045408**

NOTE	REF NO	GRAPHIC REF	PART NUMBER	QTY	PART NAME 1 2 3 4 5 6 (PRODUCT LEVEL)	SEE PAGE
	1	1	**149-5437**	1	EDGE	
	2	1	**161-4130**	2	PLATE-IDENTIFICATION (CAT)	

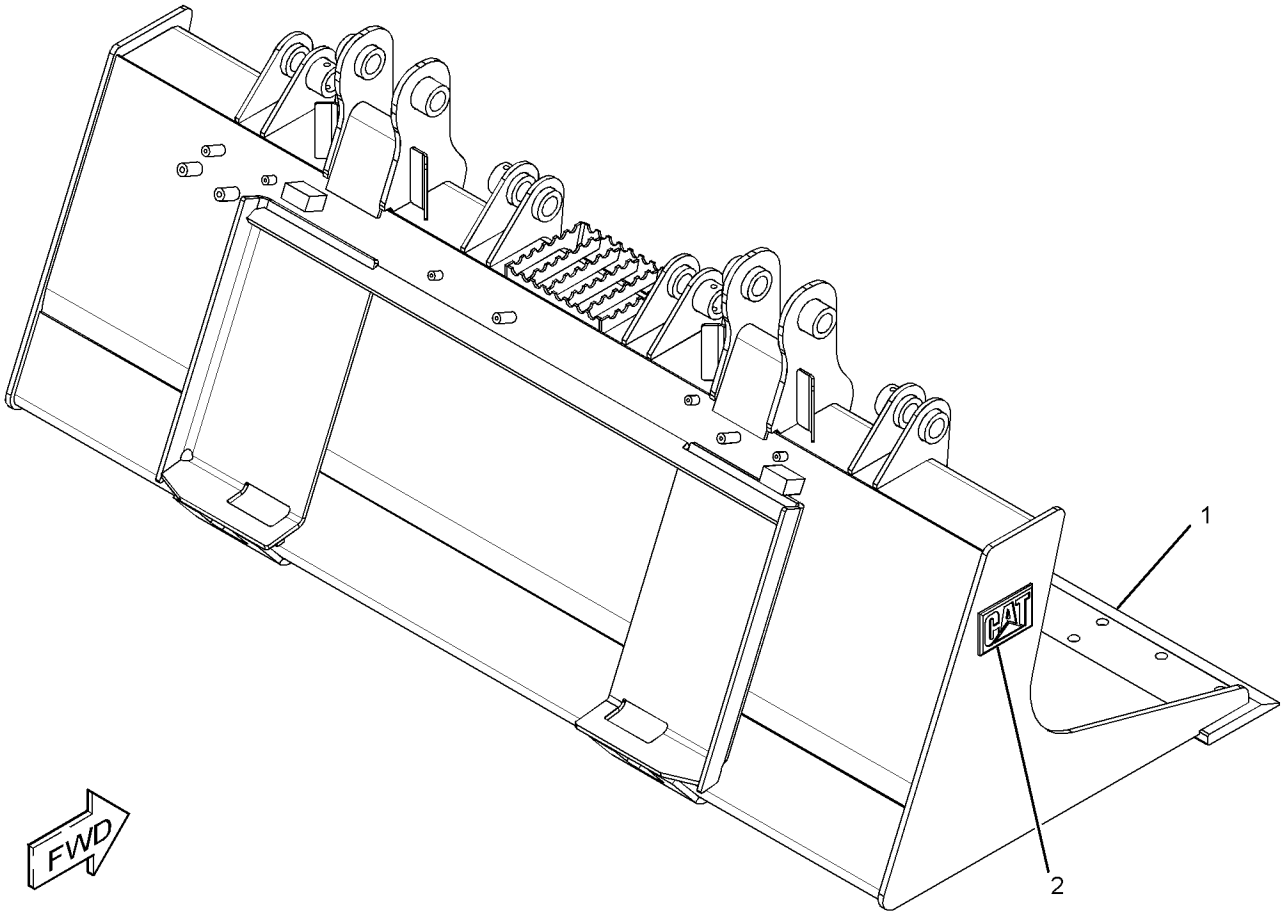

GRAPHIC #1 **<END>** g02258054

169-8941 BUCKET AS-GRAPPLE

PART OF 156-0884 BUCKET GP-GRAPPLE

AN ATTACHMENT

SMCS-6704 **i04268089**

NOTE	REF NO	GRAPHIC REF	PART NUMBER	QTY	PART NAME 1 2 3 4 5 6 (PRODUCT LEVEL)	SEE PAGE
	1	1	**358-4944**	1	PLATE-IDENTIFICATION (BUCKET SPECIFICATIONS)	
Y	2	1	*156-0887*	1	BUCKET AS-GRAPPLE (60-IN) (INDUSTRIAL)	364
	3	1	**168-8389**	4	TACK-FASTENER	

Y - SEPARATE ILLUSTRATION

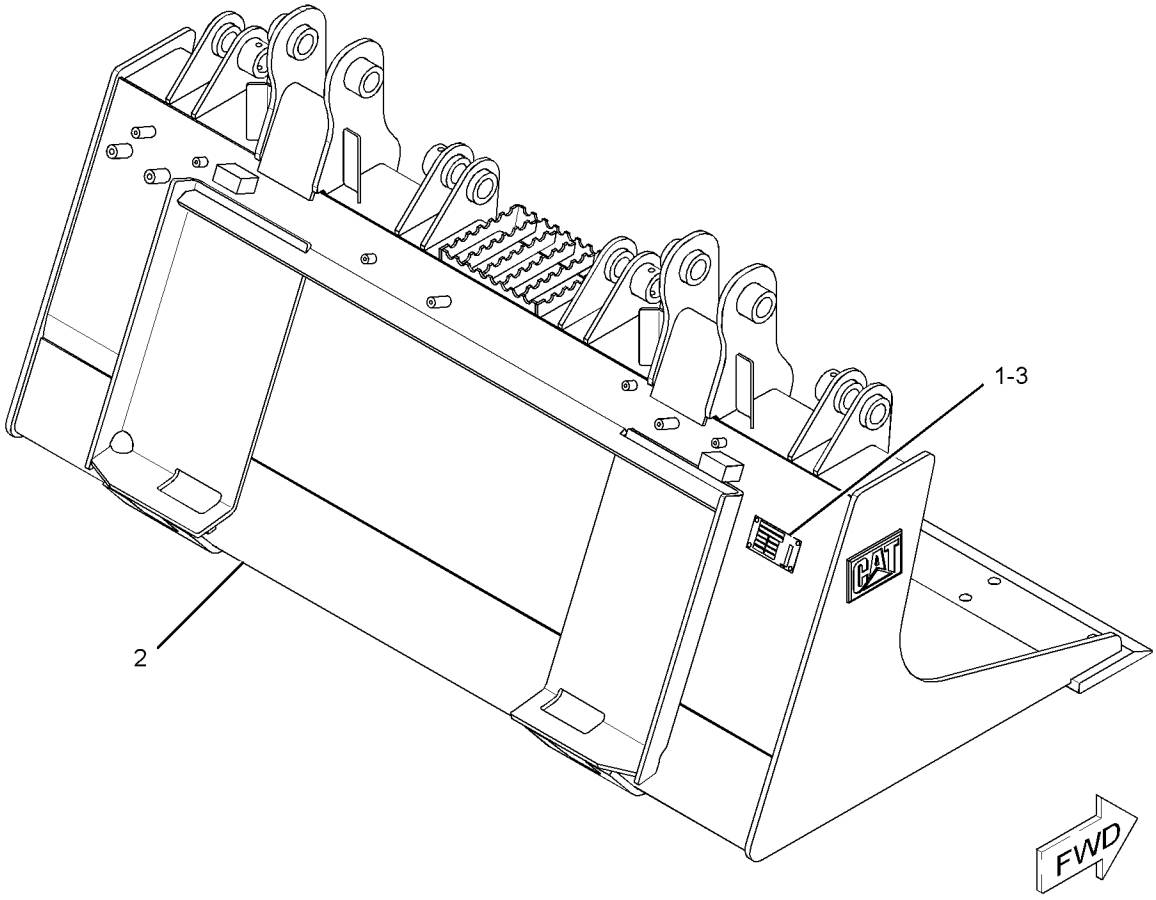

GRAPHIC #1 **<END>** g01941813

169-8942 BUCKET AS-GRAPPLE

PART OF 156-0885 BUCKET GP-GRAPPLE

AN ATTACHMENT

SMCS-6704 **i04268090**

NOTE	REF NO	GRAPHIC REF	PART NUMBER	QTY	PART NAME 1 2 3 4 5 6 (PRODUCT LEVEL)	SEE PAGE
	1	1	**358-4944**	1	PLATE-IDENTIFICATION (BUCKET SPECIFICATIONS)	
Y	2	1	*156-0888*	1	BUCKET AS-GRAPPLE (INDUSTRIAL) (66-IN)	365
	3	1	**168-8389**	4	TACK-FASTENER	

Y - SEPARATE ILLUSTRATION

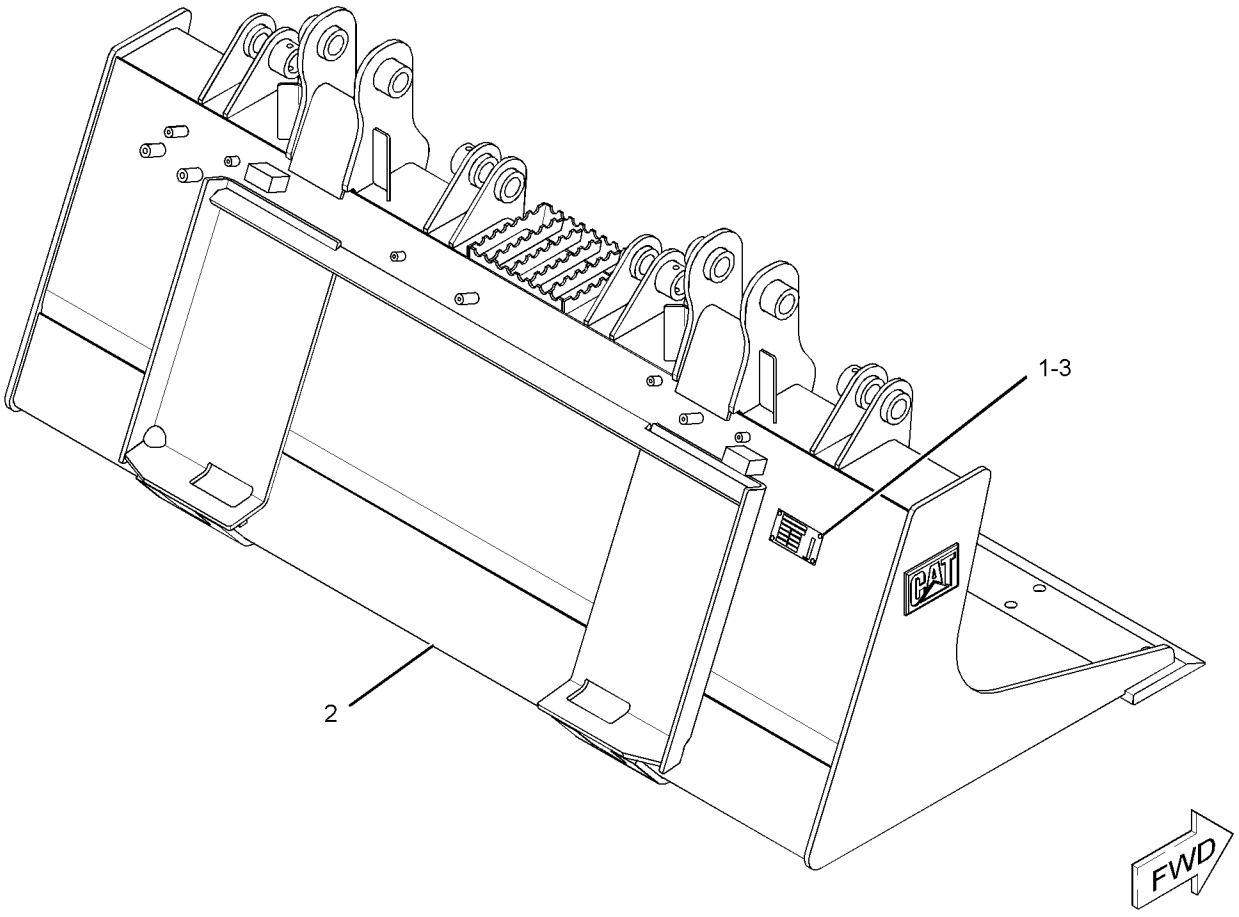

GRAPHIC #1 **<END>** g01941854

169-8943 BUCKET AS-GRAPPLE

PART OF 156-0886 BUCKET GP-GRAPPLE

AN ATTACHMENT

SMCS-6704 **i04268091**

NOTE	REF NO	GRAPHIC REF	PART NUMBER	QTY	PART NAME 1 2 3 4 5 6 (PRODUCT LEVEL)	SEE PAGE
	1	1	**358-4944**	1	PLATE-IDENTIFICATION (BUCKET SPECIFICATIONS)	
Y	2	1	*156-0889*	1	BUCKET AS-GRAPPLE (INDUSTRIAL) (72-IN)	366
	3	1	**168-8389**	4	TACK-FASTENER	

Y - SEPARATE ILLUSTRATION

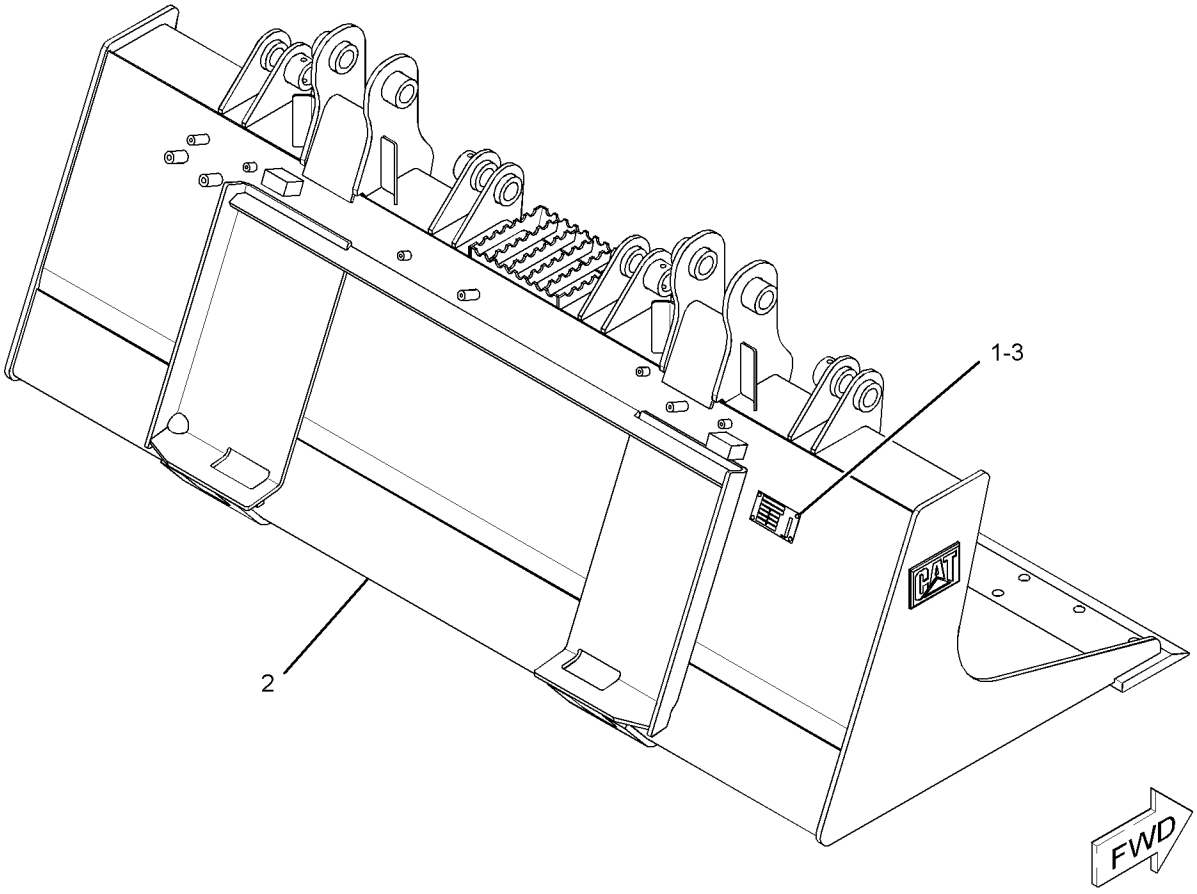

GRAPHIC #1 **<END>** g01941893

217-6226 BUCKET AS-GRAPPLE–INDUSTRIAL

1981-MM (78-IN)
PART OF 217-6227 BUCKET AS-GRAPPLE
AN ATTACHMENT

SMCS-6704 **i03638332**

NOTE	REF NO	GRAPHIC REF	PART NUMBER	QTY	PART NAME 1 2 3 4 5 6 (PRODUCT LEVEL)	SEE PAGE
	1	1	**199-7722**	1	EDGE	
	2	1	**161-4130**	2	PLATE-IDENTIFICATION (CAT)	

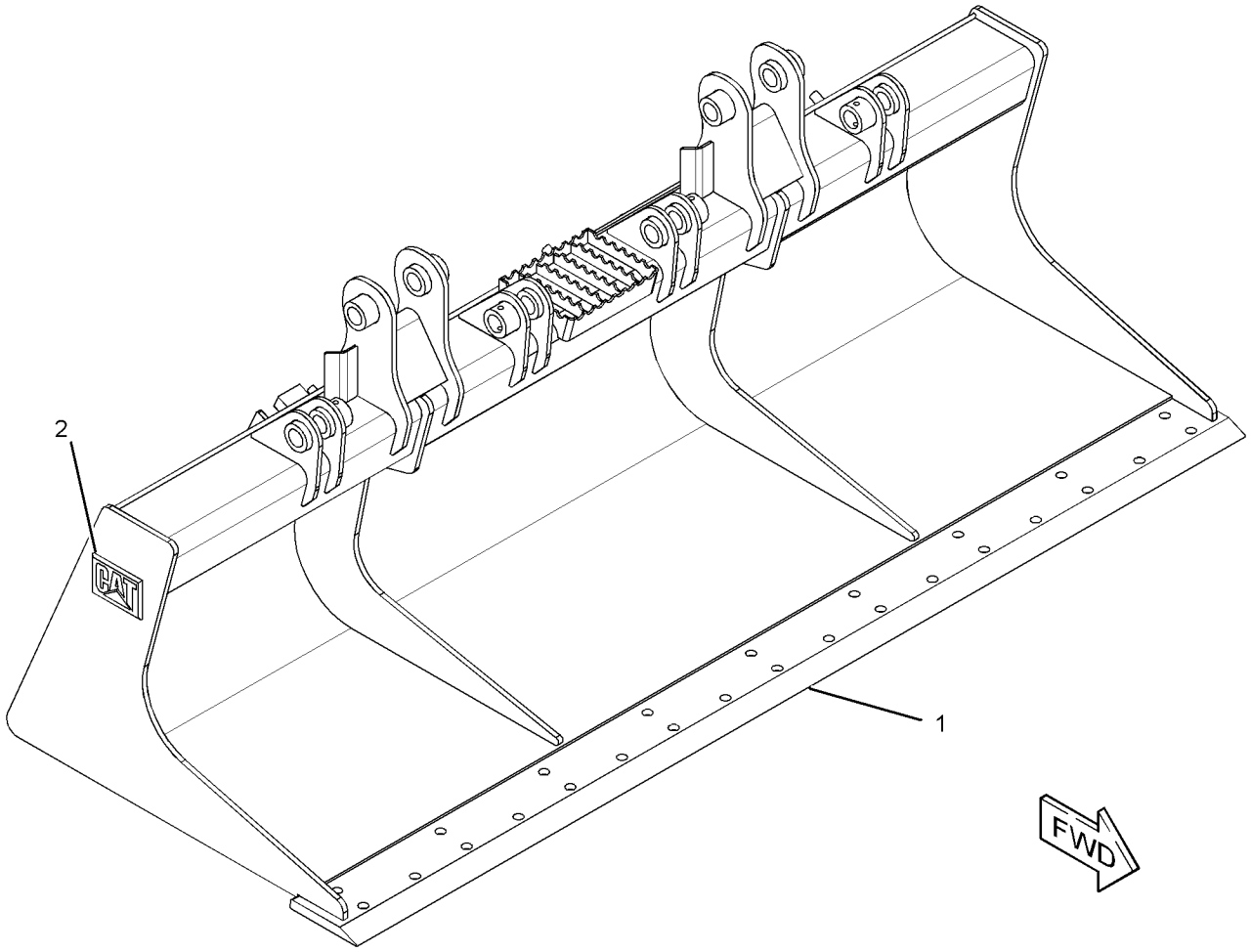

GRAPHIC #1 **<END>** g01953746

217-6227 BUCKET AS-GRAPPLE–INDUSTRIAL

PART OF 217-6228 BUCKET GP-GRAPPLE

AN ATTACHMENT

SMCS-6704 **i04156266**

NOTE	REF NO	GRAPHIC REF	PART NUMBER	QTY	PART NAME 1 2 3 4 5 6 (PRODUCT LEVEL)	SEE PAGE
	1	1	**358-4944**	1	PLATE-IDENTIFICATION (BUCKET SPECIFICATIONS)	
	2	1	**168-8389**	4	TACK-FASTENER	
Y	3	1	*217-6226*	1	BUCKET AS-GRAPPLE (INDUSTRIAL) (78-IN)	370

Y - SEPARATE ILLUSTRATION

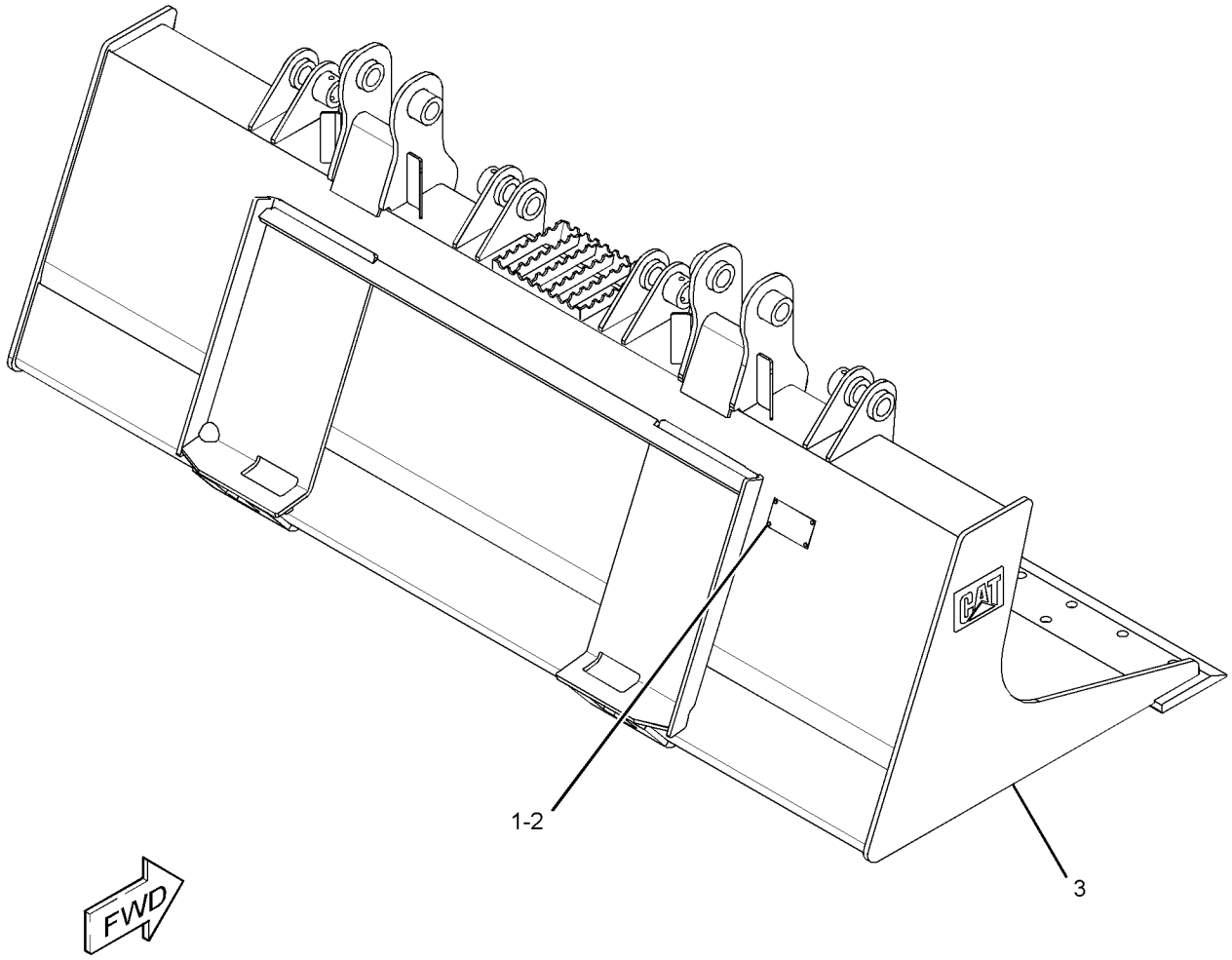

GRAPHIC #1 **<END>** g01945431

279-5421 BUCKET AS-LIGHT MATERIAL

PART OF 279-5420 BUCKET AR-LIGHT MATERIAL

AN ATTACHMENT

SMCS-6103 **i03636045**

NOTE	REF NO	GRAPHIC REF	PART NUMBER	QTY	PART NAME 1 2 3 4 5 6 (PRODUCT LEVEL)	SEE PAGE
	1	1	**154-2704**	1	PLATE-INSTRUCTION (BUCKET SPECIFICATIONS)	
	2	1	**168-8389**	4	TACK-FASTENER	
Y	3	1	*279-5422*	1	BUCKET AS-LIGHT MATERIAL (72-IN)	373

Y - SEPARATE ILLUSTRATION

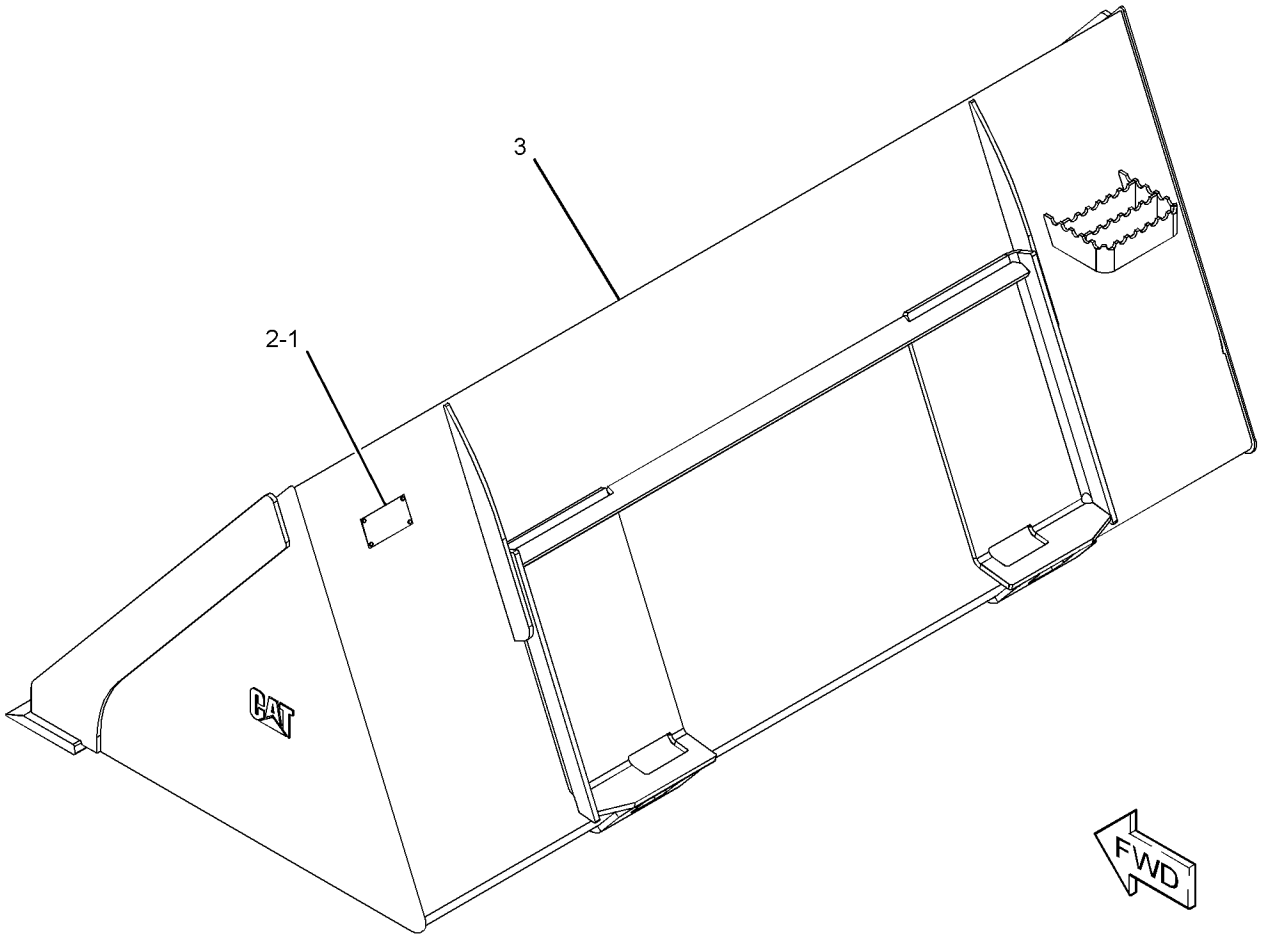

GRAPHIC #1 **<END>** g01951970

279-5422 BUCKET AS-LIGHT MATERIAL

1829-MM (72-IN)
PART OF 279-5421 BUCKET AS-LIGHT MATERIAL
AN ATTACHMENT

SMCS-6103 **i03636387**

NOTE	REF NO	GRAPHIC REF	PART NUMBER	QTY	PART NAME 1 2 3 4 5 6 (PRODUCT LEVEL)	SEE PAGE
	1	1	**149-5437**	1	EDGE	

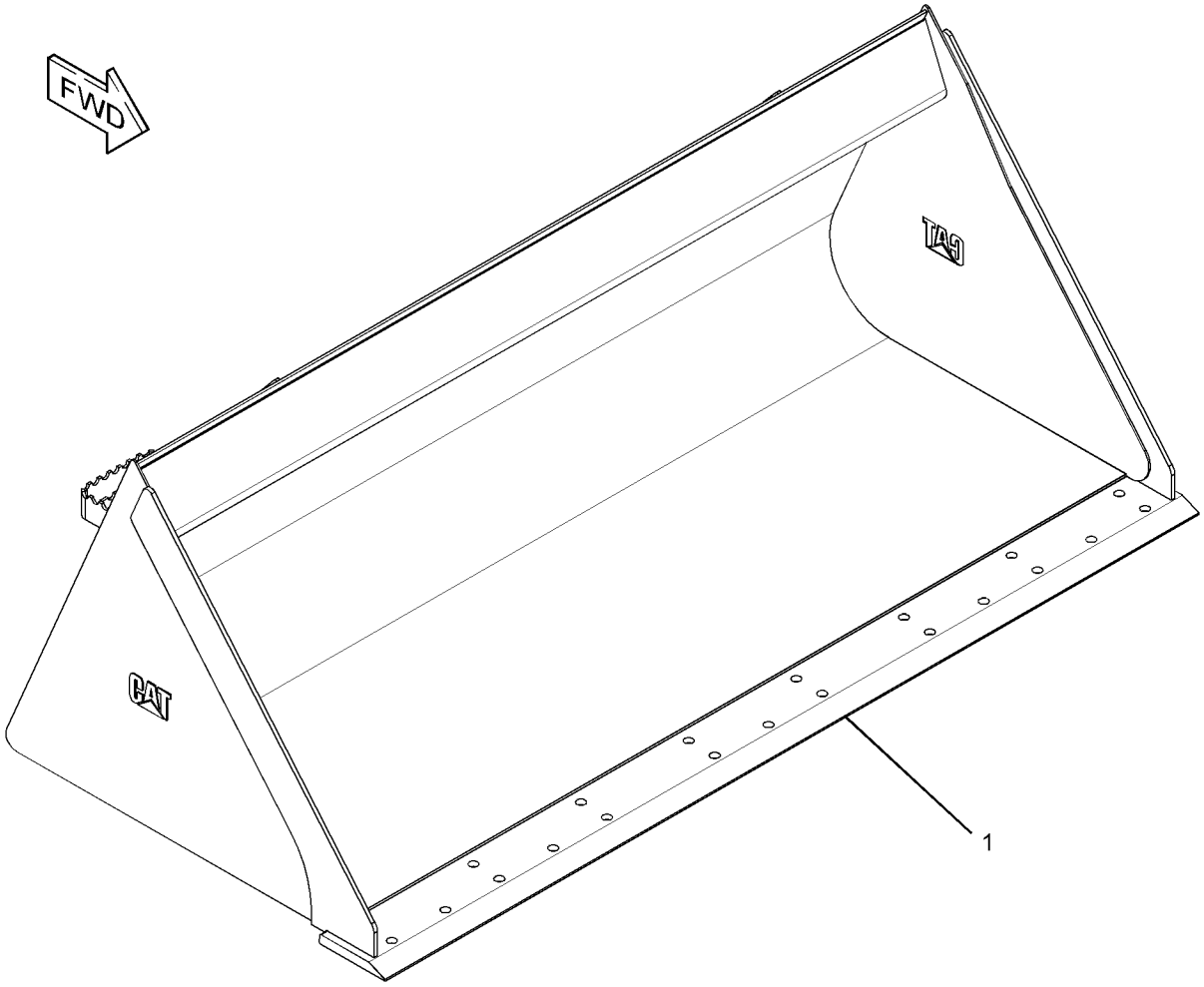

GRAPHIC #1 **<END>** g01952030

279-5423 BUCKET AS-LIGHT MATERIAL

1981-MM (78-IN)
PART OF 279-5424 BUCKET AS-LIGHT MATERIAL
AN ATTACHMENT

SMCS-6103 **i03636382**

NOTE	REF NO	GRAPHIC REF	PART NUMBER	QTY	PART NAME 1 2 3 4 5 6 (PRODUCT LEVEL)	SEE PAGE
	1	1	**199-7722**	1	EDGE	

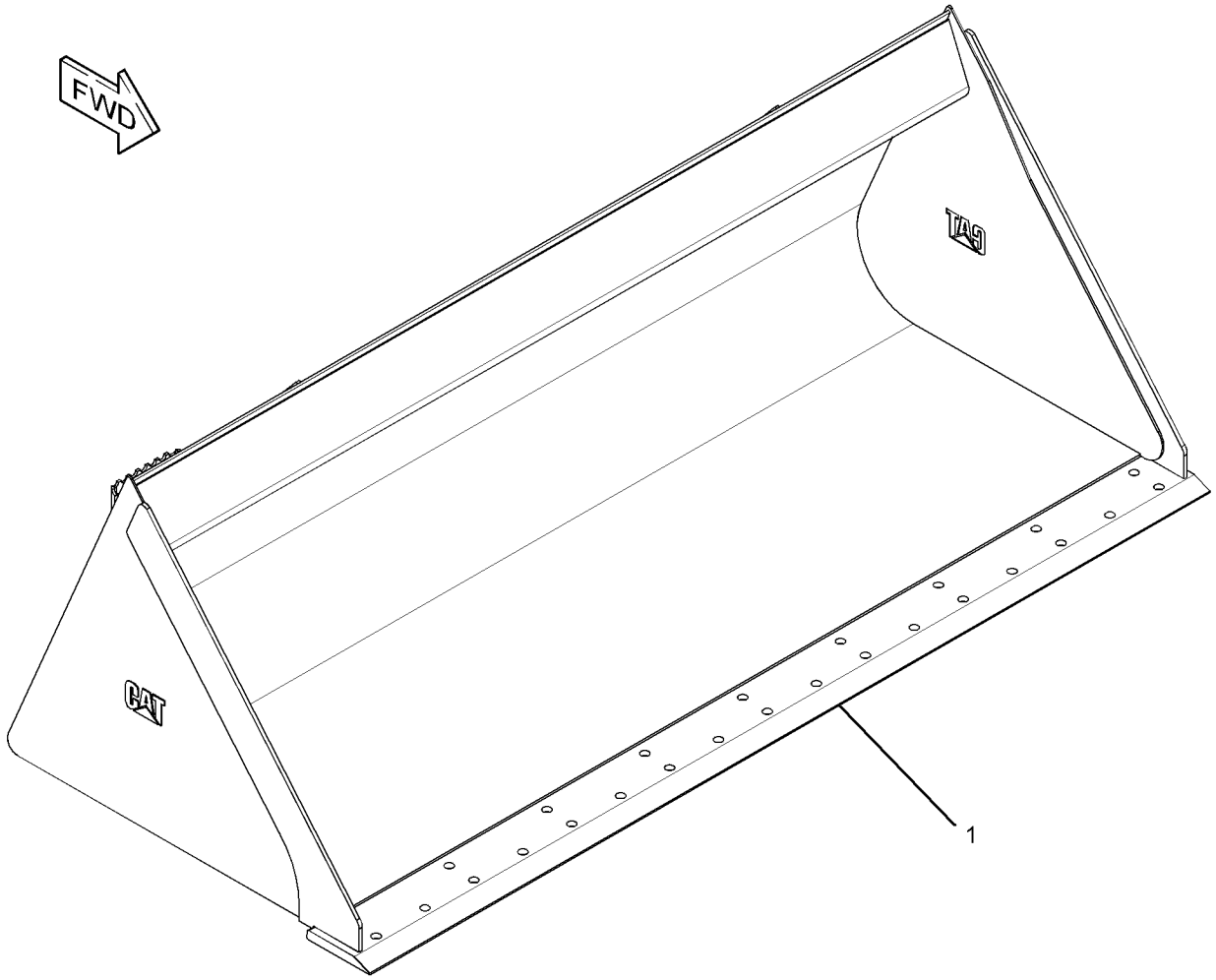

GRAPHIC #1 **<END>** g01952052

279-5424 BUCKET AS-LIGHT MATERIAL

PART OF 279-5425 BUCKET AR-LIGHT MATERIAL
AN ATTACHMENT

SMCS-6103 **i03648370**

NOTE	REF NO	GRAPHIC REF	PART NUMBER	QTY	PART NAME 1 2 3 4 5 6 (PRODUCT LEVEL)	SEE PAGE
	1	1	**154-2704**	1	PLATE-INSTRUCTION (BUCKET SPECIFICATIONS)	
	2	1	**168-8389**	4	TACK-FASTENER	
Y	3	1	*279-5423*	1	BUCKET AS-LIGHT MATERIAL (78-IN)	374

Y - SEPARATE ILLUSTRATION

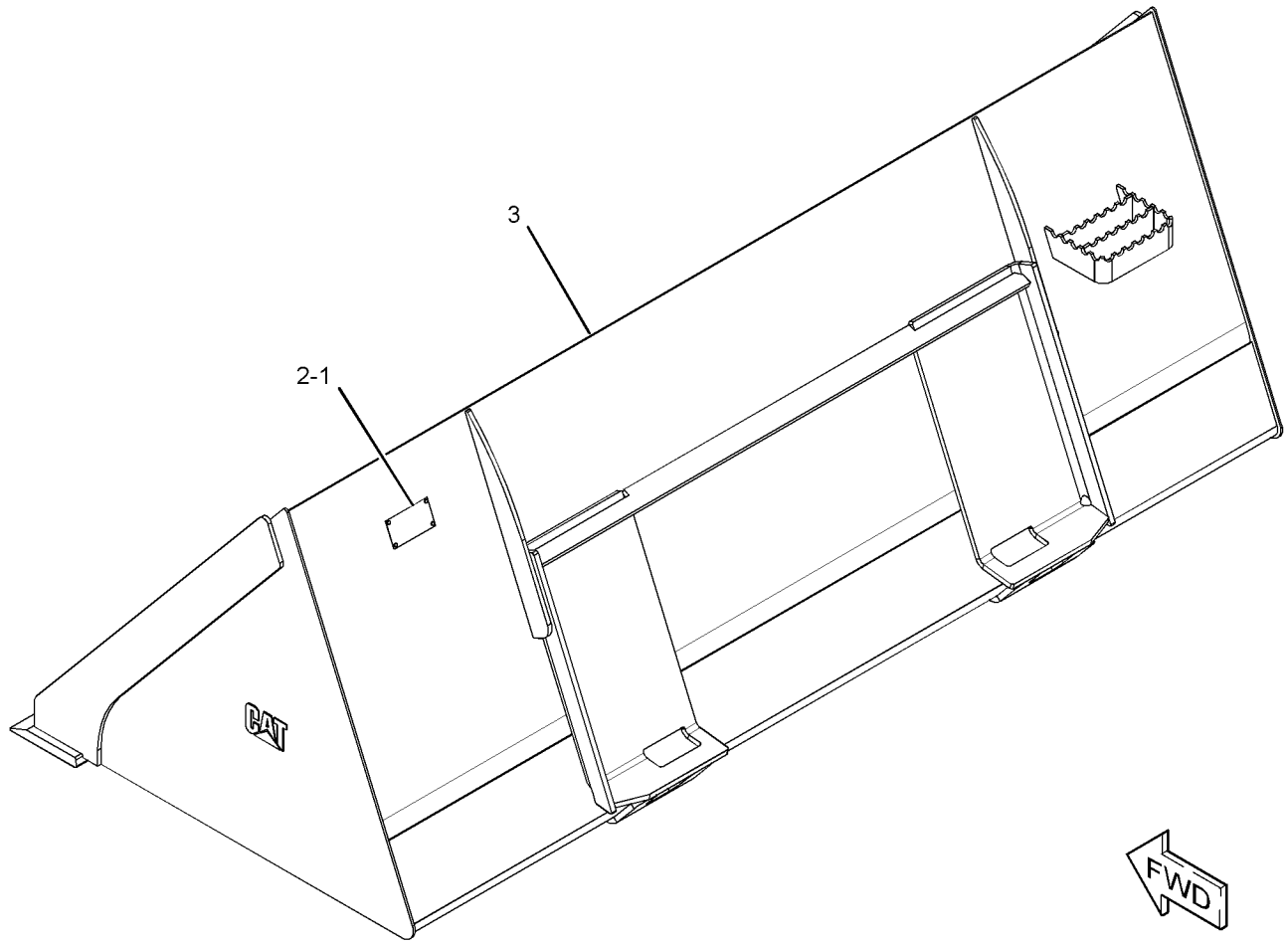

GRAPHIC #1 **<END>** g01951977

279-5428 BUCKET AS-LIGHT MATERIAL

2134-MM (84-IN)
PART OF 279-5429 BUCKET AS-LIGHT MATERIAL
AN ATTACHMENT

SMCS-6103 **i03636386**

NOTE	REF NO	GRAPHIC REF	PART NUMBER	QTY	PART NAME 1 2 3 4 5 6 (PRODUCT LEVEL)	SEE PAGE
	1	1	**220-4982**	1	EDGE	

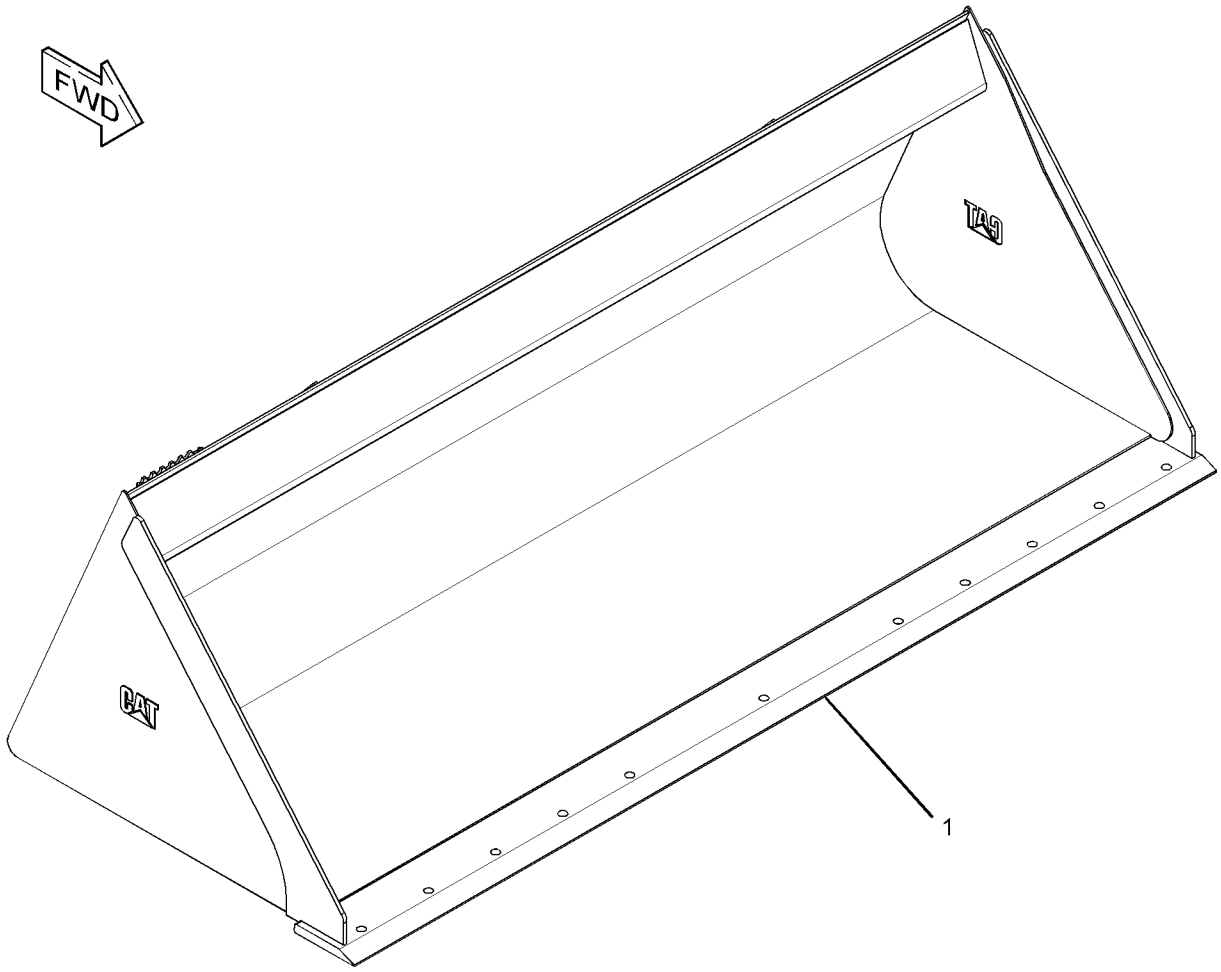

GRAPHIC #1 **<END>** g01952037

279-5429 BUCKET AS-LIGHT MATERIAL

PART OF 279-5430 BUCKET AR-LIGHT MATERIAL
AN ATTACHMENT

SMCS-6103 **i03648371**

NOTE	REF NO	GRAPHIC REF	PART NUMBER	QTY	PART NAME 1 2 3 4 5 6 (PRODUCT LEVEL)	SEE PAGE
	1	1	**154-2704**	1	PLATE-INSTRUCTION (BUCKET SPECIFICATIONS)	
	2	1	**168-8389**	4	TACK-FASTENER	
Y	3	1	*279-5428*	1	BUCKET AS-LIGHT MATERIAL (84-IN)	376

Y - SEPARATE ILLUSTRATION

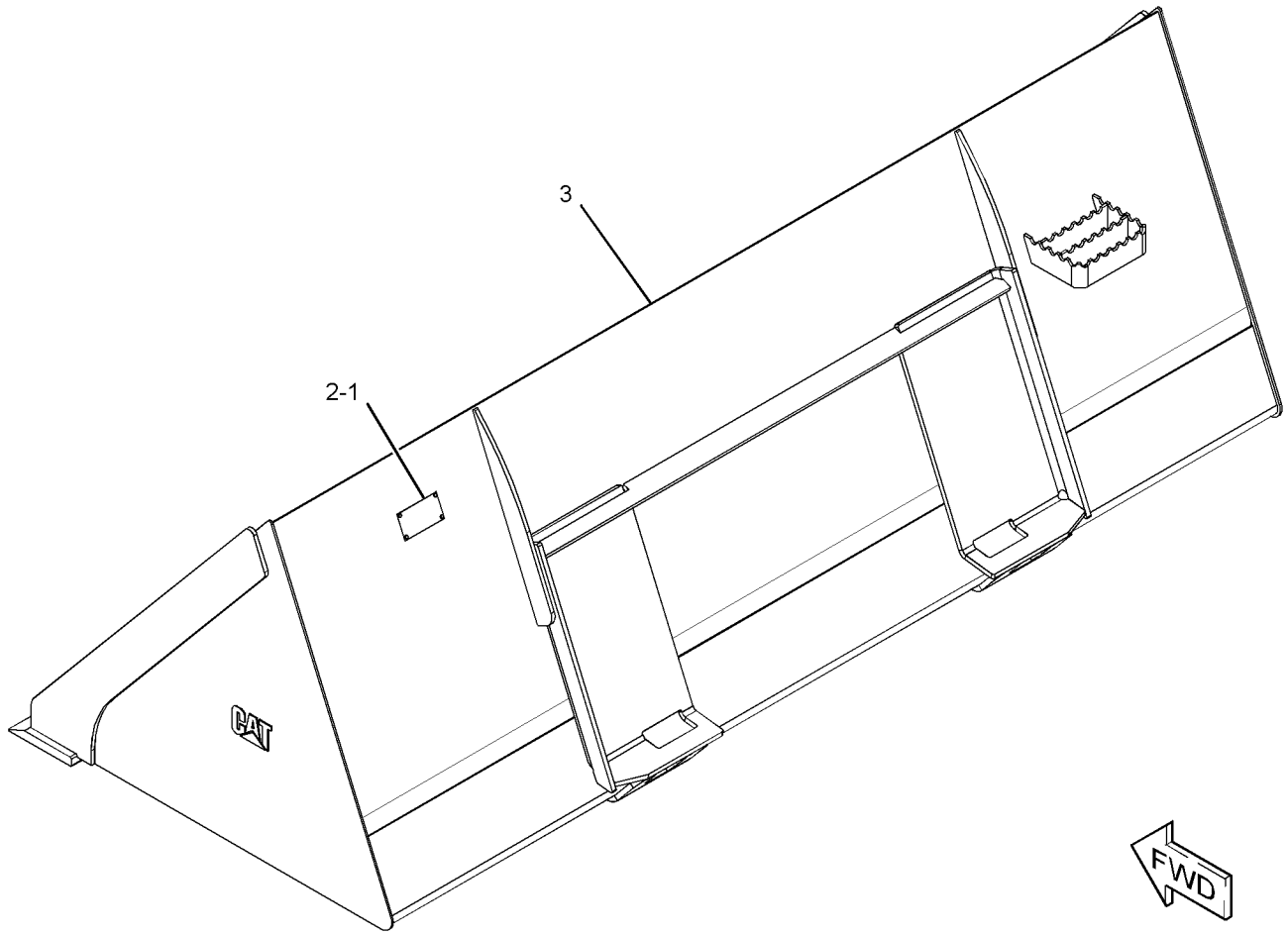

GRAPHIC #1 **<END>** g01951973

292-9223 BUCKET AS-LIGHT MATERIAL

PART OF 296-7597 BUCKET AR-LIGHT MATERIAL

AN ATTACHMENT

SMCS-6103 **i03648378**

NOTE	REF NO	GRAPHIC REF	PART NUMBER	QTY	PART NAME 1 2 3 4 5 6 (PRODUCT LEVEL)	SEE PAGE
	1	1	**154-2704**	1	PLATE-INSTRUCTION (BUCKET SPECIFICATIONS)	
	2	1	**168-8389**	4	TACK-FASTENER	
Y	3	1	*292-9224*	1	BUCKET AS-LIGHT MATERIAL (96-IN)	379

Y - SEPARATE ILLUSTRATION

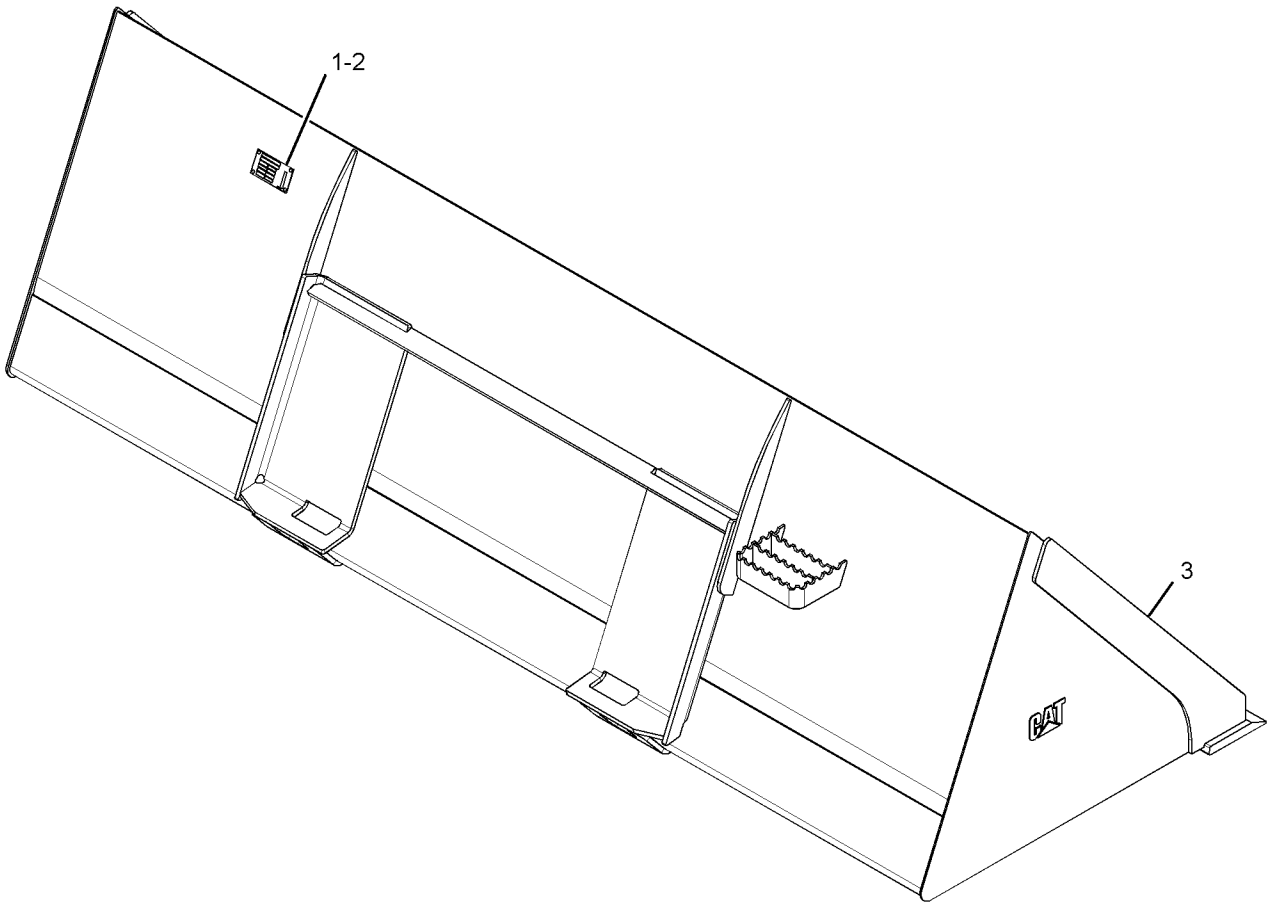

GRAPHIC #1 **<END>** g01322797

292-9224 BUCKET AS-LIGHT MATERIAL

2438-MM (96-IN)
PART OF 292-9223 BUCKET AS-LIGHT MATERIAL
AN ATTACHMENT

SMCS-6103 **i03611760**

NOTE	REF NO	GRAPHIC REF	PART NUMBER	QTY	PART NAME 1 2 3 4 5 6 (PRODUCT LEVEL)	SEE PAGE
	1	1	**292-9257**	1	EDGE	

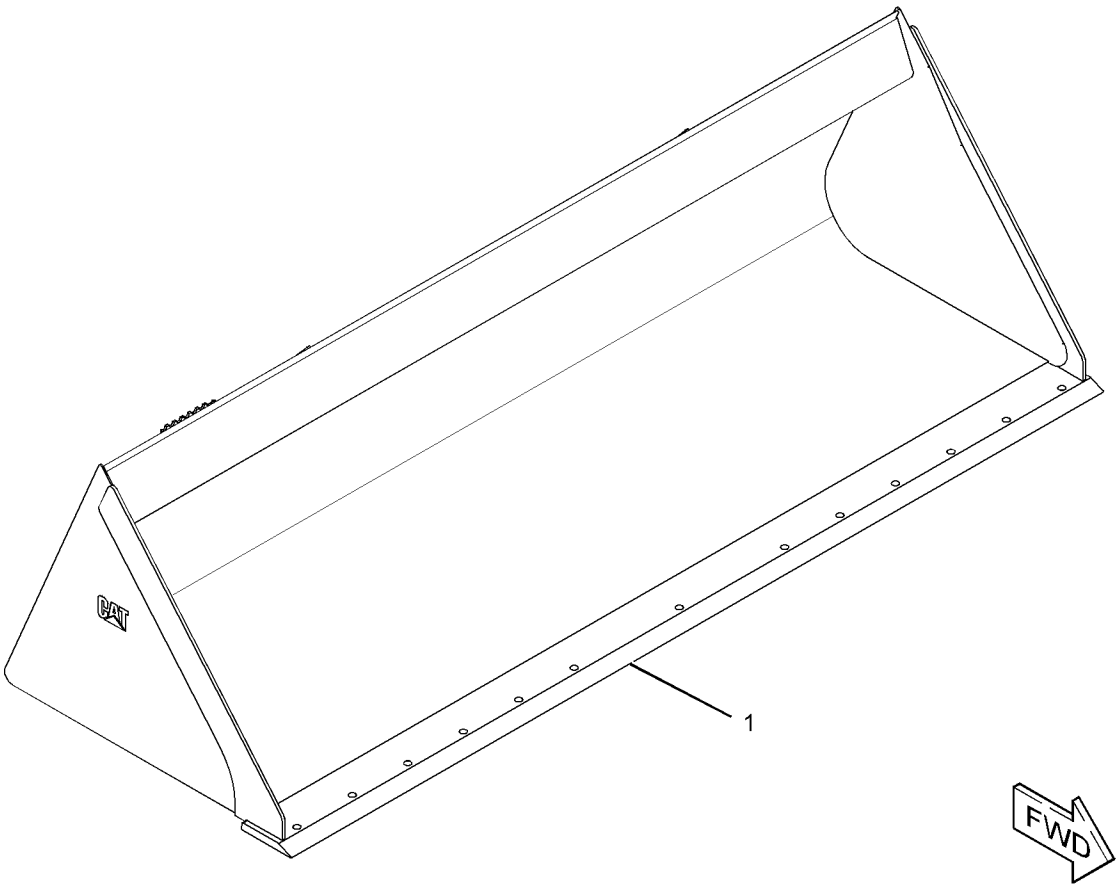

GRAPHIC #1 **<END>** g01938633

285-6097 BUCKET AS-UTILITY

1524-MM (60-IN)
PART OF 285-6096 BUCKET GP-UTILITY
AN ATTACHMENT

SMCS-6101 **i03638905**

NOTE	REF NO	GRAPHIC REF	PART NUMBER	QTY	PART NAME 1 2 3 4 5 6 (PRODUCT LEVEL)	SEE PAGE
	1	1	**149-5435**	1	EDGE	

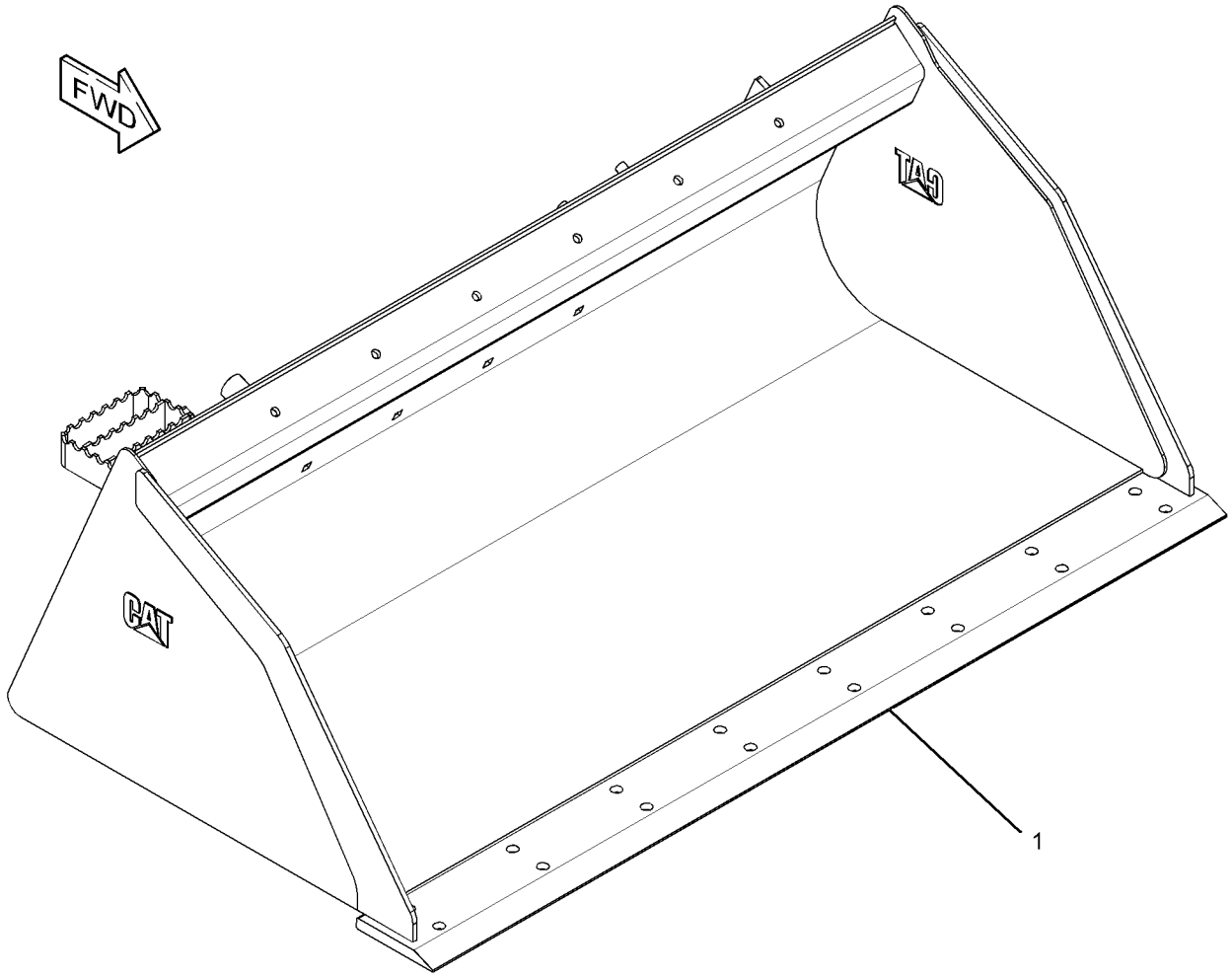

GRAPHIC #1 **<END>** g01953699

285-6098 BUCKET AS-UTILITY

1676-MM (66-IN)
PART OF 285-6099 BUCKET GP-UTILITY
AN ATTACHMENT

SMCS-6101 **i03638906**

NOTE	REF NO	GRAPHIC REF	PART NUMBER	QTY	PART NAME 1 2 3 4 5 6 (PRODUCT LEVEL)	SEE PAGE
	1	1	**149-5436**	1	EDGE	

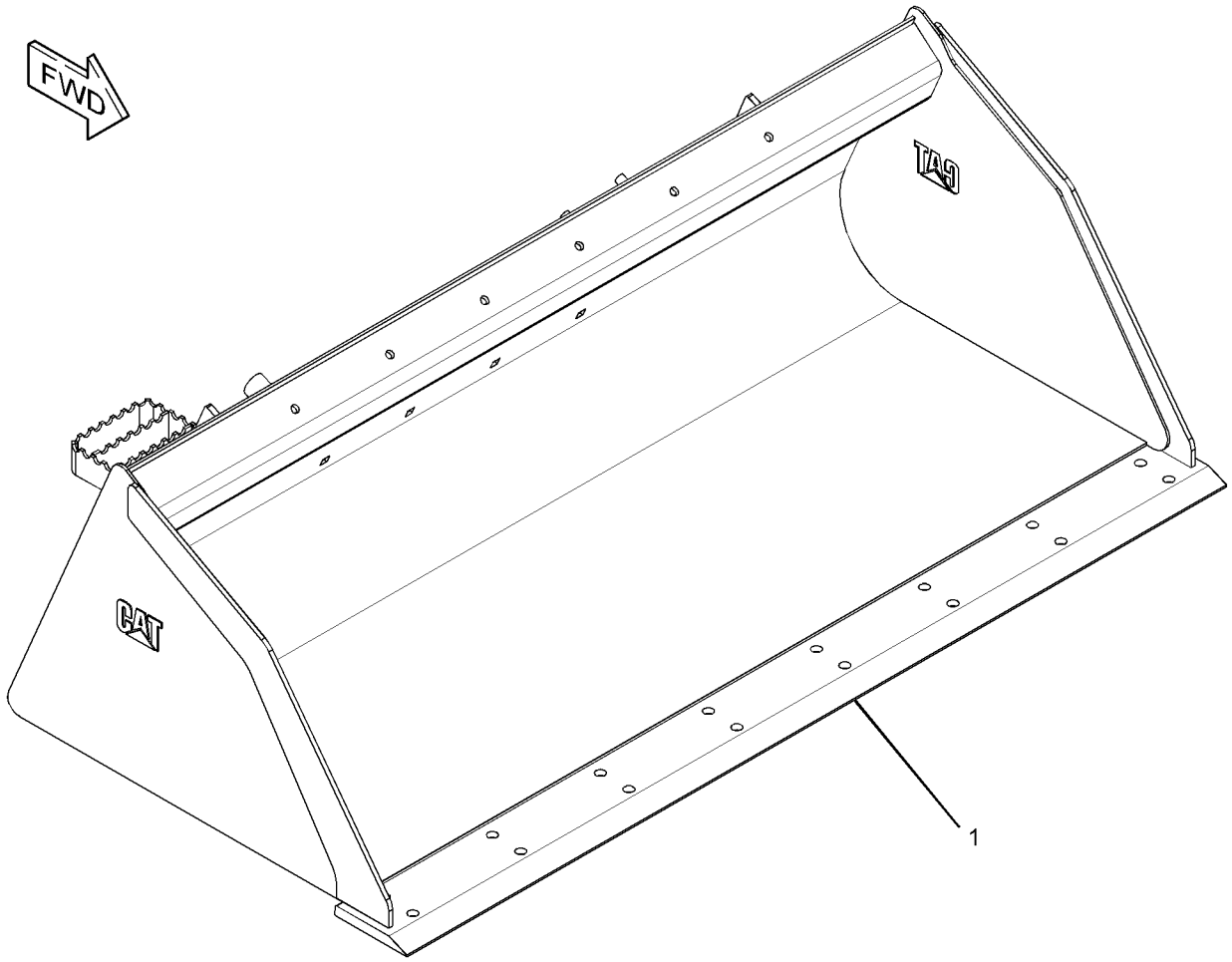

GRAPHIC #1 **<END>** g01953732

285-6103 BUCKET AS-UTILITY

1829-MM (72-IN)
PART OF 285-6102 BUCKET GP-UTILITY
AN ATTACHMENT

SMCS-6101 **i03638909**

NOTE	REF NO	GRAPHIC REF	PART NUMBER	QTY	PART NAME 1 2 3 4 5 6 (PRODUCT LEVEL)	SEE PAGE
	1	1	**149-5437**	1	EDGE	

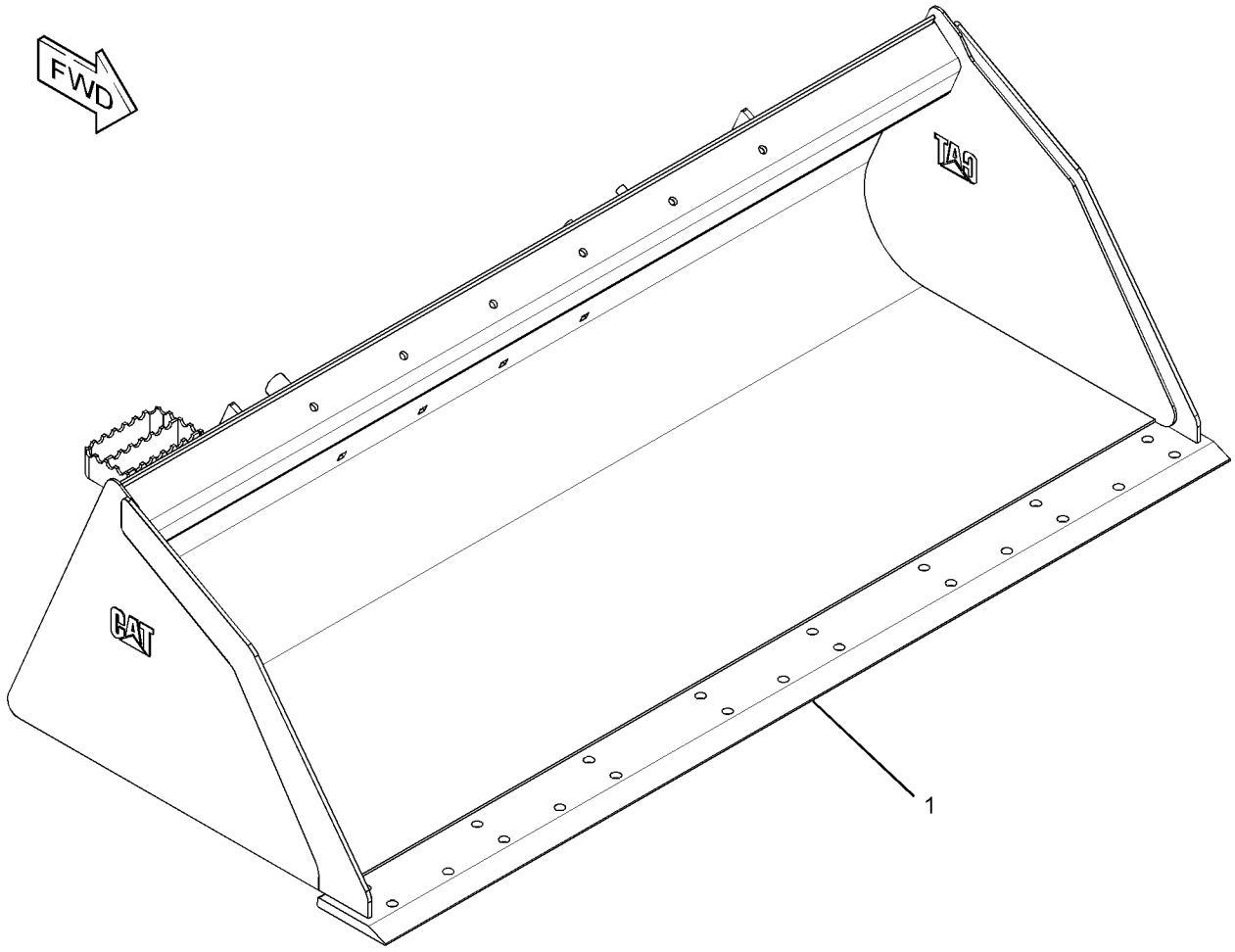

GRAPHIC #1 **<END>** g01953843

268-4084 BUCKET GP-DIRT

PART OF 268-4083 BUCKET AR-DIRT

AN ATTACHMENT

SMCS-6001 **i03647009**

NOTE	REF NO	GRAPHIC REF	PART NUMBER	QTY	PART NAME 1 2 3 4 5 6 (PRODUCT LEVEL)	SEE PAGE
	1	1	**154-2704**	1	PLATE-INSTRUCTION (BUCKET SPECIFICATIONS)	
	2	1	**168-8389**	4	TACK-FASTENER	
Y	3	1	*268-4089*	1	BUCKET AS-DIRT	345

Y - SEPARATE ILLUSTRATION

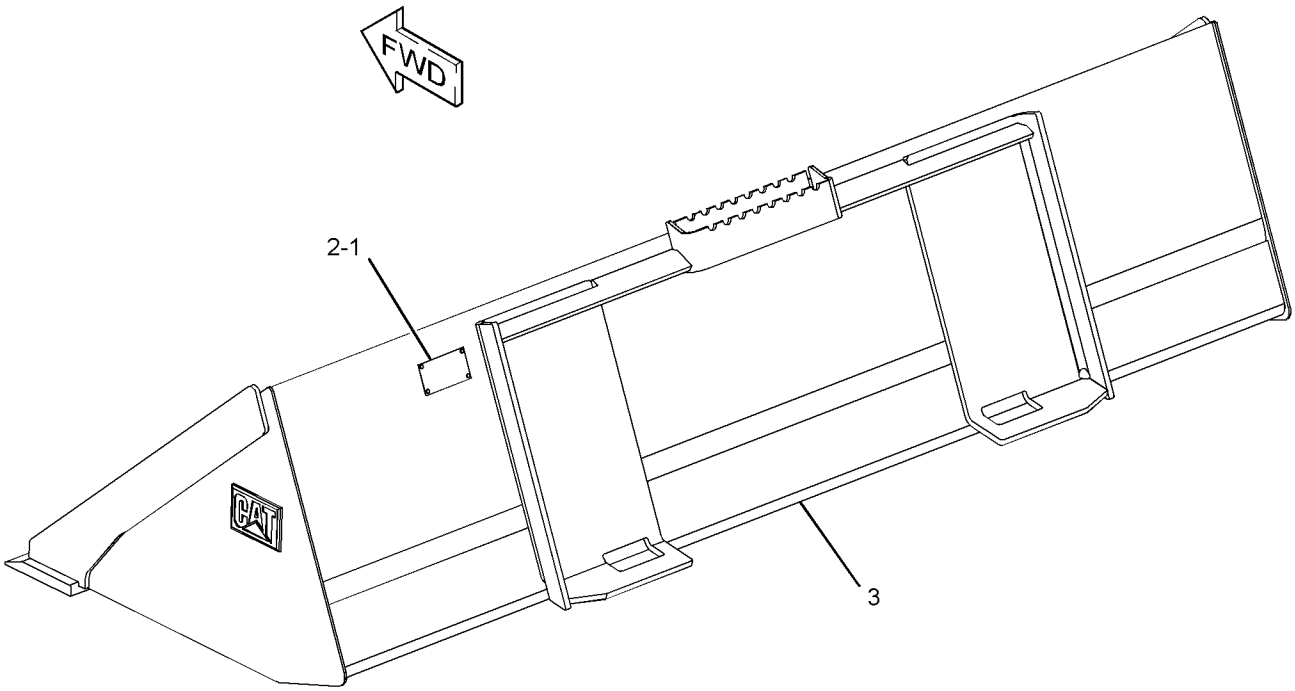

GRAPHIC #1 **<END>** g01957399

296-8191 BUCKET GP-GENERAL PURPOSE

AN ATTACHMENT

SMCS-6101 **i03922644**

NOTE	PART NUMBER	QTY	PART NAME 1 2 3 4 5 6 (PRODUCT LEVEL)	SEE PAGE
Y	**292-9270**	1	BUCKET AS-GENERAL PURPOSE	362
Y	*141-4999*	9	TOOTH GP-UNI	463

Y - SEPARATE ILLUSTRATION

<END>

156-0884 BUCKET GP-GRAPPLE—INDUSTRIAL

PART OF 157-7223 BUCKET AR-GRAPPLE

AN ATTACHMENT

SMCS-6704 **i03648335**

NOTE	REF NO	GRAPHIC REF	PART NUMBER	QTY	PART NAME 1 2 3 4 5 6 (PRODUCT LEVEL)	SEE PAGE
	1	1	**157-0940**	4	PIN	
Y	2	1	**169-8941**	1	BUCKET AS-GRAPPLE (60-IN) (INDUSTRIAL)	367
	3	1	**222-7467**	2	FORK AS	
					(EACH INCLUDES)	
		1	**158-5648**	2	BUSHING	
	4	1	**3B-8489**	4	FITTING-GREASE	
M	5	1	**6V-9189**	4	LOCKNUT (M8X1.25-THD)	
M	6	1	**8T-6869**	4	BOLT (M8X1.25X60-MM)	

M - METRIC PART
Y - SEPARATE ILLUSTRATION

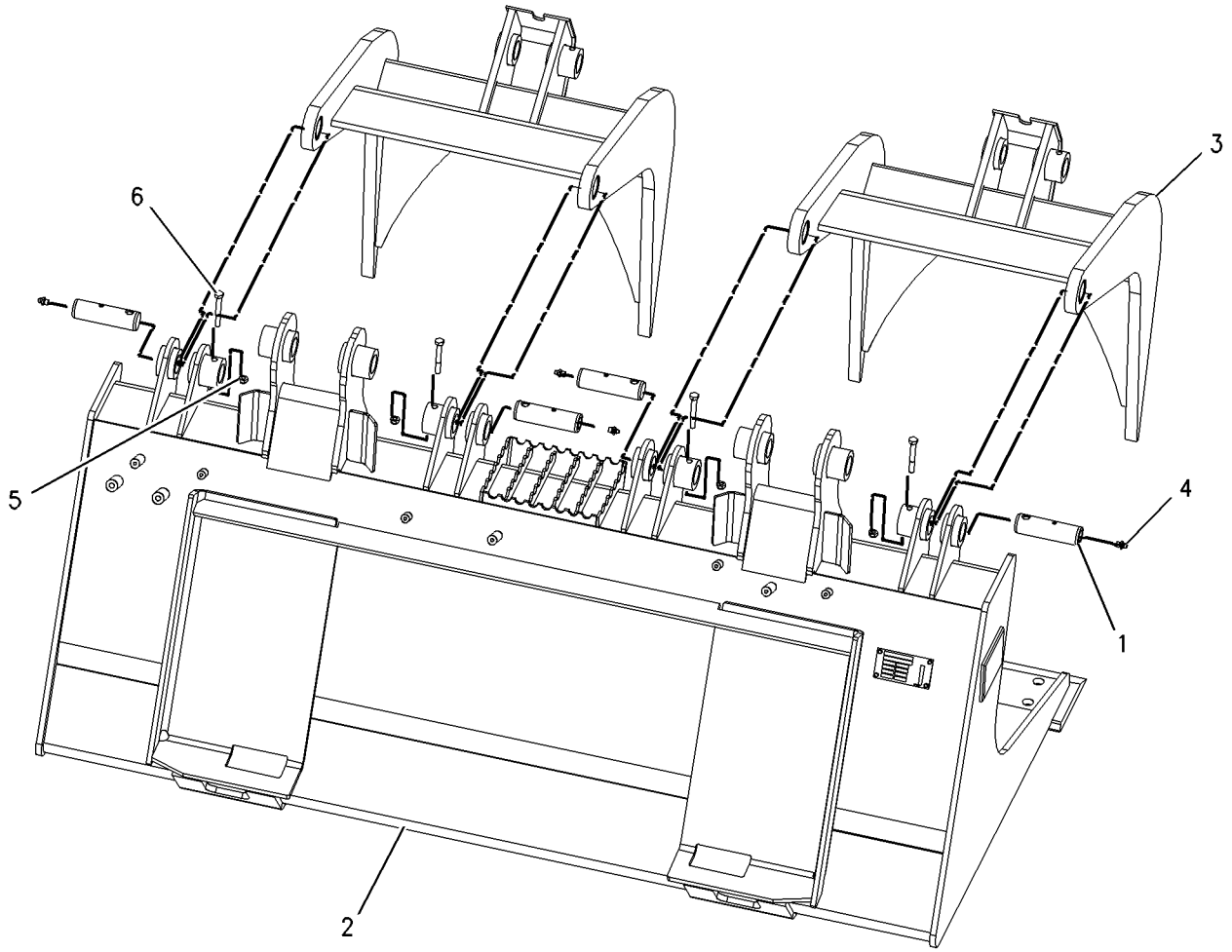

GRAPHIC #1 **<END>** g00978796

156-0885 BUCKET GP-GRAPPLE

PART OF 157-7224 BUCKET AR-GRAPPLE

AN ATTACHMENT

SMCS-6704 **i03648337**

NOTE	REF NO	GRAPHIC REF	PART NUMBER	QTY	PART NAME 1 2 3 4 5 6 (PRODUCT LEVEL)	SEE PAGE
	1	1	**157-0940**	4	PIN	
Y	2	1	**169-8942**	1	BUCKET AS-GRAPPLE (66-IN) (INDUSTRIAL)	368
	3	1	**222-7467**	2	FORK AS	
					(EACH INCLUDES)	
		1	**158-5648**	2	BUSHING	
	4	1	**3B-8489**	4	FITTING-GREASE	
M	5	1	**6V-9189**	4	LOCKNUT (M8X1.25-THD)	
M	6	1	**8T-6869**	4	BOLT (M8X1.25X60-MM)	

M - METRIC PART
Y - SEPARATE ILLUSTRATION

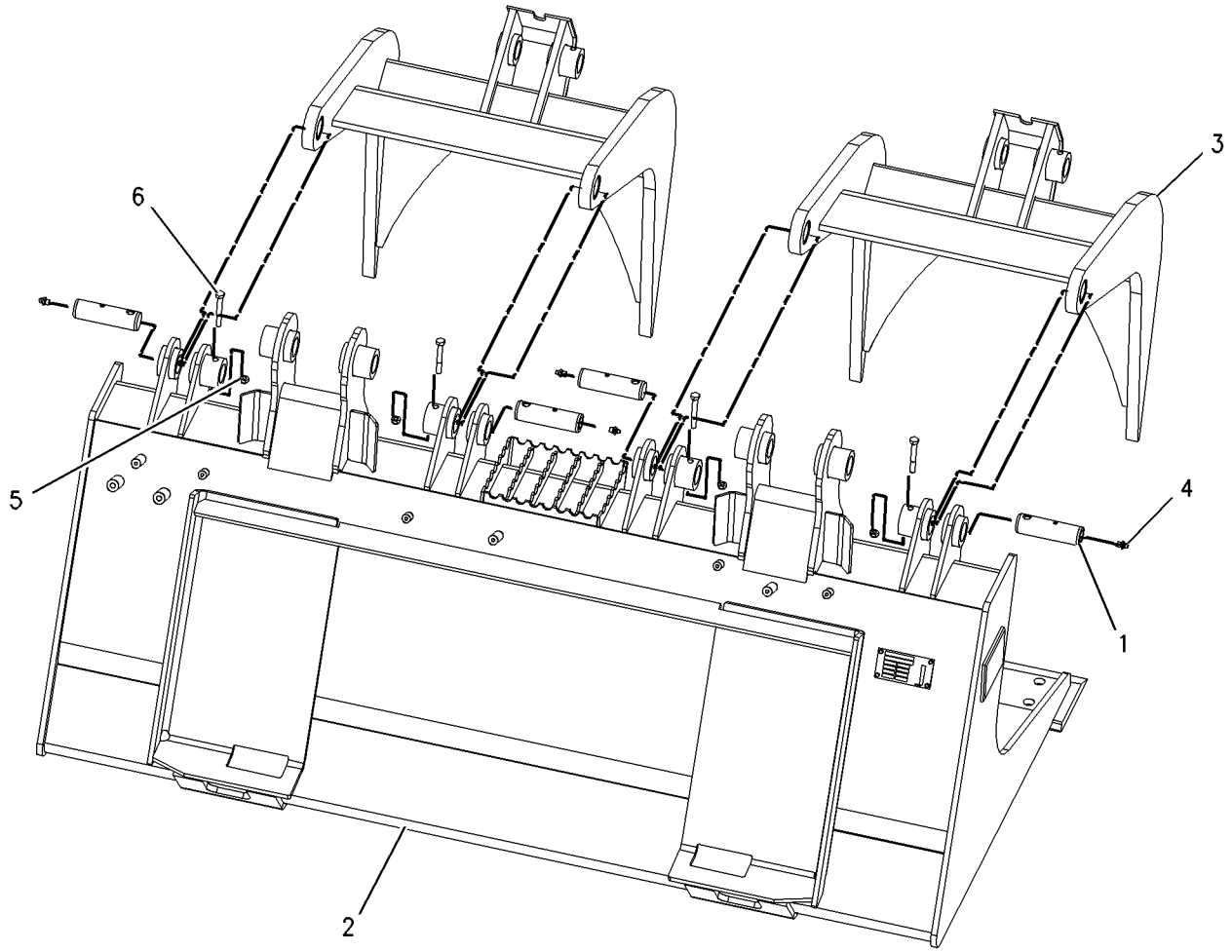

GRAPHIC #1 **<END>** g00978796

156-0886 BUCKET GP-GRAPPLE–INDUSTRIAL

PART OF 157-7225 BUCKET AR-GRAPPLE

AN ATTACHMENT

SMCS-6704 **i03648343**

NOTE	REF NO	GRAPHIC REF	PART NUMBER	QTY	PART NAME 1 2 3 4 5 6 (PRODUCT LEVEL)	SEE PAGE
	1	1	**157-0940**	4	PIN	
Y	2	1	**169-8943**	1	BUCKET AS-GRAPPLE (INDUSTRIAL) (72-IN)	369
	3	1	**222-7467**	2	FORK AS	
					(EACH INCLUDES)	
		1	**158-5648**	2	BUSHING	
	4	1	**3B-8489**	4	FITTING-GREASE	
M	5	1	**6V-9189**	4	LOCKNUT (M8X1.25-THD)	
M	6	1	**8T-6869**	4	BOLT (M8X1.25X60-MM)	

M - METRIC PART
Y - SEPARATE ILLUSTRATION

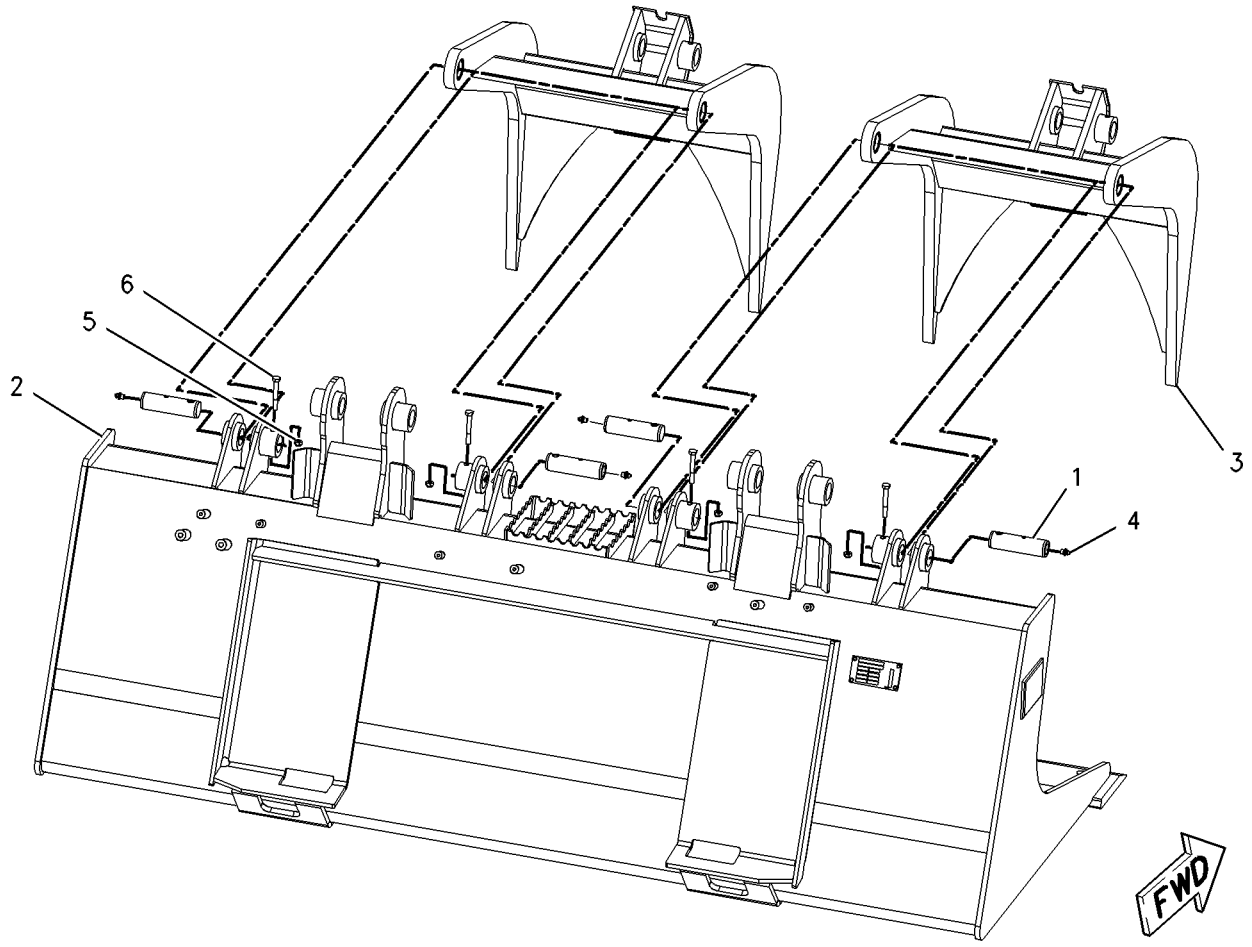

GRAPHIC #1 **<END>** g00993692

217-6228 BUCKET GP-GRAPPLE–INDUSTRIAL

PART OF 217-6229 BUCKET AR-GRAPPLE

AN ATTACHMENT

SMCS-6704 **i03648354**

NOTE	REF NO	GRAPHIC REF	PART NUMBER	QTY	PART NAME 1 2 3 4 5 6 (PRODUCT LEVEL)	SEE PAGE
	1	1	**157-0940**	4	PIN	
Y	2	1	**217-6227**	1	BUCKET AS-GRAPPLE (INDUSTRIAL) (78-IN)	371
	3	1	**222-7467**	2	FORK AS	
					(EACH INCLUDES)	
		1	**158-5648**	2	BUSHING	
	4	1	**3B-8489**	4	FITTING-GREASE	
M	5	1	**6V-9189**	4	LOCKNUT (M8X1.25-THD)	
M	6	1	**8T-6869**	4	BOLT (M8X1.25X60-MM)	

M - METRIC PART
Y - SEPARATE ILLUSTRATION

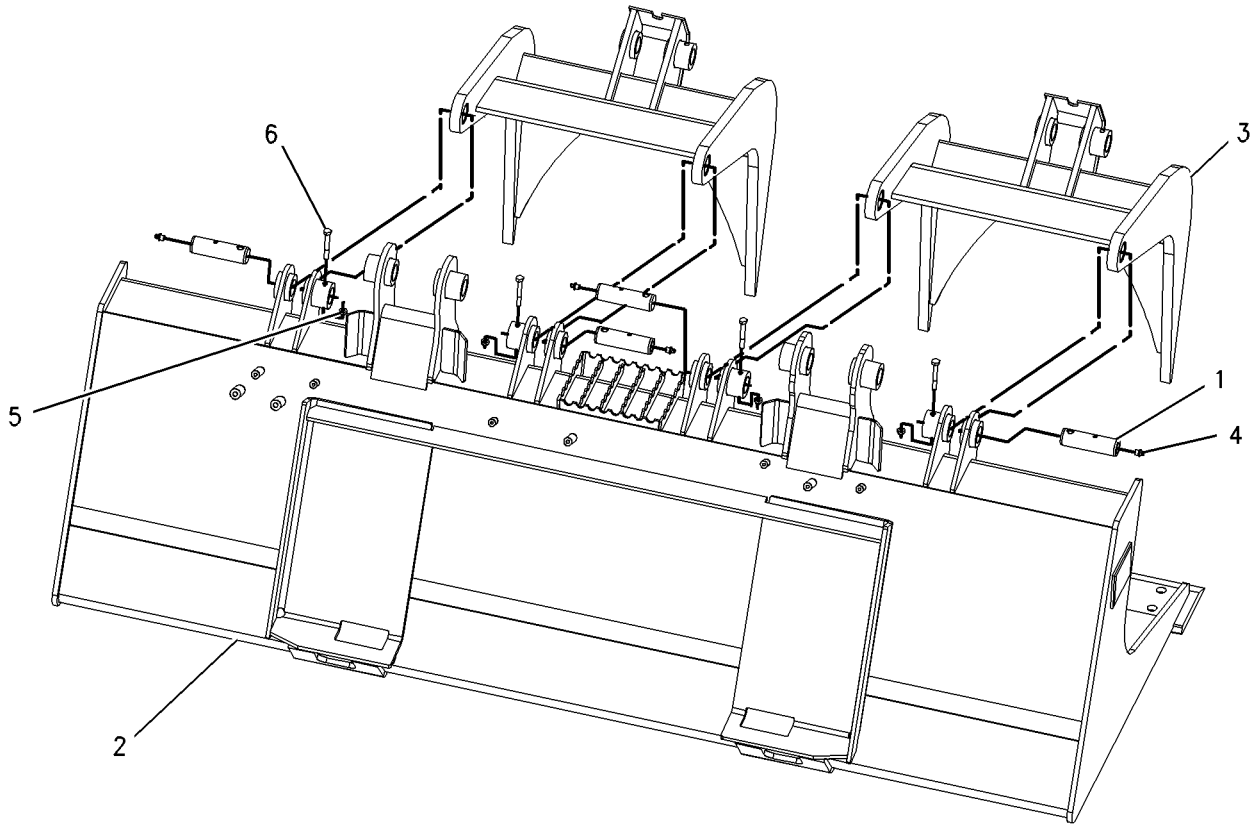

GRAPHIC #1 **<END>** g00992181

279-5359 BUCKET GP-GRAPPLE–INDUSTRIAL

PART OF 279-5360 FORK AR-GRAPPLE

AN ATTACHMENT

SMCS-6704 **i03690347**

NOTE	REF NO	GRAPHIC REF	PART NUMBER	QTY	PART NAME 1 2 3 4 5 6 (PRODUCT LEVEL)	SEE PAGE
	1	1	**157-0940**	4	PIN	
	2	1	**164-9989**	2	FILM-WARNING (CRUSH HAZARD)	
	3	1	**222-7467**	2	FORK AS	
					(EACH INCLUDES)	
		1	**158-5648**	2	BUSHING	
Y	4	1	*279-5358*	1	FRAME GP-FORK (72-IN, INDUSTRIAL)	444
	5	1	**3B-8489**	4	FITTING-GREASE	
M	6	1	**6V-9189**	4	LOCKNUT (M8X1.25-THD)	
M	7	1	**8T-6869**	4	BOLT (M8X1.25X60-MM)	

M - METRIC PART
Y - SEPARATE ILLUSTRATION

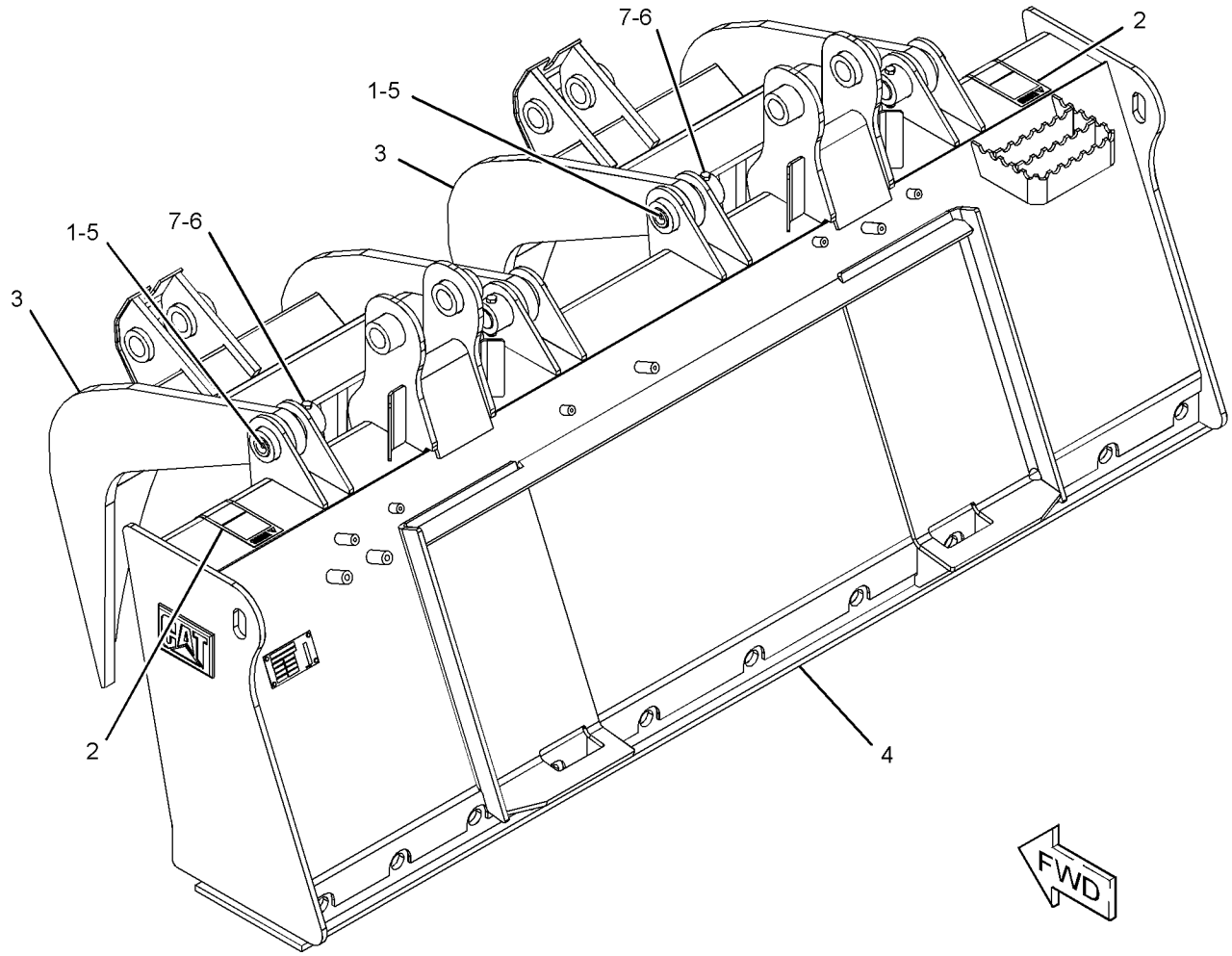

GRAPHIC #1 **<END>** g01280924

286-9244 BUCKET GP-GRAPPLE

2136-MM (84-IN)
PART OF 286-9301 BUCKET AR-GRAPPLE
AN ATTACHMENT

SMCS-6704 **i05402403**

NOTE	REF NO	GRAPHIC REF	PART NUMBER	QTY	PART NAME 1 2 3 4 5 6 (PRODUCT LEVEL)	SEE PAGE
	1	1	**157-0940**	4	PIN	
	2	1	**286-9229**	1	TINE GP	
		1	**8R-3857**	5	BOSS (M8X1.25X12-MM)	
		1	**9R-1610**	5	BOSS-THREADED (M10X1.5-THD)	
		1	**161-4130**	2	PLATE-IDENTIFICATION (CAT)	
	3	1	**286-9243**	2	FORK AS	
					(EACH INCLUDES)	
		1	**158-5648**	2	BUSHING	
	4	1	**3B-8489**	4	FITTING-GREASE	
M	5	1	**6V-9189**	4	LOCKNUT (M8X1.25-THD)	
M	6	1	**8T-6869**	4	BOLT (M8X1.25X60-MM)	

M - METRIC PART

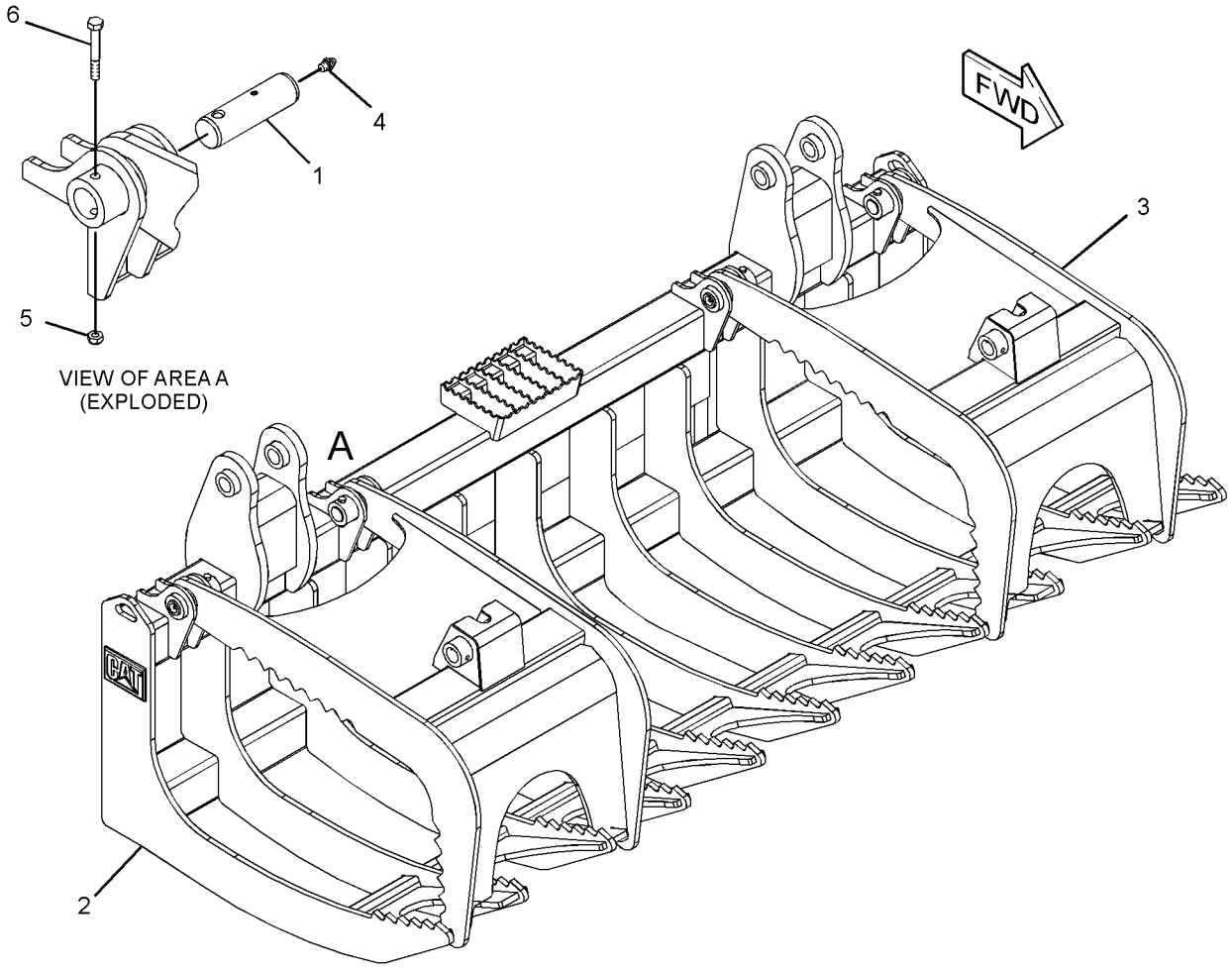

GRAPHIC #1 **<END>** g01372924

286-9278 BUCKET GP-GRAPPLE

1829-MM (72-IN)
PART OF 286-9300 BUCKET AR-GRAPPLE
AN ATTACHMENT

SMCS-6704 **i05402404**

NOTE	REF NO	GRAPHIC REF	PART NUMBER	QTY	PART NAME 1 2 3 4 5 6 (PRODUCT LEVEL)	SEE PAGE
	1	1	**157-0940**	4	PIN	
	2	1	**286-9243**	2	FORK AS	
					(EACH INCLUDES)	
		1	**158-5648**	2	BUSHING	
	3	1	**286-9274**	1	TINE GP	
		1	**8R-3857**	5	BOSS (M8X1.25X12-MM)	
		1	**9R-1610**	5	BOSS-THREADED (M10X1.5-THD)	
		1	**161-4130**	2	PLATE-IDENTIFICATION (CAT)	
	4	1	**3B-8489**	4	FITTING-GREASE	
M	5	1	**6V-9189**	4	LOCKNUT (M8X1.25-THD)	
M	6	1	**8T-6869**	4	BOLT (M8X1.25X60-MM)	

M - METRIC PART

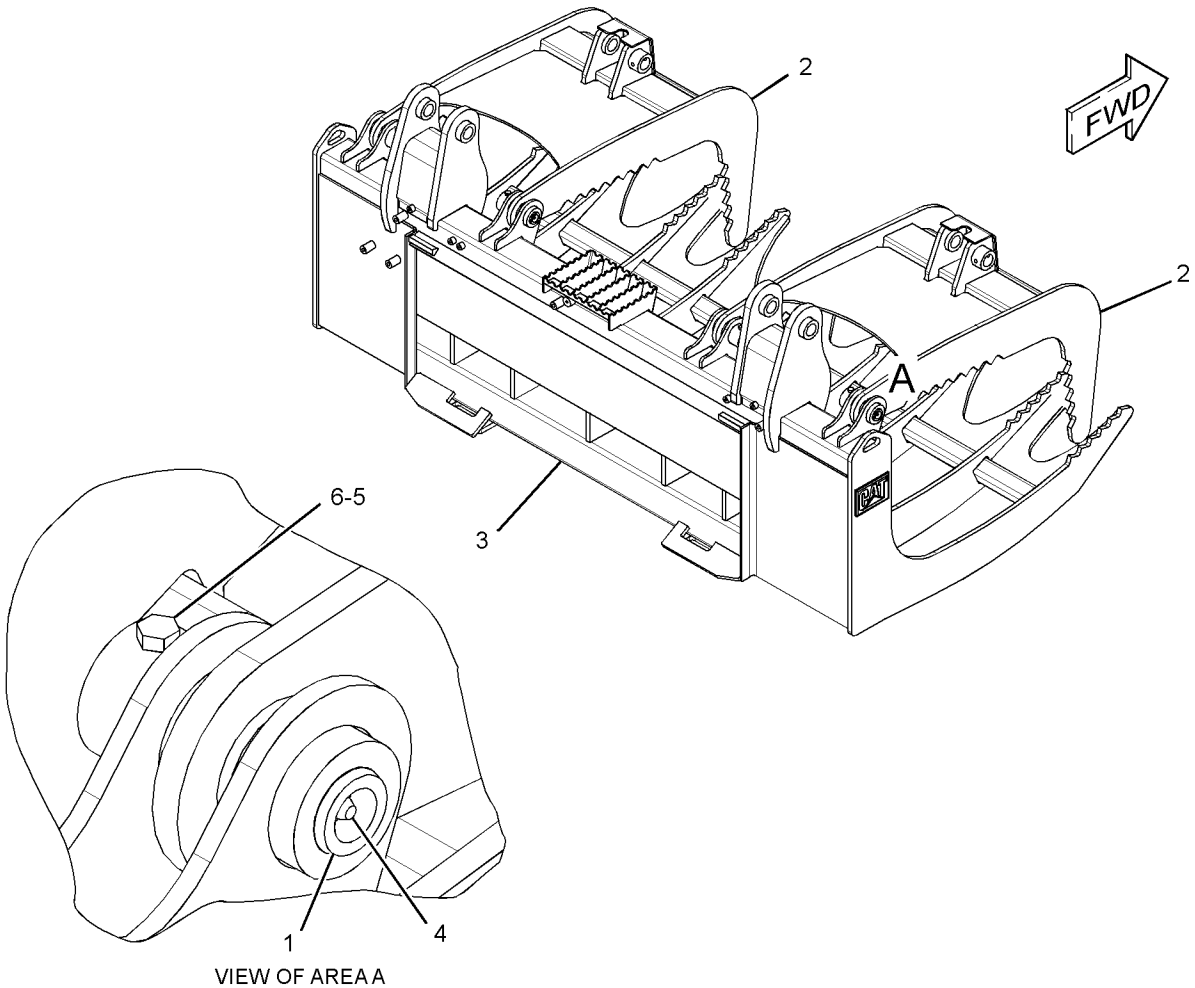

VIEW OF AREA A

GRAPHIC #1 **<END>** g01372568

423-4294 BUCKET GP-MULTIPURPOSE

PART OF 423-4291 BUCKET AR-MULTIPURPOSE

AN ATTACHMENT

SMCS-6104 **i05277423**

NOTE	REF NO	GRAPHIC REF	PART NUMBER	QTY	PART NAME 1 2 3 4 5 6 (PRODUCT LEVEL)	SEE PAGE
	1	1	**154-5012**	2	PIN	
	2	1	**159-8038**	2	FILM-WARNING (CRUSH HAZARD, STAY BACK)	
Y	3	1	**423-4297**	1	CLAM AS-MULTIPURPOSE BUCKET	406
Y	4	1	*423-4298*	1	BLADE GP-MULTIPURPOSE BUCKET	306
	5	1	**3B-8489**	2	FITTING-GREASE	
M	6	1	**6V-9189**	2	LOCKNUT (M8X1.25-THD)	
M	7	1	**8T-6869**	2	BOLT (M8X1.25X60-MM)	

M - METRIC PART
Y - SEPARATE ILLUSTRATION

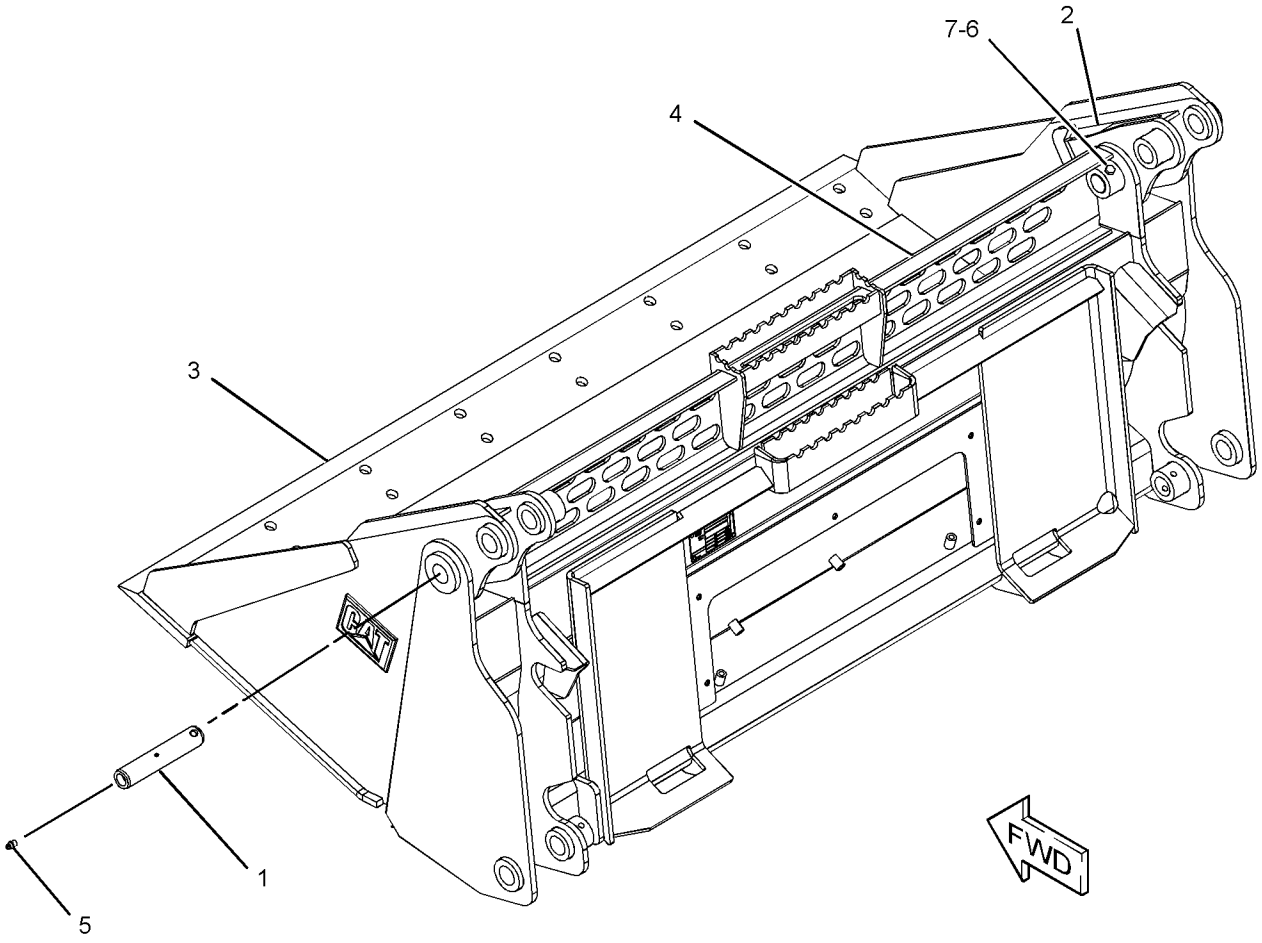

GRAPHIC #1 **<END>** g03359276

426-6495 BUCKET GP-MULTIPURPOSE

PART OF 426-6492 BUCKET AR-MULTIPURPOSE

AN ATTACHMENT

SMCS-6104 **i05281211**

NOTE	REF NO	GRAPHIC REF	PART NUMBER	QTY	PART NAME 1 2 3 4 5 6 (PRODUCT LEVEL)	SEE PAGE
	1	1	**154-5012**	2	PIN	
	2	1	**159-8038**	2	FILM-WARNING (CRUSH HAZARD, STAY BACK)	
Y	3	1	**426-6497**	1	CLAM AS-MULTIPURPOSE BUCKET	407
Y	4	1	*426-6503*	1	BLADE GP-MULTIPURPOSE BUCKET (66-IN)	308
	5	1	**3B-8489**	2	FITTING-GREASE	
M	6	1	**6V-9189**	2	LOCKNUT (M8X1.25-THD)	
M	7	1	**8T-6869**	2	BOLT (M8X1.25X60-MM)	

M - METRIC PART
Y - SEPARATE ILLUSTRATION

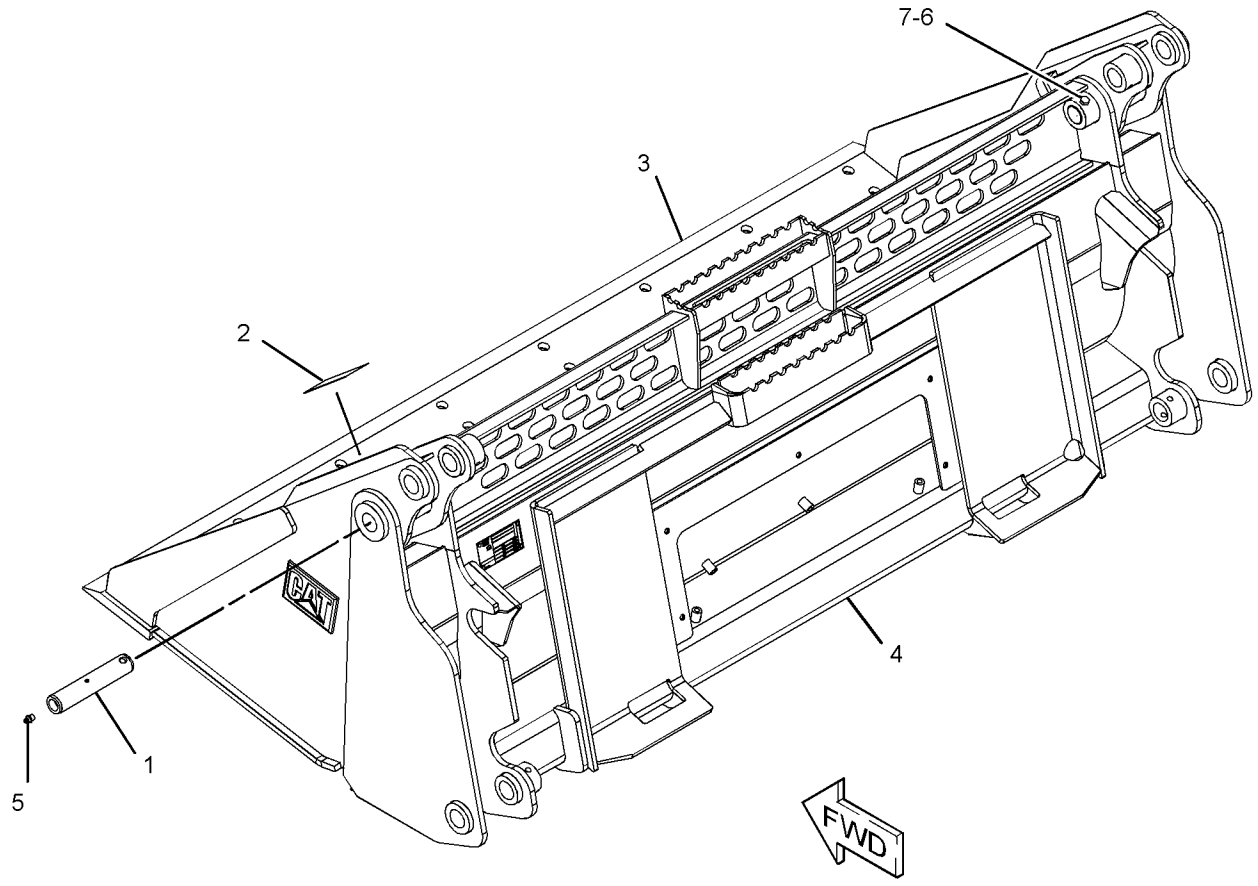

GRAPHIC #1 **<END>** g03359728

426-6538 BUCKET GP-MULTIPURPOSE

PART OF 426-6537 BUCKET AR-MULTIPURPOSE

AN ATTACHMENT

SMCS-6104 **i05281215**

NOTE	REF NO	GRAPHIC REF	PART NUMBER	QTY	PART NAME 1 2 3 4 5 6 (PRODUCT LEVEL)	SEE PAGE
	1	1	**154-5012**	2	PIN	
	2	1	**159-8038**	2	FILM-WARNING (CRUSH HAZARD, STAY BACK)	
Y	3	1	**426-6539**	1	CLAM AS-MULTIPURPOSE BUCKET	408
Y	4	1	*426-6544*	1	BLADE GP-MULTIPURPOSE BUCKET (72-IN)	310
	5	1	**3B-8489**	2	FITTING-GREASE	
M	6	1	**6V-9189**	2	LOCKNUT (M8X1.25-THD)	
M	7	1	**8T-6869**	2	BOLT (M8X1.25X60-MM)	

M - METRIC PART
Y - SEPARATE ILLUSTRATION

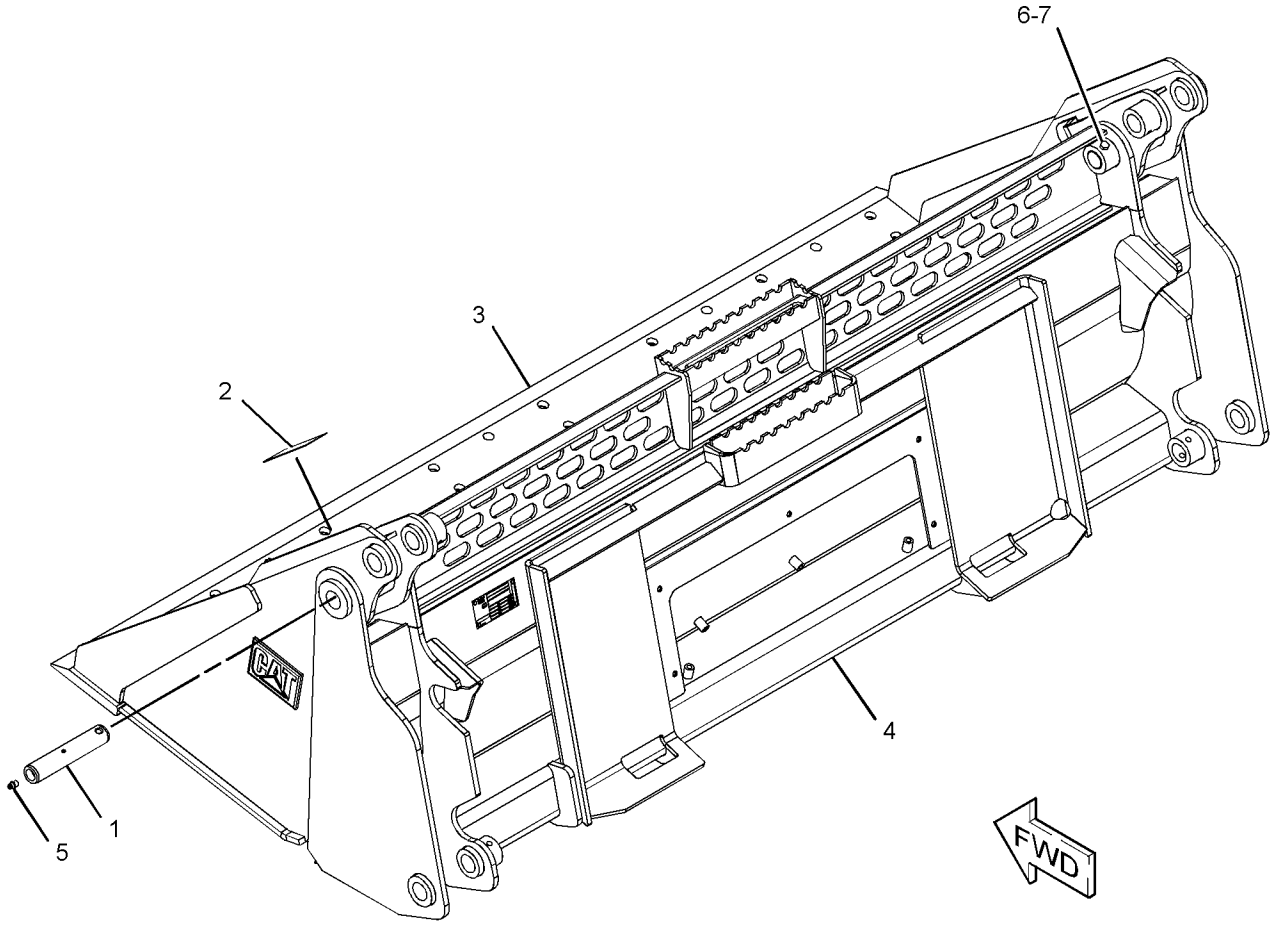

GRAPHIC #1 **<END>** g03359734

426-6550 BUCKET GP-MULTIPURPOSE

PART OF 426-6549 BUCKET AR-MULTIPURPOSE

AN ATTACHMENT

SMCS-6104 **i05281217**

NOTE	REF NO	GRAPHIC REF	PART NUMBER	QTY	PART NAME 1 2 3 4 5 6 (PRODUCT LEVEL)	SEE PAGE
	1	1	**154-5012**	2	PIN	
	2	1	**159-8038**	2	FILM-WARNING (CRUSH HAZARD, STAY BACK)	
Y	3	1	**426-6551**	1	CLAM AS-MULTIPURPOSE BUCKET	409
Y	4	1	*426-6554*	1	BLADE GP-MULTIPURPOSE BUCKET (78-IN)	312
	5	1	**3B-8489**	2	FITTING-GREASE	
M	6	1	**6V-9189**	2	LOCKNUT (M8X1.25-THD)	
M	7	1	**8T-6869**	2	BOLT (M8X1.25X60-MM)	

M - METRIC PART
Y - SEPARATE ILLUSTRATION

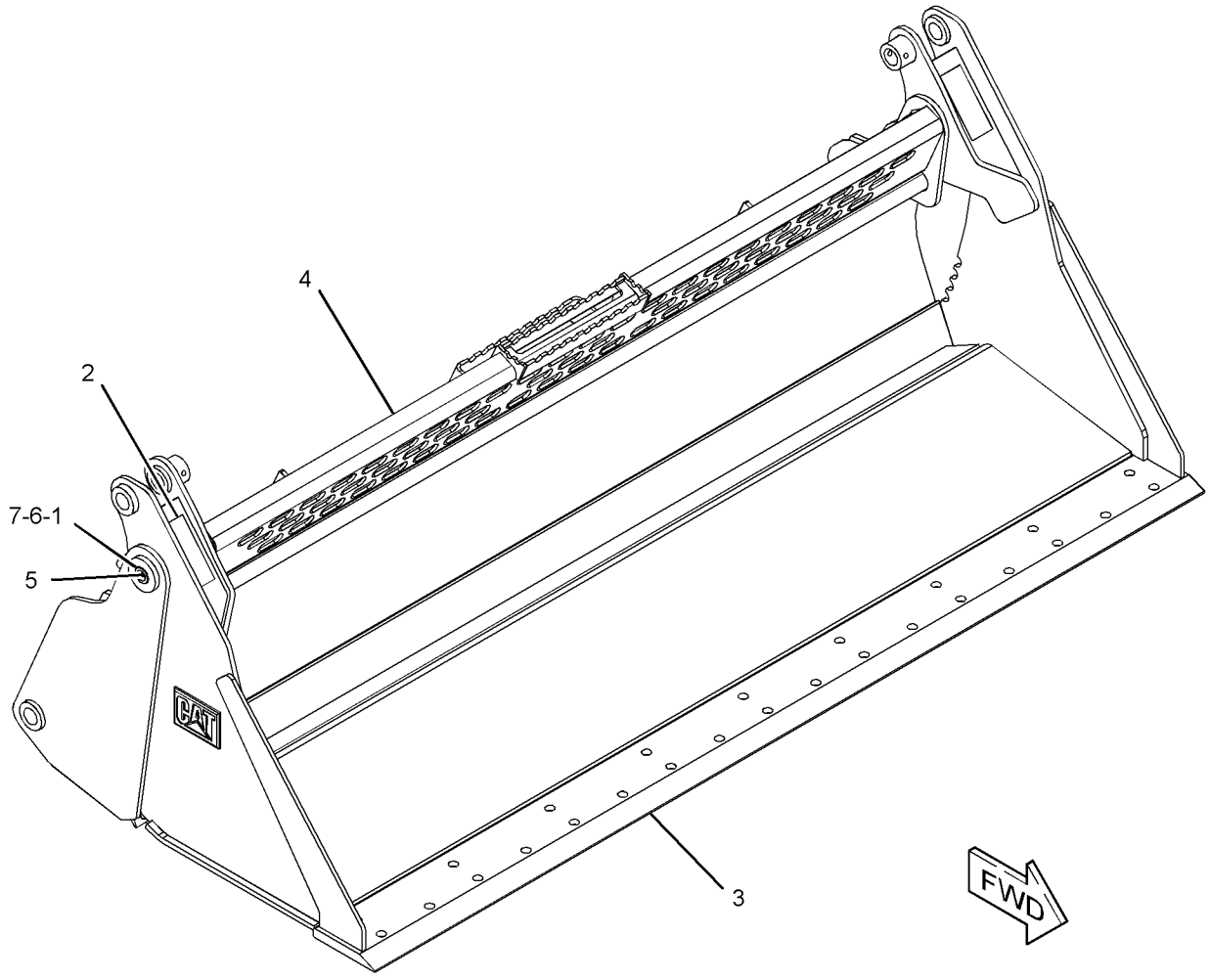

GRAPHIC #1 **<END>** g03360146

426-6560 BUCKET GP-MULTIPURPOSE

PART OF 426-6559 BUCKET AR-MULTIPURPOSE

AN ATTACHMENT

SMCS-6104 **i05401765**

NOTE	REF NO	GRAPHIC REF	PART NUMBER	QTY	PART NAME 1 2 3 4 5 6 (PRODUCT LEVEL)	SEE PAGE
	1	1	**154-5012**	2	PIN	
	2	1	**159-8038**	2	FILM-WARNING (CRUSH HAZARD, STAY BACK)	
Y	3	1	**426-6561**	1	CLAM AS-MULTIPURPOSE BUCKET	410
Y	4	1	*426-6564*	1	BLADE GP-MULTIPURPOSE BUCKET	314
	5	1	**3B-8489**	2	FITTING-GREASE	
M	6	1	**6V-9189**	2	LOCKNUT (M8X1.25-THD)	
M	7	1	**8T-6869**	2	BOLT (M8X1.25X60-MM)	

M - METRIC PART
Y - SEPARATE ILLUSTRATION

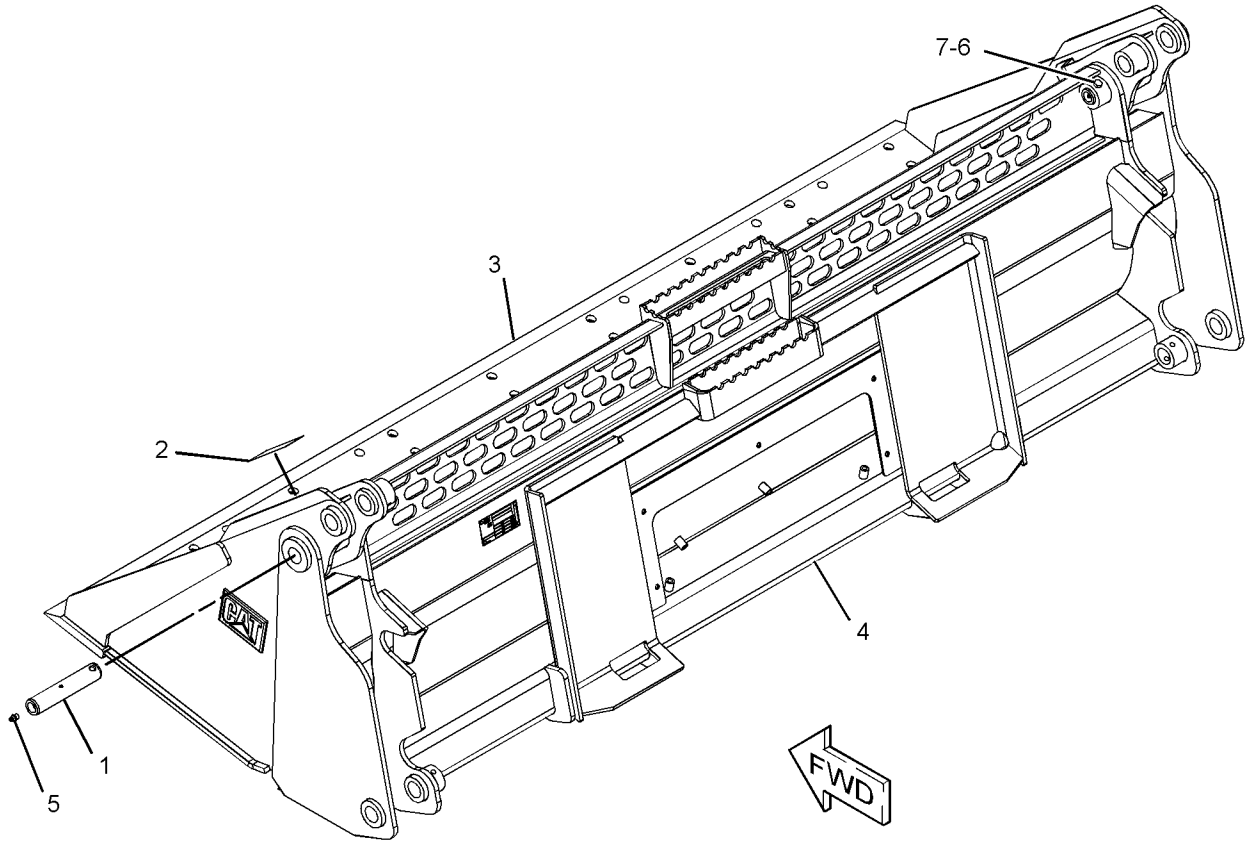

GRAPHIC #1 **<END>** g03359704

426-6934 BUCKET GP-MULTIPURPOSE

60-IN (1524-MM)

PART OF 426-6933 BUCKET AR-MULTIPURPOSE

AN ATTACHMENT

SMCS-6104 **i05281250**

NOTE	REF NO	GRAPHIC REF	PART NUMBER	QTY	PART NAME 1 2 3 4 5 6 (PRODUCT LEVEL)	SEE PAGE
	1	1	**154-5012**	2	PIN	
	2	1	**159-8038**	2	FILM-WARNING (CRUSH HAZARD, STAY BACK)	
Y	3	1	**423-4297**	1	CLAM AS-MULTIPURPOSE BUCKET	406
Y	4	1	*426-6935*	1	BLADE GP-MULTIPURPOSE BUCKET (60-IN)	316
	5	1	**3B-8489**	2	FITTING-GREASE	
M	6	1	**6V-9189**	2	LOCKNUT (M8X1.25-THD)	
M	7	1	**8T-6869**	2	BOLT (M8X1.25X60-MM)	

M - METRIC PART
Y - SEPARATE ILLUSTRATION

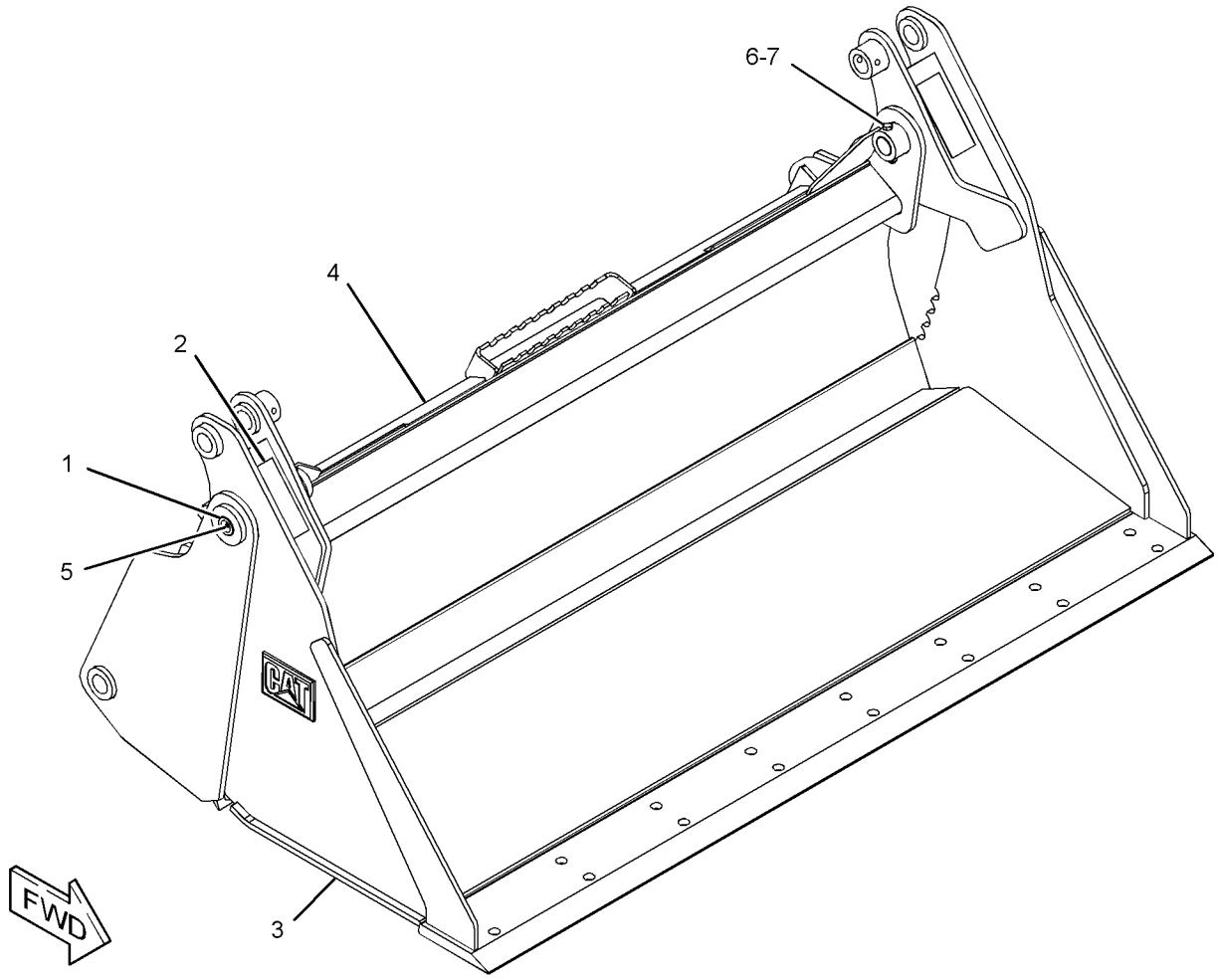

GRAPHIC #1 **<END>** g03358351

426-6941 BUCKET GP-MULTIPURPOSE

PART OF 426-6940 BUCKET AR-MULTIPURPOSE

AN ATTACHMENT

SMCS-6104 **i05281257**

NOTE	REF NO	GRAPHIC REF	PART NUMBER	QTY	PART NAME 1 2 3 4 5 6 (PRODUCT LEVEL)	SEE PAGE
	1	1	**154-5012**	2	PIN	
	2	1	**159-8038**	2	FILM-WARNING (CRUSH HAZARD, STAY BACK)	
Y	3	1	**426-6497**	1	CLAM AS-MULTIPURPOSE BUCKET	407
Y	4	1	*426-6943*	1	BLADE GP-MULTIPURPOSE BUCKET (66-IN)	318
	5	1	**3B-8489**	2	FITTING-GREASE	
M	6	1	**6V-9189**	2	LOCKNUT (M8X1.25-THD)	
M	7	1	**8T-6869**	2	BOLT (M8X1.25X60-MM)	

M - METRIC PART
Y - SEPARATE ILLUSTRATION

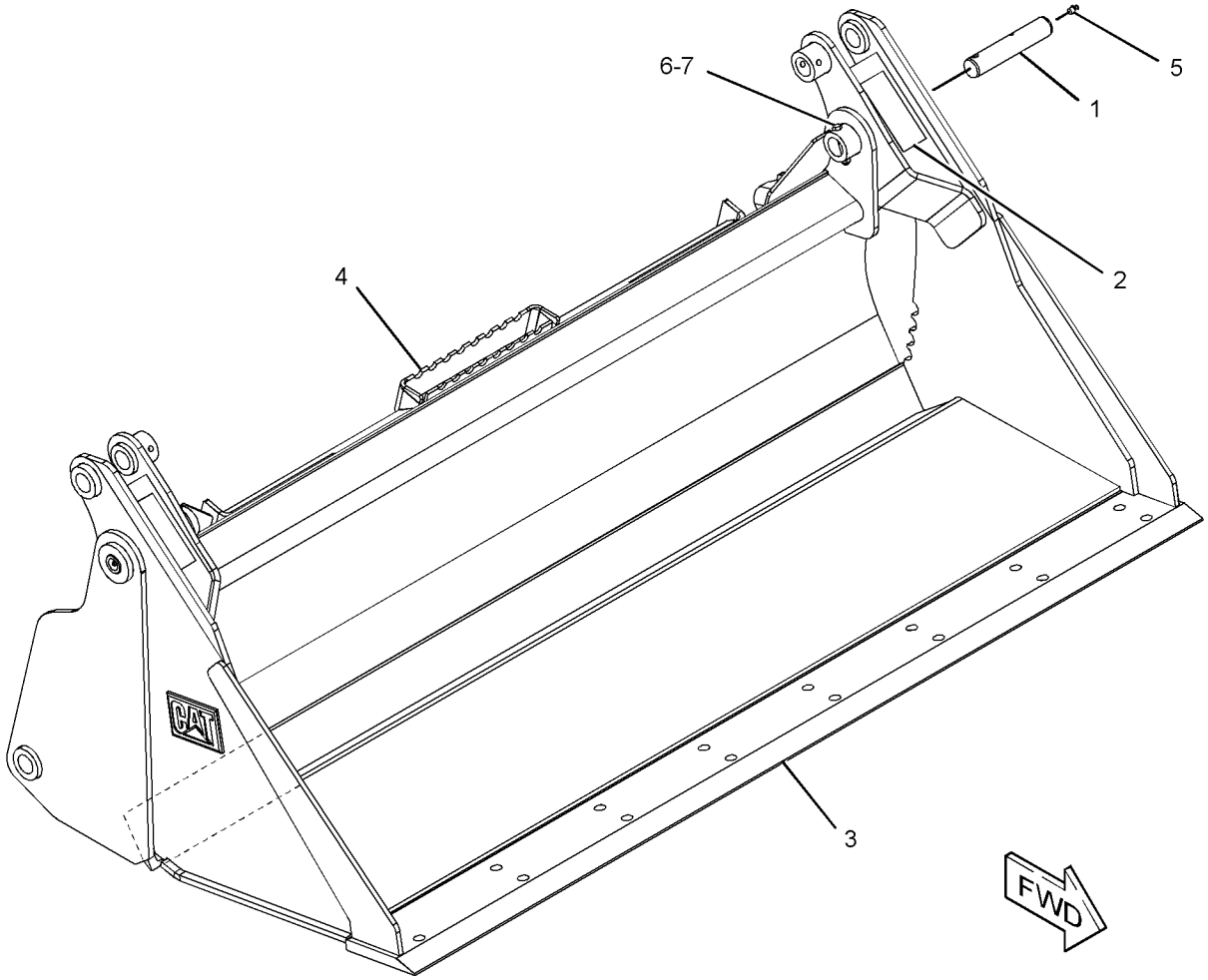

GRAPHIC #1 **<END>** g03363136

426-6951 BUCKET GP-MULTIPURPOSE

PART OF 426-6947 BUCKET AR-MULTIPURPOSE

AN ATTACHMENT

SMCS-6104 **i05281263**

NOTE	REF NO	GRAPHIC REF	PART NUMBER	QTY	PART NAME 1 2 3 4 5 6 (PRODUCT LEVEL)	SEE PAGE
	1	1	**154-5012**	2	PIN	
	2	1	**159-8038**	2	FILM-WARNING (CRUSH HAZARD, STAY BACK)	
Y	3	1	**426-6539**	1	CLAM AS-MULTIPURPOSE BUCKET	408
Y	4	1	*426-6957*	1	BLADE GP-MULTIPURPOSE BUCKET (72-IN)	319
	5	1	**3B-8489**	2	FITTING-GREASE	
M	6	1	**6V-9189**	2	LOCKNUT (M8X1.25-THD)	
M	7	1	**8T-6869**	2	BOLT (M8X1.25X60-MM)	

M - METRIC PART
Y - SEPARATE ILLUSTRATION

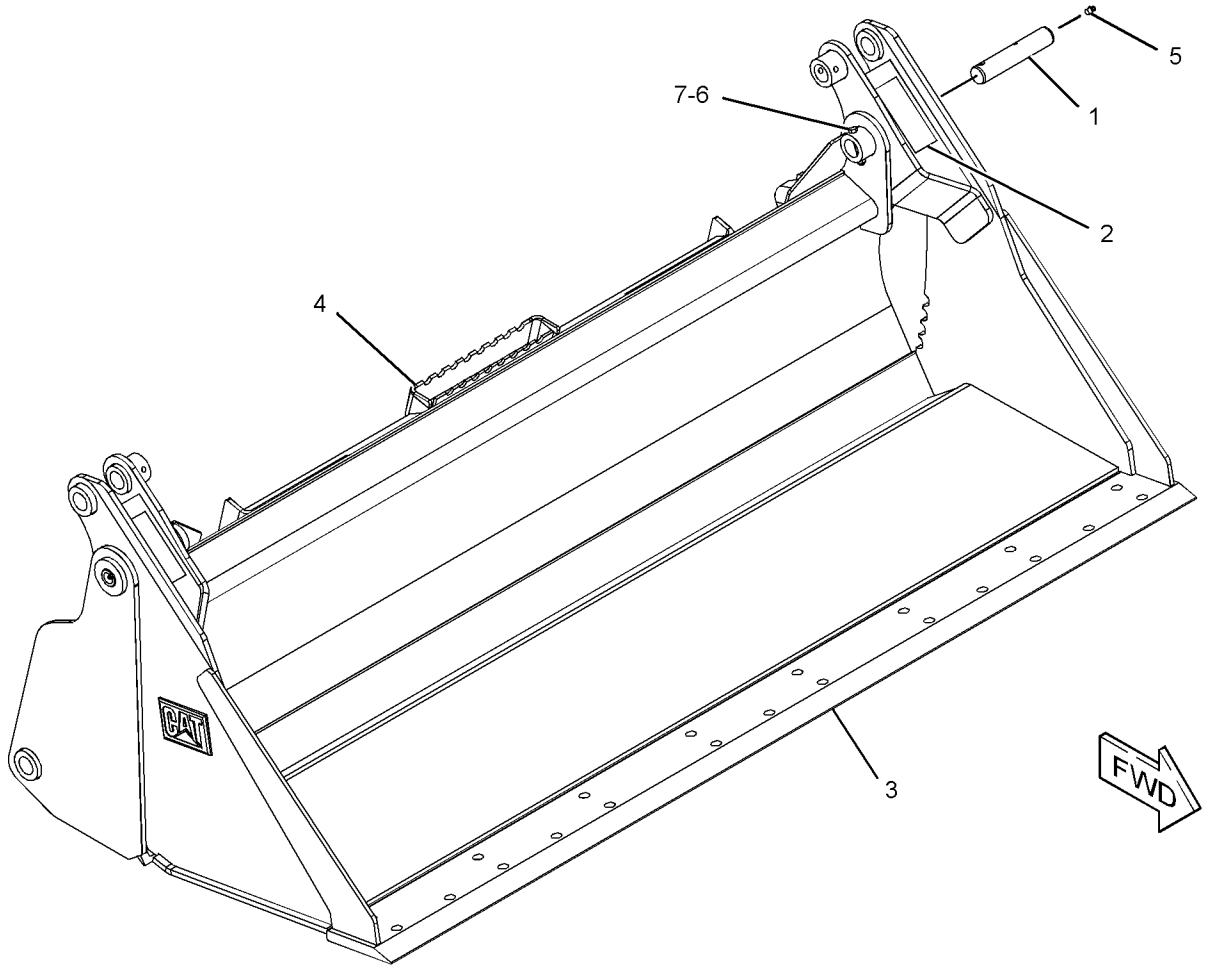

GRAPHIC #1 **<END>** g03359678

426-7102 BUCKET GP-MULTIPURPOSE

PART OF 426-6970 BUCKET AR-MULTIPURPOSE

AN ATTACHMENT

SMCS-6104 **i05281272**

NOTE	REF NO	GRAPHIC REF	PART NUMBER	QTY	PART NAME 1 2 3 4 5 6 (PRODUCT LEVEL)	SEE PAGE
	1	1	**154-5012**	2	PIN	
	2	1	**159-8038**	2	FILM-WARNING (CRUSH HAZARD, STAY BACK)	
Y	3	1	**426-6551**	1	CLAM AS-MULTIPURPOSE BUCKET	409
Y	4	1	*426-6978*	1	BLADE GP-MULTIPURPOSE BUCKET (78-IN)	321
	5	1	**3B-8489**	2	FITTING-GREASE	
M	6	1	**6V-9189**	2	LOCKNUT (M8X1.25-THD)	
M	7	1	**8T-6869**	2	BOLT (M8X1.25X60-MM)	

M - METRIC PART
Y - SEPARATE ILLUSTRATION

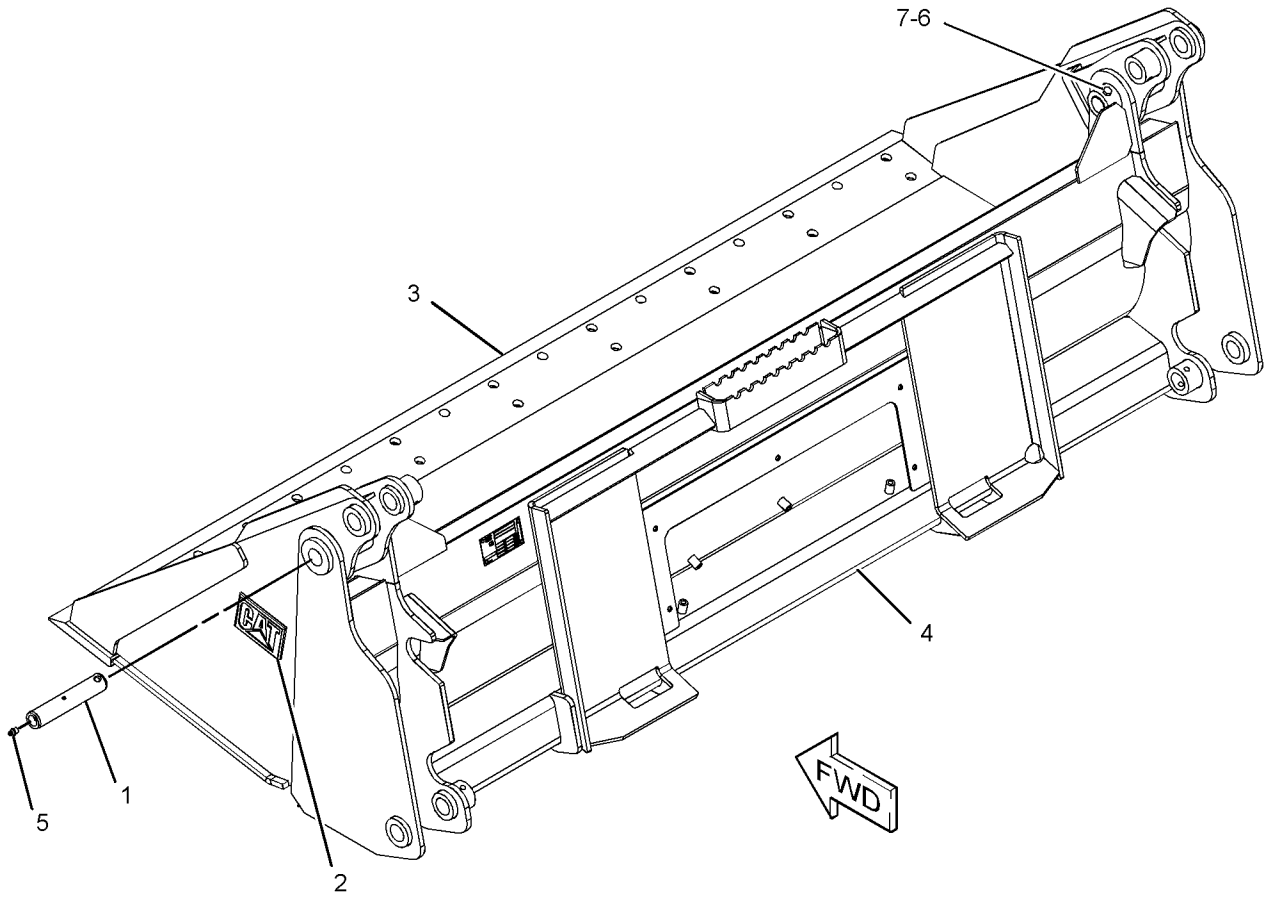

GRAPHIC #1 **<END>** g03358711

285-6096 BUCKET GP-UTILITY

PART OF 285-6095 BUCKET AR-UTILITY

AN ATTACHMENT

SMCS-6101 **i04156280**

NOTE	REF NO	GRAPHIC REF	PART NUMBER	QTY	PART NAME 1 2 3 4 5 6 (PRODUCT LEVEL)	SEE PAGE
	1	1	**358-4944**	1	PLATE-IDENTIFICATION (BUCKET SPECIFICATIONS)	
	2	1	**168-8389**	4	TACK-FASTENER	
Y	3	1	*285-6097*	1	BUCKET AS-UTILITY	380

Y - SEPARATE ILLUSTRATION

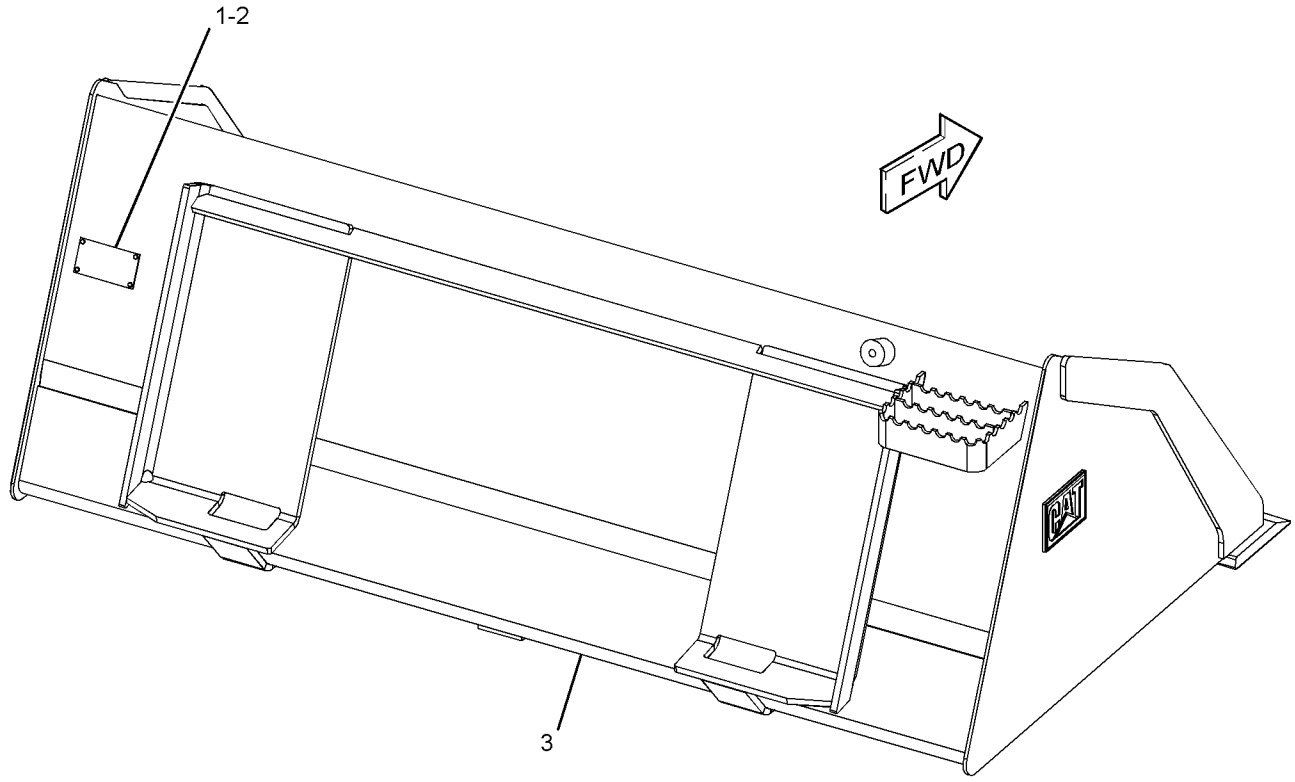

GRAPHIC #1 **<END>** g01957401

285-6099 BUCKET GP-UTILITY

PART OF 285-6100 BUCKET AR-UTILITY

AN ATTACHMENT

SMCS-6101 **i05239169**

NOTE	REF NO	GRAPHIC REF	PART NUMBER	QTY	PART NAME 1 2 3 4 5 6 (PRODUCT LEVEL)	SEE PAGE
	1	1	**358-4944**	1	PLATE-IDENTIFICATION (BUCKET SPECIFICATIONS)	
	2	1	**168-8389**	4	TACK-FASTENER	
Y	3	1	*285-6098*	1	BUCKET AS-UTILITY (66-IN)	381

Y - SEPARATE ILLUSTRATION

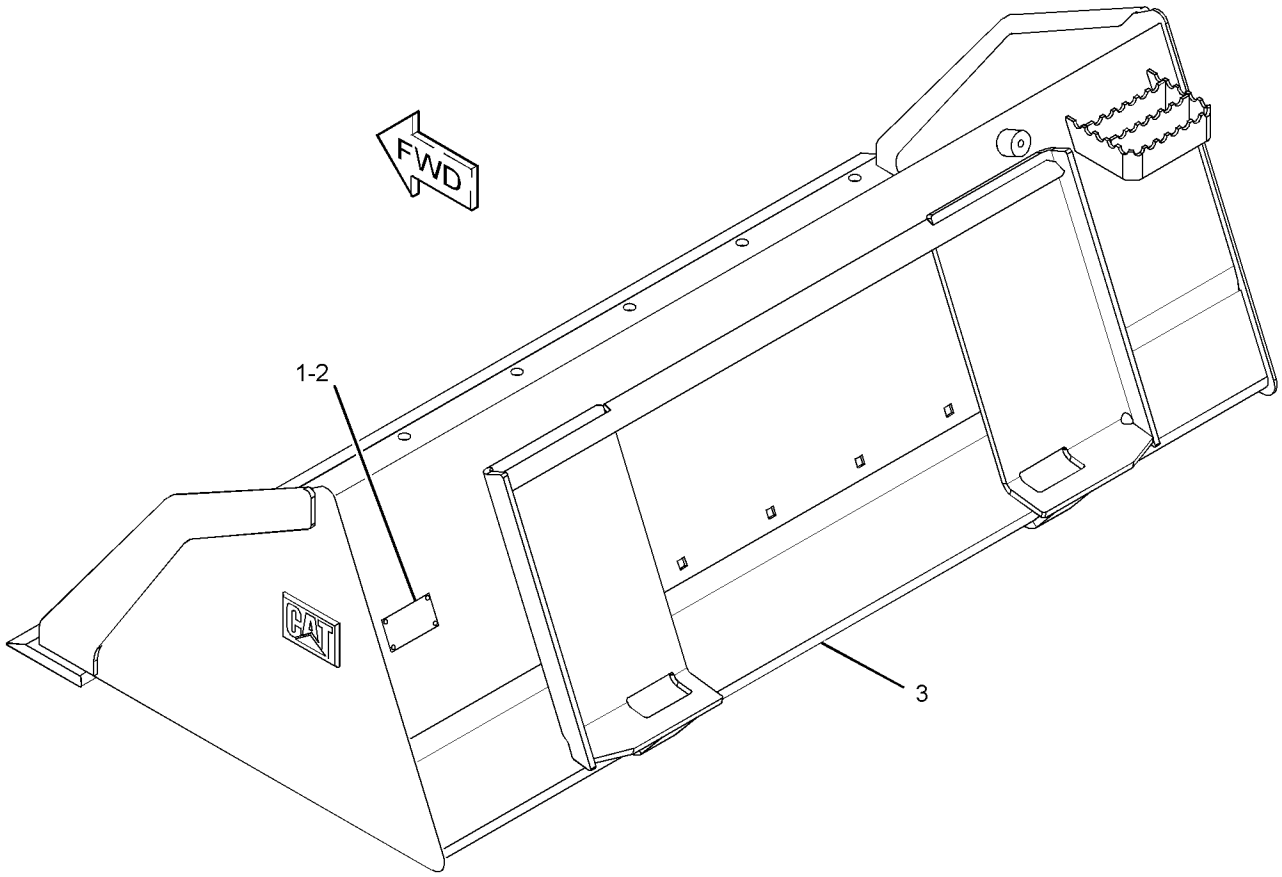

GRAPHIC #1 **<END>** g01954053

285-6102 BUCKET GP-UTILITY

PART OF 285-6101 BUCKET AR-UTILITY

AN ATTACHMENT

SMCS-6101 **i05239172**

NOTE	REF NO	GRAPHIC REF	PART NUMBER	QTY	PART NAME 1 2 3 4 5 6 (PRODUCT LEVEL)	SEE PAGE
	1	1	**358-4944**	1	PLATE-IDENTIFICATION (BUCKET SPECIFICATIONS)	
	2	1	**168-8389**	4	TACK-FASTENER	
Y	3	1	*285-6103*	1	BUCKET AS-UTILITY (72-IN)	382

Y - SEPARATE ILLUSTRATION

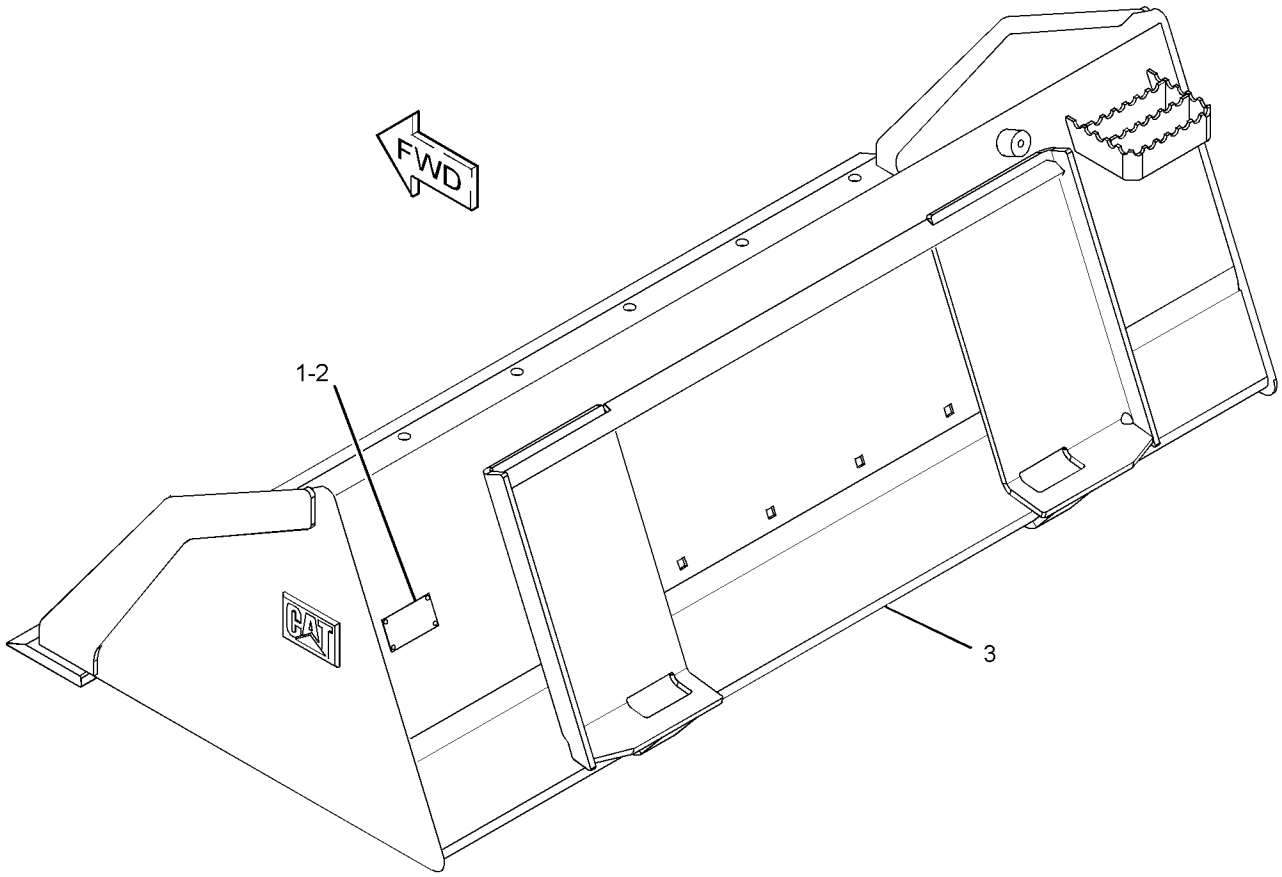

GRAPHIC #1 **<END>** g01954037

353-1693 CARRIAGE & FORK AR

AN ATTACHMENT

SMCS-6136, 6402 **i03887511**

NOTE	PART NUMBER	QTY	PART NAME 1 2 3 4 5 6 (PRODUCT LEVEL)	SEE PAGE
Y	**351-9371**	6	CARRIAGE GP-FORK	405

Y - SEPARATE ILLUSTRATION

<END>

353-1694 CARRIAGE & FORK AR

AN ATTACHMENT

SMCS-6136, 6402 **i03887530**

NOTE	PART NUMBER	QTY	PART NAME 1 2 3 4 5 6 (PRODUCT LEVEL)	SEE PAGE
Y	**351-9371**	1	CARRIAGE GP-FORK	405
Y	**195-6943**	2	FORK GP-PALLET (36-IN)	433

Y - SEPARATE ILLUSTRATION

<END>

353-1696 CARRIAGE & FORK AR

AN ATTACHMENT

SMCS-6136, 6402 **i03887531**

NOTE	PART NUMBER	QTY	PART NAME 1 2 3 4 5 6 (PRODUCT LEVEL)	SEE PAGE
Y	**351-9371**	1	CARRIAGE GP-FORK	405
Y	**195-6942**	2	FORK GP-PALLET (42-IN)	432

Y - SEPARATE ILLUSTRATION

<END>

353-1697 CARRIAGE & FORK AR

AN ATTACHMENT

SMCS-6136, 6402 **i03887532**

NOTE	PART NUMBER	QTY	PART NAME 1 2 3 4 5 6 (PRODUCT LEVEL)	SEE PAGE
Y	**351-9371**	1	CARRIAGE GP-FORK	405
Y	**195-8545**	2	FORK GP-PALLET (48-IN)	434

Y - SEPARATE ILLUSTRATION

<END>

351-9371 CARRIAGE GP-FORK

PART OF 353-1693, 353-1694, 353-1696, 353-1697 CARRIAGE & FORK AR
AN ATTACHMENT

SMCS-6402 **i05266573**

NOTE	REF NO	GRAPHIC REF	PART NUMBER	QTY	PART NAME 1 2 3 4 5 6 (PRODUCT LEVEL)	SEE PAGE
	1	1	**157-4835**	1	PLATE-INSTRUCTION	
	2	1	**168-8389**	4	TACK-FASTENER (METAL)	
	3	1	**252-8595**	1	STEP AS	
M	4	1	**8T-4136**	2	BOLT (M10X1.5X25-MM)	
	5	1	**8T-4121**	2	WASHER-HARD (11X21X2.5-MM THK)	
M	6	1	**8T-4133**	2	NUT (M10X1.5-THD)	

M - METRIC PART

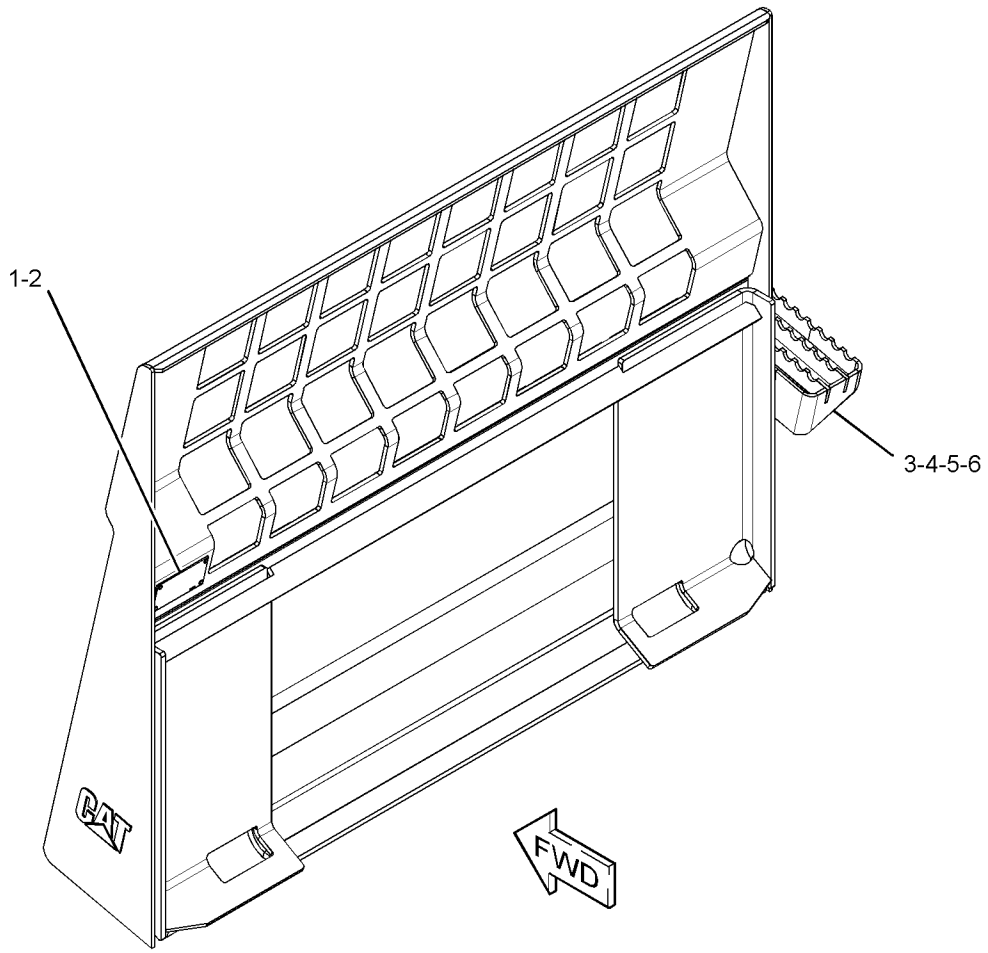

GRAPHIC #1 **<END>** g03409678

423-4297 CLAM AS-MULTIPURPOSE BUCKET

1524-MM (60-IN)
PART OF 423-4294, 426-6934 BUCKET GP-MULTIPURPOSE
AN ATTACHMENT

SMCS-6104 **i05284450**

NOTE	REF NO	GRAPHIC REF	PART NUMBER	QTY	PART NAME 1 2 3 4 5 6 (PRODUCT LEVEL)	SEE PAGE
	1	1	**142-8805**	4	BUSHING	
	2	1	**161-4130**	2	PLATE-IDENTIFICATION (CAT)	
	3	1	**149-5435**	1	EDGE	
	4	1	**159-8038**	2	FILM-WARNING (CRUSH HAZARD, STAY BACK)	

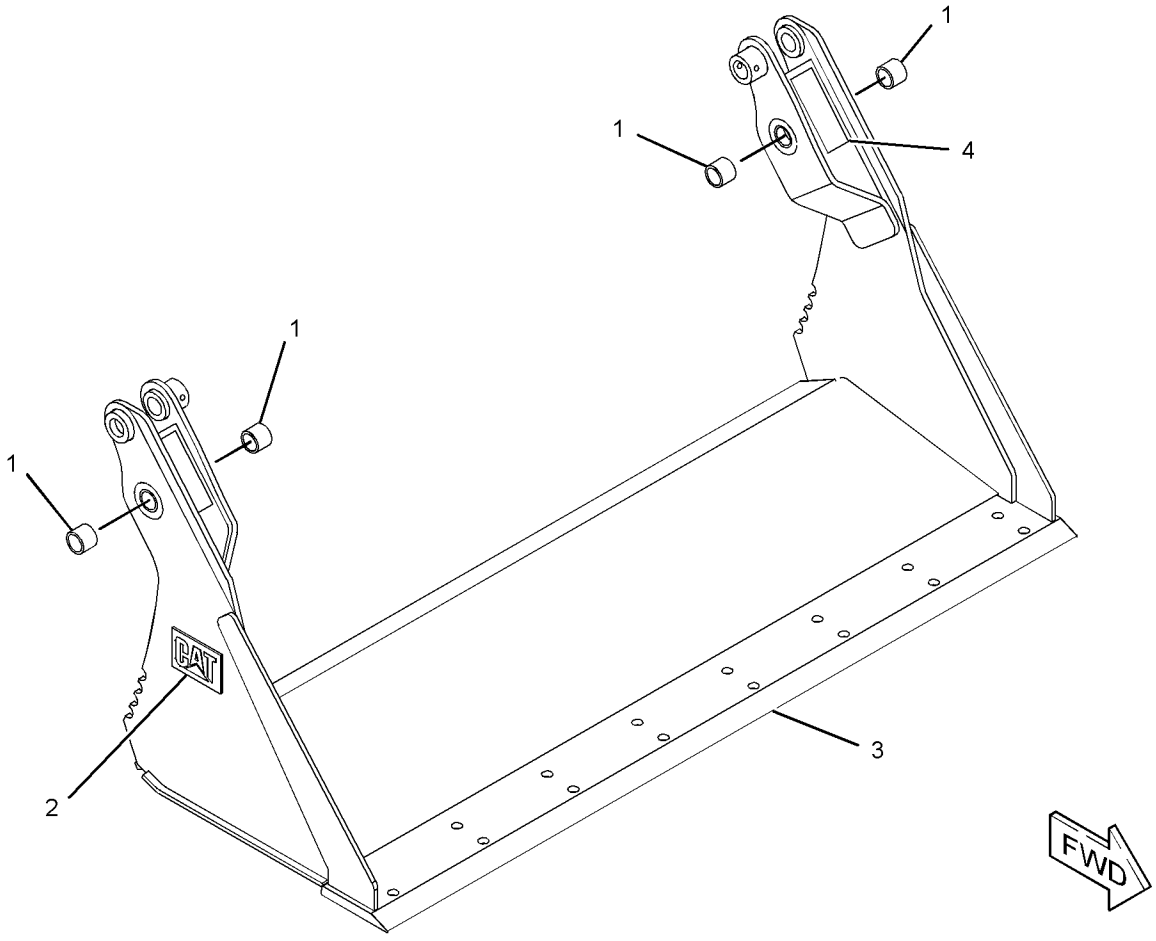

GRAPHIC #1 **<END>** g01945759

426-6497 CLAM AS-MULTIPURPOSE BUCKET

1676.4-MM (66-IN)
PART OF 426-6495, 426-6941 BUCKET GP-MULTIPURPOSE
AN ATTACHMENT

SMCS-6104 **i05284469**

NOTE	REF NO	GRAPHIC REF	PART NUMBER	QTY	PART NAME 1 2 3 4 5 6 (PRODUCT LEVEL)	SEE PAGE
	1	1	**142-8805**	4	BUSHING	
	2	1	**161-4130**	2	PLATE-IDENTIFICATION (CAT)	
	3	1	**149-5435**	1	EDGE	
	4	1	**159-8038**	2	FILM-WARNING (CRUSH HAZARD, STAY BACK)	

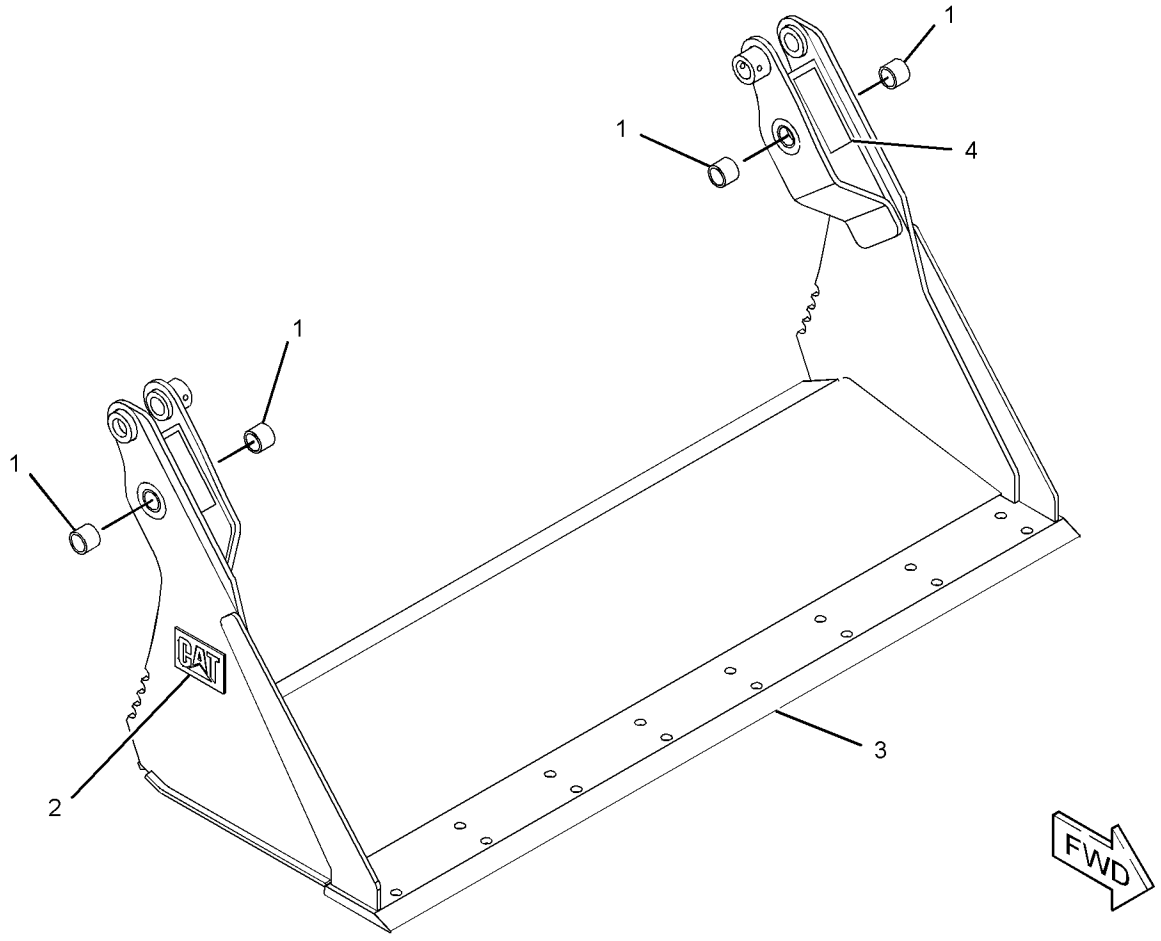

GRAPHIC #1 **<END>** g01945759

426-6539 CLAM AS-MULTIPURPOSE BUCKET

1828.8-MM (72-IN)

PART OF 426-6538, 426-6951 BUCKET GP-MULTIPURPOSE

AN ATTACHMENT

SMCS-6104 **i05288629**

NOTE	REF NO	GRAPHIC REF	PART NUMBER	QTY	PART NAME 1 2 3 4 5 6 (PRODUCT LEVEL)	SEE PAGE
	1	1	**142-8805**	4	BUSHING	
	2	1	**161-4130**	2	PLATE-IDENTIFICATION (CAT)	
	3	1	**149-5437**	1	EDGE	
	4	1	**159-8038**	2	FILM-WARNING (CRUSH HAZARD, STAY BACK)	

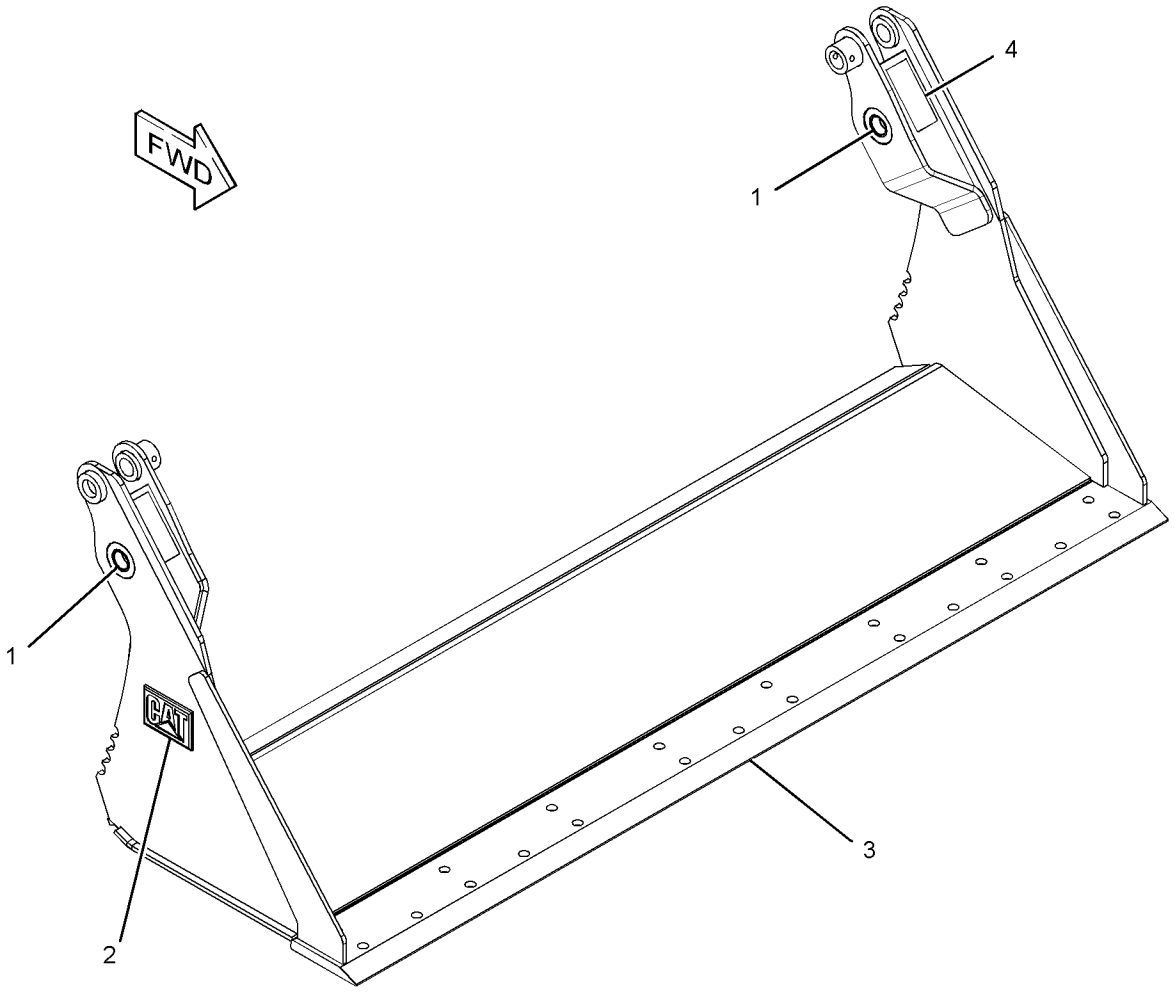

GRAPHIC #1 **<END>** g01945555

426-6551 CLAM AS-MULTIPURPOSE BUCKET

1981.2-MM (78-IN)
PART OF 426-6550, 426-7102 BUCKET GP-MULTIPURPOSE
AN ATTACHMENT

SMCS-6104 **i05284509**

NOTE	REF NO	GRAPHIC REF	PART NUMBER	QTY	PART NAME 1 2 3 4 5 6 (PRODUCT LEVEL)	SEE PAGE
	1	1	**142-8805**	4	BUSHING	
	2	1	**161-4130**	2	PLATE-IDENTIFICATION (CAT)	
	3	1	**199-7722**	1	EDGE (2035-MM)	
	4	1	**199-8317**	1	EDGE	
F			**159-8038**	2	FILM-WARNING (CRUSH HAZARD, STAY BACK)	

F - NOT SHOWN

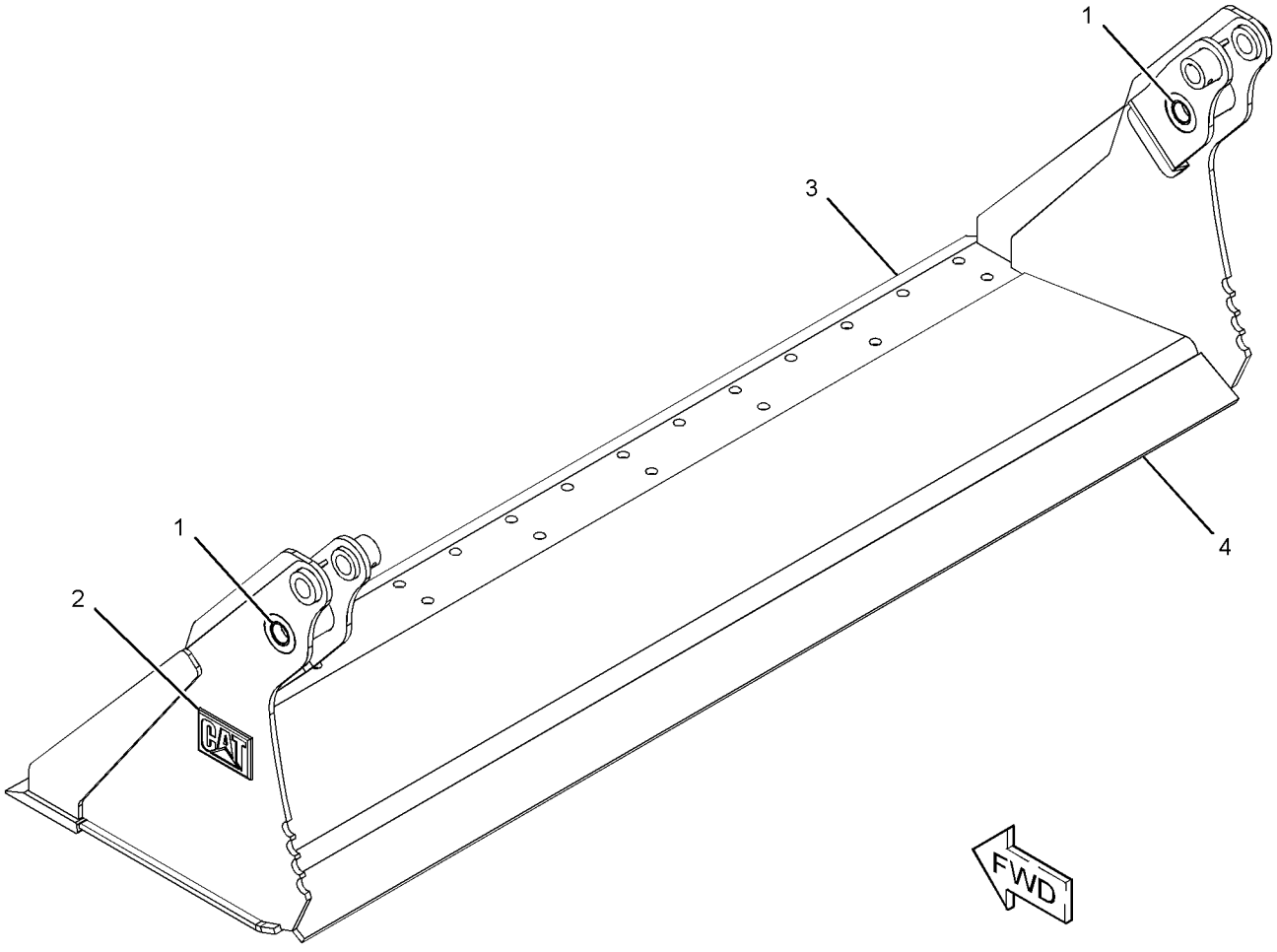

GRAPHIC #1 **<END>** g03360334

426-6561 CLAM AS-MULTIPURPOSE BUCKET

2133.6-MM (84-IN)

PART OF 426-6995 BUCKET AR-MULTIPURPOSE, 426-6560 BUCKET GP-MULTIPURPOSE

AN ATTACHMENT

SMCS-6104 **i05277421**

NOTE	REF NO	GRAPHIC REF	PART NUMBER	QTY	PART NAME 1 2 3 4 5 6 (PRODUCT LEVEL)	SEE PAGE
	1	1	**142-8805**	4	BUSHING	
	2	1	**161-4130**	2	PLATE-IDENTIFICATION (CAT)	
	3	1	**229-3432**	1	EDGE	
F			**159-8038**	2	FILM-WARNING (CRUSH HAZARD, STAY BACK)	

F - NOT SHOWN

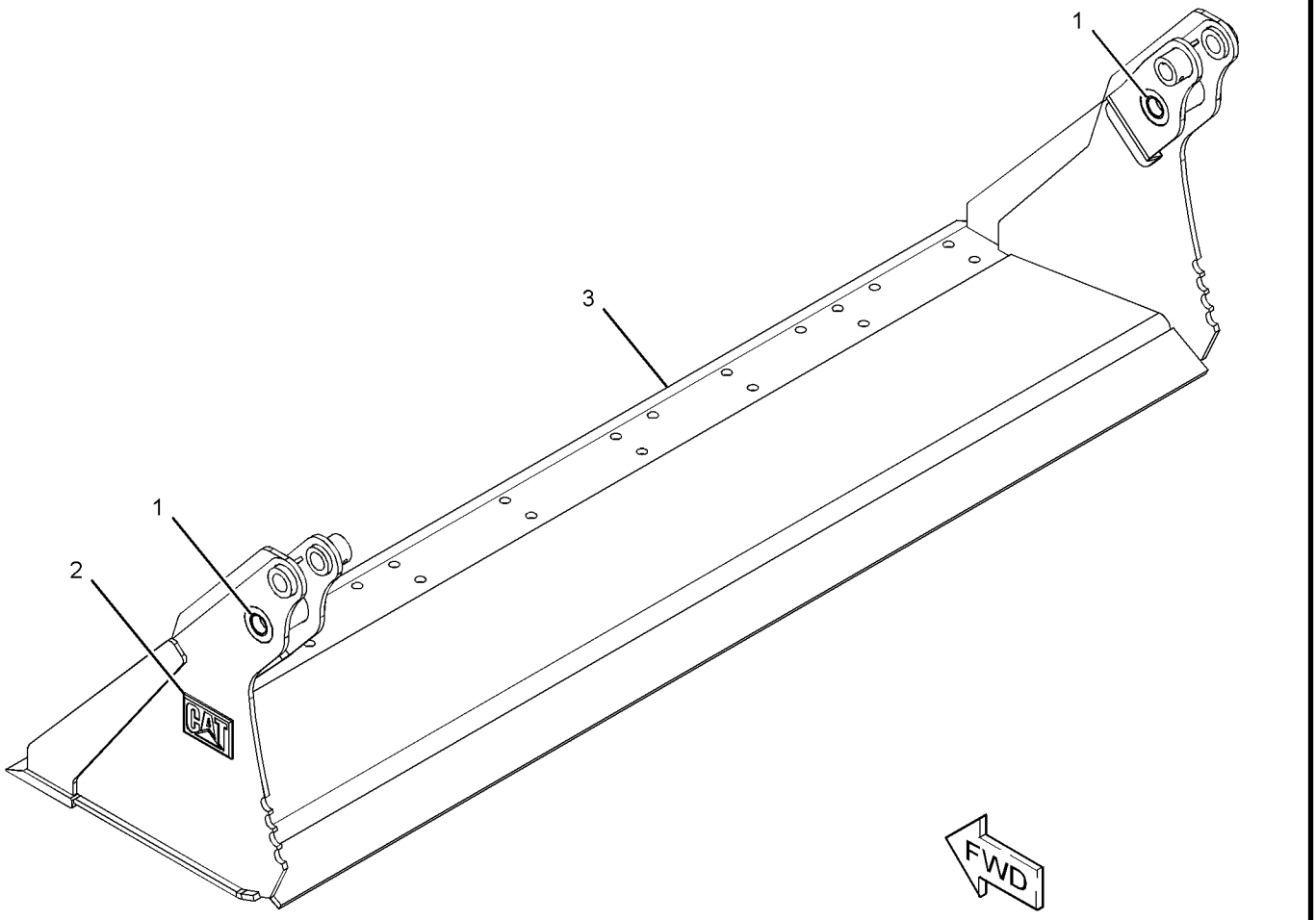

GRAPHIC #1 **<END>** g03360357

423-8296 CONVERSION GP-WORK TOOL

AN ATTACHMENT

SMCS-1408, 4283, 5057, 7553 **i05401582**

NOTE	REF NO	GRAPHIC REF	PART NUMBER	QTY	PART NAME 1 2 3 4 5 6 (PRODUCT LEVEL)	SEE PAGE
	1	1	**296-0583**	1	BRACKET	
	2	1	**296-0584**	1	MAGNET	
	3	1	**301-2980**	1	SWITCH AS-TOGGLE (IDLE SPEED)	
		1	**8T-8729**	3	PIN-CONNECTOR (16-GA TO 18-GA)	
		1	**102-8803**	1	KIT-RECEPTACLE (3-PIN)	
					(INCLUDES RECEPTACLE AS & WEDGE)	
		1	**6T-3631**	2	NUT-HEX (15/32-32-THD)	
		1	**6T-3632**	1	LOCKWASHER	
		1	**6T-3633**	1	RING-LOCKING	
Y	4	1	**421-4209**	1	HARNESS AS-CHASSIS (WORK TOOL)	98
	5	1	**096-6166**	4	WASHER-HARD (4.5X9X1-MM THK)	
M	6	1	**6V-9671**	2	SCREW-MACHINE (M3X0.5X12-MM)	
M	7	1	**8T-2658**	2	LOCKNUT (M3X0.5-THD)	

M - METRIC PART
Y - SEPARATE ILLUSTRATION

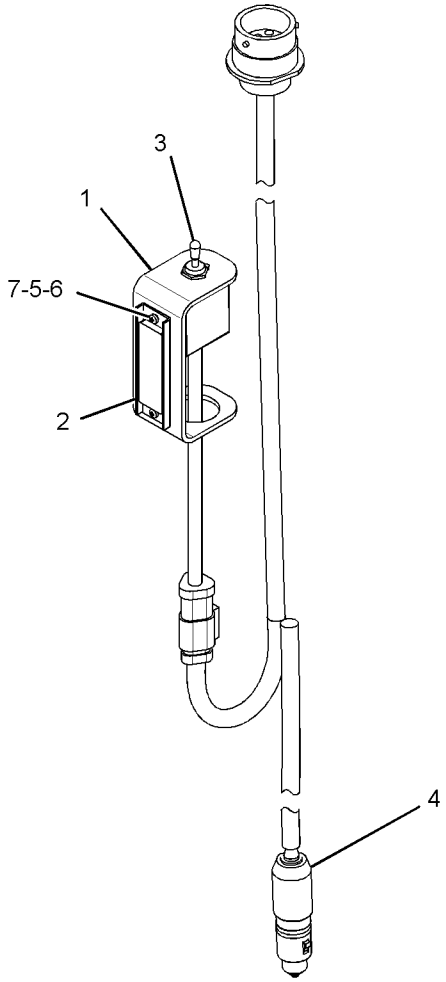

GRAPHIC #1 **<END>** g03360378

388-8298 COUPLER AR-QUICK

AN ATTACHMENT

SMCS-6129 **i05401583**

NOTE	PART NUMBER	QTY	PART NAME 1 2 3 4 5 6 (PRODUCT LEVEL)	SEE PAGE
Y	*388-8214*	1	COUPLER GP-QUICK (MANUAL)	416

Y - SEPARATE ILLUSTRATION

<END>

388-8300 COUPLER AR-QUICK—ELECTRIC

AN ATTACHMENT

SMCS-6129 **i05153654**

NOTE	PART NUMBER	QTY	PART NAME 1 2 3 4 5 6 (PRODUCT LEVEL)	SEE PAGE
Y	*388-8213*	1	COUPLER GP-QUICK	415
Y	*361-6378*	1	WIRING GP-QUICK COUPLER	144
	345-5112	1	COVER AS-GUARD	
M	**8T-4136**	2	BOLT (M10X1.5X25-MM)	
	266-3316	4	BOLT-FLANGE HEAD (M10X1.5X25-MM)	
	388-8216	2	PLATE-COVER	
	8T-4121	2	WASHER-HARD (11X21X2.5-MM THK)	

M - METRIC PART
Y - SEPARATE ILLUSTRATION

<END>

345-5030 COUPLER AS

PART OF 388-8214 COUPLER GP-QUICK
AN ATTACHMENT

SMCS-6129 **i05154381**

NOTE	REF NO	GRAPHIC REF	PART NUMBER	QTY	PART NAME 1 2 3 4 5 6 (PRODUCT LEVEL)	SEE PAGE
	1	1	**239-8534**	1	PLATE-WELD	
	2	1	**388-8212**	1	BRACKET AS	
	3	1	**388-8170**	2	PLATE AS	
					(EACH INCLUDES)	
M		1	**159-9541**	1	NUT-WELD (M10X1.5-THD)	
	4	1	**388-8205**	1	TUBE	
	5	1	**388-8206**	1	TUBE	
	6	1	**388-8211**	1	BRACKET AS	

M - METRIC PART

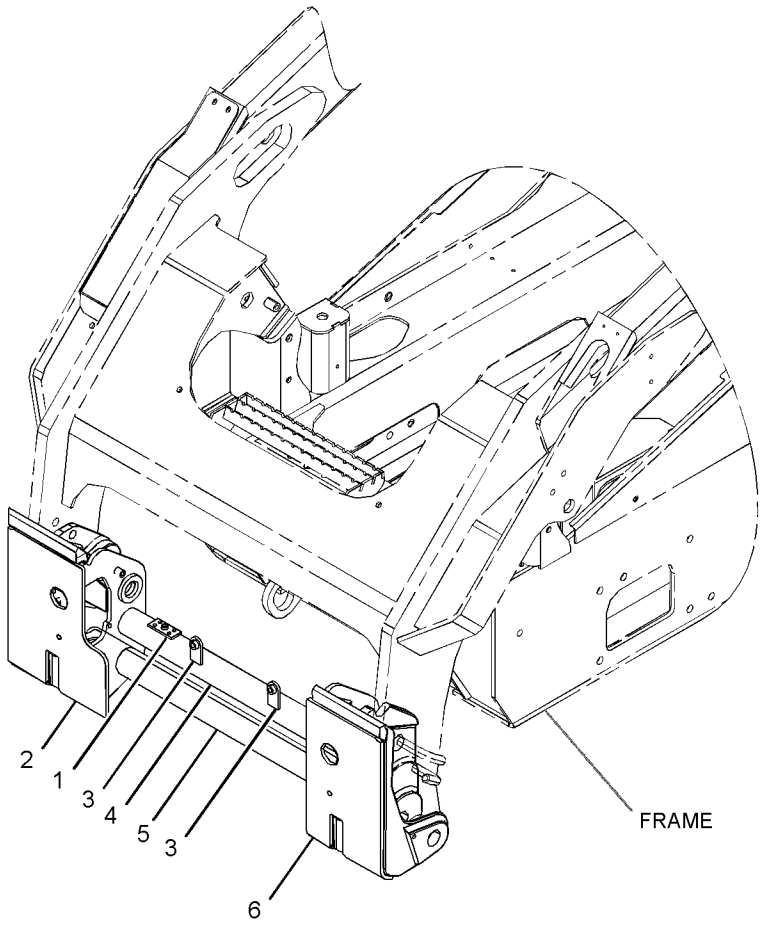

GRAPHIC #1 **<END>** g03323115

385-6372 COUPLER GP-QUICK

PART OF 385-6400, 385-6401 BLADE AR
AN ATTACHMENT

SMCS-6129 **i05164997**

NOTE	REF NO	GRAPHIC REF	PART NUMBER	QTY	PART NAME 1 2 3 4 5 6 (PRODUCT LEVEL)	SEE PAGE
	1	1	**385-6394**	1	COUPLER AS	
	2	1	**3E-9865**	4	LOCKNUT (1/4-20-THD)	
	3	1	**8T-9367**	4	BOLT (1/4-20X2-IN)	

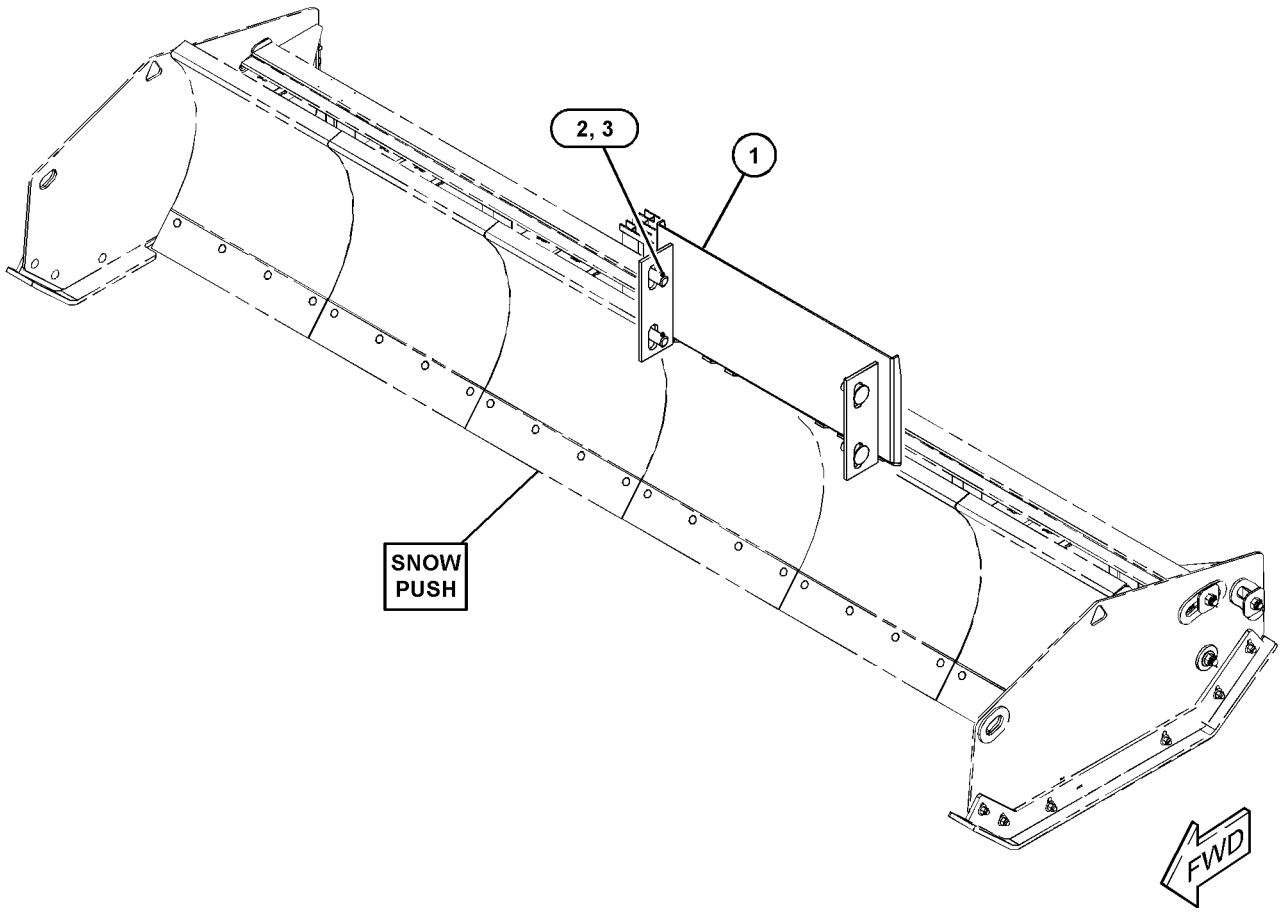

GRAPHIC #1 **<END>** g03320199

388-8213 COUPLER GP-QUICK–ELECTRIC

PART OF 388-8300 COUPLER AR-QUICK

AN ATTACHMENT

SMCS-6129 **i05401584**

NOTE	REF NO	GRAPHIC REF	PART NUMBER	QTY	PART NAME 1 2 3 4 5 6 (PRODUCT LEVEL)	SEE PAGE
	1	1	**345-5030**	1	COUPLER AS	
Y	2	1	*388-8209*	1	LINK GP-COUPLER (RH)	448
Y	3	1	*388-8210*	1	LINK GP-COUPLER (LH)	449
	4	1	**3B-4617**	2	PIN-COTTER	
	5	1	**3B-8485**	2	FITTING-GREASE	
M	6	1	**6V-7744**	2	LOCKNUT (M10X1.5-THD)	
	7	1	**6W-5752**	2	PIN	
	8	1	**8T-4121**	4	WASHER-HARD (11X21X2.5-MM THK)	
M	9	1	**8T-4178**	2	BOLT (M10X1.5X90-MM)	
	10	1	**8T-4223**	2	WASHER-HARD (13.5X25.5X3-MM THK)	

M - METRIC PART
Y - SEPARATE ILLUSTRATION

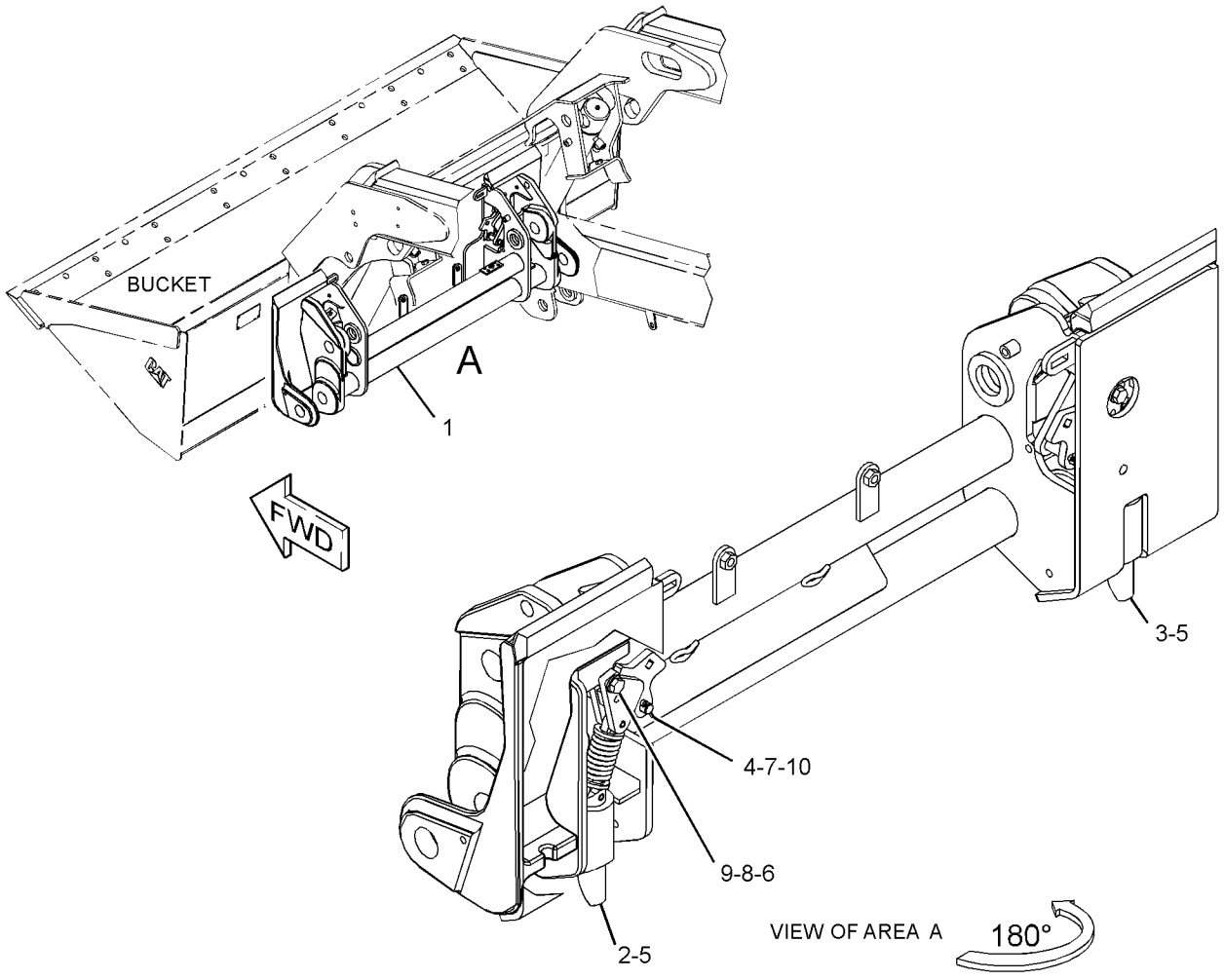

GRAPHIC #1 **<END>** g03405940

388-8214 COUPLER GP-QUICK–MANUAL

PART OF 388-8298 COUPLER AR-QUICK

AN ATTACHMENT

SMCS-6129 **i05154353**

NOTE	REF NO	GRAPHIC REF	PART NUMBER	QTY	PART NAME 1 2 3 4 5 6 (PRODUCT LEVEL)	SEE PAGE
	1	1	**159-5797**	2	SPRING	
Y	2	1	**345-5030**	1	COUPLER AS	413
Y	3	1	*388-8215*	1	LINK GP-COUPLER (RH)	450
Y	4	1	*388-8217*	1	LINK GP-COUPLER (LH)	451
	5	1	**132-7551**	2	SPACER (11X19X6-MM THK)	
	6	1	**3B-8489**	2	FITTING-GREASE	
M	7	1	**6V-7744**	2	LOCKNUT (M10X1.5-THD)	
	8	1	**8T-4121**	4	WASHER-HARD (11X21X2.5-MM THK)	
M	9	1	**8T-4172**	2	BOLT (M10X1.5X80-MM)	
	10	1	**8T-4222**	4	WASHER-PLATED (11X32X2.5-MM THK)	

M - METRIC PART
Y - SEPARATE ILLUSTRATION

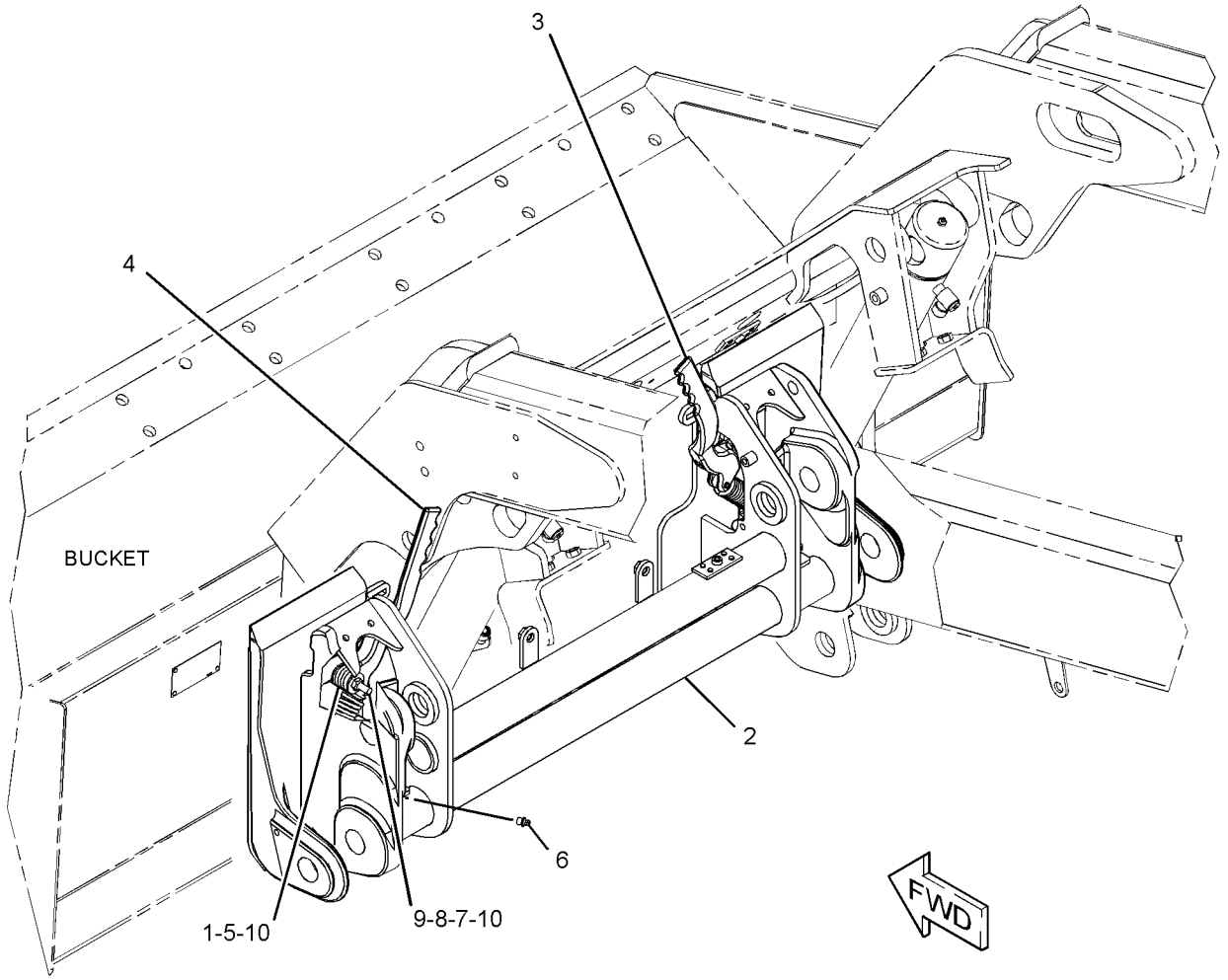

GRAPHIC #1 **<END>** g03322930

436-1605 COUPLER GP-QUICK

PART OF 388-8180 CHASSIS AR

SMCS-6129 **i05296312**

NOTE	REF NO	GRAPHIC REF	PART NUMBER	QTY	PART NAME 1 2 3 4 5 6 (PRODUCT LEVEL)	SEE PAGE
	1	1	**8V-5718**	4	CLAMP	
	2	1	**102-8705**	2	PLATE	
M	3	1	**7X-0818**	2	BOLT (M8X1.25X45-MM)	

M - METRIC PART

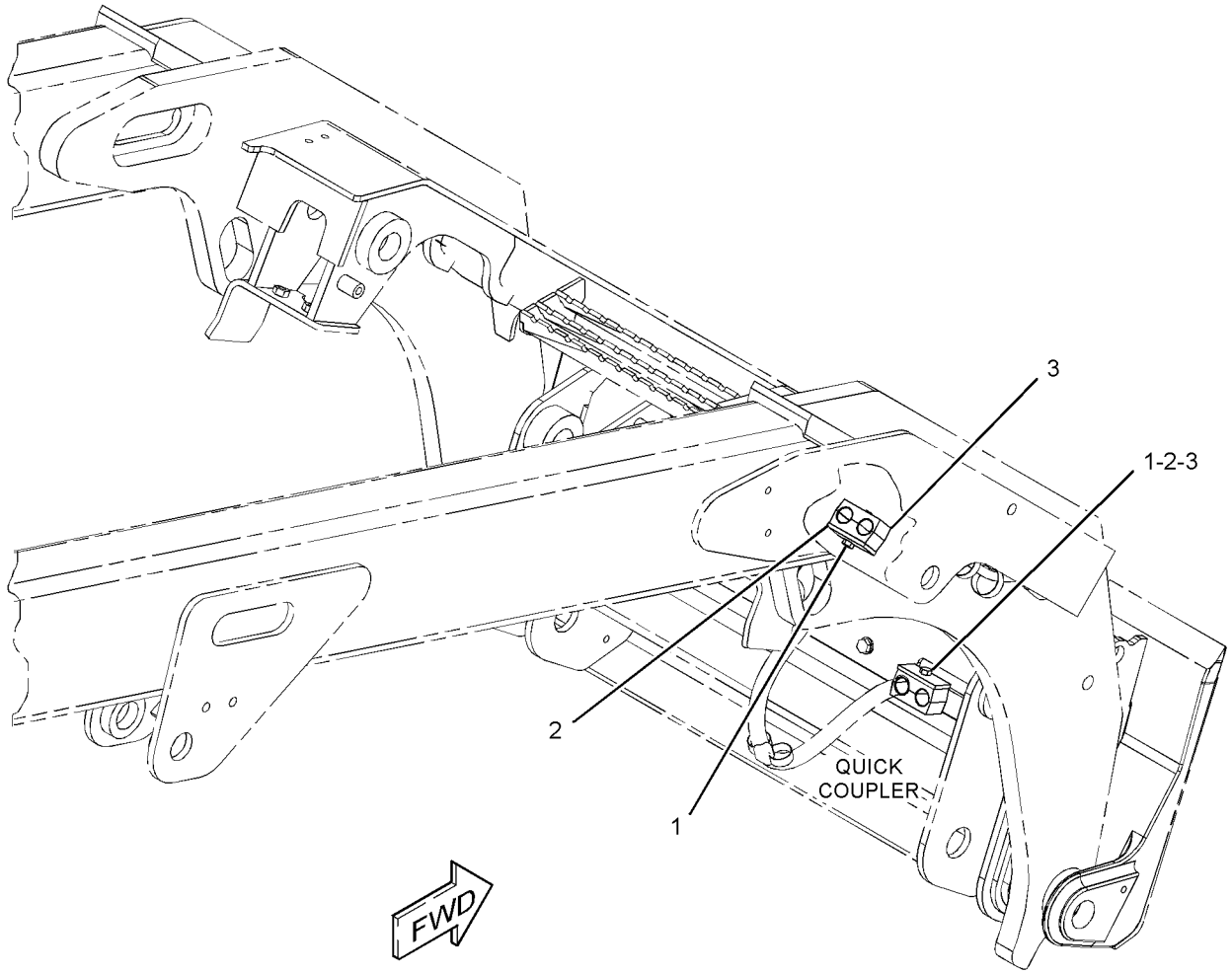

GRAPHIC #1 **<END>** g03366031

162-5236 COVER GP-LINES

PART OF 423-4291, 426-6492, 426-6537, 426-6549, 426-6559, 426-6933, 426-6940, 426-6947, 426-6970, 426-6992 BUCKET AR-MULTIPURPOSE
AN ATTACHMENT

SMCS- **i04358198**

NOTE	REF NO	GRAPHIC REF	PART NUMBER	QTY	PART NAME 1 2 3 4 5 6 (PRODUCT LEVEL)	SEE PAGE
	1	1	**161-4128**	1	PLATE	
M	2	1	**5C-9553**	5	BOLT (M6X1X16-MM)	
	3	1	**9X-2026**	5	WASHER (6.5X17X1-MM THK)	

M - METRIC PART

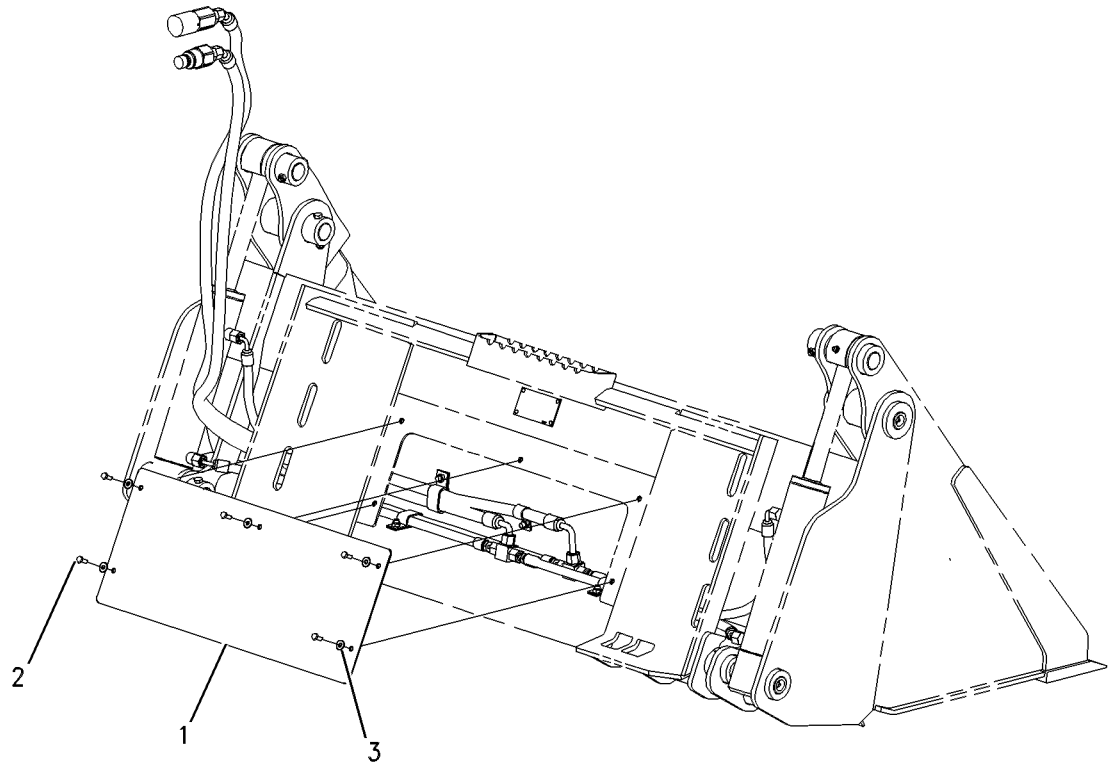

GRAPHIC #1 **<END>** g00560360

222-7545 EDGE GP-BIT & CUTTING

FOR USE WITH 2007-MM (79-IN) BUCKET
PART OF 231-5276 BLADE GP-ANGLING
AN ATTACHMENT

SMCS-6801, 6804 **i04411305**

NOTE	REF NO	GRAPHIC REF	PART NUMBER	QTY	PART NAME 1 2 3 4 5 6 (PRODUCT LEVEL)	SEE PAGE
	1	1	**6Y-5839**	1	BIT-END (RH)	
	2	1	**6Y-5840**	1	BIT-END (LH)	
	3	1	**142-4914**	1	EDGE-CUTTING	
	4	1	**3F-5108**	10	BOLT-PLOW (5/8-11X2.25-IN)	
	5	1	**4F-3658**	4	BOLT-PLOW (5/8-11X3-IN)	
	6	1	**4K-0367**	14	NUT-FULL (5/8-11-THD)	
	7	1	**5P-8247**	14	WASHER-HARD (17X32X3.5-MM THK)	

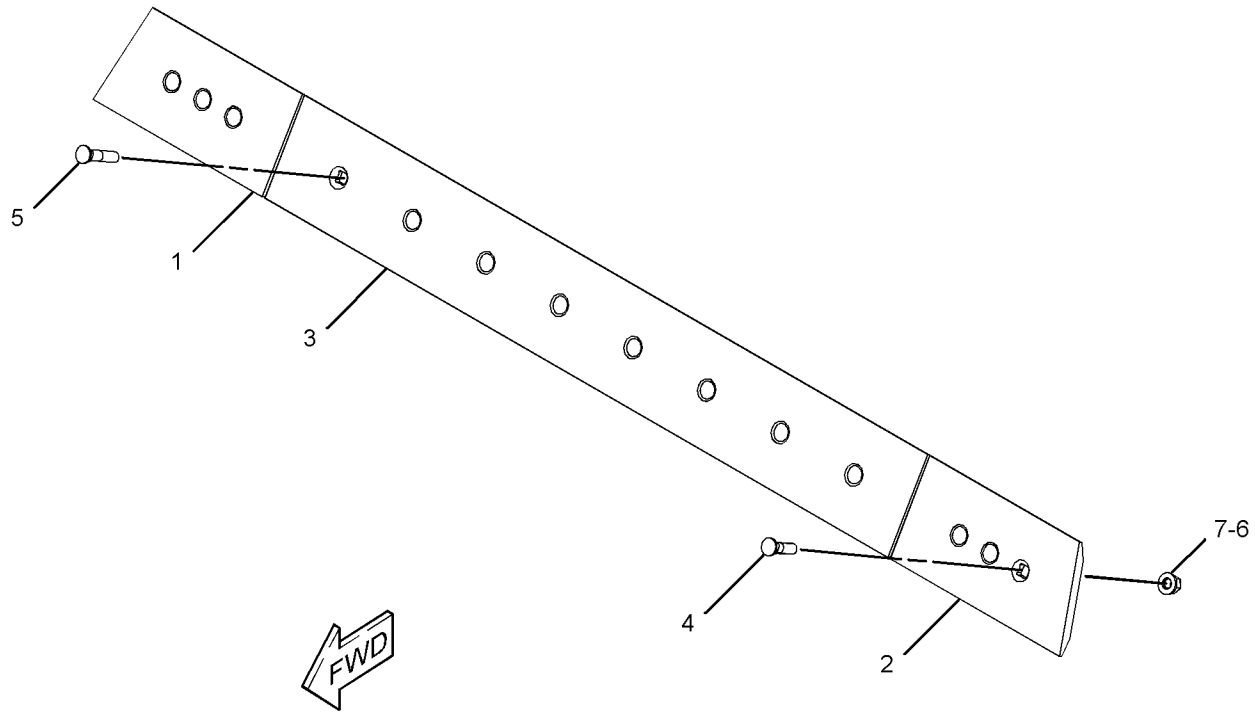

GRAPHIC #1 **<END>** g02615958

222-7546 EDGE GP-BIT & CUTTING

FOR USE WITH 2337-MM (92-IN) BUCKET
PART OF 222-7724 BLADE GP-ANGLING
AN ATTACHMENT

SMCS-6801, 6804 **i03647019**

NOTE	PART NUMBER	QTY	PART NAME 1 2 3 4 5 6 (PRODUCT LEVEL)	SEE PAGE
	6Y-5839	1	BIT-END (RH)	
	6Y-5840	1	BIT-END (LH)	
	3F-5108	13	BOLT-PLOW (5/8-11X2.25-IN)	
	4F-3658	4	BOLT-PLOW (5/8-11X3-IN)	
	143-3088	1	EDGE-CUTTING	
	4K-0367	17	NUT-FULL (5/8-11-THD)	
	5P-8247	17	WASHER-HARD (17X32X3.5-MM THK)	

<END>

135-9383 EDGE GP-CUTTING

FOR USE WITH 1372-MM (54-IN) BUCKET
PART OF 279-5435 BUCKET AR-DIRT
AN ATTACHMENT

SMCS-6801 **i02571125**

NOTE	PART NUMBER	QTY	PART NAME 1 2 3 4 5 6 (PRODUCT LEVEL)	SEE PAGE
	135-9393	1	EDGE-CUTTING	
M	**8T-4778**	6	LOCKNUT (M16X2-THD)	
M	**159-2953**	6	SCREW-FLAT HEAD (M16X2-THD)	

M - METRIC PART

<END>

135-9384 EDGE GP-CUTTING

FOR USE WITH 1524-MM (60-IN) BUCKET
PART OF 279-5438 BUCKET AR-DIRT, 279-5365 BUCKET AR-GENERAL PURPOSE, 157-7226 BUCKET AR-GRAPPLE, 426-6932, 431-5570 BUCKET AR-MULTIPURPOSE, 285-6095 BUCKET AR-UTILITY AN ATTACHMENT

SMCS-6801 **i01372033**

NOTE	REF NO	GRAPHIC REF	PART NUMBER	QTY	PART NAME 1 2 3 4 5 6 (PRODUCT LEVEL)	SEE PAGE
	1	1	**135-9394**	1	EDGE-CUTTING	
M	2	1	**8T-4778**	8	LOCKNUT (M16X2.00 THD)	
M	3	1	**159-2953**	8	SCREW-FLAT HEAD (M16X2.00 THD)	

M - METRIC PART

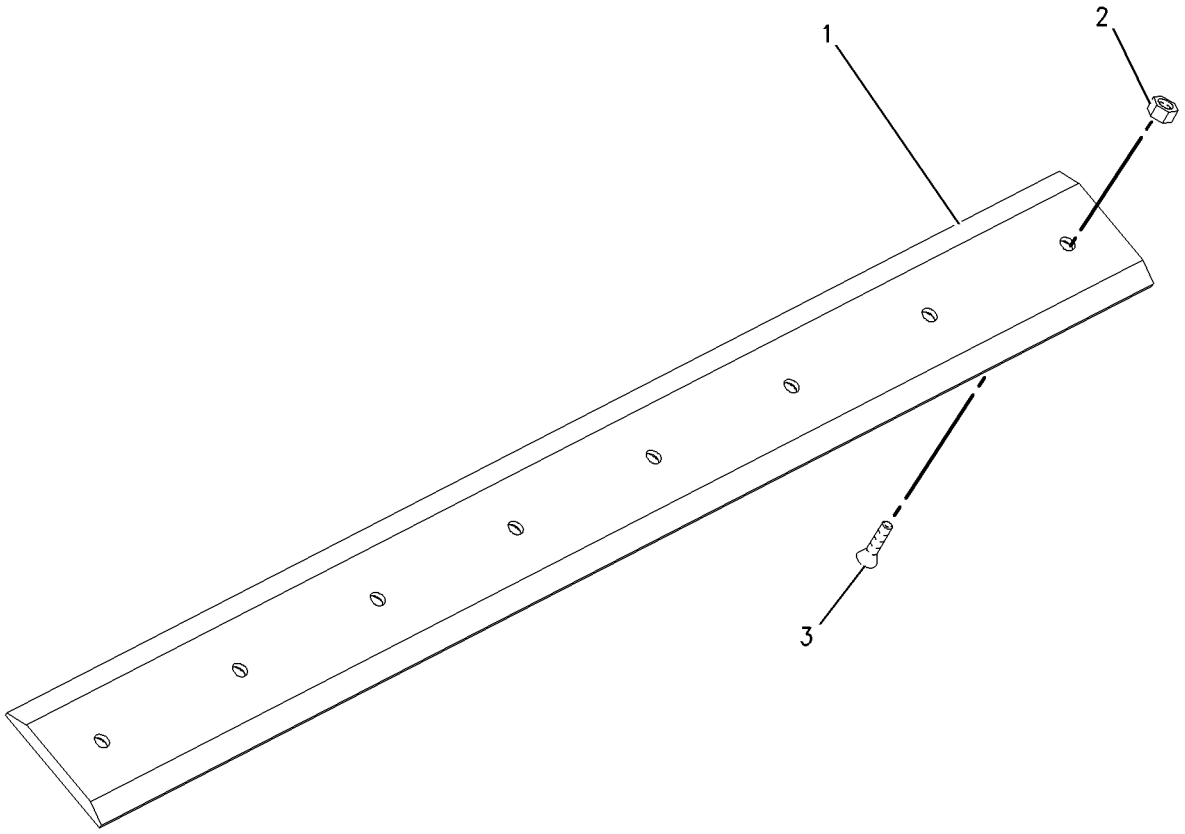

GRAPHIC #1 **<END>** g00724087

135-9385 EDGE GP-CUTTING

FOR USE WITH 1676-MM (66-IN) BUCKET
PART OF 279-5441 BUCKET AR-DIRT, 279-5369 BUCKET AR-GENERAL PURPOSE, 157-7227 BUCKET AR-GRAPPLE, 426-6490, 426-6939 BUCKET AR-MULTIPURPOSE, 285-6100 BUCKET AR-UTILITY
AN ATTACHMENT

SMCS-6801 **i01228508**

NOTE	REF NO	GRAPHIC REF	PART NUMBER	QTY	PART NAME 1 2 3 4 5 6 (PRODUCT LEVEL)	SEE PAGE
	1	1	**135-9395**	1	EDGE-CUTTING	
M	2	1	**8T-4778**	8	LOCKNUT (M16X2.00 THD)	
M	3	1	**159-2953**	8	SCREW-FLAT HEAD (M16X2.00 THD)	

M - METRIC PART

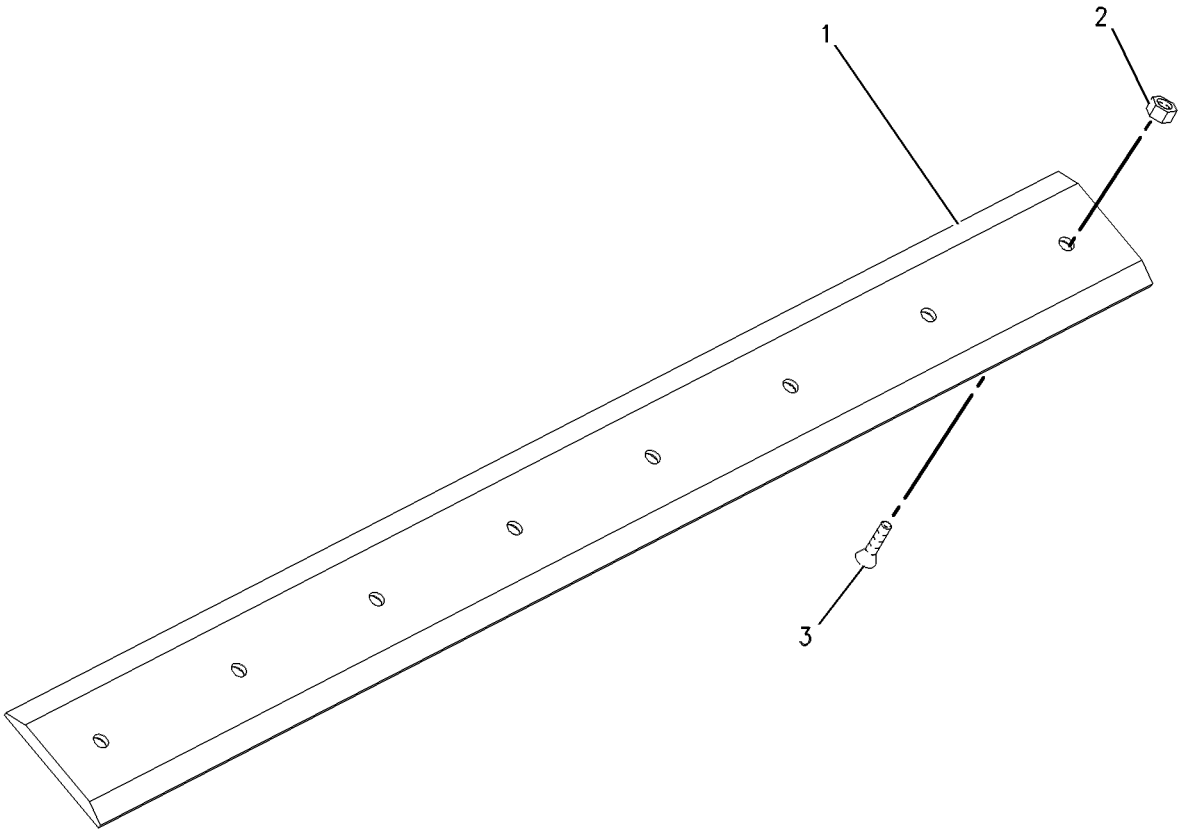

GRAPHIC #1 **<END>** g00657004

135-9386 EDGE GP-CUTTING

FOR USE WITH 1829-MM (72-IN) BUCKET
PART OF 177-1989 BLADE AR, 285-6090 BUCKET AR-DIRT, 279-5373 BUCKET AR-GENERAL PURPOSE, 158-6095 BUCKET AR-GRAPPLE, 279-5420 BUCKET AR-LIGHT MATERIAL, 426-6536, 426-6945 BUCKET AR-MULTIPURPOSE, 285-6101 BUCKET AR-UTILITY
AN ATTACHMENT

SMCS-6801 **i01372498**

NOTE	REF NO	GRAPHIC REF	PART NUMBER	QTY	PART NAME 1 2 3 4 5 6 (PRODUCT LEVEL)	SEE PAGE
	1	1	**135-9396**	1	EDGE-CUTTING	
M	2	1	**8T-4778**	11	LOCKNUT (M16X2.00 THD)	
M	3	1	**159-2953**	11	SCREW-FLAT HEAD (M16X2.00 THD)	

M - METRIC PART

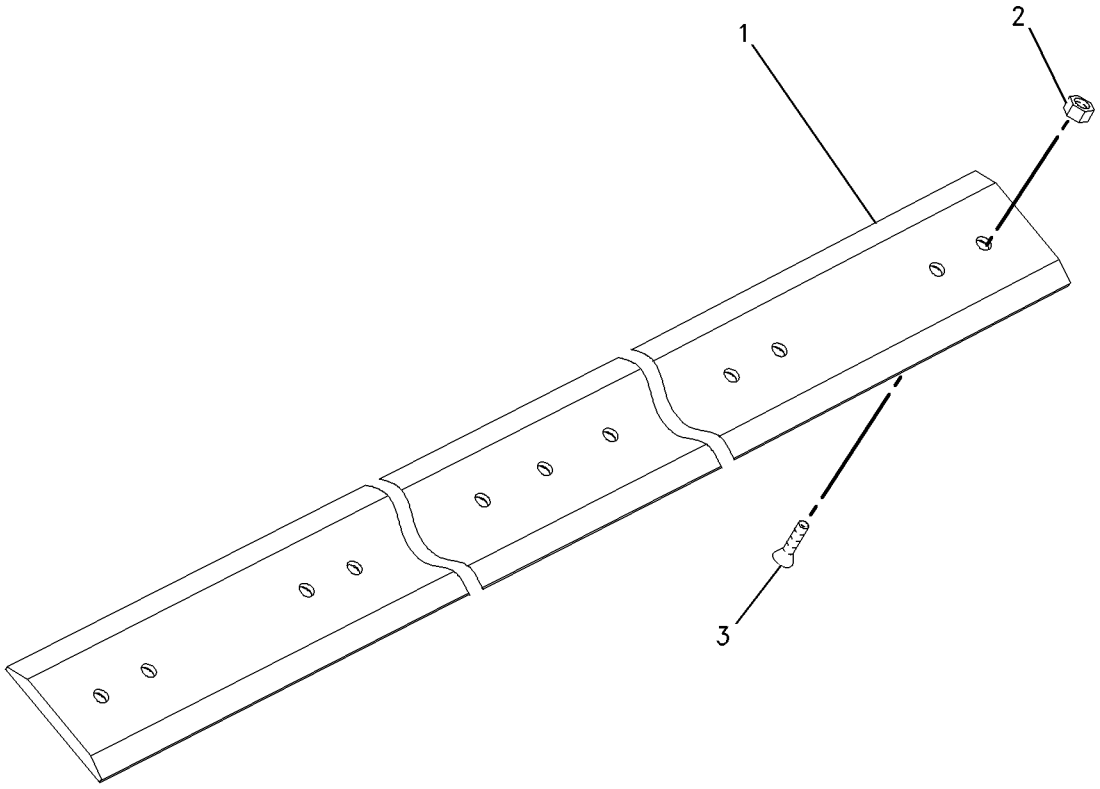

GRAPHIC #1 **<END>** g00724435

135-9387 EDGE GP-CUTTING

FOR USE WITH 1981-MM (78-IN) BUCKET
PART OF 268-4083 BUCKET AR-DIRT, 279-5377 BUCKET AR-GENERAL PURPOSE, 217-6230 BUCKET AR-GRAPPLE, 279-5425 BUCKET AR-LIGHT MATERIAL, 426-6548, 426-6967 BUCKET AR-MULTIPURPOSE
AN ATTACHMENT

SMCS-6801 **i01755490**

NOTE	REF NO	GRAPHIC REF	PART NUMBER	QTY	PART NAME 1 2 3 4 5 6 (PRODUCT LEVEL)	SEE PAGE
	1	1	**135-9397**	1	EDGE-CUTTING	
M	2	1	**8T-4778**	11	LOCKNUT (M16X2 THD)	
M	3	1	**159-2953**	11	SCREW-FLAT HEAD (M16X2.00 THD)	

M - METRIC PART

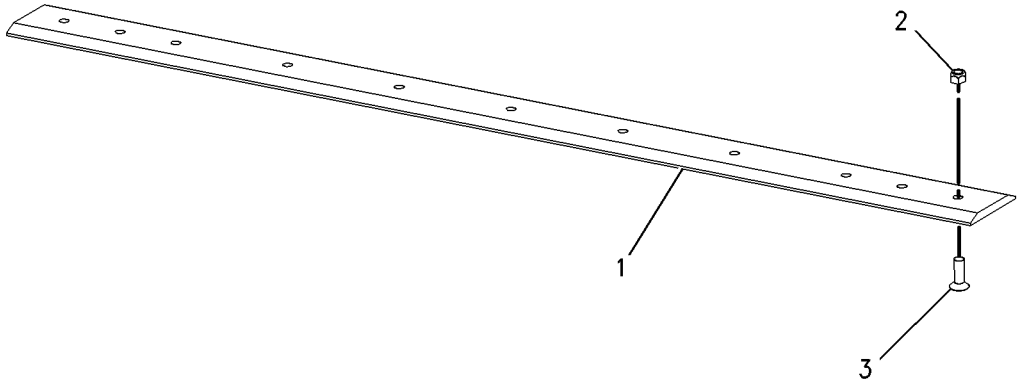

GRAPHIC #1 **<END>** g00898154

149-5741 EDGE GP-CUTTING

FOR USE WITH 2159-MM (85-IN) BUCKET
PART OF 177-1990 BLADE AR
AN ATTACHMENT

SMCS-6801 **i01832720**

NOTE	REF NO	GRAPHIC REF	PART NUMBER	QTY	PART NAME 1 2 3 4 5 6 (PRODUCT LEVEL)	SEE PAGE
	1	1	**195-5124**	1	EDGE-CUTTING	
M	2	1	**8T-4778**	7	LOCKNUT (M16X2 THD)	
M	3	1	**159-2953**	7	SCREW-FLAT HEAD (M16X2.00 THD)	

M - METRIC PART

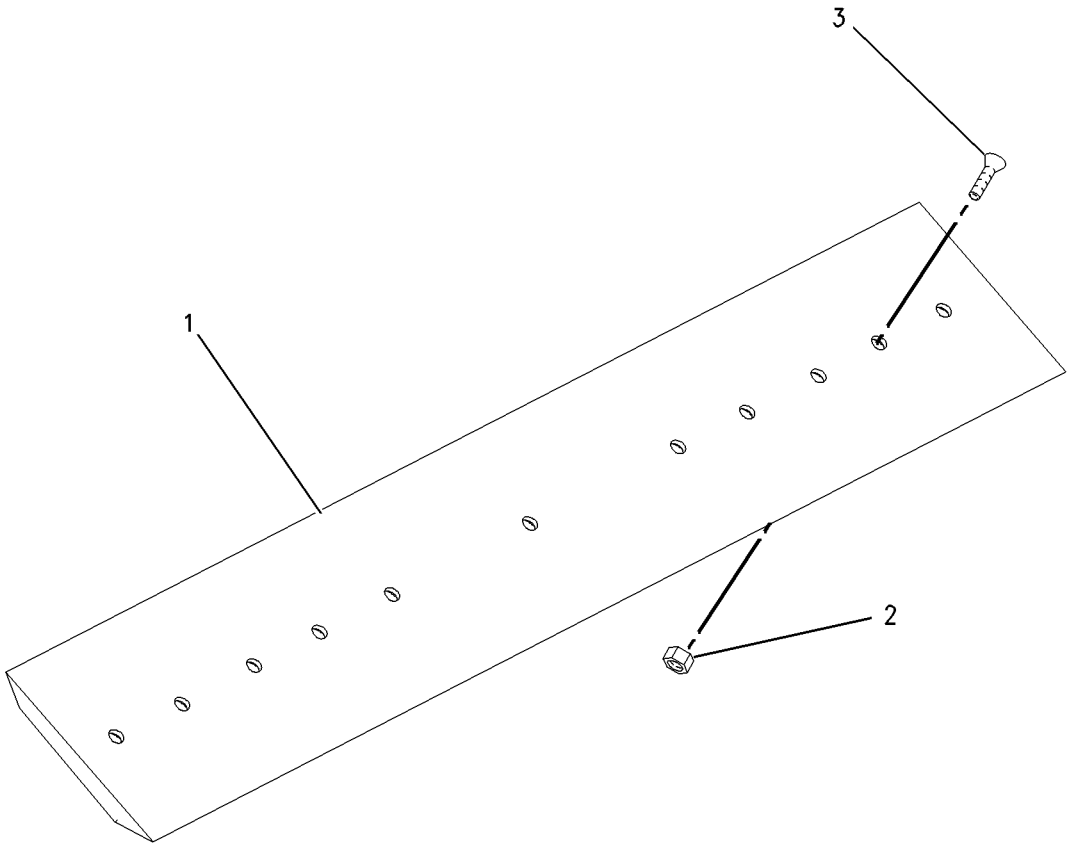

GRAPHIC #1 **<END>** g00936281

195-7124 EDGE GP-CUTTING

FOR USE WITH 2134-MM (84-IN) BUCKET
PART OF 296-8192 BUCKET AR-GENERAL PURPOSE, 279-5430 BUCKET AR-LIGHT MATERIAL, 426-6558, 426-6989 BUCKET AR-MULTIPURPOSE
AN ATTACHMENT

SMCS-6801 **i01859534**

NOTE	PART NUMBER	QTY	PART NAME 1 2 3 4 5 6 (PRODUCT LEVEL)	SEE PAGE
	195-5124	1	EDGE-CUTTING	
M	**8T-4778**	11	LOCKNUT (M16X2 THD)	
M	**159-2953**	11	SCREW-FLAT HEAD (M16X2.00 THD)	

M - METRIC PART

<END>

296-7680 EDGE GP-CUTTING

FOR USE WITH 2438.5-MM (96-IN) BUCKET
PART OF 296-7597 BUCKET AR-LIGHT MATERIAL
AN ATTACHMENT

SMCS-6801 **i03508403**

NOTE	REF NO	GRAPHIC REF	PART NUMBER	QTY	PART NAME 1 2 3 4 5 6 (PRODUCT LEVEL)	SEE PAGE
	1	1	**296-7602**	1	EDGE-CUTTING	
M	2	1	**159-2953**	13	SCREW-FLAT HEAD (M16X2-THD)	
M	3	1	**8T-4778**	13	LOCKNUT (M16X2-THD)	

M - METRIC PART

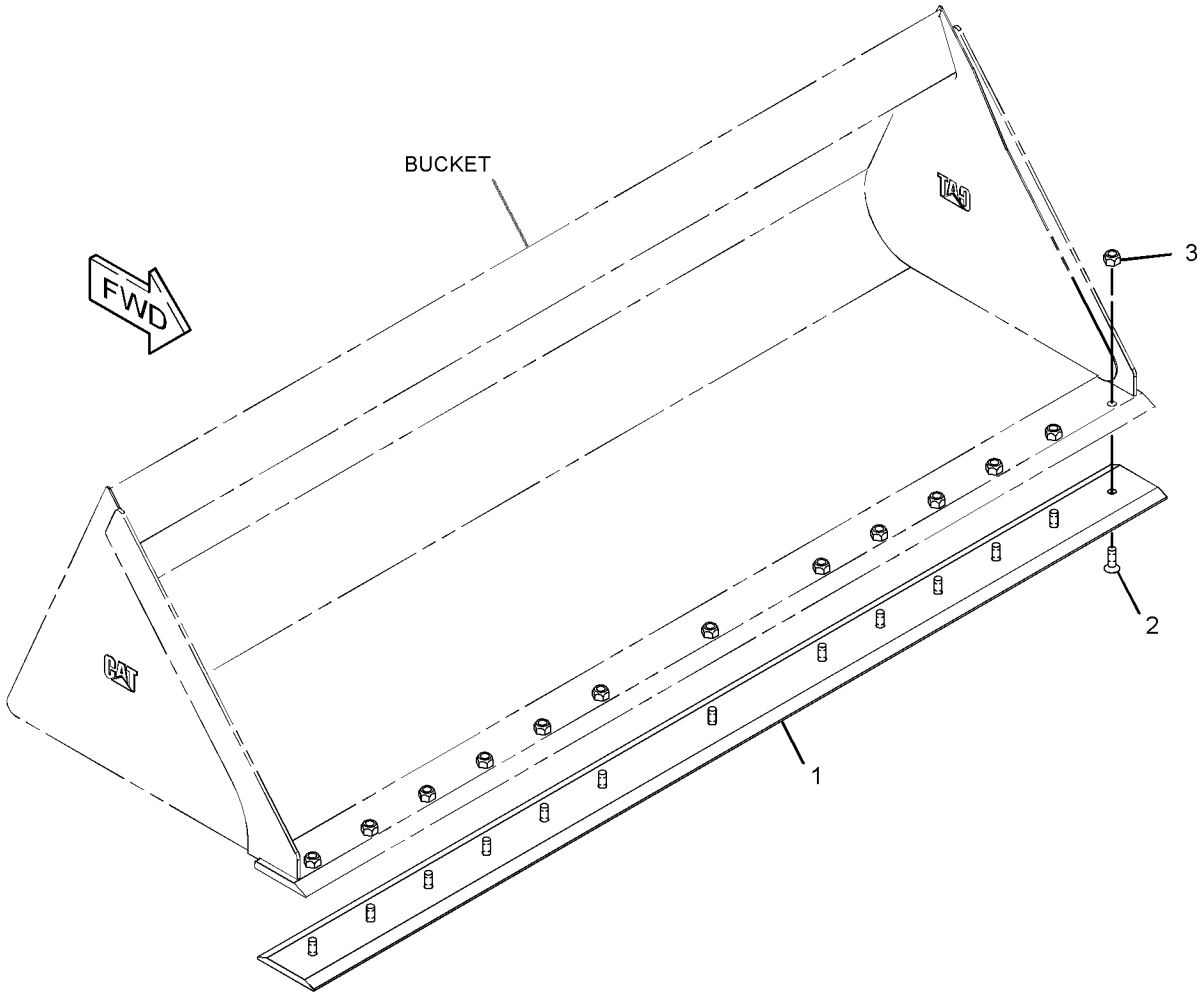

GRAPHIC #1 **<END>** g01845076

279-5350 FORK AR-GRAPPLE–INDUSTRIAL

AN ATTACHMENT

SMCS-6705 **i05202163**

NOTE	PART NUMBER	QTY	PART NAME 1 2 3 4 5 6 (PRODUCT LEVEL)	SEE PAGE
Y	**278-1975**	2	CYLINDER GP-GRAPPLE (INDUSTRIAL)	213
Y	*164-9614*	9	FORK GP-GRAPPLE (INDUSTRIAL)	429
Y	*279-5351*	1	FORK GP-GRAPPLE (66-IN, INDUSTRIAL)	430
Y	*279-5412*	1	LINES GP-BUCKET (INDUSTRIAL)	231
Y	*156-0891*	1	MOUNTING GP-CYLINDER (INDUSTRIAL)	279

Y - SEPARATE ILLUSTRATION

<END>

279-5360 FORK AR-GRAPPLE–INDUSTRIAL

AN ATTACHMENT

SMCS-6705 **i02715593**

NOTE	PART NUMBER	QTY	PART NAME 1 2 3 4 5 6 (PRODUCT LEVEL)	SEE PAGE
Y	**278-1975**	2	CYLINDER GP-GRAPPLE (INDUSTRIAL)	213
Y	*164-9614*	2	FORK GP-GRAPPLE (INDUSTRIAL)	429
Y	*279-5359*	1	BUCKET GP-GRAPPLE (72-IN, INDUSTRIAL)	389
Y	*279-5412*	1	LINES GP-BUCKET (INDUSTRIAL)	231
Y	*156-0891*	1	MOUNTING GP-CYLINDER (INDUSTRIAL)	279

Y - SEPARATE ILLUSTRATION

<END>

285-6114 FORK AR-GRAPPLE–UTILITY

AN ATTACHMENT

SMCS-6705 **i02552497**

NOTE	PART NUMBER	QTY	PART NAME 1 2 3 4 5 6 (PRODUCT LEVEL)	SEE PAGE
Y	**285-6105**	1	FORK GP-UTILITY (66-IN)	441
Y	*285-6116*	1	GRAPPLE & CYLINDER GP-UTILITY	445

Y - SEPARATE ILLUSTRATION

<END>

285-6115 FORK AR-GRAPPLE–UTILITY

AN ATTACHMENT

SMCS-6705 **i02552699**

NOTE	PART NUMBER	QTY	PART NAME 1 2 3 4 5 6 (PRODUCT LEVEL)	SEE PAGE
Y	**285-6110**	1	FORK GP-GRAPPLE	431
Y	*285-6116*	1	GRAPPLE & CYLINDER GP-UTILITY	445

Y - SEPARATE ILLUSTRATION

<END>

164-9614 FORK GP-GRAPPLE

PART OF 279-5350, 279-5360 FORK AR-GRAPPLE

AN ATTACHMENT

SMCS-6705 **i01075196**

NOTE	REF NO	GRAPHIC REF	PART NUMBER	QTY	PART NAME 1 2 3 4 5 6 (PRODUCT LEVEL)	SEE PAGE
	1	1	**3E-4370**	1	PIN-SPRING	
	2	1	**162-8154**	1	TINE	

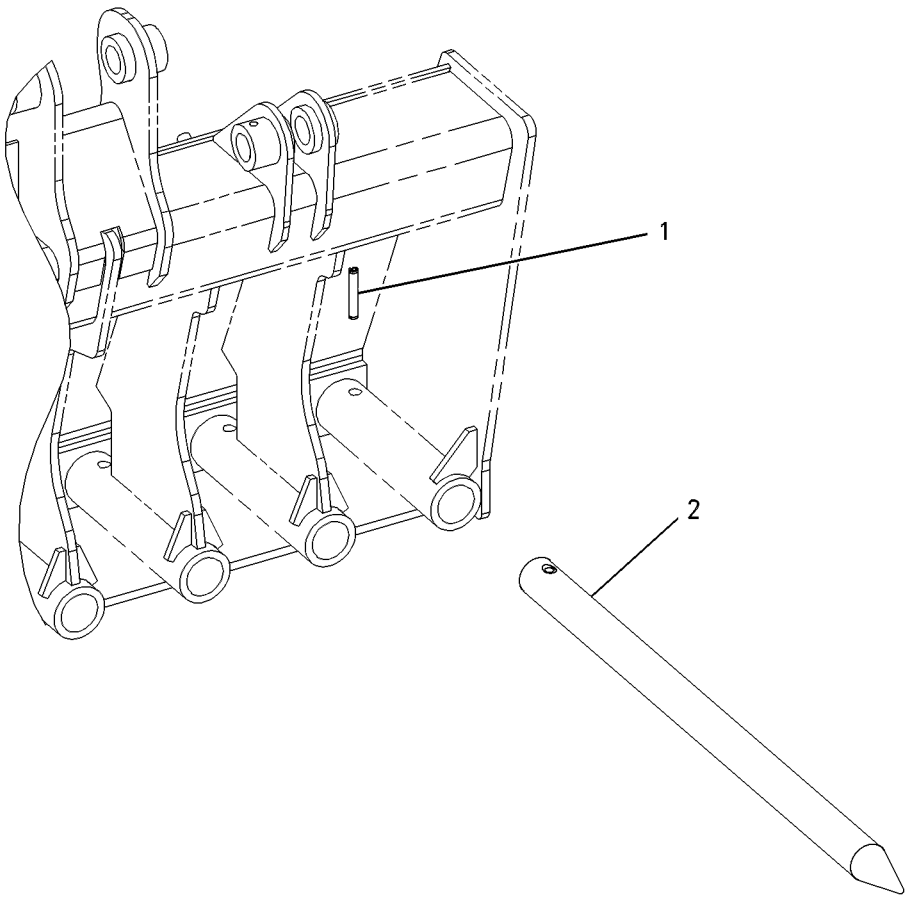

GRAPHIC #1 **<END>** g00559648

279-5351 FORK GP-GRAPPLE—INDUSTRIAL

1676-MM (66-IN)
PART OF 279-5350 FORK AR-GRAPPLE
AN ATTACHMENT

SMCS-6705 **i05401599**

NOTE	REF NO	GRAPHIC REF	PART NUMBER	QTY	PART NAME 1 2 3 4 5 6 (PRODUCT LEVEL)	SEE PAGE
	1	1	**157-0940**	4	PIN	
	2	1	**164-9989**	2	FILM-WARNING (CRUSH HAZARD)	
	3	1	**222-7467**	2	FORK AS	
					(EACH INCLUDES)	
	3A	1	**158-5648**	2	BUSHING	
Y	4	1	**279-5352**	1	FRAME GP-FORK (66-IN, INDUSTRIAL)	443
	5	1	**3B-8489**	4	FITTING-GREASE	
M	6	1	**6V-9189**	4	LOCKNUT (M8X1.25-THD)	
M	7	1	**8T-6869**	4	BOLT (M8X1.25X60-MM)	

M - METRIC PART
Y - SEPARATE ILLUSTRATION

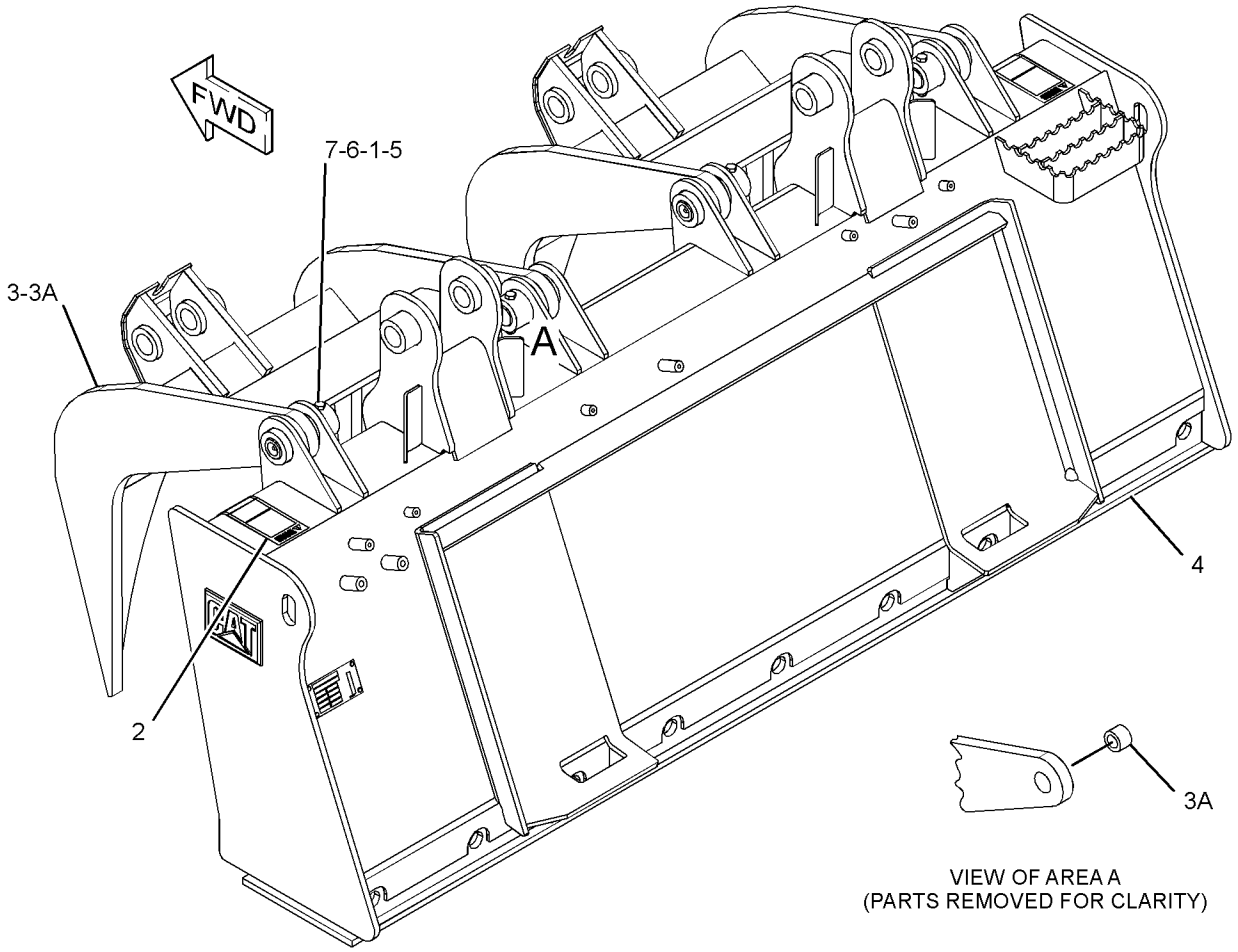

GRAPHIC #1 **<END>** g03412934

285-6110 FORK GP-GRAPPLE–UTILITY

1828.8-MM (72-IN)
PART OF 285-6115 FORK AR-GRAPPLE
AN ATTACHMENT

SMCS-6705 **i04045395**

NOTE	REF NO	GRAPHIC REF	PART NUMBER	QTY	PART NAME 1 2 3 4 5 6 (PRODUCT LEVEL)	SEE PAGE
	1	1	**164-9989**	2	FILM-WARNING (CRUSH HAZARD)	
Y	2	1	*165-8732*	9	FORK GP-UTILITY	436
	3	1	**154-2704**	1	PLATE-INSTRUCTION (BUCKET SPECIFICATIONS)	
	4	1	**168-8389**	4	TACK-FASTENER	

Y - SEPARATE ILLUSTRATION

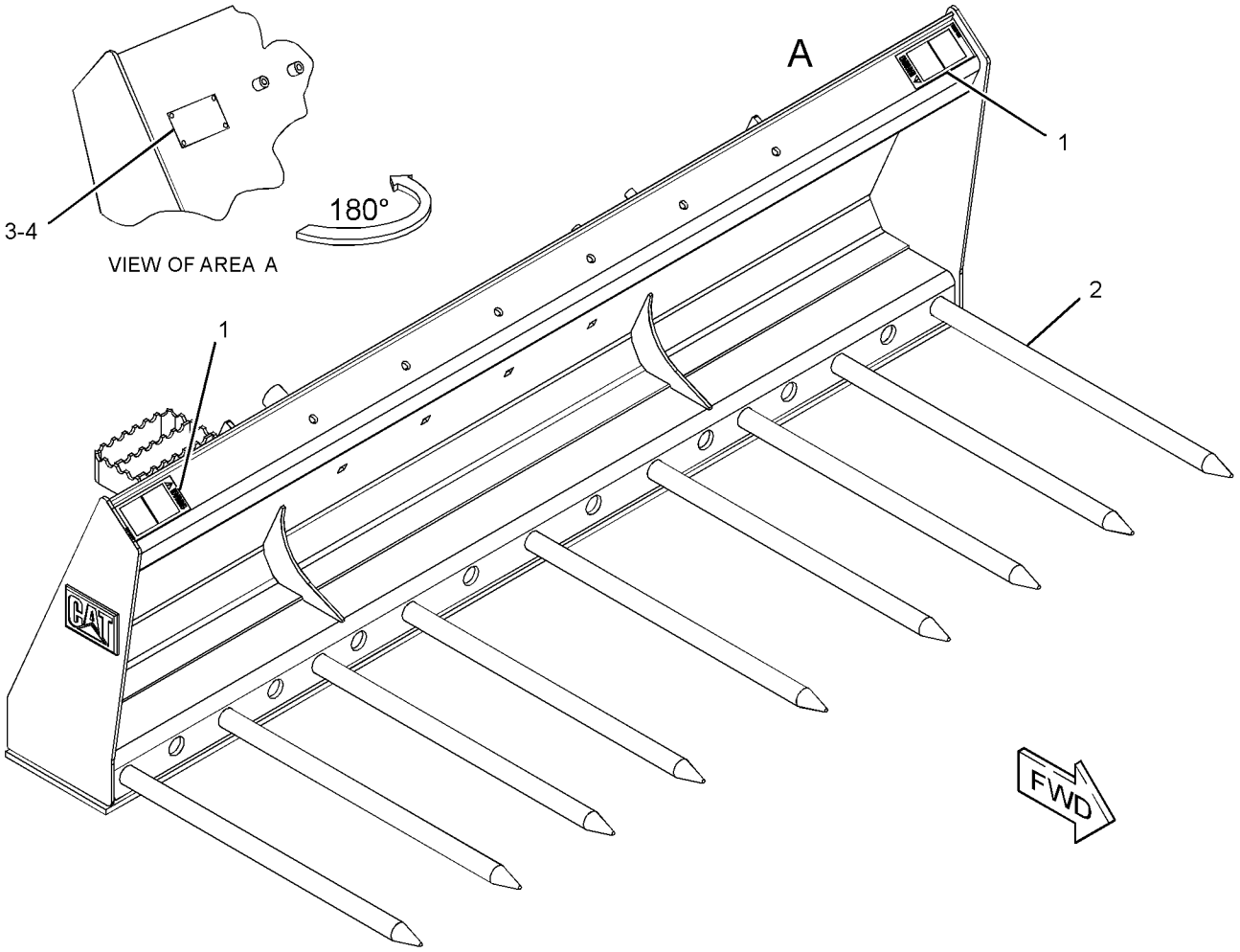

GRAPHIC #1 **<END>** g02265514

195-6942 FORK GP-PALLET

1067-MM (42-IN)

PART OF 353-1696 CARRIAGE & FORK AR, 243-0002 FORK GP-PALLET

AN ATTACHMENT

SMCS-6136 **i05203236**

NOTE	REF NO	GRAPHIC REF	PART NUMBER	QTY	PART NAME 1 2 3 4 5 6 (PRODUCT LEVEL)	SEE PAGE
	1	1	**221-3429**	1	POSITIONER GP-FORK	

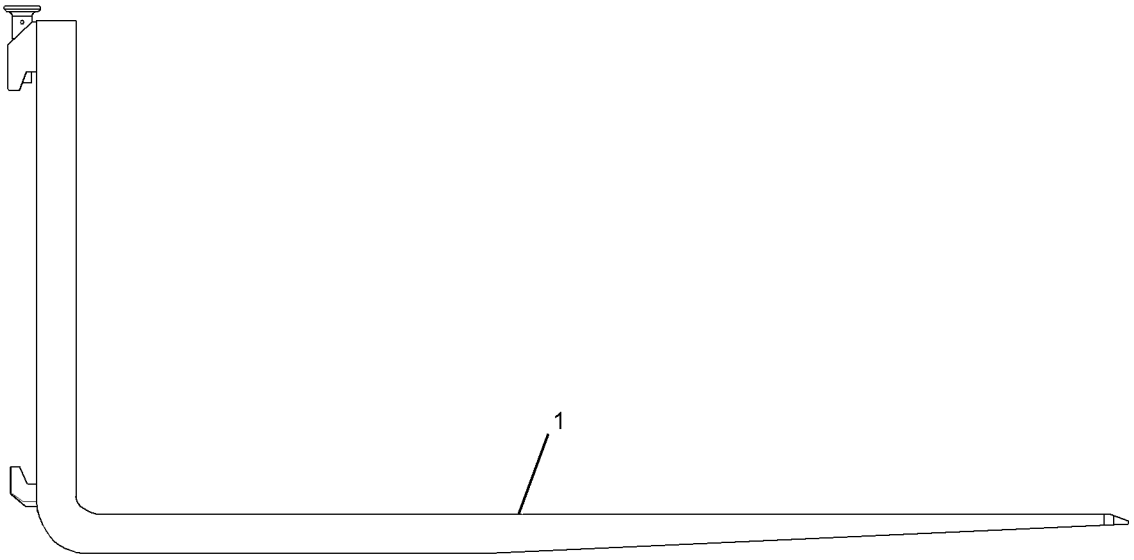

GRAPHIC #1 **<END>** g02265054

195-6943 FORK GP-PALLET

914-MM (36-IN)

PART OF 353-1694 CARRIAGE & FORK AR, 243-0001 FORK GP-PALLET

AN ATTACHMENT

SMCS-6136 **i05203237**

NOTE	REF NO	GRAPHIC REF	PART NUMBER	QTY	PART NAME 1 2 3 4 5 6 (PRODUCT LEVEL)	SEE PAGE
	1	1	**221-3429**	1	POSITIONER GP-FORK	

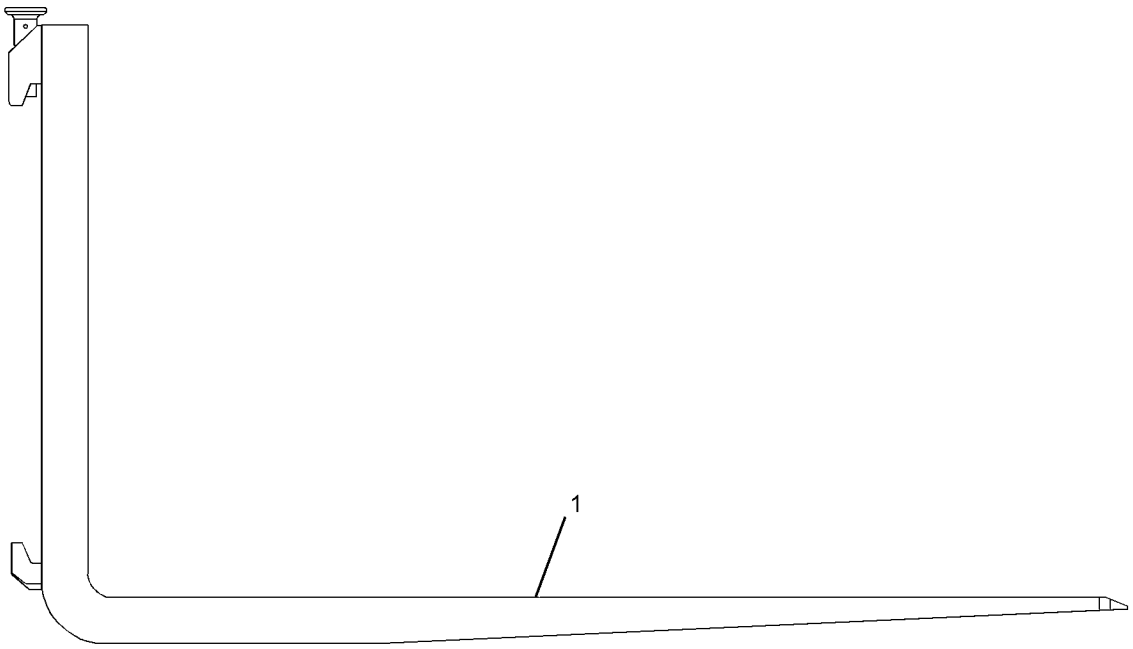

GRAPHIC #1 **<END>** g02265095

195-8545 FORK GP-PALLET

1219-MM (48-IN)

PART OF 353-1697 CARRIAGE & FORK AR, 243-0003 FORK GP-PALLET

AN ATTACHMENT

SMCS-6136 **i05203238**

NOTE	REF NO	GRAPHIC REF	PART NUMBER	QTY	PART NAME 1 2 3 4 5 6 (PRODUCT LEVEL)	SEE PAGE
	1	1	**221-3429**	1	POSITIONER GP-FORK	

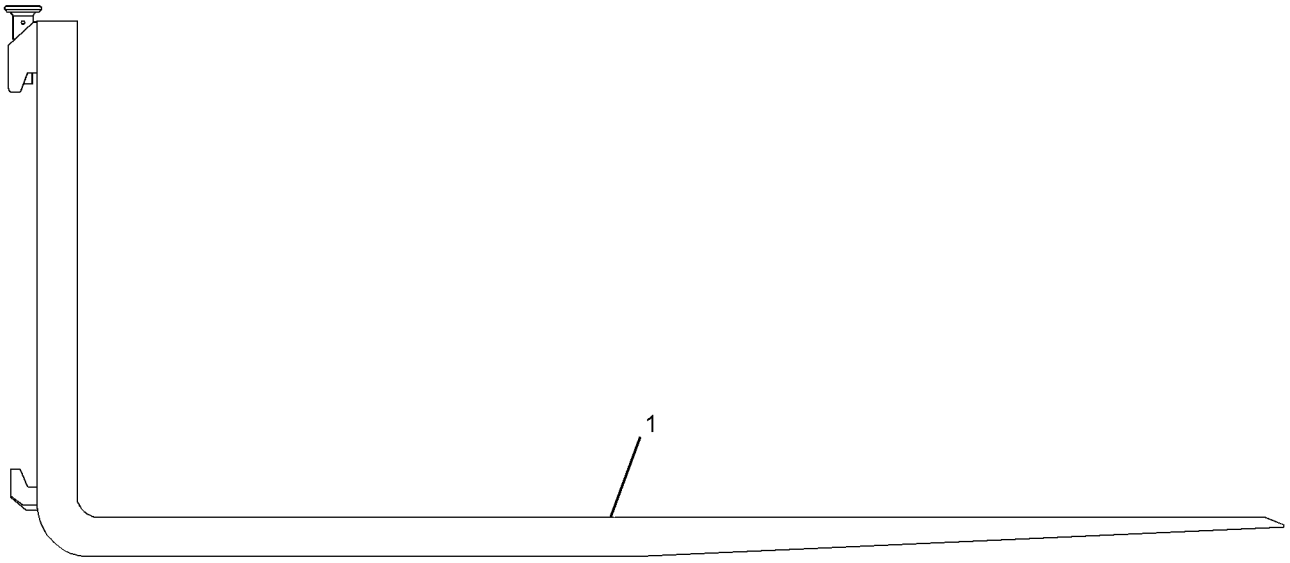

GRAPHIC #1 **<END>** g02265213

243-0001 FORK GP-PALLET–KIT

AN ATTACHMENT

SMCS-6136 **i05223750**

NOTE	PART NUMBER	QTY	PART NAME 1 2 3 4 5 6 (PRODUCT LEVEL)	SEE PAGE
Y	**195-6943**	12	FORK GP-PALLET (36-IN)	433

Y - SEPARATE ILLUSTRATION

<END>

243-0002 FORK GP-PALLET–KIT

AN ATTACHMENT

SMCS-6136 **i05203263**

NOTE	PART NUMBER	QTY	PART NAME 1 2 3 4 5 6 (PRODUCT LEVEL)	SEE PAGE
Y	**195-6942**	12	FORK GP-PALLET (42-IN)	432

Y - SEPARATE ILLUSTRATION

<END>

243-0003 FORK GP-PALLET–KIT

AN ATTACHMENT

SMCS-6136 **i05203264**

NOTE	PART NUMBER	QTY	PART NAME 1 2 3 4 5 6 (PRODUCT LEVEL)	SEE PAGE
Y	**195-8545**	12	FORK GP-PALLET (48-IN)	434

Y - SEPARATE ILLUSTRATION

<END>

165-8732 FORK GP-UTILITY

1676-MM (66-IN)

PART OF 285-6110 FORK GP-GRAPPLE, 165-8736, 165-8737, 285-6105 FORK GP-UTILITY

AN ATTACHMENT

SMCS-6458 **i01204324**

NOTE	REF NO	GRAPHIC REF	PART NUMBER	QTY	PART NAME 1 2 3 4 5 6 (PRODUCT LEVEL)	SEE PAGE
	1	1	**9R-2959**	1	CLIP	
	2	1	**166-4041**	1	TINE	

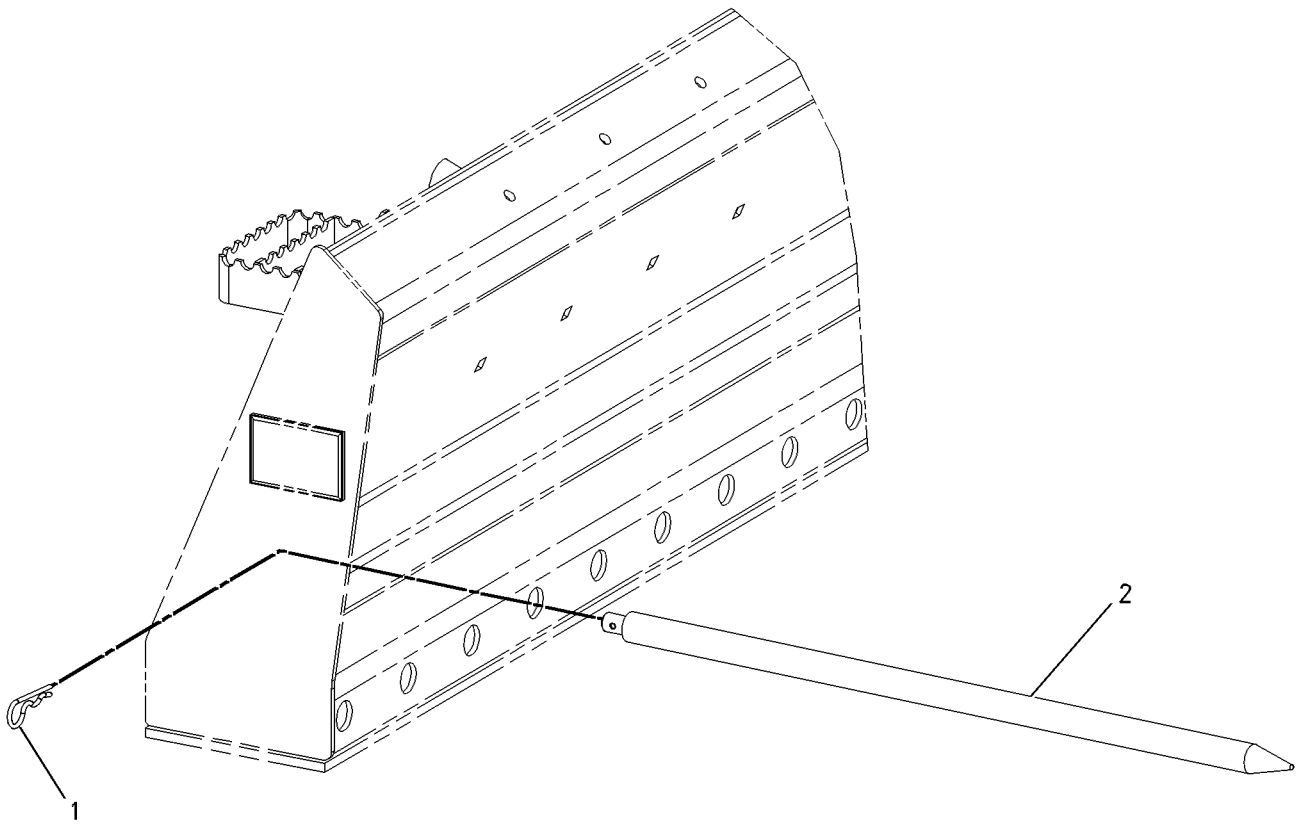

GRAPHIC #1 **<END>** g00639778

165-8736 FORK GP-UTILITY

AN ATTACHMENT

SMCS-6458 **i04268269**

NOTE	REF NO	GRAPHIC REF	PART NUMBER	QTY	PART NAME 1 2 3 4 5 6 (PRODUCT LEVEL)	SEE PAGE
	1	1	**164-9989**	2	FILM-WARNING (CRUSH HAZARD)	
Y	2	1	*165-8732*	7	FORK GP-UTILITY	436
Y	3	1	*165-8738*	1	FORK GP-UTILITY	439

Y - SEPARATE ILLUSTRATION

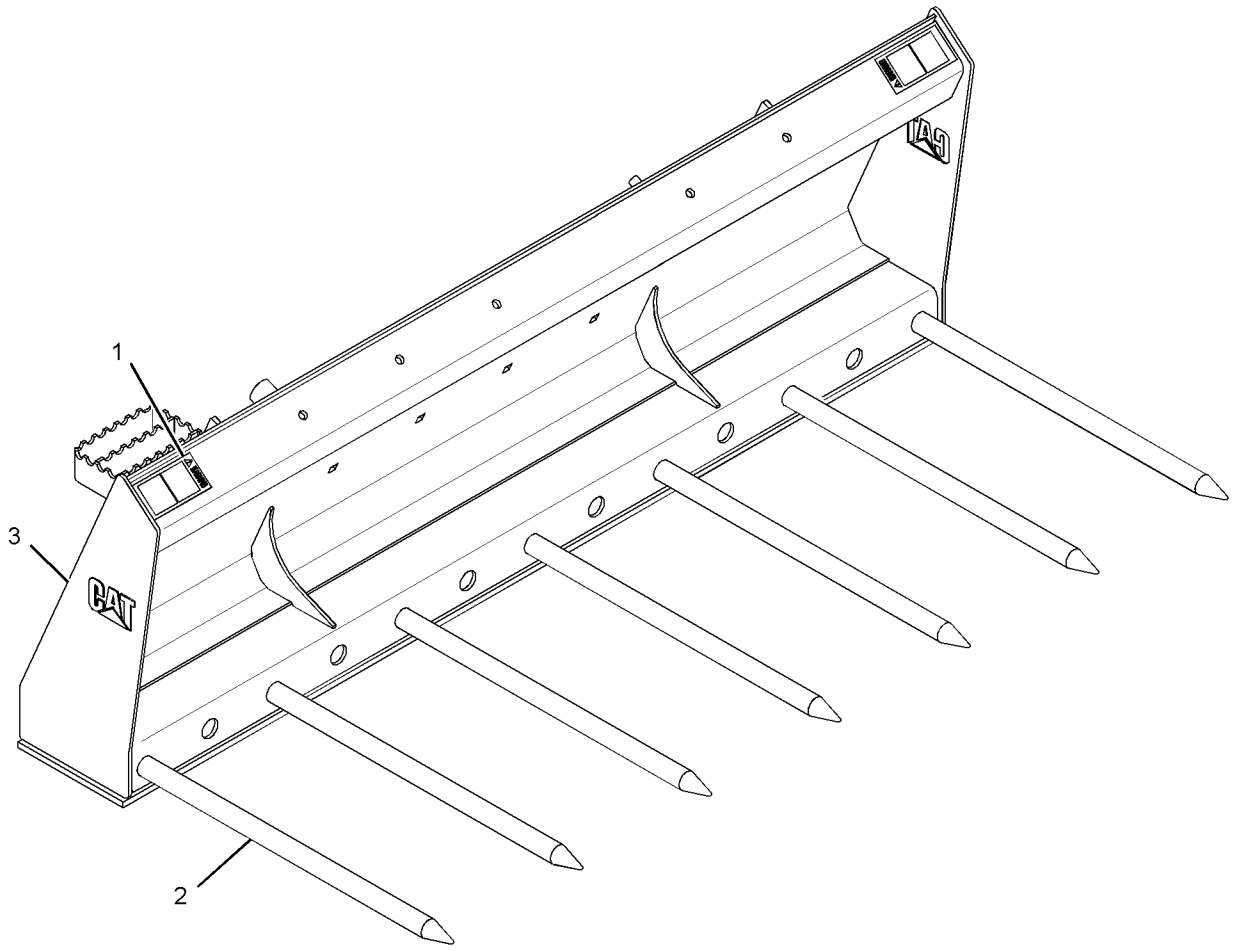

GRAPHIC #1 **<END>** g01527067

165-8737 FORK GP-UTILITY

AN ATTACHMENT

SMCS-6458 **i04269749**

NOTE	REF NO	GRAPHIC REF	PART NUMBER	QTY	PART NAME 1 2 3 4 5 6 (PRODUCT LEVEL)	SEE PAGE
	1	1	**164-9989**	2	FILM-WARNING (CRUSH HAZARD)	
Y	2	1	*165-8732*	9	FORK GP-UTILITY	436
Y	3	1	*165-8739*	1	FORK GP-UTILITY	440

Y - SEPARATE ILLUSTRATION

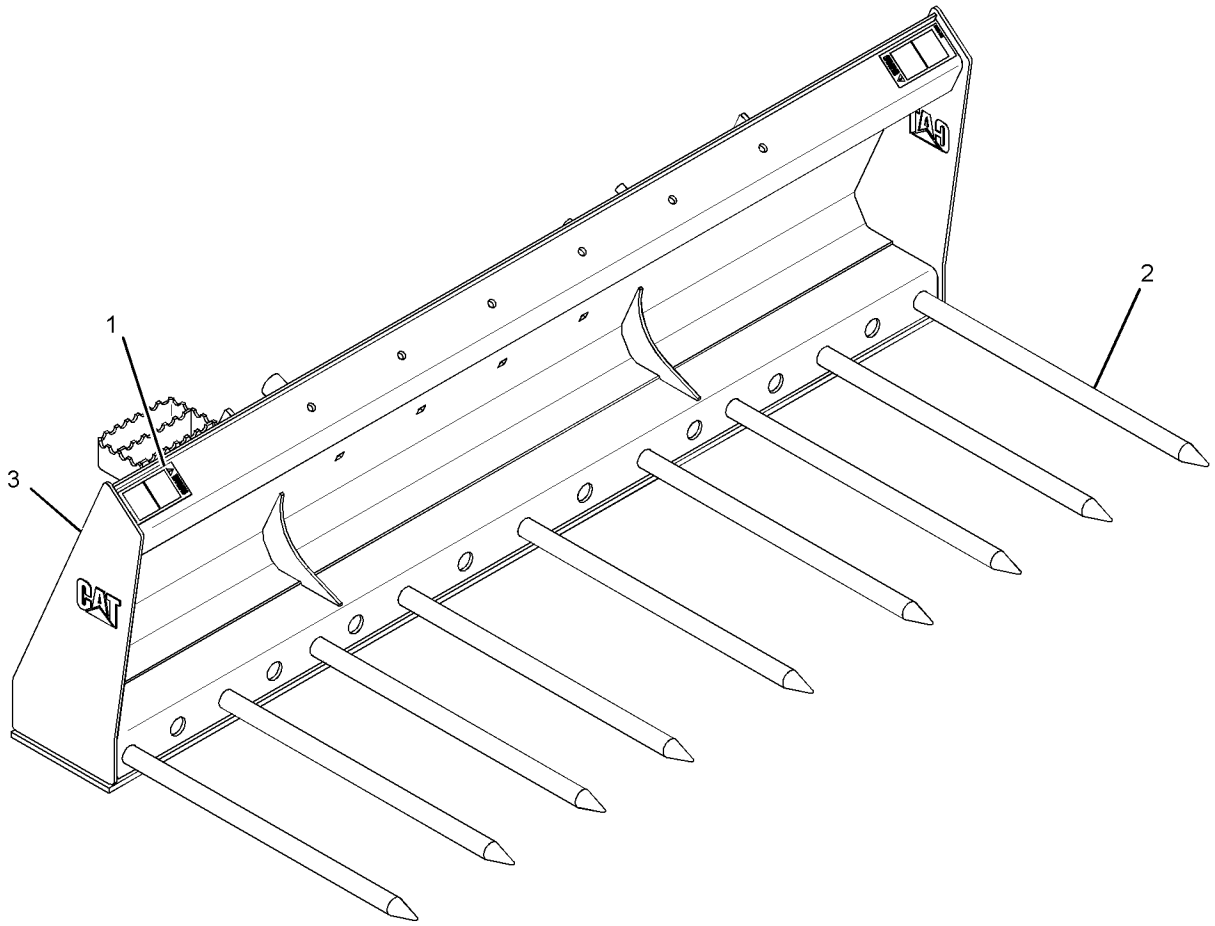

GRAPHIC #1 **<END>** g01527025

165-8738 FORK GP-UTILITY

1676-MM (66-IN)
PART OF 165-8736 FORK GP-UTILITY
AN ATTACHMENT

SMCS-6458 **i03647970**

NOTE	REF NO	GRAPHIC REF	PART NUMBER	QTY	PART NAME 1 2 3 4 5 6 (PRODUCT LEVEL)	SEE PAGE
	1	1	**165-8744**	1	FORK AS (UTILITY)	
	2	1	**154-2704**	1	PLATE-INSTRUCTION (BUCKET SPECIFICATIONS)	
	3	1	**168-8389**	4	TACK-FASTENER	
F			**164-9989**	2	FILM-WARNING (IMPALED POINT)	

F - NOT SHOWN

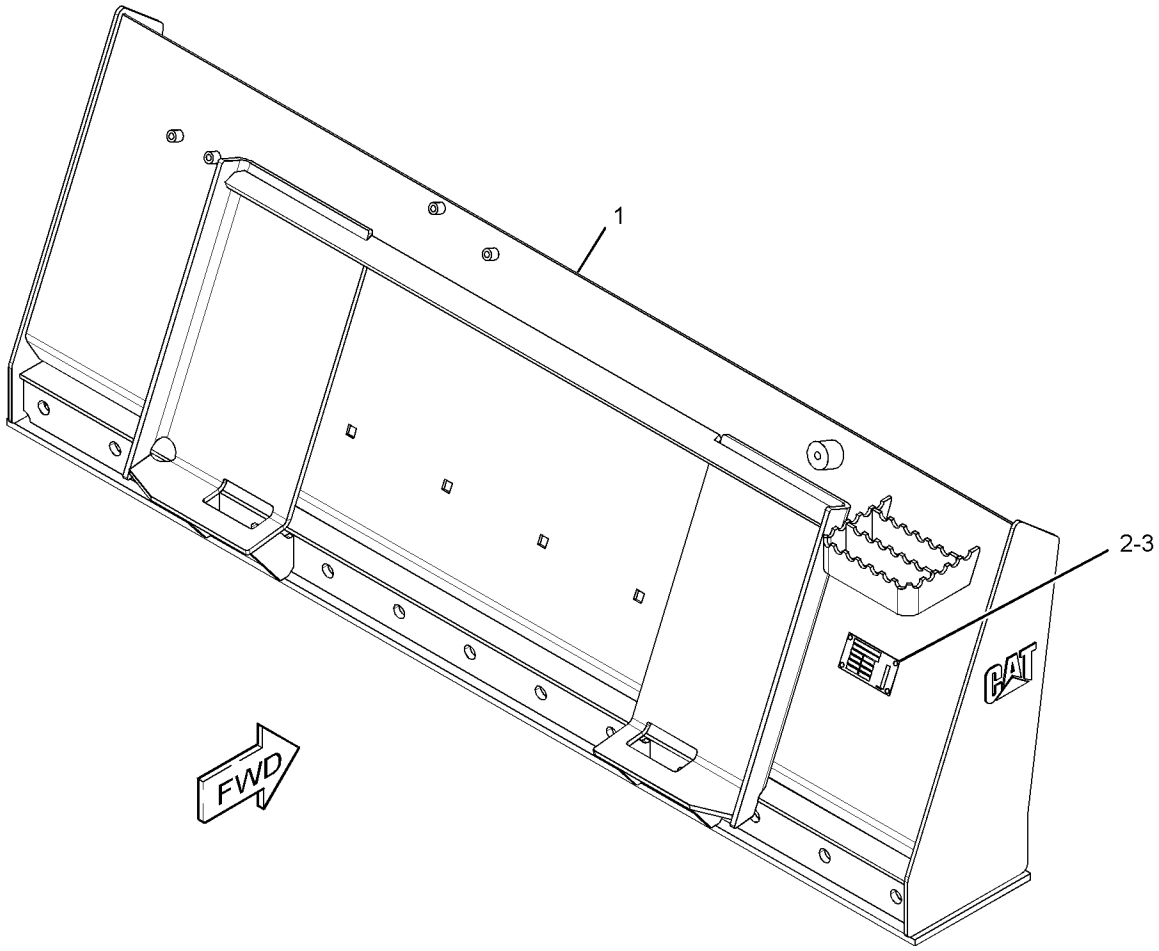

GRAPHIC #1 **<END>** g01958446

165-8739 FORK GP-UTILITY

1829-MM (72-IN)
PART OF 165-8737 FORK GP-UTILITY
AN ATTACHMENT

SMCS-6458 **i03647974**

NOTE	REF NO	GRAPHIC REF	PART NUMBER	QTY	PART NAME 1 2 3 4 5 6 (PRODUCT LEVEL)	SEE PAGE
	1	1	**165-8745**	1	FORK AS (UTILITY)	
	2	1	**154-2704**	1	PLATE-INSTRUCTION (BUCKET SPECIFICATIONS)	
	3	1	**168-8389**	4	TACK-FASTENER	
F			**164-9989**	2	FILM-WARNING (IMPALED POINT)	

F - NOT SHOWN

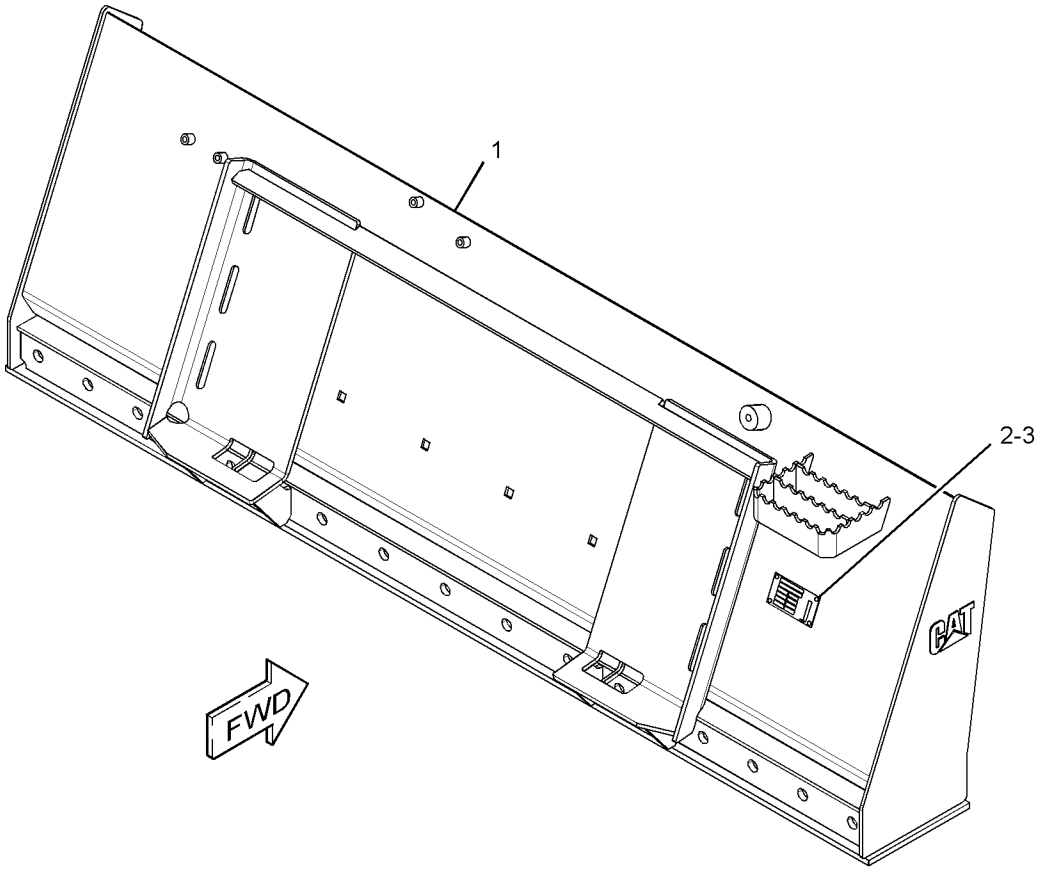

GRAPHIC #1 **<END>** g01958534

285-6105 FORK GP-UTILITY

PART OF 285-6114 FORK AR-GRAPPLE
AN ATTACHMENT

SMCS-6458 **i04269752**

NOTE	REF NO	GRAPHIC REF	PART NUMBER	QTY	PART NAME 1 2 3 4 5 6 (PRODUCT LEVEL)	SEE PAGE
	1	1	**164-9989**	2	FILM-WARNING (CRUSH HAZARD)	
Y	2	1	*165-8732*	7	FORK GP-UTILITY	436

Y - SEPARATE ILLUSTRATION

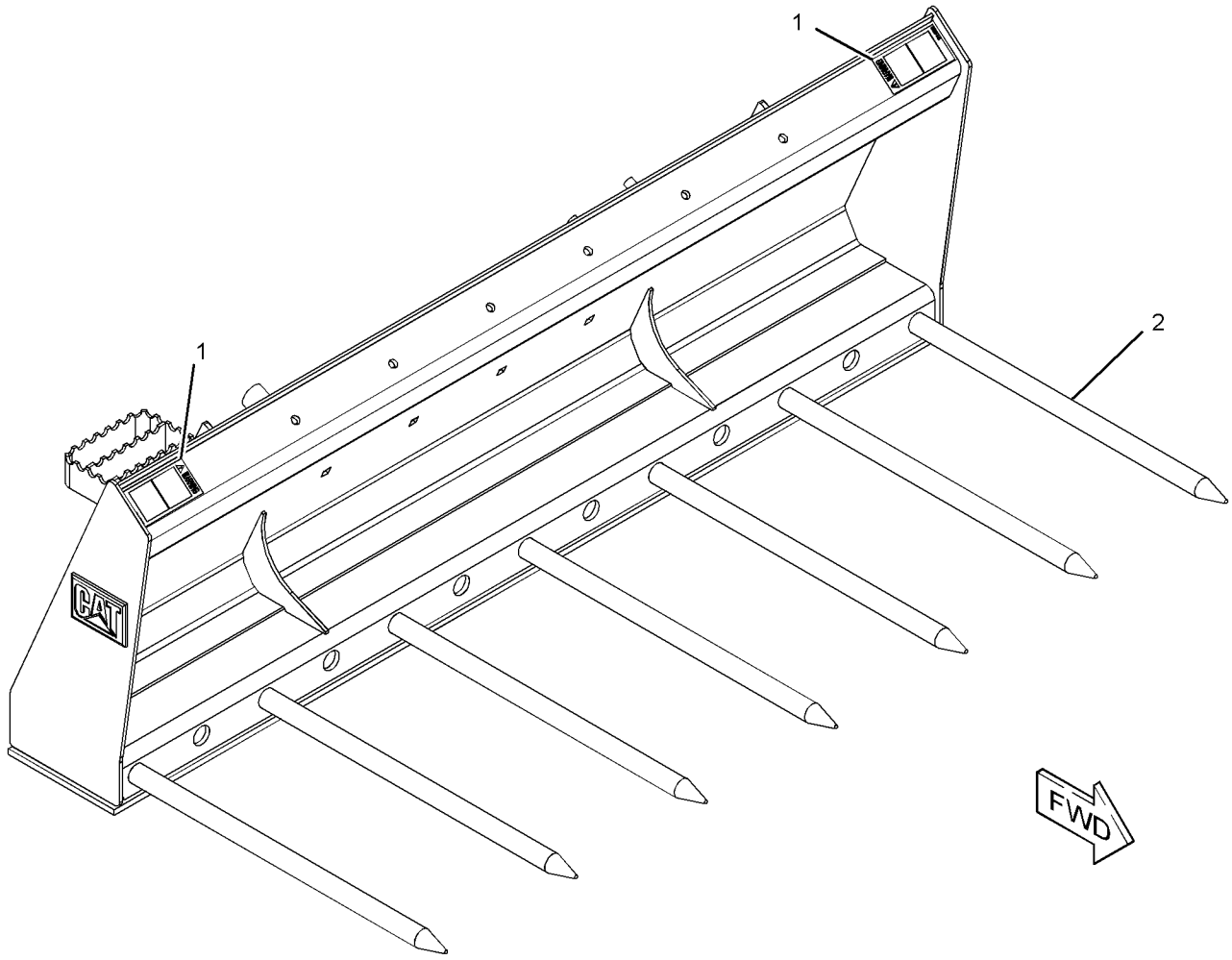

GRAPHIC #1 **<END>** g01280417

230-5670 FRAME GP-BLADE

PART OF 177-1989, 177-1990 BLADE AR

AN ATTACHMENT

SMCS-6060 **i03637977**

NOTE	REF NO	GRAPHIC REF	PART NUMBER	QTY	PART NAME 1 2 3 4 5 6 (PRODUCT LEVEL)	SEE PAGE
	1	1	**177-1914**	1	PIN AS	
B	2	1	**177-1955**	1	SHIM (1-MM THK)	
B	3	1	**177-1956**	1	SHIM (2-MM THK)	
B	4	1	**177-1957**	1	SHIM (3-MM THK)	
	5	1	**177-1971**	1	FRAME AS	
	6	1	**177-1975**	1	FRAME AS	
	7	1	**230-5407**	1	FRAME AS	
	8	1	**3B-8489**	1	FITTING-GREASE	
	9	1	**5B-0935**	1	FITTING-GREASE	
M	10	1	**7X-2553**	8	BOLT (M16X2X40-MM)	
	11	1	**7X-7729**	1	WASHER (11X25X3-MM THK)	
	12	1	**8T-4122**	8	WASHER-HARD (17X32X3.5-MM THK)	
M	13	1	**8T-4137**	1	BOLT (M10X1.5X20-MM)	

B - USE AS REQUIRED
M - METRIC PART

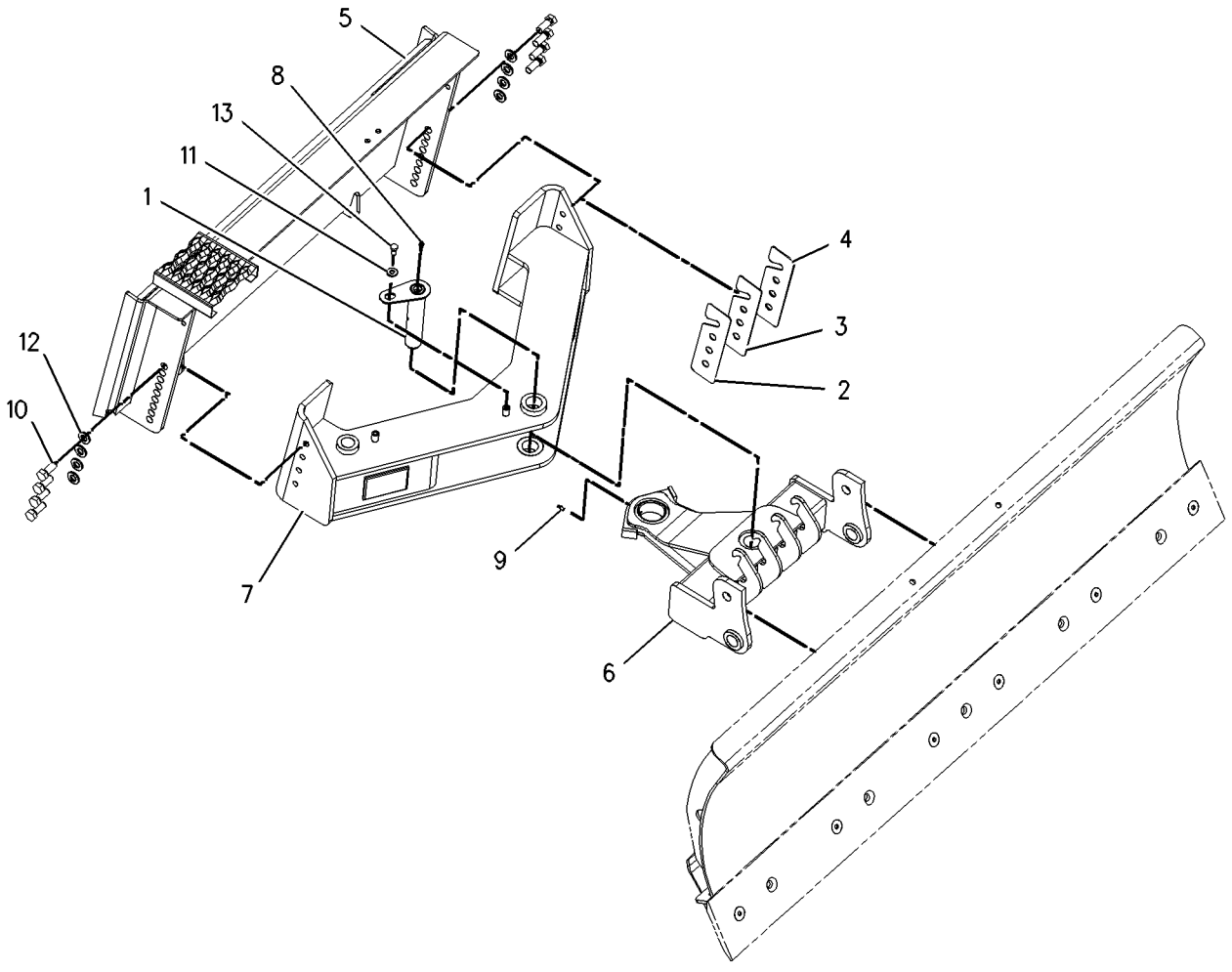

GRAPHIC #1 **<END>** g00978893

279-5352 FRAME GP-FORK–INDUSTRIAL

1676-MM (66-IN)
PART OF 279-5351 FORK GP-GRAPPLE
AN ATTACHMENT

SMCS-6705 **i04157287**

NOTE	REF NO	GRAPHIC REF	PART NUMBER	QTY	PART NAME 1 2 3 4 5 6 (PRODUCT LEVEL)	SEE PAGE
	1	1	**358-4944**	1	PLATE-IDENTIFICATION (BUCKET SPECIFICATIONS)	
	2	1	**168-8389**	4	TACK-FASTENER	
	3	1	**279-5353**	1	FORK AS	
		1	**161-4130**	2	PLATE-IDENTIFICATION (CAT)	
F			**164-9989**	2	FILM-WARNING (CRUSH HAZARD)	

F - NOT SHOWN

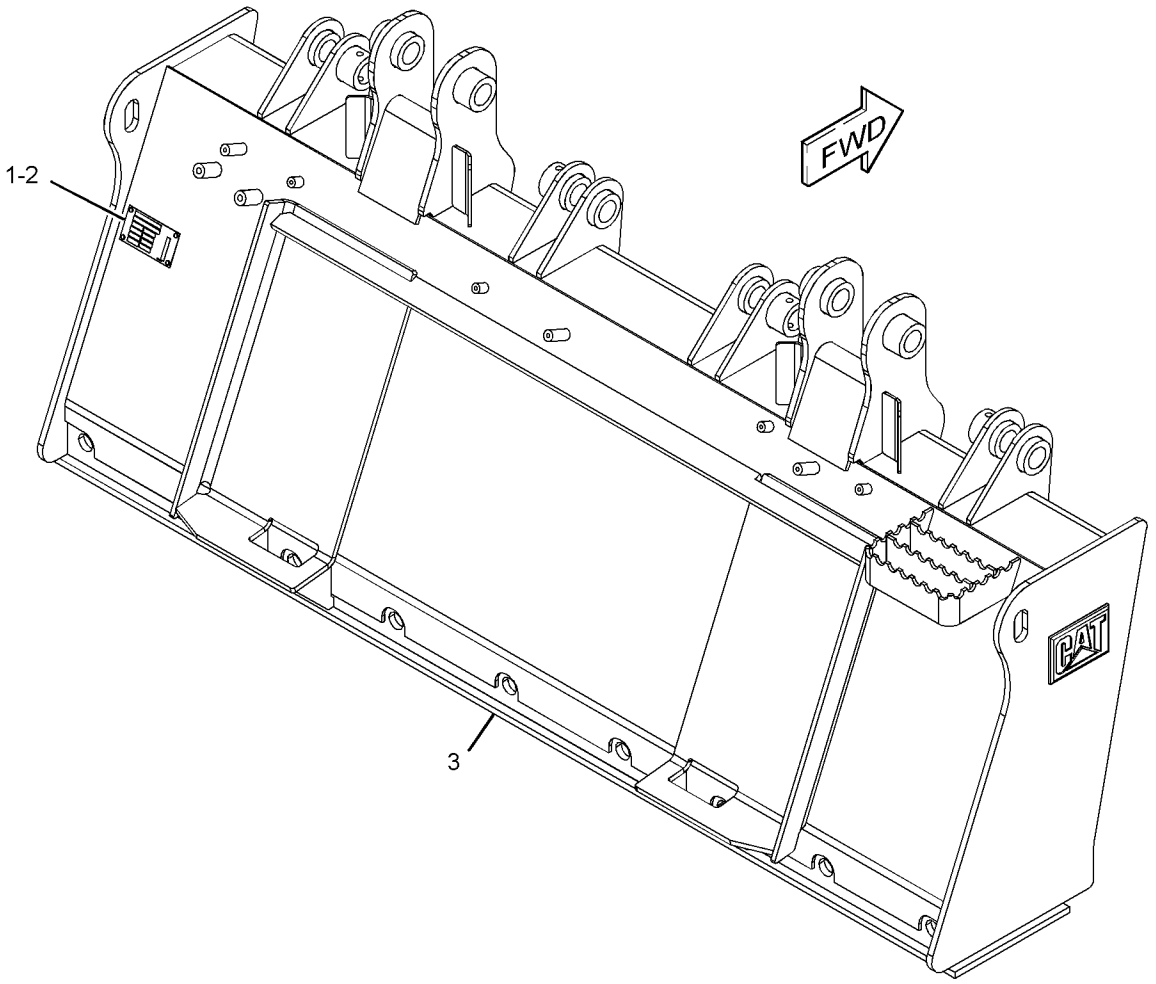

GRAPHIC #1 **<END>** g01280687

279-5358 FRAME GP-FORK—INDUSTRIAL

1829-MM (72-IN)
PART OF 279-5359 BUCKET GP-GRAPPLE
AN ATTACHMENT

SMCS-6705 **i04157292**

NOTE	REF NO	GRAPHIC REF	PART NUMBER	QTY	PART NAME 1 2 3 4 5 6 (PRODUCT LEVEL)	SEE PAGE
	1	1	**358-4944**	1	PLATE-IDENTIFICATION (BUCKET SPECIFICATIONS)	
	2	1	**168-8389**	4	TACK-FASTENER	
	3	1	**279-5357**	1	FORK AS	
		1	**161-4130**	2	PLATE-IDENTIFICATION (CAT)	
F			**164-9989**	2	FILM-WARNING (CRUSH HAZARD)	

F - NOT SHOWN

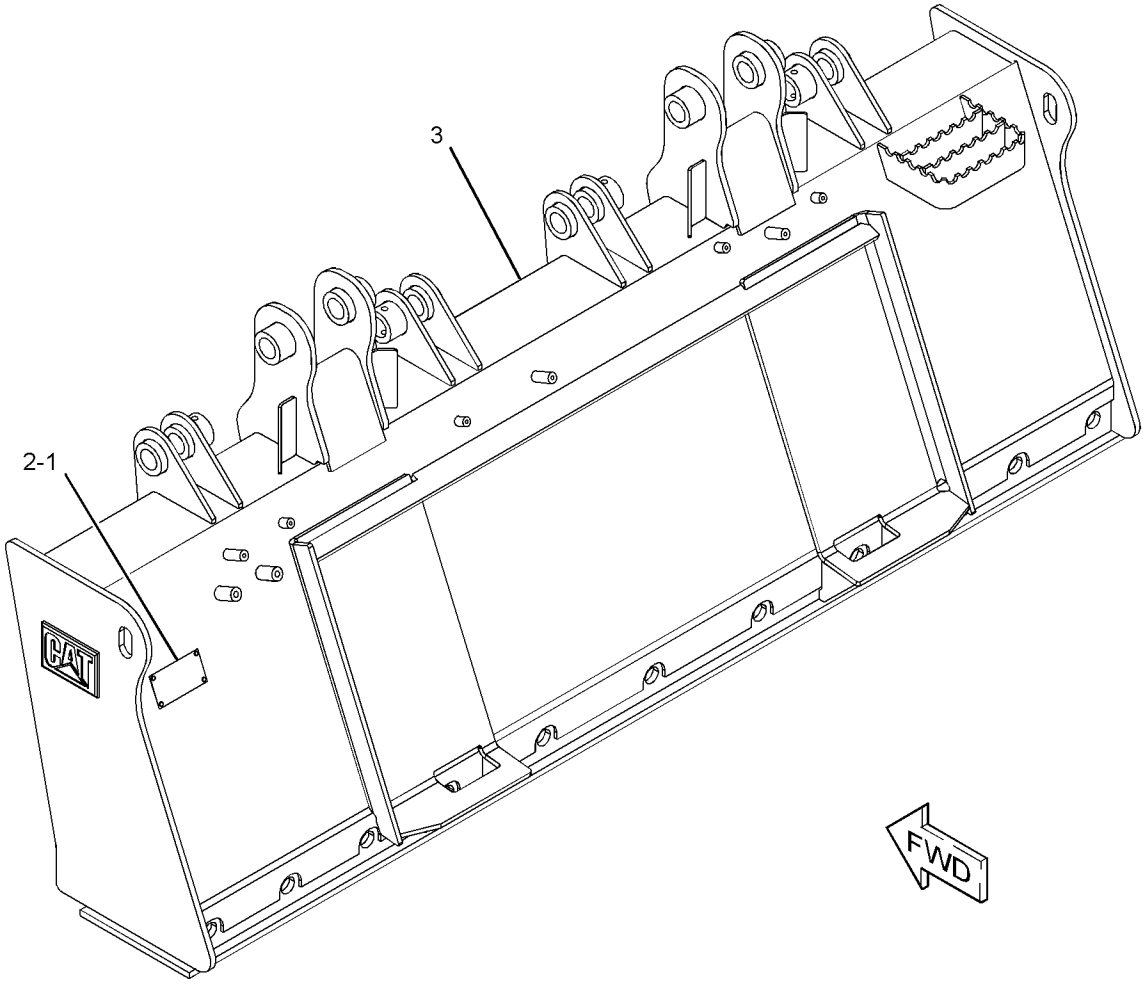

GRAPHIC #1 **<END>** g01279388

285-6116 GRAPPLE & CYLINDER GP-UTILITY

PART OF 285-6111, 285-6112 BUCKET AR-GRAPPLE, 285-6114, 285-6115 FORK AR-GRAPPLE AN ATTACHMENT

SMCS-5057, 5555, 6307 **i04358357**

NOTE	REF NO	GRAPHIC REF	PART NUMBER	QTY	PART NAME 1 2 3 4 5 6 (PRODUCT LEVEL)	SEE PAGE
CY	1	1	**255-0943**	1	CYLINDER GP-GRAPPLE (UTILITY)	212
Y	2	1	*165-8731*	1	MOUNTING GP-CYLINDER (UTILITY)	280
Y	3	1	*165-8740*	1	GRAPPLE GP-UTILITY	446
M	4	1	**170-5836**	4	BOLT (M12X1.75X35-MM)	
Y	5	1	*173-7407*	1	STOP GP-BUCKET (UTILITY)	458
	6	1	**239-5029**	1	GUARD	
Y	7	1	*285-6113*	1	LINES GP-BUCKET	241
	8	1	**5P-1076**	4	WASHER-HARD (13.5X30X4-MM THK)	
M	9	1	**8T-4139**	6	BOLT (M12X1.75X30-MM)	
	10	1	**8T-4223**	6	WASHER-HARD (13.5X25.5X3-MM THK)	
M	11	1	**8T-4244**	10	NUT (M12X1.75-THD)	

C - CHANGE FROM PREVIOUS TYPE
M - METRIC PART
Y - SEPARATE ILLUSTRATION

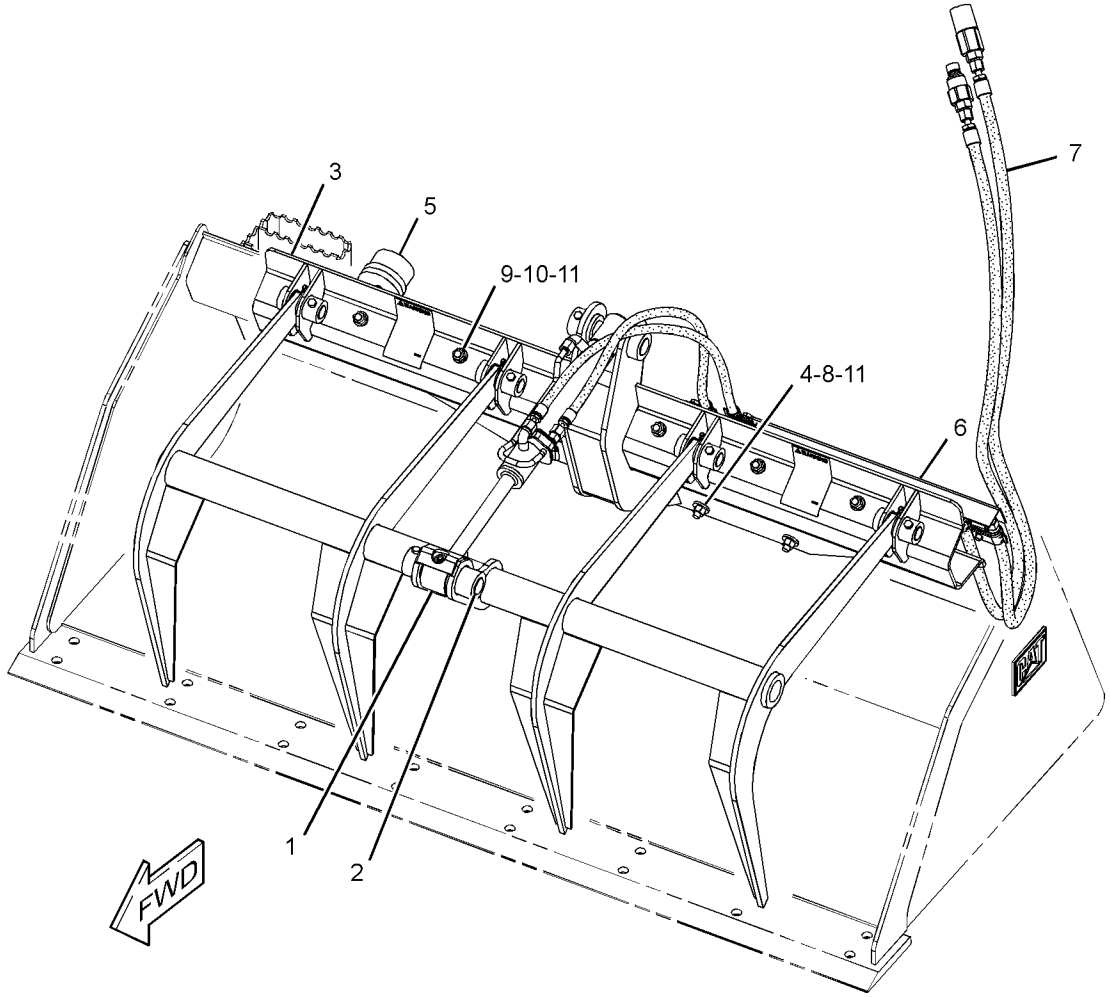

GRAPHIC #1 **<END>** g01278678

165-8740 GRAPPLE GP-UTILITY

PART OF 285-6116 GRAPPLE & CYLINDER GP-UTILITY

AN ATTACHMENT

SMCS-6307 **i04269754**

NOTE	REF NO	GRAPHIC REF	PART NUMBER	QTY	PART NAME 1 2 3 4 5 6 (PRODUCT LEVEL)	SEE PAGE
	1	1	**3B-8488**	4	FITTING-GREASE	
	2	1	**159-5411**	4	PIN	
	3	1	**165-8743**	1	ARM AS	
	4	1	**169-3569**	1	BRACKET AS	
		1	**159-8035**	2	FILM-WARNING (CRUSH HAZARD, STAY BACK)	
M	5	1	**6V-9189**	4	LOCKNUT (M8X1.25-THD)	
M	6	1	**8T-6912**	4	BOLT (M8X1.25X50-MM)	

M - METRIC PART

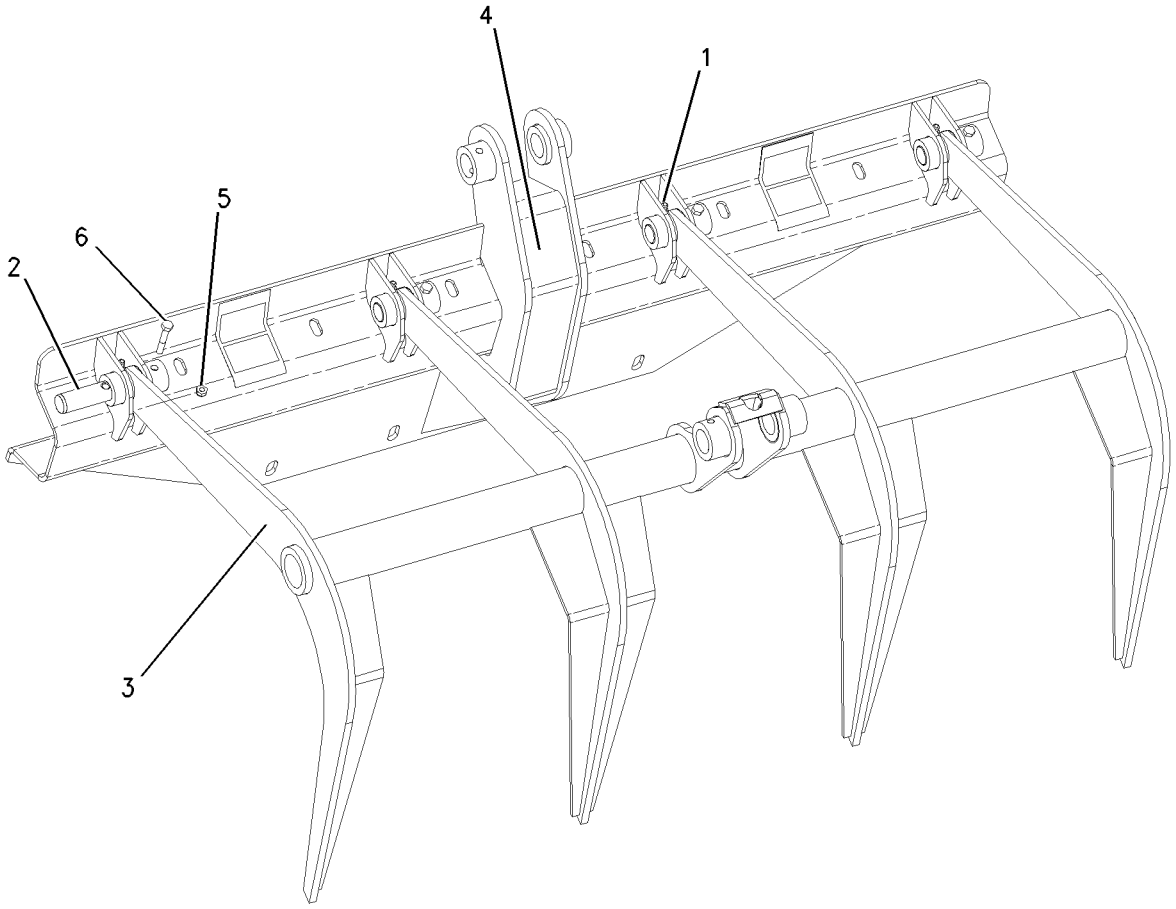

GRAPHIC #1 **<END>** g00777325

319-9480 KIT-ROADING PLATE & MOUNTING—BUCKET

PART OF 422-3401 CONVERSION AR-ROADING
AN ATTACHMENT

SMCS-7405, 7557 **i03648540**

NOTE	PART NUMBER	QTY	PART NAME 1 2 3 4 5 6 (PRODUCT LEVEL)	SEE PAGE
	319-9481	1	PLATE AS (LH)	
	177-7414	1	FILM-STRIPE (REFLECTIVE, RED, WHITE)	
	177-7415	1	FILM (REFLECTIVE)	
	319-9483	1	PLATE AS	
	319-9482	1	PLATE AS (RH)	
	177-7414	1	FILM-STRIPE (REFLECTIVE, RED, WHITE)	
	177-7415	1	FILM (REFLECTIVE)	
	319-9484	1	PLATE AS	
	319-9490	2	STRAP AS	
M	**8T-4136**	8	BOLT (M10X1.5X25-MM)	
M	**8T-4186**	2	BOLT (M10X1.5X40-MM)	
M	**6V-8949**	8	NUT (M10X1.5-THD)	
	319-9489	2	PLATE	
	039-8557	4	WASHER (13X26X6-MM THK)	
	8T-4121	16	WASHER-HARD (11X21X2.5-MM THK)	

M - METRIC PART

<END>

388-8209 LINK GP-COUPLER—RH

PART OF 388-8213 COUPLER GP-QUICK

AN ATTACHMENT

SMCS-6129 **i05402405**

NOTE	REF NO	GRAPHIC REF	PART NUMBER	QTY	PART NAME 1 2 3 4 5 6 (PRODUCT LEVEL)	SEE PAGE
	1	1	**192-2645**	1	SPRING	
	2	1	**310-6660**	2	PIN-SPRING	
M	3	1	**315-5493**	2	WASHER-HARD (22.5X35X4.5-MM THK)	
	4	1	**388-7978**	1	PLATE	
	5	1	**388-8174**	1	LINK AS (RH)	
	6	1	**424-5546**	1	PIN	

M - METRIC PART

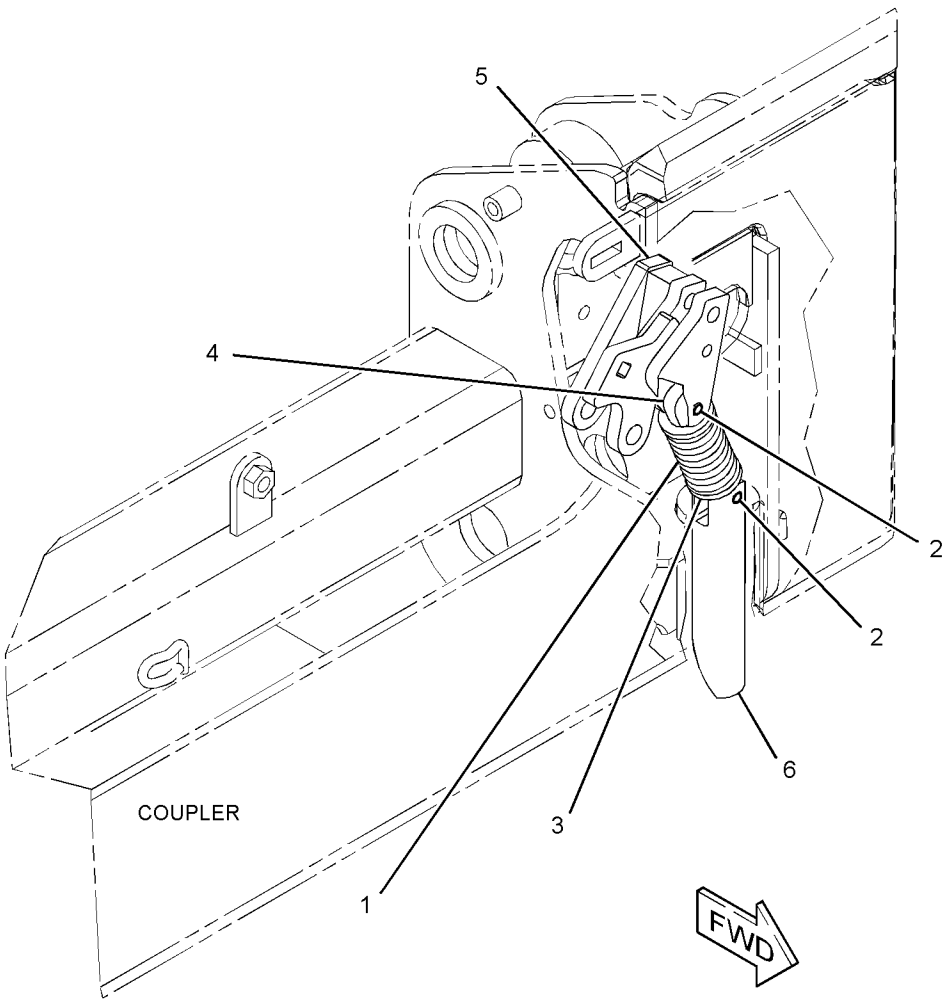

GRAPHIC #1 **<END>** g03324126

388-8210 LINK GP-COUPLER–LH

PART OF 388-8213 COUPLER GP-QUICK

AN ATTACHMENT

SMCS-6129 **i05402406**

NOTE	REF NO	GRAPHIC REF	PART NUMBER	QTY	PART NAME 1 2 3 4 5 6 (PRODUCT LEVEL)	SEE PAGE
	1	1	**192-2645**	1	SPRING	
	2	1	**310-6660**	2	PIN-SPRING	
M	3	1	**315-5493**	2	WASHER-HARD (22.5X35X4.5-MM THK)	
	4	1	**388-7978**	1	PLATE	
	5	1	**388-8173**	1	LINK AS (LH)	
	6	1	**424-5546**	1	PIN	

M - METRIC PART

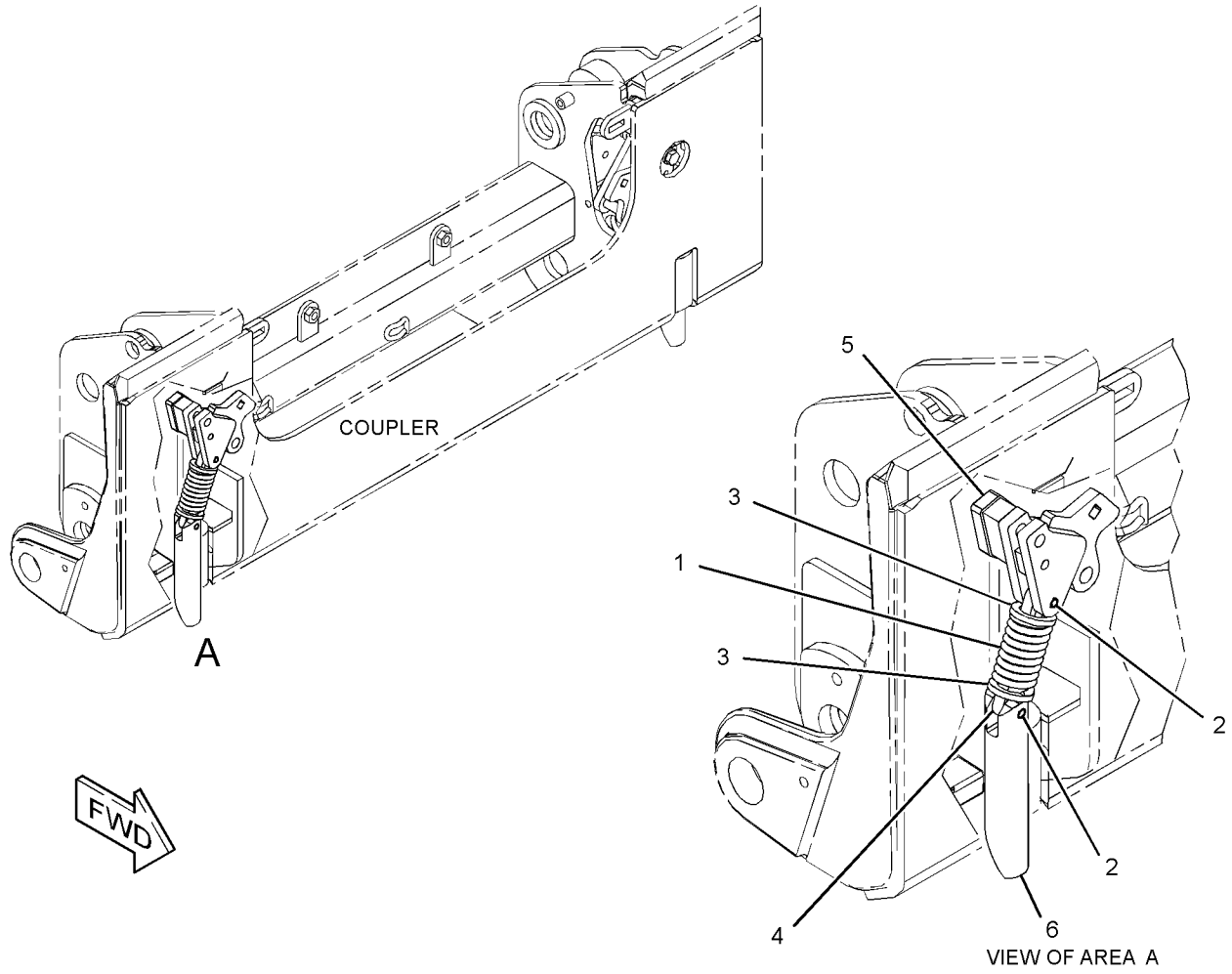

GRAPHIC #1 **<END>** g03324186

388-8215 LINK GP-COUPLER—RH

PART OF 388-8214 COUPLER GP-QUICK
AN ATTACHMENT

SMCS-6129 **i05154420**

NOTE	REF NO	GRAPHIC REF	PART NUMBER	QTY	PART NAME 1 2 3 4 5 6 (PRODUCT LEVEL)	SEE PAGE
	1	1	**192-2645**	1	SPRING	
	2	1	**310-6660**	2	PIN-SPRING	
M	3	1	**315-5493**	2	WASHER-HARD (22.5X35X4.5-MM THK)	
	4	1	**345-5135**	1	HANDLE	
	5	1	**388-7978**	1	PLATE	
	6	1	**424-5546**	1	PIN	

M - METRIC PART

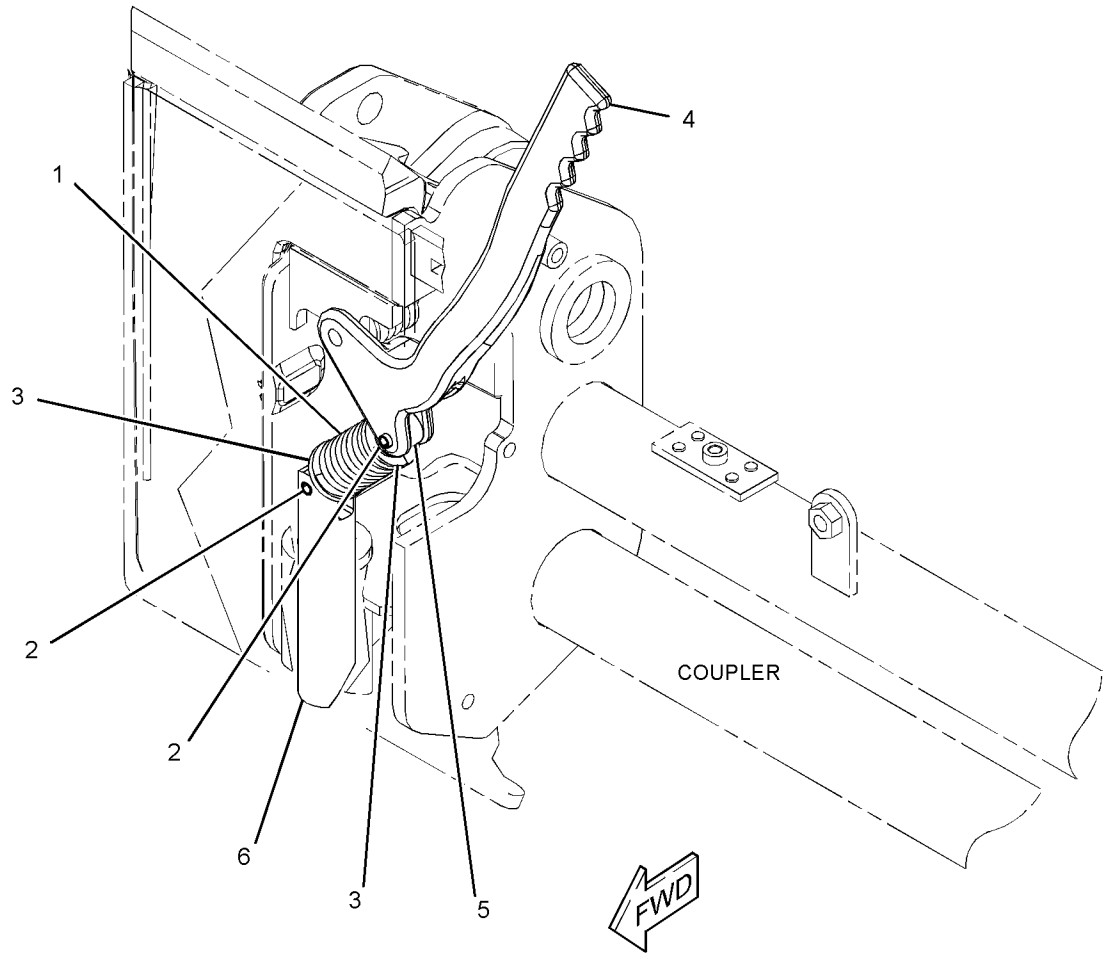

GRAPHIC #1 **<END>** g03324038

388-8217 LINK GP-COUPLER–LH

PART OF 388-8214 COUPLER GP-QUICK

AN ATTACHMENT

SMCS-6129 **i05154409**

NOTE	REF NO	GRAPHIC REF	PART NUMBER	QTY	PART NAME 1 2 3 4 5 6 (PRODUCT LEVEL)	SEE PAGE
	1	1	**192-2645**	1	SPRING	
	2	1	**310-6660**	2	PIN-SPRING	
M	3	1	**315-5493**	2	WASHER-HARD (22.5X35X4.5-MM THK)	
	4	1	**345-5132**	1	HANDLE	
	5	1	**388-7978**	1	PLATE	
	6	1	**424-5546**	1	PIN	

M - METRIC PART

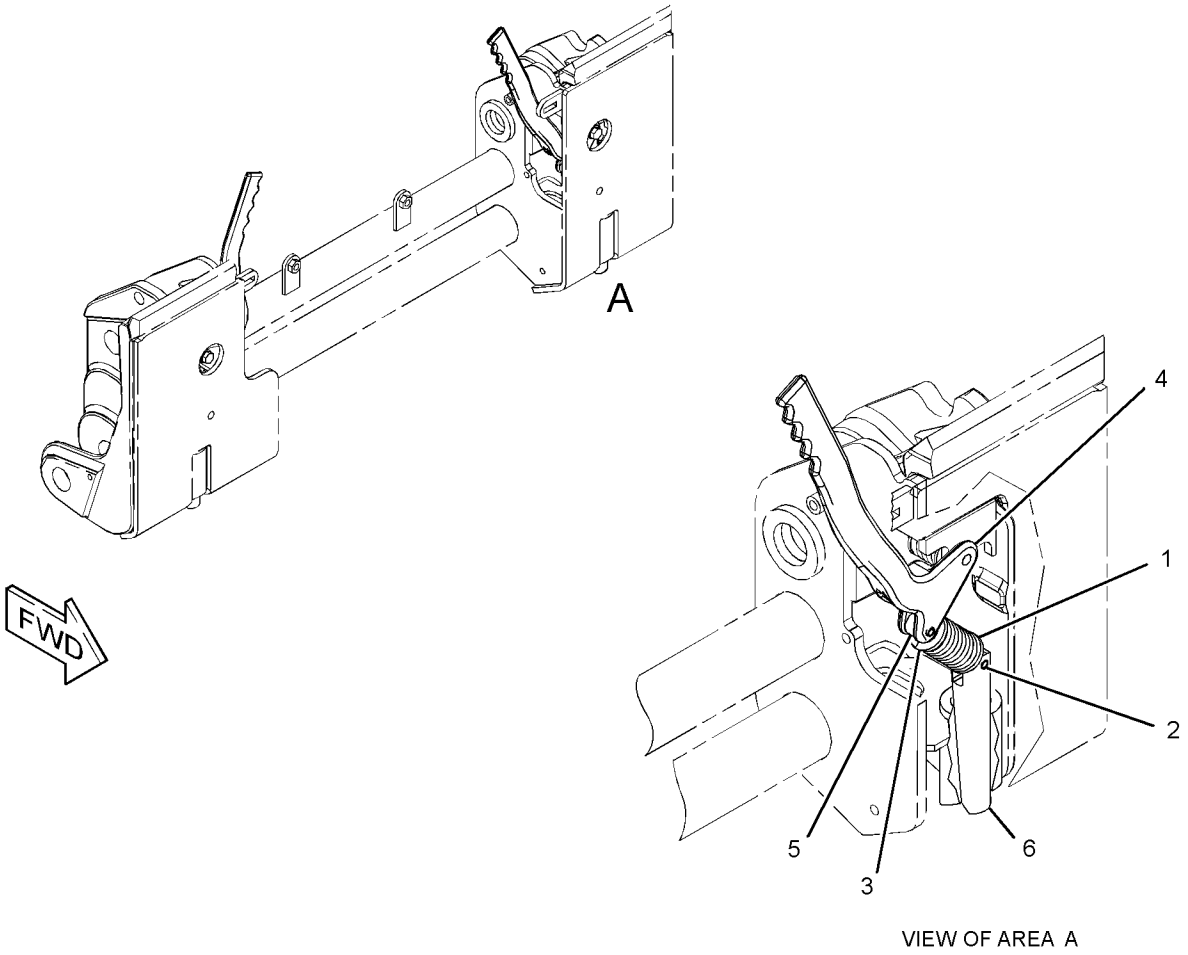

VIEW OF AREA A

GRAPHIC #1 **<END>** g03323948

175-4238 LOCK GP-QUICK COUPLER—MECHANICAL

PART OF 422-3401 CONVERSION AR-ROADING

AN ATTACHMENT

SMCS-6129 **i01408856**

NOTE	REF NO	GRAPHIC REF	PART NUMBER	QTY	PART NAME 1 2 3 4 5 6 (PRODUCT LEVEL)	SEE PAGE
	1	1	**9R-5301**	1	PIN-COTTER	
	2	1	**178-2247**	1	PIN	
	3	1	**9X-8257**	1	WASHER (17.5X30X3.5-MM THK)	

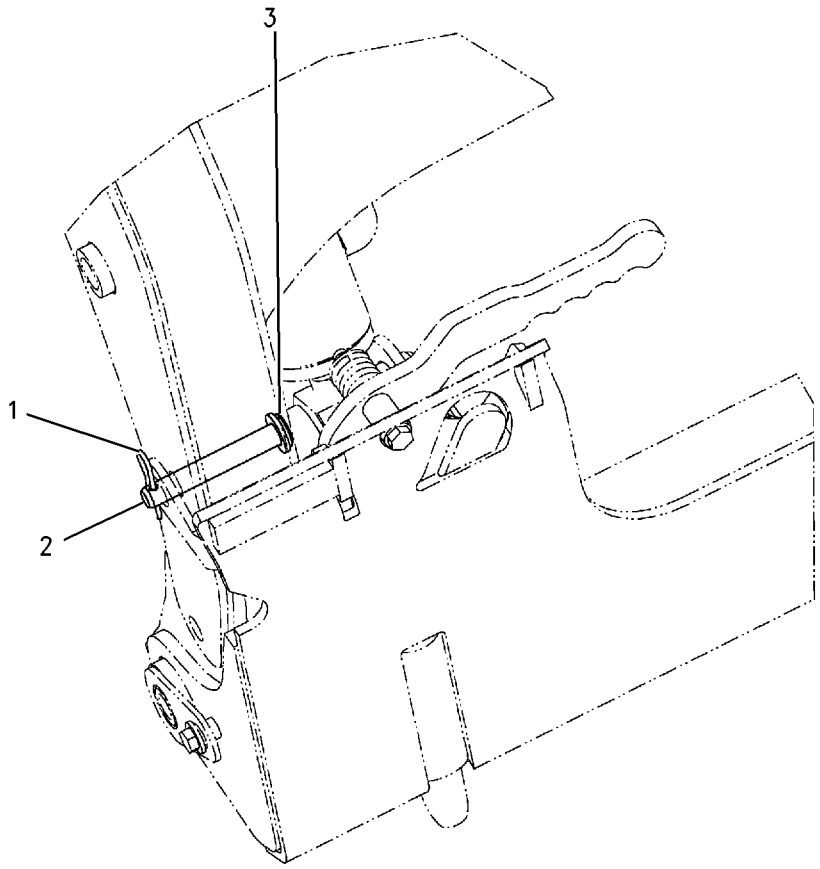

GRAPHIC #1 **<END>** g00741828

385-6368 PLATE GP-SIDE–RH

PART OF 385-6444, 417-4914 BLADE AR

AN ATTACHMENT

SMCS-6060, 6137, 6159 **i05165023**

NOTE	REF NO	GRAPHIC REF	PART NUMBER	QTY	PART NAME 1 2 3 4 5 6 (PRODUCT LEVEL)	SEE PAGE
	1	1	**276-5478**	1	WASHER (25.5X44X4.3-MM THK)	
	2	1	**385-6367**	1	PLATE AS	
	3	1	**385-6391**	1	BLOCK	
	4	1	**385-6406**	1	PLATE AS	
	5	1	**1D-4698**	6	BOLT-CARRIAGE (5/8-11X2-IN)	
	6	1	**3E-9861**	8	LOCKNUT (5/8-11-THD)	
	7	1	**5S-2457**	2	BOLT-SOCKET HEAD (5/8-11X2-IN)	
	8	1	**7X-0517**	6	WASHER-HARD (17X38X2.5-MM THK)	
	9	1	**385-6466**	1	KIT-HARDWARE	
					(ALSO INCLUDES BOLT & NUTS)	
		1	**2H-3768**	1	PIN-COTTER	

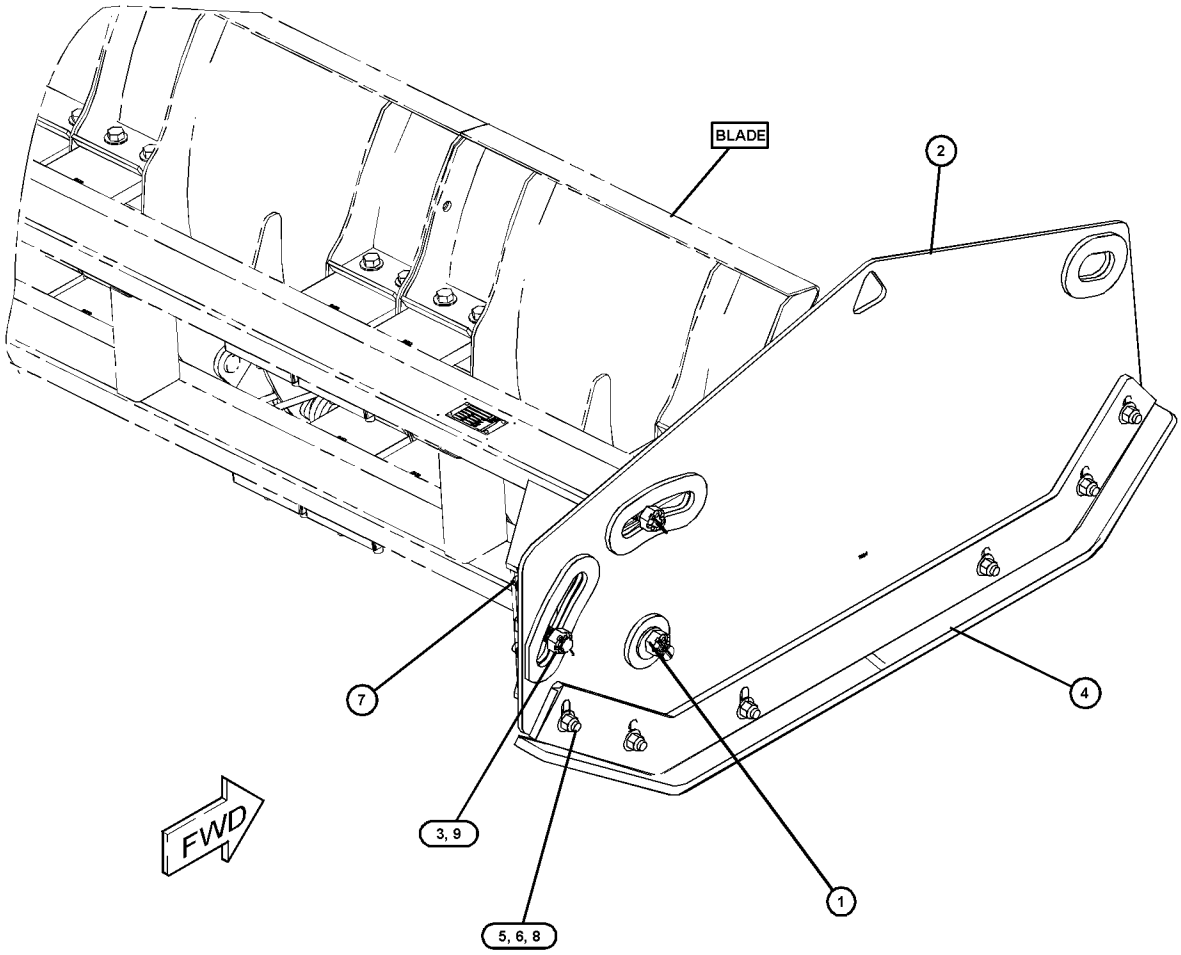

GRAPHIC #1 **<END>** g03320149

385-6371 PLATE GP-SIDE–LH

PART OF 385-6444, 417-4914 BLADE AR
AN ATTACHMENT

SMCS-6060, 6137, 6159 **i05165022**

NOTE	REF NO	GRAPHIC REF	PART NUMBER	QTY	PART NAME 1 2 3 4 5 6 (PRODUCT LEVEL)	SEE PAGE
	1	1	**276-5478**	1	WASHER (25.5X44X4.3-MM THK)	
	2	1	**385-6391**	1	BLOCK	
	3	1	**385-6392**	1	PLATE AS	
	4	1	**385-6407**	1	PLATE AS-SKID	
	5	1	**1D-4698**	6	BOLT-CARRIAGE (5/8-11X2-IN)	
	6	1	**3E-9861**	8	LOCKNUT (5/8-11-THD)	
	7	1	**5S-2457**	2	BOLT-SOCKET HEAD (5/8-11X2-IN)	
	8	1	**7X-0517**	6	WASHER-HARD (17X38X2.5-MM THK)	
	9	1	**385-6466**	1	KIT-HARDWARE	
					(ALSO INCLUDES BOLT & NUTS)	
		1	**2H-3768**	3	PIN-COTTER	

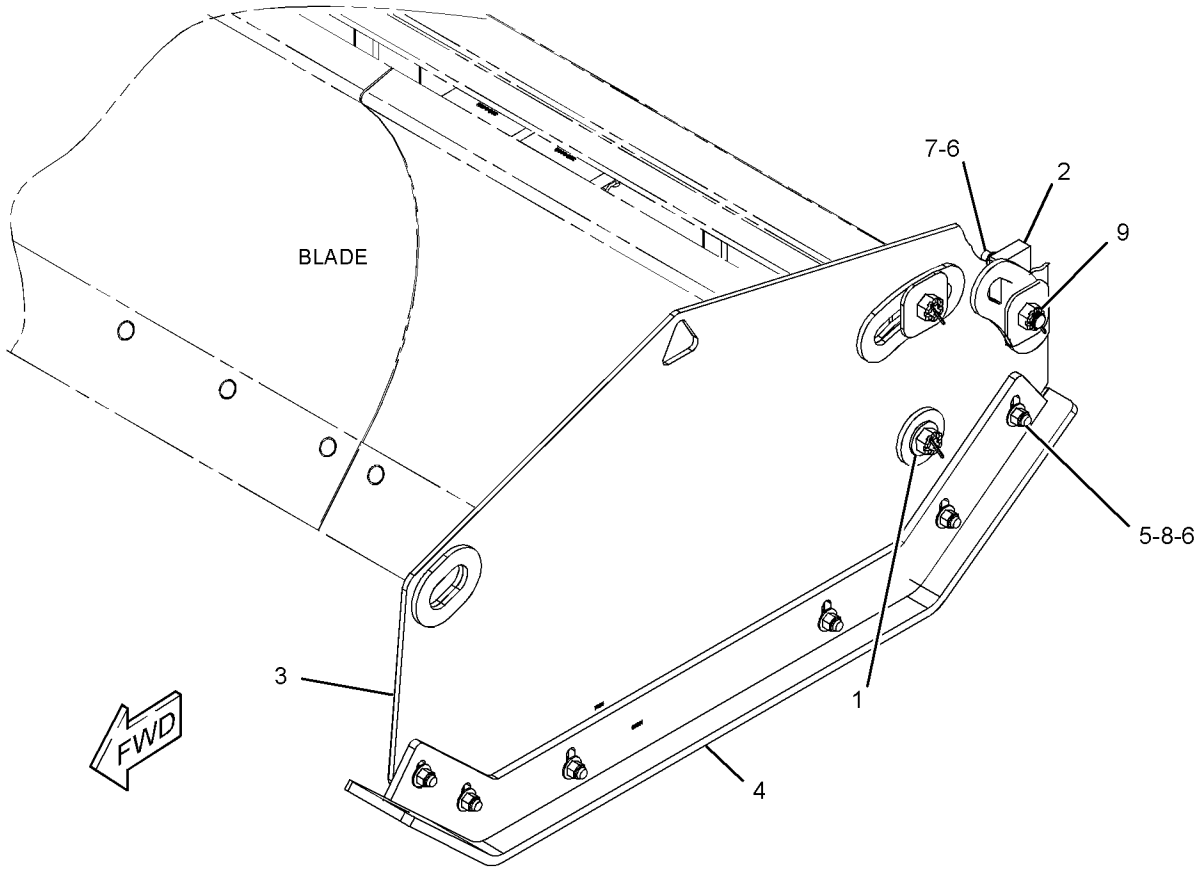

GRAPHIC #1 **<END>** g03320214

346-1832 PUMP GP-DIAPHRAGM–WATER TANK

PART OF 433-9697 TANK & MTG GP-WATER

AN ATTACHMENT

SMCS-5612 **i05391869**

NOTE	REF NO	GRAPHIC REF	PART NUMBER	QTY	PART NAME 1 2 3 4 5 6 (PRODUCT LEVEL)	SEE PAGE
					(NO BREAKDOWN OF SERVICEABLE PARTS AVAILABLE AT TIME OF PUBLICATION)	

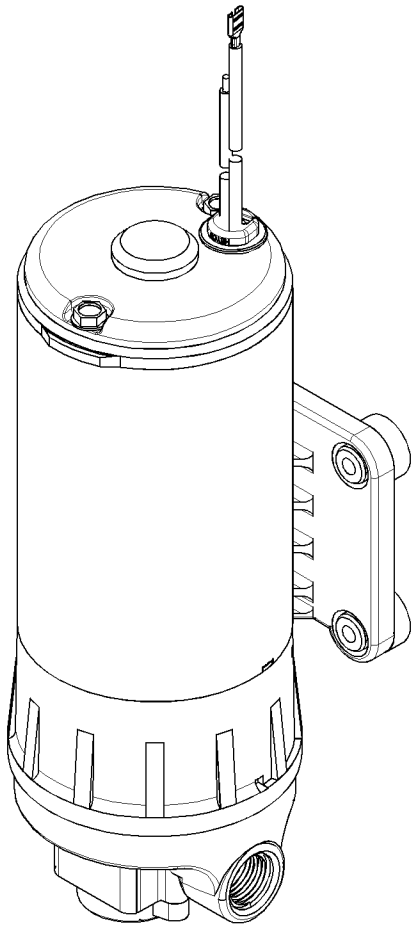

GRAPHIC #1 **<END>** g03408890

177-1983 SPRING GP-BLADE

PART OF 177-1989, 177-1990 BLADE AR

AN ATTACHMENT

SMCS-6060 **i01497986**

NOTE	REF NO	GRAPHIC REF	PART NUMBER	QTY	PART NAME 1 2 3 4 5 6 (PRODUCT LEVEL)	SEE PAGE
	1	1	**177-1941**	4	SPRING	
	2	1	**177-1973**	1	PLATE AS	
M	3	1	**8T-4194**	2	BOLT (M12X1.75X50-MM)	
	4	1	**8T-4223**	4	WASHER-HARD (13.5X25.5X3-MM THK)	
M	5	1	**8T-4244**	2	NUT (M12X1.75-THD)	

M - METRIC PART

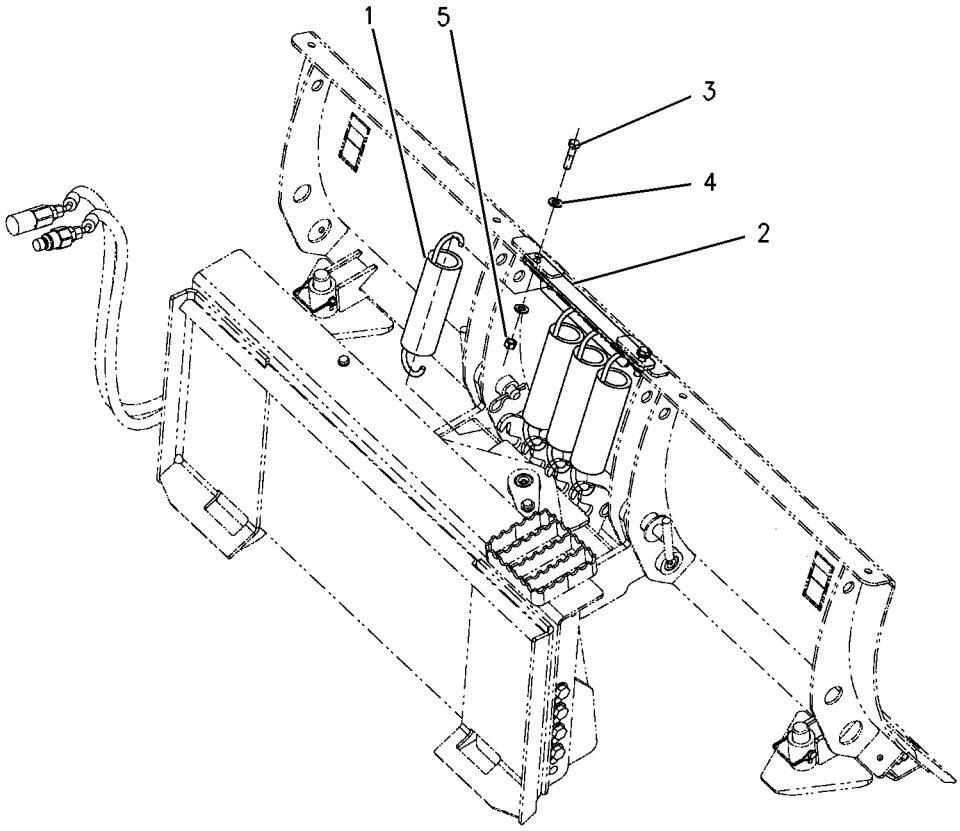

GRAPHIC #1 **<END>** g00777337

188-7733 STEP GP-MATERIAL HANDLING ARM

PART OF 216-8756 ARM GP-MATERIAL HANDLING
AN ATTACHMENT

SMCS-6542 **i01498007**

NOTE	REF NO	GRAPHIC REF	PART NUMBER	QTY	PART NAME 1 2 3 4 5 6 (PRODUCT LEVEL)	SEE PAGE
	1	1	**186-5186**	1	STEP AS	
	2	1	**8T-4121**	2	WASHER-HARD (11X21X2.5-MM THK)	
M	3	1	**8T-4133**	2	NUT (M10X1.5-THD)	
M	4	1	**8T-4136**	2	BOLT (M10X1.5X25-MM)	

M - METRIC PART

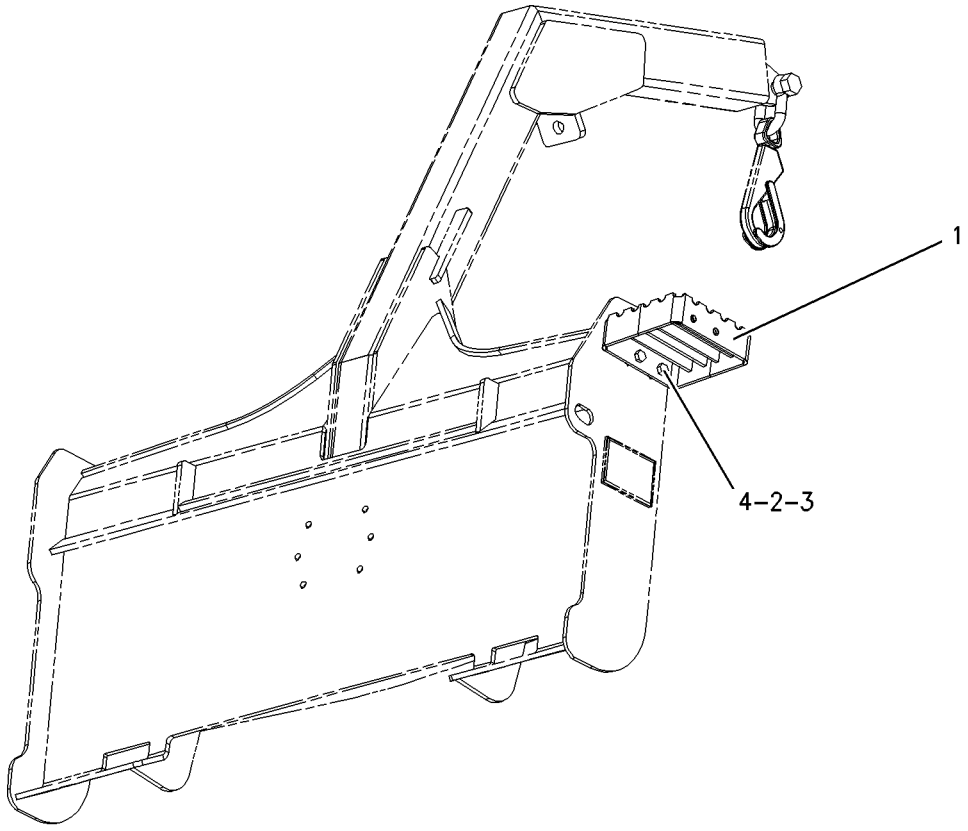

GRAPHIC #1 **<END>** g00777345

173-7407 STOP GP-BUCKET–UTILITY

PART OF 285-6116 GRAPPLE & CYLINDER GP-UTILITY

AN ATTACHMENT

SMCS-6001, 6307 **i01218895**

NOTE	REF NO	GRAPHIC REF	PART NUMBER	QTY	PART NAME 1 2 3 4 5 6 (PRODUCT LEVEL)	SEE PAGE
	1	1	**8Y-7386**	1	SPACER (12.5X17.1X16.5-MM THK)	
	2	1	**2S-6408**	2	WASHER-RETAINING (0.531X3.25X0.438-IN THK)	
	3	1	**8T-4223**	1	WASHER-HARD (13.5X25.5X3-MM THK)	
M	4	1	**8T-4910**	1	BOLT (M12X1.75X60-MM)	
	5	1	**8Y-7385**	1	STOP	

M - METRIC PART

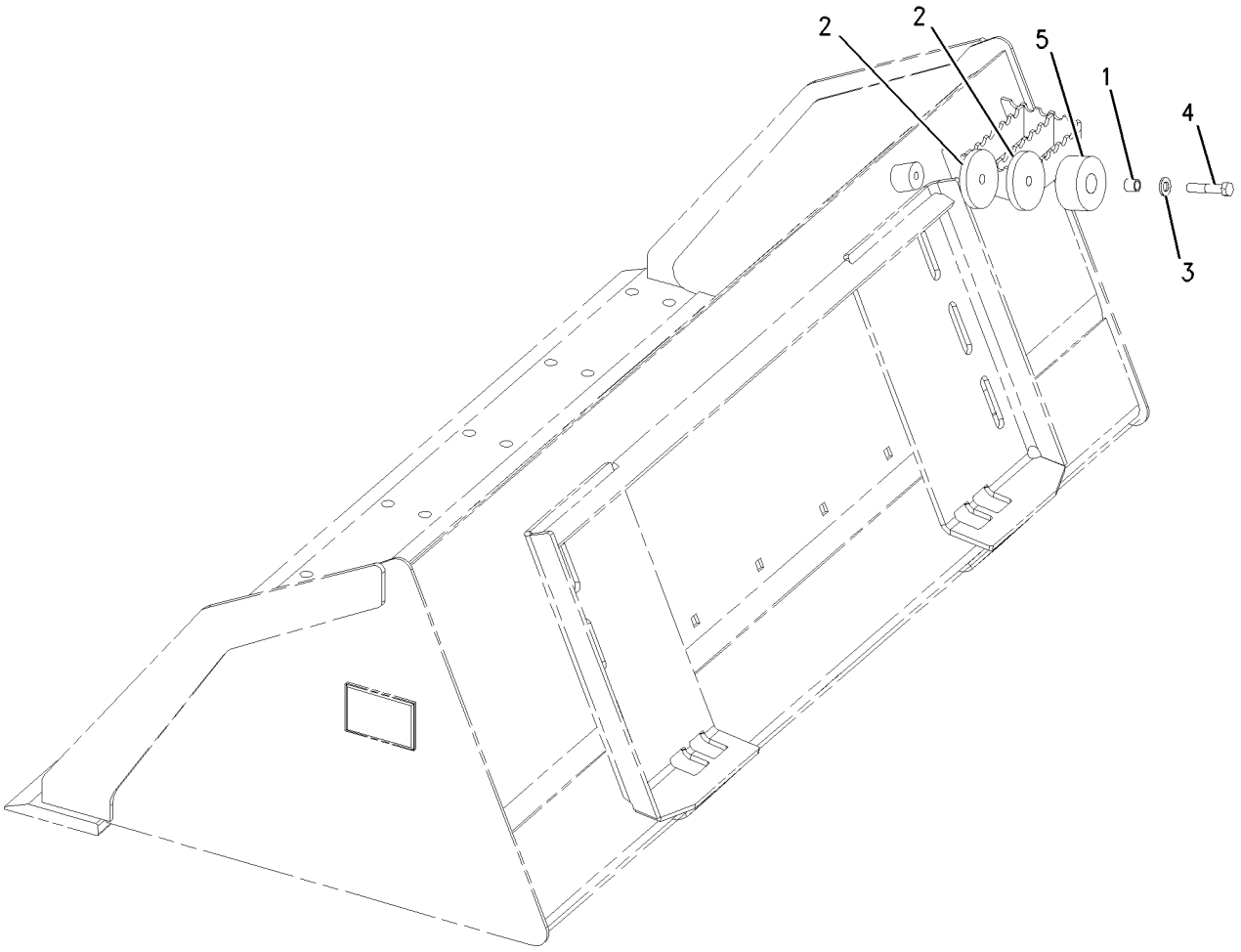

GRAPHIC #1 **<END>** g00651574

116-2001 STRAINER GP-WATER

PART OF 433-9697 TANK & MTG GP-WATER

AN ATTACHMENT

SMCS-5612 **i02571404**

NOTE	REF NO	GRAPHIC REF	PART NUMBER	QTY	PART NAME 1 2 3 4 5 6 (PRODUCT LEVEL)	SEE PAGE
	1	1	**119-1415**	1	GASKET	
	2	1	**119-1414**	1	SCREEN (WATER TANK)	

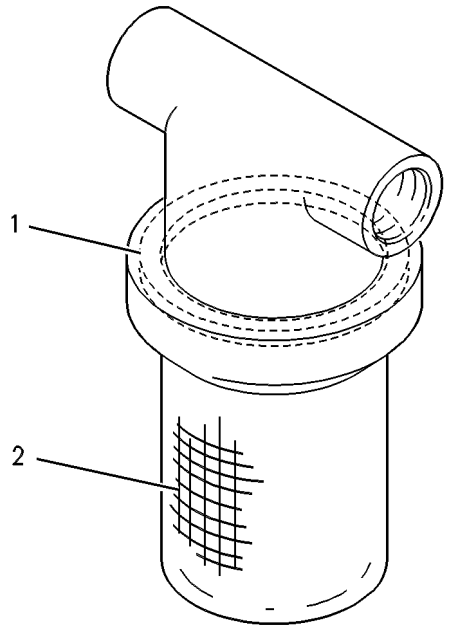

GRAPHIC #1 **<END>** g00293866

433-9697 TANK & MTG GP-WATER–KIT

AN ATTACHMENT

SMCS-5613 **i05381071**

NOTE	REF NO	GRAPHIC REF	PART NUMBER	QTY	PART NAME 1 2 3 4 5 6 (PRODUCT LEVEL)	SEE PAGE
	1	1	**3S-2093**	3	STRAP-CABLE	
	2	1	**8T-0737**	1	VALVE-SHUTOFF (WATER TANK)	
Y	3	1	**116-2001**	1	STRAINER GP-WATER	459
	4	1	**124-1916**	1	COUPLING-PERMANENT	
	5	1	**124-1917**	1	COUPLING-PERMANENT	
Y	6	1	**166-2551**	1	TANK GP-WATER	462
I	7	1	**166-2552**	1	HOSE AS	
	8	1	**166-2557**	1	PLATE	
	9	1	**166-2558**	1	COUPLING	
	10	1	**166-2559**	2	BRACKET	
	11	1	**345-6073**	2	PLATE	
Y	12	1	**346-1832**	1	PUMP GP-DIAPHRAGM (WATER TANK)	455
	13	1	**346-1836**	1	BRACKET AS	
		1	**9R-8429**	4	BOSS (M16X2X31.8-MM)	
	14	1	**356-6112**	1	HARNESS AS-WORK TOOL	
		1	**8T-8729**	2	PIN-CONNECTOR (16-GA TO 18-GA)	
		1	**155-2270**	1	KIT-CONNECTING PLUG (2-PIN)	
					(INCLUDES PLUG AS, WEDGE & INTERFACE SEAL)	
		1	**102-8802**	1	KIT-RECEPTACLE (2-PIN)	
					(INCLUDES RECEPTACLE AS & WEDGE)	
		1	**8T-8730**	2	SOCKET-CONNECTOR (16-GA TO 18-GA)	
	15	1	**433-9693**	1	BRACKET	
	16	1	**433-9694**	2	PLATE	
	17	1	**433-9695**	2	PLATE	
	18	1	**439-4991**	8	SPACER (19X27X22-MM THK)	
	19	1	**003-2143**	1	ELBOW	
	20	1	**095-0912**	3	CLIP	
M	21	1	**111-4627**	4	SCREW-MACHINE (M6X1X30-MM)	
	22	1	**119-3859**	6	SCREW-PAN HEAD (10-16X0.75-IN)	
M	23	1	**129-3178**	4	LOCKNUT (M6X1-THD)	
	24	1	**178-3620**	4	STRAP-DUAL CLAMP	
	25	1	**266-3314**	3	BOLT-FLANGE HEAD (M6X1X20.5-MM)	
	26	1	**3B-7255**	1	BUSHING-REDUCING	
	27	1	**3H-7654**	2	WASHER-HARD (13.5X22.5X3-MM THK)	
M	28	1	**5C-7261**	2	NUT (M8X1.25-THD)	
	29	1	**5P-8246**	2	WASHER-HARD (15.5X29X3-MM THK)	
	30	1	**7K-1181**	1	STRAP-CABLE	
	31	1	**7X-0495**	1	ADAPTER	
	32	1	**8T-4122**	24	WASHER-HARD (17X32X3.5-MM THK)	
M	33	1	**8T-4132**	8	NUT (M16X2-THD)	
M	34	1	**8T-4140**	8	BOLT (M16X2X60-MM)	
M	35	1	**8T-4183**	2	BOLT (M12X1.75X40-MM)	
	36	1	**8T-4205**	3	WASHER-HARD (7.2X14.5X2-MM THK)	
	37	1	**8T-4224**	2	WASHER-HARD (8.8X16X2-MM THK)	
M	38	1	**8T-4244**	2	NUT (M12X1.75-THD)	
M	39	1	**8T-4779**	4	BOLT (M16X2X35-MM)	
M	40	1	**8T-4908**	2	BOLT (M8X1.25X25-MM)	
M	41	1	**8T-7338**	4	BOLT (M16X2X45-MM)	
	42	1	**8T-7971**	4	WASHER-HARD (13.5X25.5X5-MM THK)	
	43	1	**9X-2038**	4	WASHER (7X19X2-MM THK)	
E	44	1	**167-0608**		SEAL (82-CM)	
E	45	1	**9X-2092**		TRIM-EDGE (12-CM EACH)	
G	46	1	**122-6869**		HOSE-HYDRAULIC (119.3-IN)	

E - ORDER BY THE CENTIMETER
G - ORDER BY THE INCH
I - REFER TO HYDRAULIC INFORMATION SYSTEM
M - METRIC PART
Y - SEPARATE ILLUSTRATION

433-9697 **TANK & MTG GP-WATER (*contd.*)** **i05381071**

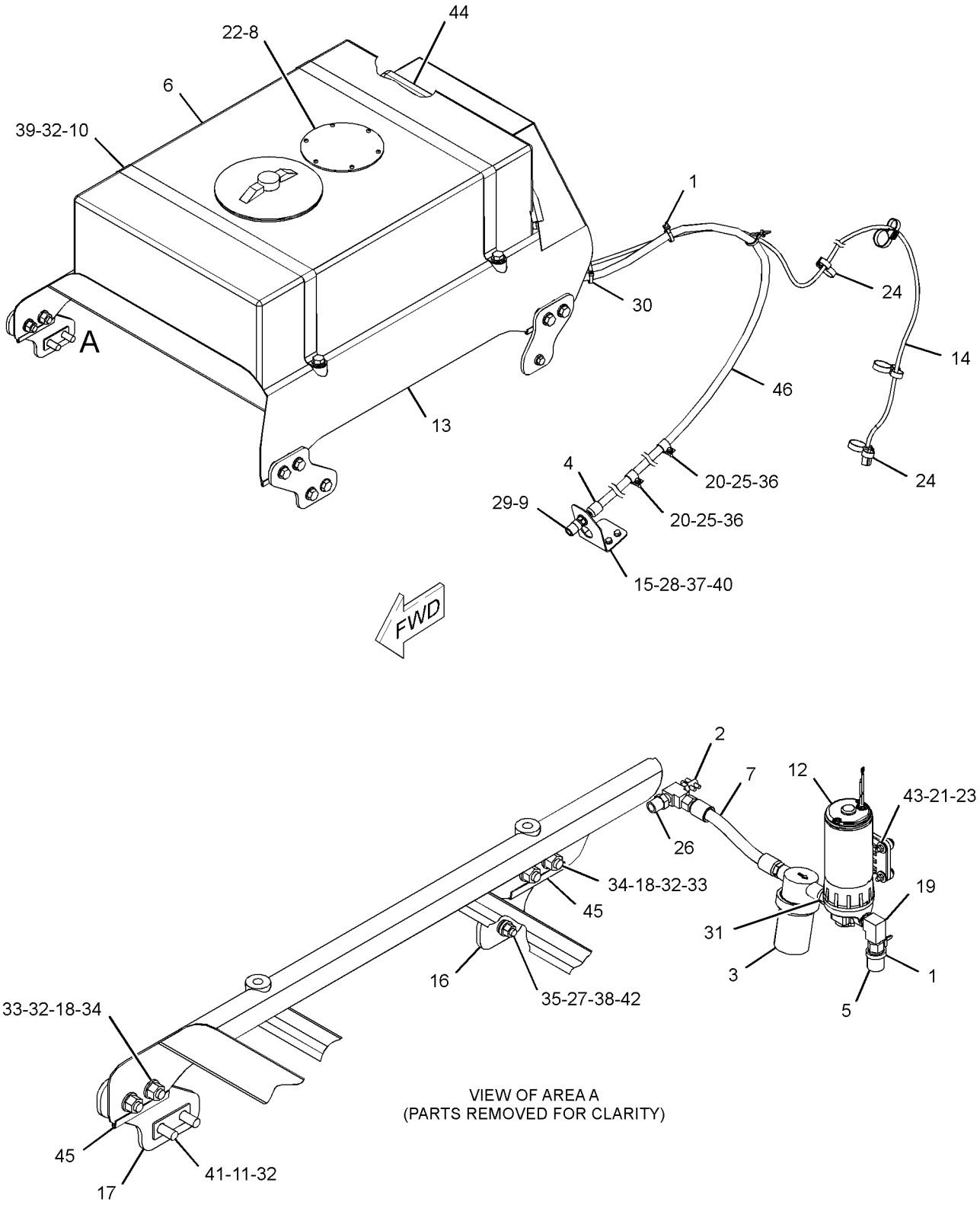

VIEW OF AREA A
(PARTS REMOVED FOR CLARITY)

GRAPHIC #1 **<END>** g03407644

166-2551 TANK GP-WATER

PART OF 433-9697 TANK & MTG GP-WATER

AN ATTACHMENT

SMCS-5613 **i04882029**

NOTE	REF NO	GRAPHIC REF	PART NUMBER	QTY	PART NAME 1 2 3 4 5 6 (PRODUCT LEVEL)	SEE PAGE
	1	1	**192-2606**	1	CAP AS (WATER TANK)	
	2	1	**192-2607**	1	FITTING-DRAIN	

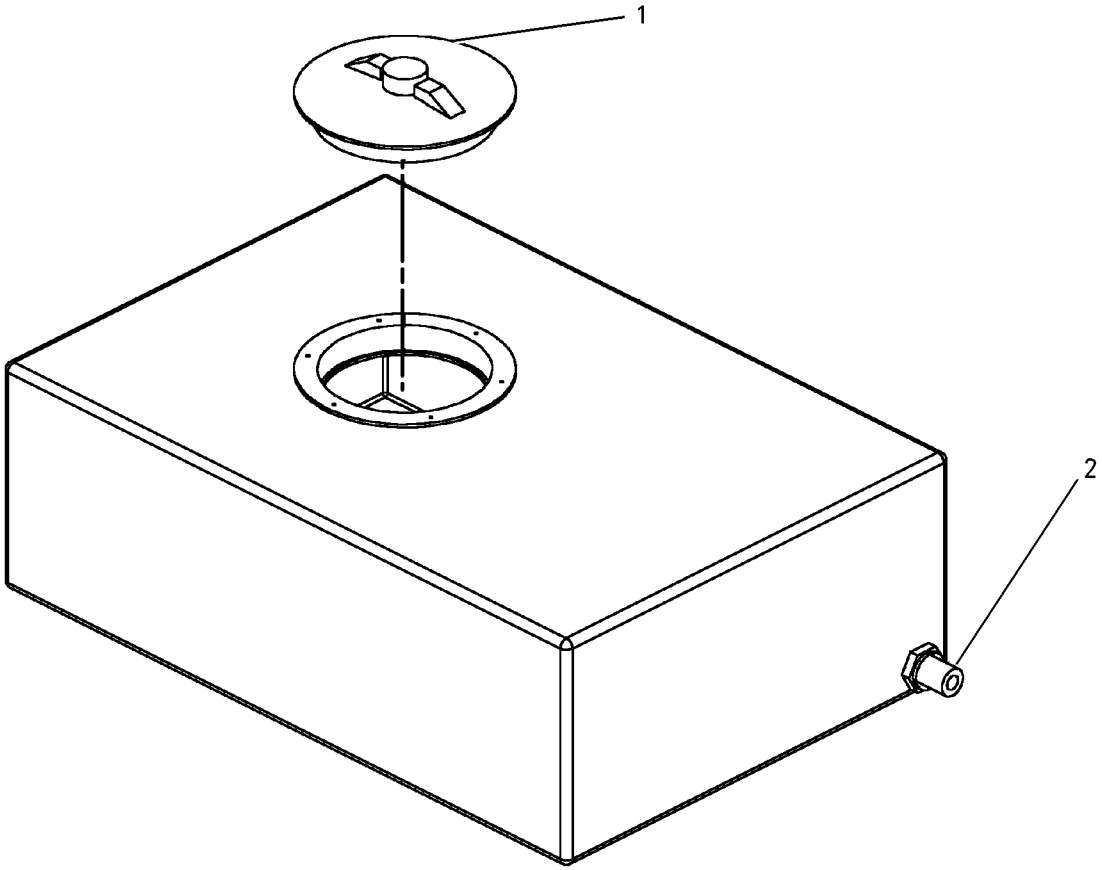

GRAPHIC #1 **<END>** g00742953

141-4999 TOOTH GP-UNI

PART OF 279-5366, 279-5370, 279-5374, 279-5378 BUCKET AR-GENERAL PURPOSE, 423-4287, 426-6487, 426-6535, 426-6547, 426-6557, 426-6931, 426-6938, 426-6944, 426-6965, 426-6985 BUCKET AR-MULTIPURPOSE, 296-8191 BUCKET GP-GENERAL PURPOSE AN ATTACHMENT

SMCS-6822 **i02163942**

NOTE	REF NO	GRAPHIC REF	PART NUMBER	QTY	PART NAME 1 2 3 4 5 6 (PRODUCT LEVEL)	SEE PAGE
	1	1	**132-4720**	1	TOOTH-UNI-SINGLE STRAP	
	2	1	**246-4349**	2	SCREW-FLAT HEAD (M16X2-THD)	
M	3	1	**8T-4778**	2	LOCKNUT (M16X2-THD)	

M - METRIC PART

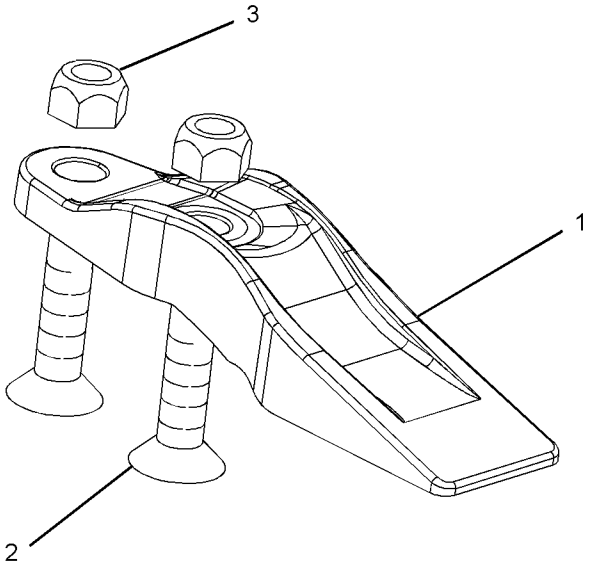

GRAPHIC #1 **<END>** g01097424

OPERATOR STATION

345-4960 ACCESSORY GP-CAB

PART OF 345-6158, 345-6160 CAB AR-ENCLOSED ROPS

AN ATTACHMENT

SMCS-7301, 731C **i05295543**

NOTE	REF NO	GRAPHIC REF	PART NUMBER	QTY	PART NAME 1 2 3 4 5 6 (PRODUCT LEVEL)	SEE PAGE
	1	1	**8Y-5947**	9	FASTENER	
	2	1	**258-3727**	3	SCREW-TRUSS HEAD (SPECIAL)	
	3	1	**345-4961**	1	HOLDER-CUP	
	4	1	**345-6021**	1	HEADLINER	
	5	1	**345-6022**	1	COVER (LH)	
	6	1	**345-6023**	1	COVER (RH)	
	7	1	**345-6024**	1	COVER (LH)	
	8	1	**345-6025**	1	COVER (RH)	
	9	1	**418-5771**	1	PLATE	

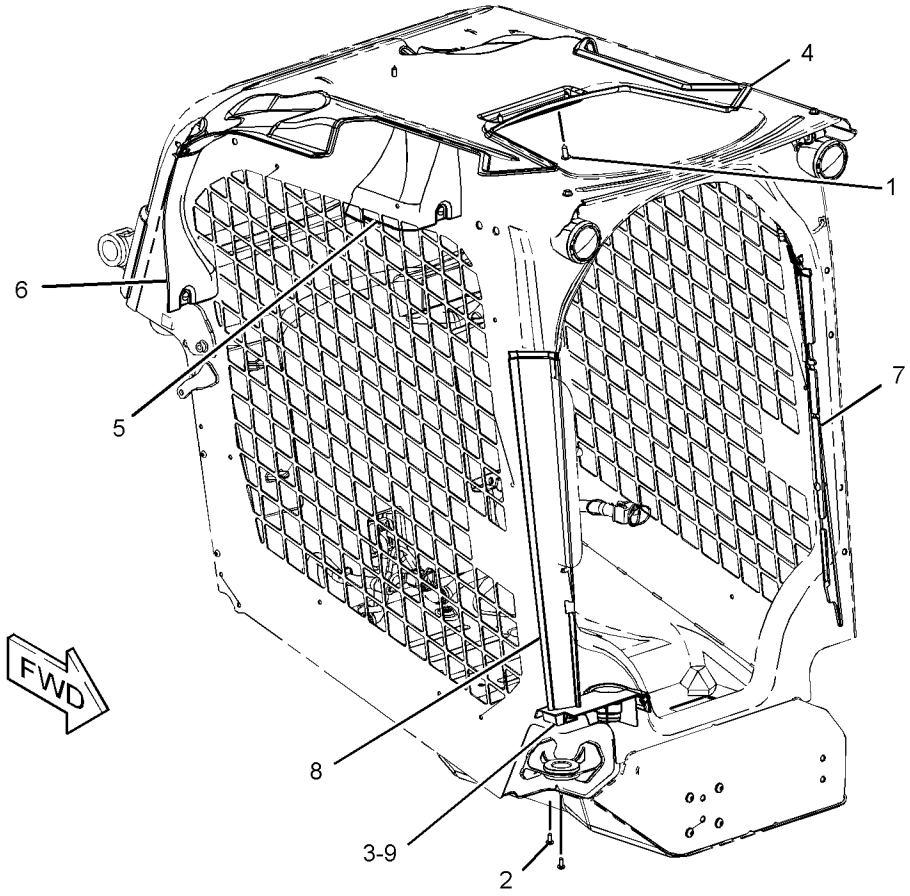

GRAPHIC #1 **<END>** g03369483

345-4962 ACCESSORY GP-CAB

PART OF 345-4913 CAB AR-OPEN ROPS

AN ATTACHMENT

SMCS-7301, 731C **i05231951**

NOTE	REF NO	GRAPHIC REF	PART NUMBER	QTY	PART NAME 1 2 3 4 5 6 (PRODUCT LEVEL)	SEE PAGE
	1	1	**8Y-5947**	7	FASTENER	
	2	1	**258-3727**	3	SCREW-TRUSS HEAD (SPECIAL)	
	3	1	**345-4961**	1	HOLDER-CUP	
	4	1	**345-6021**	1	HEADLINER	
	5	1	**345-6022**	1	COVER (LH)	
	6	1	**345-6023**	1	COVER (RH)	
	7	1	**418-5771**	1	PLATE	

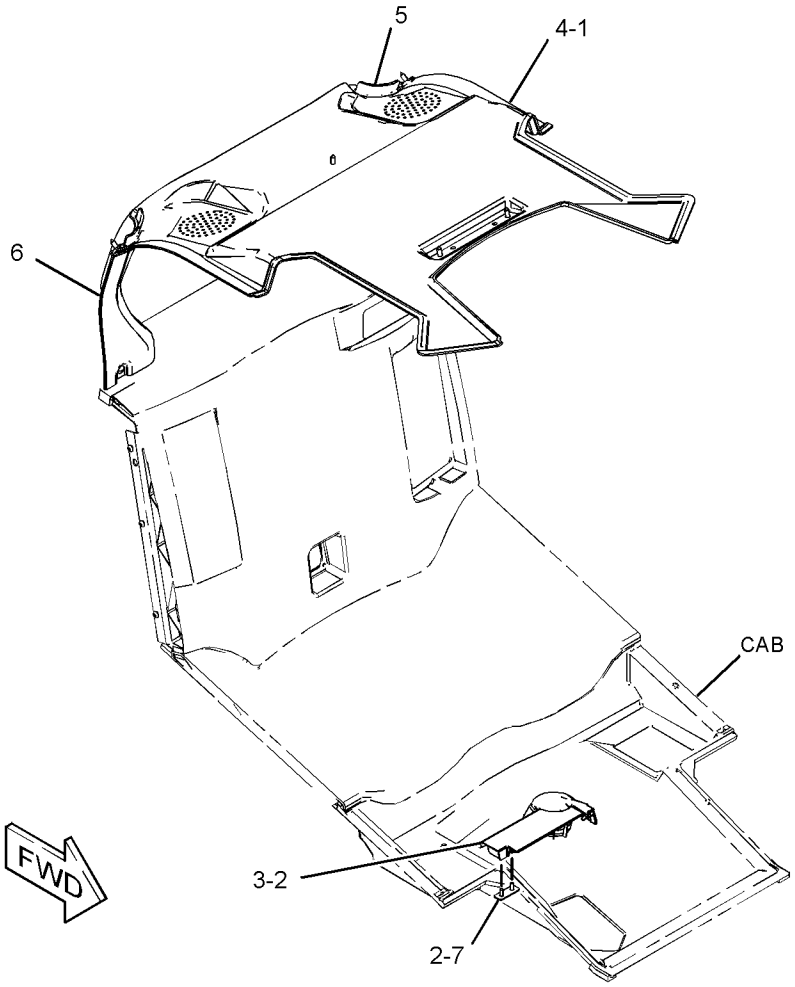

GRAPHIC #1 **<END>** g03370517

186-6190 ACCUMULATOR GP-REFRIGERANT–CHARGED

PART OF 345-5040 LINES GP-AIR CONDITIONER

AN ATTACHMENT

SMCS-7320 **i02306357**

NOTE	REF NO	GRAPHIC REF	PART NUMBER	QTY	PART NAME 1 2 3 4 5 6 (PRODUCT LEVEL)	SEE PAGE
					(NO SERVICED PARTS)	

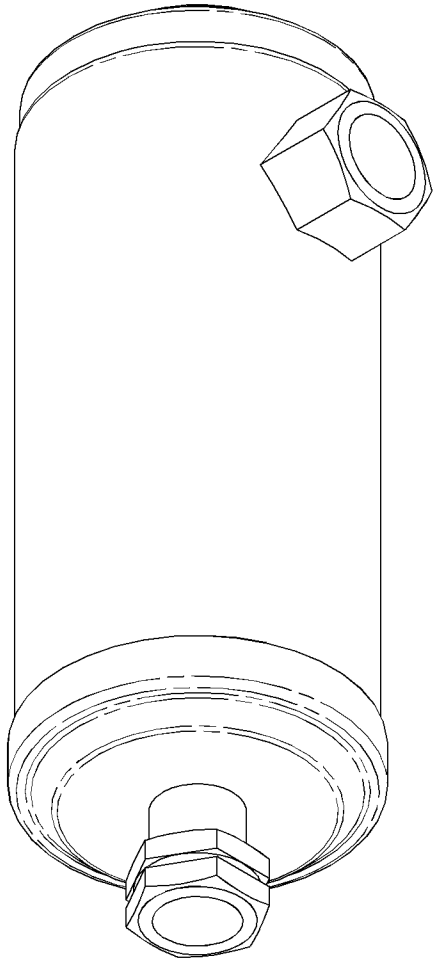

GRAPHIC #1 **<END>** g01155244

345-6190 AIR CONDITIONER & MOUNTING GP

PART OF 345-6163 AIR CONDITIONER AR, 345-6161 HEATER AR-CAB
AN ATTACHMENT

SMCS-7320 **i05352834**

NOTE	REF NO	GRAPHIC REF	PART NUMBER	QTY	PART NAME 1 2 3 4 5 6 (PRODUCT LEVEL)	SEE PAGE
	1	1	**127-4003**	2	GROMMET	
	2	1	**146-6371**	6	LOUVER AS	
	3	1	**258-3795**	4	SEAL	
	4	1	**265-6618**	1	FILTER ELEMENT-CAB AIR (RECIRCULATION)	
	5	1	**265-6619**	1	FILTER ELEMENT-CAB AIR (FRESH AIR)	
	6	1	**345-4526**	1	DUCT AS	
	7	1	**345-4527**	1	SEAL	
	8	1	**345-4528**	1	SEAL	
Y	9	1	**345-4545**	1	BLOWER GP-CAB	474
Y	10	1	**345-4546**	1	HEATER GP-CAB	512
	11	1	**345-4551**	1	SEAL	
	12	1	**345-6078**	2	KNOB AS	
	13	1	**345-6146**	1	COVER-LOUVER	
	14	1	**345-6191**	1	DUCT AS	
	15	1	**345-6192**	1	DUCT AS	
	16	1	**345-6193**	2	BOLT-SPECIAL	
	17	1	**345-6194**	4	SPRING	
	18	1	**345-6196**	2	BOLT-SPECIAL	
	19	1	**345-6197**	4	WASHER-RUBBER	
	20	1	**359-1585**	1	COVER AS	
	21	1	**388-7876**	2	BRACKET AS	
					(EACH INCLUDES)	
M		1	**159-9539**	1	NUT-WELD (M6X1-THD)	
	22	1	**114-6658**	6	WASHER (6.5X17X1-MM THK)	
	23	1	**195-0936**	2	INSERT-THREADED (M6X1-THD)	
M	25	1	**215-6406**	2	SCREW-TRUSS HEAD (M6X1X16-MM)	
	27	1	**5P-4116**	4	WASHER-HARD (8.8X20.5X2-MM THK)	
	28	1	**6V-7699**	2	WASHER-HARD (5.5X13X1.6-MM THK)	
M	30	1	**8T-0289**	2	BOLT (M5X0.8X20-MM)	
M	32	1	**8T-4181**	4	BOLT (M6X1X20-MM)	
M	33	1	**9X-2045**	6	SCREW-TRUSS HEAD (M6X1X20-MM)	

M - METRIC PART
Y - SEPARATE ILLUSTRATION

345-6190 **AIR CONDITIONER & MOUNTING GP (*contd.*)** **i05352834**

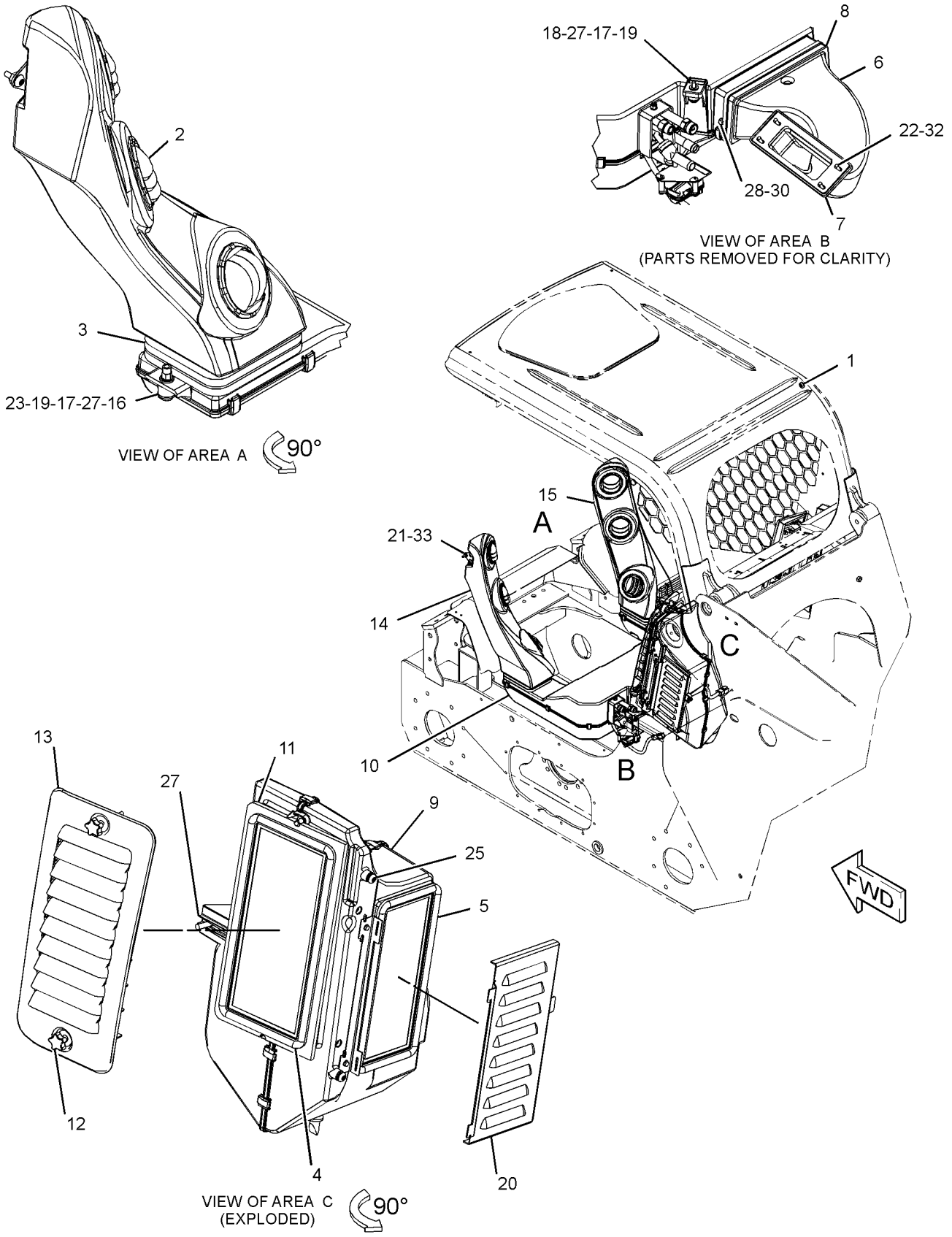

GRAPHIC #1 **<END>** g03390382

345-6163 AIR CONDITIONER AR–ENCLOSED CAB

PART OF 345-6160 CAB AR-ENCLOSED ROPS

AN ATTACHMENT

SMCS-7320 **i05195664**

NOTE	PART NUMBER	QTY	PART NAME 1 2 3 4 5 6 (PRODUCT LEVEL)	SEE PAGE
Y	*345-6190*	1	AIR CONDITIONER & MOUNTING GP	467
Y	*345-3584*	1	COMPRESSOR GP-REFRIGERANT	478
Y	*345-6151*	1	CONDENSER & MTG GP-REFRIGERANT	479
Y	*345-5040*	1	LINES GP-AIR CONDITIONER	527
Y	*361-6396*	1	WIRING GP-AIR CONDITIONER	133

Y - SEPARATE ILLUSTRATION

<END>

345-6185 ARMREST & MOUNTING GP

PART OF 345-6350, 345-6360 SEAT & ARMREST GP

AN ATTACHMENT

SMCS-7307 **i05296342**

NOTE	REF NO	GRAPHIC REF	PART NUMBER	QTY	PART NAME 1 2 3 4 5 6 (PRODUCT LEVEL)	SEE PAGE
	1	1	**258-4319**	1	ARMREST AS (RH)	
	2	1	**258-4422**	2	WASHER-SPRING	
Y	3	1	**345-6186**	1	MOUNTING GP-ARMREST (RIGHT)	532
Y	4	1	**345-6187**	1	MOUNTING GP-ARMREST (LEFT)	533
	5	1	**378-1007**	1	SWITCH AS-MAGNETIC (LOAD CONTROL)	
		1	**171-0596**	1	RECEPTACLE AS-CONNECTOR	
	6	1	**418-5935**	1	ARMREST AS (LH)	
	7	1	**418-5954**	1	BRACKET	
	8	1	**436-2988**	1	PLATE (MAGNETIC)	
M	9	1	**3T-0851**	1	LOCKNUT (M5X0.8-THD)	
	10	1	**7X-7729**	6	WASHER (11X25X3-MM THK)	
M	11	1	**8T-0267**	2	BOLT-SOCKET HEAD (M6X1X12-MM)	
	12	1	**8T-0328**	1	WASHER-HARD (5.5X10X1-MM THK)	
M	13	1	**8T-3998**	2	BOLT (M4X0.7X12-MM)	
M	14	1	**8T-6685**	2	BOLT (M10X1.5X110-MM)	

M - METRIC PART
Y - SEPARATE ILLUSTRATION

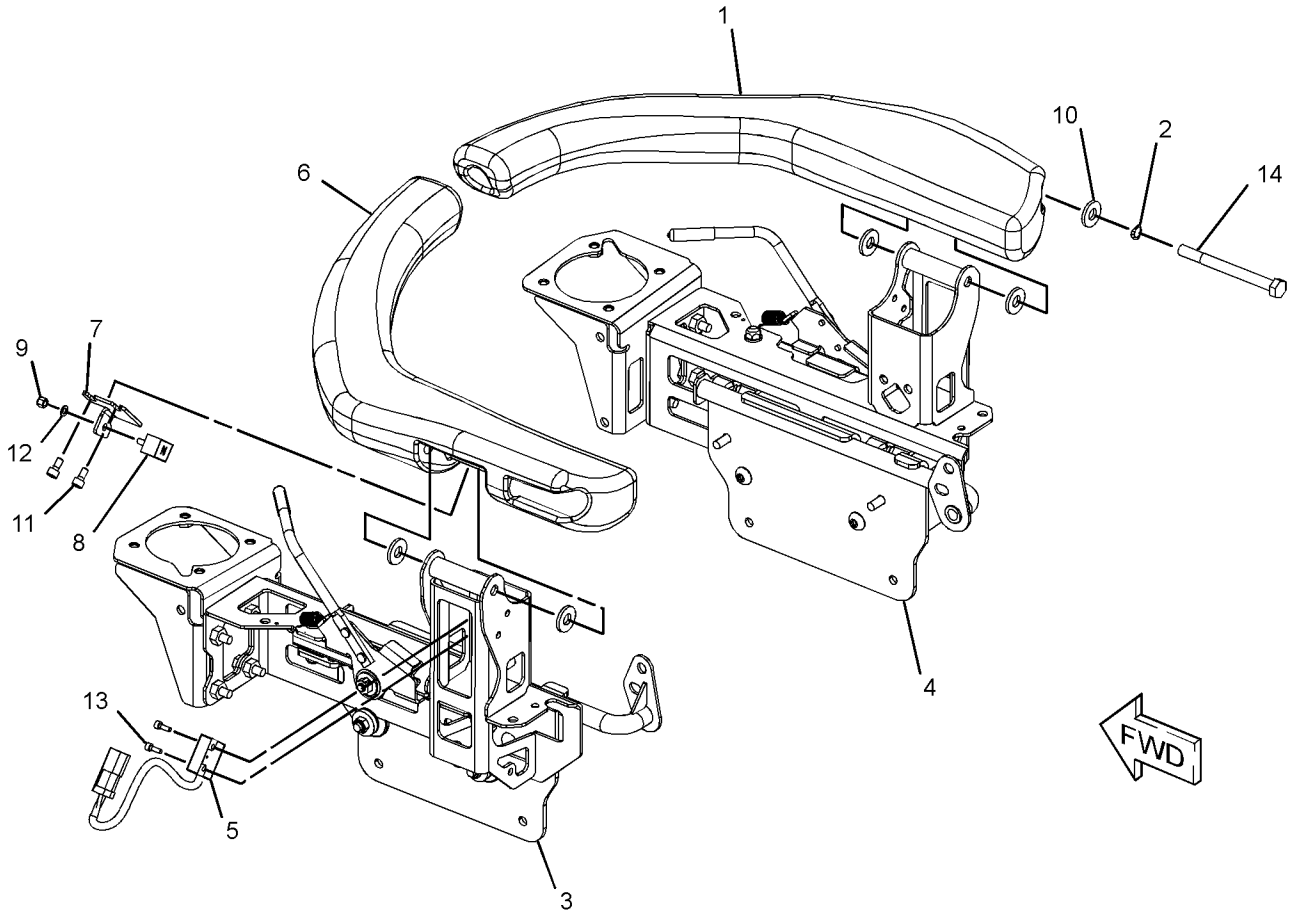

GRAPHIC #1 **<END>** g03370046

345-6188 ARMREST & MOUNTING GP

PART OF 345-6040, 345-6045 SEAT & MOUNTING GP

AN ATTACHMENT

SMCS-7307 **i05296326**

NOTE	REF NO	GRAPHIC REF	PART NUMBER	QTY	PART NAME 1 2 3 4 5 6 (PRODUCT LEVEL)	SEE PAGE
Y	1	1	**345-6184**	1	ARMREST GP (RH)	472
Y	2	1	**418-5933**	1	ARMREST GP (LH)	473
M	3	1	**131-3540**	6	LOCKNUT (M8X1.25-THD)	
	4	1	**7X-0613**	6	WASHER-HARD (8.8X25.5X5-MM THK)	

M - METRIC PART
Y - SEPARATE ILLUSTRATION

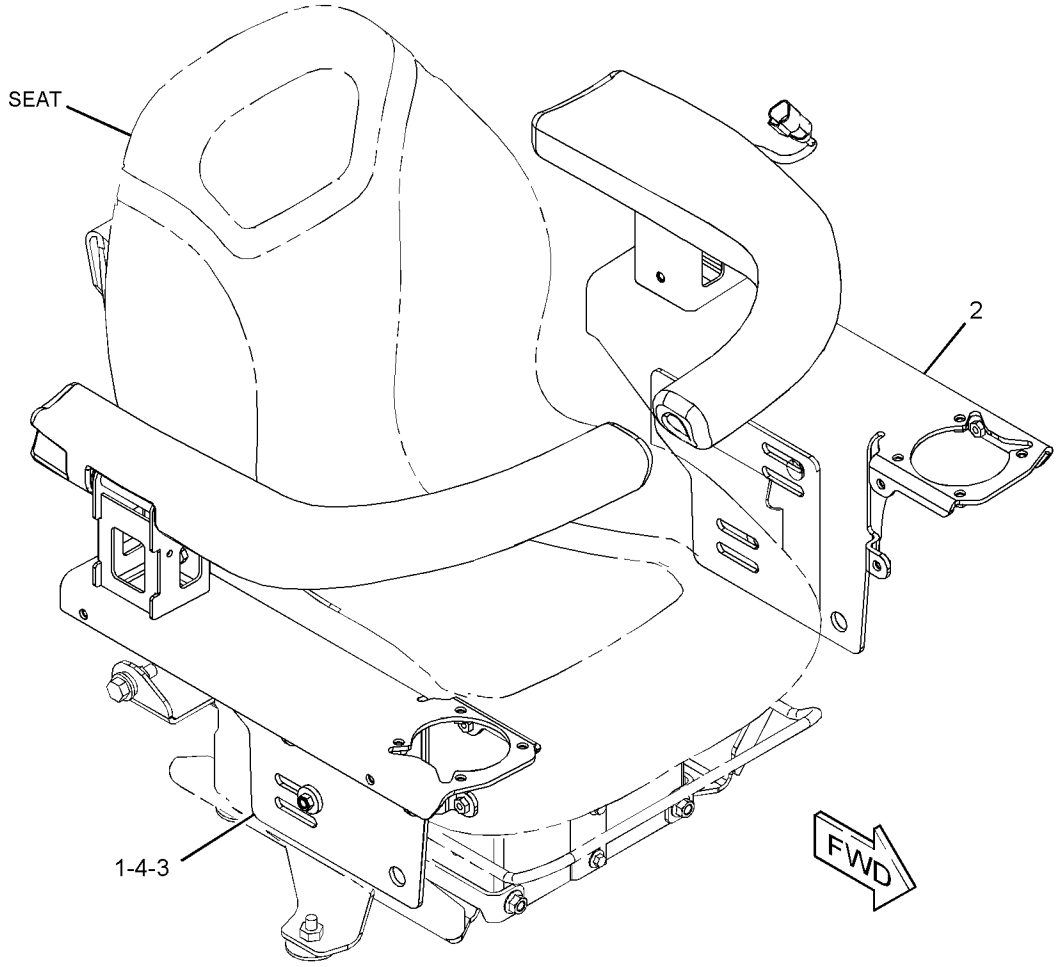

GRAPHIC #1 **<END>** g03369960

345-6184 ARMREST GP–RH

PART OF 345-6188 ARMREST & MOUNTING GP

AN ATTACHMENT

SMCS-7307 **i05296332**

NOTE	REF NO	GRAPHIC REF	PART NUMBER	QTY	PART NAME 1 2 3 4 5 6 (PRODUCT LEVEL)	SEE PAGE
	1	1	**258-4319**	1	ARMREST AS (RH)	
	2	1	**258-4422**	1	WASHER-SPRING	
	3	1	**418-5930**	1	BRACKET AS	
		1	**258-4064**	1	SPACER	
M		1	**159-9539**	12	NUT-WELD (M6X1-THD)	
	4	1	**7X-7729**	3	WASHER (11X25X3-MM THK)	
M	5	1	**8T-6685**	1	BOLT (M10X1.5X110-MM)	

M - METRIC PART

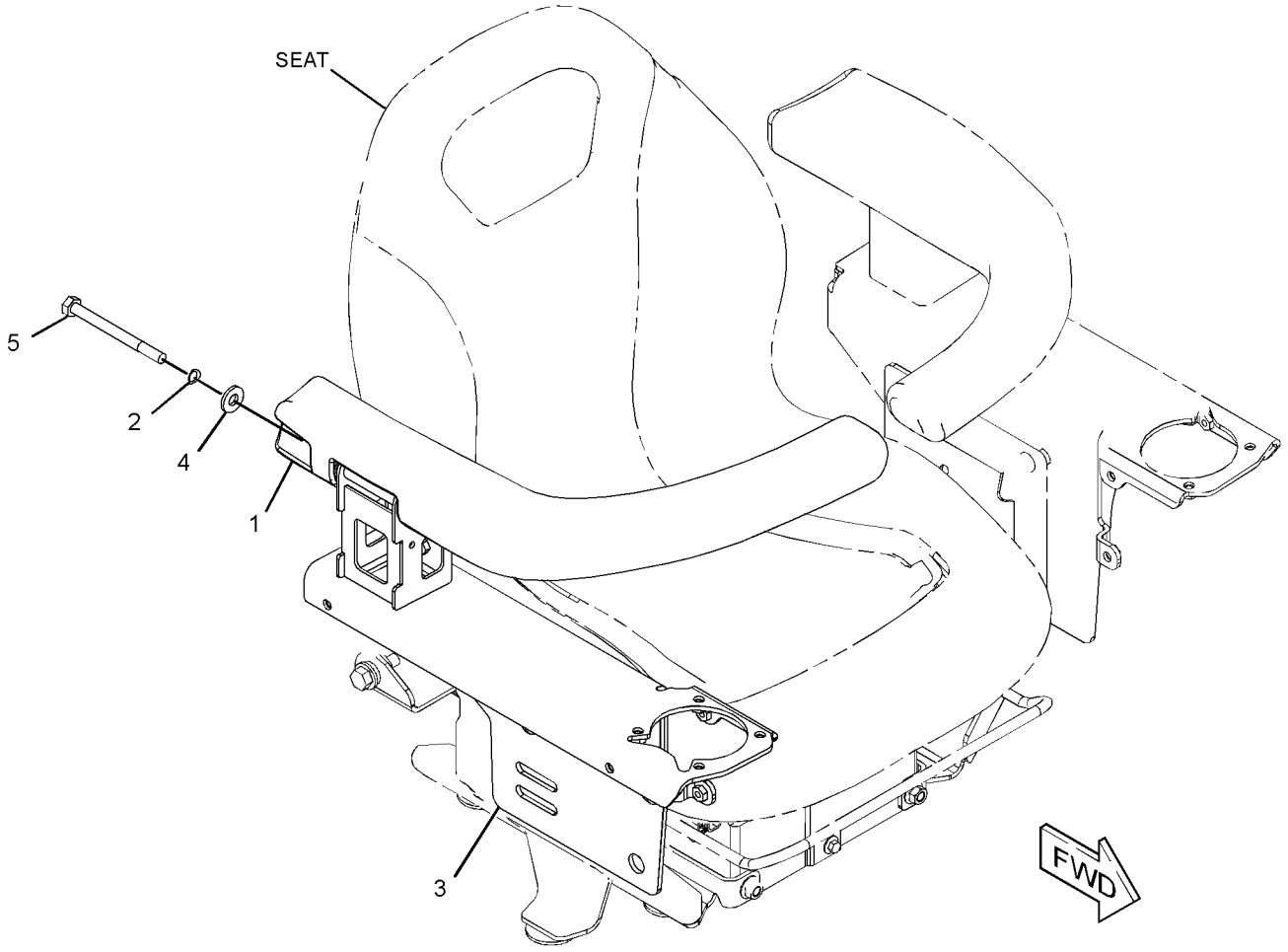

GRAPHIC #1 **<END>** g03369934

418-5933 ARMREST GP–LH

PART OF 345-6188 ARMREST & MOUNTING GP
AN ATTACHMENT

SMCS-7307 **i05296329**

NOTE	REF NO	GRAPHIC REF	PART NUMBER	QTY	PART NAME 1 2 3 4 5 6 (PRODUCT LEVEL)	SEE PAGE
	1	1	**258-4422**	1	WASHER-SPRING	
	2	1	**378-1007**	1	SWITCH AS-MAGNETIC (LOAD CONTROL)	
		1	**171-0596**	1	RECEPTACLE AS-CONNECTOR	
		1	**3E-3371**	1	WEDGE-RECEPTACLE LOCK (3-PIN)	
	3	1	**418-5934**	1	BRACKET AS	
M		1	**159-9539**	12	NUT-WELD (M6X1-THD)	
		1	**258-4064**	1	SPACER	
	4	1	**418-5935**	1	ARMREST AS (LH)	
M		1	**159-9539**	2	NUT-WELD (M6X1-THD)	
M		1	**159-9541**	1	NUT-WELD (M10X1.5-THD)	
	5	1	**418-5954**	1	BRACKET	
	6	1	**436-2988**	1	PLATE (MAGNETIC)	
M	7	1	**3T-0851**	1	LOCKNUT (M5X0.8-THD)	
	8	1	**7X-7729**	3	WASHER (11X25X3-MM THK)	
M	9	1	**8T-0267**	2	BOLT-SOCKET HEAD (M6X1X12-MM)	
	10	1	**8T-0328**	1	WASHER-HARD (5.5X10X1-MM THK)	
M	11	1	**8T-3998**	2	BOLT (M4X0.7X12-MM)	
M	12	1	**8T-6685**	1	BOLT (M10X1.5X110-MM)	

M - METRIC PART

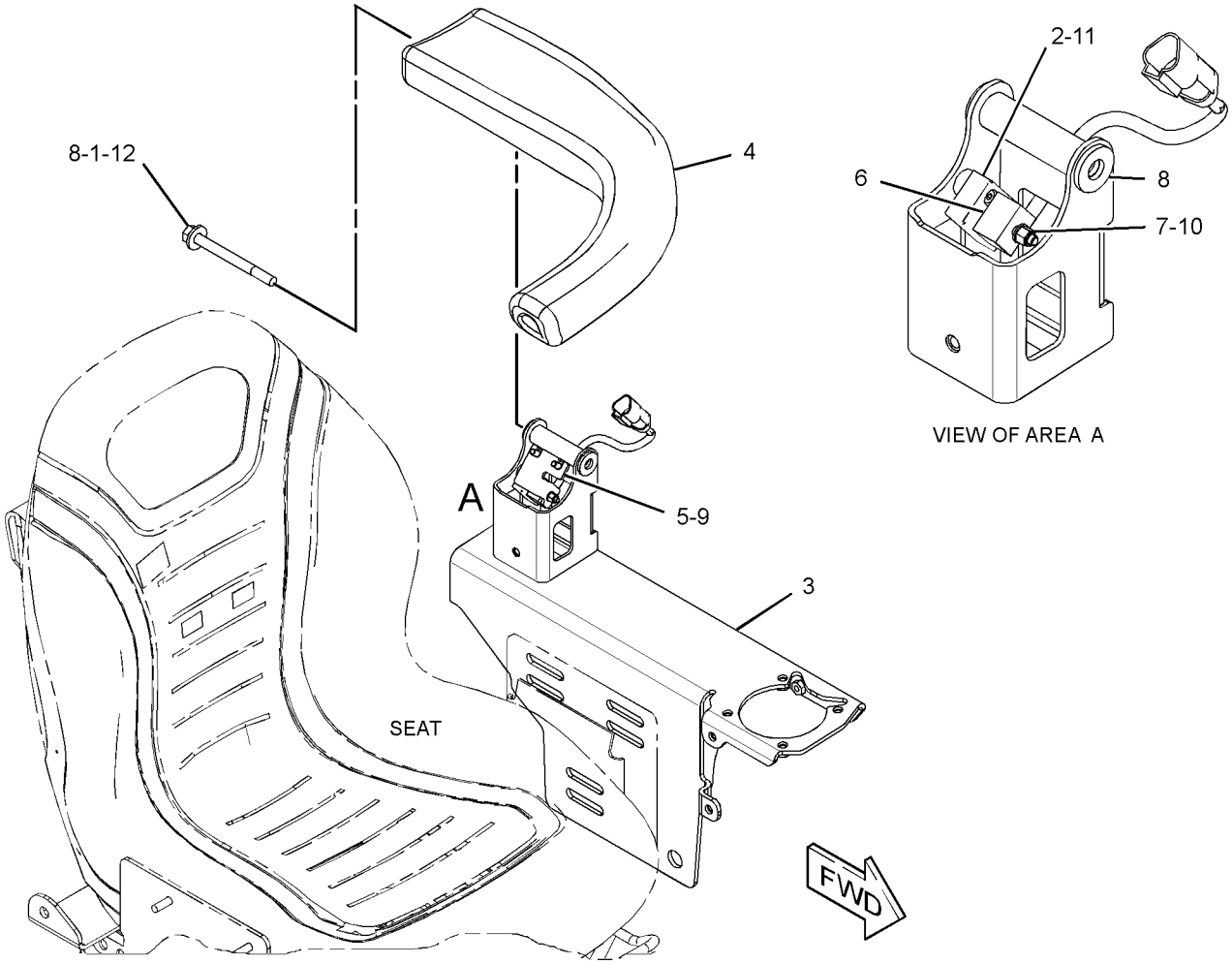

GRAPHIC #1 **<END>** g03364925

345-4545 BLOWER GP-CAB

PART OF 345-6190 AIR CONDITIONER & MOUNTING GP

AN ATTACHMENT

SMCS-7316 **i04774711**

NOTE	REF NO	GRAPHIC REF	PART NUMBER	QTY	PART NAME 1 2 3 4 5 6 (PRODUCT LEVEL)	SEE PAGE
D	1	1	**5P-5637**		SEAL (0.14-M EACH)	
D	1A	1	**5P-5637**		SEAL (0.04-M EACH)	
	2	1	**185-4015**	9	CLIP	
	3	1	**283-2458**	4	NUT-SPEED	
	4	1	**345-4549**	1	VALVE	
	5	1	**345-4558**	1	HARNESS AS-MOTOR	
		1	**5W-4957**	1	HOUSING	
		1	**9W-0852**	4	PIN-CONNECTOR (14-GA TO 16-GA)	
		1	**102-8804**	1	KIT-RECEPTACLE (4-PIN)	
					(INCLUDES RECEPTACLE AS & WEDGE)	
		1	**5W-1987**	4	TERMINAL-BLADE (12-GA TO 16-GA)	
	6	1	**345-6082**	1	GASKET	
	7	1	**345-6083**	1	GASKET	
	8	1	**359-1581**	1	CASE	
	9	1	**359-1582**	1	CASE	
	10	1	**359-1583**	1	BLOWER	
	11	1	**359-1584**	1	PLATE	
	12	1	**311-3520**	2	SCREW-HEX HEAD (8-16X0.5-IN)	

D - ORDER BY THE METER

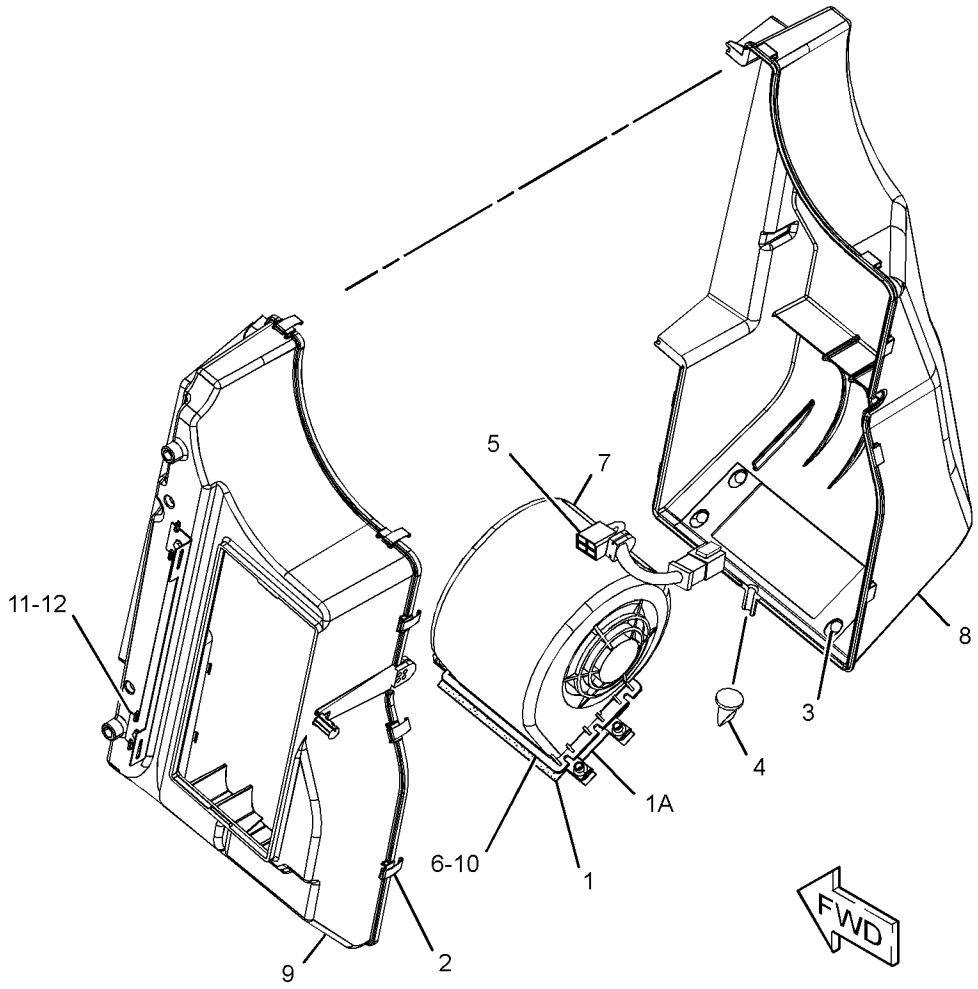

GRAPHIC #1 **<END>** g02885297

OPERATOR STATION

345-5454 CAB AR

PART OF 388-8237, 388-8238 COMMON AR

SMCS-7301, 7325 **i05401732**

NOTE	PART NUMBER	QTY	PART NAME 1 2 3 4 5 6 (PRODUCT LEVEL)	SEE PAGE
Y	*383-6243*	1	COVER GP-FUSE PANEL	91
Y	*394-5387*	1	LIGHTING GP-FLOOD (WORK LIGHTS, FRONT)	123
Y	*345-6020*	1	LINER GP-CAB	525
Y	*345-6130*	1	MIRROR & MTG GP-REAR VIEW	198
Y	*378-1025*	1	PANEL GP-INSTRUMENT	536
Y	*345-6010*	1	WINDOW GP-CAB	563
Y	*361-6400*	1	WIRING GP-CAB	135
	345-6200	1	CANOPY AS	

Y - SEPARATE ILLUSTRATION

<END>

345-6158 CAB AR-ENCLOSED ROPS—HEATER

AN ATTACHMENT

SMCS-7301 **i05156409**

NOTE	PART NUMBER	QTY	PART NAME 1 2 3 4 5 6 (PRODUCT LEVEL)	SEE PAGE
Y	*345-4960*	1	ACCESSORY GP-CAB	464
Y	*345-6161*	1	HEATER AR-CAB	511
Y	*345-6135*	1	PEDAL GP-GOVERNOR	542
Y	*345-6090*	1	WINDOW GP-CAB	564

Y - SEPARATE ILLUSTRATION

<END>

345-6160 CAB AR-ENCLOSED ROPS—AIR CONDITIONER

AN ATTACHMENT

SMCS-7301 **i05156418**

NOTE	PART NUMBER	QTY	PART NAME 1 2 3 4 5 6 (PRODUCT LEVEL)	SEE PAGE
Y	*345-4960*	1	ACCESSORY GP-CAB	464
Y	*345-6163*	1	AIR CONDITIONER AR	469
Y	*345-6135*	1	PEDAL GP-GOVERNOR	542
Y	*345-6090*	1	WINDOW GP-CAB	564

Y - SEPARATE ILLUSTRATION

<END>

345-4913 CAB AR-OPEN ROPS

AN ATTACHMENT

SMCS-7301, 7325 **i05282531**

NOTE	PART NUMBER	QTY	PART NAME 1 2 3 4 5 6 (PRODUCT LEVEL)	SEE PAGE
Y	*345-4962*	1	ACCESSORY GP-CAB	465
Y	*345-6085*	1	COVER GP-CAB	497
Y	*345-6035*	1	HANDHOLD GP	509
Y	*345-6135*	1	PEDAL GP-GOVERNOR	542

Y - SEPARATE ILLUSTRATION

<END>

OPERATOR STATION

345-5778 CAB AR-OPEN ROPS

AN ATTACHMENT

SMCS-7301, 7325 **i05282530**

NOTE	PART NUMBER	QTY	PART NAME 1 2 3 4 5 6 (PRODUCT LEVEL)	SEE PAGE
Y	*345-6085*	1	COVER GP-CAB	497
Y	*345-6035*	1	HANDHOLD GP	509
Y	*345-6319*	1	SEAT AR-SUSPENSION (MECHANICAL)	554

Y - SEPARATE ILLUSTRATION

<END>

345-5703 CABLE GP-CONTROL

PART OF 345-5751 LINES GP-LIFT CYLINDER
AN ATTACHMENT

SMCS-5154 **i04774684**

NOTE	REF NO	GRAPHIC REF	PART NUMBER	QTY	PART NAME 1 2 3 4 5 6 (PRODUCT LEVEL)	SEE PAGE
Y	1	1	**298-7197**	1	HANDLE GP	510
	2	1	**345-5718**	1	CABLE AS	
		1	**8T-4742**	1	END-YOKE ROD	
		1	**8T-4744**	1	PIN AS-SPRING	
	3	1	**9R-5744**	2	WASHER (15.9X28X1-MM THK)	

Y - SEPARATE ILLUSTRATION

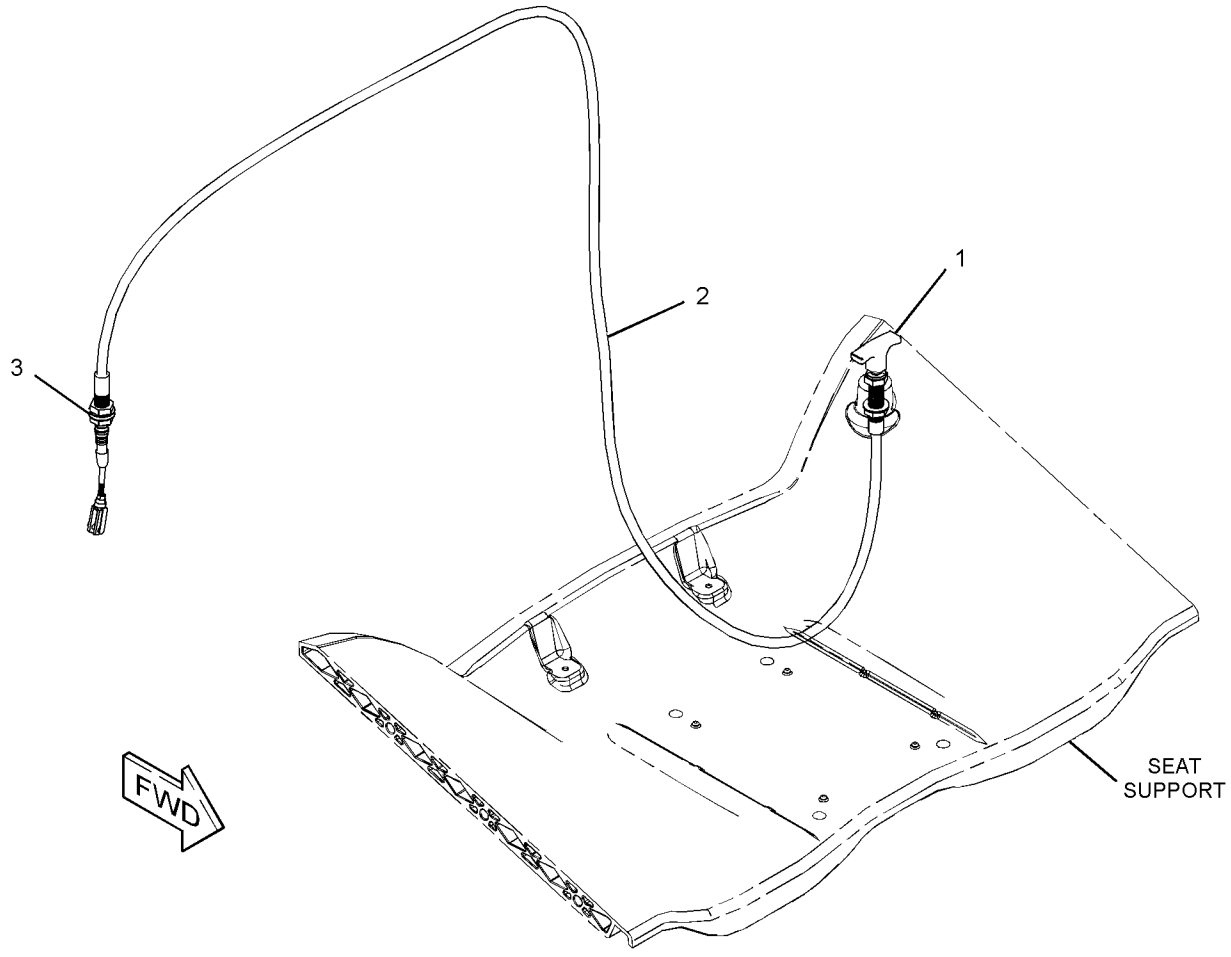

GRAPHIC #1 **<END>** g02878056

345-3584 COMPRESSOR GP-REFRIGERANT

PART OF 345-6163 AIR CONDITIONER AR
AN ATTACHMENT

SMCS-1802 **i05165054**

NOTE	REF NO	GRAPHIC REF	PART NUMBER	QTY	PART NAME 1 2 3 4 5 6 (PRODUCT LEVEL)	SEE PAGE
	1	1	**345-3527**	1	PLATE	
	2	1	**345-4547**	1	COMPRESSOR GP-REFRIGERANT	
M	3	1	**175-7141**	2	NUT-HEX FLANGE (M10X1.5-THD)	
	4	1	**198-8354**	1	V-BELT	
	5	1	**208-9291**	1	BOLT (M10X1.5X20-MM)	
	6	1	**208-9294**	1	BOLT-FLANGE HEAD (M10X1.5X35-MM)	
	7	1	**7X-7729**	1	WASHER (11X25X3-MM THK)	
	8	1	**8T-4121**	1	WASHER-HARD (11X21X2.5-MM THK)	
M	9	1	**8T-6685**	1	BOLT (M10X1.5X110-MM)	

M - METRIC PART

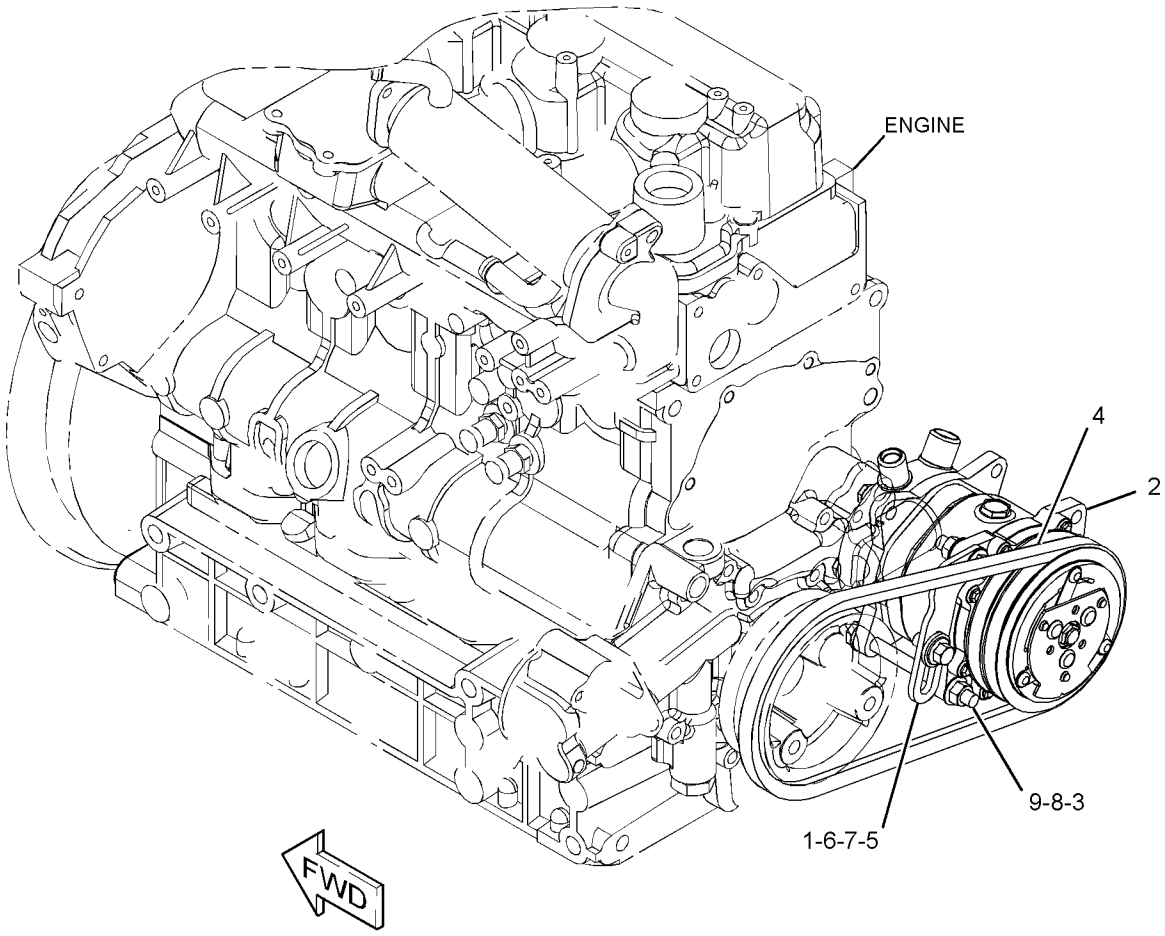

GRAPHIC #1 **<END>** g03325595

345-6151 CONDENSER & MTG GP-REFRIGERANT

PART OF 345-6163 AIR CONDITIONER AR
AN ATTACHMENT

SMCS-1805 **i05380580**

NOTE	REF NO	GRAPHIC REF	PART NUMBER	QTY	PART NAME 1 2 3 4 5 6 (PRODUCT LEVEL)	SEE PAGE
	1	1	**345-6152**	1	COIL AS	
M	2	1	**131-3540**	3	LOCKNUT (M8X1.25-THD)	
	3	1	**162-3148**	3	STUD (M8X1.25X62.75-MM)	
	4	1	**342-9920**	1	BOLT-FLANGE HEAD (M8X1.25X20-MM)	
M	5	1	**5C-7261**	1	NUT (M8X1.25-THD)	
	6	1	**5P-4116**	9	WASHER-HARD (8.8X20.5X2-MM THK)	
	7	1	**8T-4224**	4	WASHER-HARD (8.8X16X2-MM THK)	

M - METRIC PART

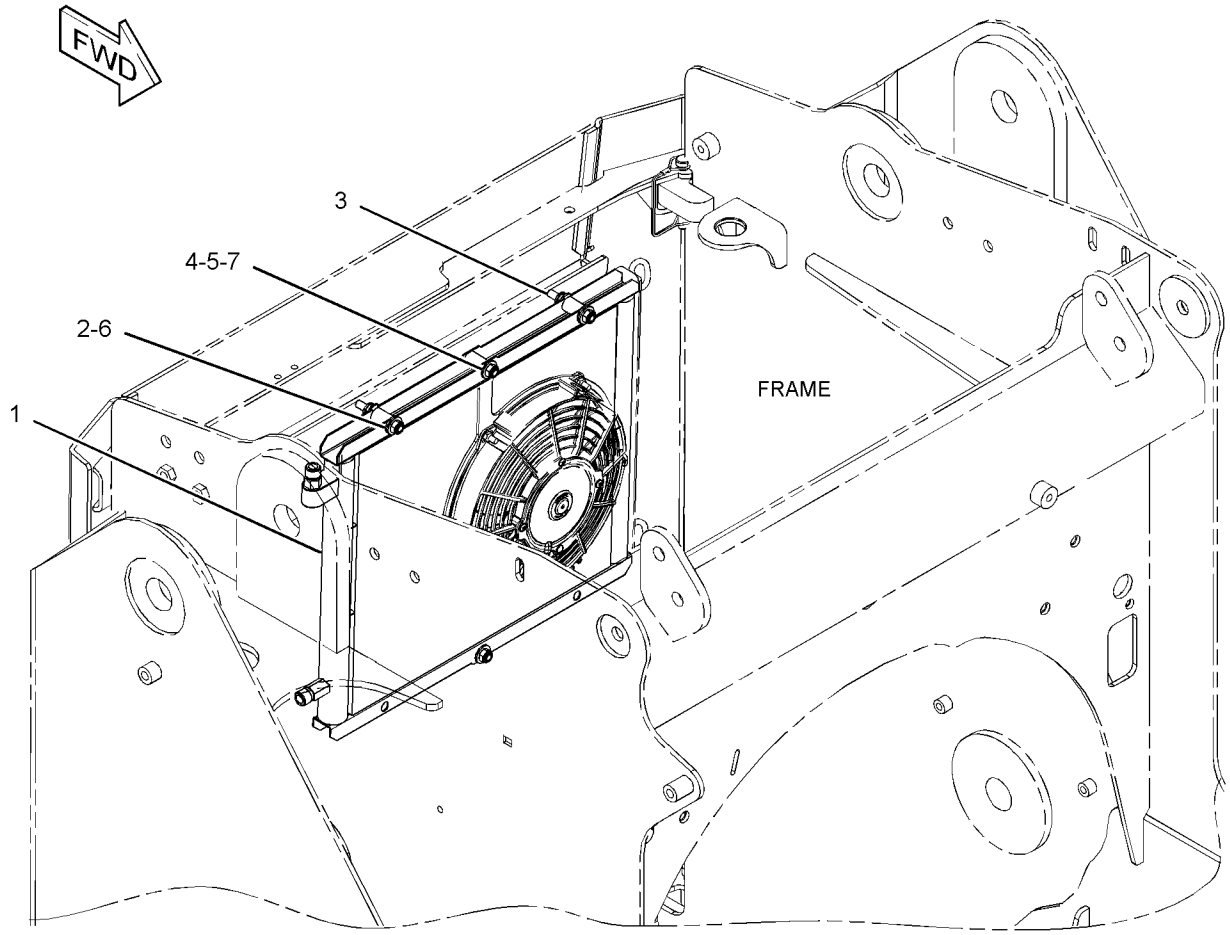

GRAPHIC #1 **<END>** g03405533

258-4299 CONTROL GP-AIR & TEMPERATURE

PART OF 356-6113 CONTROL GP-AIR & TEMPERATURE
AN ATTACHMENT

SMCS-7451 **i05401022**

NOTE	REF NO	GRAPHIC REF	PART NUMBER	QTY	PART NAME 1 2 3 4 5 6 (PRODUCT LEVEL)	SEE PAGE
	1	1	**6V-8369**	1	NUT (7/16-28-THD)	
	2	1	**340-8931**	2	KNOB AS (AIR TEMPERATURE)	
	3	1	**258-4271**	1	SWITCH AS (TEMPERATURE CONTROL)	
	4	1	**258-4272**	1	SWITCH AS (BLOWER FAN SPEED)	
	5	1	**258-4288**	1	KNOB	
	6	1	**258-4289**	1	STOP	
	7	1	**258-4292**	1	FILM-PANEL (BLOWER, TEMPERATURE CONTROL)	
	8	1	**266-2431**	1	PANEL	
	9	1	**7X-0848**	1	NUT-BULKHEAD (3/8-32-THD)	
	10	1	**9F-5644**	1	LOCKWASHER	

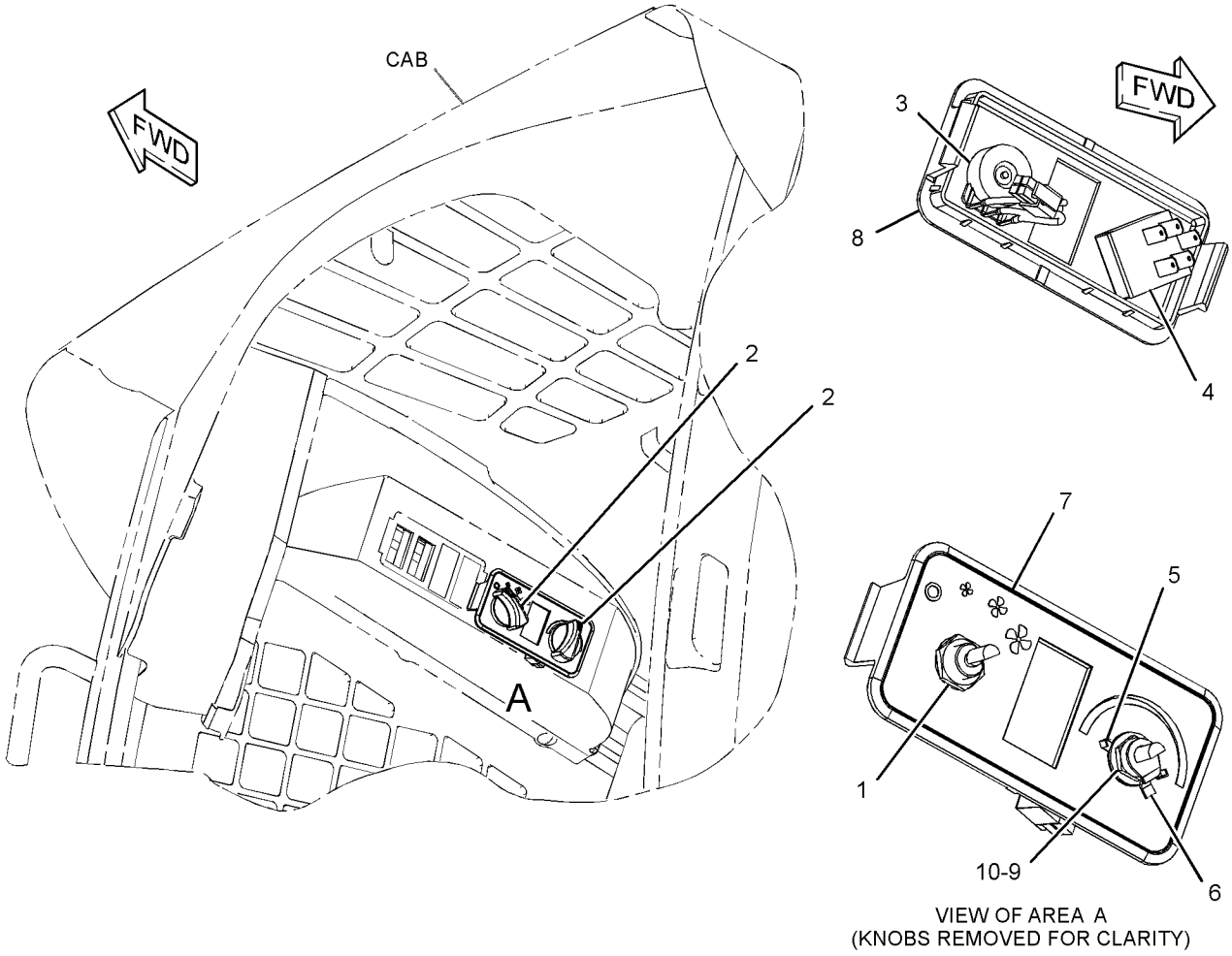

VIEW OF AREA A
(KNOBS REMOVED FOR CLARITY)

GRAPHIC #1 **<END>** g01339840

356-6113 CONTROL GP-AIR & TEMPERATURE

PART OF 361-6396 WIRING GP-AIR CONDITIONER, 361-6384 WIRING GP-HEATER AN ATTACHMENT

SMCS-7451 **i05163081**

NOTE	REF NO	GRAPHIC REF	PART NUMBER	QTY	PART NAME 1 2 3 4 5 6 (PRODUCT LEVEL)	SEE PAGE
Y	1	1	**258-4299**	1	CONTROL GP-AIR & TEMPERATURE	480
Y	2	1	**356-6106**	1	HARNESS AS-HEATER & AIR COND (BLOWER MOTOR)	100

Y - SEPARATE ILLUSTRATION

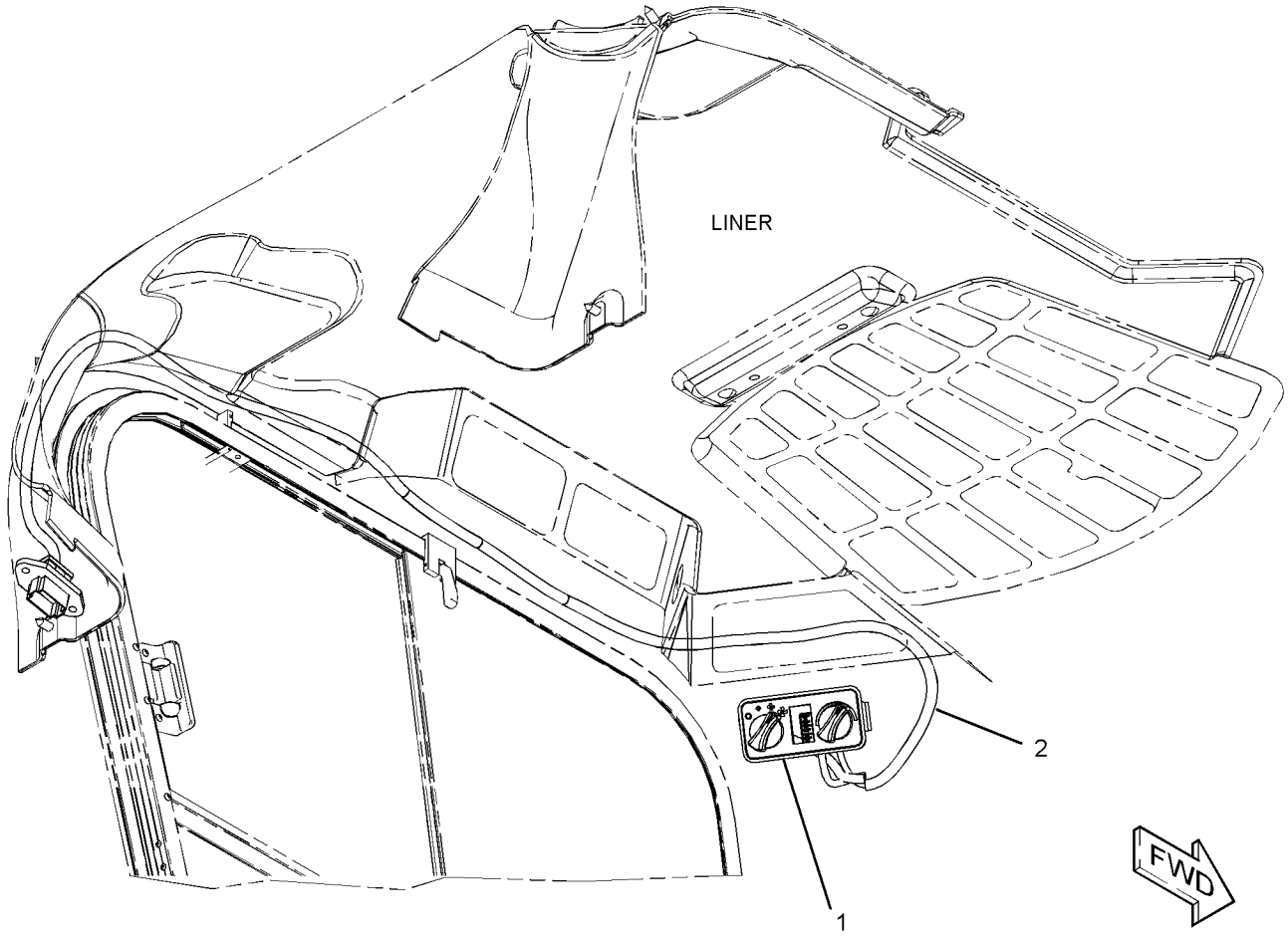

GRAPHIC #1 **<END>** g03318245

345-5919 CONTROL GP-ELECTROHYDRAULIC—ON, OFF AUXILIARY CONTROL

AN ATTACHMENT

SMCS-5702, 5705 **i05156414**

NOTE	PART NUMBER	QTY	PART NAME 1 2 3 4 5 6 (PRODUCT LEVEL)	SEE PAGE
Y	*345-6582*	1	CONTROL GP-ELECTROHYDRAULIC (RH)	485
Y	*345-6584*	1	CONTROL GP-ELECTROHYDRAULIC (LH)	487

Y - SEPARATE ILLUSTRATION

<END>

345-5923 CONTROL GP-ELECTROHYDRAULIC

AN ATTACHMENT

SMCS-5702, 5705 **i05296324**

NOTE	PART NUMBER	QTY	PART NAME 1 2 3 4 5 6 (PRODUCT LEVEL)	SEE PAGE
Y	*345-6580*	1	CONTROL GP-ELECTROHYDRAULIC (RH)	483
Y	*345-6583*	1	CONTROL GP-ELECTROHYDRAULIC (LH, HIGH FLOW)	486

Y - SEPARATE ILLUSTRATION

<END>

345-6580 CONTROL GP-ELECTROHYDRAULIC

PART OF 387-5383 CONTROL AR-HYDRAULIC, 345-5923 CONTROL GP-ELECTROHYDRAULIC AN ATTACHMENT

SMCS-5702, 5705 **i05166844**

NOTE	REF NO	GRAPHIC REF	PART NUMBER	QTY	PART NAME 1 2 3 4 5 6 (PRODUCT LEVEL)	SEE PAGE
M	1	1	**9X-2546**	4	BOLT (M6X1X20-MM)	
Y	2	1	**379-1612**	1	CONTROL GP-JOYSTICK (RH)	492
	3	1	**3S-2093**	2	STRAP-CABLE	

M - METRIC PART
Y - SEPARATE ILLUSTRATION

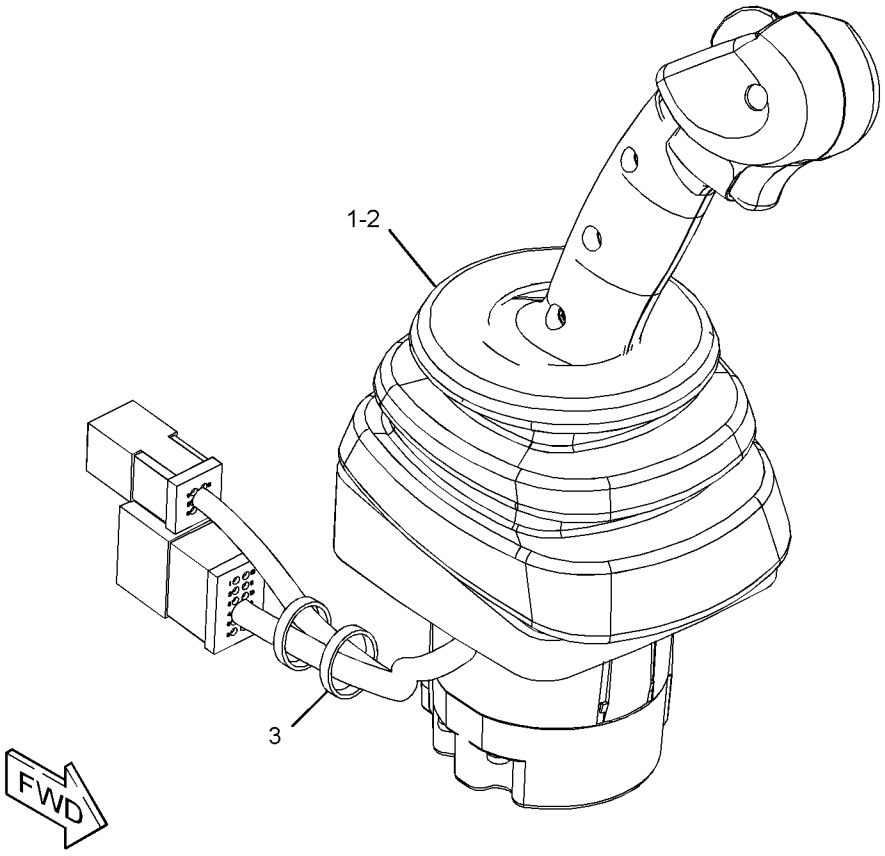

GRAPHIC #1 **<END>** g03325871

345-6581 CONTROL GP-ELECTROHYDRAULIC—RH, HIGH FLOW

PART OF 388-8038 HYDRAULIC AR

AN ATTACHMENT

SMCS-5702, 5705 **i05156699**

NOTE	REF NO	GRAPHIC REF	PART NUMBER	QTY	PART NAME 1 2 3 4 5 6 (PRODUCT LEVEL)	SEE PAGE
M	1	1	**9X-2546**	4	BOLT (M6X1X20-MM)	
Y	2	1	**379-1613**	1	CONTROL GP-JOYSTICK (RH, HIGH FLOW)	493
	3	1	**3S-2093**	2	STRAP-CABLE	

M - METRIC PART
Y - SEPARATE ILLUSTRATION

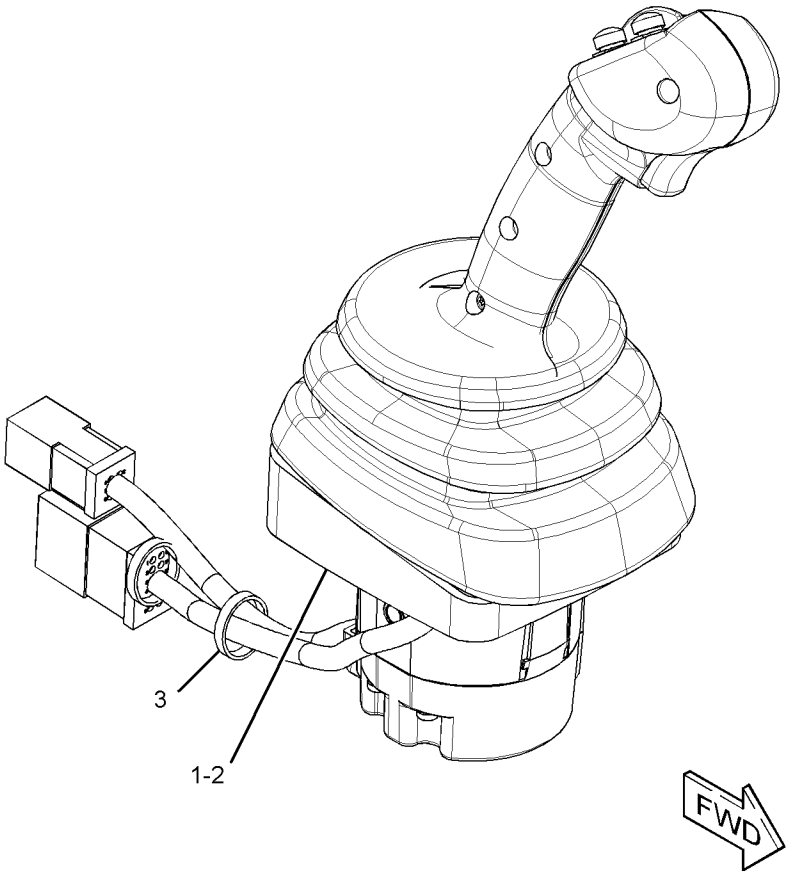

GRAPHIC #1 **<END>** g03319376

345-6582 CONTROL GP-ELECTROHYDRAULIC—RH

PART OF 345-5919 CONTROL GP-ELECTROHYDRAULIC
AN ATTACHMENT

SMCS-5702, 5705 **i05166901**

NOTE	REF NO	GRAPHIC REF	PART NUMBER	QTY	PART NAME 1 2 3 4 5 6 (PRODUCT LEVEL)	SEE PAGE
M	1	1	**9X-2546**	4	BOLT (M6X1X20-MM)	
Y	2	1	**379-1614**	1	CONTROL GP-JOYSTICK (RH)	494
	3	1	**3S-2093**	2	STRAP-CABLE	

M - METRIC PART
Y - SEPARATE ILLUSTRATION

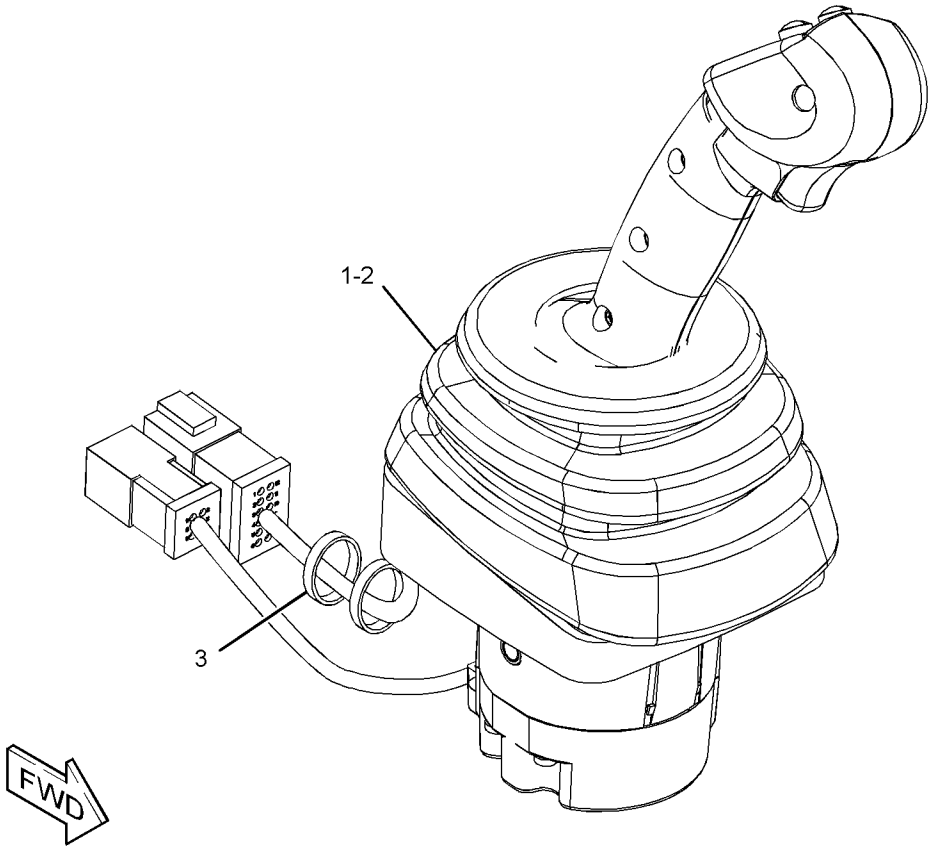

GRAPHIC #1 **<END>** g03325772

345-6583 CONTROL GP-ELECTROHYDRAULIC—LH, HIGH FLOW

PART OF 387-5383 CONTROL AR-HYDRAULIC, 345-5923 CONTROL GP-ELECTROHYDRAULIC, 388-8038 HYDRAULIC AR
AN ATTACHMENT

SMCS-5702, 5705 **i05156698**

NOTE	REF NO	GRAPHIC REF	PART NUMBER	QTY	PART NAME 1 2 3 4 5 6 (PRODUCT LEVEL)	SEE PAGE
M	1	1	**9X-2546**	4	BOLT (M6X1X20-MM)	
Y	2	1	**379-1615**	1	CONTROL GP-JOYSTICK (LH, HIGH FLOW)	495
	3	1	**3S-2093**	2	STRAP-CABLE	

M - METRIC PART
Y - SEPARATE ILLUSTRATION

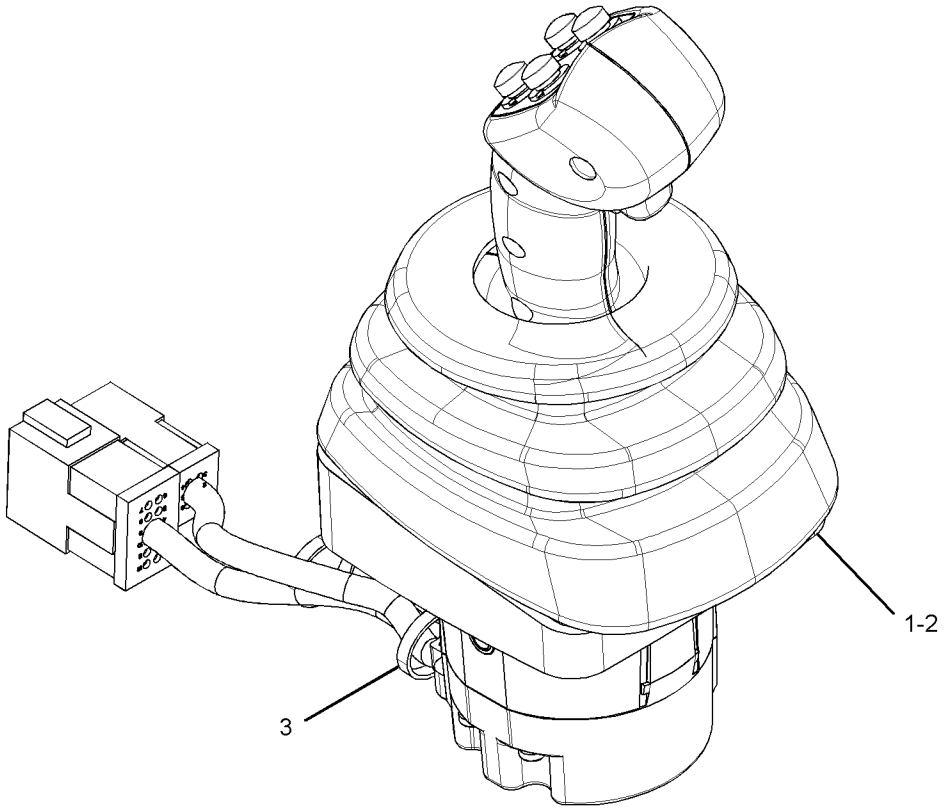

GRAPHIC #1 **<END>** g03319602

345-6584 CONTROL GP-ELECTROHYDRAULIC—LH

PART OF 345-5919 CONTROL GP-ELECTROHYDRAULIC
AN ATTACHMENT

SMCS-5702, 5705 **i05166843**

NOTE	REF NO	GRAPHIC REF	PART NUMBER	QTY	PART NAME 1 2 3 4 5 6 (PRODUCT LEVEL)	SEE PAGE
M	1	1	**9X-2546**	4	BOLT (M6X1X20-MM)	
Y	2	1	**379-1616**	1	CONTROL GP-JOYSTICK (LH)	496
	3	1	**3S-2093**	2	STRAP-CABLE	

M - METRIC PART
Y - SEPARATE ILLUSTRATION

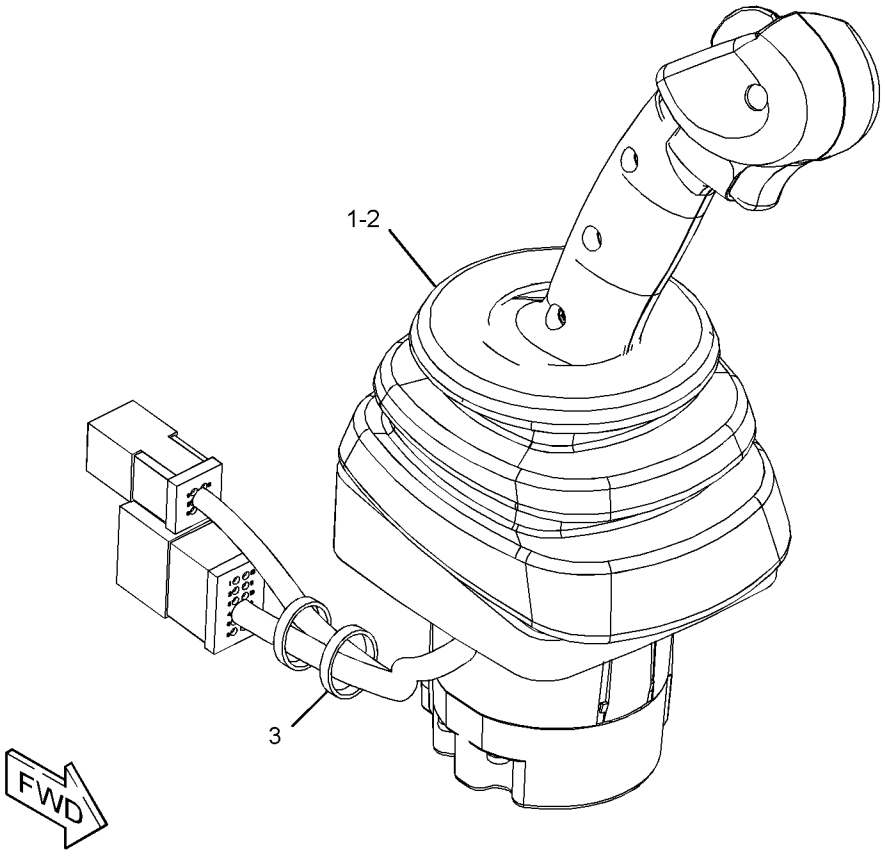

GRAPHIC #1 **<END>** g03325871

269-0259 CONTROL GP-HANDLE—JOYSTICK

PART OF 379-1614 CONTROL GP-JOYSTICK

AN ATTACHMENT

SMCS-5705 **i05166841**

NOTE	REF NO	GRAPHIC REF	PART NUMBER	QTY	PART NAME 1 2 3 4 5 6 (PRODUCT LEVEL)	SEE PAGE
	1	1	**174-3091**	1	KIT-RECEPTACLE (12-PIN)	
					(INCLUDES RECEPTACLE AS & WEDGE)	
	2	1	**9X-3401**	6	PIN-CONNECTOR (16-GA TO 18-GA)	
	3	1	**8T-8737**	6	PLUG-SEAL	
	4	1	**276-4878**	1	GROMMET	
	5	1	**220-8355**	2	CAP-PUSH BUTTON (BLACK)	

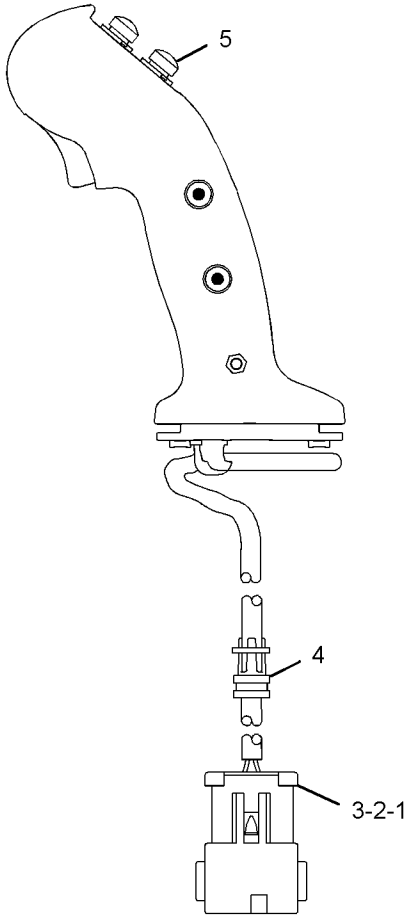

LEFT SIDE VIEW

GRAPHIC #1 **<END>** g03334870

272-1790 CONTROL GP-HANDLE–LH

PART OF 379-1615 CONTROL GP-JOYSTICK

AN ATTACHMENT

SMCS-5705 **i02629793**

NOTE	REF NO	GRAPHIC REF	PART NUMBER	QTY	PART NAME 1 2 3 4 5 6 (PRODUCT LEVEL)	SEE PAGE
	1	1	**174-3091**	1	KIT-RECEPTACLE (12-PIN)	
					(INCLUDES RECEPTACLE AS & WEDGE)	
	2	1	**186-3735**	9	PIN-CONNECTOR (16-GA TO 18-GA)	
	3	1	**8T-8737**	3	PLUG-SEAL	
	4	1	**276-4878**	1	GROMMET	

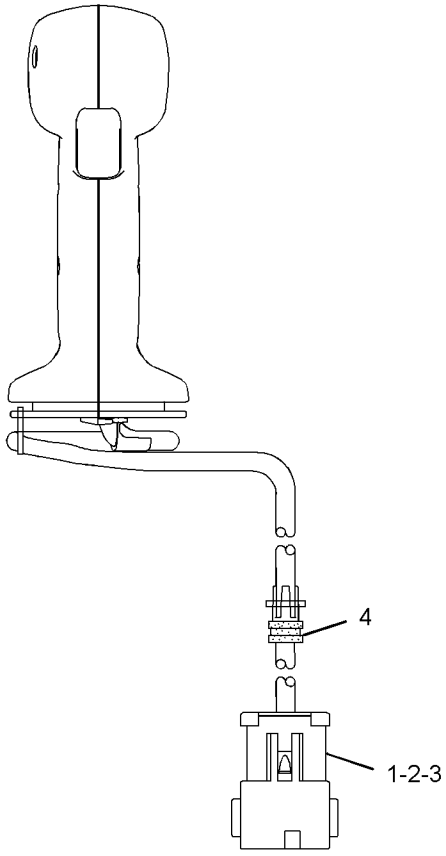

FRONT VIEW

GRAPHIC #1 **<END>** g01322784

273-9104 CONTROL GP-HANDLE—RH—JOYSTICK

PART OF 379-1613 CONTROL GP-JOYSTICK

AN ATTACHMENT

SMCS-5705 **i05401598**

NOTE	REF NO	GRAPHIC REF	PART NUMBER	QTY	PART NAME 1 2 3 4 5 6 (PRODUCT LEVEL)	SEE PAGE
	1	1	**174-3091**	1	KIT-RECEPTACLE (12-PIN)	
					(INCLUDES RECEPTACLE AS & WEDGE)	
	2	1	**9X-3401**	11	PIN-CONNECTOR (16-GA TO 18-GA)	
	3	1	**8T-8737**	1	PLUG-SEAL	
	4	1	**276-4878**	1	GROMMET	
	5	1	**220-8355**	2	CAP-PUSH BUTTON (BLACK)	

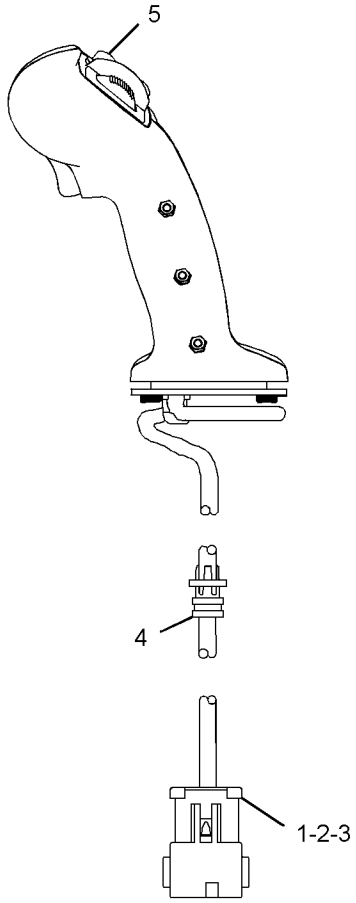

LEFT SIDE VIEW

GRAPHIC #1 **<END>** g03320932

285-8630 CONTROL GP-HANDLE

PART OF 379-1616 CONTROL GP-JOYSTICK

AN ATTACHMENT

SMCS-5705 **i05382953**

NOTE	REF NO	GRAPHIC REF	PART NUMBER	QTY	PART NAME 1 2 3 4 5 6 (PRODUCT LEVEL)	SEE PAGE
	1	1	**174-3091**	1	KIT-RECEPTACLE (12-PIN)	
					(INCLUDES RECEPTACLE AS & WEDGE)	
	2	1	**9X-3401**	6	PIN-CONNECTOR (16-GA TO 18-GA)	
	3	1	**8T-8737**	6	PLUG-SEAL	
	4	1	**276-4878**	1	GROMMET	
	5	1	**220-8355**	2	CAP-PUSH BUTTON (BLACK)	

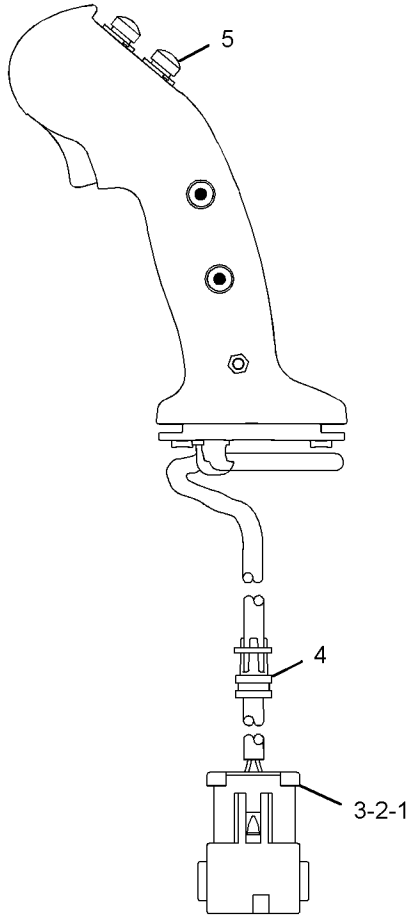

LEFT SIDE VIEW

GRAPHIC #1 **<END>** g03334870

379-1612 CONTROL GP-JOYSTICK–RH

PART OF 345-6580 CONTROL GP-ELECTROHYDRAULIC
AN ATTACHMENT

SMCS-5705 **i05166839**

NOTE	REF NO	GRAPHIC REF	PART NUMBER	QTY	PART NAME 1 2 3 4 5 6 (PRODUCT LEVEL)	SEE PAGE
	1	1	**254-3437**	1	BOOT	
	2	1	**273-9103**	1	CONTROL GP-HANDLE (RH)	
		1	**8T-8737**	5	PLUG-SEAL	
		1	**9X-3401**	7	PIN-CONNECTOR (16-GA TO 18-GA)	
		1	**174-3091**	1	KIT-RECEPTACLE (12-PIN)	
					(INCLUDES RECEPTACLE AS & WEDGE)	
		1	**276-4878**	1	GROMMET	
	3	1	**379-1577**	1	BASE AS-JOYSTICK (RH)	
		1	**8T-8729**	6	PIN-CONNECTOR (16-GA TO 18-GA)	
		1	**151-9275**	1	KIT-RECEPTACLE (6-PIN)	
					(INCLUDES RECEPTACLE AS & WEDGE)	
M	4	1	**213-7489**	3	SCREW (M4X0.7X25-MM)	
M	5	1	**178-9983**	3	LOCKNUT (M4X0.7-THD)	
	6	1	**8T-8729**	13	PIN-CONNECTOR (16-GA TO 18-GA)	
	7	1	**8T-8737**	5	PLUG-SEAL	

M - METRIC PART

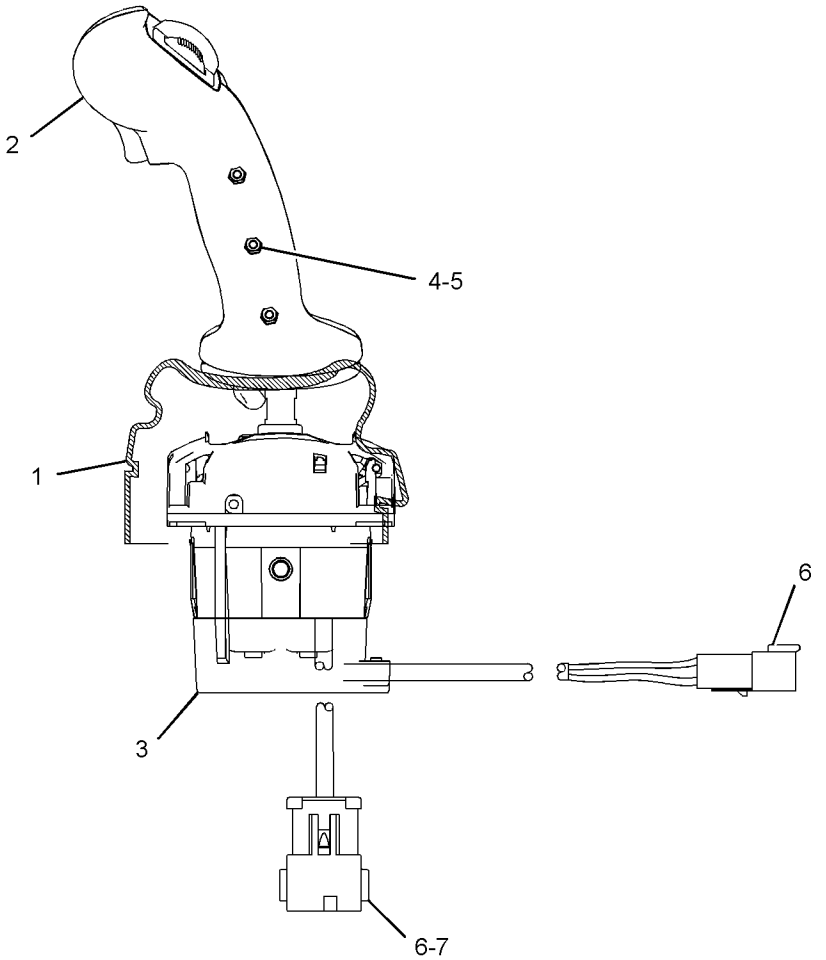

LEFT SIDE VIEW

GRAPHIC #1 **<END>** g03332549

379-1613 CONTROL GP-JOYSTICK—RH, HIGH FLOW

PART OF 345-6581 CONTROL GP-ELECTROHYDRAULIC
AN ATTACHMENT

SMCS-5705 **i05156696**

NOTE	REF NO	GRAPHIC REF	PART NUMBER	QTY	PART NAME 1 2 3 4 5 6 (PRODUCT LEVEL)	SEE PAGE
	1	1	**254-3437**	1	BOOT	
Y	2	1	**273-9104**	1	CONTROL GP-HANDLE (RH)	490
	3	1	**379-1577**	1	BASE AS-JOYSTICK (RH)	
		1	**8T-8729**	6	PIN-CONNECTOR (16-GA TO 18-GA)	
		1	**151-9275**	1	KIT-RECEPTACLE (6-PIN)	
					(INCLUDES RECEPTACLE AS & WEDGE)	
M	4	1	**213-7489**	3	SCREW (M4X0.7X25-MM)	
M	5	1	**178-9983**	3	LOCKNUT (M4X0.7-THD)	
	6	1	**174-3091**	1	KIT-RECEPTACLE (12-PIN)	
					(INCLUDES RECEPTACLE AS & WEDGE)	
	7	1	**220-8355**	2	CAP-PUSH BUTTON (BLACK)	
	8	1	**8T-8729**	11	PIN-CONNECTOR (16-GA TO 18-GA)	
	9	1	**8T-8737**	1	PLUG-SEAL	

M - METRIC PART
Y - SEPARATE ILLUSTRATION

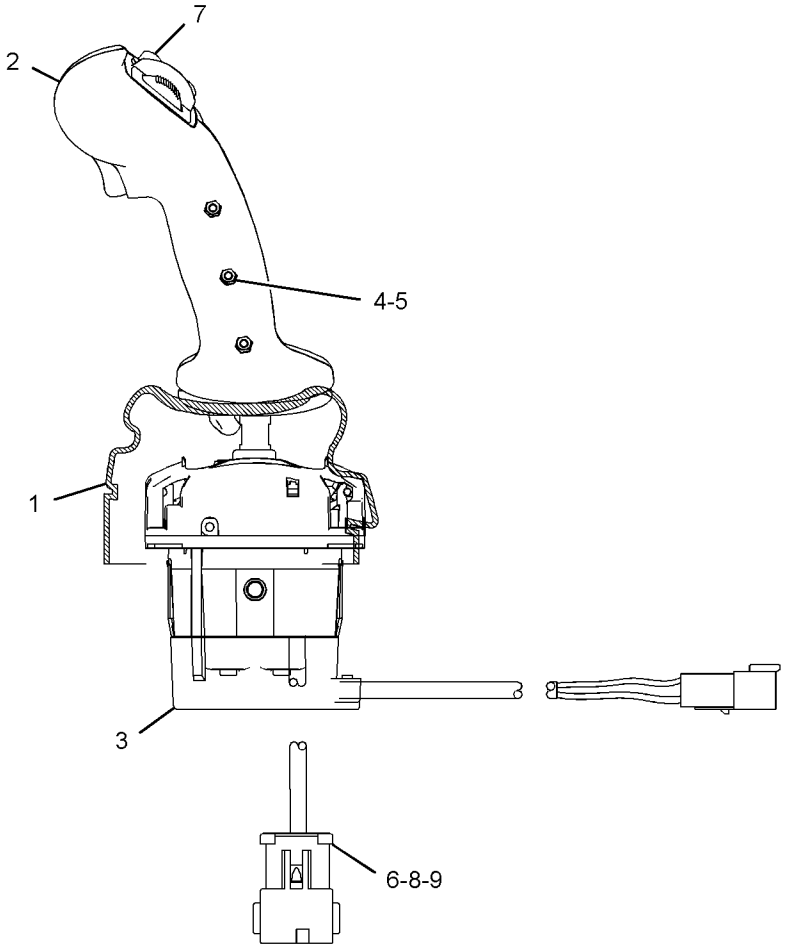

LEFT SIDE VIEW

GRAPHIC #1 **<END>** g03320499

379-1614 CONTROL GP-JOYSTICK

PART OF 345-6582 CONTROL GP-ELECTROHYDRAULIC
AN ATTACHMENT

SMCS-5705 **i05401597**

NOTE	REF NO	GRAPHIC REF	PART NUMBER	QTY	PART NAME 1 2 3 4 5 6 (PRODUCT LEVEL)	SEE PAGE
	1	1	**254-3437**	1	BOOT	
Y	2	1	**269-0259**	1	CONTROL GP-HANDLE (JOYSTICK)	488
	3	1	**379-1577**	1	BASE AS-JOYSTICK (RH)	
		1	**8T-8729**	6	PIN-CONNECTOR (16-GA TO 18-GA)	
		1	**151-9275**	1	KIT-RECEPTACLE (6-PIN)	
					(INCLUDES RECEPTACLE AS & WEDGE)	
M	4	1	**213-7489**	3	SCREW (M4X0.7X25-MM)	
M	5	1	**178-9983**	3	LOCKNUT (M4X0.7-THD)	
	6	1	**8T-8737**	6	PLUG-SEAL	
	7	1	**220-8355**	2	CAP-PUSH BUTTON (BLACK)	
	8	1	**8T-8729**	12	PIN-CONNECTOR (16-GA TO 18-GA)	

M - METRIC PART
Y - SEPARATE ILLUSTRATION

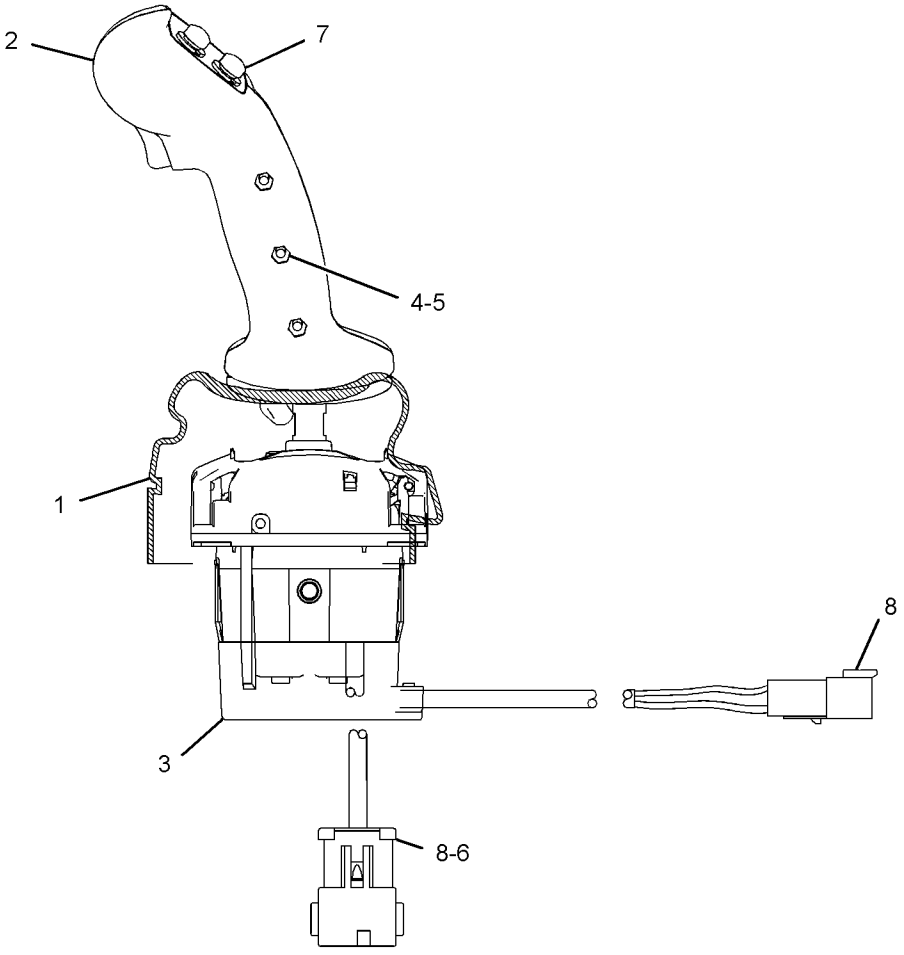

LEFT SIDE VIEW

GRAPHIC #1 **<END>** g03333127

379-1615 CONTROL GP-JOYSTICK—LH, HIGH FLOW

PART OF 345-6583 CONTROL GP-ELECTROHYDRAULIC, 388-8273 KIT-WORK TOOL WIRING AN ATTACHMENT

SMCS-5705 **i05156695**

NOTE	REF NO	GRAPHIC REF	PART NUMBER	QTY	PART NAME 1 2 3 4 5 6 (PRODUCT LEVEL)	SEE PAGE
	1	1	**254-3437**	1	BOOT	
Y	2	1	**272-1790**	1	CONTROL GP-HANDLE (LH)	489
	3	1	**379-1578**	1	BASE AS-JOYSTICK (LH)	
		1	**8T-8729**	6	PIN-CONNECTOR (16-GA TO 18-GA)	
		1	**151-9275**	1	KIT-RECEPTACLE (6-PIN)	
					(INCLUDES RECEPTACLE AS & WEDGE)	
M	4	1	**213-7489**	3	SCREW (M4X0.7X25-MM)	
M	5	1	**178-9983**	3	LOCKNUT (M4X0.7-THD)	
	6	1	**174-3091**	1	KIT-RECEPTACLE (12-PIN)	
					(INCLUDES RECEPTACLE AS & WEDGE)	
	7	1	**220-8355**	4	CAP-PUSH BUTTON (BLACK)	
	8	1	**8T-8729**	9	PIN-CONNECTOR (16-GA TO 18-GA)	
	9	1	**8T-8737**	3	PLUG-SEAL	

M - METRIC PART
Y - SEPARATE ILLUSTRATION

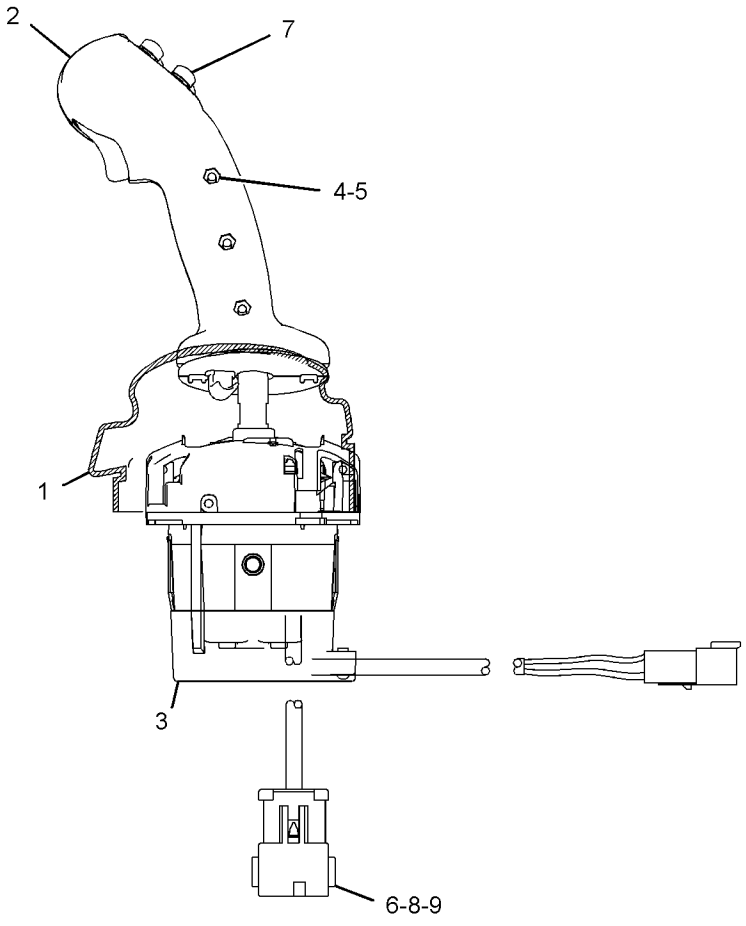

LEFT SIDE VIEW

GRAPHIC #1 **<END>** g03320493

379-1616 CONTROL GP-JOYSTICK–LH

PART OF 345-6584 CONTROL GP-ELECTROHYDRAULIC
AN ATTACHMENT

SMCS-5705 **i05401588**

NOTE	REF NO	GRAPHIC REF	PART NUMBER	QTY	PART NAME 1 2 3 4 5 6 (PRODUCT LEVEL)	SEE PAGE
	1	1	**379-1578**	1	BASE AS-JOYSTICK (LH)	
		1	**8T-8729**	6	PIN-CONNECTOR (16-GA TO 18-GA)	
		1	**151-9275**	1	KIT-RECEPTACLE (6-PIN)	
					(INCLUDES RECEPTACLE AS & WEDGE)	
Y	2	1	**285-8630**	1	CONTROL GP-HANDLE (JOYSTICK)	491
	3	1	**254-3437**	1	BOOT	
M	4	1	**213-7489**	3	SCREW (M4X0.7X25-MM)	
M	5	1	**178-9983**	3	LOCKNUT (M4X0.7-THD)	
	6	1	**8T-8737**	6	PLUG-SEAL	
	7	1	**220-8355**	2	CAP-PUSH BUTTON (BLACK)	
	8	1	**8T-8729**	6	PIN-CONNECTOR (16-GA TO 18-GA)	

M - METRIC PART
Y - SEPARATE ILLUSTRATION

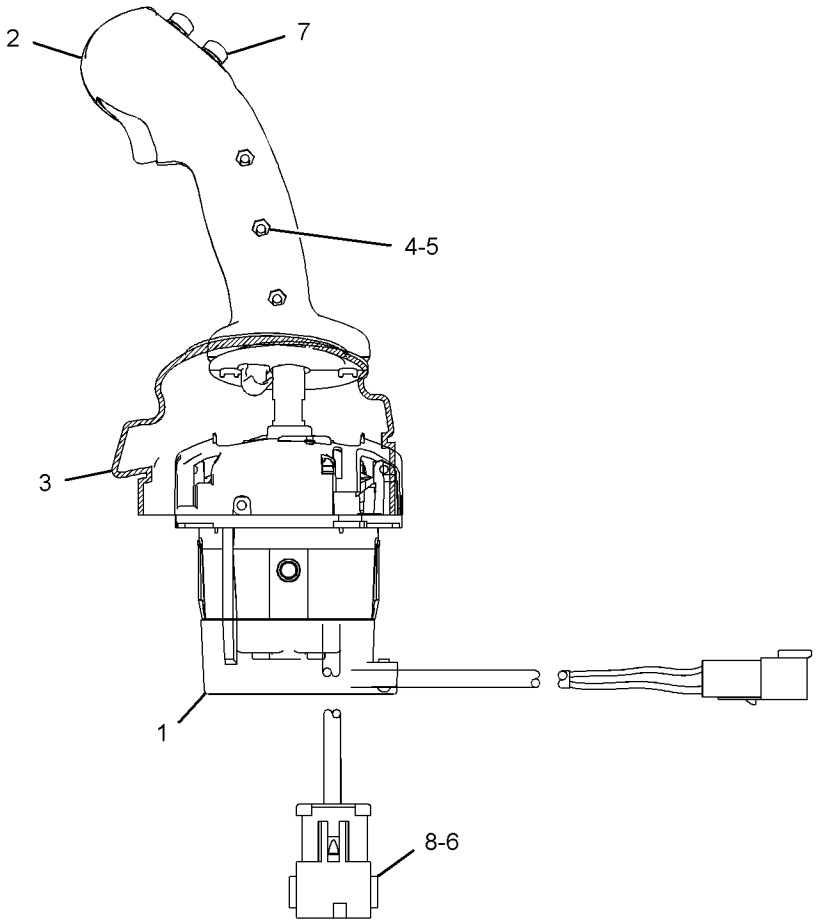

LEFT SIDE VIEW

GRAPHIC #1 **<END>** g03333101

345-6085 COVER GP-CAB

PART OF 345-4913, 345-5778 CAB AR-OPEN ROPS
AN ATTACHMENT

SMCS-7301 **i05380579**

NOTE	REF NO	GRAPHIC REF	PART NUMBER	QTY	PART NAME 1 2 3 4 5 6 (PRODUCT LEVEL)	SEE PAGE
	1	1	**258-3727**	2	SCREW-TRUSS HEAD (SPECIAL)	
	2	1	**345-6066**	1	PANEL	
	3	1	*148-8411*	1	PLUG AS	
		1	**3K-0360**	1	SEAL-O-RING	
		1	**9S-4185**	1	PLUG-O-RING	
	4	1	**345-6147**	1	COVER (RECIRCULATION)	
	5	1	**345-6148**	2	COVER-DUCT	
	6	1	**345-6154**	1	COVER-SWITCH	
	7	1	**5P-4116**	2	WASHER-HARD (8.8X20.5X2-MM THK)	
M	8	1	**5C-2890**	2	NUT (M6X1-THD)	
	9	1	**8T-4205**	2	WASHER-HARD (7.2X14.5X2-MM THK)	
M	10	1	**9X-2045**	2	SCREW-TRUSS HEAD (M6X1X20-MM)	

M - METRIC PART

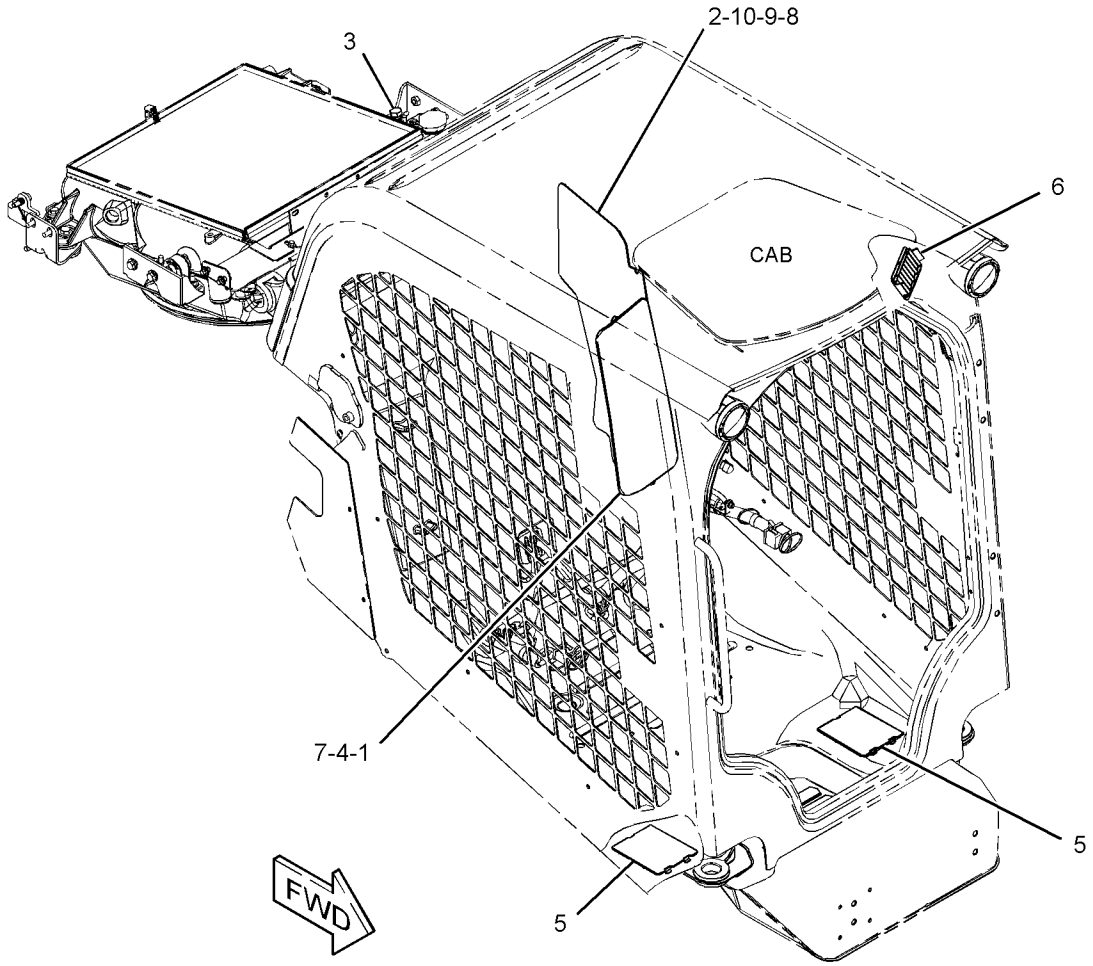

GRAPHIC #1 **<END>** g03405580

345-6056 COVER GP-CONSOLE

PART OF 345-6349, 345-6359 SEAT AR-SUSPENSION

AN ATTACHMENT

SMCS-5258 **i05263303**

NOTE	REF NO	GRAPHIC REF	PART NUMBER	QTY	PART NAME 1 2 3 4 5 6 (PRODUCT LEVEL)	SEE PAGE
	1	1	**172-8591**	10	NUT-SPRING	
	2	1	**206-1667**	4	CLIP	
	3	1	**258-3727**	2	SCREW-TRUSS HEAD (SPECIAL)	
	4	1	**345-6057**	1	COVER-CONSOLE (INSIDE, RH)	
	5	1	**345-6058**	1	COVER-CONSOLE (OUTSIDE, RH)	
	6	1	**345-6059**	1	COVER-CONSOLE (INSIDE, RH)	
	7	1	**345-6060**	1	COVER-CONSOLE (OUTSIDE, RH)	
	8	1	**156-6175**	2	CLIP	
M	9	1	**162-6556**	2	LOCKNUT (M6X1-THD)	
M	10	1	**215-6406**	10	SCREW-TRUSS HEAD (M6X1X16-MM)	
M	11	1	**5C-9553**	2	BOLT (M6X1X16-MM)	
M	12	1	**6V-5683**	2	BOLT (M6X1X16-MM)	
	13	1	**8T-4205**	4	WASHER-HARD (7.2X14.5X2-MM THK)	
	14	1	**9X-8256**	6	WASHER (6.6X12X2-MM THK)	
M	15	1	**5C-2890**	2	NUT (M6X1-THD)	

M - METRIC PART

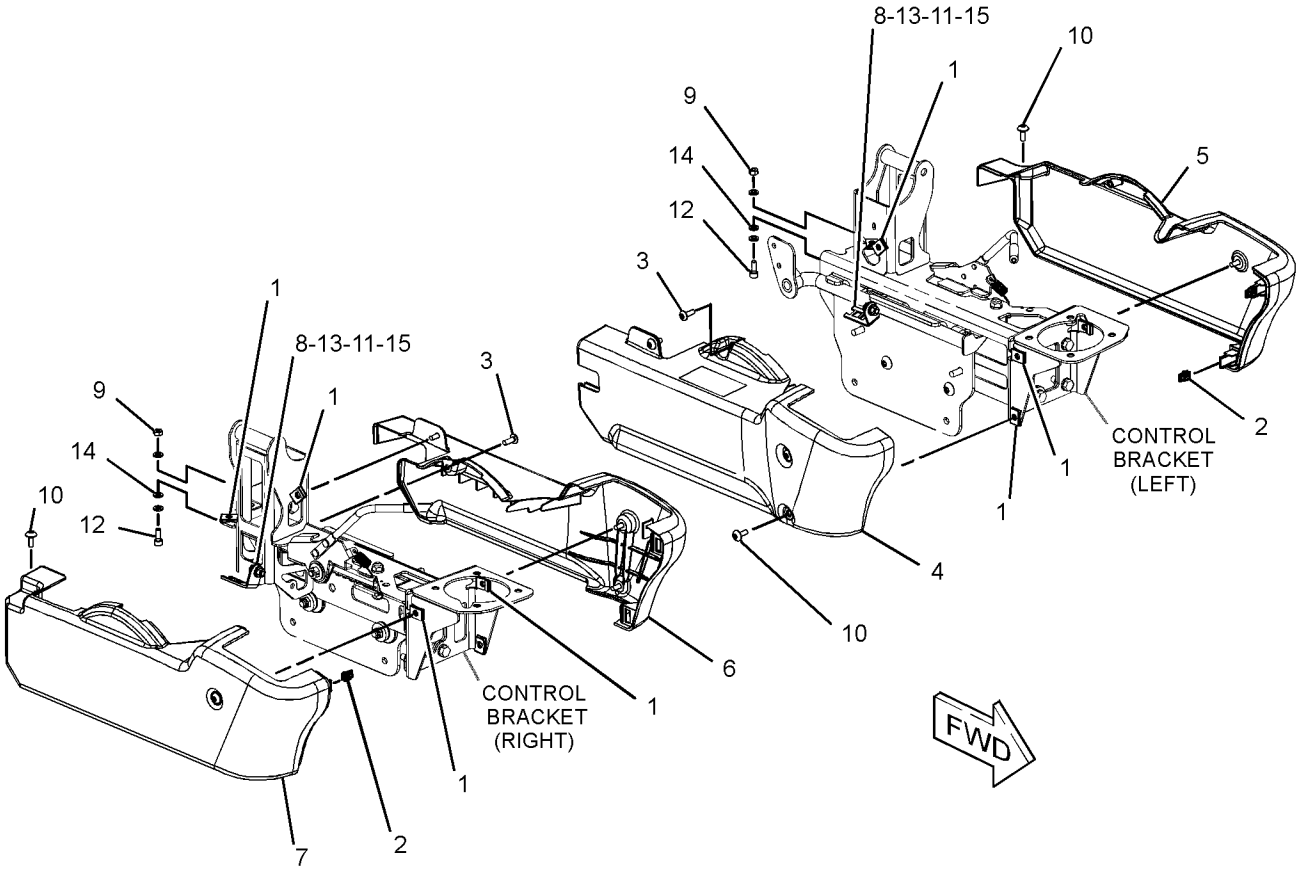

GRAPHIC #1 **<END>** g03350862

345-6061 COVER GP-CONSOLE—RH, LH

PART OF 345-6319, 345-6329 SEAT AR-SUSPENSION
AN ATTACHMENT

SMCS-5258 **i05164980**

NOTE	REF NO	GRAPHIC REF	PART NUMBER	QTY	PART NAME 1 2 3 4 5 6 (PRODUCT LEVEL)	SEE PAGE
	1	1	**206-1667**	4	CLIP	
	2	1	**258-3727**	2	SCREW-TRUSS HEAD (SPECIAL)	
	3	1	**345-6051**	1	COVER-CONSOLE (INNER, LH)	
	4	1	**345-6052**	1	COVER-CONSOLE (OUTER, LH)	
	5	1	**345-6053**	1	COVER-CONSOLE (INNER, RH)	
	6	1	**345-6054**	1	COVER-CONSOLE (OUTER, RH)	
	7	1	**156-6175**	4	CLIP	
M	8	1	**215-6406**	10	SCREW-TRUSS HEAD (M6X1X16-MM)	
M	9	1	**5C-9553**	4	BOLT (M6X1X16-MM)	
	10	1	**8T-4205**	4	WASHER-HARD (7.2X14.5X2-MM THK)	

M - METRIC PART

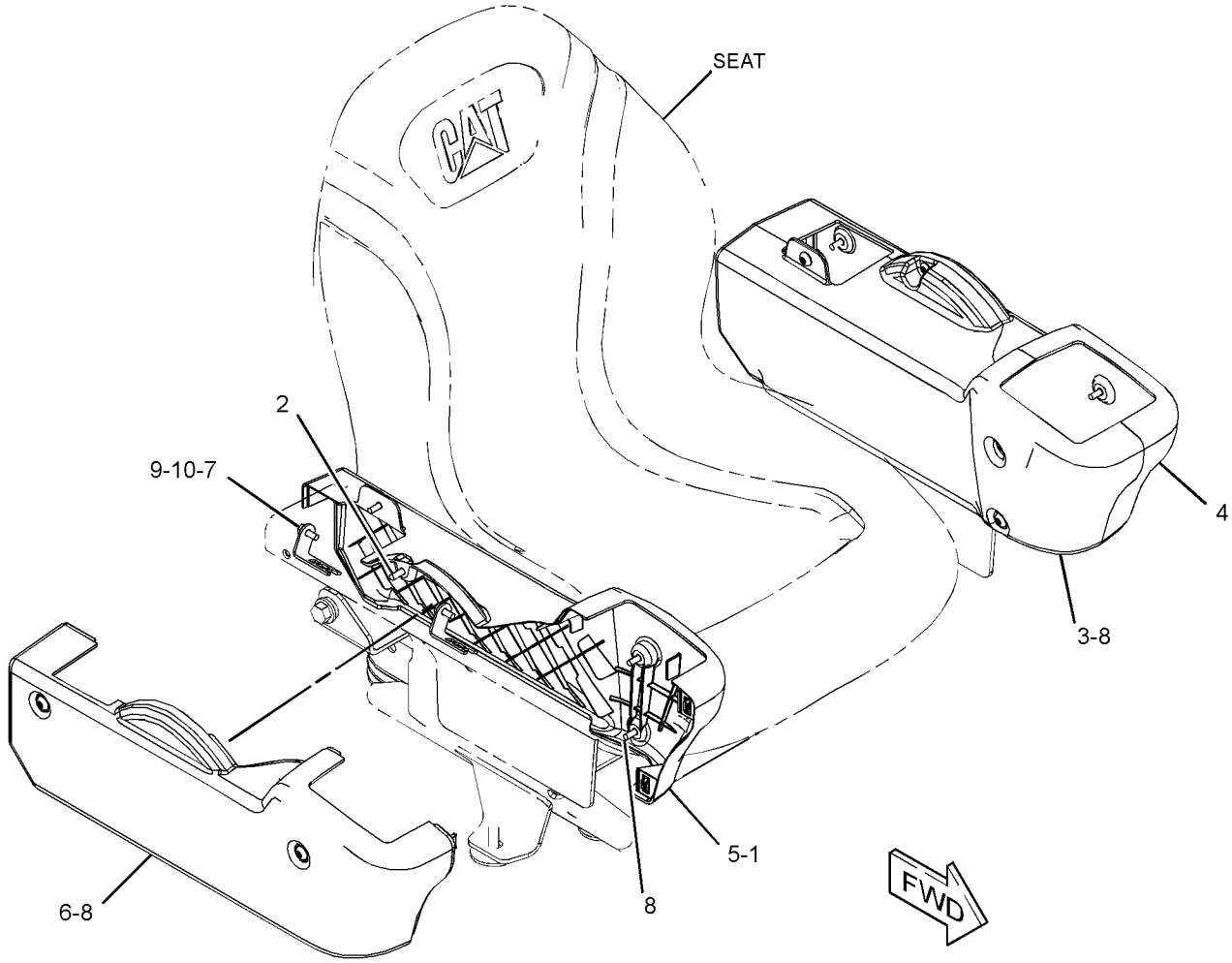

GRAPHIC #1 **<END>** g03325361

345-6235 DOOR GP-CAB—GLASS

PART OF 345-6240 DOOR GP-CAB

AN ATTACHMENT

SMCS-7308 **i05401007**

NOTE	REF NO	GRAPHIC REF	PART NUMBER	QTY	PART NAME 1 2 3 4 5 6 (PRODUCT LEVEL)	SEE PAGE
	1	1	**436-2988**	1	PLATE (MAGNETIC)	
	2	1	**146-6433**	1	BLADE AS-WIPER (500-MM) (FRONT)	
J	3	1	**252-1862**	1	HANDLE AS (PULL)	
	4	1	**253-1817**	1	SPACER (6.5X14.5X12-MM THK)	
	5	1	**258-3280**	1	LATCH AS (INNER)	
	6	1	**258-3298**	1	GROMMET	
	7	1	**258-3697**	1	WASHER-NYLON (7X20X2-MM THK)	
	8	1	**258-4075**	4	GASKET	
	9	1	**258-4085**	2	BUSHING	
	10	1	**319-0710**	2	FILM-INSTRUCTION (EGRESS SYSTEM, READ OMM)	
	11	1	**345-6230**	1	GLASS	
	12	1	**345-6233**	1	BRACKET	
	13	1	**345-6262**	2	HINGE AS	
	14	1	**418-5900**	1	HANDLE AS	
M		1	**159-9539**	2	NUT-WELD (M6X1-THD)	
M		1	**159-9541**	2	NUT-WELD (M10X1.5-THD)	
	15	1	**345-6282**	1	COVER	
	16	1	**345-6283**	1	GASKET	
	17	1	**345-6284**	1	GASKET	
	18	1	**345-6295**	1	COVER-LATCH	
	19	1	**364-1821**	2	HANDLE AS (LOWER)	
Y	20	1	**379-1084**	1	MOTOR GP-WINDOW WIPER	531
	21	1	**379-6471**	1	ARM GP-WINDOW WIPER (CAB DOOR)	
E		1	**194-5171**		HOSE (50-CM)	
		1	**305-9192**	1	NOZZLE AS-WASHER	
	22	1	**8T-0328**	1	WASHER-HARD (5.5X10X1-MM THK)	
M	24	1	**215-6406**	5	SCREW-TRUSS HEAD (M6X1X16-MM)	
M	25	1	**5C-2890**	1	NUT (M6X1-THD)	
	26	1	**5P-7648**	2	GROMMET	
M	28	1	**6V-7357**	4	BOLT (M6X1X25-MM)	
M	29	1	**8T-2192**	3	BOLT (M6X1X45-MM)	
	30	1	**8T-4205**	3	WASHER-HARD (7.2X14.5X2-MM THK)	
	31	1	**8T-5439**	2	WASHER-HARD (21.5X45X6-MM THK)	
M	32	1	**8T-6974**	1	BOLT (M6X1X80-MM)	
M	33	1	**101-7398**	4	BOLT-SOCKET HEAD (M10X1.5X40-MM)	
	34	1	**9L-9132**	2	WASHER (10.2X25.5X2.5-MM THK)	
M	35	1	**3T-0851**	1	LOCKNUT (M5X0.8-THD)	
M	36	1	**9X-2040**	2	SCREW-TRUSS HEAD (M10X1.5X25-MM)	
E	37	1	**386-6028**		SEAL (326-CM)	
	38	1	**418-5901**	1	BRACKET AS	
M		1	**159-9539**	1	NUT-WELD (M6X1-THD)	
	39	1	**8T-4121**	4	WASHER-HARD (11X21X2.5-MM THK)	

E - ORDER BY THE CENTIMETER
J - REQUIRES CORPORATE KEY
M - METRIC PART
Y - SEPARATE ILLUSTRATION

345-6235 **DOOR GP-CAB (*contd.*)** **i05401007**

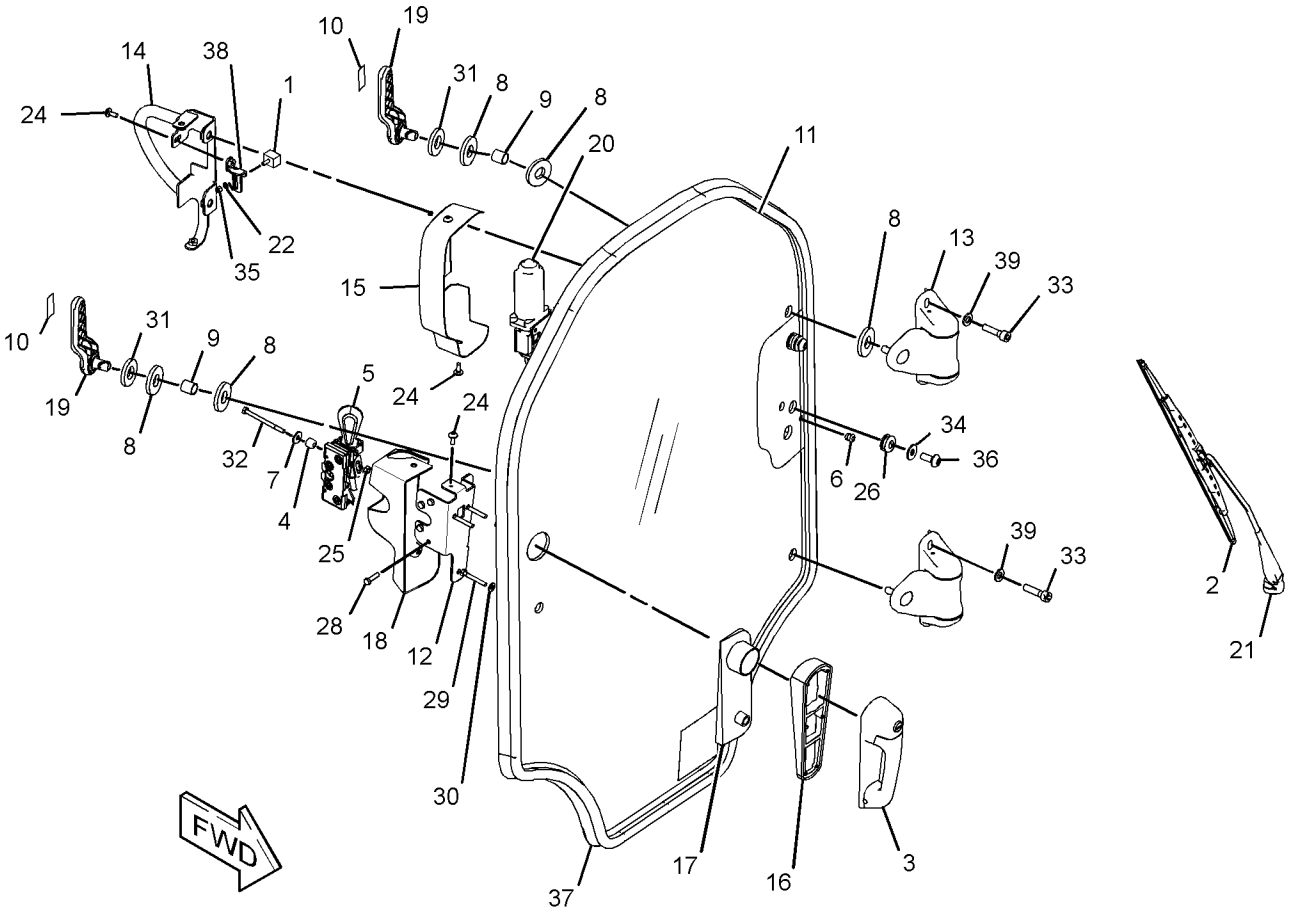

GRAPHIC #1 **<END>** g03370557

345-6240 DOOR GP-CAB—GLASS

FOR USE WITH 345-6160—PAGE: 475, 345-6158—PAGE: 475
CANNOT BE USED WITH 345-6260—PAGE: 506
AN ATTACHMENT

SMCS-7308 **i05401591**

NOTE	REF NO	GRAPHIC REF	PART NUMBER	QTY	PART NAME 1 2 3 4 5 6 (PRODUCT LEVEL)	SEE PAGE
	1	1	**388-8028**	1	SPACER (10X20X6-MM THK)	
	2	1	**8G-1151**	1	CONNECTOR	
	3	1	**418-5945**	2	SPRING AS-GAS (CAB)	
	4	1	**258-3764**	1	STRIKER AS	
	5	1	**258-4141**	3	CLIP	
	6	1	**281-6390**	1	SWITCH AS-ROCKER (FRONT WASHER, WIPER)	
		1	**111-7899**	1	GASKET	
	7	1	**332-0194**	3	STRAP-CABLE	
	8	1	**388-8018**	2	SPACER (12.7X22X19.1MM THK)	
Y	9	1	*345-6235*	1	DOOR GP-CAB (BASIC-GLASS)	500
	10	1	**345-6244**	1	TANK AS-WINDOW WASHER	
		1	**6T-1375**	1	PUMP AS-WASHER	
E		1	**144-0195**		HOSE (45-CM)	
		1	**258-3296**	1	CAP-VENTED (WINDOW WASHER TANK)	
	11	1	**378-1007**	1	SWITCH AS-MAGNETIC (LOAD CONTROL)	
		1	**171-0596**	1	RECEPTACLE AS-CONNECTOR	
Y	12	1	**378-1028**	1	HARNESS AS-CAB (AUXILIARY)	97
Y	13	1	**388-1436**	1	HARNESS AS-CAB (WIPER, WASHER)	97
	14	1	**437-9853**	1	PIN	
M	15	1	**178-9983**	2	LOCKNUT (M4X0.7-THD)	
M	16	1	**215-6406**	3	SCREW-TRUSS HEAD (M6X1X16-MM)	
	17	1	**3S-2093**	2	STRAP-CABLE	
	18	1	**5P-0372**	4	LOCK PIN	
	19	1	**6L-3966**	3	PIN	
M	20	1	**8C-4982**	2	BOLT-SOCKET HEAD (M4X0.7X20-MM)	
	21	1	**388-8019**	6	WASHER (10.5X20X2-MM THK)	
	22	1	**5P-1076**	1	WASHER-HARD (13.5X30X4-MM THK)	
M	23	1	**8T-4244**	1	NUT (M12X1.75-THD)	
E	24	1	**144-0195**		HOSE (44-CM)	
	25	1	**9X-6165**	1	WASHER (6.5X22X2.5-MM THK)	
	26	1	**424-7631**	1	FILM-IDENTIFICATION (ALTERNATE EXIT, READ OMM)	

E - ORDER BY THE CENTIMETER
M - METRIC PART
Y - SEPARATE ILLUSTRATION

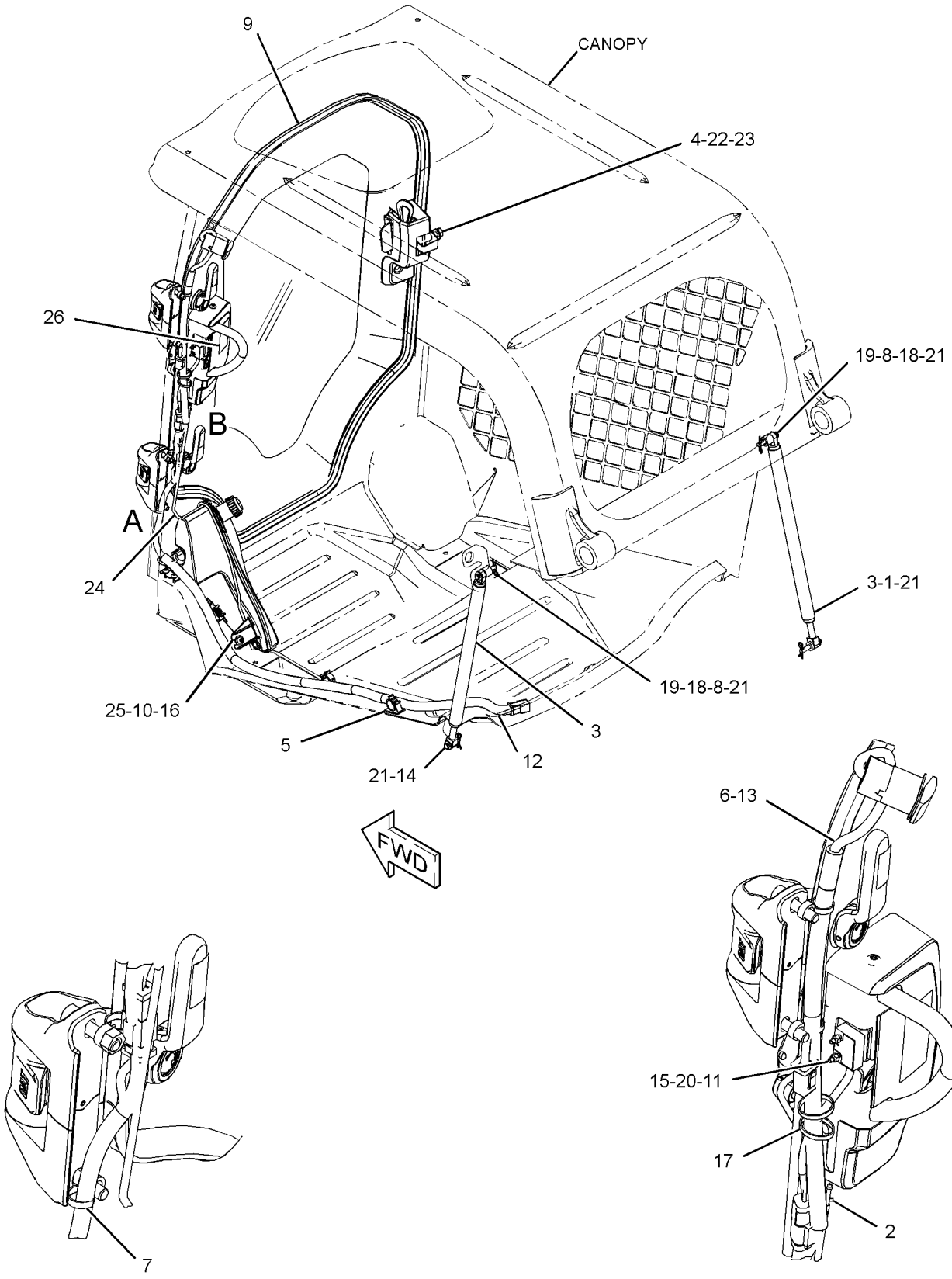

VIEW OF AREA A

VIEW OF AREA B

GRAPHIC #1

<END>

g03350031

345-6255 DOOR GP-CAB—BASIC-POLY

PART OF 345-6260 DOOR GP-CAB

AN ATTACHMENT

SMCS-7308 **i05380433**

NOTE	REF NO	GRAPHIC REF	PART NUMBER	QTY	PART NAME 1 2 3 4 5 6 (PRODUCT LEVEL)	SEE PAGE
	1	1	**436-2988**	1	PLATE (MAGNETIC)	
	2	1	**146-6433**	1	BLADE AS-WIPER (500-MM)	
	3	1	**252-1862**	1	HANDLE AS (PULL)	
	4	1	**253-1817**	1	SPACER (6.5X14.5X12-MM THK)	
	5	1	**258-3280**	1	LATCH AS	
	6	1	**258-3298**	1	GROMMET	
	7	1	**258-3697**	1	WASHER-NYLON (7X20X2-MM THK)	
	8	1	**258-4075**	4	GASKET	
	9	1	**258-4085**	2	BUSHING	
	10	1	**319-0710**	2	FILM-INSTRUCTION (EGRESS SYSTEM, READ OMM)	
	11	1	**345-6233**	1	BRACKET	
	12	1	**345-6250**	1	WINDOW	
	13	1	**345-6262**	2	HINGE AS	
	14	1	**418-5900**	1	HANDLE AS	
M		1	**159-9539**	2	NUT-WELD (M6X1-THD)	
M		1	**159-9541**	2	NUT-WELD (M10X1.5-THD)	
	15	1	**345-6282**	1	COVER	
	16	1	**345-6283**	1	GASKET	
	17	1	**345-6284**	1	GASKET	
	18	1	**345-6295**	1	COVER-LATCH	
	19	1	**364-1821**	2	HANDLE AS (LOWER)	
Y	20	1	*379-1084*	1	MOTOR GP-WINDOW WIPER	531
	21	1	**379-6471**	1	ARM GP-WINDOW WIPER (CAB DOOR)	
E		1	**194-5171**		HOSE (50-CM)	
		1	**305-9192**	1	NOZZLE AS-WASHER	
	22	1	**8T-0328**	1	WASHER-HARD (5.5X10X1-MM THK)	
M	24	1	**215-6406**	5	SCREW-TRUSS HEAD (M6X1X16-MM)	
M	25	1	**5C-2890**	1	NUT (M6X1-THD)	
	26	1	**5P-7648**	2	GROMMET	
M	27	1	**6V-7357**	4	BOLT (M6X1X25-MM)	
M	28	1	**8T-2192**	3	BOLT (M6X1X45-MM)	
	29	1	**8T-4121**	4	WASHER-HARD (11X21X2.5-MM THK)	
	30	1	**8T-4205**	3	WASHER-HARD (7.2X14.5X2-MM THK)	
	31	1	**8T-5439**	2	WASHER-HARD (21.5X45X6-MM THK)	
M	32	1	**8T-6974**	1	BOLT (M6X1X80-MM)	
M	33	1	**101-7398**	4	BOLT-SOCKET HEAD (M10X1.5X40-MM)	
	34	1	**9L-9132**	2	WASHER (10.2X25.5X2.5-MM THK)	
M	35	1	**3T-0851**	1	LOCKNUT (M5X0.8-THD)	
M	36	1	**9X-2040**	2	SCREW-TRUSS HEAD (M10X1.5X25-MM)	
E	37	1	**386-6028**		SEAL (326-CM)	
	38	1	**418-5901**	1	BRACKET AS	

E - ORDER BY THE CENTIMETER
M - METRIC PART
Y - SEPARATE ILLUSTRATION

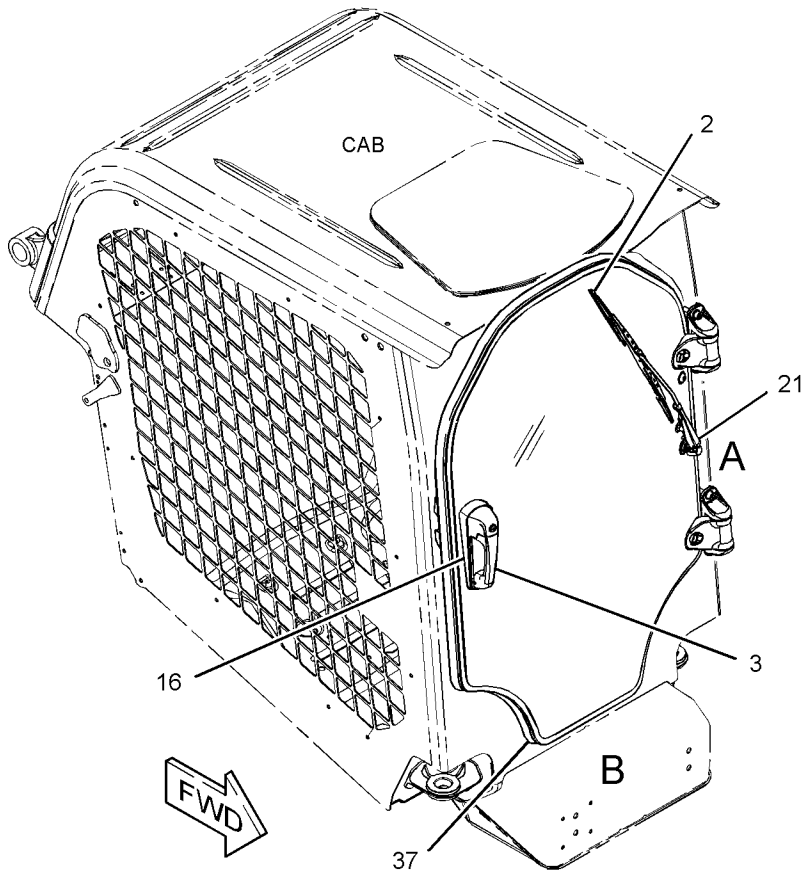

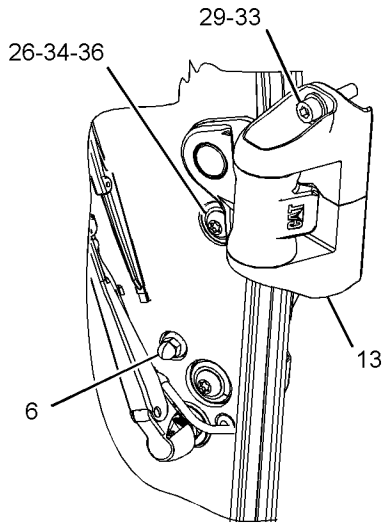

VIEW OF AREA A 90°

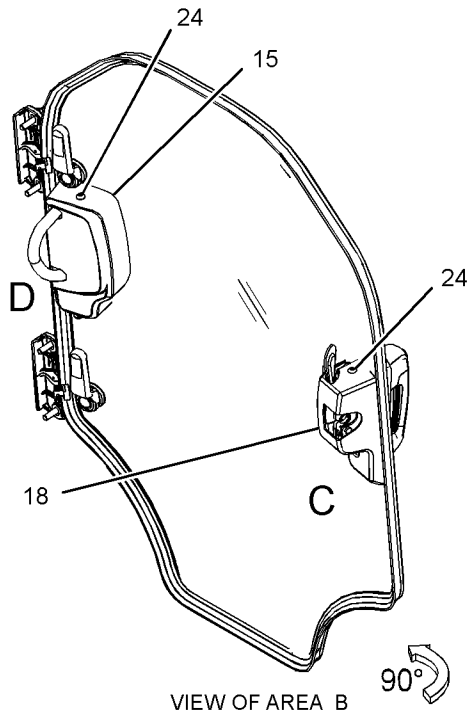

VIEW OF AREA B 90°

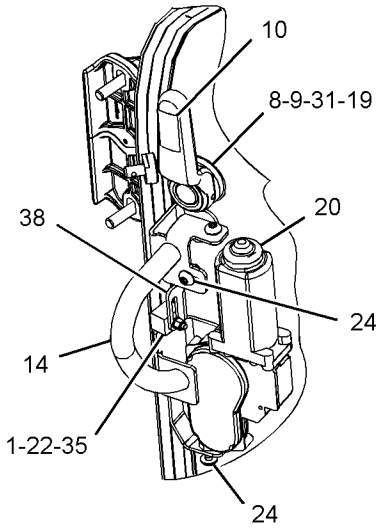

VIEW OF AREA D
(PARTS REMOVED FOR CLARITY)

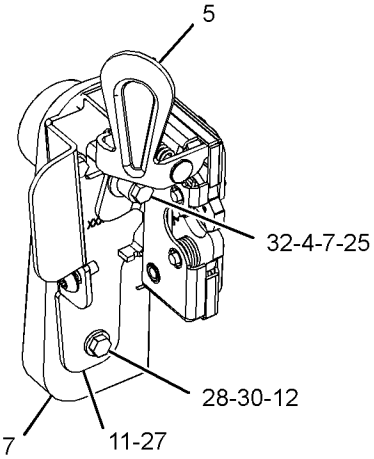

VIEW OF AREA C
(PARTS REMOVED FOR CLARITY) 90°

GRAPHIC #1 **<END>** g03408610

345-6260 DOOR GP-CAB—POLY

FOR USE WITH 345-6160—PAGE: 475, 345-6158—PAGE: 475
CANNOT BE USED WITH 345-6240—PAGE: 502
AN ATTACHMENT

SMCS-7308 **i05380434**

NOTE	REF NO	GRAPHIC REF	PART NUMBER	QTY	PART NAME 1 2 3 4 5 6 (PRODUCT LEVEL)	SEE PAGE
	1	1	**8G-1151**	1	CONNECTOR	
	2	1	**258-3764**	1	STRIKER AS	
	3	1	**258-4141**	3	CLIP	
	4	1	**281-6390**	1	SWITCH AS-ROCKER (FRONT WIPER, WASHER)	
		1	**111-7899**	1	GASKET	
	5	1	**332-0194**	3	STRAP-CABLE	
	6	1	*345-6244*	1	TANK AS-WINDOW WASHER	
		1	**6T-1375**	1	PUMP AS-WASHER	
E		1	**144-0195**		HOSE (39-CM)	
		1	**258-3296**	1	CAP-VENTED (WINDOW WASHER TANK)	
Y	7	1	*345-6255*	1	DOOR GP-CAB (BASIC-POLY)	504
	8	1	**378-1007**	1	SWITCH AS-MAGNETIC (LOAD CONTROL)	
		1	**3E-3371**	1	WEDGE-RECEPTACLE LOCK (3-PIN)	
		1	**171-0596**	1	RECEPTACLE AS-CONNECTOR	
Y	9	1	**378-1028**	1	HARNESS AS-CAB (AUXILIARY)	97
Y	10	1	**388-1436**	1	HARNESS AS-CAB (WIPER, WASHER)	97
	11	1	**388-8018**	2	SPACER (12.7X22X19.1MM THK)	
	12	1	**388-8019**	6	WASHER (10.5X20X2-MM THK)	
	13	1	**388-8028**	1	SPACER (10X20X6-MM THK)	
	14	1	**418-5945**	2	SPRING AS-GAS (DOOR)	
	15	1	**424-7631**	1	FILM-IDENTIFICATION (ALTERNATE EXIT, READ OMM)	
	16	1	**437-9853**	1	PIN	
M	17	1	**178-9983**	2	LOCKNUT (M4X0.7-THD)	
M	18	1	**215-6406**	3	SCREW-TRUSS HEAD (M6X1X16-MM)	
	19	1	**3S-2093**	2	STRAP-CABLE	
	20	1	**5P-0372**	4	LOCK PIN	
	21	1	**6L-3966**	3	PIN	
M	22	1	**8C-4982**	2	BOLT-SOCKET HEAD (M4X0.7X20-MM)	
	23	1	**5P-1076**	1	WASHER-HARD (13.5X30X4-MM THK)	
M	24	1	**8T-4244**	1	NUT (M12X1.75-THD)	
	25	1	**9X-6165**	1	WASHER (6.5X22X2.5-MM THK)	
E	26	1	**144-0195**		HOSE (44-CM)	

E - ORDER BY THE CENTIMETER
M - METRIC PART
Y - SEPARATE ILLUSTRATION

345-6260 **DOOR GP-CAB (*contd.*)** **i05380434**

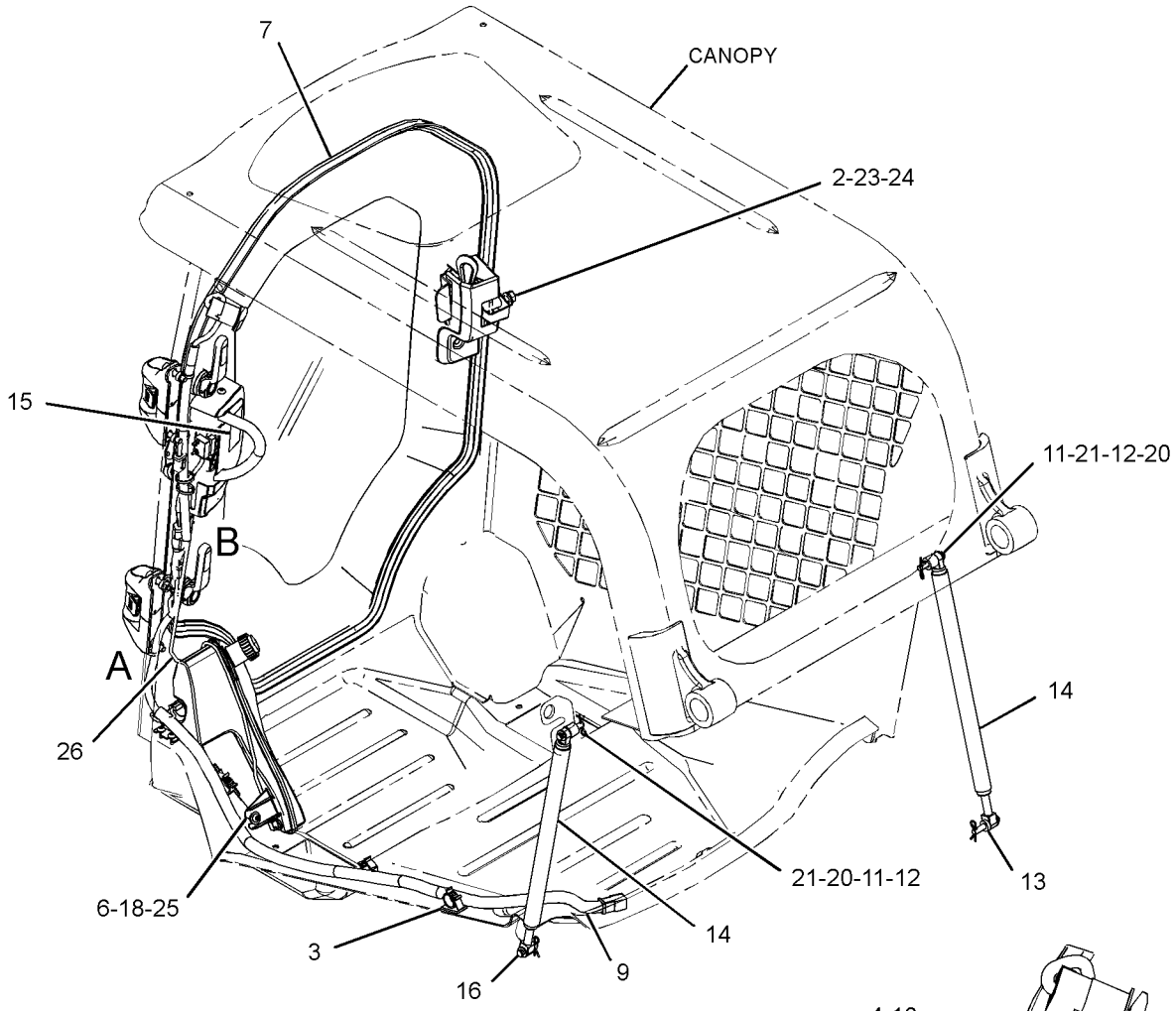

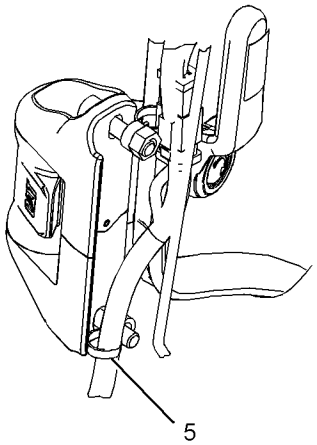

VIEW OF AREA A

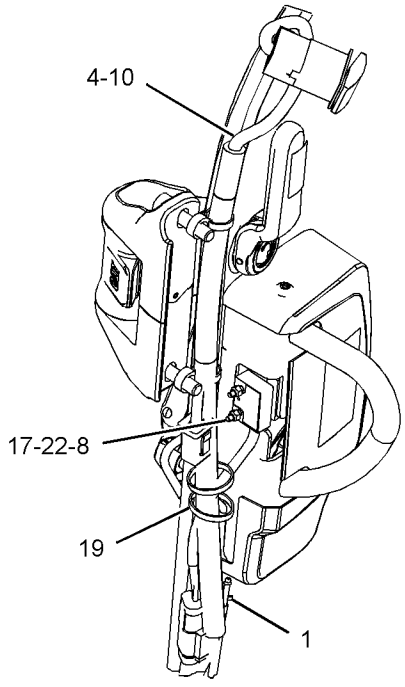

VIEW OF AREA B

GRAPHIC #1

<END>

g03409607

345-6070 GUARD GP-ROPS/FOPS

CANNOT BE USED WITH 417-4606—PAGE: 197
AN ATTACHMENT

SMCS-7323 **i05293739**

NOTE	REF NO	GRAPHIC REF	PART NUMBER	QTY	PART NAME 1 2 3 4 5 6 (PRODUCT LEVEL)	SEE PAGE
	1	1	**345-6071**	1	PLATE AS	
	2	1	**345-6072**	1	FILM-WARNING (FOPS, READ OMM)	
	3	1	**345-6073**	2	PLATE	
	4	1	**3H-7654**	4	WASHER-HARD (13.5X22.5X3-MM THK)	
	5	1	**7D-1649**	2	WASHER-HARD (13.5X32X5-MM THK)	
M	6	1	**7X-2553**	4	BOLT (M16X2X40-MM)	
	7	1	**8T-4122**	4	WASHER-HARD (17X32X3.5-MM THK)	
M	8	1	**8T-4183**	2	BOLT (M12X1.75X40-MM)	
M	9	1	**8T-4244**	2	NUT (M12X1.75-THD)	

M - METRIC PART

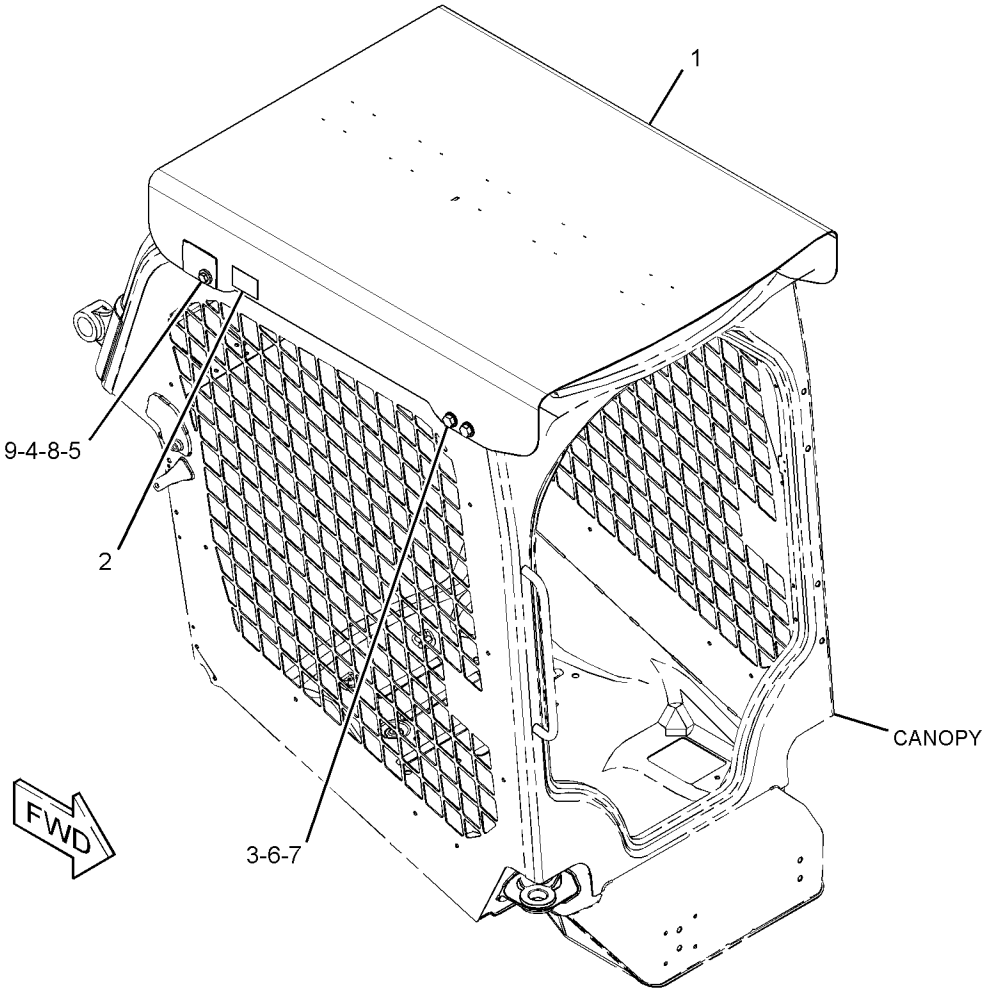

GRAPHIC #1 **<END>** g03363911

345-6035 HANDHOLD GP

PART OF 345-4913, 345-5778 CAB AR-OPEN ROPS
AN ATTACHMENT

SMCS-7256 **i05296325**

NOTE	REF NO	GRAPHIC REF	PART NUMBER	QTY	PART NAME 1 2 3 4 5 6 (PRODUCT LEVEL)	SEE PAGE
	1	1	**388-8028**	1	SPACER (10X20X6-MM THK)	
	2	1	**153-2682**	1	SPRING AS-GAS (CAB)	
	3	1	**153-2683**	1	SPRING AS-GAS (LOCKING)	
	4	1	**345-6285**	1	HANDHOLD	
	5	1	**437-9853**	1	PIN	
M	6	1	**101-7398**	2	BOLT-SOCKET HEAD (M10X1.5X40-MM)	
	7	1	**8T-4121**	2	WASHER-HARD (11X21X2.5-MM THK)	
	8	1	**5P-0372**	4	LOCK PIN	
	9	1	**6L-3966**	3	PIN	
	10	1	**388-8018**	2	SPACER (12.7X22X19.1MM THK)	
	11	1	**388-8019**	6	WASHER (10.5X20X2-MM THK)	

M - METRIC PART

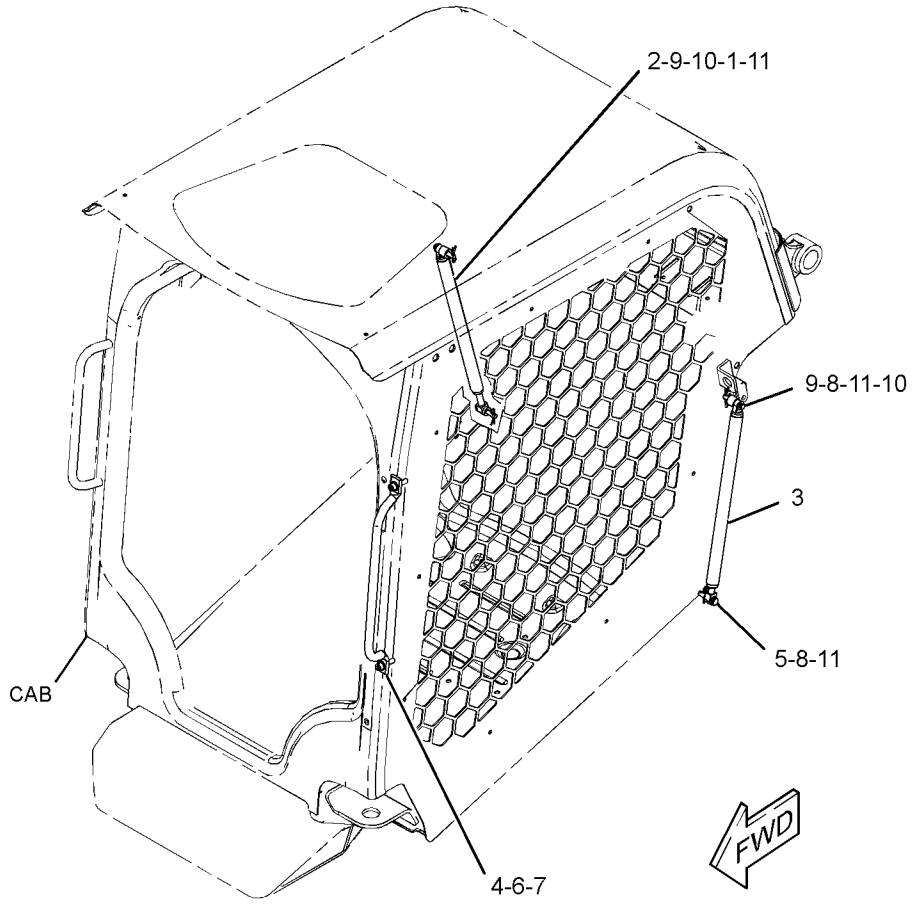

GRAPHIC #1 **<END>** g03369512

298-7197 HANDLE GP

PART OF 345-5703 CABLE GP-CONTROL

AN ATTACHMENT

SMCS-5800 **i03619742**

NOTE	REF NO	GRAPHIC REF	PART NUMBER	QTY	PART NAME 1 2 3 4 5 6 (PRODUCT LEVEL)	SEE PAGE
	1	1	**284-3914**	1	HANDLE	
	2	1	**292-2437**	1	NUT	
	3	1	**292-2438**	1	SEAL	
					PARTS SHOWN IN GRAPHIC(S) WITHOUT A REFERENCE NUMBER ARE NOT SERVICED SEPARATELY	

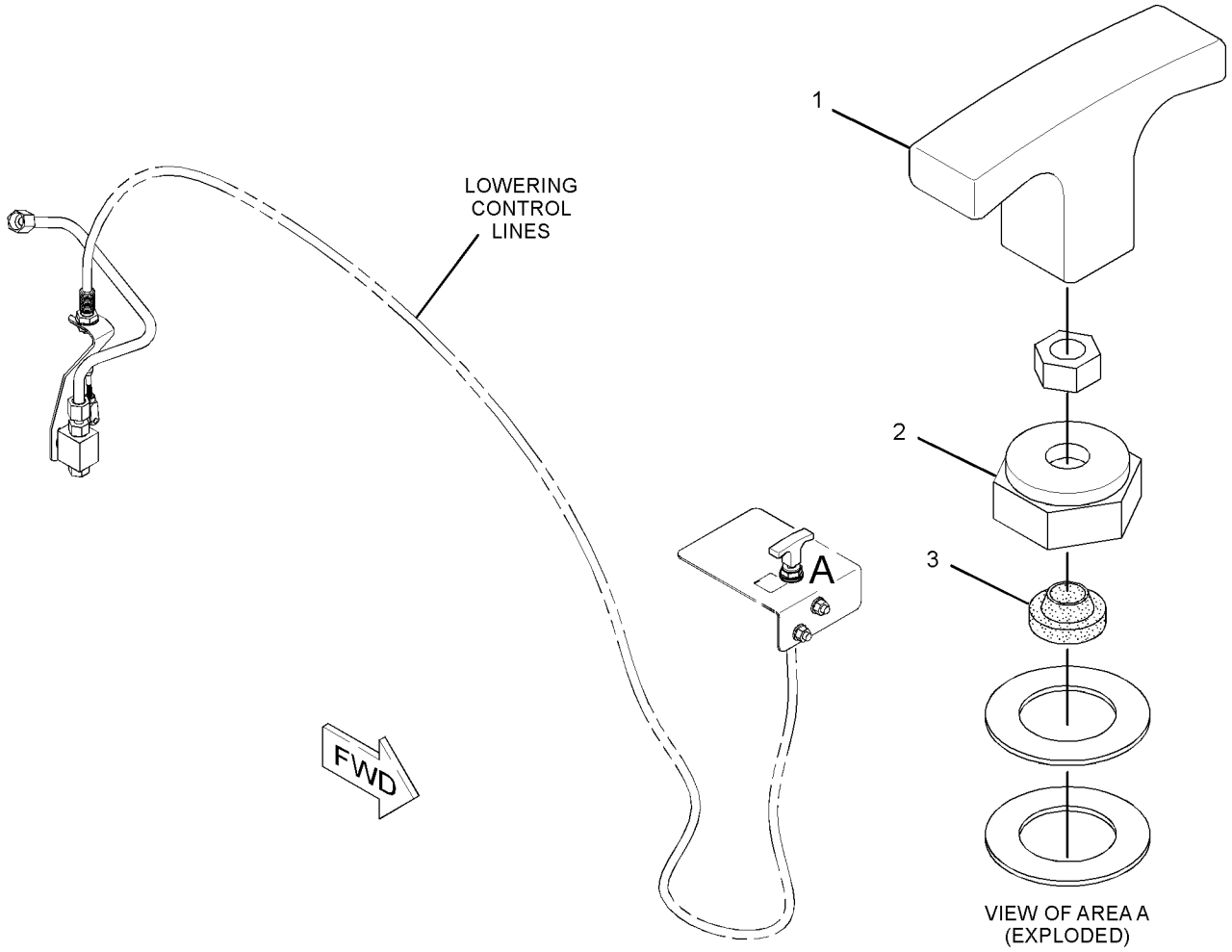

GRAPHIC #1 **<END>** g01943789

345-6161 HEATER AR-CAB—ENCLOSED

PART OF 345-6158 CAB AR-ENCLOSED ROPS

AN ATTACHMENT

SMCS-7304 **i05195653**

NOTE	PART NUMBER	QTY	PART NAME 1 2 3 4 5 6 (PRODUCT LEVEL)	SEE PAGE
Y	*345-6190*	1	AIR CONDITIONER & MOUNTING GP	467
Y	*345-5060*	1	LINES GP-HEATER	529
Y	*361-6384*	1	WIRING GP-HEATER	141

Y - SEPARATE ILLUSTRATION

<END>

345-4546 HEATER GP-CAB

PART OF 345-6190 AIR CONDITIONER & MOUNTING GP

AN ATTACHMENT

SMCS-7304, 7342 **i05401005**

NOTE	REF NO	GRAPHIC REF	PART NUMBER	QTY	PART NAME 1 2 3 4 5 6 (PRODUCT LEVEL)	SEE PAGE
	1	1	**119-9631**	1	SWITCH-TEMPERATURE (HVAC) (CAB HEATER)	
	2	1	**185-4015**	15	CLIP	
	3	1	**208-8469**	1	LOCKNUT (M6X1-THD)	
	4	1	**232-1384**	1	ORIFICE AS-AIR CONDITIONER	
	5	1	**328-3317**	1	VALVE AS-WATER (CAB HEATER)	
		1	**317-0014**	1	SEAL-O-RING	
	6	1	**345-4549**	2	VALVE	
	7	1	**359-1573**	1	CASE	
	8	1	**359-1574**	1	CASE	
	9	1	**359-1575**	1	CORE AS	
	10	1	**359-1577**	1	HARNESS AS-THERMOSTAT	
		1	**8T-8729**	2	PIN-CONNECTOR (16-GA TO 18-GA)	
		1	**102-8802**	1	KIT-RECEPTACLE (2-PIN)	
					(INCLUDES RECEPTACLE AS & WEDGE)	
	11	1	**359-1578**	1	GASKET	
	12	1	**359-1579**	1	CLAMP	
	13	1	**359-1586**	1	GASKET	
	14	1	**311-3520**	5	SCREW-HEX HEAD (8-16X0.5-IN)	
	15	1	**9X-8256**	1	WASHER (6.6X12X2-MM THK)	
D	16	1	**5P-5637**		SEAL (0.16-M EACH)	
D	17	1	**5P-5670**		SEAL (0.25-M)	
D	17A	1	**5P-5670**		SEAL (0.41-M)	

D - ORDER BY THE METER

345-4546 **HEATER GP-CAB (*contd.*)** **i05401005**

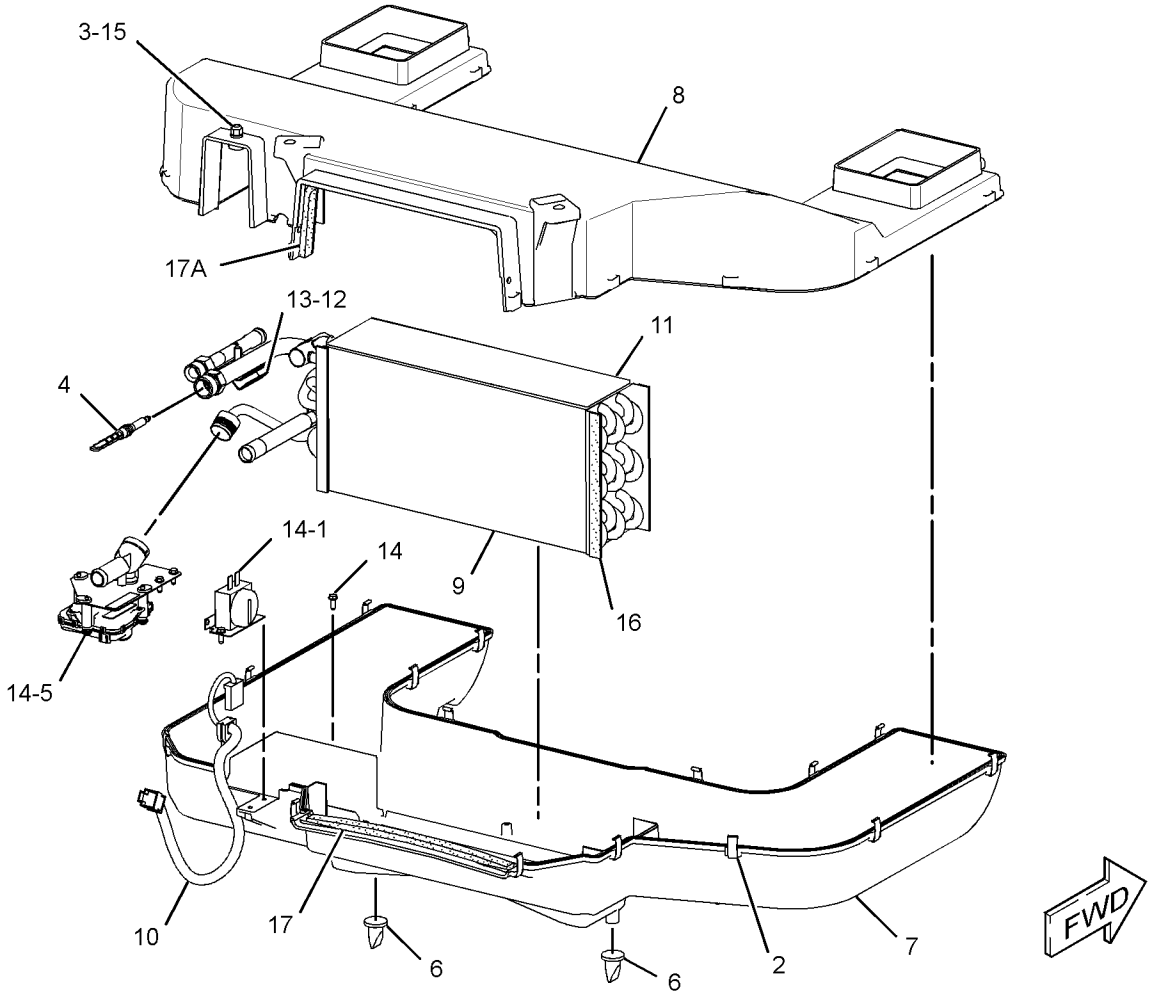

GRAPHIC #1 **<END>** g02894481

345-6175 INSTALLATION GP-RADIO

AN ATTACHMENT

SMCS-1408, 7338 **i05376559**

NOTE	REF NO	GRAPHIC REF	PART NUMBER	QTY	PART NAME 1 2 3 4 5 6 (PRODUCT LEVEL)	SEE PAGE
	1	1	**8E-1118**	1	ANTENNA AS	
	2	1	**8Y-5947**	1	FASTENER	
	3	1	**9U-8746**	1	CABLE AS-COAXIAL	
	4	1	**168-8772**	2	SPEAKER AS-RADIO	
Y	5	1	**200-5728**	1	HARNESS AS-RADIO	107
	6	1	**258-4039**	1	SPACER	
	7	1	**258-4074**	1	BRACKET	
	8	1	**258-4367**	2	BRACKET	
	9	1	**345-6140**	1	COVER	
	10	1	**345-6174**	1	GROMMET	
	11	1	**195-0936**	4	INSERT-THREADED (M6X1-THD)	
M	12	1	**5C-7261**	1	NUT (M8X1.25-THD)	
	13	1	**5P-4116**	1	WASHER-HARD (8.8X20.5X2-MM THK)	
M	14	1	**6V-7357**	4	BOLT (M6X1X25-MM)	
M	15	1	**8T-4142**	8	BOLT-FLANGE HEAD (M5X0.8X12-MM)	
	16	1	**8T-4205**	4	WASHER-HARD (7.2X14.5X2-MM THK)	

M - METRIC PART
Y - SEPARATE ILLUSTRATION

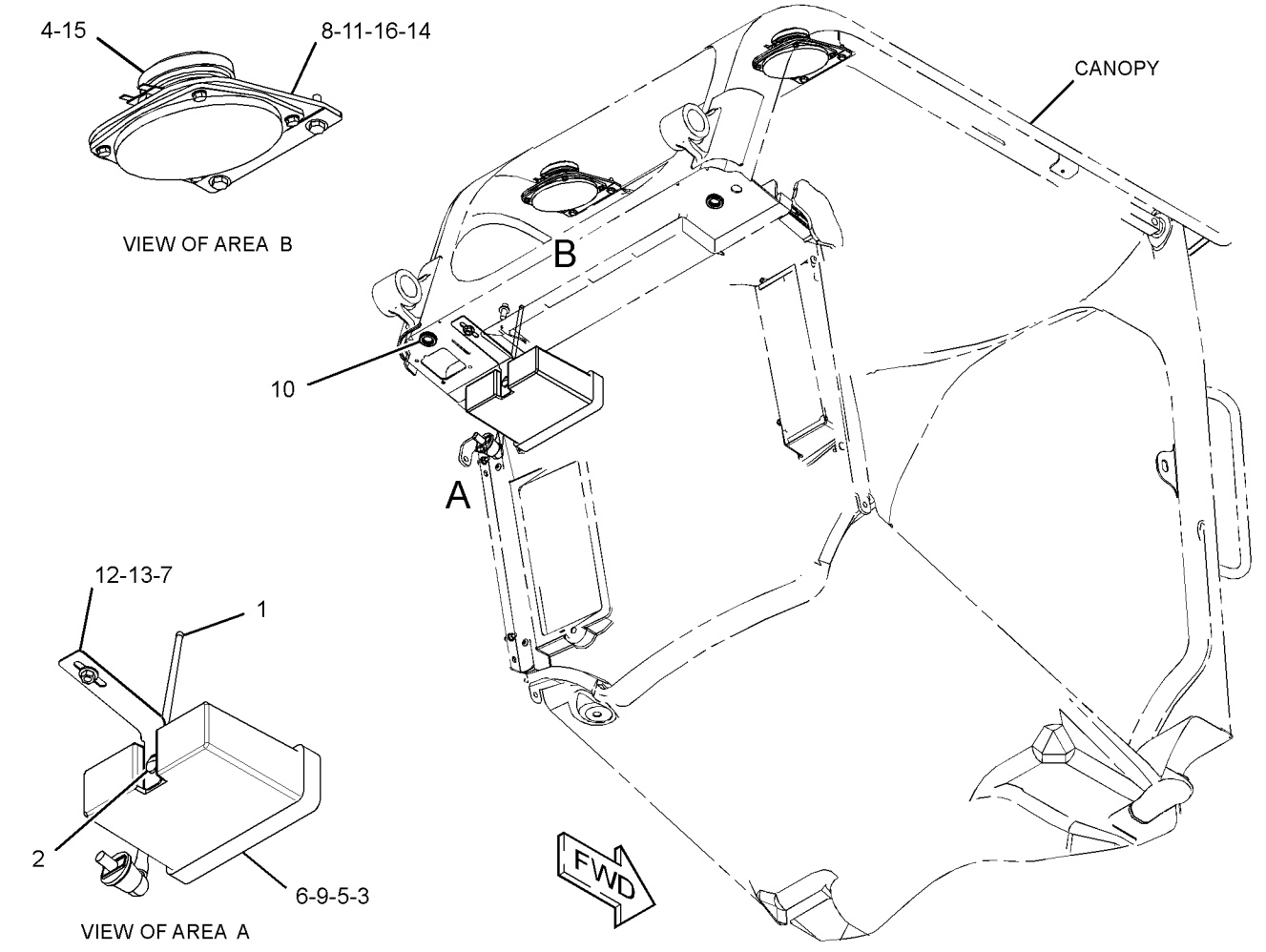

GRAPHIC #1 **<END>** g03333950

388-7849 KIT-AIR CONDITIONER BREATHER

AN ATTACHMENT

SMCS-7320 **i05303621**

NOTE	REF NO	GRAPHIC REF	PART NUMBER	QTY	PART NAME 1 2 3 4 5 6 (PRODUCT LEVEL)	SEE PAGE
	1	1	**172-8591**	3	NUT-SPRING (M6X1-THD)	
	2	1	**348-3485**	1	VALVE-DUST (AIR CLEANER)	
	3	1	**388-7902**	1	TUBE AS	
	4	1	**198-9707**	3	SCREW-TRUSS HEAD (M6X1X35-MM)	
	5	1	**388-7905**	1	HOSE	
	6	1	**388-7907**	1	COVER AS	
		1	**6V-9498**	3	WASHER-HARD (3.2X7X0.5-MM THK)	
	7	1	**9C-5344**	3	SPACER (10.5X20X18-MM THK)	

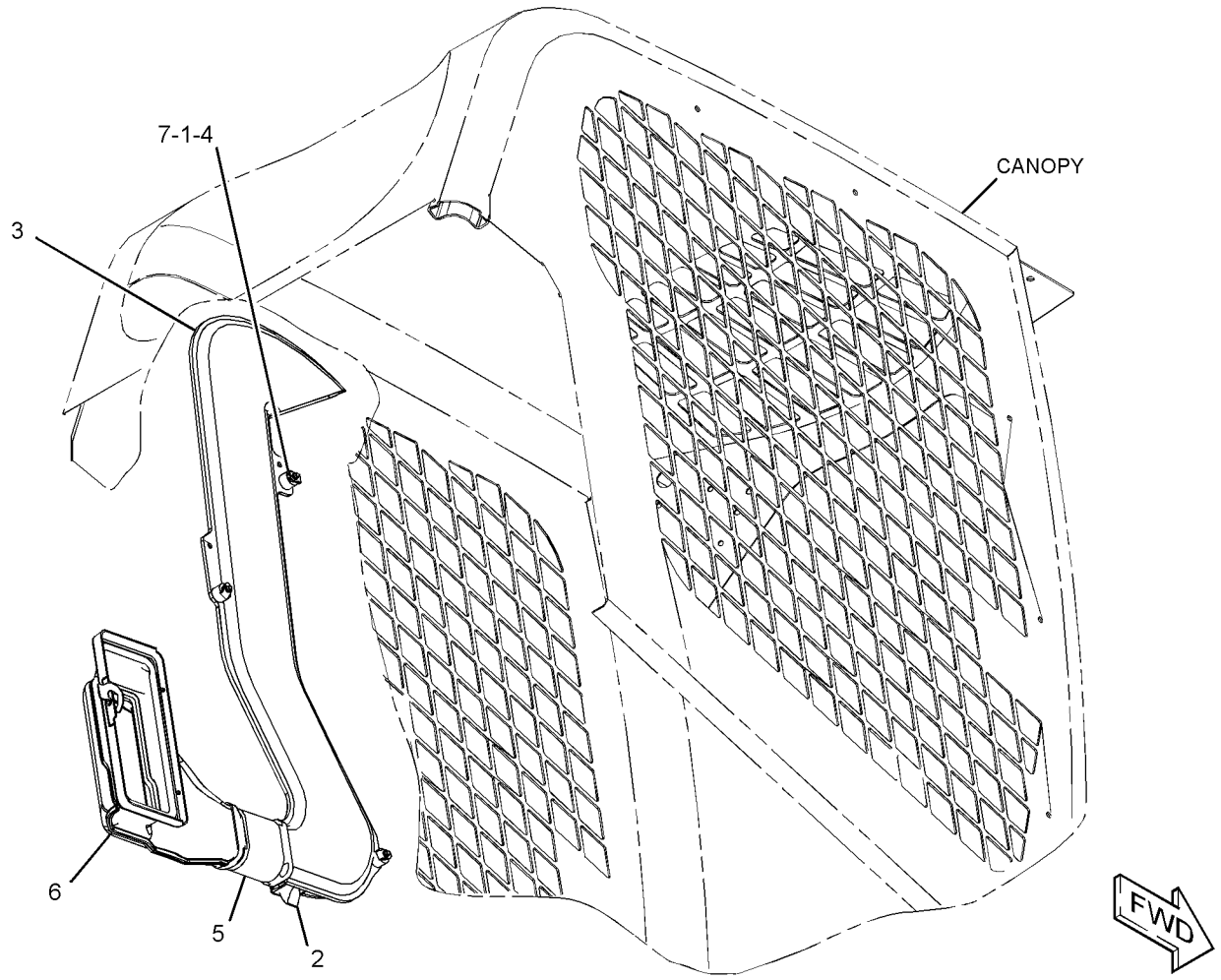

GRAPHIC #1 **<END>** g03378589

388-8276 KIT-CAB DOOR & MOUNTING—GLASS

AN ATTACHMENT

SMCS-7308 **i05400982**

NOTE	REF NO	GRAPHIC REF	PART NUMBER	QTY	PART NAME 1 2 3 4 5 6 (PRODUCT LEVEL)	SEE PAGE
	1	1	**8G-1151**	1	CONNECTOR	
	2	1	**8Y-5947**	2	FASTENER	
	3	1	**146-6433**	1	BLADE AS-WIPER (500-MM) (FRONT)	
J	4	1	**252-1862**	1	HANDLE AS (PULL)	
	5	1	**253-1817**	1	SPACER (6.5X14.5X12-MM THK)	
	6	1	**258-3280**	1	LATCH AS (INNER)	
	7	1	**258-3298**	1	GROMMET	
	8	1	**258-3697**	1	WASHER-NYLON (7X20X2-MM THK)	
	9	1	**258-3764**	1	STRIKER AS	
	10	1	**258-4075**	4	GASKET	
	11	1	**258-4085**	2	BUSHING	
	12	1	**258-4141**	3	CLIP	
	13	1	**281-6390**	1	SWITCH AS-ROCKER (WIPER)	
		1	**111-7899**	1	GASKET	
	14	1	**319-0710**	2	FILM-INSTRUCTION (EGRESS SYSTEM, READ OMM)	
	15	1	**332-0194**	3	STRAP-CABLE	
	16	1	**345-6024**	1	COVER	
	17	1	**345-6025**	1	COVER	
	18	1	**345-6230**	1	GLASS	
	19	1	**345-6233**	1	BRACKET	
	20	1	**345-6244**	1	TANK AS-WINDOW WASHER	
		1	**6T-1375**	1	PUMP AS-WASHER	
E		1	**144-0195**		HOSE (45-CM)	
		1	**258-3296**	1	CAP-VENTED (WASHER)	
	21	1	**345-6262**	2	HINGE AS	
	22	1	**345-6282**	1	COVER	
	23	1	**345-6283**	1	GASKET	
	24	1	**345-6284**	1	GASKET	
	25	1	**345-6295**	1	COVER-LATCH	
	26	1	**364-1821**	2	HANDLE AS (LOWER)	
	27	1	**378-1007**	1	SWITCH AS-MAGNETIC (LOAD CONTROL)	
		1	**171-0596**	1	RECEPTACLE AS-CONNECTOR	
		1	**3E-3371**	1	WEDGE-RECEPTACLE LOCK (3-PIN)	
Y	28	1	**378-1028**	1	HARNESS AS-CAB (AUXILIARY)	97
Y	29	1	*379-1084*	1	MOTOR GP-WINDOW WIPER	531
	30	1	*379-6471*	1	ARM GP-WINDOW WIPER (CAB DOOR)	
E		1	**194-5171**		HOSE (50-CM)	
		1	**305-9192**	1	NOZZLE AS-WASHER	
Y	31	1	**388-1436**	1	HARNESS AS-CAB (WIPER, WASHER)	97
	32	1	**388-8018**	2	SPACER (12.7X22X19.1MM THK)	
	33	1	**388-8019**	6	WASHER (10.5X20X2-MM THK)	
	34	1	**388-8028**	1	SPACER (10X20X6-MM THK)	
	35	1	**418-5900**	1	HANDLE AS	
	36	1	**418-5901**	1	BRACKET AS	
	37	1	**418-5945**	2	SPRING AS-GAS (DOOR)	
	38	1	**424-7631**	1	FILM-IDENTIFICATION (ALTERNATE EXIT, READ OMM)	
	39	1	**436-2988**	1	PLATE (MAGNETIC)	
	40	1	**437-9853**	1	PIN	
M	41	1	**101-7398**	4	BOLT-SOCKET HEAD (M10X1.5X40-MM)	
M	42	1	**178-9983**	2	LOCKNUT (M4X0.7-THD)	
M	43	1	**215-6406**	8	SCREW-TRUSS HEAD (M6X1X16-MM)	
	44	1	**3S-2093**	2	STRAP-CABLE	
M	45	1	**3T-0851**	1	LOCKNUT (M5X0.8-THD)	
M	46	1	**5C-2890**	1	NUT (M6X1-THD)	
	47	1	**5P-0372**	4	LOCK PIN	
	48	1	**5P-1076**	1	WASHER-HARD (13.5X30X4-MM THK)	
	49	1	**5P-7648**	2	GROMMET	
	50	1	**6L-3966**	3	PIN	
M	51	1	**6V-7357**	4	BOLT (M6X1X25-MM)	

388-8276 **KIT-CAB DOOR & MOUNTING (*contd.*)** **i05400982**

NOTE	REF NO	GRAPHIC REF	PART NUMBER	QTY	PART NAME 1 2 3 4 5 6 (PRODUCT LEVEL)	SEE PAGE
M	52	1	**8C-4982**	2	BOLT-SOCKET HEAD (M4X0.7X20-MM)	
	53	1	**8T-0328**	1	WASHER-HARD (5.5X10X1-MM THK)	
M	54	1	**8T-2192**	3	BOLT (M6X1X45-MM)	
	55	1	**8T-4121**	4	WASHER-HARD (11X21X2.5-MM THK)	
	56	1	**8T-4205**	3	WASHER-HARD (7.2X14.5X2-MM THK)	
M	57	1	**8T-4244**	1	NUT (M12X1.75-THD)	
	58	1	**8T-5439**	2	WASHER-HARD (21.5X45X6-MM THK)	
M	59	1	**8T-6974**	1	BOLT (M6X1X80-MM)	
	60	1	**9L-9132**	2	WASHER (10.2X25.5X2.5-MM THK)	
M	61	1	**9X-2040**	2	SCREW-TRUSS HEAD (M10X1.5X25-MM)	
	62	1	**9X-6165**	1	WASHER (6.5X22X2.5-MM THK)	
E	63	1	**386-6028**		SEAL (326-CM)	
E	64	1	**144-0195**		HOSE (44-CM)	

E - ORDER BY THE CENTIMETER
J - REQUIRES CORPORATE KEY
M - METRIC PART
Y - SEPARATE ILLUSTRATION

NO GRAPHIC AVAILABLE AT TIME OF PUBLICATION

GRAPHIC #1 **<END>** g01269539

388-8281 KIT-CAB DOOR & MOUNTING—POLYCARBONATE

AN ATTACHMENT

SMCS-7308 **i05400978**

NOTE	REF NO	GRAPHIC REF	PART NUMBER	QTY	PART NAME 1 2 3 4 5 6 (PRODUCT LEVEL)	SEE PAGE
	1	1	**8G-1151**	1	CONNECTOR	
	2	1	**8Y-5947**	2	FASTENER	
	3	1	**146-6433**	1	BLADE AS-WIPER (500-MM)	
J	4	1	**252-1862**	1	HANDLE AS (PULL)	
	5	1	**253-1817**	1	SPACER (6.5X14.5X12-MM THK)	
	6	1	**258-3280**	1	LATCH AS	
	7	1	**258-3298**	1	GROMMET	
	8	1	**258-3697**	1	WASHER-NYLON (7X20X2-MM THK)	
	9	1	**258-3764**	1	STRIKER AS	
	10	1	**258-4075**	4	GASKET	
	11	1	**258-4085**	2	BUSHING	
	12	1	**258-4141**	3	CLIP	
	13	1	**281-6390**	1	SWITCH AS-ROCKER (FRONT WIPER, WASHER)	
		1	**111-7899**	1	GASKET	
	14	1	**319-0710**	2	FILM-INSTRUCTION (EGRESS SYSTEM, READ OMM)	
	15	1	**332-0194**	3	STRAP-CABLE	
	16	1	**345-6024**	1	COVER	
	17	1	**345-6025**	1	COVER	
	18	1	**345-6233**	1	BRACKET	
	19	1	**345-6244**	1	TANK AS-WINDOW WASHER	
		1	**6T-1375**	1	PUMP AS-WASHER	
E		1	**144-0195**		HOSE (45-CM)	
		1	**258-3296**	1	CAP-VENTED (WASHER)	
	20	1	**345-6250**	1	WINDOW	
	21	1	**345-6262**	2	HINGE AS	
	22	1	**345-6282**	1	COVER	
	23	1	**345-6283**	1	GASKET	
	24	1	**345-6284**	1	GASKET	
	25	1	**345-6295**	1	COVER-LATCH	
	26	1	**364-1821**	2	HANDLE AS (LOWER)	
	27	1	**378-1007**	1	SWITCH AS-MAGNETIC (LOAD CONTROL)	
		1	**171-0596**	1	RECEPTACLE AS-CONNECTOR	
Y	28	1	**378-1028**	1	HARNESS AS-CAB (AUXILIARY)	97
Y	29	1	*379-1084*	1	MOTOR GP-WINDOW WIPER	531
	30	1	*379-6471*	1	ARM GP-WINDOW WIPER (CAB DOOR)	
E		1	**194-5171**		HOSE (50-CM)	
		1	**305-9192**	1	NOZZLE AS-WASHER	
Y	31	1	**388-1436**	1	HARNESS AS-CAB (WIPER, WASHER)	97
	32	1	**388-8018**	2	SPACER (12.7X22X19.1MM THK)	
	33	1	**388-8019**	6	WASHER (10.5X20X2-MM THK)	
	34	1	**388-8028**	1	SPACER (10X20X6-MM THK)	
	35	1	**418-5900**	1	HANDLE AS	
	36	1	**418-5901**	1	BRACKET AS	
	37	1	**418-5945**	2	SPRING AS-GAS (DOOR)	
	38	1	**424-7631**	1	FILM-IDENTIFICATION (ALTERNATE EXIT, READ OMM)	
	39	1	**436-2988**	1	PLATE (MAGNETIC)	
	40	1	**437-9853**	1	PIN	
M	41	1	**101-7398**	4	BOLT-SOCKET HEAD (M10X1.5X40-MM)	
M	42	1	**178-9983**	2	LOCKNUT (M4X0.7-THD)	
M	43	1	**215-6406**	8	SCREW-TRUSS HEAD (M6X1X16-MM)	
	44	1	**3S-2093**	2	STRAP-CABLE	
M	45	1	**3T-0851**	1	LOCKNUT (M5X0.8-THD)	
M	46	1	**5C-2890**	1	NUT (M6X1-THD)	
	47	1	**5P-0372**	4	LOCK PIN	
	48	1	**5P-1076**	1	WASHER-HARD (13.5X30X4-MM THK)	
	49	1	**5P-7648**	2	GROMMET	
	50	1	**6L-3966**	3	PIN	
M	51	1	**6V-7357**	4	BOLT (M6X1X25-MM)	
M	52	1	**8C-4982**	2	BOLT-SOCKET HEAD (M4X0.7X20-MM)	

388-8281 **KIT-CAB DOOR & MOUNTING (*contd.*)** **i05400978**

NOTE	REF NO	GRAPHIC REF	PART NUMBER	QTY	PART NAME 1 2 3 4 5 6 (PRODUCT LEVEL)	SEE PAGE
	53	1	**8T-0328**	1	WASHER-HARD (5.5X10X1-MM THK)	
M	54	1	**8T-2192**	3	BOLT (M6X1X45-MM)	
	55	1	**8T-4121**	4	WASHER-HARD (11X21X2.5-MM THK)	
	56	1	**8T-4205**	3	WASHER-HARD (7.2X14.5X2-MM THK)	
M	57	1	**8T-4244**	1	NUT (M12X1.75-THD)	
	58	1	**8T-5439**	2	WASHER-HARD (21.5X45X6-MM THK)	
M	59	1	**8T-6974**	1	BOLT (M6X1X80-MM)	
	60	1	**9L-9132**	2	WASHER (10.2X25.5X2.5-MM THK)	
M	61	1	**9X-2040**	2	SCREW-TRUSS HEAD (M10X1.5X25-MM)	
	62	1	**9X-6165**	1	WASHER (6.5X22X2.5-MM THK)	
E	63	1	**386-6028**		SEAL (326-CM)	
E	64	1	**144-0195**		HOSE (44-CM)	

E - ORDER BY THE CENTIMETER
J - REQUIRES CORPORATE KEY
M - METRIC PART
Y - SEPARATE ILLUSTRATION

NO GRAPHIC AVAILABLE AT TIME OF PUBLICATION

GRAPHIC #1 **<END>** g01269539

OPERATOR STATION

388-8275 KIT-CAB WINDOW

AN ATTACHMENT

SMCS-7310 **i05327126**

NOTE	REF NO	GRAPHIC REF	PART NUMBER	QTY	PART NAME 1 2 3 4 5 6 (PRODUCT LEVEL)	SEE PAGE
	1	1	**270-9442**	18	SCREW-TRUSS HEAD (M6X1X20-MM)	
	2	1	**345-6270**	1	WINDOW AS (LH)	
	3	1	**345-6271**	1	WINDOW AS (LH)	
	4	1	**345-6273**	1	WINDOW AS (LH)	
	5	1	**345-6274**	1	WINDOW AS (RH)	
	6	1	**345-6275**	1	WINDOW AS (RH)	
	7	1	**345-6276**	1	WINDOW AS (RH)	
	8	1	**345-6292**	1	FRAME AS (LH)	
	9	1	**345-6297**	1	FRAME AS (RH)	

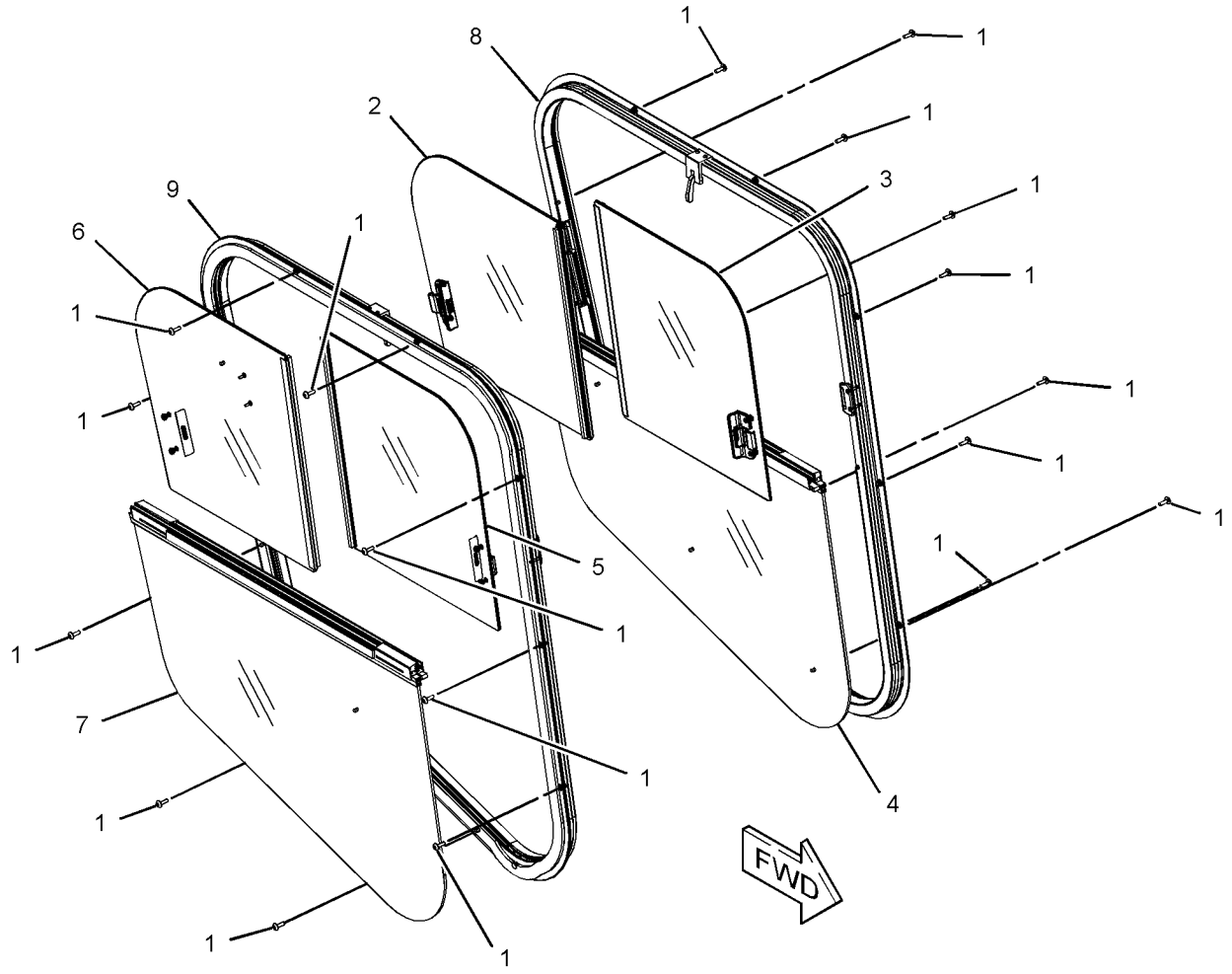

GRAPHIC #1 **<END>** g03384657

388-8274 KIT-INSTRUMENT PANEL—ADVANCED DISPLAY

FOR USE WITH 388-8284—PAGE: 112

AN ATTACHMENT

SMCS-1435, 7450, 7490 **i05327157**

NOTE	REF NO	GRAPHIC REF	PART NUMBER	QTY	PART NAME 1 2 3 4 5 6 (PRODUCT LEVEL)	SEE PAGE
	1	1	**8Y-5947**	2	FASTENER	
	2	1	**378-1006**	1	CONTROL GP-UNPRGMED MONITOR (OPTIONAL)	
	3	1	**383-7619**	1	SOFTWARE GP-MONITOR	
M	4	1	**135-7242**	4	SCREW-SELF-TAPPING (M5X2.3X18.8-MM)	
	5	1	**9X-8256**	4	WASHER (6.6X12X2-MM THK)	

M - METRIC PART

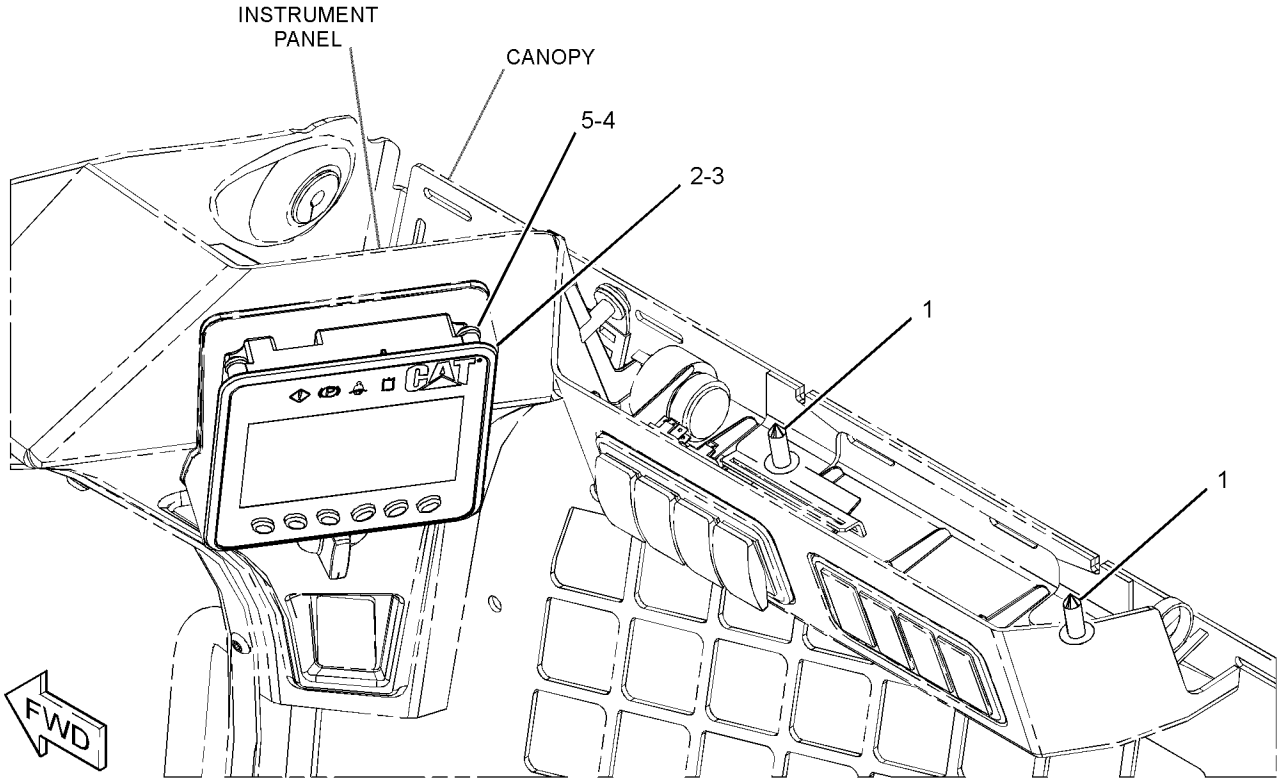

GRAPHIC #1 **<END>** g03384688

OPERATOR STATION

388-8285 KIT-PEDAL–THROTTLE
AN ATTACHMENT

SMCS-1269 **i05327131**

NOTE	REF NO	GRAPHIC REF	PART NUMBER	QTY	PART NAME 1 2 3 4 5 6 (PRODUCT LEVEL)	SEE PAGE
	1	1	**8Y-5947**	2	FASTENER	
	2	1	**206-1345**	1	STRAP-CABLE	
	3	1	**345-6024**	1	COVER (LH)	
	4	1	**345-6025**	1	COVER (RH)	
	5	1	**345-6136**	1	PEDAL AS	
Y	6	1	**378-1027**	1	HARNESS AS-WIRING (PEDAL)	109
M	7	1	**127-2170**	4	SCREW-TRUSS HEAD (M8X1.25X20-MM)	
	8	1	**3E-4352**	4	WASHER-HARD (8.8X20.5X2.5-MM THK)	
	9	1	**3S-2093**	2	STRAP-CABLE	

M - METRIC PART
Y - SEPARATE ILLUSTRATION

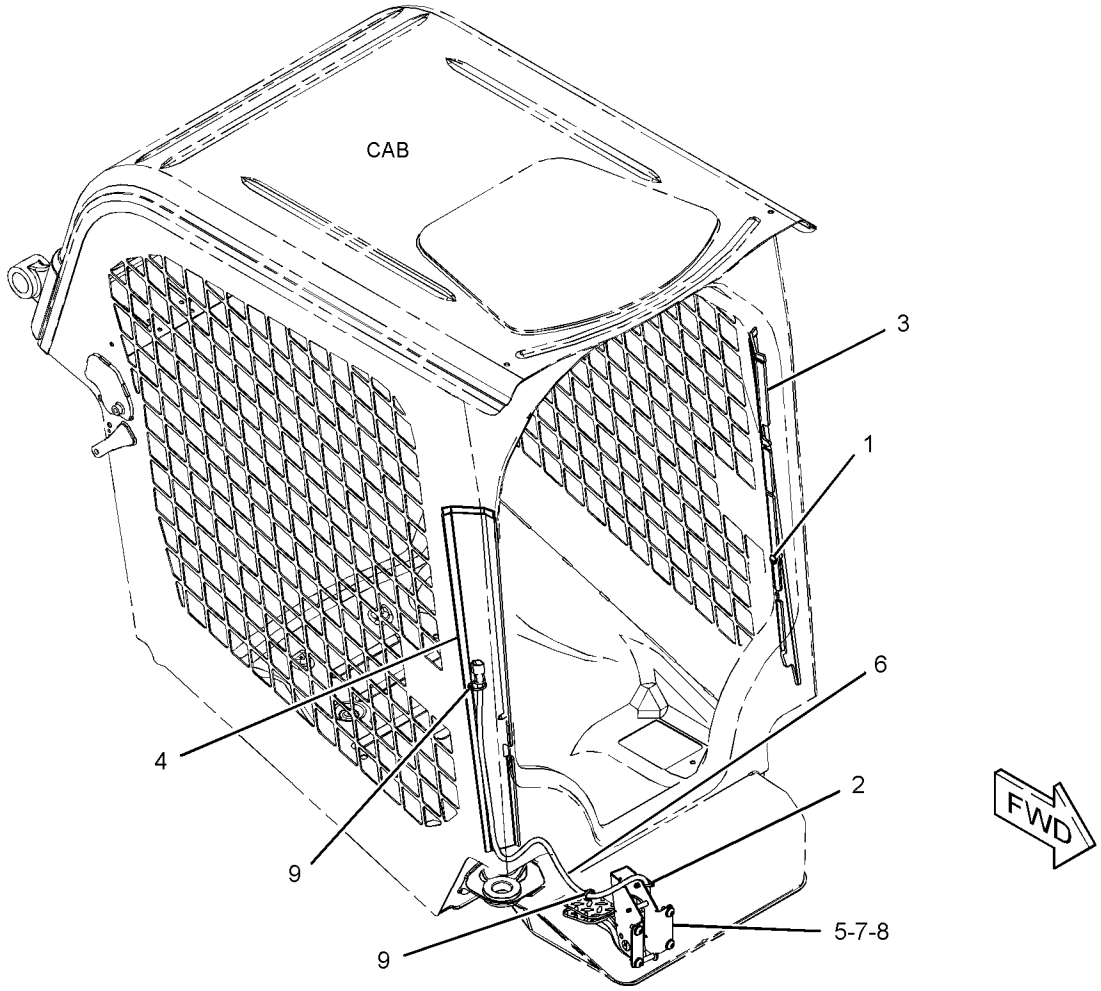

GRAPHIC #1 **<END>** g03384474

388-8283 KIT-RADIO–AM/FM

AN ATTACHMENT

SMCS-7338 **i05385907**

NOTE	REF NO	GRAPHIC REF	PART NUMBER	QTY	PART NAME 1 2 3 4 5 6 (PRODUCT LEVEL)	SEE PAGE
	1	1	**8E-1118**	1	ANTENNA AS	
	2	1	**8Y-5947**	4	FASTENER	
	3	1	**9U-8746**	1	CABLE AS-COAXIAL	
	4	1	**168-8772**	2	SPEAKER AS-RADIO	
Y	5	1	**200-5728**	1	HARNESS AS-RADIO	107
	6	1	**258-4039**	1	SPACER	
	7	1	**258-4074**	1	BRACKET	
	8	1	**258-4367**	2	BRACKET	
	9	1	**345-6140**	1	COVER	
	10	1	**345-6174**	1	GROMMET	
	11	1	**195-0936**	4	INSERT-THREADED (M6X1-THD)	
M	12	1	**5C-7261**	1	NUT (M8X1.25-THD)	
	13	1	**5P-4116**	1	WASHER-HARD (8.8X20.5X2-MM THK)	
M	14	1	**6V-7357**	4	BOLT (M6X1X25-MM)	
M	15	1	**8T-4142**	8	BOLT-FLANGE HEAD (M5X0.8X12-MM)	
	16	1	**8T-4205**	4	WASHER-HARD (7.2X14.5X2-MM THK)	

M - METRIC PART
Y - SEPARATE ILLUSTRATION

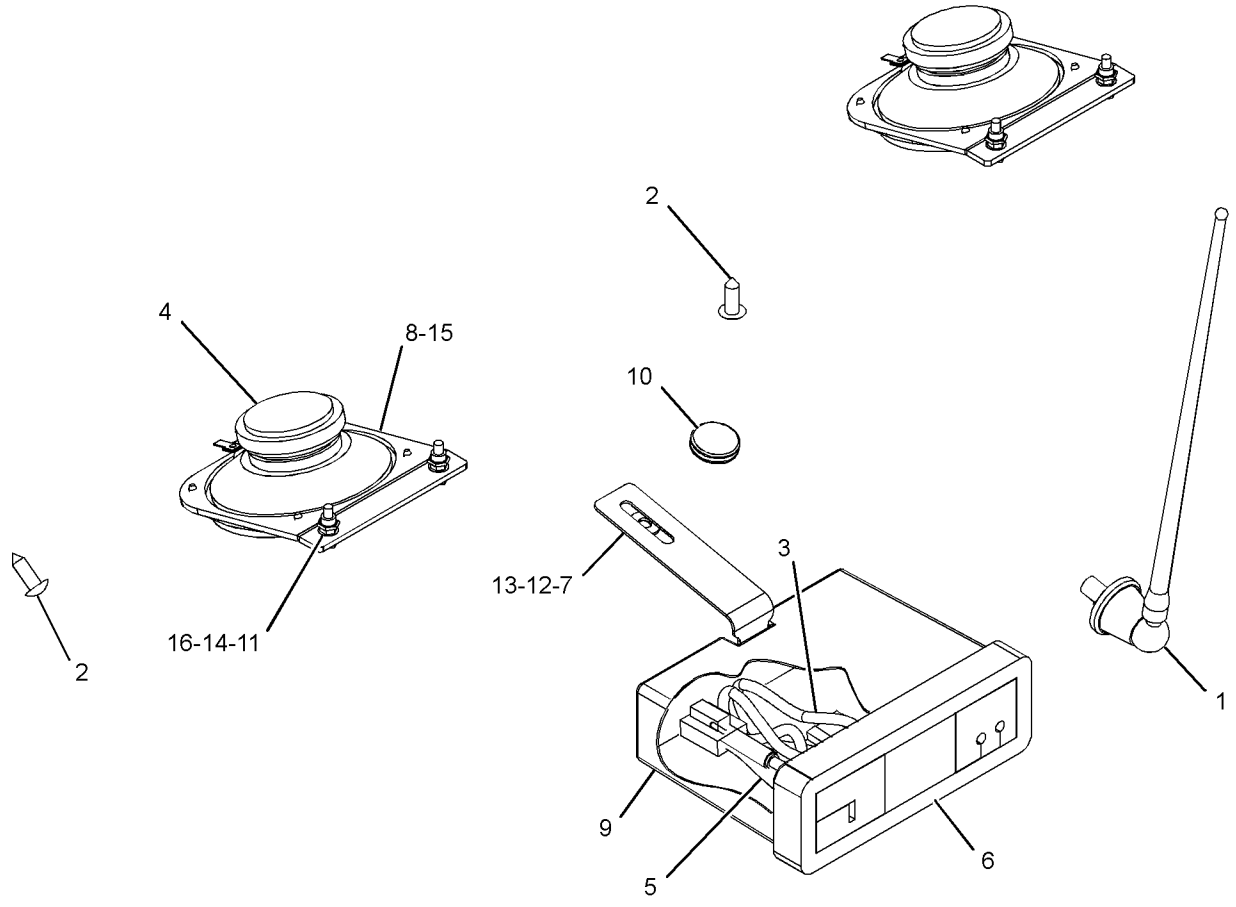

GRAPHIC #1 **<END>** g03384476

388-8286 KIT-RADIO—AM/FM/WB/CD/XM/USB/BLUETOOTH

AN ATTACHMENT

SMCS-7338 **i05327132**

NOTE	REF NO	GRAPHIC REF	PART NUMBER	QTY	PART NAME 1 2 3 4 5 6 (PRODUCT LEVEL)	SEE PAGE
	1	1	**3S-2093**	12	STRAP-CABLE	
D	2	1	**5P-9909**		SEAL (0.1-M EACH)	
	3	1	**8Y-5947**	6	FASTENER	
	4	1	**345-6145**	1	COVER	
	5	1	**349-8642**	1	MICROPHONE	
	6	1	**353-1634**	1	HARNESS AS-RADIO	
	7	1	**377-7215**	1	RADIO GP (AM/FM/WB/CD/XM/USB/BLUETOOTH)	
	8	1	**9G-1307**	1	GROMMET	

D - ORDER BY THE METER

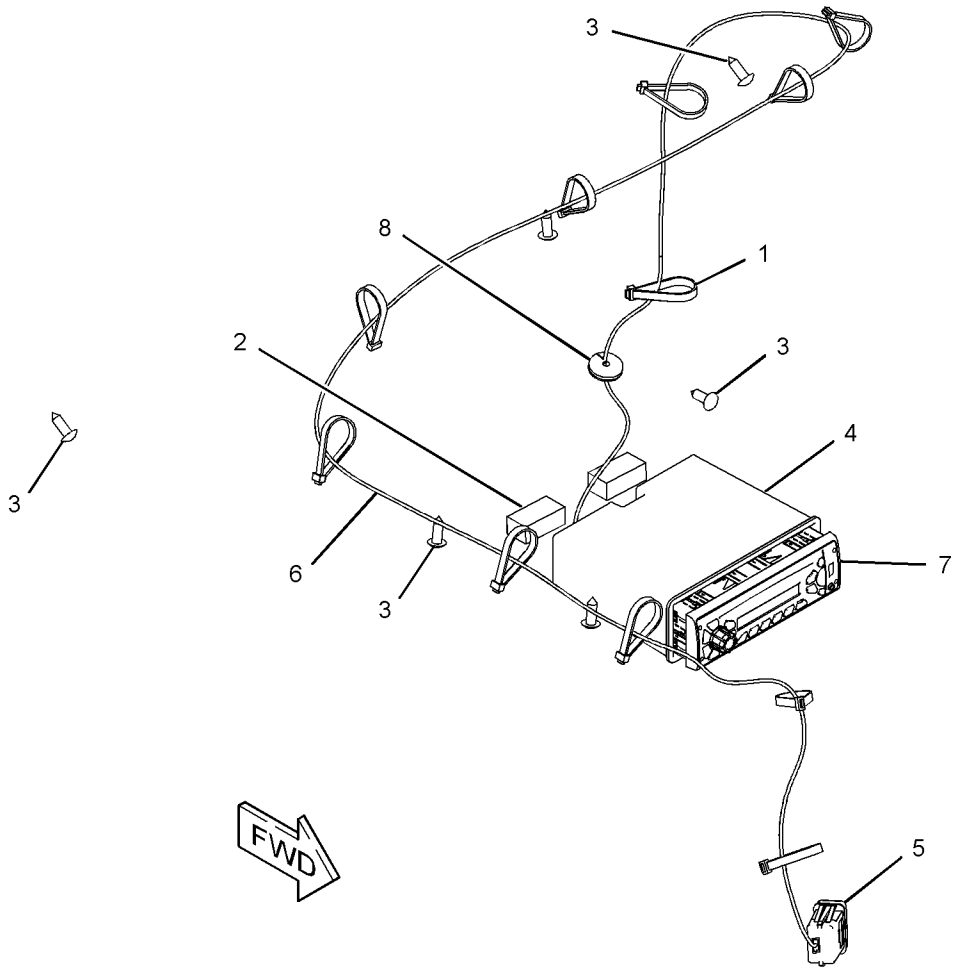

GRAPHIC #1 **<END>** g03384473

345-6020 LINER GP-CAB

PART OF 345-5454 CAB AR

SMCS-7268, 7329 **i05296317**

NOTE	REF NO	GRAPHIC REF	PART NUMBER	QTY	PART NAME 1 2 3 4 5 6 (PRODUCT LEVEL)	SEE PAGE
	1	1	**258-3786**	1	SEAL	
	2	1	**280-6071**	5	CLIP	
	3	1	**327-1067**	1	SEAL	
	4	1	**345-6030**	1	FLOOR MAT	
Y	5	1	*345-6149*	1	LINER GP-CAB	526
M	6	1	**5C-2890**	6	NUT (M6X1-THD)	
	7	1	**8T-4205**	6	WASHER-HARD (7.2X14.5X2-MM THK)	
M	8	1	**9X-2045**	6	SCREW-TRUSS HEAD (M6X1X20-MM)	
D	9	1	**8T-5372**		SEAL (0.4-M EACH)	
D	9A	1	**8T-5372**		SEAL (0.1-M EACH)	
E	10	1	**9X-2092**		TRIM-EDGE (76-CM)	
	11	1	**345-6174**	3	GROMMET	

D - ORDER BY THE METER
E - ORDER BY THE CENTIMETER
M - METRIC PART
Y - SEPARATE ILLUSTRATION

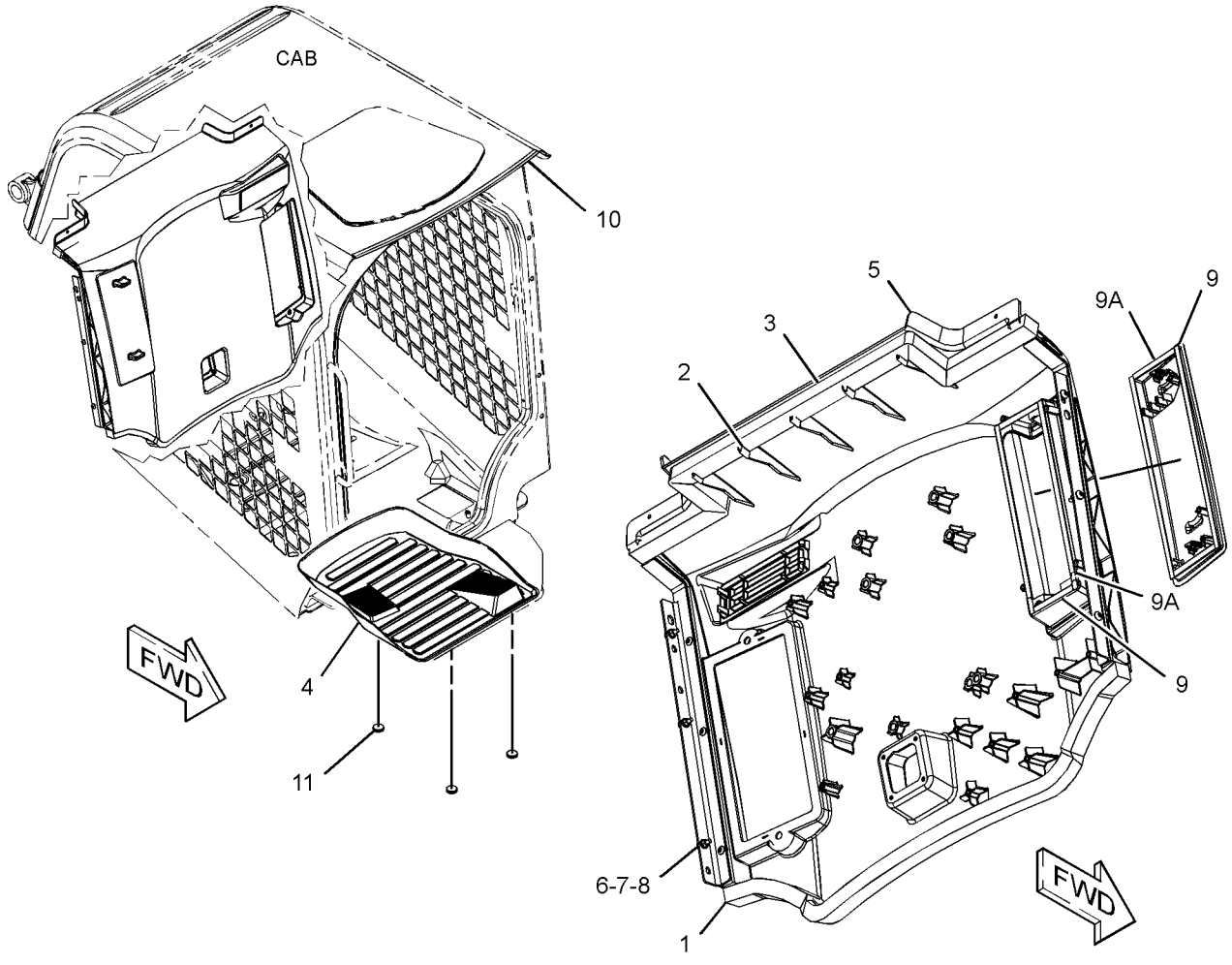

GRAPHIC #1 **<END>** g03367468

345-6149 LINER GP-CAB

PART OF 345-6020 LINER GP-CAB

SMCS-7268, 7329 **i05162975**

NOTE	REF NO	GRAPHIC REF	PART NUMBER	QTY	PART NAME 1 2 3 4 5 6 (PRODUCT LEVEL)	SEE PAGE
	1	1	**258-3727**	6	SCREW-TRUSS HEAD (SPECIAL)	
	2	1	**258-4358**	1	PLATE	
	3	1	**258-4359**	1	PLATE	
	4	1	**345-6143**	1	COVER	
	5	1	**345-6144**	1	COVER AS	
	6	1	**345-6150**	1	LINER AS	
E	7	1	**8C-7524**		SEAL (60.5-CM EACH)	

E - ORDER BY THE CENTIMETER

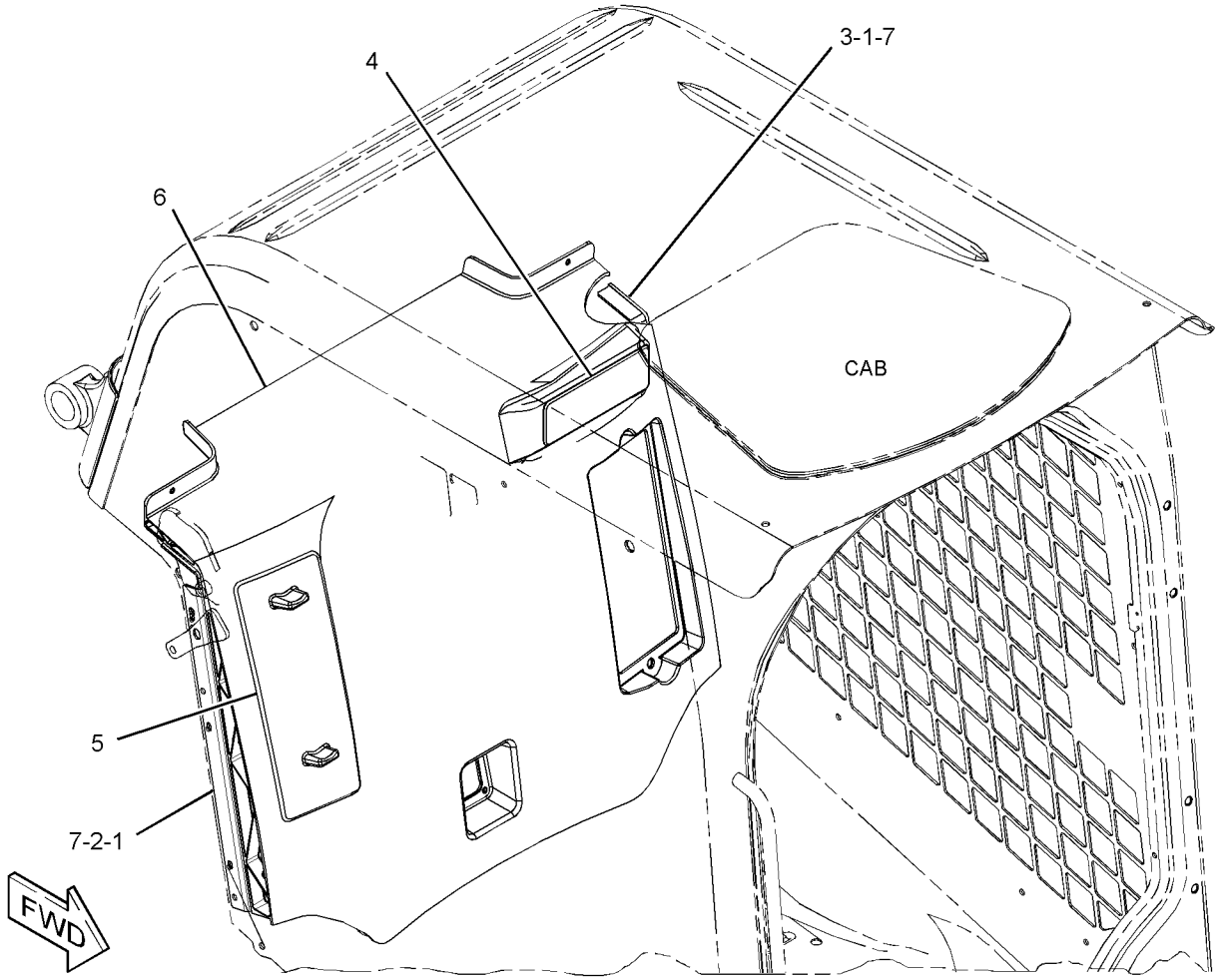

GRAPHIC #1 **<END>** g03319436

345-5040 LINES GP-AIR CONDITIONER

PART OF 345-6163 AIR CONDITIONER AR
AN ATTACHMENT

SMCS-1808, 7320 **i05401590**

NOTE	REF NO	GRAPHIC REF	PART NUMBER	QTY	PART NAME 1 2 3 4 5 6 (PRODUCT LEVEL)	SEE PAGE
	1	1	**8T-7912**	1	ADAPTER	
	2	1	**9S-1354**	1	NUT (5/8-18-THD)	
	3	1	**149-6371**	1	SWITCH AS-PRESSURE (AIR CONDITIONER)	
		1	**102-8802**	1	KIT-RECEPTACLE (2-PIN)	
					(INCLUDES RECEPTACLE AS & WEDGE)	
		1	**8T-8729**	2	PIN-CONNECTOR (16-GA TO 18-GA)	
	4	1	**178-3620**	7	STRAP-DUAL CLAMP	
Y	5	1	*186-6190*	1	ACCUMULATOR GP-REFRIGERANT (CHARGED)	466
	6	1	**206-2423**	3	SADDLE	
	7	1	**236-6923**	1	SWITCH AS-PRESSURE (REFRIGERANT)	
I	8	1	**345-5043**	1	HOSE AS	
I	9	1	**345-5046**	1	HOSE AS	
	10	1	**345-5955**	1	PLATE AS	
G	11	1	**160-2246**		SLEEVE-ABRASION (17-IN)	
	12	1	**345-6081**	1	PLATE-AIR CONDITIONER	
I	13	1	**345-6533**	1	HOSE AS	
	14	1	*392-0808*	2	ELBOW AS	
					(EACH INCLUDES)	
		1	**5P-4906**	1	ELBOW	
		1	**6V-6609**	1	SEAL-O-RING	
	15	1	**422-3351**	1	HOSE AS	
	16	1	**422-3352**	1	HOSE AS	
	17	1	**422-3353**	1	HOSE AS	
I	18	1	**422-3354**	1	HOSE AS	
	19	1	**422-3355**	1	TUBE AS	
	20	1	**422-3356**	1	TUBE AS	
	21	1	**433-9330**	1	FITTING AS-AIR CONDITIONER	
M	22	1	**174-9194**	1	BOLT (M8X1.25X16-MM)	
	23	1	**183-4403**	5	CLIP	
M	24	1	**266-3315**	4	BOLT-FLANGE HEAD (M8X1.25X25.5-MM)	
	25	1	**342-9920**	2	BOLT-FLANGE HEAD (M8X1.25X20-MM)	
	26	1	**373-7621**	8	CLAMP-BAND	
	27	1	**3S-2093**	1	STRAP-CABLE	
	28	1	**4D-7733**	1	CLIP	
	29	1	**5P-4116**	1	WASHER-HARD (8.8X20.5X2-MM THK)	
	30	1	**6D-4246**	1	CLIP	
	31	1	**6V-4356**	1	CLIP (SLOT)	
	32	1	**6V-4357**	1	CLIP (TAB)	
	33	1	**7D-1553**	2	CLIP	
	34	1	**7K-1181**	11	STRAP-CABLE	
M	35	1	**8T-4136**	1	BOLT (M10X1.5X25-MM)	
M	36	1	**8T-4139**	1	BOLT (M12X1.75X30-MM)	
	37	1	**8T-4223**	1	WASHER-HARD (13.5X25.5X3-MM THK)	
	38	1	**9X-7378**	2	SEAL-O-RING	
	39	1	**9X-7380**	2	SEAL-O-RING	
	40	1	**9X-7381**	5	SEAL-O-RING	
	41	1	**9X-7382**	3	SEAL-O-RING	
	42	1	**9X-7383**	4	SEAL-O-RING	
E	43	1	**7Y-5074**		GUARD-HOSE (25-CM EACH)	
E	44	1	**5P-0767**		HOSE (132-CM)	
E	44A	1	**5P-0767**		HOSE (200-CM EACH)	
E	44B	1	**5P-0767**		HOSE (81-CM)	

E - ORDER BY THE CENTIMETER
G - ORDER BY THE INCH
I - REFER TO HYDRAULIC INFORMATION SYSTEM
M - METRIC PART
Y - SEPARATE ILLUSTRATION

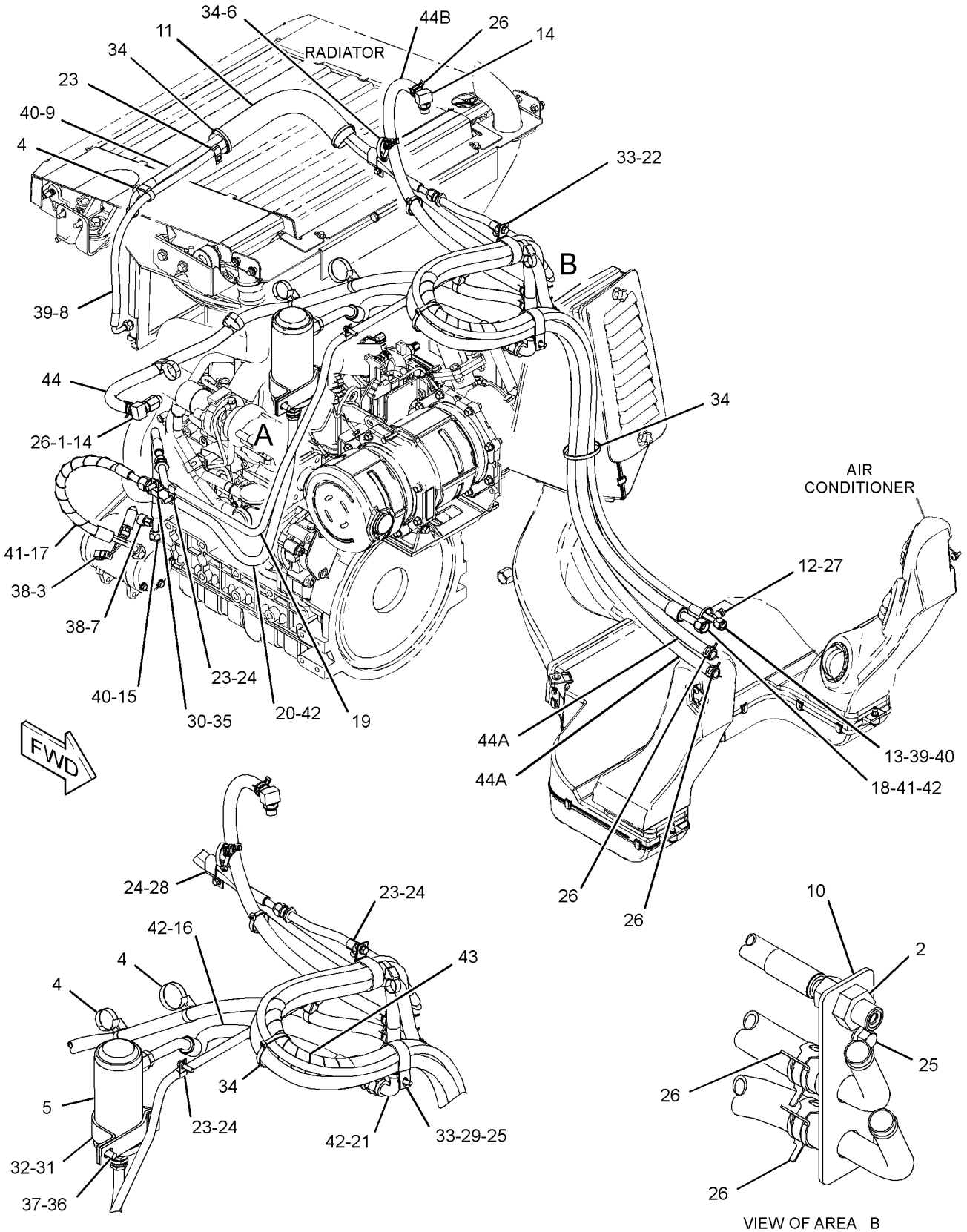

GRAPHIC #1 **<END>** g03405117

345-5060 LINES GP-HEATER

PART OF 345-6161 HEATER AR-CAB

AN ATTACHMENT

SMCS-1812, 7304 **i05380573**

NOTE	REF NO	GRAPHIC REF	PART NUMBER	QTY	PART NAME 1 2 3 4 5 6 (PRODUCT LEVEL)	SEE PAGE
	1	1	**206-2423**	1	SADDLE	
	2	1	**178-3620**	6	STRAP-DUAL CLAMP	
	3	1	**345-5955**	1	PLATE AS	
	4	1	*392-0808*	2	ELBOW AS	
					(EACH INCLUDES)	
		1	**5P-4906**	1	ELBOW	
		1	**6V-6609**	1	SEAL-O-RING	
M	5	1	**174-9194**	1	BOLT (M8X1.25X16-MM)	
	6	1	**8T-7912**	1	ADAPTER	
	7	1	**342-9920**	2	BOLT-FLANGE HEAD (M8X1.25X20-MM)	
	8	1	**373-7621**	8	CLAMP-BAND	
	9	1	**6D-1641**	2	CLIP	
	10	1	**7K-1181**	5	STRAP-CABLE	
E	11	1	**7Y-5074**		GUARD-HOSE (25-CM EACH)	
E	12	1	**5P-0767**		HOSE (200-CM EACH)	
E	12A	1	**5P-0767**		HOSE (81-CM)	
E	12B	1	**5P-0767**		HOSE (132-CM)	
	13	1	**5P-4116**	1	WASHER-HARD (8.8X20.5X2-MM THK)	

E - ORDER BY THE CENTIMETER
M - METRIC PART

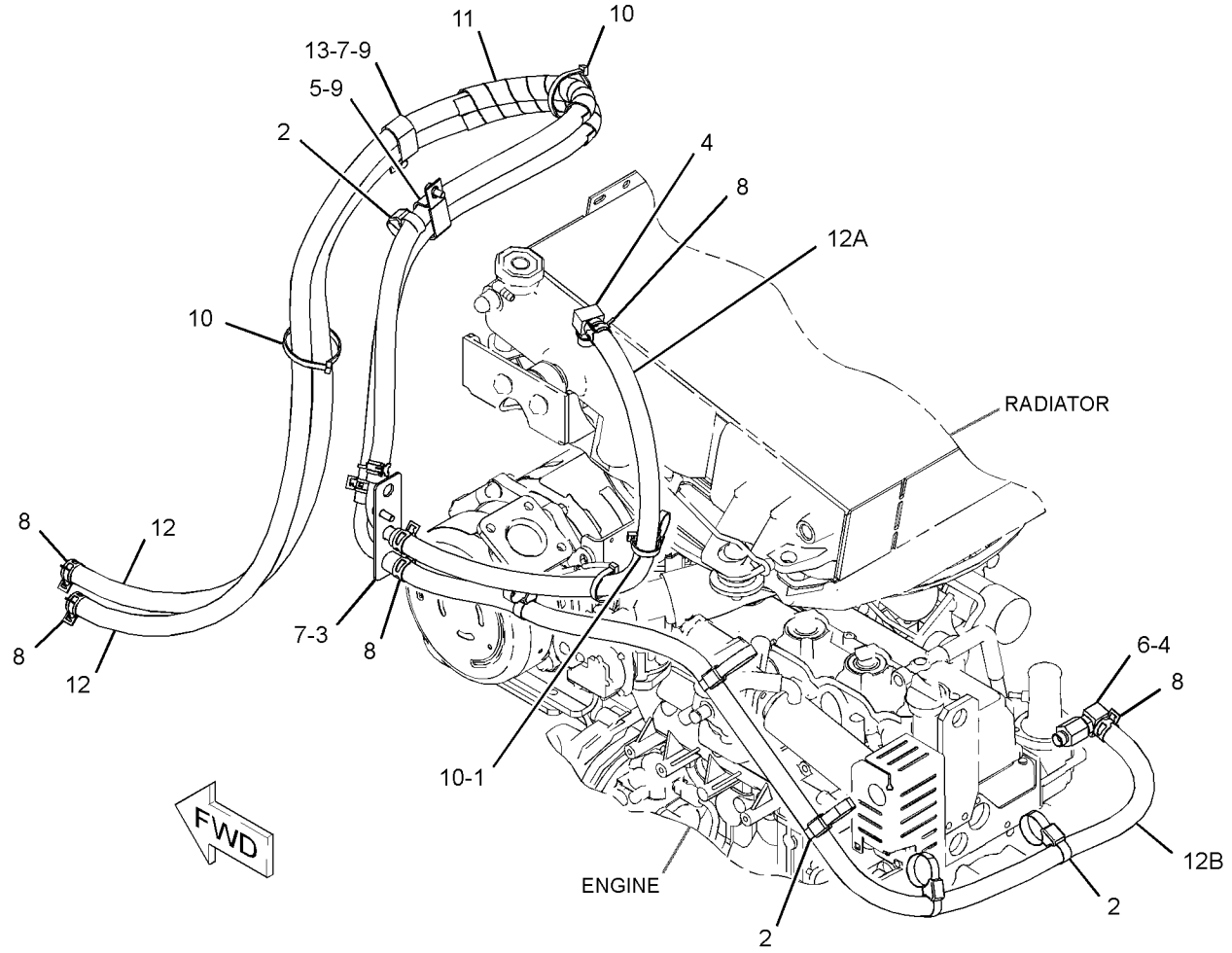

GRAPHIC #1 **<END>** g03409189

OPERATOR STATION

6V-1970 LITERATURE GP

PART OF 388-8237, 388-8238 COMMON AR

SMCS-0374, 0375, 7300 **i02831417**

NOTE	PART NUMBER	QTY	PART NAME 1 2 3 4 5 6 (PRODUCT LEVEL)	SEE PAGE
	5P-8500	2	KEY (LITERATURE COMPARTMENT)	
	5P-7958	1	SLEEVE-CABLE SPLICE	

<END>

379-1084 MOTOR GP-WINDOW WIPER

PART OF 345-6235, 345-6255 DOOR GP-CAB, 388-8276, 388-8281 KIT-CAB DOOR & MOUNTING AN ATTACHMENT

SMCS-7305 **i05166934**

NOTE	REF NO	GRAPHIC REF	PART NUMBER	QTY	PART NAME 1 2 3 4 5 6 (PRODUCT LEVEL)	SEE PAGE
	1	1	**102-8804**	1	KIT-RECEPTACLE (4-PIN)	
					(INCLUDES RECEPTACLE AS & WEDGE)	
	2	1	**263-3823**	1	CAP-WIPER	
	3	1	**3F-9556**	1	LOCKWASHER	
M	4	1	**5C-7261**	1	NUT (M8X1.25-THD)	

M - METRIC PART

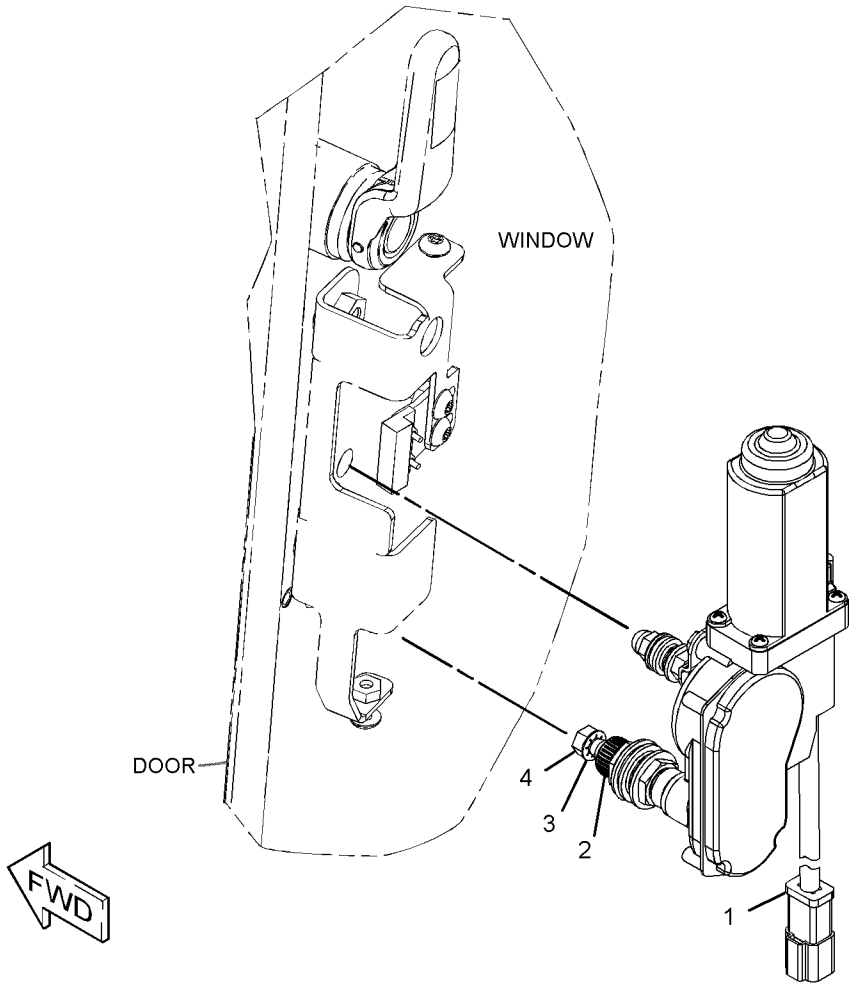

GRAPHIC #1 **<END>** g03333283

345-6186 MOUNTING GP-ARMREST—RIGHT

PART OF 345-6185 ARMREST & MOUNTING GP

AN ATTACHMENT

SMCS-7307 **i05401595**

NOTE	REF NO	GRAPHIC REF	PART NUMBER	QTY	PART NAME 1 2 3 4 5 6 (PRODUCT LEVEL)	SEE PAGE
	1	1	**258-4321**	1	BRACKET AS-MOUNTING (FRONT)	
	2	1	**258-4325**	1	SLIDE AS	
	3	1	**258-4431**	2	BLOCK	
	4	1	**345-6123**	1	SUPPORT AS	
	5	1	**345-6363**	1	BRACKET AS	
		1	**258-4064**	1	SPACER	
M	6	1	**131-3540**	2	LOCKNUT (M8X1.25-THD)	
	7	1	**216-7352**	2	SCREW-TRUSS HEAD (M8X1.25X30-MM)	
M	8	1	**6V-9189**	4	LOCKNUT (M8X1.25-THD)	
	9	1	**7X-0613**	2	WASHER-HARD (8.8X25.5X5-MM THK)	
	10	1	**8T-4224**	8	WASHER-HARD (8.8X16X2-MM THK)	
M	11	1	**8T-4908**	4	BOLT (M8X1.25X25-MM)	

M - METRIC PART

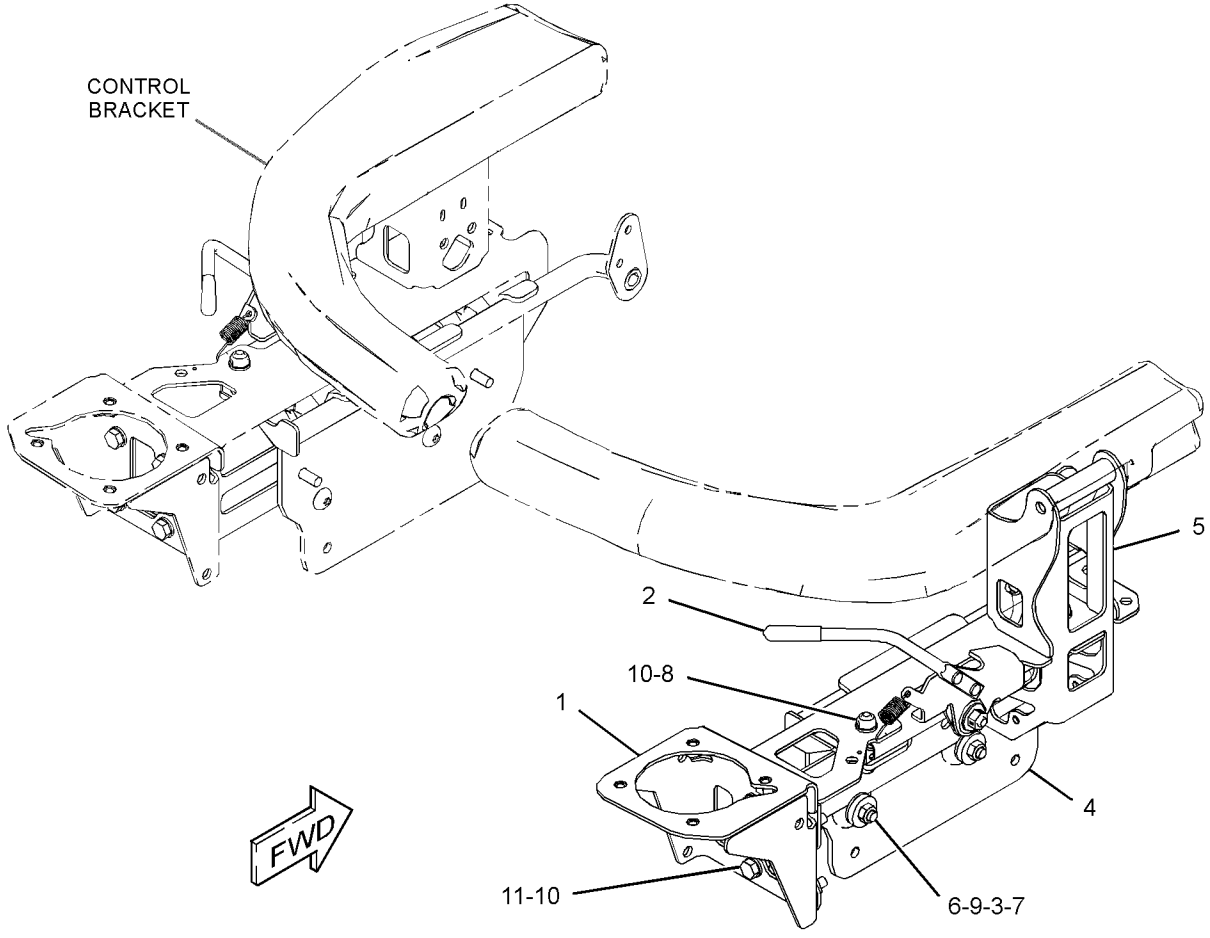

GRAPHIC #1 **<END>** g03331625

345-6187 MOUNTING GP-ARMREST–LEFT

PART OF 345-6185 ARMREST & MOUNTING GP
AN ATTACHMENT

SMCS-7307 **i05401594**

NOTE	REF NO	GRAPHIC REF	PART NUMBER	QTY	PART NAME 1 2 3 4 5 6 (PRODUCT LEVEL)	SEE PAGE
	1	1	**258-4326**	1	SLIDE AS (LH)	
	2	1	**258-4431**	2	BLOCK	
	3	1	**345-6125**	1	SUPPORT AS	
	4	1	**345-6189**	1	BRACKET AS	
	5	1	**345-6364**	1	BRACKET AS	
		1	**258-4064**	1	SPACER	
M	6	1	**131-3540**	2	LOCKNUT (M8X1.25-THD)	
	7	1	**216-7352**	2	SCREW-TRUSS HEAD (M8X1.25X30-MM)	
M	8	1	**6V-9189**	4	LOCKNUT (M8X1.25-THD)	
	9	1	**7X-0613**	2	WASHER-HARD (8.8X25.5X5-MM THK)	
	10	1	**8T-4224**	8	WASHER-HARD (8.8X16X2-MM THK)	
M	11	1	**8T-4908**	4	BOLT (M8X1.25X25-MM)	

M - METRIC PART

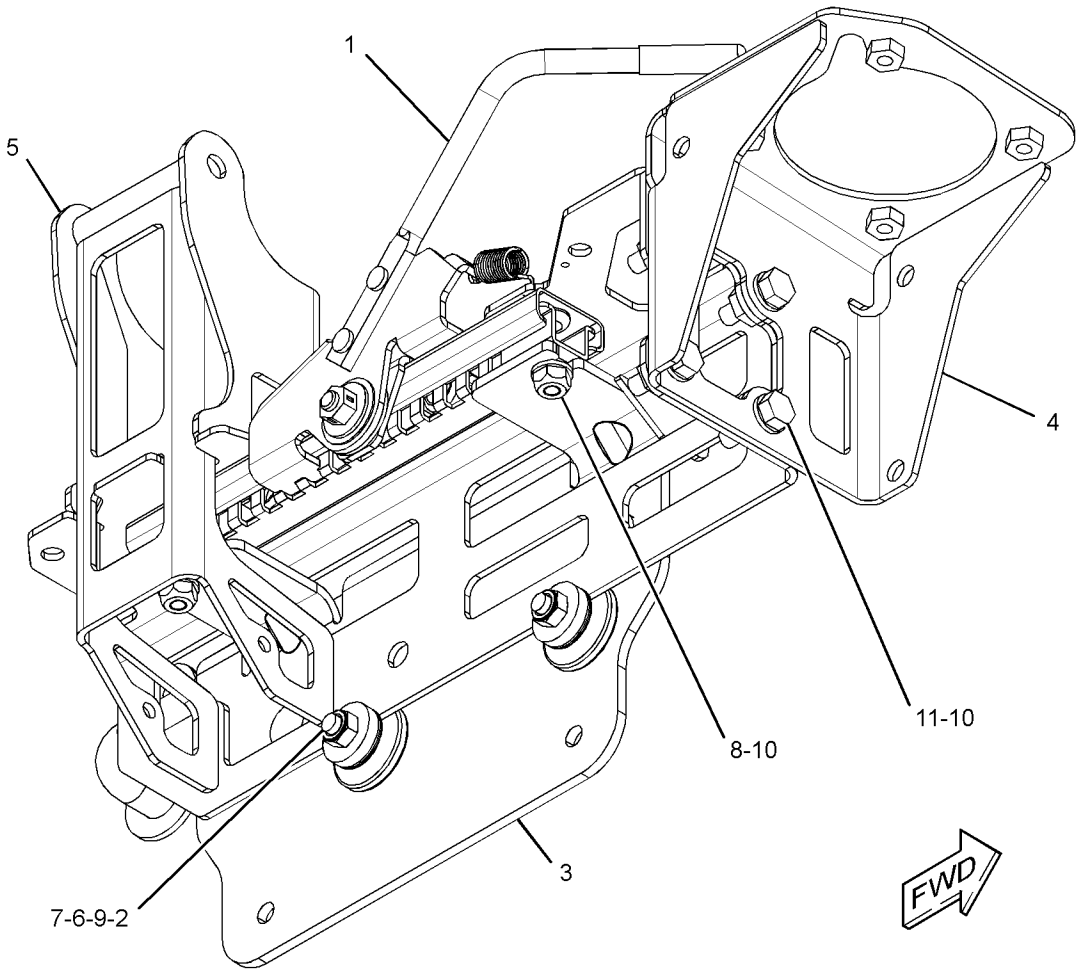

GRAPHIC #1 **<END>** g03331942

345-6222 MOUNTING GP-ROPS

PART OF 388-8180 CHASSIS AR

SMCS-7266, 7325 **i05380600**

NOTE	REF NO	GRAPHIC REF	PART NUMBER	QTY	PART NAME 1 2 3 4 5 6 (PRODUCT LEVEL)	SEE PAGE
	1	1	**117-9501**	2	BOLT-SPECIAL	
	2	1	**305-4335**	2	MOUNT	
	3	1	**305-4337**	4	PAD	
	4	1	**305-4339**	2	MOUNT AS	
	5	1	**345-6067**	1	PANEL (RH)	
	6	1	**345-6224**	1	BRACE	
	7	1	**418-5823**	1	STEP AS	
	8	1	**441-7667**	1	PLATE	
	9	1	**441-7668**	1	PLATE AS (RH)	
	10	1	**441-7669**	1	PLATE AS (LH)	
					(EACH PLATE AS INCLUDES)	
M		1	**159-9540**	2	NUT-WELD (M8X1.25-THD)	
	11	1	**090-8865**	2	SPACER (17X40X3-MM THK)	
	12	1	**164-1344**	2	WASHER-THRUST (13.6X30X2.1-MM THK)	
	13	1	**165-7095**	4	WASHER (16.5X71.5X3-MM THK)	
M	14	1	**174-9194**	2	BOLT (M8X1.25X16-MM)	
M	15	1	**5C-7261**	2	NUT (M8X1.25-THD)	
	16	1	**5H-9743**	1	GROMMET	
	17	1	**6V-5839**	4	WASHER (11X21X2.5-MM THK)	
M	18	1	**7X-2556**	2	BOLT (M16X2X100-MM)	
M	19	1	**7Y-9099**	2	SCREW-TRUSS HEAD (M8X1.25X25-MM)	
	20	1	**8T-4122**	4	WASHER-HARD (17X32X3.5-MM THK)	
M	21	1	**8T-4139**	2	BOLT (M12X1.75X30-MM)	
	22	1	**8T-4223**	3	WASHER-HARD (13.5X25.5X3-MM THK)	
	23	1	**8T-4224**	2	WASHER-HARD (8.8X16X2-MM THK)	
M	24	1	**8T-4778**	4	LOCKNUT (M16X2-THD)	
M	25	1	**9X-2040**	4	SCREW-TRUSS HEAD (M10X1.5X25-MM)	

M - METRIC PART

345-6222 **MOUNTING GP-ROPS (*contd.*)** **i05380600**

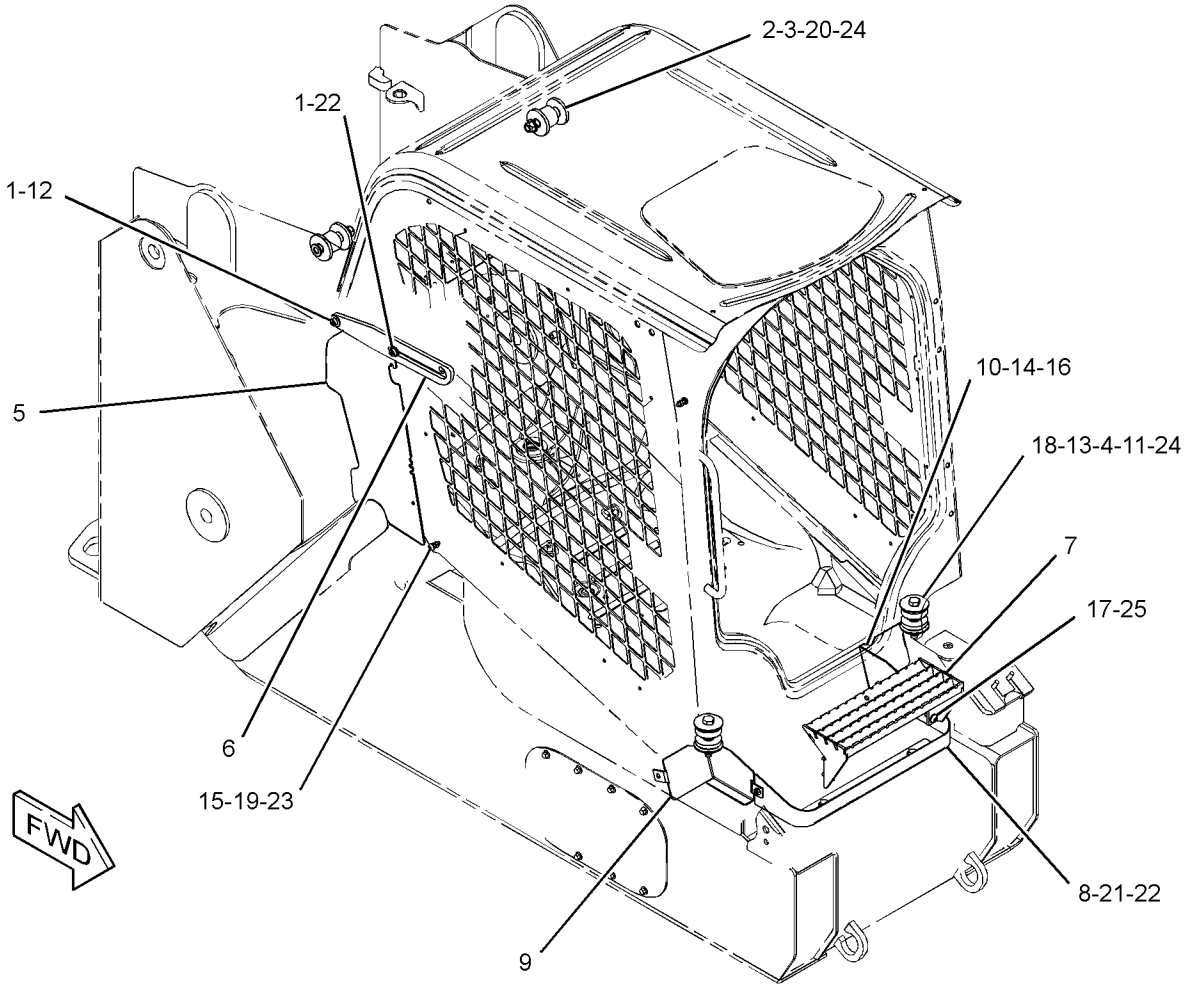

GRAPHIC #1 **<END>** g03409698

OPERATOR STATION

378-1025 PANEL GP-INSTRUMENT

PART OF 345-5454 CAB AR

SMCS-7451 **i05177714**

NOTE	REF NO	GRAPHIC REF	PART NUMBER	QTY	PART NAME 1 2 3 4 5 6 (PRODUCT LEVEL)	SEE PAGE
	1	2	**345-4728**	1	FILM-IDENTIFICATION (THROTTLE)	
	2	1	**7K-1181**	7	STRAP-CABLE	
	3	1,2	**8Y-5947**	4	FASTENER	
	4	1	**9R-7941**	1	SOCKET AS	
		1	**9R-7980**	1	COVER	
	5	1	**084-4277**	1	LAMP GP-DOME (12-VOLT) (CAB)	
		1	**210-8754**	1	LAMP (12-VOLT)	
B	6	1,2	**109-2356**	10	PLUG	
	7	2	**110-7887**	1	SWITCH AS-START (KEY)	
		2	**7T-6799**	1	NUT-MOUNTING (1-32-THD)	
		2	**8T-8729**	4	PIN-CONNECTOR (16-GA TO 18-GA)	
		2	**102-8804**	1	KIT-RECEPTACLE (4-PIN)	
					(INCLUDES RECEPTACLE AS & WEDGE)	
	8	1	**165-0312**	1	WIRE AS	
	9	2	**178-7539**	1	RECEPTACLE AS (POWER SUPPLY)	
	10	1	**206-1345**	2	STRAP-CABLE	
	11	2	**232-1792**	1	HORN	
	12	1,2	**258-3727**	8	SCREW-TRUSS HEAD (SPECIAL)	
	13	1,2	**258-4141**	2	CLIP	
	14	2	**258-4178**	1	FLANGE-MOUNTING	
	15	2	**263-5414**	1	SWITCH AS-ROCKER (PARKING BRAKE)	
	16	1	**263-5415**	1	SWITCH AS-ROCKER (OVERRIDE, HYDRAULIC LOCKOUT)	
	17	1	**265-9424**	1	SWITCH AS-ROCKER (WORK LIGHTS, FRONT)	
	18	1	**265-9425**	1	SWITCH AS-ROCKER (WORK LIGHTS, REAR)	
					(EACH SWITCH AS INCLUDES)	
		1	**111-7899**	1	GASKET	
	19	1	**345-6007**	3	COVER-SWITCH	
	20	2	**345-6026**	1	CONSOLE AS (LH)	
	21	2	**345-6027**	1	CONSOLE AS (RH)	
	22	2	**345-6031**	1	COVER	
	23	2	**356-6069**	1	KNOB-CONTROL	
	24	2	**360-7540**	1	SENSOR GP-POSITION (ROTARY)	
B	25	2	**373-4446**	1	PLUG	
B	26	1	**374-7464**	1	CAP-SEAL	
	27	1	**378-1010**	1	SWITCH AS-ROCKER (CONTINUOUS FLOW)	
		1	**111-7899**	1	GASKET	
Y	28	1	**378-1026**	1	HARNESS AS-PANEL	103
	29	2	**110-2028**	4	SCREW-PAN HEAD (10-14X0.75-IN)	
	30	1,2	**156-6175**	2	CLIP	
M	31	2	**263-5928**	2	SCREW-TRUSS HEAD (M5X0.8X25-MM)	
	32	1,2	**2V-8260**	2	GROMMET	
	33	1	**3S-2093**	3	STRAP-CABLE	
	34	1,2	**4P-7581**	2	CLIP	
	35	1,2	**5P-4115**	4	WASHER-HARD (7.2X19X2-MM THK)	
	36	1,2	**8T-4205**	2	WASHER-HARD (7.2X14.5X2-MM THK)	
	37	2	**9X-8256**	4	WASHER (6.6X12X2-MM THK)	

B - USE AS REQUIRED
M - METRIC PART
Y - SEPARATE ILLUSTRATION

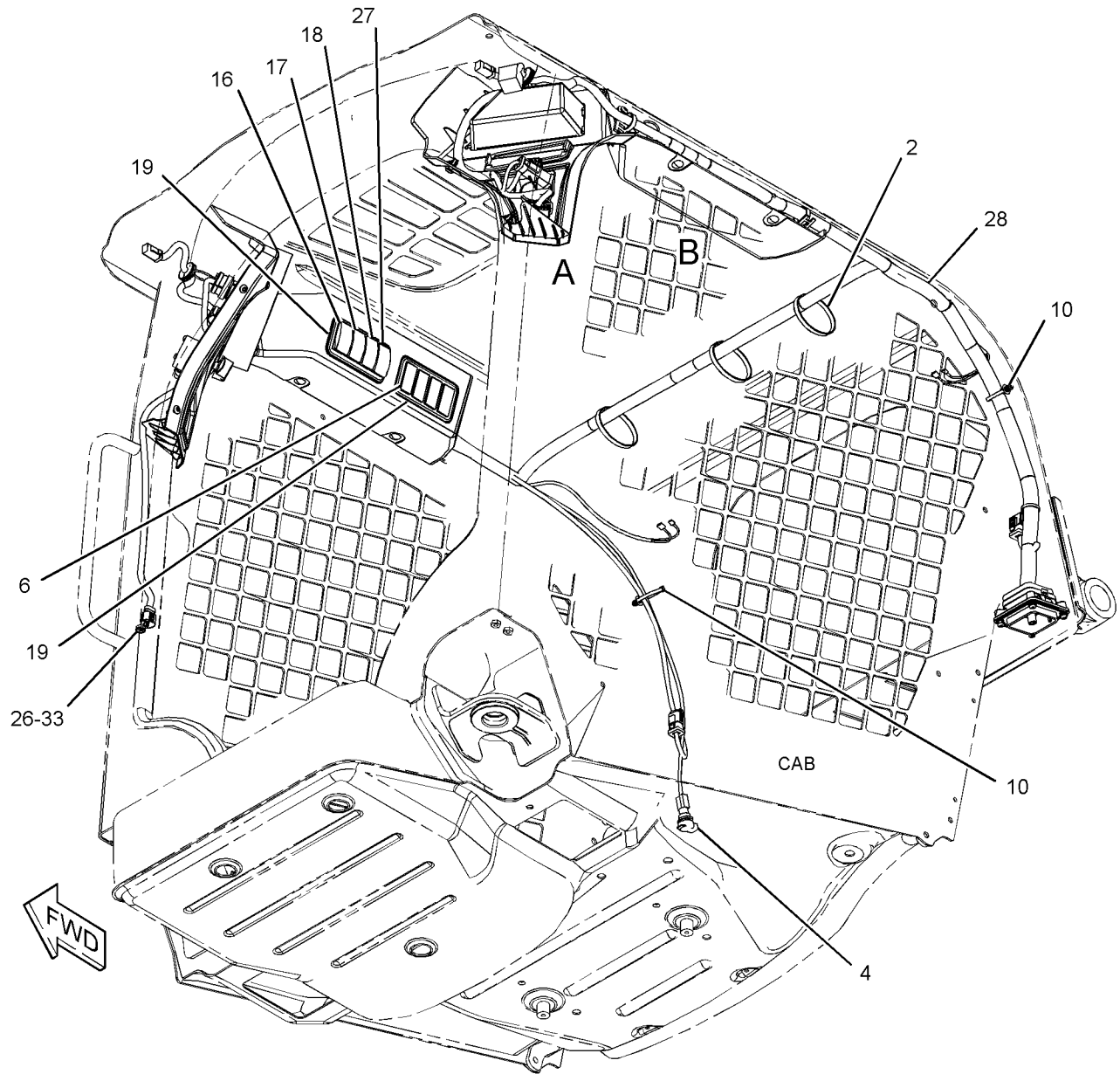

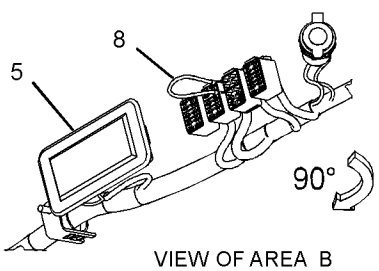

VIEW OF AREA B
(PARTS REMOVED FOR CLARITY)

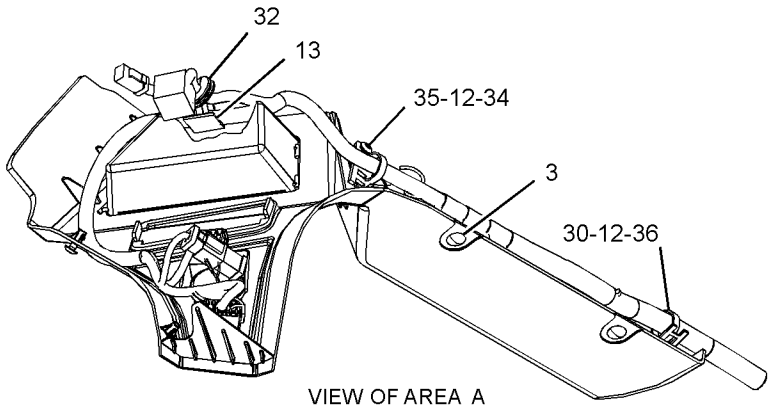

VIEW OF AREA A

GRAPHIC #1

g03356428

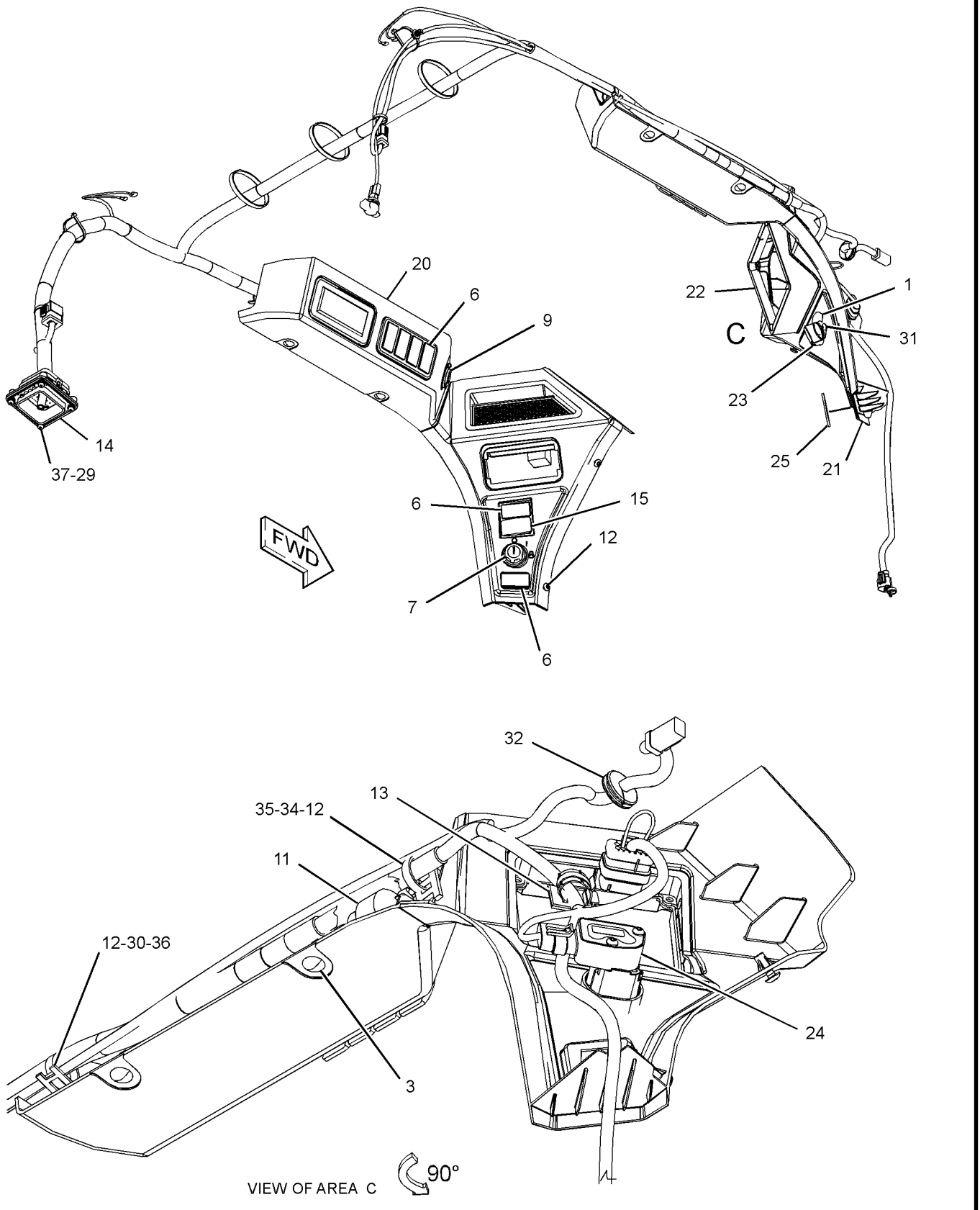

GRAPHIC #2 **<END>** g03350653

378-1033 PANEL GP-INSTRUMENT—BASE DISPLAY

AN ATTACHMENT

SMCS-7451 **i05156566**

NOTE	REF NO	GRAPHIC REF	PART NUMBER	QTY	PART NAME 1 2 3 4 5 6 (PRODUCT LEVEL)	SEE PAGE
	1	1	**345-6174**	1	GROMMET	
Y	2	1	*378-1035*	1	ELECTRONICS GP-MONITOR	92
	3	1	**416-9256**	1	PLATE	
M	4	1	**113-8694**	2	BOLT (M6X1X20-MM)	
M	5	1	**135-7242**	4	SCREW-SELF-TAPPING (M5X2.3X18.8-MM)	
M	6	1	**5C-2890**	2	NUT (M6X1-THD)	
	7	1	**8T-4205**	2	WASHER-HARD (7.2X14.5X2-MM THK)	
	8	1	**9X-8256**	4	WASHER (6.6X12X2-MM THK)	

M - METRIC PART
Y - SEPARATE ILLUSTRATION

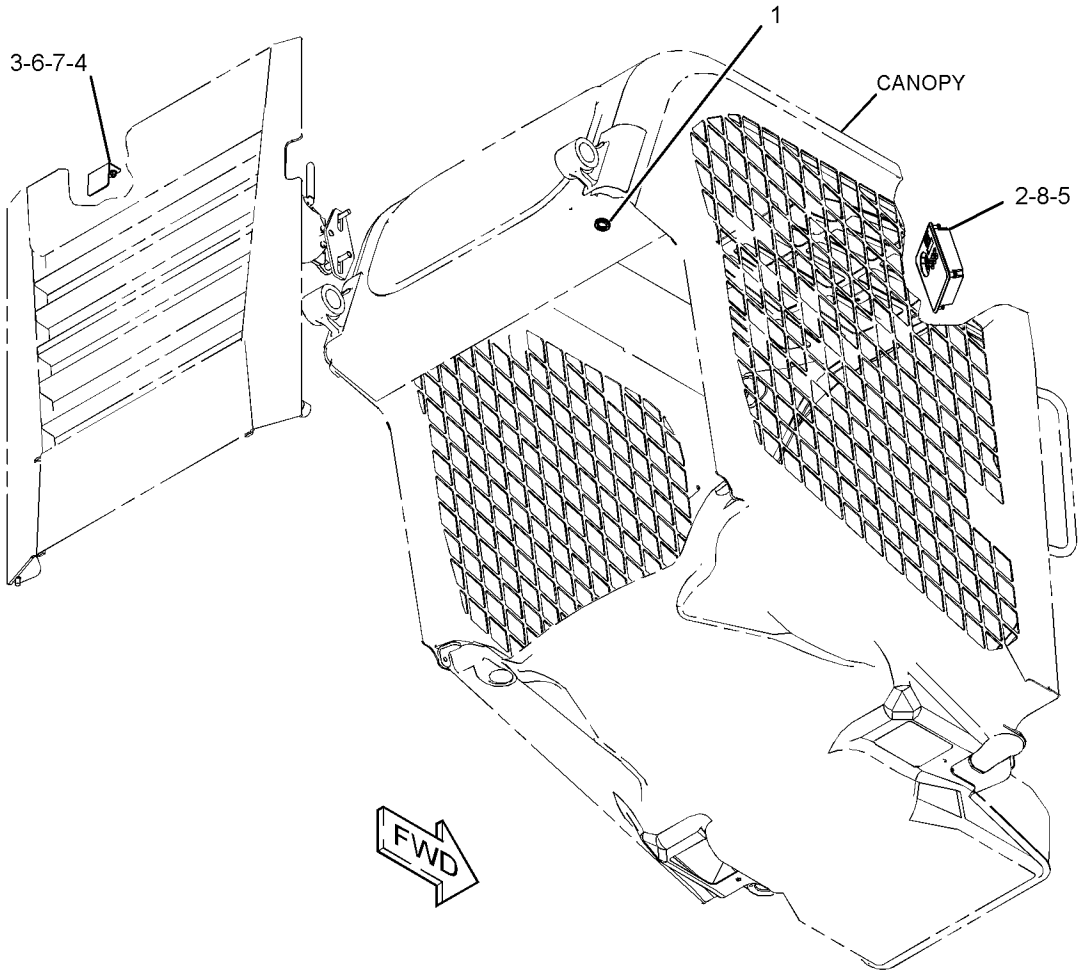

GRAPHIC #1 **<END>** g03335725

378-1034 PANEL GP-INSTRUMENT–ADVANCED DISPLAY
AN ATTACHMENT

SMCS-7451 **i05156567**

NOTE	REF NO	GRAPHIC REF	PART NUMBER	QTY	PART NAME 1 2 3 4 5 6 (PRODUCT LEVEL)	SEE PAGE
	1	1	**345-6174**	1	GROMMET	
Y	2	1	*378-1036*	1	ELECTRONICS GP-MONITOR	92
	3	1	**416-9256**	1	PLATE	
M	4	1	**113-8694**	2	BOLT (M6X1X20-MM)	
M	5	1	**135-7242**	4	SCREW-SELF-TAPPING (M5X2.3X18.8-MM)	
M	6	1	**5C-2890**	2	NUT (M6X1-THD)	
	7	1	**8T-4205**	2	WASHER-HARD (7.2X14.5X2-MM THK)	
	8	1	**9X-8256**	4	WASHER (6.6X12X2-MM THK)	

M - METRIC PART
Y - SEPARATE ILLUSTRATION

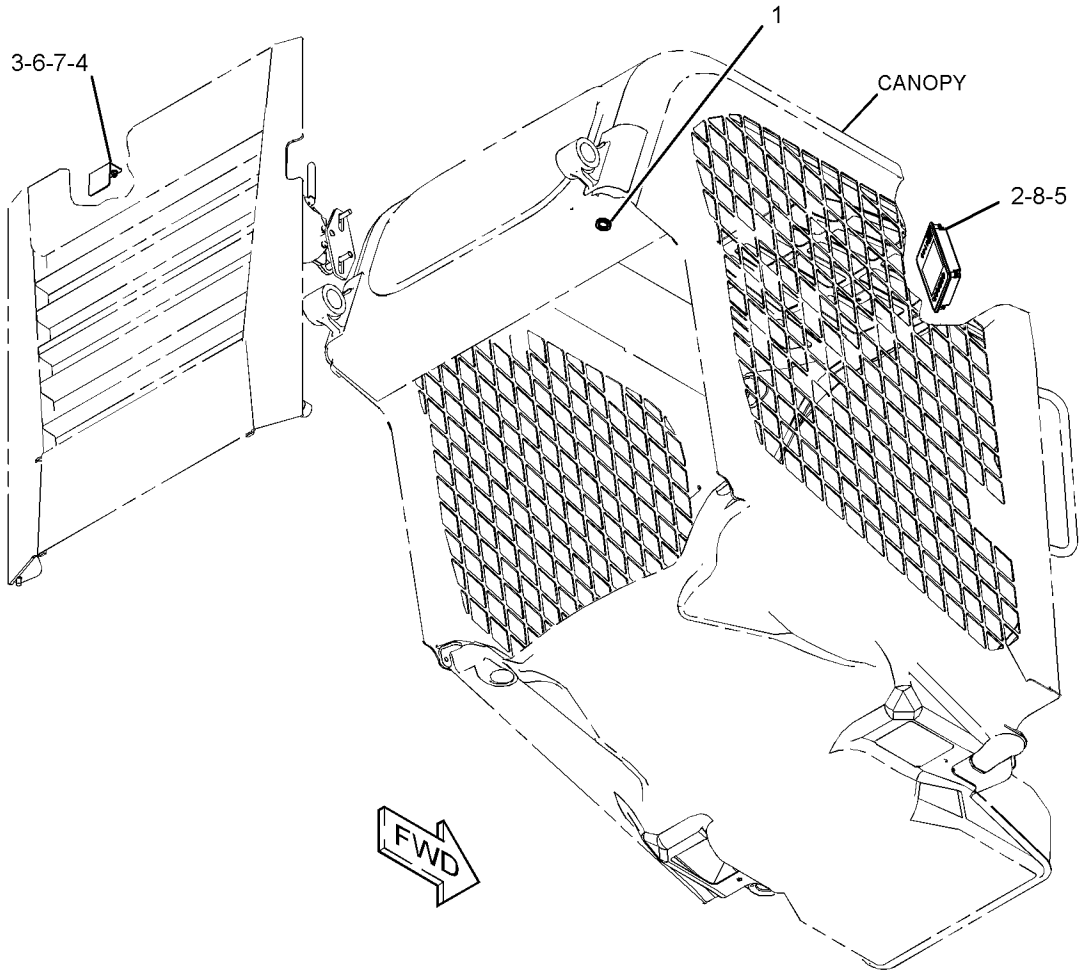

GRAPHIC #1 **<END>** g03335684

416-9265 PANEL GP-INSTRUMENT–RH

AN ATTACHMENT

SMCS-7451 **i05156463**

NOTE	REF NO	GRAPHIC REF	PART NUMBER	QTY	PART NAME 1 2 3 4 5 6 (PRODUCT LEVEL)	SEE PAGE
Y	1	1	*378-1036*	1	ELECTRONICS GP-MONITOR	92
Y	2	1	**396-7209**	1	WIRING GP-CAMERA (REAR VIEW)	137
M	3	1	**135-7242**	4	SCREW-SELF-TAPPING (M5X2.3X18.8-MM)	
	4	1	**9X-8256**	4	WASHER (6.6X12X2-MM THK)	

M - METRIC PART
Y - SEPARATE ILLUSTRATION

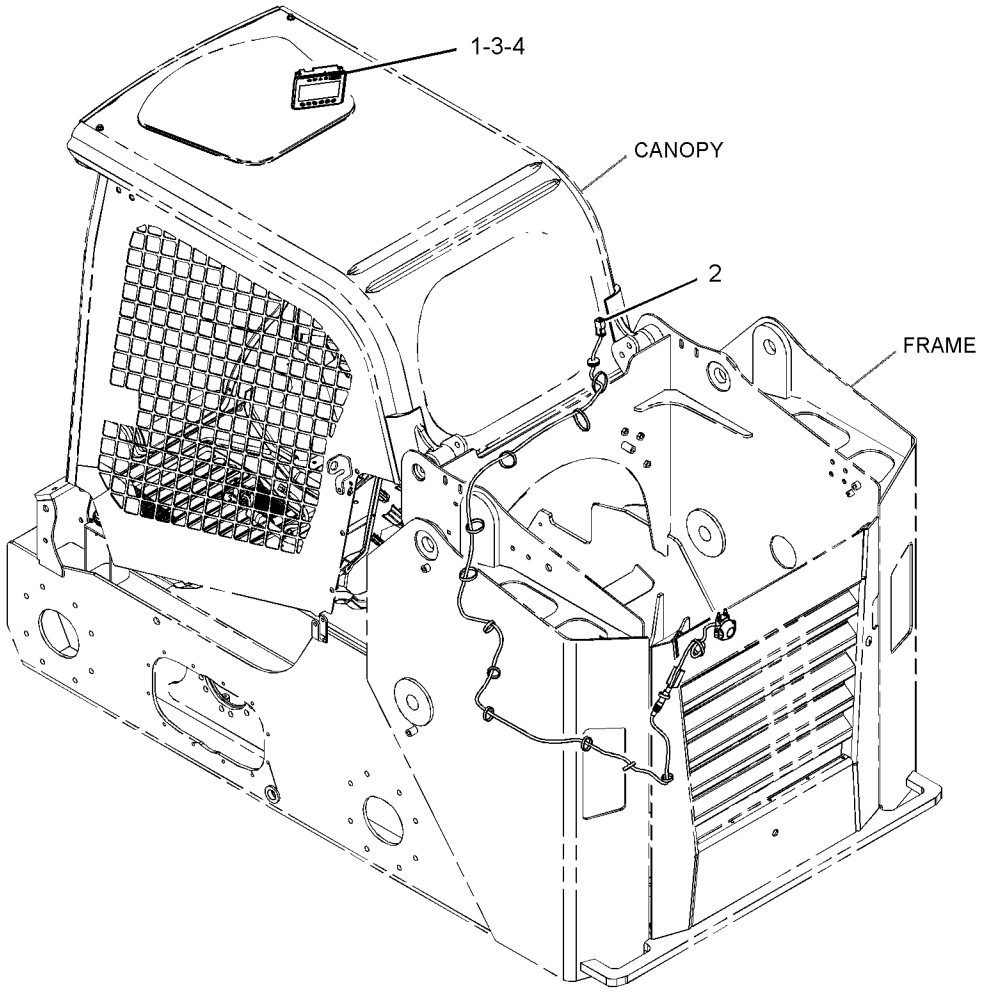

GRAPHIC #1 **<END>** g03323579

345-6135 PEDAL GP-GOVERNOR

PART OF 345-6158, 345-6160 CAB AR-ENCLOSED ROPS, 345-4913 CAB AR-OPEN ROPS AN ATTACHMENT

SMCS-1265, 1276 **i05163106**

NOTE	REF NO	GRAPHIC REF	PART NUMBER	QTY	PART NAME 1 2 3 4 5 6 (PRODUCT LEVEL)	SEE PAGE
	1	1	**206-1345**	1	STRAP-CABLE	
	2	1	**345-6136**	1	PEDAL AS	
	3	1	**378-1027**	1	HARNESS AS-WIRING	
E		1	**289-3195**		CONDUIT (98-CM)	
		1	**8T-8729**	3	PIN-CONNECTOR (16-GA TO 18-GA)	
		1	**102-8803**	1	KIT-RECEPTACLE (3-PIN)	
					(INCLUDES RECEPTACLE AS & WEDGE)	
M	4	1	**127-2170**	4	SCREW-TRUSS HEAD (M8X1.25X20-MM)	
	5	1	**3E-4352**	4	WASHER-HARD (8.8X20.5X2.5-MM THK)	
	6	1	**3S-2093**	1	STRAP-CABLE	

E - ORDER BY THE CENTIMETER
M - METRIC PART

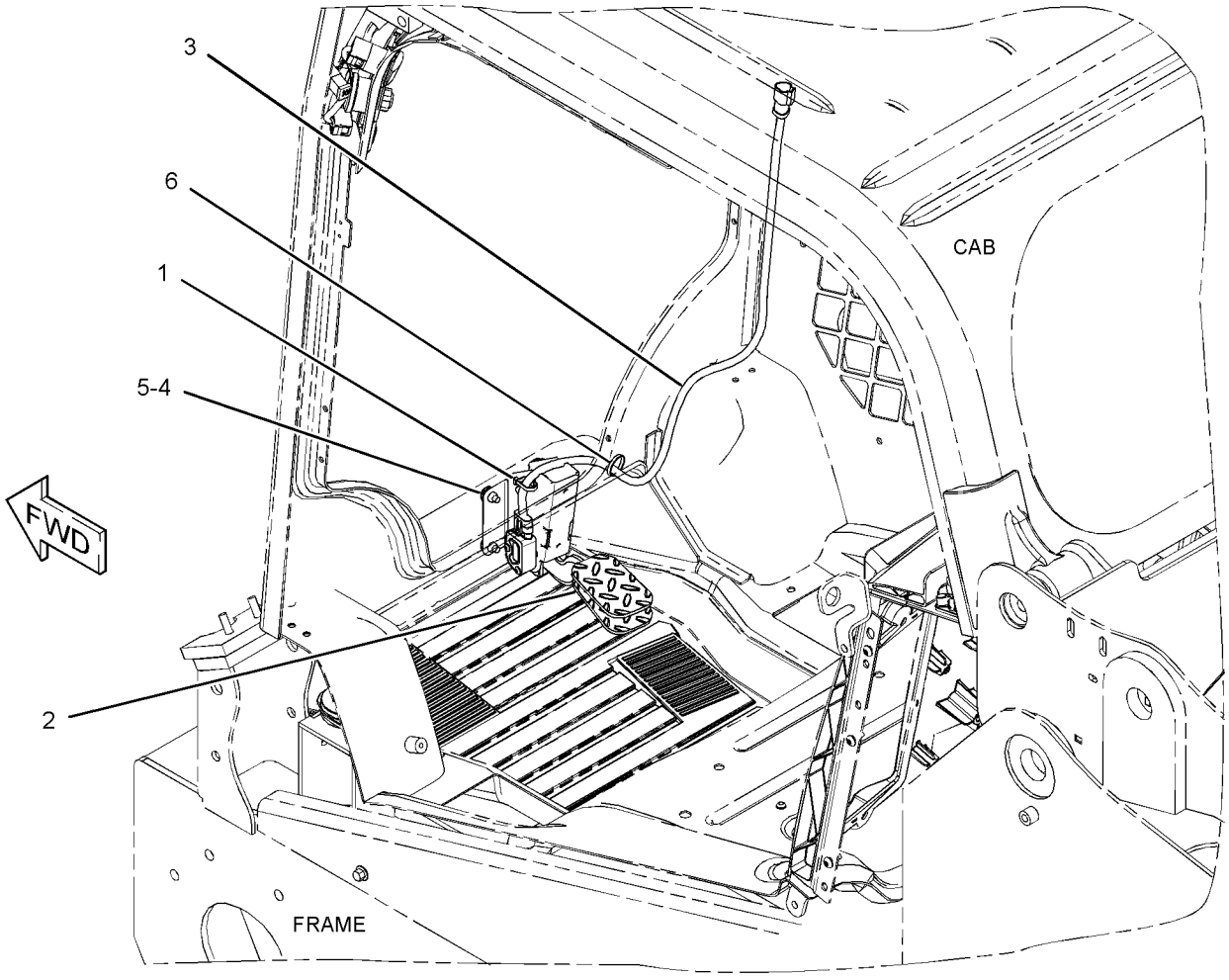

GRAPHIC #1 **<END>** g03318251

345-6180 RADIO GP–AM/FM

AN ATTACHMENT

SMCS-7338, 733C **i05296331**

NOTE	REF NO	GRAPHIC REF	PART NUMBER	QTY	PART NAME 1 2 3 4 5 6 (PRODUCT LEVEL)	SEE PAGE
	1	1	**3S-2093**	1	STRAP-CABLE	
	2	1	**8E-1118**	1	ANTENNA AS	
	3	1	**9U-8746**	1	CABLE AS-COAXIAL	
	4	1	**168-8772**	2	SPEAKER AS-RADIO	
	5	1	**200-5728**	1	HARNESS AS-RADIO (FLANGE)	
		1	**172-8037**	1	CONNECTOR (RADIO)	
		1	**8T-8729**	7	PIN-CONNECTOR (16-GA TO 18-GA)	
		1	**8T-8737**	1	PLUG-SEAL	
		1	**160-3518**	1	KIT-RECEPTACLE (8-PIN)	
					(INCLUDES RECEPTACLE AS & WEDGE)	
		1	**172-8039**	11	TERMINAL (RADIO)	
	6	1	**258-4039**	1	SPACER	
	7	1	**258-4074**	1	BRACKET	
	8	1	**258-4367**	2	BRACKET	
	9	1	**345-6145**	1	COVER	
	11	1	**349-8642**	1	MICROPHONE	
	12	1	**353-1634**	1	HARNESS AS-RADIO (BLUETOOTH)	
	13	1	**377-7215**	1	RADIO GP (AM/FM/WB/CD/XM/USB/BLUETOOTH)	
	14	1	**195-0936**	4	INSERT-THREADED (M6X1-THD)	
M	15	1	**3T-0851**	1	LOCKNUT (M5X0.8-THD)	
M	16	1	**5C-7261**	1	NUT (M8X1.25-THD)	
	17	1	**5P-4116**	1	WASHER-HARD (8.8X20.5X2-MM THK)	
M	18	1	**6V-7357**	4	BOLT (M6X1X25-MM)	
M	19	1	**8T-4142**	8	BOLT-FLANGE HEAD (M5X0.8X12-MM)	
	20	1	**8T-4224**	4	WASHER-HARD (8.8X16X2-MM THK)	
	21	1	**9G-1307**	1	GROMMET	
	22	1	**9X-2026**	1	WASHER (6.5X17X1-MM THK)	

M - METRIC PART

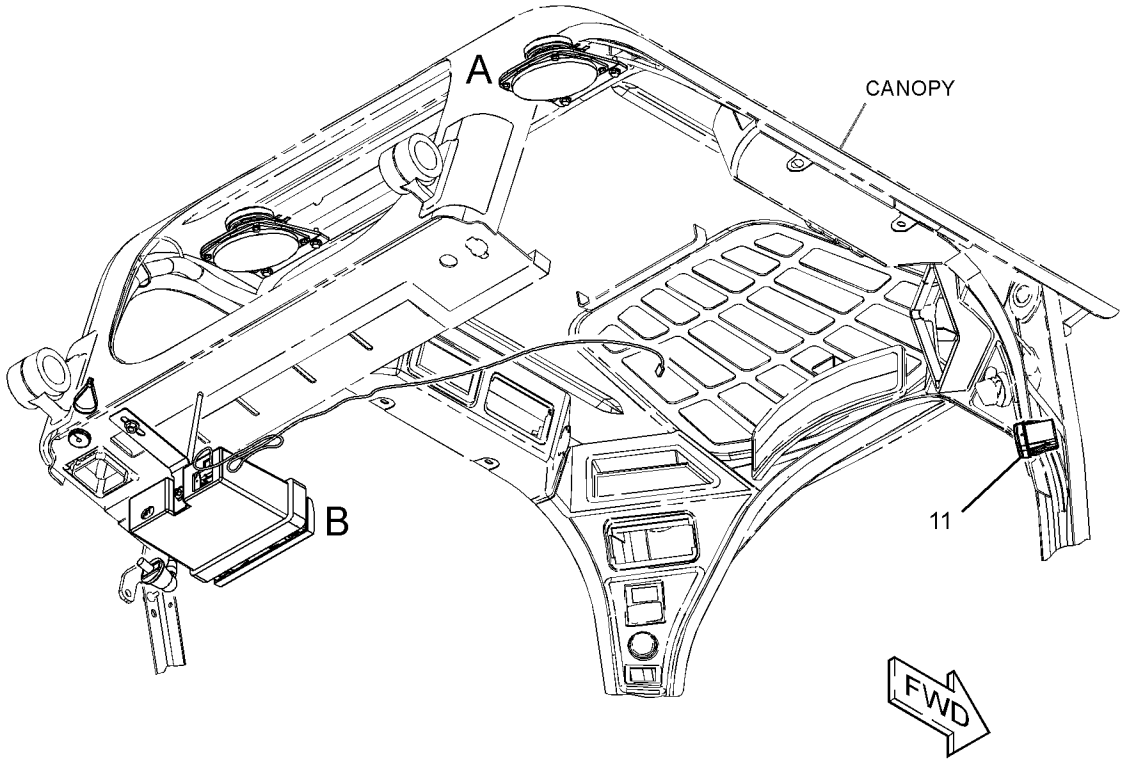

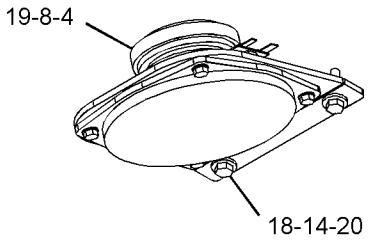

VIEW OF AREA A

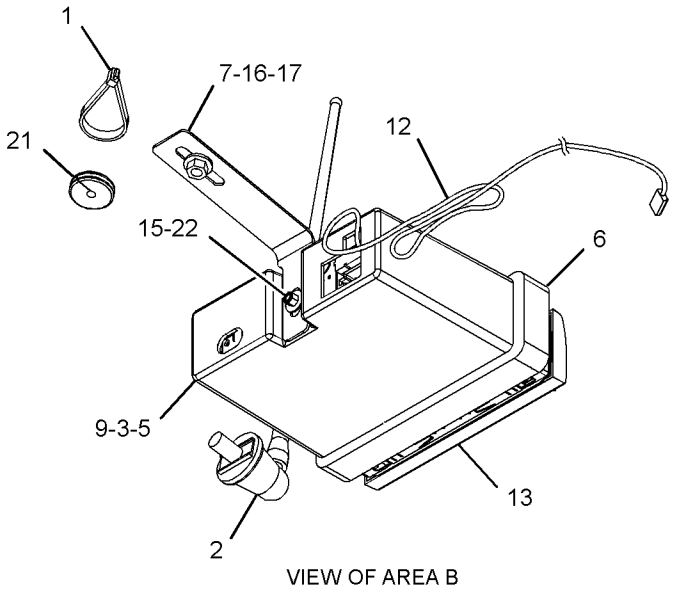

VIEW OF AREA B

GRAPHIC #1 **<END>** g03369857

345-6350 SEAT & ARMREST GP—SUSPENSION

PART OF 345-6050 SEAT & MOUNTING GP

AN ATTACHMENT

SMCS-7307, 7312 **i05401596**

NOTE	REF NO	GRAPHIC REF	PART NUMBER	QTY	PART NAME 1 2 3 4 5 6 (PRODUCT LEVEL)	SEE PAGE
Y	1	1	**345-6185**	1	ARMREST & MOUNTING GP	470
	2	1	**345-6351**	1	SEAT GP-SUSPENSION	
	3	1	**385-5501**	1	KIT-LITERATURE HOLDER	
		1	**4K-9429**	4	RIVET-POP	
		1	**5P-7957**	1	LANYARD	
		1	**345-4722**	1	HOLDER	
		1	**395-3544**	1	RETAINER	
M	4	1	**6V-9189**	8	LOCKNUT (M8X1.25-THD)	
	5	1	**8T-4205**	2	WASHER-HARD (7.2X14.5X2-MM THK)	
	6	1	**8T-4224**	12	WASHER-HARD (8.8X16X2-MM THK)	
M	7	1	**8T-4908**	4	BOLT (M8X1.25X25-MM)	
M	8	1	**9X-2045**	2	SCREW-TRUSS HEAD (M6X1X20-MM)	

M - METRIC PART
Y - SEPARATE ILLUSTRATION

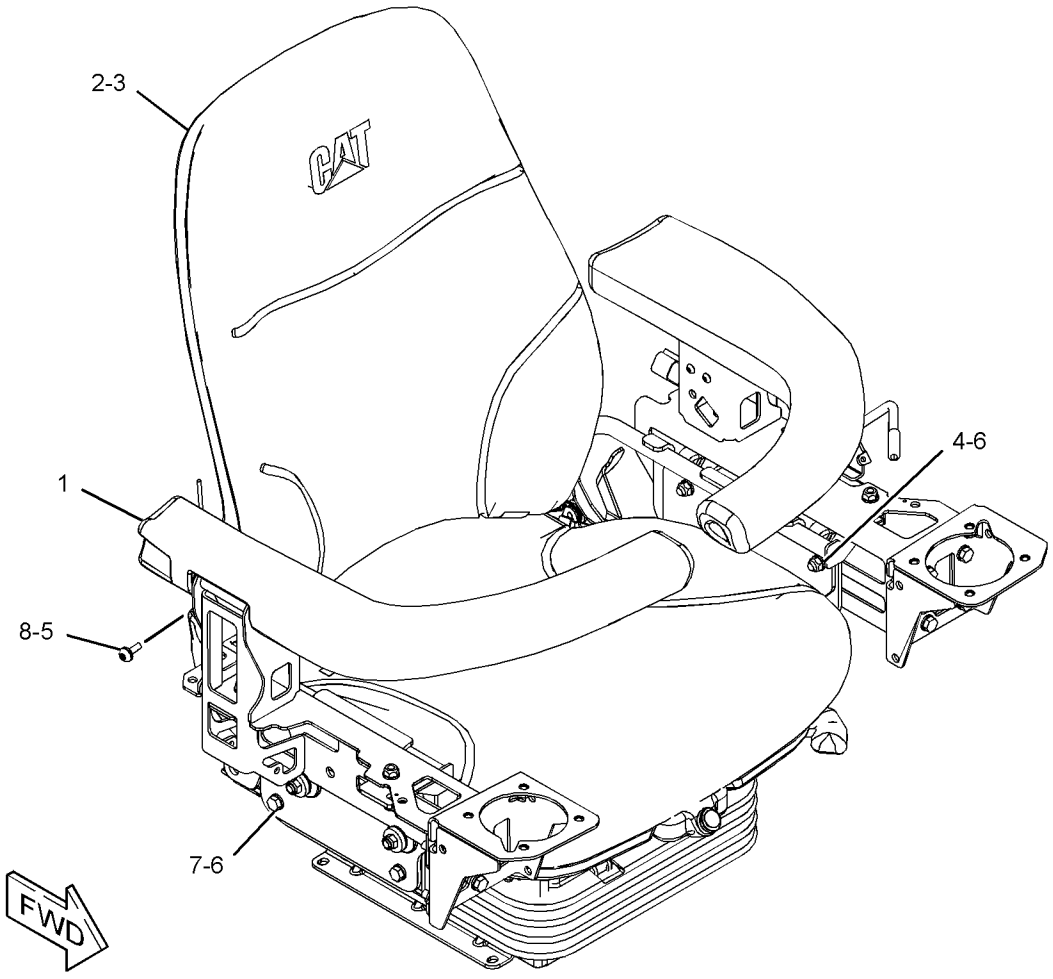

GRAPHIC #1 **<END>** g03326974

345-6360 SEAT & ARMREST GP–SUSPENSION

PART OF 345-6055 SEAT & MOUNTING GP

AN ATTACHMENT

SMCS-7307, 7312 **i05401602**

NOTE	REF NO	GRAPHIC REF	PART NUMBER	QTY	PART NAME 1 2 3 4 5 6 (PRODUCT LEVEL)	SEE PAGE
Y	1	1	**345-6185**	1	ARMREST & MOUNTING GP	470
Y	2	1	**345-6361**	1	SEAT GP-SUSPENSION (AIR)	557
	3	1	**385-5501**	1	KIT-LITERATURE HOLDER	
		1	**4K-9429**	4	RIVET-POP	
		1	**5P-7957**	1	LANYARD	
		1	**345-4722**	1	HOLDER	
		1	**395-3544**	1	RETAINER	
M	4	1	**6V-9189**	8	LOCKNUT (M8X1.25-THD)	
	5	1	**8T-4205**	2	WASHER-HARD (7.2X14.5X2-MM THK)	
	6	1	**8T-4224**	12	WASHER-HARD (8.8X16X2-MM THK)	
M	7	1	**8T-4908**	4	BOLT (M8X1.25X25-MM)	
M	8	1	**9X-2045**	2	SCREW-TRUSS HEAD (M6X1X20-MM)	

M - METRIC PART
Y - SEPARATE ILLUSTRATION

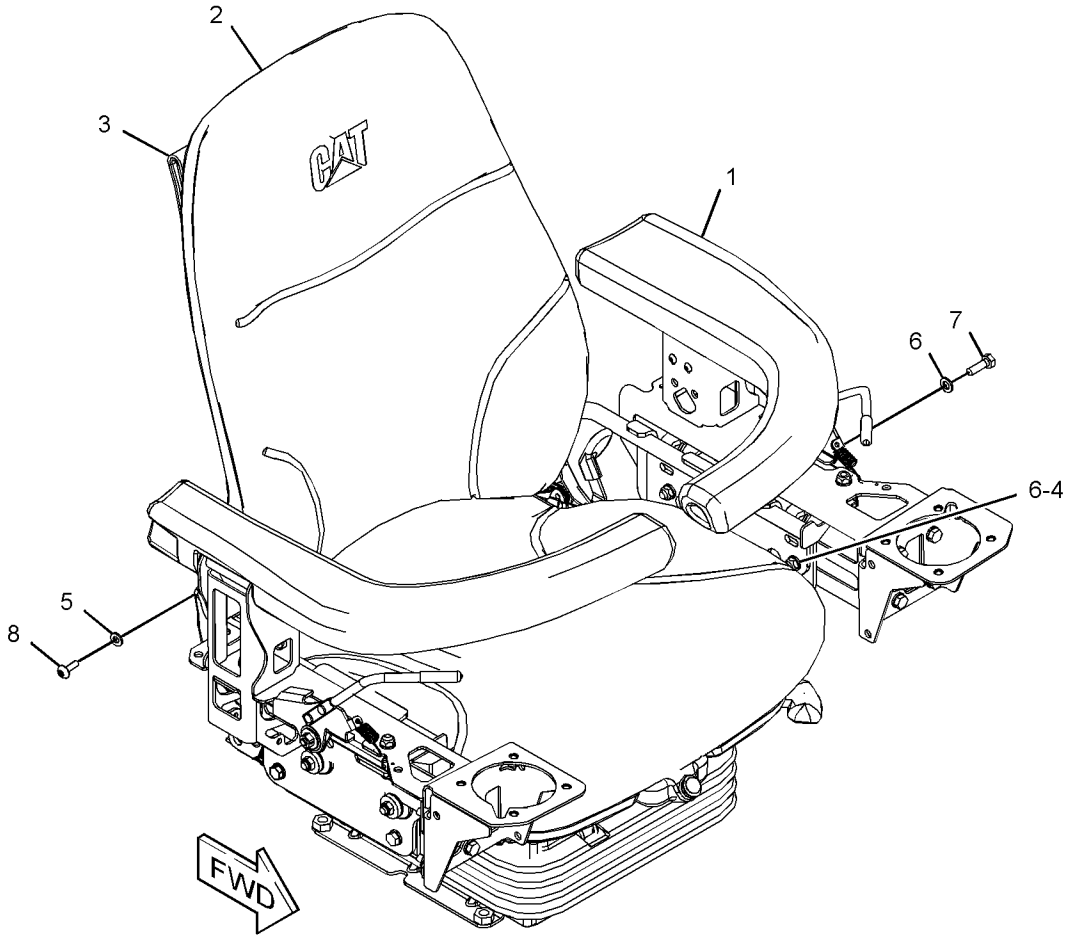

GRAPHIC #1 **<END>** g03332174

345-6040 SEAT & MOUNTING GP–SUSPENSION

PART OF 345-6319 SEAT AR-SUSPENSION

AN ATTACHMENT

SMCS-7312 **i05164964**

NOTE	REF NO	GRAPHIC REF	PART NUMBER	QTY	PART NAME 1 2 3 4 5 6 (PRODUCT LEVEL)	SEE PAGE
	1	1	**5P-7958**	1	SLEEVE-CABLE SPLICE	
Y	2	1	*345-6188*	1	ARMREST & MOUNTING GP	471
Y	3	1	*345-6320*	1	SEAT & MOUNTING GP (SUSPENSION)	551
	4	1	**7X-0507**	2	WASHER-HARD (12X22.5X5-MM THK)	
	5	1	**8S-0934**	2	LOCKNUT-FLANGE (7/16-20-THD)	
	6	1	**8S-4723**	2	BOLT (7/16-20X1.5-IN)	
M	7	1	**8T-0722**	6	BOLT-LOCKING (M10X1.5X30-MM)	
	8	1	**8T-4223**	2	WASHER-HARD (13.5X25.5X3-MM THK)	
	9	1	**8T-4226**	6	WASHER-PLATED (10.5X45X3-MM THK)	

M - METRIC PART
Y - SEPARATE ILLUSTRATION

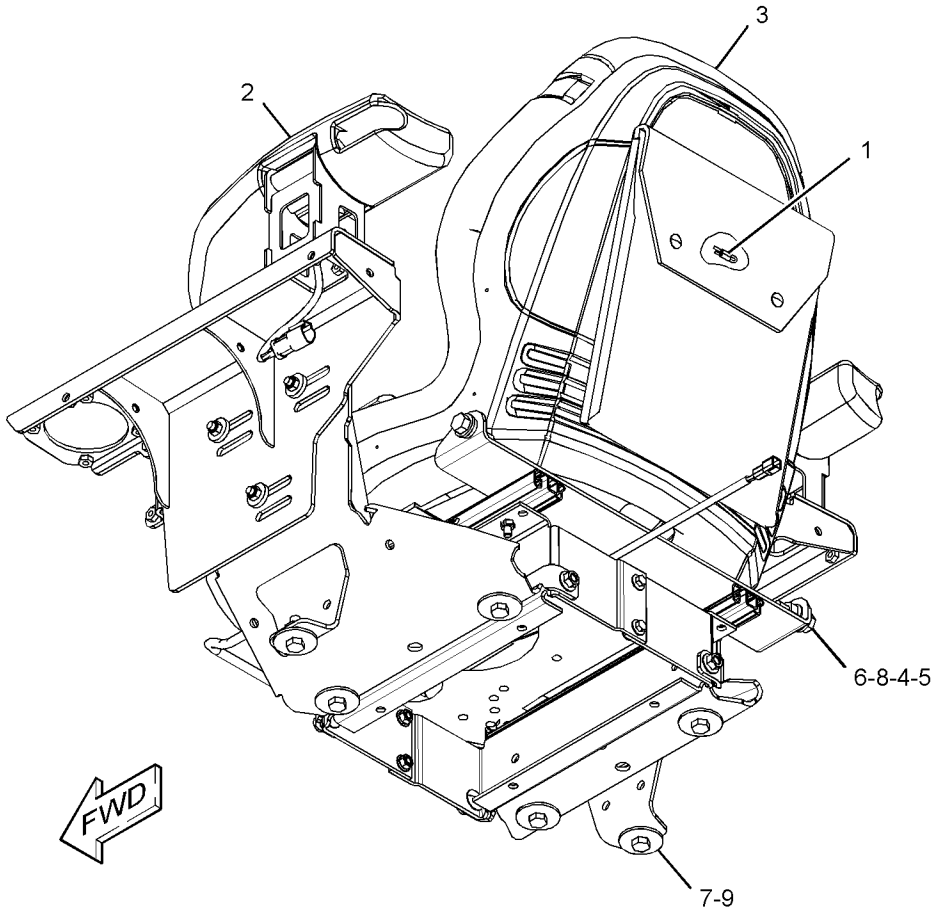

GRAPHIC #1 **<END>** g03332187

345-6045 SEAT & MOUNTING GP–SUSPENSION

PART OF 345-6329 SEAT AR-SUSPENSION

AN ATTACHMENT

SMCS-7312 **i05401600**

NOTE	REF NO	GRAPHIC REF	PART NUMBER	QTY	PART NAME 1 2 3 4 5 6 (PRODUCT LEVEL)	SEE PAGE
	1	1	**5P-7958**	1	SLEEVE-CABLE SPLICE	
Y	2	1	*345-6188*	1	ARMREST & MOUNTING GP	471
Y	3	1	*345-6330*	1	SEAT & MOUNTING GP (SUSPENSION)	553
	4	1	**7X-0507**	2	WASHER-HARD (12X22.5X5-MM THK)	
	5	1	**8S-0934**	2	LOCKNUT-FLANGE (7/16-20-THD)	
	6	1	**8S-4723**	2	BOLT (7/16-20X1.5-IN)	
M	7	1	**8T-0722**	6	BOLT-LOCKING (M10X1.5X30-MM)	
	8	1	**8T-4223**	2	WASHER-HARD (13.5X25.5X3-MM THK)	
	9	1	**8T-4226**	6	WASHER-PLATED (10.5X45X3-MM THK)	

M - METRIC PART
Y - SEPARATE ILLUSTRATION

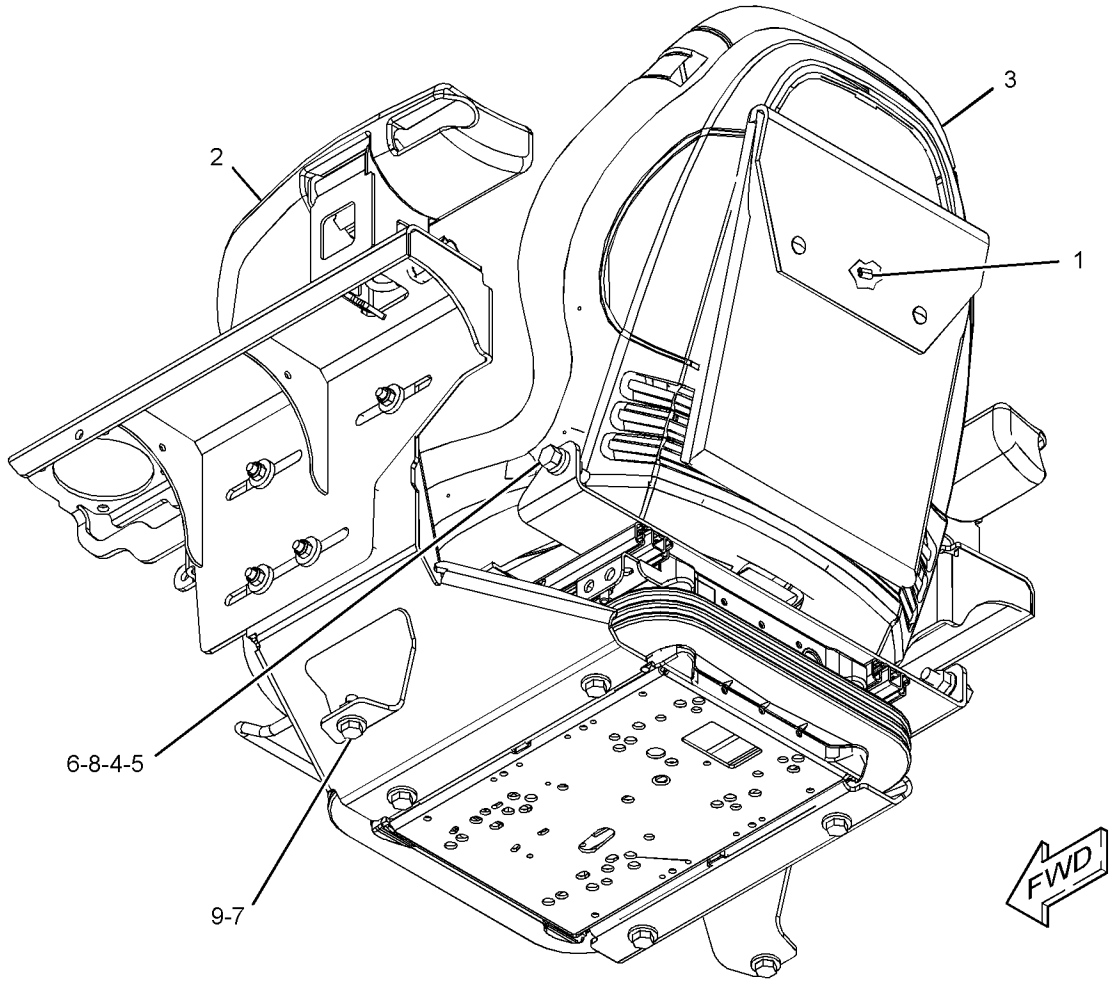

GRAPHIC #1 **<END>** g03331986

345-6050 SEAT & MOUNTING GP–SUSPENSION

PART OF 345-6349 SEAT AR-SUSPENSION

AN ATTACHMENT

SMCS-7312 **i05170304**

NOTE	REF NO	GRAPHIC REF	PART NUMBER	QTY	PART NAME 1 2 3 4 5 6 (PRODUCT LEVEL)	SEE PAGE
	1	1	**5P-7958**	1	SLEEVE-CABLE SPLICE	
	2	1	**127-4003**	2	GROMMET	
Y	3	1	*345-6350*	1	SEAT & ARMREST GP (SUSPENSION)	545
	4	1	**7X-0507**	2	WASHER-HARD (12X22.5X5-MM THK)	
	5	1	**8S-0934**	2	LOCKNUT-FLANGE (7/16-20-THD)	
	6	1	**8S-4723**	2	BOLT (7/16-20X1.5-IN)	
M	7	1	**8T-0722**	4	BOLT-LOCKING (M10X1.5X30-MM)	
	8	1	**8T-4223**	2	WASHER-HARD (13.5X25.5X3-MM THK)	
	9	1	**8T-4226**	4	WASHER-PLATED (10.5X45X3-MM THK)	

M - METRIC PART
Y - SEPARATE ILLUSTRATION

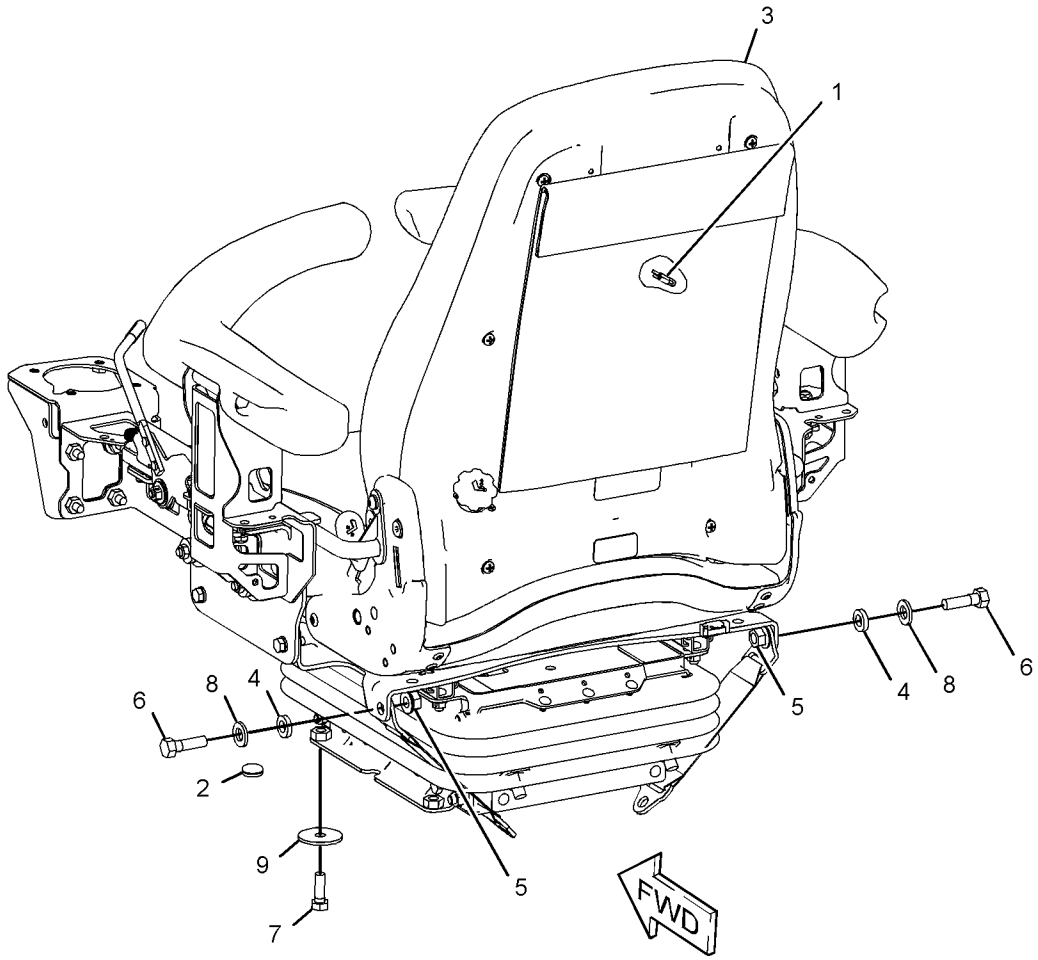

GRAPHIC #1 **<END>** g03332545

345-6055 SEAT & MOUNTING GP–SUSPENSION

PART OF 345-6359 SEAT AR-SUSPENSION

AN ATTACHMENT

SMCS-7312 **i05170302**

NOTE	REF NO	GRAPHIC REF	PART NUMBER	QTY	PART NAME 1 2 3 4 5 6 (PRODUCT LEVEL)	SEE PAGE
	1	1	**5P-7958**	1	SLEEVE-CABLE SPLICE	
	2	1	**127-4003**	2	GROMMET	
Y	3	1	*345-6360*	1	SEAT & ARMREST GP (SUSPENSION)	546
	4	1	**7X-0507**	2	WASHER-HARD (12X22.5X5-MM THK)	
	5	1	**8S-0934**	2	LOCKNUT-FLANGE (7/16-20-THD)	
	6	1	**8S-4723**	2	BOLT (7/16-20X1.5-IN)	
M	7	1	**8T-0722**	4	BOLT-LOCKING (M10X1.5X30-MM)	
	8	1	**8T-4223**	2	WASHER-HARD (13.5X25.5X3-MM THK)	
	9	1	**8T-4226**	4	WASHER-PLATED (10.5X45X3-MM THK)	

M - METRIC PART
Y - SEPARATE ILLUSTRATION

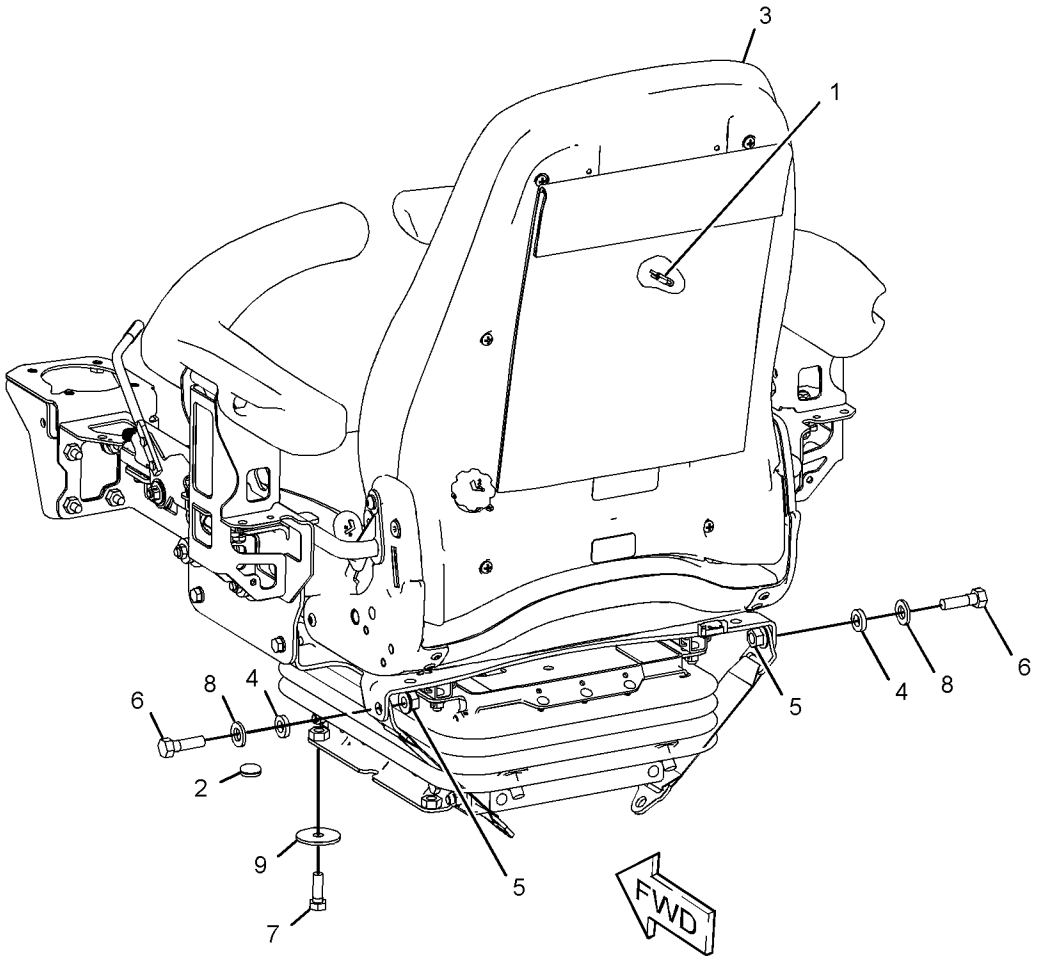

GRAPHIC #1 **<END>** g03332256

345-6320 SEAT & MOUNTING GP—SUSPENSION

PART OF 345-6040 SEAT & MOUNTING GP

AN ATTACHMENT

SMCS-7312 **i05401592**

NOTE	REF NO	GRAPHIC REF	PART NUMBER	QTY	PART NAME 1 2 3 4 5 6 (PRODUCT LEVEL)	SEE PAGE
	1	1	**397-3903**	2	RISER	
	2	1	**397-3897**	1	ADJUSTER	
	3	1	**397-3898**	1	ADJUSTER	
M	4	1	**178-3336**	8	NUT-HEX FLANGE (M8X1.25-THD)	
	5	1	**397-3899**	1	HANDLE (SEAT ADJUSTMENT)	
	6	1	**208-8469**	2	LOCKNUT (M6X1-THD)	
	7	1	**397-3900**	1	BRACKET	
	8	1	**8T-4224**	2	WASHER-HARD (8.8X16X2-MM THK)	
	9	1	**208-9283**	4	BOLT-FLANGE HEAD (M8X1.25X30-MM)	
M	10	1	**8T-4137**	4	BOLT (M10X1.5X20-MM)	
	11	1	**345-6333**	1	BRACKET AS	
	12	1	**345-6334**	1	BRACKET AS	
					(EACH BRACKET AS INCLUDES)	
M		1	**8C-8778**	3	STUD-WELD (M8X1.25X25-MM)	
M		1	**159-9541**	3	NUT-WELD (M10X1.5-THD)	
M	13	1	**175-7141**	4	NUT-HEX FLANGE (M10X1.5-THD)	
	14	1	**345-6331**	1	SEAT AS	
	15	1	**397-3901**	1	WIRE AS	
M	16	1	**174-9194**	4	BOLT (M8X1.25X16-MM)	
	17	1	**419-8939**	1	HOLDER	
	18	1	**433-9721**	1	SWITCH (12-VOLT) (SEAT BELT)	

M - METRIC PART

345-6320 **SEAT & MOUNTING GP (*contd.*)** **i05401592**

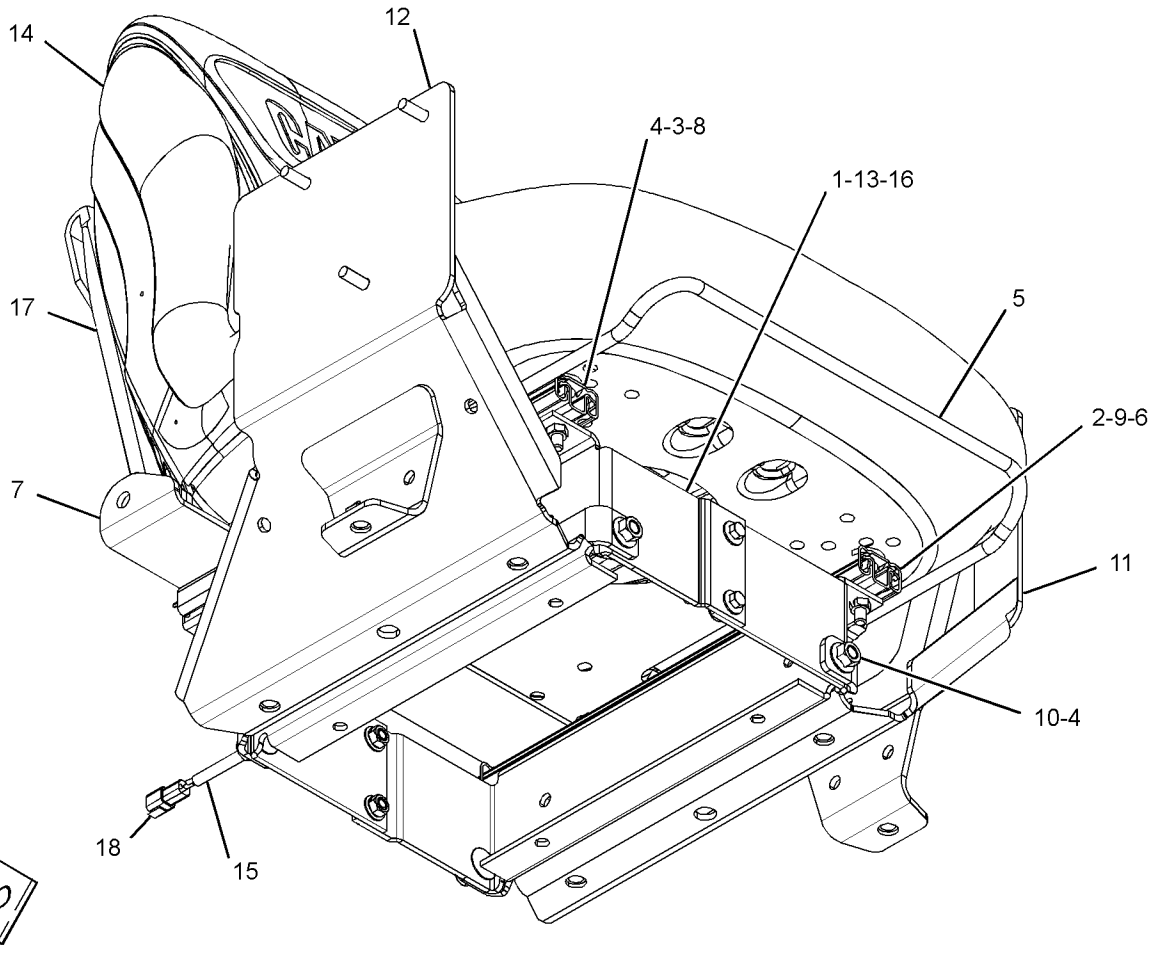

GRAPHIC #1 **<END>** g03369842

345-6330 SEAT & MOUNTING GP–SUSPENSION

PART OF 345-6045 SEAT & MOUNTING GP

AN ATTACHMENT

SMCS-7312 **i05296340**

NOTE	REF NO	GRAPHIC REF	PART NUMBER	QTY	PART NAME 1 2 3 4 5 6 (PRODUCT LEVEL)	SEE PAGE
	1	1	**345-6321**	1	SUSPENSION AS	
	2	1	**397-3897**	1	ADJUSTER	
	3	1	**397-3898**	1	ADJUSTER	
M	4	1	**178-3336**	4	NUT-HEX FLANGE (M8X1.25-THD)	
	5	1	**397-3899**	1	HANDLE (SEAT ADJUSTMENT)	
	6	1	**208-8469**	2	LOCKNUT (M6X1-THD)	
	7	1	**397-3900**	1	BRACKET	
	8	1	**8T-4224**	2	WASHER-HARD (8.8X16X2-MM THK)	
	9	1	**208-9283**	4	BOLT-FLANGE HEAD (M8X1.25X30-MM)	
	10	1	**397-3902**	4	BOLT-CARRIAGE	
	11	1	**345-6333**	1	BRACKET AS	
	12	1	**345-6334**	1	BRACKET AS	
M	13	1	**175-7141**	4	NUT-HEX FLANGE (M10X1.5-THD)	
	14	1	**345-6331**	1	SEAT AS	
	15	1	**397-3901**	1	WIRE AS	
	16	1	**419-8939**	1	HOLDER	
	17	1	**433-9721**	1	SWITCH (12-VOLT) (SEAT BELT)	

M - METRIC PART

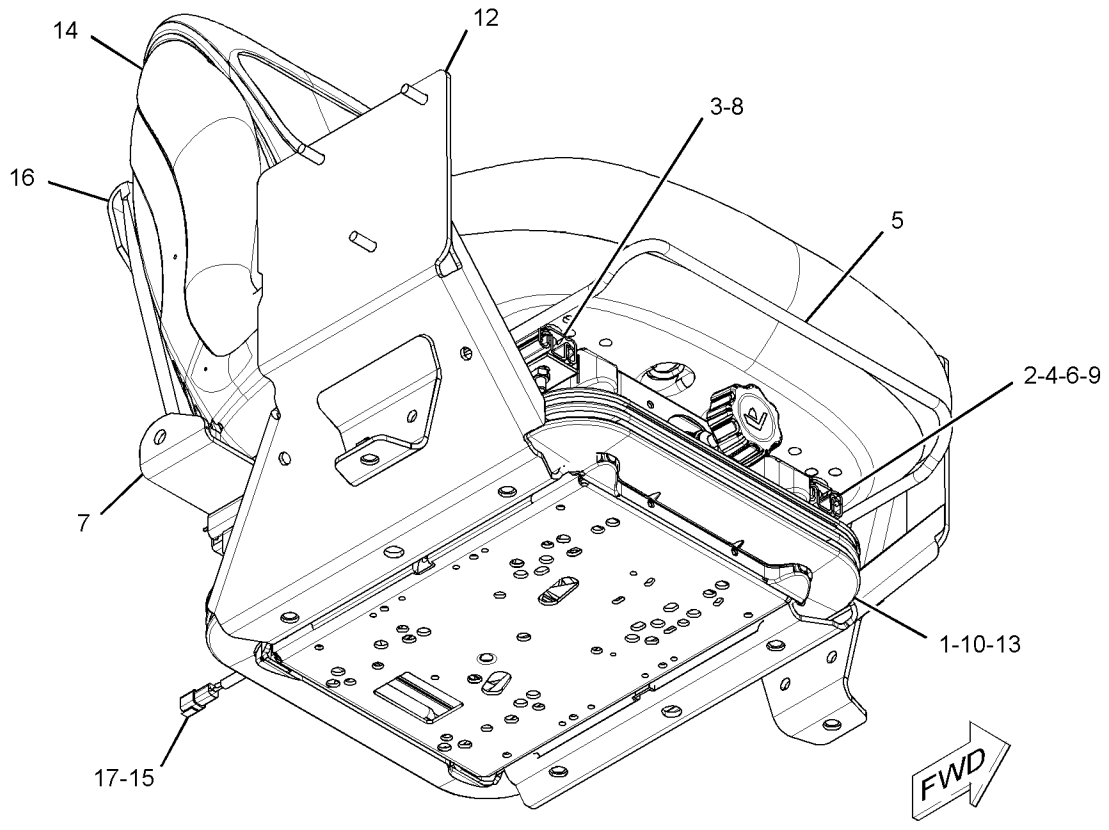

GRAPHIC #1 **<END>** g03385338

345-6319 SEAT AR-SUSPENSION

PART OF 345-5778 CAB AR-OPEN ROPS

AN ATTACHMENT

SMCS-7324 **i05164959**

NOTE	PART NUMBER	QTY	PART NAME 1 2 3 4 5 6 (PRODUCT LEVEL)	SEE PAGE
Y	*345-6061*	1	COVER GP-CONSOLE (RH, LH)	499
Y	*345-6040*	1	SEAT & MOUNTING GP (SUSPENSION)	547

Y - SEPARATE ILLUSTRATION

<END>

345-6329 SEAT AR-SUSPENSION

AN ATTACHMENT

SMCS-7324 **i05156451**

NOTE	PART NUMBER	QTY	PART NAME 1 2 3 4 5 6 (PRODUCT LEVEL)	SEE PAGE
Y	*345-6061*	1	COVER GP-CONSOLE (RH, LH)	499
Y	*345-6045*	1	SEAT & MOUNTING GP (SUSPENSION)	548

Y - SEPARATE ILLUSTRATION

<END>

345-6349 SEAT AR-SUSPENSION

AN ATTACHMENT

SMCS-7324 **i05156454**

NOTE	PART NUMBER	QTY	PART NAME 1 2 3 4 5 6 (PRODUCT LEVEL)	SEE PAGE
Y	*345-6056*	1	COVER GP-CONSOLE	498
Y	*345-6050*	1	SEAT & MOUNTING GP (SUSPENSION)	549

Y - SEPARATE ILLUSTRATION

<END>

345-6359 SEAT AR-SUSPENSION

AN ATTACHMENT

SMCS-7324 **i05156570**

NOTE	PART NUMBER	QTY	PART NAME 1 2 3 4 5 6 (PRODUCT LEVEL)	SEE PAGE
Y	*345-6056*	1	COVER GP-CONSOLE	498
Y	*345-6055*	1	SEAT & MOUNTING GP (SUSPENSION)	550

Y - SEPARATE ILLUSTRATION

<END>

258-4095 SEAT BELT GP–RETRACTABLE

51-MM (2-IN)

AN ATTACHMENT

SMCS-7327 **i03505740**

NOTE	REF NO	GRAPHIC REF	PART NUMBER	QTY	PART NAME 1 2 3 4 5 6 (PRODUCT LEVEL)	SEE PAGE
F			**2D-6412**	2	WASHER (7/16X15/16X1/4-IN THK)	
F			**8S-0934**	2	LOCKNUT-FLANGE (7/16-20-THD)	
F			**8S-4723**	2	BOLT (7/16-20X1.5-IN)	
F			**8T-4223**	2	WASHER-HARD (13.5X25.5X3-MM THK)	

F - NOT SHOWN

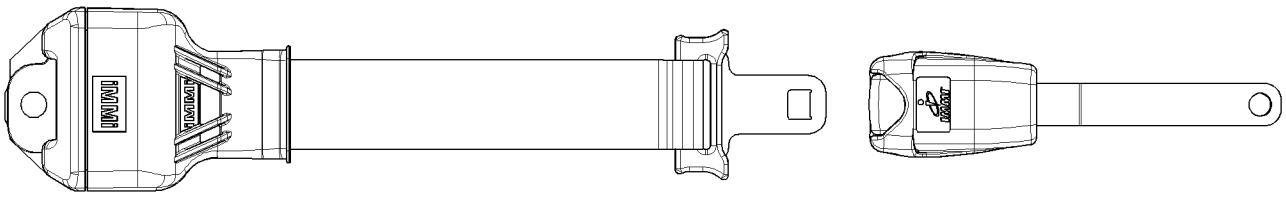

GRAPHIC #1 **<END>** g01345229

258-4096 SEAT BELT GP—RETRACTABLE, 76-MM (3-IN)

AN ATTACHMENT

SMCS-7327 **i05366283**

NOTE	REF NO	GRAPHIC REF	PART NUMBER	QTY	PART NAME 1 2 3 4 5 6 (PRODUCT LEVEL)	SEE PAGE
F			**2D-6412**	2	WASHER (7/16X15/16X1/4-IN THK)	
F			**8S-0934**	2	LOCKNUT-FLANGE (7/16-20-THD)	
F			**8S-4723**	2	BOLT (7/16-20X1.5-IN)	
F			**8T-4223**	2	WASHER-HARD (13.5X25.5X3-MM THK)	

F - NOT SHOWN

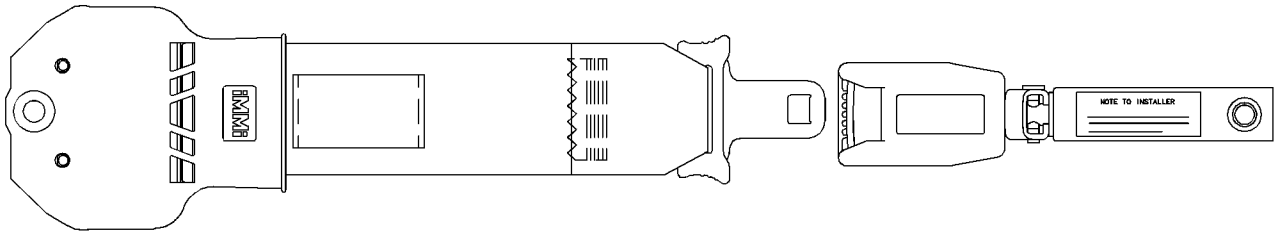

GRAPHIC #1 **<END>** g01196135

345-6361 SEAT GP-SUSPENSION—AIR

PART OF 345-6360 SEAT & ARMREST GP

AN ATTACHMENT

SMCS-7312, 7321, 7324 **i05296336**

NOTE	REF NO	GRAPHIC REF	PART NUMBER	QTY	PART NAME 1 2 3 4 5 6 (PRODUCT LEVEL)	SEE PAGE
	1	1	**273-5915**	1	PLATE	
	2	1	**305-7092**	1	SLIDE AS (LATCHING)	
	3	1	**305-7093**	1	SLIDE AS (SLAVE PISTON)	
	4	1	**307-2955**	2	TETHER	
Y	5	1	**432-8929**	1	SUSPENSION GP-SEAT	561
Y	6	1	**432-8930**	1	SEAT GP-SUSPENSION (VINYL)	559
	7	1	**031-4155**	4	LOCKNUT (5/16-18-THD)	
	8	1	**1P-1210**	4	WASHER (0.391X0.812X0.067-IN THK)	
	9	1	**4M-0061**	4	BOLT (5/16-18X0.75-IN)	
M	10	1	**6V-7687**	2	LOCKNUT (M12X1.75-THD)	
M	11	1	**6V-9189**	4	LOCKNUT (M8X1.25-THD)	
	12	1	**7X-0603**	4	WASHER-HARD (9.9X35X2.5-MM THK)	
	13	1	**8L-8413**	6	STRAP-CABLE	
	14	1	**8M-4791**	2	WASHER-HARD (13.5X27X3-MM THK)	
M	15	1	**8T-4139**	2	BOLT (M12X1.75X30-MM)	

M - METRIC PART
Y - SEPARATE ILLUSTRATION

345-6361 **SEAT GP-SUSPENSION (*contd.*)** **i05296336**

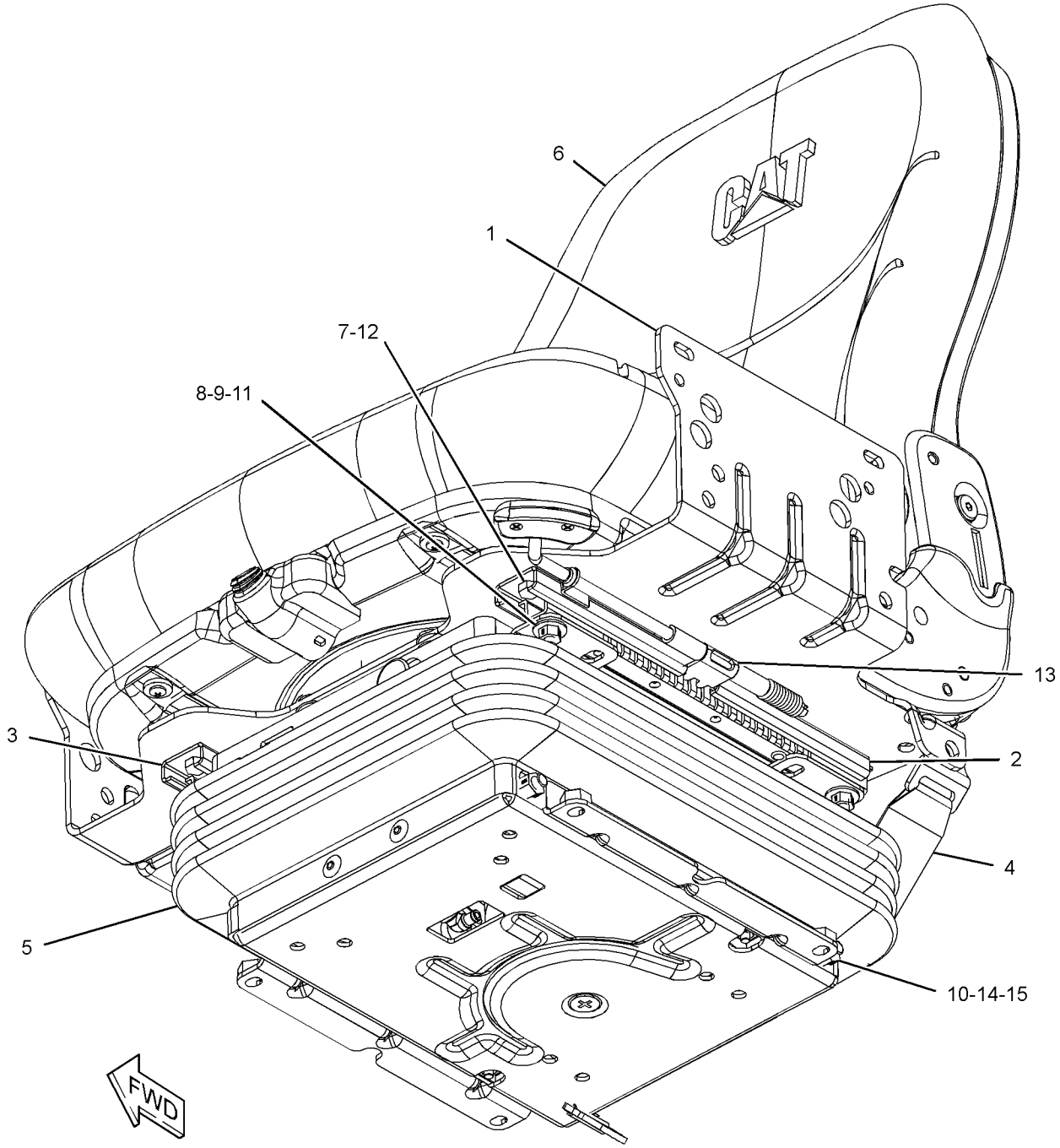

GRAPHIC #1 **<END>** g03384462

432-8930 SEAT GP-SUSPENSION–VINYL

PART OF 345-6361 SEAT GP-SUSPENSION

AN ATTACHMENT

SMCS-7312, 7321, 7324 **i05296337**

NOTE	REF NO	GRAPHIC REF	PART NUMBER	QTY	PART NAME 1 2 3 4 5 6 (PRODUCT LEVEL)	SEE PAGE
	1	1	**3E-4352**	2	WASHER-HARD (8.8X20.5X2.5-MM THK)	
	2	1	**307-2952**	1	PAN AS-SEAT	
		1	**293-2871**	1	SWITCH AS (SEAT)	
		1	**307-2953**	1	SPACER	
		1	**307-2954**	2	SPRING	
	3	1	**319-4168**	6	SCREW-PAN HEAD (1/4-15X0.5-IN)	
	4	1	**385-0229**	2	SCREW-FORMING	
	5	1	**385-5513**	1	PLATE AS-LUMBAR	
	6	1	**390-9315**	1	HARNESS AS-HEATER	
	7	1	**390-9317**	1	CUSHION AS-BACKREST (CLOTH)	
	8	1	**392-9277**	1	SWITCH-ROCKER (HEATED SEAT)	
	9	1	**432-8931**	1	PAN AS	
	10	1	**432-8932**	1	HOUSING-SWITCH	
	11	1	**156-8315**	2	SCREW-PAN HEAD (10-16X0.5-IN)	
	12	1	**432-8933**	1	CUSHION AS-SEAT (CLOTH)	
	13	1	**6C-3679**	2	RIVET-POP	
	14	1	**9X-8918**	2	SCREW-FLAT HEAD (8-32X0.5-IN)	

432-8930 **SEAT GP-SUSPENSION (*contd.*)** **i05296337**

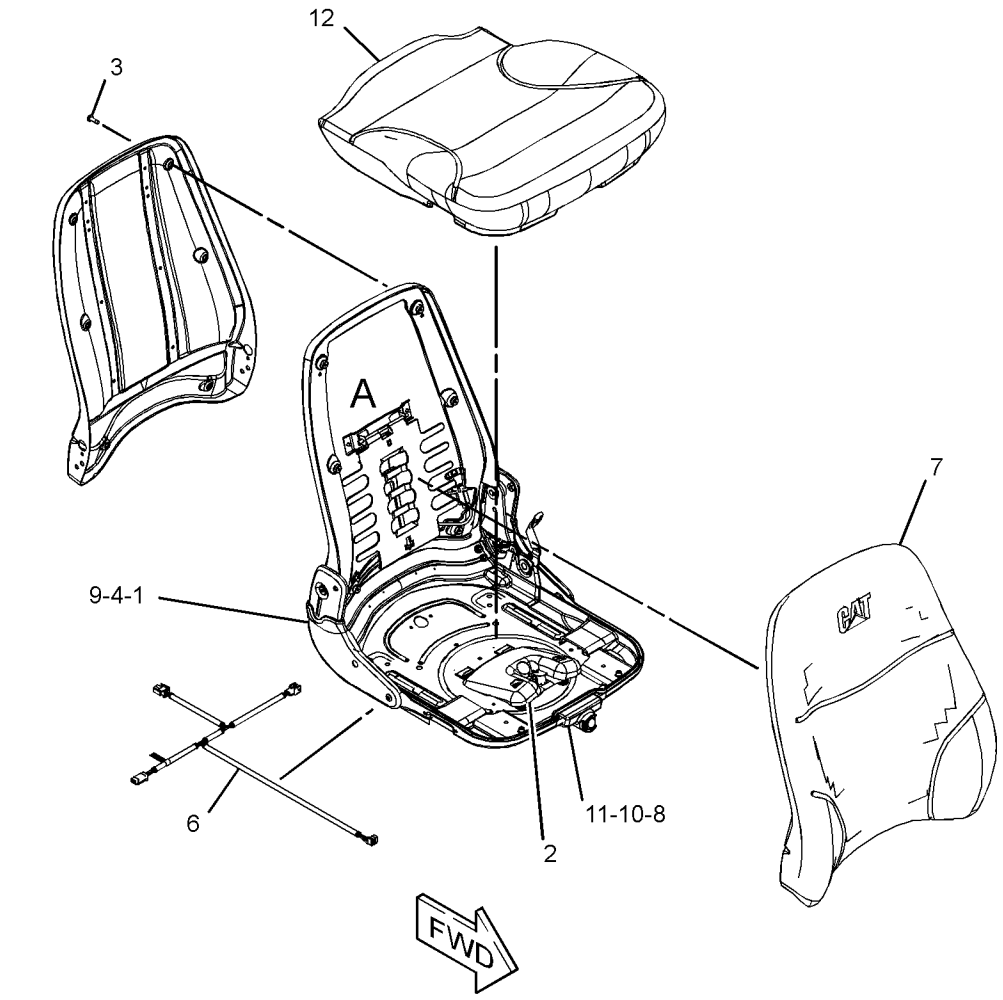

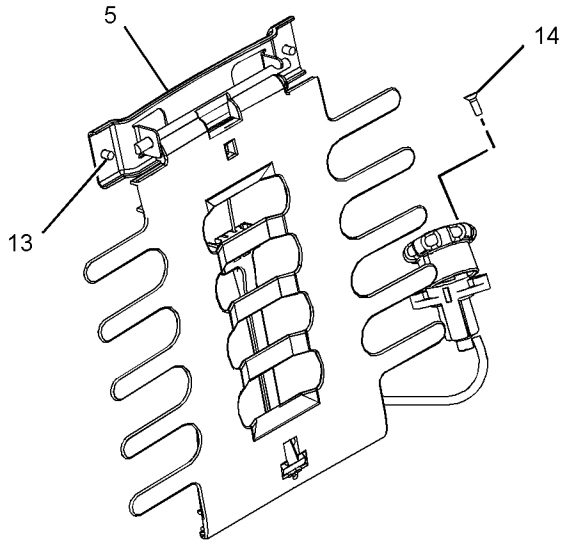

VIEW OF AREA A

GRAPHIC #1 **<END>** g03369975

432-8929 SUSPENSION GP-SEAT—AIR

PART OF 345-6361 SEAT GP-SUSPENSION

AN ATTACHMENT

SMCS-7312, 7324 **i05296335**

NOTE	REF NO	GRAPHIC REF	PART NUMBER	QTY	PART NAME 1 2 3 4 5 6 (PRODUCT LEVEL)	SEE PAGE
L	1	1	**4V-8577**	6	BEARING	
	2	1	**144-4108**	15	FASTENER	
	3	1	**163-1135**	1	SPRING	
	4	1	**163-1146**	2	FASTENER	
	5	1	**166-6781**	2	FASTENER	
S	6	1	**186-5107**	2	SCREW-DRIVE (NO 8-16X1.25-IN)	
	7	1	**304-1021**	2	ROLLER	
	8	1	**304-1022**	2	BLOCK	
	9	1	**304-1023**	2	BUMPER	
	16	1	**304-1034**	2	BRACKET	
	17	1	**304-1035**	2	BUMPER	
	18	1	**304-1036**	1	BOOT	
	21	1	**305-4353**	2	SPACER (6.4X24X6-MM THK)	
S	22	1	**372-2156**	1	COMPRESSOR AS	
S	23	1	**372-2158**	1	BRACKET-MOUNTING	
	24	1	**432-8937**	1	HARNESS AS-WIRING	
	25	1	**031-4155**	2	LOCKNUT (5/16-18-THD)	
	26	1	**108-4311**	1	SCREW-MACHINE (3/8-16X0.75-IN)	
JM	27	1	**129-3178**	1	LOCKNUT (M6X1-THD)	
	28	1	**1B-2705**	2	BOLT-CARRIAGE (5/16-18X0.75-IN)	
LN	29	1	**2K-4973**	5	LOCKNUT (3/8-16-THD)	
J	30	1	**2M-7819**	2	RING-RETAINING	
P	31	1	**3D-9369**	1	RING-RETAINING	
	32	1	**416-6224**	1	WIRE AS	
	33	1	**416-6225**	1	WIRE AS (16-GA, ORANGE)	
N	34	1	**4B-4278**	2	WASHER (10.2X20.5X1.6-MM THK)	
M	35	1	**5C-2890**	2	NUT (M6X1-THD)	
	36	1	**6L-7155**	2	SCREW-MACHINE (1/4-20X0.5-IN)	
	37	1	**6V-7412**	2	SCREW-WASHER HEAD	
J	38	1	**8T-4224**	4	WASHER-HARD (8.8X16X2-MM THK)	
	39	1	**8T-9371**	1	BOLT (3/8-16X0.5-IN)	
					PARTS SHOWN IN GRAPHIC(S) WITHOUT A REFERENCE NUMBER ARE NOT SERVICED SEPARATELY	
					AVAILABLE REPAIR KIT(S):	
J			**304-1052**	1	KIT-SHOCK ABSORBER	
					(ALSO INCLUDES BUSHINGS, SHOCK ABSORBER, BOLT & PIN)	
L			**304-1054**	1	KIT-SHAFT	
					(ALSO INCLUDES SHAFT AS)	
N			**304-1055**	1	KIT-TOGGLE BOLT	
					(ALSO INCLUDES BUSHINGS & BOLTS)	
P			**304-1056**	1	KIT-VALVE	
					(ALSO INCLUDES LOCKWASHER, NUT, VALVE, KNOB AS & FITTING)	
S			**304-1057**	1	KIT-COMPRESSOR	
					(ALSO INCLUDES FITTINGS)	

J - KIT MARKED J SERIVES PART(S)MARKED J
L - KIT MARKED L SERVICES PART(S) MARKED L
M - METRIC PART
N - KIT MARKED N SERVICES PART(S) MARKED N
P - KIT MARKED P SERVICES PART(S) MARKED P
S - KIT MARKED S SERVICES PART(S) MARKED S

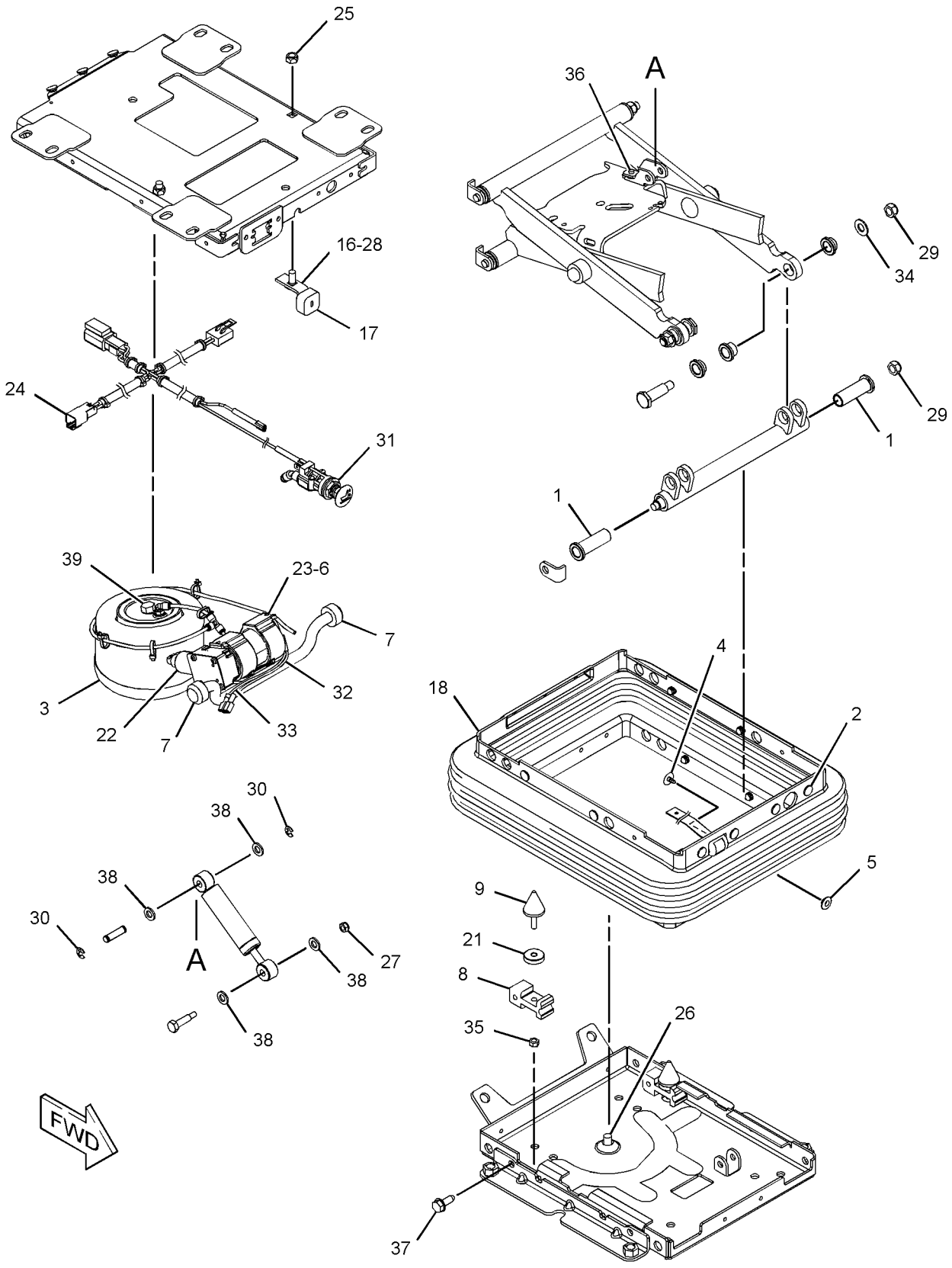

GRAPHIC #1 **<END>** g03370316

345-6010 WINDOW GP-CAB

PART OF 345-5454 CAB AR

SMCS-7310 **i05401593**

NOTE	REF NO	GRAPHIC REF	PART NUMBER	QTY	PART NAME 1 2 3 4 5 6 (PRODUCT LEVEL)	SEE PAGE
	1	1	**5C-8310**	1	BRACKET-RING	
	2	1	**5C-8311**	1	RING	
	3	1	**258-4429**	1	FILM-INSTRUCTION (ALTERNATE EXIT)	
	4	1	**345-6011**	1	GLASS-REAR	
E	5	1	**108-0656**		SEAL (192-CM)	
E	6	1	**104-5957**		STRIP-LOCKING (186-CM)	

E - ORDER BY THE CENTIMETER

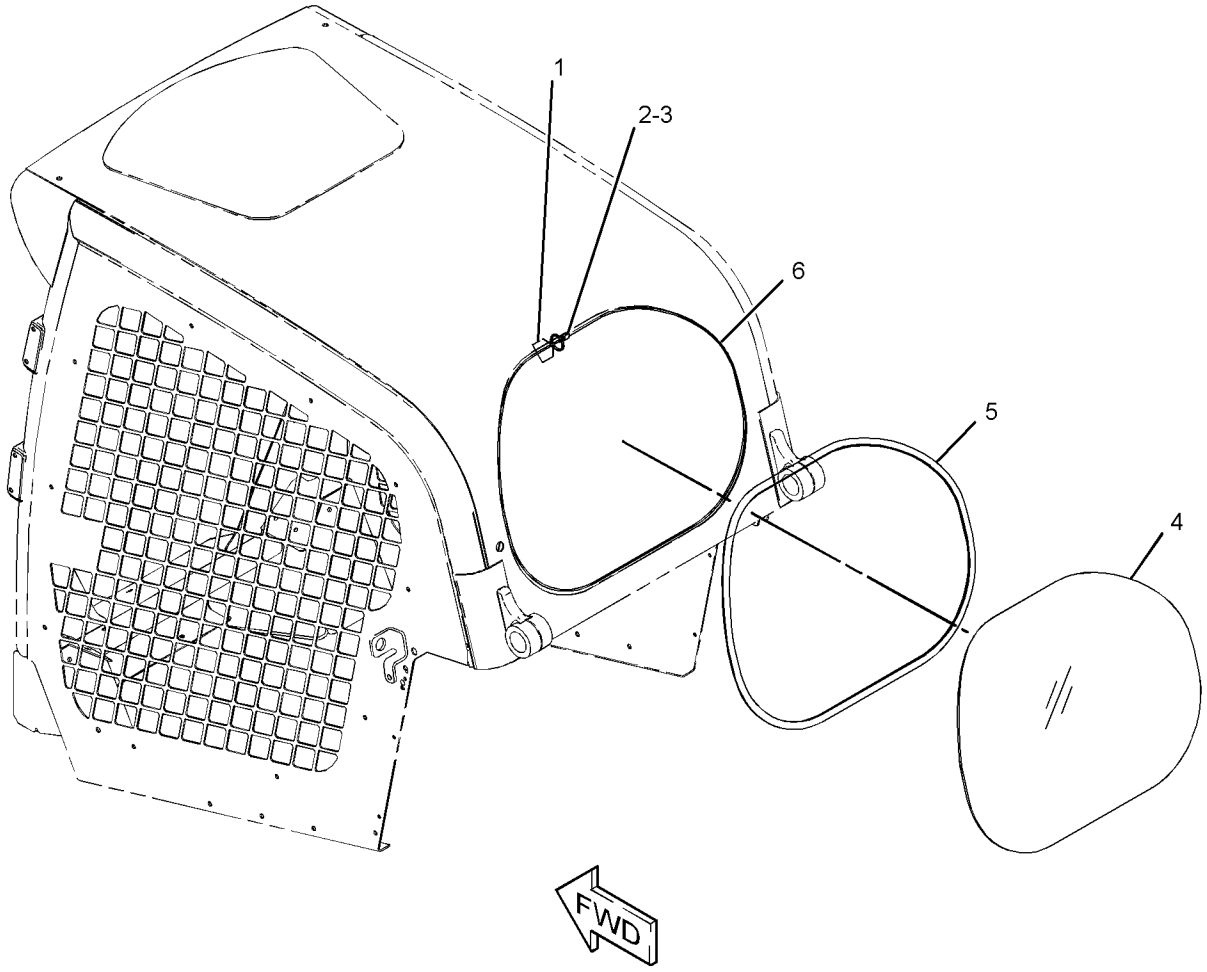

GRAPHIC #1 **<END>** g03364274

345-6090 WINDOW GP-CAB

PART OF 345-6158, 345-6160 CAB AR-ENCLOSED ROPS
AN ATTACHMENT

SMCS-7310 **i05163103**

NOTE	REF NO	GRAPHIC REF	PART NUMBER	QTY	PART NAME 1 2 3 4 5 6 (PRODUCT LEVEL)	SEE PAGE
	1	1	**270-9442**	18	SCREW-TRUSS HEAD (M6X1X20-MM)	
Y	2	1	*345-6290*	1	WINDOW GP-CAB (LH)	565
Y	3	1	*345-6291*	1	WINDOW GP-CAB (RH)	566

Y - SEPARATE ILLUSTRATION

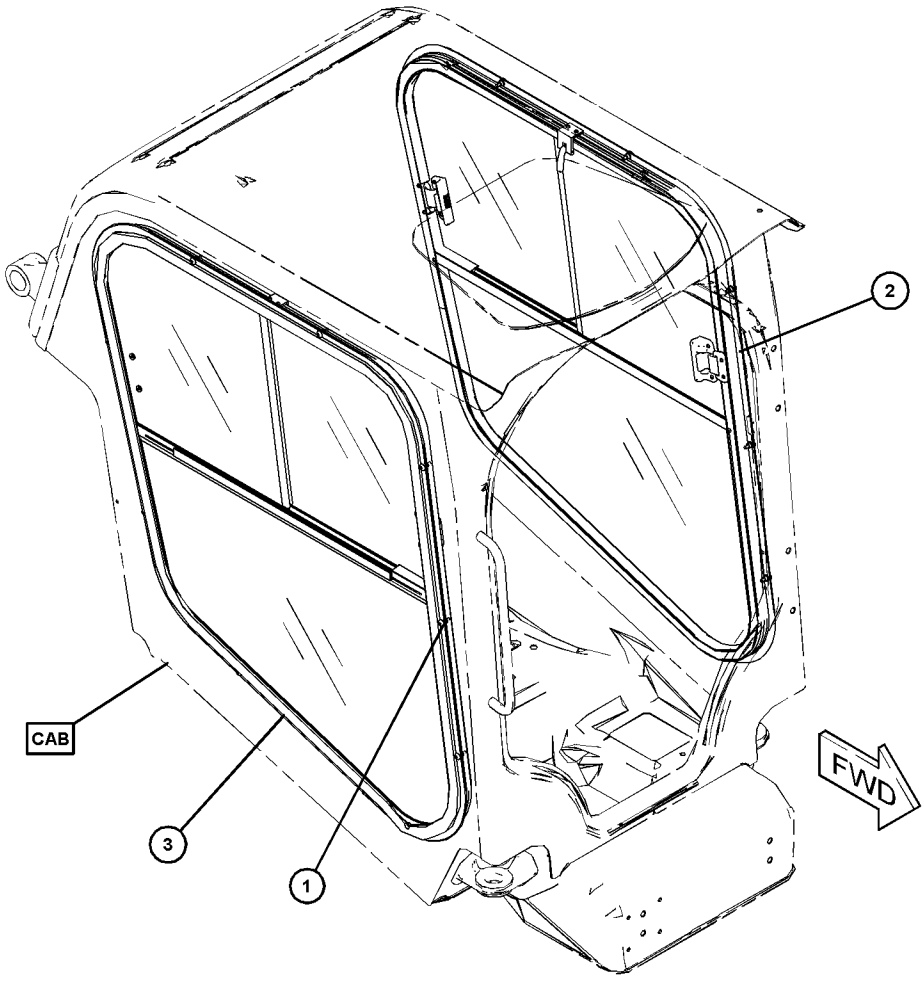

GRAPHIC #1 **<END>** g03318557

345-6290 WINDOW GP-CAB—LH

PART OF 345-6090 WINDOW GP-CAB
AN ATTACHMENT

SMCS-7310 **i05165085**

NOTE	REF NO	GRAPHIC REF	PART NUMBER	QTY	PART NAME 1 2 3 4 5 6 (PRODUCT LEVEL)	SEE PAGE
	1	1	**345-6270**	1	WINDOW AS	
	2	1	**345-6271**	1	WINDOW AS	
	3	1	**345-6273**	1	WINDOW AS	
	4	1	**345-6292**	1	FRAME AS	

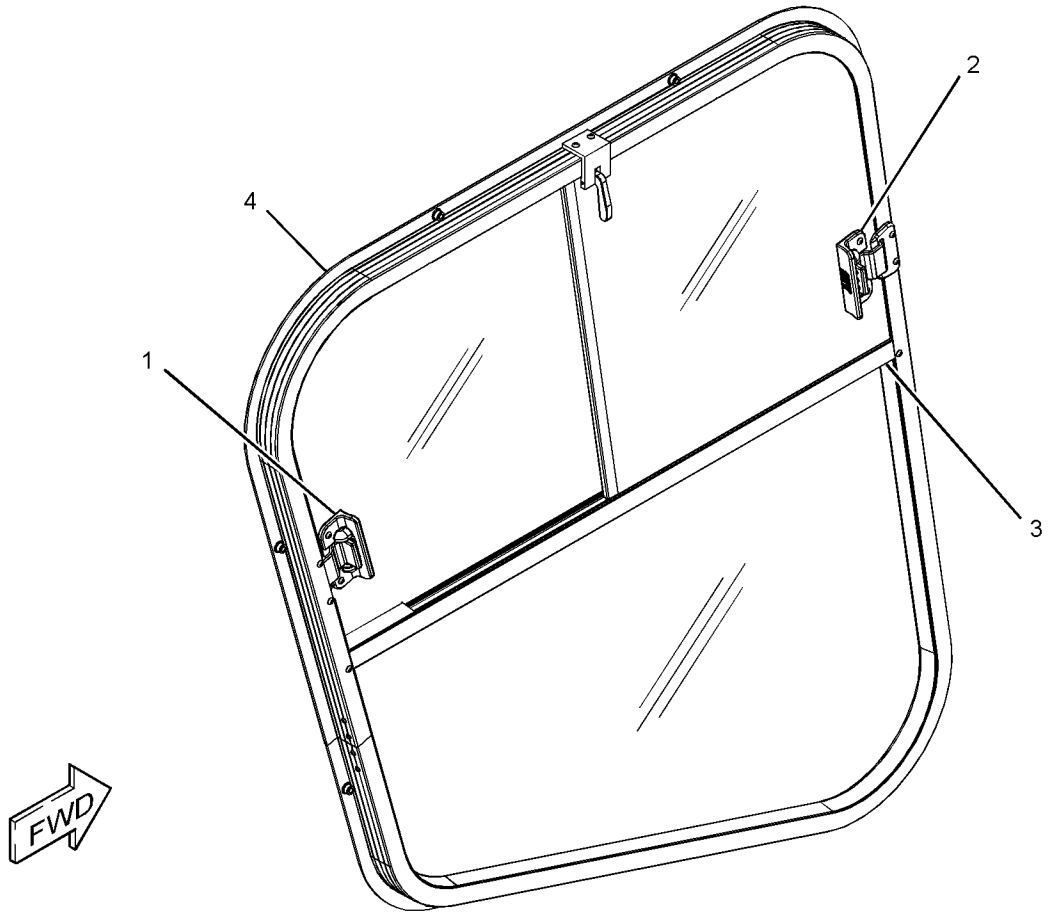

GRAPHIC #1 **<END>** g03333375

345-6291 WINDOW GP-CAB–RH

PART OF 345-6090 WINDOW GP-CAB

AN ATTACHMENT

SMCS-7310 **i05165086**

NOTE	REF NO	GRAPHIC REF	PART NUMBER	QTY	PART NAME 1 2 3 4 5 6 (PRODUCT LEVEL)	SEE PAGE
	1	1	**345-6274**	1	WINDOW AS	
	2	1	**345-6275**	1	WINDOW AS	
	3	1	**345-6276**	1	WINDOW AS	
	4	1	**345-6297**	1	FRAME AS	

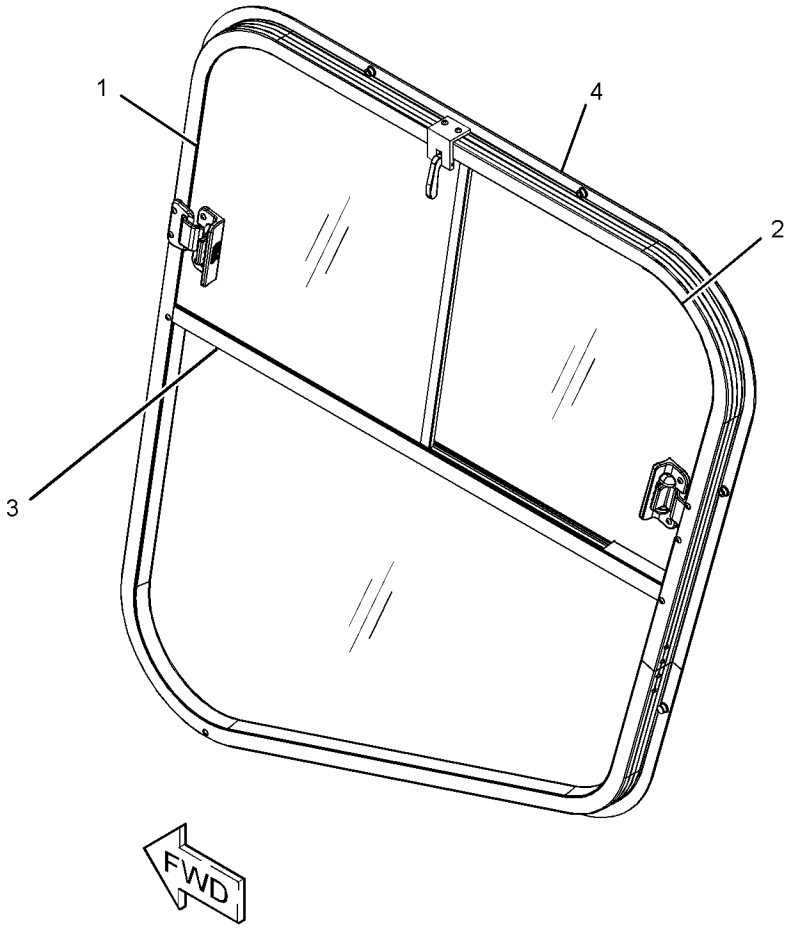

GRAPHIC #1 **<END>** g03326283

SERVICE EQUIPMENT AND SUPPLIES

345-5928 FILM GP

PART OF 388-8237, 388-8238 COMMON AR

SMCS-7557 **i05166086**

NOTE	REF NO	GRAPHIC REF	PART NUMBER	QTY	PART NAME 1 2 3 4 5 6 (PRODUCT LEVEL)	SEE PAGE
	1	1	**379-4102**	1	FILM-IDENTIFICATION (CAT)	
	2	1	**388-7891**	1	FILM-IDENTIFICATION (236D CAT)	
	3	1	**388-7892**	1	FILM-IDENTIFICATION (CAT 236D)	
	4	1	**388-8110**	1	FILM-IDENTIFICATION (CAT)	

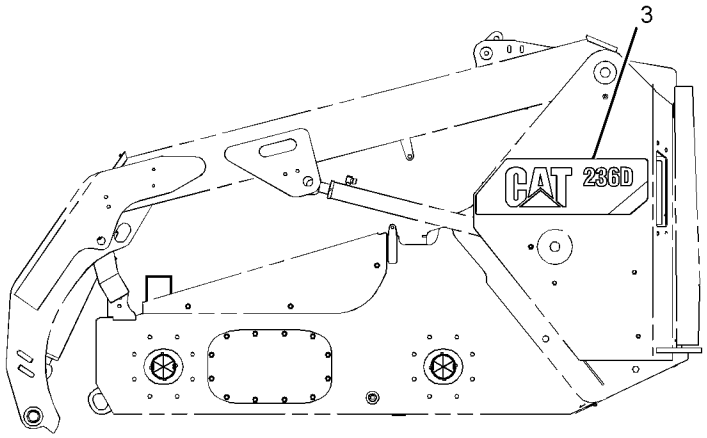

LEFT SIDE VIEW

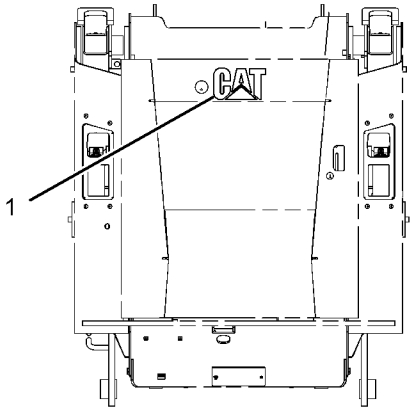

REAR VIEW

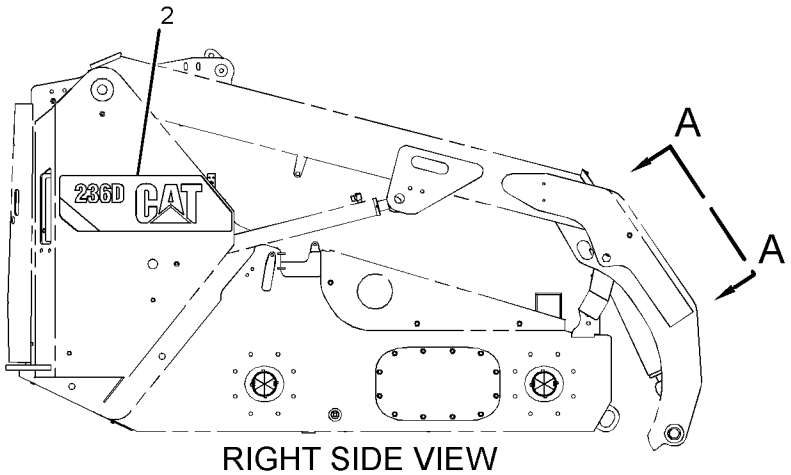

RIGHT SIDE VIEW

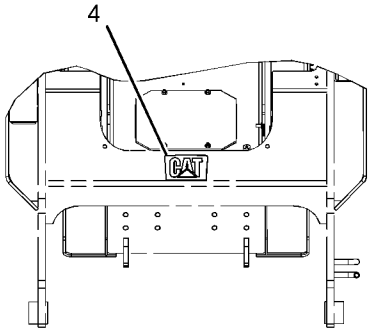

VIEW A-A

GRAPHIC #1 **<END>** g03324205

385-6373 FILM GP

BLADE

PART OF 385-6444 BLADE AR

AN ATTACHMENT

SMCS-7557 **i05282731**

NOTE	REF NO	GRAPHIC REF	PART NUMBER	QTY	PART NAME 1 2 3 4 5 6 (PRODUCT LEVEL)	SEE PAGE
	1	1	**7E-2700**	3	FILM-INFORMATION (LIFT EYE LOCATION)	
	2	1	**385-6416**	1	FILM-IDENTIFICATION (CAT, STRIPE, LH)	
	3	1	**385-6417**	1	FILM-IDENTIFICATION (CAT, STRIPE, RH)	

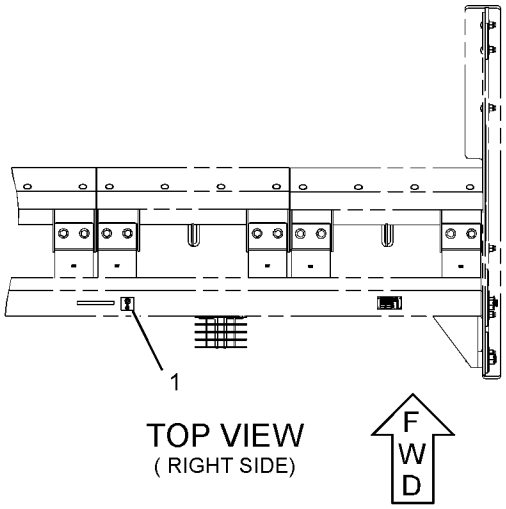

TOP VIEW
(RIGHT SIDE)

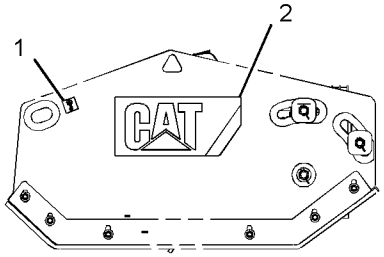

LEFT SIDE VIEW

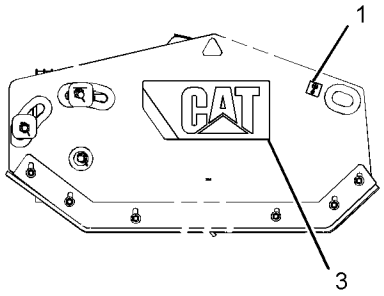

RIGHT SIDE VIEW

GRAPHIC #1 **<END>** g03137978

388-8111 FILM GP–HIGH FLOW

PART OF 388-8038 HYDRAULIC AR

AN ATTACHMENT

SMCS-7557 **i05160111**

NOTE	REF NO	GRAPHIC REF	PART NUMBER	QTY	PART NAME 1 2 3 4 5 6 (PRODUCT LEVEL)	SEE PAGE
	1	1	**388-8112**	2	FILM-IDENTIFICATION (HIGH FLOW)	

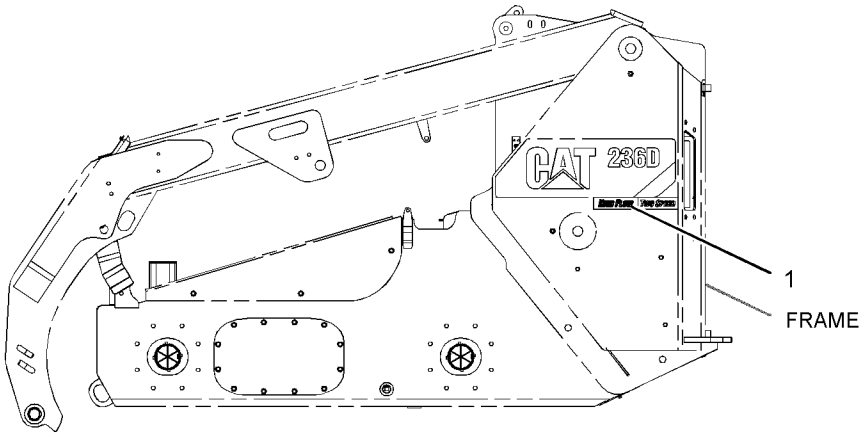

LEFT SIDE VIEW

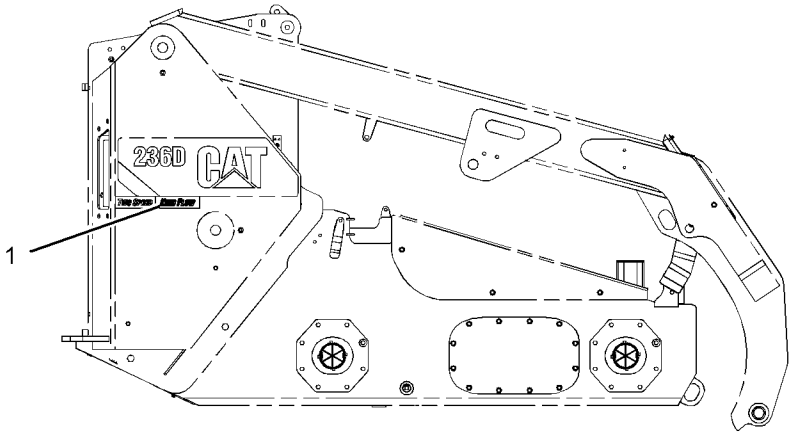

RIGHT SIDE VIEW

GRAPHIC #1 **<END>** g03322245

388-8113 FILM GP–2-SPEED

PART OF 388-8128, 388-8129 CONFIGURATION AR
AN ATTACHMENT

SMCS-7557 **i05165039**

NOTE	REF NO	GRAPHIC REF	PART NUMBER	QTY	PART NAME 1 2 3 4 5 6 (PRODUCT LEVEL)	SEE PAGE
	1	1	**388-8114**	2	FILM-IDENTIFICATION (TWO SPEED)	

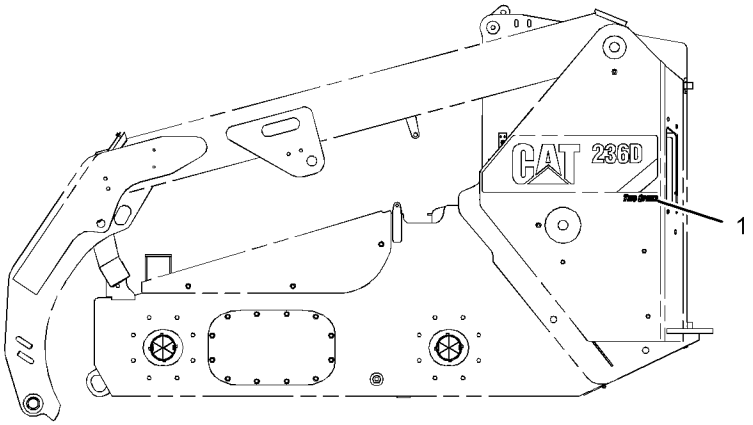

LEFT SIDE VIEW

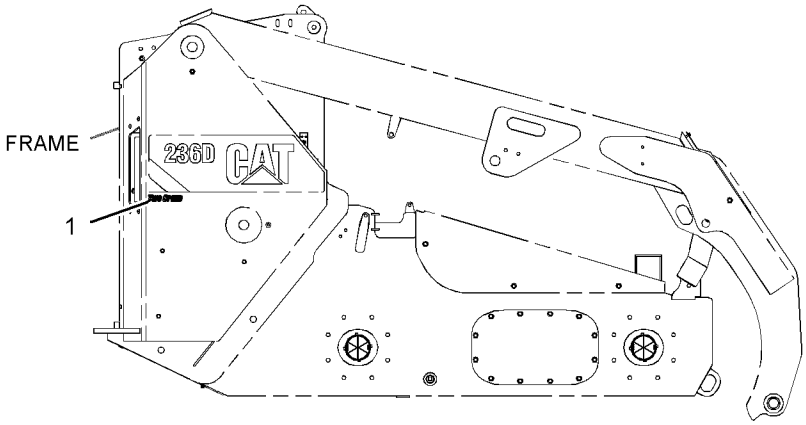

RIGHT SIDE VIEW

GRAPHIC #1 **<END>** g03323484

422-3445 FILM GP–RIDE CONTROL ANSI

FOR USE WITH MACHINES EQUIPPED WITH RIDE CONTROL AN ATTACHMENT

SMCS-7557 **i05293720**

NOTE	REF NO	GRAPHIC REF	PART NUMBER	QTY	PART NAME 1 2 3 4 5 6 (PRODUCT LEVEL)	SEE PAGE
	1	1	**239-4990**	1	FILM-WARNING (HIGH PRESSURE CYLINDER)	

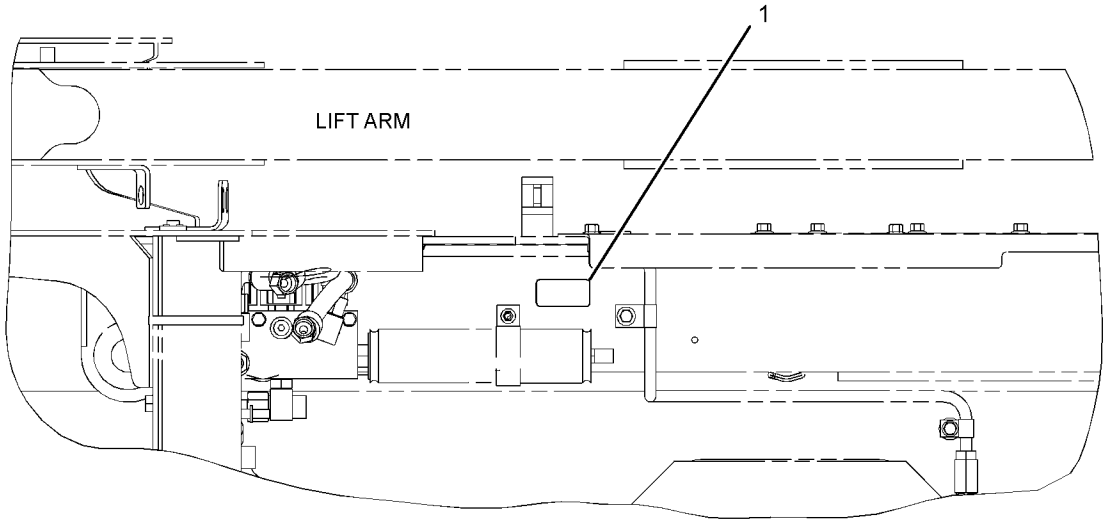

TOP VIEW FWD

GRAPHIC #1 **<END>** g03364211

422-3446 FILM GP–RIDE CONTROL ISO

FOR USE WITH MACHINES EQUIPPED WITH RIDE CONTROL
AN ATTACHMENT

SMCS-7557 **i05293719**

NOTE	REF NO	GRAPHIC REF	PART NUMBER	QTY	PART NAME 1 2 3 4 5 6 (PRODUCT LEVEL)	SEE PAGE
	1	1	**239-4991**	1	FILM-WARNING (HIGH PRESSURE CYLINDER)	

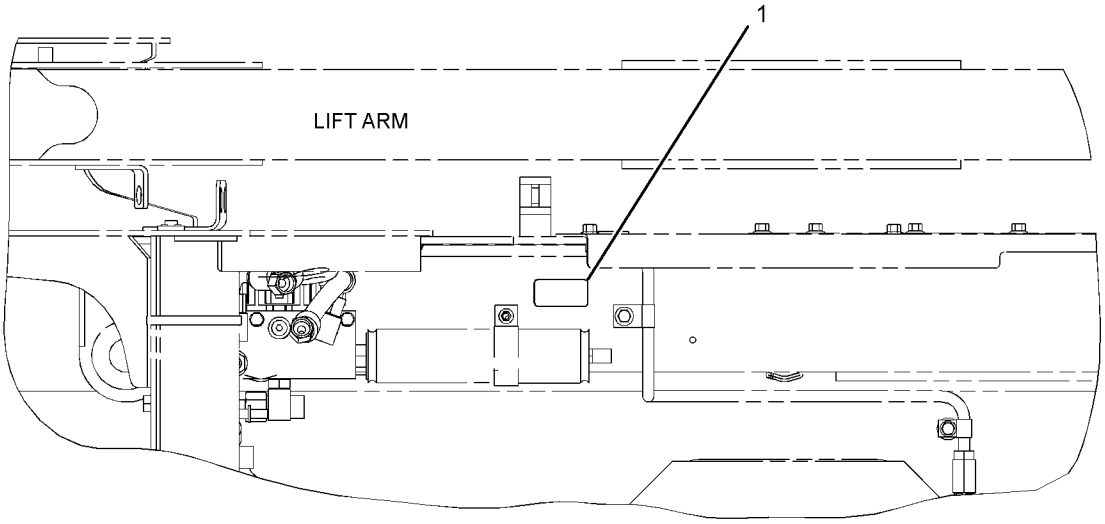

TOP VIEW FWD

GRAPHIC #1 **<END>** g03364211

247-0678 PLATE & FILM GP

PART OF 424-0450, 424-0451 BLADE AR

AN ATTACHMENT

SMCS-7405, 7557 **i02469823**

NOTE	REF NO	GRAPHIC REF	PART NUMBER	QTY	PART NAME 1 2 3 4 5 6 (PRODUCT LEVEL)	SEE PAGE
	1	1	**7X-3229**	4	FILM-IDENTIFICATION (LIFT EYE, TIE-DOWN LOCATION)	
	2	1	**226-1242**	2	FILM-WARNING (CRUSH HAZARD, STAY BACK, U.S.)	
	3	1	**228-3581**	1	FILM-WARNING (DO NOT OPERATE, READ OMM)	
	4	1	**159-8035**	1	FILM-WARNING (CRUSH HAZARD, STAY BACK)	
	5	1	**124-2456**	1	FILM-INSTRUCTION (NO STEP)	

247-0678 **PLATE & FILM GP (*contd.*)** **i02469823**

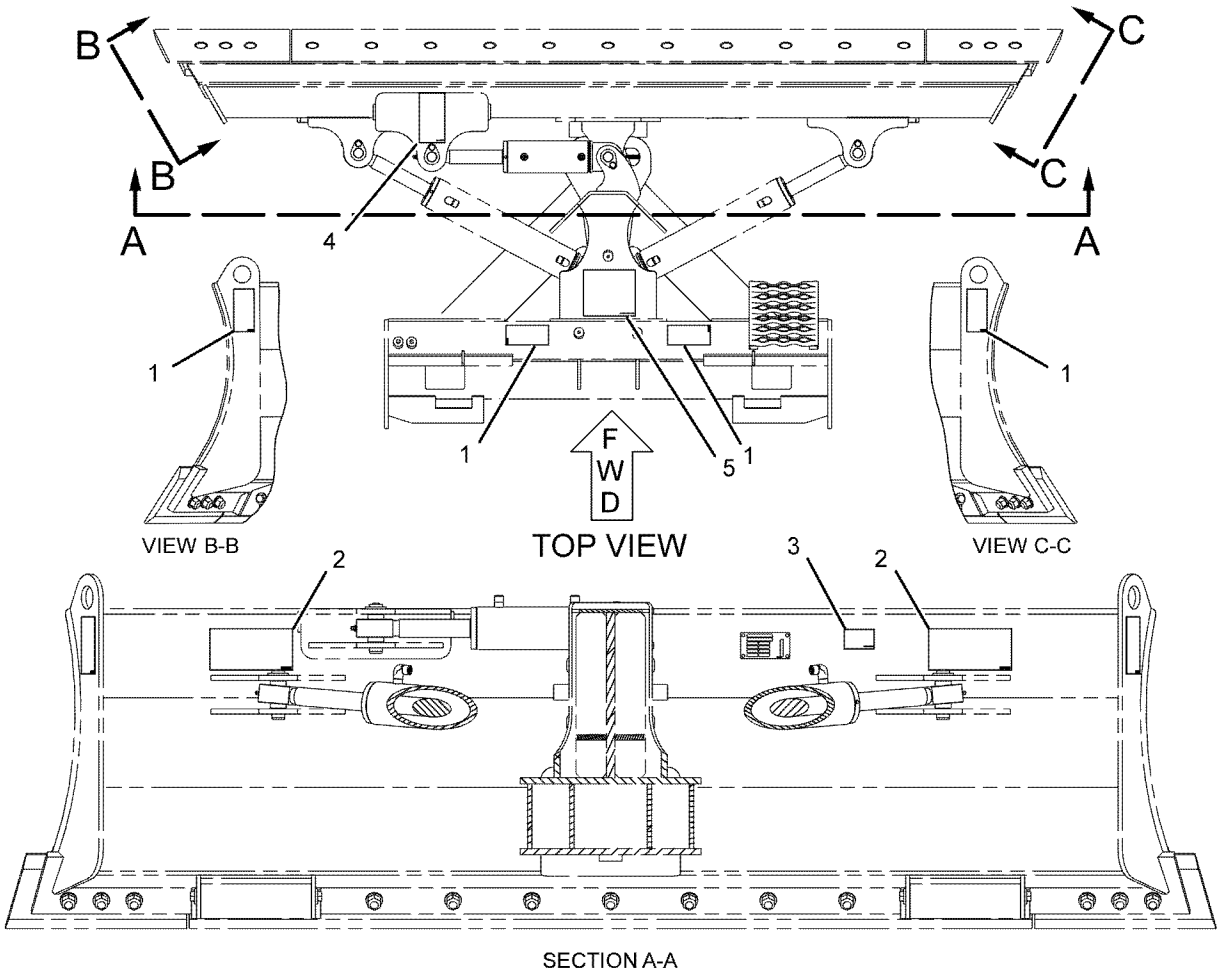

GRAPHIC #1 **<END>** g01120449

286-9251 PLATE & FILM GP

PART OF 286-9300, 286-9301 BUCKET AR-GRAPPLE

AN ATTACHMENT

SMCS-7405, 7557

i04157320

NOTE	REF NO	GRAPHIC REF	PART NUMBER	QTY	PART NAME 1 2 3 4 5 6 (PRODUCT LEVEL)	SEE PAGE
	1	1	**168-8389**	4	TACK-FASTENER	
	2	1	**228-3369**	1	FILM-WARNING (DO NOT OPERATE, READ OMM)	
	3	1	**247-6118**	2	FILM-WARNING (CRUSH HAZARD, STAY BACK)	
	4	1	**248-5245**	2	FILM-INFORMATION (LIFT EYE, TIE-DOWN LOCATION)	
	5	1	**358-4944**	1	PLATE-IDENTIFICATION (BUCKET SPECIFICATIONS)	

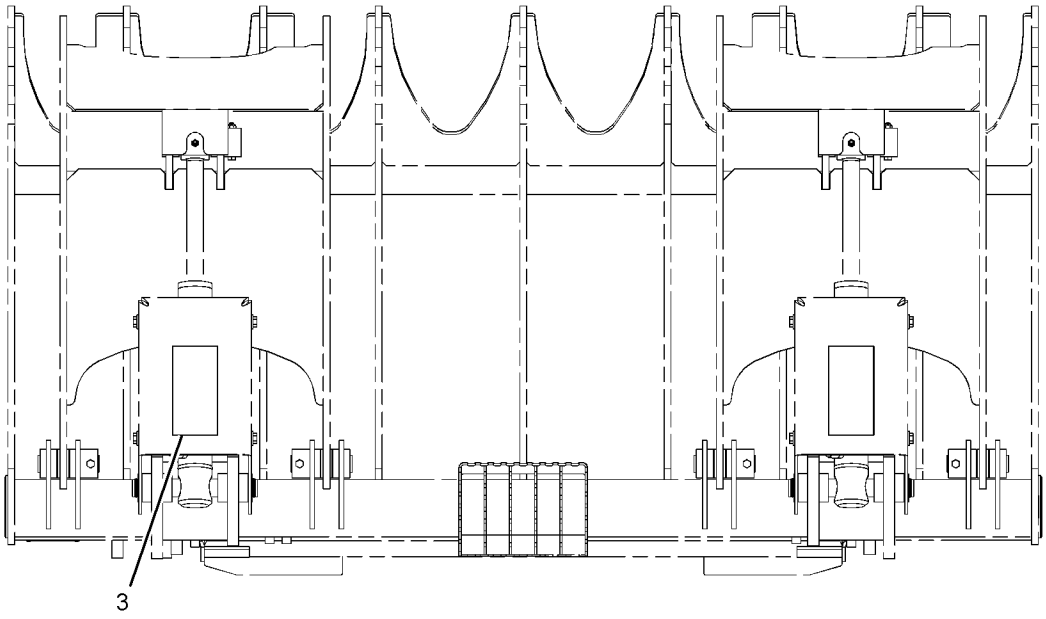

TOP VIEW

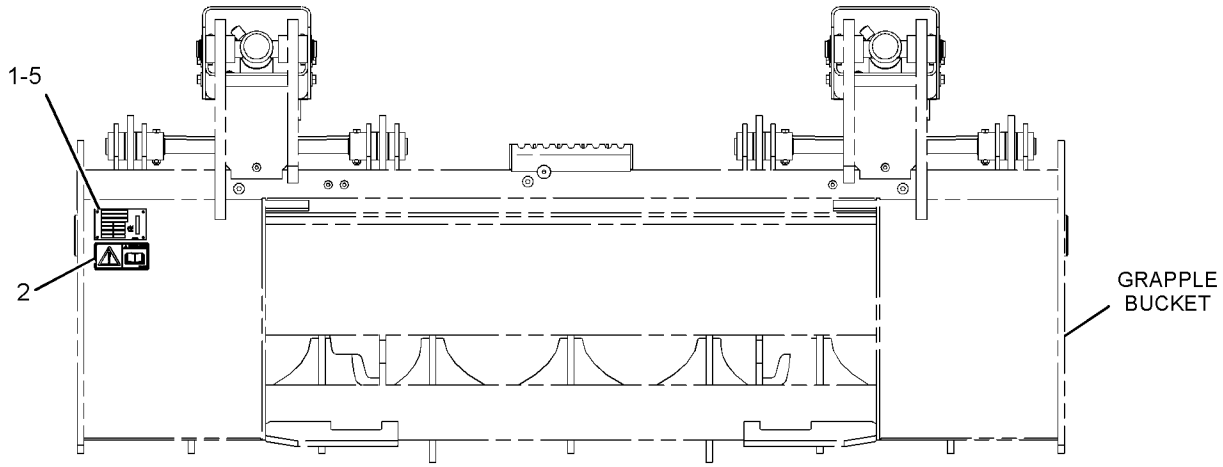

REAR VIEW

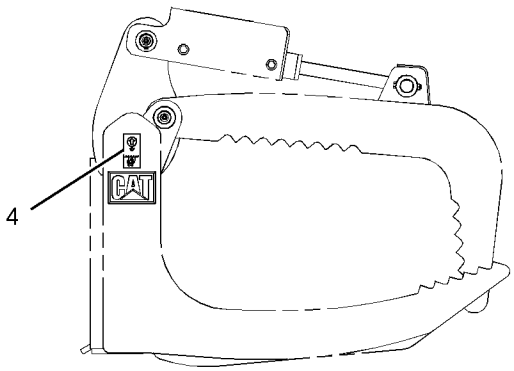

RIGHT SIDE VIEW

GRAPHIC #1 **<END>** g01373367

416-5688 PLATE & FILM GP

S/N: SEN1-UP

PART OF 393-7338 ENGINE AR-COMPLETE, 422-3447 PLATE & FILM GP

ALSO AN ATTACHMENT

SMCS-7405, 7557

i05359232

NOTE	REF NO	GRAPHIC REF	PART NUMBER	QTY	PART NAME 1 2 3 4 5 6 (PRODUCT LEVEL)	SEE PAGE
	1	1	**385-0414**	1	PLATE-IDENTIFICATION (CAT, C3.3B)	
	2	1	**375-2751**	1	FILM-IDENTIFICATION (ENGINE OIL, READ OMM)	
	3	1	**349-8603**	1	FILM-INSTRUCTION (FUEL, READ OMM)	

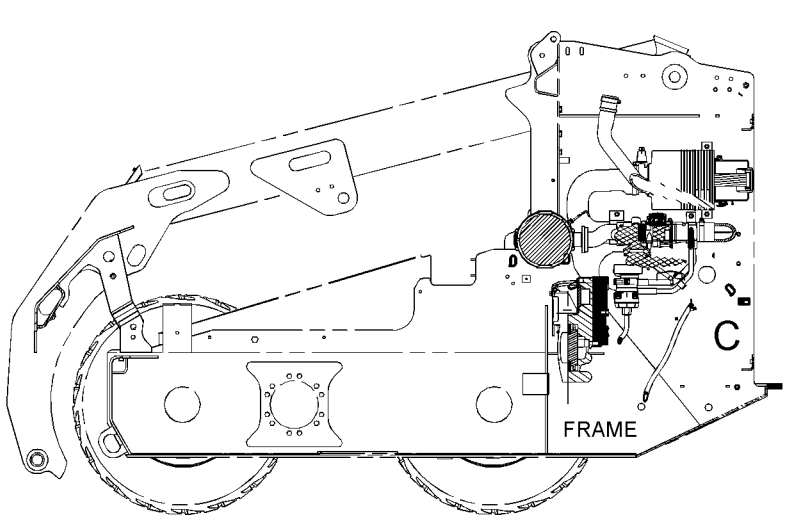

VIEW B-B

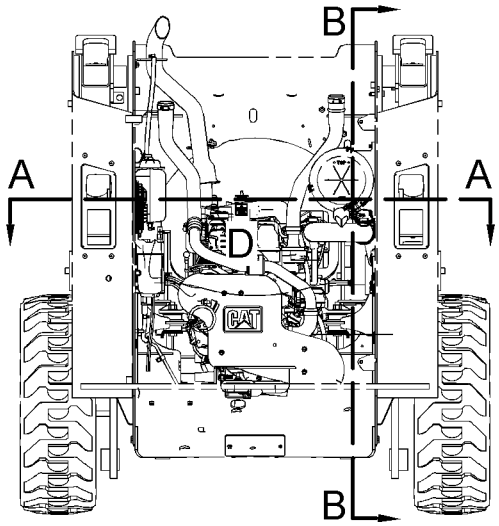

REAR VIEW
(PARTS REMOVED FOR CLARITY)

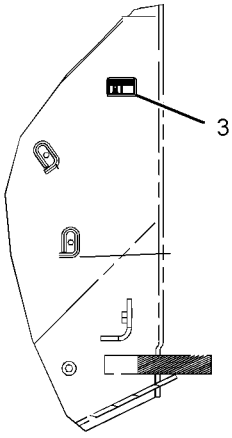

VIEW OF AREA C

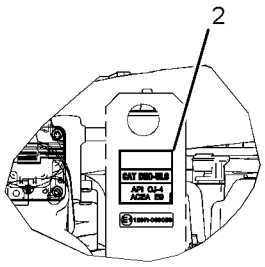

VIEW OF AREA D

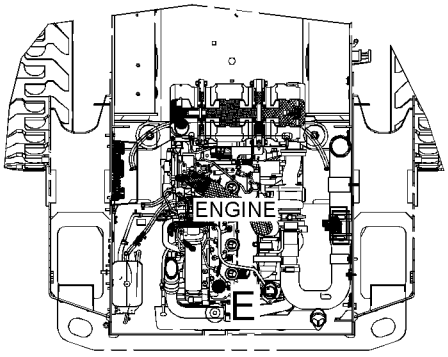

VIEW A-A

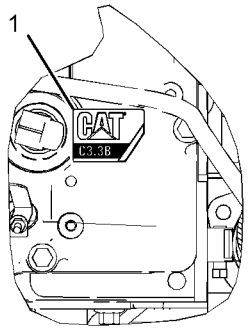

VIEW OF AREA E

GRAPHIC #1

<END>

g03394103

416-5689 PLATE & FILM GP

S/N: MPW1-UP

PART OF 393-7339 ENGINE AR-COMPLETE, 422-3448 PLATE & FILM GP

ALSO AN ATTACHMENT

SMCS-7405, 7557

i05359231

NOTE	REF NO	GRAPHIC REF	PART NUMBER	QTY	PART NAME 1 2 3 4 5 6 (PRODUCT LEVEL)	SEE PAGE
	1	1	**385-0414**	1	PLATE-IDENTIFICATION (CAT, C3.3B)	
	2	1	**375-2751**	1	FILM-IDENTIFICATION (ENGINE OIL, READ OMM)	
	3	1	**349-8603**	1	FILM-INSTRUCTION (FUEL, READ OMM)	

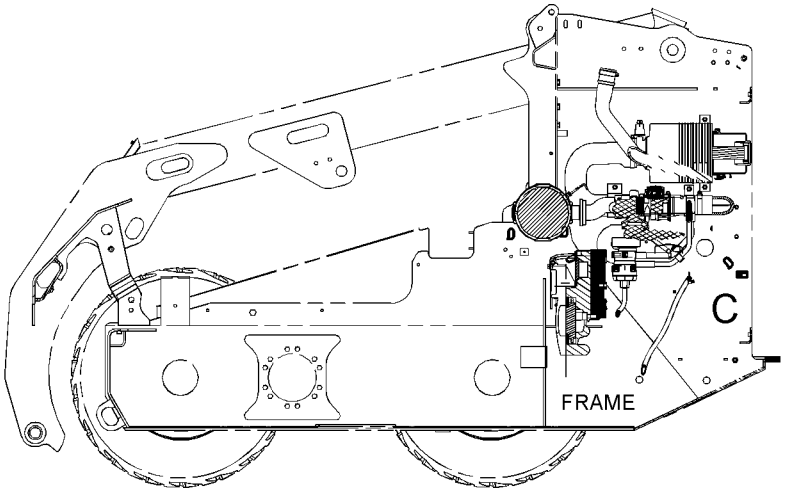

VIEW B-B

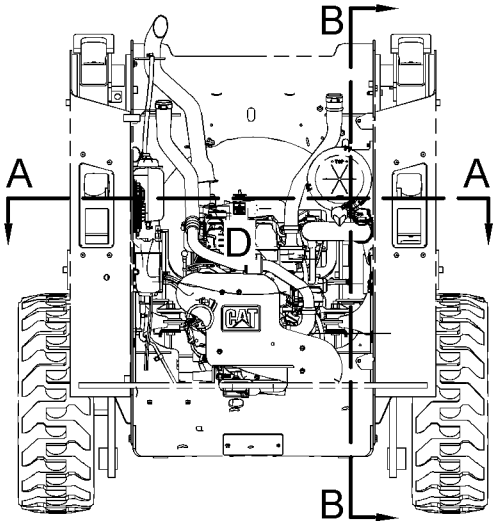

REAR VIEW
(PARTS REMOVED FOR CLARITY)

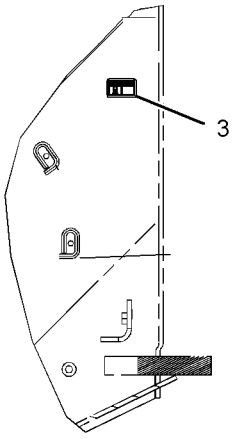

VIEW OF AREA C

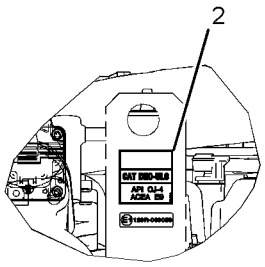

VIEW OF AREA D

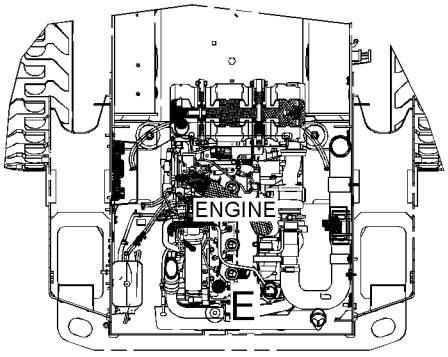

VIEW A-A

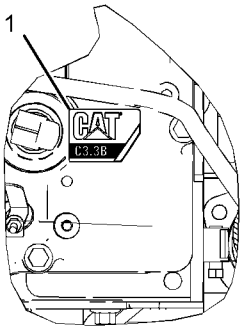

VIEW OF AREA E

GRAPHIC #1

<END>

g03394103

416-5788 PLATE & FILM GP

S/N: SEN1-UP
PART OF 422-3455 PLATE & FILM GP
AN ATTACHMENT

SMCS-7405, 7557

i05351847

NOTE	REF NO	GRAPHIC REF	PART NUMBER	QTY	PART NAME 1 2 3 4 5 6 (PRODUCT LEVEL)	SEE PAGE
	1	1	**385-0414**	1	PLATE-IDENTIFICATION (CAT, C3.3B)	
	2	1	**375-2751**	1	FILM-IDENTIFICATION (ENGINE OIL, READ OMM)	
	3	1	**349-8604**	1	FILM-INFORMATION (LOW SULFUR DIESEL FUEL)	

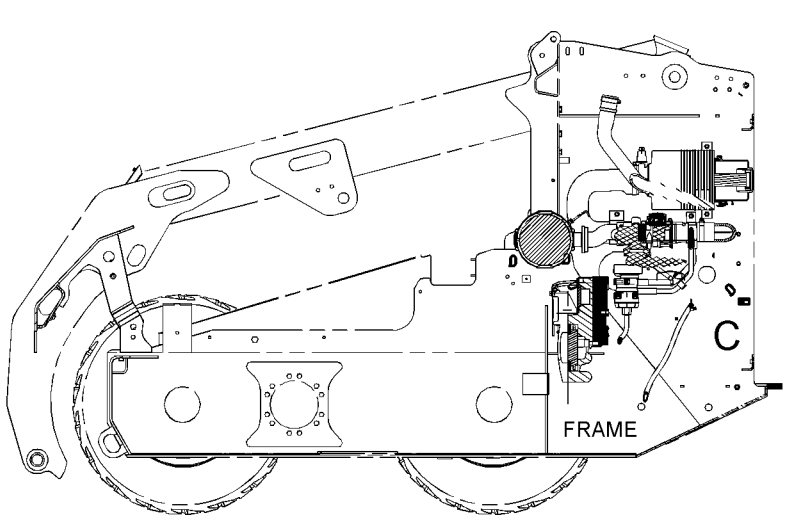

VIEW B-B

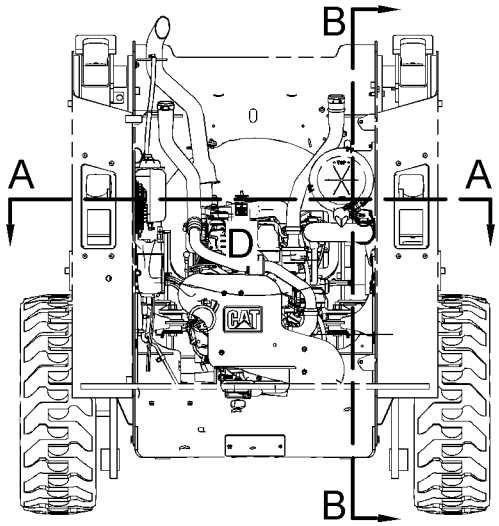

REAR VIEW
(PARTS REMOVED FOR CLARITY)

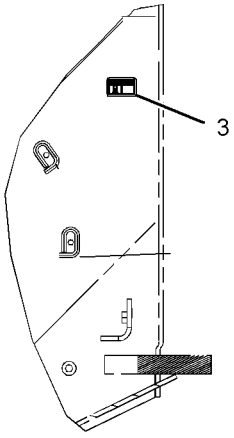

VIEW OF AREA C

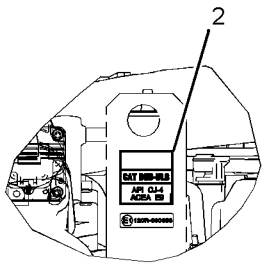

VIEW OF AREA D

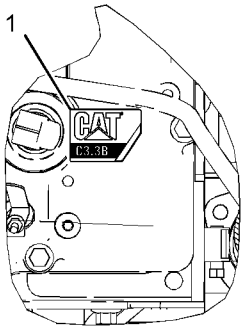

VIEW OF AREA E

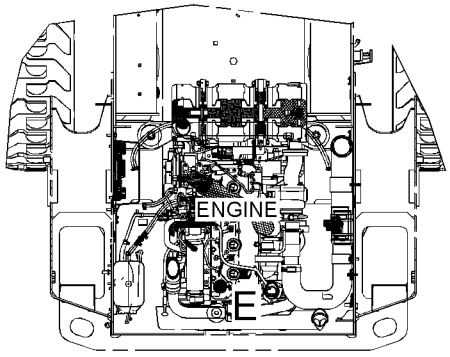

VIEW A-A

GRAPHIC #1

<END>

g03390380

416-5789 PLATE & FILM GP

S/N: MPW1-UP
PART OF 422-3456 PLATE & FILM GP
AN ATTACHMENT

SMCS-7405, 7557

i05351742

NOTE	REF NO	GRAPHIC REF	PART NUMBER	QTY	PART NAME 1 2 3 4 5 6 (PRODUCT LEVEL)	SEE PAGE
	1	1	**385-0414**	1	PLATE-IDENTIFICATION (CAT, C3.3B)	
	2	1	**375-2751**	1	FILM-IDENTIFICATION (ENGINE OIL, READ OMM)	
	3	1	**349-8604**	1	FILM-INFORMATION (LOW SULFUR DIESEL FUEL)	

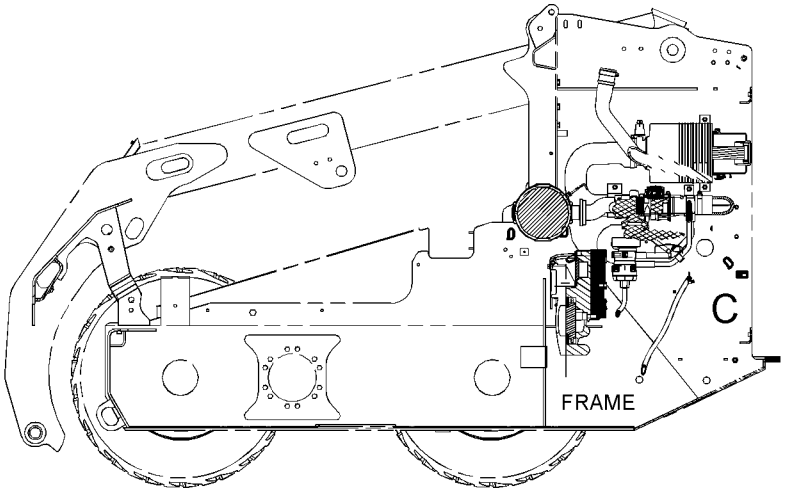

VIEW B-B

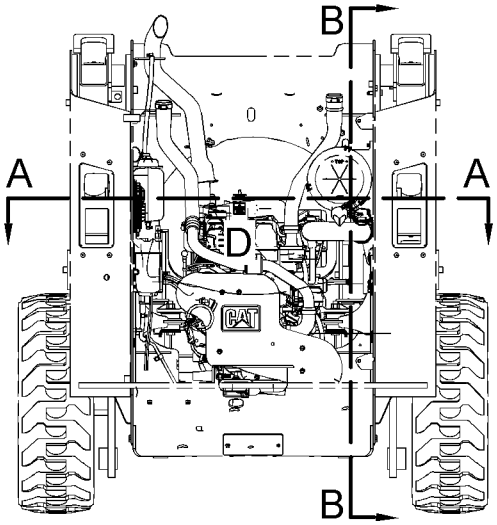

REAR VIEW
(PARTS REMOVED FOR CLARITY)

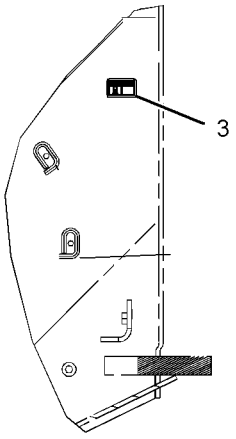

VIEW OF AREA C

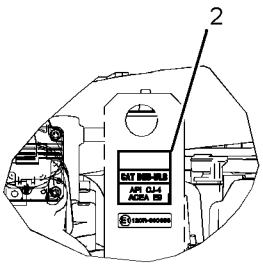

VIEW OF AREA D

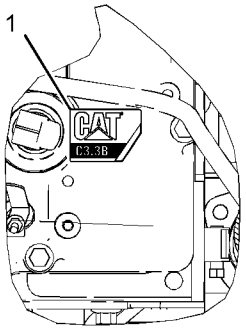

VIEW OF AREA E

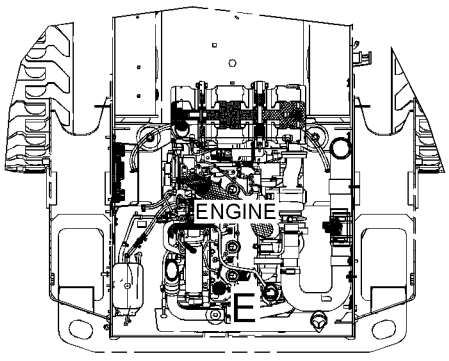

VIEW A-A

GRAPHIC #1

<END>

g03390380

418-9011 PLATE & FILM GP

AN ATTACHMENT

SMCS-7405, 7557 **i05156462**

NOTE	REF NO	GRAPHIC REF	PART NUMBER	QTY	PART NAME 1 2 3 4 5 6 (PRODUCT LEVEL)	SEE PAGE
	1	1	**199-3410**	1	FILM-IDENTIFICATION (SYNTHETIC HYD OIL, READ OMM)	

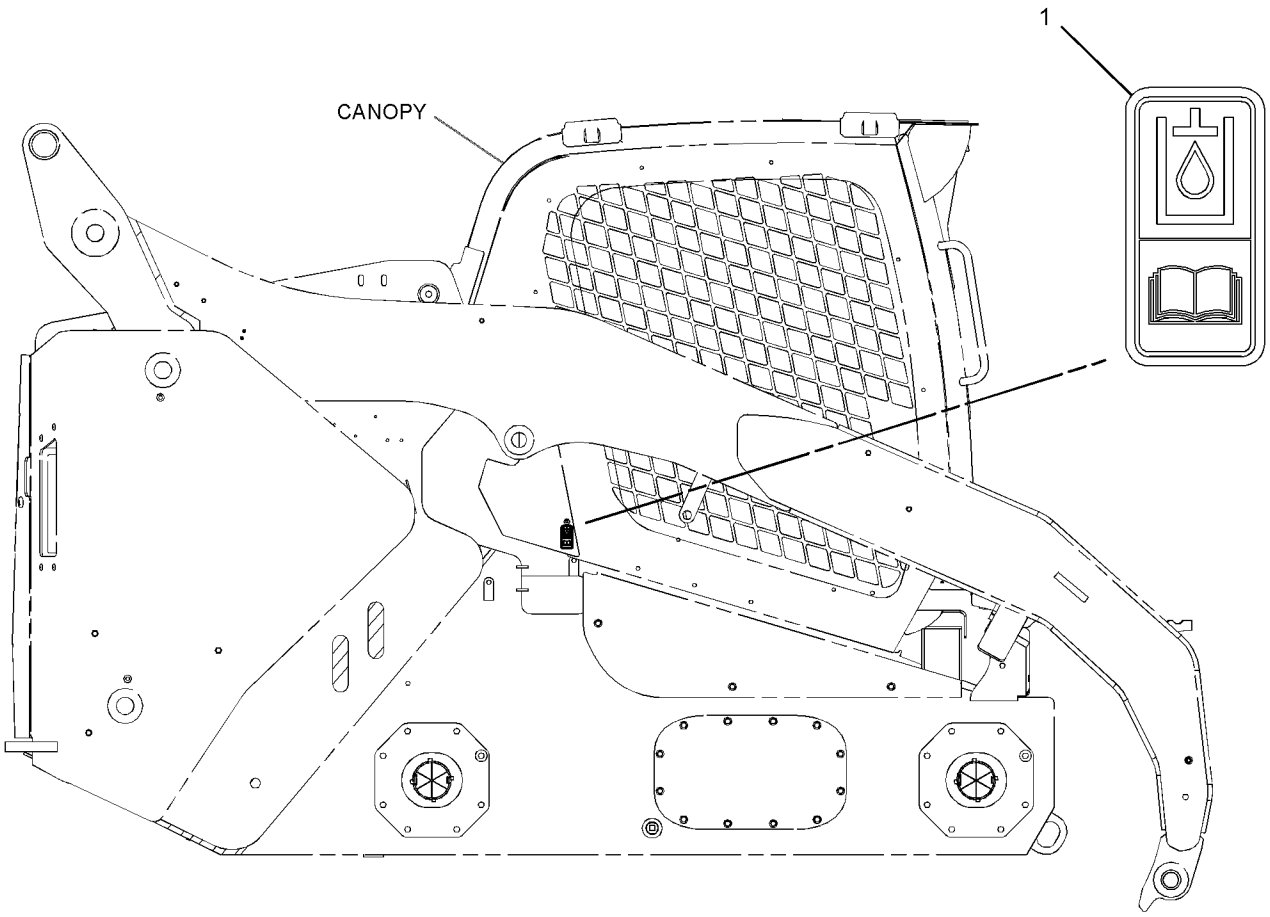

RIGHT SIDE VIEW

GRAPHIC #1 **<END>** g03323634

422-3447 PLATE & FILM GP

S/N: SEN1-UP

AN ATTACHMENT

SMCS-7405, 7557 **i05302412**

NOTE	REF NO	GRAPHIC REF	PART NUMBER	QTY	PART NAME 1 2 3 4 5 6 (PRODUCT LEVEL)	SEE PAGE
	1	2	**345-4619**	1	FILM-IDENTIFICATION (HYDRAULIC OIL FILL)	
	2	2	**344-5036**	1	FILM-WARNING (DIESEL FUEL)	
	3	2	**239-4990**	1	FILM-WARNING (HIGH PRESSURE CYLINDER)	
	4	2	**295-7337**	1	FILM-WARNING (ARM CRUSHING HAZARD)	
	5	2	**224-8945**	1	FILM-WARNING (DO NOT USE ETHER, U.S.)	
	6	2	**422-3225**	1	FILM-INSTRUCTION (SERVICE CHART, READ OMM)	
	7	1	**418-5763**	1	FILM-INSTRUCTION (OPERATOR CONTROLS, READ OMM)	
	8	1	**285-2177**	1	FILM-INSTRUCTION (OPERATOR CONSOLE)	
	9	2	**235-1365**	1	FILM-WARNING (HOT FLUID UNDER PRESSURE)	
	10	1	**346-8219**	1	FILM-WARNING (UNIVERSAL WARNING)	
	11	2	**157-2853**	1	FILM-INFORMATION (READ OMM)	
	12	1	**169-2876**	1	FILM-IDENTIFICATION (POWER RECEPTACLE, 12-VOLT)	
	13	1	**219-0302**	1	FILM-WARNING (NO WELD, NO DRILL, READ OMM)	
	14	2	**295-7320**	1	FILM-WARNING (CRUSH HAZARD, READ OMM)	
	15	2	**295-7319**	1	FILM-WARNING (CRUSH HAZARD, READ OMM)	
	16	1	**228-2615**	1	FILM-WARNING (UNIVERSAL, U.S.)	
	17	2	**295-7318**	1	FILM-WARNING (FALL/CRUSH HAZARD, NO ACCESS)	
	18	1	**295-7317**	1	FILM-WARNING (CRUSH HAZARD, CAB, READ OMM)	
	19	1	**239-6986**	1	PLATE-SERIAL NUMBER (MACHINE)	
	20	1	**253-9499**	1	FILM-WARNING (JUMP START, READ OMM)	
	21	1	**263-4836**	6	FILM-IDENTIFICATION (TIE-DOWN)	
	22	1	**416-6976**	1	FILM-WARNING (ROPS, FOPS, READ OMM)	
	23	2	**295-2567**	1	FILM-INSTRUCTION (BUCKET LOWER)	
	24	1	**384-2555**	1	FILM-WARNING (CAB SUPPORT)	
	25	2	**302-4389**	1	FILM-WARNING (CRUSH HAZARD, FASTEN SEAT BELT)	
FY			*416-5688*	1	PLATE & FILM GP	577

F - NOT SHOWN
Y - SEPARATE ILLUSTRATION

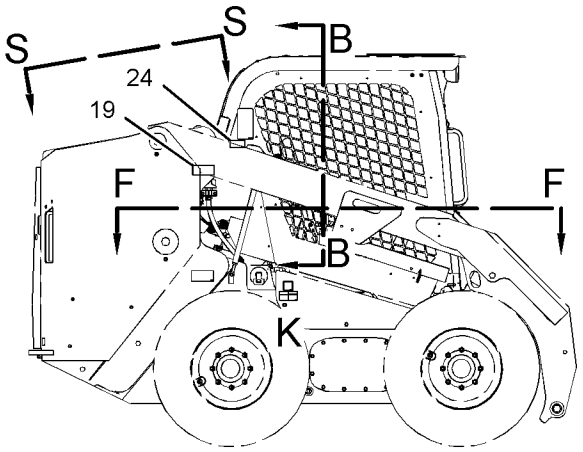

RIGHT SIDE VIEW

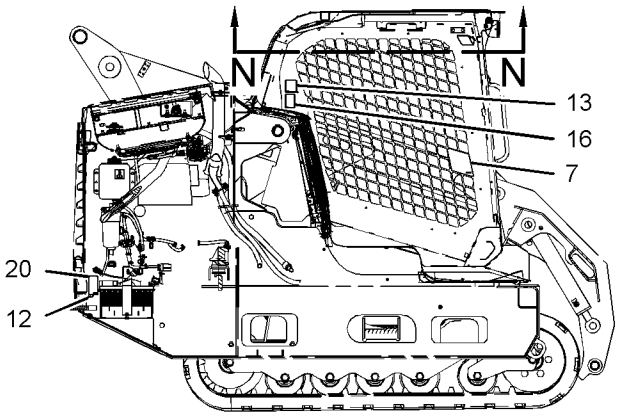

VIEW M-M

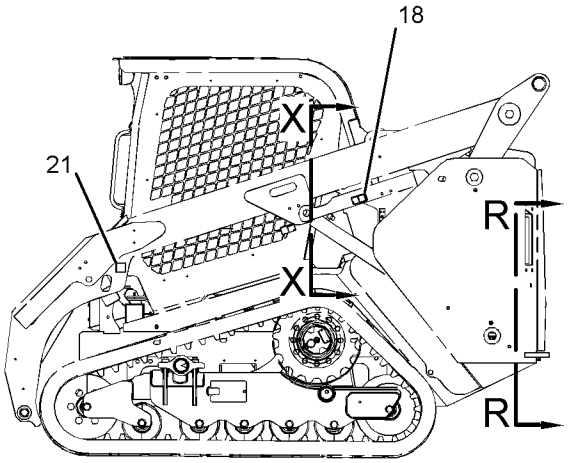

LEFT SIDE VIEW

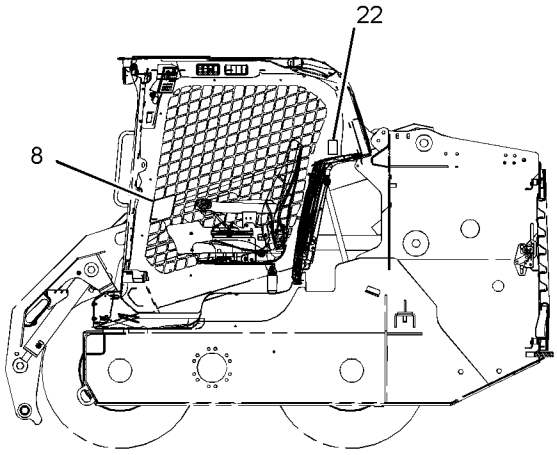

VIEW H-H

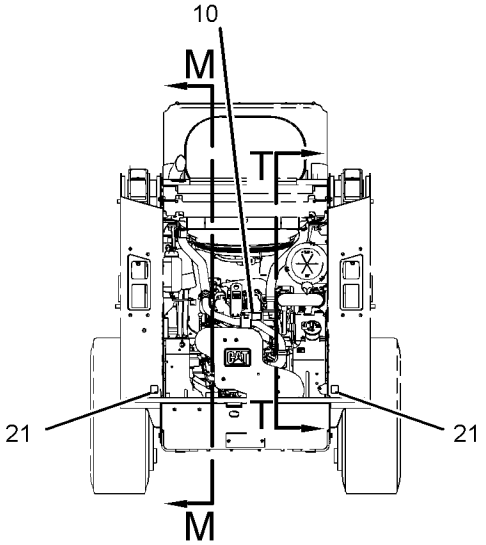

REAR VIEW
(PARTS REMOVED FOR CLARITY)

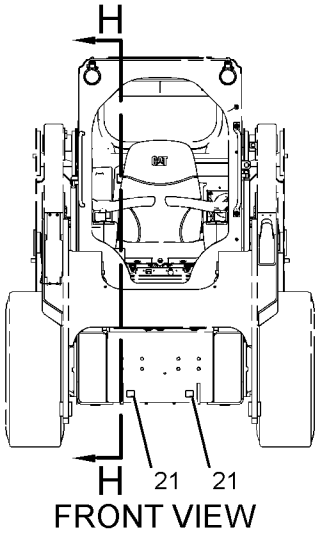

FRONT VIEW

REFER TO ALL ILLUSTRATIONS OF
THIS GROUP FOR AUXILIARY VIEWS

GRAPHIC #1

g03369849

422-3447 **PLATE & FILM GP (*contd.*)** **i05302412**

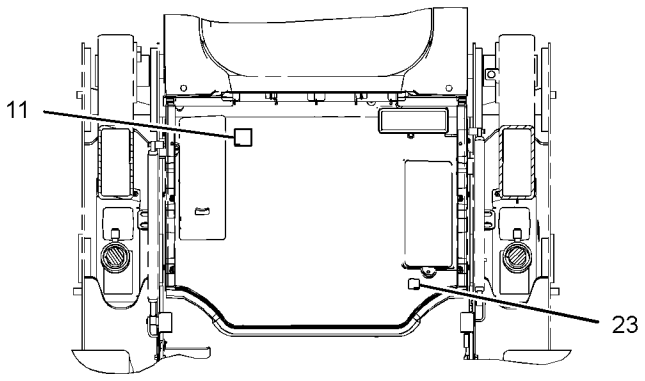

VIEW B-B

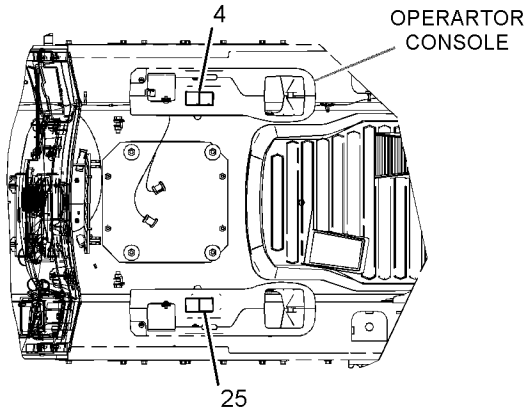

VIEW F-F

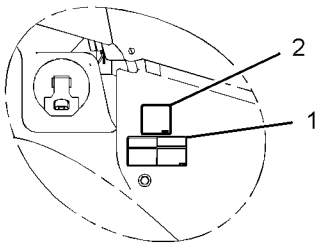

VIEW OF AREA K

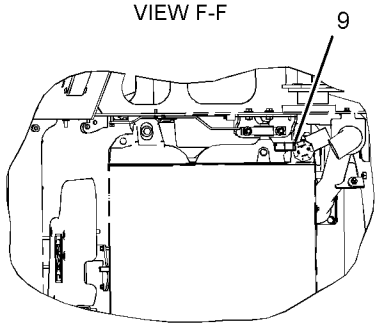

VIEW S-S

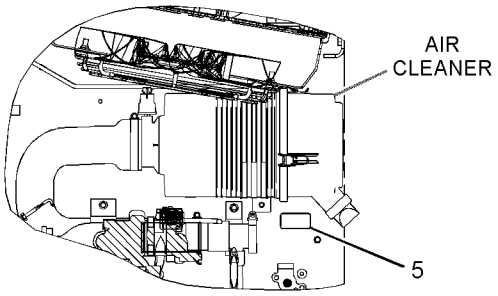

VIEW T-T

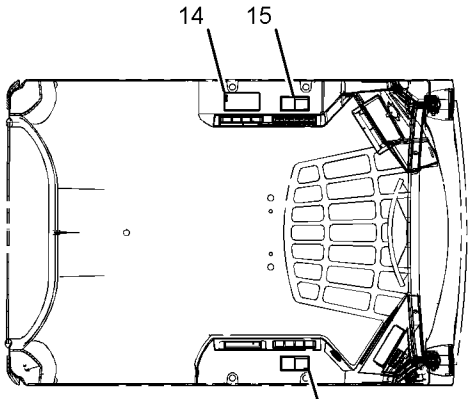

VIEW N-N

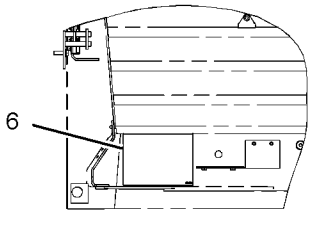

VIEW R-R

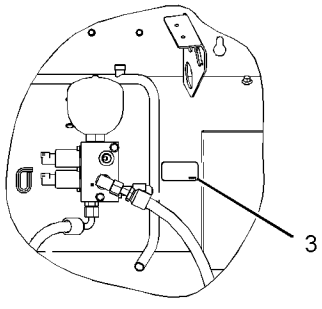

VIEW X-X

GRAPHIC #2 **<END>** g03369850

422-3448 PLATE & FILM GP

S/N: MPW1-UP

AN ATTACHMENT

SMCS-7405, 7557

i05302413

NOTE	REF NO	GRAPHIC REF	PART NUMBER	QTY	PART NAME 1 2 3 4 5 6 (PRODUCT LEVEL)	SEE PAGE
	1	2	**157-2853**	1	FILM-INFORMATION (READ OMM)	
	2	1	**169-2876**	1	FILM-IDENTIFICATION (POWER RECEPTACLE, 12-VOLT)	
	3	1	**219-0302**	1	FILM-WARNING (NO WELD, NO DRILL, READ OMM)	
	4	2	**224-8945**	1	FILM-WARNING (DO NOT USE ETHER, U.S.)	
	5	1	**228-2615**	1	FILM-WARNING (UNIVERSAL, U.S.)	
	6	2	**235-1365**	1	FILM-WARNING (HOT FLUID UNDER PRESSURE)	
	7	2	**239-4990**	1	FILM-WARNING (HIGH PRESSURE CYLINDER)	
	8	1	**239-6986**	1	PLATE-SERIAL NUMBER (MACHINE)	
	9	1	**253-9499**	1	FILM-WARNING (JUMP START, READ OMM)	
	10	1	**263-4836**	6	FILM-IDENTIFICATION (TIE-DOWN)	
	11	1	**285-2177**	1	FILM-INSTRUCTION (OPERATOR CONSOLE)	
	12	2	**295-2567**	1	FILM-INSTRUCTION (BUCKET LOWER)	
	13	1	**295-7317**	1	FILM-WARNING (CRUSH HAZARD, CAB, READ OMM)	
	14	2	**295-7318**	1	FILM-WARNING (FALL/CRUSH HAZARD, NO ACCESS)	
	15	2	**295-7319**	1	FILM-WARNING (CRUSH HAZARD, READ OMM)	
	16	2	**295-7320**	1	FILM-WARNING (CRUSH HAZARD, READ OMM)	
	17	2	**295-7337**	1	FILM-WARNING (ARM CRUSHING HAZARD)	
	18	2	**302-4389**	1	FILM-WARNING (CRUSH HAZARD, FASTEN SEAT BELT)	
	19	2	**422-3225**	1	FILM-INSTRUCTION (SERVICE CHART, READ OMM)	
	20	1	**418-5763**	1	FILM-INSTRUCTION (OPERATOR CONTROLS, READ OMM)	
	21	1	**346-8219**	1	FILM-WARNING (UNIVERSAL WARNING)	
	22	1	**384-2555**	1	FILM-WARNING (CAB SUPPORT)	
	23	1	**416-6976**	1	FILM-WARNING (ROPS, FOPS, READ OMM)	
	24	2	**345-4619**	1	FILM-IDENTIFICATION (HYDRAULIC OIL FILL)	
	25	2	**344-5036**	1	FILM-WARNING (DIESEL FUEL)	
FY			*416-5689*	1	PLATE & FILM GP	578

F - NOT SHOWN
Y - SEPARATE ILLUSTRATION

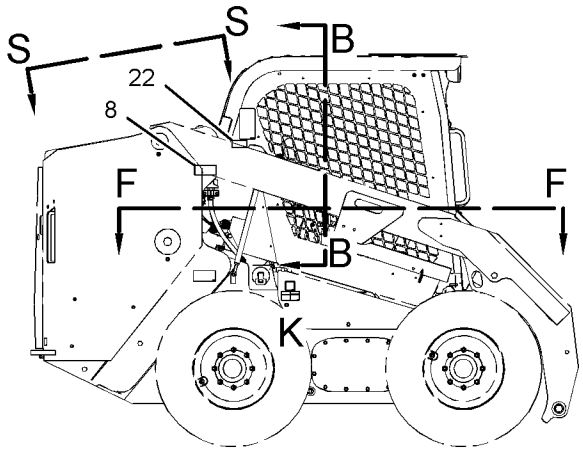

RIGHT SIDE VIEW

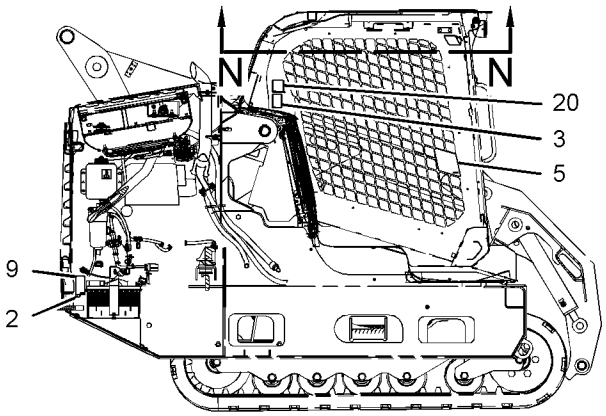

VIEW M-M

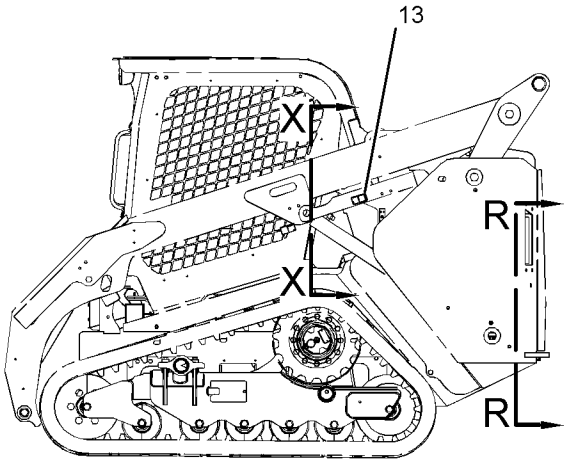

LEFT SIDE VIEW

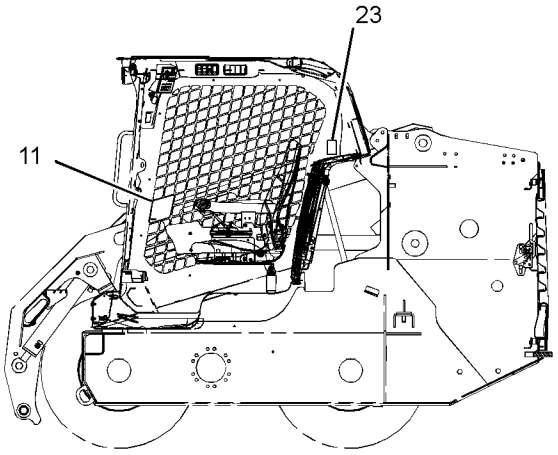

VIEW H-H

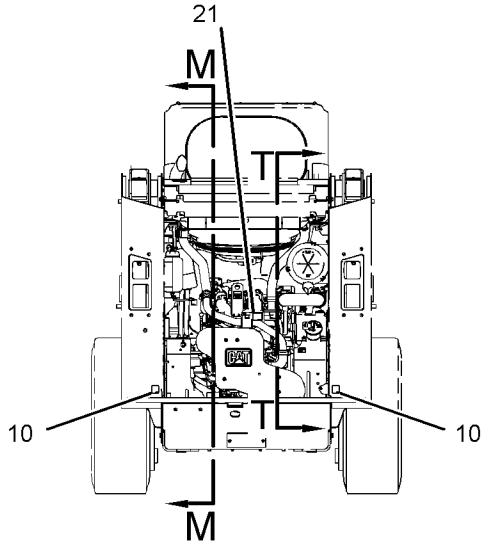

REAR VIEW
(PARTS REMOVED FOR CLARITY)

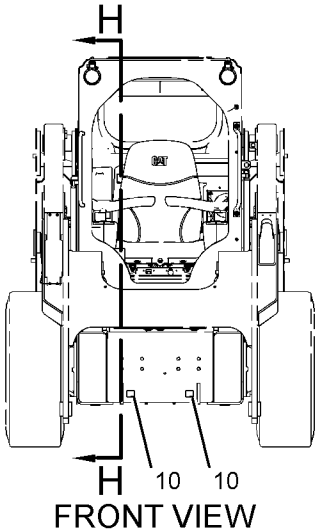

FRONT VIEW

REFER TO ALL ILLUSTRATIONS OF
THIS GROUP FOR AUXILIARY VIEWS

GRAPHIC #1

g03369912

422-3448 **PLATE & FILM GP (*contd.*)** **i05302413**

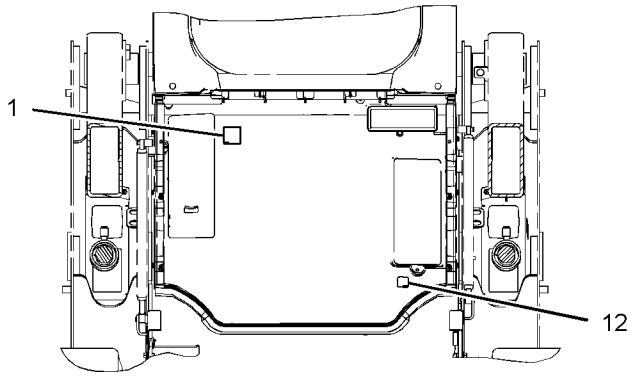

VIEW B-B

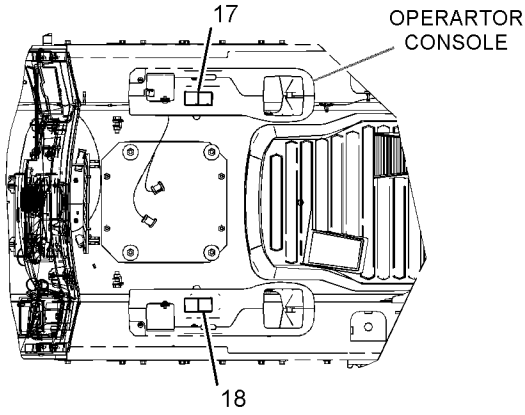

VIEW F-F

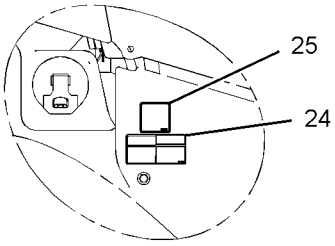

VIEW OF AREA K

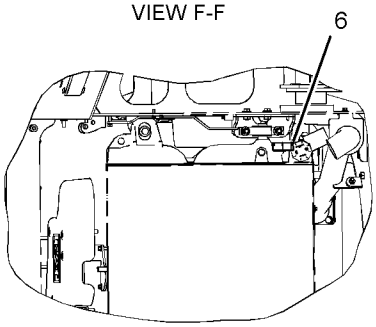

VIEW S-S

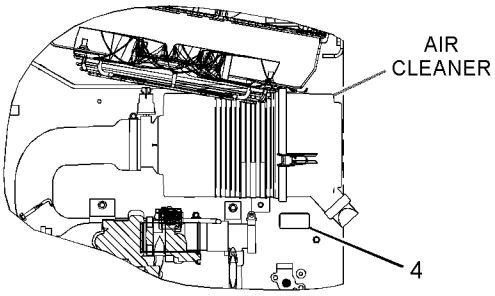

VIEW T-T

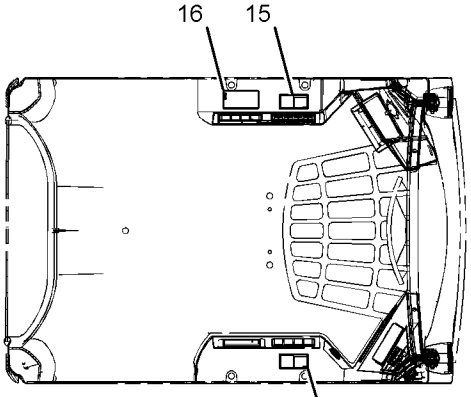

VIEW N-N

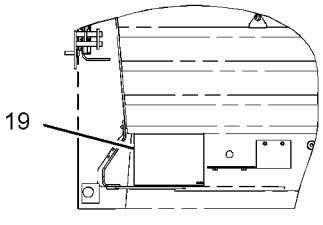

VIEW R-R

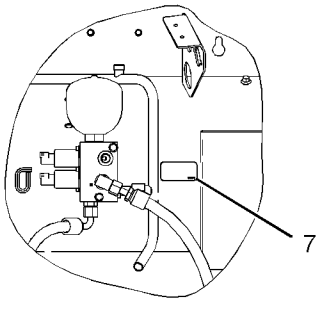

VIEW X-X

GRAPHIC #2 **<END>** g03369918

422-3455 PLATE & FILM GP

S/N: SEN1-UP

AN ATTACHMENT

SMCS-7405, 7557 **i05380592**

NOTE	REF NO	GRAPHIC REF	PART NUMBER	QTY	PART NAME 1 2 3 4 5 6 (PRODUCT LEVEL)	SEE PAGE
	1	2	**345-4619**	1	FILM-IDENTIFICATION (HYDRAULIC OIL FILL)	
	2	2	**344-5036**	1	FILM-WARNING (DIESEL FUEL)	
	3	2	**239-4991**	1	FILM-WARNING (HIGH PRESSURE CYLINDER)	
	4	2	**295-7338**	1	FILM-WARNING (CRUSH HAZARD, FASTEN SEAT BELT)	
	5	2	**224-8946**	1	FILM-WARNING (NO ETHER SPRAY/AIR INTK, INTL)	
	6	2	**422-3225**	1	FILM-INSTRUCTION (SERVICE CHART, READ OMM)	
	7	1	**418-5763**	1	FILM-INSTRUCTION (OPERATOR CONTROLS, READ OMM)	
	8	1	**285-2177**	1	FILM-INSTRUCTION (OPERATOR CONSOLE)	
	9	2	**235-1368**	1	FILM-WARNING (RADIATOR)	
	10	1	**346-8219**	1	FILM-WARNING (UNIVERSAL WARNING)	
	11	2	**157-2853**	1	FILM-INFORMATION (READ OMM)	
	12	1	**169-2876**	1	FILM-IDENTIFICATION (POWER RECEPTACLE, 12-VOLT)	
	13	1	**219-0302**	1	FILM-WARNING (NO WELD, NO DRILL, READ OMM)	
	14	2	**295-7330**	1	FILM-WARNING (CRUSH HAZARD, READ OMM)	
	15	2	**295-7329**	1	FILM-WARNING (CRUSH HAZARD, READ OMM)	
	16	1	**228-2616**	1	FILM-WARNING (UNIVERSAL, READ OMM)	
	17	2	**295-7328**	1	FILM-WARNING (FALL/CRUSH HAZARD, NO ACCESS)	
	18	1	**295-7327**	1	FILM-WARNING (CRUSH HAZARD, READ OMM)	
	19	1	**239-6986**	1	PLATE-SERIAL NUMBER (MACHINE)	
	20	1	**253-7817**	1	FILM-WARNING (JUMP START, READ OMM)	
	21	1	**263-4836**	6	FILM-IDENTIFICATION (TIE-DOWN)	
	22	1	**416-6976**	1	FILM-WARNING (ROPS, FOPS, READ OMM)	
	23	2	**295-2567**	1	FILM-INSTRUCTION (BUCKET LOWER)	
	24	1	**384-2556**	1	FILM-WARNING (CRUSH HAZARD, CAB, READ OMM)	
	25	2	**302-4390**	1	FILM-WARNING (CRUSH HAZARD, FASTEN SEAT BELT)	
FY			*416-5788*	1	PLATE & FILM GP	579

F - NOT SHOWN
Y - SEPARATE ILLUSTRATION

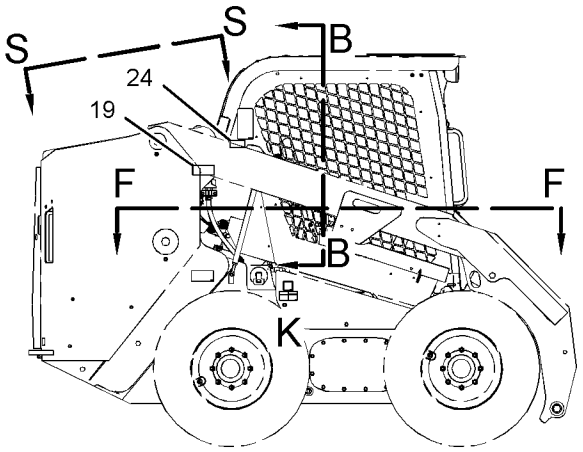

RIGHT SIDE VIEW

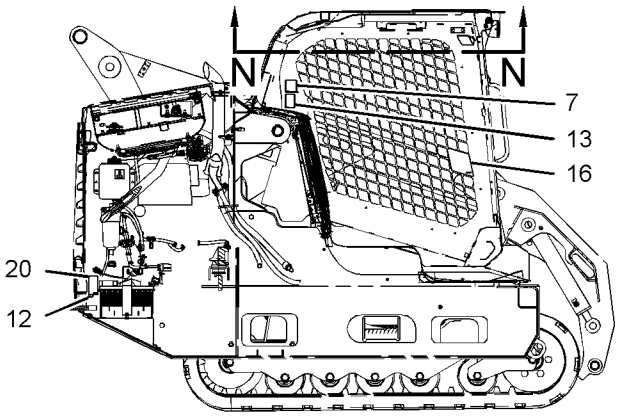

VIEW M-M

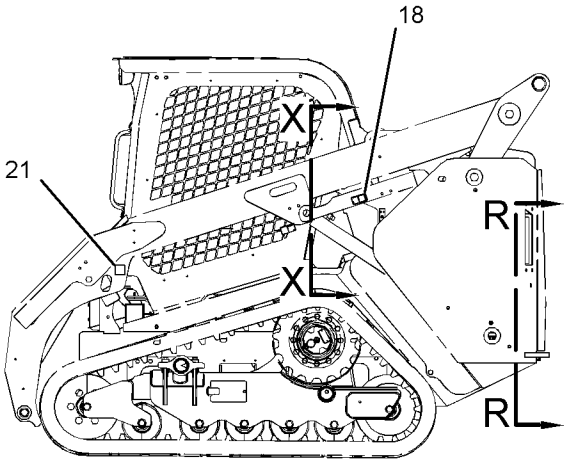

LEFT SIDE VIEW

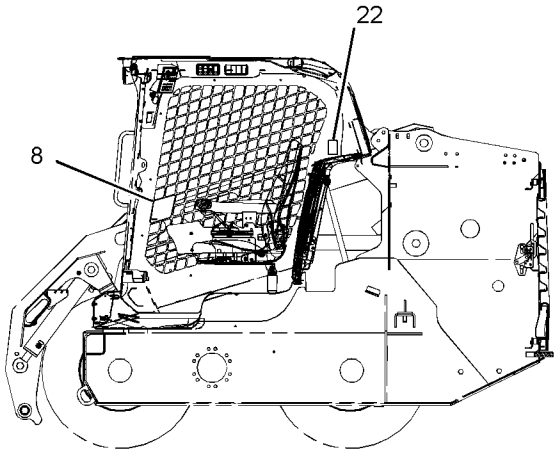

VIEW H-H

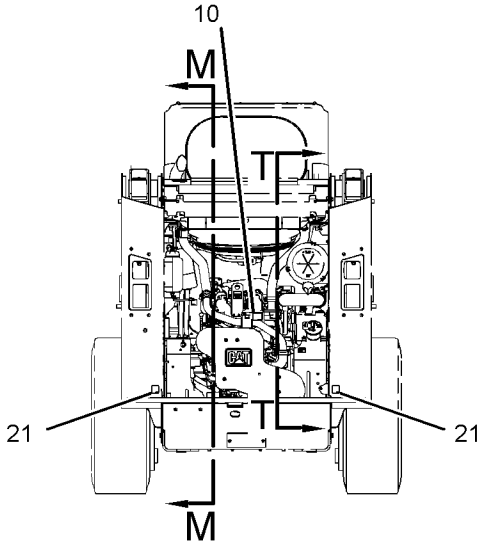

REAR VIEW
(PARTS REMOVED FOR CLARITY)

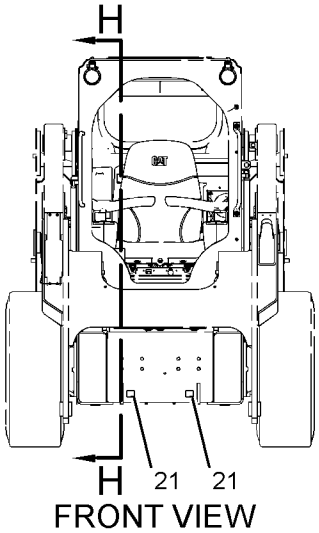

FRONT VIEW

REFER TO ALL ILLUSTRATIONS OF
THIS GROUP FOR AUXILIARY VIEWS

GRAPHIC #1

g03369926

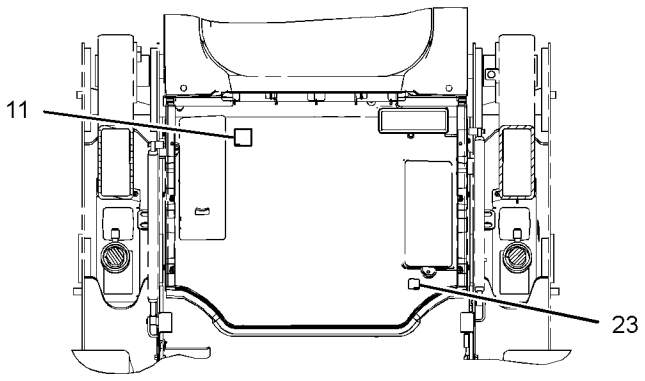

VIEW B-B

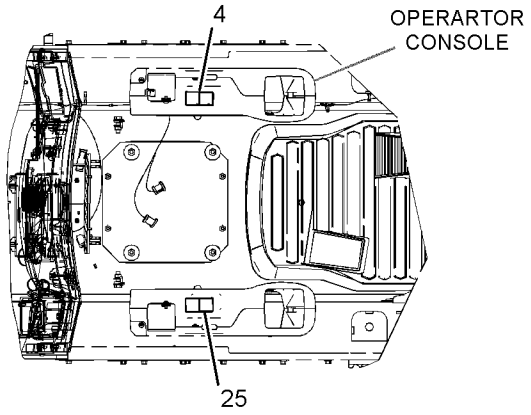

VIEW F-F

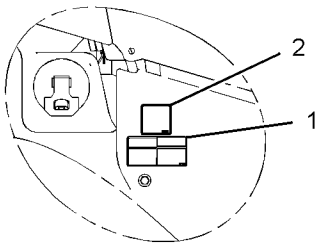

VIEW OF AREA K

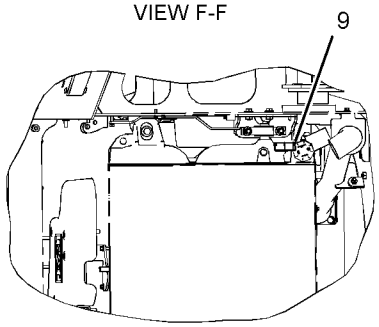

VIEW S-S

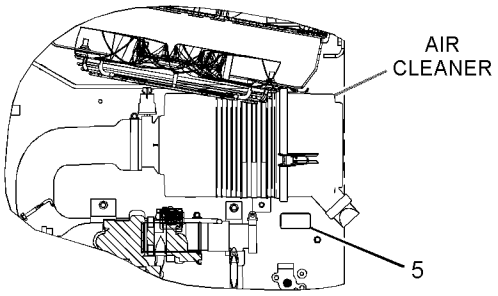

VIEW T-T

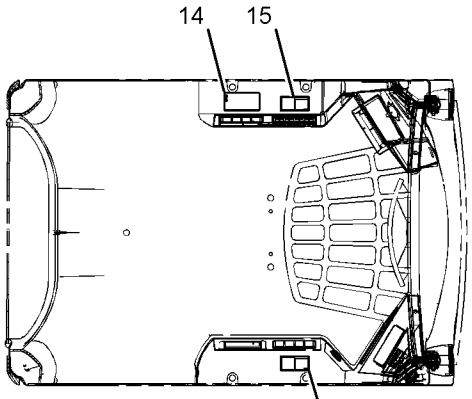

VIEW N-N

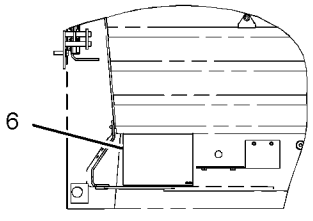

VIEW R-R

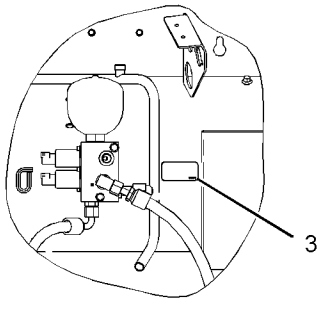

VIEW X-X

GRAPHIC #2 **<END>** g03369927

422-3456 PLATE & FILM GP

S/N: MPW1-UP

AN ATTACHMENT

SMCS-7405, 7557 **i05380591**

NOTE	REF NO	GRAPHIC REF	PART NUMBER	QTY	PART NAME 1 2 3 4 5 6 (PRODUCT LEVEL)	SEE PAGE
	1	2	**345-4619**	1	FILM-IDENTIFICATION (HYDRAULIC OIL FILL)	
	2	2	**344-5036**	1	FILM-WARNING (DIESEL FUEL)	
	3	2	**239-4991**	1	FILM-WARNING (HIGH PRESSURE CYLINDER)	
	4	2	**295-7338**	1	FILM-WARNING (CRUSH HAZARD, FASTEN SEAT BELT)	
	5	2	**224-8946**	1	FILM-WARNING (NO ETHER SPRAY/AIR INTK, INTL)	
	6	2	**422-3225**	1	FILM-INSTRUCTION (SERVICE CHART, READ OMM)	
	7	1	**418-5763**	1	FILM-INSTRUCTION (OPERATOR CONTROLS, READ OMM)	
	8	1	**285-2177**	1	FILM-INSTRUCTION (OPERATOR CONSOLE)	
	9	2	**235-1368**	1	FILM-WARNING (RADIATOR)	
	10	1	**346-8219**	1	FILM-WARNING (UNIVERSAL WARNING)	
	11	2	**157-2853**	1	FILM-INFORMATION (READ OMM)	
	12	1	**169-2876**	1	FILM-IDENTIFICATION (POWER RECEPTACLE, 12-VOLT)	
	13	1	**219-0302**	1	FILM-WARNING (NO WELD, NO DRILL, READ OMM)	
	14	2	**295-7330**	1	FILM-WARNING (CRUSH HAZARD, READ OMM)	
	15	2	**295-7329**	1	FILM-WARNING (CRUSH HAZARD, READ OMM)	
	16	1	**228-2616**	1	FILM-WARNING (UNIVERSAL, READ OMM)	
	17	2	**295-7328**	1	FILM-WARNING (FALL/CRUSH HAZARD, NO ACCESS)	
	18	1	**295-7327**	1	FILM-WARNING (CRUSH HAZARD, READ OMM)	
	19	1	**239-6986**	1	PLATE-SERIAL NUMBER (MACHINE)	
	20	1	**253-7817**	1	FILM-WARNING (JUMP START, READ OMM)	
	21	1	**263-4836**	6	FILM-IDENTIFICATION (TIE-DOWN)	
	22	1	**416-6976**	1	FILM-WARNING (ROPS, FOPS, READ OMM)	
	23	2	**295-2567**	1	FILM-INSTRUCTION (BUCKET LOWER)	
	24	1	**384-2556**	1	FILM-WARNING (CRUSH HAZARD, CAB, READ OMM)	
	25	2	**302-4390**	1	FILM-WARNING (CRUSH HAZARD, FASTEN SEAT BELT)	
FY			*416-5789*	1	PLATE & FILM GP	580

F - NOT SHOWN
Y - SEPARATE ILLUSTRATION

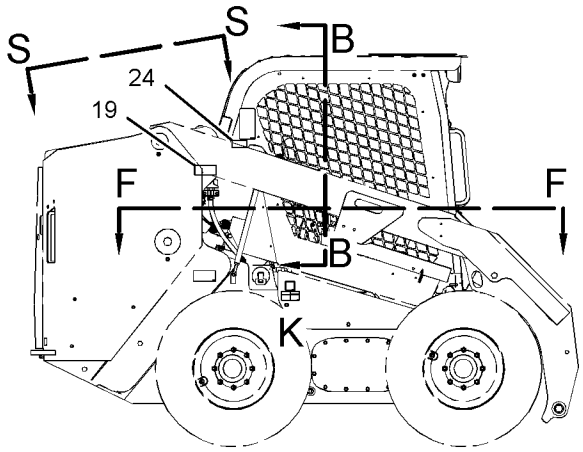

RIGHT SIDE VIEW

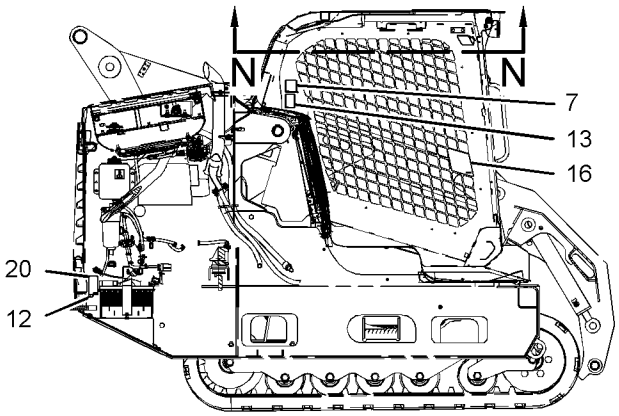

VIEW M-M

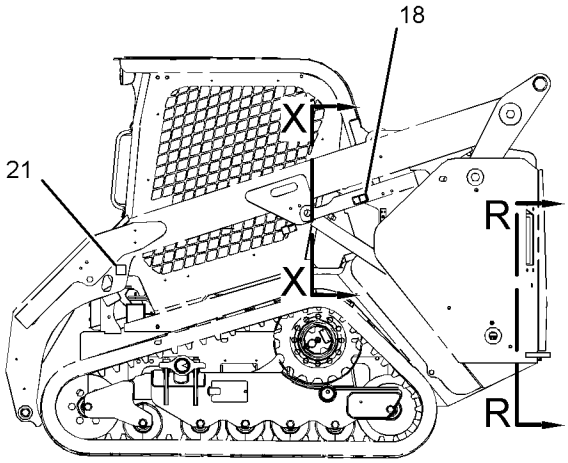

LEFT SIDE VIEW

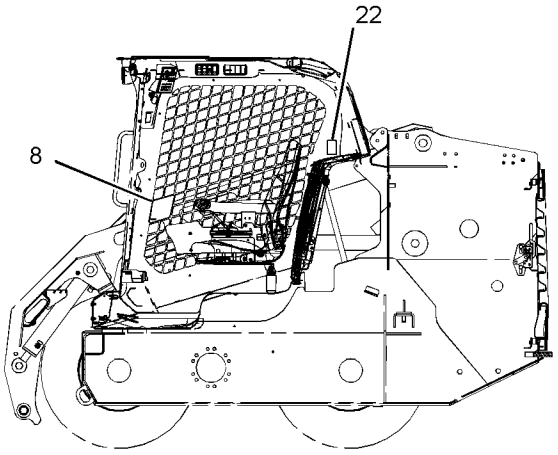

VIEW H-H

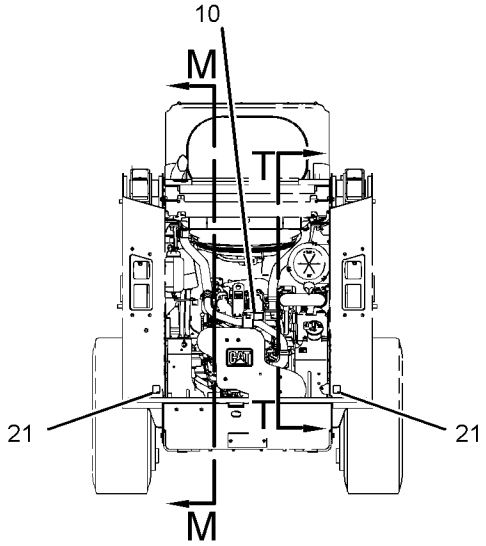

REAR VIEW
(PARTS REMOVED FOR CLARITY)

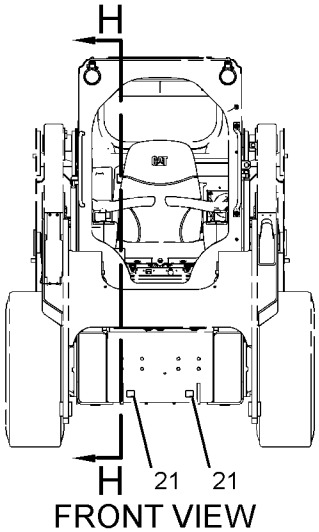

FRONT VIEW

REFER TO ALL ILLUSTRATIONS OF
THIS GROUP FOR AUXILIARY VIEWS

GRAPHIC #1

g03369926

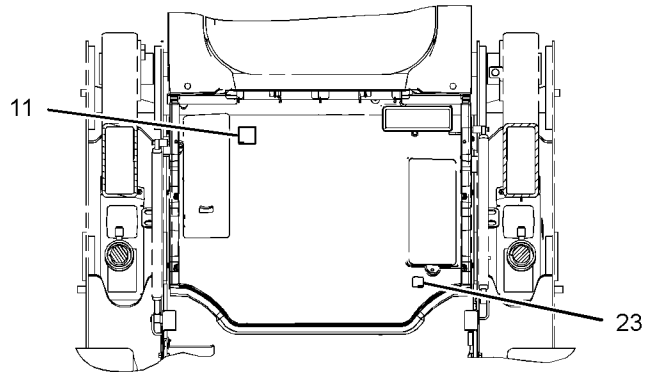

VIEW B-B

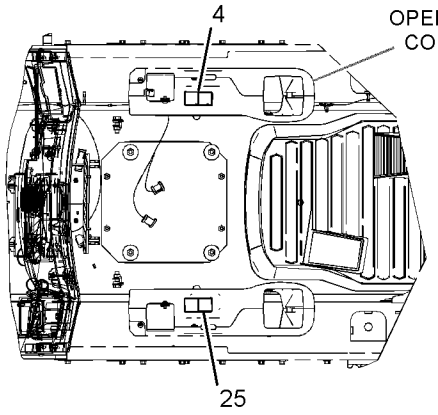

VIEW F-F

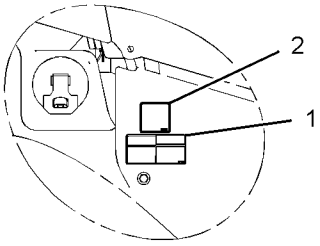

VIEW OF AREA K

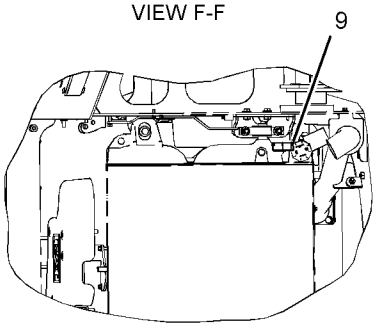

VIEW S-S

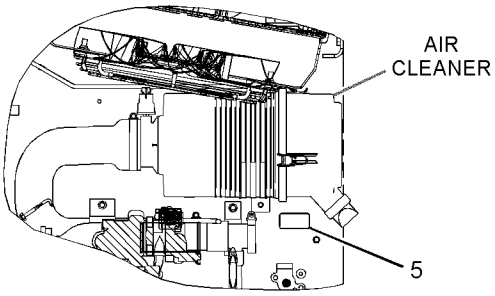

VIEW T-T

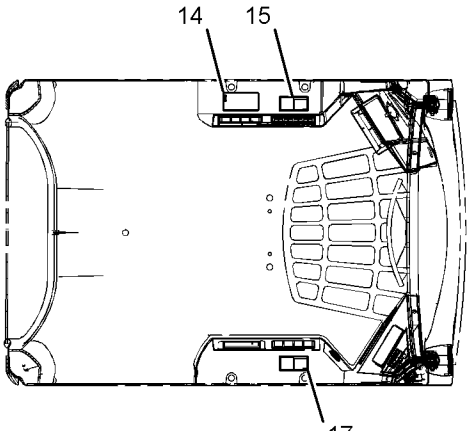

VIEW N-N

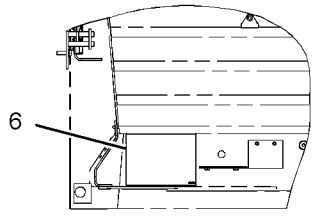

VIEW R-R

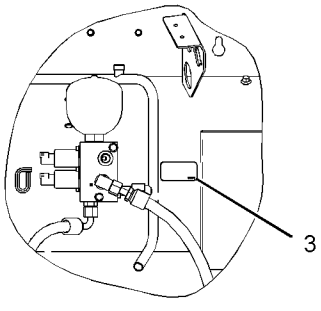

VIEW X-X

GRAPHIC #2 **<END>** g03369927

PART NUMBER INDEX

Part	Page
1	
1A-8912	87
	135
1B-2705	561
1B-3057	255
1D-4698	453
	454
1H-3244	95
	127
	128
1H-8134	210
1J-9671	205
	206
1M-6120	87
1P-1210	557
1P-4278	23
	54
	71
1S-0178	106
	108
1S-0994	233
	235
	237
	239
	243
1S-7252	87
2	
2D-6412	555
	556
2H-3755	227
2H-3768	453
	454
2H-7829	251
	253
2K-4821	212
2K-4973	561
2L-8050	96
2L-8058	96
2L-8066	104
	106
2L-8067	96
	99
2L-8069	96
	101
	104
2L-8071	105
	106
2L-8077	96
2L-8078	96
2L-8079	96
	105
	109
2L-8081	99
2M-7819	561
2M-9780	157
	231
	233
	235
	237
	239
	241
	243
	245
	247
	249
	251
	253
	257
	259
	271
2P-1293	39
2S-6408	458
2V-3216	71
	231
	249
2V-8260	536
2Y-5829	189
	202
3	
3B-4505	198
3B-4617	415
3B-7255	460
3B-8485	415
3B-8488	446
3B-8489	208
	210
	211
	212
	213
	217
	220
	222
	278
	279
	281
	302
	303
	343
	385
	386
	387
	388
	389
	390
	391
	392
	393
	394
	395
	396
	397
	398
	399
	400
	416
	430
	442
3D-2824	39
	155
	157
	158
	227
	229
	257
	259
	261
	263
	265
	268
3D-7805	218
3D-9369	561
3E-0105	111
3E-3371	473
	506
	516
3E-3892	44
3E-4075	39
3E-4091	257
	259
3E-4352	289
	522
	542
	559
3E-4370	429
3E-7404	231
	249
3E-9179	103
3E-9861	325
	453
	454
3E-9865	414
3F-5108	419
	420
3F-9556	531
3H-7654	460
	508
3J-1907	148
	155
	156
	157
	158
	218
	220
	222
	224
	227
	229
	245
	247
	261
	263
	265
3J-7354	205
	206
	257
	259
3K-0360	85
	155
	156
	157
	158
	162
	247
	255
	287
	497
3K-2151	220
	222
3K-5178	142
3K-8782	98
3P-0439	220
	222
3S-2093	87
	94
	96
	97
	99
	100
	101
	102
	103
	104
	105
	106
	108
	109
	110
	111
	112
	114
	119
	124
	133
	135
	138
	139
	140
	141
	142
	144
	145
	184
	187
	194
	196
	460
	483
	484
	485
	486
	487
	502
	506
	516
	518
	522
	524
	527
	536
	542
	543
3S-8536	210
3S-9182	189
3T-0851	470
	473
	500
	504
	516
	518
	543
3T-0852	187
3T-3349	87
4	
4B-4278	561
4B-4280	138
4B-4863	142
	148
	196
	199
4B-9302	263
	265
4D-7733	527
4F-3654	325
4F-3658	419
	420
4J-0524	218
4J-5267	265
4K-0367	419
	420
4K-9429	545
	546
4L-7711	67
4M-0061	557
4M-5285	279
	281
4P-7581	87
	124
	142
	194
	261
	536
4P-8134	87
	135

► **PRIMARY REFERENCE**

PART NUMBER INDEX

Part	Page
	139
	140
	142
	193
4V-0612	227
	229
	268
4V-8577	561

5

Part	Page
5B-0651	210
5B-0935	442
5C-2874	142
	144
5C-2890	65
	87
	95
	127
	128
	135
	142
	144
	497
	498
	500
	504
	516
	518
	525
	539
	540
	561
5C-7261	61
	87
	116
	127
	128
	135
	138
	198
	460
	479
	514
	523
	531
	534
	543
5C-8310	563
5C-8311	563
5C-8312	148
	196
	199
5C-9553	71
	87
	135
	144
	194
	200
	418
	498
	499
5H-9743	210
	534
5K-1787	152
5L-3233	47
	48
5P-0372	502
	506
	509
	516
	518
5P-0743	263
	265
5P-0767	527
	529
5P-1076	29
	44
	185
	247
	304
	305
	445
	502
	506
	516
	518
5P-1420	54
5P-1442	23
	156
	158
	257
	259
	263
	265
5P-1507	71
5P-3454	87
	96
5P-3863	67
	283
5P-4115	44
	87
	135
	142
	536
5P-4116	51
	71
	87
	142
	187
	191
	261
	270
	467
	479
	497
	514
	523
	527
	529
	543
5P-4571	103
	107
	199
5P-4868	52
	53
5P-4906	527
	529
5P-5148	251
	253
5P-5623	142
5P-5637	474
	512
5P-5670	512
5P-7162	135
5P-7648	500
	504
	516
	518
5P-7814	67
	83
5P-7957	545
	546
5P-7958	530
	547
	548
	549
	550
5P-8246	460
5P-8247	419
	420
5P-8309	191
5P-8444	54
5P-8500	530
5P-9615	287
5P-9909	112
	137
	524
5R-5927	44
5S-2457	294
	295
	453
	454
5W-1987	474
5W-4957	474

6

Part	Page
6B-6682	211
6C-3679	559
6D-1641	529
6D-4246	527
6D-4247	233
	235
	237
	239
	243
6D-5729	142
6F-4718	160
	161
6F-6672	277
6K-4148	189
6K-8178	71
6L-3966	502
	506
	509
	516
	518
6L-7155	561
6N-8863	210
6T-1375	502
	506
	516
	518
6T-3631	411
6T-3632	411
6T-3633	411
6V-0467	255
6V-0826	87
6V-0852	155
	157
	263
	265
6V-1970	1
	530
6V-2369	87
6V-2689	98
6V-3251	44
6V-3582	61
	261
6V-3965	156
	158
	263
	265
6V-4356	527
6V-4357	527
6V-5048	153
	154
6V-5683	498
6V-5839	534
6V-5845	197
6V-6609	527
	529
6V-7357	500
	504
	514
	516
	518
	523
	543
6V-7412	561
6V-7644	304
	305
6V-7687	557
6V-7688	197
6V-7699	84
	467
6V-7743	226
6V-7744	186
	415
	416
6V-8076	263
	265
6V-8210	65
6V-8369	480
6V-8397	85
	155
	157
	158
	209
	227
	229
	231
	233
	235
	237
	239
	241
	243
	245
	247
	249
	251
	253
	261
	263
	265
6V-8398	39
	155
	156
	157
	218
	220
	222
	227
	229
	255
	257
	261
	268
	287
6V-8399	271
6V-8625	255
6V-8626	257
	259
6V-8632	247
6V-8633	261
6V-8634	157
6V-8636	155
	157
	227
	229

PART NUMBER INDEX

Part	Page
	247
6V-8637	155
	157
	257
	259
6V-8638	157
6V-8639	155
	157
	255
	287
6V-8642	247
	257
	259
6V-8715	231
	233
	235
	237
	239
	241
	243
	245
	249
	251
	253
6V-8716	155
	157
6V-8724	155
	157
	245
	261
6V-8781	155
	263
	265
6V-8782	157
6V-8784	39
6V-8788	233
	235
	237
	239
	243
6V-8949	447
6V-8981	227
	229
6V-9004	155
	158
6V-9007	39
	227
	229
	257
	259
	263
	265
	268
6V-9160	39
6V-9169	227
	229
	261
	268
6V-9189	226
	278
	279
	280
	281
	302
	303
	343
	385
	386
	387
	388
	389
	390
	391
	392
	393
	394
	395
	396
	397
	398
	399
	400
	430
	446
	532
	533
	545
	546
	557
6V-9498	515
6V-9509	257
6V-9671	411
6V-9672	196
	199
6V-9746	39
	155
	157
	158
	227
	229
	257
	259
	263
	265
	268
6V-9830	257
6V-9836	158
6V-9852	257
	259
6W-5698	85
6W-5752	415
6Y-5839	419
	420
6Y-5840	419
	420

7

Part	Page
7D-1553	527
7D-1649	508
7D-8508	213
	215
	216
	217
7E-2700	197
	295
	568
7G-1060	135
7G-5984	247
7G-5985	247
7G-5986	247
7G-7917	95
	105
7G-8839	152
7J-0204	211
	212
	213
	215
7J-9108	247
	255
	257
	259
	261
	268
	271
7K-1181	39
	54
	87
	112
	113
	114
	119
	124
	135
	137
	139
	140
	142
	144
	148
	156
	158
	194
	257
	259
	261
	296
	297
	460
	527
	529
	536
7M-8485	155
	157
	158
	263
	265
7N-7221	99
	103
7P-1695	87
	113
	114
	135
	142
7R-2750	95
7R-2751	95
	102
7S-3912	241
7S-3913	241
7S-3916	231
	249
	251
	253
7S-3919	231
	249
	251
	253
7T-0094	95
7T-6799	536
7X-0495	460
7X-0507	547
	548
	549
	550
7X-0510	87
7X-0517	325
	453
	454
7X-0521	197
7X-0599	285
7X-0603	557
7X-0610	152
7X-0613	61
	471
	532
	533
7X-0632	187
7X-0818	227
	229
	268
	417
7X-0848	480
7X-2475	290
7X-2534	65
	135
	287
7X-2535	158
7X-2537	87
	135
	148
7X-2538	255
7X-2553	442
	508
7X-2556	534
7X-2557	201
7X-2559	197
7X-3229	573
7X-7729	44
	189
	202
	208
	210
	251
	253
	281
	442
	470
	472
	473
	478
7X-7920	84
7Y-3995	99
7Y-3996	99
7Y-5074	527
	529
7Y-9099	534

8

Part	Page
8C-3413	168
8C-3451	257
	259
8C-3681	71
8C-4982	142
	148
	502
	506
	517
	518
8C-6758	261
8C-7524	526
8C-8400	227
	229
	268
8C-8451	111
8C-8478	304
	305
8C-8778	187
	551
8D-9671	229
8E-1118	514
	523
	543
8E-5702	304
	305
8F-7242	87
	135
8G-1151	502
	506
	516
	518
8J-2880	304

► **PRIMARY REFERENCE**

PART NUMBER INDEX

Part	Page
	305
8L-8413	557
8M-2770	71
8M-4791	557
8N-1548	104
8N-1549	95
8Q-6027	215
	216
8R-3857	191
	390
	391
8R-9654	91
8S-0934	547
	548
	549
	550
	555
	556
8S-4723	547
	548
	549
	550
	555
	556
8T-0197	156
	158
8T-0267	470
	473
8T-0271	275
	277
8T-0289	467
8T-0328	135
	142
	144
	470
	473
	500
	504
	517
	519
8T-0337	261
8T-0341	162
8T-0389	65
	117
	118
8T-0722	547
	548
	549
	550
8T-0737	460
8T-1757	290
8T-1893	241
8T-1894	241
8T-1905	155
	158
8T-2173	71
8T-2192	500
	504
	517
	519
8T-2225	106
	108
8T-2561	44
8T-2658	411
8T-3647	226
8T-3991	189
	227
8T-3998	470
	473
8T-4121	51
	58
	71
	113
	114
	133
	142
	146
	186
	189
	193
	227
	229
	231
	241
	245
	249
	257
	259
	263
	265
	275
	276
	283
	405
	412
	415
	416
	447
	457
	478
	500
	504
	509
	517
	519
8T-4122	29
	152
	197
	201
	255
	290
	442
	460
	508
	534
8T-4123	304
	305
8T-4132	29
	460
8T-4133	44
	51
	87
	113
	114
	133
	135
	142
	146
	227
	229
	245
	249
	257
	259
	263
	265
	405
	412
	447
	457
	527
8T-4136	44
	210
	231
	249
	257
	259
	263
	265
	405
	412
	447
	457
	527
8T-4137	71
	208
	241
	442
	551
8T-4138	279
8T-4139	65
	247
	304
	305
	445
	527
	534
	557
8T-4140	460
8T-4142	514
	523
	543
8T-4171	133
	142
	144
	148
	231
	249
8T-4172	202
	227
	229
	416
8T-4176	29
8T-4178	415
8T-4181	186
	467
8T-4183	460
	508
8T-4185	189
	245
8T-4186	44
	447
8T-4189	65
	87
	193
	233
	235
	237
	239
	243
	270
8T-4190	197
	201
8T-4191	210
8T-4194	456
8T-4195	133
	245
	251
	253
	263
	265
	281
8T-4196	44
	51
	142
	186
	187
	189
	227
	229
8T-4199	142
8T-4200	87
	138
	142
	209
	251
	253
	270
8T-4205	71
	91
	95
	111
	127
	128
	133
	135
	142
	144
	148
	156
	158
	186
	194
	200
	226
	287
	460
	497
	498
	499
	500
	504
	514
	517
	519
	523
	525
	536
	539
	540
	545
	546
8T-4222	416
8T-4223	65
	192
	282
	283
	415
	445
	456
	458
	527
	534
	547
	548
	549
	550
	555
	556
8T-4224	44
	61
	65
	87
	116
	127
	128
	138
	142
	148
	193
	198
	209
	227
	229
	233
	235
	237
	239
	243
	251
	253
	255
	270
	275

PART NUMBER INDEX

Part	Page
	276
	460
	479
	532
	533
	534
	543
	545
	546
	551
	553
	561
8T-4226	547
	548
	549
	550
8T-4244	44
	65
	445
	456
	460
	502
	506
	508
	517
	519
8T-4648	44
8T-4742	477
8T-4744	477
8T-4778	197
	420
	421
	422
	423
	424
	425
	426
	427
	463
	534
8T-4779	460
8T-4908	44
	61
	193
	460
	532
	533
	545
	546
8T-4910	458
8T-4956	65
	282
	283
8T-4971	142
8T-5001	185
8T-5049	282
	283
8T-5095	284
	285
8T-5372	525
8T-5439	210
	500
	504
	517
	519
8T-6466	265
8T-6685	284
	470
	472
	473
	478
8T-6726	52
	53
	61
8T-6869	278
	279
	280
	281
	289
	302
	303
	343
	385
	386
	387
	388
	389
	390
	391
	392
	393
	394
	395
	396
	397
	398
	399
	400
	430
8T-6871	325
8T-6912	446
8T-6974	156
	500
	504
	517
	519
8T-7338	460
8T-7547	116
	275
	276
8T-7912	527
	529
8T-7971	460
8T-8192	245
8T-8193	245
8T-8729	94
	95
	97
	98
	99
	100
	101
	102
	103
	104
	106
	107
	109
	115
	117
	118
	119
	121
	124
	142
	199
	411
	460
	492
	493
	494
	495
	496
	512
	527
	536
	542
	543
8T-8730	94
	95
	97
	99
	100
	101
	102
	103
	104
	105
	107
	108
	109
	199
	460
8T-8737	94
	95
	97
	98
	99
	100
	101
	102
	103
	104
	105
	107
	108
	109
	111
	117
	118
	121
	488
	489
	490
	491
	492
	493
	494
	495
	496
	543
8T-8799	95
8T-9367	414
8T-9371	561
8V-5718	417
8Y-5947	112
	464
	465
	514
	516
	518
	521
	522
	523
	524
	536
8Y-7385	458
8Y-7386	458
8Y-8080	148

9

9C-5344	515
9F-5644	128
	480
9G-1307	111
	112
	137
	524
	543
9L-9132	500
	504
	517
	519
9M-1853	44
9M-8406	71
9R-1499	119
	124
	194
9R-1610	390
	391
9R-2004	231
	249
9R-2959	302
	303
	436
9R-5301	196
	452
9R-5744	477
9R-7240	84
9R-7941	536
9R-7942	122
9R-7958	122
9R-7980	536
9R-8429	460
9S-1354	527
9S-4182	153
9S-4185	85
	497
9S-4191	153
	224
9S-4200	251
	253
9S-8002	154
	168
9S-8004	168
	218
	220
	222
9S-8005	162
9S-8007	211
	212
	213
	215
9S-8008	168
9T-4884	275
	277
9U-6999	263
	265
9U-8746	514
	523
	543
9V-2714	290
9V-2715	290
9W-0607	115
	116
9W-0844	94
	95
	97
	98
	101
	103
	104
	105
	109
	119
9W-0852	94
	95
	97
	98
	100
	101
	102
	103

► **PRIMARY REFERENCE**

PART NUMBER INDEX

Part	Page
	104
	109
	119
	474
9W-1441	95
9W-2471	121
9W-3324	117
	118
9W-3326	119
	124
9X-1054	101
	104
9X-1055	104
	106
9X-1056	101
9X-1813	129
	130
	142
9X-2026	279
	418
	543
9X-2038	460
9X-2040	500
	504
	517
	519
	534
9X-2045	226
	229
	467
	497
	525
	545
	546
9X-2092	460
	525
9X-2546	114
	483
	484
	485
	486
	487
9X-3401	84
	94
	95
	97
	99
	101
	103
	104
	108
	111
	129
	130
	148
	488
	490
	491
	492
9X-3402	95
	103
	108
9X-4244	116
9X-6032	275
	276
9X-6165	502
	506
	517
	519
9X-6273	233
	235
	237
	239
	243
9X-6274	233
	235
	237
	239
	243
	279
	281
9X-6611	218
	220
	222
9X-6615	271
9X-7378	527
9X-7380	527
9X-7381	527
9X-7382	527
9X-7383	527
9X-7408	129
	130
9X-8118	122
9X-8139	122
9X-8256	65
	498
	512
	521
	536
	539
	540
	541
9X-8257	196
	452
9X-8918	559

0

Part	Page
003-2143	460
027-1287	215
	216
030-1705	87
031-4155	557
	561
033-6033	153
034-4202	263
	265
036-1865	44
038-9317	87
039-8557	447
064-3843	208
069-4080	44
084-4277	536
084-4348	119
	124
090-2151	87
090-8865	534
091-2436	97
	100
	102
	103
095-0641	155
	273
095-0912	227
	460
095-1671	153
	154
095-9232	285
096-4837	210
096-6166	411
097-7234	103
099-4691	152

1

Part	Page
100-3253	117
	118
100-3254	117
	118
100-3255	117
	118
100-3866	152
100-5041	101
	104
	106
100-6674	101
101-7398	500
	504
	509
	516
	518
101-7400	162
	285
101-7404	283
102-8705	417
102-8801	104
	111
102-8802	83
	84
	95
	102
	107
	115
	119
	142
	460
	512
	527
102-8803	101
	106
	109
	411
	542
102-8804	97
	98
	102
	107
	119
	121
	124
	129
	130
	148
	199
	474
	531
	536
102-8805	94
	97
	101
	108
	117
	118
102-8806	99
	102
	109
103-2529	71
103-8134	100
104-1995	97
	100
	102
104-5957	563
105-3478	44
105-3482	160
106-8715	227
	229
	268
107-4057	220
	222
108-0656	563
108-1781	162
108-4311	561
109-2356	141
	536
109-5811	255
109-5816	265
110-2028	135
	536
110-2570	23
110-6326	47
110-6331	47
	48
110-7887	536
111-4627	460
111-7899	113
	114
	119
	124
	133
	144
	145
	146
	148
	157
	194
	502
	506
	516
	518
	536
112-1817	261
112-9611	103
112-9717	47
	48
113-8490	95
113-8491	95
113-8492	95
113-8694	142
	539
	540
114-6658	467
115-1615	133
	142
	144
116-0400	61
116-2001	►459
	460
116-7471	91
117-9501	534
119-1414	459
119-1415	459
119-3662	94
	96
	103
	104
	109
119-3859	460
119-6764	39
119-9631	512
119-9868	193
122-3606	52
	53
122-4401	103
122-6869	460
122-6870	106
	108
123-1904	156
123-7615	97
	103
123-7971	54
124-1916	460

PART NUMBER INDEX

Part	Page
124-1917	460
124-2456	573
124-5640	101
125-4791	99
125-4793	99
125-4794	99
125-7874	94
	96
	97
	98
	99
	100
	101
	102
	103
	104
	105
	106
	107
	108
	109
	199
125-7875	96
	97
	100
	101
	102
	103
	105
	106
	107
	108
125-7876	104
	109
126-1767	94
	95
	97
	99
	101
	103
	108
	111
	148
126-1768	95
	103
	108
127-2170	522
	542
127-4003	467
	549
	550
127-5483	95
128-4123	95
	96
	102
128-4249	104
	105
128-5016	95
	102
128-7714	100
129-3178	65
	460
	561
129-3180	29
130-3279	▶60
	61
131-3201	99
131-3540	471
	479
	532
	533
132-4720	463
132-5166	194
	200
132-5789	124
	133
	138
	142
	194
132-7551	416
134-2540	99
135-2543	87
135-7242	191
	521
	539
	540
	541
135-9383	326
	▶420
135-9384	326
	327
	329
	339
	344
	▶421
135-9385	326
	327
	329
	336
	340
	344
	▶422
135-9386	291
	326
	327
	330
	335
	337
	341
	344
	▶423
135-9387	326
	328
	332
	335
	338
	341
	▶424
135-9393	420
135-9394	421
135-9395	422
135-9396	423
135-9397	424
136-1955	39
	263
	265
137-6645	287
140-2392	220
	222
141-4999	327
	328
	335
	336
	337
	338
	339
	340
	341
	342
	384
	▶463
141-5453	87
142-4914	419
142-7484	▶170
	176
	180
142-7485	170
	171
	172
	175
142-7486	170
142-7490	170
	173
	174
142-7493	176
	177
	178
	179
	180
	181
	182
142-8666	▶176
142-8723	150
142-8724	150
142-8729	150
142-8731	171
	174
	175
142-8758	▶150
	151
142-8759	172
	173
	176
142-8805	406
	407
	408
	409
	410
142-8832	186
	210
142-8928	85
142-8937	287
142-8997	261
142-9036	152
142-9091	210
142-9117	103
142-9142	210
143-3088	420
144-0195	502
	506
	516
	517
	518
	519
144-4108	561
144-9483	218
144-9484	218
144-9492	218
144-9493	218
146-6371	467
146-6433	500
	504
	516
	518
146-9439	113
	114
	119
	124
	135
	140
	145
	146
148-2371	194
	200
148-2372	194
	200
148-6757	268
148-8315	247
	257
	259
148-8318	157
148-8319	231
	233
	235
	237
	239
	241
	243
	245
	249
	251
	253
148-8327	155
	157
	257
	259
148-8328	261
148-8336	155
	157
	227
	229
	247
148-8339	155
	157
148-8340	155
	157
	255
	287
148-8342	247
148-8345	157
148-8347	39
	227
	229
	257
	259
	263
	265
	268
148-8364	255
148-8375	227
	229
148-8378	155
	157
	245
	261
148-8390	257
	259
148-8393	257
	259
148-8407	224
148-8411	497
148-8428	157
148-8433	157
148-8435	155
	263
	265
149-0686	155
	157
	▶203
149-3488	29
149-5434	346
149-5435	348
	354
	364
	380
	406
	407
149-5436	350
	356
	365
	381
149-5437	352
	358
	366
	373
	382

▶ **PRIMARY REFERENCE**

PART NUMBER INDEX

Part	Page
	408
149-5741	291
	▶425
149-6371	527
150-3036	155
	158
150-3056	233
	235
	237
	239
	243
150-3072	257
150-3715	138
150-4385	150
150-4386	150
150-5472	150
150-8592	▶170
	176
	180
150-8599	170
	171
	172
	173
	174
	175
	176
151-1975	67
151-2566	220
	222
151-9275	492
	493
	494
	495
	496
152-1157	152
152-5878	29
153-2682	509
153-2683	509
153-2994	231
	233
	235
	237
	239
	241
	243
	245
	247
	249
	251
	253
153-2995	231
	241
	245
	247
	249
153-6237	155
	158
153-6242	155
	158
153-8462	54
153-8463	54
153-9909	39
154-2704	294
	295
	347
	349
	351
	353
	355
	357
	359
	361
	362
	372
	375
	377
	378
	383
	431
	439
	440
154-5011	▶278
	336
	337
	338
	339
	340
	341
	342
154-5012	278
	343
	392
	393
	394
	395
	396
	397
	398
	399
	400
154-5013	278
	280
154-5020	233
154-5021	233
154-5022	233
154-5037	307
	317
154-5059	309
	318
154-5077	311
	320
154-9023	257
	259
155-2255	94
	95
	99
	101
155-2260	94
	95
	97
	98
	99
	103
	105
155-2265	95
	103
	104
155-2270	95
	100
	101
	103
	104
	105
	107
	108
	109
	119
	460
155-2271	94
	97
	101
	102
	103
	104
	105
	107
	108
	199
155-2274	94
	95
	102
156-0283	187
156-0884	328
	▶385
156-0885	329
	▶386
156-0886	329
	▶387
156-0887	▶364
	367
156-0888	▶365
	368
156-0889	▶366
	369
156-0891	▶279
	328
	329
	331
	428
156-0913	279
156-1458	109
156-5508	235
156-5509	235
156-5510	235
156-5762	290
156-6175	498
	499
	536
156-8315	559
157-0940	302
	303
	385
	386
	387
	388
	389
	390
	391
	430
157-0941	279
	281
157-0942	279
	281
157-2853	582
	585
	588
	591
157-4835	405
157-7223	▶328
	329
157-7224	▶329
	500
157-7225	▶329
	330
157-7226	▶329
157-7227	▶329
158-5648	385
	386
	387
	388
	389
	390
	391
	430
158-6095	▶330
159-2953	197
	420
	421
	422
	423
	424
	425
	426
	427
159-4535	237
159-4536	237
159-4537	237
159-5411	446
159-5772	150
159-5794	44
159-5797	416
159-8035	279
	446
	573
159-8038	392
	393
	394
	395
	396
	397
	398
	399
	400
	406
	407
	408
	409
	410
159-8047	87
159-9495	113
	114
	146
159-9496	113
	114
	146
159-9539	111
	135
	189
	263
	265
	467
	472
	473
	500
	504
159-9540	25
	61
	148
	191
	534
159-9541	44
	227
	229
	413
	473
	500
	504
	551
160-2246	527
160-3518	107
	543
160-8500	186
161-0185	231
	249
161-0186	231
	249
161-0187	▶249
	328
	329
	331
161-0188	231
	249
161-0189	231
	249
	251
	253

PART NUMBER INDEX

Part	Page
161-0190	231
	249
161-3357	142
161-4128	418
161-4130	364
	365
	366
	370
	390
	391
	406
	407
	408
	409
	410
	443
	444
161-7145	220
	222
161-8560	261
162-0177	218
	220
	222
162-3148	479
162-5236	336
	337
	338
	339
	340
	341
	342
	▶418
162-6556	498
162-8154	429
163-1135	561
163-1146	561
163-1385	231
	245
	249
	251
	253
163-1386	233
	235
	237
	239
	243
163-9320	249
164-1344	534
164-5567	156
	158
	263
	265
164-5574	39
164-6862	39
164-9425	142
164-9614	428
	▶429
164-9989	389
	430
	431
	437
	438
	439
	440
	441
	443
	444
165-0142	167
165-0312	536
165-2602	▶176
165-2605	▶170
	176
	181
165-2606	▶170
	176
	181
165-2609	▶171
	177
	180
165-2610	▶171
	177
	180
165-4891	▶177
165-4895	121
165-4898	▶177
165-4901	▶171
	177
165-4902	▶171
	177
165-4903	▶177
165-4906	▶172
	177
165-4907	▶172
	177
165-4908	170
	171
165-4909	171
	172
165-7095	29
	534
165-8731	▶280
	445
165-8732	431
	▶436
	437
	438
	441
165-8736	▶437
165-8737	▶438
165-8738	437
	▶439
165-8739	438
	▶440
165-8740	445
	▶446
165-8743	446
165-8744	439
165-8745	440
166-0319	302
	303
166-2551	460
	▶462
166-2552	460
166-2557	460
166-2558	460
166-2559	460
166-3678	150
166-4041	436
166-6781	561
166-9312	249
167-0608	460
167-3692	104
167-3693	95
168-8389	290
	294
	295
	298
	299
	304
	305
	306
	308
	310
	312
	314
	316
	319
	321
	323
	347
	349
	351
	353
	355
	357
	359
	361
	362
	367
	368
	369
	371
	372
	375
	377
	378
	383
	401
	402
	403
	405
	431
	439
	440
	443
	444
	575
168-8772	514
	523
	543
169-0705	94
	95
	103
169-2876	582
	585
	588
	591
169-3569	446
169-8941	▶367
	385
169-8942	▶368
	386
169-8943	▶369
	387
170-5836	445
170-6705	161
171-0596	470
	473
	502
	506
	516
	518
171-5349	129
	130
172-6490	119
	124
172-8037	107
	543
172-8039	107
	543
172-8591	498
	515
173-7407	445
	▶458
173-8919	106
174-2388	241
174-2389	241
174-2393	241
174-3091	488
	489
	490
	491
	492
	493
	495
174-5414	60
174-9194	25
	71
	527
	529
	534
	551
175-4238	183
	▶452
175-4239	194
	200
175-4291	116
175-7141	478
	551
	553
176-1477	105
176-1521	105
177-1910	245
177-1911	245
	251
	253
177-1912	245
177-1914	442
177-1921	302
	303
177-1941	456
177-1955	442
177-1956	442
177-1957	442
177-1958	214
177-1971	442
177-1972	302
	303
177-1973	456
177-1975	442
177-1981	291
	▶302
177-1982	291
	▶303
177-1983	291
	▶456
177-1986	▶245
	291
177-1987	▶298
	302
177-1988	▶299
	303
177-1989	▶291
177-1990	▶291
177-7414	447
177-7415	447
177-9645	99
	106
177-9648	104
	106
178-2247	196
	452
178-2593	186
178-3336	551
	553
178-3620	71
	87
	113
	114
	142
	144
	146
	148
	227
	229
	257

▶ **PRIMARY REFERENCE**

PART NUMBER INDEX

Part	Page
	259
	261
	287
	460
	527
	529
178-7539	536
178-9983	492
	493
	494
	495
	496
	502
	506
	516
	518
179-5434	98
180-3007	52
	53
180-7451	271
183-4084	241
183-4085	241
183-4403	527
185-1861	105
185-4015	474
	512
185-7887	251
	253
185-8664	▶177
185-8665	▶178
185-8666	▶178
185-8667	▶178
185-8678	▶172
	177
	180
185-8679	▶172
	177
	180
185-9926	▶173
	178
	181
185-9927	▶173
	178
	181
185-9928	▶173
	178
185-9929	▶173
	178
185-9930	▶174
	178
185-9931	▶174
	178
185-9932	172
	173
185-9933	173
	174
186-3735	489
186-5107	561
186-5186	457
186-6190	▶466
	527
187-1273	261
188-6210	104
188-7733	290
	▶457
189-3158	96
	101
	107
	109
189-5719	255
190-5386	126
190-7979	187
	227
	229
	268
190-8962	196
	199
192-1329	191
192-2606	462
192-2607	462
192-2645	448
	449
	450
	451
192-7508	271
194-5171	500
	504
	516
	518
194-5226	94
	95
	97
	98
	99
	101
	103
	105
	108
194-5227	94
	96
	97
	98
	99
	101
	103
	105
	108
195-0189	▶117
	124
	194
195-0190	▶118
	124
	194
195-0936	467
	514
	523
	543
195-3253	87
195-5124	425
	426
195-6942	404
	▶432
	435
195-6943	404
	▶433
	435
195-7124	328
	335
	338
	342
	▶426
195-8545	404
	▶434
	435
195-9712	196
	199
196-2414	106
198-8354	478
198-9707	515
199-3410	581
199-7722	345
	360
	370
	374
	409
199-8309	239
	243
199-8310	239
199-8311	239
	243
199-8316	313
	322
199-8317	409

2

Part	Page
200-0999	152
200-5728	▶107
	514
	523
	543
201-3304	94
202-0313	96
	102
202-0314	96
	102
203-4827	44
203-9007	95
204-2281	229
	263
	265
204-6466	96
204-8000	39
	263
	265
206-1345	142
	522
	536
	542
206-1667	498
	499
206-2423	54
	527
	529
206-9185	261
206-9295	153
208-6176	191
208-8469	512
	551
	553
208-9276	187
208-9281	289
208-9283	551
	553
208-9291	478
208-9294	478
210-0855	208
210-8754	536
211-0052	104
	105
211-3499	47
	48
211-5358	94
212-4114	271
213-0139	95
	104
	106
213-3943	208
213-7489	492
	493
	494
	495
	496
214-5555	214
214-7567	67
214-7568	153
	158
	263
215-3273	271
215-3274	271
215-3275	271
215-3277	277
215-6406	467
	498
	499
	500
	502
	504
	506
	516
	518
216-7352	532
	533
216-8756	▶290
216-8850	290
217-3572	44
217-3875	271
217-6226	▶370
	371
217-6227	▶371
	388
217-6228	331
	▶388
217-6229	▶331
	332
217-6230	▶332
219-0302	582
	585
	588
	591
220-4982	376
220-8355	488
	490
	491
	493
	494
	495
	496
221-3429	432
	433
	434
221-8058	186
222-3962	174
	175
222-3963	175
	176
222-7412	▶300
	304
222-7421	300
	301
222-7467	385
	386
	387
	388
	389
	430
222-7479	300
	301
222-7545	305
	▶419
222-7546	304
	▶420
222-7724	297
	▶304
222-7725	304
	305
222-7728	300
	301
223-3490	257
224-5132	205
	206
224-5152	205
	206
224-8945	582

PART NUMBER INDEX

Part	Page
	585
224-8946	588
	591
225-3854	95
225-3861	105
225-9521	208
	▶214
226-0294	186
226-1242	573
226-4560	117
	118
226-4561	117
	118
227-7025	271
227-7474	187
227-8807	▶204
228-2615	582
	585
228-2616	588
	591
228-3369	575
228-3581	573
228-5856	100
	102
	103
228-6052	117
	118
228-6053	117
	118
228-6054	117
	118
228-6056	117
	118
228-9240	277
229-3432	363
	410
229-3469	54
229-8796	44
230-3621	29
230-4009	103
230-4011	95
230-4013	108
230-4596	▶301
	305
230-5406	▶208
	291
230-5407	442
230-5670	291
	▶442
230-6368	87
231-0124	247
231-0125	247
231-0126	247
231-0127	247
231-5266	209
231-5271	304
	305
231-5273	▶247
	296
	297
231-5274	▶209
	296
	297
231-5276	296
	▶305
231-5278	▶270
	296
	297
231-5279	270
232-0893	94
232-0895	97
232-1384	512
232-1792	536
232-3121	58
	87
235-1365	582
	585
235-1368	588
	591
236-6923	527
238-0999	209
238-1003	247
238-1004	304
	305
238-1005	304
	305
238-1844	155
	157
	263
	265
238-4628	274
	275
239-4990	571
	582
	585
239-4991	572
	588
	591
239-5029	445
239-6986	582
	585
	588
	591
239-8534	227
	229
	268
	413
241-0037	205
	206
241-6215	263
	265
241-6397	29
242-9000	119
	124
243-0001	▶435
243-0002	▶435
243-0003	▶435
243-5601	271
244-1363	271
244-1364	271
244-1365	271
244-1367	304
	305
244-1370	209
246-0581	255
246-2622	67
246-4349	463
246-7853	189
247-0678	296
	297
	▶573
247-4818	148
247-6118	575
248-5245	575
250-1482	287
251-4162	89
252-0344	▶178
252-0345	▶179
252-0346	▶179
252-0347	▶179
252-0367	▶179
252-0378	▶180
252-1862	500
	504
	516
	518
252-8595	405
253-1817	500
	504
	516
	518
253-7817	588
	591
253-9499	582
	585
254-3437	492
	493
	494
	495
	496
254-9097	212
	213
	217
255-0942	213
255-0943	▶212
	445
255-8058	279
258-0930	▶121
	126
258-2405	167
	▶168
258-2555	283
	▶284
258-2577	275
258-2579	3
	90
	▶275
258-2829	287
258-2983	85
258-3184	189
258-3186	189
258-3280	500
	504
	516
	518
258-3296	502
	506
	516
	518
258-3298	500
	504
	516
	518
258-3312	189
258-3447	29
258-3451	210
258-3562	191
258-3697	500
	504
	516
	518
258-3727	91
	111
	135
	464
	465
	497
	498
	499
	526
	536
258-3764	502
	506
	516
	518
258-3786	525
258-3795	467
258-3849	184
	196
258-4039	514
	523
	543
258-4064	472
	473
	532
	533
258-4074	514
	523
	543
258-4075	500
	504
	516
	518
258-4085	500
	504
	516
	518
258-4095	▶555
258-4096	▶556
258-4134	119
	124
258-4135	▶127
	135
258-4141	502
	506
	516
	518
	536
258-4143	135
258-4170	94
	103
258-4172	95
258-4178	135
	536
258-4196	135
258-4271	480
258-4272	480
258-4288	480
258-4289	480
258-4292	480
258-4299	▶480
	481
258-4319	470
	472
258-4321	532
258-4325	532
258-4326	533
258-4358	526
258-4359	526
258-4367	514
	523
	543
258-4422	470
	472
	473
258-4429	563
258-4431	532
	533
258-9011	270
	▶271
261-6101	61
	189
261-6255	1
	▶151
262-0941	211
262-3764	▶129
	161
262-5689	287
262-9151	94
	99
	103
	106
263-0768	71
263-3823	531
263-4836	582
	585

▶ **PRIMARY REFERENCE**

PART NUMBER INDEX

Part	Page
	588
	591
263-5414	536
263-5415	536
263-5417	148
263-5418	113
	114
	146
263-5419	157
263-5421	124
	194
263-5422	119
	124
263-5928	536
264-4297	287
264-7029	95
264-7030	108
264-7034	103
265-2894	▶174
	178
	182
265-2895	▶174
	178
	182
265-2896	▶175
	179
	181
265-2897	▶175
	179
	181
265-2898	▶175
	179
265-2899	▶175
	179
265-2900	▶176
	179
265-2901	▶176
	179
265-4123	95
265-6618	467
265-6619	467
265-9424	536
265-9425	536
265-9513	144
265-9526	145
265-9543	119
	124
266-0299	133
266-2431	480
266-3314	71
	133
	141
	142
	189
	227
	460
266-3315	2
	39
	46
	52
	53
	54
	71
	84
	87
	142
	187
	196
	199
	227
	229
	257
	259
	263
	265
	268
	287
	527
266-3316	113
	114
	146
	148
	189
	194
	200
	227
	268
	412
266-6140	215
	216
266-8903	271
267-2680	91
	127
	128
267-2701	127
267-5211	127
	128
267-5213	127
	128
268-4071	▶115
	142
268-4083	▶326
268-4084	326
	▶383
268-4089	▶345
	383
269-0259	▶488
	494
269-9404	261
270-0216	261
270-2679	96
270-9442	520
	564
271-9408	261
272-1790	▶489
	495
272-9800	122
273-5915	557
273-9103	492
273-9104	▶490
	493
274-9872	128
274-9930	209
	▶215
274-9931	209
	▶216
275-0572	226
275-0600	94
	103
276-1786	87
276-4878	488
	489
	490
	491
	492
276-5478	453
	454
276-7278	87
277-8862	275
278-1969	▶217
	336
	337
	338
	339
	340
	341
	342
278-1970	213
278-1975	▶213
	328
	329
	331
	428
278-4524	215
278-4525	216
278-4875	215
	216
278-8715	284
278-8716	275
	277
278-8736	168
278-8737	168
278-8738	168
278-8739	168
278-8740	168
278-8742	168
278-8743	168
278-8744	168
278-8745	168
278-8746	168
278-8747	168
278-8748	168
278-8749	168
278-8750	168
278-8751	168
279-5350	▶428
279-5351	428
	▶430
279-5352	430
	▶443
279-5353	443
279-5357	444
279-5358	389
	▶444
279-5359	▶389
	428
279-5360	▶428
279-5363	▶354
	355
279-5364	327
	▶355
279-5365	▶327
279-5366	▶327
279-5367	▶356
	357
279-5368	327
	▶357
279-5369	▶327
279-5370	▶327
279-5371	▶358
	359
279-5372	327
	328
	▶359
279-5373	▶327
279-5374	▶328
279-5375	▶360
	361
279-5376	328
	▶361
279-5377	▶328
279-5378	▶328
279-5412	▶231
	428
279-5413	▶233
	336
	339
279-5414	▶235
	336
	340
279-5415	▶237
	337
	341
279-5416	▶239
	338
	342
279-5417	233
	235
	237
	239
	243
279-5418	233
	235
	237
	239
	243
279-5420	▶335
279-5421	335
	▶372
279-5422	372
	▶373
279-5423	▶374
	375
279-5424	335
	▶375
279-5425	▶335
279-5428	▶376
	377
279-5429	335
	▶377
279-5430	▶335
279-5433	▶346
	347
279-5434	326
	▶347
279-5435	▶326
279-5436	▶348
	349
279-5437	326
	▶349
279-5438	▶326
279-5439	▶350
	351
279-5440	326
	▶351
279-5441	▶326
280-6071	525
280-7838	163
	164
280-7840	163
	164
280-7848	162
	163
	164
280-7849	163
	164
280-7860	168
280-8911	263
	265
281-6390	502
	506
	516
	518
283-0632	95
283-2458	474
283-4198	95
283-8106	96
284-3914	510
285-2177	582
	585
	588
	591
285-6088	▶352
	353
285-6089	326

PART NUMBER INDEX

Part	Page
	▶353
285-6090	▶326
285-6095	▶344
285-6096	344
	▶401
285-6097	▶380
	401
285-6098	▶381
	402
285-6099	344
	▶402
285-6100	332
	▶344
285-6101	332
	▶344
285-6102	344
	▶403
285-6103	▶382
	403
285-6105	428
	▶441
285-6110	428
	▶431
285-6111	▶332
285-6112	▶332
285-6113	▶241
	445
285-6114	▶428
285-6115	▶428
285-6116	332
	428
	▶445
285-6125	160
	161
285-8630	▶491
	496
286-3591	212
286-9229	390
286-9243	390
	391
286-9244	334
	▶390
286-9248	▶281
	333
	334
286-9249	253
286-9250	▶251
	334
286-9251	333
	334
	▶575
286-9263	251
	253
286-9265	251
286-9266	251
286-9267	251
	253
286-9268	251
	253
286-9271	251
286-9273	281
286-9274	391
286-9278	333
	▶391
286-9279	▶253
	333
286-9280	253
286-9281	253
286-9289	281
286-9300	▶333
286-9301	▶334
287-4218	189
	202
287-4220	189
289-3195	109
	542
290-5562	142
	145
	155
	157
	229
292-2437	510
292-2438	510
292-9223	335
	▶378
292-9224	378
	▶379
292-9257	379
292-9270	328
	▶362
	384
292-9271	362
	▶363
293-0140	▶243
	339
	342
293-0144	315
	324
293-0152	243
293-2871	559
293-6264	▶211
	333
	334
293-9044	▶107
	196
	199
294-5502	231
294-5503	231
294-5504	241
294-5505	241
295-2567	582
	585
	588
	591
295-7221	▶276
295-7317	582
	585
295-7318	582
	585
295-7319	582
	585
295-7320	582
	585
295-7327	588
	591
295-7328	588
	591
295-7329	588
	591
295-7330	588
	591
295-7337	582
	585
295-7338	588
	591
296-0583	411
296-0584	411
296-5140	220
	222
296-5724	39
296-5725	255
296-7597	▶335
296-7602	427
296-7680	335
	▶427
296-8191	▶384
296-8192	▶328
297-4130	218
297-7927	156
298-7197	477
	▶510
299-1379	220
	222

3

Part	Page
300-6036	54
300-9546	142
301-2980	411
302-4389	582
	585
302-4390	588
	591
303-8205	227
	229
	268
304-1021	561
304-1022	561
304-1023	561
304-1034	561
304-1035	561
304-1036	561
304-1052	561
304-1054	561
304-1055	561
304-1056	561
304-1057	561
304-3885	85
304-6756	255
305-4335	534
305-4337	534
305-4339	534
305-4353	561
305-7092	557
305-7093	557
305-9192	500
	504
	516
	518
307-2338	99
307-2952	559
307-2953	559
307-2954	559
307-2955	557
307-3036	276
	▶277
307-3808	241
309-1325	▶122
	184
	196
309-5146	255
310-6660	448
	449
	450
	451
310-8460	▶205
	255
310-8461	▶206
311-3520	474
	512
312-4965	205
313-3499	39
	263
	265
313-9053	95
314-7328	99
314-7599	54
315-5493	448
	449
	450
	451
317-0014	512
317-1204	106
	108
	109
	111
319-0710	500
	504
	516
	518
319-4168	559
319-9480	183
	▶447
319-9481	447
319-9482	447
319-9483	447
319-9484	447
319-9489	447
319-9490	447
323-3308	263
	265
325-7034	307
325-7044	309
325-7054	311
325-7064	313
325-7074	315
327-1067	525
328-3317	512
329-2589	220
	222
329-3734	96
	103
	104
	106
	108
329-6989	179
	180
	181
	182
329-6990	179
	180
	181
	182
332-0194	502
	506
	516
	518
335-6983	71
	155
	157
	257
	259
	263
	265
336-6684	▶89
	112
	137
340-8931	480
341-7637	168
341-7647	163
	164
342-9920	51
	187
	189
	191
	479
	527
	529
342-9922	54
	189
343-4072	44
343-4076	186
343-6821	263
	265

PART NUMBER INDEX

Part	Page
344-1678	100
	108
344-1682	95
344-1690	100
344-5036	582
	585
	588
	591
344-6144	109
344-6145	98
	109
344-7391	148
345-3462	44
345-3463	44
345-3480	54
345-3495	6
	7
	▶23
345-3498	6
	7
	▶46
345-3499	46
	▶47
345-3514	52
	53
345-3516	71
345-3520	71
	▶83
345-3527	478
345-3537	44
345-3540	191
345-3548	165
345-3556	▶110
345-3557	110
345-3565	29
345-3567	110
345-3576	6
	7
	▶54
345-3577	54
345-3578	54
345-3579	51
	58
345-3584	469
	▶478
345-3588	54
345-3601	165
345-3602	6
	7
	▶165
345-3605	6
	7
	▶29
345-3609	44
345-3610	6
	7
	▶44
345-3620	6
	7
	▶25
345-3621	25
345-3623	67
345-3624	67
345-3753	263
	265
345-4526	467
345-4527	467
345-4528	467
345-4545	467
	▶474
345-4546	467
	▶512
345-4547	478
345-4549	474
	512
345-4551	467
345-4558	474
345-4581	287
345-4583	287
345-4585	287
345-4589	287
345-4596	155
345-4619	582
	585
	588
	591
345-4641	157
345-4646	155
345-4648	157
345-4651	155
345-4652	155
345-4653	155
345-4654	155
	157
345-4655	157
345-4657	157
345-4690	▶155
	166
345-4691	▶157
	166
345-4703	84
345-4719	187
345-4722	545
	546
345-4728	536
345-4755	255
	▶274
345-4761	2
345-4791	287
345-4792	263
	265
345-4798	268
345-4807	187
345-4813	187
345-4814	187
345-4821	261
345-4822	261
345-4824	261
345-4825	261
345-4835	265
345-4862	257
	259
345-4873	189
345-4875	1
	▶189
345-4898	189
345-4899	1
	▶210
345-4913	▶475
345-4960	▶464
	475
345-4961	464
	465
345-4962	▶465
	475
345-4980	224
	▶287
345-4981	287
345-5030	▶413
	415
	416
345-5040	469
	▶527
345-5043	527
345-5046	527
345-5050	▶152
	166
345-5060	511
	▶529
345-5112	412
345-5132	451
345-5135	450
345-5147	185
	192
345-5148	▶185
345-5234	▶131
345-5400	1
	▶84
345-5401	84
	▶85
345-5402	85
345-5430	180
	181
	182
	▶202
345-5454	1
	▶475
345-5496	155
	157
345-5504	▶226
345-5505	226
345-5506	226
345-5508	226
345-5509	226
345-5512	152
345-5520	186
345-5536	152
345-5640	186
345-5645	186
345-5656	152
345-5680	152
345-5694	261
345-5703	261
	▶477
345-5716	263
	265
345-5718	477
345-5726	263
345-5728	224
	▶263
345-5729	263
	265
345-5730	225
	▶265
345-5739	225
	▶227
345-5740	2
	3
	▶255
345-5741	▶39
	224
345-5742	2
	▶257
345-5743	2
	3
	▶259
345-5751	224
	225
	▶261
345-5752	261
345-5754	227
	229
	268
345-5769	229
345-5778	▶476
345-5786	255
345-5789	255
345-5790	255
345-5802	186
345-5803	1
	▶186
345-5919	▶482
345-5923	▶482
345-5925	1
	▶224
345-5928	1
	▶567
345-5955	527
	529
345-6007	536
345-6010	475
	▶563
345-6011	563
345-6020	475
	▶525
345-6021	464
	465
345-6022	464
	465
345-6023	464
	465
345-6024	464
	516
	518
	522
345-6025	464
	516
	518
	522
345-6026	536
345-6027	536
345-6030	525
345-6031	536
345-6035	475
	476
	▶509
345-6040	▶547
	554
345-6045	▶548
	554
345-6050	▶549
	554
345-6051	499
345-6052	499
345-6053	499
345-6054	499
345-6055	▶550
	554
345-6056	▶498
	554
345-6057	498
345-6058	498
345-6059	498
345-6060	498
345-6061	▶499
	554
345-6066	497
345-6067	534
345-6070	▶508
345-6071	508
345-6072	508
345-6073	197
	460
	508
345-6078	467
345-6081	527
345-6082	474
345-6083	474
345-6085	475
	476
	▶497
345-6090	475
	▶564
345-6123	532
345-6125	533
345-6130	▶198

PART NUMBER INDEX

Part	Page
	475
345-6131	198
345-6135	475
	▶542
345-6136	522
	542
345-6140	514
	523
345-6143	526
345-6144	526
345-6145	524
	543
345-6146	467
345-6147	497
345-6148	497
345-6149	525
	▶526
345-6150	526
345-6151	469
	▶479
345-6152	479
345-6154	497
345-6158	▶475
345-6160	▶475
345-6161	475
	▶511
345-6163	▶469
	475
345-6174	514
	523
	525
	539
	540
345-6175	▶514
345-6180	▶543
345-6184	471
	▶472
345-6185	▶470
	545
	546
345-6186	470
	▶532
345-6187	470
	▶533
345-6188	▶471
	547
	548
345-6189	533
345-6190	▶467
	469
	511
345-6191	467
345-6192	467
345-6193	467
345-6194	467
345-6196	467
345-6197	467
345-6200	475
345-6222	1
	▶534
345-6224	534
345-6230	500
	516
345-6233	500
	504
	516
	518
345-6235	▶500
	502
345-6240	▶502
345-6244	502
	506
	516
	518
345-6250	504
	518
345-6255	▶504
	506
345-6260	▶506
345-6262	500
	504
	516
	518
345-6270	520
	565
345-6271	520
	565
345-6273	520
	565
345-6274	520
	566
345-6275	520
	566
345-6276	520
	566
345-6282	500
	504
	516
	518
345-6283	500
	504
	516
	518
345-6284	500
	504
	516
	518
345-6285	509
345-6290	564
	▶565
345-6291	564
	▶566
345-6292	520
	565
345-6295	500
	504
	516
	518
345-6297	520
	566
345-6319	476
	▶554
345-6320	547
	▶551
345-6321	553
345-6329	▶554
345-6330	548
	▶553
345-6331	551
	553
345-6333	551
	553
345-6334	551
	553
345-6349	▶554
345-6350	▶545
	549
345-6351	545
345-6359	▶554
345-6360	▶546
	550
345-6361	546
	▶557
345-6363	532
345-6364	533
345-6401	▶160
	166
345-6402	▶161
	166
345-6403	189
345-6404	189
345-6491	261
345-6511	210
345-6515	187
345-6519	187
345-6533	527
345-6580	207
	482
	▶483
345-6581	225
	▶484
345-6582	482
	▶485
345-6583	207
	225
	482
	▶486
345-6584	482
	▶487
345-6627	152
346-1832	▶455
	460
346-1836	460
346-5576	▶153
	257
	259
346-5577	153
346-8219	582
	585
	588
	591
347-4163	263
	265
348-1862	153
	154
348-3485	515
348-7240	117
	118
349-6096	153
	▶154
349-6097	153
349-8603	577
	578
349-8604	579
	580
349-8642	524
	543
350-5720	138
351-9371	404
	▶405
352-1756	154
352-3965	138
353-1634	524
	543
353-1693	▶404
353-1694	▶404
353-1696	▶404
353-1697	▶404
356-6067	135
356-6069	536
356-6074	▶124
	183
356-6075	▶102
	124
	194
356-6077	▶102
	119
	124
356-6082	3
	90
	▶126
356-6092	135
356-6095	▶107
	145
356-6096	2
	3
	▶145
356-6106	▶100
	481
356-6112	460
356-6113	133
	141
	▶481
356-6115	▶109
	113
	114
	146
356-6119	148
358-4944	298
	299
	304
	305
	306
	308
	310
	312
	314
	316
	319
	321
	323
	367
	368
	369
	371
	401
	402
	403
	443
	444
	575
358-4945	290
358-4975	▶167
	224
358-5002	283
	▶286
358-5009	160
	▶162
358-5011	161
	▶163
358-5013	161
	▶164
358-5015	285
359-1573	512
359-1574	512
359-1575	512
359-1577	512
359-1578	512
359-1579	512
359-1581	474
359-1582	474
359-1583	474
359-1584	474
359-1585	467
359-1586	512
359-7220	155
359-7222	157
	▶273
359-7229	274
359-7230	274
359-7231	274
360-7527	106
360-7540	536
361-2657	167
361-3532	48
361-6378	▶144

▶ **PRIMARY REFERENCE**

PART NUMBER INDEX

Part	Page
	412
361-6384	▶141
	511
361-6386	1
	▶87
361-6387	87
361-6388	87
361-6391	▶104
	142
361-6393	▶105
	142
361-6395	▶92
	135
361-6396	▶133
	469
361-6397	▶94
	135
361-6398	▶101
	133
361-6399	▶95
	135
361-6400	▶135
	475
362-0154	165
362-2973	44
362-3212	155
	273
363-5818	▶67
	71
363-5819	67
363-5823	83
363-8597	119
	124
364-1821	500
	504
	516
	518
364-6428	44
366-6036	99
369-3556	92
370-8008	261
372-2156	561
372-2158	561
373-1587	106
373-1589	106
373-1592	106
373-4446	536
373-6954	289
373-7033	224
	225
	▶289
373-7039	263
	265
373-7621	263
	265
	287
	527
	529
373-7622	39
	263
	265
373-7623	263
	265
373-8426	282
	▶285
374-7463	104
	105
	141
	142
374-7464	135
	142
	536
374-7465	103
374-7466	135
374-7467	103
	135
	142
374-7468	95
374-8331	95
374-8333	95
374-8372	96
375-0712	1
	▶219
375-2751	577
	578
	579
	580
376-3916	220
376-3921	220
	222
376-3927	220
	222
376-3931	220
	222
376-8659	44
376-8660	44
376-8666	71
376-8670	61
376-8676	71
376-8677	44
376-8678	61
377-6954	38
377-6965	38
377-6969	38
377-7215	524
	543
377-9543	268
378-0891	▶218
	219
378-0892	218
378-0895	218
378-0897	218
378-0898	218
378-1005	92
378-1006	92
	521
378-1007	470
	473
	502
	506
	516
	518
378-1010	536
378-1011	142
378-1012	142
378-1013	142
378-1014	104
378-1015	104
378-1020	65
378-1022	6
	7
	▶138
378-1023	▶99
	138
378-1024	▶101
	133
	141
378-1025	475
	▶536
378-1026	▶103
	536
378-1027	▶109
	522
378-1028	▶97
	502
	506
	516
	518
378-1029	▶100
	139
378-1030	▶108
	140
378-1032	87
378-1033	▶539
378-1034	▶540
378-1035	▶92
	539
378-1036	▶92
	540
	541
378-2849	224
	▶282
378-2851	225
	▶283
378-3722	▶109
	296
	297
378-6682	6
	7
	▶71
378-6690	1
	▶6
378-6697	52
	53
378-6751	6
	7
	▶58
378-6752	58
378-6802	65
378-6804	65
378-6805	65
378-6807	65
378-6812	6
	7
	▶65
378-6814	65
378-7963	219
	▶220
378-7964	219
	▶222
379-1084	500
	504
	516
	518
	▶531
379-1577	492
	493
	494
379-1578	495
	496
379-1612	483
	▶492
379-1613	484
	▶493
379-1614	485
	▶494
379-1615	114
	486
	▶495
379-1616	487
	▶496
379-3396	222
379-4102	567
379-4975	220
	222
379-6471	500
	504
	516
	518
380-1768	4
	▶5
380-1769	4
	▶6
380-2437	▶111
383-0180	34
383-0187	9
383-0188	49
383-0190	43
	56
	57
383-0195	68
383-0196	132
383-0198	68
	77
	79
383-0199	62
	77
	79
	81
	82
383-0200	93
383-0201	132
383-0202	74
383-0205	34
383-0207	34
	132
383-0213	11
	36
383-0214	68
383-0217	11
	24
	36
	38
383-0219	70
	79
383-0220	13
383-0222	68
383-0227	8
383-0233	41
383-0245	11
383-0252	77
	79
383-0256	68
	73
	77
	79
383-0262	16
	17
383-0279	70
	79
383-0291	27
383-0303	15
	21
	22
383-0308	56
	68
383-0317	68
383-0319	74
383-0320	74
383-0358	17
	19
	27
383-0383	33
383-0396	49
383-0416	68
383-0474	73
383-0475	73
383-0507	77
	79
383-0519	75
383-0524	10
383-0563	10
383-0574	9
	11
383-0792	51

PART NUMBER INDEX

Part	Page
383-0793	6
	7
	►51
383-0794	51
383-0805	99
383-0806	99
383-6243	►91
	475
383-6244	91
383-6245	87
383-6246	►106
	144
383-6247	►105
	142
383-6642	44
383-6830	►130
	160
383-6901	115
383-7615	92
383-7616	92
383-7619	92
	521
383-7620	92
383-7621	92
383-7622	92
384-2555	582
	585
384-2556	588
	591
385-0229	559
385-0414	577
	578
	579
	580
385-5044	132
385-5360	85
385-5361	85
385-5501	545
	546
385-5513	559
385-5779	265
385-6367	453
385-6368	294
	295
	►453
385-6370	294
	295
	►325
385-6371	294
	295
	►454
385-6372	292
	293
	►414
385-6373	294
	295
	►568
385-6375	294
385-6389	325
385-6390	325
385-6391	453
	454
385-6392	454
385-6393	294
	295
385-6394	414
385-6396	294
	295
385-6397	294
	295
385-6398	294
	295
385-6400	►292
385-6401	►293
385-6405	325
385-6406	453
385-6407	454
385-6408	325
385-6413	325
385-6414	325
385-6415	325
385-6416	295
	568
385-6417	295
	568
385-6444	293
	►294
385-6466	453
	454
386-2432	191
386-2438	191
386-2439	191
386-2440	44
	►191
386-3004	111
386-6028	189
	500
	504
	517
	519
386-6607	162
386-6608	162
386-6609	162
386-7013	71
386-9954	►128
	135
387-1159	84
387-5383	►207
387-9068	5
	6
	►8
387-9070	5
	6
	►13
387-9078	5
	6
	►74
387-9083	5
	►56
387-9084	5
	6
	►34
387-9087	5
	6
	►30
387-9088	5
	6
	►31
387-9089	5
	6
	►93
387-9091	5
	6
	►43
387-9572	47
	48
387-9779	16
387-9780	8
387-9781	81
	82
387-9783	38
387-9785	8
	30
387-9788	►17
	21
387-9790	21
	22
387-9791	21
	22
387-9792	21
	22
387-9796	26
387-9797	26
387-9798	8
	26
387-9802	9
	62
387-9804	56
387-9805	56
	57
387-9806	56
	57
387-9811	62
387-9813	55
387-9814	55
	62
387-9815	55
387-9817	55
387-9819	49
387-9820	49
	86
387-9821	49
387-9822	49
387-9825	34
387-9826	21
387-9827	21
387-9829	9
	11
387-9830	8
387-9831	8
387-9832	8
387-9833	31
387-9834	31
387-9835	31
387-9836	31
387-9838	31
387-9839	31
387-9840	13
387-9841	13
387-9842	13
387-9843	13
387-9844	13
387-9845	13
387-9846	13
387-9847	8
387-9848	8
387-9849	8
387-9850	8
387-9854	24
387-9855	24
387-9856	36
387-9857	24
387-9858	24
387-9859	24
387-9861	30
387-9864	81
	82
387-9865	62
	81
	82
387-9866	81
	82
387-9868	81
	82
387-9870	62
387-9872	38
387-9873	38
387-9874	73
387-9875	73
387-9878	►76
	77
	79
387-9879	77
	79
387-9880	81
387-9881	81
	82
387-9882	81
	82
387-9884	68
387-9885	68
387-9886	68
387-9887	68
387-9889	75
387-9890	75
387-9894	132
387-9897	86
387-9899	93
387-9900	93
387-9901	93
387-9903	43
387-9904	43
387-9906	41
	42
387-9907	41
	42
388-1435	1
	►142
388-1436	►97
	502
	506
	516
	518
388-3305	157
388-3782	►116
	123
388-5551	157
388-6641	►61
388-6646	25
388-6647	25
388-6648	25
388-6650	61
388-6653	61
388-7434	15
	17
	19
388-7435	15
388-7436	30
388-7440	27
388-7442	27
388-7443	27
388-7444	27
388-7445	27
388-7446	56
388-7447	56
388-7456	62
388-7458	62
388-7461	62
388-7464	49
388-7465	49
388-7466	49
388-7467	49
388-7469	49
388-7471	49
388-7472	49
388-7473	38
	49
388-7474	9
	11
	38
	49
388-7476	49
388-7477	49
388-7479	34
388-7480	34
388-7481	34

► **PRIMARY REFERENCE**

PART NUMBER INDEX

Part	Page
388-7482	34
388-7483	34
388-7484	34
388-7485	34
388-7488	10
	12
388-7489	10
388-7490	10
	12
388-7491	10
388-7492	10
	12
388-7493	8
388-7494	8
388-7495	8
388-7496	8
388-7500	31
388-7501	31
388-7502	13
388-7507	8
388-7508	24
388-7509	38
388-7510	▶70
	77
	79
388-7511	77
	79
388-7512	77
	79
388-7513	77
	79
388-7514	77
	79
388-7515	77
	79
388-7516	77
	79
388-7517	77
	79
388-7518	77
	79
388-7522	77
	79
388-7524	77
	79
388-7526	68
388-7527	68
388-7528	68
388-7530	68
388-7532	68
388-7533	68
388-7534	68
388-7535	68
388-7536	68
388-7540	68
388-7542	74
388-7543	74
388-7544	74
388-7545	74
388-7547	41
	42
388-7756	▶3
388-7758	▶90
388-7760	224
	225
	▶268
388-7776	210
388-7780	210
388-7849	▶515
388-7875	▶192
388-7876	467
388-7891	567
388-7892	567
388-7902	515
388-7905	515
388-7907	515
388-7910	2
	3
	▶166
388-7927	227
388-7936	197
388-7940	2
	▶166
388-7948	227
	229
388-7950	268
388-7951	268
388-7960	227
	229
388-7978	448
	449
	450
	451
388-8015	65
388-8016	65
388-8018	502
	506
	509
	516
	518
388-8019	502
	506
	509
	516
	518
388-8028	502
	506
	509
	516
	518
388-8035	▶224
388-8036	▶224
388-8038	▶225
388-8050	257
388-8051	257
	259
388-8055	259
388-8058	39
388-8105	227
	229
388-8106	189
388-8110	567
388-8111	225
	▶569
388-8112	569
388-8113	2
	3
	▶570
388-8114	570
388-8118	189
388-8119	189
388-8126	▶2
388-8127	▶2
388-8128	▶2
388-8129	▶3
388-8158	229
	268
388-8159	229
388-8160	227
388-8161	229
388-8164	224
	▶229
388-8170	413
388-8173	449
388-8174	448
388-8180	▶1
388-8205	413
388-8206	413
388-8209	415
	▶448
388-8210	415
	▶449
388-8211	413
388-8212	413
388-8213	412
	▶415
388-8214	412
	▶416
388-8215	416
	▶450
388-8216	412
388-8217	416
	▶451
388-8222	194
	200
388-8223	119
	124
	194
388-8224	119
	124
	194
388-8237	▶1
388-8238	▶1
388-8265	▶113
388-8273	▶114
388-8274	▶521
388-8275	▶520
388-8276	▶516
388-8281	▶518
388-8283	▶523
388-8284	▶112
388-8285	▶522
388-8286	▶524
388-8291	210
388-8298	▶412
388-8300	▶412
389-0463	111
389-0691	17
	19
389-0692	17
	19
389-0695	17
	19
389-0696	17
	19
389-0697	17
	19
389-0698	17
	19
389-0699	17
389-0700	17
	19
389-0701	17
	19
389-5106	15
	16
389-5111	16
389-5137	19
389-5153	12
389-5154	12
389-5156	36
389-5159	27
389-5160	27
389-5163	30
389-5234	75
389-5248	86
389-5256	132
389-5292	38
389-5308	41
	42
389-5353	62
389-5383	49
389-9020	44
390-2764	111
390-9099	218
390-9315	559
390-9317	559
391-7091	87
391-7092	87
391-7093	87
392-0808	527
	529
392-4904	111
392-8074	▶48
	61
392-9277	559
393-2878	30
393-2881	9
393-2882	9
393-2885	31
393-2886	31
393-2887	31
393-2889	31
393-2891	31
393-2894	31
393-2895	31
393-2896	31
393-2897	13
393-2898	13
393-2899	13
393-2900	13
393-2901	13
393-2902	13
393-2903	13
393-2904	13
393-2905	31
393-2906	31
393-2907	31
393-2908	31
393-2909	31
393-2910	31
393-2911	13
393-2912	13
393-2913	13
393-2914	13
393-2915	13
393-2916	13
393-2917	70
	79
393-2918	70
	79
393-2919	70
	79
393-2920	77
	79
393-2921	76
	79
393-2922	76
	79
393-2923	68
393-2925	68
393-2926	68
393-2927	68
393-2932	68
393-2933	68
393-2934	68
393-2935	68
393-2936	68
393-2942	75
393-2944	49
393-2946	49
393-2947	49
393-2948	38
393-2950	68
393-2951	68

▶ **PRIMARY REFERENCE**

PART NUMBER INDEX

Part	Page
393-7328	52
393-7329	53
393-7334	6
	▶52
393-7335	7
	▶53
393-7338	1
	▶4
393-7339	1
	▶4
393-7340	1
	▶7
393-7569	68
393-7570	33
	62
	68
	77
	79
393-7571	49
393-7572	68
	81
	82
393-7573	28
	37
	49
393-7574	41
	42
	49
	77
	79
	86
393-7575	49
393-7577	15
	21
	22
393-7578	31
393-7579	24
393-7580	81
	82
393-7581	68
393-7582	15
393-7583	24
393-7584	33
393-7585	55
393-7586	62
393-7587	62
393-7588	62
393-7589	73
394-5387	▶123
	475
395-3544	545
	546
396-0901	5
	6
	▶86
396-0902	5
	▶49
396-0903	5
	▶9
396-0905	5
	▶36
396-0907	▶68
	81
396-0908	5
	▶21
396-0909	5
	6
	▶26
396-0910	5
	6
	▶28
396-0911	5
	6
	▶73
396-0912	5
	6
	▶38
396-0913	5
	▶41
396-0914	5
	6
	▶55
396-0915	5
	6
	▶132
396-0916	5
	6
	▶75
396-3352	29
	58
396-7201	144
396-7206	87
396-7208	113
	114
	146
396-7209	▶137
	541
396-7210	▶98
	112
	137
396-8364	99
396-8366	142
397-3897	551
	553
397-3898	551
	553
397-3899	551
	553
397-3900	551
	553
397-3901	551
	553
397-3902	553
397-3903	551
397-9054	28
397-9055	28
397-9056	9
397-9057	26
	▶27
397-9944	24
397-9945	▶77
	82
397-9946	82
397-9948	68
397-9949	68
397-9950	68
397-9952	75
397-9953	86
397-9954	86
397-9955	86
397-9956	86
397-9957	86
397-9958	86
397-9959	86
397-9960	38
397-9961	41
397-9962	41
397-9963	41
	42
397-9964	41
397-9965	41
397-9966	49
397-9967	49
397-9968	33
397-9970	62
397-9971	62
397-9972	62
397-9973	55
397-9974	49
397-9975	49
397-9976	49
397-9977	49
397-9979	62
397-9980	62
397-9981	62
397-9982	55
	62
397-9984	62
397-9985	62
397-9986	62
397-9987	62
397-9988	11
	36
398-0826	38
398-1476	9
	▶10
398-2306	55
398-5520	15
398-5522	34
398-5550	49
399-3775	157
399-5841	111
4	
415-2785	71
415-2789	191
415-2790	▶59
415-2810	58
416-5688	4
	▶577
	582
416-5689	4
	▶578
	585
416-5690	25
416-5691	25
416-5692	25
416-5705	▶193
416-5706	193
416-5707	193
416-5708	193
416-5709	193
416-5788	▶579
	588
416-5789	▶580
	591
416-6224	561
416-6225	561
416-6976	582
	585
	588
	591
416-9256	539
	540
416-9265	▶541
416-9266	111
416-9270	▶139
	224
417-4606	3
	90
	183
	▶197
417-4607	197
417-4914	292
	▶295
417-4915	295
418-0931	15
418-0967	49
418-0969	12
418-5763	582
	585
	588
	591
418-5771	464
	465
418-5823	534
418-5900	500
	504
	516
	518
418-5901	500
	504
	516
	518
418-5930	472
418-5933	471
	▶473
418-5934	473
418-5935	470
	473
418-5945	502
	506
	516
	518
418-5954	470
	473
418-8096	186
418-8763	197
418-9011	▶581
419-0088	144
419-0648	227
	229
419-8939	551
	553
420-8851	5
	6
	▶16
420-8852	6
	▶11
420-8853	6
	▶22
420-8855	6
	▶42
420-8856	6
	▶57
421-1876	11
421-1877	11
	▶12
421-1878	▶79
	81
421-1879	42
421-1880	42
421-1881	▶19
	22
421-1882	57
421-1883	▶15
	16
421-1884	62
421-4206	▶108
	148
421-4207	▶146
	207
	225
421-4209	▶98
	411
421-4212	148
421-4213	148
421-4219	▶148
	224
	225
421-4224	▶140
	225
421-6171	233

▶ **PRIMARY REFERENCE**

PART NUMBER INDEX

Part	Page
	235
	237
	239
	243
422-3148	263
	265
422-3178	227
422-3179	227
422-3225	582
	585
	588
	591
422-3232	196
	199
422-3323	▶194
422-3324	▶196
422-3333	183
	▶199
422-3334	183
	▶200
422-3337	▶180
422-3338	▶180
422-3339	▶180
422-3340	▶181
422-3341	▶181
422-3342	▶181
422-3343	▶181
422-3344	▶182
422-3345	▶182
422-3351	527
422-3352	527
422-3353	527
422-3354	527
422-3355	527
422-3356	527
422-3386	255
422-3387	255
422-3400	183
	▶184
422-3401	▶183
422-3445	▶571
422-3446	▶572
422-3447	▶582
422-3448	▶585
422-3455	▶588
422-3456	▶591
422-4667	210
422-7656	3
	▶201
422-9871	268
423-0437	263
	265
423-1984	287
423-4287	▶335
423-4291	335
	▶336
	344
423-4294	336
	▶392
423-4297	392
	397
	▶406
423-4298	▶306
	392
423-4300	306
	▶307
423-8296	▶411
424-0450	▶296
424-0451	▶297
424-5546	448
	449
	450
	451
424-7631	502
	506
	516
	518
426-6487	▶336
426-6490	▶336
426-6492	▶336
426-6495	336
	▶393
426-6497	393
	398
	▶407
426-6503	▶308
	393
426-6505	308
	▶309
426-6535	▶337
426-6536	▶337
426-6537	▶337
426-6538	337
	▶394
426-6539	394
	399
	▶408
426-6544	▶310
	394
426-6545	310
	▶311
426-6547	▶337
426-6548	▶338
426-6549	337
	338
	▶338
426-6550	338
	▶395
426-6551	395
	400
	▶409
426-6554	▶312
	395
426-6555	312
	▶313
426-6557	▶338
426-6558	▶338
426-6559	338
	▶339
426-6560	339
	▶396
426-6561	343
	396
	▶410
426-6564	▶314
	396
426-6565	314
	▶315
426-6931	▶339
426-6932	▶339
426-6933	▶339
426-6934	339
	▶397
426-6935	▶316
	397
426-6937	316
	▶317
426-6938	▶340
426-6939	▶340
426-6940	▶340
426-6941	340
	▶398
426-6943	▶318
	398
426-6944	▶340
426-6945	▶341
426-6947	340
	341
	▶341
426-6951	341
	▶399
426-6957	▶319
	399
426-6959	319
	▶320
426-6965	▶341
426-6967	▶341
426-6970	341
	▶342
426-6978	▶321
	400
426-6981	321
	▶322
426-6985	▶342
426-6989	▶342
426-6992	▶342
426-6995	342
	▶343
426-7001	▶323
	343
426-7003	323
	▶324
426-7102	342
	▶400
430-8499	30
431-5570	▶344
432-8929	557
	▶561
432-8930	557
	▶559
432-8931	559
432-8932	559
432-8933	559
432-8937	561
433-9330	527
433-9693	460
433-9694	460
433-9695	460
433-9697	▶460
433-9721	551
	553
435-5221	95
435-8760	▶3
435-8849	227
435-8853	263
	265
435-8854	155
	157
435-8855	155
	157
435-8860	39
435-8880	265
435-8881	263
435-9007	187
435-9008	187
435-9010	1
	▶187
435-9011	187
435-9012	187
436-0817	24
	38
436-0822	62
436-1605	1
	▶417
436-1607	87
436-1608	148
436-1609	▶106
	144
436-1612	87
436-2988	470
	473
	500
	504
	516
	518
437-2562	5
	6
	▶24
437-2564	33
437-2566	5
	6
	▶33
437-3432	37
437-5953	5
	6
	▶37
437-5954	6
	▶81
437-5955	5
	6
	▶62
437-5968	37
437-9853	502
	506
	509
	516
	518
438-1290	5
	▶82
438-1313	9
438-5693	9
439-2323	160
	161
439-4991	460
441-7667	534
441-7668	534
441-7669	534
442-5904	184
	196
444-5039	3
	▶119



©2013 Caterpillar
All Rights Reserved

CAT, CATERPILLAR, their respective logos, “Caterpillar Yellow”, and the POWER EDGE trade dress as well as corporate and product identity used herein, are trademarks of Caterpillar and may not be used without permission.