RUTHZIL TRATOR COMERCIAL DE PEÇAS LTDA 11 97083-6812 ROLANDO CITRANGULO

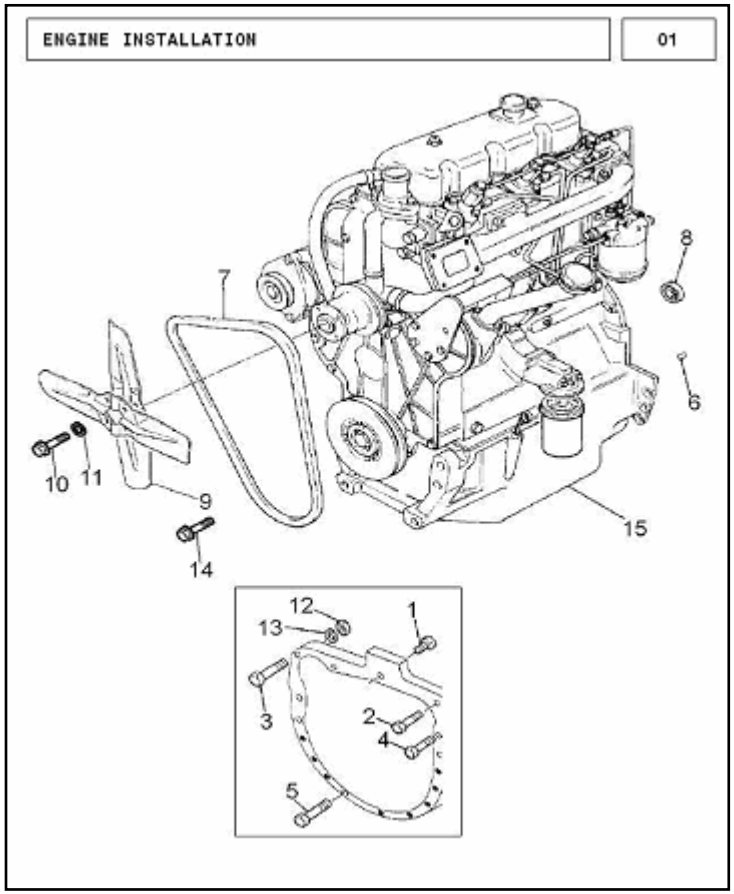

ENGINE INSTALLATION

MF240

ITEM	CKD	LocalPartNo	QTY	Description	Source
1	3019858X1	18503	1	SCREW M12 X 35L	L
2	3019852X1	18501	3	BOLT M12 X 55L	L
3	3019857X1	18610	1	BOLT M12 X 90L	L
4	3009794X1	18612	1	SCREW M12 X 1.75 X 70L	L
5	3019855X1	18502	9	BOLT M12 X 70L	L
6	825302M1	18220	2	DOWEL	L
7	1687531M1	18647	1	FAN BELT	I
8	828123M2	18643	1	BEARING CLUTCH PILOT	I
9	897050M1	37005	1	FAN	L
10	2182428	18553	4	SCREW	L
11	2411118	18590	2	WASHER	L
12	3019862X1	18611	1	NUT M12	L
13	339369X1	18621	3	LOCK WASHER I/D12.2 OD21.1 T.2.5	L
14	378810X1	185022	4	HEX BOLT 5/16 - 24 UNF-2A L.18MM	L
15	37711C05A/6	185000	1	ENGINE	L
15	41423584	185000	1	ENGINE	L

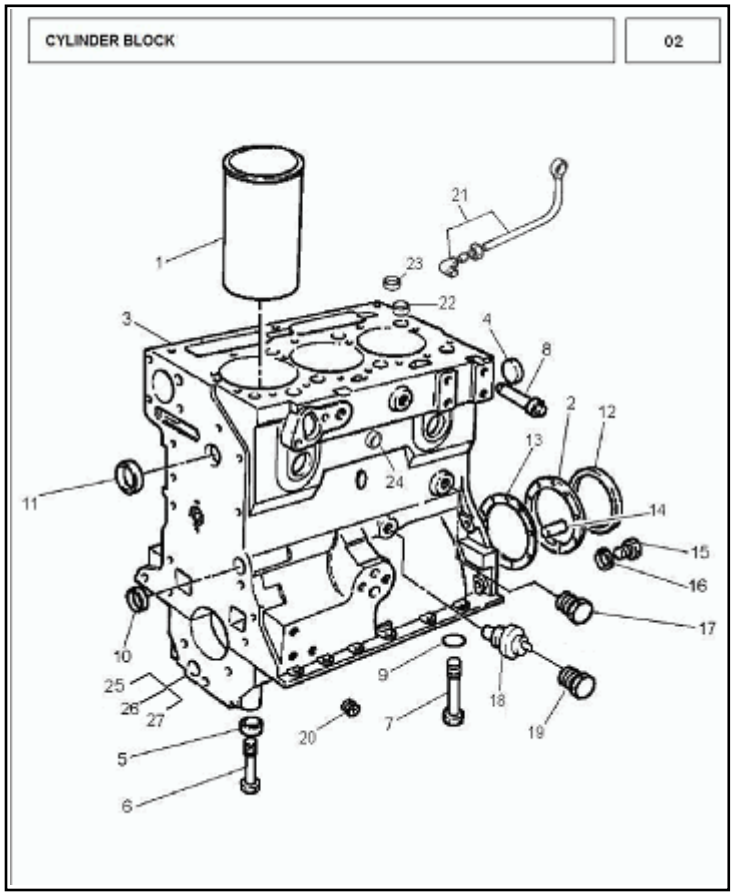

CYLINDER BLOCK

MF240

ITEM	CKD	LocalPartNo	QTY	Description	Source
1	31358356	185041	3	LINER CYLINDER BLOCK	L
2	4142V002	18063	1	HOUSING REAR END OIL SEAL	L
3	3711C059	185025	1	CYLINDER BLOCK	L
3	3711C05A/6	185025	1	CYLINDER BLOCK	L
4	0650592	18154	1	PLUG	L
5	33137409	18151	8	THIMBLE MAIN BRG CAP	L
6	32181441	18526	6	SCREW	L
7	32181442	18527	2	SCREW	L
8	32114472	18213	1	PLUG BRG FACING	L
9	2415608	18657	2	O RING	L
10	0650566	18155	2	PLUG	L
11	0650710	18153	6	PLUG WATER JACKET	L
12	2418F475	18641	1	SEAL	I
13	33828113	18046	1	JOINT OIL SEAL HOUSING	L
14	0350015	18181	2	DOWEL	L
15	0746255	18540	9	SCREW	L
16	0920003	18567	9	WASHER	L
17	32161114	18178	1	PLUG	L
18	1877721M92	29002	1	OIL PRESSURE SWITCH	L
19	0650586	18592	1	PLUG	L
20	32114451	185101	1	PLUG	L
21	35568109	18016	1	PIPE L/O CAMSHAFT-CHAMBER CYL	L
22	33157142	18196	2	PLUG	L
23	33157143	18197	2	PLUG	L
24	32417163	18164	2	PLUG CYLINDER BLOCK	L
25	31331251	18090	1	CAP MAIN BEARING FRONT	L
26	31331252	18091	2	CAP MAIN BEARING INTERMEDIATE	L
27	31331614	18092	1	CAP MAIN BRG REAR	L

CRANKSHAFT PISTON & CONNECTING RODS

MF240

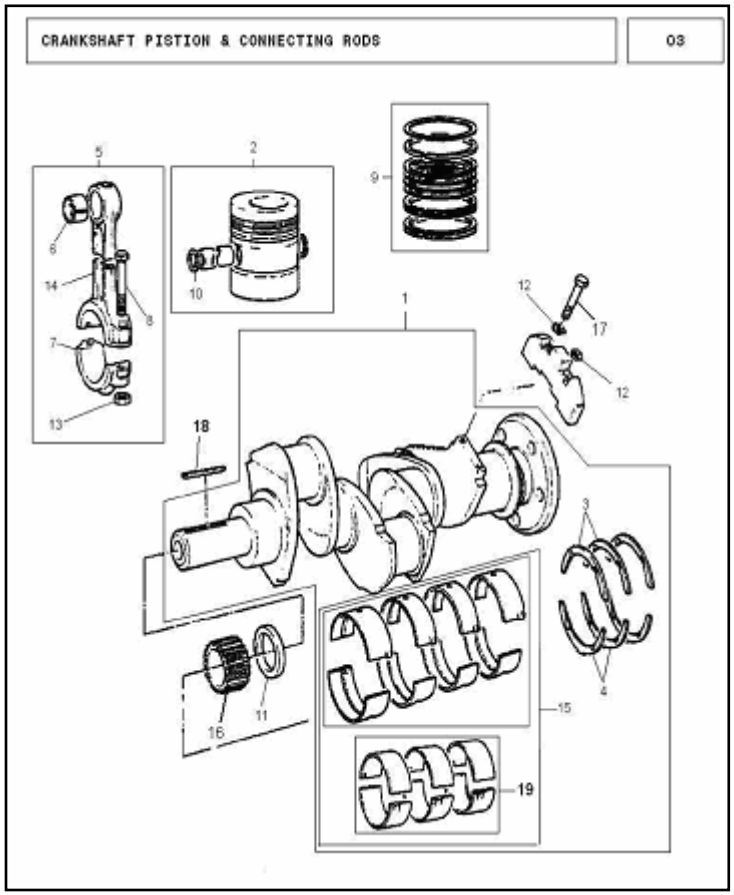

ITEM	CKD	LocalPartNo	QTY	Description	Source
1	A5BH0017	18650	1	ASSY. CRANKSHAFT +B.W+GR+ HW	I
2	31354983	18041	3	PISTON ASSY	L
3	31137211	18086	2	WASHER CRN/SHAFT THRT RR JRNL	L
4	31137221	18087	2	WASHER CRN/SHAFT THRT RR CAP	L
5	41152926	18400	3	CONNECTING ROD ASSY	L
6	31134151	18102	1	BUSH	L
7	31337542	18079	1	CAP CON ROD	L
8	095250	18103	2	SCREW	L
9	41158065	18640	3	RING PISTON	I
10	0180066	18632	2	CLIP	L
11	2415715	18658	1	O RING	L
12	3381A003	18607	2	WASHER	L
13	33221327	18104	2	NUT	L
14	31337223	18078	1	CONNECTING ROD	L
15	U5MK0100	18667	1	SHELL BEARING SET	L
16	31163495	18665	1	GEAR	L
17	2185189	18728	1	BOLT	L
18	36271704	18163	1	KEY	L
19	N/a	18058	1	KIT, BEARING MAIN	L

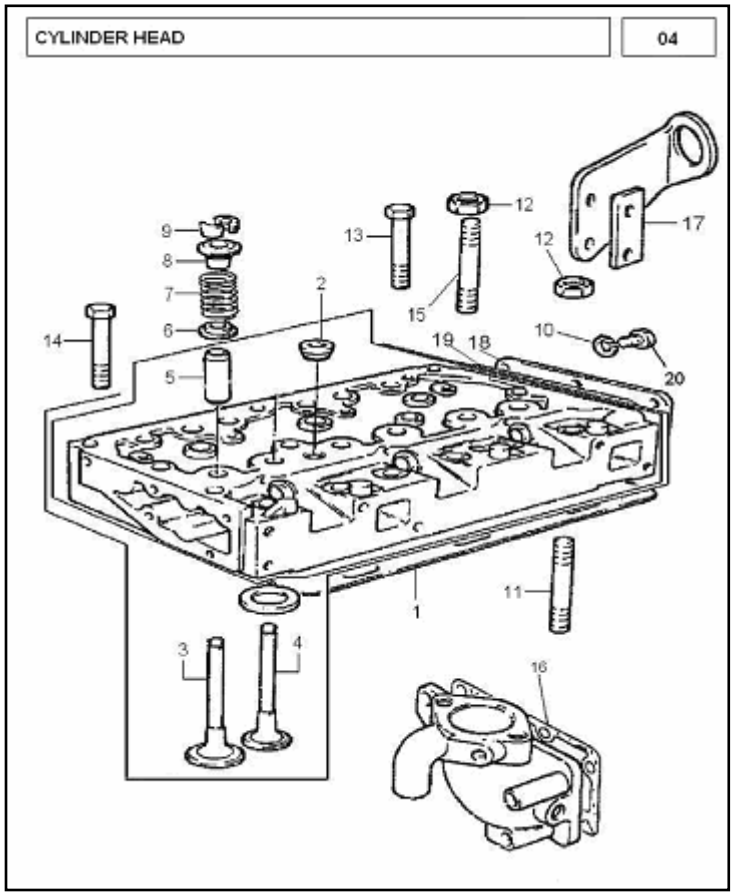

CYLINDER HEAD

MF240

ITEM	CKD	LocalPartNo	QTY	Description	Source
1	3711617A/1	18300	1	CYLINDER HEAD ASSY.	L
1	37116187	18300	1	CYLINDER HEAD ASSY.	L
1	M7BD1600	18300	1	CYLINDER HEAD ASSY.	L
2	2431154	18593	2	PLUG	L
3	31431681	18051	3	VALVE INLET	L
4	31431011	18052	3	VALVE EXHAUST	L
5	U3316A031	18193	6	GUIDE	L
6	33415133	18635	6	WASHER	L
7	0780006	18636	6	SPRING	I
8	33423148	18608	6	CAP	L
9	0230001	18637	12	COTTER	L
10	0920053	18583	6	WASHER	L
11	32524132	18573	1	STUD	L
12	33221329	18563	4	NUT	L
13	32181457	18557	5	SCREW	L
14	32181458	18558	9	SCREW	L
15	32524148	18574	3	STUD	L
16	3686J003	18006	1	JOINT CYL BLK/W-INLET CONNECT	L
17	3611000	18170	1	PLATE R-LIFTING PLT-CYL HD SPC	L
18	3612M002	18176	1	COVER CYL REAR END	L
19	36851416	18602	1	JOINT	L
20	0746214	18538	6	SCREW	L

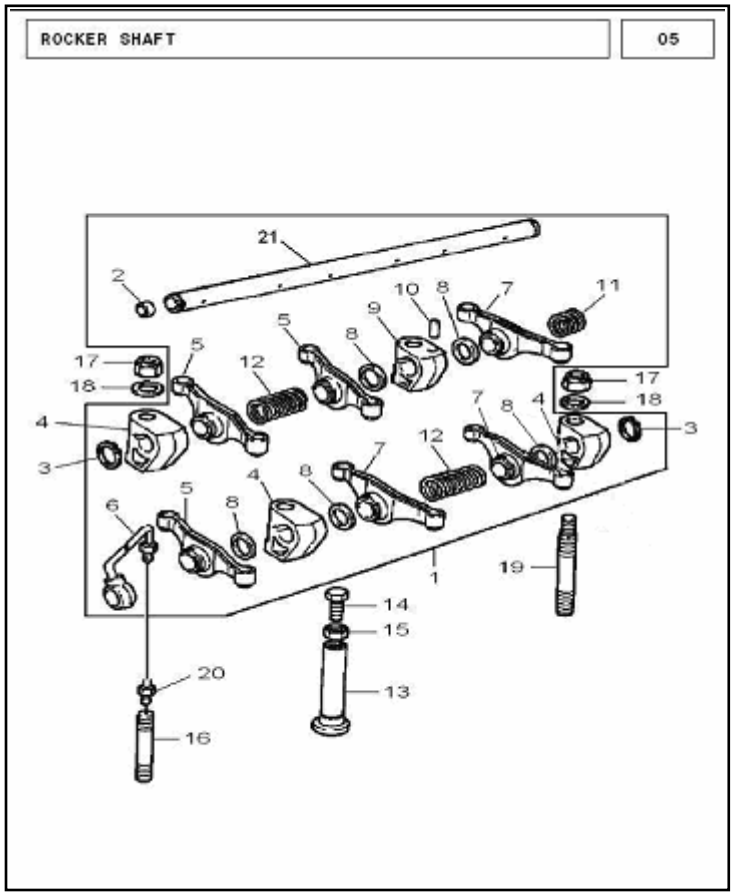

ROCKER SHAFT

MF240

ITEM	CKD	LocalPartNo	QTY	Description	Source
1	4115R805	18160	1	ROCKER SHAFT ASSY	L
2	0650507	18198	2	PLUG	L
3	0170033	18646	2	CIRCLIP EXTERNAL	L
4	0101138	18001	3	BRACKET ROCKER SHAFT	L
5	3737A101	18167	3	ROCKER LEVER LH	L
6	35568109M1	18017	1	PIPE	L
7	3737A091	18168	3	ROCKER LEVER RH	L
8	0330505	18070	5	SPACER	L
9	37521212	18033	1	BRACKET ROCKER SHAFT	L
10	2112A066	18184	1	PIN	L
11	0780175	18628	1	SPRING	L
12	0780005	18629	2	SPRING	L
13	0860012	18194	6	TAPPET	L
14	2227117	18522	6	SCREW	L
15	0576052	18551	6	NUT	L
16	2214209	18569	2	STUD	L
17	2211283	18562	4	NUT	L
18	0920004	18568	4	WASHER	L
19	32754435	18595	2	STUD	L
20	0206002	18188	1	CONNECTION	L
21	31411142	18160	1	ROCKER SHAFT	L

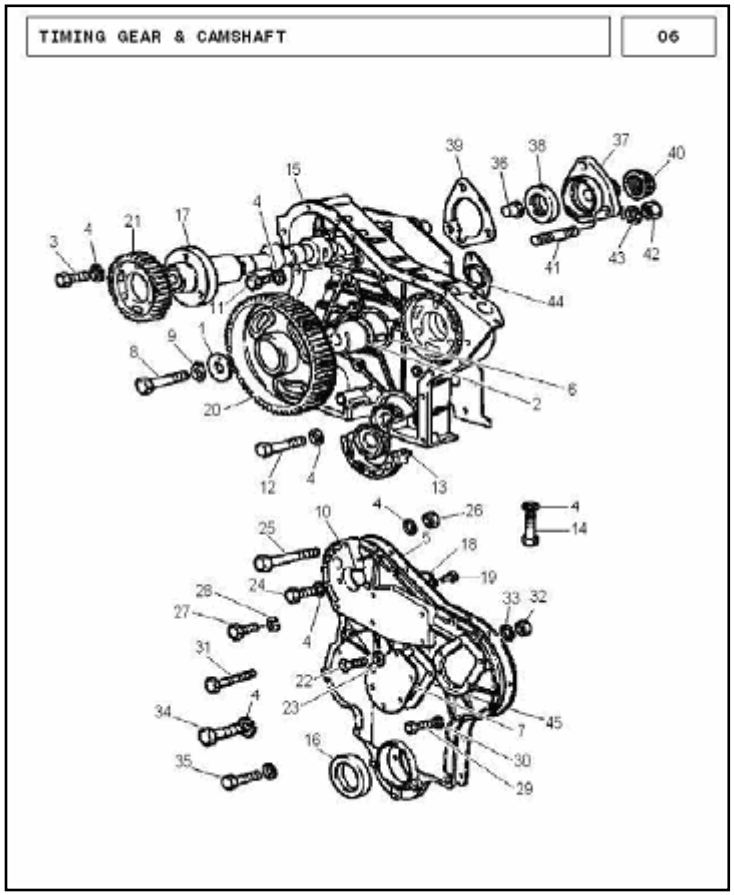

ITEM	CKD	LocalPartNo	QTY	Description	Source
1	0940738	18009	1	PLATE IDLER GEAR RETAINING	L
2	0995447	18010	1	HUB IDLER GEAR	L
3	0746214	18540	3	SCREW	L
4	0920053	18583	24	WASHER	L
5	36813158	18014	1	JOINT FRONT COVER TMGCASE(36813136)	L
6	0350005	18183	1	DOWEL	L
7	36234114	18021	1	PLATE BLANKING	L
8	095199	18548	1	BOLT IDLER GEAR HUB	L
9	0920883	18598	1	TABWASHER	L
10	37167794	18050	1	TIMING COVER	L
11	0746355	18543	15	SCREW	L
12	0096234	18530	2	SCREW	L
13	37354312	18098	1	BRIDGE PIECE TIMING CASE BOTTOM	L
14	096232	18507	2	BOLT	L
15	37161481	18064	1	TIMING CASE	L
16	2415344	18639	1	SEAL	I
17	31415261	18071	1	CAMSHAFT	L
18	3661P002	18588	1	SPRING	L
19	2126151	18664	1	RIVET	L
20	31164362	18080	1	GEAR IDLER	L
21	0410241	18081	1	GEAR CAM SHAFT	L
22	32151116	18554	6	SCREW	L
23	33117127	18565	6	WASHR ID 13.10 OD 19.05 T. 2.64	L
24	0748414	18546	2	SCREW	L
25	0096213	18528	1	SCREW	L
26	0576002	18549	1	NUT	L
27	02233203	18523	1	SCREW	L
28	3321A004	18586	1	WASHER	L
29	2183205	18506	8	BOLT	L

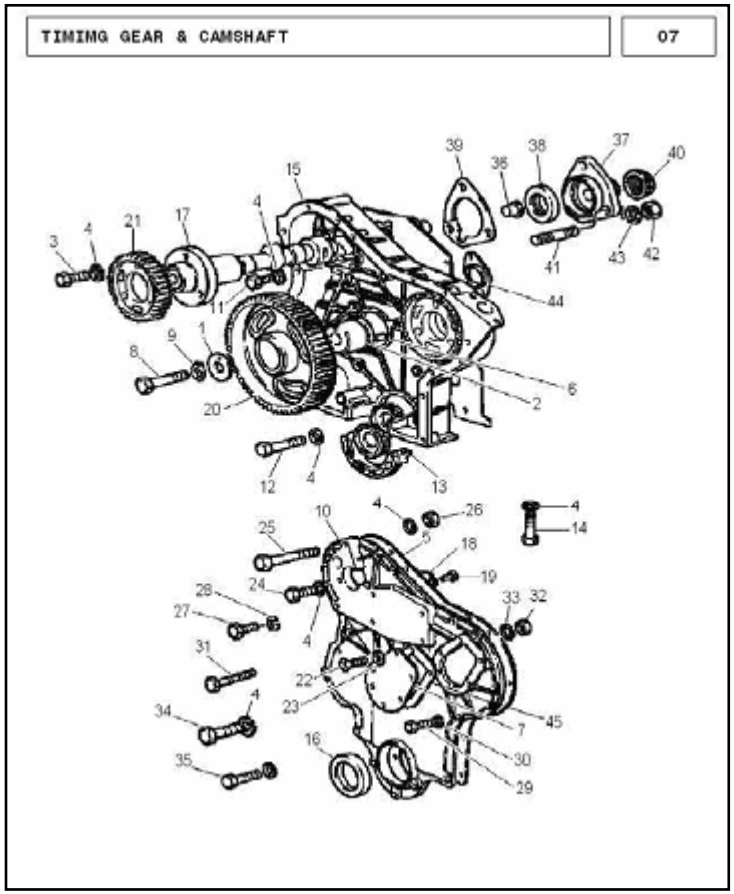

30	0920052	18582	8	WASHER	L
31	0748510	18547	2	SCREW	L
32	2238153	18521	2	NUT	L
33	0920054	18584	2	WASHER	L
34	2183204	18520	2	SCREW	L
35	0096441	18534	1	SCREW	L
36	33473106	18179	1	ADAPTOR TECHO-DRIVE METER	L
37	37416751	18150	1	HOUSING TACHO-METER DRIVE	L

TIMING GEAR & CAMSHAFT **MF240**

ITEM	CKD	LocalPartNo	QTY	Description	Source
38	30854	18642	1	LIP SEAL	I
39	36862605	18604	1	JOINT	L
40	32813106	18510	1	CAP	L
41	2217575	18571	3	STUD	L
42	0576002	18549	3	NUT	L
43	0920053	18583	3	WASHER	L
44	37461104	18032	1	COVER POWER TAKE OFF FACING	L
45	36862572	18024	1	JOINT INSPECTION COVER	L

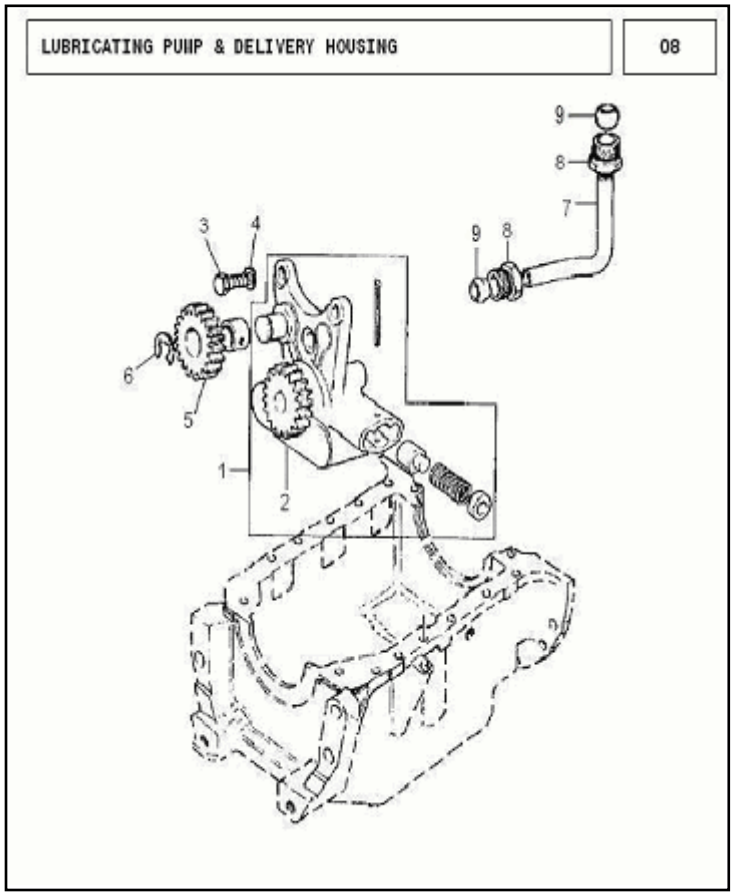

ITEM	CKD	LocalPartNo	QTY	Description	Source
1	41314187	18096	1	PUMP LUB OIL ASSY	L
2	DPA3230F481	18648	1	PUMP	L
2	DPA3238F481	18648	1	PUMP	L
2	Z643B133	18648	1	PUMP	L
3	2235210	18075	3	SCREW	L
4	0920053	18583	3	WASHER	L
5	31163372	18192	1	GEAR L/O PUMP IDLER	L
6	0180831	18645	1	CIRCLIP	L
7	34711129	18049	1	PIPE LUB OIL DELIVERY	L
8	33532121	18158	2	UNION NUT	L
9	0560244	18157	2	OLIVE LUB OIL DELIVERY PIPE	L

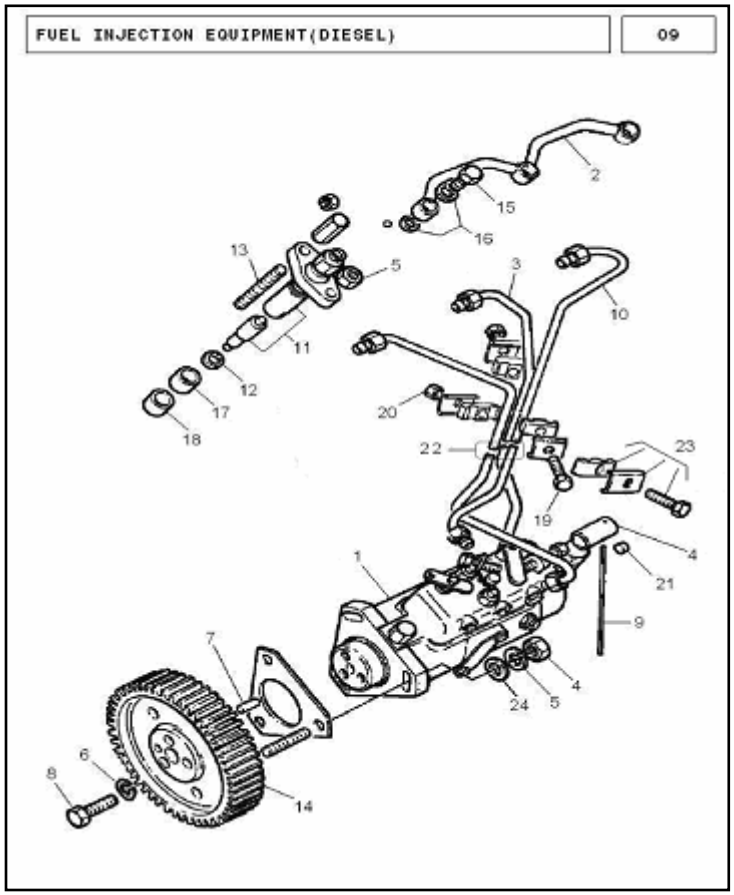

FUEL INJECTION EQUIPMENT DIESEL

MF240

ITEM	CKD	LocalPartNo	QTY	Description	Source
1	2643B133	18648	1	FUEL INJECTION PUMP	L
2	3558X022	18018	1	PIPE FUEL OIL AUTOMISER LE	L
3	3551E008	18093	1	PIPE FUEL INJ NO 2 CYL ASSY	L
4	3281M002	18174	1	SLEEVE THROTTLE LVR ADJ SCREW	L
5	0576002	18549	6	NUT	L
6	0920053	18583	6	WASHER	L
7	0350010	18182	1	DOWEL	L
8	0746214	18538	3	SCREW	L
9	31718105	18659	1	LOCK WIRE	L
10	3551E009	18094	1	PIPE FUEL INJ NO 3 CYL ASSY	L
11	2645630	18649	3	ATOMISER AND HOLDER	L
11	2646466	18649	3	ATOMISER AND HOLDER	L
11	2646825	18649	3	ATOMISER AND HOLDER	L
11	5281620	18649	3	ATOMISER AND HOLDER	L
12	0921173	18591	3	WASHER	L
13	2216105	18570	6	STUD	L
14	31164632	18082	1	GEAR FUEL PUMP DRIVING	L
15	3218R039	18559	3	BOLT (0095315)	L
16	2411D007	18597	6	WASHER (0921176)	L
17	33813126	18623	3	SPACER	L
18	33813127	18630	3	SEAL	L
19	353538X1	18217	1	BOLT 3/8-24X20MM	L
20	2211291	18552	2	NUT	L
21	31718104	29040	2	SEAL	L
22	4184A008	18095	1	PIPE ASSY	L
23	38631117	18627	1	ASSY. CHANNEL WITH PLATE & NUT	L
24	0920003	18567	3	WASHER	L

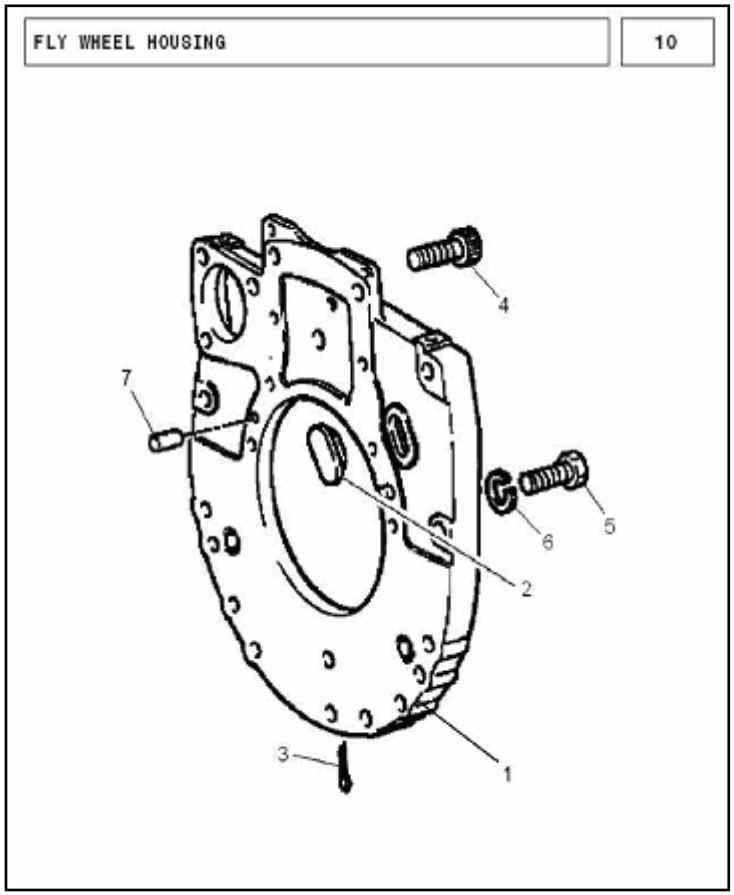

ITEM	CKD	LocalPartNo	QTY	Description	Source
1	37147974	18030	1	ADAPTOR PLATE	L
2	37813113	18175	1	PLUG ADAPTOR PLATE	L
3	0610045	18634	1	SPLIT PIN	L
4	0720798	18655	2	SCREW	L
5	0746454	18544	6	SCREW	L
6	0920054	18584	6	WASHER	L
7	0350016	18180	2	DOWEL	L

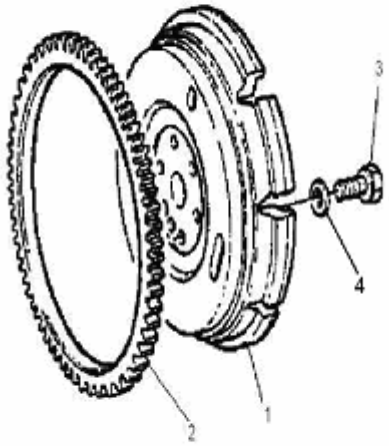

FLYWHEEL & STARTER RING

MF240

ITEM	CKD	LocalPartNo	QTY	Description	Source
1	31215851	18011	1	FLY WHEEL	L
2	0410236	18047	1	STARTER RING	L
3	32162203	18225	6	BOLT	L
4	33117121	18565	6	WASHER	L

FLYWHEEL & STARTER RING	11

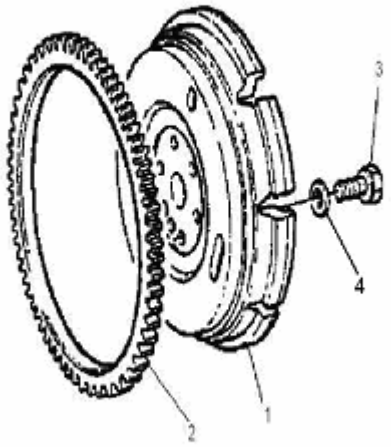

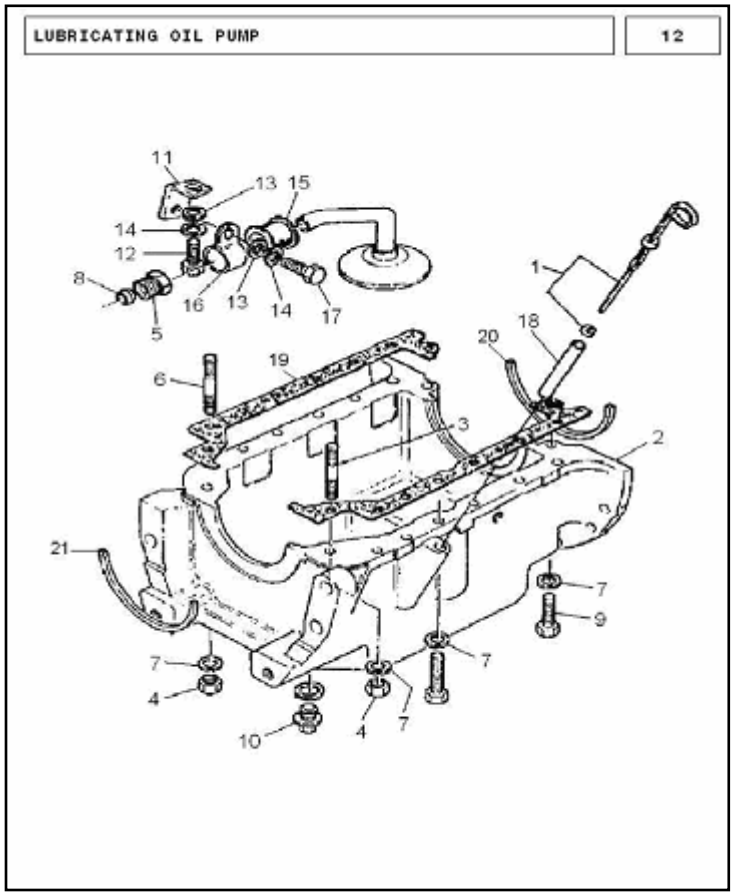

ITEM	CKD	LocalPartNo	QTY	Description	Source
1	3178C088	18661	1	DIPSTICK ASSY.	L
2	37172402	18065	1	SUMP LUB OIL	L
3	0826265	18576	2	STUD	L
4	0576002	18549	3	NUT	L
5	33532121	18158	1	NUT LUB OIL LEVER PIPE	L
6	0826285	18577	1	STUD	L
7	0920053	18583	16	WASHER	L
8	0560244	18157	1	OLIVE LUB OIL DELIVERY PIPE	L
9	0096245	18531	2	SCREW BOLT	L
10	32186405	18596	1	PLUG	L
11	38311124	18190	1	BRACKET SUCTION PIPE SUPP-ASSY	L
12	0746052	18536	1	SCREW	L
13	0920002	18566	2	WASHER	L
14	0920052	18582	2	WASHER	L
15	33817308	18156	1	BUSH SUCTION PIPE CLAMPG CLIP	L
16	36631118	18189	1	CLIP	L
17	0746053	18537	1	SCREW	L
18	33242412	18195	1	TUBE DIPSTICK	L
19	41424233	18038	2	JOINT SUMP TO BLOCK ASSY	L
20	3688V002	18505	1	JOINT LUB OIL SUMP REAR	L
21	3688V003	18504	1	JOINT LUB	L

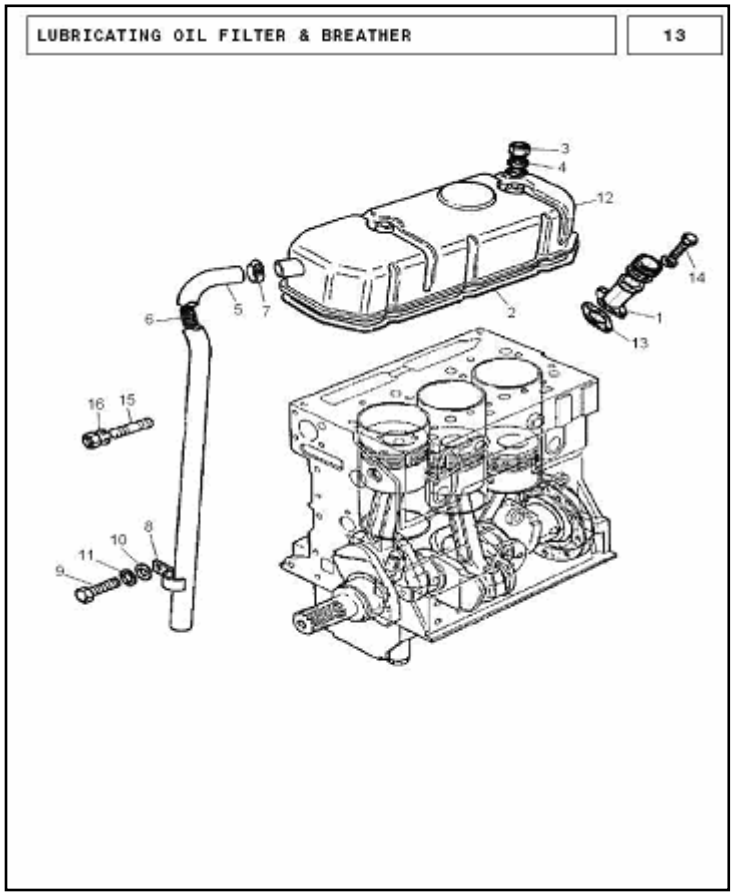

LUBRICATING OIL FILTER & BREATHER

MF240

ITEM	CKD	LocalPartNo	QTY	Description	Source
1	35784123	18019	1	FILLER LUB OIL ASSY	L
2	36811115	18025	1	JOINT CYL HD COVER TO CYL HEAD	L
3	0576102	18654	2	NUT	L
4	0920003	18567	2	WASHER	L
5	33872531	18599	1	HOSE	L
6	31754118	18177	1	SPRING	L
7	0180063	18631	1	CLIP	L
8	36561129	18587	2	CLIP	L
9	0748354	18545	1	SCREW	L
10	0920002	18566	1	WASHER	L
11	0920052	18582	1	WASHER	L
12	37188571	18031	1	COVER CYL HEAD ASSY (TAPPET)	L
13	36835432	18201	1	JOINT	L
14	0746254	18539	2	SCREW	L
15	32537404	18581	1	STUD	L
16	0920053	18583	1	WASHER	L

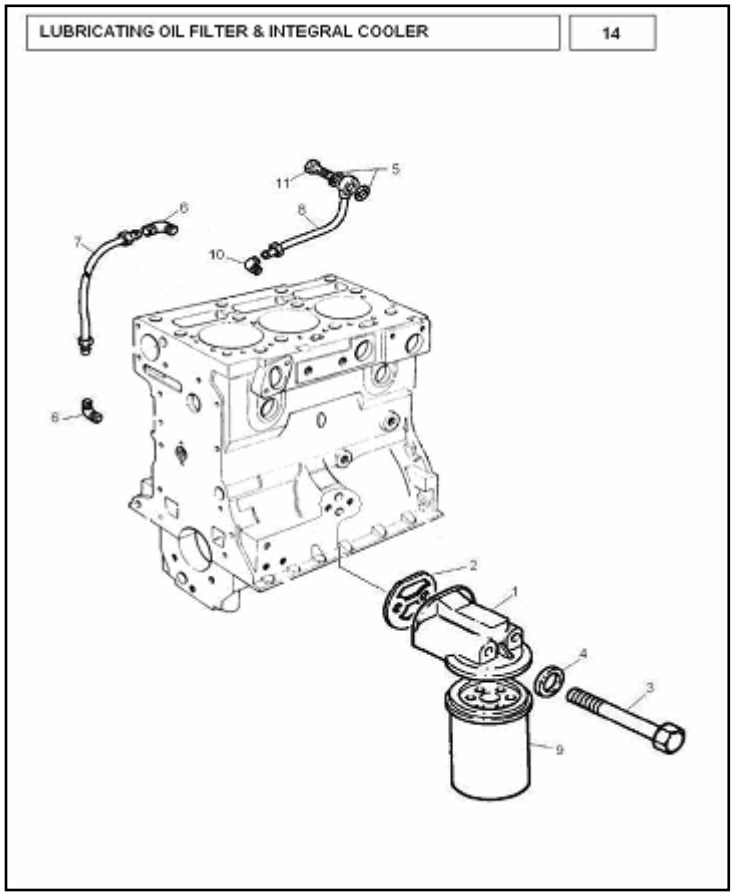

LUBRICATING OIL FILTER & INTEGRAL COOLER

MF240

ITEM	CKD	LocalPartNo	QTY	Description	Source
1	37764251	18159	1	HEAD LUB OIL FILTER ASSY	L
2	36813161	18007	1	JOINT CYLBLK L/O FLTR-HD(0490514)	L
3	0096443	18535	2	SCREW	L
4	33115129	18564	2	WASHER	L
5	3314P004	18585	2	WASHER	L
6	0201047	18187	2	ELBOW	L
7	35352404	18015	1	PIPE L/O PRS-RAIL-CAM SHAFT	L
8	35137623	18068	1	PIPE L/O SUCTION ASSY	L
9	2654408	18062	1	FILTER LUB OIL LHS	L
10	37736243	18034	1	CONNECTION CYL BLOCK W/INLET	L
11	0095350	18560	1	BOLT	L

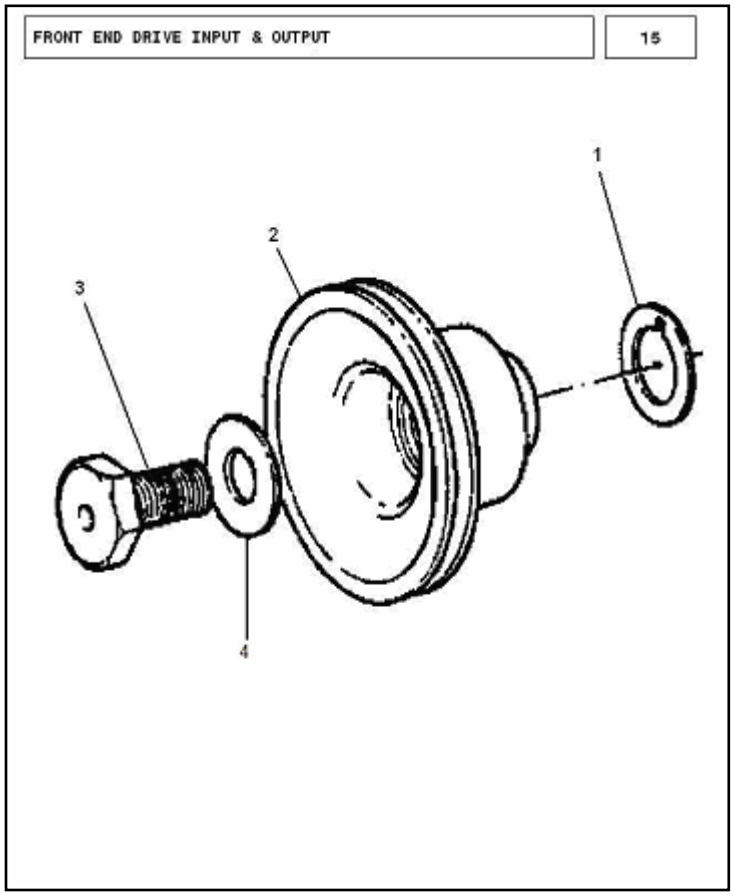

FRONT END DRIVE INPUT & OUTPUT

MF240

ITEM	CKD	LocalPartNo	QTY	Description	Source
1	33176137	18618	1	SPACER CRANK PULLEY	L
2	31143733	18040	1	PULLEY CRANK SHAFT	L
3	32162331	18556	1	SCREW	L
4	3321A004	18586	1	WASHER	L

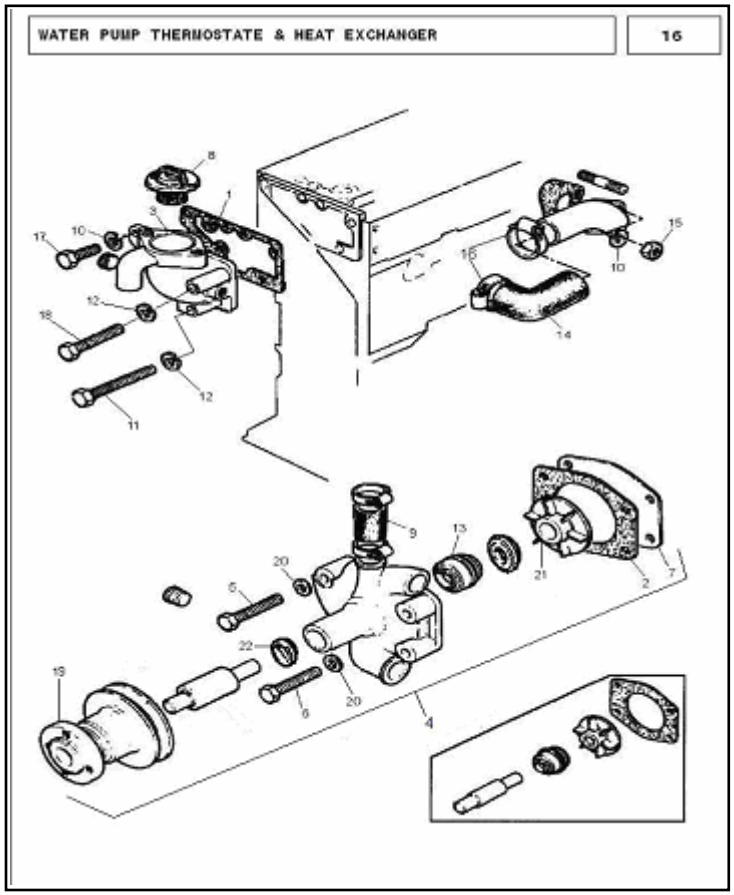

WATER PUMP THERMOSTATE & HEAT EXCHANGER

MF240

ITEM	CKD	LocalPartNo	QTY	Description	Source
1	3685A005	18003	1	JOINT THMT HSG TO CYL HEAD(0490482)	L
2	36861118	18004	1	JOINT BACK PLATE TO W/PUMP(0490484)	L
3	37766363	18036	1	HOUSING THERMOSTAT/WATER BODY	L
4	41312992	18500	1	WATER PUMP ASSY	B
5	2233207	18524	3	SCREW	L
6	2232133	18074	1	SCREW	L
7	3623H004	18172	1	PLATE WATER PUMP BACKPLATE	L
8	2485659	18638	1	THERMOSTAT	L
8	2485666	18638	1	THERMOSTAT	L
9	0202016	18053	1	HOSE BY PASS CONN- W/PUMP BDY	L
10	0920053	18583	2	WASHER	L
11	0096437	18533	1	SCREW	L
12	0920054	18584	2	WASHER	L
13	31718104	18625	1	SEAL	L
14	34821422	18059	1	HOSE CYL BLK PIP TO INLET CONN	L
15	0576002	18549	3	NUT	L
16	0180067	18633	2	CLIP	L
17	2183205	18506	2	BOLT	L
18	0096441	18534	1	SCREW	L
19	31145741	18043	1	PULLY, WATER PUMP	L
20	2411152	187050	4	WASHER	L
21	37447194	N/a	1	IMPELLER	L
22	0650586	18592	1	PLUG	L

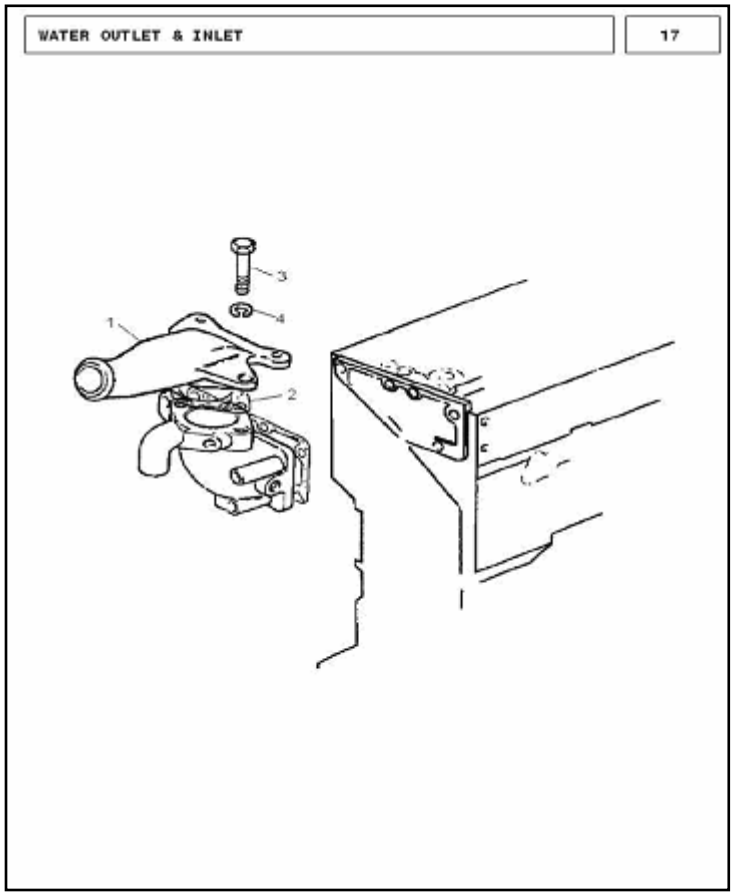

WATER OUTLET & INLET

MF240

ITEM	CKD	LocalPartNo	QTY	Description	Source
1	37747581	18035	1	WATER OUTLET	L
2	36834169	18603	1	JOINT	L
3	0096432	18532	2	SCREW	L
4	0920054	18584	2	WASHER	L

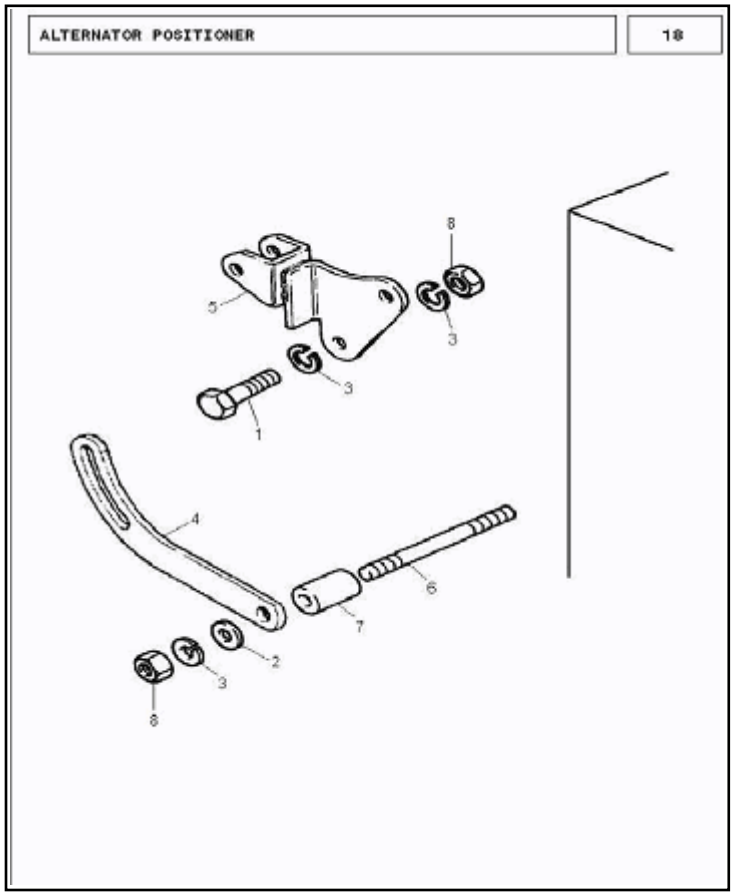

ALTERNATOR POSITIONER

MF240

ITEM	CKD	LocalPartNo	QTY	Description	Source
1	0096215	18529	2	SCREW	L
2	0920003	18567	1	WASHER	L
3	0920053	18583	3	WASHER	L
4	36178174	18020	1	LINK ALTERNATOR	L
5	37581173	18509	1	BRACKET ALTERNATOR	L
6	2217576	18572	1	STUD	L
7	33135423	18069	1	SPACER ALTERNATOR ADJNG LEVER	L
8	0576002	18549	2	NUT	L

INDUCTION & EXHAUST MANIFOLD

MF240

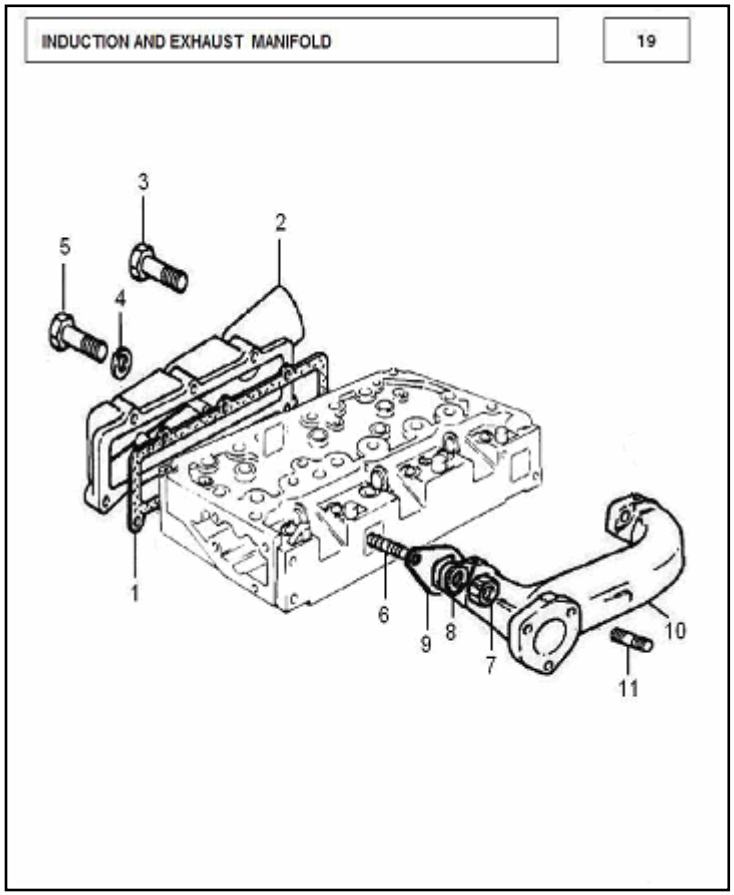

ITEM	CKD	LocalPartNo	QTY	Description	Source
1	36867201	18027	1	JOINT IND.MANIFOLD-C.HEAD(36867153)	L
2	37786351	18061	1	INDUCTION MANIFOLD (FRONT INTAKE)	L
3	0746019	18508	5	SCREW	L
4	0920052	18582	7	WASHER	L
5	361675X1	18107	2	BOLT 1/4-28 X 3-1/4	L
6	0826232	18575	4	STUD	L
7	2188134	18624	4	NUT	L
8	0920003	18567	4	WASHER	L
9	36862198	18028	2	JOINT CYL HEAD TO EXH-MANIFOLD	L
10	37781571	18214	1	EXHAUST MANIFOLD	L
11	0826403	18578	3	STUD	L

INDUCTION AND EXHAUST MANIFOLD

19

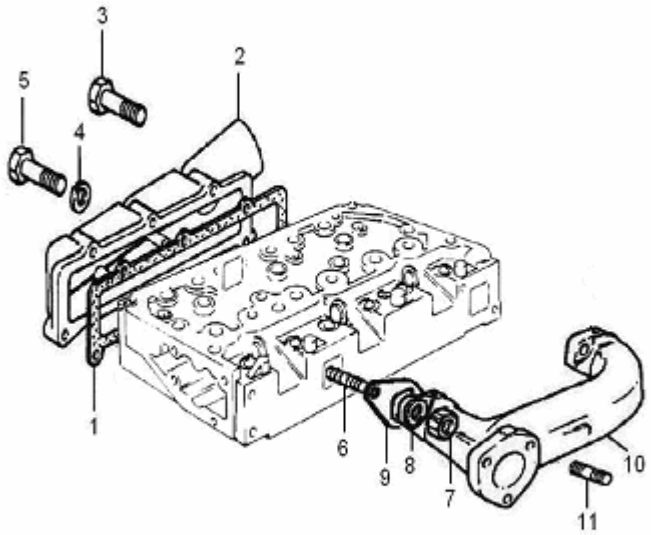

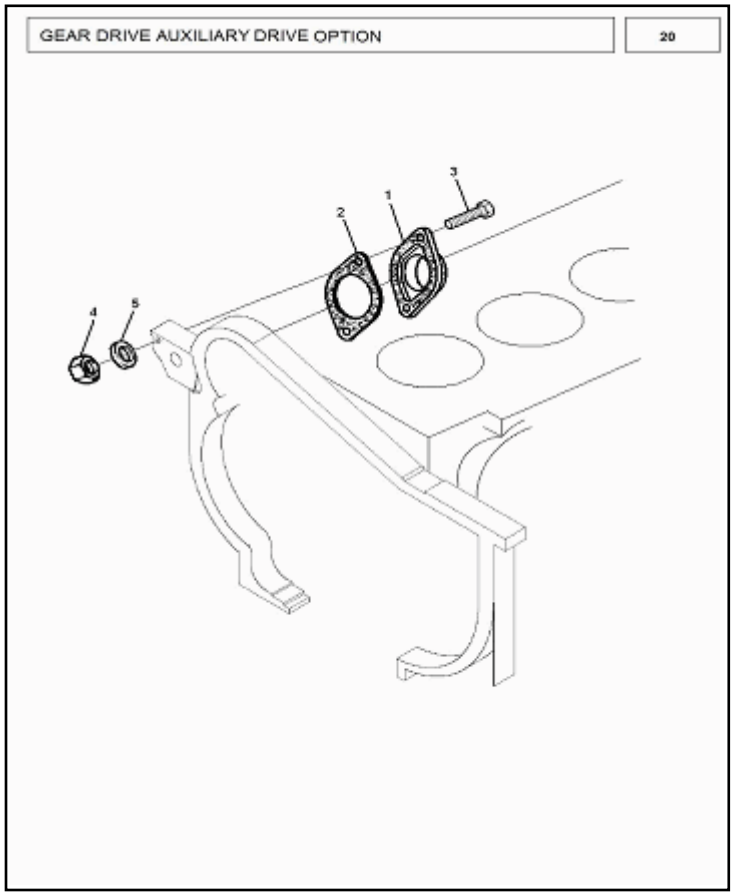

GEAR DRIVE AUXILIARY DRIVE OPTION

MF240

ITEM	CKD	LocalPartNo	QTY	Description	Source
1	36234114	18021	1	PLATE BLANKING	L
2	36835432	18201	1	JOINT	L
3	0748510	18547	2	SCREW	L
4	2238153	18521	2	NUT	L
5	0920054	18584	2	WASHER	L

GEAR DRIVE AUXILIARY DRIVE OPTION	20

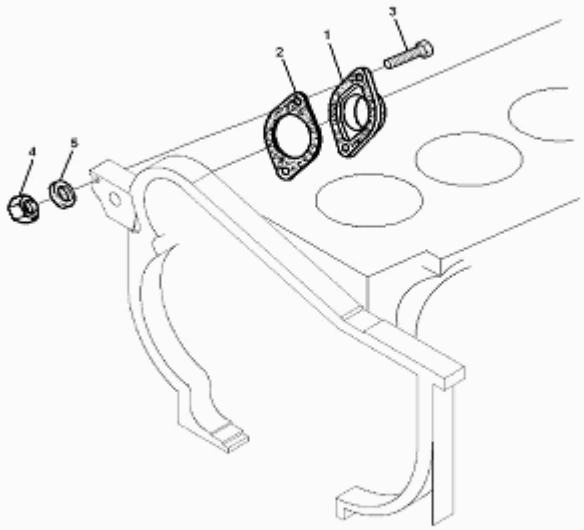

LOW PRESSURE FUEL SYSTEM | 21

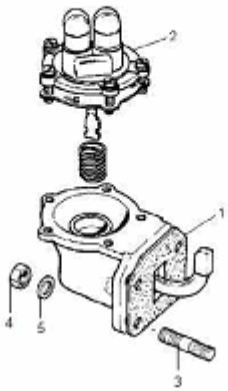

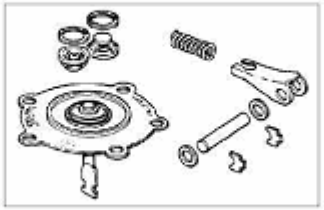

LOW PRESSURE FUEL SYSTEM

MF240

ITEM	CKD	LocalPartNo	QTY	Description	Source
1	3685A026	18060	1	JOINT (36851123)	L
2	2641808	18222	1	LIFT PUMP	L
3	0826210	N/a	4	STUD	L
4	33221115	187088	4	NUT FUEL OIL LIFT PUMP RETAINING	L
5	33114412	N/a	4	WASHER	L

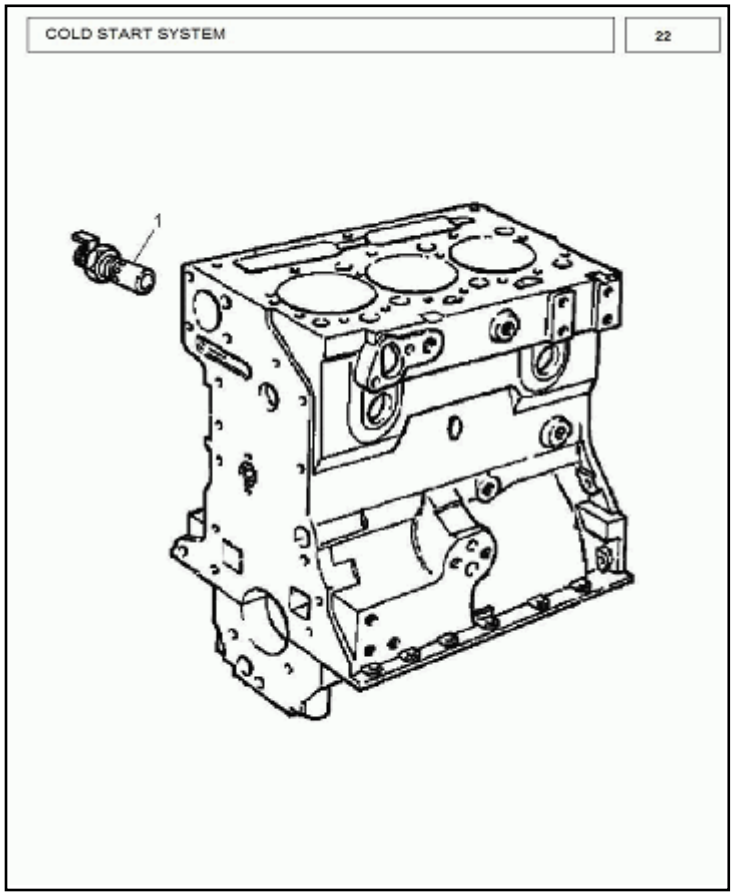

COLD START SYSTEM

MF240

ITEM	CKD	LocalPartNo	QTY	Description	Source
1	2666108	18161	1	HEATER IND MANIFOLD	L

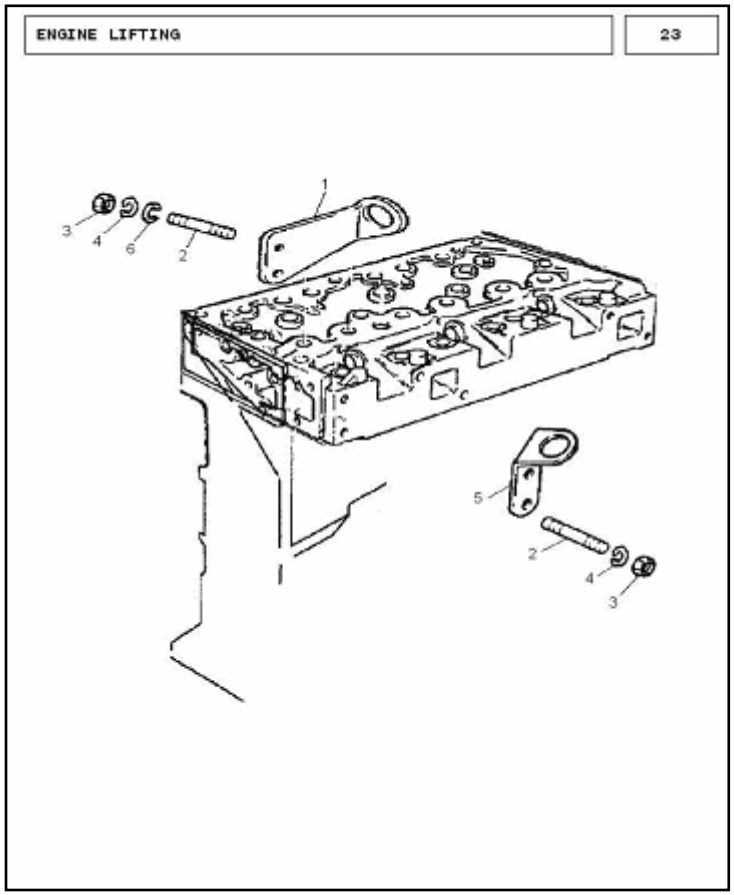

ENGINE LIFTING

MF240

ITEM	CKD	LocalPartNo	QTY	Description	Source
1	36237171	18208	1	PLATE ENGINE LIFTING REAR	L
2	0826462	18579	2	STUD	L
2	0826463	18580	2	STUD	L
3	0576051	18550	4	NUT	L
4	0920054	18584	4	WASHER	L
5	36456321	18207	1	PLATE ENGINE LIFTING FRONT	L
6	831581M2	92004	1	RING SNAP	L

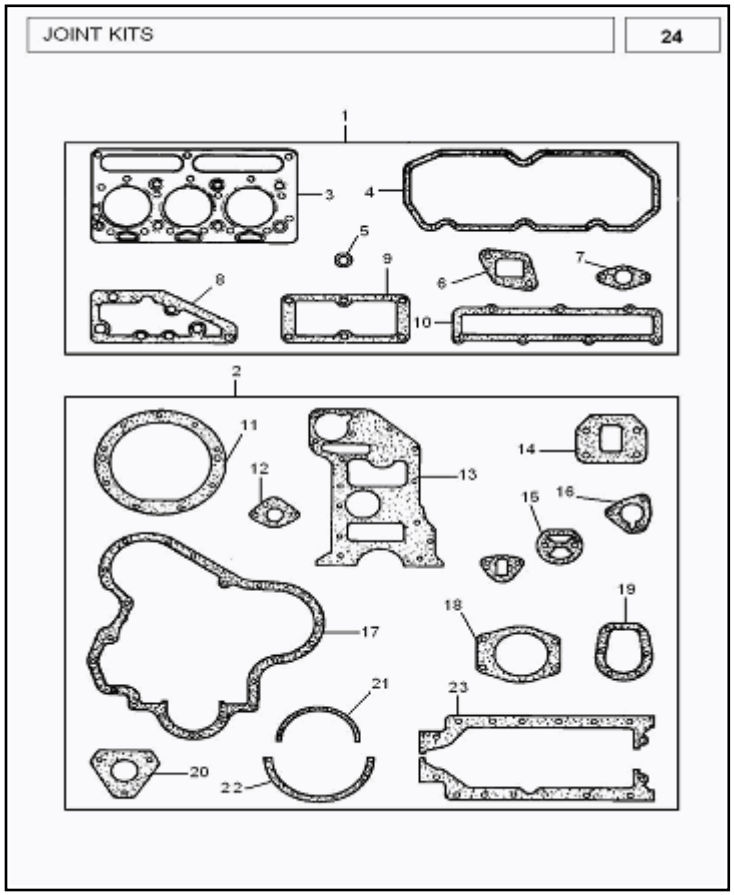

JOINT KITS

MF240

ITEM	CKD	LocalPartNo	QTY	Description	Source
1	36812127	18039	1	GASKET CYL HEAD	L
1	U5LT0038	N/a	1	KIT,JOINT TOP OVERHAUL	L
2	36814161	18026	1	JOINT CYL BLOCK TMGCASE(36814119)	L
2	U5LT0011	N/a	1	KIT,JOINT BOTTOM OVERHAUL	L
3	33826115	18600	1	JOINT	L
3	36812127	18039	1	GASKET CYL HEAD	L
3	3681E006	18039	1	GASKET CYL HEAD	L
4	36811115	18025	1	JOINT CYL HD COVER TO CYL HEAD	L
4	36837415	18601	1	JOINT	L
5	0921173	18591	3	WASHER	L
6	3688C009	185086	2	JOINT	L
7	36834169	18603	1	JOINT	L
8	3685A005	18003	1	JOINT THMT HSG TO CYL HEAD(0490482)	L
9	36851416	18602	1	JOINT	L
10	3681V011	185092	1	JOINT	L
11	33826115	18600	1	JOINT	L
12	3686J003	18006	1	JOINT CYL BLK/W-INLET CONNECT	L
13	36814161	18026	1	JOINT CYL BLOCK TMGCASE(36814119)	L
13	41424233	18038	2	JOINT SUMP TO BLOCK ASSY	L
14	3685A026	18060	1	JOINT (36851123)	L
15	36813161	18007	1	JOINT CYLBLK L/O FLTR-HD(0490514)	L
16	3381A003	18607	2	WASHER	L
17	36813158	18014	1	JOINT FRONT COVER TMGCASE(36813136)	L
18	36861118	18004	1	JOINT BACK PLATE TO W/PUMP(0490484)	L
19	36862572	18024	1	JOINT FRONT COVER TO BLNK PLT	L
20	3682A008	183069	1	JOINT	L
21	3688V003	18504	1	JOINT	L
22	3688V002	18505	1	JOINT	L

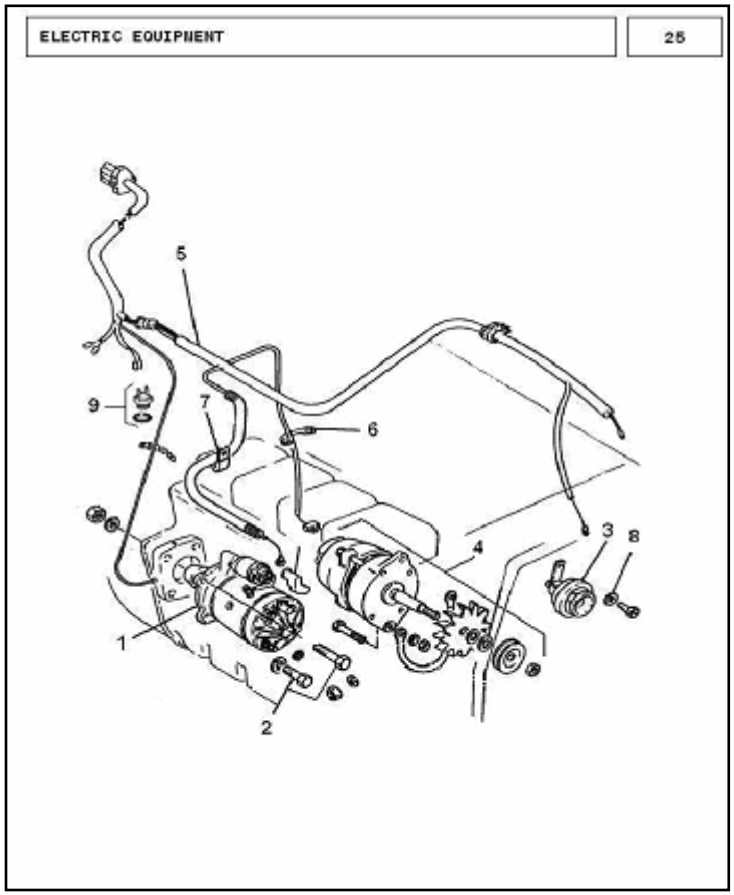

ITEM	CKD	LocalPartNo	QTY	Description	Source
1	3597426M3	24001	1	STARTER MOTOR 2 M 113	L
2	0746259	18542	2	SCREW	L
3	1678404M1	24008	1	HORN	L
4	1676690M92	24010	1	ALTERNATOR & PULLEY	L
5	3599810M91	24052	1	MAIN HARNESS	L
6	1670082M1	24064	2	STRAP	L
7	1873842M1	19306	1	TRAY FUEL LIFT PUMP	L
8	353446X1	19017	1	WASHER 5/16	L
9	3761983M91	12131	2	ASSY SWITCH	L

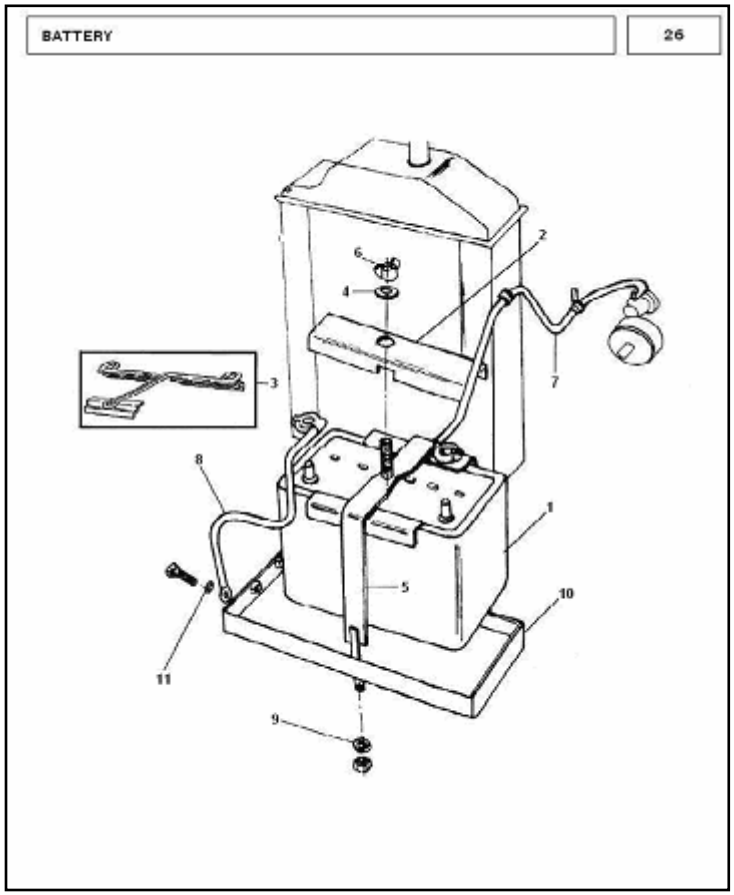

BATTERY **MF240**

ITEM	CKD	LocalPartNo	QTY	Description	Source
1	3597859M1	31001	1	BATTERY DRY N.D.	L
2	3700879P3	31026	1	COVER BATTERY CELL	L
3	3759201M91	31024	1	ASSY BATT. RETAINER	L
4	353441X1	13084	2	WASHER 1/4	L
5	1876229M1	31028	2	STRAP	L
6	355582X1	31007	3	WING NUT 1/4 - 28	L
7	1688835M93	31018	1	CABLE POSITIVE	L
8	1678610M91	31019	1	CABLE NEGETIVE	L
9	353516X2	31010	1	WASHER	L
10	3759275P91	23102	1	BATTERY BOX	L
11	390892X1	25305	1	PLAIN WASHER M-8	L

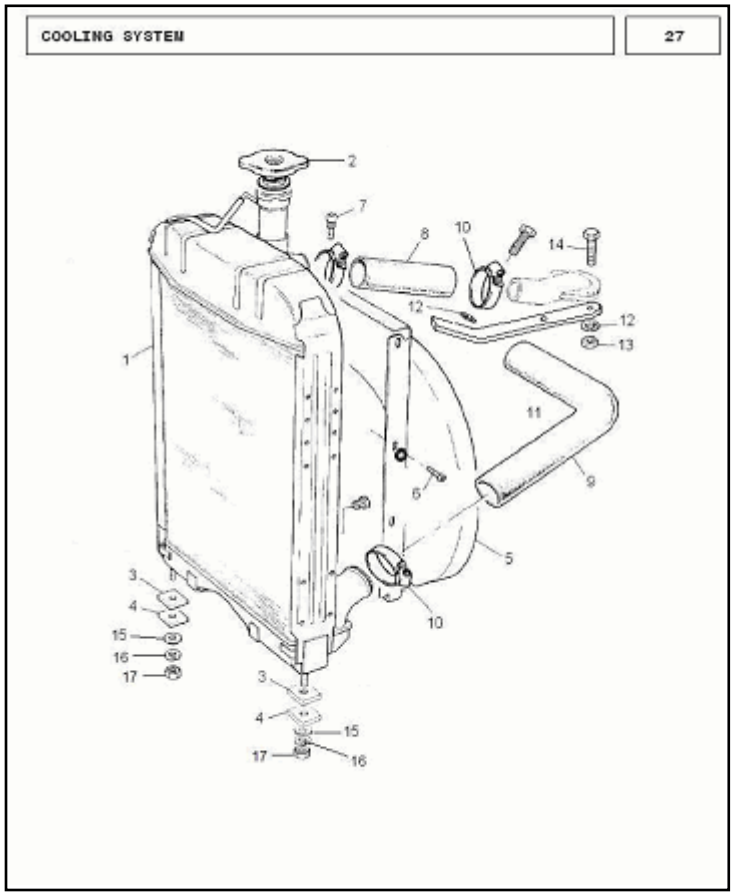

ITEM	CKD	LocalPartNo	QTY	Description	Source
1	1680547M92	21057	1	ASSY RADIATOR WITH CAP	L
2	180224M92	213002	1	ASSY CAP RADIATOR	L
3	1660611M1	21004	2	WASHER	L
4	180705M1	21005	2	PACKING	L
5	883938M4	21009	1	ASSY SHROUD	L
6	0746257	18541	11	SCREW	L
7	180673M1	21011	1	BUMPER	L
8	1869514M1	21012	1	HOSE TOP	L
9	1860374M2	21013	1	HOSE BOTTOM	L
10	338616X1	21058	4	HOSE CLIP	L
11	1676354P1	21055	1	BRACE SUPPORT	L
12	353446X1	19017	2	WASHER 5/16	L
13	355565X1	21056	2	NUT 5/16-18	L
14	353679X1	21020	1	BOLT 5/16-18 X 1	L
15	353772X1	22006	2	WASHER HARDENED 7/16	L
16	339376X1	163181	2	WASHER LOCK M10	L
17	363625X1	11027	2	NUT 7/16-20	L

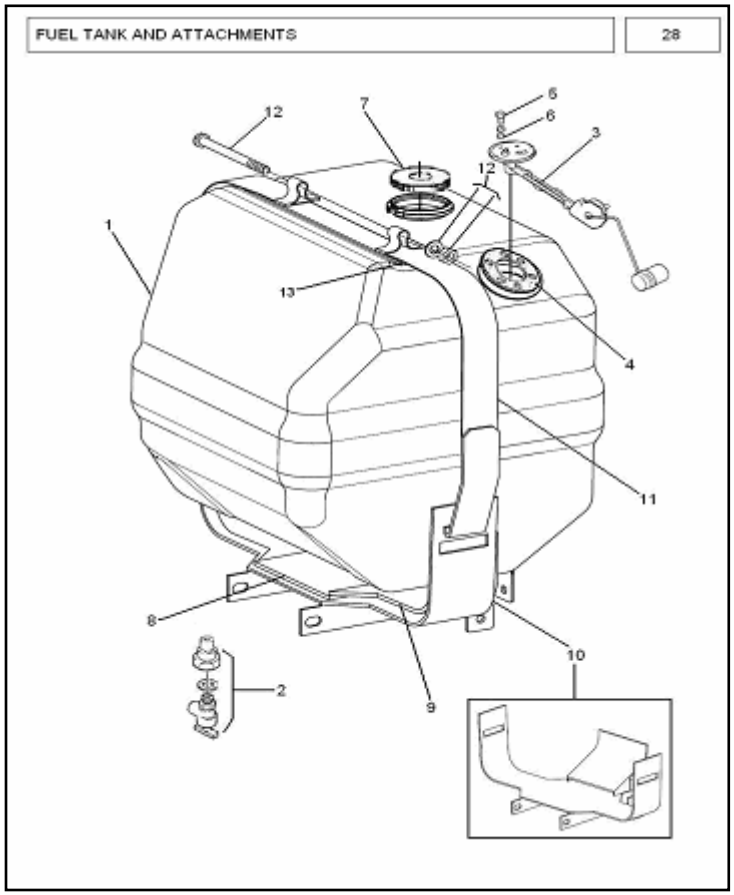

FUEL TANK AND ATTACHMENTS

MF240

ITEM	CKD	LocalPartNo	QTY	Description	Source
1	1672762M93	19304	1	ASSY TANK FUEL	L
2	1694985M92	19002	1	FUEL-TAP	L
3	1661794M92	19076	1	ASSY SENDING UNIT	L
4	1674250M1	19004	1	GASKET	L
5	1699765M1	19317	6	SCREW M4 L. 12	L
6	377748X1	19314	6	FIBRE WASHER ID 4.83/4.57 OD9.5	L
7	1876534M91	19018	1	ASSY CAP FUEL TANK	L
8	N/a	19081	1	CARPET	L
9	N/a	19082	2	CARPET PIECE	L
10	1866654P91	23093	1	BRACKET FUEL TANK	L
11	N/a	23099	2	HOLDING BRACKET LH/RH	L
12	N/a	19077	1	KIT BOLT,NUT,WASHER	L
13	N/a	19072	1	STRIP FUEL TANK	L

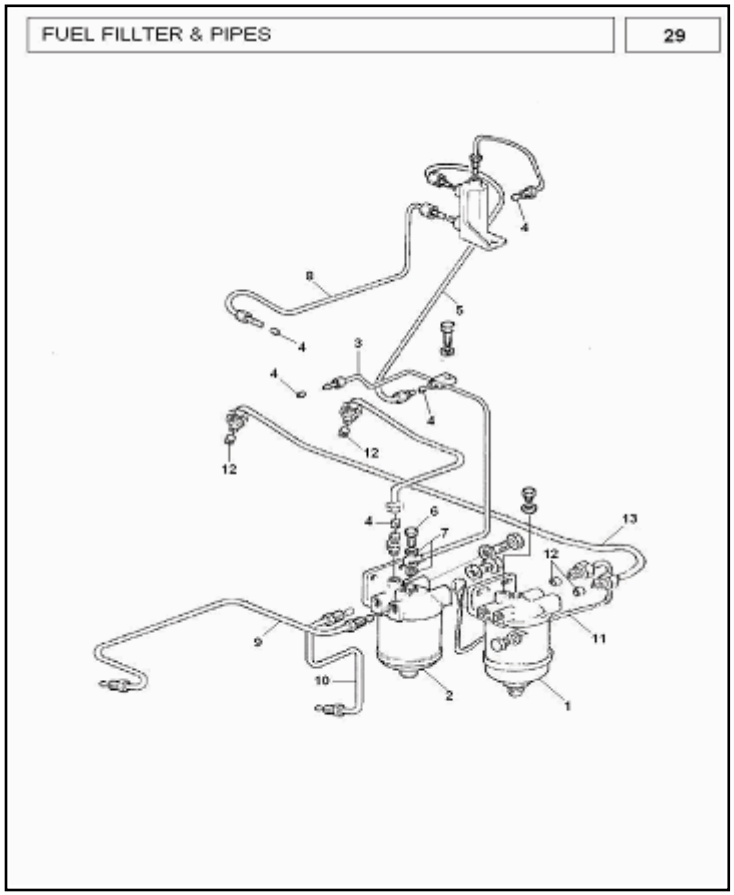

FUEL FILTER & PIPES

MF240

ITEM	CKD	LocalPartNo	QTY	Description	Source
1	883786M91	19019	1	ASSY FILTER/AGGLOMERATOR W PRIMARY	L
2	886373M91	19078	1	FUEL FILTER SECONDARY	L
3	3700421M91	19067	1	PIPE	L
4	376524X1	19061	5	OLIVE	L
5	884473M93	19084	1	RET. PIPE LEAK OFF RAIL-FUEL TNK	L
6	731352M1	19310	1	BANJO BOLT M10x1.5	L
7	731353M1	19315	2	WASHER FIBRE I/D13/32 O/D19/32	L
8	884472M94	19066	1	PIPE	L
9	888490M91	19071	1	ASSY.PIPE INJ PUMP/FLT	L
10	888482M91	19070	1	ASSY.PIPE FLT/INJ PUMP	L
11	888484M91	19068	1	PIPE FILTER TO FILTER	L
12	376525X1	19062	4	OLIVE	L
13	888488M93	195001	1	PIPE LIFT PUMP TO PRIMARY FILTER	L

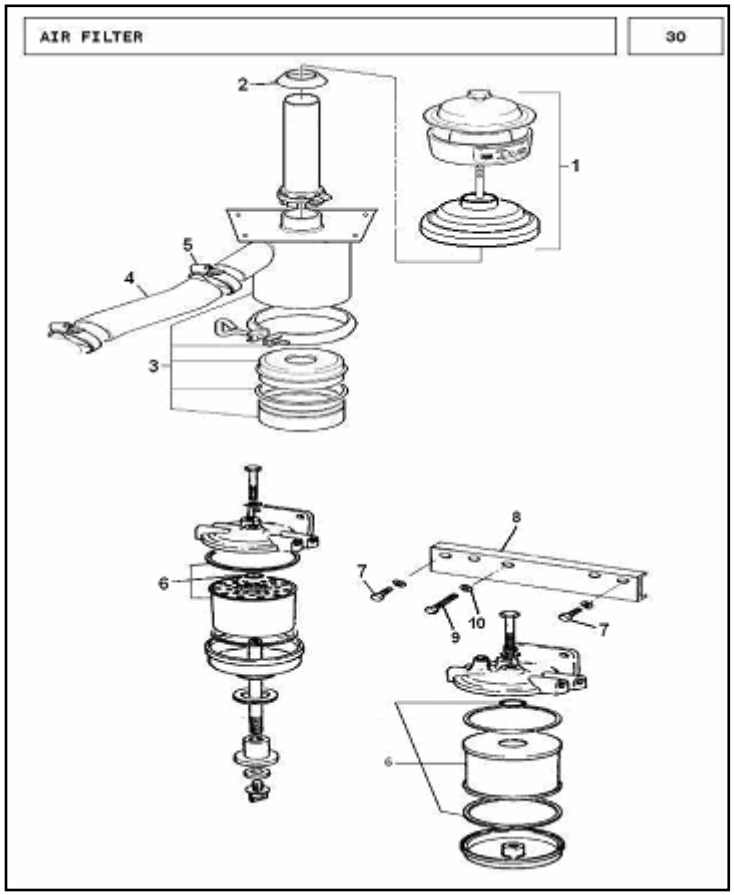

AIR FILTER

MF240

ITEM	CKD	LocalPartNo	QTY	Description	Source
1	3761802M1	45075	1	PRE CLEANER ASSY	L
2	1683302M1	45013	1	COLLAR	L
3	883914P93	45062	1	OIL BATH AIR CLEANER	L
4	898104M1	45063	1	HOSE AIR CLEANER	L
5	338618X1	45076	2	HOSE CLIP	L
6	26561117	19021	1	ELEMENT	L
7	361488X1	19309	4	SCREW 3/8 - 24 L. 1	L
8	1884249M92	23083	1	ASSY BRACKET FF	L
9	353518X1	233230	1	SCREW 5/16 24X7/8	L
10	353446X1	19017	5	WASHER 5/16	L

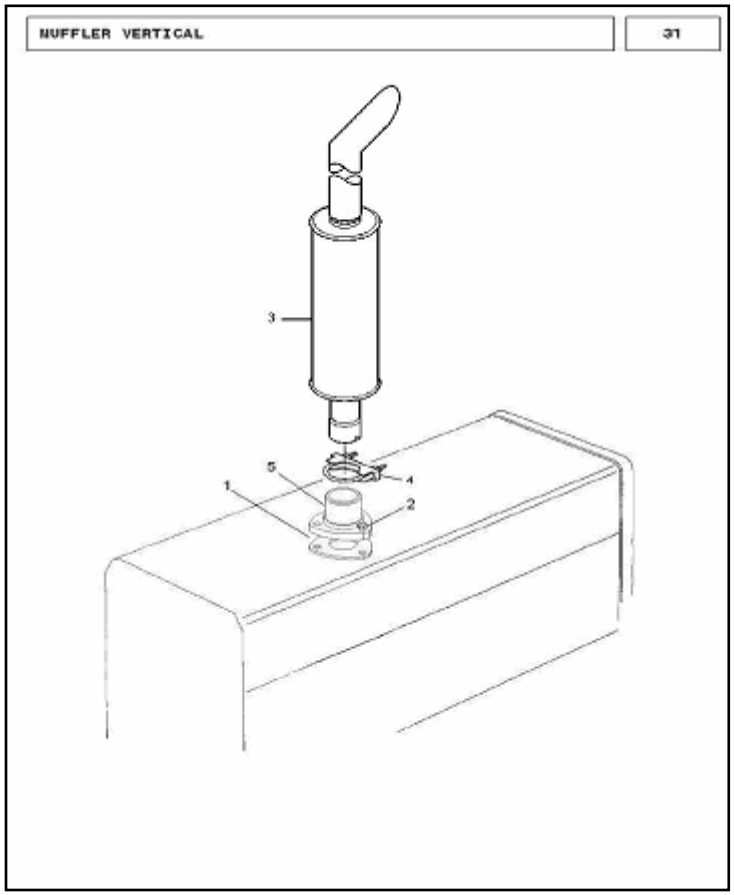

MUFFLER VERTICAL

MF240

ITEM	CKD	LocalPartNo	QTY	Description	Source
1	827877M1	20008	1	EXHAUST GASKET	L
2	376448X1	20007	3	LOCK NUT 3/8 UNF	L
3	1688171M6	20009	1	SILENCER	L
4	1690363M91	20005	1	ASSY CLAMP	L
5	1693855M1	18215	1	ELBOW VERTICAL	L

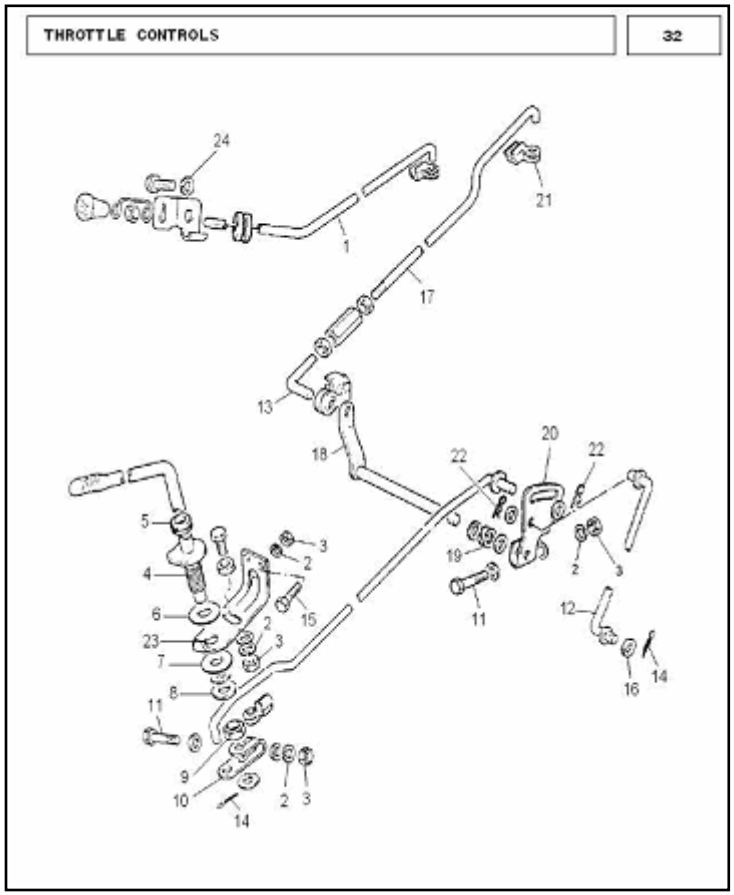

THROTTLE CONTROLS

MF240

ITEM	CKD	LocalPartNo	QTY	Description	Source
1	1675030M2	13096	1	CABLE FUEL CUT OFF	L
2	353441X1	13084	4	WASHER 1/4	L
3	353918X1	13025	4	NUT 1/4-28	L
4	1861552M91	13013	1	ASSY LEVER STOP PLATE	L
5	1875716M2	13015	1	GROMMET	L
6	1693890M1	13016	1	FRICTION WASHER	L
7	880713M1	13018	1	WASHER SPECIAL	L
8	880712M1	13019	3	WASHER BELLEVILLE	L
9	884737M1	13098	1	LOCK NUT	L
10	828019M2	13021	1	LEVER-THROTTLE CONTROL	L
11	353507X1	13022	2	BOLT 1/4-28 X 1.1/4	L
12	897466M91	13095	1	ROD FOOT THROTTLE	L
13	897633M2	13094	1	ROD THROTTLE CONTROL RH	L
14	354048X1	13071	4	PIN COTTER	L
15	362477X1	13076	2	SCREW 7/16-14 X 1.1/4	L
16	376803X1	13069	2	WASHER	L
17	897633M91	13200	1	ASSY. ROD THROTTLE CONTROL	L
18	890278M91	13092	1	ASSY CROSS SHAFT	L
19	375252X1	13105	1	WASHR LOCK ID 0.39 OD 0.67 T0.046	L
20	897467M1	13036	1	LEVER QUARANT CROSS SHAFT	L
21	894225M1	13104	2	CLIP LINKAGE	L
22	376804X1	13070	2	CLIP	L
23	1861554P1	13090	1	BRACKET	L
24	376721X1	10268	1	WASHER 7/16	L

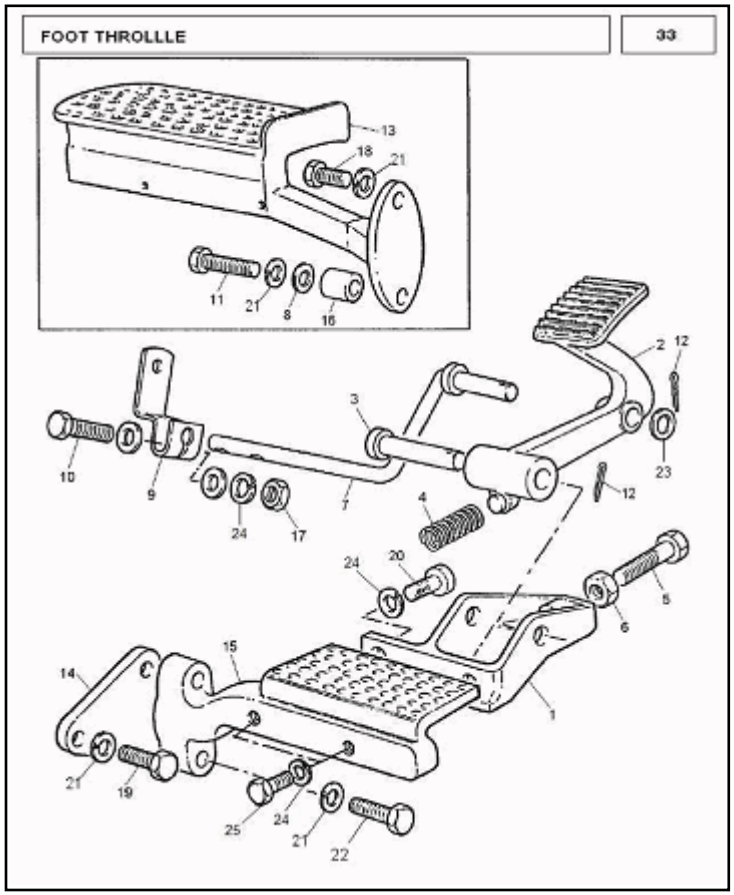

FOOT THROTTLE **MF240**

ITEM	CKD	LocalPartNo	QTY	Description	Source
1	1866841M1	13053	1	SUPPORT FOOT THROTTLE	L
2	897547M1	13054	1	PEDAL THROTTLE	L
3	195610M1	13055	1	PIN-CLEVIS 3/8	L
4	828656M1	13106	1	SPRING	L
5	890066M1	13058	1	BOLT PEDAL STOP	L
6	375108X1	13087	1	JAM NUT 5/16 - 18	L
7	893470M91	13060	1	ASSY. SHAFT RELAY	L
8	353757X1	13082	1	WASHER-FLAT 7/16	L
9	897469M91	13063	1	ASSY LEVER RELAY	L
10	353507X1	13022	1	BOLT 1/4-28 X 1.1/4	L
11	362495X1	13080	1	BOLT 7/16-14X2-5/8	L
12	354048X1	13071	2	PIN COTTER	L
13	1672928M5	13074	1	FOOT REST LH	L
14	180870M1	13075	2	PLATE-SPACER	L
15	1860939M2	13079	1	FOOT REST RH	L
16	888320M1	13083	1	SPACER	L
17	353918X1	13025	1	NUT 1/4-28	L
18	377883X1	13086	2	BOLT 7/16 - 14 UNC - 2A L. 1	L
19	362475X1	13077	1	BOLT 7/16 - 14 L. 1.25	L
20	353502X1	13028	1	SCREW 1/4-28 x 3/4	L
21	376721X1	10268	4	WASHER 7/16	L
22	353700X1	40006	2	BOLT 7/16-14 X 1-1/4	L
23	353755X1	34015	1	WASHER 5/16	L
24	353441X1	13084	5	WASHER 1/4	L
25	353501X1	N/a	2	BOLT 1/4-28 X 13	L

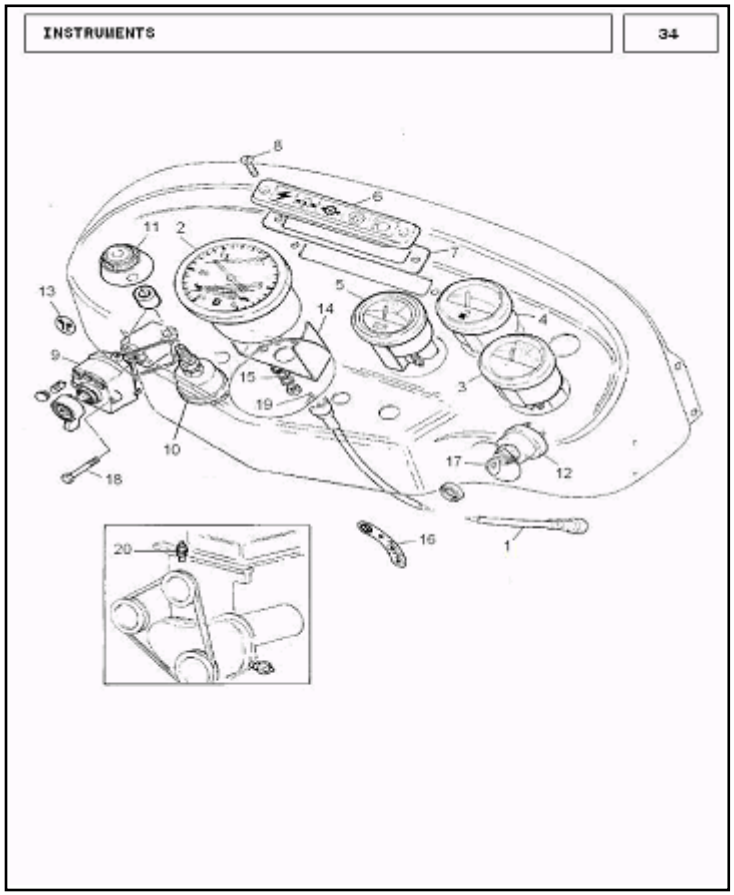

ITEM	CKD	LocalPartNo	QTY	Description	Source
1	1699381M91	29036	1	CABLE SPEED-O-METER	L
2	1674638M92	29005	1	TRACTOR METER	L
3	1877719M92	29009	1	TEMPERATURE GAUGE	L
4	1877717M92	29010	1	FUEL GAUGE	L
5	1672835M2	29011	1	BATTERY GAUGE	L
6	1663555M92	29013	1	ASSY LOCUS LAMP HSG	L
7	1669957M1	29014	1	GASKET WARNING LIGHT	L
8	377245X1	29043	2	SCREW 10 - 24 UNC - 2A L. 3/4	L
9	1682977M1	29028	1	UNIT BLINKER	L
10	1668816M2	29017	1	LIGHT SWITCH	L
11	1668830M91	29018	1	KNOB LIGHT SWITCH	L
12	1874535M3	29021	1	ASSY SWITCH HEAT / START	L
13	1875315M1	29025	1	EMBLEM TURN SIGNAL	L
14	N/a	29031	1	CLAMP	L
15	N/a	29033	2	SPACER INST. PANEL	L
16	3760644M1	29022	2	DECAL IGNITION SWITCH	L
17	1695447M1	29027	2	KEY IGNITION	L
18	365921X1	29012	2	SELF TAP SCREW 10 - 16	L
19	N/a	29041	2	WIRE	L
20	1877731M92	29003	1	ASSY TRANSMITTER TEMP	L

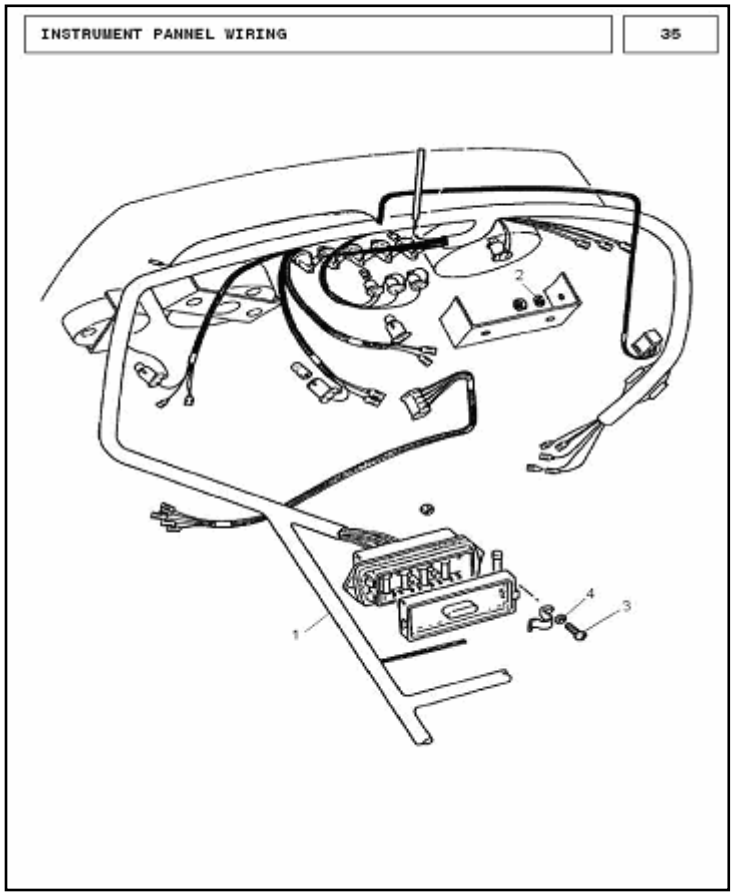

INSTRUMENT PANNEL WIRING

MF240

ITEM	CKD	LocalPartNo	QTY	Description	Source
1	3613849M91	29024	1	ASSY HARNESS	L
2	353441X1	13084	1	WASHER 1/4	L
3	187137M1	23047	6	SCREW 10 - 32 UNF - 2A	L
4	357515X1	23048	6	NUT 10 - 32	L

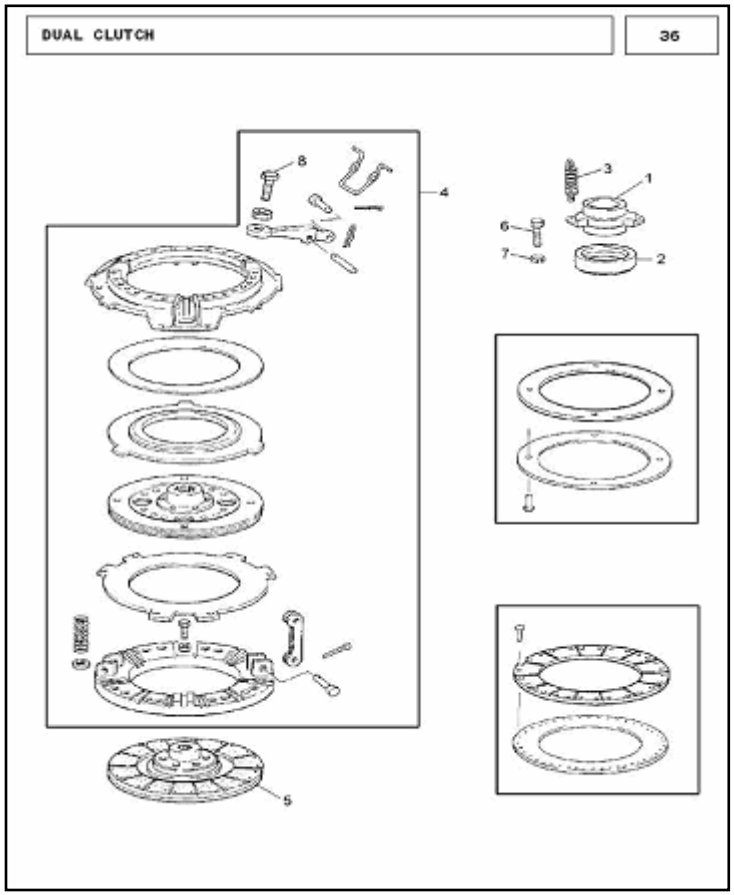

DUAL CLUTCH

MF240

ITEM	CKD	LocalPartNo	QTY	Description	Source
1	886727M3	46005	1	CARRIER CLUTCH BEARING REL	L
2	892862M3	46043	1	BEARING RELEASE	I
3	1867690M2	46042	2	SPRING	L
4	3599463M92	46040	1	ASSY CLUTCH COVER	L
5	3610274M92	46035	1	ASSY.PLATE DRIVEN	L
6	887892M1	46036	6	BOLT 5/16-18 UNC-3 THD. L.1.74	L
7	19752X	46041	6	SPRING WASHER ID 0.319 OD 0.601	L
8	361549X1	11025	3	BOLT 7/16 - 20 L. 2.50	L

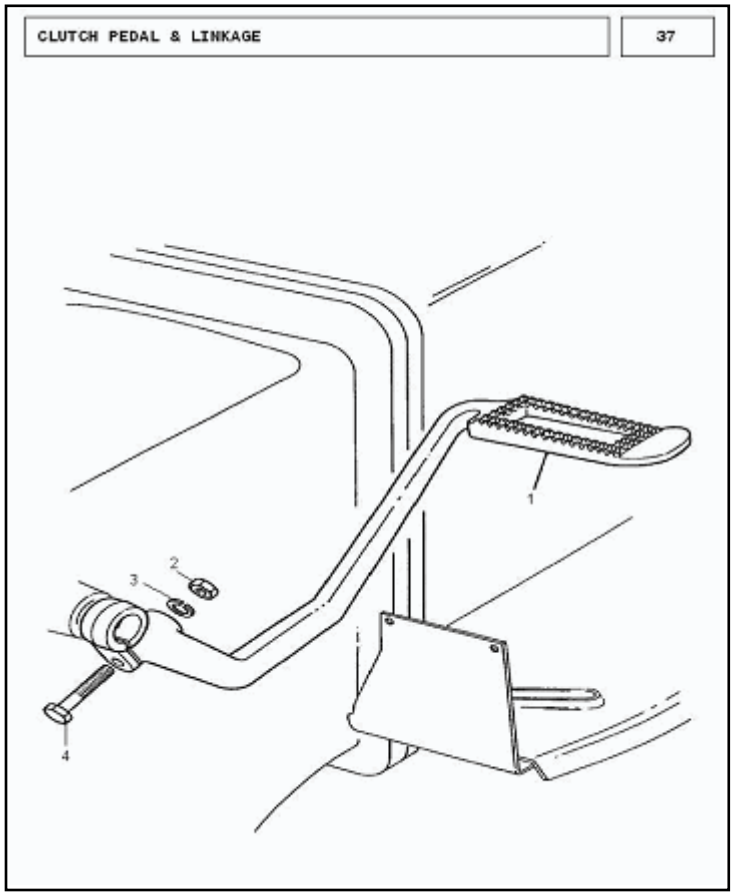

CLUTCH PEDAL & LINKAGE

MF240

ITEM	CKD	LocalPartNo	QTY	Description	Source
1	1861169M1	46001	1	PEDAL CLUTCH	L
2	363625X1	11027	1	NUT 7/16-20	L
3	353432X1	N/a	1	WASHER	L
4	353571X1	N/a	1	BOLT	L

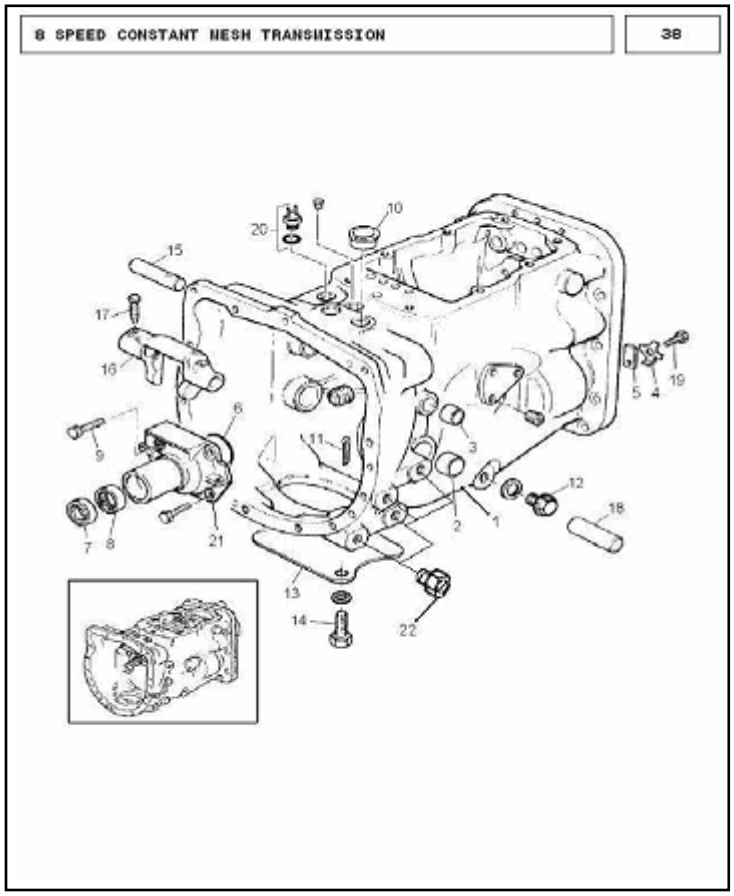

8 SPEED CONSTANT MESH TRANSMISSION

MF240

ITEM	CKD	LocalPartNo	QTY	Description	Source
1	3599015M2	12001	1	CASE TRANSMISSION	L
2	180801M1	12147	2	BUSH BRAKE SHAFT	L
3	184592M1	12150	2	BUSH CLUTCH SHAFT	L
4	828020M1	12171	1	TAB WASHER I/D 10.32 THICK. 1.2	L
5	184789M1	12014	1	STOP REV. SHAFT	L
6	886089M1	12165	1	O RING	L
7	1860867M5	12126	1	OIL SEAL	L
8	886668M1	12158	1	BEARING NEEDLE	I
9	377477X1	12061	3	SCREW 3/18-16 X 7/8	L
10	894683M1	12125	2	PLUG EXPANDING	L
11	354076X1	12148	2	PIN COTTER	L
12	33141124	18152	1	PLUG	L
13	964167M1	12115	1	COVER PLATE BOTTOM	L
14	354441X1	12116	2	BOLT 5/8 - 11 L. 1	L
15	180449M1	12117	1	SHAFT-CLUTCH RELEASE	L
16	886719M1	12118	1	FORK CLUTCH RELEASE	L
17	3771408M1	12139	2	SCREW SPECIAL 3/8 - 24 UNF - 3A	L
18	180444M2	12122	1	SHAFT-CLUTCH PEDAL	L
19	353690X1	12012	1	SCREW 3/8 - 16X7/8	L
20	3761983M91	12131	1	ASSY SWITCH	L
21	1693837M2	12063	1	RETAINER MAIN DRIVE	L
22	N/a	29032	8	PLUG (PLASTIC)	L

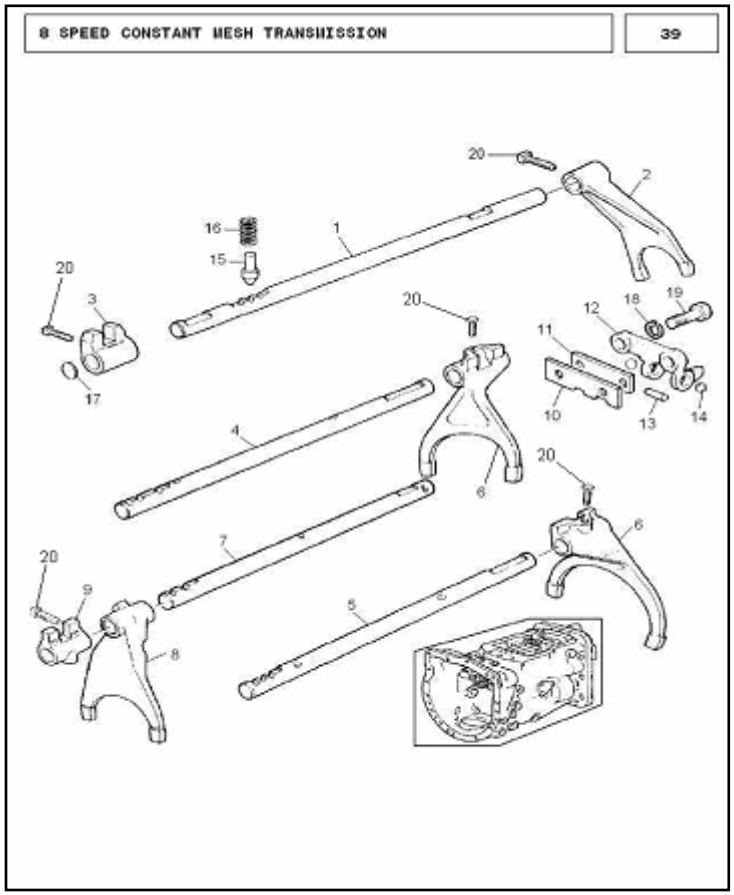

8 SPEED CONSTANT MESH TRANSMISSION

MF240

ITEM	CKD	LocalPartNo	QTY	Description	Source
1	3697277M1	12076	1	RAIL PLANETARY	L
2	897065M2	12077	1	FORK PLANETARY	L
3	180446M1	12081	1	SELECTOR - PLANET SHIFT	L
4	1693812M1	12085	1	RAIL SHIFTER REV. / LOW	L
5	1693820M2	12092	1	RAIL SHIFT INT/HIGH	L
6	1860773M1	12087	2	FORK SHIFTER	L
7	1693820M1	12086	1	RAIL SHIAFTER 2ND/3RD	L
8	1693828M1	12093	1	FORK SHIFTER	L
9	1862868M2	12094	1	SELECTOR	L
10	1860764M3	12098	1	PLATE STOP	L
11	1860765M2	12052	1	PIECE PACKING	L
12	1860761M1	12100	1	RETAINER BALL	L
13	1860767M1	12101	1	PIN	L
14	391838X1	12167	2	STEEL BALL	I
15	180418M2	12109	4	PLUNGER	L
16	191221M1	12173	4	SPRING SHIFTER RAIL	L
17	3614857M1	12127	1	PLUG	L
18	353434X1	10075	2	WASHER LOCK 3/8"	L
19	354262X1	12103	2	BOLT 3/8-16 X 1-1/2	L
20	3771408M1	12139	6	SCREW SPECIAL 3/8 - 24 UNF - 3A	L

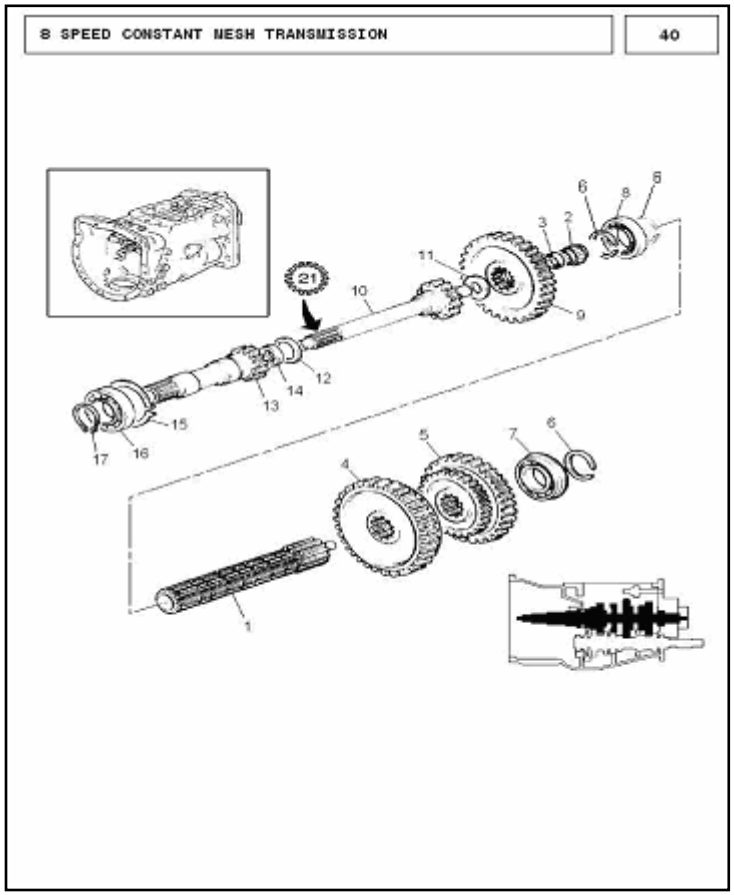

ITEM	CKD	LocalPartNo	QTY	Description	Source
1	1687643M1	12144	1	MAIN SHAFT NON SYNC ND 95	L
2	2700273M1	12156	1	ROLLER NEEDLE	I
3	2700274M2	12133	1	SPACER	L
4	1682688M1	12029	1	GEAR MAIN SHAFT LOW	L
5	1682691M1	12030	1	GEAR MAIN INT./HIGH	L
6	195363M1	12161	4	SNAP RING	L
7	32346	18073	1	BEARING	I
8	338552X1	12157	1	ROLLER BEARING	I
9	1682690M1	12036	1	GEAR DRIVEN 3RD	L
10	964926M3	128002	1	PINION MAIN DRIVE SHAFT	L
11	964944M1	12135	1	DISTANCE PIECE	L
12	964929M1	12138	1	THRUST WSHR ID40.12/40.02 OD52.50	L
13	1671705M1	12042	1	PINION	L
14	1860011M1	14095	1	OIL SEAL	L
15	377631X1	12146	1	RETAINING RING	L
16	GK2151	12159	1	BEARING	I
17	762101M1	12163	1	SNAP RING	L

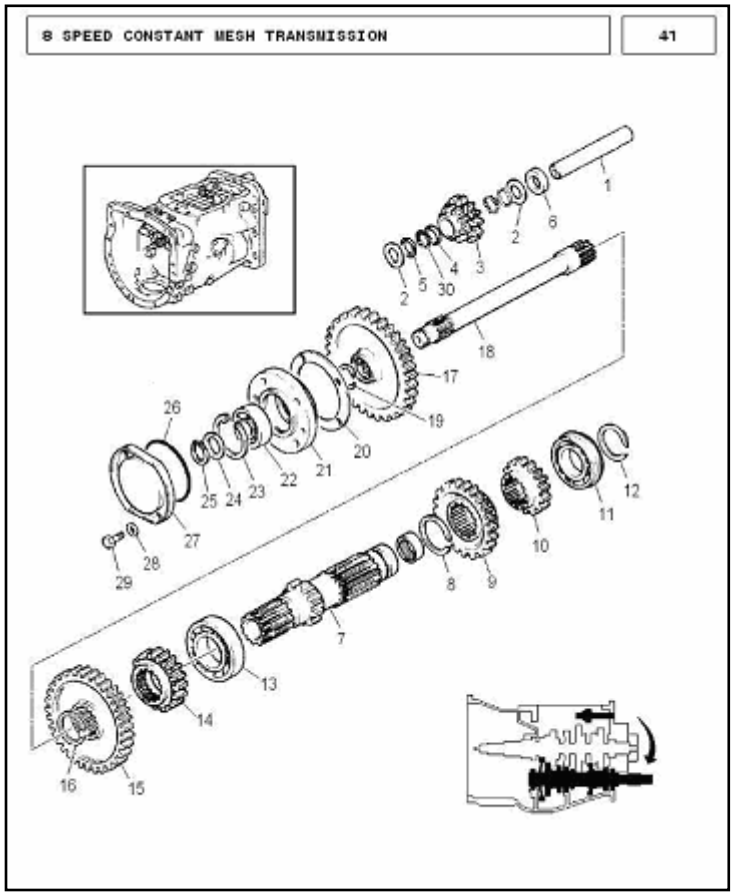

8 SPEED CONSTANT MESH TRANSMISSION

MF240

ITEM	CKD	LocalPartNo	QTY	Description	Source
1	180445M1	12004	1	SHAFT - REVERSE CUSTER	L
2	180458M1	12140	2	WASHER I/D25.42 OD41.148 T1.52/1.60	L
3	183040M1	12006	1	GEAR REVERSE CLUSTER	L
4	183038M1	12134	1	SPACER	L
5	183037M1	12141	2	WASHR GEAR RETAIN ID25.91 OD30.48	L
6	189449M1	12011	1	SPACER	L
7	906472M2	12015	1	COUNTER SHAFT	L
8	195500M1	12160	1	CIRCLIP	L
9	180415M1	12018	1	PINION COUNTER SHAFT HIGH	L
10	180419M1	12019	1	PINION- INTERMEDIATE	L
11	3008252X1	12154	2	BALL BEARING	I
12	195363M1	12161	1	SNAP RING	L
13	195507M1	12153	1	BALL BEARING	I
14	964916M1	12024	1	PINION C/SHAFT 3RD	L
15	906468M1	128001	1	GEAR C/MESH CAM-SHAFT(15 Teeth)	L
16	195499M1	12168	1	SNAP RING	L
17	1671706M4	12038	1	GEAR PTO C/MESH 53 T	L
18	1868533M1	12047	1	SHAFT FRONT PTO DRIVE	L
19	358913X1	12145	1	SNAP RING	L
20	180432M1	12129	1	GASKET PTO BEARING. HOUSING	L
21	899331M1	12050	1	HOUSING FRONT PTO BRG	L
22	899377M2	12155	1	BEARING	I
23	355988X1	12162	1	SNAP RING INLET	L
24	881122M2	12169	1	RETAINING RING	L
25	899385M1	12164	1	SNAP RING	L
26	1004633M1	12152	2	O RING	L
27	883620M1	12056	1	CAP FRONT PTO BRG HOUSING	L
28	353771X1	12058	4	WASHER-HARDENED 3/8	L
29	377479X1	12057	4	BOLT 3/8-16 X 1.1/4	L

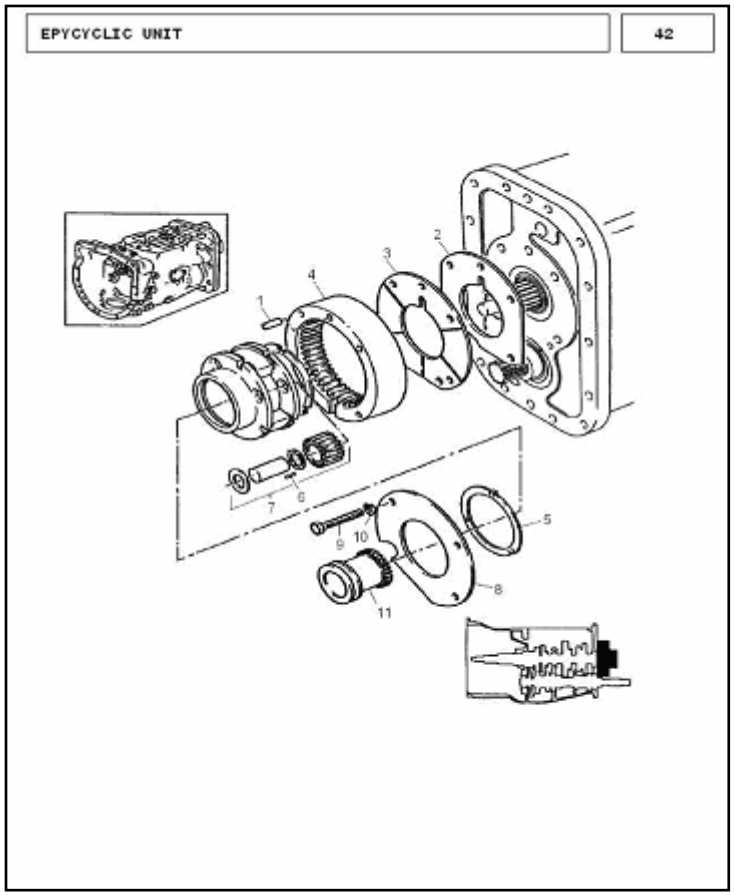

30	183039M1	12166	56	ROLLER NEEDLE	I

EPYCYCLIC UNIT **MF240**

ITEM	CKD	LocalPartNo	QTY	Description	Source
1	180409M1	12065	2	DOWEL	L
2	184011M1	12170	1	SHIM	L
3	180408M2	12067	1	PLATE-FRONT COVER	L
4	1671558M1	12149	1	GEAR PLAN RING	L
5	897367M1	12151	2	WASHR PLANETARY GEAR	L
6	897025M1	12123	162	NEEDLE ROLLER (POA 12070)	I
7	897711M93	12070	1	ASSY EPI-CARRIER WITH ROLLER	B
8	184012M4	12072	1	PLATE-REAR COVER	L
9	354271X1	12073	4	BOLT 3/8-16 X 2-3/4	L
10	353434X1	10075	3	WASHER LOCK 3/8"	L
11	184770M3	12075	1	COUPLER-PLAN SHIFT	L

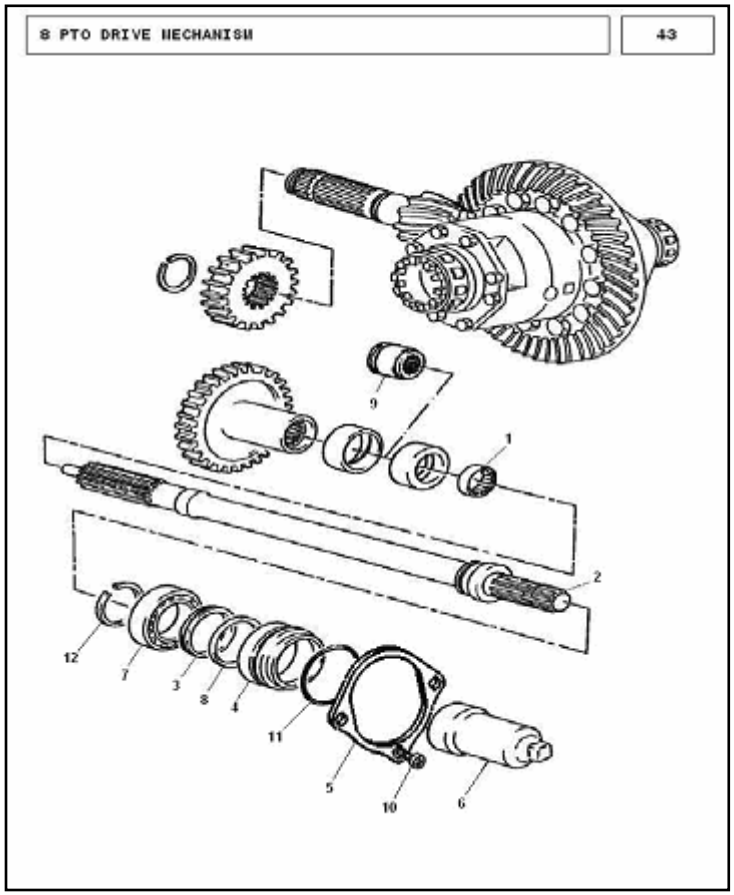

8 PTO DRIVE MECHANISM

MF240

ITEM	CKD	LocalPartNo	QTY	Description	Source
1	195453M1	10277	2	BEARING NEEDLE	I
2	3599002M3	10013	1	ASSY. PTO SHAFT	L
3	2418M006	18072	1	SEAL	I
4	3599002M3	10017	1	RETAINER PTO	L
5	532912M1	10020	1	RETAINER PTO BRG	L
6	532888M2	10292	1	CAP PTO (PLASTIC)	L
7	391162X1	92005	1	BALL BEARING	I
8	3699801M1	10122	1	SEAL PTO	I
9	3599630M1	10119	1	COUPLER	L
10	362471X1	25001	9	BOLT 7/16-14 UNC L. 22.3	L
11	1004633M1	12152	2	O RING	L
12	831581M2	92004	1	RING SNAP	L

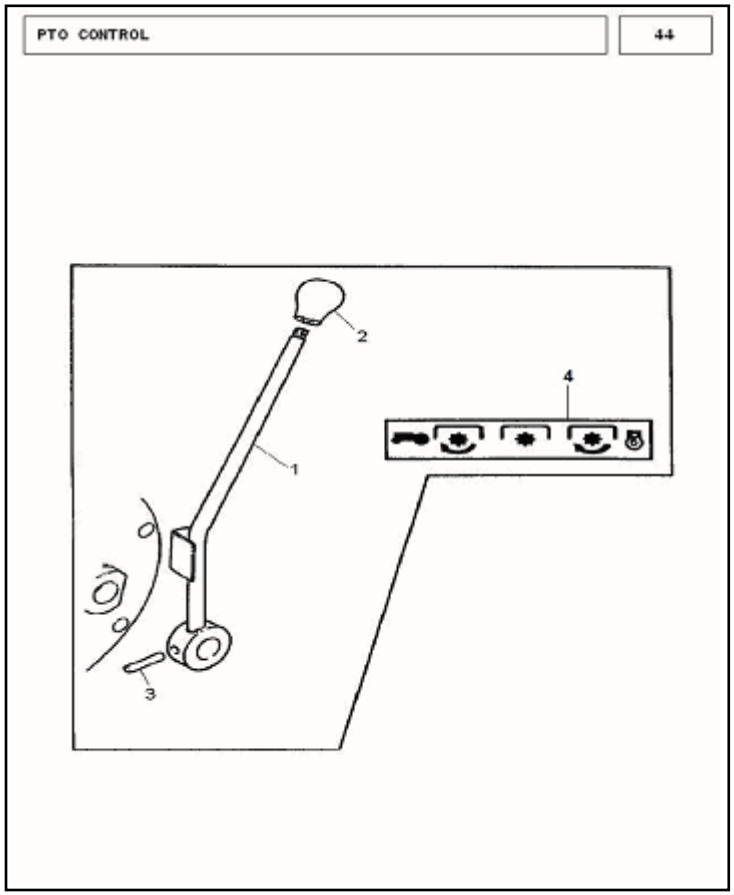

PTO CONTROL

MF240

ITEM	CKD	LocalPartNo	QTY	Description	Source
1	3599935M91	49001	1	ASSY LEVER PTO	L
2	1877461M1	49002	1	KNOB	L
3	357661X1	49005	1	PIN	L
4	1683861M	49009	1	DECAL LIVE PTO LEVER	L

PTO COVER ASSEMBLY

MF240

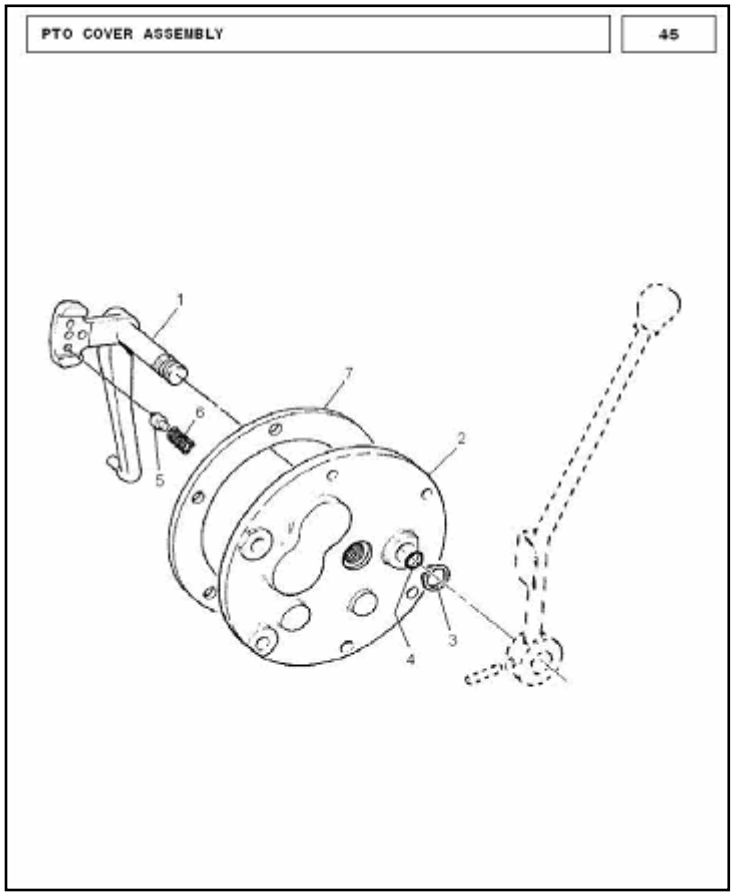

ITEM	CKD	LocalPartNo	QTY	Description	Source
1	1870594M94	27003	1	ASSY-LEVER INTERNAL	L
2	3760665M1	27004	1	COVER PTO SHIFT	L
3	353213X1	27093	1	CIRCLIP EXTERNAL	L
4	195562M1	26116	1	O RING	L
5	180418M2	12109	1	PLUNGER	L
6	191221M1	12173	1	SPRING SHIFTER RAIL	L
7	1688222M3	26075	2	GASKET-SIDE COVER	L

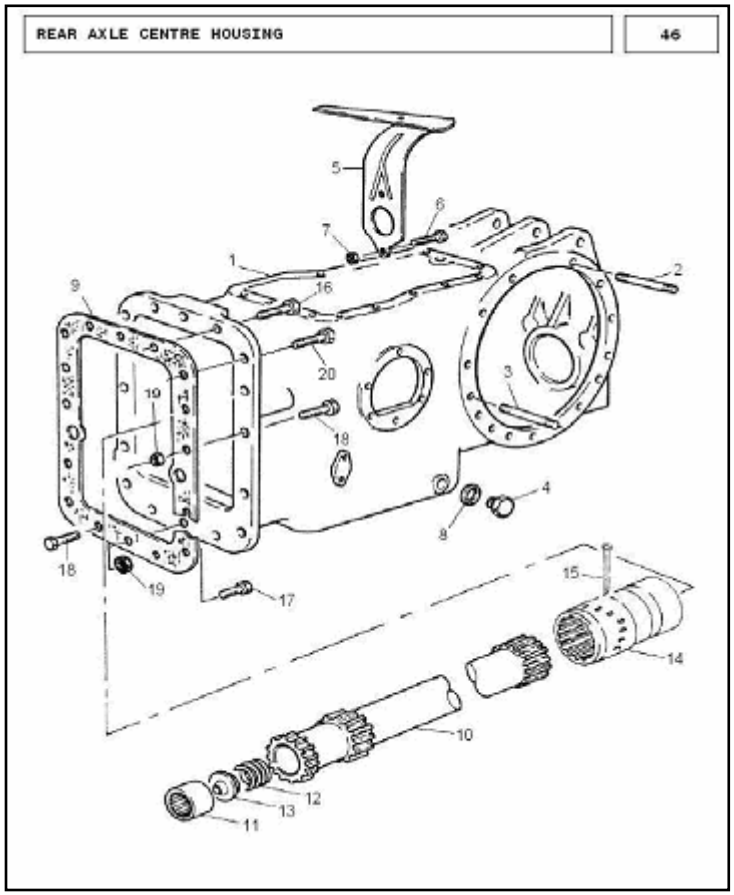

REAR AXLE CENTRE HOUSING

MF240

ITEM	CKD	LocalPartNo	QTY	Description	Source
1	1686507M2	10001	1	CENTRE HOUSING	L
2	1860900M2	10002	4	STUD 1/2-13 UNC1/2-20 UNF-3A L66.7	L
3	377618X1	10003	2	STUD 1/2 X 49.2	L
4	884691M1	10269	2	PLUG DRAIN THREAD	L
5	191138M91	10007	1	ASSY-TROUGH DIFF BRG	L
6	361418X1	10008	2	BOLT 1/4-28 L. 38.1	L
7	376446X1	10009	2	LOCK NUT 1/4	L
8	180474M2	105017	2	WASHER ALUMINIUM	L
9	3599804M2	50020	1	GASKET	L
10	886548M1	50004	1	SHAFT REAR DRIVE	L
11	195513M1	50024	1	BEARING ROLLER	L
12	886352M1	50026	1	SPRING	L
13	886353M1	50007	1	ABUTMENT	L
14	1871924M1	50008	1	COUPLER REAR DRIVE	L
15	354415X1	50023	1	PIN COTTER	L
15	3701695M1	50023	1	PIN COTTER	L
16	377825X1	50012	3	BOLT 7/16 - 14 UNC -2A L. 57 MM	L
17	377557X1	12062	1	BOLT 3/8 -16 X 1.7/8	L
18	377181X1	50010	10	BOLT 7/16-20 X 1.3/3	L
19	377185X1	50011	10	NUT 7/16 - 20 UNF - 2B	L
20	377824X1	50013	5	BOLT 7/16 - 14 UNC - 2A L.35MM	L

REAR AXLE CENTRE HOUSING	46

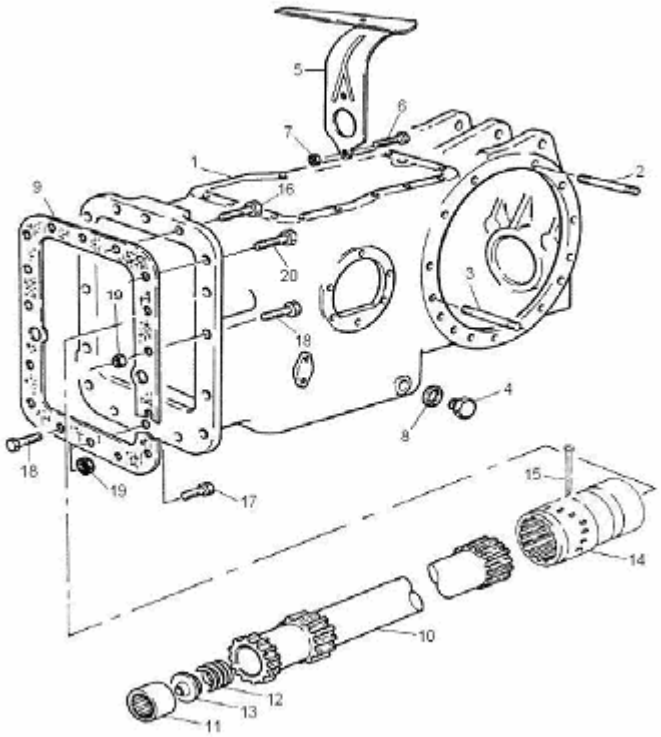

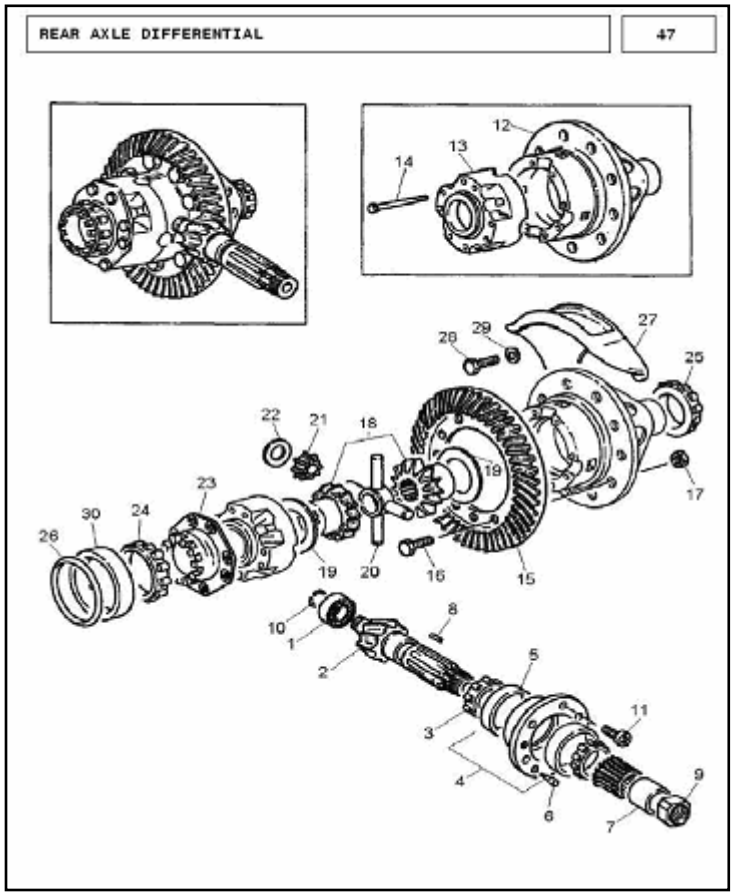

ITEM	CKD	LocalPartNo	QTY	Description	Source
1	191250M1	10278	1	BEARING PILOT PINION	L
2	3822045M1	108017	1	DRIVING PINION	L
3	185777M1	10275	2	BEARING CONE &ROLLER	L
4	518861M91	10300	1	ASSY. SLEEVE	B
5	185778M1	10276	2	CUP BEARING	L
5	KHM903210	10276	2	CUP BEARING	L
6	181253M1	10027	1	PIN PINION BEARING LOCK	L
7	1661065M1	10030	1	SPACER PINION	L
8	3612442M1	10279	2	ROLLER NEEDLE	L
9	532956M1	10032	1	NUT PINION	L
10	196097M1	10273	1	RING SNAP PINION BEARING	L
11	899199M1	10033	6	BOLT P. SLEEVE 9/16-12UNC-2A L1-1/4	L
12	181273M1	10038	1	CASE LH (MACHINING)	L
13	191465M1	10039	1	CASE RH	L
14	882232M1	10040	8	SCREW 1/2 - 13 UNC - 3A	L
15	1662955M1	108018	1	CROWN WHEEL	L
16	825776M1	10265	12	BOLT 1/2 - 20 - 2A	L
16	K3920	10265	12	BOLT 1/2 - 20 - 2A	L
17	891947M1	10287	12	NUT	L
18	885518M1	10044	2	GEAR DIFF (GEAR SUN)	L
19	897726M1	10266	2	THRUST WASHER ID76.23/76.2 OD105.4	L
20	894302M2	10118	1	JOINT DIFF. CROSS (MACHINING)	L
21	2746322M1	10047	4	PINION DIFF. (PINION PLANETARY)	L
22	3387281M1	10267	4	WASHER DIFF. ID25.75 OD52.32/49.78	L
23	190963M1	10049	1	CAP DIFF. COUPLING	L
24	195675M1	10109	2	CONE & ROLLER BEARING	L
25	185775M1	10282	1	CONE & ROLLER BEARING	L
25	K3984	10282	1	CONE & ROLLER BEARING	L
26	191124M1	10058	1	SHIELD BEARING	L

26	521401M1	10060	1	SHIELD BEARING	L
26	892170M1	10057	1	SHIELD BEARING	L
26	892171M1	10056	1	SHIELD BEARING	L
26	892172M1	10055	1	SHIELD BEARING	L
26	892173M1	10054	1	SHIELD BEARING	L
27	825774M2	10073	1	BLOCK THRUST	L
28	362433X1	10074	2	SCREW 3/8 -16 X 7/8	L
29	353434X1	10075	2	WASHER LOCK 3/8"	L
30	1850909M91	10274	1	ASSY CUP & CONE BEARING	L
30	K37425	10274	1	ASSY CUP & CONE BEARING	L
30	K37625	10274	1	ASSY CUP & CONE BEARING	L

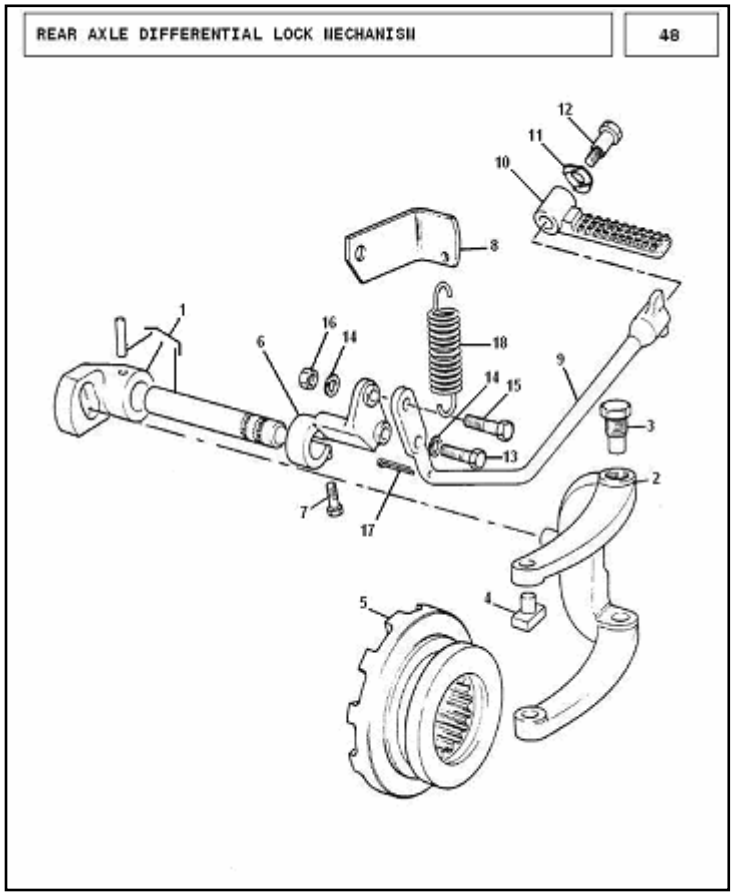

REAR AXLE DIFFERENTIAL LOCK MECHANISM

MF240

ITEM	CKD	LocalPartNo	QTY	Description	Source
1	190960M92	10061	1	ASSY-DIFF LOCK C/SHAFT	L
2	190968M1	10062	1	FORK-SHIFTER	L
3	190981M1	10288	2	PIN	L
4	190980M1	10064	2	SHOE-GUIDE	L
5	897036M1	10065	1	COUPLER DIFF LOCK	L
6	1872599M1	10066	1	LEVER DIFF LOCK	L
7	353540X1	10272	1	BOLT 3/8-24 L. 31.7	L
8	1872690M3	10068	1	BRACKET SPRING D/L-PEDAL	L
9	1872597M1	50015	1	PEDAL DIFF LOCK	L
10	192779M2	50016	1	PAD	L
11	1868032M1	50025	1	WASHER SPRING ID 15.48 OD 40.60	L
12	192778M1	50018	1	BOLT 7/16 - 20 UNF - 2A	L
13	353538X1	50019	1	SCREW 3/8 -24 X1	L
14	353434X1	10075	2	WASHER LOCK 3/8"	L
15	353541X1	50021	1	BOLT 3/8 - 24 L. 1.38	L
16	353431X1	30011	1	NUT 3/8 - 24	L
17	354076X1	12148	1	PIN COTTER	L
18	190978M1	50022	1	SPRING	L

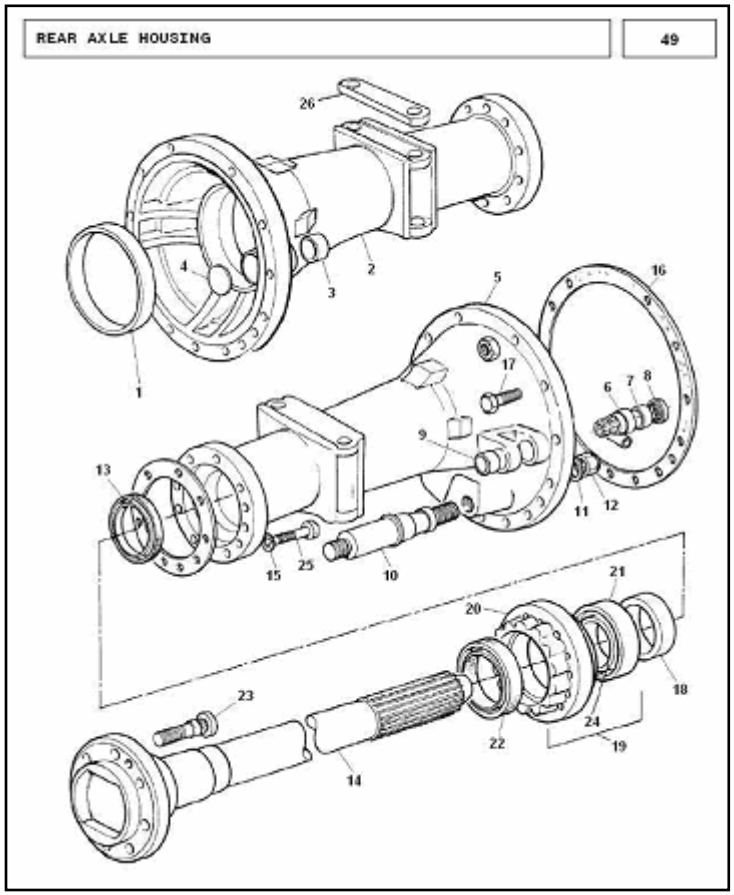

REAR AXLE HOUSING

MF240

ITEM	CKD	LocalPartNo	QTY	Description	Source
1	185776M1	10281	1	BEARING CUP	I
2	884855M92	10070	1	HOUSING REAR AXLE LH	L
3	180802M1	10284	1	BUSH	L
4	13710X	10072	1	PLUG EXPANSION 1.1/4	L
5	190962M2	10076	1	HOUSING REAR AXLE RH	L
6	191056M1	10123	1	BRACKET	L
7	190976M1	10286	1	BUSH	L
8	832741M1	10121	1	OIL SEAL	L
9	190975M1	10285	1	BUSH	L
10	1867851M3	10082	2	SHAFT LOWER LINK	L
11	353774X1	10083	2	WASHER-HARDENED 5/8	L
12	376450X1	10084	2	LOCK NUT 5/8	L
13	195678M2	10120	2	OIL SEAL	L
14	897039M1	10086	2	SHAFT AXLE	L
15	183259M1	10088	4	SHIM (0.015)	L
15	183260M1	10089	4	SHIM (0.020)	L
15	183261M1	10090	4	SHIM (0.020)	L
16	183254M1	10093	2	GASKET-AXLE HOUSING	L
17	377623X1	10099	28	BOLT 1/2-13 UNC-2A	L
18	180596M1	10107	2	COLLAR	L
19	867689M1	10053	1	SHIELD BEARING	L
20	183255M2	10106	2	RETAINER	L
21	1668054M1	10059	1	SHIELD BEARING	L
22	195677M1	10110	2	OIL SEAL	L
23	185400M2	10108	16	BOLT REAR WHL DIS9/16-18-2A L54.60	L
24	300975M1	10280	2	BEARING CUP	I
25	361542X1	10091	24	BOLT 7/16-20 UNF L. 2	L
26	N/a	85024	2	PLATE AXLE HOUSING	L

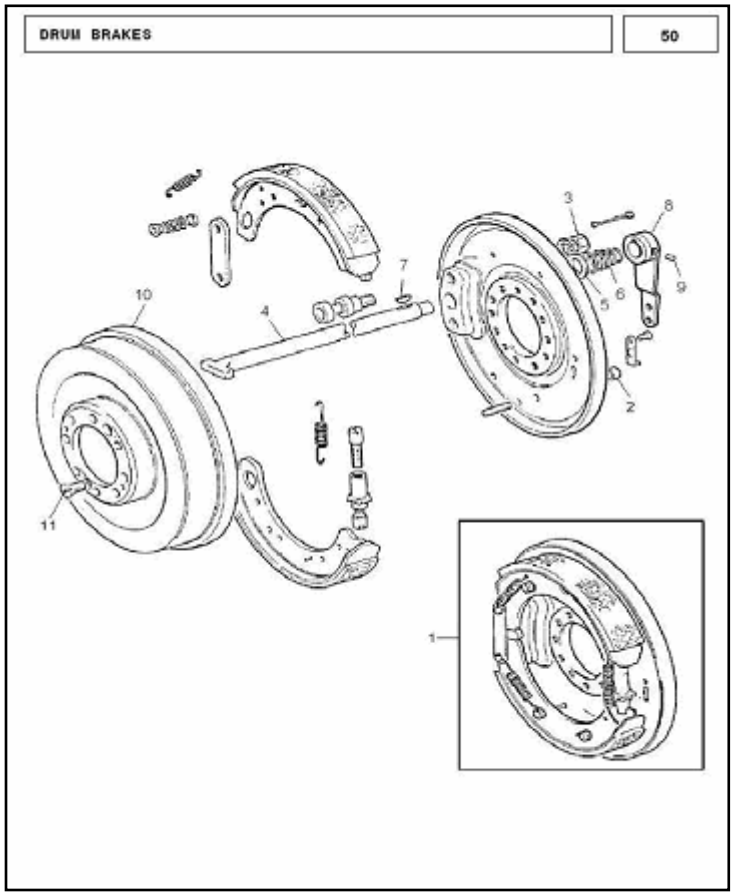

DRUM BRAKES

MF240

ITEM	CKD	LocalPartNo	QTY	Description	Source
1	827143M96	10095	2	ASSY-BRAKE	L
2	353431X1	30011	2	NUT 3/8 - 24	L
3	377626X1	10094	2	NUT 1/2-20 AXLE HOUSING	L
4	880033M2	10096	1	OPERATING SHAFT RH	L
4	897042M2	10097	1	OPERATING SHAFT LH	L
5	825040M2	10098	2	PLATE-COVER	L
6	825041M2	10290	2	SPRING	L
7	16346X1	10271	2	WOODRUF KEY	L
8	880034M2	10101	1	LEVER CAM SHAFT RH	L
8	897087M2	10102	1	LEVER CAM SHAFT LH	L
9	355434X1	10289	2	SCREW 1/4-20 L. 6.3	L
10	827707M5	10104	2	DRUM-BRAKE	L
11	182278M1	10260	4	SCREW-BRAKE DRUM	L

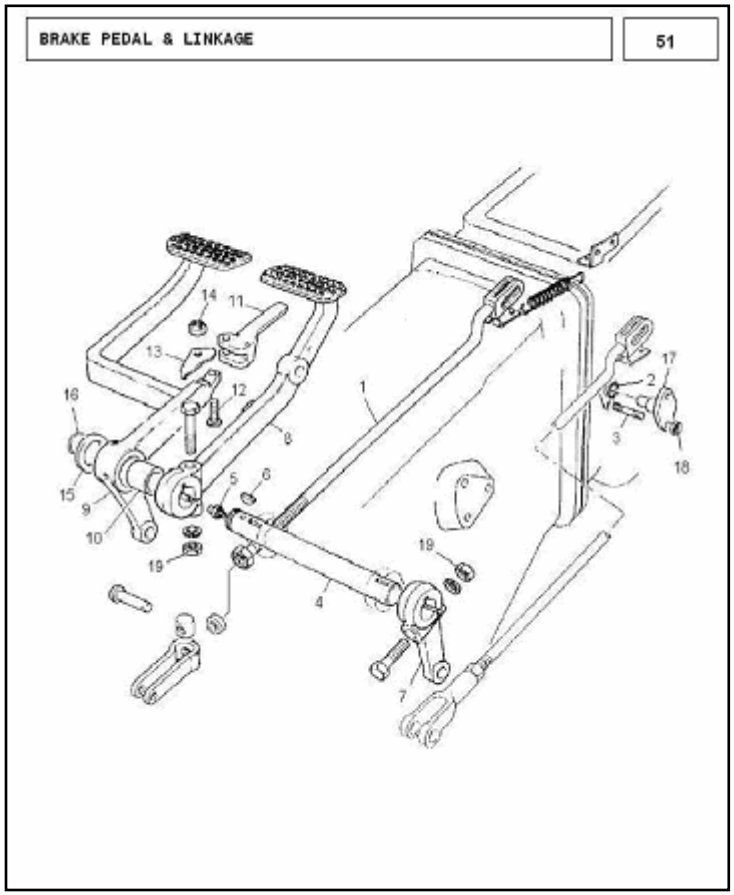

BRAKE PEDAL & LINKAGE

MF240

ITEM	CKD	LocalPartNo	QTY	Description	Source
1	1676736M93	11100	2	ASSY ROD & YOKE (LARGE)	L
2	851258M1	11077	2	O RING (762026M1)	L
3	195569M2	11043	4	STUD 5/16-24 UNF-3A	L
4	1860802M1	11021	1	SHAFT BRAKE CROSS	L
5	200191M1	11076	1	LUBRICATOR	L
6	12501X	11073	2	WOODRUF KEY	L
7	180864M1	11024	1	ARM-COMBINED BRAKE	L
8	1861172M1	11028	1	PEDAL LH	L
9	1861171P91	11065	1	ASSY PEDAL RH	L
10	195910M1	11075	1	BUSH	L
11	181960M1	11067	1	LOCK-COMBINED BRAKE	L
12	361203X1	11035	1	SCREW 5/16 - 24 UNF-2A L.1.572	L
13	181958M1	25058	1	SPRING	L
14	376447X1	11037	1	LOCK NUT 5/16 UNF	L
15	181964M1	11072	1	WASHER I/D35.5 O/D 47.62 THK 4.29	L
16	195904M1	11074	1	RING SNAP	L
17	898643M1	11040	2	PIN PUMP SUPPORT	L
18	363621X1	11042	4	NUT PUMP SUPPORT PIN 5/16 - 24	L
19	363625X1	11027	2	NUT 7/16-20	L

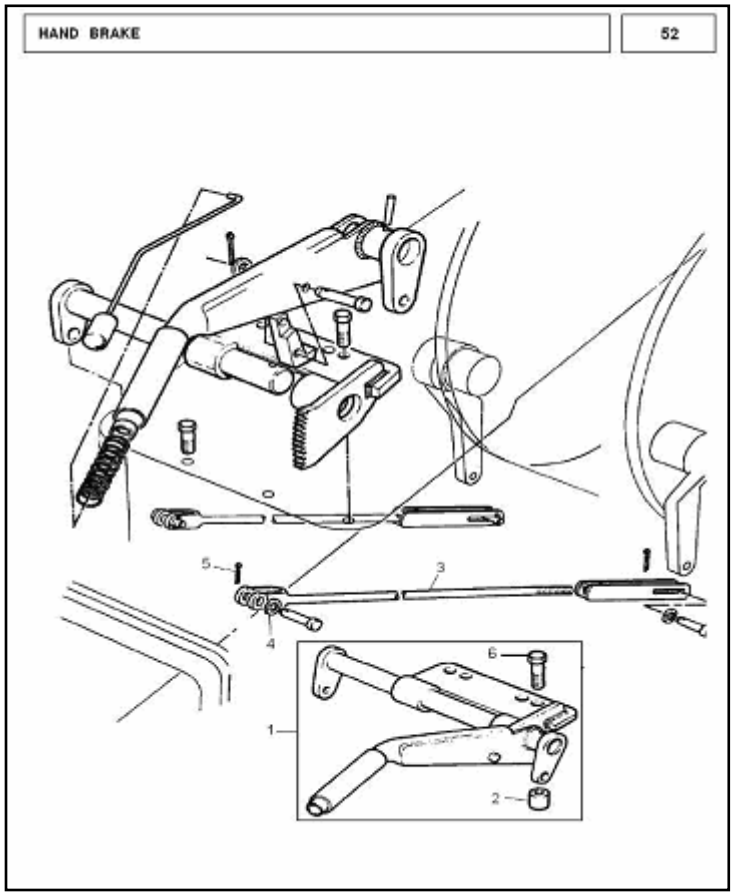

HAND BRAKE

MF240

ITEM	CKD	LocalPartNo	QTY	Description	Source
1	898652M94	11001	1	ASSY HAND BRAKE	L
2	1694699M1	11002	2	SPACER	L
3	1694778M91	11200	2	ASSY ROD & YOKE (SMALL)	L
4	355619X1	11066	3	WASHER LARGE 3/8	L
5	354059X1	11005	1	PIN COTTER	L
6	1694297M1	26086	2	BOLT 7/16 - 14 UNC - 2A L. 89	L

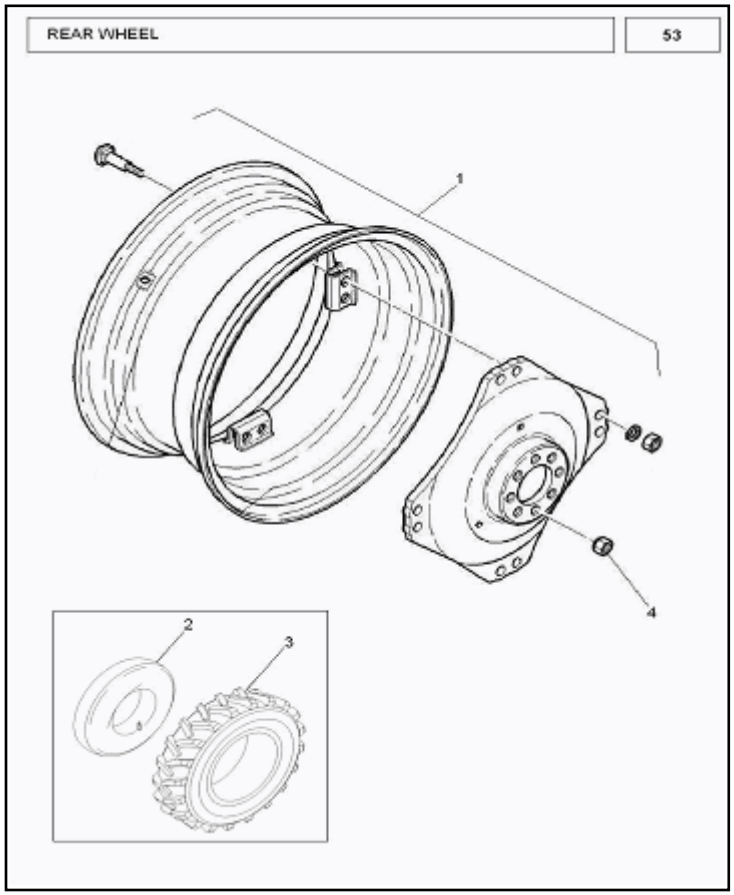

REAR WHEELS

MF240

ITEM	CKD	LocalPartNo	QTY	Description	Source
1	1688395M91	15003	2	RIM REAR 11X28	L
2	827385M1	15004	2	TUBE REAR 12.4/11-28	L
3	893148M1	15005	2	REAR TYRE 12.4/11-28 6 PR	L
4	180004M1	15007	16	NUT WHEEL 9/16 - 18 UNF - 2B	L

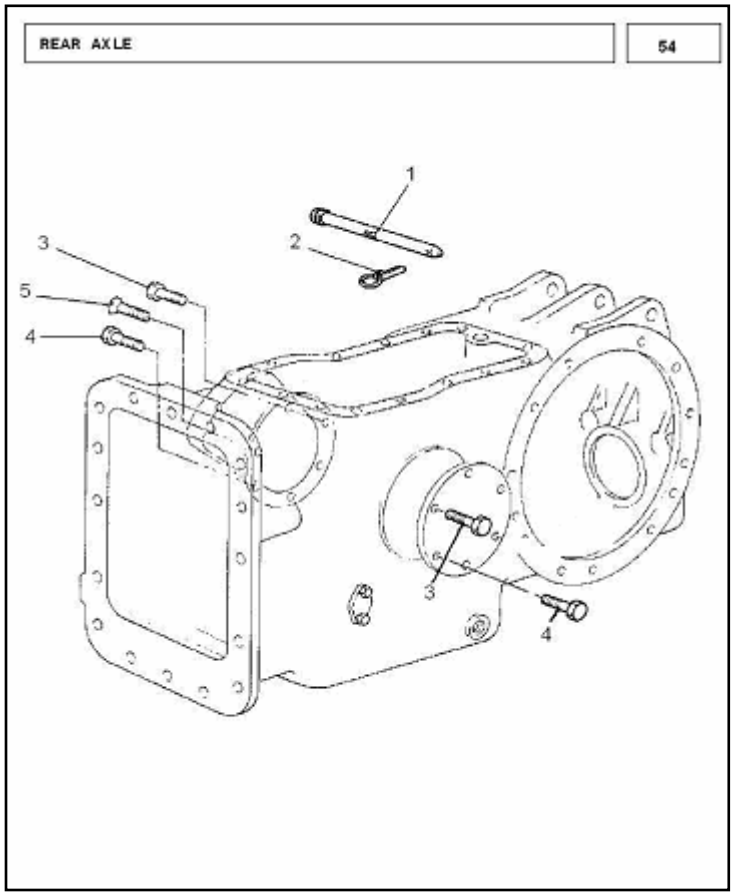

REAR AXLE

MF240

ITEM	CKD	LocalPartNo	QTY	Description	Source
1	180901M91	40001	1	PIN ASSY	L
2	810285M92	25028	1	PIN & RING ASSY	L
3	3771826M1	40041	4	PTCHD BOLT 7/16-14 UNC-2A L.1	L
4	3771827M1	40042	2	PTCHD BOLT7/16-14 UNC-2A L.1-1/4	L
5	3772195M1	40043	1	PTCHD. SCREW 7/16-14 UNC-2A L0.7872	L

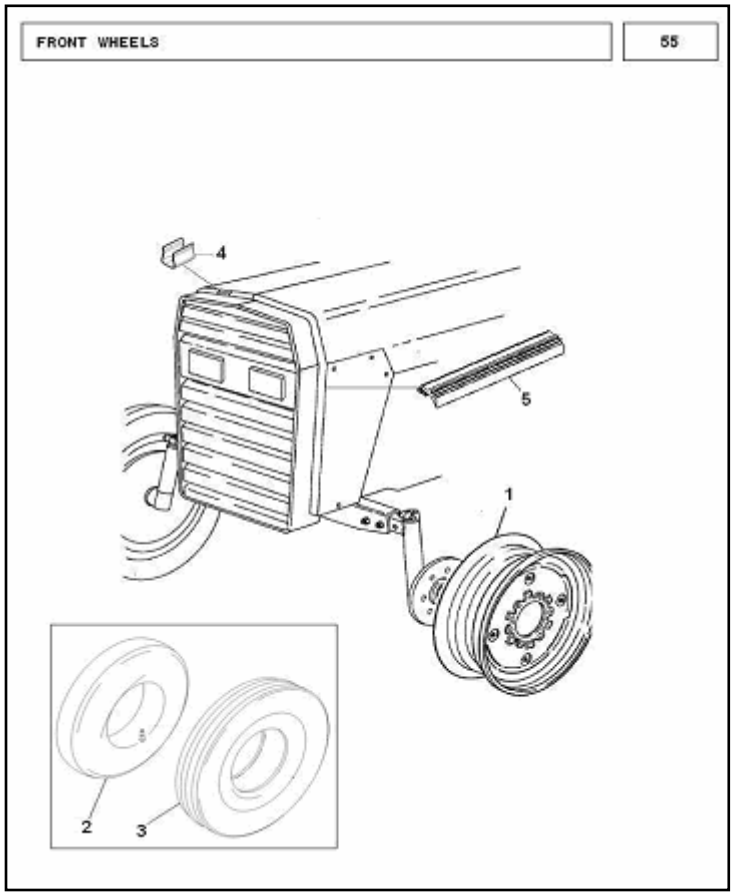

FRONT WHEELS

MF240

ITEM	CKD	LocalPartNo	QTY	Description	Source
1	885741M4	17001	2	WHEEL 4.5 x 16 (RIM FRONT)	L
2	893257M1	17002	2	TUBE FRONT 6.00x16	L
3	893255M1	17003	2	FRONT TYRE 6.00X16	L
4	N/a	23202	4	CLIP MOULDING WRAPPER	L
5	3697716M1	23201	1	MOULDING FRONT	L

AXLE SUPPORT

MF240

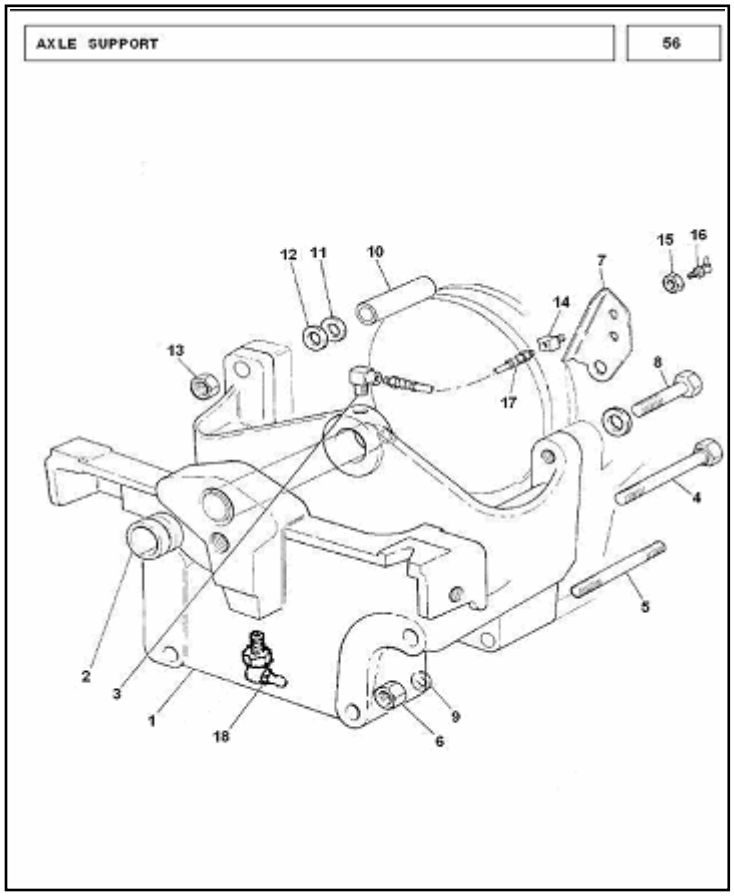

ITEM	CKD	LocalPartNo	QTY	Description	Source
1	2528935K93	14700	1	FRONT SUPPORT	L
2	1660114M2	14003	2	BUSH	L
3	377859X1	14070	1	ELBOW 90-DEG	L
4	3019864X1	14077	2	BOLT M16 L. 65	L
5	3019884X1	14083	2	STUD M16	L
6	3019871X1	14009	2	NUT M 16	L
7	1670940M2	14011	1	BRACKET REMOTE GREASING	L
8	3019865X1	14078	1	BOLT M16 L. 75	L
9	353433X1	14085	5	WASHER 5/8	L
10	847189M1	14014	1	SPACER	L
11	365690X1	14016	1	SHIM	L
11	365691X1	14104	1	SHIM	L
11	377126X1	14103	1	SHIM	L
12	377127X1	14091	1	SHIM	L
13	353427X1	14036	1	NUT 5/8-18	L
14	1809904M1	14071	1	UNION BULK HEAD	L
15	517254M1	14080	1	NUT LOCK 1/8 NPSM	L
16	850778M1	14107	1	GREASER (ALT 894467 M1)	L
17	1670913M91	14024	1	ASSY.HOSE REMOTE GREASING	L
18	355547X1	N/a	1	GREAS NIPPLE	L

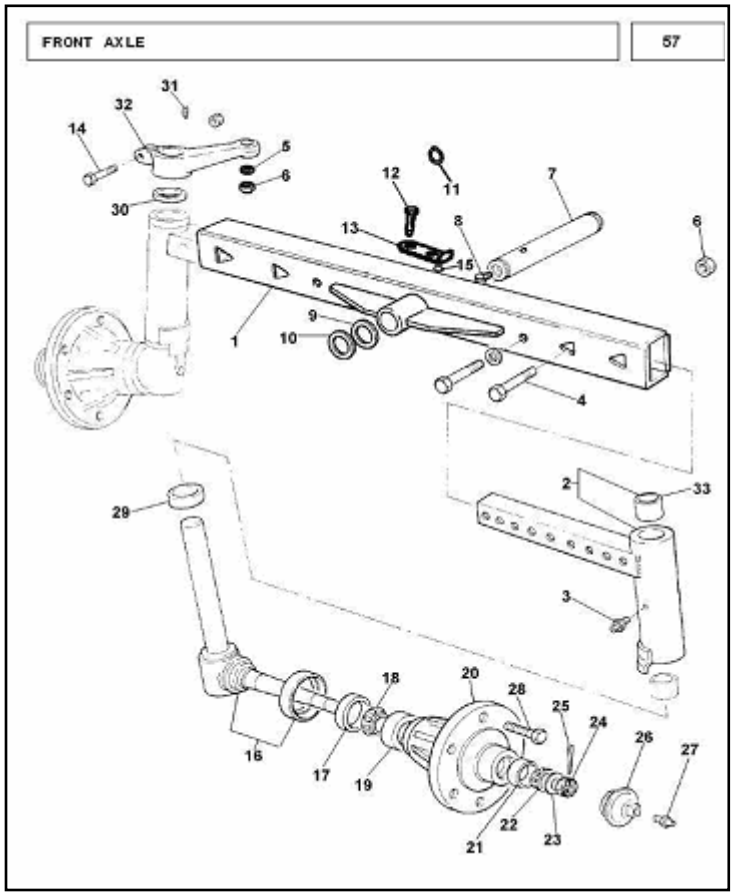

FRONT AXLE **MF240**

ITEM	CKD	LocalPartNo	QTY	Description	Source
1	1865911M95	14025	1	ASSY CENTRE BEAM	L
2	888300M92	14300	1	ASSY ARM FRONT AXLE LH	L
2	897236M94	145600	1	ASSY FRT AXLE SPDL&DUST SHIELD RH	L
3	MP1056	14101	2	LUBRICATOR	L
4	377170X1	14076	4	BOLT 5/8 - 18 UNF-2A L.79.4MM	L
5	353760X1	14035	4	WASHER FLAT5/8	L
6	353427X1	14036	4	NUT 5/8-18	L
7	1670939M1	14037	1	PIN PIVOT	L
8	376408X1	14079	3	SCREW 7/16 - 14 L. 0.75	L
9	1661600M1	14089	1	SHIM	L
9	1863312M1	14105	1	SHIM	L
9	1863313M1	14087	1	SHIM	L
9	1863314M1	14088	1	SHIM	L
10	1442689X1	14108	1	CIRCLIP	L
11	1440528X1	14100	1	CIRCLIP EXTERNAL	L
12	1867906M1	14081	1	SCREW 1/2 - 20 UNF - 2A	L
13	1865932M1	14068	1	TAB WASHER A/F 19.30/19.10 T.1.5	L
14	361551X1	14075	2	BOLT 7/16 - 20 L. 0.5	L
15	353754X1	14048	1	WASHER-FLAT 1/4	L
16	897236M94	14049	1	ASSY- SPINDLE & DUST SHIELD RH	L
16	897237M94	14050	1	ASSY- SPINDLE & DUST SHIELD LH	L
17	897242M1	14069	2	OIL SEAL	L
18	831078M1	14099	2	BEARING TAPER ROLLER	I
19	831077M1	14098	2	BEARING TAPER ROLLER	I
20	886336M1	14054	2	HUB	L
21	831054M1	14097	2	BEARING CUP OUTER	I
22	831055M1	14096	2	BEARING CONE & ROLLER	I
23	180010M1	14082	2	WASHR RETAIN ID 19.10/19.36 OD 40	L
24	353928X1	14058	2	NUT 7/16-14	L

25	354068X1	14092	2	PIN COTTER	L
26	191142M1	14061	2	CAP-HUB	L
27	200191M1	11076	2	LUBRICATOR	L
28	906863M1	14072	12	BOLT 1/2-20 UNF P.D.11.842/11.732	L
29	195175M1	14094	2	BEARING	L
30	180355M2	14093	2	SEAL	L
31	350355X1	14090	2	KEY	L
32	180350M1	14067	2	ARM STEERING / ARM SPINDLE	L
33	180345M1	14026	2	BUSHING	L

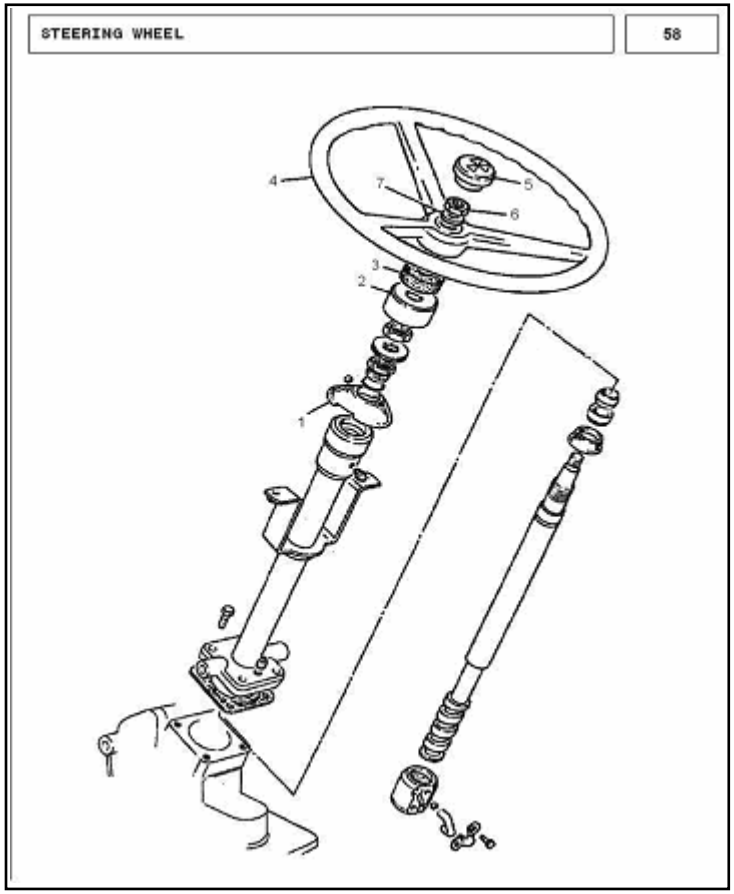

STEERING WHEEL **MF240**

ITEM	CKD	LocalPartNo	QTY	Description	Source
1	1863359M1	16027	1	STEERING GROMMET	L
2	1864867M1	16002	1	COVER STRG.COULMN	L
3	827210M1	16006	1	FELT WASHER	L
4	3774838M1	16035	1	STEERING - WHEEL (OLD NO. 16003)	L
5	3774841M91	16036	1	CAP & MOTIF (OLD NO. 16024)	L
6	966461M1	16037	1	NUT STEERING WHEEL	L
7	1441664X1	16029	1	FLAT WASHER M16	L

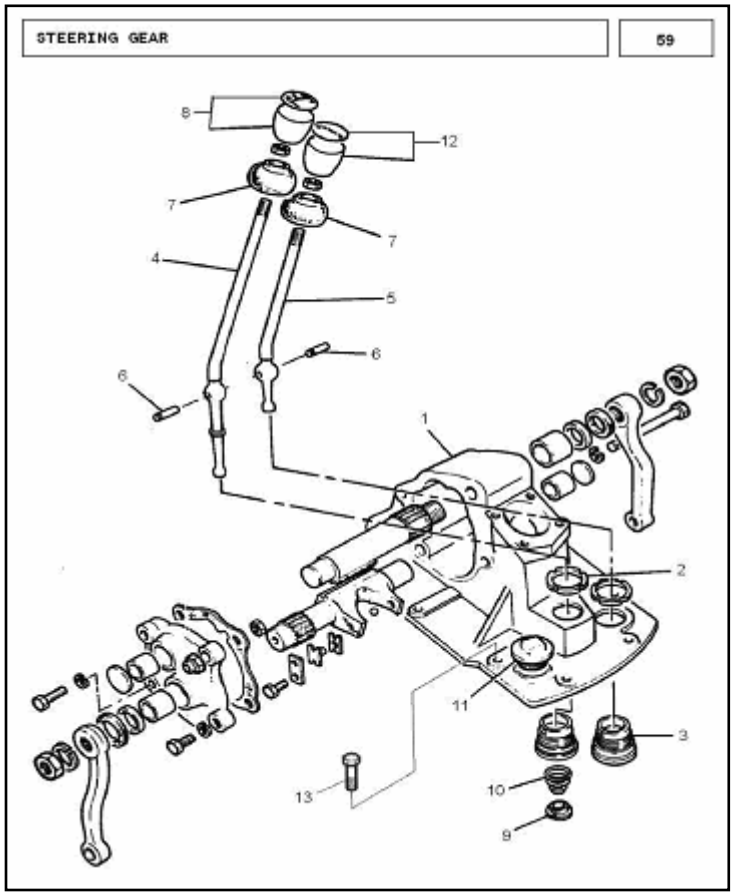

ITEM	CKD	LocalPartNo	QTY	Description	Source
1	1673663M91	16005	1	ASSY STEERING GEAR	L
2	827211M1	16012	1	LOCKING-RING	L
3	827690M1	16008	2	CUP	L
4	1688964M1	16009	1	GEAR SHIFT LEVER	L
5	1689028M1	16010	1	LEVER PLAN. SHIFT	L
6	180581M1	16011	2	PIN	L
7	180579M3	16013	2	COVER SHIFT LEVER	L
8	1862400M1	16040	1	KNOB GEAR PLANETARY SHIFT LEVER	L
9	1861024M1	16025	1	SEAT SPRING	L
10	192007M1	16038	1	SPRING GEAR SHIFTER	L
11	768300M1	16020	1	PLUG-FILLER	L
12	893015M2	16039	1	KNOB GEAR SHIFT LEVER	L
13	353699X1	47004	8	BOLT 7/16 - 14 L. 1.12	L

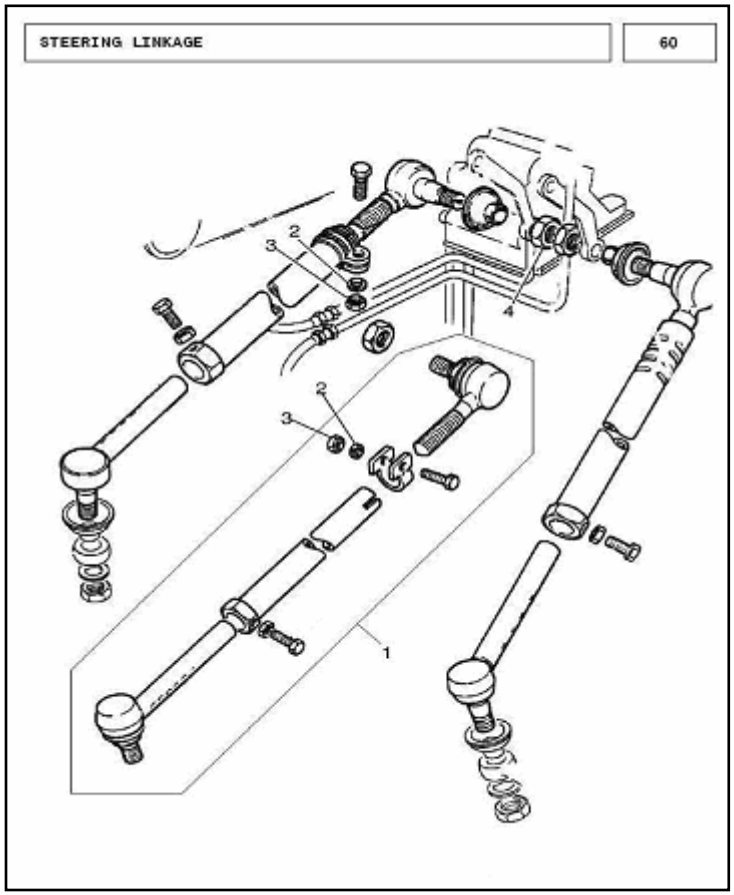

STEERING LINKAGE

MF240

ITEM	CKD	LocalPartNo	QTY	Description	Source
1	1860411M92	16021	2	ASSY DRAG LINK	L
2	353446X1	19017	2	WASHER 5/16	L
3	353916X1	34017	2	NUT 5/16 - 24	L
4	353430X2	16028	2	NUT	L

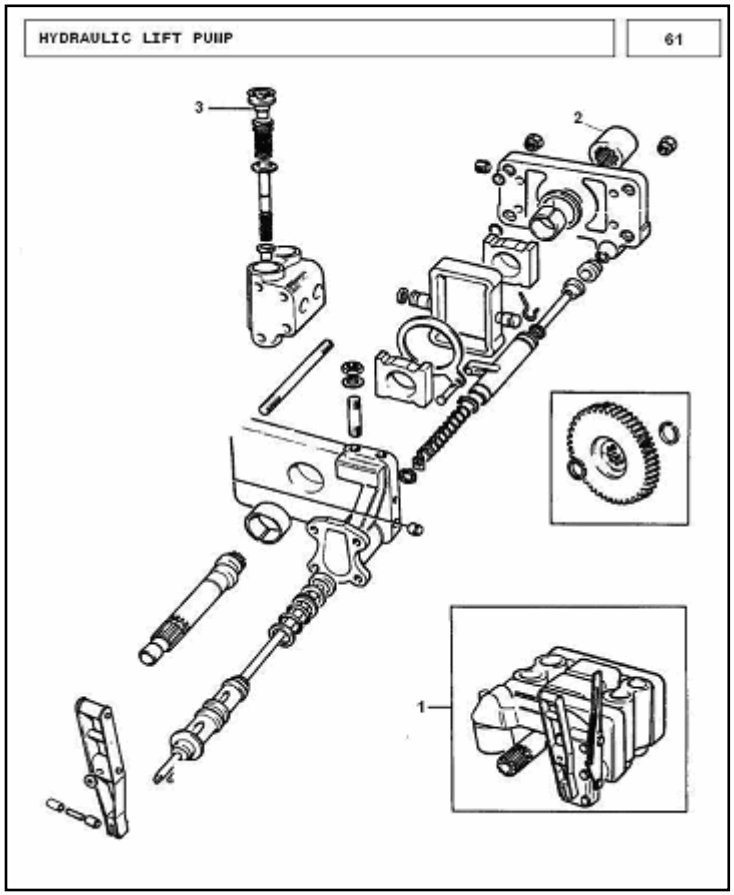

HYDRAULIC LIFT PUMP

MF240

ITEM	CKD	LocalPartNo	QTY	Description	Source
1	3761330K91	27092	1	ASSY. HYDRAULIC PUMP	L
1	6216558M91	27092	1	ASSY. HYDRAULIC PUMP	L
2	1868538M4	27002	1	COUPLER PTO	L
3	376722X1	25004	4	WASHER LOCK 1/2	L

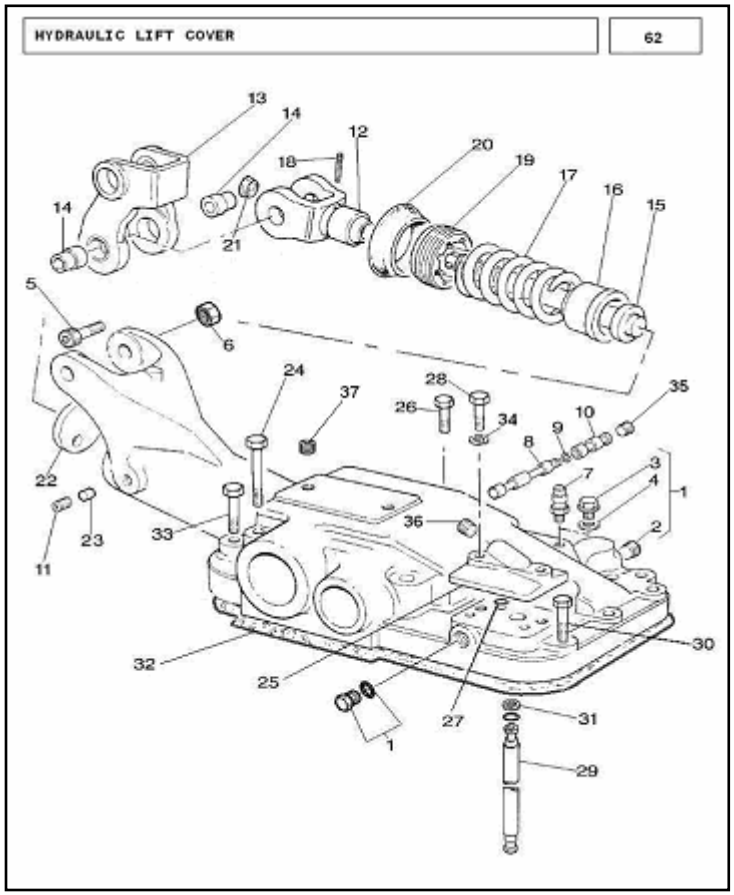

HYDRAULIC LIFT COVER

MF240

ITEM	CKD	LocalPartNo	QTY	Description	Source
1	3612130M91	26200	1	ASSY. HYD. LIFT COVER	L
2	825031M2	26002	2	PLUG 3/8 - 18 N.P.T.F.	L
3	826237M1	26003	1	PLUG 3/8 NPSM x 18 T.P.I.	L
4	826238M1	26004	1	BONDED SEAL	L
5	363593X1	26101	2	SCREW 1/2-20 UNF-3A L. 1-3/8	L
6	363650X1	26108	2	LOCK NUT 1/2-20	L
7	182099M91	26008	1	BREATHER ASSY	L
8	898305M1	26033	1	SHAFT PIVOT	L
9	898306M1	26034	1	SNAP RING	L
10	898307M1	26036	1	COLLAR	L
11	355286X1	26122	2	HEX. SKT. SETSCREW 5/16-18 UNC3A	L
12	180972M2	26053	1	CLEVIS	L
13	180973M2	26054	1	LINK-ROCKER	L
14	180974M1	26111	2	BUSHING	L
15	886348M2	26056	1	PLUNGER CONTROL SPRING	L
16	886351M1	26057	1	SEAT CONTROL SPRING	L
17	182582M1	26112	1	SPRING - 7500 L	L
18	195573M1	26123	1	PIN GORVED	L
19	180979M2	26060	1	NUT	L
20	887654M2	26061	1	BOOT RUBBER	L
21	180982M1	26062	1	PLUG-RUBBER	L
22	180981M1	26063	1	DISC COVERLOAD STOP	L
23	882451M1	26118	1	PLUG LOCKING	L
24	377145X1	26098	5	BOLT 7/16-14 UNC-2A L.104.8/103.2	L
25	180908M1	26066	1	CAP LIFT COVER	L
26	377143X1	26095	3	BOLT 7/16-14 UNC-2A L. 52.4/54.0	L
27	195561M1	26113	3	O RING	L
28	1694297M1	26086	2	BOLT 7/16 - 14 UNC - 2A L. 89	L
29	898229M1	26089	1	STAND PIPE	L

30	376805X1	26102	2	BOLT 7/16-14 UNC-2A L.46.0/47.6	L
31	195874M1	26126	2	WASHER BACKUP 3/8 THICK. 0.029	L
32	886549M2	26081	1	GASKET	L
33	377144X1	26097	2	BOLT 7/16-14 UNC-2A L.77.8/79.4	L
34	376721X1	10268	2	WASHER 7/16	L
35	882451M1	26118	1	PLUG LOCKING	L
36	355286X1	26122	2	HEX. SKT. SETSCREW 5/16-18 UNC3A	L
37	195567M1	26124	1	PLUG	L

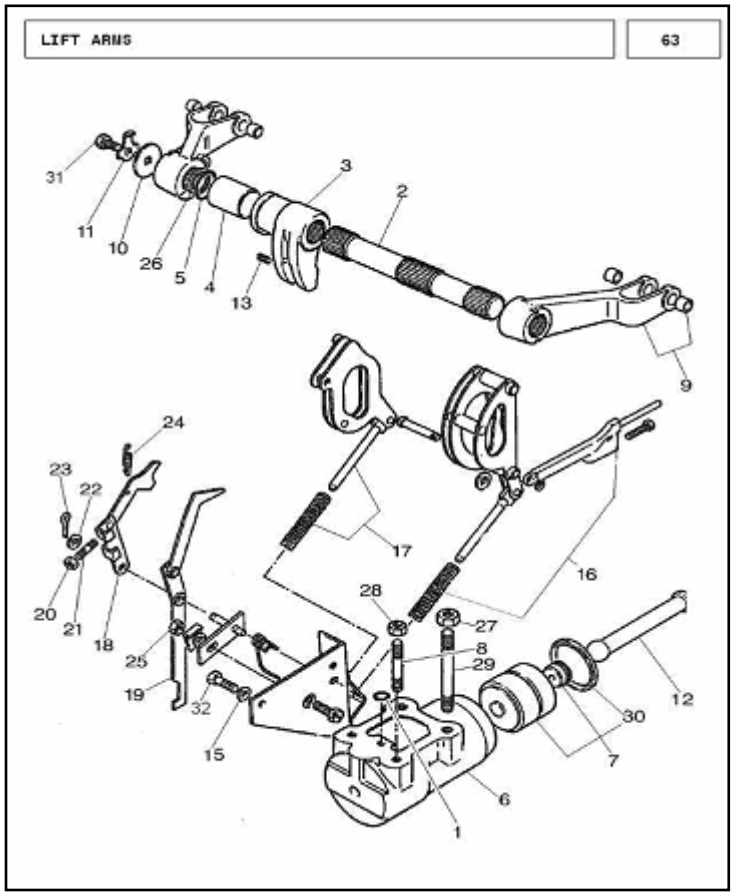

ITEM	CKD	LocalPartNo	QTY	Description	Source
1	195562M1	26116	1	O RING	L
2	897567M3	26011	1	SHAFT HYD. LIFT	L
3	3610357M1	26012	1	ARM LIFT RAM	L
4	3611558M1	26109	2	BEARING LIFT SHAFT	L
5	3000789X1	26117	2	O RING	L
6	3599900M1	26015	1	CYLINDER HYDRAULIC	L
7	2528785K92	26016	1	ASSY PISTON & CUP	L
8	1667580M1	26107	2	FRONT STUD 9/16 - 18 UNF - 3A	L
9	885444M91	26021	2	ASSY ARM HYD LIFT	L
10	897580M2	26024	2	WASHER - LIFT ARM	L
11	897581M3	26093	2	CLIP -LICKING	L
12	3610356M2	26028	1	ROD - CONNECTING	L
13	371925X1	26121	1	COILED SPRING PIN	L
14	1870190M92	26030	1	ASSY.- BRKT. LEVER SUPPORT	L
15	22764X	26120	2	WASHER 3/8	L
16	1660324M91	26039	1	ASSY. LINK	L
17	1661918M91	26042	1	ASSY. LINK	L
18	1661547M92	26043	1	ASSY.CAM POSITION	L
19	1869093M93	26044	1	ASSY. LEVER & CAM	L
20	354120X1	26099	1	NUT 10 - 24	L
21	898153M2	26104	1	SET SCREW 10 - 24 UNC - 3A L.22.2	L
22	355616X1	26106	1	WASHER NO. 10	L
23	354039X1	26110	1	PIN COTTER	L
24	898137M1	26125	1	SPRING	L
25	353916X1	34017	1	NUT 5/16 - 24	L
26	3611557M1	26091	2	RING SPACER	L
27	377641X1	26100	2	NUT 5/8 - 18 UNF - 2B	L
28	377765X1	26103	2	NUT 9/16 - 18 - 2B	L
29	1693939M2	26105	2	STUD 5/8 - 18 UNF - 3A	L

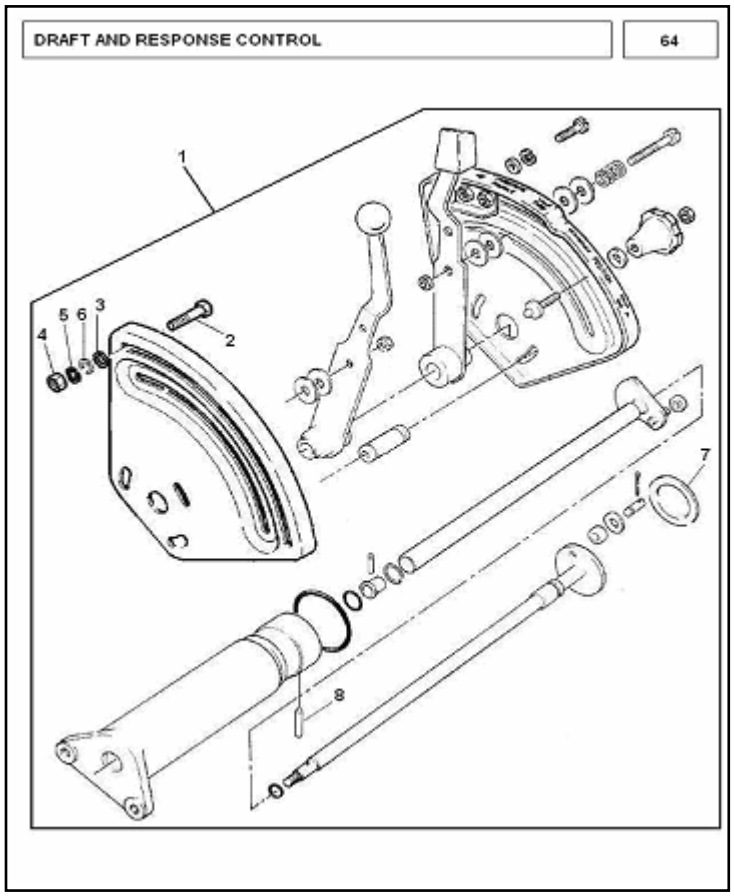

30	3761475M1	26114	1	O RING	L
30	3761478M1	26115	1	PTFE SLIP SEAL	L
31	361526X1	26096	2	BOLT 7/16-20 L. 1	L
32	362429X1	26031	2	SCREW 3/8 -16X5/8	L

DRAFT AND RESPONSE CONTROL **MF240**

ITEM	CKD	LocalPartNo	QTY	Description	Source
1	3611464M91	26052	1	ASSY-QUARDRANT	L
2	339124X1	163070	1	SCREW M8X16MM	L
3	353754X1	14048	1	WASHER-FLAT 1/4	L
4	339169X1	163033	1	NUT M8	L
5	353441X1	13084	2	WASHER 1/4	L
6	353434X1	10075	2	WASHER LOCK 3/8"	L
7	1869075M1	26127	1	SPRING	L
8	1869074M1	26090	1	PIN	L

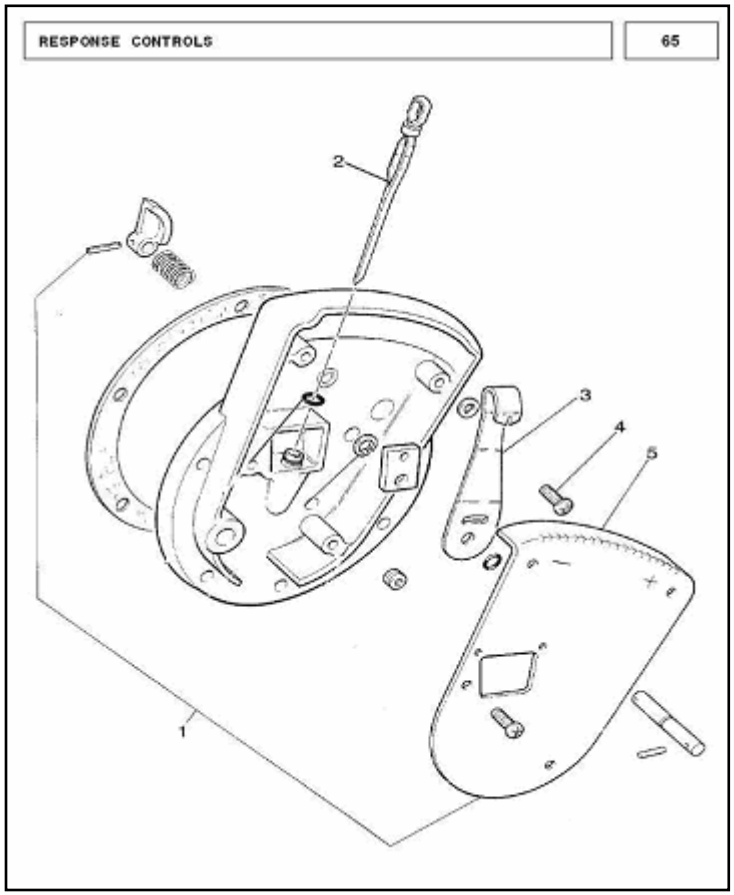

RESPONSE CONTROLS

MF240

ITEM	CKD	LocalPartNo	QTY	Description	Source
1	3761410M91	26074	1	ASSY RESPONSE COVER	L
2	1665962M91	26087	1	ASSY INDICATOR OIL LEVEL	L
3	1662278M2	26076	1	LEVER-RESPONSE CONTROL	L
4	1869138M1	26119	1	SCREW 10-32 UNF - 2A	L
5	1668053M2	26079	1	PLATE DRAFT RESPONSE	L

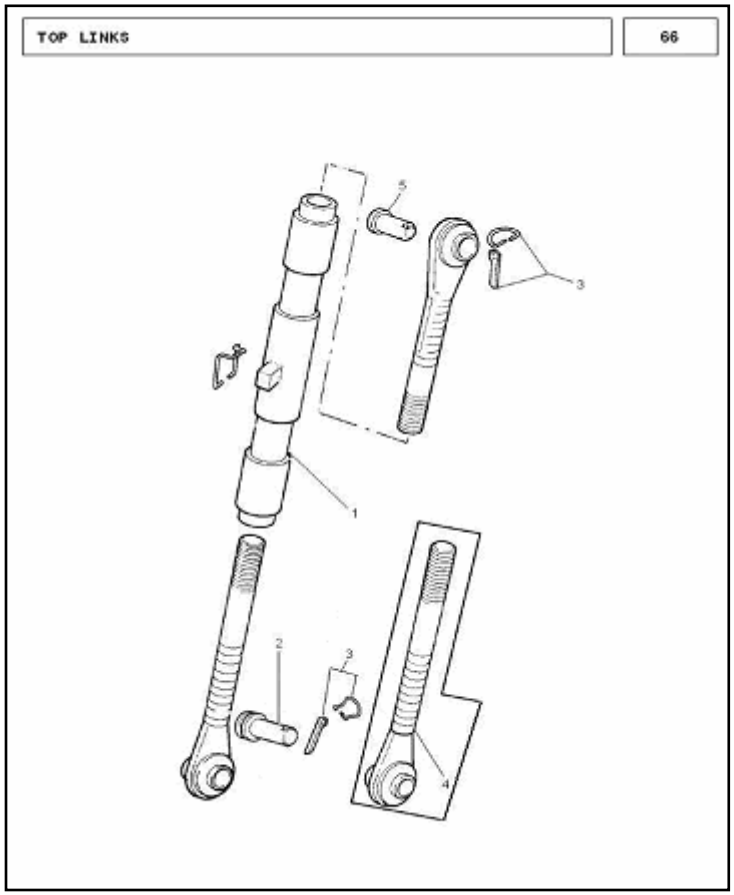

TOP LINKS

MF240

ITEM	CKD	LocalPartNo	QTY	Description	Source
1	184225P91	25023	1	ASSY TUBE TOP LINK	L
2	831513M1	25027	1	PIN RETAINER CAT-I	L
3	810285M92	25028	2	PIN & RING ASSY	L
4	183615M93	25030	1	ASSY END IMPLEMENT CAT 2	L
5	195589M1	25034	1	PIN-CLEVIS	L

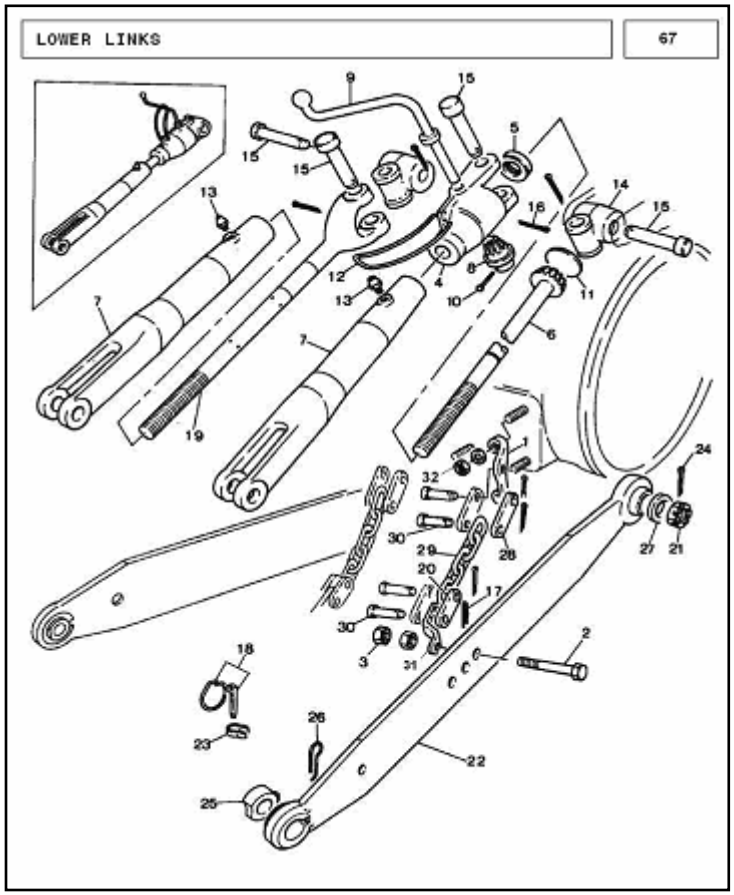

ITEM	CKD	LocalPartNo	QTY	Description	Source
1	897911M1	25002	1	ANCHOR CHECK CHAIN	L
1	897912M1	25003	1	ANCHOR CHECK CHAIN	L
2	1863267M1	25057	2	BOLT SPECIAL 5/8 - 18 UNF - 2A	L
3	353429X1	25141	4	NUT-JAM 5/8-18	L
4	193181M1	25005	1	BOX-LEVELLING	L
5	195457M1	25316	1	BEARING	L
6	1660375M1	25009	1	SHAFT (LEVELLING)	L
7	897659M1	25010	2	LIFT FORK ROD	L
8	181345M2	25011	1	GEAR LEVELLING	L
9	1662382M1	25012	1	LEVER LEVELLING	L
10	195648M1	25315	1	REVIT	L
11	195644M1	25317	1	PLUG	L
12	193092M1	25015	1	RING LOCKING	L
13	200191M1	11076	3	LUBRICATOR	L
14	897660M1	25017	2	KNUCKLE	L
15	376399X1	25018	4	PIN-CLEVIS	L
16	354066X1	25019	10	PIN COTTER	L
17	195415M1	25054	2	PIN - HAIR	L
18	810285M92	25028	2	PIN & RING ASSY	L
19	1660372M91	25020	1	ASSY YOKE LIFT ROD	L
20	1866324M1	25049	4	LINK CHECK CHAIN	L
21	353928X1	14058	2	NUT 7/16-14	L
22	1869289M91	25035	2	ASSY LOWER LINK	L
23	1869218M1	25036	2	CLIP	L
24	354068X1	14092	2	PIN COTTER	L
25	886428M1	25039	2	BALL - CAT.1	L
25	886429M1	25041	2	BALL CAT.2 LOWER LINK	L
26	1869219M1	25313	2	CLIP	L
27	353762X1	25042	2	WASHER 3/4	L

28	1863283M1	25045	4	LINK CHECK CHAIN	L
29	184377M1	25046	2	CHECK CHAIN	L
30	195396M1	25047	8	PIN CLEVIS 1/2	L
31	184368M1	25052	2	BRACKET	L
32	363627X1	25006	4	NUT 1/2-20	L

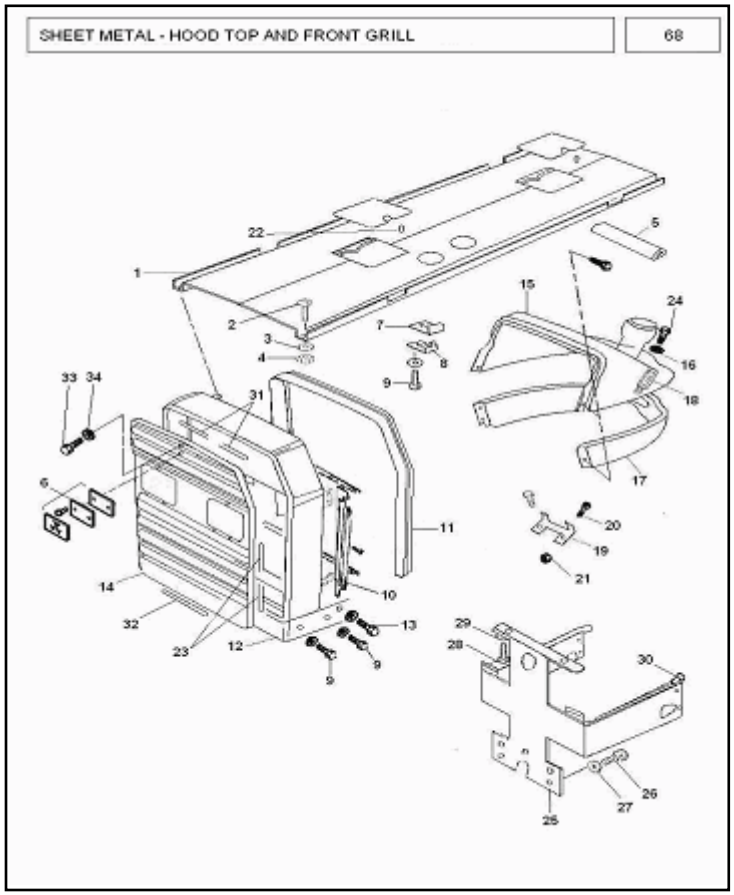

SHEET METAL - HOOD TOP AND FRONT GRILL

MF240

ITEM	CKD	LocalPartNo	QTY	Description	Source
1	3614689P91	23310	1	HOOD TOP ASSEMBLY	L
2	385368X1	23194	4	CARR. BOLT M8x13(385368X1 MF-375)	L
3	390892X1	25305	1	PLAIN WASHER M-8	L
4	390679X1	25304	4	NUT M-8	L
5	1672800M1	23149	1	BEADING SEAL (HOOD)	L
6	3580033M1	23142	1	BADGE ASSY	L
7	1694819M3	23096	4	KEEPER HING	L
8	1694914M3	23097	4	BRACKET HING (1694914M3 MF-375)	L
9	339124X1	163070	10	SCREW M8X16MM	L
10	1672717P2	21051	1	BRACKET RADIATOR RH	L
10	1672718P2	21052	1	BRACKET RADIATOR LH	L
11	3697716M1	23201	1	MOULDING FRONT	L
12	1682961M93	23089	1	WRAPPER ASSY	L
13	353901X1	253040	2	BOLT 5/8-11X1.1/4(353901X1 MF375	L
14	1687819M91	23022	1	ASSY GRILL	L
15	1683524P93	23040	1	INSTRUMENT PANEL UPPER	L
16	353754X1	14048	2	WASHER-FLAT 1/4	L
17	886792P1	23039	1	INSTRUMENT PANEL LOWER	L
18	29033	29033	2	SPACER INST. PANEL	L
19	1683864M1	23144	1	BRACKET FUSE BOX	L
20	187137M1	23047	6	SCREW 10 - 32 UNF - 2A	L
21	357515X1	23048	6	NUT 10 - 32	L
22	897892M1	23137	4	HOOD DAMPER	L
23	1686414M1	23322	2	SEALING STRIP	L
24	353503X1	23032	2	SCREW UNF 1/4 -16 X 3/4	L
25	N/a	23309	1	BRACKET MULTIPLE	L
26	0920053	18583	5	WASHER	L
27	0746355	18543	5	SCREW	L
28	339124X1	163070	2	SCREW M8X16MM	L

29	390892X1	25305	2	PLAIN WASHER M-8	L
30	N/a	23317	2	BOOTSTAY HOOD	L
31	1686412M1	23320	2	SEALING STRIP	L
32	1686413M1	23321	1	SEALING STRIP	L
33	N/a	23326	1	BOLT	L
34	N/a	23327	1	Washer Front Grill Bolt	L

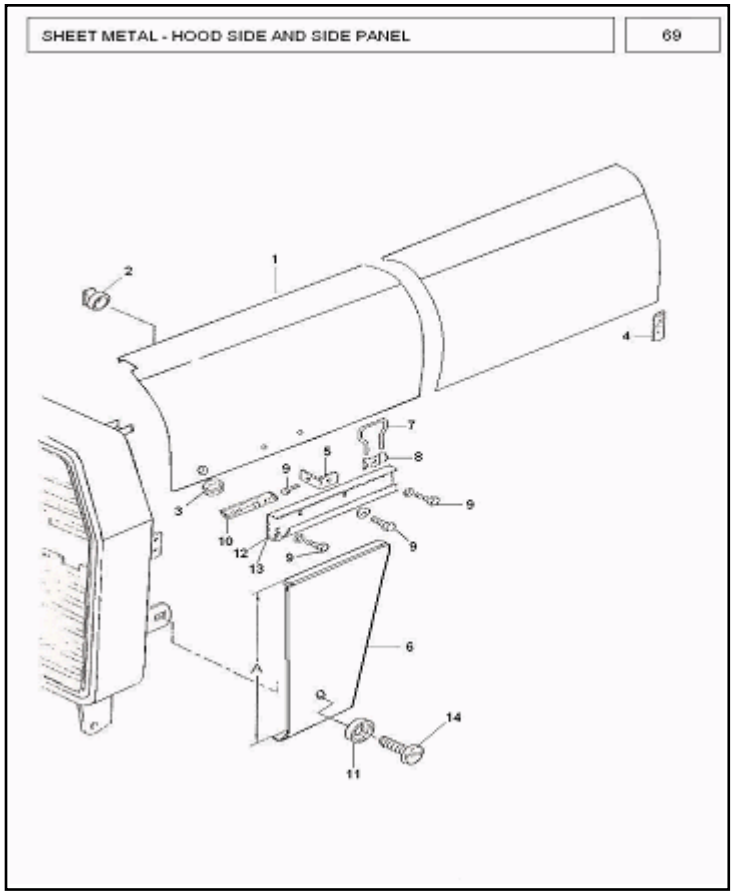

SHEET METAL - HOOD SIDE AND SIDE PANEL **MF240**

ITEM	CKD	LocalPartNo	QTY	Description	Source
1	3614689P92	23311	1	HOOD SIDE LH (POA 23086)	L
1	3614689P93	23312	1	HOOD SIDE RH (POA 23086)	L
2	1693951M3	23126	4	CAM FASTNER	L
3	1693952M2	23127	4	FASTNER	L
4	1672801M1	23150	2	EDGING SEAL	L
5	N/a	18212	2	BRACKET RADIATOR	L
6	1672717P21	23315	1	PLATE SIDE LH	L
6	1672718P21	23316	1	PLATE SIDE RH	L
7	1694817M1	233080	2	CATCH	L
8	1694816M91	23134	2	CLAMP CATCH	L
9	339124X1	163070	12	SCREW M8X16MM	L
10	3611645M1	23319	4	EDGING SEAL	L
11	3595613M1	23200	2	NYLON WASHER	L
12	1695235M4	23313	1	SIDE CHAN. LH(1695235-M4 MF-375)	L
13	1695236M5	23314	1	SIDE CHAN. RH(1695236M5 MF-375)	L
14	339123X1	23193	2	PAN HD SCW M8X20(339123X1 MF-37)	L

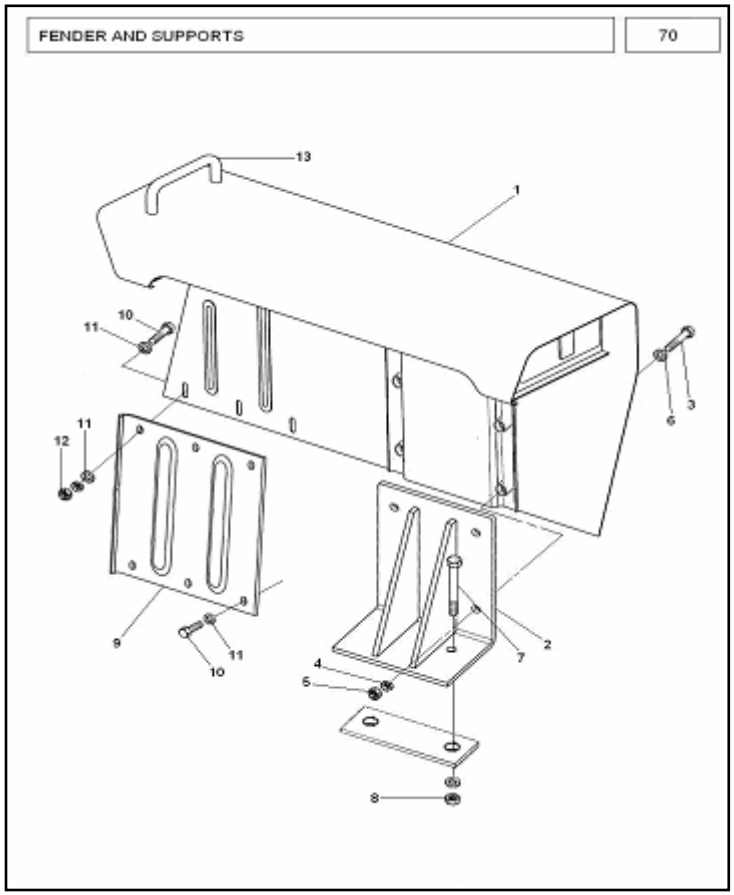

FENDERS AND SUPPORTS

MF240

ITEM	CKD	LocalPartNo	QTY	Description	Source
1	1679373P94	34166	1	FENDER RH	L
1	1679373P94	345003	1	ASSY. FENDER RH	L
2	1808640M91	34105	2	ASSY SUPPORT FENDER	L
3	353887X1	34004	8	BOLT 1/2 -20 X 2.1/2	L
4	353439X1	34005	8	WASHER-LOCK 1/2	L
5	353437X1	34006	8	NUT 1/2 -20	L
6	355621X1	34007	8	WASHER FLAT 1/2	L
7	369424X1	34010	4	HEX BOLT 5/8 - 11	L
8	375099X1	34008	4	NUT 5/8 -11	L
9	1675414P2	34168	1	PLATE EXT. FENDER LH	L
9	1676370P1	34169	1	PLATE EXT. FENDER RH	L
10	353517X1	34014	12	BOLT 5/16-24 X 3/4	L
11	353755X1	34015	24	WASHER 5/16	L
12	353916X1	34017	12	NUT 5/16 - 24	L
13	N/a	34165	2	HOLDING HANDLE	L

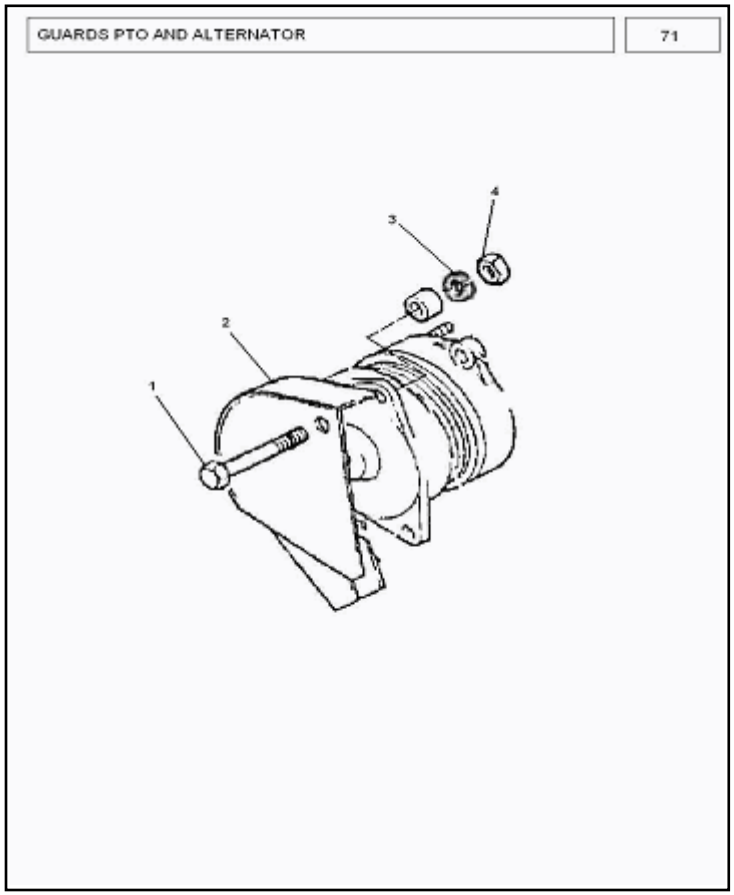

GUARDS PTO AND ALTERNATOR

MF240

ITEM	CKD	LocalPartNo	QTY	Description	Source
1	354267X1	39004	1	BOLT 3/8 -16 X 2.1/4	L
2	1872714M93	39013	1	GAURD ALTERNATOR	L
3	353434X1	10075	1	WASHER LOCK 3/8"	L
4	355566X1	39007	1	NUT 3/8 - 16	L

FOOT STEP 72

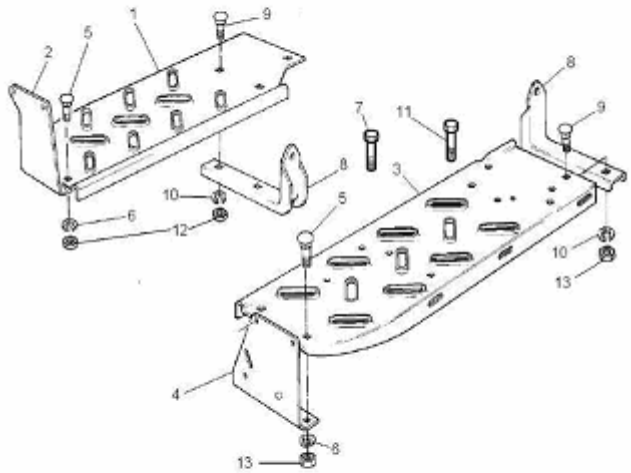

FOOT STEP **MF240**

ITEM	CKD	LocalPartNo	QTY	Description	Source
1	880096P5	30001	1	STEP RH	L
2	892765M3	30002	1	SUPPORT	L
3	892762P6	30003	1	STEP LH	L
4	1672744P2	30004	1	SUPPORT	L
5	354241X1	30005	4	BOLT 1/4 - 28 L. 0.62	L
6	353441X1	13084	4	WASHER 1/4	L
7	339337X1	25310	5	BOLT M-8 X 30	L
8	881719M1	30008	2	BRACKET SUPPORT	L
9	353807X1	30006	4	BOLT 3/8 - 24 L. .88	L
10	353434X1	10075	4	WASHER LOCK 3/8"	L
11	339123X1	23193	6	PAN HD SCW M8X20(339123X1 MF-37)	L
12	390679X1	25304	7	NUT M-8	L
13	353431X1	30011	4	NUT 3/8 - 24	L

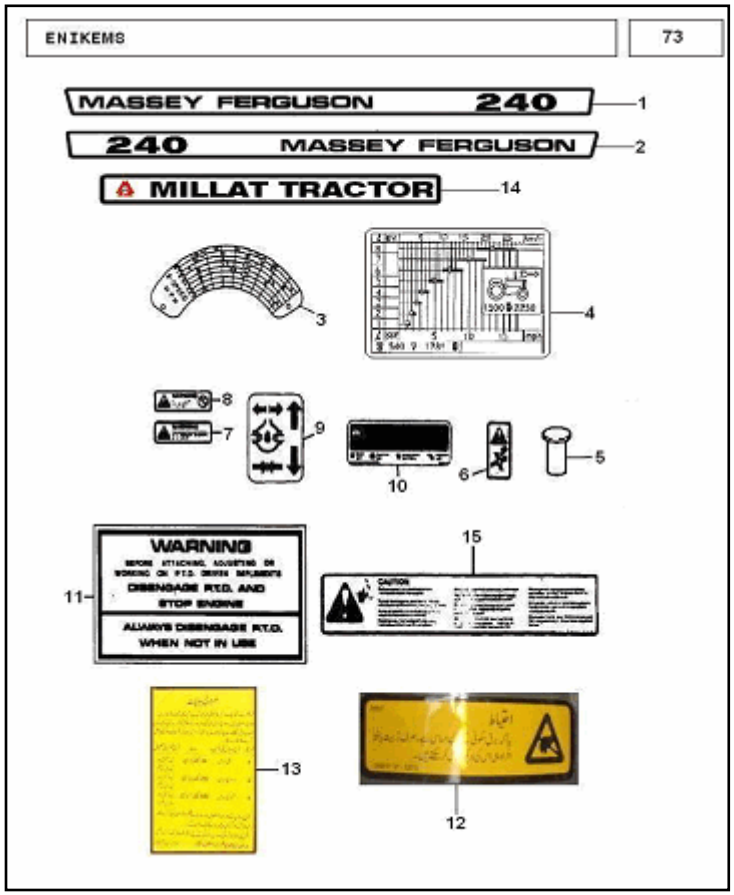

ITEM	CKD	LocalPartNo	QTY	Description	Source
1	3759666M1	33027	1	EMBLEM HOOD RH	L
2	3759667M1	33028	1	EMBLEM HOOD LH	L
3	3595479M1	33003	1	PLATE SERIAL NO. DECAL SPEED	L
4	3698568M1	33018	1	DECAL SPEED	L
5	391349X1	71005	2	RIVET	L
6	3697199M1	33023	1	DECAL FAN RH(3697199M1)	L
6	3697199M1	33024	1	DECAL FAN LH (3697199M1)	L
7	3595685M1	33020	1	DECAL-RAD. CAP(3595685M1)	L
8	3596431M2	33021	1	DECAL FUEL TANK(3596431)	L
9	3596649M2	33022	1	DECAL	L
10	3596959M1	33025	1	DECAL BATTERY WARN. (3596959M1)	L
11	1664249M1	23318	1	DECAL WARNING	L
12	3596761M1	33019	1	DECAL ELECT. (3596761M1)	L
13	N/a	33801	1	DECAL SERVICE INST	L
14	N/a	33803	1	EMBLEM MILLAT	L
15	3595675M3	33026	1	DECAL MAIN INSTR(3595675M3 MF375)	L

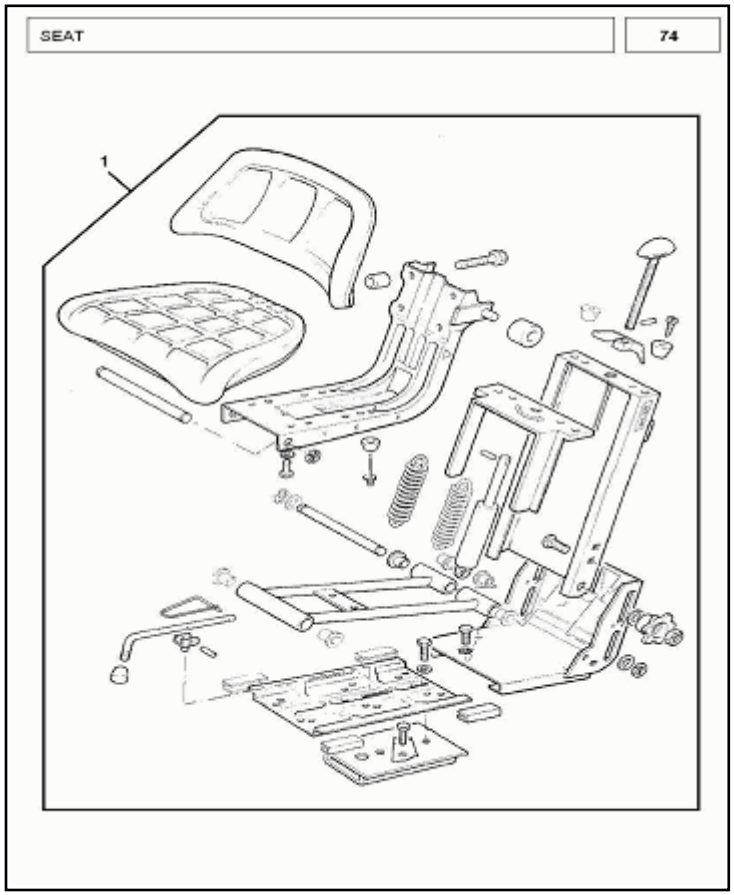

DRIVER SEAT **MF240**

ITEM	CKD	LocalPartNo	QTY	Description	Source
1	1689031M91	22075	1	GRAMMER SEAT ASSY	L

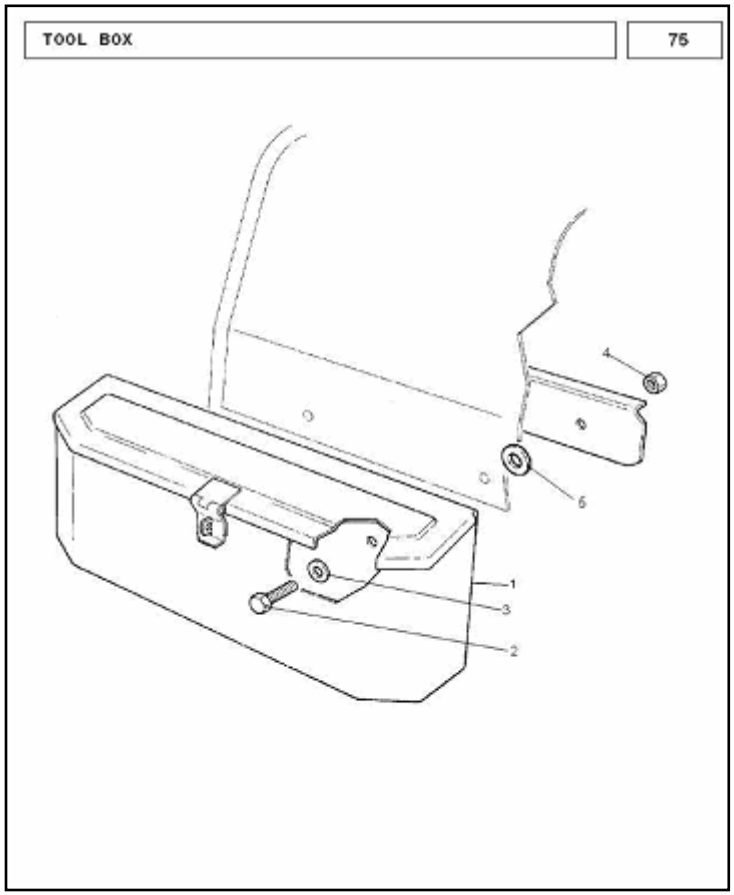

TOOL BOX **MF240**

ITEM	CKD	LocalPartNo	QTY	Description	Source
1	909616P95	56001	1	ASSY.TOOL BOX	L
2	363316X1	99011	2	BOLT UNC 3/8 X 1	L
3	390469X1	19312	6	FLAT WASHER M5	L
4	363622X1	99015	2	NUT 3/8	L
5	882690M1	56005	2	SPACER TOOL BOX	L

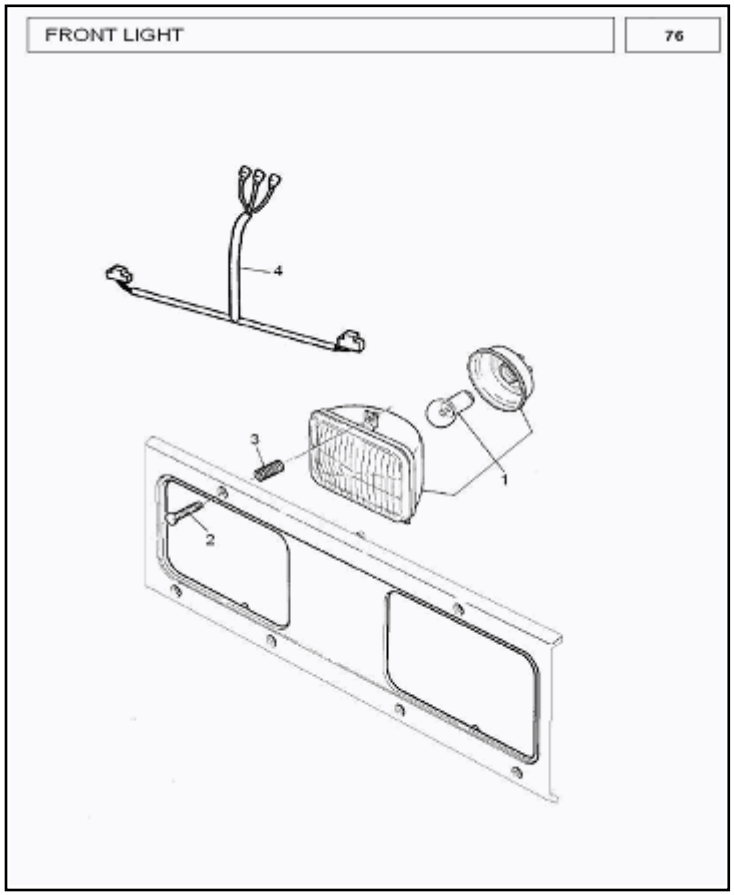

FRONT LIGHTING EQUIPMENT

MF240

ITEM	CKD	LocalPartNo	QTY	Description	Source
1	1672766M91	35050	2	ASSY HEAD LAMP RH DIP	L
2	1860172M1	35053	6	HEAD LAMP SCREW 10 - 32 UNF - 2A	L
3	3771550M1	35054	6	SPRING HEAD LIGHT	L
4	1678405M91	34053	1	WIRE ASSY HEAD LAMP	L

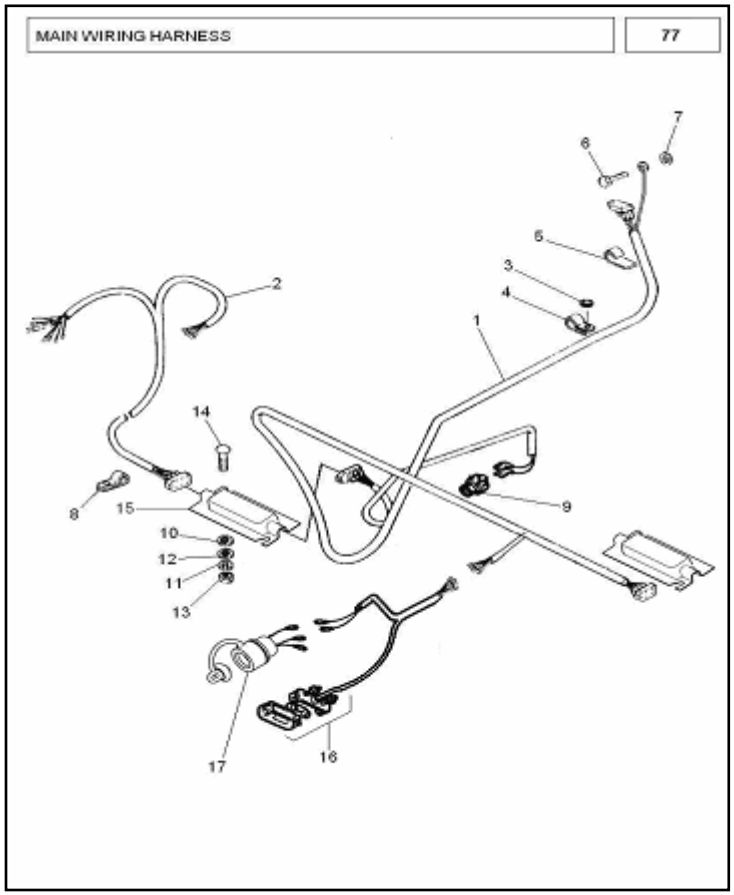

MAIIN WIRING HARNESS

MF240

ITEM	CKD	LocalPartNo	QTY	Description	Source
1	3613850M91	34016	1	ASSY HARNESS REAR	L
2	3613853M91	34026	1	ASSY HARNESS FENDER RH	L
2	3613854M91	34027	1	ASSY HARNESS FENDER LH	L
3	353772X1	22006	1	WASHER HARDENED 7/16	L
4	884518M1	34056	1	CLIP	L
5	1873860M1	34019	1	OPEN CLIP	L
6	353502X1	13028	1	SCREW 1/4-28 x 3/4	L
7	353754X1	14048	1	WASHER-FLAT 1/4	L
8	1680882M1	34055	2	CLIP	L
9	1687049M92	34024	1	ASSY SWITCH STOP LIGHT	L
10	353773X1	34064	2	FLAT WASHER 1/2	L
11	353434X1	10075	2	WASHER LOCK 3/8"	L
12	355619X1	11066	2	WASHER LARGE 3/8	L
13	353431X1	30011	2	NUT 3/8 - 24	L
14	353807X1	30006	2	BOLT 3/8 - 24 L. .88	L
15	N/a	24032	2	COVER HARNESS	L
16	1684833M91	34155	1	LAMP NO. PLATE	L
17	409965M1	34057	1	SOCKET 7 PIN	L

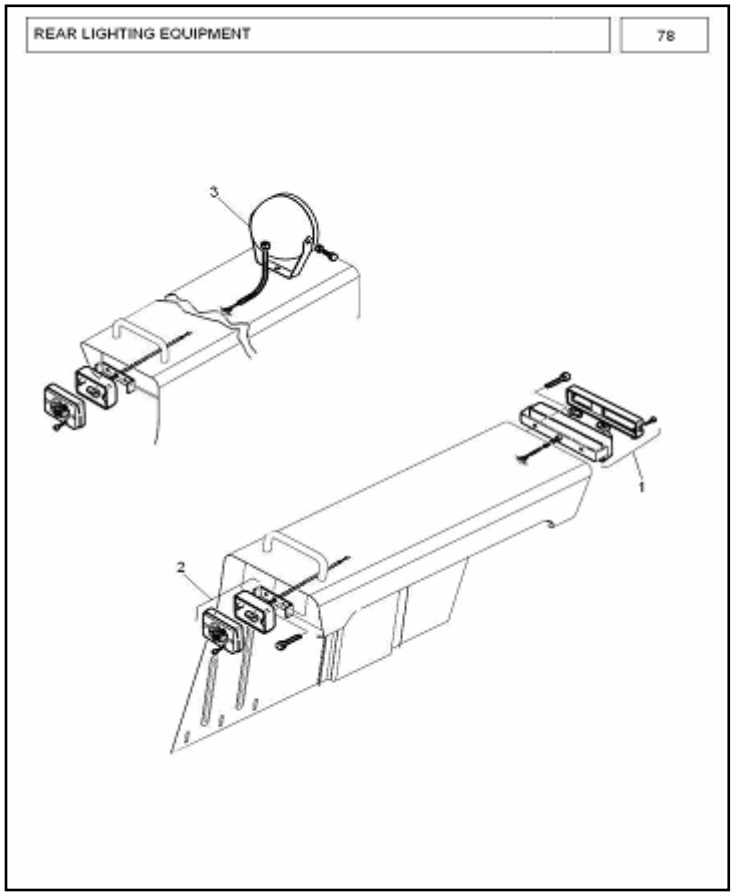

REAR LIGHTING EQUIPMENT

MF240

ITEM	CKD	LocalPartNo	QTY	Description	Source
1	1678868M91	34174	1	LAMP REAR IND STOP LH	L
1	1678869M91	34175	1	LAMP REAR IND STOP RH	L
2	1678990M91	34177	1	LAMP FRONT RH INDICATOR	L
2	1678991M91	34176	1	LAMP FRONT LH INDICATOR	L
3	1678582M91	34173	1	ASSY WORK LAMP	L

WEIGHT FRAME AND TOW PIN | 79

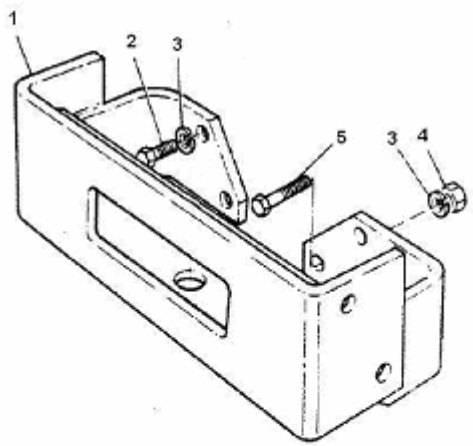

WEIGHT FRAME AND TOW PIN

MF240

ITEM	CKD	LocalPartNo	QTY	Description	Source
1	25032G92	23324	1	WEIGHT FRAME	L
2	353727X1	85022	2	BOLT 5/8-11-2A x 1-3/4	L
3	353433X1	14085	4	WASHER 5/8	L
4	353427X1	14036	1	NUT 5/8-18	L
5	353632X1	14074	2	BOLT 5/8 - 18 L. 4.12	L

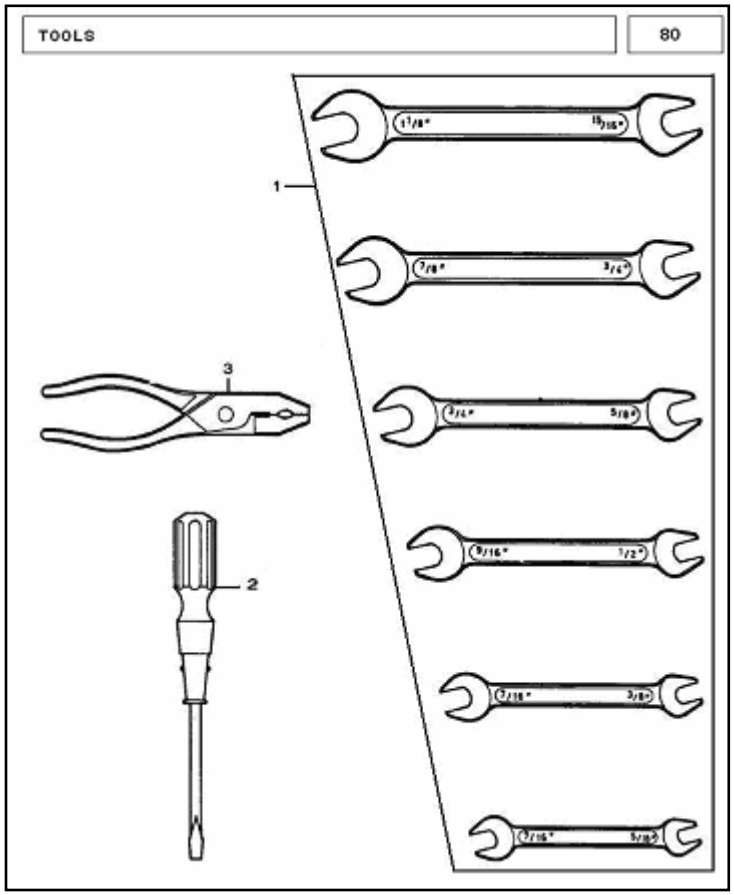

TOOLS **MF240**

ITEM	CKD	LocalPartNo	QTY	Description	Source
1	886127M92	56002	1	SPANNER SET	L
2	886127M94	56004	1	SCREW DRIVER	L
3	N/a	56008	1	PLIER 8"	L

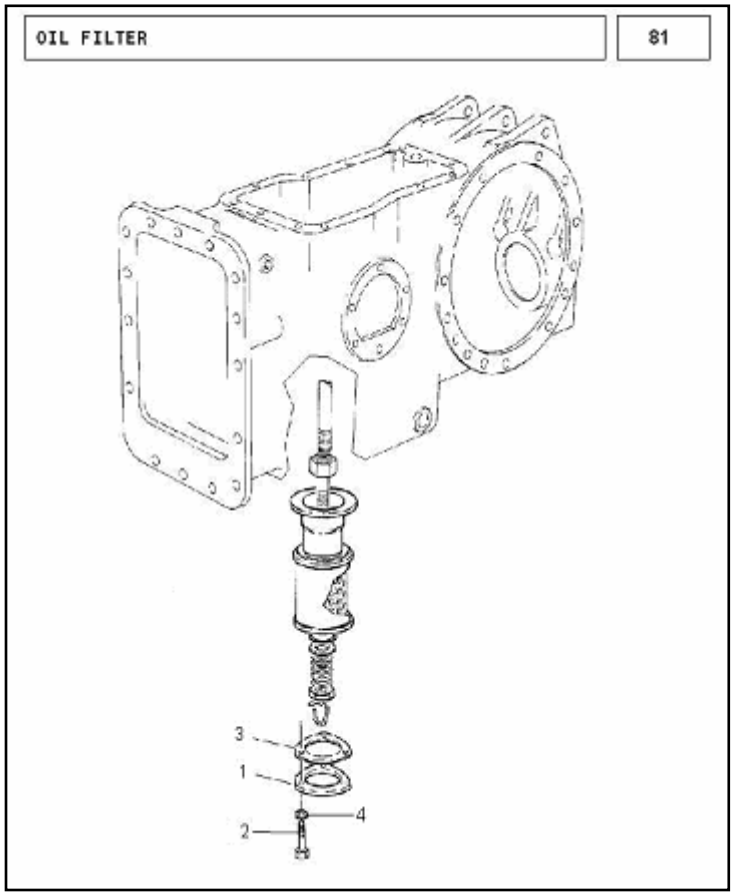

OIL FILTER **MF240**

ITEM	CKD	LocalPartNo	QTY	Description	Source
1	1869491M1	41002	1	PLATE COVER	L
2	353676X1	41004	3	SCREW 5/15-18X5/8	L
3	1660551M2	41005	1	GASKET	L
4	353446X1	19017	3	WASHER 5/16	L

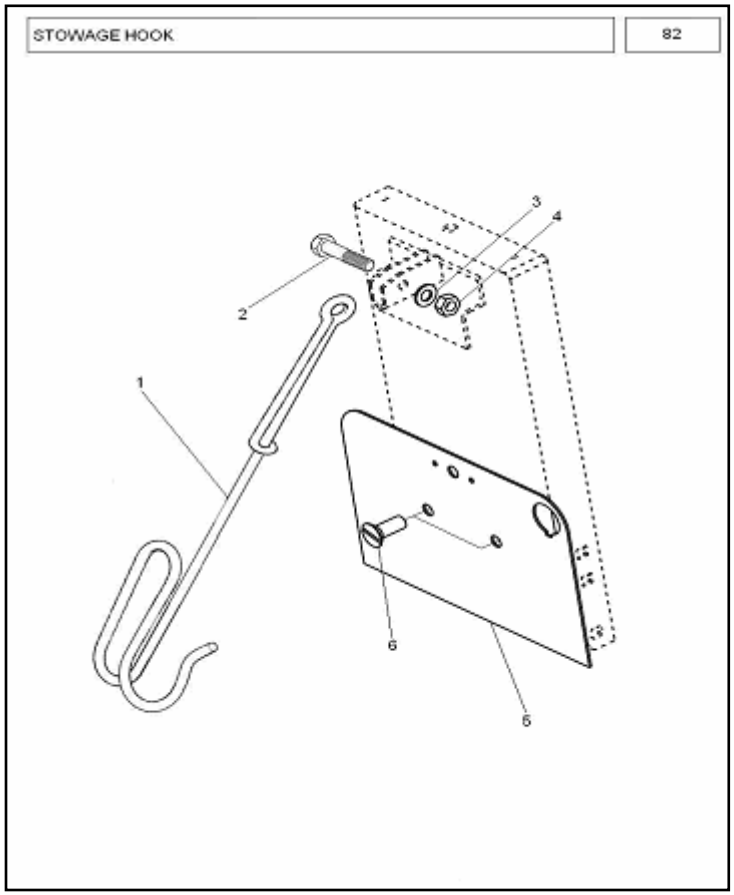

STOWAGE HOOK

MF240

ITEM	CKD	LocalPartNo	QTY	Description	Source
1	3699930M1	25252	1	HOOK STORAGE (3699930M1)	L
2	339123X1	25303	1	BOLT M-8 X 20 (339123X1)	L
3	1442802X1	25301	1	WASHER LOCK M-10	L
4	390679X1	25304	1	NUT M-8	L
5	3762569P91	22107	1	ASSY.NUMBER PLATE	L
6	376408X1	14079	2	SCREW 7/16 - 14 L. 0.75	L