SEBP4631-02
November 2007

RUTHZIL TRATOR COMERCIAL DE PEÇAS LTDA 11 97083-6812 ROLANDO

Parts Manual

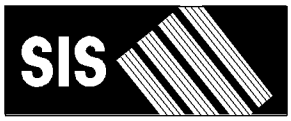

See "General Information" for New Parts Manual Features.

242B2 Skid Steer Loader

BXM4225-Up (Machine)
CSD1-11322 (Engine)
CYP1-Up (Engine)
CYS1-Up (Engine)

Powered By 3024C Engine
This Parts Manual is also Available in .PDF Format on Compact Disc (CD-ROM)-Caterpillar Form No. SERP4631.

Product and Dealer Information

Note: For product identification plate locations, see the section “Product Identification Information” in the Operation and Maintenance Manual.

Delivery Date: _____

Product Information

Model: _____

Product Identification Number: _____

Engine Serial Number: _____

Transmission Serial Number: _____

Generator Serial Number: _____

Attachment Serial Numbers: _____

Attachment Information: _____

Customer Equipment Number: _____

Dealer Equipment Number: _____

Dealer Information

Name: _____ Branch: _____

Address: _____

_____

_____

	Dealer Contact	Phone Number	Hours
Sales:	_____	_____	_____
Parts:	_____	_____	_____
Service:	_____	_____	_____

Informations produit et concessionnaire

Nota: Voir l'emplacement de la plaque signalétique du produit au chapitre "Informations produit" du guide d'utilisation et d'entretien.

Date de livraison: _____

Informations produit

Modèle: _____

Numéro d'identification produit: _____

Numéro de série du moteur: _____

Numéro de série de la boîte de vitesses: _____

Numéro de série de l'alternateur: _____

Numéros de série d'équipement: _____

Informations sur l'équipement: _____

Numéro matériel client: _____

Numéro matériel concessionnaire: _____

Informations concessionnaire

Nom: _____ Agence: _____

Adresse: _____

_____

_____

	Contact concessionnaire	Numéro de téléphone	Heures
Ventes:			
Pièces:			
Service:			

Información del Producto/Distribuidor

Nota: Para saber la ubicación de las placas de identificación del producto, ver la sección “Información sobre identificación del producto” en el Manual de Operación y Mantenimiento.

Fecha de entrega: _____

Información del producto

Modelo: _____

Número de identificación del producto: _____

Número de serie del motor: _____

Número de serie de la transmisión: _____

Número de serie del generador: _____

Números de serie de los accesorios: _____

Información sobre los accesorios: _____

Número del equipo del cliente: _____

Número del equipo del distribuidor: _____

Información del distribuidor

Nombre: _____ Sucursal: _____

Dirección: _____

_____

_____

Comunicación con el distribuidor	Número de teléfono	Horas
Ventas: _____	_____	_____
Piezas: _____	_____	_____
Servicio: _____	_____	_____

Informações Sobre Produto e Revendedor

Nota: Para localizações da placa de identificação do produto, consulte a seção, “Informações Sobre Identificação do Produto” no Manual de Operação e Manutenção.

Data de Entrega: _____

Informações Sobre o Produto

Modelo: _____

Número de Identificação do Produto: _____

Número de Série do Motor: _____

Número de Série da Transmissão: _____

Número de Série do Gerador: _____

Números de Série de Acessórios: _____

Informações Sobre Acessórios: _____

Número do Equipamento do Cliente: _____

Número do Equipamento do Revendedor: _____

Informações Sobre o Revendedor

Nome: _____ Filial: _____

Endereço: _____

_____

_____

	Contato do Revendedor	Telefone	Horas
Vendas:	_____	_____	_____
Peças:	_____	_____	_____
Serviço:	_____	_____	_____

Produkt- und Händlerinformation

Anmerkung: Für die Lage der Produkt-Identnummer und Seriennummern siehe Abschnitt “Produkt-Identinformation” im Betriebs- und Wartungshandbuch.

Lieferdatum: _____

Produkt-Identinformation

Modell: _____

Produkt-Identnummer: _____

Seriennummer des Motors: _____

Seriennummer des Getriebes: _____

Seriennummer des Generators: _____

Seriennummern der Arbeitsgeräte: _____

Arbeitsgeräteinformation: _____

Kundennummer: _____

Händlernummer: _____

Händlerinformation

Name: _____ Niederlassung: _____

Adresse: _____

_____

_____

	Kontaktperson beim Händler	Telefon	Dienststunden
Verkauf:	_____	_____	_____
Ersatzteile:	_____	_____	_____
Service:	_____	_____	_____

MEMORANDA

TABLE OF CONTENTS

Name	Page
GENERAL INFORMATION	A20
REPAIR ALTERNATIVES	A39
SUPPLEMENTAL COOLANT ADDITIVES	A44
MAINTENANCE PARTS	A49
INDEX	A73
MACHINE ARRANGEMENT	1
CHASSIS AR	1
COMMON AR	1
CONTROL AR-MACHINE	2
CONVERSION AR-MACHINE	3
ENGINE ARRANGEMENT	13
ENGINE AR	13
ENGINE AR-PRIMARY	14
INSTALLATION AR-ENGINE	17
BASIC ENGINE	19
CAMSHAFT GP	19
COVER GP-FRONT HOUSING	21
COVER GP-VALVE MECHANISM	22
CRANKSHAFT GP	24
CYLINDER BLOCK GP	29
CYLINDER HEAD AS	33
CYLINDER HEAD GP	35
DRAIN GP-ENGINE OIL	40
FLYWHEEL GP	41
GUARD GP-BELT	43
HOUSING GP-FLYWHEEL	44
HOUSING GP-FRONT	46
LIFTING GP-ENGINE	50
MOUNTING GP-ENGINE	52
MOUNTING GP-FAN	54
PAN GP-OIL	56
PISTON & ROD GP	62
PLUG GP-ENGINE	64
PULLEY GP-CRANKSHAFT	65
PULLEY GP-WATER PUMP	67
V-BELT GP	69
VALVE MECHANISM GP	70
LUBRICATION SYSTEM	73
FILLER GP-ENGINE OIL	73
PUMP GP-ENGINE OIL	75
COOLING SYSTEM	78
HOUSING GP-WATER REGULATOR	78
MOUNTING GP-RAD & OIL COOLER	79
PUMP GP-WATER	81
RADIATOR & HYD OIL COOLER GP	86
RADIATOR & OIL COOLER MTG GP	88
AIR INLET AND EXHAUST SYSTEM	92
AIR CLEANER GP	92
LINES GP-AIR	94
MANIFOLD GP-EXHAUST	95
MUFFLER GP	96
TURBOCHARGER GP	98
FUEL SYSTEM	104
CABLE GP-GOVERNOR CONTROL	104
CONTROL GP-GOVERNOR	105
FILTER GP-WATER SEP & FUEL	106
GOVERNOR GP	107
LINES GP-FUEL PRM & FILTER	112
PUMP & MTG GP-FUEL TRANSFER	114
PUMP GP-FUEL INJECTION	116
PUMP GP-FUEL PRM & PRIM FILTER	122
ELECTRICAL AND STARTING SYSTEM	123
ALTERNATOR GP-CHARGING	123
BATTERY GP	126
CONNECTION GP-ELECTRICAL	128
CONTROL GP-INTERLOCK	130
CONTROL GP-MANUAL START/STOP	131
CONVERSION AR-NON-ROADING	132
COVER GP-FUSE PANEL	133
ELECTRONICS GP-IMPLEMENT	134
ELECTRONICS GP-MACHINE	135
FASTENER GP-WIRING HARNESS	136
GLOW PLUG GP	137
HEATER GP-JACKET WATER	139
INSTALLATION GP-SECURITY	141
KIT-WORK TOOL CONTROL & WIRING	143
KIT-WORK TOOL WIRING	144
LAMP GP-FLOOD	145
LAMP GP-HEAD & SIGNAL	147
LAMP GP-STOP & TAIL	149
LAMP GP-WARNING BEACON	151
LIGHTING GP-FLOOD	152
LIGHTING GP-ROADING	154
LIGHTING GP-STOP & TAIL	156
LIGHTING GP-WARNING BEACON	157
SENSOR GP-TEMP & PRESS	158
STARTING MOTOR GP-ELECTRIC	159
SWITCH GP-PRESSURE	163
SWITCH GP-TEMPERATURE	165
WARNING GP-BACKUP	166
WIRING GP-AIR CONDITIONER	167
WIRING GP-CHASSIS	168
WIRING GP-ENGINE	172
WIRING GP-HORN	177
WIRING GP-MACHINE	178
WIRING GP-REAR LIGHTING	180
WIRING GP-WORK TOOL	181

TABLE OF CONTENTS

Name	Page
POWER TRAIN	183
AXLE GP	183
DRIVE GP-TANDEM	185
FILTER & LINES GP-HYDRAULIC	186
FILTER GP-OIL	188
LINES GP-HYDROSTATIC	192
MANIFOLD GP-RETURN	194
MOTOR & MTG GP-HYDROSTATIC	196
MOTOR GP-PISTON	197
MOUNTING GP-PUMP	199
POWER TRAIN AR	200
PUMP & MTG GP-HYDROSTATIC	201
PUMP GP-PISTON	202
TIRE & RIM GP	204
WHEEL & TIRE AR	213
WHEEL & TIRE GP	218
FRAME AND BODY	219
BUMPER GP	219
CONVERSION AR-ROADING	220
CONVERSION GP-ROADING	226
COUNTERWEIGHT GP	230
ENCLOSURE GP-ENGINE	232
FRAME GP-LOADER	234
FRAME GP-MACHINE	236
GUIDE GP-LINES	237
KIT-ROADING CONVERSION	238
LIFTING GP-MACHINE	244
MIRROR & MTG GP-REAR VIEW	246
MOUNTING GP-REGISTRATION	248
MOUNTING GP-ROADING LIGHTS	250
SUPPRESSION GP-SOUND	252
HYDRAULIC SYSTEM	253
ACCUMULATOR & MTG GP-HYDRAULIC	253
ADAPTER GP-OIL LINE	254
CYLINDER & MTG GP-ANGLE BLADE	255
CYLINDER & MTG GP-BUCKET	257
CYLINDER & MTG GP-LIFT ARM	258
CYLINDER GP-BUCKET	260
CYLINDER GP-GRAPPLE	261
CYLINDER GP-HYDRAULIC	262
CYLINDER GP-LIFT	269
CYLINDER GP-TILT	270
FITTING GP-HYDRAULIC	272
HYDRAULIC AR	274
KIT-HIGH FLOW CONVERSION	277
KIT-QUICK COUPLER CONVERSION	280
LINES GP-BUCKET	283
LINES GP-CONNECTING	296
LINES GP-GRAPPLE	300
LINES GP-HYDRAULIC FAN	306
LINES GP-HYDRAULIC OIL COOLER	310
LINES GP-LIFT CYLINDER	311
LINES GP-LOWERING CONTROL	315
LINES GP-PILOT	317
LINES GP-PUMP	321
LINES GP-TILT CYLINDER	325
LINES GP-WORK TOOL	329
MANIFOLD & LINES GP-CONTROL	335
MANIFOLD & MTG GP-CONTROL	339
MANIFOLD & SOLENOID GP-CONTROL	342
MANIFOLD GP-CONTROL	345
MOTOR & MTG GP-HYDRAULIC FAN	348
MOTOR GP-GEAR	351
MOUNTING GP-CYLINDER	357
PLUG GP-PILOT VALVE	360
PUMP & MTG GP-WORK TOOL	361
PUMP GP-GEAR	365
TANK & MTG GP-HYDRAULIC	367
TANK GP-HYDRAULIC	368
VALVE & LINES GP-COUPLER	369
VALVE & MTG GP-CONTROL	373
VALVE GP-CONTROL	374
VALVE GP-MANUAL	376
VALVE GP-PILOT	377
VALVE GP-RELIEF	384
VALVE GP-SOLENOID	385
WORK TOOLS	389
ARM GP-MATERIAL HANDLING	389
BLADE AR	390
BLADE GP-ANGLING	393
BLADE GP-MULTIPURPOSE BUCKET	397
BUCKET AR-DIRT	401
BUCKET AR-GENERAL PURPOSE	402
BUCKET AR-GRAPPLE	404
BUCKET AR-LIGHT MATERIAL	409
BUCKET AR-MULTIPURPOSE	409
BUCKET AR-UTILITY	412
BUCKET AS-DIRT	414
BUCKET AS-GENERAL PURPOSE	418
BUCKET AS-LIGHT MATERIAL	422
BUCKET GP-DIRT	425
BUCKET GP-GRAPPLE	426
BUCKET GP-MULTIPURPOSE	431
BUCKET GP-UTILITY	436
CARRIAGE & FORK AR	439
CARRIAGE GP-FORK	440
CONVERSION GP-WORK TOOL	442
COUPLER AR-QUICK	443
COUPLER GP-QUICK	444
COVER GP-LINES	447
CYLINDER & LINK GP-COUPLER	448
EDGE GP-BIT & CUTTING	450
EDGE GP-CUTTING	450
FORK AR-GRAPPLE	456
FORK GP-GRAPPLE	458

TABLE OF CONTENTS

Name	Page
FORK GP-PALLET	461
FORK GP-UTILITY	463
FRAME GP-BLADE	465
FRAME GP-FORK	466
FRAME GP-GRAPPLE	468
GRAPPLE GP-UTILITY	469
HANDLE & PIN GP-COUPLER	472
HANDLE GP-COUPLER	474
KIT-ROADING PLATE & MOUNTING	476
LINK GP-COUPLER	477
LOCK GP-QUICK COUPLER	478
PLATE GP-ROADING	479
SPRING GP-BLADE	481
STEP GP-MATERIAL HANDLING ARM	482
STOP GP-GRAPPLE	483
STRAINER GP-WATER	484
TANK & MTG GP-WATER	485
TANK GP-WATER	488
TOOTH GP-UNI	489
OPERATOR STATION	490
ACCUMULATOR GP-REFRIGERANT	490
AIR CONDITIONER & MOUNTING GP	492
AIR CONDITIONER AR	493
AIR CONDITIONER GP	494
ARMREST & MOUNTING GP	498
ARMREST GP	499
BOX GP-STORAGE	501
CAB AR-ENCLOSED ROPS	502
CAB GP-ENCLOSED ROPS	503
CABLE GP-CONTROL	504
COMPRESSOR & MOTOR GP-REFRIG	505
COMPRESSOR & MTG GP-REFRIG	508
CONDENSER & MTG GP-REFRIGERANT	509
CONTROL GP-HANDLE	510
CONTROL GP-PILOT OPERATED HYD	518
COUPLING GP-DRIVE	542
COVER GP-CONSOLE	544
COVER GP-INSTRUMENT PANEL	546
DOOR & MTG GP-CAB	547
DOOR GP-CAB	552
DUCT & CONTROL GP	558
FRAME GP-WINDOW	560
GAUGE & WARNING GP	562
GUARD GP-ROPS/FOPS	564
HANDHOLD GP	565
HANDLE GP-MODULAR	566
HEATER & MTG GP-CAB	568
HEATER AR-CAB	569
HEATER GP-CAB	570
HOLDER-CUP	575
HOUSING AS-SIDE	576
INSTALLATION GP	577
KIT-AIR COND & HEATER INSTL	577
KIT-CAB DOOR & MOUNTING	582
KIT-CAB SEAL	584
LEVER GP-GOVERNOR	585
LINER GP-CAB	586
LINER-CAB	587
LINES GP-AIR CONDITIONER	588
LINES GP-HEATER	590
LITERATURE GP	591
MIRROR GP-REAR VIEW	592
MODULE GP-WARNING INDICATOR	593
MOUNTING GP-ROPS	595
OPTION AR-CAB	596
PANEL AR-INSTRUMENT	597
PANEL GP-INSTRUMENT	598
PANEL GP-SIDE	602
PEDAL GP-GOVERNOR	603
PLATFORM GP-OPERATOR	605
SEAL GP-CAB	607
SEAT BELT GP	609
SEAT GP	613
SEAT GP-ADJUSTABLE	615
SPRING GP-GAS	616
VISOR GP-CAB	617
WINDOW GP-CAB	619
SERVICE EQUIPMENT AND SUPPLIES	626
FILM GP	626
PARTS GP-MISCELLANEOUS	630
PLATE & FILM GP	632
PART NUMBER INDEX	B1

TABLE DES MATIÈRES

Désignation	Page
GÉNÉRALITÉS	A23
OPTIONS DE RÉPARATION	A40
ADDITIFS POUR LIQUIDE DE REFROIDISSEMENT	A45
PIÈCES DE RECHANGE	A53
INDEX	A84
MACHINE COMPLÈTE	1
VERSION DE CHASSIS	1
VERSION NORMALE	1
VERSION DE COMMANDE DE MACHINE	2
VERSION DE TRANSFORMATION MACHINE	3
MOTEUR COMPLET	13
MOTEUR (VERSION)	13
MOTEUR (VERSION PRINCIPALE)	14
MONTAGE DE MOTEUR (VERSION)	17
MOTEUR DE BASE	19
ARBRE A CAMES (ASS)	19
COUVERCLE DE CARTER AV (ASS)	21
CACHE-SOUPAPES (ASS)	22
VILEBREQUIN (ASS)	24
BLOC-CYLINDRES (ASS)	29
CULASSE (ENS)	33
CULASSE (ASS)	35
VIDANGE-HUILE DE MOTEUR (ASS)	40
VOLANT MOTEUR (ASS)	41
PROTEGE-COURROIE (ASS)	43
CARTER DE VOLANT (ASS)	44
CARTER AV (ASS)	46
OEILLETONS DE LEVAGE MOTEUR (ASS)	50
MONTAGE DE MOTEUR (ASS)	52
MONTAGE DE VENTILATEUR (ASS)	54
HUILE MOTEUR - CARTER (ASS)	56
PISTON ET BIELLE (ASS)	62
BOUCHON DE MOTEUR (ASS)	64
VILEBREQUIN - POULIE (ASS)	65
POULIE DE POMPE À EAU (ASS)	67
*V-BELT GP	69
CULBUTERIE (ASS)	70
CIRCUIT DE GRAISSAGE	73
BOUCHON DE REMPLISSAGE D'HUILE MOTEUR (ASS)	73
POMPE A HUILE MOTEUR (ASS)	75
CIRCUIT DE REFROIDISSEMENT	78
LOGEMENT DE RÉGULATEUR D'EAU (ASS)	78
MONTAGE DE RADIATEUR ET REFROIDISSEUR D'HUILE (ASS)	79
POMPE A EAU (ASS)	81
RADIATEUR ET REFROIDISSEUR D'HUILE HYDRAULIQUE (ASS)	86
RADIATEUR ET REFROIDISSEUR D'HUILE-MONTAGE (ASS)	88
CIRCUIT D'ADMISSION D'AIR ET D'ÉCHAPPEMENT	92
FILTRE A AIR (ASS)	92
CANALISATIONS D'AIR (ASS)	94
COLLECTEUR D'ÉCHAPPEMENT (ASS)	95
SILENCIEUX (ASS)	96
TURBOCOMPRESSEUR (ASS)	98
CIRCUIT DE CARBURANT	104
CÂBLE DE COMMANDE DU RÉGULATEUR (ASS)	104
COMMANDE DE RÉGULATEUR (ASS)	105
FILTRE DE SÉPARATEUR D'EAU ET DE CARBURANT (ASS)	106
REGULATEUR (ASS)	107
CANALISATIONS DE FILTRE ET D'AMORÇAGE DE CARBURANT (ASS)	112
POMPE D'ALIMENTATION ET MONTAGE (ASS)	114
POMPE D'INJECTION DE CARBURANT (ASS)	116
POMPE D'AMORÇAGE DE CARBURANT ET FILTRE PRINCIPAL	122
CIRCUIT ÉLECTRIQUE ET DE DÉMARRAGE	123
ALTERNATEUR DE CHARGE (ASS)	123
BATTERIE (ASS)	126
BRANCHEMENT ÉLECTRIQUE (ASS)	128
COMMANDE D'INTERVERROUILLAGE (ASS)	130
COMMANDE MANUELLE DÉMARRAGE/ ARRÊT (ASS)	131
VERSION DE TRANSFORMATION - DÉPLACEMENT NON ROUTIER	132
COUVERCLE - PANNEAU DE FUSIBLES (ASS)	133
COMMANDE ÉLECTRONIQUE D'ÉQUIPEMENT (ASS)	134
ÉLECTRONIQUE - MACHINE (ENS)	135

* TRADUCTION NON DISPONIBLE AU MOMENT DE LA PUBLICATION

TABLE DES MATIÈRES

Désignation	Page
BOULONNERIE DE FAISCEAU DE CABLES	136
BOUGIE DE PRÉCHAUFFAGE (ASS)	137
EAU DES CHEMISES - RECHAUFFEUR (ASS)	139
MONTAGE-SÉCURITÉ (ASS)	141
KIT DE COMMANDE D'OUTIL DE TRAVAIL ET CÂBLAGE	143
KIT DE CÂBLAGE D'OUTIL DE TRAVAIL	144
LAMPE - PHARE (ASS)	145
LAMPE - PHARE ET CLIGNOTANT	147
FEUX ARRIÈRE ET FEUX D'ARRÊT	149
LAMPE - GYROPHARE (ASS)	151
ÉCLAIRAGE - PROJECTEURS (ASS)	152
ÉCLAIRAGE - FEUX DE ROUTE (ASS)	154
ÉCLAIRAGE-FEUX DE STOP ET ARRIÈRE (ASS)	156
ÉCLAIRAGE - GYROPHARE (ASS)	157
CAPTEUR - TEMP. ET PRESSION (ASS)	158
DÉMARREUR ÉLECTRIQUE (ASS)	159
MANOCONTACT	163
BOUTON DE TEMPÉRATURE	165
AVERTISSEUR DE RECUL (ASS)	166
CABLAGE - CLIMATISEUR (ASS)	167
CABLAGE DE CHASSIS (ASS)	168
CABLAGE DE MOTEUR (ASS)	172
CÂBLAGE DE KLAXON (ASS)	177
CABLAGE DE LA MACHINE (ASS)	178
CABLAGE D'ECLAIRAGE ARRIERE (ASS)	180
CÂBLAGE - OUTIL DE TRAVAIL (ASS)	181
TRANSMISSION	183
ESSIEU (ASS)	183
ENTRAINEMENT EN TANDEM (ASS)	185
FILTRE ET CANALISATIONS HYRAULIQUES (ASS)	186
FILTRE A HUILE (ASS)	188
CANALISATIONS HYDROSTATIQUES (ASS)	192
COLLECTEUR-RETOUR (ASS)	194
MOTEUR ET MONTAGE - HYDROSTATIQUE (ASS)	196
GROUPE DE MOTEUR A PISTONS	197
MONTAGE DE POMPE (ASS)	199
TRANSMISSION (VERSION)	200
POMPE HYDROSTATIQUE ET MONTAGE (ASS)	201
POMPE A PISTONS (ASS)	202
PNEU ET JANTE (ASS)	204
ROUE ET PNEU (VERSION)	213
ROUE ET PNEU (ASS)	218
CHÂSSIS ET BENNE	219
PARE-CHOCS (ASS)	219
VERSION DE TRANSFORMATION POUR DÉPLACEMENT ROUTIER	220
GROUPE DE TRANSFORMATION - DÉPLACEMENT ROUTIER	226
CONTREPOIDS (ASS)	230
CARENAGE DE MOTEUR (ASS)	232
BATI - CHARGEUSE (ASS)	234
BÂTI DE MACHINE (ASS)	236
GUIDE - CANALISATIONS (ASS)	237
KIT DE TRANSFORMATION POUR DÉPLACEMENTS SUR ROUTE	238
MACHINE DE LEVAGE	244
RÉTROVISEUR ET MONTAGE (ASS)	246
MONTAGE - IMMATRICULATION (ASS)	248
MONTAGE DE FEUX DE DÉPLACEMENT SUR ROUTE (ASS)	250
INSONORISATION (ASS)	252
CIRCUIT HYDRAULIQUE	253
ACCUMULATEUR ET MONTAGE - HYDRAULIQUE (ASS)	253
RACCORD DE CANALISATION D'HUILE (ASS)	254
VÉRIN DE LAME D'ORIENTATION ET MONTAGE (ASS)	255
VÉRIN ET MONTAGE - GODET (ASS)	257
VÉRIN DE BRAS DE LEVAGE ET MONTAGE (ASS)	258
VERIN DE GODET (ASS)	260
PINCE - VÉRIN (ASS)	261
VÉRIN HYDRAULIQUE (ASS)	262
VÉRIN DE LEVAGE (ASS)	269
VÉRIN D'INCLINAISON (ASS)	270
GRAISSEUR HYDRAULIQUE (ASS)	272
VERSION HYDRAULIQUE	274
KIT DE TRANSFORMATION DE DÉBIT ÉLEVÉ	277
KIT DE TRANSFORMATION DU COUPLEUR EXPRESS	280
ECLAIRAGE DE GODET (ASS)	283
CANALISATIONS - BRANCHEMENT (ASS)	296
PINCE - CANALISATIONS (ASS)	300
CANALISATIONS HYDRAULIQUES DE VENTILATEUR (ASS)	306
CANALISATIONS DE REFROIDISSEUR D'HUILE HYDR. (ASS)	310

* TRADUCTION NON DISPONIBLE AU MOMENT DE LA PUBLICATION

TABLE DES MATIÈRES

Désignation	Page
CANALISATIONS DE VÉRIN DE LEVAGE (ASS)	311
CANALISATIONS-COMMANDE D'ABAISSEMENT (ASS)	315
CANALISATIONS A COMMANDE PILOTE (ASS)	317
CANALISATIONS DE POMPE (ASS)	321
CANALISATIONS DU VÉRIN D'INCLINAISON (ASS)	325
CANALISATIONS - OUTIL DE TRAVAIL (ASS)	329
COLLECTEUR ET CANALISATIONS (ASS) - COMMANDE	335
COMMANDE DE COLLECTEUR ET MONTAGE (ASS)	339
COLLECTEUR ET SOLÉNOÏDE (ASS)-COMMANDE	342
COLLECTEUR - COMMANDE (ASS)	345
MOTEUR ET MONTAGE DE VENTILATEUR HYDRAULIQUE (ASS)	348
MOTEUR À ENGRENAGES (ASS)	351
MONTAGE DE VÉRIN (ASS)	357
BOUCHON DE SOUPAPE PILOTE (ASS)	360
POMPE ET MONTAGE - OUTIL DE TRAVAIL (ASS)	361
POMPE A ENGRENAGES (ASS)	365
RÉSERVOIR HYDRAULIQUE ET MONTAGE (ASS)	367
RÉSERVOIR HYDRAULIQUE (ASS)	368
SOUPAPE ET CANALISATIONS DE COUPLEUR (ASS)	369
DISTRIBUTEUR ET MONTAGE (ASS)	373
DISTRIBUTEUR (ASS)	374
SOUPAPE A COMMANDE MANUELLE (ASS)	376
SOUPAPE PILOTE (ASS)	377
CLAPET DE DECHARGE (ASS)	384
SOUPAPE - SOLÉNOÏDE (ASS)	385
OUTILS DE TRAVAIL	389
BRAS DE MANUTENTION (ASS)	389
LAME (VERSION)	390
LAME À ORIENTATION (ASS)	393
LAME DE GODET TOUS-TRAVAUX	397
GODET - SALETÉ (VERSION)	401
GODET NORMAL (VERSION)	402
GODET - PINCE (VERSION)	404
GODET - MATÉRIAUX MEUBLES (VERSION)	409
GODET TOUS-TRAVAUX (VERSION)	409
VERSION DE GODET POUR TRAVAUX DE SERVITUDE	412
GODET - SALETÉ (ENS)	414
GODET NORMAL (ENS)	418
GODET POUR MATERIAUX MEUBLES (ENS)	422
GODET POUR TERRASSEMENT (ASS)	425
GODET - PINCE (ASS)	426
GODET TOUS-TRAVAUX (ASS)	431
GODET POUR TRAVAUX DE SERVITUDE (ASS)	436
VERSION DE TABLIER ET DE FOURCHE	439
TABLIER - FOURCHE (ASS)	440
TRANSFORMATION D'OUTIL DE TRAVAIL (ASS)	442
COUPLEUR EXPRESS (VERSION)	443
COUPLEUR EXPRESS (ASS)	444
COUVERCLE-CANALISATIONS (ASS)	447
VÉRIN ET BIELLE DE COUPLEUR (ASS)	448
EMBOUT ET LAME DE COUPE (ASS)	450
LAME DE COUPE (ASS)	450
FOURCHE - PINCE (VERSION)	456
FOURCHE - PINCE (ASS)	458
FOURCHE PALLETTE (ASS)	461
FOURCHE-RÉSEAU PUBLIC (ASS)	463
BÂTI DE LAME (ASS)	465
BÂTI DE FOURCHE (ASS)	466
PINCE - BÂTI (ASS)	468
PINCE-RÉSEAU PUBLIC (ASS)	469
POIGNÉE ET AXE DE COUPLEUR (ASS)	472
POIGNÉE DE COUPLEUR (ASS)	474
KIT DE PLAQUE DE DÉPLACEMENT ROUTIER ET MONTAGE	476
BIELLE DE COUPLEUR (ASS)	477
VERROUILLAGE DE COUPLEUR EXPRESS (ASS)	478
PLAQUE-DÉPLACEMENT ROUTIER (ASS)	479
RESSORT DE LAME (ASS)	481
MARCHEPIED-BRAS DE MANUTENTION (ASS)	482
ARRÊT-PINCE (ASS)	483
TAMIS D'EAU (ASS)	484
RÉSERVOIR D'EAU ET MONTAGE (ASS)	485
RÉSERVOIR D'EAU (ASS)	488
DENT MONOBLOC (ASS)	489
POSTE DE CONDUITE	490
ACCUMULATEUR - CLIMATISEUR (ASS)	490

* TRADUCTION NON DISPONIBLE AU MOMENT DE LA PUBLICATION

TABLE DES MATIÈRES

Désignation	Page
CLIMATISEUR ET MONTAGE (ASS)	492
CLIMATISEUR (VERSION)	493
CLIMATISEUR (ASS)	494
ACCOUDOIR ET MONTAGE (ASS)	498
ACCOUDOIR (ASS)	499
COFFRE DE RANGEMENT (ASS)	501
CABINE ROPS FERMÉE (VERSION)	502
*CAB GP-ENCLOSED ROPS	503
CABLAGE - COMMANDE MANUELLE ELECTRIQUE	504
COMPRESSEUR ET MOTEUR DE RÉFRIGÉRATION (ASS)	505
COMPRESSEUR ET MONTAGE - RÉFRIGÉRANT (ASS)	508
CONDENSATEUR ET MONTAGE (RÉFRIGÉRANT)	509
COMMANDE DE POIGNÉE (ASS)	510
COMMANDE HYDRAULIQUE PILOTE (ASS)	518
ACCOUPLEMENT D'ENTRAINEMENT (ASS)	542
COUVERCLE DE LA CONSOLE (ASS)	544
COUVERCLE DU TABLEAU DE BORD (ASS)	546
PORTE DE CABINE ET MONTAGE (ASS)	547
PORTIÈRE DE CABINE (ASS)	552
CONDUIT ET COMMANDE (ASS)	558
CADRE DE VITRE (ASS)	560
INDICATEURS ET TÉMOINS LUMINEUX (ASS)	562
PROTECTION DE ROPS/FOPS (ASS)	564
POIGNÉE	565
POIGNÉE MODULAIRE (ASS)	566
CHAUFFAGE ET MONTAGE - CABINE (ASS)	568
CHAUFFAGE DE CABINE (VERSION)	569
CHAUFFAGE DE CABINE (ASS)	570
*HOLDER-CUP	575
CÔTÉ CARTER (ENS)	576
GROUPE DE MONTAGE	577
KIT DE MONTAGE DE CLIMATISEUR ET CHAUFFAGE	577
KIT DE PORTE DE CABINE ET MONTAGE	582
KIT DE JOINT DE CABINE	584
LEVIER DE RÉGULATEUR (ASS)	585
CABINE - REVÊTEMENT (ASS)	586
CAPITONNAGE	587
CANALISATIONS DE CLIMATISEUR (ASS)	588
CANALISATIONS DE CHAUFFAGE (ASS)	590
LITTÉRATURE (ASS)	591
RÉTROVISEUR (ASS)	592
MODULE - TÉMOIN (ASS)	593
MONTAGE DU TOIT ROPS (ASS)	595
VERSION D'OPTION DE CABINE	596
VERSION DE TABLEAU DE BORD	597
TABLEAU DE BORD (ASS)	598
PANNEAU LATERAL (ASS)	602
RÉGULATEUR - PÉDALE (ASS)	603
PLATE-FORME DE CABINE	605
JOINT DE CABINE (ASS)	607
CEINTURE DE SECURITE (ASS)	609
SIÈGE (ASS)	613
SIÈGE RÉGLABLE (ASS)	615
RESSORT-GAZ (ASS)	616
RETROVISEUR - CABINE (ASS)	617
VITRE DE CABINE (ASS)	619
MATÉRIEL ET FOURNITURES D'ENTRETIEN	626
PLAQUE SIGNALÉTIQUE (ASS)	626
GROUPE DE PIECES DIVERSES	630
PLAQUES SIGNALETIQUES ET AUTOCOLLANTS (ASS)	632
INDEX DE NUMÉROS DE PIÈCES	B1

* TRADUCTION NON DISPONIBLE AU MOMENT DE LA PUBLICATION

CONTENIDO

Nombre	Página
INFORMACIÓN GENERAL	A27
ALTERNATIVAS DE REPARACIÓN	A41
ADITIVOS DE REFRIGERANTE SUPLEMENTARIOS	A46
PIEZAS DE MANTENIMIENTO	A58
INDICE	A96
CONFIGURACION DE LA MAQUINA	1
CHASIS (CONFIG)	1
CONFIGURACIÓN COMÚN	1
*CONTROL AR-MACHINE	2
CONVERSION DE LA MAQUINA (CONFIG)	3
CONFIGURACION DE MOTOR	13
CONFIGURACIÓN DE MOTORES	13
MOTOR PRIMARIO (CONFIG)	14
CONFIGURACIÓN DE INSTALACIÓN DEL MOTOR	17
MOTOR BASICO	19
ÁRBOL DE LEVAS (GR)	19
TAPA DE LA CAJA DELANTERA (GR)	21
TAPA DEL MECANISMO DE VÁLVULAS (GR)	22
CIGÜEÑAL (GR)	24
BLOQUE MOTOR (GR)	29
CULATA DE CILINDROS (CONJ)	33
CULATA DE CILINDROS (GR)	35
DRENAJE DEL ACEITE DE MOTOR	40
VOLANTE (GR)	41
PROTECTOR DE CORREA (GR)	43
VOLANTE - CAJA DE (GR)	44
CAJA DELANTERA (GR)	46
CÁNCAMOS DE LEVANTAMIENTO DEL MOTOR (GR)	50
MONTAJE DEL MOTOR (GR)	52
MONTAJE DEL VENTILADOR (GR)	54
CÁRTER - COLECTOR DEL (GR)	56
PISTÓN Y BIELA (GR)	62
TAPÓN DEL MOTOR (GR)	64
CIGÜEÑAL - POLEA DE (GR)	65
GRUPO, MANIJA, BOMBA DE AGUA	67
*V-BELT GP	69
MECANISMO DE VÁLVULAS (GR)	70
SISTEMA DE LUBRICACION	73
TUBO DE LLENADO DE ACEITE (GR)	73
BOMBA DE ACEITE DEL MOTOR (GR)	75
SISTEMA DE ENFRIAMIENTO	78
*HOUSING GP-WATER REGULATOR	78
GRUPO DEMONTAJE DE RADIADOR Y ENFRIAMIENTO DE ACEITE	79
BOMBA DE AGUA (GR)	81
RADIADOR Y ENFRIADOR DE ACEITE HIDRÁULICO (GR)	86
MONTAJE DE RADIADOR Y ENFRIAMIENTO DE ACEITE (GR)	88
SISTEMA DE ESCAPE Y ADMISION DE AIRE	92
FILTRO DE AIRE (GR)	92
AIRE - TUBERÍAS DE (GR)	94
MÚLTIPLE DE ESCAPE (GR)	95
SILENCIADOR (GR)	96
TURBOCOMPRESOR (GR)	98
SISTEMA DE COMBUSTIBLE	104
CABLE GR-CONTROL DE MANDO	104
CONTROL DE REGULADOR (GR)	105
FILTRO DE COMBUSTIBLE Y SEPARADOR DE AGUA (GR)	106
REGULADOR (GR)	107
TUBERIAS (GR) -COMBUSTIBLE PRIMARIO Y FILTRO	112
BOMBA DE TRANSFERENCIA DE COMBUSTIBLE Y MONTAJE (GR)	114
BOMBA DE INYECCIÓN DE COMBUSTIBLE (GR)	116
BOMBA DE CEBADO Y FILTRO PRIMARIO DE COMBUSTIBLE (GR)	122
SISTEMA DE ARRANQUE ELECTRICO	123
CARGA - ALTERNADOR DE (GR)	123
BATERÍA (GR)	126
CONEXIÓN ELÉCTRICA (GR)	128
CONTROL DE TRABA (GR)	130
CONTROL MANUAL DE ARRANQUE/ PARADA (GR)	131
CONFIGURACIÓN DE TRANSFORMACIÓN PARA OBRAS	132
CUBIERTO DEL PANEL DE FUSIBLES (GR)	133
IMPLEMENTOS (GR ELECTRÓNICO)	134
ELECTRÓNICA DE LA MÁQUINA (GR)	135
TORNILLERIA DE MAZO DE CABLES (GR)	136
BUJÍA INCANDESCENTE (GR)	137
AGUA DE LAS CAMISAS - CALENTADOR DEL (GR)	139
INSTALACION DE SEGURIDAD (GR)	141

* NO HAY TRADUCCION DISPONIBLE EN EL MOMENTO DE LA IMPRESION

CONTENIDO

Nombre	Página
*KIT-WORK TOOL CONTROL & WIRING	143
*KIT-WORK TOOL WIRING	144
REFLECTOR (GR)	145
LÁMPARA DE LUZ DELANTERA Y DE SEÑAL (GR)	147
LUCES DE PARADA Y COLA (GR)	149
LÁMPARA DE BALIZA DE ADVERTENCIA (GR)	151
LUCES DE REFLECTOR (GR)	152
LUCES DE DESPLAZAMIENTO (GR)	154
LUCES DE PARADA Y DE COLA (GR)	156
LUZ DE BALIZA (GR)	157
GRUPO DE SENSORES DE TEMPERATURA Y PRESIÓN	158
MOTOR DE ARRANQUE ELÉCTRICO (GR)	159
INTERRUPTOR DE PRESIÓN (GR)	163
INTERRUPTOR PARA LA TEMPERATURA (GR)	165
RETROCESO - ALARMA DE (GR)	166
CABLES DEL ACONDICIONADOR DE AIRE (GR)	167
CABLES DEL CHASIS (GR)	168
CABLES DEL MOTOR (GR)	172
CABLE GR-BOCINA	177
CABLES DE LA MÁQUINA (GR)	178
ALAMBRADO DE LUCES TRASERAS (GR)	180
CABLES DE LA HERRAMIENTA DE TRABAJO (GR)	181
TREN DE FUERZA	183
EJE (GR)	183
MANDO TANDEM (GR)	185
FILTROS Y TUBERÍAS HIDRÁULICAS (GR)	186
FILTRO DE ACEITE (GR)	188
TUBERÍAS HIDROSTÁTICAS (GR)	192
RETORNO EN EL MULTIPLE(GR)	194
MOTOR HIDROSTATICO Y MONTAJE (GR)	196
PISTONES DEL MOTOR (GR)	197
MONTAJE DE LA BOMBA (GR)	199
TREN DE FUERZA (CONFIG)	200
HIDROSTATICO, BOMBA Y GRUPO DE MONTAJE	201
BOMBA DE PISTONES (GR)	202
ARO Y LLANTA (GR)	204
RUEDA Y LLANTA (CONFIG)	213
RUEDA Y NEUMÁTICO (GR)	218
BASTIDOR Y CAJA	219
PARACHOQUES (GR)	219
CONFIGURACIÓN DE TRANSFORMACIÓN PARA CARRETERA	220
CONVERSION PARA DESPLAZAMIENTO POR CARRETERA (GR)	226
CONTRAPESO (GR)	230
COMPARTIMIENTO DEL MOTOR (GR)	232
BASTIDOR DEL CARGADOR (GR)	234
GRUPO DE BASTIDOR, MAQUINARIA	236
TUBERIAS DE LA GUIA (GR)	237
*KIT-ROADING CONVERSION	238
LEVANTAMIENTO DE LA MÁQUINA (GR)	244
RETROVISOR Y MONTAJE (GR)	246
MONTAJE-REGISTRO (GR)	248
MONTAJE DE LUCES DE DESPLAZAMIENTO POR CARRETERA (GR)	250
INSONORIZADOR (GR)	252
SISTEMA HIDRAULICO	253
ACUMULADOR HIDRAULICO Y MONTAJE (GR)	253
GRUPO ADAPTADOR-TUBERIA DE ACEITE	254
CILINDRO Y MONTAJE (GR)- INCLINACIÓN DE LA HOJA	255
MONTAJE DEL CILINDRO DEL CUCHARÓN (GR)	257
GRUPO DE MONTAJE Y CILINDRO, LEVANTAMIENTO DEL BRAZO	258
CILINDRO DE CUCHARÓN (GR)	260
CILINDRO DE GARFIO (GR)	261
CILINDRO HIDRÁULICO (GRUPO)	262
CILINDRO DE LEVANTAMIENTO (GR)	269
INCLINACIÓN HORIZONTAL - CILINDRO DE (GR)	270
CONEXION HIDRAULICA (GR)	272
HIDRÁULICA (CONFIG)	274
*KIT-HIGH FLOW CONVERSION	277
*KIT-QUICK COUPLER CONVERSION	280
TUBERÍAS DEL CUCHARÓN (GR)	283
TUBERIAS DE CONEXION (GR)	296
TUBERÍAS DEL GARFIO (GR)	300
TUBERÍAS HIDRÁULICAS DEL VENTILADOR (GR)	306
TUBERÍAS DEL ENFRIADOR DE ACEITE HIDRÁULICO (GR)	310
CILINDRO DE LEVANTAMIENTO - TUBERÍAS DEL (GR)	311
*LINES GP-LOWERING CONTROL	315
TUBERÍAS CON SERVOMANDO (GR)	317
BOMBA - TUBERÍAS DE (GR)	321

* NO HAY TRADUCCION DISPONIBLE EN EL MOMENTO DE LA IMPRESION

CONTENIDO

Nombre	Página
TUBERÍAS DEL CILINDRO DE INCLINACIÓN (GR)	325
TUBERIAS DE LA HERRAMIENTA DE TRABAJO	329
*MANIFOLD & LINES GP-CONTROL	335
MULTIPLE Y MONTAJE (GR) - CONTROL	339
*MANIFOLD & SOLENOID GP-CONTROL	342
CONTROL DEL MULTIPLE (GR)	345
MOTOR Y MONTAJE DE VENTILADOR HIDRAULICO (GR)	348
MOTOR DE ENGRANAJES (GR)	351
MONTAJE DE CILINDRO (GR)	357
TAPON DE LA VALVULA PILOTO (GR)	360
BOMBA Y MONTAJE DE LA HERRAMIENTA DE TRABAJO (GR)	361
BOMBA DE ENGRANAJES (GR)	365
TANQUE HIDRÁULICO Y MONTAJE (GR)	367
TANQUE HIDRÁULICO (GR)	368
GR. VÁLVULA Y TUBERIAS-ACOPLADOR	369
VÁLVULA DE CONTROL Y MONTAJE (GR)	373
VÁLVULA DE CONTROL (GR)	374
VÁLVULA DE CONTROL MANUAL (GR)	376
VÁLVULA PILOTO (GR)	377
VÁLVULA DE ALIVIO (GR)	384
VÁLVULA DE SOLENOIDE (GR)	385
HERRAMIENTAS	389
AGUILÓN TELESCÓPICO (GR)	389
HOJA (CONFIG)	390
HOJA ORIENTABLE (GR)	393
GRUPO DE HOJA DE CUCHARÓN DE USO MÚLTIPLE	397
CUCHARON PARA TIERRA (CONF)	401
CUCHARÓN DE USO GENERAL (CONFIG)	402
CUCHARON DE GARFIO (CONF)	404
CUCHARÓN PARA MATERIALES LIVIANOS (CONFIG)	409
CUCHARÓN DE USO MÚLTIPLE (CONFIG)	409
CUCHARON UTILITARIO (CONFIG)	412
CUCHARON PARA TIERRA (CONJ)	414
CUCHARÓN DE USO GENERAL (CONJ)	418
CUCHARÓN PARA MATERIALES LIVIANOS	422
CUCHARÓN PARA TIERRA (GR)	425
CUCHARON DE GARFIO (GR)	426
CUCHARÓN DE USO MÚLTIPLE (GR)	431
CUCHARÓN UTILITARIO (GR)	436
CARGADOR Y HORQUILLA (CONF)	439
PORTAHORQUILLAS (GR)	440
GRUPO DE CONVERSIÓN DE LA HERRAMIENTA	442
ACOPLADOR RÁPIDO (CONFIG)	443
ACOPLADOR RÁPIDO (GR)	444
TAPA DE TUBERIAS (GR)	447
GRUPO DE CILINDRO Y ESLABON, ACOPLADOR	448
GRUPO DE CANTONERA Y CUCHILLA	450
CUCHILLA (GR)	450
HORQUILLA DE GARFIO (CONF)	456
HORQUILLA DE GARFIO (GR)	458
HORQUILLA PARA TARIMAS (GR)	461
HORQUILLA DE UTILIDAD (GR)	463
BASTIDOR DE HOJA (GR)	465
GRUPO DE BASTIDOR DE HORQUILLA	466
BASTIDOR DE GARFIO (GR)	468
GARFIO DE UTILIDAD (GR)	469
GRUPO DE MANIJA Y PIN-ACOPLADOR	472
ACOPLADOR DE MANIJA	474
JUEGO-PLACA DE DESPLAZAMIENTO Y MONTAJE	476
GRUPO DE ESLABON, ACOPLADOR	477
TRABA-ACOPLADOR RAPIDO (GR)	478
PLACA DE DESPLAZAMIENTO POR CARRETERA (GR)	479
RESORTE DE HOJA (GR)	481
ESCALON DE BRAZO DE MANEJO DE MATERIALES (GR)	482
TOPE DEL GARFIO(GR)	483
COLADOR DEL AGUA (GR)	484
MONTAJE DEL TANQUE DE AGUA (GR)	485
TANQUE DEL AGUA (GR)	488
DIENTE DE UNA PIEZA (UNI-TOOTH) (GR)	489
ESTACION DEL OPERADOR	490
ACUMULADOR DEL ACONDICIONADOR DE AIRE (GR)	490
ACONDICIONADOR DE AIRE Y MONTAJE (GR)	492
ACONDICIONADOR DE AIRE (CONFIG)	493
ACONDICIONADOR DE AIRE (GR)	494
POSABRAZOS Y MONTAJE (GR)	498

* NO HAY TRADUCCION DISPONIBLE EN EL MOMENTO DE LA IMPRESION

CONTENIDO

Nombre	Página
POSABRAZOS (GR)	499
CAJA DE ALMACENAMIENTO	501
SISTEMA ROPS DE CABINA CERRADA (CONFIG)	502
CABINA INCLUYE ROPS (GR)	503
CABLE DE CONTROL (GR)	504
COMPRESOR Y MOTOR GR-REFRIGERANTE	505
COMPRESOR DE REFRIGERANTE Y GRUPO DE MONTAJE	508
CONDENSADOR DEL REFRIGERANTE Y MONTAJE (GR)	509
CONTROL DE MANIJA (GR)	510
CONTROL HIDRÁULICO DE OPERACIÓN PILOTO (GR)	518
*COUPLING GP-DRIVE	542
TAPA DE LA CONSOLA (GR)	544
TAPA DEL TABLERO DE INSTRUMENTOS (GR)	546
PUERTA Y MONTAJE DE CABINA (GR)	547
PUERTA DE CABINA	552
CONDUCTO Y CONTROL (GR)	558
BASTIDOR DE LA VENTANA (GR)	560
INDICADORES Y ADVERTENCIA (GR)	562
PROTECTOR DE ROPS/FOPS	564
PASAMANOS (GR)	565
MANIJA MODULAR (GR)	566
CALEFACCIÓN Y MONTAJE DE LA CABINA (GR)	568
CALEFACCIÓN DE LA CABINA (CONFIG)	569
CALEFACCIÓN DE LA CABINA (GR)	570
*HOLDER-CUP	575
COMPARTIMENTO CONJ-LATERAL	576
GRUPO DE INSTALACIÓN	577
JUEGO DE INSTALACIÓN DEL ACONDICIONADOR DE AIRE Y CALENTADOR	577
JUEGO, PUERTA DE CABINA Y MONTAJE	582
*KIT-CAB SEAL	584
GRUPO DE PALANCA-REGULADOR	585
REVESTIMIENTO DE LA CABINA (GR)	586
REVESTIMIENTO-TECHO	587
TUBERÍAS DE ACONDICIONADOR DE AIRE (GR)	588
TUBERÍAS DE LA CALEFACCIÓN (GR)	590
PUBLICACIONES (GR)	591
RETROVISOR (GR)	592
MÓDULO INDICADOR DE ADVERTENCIA (GR)	593
MONTAJE DE LA ESTRUCTURA ROPS (GR)	595
*OPTION AR-CAB	596
TABLERO DE INSTRUMENTOS (CONFIG)	597
TABLERO DE INSTRUMENTOS (GR)	598
PANEL LATERAL (GR)	602
REGULADOR - PEDAL DEL (GR)	603
PLATAFORMA DE LA CABINA	605
SELLO DE CABINA (GR)	607
CINTURÓN DE SEGURIDAD (GR)	609
ASIENTO (GR)	613
ASIENTO AJUSTABLE (GR)	615
RESORTE DE GAS (GR)	616
VISERA (GR)	617
VENTANA DE LA CABINA (GR)	619
EQUIPO DE SERVICIO Y SUMINISTROS	626
ETIQUETA DE ADVERTENCIA (GR)	626
PIEZAS DIVERSAS (GR)	630
CALCOMANÍAS Y PLACAS DE IDENTIFICACIÓN (GR)	632
INDICE DE NUMEROS DE PIEZA	B1

* NO HAY TRADUCCION DISPONIBLE EN EL MOMENTO DE LA IMPRESION

ÍNDICE

Designação	Página
INFORMAÇÃO GERAL	A31
ALTERNATIVAS DE REPARO	A42
ADITIVOS SUPLEMENTARES DO LÍQUIDO ARREFECEDOR	A47
PEÇAS DE MANUTENÇÃO	A64
ÍNDICE	A108
ARRANJO DA MÁQUINA	1
CHASSI	1
ARRANJO BÁSICO	1
MÁQUINA AR DE CONTROLE	2
MÁQUINA - CONVERSÃO	3
ARRANJO DO MOTOR	13
MOTOR	13
MOTOR PRIMÁRIO	14
GRUPO DE INSTALAÇÃO - MOTOR	17
MOTOR BÁSICO	19
EIXO-COMANDO DE VÁLVULA	19
TAMPA - CAIXA DIANTEIRA	21
TAMPA - MECANISMO DAS VÁLVULAS	22
VIRABREQUIM	24
BLOCO DO MOTOR	29
CABEÇOTE DO MOTOR	33
DRENO - ÓLEO DO MOTOR	40
VOLANTE DO MOTOR	41
PROTETOR - CORREIAS	43
CAIXA DO VOLANTE DO MOTOR	44
CAIXA DIANTEIRA	46
LEVANTAMENTO DO MOTOR	50
MONTAGEM - MOTOR	52
MONTAGEM - VENTILADOR	54
CÁRTER DO ÓLEO DO MOTOR	56
PISTÃO E BIELA	62
BUJÃO DO MOTOR	64
POLIA DO VIRABREQUIM	65
GRUPO DE POLIA - BOMBA DE ÁGUA	67
*V-BELT GP	69
MECANISMO DAS VÁLVULAS	70
SISTEMA DE LUBRIFICAÇÃO	73
BOCAL DE ENCHIMENTO DE ÓLEO DO MOTOR	73
BOMBA DE ÓLEO - MOTOR	75
SISTEMA DE ARREFECIMENTO	78
ALOJAMENTO-TERMOSTATO DE ÁGUA	78
SUPORTE - ARREFECEDR DE ÓLEO E RADIADOR	79
BOMBA DE ÁGUA	81
RADIADOR E ARREFECEDOR DO ÓLEO HIDRÁULICO	86
RADIADOR E ARREFECEDOR DE ÓLEO - MONTAGEM	88
SISTEMA DE ADMISSÃO DE AR E DE ESCAPE	92
PURIFICADOR DE AR	92
TUBOS - AR	94
COLETOR DE ESCAPE	95
SILENCIADOR	96
TURBOALIMENTADOR	98
SISTEMA DE COMBUSTÍVEL	104
CABO - CONTROLE DO GOVERNADOR	104
CONTROLE DO GOVERNADOR	105
FILTRO DE COMBUSTÍVEL E SEPARADOR DE ÁGUA	106
GOVERNADOR	107
TUBULAÇÕES - FILTRO E ESCORVA DO COMBUSTÍVEL	112
BOMBA E MONTAGEM - TRANSFERÊNCIA DE COMBUSTÍVEL	114
BOMBA DE INJEÇÃO DO COMBUSTÍVEL	116
BOMBA DE ESCORVA DO COMBUSTÍVEL E DO FILTRO PRIMÁRIO	122
SISTEMA ELÉTRICO E DE PARTIDA	123
ALTERNADOR DE CORRENTE	123
BATERIA	126
CONEXÃO - ELÉTRICA	128
CONTROLE DE TRAVAMENTO	130
CONTROLE MANUAL DE PARTIDA E PARADA	131
GR. DE CONVERSÃO - ARRANJO NÃO RODOVIÁRIO	132
TAMPA DO PAINEL DO FUSÍVEL	133
SIST. ELETRÔNICO - ACESSÓRIO	134
SISTEMA ELETRÔNICO - MÁQUINA	135
FIXADORES - CHICOTE	136
VELA DE AQUECIMENTO; VELA INCANDESCENTE	137
AQUECEDOR DA ÁGUA DO MOTOR	139
INSTALAÇÃO-SEGURANÇA	141

* TRADUÇÃO NÃO DISPONÍVEL NO MOMENTO DA IMPRESSÃO

ÍNDICE

Designação	Página
KIT-CONTROLE E FIAÇÃO DA FERRAMENTA DE TRABALHO	143
KIT-FIAÇÃO DA FERRAMENTA DE TRABALHO	144
LÂMPADA - FAROL	145
LÂMPADA DIANTEIRA E DE SINAL	147
LUZ TRASEIRA E DE FREIO	149
LUZ GIRATÓRIA DE ALARME	151
SISTEMA DE ILUMINAÇÃO - FARÓIS	152
ILUMINAÇÃO - RODOVIÁRIA	154
ILUMINAÇÃO - FREIO E MARCHA À RÉ	156
SIST. DE ILUMINAÇÃO - PISCA-PISCA GIRATÓRIO DE ADVERTÊNCIA	157
SENSOR DE PRESSÃO E TEMPERATURA	158
MOTOR ELÉTRICO DE PARTIDA	159
INTERRUPTOR - PRESSÃO	163
INTERRUPTOR - TEMPERATURA	165
ALARME DE MARCHA À RÉ	166
CABOS/FIOS ELÉTRICOS - AR CONDICIONADO	167
CABOS/FIOS ELÉTRICOS - CHASSI	168
CABOS/FIOS ELÉTRICOS - MOTOR	172
FIAÇÃO - BUZINA	177
CABOS/FIOS ELÉTRICOS - MÁQUINA	178
CABOS E FIOS ELÉTRICOS-LUZES TRASEIRAS	180
CABOS/FIOS ELÉTRICOS - FERRAMENTAS DE TRABALHO	181
TREM DE FORÇA	183
EIXO	183
COMANDO DO TANDEM	185
FILTRO HIDRÁULICO E TUBOS	186
FILTRO - ÓLEO	188
TUBOS - SISTEMA HIDROSTÁTICO	192
COLETOR - RETORNO	194
MOTOR HIDROSTÁTICO E MONTAGEM	196
MOTOR - PISTÃO	197
MONTAGEM - BOMBA	199
TREM DE FORÇA	200
BOMBA E MONTAGEM - HIDROSTÁTICA	201
BOMBA DE PISTÃO	202
PNEU E ARO	204
RODA E PNEU	213
CHASSI E CARROCERIA	219
PÁRA-CHOQUE	219
GRUPO DE CONVERSÃO - ARRANJO RODOVIÁRIO	220
GR. DE CONVERSÃO - OPERAÇÃO RODOVIÁRIA	226
CONTRAPESO	230
COBERTURA DO MOTOR	232
CHASSI DIANTEIRO	234
CHASSI - MÁQUINA	236
GUIA - TUBOS	237
KIT-CONVERSÃO DE RODAGEM	238
LEVANTAMENTO DA MÁQUINA	244
ESPELHO RETROVISOR E MONTAGEM	246
MONTAGEM DA PLACA DE REGISTRO	248
MONTAGEM - LUZES PARA ILUMINAÇÃO RODOVIÁRIA	250
REDUÇÃO DE RUÍDO	252
SISTEMA HIDRÁULICO	253
ACUMULADOR HIDRÁULICO E MONTAGEM	253
ADAPTADOR-TUBULAÇÃO DE ÓLEO	254
CILINDRO E MONTAGEM - LÂMINA ANGULÁVEL	255
CILINDRO E MONTAGEM - CAÇAMBA	257
CILINDRO E MONTAGEM - BRAÇO DE LEVANTAMENTO	258
CILINDRO DA CAÇAMBA	260
CILINDRO DA GARRA	261
CILINDRO HIDRÁULICO	262
CILINDRO DE LEVANTAMENTO	269
CILINDRO DE INCLINAÇÃO	270
CONEXÃO - HIDRÁULICA	272
COMANDO HIDRÁULICO	274
KIT-CONVERSÃO DE FLUXO ALTO	277
KIT-CONVERSÃO DO ACOPLADOR RÁPIDO	280
TUBOS - CAÇAMBA	283
TUBOS DE CONEXÃO	296
TUBOS - GARRA	300
TUBOS - VENTILADOR HIDRÁULICOS	306
TUBOS - ARREFECEDOR DE ÓLEO HIDRÁULICO	310
TUBOS - CILINDRO DE LEVANTAMENTO	311
TUBULAÇÕES-CONTROLE DE ABAIXAMENTO	315
TUBOS - CIRCUITO PILOTO	317
TUBOS - BOMBA	321
TUBOS - CILINDRO DE INCLINAÇÃO	325
TUBOS - FERRAMENTA DE TRABALHO	329
COLETOR E TUBULAÇÕES -CONTROLE	335

* TRADUÇÃO NÃO DISPONÍVEL NO MOMENTO DA IMPRESSÃO

ÍNDICE

Designação	Página
COLETOR E MONTAGEM - CONTROLE	339
COLETOR E SOLENÓIDE-CONTROLE	342
COLETOR - CONTROLE	345
MOTOR E MONTAGEM - VENTILADOR HIDRÁULICO	348
MOTOR - ENGRENAGENS	351
MONTAGEM - CILINDRO	357
BUJÃO DA VÁLVULA PILOTO	360
BOMBA DA FERRAMENTA DE TRABALHO E MONTAGEM	361
BOMBA DE ENGRENAGENS	365
TANQUE DE ÓLEO HIDRÁULICO E MONTAGEM	367
TANQUE HIDRÁULICO	368
VÁLVULA E TUBULAÇÔES - ACOPLADOR	369
VÁLVULA DE CONTROLE E MONTAGEM	373
VÁLVULA DE CONTROLE	374
VÁLVULA MANUAL	376
VÁLVULA DE CONTROLE PILOTO	377
VÁLVULA DE ALÍVIO	384
VÁLVULA SOLENÓIDE	385
FERRAMENTAS DE TRABALHO	389
BRAÇO - MANIPULADOR DE MATERIAIS	389
LÂMINA	390
LÂMINA ANGULÁVEL	393
LÂMINA-CAÇAMBA DE APLICAÇÕES MÚLTIPLAS	397
CAÇAMBA PARA TERRA	401
CAÇAMBA - PARA APLICAÇAO GERAL	402
CAÇAMBA - GARRA	404
CAÇAMBA PARA MATERIAL LEVE	409
CAÇAMBA DE MÚLTIPLAS APLICAÇÕES	409
CAÇAMBA - SERVIÇOS GERAIS	412
CAÇAMBA PARA TERRA	414
CAÇAMBA PARA APLICAÇÃO GERAL	418
CACAMBA PARA MATERIAL LEVE	422
CACAMBA - TERRA	425
CAÇAMBA - GARRA	426
CAÇAMBA DE MÚLTIPLAS APLICAÇÕES	431
CAÇAMBA PARA SERVIÇOS GERAIS	436
CACAMBA E GARFO	439
SUPORTE - GARFO	440
CONVERSÃO-FERRAMENTA DE TRABALHO	442
ACOPLADOR RÁPIDO	443
TAMPA - TUBULAÇÕES	447
CILINDRO E ARTICULAÇÃO - ACOPLADOR	448
BEIRA - PONTA CORTANTE	450
BORDA CORTANTE	450
GARFO DA GARRA	456
GARFO DE PALETAS	461
GARFO - SERVIÇOS PÚBLICOS	463
ARMAÇÃO - LÂMINA	465
ARMAÇÃO-GARFO	466
ARMAÇÃO DA GARRA	468
GARRA - SERVIÇOS PÚBLICOS	469
ALÇA E PINO - ACOPLADOR	472
ALÇA - ACOPLADOR	474
JOGO-PLACA DE RODAGEM E MONTAGEM	476
ARTICULAÇÃO - ACOPLADOR	477
TRAVA - ACOPLADOR RÁPIDO	478
PLACA-RODOVIÁRIO	479
MOLA - LÂMINA	481
DEGRAU - BRAÇO DE MANIPULAÇÃO DE MATERIAIS	482
BATENTE - GARRA	483
TELA FILTRANTE - ÁGUA	484
TANQUE DE ÁGUA E MONTAGEM	485
TANQUE DE ÁGUA	488
UNI-DENTE	489
POSTO DO OPERADOR	490
ACUMULADOR - AR CONDICIONADO	490
CONDICIONADOR DE AR E MONTAGEM	492
CONDICIONADOR DE AR	493
ENCOSTO DO BRAÇO E MONTAGEM	498
BRAÇO DO ASSENTO	499
CAIXA DE ARMAZENAMENTO	501
CABINE - ESTRUTURA ROPS COBERTA	502
CABINE - ESTRUTURA DE PROTEÇÃO CONTRA CAPOTAMENTO	503
CABO DE CONTROLE	504
COMPRESSOR E MOTOR - REFRIGERADO	505
COMPRESSOR DE REFRIGERANTE E MONTAGEM	508
CONDENSADOR DO REFRIGERANTE E MONTAGEM	509
CONTROLE-CABO	510
CONTROLE HIDRÁULICO DE OPERAÇÃO PILOTO	518
ACOPLAMENTO DE COMANDO	542
TAMPA - CONSOLO	544
TAMPA - PAINEL DE INSTRUMENTOS	546

* TRADUÇÃO NÃO DISPONÍVEL NO MOMENTO DA IMPRESSÃO

ÍNDICE

Designação	Página
PORTA E MONTAGEM-CABINA	547
PORTA DA CABINE	552
DUCTO E CONTROLE	558
ARMAÇÃO DO VIDRO	560
INDICADOR E ALARME	562
PROTETOR - ROPS/FOPS	564
PEGA-MÃO	565
ALAVANCA DE CONTROLE - MODULAR	566
AQUECEDOR DA CABINE E MONTAGEM	568
AQUECEDOR DA CABINE	569
*HOLDER-CUP	575
ALOJAMENTO - LATERAL	576
INSTALAÇÃO	577
JOGO-INSTALAÇÃO DO CONDICIONADOR DE AR E AQUECEDOR	577
JOGO - PORTA DA CABINE E MONTAGEM	582
KIT-RETENTOR DA CABINE	584
ALAVANCA - GOVERNADOR	585
REVESTIMENTO DA CABINE	586
REVESTIMENTO - CABINE	587
TUBOS - AR CONDICIONADO	588
TUBOS - AQUECEDOR	590
PUBLICAÇÃO	591
ESPELHO RETROVISOR	592
MÓDULO - INDICADOR DE ALARME	593
MONTAGEM - ESTRUTURA ROPS	595
OPÇÃO-CABINE	596
PAINEL DE INSTRUMENTOS	597
PAINEL LATERAL	602
PEDAL DO GOVERNADOR	603
PLATAFORMA DO OPERADOR	605
RETENTOR-CABINE	607
CINTO DE SEGURANÇA	609
ASSENTO	613
ASSENTO AJUSTÁVEL	615
MOLA A GÁS	616
PÁRA-SOL DA CABINE	617
JANELA DA CABINE	619
EQUIPAMENTO DE SERVIÇO E SUPRIMENTOS	626
DECALQUE	626
PEÇAS DIVERSAS	630
PLACA E DECALQUE	632
ÍNDICE DE NÚMERO DE PEÇA	B1

* TRADUÇÃO NÃO DISPONÍVEL NO MOMENTO DA IMPRESSÃO

INHALTSVERZEICHNIS

Bezeichnung	Seite
ALLGEMEINE HINWEISE	A35
REPARATURALTERNATIVEN	A43
KÜHLMITTELZUSATZ	A48
WARTUNGSTEILE	A69
STICHWORTVERZEICHNIS	A119
MASCHINE	1
FAHRWERK	1
GRUNDAUSFÜHRUNG	1
MASCHINENSTEUERUNG	2
MASCHINEN-UMBAUSATZ	3
MOTOR	13
MOTORAUSFÜHRUNG	13
MOTOR-EINBAUSATZ	17
MOTOR - GRUNDAUSFÜHRUNG	19
NOCKENWELLE	19
STIRNRADGEHÄUSEDECKEL	21
VENTILDECKEL	22
KURBELWELLE	24
MOTORBLOCK	29
ZYLINDERKOPF	33
MOTORÖLABLASS	40
SCHWUNGRAD	41
RIEMENSCHUTZ	43
SCHWUNGRADGEHÄUSE	44
STIRNRADGEHÄUSE	46
MOTORHUBÖSE	50
MOTORAUFLAGER	52
LÜFTERBEFESTIGUNG	54
ÖLWANNE	56
PLEUELSTANGE UND KOLBEN	62
MOTORSTOPFEN	64
KURBELWELLEN-RIEMENSCHEIBE	65
WASSERPUMPE - RIEMENSCHEIBE	67
*V-BELT GP	69
VENTILSTEUERUNG	70
SCHMIERSYSTEM	73
MOTORÖLEINFÜLLSTUTZEN	73
SCHMIERPUMPE	75
KÜHLSYSTEM	78
THERMOSTATGEHÄUSE	78
KÜHLER U. ÖLKÜHLER - BEFESTIGUNG	79
KÜHLWASSERPUMPE	81
KÜHLER UND HYDRAULIKÖLKÜHLER	86
KÜHLER U. ÖLKÜHLERBEFESTIGUNG	88
LUFTANSAUG- UND ABGASSYSTEM	92
LUFTREINIGER	92
DRUCKLUFTLEITUNGEN	94
AUSPUFFKRÜMMER	95
SCHALLDÄMPFER	96
TURBOLADER	98
KRAFTSTOFFSYSTEM	104
DREHZAHLREGLERKABEL	104
REGLERSTEUERUNG	105
WASSERABSCHEIDER- U. KRAFTSTOFFILTER	106
REGLER	107
KRAFTSTOFFENTLÜFTUNGS- U. FILTERLEITUNGEN	112
KRAFTSTOFFÖRDERPUMPE UND BEFESTIGUNGSTEILE	114
KRAFTSTOFFEINSPRITZPUMPE	116
KRAFTSTOFFENTLÜFTUNGSPUMPE UND -HAUPTFILTER	122
ELEKTRISCHE ANLAGE UND STARTSYSTEM	123
DREHSTROMGENERATOR	123
BATTERIE	126
ANSCHLUSS, ELEKTR.	128
VERRIEGELUNGSSTEUERUNG	130
STEUERUNG - MANUELLES STARTEN/ABSTELLEN	131
UMBAUSATZ - NICHT FÜR STRASSENVERKEHR	132
SICHERUNGSTAFEL - ABDECKUNG	133
ARBEITSGERÄTEELEKTRONIK	134
ELEKTRONIK - MASCHINE	135
VERDRAHTUNGSKABELBAUMHALTETEILE	136
GLÜHKERZE	137
UMLAUFKÜHLWASSERHEIZUNG	139
SICHERHEITSEINBAUSATZ	141
SATZ - ARBEITSGERÄTE U. VERDRAHTUNG	143
ARBEITSGERÄTEVERDRAHTUNGSSATZ	144
ARBEITSLEUCHTEN	145
SCHEINWERFER U. RICHTUNGSLEUCHTE	147
BREMS- UND RÜCKLEUCHTE	149
RUNDUM-KENNLEUCHTE	151

* ÜBERSETZUNG ZUM ZEITPUNKT DER DRUCKLEGUNG NICHT VORHANDEN

INHALTSVERZEICHNIS

Bezeichnung	Seite
ARBEITSLEUCHTEN	152
BELEUCHTUNGSANLAGE (STRASSENAUSRÜSTUNG)	154
BREMS- UND RÜCKLEUCHTEN	156
RUNDUM-KENNLEUCHTE	157
TEMPERATUR- U. DRUCKSENSOR	158
STARTERMOTOR	159
DRUCKSCHALTER	163
TEMPERATURSCHALTER	165
RÜCKFAHRWARNHORN	166
KLIMAANLAGENVERDRAHTUNG	167
FAHRGESTELLVERDRAHTUNG	168
MOTORVERDRAHTUNG	172
WARNHORNVERDRAHTUNG	177
MASCHINENVERDRAHTUNG	178
HECKBELEUCHTUNGSVERDRAHTUNG	180
ARBEITSGERÄT - VERDRAHTUNG	181
KRAFTSÜBERTRAGUNG	183
ACHSE	183
TANDEMANTRIEB	185
HYDRAULIKFILTER U. LEITUNGEN	186
ÖLFILTER	188
HYDROSTATIKLEITUNGEN	192
RÜCKLAUFVENTIL - VERTEILER	194
HYDROSTATIKMOTOR U. BEFESTIGUNG	196
KOLBENMOTOR	197
PUMPENAUFHÄNGUNG	199
KRAFTÜBERTRAGUNG	200
HYDROSTATIKPUMPE U. BEFESTIGUNG	201
KOLBENPUMPE	202
REIFEN UND FELGE	204
RAD UND REIFEN	213
RAHMEN UND FAHRGESTELL	219
STOSSSTANGE	219
UMBAUSATZ - FÜR STRASSENVERKEHR	220
STRASSENFAHRT - UMRÜSTSATZ	226
GEGENGEWICHT	230
MOTORVERKLEIDUNG	232
LADERRAHMEN	234
MASCHINENRAHMEN	236
LEITUNGSFÜHRUNG	237
UMRÜSTSATZ FÜR STRASSENFAHRT	238
MASCHINENHUBÖSE	244
RÜCKSPIEGEL U. BEFESTIGUNG	246
TYPENSCHILDBEFESTIGUNG	248
BELEUCHTUNG FÜR STRASSENFAHRT - BEFESTIGUNG	250
SCHALLDÄMPFUNG	252
HYDRAULIKSYSTEM	253
HYDRAULIKDRUCKSPEICHER U. BEFESTIGUNG	253
ADAPTER - ÖLLEITUNG	254
ZYLINDER U. BEFESTIGUNG - WINKELSCHLID	255
*CYLINDER & MTG GP-BUCKET	257
HUBARMZYLINDER U. BEFESTIGUNGSSATZ	258
SCHAUFELZYLINDER	260
GREIFERZYLINDER	261
HYDRAULIKZYLINDER	262
HUBZYLINDER	269
KIPPZYLINDER	270
HYDRAULIKFITTING	272
HYDRAULIKSYSTEM	274
UMRÜSTUNGSSATZ - HOCHFLUSS	277
*KIT-QUICK COUPLER CONVERSION	280
SCHAUFELLEITUNGEN	283
ANSCHLUSSLEITUNGEN	296
GREIFERLEITUNGEN	300
HYDRAULIKLÜFTERLEITUNGEN	306
HYDRAULIKÖLKÜHLERLEITUNGEN	310
HUBZYLINDERLEITUNGEN	311
LEITUNGEN, ABSENKSTEUERUNG	315
VORSTEUERLEITUNGEN	317
HYDRAULIKPUMPE UND LEITUNGEN	321
NEIGEZYLINDERLEITUNGEN	325
ARBEITSGERÄT - LEITUNGEN	329
KRÜMMER U. LEITUNGEN - STEUERUNG	335
KRÜMMERSTEUERUNG U. BEFESTIGUNG	339
*MANIFOLD & SOLENOID GP-CONTROL	342
STEUERKRÜMMER	345
HYDRAULIKKÜHLERMOTOR U. BEFESTIGUNG	348
MOTORANTRIEB	351
ZYLINDERAUFHÄNGUNG	357
VORSTEUERVENTILSTOPFEN	360
ARBEITSGERÄTEPUMPE U. BEFESTIGUNG	361
ZAHNRADPUMPE	365
HYDRAULIKTANK UND BEFESTIGUNGSTEILE	367
HYDRAULIKTANK	368
KUPPLUNGSVENTIL U. LEITUNGEN	369

* ÜBERSETZUNG ZUM ZEITPUNKT DER DRUCKLEGUNG NICHT VORHANDEN

INHALTSVERZEICHNIS

Bezeichnung	Seite
STEUERVENTIL UND BEFESTIGUNGSTEILE	373
STEUERVENTIL	374
VENTIL, MECH.	376
VORSTEUERVENTIL	377
ÜBERDRUCKVENTIL	384
MAGNETVENTIL	385
ARBEITSGERÄTE	389
TRAGARM	389
SCHILD	390
SCHWENKSCHILD	393
SCHNEIDMESSER - KOMBISCHAUFEL	397
ERDSCHAUFEL	401
UNIVERSALSCHAUFEL	402
GREIFERSCHAUFEL	404
LEICHTGUTSCHAUFEL	409
KOMBISCHAUFEL	409
*BUCKET AR-UTILITY	412
ERDSCHAUFEL	414
UNIVERSALSCHAUFEL	418
LEICHTGUTSCHAUFEL	422
ERDSCHAUFEL	425
GREIEFERSCHAUFEL	426
KOMBISCHAUFEL	431
MEHRZWECKSCHAUFEL	436
TRÄGER U. GABEL	439
GABELTRÄGER	440
UMRÜSTSATZ - ARBEITSGERÄT	442
SCHNELLWECHSELVORRICHTUNG	443
SCHNELLWECHSELEINRICHTUNG	444
LEITUNGSABDECKUNG	447
SCHNELLWECHSELEINRICHTUNG - ZYLINDER U. VERBINDUNG	448
SCHNEIDMESSER UND EINSATZSTÜCK	450
SCHNEIDMESSER	450
GREIFERGABEL	456
PALETTENGABEL	461
MEHRZWECKGABEL	463
SCHILDRAHMEN	465
*FRAME GP-FORK	466
GREIFERRAHMEN	468
MEHRZWECKGREIFER	469
GRIFF U. BOLZEN - ANSCHLUSS	472
ANSCHLUSSGRIFF	474
STRASSENFAHRTSCHILD UND BEFESTIGUNG	476
VERBINDUNG - SCHNELLWECHSELEINRICHTUNG	477
SCHNELLWECHSELEINRICHTUNGSSPERRE	478
SCHILD - STRASSENFAHRT	479
SCHILDFEDER	481
TRAGARMSTUFE	482
GREIFERANSCHLAG	483
WASSERSIEBEINSATZ	484
WASSERTANK U. BEFESTIGUNGSTEILE	485
WASSERTANK	488
UNIVERSAL-ZAHNSPITZE	489
FAHRERHAUS	490
KLIMAANLAGENDRUCKSPEICHER	490
KLIMAANLAGE UND AUFHÄNGUNG	492
KLIMAANLAGE	493
ARNLEHNE U. BEFESTIGUNG	498
ARMLEHNE	499
VERSTAUKASTEN	501
FAHRERHAUS MIT ÜBERROLLSCHUTZ	502
STEUERKABEL	504
KÜHLKOMPRESSOR U. MOTOR	505
KÄLTEMITTELKOMPRESSOR U. BEFESTIGUNG	508
KÄLTEMITTELKONDENSATOR U. BEFESTIGUNGSTEILE	509
STEUERHEBEL	510
HYDRAULIKBEDIENUNG (MIT VORSTEUERUNG)	518
ANTRIEBSKUPPLUNG	542
STEUERKONSOLENABDECKUNG	544
INSTRUMENTENTAFELABDECKUNG	546
FAHRERHAUSTÜR U. BEFESTIGUNG	547
FAHRERHAUSTÜR	552
LUFTKANAL UND REGULIERUNG	558
FENSTERRAHMEN	560
WARNANZEIGENSATZ	562
VERKLEIDUNG - ÜBERROLLSCHUTZ/ STEINSCHLAGSCHUTZ	564
HALTEGRIFF	565
MODULARHEBEL	566
FAHRERHAUSHEIZUNG U. BEFESTIGUNGSTEILE	568
FAHRERHAUSHEIZUNG	569
*HOLDER-CUP	575
SEITENGEHÄUSE	576
EINBAUSATZ	577
EINBAUSATZ - KLIMAANLAGE U. HEIZUNG	577
FAHRERHAUSTÜR U. BEFESTIGUNG	582
FAHRERHAUSDICHTUNGSSATZ	584
REGELERHEBEL	585
FAHRERHAUSAUSKLEIDUNG	586
FAHRERHAUS - LINER	587

* ÜBERSETZUNG ZUM ZEITPUNKT DER DRUCKLEGUNG NICHT VORHANDEN

INHALTSVERZEICHNIS

Bezeichnung	Seite
KLIMAANLAGENLEITUNGEN	588
HEIZUNGSLEITUNGEN	590
DOKUMENTATION	591
RÜCKSPIEGEL	592
WARNANZEIGEMODUL	593
ÜBERROLLSCHUTZAUFLAGER	595
OPTION - FAHRERHAUS	596
INSTRUMENTENTAFEL	597
SEITENVERKLEIDUNG	602
GASPEDAL	603
FAHRERPLATTFORM	605
FAHERHAUSDICHTUNG	607
SICHERHEITSGURT	609
FAHRERSITZ	613
FAHRERSITZ, VERSTELLBAR	615
GASFEDERGRUPPE	616
FAHRERHAUS, SONNENBLENDE	617
FAHRERHAUSFENSTER	619
WARTUNGSAUSRÜSTUNG UND -ZUBEHÖR	626
AUFKLEBER	626
SORTIMENTSATZ	630
SCHILD UND AUFKLEBER	632
ERSATZTEILNUMMERNINDEX	B1

* ÜBERSETZUNG ZUM ZEITPUNKT DER DRUCKLEGUNG NICHT VORHANDEN

GENERAL INFORMATION

1. MACHINE IDENTIFICATION

Caterpillar machines are identified by Product Identification Numbers (PIN). Some components included in a machine may be identified by Serial Numbers (S/N). Typical components that will be serialized include engines, transmissions, bulldozers, and rippers. The machine and engine are further identified by arrangement numbers and in some cases modification numbers. These numbers are shown on the product identification plate(s) and on the master plate in the operator's compartment.

Caterpillar dealers need all of these numbers to determine accurate parts identification.

SIS *New Feature*

Effective First Quarter 2001 the Caterpillar Product Identification Number (PIN) changed from 8 to 17 characters. In an effort to provide uniform equipment identification, Caterpillar and other construction equipment manufacturers are moving to comply with the latest version of the product identification numbering standard. Non-road machine PINs are defined by ISO 10261. The new PIN format will apply to all Caterpillar machines and generator sets. The PIN plates and frame marking will display the 17 character PIN. The new format will look like the following:

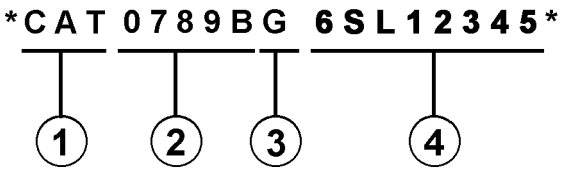

Where:

1. Caterpillar's World Manufacturing Code (characters 1-3)

2. Machine Descriptor (characters 4-8)

3. Check Character (character 9)

4. Machine Indicator Section (MIS) or Product Sequence Number (characters 10-17). These were previously referred to as the Serial Number.

Machines and generator sets produced before First Quarter 2001 will maintain their 8 character PIN format.

Components such as engines, transmissions, axles, etc. and work tools will continue to use an 8 character Serial Number (S/N).

2. ORDERING PARTS

⚠ WARNING

When replacement parts are required for this product Caterpillar recommends using Caterpillar replacement parts or parts with equivalent specifications including, but not limited to, physical dimensions, type, strength and material.

Failure to heed this warning can lead to premature failures, product damage, personal injury or death.

Quality Caterpillar replacement parts are available from Caterpillar dealers throughout the world. Their parts inventories are up to date and include all parts normally required to protect your investment in Caterpillar machines. Dealers may offer repair kits or remanufactured parts to allow selection of the most effective repair alternative for a particular situation. When ordering parts, your order should specify the quantity, part number, part name, and the serial number/product identification number of the machine for which the parts are needed.

3. PARTS MANUAL ORGANIZATION

Product information in this manual is presented as "information elements" that represent all of the components for the specific model. Engine Arrangement and Seat Group are examples of information elements. The information elements are organized alphabetically by part name and secondarily by part number within each major section of the manual.

4. TABLE OF CONTENTS

A table of contents (TOC) is found at the beginning of the manual. The TOC lists each section of the manual with a complete list of all information elements organized as they appear in the manual. Page numbers are provided for quick reference to detailed parts identification illustrations and serviceable consist lists.

5. MAINTENANCE PARTS INDEX

The Maintenance Parts Index, located near the beginning of the manual, references most frequently used maintenance part numbers, providing description, quantity, usage and page number. This information is organized alphabetically by part description.

6. INDEX

The index located near the front of the manual is an alphabetical listing of all information elements included in the manual. Page numbers are provided for quick reference to detailed parts identification illustrations and serviceable consist lists.

7. PART NUMBER INDEX

A numerical index listing all part numbers and the corresponding page number(s) appears at the back of the manual.

8. CAPTIONS

Captions located at the beginning of each information element identify the part number and part name along with additional descriptive information. PIN and S/N information found in each caption should be used to select correct information for a specific machine. Field replacement options, identification of optional attachment components, and where used ("part of") information is also provided.

The first line of a caption is shown in larger type font to indicate the beginning of an information element. Captions for additional pages that may be required to illustrate an information element will be shown in standard type font and will include the term *(contd.)* .

9. NON-SERVICED PARTS

In some instances it is necessary to display non-serviced parts that are a link to a lower level serviceable consist lists. These non-serviced part numbers are shown in *italic* type indicating that they are not available.

10. PARTS LIST REFERENCE NUMBERS

Numbers shown in the Ref No column correspond to numbers used in the associated graphic(s). An alphabetic suffix may be added to a reference number to identify lower level consist items. Numbers shown in the Graphic Ref column refer to the graphic number identifier displayed in the lower left corner of each illustration. The Graphic Ref number may be used in combination with the item Ref No to determine the correct part number. There may be intentional omission of a Ref No in a consist list as information is updated to reflect the latest serviceable part numbers.

11. INDENTED PART NAMES

When a part name is indented in a parts list, it is part of (included in) the group or assembly under which it is indented.

12. ILLUSTRATION REFERENCE LETTERS

When necessary, illustrations contain reference letters (A, B, C etc.) that are intended to track lines and harnesses from one point to another. They are also used to show where to reconnect illustrations that have been separated.

13. ABBREVIATIONS AND SYMBOLS

O.D. – Outside Diameter
I.D. – Inside Diameter
A – Not Part Of This Group
B – Use As Required
C – Change From Previous Type
D – Order By The Meter
E – Order By The Centimeter
F – Not Shown
G – Order By The Inch
I – Refer To Hydraulic Information System
M – Metric Part
R – Remfg Part May Be Available
Y – Separate Illustration
Z – Not Serviced Separately

SIS *New Feature*

14. DESCRIPTION OF TYPE CHANGES

Type - A type is defined as any configuration change that requires an additional Information Element for an Arrangement, Group, or Assembly. If serial number breaks for types are not available, a type # (Type 1, Type 2, etc.) will be displayed in the caption. These "type" changes are identified with a "C" note (change from previous type) in the Parts List. Only the "types" that apply to this Parts Manual will be included. Additional types may exist causing "C" notes to appear on an Information Element when no other types are shown.

15.<END>

This symbol indicates the end of an information element.

NOTE:

Continuing improvement and advancement of product design may cause changes to your machine which may not be included in this publication. Whenever a question arises regarding your caterpillar product or this publication, please consult your caterpillar dealer for the latest available information.

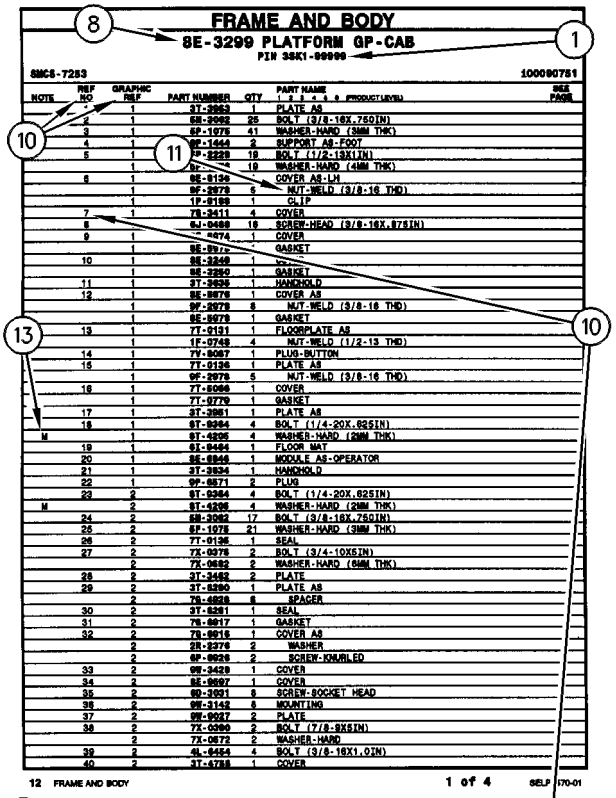

FRAME AND BODY

8E-3299 PLATFORM GP-CAB

PIN 3SK1-99999

SMCS-7283 100090751

NOTE	REF NO	GRAPHIC REF	PART NUMBER	QTY	PART NAME 1 2 3 4 5 6 (PRODUCT LEVEL)	SEE PAGE
	*	1	3T-3963	1	PLATE AS	
	2	1	6H-2062	25	BOLT (3/8-16X.750IN)	
	3	1	6P-1075	41	WASHER-HARD (3MM THK)	
	4	1	9F-1443	2	SUPPORT AS-FOOT	
	5	1	9P-2229	19	BOLT (1/2-13X1IN)	
		1	9P-[illegible]	19	WASHER-HARD (4MM THK)	
	6	1	8E-8136	*	COVER AS-LH	
		1	9F-2078	6	NUT-WELD (3/8-16 THD)	
		1	1P-8189	1	CLIP	
	7	1	7X-3411	4	COVER	
	8	1	6J-0468	18	SCREW-HEAD (3/8-16X.87SIN)	
	9	1	[illegible]074	1	COVER	
		1	8E-8976	*	GASKET	
	10	1	8E-3248	1	[illegible]	
		1	8E-2260	1	GASKET	
	11	1	3T-3636	1	HANDHOLD	
	12	1	8E-8976	1	COVER AS	
		1	9F-2078	8	NUT-WELD (3/8-16 THD)	
		1	8E-8978	1	GASKET	
	13	1	7T-0131	1	FLOORPLATE AS	
		1	1F-0748	4	NUT-WELD (1/2-13 THD)	
	14	1	7Y-8067	1	PLUG-BUTTON	
	15	1	7T-0126	1	PLATE AS	
		1	9F-2078	5	NUT-WELD (3/8-16 THD)	
	16	1	7T-8066	1	COVER	
		1	7T-0779	1	GASKET	
	17	1	3T-3961	1	PLATE AS	
	18	1	9T-0264	4	BOLT (1/4-20X.62SIN)	
M		1	9T-4295	4	WASHER-HARD (2MM THK)	
	19	1	9X-8464	1	FLOOR MAT	
	20	1	8E-8946	1	MODULE AS-OPERATOR	
	21	1	3T-3934	1	HANDHOLD	
	22	1	9F-8671	2	PLUG	
	23	2	9T-0264	4	BOLT (1/4-20X.62SIN)	
M		2	9T-4295	4	WASHER-HARD (2MM THK)	
	24	2	6H-2062	17	BOLT (3/8-16X.750IN)	
	25	2	6P-1075	21	WASHER-HARD (3MM THK)	
	26	2	7T-0136	1	SEAL	
	27	2	7X-0078	2	BOLT (3/4-10X5IN)	
		2	7X-0682	2	WASHER-HARD (6MM THK)	
	28	2	3T-3482	2	PLATE	
	29	2	3T-8290	1	PLATE AS	
		2	7X-4828	8	SPACER	
	30	2	3T-8281	1	SEAL	
	31	2	7X-8017	1	GASKET	
	32	2	7X-8016	1	COVER AS	
		2	5R-2276	2	WASHER	
		2	9F-8026	2	SCREW-KNURLED	
	33	2	9M-3429	1	COVER	
	34	2	8E-8697	1	COVER	
	35	2	9D-3091	8	SCREW-SOCKET HEAD	
	36	2	9M-3142	8	MOUNTING	
	37	2	9M-9017	2	PLATE	
	38	2	7X-0360	2	BOLT (7/8-9X5IN)	
		2	7X-0672	2	WASHER-HARD	
	39	2	4L-8454	4	BOLT (3/8-16X1.0IN)	
	40	2	3T-4788	1	COVER	

12 FRAME AND BODY 1 of 4 SELP4570-01

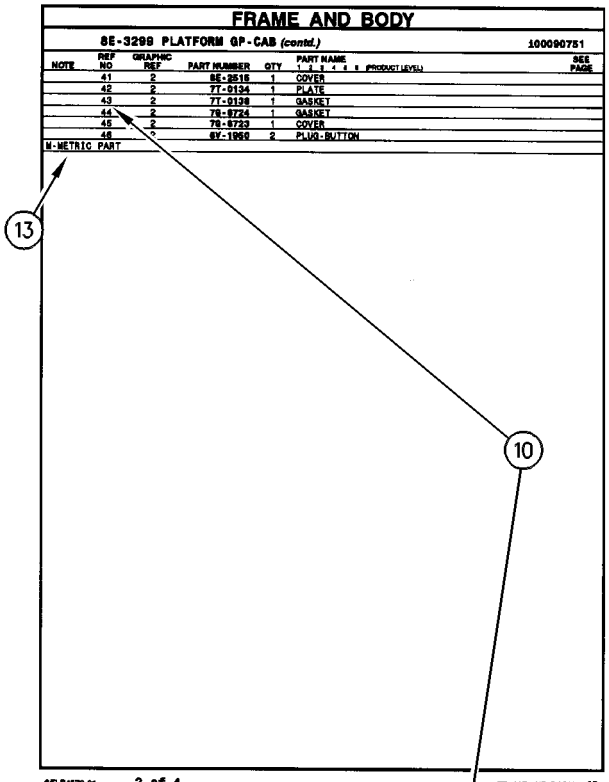

FRAME AND BODY

8E-3299 PLATFORM GP-CAB (contd.) 100090751

NOTE	REF NO	GRAPHIC REF	PART NUMBER	QTY	PART NAME 1 2 3 4 5 6 (PRODUCT LEVEL)	SEE PAGE
	41	2	8E-2516	1	COVER	
	42	2	7T-0134	1	PLATE	
	43	2	7T-0138	1	GASKET	
	44	2	7S-8724	1	GASKET	
	45	2	7S-8723	1	COVER	
	46	*	8Y-1950	2	PLUG-BUTTON	

M-METRIC PART

SELP4570-01 2 of 4 FRAME AND BODY 13

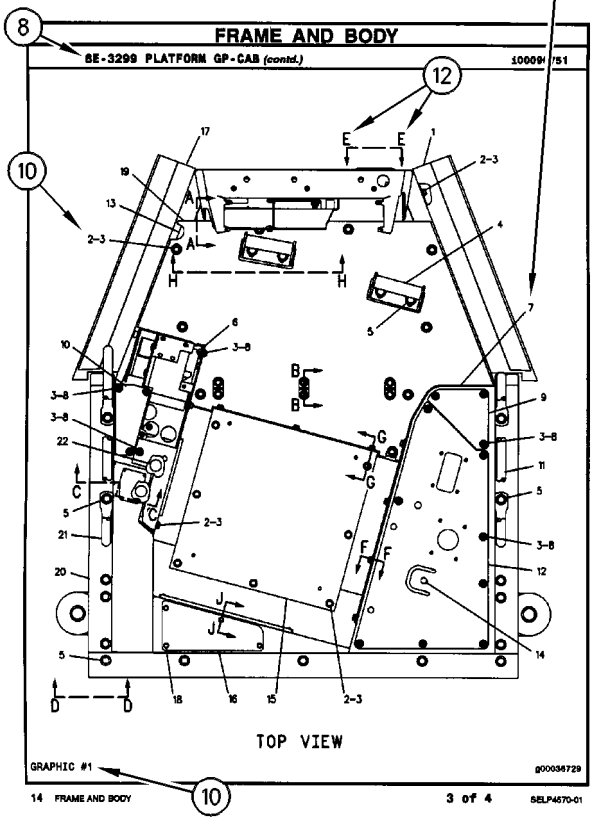

FRAME AND BODY

8E-3299 PLATFORM GP-CAB (contd.) 100090751

TOP VIEW

GRAPHIC #1 g00036729

14 FRAME AND BODY 3 of 4 SELP4570-01

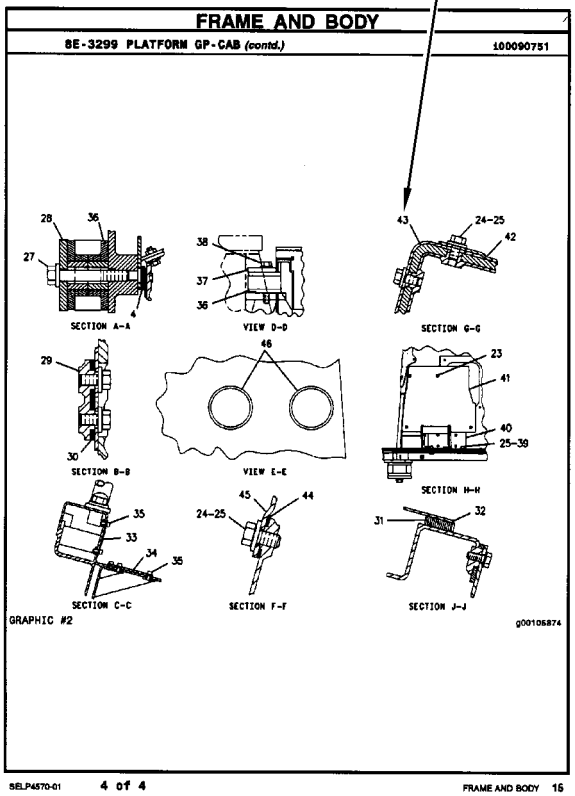

FRAME AND BODY

8E-3299 PLATFORM GP-CAB (contd.) 100090751

SECTION A-A

VIEW D-D

SECTION G-G

SECTION B-B

VIEW E-E

SECTION H-H

SECTION C-C

SECTION F-F

SECTION J-J

GRAPHIC #2 g00105874

SELP4570-01 4 of 4 FRAME AND BODY 15

1. IDENTIFICATION DE LA MACHINE

Toutes les machines Caterpillar portent un numéro d'identification (PIN). Certains composants des machines peuvent porter des numéros de série (S/N). En général, parmi les composants qui portent des numéros de série il y a les moteurs, les transmissions, les bulldozers et les rippers. En plus, la machine et le moteur peuvent recevoir des numéros de version, et dans certains cas, de modification. Ces numéros figurent sur les plaques de numéro de série et sur la plaque signalétique principale qui se trouve dans le poste de conduite.

Les concessionnaires Caterpillar doivent connaître tous ces numéros pour identifier correctement les pièces.

SIS *Nouvelle Caractéristique*

À partir du premier trimestre 2001, le numéro d'identification produit (PIN) Caterpillar passe de 8 à 17 caractères. Afin de permettre une identification uniforme des matériels, Caterpillar et d'autres constructeurs de machines de travaux publics s'efforcent de se conformer à la norme la plus récente portant sur les numéros d'identification des produits. Les numéros d'identification (PIN) de machines de chantier sont définis par la norme ISO 10261. Le nouveau format du numéro d'identification est valable pour toutes les machines et tous les groupes électrogènes Caterpillar. Le numéro d'identification produit (PIN) figurant sur la plaque et sur le châssis se composera de 17 caractères. Le nouveau format ressemblera à ceci:

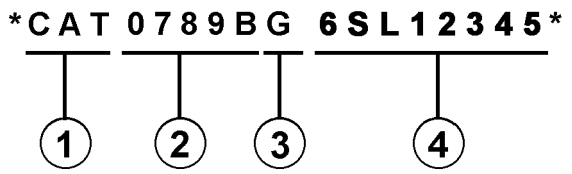

Il se décomposera de la façon suivante:

1. Code international de fabrication de Caterpillar (caractères 1 à 3)

2. Descriptif de la machine (caractères 4 à 8)

3. Contrôle (caractère 9)

4. Indicateur machine (MIS) ou numéro de séquence produit (caractères 10 à 17). Ceux-ci étaient auparavant désignés sous le terme de numéro de série.

Les machines et les groupes électrogènes construits avant le premier trimestre 2001 garderont le format à 8 caractères du numéro d'identification produit (PIN).

Les organes tels que les moteurs, les boîtes de vitesses, les essieux, etc., continueront d'être désignés par un numéro de série (S/N) à 8 caractères.

2. COMMANDE DE PIÈCES

⚠ DANGER

Lorsqu'il faut remplacer des pièces de rechange pour ce produit Caterpillar recommande d'utiliser les pièces de rechange Caterpillar ou les pièces qui ont des spécifications équivalentes dont les dimensions physiques, le type, la force et le matériau. Ces équivalences ne se limitent pas à l'énoncé précédent.

L'inobservation de cette mise en garde peut entraîner des défaillances prématurées, des dommages au produit, des blessures ou même la mort.

Les concessionnaires Caterpillar fournissent dans le monde entier des pièces de rechange de qualité Caterpillar. Leurs stocks de pièces sont constamment réapprovisionnés et comptent toutes les pièces nécessaires pour assurer la bonne marche de vos machines Caterpillar. Certains concessionnaires proposent également des kits de réparation ou des pièces rénovées, ce qui permet de choisir la solution la plus économique dans une situation donnée. Lors des commandes de pièces, mentionner la quantité, le numéro et la désignation des pièces ainsi que le numéro de série ou le numéro d'identification (PIN) de la machine pour laquelle ces pièces sont requises.

3. ORGANISATION DU CATALOGUE DE PIÈCES

Les renseignements sur les produits sont présentés sous forme de "Information element" (élément d'information) représentant tous les composants d'un modèle donné. "Engine Arrangement" (version de moteur) et "Seat Group" (assemblage de siège)" sont des exemples d'éléments d'information. Les éléments d'information sont classés par ordre alphabétique par la désignation standard des pièces et par numéros de pièces dans chaque partie importante du manuel.

4. TABLE DES MATIÈRES

SIS *Nouvelle Caractéristique*

La table des matières se trouve au début du manuel. La table des matières fournit la liste de tous les chapitres du manuel avec une liste complète de tous les éléments d'information classés par ordre d'apparition dans le manuel. Les numéros de page sont fournis afin que l'utilisateur puisse trouver rapidement les illustrations détaillées concernant l'identification des pièces et les listes des pièces d'entretien.

5. INDEX DES PIÈCES D'ENTRETIEN

La rubrique "Index des pièces d'entretien" qui se trouve au début du manuel renvoie aux pièces d'entretien les plus fréquemment utilisées en précisant la désignation, la quantité, là où la pièce est utilisée et le numéro de page. Ces pièces sont classés par ordre alphabétique.

6. INDEX

L'index qui se trouve vers le début du manuel est une liste alphabétique de tous les éléments d'information du manuel. Les numéros de page sont fournis afin que l'utilisateur puisse trouver rapidement les illustrations détaillées concernant l'identification des pièces et les listes des pièces d'entretien.

7. INDEX DES NUMÉROS DE PIÈCES

Une liste numérique de tous les numéros de pièces et des pages correspondantes se trouve à la fin du manuel.

8. LÉGENDES

Les légendes qui se trouvent en haut de chaque page de chaque élément d'information fournissent le numéro de pièce, la désignation ainsi que des renseignements supplémentaires sur les pièces. Les renseignements concernant les numéros de série (S/N) qui se trouvent dans chaque légende doivent être utilisés pour sélectionner les informations correctes pour un moteur donné. Les informations concernant les options de remplacement sur le chantier, l'identification des composants des équipements offerts en option et les lieux d'application sont aussi fournies.

SIS *Nouvelle Caractéristique*

Les lettres de la première ligne d'une légende sont présentées en police plus grande afin d'indiquer le début d'une unité d'information. Les légendes qui pourraient être requises pour des pages supplémentaires afin d'illustrer une unité d'information seront présentées en police standard et comprendront le terme (à suivre).

9. PIÈCES NON FOURNIES

SIS *Nouvelle Caractéristique*

Dans certains cas, il est nécessaire d'indiquer les pièces non fournies qui sont en aval de la liste des pièces d'entretien. Les numéros des pièces non fournies dans la liste des pièces et les légendes seront en italique pour signaler qu'ils ne sont pas disponibles.

10. NUMÉROS DE RÉFÉRENCE DE LA LISTE DES PIÈCES

SIS *Nouvelle Caractéristique*

Les numéros indiqués dans la colonne des numéros de références correspondent aux numéros utilisés dans les illustrations auxquelles ils sont associés. Un suffixe alphabétique peut être ajouté à un numéro de référence pour identifier la liste des articles en aval. Les numéros indiqués dans la colonne de référence de l'illustration renvoient à l'identification du numéro affiché dans le coin inférieur gauche de chaque illustration. Le numéro de référence de l'illustration pourrait être utilisé avec le numéro de référence de l'article pour déterminer le numéro de pièce correct. Il peut y avoir une omission intentionnelle d'un numéro de référence dans une liste de pièces suite à la mise à jour des informations en vue de refléter les numéros de pièces les plus récentes.

11. DÉSIGNATIONS DE PIÈCES EN RETRAIT

Lorsqu'une désignation de pièce est en retrait, cela veut dire que l'article en regard fait partie de l'ensemble sous lequel il figure.

12. LETTRES DE RÉFÉRENCE DES ILLUSTRATIONS

Quand cela est nécessaire, les illustrations comportent des lettres de référence (A, B, C, etc.) pour montrer le trajet des canalisations et faisceaux de câbles d'un point à l'autre. Elles sont utilisées également pour indiquer où relier les illustrations séparées auparavant.

13. ABRÉVIATIONS ET SYMBOLES

O.D. – Diamètre extérieur
I.D. – Diamètre intérieur
A – Ne fait pas partie de ce groupe
B – Utiliser selon besoin
C – Modification
D – Commander par mètre
E – Commander par centimètre
F – Non représenté
G – Commander par pouce
I – Voir "Hydraulic Information System"
M – Pièce métrique
R – Pièce rénovée éventuellement disponible
Y – Illustration séparée
Z – Non fourni séparément

NOTA:

En raison du progrès technique et des améliorations continuelles apportées au matériel, votre machine comporte peut-être des modifications qui n'apparaissent pas dans la présente publication. En cas de doute sur un détail de votre machine Caterpillar ou sur le texte de la présente publication, adressez-vous à votre concessionnaire Caterpillar.

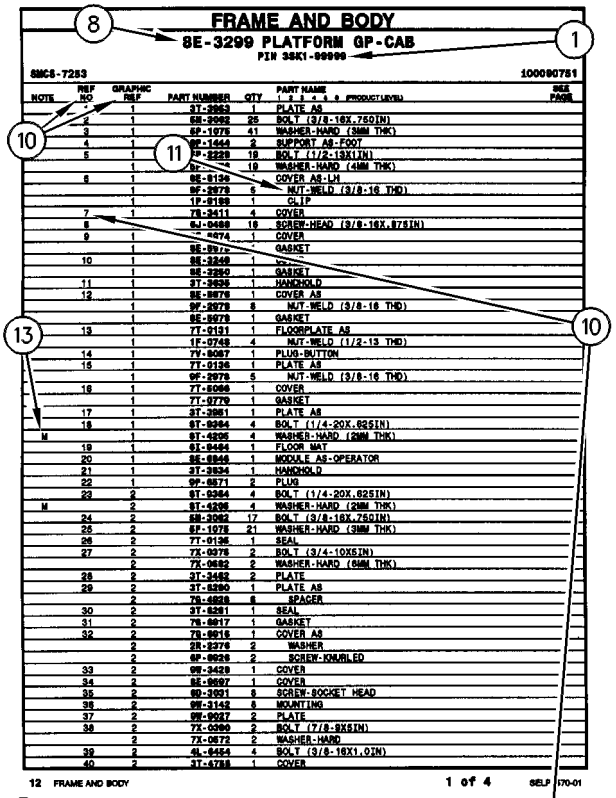
FRAME AND BODY
8E-3299 PLATFORM GP-CAB
PIN 3SK1-99999
SMCS-7283
100090751
NOTE REF NO GRAPHIC REF PART NUMBER QTY PART NAME SEE PAGE
1 2 3 4 5 6 (PRODUCT LEVEL)
1 1 3T-3963 1 PLATE AS
2 1 6M-2062 25 BOLT (3/8-16X.750IN)
3 1 6P-1075 41 WASHER-HARD (3MM THK)
4 1 9F-1444 2 SUPPORT AS-FOOT
5 1 9P-2229 19 BOLT (1/2-13X1IN)
WASHER-HARD (4MM THK)
6 1 8E-9139 COVER AS-LH
NUT-WELD (3/8-16 THD)
1P-8189 1 CLIP
7 1 7S-3411 4 COVER
6J-0468 18 SCREW-HEAD (3/8-16X.875IN)
9 1 4074 1 COVER
GASKET
10 1 8E-3249 1
8E-2260 1 GASKET
11 1 3T-3636 1 HANDHOLD
12 1 8E-9876 1 COVER AS
NUT-WELD (3/8-16 THD)
8E-9878 1 GASKET
13 1 7T-9131 1 FLOORPLATE AS
1F-0748 4 NUT-WELD (1/2-13 THD)
14 1 7V-8067 1 PLUG-BUTTON
15 1 7T-9126 1 PLATE AS
9P-2978 5 NUT-WELD (3/8-16 THD)
16 1 7T-8066 1 COVER
7T-9779 1 GASKET
17 1 3T-3961 1 PLATE AS
18 1 9T-0264 4 BOLT (1/4-20X.625IN)
M 1 9T-4295 4 WASHER-HARD (2MM THK)
19 1 6J-8464 1 FLOOR MAT
20 1 8E-8848 1 MODULE AS-OPERATOR
21 1 3T-3934 1 HANDHOLD
22 1 9P-8871 2 PLUG
23 2 9T-0264 4 BOLT (1/4-20X.625IN)
M 2 9T-4295 4 WASHER-HARD (2MM THK)
24 2 6M-2062 17 BOLT (3/8-16X.750IN)
25 2 6P-1075 21 WASHER-HARD (3MM THK)
26 2 7T-9136 1 SEAL
27 2 7X-0975 2 BOLT (3/4-10X5IN)
7X-0682 2 WASHER-HARD (6MM THK)
28 2 3T-3482 2 PLATE
29 2 3T-8290 1 PLATE AS
7S-4828 8 SPACER
30 2 3T-8281 1 SEAL
31 2 7S-8817 1 GASKET
32 2 7S-8816 1 COVER AS
2R-2276 2 WASHER
9P-8826 2 SCREW-KNURLED
33 2 9M-3429 1 COVER
34 2 8E-9897 1 COVER
35 2 8D-3931 8 SCREW-SOCKET HEAD
36 2 9M-3142 8 MOUNTING
37 2 9M-9937 2 PLATE
38 2 7X-0960 2 BOLT (7/8-9X5IN)
7X-0672 2 WASHER-HARD
39 2 4L-8454 4 BOLT (3/8-16X1.0IN)
40 2 3T-4788 1 COVER
12 FRAME AND BODY
1 of 4
SELP4570-01

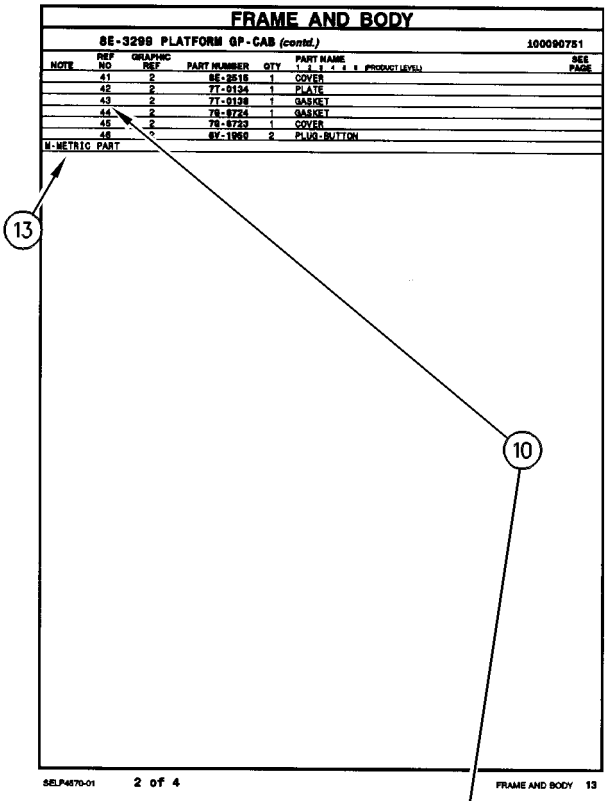
FRAME AND BODY
8E-3299 PLATFORM GP-CAB (contd.)
100090751
NOTE REF NO GRAPHIC REF PART NUMBER QTY PART NAME SEE PAGE
1 2 3 4 5 6 (PRODUCT LEVEL)
41 2 8E-2515 1 COVER
42 2 7T-9134 1 PLATE
43 2 7T-9138 1 GASKET
44 2 7S-8724 1 GASKET
45 2 7S-8723 1 COVER
46 * 8Y-1950 2 PLUG-BUTTON
M-METRIC PART
SELP4570-01
2 of 4
FRAME AND BODY 13

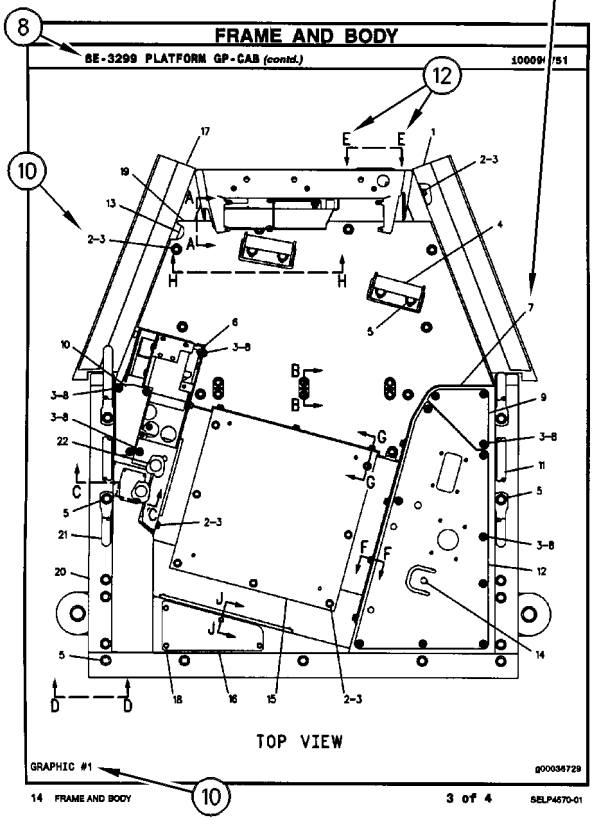
FRAME AND BODY
8E-3299 PLATFORM GP-CAB (contd.)
100090751
TOP VIEW
GRAPHIC #1
g00036729
14 FRAME AND BODY
3 of 4
SELP4570-01

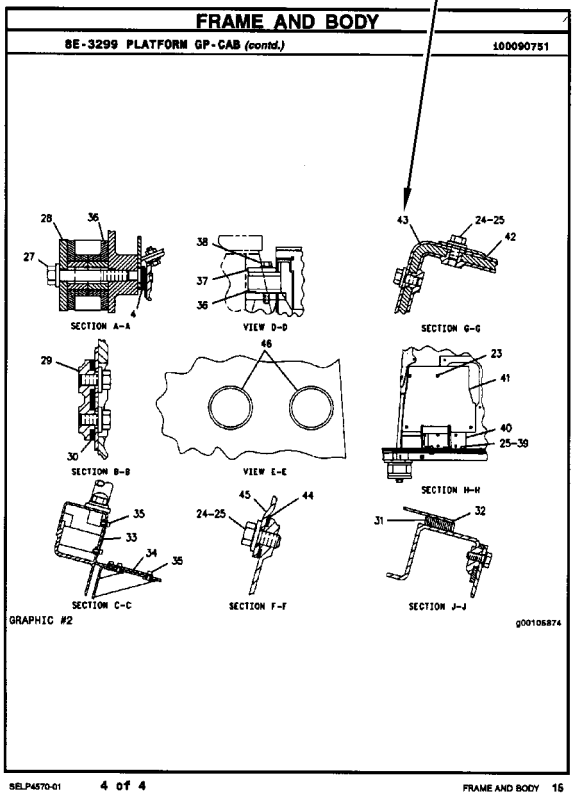
FRAME AND BODY
8E-3299 PLATFORM GP-CAB (contd.)
100090751
SECTION A-A
VIEW D-D
SECTION G-G
SECTION B-B
VIEW E-E
SECTION H-H
SECTION C-C
SECTION F-F
SECTION J-J
GRAPHIC #2
g00105874
SELP4570-01
4 of 4
FRAME AND BODY 15

INFORMACIÓN GENERAL

1. MÁQUINAS

Las máquinas Caterpillar se identifican con Números de Identificación del Producto (PIN). Algunos componentes incluídos en la máquina pueden estar identificados con Números de Serie (N/S). Los componentes que tienen típicamente esta identificación incluyen motores, transmisiones, hojas topadoras y desgarradores. La máquina y el motor se identifican además con Números de Configuración y en algunos casos, Números de Modificación. Estos números están en las placas de identificación del producto o en la placa principal en la cabina del operador.

Los distribuidores Caterpillar necesitan estos números para identificar con exactitud los números de piezas de repuesto.

SIS *Nueva Característica*

A partir del primer trimestre del 2001, el Número de Identificación de Producto (PIN) de Caterpillar cambió de 8 a 17 caracteres. Para hacer más uniforme el método de identificación de equipos, Caterpillar y otros fabricantes de equipo de construcción han tomado medidas para cumplir con la versión más reciente de la norma de numeración de identificación de productos. Los Números de Identificación de Producto para máquinas que no se operan en carreteras son definidos por la norma ISO 10261. El nuevo formato PIN corresponderá a todas las máquinas y grupos electrógenos Caterpillar. Las placas y los caracteres PIN estampados en el bastidor mostrarán el PIN de 17 caracteres. El nuevo formato tendrá la apariencia siguiente:

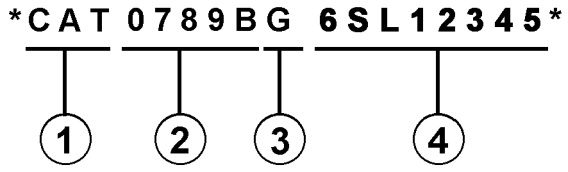

Significado de los caracteres:

1. Código de Fabricación Mundial de Caterpillar (caracteres 1-3)

2. Sección Descriptor de la Máquina (caracteres 4-8)

3. Carácter de Verificación (carácter 9)

4. Sección Indicador de la Máquina (MIS) o Número de Secuencia de Producto (caracteres 10-17). Anteriormente, estos caracteres constituían el Número de Serie.

Las máquinas y grupos electrógenos producidos antes del primer semestre del 2001 mantendrán su formato PIN de 8 caracteres.

Los componentes como motores, transmisiones, ejes, herramientas de trabajo, etc., continuarán usando un Número de Serie (S/N) de 8 caracteres.

2. COMO PEDIR REPUESTOS

⚠ ADVERTENCIA

Cuando se necesiten piezas de repuesto para este producto, Caterpillar recomienda usar piezas de repuesto Caterpillar o piezas que tengan especificaciones equivalentes incluyendo, pero sin estar limitadas a, dimensiones físicas, tipo, fortaleza y material.

El no hacer caso de esta advertencia puede llevar a fallas prematuras, daños al producto y lesiones graves o mortales.

Las piezas de repuesto Caterpillar de calidad están a la disposición de los distribuidores Caterpillar en todo el mundo. Sus existencias actualizadas incluyen todas las piezas normalmente requeridas para proteger su inversión en máquinas Caterpillar. Los distribuidores pueden tener juegos de reparación o piezas remanufacturadas para permitir la selección de la mejor alternativa de reparación en un caso en particular. Al pedir piezas de repuesto, especifique en su pedido la cantidad, el número de pieza, el nombre de la pieza y el número de serie/número de identificación del producto, de la máquina para la cual se necesitan estas piezas.

3. ORGANIZACION DEL MANUAL DE PIEZAS

La información sobre el producto, se presenta en este manual, como "elementos de información" que representan todos los componentes de un modelo específico. Las configuraciones de motores y los grupos de asientos son ejemplos de elementos de información. Los elementos de información están organizados primeramente por nombres de piezas en orden alfabético y en segundo lugar, por el número de pieza dentro de cada sección principal del manual.

4. CONTENIDO

La página de Contenido se encuentra al principio del manual. El Contenido indica cada sección del manual con una lista completa de todos los elementos de información organizados en el orden que aparecen en el manual. Los números de página proporcionan una referencia rápida a las ilustraciones detalladas de identificación de piezas y a las listas de componentes de repuesto de dichas piezas.

5. ÍNDICE DE PIEZAS DE MANTENIMIENTO

Al principio de este catálogo se encuentra un índice de los números de piezas utilizadas más frecuentemente para el mantenimiento, que incluye descripción, cantidad necesaria, lugar de utilización y número de página. Esta información está organizada alfabéticamente, por descripción de la pieza.

6. ÍNDICE

El Índice, ubicado cerca del principio del manual, es una lista en orden alfabético de todos los elementos de información incluídos en el manual. Los números de página proporcionan una referencia rápida a las ilustraciones detalladas de identificación de piezas y a las listas de componentes de repuesto de dichas piezas.

7. INDICE NUMÉRICO DE PIEZAS

Un índice numérico de piezas con el correspondiente número de página aparece al final de este catálogo.

8. TÍTULOS

Los títulos ubicados al principio de cada elemento de información identifican el número y el nombre de la pieza junto con información descriptiva. Se debe usar información sobre los Números de Identificación de Pieza (PIN) y los números de serie (S/N) para seleccionar la información que corresponda a una máquina en particular. También se suministra información sobre las opciones de reparación en el campo, la identificación de componentes de accesorios optativos y el lugar de ubicación de la pieza ("es parte de").

La primera línea del título se muestra con un tipo de letra más grande para indicar el comienzo de un elemento de información. Si se requieren páginas adicionales para ilustrar un elemento de información, los títulos se muestran con un tipo de letra normal y la continuación se indica entre paréntesis.

9. PIEZAS QUE NO SE SUMINISTRAN COMO REPUESTO

En algunos casos es necesario indicar piezas que no se suministran como repuesto pero que pueden estar conectadas a listas de componentes de otras piezas de repuesto. En tal caso, dichas piezas se muestran en cursiva para indicar que no son piezas disponibles.

10. NÚMEROS DE REFERENCIA

Los números en la columna de No. de Referencia corresponden a los números indicados en la ilustración que pertenece a ese número de pieza. Los números que tienen un sufijo alfabético identifican artículos de las listas de componentes de piezas. Los números en la columna de Referencia de la ilustración se identifican en la esquina inferior izquierda de cada ilustración. Para determinar el número de pieza correcto se puede utilizar tanto el No. de Referencia de la ilustración como el No. de Referencia del artículo. A medida que se actualiza la información para indicar los más recientes números de piezas de repuesto, puede omitirse intencionalmente un No. de Referencia en una lista de componentes de piezas.

11. NOMBRES DE PIEZA SANGRADOS

Cuando el nombre de una pieza está sangrado en una lista, significa que esta pieza forma parte del grupo o conjunto del renglón inmediatamente superior.

12. LETRAS DE REFERENCIA DE ILUSTRACIONES

Las ilustraciones contienen algunas veces letras de referencia (A, B, C etc.) cuyo propósito es seguir el trayecto de líneas y mazos de cables de un punto a otro. También se utilizan para mostrar dónde volver a unir ilustraciones que se habían separado.

13. ABREVIATURAS Y SIMBOLOS

O.D. – Diámetro exterior
I.D. – Diámetro interior
A – No es pieza de este grupo
B – Utilizado según la demanda
C – Indica cambio
D – Se pide por metro
E – Se pide por centímetro
F – No se muestra
G – Se pide por pulgada
I – Consulte el sistema de información hidráulica
M – Pieza métrica
R – Puede estar disponible como pieza remanufacturada
Y – Ilustración separada
Z – No se suministra por separado

SIS *Nueva Característica*

14. DESCRIPCIÓN DE LOS CAMBIOS DE TIPO

Tipo – Un tipo se define como cualquier cambio de configuración que requiere un Elemento de información adicional de una Configuración, Grupo o Conjunto. Si el número de serie se clasifica por tipos que no están disponibles, se mostrará un número de tipo (Tipo 1,Tipo 2,etc.) en el comentario de la fotografía. Estos cambios de "tipo" se identifican con una nota "C" (cambio con respecto al tipo anterior) en la Lista de Piezas. Se incluirían sólo los "tipos" que aplican a este Manual de Piezas. Es posible que haya tipos adicionales que causen la aparición de notas "C" en el Elemento de Información cuando no se muestran otros tipos."

15.<END>

Este símbolo indica el final de un elemento de información.

NOTA:

Las contínuas mejoras y adelantos en diseño podrían originar cambios a su máquina que no se incluyen en esta publicación. Cuando tenga alguna pregunta acerca de su producto Caterpillar o de esta publicación, consulte al distribuidor Caterpillar para obtener la información más reciente.

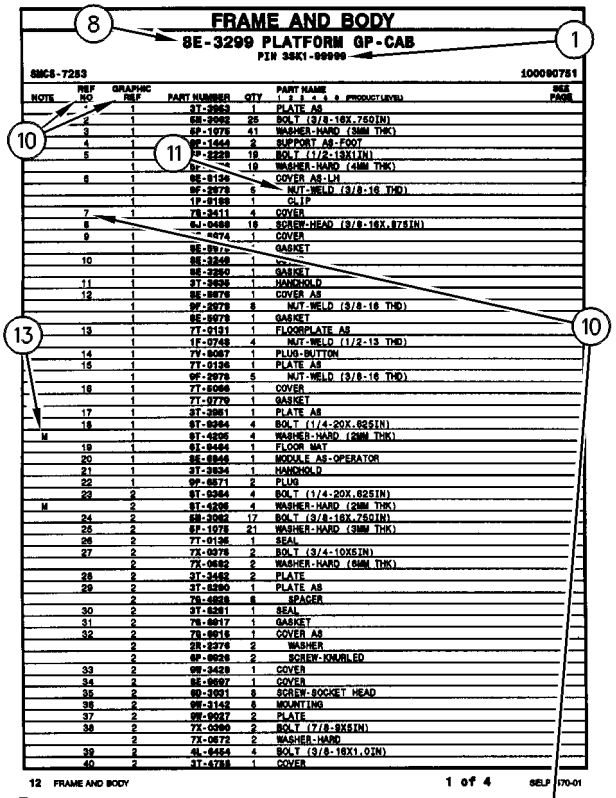

FRAME AND BODY

8E-3299 PLATFORM GP-CAB

PIN 3SK1-99999

SMCS-7283 100090751

NOTE	REF NO	GRAPHIC REF	PART NUMBER	QTY	PART NAME 1 2 3 4 5 6 (PRODUCT LEVEL)	SEE PAGE
	*	1	3T-3963	1	PLATE AS	
	2	1	5H-3962	25	BOLT (3/8-16X.750IN)	
	3	1	6P-1075	41	WASHER-HARD (3MM THK)	
	4	1	9F-1443	2	SUPPORT AS-FOOT	
	5	1	9P-2229	19	BOLT (1/2-13X1IN)	
		1	6P-[illegible]	19	WASHER-HARD (4MM THK)	
	6	1	8E-8136	*	COVER AS-LH	
		1	9F-2979	6	NUT-WELD (3/8-16 THD)	
		1	1P-8189	1	CLIP	
	7	1	7X-3411	4	COVER	
	8	1	6J-0468	18	SCREW-HEAD (3/8-16X.87SIN)	
	9	1	[illegible]-8974	1	COVER	
		1	8E-8976	*	GASKET	
	10	1	8E-3249	1	[illegible]	
		1	8E-3250	1	GASKET	
	11	1	3T-3636	1	HANDHOLD	
	12	1	8E-8976	1	COVER AS	
		1	9F-2979	8	NUT-WELD (3/8-16 THD)	
		1	8E-8978	1	GASKET	
	13	1	7T-9131	1	FLOORPLATE AS	
		1	1F-0748	4	NUT-WELD (1/2-13 THD)	
	14	1	7Y-8067	1	PLUG-BUTTON	
	15	1	7T-0136	1	PLATE AS	
		1	9F-2978	5	NUT-WELD (3/8-16 THD)	
	16	1	7T-8066	1	COVER	
		1	7T-9779	1	GASKET	
	17	1	3T-3961	1	PLATE AS	
	18	1	9T-0264	4	BOLT (1/4-20X.62SIN)	
M		1	9T-4295	4	WASHER-HARD (2MM THK)	
	19	1	6J-8464	1	FLOOR MAT	
	20	1	8E-8846	1	MODULE AS-OPERATOR	
	21	1	3T-3834	1	HANDHOLD	
	22	1	9F-8871	2	PLUG	
	23	2	9T-0264	4	BOLT (1/4-20X.62SIN)	
M		2	9T-4295	4	WASHER-HARD (2MM THK)	
	24	2	5H-3962	17	BOLT (3/8-16X.75QIN)	
	25	2	6P-1075	21	WASHER-HARD (3MM THK)	
	26	2	7T-0136	1	SEAL	
	27	2	7X-0078	2	BOLT (3/4-10X5IN)	
		2	7X-0682	2	WASHER-HARD (6MM THK)	
	28	2	3T-3482	2	PLATE	
	29	2	3T-8290	1	PLATE AS	
		2	7X-4828	8	SPACER	
	30	2	3T-8281	1	SEAL	
	31	2	7X-8017	1	GASKET	
	32	2	7X-8016	1	COVER AS	
		2	2R-2276	2	WASHER	
		2	9F-8026	2	SCREW-KNURLED	
	33	2	9M-3429	1	COVER	
	34	2	8E-8697	1	COVER	
	35	2	9D-3091	8	SCREW-SOCKET HEAD	
	36	2	9M-3142	8	MOUNTING	
	37	2	9M-9017	2	PLATE	
	38	2	7X-0360	2	BOLT (7/8-9X5IN)	
		2	7X-0672	2	WASHER-HARD	
	39	2	4L-8454	4	BOLT (3/8-16X1.0IN)	
	40	2	3T-4788	1	COVER	

12 FRAME AND BODY 1 of 4 SELP4570-01

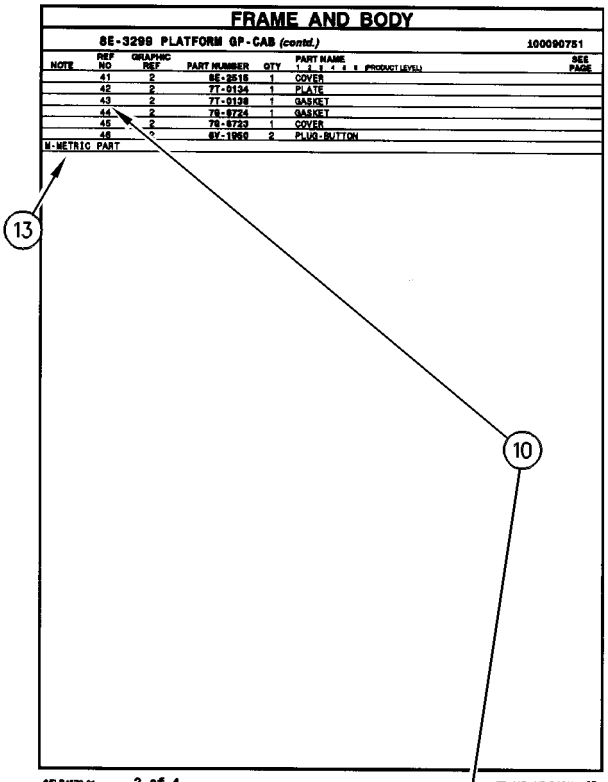

FRAME AND BODY

8E-3299 PLATFORM GP-CAB (contd.) 100090751

NOTE	REF NO	GRAPHIC REF	PART NUMBER	QTY	PART NAME 1 2 3 4 5 6 (PRODUCT LEVEL)	SEE PAGE
	41	2	8E-2515	1	COVER	
	42	2	7T-0134	1	PLATE	
	43	2	7T-0138	1	GASKET	
	44	2	7G-8724	1	GASKET	
	45	2	7G-8723	1	COVER	
	46	*	8Y-1950	2	PLUG-BUTTON	

M-METRIC PART

SELP4570-01 2 of 4 FRAME AND BODY 13

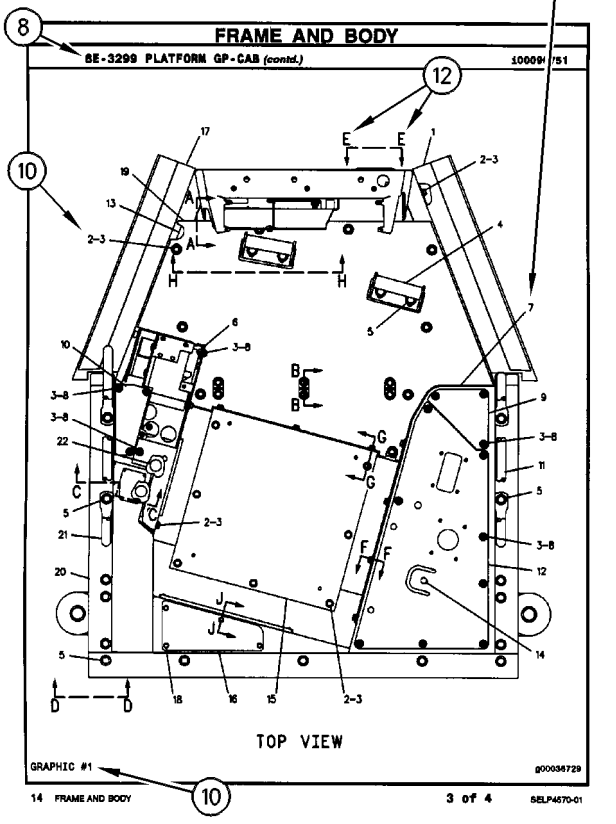

FRAME AND BODY

8E-3299 PLATFORM GP-CAB (contd.) 100090751

TOP VIEW

GRAPHIC #1 g00036729

14 FRAME AND BODY 3 of 4 SELP4570-01

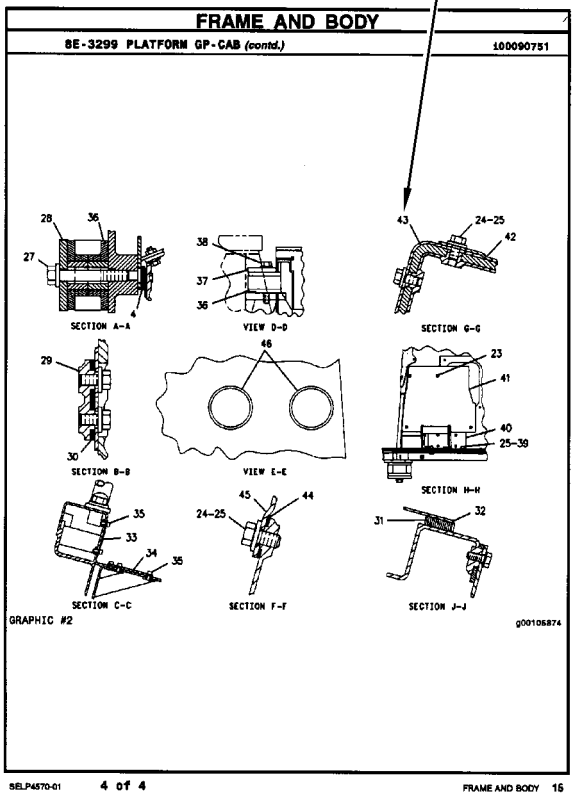

FRAME AND BODY

8E-3299 PLATFORM GP-CAB (contd.) 100090751

SECTION A-A

VIEW D-D

SECTION G-G

SECTION B-B

VIEW E-E

SECTION H-H

SECTION C-C

SECTION F-F

SECTION J-J

GRAPHIC #2 g00105874

SELP4570-01 4 of 4 FRAME AND BODY 15

INFORMAÇÃO GERAL

1. IDENTIFICAÇÃO DA MÁQUINA

As máquinas Caterpillar são identificadas pelos Números de Informação do Produto (PIN). Alguns componentes incluídos numa máquina podem ser identificados por Números de Série (S/N). Componentes típicos que serão enumerados com números de série incluem motores, transmissões, lâminas e ríperes. Além do número de série, a máquina e o motor são ainda identificados por números de arranjo e, em alguns casos, números de modificações. Tais números encontram-se na(s) placa(s) de identificação do produto e na placa mestre no compartimento do operador.

SIS *Novidades*

A partir do primeiro trimestre de 2001 o Número de Identificação de Produto da Caterpillar (PIN) precisa ser mudado de 8 para 17 caracteres. Esforçando-se para fornecer uma identificação uniforme de equipamentos, a Caterpillar e outros fabricantes de equipamento de construção estão mudando para atender a versão mais atualizada do padrão de identificação de produtos. Os números de PIN para produtos de aplicações não rodoviárias são definidos pela ISO 10261. O novo formato de número PIN será adotado em todas as máquinas e grupos geradores Caterpillar. As placas e as marcações do chassi mostrarão os 17 dígitos de PIN. O novo formato terá a seguinte disposição:

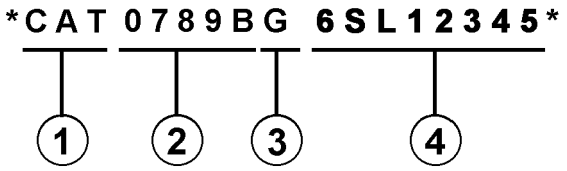

Onde:

1. Código de Fabricação Mundial da Caterpillar (dígitos 1-3)

2. Descrição da Máquina (dígitos 4-8)

3. Dígito de Verificação (dígito 9)

4. Seção de Indicador da Máquina (MIS) ou Número de Seqüência de Produto (dígitos 10-17). Estes eram anteriormente chamados de Número de Série.

Máquinas e grupos geradores produzidos antes do primeiro trimestre de 2001 manterão o formato de 8 caracteres de PIN.

Componentes como motores, transmissões, eixos, ferramentas de trabalho, etc. continuarão a usar Número de Série (S/N) com oito caracteres.

2. COMO OBTER PEÇAS

⚠ CUIDADO

Quando peças de substituição são exigidas para este produto, a Caterpillar recomenda a utilização de peças de substituição Caterpillar ou peças com as especificações equivalentes incluindo, mas não limitadas, à dimensões físicas, tipos, resistência e materiais.

A inobservância desta advertência poderá resultar em falhas prematuras, danos ao produto, ferimentos ou morte.

As Peças de Reposição de Qualidade Caterpillar encontram-se disponíveis nos revendedores Caterpillar no mundo inteiro. Seus estoques de peças são atualizados e incluem todas as peças normalmente necessárias para proteger seu investimento em máquinas Caterpillar. Alguns revendedores podem oferecer jogos de reparo ou peças de troca/remanufaturadas disponíveis como uma opção da alternativa de reparo mais eficaz para uma situação específica. Ao encomendar peças, seu pedido deve especificar a quantidade, o número e o nome da peça e o número de série/número de identificação do produto referentes à máquina para a qual as peças se destinam.

3. ORGANIZAÇÃO DO MANUAL DE PEÇAS

A informação do produto neste manual é apresentada em forma de "elementos de informação" que representam todos os componentes para o modelo específico. Arranjo de Motor e Grupo de Assento são exemplos de elementos de informação. Os elementos de informação são organizados em ordem alfabética por nome de peça ou secundariamente, por número de peça incluído em cada seção principal do manual.

4. LISTA DE CONTEÚDOS

A Lista de Conteúdos (TOC) se encontra no princípio do manual. A Lista de Conteúdos (TOC) relaciona em cada seção do manual uma lista completa com todos os elementos de informação organizados conforme aparecem no manual. Números de página são fornecidos para que se tenha referência rápida de ilustrações de peças detalhadas e listas de conteúdos que podem receber serviço de manutenção.

5. ÍNDICE DE PEÇAS DE MANUTENÇÃO

O Índice de Peças de Manutenção, localizado perto do princípio do manual, faz referência aos números de peça de manutenção usados com maior frequência, fornecendo uma descrição, a quantidade, o uso e o número de página. Esta informação é organizada com a descrição da peça em ordem alfabética.

6. ÍNDICE

O Índice localizado perto do princípio do manual, consiste de uma lista em ordem alfabética de todos os elementos de informação incluídos no manual. Números de página são fornecidos para que se tenha referência rápida de ilustrações de peças detalhadas e listas de conteúdos que podem receber serviço de manutenção.

7. ÍNDICE DE NÚMERO DE PEÇA

Um índice numérico relacionando todos os números de peça e a(s) página(s) correspondentes, aparece no final do manual.

8. LEGENDAS

As legendas localizadas no início de cada elemento de informação identificam o número e o nome de peça, juntamente com informação descritiva adicional. Informações sobre o Número de Informação do Produto (PIN) e o Número de Série (S/N) encontradas em cada legenda devem ser usadas para selecionar a informação correta sobre uma máquina específica. Opções de substituição no campo, identificação de componentes de acessórios opcionais e informações sobre onde são utilizados ("parte de") são também fornecidas.

A primeira linha de uma legenda é indicada em tipo maior para indicar o princípio de um elemento de informação. Legendas para páginas adicionais que podem ser necessárias para ilustrar um elemento de informação serão apresentadas em tipo padrão e incluirão o termo *(continua)* .

9. NÃO DISPONÍVEL SEPARADAMENTE

Em alguns casos, é necessário mostrar peças não disponíveis separadamente que têm uma ligação com listas de conteúdos de nível inferior que podem receber serviço de manutenção. Os números de peça destes componentes não disponíveis aparecerão em *itálico* , a fim de indicar que não estão disponíveis.

10. NÙMEROS DE REFERÊNCIA À LISTA DE PEÇAS

Os números indicados na coluna Ref No (No. de Referência) correspondem-se aos números usados no(s) gráfico(s) correspondente(s). Um sufixo com letras pode ser acrescentado a um número de referência para identificar itens de conteúdo de nível inferior. Os números indicados na coluna Graphic Ref (Referência de Gráfico) referem-se ao identificador de número de gráfico presente no canto esquerdo inferior de cada ilustração. O número de Referência de Gráfico pode ser usado em combinação com o item Ref No para determinar-se o número de peça correto. Poderá haver omissão intencional de um número de referência (Ref No) de uma lista de conteúdos uma vez que as informações são atualizadas para refletir os números de peça mais recentes que podem receber serviço de manutenção.

11. NOMES DE PEÇAS DESALINHADOS

Quando um nome de peça encontra-se desalinhado numa lista de peças, significa que tal item faz parte do (está incluído no) grupo ou conjunto sob o qual está relacionado.

12. LETRAS DE REFERÊNCIA NAS ILUSTRAÇÕES

Quando necessário, as ilustrações contêm letras de referência (A, B, C, etc.) que são utilizadas para seguir tubulações e cabos elétricos de um ponto a outro. Também foram utilizadas para indicar onde se pode reconectar as ilustrações que foram separadas.

13. ABREVIAÇÕES E SÍMBOLOS

O.D. – "Outside Diameter" (Diâmetro Externo)
I.D. – "Inside Diameter" (Diâmetro Interno)
A – Não faz parte deste grupo
B – Use conforme necessário
C – Indica modificação
D – Vendido por metro
E – Vendido por centímetro
F – Não ilustrado
G – Vendido por polegada
I – Consultar o Sistema de Informações Hidráulicas
M – Peça métrica
R – Peça remanufaturada pode estar disponível; consulte o seu revendedor Cat
Y – Ilustração separada
Z – Não disponível separadamente

SIS *Novidades*

14. <END>

Este símbolo indica o final de um elemento de informação.

NOTA:

Os contínuos aperfeiçoamentos e avanços no projeto do produto podem ocasionar modificações em sua máquina que talvez ainda não estejam incluídas nesta publicação. Sempre que surgirem dúvidas quanto a um produto Caterpillar ou quanto à presente publicação, consulte o seu revendedor Caterpillar para obter as informações mais recentes disponíveis.

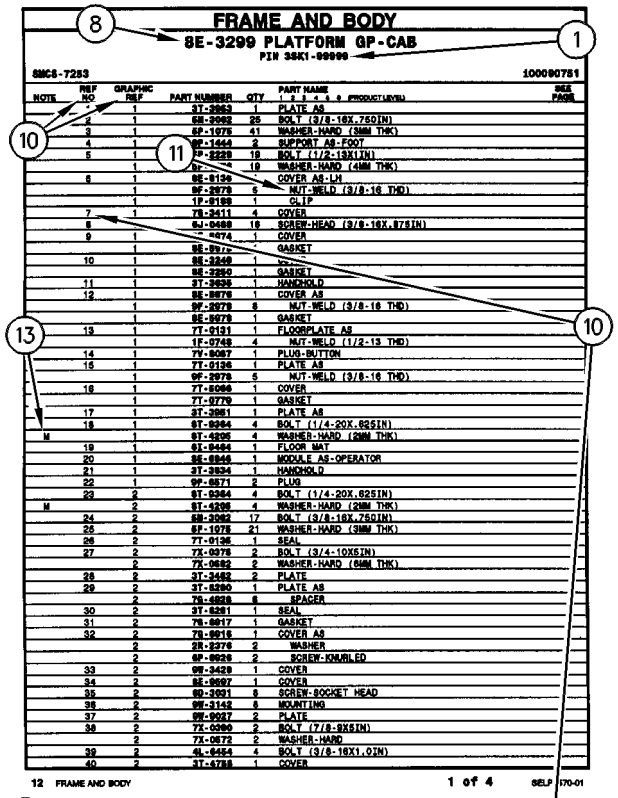

FRAME AND BODY

8E-3299 PLATFORM GP-CAB

PIN 3SK1-99999

SMCS-7283 100090751

NOTE	REF NO	GRAPHIC REF	PART NUMBER	QTY	PART NAME 1 2 3 4 5 6 (PRODUCT LEVEL)	SEE PAGE
	*	1	3T-3963	1	PLATE AS	
	2	1	5M-3062	25	BOLT (3/8-16X.750IN)	
	3	1	6P-1075	41	WASHER-HARD (3MM THK)	
	4	1	9F-1443	2	SUPPORT AS-FOOT	
	5	1	9P-2229	19	BOLT (1/2-13X1IN)	
		1	9P-[illegible]	19	WASHER-HARD (4MM THK)	
	6	1	8E-8136	*	COVER AS-LH	
		1	9F-2979	6	NUT-WELD (3/8-16 THD)	
		1	1P-8189	1	CLIP	
	7	1	7X-3411	4	COVER	
	8	1	9J-0468	18	SCREW-HEAD (3/8-16X.875IN)	
	9	1	[illegible]-8974	1	COVER	
		1	8E-8976	*	GASKET	
	10	1	8E-3249	1	[illegible]	
		1	8E-3250	1	GASKET	
	11	1	3T-3636	1	HANDHOLD	
	12	1	8E-8976	1	COVER AS	
		1	9F-2979	8	NUT-WELD (3/8-16 THD)	
		1	8E-8978	1	GASKET	
	13	1	7T-9131	1	FLOORPLATE AS	
		1	1F-0748	4	NUT-WELD (1/2-13 THD)	
	14	1	7Y-8067	1	PLUG-BUTTON	
	15	1	7T-0136	1	PLATE AS	
		1	9F-2979	5	NUT-WELD (3/8-16 THD)	
	16	1	7T-8066	1	COVER	
		1	7T-9779	1	GASKET	
	17	1	3T-3961	1	PLATE AS	
	18	1	9T-0264	4	BOLT (1/4-20X.625IN)	
M		1	9T-4295	4	WASHER-HARD (2MM THK)	
	19	1	9J-8464	1	FLOOR MAT	
	20	1	8E-8846	1	MODULE AS-OPERATOR	
	21	1	3T-3834	1	HANDHOLD	
	22	1	9F-8871	2	PLUG	
	23	2	9T-0264	4	BOLT (1/4-20X.625IN)	
M		2	9T-4295	4	WASHER-HARD (2MM THK)	
	24	2	5M-3062	17	BOLT (3/8-16X.750IN)	
	25	2	6P-1075	21	WASHER-HARD (3MM THK)	
	26	2	7T-0136	1	SEAL	
	27	2	7X-0078	2	BOLT (3/4-10X5IN)	
		2	7X-0682	2	WASHER-HARD (6MM THK)	
	28	2	3T-3482	2	PLATE	
	29	2	3T-8290	1	PLATE AS	
		2	7S-4828	8	SPACER	
	30	2	3T-8281	1	SEAL	
	31	2	7S-8817	1	GASKET	
	32	2	7S-8816	1	COVER AS	
		2	5R-2276	2	WASHER	
		2	9F-8826	2	SCREW-KNURLED	
	33	2	9M-3429	1	COVER	
	34	2	8E-8697	1	COVER	
	35	2	9D-3091	8	SCREW-SOCKET HEAD	
	36	2	9M-3142	8	MOUNTING	
	37	2	9M-9017	2	PLATE	
	38	2	7X-0360	2	BOLT (7/8-9X5IN)	
		2	7X-0672	2	WASHER-HARD	
	39	2	4L-8454	4	BOLT (3/8-16X1.0IN)	
	40	2	3T-4788	1	COVER	

12 FRAME AND BODY 1 of 4 SELP4570-01

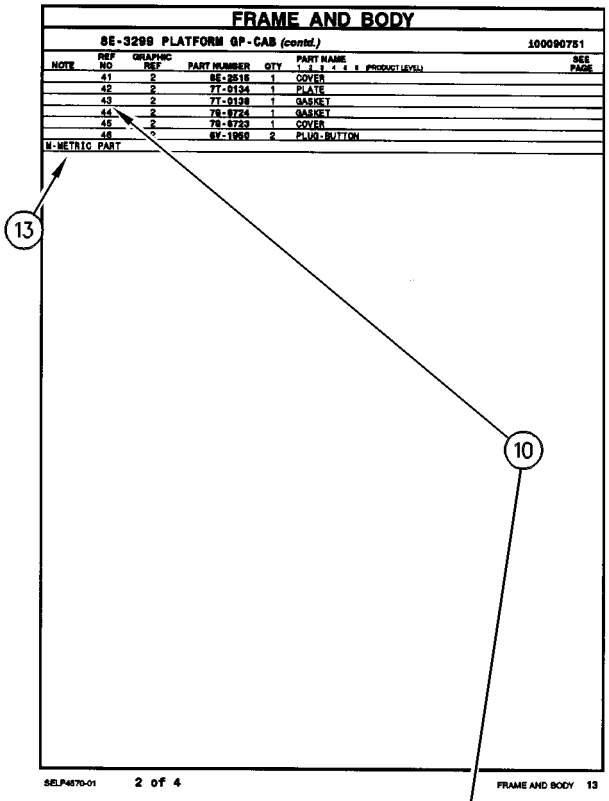

FRAME AND BODY

8E-3299 PLATFORM GP-CAB (contd.) 100090751

NOTE	REF NO	GRAPHIC REF	PART NUMBER	QTY	PART NAME 1 2 3 4 5 6 (PRODUCT LEVEL)	SEE PAGE
	41	2	8E-2515	1	COVER	
	42	2	7T-9134	1	PLATE	
	43	2	7T-9138	1	GASKET	
	44	2	7S-8724	1	GASKET	
	45	2	7S-8723	1	COVER	
	46	*	8Y-1950	2	PLUG-BUTTON	

M-METRIC PART

SELP4570-01 2 of 4 FRAME AND BODY 13

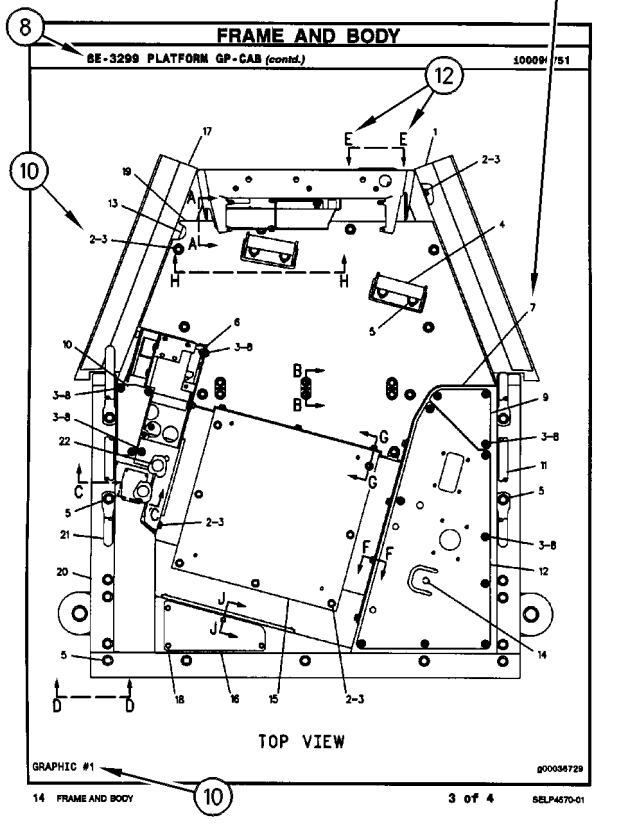

FRAME AND BODY

8E-3299 PLATFORM GP-CAB (contd.) 100090751

TOP VIEW

GRAPHIC #1 g00036729

14 FRAME AND BODY 3 of 4 SELP4570-01

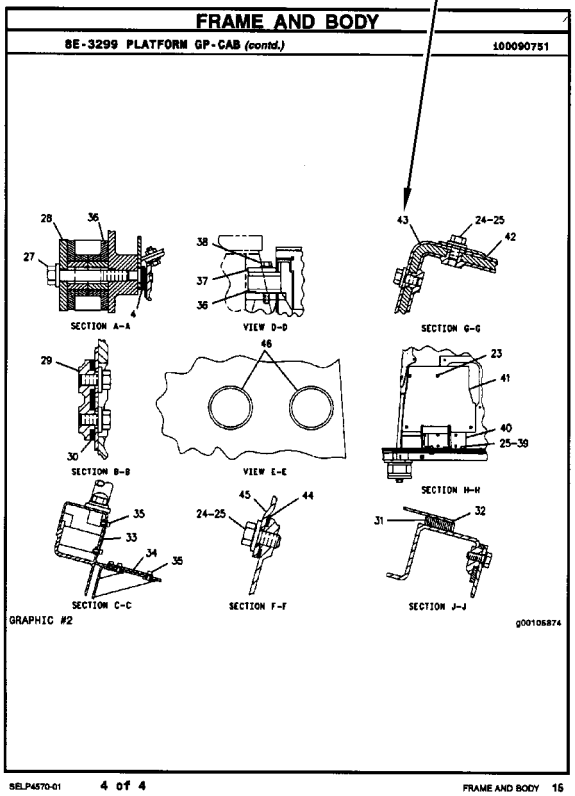

FRAME AND BODY

8E-3299 PLATFORM GP-CAB (contd.) 100090751

SECTION A-A

VIEW D-D

SECTION G-G

SECTION B-B

VIEW E-E

SECTION H-H

SECTION C-C

SECTION F-F

SECTION J-J

GRAPHIC #2 g00105874

SELP4570-01 4 of 4 FRAME AND BODY 15

ALLGEMEINE HINWEISE

1. MASCHINENKENNZEICHNUNG

Caterpillar-Maschinen sind mit PRODUCT IDENTIFICATION NUMBERS (PIN) (Produkt-Identnummern) gekennzeichnet. Einige Baugruppen, z.B. Motoren, Getriebe, Planierschilde und Aufreißer, sind mit SERIAL NUMBERS (S/N) (Seriennummern) gekennzeichnet. An der Maschine und am Motor befinden sich außerdem ARRANGEMENT NUMBERS (Ausrüstungsnummern) sowie in einigen Fällen MODIFICATION NUMBERS (Änderungsnummern). Sie befinden sich auf den PIN-Schildern und auf dem Typenschild im Fahrerhaus.

Bei Ersatzteilbestellungen müssen dem Händler alle diese Nummern zur Verfügung gestellt werden.

SIS *Neu im Parts Manual*

Vom ersten Quartal 2001 ab wurde die Caterpillar Produkt-Identnummer (PIN) von 8 auf 17 Zeichen geändert. Um zur Standardisierung der Produkt-Identnummer beizutragen, sind Caterpillar und andere Baumaschinenhersteller bestrebt, die aktuellste Norm zur Produkt-Identnummerierung einzuführen. Produkt-Identnummern für Baumaschinen sind durch ISO 10261 definiert. Das neue Format der Produkt-Identnummern gilt für alle Caterpillar-Maschinen und -Stromaggregate. Die Produkt-Identschilder und -Identrahmenmarkierung enthalten die aus 17 Zeichen bestehende Identnummer. Das neue Format hat folgende Abschnitte:

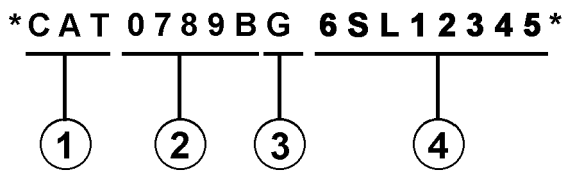

Abschnitte:

1. Caterpillars weltweiter Herstellungscode (Zeichen 1-3)

2. Modell (Zeichen 4-8)

3. Kontrollzeichen (Zeichen 9)

4. Maschinenspezifische Kennung (MIS) oder Produktsequenznummer (Zeichen 10-17). Diese wurde früher als Seriennummer bezeichnet.

Für vor dem ersten Quartal 2001 hergestellte Maschinen und Stromaggregate wird das aus 8 Zeichen bestehende PIN-Format beibehalten.

Bauteile wie z.B. Motoren, Getriebe, Achsen sowie Arbeitsgeräte werden weiterhin eine aus 8 Zeichen bestehende Seriennummer (S/N) aufweisen.

2. BESTELLEN VON ERSATZTEILEN

⚠ WARNUNG

Wenn für diese Maschine Ersatzteile benötigt werden, empfiehlt Caterpillar, ausschließlich Caterpillar-Ersatzteile oder solche zu verwenden, die die gleichen technischen Merkmale hinsichtlich Typ, Festigkeit, Werkzeugeigenschaften und die gleichen Maße aufweisen.

Bei Nichtbeachtung dieser Warnung besteht Verletzungs- oder sogar Lebensgefahr! Ferner kann Nichtbeachtung vorzeitige Ausfälle der Teile und Beschädigung der Maschine zur Folge haben.

Original Caterpillar-Ersatzteile können weltweit bei jedem Caterpillar-Händlern bestellt werden. Die umfangreichen Händlerlager enthalten normalerweise alle Teile, die Sie für Ihre Caterpillar-Maschine benötigen. Einige Händler bieten Reparatursätze, Austausch- oder werküberholte Teile an, so daß Sie eine Auswahl unter verschiedenen Reparaturmöglichkeiten treffen können. Ihre Bestellung muß folgende Angaben enthalten: Anzahl der benötigten Teile, Bestellnummer, Bezeichnung des Teils, Serien-Nr./Produkt-Ident-Nr., Ausrüstungs-Nr. und Änderungs-Nr. der Maschine, für die diese Teile benötigt werden.

3. AUFBAU DES PARTS MANUAL

Die Produktinformationen für alle Komponenten eines bestimmten Modells sind in INFORMATION ELEMENTS (Informationseinheiten) gegliedert. ENGINE ARRANGEMENT (Motorausführung) und SEAT GROUP (Fahrersitz) sind Beispiele für solche Informationseinheiten. Sie sind innerhalb jeder Gruppe alphabetisch, entsprechend der Ersatzteilbezeichnung, und zusätzlich numerisch, entsprechend der Ersatzteilnummer, geordnet.

4. INHALTSVERZEICHNIS

Das Inhaltsverzeichnis befindet sich am Anfang des Buches. Im Inhaltsverzeichnis werden die einzelnen Abschnitte des Buches aufgeführt. Die Abschnitte enthalten eine vollständige Aufstellung aller Informationseinheiten. Diese sind entsprechend ihrem Erscheinen im Buch geordnet. Das Inhaltsverzeichnis enthält Seitenangaben für Schnellverweise auf detaillierte Abbildungen und Teillisten.

ALLGEMEINE HINWEISE

5. INDEX FÜR WARTUNGSTEILE

Der Index für Wartungsteile vorn im Buch enthält die Bestellnummern, Seitenangaben, Mengenangaben und Informationen über den Einsatzbereich für die am häufigsten benötigten Ersatzteile. Die Angaben sind alphabetisch entsprechend der Teilebezeichnung geordnet.

6. INDEX

Der Index vorn im Buch enthält eine alphabetische Liste aller Informationseinheiten. Er enthält Seitenangaben für Schnellverweise auf detaillierte Abbildungen und Teillisten.

7. INDEX FÜR BESTELLNUMMERN

Hinten im Buch befindet sich ein numerischer Index, mit allen Bestellnummern und dem Hinweis auf die Seite, auf der sich die betreffende Abbildung befindet.

8. ÜBERSCHRIFTEN

Die Überschriften, die sich am Anfang jeder der Informationseinheiten befinden, enthalten Bestellnummern, Ersatzteilbezeichnungen und zusätzliche beschreibende Informationen. Produkt-Ident- und Seriennummern in den Überschriften sollten zur Auswahl der richtigen Informationen für die betreffende Maschine verwendet werden. Die Überschriften enthalten außerdem Informationen über möglichen Außendienstersatz, mögliche Baugerätekomponenten und die Baugruppe, zu der das Teil gehört.

Die erste Zeile einer Überschrift erscheint in einer größeren Schriftart, um den Anfang einer Informationseinheit zu kennzeichnen. Überschriften für zusätzliche Seiten, die zur Erläuterung einer Informationseinheit notwendig sind, erscheinen in normaler Schriftart und enthalten den Begriff "(contd.)".

9. NICHT EINZELN LIEFERBARE TEILE

In einigen Fällen ist es notwendig nicht lieferbare Teile, die selbst mit einer eigenen Teilliste im Buch vertreten sind, aufzuführen. Die Bestellnummern dieser nicht einzeln lieferbaren Teile erscheinen kursiv, wodurch angezeigt wird, daß sie nur in Verbindung mit anderen Teilen lieferbar sind.

10. REFERENZNUMMER FÜR ERSATZTEILE

Die Zahlen, die in der Spalte "Ref No" aufgeführt sind, stimmen mit den Zahlen in den beigefügten Abbildungen überein. Ein Buchstaben-Suffix kann zu einer Referenznummer hinzugefügt werden, um zu kennzeichnen, daß das Teil mit einer eigenen Teilliste im Buch aufgeführt ist. Die in der Spalte "Graphic Ref" angeführten Zahlen verweisen auf die Identifikationsnummer der Abbildung, die sich in der linken unteren Ecke der Abbildung befindet. Diese Nummer kann zusammen mit der Referenznummer des Teils angegeben werden, um die richtige Ersatzteilnummer zu ermitteln. Referenznummern können absichtlich weggelassen werden, da die Nummern der lieferbaren Ersatzteile ständig aktualisiert werden.

11. EINGERÜCKTE BEZEICHNUNGEN

Wenn eine Bezeichnung eingerückt ist, wird dadurch angezeigt, daß das Teil zu einer Baugruppe gehört, unter deren Bezeichnung es eingerückt ist.

12. REFERENZBUCHSTABEN

Falls erforderlich sind in den Abbildungen Referenzbuchstaben enthalten (z.B. A, B, C, usw.), die Leitungen und Kabelbäume von einem Punkt zum anderen verfolgen. Außerdem geben sie die Stelle an, an der getrennte Abbildungen fortgesetzt werden.

13. ABKÜRZUNGEN UND SYMBOLE

O.D. – Außendurchmesser
I.D. – Innendurchmesser
A – kein Teil dieser Gruppe
B – nach Bedarf verwenden
C – Hinweis auf eine Änderung
D – in Meter-Länge bestellen
E – in Zentimeter-Länge bestellen
F – nicht gezeigt
G – in Zoll-Länge bestellen
I – siehe Hydraulikinformationssystem
M – metrisches Teil
R – werküberholtes Teil unter Umständen lieferbar
Y – separate Abbildung
Z – nicht einzeln lieferbar

SIS *Neu im Parts Manual*

14. BESCHREIBUNG DER TYPENÄNDERUNGEN

Typ-A bezieht sich auf alle Konfigurationsänderungen, die ein zusätzliches Informationselement für Ausführung, Gruppe oder Einheit benötigen. Wenn kein Seriennummernumbruch für Typen erhältlich ist, wird in der Überschrift eine Typennummer (Typ 1, Typ 2, etc.) angegeben. Diese "Typenänderungen" sind in der Teileliste mit der Anmerkung "C" (Änderung des vorherigen Typs) versehen. Es werden nur die für dieses Ersatzteilhandbuch relevanten "Typen" angegeben. Es können zusätzliche Typen vorhanden sein, was zu "C" Anmerkungen zu einem Informationselement führen kann, wenn keine anderen Typen angegeben werden.

15. <END>

Dieses Symbol zeigt das Ende eines Informationselements an.

ANMERKUNG:

Ständig vorgenommene Verbesserungen und Weiterentwicklungen an Ihrer Maschine können Änderungen verursachen, die in der vorliegenden Ausgabe noch nicht berücksichtigt sind. Fragen zu Ihrer Caterpillar-Maschine oder diesem Ersatzteilbuch beantwortet Ihr Caterpillar-Händler.

ALLGEMEINE HINWEISE

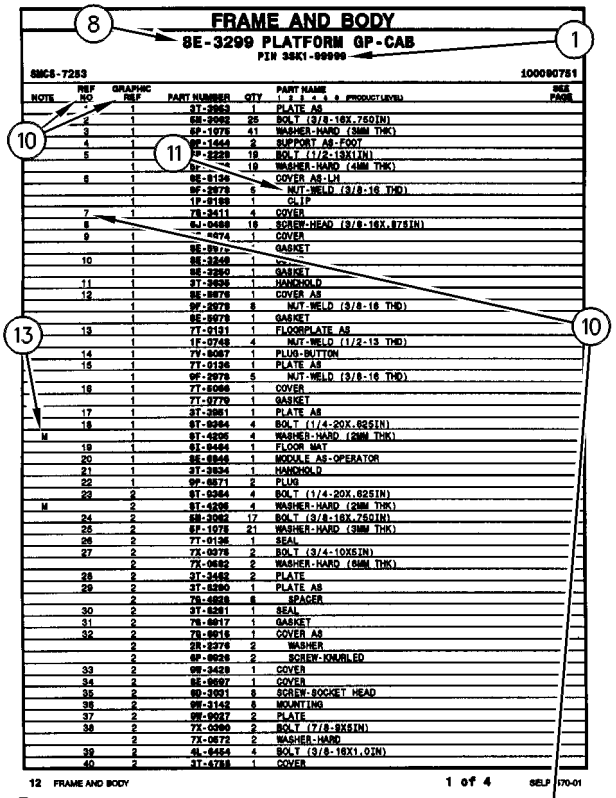

NOTE	REF NO	GRAPHIC REF	PART NUMBER	QTY	PART NAME 1 2 3 4 5 6 (PRODUCT LEVEL)	SEE PAGE
	*	1	3T-3963	1	PLATE AS	
	2	1	6M-2062	25	BOLT (3/8-16X.750IN)	
	3	1	6P-1075	41	WASHER-HARD (3MM THK)	
	4	1	9F-1444	2	SUPPORT AS-FOOT	
	5	1	9P-2229	19	BOLT (1/2-13X1IN)	
		1	6P-[illegible]	19	WASHER-HARD (4MM THK)	
	6	1	9E-9139	*	COVER AS-LH	
		1	9F-2979	6	NUT-WELD (3/8-16 THD)	
		1	1P-0189	1	CLIP	
	7	1	7X-3411	4	COVER	
	8	1	6J-0468	18	SCREW-HEAD (3/8-16X.87SIN)	
	9	1	[illegible]-4074	1	COVER	
		1	9E-[illegible]	*	GASKET	
	10	1	9E-3249	1	[illegible]	
		1	9E-2250	1	GASKET	
	11	1	3T-3936	1	HANDHOLD	
	12	1	9E-9976	1	COVER AS	
		1	9F-2979	8	NUT-WELD (3/8-16 THD)	
		1	9E-9978	1	GASKET	
	13	1	7T-9131	1	FLOORPLATE AS	
		1	1F-0749	4	NUT-WELD (1/2-13 THD)	
	14	1	7Y-8067	1	PLUG-BUTTON	
	15	1	7T-0136	1	PLATE AS	
		1	9F-2979	5	NUT-WELD (3/8-16 THD)	
	16	1	7T-8066	1	COVER	
		1	7T-9779	1	GASKET	
	17	1	3T-3961	1	PLATE AS	
	18	1	9T-0264	4	BOLT (1/4-20X.62SIN)	
M		1	9T-4295	4	WASHER-HARD (2MM THK)	
	19	1	9X-9464	1	FLOOR MAT	
	20	1	9E-6946	1	MODULE AS-OPERATOR	
	21	1	3T-3934	1	HANDHOLD	
	22	1	9F-8671	2	PLUG	
	23	2	9T-0264	4	BOLT (1/4-20X.62SIN)	
M		2	9T-4295	4	WASHER-HARD (2MM THK)	
	24	2	6M-2062	17	BOLT (3/8-16X.75QIN)	
	25	2	6P-1075	21	WASHER-HARD (3MM THK)	
	26	2	7T-0136	1	SEAL	
	27	2	7X-0078	2	BOLT (3/4-10X5IN)	
		2	7X-0682	2	WASHER-HARD (6MM THK)	
	28	2	3T-3482	2	PLATE	
	29	2	3T-8290	1	PLATE AS	
		2	7X-4828	6	SPACER	
	30	2	3T-8281	1	SEAL	
	31	2	7X-8017	1	GASKET	
	32	2	7X-8016	1	COVER AS	
		2	2R-2276	2	WASHER	
		2	9F-9026	2	SCREW-KNURLED	
	33	2	9M-3429	1	COVER	
	34	2	8E-9697	1	COVER	
	35	2	9D-3091	8	SCREW-SOCKET HEAD	
	36	2	9M-3142	8	MOUNTING	
	37	2	9M-9017	2	PLATE	
	38	2	7X-0360	2	BOLT (7/8-9X5IN)	
		2	7X-0672	2	WASHER-HARD	
	39	2	4L-6454	4	BOLT (3/8-16X1.0IN)	
	40	2	3T-4788	1	COVER	

12 FRAME AND BODY 1 of 4 SELP4570-01

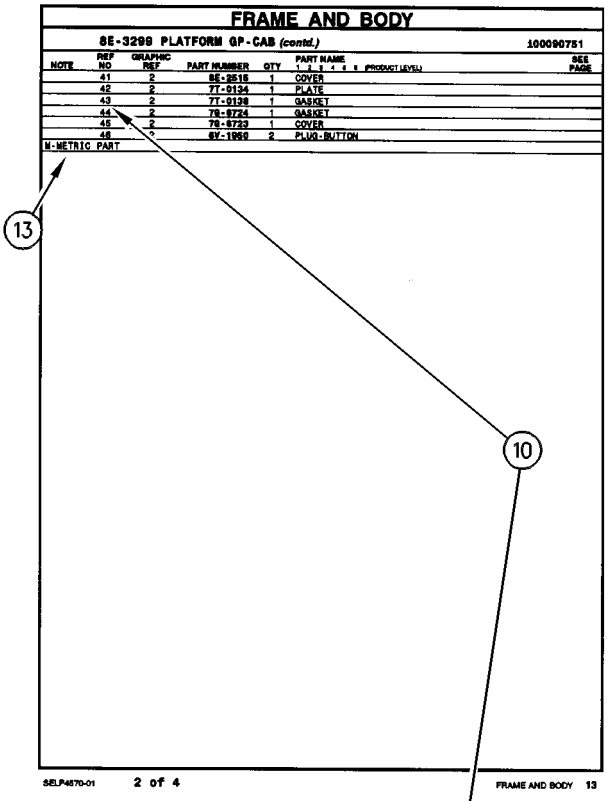

NOTE	REF NO	GRAPHIC REF	PART NUMBER	QTY	PART NAME 1 2 3 4 5 6 (PRODUCT LEVEL)	SEE PAGE
	41	2	8E-2515	1	COVER	
	42	2	7T-0134	1	PLATE	
	43	2	7T-0138	1	GASKET	
	44	2	7S-8724	1	GASKET	
	45	2	7S-8723	1	COVER	
	46	*	8Y-1950	2	PLUG-BUTTON	

M-METRIC PART

SELP4570-01 2 of 4 FRAME AND BODY 13

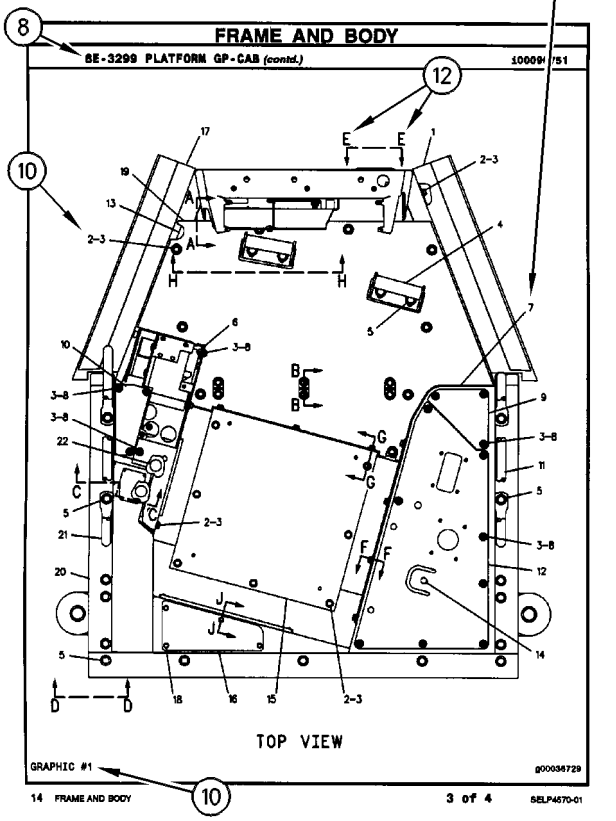

14 FRAME AND BODY 3 of 4 SELP4570-01

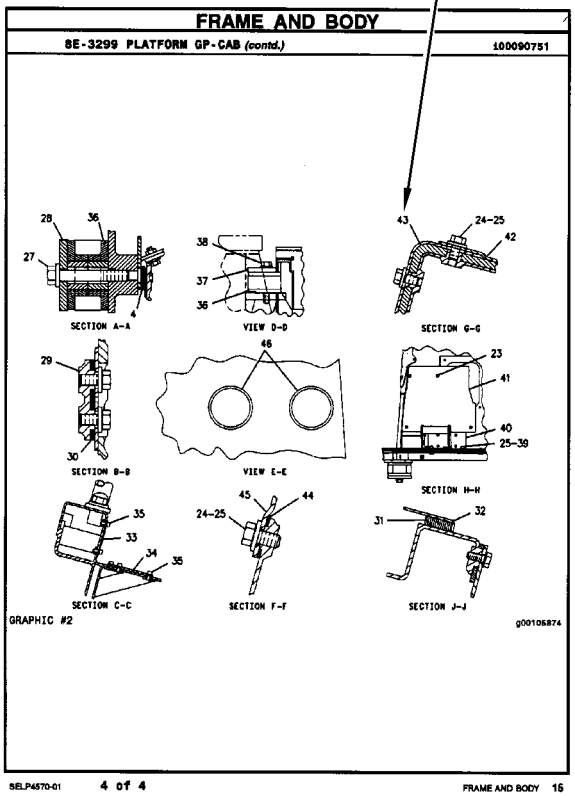

SELP4570-01 4 of 4 FRAME AND BODY 15

REMANUFACTURED COMPONENTS

As an option when making repairs consider Caterpillar Remanufactured Components. Components that are available through the Caterpillar Remanufactured Program are identified three ways in the parts book:

- with the letter R in the note field of the parts list
- with an R* at the beginning of the first line of the caption
- with an *R at the end of the first line of the caption

Typical components included in the Remanufacturing Program include:

ALTERNATORS
CONNECTING RODS
CRANKSHAFTS - UNDERSIZE
CRANKSHAFTS - UPGRADE TO NEW
CYLINDER HEADS
ELECTRONIC CONTROL MODULES (ECM)
ELECTRONIC SENSORS
FUEL INJECTORS
FUEL NOZZLES
FUEL PUMPS
GOVERNORS
OIL PUMPS
PISTONS
SHORT BLOCKS
STARTERS
TURBOCHARGERS - COMPLETE
TURBOCHARGER CARTRIDGES
WATER PUMPS

Caterpillar Remanufactured engines for many engine arrangements are also available.

OPTIONS DE RÉPARATION

COMPOSANTS RÉNOVÉS

Comme option de réparation, considérer les composants rénovés Caterpillar. Les composants disponibles dans le cadre du programme Caterpillar de composants rénovés sont identifiés de trois façons dans le catalogue de pièces:

- avec la lettre "R" dans l'espace note de la liste des pièces
- avec R* au début de la première ligne des légendes
- avec *R à la fin de la première ligne des légendes

Les composants suivants figurent parmi les composants typiques du programme de rénovation:

ALTERNATEURS
BIELLES
VILEBREQUINS - SOUS-DIMENSIONNÉS
VILEBREQUINS - REMIS À NEUF
CULASSES
MODULES DE COMMANDE ÉLECTRONIQUE (ECM)
CAPTEURS ÉLECTRONIQUES
INJECTEURS
TÊTES D'INJECTEURS
POMPES À CARBURANT
RÉGULATEURS
POMPES À HUILE
PISTONS
BLOCS EMBIELLÉS
DÉMARREURS
TURBOCOMPRESSEURS - COMPLETS
CARTOUCHES DE TURBOCOMPRESSEUR
POMPES À EAU

Des moteurs rénovés sont aussi disponibles pour plusieurs versions de moteur.

ALTERNATIVAS DE REPARACIÓN

COMPONENTES REMANUFACTURADOS

Al hacer reparaciones, tenga en cuenta la opción de Componentes Remanufacturados Caterpillar. Los componentes que están disponibles por medio del programa de Productos Remanufacturados Caterpillar se identifican de tres maneras en el manual de piezas:

- con la letra R en el espacio de Nota de la lista de piezas
- con una R* al comienzo de la primera línea de la leyenda
- con una *R al final de la primera línea de la leyenda

Los componentes que se incluyen típicamente en el Programa de Productos Remanufacturados son:

ALTERNADORES
BIELAS
CIGÜEÑALES - BAJOMEDIDA
CIGÜEÑALES - REMANUFACTURADOS A NUEVO
CULATAS
MÓDULOS DE CONTROL ELECTRÓNICO (ECM)
SENSORES ELECTRONICOS
INYECTORES
BOQUILLAS
BOMBAS DE COMBUSTIBLE
REGULADORES
BOMBAS DE ACEITE
PISTONES
MONOBLOQUES
MOTORES DE ARRANQUE
TURBOCOMPRESORES - COMPLETOS
NÚCLEOS DE TURBOCOMPRESOR
BOMBAS DE AGUA

También hay disponibles motores Remanufacturados Caterpillar para muchas de las configuraciones de motores.

ALTERNATIVAS DE REPARO

COMPONENTES REMANUFATURADOS

Considere o uso de Componentes Remanufaturados Caterpillar ao efetuar reparos. Os componentes disponíveis através do Programa de Remanufatura Caterpillar são identificados de três formas no manual de peças:

- com um R na área da nota da lista de peças
- com um R* no princípio da primeira linha da legenda
- com um *R no final da primeira linha da legenda

Os componentes típicos que constam no Programa de Remanufatura incluem:

ALTERNADORES
BIELAS
VIRABREQUINS - SUBMEDIDAS
VIRABREQUINS - ATUALIZAÇÃO
CABEÇOTES
MÓDULOS DE CONTROLE ELETRÔNICO (ECM)
SENSORES ELETRÔNICOS
INJETORES DE COMBUSTÍVEL
BICOS DE ABASTECIMENTO DE COMBUSTÍVEL
BOMBAS DE COMBUSTÍVEL
GOVERNADORES
BOMBAS DE ÓLEO
PISTÕES
BLOCOS BÁSICOS DO MOTOR
MOTORES DE PARTIDA
TURBOALIMENTADORES - COMPLETOS
CARTUCHOS DE TURBOALIMENTADORES
BOMBAS D'ÁGUA

Motores Remanufaturados Caterpillar também encontram-se disponíveis para diversos arranjos de motor.

REPARATURALTERNATIVEN

WERKÜBERHOLTE AT-PRODUKTE

Bei Reparaturen sollten werküberholte AT-Produkte von Caterpillar in Betracht gezogen werden. Die durch das AT-Programm von Caterpillar erhältlichen Teile sind im Parts Book auf drei verschiedene Arten gekennzeichnet:

- mit dem Buchstaben R in der Spalte NOTE der Ersatzteilliste
- mit einem R* am Anfang der ersten Zeile der Überschrift
- mit einem *R am Ende der ersten Zeile der Überschrift

Das AT-Programm umfaßt u.a. folgende Produkte:

DREHSTROMGENERATOREN
PLEUELSTANGEN
KURBELWELLEN - MIT UNTERMASS
KURBELWELLEN - MIT ORIGINALMASS
ZYLINDERKÖPFE
ELEKTRONISCHE STEUEREINHEITEN (EMC)
ELEKTRONISCHE SENSOREN
PUMPENDÜSEN
EINSPRITZDÜSEN
KRAFTSTOFFPUMPEN
DREHZAHLREGLER
ÖLPUMPEN
KOLBEN
TEILMOTOREN
ANLASSER
TURBOLADER - KOMPLETT
TURBOLADERLAUFZEUGE
KÜHLWASSERPUMPEN

Viele Motoren können durch werküberholte AT-Motoren von Caterpillar ersetzt werden.

SUPPLEMENTAL COOLANT ADDITIVES

CUSTOMER BENEFITS:

Protects against cavitation, foam, erosion, corrosion, and scale buildup in cooling systems.

- Provides measured coolant conditioner.

DESCRIPTION:

Additives deplete from the coolant with normal operation. For this reason, Supplemental Coolant Additives (SCA) must be added to all heavy duty coolants at regular intervals. In addition, when not using a fully formulated, pre-charged antifreeze, like Caterpillar's DEAC, an initial charge of SCA must be added to the cooling system. The amount of SCA added to the system is dependent on the capacity of the system.

The SCA for initial fill is provided as a liquid. SCA's for maintenance intervals are available in liquid form and as a spin-on element. (No Spin-on available for 3600 Family of Engines)

NOTE:

The amount of SCA added at initial fill is not the same as the amount added at maintenance intervals.

The coolant additive elements can be used with any ethylene or propylene glycol type antifreeze which meets ASTM D4985 or ASTM D5345 Specifications.

NOTE:

For use with standard heavy duty coolant only, not for use with Extended Life Coolant.

PARTS NEEDED:

Cooling System Capacity		Liquid SCA at Initial Fill	Liquid SCA at Maintenance*	Spin-on SCA Maintenance Element*
Liters	Gallons			
22-30	(6-8)	3P-2044 (1)	6V-3542 (1)	111-2370 (1)
30-38	(8-10)	3P-2044 (1) 6V-3542 (1)	111-2372 (1)	111-2369 (1)
38-49	(10-13)	3P-2044 (1) 8T-1589 (1)	111-2372 (1)	111-2369 (1)
49-64	(13-17)	3P-2044 (2)	8T-1589 (1)	9N-3368 (1)
64-83	(17-22)	3P-2044 (2) 8T-1589 (1)	111-2372 (1) 6V-3542 (1)	111-2371 (1)
83-114	(22-30)	3P-2044 (3) 8T-1589 (1)	3P-2044 (1)	9N-3718 (1)
114-163	(30-43)	3P-2044 (5)	3P-2044 (1) 6V-3542 (1)	111-2371 (2)
163-242	(43-64)	3P-2044 (8)	3P-2044 (2)	9N-3718 (2)

** Normal maintenance period is 250 hrs. See your Operation and Maintenance Manual for complete coolant maintenance instructions.*

( ) Indicates quantity required.

ADDITIFS POUR LIQUIDE DE REFROIDISSEMENT

AVANTAGES POUR LE CLIENT

L'additif protège contre la cavitation, la mousse, l'érosion, la corrosion et l'accumulation de dépôts dans le circuit de refroidissement.

- L'additif complémentaire fournit une quantité mesurée d'additif.

DESCRIPTION:

Les additifs s'épuisent pendant l'utilisation du moteur. C'est pourquoi l'on doit ajouter de l'additif au liquide de refroidissement/antigel pour moteurs diesel à intervalles réguliers. En plus, si l'on n'utilise pas de l'antigel entièrement formulé et pré-chargé comme le liquide de refroidissement/antigel Caterpillar pour moteurs diesel, une quantité initiale d'additif doit être ajoutée au circuit de refroidissement. La quantité d'additif à ajouter au circuit dépend de la contenance du circuit.

L'additif pour le remplissage initial est fourni sous forme liquide. L'additif pour l'entretien ultérieur est disponible sous forme liquide et sous forme d'élément à visser. (Il n'y a pas d'élément à visser pour les moteurs de la famille 3600).

NOTA:

La quantité d'additif à ajouter au remplissage initial diffère de la quantité à ajouter aux intervalles d'entretien.

Les éléments d'additif peuvent être utilisés avec tout antigel de type éthylène ou propylène-glycol conforme à la norme ASTM D4985 ou ASTM D5345.

NOTA:

A utiliser uniquement avec du liquide de refroidissement pour moteurs diesel et non avec le liquide de refroidissement longue durée.

PIÈCES NÉCESSAIRES:

Contenance du circuit de refroidissement		Additif liquide au remplissage initial	Additif liquide aux intervalles d'entretien*	Elément d'additif à visser aux intervalles d'entretien*
Litres	Gallons U.S.			
22-30	(6-8)	3P-2044 (1)	6V-3542 (1)	111-2370 (1)
30-38	(8-10)	3P-2044 (1) 6V-3542 (1)	111-2372 (1)	111-2369 (1)
38-49	(10-13)	3P-2044 (1) 8T-1589 (1)	111-2372 (1)	111-2369 (1)
49-64	(13-17)	3P-2044 (2)	8T-1589 (1)	9N-3368 (1)
64-83	(17-22)	3P-2044 (2) 8T-1589 (1)	111-2372 (1) 6V-3542 (1)	111-2371 (1)
83-114	(22-30)	3P-2044 (3) 8T-1589 (1)	3P-2044 (1)	9N-3718 (1)
114-163	(30-43)	3P-2044 (5)	3P-2044 (1) 6V-3542 (1)	111-2371 (2)
163-242	(43-64)	3P-2044 (8)	3P-2044 (2)	9N-3718 (2)

** L'intervalle d'entretien normal est de 250 heures-service. Voir le Guide d'utilisation et d'entretien pour de plus amples renseignements concernant l'entretien du circuit de refroidissement.*

( ) Indique la quantité exigée.

ADITIVOS DE REFRIGERANTE SUPLEMENTARIOS

VENTAJAS PARA EL USUARIO:

Protegen contra la cavitación, la formación de espuma, la corrosión y la acumulación de escamas en los sistemas de enfriamiento.

- Suministra un acondicionador dosificado de refrigerante.

DESCRIPCIÓN:

Los aditivos en el refrigerante se agotan con la operación normal. Por esta razón, se debe agregar Aditivo de refrigerante suplementario (SCA) a todos los refrigerantes para servicio pesado, a intervalos regulares. Además, cuando no se usa un anticongelante de precarga completo, tal como el DEAC de Caterpillar, es necesario agregar una cantidad de aditivo de refrigerante suplementario inicial al sistema de enfriamiento. La cantidad de aditivo que se debe agregar depende de la capacidad del sistema.

El SCA de llenado inicial es líquido. El que se usa para el mantenimiento está disponible tanto en líquido como en un elemento enroscable. (No hay elemento enroscable disponible para la Familia de Motores 3600).

NOTA:

La cantidad de aditivo de llenado inicial no es la misma que se agrega en los intervalos de mantenimiento.

Los elementos de aditivo de refrigerante se pueden usar con cualquier anticongelante de tipo glicol etilénico o propílico que esté de acuerdo con las especificaciones de las normas ASTM D4985 o ASTM D5345.

NOTA:

Se debe utilizar únicamente con refrigerante estándar para servicio pesado; no se debe usar con Refrigerante de Larga Duración.

PIEZAS NECESARIAS:

Capacidad del Sistema de Enfriamiento		SCA líquido de llenado inicial	SCA líquido de mantenimiento*	Elemento de mantenimiento enroscable*
litros	gal EE.UU.			
22-30	6-8	3P-2044 (1)	6V-3542 (1)	111-2370 (1)
30-38	8-10	3P-2044 (1) 6V-3542 (1)	111-2372 (1)	111-2369 (1)
38-49	10-13	3P-2044 (1) 8T-1589 (1)	111-2372 (1)	111-2369 (1)
49-64	13-17	3P-2044 (2)	8T-1589 (1)	9N-3368 (1)
64-83	17-22	3P-2044 (2) 8T-1589 (1)	111-2372 (1) 6V-3542 (1)	111-2371 (1)
83-114	22-30	3P-2044 (3) 8T-1589 (1)	3P-2044 (1)	9N-3718 (1)
114-163	30-43	3P-2044 (5)	3P-2044 (1) 6V-3542 (1)	111-2371 (2)
163-242	43-64	3P-2044 (8)	3P-2044 (2)	9N-3718 (2)

** El período normal de mantenimiento es de 250 horas. Para ver las instrucciones completas sobre el mantenimiento del refrigerante, consulte el Manual de Operación y Mantenimiento.*

( ) Indica la cantidad necesaria.

ADITIVOS SUPLEMENTARES DO LÍQUIDO ARREFECEDOR

BENEFÍCIOS PARA O CLIENTE:

Protege contra cavitação, espuma, erosão, corrosão e acúmulo de crostas nos sistemas de arrefecimento.

- Fornece uma quantidade pré-determinada de condicionador de arrefecimento.

DESCRIÇÃO:

Com a operação normal, os aditivos se esgotam do líquido arrefecedor. Por isso, Aditivos Suplementares do Líquido Arrefecedor (SCA) devem ser acrescentados a todos os líquidos arrefecedores para serviço pesado em intervalos regulares. Além disso, quando um anticongelante pré-carregado, totalmente formulado não for usado, como o DEAC Caterpillar, uma carga inicial de SCA deve ser acrescentada ao sistema de arrefecimento. A quantidade de SCA acrescentada ao sistema depende da capacidade do sistema.

O SCA para abastecimento inicial é fornecido em forma de líquido. Os aditivos suplementares (SCA) para intervalos de manutenção estão à disposição em forma líquida e como um elemento com roscas. (Exceto os Motores da Família 3600)

NOTA:

A quantidade de SCA adicionada no abastecimento inicial não é a mesma que a acrescentada nos intervalos de manutenção.

Os elementos do aditivo do líquido arrefecedor podem ser usados com qualquer tipo de anticongelante etileno ou propileno que satisfaz as Especificações ASTM D4985 ou ASTM D5345.

NOTA:

Para uso apenas com líquido arrefecedor para serviço pesado padrão, não deve ser usado com Líquido Arrefecedor de Vida Longa.

PEÇAS NECESSÁRIAS:

Capacidade do Sistema de Arrefecimento		Líquido SCA Durante Abastecimento Inicial	Líquido SCA Durante Manutenção*	Elemento de Manutenção de SCA com Roscas*
Litros	Galões			
22-30	6-8	3P-2044 (1)	6V-3542 (1)	111-2370 (1)
30-38	8-10	3P-2044 (1) 6V-3542 (1)	111-2372 (1)	111-2369 (1)
38-49	10-13	3P-2044 (1) 8T-1589 (1)	111-2372 (1)	111-2369 (1)
49-64	13-17	3P-2044 (2)	8T-1589 (1)	9N-3368 (1)
64-83	17-22	3P-2044 (2) 8T-1589 (1)	111-2372 (1) 6V-3542 (1)	111-2371 (1)
83-114	22-30	3P-2044 (3) 8T-1589 (1)	3P-2044 (1)	9N-3718 (1)
114-163	30-43	3P-2044 (5)	3P-2044 (1) 6V-3542 (1)	111-2371 (2)
163-242	43-64	3P-2044 (8)	3P-2044 (2)	9N-3718 (2)

** O período normal de manutenção é de 250 horas. Consulte o Manual de Operação e Manutenção para obter instruções completas quanto à manutenção do líquido arrefecedor.*

( ) Indica a quantidade exigida.

KÜHLMITTELZUSATZ

VORTEILE FÜR DEN KUNDEN:

Schutz gegen Kavitation, Schaumbildung, Erosion, Korrosion und Kesselsteinbildung in Kühlsystemen.

- Richtig dosierter Kühlmittelzusatz

BESCHREIBUNG:

Additive erschöpfen sich während des Motorbetriebs. Deshalb muß allen HD-Kühlmitteln regelmäßig Kühlmittelzusatz beigefügt werden. Wenn bei Erstfüllung kein vollwertiges Fertigkühlmittel, wie das Frostschutz- und Kühlmittel für Dieselmotoren von Caterpiller (DEAC), verwendet wird, muß bei Erstfüllung Kühlmittelzusatz beigefügt werden. Wieviel Kühlmittelzusatz beigefügt werden muß, hängt vom Inhalt des Kühlsystems ab.

Für Erstfüllung ist Kühlmittelzusatz nur in flüssiger Form erhältlich. Für Wartungsintervalle ist Kühlmittelzusatz in flüssiger Form und als Zusatzelement erhältlich. (Für die Motorbaureihe 3600 sind keine Zusatzelemente erhältlich.)

ANMERKUNG:

Die Kühlmittelmenge bei Erstfüllung ist nicht die gleiche Menge, die bei Wartungsintervallen beigefügt werden muß.

Die Kühlmittelzusatzelemente können mit allen Frostschutzmitteln auf Ethylen- oder Propylenglykolbasis verwendet werden, die den Standards nach ASTM D4985 oder ASTM D5345 entsprechen.

ANMERKUNG:

Den Kühlmittelzusatz nicht mit Langzeitkühlmittel (ELC) von Caterpillar verwenden. Der Kühlmittelzusatz ist nur für HD-Kühlmittel bestimmt.

TEILEBEZEICHNUNG:

Kühlsysteminhalt		Kühlmittelzusatz bei Erstfüllung	Flüssiger Kühlmittelzusatz bei Wartung*	Kühlmittelzusatzelement bei Wartung*
Liter	US-Gall.			
22-30	(6-8)	3P-2044 (1)	6V-3542 (1)	111-2370 (1)
30-38	(8-10)	3P-2044 (1) 6V-3542 (1)	111-2372 (1)	111-2369 (1)
38-49	(10-13)	3P-2044 (1) 8T-1589 (1)	111-2372 (1)	111-2369 (1)
49-64	(13-17)	3P-2044 (2)	8T-1589 (1)	9N-3368 (1)
64-83	(17-22)	3P-2044 (2) 8T-1589 (1)	111-2372 (1) 6V-3542 (1)	111-2371 (1)
83-114	(22-30)	3P-2044 (3) 8T-1589 (1)	3P-2044 (1)	9N-3718 (1)
114-163	(30-43)	3P-2044 (5)	3P-2044 (1) 6V-3542 (1)	111-2371 (2)
163-242	(43-64)	3P-2044 (8)	3P-2044 (2)	9N-3718 (2)

** Der normale Wartungsintervall beträgt 250 Betriebsstunden. Für vollständige Anweisungen zur Wartung des Kühlsystems, siehe Betriebs- und Wartungshandbuch.*

( ) Erforderliche Anzahl

MAINTENANCE PARTS

DESCRIPTION	PART NUMBER	QTY	WHERE USED	PAGE
AIR INLET AND EXHAUST SYSTEM				
FILTER ELEMENT AS-AIR (PRIMARY)	231-0167	1	AIR CLEANER GP	93
FILTER ELEMENT AS-AIR (SECONDARY)	231-0168	1	AIR CLEANER GP	93
GAUZE (CRANKCASE BREATHER)	153-5939	1	TURBOCHARGER GP	100
SEAL-VALVE COVER	233-0695	1	TURBOCHARGER GP	100
BASIC ENGINE				
CAP (ENGINE OIL FILLER)	217-7358	1	PAN GP-OIL	56
FILTER ELEMENT AS-ENGINE OIL	220-1523	1	PAN GP-OIL	56
GAUZE (CRANKCASE BREATHER)	153-5939	1	COVER GP-VALVE MECHANISM	22
PLUG-DRAIN (ENGINE OIL)	218-2334	1	PAN GP-OIL	56
PLUG-DRAIN (ENGINE OIL PAN)	218-2334	1	PLUG GP-ENGINE	64
SEAL-VALVE COVER	233-0695	1	COVER GP-VALVE MECHANISM	22
V-BELT (WATER PUMP)	211-5172	1	V-BELT GP	69
	251-6789	1	PULLEY GP-WATER PUMP	67
COOLING SYSTEM				
CAP AS-RADIATOR (SEA WATER HEAT EXCHANGER)	036-1865	1	RADIATOR & HYD OIL COOLER GP	86
		1	RADIATOR & HYD OIL COOLER GP	87
CAP-VENTED (COOLANT RECOVERY)	169-6715	1	RADIATOR & OIL COOLER MTG GP	88
		1	RADIATOR & OIL COOLER MTG GP	90
GASKET-COVER	154-1828	1	PUMP GP-WATER	81
GASKET-COVER (TEMPERATURE REGULATOR)	154-1828	1	HOUSING GP-WATER REGULATOR	78
HOSE (LOWER)	231-3579	1	RADIATOR & OIL COOLER MTG GP	88
		1	RADIATOR & OIL COOLER MTG GP	90
HOSE (UPPER)	231-3578	1	RADIATOR & OIL COOLER MTG GP	88
		1	RADIATOR & OIL COOLER MTG GP	90
REGULATOR-WATER TEMPERATURE	249-5541	1	PUMP GP-WATER	81
		1	PUMP GP-WATER	83

MAINTENANCE PARTS

DESCRIPTION	PART NUMBER	QTY	WHERE USED	PAGE
ELECTRICAL AND STARTING SYSTEM				
BATTERY (12-VOLT, MAINTENANCE FREE)	230-6368	1	BATTERY GP	127
BATTERY (12 VOLT, STANDARD)	153-5656	1	BATTERY GP	126
BELT-DRIVE (WARNING BEACON)	9X-8139	1	LAMP GP-WARNING BEACON	151
CIRCUIT BREAKER AS (105-AMPERE)	171-2212	1	WIRING GP-ENGINE	172
		1	WIRING GP-ENGINE	175
CIRCUIT BREAKER AS (30-AMPERE)	147-1773	1	LIGHTING GP-ROADING	154
ELEMENT AS-JACKET WATER HEATER (ENGINE)	149-3499	1	HEATER GP-JACKET WATER	139
	151-1394	11	HEATER GP-JACKET WATER	140
FLASHER AS (12-VOLT)	242-9000	1	LIGHTING GP-ROADING	154
FUSE (10-AMPERE)	113-8490	4	KIT-WORK TOOL CONTROL & WIRING	143
		4	KIT-WORK TOOL WIRING	144
		1	WARNING GP-BACKUP	166
		16	WIRING GP-CHASSIS	168
		4	WIRING GP-WORK TOOL	181
FUSE (15-AMPERE)	113-8491	2	KIT-WORK TOOL CONTROL & WIRING	143
		2	KIT-WORK TOOL WIRING	144
		1	WIRING GP-AIR CONDITIONER	167
		5	WIRING GP-CHASSIS	168
		2	WIRING GP-WORK TOOL	181
FUSE (20-AMPERE)	113-8492	2	WIRING GP-CHASSIS	168
FUSE (30-AMPERE)	124-3548	1	WIRING GP-AIR CONDITIONER	167
		1	WIRING GP-CHASSIS	168
GLOW PLUG	172-4585	4	GLOW PLUG GP	137
		4	GLOW PLUG GP	138
KEY AS-ELECTRONIC (SECURITY)	206-5162	2	ELECTRONICS GP-MACHINE	135
		2	INSTALLATION GP-SECURITY	141
	206-5165	2	ELECTRONICS GP-MACHINE	135
		1	INSTALLATION GP-SECURITY	141
LAMP AS (RED, GREEN, LED, 12-VOLT)	165-5655	1	INSTALLATION GP-SECURITY	142
LAMP-HEAD	9W-3324	1	LAMP GP-HEAD & SIGNAL	147
LAMP (12-VOLT, 21-WATT)	5G-3244	1	LAMP GP-HEAD & SIGNAL	147
	9W-3326	1	LAMP GP-STOP & TAIL	150
LAMP (12-VOLT, 4-WATT)	100-3246	1	LAMP GP-HEAD & SIGNAL	147
LAMP (12-VOLT, 5-WATT)	084-4348	1	LAMP GP-STOP & TAIL	149
		1	LAMP GP-STOP & TAIL	150
LAMP (12-VOLT, 55-WATT)	9W-0607	1	LAMP GP-FLOOD	145
		1	LAMP GP-FLOOD	146
	9X-8118	1	LAMP GP-WARNING BEACON	151
FRAME AND BODY				
BREATHER (TANDEM HOUSING)	9G-5127	2	FRAME GP-LOADER	234
CIRCUIT BREAKER AS (30-AMPERE)	147-1773	1	KIT-ROADING CONVERSION	239
		1	KIT-ROADING CONVERSION	242
FLASHER AS (12-VOLT)	242-9000	1	KIT-ROADING CONVERSION	239
		1	KIT-ROADING CONVERSION	242
LAMP GP-REGISTRATION PLATE	190-8962	1	CONVERSION AR-ROADING	224
LAMP (12-VOLT) (REGISTRATION PLATE)	7M-9957	1	MOUNTING GP-REGISTRATION	248
LAMP (12-VOLT, 10-WATT)	195-9712	1	CONVERSION AR-ROADING	224
PLUG-MAGNETIC (FRAME)	3S-9182	5	FRAME GP-LOADER	234

MAINTENANCE PARTS

DESCRIPTION	PART NUMBER	QTY	WHERE USED	PAGE
FUEL SYSTEM				
CAP AS-FILLER (FUEL)	142-8828	1	LINES GP-FUEL PRM & FILTER	112
FILTER ELEMENT-FUEL (WATER SEPARATOR)	156-1200	1	FILTER GP-WATER SEP & FUEL	106
HYDRAULIC SYSTEM				
BREATHER AS (INLINE) (HYDRAULIC OIL)	207-9729	1	TANK & MTG GP-HYDRAULIC	367
CAP AS-FILLER (HYDRAULIC TANK)	142-8937	1	TANK GP-HYDRAULIC	368
FUSE (10-AMPERE)	113-8490	1	KIT-QUICK COUPLER CONVERSION	280
SCREEN (HYDRAULIC)	195-6768	1	LINES GP-PILOT	317
SCREEN-SUCTION (HYDRAULIC TANK)	142-8929	1	TANK GP-HYDRAULIC	368
LUBRICATION SYSTEM				
CAP (ENGINE OIL FILLER)	217-7358	1	FILLER GP-ENGINE OIL	73
CAP-OIL FILLER (ENGINE)	289-6120	1	FILLER GP-ENGINE OIL	73
OPERATOR STATION				
ACCUMULATOR GP-REFRIGERANT (WITH DESICCANT)	176-3900	1	KIT-AIR COND & HEATER INSTL	577
BLADE AS-WIPER (558-MM) (CAB DOOR)	6W-3924	1	DOOR GP-CAB	555
BLADE AS-WIPER (558-MM) (FRONT, REAR)	6W-3924	1	DOOR GP-CAB	553
BREATHER (AIR CONDITIONER)	9G-5127	1	COMPRESSOR & MOTOR GP-REFRIG	505
		1	COMPRESSOR & MOTOR GP-REFRIG	506
BREATHER (AIR CONDITIONER COMPRESSOR)	9G-5127	1	KIT-AIR COND & HEATER INSTL	577
		1	KIT-AIR COND & HEATER INSTL	579
FILTER ELEMENT-CAB AIR	231-8130	1	AIR CONDITIONER GP	494
		1	HEATER GP-CAB	570
	231-8132	1	AIR CONDITIONER GP	494
		1	AIR CONDITIONER GP	496
		1	HEATER GP-CAB	570
		1	HEATER GP-CAB	572
FILTER ELEMENT-CAB AIR (AIR)	303-6658	1	AIR CONDITIONER GP	496
		1	HEATER GP-CAB	572
FUSE (10-AMPERE)	113-8490	1	CONTROL GP-PILOT OPERATED HYD	534
FUSE (30-AMPERE)	124-3548	1	KIT-AIR COND & HEATER INSTL	578
		1	KIT-AIR COND & HEATER INSTL	580
LAMP (12-VOLT)	7X-9065	1	GAUGE & WARNING GP	563
LAMP (12-VOLT, 10-WATT)	6R-7490	1	GAUGE & WARNING GP	563
VALVE AS-SHUTOFF	8F-8151	1	KIT-AIR COND & HEATER INSTL	580
VALVE AS-SHUTOFF (CAB HEATER)	8F-8151	1	LINES GP-HEATER	590
VALVE AS-SHUTOFF (WATER)	8F-8151	1	HEATER GP-CAB	574
POWER TRAIN				
FILTER AS-OIL (ADVANCED EFFICIENCY) (HYDRAULIC)	1G-8878	1	FILTER GP-OIL	188
FILTER ELEMENT AS-ENGINE OIL	220-1523	1	FILTER GP-OIL	189

MAINTENANCE PARTS

DESCRIPTION	PART NUMBER	QTY	WHERE USED	PAGE
WORK TOOLS				
CAP AS (WATER TANK)	192-2606	1	TANK GP-WATER	488
FUSE (10-AMPERE)	113-8490	1	COUPLER AR-QUICK	443
SCREEN (WATER TANK)	119-1414	1	STRAINER GP-WATER	484

PIÈCES DE RECHANGE

DESCRIPTION	NUMÉRO DE PIECÈS	QTÉ	DOMAINE D'APPLICATION	PAGE
CHÂSSIS ET BENNE				
AMPOULE (12 VOLTS) (PLAQUE D'IMMATRICULATION)	7M-9957	1	MONTAGE - IMMATRICULATION (ASS)	248
AMPOULE (12V, 10W)	195-9712	1	VERSION DE TRANSFORMATION POUR DÉPLACEMENT ROUTIER	224
BOUCHON AIMANTÉ (CHÂSSIS)	3S-9182	5	BATI - CHARGEUSE (ASS)	234
CLIGNOTANT (ENS) (12 VOLTS)	242-9000	1	KIT DE TRANSFORMATION POUR DÉPLACEMENTS SUR ROUTE	239
		1	KIT DE TRANSFORMATION POUR DÉPLACEMENTS SUR ROUTE	242
DISJONCTEUR (ENS) (30A)	147-1773	1	KIT DE TRANSFORMATION POUR DÉPLACEMENTS SUR ROUTE	239
		1	KIT DE TRANSFORMATION POUR DÉPLACEMENTS SUR ROUTE	242
LAMPE-PLAQUE D'IMMATRICULATION (ASS)	190-8962	1	VERSION DE TRANSFORMATION POUR DÉPLACEMENT ROUTIER	224
RENIFLARD (CARTER DE TANDEM)	9G-5127	2	BATI - CHARGEUSE (ASS)	234
CIRCUIT D'ADMISSION D'AIR ET D'ÉCHAPPEMENT				
ÉLÉMENT DE FILTRE À AIR (ENS) (PRINCIPAL)	231-0167	1	FILTRE A AIR (ASS)	93
ÉLÉMENT DE FILTRE À AIR (ENS) (SECONDAIRE)	231-0168	1	FILTRE A AIR (ASS)	93
JOINT DE CACHE-SOUPAPES	233-0695	1	TURBOCOMPRESSEUR (ASS)	100
TOILE (RENIFLARD DE CARTER MOTEUR)	153-5939	1	TURBOCOMPRESSEUR (ASS)	100
CIRCUIT DE CARBURANT				
BOUCHON DE GOULOTTE DE REMPLISSAGE (ENS) (CARBURANT)	142-8828	1	CANALISATIONS DE FILTRE ET D'AMORÇAGE DE CARBURANT (ASS)	112
ÉLÉMENT DE FILTRE À CARBURANT (SÉPARATEUR D'EAU)	156-1200	1	FILTRE DE SÉPARATEUR D'EAU ET DE CARBURANT (ASS)	106
CIRCUIT DE GRAISSAGE				
BOUCHON DE GOULOTTE DE REMPLISSAGE D'HUILE (MOTEUR)	289-6120	1	BOUCHON DE REMPLISSAGE D'HUILE MOTEUR (ASS)	73
CHAPEAU (GOULOTTE D'HUILE MOTEUR)	217-7358	1	BOUCHON DE REMPLISSAGE D'HUILE MOTEUR (ASS)	73

* TRADUCTION NON DISPONIBLE AU MOMENT DE LA PUBLICATION

PIÈCES DE RECHANGE

DESCRIPTION	NUMÉRO DE PIECÈS	QTÉ	DOMAINE D'APPLICATION	PAGE
CIRCUIT DE REFROIDISSEMENT				
BOUCHON À ÉVENT (RÉSERVOIR D'EXPANSION DU LIQUIDE DE REFROIDISSEMENT)	169-6715	1	RADIATEUR ET REFROIDISSEUR D'HUILE-MONTAGE (ASS)	88
		1	RADIATEUR ET REFROIDISSEUR D'HUILE-MONTAGE (ASS)	90
BOUCHON DE RADIATEUR (ENS) (ÉCHANGEUR THERMIQUE D'EAU DE MER)	036-1865	1	RADIATEUR ET REFROIDISSEUR D'HUILE HYDRAULIQUE (ASS)	86
		1	RADIATEUR ET REFROIDISSEUR D'HUILE HYDRAULIQUE (ASS)	87
FLEXIBLE (INFÉRIEUR)	231-3579	1	RADIATEUR ET REFROIDISSEUR D'HUILE-MONTAGE (ASS)	88
		1	RADIATEUR ET REFROIDISSEUR D'HUILE-MONTAGE (ASS)	90
FLEXIBLE (SUPERIEUR)	231-3578	1	RADIATEUR ET REFROIDISSEUR D'HUILE-MONTAGE (ASS)	88
		1	RADIATEUR ET REFROIDISSEUR D'HUILE-MONTAGE (ASS)	90
JOINT DE COUVERCLE	154-1828	1	POMPE A EAU (ASS)	81
JOINT DE COUVERCLE (THERMOSTAT)	154-1828	1	LOGEMENT DE RÉGULATEUR D'EAU (ASS)	78
THERMOSTAT-TEMPÉRATURE D'EAU	249-5541	1	POMPE A EAU (ASS)	81
		1	POMPE A EAU (ASS)	83

* TRADUCTION NON DISPONIBLE AU MOMENT DE LA PUBLICATION

PIÈCES DE RECHANGE

DESCRIPTION	NUMÉRO DE PIECÈS	QTÉ	DOMAINE D'APPLICATION	PAGE
CIRCUIT ÉLECTRIQUE ET DE DÉMARRAGE				
AMPOULE (12-V, 5-W)	084-4348	1	FEUX ARRIÈRE ET FEUX D'ARRÊT	149
		1	FEUX ARRIÈRE ET FEUX D'ARRÊT	150
AMPOULE (12V, 21W)	5G-3244	1	LAMPE - PHARE ET CLIGNOTANT	147
	9W-3326	1	FEUX ARRIÈRE ET FEUX D'ARRÊT	150
AMPOULE (12V, 4W)	100-3246	1	LAMPE - PHARE ET CLIGNOTANT	147
AMPOULE (12V, 55W)	9W-0607	1	LAMPE - PHARE (ASS)	145
		1	LAMPE - PHARE (ASS)	146
	9X-8118	1	LAMPE - GYROPHARE (ASS)	151
BATTERIE (12V, SANS ENTRETIEN)	230-6368	1	BATTERIE (ASS)	127
BATTERIE (12V, STANDARD)	153-5656	1	BATTERIE (ASS)	126
BOUGIE DE PRECHAUFFAGE	172-4585	4	BOUGIE DE PRÉCHAUFFAGE (ASS)	137
		4	BOUGIE DE PRÉCHAUFFAGE (ASS)	138
CLÉ ÉLECTRONIQUE (ENS) (SÉCURITÉ)	206-5162	2	ÉLECTRONIQUE - MACHINE (ENS)	135
		2	MONTAGE-SÉCURITÉ (ASS)	141
	206-5165	2	ÉLECTRONIQUE - MACHINE (ENS)	135
		1	MONTAGE-SÉCURITÉ (ASS)	141
CLIGNOTANT (ENS) (12 VOLTS)	242-9000	1	ÉCLAIRAGE - FEUX DE ROUTE (ASS)	154
DISJONCTEUR (ENS) (105A)	171-2212	1	CABLAGE DE MOTEUR (ASS)	172
		1	CABLAGE DE MOTEUR (ASS)	175
DISJONCTEUR (ENS) (30A)	147-1773	1	ÉCLAIRAGE - FEUX DE ROUTE (ASS)	154
ÉLÉMENT DU RÉCHAUFFEUR D'EAU DES CHEMISES (ENS) (MOTEUR)	149-3499	1	EAU DES CHEMISES - RECHAUFFEUR (ASS)	139
	151-1394	11	EAU DES CHEMISES - RECHAUFFEUR (ASS)	140
ENTRAÎNEMENT POUR COURROIE (GYROPHARE)	9X-8139	1	LAMPE - GYROPHARE (ASS)	151
FUSIBLE (10A)	113-8490	1	AVERTISSEUR DE RECUL (ASS)	166
		4	CÂBLAGE - OUTIL DE TRAVAIL (ASS)	181
		16	CABLAGE DE CHASSIS (ASS)	168
		4	KIT DE CÂBLAGE D'OUTIL DE TRAVAIL	144
		4	KIT DE COMMANDE D'OUTIL DE TRAVAIL ET CÂBLAGE	143
FUSIBLE (15A)	113-8491	1	CABLAGE - CLIMATISEUR (ASS)	167
		2	CÂBLAGE - OUTIL DE TRAVAIL (ASS)	181
		5	CABLAGE DE CHASSIS (ASS)	168
		2	KIT DE CÂBLAGE D'OUTIL DE TRAVAIL	144
		2	KIT DE COMMANDE D'OUTIL DE TRAVAIL ET CÂBLAGE	143
FUSIBLE (20A)	113-8492	2	CABLAGE DE CHASSIS (ASS)	168
FUSIBLE (30A)	124-3548	1	CABLAGE - CLIMATISEUR (ASS)	167
		1	CABLAGE DE CHASSIS (ASS)	168
LAMPE - FEUX AV	9W-3324	1	LAMPE - PHARE ET CLIGNOTANT	147
LAMPE (ENS) (ROUGE, VERT, TÉMOIN LUMINEUX, 12V)	165-5655	1	MONTAGE-SÉCURITÉ (ASS)	142

* TRADUCTION NON DISPONIBLE AU MOMENT DE LA PUBLICATION

PIÈCES DE RECHANGE

DESCRIPTION	NUMÉRO DE PIECÈS	QTÉ	DOMAINE D'APPLICATION	PAGE
CIRCUIT HYDRAULIQUE				
BOUCHON DE GOULOTTE DE REMPLISSAGE (ENS) (RÉSERVOIR HYDRAULIQUE)	142-8937	1	RÉSERVOIR HYDRAULIQUE (ASS)	368
ÉCRAN (HYDRAULIQUE)	195-6768	1	CANALISATIONS A COMMANDE PILOTE (ASS)	317
FUSIBLE (10A)	113-8490	1	KIT DE TRANSFORMATION DU COUPLEUR EXPRESS	280
RENIFLARD (ENS) (*INLINE) (HUILE HYDRAULIQUE)	207-9729	1	RÉSERVOIR HYDRAULIQUE ET MONTAGE (ASS)	367
TAMIS D'ASPIRATION (RÉSERVOIR HYDRAULIQUE)	142-8929	1	RÉSERVOIR HYDRAULIQUE (ASS)	368
MOTEUR DE BASE				
BOUCHON DE VIDANGE (CARTER D'HUILE MOTEUR)	218-2334	1	BOUCHON DE MOTEUR (ASS)	64
BOUCHON DE VIDANGE (HUILE MOTEUR)	218-2334	1	HUILE MOTEUR - CARTER (ASS)	56
CHAPEAU (GOULOTTE D'HUILE MOTEUR)	217-7358	1	HUILE MOTEUR - CARTER (ASS)	56
COURROIE TRAPEZOIDALE (POMPE À EAU)	211-5172	1	*V-BELT GP	69
	251-6789	1	POULIE DE POMPE À EAU (ASS)	67
ÉLÉMENT DE FILTRE (ENS)-HUILE MOTEUR	220-1523	1	HUILE MOTEUR - CARTER (ASS)	56
JOINT DE CACHE-SOUPAPES	233-0695	1	CACHE-SOUPAPES (ASS)	22
TOILE (RENIFLARD DE CARTER MOTEUR)	153-5939	1	CACHE-SOUPAPES (ASS)	22
OUTILS DE TRAVAIL				
CHAPEAU (ENS) (RÉSERVOIR D'EAU)	192-2606	1	RÉSERVOIR D'EAU (ASS)	488
ÉCRAN (RÉSERVOIR D'EAU)	119-1414	1	TAMIS D'EAU (ASS)	484
FUSIBLE (10A)	113-8490	1	COUPLEUR EXPRESS (VERSION)	443

* TRADUCTION NON DISPONIBLE AU MOMENT DE LA PUBLICATION

PIÈCES DE RECHANGE

DESCRIPTION	NUMÉRO DE PIECÈS	QTÉ	DOMAINE D'APPLICATION	PAGE
POSTE DE CONDUITE				
ACCUMULATEUR - CLIMATISEUR (ASS) (AVEC SICCATIF)	176-3900	1	KIT DE MONTAGE DE CLIMATISEUR ET CHAUFFAGE	577
AMPOULE (12 VOLTS)	7X-9065	1	INDICATEURS ET TÉMOINS LUMINEUX (ASS)	563
AMPOULE (12V, 10W)	6R-7490	1	INDICATEURS ET TÉMOINS LUMINEUX (ASS)	563
BALAI D'ESSUIE-GLACE (ENS) (*558-MM) (AVANT, ARRIÈRE)	6W-3924	1	PORTIÈRE DE CABINE (ASS)	553
BALAI D'ESSUIE-GLACE (ENS) (*558-MM) (PORTE DE CABINE)	6W-3924	1	PORTIÈRE DE CABINE (ASS)	555
ÉLÉMENT DE FILTRE À AIR DE CABINE	231-8130	1	CHAUFFAGE DE CABINE (ASS)	570
		1	CLIMATISEUR (ASS)	494
	231-8132	1	CHAUFFAGE DE CABINE (ASS)	570
		1	CHAUFFAGE DE CABINE (ASS)	572
		1	CLIMATISEUR (ASS)	494
		1	CLIMATISEUR (ASS)	496
ÉLÉMENT DE FILTRE À AIR DE CABINE (AIR)	303-6658	1	CHAUFFAGE DE CABINE (ASS)	572
		1	CLIMATISEUR (ASS)	496
FUSIBLE (10A)	113-8490	1	COMMANDE HYDRAULIQUE PILOTE (ASS)	534
FUSIBLE (30A)	124-3548	1	KIT DE MONTAGE DE CLIMATISEUR ET CHAUFFAGE	578
		1	KIT DE MONTAGE DE CLIMATISEUR ET CHAUFFAGE	580
RENIFLARD (CLIMATISEUR)	9G-5127	1	COMPRESSEUR ET MOTEUR DE RÉFRIGÉRATION (ASS)	505
		1	COMPRESSEUR ET MOTEUR DE RÉFRIGÉRATION (ASS)	506
RENIFLARD (COMPRESSEUR DE CLIMATISEUR)	9G-5127	1	KIT DE MONTAGE DE CLIMATISEUR ET CHAUFFAGE	577
		1	KIT DE MONTAGE DE CLIMATISEUR ET CHAUFFAGE	579
SOUPAPE D'ARRET	8F-8151	1	KIT DE MONTAGE DE CLIMATISEUR ET CHAUFFAGE	580
SOUPAPE D'ARRET (EAU)	8F-8151	1	CHAUFFAGE DE CABINE (ASS)	574
SOUPAPE D'ARRET (RÉCHAUFFEUR DE CABINE)	8F-8151	1	CANALISATIONS DE CHAUFFAGE (ASS)	590
TRANSMISSION				
ÉLÉMENT DE FILTRE (ENS)-HUILE MOTEUR	220-1523	1	FILTRE A HUILE (ASS)	189
FILTRE À HUILE (ENS) (EFFICACITÉ AVANCÉE) (HYDRAULIQUE)	1G-8878	1	FILTRE A HUILE (ASS)	188

* TRADUCTION NON DISPONIBLE AU MOMENT DE LA PUBLICATION

PIEZAS DE MANTENIMIENTO

DESCRIPCION	NUMERO DE PIEZA	CANT	SE UTILIZA EN	PAGINA
BASTIDOR Y CAJA				
CONJUNTO DE DESTELLADOR (12 VOLTIOS)	242-9000	1	*KIT-ROADING CONVERSION	239
		1	*KIT-ROADING CONVERSION	242
DISYUNTOR (CONJ) (30-AMPERIOS)	147-1773	1	*KIT-ROADING CONVERSION	239
		1	*KIT-ROADING CONVERSION	242
LAMPARA DE PLACA DE REGISTRO (GR)	190-8962	1	CONFIGURACIÓN DE TRANSFORMACIÓN PARA CARRETERA	224
LÁMPARA (12 VOLTIOS) (PLACA DE REGISTRACIÓN)	7M-9957	1	MONTAJE-REGISTRO (GR)	248
LÁMPARA (12 VOLTIOS, 10 VATIOS)	195-9712	1	CONFIGURACIÓN DE TRANSFORMACIÓN PARA CARRETERA	224
RESPIRADERO (COMPARTIMENTO DE TANDEM)	9G-5127	2	BASTIDOR DEL CARGADOR (GR)	234
TAPÓN MAGNÉTICO (BASTIDOR)	3S-9182	5	BASTIDOR DEL CARGADOR (GR)	234

* NO HAY TRADUCCION DISPONIBLE EN EL MOMENTO DE LA IMPRESION

PIEZAS DE MANTENIMIENTO

DESCRIPCION	NUMERO DE PIEZA	CANT	SE UTILIZA EN	PAGINA
ESTACION DEL OPERADOR				
ACUMULADOR DEL ACONDICIONADOR DE AIRE (GR) (CON DESECANTE)	176-3900	1	JUEGO DE INSTALACIÓN DEL ACONDICIONADOR DE AIRE Y CALENTADOR	577
*FILTER ELEMENT-CAB AIR	231-8130	1	ACONDICIONADOR DE AIRE (GR)	494
		1	CALEFACCIÓN DE LA CABINA (GR)	570
	231-8132	1	ACONDICIONADOR DE AIRE (GR)	494
		1	ACONDICIONADOR DE AIRE (GR)	496
		1	CALEFACCIÓN DE LA CABINA (GR)	570
		1	CALEFACCIÓN DE LA CABINA (GR)	572
*FILTER ELEMENT-CAB AIR (AIRE)	303-6658	1	ACONDICIONADOR DE AIRE (GR)	496
		1	CALEFACCIÓN DE LA CABINA (GR)	572
FUSIBLE (10-AMPERIOS)	113-8490	1	CONTROL HIDRÁULICO DE OPERACIÓN PILOTO (GR)	534
FUSIBLE (30-AMPERIOS)	124-3548	1	JUEGO DE INSTALACIÓN DEL ACONDICIONADOR DE AIRE Y CALENTADOR	578
		1	JUEGO DE INSTALACIÓN DEL ACONDICIONADOR DE AIRE Y CALENTADOR	580
HOJA DE LIMPIAPARABRISAS (CONJ) (*558-MM) (DELANTERO, TRASERO)	6W-3924	1	PUERTA DE CABINA	553
HOJA DE LIMPIAPARABRISAS (CONJ) (*558-MM) (PUERTA, CABINA)	6W-3924	1	PUERTA DE CABINA	555
LÁMPARA (12 VOLTIOS)	7X-9065	1	INDICADORES Y ADVERTENCIA (GR)	563
LÁMPARA (12 VOLTIOS, 10 VATIOS)	6R-7490	1	INDICADORES Y ADVERTENCIA (GR)	563
RESPIRADERO (AIRE ACONDICIONADO)	9G-5127	1	COMPRESOR Y MOTOR GR-REFRIGERANTE	505
		1	COMPRESOR Y MOTOR GR-REFRIGERANTE	506
RESPIRADERO (COMPRESOR DE AIRE ACONDICIONADO)	9G-5127	1	JUEGO DE INSTALACIÓN DEL ACONDICIONADOR DE AIRE Y CALENTADOR	577
		1	JUEGO DE INSTALACIÓN DEL ACONDICIONADOR DE AIRE Y CALENTADOR	579
VALVULA DE CORTE (CONJ)	8F-8151	1	JUEGO DE INSTALACIÓN DEL ACONDICIONADOR DE AIRE Y CALENTADOR	580
VALVULA DE CORTE (CONJ) (AGUA)	8F-8151	1	CALEFACCIÓN DE LA CABINA (GR)	574
VALVULA DE CORTE (CONJ) (CALENTADOR DE CABINA)	8F-8151	1	TUBERÍAS DE LA CALEFACCIÓN (GR)	590
HERRAMIENTAS				
FUSIBLE (10-AMPERIOS)	113-8490	1	ACOPLADOR RÁPIDO (CONFIG)	443
REJILLA (TANQUE DE AGUA)	119-1414	1	COLADOR DEL AGUA (GR)	484
TAPÓN (CONJ) (TANQUE DE AGUA)	192-2606	1	TANQUE DEL AGUA (GR)	488

* NO HAY TRADUCCION DISPONIBLE EN EL MOMENTO DE LA IMPRESION

PIEZAS DE MANTENIMIENTO

DESCRIPCION	NUMERO DE PIEZA	CANT	SE UTILIZA EN	PAGINA
MOTOR BASICO				
CORREA TRAPEZOIDAL (BOMBA DE AGUA)	211-5172	1	*V-BELT GP	69
	251-6789	1	GRUPO, MANIJA, BOMBA DE AGUA	67
ELEMENTO DE FILTRO DE ACEITE DE MOTOR (CONJ)	220-1523	1	CÁRTER - COLECTOR DEL (GR)	56
GASA (RESPIRADERO DE CARTER)	153-5939	1	TAPA DEL MECANISMO DE VÁLVULAS (GR)	22
SELLO - TAPA DE VÁLVULA	233-0695	1	TAPA DEL MECANISMO DE VÁLVULAS (GR)	22
TAPA (LLENADO DE ACEITE DEL MOTOR)	217-7358	1	CÁRTER - COLECTOR DEL (GR)	56
TAPÓN DE DRENAJE (ACEITE DEL MOTOR)	218-2334	1	CÁRTER - COLECTOR DEL (GR)	56
TAPÓN DE DRENAJE (COLECTOR DE ACEITE DEL MOTOR)	218-2334	1	TAPÓN DEL MOTOR (GR)	64
SISTEMA DE ARRANQUE ELECTRICO				
BATERÍA (12 VOLTIOS, ESTANDAR)	153-5656	1	BATERÍA (GR)	126
BATERÍA (12-VOLTIOS, LIBRE DE MANTENIMIENTO)	230-6368	1	BATERÍA (GR)	127
BUJÍA INCANDESCENTE	172-4585	4	BUJÍA INCANDESCENTE (GR)	137
		4	BUJÍA INCANDESCENTE (GR)	138
CONJUNTO DE DESTELLADOR (12 VOLTIOS)	242-9000	1	LUCES DE DESPLAZAMIENTO (GR)	154
CONJUNTO DE LLAVE, ELECTRONICA (SEGURIDAD)	206-5162	2	ELECTRÓNICA DE LA MÁQUINA (GR)	135
		2	INSTALACION DE SEGURIDAD (GR)	141
	206-5165	2	ELECTRÓNICA DE LA MÁQUINA (GR)	135
		1	INSTALACION DE SEGURIDAD (GR)	141
DISYUNTOR (CONJ) (105 AMPERIOS)	171-2212	1	CABLES DEL MOTOR (GR)	172
		1	CABLES DEL MOTOR (GR)	175
DISYUNTOR (CONJ) (30-AMPERIOS)	147-1773	1	LUCES DE DESPLAZAMIENTO (GR)	154
ELEMENTO DEL CALENTADOR DEL AGUA DE LAS CAMISAS (MOTOR)	149-3499	1	AGUA DE LAS CAMISAS - CALENTADOR DEL (GR)	139
	151-1394	11	AGUA DE LAS CAMISAS - CALENTADOR DEL (GR)	140
FUSIBLE (10-AMPERIOS)	113-8490	4	CABLES DE LA HERRAMIENTA DE TRABAJO (GR)	181
		16	CABLES DEL CHASIS (GR)	168
		4	*KIT-WORK TOOL CONTROL & WIRING	143
		4	*KIT-WORK TOOL WIRING	144
		1	RETROCESO - ALARMA DE (GR)	166
FUSIBLE (15 AMPERIOS)	113-8491	2	CABLES DE LA HERRAMIENTA DE TRABAJO (GR)	181
		1	CABLES DEL ACONDICIONADOR DE AIRE (GR)	167
		5	CABLES DEL CHASIS (GR)	168
		2	*KIT-WORK TOOL CONTROL & WIRING	143
		2	*KIT-WORK TOOL WIRING	144

* NO HAY TRADUCCION DISPONIBLE EN EL MOMENTO DE LA IMPRESION

PIEZAS DE MANTENIMIENTO

DESCRIPCION	NUMERO DE PIEZA	CANT	SE UTILIZA EN	PAGINA
FUSIBLE (20-AMPERIOS)	113-8492	2	CABLES DEL CHASIS (GR)	168
FUSIBLE (30-AMPERIOS)	124-3548	1	CABLES DEL ACONDICIONADOR DE AIRE (GR)	167
		1	CABLES DEL CHASIS (GR)	168
LÁMPARA (CONJ) (ROJO, VERDE, DIODO, 12 VOLTIOS)	165-5655	1	INSTALACION DE SEGURIDAD (GR)	142
LÁMPARA DE FARO DELANTERO	9W-3324	1	LÁMPARA DE LUZ DELANTERA Y DE SEÑAL (GR)	147
LÁMPARA (12 VLOTIOS, 5 VATIOS)	084-4348	1	LUCES DE PARADA Y COLA (GR)	149
		1	LUCES DE PARADA Y COLA (GR)	150
LÁMPARA (12 VOLTIOS, 21 VATIOS)	5G-3244	1	LÁMPARA DE LUZ DELANTERA Y DE SEÑAL (GR)	147
	9W-3326	1	LUCES DE PARADA Y COLA (GR)	150
LÁMPARA (12 VOLTIOS, 4 VATIOS)	100-3246	1	LÁMPARA DE LUZ DELANTERA Y DE SEÑAL (GR)	147
LÁMPARA (12 VOLTIOS, 55 VATIOS)	9X-8118	1	LÁMPARA DE BALIZA DE ADVERTENCIA (GR)	151
	9W-0607	1	REFLECTOR (GR)	145
		1	REFLECTOR (GR)	146
MANDO DE CORREA (BALIZA DE ADVERTENCIA)	9X-8139	1	LÁMPARA DE BALIZA DE ADVERTENCIA (GR)	151
SISTEMA DE COMBUSTIBLE				
ELEMENTO DE FILTRO DE COMBUSTIBLE (SEPARADOR DE AGUA)	156-1200	1	FILTRO DE COMBUSTIBLE Y SEPARADOR DE AGUA (GR)	106
TAPA DE LLENADO (CONJ) (COMBUSTIBLE)	142-8828	1	TUBERIAS (GR) -COMBUSTIBLE PRIMARIO Y FILTRO	112

* NO HAY TRADUCCION DISPONIBLE EN EL MOMENTO DE LA IMPRESION

PIEZAS DE MANTENIMIENTO

DESCRIPCION	NUMERO DE PIEZA	CANT	SE UTILIZA EN	PAGINA
SISTEMA DE ENFRIAMIENTO				
JUNTA DE LA TAPA DE VÁLVULAS	154-1828	1	BOMBA DE AGUA (GR)	81
JUNTA DE LA TAPA DE VÁLVULAS (REGULADOR DE TEMPERATURA)	154-1828	1	*HOUSING GP-WATER REGULATOR	78
MANGUERA (INFERIOR)	231-3579	1	MONTAJE DE RADIADOR Y ENFRIAMIENTO DE ACEITE (GR)	88
		1	MONTAJE DE RADIADOR Y ENFRIAMIENTO DE ACEITE (GR)	90
MANGUERA (SUPERIOR)	231-3578	1	MONTAJE DE RADIADOR Y ENFRIAMIENTO DE ACEITE (GR)	88
		1	MONTAJE DE RADIADOR Y ENFRIAMIENTO DE ACEITE (GR)	90
REGULADOR DE TEMPERATURA DEL AGUA	249-5541	1	BOMBA DE AGUA (GR)	81
		1	BOMBA DE AGUA (GR)	83
TAPA CON RESPIRADERO (RECUPERACIÓN DE REFRIGERANTE)	169-6715	1	MONTAJE DE RADIADOR Y ENFRIAMIENTO DE ACEITE (GR)	88
		1	MONTAJE DE RADIADOR Y ENFRIAMIENTO DE ACEITE (GR)	90
TAPA DE RADIADOR (CONJ) (INTERCAMBIADOR DE CALOR PARA AGUA DE MAR)	036-1865	1	RADIADOR Y ENFRIADOR DE ACEITE HIDRÁULICO (GR)	86
		1	RADIADOR Y ENFRIADOR DE ACEITE HIDRÁULICO (GR)	87
SISTEMA DE ESCAPE Y ADMISION DE AIRE				
ELEMENTO DEL FILTRO DE AIRE (CONJ) (PRIMARIO)	231-0167	1	FILTRO DE AIRE (GR)	93
ELEMENTO DEL FILTRO DE AIRE (CONJ) (SECUNDARIO)	231-0168	1	FILTRO DE AIRE (GR)	93
GASA (RESPIRADERO DE CARTER)	153-5939	1	TURBOCOMPRESOR (GR)	100
*SEAL-VALVE COVER	233-0695	1	TURBOCOMPRESOR (GR)	100
SISTEMA DE LUBRICACION				
TAPA DEL TUBO DE LLENADO DE ACEITE (MOTOR)	289-6120	1	TUBO DE LLENADO DE ACEITE (GR)	73
TAPA (LLENADO DE ACEITE DEL MOTOR)	217-7358	1	TUBO DE LLENADO DE ACEITE (GR)	73
SISTEMA HIDRAULICO				
FUSIBLE (10-AMPERIOS)	113-8490	1	*KIT-QUICK COUPLER CONVERSION	280
REJILLA DE SUCCIÓN (TANQUE HIDRÁULICO)	142-8929	1	TANQUE HIDRÁULICO (GR)	368
REJILLA (HIDRÁULICO)	195-6768	1	TUBERÍAS CON SERVOMANDO (GR)	317
RESPIRADERO (CONJ) (*INLINE) (ACEITE HIDRÁULICO)	207-9729	1	TANQUE HIDRÁULICO Y MONTAJE (GR)	367
TAPA DE LLENADO (CONJ) (TANQUE HIDRAULICO)	142-8937	1	TANQUE HIDRÁULICO (GR)	368

* NO HAY TRADUCCION DISPONIBLE EN EL MOMENTO DE LA IMPRESION

PIEZAS DE MANTENIMIENTO

DESCRIPCION	NUMERO DE PIEZA	CANT	SE UTILIZA EN	PAGINA
TREN DE FUERZA				
ELEMENTO DE FILTRO DE ACEITE DE MOTOR (CONJ)	220-1523	1	FILTRO DE ACEITE (GR)	189
FILTRO DE ACEITE (CONJ) (EFICIENCIA AVANZADA) (HIDRÁULICO)	1G-8878	1	FILTRO DE ACEITE (GR)	188

* NO HAY TRADUCCION DISPONIBLE EN EL MOMENTO DE LA IMPRESION

PEÇAS DE MANUTENÇÃO

DESCRIÇÃO	NÚMERO DE PEÇA	QUANT	UTILIZADA EM	PÁGINA
CHASSI E CARROCERIA				
BUJÃO MAGNÉTICO (ARMAÇÃO)	3S-9182	5	CHASSI DIANTEIRO	234
DISJUNTOR AUTOMÁTICO DE CIRCUITO (30 AMPERES)	147-1773	1	KIT-CONVERSÃO DE RODAGEM	239
		1	KIT-CONVERSÃO DE RODAGEM	242
LAMPADA-PLACA DE REGISTRO	190-8962	1	GRUPO DE CONVERSÃO - ARRANJO RODOVIÁRIO	224
LÂMPADA (12-VOLTS) (PLACA DE REGISTRO)	7M-9957	1	MONTAGEM DA PLACA DE REGISTRO	248
LÂMPADA (12-VOLTS, 10-WATTS)	195-9712	1	GRUPO DE CONVERSÃO - ARRANJO RODOVIÁRIO	224
LUZ INTERMITENTE (12-VOLTS)	242-9000	1	KIT-CONVERSÃO DE RODAGEM	239
		1	KIT-CONVERSÃO DE RODAGEM	242
RESPIRO (ALOJAMENTO DO TANDEM)	9G-5127	2	CHASSI DIANTEIRO	234
FERRAMENTAS DE TRABALHO				
FUSÍVEL (10 AMPERES)	113-8490	1	ACOPLADOR RÁPIDO	443
TAMPA (TANQUE DE ÁGUA)	192-2606	1	TANQUE DE ÁGUA	488
TELA FILTRANTE (TANQUE DE ÁGUA)	119-1414	1	TELA FILTRANTE - ÁGUA	484
MOTOR BÁSICO				
BUJÃO DO DRENO (CÁRTER DE ÓLEO DO MOTOR)	218-2334	1	BUJÃO DO MOTOR	64
BUJÃO DO DRENO (ÓLEO DO MOTOR)	218-2334	1	CÁRTER DO ÓLEO DO MOTOR	56
CORREIA EM V (BOMBA D'ÁGUA)	211-5172	1	*V-BELT GP	69
	251-6789	1	GRUPO DE POLIA - BOMBA DE ÁGUA	67
ELEMENTO FILTRANTE - ÓLEO DO MOTOR	220-1523	1	CÁRTER DO ÓLEO DO MOTOR	56
FILTRO (RESPIRO DO CÁRTER)	153-5939	1	TAMPA - MECANISMO DAS VÁLVULAS	22
RETENTOR - TAMPA DA VÁLVULA	233-0695	1	TAMPA - MECANISMO DAS VÁLVULAS	22
TAMPA (BOCAL DE ENCHIMENTO DO ÓLEO DO MOTOR)	217-7358	1	CÁRTER DO ÓLEO DO MOTOR	56

* TRADUÇÃO NÃO DISPONÍVEL NO MOMENTO DA IMPRESSÃO

PEÇAS DE MANUTENÇÃO

DESCRIÇÃO	NÚMERO DE PEÇA	QUANT	UTILIZADA EM	PÁGINA
POSTO DO OPERADOR				
ACUMULADOR - AR CONDICIONADO (COM DESSECANTE)	176-3900	1	JOGO-INSTALAÇÃO DO CONDICIONADOR DE AR E AQUECEDOR	577
ELEMENTO FILTRANE-AR DA CABINE	231-8130	1	AQUECEDOR DA CABINE	570
		1	CONDICIONADOR DE AR	494
	231-8132	1	AQUECEDOR DA CABINE	570
		1	AQUECEDOR DA CABINE	572
		1	CONDICIONADOR DE AR	494
		1	CONDICIONADOR DE AR	496
ELEMENTO FILTRANE-AR DA CABINE (AR)	303-6658	1	AQUECEDOR DA CABINE	572
		1	CONDICIONADOR DE AR	496
FUSÍVEL (10 AMPERES)	113-8490	1	CONTROLE HIDRÁULICO DE OPERAÇÃO PILOTO	534
FUSÍVEL (30 AMPERES)	124-3548	1	JOGO-INSTALAÇÃO DO CONDICIONADOR DE AR E AQUECEDOR	578
		1	JOGO-INSTALAÇÃO DO CONDICIONADOR DE AR E AQUECEDOR	580
LÂMINA DO LIMPADOR DE PÁRA-BRISA (*558-MM) (DIANTEIRO, TRASEIRO)	6W-3924	1	PORTA DA CABINE	553
LÂMINA DO LIMPADOR DE PÁRA-BRISA (*558-MM) (PORTA DA CABINE)	6W-3924	1	PORTA DA CABINE	555
LÂMPADA (12-VOLTS)	7X-9065	1	INDICADOR E ALARME	563
LÂMPADA (12-VOLTS, 10-WATTS)	6R-7490	1	INDICADOR E ALARME	563
RESPIRO (AR CONDICIONADO)	9G-5127	1	COMPRESSOR E MOTOR - REFRIGERADO	505
		1	COMPRESSOR E MOTOR - REFRIGERADO	506
RESPIRO (COMPRESSOR DO AR CONDICIONADO)	9G-5127	1	JOGO-INSTALAÇÃO DO CONDICIONADOR DE AR E AQUECEDOR	577
		1	JOGO-INSTALAÇÃO DO CONDICIONADOR DE AR E AQUECEDOR	579
VÁLVULA DE FECHAMENTO	8F-8151	1	JOGO-INSTALAÇÃO DO CONDICIONADOR DE AR E AQUECEDOR	580
VÁLVULA DE FECHAMENTO (ÁGUA)	8F-8151	1	AQUECEDOR DA CABINE	574
VÁLVULA DE FECHAMENTO (AQUECEDOR DA CABINE)	8F-8151	1	TUBOS - AQUECEDOR	590
SISTEMA DE ADMISSÃO DE AR E DE ESCAPE				
ELEMENTO DO FILTRO DE AR (PRIMÁRIO)	231-0167	1	PURIFICADOR DE AR	93
ELEMENTO DO FILTRO DE AR (SECUNDÁRIO)	231-0168	1	PURIFICADOR DE AR	93
FILTRO (RESPIRO DO CÁRTER)	153-5939	1	TURBOALIMENTADOR	100
RETENTOR - TAMPA DA VÁLVULA	233-0695	1	TURBOALIMENTADOR	100

* TRADUÇÃO NÃO DISPONÍVEL NO MOMENTO DA IMPRESSÃO

PEÇAS DE MANUTENÇÃO

DESCRIÇÃO	NÚMERO DE PEÇA	QUANT	UTILIZADA EM	PÁGINA
SISTEMA DE ARREFECIMENTO				
JUNTA - TAMPA	154-1828	1	BOMBA DE ÁGUA	81
JUNTA - TAMPA (TERMOSTATO)	154-1828	1	ALOJAMENTO-TERMOSTATO DE ÁGUA	78
MANGUEIRA (INFERIOR)	231-3579	1	RADIADOR E ARREFECEDOR DE ÓLEO - MONTAGEM	88
		1	RADIADOR E ARREFECEDOR DE ÓLEO - MONTAGEM	90
MANGUEIRA (SUPERIOR)	231-3578	1	RADIADOR E ARREFECEDOR DE ÓLEO - MONTAGEM	88
		1	RADIADOR E ARREFECEDOR DE ÓLEO - MONTAGEM	90
REGULADOR DE TEMPERATURA DA ÁGUA	249-5541	1	BOMBA DE ÁGUA	81
		1	BOMBA DE ÁGUA	83
TAMPA - RADIADOR (PERMUTADOR DE CALOR DE AGUA SALGADA)	036-1865	1	RADIADOR E ARREFECEDOR DO ÓLEO HIDRÁULICO	86
		1	RADIADOR E ARREFECEDOR DO ÓLEO HIDRÁULICO	87
TAMPA COM RESPIRO (RECUPERAÇÃO DO LÍQUIDO ARREFECEDOR)	169-6715	1	RADIADOR E ARREFECEDOR DE ÓLEO - MONTAGEM	88
		1	RADIADOR E ARREFECEDOR DE ÓLEO - MONTAGEM	90
SISTEMA DE COMBUSTÍVEL				
ELEMENTO DO FILTRO DE COMBUSTÍVEL (SEPARADOR DE ÁGUA)	156-1200	1	FILTRO DE COMBUSTÍVEL E SEPARADOR DE ÁGUA	106
TAMPA - BOCAL DE ENCHIMENTO (COMBUSTÍVEL)	142-8828	1	TUBULAÇÕES - FILTRO E ESCORVA DO COMBUSTÍVEL	112
SISTEMA DE LUBRIFICAÇÃO				
TAMPA - BOCAL DE ENCHIMENTO DE ÓLEO (MOTOR)	289-6120	1	BOCAL DE ENCHIMENTO DE ÓLEO DO MOTOR	73
TAMPA (BOCAL DE ENCHIMENTO DO ÓLEO DO MOTOR)	217-7358	1	BOCAL DE ENCHIMENTO DE ÓLEO DO MOTOR	73
SISTEMA ELÉTRICO E DE PARTIDA				
BATERIA (12 VOLTS, ISENTO DE MANUTENÇÃO)	230-6368	1	BATERIA	127
BATERIA (12 VOLTS, PADRÃO)	153-5656	1	BATERIA	126
CHAVE - ELETRÔNICO (SEGURANÇA)	206-5162	2	INSTALAÇÃO-SEGURANÇA	141
		2	SISTEMA ELETRÔNICO - MÁQUINA	135
	206-5165	1	INSTALAÇÃO-SEGURANÇA	141
		2	SISTEMA ELETRÔNICO - MÁQUINA	135
CORREIA DE COMANDO (PISCA-ALERTA)	9X-8139	1	LUZ GIRATÓRIA DE ALARME	151
DISJUNTOR AUTOMÁTICO DE CIRCUITO (105 AMPERES)	171-2212	1	CABOS/FIOS ELÉTRICOS - MOTOR	172
		1	CABOS/FIOS ELÉTRICOS - MOTOR	175

* TRADUÇÃO NÃO DISPONÍVEL NO MOMENTO DA IMPRESSÃO

PEÇAS DE MANUTENÇÃO

DESCRIÇÃO	NÚMERO DE PEÇA	QUANT	UTILIZADA EM	PÁGINA
DISJUNTOR AUTOMÁTICO DE CIRCUITO (30 AMPERES)	147-1773	1	ILUMINAÇÃO - RODOVIÁRIA	154
ELEMENTO - AQUECEDOR DE ÁGUA DA CAMISA (MOTOR)	149-3499	1	AQUECEDOR DA ÁGUA DO MOTOR	139
	151-1394	11	AQUECEDOR DA ÁGUA DO MOTOR	140
FAROL DIANTEIRO	9W-3324	1	LÂMPADA DIANTEIRA E DE SINAL	147
FUSÍVEL (10 AMPERES)	113-8490	1	ALARME DE MARCHA À RÉ	166
		16	CABOS/FIOS ELÉTRICOS - CHASSI	168
		4	CABOS/FIOS ELÉTRICOS - FERRAMENTAS DE TRABALHO	181
		4	KIT-CONTROLE E FIAÇÃO DA FERRAMENTA DE TRABALHO	143
		4	KIT-FIAÇÃO DA FERRAMENTA DE TRABALHO	144
FUSÍVEL (15 AMPERES)	113-8491	1	CABOS/FIOS ELÉTRICOS - AR CONDICIONADO	167
		5	CABOS/FIOS ELÉTRICOS - CHASSI	168
		2	CABOS/FIOS ELÉTRICOS - FERRAMENTAS DE TRABALHO	181
		2	KIT-CONTROLE E FIAÇÃO DA FERRAMENTA DE TRABALHO	143
		2	KIT-FIAÇÃO DA FERRAMENTA DE TRABALHO	144
FUSÍVEL (20-AMPERES)	113-8492	2	CABOS/FIOS ELÉTRICOS - CHASSI	168
FUSÍVEL (30 AMPERES)	124-3548	1	CABOS/FIOS ELÉTRICOS - AR CONDICIONADO	167
		1	CABOS/FIOS ELÉTRICOS - CHASSI	168
LÂMPADA (VERMELHA, VERDE, LED, 12 VOLTS)	165-5655	1	INSTALAÇÃO-SEGURANÇA	142
LÂMPADA (12-VOLTS, 21-WATTS)	5G-3244	1	LÂMPADA DIANTEIRA E DE SINAL	147
	9W-3326	1	LUZ TRASEIRA E DE FREIO	150
LÂMPADA (12-VOLTS, 4-WATTS)	100-3246	1	LÂMPADA DIANTEIRA E DE SINAL	147
LÂMPADA (12 VOLTS, 5 WATTS)	084-4348	1	LUZ TRASEIRA E DE FREIO	149
		1	LUZ TRASEIRA E DE FREIO	150
LÂMPADA (12-VOLTS, 55-WATTS)	9W-0607	1	LÂMPADA - FAROL	145
		1	LÂMPADA - FAROL	146
	9X-8118	1	LUZ GIRATÓRIA DE ALARME	151
LUZ INTERMITENTE (12-VOLTS)	242-9000	1	ILUMINAÇÃO - RODOVIÁRIA	154
VELA DE AQUECIMENTO; VELA INCANDESCENTE	172-4585	4	VELA DE AQUECIMENTO; VELA INCANDESCENTE	137
		4	VELA DE AQUECIMENTO; VELA INCANDESCENTE	138

* TRADUÇÃO NÃO DISPONÍVEL NO MOMENTO DA IMPRESSÃO

PEÇAS DE MANUTENÇÃO

DESCRIÇÃO	NÚMERO DE PEÇA	QUANT	UTILIZADA EM	PÁGINA
SISTEMA HIDRÁULICO				
FUSÍVEL (10 AMPERES)	113-8490	1	KIT-CONVERSÃO DO ACOPLADOR RÁPIDO	280
RESPIRO (EM LINHA) (ÓLEO HIDRÁULICO)	207-9729	1	TANQUE DE ÓLEO HIDRÁULICO E MONTAGEM	367
TAMPA - BOCAL DE ENCHIMENTO (TANQUE HIDRÁULICO)	142-8937	1	TANQUE HIDRÁULICO	368
TELA DE SUCÇÃO (TANQUE HIDRÁULICO)	142-8929	1	TANQUE HIDRÁULICO	368
TELA FILTRANTE (HIDRÁULICO)	195-6768	1	TUBOS - CIRCUITO PILOTO	317
TREM DE FORÇA				
ELEMENTO FILTRANTE - ÓLEO DO MOTOR	220-1523	1	FILTRO - ÓLEO	189
FILTRO - ÓLEO (EFICIÊNCIA AVANÇADA) (HIDRÁULICO)	1G-8878	1	FILTRO - ÓLEO	188

* TRADUÇÃO NÃO DISPONÍVEL NO MOMENTO DA IMPRESSÃO

WARTUNGSTEILE

BESCHREIBUNG	ERSATZTEIL-NUMMER	MENGE	VERWENDET IN	SEITE
ARBEITSGERÄTE				
KAPPE (WASSERTANK)	192-2606	1	WASSERTANK	488
SCREEN (WASSERTANK)	119-1414	1	WASSERSIEBEINSATZ	484
SICHERUNG (10 A)	113-8490	1	SCHNELLWECHSELVORRICHTUNG	443
ELEKTRISCHE ANLAGE UND STARTSYSTEM				
BATTERIE (12 V, STANDARD)	153-5656	1	BATTERIE	126
BATTERIE (12 V, WARTUNGSFREI)	230-6368	1	BATTERIE	127
BELEUCHTUNGSANLAGE (ROT, GRÜN, LED, 12 V)	165-5655	1	SICHERHEITSEINBAUSATZ	142
BLINKER (12 V)	242-9000	1	BELEUCHTUNGSANLAGE (STRASSENAUSRÜSTUNG)	154
ELEKTRONISCHER SCHLÜSSEL (SICHERHEIT)	206-5162	2	ELEKTRONIK - MASCHINE	135
		2	SICHERHEITSEINBAUSATZ	141
	206-5165	2	ELEKTRONIK - MASCHINE	135
		1	SICHERHEITSEINBAUSATZ	141
GLÜHKERZE	172-4585	4	GLÜHKERZE	137
		4	GLÜHKERZE	138
LAUFBAND UND ANTRIEB (RUNDUM-KENNLEUCHTE)	9X-8139	1	RUNDUM-KENNLEUCHTE	151
LEUCHTE (12 V, 21 W)	5G-3244	1	SCHEINWERFER U. RICHTUNGS-LEUCHTE	147
	9W-3326	1	BREMS- UND RÜCKLEUCHTE	150
LEUCHTE (12 V, 4 W)	100-3246	1	SCHEINWERFER U. RICHTUNGS-LEUCHTE	147
LEUCHTE (12 V, 5 W)	084-4348	1	BREMS- UND RÜCKLEUCHTE	149
		1	BREMS- UND RÜCKLEUCHTE	150
LEUCHTE (12 V, 55 W)	9W-0607	1	ARBEITSLEUCHTEN	145
		1	ARBEITSLEUCHTEN	146
	9X-8118	1	RUNDUM-KENNLEUCHTE	151
SCHEINWERFER	9W-3324	1	SCHEINWERFER U. RICHTUNGS-LEUCHTE	147
SICHERUNG (10 A)	113-8490	4	ARBEITSGERÄT - VERDRAHTUNG	181
		4	ARBEITSGERÄTEVERDRAHTUNGS-SATZ	144
		16	FAHRGESTELLVERDRAHTUNG	168
		1	RÜCKFAHRWARNHORN	166
		4	SATZ - ARBEITSGERÄTE U. VERDRAHTUNG	143
SICHERUNG (15 A)	113-8491	2	ARBEITSGERÄT - VERDRAHTUNG	181
		2	ARBEITSGERÄTEVERDRAHTUNGS-SATZ	144
		5	FAHRGESTELLVERDRAHTUNG	168
		1	KLIMAANLAGENVERDRAHTUNG	167
		2	SATZ - ARBEITSGERÄTE U. VERDRAHTUNG	143
SICHERUNG (20 A)	113-8492	2	FAHRGESTELLVERDRAHTUNG	168
SICHERUNG (30 A)	124-3548	1	FAHRGESTELLVERDRAHTUNG	168
		1	KLIMAANLAGENVERDRAHTUNG	167
UMLAUFKÜHLWASSERHEIZUNGS-ELEMENT (MOTOR)	149-3499	1	UMLAUFKÜHLWASSERHEIZUNG	139

* ÜBERSETZUNG ZUM ZEITPUNKT DER DRUCKLEGUNG NICHT VORHANDEN

WARTUNGSTEILE

BESCHREIBUNG	ERSATZTEIL-NUMMER	MENGE	VERWENDET IN	SEITE
	151-1394	11	UMLAUFKÜHLWASSERHEIZUNG	140
UNTERBRECHER (105 A)	171-2212	1	MOTORVERDRAHTUNG	172
		1	MOTORVERDRAHTUNG	175
UNTERBRECHER (30 A)	147-1773	1	BELEUCHTUNGSANLAGE (STRASSENAUSRÜSTUNG)	154
FAHRERHAUS				
ABSPERRVENTIL	8F-8151	1	EINBAUSATZ - KLIMAANLAGE U. HEIZUNG	580
ABSPERRVENTIL (FAHRERHAUSHEIZUNG)	8F-8151	1	HEIZUNGSLEITUNGEN	590
ABSPERRVENTIL (WASSER)	8F-8151	1	FAHRERHAUSHEIZUNG	574
ENTLÜFTER (KLIMAANLAGE)	9G-5127	1	KÜHLKOMPRESSOR U. MOTOR	505
		1	KÜHLKOMPRESSOR U. MOTOR	506
ENTLÜFTER (KLIMAANLAGEN-KOMRESSOR)	9G-5127	1	EINBAUSATZ - KLIMAANLAGE U. HEIZUNG	577
		1	EINBAUSATZ - KLIMAANLAGE U. HEIZUNG	579
*FILTER ELEMENT-CAB AIR	231-8130	1	FAHRERHAUSHEIZUNG	570
		1	KLIMAANLAGE	494
	231-8132	1	FAHRERHAUSHEIZUNG	570
		1	FAHRERHAUSHEIZUNG	572
		1	KLIMAANLAGE	494
		1	KLIMAANLAGE	496
*FILTER ELEMENT-CAB AIR (DRUCKLUFT)	303-6658	1	FAHRERHAUSHEIZUNG	572
		1	KLIMAANLAGE	496
KLIMAANLAGENDRUCKSPEICHER (MIT TROCKENMITTEL)	176-3900	1	EINBAUSATZ - KLIMAANLAGE U. HEIZUNG	577
LEUCHTE (12 V)	7X-9065	1	WARNANZEIGENSATZ	563
LEUCHTE (12 V, 10 W)	6R-7490	1	WARNANZEIGENSATZ	563
SCHEIBENWISCHERBLATT (*558-MM) (FAHRERHAUSTÜR)	6W-3924	1	FAHRERHAUSTÜR	555
SCHEIBENWISCHERBLATT (*558-MM) (VORN, HINTEN)	6W-3924	1	FAHRERHAUSTÜR	553
SICHERUNG (10 A)	113-8490	1	HYDRAULIKBEDIENUNG (MIT VORSTEUERUNG)	534
SICHERUNG (30 A)	124-3548	1	EINBAUSATZ - KLIMAANLAGE U. HEIZUNG	578
		1	EINBAUSATZ - KLIMAANLAGE U. HEIZUNG	580
HYDRAULIKSYSTEM				
ANSAUGSIEB (HYDRAULIKTANK)	142-8929	1	HYDRAULIKTANK	368
EINFÜLLKAPPE (HYDRAULIKTANK)	142-8937	1	HYDRAULIKTANK	368
ENTLÜFTER (*INLINE) (HYDRAULIKÖL)	207-9729	1	HYDRAULIKTANK UND BEFESTIGUNGSTEILE	367
SCREEN (HYDRAULIK)	195-6768	1	VORSTEUERLEITUNGEN	317
SICHERUNG (10 A)	113-8490	1	*KIT-QUICK COUPLER CONVERSION	280

* ÜBERSETZUNG ZUM ZEITPUNKT DER DRUCKLEGUNG NICHT VORHANDEN

WARTUNGSTEILE

BESCHREIBUNG	ERSATZTEIL-NUMMER	MENGE	VERWENDET IN	SEITE
KRAFTSTOFFSYSTEM				
EINFÜLLKAPPE (KRAFTSTOFF)	142-8828	1	KRAFTSTOFFENTLÜFTUNGS- U. FILTERLEITUNGEN	112
KRAFTSTOFFILTERELEMENT (WASSERABSCHEIDER)	156-1200	1	WASSERABSCHEIDER- U. KRAFTSTOFFILTER	106
KRAFTSÜBERTRAGUNG				
MOTORÖLFILTERELEMENT	220-1523	1	ÖLFILTER	189
ÖLFILTER (HOCHLEISTUNG) (HYDRAULIK)	1G-8878	1	ÖLFILTER	188
KÜHLSYSTEM				
KAPPE MIT ENTLÜFTER (KÄLTEMITTELRÜCKGEWINNUNG)	169-6715	1	KÜHLER U. ÖLKÜHLERBEFESTIGUNG	88
		1	KÜHLER U. ÖLKÜHLERBEFESTIGUNG	90
KÜHLERKAPPE (ROHWASSERHEIZUNGSAUSTAUSCHER)	036-1865	1	KÜHLER UND HYDRAULIKÖLKÜHLER	86
		1	KÜHLER UND HYDRAULIKÖLKÜHLER	87
SCHLAUCHLEITUNG (OBEN)	231-3578	1	KÜHLER U. ÖLKÜHLERBEFESTIGUNG	88
		1	KÜHLER U. ÖLKÜHLERBEFESTIGUNG	90
SCHLAUCHLEITUNG (UNTEN)	231-3579	1	KÜHLER U. ÖLKÜHLERBEFESTIGUNG	88
		1	KÜHLER U. ÖLKÜHLERBEFESTIGUNG	90
VENTILDECKELDICHTUNG	154-1828	1	KÜHLWASSERPUMPE	81
VENTILDECKELDICHTUNG (THERMOSTAT)	154-1828	1	THERMOSTATGEHÄUSE	78
WASSERTEMPERATURREGLER	249-5541	1	KÜHLWASSERPUMPE	81
		1	KÜHLWASSERPUMPE	83
LUFTANSAUG- UND ABGASSYSTEM				
GAZE (KURBELGEHÄUSEENTLÜFTER)	153-5939	1	TURBOLADER	100
LUFTFILTER (HAUPTELEMENT)	231-0167	1	LUFTREINIGER	93
LUFTFILTER (HILFSELEMENT)	231-0168	1	LUFTREINIGER	93
VENTILDECKELDICHTUNG	233-0695	1	TURBOLADER	100
MOTOR - GRUNDAUSFÜHRUNG				
ABLASSSTOPFEN (MOTORÖL)	218-2334	1	ÖLWANNE	56
ABLASSSTOPFEN (MOTORÖLWANNE)	218-2334	1	MOTORSTOPFEN	64
GAZE (KURBELGEHÄUSEENTLÜFTER)	153-5939	1	VENTILDECKEL	22
KAPPE (MOTORÖLFÜLLUNG)	217-7358	1	ÖLWANNE	56
KEILRIEMEN (WASSERPUMPE)	211-5172	1	*V-BELT GP	69
	251-6789	1	WASSERPUMPE - RIEMENSCHEIBE	67
MOTORÖLFILTERELEMENT	220-1523	1	ÖLWANNE	56
VENTILDECKELDICHTUNG	233-0695	1	VENTILDECKEL	22

* ÜBERSETZUNG ZUM ZEITPUNKT DER DRUCKLEGUNG NICHT VORHANDEN

WARTUNGSTEILE

BESCHREIBUNG	ERSATZTEIL-NUMMER	MENGE	VERWENDET IN	SEITE
RAHMEN UND FAHRGESTELL				
BLINKER (12 V)	242-9000	1	UMRÜSTSATZ FÜR STRASSENFAHRT	239
		1	UMRÜSTSATZ FÜR STRASSENFAHRT	242
ENTLÜFTER (TANDEMGEHÄUSE)	9G-5127	2	LADERRAHMEN	234
LEUCHTE (12 V) (KENNZEICHEN)	7M-9957	1	TYPENSCHILDBEFESTIGUNG	248
LEUCHTE (12 V, 10 W)	195-9712	1	UMBAUSATZ - FÜR STRASSENVER-KEHR	224
MAGNETSTOPFEN (RAHMEN)	3S-9182	5	LADERRAHMEN	234
UNTERBRECHER (30 A)	147-1773	1	UMRÜSTSATZ FÜR STRASSENFAHRT	239
		1	UMRÜSTSATZ FÜR STRASSENFAHRT	242
ZULASSUNGSSCHILDLEUCHTE	190-8962	1	UMBAUSATZ - FÜR STRASSENVER-KEHR	224
SCHMIERSYSTEM				
KAPPE (MOTORÖLFÜLLUNG)	217-7358	1	MOTORÖLEINFÜLLSTUTZEN	73
ÖLEINFÜLLKAPPE (MOTOR)	289-6120	1	MOTORÖLEINFÜLLSTUTZEN	73

* ÜBERSETZUNG ZUM ZEITPUNKT DER DRUCKLEGUNG NICHT VORHANDEN

INDEX

Name	Page
A	
ACCUMULATOR & MTG GP-HYDRAULIC	253
ACCUMULATOR GP-REFRIGERANT–WITH DESICCANT	490, 491
ACCUMULATOR GP-REFRIGERANT (WITH DESICCANT)	577
ADAPTER GP-OIL LINE	254
AIR CLEANER GP	92, 93
AIR CONDITIONER & MOUNTING GP	492
AIR CONDITIONER AR	493
AIR CONDITIONER GP	494, 496
ALTERNATOR GP-CHARGING	123, 125
ARM GP-MATERIAL HANDLING	389
ARM GP-WINDOW WIPER	553
ARM GP-WINDOW WIPER (FRONT)	555
ARMREST & MOUNTING GP	498
ARMREST GP	499
AXLE GP	183, 184
B	
BATTERY GP–HEAVY DUTY	127
BATTERY GP–STANDARD	126
BATTERY (12-VOLT, MAINTENANCE FREE)	127
BATTERY (12 VOLT, STANDARD)	126
BELT-DRIVE (WARNING BEACON)	151
BLADE AR–ANGLING	390, 391, 392
BLADE AS-WIPER (558-MM) (CAB DOOR)	555
BLADE AS-WIPER (558-MM) (FRONT, REAR)	553
BLADE GP-ANGLING	393, 394, 395, 396
BLADE GP-MULTIPURPOSE BUCKET	397, 398, 399, 400
BOX GP-STORAGE	501
BREATHER (AIR CONDITIONER)	505, 506
BREATHER (AIR CONDITIONER COMPRESSOR)	577, 579
BREATHER AS (INLINE) (HYDRAULIC OIL)	367
BREATHER (TANDEM HOUSING)	234
BUCKET AR-DIRT	401, 402
BUCKET AR-GENERAL PURPOSE	402, 403, 404
BUCKET AR-GRAPPLE	404, 406, 407, 408
BUCKET AR-GRAPPLE–INDUSTRIAL	405
BUCKET AR-LIGHT MATERIAL	409
BUCKET AR-MULTIPURPOSE	409, 410, 411, 412
BUCKET AR-UTILITY	412, 413
BUCKET AS-DIRT	414, 415, 416, 417
BUCKET AS-GENERAL PURPOSE	418, 419, 420, 421
BUCKET AS-LIGHT MATERIAL	422, 423, 424
BUCKET GP-DIRT	425
BUCKET GP-GRAPPLE	426, 427, 428, 429, 430
BUCKET GP-MULTIPURPOSE	431, 432, 433, 434, 435
BUCKET GP-UTILITY	436, 437, 438
BUMPER GP–REAR	219
C	
CAB AR-ENCLOSED ROPS	502
CAB GP-ENCLOSED ROPS	503
CABLE GP-CONTROL–MANUAL LOWERING	504
CABLE GP-GOVERNOR CONTROL	104
CAMSHAFT GP	19, 20
CAP AS-FILLER (FUEL)	112
CAP AS-FILLER (HYDRAULIC TANK)	368
CAP AS-RADIATOR (SEA WATER HEAT EXCHANGER)	86, 87

INDEX

Name	Page
CAP AS (WATER TANK)	488
CAP (ENGINE OIL FILLER)	56
	73
CAP-OIL FILLER (ENGINE)	73
CAP-VENTED (COOLANT RECOVERY)	88
	90
CARRIAGE & FORK AR	439
CARRIAGE GP-FORK	440
	441
CHASSIS AR	1
CIRCUIT BREAKER AS (105-AMPERE)	172
	175
CIRCUIT BREAKER AS (30-AMPERE)	154
	239
	242
COIL AS-SOLENOID (12-VOLT)	385
COMMON AR	1
	2
COMPRESSOR & MOTOR GP-REFRIG	505
	506
COMPRESSOR & MTG GP-REFRIG	508
COMPRESSOR GP-REFRIGERANT	505
	506
	577
	579
CONDENSER & MTG GP-REFRIGERANT	509
CONNECTION GP-ELECTRICAL	128
	129
CONNECTOR GP	278
	323
CONTROL AR-MACHINE–AUX PROPORTIONAL FLOW	2
CONTROL AR-MACHINE–ON, OFF AUXILIARY CONTROL	2
CONTROL GP-FAN	178
CONTROL GP-GOVERNOR	105
CONTROL GP-HANDLE	517
CONTROL GP-HANDLE–DIRECTION, SPEED	510
	511
CONTROL GP-HANDLE–LH	513
	515
CONTROL GP-HANDLE–RH	514
	517
CONTROL GP-HANDLE–WORK TOOL	512
	516
CONTROL GP-INTERLOCK	130
CONTROL GP-MANUAL START/STOP	131
CONTROL GP-PILOT OPERATED HYD	518
	521
	522
	524
	525
	527
	528
	530
	531
	532
	534
	536
	539
CONTROL GP-UNPROGRAMMED	134
CONTROL GP-UNPROGRAMMED (SECURITY)	135
CONVERSION AR-MACHINE–GERMANY	5
CONVERSION AR-MACHINE–GERMANY, HIGH FLOW	7
CONVERSION AR-MACHINE–GERMANY, ITALY	8
CONVERSION AR-MACHINE–ITALY	4
CONVERSION AR-MACHINE–ITALY, HIGH FLOW	6
CONVERSION AR-MACHINE–NACD	3
CONVERSION AR-MACHINE–OUTSIDE NACD	3
	4
	8
	9
CONVERSION AR-MACHINE–ROADING (GERMANY)	11
	12
CONVERSION AR-MACHINE–ROADING (ITALY)	10
CONVERSION AR-NON-ROADING–NACD	132
CONVERSION AR-ROADING–EUROPE	220
CONVERSION AR-ROADING–GERMANY	220
	222
CONVERSION AR-ROADING–GERMANY, ITALY	223
CONVERSION AR-ROADING–GERMANY, ITALY, HIGH FLOW	225
CONVERSION AR-ROADING–ITALY	221
	222
	224
CONVERSION AR-ROADING–UNITED KINGDOM	221
CONVERSION GP-ROADING–GERMANY	226
	228
CONVERSION GP-ROADING–ITALY	227
	229
CONVERSION GP-WORK TOOL–KIT, HIGH FLOW	442
COOLANT HEATER LINES	590
COUNTERWEIGHT GP	231
COUNTERWEIGHT GP–KIT	230
COUPLER AR-QUICK	443
COUPLER GP-QUICK	444
	445
COUPLING GP-DRIVE	542
	577

INDEX

Name	Page
	579
COVER GP-CONSOLE	544
	545
COVER GP-FRONT HOUSING	21
COVER GP-FUSE PANEL	133
COVER GP-INSTRUMENT PANEL	546
COVER GP-LINES	447
COVER GP-VALVE MECHANISM	22
CRANKSHAFT GP	24
	25
	27
CYLINDER & LINK GP-COUPLER–LH	448
CYLINDER & LINK GP-COUPLER–RH	449
CYLINDER & MTG GP-ANGLE BLADE	255
	256
CYLINDER & MTG GP-BUCKET	257
CYLINDER & MTG GP-LIFT ARM	258
CYLINDER BLOCK GP	29
	31
CYLINDER GP-BUCKET	260
CYLINDER GP-GRAPPLE	261
CYLINDER GP-HYDRAULIC	264
	265
	266
	267
	268
	280
CYLINDER GP-HYDRAULIC–ANGLE BLADE	263
CYLINDER GP-HYDRAULIC–COUPLER	262
CYLINDER GP-LIFT	269
CYLINDER GP-TILT–BUCKET EJECTOR, LH	270
CYLINDER GP-TILT–BUCKET EJECTOR, RH	271
CYLINDER HEAD AS	33
CYLINDER HEAD GP	35
	36
	38

D

DOOR & MTG GP-CAB–GLASS	550
DOOR & MTG GP-CAB–POLYCARBONATE	547
DOOR GP-CAB	557
DOOR GP-CAB–GLASS	552
	553
DOOR GP-CAB–POLYCARBONATE	555
DOOR GP-CAB (POLYCARBONATE)	547
	582
DRAIN GP-ENGINE OIL	40
DRIVE GP-TANDEM	185
DUCT & CONTROL GP	558

E

EDGE GP-BIT & CUTTING	450
EDGE GP-CUTTING	450
	451
	452
	453
	454
	455
	456
ELECTRONICS GP-IMPLEMENT–WORK TOOL	134
ELECTRONICS GP-MACHINE–SECURITY	135
ELEMENT AS-JACKET WATER HEATER (ENGINE)	139
	140
ENCLOSURE GP-ENGINE	232
ENGINE AR	13
ENGINE AR-PRIMARY	14
	15
	16

F

FAN GP-BLOWER	86
	87
FASTENER GP-WIRING HARNESS	136
FILLER GP-ENGINE OIL–ENGINE	73
FILM (FOPS)	564
FILM-FUSE/RELAY	133
FILM GP	275
	276
	629
FILM GP–CLEARANCE	626
FILM GP–UN	627
FILM (HIGH FLOW)	275
	278
FILM (HIGH FLOW)	275
FILM-IDENTIFICATION (IGNITION SWITCH)	141
	142
FILM-IDENTIFICATION (POWER RECEPTACLE, 12-VOLT)	649
FILM-IDENTIFICATION (POWER RECEPTACLE, 12-VOLT)	643
FILM-IDENTIFICATION (POWER RECEPTACLE, 12-VOLT)	636
FILM-IDENTIFICATION (POWER RECEPTACLE, 12-VOLT)	633
FILM-IDENTIFICATION (POWER RECEPTACLE, 12-VOLT)	646
FILM-IDENTIFICATION (13-KM/H)	5
	11
	12
	220
FILM-IDENTIFICATION (13-KM/H)	7
FILM-INFORMATION (TIE-DOWN LOCATION)	389
FILM-INSTRUCTION (ALTERNATE EXIT)	557
	619
FILM-INSTRUCTION (DASH)	563

INDEX

Name	Page
FILM-INSTRUCTION (INSTRUMENT PANEL)	562
FILM-INSTRUCTION (MACHINE CONTROL)	278
FILM-INSTRUCTION (MACHINE CONTROL, READ OMM)	524
FILM-INSTRUCTION (MACHINE CONTROL, READ OMM)	522
	528
	530
	532
	534
FILM-INSTRUCTION (MACHINE CONTROL, READ OMM)	531
FILM-INSTRUCTION (MACHINE CONTROLS)	518
	521
	525
	527
	536
	539
FILM-INSTRUCTION (MACHINE SECURITY, INTL)	141
	142
FILM-INSTRUCTION (NO STEP)	280
	369
FILM-INSTRUCTION (NO STEP)	639
FILM (REFLECTIVE)	479
	480
FILM-STRIPE (REFLECTIVE, RED, WHITE)	479
	480
FILM (TEMPERATURE CONTROL)	494
	496
	570
	572
FILM-WARNING (CLEARANCE)	238
	626
FILM-WARNING (CRUSH HAZARD)	431
	432
	433
	435
FILM-WARNING (CRUSH HAZARD, STAY BACK)	633
	639
	646
	649
FILM-WARNING (CRUSH HAZARD, STAY BACK, U.S.)	639
FILM-WARNING (HIGH PRESSURE, READ MANUAL)	633
	646
	649
FILM-WARNING (HIGH PRESSURE, READ OMM, U.S.)	636
	643
FILM-WARNING (IMPALED POINT)	459
	460
	464
	468
FILM-WARNING (NO ACCESS)	633
	646
FILM-WARNING (NO CLEARANCE, STAY BACK)	393
	394
FILM-WARNING (STEERING)	228
FILTER & LINES GP-HYDRAULIC	186
FILTER AS-OIL (ADVANCED EFFICIENCY) (HYDRAULIC)	188
FILTER ELEMENT AS-AIR (PRIMARY)	93
FILTER ELEMENT AS-AIR (SECONDARY)	93
FILTER ELEMENT AS-ENGINE OIL	56
	189
FILTER ELEMENT-CAB AIR	494
	496
	570
	572
FILTER ELEMENT-CAB AIR (AIR)	496
FILTER ELEMENT-CAB AIR (AIR)	572
FILTER ELEMENT-FUEL (WATER SEPARATOR)	106
FILTER GP-OIL	190
FILTER GP-OIL–ENGINE	189
FILTER GP-OIL–HYDRAULIC	188
FILTER GP-WATER SEP & FUEL	106
FITTING GP	278
	321
	323
FITTING GP-HYDRAULIC	321
FITTING GP-HYDRAULIC–QUICK DISCONNECT, FEMALE, HIGH FLOW	273
FITTING GP-HYDRAULIC–QUICK DISCONNECT, MALE, HIGH FLOW	272
FITTING GP (PUMP CASE DRAIN)	331
FLASHER AS (12-VOLT)	154
	239
	242
FLOOR MAT	1
	2
	3
	4
	5
	6
	7
	220
	221
	222
	223
FLYWHEEL GP	41
	42
FORK AR-GRAPPLE–INDUSTRIAL	456
FORK AR-GRAPPLE–UTILITY	457
FORK GP-GRAPPLE	458
	460

INDEX

Name	Page
FORK GP-GRAPPLE–INDUSTRIAL	459
FORK GP-PALLET	461
FORK GP-PALLET–KIT	461
	462
FORK GP-UTILITY	463
	464
FRAME GP-BLADE	465
FRAME GP-FORK–INDUSTRIAL	466
	467
FRAME GP-GRAPPLE–INDUSTRIAL	468
FRAME GP-LOADER	234
FRAME GP-MACHINE	236
FRAME GP-WINDOW–LH	561
FRAME GP-WINDOW–RH	560
FUSE (10-AMPERE)	143
	144
	166
	168
	181
	280
	443
FUSE (10-AMPERE)	534
FUSE (15-AMPERE)	143
	144
	167
	168
	181
FUSE (20-AMPERE)	168
FUSE (30-AMPERE)	167
	168
	578
	580

G

GASKET-COVER	81
GASKET-COVER (TEMPERATURE REGULATOR)	78
GAUGE & WARNING GP–LH	562
GAUGE & WARNING GP–RH	563
GAUGE GP-FUEL LEVEL	563
GAUGE-SIGHT (COOLANT LEVEL)	87
GAUGE-SIGHT (HYDRAULIC TANK)	368
GAUGE-SIGHT (RADIATOR)	86
GAUZE (CRANKCASE BREATHER)	100
GAUZE (CRANKCASE BREATHER)	22
GEAR GP-IDLER	75
GLOW PLUG	137
	138
GLOW PLUG GP	137
	138
GOVERNOR GP	107
	110
GRAPPLE GP-UTILITY	469
	470
	471
GUARD GP-BELT	43
GUARD GP-ROPS/FOPS	564
GUIDE GP-LINES	237

H

HANDHOLD GP	565
HANDLE & PIN GP-COUPLER–LH	472
HANDLE & PIN GP-COUPLER–RH	473
HANDLE GP	504
HANDLE GP-COUPLER–LH	474
HANDLE GP-COUPLER–RH	475
HANDLE GP-MODULAR	513
	514
	515
	566
	567
HARNESS AS-CHASSIS (HORN)	177
HARNESS AS-CHASSIS (TRANSMISSION)	578
	580
HARNESS AS-CONTROL (SECURITY)	142
HARNESS AS-CONTROL (SECURITY)	141
HARNESS AS-ENGINE	172
	175
HARNESS AS-FRONT LIGHTING	154
	239
	242
HARNESS AS-FUEL TANK	167
	578
	580
HARNESS AS-HEATER & AIR COND	167
	570
	572
	578
	580
HARNESS AS-OPERATOR CONTROLS (HIGH FLOW)	278
	539
HARNESS AS-OPERATOR CONTROLS (JOYSTICK)	521
	524
	527
	536
HARNESS AS-OPERATOR CONTROLS (JOYSTICK)	278
	539
HARNESS AS-PLATFORM	169
HARNESS AS-PLATFORM (LOWER)	168
HARNESS AS-REAR LIGHTING	154
	168
	224
	239
	242
	250

INDEX

Name	Page
HARNESS AS-REAR LIGHTING (BRAKE)	180, 224, 239, 242
HARNESS AS-SWITCH	178
HARNESS AS-WINDOW WIPER	547, 550, 553, 555, 582, 583
HARNESS AS-WIRING (GLOW PLUG)	175
HARNESS AS-WIRING (SERVICE METER)	546
HARNESS AS-WORK TOOL	485
HARNESS AS-WORK TOOL (CONNECTING)	391, 392
HARNESS AS-WORK TOOL (LIFT ARM)	143, 144
HARNESS AS-WORK TOOL (LIFT ARM)	181
HARNESS AS-WORK TOOL (PLATFORM)	143, 144
HARNESS AS-WORK TOOL (PLATFORM)	181
HEATER & MTG GP-CAB	568
HEATER AR-CAB	569
HEATER GP-CAB	570, 572
HEATER GP-CAB–KIT	574
HEATER GP-JACKET WATER	139, 140
HOLDER-CUP	575
HORN AS (LOW TONE)	531, 532
HOSE (LOWER)	88, 90
HOSE (UPPER)	88, 90
HOUSING AS-SIDE–A/C, HEATER	576
HOUSING GP-FLYWHEEL	44, 45
HOUSING GP-FRONT	46, 48
HOUSING GP-WATER REGULATOR	78
HYDRAULIC AR	274, 275, 276
HYDRAULIC AR–HIGH FLOW	276
HYDRAULIC AR–HIGH FLOW, SOUND SUPPRESSION	275
HYDRAULIC AR–SOUND SUPPRESSION	275

I

Name	Page
INSTALLATION AR-ENGINE	17, 18
INSTALLATION GP	577
INSTALLATION GP-SECURITY	141
INSTALLATION GP-SECURITY–KIT	142

K

Name	Page
KEY	226
KEY AS-ELECTRONIC (SECURITY)	135
KEY AS-ELECTRONIC (SECURITY)	141
KIT-AIR COND & HEATER INSTL	577
KIT-AIR COND & HEATER INSTL–A/C, HEATER	579
KIT-CAB DOOR & MOUNTING–GLASS	583
KIT-CAB DOOR & MOUNTING–POLYCARBONATE	582
KIT-CAB SEAL–DEBRIS BARRIER	584
KIT-HIGH FLOW CONVERSION–KIT	277
KIT-PILOT VALVE (SPRING)	379
KIT-QUICK COUPLER CONVERSION–KIT	280
KIT-ROADING CONVERSION	239, 242
KIT-ROADING CONVERSION–OUTSIDE NACD	238
KIT-ROADING PLATE & MOUNTING–BUCKET	476
KIT-SEAL	379
KIT-SEAL (GEAR PUMP)	352
KIT-WORK TOOL CONTROL & WIRING–VERTICAL LIFT	143
KIT-WORK TOOL WIRING–VERTICAL LIFT	144

L

Name	Page
LAMP AS (RED, GREEN, LED, 12-VOLT)	142
LAMP GP-DOME (12-VOLT)	563
LAMP GP-FLOOD	145
LAMP GP-FLOOD–12-VOLT, VERTICAL MOUNT	146
LAMP GP-HEAD & SIGNAL	147
LAMP GP-REGISTRATION PLATE	224, 248
LAMP GP-STOP & TAIL	149, 150
LAMP GP-WARNING BEACON–12-VOLT, AMBER	151
LAMP-HEAD	147
LAMP (12-VOLT)	563
LAMP (12-VOLT) (REGISTRATION PLATE)	248
LAMP (12-VOLT, 10-WATT)	224, 563
LAMP (12-VOLT, 21-WATT)	147, 150
LAMP (12-VOLT, 4-WATT)	147
LAMP (12-VOLT, 5-WATT)	149, 150
LAMP (12-VOLT, 55-WATT)	145

INDEX

Name	Page
	146
	151
LEVER GP-GOVERNOR	585
LIFTING GP-ENGINE	50
	51
LIFTING GP-MACHINE–SINGLE POINT	245
LIFTING GP-MACHINE–4-POINT	244
LIGHTING GP-FLOOD–FRONT	153
LIGHTING GP-FLOOD–REAR	152
LIGHTING GP-ROADING	154
LIGHTING GP-STOP & TAIL	156
LIGHTING GP-WARNING BEACON–12-VOLT	157
LINER-CAB	587
LINER GP-CAB	586
LINES GP-AIR	94
LINES GP-AIR CONDITIONER	588
LINES GP-BUCKET	285
	287
	289
	291
	293
	295
LINES GP-BUCKET–INDUSTRIAL	283
LINES GP-CONNECTING	296
	298
LINES GP-FUEL PRM & FILTER	112
LINES GP-GRAPPLE	300
	302
	304
LINES GP-HEATER	590
LINES GP-HYDRAULIC FAN	306
	308
LINES GP-HYDRAULIC OIL COOLER	310
LINES GP-HYDROSTATIC	192
LINES GP-LIFT CYLINDER	311
	313
LINES GP-LOWERING CONTROL	315
LINES GP-PILOT–DIRECTION, SPEED	319
LINES GP-PILOT–WORK TOOL	317
LINES GP-PUMP	321
	323
LINES GP-TILT CYLINDER	325
	327
LINES GP-WORK TOOL	329
	331
LINK GP-COUPLER	477
LITERATURE GP	591
LOCK GP-CYLINDER	501
LOCK GP-QUICK COUPLER–MECHANICAL	478

M

Name	Page
MANIFOLD & LINES GP-CONTROL–PARKING BRAKE	335
	337
MANIFOLD & MTG GP-CONTROL	339
	340
MANIFOLD & MTG GP-CONTROL–ANGLING BLADE	341
MANIFOLD & SOLENOID GP-CONTROL	342
MANIFOLD & SOLENOID GP-CONTROL–PARKING BRAKE	343
	344
MANIFOLD GP-CONTROL	346
MANIFOLD GP-CONTROL–ANGLING BLADE	347
MANIFOLD GP-CONTROL–QUICK COUPLER	345
MANIFOLD GP-CONTROL (BOOSTED AUXILIARY HYD FLOW)	277
	340
MANIFOLD GP-EXHAUST	95
MANIFOLD GP-RETURN	194
METER GP-SERVICE	546
MIRROR & MTG GP-REAR VIEW	247
MIRROR & MTG GP-REAR VIEW–WITH ROADING LIGHT MOUNT	246
MIRROR GP-REAR VIEW	592
MODULE GP-WARNING INDICATOR	593
	594
MOTOR & MTG GP-HYDRAULIC FAN	348
	349
	350
MOTOR & MTG GP-HYDROSTATIC	196
MOTOR GP-GEAR	353
	354
	355
	356
MOTOR GP-GEAR–A/C COMPRESSOR	351
MOTOR GP-GEAR–HYDRAULIC FAN	352
MOTOR GP-PISTON	197
MOTOR GP-WINDOW WIPER	553
	555
MOUNTING GP-CYLINDER	357
	358
	359
MOUNTING GP-ENGINE–HARDWARE	53
MOUNTING GP-ENGINE–SUPPORTS	52
MOUNTING GP-FAN	54
	55
MOUNTING GP-PUMP	199
MOUNTING GP-RAD & OIL COOLER	79
MOUNTING GP-REGISTRATION	248
	249
MOUNTING GP-ROADING LIGHTS–REAR	250
MOUNTING GP-ROPS	595
MUFFLER GP	96
	97

INDEX

Name	Page
O	
OPTION AR-CAB	596, 597
P	
PADLOCK GP	226, 228
PAN GP-OIL	56, 60
PANEL AR-INSTRUMENT	597
PANEL GP-FUSE	143, 144, 168, 181
PANEL GP-INSTRUMENT	598, 600
PANEL GP-SIDE	602
PARTS GP-MISCELLANEOUS	630
PEDAL GP-GOVERNOR	604
PEDAL GP-GOVERNOR–INCLUDES LEVER	603
PISTON & ROD GP	62, 63
PLATE & FILM GP	632, 633, 636, 639, 641, 643, 646, 649
PLATE GP-ROADING–LH	479
PLATE GP-ROADING–RH	480
PLATE-IDENTIFICATION (ENGLISH, GERMAN, SPANISH)	228, 229
PLATE-IDENTIFICATION (MACHINE)	633, 636, 643, 646, 649
PLATE-INFORMATION (MAXIMUM WEIGHT)	226
PLATFORM GP-OPERATOR	605
PLUG-DRAIN (ENGINE OIL)	56
PLUG-DRAIN (ENGINE OIL PAN)	64
PLUG GP-ENGINE	64
PLUG GP-PILOT VALVE	360
PLUG KIT-CONN	499
PLUG-MAGNETIC (FRAME)	234
POSITIONER GP-FORK	461
POWER TRAIN AR	200
PULLEY GP-CRANKSHAFT	65, 66
PULLEY GP-WATER PUMP	67, 68
PUMP & MTG GP-FUEL TRANSFER	114, 115
PUMP & MTG GP-HYDROSTATIC	201
PUMP & MTG GP-WORK TOOL	361, 362, 363, 364
PUMP GP-DIAPHRAGM	485
PUMP GP-ENGINE OIL	75
PUMP GP-FUEL INJECTION	116, 119, 120
PUMP GP-FUEL PRIMING	122
PUMP GP-FUEL PRM & PRIM FILTER–WATER SEPARATOR	122
PUMP GP-GEAR	363, 364, 366
PUMP GP-GEAR–WORK TOOL	365
PUMP GP-PISTON	202
PUMP GP-WATER	81, 83
R	
RADIATOR & HYD OIL COOLER GP	86, 87
RADIATOR & OIL COOLER MTG GP	88, 90
RECOVERY GP-COOLANT	88, 90
REGULATOR-WATER TEMPERATURE	81, 83
RELAY AS (SHELL)	169
RELAY AS (12-VOLT)	143, 144, 181, 224, 239, 242, 278, 494, 496, 536, 539
RELAY AS (12-VOLT) (BRAKE LIGHT)	180
RELAY AS (12-VOLT) (COLD START)	172
RELAY AS (12-VOLT) (COLD START)	175
RELAY AS (12-VOLT) (HEATER)	570, 572
RELAY AS (12-VOLT) (MAIN POWER)	168
RELAY AS (12-VOLT) (MAIN POWER)	181
RELAY AS (12-VOLT) (START)	172
RELAY AS (12-VOLT) (START)	175

INDEX

Name	Page
RELAY AS (12-VOLT) (WORK TOOL)	181
ROTATING GP-PUMP (LH)	202
ROTATING GP-PUMP (RH)	202

S

SCREEN (HYDRAULIC)	317
SCREEN-SUCTION (HYDRAULIC TANK)	368
SCREEN (WATER TANK)	484
SEAL GP-CAB–DEBRIS BARRIER	607
SEAL-VALVE COVER	22
	100
SEAT BELT GP	609
	610
	611
	612
SEAT GP	614
SEAT GP–SUSPENSION	613
SEAT GP-ADJUSTABLE	615
SENSOR GP-TEMP & PRESS	158
SENSOR GP-TEMPERATURE (ENGINE COOLANT)	87
SENSOR GP-TEMPERATURE (HYDRAULIC OIL)	350
SENSOR-SPEED (ENGINE TIMING)	110
SENSOR-SPEED (FAN MOTOR)	355
SOFTWARE GP-MACHINE (SECURITY)	135
SOFTWARE GP-MACHINE (SECURITY)	141
SOLENOID (FUEL SHUTOFF)	116
	131
SOLENOID (STARTING MOTOR)	159
SPRING AS-GAS	79
	564
SPRING AS-GAS (CAB)	245
	616
SPRING AS-GAS (LOCKING)	547
	550
	582
	583
SPRING GP-BLADE	481
SPRING GP-GAS	616
STARTING MOTOR GP-ELECTRIC	159
	161
	162
STEP GP-MATERIAL HANDLING ARM	482
STOP GP-GRAPPLE	470
	471
STOP GP-GRAPPLE–UTILITY	483
STRAINER GP-WATER	484
SUN VISOR	617
	618
SUPPORT GP-STORAGE BOX	5
	7
	11
	12
	220
	222
SUPPRESSION GP-SOUND	252
SWITCH AS-KEY START	562
SWITCH AS-LIMIT (WIPER)	553
	555
SWITCH AS-PRESSURE (AIR CONDITIONER)	588
SWITCH AS-PRESSURE (HYDRAULIC OIL)	188
SWITCH AS-PRESSURE (REFRIGERANT)	578
	580
SWITCH AS-ROCKER (AIR CONDITIONER)	494
SWITCH AS-ROCKER (AIR CONDITIONER)	496
SWITCH AS-ROCKER (COLD START)	598
	600
SWITCH AS-ROCKER (ELECTRIC POWER, WORK TOOL)	143
	144
SWITCH AS-ROCKER (ELECTRIC POWER, WORK TOOL)	181
SWITCH AS-ROCKER (FRONT WORK LIGHT)	598
	600
SWITCH AS-ROCKER (HAZARD WARNING LIGHTS)	154
	239
	242
SWITCH AS-ROCKER (PARKING BRAKE)	598
	600
SWITCH AS-ROCKER (QUICK COUPLER)	280
	443
SWITCH AS-ROCKER (REAR WIPER)	553
	555
SWITCH AS-ROCKER (REAR WORK LAMPS)	152
SWITCH AS-ROCKER (ROADING LIGHTS)	239
	242
SWITCH AS-ROCKER (ROADING LIGHTS)	154
SWITCH AS-ROCKER (TURN SIGNAL)	154
	239
	242
SWITCH AS-ROCKER (WARNING BEACON)	157
SWITCH AS (SEAT)	615
SWITCH AS-TEMPERATURE (HYDRAULIC OIL)	368
SWITCH GP-PRESSURE	164
SWITCH GP-PRESSURE–BRAKE LIGHT	163
SWITCH GP-PRESSURE (BACKUP ALARM)	166
SWITCH GP-ROCKER (HIGH FLOW)	536
	539
SWITCH GP-ROCKER (HIGH FLOW)	278
SWITCH GP-ROCKER (WORK TOOL POSITIONER)	274
SWITCH GP-TEMPERATURE–COOLANT	165
SWITCH-PRESSURE (ENGINE OIL)	158
	164

INDEX

Name	Page
SWITCH-ROCKER (HEATER)	494, 496, 570, 572
SWITCH (SEAT)	614
SWITCH-TEMPERATURE (AIR CONDITIONER)	494, 496
SWITCH-TEMPERATURE (ENGINE COOLANT)	158, 165

T

TANK & MTG GP-HYDRAULIC	367
TANK & MTG GP-WATER	485
TANK GP-HYDRAULIC	368
TANK GP-WATER	488
TIRE & RIM GP–HEAVY-DUTY, LH	206
TIRE & RIM GP–HEAVY-DUTY, RH	206
TIRE & RIM GP–LH	204, 205, 206, 207, 208, 209, 210, 211, 212, 213
TIRE & RIM GP–RH	204, 205, 207, 208, 209, 210, 211, 212, 213
TOOTH GP-UNI	489
TURBOCHARGER GP	98, 100

V

V-BELT GP–FAN DRIVE	69
V-BELT (WATER PUMP)	67, 69
VALVE & LINES GP-COUPLER	369
VALVE & MTG GP-CONTROL	373
VALVE AS-SHUTOFF	580
VALVE AS-SHUTOFF (CAB HEATER)	590
VALVE AS-SHUTOFF (WATER)	574
VALVE-BREATHER (CRANKCASE)	100
VALVE-BREATHER (CRANKCASE)	22
VALVE GP-CHECK	346
VALVE GP-CONTROL	374
VALVE GP-MANUAL	376
VALVE GP-PILOT	377, 381, 382
VALVE GP-PILOT–WORK TOOL	379
VALVE GP-PUMP CONTROL (PISTON PUMP)	202
VALVE GP-RELIEF	346, 354, 384
VALVE GP-RELIEF (CHARGE)	202
VALVE GP-RELIEF (FAN SPEED)	352
VALVE GP-RELIEF (LIFT)	374
VALVE GP-RELIEF (TILT, AUXILARY)	374
VALVE GP-SOLENOID	350, 386, 388
VALVE GP-SOLENOID–A/C COMPRESSOR	387
VALVE GP-SOLENOID–AUXILIARY	385
VALVE GP-SOLENOID (HIGH FLOW)	346
VALVE GP-SOLENOID (HIGH FLOW BOOST)	346
VALVE GP-SOLENOID (QUICK COUPLER)	345
VALVE GP-SOLENOID (12 VDC)	579
VALVE GP-SOLENOID (12 VDC)	577
VALVE GP-SOLENOID (12 VDC)	356
VALVE MECHANISM GP	70, 71
VALVE-RELIEF (CROSSOVER)	202
VISOR GP-CAB	617, 618

W

WARNING GP-BACKUP	166
WHEEL & TIRE AR	213, 216, 217
WHEEL & TIRE AR–HEAVY DUTY	214, 215, 216
WHEEL & TIRE AR–LOW SIDE WALL	215
WHEEL & TIRE AR–SOLID	213, 217
WHEEL & TIRE GP	218
WINDOW GP-CAB	619, 620
WINDOW GP-CAB–KIT	621
WINDOW GP-CAB–RH,UPPER	624
WINDOW GP-CAB–UPPER,LH	622
WIRING GP-AIR CONDITIONER	167
WIRING GP-CHASSIS	168
WIRING GP-ENGINE	172, 175
WIRING GP-HORN	177

INDEX

Name	Page	Name	Page
WIRING GP-MACHINE–DEMAND FAN	178		
WIRING GP-REAR LIGHTING	180		
WIRING GP-WORK TOOL	181		

INDEX

Désignation	Page

A

ACCOUDOIR (ASS)	499
ACCOUDOIR ET MONTAGE (ASS)	498
ACCOUPLEMENT D'ENTRAINEMENT (ASS)	542, 579
ACCOUPLEMENT D'ENTRAINEMENT (ASS)	577
ACCUMULATEUR - CLIMATISEUR (ASS)	490, 491
ACCUMULATEUR - CLIMATISEUR (ASS) (AVEC SICCATIF)	577
ACCUMULATEUR ET MONTAGE - HYDRAULIQUE (ASS)	253
ALTERNATEUR DE CHARGE (ASS)	123, 125
AMPOULE (12-V, 5-W)	149, 150
AMPOULE (12 VOLTS)	563
AMPOULE (12 VOLTS) (PLAQUE D'IMMATRICULATION)	248
AMPOULE (12V, 10W)	563
AMPOULE (12V, 10W)	224
AMPOULE (12V, 21W)	147, 150
AMPOULE (12V, 4W)	147
AMPOULE (12V, 55W)	151
AMPOULE (12V, 55W)	145, 146
ARBRE A CAMES (ASS)	19, 20
ARRÊT-PINCE (ASS)	470, 471, 483
AUTOCOLLANT (COMMANDE DE TEMPÉRATURE)	494, 496, 570, 572
AUTOCOLLANT DE FUSIBLE/ RELAIS	133
AUTOCOLLANT DE MISE EN GARDE (AUCUN ACCÈS)	633
AUTOCOLLANT DE MISE EN GARDE (AUCUN ACCÈS)	646
AUTOCOLLANT DE MISE EN GARDE (DÉGAGEMENT)	238, 626
AUTOCOLLANT DE MISE EN GARDE (DIRECTION)	228
AUTOCOLLANT DE MISE EN GARDE (HAUTE PRESSION, LIRE LE MANUEL)	646, 649
AUTOCOLLANT DE MISE EN GARDE (HAUTE PRESSION, LIRE LE MANUEL)	633
AUTOCOLLANT DE MISE EN GARDE (PAS DE DÉGAGEMENT, RESTER À L'ÉCART)	393, 394
AUTOCOLLANT DE MISE EN GARDE (POINT PERCÉ)	459, 460, 464, 468
AUTOCOLLANT DE MISE EN GARDE (PRESSION ÉLEVÉE, LIRE LE GUIDE D'UTILISATION ET D'ENTRETIEN, ÉTATS-UNIS)	636
AUTOCOLLANT DE MISE EN GARDE (PRESSION ÉLEVÉE, LIRE LE GUIDE D'UTILISATION ET D'ENTRETIEN, ÉTATS-UNIS)	643
AUTOCOLLANT DE MISE EN GARDE (RISQUE D'ÉCRASEMENT)	431, 432, 433, 435
AUTOCOLLANT DE MISE EN GARDE (RISQUE D'ÉCRASEMENT, RESTER À L'ÉCART)	633, 639, 646, 649
AUTOCOLLANT DE MISE EN GARDE (RISQUE D'ÉCRASEMENT, RESTER À L'ÉCART, ÉTATS-UNIS)	639
AUTOCOLLANT (DÉBIT ÉLEVÉ)	275, 278
AUTOCOLLANT D'IDENTIFICATION (CONTACTEUR D'ALLUMAGE)	141
AUTOCOLLANT D'IDENTIFICATION (CONTACTEUR D'ALLUMAGE)	142
AUTOCOLLANT D'IDENTIFICATION (PRISE DE COURANT, 12V)	633, 636, 643, 646, 649
AUTOCOLLANT D'IDENTIFICATION (13-KM/H)	5, 7, 11, 12, 220
AUTOCOLLANT (FOPS)	564
AUTOCOLLANT-INFORMATION (EMPLACEMENT DU TIRANT)	389
AUTOCOLLANT (RÉFLECTEUR)	479, 480
AVERTISSEUR DE RECUL (ASS)	166

* TRADUCTION NON DISPONIBLE AU MOMENT DE LA PUBLICATION

INDEX

Désignation	Page

B

BAÏONNETTE- NIVEAU DE CARBURANT (ASS) 563
BALAI D'ESSUIE-GLACE (ENS) (*558-MM) (AVANT, ARRIÈRE) 553
BALAI D'ESSUIE-GLACE (ENS) (*558-MM) (PORTE DE CABINE) 555
BANDE AUTOCOLLANTE (RÉFLECTEUR, ROUGE, BLANC) 479
480
BATI - CHARGEUSE (ASS) 234
BÂTI DE FOURCHE (ASS) 466
467
BÂTI DE LAME (ASS) 465
BÂTI DE MACHINE (ASS) 236
BATTERIE (ASS) 126
127
BATTERIE (12V, SANS ENTRETIEN) 127
BATTERIE (12V, STANDARD) 126
BIELLE DE COUPLEUR (ASS) 477
BLOC-CYLINDRES (ASS) 29
31
BOBINE DE SOLÉNOÏDE (ENS) (12 VOLTS) 385
BOUCHON À ÉVENT (RÉSERVOIR D'EXPANSION DU LIQUIDE DE REFROIDISSEMENT) 88
90
BOUCHON AIMANTÉ (CHÂSSIS) 234
BOUCHON DE GOULOTTE DE REMPLISSAGE D'HUILE (MOTEUR) 73
BOUCHON DE GOULOTTE DE REMPLISSAGE (ENS) (CARBURANT) 112
BOUCHON DE GOULOTTE DE REMPLISSAGE (ENS) (RÉSERVOIR HYDRAULIQUE) 368
BOUCHON DE MOTEUR (ASS) 64
BOUCHON DE RADIATEUR (ENS) (ÉCHANGEUR THERMIQUE D'EAU DE MER) 86
87
BOUCHON DE REMPLISSAGE D'HUILE MOTEUR (ASS) 73
BOUCHON DE SOUPAPE PILOTE (ASS) 360
BOUCHON DE VIDANGE (CARTER D'HUILE MOTEUR) 64
BOUCHON DE VIDANGE (HUILE MOTEUR) 56
BOUGIE DE PRECHAUFFAGE 137
138
BOUGIE DE PRÉCHAUFFAGE (ASS) 137
138
BOULONNERIE DE FAISCEAU DE CABLES 136
BOUTON DE TEMPÉRATURE 165
BRANCHEMENT ÉLECTRIQUE (ASS) 128
129
BRAS DE MANUTENTION (ASS) 389
BRAS D'ESSUIE-GLACE (ASS) 553
BRAS D'ESSUIE-GLACE (ASS) (AVANT) 555

C

*CAB GP-ENCLOSED ROPS 503
CABINE - REVÊTEMENT (ASS) 586
CABINE ROPS FERMÉE (VERSION) 502
CABLAGE - CLIMATISEUR (ASS) 167
CABLAGE - COMMANDE MANUELLE ELECTRIQUE 504
CÂBLAGE - OUTIL DE TRAVAIL (ASS) 181
CABLAGE DE CHASSIS (ASS) 168
CÂBLAGE DE KLAXON (ASS) 177
CABLAGE DE LA MACHINE (ASS) 178
CABLAGE DE MOTEUR (ASS) 172
175
CABLAGE D'ECLAIRAGE ARRIERE (ASS) 180
CABLAGE MOTEUR (ENS) 172
175
CÂBLE DE COMMANDE DU RÉGULATEUR (ASS) 104
CACHE-SOUPAPES (ASS) 22
CADENAS (ASS) 226
228
CADRE DE VITRE (ASS) 560
561
CANALISATIONS - BRANCHEMENT (ASS) 296
298
CANALISATIONS - OUTIL DE TRAVAIL (ASS) . . . 329
331
CANALISATIONS A COMMANDE PILOTE (ASS) 317
319
CANALISATIONS-COMMANDE D'ABAISSEMENT (ASS) 315
CANALISATIONS D'AIR (ASS) 94
CANALISATIONS DE CHAUFFAGE (ASS) 590
CANALISATIONS DE CLIMATISEUR (ASS) 588
CANALISATIONS DE FILTRE ET D'AMORÇAGE DE CARBURANT (ASS) 112
CANALISATIONS DE POMPE (ASS) 321
323
CANALISATIONS DE RÉCHAUFFEUR DE LIQUIDE DE REFROIDISSEMENT 590
CANALISATIONS DE REFROIDISSEUR D'HUILE HYDR. (ASS) 310
CANALISATIONS DE VÉRIN DE LEVAGE (ASS) 311
313
CANALISATIONS DU VÉRIN D'INCLINAISON (ASS) 325

* TRADUCTION NON DISPONIBLE AU MOMENT DE LA PUBLICATION

INDEX

Désignation	Page
	327
CANALISATIONS HYDRAULIQUES DE VENTILATEUR (ASS)	306
	308
CANALISATIONS HYDROSTATIQUES (ASS)	192
CAPITONNAGE	587
CAPTEUR - TEMP. ET PRESSION (ASS)	158
CAPTEUR DE TEMPERATURE (ASS) (HUILE HYDRAULIQUE)	350
CAPTEUR DE TEMPERATURE (ASS) (LIQUIDE DE REFROIDISSEMENT DU MOTEUR)	87
CAPTEUR DE VITESSE (CALAGE DU MOTEUR)	110
CAPTEUR DE VITESSE (MOTEUR DE VENTILATEUR)	355
CARENAGE DE MOTEUR (ASS)	232
CARTER AV (ASS)	46
	48
CARTER DE VOLANT (ASS)	44
	45
CEINTURE DE SECURITE (ASS)	609
	610
	611
	612
CHAPEAU (ENS) (RÉSERVOIR D'EAU)	488
CHAPEAU (GOULOTTE D'HUILE MOTEUR)	56
	73
CHAUFFAGE DE CABINE (ASS)	570
	572
	574
CHAUFFAGE DE CABINE (VERSION)	569
CHAUFFAGE ET MONTAGE - CABINE (ASS)	568
CLAPET DE DECHARGE (ASS)	346
	354
CLAPET DE DECHARGE (ASS)	384
CLAPET DE DECHARGE (ASS) (CHARGE)	202
CLAPET DE DECHARGE (ASS) (INCLINAISON, AUXILIAIRE)	374
CLAPET DE DECHARGE (ASS) (LEVAGE)	374
CLAPET DE DECHARGE (ASS) (VITESSE DU VENTILATEUR)	352
CLAPET DE DECHARGE (LIMITEUR SECONDAIRE)	202
CLAPET DE RETENUE (ENS)	346
CLÉ	226
CLÉ ÉLECTRONIQUE (ENS) (SÉCURITÉ)	135
CLÉ ÉLECTRONIQUE (ENS) (SÉCURITÉ)	141
CLIGNOTANT (ENS) (12 VOLTS)	154
	239
	242
CLIMATISEUR (ASS)	494
	496
CLIMATISEUR ET MONTAGE (ASS)	492
CLIMATISEUR (VERSION)	493
COFFRE DE RANGEMENT (ASS)	501
COLLECTEUR - COMMANDE (ASS)	345
COLLECTEUR - COMMANDE (ASS)	346
COLLECTEUR - COMMANDE (ASS)	347
COLLECTEUR - COMMANDE (ASS) (*BOOSTED AUXILIARY HYD FLOW)	277
COLLECTEUR - COMMANDE (ASS) (*BOOSTED AUXILIARY HYD FLOW)	340
COLLECTEUR D'ÉCHAPPEMENT (ASS)	95
COLLECTEUR ET CANALISATIONS (ASS) - COMMANDE	335
	337
COLLECTEUR ET SOLÉNOÏDE (ASS)- COMMANDE	342
	343
	344
COLLECTEUR-RETOUR (ASS)	194
COMMANDE DE COLLECTEUR ET MONTAGE (ASS)	339
	340
	341
COMMANDE DE FAISCEAU (ENS) (SÉCURITÉ)	142
COMMANDE DE FAISCEAU (ENS) (SÉCURITÉ)	141
COMMANDE DE POIGNÉE (ASS)	510
	511
	512
	513
	514
	515
	516
	517
COMMANDE DE RÉGULATEUR (ASS)	105
COMMANDE DE VENTILATEUR (ASS)	178
COMMANDE D'INTERVERROUILLAGE (ASS)	130
COMMANDE ÉLECTRONIQUE D'ÉQUIPEMENT (ASS)	134
COMMANDE HYDRAULIQUE PILOTE (ASS)	518
	521
	522
	524
	525
	527
	528
	530
	531
	532
	534
	536
	539

* TRADUCTION NON DISPONIBLE AU MOMENT DE LA PUBLICATION

INDEX

Désignation	Page
COMMANDE MANUELLE DÉMARRAGE/ARRÊT (ASS)	131
COMMANDE NON PROGRAMMEE (ASS)	134
COMMANDE NON PROGRAMMEE (ASS) (SÉCURITÉ)	135
COMPRESSEUR DE REFRIGERANT (ASS)	505
	506
	577
	579
COMPRESSEUR ET MONTAGE - RÉFRIGÉRANT (ASS)	508
COMPRESSEUR ET MOTEUR DE RÉFRIGÉRATION (ASS)	505
	506
COMPTEUR D'ENTRETIEN (ASS)	546
CONDENSATEUR ET MONTAGE (RÉFRIGÉRANT)	509
CONDUIT ET COMMANDE (ASS)	558
CONNEXION (ASS)	278
	323
CONTACTEUR DE DÉMARRAGE À CLÉ (ENS)	562
CONTACTEUR (ENS) (SIÈGE)	615
CONTREPOIDS (ASS)	230
	231
CÔTÉ CARTER (ENS)	576
COUPLEUR EXPRESS (ASS)	444
	445
COUPLEUR EXPRESS (VERSION)	443
COURROIE TRAPEZOIDALE (POMPE À EAU)	67
	69
COUVERCLE - PANNEAU DE FUSIBLES (ASS)	133
COUVERCLE-CANALISATIONS (ASS)	447
COUVERCLE DE CARTER AV (ASS)	21
COUVERCLE DE LA CONSOLE (ASS)	544
	545
COUVERCLE DU TABLEAU DE BORD (ASS)	546
CULASSE (ASS)	35
	36
	38
CULASSE (ENS)	33
CULBUTERIE (ASS)	70
	71

D

Désignation	Page
DÉMARREUR ÉLECTRIQUE (ASS)	159
	161
	162
DENT MONOBLOC (ASS)	489
DISJONCTEUR DE SECURITE (ENS) (ESSUIE-GLACE)	553
DISJONCTEUR DE SECURITE (ENS) (ESSUIE-GLACE)	555
DISJONCTEUR (ENS) (105A)	172
	175
DISJONCTEUR (ENS) (30A)	239
	242
DISJONCTEUR (ENS) (30A)	154
DISTRIBUTEUR (ASS)	374
DISTRIBUTEUR DE POMPE (ASS) (POMPE À PISTONS)	202
DISTRIBUTEUR ET MONTAGE (ASS)	373

E

Désignation	Page
EAU DES CHEMISES - RECHAUFFEUR (ASS)	140
EAU DES CHEMISES - RECHAUFFEUR (ASS)	139
ÉCLAIRAGE - FEUX DE ROUTE (ASS)	154
ÉCLAIRAGE - GYROPHARE (ASS)	157
ÉCLAIRAGE - PROJECTEURS (ASS)	152
	153
ECLAIRAGE DE GODET (ASS)	283
	285
	287
	289
	291
	293
	295
ÉCLAIRAGE-FEUX DE STOP ET ARRIÈRE (ASS)	156
ÉCRAN (HYDRAULIQUE)	317
ÉCRAN (RÉSERVOIR D'EAU)	484
ÉLECTRONIQUE - MACHINE (ENS)	135
ÉLÉMENT DE FILTRE À AIR DE CABINE	494
	496
	570
	572
ÉLÉMENT DE FILTRE À AIR DE CABINE (AIR)	496
	572
ÉLÉMENT DE FILTRE À AIR (ENS) (PRINCIPAL)	93
ÉLÉMENT DE FILTRE À AIR (ENS) (SECONDAIRE)	93
ÉLÉMENT DE FILTRE À CARBURANT (SÉPARATEUR D'EAU)	106
ÉLÉMENT DE FILTRE (ENS)-HUILE MOTEUR	189
ÉLÉMENT DE FILTRE (ENS)-HUILE MOTEUR	56
ÉLÉMENT DU RÉCHAUFFEUR D'EAU DES CHEMISES (ENS) (MOTEUR)	139
	140
EMBOUT ET LAME DE COUPE (ASS)	450

* TRADUCTION NON DISPONIBLE AU MOMENT DE LA PUBLICATION

INDEX

Désignation	Page
EMBRAYAGE-ROUE AV (ASS)	75
ENTRAINEMENT EN TANDEM (ASS)	185
ENTRAÎNEMENT POUR COURROIE (GYROPHARE)	151
ESSIEU (ASS)	183
	184

F

FAISCEAU DE CABLES DE LA PLATE-FORME	169
FAISCEAU DE CABLES DE LA PLATE-FORME (INFÉRIEUR)	168
FAISCEAU DE CABLES (ENS) (BOUGIE DE PRÉCHAUFFAGE)	175
FAISCEAU DE CABLES (ENS) (COMPTEUR D'ENTRETIEN)	546
FAISCEAU DE CHÂSSIS (ENS) (BOITE DE VITESSE)	578
FAISCEAU DE CHÂSSIS (ENS) (BOITE DE VITESSE)	580
FAISCEAU DE CHÂSSIS (ENS) (KLAXON)	177
FAISCEAU DE CHAUFFAGE ET CLIMATISATION	167
	570
	572
	578
	580
FAISCEAU DE COMMANDES (ENS) (DÉBIT ÉLEVÉ)	278
FAISCEAU DE COMMANDES (ENS) (DÉBIT ÉLEVÉ)	539
FAISCEAU DE COMMANDES (ENS) (LEVIER)	278
FAISCEAU DE COMMANDES (ENS) (LEVIER)	521
	524
	527
FAISCEAU DE COMMANDES (ENS) (LEVIER)	536
	539
FAISCEAU DE CONTACTEUR (ENS)	178
FAISCEAU DE RÉSERVOIR DE CARBURANT (ENS)	167
	578
	580
FAISCEAU D'ÉCLAIRAGE ARRIÈRE (ENS)	154
	168
	224
	239
	242
	250
FAISCEAU D'ÉCLAIRAGE ARRIÈRE (ENS) (FREIN)	180
	224
FAISCEAU D'ÉCLAIRAGE ARRIÈRE (ENS) (FREIN)	239
	242
FAISCEAU D'ÉCLAIRAGE AVANT (ENS)	154
	239
	242
FAISCEAU D'ESSUIE-GLACE (ENS)	547
	550
	582
	583
FAISCEAU D'ESSUIE-GLACE (ENS)	553
	555
FAISCEAU D'OUTIL DE TRAVAIL (ENS)	485
FAISCEAU D'OUTIL DE TRAVAIL (ENS) (ACCOUPLEMENT)	391
	392
FAISCEAU D'OUTIL DE TRAVAIL (ENS) (BRAS DE LEVAGE)	143
	144
	181
FAISCEAU D'OUTIL DE TRAVAIL (ENS) (PLATEFORME)	143
	144
	181
FEUX ARRIÈRE ET FEUX D'ARRÊT	149
	150
FILTRE A AIR (ASS)	92
	93
FILTRE A HUILE (ASS)	188
	189
	190
FILTRE À HUILE (ENS) (EFFICACITÉ AVANCÉE) (HYDRAULIQUE)	188
FILTRE DE SÉPARATEUR D'EAU ET DE CARBURANT (ASS)	106
FILTRE ET CANALISATIONS HYRAULIQUES (ASS)	186
FLEXIBLE (INFÉRIEUR)	88
	90
FLEXIBLE (SUPERIEUR)	88
	90
FOURCHE - PINCE (ASS)	458
	459
	460
FOURCHE - PINCE (VERSION)	456
	457
FOURCHE PALLETTE (ASS)	461
	462
FOURCHE-RÉSEAU PUBLIC (ASS)	463
	464
FUSIBLE (10A)	143
	144
	166

* TRADUCTION NON DISPONIBLE AU MOMENT DE LA PUBLICATION

INDEX

Désignation	Page
	168
	181
	280
	443
	534
FUSIBLE (15A)	143
	144
	167
	168
	181
FUSIBLE (20A)	168
FUSIBLE (30A)	167
	168
	578
FUSIBLE (30A)	580

G

GODET - MATÉRIAUX MEUBLES (VERSION)	409
GODET - PINCE (ASS)	426
	427
	428
	429
	430
GODET - PINCE (VERSION)	404
	405
	406
	407
	408
GODET - SALETÉ (ENS)	414
	415
	416
	417
GODET - SALETÉ (VERSION)	401
	402
GODET NORMAL (ENS)	418
	419
	420
	421
GODET NORMAL (VERSION)	402
	403
	404
GODET POUR MATERIAUX MEUBLES (ENS)	422
	423
	424
GODET POUR TERRASSEMENT (ASS)	425
GODET POUR TRAVAUX DE SERVITUDE (ASS)	436
	437
	438
GODET TOUS-TRAVAUX (ASS)	431
	432
	433
	434
	435
GODET TOUS-TRAVAUX (VERSION)	409
	410
	411
	412
GRAISSEUR HYDRAULIQUE (ASS)	272
	273
GRAISSEUR HYDRAULIQUE (ASS)	321
GROUPE DE MONTAGE	577
GROUPE DE MOTEUR A PISTONS	197
GROUPE DE PIECES DIVERSES	630
GROUPE DE ROTATION DE POMPE (DROITE)	202
GROUPE DE ROTATION DE POMPE (GAUCHE)	202
GROUPE DE TRANSFORMATION - DÉPLACEMENT ROUTIER	226
	227
	228
	229
GUIDE - CANALISATIONS (ASS)	237

H

*HOLDER-CUP	575
HUILE MOTEUR - CARTER (ASS)	56
HUILE MOTEUR - CARTER (ASS)	60

I

INDICATEURS ET TÉMOINS LUMINEUX (ASS)	562
	563
INSONORISATION (ASS)	252
INTERRUPTEUR - CONTACTEUR (SIÈGE)	614
INTERRUPTEUR À BASCULE (ASS) (DÉBIT ÉLEVÉ)	278
	536
	539
INTERRUPTEUR À BASCULE (ASS) (POSITIONNEUR D'OUTIL DE TRAVAIL)	274
INTERRUPTEUR BALANCIER (ENS) (ALIMENTATION ÉLECTRIQUE, OUTIL DE TRAVAIL)	181
INTERRUPTEUR BALANCIER (ENS) (ALIMENTATION ÉLECTRIQUE, OUTIL DE TRAVAIL)	143
	144
INTERRUPTEUR BALANCIER (ENS) (CLIGNOTANT)	154
	239
	242

* TRADUCTION NON DISPONIBLE AU MOMENT DE LA PUBLICATION

INDEX

Désignation	Page
INTERRUPTEUR BALANCIER (ENS) (CLIMATISEUR)	496
INTERRUPTEUR BALANCIER (ENS) (CLIMATISEUR)	494
INTERRUPTEUR BALANCIER (ENS) (COUPLEUR EXPRESS)	280, 443
INTERRUPTEUR BALANCIER (ENS) (DÉMARRAGE À FROID)	598, 600
INTERRUPTEUR BALANCIER (ENS) (ESSUIE-GLACE ARRIÈRE)	553, 555
INTERRUPTEUR BALANCIER (ENS) (FEUX DE DÉPLACEMENT SUR ROUTE)	154, 239, 242
INTERRUPTEUR BALANCIER (ENS) (FEUX DE DÉTRESSE)	154, 239, 242
INTERRUPTEUR BALANCIER (ENS) (FREIN DE STATIONNEMENT)	598, 600
INTERRUPTEUR BALANCIER (ENS) (GYROPHARE)	157
INTERRUPTEUR BALANCIER (ENS) (PROJECTEUR AVANT)	598, 600
INTERRUPTEUR BALANCIER (ENS) (PROJECTEURS ARRIÈRE)	152
INTERRUPTEUR-CULBUTEUR (RÉCHAUFFEUR)	494, 496, 570, 572
J	
JOINT DE CABINE (ASS)	607
JOINT DE CACHE-SOUPAPES	22, 100
JOINT DE COUVERCLE	81
JOINT DE COUVERCLE (THERMOSTAT)	78
K	
KIT DE CÂBLAGE D'OUTIL DE TRAVAIL	144
KIT DE COMMANDE D'OUTIL DE TRAVAIL ET CÂBLAGE	143
KIT DE JOINT DE CABINE	584
KIT DE JOINTS	379
KIT DE JOINTS (POMPE À ENGRENAGES)	352
KIT DE MONTAGE DE CLIMATISEUR ET CHAUFFAGE	577, 579
KIT DE PLAQUE DE DÉPLACEMENT ROUTIER ET MONTAGE	476
KIT DE PORTE DE CABINE ET MONTAGE	582, 583
KIT DE PRISE DE CONNEXION	499
KIT DE SOUPAPE PILOTE (RESSORT)	379
KIT DE TRANSFORMATION DE DÉBIT ÉLEVÉ	277
KIT DE TRANSFORMATION DU COUPLEUR EXPRESS	280
KIT DE TRANSFORMATION POUR DÉPLACEMENTS SUR ROUTE	238, 239, 242
KLAXON (ENS) (BAS)	531, 532
L	
LAME À ORIENTATION (ASS)	393, 394, 395, 396
LAME DE COUPE (ASS)	450, 451, 452, 453, 454, 455, 456
LAME DE GODET TOUS-TRAVAUX	397, 398, 399, 400
LAME (VERSION)	390, 391, 392
LAMPE - FEUX AV	147
LAMPE - GYROPHARE (ASS)	151
LAMPE - PHARE (ASS)	145, 146
LAMPE - PHARE ET CLIGNOTANT	147
LAMPE (ENS) (ROUGE, VERT, TÉMOIN LUMINEUX, 12V)	142
LAMPE-PLAQUE D'IMMATRICULATION (ASS)	224, 248
LEVIER DE RÉGULATEUR (ASS)	585
LITTÉRATURE (ASS)	591
LOGEMENT DE RÉGULATEUR D'EAU (ASS)	78

* TRADUCTION NON DISPONIBLE AU MOMENT DE LA PUBLICATION

INDEX

Désignation	Page
LOGICIEL - MACHINE (ENS) (SÉCURITÉ)	135, 141

M

Désignation	Page
MACHINE DE LEVAGE	244, 245
MANOCONTACT	163, 164
MANOCONTACT (AVERTISSEUR DE RECUL)	166
MANOCONTACT (ENS) (CLIMATISEUR)	588
MANOCONTACT (ENS) (HUILE HYDRAULIQUE)	188
MANOCONTACT (ENS) (RÉFRIGÉRANT)	578, 580
MANOCONTACT (HUILE MOTEUR)	158, 164
MARCHEPIED-BRAS DE MANUTENTION (ASS)	482
MODULE - TÉMOIN (ASS)	593, 594
MONTAGE - IMMATRICULATION (ASS)	248
MONTAGE - IMMATRICULATION (ASS)	249
MONTAGE DE FEUX DE DÉPLACEMENT SUR ROUTE (ASS)	250
MONTAGE DE MOTEUR (ASS)	52, 53
MONTAGE DE MOTEUR (VERSION)	17, 18
MONTAGE DE POMPE (ASS)	199
MONTAGE DE RADIATEUR ET REFROIDISSEUR D'HUILE (ASS)	79
MONTAGE DE VENTILATEUR (ASS)	54, 55
MONTAGE DE VÉRIN (ASS)	357, 358, 359
MONTAGE DU TOIT ROPS (ASS)	595
MONTAGE-SÉCURITÉ (ASS)	141, 142
MOTEUR À ENGRENAGES (ASS)	351, 352, 353, 354, 355, 356
MOTEUR D'ESSUIE-GLACE (ASS)	553, 555
MOTEUR ET MONTAGE - HYDROSTATIQUE (ASS)	196
MOTEUR ET MONTAGE DE VENTILATEUR HYDRAULIQUE (ASS)	348, 349, 350
MOTEUR (VERSION)	13
MOTEUR (VERSION PRINCIPALE)	14, 15, 16

O

Désignation	Page
OEILLETONS DE LEVAGE MOTEUR (ASS)	50, 51

P

Désignation	Page
PANNEAU - FUSIBLES (ASS)	143, 144, 168, 181
PANNEAU LATERAL (ASS)	602
PARE-CHOCS (ASS)	219
PARE-SOLEIL	617, 618
PINCE - BÂTI (ASS)	468
PINCE - CANALISATIONS (ASS)	300, 302, 304
PINCE - VÉRIN (ASS)	261
PINCE-RÉSEAU PUBLIC (ASS)	469, 470, 471
PISTON ET BIELLE (ASS)	62, 63
PLAFONNIER (ASS) (12 VOLTS)	563
PLAQUE-DÉPLACEMENT ROUTIER (ASS)	480
PLAQUE-DÉPLACEMENT ROUTIER (ASS)	479
PLAQUE (IDENTIFICATION) (*ENGLISH, GERMAN, SPANISH)	228, 229
PLAQUE (IDENTIFICATION) (MACHINE)	633, 636, 643, 646, 649
PLAQUE SIGNALÉTIQUE (ASS)	275, 276, 627, 629
PLAQUE SIGNALÉTIQUE (ASS)	626
PLAQUE SIGNALÉTIQUE (POIDS MAXIMUM)	226
PLAQUES SIGNALETIQUES ET AUTOCOLLANTS (ASS)	632, 633, 636, 639

* TRADUCTION NON DISPONIBLE AU MOMENT DE LA PUBLICATION

INDEX

Désignation	Page
	641
	643
	646
	649
PLATE-FORME DE CABINE	605
PNEU ET JANTE (ASS)	204
	205
	206
	207
	208
	209
	210
	211
	212
	213
POIGNÉE	565
POIGNÉE (ASS)	504
POIGNÉE DE COUPLEUR (ASS)	474
	475
POIGNÉE ET AXE DE COUPLEUR (ASS)	472
	473
POIGNÉE MODULAIRE (ASS)	513
	514
	515
	566
	567
POMPE - DIAPHRAGME (ASS)	485
POMPE A EAU (ASS)	81
	83
POMPE A ENGRENAGES (ASS)	363
	364
	365
	366
POMPE A HUILE MOTEUR (ASS)	75
POMPE A PISTONS (ASS)	202
POMPE D'ALIMENTATION ET MONTAGE (ASS)	114
	115
POMPE D'AMORÇAGE DE CARBURANT (ASS)	122
POMPE D'AMORÇAGE DE CARBURANT ET FILTRE PRINCIPAL	122
POMPE D'INJECTION DE CARBURANT (ASS)	116
	119
	120
POMPE ET MONTAGE - OUTIL DE TRAVAIL (ASS)	361
	362
	363
	364
POMPE HYDROSTATIQUE ET MONTAGE (ASS)	201
PORTE DE CABINE ET MONTAGE (ASS)	547
	550
PORTIÈRE DE CABINE (ASS)	555
	557
PORTIÈRE DE CABINE (ASS)	552
	553
PORTIÈRE DE CABINE (ASS) (POLYCARBONATE)	547
	582
POSITIONNEUR DE FOURCHE (ASS)	461
POULIE DE POMPE À EAU (ASS)	67
	68
PROTECTION DE ROPS/FOPS (ASS)	564
PROTEGE-COURROIE (ASS)	43

R

Désignation	Page
RACCORD (ASS)	278
	321
	323
RACCORD (ASS) (REFOULEMENT AU CARTER DE POMPE)	331
RACCORD DE CANALISATION D'HUILE (ASS)	254
RADIATEUR ET REFROIDISSEUR D'HUILE HYDRAULIQUE (ASS)	86
RADIATEUR ET REFROIDISSEUR D'HUILE HYDRAULIQUE (ASS)	87
RADIATEUR ET REFROIDISSEUR D'HUILE-MONTAGE (ASS)	88
RADIATEUR ET REFROIDISSEUR D'HUILE-MONTAGE (ASS)	90
REGARD DE NIVEAU (NIVEAU DE LIQUIDE DE REFROIDISSEMENT)	87
REGARD DE NIVEAU (RADIATEUR)	86
REGARD DE NIVEAU (RÉSERVOIR HYDRAULIQUE)	368
RÉGULATEUR - PÉDALE (ASS)	603
	604
REGULATEUR (ASS)	107
	110
RELAIS (ENS) (COQUILLE)	169
RELAIS (ENS) (12 VOLTS)	143
	144
	224
	278
	494
	496
	536
	539
RELAIS (ENS) (12 VOLTS)	239
	242
RELAIS (ENS) (12 VOLTS)	143

* TRADUCTION NON DISPONIBLE AU MOMENT DE LA PUBLICATION

INDEX

Désignation	Page
	144
	181
RELAIS (ENS) (12 VOLTS) (DÉMARRAGE)	172
RELAIS (ENS) (12 VOLTS) (DÉMARRAGE)	175
RELAIS (ENS) (12 VOLTS) (DÉMARRAGE À FROID)	172
RELAIS (ENS) (12 VOLTS) (DÉMARRAGE À FROID)	175
RELAIS (ENS) (12 VOLTS) (ÉCLAIRAGE DE FREIN)	180
RELAIS (ENS) (12 VOLTS) (OUTIL DE TRAVAIL)	181
RELAIS (ENS) (12 VOLTS) (PUISSANCE PRINCIPALE)	168
RELAIS (ENS) (12 VOLTS) (PUISSANCE PRINCIPALE)	181
RELAIS (ENS) (12 VOLTS) (RÉCHAUFFEUR)	570
	572
RENIFLARD (CARTER DE TANDEM)	234
RENIFLARD (CLIMATISEUR)	505
	506
RENIFLARD (COMPRESSEUR DE CLIMATISEUR)	577
	579
RENIFLARD (ENS) (*INLINE) (HUILE HYDRAULIQUE)	367
RÉSERVOIR D'EAU (ASS)	488
RÉSERVOIR D'EAU ET MONTAGE (ASS)	485
RÉSERVOIR HYDRAULIQUE (ASS)	368
RÉSERVOIR HYDRAULIQUE ET MONTAGE (ASS)	367
RESSORT DE LAME (ASS)	481
RESSORT-GAZ (ASS)	616
RETROVISEUR - CABINE (ASS)	617
	618
RÉTROVISEUR (ASS)	592
RÉTROVISEUR ET MONTAGE (ASS)	246
	247
ROTATION DE LA ROUE DU VENTILATEUR SOUFFLANT (COMMANDE DE LA MACHINE)	278
ROTATION DE LA ROUE DU VENTILATEUR SOUFFLANT (COMMANDE DE MACHINE, LIRE LE GUIDE D'UTILISATION ET D'ENTRETIEN)	522
	524
	528
	530
	531
	532
	534
ROTATION DE LA ROUE DU VENTILATEUR SOUFFLANT (COMMANDES DE MACHINE)	525
	527
	536
	539
ROTATION DE LA ROUE DU VENTILATEUR SOUFFLANT (COMMANDES DE MACHINE)	518
	521
ROTATION DE LA ROUE DU VENTILATEUR SOUFFLANT (ISSUE DE SECOURS)	619
ROTATION DE LA ROUE DU VENTILATEUR SOUFFLANT (ISSUE DE SECOURS)	557
ROTATION DE LA ROUE DU VENTILATEUR SOUFFLANT (*MACHINE SECURITY, INTL)	141
	142
ROTATION DE LA ROUE DU VENTILATEUR SOUFFLANT (N. D'ÉTAPE)	280
	369
	639
ROTATION DE LA ROUE DU VENTILATEUR SOUFFLANT (TABLEAU DE BORD)	562
	563
ROUE ET PNEU (ASS)	218
ROUE ET PNEU (VERSION)	213
	214
	215
	216
	217

S

SIÈGE (ASS)	613
	614
SIÈGE RÉGLABLE (ASS)	615
SILENCIEUX (ASS)	96
	97
SOLÉNOÏDE (ARRÊT DE CARBURANT)	116
	131
SOLÉNOÏDE (DÉMARREUR)	159
SOUPAPE - RENIFLARD (VILEBREQUIN)	22
	100
SOUPAPE - SOLÉNOÏDE (ASS)	350
	385
	386
	387
	388
SOUPAPE - SOLÉNOÏDE (ASS) (COUPLEUR EXPRESS)	345
SOUPAPE - SOLÉNOÏDE (ASS) (DÉBIT ÉLEVÉ)	346

* TRADUCTION NON DISPONIBLE AU MOMENT DE LA PUBLICATION

INDEX

Désignation	Page
SOUPAPE - SOLÉNOÏDE (ASS) (SURALIMENTATION DE DÉBIT)	346
SOUPAPE - SOLÉNOÏDE (ASS) (12 VCC)	356
	579
SOUPAPE - SOLÉNOÏDE (ASS) (12 VCC)	577
SOUPAPE A COMMANDE MANUELLE (ASS)	376
SOUPAPE D'ARRET	580
SOUPAPE D'ARRET (EAU)	574
SOUPAPE D'ARRET (RÉCHAUFFEUR DE CABINE)	590
SOUPAPE ET CANALISATIONS DE COUPLEUR (ASS)	369
SOUPAPE PILOTE (ASS)	377
	379
	381
	382
SUPPORT DE BOÎTE DE RANGEMENT (ASS)	5
	7
	11
	12
	220
	222

T

TABLEAU DE BORD (ASS)	598
	600
TABLIER - FOURCHE (ASS)	440
	441
TAMIS D'ASPIRATION (RÉSERVOIR HYDRAULIQUE)	368
TAMIS D'EAU (ASS)	484
TAPIS DE PLANCHER	1
	2
	3
	4
	5
	6
	7
	220
	221
	222
	223
THERMOCONTACT (CLIMATISEUR)	494
	496
THERMOCONTACT (ENS) (HUILE HYDRAULIQUE)	368
THERMOCONTACT (LIQUIDE DE REFROIDISSEMENT DU MOTEUR)	158
	165
THERMOSTAT-TEMPÉRATURE D'EAU	81
	83
TOILE (RENIFLARD DE CARTER MOTEUR)	22
	100
TRANSFORMATION D'OUTIL DE TRAVAIL (ASS)	442
TRANSMISSION (VERSION)	200
TURBOCOMPRESSEUR (ASS)	98
	100

V

*V-BELT GP	69
VASE D'EXPANSION POUR LIQUIDE RÉFRIGERANT	88
	90
VENTILATEUR SOUFFLANT (ASS)	87
VENTILATEUR SOUFFLANT (ASS)	86
VÉRIN DE BRAS DE LEVAGE ET MONTAGE (ASS)	258
VERIN DE GODET (ASS)	260
VÉRIN DE LAME D'ORIENTATION ET MONTAGE (ASS)	255
	256
VÉRIN DE LEVAGE (ASS)	269
VÉRIN D'INCLINAISON (ASS)	270
	271
VÉRIN ET BIELLE DE COUPLEUR (ASS)	448
	449
VÉRIN ET MONTAGE - GODET (ASS)	257
VERIN-GAZ (ENS)	79
	564
VERIN-GAZ (ENS) (CABINE)	245
VERIN-GAZ (ENS) (CABINE)	616
VERIN-GAZ (ENS) (VERROUILLAGE)	547
	550
	582
	583
VÉRIN HYDRAULIQUE (ASS)	280
VÉRIN HYDRAULIQUE (ASS)	262
	263
	264
	265
	266
	267
	268
VERROUILLAGE DE COUPLEUR EXPRESS (ASS)	478
VERROUILLAGE DE VÉRIN (ASS)	501
VERSION DE CHASSIS	1
VERSION DE COMMANDE DE MACHINE	2
VERSION DE GODET POUR TRAVAUX DE SERVITUDE	412
	413
VERSION DE TABLEAU DE BORD	597
VERSION DE TABLIER ET DE FOURCHE	439

* TRADUCTION NON DISPONIBLE AU MOMENT DE LA PUBLICATION

INDEX

Désignation	Page	Désignation	Page
VERSION DE TRANSFORMATION - DÉPLACEMENT NON ROUTIER	132		
VERSION DE TRANSFORMATION MACHINE	3		
	4		
	5		
	6		
	7		
	8		
	9		
	10		
	11		
	12		
VERSION DE TRANSFORMATION POUR DÉPLACEMENT ROUTIER	220		
	221		
	222		
	223		
	224		
	225		
VERSION D'OPTION DE CABINE	596		
	597		
VERSION HYDRAULIQUE	274		
	275		
	276		
VERSION NORMALE	1		
	2		
VIDANGE-HUILE DE MOTEUR (ASS)	40		
VILEBREQUIN - POULIE (ASS)	65		
	66		
VILEBREQUIN (ASS)	24		
	25		
	27		
VITRE DE CABINE (ASS)	619		
	620		
	621		
	622		
	624		
VOLANT MOTEUR (ASS)	41		
	42		

* TRADUCTION NON DISPONIBLE AU MOMENT DE LA PUBLICATION

INDICE

Nombre	Página

A

ACONDICIONADOR DE AIRE (CONFIG) 493
ACONDICIONADOR DE AIRE (GR) 494
496
ACONDICIONADOR DE AIRE Y MONTAJE (GR) 492
ACOPLADOR DE MANIJA 474
475
ACOPLADOR RÁPIDO (CONFIG) 443
ACOPLADOR RÁPIDO (GR) 444
445
ACUMULADOR DEL ACONDICIONADOR DE AIRE (GR) 490
491
ACUMULADOR DEL ACONDICIONADOR DE AIRE (GR) (CON DESECANTE) 577
ACUMULADOR HIDRAULICO Y MONTAJE (GR) 253
AGUA DE LAS CAMISAS - CALENTADOR DEL (GR) 139
140
AGUILÓN TELESCÓPICO (GR) 389
AIRE - TUBERÍAS DE (GR) 94
ALAMBRADO DE LUCES TRASERAS (GR) 180
ALFOMBRILLA DEL PISO 1
2
3
4
5
6
7
220
221
222
223
ÁRBOL DE LEVAS (GR) 19
20
ARO Y LLANTA (GR) 204
205
206
207
208
209
210
211
212
213
ASIENTO AJUSTABLE (GR) 615
ASIENTO (GR) 613
614

Nombre	Página

B

BASTIDOR DE GARFIO (GR) 468
BASTIDOR DE HOJA (GR) 465
BASTIDOR DE LA VENTANA (GR) 560
561
BASTIDOR DEL CARGADOR (GR) 234
BATERÍA (GR) 126
127
BATERÍA (12 VOLTIOS, ESTANDAR) 126
BATERÍA (12-VOLTIOS, LIBRE DE MANTENIMIENTO) 127
BLOQUE MOTOR (GR) 29
31
BOCINA (CONJ) (TONO BAJO) 531
532
BOMBA - TUBERÍAS DE (GR) 321
323
BOMBA DE ACEITE DEL MOTOR (GR) 75
BOMBA DE AGUA (GR) 81
83
BOMBA DE CEBADO DE COMBUSTIBLE (GR) 122
BOMBA DE CEBADO Y FILTRO PRIMARIO DE COMBUSTIBLE (GR) 122
BOMBA DE ENGRANAJES (GR) 363
364
365
366
BOMBA DE INYECCIÓN DE COMBUSTIBLE (GR) 116
119
120
BOMBA DE PISTONES (GR) 202
BOMBA DE TRANSFERENCIA DE COMBUSTIBLE Y MONTAJE (GR) 114
115
BOMBA DEL DIAFRAGMA (GR) 485
BOMBA Y MONTAJE DE LA HERRAMIENTA DE TRABAJO (GR) 361
362
363
364
BRAZO DE LIMPIAPARABRISAS (GR) 553
BRAZO DE LIMPIAPARABRISAS (GR) (DELANTERO) 555
BUJÍA INCANDESCENTE 137
138
BUJÍA INCANDESCENTE (GR) 137
138

C

CABINA INCLUYE ROPS (GR) 503

* NO HAY TRADUCCION DISPONIBLE EN EL MOMENTO DE LA IMPRESION

INDICE

Nombre	Página
CABLE DE CONTROL (GR)	504
CABLE GR-BOCINA	177
CABLE GR-CONTROL DE MANDO	104
CABLES CONJ. - TANQUE DE COMBUSTIBLE	167
	578
	580
CABLES CONJ. -LIMPIADOR DE VENTANAS	547
	550
	553
	555
	582
	583
CABLES DE LA HERRAMIENTA DE TRABAJO (GR)	181
CABLES DE LA MÁQUINA (GR)	178
CABLES DEL ACONDICIONADOR DE AIRE (GR)	167
CABLES DEL CHASIS (GR)	168
CABLES DEL MOTOR (GR)	172
	175
CAJA DE ALMACENAMIENTO	501
CAJA DELANTERA (GR)	46
	48
CALCOMANÍA (CONTROL DE TEMPERATURA)	494
	496
	570
	572
CALCOMANÍA DE ADVERTENCIA (CONTROL DE MAQUINA)	278
CALCOMANÍA DE ADVERTENCIA (CONTROLES DE LA MAQUINA)	518
	521
	525
	527
	536
	539
CALCOMANÍA DE ADVERTENCIA (*CRUSH HAZARD, STAY BACK, U.S.)	639
CALCOMANÍA DE ADVERTENCIA (DIRECCIÓN)	228
CALCOMANÍA DE ADVERTENCIA (ESPACIO)	238
	626
CALCOMANÍA DE ADVERTENCIA (*HIGH PRESSURE, READ MANUAL)	633
	646
	649
CALCOMANÍA DE ADVERTENCIA (*MACHINE CONTROL, READ OMM)	522
	524
	528
	530
	532
	534
CALCOMANÍA DE ADVERTENCIA (*MACHINE CONTROL, READ OMM)	531
CALCOMANÍA DE ADVERTENCIA (*MACHINE SECURITY, INTL)	141
	142
CALCOMANÍA DE ADVERTENCIA (*NO ACCESS)	633
	646
CALCOMANÍA DE ADVERTENCIA (NO ESPACIO LIBRE, MANTENGASE DETRAS DE ESTE LUGAR)	393
	394
CALCOMANÍA DE ADVERTENCIA (NO PISAR)	280
	369
	639
CALCOMANÍA DE ADVERTENCIA (PELIGRO DE APLASTAMIENTO)	431
	432
	433
	435
CALCOMANÍA DE ADVERTENCIA (PELIGRO DE APLASTAMIENTO, MANTENGASE DETRAS DE ESTE LUGAR)	633
	639
	646
	649
CALCOMANÍA DE ADVERTENCIA (PELIGRO DE EMPALAMIENTO)	459
	460
	468
CALCOMANÍA DE ADVERTENCIA (PELIGRO DE EMPALAMIENTO)	464
CALCOMANÍA DE ADVERTENCIA (PRESIÓN ALTA, LEER OMM, EE.UU.)	636
	643
CALCOMANÍA DE ADVERTENCIA (SALIDA ALTERNATIVA)	619
CALCOMANÍA DE ADVERTENCIA (SALIDA ALTERNATIVA)	557
CALCOMANÍA DE ADVERTENCIA (TABLERO)	563
CALCOMANÍA DE ADVERTENCIA (TABLERO DE INSTRUMENTOS)	562
CALCOMANÍA DE IDENTIFICACIÓN (INTERRUPTOR DE ENCENDIDO)	141
	142
CALCOMANÍA DE IDENTIFICACIÓN (*POWER RECEPTACLE, 12-VOLT)	633
	636
	643

* NO HAY TRADUCCION DISPONIBLE EN EL MOMENTO DE LA IMPRESION

INDICE

Nombre	Página
	646
	649
CALCOMANÍA DE IDENTIFICACIÓN (*13-KM/H)	5
	7
	11
	12
	220
CALCOMANÍA DE RAYAS (*REFLECTIVE, RED, WHITE)	479
	480
CALCOMANÍA (FLUJO ALTO)	278
CALCOMANÍA (FLUJO ALTO)	275
CALCOMANÍA (*FOPS)	564
CALCOMANIA-FUSIBLE/RELÉ	133
CALCOMANÍA (*REFLECTIVE)	479
	480
CALCOMANÍAS Y PLACAS DE IDENTIFICACIÓN (GR)	632
	633
	636
	639
	641
	643
	649
CALCOMANÍAS Y PLACAS DE IDENTIFICACIÓN (GR)	646
CALEFACCIÓN DE LA CABINA (CONFIG)	569
CALEFACCIÓN DE LA CABINA (GR)	570
CALEFACCIÓN DE LA CABINA (GR)	572
	574
CALEFACCIÓN Y MONTAJE DE LA CABINA (GR)	568
CÁNCAMOS DE LEVANTAMIENTO DEL MOTOR (GR)	50
	51
CANDADO (GR)	226
	228
CARGA - ALTERNADOR DE (GR)	123
	125
CARGADOR Y HORQUILLA (CONF)	439
CÁRTER - COLECTOR DEL (GR)	60
CÁRTER - COLECTOR DEL (GR)	56
CHASIS (CONFIG)	1
CIGÜEÑAL - POLEA DE (GR)	65
	66
CIGÜEÑAL (GR)	24
	25
	27
CILINDRO DE CUCHARÓN (GR)	260
CILINDRO DE GARFIO (GR)	261
CILINDRO DE LEVANTAMIENTO - TUBERÍAS DEL (GR)	311
	313
CILINDRO DE LEVANTAMIENTO (GR)	269
CILINDRO HIDRÁULICO (GRUPO)	262
	263
	264
	265
	266
	267
	268
	280
CILINDRO Y MONTAJE (GR)- INCLINACIÓN DE LA HOJA	255
	256
CINTURÓN DE SEGURIDAD (GR)	609
	610
	611
	612
*COIL AS-SOLENOID (12 VOLTIOS)	385
COLADOR DEL AGUA (GR)	484
COMPARTIMENTO CONJ-LATERAL	576
COMPARTIMIENTO DEL MOTOR (GR)	232
COMPRESOR DE REFRIGERANTE (GR)	505
	506
	577
	579
COMPRESOR DE REFRIGERANTE Y GRUPO DE MONTAJE	508
COMPRESOR Y MOTOR GR-REFRIGERANTE	505
	506
CONDENSADOR DEL REFRIGERANTE Y MONTAJE (GR)	509
CONDUCTO Y CONTROL (GR)	558
CONEXIÓN ELÉCTRICA (GR)	128
	129
CONEXIÓN (GR)	278
	321
	323
CONEXIÓN (GR) (DRENAJE DE CAJA DE BOMBA)	331
CONEXION HIDRAULICA (GR)	272
	273
	321
CONFIGURACIÓN COMÚN	1
	2
CONFIGURACIÓN DE CABLERIA, CALENTADOR Y ACONDICIONADOR DE AIRE	167
	570
	572
	578
	580

* NO HAY TRADUCCION DISPONIBLE EN EL MOMENTO DE LA IMPRESION

INDICE

Nombre	Página
CONFIGURACIÓN DE INSTALACIÓN DEL MOTOR	17
	18
CONFIGURACIÓN DE MOTORES	13
CONFIGURACIÓN DE TRANSFORMACIÓN PARA CARRETERA	220
	221
	222
	223
	224
	225
CONFIGURACIÓN DE TRANSFORMACIÓN PARA OBRAS	132
CONJUNTO DE DESTELLADOR (12 VOLTIOS)	154
	239
	242
CONJUNTO DE LLAVE, ELECTRONICA (SEGURIDAD)	135
	141
CONJUNTO MAZO DE CABLES-CONTROLES DEL OPERADOR (FLUJO ALTO)	278
	539
CONJUNTO MAZO DE CABLES-CONTROLES DEL OPERADOR (PALANCA UNIVERSAL)	521
	524
	527
	536
	539
CONJUNTO MAZO DE CABLES-CONTROLES DEL OPERADOR (PALANCA UNIVERSAL)	278
CONJUNTO, MAZO DE CABLES, LUCES DELANTERAS	154
	239
	242
CONTRAPESO (GR)	230
	231
*CONTROL AR-MACHINE	2
CONTROL DE MANIJA (GR)	510
	511
	512
	513
CONTROL DE MANIJA (GR)	514
	515
	516
	517
CONTROL DE REGULADOR (GR)	105
CONTROL DE TRABA (GR)	130
CONTROL DEL MULTIPLE (GR)	345
	346
CONTROL DEL MULTIPLE (GR)	347
CONTROL DEL MULTIPLE (GR) (*BOOSTED AUXILIARY HYD FLOW)	277
	340
CONTROL DEL VENTILADOR (GR)	178
CONTROL HIDRÁULICO DE OPERACIÓN PILOTO (GR)	518
	521
	522
	524
	525
	527
	528
	530
	531
	532
	534
	536
	539
CONTROL MANUAL DE ARRANQUE/PARADA (GR)	131
CONTROL NO PROGRAMADO (GR)	134
CONTROL NO PROGRAMADO (GR) (SEGURIDAD)	135
CONVERSION DE LA MAQUINA (CONFIG)	3
	4
	5
	6
	7
	8
	9
	10
	11
	12
CONVERSION PARA DESPLAZAMIENTO POR CARRETERA (GR)	226
	227
	228
	229
CORREA TRAPEZOIDAL (BOMBA DE AGUA)	67
	69
*COUPLING GP-DRIVE	542
	577
	579
CUBIERTO DEL PANEL DE FUSIBLES (GR)	133
CUCHARON DE GARFIO (CONF)	404
	405
	406
	407
	408
CUCHARON DE GARFIO (GR)	426
	427
	428
	429
	430
CUCHARÓN DE USO GENERAL (CONFIG)	402

* NO HAY TRADUCCION DISPONIBLE EN EL MOMENTO DE LA IMPRESION

INDICE

Nombre	Página
	403
	404
CUCHARÓN DE USO GENERAL (CONJ)	418
	419
	420
	421
CUCHARÓN DE USO MÚLTIPLE (CONFIG)	409
	410
	411
	412
CUCHARÓN DE USO MÚLTIPLE (GR)	431
CUCHARÓN DE USO MÚLTIPLE (GR)	432
	433
	434
	435
CUCHARÓN PARA MATERIALES LIVIANOS	422
	423
	424
CUCHARÓN PARA MATERIALES LIVIANOS (CONFIG)	409
CUCHARON PARA TIERRA (CONF)	401
	402
CUCHARON PARA TIERRA (CONJ)	414
	415
	416
	417
CUCHARÓN PARA TIERRA (GR)	425
CUCHARON UTILITARIO (CONFIG)	412
	413
CUCHARÓN UTILITARIO (GR)	436
	437
	438
CUCHILLA (GR)	450
	451
	452
	453
	454
	455
	456
CULATA DE CILINDROS (CONJ)	33
CULATA DE CILINDROS (GR)	35
	36
	38

D

DIENTE DE UNA PIEZA (UNI-TOOTH) (GR)	489
DISYUNTOR (CONJ) (105 AMPERIOS)	172
	175
DISYUNTOR (CONJ) (30-AMPERIOS)	154
	239
	242
DRENAJE DEL ACEITE DE MOTOR	40

E

EJE (GR)	183
	184
ELECTRÓNICA DE LA MÁQUINA (GR)	135
ELEMENTO DE FILTRO DE ACEITE DE MOTOR (CONJ)	189
ELEMENTO DE FILTRO DE ACEITE DE MOTOR (CONJ)	56
ELEMENTO DE FILTRO DE COMBUSTIBLE (SEPARADOR DE AGUA)	106
ELEMENTO DEL CALENTADOR DEL AGUA DE LAS CAMISAS (MOTOR)	139
	140
ELEMENTO DEL FILTRO DE AIRE (CONJ) (PRIMARIO)	93
ELEMENTO DEL FILTRO DE AIRE (CONJ) (SECUNDARIO)	93
ESCALON DE BRAZO DE MANEJO DE MATERIALES (GR)	482
ETIQUETA DE ADVERTENCIA (GR)	275
	276
	627
	629
ETIQUETA DE ADVERTENCIA (GR)	626

F

*FILTER ELEMENT-CAB AIR	494
	496
	570
	572
*FILTER ELEMENT-CAB AIR (AIRE)	496
	572
FILTRO DE ACEITE (CONJ) (EFICIENCIA AVANZADA) (HIDRÁULICO)	188
FILTRO DE ACEITE (GR)	188
	189
	190
FILTRO DE AIRE (GR)	92
	93
FILTRO DE COMBUSTIBLE Y SEPARADOR DE AGUA (GR)	106
FILTROS Y TUBERÍAS HIDRÁULICAS (GR)	186
FUSIBLE (10-AMPERIOS)	166
	280
	443
	534
FUSIBLE (10-AMPERIOS)	143
	144
	168
	181
FUSIBLE (15 AMPERIOS)	167
FUSIBLE (15 AMPERIOS)	143

* NO HAY TRADUCCION DISPONIBLE EN EL MOMENTO DE LA IMPRESION

INDICE

Nombre	Página
	144
	168
	181
FUSIBLE (20-AMPERIOS)	168
FUSIBLE (30-AMPERIOS)	167
	578
	580
FUSIBLE (30-AMPERIOS)	168

G

GARFIO DE UTILIDAD (GR)	469
	470
	471
GASA (RESPIRADERO DE CARTER)	22
	100
GR. VÁLVULA Y TUBERIAS-ACOPLADOR	369
GRUPO ADAPTADOR-TUBERIA DE ACEITE	254
GRUPO DE BASTIDOR DE HORQUILLA	466
	467
GRUPO DE BASTIDOR, MAQUINARIA	236
GRUPO DE CANTONERA Y CUCHILLA	450
GRUPO DE CILINDRO Y ESLABON, ACOPLADOR	448
	449
GRUPO DE CONEXIÓN	278
	323
GRUPO DE CONVERSIÓN DE LA HERRAMIENTA	442
GRUPO DE ESLABON, ACOPLADOR	477
GRUPO DE HOJA DE CUCHARÓN DE USO MÚLTIPLE	397
	398
	399
	400
GRUPO DE INSTALACIÓN	577
GRUPO DE MANIJA Y PIN-ACOPLADOR	472
	473
GRUPO DE MONTAJE Y CILINDRO, LEVANTAMIENTO DEL BRAZO	258
GRUPO DE PALANCA-REGULADOR	585
GRUPO DE POSICIONADOR DE LA HORQUILLA	461
GRUPO DE RESPALDO DE CAJA DE ALMACENAMIENTO	220
	222
GRUPO DE SENSORES DE TEMPERATURA Y PRESIÓN	158
GRUPO DE TRABA-CILINDRO	501
GRUPO DEMONTAJE DE RADIADOR Y ENFRIAMIENTO DE ACEITE	79
GRUPO GIRATORIO DE BOMBA (LADO DERECHO)	202
GRUPO GIRATORIO DE BOMBA (LADO IZQUIERDO)	202
GRUPO, MANIJA, BOMBA DE AGUA	67
	68

H

*HANDLE GP	504
HIDRÁULICA (CONFIG)	274
	275
	276
HIDRÁULICA (CONFIG)	274
HIDROSTATICO, BOMBA Y GRUPO DE MONTAJE	201
HOJA (CONFIG)	390
	391
	392
HOJA DE LIMPIAPARABRISAS (CONJ) (*558-MM) (DELANTERO, TRASERO)	553
HOJA DE LIMPIAPARABRISAS (CONJ) (*558-MM) (PUERTA, CABINA)	555
HOJA ORIENTABLE (GR)	393
	394
	395
	396
*HOLDER-CUP	575
HORQUILLA DE GARFIO (CONF)	456
	457
HORQUILLA DE GARFIO (GR)	458
	459
	460
HORQUILLA DE UTILIDAD (GR)	463
	464
HORQUILLA PARA TARIMAS (GR)	461
	462
*HOUSING GP-WATER REGULATOR	78

I

IMPLEMENTOS (GR ELECTRÓNICO)	134
INCLINACIÓN HORIZONTAL - CILINDRO DE (GR)	270
	271
INDICADOR DEL NIVEL DE ACEITE (GR)	563
INDICADORES Y ADVERTENCIA (GR)	563
INDICADORES Y ADVERTENCIA (GR)	562
INSONORIZADOR (GR)	252
INSTALACION DE SEGURIDAD (GR)	141
INSTALACION DE SEGURIDAD (GR)	142
INTERRUPTOR (ASIENTO)	614
INTERRUPTOR BASCULANTE (CALEFACTOR)	494
	496

* NO HAY TRADUCCION DISPONIBLE EN EL MOMENTO DE LA IMPRESION

INDICE

Nombre	Página
	570
	572
INTERRUPTOR (CONJ) (ASIENTO)	615
INTERRUPTOR DE ARRANQUE CON LLAVE (CONJ)	562
INTERRUPTOR DE LÍMITE (CONJ) (LIMPIADOR)	553
	555
INTERRUPTOR DE PRESIÓN (ACEITE DEL MOTOR)	158
	164
INTERRUPTOR DE PRESIÓN (CONJ) (ACEITE HIDRÁULICO)	188
INTERRUPTOR DE PRESIÓN (CONJ) (AIRE ACONDICIONADO)	588
INTERRUPTOR DE PRESIÓN (CONJ) (REFRIGERANTE)	578
	580
INTERRUPTOR DE PRESIÓN (GR)	163
	164
INTERRUPTOR DE PRESIÓN (GR) (ALARMA DE RETROCESO)	166
INTERRUPTOR DE TEMPERATURA (AIRE ACONDICIONADO)	494
	496
INTERRUPTOR DE TEMPERATURA (CONJ) (ACEITE HIDRÁULICO)	368
INTERRUPTOR DE TEMPERATURA (REFRIGERANTE DEL MOTOR)	158
	165
INTERRUPTOR DE VOLQUETE (CONJ) (ACONDICIONADOR DE AIRE)	496
INTERRUPTOR DE VOLQUETE (CONJ) (ACONDICIONADOR DE AIRE)	494
INTERRUPTOR DE VOLQUETE (CONJ) (ACOPLADOR RAPIDO)	280
INTERRUPTOR DE VOLQUETE (CONJ) (ACOPLADOR RAPIDO)	443
INTERRUPTOR DE VOLQUETE (CONJ) (ARRANQUE EN FRIO)	598
	600
INTERRUPTOR DE VOLQUETE (CONJ) (BALIZA DE ADVERTENCIA)	157
INTERRUPTOR DE VOLQUETE (CONJ) (FRENO DE ESTACIONAMIENTO)	598
	600
INTERRUPTOR DE VOLQUETE (CONJ) (LIMPIAPARABRISAS TRASERO)	553
	555
INTERRUPTOR DE VOLQUETE (CONJ) (LUCES DE ADVERTENCIA DE PELIGRO)	154
	239
	242
INTERRUPTOR DE VOLQUETE (CONJ) (LUCES DE DESPLAZAMIENTO)	154
	239
	242
INTERRUPTOR DE VOLQUETE (CONJ) (LUCES DE TRABAJO TRASERAS)	152
INTERRUPTOR DE VOLQUETE (CONJ) (LUZ DE TRABAJO DELANTERA)	598
	600
INTERRUPTOR DE VOLQUETE (CONJ) (POTENCIA ELECTRICA, HERRAMIENTA DE TRABAJO)	143
	144
	181
INTERRUPTOR DE VOLQUETE (CONJ) (SEÑAL DE GIRO)	154
INTERRUPTOR DE VOLQUETE (CONJ) (SEÑAL DE GIRO)	239
	242
INTERRUPTOR DE VOLQUETE (GR) (FLUJO ALTO)	278
	536
	539
INTERRUPTOR DE VOLQUETE (GR) (UBICADOR DE HERRAMIENTA DE TRABAJO)	274
INTERRUPTOR PARA LA TEMPERATURA (GR)	165

J

JUEGO DE ENCHUFE DE CONEXIÓN	499
JUEGO DE INSTALACIÓN DEL ACONDICIONADOR DE AIRE Y CALENTADOR	577
	579
JUEGO DE SELLOS	379
JUEGO DE SELLOS (BOMBA DE ENGRANAJE)	352
JUEGO DE VÁLVULA PILOTO (RESORTE)	379
JUEGO-PLACA DE DESPLAZAMIENTO Y MONTAJE	476
JUEGO, PUERTA DE CABINA Y MONTAJE	582
	583
JUNTA DE LA TAPA DE VÁLVULAS	81
JUNTA DE LA TAPA DE VÁLVULAS (REGULADOR DE TEMPERATURA)	78

K

*KIT-CAB SEAL	584
*KIT-HIGH FLOW CONVERSION	277
*KIT-QUICK COUPLER CONVERSION	280

* NO HAY TRADUCCION DISPONIBLE EN EL MOMENTO DE LA IMPRESION

INDICE

Nombre	Página
*KIT-ROADING CONVERSION	238
	239
	242
*KIT-WORK TOOL CONTROL & WIRING	143
*KIT-WORK TOOL WIRING	144
L	
LÁMPARA (CONJ) (ROJO, VERDE, DIODO, 12 VOLTIOS)	142
LÁMPARA DE BALIZA DE ADVERTENCIA (GR)	151
LÁMPARA DE FARO DELANTERO	147
LÁMPARA DE LUZ DELANTERA Y DE SEÑAL (GR)	147
LAMPARA DE PLACA DE REGISTRO (GR)	224
	248
LÁMPARA DEL TECHO (GR) (12 VOLTIOS)	563
LÁMPARA (12 VLOTIOS, 5 VATIOS)	149
	150
LÁMPARA (12 VOLTIOS)	563
LÁMPARA (12 VOLTIOS) (PLACA DE REGISTRACIÓN)	248
LÁMPARA (12 VOLTIOS, 10 VATIOS)	563
LÁMPARA (12 VOLTIOS, 10 VATIOS)	224
LÁMPARA (12 VOLTIOS, 21 VATIOS)	147
	150
LÁMPARA (12 VOLTIOS, 4 VATIOS)	147
LÁMPARA (12 VOLTIOS, 55 VATIOS)	145
	146
	151
LEVANTAMIENTO DE LA MÁQUINA (GR)	244
	245
*LINES GP-LOWERING CONTROL	315
LLAVE	226
LUCES DE DESPLAZAMIENTO (GR)	154
LUCES DE PARADA Y COLA (GR)	149
	150
LUCES DE PARADA Y DE COLA (GR)	156
LUCES DE REFLECTOR (GR)	152
LUCES DE REFLECTOR (GR)	153
LUZ DE BALIZA (GR)	157
M	
MANDO DE CORREA (BALIZA DE ADVERTENCIA)	151
MANDO TANDEM (GR)	185
MANGUERA (INFERIOR)	88
	90
MANGUERA (SUPERIOR)	88
	90
*MANIFOLD & LINES GP-CONTROL	335
	337
*MANIFOLD & SOLENOID GP-CONTROL	342
	343
	344
MANIJA MODULAR (GR)	513
	514
	515
MANIJA MODULAR (GR)	566
	567
MAZO DE CABLES (CONJ) (BUJÍA INCANDESCENTE)	175
MAZO DE CABLES (CONJ) (MEDIDOR DE SERVICIO)	546
MAZO DE CABLES DE CONTROL (CONJ) (SEGURIDAD)	141
	142
MAZO DE CABLES DE LA HERRAMIENTA	485
MAZO DE CABLES DE LA HERRAMIENTA (*CONNECTING)	391
	392
MAZO DE CABLES DE LA HERRAMIENTA (*LIFT ARM)	143
	144
	181
MAZO DE CABLES DE LA HERRAMIENTA (PLATAFORMA)	143
	144
	181
MAZO DE CABLES DE LA PLATAFORMA (CONJ)	169
MAZO DE CABLES DE LA PLATAFORMA (CONJ) (INFERIOR)	168
MAZO DE CABLES DE LUCES TRASERAS (CONJ)	154
	168
	224
	239
	242
	250
MAZO DE CABLES DE LUCES TRASERAS (CONJ) (FRENO)	180
	224
	239
	242
MAZO DE CABLES DEL CHASIS (CONJ) (BOCINA)	177
MAZO DE CABLES DEL CHASIS (CONJ) (TRANSMISION)	578
	580
MAZO DE CABLES DEL INTERRUPTOR (CONFIG)	178
MAZO DE CABLES DEL MOTOR (CONJ)	172
	175

* NO HAY TRADUCCION DISPONIBLE EN EL MOMENTO DE LA IMPRESION

INDICE

Nombre	Página
MECANISMO DE VÁLVULAS (GR)	70, 71
MEDIDOR DE SERVICIO (GR)	546
MIRILLA (NIVEL DE REFRIGERANTE)	87
MIRILLA (RADIADOR)	86
MIRILLA (TANQUE HIDRÁULICO)	368
MÓDULO INDICADOR DE ADVERTENCIA (GR)	593, 594
MONTAJE DE CILINDRO (GR)	357, 358, 359
MONTAJE DE LA BOMBA (GR)	199
MONTAJE DE LA ESTRUCTURA ROPS (GR)	595
MONTAJE DE LUCES DE DESPLAZAMIENTO POR CARRETERA (GR)	250
MONTAJE DE RADIADOR Y ENFRIAMIENTO DE ACEITE (GR)	88, 90
MONTAJE DEL CILINDRO DEL CUCHARÓN (GR)	257
MONTAJE DEL MOTOR (GR)	52, 53
MONTAJE DEL TANQUE DE AGUA (GR)	485
MONTAJE DEL VENTILADOR (GR)	54, 55
MONTAJE-REGISTRO (GR)	248, 249
MOTOR DE ARRANQUE ELÉCTRICO (GR)	159
MOTOR DE ARRANQUE ELÉCTRICO (GR)	161, 162
MOTOR DE ENGRANAJES (GR)	351, 352, 353, 354, 355, 356
MOTOR HIDROSTATICO Y MONTAJE (GR)	196
MOTOR-LIMPIAPARABRISAS (GR)	553, 555
MOTOR PRIMARIO (CONFIG)	14, 15, 16
MOTOR Y MONTAJE DE VENTILADOR HIDRAULICO (GR)	348, 349, 350
MUELLE DE GAS (CONJ)	79, 564
MUELLE DE GAS (CONJ) (CABINA)	245
MUELLE DE GAS (CONJ) (CABINA)	616
MUELLE DE GAS (CONJ) (TRABA)	582, 583
MUELLE DE GAS (CONJ) (TRABA)	547, 550
MÚLTIPLE DE ESCAPE (GR)	95
MULTIPLE Y MONTAJE (GR) - CONTROL	339, 340, 341

O

*OPTION AR-CAB	596, 597

P

PANEL DE FUSIBLES (GR)	143, 144, 168, 181
PANEL LATERAL (GR)	602
PARACHOQUES (GR)	219
PASAMANOS (GR)	565
PIEZAS DIVERSAS (GR)	630
PISTÓN Y BIELA (GR)	62, 63
PISTONES DEL MOTOR (GR)	197
PLACA DE DESPLAZAMIENTO POR CARRETERA (GR)	479, 480
PLACA DE IDENTIFICACION (*ENGLISH, GERMAN, SPANISH)	228, 229
PLACA DE IDENTIFICACION (*MACHINE)	633, 636, 643, 646, 649
PLACA DE INFORMACION (PESO MAXIMO)	226
PLACA DE INFORMACION (PUNTO DE AMARRE)	389
PLATAFORMA DE LA CABINA	605
PORTAHORQUILLAS (GR)	440, 441
POSABRAZOS (GR)	499
POSABRAZOS Y MONTAJE (GR)	498
PROTECTOR DE CORREA (GR)	43
PROTECTOR DE ROPS/FOPS	564
PUBLICACIONES (GR)	591
PUERTA DE CABINA	552, 553, 555, 557
PUERTA DE CABINA (*POLYCARBONATE)	547, 582

* NO HAY TRADUCCION DISPONIBLE EN EL MOMENTO DE LA IMPRESION

INDICE

Nombre	Página
PUERTA Y MONTAJE DE CABINA (GR)	547, 550

R

Nombre	Página
RADIADOR Y ENFRIADOR DE ACEITE HIDRÁULICO (GR)	86, 87
RECUPERACIÓN DEL REFRIGERANTE (GR)	88, 90
REFLECTOR (GR)	145, 146
REGULADOR - PEDAL DEL (GR)	603, 604
REGULADOR DE TEMPERATURA DEL AGUA	81, 83
REGULADOR (GR)	107, 110
REJILLA DE SUCCIÓN (TANQUE HIDRÁULICO)	368
REJILLA (HIDRÁULICO)	317
REJILLA (TANQUE DE AGUA)	484
RELÉ (CONJ) (*SHELL)	169
RELÉ (CONJ) (12 VOLTIOS)	143, 144, 181, 224, 239, 242, 278, 494, 496, 536, 539
RELÉ (CONJ) (12 VOLTIOS) (ARRANQUE)	172, 175
RELÉ (CONJ) (12 VOLTIOS) (ARRANQUE EN FRIO)	172, 175
RELÉ (CONJ) (12 VOLTIOS) (CALEFACTOR)	570, 572
RELÉ (CONJ) (12 VOLTIOS) (CORRIENTE PRINCIPAL)	168
RELÉ (CONJ) (12 VOLTIOS) (CORRIENTE PRINCIPAL)	181
RELÉ (CONJ) (12 VOLTIOS) (HERRAMIENTA)	181
RELÉ (CONJ) (12 VOLTIOS) (LUZ DEL FRENO)	180
RESORTE DE GAS (GR)	616
RESORTE DE HOJA (GR)	481
RESPIRADERO (AIRE ACONDICIONADO)	505, 506
RESPIRADERO (COMPARTIMENTO DE TANDEM)	234
RESPIRADERO (COMPRESOR DE AIRE ACONDICIONADO)	577, 579
RESPIRADERO (CONJ) (*INLINE) (ACEITE HIDRÁULICO)	367
RETORNO EN EL MULTIPLE(GR)	194
RETROCESO - ALARMA DE (GR)	166
RETROVISOR (GR)	592
RETROVISOR Y MONTAJE (GR)	246, 247
REVESTIMIENTO DE LA CABINA (GR)	586
REVESTIMIENTO-TECHO	587
RUEDA MOTRIZ DEL ENGRANAJE(GR)	75
RUEDA Y LLANTA (CONFIG)	213, 214, 215, 216, 217
RUEDA Y NEUMÁTICO (GR)	218

S

Nombre	Página
*SEAL-VALVE COVER	100
SELLO - TAPA DE VÁLVULA	22
SELLO DE CABINA (GR)	607
SENSOR DE TEMPERATURA (GR) (ACEITE HIDRÁULICO)	350
SENSOR DE TEMPERATURA (GR) (REFRIGERANTE DEL MOTOR)	87
SENSOR DE VELOCIDAD (SINCRONIZACION DEL MOTOR)	110
SENSOR DE VELOCIDAD (VENTILADOR DEL MOTOR)	355
SILENCIADOR (GR)	96, 97
SISTEMA ROPS DE CABINA CERRADA (CONFIG)	502
SOFTWARE PARA LA MAQUINA (GR) (SEGURIDAD)	141
SOFTWARE PARA LA MAQUINA (GR) (SEGURIDAD)	135
SOLENOIDE (CORTE DE COMBUSTIBLE)	116, 131
SOLENOIDE (MOTOR DE ARRANQUE)	159
SOPLADOR - VENTILADOR (GR)	87
SOPLADOR - VENTILADOR (GR)	86
*SUPPORT GP-STORAGE BOX	5, 7, 11, 12

* NO HAY TRADUCCION DISPONIBLE EN EL MOMENTO DE LA IMPRESION

INDICE

Nombre	Página

T

TABLERO DE INSTRUMENTOS (CONFIG)	597
TABLERO DE INSTRUMENTOS (GR)	598, 600
TANQUE DEL AGUA (GR)	488
TANQUE HIDRÁULICO (GR)	368
TANQUE HIDRÁULICO Y MONTAJE (GR)	367
TAPA CON RESPIRADERO (RECUPERACIÓN DE REFRIGERANTE)	88, 90
TAPA DE LA CAJA DELANTERA (GR)	21
TAPA DE LA CONSOLA (GR)	544, 545
TAPA DE LLENADO (CONJ) (COMBUSTIBLE)	112
TAPA DE LLENADO (CONJ) (TANQUE HIDRAULICO)	368
TAPA DE RADIADOR (CONJ) (INTERCAMBIADOR DE CALOR PARA AGUA DE MAR)	86, 87
TAPA DE TUBERIAS (GR)	447
TAPA DEL MECANISMO DE VÁLVULAS (GR)	22
TAPA DEL TABLERO DE INSTRUMENTOS (GR)	546
TAPA DEL TUBO DE LLENADO DE ACEITE (MOTOR)	73
TAPA (LLENADO DE ACEITE DEL MOTOR)	56, 73
TAPÓN (CONJ) (TANQUE DE AGUA)	488
TAPÓN DE DRENAJE (ACEITE DEL MOTOR)	56
TAPÓN DE DRENAJE (COLECTOR DE ACEITE DEL MOTOR)	64
TAPON DE LA VALVULA PILOTO (GR)	360
TAPÓN DEL MOTOR (GR)	64
TAPÓN MAGNÉTICO (BASTIDOR)	234
TOPE DEL GARFIO(GR)	470, 471, 483
TORNILLERIA DE MAZO DE CABLES (GR)	136
TRABA-ACOPLADOR RAPIDO (GR)	478
TREN DE FUERZA (CONFIG)	200
TUBERÍAS CON SERVOMANDO (GR)	317, 319
TUBERÍAS DE ACONDICIONADOR DE AIRE (GR)	588
TUBERIAS DE CALEFACCION	590
TUBERIAS DE CONEXION (GR)	296, 298
TUBERÍAS DE LA CALEFACCIÓN (GR)	590
TUBERIAS DE LA GUIA (GR)	237
TUBERIAS DE LA HERRAMIENTA DE TRABAJO	329, 331
TUBERÍAS DEL CILINDRO DE INCLINACIÓN (GR)	325, 327
TUBERÍAS DEL CUCHARÓN (GR)	283, 285, 287, 289, 291, 293, 295
TUBERÍAS DEL ENFRIADOR DE ACEITE HIDRÁULICO (GR)	310
TUBERÍAS DEL GARFIO (GR)	300, 302, 304
TUBERIAS (GR) -COMBUSTIBLE PRIMARIO Y FILTRO	112
TUBERÍAS HIDRÁULICAS DEL VENTILADOR (GR)	306, 308
TUBERÍAS HIDROSTÁTICAS (GR)	192
TUBO DE LLENADO DE ACEITE (GR)	73
TURBOCOMPRESOR (GR)	98, 100

V

*V-BELT GP	69
VALVULA DE ALIVIO (CRUCE)	202
VÁLVULA DE ALIVIO (GR)	346, 354
VÁLVULA DE ALIVIO (GR)	384
VÁLVULA DE ALIVIO (GR) (ACEITE DEL MOTOR)	202
VÁLVULA DE ALIVIO (GR) (LEVANTAMIENTO)	374
VÁLVULA DE ALIVIO (GR) (*TILT, AUXILARY)	374
VÁLVULA DE ALIVIO (GR) (VELOCIDAD DEL VENTILADOR)	352
VALVULA DE CONTROL DE LA BOMBA (GR) (BOMBA DE PISTON)	202
VÁLVULA DE CONTROL (GR)	374
VÁLVULA DE CONTROL MANUAL (GR)	376
VÁLVULA DE CONTROL Y MONTAJE (GR)	373
VALVULA DE CORTE (CONJ)	580
VALVULA DE CORTE (CONJ) (AGUA)	574
VALVULA DE CORTE (CONJ) (CALENTADOR DE CABINA)	590
VÁLVULA DE RETENCIÓN (GR)	346
VÁLVULA DE RETENCIÓN (GR)	346
VÁLVULA DE SOLENOIDE (GR)	350, 386, 387

* NO HAY TRADUCCION DISPONIBLE EN EL MOMENTO DE LA IMPRESION

INDICE

Nombre	Página
	388
VÁLVULA DE SOLENOIDE (GR)	385
VÁLVULA DE SOLENOIDE (GR) (ACOPLADOR RAPIDO)	345
VÁLVULA DE SOLENOIDE (GR) (*HIGH FLOW)	346
VÁLVULA DE SOLENOIDE (GR) (*HIGH FLOW)	346
VÁLVULA DE SOLENOIDE (GR) (*HIGH FLOW BOOST)	346
VÁLVULA DE SOLENOIDE (GR) (12 VOLTIOS CORRIENTE DIRECTA)	356
	579
VÁLVULA DE SOLENOIDE (GR) (12 VOLTIOS CORRIENTE DIRECTA)	577
VÁLVULA PILOTO (GR)	377
	379
	381
	382
VÁLVULA-RESPIRADERO (CÁRTER DEL MOTOR)	100
VÁLVULA-RESPIRADERO (CÁRTER DEL MOTOR)	22
VENTANA DE LA CABINA (GR)	619
VENTANA DE LA CABINA (GR)	620
	621
	622
	624
VISERA	617
	618
VISERA (GR)	617
	618
VOLANTE - CAJA DE (GR)	44
	45
VOLANTE (GR)	41
	42

* NO HAY TRADUCCION DISPONIBLE EN EL MOMENTO DE LA IMPRESION

ÍNDICE

Designação	Página

A

ACOPLADOR RÁPIDO 443, 444, 445
ACOPLAMENTO DE COMANDO 542, 577, 579
ACUMULADOR - AR CONDICIONADO 490, 491
ACUMULADOR - AR CONDICIONADO (COM DESSECANTE) 577
ACUMULADOR HIDRÁULICO E MONTAGEM . . . 253
ADAPTADOR-TUBULAÇÃO DE ÓLEO 254
ADESIVO - FUSÍVEL/RELÉ 133
ALARME DE MARCHA À RÉ 166
ALAVANCA - GOVERNADOR 585
ALAVANCA DE CONTROLE - MODULAR 513, 514, 515, 566, 567
ALÇA 504
ALÇA - ACOPLADOR 474, 475
ALÇA E PINO - ACOPLADOR 472, 473
ALOJAMENTO - LATERAL 576
ALOJAMENTO-TERMOSTATO DE ÁGUA 78
ALTERNADOR DE CORRENTE 123, 125
AQUECEDOR DA ÁGUA DO MOTOR 139, 140
AQUECEDOR DA CABINE 569, 570, 572, 574
AQUECEDOR DA CABINE E MONTAGEM 568
ARMAÇÃO - LÂMINA 465
ARMAÇÃO DA GARRA 468
ARMAÇÃO DO VIDRO 560, 561
ARMAÇÃO-GARFO 466, 467
ARRANJO BÁSICO 1, 2
ARTICULAÇÃO - ACOPLADOR 477
ASSENTO 613, 614
ASSENTO AJUSTÁVEL 615

B

BATENTE - GARRA 470, 471, 483
BATERIA 126, 127
BATERIA (12 VOLTS, ISENTO DE MANUTENÇÃO) 127
BATERIA (12 VOLTS, PADRÃO) 126
BEIRA - PONTA CORTANTE 450
BLOCO DO MOTOR 29, 31
BOBINA-SOLENÓIDE (12-VOLTS) 385
BOCAL DE ENCHIMENTO DE ÓLEO DO MOTOR 73
BOMBA DA FERRAMENTA DE TRABALHO E MONTAGEM 361, 362, 363, 364
BOMBA DE ÁGUA 81, 83
BOMBA DE DIAFRAGMA 485
BOMBA DE ENGRENAGENS 363, 364, 365, 366
BOMBA DE ESCORVA DO COMBUSTÍVEL 122
BOMBA DE ESCORVA DO COMBUSTÍVEL E DO FILTRO PRIMÁRIO 122
BOMBA DE INJEÇÃO DO COMBUSTÍVEL 116, 119, 120
BOMBA DE ÓLEO - MOTOR 75
BOMBA DE PISTÃO 202
BOMBA E MONTAGEM - HIDROSTÁTICA 201
BOMBA E MONTAGEM - TRANSFERÊNCIA DE COMBUSTÍVEL 114, 115
BORDA CORTANTE 450, 451, 452, 453, 454, 455, 456
BRAÇO - MANIPULADOR DE MATERIAIS 389
BRAÇO DO ASSENTO 499
BRAÇO DO LIMPADOR 553
BRAÇO DO LIMPADOR (DIANTEIRO) 555
BUJÃO DA VÁLVULA PILOTO 360
BUJÃO DO DRENO (CÁRTER DE ÓLEO DO MOTOR) 64
BUJÃO DO DRENO (ÓLEO DO MOTOR) 56
BUJÃO DO MOTOR 64

* TRADUÇÃO NÃO DISPONÍVEL NO MOMENTO DA IMPRESSÃO

ÍNDICE

Designação	Página
BUJÃO MAGNÉTICO (ARMAÇÃO)	234
BUZINA (TOM BAIXO)	531
	532

C

CABEÇOTE DO MOTOR	33
	35
	36
	38
CABINE - ESTRUTURA DE PROTEÇÃO CONTRA CAPOTAMENTO	503
CABINE - ESTRUTURA ROPS COBERTA	502
CABO - CONTROLE DO GOVERNADOR	104
CABO DE CONTROLE	504
CABOS E FIOS ELÉTRICOS-LUZES TRASEIRAS	180
CABOS/FIOS ELÉTRICOS - AR CONDICIONADO	167
CABOS/FIOS ELÉTRICOS - CHASSI	168
CABOS/FIOS ELÉTRICOS - FERRAMENTAS DE TRABALHO	181
CABOS/FIOS ELÉTRICOS - MÁQUINA	178
CABOS/FIOS ELÉTRICOS - MOTOR	172
	175
CAÇAMBA - GARRA	404
	405
	406
	407
	408
	426
	427
	428
	429
	430
CAÇAMBA - PARA APLICAÇAO GERAL	402
	403
	404
CAÇAMBA - SERVIÇOS GERAIS	412
	413
CACAMBA - TERRA	425
CAÇAMBA DE MÚLTIPLAS APLICAÇÕES	409
	410
	411
	412
	431
	432
	433
	434
	435
CACAMBA E GARFO	439
CAÇAMBA PARA APLICAÇÃO GERAL	418
	419
	420
	421
CACAMBA PARA MATERIAL LEVE	422
	423
	424
CAÇAMBA PARA MATERIAL LEVE	409
CAÇAMBA PARA SERVIÇOS GERAIS	436
	437
	438
CAÇAMBA PARA TERRA	401
	402
	414
	415
	416
	417
CADEADO	226
	228
CAIXA DE ARMAZENAMENTO	501
CAIXA DIANTEIRA	46
	48
CAIXA DO VOLANTE DO MOTOR	44
	45
CÁRTER DO ÓLEO DO MOTOR	56
	60
CHASSI	1
CHASSI - MÁQUINA	236
CHASSI DIANTEIRO	234
CHAVE	226
CHAVE - ELETRÔNICO (SEGURANÇA)	135
	141
CHAVE INTERRUPTORA DE PARTIDA	562
CHICOTE - CABOS ELÉTRICOS (MARCADOR DE HORAS DE SERVIÇO)	546
CHICOTE - CABOS ELÉTRICOS (VELA DE AQUECIMENTO)	175
CHICOTE - CHASSI (BUZINA)	177
CHICOTE - CHASSI (TRANSMISSÃO)	578
	580
CHICOTE - MOTOR	172
	175
CHICOTE - PLATAFORMA	169
CHICOTE - PLATAFORMA (INFERIOR)	168
CILINDRO DA CAÇAMBA	260
CILINDRO DA GARRA	261
CILINDRO DE INCLINAÇÃO	270
	271
CILINDRO DE LEVANTAMENTO	269
CILINDRO E ARTICULAÇÃO - ACOPLADOR	448
	449
CILINDRO E MONTAGEM - BRAÇO DE LEVANTAMENTO	258
CILINDRO E MONTAGEM - CAÇAMBA	257

* TRADUÇÃO NÃO DISPONÍVEL NO MOMENTO DA IMPRESSÃO

ÍNDICE

Designação	Página
CILINDRO E MONTAGEM - LÂMINA ANGULÁVEL	255
	256
CILINDRO HIDRÁULICO	262
	263
	264
	265
	266
	267
	268
	280
CINTO DE SEGURANÇA	609
	610
	611
	612
COBERTURA DO MOTOR	232
COLETOR - CONTROLE	345
	346
	347
COLETOR - CONTROLE (*BOOSTED AUXILIARY HYD FLOW)	277
	340
COLETOR - RETORNO	194
COLETOR DE ESCAPE	95
COLETOR E MONTAGEM - CONTROLE	339
	340
	341
COLETOR E SOLENÓIDE-CONTROLE	342
	343
	344
COLETOR E TUBULAÇÕES -CONTROLE	335
	337
COMANDO DO TANDEM	185
COMANDO HIDRÁULICO	274
	275
	276
COMPRESSOR DE REFRIGERANTE	505
	506
	577
	579
COMPRESSOR DE REFRIGERANTE E MONTAGEM	508
COMPRESSOR E MOTOR - REFRIGERADO	505
	506
CONDENSADOR DO REFRIGERANTE E MONTAGEM	509
CONDICIONADOR DE AR	493
	494
	496
CONDICIONADOR DE AR E MONTAGEM	492
CONECTOR	278
	323
CONEXÃO	278
	321
	323
CONEXÃO - ELÉTRICA	128
	129
CONEXÃO - HIDRÁULICA	272
	273
	321
CONEXÃO (DRENO DA CAIXA DA BOMBA)	331
CONTRAPESO	230
	231
CONTROLE - NÃO PROGRAMADO	134
CONTROLE - NÃO PROGRAMADO (SEGURANÇA)	135
CONTROLE-CABO	510
	511
	512
	513
	514
	515
	516
	517
CONTROLE DE TRAVAMENTO	130
CONTROLE DO GOVERNADOR	105
CONTROLE DO VENTILADOR	178
CONTROLE HIDRÁULICO DE OPERAÇÃO PILOTO	518
	521
	522
	524
	525
	527
	528
	530
	531
	532
	534
	536
	539
CONTROLE MANUAL DE PARTIDA E PARADA	131
CONVERSÃO-FERRAMENTA DE TRABALHO	442
CORREIA DE COMANDO (PISCA-ALERTA)	151
CORREIA EM V (BOMBA D'ÁGUA)	67
	69

D

DECALQUE	275
	276
	626
	627
	629

* TRADUÇÃO NÃO DISPONÍVEL NO MOMENTO DA IMPRESSÃO

ÍNDICE

Designação	Página
DECALQUE - ADVERTÊNCIA (ALTA PRESSÃO, CONSULTAR MANUAL)	633, 646, 649
DECALQUE - ADVERTÊNCIA (ALTA PRESSÃO, CONSULTAR OMM, EUA)	636, 643
DECALQUE - ADVERTÊNCIA (DIREÇÃO)	228
DECALQUE - ADVERTÊNCIA (FOLGA)	238, 626
DECALQUE - ADVERTÊNCIA (NÃO É ACESSO)	633, 646
DECALQUE - ADVERTÊNCIA (NAO HÁ VAO LIVRE, MANTENHA DISTANCIA)	393, 394
DECALQUE - ADVERTÊNCIA (PERIGO DE ESMAGAMENTO)	431, 432, 433, 435
DECALQUE - ADVERTÊNCIA (PERIGO DE ESMAGAMENTO, MANTENHA DISTÂNCIA)	633, 639, 646, 649
DECALQUE - ADVERTÊNCIA (PERIGO DE ESMAGAMENTO, MANTENHA DISTANCIA, EUA)	639
DECALQUE - ADVERTÊNCIA (PONTO DE UNIÃO)	459, 460, 464, 468
DECALQUE - IDENTIFICAÇÃO (IGNIÇÃO)	141, 142
DECALQUE - IDENTIFICAÇÃO (TOMADA DE FORÇA, 12 VOLTS)	633, 636, 643, 646, 649
DECALQUE - IDENTIFICAÇÃO (13 KM/H)	5, 7, 11, 12, 220
DECALQUE - INFORMAÇÕES (LOCAL DE AMARRAÇÃO)	389
DECALQUE - INSTRUÇÃO (CONTROLE DA MÁQUINA)	278
DECALQUE - INSTRUÇÃO (CONTROLE DA MÁQUINA, LER OMM)	524
DECALQUE - INSTRUÇÃO (CONTROLE DA MÁQUINA, LER OMM)	522, 528, 530, 531, 532, 534
DECALQUE - INSTRUÇÃO (CONTROLES DA MÁQUINA)	518, 521, 525, 527, 536, 539
DECALQUE - INSTRUÇÃO (*MACHINE SECURITY, INTL)	141, 142
DECALQUE - INSTRUÇÃO (PAINEL)	563
DECALQUE - INSTRUÇÃO (PAINEL DE INSTRUMENTOS)	562
DECALQUE - INSTRUÇÃO (SAÍDA DE EMERGÊNCIA)	557, 619
DECALQUE - INSTRUÇÃO (SEM DEGRAUS)	369, 639
DECALQUE - INSTRUÇÃO (SEM DEGRAUS)	280
DECALQUE - TIRA (*REFLECTIVE, RED, WHITE)	479, 480
DECALQUE (CONTROLE DE TEMPERATURA)	494, 570
DECALQUE (CONTROLE DE TEMPERATURA)	496, 572
DECALQUE (FLUXO ALTO)	275, 278
DECALQUE (FOPS)	564
DECALQUE (REFLETOR)	479, 480
DEGRAU - BRAÇO DE MANIPULAÇÃO DE MATERIAIS	482
DISJUNTOR AUTOMÁTICO DE CIRCUITO (105 AMPERES)	172, 175
DISJUNTOR AUTOMÁTICO DE CIRCUITO (30 AMPERES)	154, 239, 242
DRENO - ÓLEO DO MOTOR	40
DUCTO E CONTROLE	558

* TRADUÇÃO NÃO DISPONÍVEL NO MOMENTO DA IMPRESSÃO

ÍNDICE

Designação	Página

E

EIXO 183, 184
EIXO-COMANDO DE VÁLVULA 19, 20
ELEMENTO - AQUECEDOR DE ÁGUA DA CAMISA (MOTOR) 139, 140
ELEMENTO DO FILTRO DE AR (PRIMÁRIO) 93
ELEMENTO DO FILTRO DE AR (SECUNDÁRIO) 93
ELEMENTO DO FILTRO DE COMBUSTÍVEL (SEPARADOR DE ÁGUA) 106
ELEMENTO FILTRANE-AR DA CABINE 494, 496, 570, 572
ELEMENTO FILTRANE-AR DA CABINE (AR) 496, 572
ELEMENTO FILTRANTE - ÓLEO DO MOTOR 56, 189
ENCOSTO DO BRAÇO E MONTAGEM 498
ENGRENAGEM DA RODA-GUIA 75
ESPELHO RETROVISOR 592
ESPELHO RETROVISOR E MONTAGEM 246, 247

F

FAROL DIANTEIRO 147
FIAÇÃO - AQUECEDOR E AR CONDICIONADO 167, 570, 572, 578, 580
FIAÇÃO - BUZINA 177
FIAÇÃO - CONTROLE (SEGURANÇA) 142
FIAÇÃO - CONTROLE (SEGURANÇA) 141
FIAÇAO - CONTROLES DO OPERADOR (ALAVANCA DE CONTROLE) 278, 521, 524, 527, 536, 539
FIAÇAO - CONTROLES DO OPERADOR (FLUXO ALTO) 278, 539
FIAÇÃO - FERRAMENTA DE TRABALHO 485
FIAÇÃO - FERRAMENTA DE TRABALHO (BRAÇO DE LEVANTAMENTO) 143, 144, 181
FIAÇÃO - FERRAMENTA DE TRABALHO (CONECTANDO) 391, 392
FIAÇÃO - FERRAMENTA DE TRABALHO (PLATAFORMA) 143, 144, 181
FIAÇÃO - INTERRUPTOR 178
FIAÇÃO - LUZES TRASEIRAS 154, 168, 224, 239, 242, 250
FIAÇÃO - LUZES TRASEIRAS (FREIO) 180, 224
FIAÇÃO - LUZES TRASEIRAS (FREIO) 239, 242
FIAÇÃO -LUZES DIANTEIRAS 154, 239, 242
FIAÇÃO-LIMPADOR DE VIDROS 547, 550, 553, 555, 582, 583
FIAÇÃO-TANQUE DE COMBUSTÍVEL 167, 578, 580
FILTRO - ÓLEO 188, 189, 190
FILTRO - ÓLEO (EFICIÊNCIA AVANÇADA) (HIDRÁULICO) 188
FILTRO DE COMBUSTÍVEL E SEPARADOR DE ÁGUA 106
FILTRO HIDRÁULICO E TUBOS 186
FILTRO (RESPIRO DO CÁRTER) 22, 100
FIXADORES - CHICOTE 136
FUSÍVEL (10 AMPERES) 143, 144, 166, 168, 181, 280, 443
FUSÍVEL (10 AMPERES) 534
FUSÍVEL (15 AMPERES) 143, 144, 167

* TRADUÇÃO NÃO DISPONÍVEL NO MOMENTO DA IMPRESSÃO

ÍNDICE

Designação	Página
	168
	181
FUSÍVEL (20-AMPERES)	168
FUSÍVEL (30 AMPERES)	167
	168
	578
	580

G

GARFO - SERVIÇOS PÚBLICOS	463
	464
GARFO DA GARRA	456
	457
	458
	459
	460
GARFO DE PALETAS	461
	462
GARRA - SERVIÇOS PÚBLICOS	469
	470
	471
GOVERNADOR	107
	110
GR. DE CONVERSÃO - ARRANJO NÃO RODOVIÁRIO	132
GR. DE CONVERSÃO - OPERAÇÃO RODOVIÁRIA	226
	227
	228
	229
GRUPO DE CONVERSÃO - ARRANJO RODOVIÁRIO	220
	221
	222
	223
	224
	225
GRUPO DE INSTALAÇÃO - MOTOR	17
	18
GRUPO DE POLIA - BOMBA DE ÁGUA	67
	68
GRUPO ROTATIVO DA BOMBA (DIREITO)	202
GRUPO ROTATIVO DA BOMBA (ESQUERDO)	202
GUIA - TUBOS	237

H

*HOLDER-CUP	575

I

ILUMINAÇÃO - FREIO E MARCHA À RÉ	156
ILUMINAÇÃO - RODOVIÁRIA	154
INDICADOR E ALARME	562
	563
INSTALAÇÃO	577
INSTALAÇÃO-SEGURANÇA	141
	142
INTERRUPTOR - BALANCIM (ACOPLADOR RAPIDO)	280
	443
INTERRUPTOR - BALANCIM (AQUECEDOR)	494
	496
	570
	572
INTERRUPTOR - BALANCIM (CONDICIONADOR DE AR)	494
INTERRUPTOR - BALANCIM (CONDICIONADOR DE AR)	496
INTERRUPTOR - BALANCIM (ENERGIA ELÉTRICA, FERRAMENTA DE TRABALHO)	143
	144
	181
INTERRUPTOR - BALANCIM (FARÓIS DE ESTRADA)	154
	239
INTERRUPTOR - BALANCIM (FARÓIS DE ESTRADA)	242
INTERRUPTOR - BALANCIM (FAROL DIANTEIRO)	598
	600
INTERRUPTOR - BALANCIM (FLUXO ALTO)	278
	536
	539
INTERRUPTOR - BALANCIM (FREIO DE ESTACIONAMENTO)	598
	600
INTERRUPTOR - BALANCIM (LIMPADOR TRASEIRO)	553
	555
INTERRUPTOR - BALANCIM (LUZES DE ADVERTÊNCIA CONTRA PERIGO)	154
	239
INTERRUPTOR - BALANCIM (LUZES DE ADVERTÊNCIA CONTRA PERIGO)	242
INTERRUPTOR - BALANCIM (LUZES DE TRABALHO TRASEIRAS)	152
INTERRUPTOR - BALANCIM (PARTIDA A FRIO)	598
	600
INTERRUPTOR - BALANCIM (PISCA-ALERTA)	157
INTERRUPTOR - BALANCIM (POSICIONADOR DA FERRAMENTA DE TRABALHO)	274

* TRADUÇÃO NÃO DISPONÍVEL NO MOMENTO DA IMPRESSÃO

ÍNDICE

Designação	Página
INTERRUPTOR - BALANCIM (SETA DE DIREÇÃO)	154, 239, 242
INTERRUPTOR - LIMITADOR (LIMPADOR)	553, 555
INTERRUPTOR - PRESSÃO	163, 164
INTERRUPTOR - PRESSÃO (ALARME DE MARCHA-À-RÉ)	166
INTERRUPTOR - PRESSÃO (AR CONDICIONADO)	588
INTERRUPTOR - PRESSÃO (ÓLEO DO MOTOR)	158, 164
INTERRUPTOR - PRESSÃO (ÓLEO HIDRÁULICO)	188
INTERRUPTOR - PRESSÃO (REFRIGERANTE)	578, 580
INTERRUPTOR - TEMPERATURA	165
INTERRUPTOR - TEMPERATURA (AR CONDICIONADO)	494, 496
INTERRUPTOR - TEMPERATURA (LÍQUIDO ARREFECEDOR DO MOTOR)	158, 165
INTERRUPTOR - TEMPERATURA (ÓLEO HIDRÁULICO)	368
INTERRUPTOR (ASSENTO)	614, 615

J

JANELA DA CABINE	619, 620, 621, 622, 624
JOGO - PORTA DA CABINE E MONTAGEM	582, 583
JOGO - VÁLVULA PILOTO (MOLA)	379
JOGO DE BUJÃO-CON	499
JOGO DE RETENTOR	379
JOGO DE RETENTOR (BOMBA DE ENGRENAGEM)	352
JOGO-INSTALAÇÃO DO CONDICIONADOR DE AR E AQUECEDOR	577, 579
JOGO-PLACA DE RODAGEM E MONTAGEM	476
JUNTA - TAMPA	81
JUNTA - TAMPA (TERMOSTATO)	78

K

KIT-CONTROLE E FIAÇÃO DA FERRAMENTA DE TRABALHO	143
KIT-CONVERSÃO DE FLUXO ALTO	277
KIT-CONVERSÃO DE RODAGEM	238, 239, 242
KIT-CONVERSÃO DO ACOPLADOR RÁPIDO	280
KIT-FIAÇÃO DA FERRAMENTA DE TRABALHO	144
KIT-RETENTOR DA CABINE	584

L

LÂMINA	390, 391, 392
LÂMINA ANGULÁVEL	393, 394, 395, 396
LÂMINA-CAÇAMBA DE APLICAÇÕES MÚLTIPLAS	397, 398, 399, 400
LÂMINA DO LIMPADOR DE PÁRA-BRISA (*558-MM) (DIANTEIRO, TRASEIRO)	553
LÂMINA DO LIMPADOR DE PÁRA-BRISA (*558-MM) (PORTA DA CABINE)	555
LÂMPADA - FAROL	145, 146
LÂMPADA - TETO (12-VOLTS)	563
LÂMPADA DIANTEIRA E DE SINAL	147
LAMPADA-PLACA DE REGISTRO	224, 248
LÂMPADA (VERMELHA, VERDE, LED, 12 VOLTS)	142
LÂMPADA (12-VOLTS)	563
LÂMPADA (12-VOLTS) (PLACA DE REGISTRO)	248
LÂMPADA (12-VOLTS, 10-WATTS)	224, 563
LÂMPADA (12-VOLTS, 21-WATTS)	147, 150
LÂMPADA (12-VOLTS, 4-WATTS)	147
LÂMPADA (12 VOLTS, 5 WATTS)	149, 150
LÂMPADA (12-VOLTS, 55-WATTS)	145, 146, 151
LEVANTAMENTO DA MÁQUINA	244, 245

* TRADUÇÃO NÃO DISPONÍVEL NO MOMENTO DA IMPRESSÃO

ÍNDICE

Designação	Página
LEVANTAMENTO DO MOTOR	50 51
LUZ GIRATÓRIA DE ALARME	151
LUZ INTERMITENTE (12-VOLTS)	154 239 242
LUZ TRASEIRA E DE FREIO	149 150

M

MANGUEIRA (INFERIOR)	88 90
MANGUEIRA (SUPERIOR)	88 90
MÁQUINA - CONVERSÃO	3 4 5 6 7 8 9 10 11 12
MÁQUINA AR DE CONTROLE	2
MARCADOR DE HORAS DE SERVIÇO	546
MECANISMO DAS VÁLVULAS	70 71
MEDIDOR - NÍVEL DE COMBUSTÍVEL	563
MÓDULO - INDICADOR DE ALARME	593 594
MOLA - LÂMINA	481
MOLA A GÁS	616
MOLA ACIONADA A GAS	79 564
MOLA ACIONADA A GAS (CABINE)	245
MOLA ACIONADA A GAS (CABINE)	616
MOLA ACIONADA A GAS (TRAVAMENTO)	547 550 582 583
MONTAGEM - BOMBA	199
MONTAGEM - CILINDRO	357 358 359
MONTAGEM - ESTRUTURA ROPS	595
MONTAGEM - LUZES PARA ILUMINAÇÃO RODOVIÁRIA	250
MONTAGEM - MOTOR	52 53
MONTAGEM - VENTILADOR	54 55
MONTAGEM DA PLACA DE REGISTRO	248 249
MOTOR	13
MOTOR - ENGRENAGENS	351 352 353 354 355 356
MOTOR - LIMPADOR DO VIDRO	553 555
MOTOR - PISTÃO	197
MOTOR E MONTAGEM - VENTILADOR HIDRÁULICO	348 349 350
MOTOR ELÉTRICO DE PARTIDA	159 161 162
MOTOR HIDROSTÁTICO E MONTAGEM	196
MOTOR PRIMÁRIO	14 15 16

O

OPÇÃO-CABINE	596 597

P

PAINEL DE FUSÍVEIS	143 144 168 181
PAINEL DE INSTRUMENTOS	597 598 600
PAINEL LATERAL	602
PÁRA-CHOQUE	219
PÁRA-SOL	617 618
PÁRA-SOL DA CABINE	617 618
PEÇAS DIVERSAS	630
PEDAL DO GOVERNADOR	603 604
PEGA-MÃO	565
PISTÃO E BIELA	62 63
PLACA DE IDENTIFICAÇÃO (*ENGLISH, GERMAN, SPANISH)	228 229

* TRADUÇÃO NÃO DISPONÍVEL NO MOMENTO DA IMPRESSÃO

ÍNDICE

Designação	Página
PLACA DE IDENTIFICAÇÃO (MÁQUINA)	633, 636, 643, 646, 649
PLACA DE INFORMAÇÃO (PESO MÁXIMO)	226
PLACA E DECALQUE	632, 633, 636, 639, 641, 643, 646, 649
PLACA-RODOVIÁRIO	479, 480
PLATAFORMA DO OPERADOR	605
PNEU E ARO	204, 205, 206, 207, 208, 209, 210, 211, 212, 213
POLIA DO VIRABREQUIM	65, 66
PORTA DA CABINE	552, 553, 555, 557
PORTA DA CABINE (POLICARBONATO)	582
PORTA DA CABINE (POLICARBONATO)	547
PORTA E MONTAGEM-CABINA	547, 550
POSICIONADOR-GARFO	461
PROTETOR - CORREIAS	43
PROTETOR - ROPS/FOPS	564
PUBLICAÇÃO	591
PURIFICADOR DE AR	92, 93

R

RADIADOR E ARREFECEDOR DE ÓLEO - MONTAGEM	88, 90
RADIADOR E ARREFECEDOR DO ÓLEO HIDRÁULICO	86, 87
RECUPERAÇÃO DE LÍQUIDO ARREFECEDOR	88, 90
REDUÇÃO DE RUÍDO	252
REGULADOR DE TEMPERATURA DA ÁGUA	81, 83
RELÉ (CONJ) (CARCAÇA)	169
RELÉ (CONJ) (12-VOLTS)	143, 144, 181, 239, 242, 278, 494, 496, 536, 539
RELÉ (CONJ) (12-VOLTS)	224
RELÉ (CONJ) (12-VOLTS) (AQUECEDOR)	570, 572
RELÉ (CONJ) (12-VOLTS) (FERRAMENTA DE TRABALHO)	181
RELÉ (CONJ) (12-VOLTS) (LUZ DE FREIO)	180
RELÉ (CONJ) (12-VOLTS) (PARTIDA)	172, 175
RELÉ (CONJ) (12-VOLTS) (PARTIDA A FRIO)	172, 175
RELÉ (CONJ) (12-VOLTS) (POTÊNCIA PRINCIPAL)	168, 181
RESPIRO (ALOJAMENTO DO TANDEM)	234
RESPIRO (AR CONDICIONADO)	505, 506
RESPIRO (COMPRESSOR DO AR CONDICIONADO)	577, 579
RESPIRO (EM LINHA) (ÓLEO HIDRÁULICO)	367
RETENTOR - TAMPA DA VÁLVULA	22, 100
RETENTOR-CABINE	607
REVESTIMENTO - CABINE	587
REVESTIMENTO DA CABINE	586
RODA E PNEU	213, 214, 215, 216, 217, 218

S

SENSOR - TEMPERATURA (LÍQUIDO ARREFECEDOR DO MOTOR)	87

* TRADUÇÃO NÃO DISPONÍVEL NO MOMENTO DA IMPRESSÃO

ÍNDICE

Designação	Página
SENSOR - TEMPERATURA (ÓLEO HIDRÁULICO)	350
SENSOR DE PRESSÃO E TEMPERATURA	158
SENSOR DE VELOCIDADE (MOTOR DO VENTILADOR)	355
SENSOR DE VELOCIDADE (SINCRONIZAÇÃO DO MOTOR)	110
SILENCIADOR	96
	97
SIST. DE ILUMINAÇÃO - PISCA-PISCA GIRATÓRIO DE ADVERTÊNCIA	157
SIST. ELETRÔNICO - ACESSÓRIO	134
SISTEMA DE ILUMINAÇÃO - FARÓIS	152
	153
SISTEMA ELETRÔNICO - MÁQUINA	135
SOFTWARE - MÁQUINA (SEGURANÇA)	135
	141
SOLENÓIDE (DESLIGAMENTO - COMBUSTÍVEL)	116
	131
SOLENÓIDE (MOTOR DE PARTIDA)	159
SUPORTE - ARREFECEDR DE ÓLEO E RADIADOR	79
SUPORTE - CAIXA DE ARMAZENAGEM	5
	7
	11
	12
	220
	222
SUPORTE - GARFO	440
	441

T

TAMPA - BOCAL DE ENCHIMENTO (COMBUSTÍVEL)	112
TAMPA - BOCAL DE ENCHIMENTO DE ÓLEO (MOTOR)	73
TAMPA - BOCAL DE ENCHIMENTO (TANQUE HIDRÁULICO)	368
TAMPA - CAIXA DIANTEIRA	21
TAMPA - CONSOLO	544
	545
TAMPA - MECANISMO DAS VÁLVULAS	22
TAMPA - PAINEL DE INSTRUMENTOS	546
TAMPA - RADIADOR (PERMUTADOR DE CALOR DE AGUA SALGADA)	86
	87
TAMPA - TUBULAÇÕES	447
TAMPA (BOCAL DE ENCHIMENTO DO ÓLEO DO MOTOR)	56
	73
TAMPA COM RESPIRO (RECUPERAÇÃO DO LÍQUIDO ARREFECEDOR)	88
	90
TAMPA DO PAINEL DO FUSÍVEL	133
TAMPA (TANQUE DE ÁGUA)	488
TANQUE DE ÁGUA	488
TANQUE DE ÁGUA E MONTAGEM	485
TANQUE DE ÓLEO HIDRÁULICO E MONTAGEM	367
TANQUE HIDRÁULICO	368
TAPETE	1
	2
	3
	4
	5
	6
	7
	220
	221
	222
	223
TELA DE SUCÇÃO (TANQUE HIDRÁULICO)	368
TELA FILTRANTE - ÁGUA	484
TELA FILTRANTE (HIDRÁULICO)	317
TELA FILTRANTE (TANQUE DE ÁGUA)	484
TRAVA - ACOPLADOR RÁPIDO	478
TRAVA-CILINDRO	501
TREM DE FORÇA	200
TUBOS - AQUECEDOR	590
TUBOS - AR	94
TUBOS - AR CONDICIONADO	588
TUBOS - ARREFECEDOR DE ÓLEO HIDRÁULICO	310
TUBOS - BOMBA	321
	323
TUBOS - CAÇAMBA	283
	285
	287
	289
	291
	293
	295
TUBOS - CILINDRO DE INCLINAÇÃO	325
	327
TUBOS - CILINDRO DE LEVANTAMENTO	311
	313
TUBOS - CIRCUITO PILOTO	317
	319
TUBOS - FERRAMENTA DE TRABALHO	329
	331
TUBOS - GARRA	300
	302
	304

* TRADUÇÃO NÃO DISPONÍVEL NO MOMENTO DA IMPRESSÃO

ÍNDICE

Designação	Página
TUBOS - SISTEMA HIDROSTÁTICO	192
TUBOS - VENTILADOR HIDRÁULICOS	306
	308
TUBOS DE CONEXÃO	296
	298
TUBOS DO AQUECEDOR	590
TUBULAÇÕES - FILTRO E ESCORVA DO COMBUSTÍVEL	112
TUBULAÇÕES-CONTROLE DE ABAIXAMENTO	315
TURBOALIMENTADOR	98
	100

U

UNI-DENTE	489

V

*V-BELT GP	69
VÁLVULA DE ALÍVIO	346
	354
	384
VÁLVULA DE ALÍVIO (CARGA)	202
VÁLVULA DE ALÍVIO (DE DUAS DIREÇÕES)	202
VÁLVULA DE ALÍVIO (INCLINAÇÃO, AUXILIAR)	374
VÁLVULA DE ALÍVIO (LEVANTAMENTO)	374
VÁLVULA DE ALÍVIO (VELOCIDADE DO VENTILADOR)	352
VÁLVULA DE CONTROLE	374
VÁLVULA DE CONTROLE DA BOMBA (BOMBA DO PISTÃO)	202
VÁLVULA DE CONTROLE E MONTAGEM	373
VÁLVULA DE CONTROLE PILOTO	377
	379
	381
	382
VÁLVULA DE FECHAMENTO	580
VÁLVULA DE FECHAMENTO (ÁGUA)	574
VÁLVULA DE FECHAMENTO (AQUECEDOR DA CABINE)	590
VÁLVULA DE RETENÇÃO	346
VÁLVULA DO RESPIRO (CÁRTER)	22
	100
VÁLVULA E TUBULAÇÔES - ACOPLADOR	369
VÁLVULA MANUAL	376
VÁLVULA SOLENÓIDE	350
	385
	386
	387
	388
VÁLVULA SOLENÓIDE (ACOPLADOR RÁPIDO)	345
VÁLVULA SOLENÓIDE (FLUXO ALTO)	346
VÁLVULA SOLENÓIDE (REFORÇO DO FLUXO ALTO)	346
VÁLVULA SOLENÓIDE (12 VDC)	356
	577
	579
VELA DE AQUECIMENTO; VELA INCANDESCENTE	137
	138
VENTILADOR DE SOPRO	86
	87
VIGIA (NÍVEL DO LÍQUIDO ARREFECEDOR)	87
VIGIA (RADIADOR)	86
VIGIA (TANQUE HIDRÁULICO)	368
VIRABREQUIM	24
	25
	27
VOLANTE DO MOTOR	41
	42

* TRADUÇÃO NÃO DISPONÍVEL NO MOMENTO DA IMPRESSÃO

STICHWORTVERZEICHNIS

Bezeichnung	Seite
A	
ABLASSSTOPFEN (MOTORÖL)	56
ABLASSSTOPFEN (MOTORÖLWANNE)	64
ABSPERRVENTIL	580
ABSPERRVENTIL (FAHRERHAUSHEIZUNG)	590
ABSPERRVENTIL (WASSER)	574
ACHSE	183, 184
ADAPTER - ÖLLEITUNG	254
ANSAUGSIEB (HYDRAULIKTANK)	368
ANSCHLUSS, ELEKTR.	128, 129
ANSCHLUSSGRIFF	474, 475
ANSCHLUSSLEITUNGEN	296, 298
ANSCHLUSSSTÜCK	278, 321, 323
ANSCHLUSSSTÜCK (PUMPENGEHÄUSEABLASS)	331
ANTRIEBSKUPPLUNG	542, 577, 579
ARBEITSGERÄT - LEITUNGEN	329, 331
ARBEITSGERÄT - VERDRAHTUNG	181
ARBEITSGERÄTEELEKTRONIK	134
ARBEITSGERÄTEPUMPE U. BEFESTIGUNG	361, 362, 363, 364
ARBEITSGERÄTEVERDRAHTUNGSSATZ	144
ARBEITSLEUCHTEN	145, 146, 152, 153
ARMLEHNE	499
ARNLEHNE U. BEFESTIGUNG	498
AUFKLEBER	275, 276, 626, 627, 629
AUFKLEBER - INFORMATION (FESTZURRSTELLE)	389
AUFKLEBER - SOICHERUNG/RELAIS	133
AUFKLEBER (*FOPS)	564
AUFKLEBER (HOHER FLUSS)	275, 278
AUFKLEBER (REFLEKTIEREND, ROT, WEISS)	479, 480
AUFKLEBER (REFLEKTIV)	479, 480
AUFKLEBER (TEMPERATURREGELUNG)	494, 496, 570, 572
AUSPUFFKRÜMMER	95
B	
BATTERIE	126, 127
BATTERIE (12 V, STANDARD)	126
BATTERIE (12 V, WARTUNGSFREI)	127
BEDIENUNGSELEMENTE - KABELSTRANG (HOHER FLUSS)	278, 539
BEDIENUNGSELEMENTE - KABELSTRANG (JOYSTICK)	278, 521, 524, 527, 536, 539
BELEUCHTUNG FÜR STRASSENFAHRT - BEFESTIGUNG	250
BELEUCHTUNGSANLAGE (ROT, GRÜN, LED, 12 V)	142
BELEUCHTUNGSANLAGE (STRASSENAUSRÜSTUNG)	154
BETRIEBSSTUNDENZÄHLER	546
BLINKER (12 V)	154, 239, 242
BREMS- UND RÜCKLEUCHTE	149, 150
BREMS- UND RÜCKLEUCHTEN	156
*BUCKET AR-UTILITY	412, 413
C	
*CYLINDER & MTG GP-BUCKET	257
D	
DICHTUNGSSATZ	379
DICHTUNGSSATZ (ZAHNRADPUMPE)	352
DOKUMENTATION	591
DREHSTROMGENERATOR	123, 125
DREHZAHLREGLERKABEL	104
DREHZAHLSENSOR (LÜFTERMOTOR)	355

* ÜBERSETZUNG ZUM ZEITPUNKT DER DRUCKLEGUNG NICHT VORHANDEN

STICHWORTVERZEICHNIS

Bezeichnung	Seite
DREHZAHLSENSOR (ZÜNDZEITPUNKT-EINSTELLUNG)	110
DRUCKBEGRENZUNGSVENTIL (UMSCHALT-VENTIL)	202
DRUCKLÜFTER	86
	87
DRUCKLUFTLEITUNGEN	94
DRUCKSCHALTER	163
	164
DRUCKSCHALTER (HYDRAULIKÖL)	188
DRUCKSCHALTER (KLIMAANLAGE)	588
DRUCKSCHALTER (KÜHLMITTEL)	578
	580
DRUCKSCHALTER (MOTORÖL)	158
	164
DRUCKSCHALTER (RÜCKFAHRALARM)	166
E	
EINBAUSATZ	577
EINBAUSATZ - KLIMAANLAGE U. HEIZUNG	577
	579
EINFÜLLKAPPE (HYDRAULIKTANK)	368
EINFÜLLKAPPE (KRAFTSTOFF)	112
ELEKTRONIK - MASCHINE	135
ELEKTRONISCHER SCHLÜSSEL (SICHER-HEIT)	135
	141
ENDSCHALTER (SCHEIBENWISCHER)	553
	555
ENTLÜFTER (*INLINE) (HYDRAULIKÖL)	367
ENTLÜFTER (KLIMAANLAGE)	505
	506
ENTLÜFTER (KLIMAANLAGENKOMRES-SOR)	577
	579
ENTLÜFTER (TANDEMGEHÄUSE)	234
ENTLÜFTERVENTIL (KURBELGEHÄUSE)	22
	100
ERDSCHAUFEL	401
	402
	414
	415
	416
	417
	425
F	
FAHERHAUSDICHTUNG	607
FAHRERHAUS - LINER	587
FAHRERHAUS MIT ÜBERROLLSCHUTZ	502
	503
FAHRERHAUS, SONNENBLENDE	617
	618
FAHRERHAUSAUSKLEIDUNG	586
FAHRERHAUSBELEUCHTUNG (12 V)	563
FAHRERHAUSDICHTUNGSSATZ	584
FAHRERHAUSFENSTER	619
	620
	621
	622
	624
FAHRERHAUSHEIZUNG	569
	570
	572
	574
FAHRERHAUSHEIZUNG U. BEFESTIGUNGS-TEILE	568
FAHRERHAUSTÜR	552
	553
	555
	557
FAHRERHAUSTÜR (*POLYCARBONATE)	547
FAHRERHAUSTÜR (*POLYCARBONATE)	582
FAHRERHAUSTÜR U. BEFESTIGUNG	547
	550
	582
	583
FAHRERPLATTFORM	605
FAHRERPLATTFORM-KABELSTRANG	169
FAHRERPLATTFORM-KABELSTRANG (UNTEN)	168
FAHRERSITZ	613
	614
FAHRERSITZ, VERSTELLBAR	615
FAHRGESTELLVERDRAHTUNG	168
FAHRWERK	1
FAHRWERK-KABELBAUM (GETRIEBE)	578
	580
FAHRWERK-KABELBAUM (WARNHORN)	177
FENSTERRAHMEN	560
	561
*FILTER ELEMENT-CAB AIR	494
	496
	570
	572
*FILTER ELEMENT-CAB AIR (DRUCKLUFT)	496
	572
*FRAME GP-FORK	466
	467
FUSSMATTE	1
	2
	3
	4
	5

* ÜBERSETZUNG ZUM ZEITPUNKT DER DRUCKLEGUNG NICHT VORHANDEN

STICHWORTVERZEICHNIS

Bezeichnung	Seite
	6
	7
	220
	221
	222
	223
G	
GABELEINSTELLER	461
GABELTRÄGER	440
	441
GASFEDER	79
	564
GASFEDER (FAHRERHAUS)	245
	616
GASFEDER (SPERRUNG)	547
	550
	582
	583
GASFEDERGRUPPE	616
GASPEDAL	603
	604
GAZE (KURBELGEHÄUSEENTLÜFTER)	22
	100
GEGENGEWICHT	230
	231
GLÜHKERZE	137
	138
GREIEFERSCHAUFEL	426
	427
	428
	429
	430
GREIFERANSCHLAG	470
	471
	483
GREIFERGABEL	456
	457
	458
	459
	460
GREIFERLEITUNGEN	300
	302
	304
GREIFERRAHMEN	468
GREIFERSCHAUFEL	404
	405
	406
	407
	408
GREIFERZYLINDER	261
GRIFF U. BOLZEN - ANSCHLUSS	472
	473
GRUNDAUSFÜHRUNG	1
	2
H	
HALTEGRIFF	565
*HANDLE GP	504
HECKBELEUCHTUNGSVERDRAHTUNG	180
HEIZUNGSLEITUNGEN	590
*HOLDER-CUP	575
HUBARMZYLINDER U. BEFESTIGUNGS-SATZ	258
HUBZYLINDER	269
HUBZYLINDERLEITUNGEN	311
	313
HYDRAULIKBEDIENUNG (MIT VORSTEUE-RUNG)	518
	521
	522
	524
	525
	527
	528
	530
	531
	532
	534
	536
	539
HYDRAULIKDRUCKSPEICHER U. BEFESTIGUNG	253
HYDRAULIKFILTER U. LEITUNGEN	186
HYDRAULIKFITTING	272
	273
	321
HYDRAULIKKÜHLERMOTOR U. BEFESTI-GUNG	348
	349
	350
HYDRAULIKLÜFTERLEITUNGEN	306
	308
HYDRAULIKÖLKÜHLERLEITUNGEN	310
HYDRAULIKPUMPE UND LEITUNGEN	321
	323
HYDRAULIKSYSTEM	274
	275
	276
HYDRAULIKTANK	368
HYDRAULIKTANK UND BEFESTIGUNGSTEI-LE	367
HYDRAULIKZYLINDER	262
	263

* ÜBERSETZUNG ZUM ZEITPUNKT DER DRUCKLEGUNG NICHT VORHANDEN

STICHWORTVERZEICHNIS

Bezeichnung	Seite
	264
	265
	266
	267
	268
	280
HYDROSTATIKLEITUNGEN	192
HYDROSTATIKMOTOR U. BEFESTIGUNG	196
HYDROSTATIKPUMPE U. BEFESTIGUNG	201

I

IDENTIFIKATIONSSCHILD (*ENGLISH, GERMAN, SPANISH)	229
IDENTIFIKATIONSSCHILD (*ENGLISH, GERMAN, SPANISH)	228
IDENTIFIKATIONSSCHILD (MASCHINE)	633
	636
	643
	646
	649
IDENTIFIZIERUNGS-AUFKLEBER (START-SCHLÜSSELSCHALTER)	141
	142
IDENTIFIZIERUNGS-AUFKLEBER (STECKDOSE, 12 V)	636
	646
IDENTIFIZIERUNGS-AUFKLEBER (STECKDOSE, 12 V)	633
	649
IDENTIFIZIERUNGS-AUFKLEBER (STECKDOSE, 12 V)	643
IDENTIFIZIERUNGS-AUFKLEBER (12 KM/H)	5
	7
	11
	12
	220
INFORMATIONSSCHILD (MAX. GEWICHT)	226
INSTRUKTIONS-AUFKLEBER (INSTRUMENTENBRETT)	563
INSTRUKTIONS-AUFKLEBER (INSTRUMENTENTAFEL)	562
INSTRUKTIONS-AUFKLEBER (*MACHINE SECURITY, INTL)	141
	142
INSTRUKTIONS-AUFKLEBER (MASCHINEN-STEUERUNG)	278
INSTRUKTIONS-AUFKLEBER (MASCHINEN-STEUERUNG, HANDBUCH LESEN)	522
	524
	528
	530
	532
	534
INSTRUKTIONS-AUFKLEBER (MASCHINEN-STEUERUNG, HANDBUCH LESEN)	531
INSTRUKTIONS-AUFKLEBER (MASCHINEN-STEUERUNGEN)	518
	521
	525
	527
	536
INSTRUKTIONS-AUFKLEBER (MASCHINEN-STEUERUNGEN)	539
INSTRUKTIONS-AUFKLEBER (NICHT BETRETEN)	280
	639
INSTRUKTIONS-AUFKLEBER (NICHT BETRETEN)	369
INSTRUKTIONS-AUFKLEBER (NOTAUSGANG)	557
	619
INSTRUMENTENTAFEL	597
	598
	600
INSTRUMENTENTAFEL-SICHERUNG	143
	144
	168
	181
INSTRUMENTENTAFELABDECKUNG	546

K

KABELSTRANG - ARBEITSGERÄT	485
KABELSTRANG - ARBEITSGERÄT (*CONNECTING)	391
	392
KABELSTRANG - ARBEITSGERÄT (*LIFT ARM)	143
	144
	181
KABELSTRANG - ARBEITSGERÄT (PLATTFORM)	143
	144
	181
KABELSTRANG - HECKBELEUCHTUNG	154
	168
	224
	239
	242
	250
KABELSTRANG - HECKBELEUCHTUNG (BREMSE)	239
	242
KABELSTRANG - HECKBELEUCHTUNG (BREMSE)	180

* ÜBERSETZUNG ZUM ZEITPUNKT DER DRUCKLEGUNG NICHT VORHANDEN

STICHWORTVERZEICHNIS

Bezeichnung	Seite
	224
KABELSTRANG - HEIZUNG U. KLIMAANLAGE	167
	570
	572
	578
	580
KABELSTRANG - VORDERE BELEUCHTUNG	154
	239
	242
KÄLTEMITTELKOMPRESSOR	505
	506
	577
	579
KÄLTEMITTELKOMPRESSOR U. BEFESTIGUNG	508
KÄLTEMITTELKONDENSATOR U. BEFESTIGUNGSTEILE	509
KAPPE MIT ENTLÜFTER (KÄLTEMITTELRÜCKGEWINNUNG)	88
	90
KAPPE (MOTORÖLFÜLLUNG)	56
	73
KAPPE (WASSERTANK)	488
KEILRIEMEN (WASSERPUMPE)	67
	69
KIPPSCHALTER (ARBEITSGERÄTEANORDNUNG)	274
KIPPSCHALTER (ELEKTRISCHER STROM, ARBEITSGERÄT)	143
	144
	181
KIPPSCHALTER (FAHRTRICHTUNGSBLINKER)	154
	239
	242
KIPPSCHALTER (FESTSTELLBREMSE)	598
	600
KIPPSCHALTER (HEIZUNG)	494
	496
KIPPSCHALTER (HEIZUNG)	570
	572
KIPPSCHALTER (HINTERE ARBEITSSCHEINWERFER)	152
KIPPSCHALTER (HINTERER SCHEIBENWISCHER)	553
	555
KIPPSCHALTER (HOHER FLUSS)	278
	536
	539
KIPPSCHALTER (KALTSTART)	598
	600
KIPPSCHALTER (KLIMAANLAGE)	494
	496
KIPPSCHALTER (RUNDUM-KENNLEUCHTE)	157
KIPPSCHALTER (SCHNELLWECHSELEINRICHTUNG)	280
	443
KIPPSCHALTER (STRASSENBELEUCHTUNG)	154
	239
	242
KIPPSCHALTER (VORDERER ARBIETSSCHEINWERFER)	598
	600
KIPPSCHALTER (WARNLEUCHTEN)	154
	239
	242
KIPPZYLINDER	270
	271
*KIT-QUICK COUPLER CONVERSION	280
KLIMAANLAGE	493
	494
	496
KLIMAANLAGE UND AUFHÄNGUNG	492
KLIMAANLAGENDRUCKSPEICHER	490
	491
KLIMAANLAGENDRUCKSPEICHER (MIT TROCKENMITTEL)	577
KLIMAANLAGENLEITUNGEN	588
KLIMAANLAGENVERDRAHTUNG	167
KOLBENMOTOR	197
KOLBENPUMPE	202
KOLBENPUMPENUMLAUFSATZ (LINKS)	202
KOLBENPUMPENUMLAUFSATZ (RECHTS)	202
KOMBISCHAUFEL	409
	410
	411
	412
	431
	432
	433
	434
	435
KRAFTSTOFF-ENTLÜFTUNGSPUMPE	122
KRAFTSTOFFEINSPRITZPUMPE	116
	119
	120
KRAFTSTOFFENTLÜFTUNGS- U. FILTERLEITUNGEN	112
KRAFTSTOFFENTLÜFTUNGSPUMPE UND -HAUPTFILTER	122
KRAFTSTOFFILTERELEMENT (WASSERABSCHEIDER)	106

* ÜBERSETZUNG ZUM ZEITPUNKT DER DRUCKLEGUNG NICHT VORHANDEN

STICHWORTVERZEICHNIS

Bezeichnung	Seite
KRAFTSTOFFÖRDERPUMPE UND BEFESTIGUNGSTEILE	114, 115
KRAFTSTOFFSTANDANZEIGE	563
KRAFTSTOFFTANK-KABELSTRANG	167, 578, 580
KRAFTÜBERTRAGUNG	200
KRÜMMER U. LEITUNGEN - STEUERUNG	335, 337
KRÜMMERSTEUERUNG U. BEFESTIGUNG	339, 340, 341
KÜHLER U. ÖLKÜHLER - BEFESTIGUNG	79
KÜHLER U. ÖLKÜHLERBEFESTIGUNG	88, 90
KÜHLER UND HYDRAULIKÖLKÜHLER	86, 87
KÜHLERKAPPE (ROHWASSERHEIZUNGSAUSTAUSCHER)	86, 87
KÜHLKOMPRESSOR U. MOTOR	505, 506
KÜHLMITTELÜBERLAUFBEHÄLTER	88, 90
KÜHLWASSERPUMPE	81, 83
KUPPLUNGSVENTIL U. LEITUNGEN	369
KURBELWELLE	24, 25, 27
KURBELWELLEN-RIEMENSCHEIBE	65, 66

L

Bezeichnung	Seite
LADERRAHMEN	234
LAUFBAND UND ANTRIEB (RUNDUM-KENNLEUCHTE)	151
LEICHTGUTSCHAUFEL	409, 422, 423, 424
LEITUNGEN, ABSENKSTEUERUNG	315
LEITUNGSABDECKUNG	447
LEITUNGSFÜHRUNG	237
LEUCHTE (12 V)	563
LEUCHTE (12 V) (KENNZEICHEN)	248
LEUCHTE (12 V, 10 W)	224
LEUCHTE (12 V, 10 W)	563
LEUCHTE (12 V, 21 W)	147, 150
LEUCHTE (12 V, 4 W)	147
LEUCHTE (12 V, 5 W)	149
LEUCHTE (12 V, 5 W)	150
LEUCHTE (12 V, 55 W)	145, 146, 151
LÜFTERBEFESTIGUNG	54, 55
LÜFTERSTEUERUNG	178
LUFTFILTER (HAUPTELEMENT)	93
LUFTFILTER (HILFSELEMENT)	93
LUFTKANAL UND REGULIERUNG	558
LUFTREINIGER	92, 93

M

Bezeichnung	Seite
MAGNETSTOPFEN (RAHMEN)	234
MAGNETVENTIL	350, 385, 386, 387, 388
MAGNETVENTIL (*HIGH FLOW)	346
MAGNETVENTIL (HIGH FLOW BOOST)	346
MAGNETVENTIL (SCHNELLWECHSELEINRICHTUNG)	345
MAGNETVENTIL (12 V DC)	356, 577, 579
*MANIFOLD & SOLENOID GP-CONTROL	342, 343, 344
MASCHINEN-UMBAUSATZ	3, 4, 5, 6, 7, 8, 9, 10, 11, 12
MASCHINENHUBÖSE	244, 245
MASCHINENRAHMEN	236
MASCHINENSTEUERUNG	2
MASCHINENVERDRAHTUNG	178
MEHRZWECKGABEL	463, 464
MEHRZWECKGREIFER	469, 470, 471
MEHRZWECKSCHAUFEL	436

* ÜBERSETZUNG ZUM ZEITPUNKT DER DRUCKLEGUNG NICHT VORHANDEN

STICHWORTVERZEICHNIS

Bezeichnung	Seite
	437
	438
MEMBRANPUMPE	485
MODULARHEBEL	513
	514
	515
	566
	567
MOTOR-EINBAUSATZ	17
	18
MOTORANTRIEB	351
	352
	353
	354
	355
	356
MOTORAUFLAGER	52
	53
MOTORAUSFÜHRUNG	13
	14
	15
	16
MOTORBLOCK	29
	31
MOTORHUBÖSE	50
	51
MOTORKABELSTRANG	172
	175
MOTORÖLABLASS	40
MOTORÖLEINFÜLLSTUTZEN	73
MOTORÖLFILTERELEMENT	56
	189
MOTORSTOPFEN	64
MOTORVERDRAHTUNG	172
	175
MOTORVERKLEIDUNG	232

N

NEIGEZYLINDERLEITUNGEN	325
	327
NOCKENWELLE	19
	20

O

ÖLEINFÜLLKAPPE (MOTOR)	73
ÖLFILTER	188
	189
	190
ÖLFILTER (HOCHLEISTUNG) (HYDRAULIK)	188
ÖLWANNE	56
	60
OPTION - FAHRERHAUS	596
	597

P

PALETTENGABEL	461
	462
PLEUELSTANGE UND KOLBEN	62
	63
*PLUG KIT-CONN	499
PUMPENAUFHÄNGUNG	199
PUMPENSTEUERVENTIL (KOLBENPUMPE)	202

R

RAD UND REIFEN	213
	214
	215
	216
	217
	218
REGELERHEBEL	585
REGLER	107
	110
REGLERSTEUERUNG	105
REIFEN UND FELGE	204
	205
	206
	207
	208
	209
	210
	211
	212
	213
RELAIS (SCHALE)	169
RELAIS (12 V)	143
	144
	181
	224
	278
	494
	496
	536
	539
RELAIS (12 V)	239
	242
RELAIS (12 V) (ARBEITSGERÄT)	181
RELAIS (12 V) (BREMSLEUCHTE)	180
RELAIS (12 V) (HAUPTSTROM)	168
	181
RELAIS (12 V) (HEIZUNG)	570
	572

* ÜBERSETZUNG ZUM ZEITPUNKT DER DRUCKLEGUNG NICHT VORHANDEN

STICHWORTVERZEICHNIS

Bezeichnung	Seite
RELAIS (12 V) (KALTSTART)	172
	175
RELAIS (12 V) (STARTEN)	172
	175
RIEMENSCHUTZ	43
RÜCKFAHRWARNHORN	166
RÜCKLAUFVENTIL - VERTEILER	194
RÜCKSPIEGEL	592
RÜCKSPIEGEL U. BEFESTIGUNG	246
	247
RUNDUM-KENNLEUCHTE	151
	157

S

SATZ - ARBEITSGERÄTE U. VERDRAHTUNG	143
SCHALLDÄMPFER	96
	97
SCHALLDÄMPFUNG	252
SCHALTER (SITZ)	614
SCHALTER (SITZ)	615
SCHALTERKABELSTRANG	178
SCHAUFELLEITUNGEN	283
	285
	287
	289
	291
	293
	295
SCHAUFELZYLINDER	260
SCHAUGLAS (HYDRAULIKTANK)	368
SCHAUGLAS (KÜHLER)	86
SCHAUGLAS (KÜHLMITTELSTAND)	87
SCHEIBENWISCHERARM	553
SCHEIBENWISCHERARM (VORNE)	555
SCHEIBENWISCHERBLATT (*558-MM) (FAHRERHAUSTÜR)	555
SCHEIBENWISCHERBLATT (*558-MM) (VORN, HINTEN)	553
SCHEIBENWISCHERKABELSTRANG	547
	550
	553
	555
	582
	583
SCHEIBENWISCHERMOTOR	553
	555
SCHEINWERFER	147
SCHEINWERFER U. RICHTUNGSLEUCHTE	147
SCHILD	390
	391
	392
SCHILD - STRASSENFAHRT	479
	480
SCHILD UND AUFKLEBER	632
	633
	636
	639
	641
	643
	646
	649
SCHILDFEDER	481
SCHILDRAHMEN	465
SCHLAUCHLEITUNG (OBEN)	88
	90
SCHLAUCHLEITUNG (UNTEN)	88
	90
SCHLÜSSEL	226
SCHMIERPUMPE	75
SCHNEIDMESSER	450
	451
	452
	453
	454
	455
	456
SCHNEIDMESSER - KOMBISCHAUFEL	397
	398
	399
	400
SCHNEIDMESSER UND EINSATZSTÜCK	450
SCHNELLWECHSELEINRICHTUNG	444
	445
SCHNELLWECHSELEINRICHTUNG - ZYLINDER U. VERBINDUNG	448
	449
SCHNELLWECHSELEINRICHTUNGSSPERRE	478
SCHNELLWECHSELVORRICHTUNG	443
SCHWENKSCHILD	393
	394
	395
	396
SCHWUNGRAD	41
	42
SCHWUNGRADGEHÄUSE	44
	45
SCREEN (HYDRAULIK)	317
SCREEN (WASSERTANK)	484
SEITENGEHÄUSE	576
SEITENVERKLEIDUNG	602
SICHERHEITSEINBAUSATZ	141
	142
SICHERHEITSGURT	609
	610

* ÜBERSETZUNG ZUM ZEITPUNKT DER DRUCKLEGUNG NICHT VORHANDEN

STICHWORTVERZEICHNIS

Bezeichnung	Seite
	611
	612
SICHERUNG (10 A)	143
	144
	166
	168
	181
	280
	443
	534
SICHERUNG (15 A)	143
	144
	167
	168
	181
SICHERUNG (20 A)	168
SICHERUNG (30 A)	167
	168
	578
	580
SICHERUNGSTAFEL - ABDECKUNG	133
SOFTWARE - MASCHINE (SICHERHEIT)	135
SOFTWARE - MASCHINE (SICHERHEIT)	141
SOLENOID (KRAFTSTOFFABSTELLUNG)	116
	131
SOLENOID (STARTERMOTOR)	159
SOLENOIDSPULE (12 V)	385
SONNENBLENDE	617
	618
SORTIMENTSATZ	630
SPERRVENTIL	346
STARTERMOTOR	159
	161
	162
STARTSCHLÜSSELSCHALTER	562
STEUERHEBEL	510
	511
	512
	513
	514
	515
	516
	517
STEUERKABEL	504
STEUERKONSOLENABDECKUNG	544
	545
STEUERKRÜMMER	345
	346
	347
STEUERKRÜMMER (*BOOSTED AUXILIARY HYD FLOW)	277
STEUERKRÜMMER (*BOOSTED AUXILIARY HYD FLOW)	340
STEUERUNG - MANUELLES STARTEN/ ABSTELLEN	131
STEUERUNG - NICHT PROGRAMMIERT	134
STEUERUNG - NICHT PROGRAMMIERT (SICHERHEIT)	135
STEUERUNGS-KABELSTRANG (SICHERHEIT)	141
	142
STEUERVENTIL	374
STEUERVENTIL UND BEFESTIGUNGSTEILE	373
STIRNRADGEHÄUSE	46
	48
STIRNRADGEHÄUSEDECKEL	21
STOSSSTANGE	219
STRASSENFAHRT - UMRÜSTSATZ	226
	227
	228
	229
STRASSENFAHRTSCHILD UND BEFESTIGUNG	476

T

TANDEMANTRIEB	185
TEMPERATUR- U. DRUCKSENSOR	158
TEMPERATURSCHALTER	165
TEMPERATURSCHALTER (HYDRAULIKÖL)	368
TEMPERATURSCHALTER (KLIMAANLAGE)	494
	496
TEMPERATURSCHALTER (MOTORKÜHLMITTEL)	158
	165
TEMPERATURSENSOR (HYDRAULIKÖL)	350
TEMPERATURSENSOR (MOTORKÜHLMITTEL)	87
THERMOSTATGEHÄUSE	78
TRAGARM	389
TRAGARMSTUFE	482
TRÄGER - STAUKASTEN	5
	7
	11
	12
	220
	222
TRÄGER U. GABEL	439
TURBOLADER	98
	100
TYPENSCHILDBEFESTIGUNG	248
	249

U

ÜBERDRUCKVENTIL	346

* ÜBERSETZUNG ZUM ZEITPUNKT DER DRUCKLEGUNG NICHT VORHANDEN

STICHWORTVERZEICHNIS

Bezeichnung	Seite
	354
	384
ÜBERDRUCKVENTIL (GEBLÄSEGESCHWINDIGKEIT)	352
ÜBERDRUCKVENTIL (HUB)	374
ÜBERDRUCKVENTIL (LADUNG)	202
ÜBERDRUCKVENTIL (NEIGEN, HILFS)	374
ÜBERROLLSCHUTZAUFLAGER	595
UMBAUSATZ - FÜR STRASSENVERKEHR	220
	221
	222
	223
	224
	225
UMBAUSATZ - NICHT FÜR STRASSENVERKEHR	132
UMLAUFKÜHLWASSERHEIZUNG	139
	140
UMLAUFKÜHLWASSERHEIZUNGS-ELEMENT (MOTOR)	139
	140
UMRÜSTSATZ - ARBEITSGERÄT	442
UMRÜSTSATZ FÜR STRASSENFAHRT	238
	239
	242
UMRÜSTUNGSSATZ - HOCHFLUSS	277
UNIVERSAL-ZAHNSPITZE	489
UNIVERSALSCHAUFEL	402
	403
	404
	418
	419
	420
	421
UNTERBRECHER (105 A)	172
	175
UNTERBRECHER (30 A)	154
	239
	242

V

*V-BELT GP	69
VENTIL, MECH.	376
VENTILDECKEL	22
VENTILDECKELDICHTUNG	22
	81
	100
VENTILDECKELDICHTUNG (THERMOSTAT)	78
VENTILSTEUERUNG	70
	71
VERBINDER	278
	323
VERBINDUNG - SCHNELLWECHSELEINRICHTUNG	477
VERDRAHTUNGSKABELBAUM (GLÜHKERZE)	175
VERDRAHTUNGSKABELBAUM-HALTETEILE	136
VERDRAHTUNGSKABELBAUM (WARTUNGSANZEIGE)	546
VERKLEIDUNG - ÜBERROLLSCHUTZ/ STEINSCHLAGSCHUTZ	564
VERRIEGELUNGSSTEUERUNG	130
VERSTAUKASTEN	501
VORHÄNGESCHLOSS	226
	228
VORSTEUERLEITUNGEN	317
	319
VORSTEUERVENTIL	377
	379
	381
	382
VORSTEUERVENTILSATZ (FEDER)	379
VORSTEUERVENTILSTOPFEN	360

W

WARNANZEIGEMODUL	593
	594
WARNANZEIGENSATZ	562
	563
WARNAUFKLEBER (AUFGESPIESSTER PUNKT)	459
	460
	464
	468
WARNAUFKLEBER (*CRUSH HAZARD, STAY BACK, U.S.)	639
WARNAUFKLEBER (FREIRAUM)	238
	626
WARNAUFKLEBER (HOCHDRUCK, HANDBICH LESEN, US)	636
	643
WARNAUFKLEBER (HOCHDRUCK, HANDBUCH LESEN)	633
	646
	649
WARNAUFKLEBER (KEIN ZUGANG)	633
	646
WARNAUFKLEBER (LENKUNG)	228
WARNAUFKLEBER (QUETSCHGEFAHR)	431
	432
	433
	435
WARNAUFKLEBER (QUETSCHGEFAHR, DIESEN BEREICH NICHT BETRETEN)	393

* ÜBERSETZUNG ZUM ZEITPUNKT DER DRUCKLEGUNG NICHT VORHANDEN

STICHWORTVERZEICHNIS

Bezeichnung	Seite
	394
WARNAUFKLEBER (QUETSCHGEFAHR, NICHT BETRETEN)	633
	646
	649
WARNAUFKLEBER (QUETSCHGEFAHR, NICHT BETRETEN)	639
WARNHORN (NIEDRIGER TON)	531
	532
WARNHORNVERDRAHTUNG	177
WASSERABSCHEIDER- U. KRAFTSTOFFILTER	106
WASSERPUMPE - RIEMENSCHEIBE	67
	68
WASSERSIEBEINSATZ	484
WASSERTANK	488
WASSERTANK U. BEFESTIGUNGSTEILE	485
WASSERTEMPERATURREGLER	81
	83

Z

Bezeichnung	Seite
ZAHNRADPUMPE	363
	364
	365
	366
ZULASSUNGSSCHILDLEUCHTE	224
	248
ZWISCHENRAD	75
ZYLINDER - SPERRVORRICHTUNG	501
ZYLINDER U. BEFESTIGUNG - WINKELSCHLID	255
	256
ZYLINDERAUFHÄNGUNG	357
	358
	359
ZYLINDERKOPF	33
	35
	36
	38

* ÜBERSETZUNG ZUM ZEITPUNKT DER DRUCKLEGUNG NICHT VORHANDEN

MEMORANDA

MACHINE ARRANGEMENT

295-7210 CHASSIS AR

S/N: BXM4225-UP

PART OF 295-7242, 295-7243 COMMON AR

SMCS-7000 **i02732851**

NOTE	PART NUMBER	QTY	PART NAME 1 2 3 4 5 6 (PRODUCT LEVEL)	SEE PAGE
Y	*261-6255*	1	AXLE GP	184
Y	*218-5772*	1	BUMPER GP (REAR)	219
Y	*218-5602*	1	CONTROL GP-GOVERNOR	105
Y	*218-6899*	1	CYLINDER & MTG GP-LIFT ARM	258
Y	*218-5803*	1	ENCLOSURE GP-ENGINE	232
Y	*295-7175*	1	FRAME GP-LOADER	234
Y	*156-9809*	1	GUIDE GP-LINES	237
Y	*218-0933*	1	LINES GP-FUEL PRM & FILTER	112
Y	*218-6428*	1	PANEL GP-SIDE	602
Y	*218-6360*	1	PLATFORM GP-OPERATOR	605
Y	*225-8001*	1	WIRING GP-CHASSIS	168

Y-SEPARATE ILLUSTRATION

<END>

295-7242 COMMON AR

S/N: BXM4225-4774

SMCS-7000 **i02732887**

NOTE	PART NUMBER	QTY	PART NAME 1 2 3 4 5 6 (PRODUCT LEVEL)	SEE PAGE
Y	*218-6350*	1	CAB AR-ENCLOSED ROPS	502
Y	*295-7210*	1	CHASSIS AR	1
Y	*215-3926*	1	COUNTERWEIGHT GP	231
Y	*295-7142*	1	FILM GP	629
Y	*278-1243*	1	HYDRAULIC AR	276
Y	*295-7027*	1	INSTALLATION AR-ENGINE	17
Y	*216-4746*	1	LIGHTING GP-FLOOD (REAR)	152
Y	*6V-1970*	1	LITERATURE GP	591
Y	*261-5751*	1	POWER TRAIN AR	200
Y	*225-7969*	1	WARNING GP-BACKUP	166
	218-5601	1	FLOOR MAT	

Y-SEPARATE ILLUSTRATION

<END>

MACHINE ARRANGEMENT

295-7243 COMMON AR

S/N: BXM4775-UP

SMCS-7000 **i02835677**

NOTE	PART NUMBER	QTY	PART NAME 1 2 3 4 5 6 (PRODUCT LEVEL)	SEE PAGE
Y	*218-6350*	1	CAB AR-ENCLOSED ROPS	502
Y	*295-7210*	1	CHASSIS AR	1
Y	*215-3926*	1	COUNTERWEIGHT GP	231
Y	*295-7142*	1	FILM GP	629
Y	*278-1243*	1	HYDRAULIC AR	276
Y	*295-7028*	1	INSTALLATION AR-ENGINE	18
Y	*216-4746*	1	LIGHTING GP-FLOOD (REAR)	152
Y	*6V-1970*	1	LITERATURE GP	591
Y	*261-5751*	1	POWER TRAIN AR	200
Y	*225-7969*	1	WARNING GP-BACKUP	166
	218-5601	1	FLOOR MAT	

Y-SEPARATE ILLUSTRATION

<END>

295-7491 CONTROL AR-MACHINE—ON, OFF AUXILIARY CONTROL

S/N: BXM4225-UP

AN ATTACHMENT

SMCS-4062, 4284, 4351, 5059, 5705 **i02736507**

NOTE	PART NUMBER	QTY	PART NAME 1 2 3 4 5 6 (PRODUCT LEVEL)	SEE PAGE
Y	*218-5611*	1	CONTROL GP-PILOT OPERATED HYD (WORK TOOL)	518
Y	*218-5931*	1	CONTROL GP-PILOT OPERATED HYD (HYDROSTATIC)	531

Y-SEPARATE ILLUSTRATION

<END>

295-7493 CONTROL AR-MACHINE—AUX PROPORTIONAL FLOW

S/N: BXM4225-UP

AN ATTACHMENT

SMCS-4062, 4284, 4351, 5059, 5705 **i02736504**

NOTE	PART NUMBER	QTY	PART NAME 1 2 3 4 5 6 (PRODUCT LEVEL)	SEE PAGE
Y	*218-5618*	1	CONTROL GP-PILOT OPERATED HYD (WORK TOOL)	525
Y	*218-5932*	1	CONTROL GP-PILOT OPERATED HYD (HYDROSTATIC)	532

Y-SEPARATE ILLUSTRATION

<END>

MACHINE ARRANGEMENT

261-6158 CONVERSION AR-MACHINE—OUTSIDE NACD

S/N: BXM4225-UP
AN ATTACHMENT

SMCS-7000 **i02441115**

NOTE	PART NUMBER	QTY	PART NAME 1 2 3 4 5 6 (PRODUCT LEVEL)	SEE PAGE
Y	*218-5791*	1	PANEL AR-INSTRUMENT	597
Y	*216-6146*	1	BOX GP-STORAGE	501
Y	*188-0147*	1	LIFTING GP-MACHINE	244
Y	*142-8652*	1	LIGHTING GP-STOP & TAIL	156
Y	*261-6121*	1	MOTOR & MTG GP-HYDRAULIC FAN	350
Y	*272-3047*	1	MUFFLER GP	97
Y	*261-6118*	1	RADIATOR & OIL COOLER MTG GP	90
Y	*233-5616*	1	SUPPRESSION GP-SOUND	252
Y	*230-3743*	1	WIRING GP-HORN (WITH MOUNTING)	177
Y	*272-1625*	1	WIRING GP-MACHINE (DEMAND FAN)	178
	218-5601	1	FLOOR MAT	

Y-SEPARATE ILLUSTRATION

<END>

261-6160 CONVERSION AR-MACHINE—NACD

S/N: BXM4225-UP
AN ATTACHMENT

SMCS-7000 **i02454485**

NOTE	PART NUMBER	QTY	PART NAME 1 2 3 4 5 6 (PRODUCT LEVEL)	SEE PAGE
Y	*142-8652*	1	LIGHTING GP-STOP & TAIL	156
Y	*218-6058*	1	MOTOR & MTG GP-HYDRAULIC FAN	348
Y	*272-3047*	1	MUFFLER GP	97
Y	*218-5790*	1	PANEL AR-INSTRUMENT	597
Y	*228-1783*	1	RADIATOR & OIL COOLER MTG GP	88

Y-SEPARATE ILLUSTRATION

<END>

MACHINE ARRANGEMENT

278-1213 CONVERSION AR-MACHINE—ITALY

S/N: BXM4225-UP

AN ATTACHMENT

SMCS-7000 **i02445032**

NOTE	PART NUMBER	QTY	PART NAME 1 2 3 4 5 6 (PRODUCT LEVEL)	SEE PAGE
Y	*216-6146*	1	BOX GP-STORAGE	501
Y	*278-1293*	1	CONVERSION GP-ROADING	229
Y	**177-9152**	1	KIT-ROADING PLATE & MOUNTING (BUCKET)	476
Y	*188-0147*	1	LIFTING GP-MACHINE	244
Y	*216-4716*	1	LIGHTING GP-ROADING	154
Y	*175-4238*	1	LOCK GP-QUICK COUPLER (MECHANICAL)	478
Y	*238-7671*	1	MIRROR & MTG GP-REAR VIEW (WITH ROADING LIGHT MOUNT)	246
Y	*261-6121*	1	MOTOR & MTG GP-HYDRAULIC FAN	350
Y	*225-7963*	1	MOUNTING GP-REGISTRATION	249
Y	*272-3047*	1	MUFFLER GP	97
Y	*218-5791*	1	PANEL AR-INSTRUMENT	597
Y	*261-6118*	1	RADIATOR & OIL COOLER MTG GP	90
Y	*233-5616*	1	SUPPRESSION GP-SOUND	252
Y	*230-3743*	1	WIRING GP-HORN (WITH MOUNTING)	177
Y	*272-1625*	1	WIRING GP-MACHINE (DEMAND FAN)	178
Y	*225-7964*	1	WIRING GP-REAR LIGHTING	180
	218-5601	1	FLOOR MAT	

Y-SEPARATE ILLUSTRATION

<END>

278-1221 CONVERSION AR-MACHINE—OUTSIDE NACD

S/N: BXM4225-UP

AN ATTACHMENT

SMCS-7000 **i02444336**

NOTE	PART NUMBER	QTY	PART NAME 1 2 3 4 5 6 (PRODUCT LEVEL)	SEE PAGE
Y	*216-6146*	1	BOX GP-STORAGE	501
Y	**191-9684**	1	FILM GP (CLEARANCE)	626
Y	*188-0147*	1	LIFTING GP-MACHINE	244
Y	*142-8652*	1	LIGHTING GP-STOP & TAIL	156
Y	*261-6121*	1	MOTOR & MTG GP-HYDRAULIC FAN	350
Y	*272-3047*	1	MUFFLER GP	97
Y	*218-5791*	1	PANEL AR-INSTRUMENT	597
Y	*261-6118*	1	RADIATOR & OIL COOLER MTG GP	90
Y	*233-5616*	1	SUPPRESSION GP-SOUND	252
Y	*230-3743*	1	WIRING GP-HORN (WITH MOUNTING)	177
Y	*272-1625*	1	WIRING GP-MACHINE (DEMAND FAN)	178
	218-5601	1	FLOOR MAT	

Y-SEPARATE ILLUSTRATION

<END>

MACHINE ARRANGEMENT

278-1225 CONVERSION AR-MACHINE—GERMANY

S/N: BXM4225-UP

AN ATTACHMENT

SMCS-7000 **i02890105**

NOTE	PART NUMBER	QTY	PART NAME 1 2 3 4 5 6 (PRODUCT LEVEL)	SEE PAGE
Y	*216-6146*	1	BOX GP-STORAGE	501
Y	*278-1292*	1	CONVERSION GP-ROADING (GERMANY)	228
Y	**177-9152**	1	KIT-ROADING PLATE & MOUNTING (BUCKET)	476
Y	*188-0147*	1	LIFTING GP-MACHINE	244
Y	*216-4716*	1	LIGHTING GP-ROADING	154
Y	*175-4238*	1	LOCK GP-QUICK COUPLER (MECHANICAL)	478
Y	*238-7671*	1	MIRROR & MTG GP-REAR VIEW (WITH ROADING LIGHT MOUNT)	246
Y	*261-6121*	1	MOTOR & MTG GP-HYDRAULIC FAN	350
Y	*272-3047*	1	MUFFLER GP	97
Y	*218-5791*	1	PANEL AR-INSTRUMENT	597
Y	*261-6118*	1	RADIATOR & OIL COOLER MTG GP	90
Y	*233-5616*	1	SUPPRESSION GP-SOUND	252
Y	*173-3022*	1	VISOR GP-CAB	618
Y	*230-3743*	1	WIRING GP-HORN (WITH MOUNTING)	177
Y	*272-1625*	1	WIRING GP-MACHINE (DEMAND FAN)	178
	222-5695	1	SUPPORT GP-STORAGE BOX	
	216-6144	1	BRACKET AS	
	233-5680	3	FILM-IDENTIFICATION (13-KM/H)	
			(1-FACING THE REAR OF THE MACHINE, ON THE ENGINE ENCLOSURE, THE LEFT EDGE OF THE FILM TO BE LOCATED 17-MM FROM THE	
			VERTICAL CENTERLINE OF THE MACHINE. THE BOTTOM EDGE OF THE FILM IS 5-MM ABOVE THE SEAM BETWEEN	
			THE HOOD & DOOR ASSEMBLY)	
			(1-FACING THE RIGHT SIDE OF THE MACHINE, LOCATED ON THE LOWER FRAME ASSEMBLY, THE RIGHT EDGE OF THE FILM IS TO BE	
			661-MM FROM THE FRONT EDGE OF THE LOWER FRAME ASSEMBY. THE BOTTOM EDGE OF THEOF THE FILM IS 425-MM FROM THE BOTTOM	
			EDGE OF THE LOWER FRAME ASSEMBLY)	
			(1-FACING THE LEFT SIDE OF THE MACHINE, LOCATED ON THE LOWER FRAME ASSEMBLY, THE RIGHT EDGE OF THE FILM IS TO BE 661-MM	
			FROM THE FRONT EDGE OF THE LOWER FRAME ASSEMBLY. THE BOTTOM EDGE OF THE FILM IS 425-MM FROM THE BOTTOM EDGE OF THE	
			LOWER FRAME ASSEMBLY)	
	218-5601	1	FLOOR MAT	

Y-SEPARATE ILLUSTRATION

<END>

MACHINE ARRANGEMENT

278-5409 CONVERSION AR-MACHINE—ITALY, HIGH FLOW

S/N: BXM4225-UP

AN ATTACHMENT

SMCS-7000 **i02869830**

NOTE	PART NUMBER	QTY	PART NAME 1 2 3 4 5 6 (PRODUCT LEVEL)	SEE PAGE
Y	*216-6146*	1	BOX GP-STORAGE	501
Y	*278-1293*	1	CONVERSION GP-ROADING	229
Y	**177-9152**	1	KIT-ROADING PLATE & MOUNTING (BUCKET)	476
Y	*188-0147*	1	LIFTING GP-MACHINE	244
Y	*216-4716*	1	LIGHTING GP-ROADING	154
Y	*175-4238*	1	LOCK GP-QUICK COUPLER (MECHANICAL)	478
Y	*238-7672*	1	MIRROR & MTG GP-REAR VIEW (WITH ROADING LIGHT MOUNT)	247
Y	*261-6121*	1	MOTOR & MTG GP-HYDRAULIC FAN	350
Y	*225-7963*	1	MOUNTING GP-REGISTRATION	249
Y	*272-3047*	1	MUFFLER GP	97
Y	*218-5791*	1	PANEL AR-INSTRUMENT	597
Y	*261-6118*	1	RADIATOR & OIL COOLER MTG GP	90
Y	*233-5616*	1	SUPPRESSION GP-SOUND	252
Y	*230-3743*	1	WIRING GP-HORN (WITH MOUNTING)	177
Y	*272-1625*	1	WIRING GP-MACHINE (DEMAND FAN)	178
Y	*225-7964*	1	WIRING GP-REAR LIGHTING	180
	218-5601	1	FLOOR MAT	

Y-SEPARATE ILLUSTRATION

<END>

MACHINE ARRANGEMENT

278-5442 CONVERSION AR-MACHINE—GERMANY, HIGH FLOW

S/N: BXM4225-UP

AN ATTACHMENT

SMCS-7000 **i02473415**

NOTE	PART NUMBER	QTY	PART NAME 1 2 3 4 5 6 (PRODUCT LEVEL)	SEE PAGE
Y	*216-6146*	1	BOX GP-STORAGE	501
Y	*278-1292*	1	CONVERSION GP-ROADING (GERMANY)	228
Y	**177-9152**	1	KIT-ROADING PLATE & MOUNTING (BUCKET)	476
Y	*188-0147*	1	LIFTING GP-MACHINE	244
Y	*216-4716*	1	LIGHTING GP-ROADING	154
Y	*175-4238*	1	LOCK GP-QUICK COUPLER (MECHANICAL)	478
Y	*238-7672*	1	MIRROR & MTG GP-REAR VIEW (WITH ROADING LIGHT MOUNT)	247
Y	*261-6121*	1	MOTOR & MTG GP-HYDRAULIC FAN	350
Y	*272-3047*	1	MUFFLER GP	97
Y	*218-5791*	1	PANEL AR-INSTRUMENT	597
Y	*261-6118*	1	RADIATOR & OIL COOLER MTG GP	90
Y	*233-5616*	1	SUPPRESSION GP-SOUND	252
Y	*173-3022*	1	VISOR GP-CAB	618
Y	*230-3743*	1	WIRING GP-HORN (WITH MOUNTING)	177
Y	*272-1625*	1	WIRING GP-MACHINE (DEMAND FAN)	178
	222-5695	1	SUPPORT GP-STORAGE BOX	
	216-6144	1	BRACKET AS	
	233-5680	3	FILM-IDENTIFICATION (13-KM/H)	
			(1-FACING THE REAR OF THE MACHINE, ON THE ENGINE ENCLOSURE, THE LEFT EDGE OF THE FILM TO BE LOCATED 17-MM FROM THE	
			VERTICAL CENTERLINE OF THE MACHINE. THE BOTTOM EDGE OF THE FILM IS 5-MM ABOVE THE SEAM BETWEEN THE HOOD & DOOR ASSEMBLY)	
			(1-FACING THE RIGHT SIDE OF THE MACHINE LOCATED ON THE LOWER FRAME ASSEMBLY, THE RIGHT EDGE OF THE FILM IS TO BE 661-MM	
			FROM THE FRONT EDGE OF THE LOWER FRAME ASSEMBLY. THE BOTTOM EDGE OF THE FILM IS 425-MM FROM THE BOTTOM EDGE OF THE LOWER	
			FRAME ASSEMBLY)	
			(1-FACING THE LEFT SIDE OF THE MACHINE, LOCATED ON THE LOWER FRAME ASSEMBLY, THE RIGHT EDGE OF THE FILM IS TO BE 661-MM	
			FROM THE FRONT EDGE OF THE LOWER FRAME ASSEMBLY. THE BOTTOM EDGE OF THE FILM IS 425-MM FROM THE BOTTOM EDGE OF THE LOWER	
			FRAME ASSEMBLY)	
	218-5601	1	FLOOR MAT	

Y-SEPARATE ILLUSTRATION

<END>

MACHINE ARRANGEMENT

295-7039 CONVERSION AR-MACHINE—GERMANY, ITALY

S/N: BXM4225-UP

AN ATTACHMENT

SMCS-7000 **i02732274**

NOTE	PART NUMBER	QTY	PART NAME 1 2 3 4 5 6 (PRODUCT LEVEL)	SEE PAGE
Y	*216-6146*	1	BOX GP-STORAGE	501
Y	**177-9152**	1	KIT-ROADING PLATE & MOUNTING (BUCKET)	476
Y	*188-0147*	1	LIFTING GP-MACHINE	244
Y	*216-4716*	1	LIGHTING GP-ROADING	154
Y	*175-4238*	1	LOCK GP-QUICK COUPLER (MECHANICAL)	478
Y	*238-7671*	1	MIRROR & MTG GP-REAR VIEW (WITH ROADING LIGHT MOUNT)	246
Y	*261-6121*	1	MOTOR & MTG GP-HYDRAULIC FAN	350
Y	*272-3047*	1	MUFFLER GP	97
Y	*218-5791*	1	PANEL AR-INSTRUMENT	597
Y	*261-6118*	1	RADIATOR & OIL COOLER MTG GP	90
Y	*233-5616*	1	SUPPRESSION GP-SOUND	252
Y	*230-3743*	1	WIRING GP-HORN (WITH MOUNTING)	177
Y	*272-1625*	1	WIRING GP-MACHINE (DEMAND FAN)	178

Y-SEPARATE ILLUSTRATION

<END>

295-7050 CONVERSION AR-MACHINE—OUTSIDE NACD

S/N: BXM4225-UP

AN ATTACHMENT

SMCS-7000 **i02731017**

NOTE	PART NUMBER	QTY	PART NAME 1 2 3 4 5 6 (PRODUCT LEVEL)	SEE PAGE
Y	*216-6146*	1	BOX GP-STORAGE	501
Y	*188-0147*	1	LIFTING GP-MACHINE	244
Y	*142-8652*	1	LIGHTING GP-STOP & TAIL	156
Y	*261-6121*	1	MOTOR & MTG GP-HYDRAULIC FAN	350
Y	*272-3047*	1	MUFFLER GP	97
Y	*218-5791*	1	PANEL AR-INSTRUMENT	597
Y	*261-6118*	1	RADIATOR & OIL COOLER MTG GP	90
Y	*233-5616*	1	SUPPRESSION GP-SOUND	252
Y	*230-3743*	1	WIRING GP-HORN (WITH MOUNTING)	177
Y	*272-1625*	1	WIRING GP-MACHINE (DEMAND FAN)	178

Y-SEPARATE ILLUSTRATION

<END>

MACHINE ARRANGEMENT

295-7061 CONVERSION AR-MACHINE—OUTSIDE NACD

S/N: BXM4225-UP

AN ATTACHMENT

SMCS-7000 **i02731026**

NOTE	PART NUMBER	QTY	PART NAME 1 2 3 4 5 6 (PRODUCT LEVEL)	SEE PAGE
Y	*216-6146*	1	BOX GP-STORAGE	501
Y	*188-0147*	1	LIFTING GP-MACHINE	244
Y	*142-8652*	1	LIGHTING GP-STOP & TAIL	156
Y	*261-6121*	1	MOTOR & MTG GP-HYDRAULIC FAN	350
Y	*272-3047*	1	MUFFLER GP	97
Y	*218-5791*	1	PANEL AR-INSTRUMENT	597
Y	*261-6118*	1	RADIATOR & OIL COOLER MTG GP	90
Y	*233-5616*	1	SUPPRESSION GP-SOUND	252
Y	*230-3743*	1	WIRING GP-HORN (WITH MOUNTING)	177
Y	*272-1625*	1	WIRING GP-MACHINE (DEMAND FAN)	178

Y-SEPARATE ILLUSTRATION

<END>

295-7068 CONVERSION AR-MACHINE—OUTSIDE NACD

S/N: BXM4225-UP

AN ATTACHMENT

SMCS-7000 **i02731053**

NOTE	PART NUMBER	QTY	PART NAME 1 2 3 4 5 6 (PRODUCT LEVEL)	SEE PAGE
Y	*216-6146*	1	BOX GP-STORAGE	501
Y	**191-9684**	1	FILM GP (CLEARANCE)	626
Y	*188-0147*	1	LIFTING GP-MACHINE	244
Y	*142-8652*	1	LIGHTING GP-STOP & TAIL	156
Y	*261-6121*	1	MOTOR & MTG GP-HYDRAULIC FAN	350
Y	*272-3047*	1	MUFFLER GP	97
Y	*218-5791*	1	PANEL AR-INSTRUMENT	597
Y	*261-6118*	1	RADIATOR & OIL COOLER MTG GP	90
Y	*233-5616*	1	SUPPRESSION GP-SOUND	252
Y	*230-3743*	1	WIRING GP-HORN (WITH MOUNTING)	177
Y	*272-1625*	1	WIRING GP-MACHINE (DEMAND FAN)	178

Y-SEPARATE ILLUSTRATION

<END>

MACHINE ARRANGEMENT

295-7151 CONVERSION AR-MACHINE—ROADING (ITALY)

S/N: BXM4225-UP
STANDARD FLOW
AN ATTACHMENT

SMCS-7000 **i02726292**

NOTE	PART NUMBER	QTY	PART NAME 1 2 3 4 5 6 (PRODUCT LEVEL)	SEE PAGE
Y	*216-6146*	1	BOX GP-STORAGE	501
Y	*278-1293*	1	CONVERSION GP-ROADING	229
Y	**177-9152**	1	KIT-ROADING PLATE & MOUNTING (BUCKET)	476
Y	*188-0147*	1	LIFTING GP-MACHINE	244
Y	*216-4716*	1	LIGHTING GP-ROADING	154
Y	*175-4238*	1	LOCK GP-QUICK COUPLER (MECHANICAL)	478
Y	*238-7671*	1	MIRROR & MTG GP-REAR VIEW (WITH ROADING LIGHT MOUNT)	246
Y	*261-6121*	1	MOTOR & MTG GP-HYDRAULIC FAN	350
Y	*225-7963*	1	MOUNTING GP-REGISTRATION	249
Y	*272-3047*	1	MUFFLER GP	97
Y	*218-5791*	1	PANEL AR-INSTRUMENT	597
Y	*261-6118*	1	RADIATOR & OIL COOLER MTG GP	90
Y	*233-5616*	1	SUPPRESSION GP-SOUND	252
Y	*230-3743*	1	WIRING GP-HORN (WITH MOUNTING)	177
Y	*272-1625*	1	WIRING GP-MACHINE (DEMAND FAN)	178
Y	*225-7964*	1	WIRING GP-REAR LIGHTING	180

Y-SEPARATE ILLUSTRATION

<END>

295-7159 CONVERSION AR-MACHINE—ROADING (ITALY)

S/N: BXM4225-UP
HIGH FLOW
AN ATTACHMENT

SMCS-7000 **i02726290**

NOTE	PART NUMBER	QTY	PART NAME 1 2 3 4 5 6 (PRODUCT LEVEL)	SEE PAGE
Y	*216-6146*	1	BOX GP-STORAGE	501
Y	*278-1293*	1	CONVERSION GP-ROADING	229
Y	**177-9152**	1	KIT-ROADING PLATE & MOUNTING (BUCKET)	476
Y	*188-0147*	1	LIFTING GP-MACHINE	244
Y	*216-4716*	1	LIGHTING GP-ROADING	154
Y	*175-4238*	1	LOCK GP-QUICK COUPLER (MECHANICAL)	478
Y	*238-7672*	1	MIRROR & MTG GP-REAR VIEW (WITH ROADING LIGHT MOUNT)	247
Y	*261-6121*	1	MOTOR & MTG GP-HYDRAULIC FAN	350
Y	*225-7963*	1	MOUNTING GP-REGISTRATION	249
Y	*272-3047*	1	MUFFLER GP	97
Y	*218-5791*	1	PANEL AR-INSTRUMENT	597
Y	*261-6118*	1	RADIATOR & OIL COOLER MTG GP	90
Y	*233-5616*	1	SUPPRESSION GP-SOUND	252
Y	*230-3743*	1	WIRING GP-HORN (WITH MOUNTING)	177
Y	*272-1625*	1	WIRING GP-MACHINE (DEMAND FAN)	178
Y	*225-7964*	1	WIRING GP-REAR LIGHTING	180

Y-SEPARATE ILLUSTRATION

<END>

MACHINE ARRANGEMENT

295-7164 CONVERSION AR-MACHINE—ROADING (GERMANY)

S/N: BXM4225-UP
STANDARD FLOW
AN ATTACHMENT

SMCS-7000 **i02890107**

NOTE	PART NUMBER	QTY	PART NAME 1 2 3 4 5 6 (PRODUCT LEVEL)	SEE PAGE
Y	*216-6146*	1	BOX GP-STORAGE	501
Y	*278-1292*	1	CONVERSION GP-ROADING (GERMANY)	228
Y	**177-9152**	1	KIT-ROADING PLATE & MOUNTING (BUCKET)	476
Y	*188-0147*	1	LIFTING GP-MACHINE	244
Y	*216-4716*	1	LIGHTING GP-ROADING	154
Y	*175-4238*	1	LOCK GP-QUICK COUPLER (MECHANICAL)	478
Y	*238-7671*	1	MIRROR & MTG GP-REAR VIEW (WITH ROADING LIGHT MOUNT)	246
Y	*261-6121*	1	MOTOR & MTG GP-HYDRAULIC FAN	350
Y	*272-3047*	1	MUFFLER GP	97
Y	*218-5791*	1	PANEL AR-INSTRUMENT	597
Y	*261-6118*	1	RADIATOR & OIL COOLER MTG GP	90
Y	*233-5616*	1	SUPPRESSION GP-SOUND	252
Y	*173-3022*	1	VISOR GP-CAB	618
Y	*230-3743*	1	WIRING GP-HORN (WITH MOUNTING)	177
Y	*272-1625*	1	WIRING GP-MACHINE (DEMAND FAN)	178
	222-5695	1	SUPPORT GP-STORAGE BOX	
	216-6144	1	BRACKET AS	
	233-5680	3	FILM-IDENTIFICATION (13-KM/H)	
			(1-FACING THE REAR OF THE MACHINE, ON THE ENGINE ENCLOSURE, THE LEFT EDGE OF THE FILM TO BE LOCATED 18-MM FROM THE	
			VERTICAL CENTERLINE OF THE MACHINE. THE BOTTOM EDGE OF THE FILM IS 5-MM ABOVE THE SEAM BETWEEN THE HOOD & DOOR	
			ASSEMBLY)	
			(1-FACING THE RIGHT SIDE OF THE MACHINE, LOCATED ON THE LOWER FRAME ASSEMBLY, THE RIGHT EDGE OF THE FILM IS TO BE	
			661-MM FROM THE FRONT EDGE OF THE LOWER FRAME ASSEMBY.	
			THE BOTTOM EDGE OF THE FILM IS 425-MM FROM THE BOTTOM EDGE OF THE LOWER FRAME ASSEMBLY)	
			(1-FACING THE LEFT SIDE OF THE MACHINE, LOCATED ON THE LOWER FRAME ASSEMBLY, THE RIGHT EDGE OF THE FILM IS TO BE 661-MM	
			FROM THE FRONT EDGE OF THE LOWER FRAME ASSEMBLY. THE BOTTOM EDGE OF THE FILM IS 425-MM FROM THE BOTTOM EDGE OF THE	

Y-SEPARATE ILLUSTRATION

<END>

MACHINE ARRANGEMENT

295-7168 CONVERSION AR-MACHINE—ROADING (GERMANY)

S/N: BXM4225-UP
HIGH FLOW
AN ATTACHMENT

SMCS-7000 **i02890108**

NOTE	PART NUMBER	QTY	PART NAME 1 2 3 4 5 6 (PRODUCT LEVEL)	SEE PAGE
Y	*216-6146*	1	BOX GP-STORAGE	501
Y	*278-1292*	1	CONVERSION GP-ROADING (GERMANY)	228
Y	**177-9152**	1	KIT-ROADING PLATE & MOUNTING (BUCKET)	476
Y	*188-0147*	1	LIFTING GP-MACHINE	244
Y	*216-4716*	1	LIGHTING GP-ROADING	154
Y	*175-4238*	1	LOCK GP-QUICK COUPLER (MECHANICAL)	478
Y	*238-7672*	1	MIRROR & MTG GP-REAR VIEW (WITH ROADING LIGHT MOUNT)	247
Y	*261-6121*	1	MOTOR & MTG GP-HYDRAULIC FAN	350
Y	*272-3047*	1	MUFFLER GP	97
Y	*218-5791*	1	PANEL AR-INSTRUMENT	597
Y	*261-6118*	1	RADIATOR & OIL COOLER MTG GP	90
Y	*233-5616*	1	SUPPRESSION GP-SOUND	252
Y	*173-3022*	1	VISOR GP-CAB	618
Y	*230-3743*	1	WIRING GP-HORN (WITH MOUNTING)	177
Y	*272-1625*	1	WIRING GP-MACHINE (DEMAND FAN)	178
	222-5695	1	SUPPORT GP-STORAGE BOX	
	216-6144	1	BRACKET AS	
	233-5680	3	FILM-IDENTIFICATION (13-KM/H)	
			(1-FACING THE REAR OF THE MACHINE, ON THE ENGINE ENCLOSURE, THE LEFT EDGE OF THE FILM TO BE LOCATED 18-MM FROM THE	
			VERTICAL CENTERLINE OF THE MACHINE. THE BOTTOM EDGE OF THE FILM IS 5-MM ABOVE	
			SEAM BETWEEN THE HOOD & DOOR ASSEMBLY)	
			(1-FACING THE RIGHT SIDE OF THE MACHINE, LOCATED ON THE LOWER FRAME ASSEMBLY, THE RIGHT EDGE OF THE FILM IS TO BE	
			661-MM FROM THE FRONT EDGE OF THE LOWER FRAME ASSEMBY. THE BOTTOM EDGE OF THE FILM	
			IS 425-MM FROM THE BOTTOM EDGE OF THE LOWER FRAME ASSEMBLY)	
			(1-FACING THE LEFT SIDE OF THE MACHINE, LOCATED ON THE LOWER FRAME ASSEMBLY, THE RIGHT EDGE OF THE FILM IS TO BE 661-MM	
			FROM THE FRONT EDGE OF THE LOWER FRAME ASSEMBLY. THE BOTTOM EDGE OF THE FILM IS 425-MM FROM THE BOTTOM EDGE OF THE	

Y-SEPARATE ILLUSTRATION

<END>

ENGINE ARRANGEMENT

295-7123 ENGINE AR

S/N: BXM4225-UP

AN ATTACHMENT

SMCS-1000 **i02747709**

NOTE	PART NUMBER	QTY	PART NAME 1 2 3 4 5 6 (PRODUCT LEVEL)	SEE PAGE
Y	**300-5206**	1	ENGINE AR-PRIMARY	16

Y-SEPARATE ILLUSTRATION

ENGINE ARRANGEMENT

292-5719 ENGINE AR-PRIMARY

S/N: CYP1-UP
46 BRAKE KW (61 BHP) AT 3000 RPM
PART OF 295-7023 ENGINE AR-PRIMARY
AN ATTACHMENT

SMCS-1000 **i02890111**

NOTE	PART NUMBER	QTY	PART NAME 1 2 3 4 5 6 (PRODUCT LEVEL)	SEE PAGE
Y	*316-6963*	1	ALTERNATOR GP-CHARGING	125
Y	*308-2306*	1	V-BELT GP (FAN DRIVE)	69
Y	*317-0971*	1	CAMSHAFT GP	20
Y	*317-0967*	1	GOVERNOR GP	110
Y	*308-2313*	1	CONTROL GP-MANUAL START/STOP	131
Y	*308-2283*	1	CRANKSHAFT GP	27
Y	*308-2281*	1	CYLINDER BLOCK GP	31
Y	*308-2284*	1	CYLINDER HEAD GP	38
Y	*315-7813*	1	MOUNTING GP-FAN	55
Y	*308-2297*	1	FILLER GP-ENGINE OIL	73
Y	*308-2298*	1	FILTER GP-OIL	189
Y	*317-0974*	1	FILTER GP-OIL	190
Y	*308-2291*	1	FLYWHEEL GP	42
Y	*316-6896*	1	GLOW PLUG GP	138
Y	*316-7030*	1	HOUSING GP-FLYWHEEL	45
Y	*317-0965*	1	HOUSING GP-FRONT	48
Y	*317-0980*	1	HOUSING GP-WATER REGULATOR	78
Y	*317-0982*	1	LIFTING GP-ENGINE	51
Y	*316-6997*	1	PAN GP-OIL	60
Y	*317-0972*	1	PARTS GP-MISCELLANEOUS	630
Y	*308-2286*	1	PISTON & ROD GP	63
Y	*308-2307*	1	COVER GP-FRONT HOUSING	21
Y	*315-5252*	1	PLUG GP-ENGINE	64
Y	*308-2300*	1	PULLEY GP-CRANKSHAFT	66
Y	*308-2294*	1	PULLEY GP-WATER PUMP	68
Y	*315-7814*	1	PUMP & MTG GP-FUEL TRANSFER	115
Y	*308-2287*	1	PUMP GP-ENGINE OIL	75
Y	*317-0977*	1	PUMP GP-FUEL INJECTION	120
Y	*317-0979*	1	PUMP GP-WATER	83
Y	*308-2293*	1	STARTING MOTOR GP-ELECTRIC	162
Y	*316-6890*	1	SWITCH GP-PRESSURE	164
Y	*308-2317*	1	SWITCH GP-TEMPERATURE (ENGINE COOLANT)	165
Y	*317-0981*	1	TURBOCHARGER GP	100
Y	*308-2285*	1	VALVE MECHANISM GP	71

Y-SEPARATE ILLUSTRATION

ENGINE ARRANGEMENT

295-7023 ENGINE AR-PRIMARY

S/N: BXM4775-UP
AN ATTACHMENT

SMCS-1000 **i02760042**

NOTE	PART NUMBER	QTY	PART NAME 1 2 3 4 5 6 (PRODUCT LEVEL)	SEE PAGE
Y	**292-5719**	1	ENGINE AR-PRIMARY	14

Y-SEPARATE ILLUSTRATION

ENGINE ARRANGEMENT

300-5206 ENGINE AR-PRIMARY

S/N: CSD1-11322
45 BRAKE KW (61 BHP) AT 3000 RPM
PART OF 295-7123 ENGINE AR
AN ATTACHMENT

SMCS-1000 **i02746865**

NOTE	PART NUMBER	QTY	PART NAME 1 2 3 4 5 6 (PRODUCT LEVEL)	SEE PAGE
Y	*246-4319*	1	ALTERNATOR GP-CHARGING	123
Y	*246-3337*	1	CAMSHAFT GP	19
Y	*217-2778*	1	CONNECTION GP-ELECTRICAL	128
Y	*217-5884*	1	CONNECTION GP-ELECTRICAL (ALTERNATOR, STARTING MOTOR)	129
Y	*238-9348*	1	COVER GP-VALVE MECHANISM	22
Y	*270-6915*	1	CRANKSHAFT GP	25
Y	*270-6932*	1	CYLINDER BLOCK GP	29
Y	*303-0337*	1	CYLINDER HEAD GP	36
Y	*217-7221*	1	FLYWHEEL GP	41
Y	*192-0104*	1	GLOW PLUG GP	137
Y	*246-3415*	1	GOVERNOR GP	107
Y	*217-7238*	1	HOUSING GP-FLYWHEEL	44
Y	*246-3338*	1	HOUSING GP-FRONT	46
Y	*251-7618*	1	LIFTING GP-ENGINE	50
Y	*239-0233*	1	MANIFOLD GP-EXHAUST	95
Y	*307-8201*	1	STARTING MOTOR GP-ELECTRIC	161
Y	*154-2435*	1	MOUNTING GP-FAN	54
Y	*311-2345*	1	PAN GP-OIL	56
Y	*270-6930*	1	PISTON & ROD GP	62
Y	*217-2777*	1	PULLEY GP-CRANKSHAFT	65
Y	*251-6791*	1	PULLEY GP-WATER PUMP	67
Y	*176-7711*	1	PUMP & MTG GP-FUEL TRANSFER	114
Y	*295-8181*	1	PUMP GP-FUEL INJECTION	116
Y	*246-3451*	1	PUMP GP-WATER	81
Y	*247-0323*	1	SENSOR GP-TEMP & PRESS (ENGINE COOLANT, ENGINE OIL)	158
Y	*239-0230*	1	TURBOCHARGER GP	98

Y-SEPARATE ILLUSTRATION

ENGINE ARRANGEMENT

295-7027 INSTALLATION AR-ENGINE

S/N: BXM4225-4774

PART OF 295-7242 COMMON AR

SMCS-1000 **i02748615**

NOTE	PART NUMBER	QTY	PART NAME 1 2 3 4 5 6 (PRODUCT LEVEL)	SEE PAGE
Y	*228-1773*	1	AIR CLEANER GP	92
Y	*229-8730*	1	DRAIN GP-ENGINE OIL	40
Y	*246-8723*	1	GUARD GP-BELT	43
Y	*280-8365*	1	LINES GP-AIR	94
Y	*228-1764*	1	MOUNTING GP-ENGINE (SUPPORTS)	52
Y	*241-5789*	1	MOUNTING GP-ENGINE (HARDWARE)	53
Y	*228-1763*	1	MOUNTING GP-PUMP	199
Y	*228-1762*	1	MOUNTING GP-RAD & OIL COOLER	79
Y	*225-8010*	1	WIRING GP-ENGINE	172

Y-SEPARATE ILLUSTRATION

ENGINE ARRANGEMENT

295-7028 INSTALLATION AR-ENGINE

S/N: BXM4775-UP

PART OF 295-7243 COMMON AR

SMCS-1000 **i02748614**

NOTE	PART NUMBER	QTY	PART NAME 1 2 3 4 5 6 (PRODUCT LEVEL)	SEE PAGE
Y	*228-1773*	1	AIR CLEANER GP	92
Y	*229-8730*	1	DRAIN GP-ENGINE OIL	40
Y	*246-8723*	1	GUARD GP-BELT	43
Y	*280-8365*	1	LINES GP-AIR	94
Y	*228-1764*	1	MOUNTING GP-ENGINE (SUPPORTS)	52
Y	*241-5789*	1	MOUNTING GP-ENGINE (HARDWARE)	53
Y	*228-1763*	1	MOUNTING GP-PUMP	199
Y	*228-1762*	1	MOUNTING GP-RAD & OIL COOLER	79
Y	*225-8010*	1	WIRING GP-ENGINE	172

Y-SEPARATE ILLUSTRATION

246-3337 CAMSHAFT GP

S/N: CSD1-11322
PART OF 300-5206 ENGINE AR-PRIMARY
AN ATTACHMENT

SMCS-1210, 1211, 1212 **i01992078**

NOTE	REF NO	GRAPHIC REF	PART NUMBER	QTY	PART NAME 1 2 3 4 5 6 (PRODUCT LEVEL)	SEE PAGE
	1	1	**217-7174**	1	TAPPET	
	2	1	**154-4504**	1	CAMSHAFT AS	
	2A	1	**153-6492**	1	KEY-WOODRUFF	
	2B	1	**154-4506**	3	SPACER	
	2C	1	**154-4507**	1	GEAR-CAMSHAFT (22 TEETH)	
	2D	1	**154-4508**	1	GEAR-CAMSHAFT (66 TEETH)	
	2E	1	**154-4505**	1	BEARING	

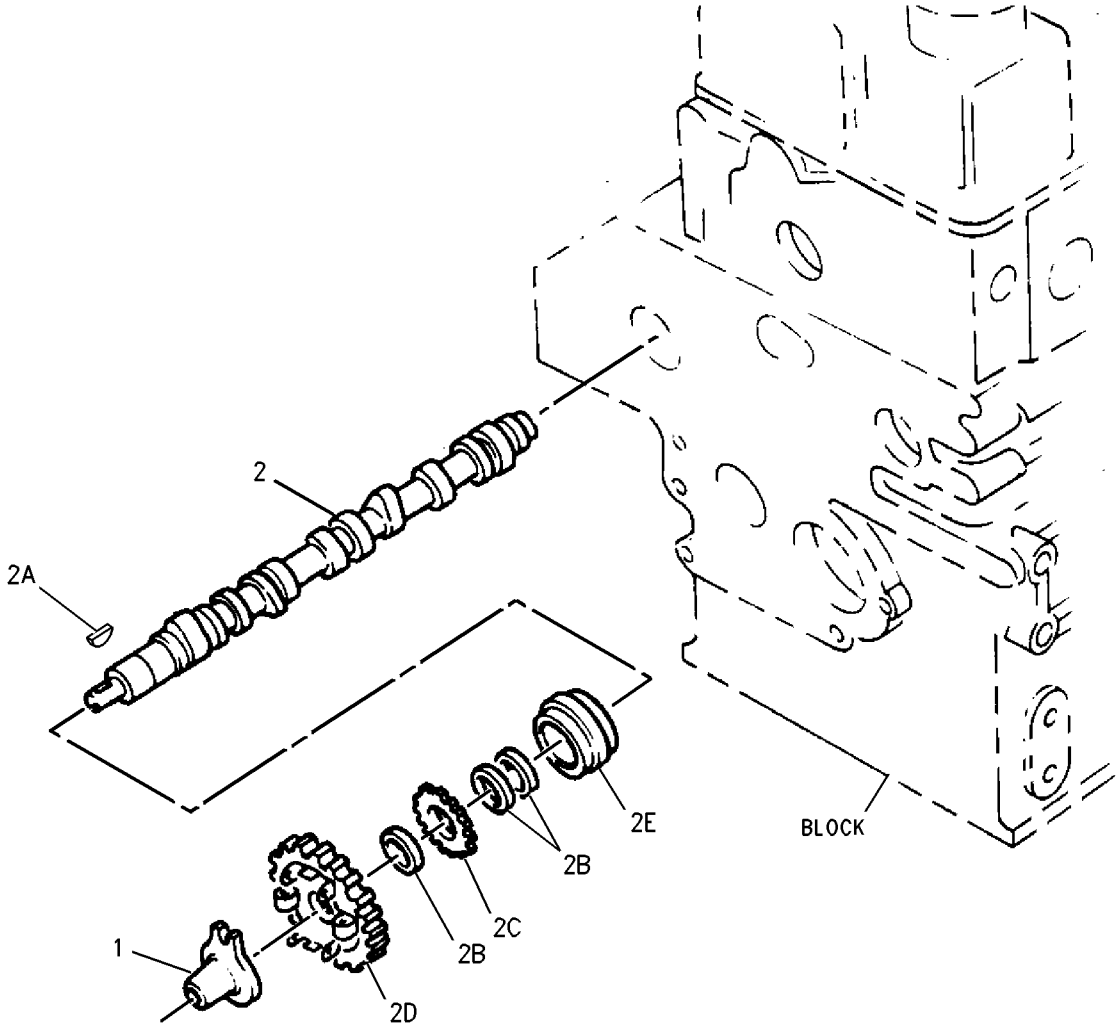

GRAPHIC #1 **<END>** g00715135

BASIC ENGINE

317-0971 CAMSHAFT GP

S/N: CYP1-UP
PART OF 292-5719 ENGINE AR-PRIMARY
AN ATTACHMENT

SMCS-1210, 1211, 1212 **i02827173**

NOTE	REF NO	GRAPHIC REF	PART NUMBER	QTY	PART NAME 1 2 3 4 5 6 (PRODUCT LEVEL)	SEE PAGE
	1	1	**153-6838**	2	BOLT	
	2	1	**154-1680**	1	PLATE	
	3	1	**308-1904**	1	SLIDER	
	4	1	**308-1902**	1	CAMSHAFT AS	
	4A	1	**153-6492**	1	KEY-WOODRUFF	
	4B	1	**154-4505**	1	BEARING	
	4C	1	**308-1903**	1	GEAR-CAMSHAFT (66-TEETH)	
	4D	1	**313-9323**	1	SPACER	

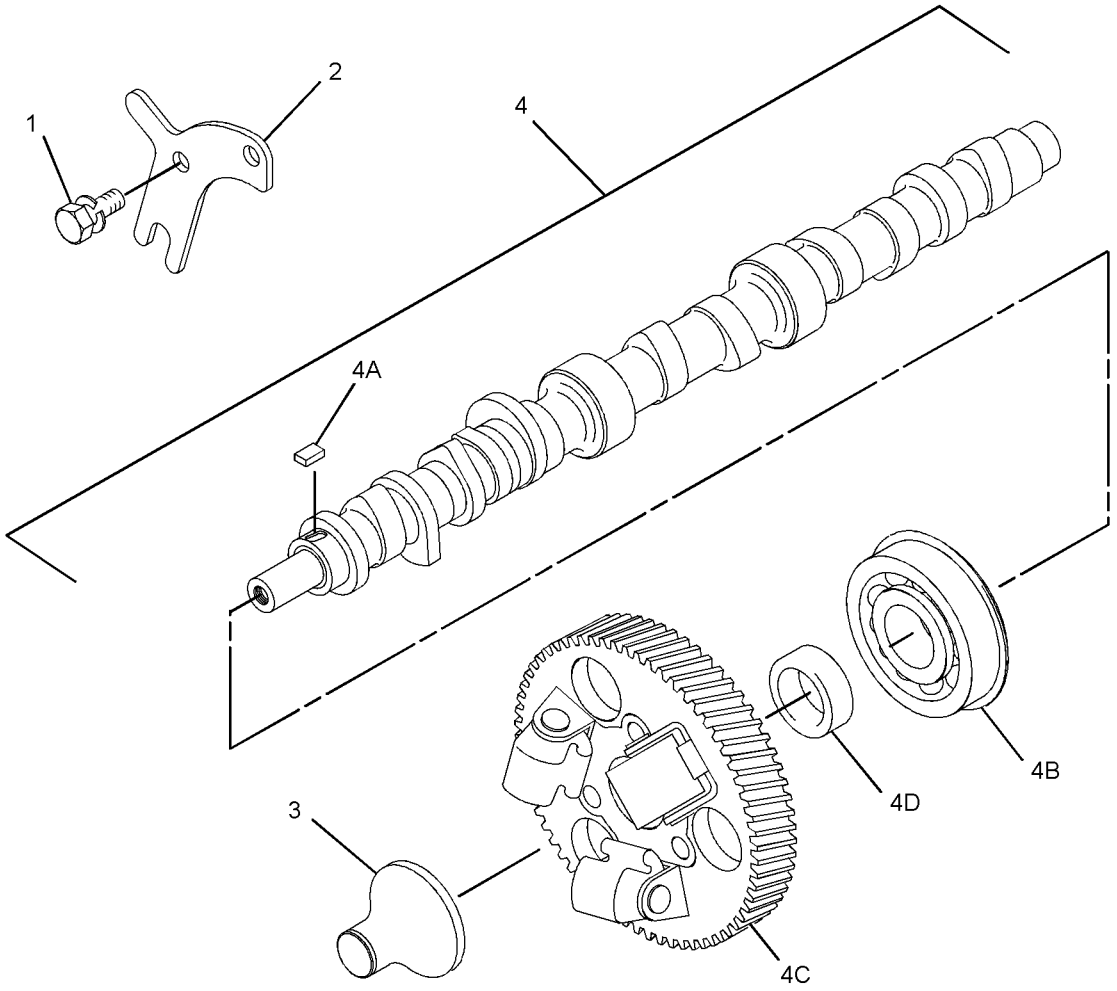

GRAPHIC #1 **<END>** g01418833

308-2307 COVER GP-FRONT HOUSING

S/N: CYP1-UP
PART OF 292-5719 ENGINE AR-PRIMARY
AN ATTACHMENT

SMCS-1166 **i02752401**

NOTE	REF NO	GRAPHIC REF	PART NUMBER	QTY	PART NAME 1 2 3 4 5 6 (PRODUCT LEVEL)	SEE PAGE
	1	1	**154-2403**	2	WASHER	
	2	1	**308-1875**	2	SEAL-O-RING	
	3	1	**308-1912**	2	COVER	
	4	1	**308-1913**	2	BOLT	
	5	1	**311-1171**	2	NUT	

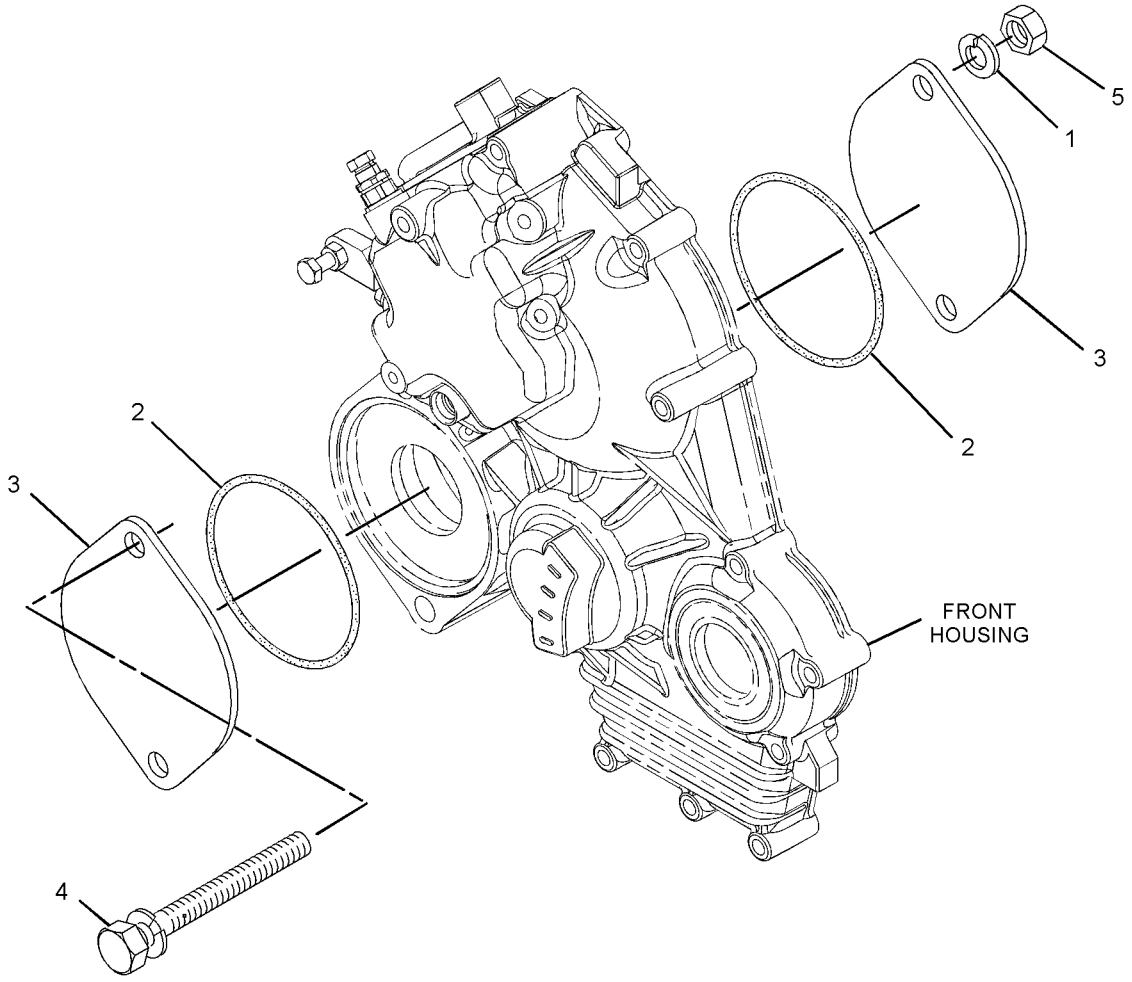

GRAPHIC #1 **<END>** g01415718

BASIC ENGINE

238-9348 COVER GP-VALVE MECHANISM

S/N: CSD1-11322

PART OF 300-5206 ENGINE AR-PRIMARY

AN ATTACHMENT

SMCS-1107 **i02546696**

NOTE	REF NO	GRAPHIC REF	PART NUMBER	QTY	PART NAME 1 2 3 4 5 6 (PRODUCT LEVEL)	SEE PAGE
	1	1	**153-5939**	1	GAUZE (CRANKCASE BREATHER)	
	2	1	**165-2140**	2	BOLT	
	3	1	**153-5962**	3	BOLT	
	4	1	**153-7640**	2	BOLT	
	5	1	**154-1347**	4	NUT	
	6	1	**190-3762**	4	WASHER	
	7	1	**183-1165**	1	PLUG	
	8	1	**217-5859**	1	VALVE-BREATHER (CRANKCASE)	
	9	1	**217-5861**	1	PLATE-RETAINING	
	10	1	**217-5862**	6	BOLT	
	11	1	**217-5864**	1	GASKET	
	12	1	**233-0695**	1	SEAL-VALVE COVER	
	13	1	**238-8731**	1	ADAPTER-BREATHER	
	14	1	**238-9289**	1	COVER-VALVE	
	15	1	**238-9295**	1	BOLT	
C	16	1	**262-3975**	1	GASKET	
C	17	1	**249-1486**	1	CONNECTION-AIR	

C-CHANGE FROM PREVIOUS TYPE

238-9348 **COVER GP-VALVE MECHANISM** *(contd.)* **i02546696**

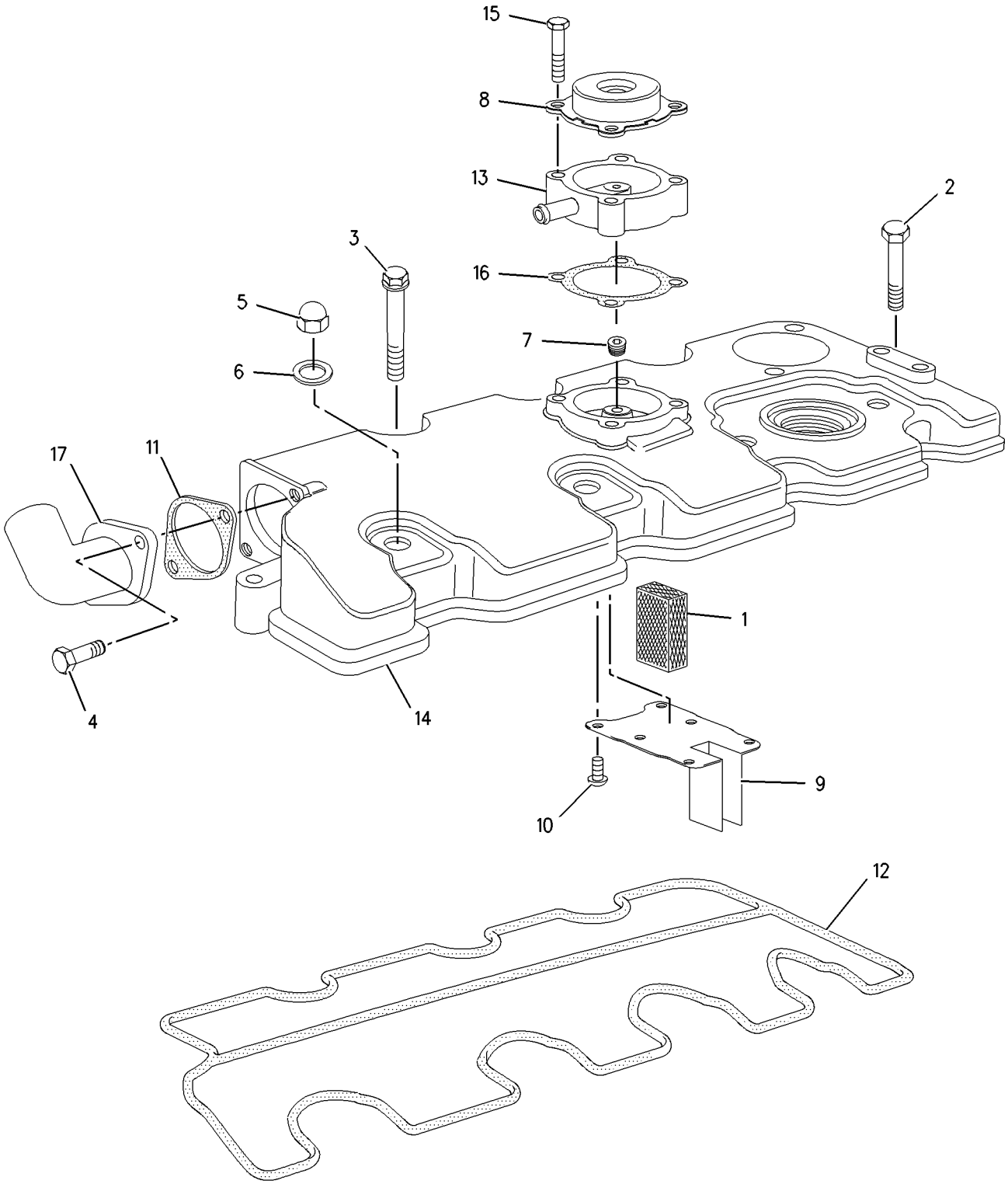

GRAPHIC #1 **<END>** g01007735

BASIC ENGINE

154-1201 CRANKSHAFT GP

S/N: CSD9241-11322
PART OF 270-6915 CRANKSHAFT GP
AN ATTACHMENT

SMCS-1202 **i01498296**

NOTE	REF NO	GRAPHIC REF	PART NUMBER	QTY	PART NAME 1 2 3 4 5 6 (PRODUCT LEVEL)	SEE PAGE
	1	1	*153-5518*	1	KEY	
	2	1	*154-1202*	1	GEAR-CRANKSHAFT (33 TEETH)	

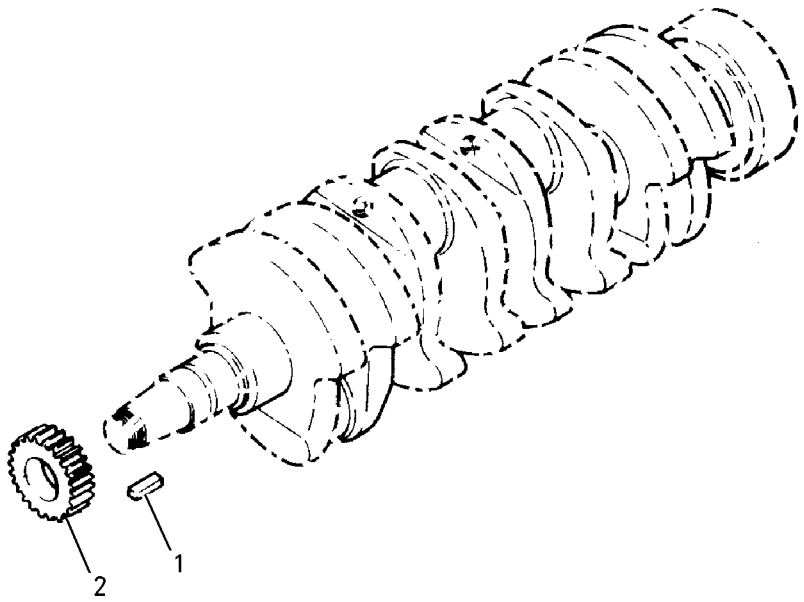

GRAPHIC #1 **<END>** g00777635

270-6915 CRANKSHAFT GP

S/N: CSD1-11322
PART OF 300-5206 ENGINE AR-PRIMARY
AN ATTACHMENT

SMCS-1202 **i02817662**

NOTE	REF NO	GRAPHIC REF	PART NUMBER	QTY	PART NAME 1 2 3 4 5 6 (PRODUCT LEVEL)	SEE PAGE
	1	1	**154-0181**	1	CAP AS-BEARING	
	1A	1	**153-5402**	2	DOWEL	
	1B	1	**154-0385**	2	BOLT	
	2	1	**154-0386**	1	CAP AS-BEARING	
	2A	1	**153-5402**	2	DOWEL	
	2B	1	**154-0385**	2	BOLT	
	3	1	**154-0388**	1	CAP AS-BEARING	
	3A	1	**153-5402**	2	DOWEL	
	3B	1	**154-0385**	2	BOLT	
	4	1	**154-0389**	1	CAP AS-BEARING	
	4A	1	**153-5402**	2	DOWEL	
	4B	1	**154-0385**	2	BOLT	
Y	5	1	**154-1201**	1	CRANKSHAFT GP	24
	6	1	**154-1230**	1	WASHER-THRUST	
	7	1	**154-1231**	2	WASHER-THRUST	
	8	1	**156-6971**	3	BOLT	
	9	1	**154-1203**	1	KIT-CRANKSHAFT BEARING (MAIN)	
		1	**161-7163**	1	KIT-CRANKSHAFT BEARING (0.25-MM US)	
		1	**161-7164**		KIT-CRANKSHAFT BEARING (0.5-MM US)	
	10	1	**183-1336**	2	BOLT	

Y-SEPARATE ILLUSTRATION

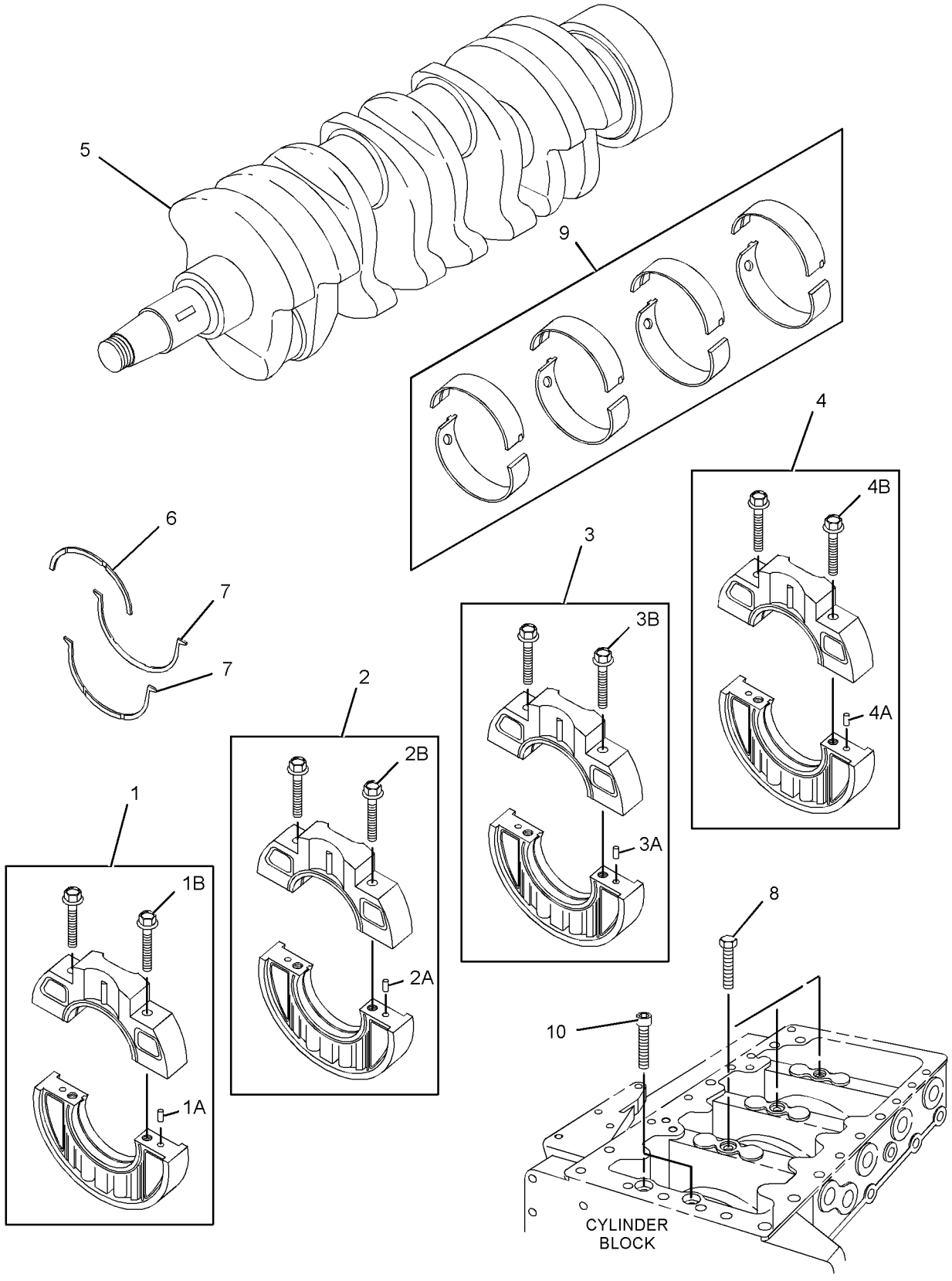

GRAPHIC #1 **<END>** g01193079

308-2283 CRANKSHAFT GP

S/N: CYP1-UP
PART OF 292-5719 ENGINE AR-PRIMARY
AN ATTACHMENT

SMCS-1202 **i02752406**

NOTE	REF NO	GRAPHIC REF	PART NUMBER	QTY	PART NAME 1 2 3 4 5 6 (PRODUCT LEVEL)	SEE PAGE
	1	1	**154-0181**	1	CAP AS-BEARING	
	1A	1	**153-5402**	2	DOWEL	
	1B	1	**154-0385**	2	BOLT	
	2	1	**154-0386**	1	CAP AS-BEARING	
	2A	1	**153-5402**	2	DOWEL	
	2B	1	**154-0385**	2	BOLT	
	3	1	**154-0388**	1	CAP AS-BEARING	
	3A	1	**153-5402**	2	DOWEL	
	3B	1	**154-0385**	2	BOLT	
	4	1	**154-0389**	1	CAP AS-BEARING	
	4A	1	**153-5402**	2	DOWEL	
	4B	1	**154-0385**	2	BOLT	
	5	1	**154-1230**	1	WASHER-THRUST	
	6	1	**154-1231**	2	WASHER-THRUST	
	7	1	**156-6971**	3	BOLT	
	8	1	**183-1336**	2	BOLT	
	9	1	**308-1852**	1	CRANKSHAFT AS	
	9A	1	**153-5518**	1	KEY	
	9B	1	**308-1853**	1	GEAR-CRANKSHAFT	
	10	1	**308-1855**	1	KIT-BEARING	
	11	1	**308-2362**	1	KIT-BEARING	

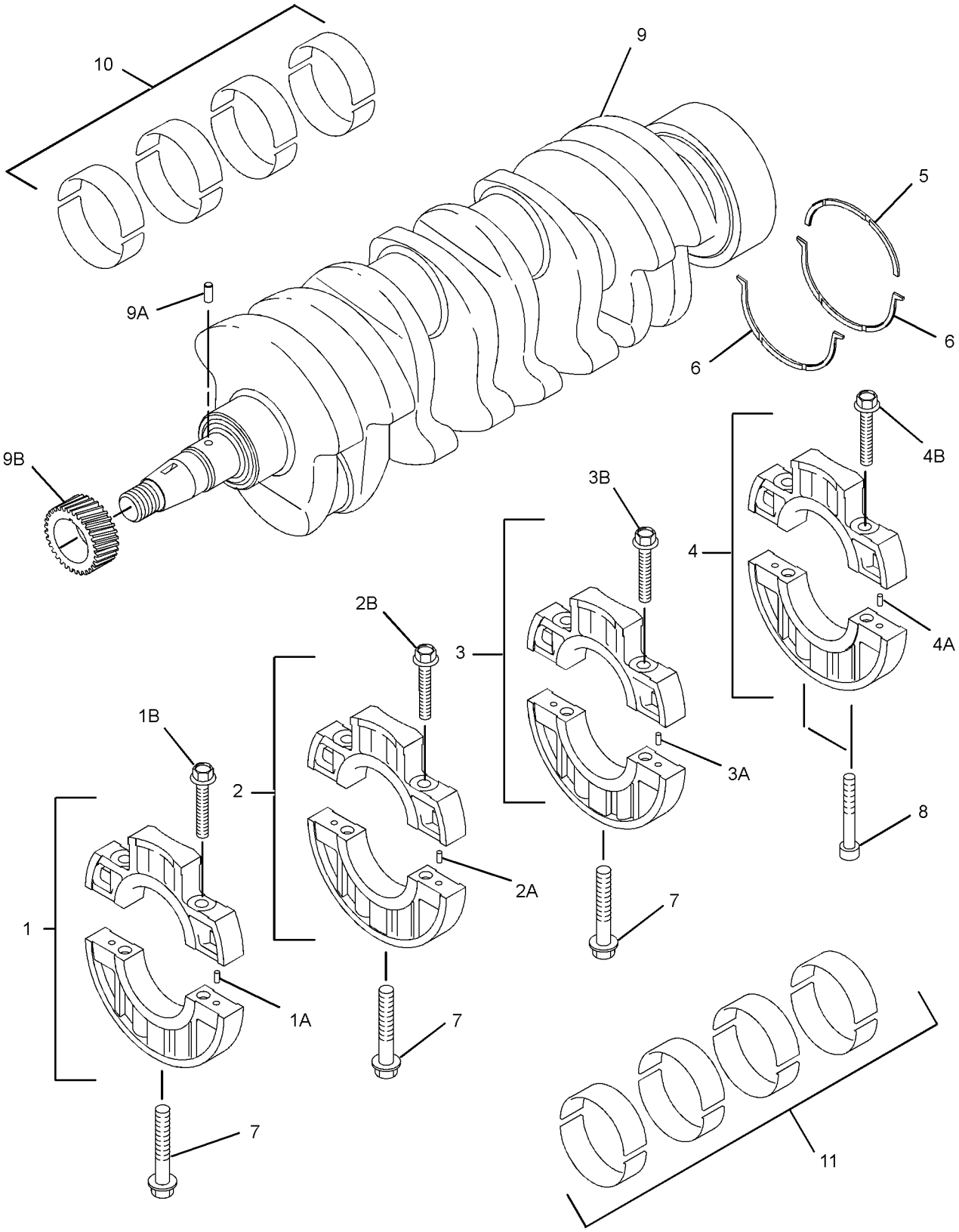

GRAPHIC #1 **<END>** g01406829

270-6932 CYLINDER BLOCK GP

S/N: CSD1-11322
PART OF 300-5206 ENGINE AR-PRIMARY
AN ATTACHMENT

SMCS-1201 **i02585857**

NOTE	REF NO	GRAPHIC REF	PART NUMBER	QTY	PART NAME 1 2 3 4 5 6 (PRODUCT LEVEL)	SEE PAGE
	1	1	**237-9315**	1	PLUG	
	2	1	**153-5387**	3	PLUG	
	3	1	**6B-0924**	1	BALL BEARING	
	4	1	**153-5394**	2	DOWEL	
	5	1	**153-5395**	2	DOWEL	
	6	1	**153-5396**	2	PIN	
	7	1	**153-5402**	1	DOWEL	
	8	1	**153-6838**	2	BOLT	
	9	1	**154-0175**	2	PLUG	
	10	1	**154-0176**	1	BUSHING	
	11	1	**154-0177**	1	BUSHING	
	12	1	**154-0178**	1	SEAL	
	13	1	**154-0391**	1	PLATE	
	14	1	**154-0393**	3	STUD	
	15	1	**183-1163**	1	STUD	
	16	1	**183-1164**	1	STUD	
	17	1	**294-4916**	1	BUSHING	
	18	1	**215-2620**	1	GASKET (PLATE)	
	19	1	**217-5770**	2	PLUG	
	20	1	**217-5771**	1	SHAFT	
	21	1	**221-1136**	3	PLUG	

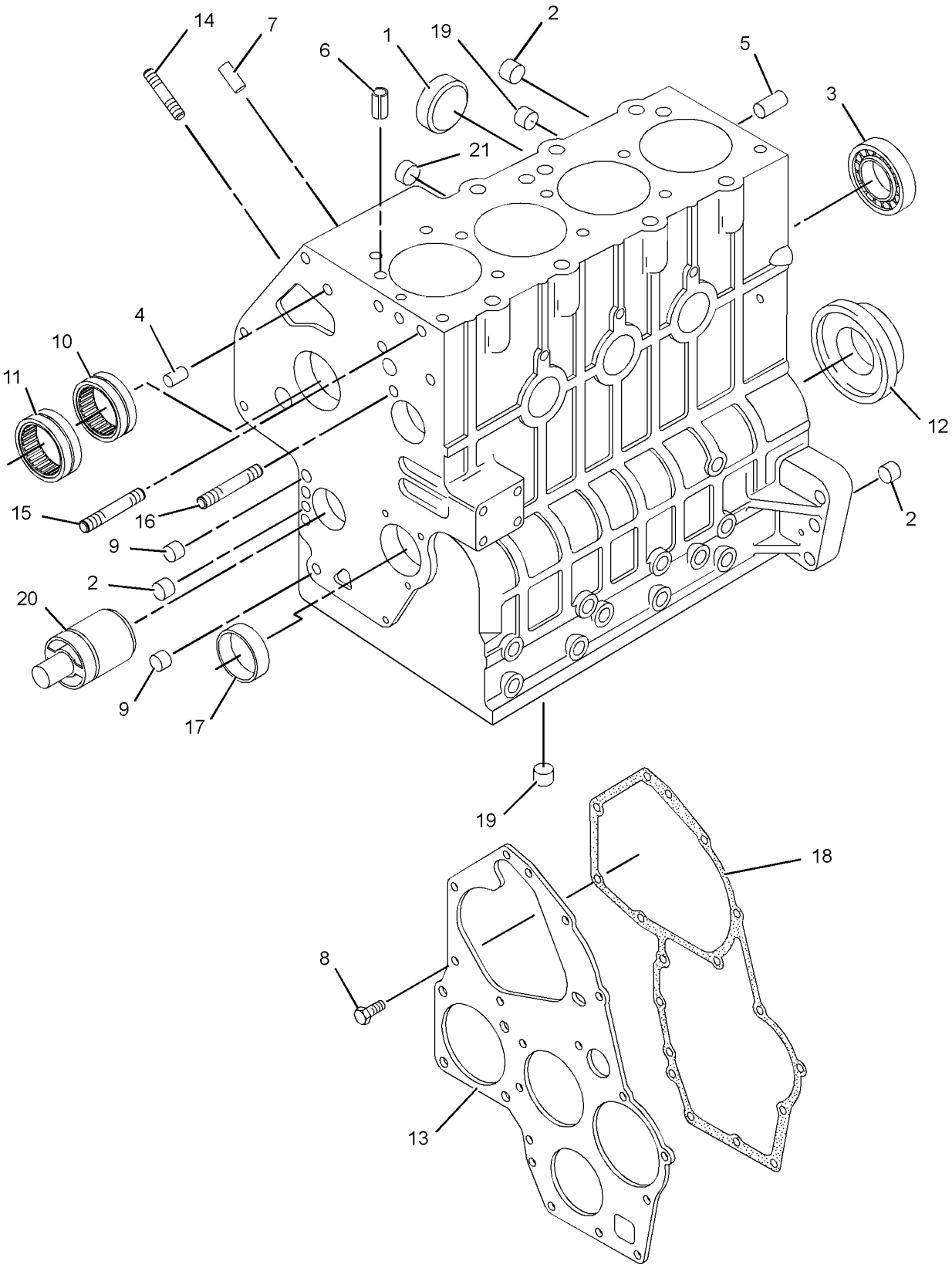

GRAPHIC #1 **<END>** g01192267

308-2281 CYLINDER BLOCK GP

S/N: CYP1-UP
PART OF 292-5719 ENGINE AR-PRIMARY
AN ATTACHMENT

SMCS-1201 **i02883558**

NOTE	REF NO	GRAPHIC REF	PART NUMBER	QTY	PART NAME 1 2 3 4 5 6 (PRODUCT LEVEL)	SEE PAGE
	1	1	**153-5387**	3	PLUG	
	2	1	**6B-0924**	1	BALL BEARING	
	3	1	**153-5391**	1	PLUG	
	4	1	**153-5394**	2	DOWEL	
	5	1	**153-5395**	2	DOWEL	
	6	1	**153-5396**	2	PIN	
	7	1	**153-5402**	2	DOWEL	
	8	1	**153-6838**	2	BOLT	
	9	1	**154-0175**	2	PLUG	
	10	1	**154-0176**	1	BUSHING	
	11	1	**154-0177**	1	BUSHING	
	12	1	**154-0178**	1	SEAL	
	13	1	**154-0393**	1	STUD	
	14	1	**183-1163**	1	STUD	
	15	1	**183-1164**	1	STUD	
	16	1	**215-2620**	1	GASKET	
	17	1	**217-5770**	3	PLUG	
	18	1	**221-1136**	4	PLUG	
	19	1	**237-9315**	2	PLUG (SEALING)	
	20	1	**237-9316**	5	PLUG (SEALING)	
	21	1	**294-4916**	1	BUSHING (STANDARD)	
B		1	**302-4181**	1	BUSHING (0.25-MM US)	
B		1	**302-4182**	1	BUSHING (0.50-MM US)	
	22	1	**308-1850**	1	SHAFT	
	23	1	**321-5907**	1	PLATE	

B-USE AS REQUIRED

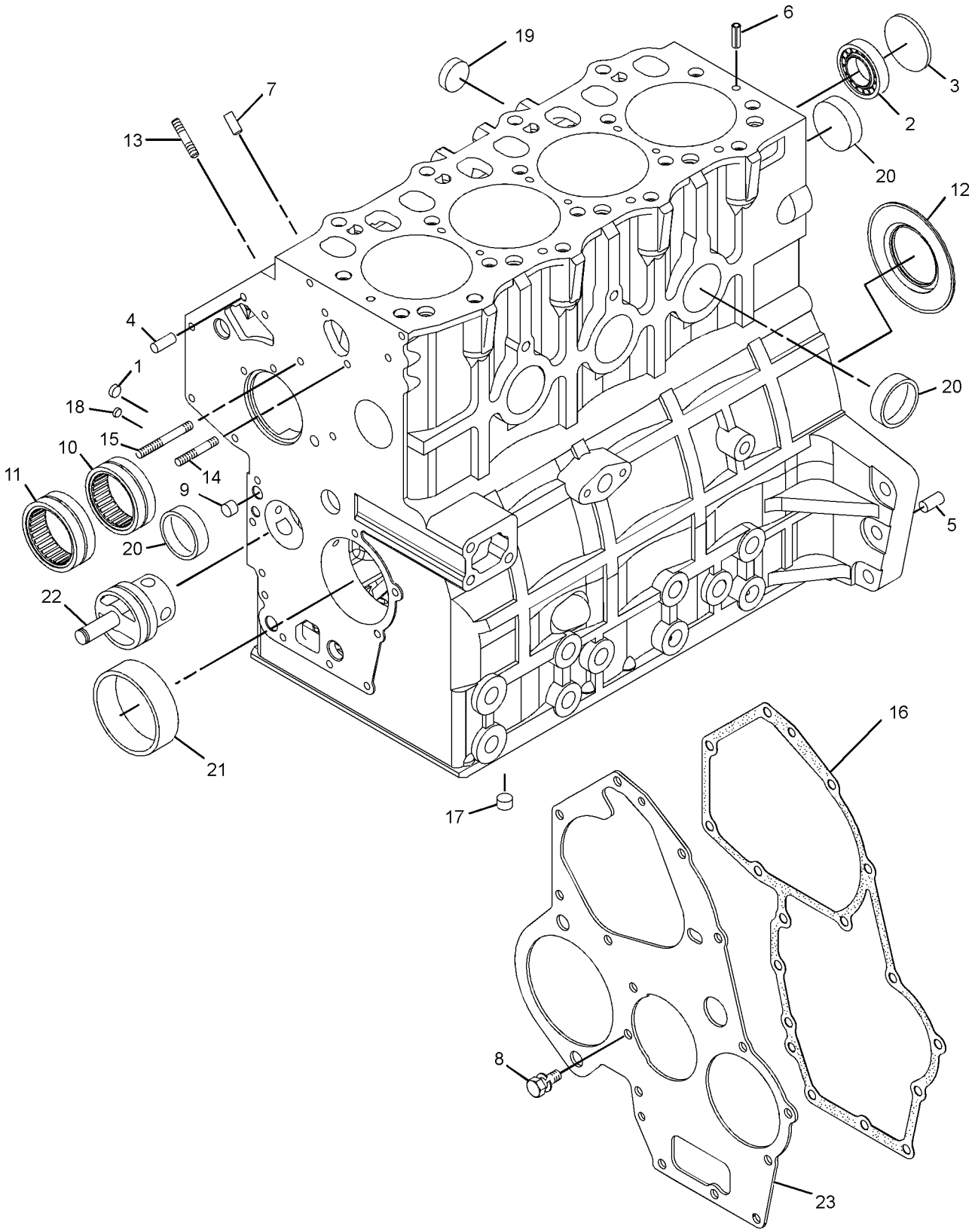

GRAPHIC #1 **<END>** g01398795

308-1859 CYLINDER HEAD AS

S/N: CYP1-UP

PART OF 308-2284 CYLINDER HEAD GP

AN ATTACHMENT

SMCS-1100 **i02752395**

NOTE	REF NO	GRAPHIC REF	PART NUMBER	QTY	PART NAME 1 2 3 4 5 6 (PRODUCT LEVEL)	SEE PAGE
	1	1	**153-5554**	4	SEAL	
	2	1	**153-5556**	8	RETAINER	
	3	1	**153-5557**	8	CAP	
	4	1	**153-5558**	8	SPRING	
	5	1	**153-5559**	4	SEAL	
	6	1	**237-9315**	6	PLUG (SEALING)	
	7	1	**256-2084**	4	INSERT-INLET VALVE	
	8	1	**256-2085**	4	INSERT-EXHAUST VALVE	
	9	1	**288-6537**	7	CAP	
	10	1	**291-1808**	2	CAP	
	11	1	**303-0338**	3	PLUG	
	12	1	**308-1860**	4	VALVE-INLET	
	13	1	**308-1861**	4	VALVE-EXHAUST	

308-1859 **CYLINDER HEAD AS** *(contd.)* **i02752395**

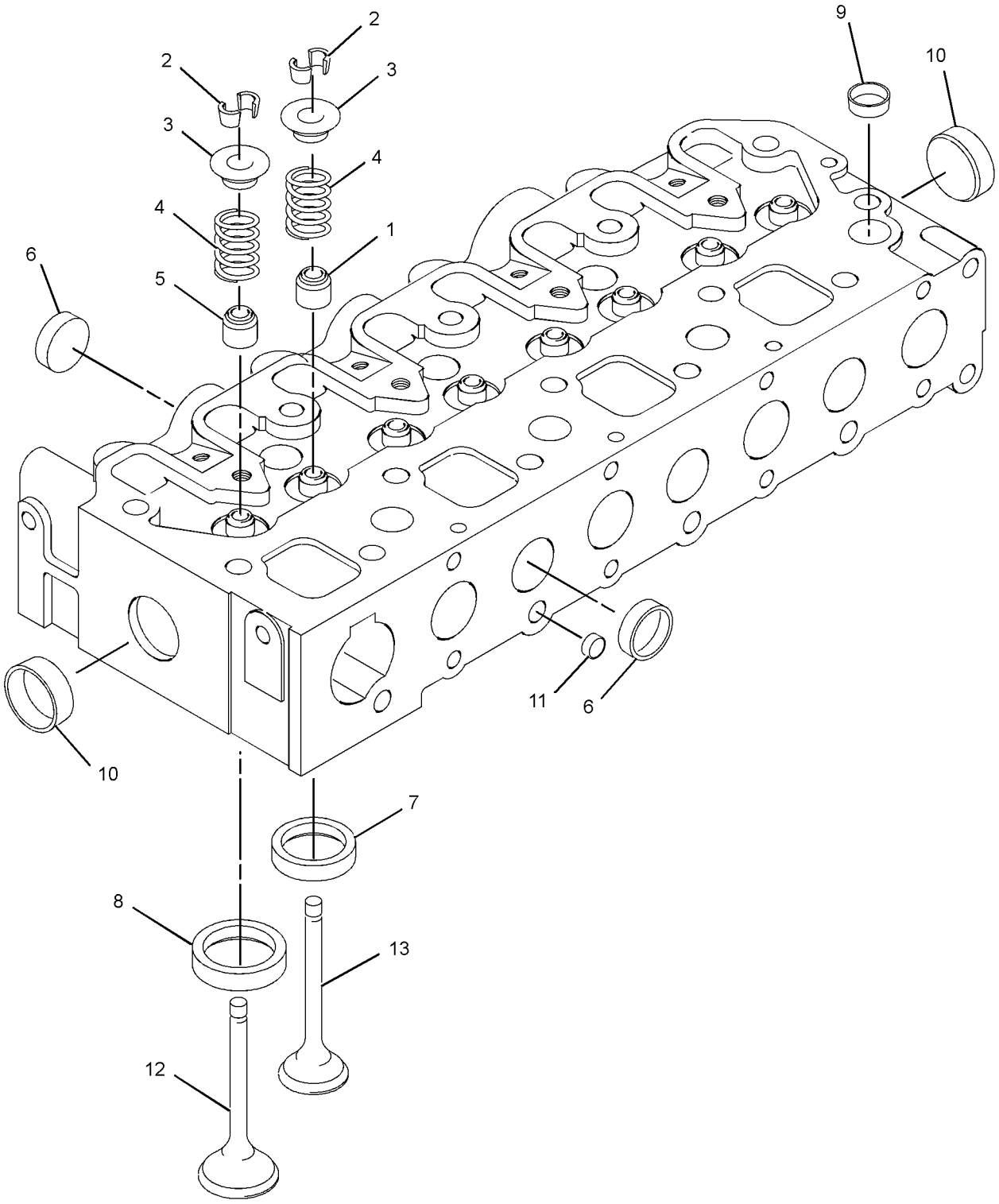

GRAPHIC #1 **<END>** g01418931

236-5127 CYLINDER HEAD GP

S/N: CSD1-11322
PART OF 303-0337 CYLINDER HEAD GP
AN ATTACHMENT

SMCS-1100, 1101, 1103, 1104, 1105, 1108, 1109, 1115, 1117, 1121, 1124, 1125

i02787223

NOTE	REF NO	GRAPHIC REF	PART NUMBER	QTY	PART NAME 1 2 3 4 5 6 (PRODUCT LEVEL)	SEE PAGE
	1	1	**237-9315**	5	PLUG (SEALING)	
	2	1	**291-1808**	2	CAP	
	3	1	**288-6537**	7	CAP	
	4	1	**153-5556**	16	RETAINER	
	5	1	**153-5557**	8	CAP	
	6	1	**153-5558**	8	SPRING	
	7	1	**303-0338**	3	PLUG	
	8	1	**154-0888**	4	VALVE-INLET	
	9	1	**154-0889**	4	VALVE-EXHAUST	
	10	1	**256-2085**	4	INSERT-EXHAUST VALVE	
	11	1	**256-2084**	4	INSERT-INLET VALVE	
	12	1	**153-5554**	4	SEAL (EXHAUST)	
	13	1	**153-5559**	4	SEAL (INLET)	

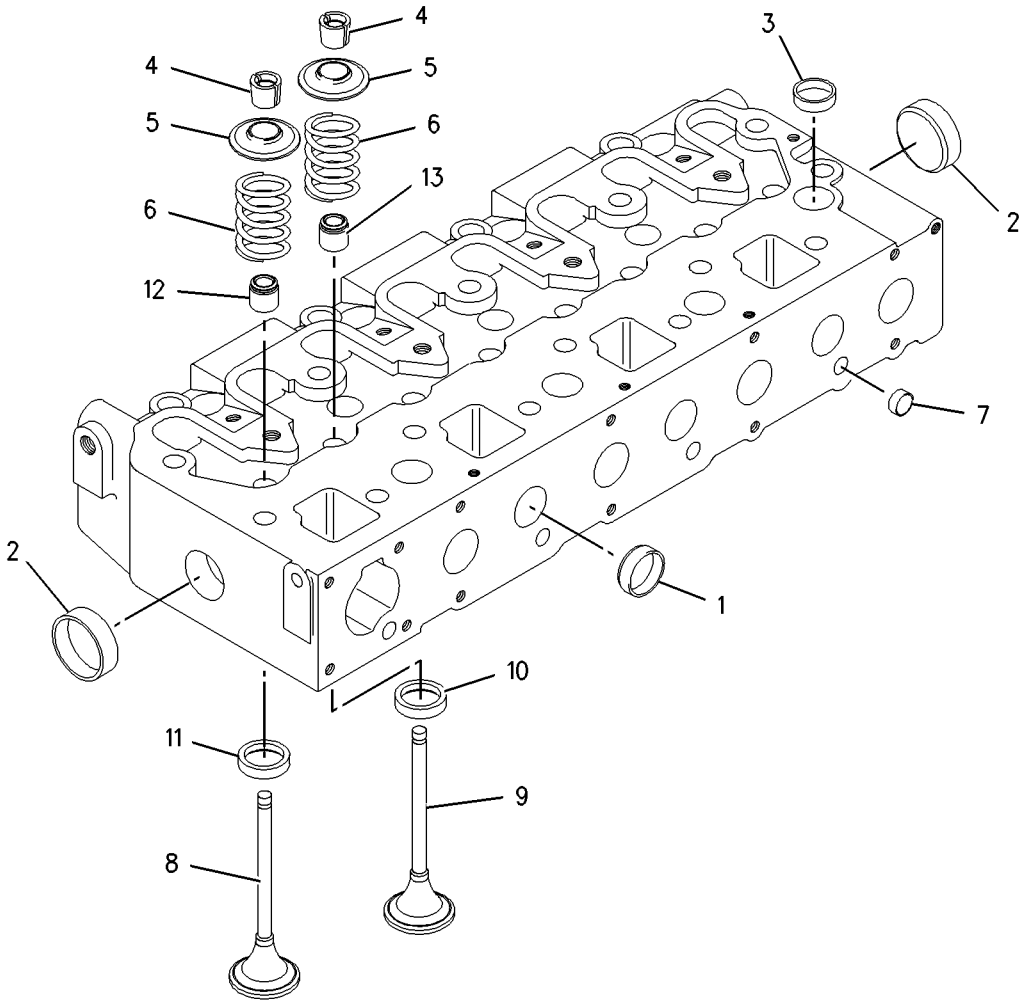

GRAPHIC #1 **<END>** g01007374

303-0337 CYLINDER HEAD GP

S/N: CSD1-11322
PART OF 300-5206 ENGINE AR-PRIMARY
AN ATTACHMENT

SMCS-1100, 1101, 1103, 1104, 1105, 1108, 1109, 1115, 1117, 1121, 1124, 1125

i02870321

NOTE	REF NO	GRAPHIC REF	PART NUMBER	QTY	PART NAME 1 2 3 4 5 6 (PRODUCT LEVEL)	SEE PAGE
	1	1	**153-5573**	8	CAP	
	2	2	**153-5961**	2	BOLT	
	3	2	**153-7988**	4	NUT	
	4	2	**154-1246**	4	STUD	
	5	2	**154-1248**	8	ROD	
	6	2	**154-1249**	8	TAPPET	
	7	1	**156-6988**	14	BOLT	
	8	1	**156-6989**	4	BOLT	
	9	1	**183-1164**	1	STUD	
	10	1	**183-3213**	4	STUD	
	11	2	**217-2752**	1	GASKET (VALVE BRACKET)	
Y	12	1	**236-5127**	1	CYLINDER HEAD GP	35
	13	1	**291-3781**	1	GASKET-CYLINDER HEAD (0.5-MM THK)	
Y	14	2	**293-2167**	1	VALVE MECHANISM GP	70

Y-SEPARATE ILLUSTRATION

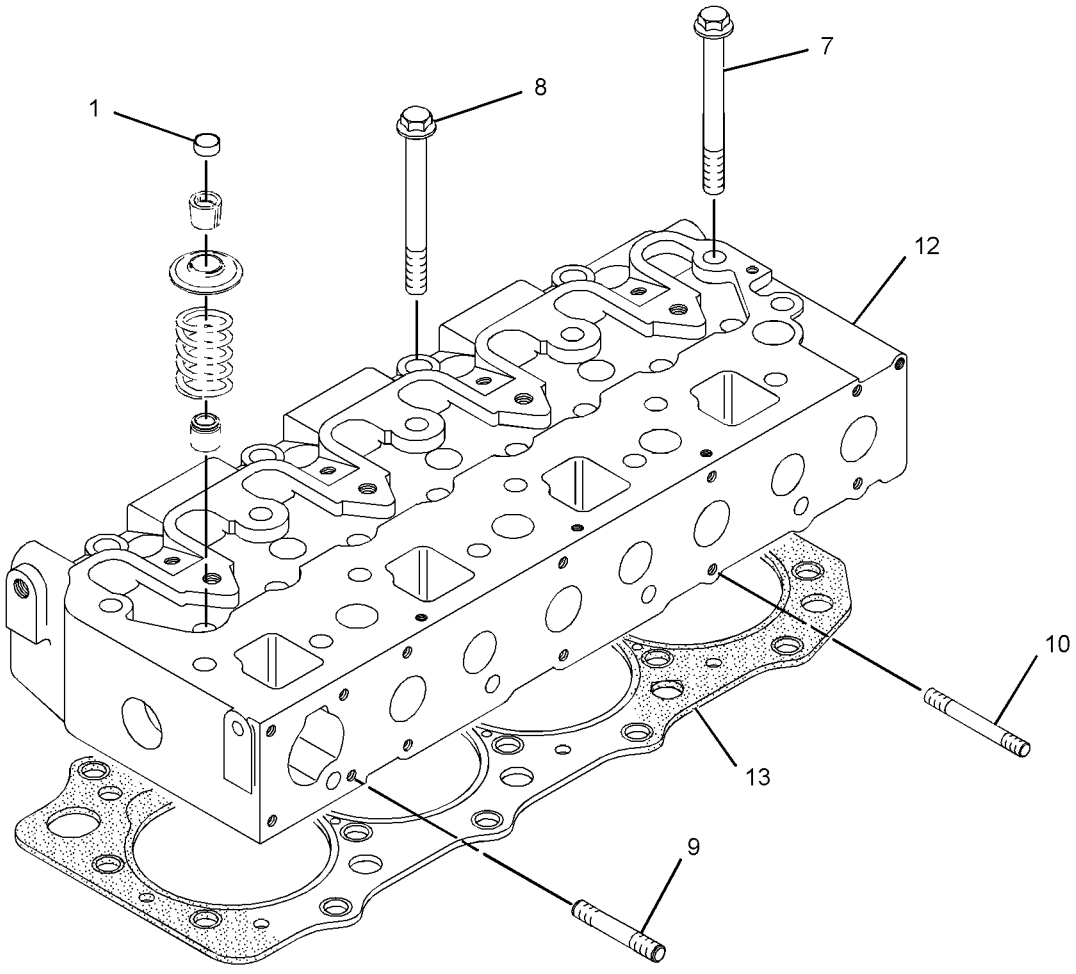

GRAPHIC #1

g01379270

303-0337 **CYLINDER HEAD GP** *(contd.)* **i02870321**

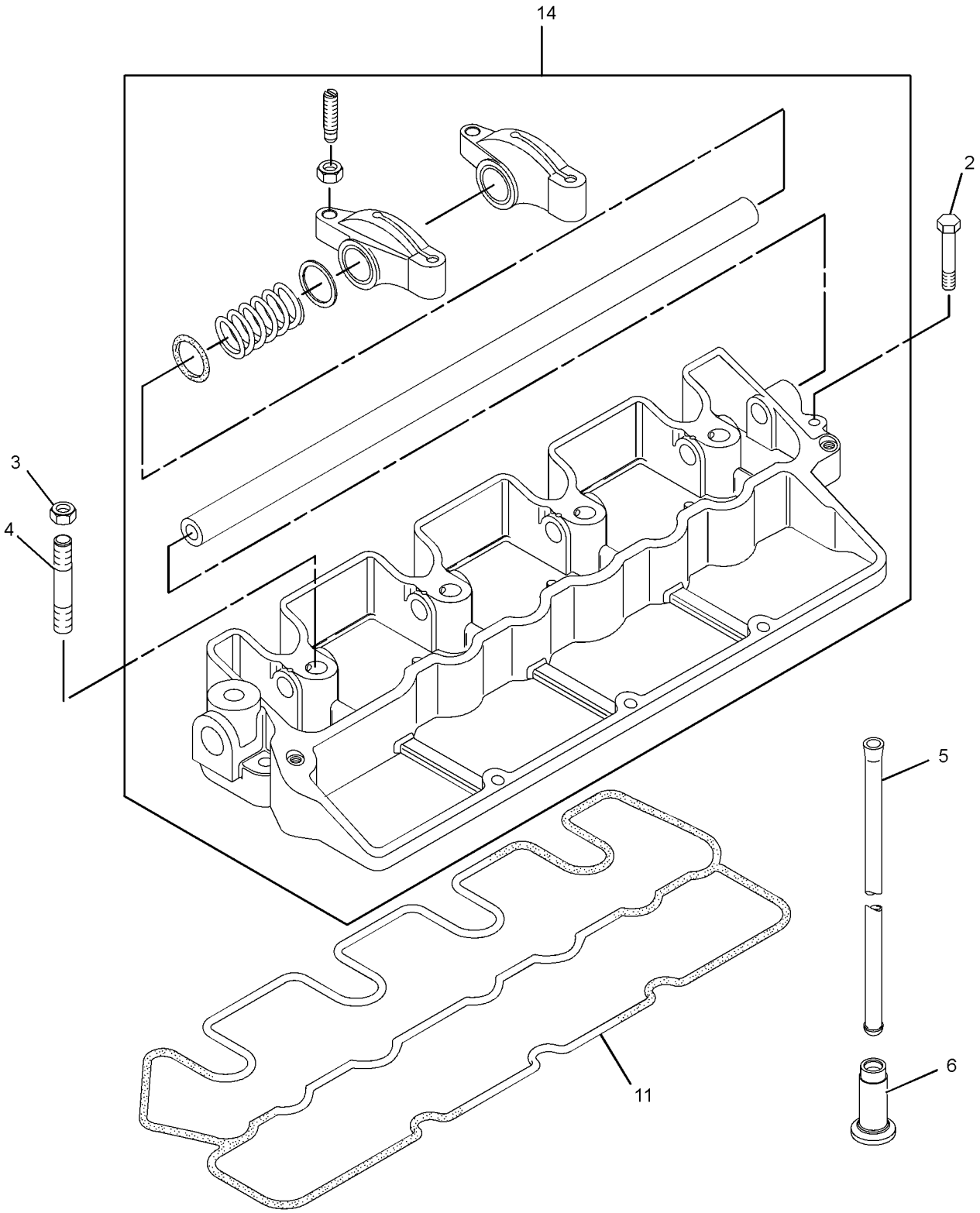

GRAPHIC #2 **<END>** g01379272

BASIC ENGINE

308-2284 CYLINDER HEAD GP

S/N: CYP1-UP
PART OF 292-5719 ENGINE AR-PRIMARY
AN ATTACHMENT

SMCS-1100, 1101, 1103, 1104, 1105, 1108, 1109, 1115, 1117, 1121, 1124, 1125

i02752404

NOTE	REF NO	GRAPHIC REF	PART NUMBER	QTY	PART NAME 1 2 3 4 5 6 (PRODUCT LEVEL)	SEE PAGE
	1	1	**153-5573**	8	CAP	
	2	1	**156-6988**	14	BOLT	
	3	1	**156-6989**	4	BOLT	
	4	1	**183-3213**	2	STUD	
Y	5	1	**308-1859**	1	CYLINDER HEAD AS	33
	6	1	**308-1862**	2	STUD	
B	7	1	**308-1910**	1	GASKET (1.2-MM)	
B		1	**308-1911**	1	GASKET (1.3-MM)	

B-USE AS REQUIRED
Y-SEPARATE ILLUSTRATION

308-2284 **CYLINDER HEAD GP** *(contd.)* **i02752404**

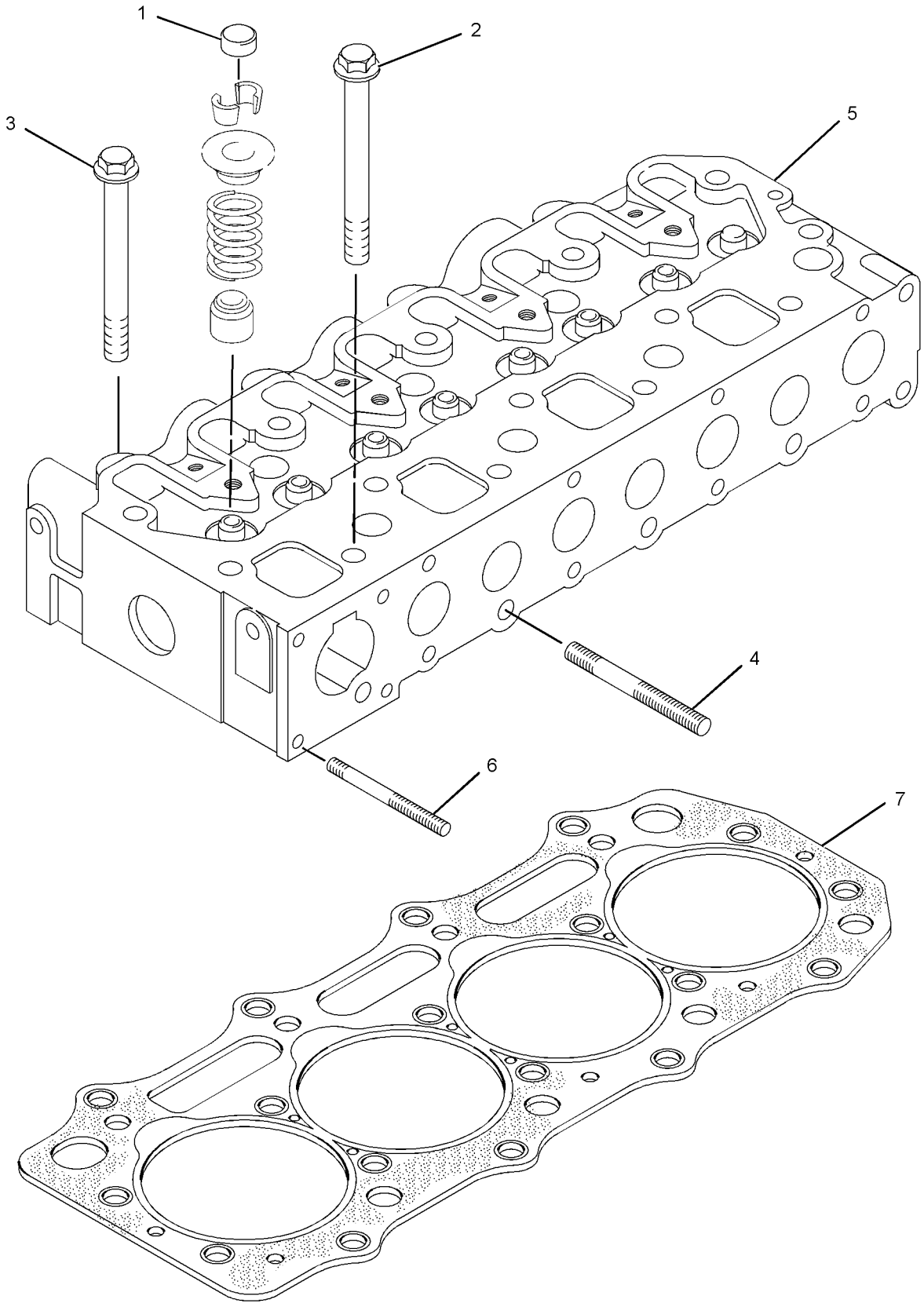

GRAPHIC #1 **<END>** g01409220

229-8730 DRAIN GP-ENGINE OIL

S/N: BXM4225-UP

PART OF 295-7027, 295-7028 INSTALLATION AR-ENGINE

SMCS-1302 **i02752749**

NOTE	REF NO	GRAPHIC REF	PART NUMBER	QTY	PART NAME 1 2 3 4 5 6 (PRODUCT LEVEL)	SEE PAGE
	1	1	**5P-4961**	1	CLAMP-HOSE	
	2	1	**8C-3445**	1	CAP-DUST	
	3	1	**8C-3446**	1	VALVE-FLUID SAMPLING	
	6	1	**218-0919**	1	ADAPTER	
	8	1	**8L-2779**	1	SEAL-O-RING	
CE	9	1	**5P-1505**		HOSE (35-CM)	

C-CHANGE FROM PREVIOUS TYPE
E-ORDER BY THE CENTIMETER

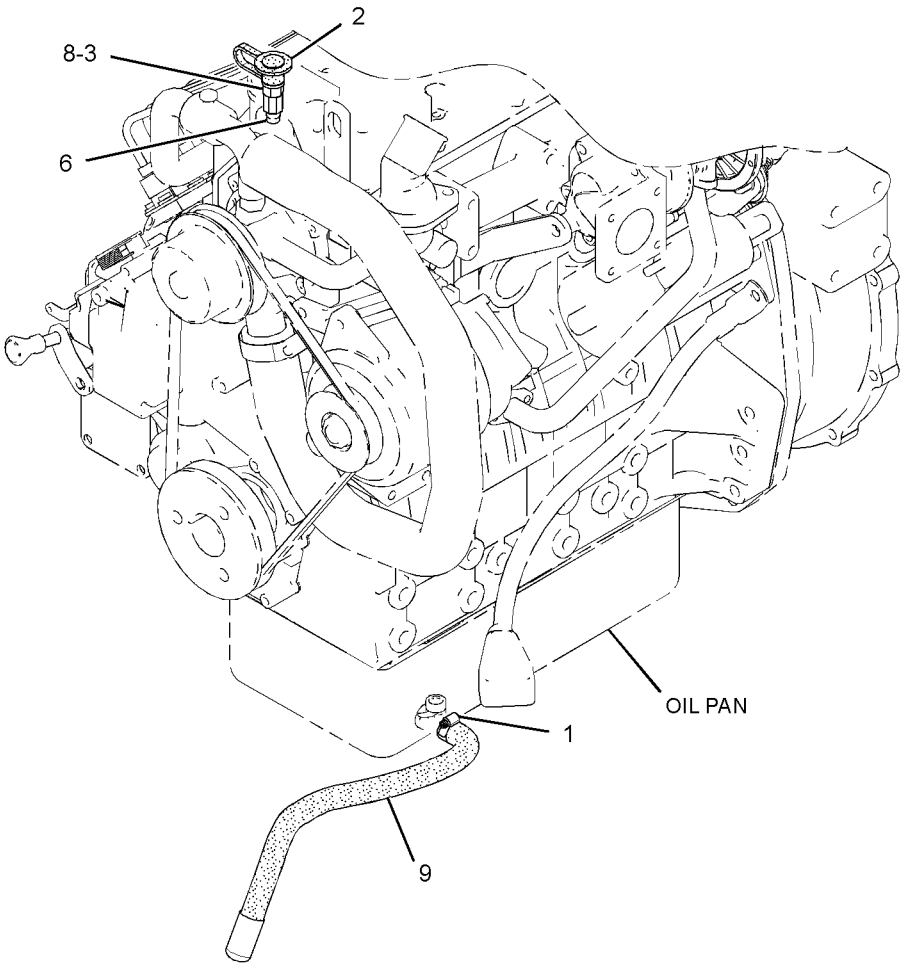

GRAPHIC #1 **<END>** g01381559

217-7221 FLYWHEEL GP

S/N: CSD1-11322
PART OF 300-5206 ENGINE AR-PRIMARY
AN ATTACHMENT

SMCS-1156, 1158 **i01649085**

NOTE	REF NO	GRAPHIC REF	PART NUMBER	QTY	PART NAME 1 2 3 4 5 6 (PRODUCT LEVEL)	SEE PAGE
	1	1	**138-7446**	1	FLYWHEEL AS	
	1A	1	**154-2405**	1	GEAR-STARTER (126 TEETH)	
	2	1	**154-2406**	6	BOLT	

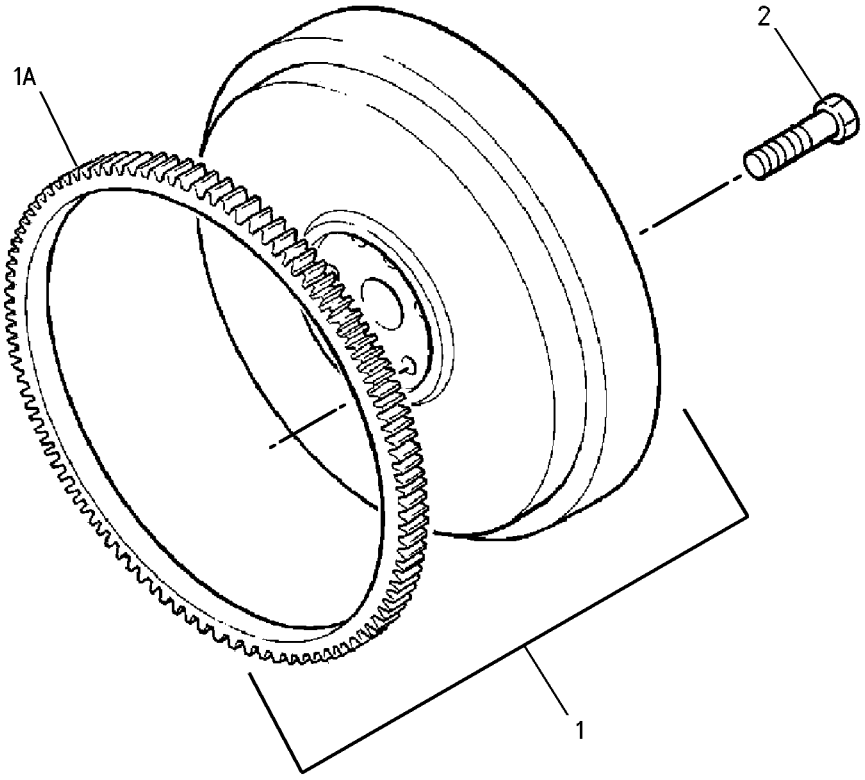

GRAPHIC #1 **<END>** g00640776

BASIC ENGINE

308-2291 FLYWHEEL GP

S/N: CYP1-UP
PART OF 292-5719 ENGINE AR-PRIMARY
AN ATTACHMENT

SMCS-1156, 1158 **i02724854**

NOTE	REF NO	GRAPHIC REF	PART NUMBER	QTY	PART NAME 1 2 3 4 5 6 (PRODUCT LEVEL)	SEE PAGE
	1	1	**138-7446**	1	FLYWHEEL AS	
	1A	1	**154-2405**	1	GEAR-STARTER (126-TEETH)	
	2	1	**154-2406**	6	BOLT	

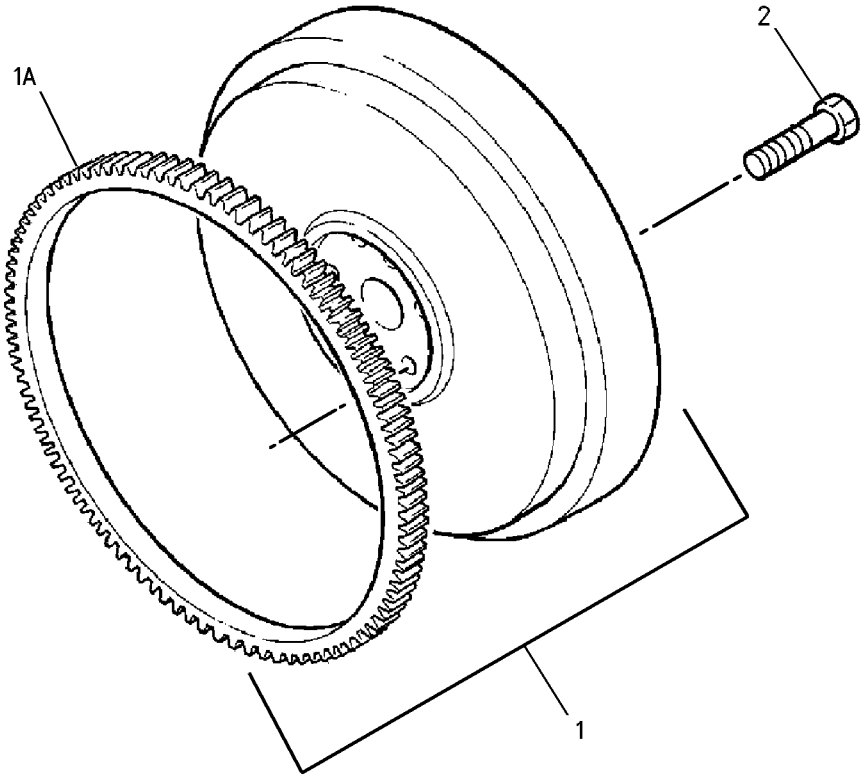

GRAPHIC #1 **<END>** g00640776

246-8723 GUARD GP-BELT

S/N: BXM4225-UP

PART OF 295-7027, 295-7028 INSTALLATION AR-ENGINE

SMCS-7174 **i02634185**

NOTE	REF NO	GRAPHIC REF	PART NUMBER	QTY	PART NAME 1 2 3 4 5 6 (PRODUCT LEVEL)	SEE PAGE
	1	1	**149-7694**	1	BRACKET AS	
M		1	**8T-3612**	4	NUT-WELD (M8X1.25-THD)	
	2	1	**208-0044**	1	GUARD-BELT	
	3	1	**228-9953**	1	BRACKET AS	
M		1	**8T-3490**	2	NUT-WELD (M10X1.5-THD)	
M		1	**8T-3612**	2	NUT-WELD (M8X1.25-THD)	
	4	1	**5P-4116**	8	WASHER-HARD (8.8X20.5X2-MM THK)	
M	5	1	**8T-4189**	4	BOLT (M8X1.25X20-MM)	
M	6	1	**8T-4908**	2	BOLT (M8X1.25X25-MM)	
M	7	1	**8T-5091**	2	BOLT (M8X1.25X20-MM)	

M-METRIC PART

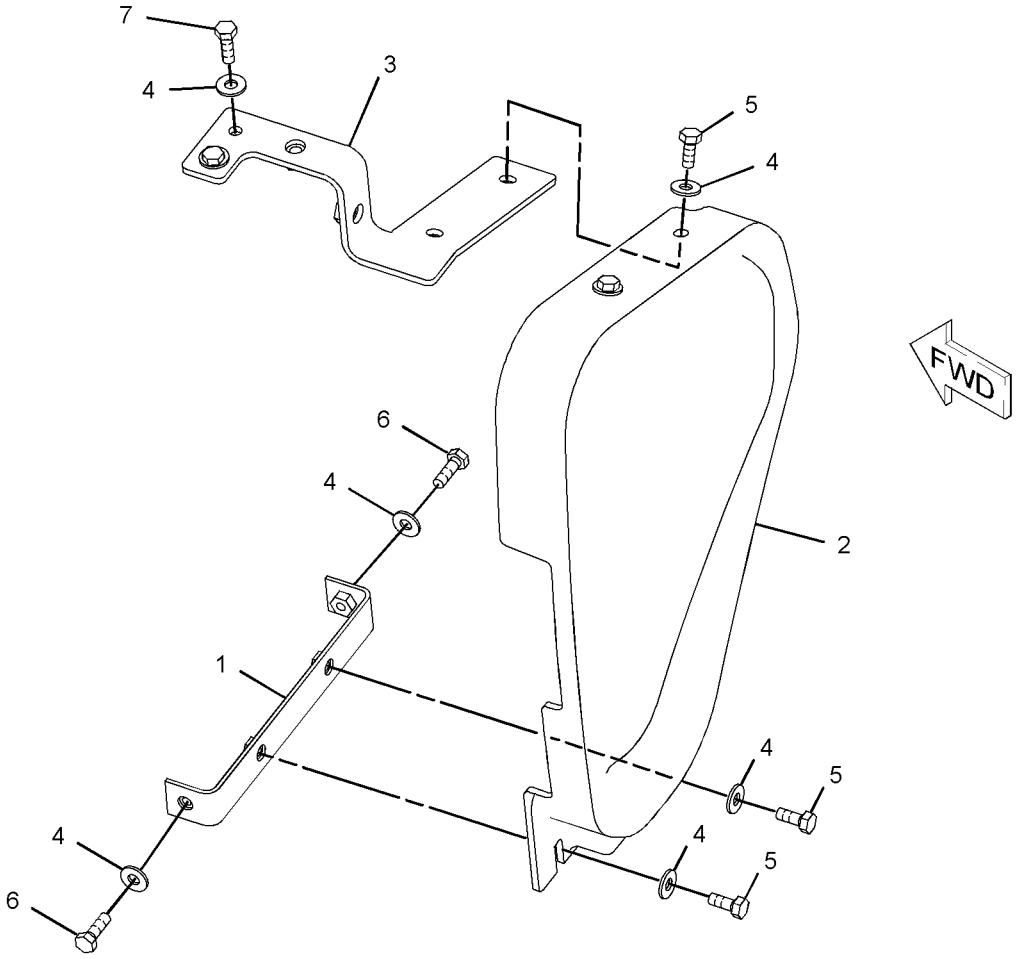

GRAPHIC #1 **<END>** g01071917

BASIC ENGINE

217-7238 HOUSING GP-FLYWHEEL

S/N: CSD1-11322
PART OF 300-5206 ENGINE AR-PRIMARY
AN ATTACHMENT

SMCS-1157 **i01649087**

NOTE	REF NO	GRAPHIC REF	PART NUMBER	QTY	PART NAME 1 2 3 4 5 6 (PRODUCT LEVEL)	SEE PAGE
	1	1	**217-7225**	1	HOUSING-FLYWHEEL	
	2	1	**138-7402**	6	BOLT	
	3	1	**153-6375**	10	BOLT	
	4	1	**153-6868**	3	BOLT	
	5	1	**154-2394**	1	PLATE	
	6	1	**154-2395**	1	PLUG	
	7	1	**154-2403**	4	WASHER	
	8	1	**165-2142**	2	BOLT	
	9	1	**138-7162**	4	BOLT	
	10	1	**166-2338**	4	NUT	

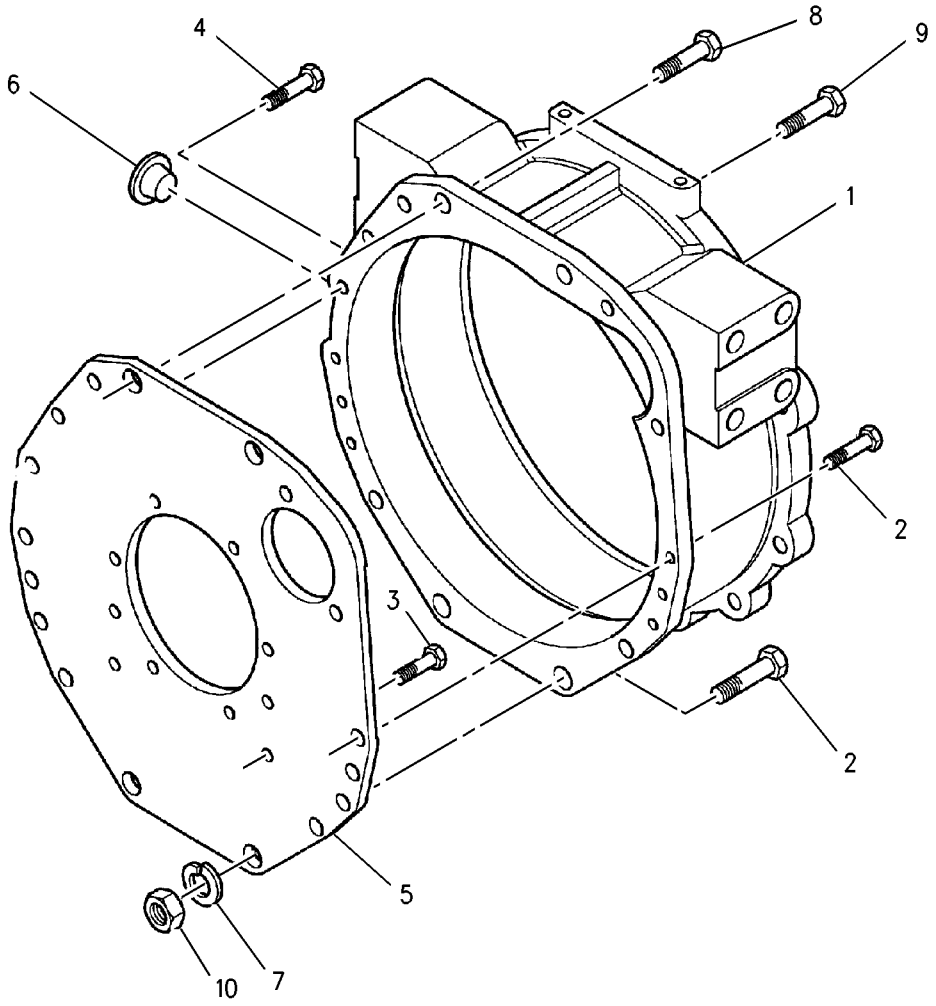

GRAPHIC #1 **<END>** g00852718

316-7030 HOUSING GP-FLYWHEEL

S/N: CYP1-UP
PART OF 292-5719 ENGINE AR-PRIMARY
AN ATTACHMENT

SMCS-1157 **i02826809**

NOTE	PART NUMBER	QTY	PART NAME 1 2 3 4 5 6 (PRODUCT LEVEL)	SEE PAGE
	138-7162	4	BOLT	
	252-1802	6	BOLT	
	153-6375	10	BOLT	
	153-6868	2	BOLT	
	165-2142	2	BOLT	
	217-7225	1	HOUSING-FLYWHEEL	
	166-2338	4	NUT	
	154-2394	1	PLATE	
	154-2395	1	PLUG	
	154-2403	4	WASHER	

<END>

BASIC ENGINE

246-3338 HOUSING GP-FRONT

S/N: CSD1-11322

PART OF 300-5206 ENGINE AR-PRIMARY

AN ATTACHMENT

SMCS-1151, 1160, 1162, 1166, 3108 **i02576123**

NOTE	REF NO	GRAPHIC REF	PART NUMBER	QTY	PART NAME 1 2 3 4 5 6 (PRODUCT LEVEL)	SEE PAGE
	1	1	**153-5960**	2	NUT	
	2	1	**153-5962**	3	BOLT	
	3	1	**153-6838**	4	BOLT	
	4	1	**153-6856**	6	BOLT	
	5	1	**153-7985**	1	WASHER	
	6	1	**154-1680**	1	PLATE	
	7	1	**154-1672**	1	HOUSING-FRONT	
	8	1	**154-1673**	1	PIN	
	9	1	**154-1675**	1	SEAL	
	10	1	**297-3050**	1	GEAR AS (62-TEETH)	
	10A	1	**154-1677**	3	BUSHING	
	10B	1	**154-1678**	3	DOWEL	
	10C	1	**154-1679**	1	SPRING	
	11	1	**165-2139**	2	BOLT	
	12	1	*215-2621*	1	GASKET	
F		1	**160-7626**	1	STUD	

F-NOT SHOWN

246-3338 **HOUSING GP-FRONT** *(contd.)* **i02576123**

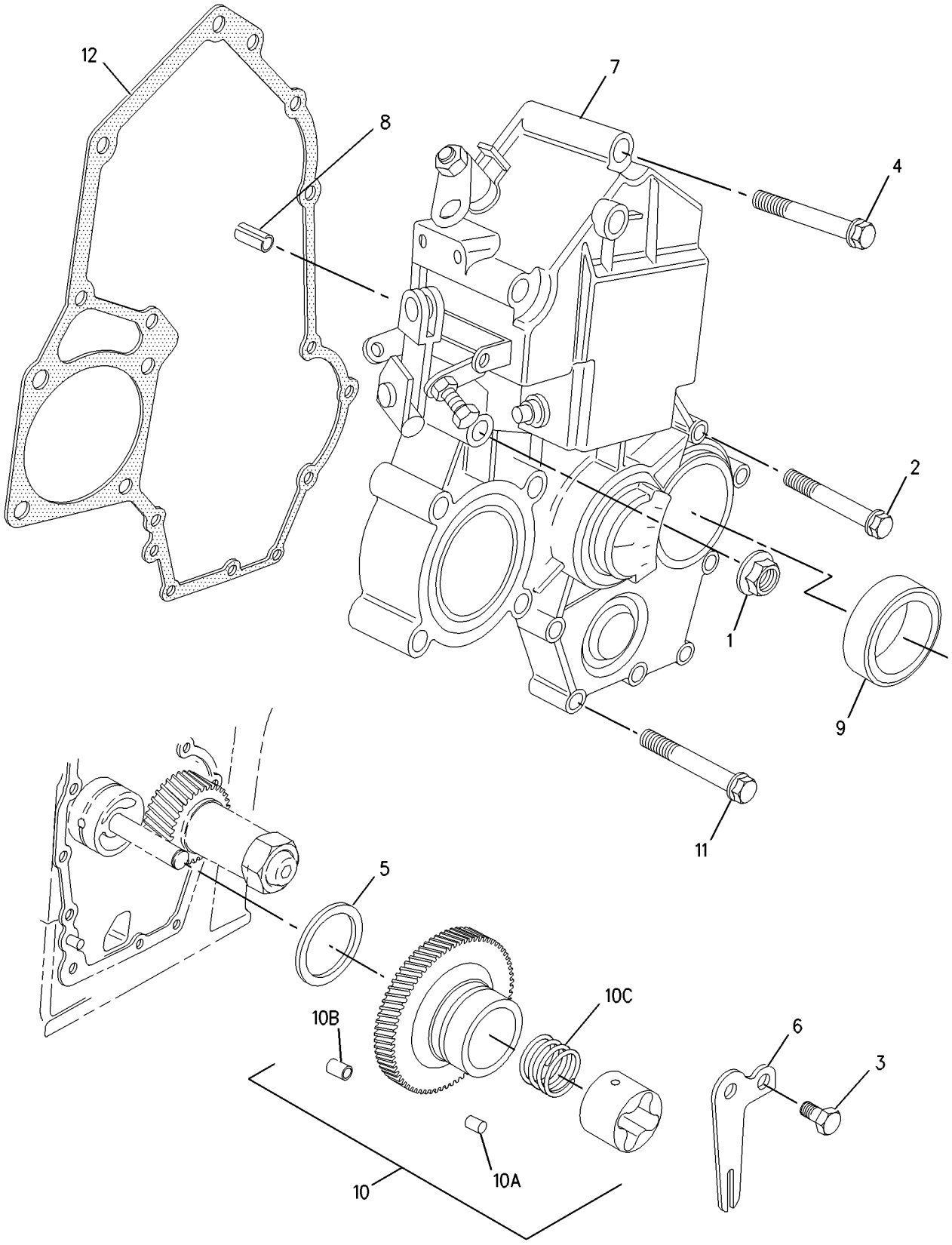

GRAPHIC #1 **<END>** g00995977

BASIC ENGINE

317-0965 HOUSING GP-FRONT

S/N: CYP1-UP

PART OF 292-5719 ENGINE AR-PRIMARY

AN ATTACHMENT

SMCS-1151, 1160, 1162, 1166, 3108 **i02827170**

NOTE	REF NO	GRAPHIC REF	PART NUMBER	QTY	PART NAME 1 2 3 4 5 6 (PRODUCT LEVEL)	SEE PAGE
	1	1	**153-5960**	2	NUT	
	2	1	**153-5962**	4	BOLT	
	3	1	**154-1673**	1	PIN	
	4	1	**154-1675**	1	SEAL	
	5	1	**165-2140**	7	BOLT	
	6	1	**308-1871**	1	GASKET	
	7	1	**308-1874**	1	HOLDER	
	8	1	**308-1875**	3	SEAL-O-RING	
	9	1	**311-0656**	1	CASE	

317-0965 **HOUSING GP-FRONT** *(contd.)* **i02827170**

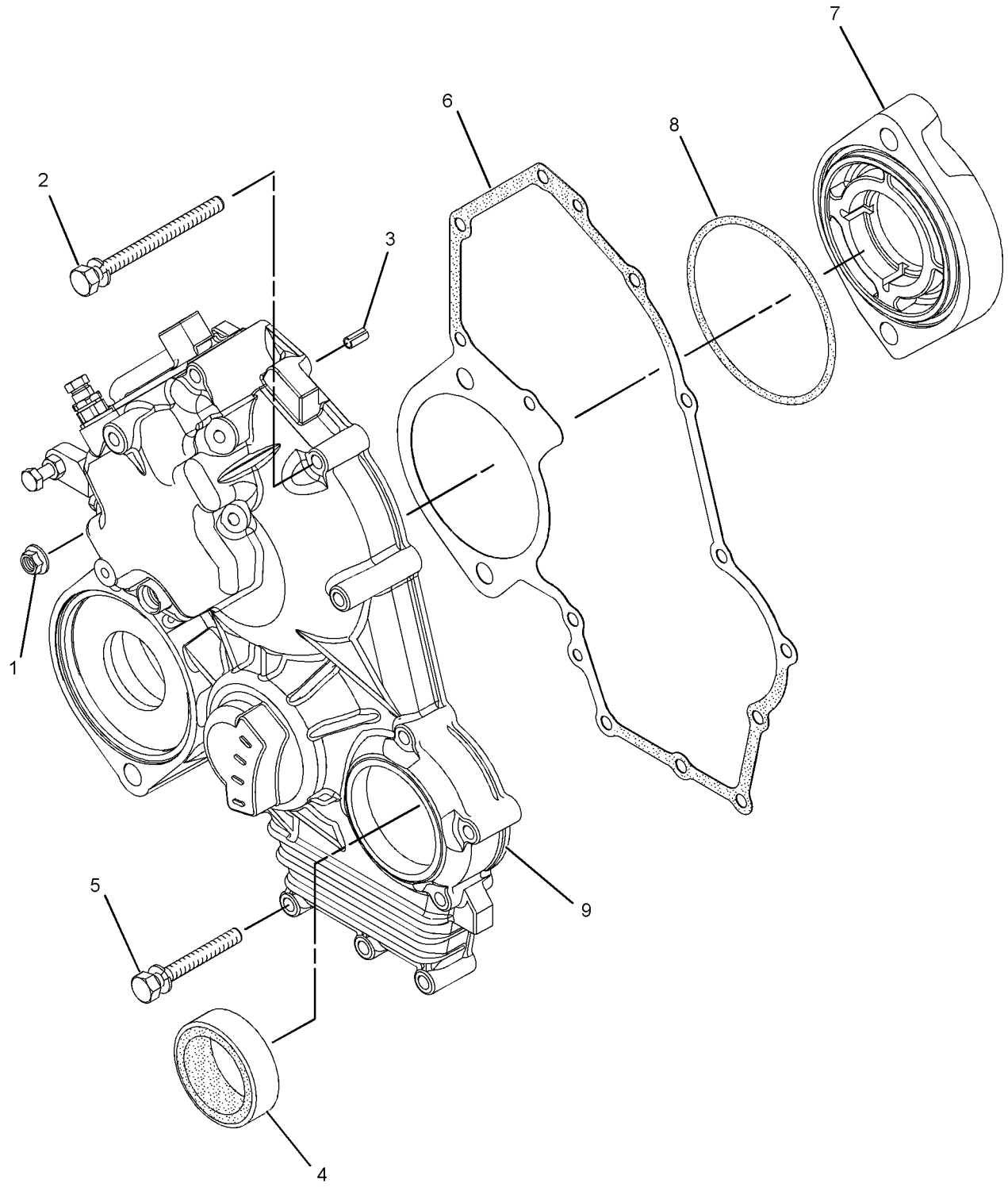

GRAPHIC #1 **<END>** g01438892

BASIC ENGINE

251-7618 LIFTING GP-ENGINE

S/N: CSD1-11322
PART OF 300-5206 ENGINE AR-PRIMARY
AN ATTACHMENT

SMCS-1122 **i02089687**

NOTE	REF NO	GRAPHIC REF	PART NUMBER	QTY	PART NAME 1 2 3 4 5 6 (PRODUCT LEVEL)	SEE PAGE
	1	1	**155-7984**	2	WASHER	
	2	1	**165-2141**	2	BOLT	
	3	1	**251-7615**	2	PLATE-LIFTING	

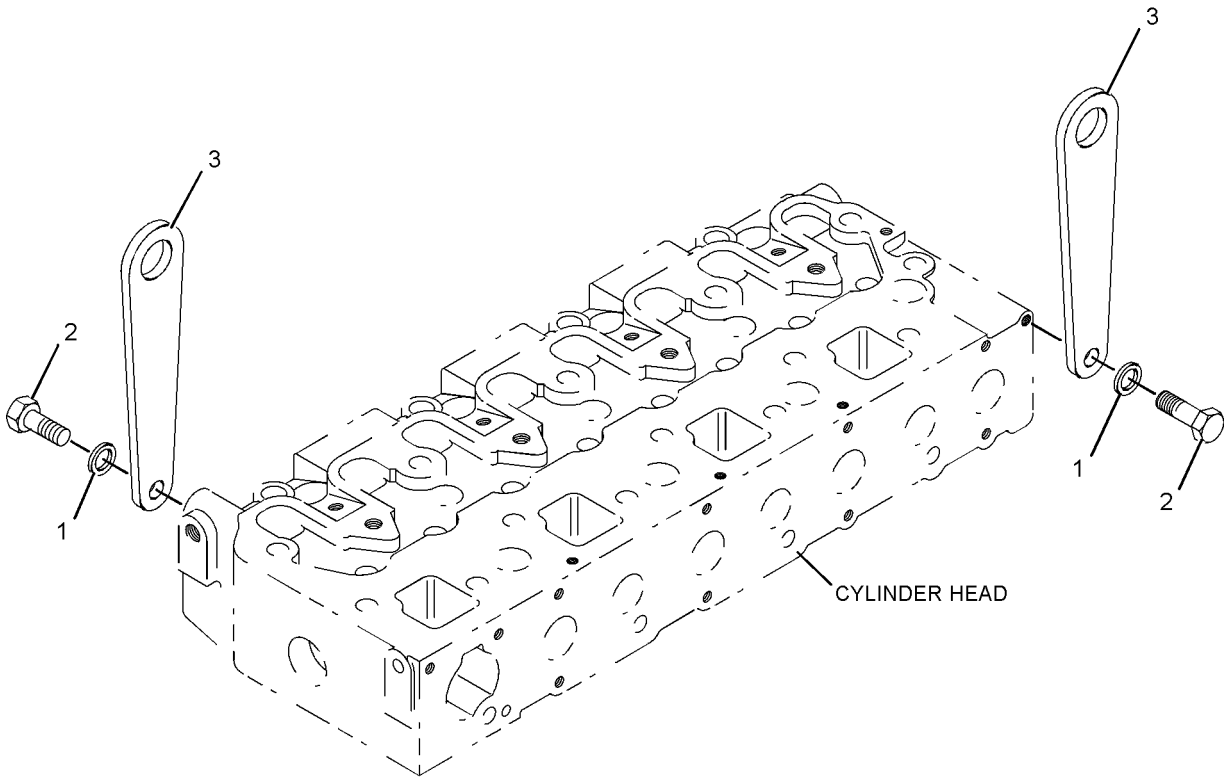

GRAPHIC #1 **<END>** g01091205

317-0982 LIFTING GP-ENGINE

S/N: CYP1-UP
PART OF 292-5719 ENGINE AR-PRIMARY
AN ATTACHMENT

SMCS-1122 **i02827332**

NOTE	REF NO	GRAPHIC REF	PART NUMBER	QTY	PART NAME 1 2 3 4 5 6 (PRODUCT LEVEL)	SEE PAGE
	1	1	**155-7984**	2	WASHER	
	2	1	**165-2141**	2	BOLT	
	3	1	**251-7615**	2	PLATE-LIFTING	

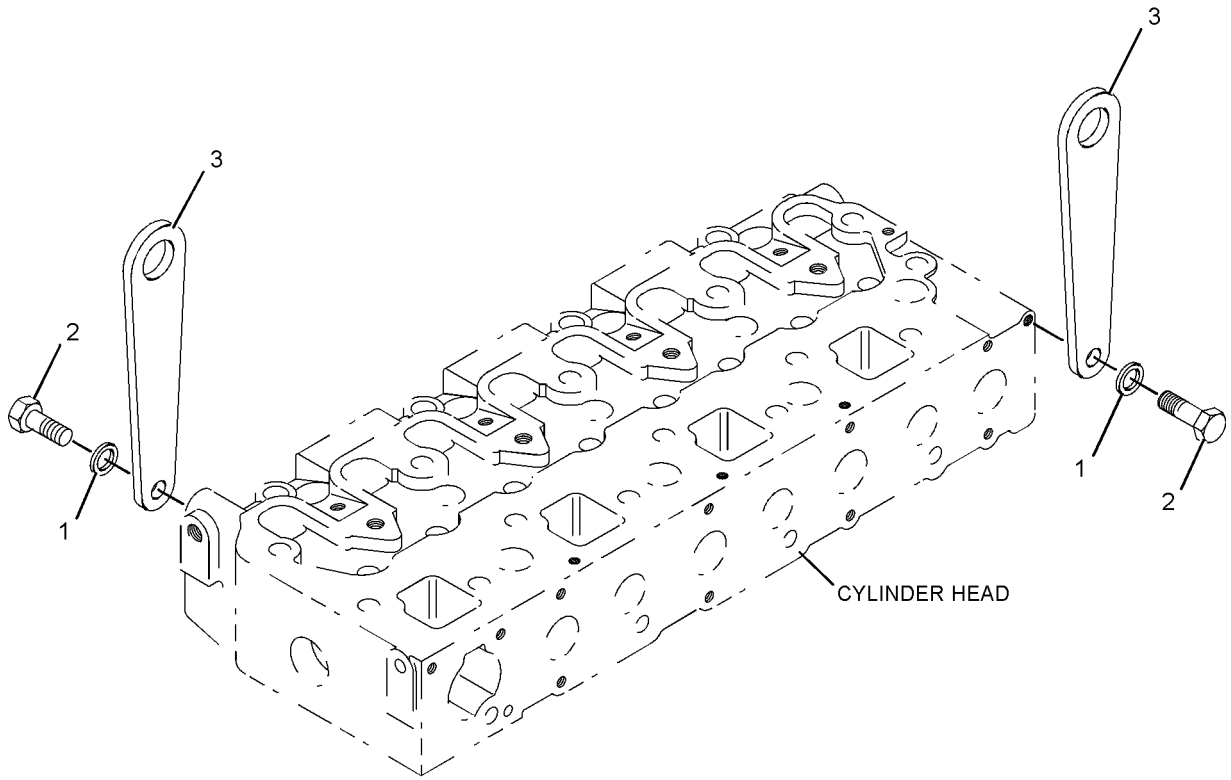

GRAPHIC #1 **<END>** g01091205

228-1764 MOUNTING GP-ENGINE—SUPPORTS

S/N: BXM4225-UP

PART OF 295-7027, 295-7028 INSTALLATION AR-ENGINE

SMCS-1152, 1153, 1154 **i02579693**

NOTE	REF NO	GRAPHIC REF	PART NUMBER	QTY	PART NAME 1 2 3 4 5 6 (PRODUCT LEVEL)	SEE PAGE
	1	1	**205-3185**	1	BRACKET AS	
	2	1	**237-0419**	1	BRACKET AS	
	3	1	**237-0420**	1	BRACKET AS	
M	4	1	**141-5453**	8	BOLT (M14X1.5X30-MM) (M14X1.5X35-MM)	
	5	1	**8T-4122**	8	WASHER-HARD (17X32X3.5-MM THK)	
M	6	1	**8T-4192**	8	BOLT (M12X1.75X25-MM)	
	7	1	**8T-4223**	8	WASHER-HARD (13.5X25.5X3-MM THK)	

M-METRIC PART

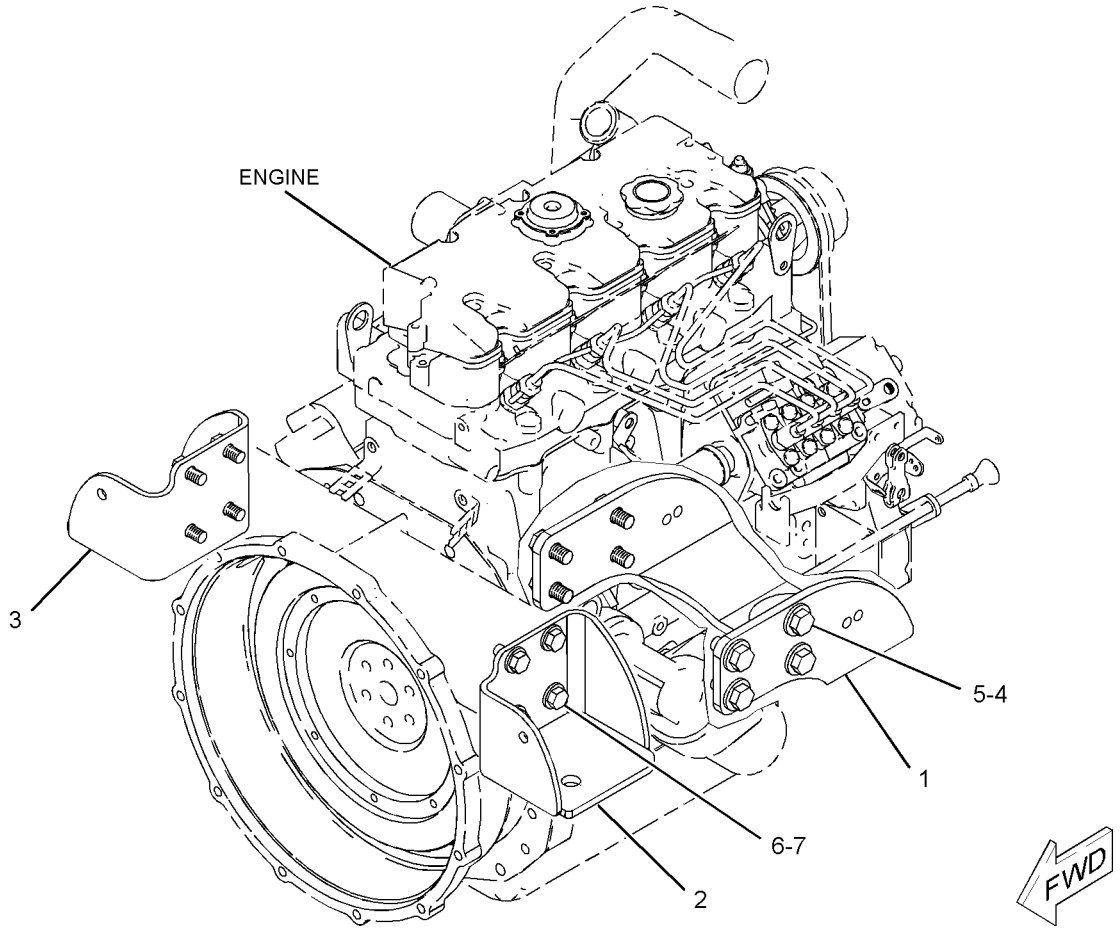

GRAPHIC #1 **<END>** g01072247

241-5789 MOUNTING GP-ENGINE—HARDWARE

S/N: BXM4225-UP

PART OF 295-7027, 295-7028 INSTALLATION AR-ENGINE

SMCS-1152, 1153, 1154 **i02003955**

NOTE	REF NO	GRAPHIC REF	PART NUMBER	QTY	PART NAME 1 2 3 4 5 6 (PRODUCT LEVEL)	SEE PAGE
	1	1	**211-9061**	3	MOUNT AS	
	2	1	**165-7095**	6	WASHER (16.5X71.5X3-MM THK)	
M	3	1	**7X-2556**	3	BOLT (M16X2X100-MM)	
	4	1	**8T-4122**	3	WASHER-HARD (17X32X3.5-MM THK)	
M	5	1	**8T-4132**	3	NUT (M16X2-THD)	

M-METRIC PART

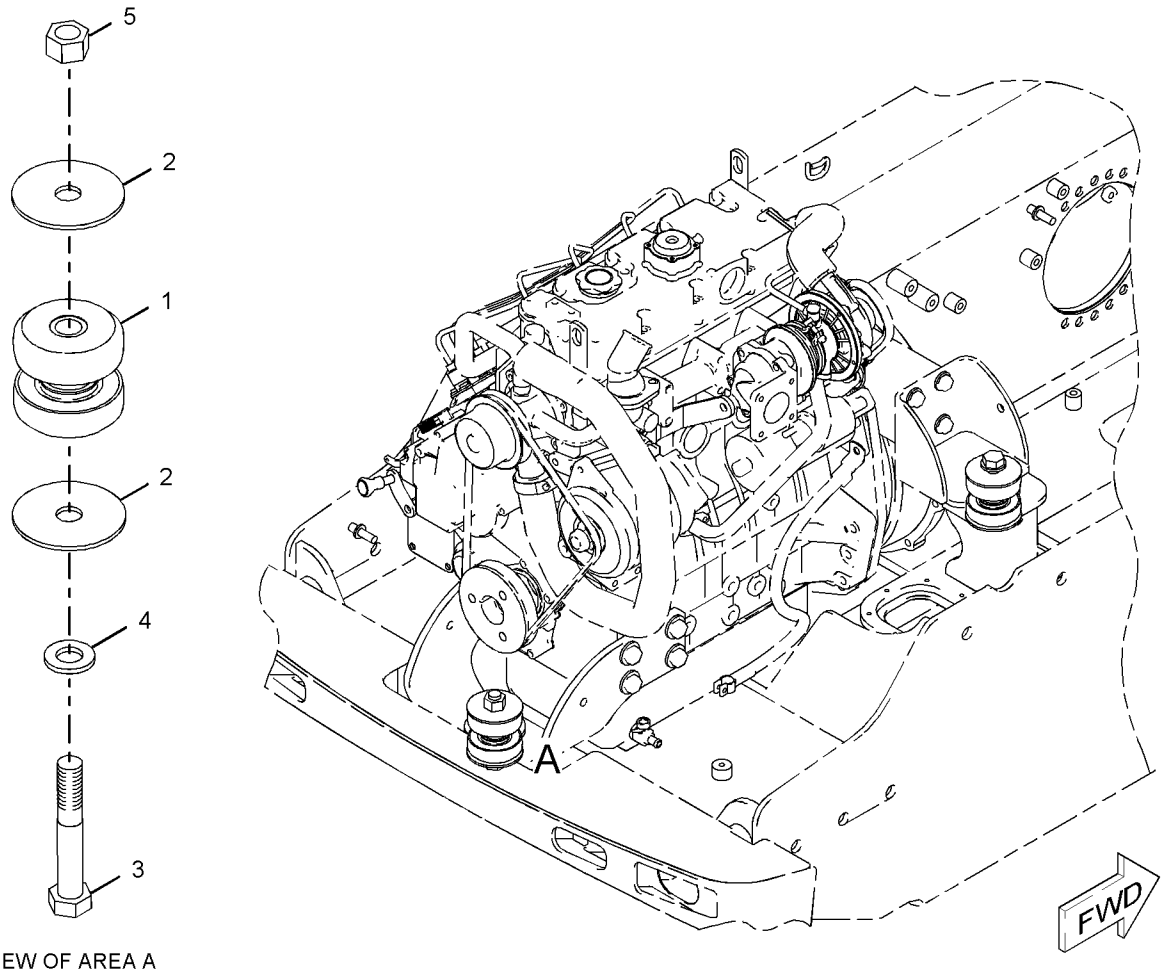

VIEW OF AREA A

GRAPHIC #1 **<END>** g01036490

BASIC ENGINE

154-2435 MOUNTING GP-FAN

S/N: CSD1-11322
PART OF 300-5206 ENGINE AR-PRIMARY
AN ATTACHMENT

SMCS-1356 **i00897568**

NOTE	REF NO	GRAPHIC REF	PART NUMBER	QTY	PART NAME 1 2 3 4 5 6 (PRODUCT LEVEL)	SEE PAGE
	1	1	**153-7640**	4	BOLT	
	2	1	**154-2433**	1	PLATE	

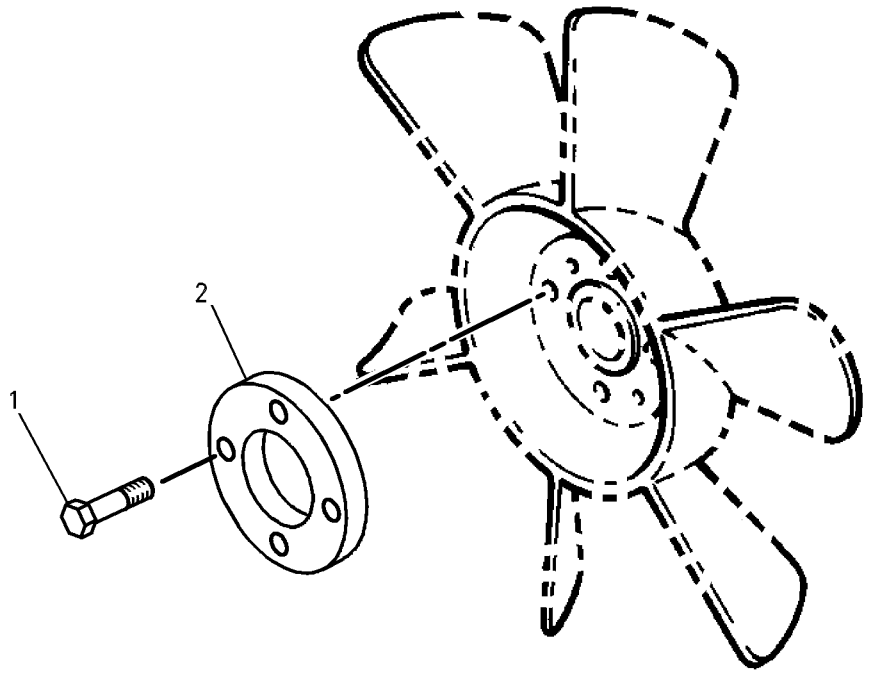

GRAPHIC #1 **<END>** g00485543

315-7813 MOUNTING GP-FAN

S/N: CYP1-UP
PART OF 292-5719 ENGINE AR-PRIMARY
AN ATTACHMENT

SMCS-1356 **i02810575**

NOTE	REF NO	GRAPHIC REF	PART NUMBER	QTY	PART NAME 1 2 3 4 5 6 (PRODUCT LEVEL)	SEE PAGE
	1	1	**153-7640**	4	BOLT	
	2	1	**154-2433**	1	PLATE	

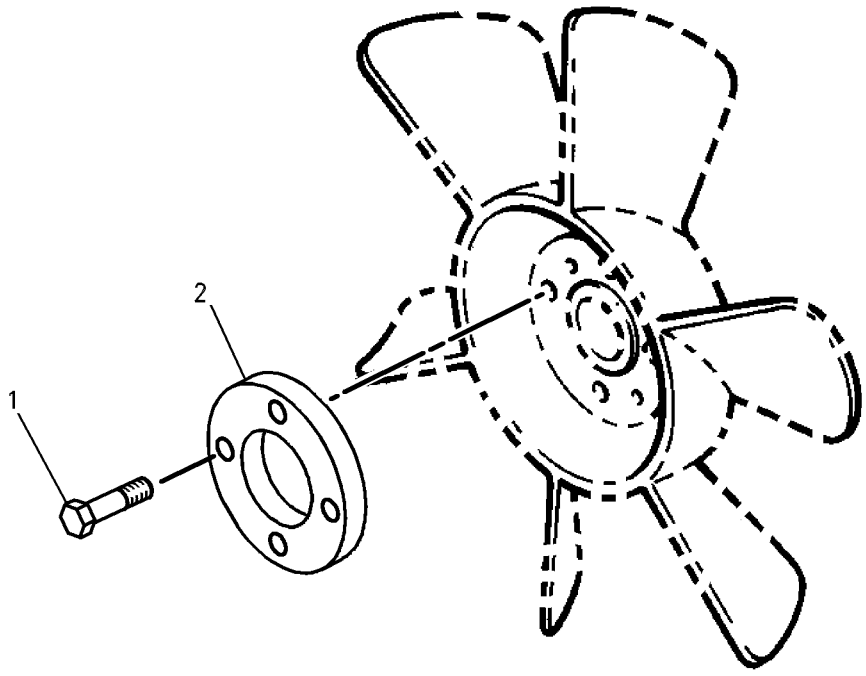

GRAPHIC #1 **<END>** g00485543

BASIC ENGINE

311-2345 PAN GP-OIL

S/N: CSD1-11322
PART OF 300-5206 ENGINE AR-PRIMARY
AN ATTACHMENT

SMCS-1302 **i02810882**

NOTE	REF NO	GRAPHIC REF	PART NUMBER	QTY	PART NAME 1 2 3 4 5 6 (PRODUCT LEVEL)	SEE PAGE
	1	2	**6I-1201**	1	SEAL-O-RING	
	2	2	**118-9145**	1	CONNECTOR	
	3	2	**153-5933**	1	SEAL	
	4	3	**153-5936**	2	WASHER	
	5	1	**153-6412**	2	WASHER	
	6	1	**153-6833**	30	BOLT	
	7	1	**153-6835**	1	SEAL-O-RING	
	8	1,2	**153-6838**	3	BOLT	
	9	2	**153-6841**	2	SEAL-O-RING	
	10	3	**153-6848**	1	COVER	
	11	3	**153-6849**	1	SPRING	
	12	3	**153-6850**	1	COLLAR	
	13	3	**153-6851**	1	CLIP	
	14	3	**153-6853**	1	SEAL-O-RING	
	15	2	**153-6879**	1	STUD-HOLLOW	
	16	3	**153-6881**	1	BOLT	
	17	3	**154-1942**	1	VALVE-RELIEF	
	18	3	**154-2353**	1	TUBE AS-OIL	
	19	2	**155-8084**	1	WASHER	
	20	2	**156-7347**	1	TUBE AS	
B	21	3	**160-4150**	1	SHIM (0.1-MM THK)	
B		3	**160-4151**	1	SHIM (0.15-MM THK)	
B		3	**160-4152**	1	SHIM (0.2-MM THK)	
B		3	**160-4153**	1	SHIM (0.5-MM THK)	
	22	2	**164-7619**	1	SEAL-O-RING	
	23	2	**198-2663**	1	BOLT	
	24	1	**215-2605**	1	GASKET	
	25	1	**217-7352**	1	COVER-VALVE	
	26	2	**217-7358**	1	CAP (ENGINE OIL FILLER)	
	27	1	**218-2333**	1	PAN-OIL	
	28	1	**218-2334**	1	PLUG-DRAIN (ENGINE OIL)	
	29	2	**220-1523**	1	FILTER ELEMENT AS-ENGINE OIL	
	30	2	**231-8920**	1	BOLT	
C	31	1	**312-4560**	1	VALVE-DRAIN	
	32	2	**252-0787**	1	SEAL-O-RING	
	33	2	**252-0788**	1	BASE-OIL FILTER	
	34	2	**293-4781**	1	GAUGE AS-OIL LEVEL (DIPSTICK) (ENGINE)	
	35	3	**296-5162**	1	ROTOR	
	36	1	**305-0584**	1	STRAINER (ENGINE OIL)	
C	37	1	**316-1016**	1	PIPE-SUCTION	
	38	2	**311-2349**	1	WASHER	

B-USE AS REQUIRED
C-CHANGE FROM PREVIOUS TYPE

311-2345 **PAN GP-OIL** *(contd.)* **i02810882**

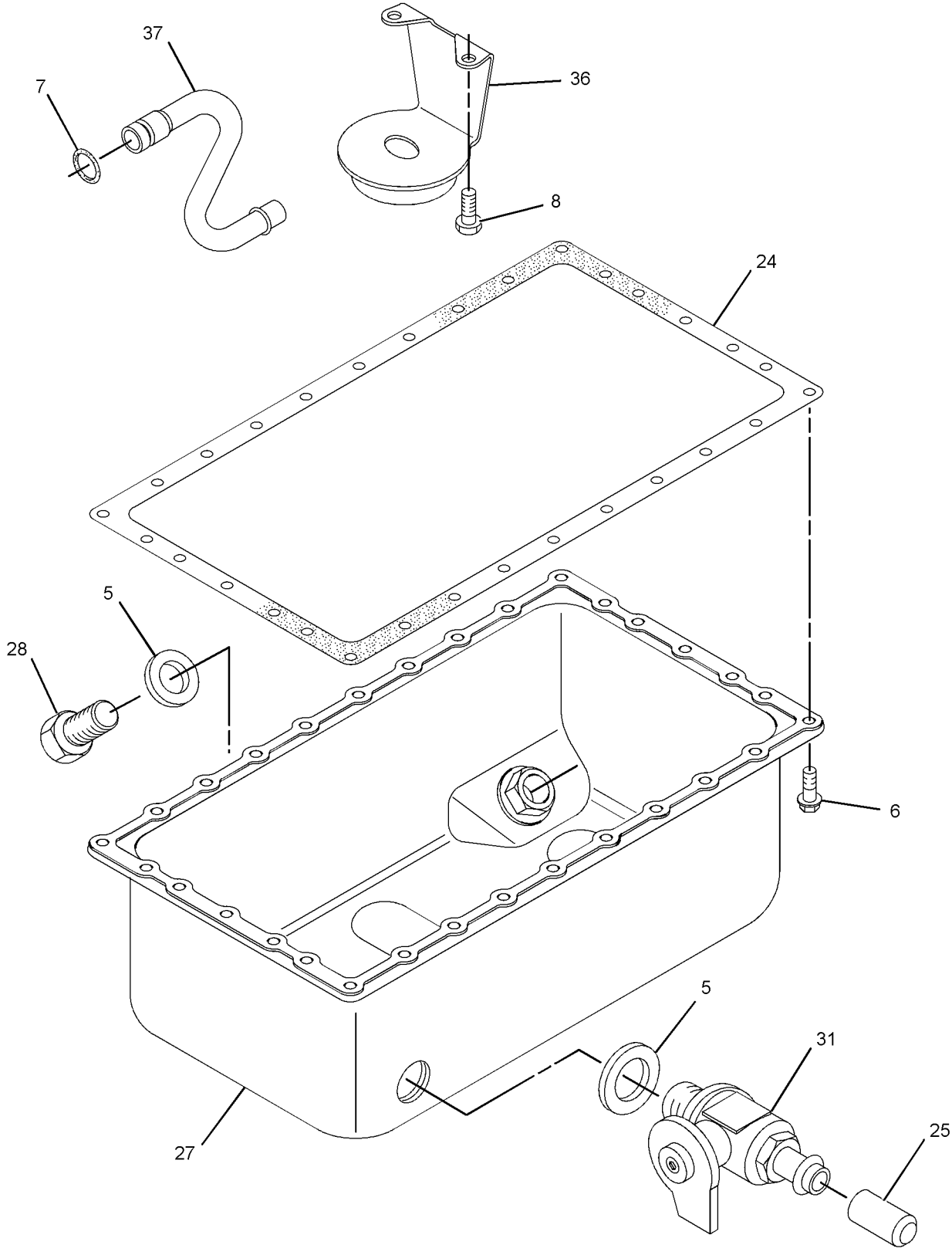

GRAPHIC #1 g01392649

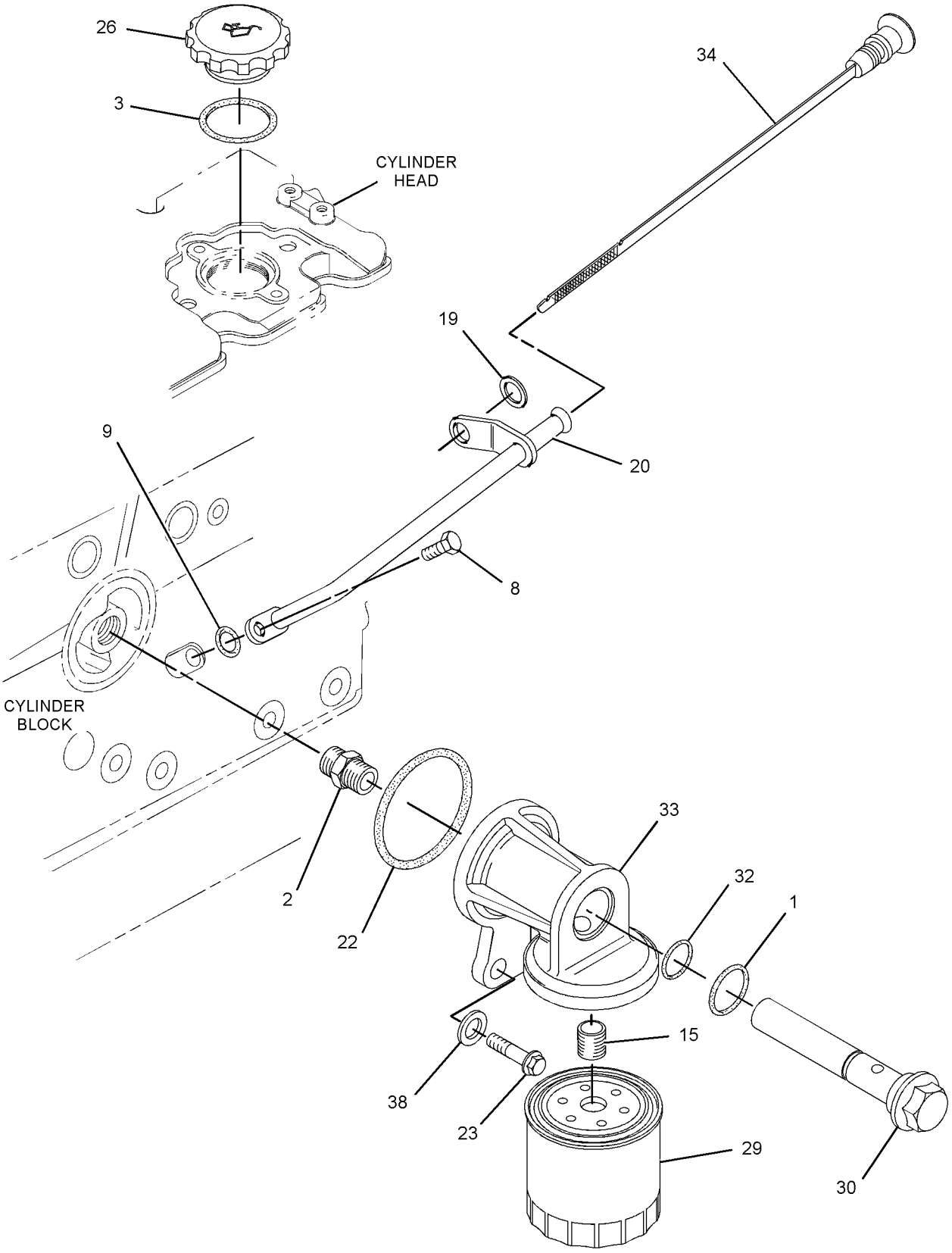

GRAPHIC #2

g01392650

311-2345 **PAN GP-OIL** *(contd.)* **i02810882**

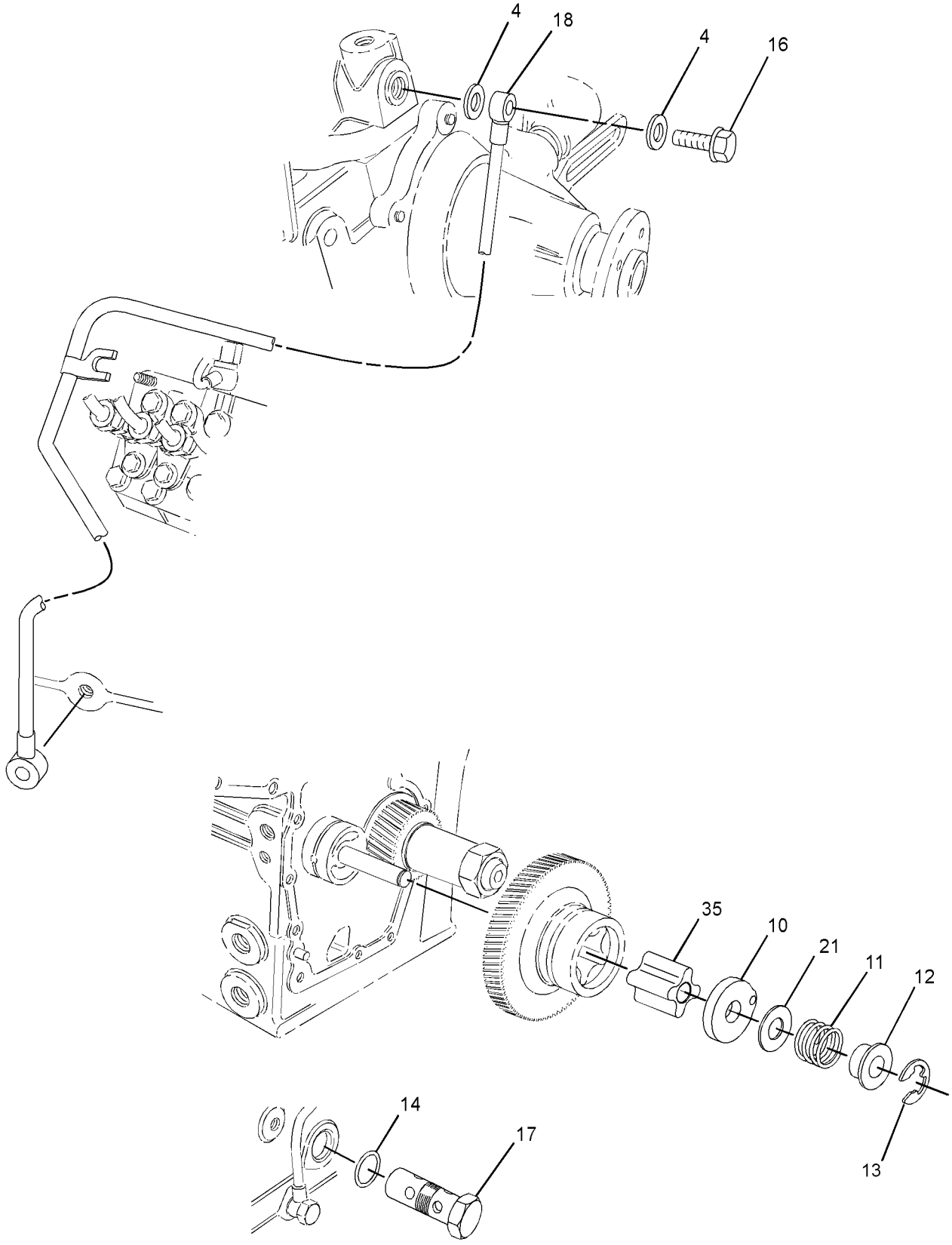

GRAPHIC #3 **<END>** g01392652

BASIC ENGINE

316-6997 PAN GP-OIL

S/N: CYP1-UP
PART OF 292-5719 ENGINE AR-PRIMARY
AN ATTACHMENT

SMCS-1302 **i02826911**

NOTE	REF NO	GRAPHIC REF	PART NUMBER	QTY	PART NAME 1 2 3 4 5 6 (PRODUCT LEVEL)	SEE PAGE
	1	1	**153-6833**	30	BOLT	
	2	1	**153-6835**	1	SEAL-O-RING	
	3	1	**153-6838**	2	BOLT	
	4	1	**215-2605**	1	GASKET	
	5	1	**218-2333**	1	PAN-OIL	
	6	1	**305-0584**	1	STRAINER (ENGINE OIL)	
	7	1	**316-1016**	1	PIPE-SUCTION	

316-6997 **PAN GP-OIL** *(contd.)* **i02826911**

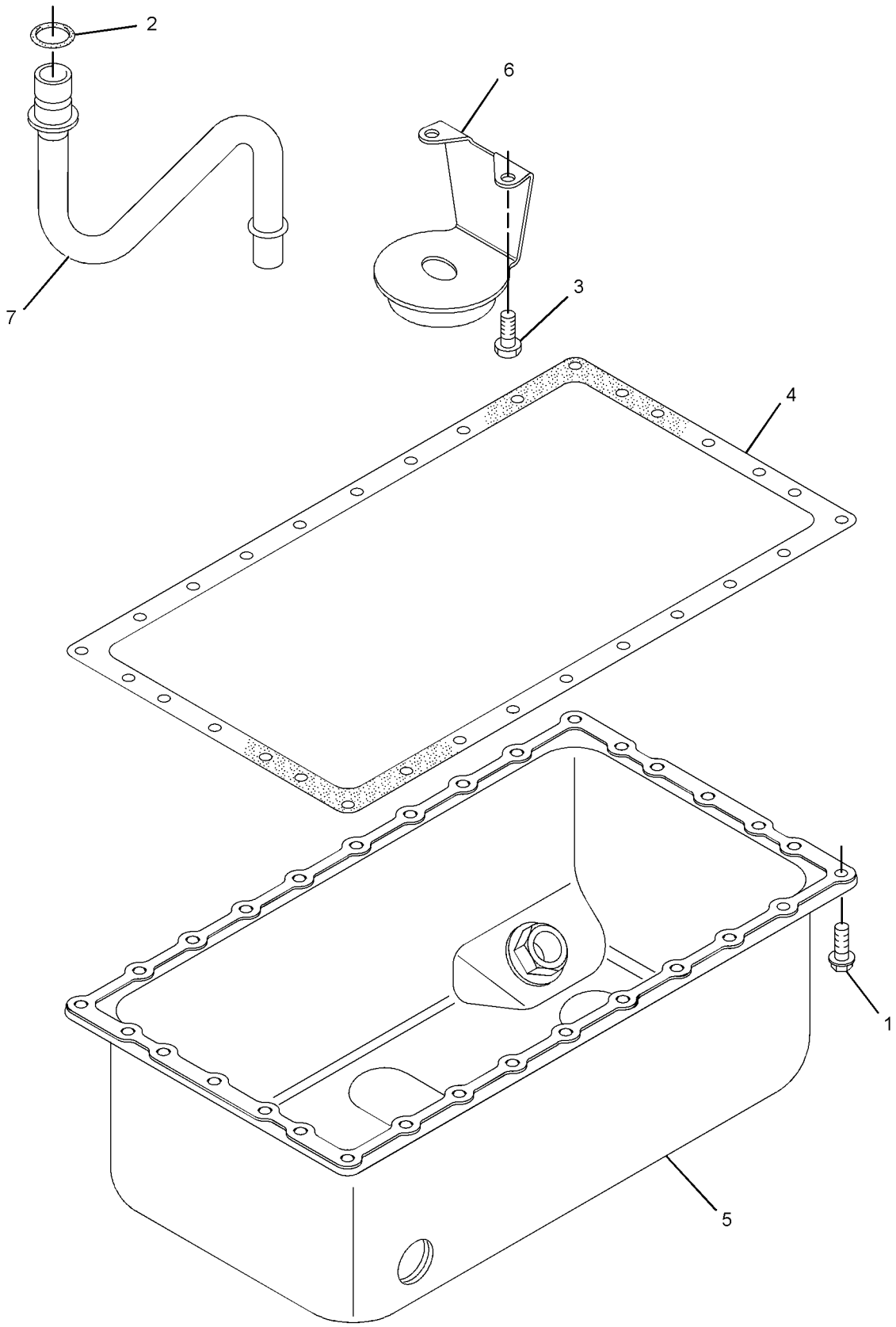

GRAPHIC #1 **<END>** g01439578

BASIC ENGINE

270-6930 PISTON & ROD GP

S/N: CSD1-11322
23.3:1 COMPRESSION RATIO
PART OF 300-5206 ENGINE AR-PRIMARY
AN ATTACHMENT

SMCS-1225 **i02817674**

NOTE	REF NO	GRAPHIC REF	PART NUMBER	QTY	PART NAME 1 2 3 4 5 6 (PRODUCT LEVEL)	SEE PAGE
	1	1	**146-7808**	4	KIT-BEARING (ROD)	
		1	**307-9855**	1	KIT-BEARING (ROD) (0.25-MM OS)	
		1	**307-9856**	1	KIT-BEARING (ROD) (0.50-MM OS)	
	2	1	**154-0867**	4	ROD AS-CONNECTING	
					(EACH INCLUDES)	
	2A	1	**154-0869**	1	BUSHING	
	2B	1	**154-0870**	2	BOLT	
	2C	1	**154-0871**	2	NUT	
	3	1	**154-0873**	1	PIN	
	4	1	**154-0874**	2	CLIP	
	5	1	**270-6968**	4	PISTON AS	
					(EACH INCLUDES)	
	5A	1	**270-6970**	4	KIT-PISTON RING	

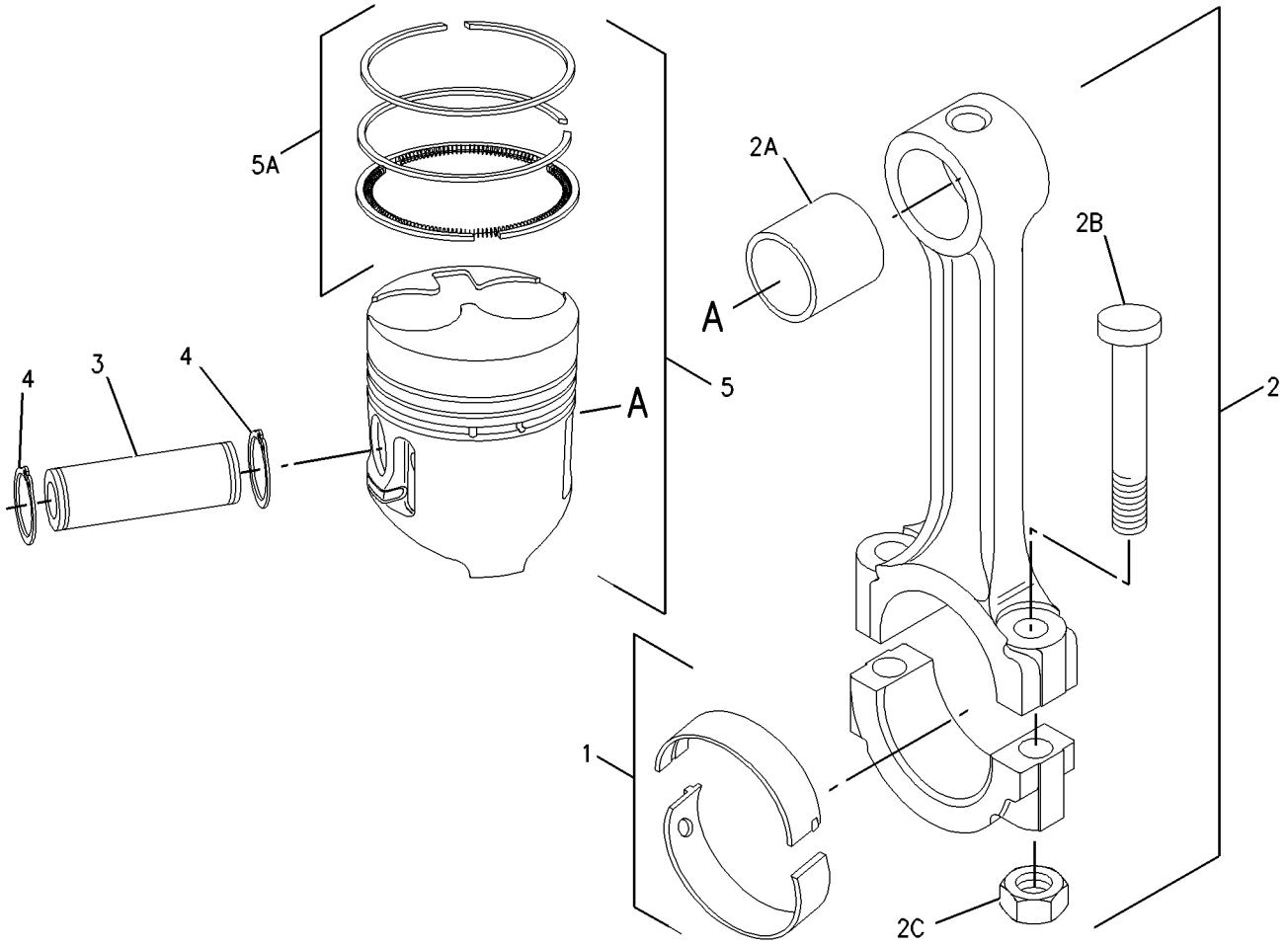

GRAPHIC #1 **<END>** g01006481

308-2286 PISTON & ROD GP

S/N: CYP1-UP
PART OF 292-5719 ENGINE AR-PRIMARY
AN ATTACHMENT

SMCS-1225 **i02752166**

NOTE	REF NO	GRAPHIC REF	PART NUMBER	QTY	PART NAME 1 2 3 4 5 6 (PRODUCT LEVEL)	SEE PAGE
	1	1	**154-0867**	4	ROD AS-CONNECTING	
					(EACH INCLUDES)	
	1A	1	**154-0869**	1	BUSHING	
	1B	1	**154-0870**	2	BOLT	
	1C	1	**154-0871**	2	NUT	
	2	1	**154-0873**	1	PIN	
	3	1	**154-0874**	2	CLIP	
	4	1	**270-6968**	4	PISTON AS	
					(EACH INCLUDES)	
	4A	1	**270-6970**	1	KIT-PISTON RING	

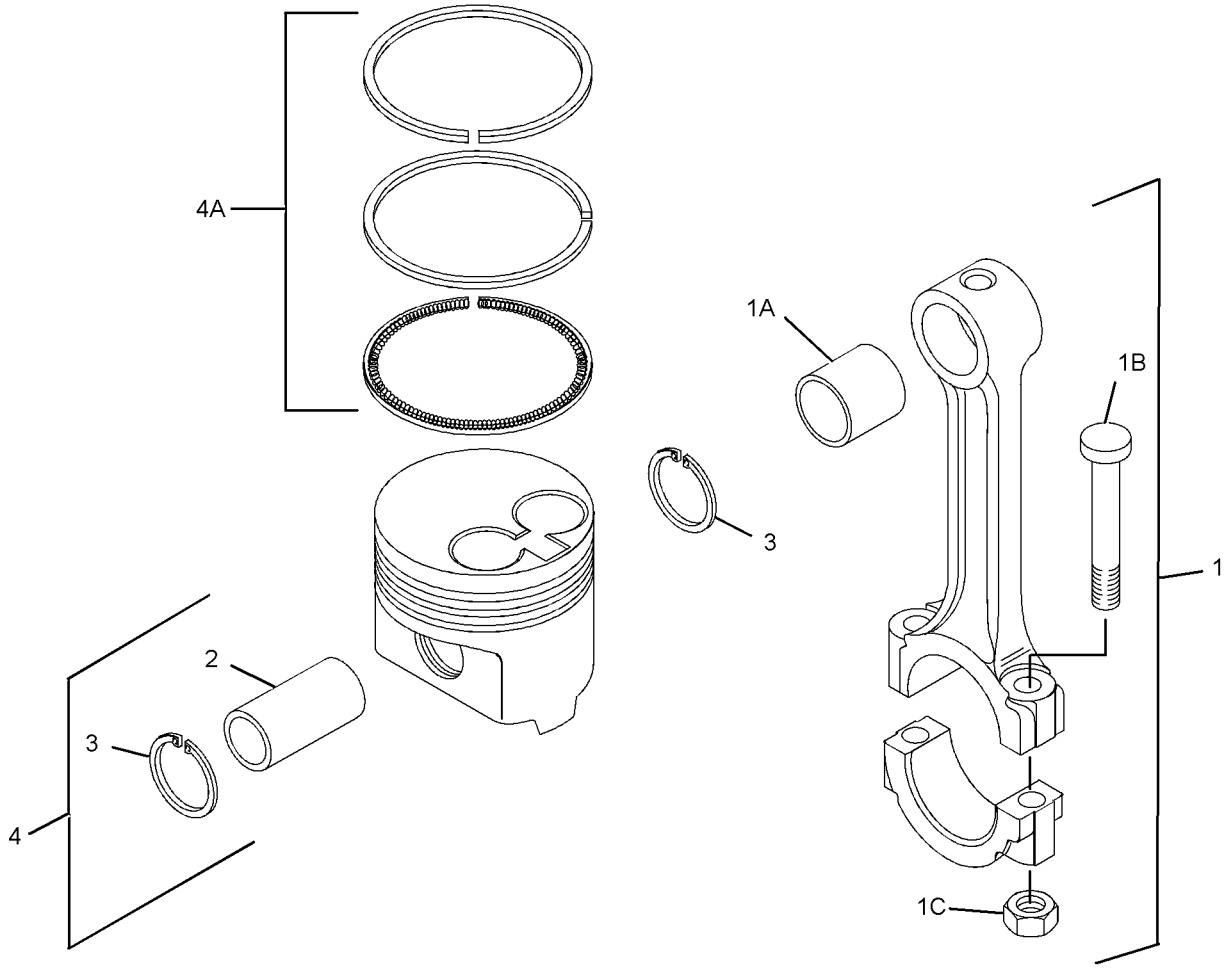

GRAPHIC #1 **<END>** g01410074

315-5252 PLUG GP-ENGINE

S/N: CYP1-UP
PART OF 292-5719 ENGINE AR-PRIMARY
AN ATTACHMENT

SMCS-1000 **i02810593**

NOTE	REF NO	GRAPHIC REF	PART NUMBER	QTY	PART NAME 1 2 3 4 5 6 (PRODUCT LEVEL)	SEE PAGE
	1	1	**153-6412**	2	WASHER	
	2	1	**218-2334**	1	PLUG-DRAIN (ENGINE OIL PAN)	
	3	1	**312-4560**	1	VALVE-DRAIN	

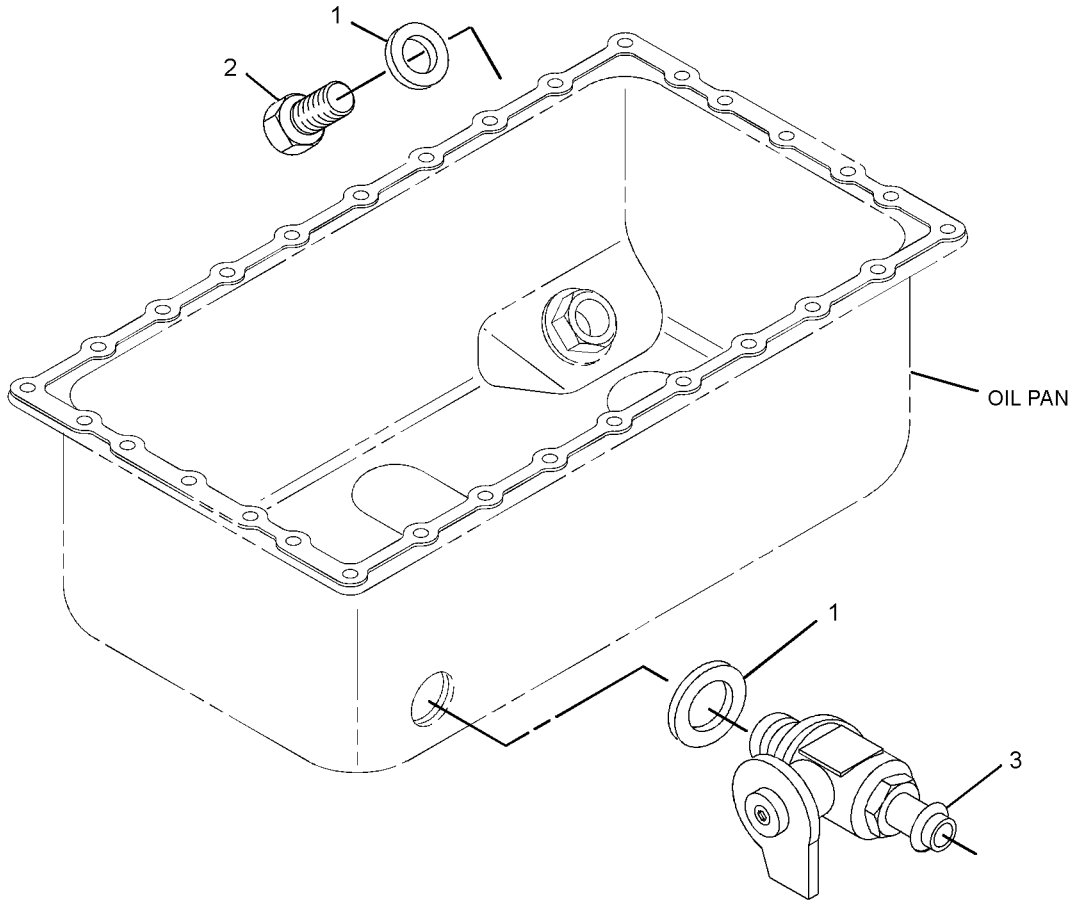

GRAPHIC #1 **<END>** g01414783

217-2777 PULLEY GP-CRANKSHAFT

S/N: CSD1-11322
PART OF 300-5206 ENGINE AR-PRIMARY
AN ATTACHMENT

SMCS-1205 **i01649069**

NOTE	REF NO	GRAPHIC REF	PART NUMBER	QTY	PART NAME 1 2 3 4 5 6 (PRODUCT LEVEL)	SEE PAGE
	1	1	**153-5592**	4	NUT	
	2	1	**153-6492**	1	KEY-WOODRUFF	
	3	1	**153-6494**	1	GASKET	
	4	1	**153-6497**	1	SEAL-O-RING	
	5	1	**154-1880**	1	NUT	
	6	1	**154-1882**	2	PLATE	
	7	1	**180-6115**	4	BOLT	
	8	1	**217-2776**	1	PULLEY-CRANKSHAFT	

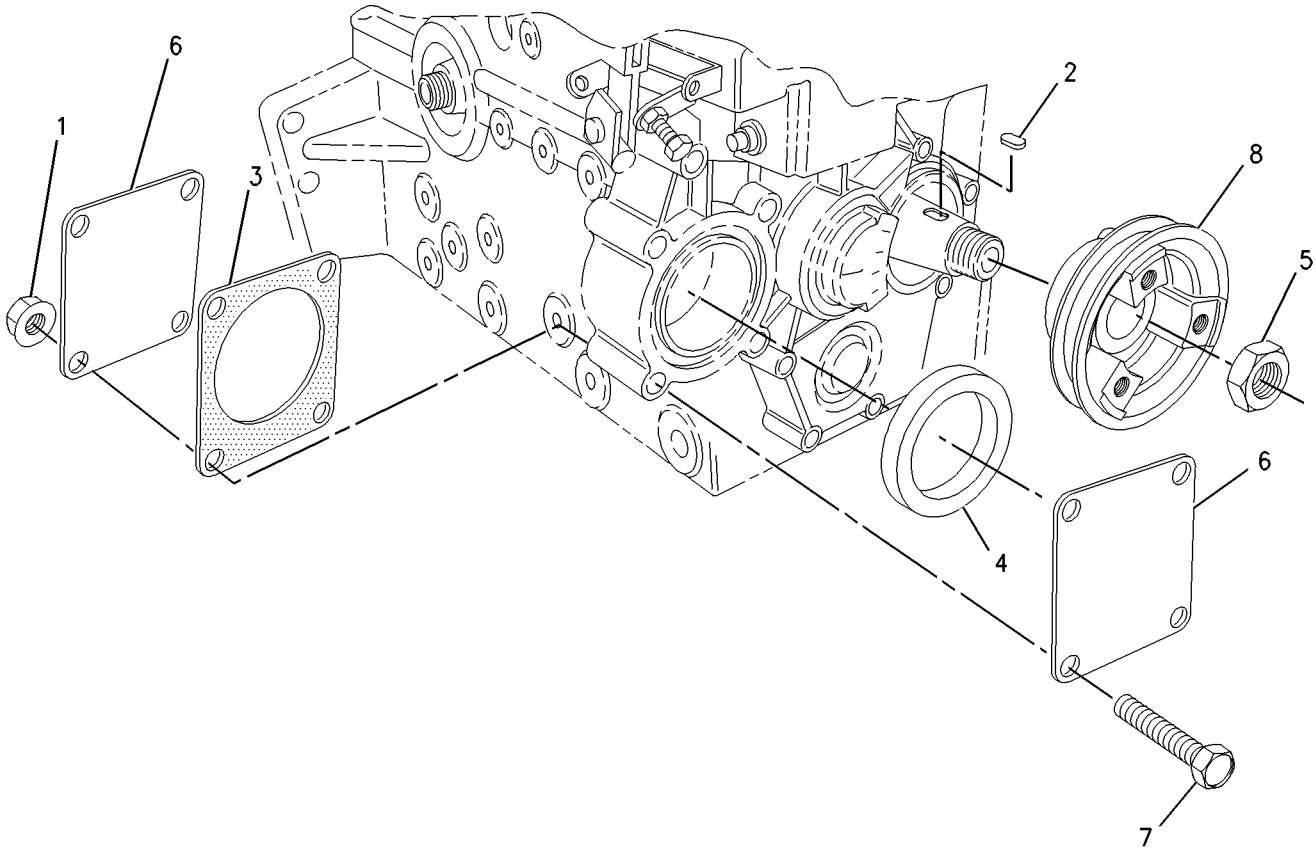

GRAPHIC #1 **<END>** g00852781

308-2300 PULLEY GP-CRANKSHAFT

S/N: CYP1-UP
PART OF 292-5719 ENGINE AR-PRIMARY
AN ATTACHMENT

SMCS-1205 **i02752268**

NOTE	REF NO	GRAPHIC REF	PART NUMBER	QTY	PART NAME 1 2 3 4 5 6 (PRODUCT LEVEL)	SEE PAGE
	1	1	**153-6492**	1	KEY-WOODRUFF	
	2	1	**154-1880**	1	NUT	
	3	1	**217-2776**	1	PULLEY-CRANKSHAFT	

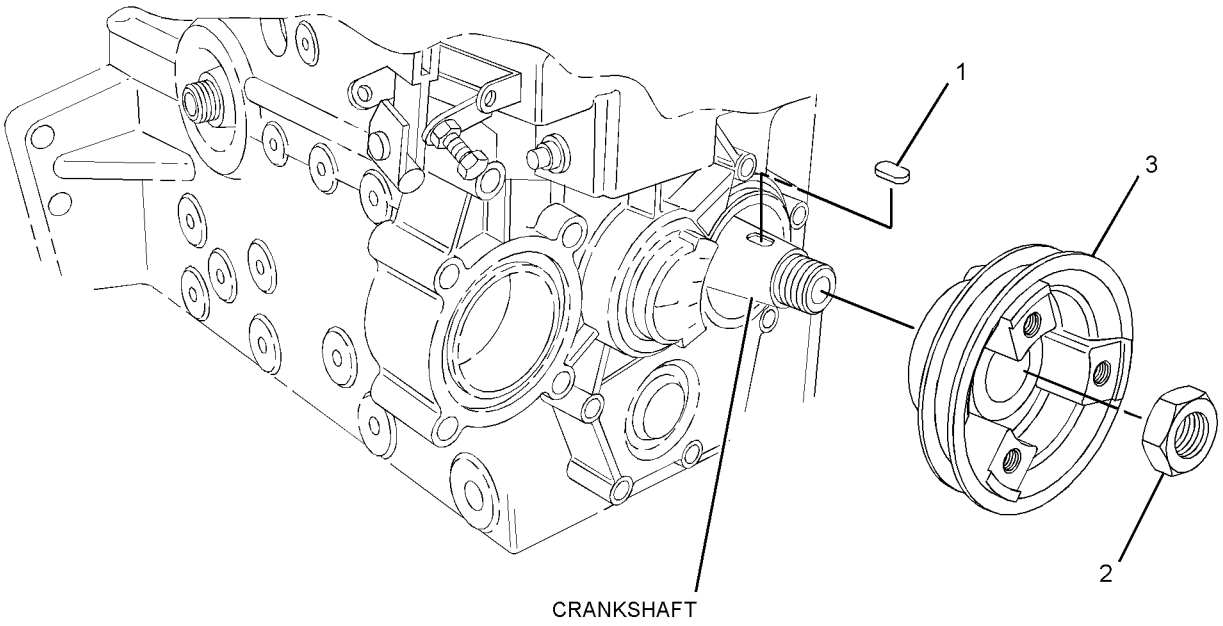

GRAPHIC #1 **<END>** g01390599

251-6791 PULLEY GP-WATER PUMP

S/N: CSD1-11322
PART OF 300-5206 ENGINE AR-PRIMARY
AN ATTACHMENT

SMCS-1384 **i02089686**

NOTE	REF NO	GRAPHIC REF	PART NUMBER	QTY	PART NAME 1 2 3 4 5 6 (PRODUCT LEVEL)	SEE PAGE
	1	1	**154-1822**	1	PULLEY-WATER PUMP	
	2	1	**251-6789**	1	V-BELT (WATER PUMP)	

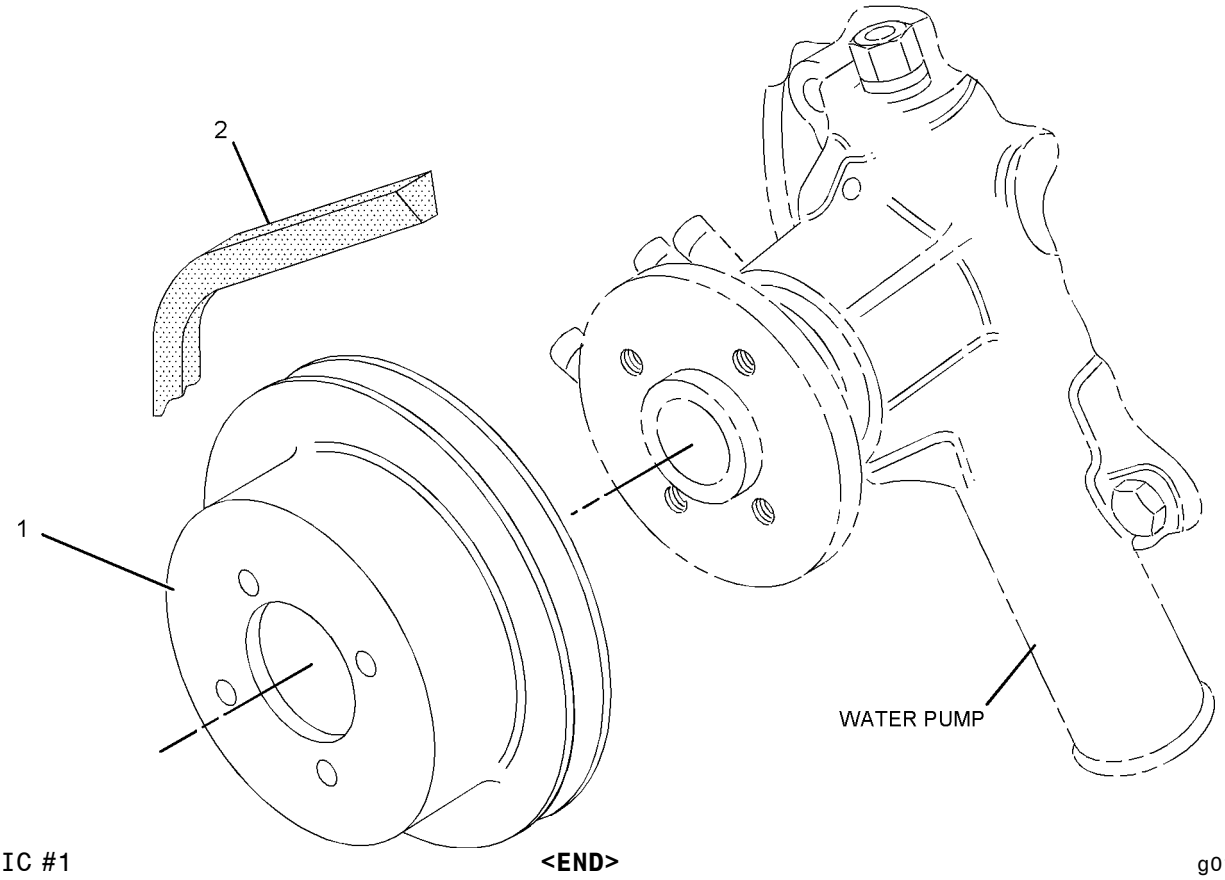

GRAPHIC #1 **<END>** g01048774

308-2294 PULLEY GP-WATER PUMP

S/N: CYP1-UP
PART OF 292-5719 ENGINE AR-PRIMARY
AN ATTACHMENT

SMCS-1384 **i02743517**

NOTE	REF NO	GRAPHIC REF	PART NUMBER	QTY	PART NAME 1 2 3 4 5 6 (PRODUCT LEVEL)	SEE PAGE
	1	1	**154-1822**	1	PULLEY-WATER PUMP	

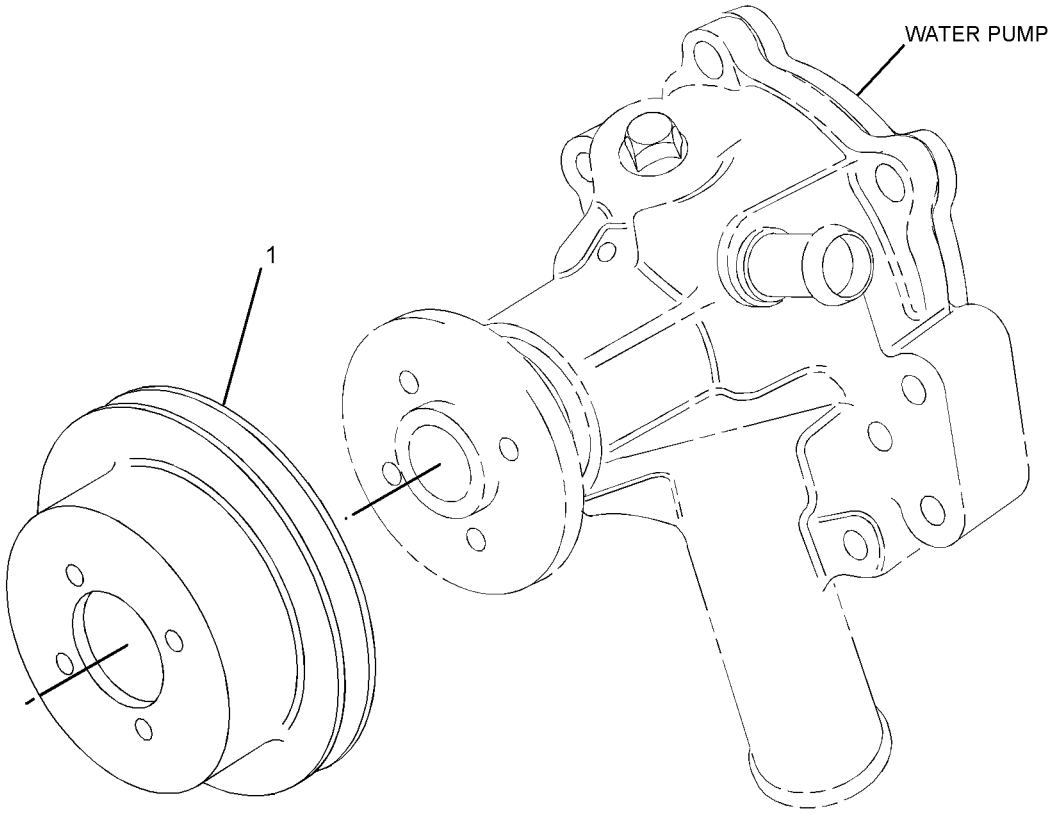

GRAPHIC #1 **<END>** g01412305

308-2306 V-BELT GP–FAN DRIVE

S/N: CYP1-UP
PART OF 292-5719 ENGINE AR-PRIMARY
AN ATTACHMENT

SMCS-1357 **i02890359**

NOTE	REF NO	GRAPHIC REF	PART NUMBER	QTY	PART NAME 1 2 3 4 5 6 (PRODUCT LEVEL)	SEE PAGE
	1	1	**211-5172**	1	V-BELT (WATER PUMP)	

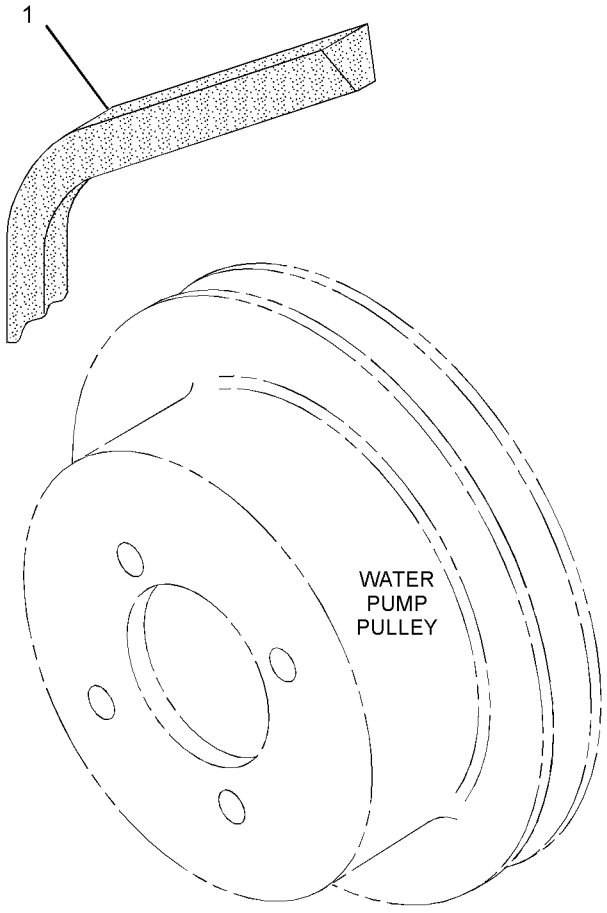

GRAPHIC #1 **<END>** g01407842

293-2167 VALVE MECHANISM GP

S/N: CSD1-11322; CYP1-UP

PART OF 303-0337 CYLINDER HEAD GP, 308-2285 VALVE MECHANISM GP

AN ATTACHMENT

SMCS-1102, 1112, 1121, 1123, 1208, 1209 **i02869546**

NOTE	REF NO	GRAPHIC REF	PART NUMBER	QTY	PART NAME 1 2 3 4 5 6 (PRODUCT LEVEL)	SEE PAGE
	1	1	**154-1243**	6	WASHER	
	2	1	**153-5587**	8	SCREW-ADJUSTMENT	
	3	1	**153-5590**	8	NUT	
	4	1	**153-6835**	1	SEAL-O-RING	
	5	1	**206-3499**	1	SHAFT-ROCKER ARM	
	7	1	**154-1240**	4	LEVER-RH	
	8	1	**154-1241**	4	LEVER-LH	
	9	1	**154-1242**	3	SPRING	

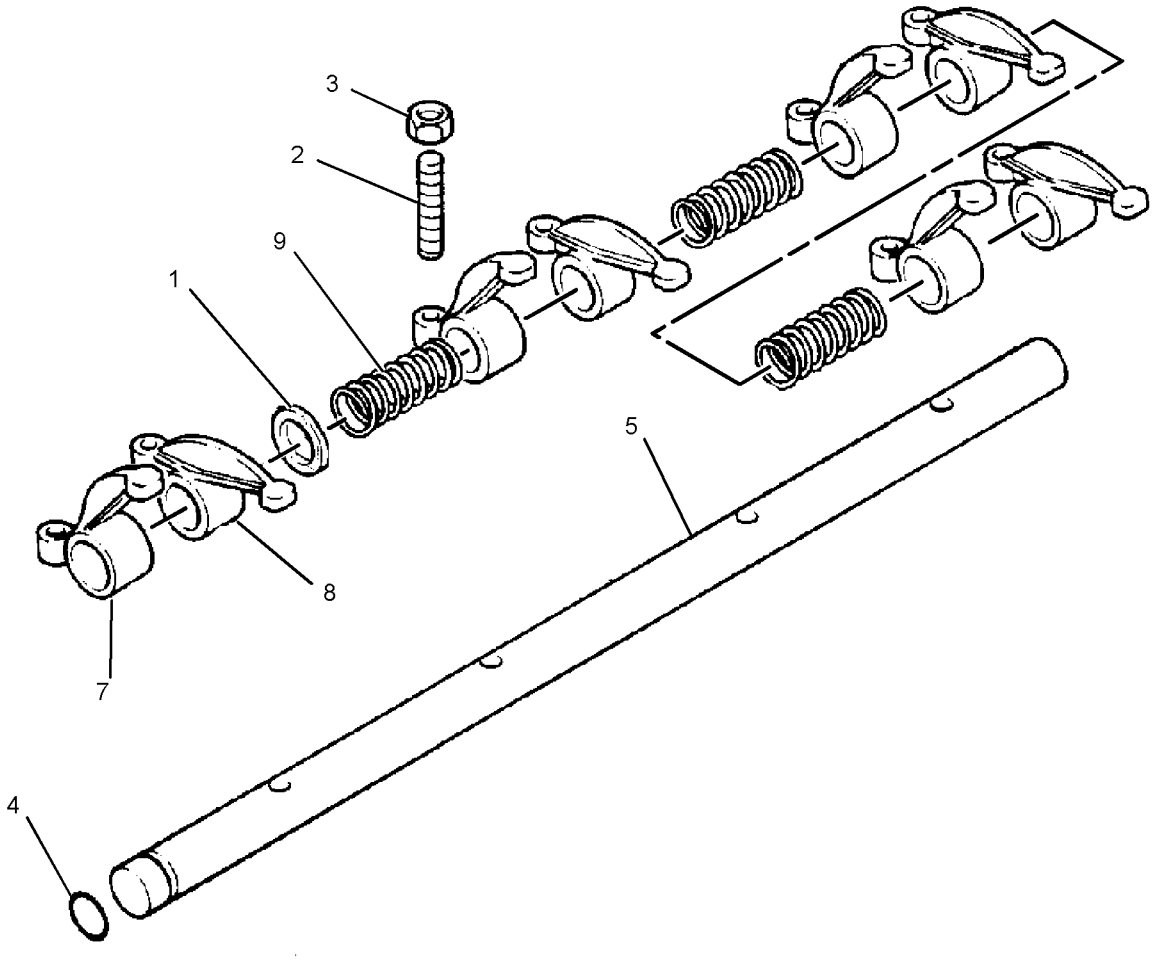

GRAPHIC #1 **<END>** g01395519

308-2285 VALVE MECHANISM GP

S/N: CYP1-UP

PART OF 292-5719 ENGINE AR-PRIMARY

AN ATTACHMENT

SMCS-1102, 1112, 1121, 1123, 1208, 1209 **i02752240**

NOTE	REF NO	GRAPHIC REF	PART NUMBER	QTY	PART NAME 1 2 3 4 5 6 (PRODUCT LEVEL)	SEE PAGE
	1	1	**153-5961**	2	BOLT	
	2	1	**153-7988**	4	NUT	
	3	1	**154-1246**	4	STUD	
	4	1	**154-1248**	8	ROD	
	5	1	**154-1249**	8	TAPPET	
	6	1	**217-2752**	1	GASKET (VALVE BRACKET)	
Y	7	1	**293-2167**	1	VALVE MECHANISM GP	70

Y-SEPARATE ILLUSTRATION

308-2285 **VALVE MECHANISM GP** *(contd.)* **i02752240**

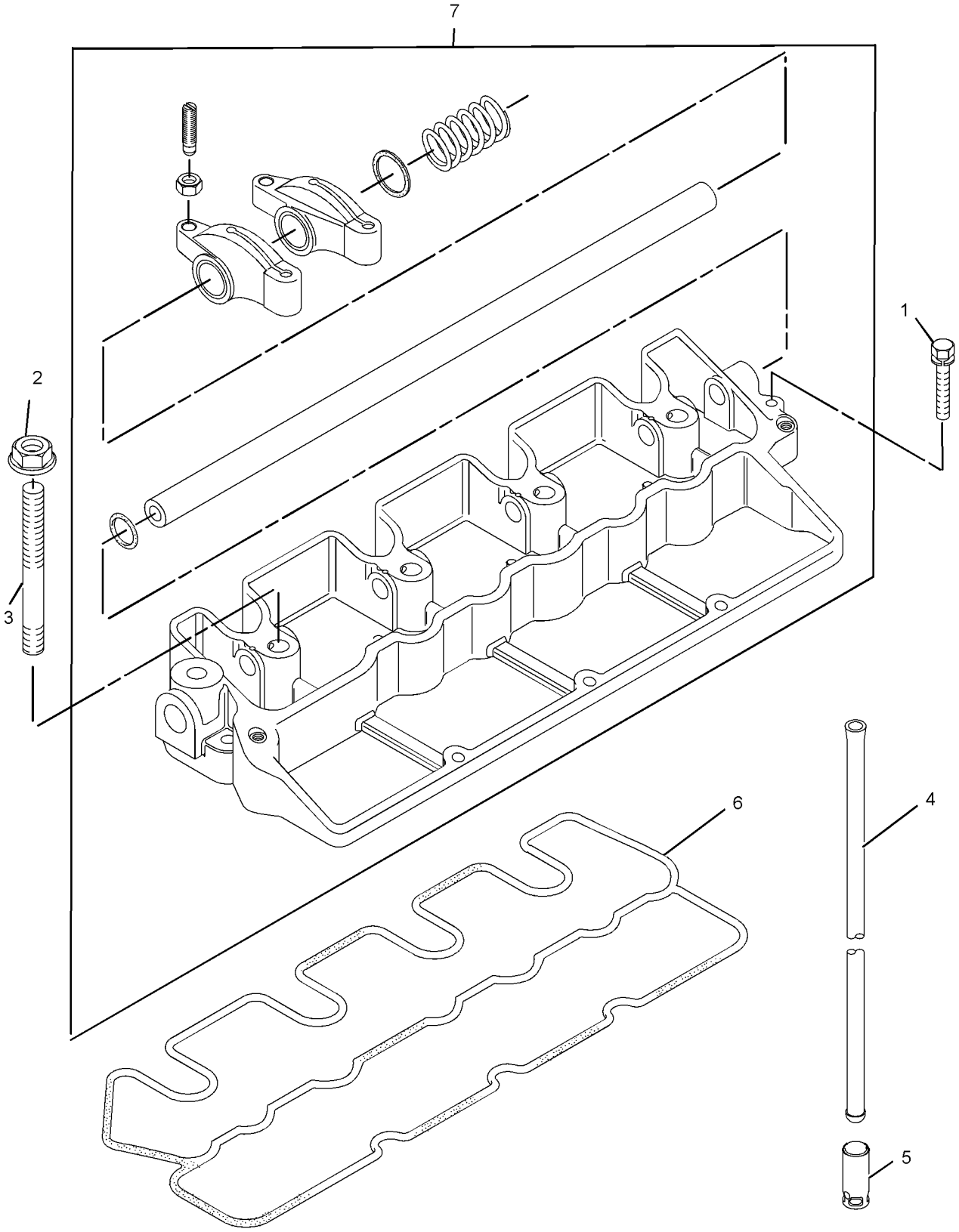

GRAPHIC #1 **<END>** g01409366

308-2297 FILLER GP-ENGINE OIL—ENGINE

S/N: CYP1-UP
PART OF 292-5719 ENGINE AR-PRIMARY
AN ATTACHMENT

SMCS-1316 **i02743497**

NOTE	REF NO	GRAPHIC REF	PART NUMBER	QTY	PART NAME 1 2 3 4 5 6 (PRODUCT LEVEL)	SEE PAGE
	1	1	**153-5933**	1	SEAL	
	2	1	**217-7358**	1	CAP (ENGINE OIL FILLER)	
	3	1	**288-6593**	1	SEAL	
	4	1	**289-6120**	1	CAP-OIL FILLER (ENGINE)	

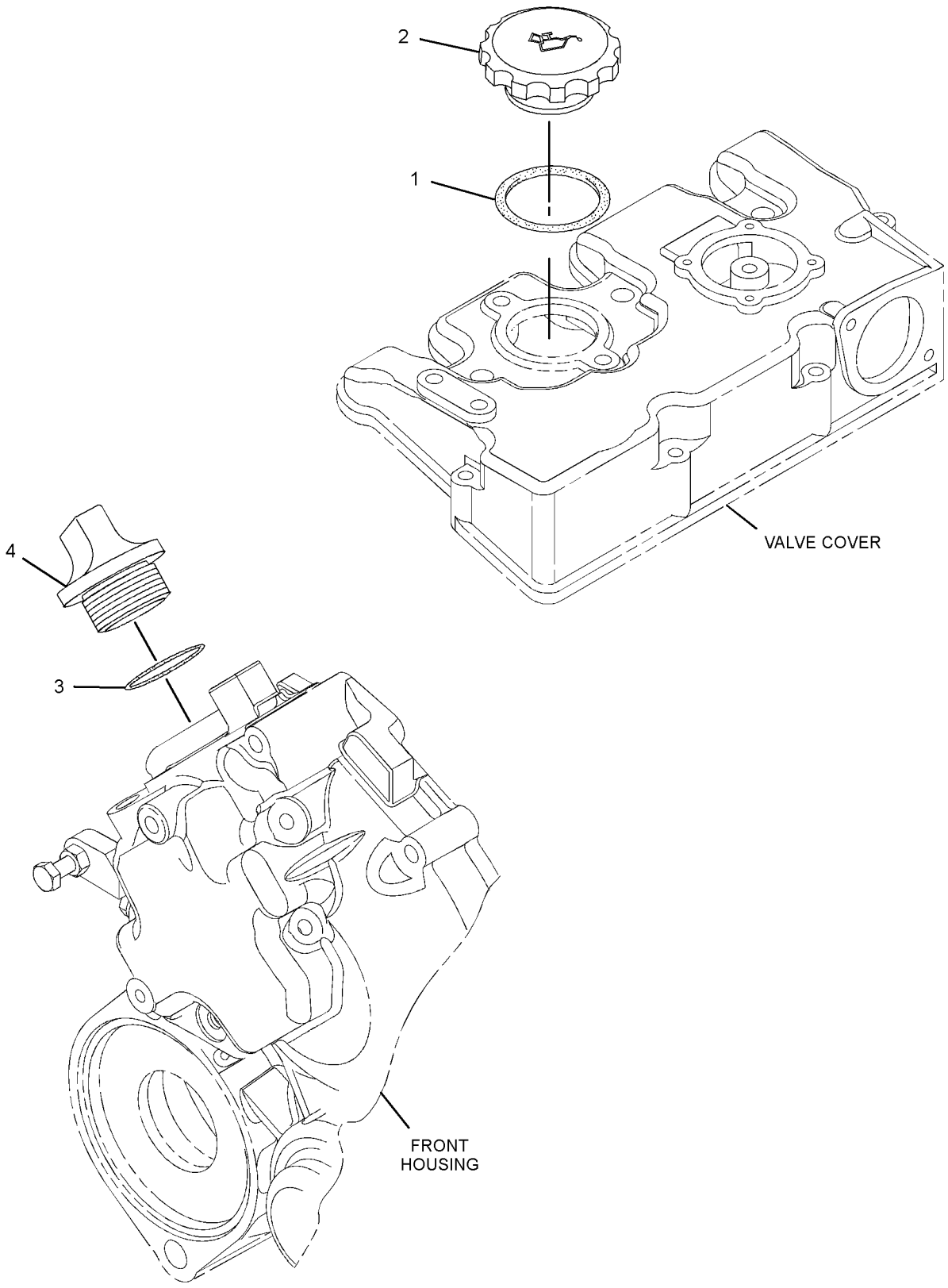

GRAPHIC #1 **<END>** g01412730

308-2287 PUMP GP-ENGINE OIL

S/N: CYP1-UP
PART OF 292-5719 ENGINE AR-PRIMARY
AN ATTACHMENT

SMCS-1304, 1315 **i02877258**

NOTE	REF NO	GRAPHIC REF	PART NUMBER	QTY	PART NAME 1 2 3 4 5 6 (PRODUCT LEVEL)	SEE PAGE
	1	1	**153-5936**	2	WASHER	
	2	1	**153-6849**	1	SPRING	
	3	1	**153-6850**	1	COLLAR	
	4	1	**153-6851**	1	CLIP	
	5	1	**153-6853**	1	SEAL-O-RING	
	6	1	**153-6881**	1	BOLT	
	7	1	**154-1942**	1	VALVE-RELIEF	
	8	1	**154-2353**	1	TUBE AS-OIL	
B	9	1	**160-4150**	1	SHIM (0.1-MM THK)	
B		1	**160-4151**	1	SHIM (0.15-MM THK)	
B		1	**160-4152**	1	SHIM (0.2-MM THK)	
B		1	**160-4153**	1	SHIM (0.5-MM THK)	
	10	1	**318-8382**	1	GEAR GP-IDLER	
	10A	1	**154-1677**	3	BUSHING	
	10B	1	**154-1678**	3	DOWEL	
	10C	1	**308-1984**	1	SPRING	
	11	1	**308-1867**	1	WASHER-THRUST	
	12	1	**308-1869**	1	COVER	

B-USE AS REQUIRED

308-2287 **PUMP GP-ENGINE OIL** *(contd.)* **i02877258**

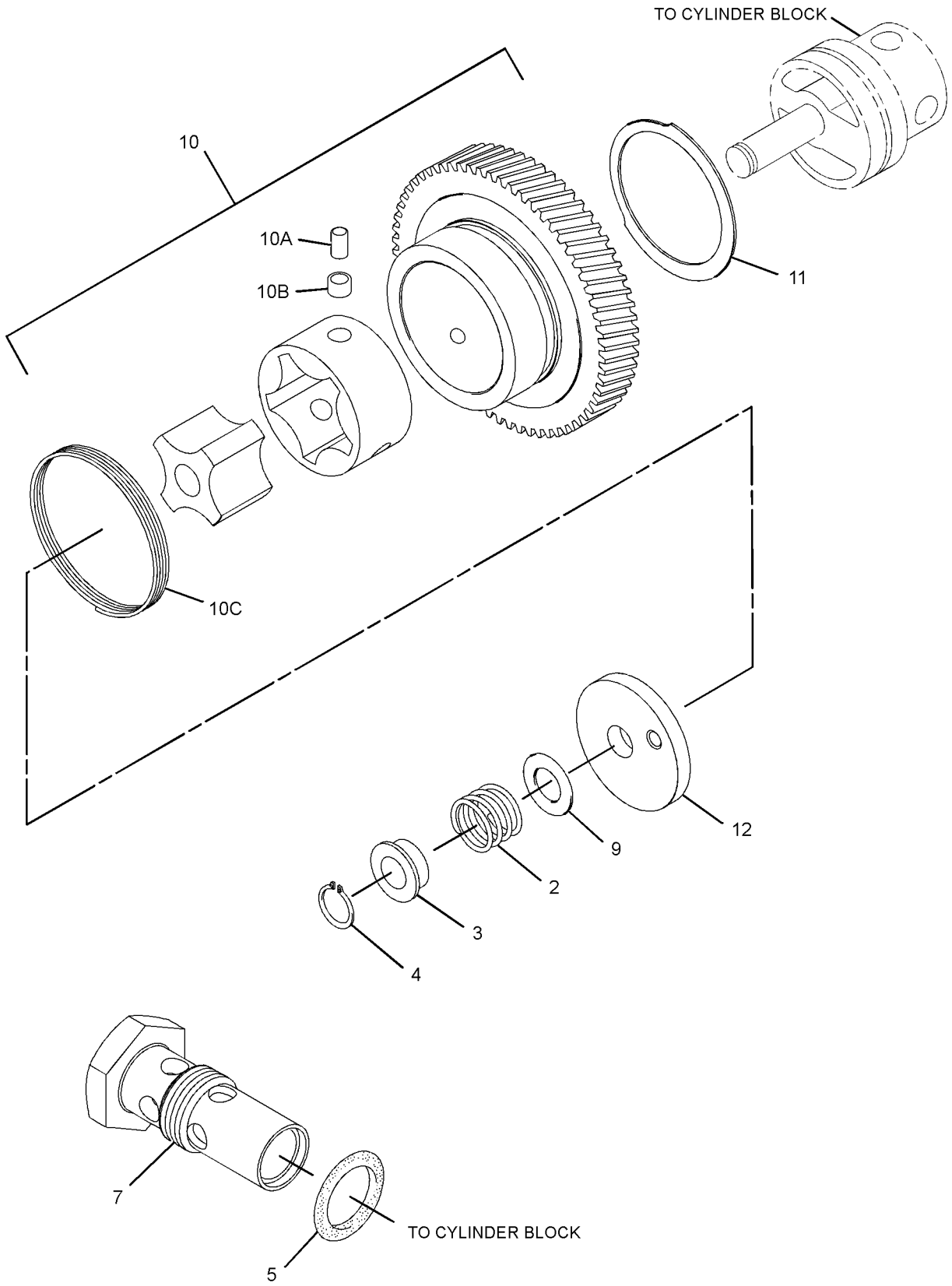

GRAPHIC #1 g01410345

308-2287 **PUMP GP-ENGINE OIL** ***(contd.)*** **i02877258**

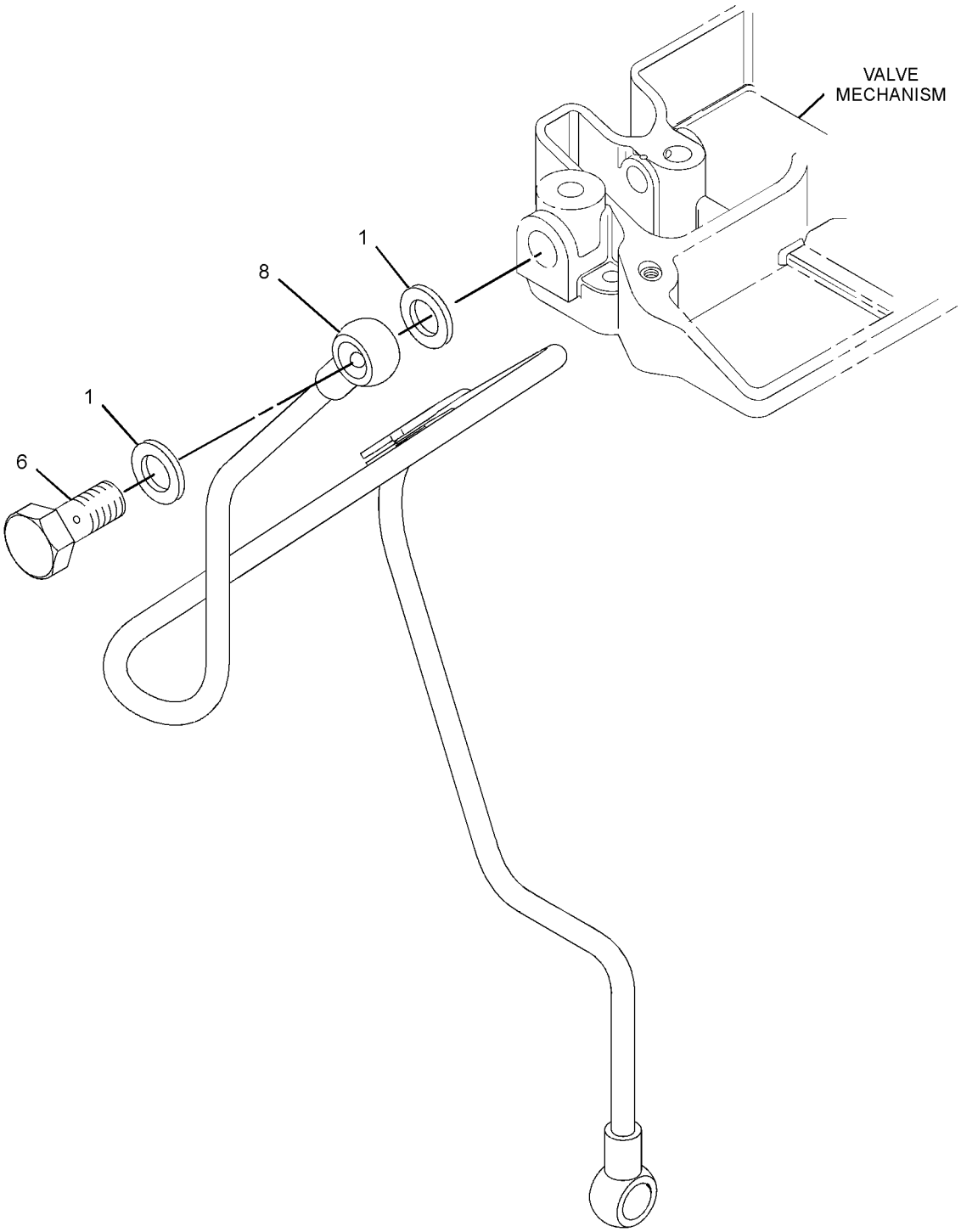

GRAPHIC #2 **<END>** g01410346

317-0980 HOUSING GP-WATER REGULATOR

S/N: CYP1-UP

PART OF 292-5719 ENGINE AR-PRIMARY

AN ATTACHMENT

SMCS-1393 **i02826830**

NOTE	REF NO	GRAPHIC REF	PART NUMBER	QTY	PART NAME 1 2 3 4 5 6 (PRODUCT LEVEL)	SEE PAGE
	1	1	**154-1828**	1	GASKET-COVER (TEMPERATURE REGULATOR)	
	2	1	**168-9001**	2	BOLT	
	3	1	**217-7379**	1	HOUSING	

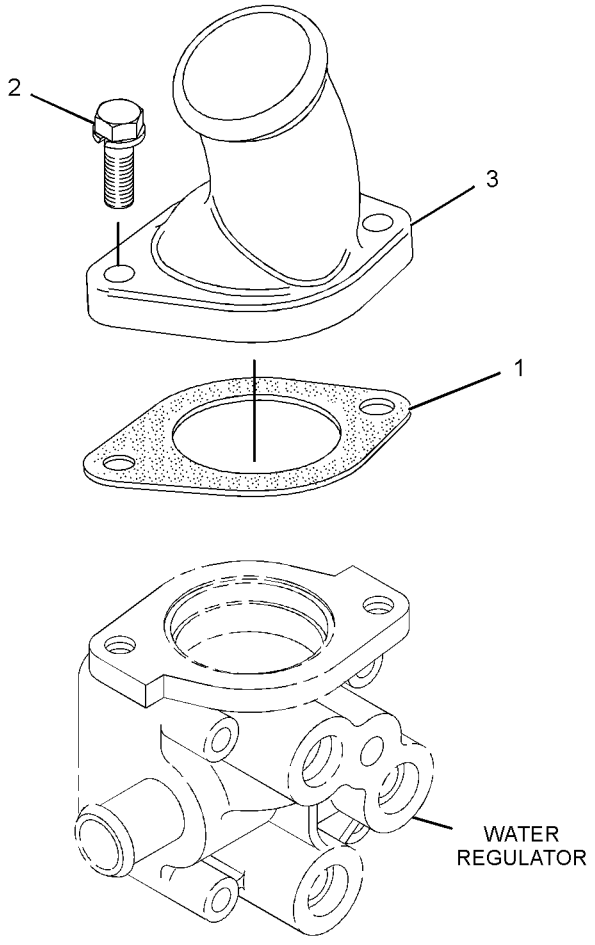

GRAPHIC #1 **<END>** g01439312

228-1762 MOUNTING GP-RAD & OIL COOLER

S/N: BXM4225-UP

PART OF 295-7027, 295-7028 INSTALLATION AR-ENGINE

SMCS-1353, 1374 **i02602679**

NOTE	REF NO	GRAPHIC REF	PART NUMBER	QTY	PART NAME 1 2 3 4 5 6 (PRODUCT LEVEL)	SEE PAGE
	1	1	**5P-0372**	2	LOCK PIN	
	2	1	**5V-8309**	1	STRIKER AS	
B	3	1	**8T-0318**	1	SHIM (0.8-MM THK)	
	4	1	**8T-4159**	1	BUMPER	
	5	1	**142-8812**	1	SUPPORT AS	
	6	1	**142-8832**	1	PIN AS	
	7	1	**161-2347**	1	LATCH AS	
	8	1	**193-8345**	1	SPRING AS-GAS	
	9	1	**208-6176**	4	STUD-BALL	
	10	1	**228-3724**	1	SUPPORT AS	
	11	1	**228-9641**	1	GRILL AS	
	12	1	**232-1789**	1	SPRING AS-GAS	
	13	1	**178-2255**	2	PIN	
	14	1	**2K-4973**	1	LOCKNUT (3/8-16-THD)	
M	15	1	**5C-7261**	1	NUT (M8X1.25-THD)	
	16	1	**7X-7729**	1	WASHER (11X25X3-MM THK)	
	17	1	**8T-4121**	8	WASHER-HARD (11X21X2.5-MM THK)	
M	18	1	**8T-4133**	4	NUT (M10X1.5-THD)	
M	19	1	**8T-4181**	3	BOLT (M6X1X20-MM)	
	20	1	**8T-4205**	3	WASHER-HARD (7.2X14.5X2-MM THK)	
M	21	1	**8T-6466**	4	BOLT (M10X1.5X60-MM)	
D	22	1	**5P-8309**		SEAL (0.5-M EACH)	

B-USE AS REQUIRED
D-ORDER BY THE METER
M-METRIC PART

228-1762 **MOUNTING GP-RAD & OIL COOLER** *(contd.)* **i02602679**

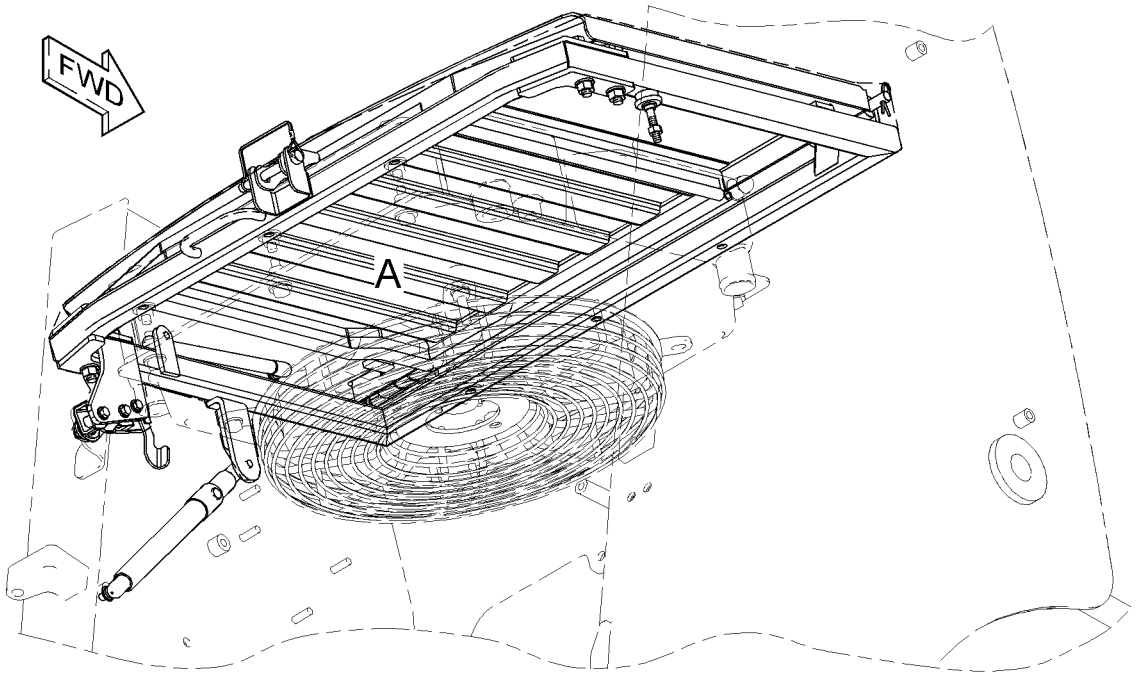

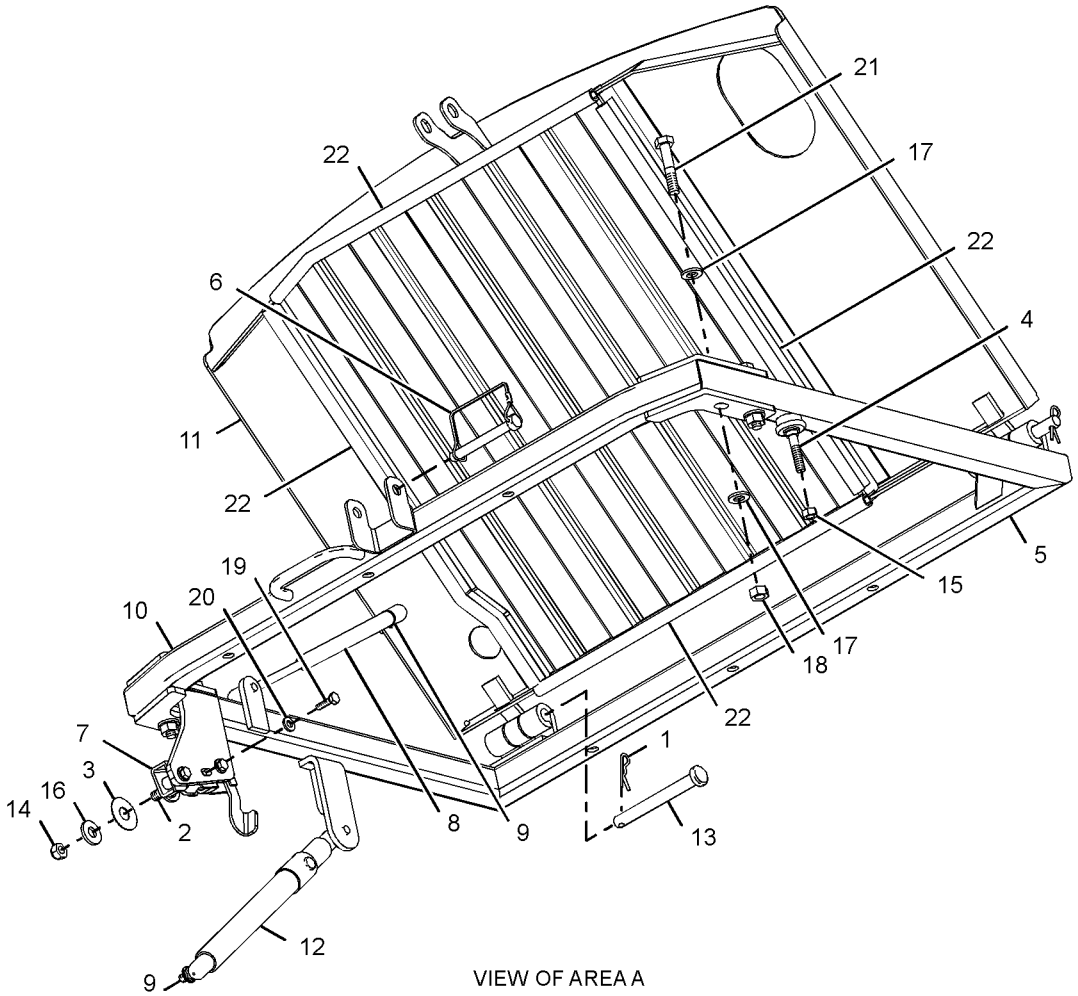

VIEW OF AREA A

GRAPHIC #1 **<END>** g01313171

COOLING SYSTEM

246-3451 PUMP GP-WATER

S/N: CSD1-11322
PART OF 300-5206 ENGINE AR-PRIMARY
AN ATTACHMENT

SMCS-1355, 1361 **i02877607**

NOTE	REF NO	GRAPHIC REF	PART NUMBER	QTY	PART NAME 1 2 3 4 5 6 (PRODUCT LEVEL)	SEE PAGE
	1	1	**5P-2369**	1	CLIP	
	2	1,1	**153-5960**	5	NUT	
	3	1	**153-5961**	4	BOLT	
	4	1	**218-2317**	1	PLUG	
C	5	1	**311-0023**	1	PUMP GP-WATER	
C	7	1	**5D-1026**	2	CLAMP-HOSE	
	8	1	**154-1828**	1	GASKET-COVER	
C	9	1	**286-7496**	1	HOSE-WATER	
	11	1	**165-2141**	2	BOLT	
	13	1	**205-4585**	1	HOSE	
	14	1	**303-0307**	1	GASKET	
	15	1	**215-2617**	1	GASKET (HOUSING)	
	16	1	**217-7379**	1	HOUSING	
	17	1	**154-1817**	4	PLUG	
C	18	1	**286-7495**	1	HOUSING-THERMOSTAT	
	19	1	**5P-2230**	1	CLAMP-HOSE	
	20	1	**153-6856**	2	BOLT	
	21	1	**249-5541**	1	REGULATOR-WATER TEMPERATURE	
	22	1	**153-6375**	1	BOLT	
F			**267-0328**	1	HOSE	

C-CHANGE FROM PREVIOUS TYPE
F-NOT SHOWN

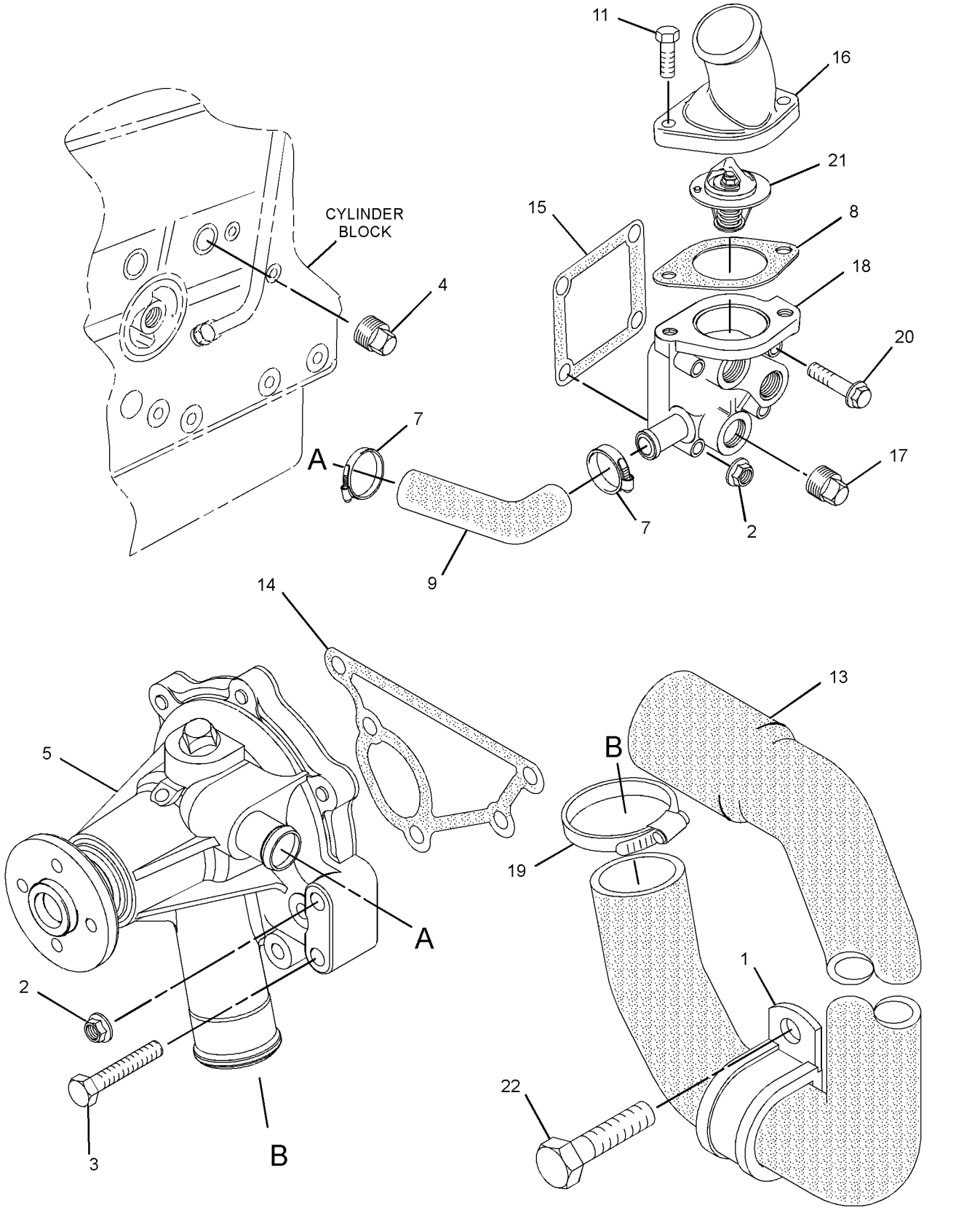

GRAPHIC #1 **<END>** g01435281

317-0979 PUMP GP-WATER

S/N: CYP1-UP
PART OF 292-5719 ENGINE AR-PRIMARY
AN ATTACHMENT

SMCS-1355, 1361 **i02826936**

NOTE	REF NO	GRAPHIC REF	PART NUMBER	QTY	PART NAME 1 2 3 4 5 6 (PRODUCT LEVEL)	SEE PAGE
	1	1	**5D-1026**	2	CLAMP-HOSE	
	2	2	**127-8281**	1	CLIP	
	3	1	**153-5960**	3	NUT	
	4	1	**153-5961**	4	BOLT	
	5	1	**154-1817**	1	PLUG	
	6	1	**154-1831**	1	PLUG	
	7	2	**155-7984**	1	WASHER	
	8	2	**180-6118**	1	BOLT	
	9	1	**215-2617**	1	GASKET	
	10	1	**238-9137**	1	CONNECTION	
	11	2	**238-9143**	1	CONNECTION	
	12	2	**245-1361**	1	COOLER AS-OIL (ENGINE)	
	12A	2	**245-1362**	1	CONNECTOR	
	12B	2	**245-1364**	1	SEAL	
	13	1	**249-5541**	1	REGULATOR-WATER TEMPERATURE	
	14	1	**286-7495**	1	HOUSING-THERMOSTAT	
	15	1	**286-7496**	1	HOSE-WATER	
	16	1	**308-1907**	2	BOLT	
	17	1	**308-1908**	1	GASKET-WATER PUMP	
	18	1	**311-0023**	1	PUMP GP-WATER	

317-0979 **PUMP GP-WATER** *(contd.)* **i02826936**

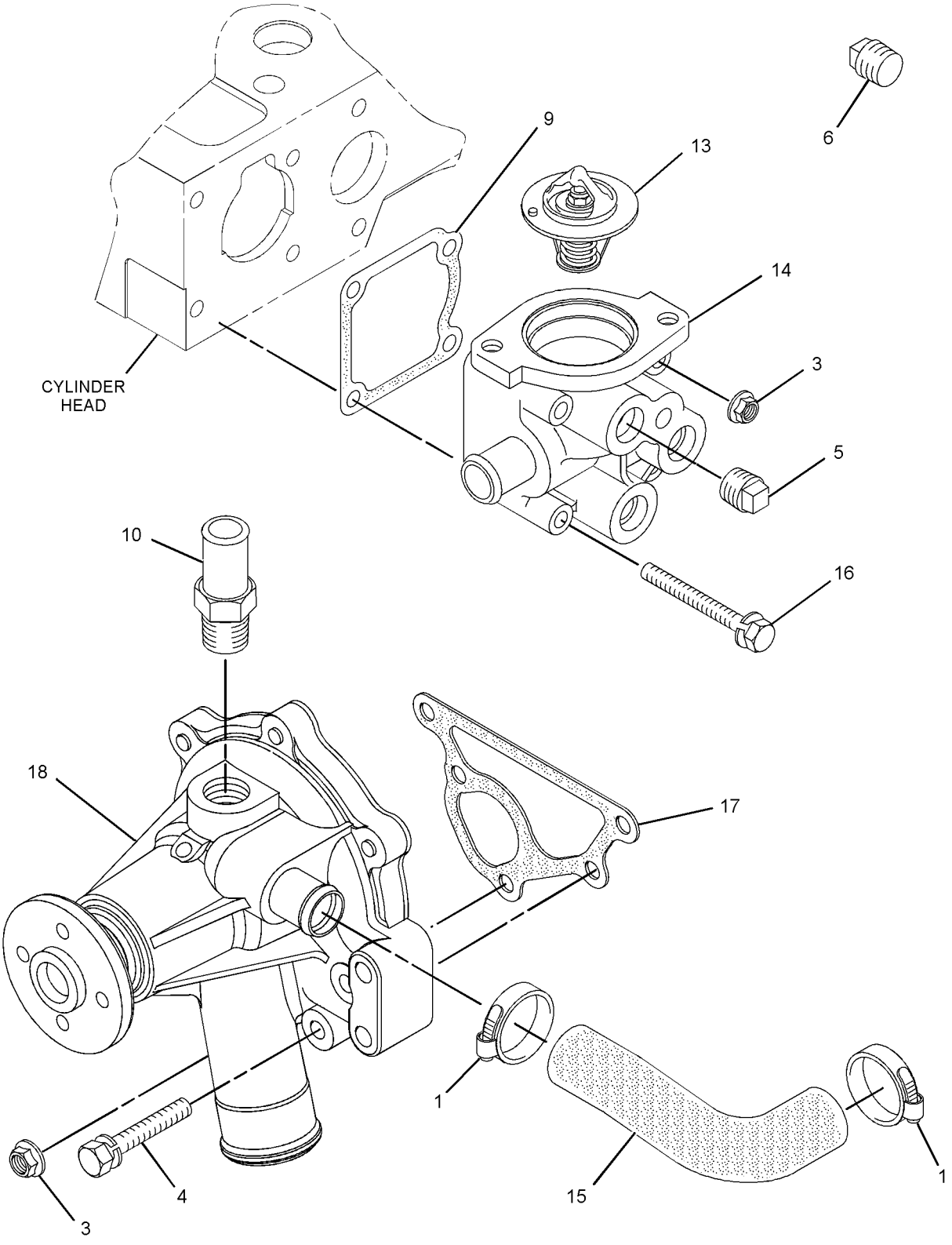

GRAPHIC #1 g01439166

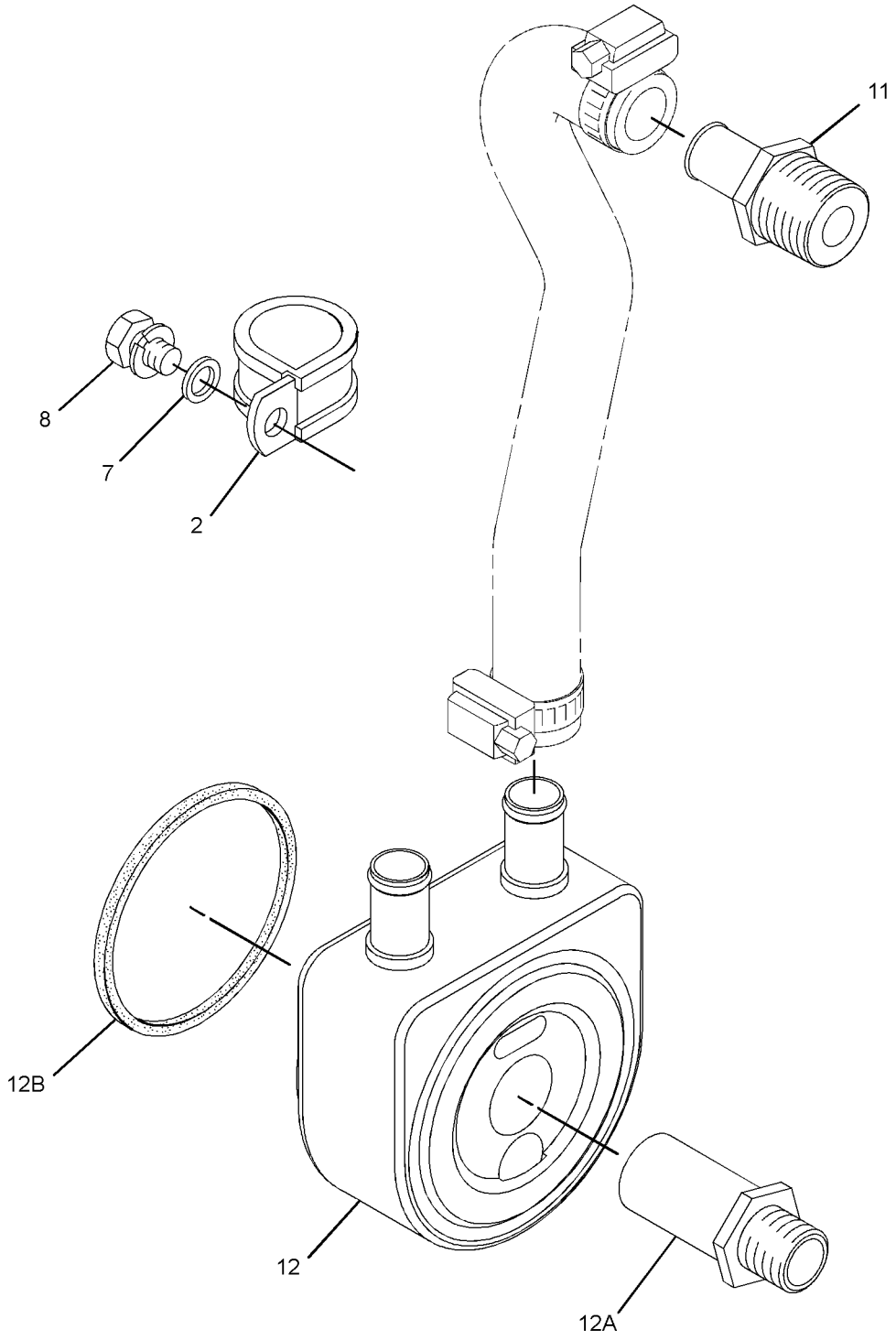

GRAPHIC #2 **<END>** g01439167

228-3359 RADIATOR & HYD OIL COOLER GP

S/N: BXM4225-UP

PART OF 228-1783 RADIATOR & OIL COOLER MTG GP

AN ATTACHMENT

SMCS-1351, 1356, 1386 **i02799297**

NOTE	REF NO	GRAPHIC REF	PART NUMBER	QTY	PART NAME 1 2 3 4 5 6 (PRODUCT LEVEL)	SEE PAGE
	1	1	**036-1865**	1	CAP AS-RADIATOR (SEA WATER HEAT EXCHANGER)	
	2	1	**069-4080**	1	FITTING	
	4	1	**207-6154**	1	GAUGE-SIGHT (RADIATOR)	
	5	1	**280-8310**	1	RADIATOR & HYD OIL COOLER AS	
	6	1	**228-3350**	1	SHROUD AS	
	7	1	**233-6683**	1	GUARD AS (FAN)	
	8	1	*236-5816*	1	FAN GP-BLOWER	
		1	**8T-4224**	4	WASHER-HARD (8.8X16X2-MM THK)	
M		1	**8T-4908**	4	BOLT (M8X1.25X25-MM)	
		1	**205-3727**	1	FAN AS	
		1	**229-8796**	1	ADAPTER	
	9	1	**7M-7410**	1	PLUG-PIPE	
	10	1	**7X-7729**	12	WASHER (11X25X3-MM THK)	
	11	1	**8T-4121**	3	WASHER-HARD (11X21X2.5-MM THK)	
M	12	1	**8T-4133**	6	NUT (M10X1.5-THD)	
M	13	1	**8T-4196**	9	BOLT (M10X1.5X35-MM)	

M-METRIC PART

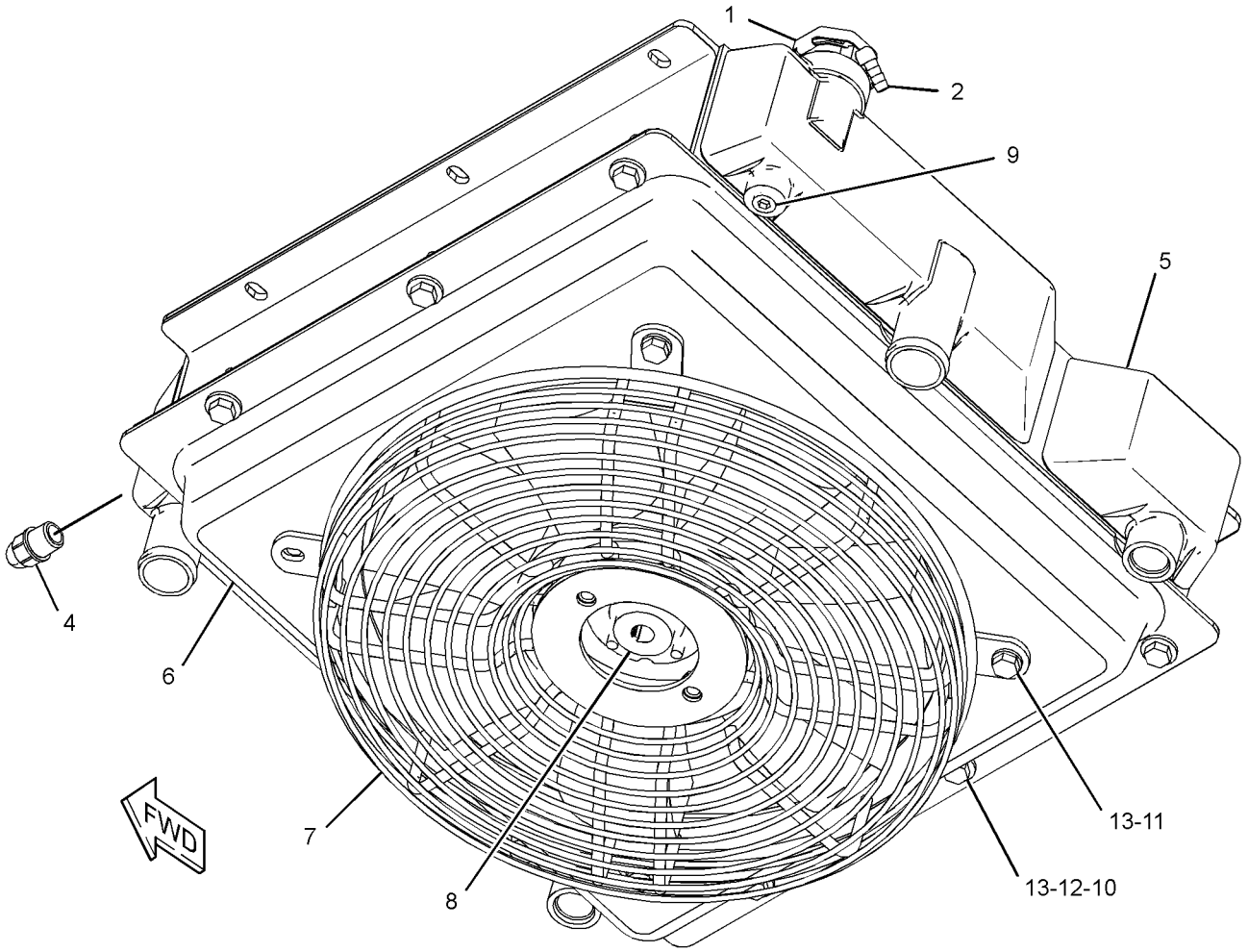

GRAPHIC #1 **<END>** g01399073

261-6119 RADIATOR & HYD OIL COOLER GP

S/N: BXM4225-UP
PART OF 261-6118 RADIATOR & OIL COOLER MTG GP
AN ATTACHMENT

SMCS-1351, 1356, 1386 **i02799295**

NOTE	REF NO	GRAPHIC REF	PART NUMBER	QTY	PART NAME 1 2 3 4 5 6 (PRODUCT LEVEL)	SEE PAGE
	1	1	**036-1865**	1	CAP AS-RADIATOR (SEA WATER HEAT EXCHANGER)	
	2	1	**069-4080**	1	FITTING	
	3	1	**207-6154**	1	GAUGE-SIGHT (COOLANT LEVEL)	
	5	1	**228-3350**	1	SHROUD AS	
	6	1	**233-6683**	1	GUARD AS	
	7	1	*236-5816*	1	FAN GP-BLOWER	
		1	**8T-4224**	4	WASHER-HARD (8.8X16X2-MM THK)	
M		1	**8T-4908**	4	BOLT (M8X1.25X25-MM)	
		1	**205-3727**	1	FAN AS	
		1	**229-8796**	1	ADAPTER	
	8	1	**280-8311**	1	RADIATOR & HYD OIL COOLER AS	
	9	1	**238-0112**	1	SENSOR GP-TEMPERATURE (ENGINE COOLANT)	
	10	1	**6V-9028**	1	SEAL-O-RING	
	11	1	**7M-7410**	1	PLUG-PIPE	
	12	1	**7X-7729**	12	WASHER (11X25X3-MM THK)	
	13	1	**8T-4121**	3	WASHER-HARD (11X21X2.5-MM THK)	
M	14	1	**8T-4133**	6	NUT (M10X1.5-THD)	
M	15	1	**8T-4196**	9	BOLT (M10X1.5X35-MM)	

M-METRIC PART

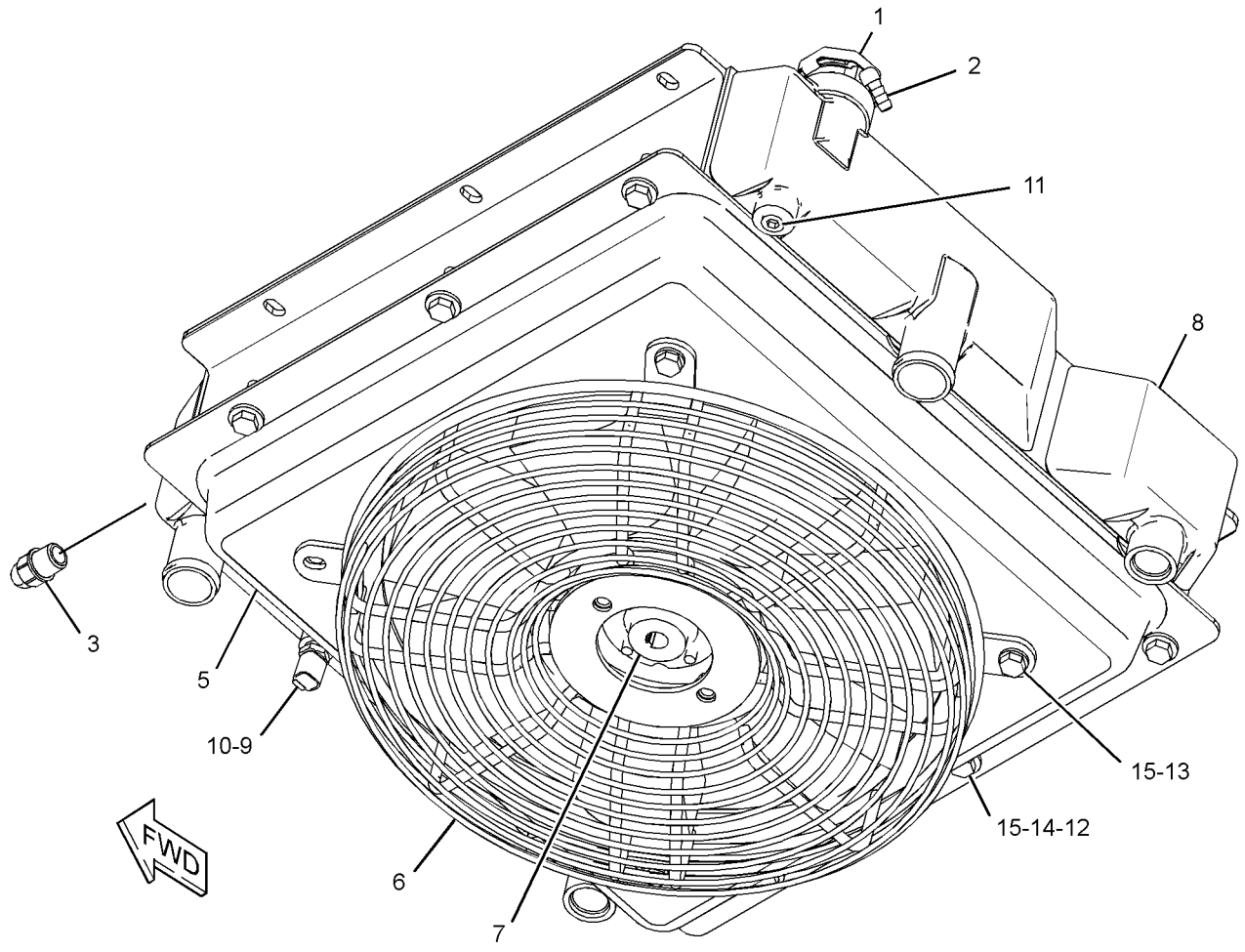

GRAPHIC #1 **<END>** g01399078

228-1783 RADIATOR & OIL COOLER MTG GP

S/N: BXM4225-UP
PART OF 261-6160 CONVERSION AR-MACHINE
AN ATTACHMENT

SMCS-1351, 1354 **i02890396**

NOTE	REF NO	GRAPHIC REF	PART NUMBER	QTY	PART NAME 1 2 3 4 5 6 (PRODUCT LEVEL)	SEE PAGE
	1	1	**1P-4278**	2	CLAMP-HOSE	
	2	1	**7X-1443**	4	PROTECTOR	
	3	1	**124-6264**	1	CLAMP-HOSE	
	4	1	**205-6383**	1	TUBE	
	5	1	**222-1178**	2	CLAMP	
Y	6	1	*228-3359*	1	RADIATOR & HYD OIL COOLER GP	86
C	7	1	**285-5794**	1	RECOVERY GP-COOLANT	
		1	**169-6715**	1	CAP-VENTED (COOLANT RECOVERY)	
	8	1	**231-3578**	1	HOSE (UPPER)	
	9	1	**231-3579**	1	HOSE (LOWER)	
	10	1	**231-3925**	1	BRACKET AS	
	11	1	**232-4901**	2	CLAMP	
	12	1	**143-4535**	1	CLIP (SLOT)	
	13	1	**143-4536**	1	CLIP (TAB)	
	14	1	**4K-8864**	2	CLIP	
	15	1	**7X-7729**	12	WASHER (11X25X3-MM THK)	
	16	1	**8T-4121**	2	WASHER-HARD (11X21X2.5-MM THK)	
M	17	1	**8T-4133**	6	NUT (M10X1.5-THD)	
M	18	1	**8T-4136**	1	BOLT (M10X1.5X25-MM)	
M	19	1	**8T-4137**	1	BOLT (M10X1.5X20-MM)	
	20	1	**8T-4224**	2	WASHER-HARD (8.8X16X2-MM THK)	
M	21	1	**8T-5005**	1	BOLT (M10X1.5X70-MM)	
M	22	1	**8T-5091**	2	BOLT (M8X1.25X20-MM)	
M	23	1	**8T-6466**	5	BOLT (M10X1.5X60-MM)	
E	24	1	**5P-1420**		HOSE (110-CM)	

C-CHANGE FROM PREVIOUS TYPE
E-ORDER BY THE CENTIMETER
M-METRIC PART
Y-SEPARATE ILLUSTRATION

228 - 1783 **RADIATOR & OIL COOLER MTG GP** *(contd.)* **i02890396**

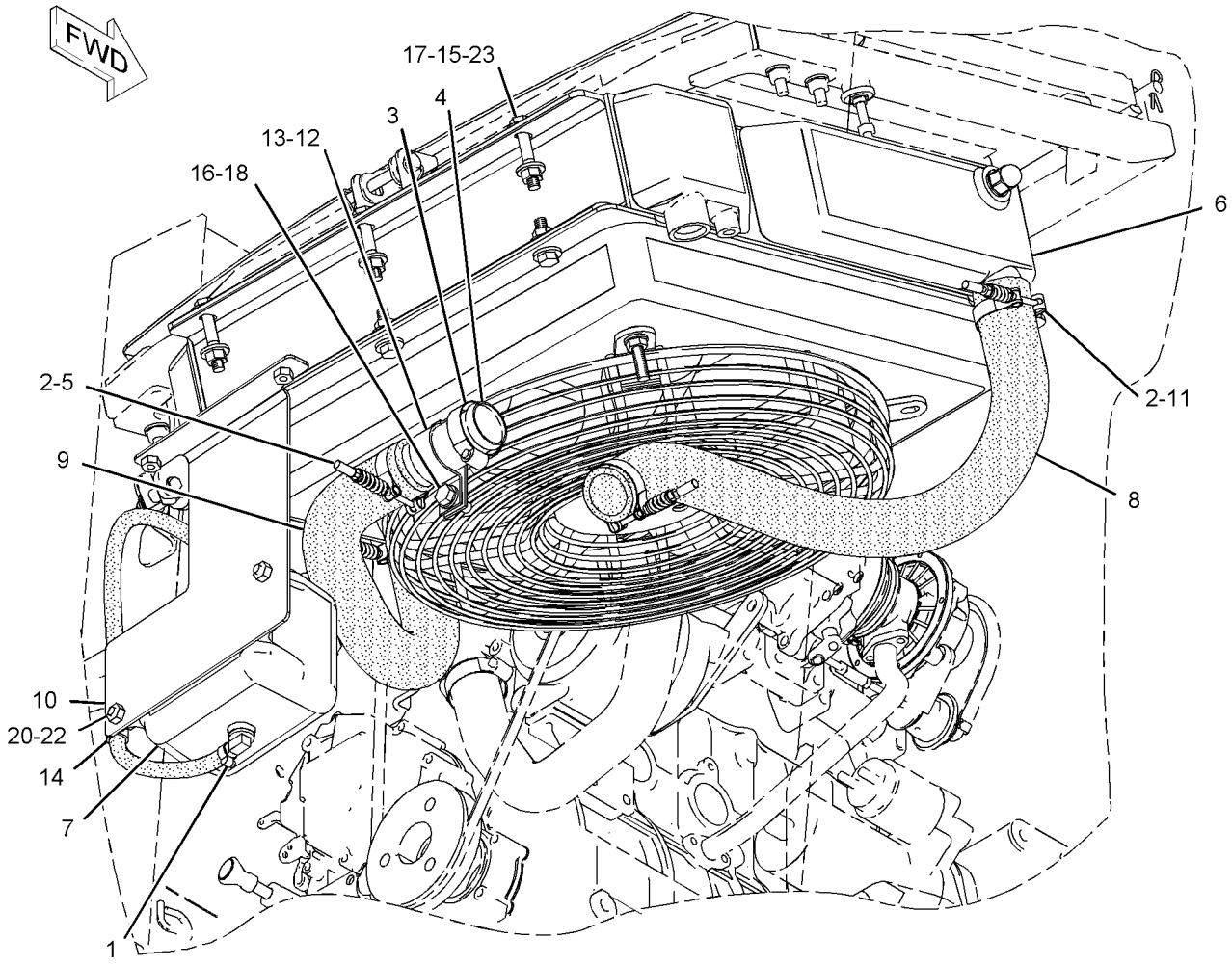

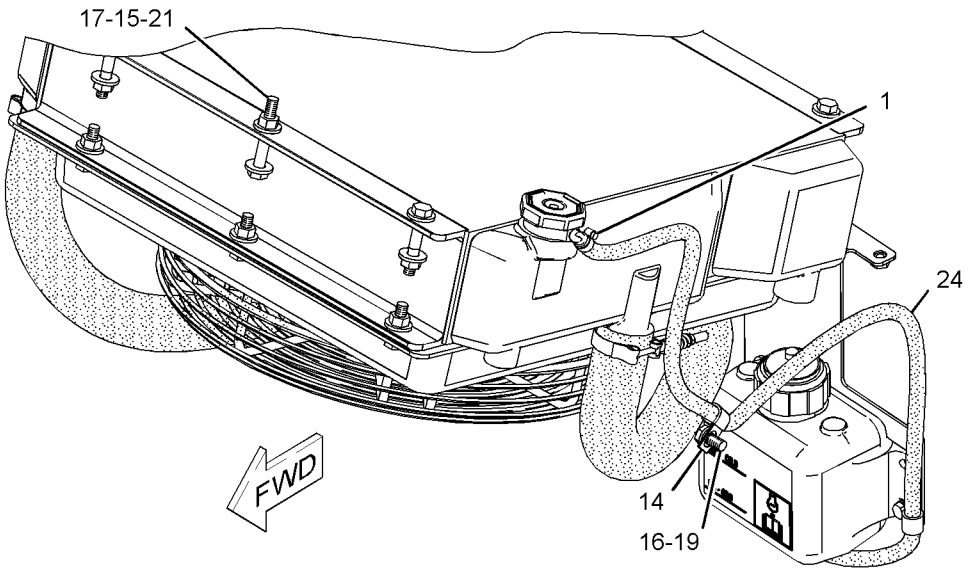

GRAPHIC #1 **<END>** g01051095

261-6118 RADIATOR & OIL COOLER MTG GP

S/N: BXM4225-UP
STAGE II SOUND
PART OF 261-6158, 278-1213, 278-1221, 278-1225, 278-5409, 278-5442, 295-7039, 295-7050, 295-7061, 295-7068, 295-7151, 295-7159, 295-7164, 295-7168 CONVERSION AR-MACHINE, 257-5721, 257-5722, 295-7044 CONVERSION AR-ROADING AN ATTACHMENT

SMCS-1351, 1354 **i02890399**

NOTE	REF NO	GRAPHIC REF	PART NUMBER	QTY	PART NAME 1 2 3 4 5 6 (PRODUCT LEVEL)	SEE PAGE
	1	1	**1P-4278**	2	CLAMP-HOSE	
	2	1	**7X-1443**	4	PROTECTOR	
	3	1	**124-6264**	1	CLAMP-HOSE	
	4	1	**205-6383**	1	TUBE	
	5	1	**222-1178**	2	CLAMP	
C	6	1	**285-5794**	1	RECOVERY GP-COOLANT	
		1	**169-6715**	1	CAP-VENTED (COOLANT RECOVERY)	
	7	1	**231-3578**	1	HOSE (UPPER)	
	8	1	**231-3579**	1	HOSE (LOWER)	
	9	1	**231-3925**	1	BRACKET AS	
M		1	**8T-3612**	4	NUT-WELD (M8X1.25-THD)	
	10	1	**232-4901**	2	CLAMP	
Y	11	1	*261-6119*	1	RADIATOR & HYD OIL COOLER GP	87
	12	1	**143-4535**	1	CLIP (SLOT)	
	13	1	**143-4536**	1	CLIP (TAB)	
	14	1	**4K-8864**	2	CLIP	
	15	1	**7X-7729**	12	WASHER (11X25X3-MM THK)	
	16	1	**8T-4121**	2	WASHER-HARD (11X21X2.5-MM THK)	
M	17	1	**8T-4133**	6	NUT (M10X1.5-THD)	
M	18	1	**8T-4136**	1	BOLT (M10X1.5X25-MM)	
M	19	1	**8T-4137**	1	BOLT (M10X1.5X20-MM)	
	20	1	**8T-4224**	2	WASHER-HARD (8.8X16X2-MM THK)	
M	21	1	**8T-5005**	1	BOLT (M10X1.5X70-MM)	
M	22	1	**8T-5091**	2	BOLT (M8X1.25X20-MM)	
M	23	1	**8T-6466**	5	BOLT (M10X1.5X60-MM)	
E	24	1	**5P-1420**		HOSE (110-CM)	

C-CHANGE FROM PREVIOUS TYPE
E-ORDER BY THE CENTIMETER
M-METRIC PART
Y-SEPARATE ILLUSTRATION

261-6118 **RADIATOR & OIL COOLER MTG GP** *(contd.)* **i02890399**

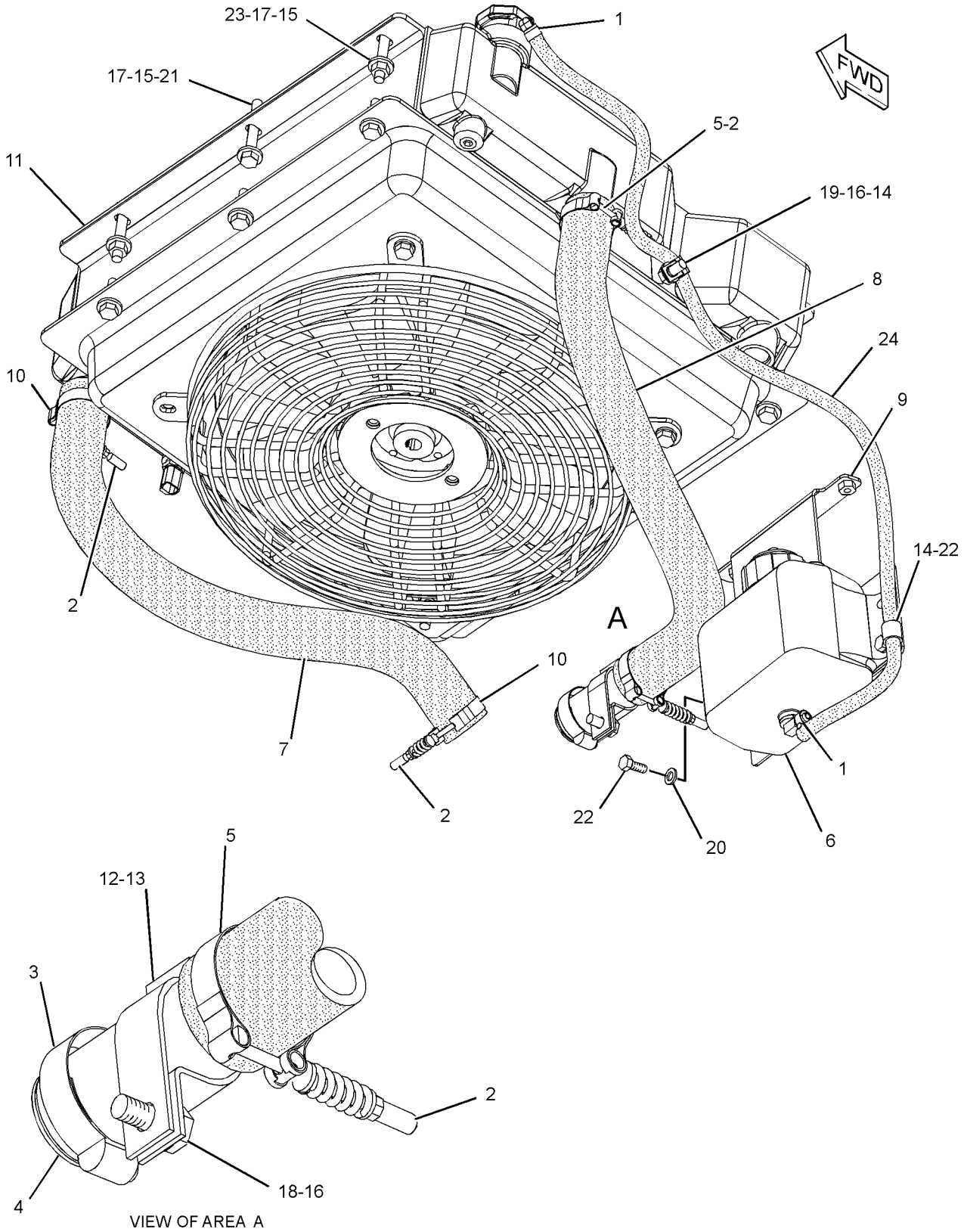

GRAPHIC #1 **<END>** g01229599

AIR INLET AND EXHAUST SYSTEM

228-1773 AIR CLEANER GP

S/N: BXM4225-UP

PART OF 295-7027, 295-7028 INSTALLATION AR-ENGINE

SMCS-1051, 1054 **i02796039**

NOTE	REF NO	GRAPHIC REF	PART NUMBER	QTY	PART NAME 1 2 3 4 5 6 (PRODUCT LEVEL)	SEE PAGE
Y	1	1	*242-0171*	1	AIR CLEANER GP	93
	2	1	**307-8337**	2	STUD	
	3	1	**5P-4116**	6	WASHER-HARD (8.8X20.5X2-MM THK)	
M	4	1	**5C-7261**	2	NUT (M8X1.25-THD)	

M-METRIC PART
Y-SEPARATE ILLUSTRATION

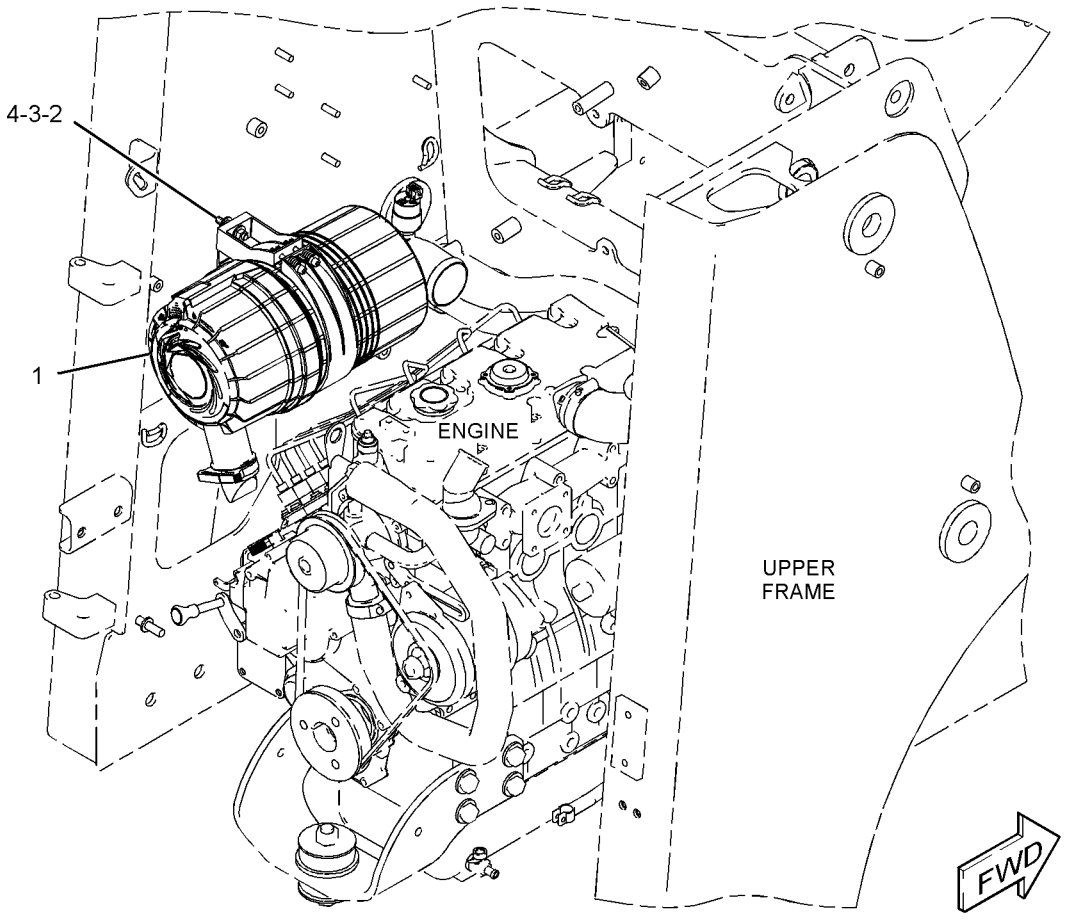

GRAPHIC #1 **<END>** g01406934

AIR INLET AND EXHAUST SYSTEM

242-0171 AIR CLEANER GP

S/N: BXM4225-UP

PART OF 228-1773 AIR CLEANER GP

SMCS-1051, 1054 **i02650200**

NOTE	REF NO	GRAPHIC REF	PART NUMBER	QTY	PART NAME 1 2 3 4 5 6 (PRODUCT LEVEL)	SEE PAGE
	1	1	**5L-3233**	1	FITTING	
	2	1	**231-0169**	1	BAND AS	
	3	1	**241-3394**	1	INDICATOR	
	4	1	**242-0172**	1	AIR CLEANER GP	
		1	**112-9717**	1	VALVE-VACUATOR	
		1	**231-0167**	1	FILTER ELEMENT AS-AIR (PRIMARY)	
		1	**231-0168**	1	FILTER ELEMENT AS-AIR (SECONDARY)	
		1	**242-0173**	1	COVER AS	
	5	1	**280-8298**		CLAMP	

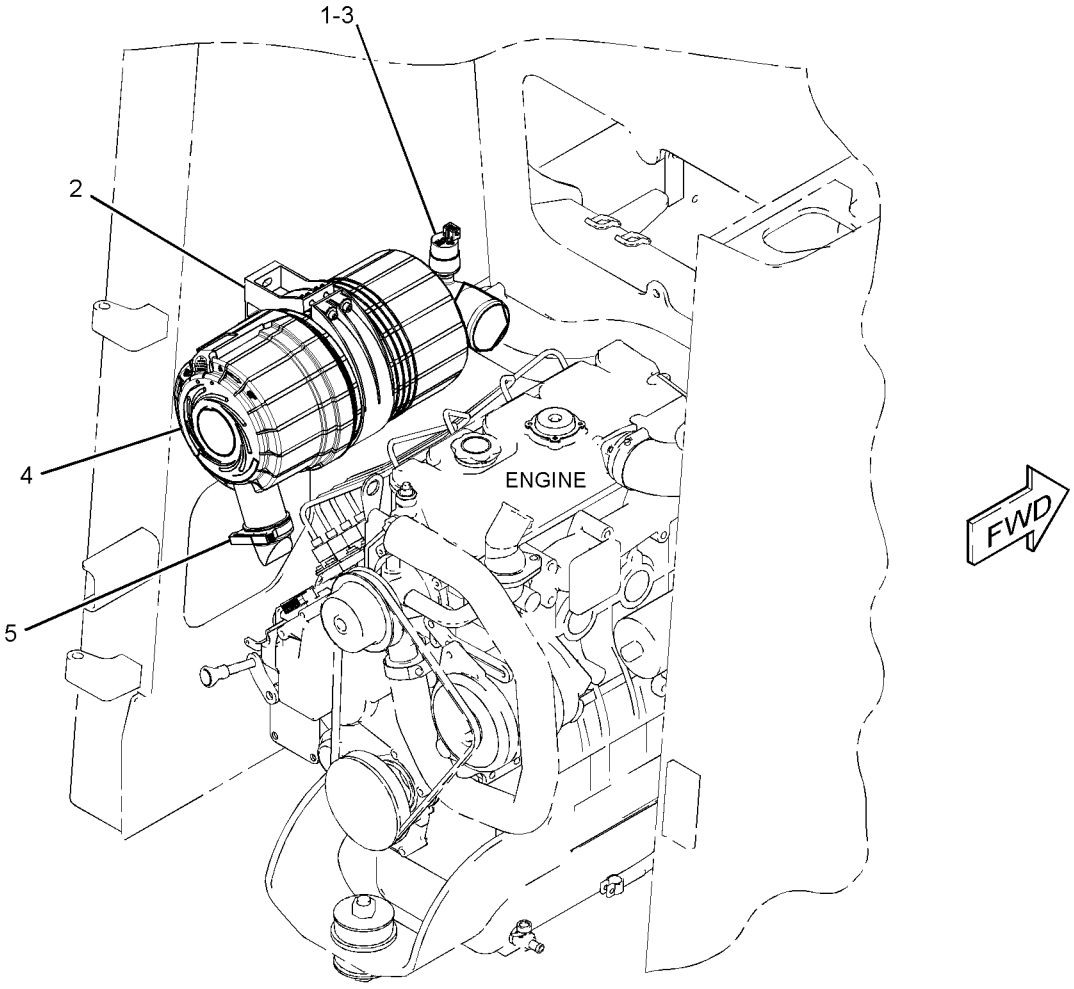

GRAPHIC #1 **<END>** g01336653

AIR INLET AND EXHAUST SYSTEM

280-8365 LINES GP-AIR

S/N: BXM4225-UP

PART OF 295-7027, 295-7028 INSTALLATION AR-ENGINE

SMCS-1071 **i02796126**

NOTE	REF NO	GRAPHIC REF	PART NUMBER	QTY	PART NAME 1 2 3 4 5 6 (PRODUCT LEVEL)	SEE PAGE
	1	1	**5P-4868**	1	CLAMP-HOSE	
	2	1	**5P-4961**	1	CLAMP-HOSE	
	3	1	**280-8341**	1	SPACER (8.7X15.8X21.1-MM THK)	
	4	1	**280-8364**	1	HOSE	
	5	1	**3S-2093**	1	STRAP-CABLE	
	6	1	**5P-0597**	1	CLAMP-HOSE	
	7	1	**5P-4116**	1	WASHER-HARD (8.8X20.5X2-MM THK)	
	8	1	**6D-4246**	2	CLIP	
M	9	1	**7X-2537**	1	BOLT (M8X1.25X35-MM)	
M	10	1	**7X-2621**	1	BOLT (M10X1.5X12-MM)	
	11	1	**8T-4121**	1	WASHER-HARD (11X21X2.5-MM THK)	
E	12	1	**5P-1505**		HOSE (75-CM)	

E-ORDER BY THE CENTIMETER
M-METRIC PART

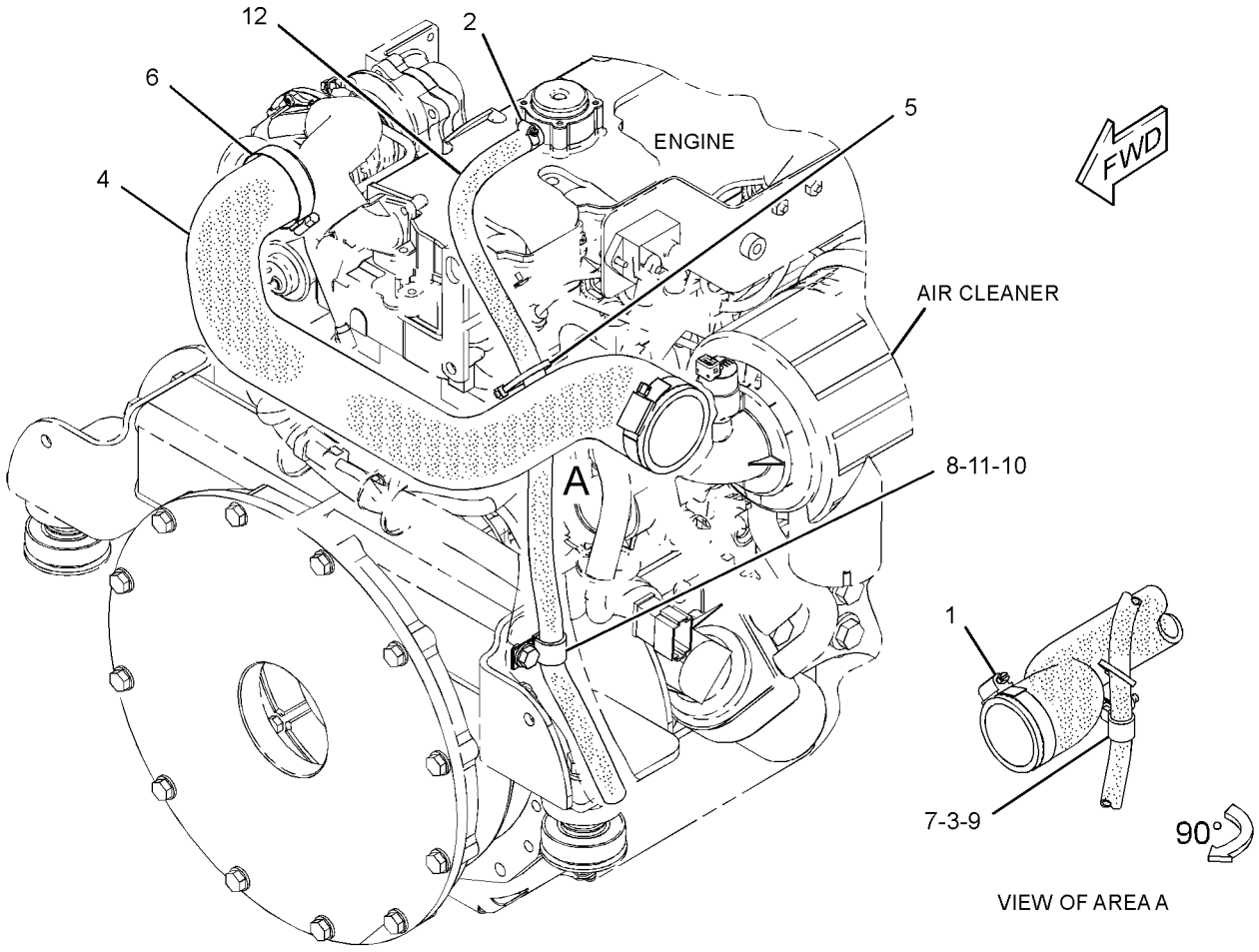

GRAPHIC #1 **<END>** g01421851

239-0233 MANIFOLD GP-EXHAUST

S/N: CSD1-11322
PART OF 300-5206 ENGINE AR-PRIMARY
AN ATTACHMENT

SMCS-1059 **i02656861**

NOTE	REF NO	GRAPHIC REF	PART NUMBER	QTY	PART NAME 1 2 3 4 5 6 (PRODUCT LEVEL)	SEE PAGE
	1	1	**153-5592**	8	NUT	
	2	1	**154-2427**	1	GASKET-EXHAUST	
	3	1	**154-2428**	4	BOLT	
	4	1	**163-5372**	5	WASHER (8X15.4X4-MM THK)	
	5	1	**236-9987**	1	MANIFOLD-EXHAUST	
	6	1	**238-9196**	1	GASKET-TURBOCHARGER	
	7	1	**238-9198**	1	ELBOW-EXHAUST	
	8	1	**304-5061**	1	GASKET	
	9	1	**238-9200**	5	BOLT (M8X1.25X25-MM)	
	10	1	**239-0232**	4	STUD (M8X1.25X31-MM)	

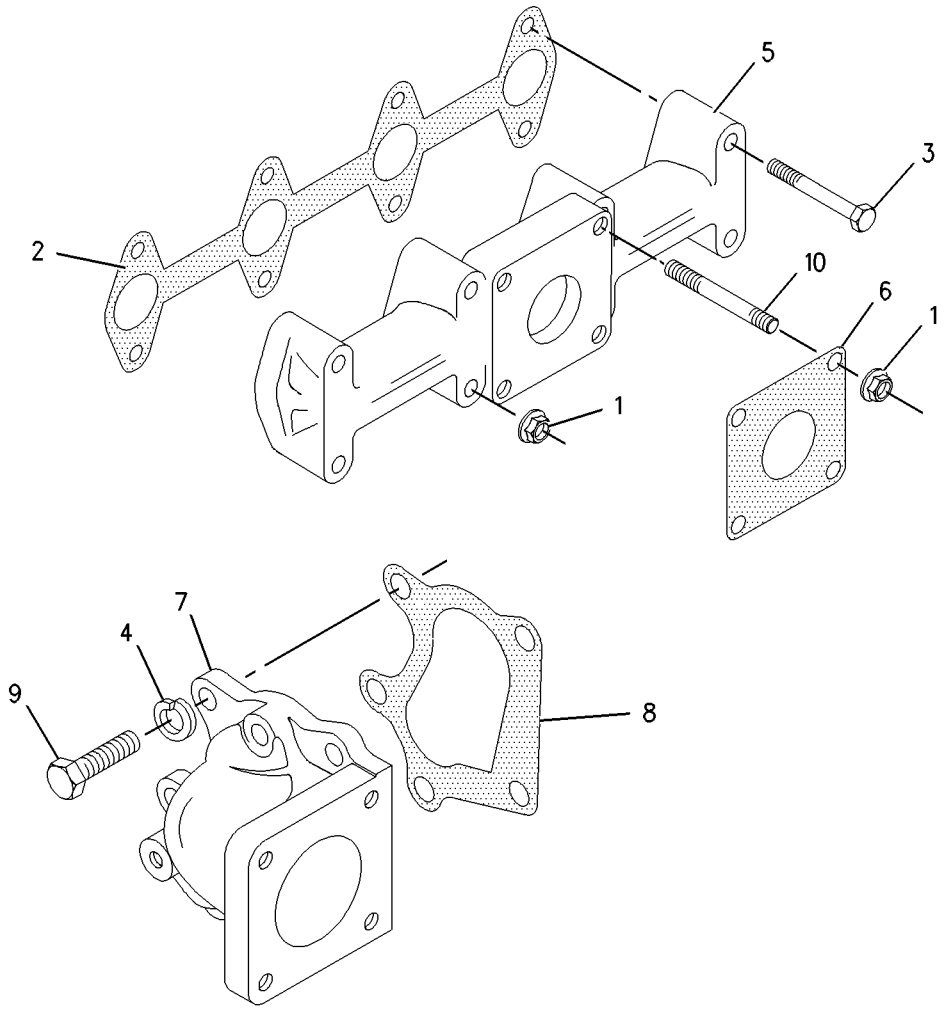

GRAPHIC #1 **<END>** g01007667

AIR INLET AND EXHAUST SYSTEM

272-3046 MUFFLER GP

S/N: BXM4225-UP
STAGE II SOUND
PART OF 272-3047 MUFFLER GP
AN ATTACHMENT

SMCS-1062 **i02531476**

NOTE	REF NO	GRAPHIC REF	PART NUMBER	QTY	PART NAME 1 2 3 4 5 6 (PRODUCT LEVEL)	SEE PAGE
	1	1	**142-8818**	1	CLAMP-PIPE	
	2	1	**228-2524**	1	ELBOW AS-EXHAUST	
	3	1	**272-3056**	1	MUFFLER AS	

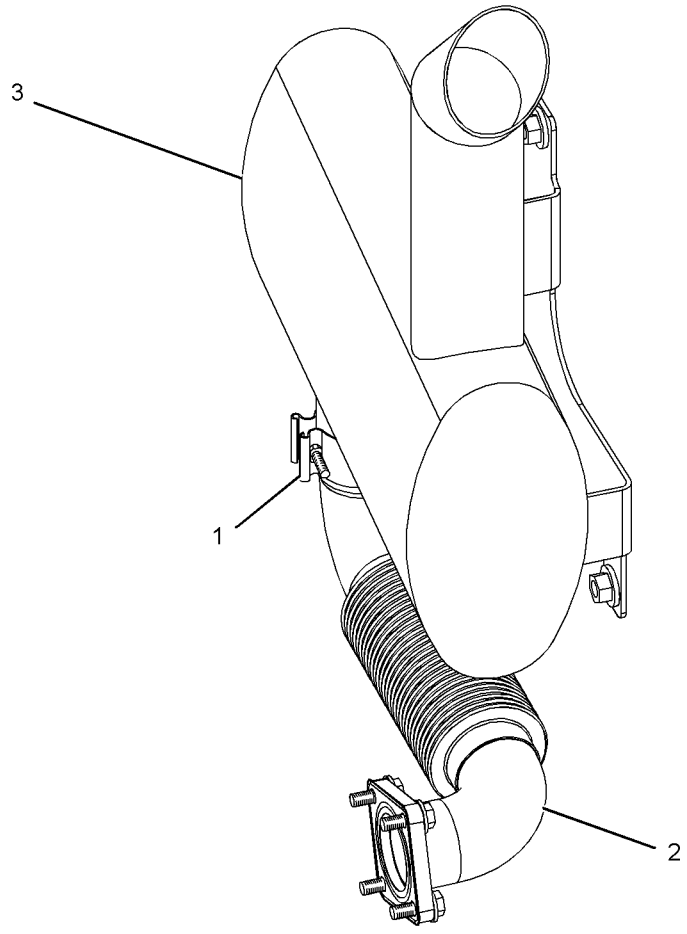

REAR VIEW
(UPPER LEFT)

GRAPHIC #1 **<END>** g01266510

AIR INLET AND EXHAUST SYSTEM

272-3047 MUFFLER GP

S/N: BXM4225-UP
STAGE II SOUND
PART OF 261-6158, 261-6160, 278-1213, 278-1221, 278-1225, 278-5409, 278-5442, 295-7039, 295-7050, 295-7061, 295-7068, 295-7151, 295-7159, 295-7164, 295-7168 CONVERSION AR-MACHINE, 257-5721, 257-5722, 295-7044 CONVERSION AR-ROADING AN ATTACHMENT

SMCS-1062 **i02431659**

NOTE	REF NO	GRAPHIC REF	PART NUMBER	QTY	PART NAME 1 2 3 4 5 6 (PRODUCT LEVEL)	SEE PAGE
	1	1	**153-7920**	1	GASKET	
Y	2	1	*272-3046*	1	MUFFLER GP	96
	3	1	**5P-4116**	4	WASHER-HARD (8.8X20.5X2-MM THK)	
	4	1	**7X-7729**	3	WASHER (11X25X3-MM THK)	
M	5	1	**8T-4133**	3	NUT (M10X1.5-THD)	
M	6	1	**8T-4908**	4	BOLT (M8X1.25X25-MM)	

M-METRIC PART
Y-SEPARATE ILLUSTRATION

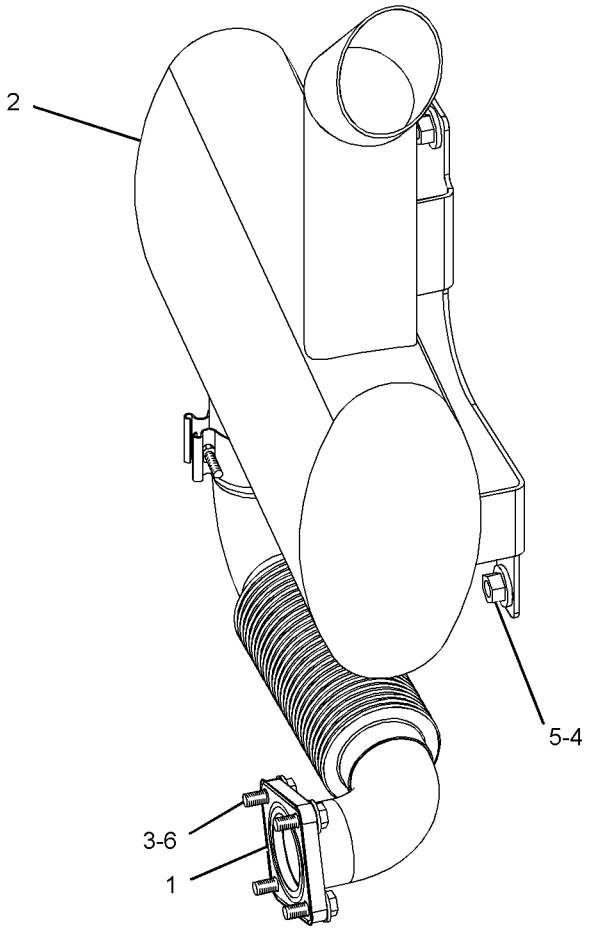

REAR VIEW
(UPPER LEFT)

GRAPHIC #1 **<END>** g01229585

AIR INLET AND EXHAUST SYSTEM

239-0230 TURBOCHARGER GP

S/N: CSD1-11322
PART OF 300-5206 ENGINE AR-PRIMARY
AN ATTACHMENT

SMCS-1052, 1053 **i02874985**

NOTE	REF NO	GRAPHIC REF	PART NUMBER	QTY	PART NAME 1 2 3 4 5 6 (PRODUCT LEVEL)	SEE PAGE
	1	1	**064-3058**	2	CLAMP-HOSE	
	2	1	**249-7263**	2	BOLT	
	3	1	**153-6853**	1	SEAL-O-RING	
	4	1	**155-7984**	2	WASHER	
	5	1	**165-2141**	2	BOLT	
	6	1	**168-9001**	2	BOLT	
	7	1	**183-3572**	3	BOLT	
	8	1	**225-8533**	2	GASKET	
	9	1	**238-9349**	1	TURBOCHARGER GP	
	10	1	**249-1532**	1	HOSE-AIR INLET	
	11	1	**317-0962**	1	TUBE-TURBOCHARGER OIL	
	12	1	**239-0187**	1	BRACKET	
	13	1	**317-0959**	1	CONNECTION GP-OIL	
	13A	1	**317-0960**	1	BOLT-SPECIAL (BANJO)	
	13B	1	**225-8526**	2	WASHER (10.4X13.75X1.37-MM THK)	
	13C	1	**317-0961**	1	CLIP	
	14	1	**239-0229**	1	SPACER	

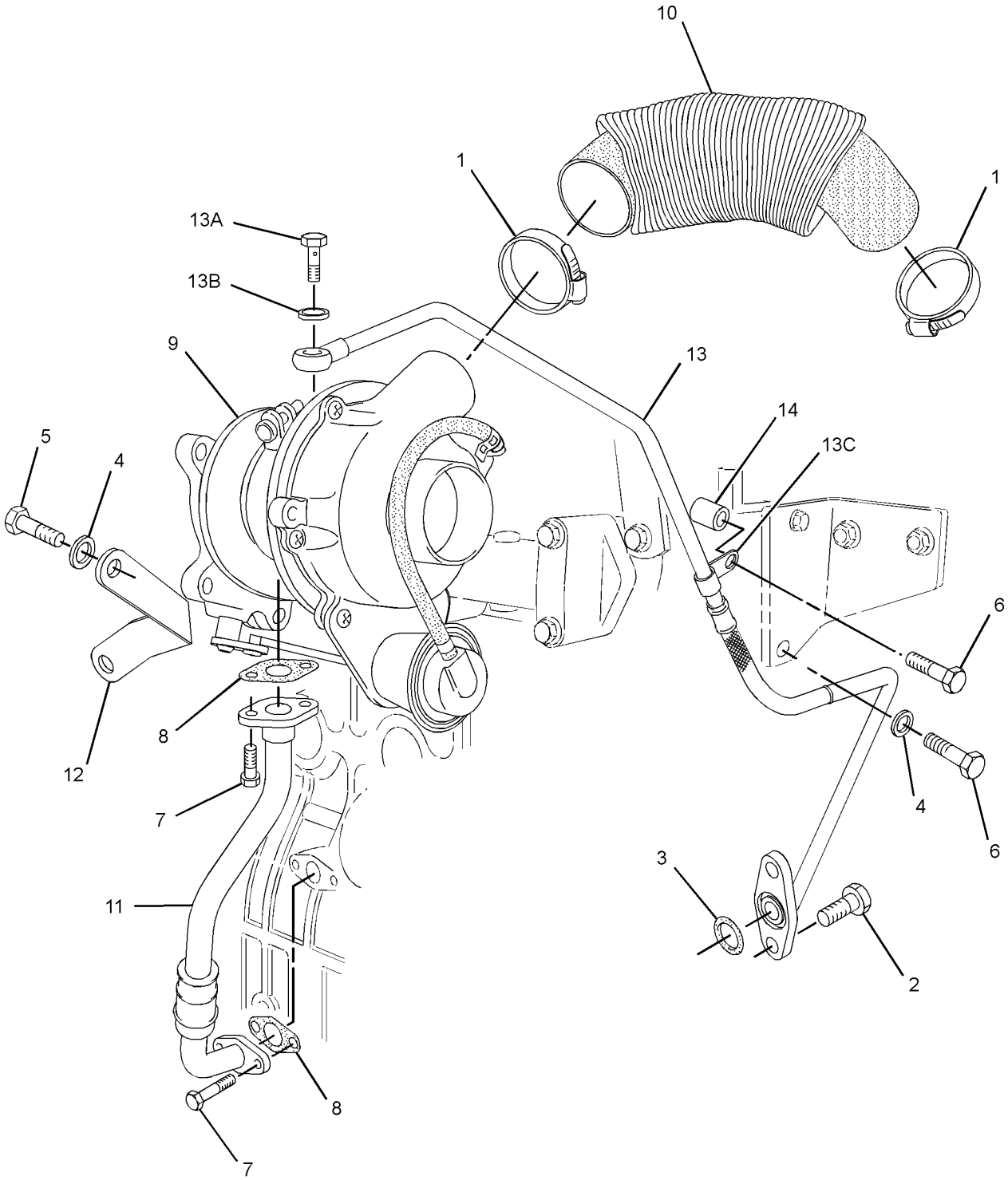

GRAPHIC #1 **<END>** g01395263

AIR INLET AND EXHAUST SYSTEM

317-0981 TURBOCHARGER GP

S/N: CYP1-UP
PART OF 292-5719 ENGINE AR-PRIMARY
AN ATTACHMENT

SMCS-1052, 1053 **i02862676**

NOTE	REF NO	GRAPHIC REF	PART NUMBER	QTY	PART NAME 1 2 3 4 5 6 (PRODUCT LEVEL)	SEE PAGE
	1	2	**064-3058**	2	CLAMP-HOSE	
	2	2	**153-5592**	8	NUT	
	3	3	**153-5939**	1	GAUZE (CRANKCASE BREATHER)	
	4	3	**153-5962**	3	BOLT	
	5	1	**153-6375**	1	BOLT	
	6	1	**153-6853**	1	SEAL-O-RING	
	7	2	**153-7640**	2	BOLT	
	8	3	**154-1347**	4	NUT	
	9	2	**154-2427**	1	GASKET-EXHAUST	
	10	2	**154-2428**	4	BOLT	
	11	1	**155-8009**	4	BOLT	
	12	1	**163-5372**	5	WASHER (8X15.4X4-MM THK)	
	13	3	**165-2140**	2	BOLT	
	14	1	**165-2141**	1	BOLT	
	15	1	**168-9001**	4	BOLT	
	16	3	**183-1165**	1	PLUG	
	17	3	**190-3762**	4	WASHER	
	18	3	**217-5859**	1	VALVE-BREATHER (CRANKCASE)	
	19	3	**217-5861**	1	PLATE-RETAINING	
	20	3	**217-5862**	6	BOLT	
	21	2	**217-5864**	1	GASKET	
	22	1	**225-8533**	2	GASKET	
	23	3	**233-0695**	1	SEAL-VALVE COVER	
	24	2	**236-9987**	1	MANIFOLD-EXHAUST	
	25	3	**238-8731**	1	ADAPTER-BREATHER	
	26	2	**238-9196**	1	GASKET-TURBOCHARGER	
	27	1	**238-9198**	1	ELBOW-EXHAUST	
	28	1	**238-9200**	5	BOLT (M8X1.25X25-MM)	
	29	3	**238-9289**	1	COVER-VALVE	
	30	3	**238-9295**	4	BOLT	
	31	2	**238-9349**	1	TURBOCHARGER GP	
	32	1	**239-0187**	1	BRACKET	
	33	1	**239-0229**	1	SPACER	
	34	2	**239-0232**	4	STUD (M8X1.25X31-MM)	
	35	2	**249-1486**	1	CONNECTION-AIR	
	36	2	**249-1532**	1	HOSE-AIR INLET	
	37	3	**262-3975**	1	GASKET	
	38	1	**304-5061**	1	GASKET	
	39	1	**317-0959**	1	CONNECTION GP-OIL	
	39A	1	**225-8526**	2	WASHER (10.4X13.75X1.37-MM THK)	
	39B	1	**317-0960**	1	BOLT-SPECIAL (BANJO)	
	39C	1	**317-0961**	1	CLIP	
	40	1	**317-0962**	1	TUBE-TURBOCHARGER OIL	

317-0981 **TURBOCHARGER GP** ***(contd.)*** **i02862676**

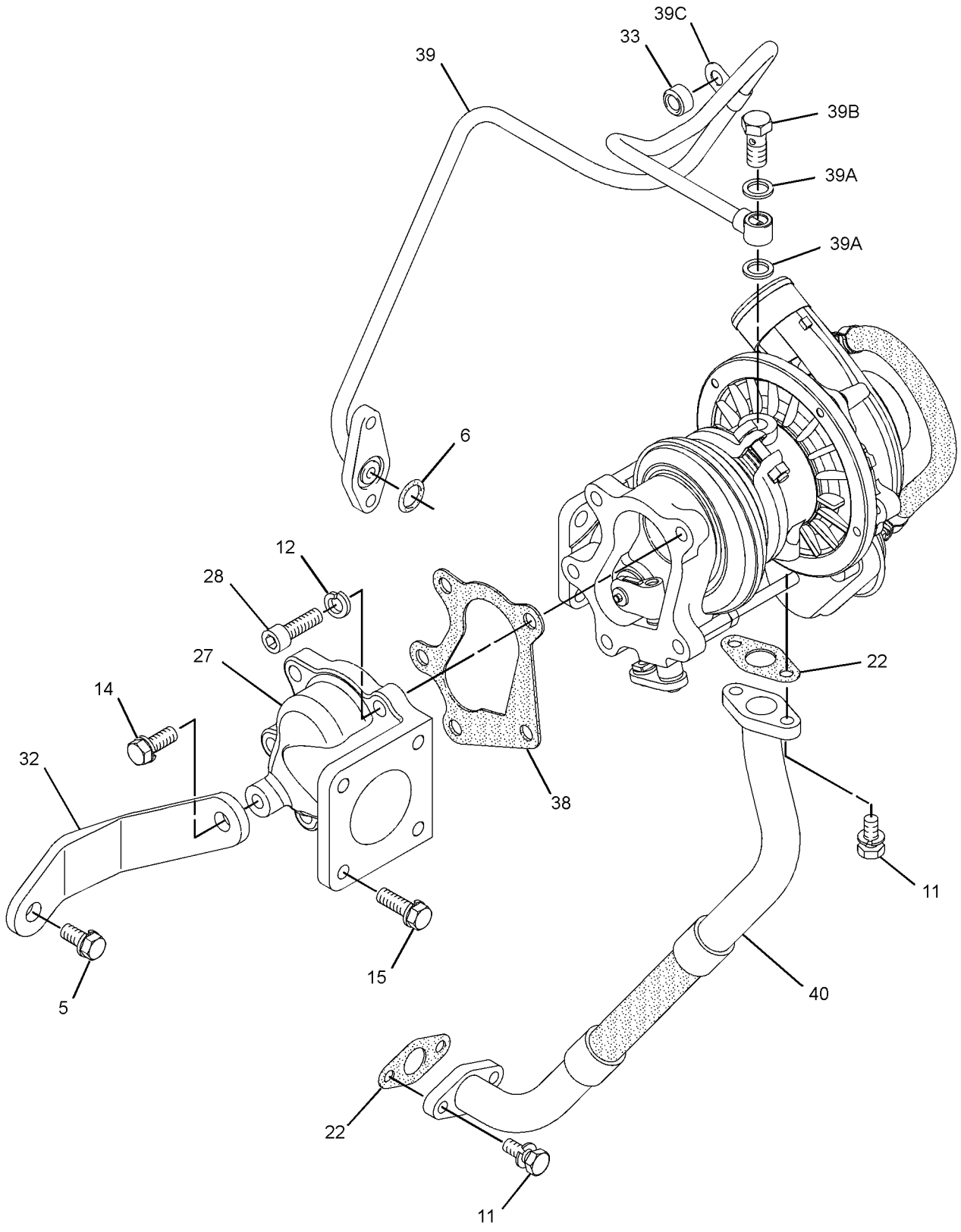

GRAPHIC #1 g01439498

317-0981 **TURBOCHARGER GP** ***(contd.)*** **i02862676**

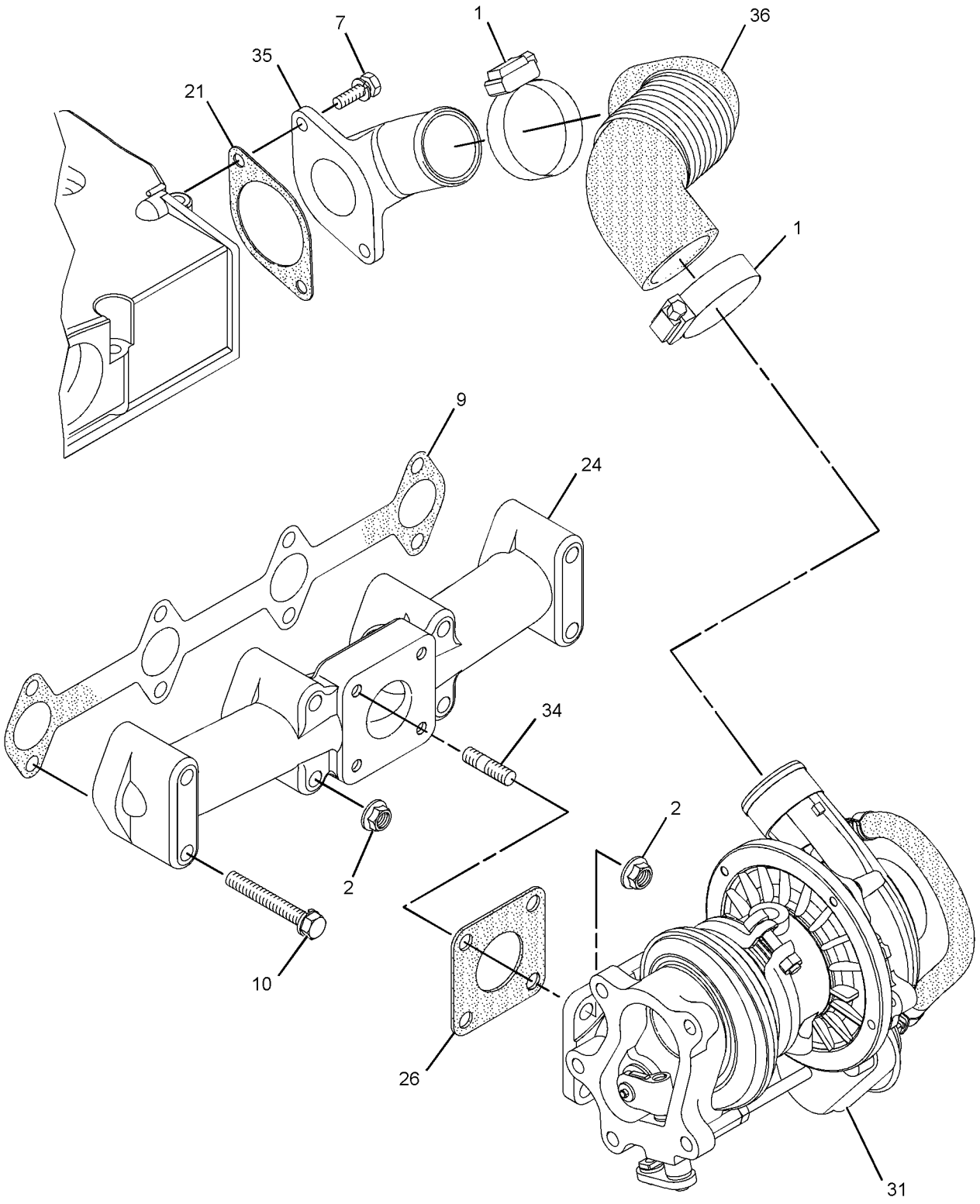

GRAPHIC #2 g01439501

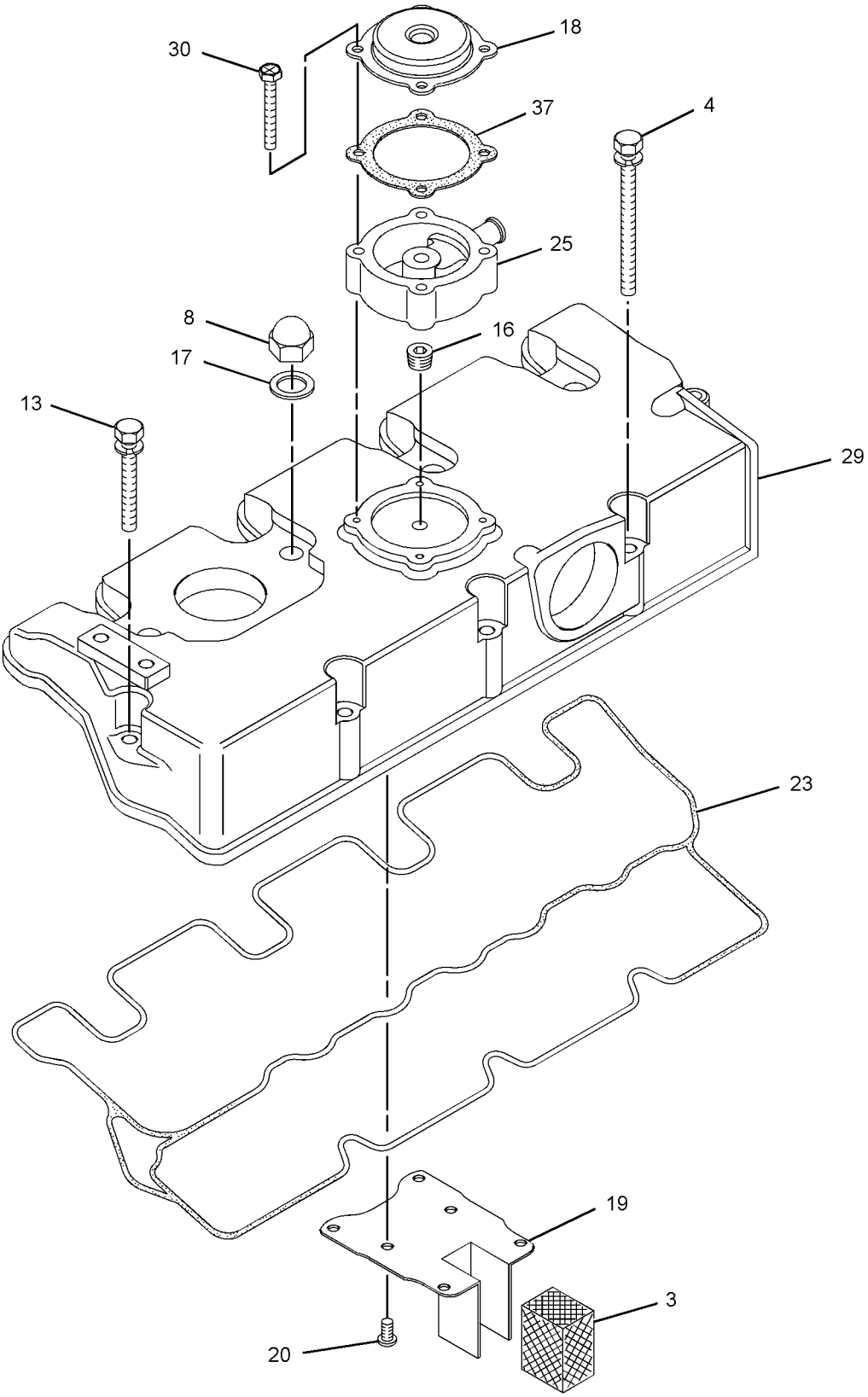

GRAPHIC #3 **<END>** g01439503

218-5566 CABLE GP-GOVERNOR CONTROL

S/N: BXM4225-UP

PART OF 218-5565 PEDAL GP-GOVERNOR

SMCS-1265 **i02533085**

NOTE	REF NO	GRAPHIC REF	PART NUMBER	QTY	PART NAME 1 2 3 4 5 6 (PRODUCT LEVEL)	SEE PAGE
	1	1	**8T-4744**	1	PIN AS-SPRING	
	2	1	**253-8677**	1	PIN AS-SPRING	
	3	1	**285-7970**	1	END-YOKE ROD	
M	4	1	**5C-2874**	1	NUT (M5X0.8-THD)	
M	5	1	**5C-2890**	1	NUT (M6X1-THD)	
	6	1	**8T-4742**	1	END-YOKE ROD	

M-METRIC PART

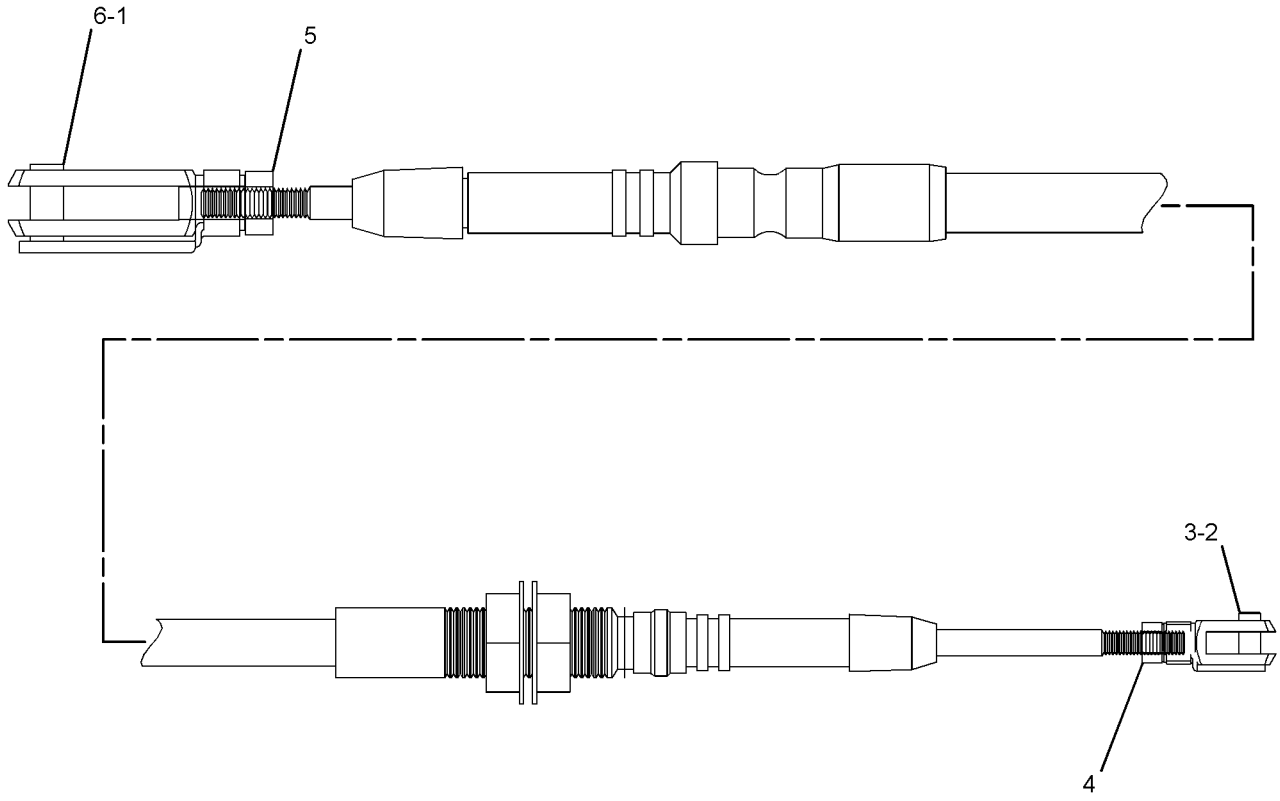

GRAPHIC #1 **<END>** g01266306

218-5602 CONTROL GP-GOVERNOR

S/N: BXM4225-UP

PART OF 295-7210 CHASSIS AR

SMCS-1265, 1276 **i01934895**

NOTE	REF NO	GRAPHIC REF	PART NUMBER	QTY	PART NAME 1 2 3 4 5 6 (PRODUCT LEVEL)	SEE PAGE
	1	1	**7K-1181**	1	STRAP-CABLE	
	2	1	**218-6616**	1	BRACKET AS	
	3	1	**218-6617**	1	BRACKET-STOP	
Y	4	1	*218-5565*	1	PEDAL GP-GOVERNOR (INCLUDES LEVER)	603
	5	1	**237-7296**	4	SCREW-FLAT HEAD (M6X1X35-MM)	
	6	1	**4B-4863**	2	WASHER (4.7X11X1.2-MM THK)	
M	7	1	**5C-2890**	4	NUT (M6X1-THD)	
	8	1	**8T-3984**	1	KNOB	
M	9	1	**8T-3998**	2	BOLT (M4X0.7X12-MM)	
M	10	1	**8T-4138**	3	BOLT (M6X1X20-MM)	
	11	1	**8T-4205**	7	WASHER-HARD (7.2X14.5X2-MM THK)	

M-METRIC PART
Y-SEPARATE ILLUSTRATION

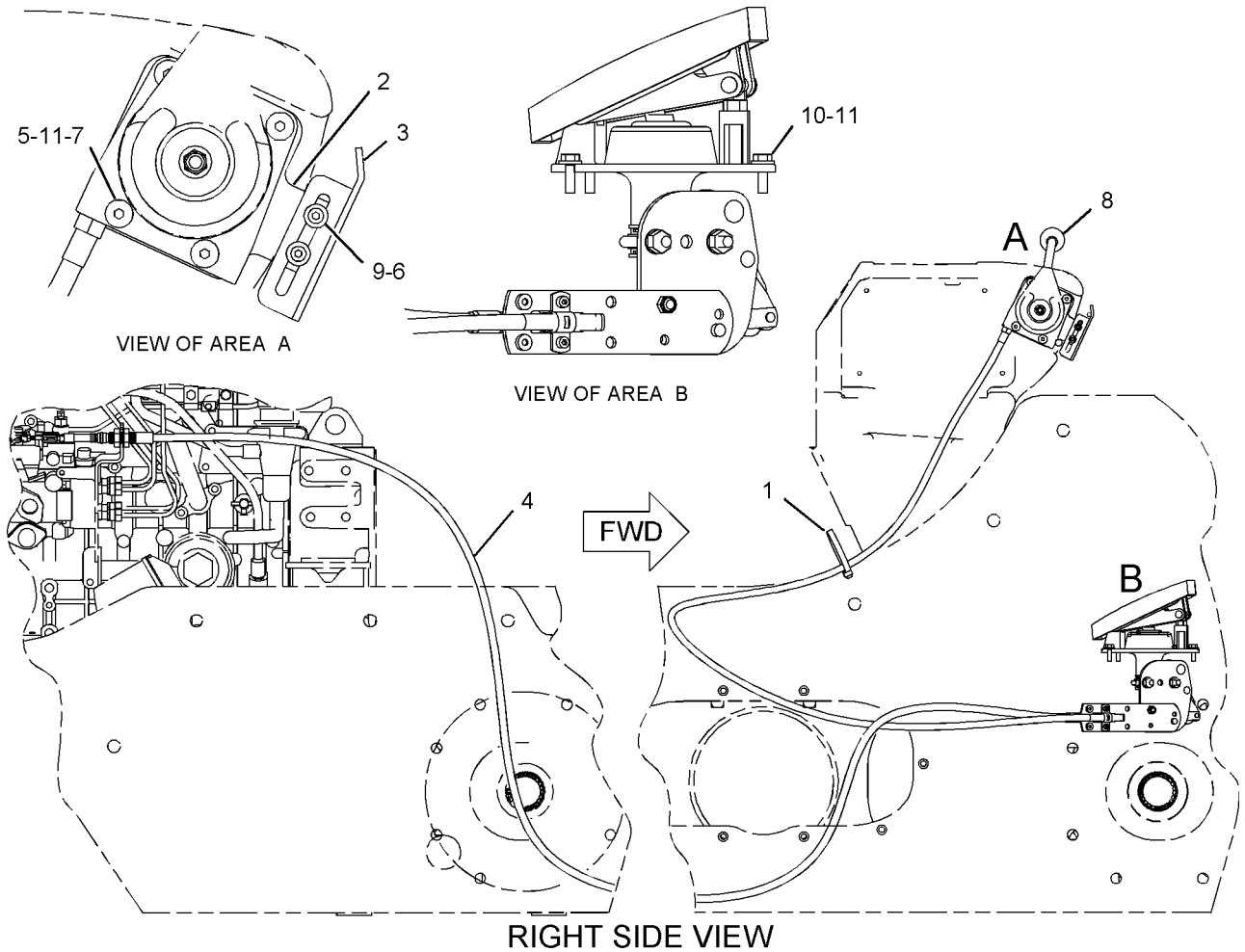

GRAPHIC #1 **<END>** g01029882

144-9962 FILTER GP-WATER SEP & FUEL

S/N: BXM4225-UP

PART OF 176-9954 PUMP GP-FUEL PRM & PRIM FILTER

SMCS-1261, 1263 **i02152337**

NOTE	REF NO	GRAPHIC REF	PART NUMBER	QTY	PART NAME 1 2 3 4 5 6 (PRODUCT LEVEL)	SEE PAGE
	1	1	**156-1200**	1	FILTER ELEMENT-FUEL (WATER SEPARATOR)	
	2	1	**149-3516**	1	BASE AS	
	3	1	**118-8118**	1	RING-RETAINING	
	4	1	**112-9401**	1	BOWL AS-WATER COLLECTION	
		1	**128-8614**	1	KIT-SEAL (WATER SEPARATOR)	
	5	1	**118-8119**	1	NUT	
					AVAILABLE REPAIR KIT(S):	
			121-4480	1	KIT-WATER BASE (WATER SEPARATOR)	

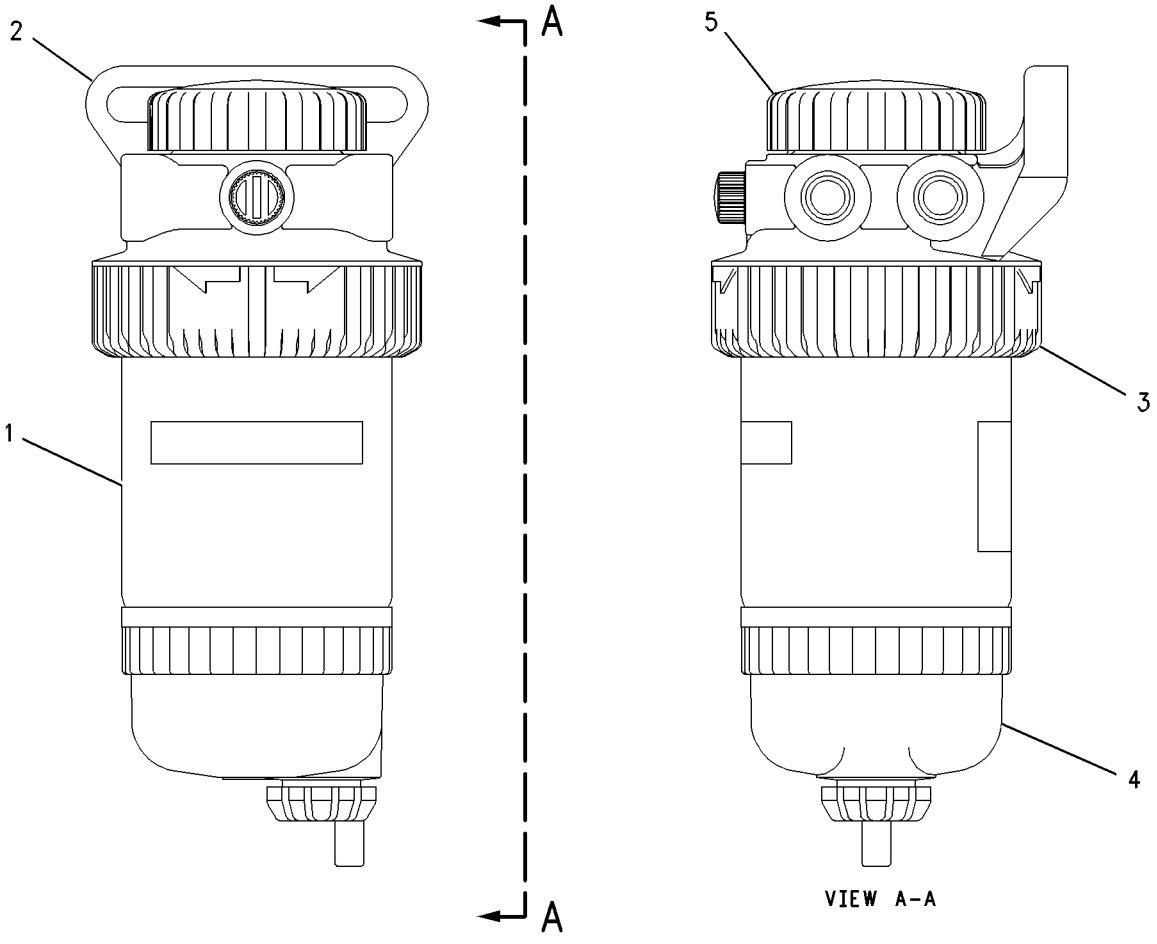

GRAPHIC #1 **<END>** g00430959

246-3415 GOVERNOR GP

S/N: CSD1-11322
PART OF 300-5206 ENGINE AR-PRIMARY
AN ATTACHMENT

SMCS-1264, 1908 **i02883346**

NOTE	REF NO	GRAPHIC REF	PART NUMBER	QTY	PART NAME 1 2 3 4 5 6 (PRODUCT LEVEL)	SEE PAGE
M	1	1,2	**5C-2890**	1	NUT (M6X1-THD)	
	2	2	**139-5511**	1	CAP (TAMPER RESISTANT)	
	3	1	**153-5960**	1	NUT	
	4	1	**153-7983**	1	PIN	
	5	2	**153-7987**	1	WASHER	
	6	1	**154-1396**	1	CLIP	
	7	1	**154-1401**	1	ARM	
	8	1	**154-1403**	1	SEAL-O-RING	
	9	1	**154-1405**	1	LEVER	
	10	1	**154-1408**	1	WASHER	
	11	1	**154-1410**	2	SEAL-O-RING	
	12	1	**154-1411**	1	CLIP	
	13	1	**154-1416**	1	SPRING	
	14	1	**154-1636**	2	NUT	
	15	1	**154-1637**	1	ARM	
	16	1	**154-1638**	1	SEAL-O-RING	
	17	1	**154-1639**	1	CLIP	
	18	1	**310-7139**	1	SPRING	
	19	1	**155-8009**	1	BOLT	
	20	1,2	**158-7936**	2	BOLT	
	21	1	**162-2207**	1	NUT	
	22	1	**249-7263**	2	BOLT	
	23	1	**191-0542**	1	SHAFT	
	24	2	**191-9293**	1	CAP-COVER	
	25	2	**191-9296**	1	BOLT	
	26	2	**191-9297**	1	NUT	
	27	1	**217-5794**	1	LEVER	
	28	1	**217-7108**	1	SPRING	
	29	2	**217-7111**	1	BOLT AS	
	29A	2	**153-7987**	1	WASHER	
	29B	2	**212-0743**	1	NUT	
	29C	2	**212-0744**	1	SEAL-O-RING	
	29D	2	**212-0745**	1	BOLT	
	29E	2	**212-0747**	1	RING-RETAINING	
	30	2	**217-7115**	1	CAP (TAMPER RESISTANT)	
	31	1	**293-3319**	1	SENSOR (TORQUE)	
	32	1	**238-1266**	1	LEVER	
	33	2	**211-7739**	1	KIT-CAP (TAMPER RESISTANT)	
	34	1	**265-5624**	1	SPRING-RETURN	
	35	1	**265-5625**	1	BRACKET-THROTTLE	
	36	1	**265-6944**	1	PLUG	

M-METRIC PART

246-3415 **GOVERNOR GP** *(contd.)* **i02883346**

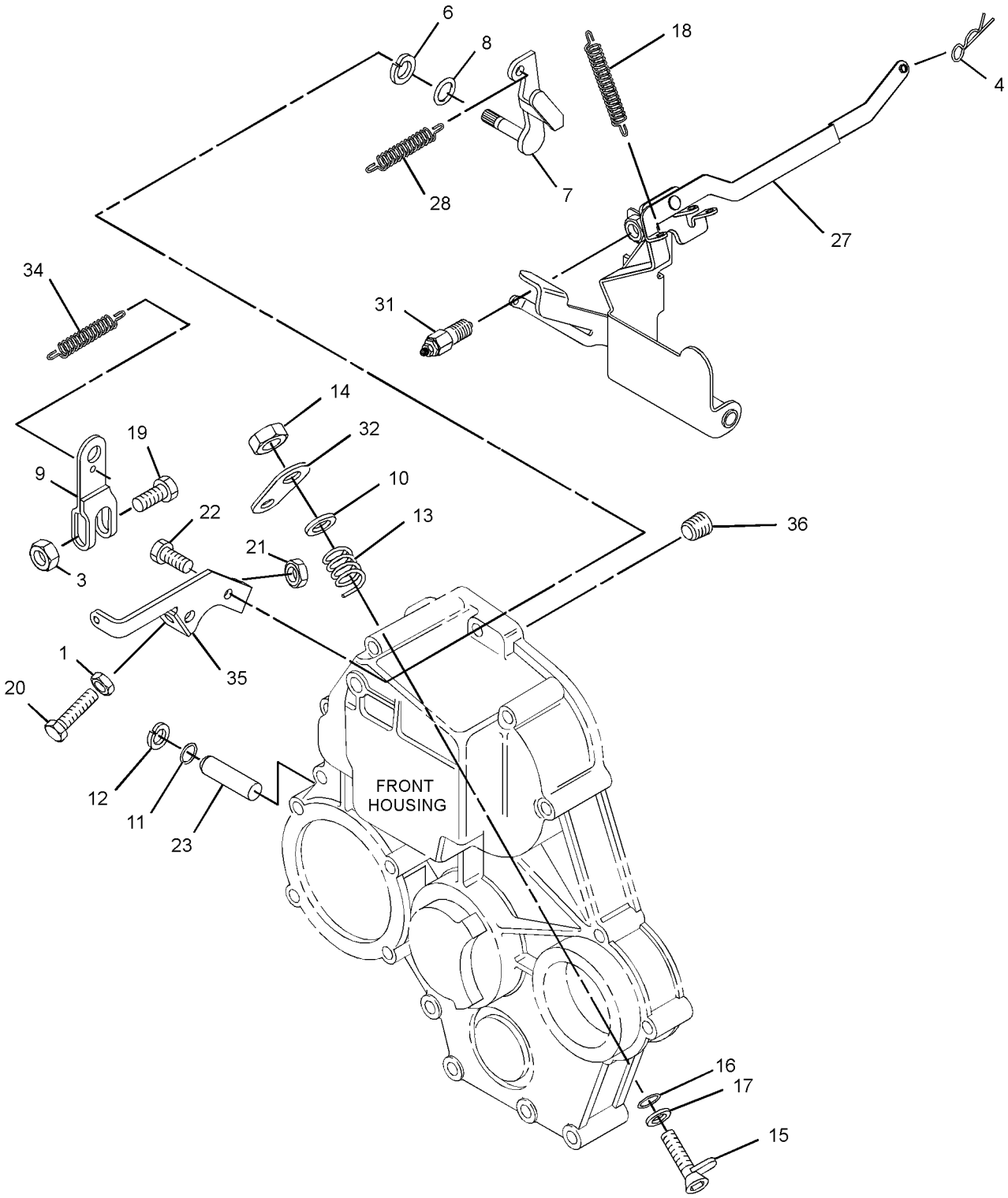

GRAPHIC #1 g01439456

246-3415 **GOVERNOR GP** *(contd.)* **i02883346**

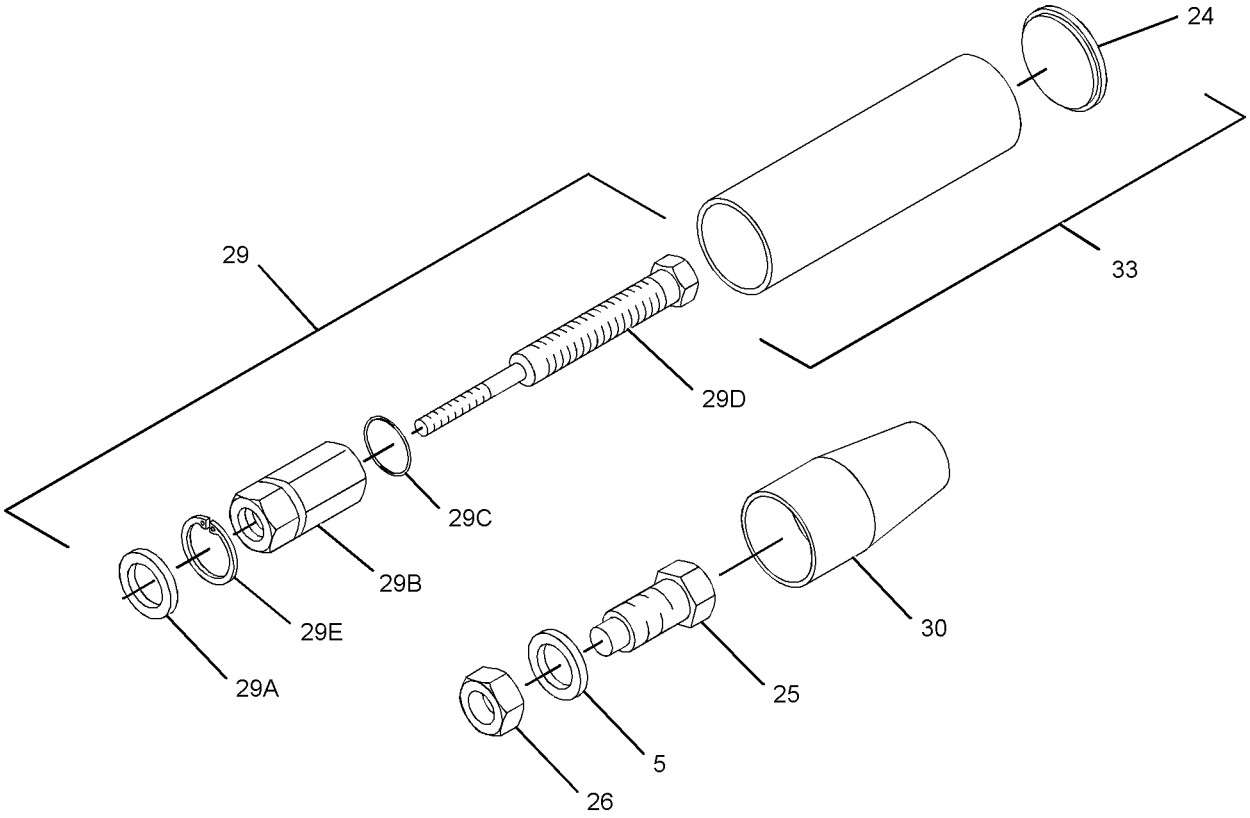

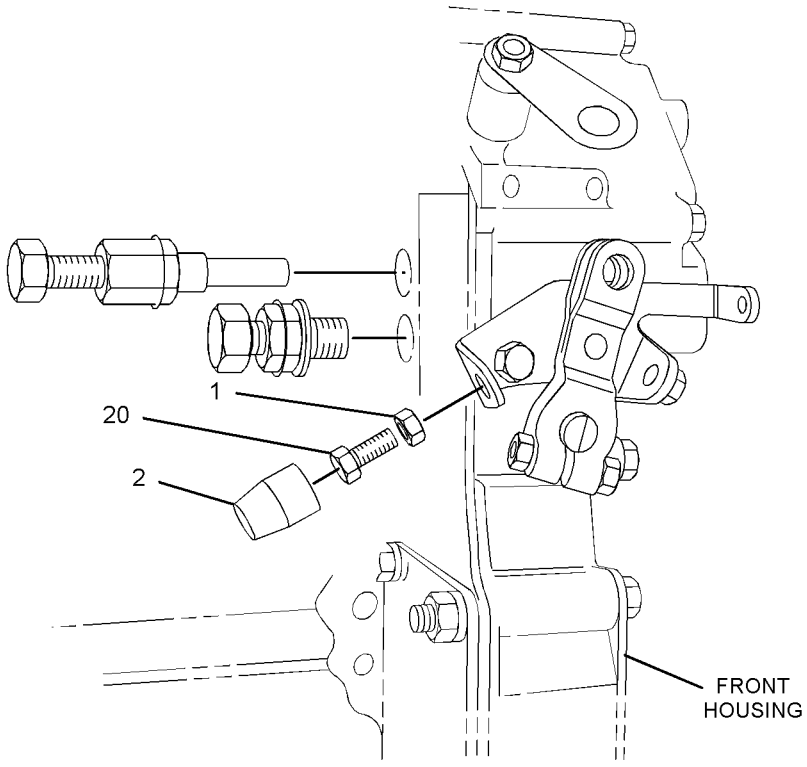

GRAPHIC #2 **<END>** g01439457

FUEL SYSTEM

317-0967 GOVERNOR GP

S/N: CYP1-UP
PART OF 292-5719 ENGINE AR-PRIMARY
AN ATTACHMENT

SMCS-1264, 1908 **i02826941**

NOTE	REF NO	GRAPHIC REF	PART NUMBER	QTY	PART NAME 1 2 3 4 5 6 (PRODUCT LEVEL)	SEE PAGE
M	1	1	**5C-2890**	1	NUT (M6X1-THD)	
	2	1	**139-5511**	1	CAP (TAMPER RESISTANT)	
	3	1	**153-5592**	1	NUT	
	4	1	**153-6415**	2	WASHER	
	5	1	**153-7983**	1	PIN	
	6	1	**154-1403**	1	SEAL-O-RING	
	7	1	**154-2715**	1	WASHER	
	8	1	**158-7936**	2	BOLT	
	9	1	**162-2207**	1	NUT	
	10	1	**183-3538**	4	BOLT	
	11	1	**217-7115**	1	CAP (TAMPER RESISTANT)	
	12	1	**308-1877**	1	BRACKET	
	13	1	**308-1878**	1	GASKET	
	14	1	**308-1879**	1	ARM	
	15	1	**308-1882**	1	SPRING	
	16	1	**308-1889**	1	NUT	
	17	1	**308-1890**	1	LEVER-CONTROL	
	18	1	**308-1892**	1	NUT	
	19	1	**308-1897**	1	RING	
	20	1	**308-1899**	1	CAP	
	21	1	**308-1900**	1	NUT	
	22	1	**308-1901**	1	CAP	
	23	1	**308-4266**	1	SHAFT	
	24	1	**309-6728**	1	SHAFT	
	25	1	**309-6732**	1	BOLT	
	26	1	**317-7195**	1	SPRING	
	27	1	**311-0655**	1	SPRING	
	28	1	**313-5832**	1	BOLT AS	
	28A	1	**153-7987**	1	WASHER	
	28B	1	**191-9297**	1	NUT	
	28C	1	**313-5833**	1	SPRING	
	29	1	**313-6211**	1	LEVER-CONTROL	
	30	1	**319-3251**	1	SENSOR-SPEED (ENGINE TIMING)	

M-METRIC PART

317-0967 **GOVERNOR GP** *(contd.)* **i02826941**

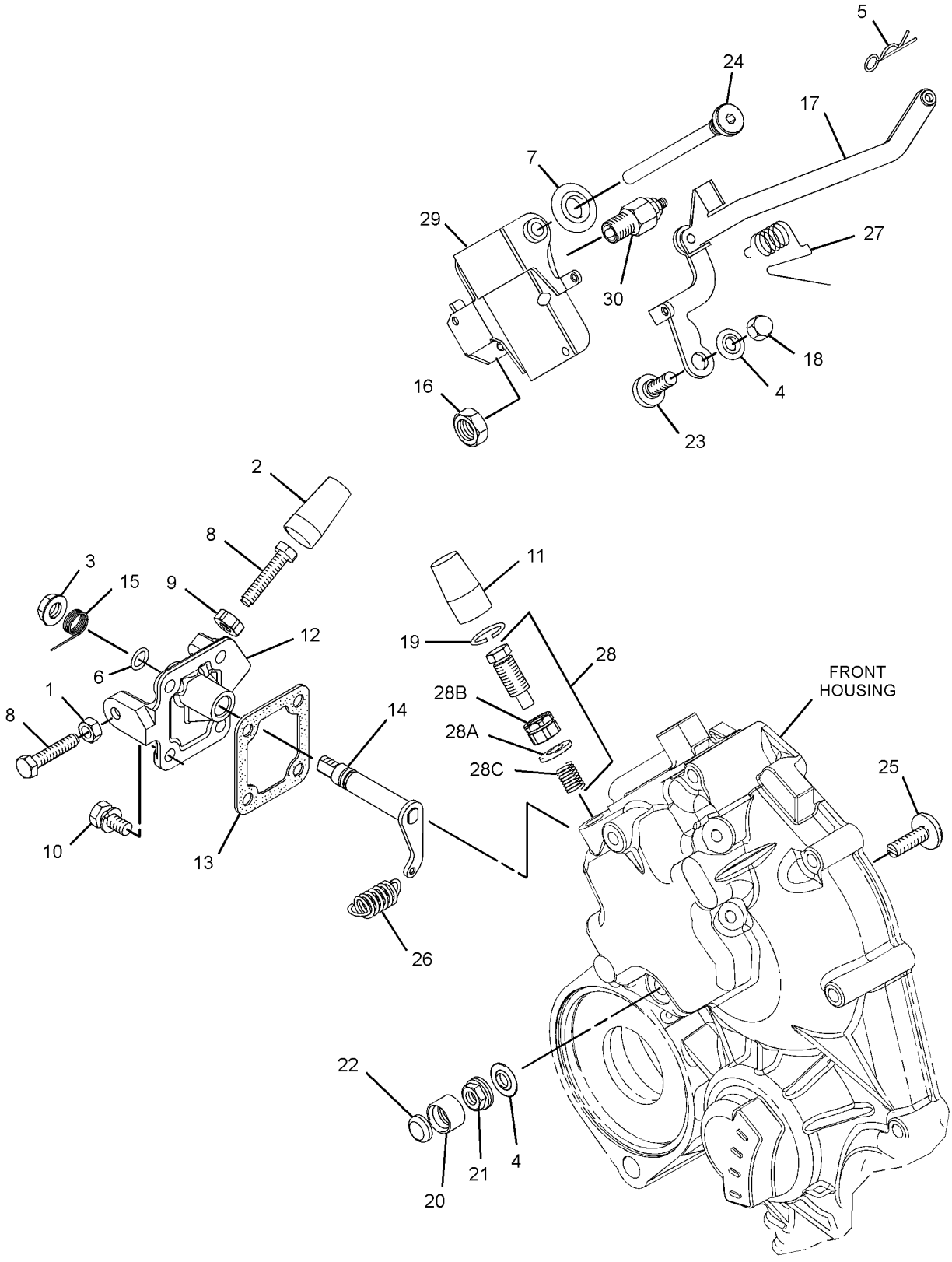

GRAPHIC #1 **<END>** g01439404

218-0933 LINES GP-FUEL PRM & FILTER

S/N: BXM4225-UP

PART OF 295-7210 CHASSIS AR

SMCS-1258, 1263, 1274 **i02534995**

NOTE	REF NO	GRAPHIC REF	PART NUMBER	QTY	PART NAME 1 2 3 4 5 6 (PRODUCT LEVEL)	SEE PAGE
	1	1	**1P-4278**	9	CLAMP-HOSE	
	2	1	**3E-7404**	1	CLAMP-HOSE	
	3	1	**5P-4961**	2	CLAMP-HOSE	
	4	1	**9X-2038**	2	WASHER (7X19X2-MM THK)	
	5	1	**3K-8460**	2	PLUG	
	6	1	**252-0368**	1	GUARD AS	
		1	**6W-5698**	1	GROMMET	
		1	**142-8928**	1	ELBOW	
	7	1	**142-8828**	1	CAP AS-FILLER (FUEL)	
Y	8	1	*176-9954*	1	PUMP GP-FUEL PRM & PRIM FILTER	122
	9	1	**180-3007**	1	CLAMP-HOSE	
	10	1	**212-6627**	1	HOSE	
	11	1	**231-3041**	1	CONNECTOR	
	12	1	**246-2622**	2	ELBOW	
E	13	1	**8C-6959**		HOSE (22-CM)	
	14	1	**5P-7814**	2	SEAL-O-RING	
	15	1	**4D-6466**	1	CLIP	
M	16	1	**5C-9553**	2	BOLT (M6X1X16-MM)	
	17	1	**8F-8513**	1	CLIP	
	18	1	**8T-4121**	4	WASHER-HARD (11X21X2.5-MM THK)	
M	19	1	**8T-4133**	2	NUT (M10X1.5-THD)	
M	20	1	**8T-4196**	2	BOLT (M10X1.5X35-MM)	
E	21	1	**5P-1442**		HOSE (134-CM)	
E	22	1	**5P-9770**		HOSE (45-CM)	

E-ORDER BY THE CENTIMETER
M-METRIC PART
Y-SEPARATE ILLUSTRATION

218-0933 **LINES GP-FUEL PRM & FILTER** *(contd.)* **i02534995**

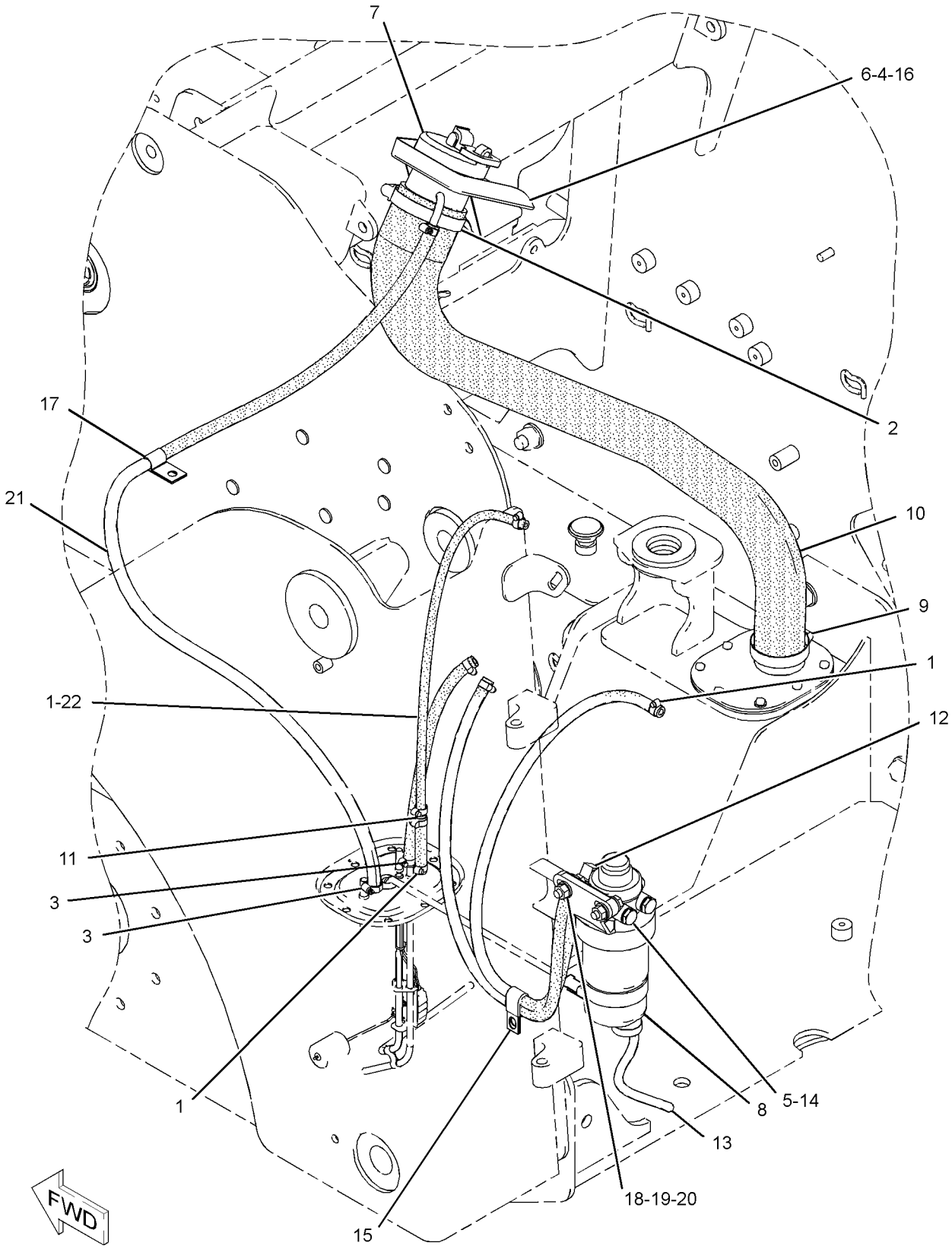

GRAPHIC #1 **<END>** g01268497

176-7711 PUMP & MTG GP-FUEL TRANSFER

S/N: CSD1-11322
PART OF 300-5206 ENGINE AR-PRIMARY
AN ATTACHMENT

SMCS-1256 **i02572746**

NOTE	REF NO	GRAPHIC REF	PART NUMBER	QTY	PART NAME 1 2 3 4 5 6 (PRODUCT LEVEL)	SEE PAGE
	1	1	**153-6873**	2	BOLT	
	2	1	**295-4070**	1	PUMP AS-FUEL TRANSFER	
	3	1	**176-7719**	1	SEAL-O-RING	

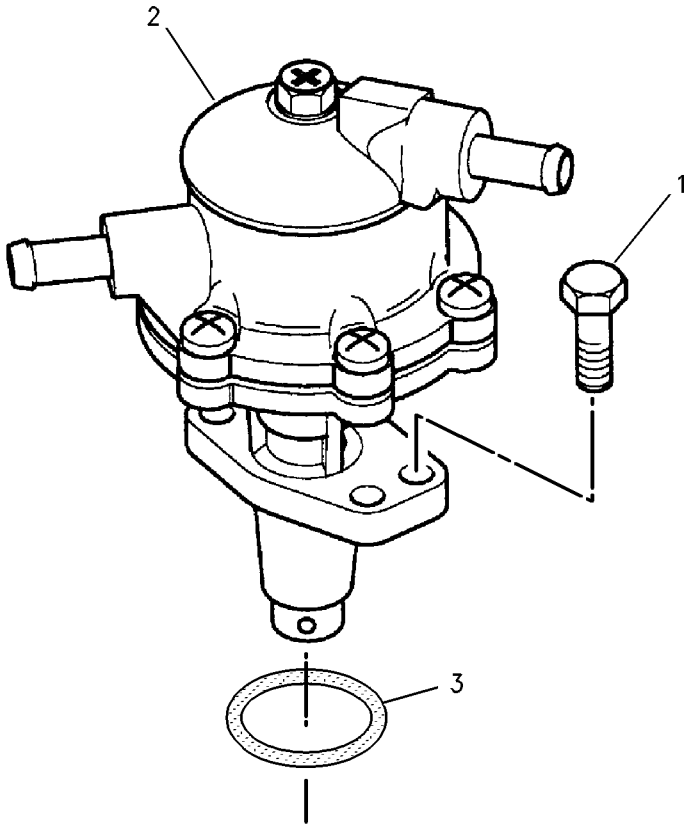

GRAPHIC #1 **<END>** g00758159

315-7814 PUMP & MTG GP-FUEL TRANSFER

S/N: CYP1-UP
PART OF 292-5719 ENGINE AR-PRIMARY
AN ATTACHMENT

SMCS-1256 **i02810614**

NOTE	REF NO	GRAPHIC REF	PART NUMBER	QTY	PART NAME 1 2 3 4 5 6 (PRODUCT LEVEL)	SEE PAGE
	1	1	**6I-0846**	2	BOLT (M6X1X14-MM)	
	2	1	**295-4070**	1	PUMP AS-FUEL TRANSFER	
	3	1	**176-7719**	1	SEAL-O-RING	

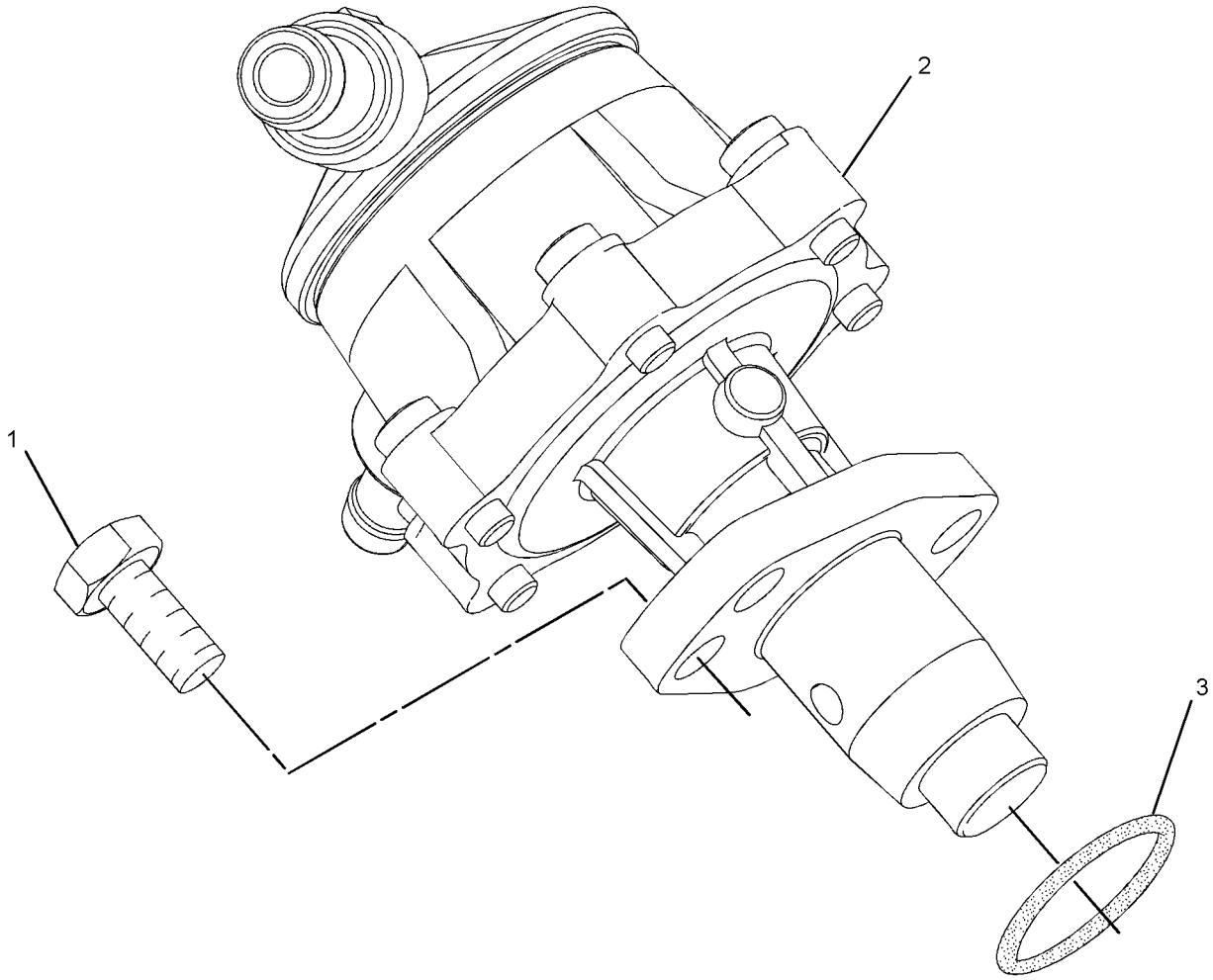

GRAPHIC #1 **<END>** g01421535

295-8181 PUMP GP-FUEL INJECTION

S/N: CSD1-11322
PART OF 300-5206 ENGINE AR-PRIMARY
AN ATTACHMENT

SMCS-1251, 1290, 5479 **i02845307**

NOTE	REF NO	GRAPHIC REF	PART NUMBER	QTY	PART NAME 1 2 3 4 5 6 (PRODUCT LEVEL)	SEE PAGE
	1	1	**153-5592**	3	NUT	
	2	1	**153-5960**	3	NUT	
	3	2	**153-6412**	1	WASHER	
	4	1	**154-2713**	2	BOLT	
	5	2	**154-2715**	2	WASHER	
	6	2	**154-2716**	4	SEAL	
	7	2	**154-3018**	1	INJECTOR AS-FUEL	
	7A	2	**202-1196**	1	WASHER-SPECIAL	
	7B	2	**205-4731**	1	NUT	
	8	1	**160-3550**	1	CLAMP-HOSE	
B	9	1	**154-3017**	1	SHIM (0.2-MM THK)	
B		1	**160-3555**	1	SHIM (0.3-MM THK)	
B		1	**160-3556**	1	SHIM (0.4-MM THK)	
B		1	**160-3557**	1	SHIM (0.5-MM THK)	
B		1	**160-3558**	1	SHIM (0.5-MM THK)	
	10	1	**163-5372**	1	WASHER (8X15.4X4-MM THK)	
	11	1	**183-3353**	3	BOLT	
	12	2	**190-3803**	1	BOLT	
	13	1	**217-2760**	1	TUBE AS (CYL NO. 1)	
	14	1	**217-2761**	1	TUBE AS (CYL NO. 2)	
	15	1	**217-2762**	1	TUBE AS (CYL NO. 3)	
	16	1	**217-2763**	1	TUBE AS (CYL NO. 4)	
	17	2	**311-7561**	1	TUBE	
M	19	1	**8T-4189**	1	BOLT (M8X1.25X20-MM)	
	20	2	**271-2117**	1	SOLENOID (FUEL SHUTOFF)	
	21	1	**290-8014**	4	CLAMP	
Y	22	1	**302-7821**	1	PUMP GP-FUEL INJECTION	119
	23	1	**295-8184**	1	HOSE	

B-USE AS REQUIRED
M-METRIC PART
Y-SEPARATE ILLUSTRATION

295-8181 **PUMP GP-FUEL INJECTION** *(contd.)* **i02845307**

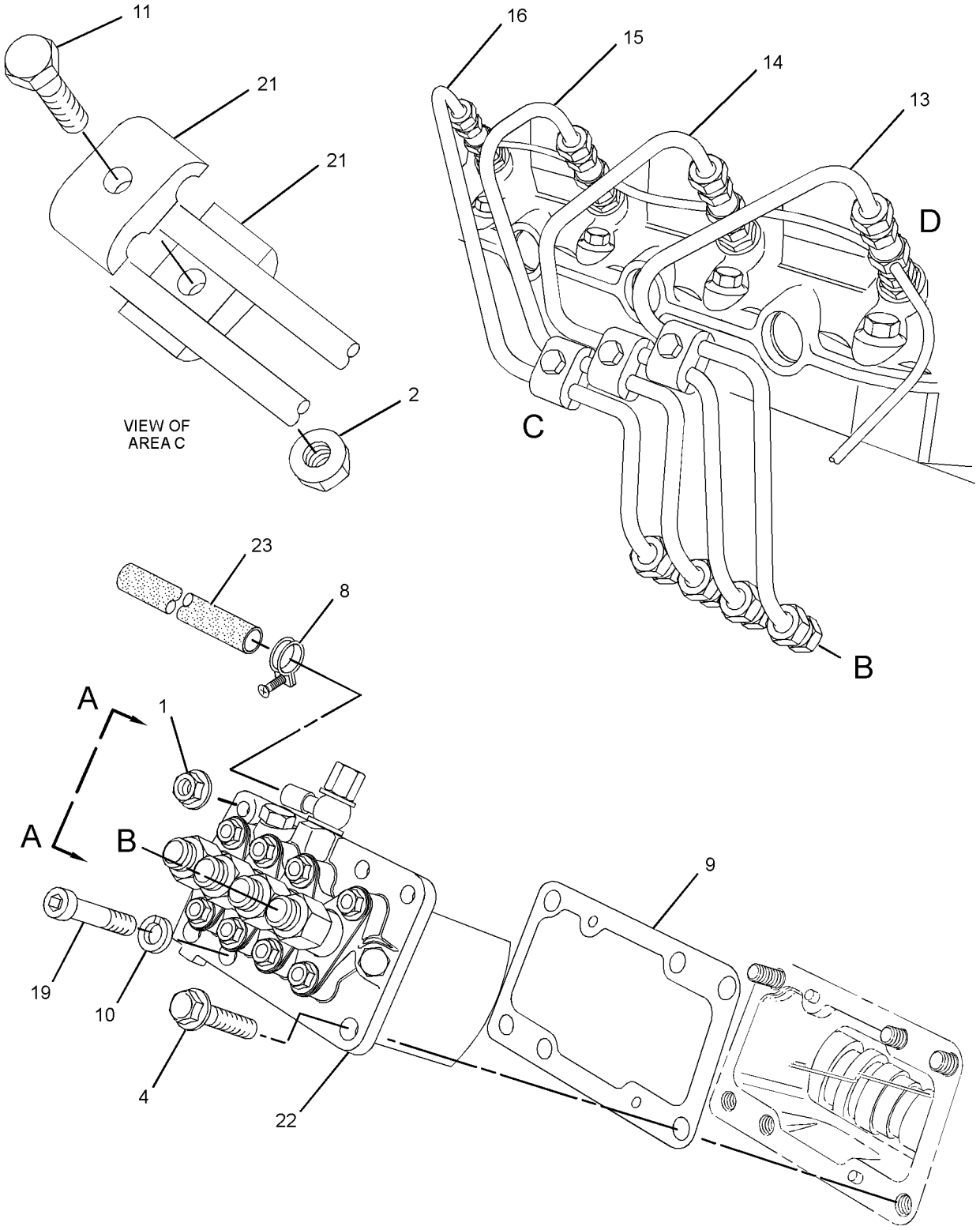

REFER TO ALL ILLUSTRATIONS OF
THIS GROUP FOR AUXILIARY VIEWS

GRAPHIC #1

g01393730

295-8181 **PUMP GP-FUEL INJECTION** *(contd.)* **i02845307**

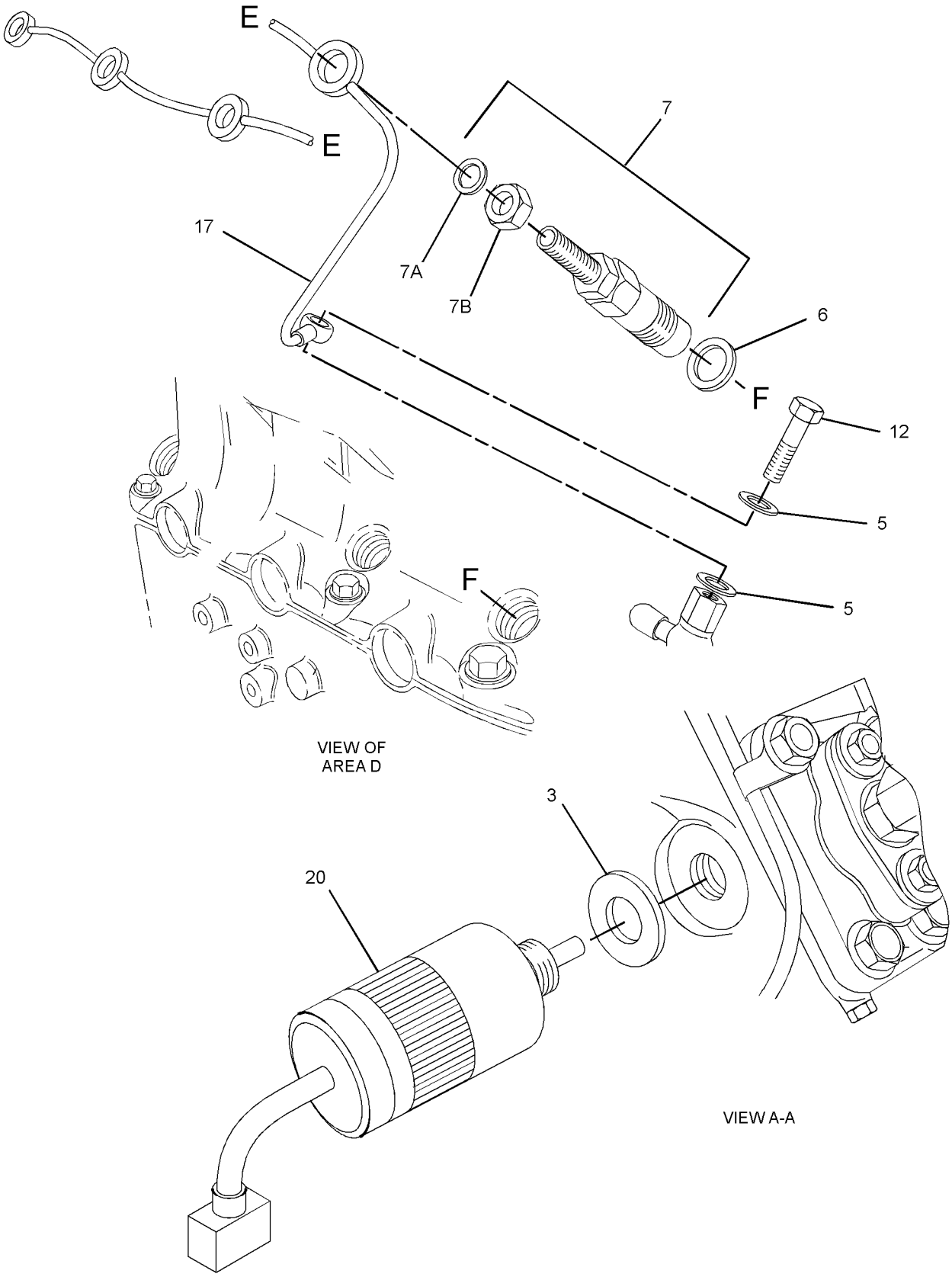

GRAPHIC #2 **<END>** g01393731

302-7821 PUMP GP-FUEL INJECTION

S/N: CSD1-11322

PART OF 295-8181 PUMP GP-FUEL INJECTION

AN ATTACHMENT

SMCS-1251, 1290, 5479 **i02794118**

NOTE	REF NO	GRAPHIC REF	PART NUMBER	QTY	PART NAME 1 2 3 4 5 6 (PRODUCT LEVEL)	SEE PAGE
	1	1	**205-4726**	1	BOLT	
	2	1	**205-4727**	2	WASHER	
	3	1	**205-4728**	1	CONNECTOR	

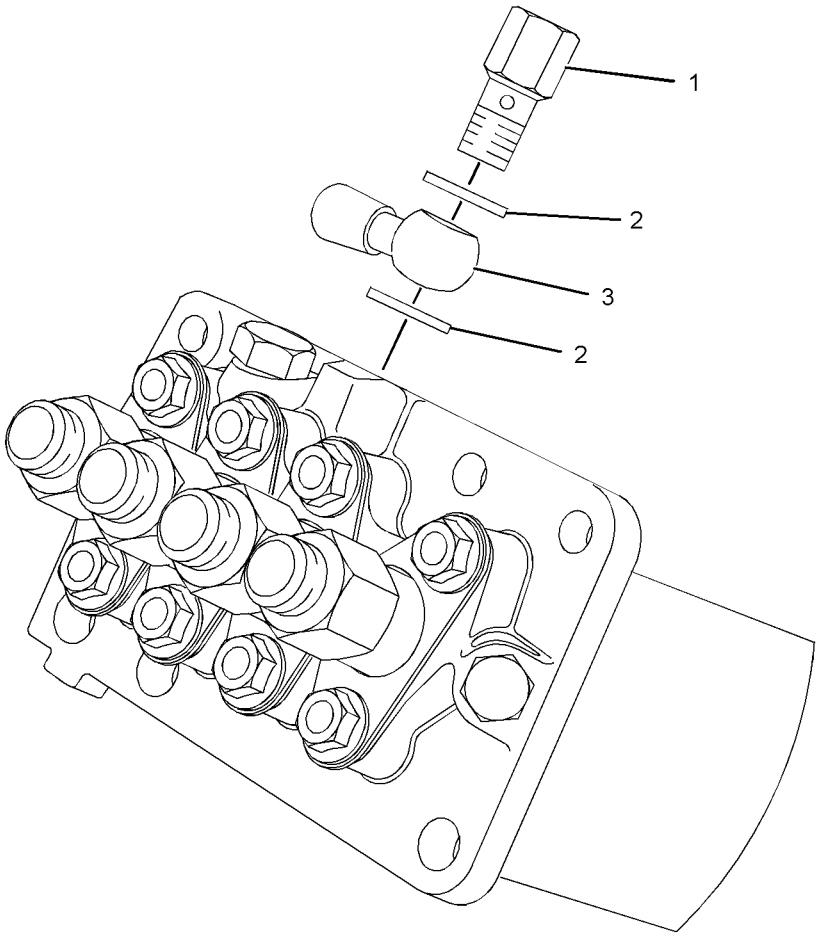

GRAPHIC #1 **<END>** g01281336

317-0977 PUMP GP-FUEL INJECTION

S/N: CYP1-UP
PART OF 292-5719 ENGINE AR-PRIMARY
AN ATTACHMENT

SMCS-1251, 1290, 5479 **i02826920**

NOTE	REF NO	GRAPHIC REF	PART NUMBER	QTY	PART NAME 1 2 3 4 5 6 (PRODUCT LEVEL)	SEE PAGE
	1	1	**153-5592**	3	NUT	
	2	1	**153-5960**	3	NUT	
	3	1	**154-2713**	2	BOLT	
	4	1	**154-2715**	2	WASHER	
	5	1	**154-2716**	4	SEAL	
B	6	1	**154-3017**	1	SHIM (0.2-MM THK)	
B		1	**302-7822**	1	SHIM (0.25-MM THK)	
B		1	**160-3555**	1	SHIM (0.3-MM THK)	
B		1	**302-7823**	1	SHIM (0.35-MM THK)	
B		1	**160-3556**	1	SHIM (0.4-MM THK)	
B		1	**160-3557**	1	SHIM (0.5-MM THK)	
B		1	**160-3558**	1	SHIM (0.5-MM THK)	
	7	1	**163-5372**	1	WASHER (8X15.4X4-MM THK)	
	8	1	**183-3353**	3	BOLT	
	9	1	**190-3803**	1	BOLT	
	10	1	**217-2760**	1	TUBE AS (CYL NO. 1)	
	11	1	**217-2761**	1	TUBE AS (CYL NO. 2)	
	12	1	**217-2762**	1	TUBE AS (CYL NO. 3)	
	13	1	**217-2763**	1	TUBE AS (CYL NO. 4)	
M	14	1	**8T-4189**	1	BOLT (M8X1.25X20-MM)	
	15	1	**290-8014**	6	CLAMP	
	16	1	**308-1905**	1	PUMP-FUEL INJECTION	
	17	1	**308-1906**	4	ATOMIZER	
	17A	1	**202-1196**	1	WASHER-SPECIAL	
	18	1	**311-7561**	1	TUBE	

B-USE AS REQUIRED
M-METRIC PART

317-0977 **PUMP GP-FUEL INJECTION** *(contd.)* **i02826920**

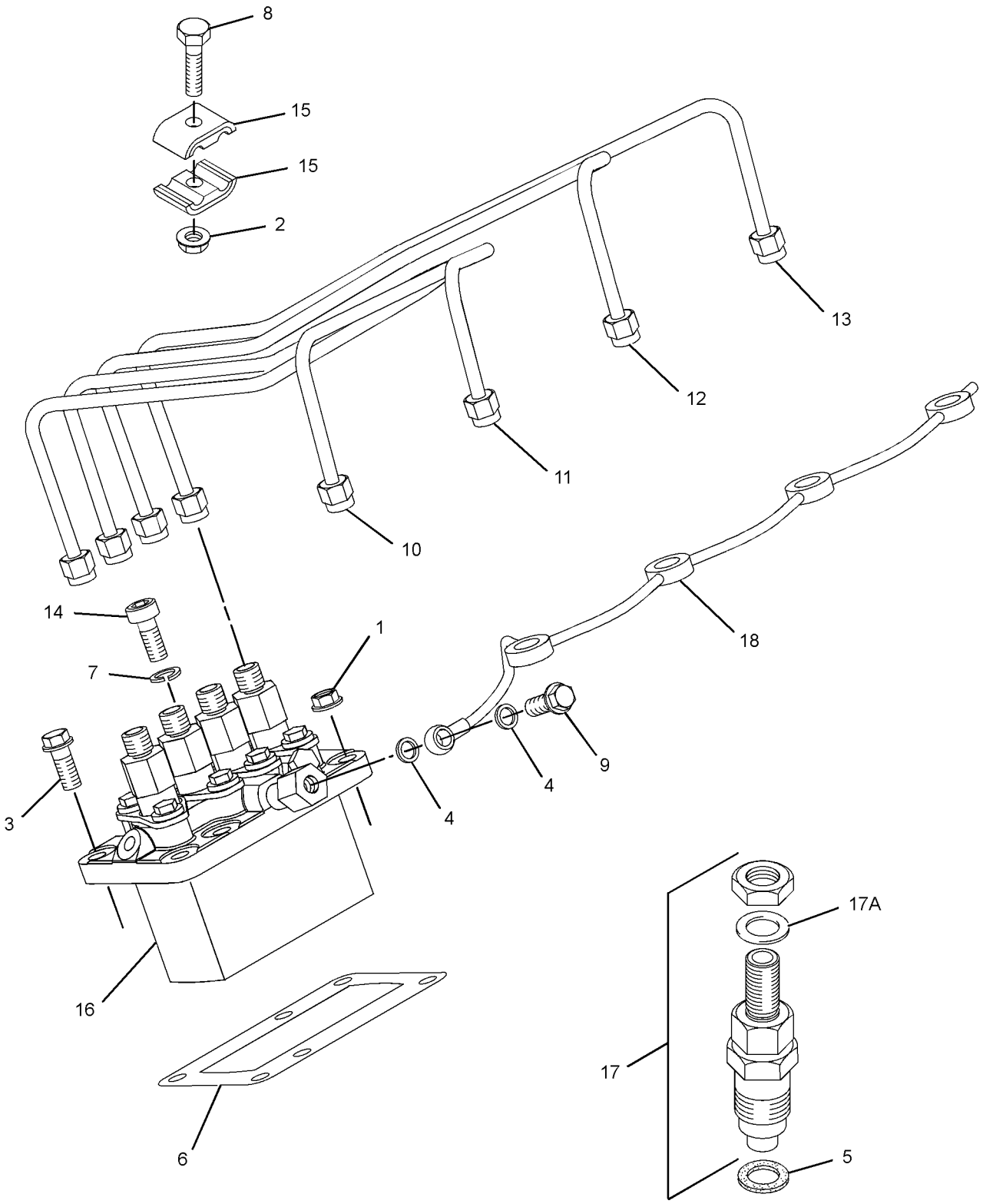

GRAPHIC #1 **<END>** g01438681

176-9954 PUMP GP-FUEL PRM & PRIM FILTER–WATER SEPARATOR

S/N: BXM4225-UP

PART OF 218-0933 LINES GP-FUEL PRM & FILTER

SMCS-1258, 1261, 1263 **i01757278**

NOTE	PART NUMBER	QTY	PART NAME 1 2 3 4 5 6 (PRODUCT LEVEL)	SEE PAGE
Y	**144-9962**	1	FILTER GP-WATER SEP & FUEL	106
	129-6259	1	PUMP GP-FUEL PRIMING	
	129-6262	1	BLADDER	

Y-SEPARATE ILLUSTRATION

<END>

246-4319 ALTERNATOR GP-CHARGING

S/N: CSD1-11322
PART OF 300-5206 ENGINE AR-PRIMARY
AN ATTACHMENT

SMCS-1405 **i02869232**

NOTE	REF NO	GRAPHIC REF	PART NUMBER	QTY	PART NAME 1 2 3 4 5 6 (PRODUCT LEVEL)	SEE PAGE
	1	1	**100-8451**	1	BOLT (M8X1.25X130-MM)	
	2	1	**180-8579**	1	NUT	
	3	1	**155-7984**	2	WASHER	
	4	1	**165-2141**	1	BOLT	
	5	1	**168-8999**	1	LEVER-ADJUSTING	
	6	1	**168-9001**	4	BOLT	
	7	1	**168-9002**	1	WASHER	
	8	1	**225-3143**	1	ALTERNATOR GP-CHARGING	
	9	1	**225-7955**	1	CABLE AS-BATTERY (NEGATIVE)	
		1	**225-7956**	1	TERMINAL-CABLE	
	9A	1	**3S-6050**	1	TERMINAL AS-BATTERY (NEGATIVE)	
		1	**1M-6119**	1	BOLT (5/16-18X1.375-IN)	
		1	**1M-6120**	1	NUT (5/16-18-THD)	
		1	**7N-5274**	1	COVER-TERMINAL (BLACK)	
		1	**8L-8413**	1	STRAP-CABLE	
	9B	1	**159-8050**		CABLE (02-GA, BLACK) (51-CM)	
	10	1	**246-3198**	1	PULLEY-ALTERNATOR	
	11	1	**246-4267**	1	BRACKET	
	12	1	**246-4318**	5	CLIP	
	13	1	**163-5372**	1	WASHER (8X15.4X4-MM THK)	
	14	1	**280-8336**	1	BRACKET AS	
M	14A	1	**8T-3612**	1	NUT-WELD (M8X1.25-THD)	

M-METRIC PART

246-4319 **ALTERNATOR GP-CHARGING** *(contd.)* **i02869232**

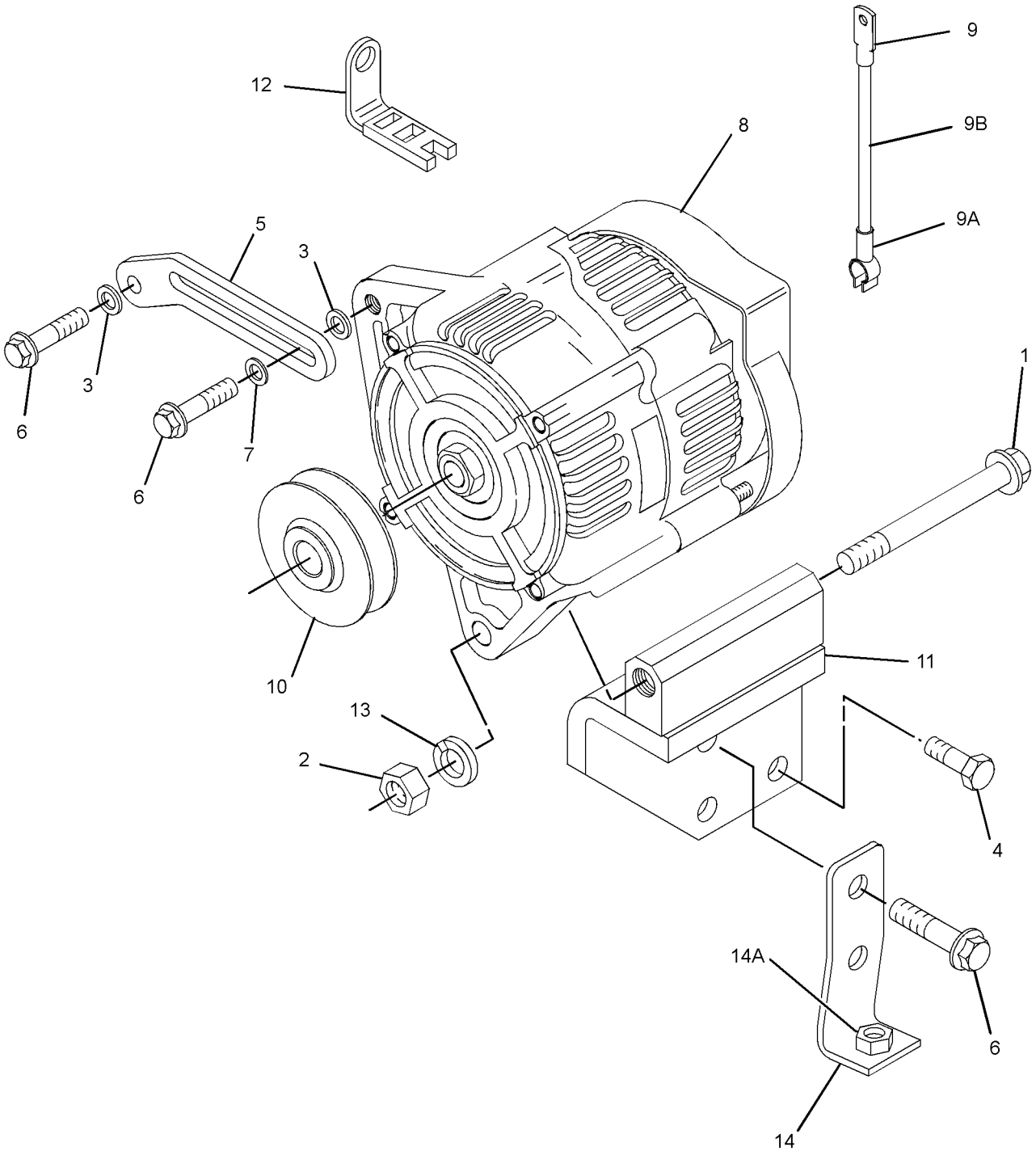

GRAPHIC #1 **<END>** g01429716

316-6963 ALTERNATOR GP-CHARGING

S/N: CYP1-UP

PART OF 292-5719 ENGINE AR-PRIMARY

AN ATTACHMENT

SMCS-1405 **i02826949**

NOTE	REF NO	GRAPHIC REF	PART NUMBER	QTY	PART NAME 1 2 3 4 5 6 (PRODUCT LEVEL)	SEE PAGE
	1	1	**100-8451**	1	BOLT (M8X1.25X130-MM)	
	2	1	**153-5592**	1	NUT	
	3	1	**155-7984**	1	WASHER	
	4	1	**165-2141**	3	BOLT	
	5	1	**168-8999**	1	LEVER-ADJUSTING	
	6	1	**168-9001**	2	BOLT	
	7	1	**168-9002**	1	WASHER	
	8	1	**246-4267**	1	BRACKET	
	9	1	**305-3661**	1	ALTERNATOR GP-CHARGING	

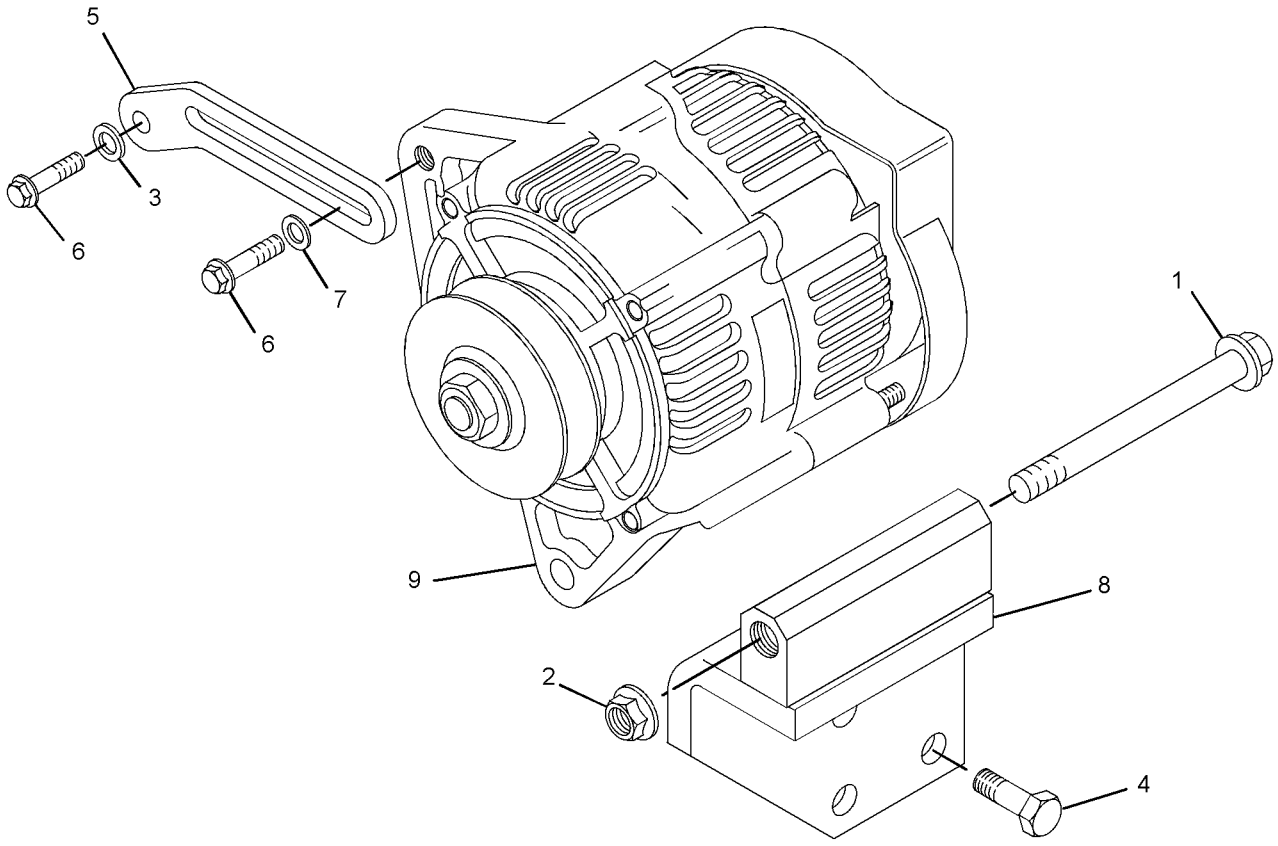

GRAPHIC #1 **<END>** g01439071

225-7950 BATTERY GP—STANDARD

S/N: BXM4225-UP

CANNOT BE USED WITH 225-7952—PAGE 127

AN ATTACHMENT

SMCS-1401 **i02014204**

NOTE	REF NO	GRAPHIC REF	PART NUMBER	QTY	PART NAME 1 2 3 4 5 6 (PRODUCT LEVEL)	SEE PAGE
	1	1	**153-5656**	1	BATTERY (12 VOLT, STANDARD)	
	2	1	**193-8329**	1	CLAMP	
	3	1	**5P-4116**	2	WASHER-HARD (8.8X20.5X2-MM THK)	
M	4	1	**8T-4189**	1	BOLT (M8X1.25X20-MM)	
M	5	1	**8T-6912**	1	BOLT (M8X1.25X50-MM)	

M-METRIC PART

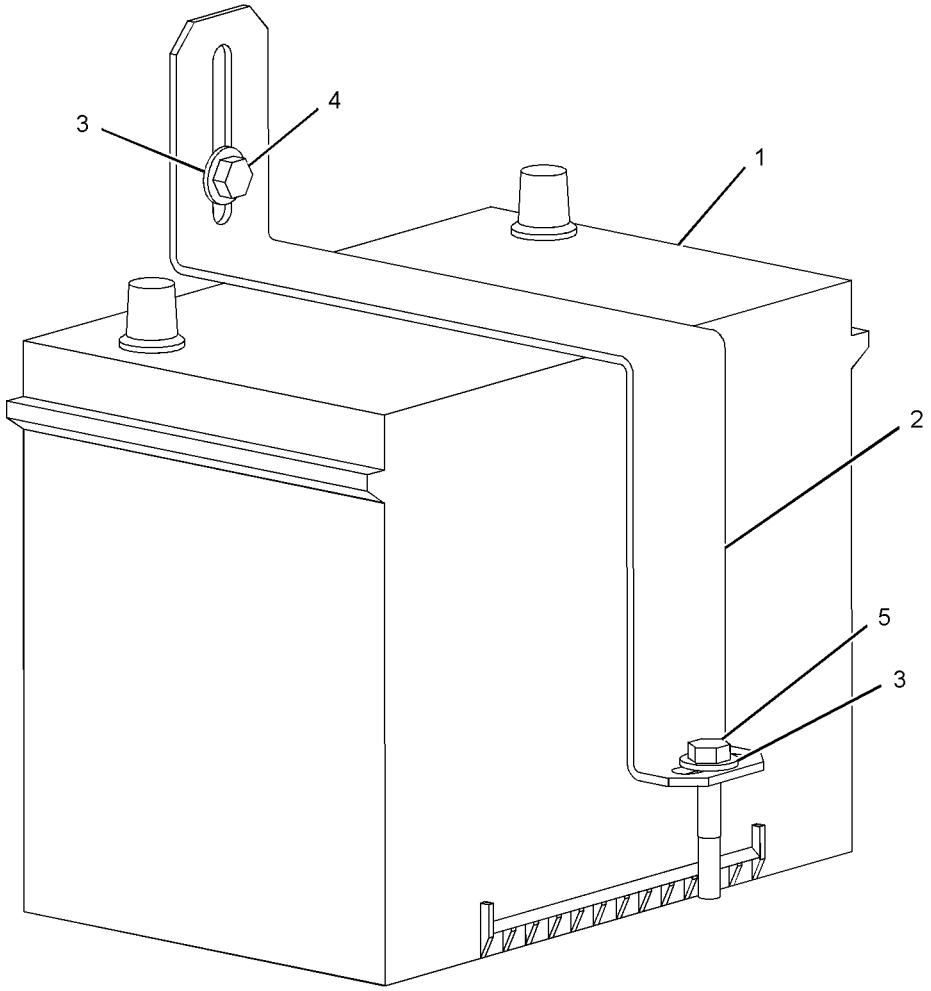

GRAPHIC #1

<END>

g01010454

225-7952 BATTERY GP—HEAVY DUTY

S/N: BXM4225-UP

CANNOT BE USED WITH 225-7950—PAGE 126

AN ATTACHMENT

SMCS-1401 **i02014205**

NOTE	REF NO	GRAPHIC REF	PART NUMBER	QTY	PART NAME 1 2 3 4 5 6 (PRODUCT LEVEL)	SEE PAGE
	1	1	**193-8329**	1	CLAMP	
	2	1	**230-6368**	1	BATTERY (12-VOLT, MAINTENANCE FREE)	
	3	1	**5P-4116**	2	WASHER-HARD (8.8X20.5X2-MM THK)	
M	4	1	**8T-4189**	2	BOLT (M8X1.25X20-MM)	

M-METRIC PART

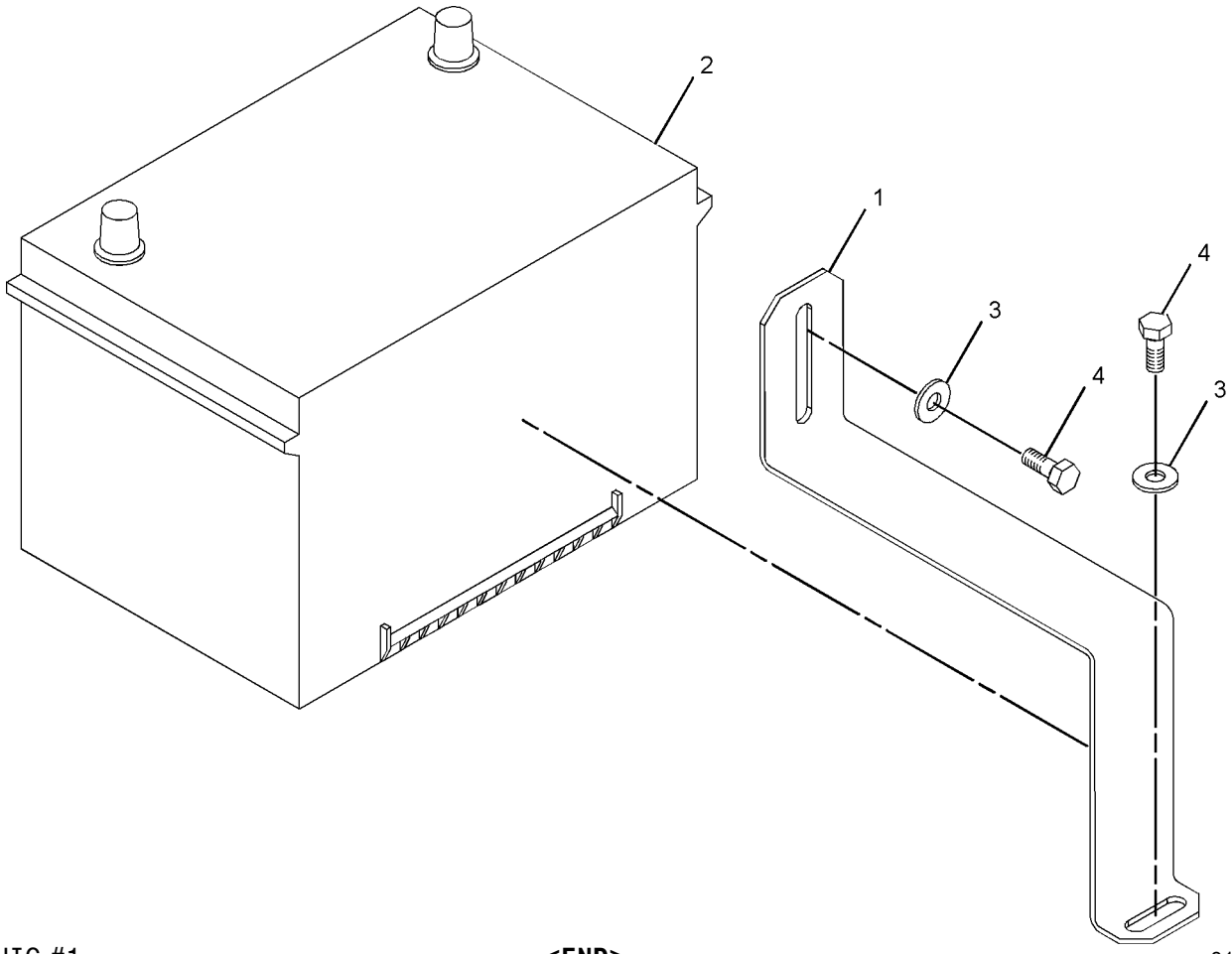

GRAPHIC #1 **<END>** g01015484

217-2778 CONNECTION GP-ELECTRICAL

S/N: CSD1-11322
PART OF 300-5206 ENGINE AR-PRIMARY
AN ATTACHMENT

SMCS-1408, 4459 **i01649071**

NOTE	REF NO	GRAPHIC REF	PART NUMBER	QTY	PART NAME 1 2 3 4 5 6 (PRODUCT LEVEL)	SEE PAGE
	1	1	**183-4037**	1	CONNECTOR AS	
	2	1	**200-5976**	1	CONNECTION	

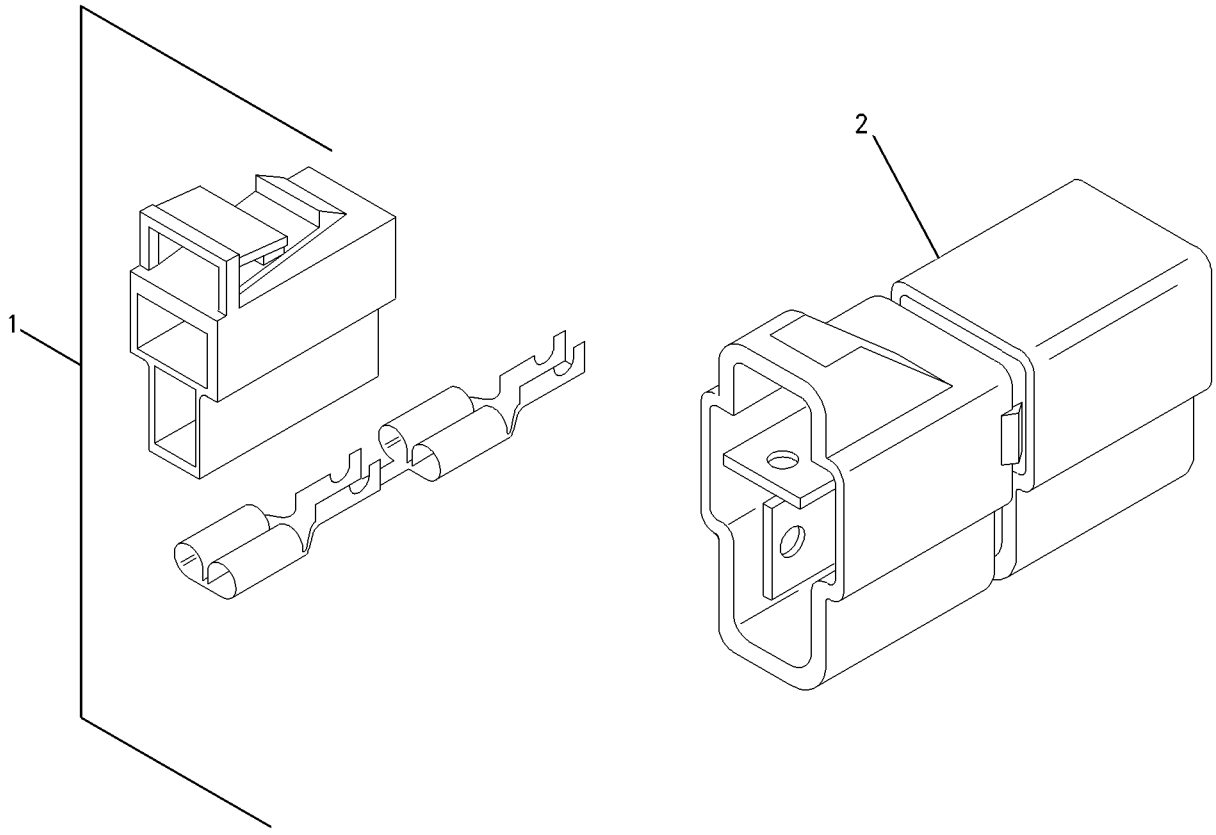

GRAPHIC #1 **<END>** g00852746

217-5884 CONNECTION GP-ELECTRICAL

S/N: CSD1-11322
PART OF 300-5206 ENGINE AR-PRIMARY
AN ATTACHMENT

SMCS-1408, 4459 **i02135600**

NOTE	REF NO	GRAPHIC REF	PART NUMBER	QTY	PART NAME 1 2 3 4 5 6 (PRODUCT LEVEL)	SEE PAGE
	1	1	**193-0161**	3	CABLE AS-ADAPTER	

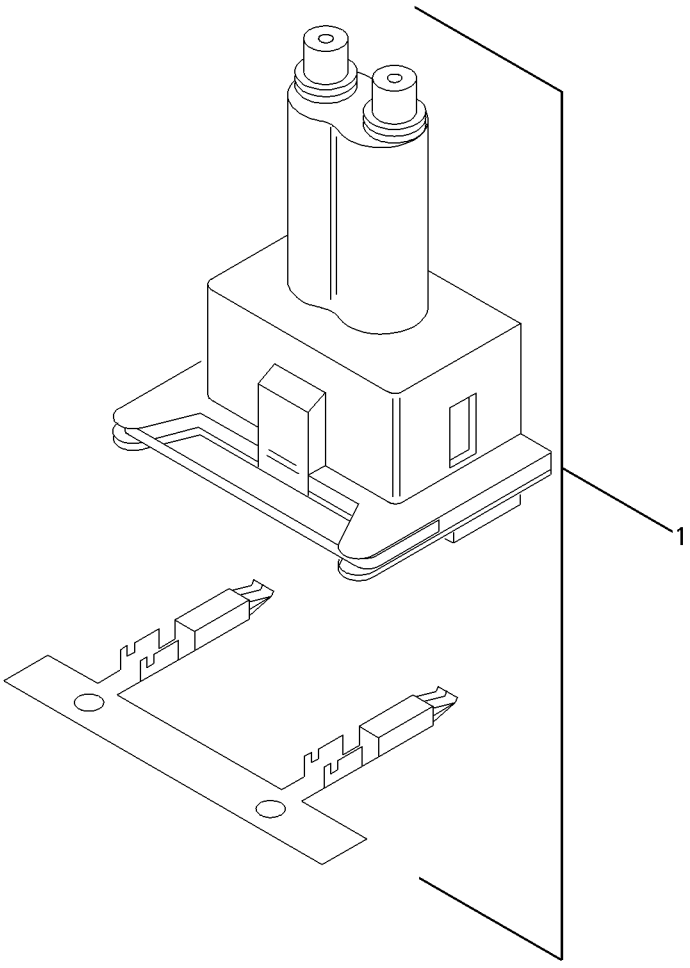

GRAPHIC #1 **<END>** g00852753

154-4233 CONTROL GP-INTERLOCK

S/N: BXM4225-UP

PART OF 225-8001 WIRING GP-CHASSIS

SMCS-7630 **i01698898**

NOTE	REF NO	GRAPHIC REF	PART NUMBER	QTY	PART NAME 1 2 3 4 5 6 (PRODUCT LEVEL)	SEE PAGE
	1	1	**7X-6315**	1	STRAP AS-GROUND	
	2	1	**184-2472**	1	SCREW-PAN HEAD (NO 8-32X9.52-MM)	
	3	1	**134-4126**	1	WASHER (4.52X8.28X0.76-MM THK)	

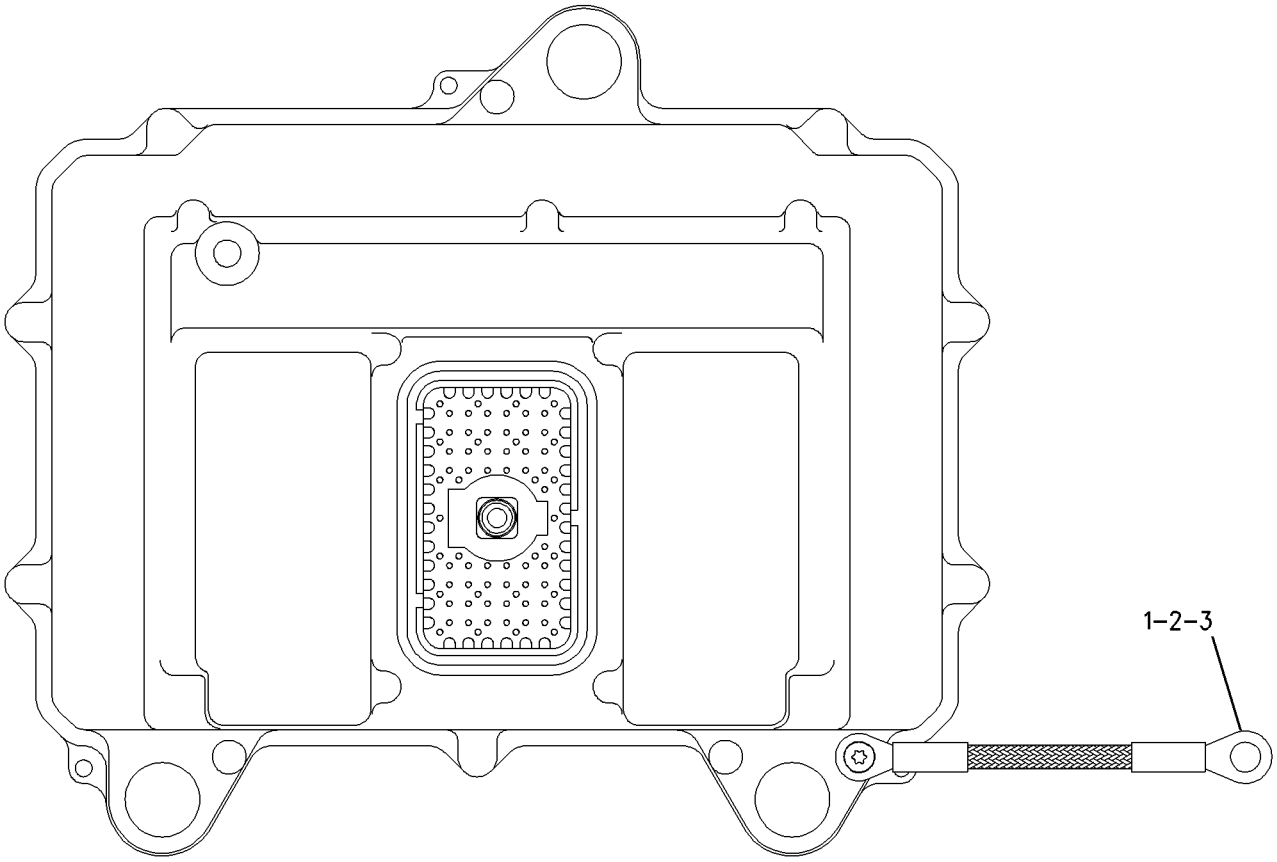

GRAPHIC #1 **<END>** g00843169

308-2313 CONTROL GP-MANUAL START/STOP

S/N: CYP1-UP

PART OF 292-5719 ENGINE AR-PRIMARY

AN ATTACHMENT

SMCS-1426, 7418 **i02752301**

NOTE	REF NO	GRAPHIC REF	PART NUMBER	QTY	PART NAME 1 2 3 4 5 6 (PRODUCT LEVEL)	SEE PAGE
	1	1	**153-6412**	1	WASHER	
	2	1	**271-2117**	1	SOLENOID (FUEL SHUTOFF)	
	3	1	**308-1914**	1	LEVER-CONTROL	

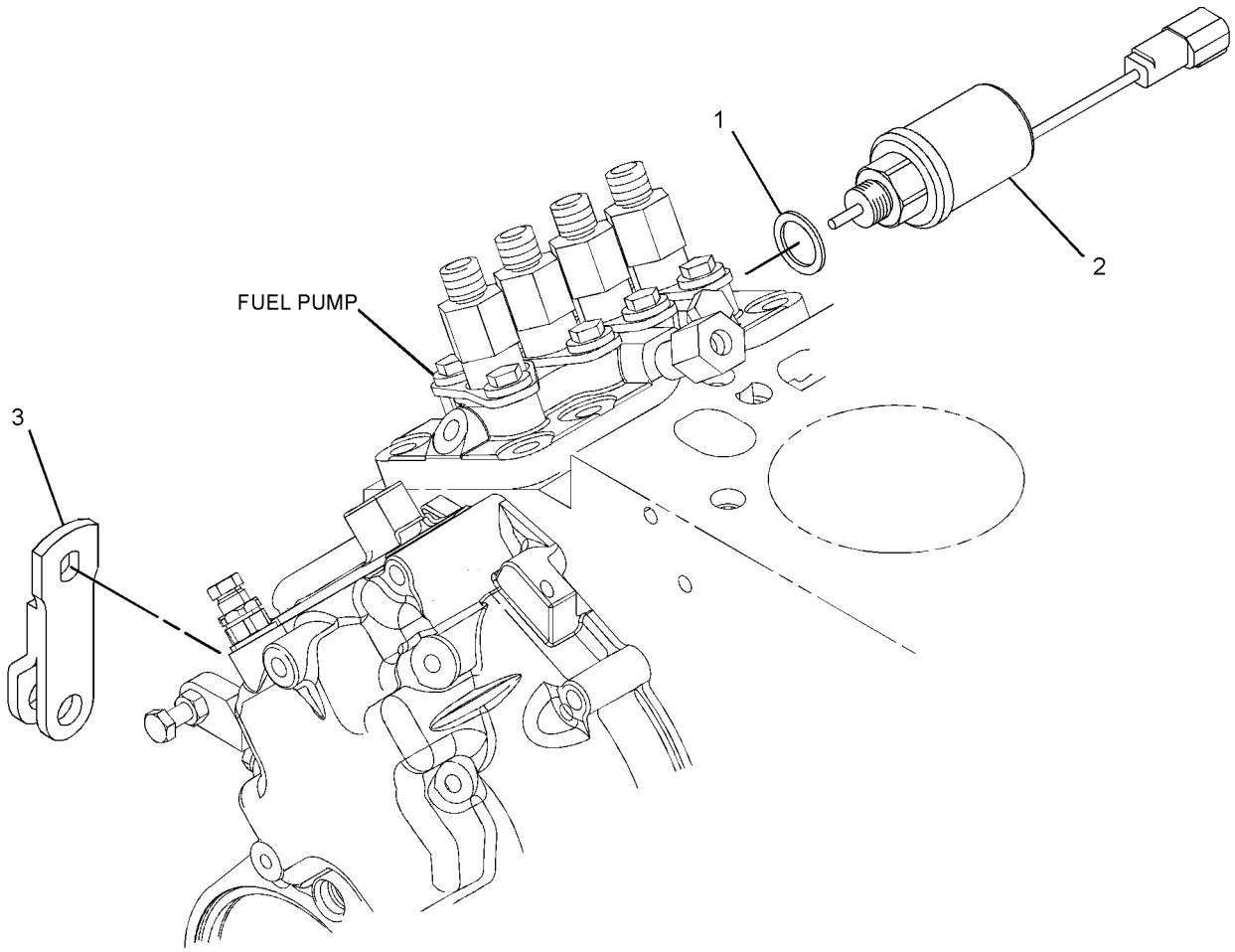

GRAPHIC #1 **<END>** g01420648

ELECTRICAL AND STARTING SYSTEM

233-5670 CONVERSION AR-NON-ROADING—NACD

S/N: BXM4225-UP

AN ATTACHMENT

SMCS-7000 **i02009667**

NOTE	PART NUMBER	QTY	PART NAME 1 2 3 4 5 6 (PRODUCT LEVEL)	SEE PAGE
Y	*142-8652*	1	LIGHTING GP-STOP & TAIL	156
Y	*218-5790*	1	PANEL AR-INSTRUMENT	597

Y-SEPARATE ILLUSTRATION

<END>

216-4755 COVER GP-FUSE PANEL

S/N: BXM4225-UP

PART OF 225-8001 WIRING GP-CHASSIS

SMCS-1417 **i02757074**

NOTE	REF NO	GRAPHIC REF	PART NUMBER	QTY	PART NAME 1 2 3 4 5 6 (PRODUCT LEVEL)	SEE PAGE
	1	1	**116-7471**	1	PULLER-MINIFUSE	
	2	1	**164-3765**	2	RETAINER	
	3	1	**216-4714**	1	FILM-FUSE/RELAY	
	4	1	**225-5193**	1	COVER AS	
M	5	1	**232-6692**	2	SCREW (M6X1X20-MM)	
E	6	1	**103-2543**		SEAL (3-CM)	
CJ	7	1	**5P-5969**		SEAL (9-DM)	

C-CHANGE FROM PREVIOUS TYPE
E-ORDER BY THE CENTIMETER
J-ORDER BY THE DECIMETER
M-METRIC PART

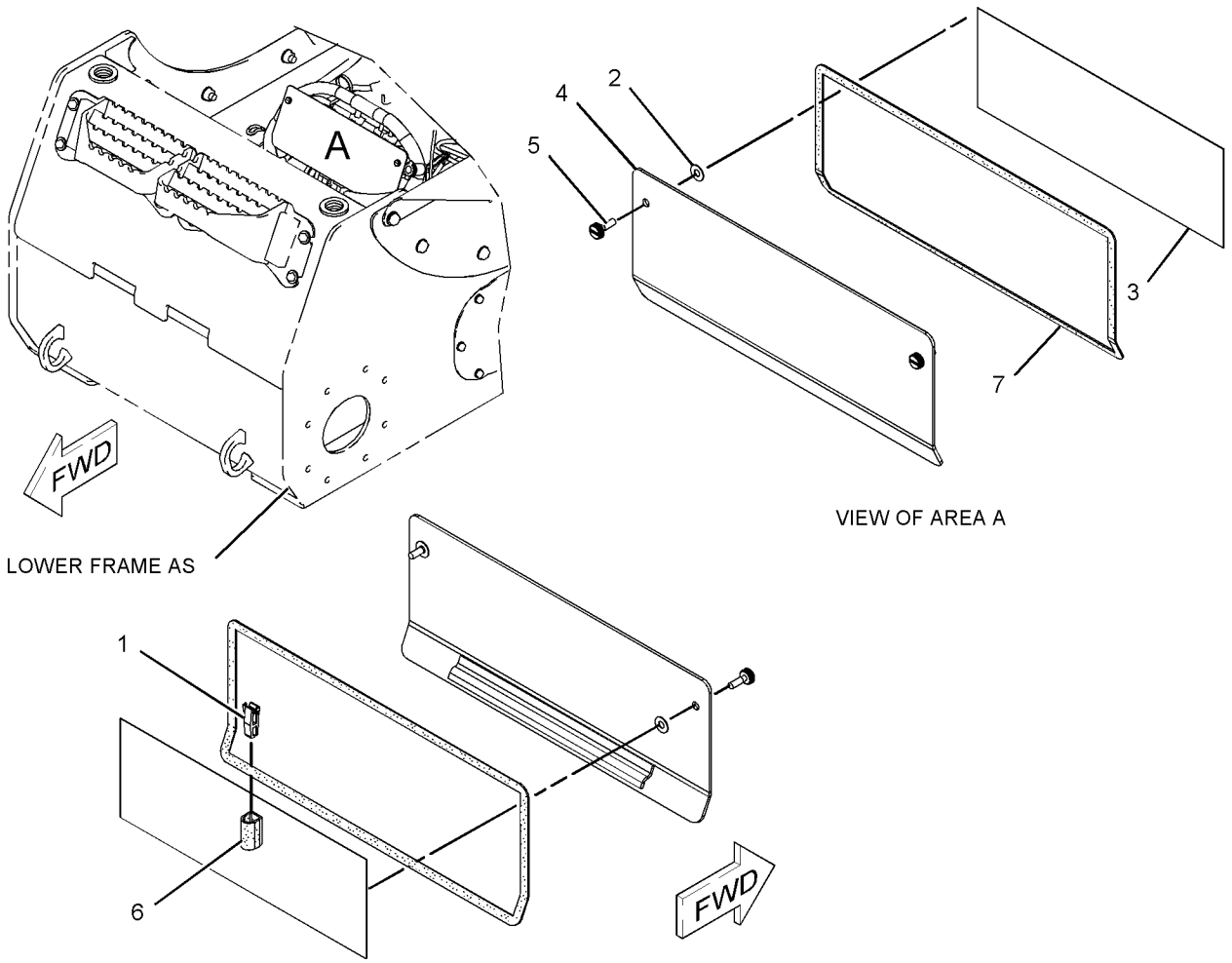

GRAPHIC #1 **<END>** g01056852

225-8000 ELECTRONICS GP-IMPLEMENT—WORK TOOL

S/N: BXM4225-UP

PART OF 225-8001 WIRING GP-CHASSIS

SMCS-7610, 7620 **i02492938**

NOTE	PART NUMBER	QTY	PART NAME 1 2 3 4 5 6 (PRODUCT LEVEL)	SEE PAGE
R	**216-0658**	1	CONTROL GP-UNPROGRAMMED	
	7X-6315	1	STRAP AS-GROUND	
	120-4897	1	SCREW-PAN HEAD (NO 8-32X9.52)	
	134-4126	1	WASHER (4.52X8.28X0.76-MM THK)	
	284-3058	1	SOFTWARE GP-IMPLEMENT	
			—OR—	
	284-3059	1	SERVICE GP-IMPLEMENT	
			(OPTIONAL SERVICE REPLACEMENT)	
			(INCLUDES CONTROL GP, SOFTWARE GP)	

R-REMFG PART MAY BE AVAILABLE

<END>

207-5262 ELECTRONICS GP-MACHINE–SECURITY

S/N: BXM4225-UP

PART OF 225-7991, 239-5010 INSTALLATION GP-SECURITY AN ATTACHMENT

SMCS-7610, 7620 **i02348756**

NOTE	REF NO	GRAPHIC REF	PART NUMBER	QTY	PART NAME 1 2 3 4 5 6 (PRODUCT LEVEL)	SEE PAGE
	1	1	*156-6155*	1	CONTROL GP-UNPROGRAMMED (SECURITY)	
	1A	1	**7X-6315**	1	STRAP AS-GROUND	
	1B	1	**184-2472**	1	SCREW-PAN HEAD (NO 8-32X9.52-MM)	
	1C	1	**134-4126**	1	WASHER (4.52X8.28X0.76-MM THK)	
	2	1	**243-6464**	1	SOFTWARE GP-MACHINE (SECURITY)	
	3	1	**206-5162**	2	KEY AS-ELECTRONIC (SECURITY)	
					–OR–	
		1	**206-5165**	2	KEY AS-ELECTRONIC (SECURITY)	
	4	1	**219-6314**	2	KEY RING (IDENTIFICATION)	

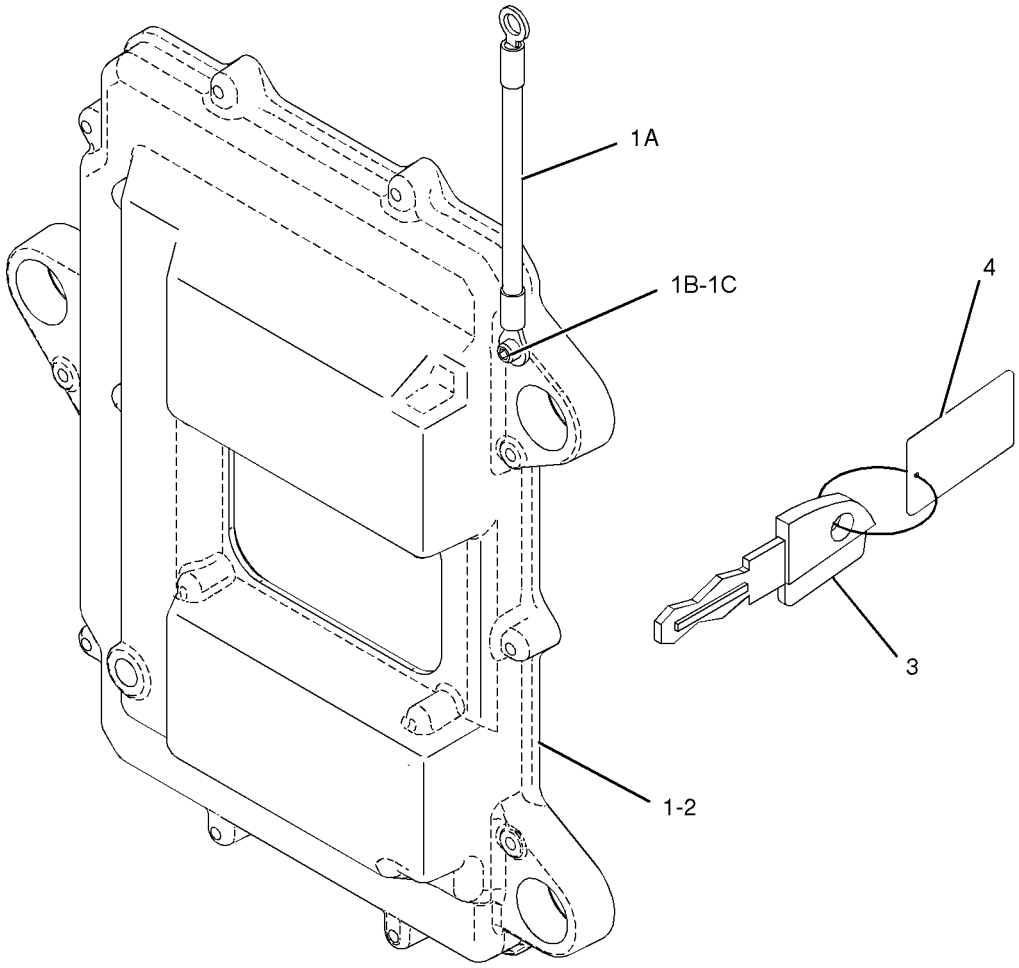

GRAPHIC #1 **<END>** g01026135

216-4750 FASTENER GP-WIRING HARNESS

S/N: BXM4225-UP

PART OF 218-6350 CAB AR-ENCLOSED ROPS

SMCS-1408 **i02738481**

NOTE	REF NO	GRAPHIC REF	PART NUMBER	QTY	PART NAME 1 2 3 4 5 6 (PRODUCT LEVEL)	SEE PAGE
	1	1	**4B-4863**	2	WASHER (4.7X11X1.2-MM THK)	
	2	1	**7G-1060**	1	STRAP AS-GROUND	
	3	1	**9R-7941**	1	SOCKET AS	
		1	**9R-7980**	1	COVER	
M	4	1	**111-4627**	4	SCREW-MACHINE (M6X1X30-MM)	
	5	1	**195-0936**	4	INSERT-THREADED (M6X1)	
B	6	1	**3S-2093**	6	STRAP-CABLE	
M	7	1	**5C-8312**	2	NUT (M4X0.7-THD)	
	8	1	**7G-7053**	1	GROMMET	
	9	1	**8T-4121**	2	WASHER-HARD (11X21X2.5-MM THK)	
M	10	1	**8T-4133**	1	NUT (M10X1.5-THD)	
M	11	1	**9X-1046**	2	SCREW (M4X0.7X18-MM)	
M	12	1	**9X-2042**	6	SCREW-TRUSS HEAD (M6X1X12-MM)	
	13	1	**101-2867**	4	WASHER-HARD (7.2X25X2-MM THK)	

B-USE AS REQUIRED
M-METRIC PART

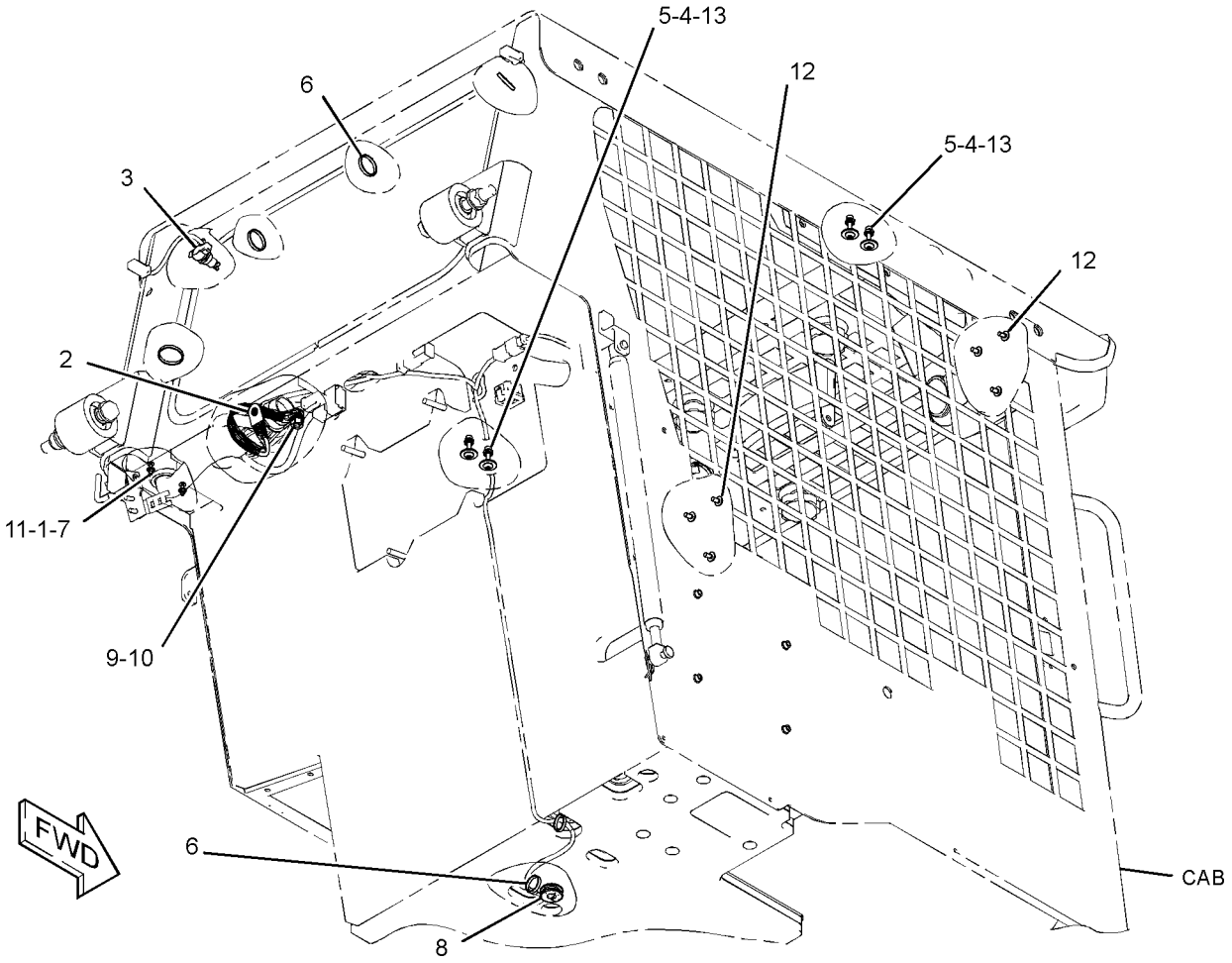

GRAPHIC #1 **<END>** g01376950

192-0104 GLOW PLUG GP

S/N: CSD1-11322
PART OF 300-5206 ENGINE AR-PRIMARY
AN ATTACHMENT

SMCS-1412 **i01992077**

NOTE	REF NO	GRAPHIC REF	PART NUMBER	QTY	PART NAME 1 2 3 4 5 6 (PRODUCT LEVEL)	SEE PAGE
	1	1	**155-8076**	1	NUT	
	2	1	**155-8077**	1	WASHER	
	3	1	**172-4585**	4	GLOW PLUG	
	4	1	**192-0105**	1	SUPPORT-PLUG	

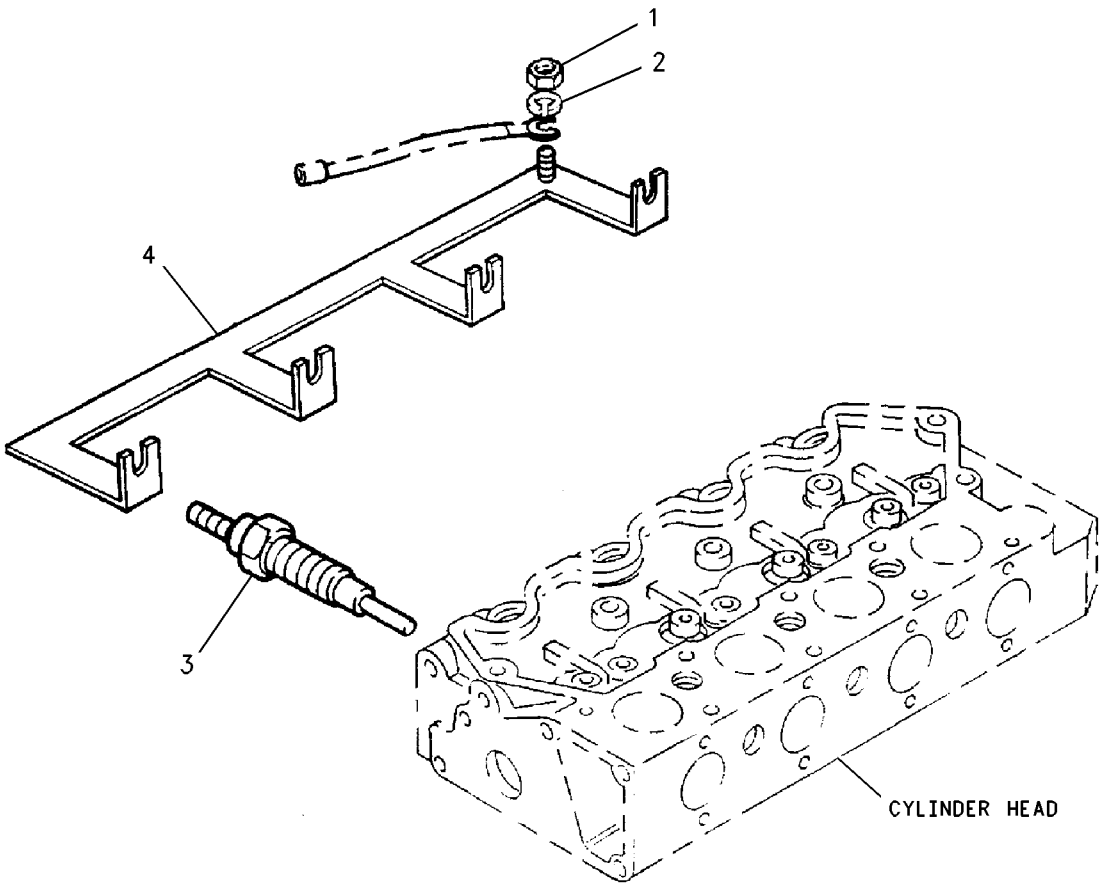

GRAPHIC #1 **<END>** g00708690

316-6896 GLOW PLUG GP

S/N: CYP1-UP
PART OF 292-5719 ENGINE AR-PRIMARY
AN ATTACHMENT

SMCS-1412 **i02827168**

NOTE	REF NO	GRAPHIC REF	PART NUMBER	QTY	PART NAME 1 2 3 4 5 6 (PRODUCT LEVEL)	SEE PAGE
	1	1	**155-8076**	1	NUT	
	2	1	**155-8077**	1	WASHER	
	3	1	**172-4585**	4	GLOW PLUG	
	4	1	**192-0105**	1	SUPPORT-PLUG	

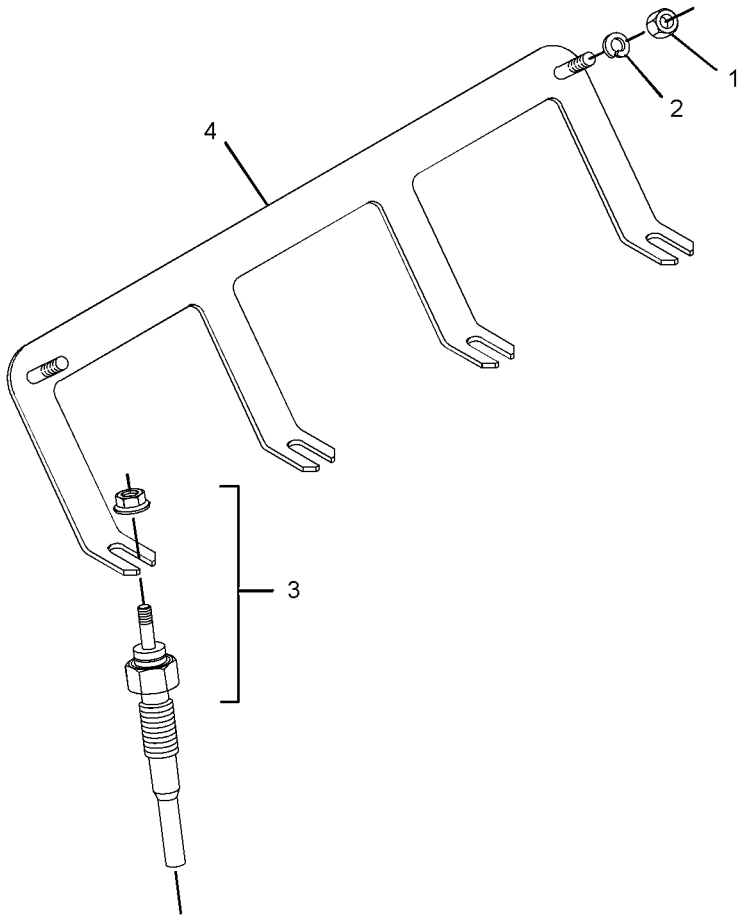

GRAPHIC #1 **<END>** g01439420

172-4445 HEATER GP-JACKET WATER

S/N: BXM4225-UP
120-VOLTS, 530-WATTS
CANNOT BE USED WITH 172-4446—PAGE 140
AN ATTACHMENT

SMCS-1383 **i02577831**

NOTE	REF NO	GRAPHIC REF	PART NUMBER	QTY	PART NAME 1 2 3 4 5 6 (PRODUCT LEVEL)	SEE PAGE
	1	1	*154-3927*	1	HEATER GP-JACKET WATER	
		1	**7X-6312**	1	CORD AS-JACKET WATER HEATER	
		1	**149-3499**	1	ELEMENT AS-JACKET WATER HEATER (ENGINE)	
		1	**133-6517**	1	CAP AS-DUST	
	2	1	**9X-6772**	1	STRAP-CABLE	

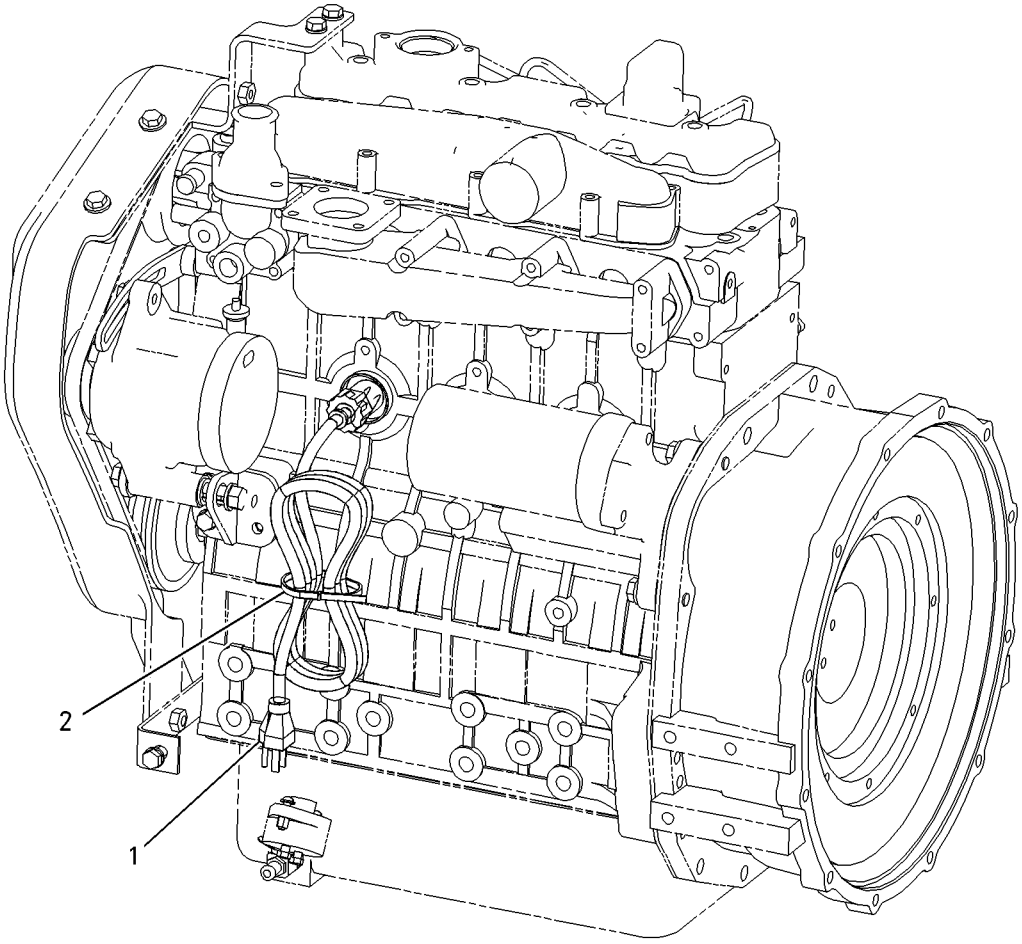

GRAPHIC #1 **<END>** g00808146

172-4446 HEATER GP-JACKET WATER

S/N: BXM4225-UP
240-VOLTS, 530-WATTS
CANNOT BE USED WITH 172-4445—PAGE 139
AN ATTACHMENT

SMCS-1383 **i02577832**

NOTE	REF NO	GRAPHIC REF	PART NUMBER	QTY	PART NAME 1 2 3 4 5 6 (PRODUCT LEVEL)	SEE PAGE
	1	1	*154-3928*	1	HEATER GP-JACKET WATER	
		1	**127-8609**	1	CORD AS-JACKET WATER HEATER	
		1	**151-1394**	11	ELEMENT AS-JACKET WATER HEATER (ENGINE)	
		1	**133-6517**	1	CAP AS-DUST	
	2	1	**9X-6772**	1	STRAP-CABLE	

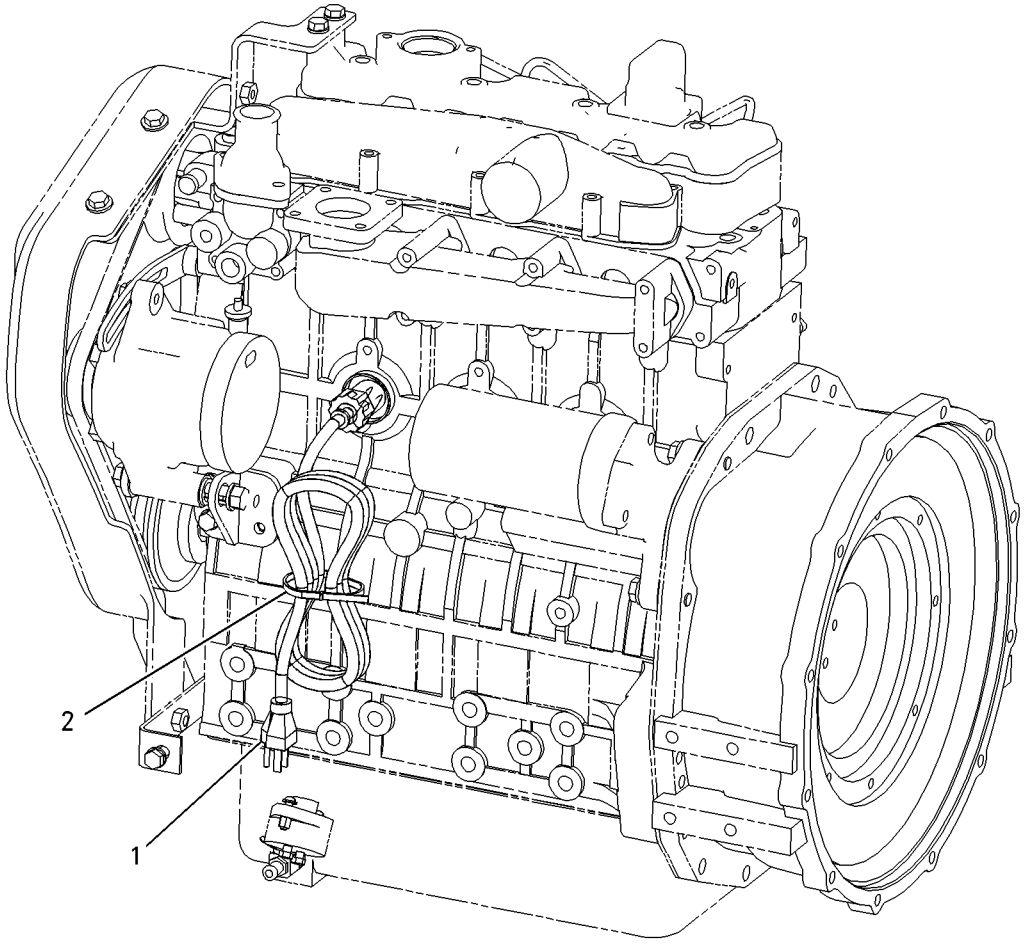

GRAPHIC #1 **<END>** g00808142

225-7991 INSTALLATION GP-SECURITY

S/N: BXM4225-UP
AN ATTACHMENT

SMCS-7631 **i02659112**

NOTE	PART NUMBER	QTY	PART NAME 1 2 3 4 5 6 (PRODUCT LEVEL)	SEE PAGE
Y	**207-5262**	1	ELECTRONICS GP-MACHINE (SECURITY)	135
	243-6464	1	SOFTWARE GP-MACHINE (SECURITY)	
	205-8257	1	COIL AS (EXCITER)	
D	**5P-5677**		WIRE (18-GA, BLACK) (0.4-M)	
	186-3735	2	PIN-CONNECTOR (16-GA TO 18-GA)	
	222-3870	1	COIL AS (FERRITE)	
	102-8802	2	KIT-RECEPTACLE (2-PIN)	
			(INCLUDES RECEPTACLE AS & WEDGE)	
	186-3735	4	PIN-CONNECTOR (16-GA TO 18-GA)	
D	**5P-5677**		WIRE (18-GA, BLACK) (0.4-M)	
E	**9X-1813**		SLEEVE (15-CM)	
	216-4709	1	HARNESS AS-CONTROL (SECURITY)	
	102-8804	1	KIT-RECEPTACLE (4-PIN)	
	102-8801	1	KIT-RECEPTACLE (12-PIN)	
			(EACH KIT INCLUDES RECEPTACLE AS & WEDGE)	
	155-2270	2	KIT-CONNECTING PLUG (2-PIN)	
			(INCLUDES PLUG AS, WEDGE & INTERFACE SEAL)	
E	**125-7874**		TUBE-HEAT SHRINK (5.72-MM DIA) (10-CM)	
	150-6766	1	PLUG AS-CONNECTOR (26-PIN)	
	206-5162	2	KEY AS-ELECTRONIC (SECURITY)	
			—OR—	
	206-5165	1	KEY AS-ELECTRONIC (SECURITY)	
	198-5389	1	FILM-IDENTIFICATION (IGNITION SWITCH)	
	205-0826	1	FILM-INSTRUCTION (MACHINE SECURITY, INTL)	
	102-8802	1	KIT-RECEPTACLE (2-PIN)	
			(INCLUDES RECEPTACLE AS & WEDGE)	
	8T-9655	6	MOUNT-ISOLATION	
M	**5C-7261**	3	NUT (M8X1.25-THD)	
	4P-8134	3	CLIP	
	6I-1418	3	SPACER (8.2X12.7X28.7-MM THK)	
	3S-2093	7	STRAP-CABLE	
	7K-1181	5	STRAP-CABLE	
	7X-0579	3	WASHER-HARD (8.8X25.5X2-MM THK)	

D-ORDER BY THE METER
E-ORDER BY THE CENTIMETER
M-METRIC PART
Y-SEPARATE ILLUSTRATION

<END>

ELECTRICAL AND STARTING SYSTEM

239-5010 INSTALLATION GP-SECURITY–KIT

S/N: BXM4225-UP

FIELD INSTALLATION

SMCS-7631 **i02359042**

NOTE	PART NUMBER	QTY	PART NAME 1 2 3 4 5 6 (PRODUCT LEVEL)	SEE PAGE
Y	**207-5262**	1	ELECTRONICS GP-MACHINE (SECURITY)	135
M	**7X-0818**	3	BOLT (M8X1.25X45-MM)	
	4P-7581	3	CLIP	
	205-8257	1	COIL AS (EXCITER)	
	186-3735	2	PIN-CONNECTOR (16-GA TO 18-GA)	
BD	**5P-5677**		WIRE (18-GA, BLACK)	
	222-3870	1	COIL AS (FERRITE)	
	102-8802	2	KIT-RECEPTACLE (2-PIN)	
			(INCLUDES RECEPTACLE AS & WEDGE)	
	186-3735	4	PIN-CONNECTOR (16-GA TO 18-GA)	
BD	**5P-5677**		WIRE (18-GA, BLACK)	
BE	**9X-1813**		SLEEVE (1)	
	198-5389	1	FILM-IDENTIFICATION (IGNITION SWITCH)	
	205-0826	1	FILM-INSTRUCTION (MACHINE SECURITY, INTL)	
	216-4709	1	HARNESS AS-CONTROL (SECURITY)	
	102-8804	1	KIT-RECEPTACLE (4-PIN)	
	102-8801	1	KIT-RECEPTACLE (12-PIN)	
			(EACH KIT INCLUDES RECEPTACLE AS & WEDGE)	
	155-2270	2	KIT-CONNECTING PLUG (2-PIN)	
			(INCLUDES PLUG AS, WEDGE & INTERFACE SEAL)	
M	**195-0937**	3	INSERT-THREADED (M8X1.25-THD)	
	155-2260	1	KIT-CONNECTING PLUG (3-PIN)	
			(INCLUDES PLUG AS & WEDGE)	
	102-8802	1	KIT-RECEPTACLE (2-PIN)	
			(INCLUDES RECEPTACLE AS & WEDGE)	
	102-8803	1	KIT-RECEPTACLE (3-PIN)	
			(INCLUDES RECEPTACLE AS & WEDGE)	
	165-5655	1	LAMP AS (RED, GREEN, LED, 12-VOLT)	
	186-3735	3	PIN-CONNECTOR (16-GA TO 18-GA)	
	8T-9655	6	MOUNT-ISOLATION	
M	**5C-7261**	3	NUT (M8X1.25-THD)	
	8T-8737	2	PLUG-SEAL	
	6I-1418	3	SPACER (8.2X12.7X28.7-MM THK)	
	115-8109	1	SPLICE-WIRE	
	7K-1181	12	STRAP-CABLE	
	9N-0869	9	WASHER-HARD (8.8X25.5X2-MM THK)	
	207-3814	1	WIRE AS (PRODUCT LINK, SPLICE)	
	186-3735	1	PIN-CONNECTOR (16-GA TO 18-GA)	
	186-3736	2	SOCKET-CONNECTOR (16-GA TO 18-GA)	
BE	**125-7874**		TUBE-HEAT SHRINK (5.72-MM DIA)	

B-USE AS REQUIRED
D-ORDER BY THE METER
E-ORDER BY THE CENTIMETER
M-METRIC PART
Y-SEPARATE ILLUSTRATION

<END>

233-5638 KIT-WORK TOOL CONTROL & WIRING—VERTICAL LIFT

S/N: BXM4225-UP
AN ATTACHMENT

SMCS-1408, 5705 **i02302989**

NOTE	PART NUMBER	QTY	PART NAME 1 2 3 4 5 6 (PRODUCT LEVEL)	SEE PAGE
Y	**231-4258**	1	CONTROL GP-HANDLE (LH)	515
	221-3881	1	PANEL GP-FUSE	
	113-8490	4	FUSE (10-AMPERE)	
	113-8491	2	FUSE (15-AMPERE)	
	146-9439	5	RELAY AS (12-VOLT)	
	215-5564	2	SUPPRESSOR-ARC	
	216-4725	1	HARNESS AS-WORK TOOL (LIFT ARM)	
	156-1460	1	RECEPTACLE (8-PIN)	
			(INCLUDES RECEPTACLE AS & WEDGE)	
	156-1458	1	COVER	
	1S-9593		STRAP-CABLE	
	225-8012	1	HARNESS AS-WORK TOOL (PLATFORM)	
	155-2255	1	KIT-CONNECTING PLUG (12-PIN)	
	155-2265	1	KIT-CONNECTING PLUG (8-PIN)	
	196-2382	1	KIT-CONNECTING PLUG (2-PIN)	
	196-2383	1	KIT-CONNECTING PLUG (8-PIN)	
	196-2384	1	KIT-CONNECTING PLUG (8-PIN)	
			(EACH PLUG KIT INCLUDES PLUG AS, WEDGE & INTERFACE SEAL)	
	177-9645	1	KIT-RECEPTACLE (2-PIN)	
			(INCLUDES RECEPTACLE AS & WEDGE)	
	102-8806	1	KIT-RECEPTACLE (8-PIN)	
			(INCLUDES RECEPTACLE AS & WEDGE)	
	115-1615	1	RELAY AS (12-VOLT)	
	146-9439	1	RELAY AS (12-VOLT)	
	142-8633	1	SWITCH AS-ROCKER (ELECTRIC POWER, WORK TOOL)	
M	**5C-9553**	1	BOLT (M6X1X16-MM)	
	159-9496	1	LOCKWASHER	
	159-9495	1	NUT (1-1/2-18-THD)	
M	**095-0733**	2	SCREW-MACHINE (M4X0.7X40-MM)	
	3S-2093	8	STRAP-CABLE	
	4B-4863	2	WASHER (4.7X11X1.2-MM THK)	
	8T-4205	1	WASHER-HARD (7.2X14.5X2-MM THK)	
	3E-3389	1	WEDGE-RECEPTACLE LOCK	

M-METRIC PART
Y-SEPARATE ILLUSTRATION

<END>

218-6742 KIT-WORK TOOL WIRING—VERTICAL LIFT

S/N: BXM4225-UP

AN ATTACHMENT

SMCS-1408 **i02360165**

NOTE	PART NUMBER	QTY	PART NAME 1 2 3 4 5 6 (PRODUCT LEVEL)	SEE PAGE
	221-3881	1	PANEL GP-FUSE	
	113-8490	4	FUSE (10-AMPERE)	
	113-8491	2	FUSE (15-AMPERE)	
	146-9439	5	RELAY AS (12-VOLT)	
M	**5C-9553**	1	BOLT (M6X1X16-MM)	
	216-4725	1	HARNESS AS-WORK TOOL (LIFT ARM)	
	1S-9593	1	STRAP-CABLE	
	156-1458	1	COVER	
	156-1460	1	RECEPTACLE (8-PIN)	
	225-8012	1	HARNESS AS-WORK TOOL (PLATFORM)	
	177-9643	1	LOCK	
	177-9644	1	SEAL-RECEPTACLE	
	177-9645	1	KIT-RECEPTACLE (2-PIN)	
			(INCLUDES RECEPTACLE AS & WEDGE)	
	155-2255	1	KIT-CONNECTING PLUG (12-PIN)	
	155-2265	1	KIT-CONNECTING PLUG (8-PIN)	
	196-2382	1	KIT-CONNECTING PLUG (2-PIN)	
	196-2383	1	KIT-CONNECTING PLUG (8-PIN)	
	196-2384	1	KIT-CONNECTING PLUG (8-PIN)	
			(EACH INCLUDES PLUG AS, WEDGE, INTERFACE SEAL)	
	102-8806	1	KIT-RECEPTACLE (8-PIN)	
			(INCLUDES RECEPTACLE AS & WEDGE)	
	159-9496	1	LOCKWASHER	
	159-9495	1	NUT (1-1/2-18-THD)	
	115-1615	1	RELAY AS (12-VOLT)	
	146-9439	1	RELAY AS (12-VOLT)	
M	**095-0733**	2	SCREW-MACHINE (M4X0.7X40-MM)	
	3S-2093	8	STRAP-CABLE	
	142-8633	1	SWITCH AS-ROCKER (ELECTRIC POWER, WORK TOOL)	
	4B-4863	2	WASHER (4.7X11X1.2-MM THK)	
	8T-4205	1	WASHER-HARD (7.2X14.5X2-MM THK)	

M-METRIC PART

<END>

234-4328 LAMP GP-FLOOD

S/N: BXM4225-UP
12-VOLT
PART OF 218-6425 LIGHTING GP-FLOOD

SMCS-1434 **i02532634**

NOTE	REF NO	GRAPHIC REF	PART NUMBER	QTY	PART NAME 1 2 3 4 5 6 (PRODUCT LEVEL)	SEE PAGE
	1	1	**9W-0607**	1	LAMP (12-VOLT, 55-WATT)	
M	2	1	**8T-0389**	1	LOCKNUT (M10X1.5-THD)	
	3	1	**9X-4244**	2	SCREW-SPECIAL	
	4	1	**202-6614**	1	LENS AS	
	5	1	**234-7730**	1	BODY AS	
	6	1	**164-7556**	1	BRACKET (LAMP RETAINING)	
	7	1	**234-7731**	1	BRACKET AS	
	8	1	**8T-4121**	1	WASHER-HARD (11X21X2.5-MM THK)	

M-METRIC PART

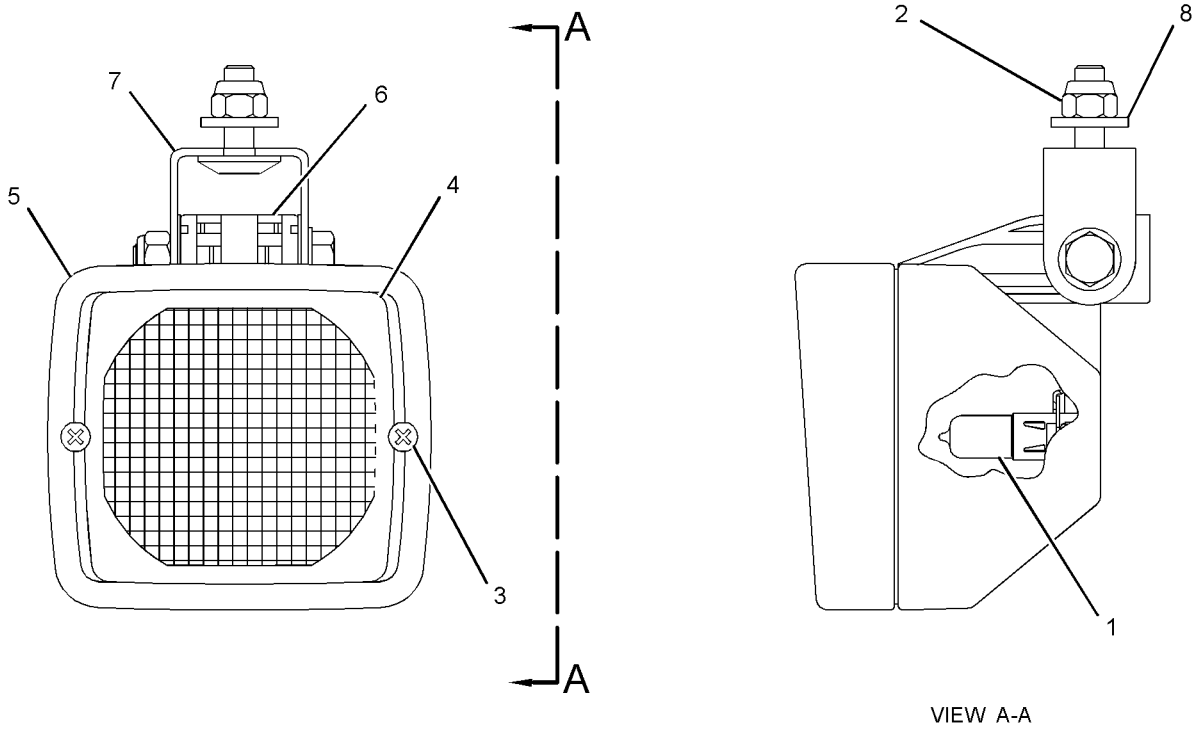

GRAPHIC #1 **<END>** g01283627

234-7727 LAMP GP-FLOOD–12-VOLT, VERTICAL MOUNT

S/N: BXM4225-UP

PART OF 216-4746 LIGHTING GP-FLOOD

ALSO AN ATTACHMENT

SMCS-1434 **i01957412**

NOTE	REF NO	GRAPHIC REF	PART NUMBER	QTY	PART NAME 1 2 3 4 5 6 (PRODUCT LEVEL)	SEE PAGE
	1	1	**9W-0607**	1	LAMP (12-VOLT, 55-WATT)	
	2	1	**9X-4244**	2	SCREW-SPECIAL	
	3	1	**202-6611**	1	LENS AS	
	4	1	**234-7758**	1	BODY AS	
	5	1	**164-7556**	1	BRACKET (LAMP RETAINING)	
	6	1	**234-7756**	1	BRACKET-MOUNTING	

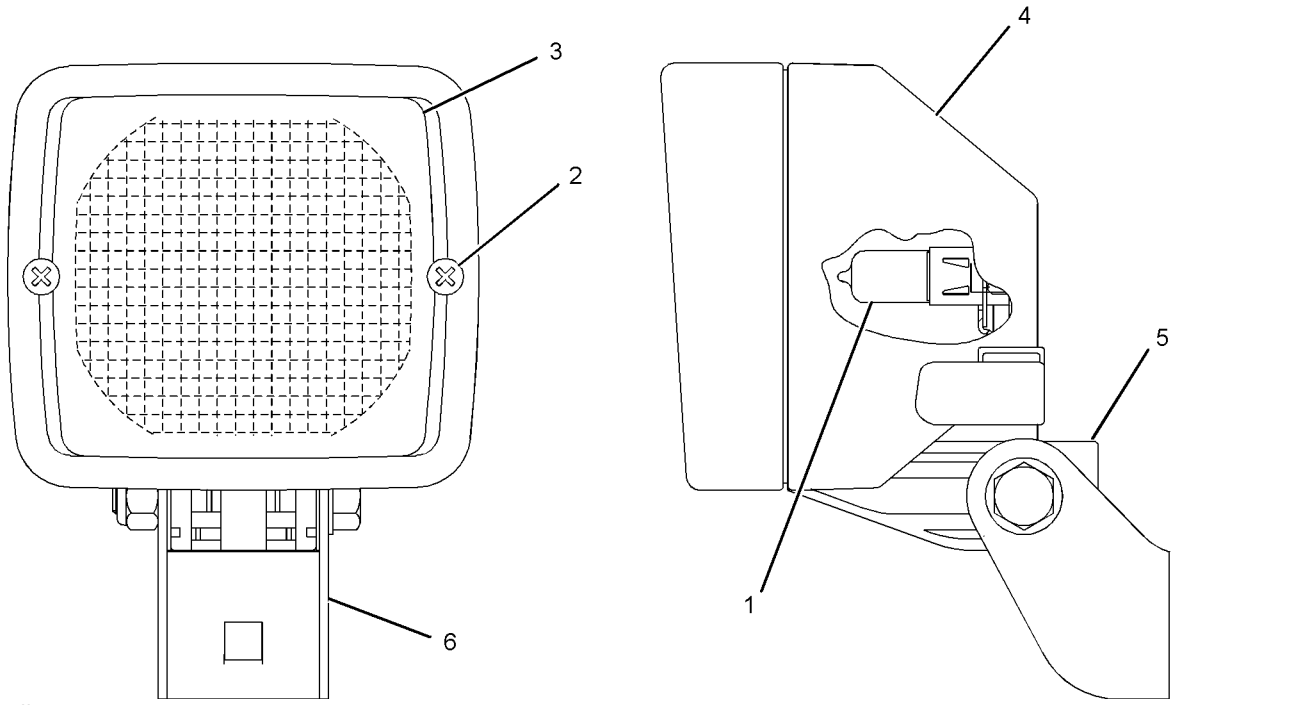

GRAPHIC #1 **<END>** g01017848

3E-7584 LAMP GP-HEAD & SIGNAL

S/N: BXM4225-UP

PART OF 277-0651, 277-0653 KIT-ROADING CONVERSION, 216-4716 LIGHTING GP-ROADING AN ATTACHMENT

SMCS-1429, 1430 **i02577854**

NOTE	REF NO	GRAPHIC REF	PART NUMBER	QTY	PART NAME 1 2 3 4 5 6 (PRODUCT LEVEL)	SEE PAGE
	1	1	**9X-4244**	4	SCREW-SPECIAL	
	2	1	**100-3251**	2	SCREW-LENS	
	3	1	**9X-9865**	1	SEAL	
	4	1	**100-3248**	1	LENS AS (HEADLIGHT)	
	5	1	**9W-3324**	1	LAMP-HEAD	
	6	1	**100-3247**	1	BODY AS-LAMP	
M	7	1	**8T-5005**	1	BOLT (M10X1.5X70-MM)	
M	8	1	**8T-0389**	1	LOCKNUT (M10X1.15-THD)	
	9	1	**100-3253**	1	SPACER (SPHERICAL)	
	10	1	**100-3254**	1	SPACER (SPHERICAL)	
	11	1	**100-3255**	1	WASHER (SPHERICAL)	
J	12	1	**102-8805**	1	KIT-RECEPTACLE (6-PIN)	
					(INCLUDES RECEPTACLE AS & WEDGE)	
	13	1	**8T-8729**	5	PIN-CONNECTOR	
J	14	1	**3E-3383**	1	WEDGE-RECEPTACLE LOCK (6-PIN)	
	15	1	**8T-8737**	1	PLUG-SEAL	
	16	1	**100-3246**	1	LAMP (12-VOLT, 4-WATT)	
	17	1	**5G-3244**	1	LAMP (12-VOLT, 21-WATT)	
	18	1	**100-3250**	1	LENS (AMBER) (FRONT TURN)	

J-KIT MARKED J INCLUDES PART MARKED J
M-METRIC PART

3E-7584 LAMP GP-HEAD & SIGNAL *(contd.)* **i02577854**

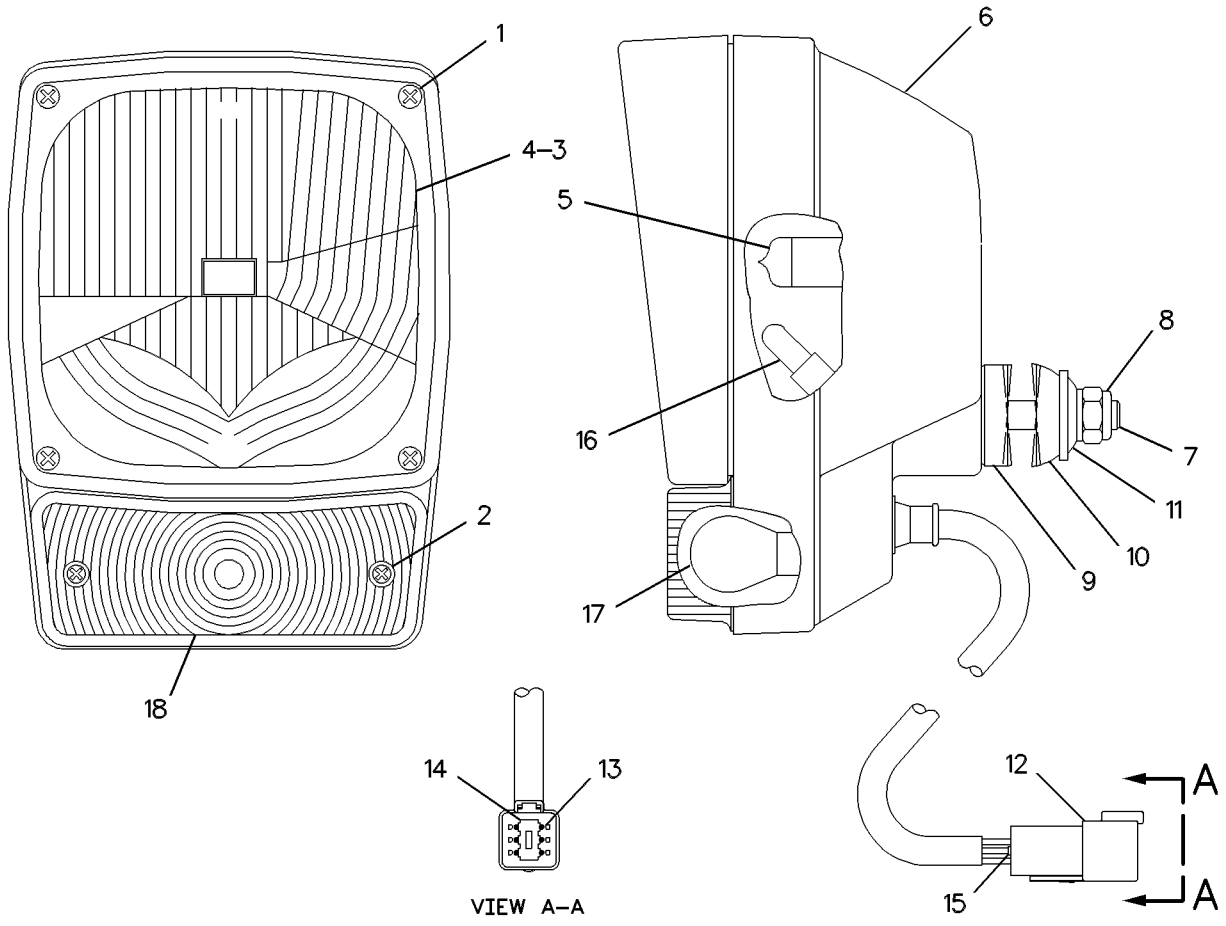

GRAPHIC #1 **<END>** g00460921

142-7503 LAMP GP-STOP & TAIL

S/N: BXM4225-UP
12-VOLT
PART OF 142-8652 LIGHTING GP-STOP & TAIL
AN ATTACHMENT

SMCS-1432 **i02577856**

NOTE	REF NO	GRAPHIC REF	PART NUMBER	QTY	PART NAME 1 2 3 4 5 6 (PRODUCT LEVEL)	SEE PAGE
	1	1	**084-4348**	1	LAMP (12-VOLT, 5-WATT)	
	2	1	**102-8804**	1	KIT-RECEPTACLE (4-PIN)	
					(INCLUDES RECEPTACLE AS & WEDGE)	
	3	1	**165-4895**	1	LENS	
M	4	1	**5C-2890**	2	NUT (M6X1-THD)	
	5	1	**8T-0087**	2	LOCKWASHER	

M-METRIC PART

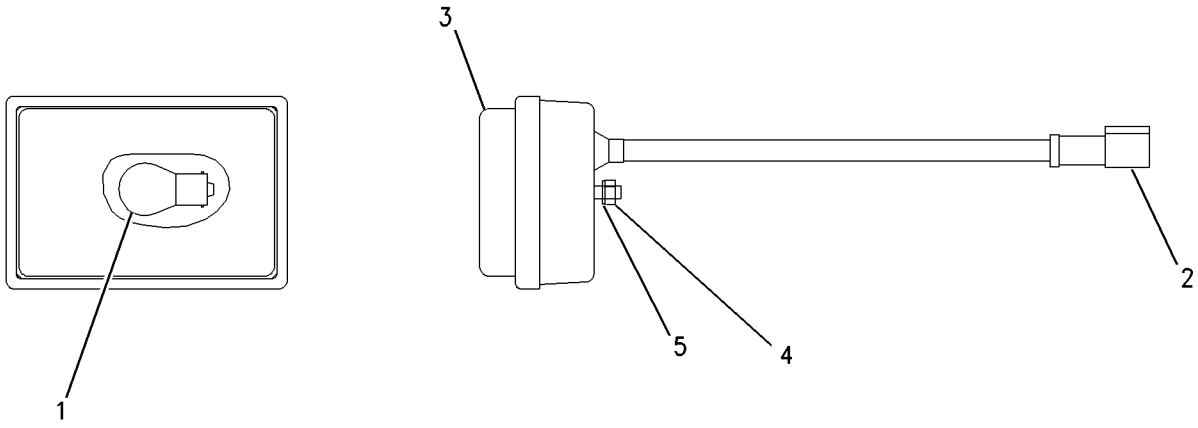

GRAPHIC #1 **<END>** g00669668

142-8634 LAMP GP-STOP & TAIL

S/N: BXM4225-UP
12-VOLT
PART OF 277-0651, 277-0653 KIT-ROADING CONVERSION, 216-4716 LIGHTING GP-ROADING AN ATTACHMENT

SMCS-1432 **i02570776**

NOTE	REF NO	GRAPHIC REF	PART NUMBER	QTY	PART NAME 1 2 3 4 5 6 (PRODUCT LEVEL)	SEE PAGE
	1	1	**9W-3326**	1	LAMP (12-VOLT, 21-WATT)	
	2	1	**084-4348**	1	LAMP (12-VOLT, 5-WATT)	
	3	1	**102-8804**	1	KIT-RECEPTACLE (4-PIN)	
					(INCLUDES RECEPTACLE AS & WEDGE)	
	4	1	**146-2438**	1	LENS-LAMP (REAR, LH)	
M	5	1	**5C-2890**	2	NUT (M6X1-THD)	
	6	1	**1H-3244**	2	LOCKWASHER	
	7	1	**186-3735**	4	PIN-CONNECTOR (16-GA TO 18-GA)	

M-METRIC PART

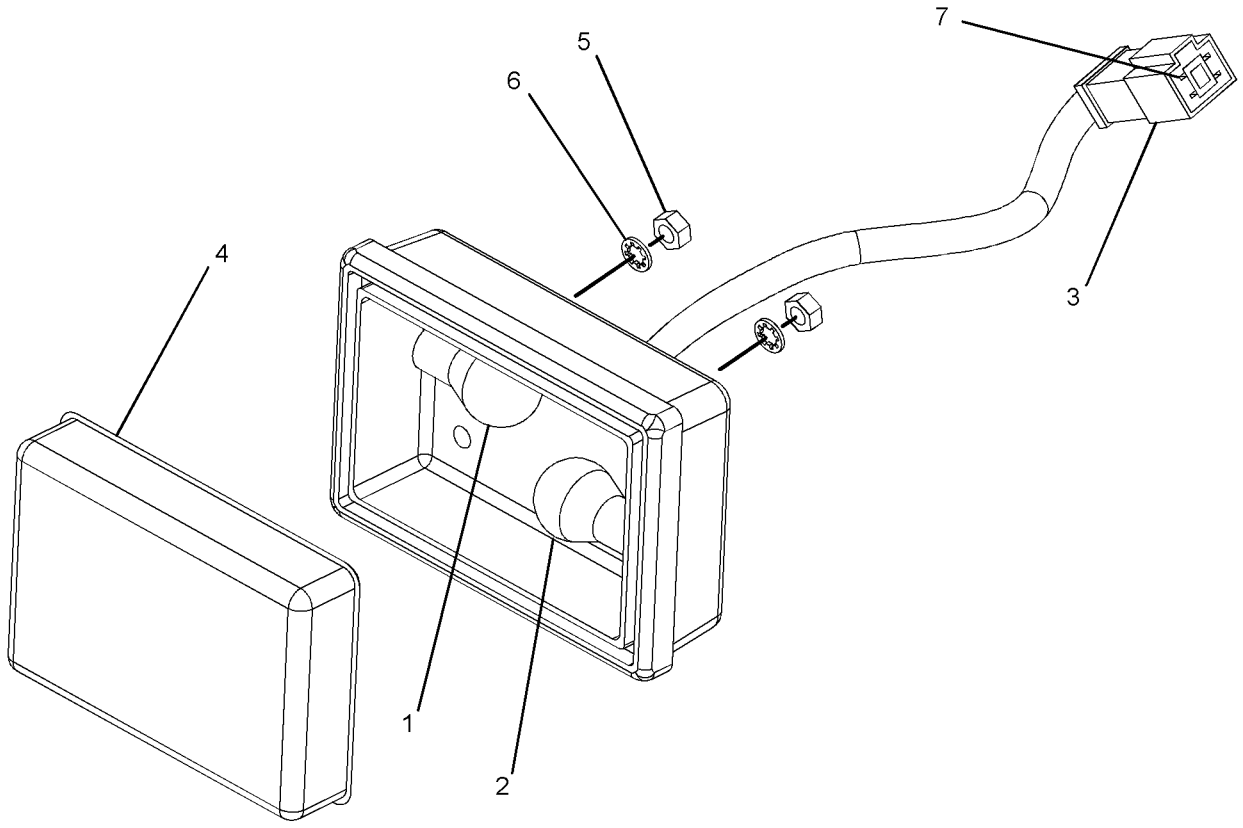

GRAPHIC #1 **<END>** g01212497

128-6985 LAMP GP-WARNING BEACON–12-VOLT, AMBER

S/N: BXM4225-UP

PART OF 257-5727 CONVERSION AR-ROADING, 234-0793, 278-1293 CONVERSION GP-ROADING, 142-8653 LIGHTING GP-WARNING BEACON AN ATTACHMENT

SMCS-1431 **i02712963**

NOTE	REF NO	GRAPHIC REF	PART NUMBER	QTY	PART NAME 1 2 3 4 5 6 (PRODUCT LEVEL)	SEE PAGE
	1	1	**9X-8121**	1	LENS (AMBER, WARNING BEACON)	
	2	1	**9X-8118**	1	LAMP (12-VOLT, 55-WATT)	
	3	1	**9X-8139**	1	BELT-DRIVE (WARNING BEACON)	
	4	1	**9R-7958**	1	CORD AS	
	5	1	**9R-7942**	1	PLUG AS	

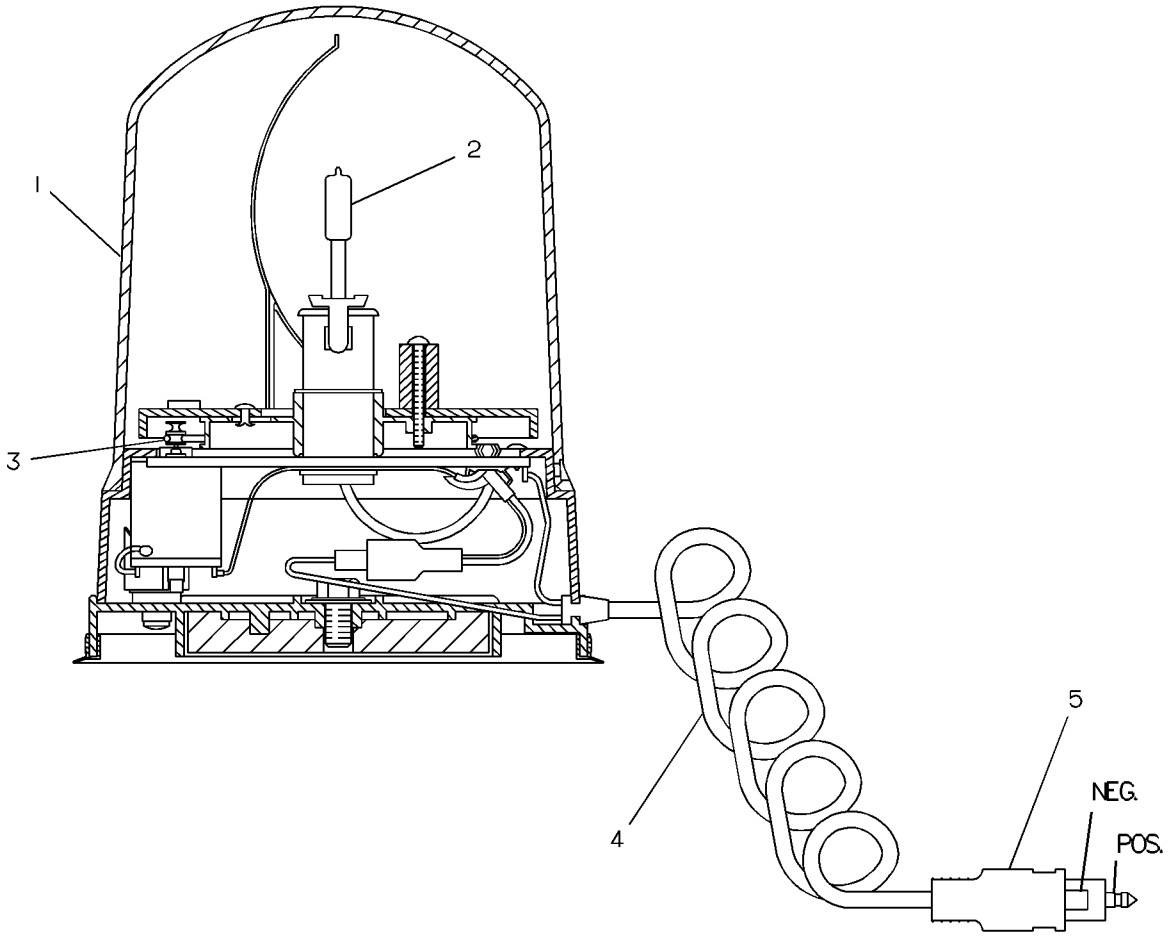

GRAPHIC #1 **<END>** g00130921

216-4746 LIGHTING GP-FLOOD–REAR

S/N: BXM4225-UP
PART OF 295-7242, 295-7243 COMMON AR
ALSO AN ATTACHMENT

SMCS-1434 **i02262618**

NOTE	REF NO	GRAPHIC REF	PART NUMBER	QTY	PART NAME 1 2 3 4 5 6 (PRODUCT LEVEL)	SEE PAGE
	1	1	**142-9326**	1	SWITCH AS-ROCKER (REAR WORK LAMPS)	
		1	**111-7899**	1	GASKET	
Y	2	1	**234-7727**	2	LAMP GP-FLOOD (12-VOLT) (REAR)	146
M	3	1	**195-0937**	2	INSERT-THREADED (M8X1.25-THD)	
	4	1	**5P-8439**	2	GROMMET	
M	5	1	**6V-2317**	2	BOLT (M8X1.25X30-MM)	
	6	1	**8T-4224**	4	WASHER-HARD (8.8X16X2-MM THK)	

M-METRIC PART
Y-SEPARATE ILLUSTRATION

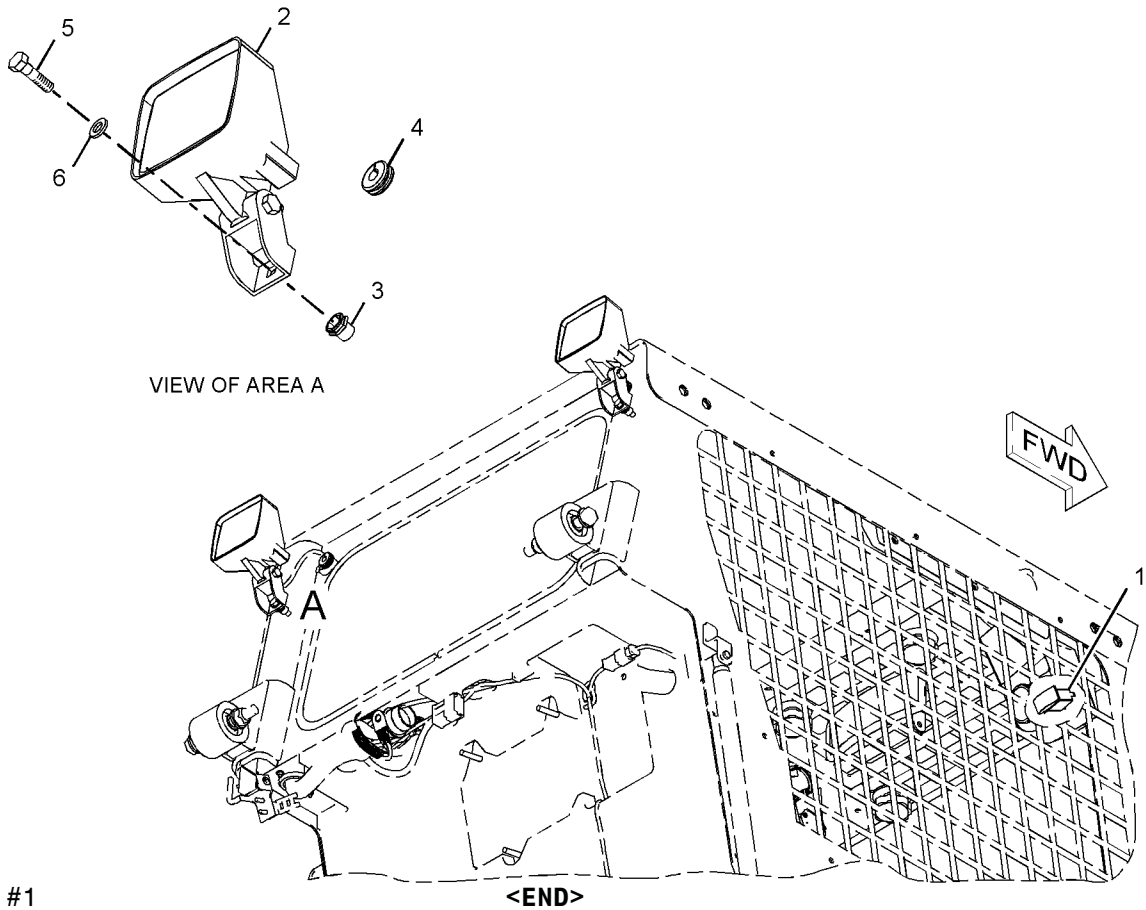

GRAPHIC #1

<END>

g01136313

218-6425 LIGHTING GP-FLOOD–FRONT

S/N: BXM4225-UP

PART OF 218-6350 CAB AR-ENCLOSED ROPS

SMCS-1434 **i02889665**

NOTE	REF NO	GRAPHIC REF	PART NUMBER	QTY	PART NAME 1 2 3 4 5 6 (PRODUCT LEVEL)	SEE PAGE
Y	1		**234-4328**	2	LAMP GP-FLOOD (12-VOLT) (FRONT)	145
	2		**5P-8439**	2	GROMMET	
	3		**8T-4121**	4	WASHER-HARD (11X21X2.5-MM THK)	

Y-SEPARATE ILLUSTRATION

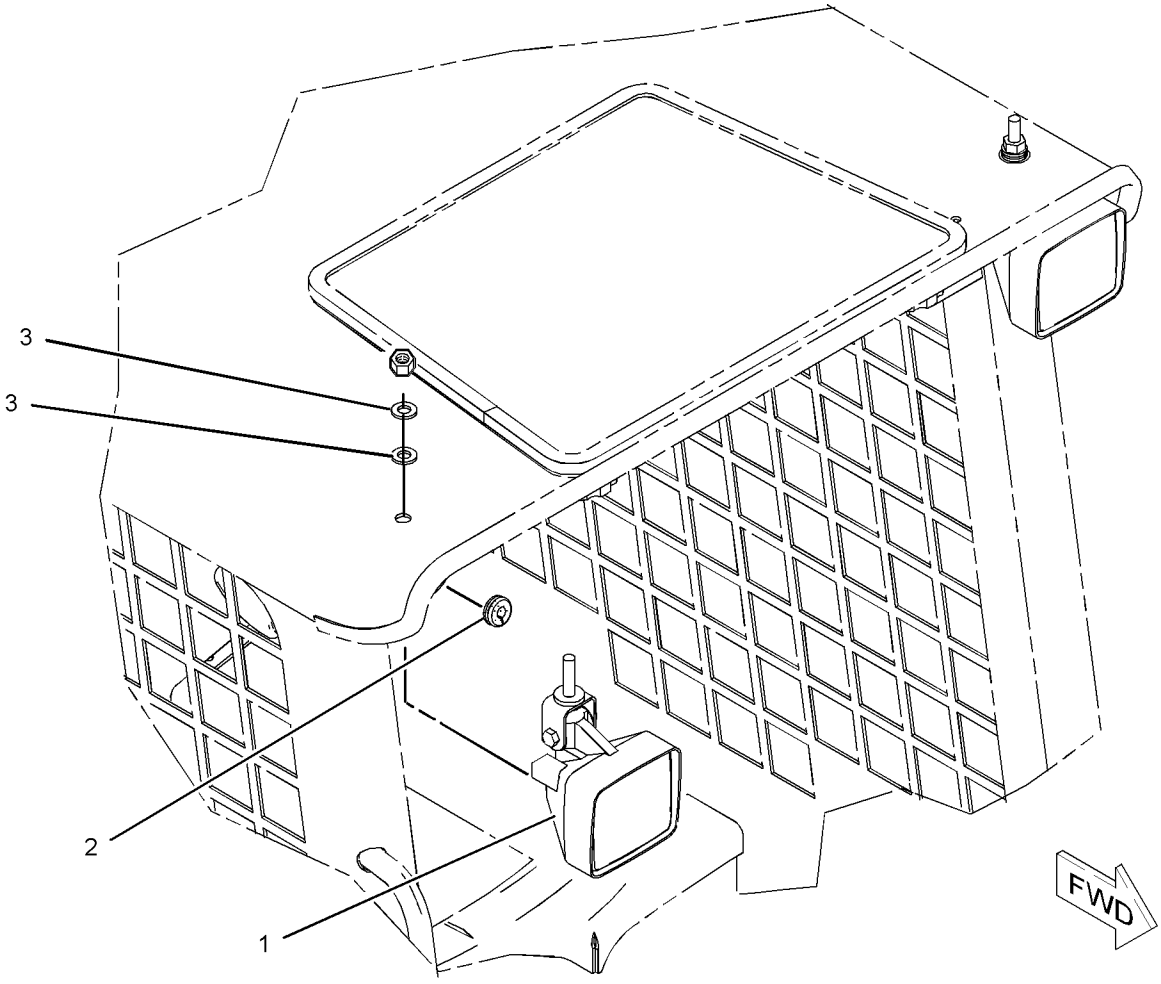

GRAPHIC #1 **<END>** g01040888

ELECTRICAL AND STARTING SYSTEM

216-4716 LIGHTING GP-ROADING

S/N: BXM4225-UP

PART OF 278-1213, 278-1225, 278-5409, 278-5442, 295-7039, 295-7151, 295-7159, 295-7164, 295-7168 CONVERSION AR-MACHINE, 233-5682, 233-5683, 233-5685, 233-5686, 257-5721, 257-5722, 295-7044 CONVERSION AR-ROADING AN ATTACHMENT

SMCS-1429 **i02771661**

NOTE	REF NO	GRAPHIC REF	PART NUMBER	QTY	PART NAME 1 2 3 4 5 6 (PRODUCT LEVEL)	SEE PAGE
Y	1	1	**3E-7584**	2	LAMP GP-HEAD & SIGNAL	147
	2	1	**7D-5473**	2	BOLT-SOCKET HEAD (8-32X0.75-IN)	
	3	1	**8T-1887**	2	CLIP (SLOT)	
	4	1	**8T-1888**	2	CLIP (TAB)	
	5	1	**8W-8909**	2	SLEEVE	
	6	1	**9R-1499**	2	REFLECTOR	
Y	7	1	**142-8634**	2	LAMP GP-STOP & TAIL	150
	8	1	**147-1773**	1	CIRCUIT BREAKER AS (30-AMPERE)	
		1	**6V-8378**	2	NUT (10-32-THD)	
		1	**8F-1434**	2	LOCKWASHER	
		1	**8T-0328**	2	WASHER-HARD (5.5X10X1-MM THK)	
	9	1	**216-4726**	1	HARNESS AS-FRONT LIGHTING	
		1	**155-2274**	1	KIT-CONNECTING PLUG (6-PIN)	
					(INCLUDES PLUG AS, WEDGE & INTERFACE SEAL)	
	10	1	**216-4727**	1	HARNESS AS-REAR LIGHTING	
		1	**102-8805**	1	KIT-RECEPTACLE (6-PIN)	
		1	**102-8806**	1	KIT-RECEPTACLE (8-PIN)	
					(EACH KIT INCLUDES RECEPTACLE AS & WEDGE)	
		1	**155-2265**	1	KIT-CONNECTING PLUG (8-PIN)	
					(INCLUDES PLUG AS, WEDGE & INTERFACE SEAL)	
	11	1	*225-7962*	1	SWITCH GP-ROCKER (ROADING)	
		1	**142-9329**	1	SWITCH AS-ROCKER (ROADING LIGHTS)	
		1	**142-9331**	1	SWITCH AS-ROCKER (HAZARD WARNING LIGHTS)	
		1	**226-5900**	1	SWITCH AS-ROCKER (TURN SIGNAL)	
					(EACH SWITCH AS-ROCKER INCLUDES)	
		1	**111-7899**	1	GASKET	
	12	1	**225-8013**	1	WIRE AS	
	13	1	**242-9000**	1	FLASHER AS (12-VOLT)	
	14	1	**195-0935**	1	INSERT-THREADED (M6X1-THD)	
	15	1	**206-1346**	2	STRAP-CABLE	
	16	1	**3S-2093**	18	STRAP-CABLE	
	17	1	**4B-4863**	2	WASHER (4.7X11X1.2-MM THK)	
	18	1	**4P-7581**	1	CLIP	
M	19	1	**8T-4201**	1	BOLT-LOCKING (M10X1.5X20-MM)	
M	20	1	**9X-2042**	1	SCREW-TRUSS HEAD (M6X1X12-MM)	

M-METRIC PART
Y-SEPARATE ILLUSTRATION

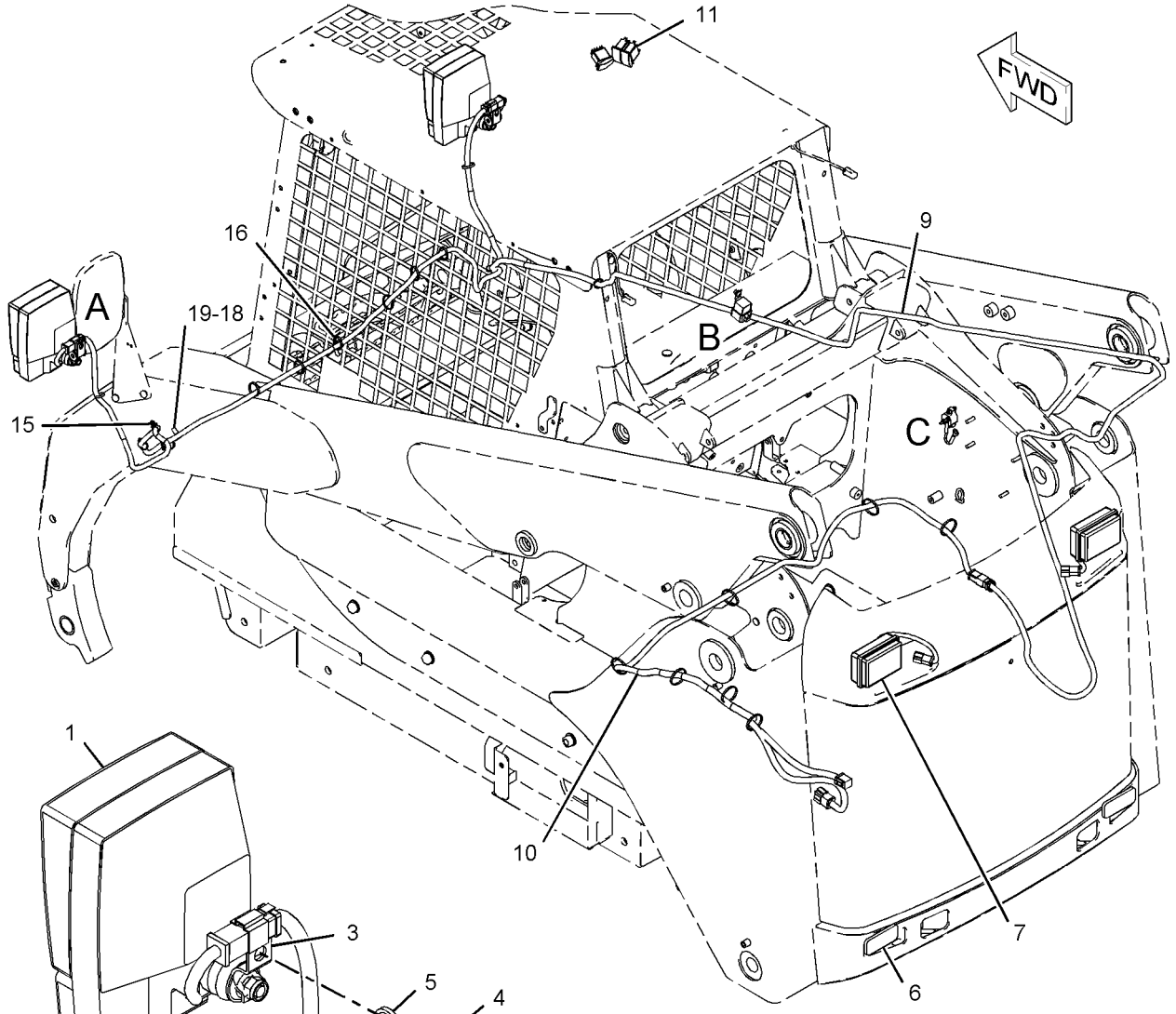

VIEW OF AREA A

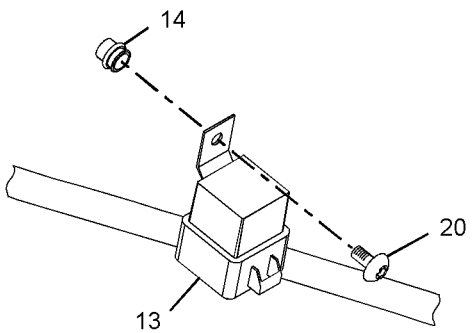

VIEW OF AREA B

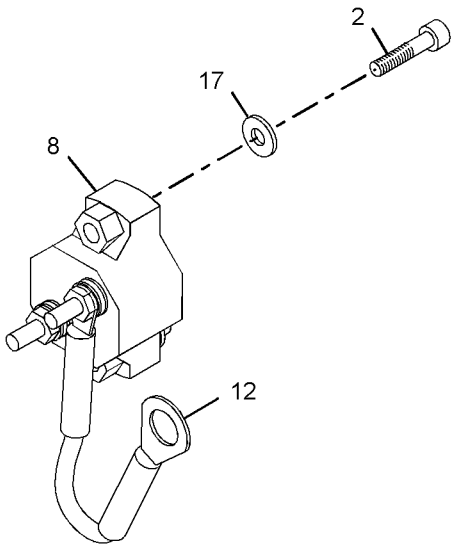

VIEW OF AREA C

GRAPHIC #1 **<END>** g01035544

142-8652 LIGHTING GP-STOP & TAIL

S/N: BXM4225-UP
PART OF 261-6158, 261-6160, 278-1221, 295-7050, 295-7061, 295-7068 CONVERSION AR-MACHINE, 233-5670 CONVERSION AR-NON-ROADING, 233-5681, 233-5684 CONVERSION AR-ROADING
AN ATTACHMENT

SMCS-1432 **i02757097**

NOTE	REF NO	GRAPHIC REF	PART NUMBER	QTY	PART NAME 1 2 3 4 5 6 (PRODUCT LEVEL)	SEE PAGE
	1	1	**3S-2093**	2	STRAP-CABLE	
	2	1	**9R-1499**	2	REFLECTOR	
Y	3	1	**142-7503**	2	LAMP GP-STOP & TAIL (12-VOLT)	149
	4	1	**4P-7581**	2	CLIP	
	5	1	**8T-4205**	4	WASHER-HARD (7.2X14.5X2-MM THK)	

Y-SEPARATE ILLUSTRATION

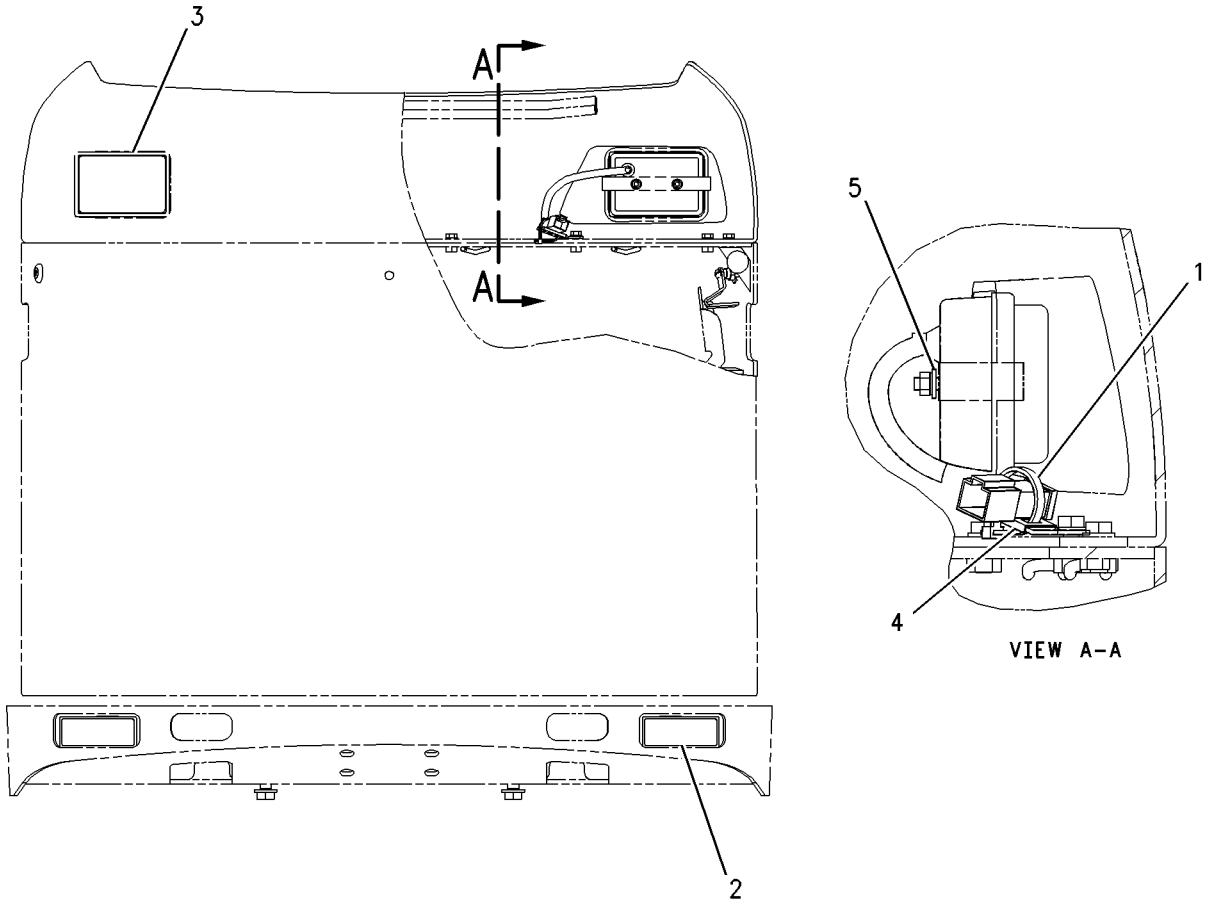

GRAPHIC #1 **<END>** g00771277

142-8653 LIGHTING GP-WARNING BEACON–12-VOLT

S/N: BXM4225-UP
AN ATTACHMENT

SMCS-1431 **i02262621**

NOTE	REF NO	GRAPHIC REF	PART NUMBER	QTY	PART NAME 1 2 3 4 5 6 (PRODUCT LEVEL)	SEE PAGE
Y	1	1	**128-6985**	1	LAMP GP-WARNING BEACON (12-VOLT, AMBER)	151
	2	1	**142-9327**	1	SWITCH AS-ROCKER (WARNING BEACON)	
		1	**111-7899**	1	GASKET	

Y-SEPARATE ILLUSTRATION

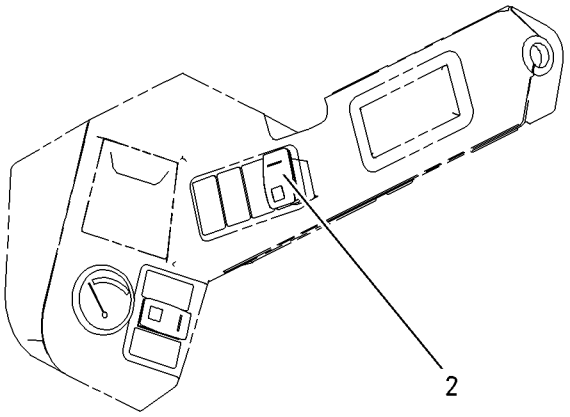

RH CONTROL PANEL

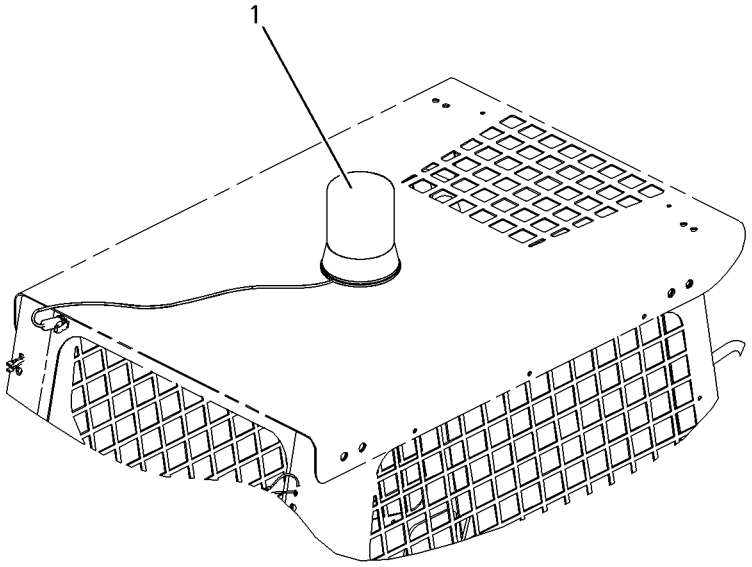

GRAPHIC #1 **<END>** g00867567

247-0323 SENSOR GP-TEMP & PRESS

S/N: CSD1-11322
PART OF 300-5206 ENGINE AR-PRIMARY
AN ATTACHMENT

SMCS-1906, 1924 **i02707018**

NOTE	REF NO	GRAPHIC REF	PART NUMBER	QTY	PART NAME 1 2 3 4 5 6 (PRODUCT LEVEL)	SEE PAGE
	1	1	**308-1222**	1	ADAPTER	
	2	1	**291-1265**	1	SWITCH-PRESSURE (ENGINE OIL)	
	3	1	**231-2999**	1	SWITCH-TEMPERATURE (ENGINE COOLANT)	
	4	1	**153-5936**	2	WASHER	

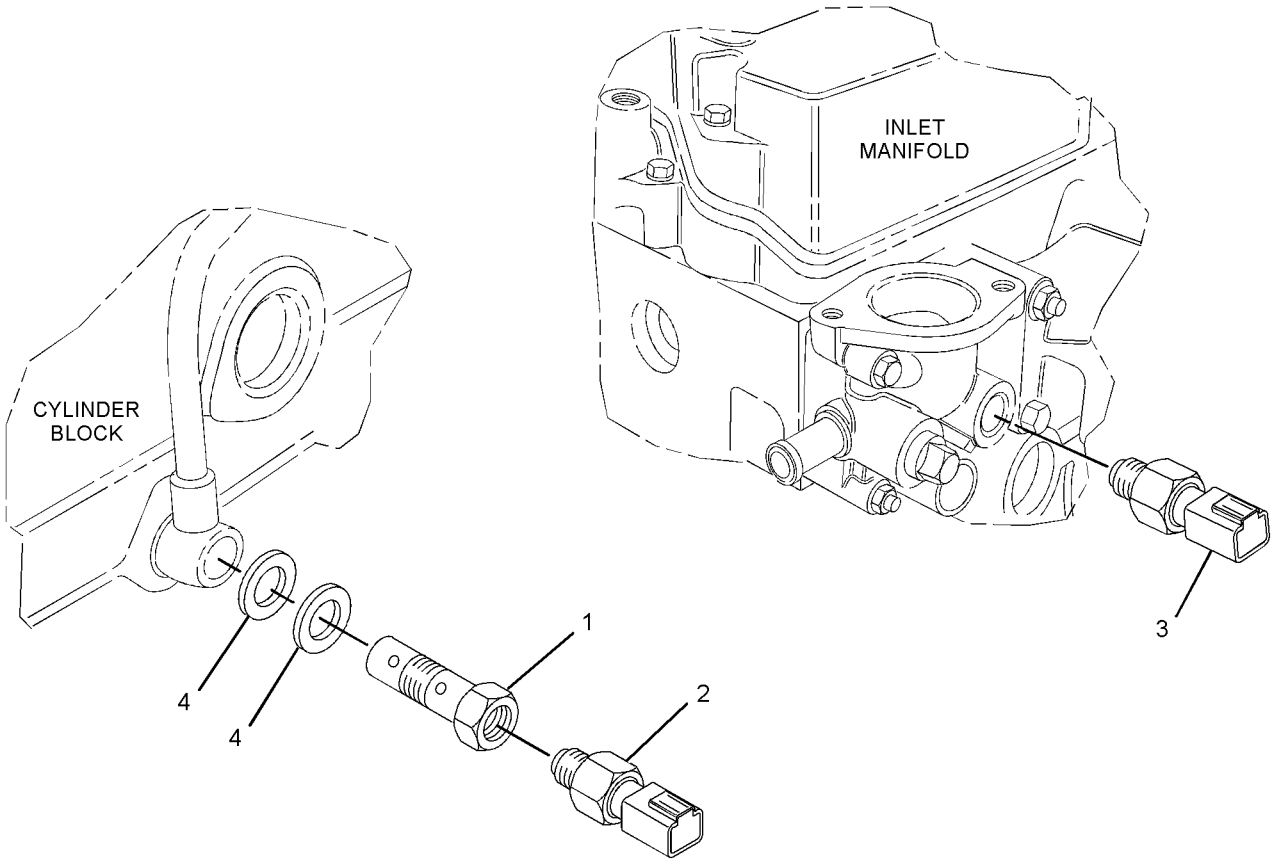

GRAPHIC #1 **<END>** g01369034

163-3361 STARTING MOTOR GP-ELECTRIC

S/N: CSD1-11322; CYP1-UP
12-VOLT
PART OF 307-8201, 308-2293 STARTING MOTOR GP-ELECTRIC
AN ATTACHMENT

SMCS-1453 **i02385155**

NOTE	REF NO	GRAPHIC REF	PART NUMBER	QTY	PART NAME 1 2 3 4 5 6 (PRODUCT LEVEL)	SEE PAGE
	1	1	**242-7070**	1	BUSHING	
	2	1	**242-7071**	1	SOLENOID (STARTING MOTOR)	
	3	1	**242-7073**	1	BUSHING	
	4	1	**242-7074**	1	DRIVE-MOTOR	
	5	1	**242-7075**	1	HOLDER	
	6	1	**242-7076**	1	BUSHING	
	7	1	**242-7077**	1	KIT-STARTING MOTOR	
	8	1	**242-7078**	1	ARMATURE	

163-3361 **STARTING MOTOR GP-ELECTRIC** *(contd.)* **i02385155**

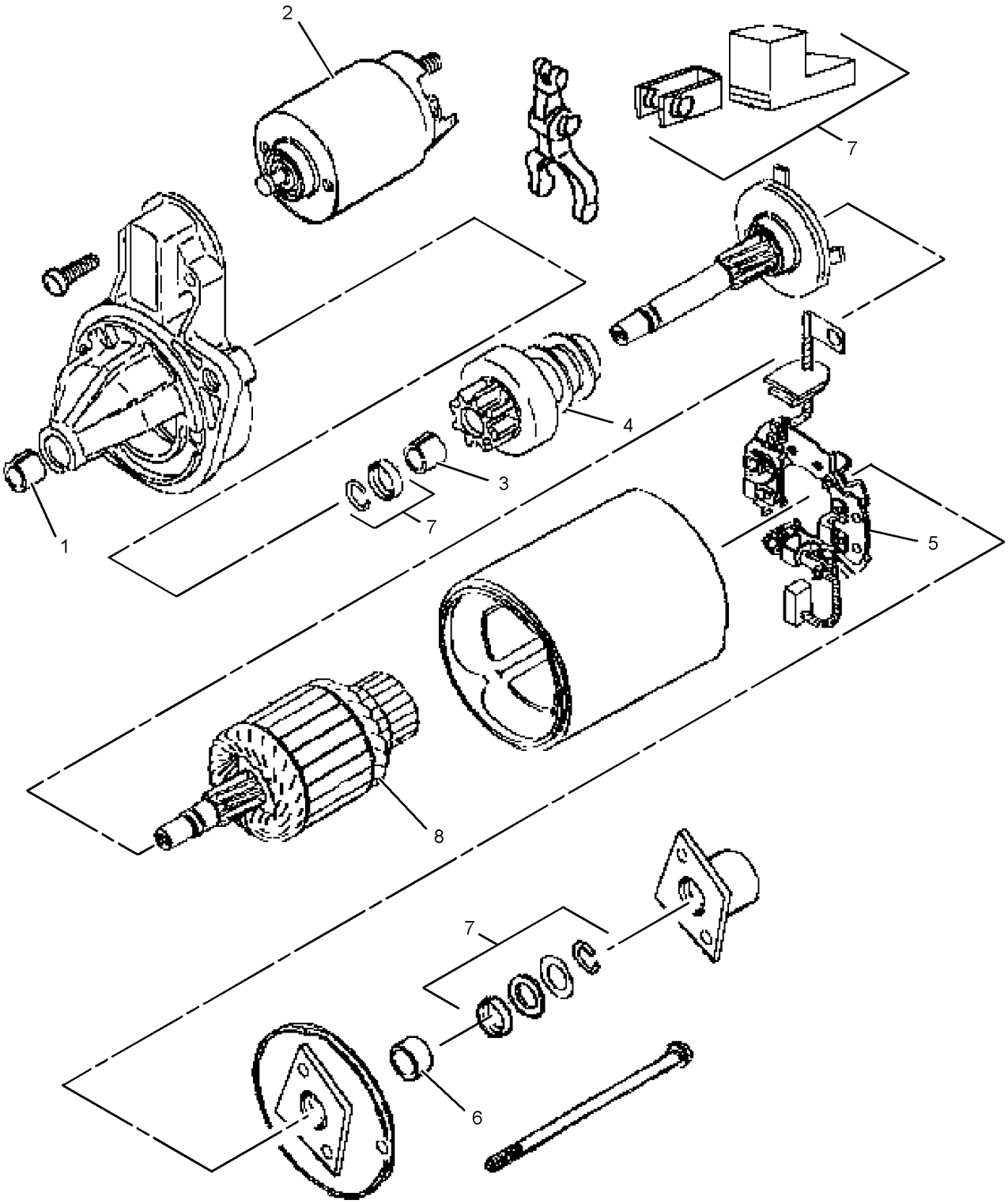

GRAPHIC #1 **<END>** g01158306

307-8201 STARTING MOTOR GP-ELECTRIC

S/N: CSD1-11322
PART OF 300-5206 ENGINE AR-PRIMARY
AN ATTACHMENT

SMCS-1453 **i02702403**

NOTE	REF NO	GRAPHIC REF	PART NUMBER	QTY	PART NAME 1 2 3 4 5 6 (PRODUCT LEVEL)	SEE PAGE
	1	1	**154-1399**	2	WASHER	
	2	1	**197-8004**	2	BOLT	
	3	1	**154-2403**	2	WASHER	
Y	4	1	**163-3361**	1	STARTING MOTOR GP-ELECTRIC	159

Y-SEPARATE ILLUSTRATION

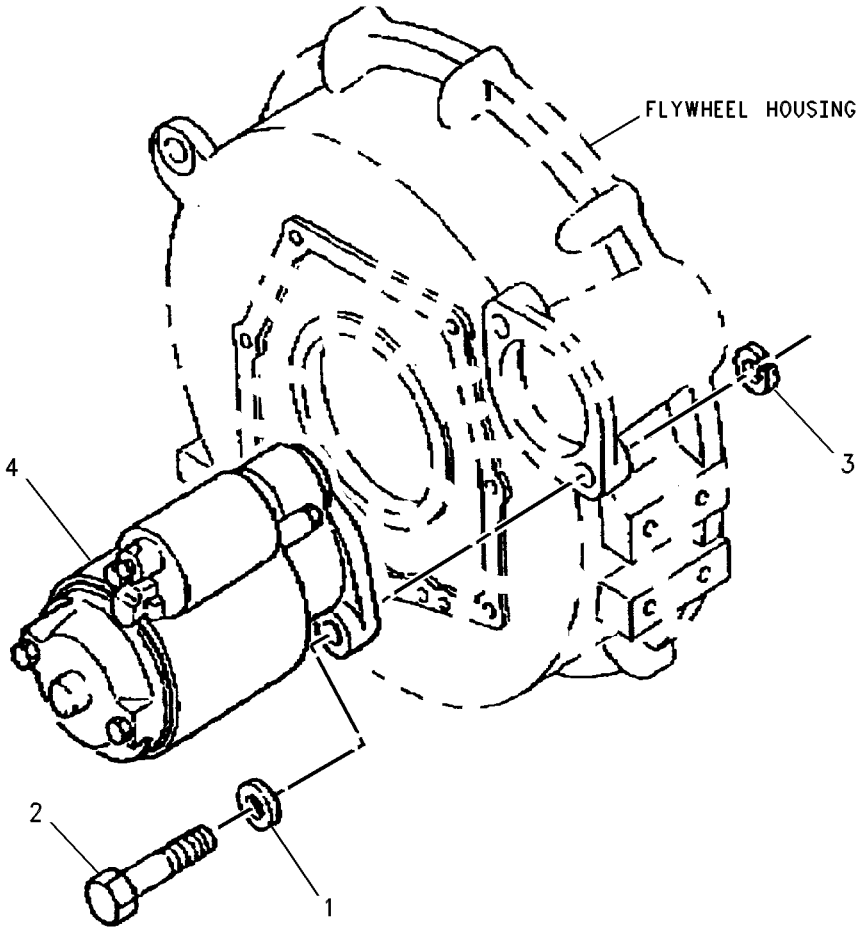

GRAPHIC #1 **<END>** g00582487

ELECTRICAL AND STARTING SYSTEM

308-2293 STARTING MOTOR GP-ELECTRIC

S/N: CYP1-UP
PART OF 292-5719 ENGINE AR-PRIMARY
AN ATTACHMENT

SMCS-1453 **i02743439**

NOTE	REF NO	GRAPHIC REF	PART NUMBER	QTY	PART NAME 1 2 3 4 5 6 (PRODUCT LEVEL)	SEE PAGE
Y	1	1	**163-3361**	1	STARTING MOTOR GP-ELECTRIC	159

Y-SEPARATE ILLUSTRATION

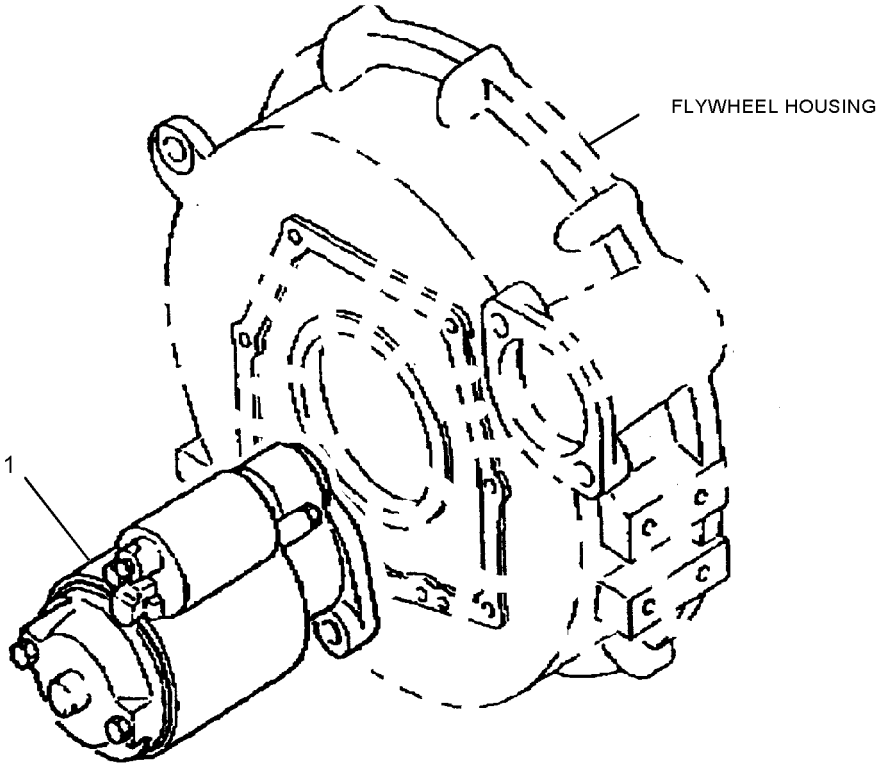

GRAPHIC #1 **<END>** g01140591

184-1564 SWITCH GP-PRESSURE–BRAKE LIGHT

S/N: BXM4225-UP
PART OF 257-5727 CONVERSION AR-ROADING, 277-0651, 277-0653 KIT-ROADING CONVERSION, 225-7964 WIRING GP-REAR LIGHTING AN ATTACHMENT

SMCS-1435, 7400 **i02570793**

NOTE	REF NO	GRAPHIC REF	PART NUMBER	QTY	PART NAME 1 2 3 4 5 6 (PRODUCT LEVEL)	SEE PAGE
	1	1	**9X-1813**		SLEEVE (19-CM)	
	2	1	**102-8802**	1	KIT-RECEPTACLE (2-PIN)	
					(INCLUDES RECECPTACLE AS & WEDGE)	
	3	1	**8T-8729**	2	PIN-CONNECTOR	
	4	1	**3E-3365**	1	WEDGE-RECEPTACLE LOCK (2-PIN)	
	5	1	**3J-1907**	1	SEAL-O-RING	

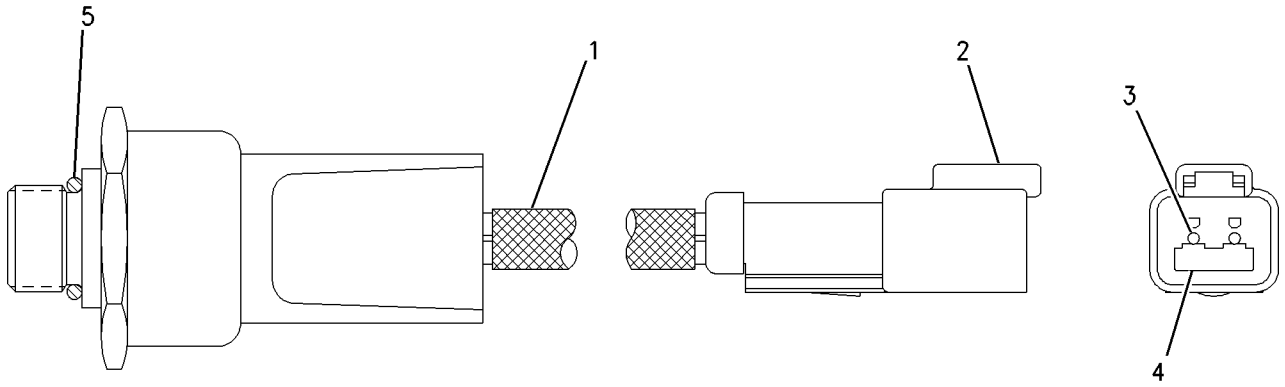

GRAPHIC #1 **<END>** g00788762

316-6890 SWITCH GP-PRESSURE

S/N: CYP1-UP
PART OF 292-5719 ENGINE AR-PRIMARY
AN ATTACHMENT

SMCS-1435, 7400 **i02862678**

NOTE	REF NO	GRAPHIC REF	PART NUMBER	QTY	PART NAME 1 2 3 4 5 6 (PRODUCT LEVEL)	SEE PAGE
	1	1	**153-5936**	2	WASHER	
	2	1	**183-1165**	1	PLUG	
	3	1	**291-1265**	1	SWITCH-PRESSURE (ENGINE OIL)	
	4	1	**308-1222**	1	ADAPTER	

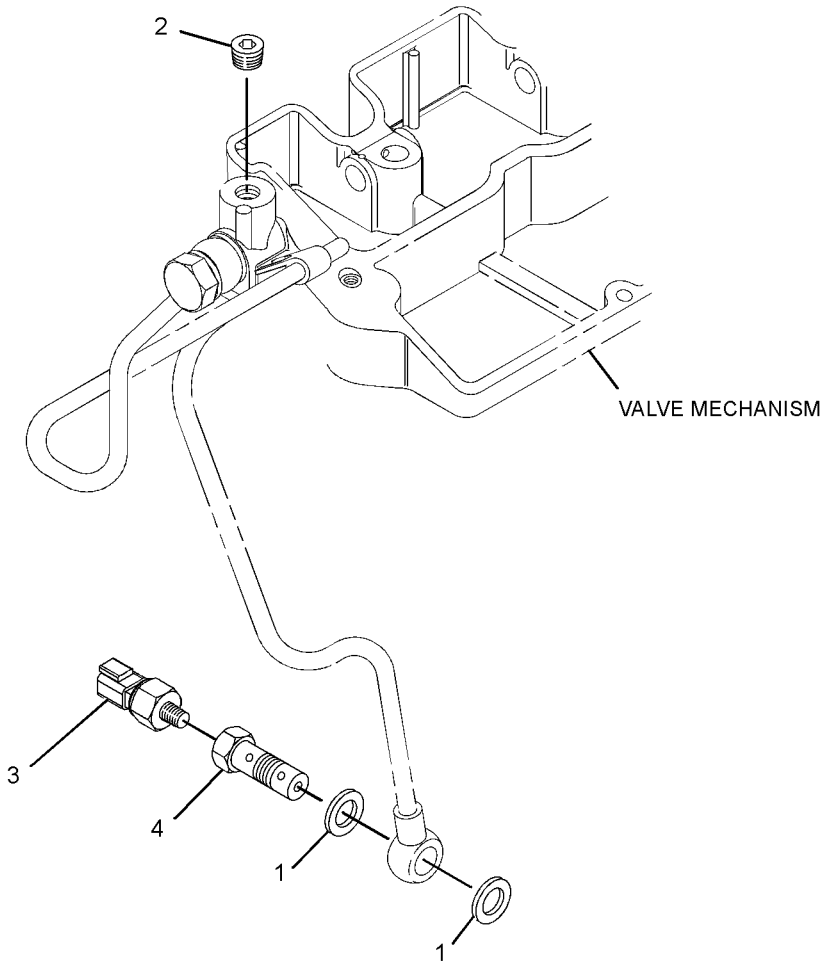

GRAPHIC #1 **<END>** g01439331

308-2317 SWITCH GP-TEMPERATURE–COOLANT

S/N: CYP1-UP
PART OF 292-5719 ENGINE AR-PRIMARY
AN ATTACHMENT

SMCS-1435, 7400 **i02752315**

NOTE	REF NO	GRAPHIC REF	PART NUMBER	QTY	PART NAME 1 2 3 4 5 6 (PRODUCT LEVEL)	SEE PAGE
	1	1	**231-2999**	1	SWITCH-TEMPERATURE (ENGINE COOLANT)	

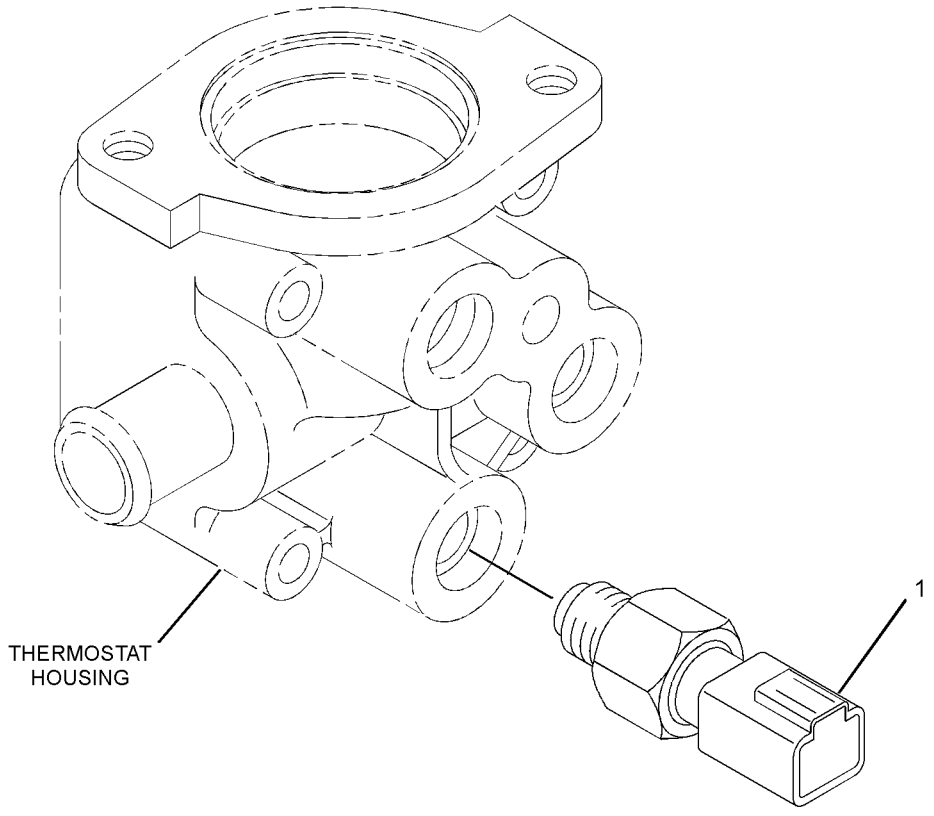

GRAPHIC #1 **<END>** g01416429

225-7969 WARNING GP-BACKUP

S/N: BXM4225-UP
PART OF 295-7242, 295-7243 COMMON AR
CANNOT BE USED WITH 142-8714—PAGE 360
ALSO AN ATTACHMENT

SMCS-7406 **i02359135**

NOTE	REF NO	GRAPHIC REF	PART NUMBER	QTY	PART NAME 1 2 3 4 5 6 (PRODUCT LEVEL)	SEE PAGE
	1	1	**8T-4205**	2	WASHER-HARD (7.2X14.5X2-MM THK)	
	2	1	**161-2539**	1	ALARM AS	
	3	1	**192-0836**	1	SWITCH GP-PRESSURE (BACKUP ALARM)	
		1	**102-8802**	2	KIT-RECEPTACLE (2-PIN)	
					(INCLUDES RECEPTACLE AS & WEDGE)	
		1	**3E-3365**	1	WEDGE-RECEPTACLE LOCK (2-PIN)	
		1	**3J-1907**	1	SEAL-O-RING	
		1	**8T-8729**	1	PIN-CONNECTOR	
M	4	1	**6V-7357**	2	BOLT (M6X1X25-MM)	
F		1	**113-8490**	1	FUSE (10-AMPERE)	

F-NOT SHOWN
M-METRIC PART

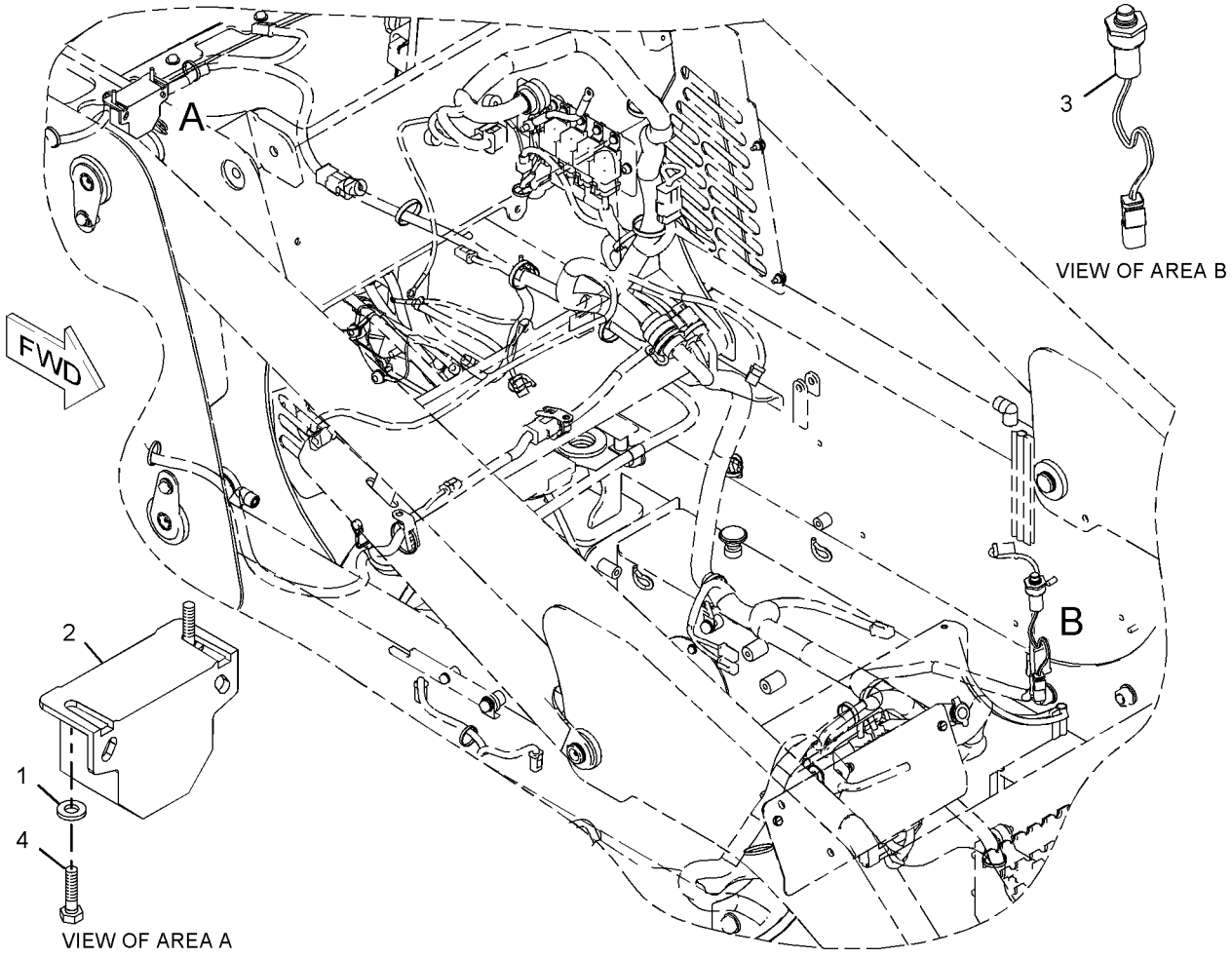

GRAPHIC #1 **<END>** g01030769

225-7948 WIRING GP-AIR CONDITIONER

S/N: BXM4225-UP
PART OF 218-6302 AIR CONDITIONER AR
AN ATTACHMENT

SMCS-1408, 7320 **i02359133**

NOTE	REF NO	GRAPHIC REF	PART NUMBER	QTY	PART NAME 1 2 3 4 5 6 (PRODUCT LEVEL)	SEE PAGE
	1	1	**3S-2093**	12	STRAP-CABLE	
	2	1	**202-2168**	1	HARNESS AS-FUEL TANK	
		1	**102-8802**	1	KIT-RECEPTACLE (2-PIN)	
					(INCLUDES RECEPTACLE AS & WEDGE)	
		1	**155-2270**	1	KIT-CONNECTING PLUG (2-PIN)	
					(INCLUDES PLUG AS, WEDGE & INTERFACE SEAL)	
	3	1	**221-3879**	1	HARNESS AS-HEATER & AIR COND	
		1	**155-2260**	1	KIT-CONNECTING PLUG (3-PIN)	
		1	**155-2270**	1	KIT-CONNECTING PLUG (2-PIN)	
					(EACH KIT INCLUDES PLUG AS, WEDGE & INTERFACE SEAL)	
BF		1	**124-3548**	1	FUSE (30-AMPERE)	
BF		1	**113-8491**	1	FUSE (15-AMPERE)	

B-USE AS REQUIRED
F-NOT SHOWN

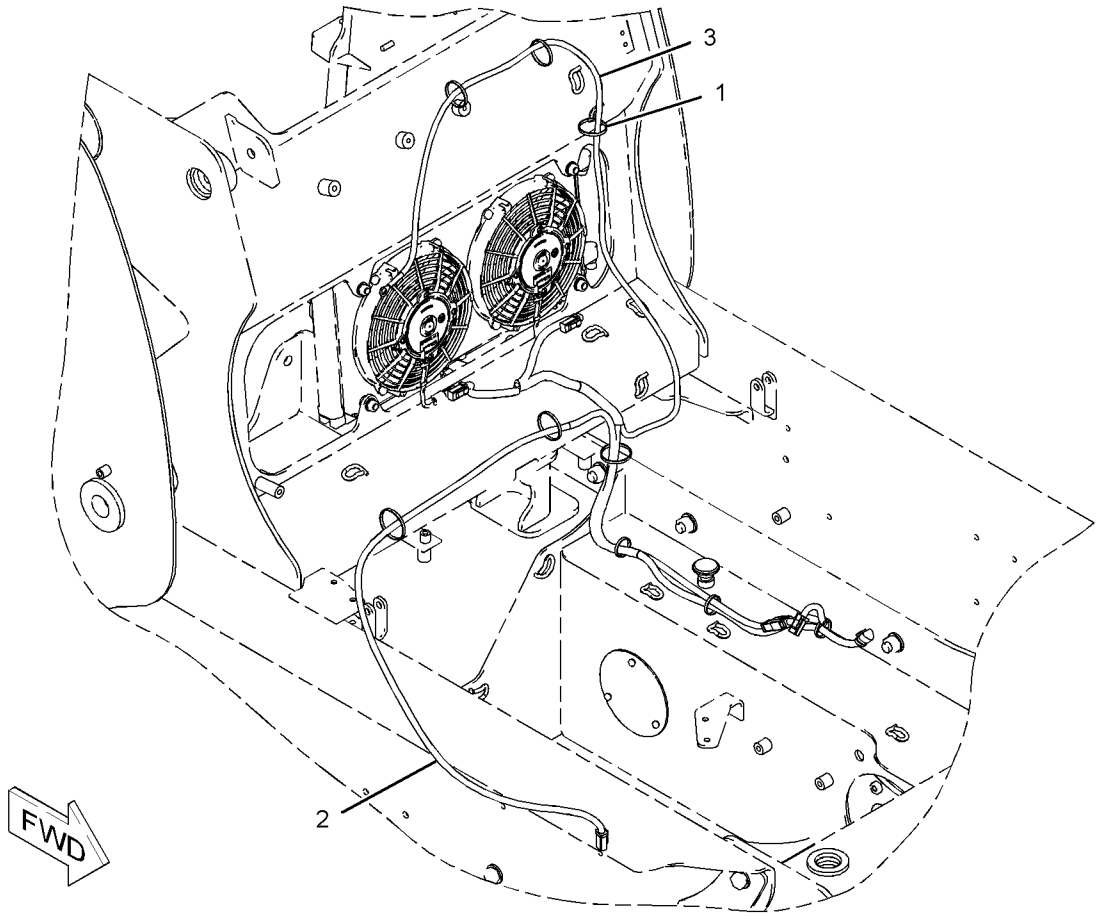

GRAPHIC #1 **<END>** g01029283

ELECTRICAL AND STARTING SYSTEM

225-8001 WIRING GP-CHASSIS

S/N: BXM4225-UP

PART OF 295-7210 CHASSIS AR

SMCS-1408, 7051 **i02752329**

NOTE	REF NO	GRAPHIC REF	PART NUMBER	QTY	PART NAME 1 2 3 4 5 6 (PRODUCT LEVEL)	SEE PAGE
	1	1	**4B-4863**	2	WASHER (4.7X11X1.2-MM THK)	
	2	1	**6I-1418**	6	SPACER (8.2X12.7X28.7-MM THK)	
	3	1	**7K-1181**	10	STRAP-CABLE	
	4	1	**8M-4963**	1	STRAP AS-GROUND	
	5	1	**8T-8799**	2	BOOT	
	6	1	**8T-9655**	12	MOUNT-ISOLATION	
E	7	1	**9X-2092**		STRIP-EDGE (50-CM)	
	8	1	**090-9434**	3	SPACER (9X20X10-MM THK)	
	9	1	**114-4516**	1	BLOCK	
	10	1	**115-1615**	3	RELAY AS (12-VOLT) (MAIN POWER)	
Y	11	1	**154-4233**	1	CONTROL GP-INTERLOCK	130
	12	1	**3S-2093**	34	STRAP-CABLE	
	13	1	**178-7539**	1	RECEPTACLE AS (POWER SUPPLY)	
	14	1	**216-4703**	1	HARNESS AS-REAR LIGHTING	
E		1	**125-7874**		TUBE-HEAT SHRINK (5.72-MM DIA) (5-CM)	
E		1	**125-7875**		TUBE-HEAT SHRINK (7.44-MM DIA) (5-CM)	
		1	**155-2271**	2	KIT-CONNECTING PLUG (4-PIN)	
					(EACH INCLUDES PLUG AS, WEDGE & INTERFACE SEAL)	
		1	**102-8806**	1	KIT-RECEPTACLE (8-PIN)	
					(INCLUDES RECEPTACLE AS & WEDGE)	
Y	15	1	*216-4755*	1	COVER GP-FUSE PANEL	133
	16	1	**221-3880**	1	PANEL GP-FUSE	
		1	**124-3548**	1	FUSE (30-AMPERE)	
		1	**113-8490**	16	FUSE (10-AMPERE)	
		1	**113-8491**	5	FUSE (15-AMPERE)	
		1	**113-8492**	2	FUSE (20-AMPERE)	
	17	1	**225-5190**	1	BRACKET AS	
	18	1	**225-7981**	1	BRACKET AS	
	19	1	**225-7982**	1	WIRE AS	
Y	20	1	*225-8000*	1	ELECTRONICS GP-IMPLEMENT (WORK TOOL)	134
	21	1	**225-8002**	1	HARNESS AS-PLATFORM (LOWER)	
		1	**7R-2750**	16	SEAL-CONNECTOR	
		1	**7R-2751**	1	PLUG-CONNECTOR	
		1	**8C-6354**	1	CAP-RECEPTACLE	
		1	**9W-1951**	1	RECEPTACLE-CONNECTOR (9-PIN)	
E		1	**119-3662**		TUBE-HEAT SHRINK (10.85-MM DIA) (7-CM)	
E		1	**125-7874**		TUBE-HEAT SHRINK (5.72-MM DIA) (60-CM)	
E		1	**125-7875**		TUBE-HEAT SHRINK (7.44-MM DIA) (20-CM)	
E		1	**128-4123**		SEAL (7-CM)	
		1	**150-6764**	1	PLUG AS-CONNECTOR (26-PIN)	
		1	**150-6765**	1	PLUG AS-CONNECTOR (26-PIN)	
					(EACH PLUG AS INCLUDES)	
		1	**159-9322**	1	SEAL-O-RING	
		1	**155-2271**	1	KIT-CONNECTING PLUG (4-PIN)	
		1	**155-2255**	2	KIT-CONNECTING PLUG (12-PIN)	
		1	**155-2265**	1	KIT-CONNECTING PLUG (8-PIN)	
		1	**155-2270**	6	KIT-CONNECTING PLUG (2-PIN)	
					(EACH PLUG KIT INCLUDES PLUG AS, WEDGE & INTERFACE SEAL)	
		1	**102-8805**	1	KIT-RECEPTACLE (6-PIN)	
		1	**102-8801**	1	KIT-RECEPTACLE (12-PIN)	
		1	**177-9653**	1	KIT-RECEPTACLE (4-PIN)	
					(EACH RECEPTACLE KIT INCLUDES RECEPTACLE AS & WEDGE)	
		1	**196-2381**	1	KIT-CONNECTING PLUG (2-PIN)	

225-8001 **WIRING GP-CHASSIS** *(contd.)* **i02752329**

NOTE	REF NO	GRAPHIC REF	PART NUMBER	QTY	PART NAME 1 2 3 4 5 6 (PRODUCT LEVEL)	SEE PAGE
		1	**196-2382**	1	KIT-CONNECTING PLUG (2-PIN)	
					(EACH PLUG KIT INCLUDES PLUG AS & WEDGE)	
		1	**196-2383**	1	KIT-CONNECTING PLUG (8-PIN)	
		1	**196-2384**	1	KIT-CONNECTING PLUG (8-PIN)	
		1	**196-2385**	1	KIT-CONNECTING PLUG (8-PIN)	
					(EACH PLUG KIT INCLUDES PLUG AS, LOCK & TERMINAL AS)	
		1	**8L-8413**	7	STRAP-CABLE	
		1	**173-8919**	4	SEAL-CONNECTOR	
		1	**167-3692**	1	RECEPTACLE AS-CONNECTOR (31-PIN)	
	22	1	**292-1159**	1	HARNESS AS-PLATFORM	
		1	**102-8804**	1	KIT-RECEPTACLE (4-PIN)	
		1	**102-8801**	1	KIT-RECEPTACLE (12-PIN)	
					(EACH RECEPTACLE KIT INCLUDES RECEPTACLE AS & WEDGE)	
		1	**8L-8413**	28	STRAP-CABLE	
		1	**9X-1054**	4	PLUG AS-CONNECTOR (4-PIN)	
		1	**100-3320**	1	PLUG AS-CONNECTOR (2-PIN)	
		1	**126-5011**	1	SEAL-CONNECTOR	
E		1	**119-3662**		TUBE-HEAT SHRINK (10.85-MM DIA) (33-CM)	
E		1	**125-7874**		TUBE-HEAT SHRINK (5.72-MM DIA) (25-CM)	
E		1	**125-7875**		TUBE-HEAT SHRINK (7.44-MM DIA) (15-CM)	
		1	**155-2255**	3	KIT-CONNECTING PLUG (12-PIN)	
		1	**155-2265**	1	KIT-CONNECTING PLUG (8-PIN)	
		1	**155-2260**	2	KIT-CONNECTING PLUG (3-PIN)	
		1	**155-2270**	2	KIT-CONNECTING PLUG (2-PIN)	
		1	**155-2271**	2	KIT-CONNECTING PLUG (4-PIN)	
		1	**155-2274**	1	KIT-CONNECTING PLUG (6-PIN)	
					(EACH PLUG KIT INCLUDES PLUG AS, WEDGE & INTERFACE SEAL)	
		1	**177-9648**	1	KIT-CONNECTING PLUG (2-PIN)	
		1	**177-9656**	1	KIT-CONNECTING PLUG (4-PIN)	
					(EACH PLUG KIT INCLUDES PLUG AS & WEDGE)	
E		1	**211-5358**		CONDUIT-FLEXIBLE (30-CM)	
		1	**213-0139**	6	PIN	
		1	**167-3693**	2	PLUG AS-CONNECTOR (31-PIN)	
M	23	1	**8T-0389**	1	LOCKNUT (M10X1.5-THD)	
M	24	1	**095-0733**	2	SCREW-MACHINE (M4X0.7X40-MM)	
B	25	1	**155-2255**	1	KIT-CONNECTING PLUG (12-PIN)	
B	26	1	**155-2271**	1	KIT-CONNECTING PLUG (4-PIN)	
					(EACH PLUG KIT INCLUDES PLUG AS, WEDGE & INTERFACE SEAL)	
B	27	1	**102-8802**	2	KIT-RECEPTACLE (2-PIN)	
B	28	1	**102-8803**	1	KIT-RECEPTACLE (3-PIN)	
B	29	1	**102-8804**	3	KIT-RECEPTACLE (4-PIN)	
B	30	1	**102-8806**	1	KIT-RECEPTACLE (8-PIN)	
B	31	1	**177-9645**	1	KIT-RECEPTACLE (2-PIN)	
					(EACH RECEPTACLE KIT INCLUDES RECEPTACLE AS & WEDGE)	
	32	1	**4P-7581**	3	CLIP	
	33	1	**4P-8134**	5	CLIP	
	34	1	**246-9371**	1	RELAY AS (SHELL)	
M	35	1	**5C-7261**	3	NUT (M8X1.25-THD)	
M	36	1	**5C-9553**	4	BOLT (M6X1X16-MM)	
M	37	1	**6V-5698**	2	SCREW-BUTTON HEAD (M4X0.7X10-MM)	
	38	1	**7X-0579**	6	WASHER-HARD (8.8X25.5X2-MM THK)	
M	39	1	**7X-0818**	6	BOLT (M8X1.25X45-MM)	
	40	1	**8C-8558**	2	SCREW-LOCK (4-40X0.25-IN)	
	41	1	**8T-4121**	5	WASHER-HARD (11X21X2.5-MM THK)	
M	42	1	**8T-4133**	3	NUT (M10X1.5-THD)	

225-8001 **WIRING GP-CHASSIS** ***(contd.)*** **i02752329**

NOTE	REF NO	GRAPHIC REF	PART NUMBER	QTY	PART NAME 1 2 3 4 5 6 (PRODUCT LEVEL)	SEE PAGE
M	43	1	**8T-4191**	2	BOLT (M10X1.5X16-MM)	
	44	1	**8T-4205**	4	WASHER-HARD (7.2X14.5X2-MM THK)	
	45	1	**8T-4224**	3	WASHER-HARD (8.8X16X2-MM THK)	
M	46	1	**9X-2044**	4	SCREW-TRUSS HEAD (M6X1X16-MM)	
B	49	1	**8T-8737**	45	PLUG-SEAL	
	50	1	**178-3620**	4	STRAP-DUAL CLAMP	

B-USE AS REQUIRED
E-ORDER BY THE CENTIMETER
M-METRIC PART
Y-SEPARATE ILLUSTRATION

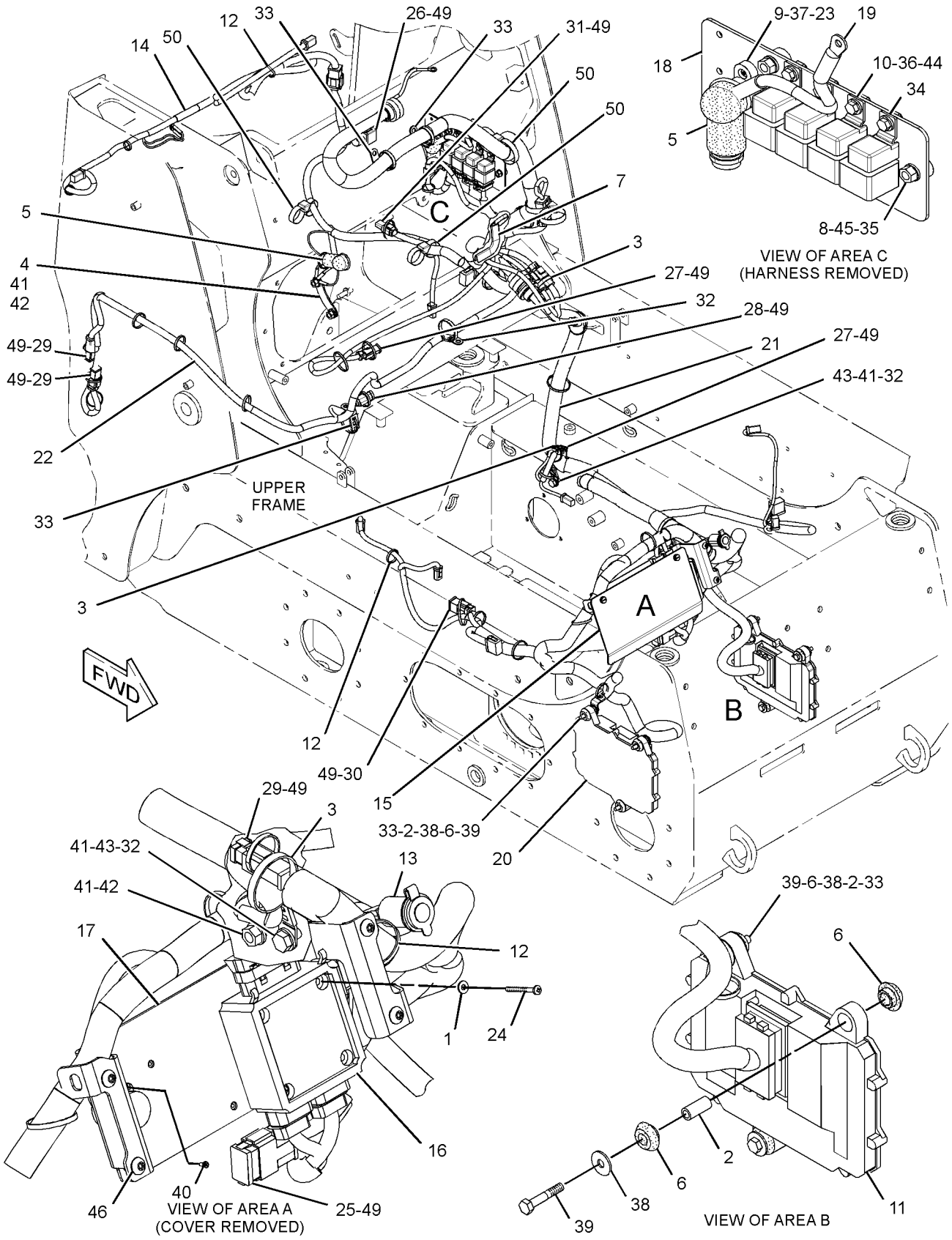

GRAPHIC #1 **<END>** g01381581

ELECTRICAL AND STARTING SYSTEM

225-8010 WIRING GP-ENGINE

S/N: BXM4225-4774

PART OF 295-7027 INSTALLATION AR-ENGINE

SMCS-1000, 1408, 1420 **i02807727**

NOTE	REF NO	GRAPHIC REF	PART NUMBER	QTY	PART NAME 1 2 3 4 5 6 (PRODUCT LEVEL)	SEE PAGE
	1	1	**4B-4274**	2	WASHER (5.5X13X1.2-MM THK)	
	2	1	**5L-4507**	2	SCREW-MACHINE (10-32X0.875-IN)	
	3	1	**7G-1060**	1	STRAP AS-GROUND	
	4	1	**8F-1434**	2	LOCKWASHER	
	5	1	**090-9434**	3	SPACER (9X20X10-MM THK)	
	6	1	**115-1615**	1	RELAY AS (12-VOLT) (COLD START)	
	6A	1	**115-1615**	1	RELAY AS (12-VOLT) (START)	
C	7	1	**106-8704**	1	SUPPRESSOR AS-ARC	
		1	**102-8802**	1	KIT-RECEPTACLE (2-PIN)	
					(INCLUDES RECEPTACLE AS & WEDGE)	
		1	**186-3735**	2	PIN-CONNECTOR (16-GA TO 18-GA)	
	8	1	**171-2212**	1	CIRCUIT BREAKER AS (105-AMPERE)	
		1	**253-2111**	2	LOCKWASHER	
		1	**6V-8187**	2	NUT (1/4-28-THD)	
		1	**8T-4205**	2	WASHER-HARD (7.2X14.5X2-MM THK)	
	9	1	**225-7954**	1	CABLE AS-BATTERY (POSITIVE)	
	10	1	**225-7980**	1	BRACKET AS	
C	11	1	**270-2702**	1	HARNESS AS-ENGINE	
		1	**102-8802**	1	KIT-RECEPTACLE (2-PIN)	
					(INCLUDES RECEPTACLE AS & WEDGE)	
		1	**7K-1181**	2	STRAP-CABLE	
		1	**155-2270**	2	KIT-CONNECTING PLUG (2-PIN)	
					(EACH INCLUDES PLUG AS, WEDGE & INTERFACE SEAL)	
	12	1	**264-8106**	1	HARNESS AS-ENGINE	
		1	**102-8801**	1	KIT-RECEPTACLE (12-PIN)	
					(INCLUDES RECEPTACLE AS & WEDGE)	
		1	**8L-8413**	7	STRAP-CABLE	
		1	**8T-8799**	2	BOOT	
		1	**9X-1054**	2	PLUG AS-CONNECTOR (4-PIN)	
E		1	**119-3662**		TUBE-HEAT SHRINK (10.85-MM DIA) (7-CM)	
E		1	**125-7874**		TUBE-HEAT SHRINK (5.72-MM DIA) (10-CM)	
E		1	**125-7875**		TUBE-HEAT SHRINK (7.44-MM DIA) (5-CM)	
		1	**155-2270**	4	KIT-CONNECTING PLUG (2-PIN)	
		1	**155-2271**	1	KIT-CONNECTING PLUG (4-PIN)	
					(EACH PLUG KIT INCLUDES PLUG AS, WEDGE & INTERFACE SEAL)	
E		1	**211-5358**		CONDUIT-FLEXIBLE (32-CM)	
	13	1	**238-9397**	1	RESISTOR AS	
		1	**102-8802**	1	KIT-RECEPTACLE (2-PIN)	
					(INCLUDES RECEPTACLE AS & WEDGE)	
		1	**186-3735**	2	PIN-CONNECTOR (16-GA TO 18-GA)	
	14	1	**172-9200**	1	SUPPRESSOR-ARC	
	15	1	**1H-3244**	1	LOCKWASHER	
C	16	1	**3S-2093**	10	STRAP-CABLE	
	17	1	**4P-8134**	1	CLIP	
M	18	1	**5C-2874**	2	NUT (M5X0.8-THD)	
M	19	1	**5C-2890**	1	NUT (M6X1-THD)	
M	20	1	**5C-7261**	4	NUT (M8X1.25-THD)	
M	21	1	**5C-9553**	2	BOLT (M6X1X16-MM)	
	22	1	**8T-0328**	2	WASHER-HARD (5.5X10X1-MM THK)	
	23	1	**8T-4121**	2	WASHER-HARD (11X21X2.5-MM THK)	
M	24	1	**8T-4133**	1	NUT (M10X1.5-THD)	
M	25	1	**8T-4200**	1	BOLT (M8X1.25X16-MM)	
	26	1	**8T-4205**	3	WASHER-HARD (7.2X14.5X2-MM THK)	
	27	1	**8T-4224**	4	WASHER-HARD (8.8X16X2-MM THK)	

225-8010 **WIRING GP-ENGINE** ***(contd.)*** **i02807727**

NOTE	REF NO	GRAPHIC REF	PART NUMBER	QTY	PART NAME 1 2 3 4 5 6 (PRODUCT LEVEL)	SEE PAGE
	29	1	**7K-1181**	1	STRAP-CABLE	
	30	1	**8T-4122**	1	WASHER-HARD (17X32X3.5-MM THK)	
	31	1	**104-6202**	1	CLIP	
M	32	1	**141-5453**	1	BOLT (M14X1.5X30-MM)	

C-CHANGE FROM PREVIOUS TYPE
E-ORDER BY THE CENTIMETER
M-METRIC PART

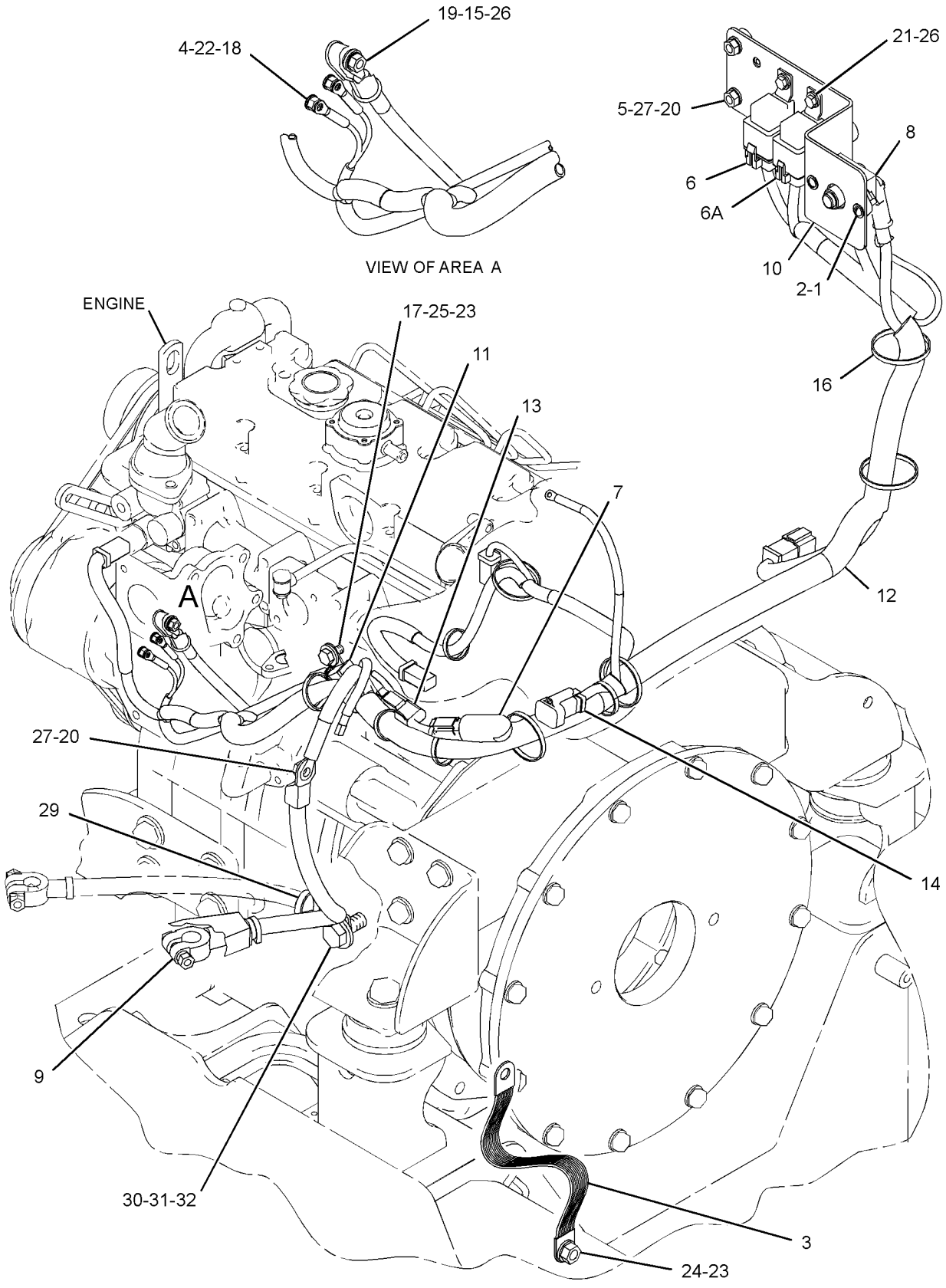

GRAPHIC #1

<END>

g01416086

225-8010 WIRING GP-ENGINE

S/N: BXM4775-UP

PART OF 295-7028 INSTALLATION AR-ENGINE

SMCS-1000, 1408, 1420 **i02881009**

NOTE	REF NO	GRAPHIC REF	PART NUMBER	QTY	PART NAME 1 2 3 4 5 6 (PRODUCT LEVEL)	SEE PAGE
	1	1	**4B-4274**	2	WASHER (5.5X13X1.2-MM THK)	
	2	1	**5L-4507**	2	SCREW-MACHINE (10-32X0.875-IN)	
	3	1	**7G-1060**	1	STRAP AS-GROUND	
	4	1	**8F-1434**	2	LOCKWASHER	
	5	1	**090-9434**	3	SPACER (9X20X10-MM THK)	
	6	1	**115-1615**	1	RELAY AS (12-VOLT) (COLD START)	
	6A	1	**115-1615**	1	RELAY AS (12-VOLT) (START)	
	7	1	**106-8704**	1	SUPPRESSOR AS-ARC	
	8	1	**171-2212**	1	CIRCUIT BREAKER AS (105-AMPERE)	
		1	**253-2111**	2	LOCKWASHER	
		1	**6V-8187**	2	NUT (1/4-28-THD)	
		1	**8T-4205**	2	WASHER-HARD (7.2X14.5X2-MM THK)	
	9	1	**225-7954**	1	CABLE AS-BATTERY (POSITIVE)	
	10	1	**225-7980**	1	BRACKET AS	
C	11	1	**317-2691**	1	HARNESS AS-ENGINE	
C	12	1	**318-0555**	1	HARNESS AS-WIRING (GLOW PLUG)	
	13	1	**238-9397**	1	RESISTOR AS	
		1	**102-8802**	1	KIT-RECEPTACLE (2-PIN)	
					(INCLUDES RECEPTACLE AS & WEDGE)	
		1	**186-3735**	2	PIN-CONNECTOR (16-GA TO 18-GA)	
	14	1	**172-9200**	1	SUPPRESSOR-ARC	
	15	1	**1H-3244**	1	LOCKWASHER	
	16	1	**3S-2093**	10	STRAP-CABLE	
	17	1	**4P-8134**	1	CLIP	
M	18	1	**5C-2874**	2	NUT (M5X0.8-THD)	
M	19	1	**5C-2890**	1	NUT (M6X1-THD)	
CM	20	1	**5C-7261**	3	NUT (M8X1.25-THD)	
M	21	1	**5C-9553**	2	BOLT (M6X1X16-MM)	
	22	1	**8T-0328**	2	WASHER-HARD (5.5X10X1-MM THK)	
	23	1	**8T-4121**	2	WASHER-HARD (11X21X2.5-MM THK)	
M	24	1	**8T-4133**	1	NUT (M10X1.5-THD)	
M	25	1	**8T-4200**	1	BOLT (M8X1.25X16-MM)	
	26	1	**8T-4205**	3	WASHER-HARD (7.2X14.5X2-MM THK)	
C	27	1	**8T-4224**	3	WASHER-HARD (8.8X16X2-MM THK)	
	29	1	**7K-1181**	1	STRAP-CABLE	
	30	1	**8T-4122**	1	WASHER-HARD (17X32X3.5-MM THK)	
	31	1	**104-6202**	1	CLIP	
M	32	1	**141-5453**	1	BOLT (M14X1.5X30-MM)	

C-CHANGE FROM PREVIOUS TYPE
M-METRIC PART

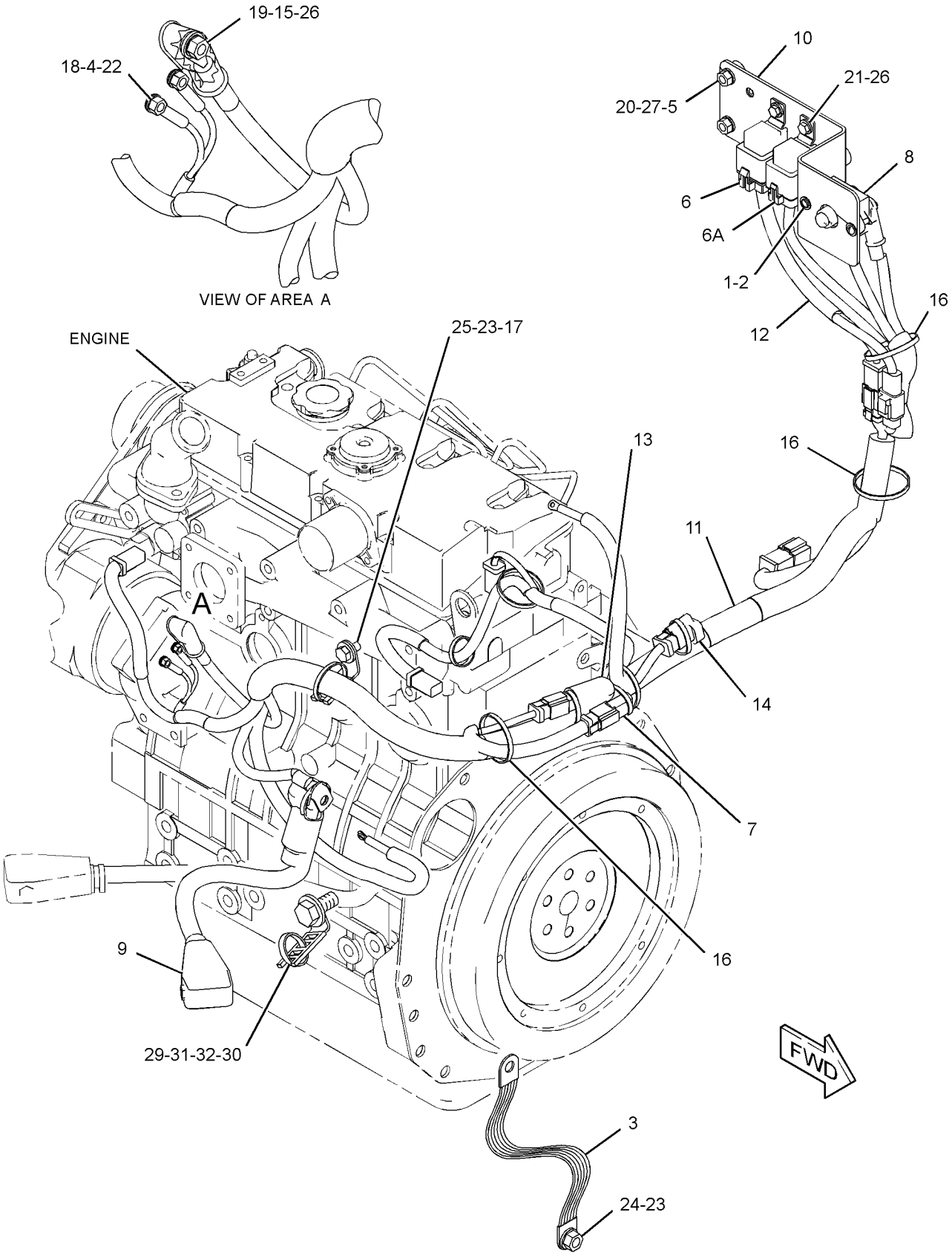

GRAPHIC #1

<END>

g01437866

230-3743 WIRING GP-HORN

S/N: BXM4225-UP

PART OF 261-6158, 278-1213, 278-1221, 278-1225, 278-5409, 278-5442, 295-7039, 295-7050, 295-7061, 295-7068, 295-7151, 295-7159, 295-7164, 295-7168 CONVERSION AR-MACHINE, 233-5681, 233-5682, 233-5683, 233-5684, 233-5685, 233-5686, 257-5721, 257-5722, 295-7044 CONVERSION AR-ROADING AN ATTACHMENT

SMCS-1408, 7402 **i02757122**

NOTE	REF NO	GRAPHIC REF	PART NUMBER	QTY	PART NAME 1 2 3 4 5 6 (PRODUCT LEVEL)	SEE PAGE
	1	1	**3S-2093**	5	STRAP-CABLE	
M	2	1	**8T-4186**	1	BOLT (M10X1.5X40-MM)	
	3	1	**142-8833**	1	SPACER (11X14.3X9-MM THK)	
M	4	1	**8T-4133**	1	NUT (M10X1.5-THD)	
	5	1	**186-3362**	1	HARNESS AS-CHASSIS (HORN)	
		1	**102-8802**	1	KIT-RECEPTACLE (2-PIN)	
					(INCLUDES RECEPTACLE AS & WEDGE)	
		1	**155-2270**	1	KIT-CONNECTING PLUG (2-PIN)	
					(INCLUDES PLUG AS, WEDGE & INTERFACE SEAL)	
	6	1	**8T-4121**	3	WASHER-HARD (11X21X2.5-MM THK)	

M-METRIC PART

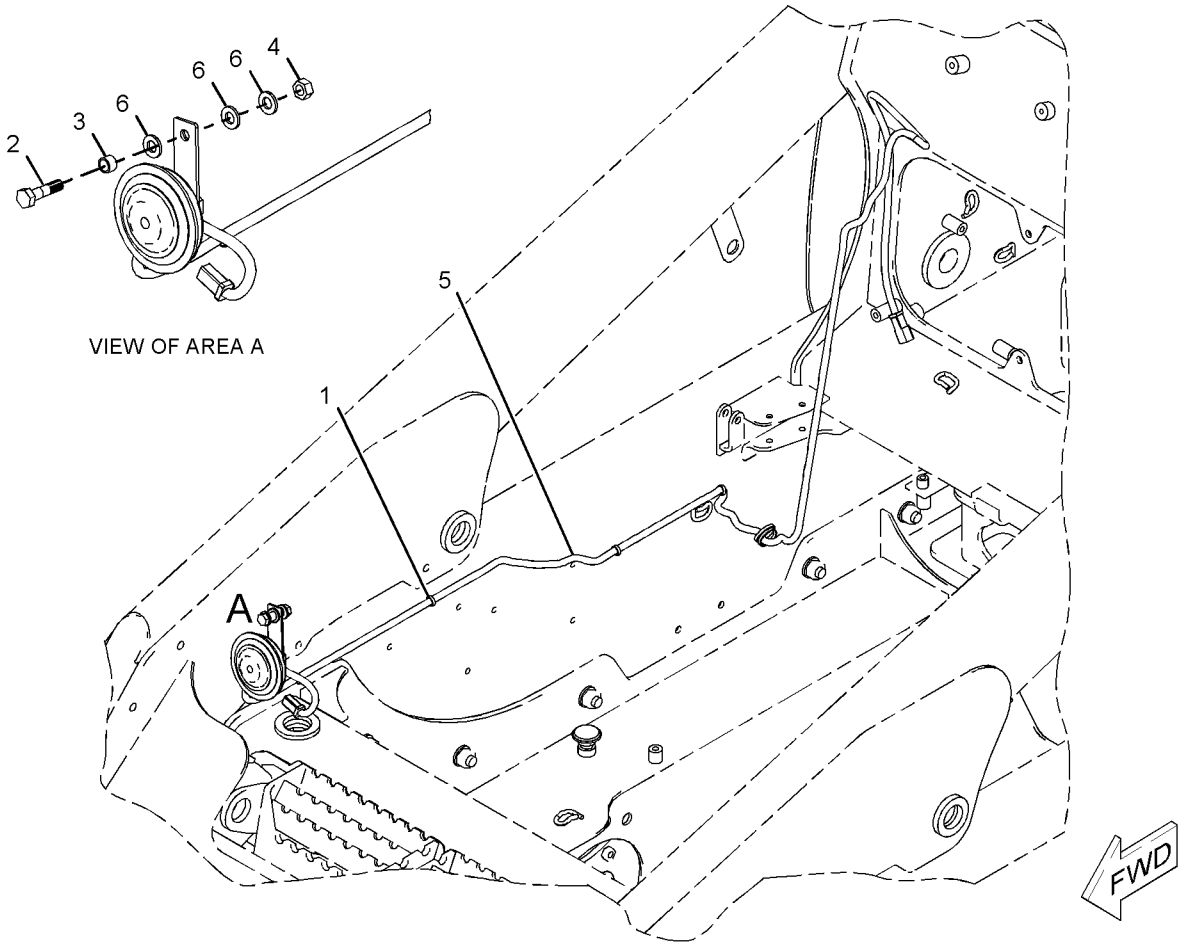

GRAPHIC #1 **<END>** g01037702

272-1625 WIRING GP-MACHINE–DEMAND FAN

S/N: BXM4225-UP
STAGE II SOUND
PART OF 261-6158, 278-1213, 278-1221, 278-1225, 278-5409, 278-5442, 295-7039, 295-7050, 295-7061, 295-7068, 295-7151, 295-7159, 295-7164, 295-7168 CONVERSION AR-MACHINE, 257-5721, 257-5722, 295-7044 CONVERSION AR-ROADING AN ATTACHMENT

SMCS-1408 **i02639958**

NOTE	REF NO	GRAPHIC REF	PART NUMBER	QTY	PART NAME 1 2 3 4 5 6 (PRODUCT LEVEL)	SEE PAGE
	1	1	**7K-1181**	10	STRAP-CABLE	
	2	1	**8T-8737**	5	PLUG-SEAL	
	3	1	**206-2423**	8	SADDLE	
C	4	1	**292-9624**	1	CONTROL GP-FAN	
	5	1	**272-1626**	1	HARNESS AS-SWITCH	
		1	**102-8803**	1	KIT-RECEPTACLE (3-PIN)	
					(INCLUDES RECEPTACLE AS & WEDGE)	
		1	**8L-8413**	10	STRAP-CABLE	
E		1	**119-3662**		TUBE-HEAT SHRINK (10.85-MM DIA) (7-CM)	
E		1	**125-7874**		TUBE-HEAT SHRINK (5.72-MM DIA) (10-CM)	
		1	**155-2260**	3	KIT-CONNECTING PLUG (3-PIN)	
		1	**155-2270**	3	KIT-CONNECTING PLUG (2-PIN)	
		1	**155-2271**	1	KIT-CONNECTING PLUG (4-PIN)	
					(EACH PLUG KIT INCLUDES PLUG AS, WEDGE & INTERFACE SEAL)	
		1	**230-4011**	1	PLUG AS-CONNECTOR (2-PIN)	
		1	**253-8110**	1	PLUG	
	6	1	**278-1061**	1	BRACKET AS	
	7	1	**205-7048**	3	INSERT-THREADED (M6X1-THD)	
	8	1	**102-8802**	1	KIT-RECEPTACLE (2-PIN)	
	9	1	**102-8803**	1	KIT-RECEPTACLE (3-PIN)	
					(EACH RECEPTACLE KIT INCLUDES RECEPTACLE AS & WEDGE)	
	10	1	**3S-2093**	19	STRAP-CABLE	
	11	1	**4P-8134**	1	CLIP (LADDER)	
M	12	1	**8T-4138**	3	BOLT (M6X1X20-MM)	
	13	1	**8T-4205**	5	WASHER-HARD (7.2X14.5X2-MM THK)	
M	14	1	**8T-4971**	2	BOLT (M6X1X30-MM)	

C-CHANGE FROM PREVIOUS TYPE
E-ORDER BY THE CENTIMETER
M-METRIC PART

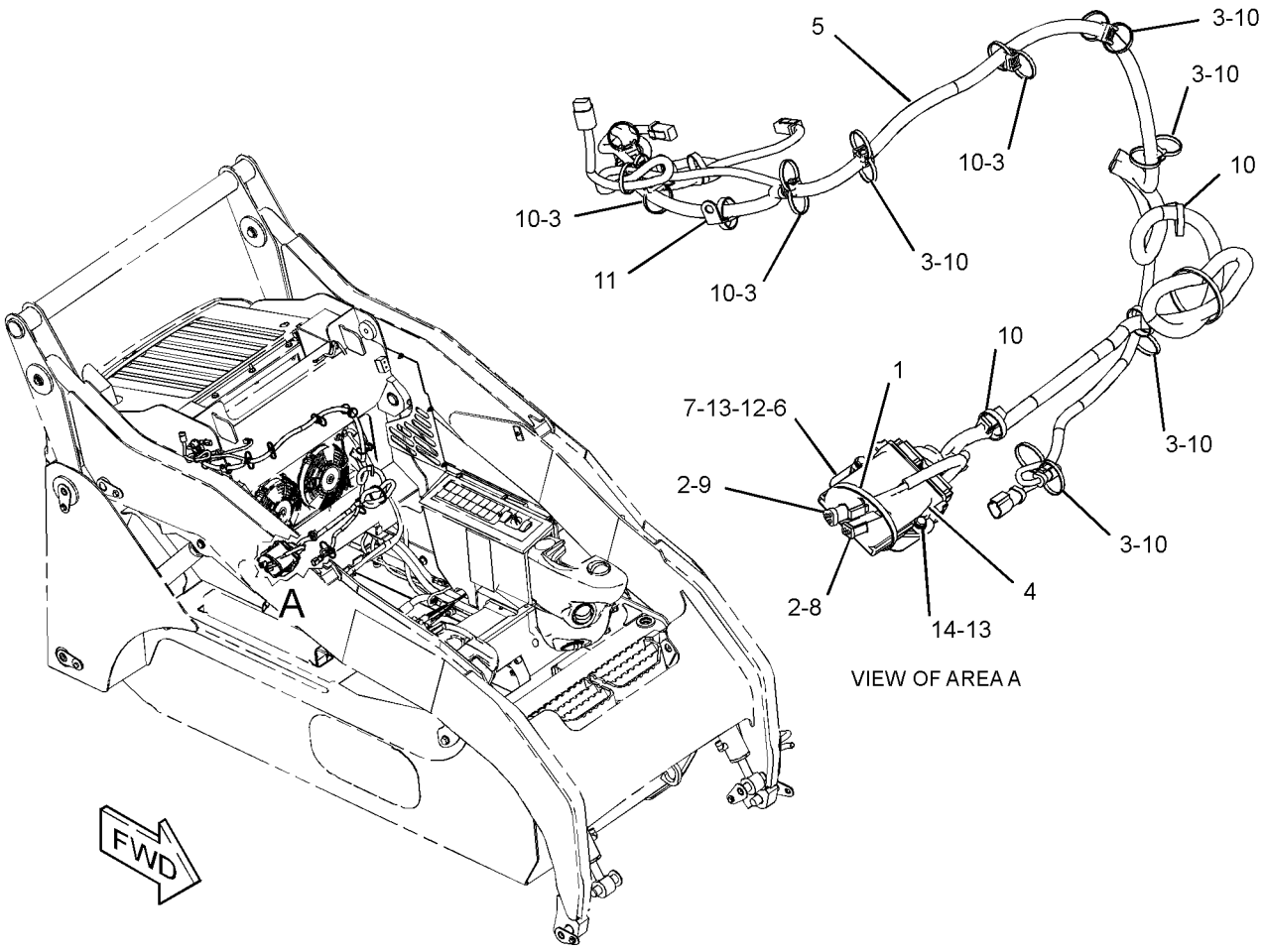

GRAPHIC #1 **<END>** g01229171

225-7964 WIRING GP-REAR LIGHTING

S/N: BXM4225-UP

PART OF 278-1213, 278-5409, 295-7151, 295-7159 CONVERSION AR-MACHINE, 233-5683, 233-5686 CONVERSION AR-ROADING AN ATTACHMENT

SMCS-1408, 1429 **i02359264**

NOTE	REF NO	GRAPHIC REF	PART NUMBER	QTY	PART NAME 1 2 3 4 5 6 (PRODUCT LEVEL)	SEE PAGE
	1	1	**115-1615**	1	RELAY AS (12-VOLT) (BRAKE LIGHT)	
	2	1	*166-2033*	2	TEE AS	
					(EACH INCLUDES)	
		1	**4J-5477**	1	SEAL-O-RING	
		1	**7X-2444**	1	TEE-SWIVEL	
Y	3	1	**184-1564**	2	SWITCH GP-PRESSURE (BRAKE LIGHT)	163
	4	1	**216-4711**	1	HARNESS AS-REAR LIGHTING (BRAKE)	
		1	**102-8803**	1	KIT-RECEPTACLE (3-PIN)	
					(INCLUDES RECEPTACLE AS & WEDGE)	
		1	**155-2270**	2	KIT-CONNECTING PLUG (2-PIN)	
					(EACH INCLUDES PLUG AS, WEDGE & INTERFACE SEAL)	
B	5	1	**3S-2093**	4	STRAP-CABLE	

B-USE AS REQUIRED
Y-SEPARATE ILLUSTRATION

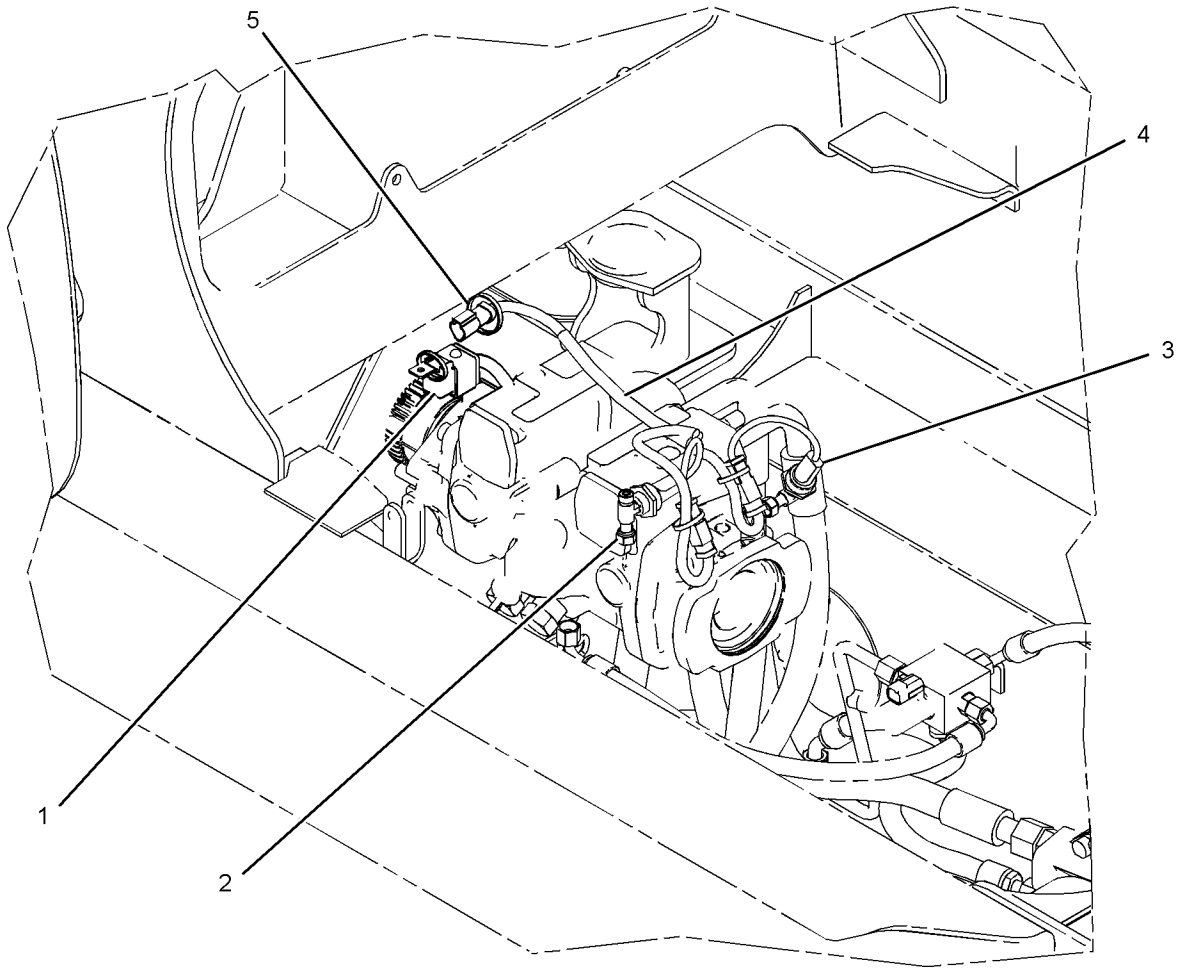

GRAPHIC #1 **<END>** g01030665

216-4724 WIRING GP-WORK TOOL

S/N: BXM4225-UP
PART OF 218-5947 CONTROL GP-PILOT OPERATED HYD
AN ATTACHMENT

SMCS-1408 **i02534370**

NOTE	REF NO	GRAPHIC REF	PART NUMBER	QTY	PART NAME 1 2 3 4 5 6 (PRODUCT LEVEL)	SEE PAGE
	1	1	**4B-4863**	2	WASHER (4.7X11X1.2-MM THK)	
	2	1	**115-1615**	1	RELAY AS (12-VOLT) (MAIN POWER)	
	3	1	**142-8633**	1	SWITCH AS-ROCKER (ELECTRIC POWER, WORK TOOL)	
		1	**111-7899**	1	GASKET	
	4	1	**146-9439**	1	RELAY AS (12-VOLT) (WORK TOOL)	
	5	1	**159-9495**	1	NUT (1-1/2-18-THD)	
	6	1	**159-9496**	1	LOCKWASHER	
	7	1	**216-4725**	1	HARNESS AS-WORK TOOL (LIFT ARM)	
		1	**156-1460**	1	RECEPTACLE (8-PIN)	
	8	1	**221-3881**	1	PANEL GP-FUSE	
		1	**113-8490**	4	FUSE (10-AMPERE)	
		1	**113-8491**	2	FUSE (15-AMPERE)	
		1	**146-9439**	5	RELAY AS (12-VOLT)	
		1	**215-5564**	2	SUPPRESSOR-ARC	
	9	1	**225-8012**	1	HARNESS AS-WORK TOOL (PLATFORM)	
		1	**177-9645**	1	KIT-RECEPTACLE (2-PIN)	
					(INCLUDES RECEPTACLE AS & WEDGE)	
		1	**155-2255**	1	KIT-CONNECTING PLUG (12-PIN)	
		1	**155-2265**	1	KIT-CONNECTING PLUG (8-PIN)	
					(EACH PLUG KIT INCLUDES PLUG AS, WEDGE & INTERFACE SEAL)	
		1	**196-2382**	1	KIT-CONNECTING PLUG (2-PIN)	
		1	**196-2383**	1	KIT-CONNECTING PLUG (8-PIN)	
		1	**196-2384**	1	KIT-CONNECTING PLUG (8-PIN)	
M	10	1	**095-0733**	2	SCREW-MACHINE (M4X0.7X40-MM)	
	11	1	**3S-2093**	7	STRAP-CABLE	
M	12	1	**5C-9553**	1	BOLT (M6X1X16-MM)	
	13	1	**8T-4205**	1	WASHER-HARD (7.2X14.5X2-MM THK)	
	14	1	**102-8806**	1	KIT-RECEPTACLE (8-PIN)	
					(INCLUDES RECEPTACLE AS & WEDGE)	
	15	1	**3E-3389**	1	WEDGE-RECEPTACLE LOCK	
	16	1	**178-3620**	1	STRAP-DUAL CLAMP	
	17	1	**110-8760**	1	STRAP	

M-METRIC PART

216-4724 **WIRING GP-WORK TOOL** *(contd.)* **i02534370**

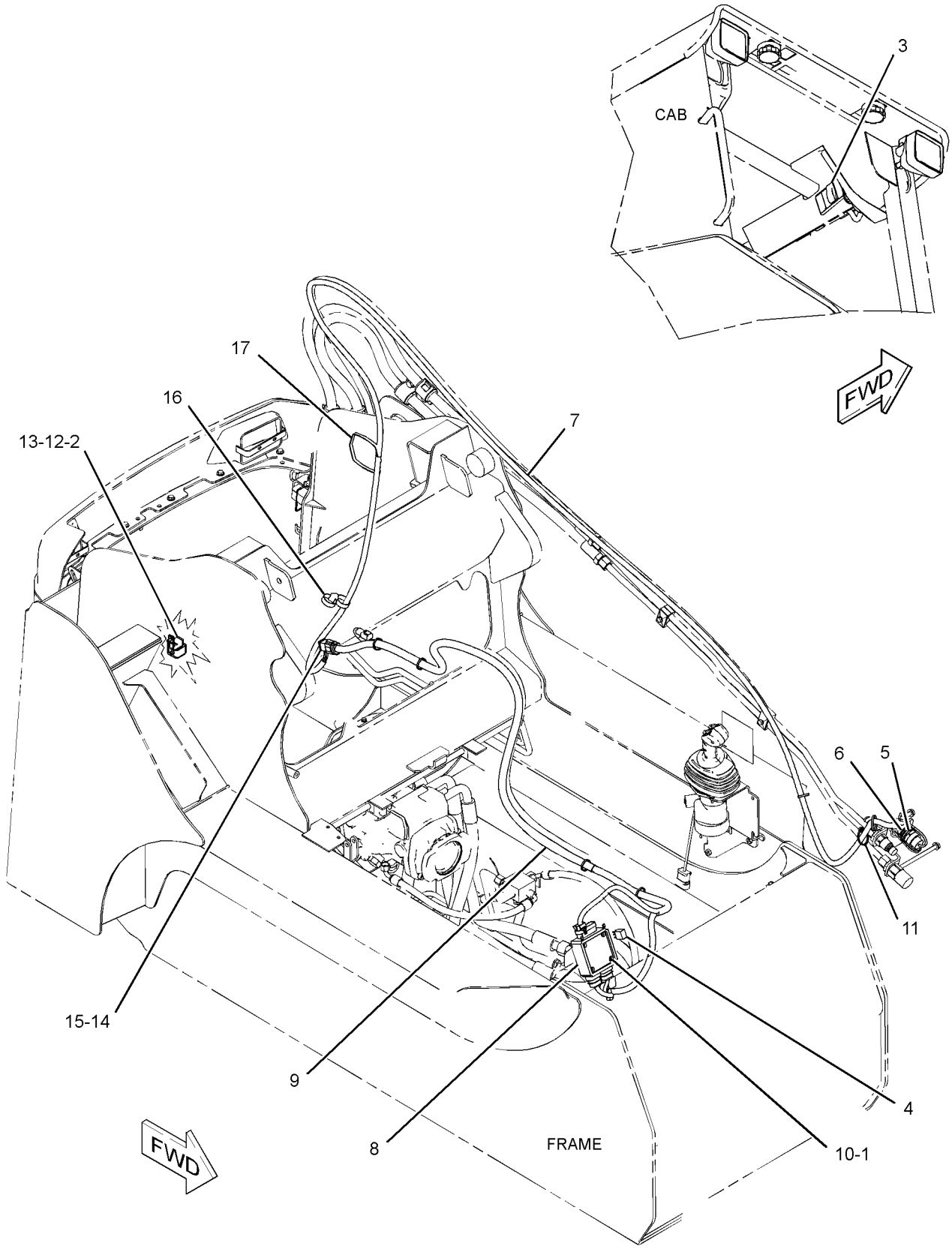

GRAPHIC #1 **<END>** g01315475

142-8758 AXLE GP

S/N: BXM4225-UP
PART OF 261-6255 AXLE GP
ALSO AN ATTACHMENT

SMCS-3278 **i01790260**

NOTE	REF NO	GRAPHIC REF	PART NUMBER	QTY	PART NAME 1 2 3 4 5 6 (PRODUCT LEVEL)	SEE PAGE
	1	1	**142-8723**	1	HOUSING-AXLE	
	2	1	**142-8724**	1	SPINDLE-WHEEL	
	3	1	**142-8729**	1	SPACER (32.045 MM THK)	
	4	1	**150-4385**	2	CONE	
	5	1	**150-4386**	2	CUP	
	6	1	**150-5472**	1	SEAL-LIP TYPE	
	7	1	**159-5772**	8	STUD (9/16-18-2A THD)	
	8	1	**166-3678**	1	SEAL-LIP TYPE	

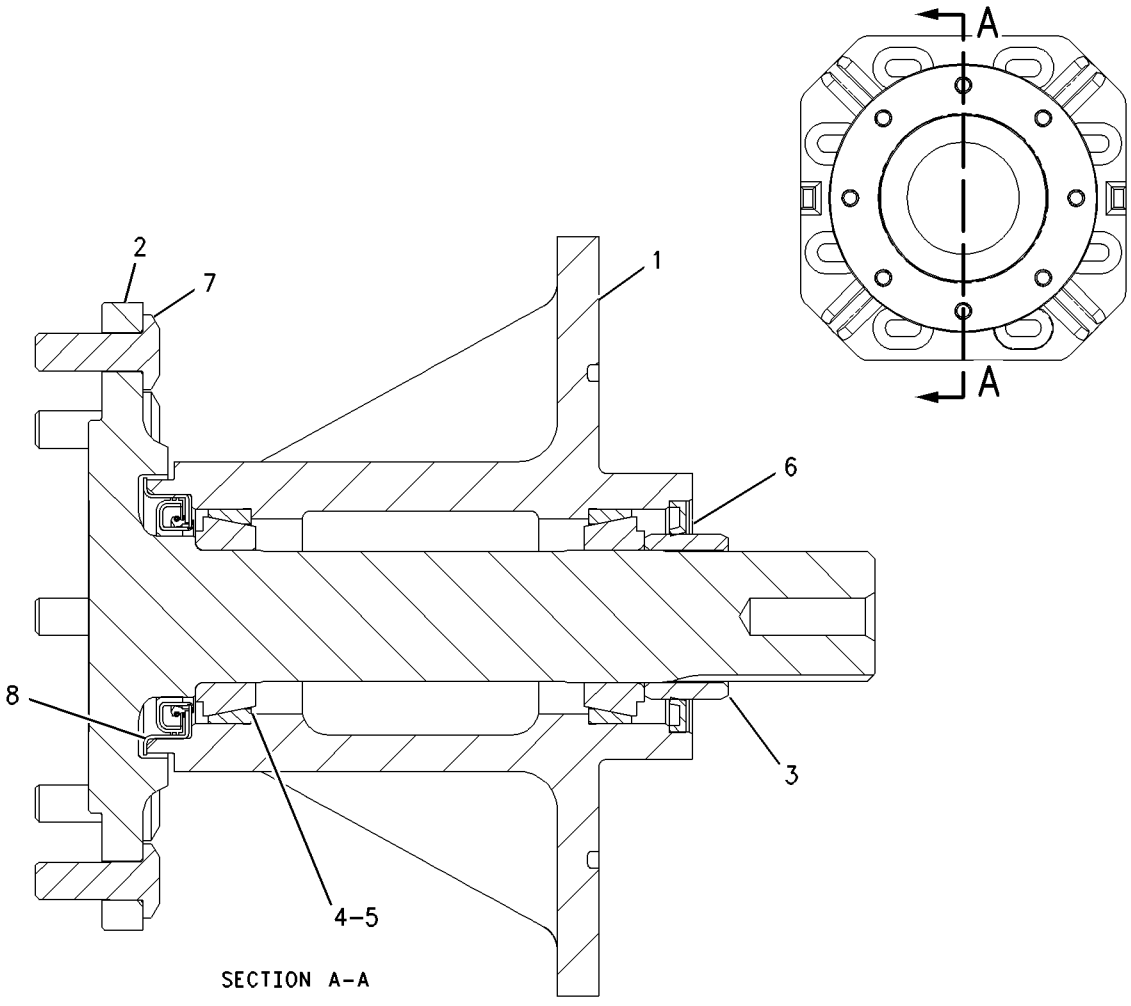

GRAPHIC #1 **<END>** g00916188

POWER TRAIN

261-6255 AXLE GP

S/N: BXM4225-UP
PART OF 295-7210 CHASSIS AR
ALSO AN ATTACHMENT

SMCS-3278 **i02476310**

NOTE	PART NUMBER	QTY	PART NAME 1 2 3 4 5 6 (PRODUCT LEVEL)	SEE PAGE
Y	**142-8758**	4	AXLE GP	183

Y-SEPARATE ILLUSTRATION

<END>

212-6692 DRIVE GP-TANDEM

S/N: BXM4225-UP

PART OF 261-5751 POWER TRAIN AR

SMCS-4062 **i02588524**

NOTE	REF NO	GRAPHIC REF	PART NUMBER	QTY	PART NAME 1 2 3 4 5 6 (PRODUCT LEVEL)	SEE PAGE
	1	1	**142-8732**	4	SPROCKET (12-TEETH) (MOTOR)	
	2	1	**152-1157**	32	WASHER (15.5X32X8-MM THK)	
	3	1	**159-5793**	2	SPACER (14.3-MM THK)	
	4	1	**191-9659**	4	CHAIN AS	
	5	1	**191-9661**	4	SPROCKET (40-TEETH) (AXLE)	
	6	1	**200-0999**	32	STUD	
M	7	1	**099-4691**	2	BOLT-LOCKING (M12X1.75X25-MM)	
M	8	1	**100-3866**	4	BOLT-SELF-LOCKING (M16X2X40-MM)	
	9	1	**142-9036**	32	NUT (9/16-18-THD)	
	10	1	**5K-1787**	4	SEAL-O-RING	
	11	1	**7G-8839**	2	SPACER (13.5X57X6-MM THK)	
	12	1	**7X-0610**	4	WASHER-HARD (20X75X6-MM THK)	
	13	1	**8T-4122**	4	WASHER-HARD (17X32X3.5-MM THK)	

M-METRIC PART

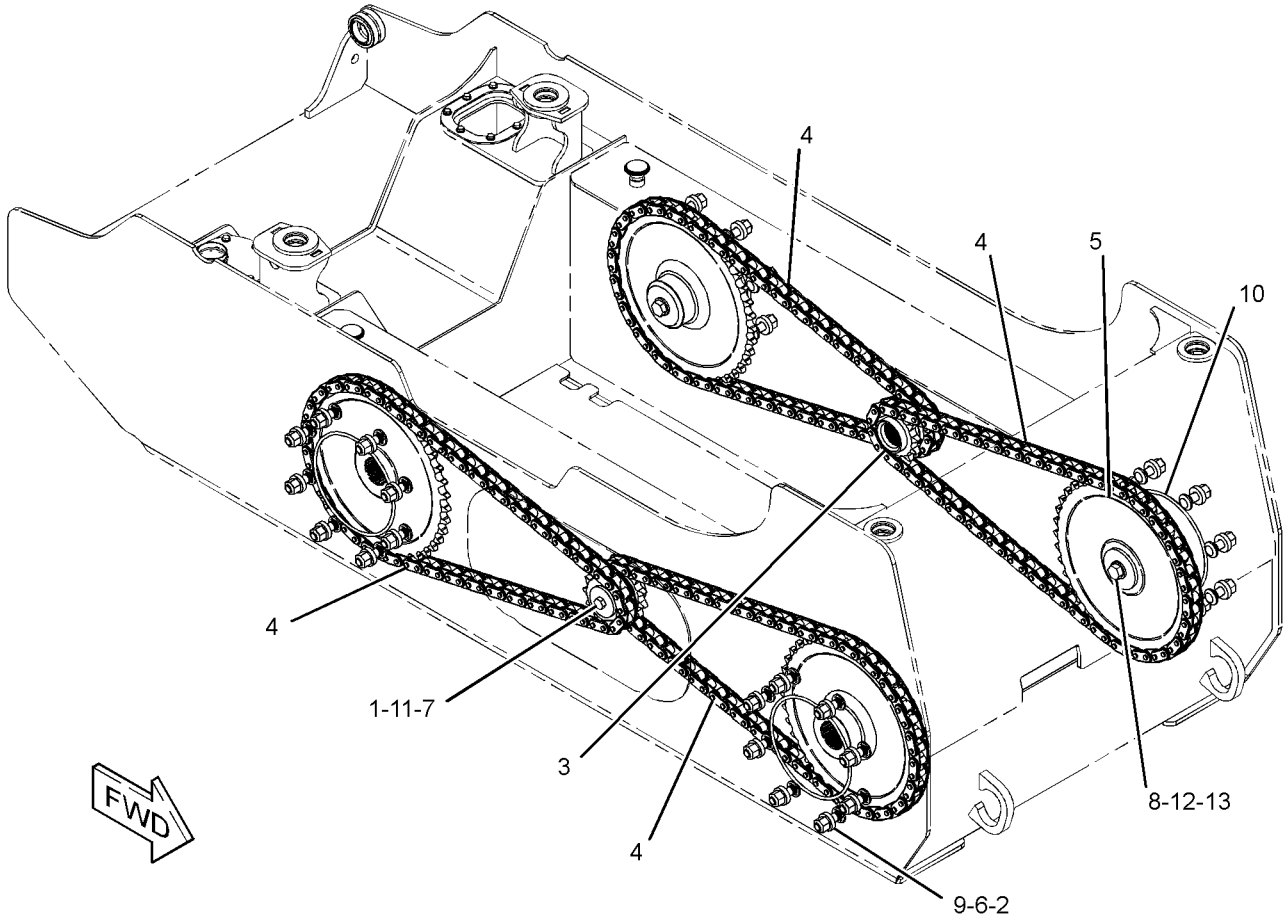

GRAPHIC #1 **<END>** g01229421

218-6545 FILTER & LINES GP-HYDRAULIC

S/N: BXM4225-UP

PART OF 278-1243 HYDRAULIC AR

SMCS-5057, 5068 **i02819804**

NOTE	REF NO	GRAPHIC REF	PART NUMBER	QTY	PART NAME 1 2 3 4 5 6 (PRODUCT LEVEL)	SEE PAGE
	1	1	**218-6548**	1	BRACKET AS	
Y	2	1	**223-9974**	1	FILTER GP-OIL (HYDRAULIC)	188
	3	1	**238-7733**	1	HOSE AS	
CI	4	1	**311-3888**	1	HOSE AS	
	5	1	*148-8315*	1	CONNECTOR AS	
		1	**6V-8642**	1	CONNECTOR	
		1	**2M-9780**	1	SEAL-O-RING	
		1	**7J-9108**	1	SEAL-O-RING	
	6	1	*148-8328*	1	CONNECTOR AS	
		1	**6V-8633**	1	CONNECTOR	
		1	**3D-2824**	1	SEAL-O-RING	
		1	**6V-8398**	1	SEAL-O-RING	
	7	1	*148-8340*	1	CONNECTOR AS	
		1	**6V-8639**	1	CONNECTOR	
		1	**3K-0360**	1	SEAL-O-RING	
		1	**6V-8398**	1	SEAL-O-RING	
	8	1	*148-8382*	1	ELBOW AS	
		1	**8T-0404**	1	ELBOW	
		1	**3D-2824**	1	SEAL-O-RING	
		1	**7J-9108**	1	SEAL-O-RING	
C	9	1	**6D-4636**	2	CLIP	
	10	1	**8T-4121**	9	WASHER-HARD (11X21X2.5-MM THK)	
M	11	1	**8T-4133**	1	NUT (M10X1.5-THD)	
M	12	1	**8T-4136**	2	BOLT (M10X1.5X25-MM)	
M	13	1	**8T-4137**	4	BOLT (M10X1.5X20-MM)	
M	14	1	**8T-4195**	1	BOLT (M10X1.5X30-MM)	
M	15	1	**8T-4196**	1	BOLT (M10X1.5X35-MM)	

C-CHANGE FROM PREVIOUS TYPE
I-REFER TO HYDRAULIC INFORMATION SYSTEM
M-METRIC PART
Y-SEPARATE ILLUSTRATION

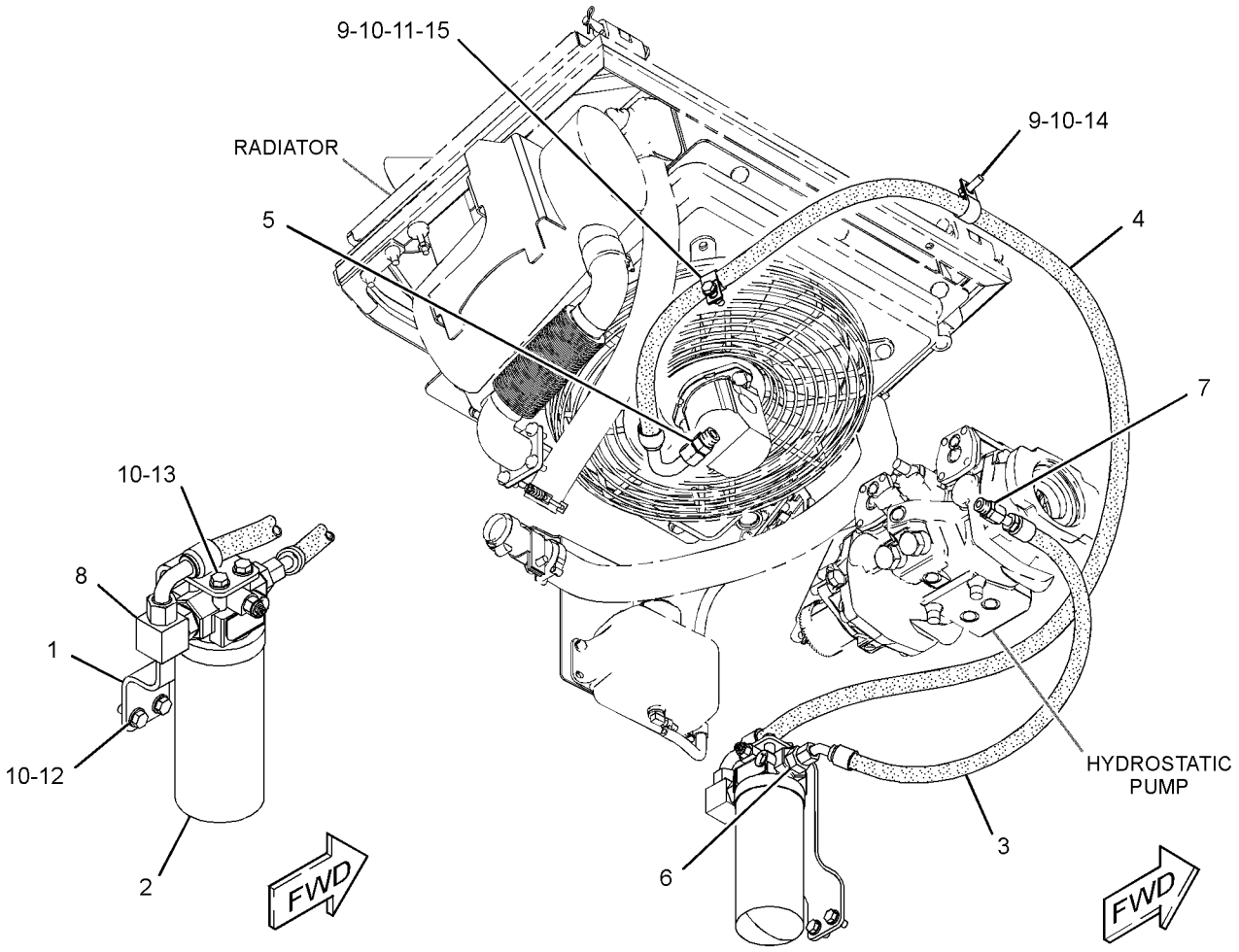

GRAPHIC #1 **<END>** g01409135

223-9974 FILTER GP-OIL–HYDRAULIC

S/N: BXM4225-UP

PART OF 218-6545 FILTER & LINES GP-HYDRAULIC

SMCS-5068 **i02469830**

NOTE	REF NO	GRAPHIC REF	PART NUMBER	QTY	PART NAME 1 2 3 4 5 6 (PRODUCT LEVEL)	SEE PAGE
	1	1	**3J-1907**	1	SEAL-O-RING	
	2	1	**134-0404**	1	SWITCH AS-PRESSURE (HYDRAULIC OIL)	
	3	1	**1G-8878**	1	FILTER AS-OIL (ADVANCED EFFICIENCY) (HYDRAULIC)	

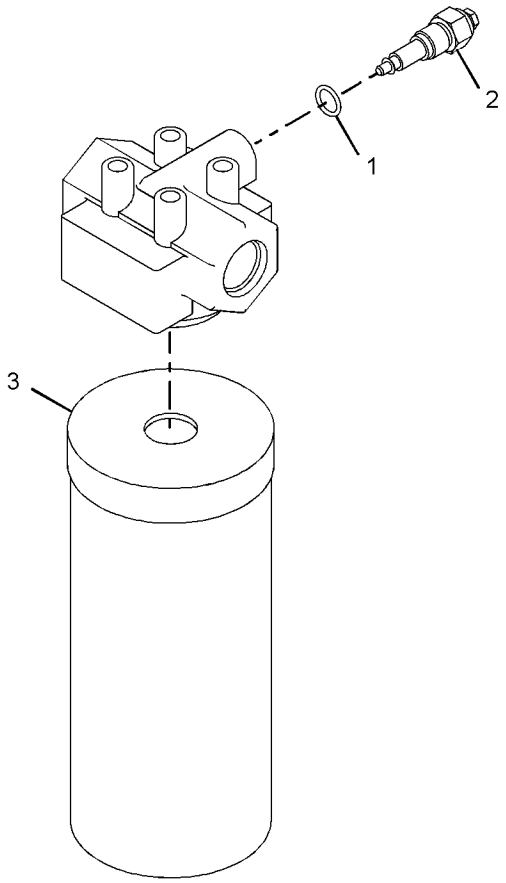

GRAPHIC #1 **<END>** g01035150

308-2298 FILTER GP-OIL—ENGINE

S/N: CYP1-UP
PART OF 292-5719 ENGINE AR-PRIMARY
AN ATTACHMENT

SMCS-5068 **i02752264**

NOTE	REF NO	GRAPHIC REF	PART NUMBER	QTY	PART NAME 1 2 3 4 5 6 (PRODUCT LEVEL)	SEE PAGE
	1	1	**220-1523**	1	FILTER ELEMENT AS-ENGINE OIL	

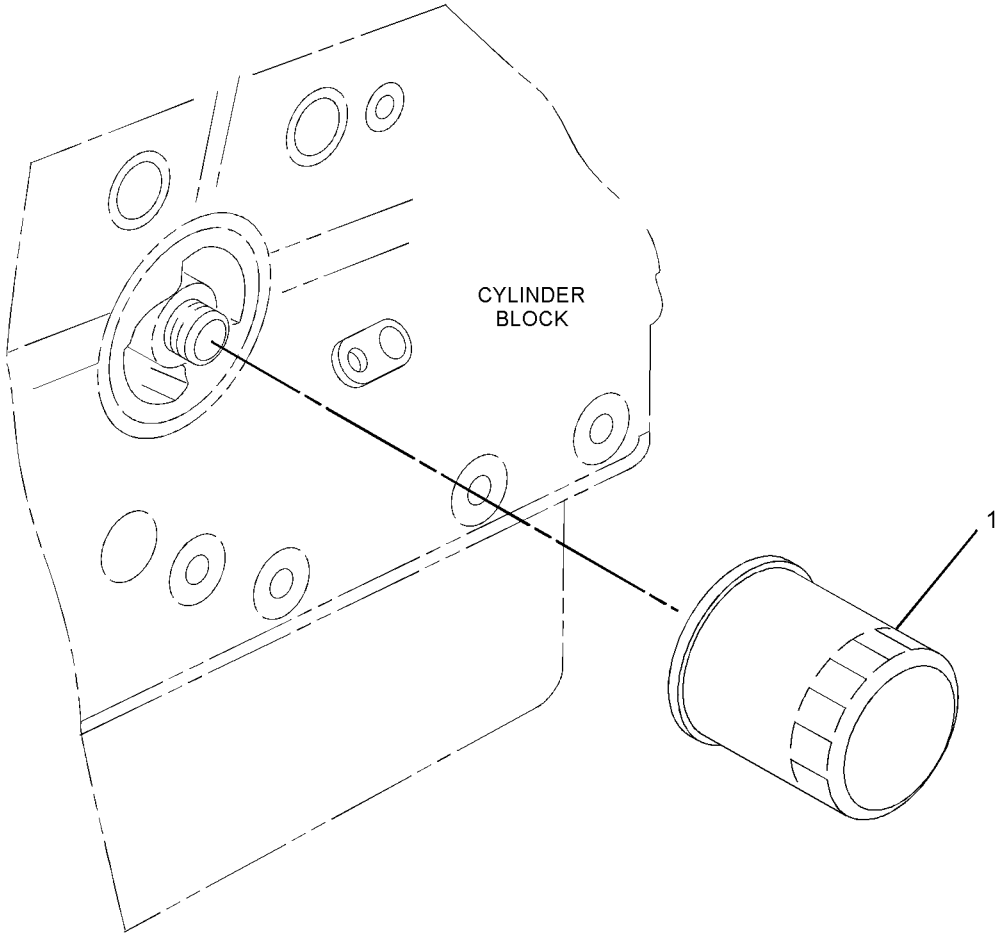

GRAPHIC #1 **<END>** g01389723

317-0974 FILTER GP-OIL

S/N: CYP1-UP
PART OF 292-5719 ENGINE AR-PRIMARY
AN ATTACHMENT

SMCS-5068 **i02827171**

NOTE	REF NO	GRAPHIC REF	PART NUMBER	QTY	PART NAME 1 2 3 4 5 6 (PRODUCT LEVEL)	SEE PAGE
	1	1	**6I-1201**	1	SEAL-O-RING	
	2	1	**118-9145**	1	CONNECTOR	
	3	1	**153-6879**	1	STUD-HOLLOW	
	4	2	**160-4826**	4	CLAMP-HOSE	
	5	1	**164-7619**	1	SEAL-O-RING	
	6	1	**198-2663**	1	BOLT	
	7	1	**231-8920**	1	BOLT	
	8	2	**246-3470**	1	HOSE	
	9	2	**246-3471**	1	HOSE	
	10	1	**252-0787**	1	SEAL-O-RING	
	11	1	**252-0788**	1	BASE-OIL FILTER	
	12	1	**311-2349**	1	WASHER	

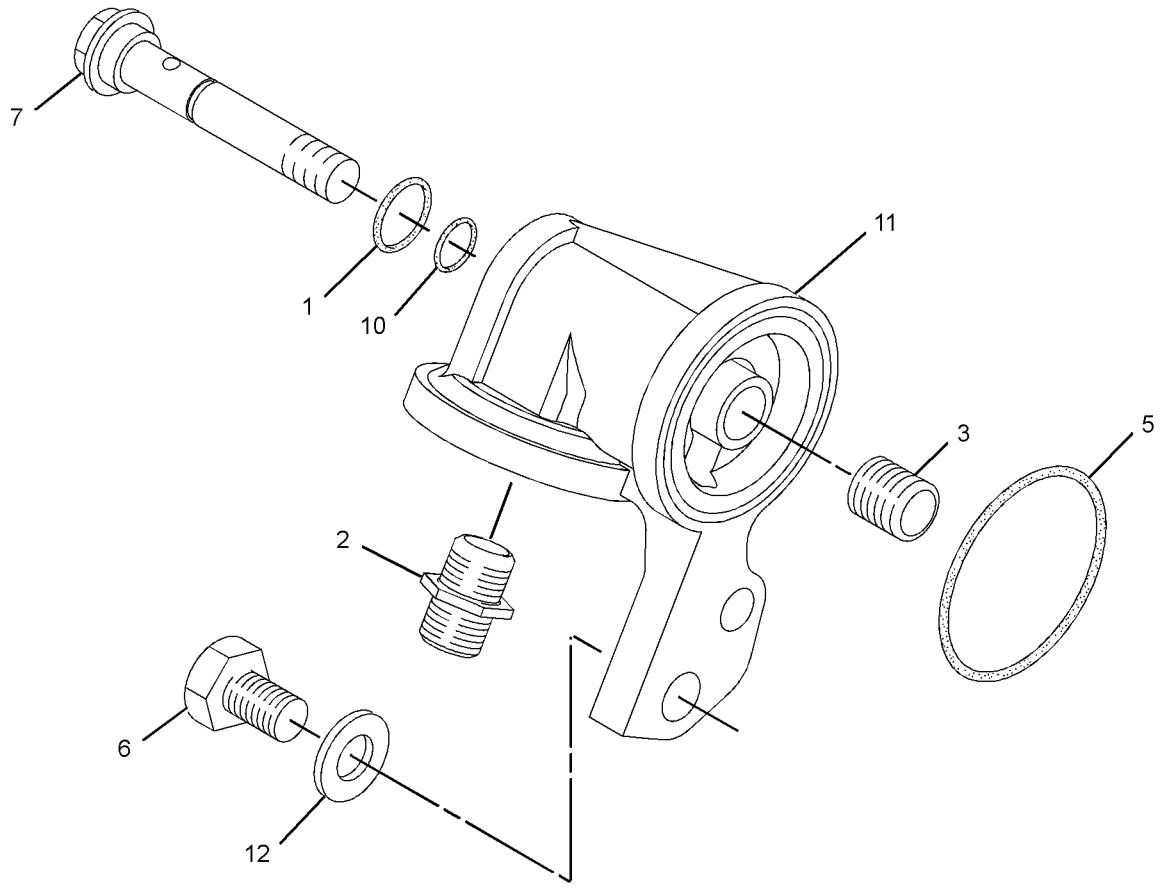

GRAPHIC #1 g01439021

317-0974 **FILTER GP-OIL** *(contd.)* **i02827171**

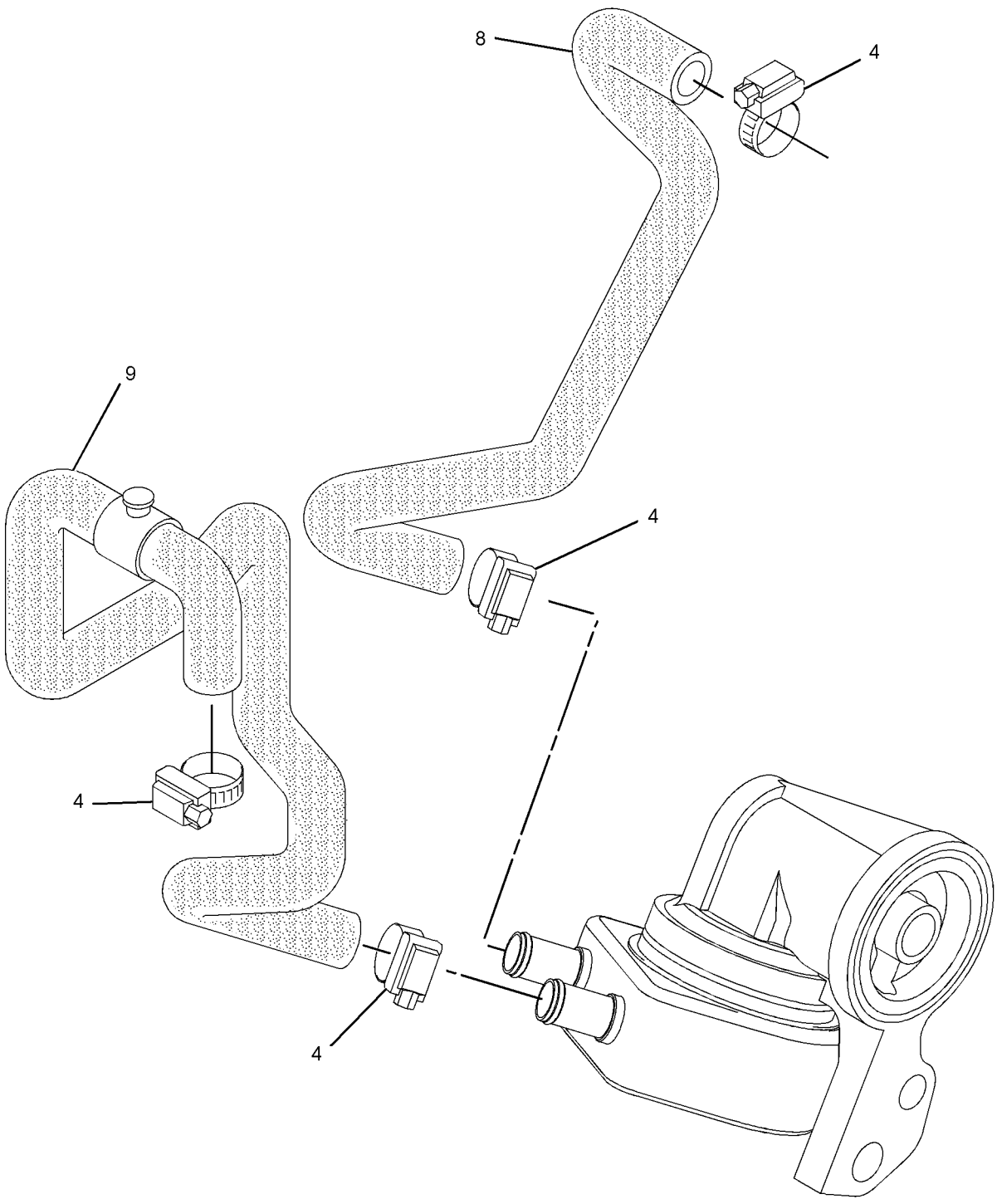

GRAPHIC #2 **<END>** g01439024

POWER TRAIN

218-6506 LINES GP-HYDROSTATIC

S/N: BXM4225-UP

PART OF 278-1243 HYDRAULIC AR

SMCS-3154 **i02769730**

NOTE	REF NO	GRAPHIC REF	PART NUMBER	QTY	PART NAME 1 2 3 4 5 6 (PRODUCT LEVEL)	SEE PAGE
	2	1	**6V-0852**	5	CAP-DUST	
C	3	1	*188-2008*	2	ELBOW AS (45-DEG)	
					(EACH INCLUDES)	
		1	**5K-9090**	1	SEAL-O-RING	
		1	**8T-7970**	1	ELBOW	
		1	**3D-2824**	1	SEAL-O-RING	
	4	1	*164-5567*	5	COUPLER AS-QUICK	
					(EACH INCLUDES)	
		1	**3J-1907**	1	SEAL-O-RING	
		1	**6V-3965**	1	COUPLER-QUICK DISCONNECT	
CY	5	1	*308-0421*	1	MANIFOLD GP-RETURN	194
I	6	1	**142-9241**	2	HOSE AS	
I	7	1	**218-6095**	2	HOSE AS	
I	9	1	**218-6508**	1	HOSE AS	
I	10	1	**218-6863**	1	HOSE AS	
	11	1	*148-8322*	4	CONNECTOR AS	
					(EACH INCLUDES)	
		1	**2M-9780**	1	SEAL-O-RING	
		1	**6V-8640**	1	CONNECTOR	
		1	**6V-9746**	1	SEAL-O-RING	
	12	1	*148-8327*	4	CONNECTOR AS	
					(EACH INCLUDES)	
		1	**3D-2824**	1	SEAL-O-RING	
		1	**6V-8637**	1	CONNECTOR (SEAL)	
		1	**6V-9746**	1	SEAL-O-RING	
	13	1	*148-8338*	2	CONNECTOR AS	
					(EACH INCLUDES)	
		1	**3J-1907**	1	SEAL-O-RING	
		1	**6V-8397**	1	SEAL-O-RING	
		1	**8T-0075**	1	CONNECTOR	
M	14	1	**5C-7261**	3	NUT (M8X1.25-THD)	
	16	1	**5P-4116**	3	WASHER-HARD (8.8X20.5X2-MM THK)	

C-CHANGE FROM PREVIOUS TYPE
I-REFER TO HYDRAULIC INFORMATION SYSTEM
M-METRIC PART
Y-SEPARATE ILLUSTRATION

218-6506 **LINES GP-HYDROSTATIC** *(contd.)* **i02769730**

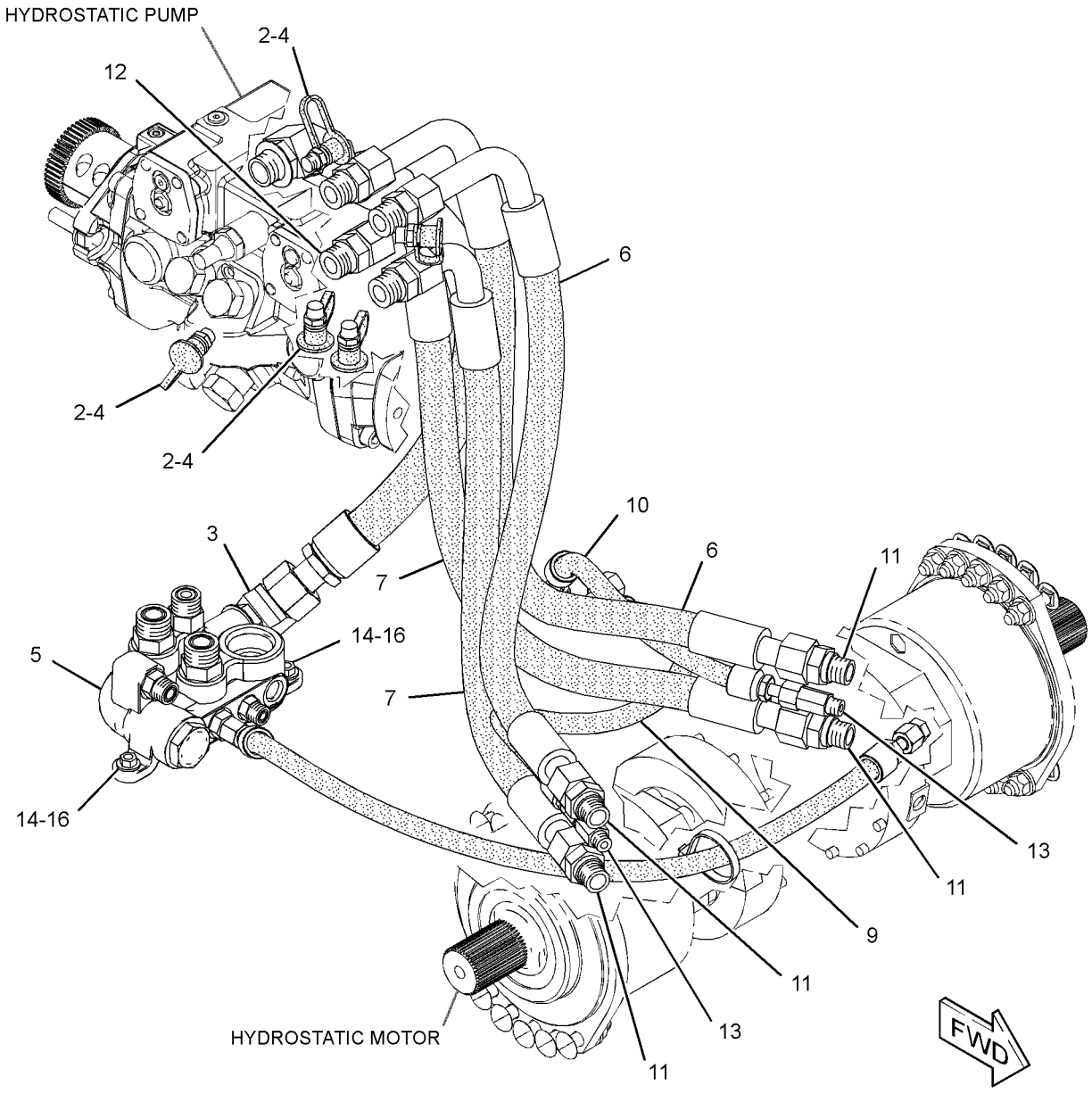

GRAPHIC #1 **<END>** g01388504

308-0421 MANIFOLD GP-RETURN

S/N: BXM4225-UP

PART OF 218-6506 LINES GP-HYDROSTATIC

SMCS-5264 **i02730543**

NOTE	REF NO	GRAPHIC REF	PART NUMBER	QTY	PART NAME 1 2 3 4 5 6 (PRODUCT LEVEL)	SEE PAGE
	1	1	**7K-1181**	1	STRAP-CABLE	
	2	1	**105-4593**	1	POPPET	
	3	1	**212-6603**	1	PLUG AS	
		1	**6V-8978**	1	SEAL-O-RING	
	4	1	**212-6604**	1	SPRING	
I	5	1	**233-5716**	1	HOSE AS	
	6	1	**305-4185**	1	BLOCK	
	7	1	*148-8318*	1	CONNECTOR AS	
		1	**3K-0360**	1	SEAL-O-RING	
		1	**6V-8397**	1	SEAL-O-RING	
		1	**6V-8634**	1	CONNECTOR	
	8	1	*148-8327*	2	CONNECTOR AS	
					(EACH INCLUDES)	
		1	**3D-2824**	1	SEAL-O-RING	
		1	**6V-8637**	1	CONNECTOR	
		1	**6V-9746**	1	SEAL-O-RING	
	9	1	*148-8336*	1	CONNECTOR AS	
		1	**3J-1907**	1	SEAL-O-RING	
		1	**6V-8397**	1	SEAL-O-RING	
		1	**6V-8636**	1	CONNECTOR	
	10	1	*148-8340*	1	CONNECTOR AS	
		1	**3K-0360**	1	SEAL-O-RING	
		1	**6V-8398**	1	SEAL-O-RING	
		1	**6V-8639**	1	CONNECTOR	
	11	1	*148-8342*	1	CONNECTOR AS	
		1	**3K-0360**	1	SEAL-O-RING	
		1	**6V-8632**	1	CONNECTOR	
		1	**7J-9108**	1	SEAL-O-RING	
	12	1	*165-4934*	1	PLUG AS	
		1	**6V-8397**	1	SEAL-O-RING	
		1	**6V-9508**	1	PLUG	

I-REFER TO HYDRAULIC INFORMATION SYSTEM

308-0421 **MANIFOLD GP-RETURN** *(contd.)* **i02730543**

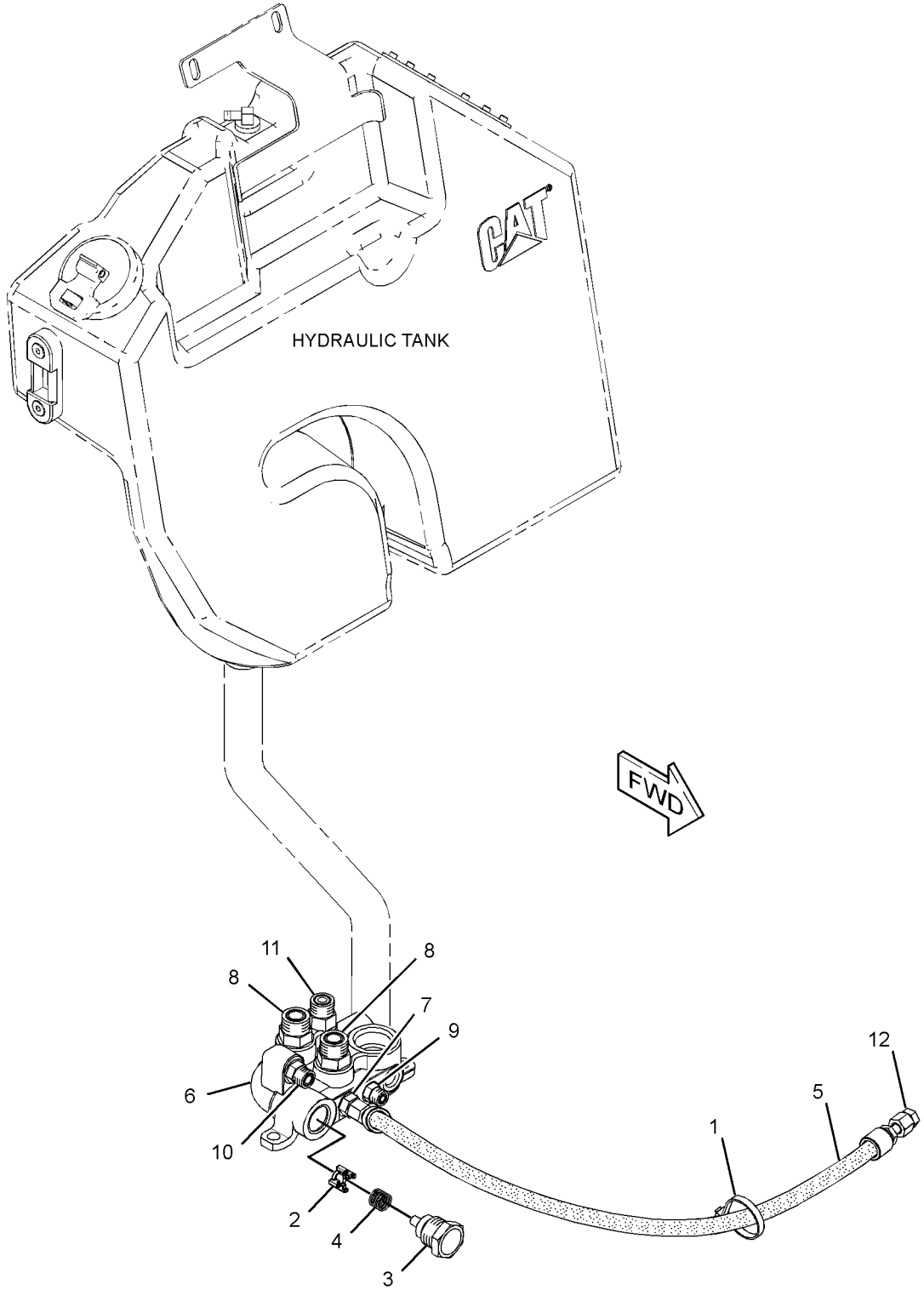

GRAPHIC #1 **<END>** g01380873

191-9650 MOTOR & MTG GP-HYDROSTATIC

S/N: BXM4225-UP

PART OF 261-5751 POWER TRAIN AR

SMCS-5058 **i02639962**

NOTE	REF NO	GRAPHIC REF	PART NUMBER	QTY	PART NAME 1 2 3 4 5 6 (PRODUCT LEVEL)	SEE PAGE
	1	1	**206-5143**	20	BOLT (M12X1.75-THD)	
CYR	2	1	**280-7854**	2	MOTOR GP-PISTON	197
M	3	1	**6V-7687**	20	LOCKNUT (M12X1.75-THD)	
	4	1	**8T-4223**	20	WASHER-HARD (13.5X25.5X3-MM THK)	

C-CHANGE FROM PREVIOUS TYPE
M-METRIC PART
R-REMFG PART MAY BE AVAILABLE
Y-SEPARATE ILLUSTRATION

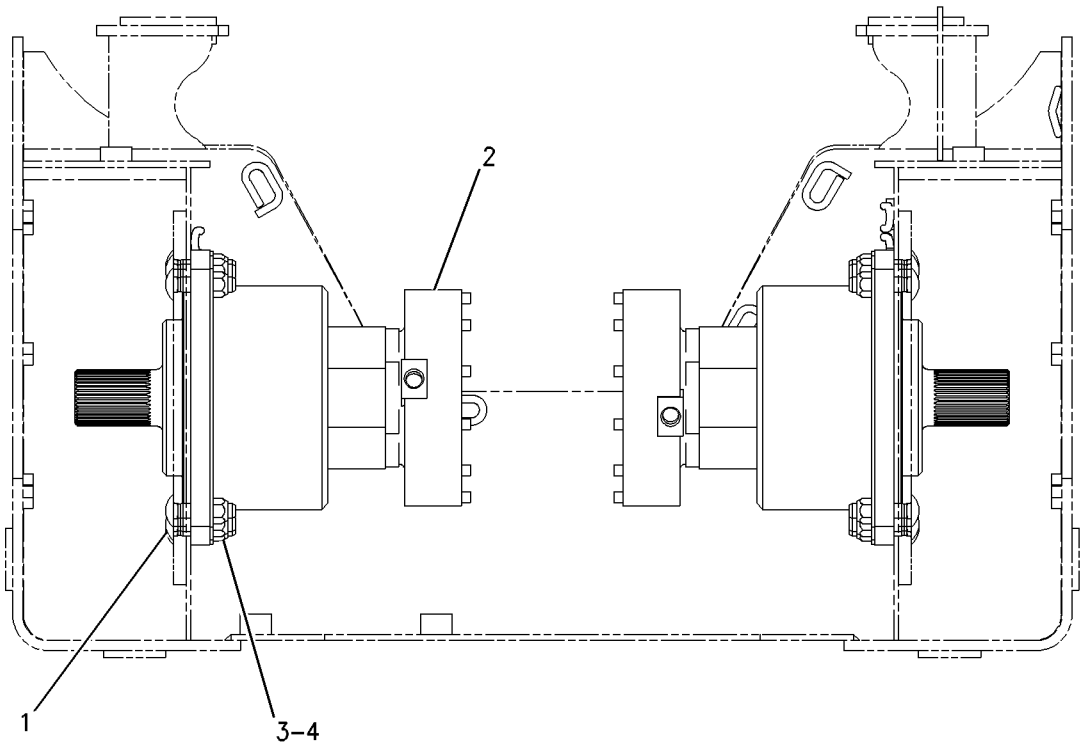

REAR VIEW

GRAPHIC #1 **<END>** g00978901

280-7854 MOTOR GP-PISTON*R

S/N: BXM4225-UP

PART OF 191-9650 MOTOR & MTG GP-HYDROSTATIC

SMCS-5058 **i02752612**

NOTE	REF NO	GRAPHIC REF	PART NUMBER	QTY	PART NAME 1 2 3 4 5 6 (PRODUCT LEVEL)	SEE PAGE
	1	1	**140-2490**	1	RING-SPLIT	
	2	1	**3K-0360**	1	SEAL-O-RING	
	3	1	**279-0733**	1	KIT-SHIM (PISTON MOTOR)	
					(INCLUDES WASHERS)	
J	4	1	**033-5853**	1	SEAL-O-RING	
	5	1	**172-8175**	13	DISC-BRAKE (INNER)	
	6	1	**216-6124**	1	PLUG	
J	7	1	**095-1517**	1	SEAL-O-RING	
M	8	1	**5C-7883**	12	BOLT-SOCKET HEAD (M6X1X16-MM)	
	9	1	**222-5693**	1	PLUG-O-RING	
	10	1	**172-8173**	15	DISC-BRAKE (OUTER)	
M	11	1	**8T-0271**	5	BOLT-SOCKET HEAD (M10X1.5X35-MM)	
	12	1	**140-2492**	1	BEARING	
	13	1	**268-1936**	1	BEARING AS-TAPERED ROLLER	
	14	1	**140-2513**	1	SHIM (0.01-MM THK)	
	15	1	**140-2514**	2	SHIM (0.3-MM THK)	
	16	1	**9S-8005**	1	PLUG-O-RING	
M	17	1	**289-6347**	6	BOLT-SOCKET HEAD (M12X1.75X55-MM)	
					AVAILABLE REPAIR KIT(S):	
J			**289-6336**	1	KIT-SEAL (PISTON MOTOR)	
					(INCLUDES SEALS, SEAL RINGS & GASKET)	

J-KIT MARKED J INCLUDES PARTS MARKED J
M-METRIC PART

280-7854 MOTOR GP-PISTON *(contd.)* **i02752612**

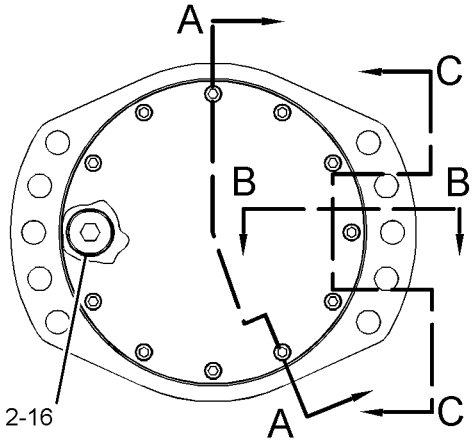

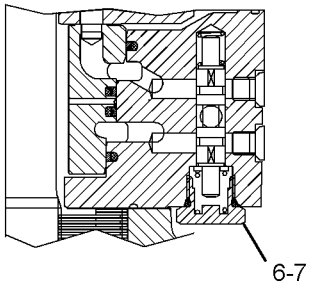

SECTION B-B

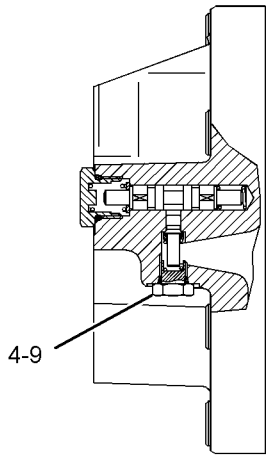

SECTION C-C

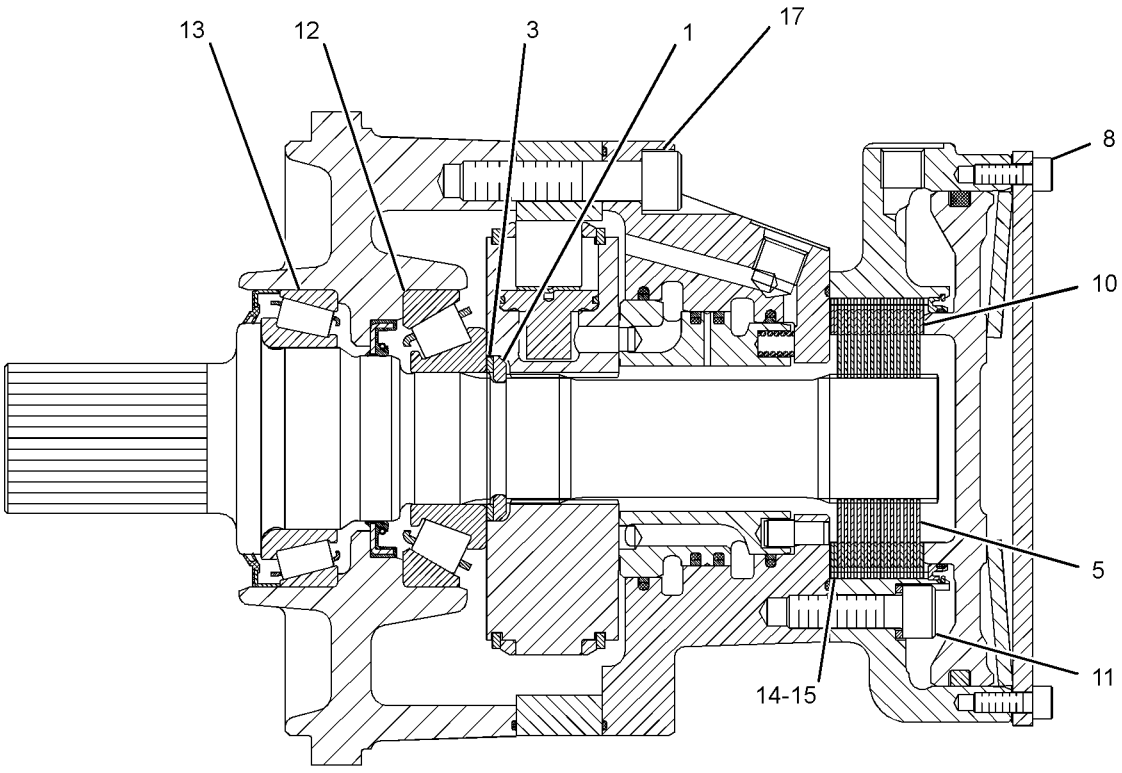

SECTION A-A

GRAPHIC #1 **<END>** g01380520

228-1763 MOUNTING GP-PUMP

S/N: BXM4225-UP

PART OF 295-7027, 295-7028 INSTALLATION AR-ENGINE

SMCS-3203, 5062, 5070 **i01988423**

NOTE	REF NO	GRAPHIC REF	PART NUMBER	QTY	PART NAME 1 2 3 4 5 6 (PRODUCT LEVEL)	SEE PAGE
	1	1	**141-7562**	1	FLANGE-NYLON	
	2	1	**142-8719**	1	PLATE-ADAPTER	
	3	1	**6V-8918**	8	BOLT (5/16-18X1.25-IN)	
	4	1	**8T-4121**	12	WASHER-HARD (11X21X2.5-MM THK)	
M	5	1	**8T-4196**	12	BOLT (M10X1.5X35-MM)	

M-METRIC PART

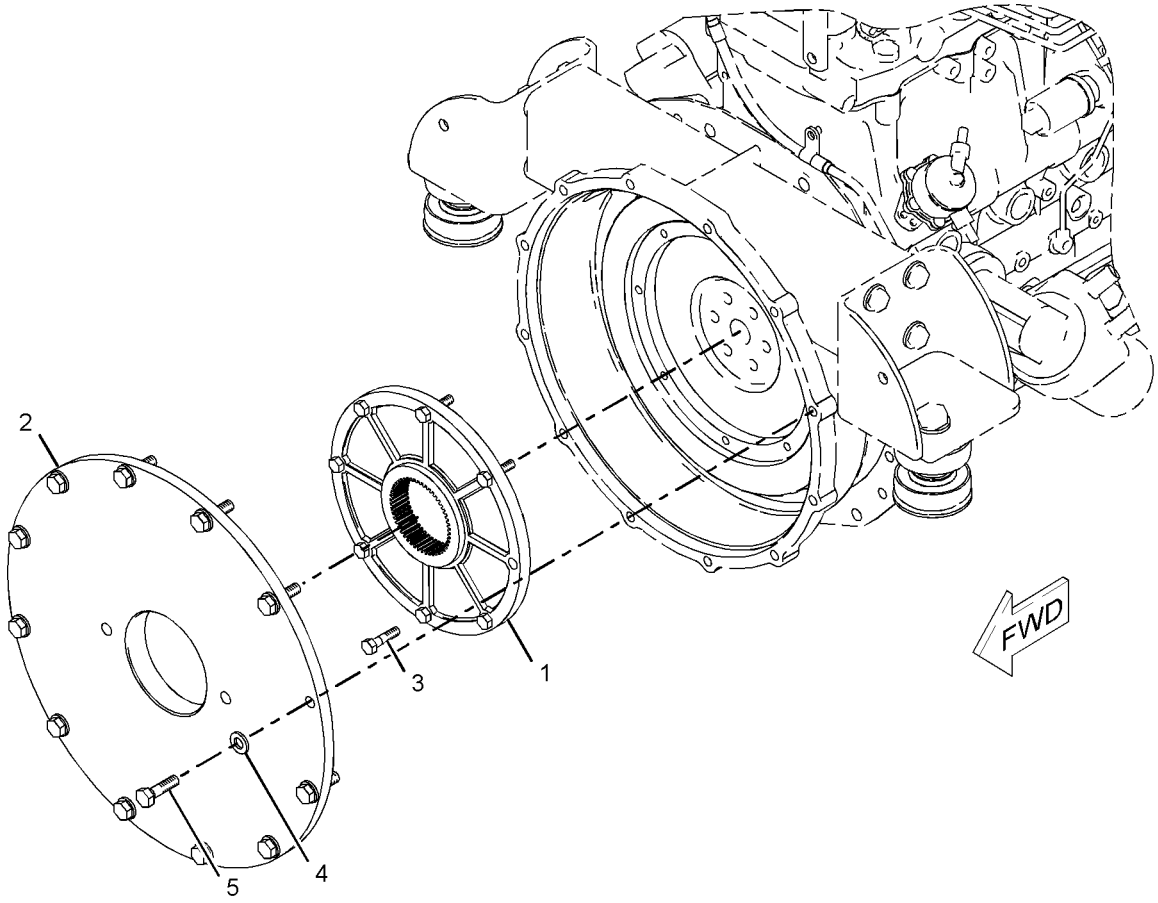

GRAPHIC #1 **<END>** g01030422

POWER TRAIN

261-5751 POWER TRAIN AR

S/N: BXM4225-UP

PART OF 295-7242, 295-7243 COMMON AR

SMCS-3203, 4062, 5058, 5070 **i02288840**

NOTE	PART NUMBER	QTY	PART NAME 1 2 3 4 5 6 (PRODUCT LEVEL)	SEE PAGE
Y	*212-6692*	1	DRIVE GP-TANDEM	185
Y	*191-9650*	1	MOTOR & MTG GP-HYDROSTATIC	196
Y	*261-5660*	1	PUMP & MTG GP-HYDROSTATIC	201

Y-SEPARATE ILLUSTRATION

<END>

261-5660 PUMP & MTG GP-HYDROSTATIC

S/N: BXM4225-UP

PART OF 261-5751 POWER TRAIN AR

SMCS-3203, 5070 **i02619542**

NOTE	REF NO	GRAPHIC REF	PART NUMBER	QTY	PART NAME 1 2 3 4 5 6 (PRODUCT LEVEL)	SEE PAGE
	1	1	**165-0142**	2	WASHER-HARD (14.8X27X3-MM THK)	
CYR	2	1	**289-6342**	1	PUMP GP-PISTON	202
	3	1	**252-9167**	2	BOLT-SOCKET HEAD	
	4	1	**263-4997**	1	HUB AS-COUPLING	
		1	**096-0194**	1	RING-RETAINING	
M	5	1	**167-4339**	2	BOLT (M14X2X40-MM)	

C-CHANGE FROM PREVIOUS TYPE
M-METRIC PART
R-REMFG PART MAY BE AVAILABLE
Y-SEPARATE ILLUSTRATION

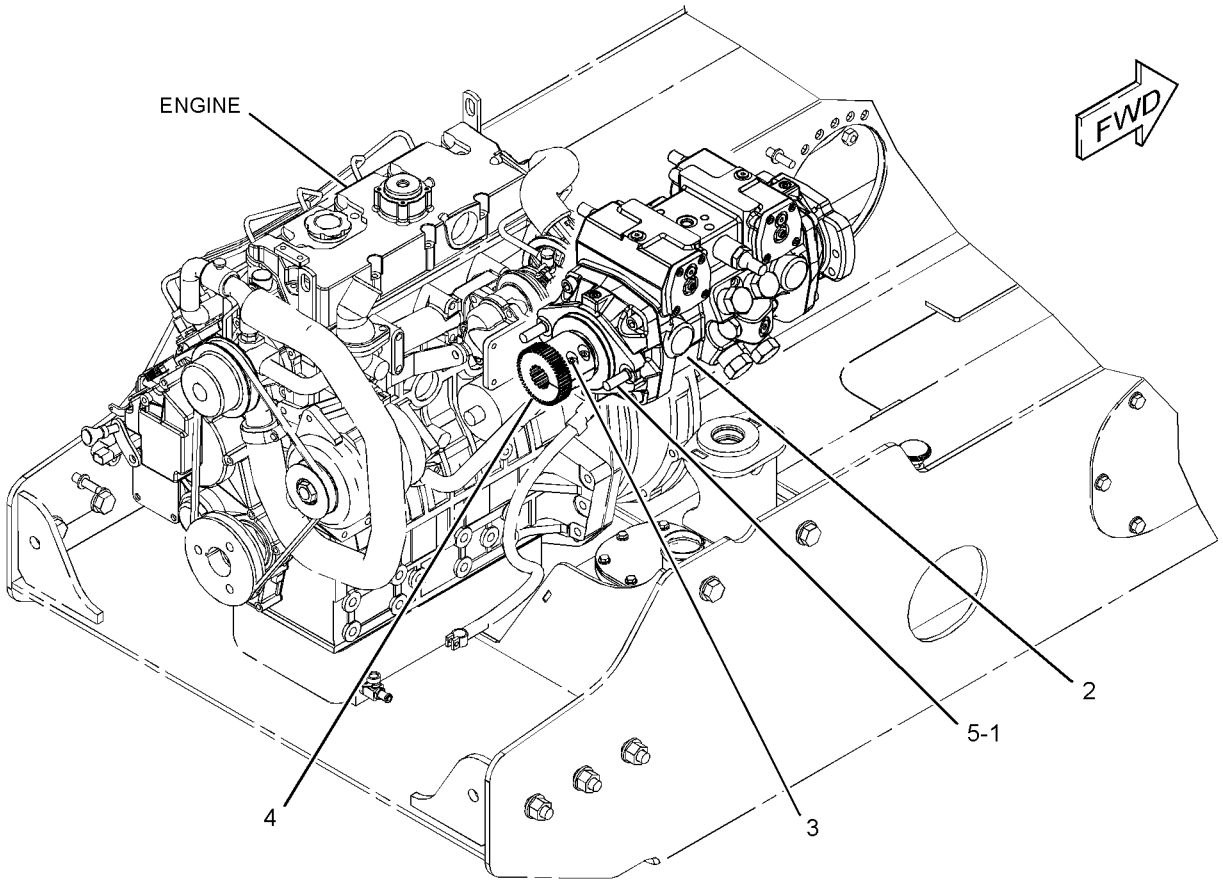

GRAPHIC #1 **<END>** g01174571

289-6342 PUMP GP-PISTON*R

S/N: BXM4225-UP

PART OF 261-5660 PUMP & MTG GP-HYDROSTATIC

SMCS-3203, 5070 **i02619344**

NOTE	REF NO	GRAPHIC REF	PART NUMBER	QTY	PART NAME 1 2 3 4 5 6 (PRODUCT LEVEL)	SEE PAGE
	1	1	**6E-5060**	3	CAP AS	
	2	1	**167-7713**	4	RING-BACKUP	
	3	1	**121-4459**	2	BEARING-ROLLER	
	4	1	**108-3565**	2	CLIP	
	5	1	**204-1454**	2	PIN-THREADED	
	6	1	**204-1455**	2	LOCKNUT	
	7	1	**204-1456**	1	SHIM	
	8	1	**280-7805**	1	VALVE GP-PUMP CONTROL (PISTON PUMP)	
	9	1	**121-4870**	4	VALVE-RELIEF (CROSSOVER)	
	10	1	**204-1459**	1	VALVE GP-RELIEF (CHARGE)	
	11	1	**135-2655**	2	SEAL-O-RING	
	12	1	**3J-7354**	2	SEAL-O-RING	
	13	1	**3K-0715**	1	SEAL-O-RING	
	14	1	**6V-5326**	4	SEAL-O-RING	
	15	1	**6V-5586**	2	SEAL-O-RING	
	16	1	**6V-8352**	1	SEAL-O-RING	
M	17	1	**8T-0267**	8	BOLT-SOCKET HEAD (M6X1X12-MM)	
	18	1	**9S-8002**	2	PLUG-O-RING	
M	19	1	**9X-6606**	2	NUT-HEX (M10X1-THD)	
	20	1	**126-5643**	2	CAGE	
	21	1	**081-3698**	2	BEARING	
	22	1	**204-1452**	3	RING-RETAINING	
	23	1	**140-1802**	1	SEAL-RING	
	24	1	**126-5640**	2	BEARING-ROLLER	
	25	1	**1G-3410**	4	WIRE	
	26	1	**280-7863**	1	ROTATING GP-PUMP (RH)	
	27	1	**6E-0725**	4	ROLLER	
	28	1	**280-7865**	1	ROTATING GP-PUMP (LH)	
	29	1	**268-1929**	2	CRADLE	
	30	1	**261-5659**	1	ORIFICE	
					AVAILABLE GASKET KIT(S):	
			268-9529	1	KIT-SEAL (PISTON PUMP)	
					(INCLUDES SHAFT SEAL, SEALS, SEAL-O-RINGS, SEAL LOCK NUTS, SPACERS & RING)	

M-METRIC PART

289-6342 PUMP GP-PISTON *(contd.)* **i02619344**

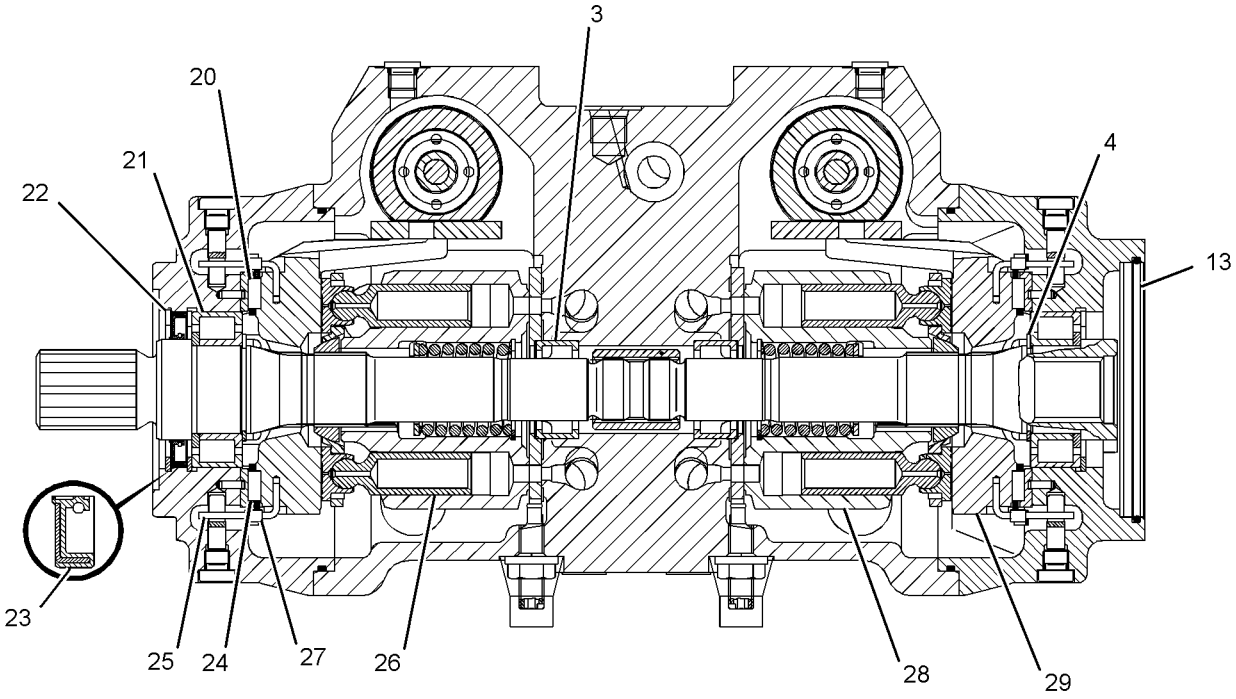

SECTION A-A

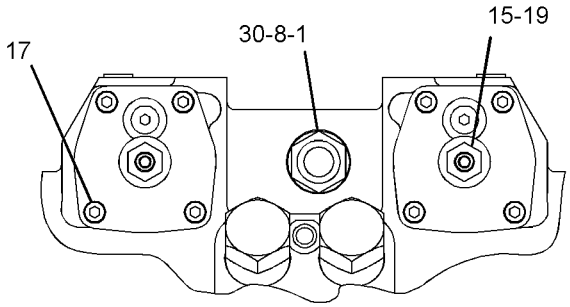

VIEW B-B

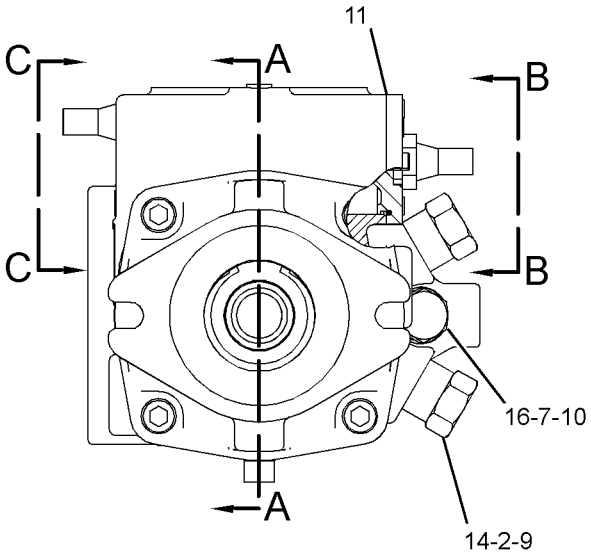

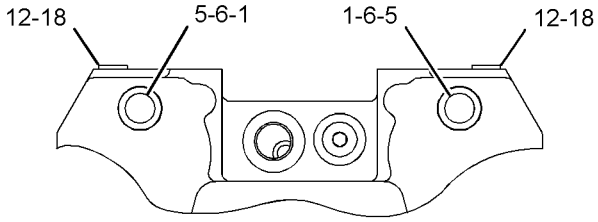

VIEW C-C

GRAPHIC #1 **<END>** g01312749

142-7484 TIRE & RIM GP–LH

S/N: BXM4225-UP
(16.5X8.25). DIRECTIONAL TIRE
PART OF 142-8666 WHEEL & TIRE AR
AN ATTACHMENT

SMCS-4202 **i02578088**

NOTE	PART NUMBER	QTY	PART NAME 1 2 3 4 5 6 (PRODUCT LEVEL)	SEE PAGE
	150-8599	1	VALVE AS-TIRE	
	142-7485	1	WHEEL AS	
	142-7486	1	TIRE (10-16.5)	

<END>

150-8592 TIRE & RIM GP–RH

S/N: BXM4225-UP
(16.5X8.25). DIRECTIONAL TIRE
PART OF 142-8666 WHEEL & TIRE AR
AN ATTACHMENT

SMCS-4202 **i02578156**

NOTE	PART NUMBER	QTY	PART NAME 1 2 3 4 5 6 (PRODUCT LEVEL)	SEE PAGE
	150-8599	1	VALVE AS-TIRE	
	142-7485	1	WHEEL AS	
	142-7486	1	TIRE (10-16.5)	

<END>

165-2605 TIRE & RIM GP–LH

S/N: BXM4225-UP
(16.5X8.25). DIRECTIONAL TIRE
PART OF 165-2602 WHEEL & TIRE AR
AN ATTACHMENT

SMCS-4202 **i02362220**

NOTE	PART NUMBER	QTY	PART NAME 1 2 3 4 5 6 (PRODUCT LEVEL)	SEE PAGE
	150-8599	1	VALVE AS-TIRE	
	142-7490	1	WHEEL AS	
	165-4908	1	TIRE (10-16.5)	

<END>

165-2606 TIRE & RIM GP–RH

S/N: BXM4225-UP
(16.5X8.25). DIRECTIONAL TIRE
PART OF 165-2602 WHEEL & TIRE AR
AN ATTACHMENT

SMCS-4202 **i02362218**

NOTE	PART NUMBER	QTY	PART NAME 1 2 3 4 5 6 (PRODUCT LEVEL)	SEE PAGE
	150-8599	1	VALVE AS-TIRE	
	142-7490	1	WHEEL AS	
	165-4908	1	TIRE (10-16.5)	

<END>

165-2609 TIRE & RIM GP–LH

S/N: BXM4225-UP
(16.5X8.25). DIRECTIONAL TIRE
PART OF 165-4891 WHEEL & TIRE AR
AN ATTACHMENT

SMCS-4202 **i02362238**

NOTE	PART NUMBER	QTY	PART NAME 1 2 3 4 5 6 (PRODUCT LEVEL)	SEE PAGE
	150-8599	1	VALVE AS-TIRE	
	142-7485	1	WHEEL AS	
	165-4908	1	TIRE (10-16.5)	

<END>

165-2610 TIRE & RIM GP–RH

S/N: BXM4225-UP
(16.5X8.25). DIRECTIONAL TIRE
PART OF 165-4891 WHEEL & TIRE AR
AN ATTACHMENT

SMCS-4202 **i02362235**

NOTE	PART NUMBER	QTY	PART NAME 1 2 3 4 5 6 (PRODUCT LEVEL)	SEE PAGE
	150-8599	1	VALVE AS-TIRE	
	142-7485	1	WHEEL AS	
	165-4908	1	TIRE (10-16.5)	

<END>

165-4901 TIRE & RIM GP—HEAVY-DUTY, LH

S/N: BXM4225-UP
(16.5X9.75). DIRECTIONAL TIRE
PART OF 165-4898 WHEEL & TIRE AR
AN ATTACHMENT

SMCS-4202 **i02474449**

NOTE	PART NUMBER	QTY	PART NAME 1 2 3 4 5 6 (PRODUCT LEVEL)	SEE PAGE
	150-8599	1	VALVE AS-TIRE	
	142-8731	1	WHEEL AS	
	165-4909	1	TIRE (12-16.5)	

<END>

165-4902 TIRE & RIM GP—HEAVY-DUTY, RH

S/N: BXM4225-UP
(16.5X9.75). DIRECTIONAL TIRE
PART OF 165-4898 WHEEL & TIRE AR
AN ATTACHMENT

SMCS-4202 **i02474458**

NOTE	PART NUMBER	QTY	PART NAME 1 2 3 4 5 6 (PRODUCT LEVEL)	SEE PAGE
	150-8599	1	VALVE AS-TIRE	
	142-8731	1	WHEEL AS	
	165-4909	1	TIRE (12-16.5)	

<END>

185-8670 TIRE & RIM GP—LH

S/N: BXM4225-UP
(265-MMX521-MM). DIRECTIONAL TIRE
PART OF 185-8660 WHEEL & TIRE AR
AN ATTACHMENT

SMCS-4202 **i02362163**

NOTE	PART NUMBER	QTY	PART NAME 1 2 3 4 5 6 (PRODUCT LEVEL)	SEE PAGE
	150-8599	1	VALVE AS-TIRE	
	185-8668	1	WHEEL AS	
	185-9934	1	TIRE (265-521)	

<END>

185-8671 TIRE & RIM GP–RH

S/N: BXM4225-UP
(265-MMX521-MM). DIRECTIONAL TIRE
PART OF 185-8660 WHEEL & TIRE AR
AN ATTACHMENT

SMCS-4202 **i02362161**

NOTE	PART NUMBER	QTY	PART NAME 1 2 3 4 5 6 (PRODUCT LEVEL)	SEE PAGE
	150-8599	1	VALVE AS-TIRE	
	185-8668	1	WHEEL AS	
	185-9934	1	TIRE (265-521)	

<END>

185-8672 TIRE & RIM GP–LH

S/N: BXM4225-UP
(521-MMX210-MM). DIRECTIONAL TIRE
PART OF 185-8661 WHEEL & TIRE AR
AN ATTACHMENT

SMCS-4202 **i02362165**

NOTE	PART NUMBER	QTY	PART NAME 1 2 3 4 5 6 (PRODUCT LEVEL)	SEE PAGE
	150-8599	1	VALVE AS-TIRE	
	185-8669	1	WHEEL AS	
	185-9934	1	TIRE (265-521)	

<END>

185-8673 TIRE & RIM GP–RH

S/N: BXM4225-UP
(521-MMX210-MM). DIRECTIONAL TIRE
PART OF 185-8661 WHEEL & TIRE AR
AN ATTACHMENT

SMCS-4202 **i02362171**

NOTE	PART NUMBER	QTY	PART NAME 1 2 3 4 5 6 (PRODUCT LEVEL)	SEE PAGE
	150-8599	1	VALVE AS-TIRE	
	185-8669	1	WHEEL AS	
	185-9934	1	TIRE (265-521)	

<END>

185-8676 TIRE & RIM GP–LH

S/N: BXM4225-UP
(546X248). DIRECTIONAL TIRE
PART OF 185-8663 WHEEL & TIRE AR
AN ATTACHMENT

SMCS-4202 **i02474467**

NOTE	PART NUMBER	QTY	PART NAME 1 2 3 4 5 6 (PRODUCT LEVEL)	SEE PAGE
	150-8599	1	VALVE AS-TIRE	
	185-9937	1	WHEEL AS	
	185-9935	1	TIRE (305-546)	

<END>

185-8677 TIRE & RIM GP–RH

S/N: BXM4225-UP
(547X248). DIRECTIONAL TIRE
PART OF 185-8663 WHEEL & TIRE AR
AN ATTACHMENT

SMCS-4202 **i02474504**

NOTE	PART NUMBER	QTY	PART NAME 1 2 3 4 5 6 (PRODUCT LEVEL)	SEE PAGE
	150-8599	1	VALVE AS-TIRE	
	185-9937	1	WHEEL AS	
	185-9935	1	TIRE (305-546)	

<END>

185-8678 TIRE & RIM GP–LH

S/N: BXM4225-UP
(16.5X8.25). DIRECTIONAL TIRE
PART OF 185-8664 WHEEL & TIRE AR
AN ATTACHMENT

SMCS-4202 **i02361343**

NOTE	PART NUMBER	QTY	PART NAME 1 2 3 4 5 6 (PRODUCT LEVEL)	SEE PAGE
	150-8599	1	VALVE AS-TIRE	
	142-7485	1	WHEEL AS	
	185-9932	1	TIRE (10-16.5)	

<END>

185-8679 TIRE & RIM GP–RH

S/N: BXM4225-UP
(16.5X8.25). DIRECTIONAL TIRE
PART OF 185-8664 WHEEL & TIRE AR
AN ATTACHMENT

SMCS-4202 **i02361345**

NOTE	PART NUMBER	QTY	PART NAME 1 2 3 4 5 6 (PRODUCT LEVEL)	SEE PAGE
	150-8599	1	VALVE AS-TIRE	
	142-7485	1	WHEEL AS	
	185-9932	1	TIRE (10-16.5)	

<END>

185-9926 TIRE & RIM GP–LH

S/N: BXM4225-UP
(16.5X8.25). DIRECTIONAL TIRE
PART OF 185-8665 WHEEL & TIRE AR
AN ATTACHMENT

SMCS-4202 **i02362228**

NOTE	PART NUMBER	QTY	PART NAME 1 2 3 4 5 6 (PRODUCT LEVEL)	SEE PAGE
	150-8599	1	VALVE AS-TIRE	
	142-7490	1	WHEEL AS	
	185-9932	1	TIRE (10-16.5)	

<END>

185-9927 TIRE & RIM GP–RH

S/N: BXM4225-UP
(16.5X8.25). DIRECTIONAL TIRE
PART OF 185-8665 WHEEL & TIRE AR
AN ATTACHMENT

SMCS-4202 **i02362230**

NOTE	PART NUMBER	QTY	PART NAME 1 2 3 4 5 6 (PRODUCT LEVEL)	SEE PAGE
	150-8599	1	VALVE AS-TIRE	
	142-7490	1	WHEEL AS	
	185-9932	1	TIRE (10-16.5)	

<END>

185-9930 TIRE & RIM GP–LH

S/N: BXM4225-UP
(16.5X9.75). DIRECTIONAL TIRE
PART OF 185-8667 WHEEL & TIRE AR
AN ATTACHMENT

SMCS-4202 **i02362232**

NOTE	PART NUMBER	QTY	PART NAME 1 2 3 4 5 6 (PRODUCT LEVEL)	SEE PAGE
	150-8599	1	VALVE AS-TIRE	
	142-8731	1	WHEEL AS	
	185-9933	1	TIRE (12-16.5)	

<END>

185-9931 TIRE & RIM GP–RH

S/N: BXM4225-UP
(16.5X9.75). DIRECTIONAL TIRE
PART OF 185-8667 WHEEL & TIRE AR
AN ATTACHMENT

SMCS-4202 **i02362236**

NOTE	PART NUMBER	QTY	PART NAME 1 2 3 4 5 6 (PRODUCT LEVEL)	SEE PAGE
	150-8599	1	VALVE AS-TIRE	
	142-8731	1	WHEEL AS	
	185-9933	1	TIRE (12-16.5)	

<END>

188-0124 TIRE & RIM GP–LH

S/N: BXM4225-UP
(16.5X9.75). DIRECTIONAL TIRE
PART OF 187-3239 WHEEL & TIRE AR
AN ATTACHMENT

SMCS-4202 **i02474523**

NOTE	PART NUMBER	QTY	PART NAME 1 2 3 4 5 6 (PRODUCT LEVEL)	SEE PAGE
	142-8731	1	WHEEL AS	
	150-8599	1	VALVE AS-TIRE	
	185-9933	1	TIRE (12-16.5)	

<END>

188-0125 TIRE & RIM GP–RH

S/N: BXM4225-UP
(16.5X9.75). DIRECTIONAL TIRE
PART OF 187-3239 WHEEL & TIRE AR
AN ATTACHMENT

SMCS-4202 **i02474537**

NOTE	PART NUMBER	QTY	PART NAME 1 2 3 4 5 6 (PRODUCT LEVEL)	SEE PAGE
	142-8731	1	WHEEL AS	
	150-8599	1	VALVE AS-TIRE	
	185-9933	1	TIRE (12-16.5)	

<END>

199-5438 TIRE & RIM GP–LH

S/N: BXM4225-UP
(16.5X12). DIRECTIONAL TIRE
PART OF 178-2256 WHEEL & TIRE AR
AN ATTACHMENT

SMCS-4202 **i02362244**

NOTE	PART NUMBER	QTY	PART NAME 1 2 3 4 5 6 (PRODUCT LEVEL)	SEE PAGE
	150-8599	1	VALVE AS-TIRE	
	178-2270	1	WHEEL AS	
	199-5440	1	TIRE (33/15.5-16.5)	

<END>

199-5439 TIRE & RIM GP–RH

S/N: BXM4225-UP
(16.5X12). DIRECTIONAL TIRE
PART OF 178-2256 WHEEL & TIRE AR
AN ATTACHMENT

SMCS-4202 **i02362243**

NOTE	PART NUMBER	QTY	PART NAME 1 2 3 4 5 6 (PRODUCT LEVEL)	SEE PAGE
	150-8599	1	VALVE AS-TIRE	
	178-2270	1	WHEEL AS	
	199-5440	1	TIRE (33/15.5-16.5)	

<END>

265-2894 TIRE & RIM GP–LH

S/N: BXM4225-UP
PART OF 252-0344 WHEEL & TIRE AR
AN ATTACHMENT

SMCS-4202 **i02279688**

NOTE	PART NUMBER	QTY	PART NAME 1 2 3 4 5 6 (PRODUCT LEVEL)	SEE PAGE
	150-8599	1	VALVE AS-TIRE	
	142-7490	1	WHEEL AS	
	222-3962	1	TIRE (10-16.5)	

<END>

265-2895 TIRE & RIM GP–RH

S/N: BXM4225-UP
PART OF 252-0344 WHEEL & TIRE AR
AN ATTACHMENT

SMCS-4202 **i02279722**

NOTE	PART NUMBER	QTY	PART NAME 1 2 3 4 5 6 (PRODUCT LEVEL)	SEE PAGE
	150-8599	1	VALVE AS-TIRE	
	142-7490	1	WHEEL AS	
	222-3962	1	TIRE (10-16.5)	

<END>

265-2896 TIRE & RIM GP–LH

S/N: BXM4225-UP
PART OF 252-0345 WHEEL & TIRE AR
AN ATTACHMENT

SMCS-4202 **i02279732**

NOTE	PART NUMBER	QTY	PART NAME 1 2 3 4 5 6 (PRODUCT LEVEL)	SEE PAGE
	150-8599	1	VALVE AS-TIRE	
	142-7485	1	WHEEL AS	
	222-3962	1	TIRE (10-16.5)	

<END>

265-2897 TIRE & RIM GP–RH

S/N: BXM4225-UP
PART OF 252-0345 WHEEL & TIRE AR
AN ATTACHMENT

SMCS-4202 **i02363184**

NOTE	PART NUMBER	QTY	PART NAME 1 2 3 4 5 6 (PRODUCT LEVEL)	SEE PAGE
	150-8599	1	VALVE AS-TIRE	
	142-7485	1	WHEEL AS	
	222-3962	1	TIRE (10-16.5)	

<END>

265-2898 TIRE & RIM GP—LH

S/N: BXM4225-UP
PART OF 252-0346 WHEEL & TIRE AR
AN ATTACHMENT

SMCS-4202 **i02361217**

NOTE	PART NUMBER	QTY	PART NAME 1 2 3 4 5 6 (PRODUCT LEVEL)	SEE PAGE
	150-8599	1	VALVE AS-TIRE	
	142-8731	1	WHEEL AS	
	222-3963	1	TIRE (12-16.5)	

<END>

265-2899 TIRE & RIM GP—RH

S/N: BXM4225-UP
PART OF 252-0346 WHEEL & TIRE AR
AN ATTACHMENT

SMCS-4202 **i02361220**

NOTE	PART NUMBER	QTY	PART NAME 1 2 3 4 5 6 (PRODUCT LEVEL)	SEE PAGE
	150-8599	1	VALVE AS-TIRE	
	142-8731	1	WHEEL AS	
	222-3963	1	TIRE (12-16.5)	

<END>

142-8666 WHEEL & TIRE AR

S/N: BXM4225-UP
AN ATTACHMENT

SMCS-4200, 4201, 4203 **i02361114**

NOTE	PART NUMBER	QTY	PART NAME 1 2 3 4 5 6 (PRODUCT LEVEL)	SEE PAGE
Y	*142-7484*	2	TIRE & RIM GP (LH)	204
Y	*150-8592*	2	TIRE & RIM GP (RH)	204
	142-7493	32	NUT-LUG (9/16-18-2B THD)	

Y-SEPARATE ILLUSTRATION

<END>

159-5761 WHEEL & TIRE AR—SOLID

S/N: BXM4225-UP
AN ATTACHMENT

SMCS-4200, 4201, 4203 **i02361156**

NOTE	PART NUMBER	QTY	PART NAME 1 2 3 4 5 6 (PRODUCT LEVEL)	SEE PAGE
	142-7493	32	NUT-LUG (9/16-18-2B THD)	
	187-3230	4	TIRE-SOLID (33X6X8)	

<END>

165-2602 WHEEL & TIRE AR—HEAVY DUTY

S/N: BXM4225-UP
AN ATTACHMENT

SMCS-4200, 4201, 4203 **i02361177**

NOTE	PART NUMBER	QTY	PART NAME 1 2 3 4 5 6 (PRODUCT LEVEL)	SEE PAGE
Y	*165-2605*	2	TIRE & RIM GP (LH)	204
Y	*165-2606*	2	TIRE & RIM GP (RH)	205
	142-7493	32	NUT-LUG (9/16-18-2B THD)	

Y-SEPARATE ILLUSTRATION

<END>

165-4891 WHEEL & TIRE AR—HEAVY DUTY

S/N: BXM4225-UP
AN ATTACHMENT

SMCS-4200, 4201, 4203 **i02361179**

NOTE	PART NUMBER	QTY	PART NAME 1 2 3 4 5 6 (PRODUCT LEVEL)	SEE PAGE
Y	*165-2609*	2	TIRE & RIM GP (LH)	205
Y	*165-2610*	2	TIRE & RIM GP (RH)	205
	142-7493	32	NUT-LUG (9/16-18-2B THD)	

Y-SEPARATE ILLUSTRATION

<END>

165-4898 WHEEL & TIRE AR—HEAVY DUTY

S/N: BXM4225-UP
AN ATTACHMENT

SMCS-4200, 4201, 4203 **i02361187**

NOTE	PART NUMBER	QTY	PART NAME 1 2 3 4 5 6 (PRODUCT LEVEL)	SEE PAGE
Y	*165-4901*	2	TIRE & RIM GP (LH)	206
Y	*165-4902*	2	TIRE & RIM GP (RH)	206
	142-7493	32	NUT-LUG (9/16-18-2B THD)	

Y-SEPARATE ILLUSTRATION

<END>

178-2256 WHEEL & TIRE AR—HEAVY DUTY

S/N: BXM4225-UP
AN ATTACHMENT

SMCS-4200, 4201, 4203 **i02361189**

NOTE	PART NUMBER	QTY	PART NAME 1 2 3 4 5 6 (PRODUCT LEVEL)	SEE PAGE
Y	*199-5438*	2	TIRE & RIM GP (LH)	211
Y	*199-5439*	2	TIRE & RIM GP (RH)	211
	142-7493	32	NUT-LUG (9/16-18-2B THD)	

Y-SEPARATE ILLUSTRATION

<END>

185-8660 WHEEL & TIRE AR—LOW SIDE WALL

S/N: BXM4225-UP
AN ATTACHMENT

SMCS-4200, 4201, 4203 **i02361192**

NOTE	PART NUMBER	QTY	PART NAME 1 2 3 4 5 6 (PRODUCT LEVEL)	SEE PAGE
Y	*185-8670*	2	TIRE & RIM GP (LH)	206
Y	*185-8671*	2	TIRE & RIM GP (RH)	207
	142-7493	32	NUT-LUG (9/16-18-2B THD)	

Y-SEPARATE ILLUSTRATION

<END>

185-8661 WHEEL & TIRE AR—LOW SIDE WALL

S/N: BXM4225-UP
AN ATTACHMENT

SMCS-4200, 4201, 4203 **i02361196**

NOTE	PART NUMBER	QTY	PART NAME 1 2 3 4 5 6 (PRODUCT LEVEL)	SEE PAGE
Y	*185-8672*	2	TIRE & RIM GP (LH)	207
Y	*185-8673*	2	TIRE & RIM GP (RH)	207
	142-7493	32	NUT-LUG (9/16-18-2B THD)	

Y-SEPARATE ILLUSTRATION

<END>

185-8663 WHEEL & TIRE AR—LOW SIDE WALL

S/N: BXM4225-UP
AN ATTACHMENT

SMCS-4200, 4201, 4203 **i02361197**

NOTE	PART NUMBER	QTY	PART NAME 1 2 3 4 5 6 (PRODUCT LEVEL)	SEE PAGE
Y	*185-8676*	2	TIRE & RIM GP (LH)	208
Y	*185-8677*	2	TIRE & RIM GP (RH)	208
	142-7493	32	NUT-LUG (9/16-18-2B THD)	

Y-SEPARATE ILLUSTRATION

<END>

185-8664 WHEEL & TIRE AR—HEAVY DUTY

S/N: BXM4225-UP
AN ATTACHMENT

SMCS-4200, 4201, 4203 **i02361199**

NOTE	PART NUMBER	QTY	PART NAME 1 2 3 4 5 6 (PRODUCT LEVEL)	SEE PAGE
Y	*185-8678*	2	TIRE & RIM GP (LH)	208
Y	*185-8679*	2	TIRE & RIM GP (RH)	209
	142-7493	32	NUT-LUG (9/16-18-2B THD)	

Y-SEPARATE ILLUSTRATION

<END>

POWER TRAIN

185-8665 WHEEL & TIRE AR—HEAVY DUTY

S/N: BXM4225-UP
AN ATTACHMENT

SMCS-4200, 4201, 4203 **i02361201**

NOTE	PART NUMBER	QTY	PART NAME 1 2 3 4 5 6 (PRODUCT LEVEL)	SEE PAGE
Y	*185-9926*	2	TIRE & RIM GP (LH)	209
Y	*185-9927*	2	TIRE & RIM GP (RH)	209
	142-7493	32	NUT-LUG (9/16-18-2B THD)	

Y-SEPARATE ILLUSTRATION

<END>

185-8667 WHEEL & TIRE AR—HEAVY DUTY

S/N: BXM4225-UP
AN ATTACHMENT

SMCS-4200, 4201, 4203 **i02361203**

NOTE	PART NUMBER	QTY	PART NAME 1 2 3 4 5 6 (PRODUCT LEVEL)	SEE PAGE
Y	*185-9930*	2	TIRE & RIM GP (LH)	210
Y	*185-9931*	2	TIRE & RIM GP (RH)	210
	142-7493	32	NUT-LUG (9/16-18-2B THD)	

Y-SEPARATE ILLUSTRATION

<END>

187-3239 WHEEL & TIRE AR

S/N: BXM4225-UP
AN ATTACHMENT

SMCS-4200, 4201, 4203 **i02361206**

NOTE	PART NUMBER	QTY	PART NAME 1 2 3 4 5 6 (PRODUCT LEVEL)	SEE PAGE
Y	*188-0124*	2	TIRE & RIM GP (LH)	210
Y	*188-0125*	2	TIRE & RIM GP (RH)	211
	142-7493	32	NUT-LUG (9/16-18-2B THD)	

Y-SEPARATE ILLUSTRATION

<END>

252-0344 WHEEL & TIRE AR

S/N: BXM4225-UP
AN ATTACHMENT

SMCS-4200, 4201, 4203 **i02279641**

NOTE	PART NUMBER	QTY	PART NAME 1 2 3 4 5 6 (PRODUCT LEVEL)	SEE PAGE
Y	**265-2895**	2	TIRE & RIM GP (RH)	212
Y	**265-2894**	2	TIRE & RIM GP (LH)	212
	142-7493	32	NUT-LUG (9/16-18-2B THD)	

Y-SEPARATE ILLUSTRATION

<END>

252-0345 WHEEL & TIRE AR

S/N: BXM4225-UP
AN ATTACHMENT

SMCS-4200, 4201, 4203 **i02279670**

NOTE	PART NUMBER	QTY	PART NAME 1 2 3 4 5 6 (PRODUCT LEVEL)	SEE PAGE
Y	**265-2896**	2	TIRE & RIM GP (LH)	212
Y	**265-2897**	2	TIRE & RIM GP (RH)	212
	142-7493	32	NUT-LUG (9/16-18-2B THD)	

Y-SEPARATE ILLUSTRATION

<END>

252-0346 WHEEL & TIRE AR

S/N: BXM4225-UP
AN ATTACHMENT

SMCS-4200, 4201, 4203 **i02279611**

NOTE	PART NUMBER	QTY	PART NAME 1 2 3 4 5 6 (PRODUCT LEVEL)	SEE PAGE
Y	**265-2899**	2	TIRE & RIM GP (RH)	213
Y	**265-2898**	2	TIRE & RIM GP (LH)	213
	142-7493	32	NUT-LUG (9/16-18-2B THD)	

Y-SEPARATE ILLUSTRATION

<END>

252-0367 WHEEL & TIRE AR—SOLID

S/N: BXM4225-UP
AN ATTACHMENT

SMCS-4200, 4201, 4203 **i02279677**

NOTE	PART NUMBER	QTY	PART NAME 1 2 3 4 5 6 (PRODUCT LEVEL)	SEE PAGE
	142-7493	32	NUT-LUG (9/16-18-2B THD)	
	226-3736	2	TIRE-SOLID (31X6X10)	
	226-3737	2	TIRE-SOLID (31X6X10)	

<END>

252-0378 WHEEL & TIRE AR—SOLID

S/N: BXM4225-UP
AN ATTACHMENT

SMCS-4200, 4201, 4203 **i02279683**

NOTE	PART NUMBER	QTY	PART NAME 1 2 3 4 5 6 (PRODUCT LEVEL)	SEE PAGE
	142-7493	32	NUT-LUG (9/16-18-2B THD)	
	226-3736	2	TIRE-SOLID (31X6X10)	
	226-3737	2	TIRE-SOLID (31X6X10)	

<END>

317-0690 WHEEL & TIRE GP

S/N: BXM4225-UP

FIELD INSTALLATION

SMCS-4200, 4201, 4202, 4203, 4208, 4209 **i02839895**

NOTE	REF NO	GRAPHIC REF	PART NUMBER	QTY	PART NAME 1 2 3 4 5 6 (PRODUCT LEVEL)	SEE PAGE
	1	1	**311-4926**	4	TIRE (31X5X9)	

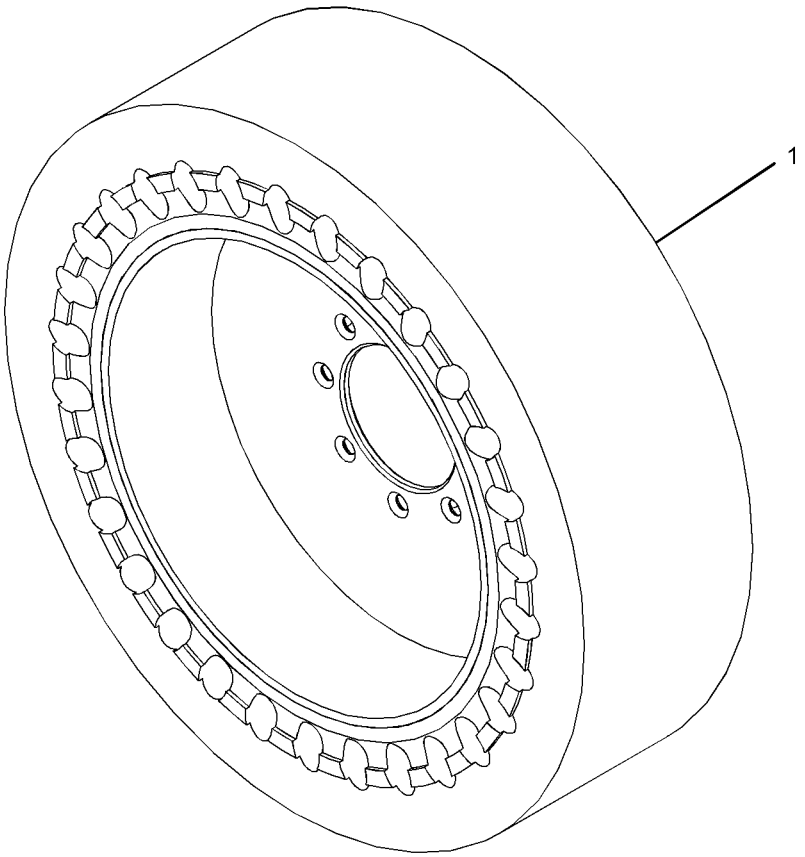

GRAPHIC #1 **<END>** g01417446

FRAME AND BODY

218-5772 BUMPER GP–REAR

S/N: BXM4225-UP

PART OF 295-7210 CHASSIS AR

SMCS-7156 **i01964597**

NOTE	REF NO	GRAPHIC REF	PART NUMBER	QTY	PART NAME 1 2 3 4 5 6 (PRODUCT LEVEL)	SEE PAGE
	1	1	**142-9021**	2	STUD	
	2	1	**154-4006**	2	BOSS	
	3	1	**218-5651**	1	BUMPER AS	
	4	1	**8T-4122**	6	WASHER-HARD (17X32X3.5-MM THK)	
M	5	1	**8T-4132**	4	NUT (M16X2-THD)	
M	6	1	**8T-7338**	2	BOLT (M16X2X45-MM)	

M-METRIC PART

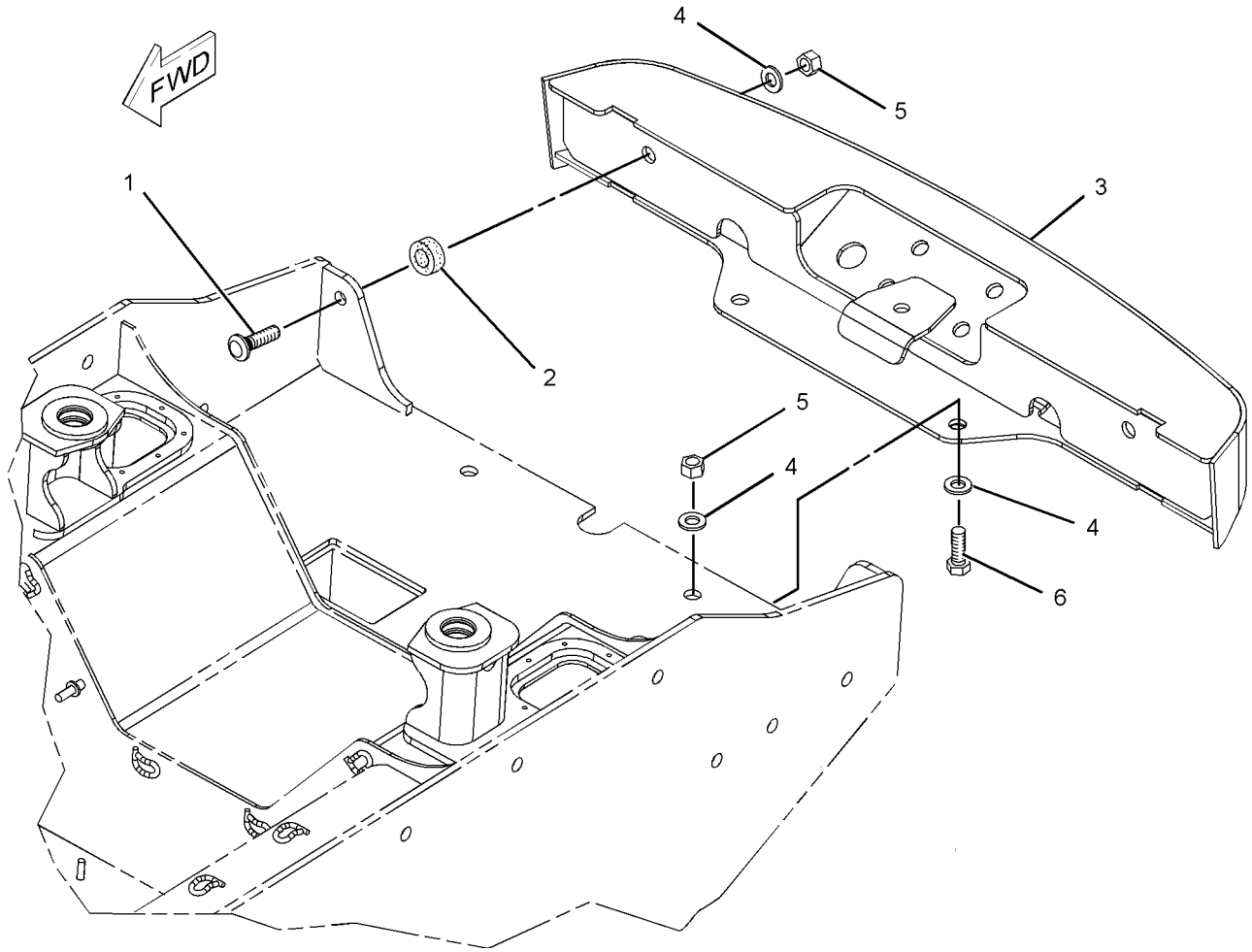

GRAPHIC #1 **<END>** g01021209

233-5681 CONVERSION AR-ROADING—EUROPE

S/N: BXM4225-UP

AN ATTACHMENT

SMCS-7000 **i02124778**

NOTE	PART NUMBER	QTY	PART NAME 1 2 3 4 5 6 (PRODUCT LEVEL)	SEE PAGE
Y	*216-6146*	1	BOX GP-STORAGE	501
Y	*188-0147*	1	LIFTING GP-MACHINE	244
Y	*142-8652*	1	LIGHTING GP-STOP & TAIL	156
Y	*218-5791*	1	PANEL AR-INSTRUMENT	597
Y	*233-5616*	1	SUPPRESSION GP-SOUND	252
Y	*230-3743*	1	WIRING GP-HORN (WITH MOUNTING)	177
	218-5601	1	FLOOR MAT	

Y-SEPARATE ILLUSTRATION

<END>

233-5682 CONVERSION AR-ROADING—GERMANY

S/N: BXM4225-UP

AN ATTACHMENT

SMCS-7000 **i02338195**

NOTE	PART NUMBER	QTY	PART NAME 1 2 3 4 5 6 (PRODUCT LEVEL)	SEE PAGE
Y	*216-6146*	1	BOX GP-STORAGE	501
Y	*234-0792*	1	CONVERSION GP-ROADING	226
Y	**177-9152**	1	KIT-ROADING PLATE & MOUNTING (BUCKET)	476
Y	*188-0147*	1	LIFTING GP-MACHINE	244
Y	*216-4716*	1	LIGHTING GP-ROADING	154
Y	*175-4238*	1	LOCK GP-QUICK COUPLER (MECHANICAL)	478
Y	*238-7671*	1	MIRROR & MTG GP-REAR VIEW (WITH ROADING LIGHT MOUNT)	246
Y	*218-5791*	1	PANEL AR-INSTRUMENT	597
Y	*233-5616*	1	SUPPRESSION GP-SOUND	252
Y	*173-3022*	1	VISOR GP-CAB	618
Y	*230-3743*	1	WIRING GP-HORN (WITH MOUNTING)	177
	222-5695	1	SUPPORT GP-STORAGE BOX	
	216-6144	1	BRACKET AS	
	233-5680	3	FILM-IDENTIFICATION (13-KM/H)	
	218-5601	1	FLOOR MAT	

Y-SEPARATE ILLUSTRATION

<END>

233-5683 CONVERSION AR-ROADING—ITALY

S/N: BXM4225-UP
AN ATTACHMENT

SMCS-7000 **i02338194**

NOTE	PART NUMBER	QTY	PART NAME 1 2 3 4 5 6 (PRODUCT LEVEL)	SEE PAGE
Y	*216-6146*	1	BOX GP-STORAGE	501
Y	*234-0793*	1	CONVERSION GP-ROADING	227
Y	**177-9152**	1	KIT-ROADING PLATE & MOUNTING (BUCKET)	476
Y	*188-0147*	1	LIFTING GP-MACHINE	244
Y	*216-4716*	1	LIGHTING GP-ROADING	154
Y	*175-4238*	1	LOCK GP-QUICK COUPLER (MECHANICAL)	478
Y	*238-7671*	1	MIRROR & MTG GP-REAR VIEW (WITH ROADING LIGHT MOUNT)	246
Y	*225-7963*	1	MOUNTING GP-REGISTRATION	249
Y	*218-5791*	1	PANEL AR-INSTRUMENT	597
Y	*233-5616*	1	SUPPRESSION GP-SOUND	252
Y	*230-3743*	1	WIRING GP-HORN (WITH MOUNTING)	177
Y	*225-7964*	1	WIRING GP-REAR LIGHTING	180
	218-5601	1	FLOOR MAT	

Y-SEPARATE ILLUSTRATION

<END>

233-5684 CONVERSION AR-ROADING—UNITED KINGDOM

S/N: BXM4225-UP
AN ATTACHMENT

SMCS-7000 **i02124783**

NOTE	PART NUMBER	QTY	PART NAME 1 2 3 4 5 6 (PRODUCT LEVEL)	SEE PAGE
Y	*216-6146*	1	BOX GP-STORAGE	501
Y	**191-9684**	1	FILM GP (CLEARANCE)	626
Y	*188-0147*	1	LIFTING GP-MACHINE	244
Y	*142-8652*	1	LIGHTING GP-STOP & TAIL	156
Y	*218-5791*	1	PANEL AR-INSTRUMENT	597
Y	*233-5616*	1	SUPPRESSION GP-SOUND	252
Y	*230-3743*	1	WIRING GP-HORN (WITH MOUNTING)	177
	218-5601	1	FLOOR MAT	

Y-SEPARATE ILLUSTRATION

<END>

233-5685 CONVERSION AR-ROADING—GERMANY

S/N: BXM4225-UP
HIGH FLOW
AN ATTACHMENT

SMCS-7000 **i02338193**

NOTE	PART NUMBER	QTY	PART NAME 1 2 3 4 5 6 (PRODUCT LEVEL)	SEE PAGE
Y	*216-6146*	1	BOX GP-STORAGE	501
Y	*234-0792*	1	CONVERSION GP-ROADING	226
Y	**177-9152**	1	KIT-ROADING PLATE & MOUNTING (BUCKET)	476
Y	*188-0147*	1	LIFTING GP-MACHINE	244
Y	*216-4716*	1	LIGHTING GP-ROADING	154
Y	*175-4238*	1	LOCK GP-QUICK COUPLER (MECHANICAL)	478
Y	*238-7672*	1	MIRROR & MTG GP-REAR VIEW (WITH ROADING LIGHT MOUNT)	247
Y	*218-5791*	1	PANEL AR-INSTRUMENT	597
Y	*233-5616*	1	SUPPRESSION GP-SOUND	252
Y	*173-3022*	1	VISOR GP-CAB	618
Y	*230-3743*	1	WIRING GP-HORN (WITH MOUNTING)	177
	222-5695	1	SUPPORT GP-STORAGE BOX	
	216-6144	1	BRACKET AS	
	218-5601	1	FLOOR MAT	

Y-SEPARATE ILLUSTRATION

<END>

233-5686 CONVERSION AR-ROADING—ITALY

S/N: BXM4225-UP
HIGH FLOW
AN ATTACHMENT

SMCS-7000 **i02338192**

NOTE	PART NUMBER	QTY	PART NAME 1 2 3 4 5 6 (PRODUCT LEVEL)	SEE PAGE
Y	*216-6146*	1	BOX GP-STORAGE	501
Y	*234-0793*	1	CONVERSION GP-ROADING	227
Y	**177-9152**	1	KIT-ROADING PLATE & MOUNTING (BUCKET)	476
Y	*188-0147*	1	LIFTING GP-MACHINE	244
Y	*216-4716*	1	LIGHTING GP-ROADING	154
Y	*175-4238*	1	LOCK GP-QUICK COUPLER (MECHANICAL)	478
Y	*238-7672*	1	MIRROR & MTG GP-REAR VIEW (WITH ROADING LIGHT MOUNT)	247
Y	*225-7963*	1	MOUNTING GP-REGISTRATION	249
Y	*218-5791*	1	PANEL AR-INSTRUMENT	597
Y	*233-5616*	1	SUPPRESSION GP-SOUND	252
Y	*230-3743*	1	WIRING GP-HORN (WITH MOUNTING)	177
Y	*225-7964*	1	WIRING GP-REAR LIGHTING	180
	218-5601	1	FLOOR MAT	

Y-SEPARATE ILLUSTRATION

<END>

257-5721 CONVERSION AR-ROADING—GERMANY, ITALY

S/N: BXM4225-UP
FOR USE WITH 218-6762—PAGE 275
AN ATTACHMENT

SMCS-7000 **i02844620**

NOTE	PART NUMBER	QTY	PART NAME 1 2 3 4 5 6 (PRODUCT LEVEL)	SEE PAGE
Y	*216-6146*	1	BOX GP-STORAGE	501
Y	**177-9152**	1	KIT-ROADING PLATE & MOUNTING (BUCKET)	476
Y	*188-0147*	1	LIFTING GP-MACHINE	244
Y	*216-4716*	1	LIGHTING GP-ROADING	154
Y	*175-4238*	1	LOCK GP-QUICK COUPLER (MECHANICAL)	478
Y	*238-7671*	1	MIRROR & MTG GP-REAR VIEW (WITH ROADING LIGHT MOUNT)	246
Y	*261-6121*	1	MOTOR & MTG GP-HYDRAULIC FAN	350
Y	*272-3047*	1	MUFFLER GP	97
Y	*218-5791*	1	PANEL AR-INSTRUMENT	597
Y	*261-6118*	1	RADIATOR & OIL COOLER MTG GP	90
Y	*233-5616*	1	SUPPRESSION GP-SOUND	252
Y	*230-3743*	1	WIRING GP-HORN (WITH MOUNTING)	177
Y	*272-1625*	1	WIRING GP-MACHINE (DEMAND FAN)	178
	218-5601	1	FLOOR MAT	

Y-SEPARATE ILLUSTRATION

<END>

257-5722 CONVERSION AR-ROADING—GERMANY, ITALY

S/N: BXM4225-UP
FOR USE WITH 257-5727—PAGE 224. CANNOT BE USED WITH 218-6760—PAGE 274, 233-5670—PAGE 132
AN ATTACHMENT

SMCS-7000 **i02844649**

NOTE	PART NUMBER	QTY	PART NAME 1 2 3 4 5 6 (PRODUCT LEVEL)	SEE PAGE
Y	*216-6146*	1	BOX GP-STORAGE	501
Y	**177-9152**	1	KIT-ROADING PLATE & MOUNTING (BUCKET)	476
Y	*188-0147*	1	LIFTING GP-MACHINE	244
Y	*216-4716*	1	LIGHTING GP-ROADING	154
Y	*175-4238*	1	LOCK GP-QUICK COUPLER (MECHANICAL)	478
Y	*238-7672*	1	MIRROR & MTG GP-REAR VIEW (WITH ROADING LIGHT MOUNT)	247
Y	*261-6121*	1	MOTOR & MTG GP-HYDRAULIC FAN	350
Y	*272-3047*	1	MUFFLER GP	97
Y	*218-5791*	1	PANEL AR-INSTRUMENT	597
Y	*261-6118*	1	RADIATOR & OIL COOLER MTG GP	90
Y	*233-5616*	1	SUPPRESSION GP-SOUND	252
Y	*230-3743*	1	WIRING GP-HORN (WITH MOUNTING)	177
Y	*272-1625*	1	WIRING GP-MACHINE (DEMAND FAN)	178
	218-5601	1	FLOOR MAT	

Y-SEPARATE ILLUSTRATION

<END>

FRAME AND BODY

257-5727 CONVERSION AR-ROADING—ITALY

S/N: BXM4225-UP

AN ATTACHMENT

SMCS-7000 **i02866479**

NOTE	PART NUMBER	QTY	PART NAME 1 2 3 4 5 6 (PRODUCT LEVEL)	SEE PAGE
Y	**128-6985**	1	LAMP GP-WARNING BEACON (12-VOLT, AMBER)	151
Y	**184-1564**	2	SWITCH GP-PRESSURE (BRAKE LIGHT)	163
	190-8962	1	LAMP GP-REGISTRATION PLATE	
	195-9712	1	LAMP (12-VOLT, 10-WATT)	
	207-9780	1	BRACKET AS	
	186-2360	4	COVER AS	
E	**129-1854**		FASTENER-LOOP (10-CM)	
E	**129-1855**		FASTENER-HOOK (10-CM)	
	186-0239	1	HARNESS AS-REAR LIGHTING	
	216-4711	1	HARNESS AS-REAR LIGHTING (BRAKE)	
	115-1615	1	RELAY AS (12-VOLT)	
	166-2033	2	TEE AS	
			(EACH INCLUDES)	
	4J-5477	1	SEAL-O-RING	
	7X-2444	1	TEE-SWIVEL	
M	**8T-4171**	3	BOLT (M6X1X12-MM)	
M	**5C-8312**	2	NUT (M4X0.7-THD)	
	175-4236	1	PLATE	
	204-1365	1	PLATE	
	215-4001	1	PLATE	
	258-3849	1	PLATE-IDENTIFICATION (ENGLISH, GERMAN, SPANISH)	
M	**6V-9672**	2	SCREW-MACHINE (M4X0.7X16-MM)	
	3S-2093	4	STRAP-CABLE	
	4B-4863	2	WASHER (4.7X11X1.2-MM THK)	
	8T-4205	1	WASHER-HARD (7.2X14.5X2-MM THK)	

E-ORDER BY THE CENTIMETER
M-METRIC PART
Y-SEPARATE ILLUSTRATION

<END>

295-7044 CONVERSION AR-ROADING—GERMANY, ITALY, HIGH FLOW

S/N: BXM4225-UP

AN ATTACHMENT

SMCS-7000 **i02733280**

NOTE	PART NUMBER	QTY	PART NAME 1 2 3 4 5 6 (PRODUCT LEVEL)	SEE PAGE
Y	*216-6146*	1	BOX GP-STORAGE	501
Y	**177-9152**	1	KIT-ROADING PLATE & MOUNTING (BUCKET)	476
Y	*188-0147*	1	LIFTING GP-MACHINE	244
Y	*216-4716*	1	LIGHTING GP-ROADING	154
Y	*175-4238*	1	LOCK GP-QUICK COUPLER (MECHANICAL)	478
Y	*238-7672*	1	MIRROR & MTG GP-REAR VIEW (WITH ROADING LIGHT MOUNT)	247
Y	*261-6121*	1	MOTOR & MTG GP-HYDRAULIC FAN	350
Y	*272-3047*	1	MUFFLER GP	97
Y	*218-5791*	1	PANEL AR-INSTRUMENT	597
Y	*261-6118*	1	RADIATOR & OIL COOLER MTG GP	90
Y	*233-5616*	1	SUPPRESSION GP-SOUND	252
Y	*230-3743*	1	WIRING GP-HORN (WITH MOUNTING)	177
Y	*272-1625*	1	WIRING GP-MACHINE (DEMAND FAN)	178

Y-SEPARATE ILLUSTRATION

<END>

234-0792 CONVERSION GP-ROADING–GERMANY

S/N: BXM4225-UP

PART OF 233-5682, 233-5685 CONVERSION AR-ROADING

AN ATTACHMENT

SMCS-7000 **i02785770**

NOTE	REF NO	GRAPHIC REF	PART NUMBER	QTY	PART NAME 1 2 3 4 5 6 (PRODUCT LEVEL)	SEE PAGE
	1	1	**246-2641**	1	PADLOCK GP	
		1	**5P-8500**	1	KEY	
					(WITH PLASTIC OVERMOLD)	
	2	1	**113-7634**	1	FILM-WARNING (STEERING)	
	3	1	**159-7342**	1	PLATE-INFORMATION (MAXIMUM WEIGHT)	
	4	1	**168-8389**	4	TACK-FASTENER	
	5	1	**173-3015**	1	BRACKET AS	
	6	1	**173-3016**	1	CHOCK	
	7	1	**173-3018**	1	BRACKET	
M	8	1	**8T-4171**	5	BOLT (M6X1X12-MM)	
	9	1	**8T-4205**	5	WASHER-HARD (7.2X14.5X2-MM THK)	

M-METRIC PART

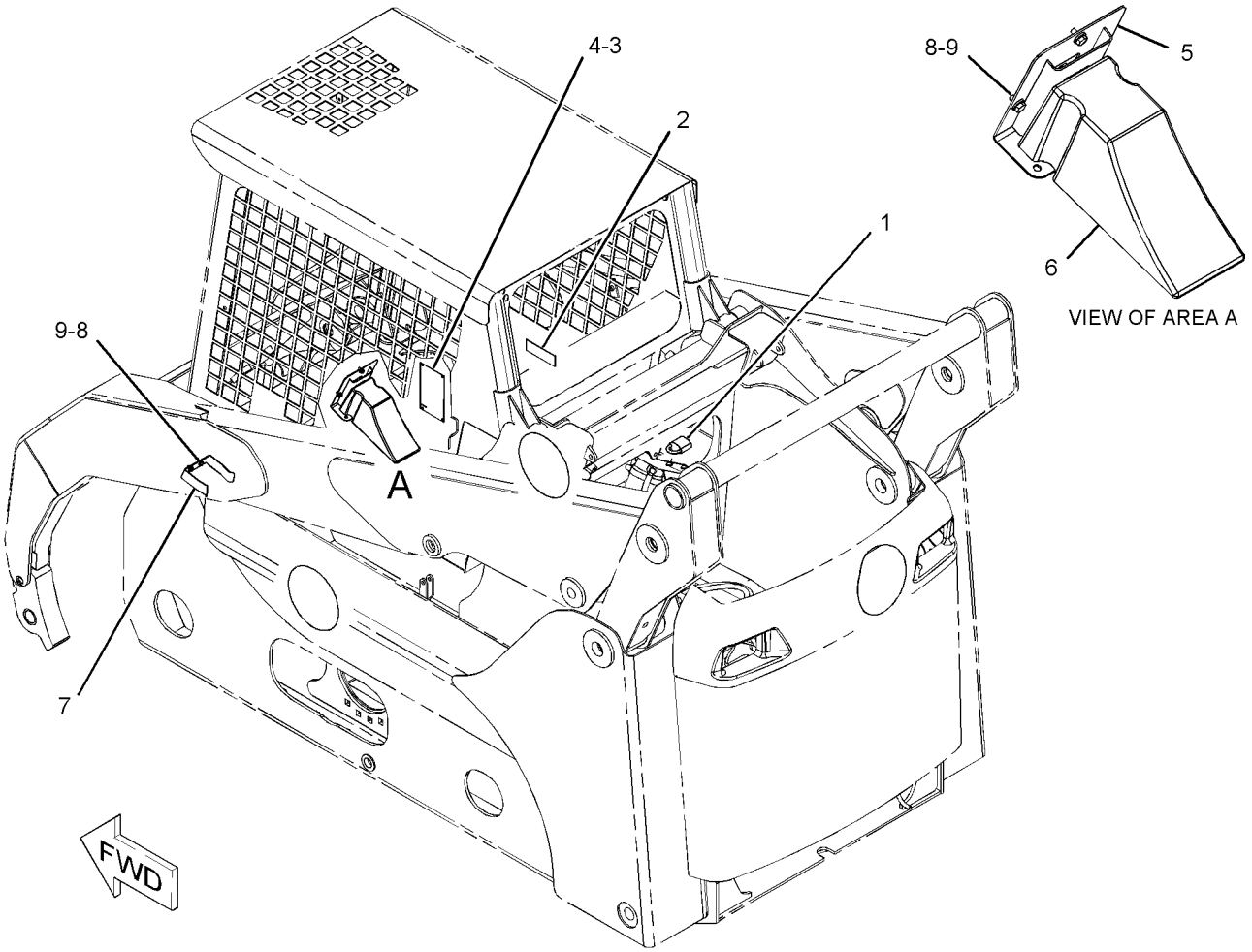

GRAPHIC #1 **<END>** g01131744

234-0793 CONVERSION GP-ROADING–ITALY

S/N: BXM4225-UP
PART OF 233-5683, 233-5686 CONVERSION AR-ROADING
AN ATTACHMENT

SMCS-7000 **i02771681**

NOTE	REF NO	GRAPHIC REF	PART NUMBER	QTY	PART NAME 1 2 3 4 5 6 (PRODUCT LEVEL)	SEE PAGE
Y	1	1	**128-6985**	1	LAMP GP-WARNING BEACON (12-VOLT, AMBER)	151
	2	1	**159-7342**	1	PLATE-INFORMATION (MAXIMUM WEIGHT)	
	3	1	**168-8389**	4	TACK-FASTENER	
	4	1	**186-2360**	4	COVER AS	
					(EACH INCLUDES)	
BE		1	**129-1854**		FASTENER-LOOP	
BE		1	**129-1855**		FASTENER-HOOK	

B-USE AS REQUIRED
E-ORDER BY THE CENTIMETER
Y-SEPARATE ILLUSTRATION

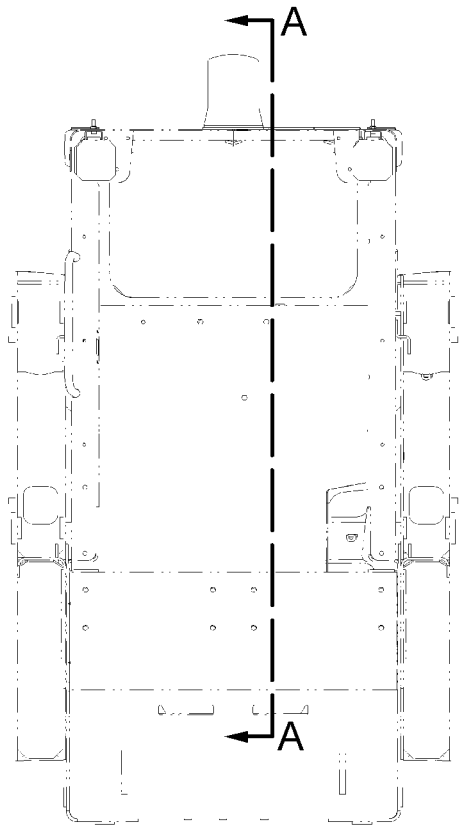

FRONT VIEW

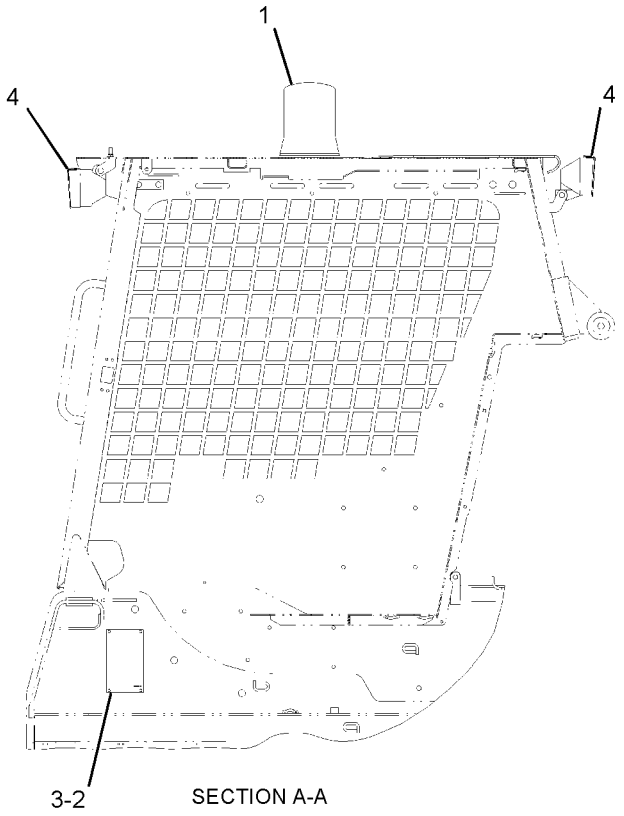

SECTION A-A

GRAPHIC #1 **<END>** g01130743

278-1292 CONVERSION GP-ROADING—GERMANY

S/N: BXM4225-UP

PART OF 278-1225, 278-5442, 295-7164, 295-7168 CONVERSION AR-MACHINE AN ATTACHMENT

SMCS-7000 **i02866415**

NOTE	REF NO	GRAPHIC REF	PART NUMBER	QTY	PART NAME 1 2 3 4 5 6 (PRODUCT LEVEL)	SEE PAGE
	1	1	**246-2641**	1	PADLOCK GP	
		1	**5P-8500**	1	KEY	
					(WITH PLASTIC OVERMOLD)	
	2	1	**113-7634**	1	FILM-WARNING (STEERING)	
	3	1	**258-3849**	1	PLATE-IDENTIFICATION (ENGLISH, GERMAN, SPANISH)	
	5	1	**173-3015**	1	BRACKET AS	
	6	1	**173-3016**	1	CHOCK	
	7	1	**173-3018**	1	BRACKET	
M	8	1	**8T-4171**	5	BOLT (M6X1X12-MM)	
	9	1	**8T-4205**	5	WASHER-HARD (7.2X14.5X2-MM THK)	

M-METRIC PART

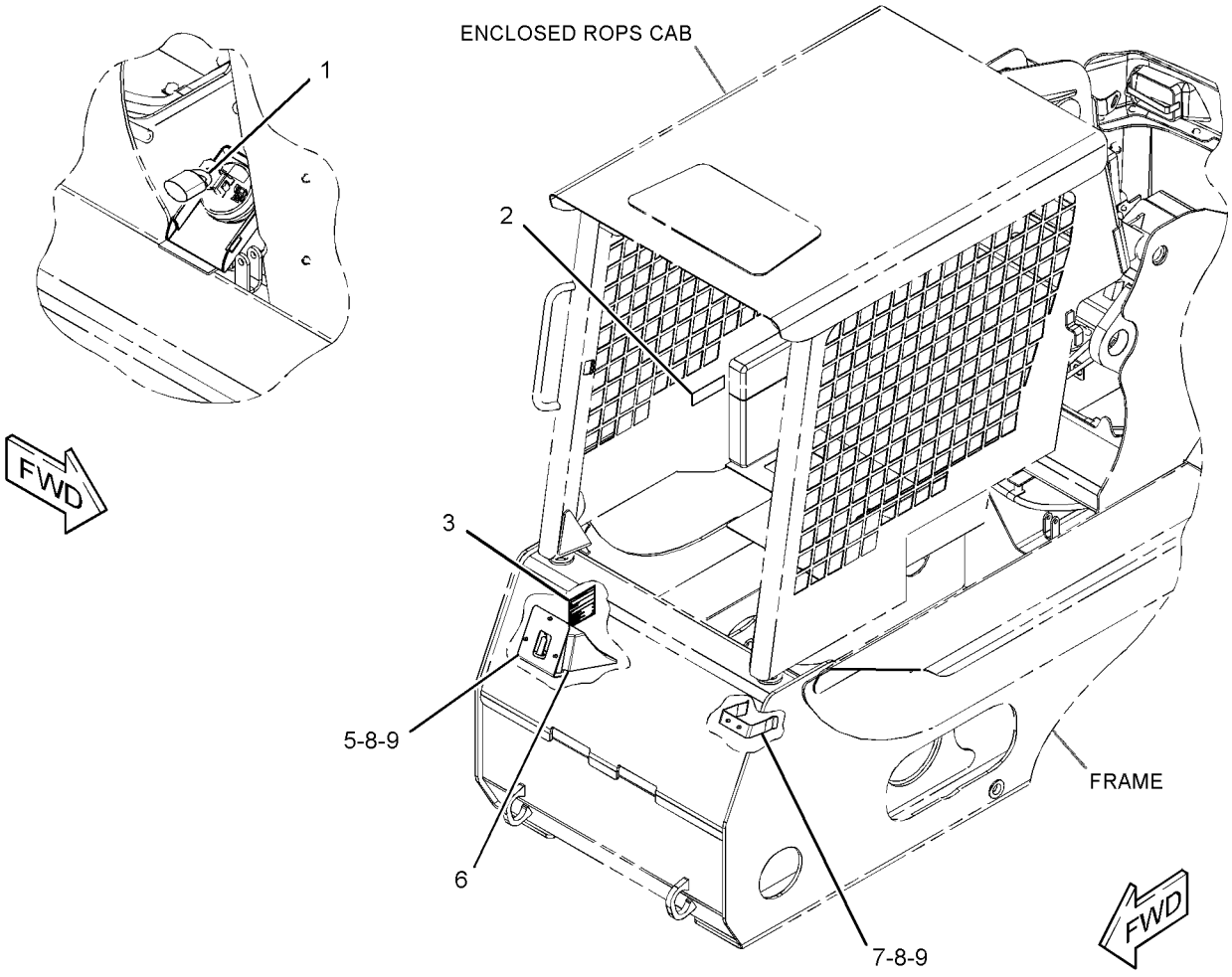

GRAPHIC #1 **<END>** g01437301

278-1293 CONVERSION GP-ROADING–ITALY

S/N: BXM4225-UP

PART OF 278-1213, 278-5409, 295-7151, 295-7159 CONVERSION AR-MACHINE AN ATTACHMENT

SMCS-7000 **i02866420**

NOTE	REF NO	GRAPHIC REF	PART NUMBER	QTY	PART NAME 1 2 3 4 5 6 (PRODUCT LEVEL)	SEE PAGE
Y	1	1	**128-6985**	1	LAMP GP-WARNING BEACON (12-VOLT, AMBER)	151
	2	1	**186-2360**	4	COVER AS	
					(EACH INCLUDES)	
E		1	**129-1854**		FASTENER-LOOP (10-CM)	
E		1	**129-1855**		FASTENER-HOOK (10-CM)	
	3	1	**258-3849**	1	PLATE-IDENTIFICATION (ENGLISH, GERMAN, SPANISH)	

E-ORDER BY THE CENTIMETER
Y-SEPARATE ILLUSTRATION

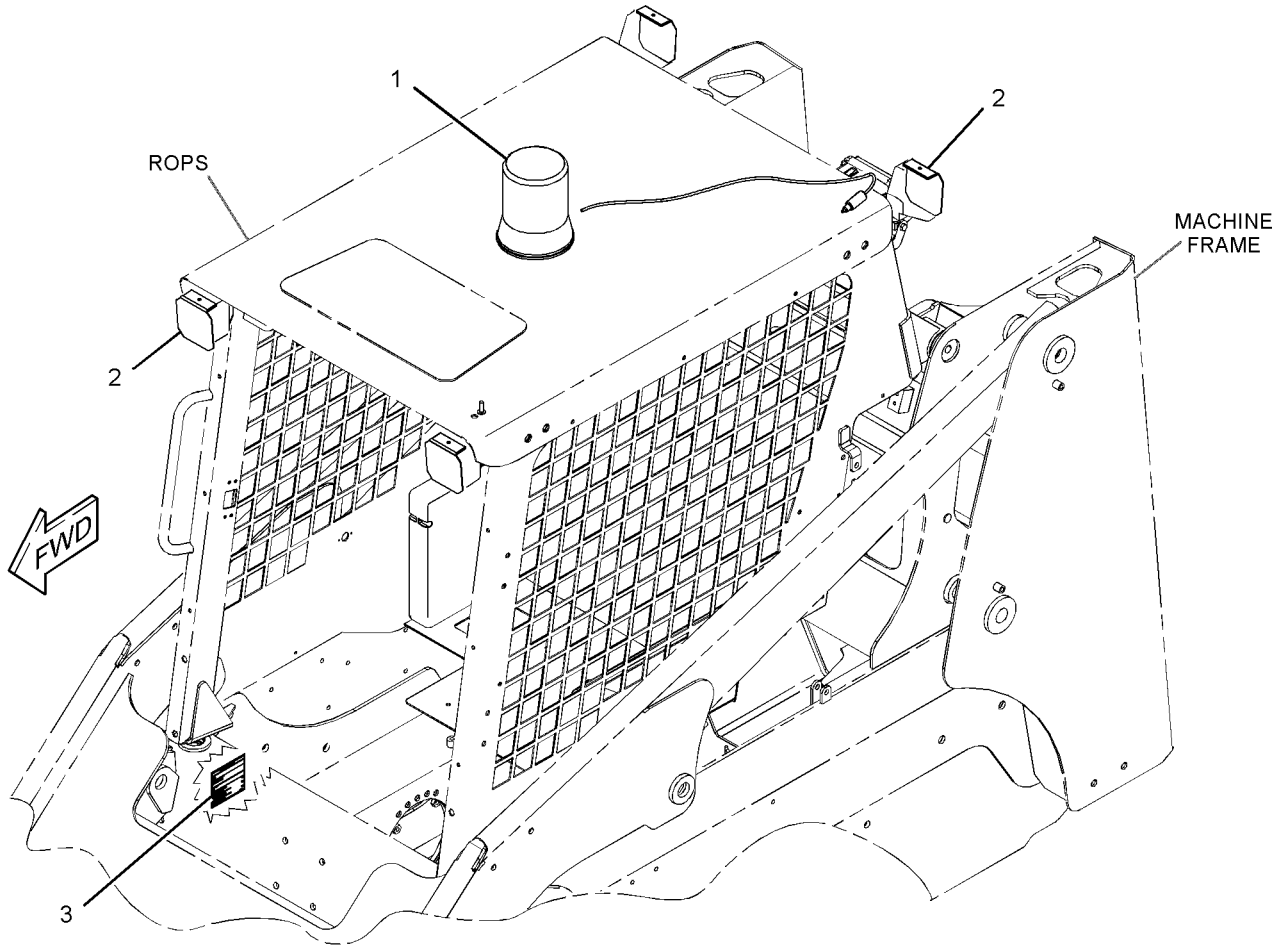

GRAPHIC #1 **<END>** g01436156

191-9566 COUNTERWEIGHT GP–KIT

S/N: BXM4225-UP
37.05 KG (81.5 LBS)
AN ATTACHMENT

SMCS-7056 **i01986629**

NOTE	REF NO	GRAPHIC REF	PART NUMBER	QTY	PART NAME 1 2 3 4 5 6 (PRODUCT LEVEL)	SEE PAGE
	1	1	**215-3927**	4	PLATE	
	2	1	**5P-1076**	12	WASHER-HARD (13.5X30X4-MM THK)	
M	3	1	**8T-4244**	6	NUT (M12X1.75-THD)	
M	4	1	**8T-4910**	6	BOLT (M12X1.75X60-MM)	

M-METRIC PART

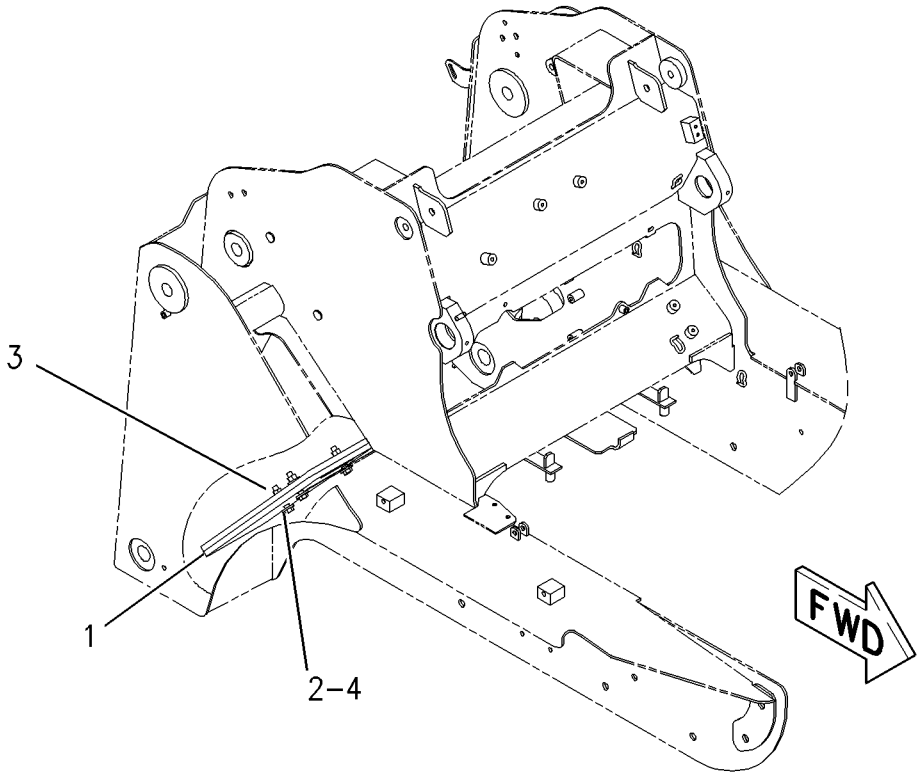

GRAPHIC #1 **<END>** g00888360

215-3926 COUNTERWEIGHT GP

S/N: BXM4225-UP
37.05KG (81.51 LBS)
PART OF 295-7242, 295-7243 COMMON AR
ALSO AN ATTACHMENT

SMCS-7056 **i01749135**

NOTE	REF NO	GRAPHIC REF	PART NUMBER	QTY	PART NAME 1 2 3 4 5 6 (PRODUCT LEVEL)	SEE PAGE
	1	1	**215-3927**	4	PLATE	
	2	1	**5P-1076**	12	WASHER-HARD (13.5X30X4-MM THK)	
M	3	1	**8T-4244**	6	NUT (M12X1.75-THD)	
M	4	1	**8T-4910**	6	BOLT (M12X1.75X60-MM)	

M-METRIC PART

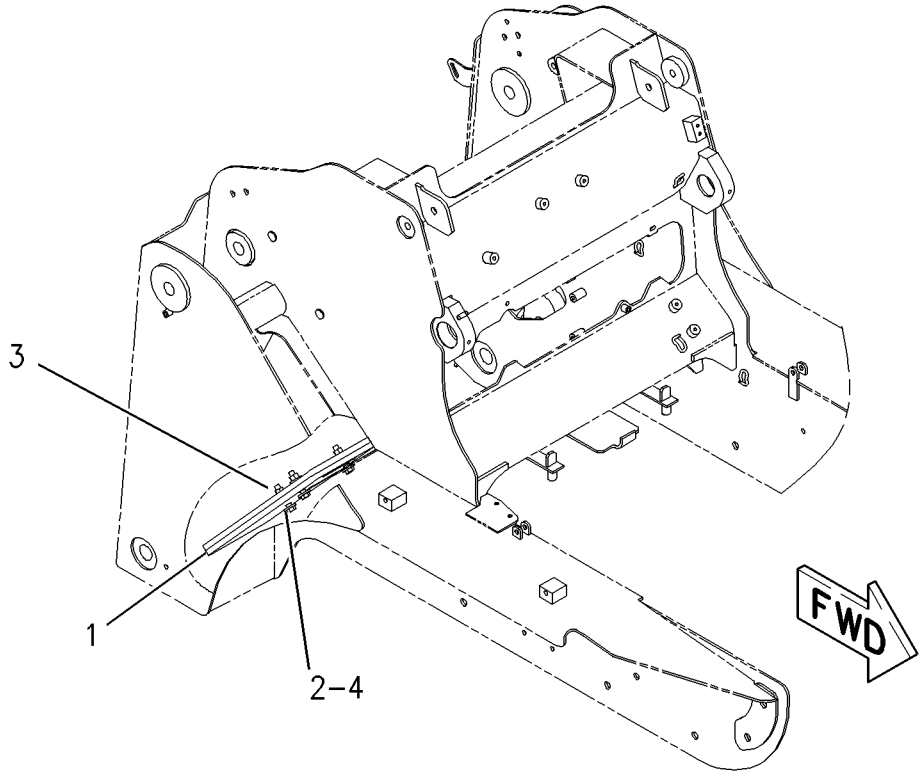

GRAPHIC #1 **<END>** g00888360

FRAME AND BODY

218-5803 ENCLOSURE GP-ENGINE

S/N: BXM4225-UP

PART OF 295-7210 CHASSIS AR

SMCS-7263 **i02014410**

NOTE	REF NO	GRAPHIC REF	PART NUMBER	QTY	PART NAME 1 2 3 4 5 6 (PRODUCT LEVEL)	SEE PAGE
	1	1	**110-0885**	2	BUMPER	
	2	1	**142-8801**	1	HOOD AS	
	3	1	**142-8831**	1	STRIKER AS	
	4	1	**142-8832**	1	PIN AS	
	5	1	**159-8405**	2	BOLT-SHOULDER	
	6	1	**218-5802**	1	DOOR AS	
	7	1	**223-4240**	1	LATCH AS	
J	8	1	**224-3875**	1	LOCK GP	
		1	**226-0291**	1	LOCK AS	
		1	**233-4872**	1	CAM	
M	9	1	**131-3540**	3	LOCKNUT (M8X1.25-THD)	
	10	1	**2K-4973**	2	LOCKNUT (3/8-16-THD)	
M	11	1	**5C-7261**	2	NUT (M8X1.25-THD)	
	12	1	**5P-4116**	11	WASHER-HARD (8.8X20.5X2-MM THK)	
M	13	1	**7X-2537**	3	BOLT (M8X1.25X35-MM)	
	14	1	**7X-7729**	2	WASHER (11X25X3-MM THK)	
M	15	1	**8T-4137**	2	BOLT (M10X1.5X20-MM)	
M	16	1	**8T-4181**	4	BOLT (M6X1X20-MM)	
	17	1	**8T-4205**	4	WASHER-HARD (7.2X14.5X2-MM THK)	
M	18	1	**8T-4908**	5	BOLT (M8X1.25X25-MM)	

J-REQUIRES 5P-8500 KEY
M-METRIC PART

218-5803 **ENCLOSURE GP-ENGINE** *(contd.)* **i02014410**

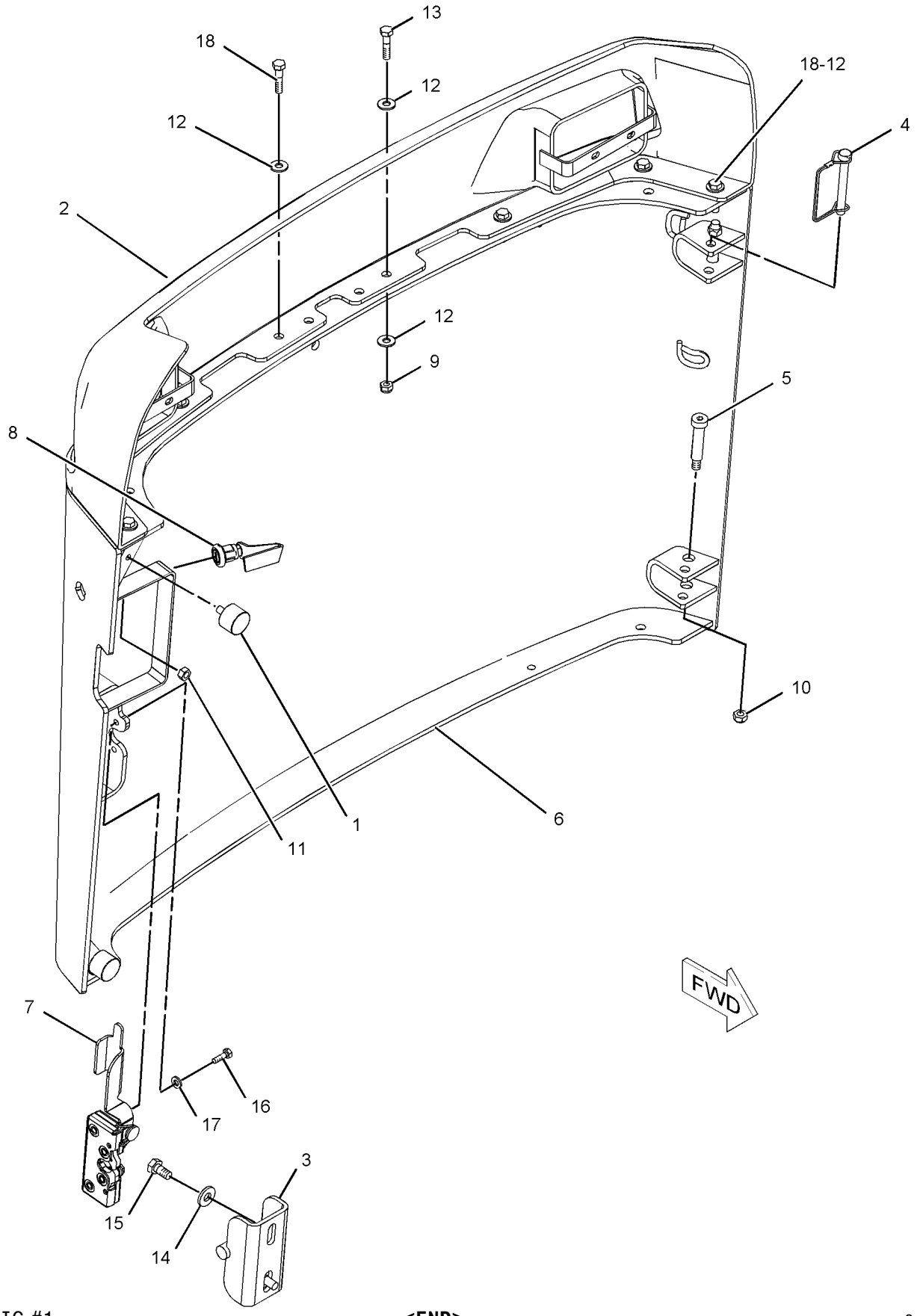

GRAPHIC #1 **<END>** g01030767

FRAME AND BODY

295-7175 FRAME GP-LOADER

S/N: BXM4225-UP

PART OF 295-7210 CHASSIS AR

SMCS-7054 **i02890405**

NOTE	REF NO	GRAPHIC REF	PART NUMBER	QTY	PART NAME 1 2 3 4 5 6 (PRODUCT LEVEL)	SEE PAGE
	1	1	**3B-8488**	2	FITTING-GREASE	
	2	1	**3S-9182**	5	PLUG-MAGNETIC (FRAME)	
	3	1	**4D-0298**	2	BEARING	
	4	1	**9G-5127**	2	BREATHER (TANDEM HOUSING)	
	5	1	**142-8810**	1	PLATE AS	
	6	1	**142-8823**	2	GASKET	
	7	1	**191-2894**	2	PLATE	
	8	1	**191-9576**	1	COVER AS	
	9	1	**207-9731**	1	STEP AS (LH)	
	10	1	**207-9732**	1	STEP AS (RH)	
	11	1	**261-6101**	4	COVER	
	12	1	**231-2105**	1	SENDER AS-FUEL LEVEL	
		1	**102-8802**	1	KIT-RECEPTACLE (2-PIN)	
					(INCLUDES RECEPTACLE AS & WEDGE)	
		1	**186-3735**	2	PIN-CONNECTOR (16-GA TO 18-GA)	
Y	13	1	*295-7042*	1	FRAME GP-MACHINE	236
	14	1	**295-7176**	1	PLATE	
	16	1	**5P-1076**	16	WASHER-HARD (13.5X30X4-MM THK)	
	17	1	**5P-4116**	4	WASHER-HARD (8.8X20.5X2-MM THK)	
M	18	1	**6V-7357**	2	BOLT (M6X1X25-MM)	
	19	1	**8T-4121**	20	WASHER-HARD (11X21X2.5-MM THK)	
	20	1	**8T-4122**	28	WASHER-HARD (17X32X3.5-MM THK)	
M	21	1	**8T-4132**	14	NUT (M16X2-THD)	
M	22	1	**8T-4136**	20	BOLT (M10X1.5X25-MM)	
M	23	1	**8T-4194**	8	BOLT (M12X1.75X50-MM)	
	24	1	**8T-4205**	18	WASHER-HARD (7.2X14.5X2-MM THK)	
M	25	1	**8T-4244**	8	NUT (M12X1.75-THD)	
M	26	1	**8T-4908**	4	BOLT (M8X1.25X25-MM)	
M	27	1	**8T-4970**	16	BOLT (M6X1X14-MM)	
M	28	1	**8T-7338**	14	BOLT (M16X2X45-MM)	

M-METRIC PART
Y-SEPARATE ILLUSTRATION

295 - 7175 **FRAME GP - LOADER** *(contd.)* **i02890405**

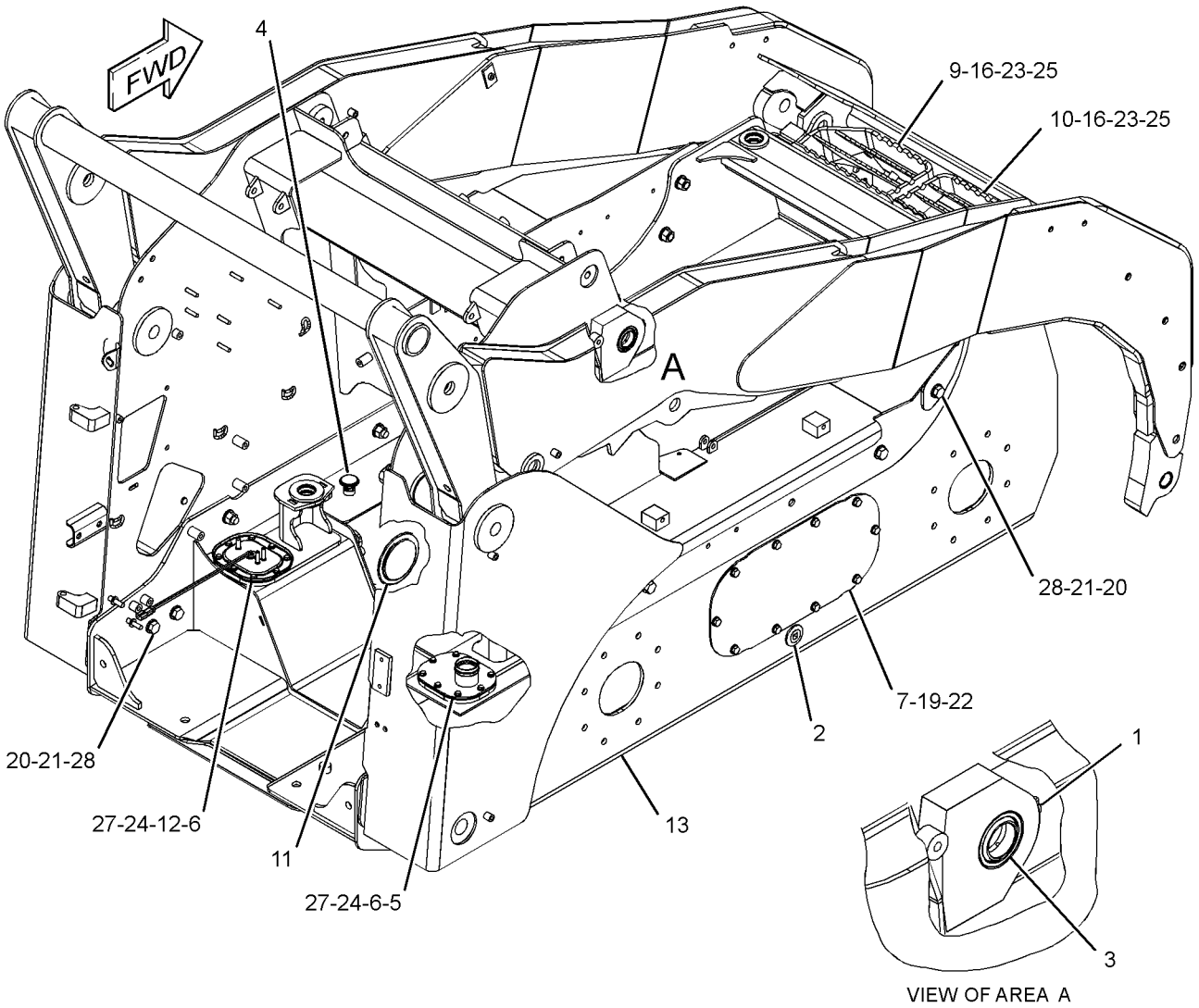

GRAPHIC #1 **<END>** g01389023

295-7042 FRAME GP-MACHINE

S/N: BXM4225-UP

PART OF 295-7175 FRAME GP-LOADER

SMCS-6119, 7050 **i02732860**

NOTE	PART NUMBER	QTY	PART NAME 1 2 3 4 5 6 (PRODUCT LEVEL)	SEE PAGE
	218-6898	1	ARM AS-LIFT	
	142-8805	4	BEARING-SLEEVE	
	159-5756	2	BEARING-SLEEVE	
	295-7173	1	FRAME AS	
	261-6201	1	FRAME AS-UPPER	
	191-9594	1	LINK AS	

<END>

FRAME AND BODY

156-9809 GUIDE GP-LINES

S/N: BXM4225-UP

PART OF 295-7210 CHASSIS AR

SMCS-5057 **i02059887**

NOTE	REF NO	GRAPHIC REF	PART NUMBER	QTY	PART NAME 1 2 3 4 5 6 (PRODUCT LEVEL)	SEE PAGE
	1	1	**227-4315**	1	PLATE AS	
	2	1	**247-4877**	1	BOLT (M8X1.25X12-MM)	
M	3	1	**6V-9189**	1	LOCKNUT (M8X1.25-THD)	
	4	1	**7X-0603**	2	WASHER-HARD (9.9X35X2.5-MM THK)	
M	5	1	**8T-4177**	1	BOLT (M8X1.25X90-MM)	
	6	1	**8T-4224**	1	WASHER-HARD (8.8X16X2-MM THK)	

M-METRIC PART

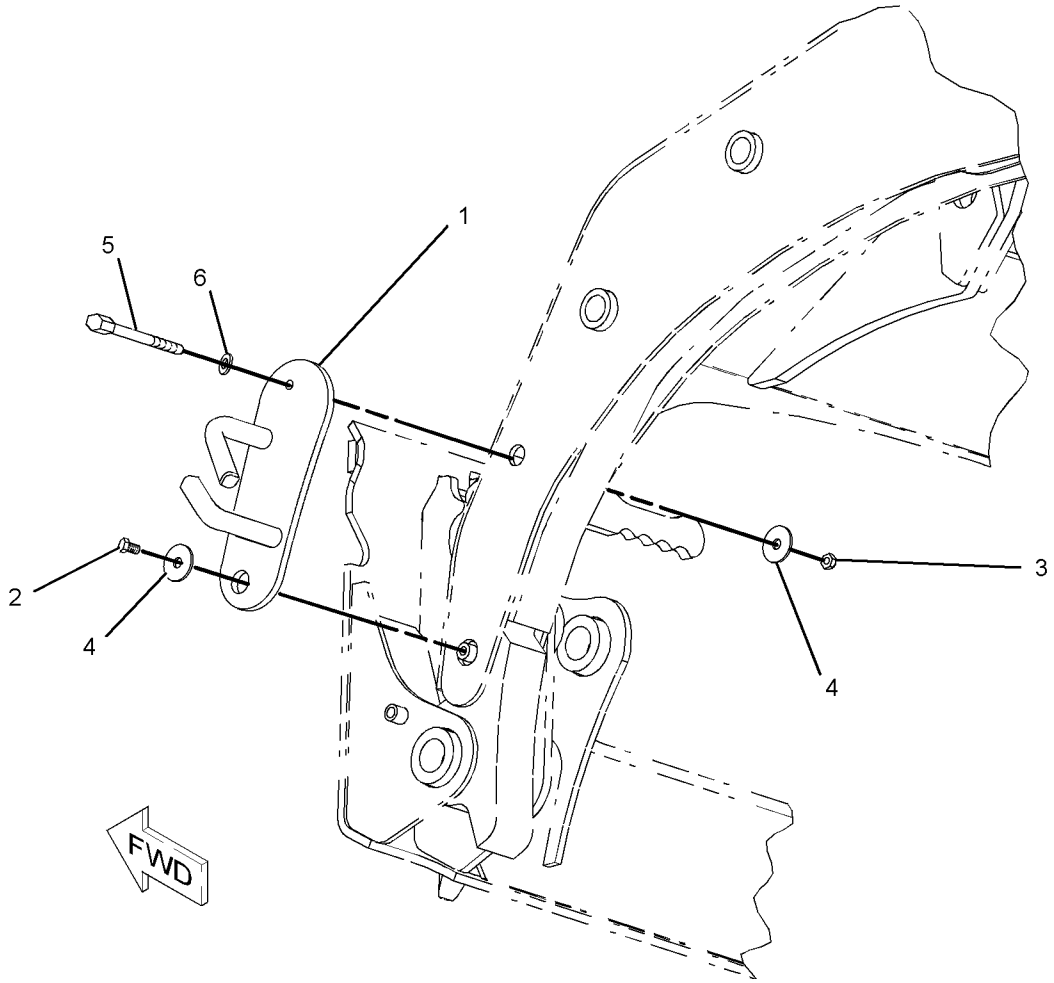

GRAPHIC #1 **<END>** g01056800

257-5730 KIT-ROADING CONVERSION—OUTSIDE NACD

S/N: BXM4225-UP

AN ATTACHMENT

SMCS-1408, 1429, 1430, 1432, 7000, 7319 **i02330195**

NOTE	PART NUMBER	QTY	PART NAME 1 2 3 4 5 6 (PRODUCT LEVEL)	SEE PAGE
	160-1600	1	FILM-WARNING (CLEARANCE)	

<END>

277-0651 KIT-ROADING CONVERSION

S/N: BXM4225-UP
AN ATTACHMENT

SMCS-1408, 1429, 1430, 1432, 7000, 7319 **i02545987**

NOTE	REF NO	GRAPHIC REF	PART NUMBER	QTY	PART NAME 1 2 3 4 5 6 (PRODUCT LEVEL)	SEE PAGE
Y	1	2	**3E-7584**	2	LAMP GP-HEAD & SIGNAL	147
	2	2	**7D-5473**	2	BOLT-SOCKET HEAD (8-32X0.75-IN)	
	3	2	**8T-1887**	2	CLIP (SLOT)	
	4	2	**8T-1888**	2	CLIP (TAB)	
	5	2	**8W-8909**	2	SLEEVE	
	6	2	**132-5166**	2	MIRROR GP	
					(EACH INCLUDES)	
		2	**148-2371**	1	CLAMP (TOP)	
		2	**148-2372**	1	CLAMP (BOTTOM)	
Y	7	1	**142-8634**	2	LAMP GP-STOP & TAIL	150
	8	2	**142-9329**	1	SWITCH AS-ROCKER (ROADING LIGHTS)	
	9	2	**142-9331**	1	SWITCH AS-ROCKER (HAZARD WARNING LIGHTS)	
	10	2	**147-1773**	1	CIRCUIT BREAKER AS (30-AMPERE)	
		2	**6V-8378**	2	NUT (10-32-THD)	
		2	**8F-1434**	2	LOCKWASHER	
		2	**8T-0328**	2	WASHER-HARD (5.5X10X1-MM THK)	
	11	2	*166-2033*	2	TEE AS	
					(EACH INCLUDES)	
		2	**4J-5477**	1	SEAL-O-RING	
		2	**7X-2444**	1	TEE-SWIVEL	
	12	2	**175-4239**	2	BRACKET AS	
Y	13	2	**184-1564**	2	SWITCH GP-PRESSURE	163
	14	2	**216-4711**	1	HARNESS AS-REAR LIGHTING (BRAKE)	
		2	**102-8803**	1	KIT-RECEPTACLE (3-PIN)	
					(INCLUDES RECEPTACLE AS & WEDGE)	
		2	**155-2270**	2	KIT-CONNECTING PLUG (2-PIN)	
					(EACH INCLUDES PLUG AS, WEDGE & INTERFACE SEAL)	
E		2	**125-7874**		TUBE-HEAT SHRINK (5.72-MM DIA) (5-CM)	
	15	1	**216-4726**	1	HARNESS AS-FRONT LIGHTING	
E		1	**125-7874**		TUBE-HEAT SHRINK (5.72-MM DIA) (5-CM)	
E		1	**125-7875**		TUBE-HEAT SHRINK (7.44-MM DIA) (5-CM)	
		1	**155-2274**	1	KIT-CONNECTING PLUG (6-PIN)	
					(INCLUDES PLUG AS, WEDGE & INTERFACE SEAL)	
	16	1	**216-4727**	1	HARNESS AS-REAR LIGHTING	
		1	**102-8805**	1	KIT-RECEPTACLE (6-PIN)	
		1	**102-8806**	1	KIT-RECEPTACLE (8-PIN)	
					(EACH KIT INCLUDES RECEPTACLE AS & WEDGE)	
		1	**155-2265**	1	KIT-CONNECTING PLUG (8-PIN)	
					(INCLUDES PLUG AS, WEDGE & INTERFACE SEAL)	
E		1	**125-7874**		TUBE-HEAT SHRINK (5.72-MM DIA) (20-CM)	
E		1	**125-7875**		TUBE-HEAT SHRINK (7.44-MM DIA) (5-CM)	
	17	2	**225-8013**	1	WIRE AS	
	18	2	**226-5900**	1	SWITCH AS-ROCKER (TURN SIGNAL)	
	19	2	**238-7675**	2	PLATE	
	20	2	**242-9000**	1	FLASHER AS (12-VOLT)	
	21	2	**115-1615**	1	RELAY AS (12-VOLT)	
	22	2	**195-0935**	1	INSERT-THREADED (M6X1)	
	23	1	**206-1346**	2	STRAP-CABLE	
B	24	1,2	**3S-2093**	*22*	STRAP-CABLE	
	25	2	**4B-4863**	2	WASHER (4.7X11X1.2-MM THK)	
	26	1	**4P-7581**	1	CLIP	
M	27	2	**5C-9553**	4	BOLT (M6X1X16-MM)	
	28	2	**8T-4121**	4	WASHER-HARD (11X21X2.5-MM THK)	
M	29	2	**8T-4133**	2	NUT (M10X1.5-THD)	
M	30	2	**8T-4178**	2	BOLT (M10X1.5X90-MM)	

277-0651 KIT-ROADING CONVERSION *(contd.)* i02545987

NOTE	REF NO	GRAPHIC REF	PART NUMBER	QTY	PART NAME 1 2 3 4 5 6 (PRODUCT LEVEL)	SEE PAGE
M	31	1	**8T-4201**	1	BOLT-LOCKING (M10X1.5X20-MM)	
	32	2	**8T-4205**	4	WASHER-HARD (7.2X14.5X2-MM THK)	
M	33	2	**9X-2042**	1	SCREW-TRUSS HEAD (M6X1X12-MM)	

B-USE AS REQUIRED
E-ORDER BY THE CENTIMETER
M-METRIC PART
Y-SEPARATE ILLUSTRATION

REFER TO ALL ILLUSTRATIONS OF THIS GROUP FOR AUXILIARY VIEWS

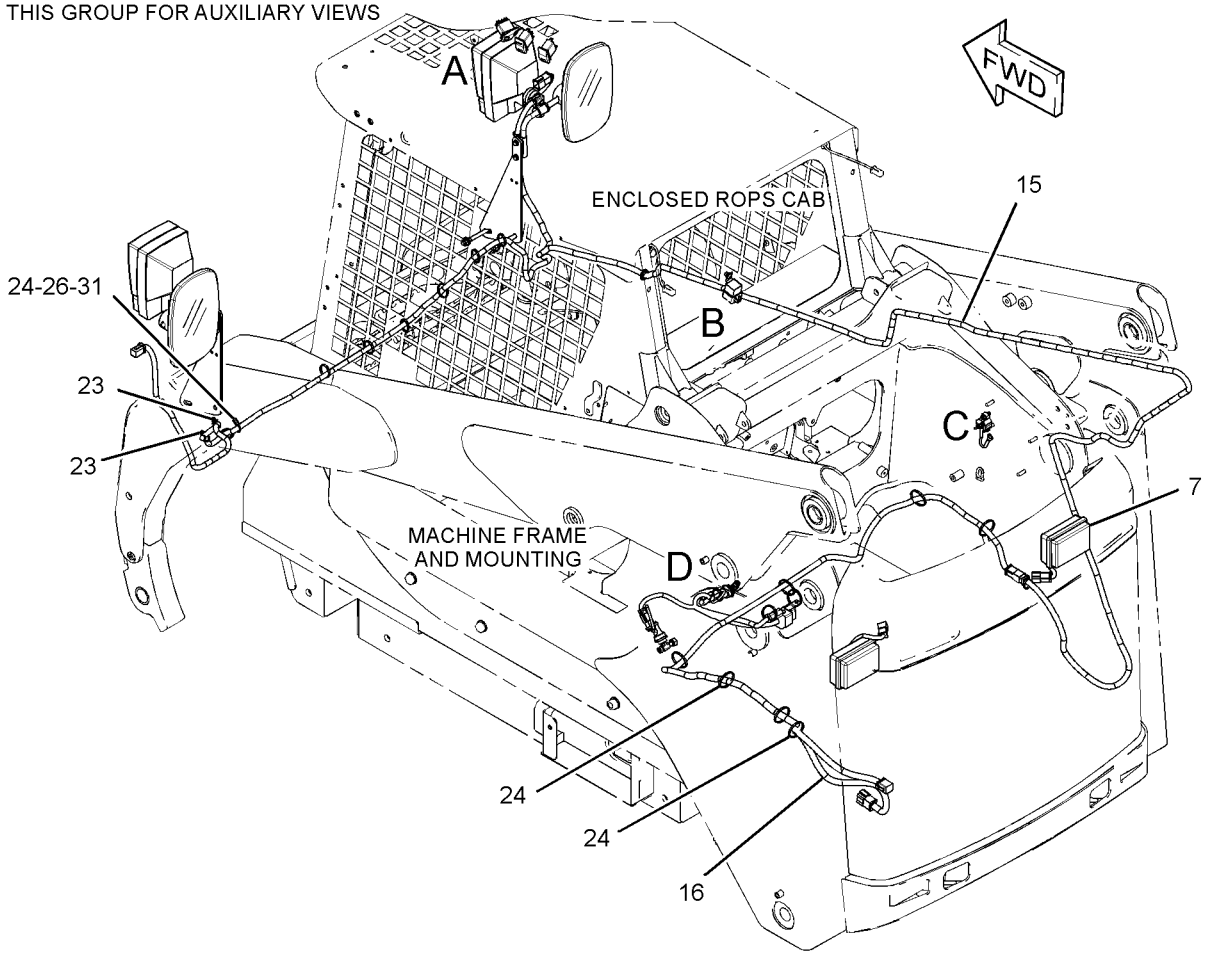

GRAPHIC #1 g01346722

277-0651 KIT-ROADING CONVERSION *(contd.)* **i02545987**

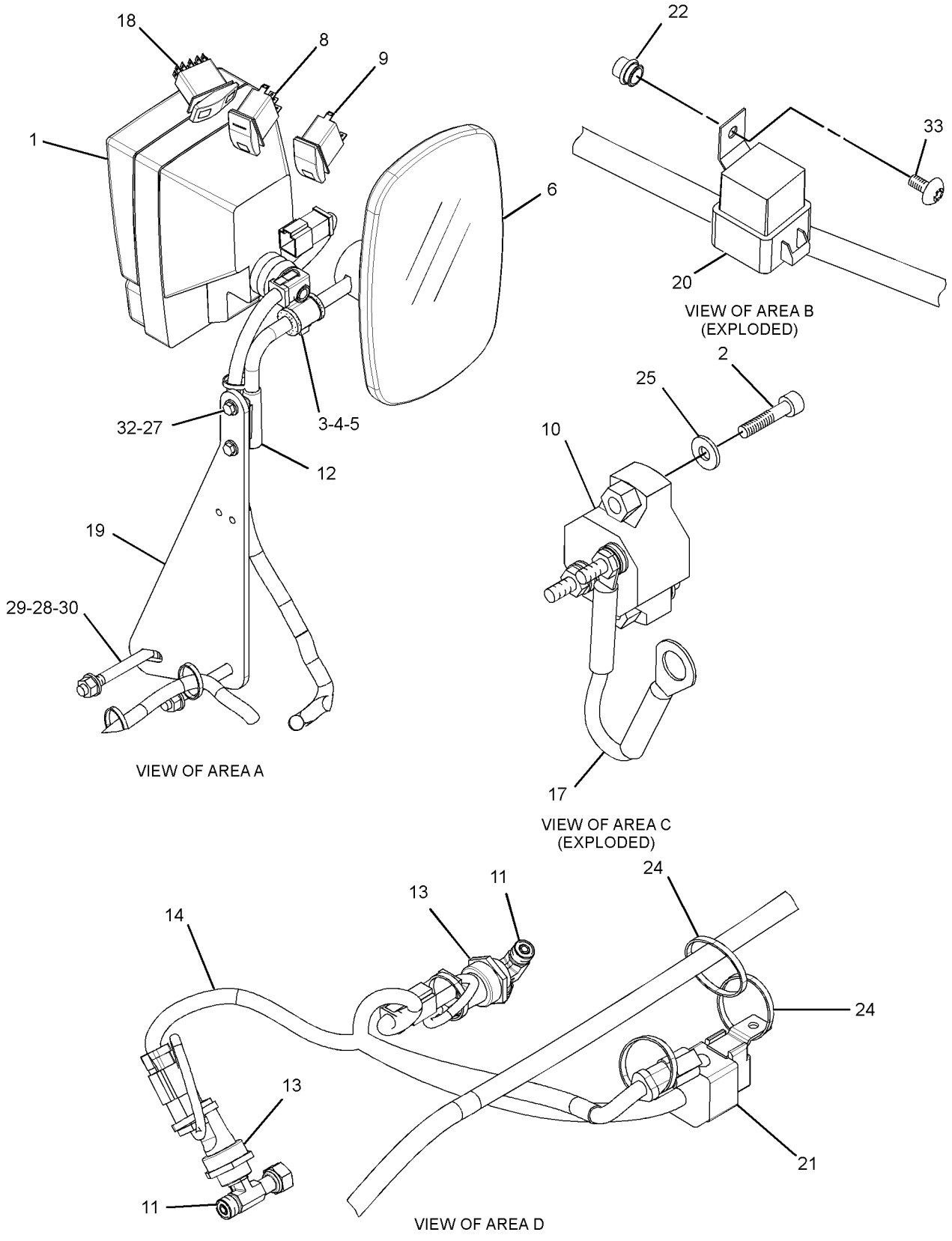

GRAPHIC #2 **<END>** g01346719

FRAME AND BODY

277-0653 KIT-ROADING CONVERSION

S/N: BXM4225-UP

AN ATTACHMENT

SMCS-1408, 1429, 1430, 1432, 7000, 7319 **i02545996**

NOTE	REF NO	GRAPHIC REF	PART NUMBER	QTY	PART NAME 1 2 3 4 5 6 (PRODUCT LEVEL)	SEE PAGE
Y	1	1	**3E-7584**	2	LAMP GP-HEAD & SIGNAL	147
	2	1	**7D-5473**	2	BOLT-SOCKET HEAD (8-32X0.75-IN)	
	3	1	**8T-1887**	2	CLIP (SLOT)	
	4	1	**8T-1888**	2	CLIP (TAB)	
	5	1	**8W-8909**	2	SLEEVE	
	6	1	**132-5166**	2	MIRROR GP	
					(EACH INCLUDES)	
		1	**148-2371**	1	CLAMP (TOP)	
		1	**148-2372**	1	CLAMP (BOTTOM)	
Y	7	1	**142-8634**	2	LAMP GP-STOP & TAIL	150
	8	1	**142-9329**	1	SWITCH AS-ROCKER (ROADING LIGHTS)	
	9	1	**142-9331**	1	SWITCH AS-ROCKER (HAZARD WARNING LIGHTS)	
	10	1	**147-1773**	1	CIRCUIT BREAKER AS (30-AMPERE)	
		1	**6V-8378**	2	NUT (10-32-THD)	
		1	**8F-1434**	2	LOCKWASHER	
		1	**8T-0328**	2	WASHER-HARD (5.5X10X1-MM THK)	
	11	1	*166-2033*	2	TEE AS	
					(EACH INCLUDES)	
		1	**4J-5477**	1	SEAL-O-RING	
		1	**7X-2444**	1	TEE-SWIVEL	
	12	1	**175-4239**	2	BRACKET AS	
Y	13	1	**184-1564**	2	SWITCH GP-PRESSURE	163
	14	1	**216-4711**	1	HARNESS AS-REAR LIGHTING (BRAKE)	
	15	1	**216-4726**	1	HARNESS AS-FRONT LIGHTING	
	16	1	**216-4727**	1	HARNESS AS-REAR LIGHTING	
	17	1	**225-8013**	1	WIRE AS	
	18	1	**226-5900**	1	SWITCH AS-ROCKER (TURN SIGNAL)	
	19	1	**238-7675**	1	PLATE	
	20	1	**238-7676**	1	BRACKET AS	
	21	1	**242-9000**	1	FLASHER AS (12-VOLT)	
	22	1	**115-1615**	1	RELAY AS (12-VOLT)	
	23	1	**195-0935**	1	INSERT-THREADED (M6X1)	
	24	1	**206-1346**	2	STRAP-CABLE	
B	25	1	**3S-2093**	22	STRAP-CABLE	
	26	1	**4B-4863**	2	WASHER (4.7X11X1.2-MM THK)	
	27	1	**4P-7581**	1	CLIP	
M	28	1	**5C-9553**	4	BOLT (M6X1X16-MM)	
M	29	1	**7X-0818**	1	BOLT (M8X1.25X45-MM)	
	30	1	**8T-4121**	4	WASHER-HARD (11X21X2.5-MM THK)	
M	31	1	**8T-4133**	2	NUT (M10X1.5-THD)	
M	32	1	**8T-4178**	2	BOLT (M10X1.5X90-MM)	
M	33	1	**8T-4201**	1	BOLT-LOCKING (M10X1.5X20-MM)	
	34	1	**8T-4205**	4	WASHER-HARD (7.2X14.5X2-MM THK)	
M	35	1	**8T-7547**	1	BOLT (M8X1.25X30-MM)	
M	36	1	**9X-2042**	1	SCREW-TRUSS HEAD (M6X1X12-MM)	

B-USE AS REQUIRED
M-METRIC PART
Y-SEPARATE ILLUSTRATION

277-0653 KIT-ROADING CONVERSION *(contd.)* **i02545996**

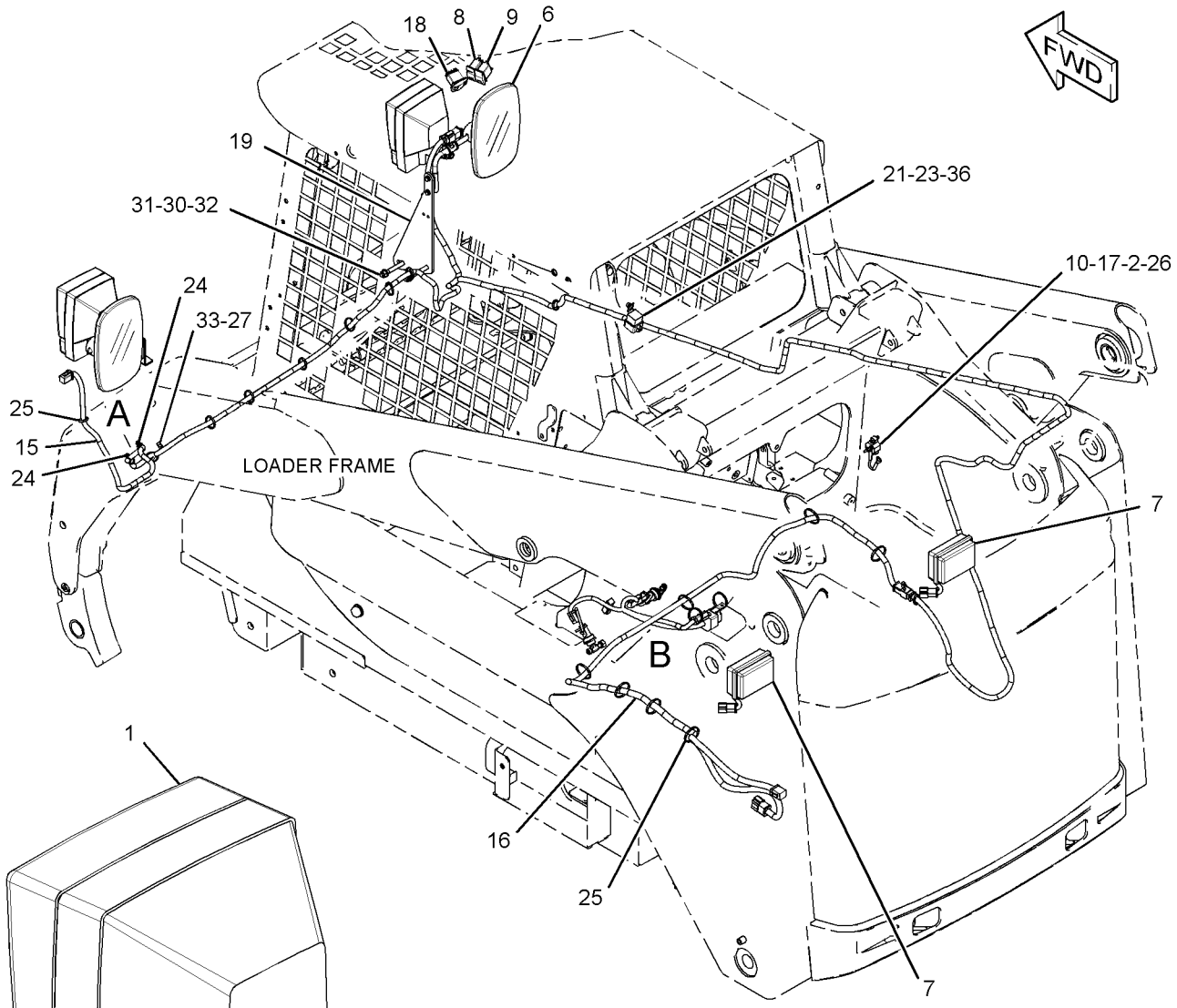

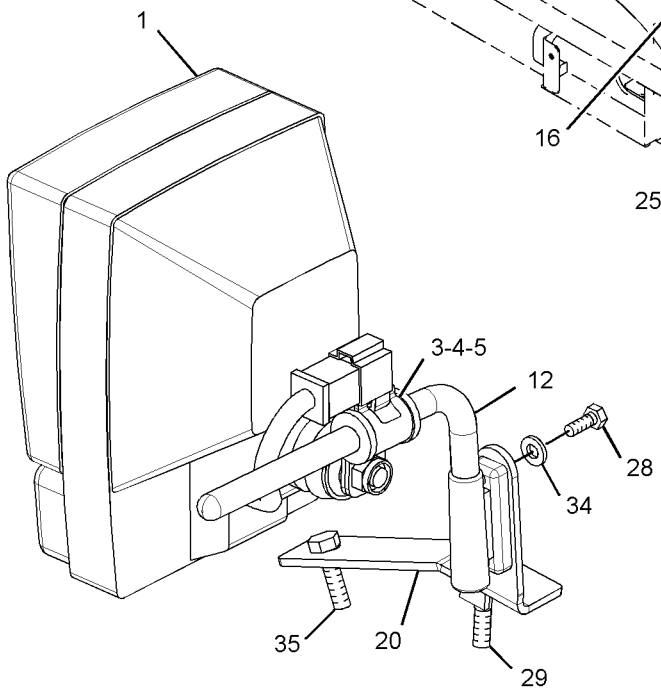

VIEW OF AREA A
(MIRROR REMOVED)
(EXPLODED)

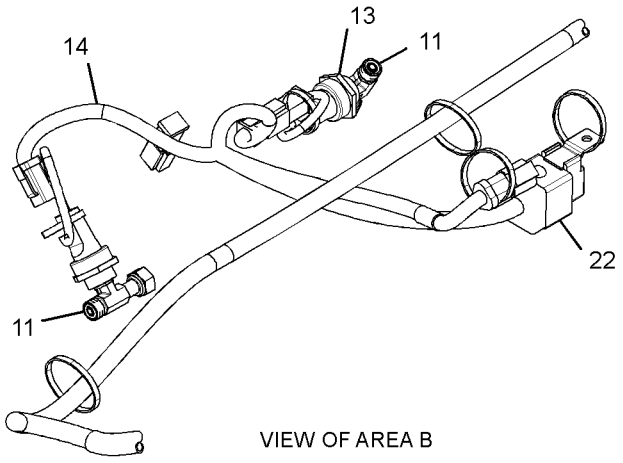

VIEW OF AREA B

GRAPHIC #1 **<END>** g01349684

188-0147 LIFTING GP-MACHINE–4-POINT

S/N: BXM4225-UP

PART OF 261-6158, 278-1213, 278-1221, 278-1225, 278-5409, 278-5442, 295-7039, 295-7050, 295-7061, 295-7068, 295-7151, 295-7159, 295-7164, 295-7168 CONVERSION AR-MACHINE, 233-5681, 233-5682, 233-5683, 233-5684, 233-5685, 233-5686, 257-5721, 257-5722, 295-7044 CONVERSION AR-ROADING AN ATTACHMENT

SMCS-1122, 6459, 7000 **i02571185**

NOTE	REF NO	GRAPHIC REF	PART NUMBER	QTY	PART NAME 1 2 3 4 5 6 (PRODUCT LEVEL)	SEE PAGE
	1	1	**7E-2700**	4	FILM-SYMBOL (LIFT EYE LOCATION)	
	2	1	**142-8826**	4	PLATE-LIFT	
M	3	1	**159-2953**	8	SCREW-FLAT HEAD (M16X2-THD)	
	4	1	**8T-4122**	4	WASHER-HARD (17X32X3.5-MM THK)	
M	5	1	**8T-4132**	4	NUT (M16X2-THD)	

M-METRIC PART

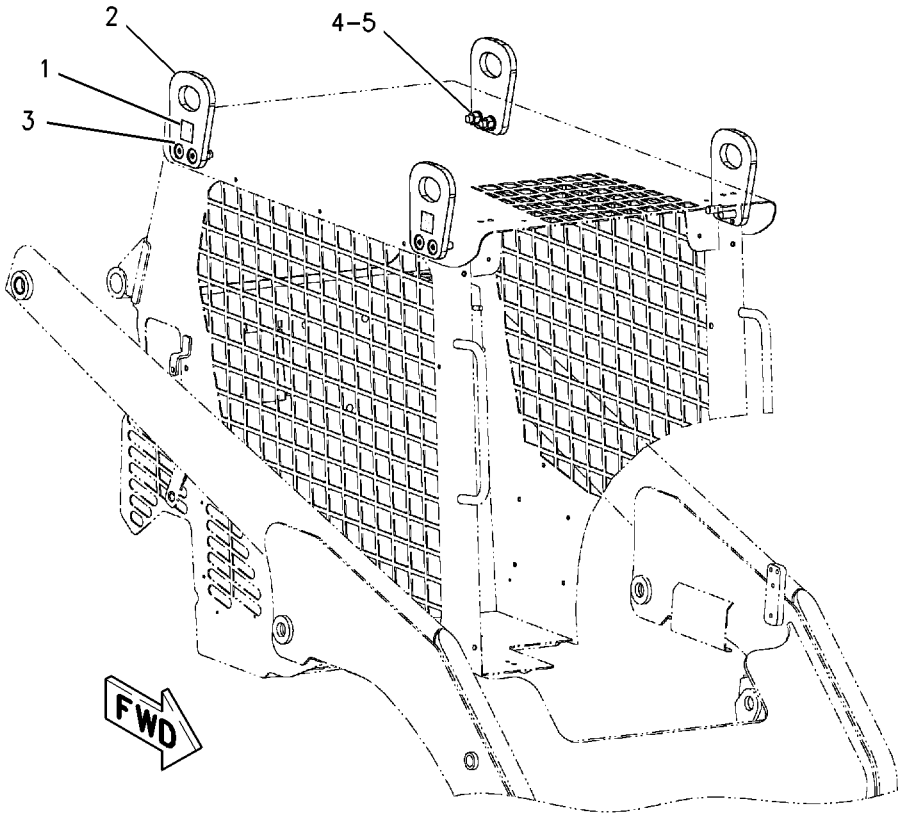

GRAPHIC #1 **<END>** g00902178

218-5969 LIFTING GP-MACHINE—SINGLE POINT

S/N: BXM4225-UP

CANNOT BE USED WITH 188-0147—PAGE 244

AN ATTACHMENT

SMCS-1122, 6459, 7000 **i02771699**

NOTE	REF NO	GRAPHIC REF	PART NUMBER	QTY	PART NAME 1 2 3 4 5 6 (PRODUCT LEVEL)	SEE PAGE
	1	1	**5P-0372**	2	LOCK PIN	
	2	1	**7E-2700**	2	FILM-SYMBOL (LIFT EYE LOCATION)	
	3	1	**9C-5344**	1	SPACER (10.5X20X18-MM THK)	
	4	1	**095-1325**	1	PIN-CLEVIS	
	5	1	**152-1154**	1	BRACKET AS-LIFT	
	6	1	**152-1156**	4	PLATE	
	7	1	**153-2683**	1	SPRING AS-GAS (CAB)	
	8	1	**177-3405**	1	PIN	
M	9	1	**159-2953**	8	SCREW-FLAT HEAD (M16X2-THD)	
	10	1	**8T-4122**	4	WASHER-HARD (17X32X3.5-MM THK)	
M	11	1	**8T-4132**	4	NUT (M16X2-THD)	

M-METRIC PART

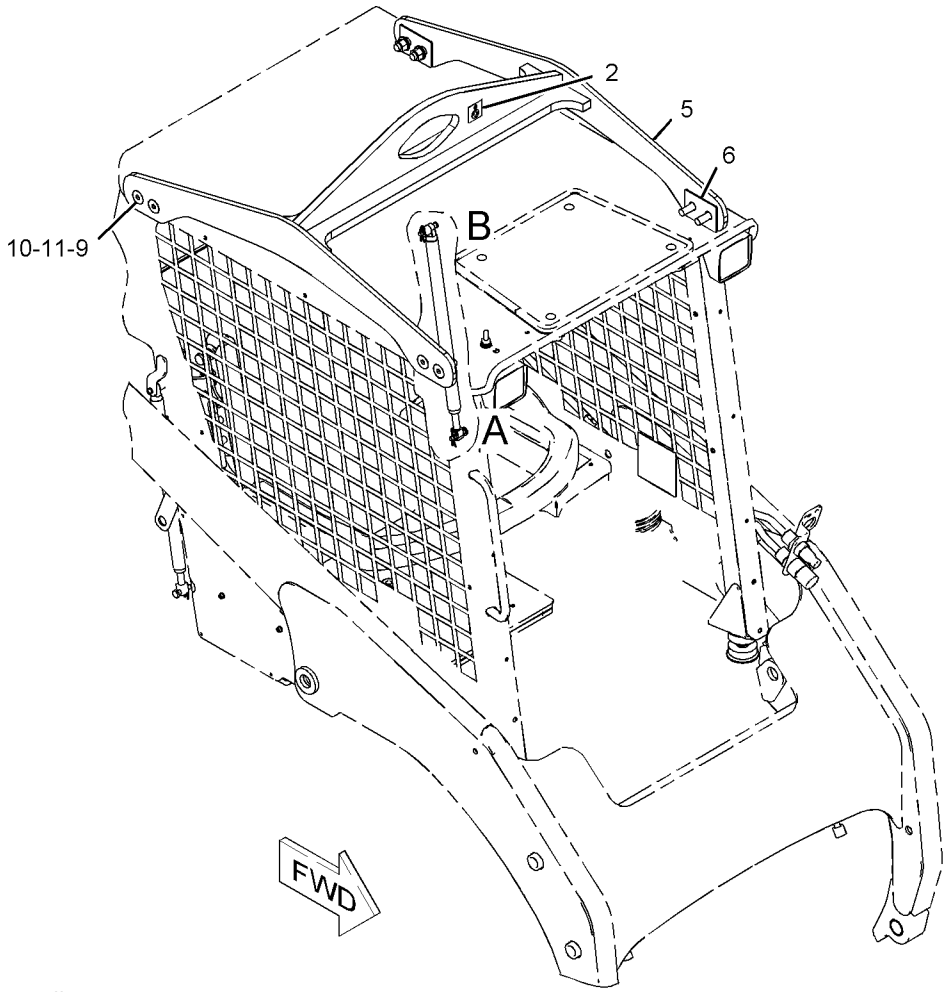

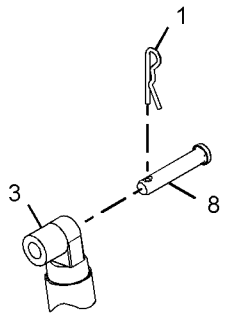

VIEW OF AREA B

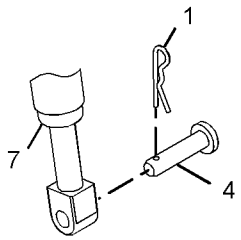

VIEW OF AREA A

GRAPHIC #1

<END>

g01033956

238-7671 MIRROR & MTG GP-REAR VIEW–
WITH ROADING LIGHT MOUNT

S/N: BXM4225-UP

PART OF 278-1213, 278-1225, 295-7039, 295-7151, 295-7164 CONVERSION AR-MACHINE, 233-5682, 233-5683, 257-5721 CONVERSION AR-ROADING AN ATTACHMENT

SMCS-7319 **i01958287**

NOTE	REF NO	GRAPHIC REF	PART NUMBER	QTY	PART NAME 1 2 3 4 5 6 (PRODUCT LEVEL)	SEE PAGE
	1	1	**132-5166**	2	MIRROR GP	
					(EACH INCLUDES)	
		1	**148-2371**	1	CLAMP (TOP)	
		1	**148-2372**	1	CLAMP (BOTTOM)	
	2	1	**175-4237**	1	BLOCK AS	
	3	1	**175-4239**	2	BRACKET AS	
	4	1	**238-7675**	2	PLATE	
M	5	1	**5C-9553**	4	BOLT (M6X1X16-MM)	
	6	1	**8T-4121**	4	WASHER-HARD (11X21X2.5-MM THK)	
M	7	1	**8T-4133**	2	NUT (M10X1.5-THD)	
M	8	1	**8T-4178**	2	BOLT (M10X1.5X90-MM)	
	9	1	**8T-4205**	4	WASHER-HARD (7.2X14.5X2-MM THK)	

M-METRIC PART

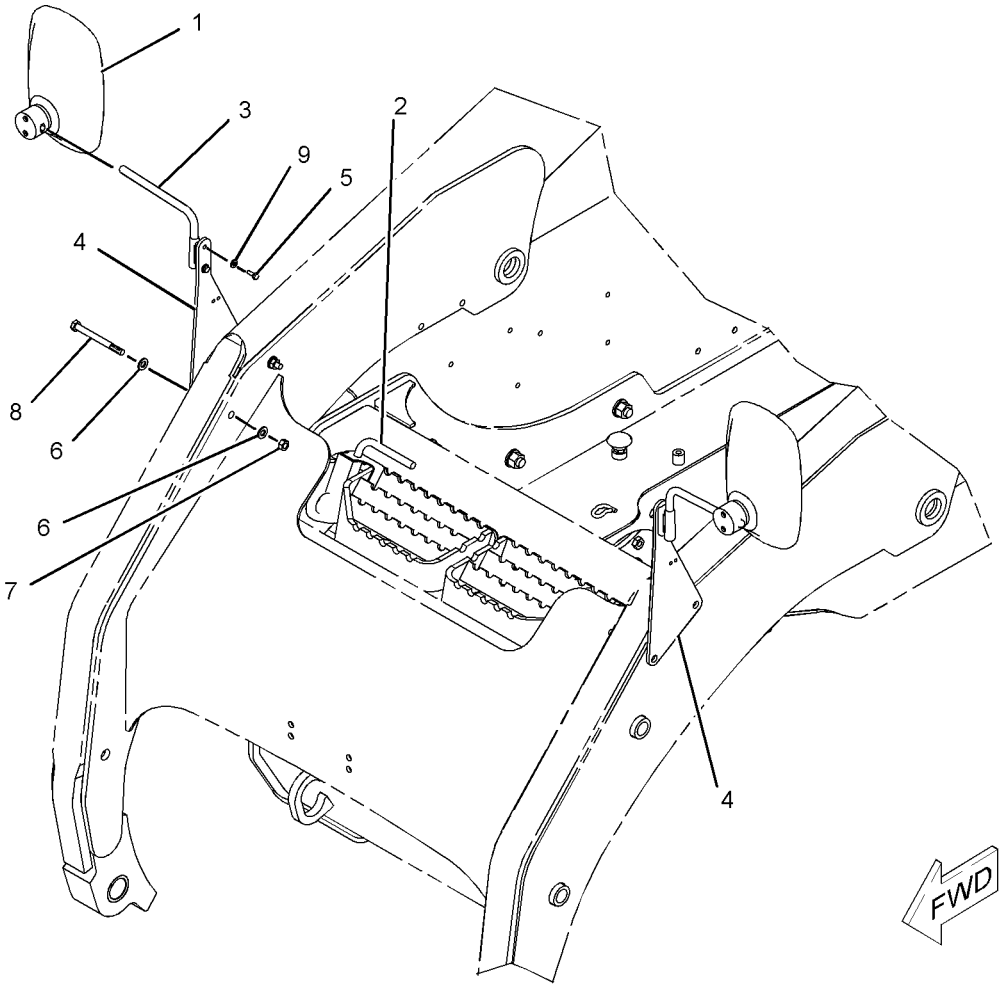

GRAPHIC #1 **<END>** g01017865

238-7672 MIRROR & MTG GP-REAR VIEW

S/N: BXM4225-UP
HIGH FLOW
PART OF 278-5409, 278-5442, 295-7159, 295-7168 CONVERSION AR-MACHINE, 233-5685, 233-5686, 257-5722, 295-7044 CONVERSION AR-ROADING
AN ATTACHMENT

SMCS-7319 **i01957890**

NOTE	REF NO	GRAPHIC REF	PART NUMBER	QTY	PART NAME 1 2 3 4 5 6 (PRODUCT LEVEL)	SEE PAGE
	1	1	**132-5166**	2	MIRROR GP	
					(EACH INCLUDES)	
		1	**148-2371**	1	CLAMP (TOP)	
		1	**148-2372**	1	CLAMP (BOTTOM)	
	2	1	**175-4237**	1	BLOCK AS	
	3	1	**175-4239**	2	BRACKET AS	
	4	1	**238-7675**	1	PLATE	
	5	1	**238-7676**	1	BRACKET AS	
M	6	1	**5C-9553**	4	BOLT (M6X1X16-MM)	
M	7	1	**7X-0818**	1	BOLT (M8X1.25X45-MM)	
	8	1	**8T-4121**	4	WASHER-HARD (11X21X2.5-MM THK)	
M	9	1	**8T-4133**	2	NUT (M10X1.5-THD)	
M	10	1	**8T-4178**	2	BOLT (M10X1.5X90-MM)	
	11	1	**8T-4205**	4	WASHER-HARD (7.2X14.5X2-MM THK)	
M	12	1	**8T-7547**	1	BOLT (M8X1.25X30-MM)	

M-METRIC PART

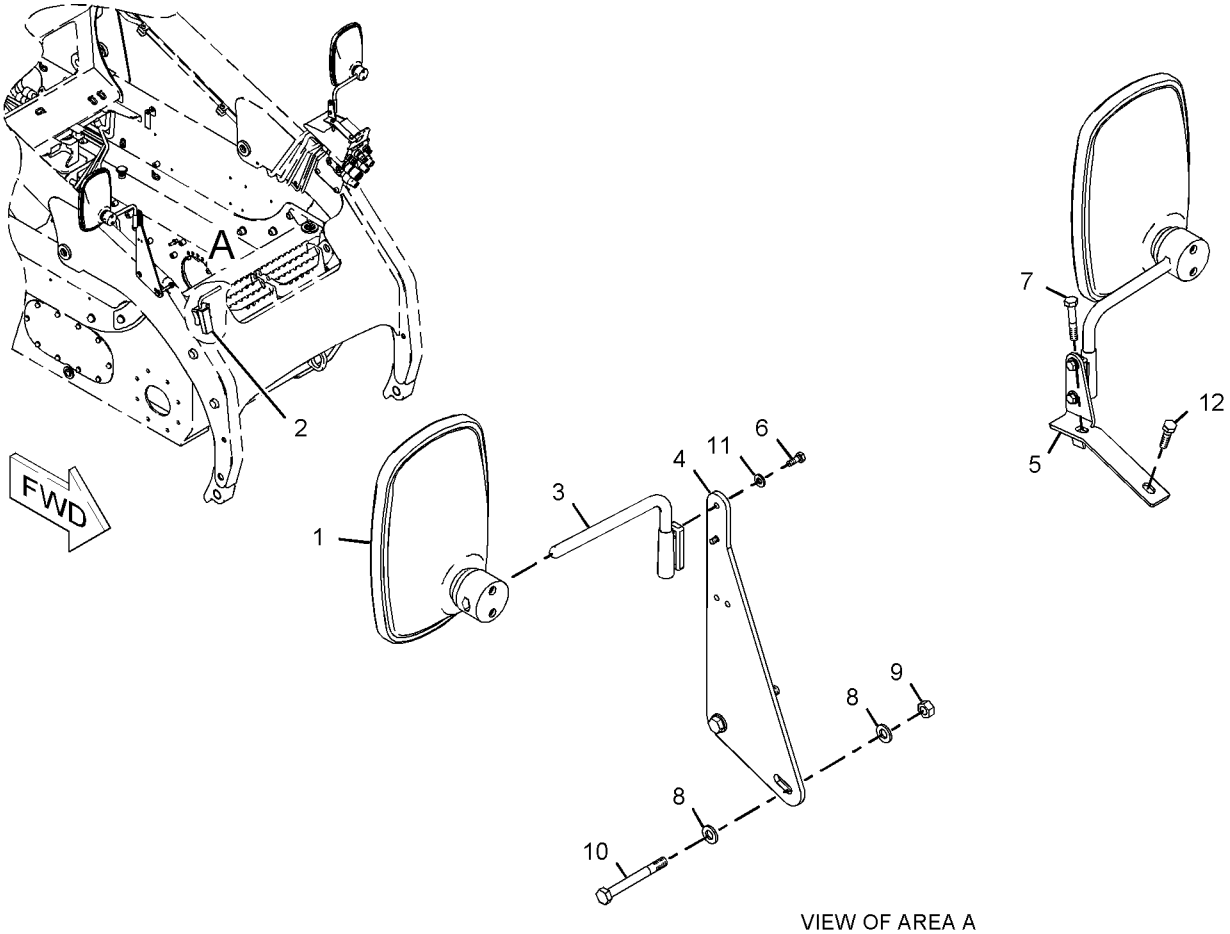

GRAPHIC #1 **<END>** g01030330

173-3021 MOUNTING GP-REGISTRATION

S/N: BXM4225-UP

PART OF 225-7963 MOUNTING GP-REGISTRATION

AN ATTACHMENT

SMCS-1408, 1429, 7050 **i02005879**

NOTE	REF NO	GRAPHIC REF	PART NUMBER	QTY	PART NAME 1 2 3 4 5 6 (PRODUCT LEVEL)	SEE PAGE
	1	1	**175-4236**	1	PLATE	
	2	1	**190-8962**	1	LAMP GP-REGISTRATION PLATE	
		1	**7M-9957**	1	LAMP (12-VOLT) (REGISTRATION PLATE)	
	3	1	**204-1365**	1	PLATE	
	4	1	**207-9780**	1	BRACKET AS	
	5	1	**215-4001**	1	PLATE	
	6	1	**4B-4863**	2	WASHER (4.7X11X1.2-MM THK)	
M	7	1	**5C-8312**	2	NUT (M4X0.7 THD)	
M	8	1	**6V-9672**	2	SCREW-MACHINE (M4X0.7X16-MM)	
M	9	1	**8T-4171**	3	BOLT (M6X1X12-MM)	
	10	1	**8T-4205**	3	WASHER-HARD (7.2X14.5X2-MM THK)	

M-METRIC PART

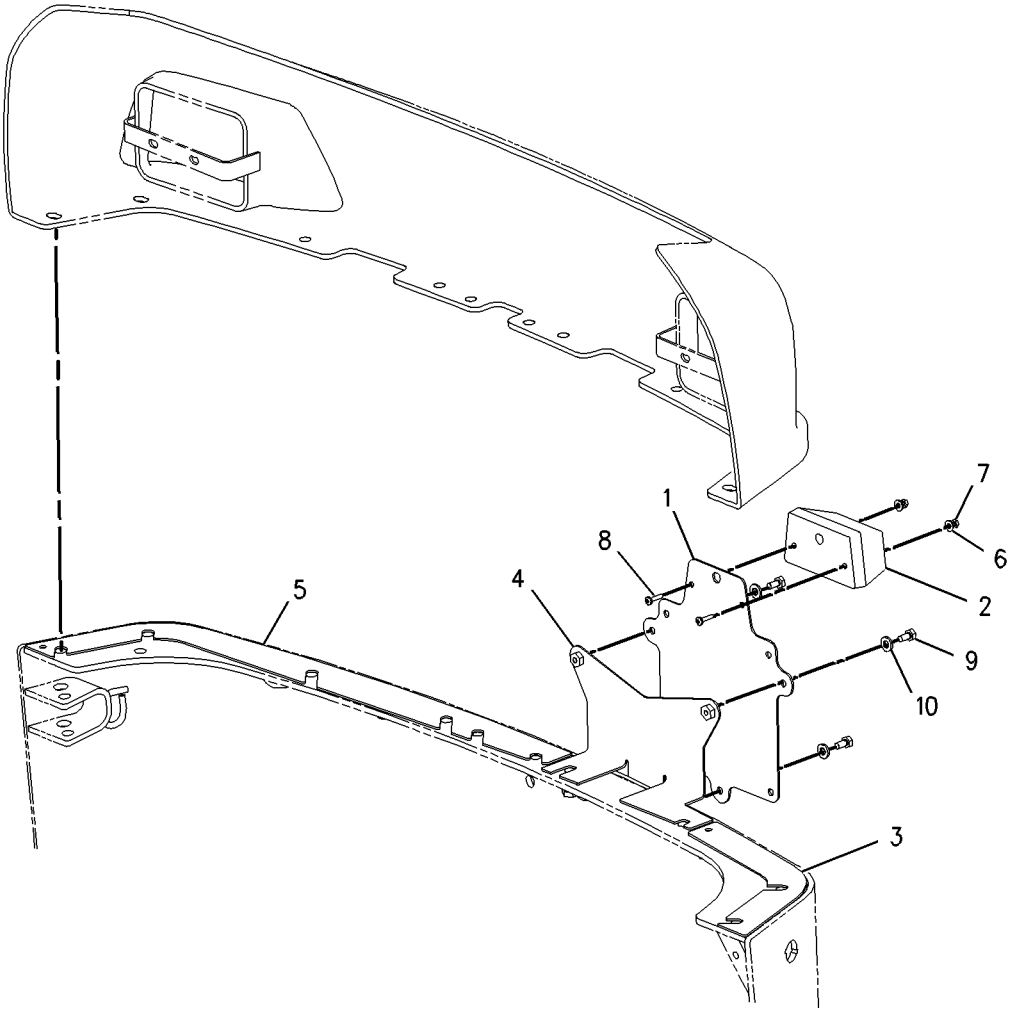

GRAPHIC #1 **<END>** g00874745

225-7963 MOUNTING GP-REGISTRATION

S/N: BXM4225-UP

PART OF 278-1213, 278-5409, 295-7151, 295-7159 CONVERSION AR-MACHINE, 233-5683, 233-5686 CONVERSION AR-ROADING

AN ATTACHMENT

SMCS-1408, 1429, 7050 **i01951893**

NOTE	REF NO	GRAPHIC REF	PART NUMBER	QTY	PART NAME 1 2 3 4 5 6 (PRODUCT LEVEL)	SEE PAGE
Y	1	1	*173-3021*	1	MOUNTING GP-REGISTRATION	248
	2	1	**186-0239**	1	HARNESS AS-REAR LIGHTING	
		1	**102-8804**	1	KIT-RECEPTACLE (4-PIN)	
		1	**155-2271**	1	KIT-CONNECTING PLUG (4-PIN)	

Y-SEPARATE ILLUSTRATION

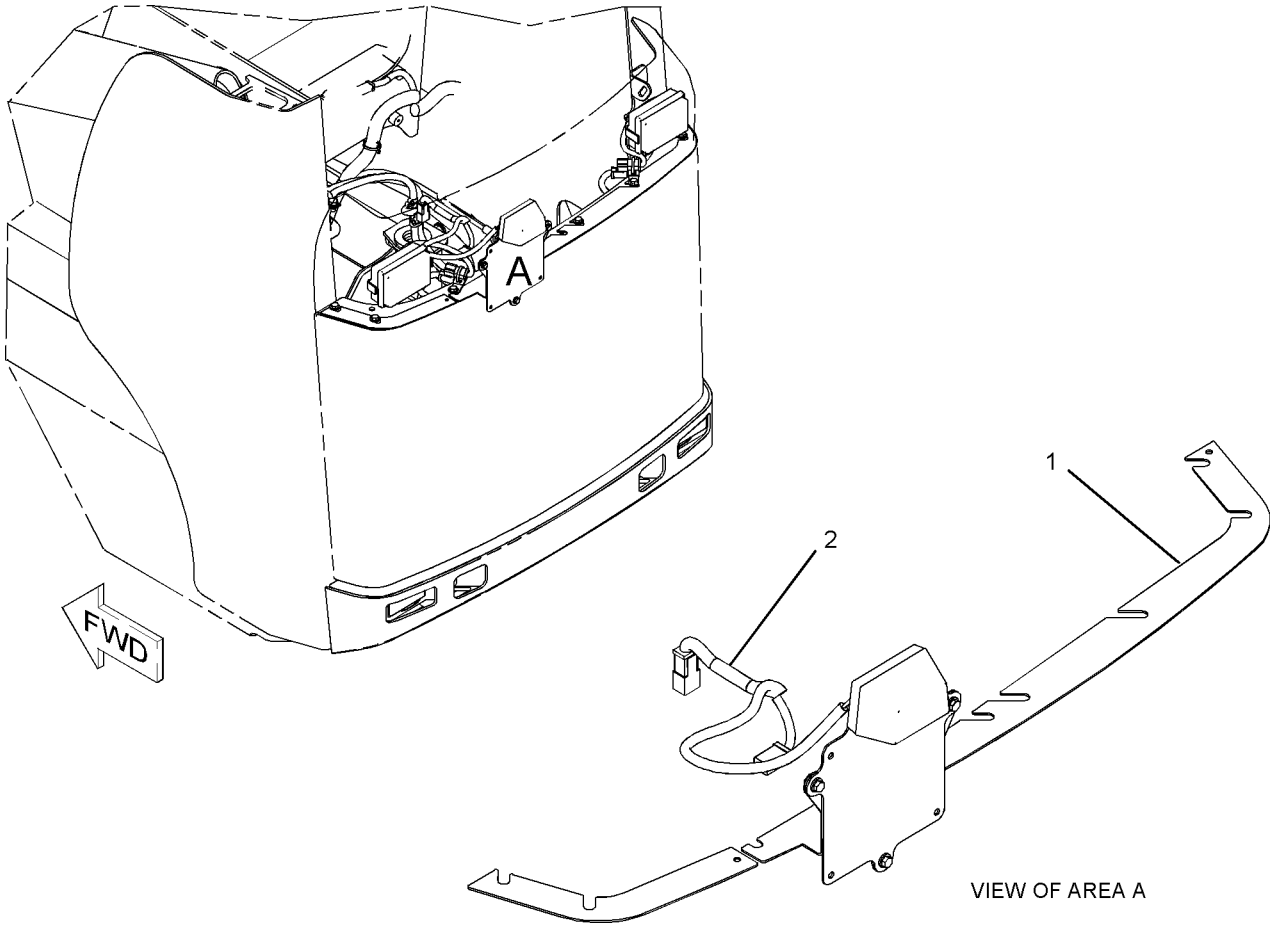

GRAPHIC #1

<END>

g01030726

175-4228 MOUNTING GP-ROADING LIGHTS—REAR

S/N: BXM4225-UP

CANNOT BE USED WITH 233-5670—PAGE 132, 233-5681—PAGE 220, 233-5684—PAGE 221

AN ATTACHMENT

SMCS-1429 **i02571196**

NOTE	REF NO	GRAPHIC REF	PART NUMBER	QTY	PART NAME 1 2 3 4 5 6 (PRODUCT LEVEL)	SEE PAGE
	1	1	**3S-2093**	6	STRAP-CABLE	
	2	1	**9R-1499**	2	REFLECTOR	
	3	1	**165-7098**	2	SUPPORT AS	
	4	1	**166-2561**	1	BRACKET AS	
	5	1	**183-7117**	2	HARNESS AS-REAR LIGHTING	
					(EACH INCLUDES)	
		1	**102-8804**	1	KIT-RECEPTACLE (4-PIN)	
M	6	1	**5C-2890**	4	NUT (M6X1-THD)	
M	7	1	**6V-7357**	4	BOLT (M6X1X25-MM)	
M	8	1	**8T-4138**	4	BOLT (M6X1X20-MM)	
	9	1	**8T-4205**	12	WASHER-HARD (7.2X14.5X2-MM THK)	

M-METRIC PART

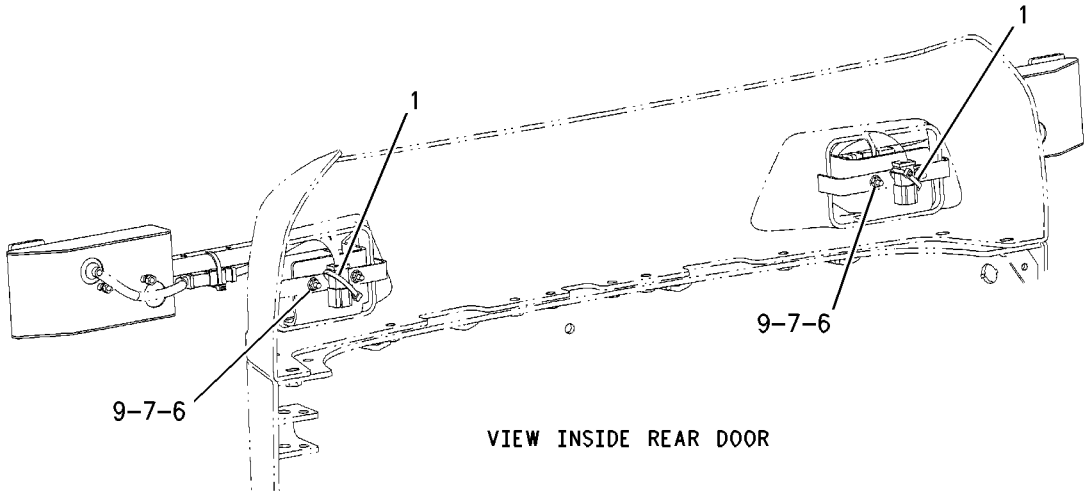

VIEW INSIDE REAR DOOR

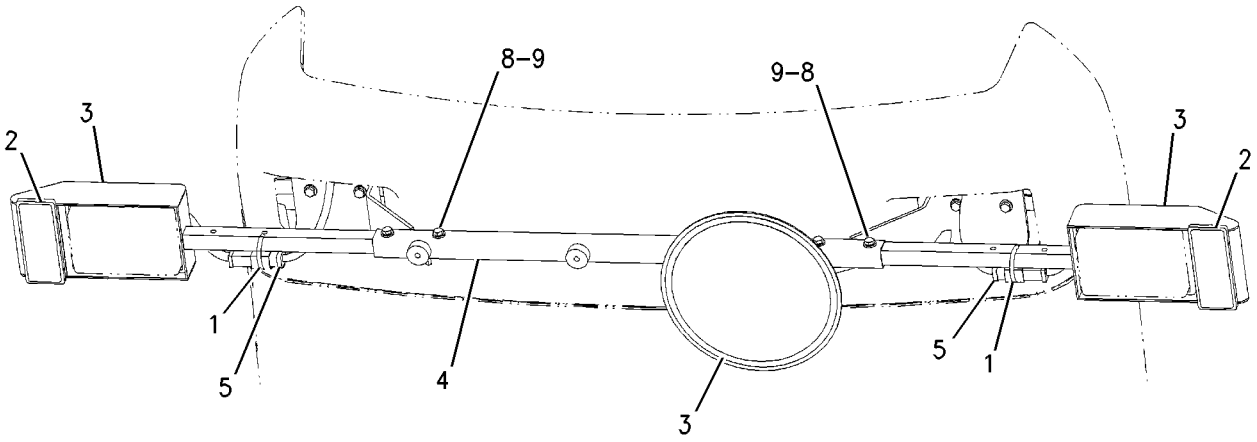

REAR VIEW
GERMAN MACHINE

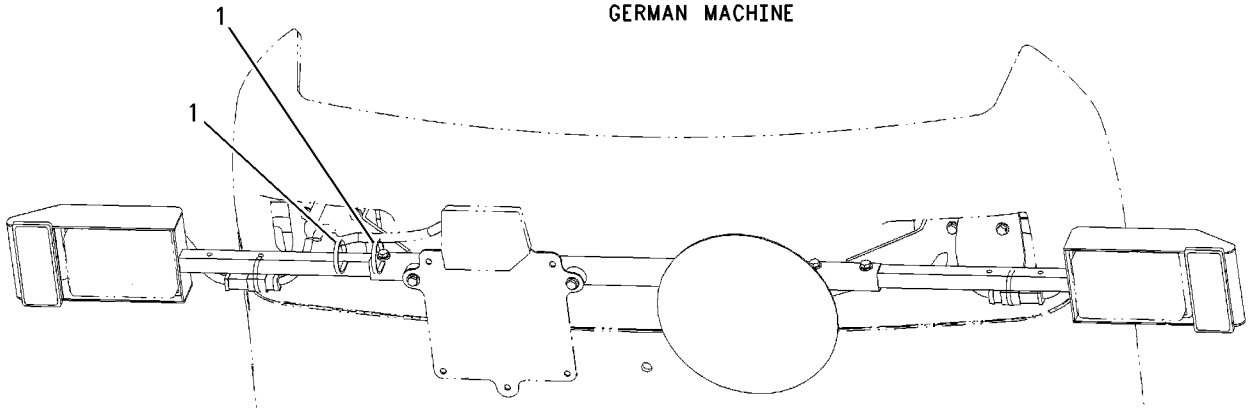

REAR VIEW
ITALIAN MACHINE

GRAPHIC #1 **<END>** g00902191

233-5616 SUPPRESSION GP-SOUND

S/N: BXM4225-UP

PART OF 261-6158, 278-1213, 278-1221, 278-1225, 278-5409, 278-5442, 295-7039, 295-7050, 295-7061, 295-7068, 295-7151, 295-7159, 295-7164, 295-7168 CONVERSION AR-MACHINE, 233-5681, 233-5682, 233-5683, 233-5684, 233-5685, 233-5686, 257-5721, 257-5722, 295-7044 CONVERSION AR-ROADING AN ATTACHMENT

SMCS-1801, 7076 **i01952009**

NOTE	REF NO	GRAPHIC REF	PART NUMBER	QTY	PART NAME 1 2 3 4 5 6 (PRODUCT LEVEL)	SEE PAGE
	1	1	**176-4079**	2	INSULATION	
	2	1	**236-5088**	1	INSULATION	
	3	1	**241-5648**	1	INSULATION	
	4	1	**241-5649**	1	INSULATION	

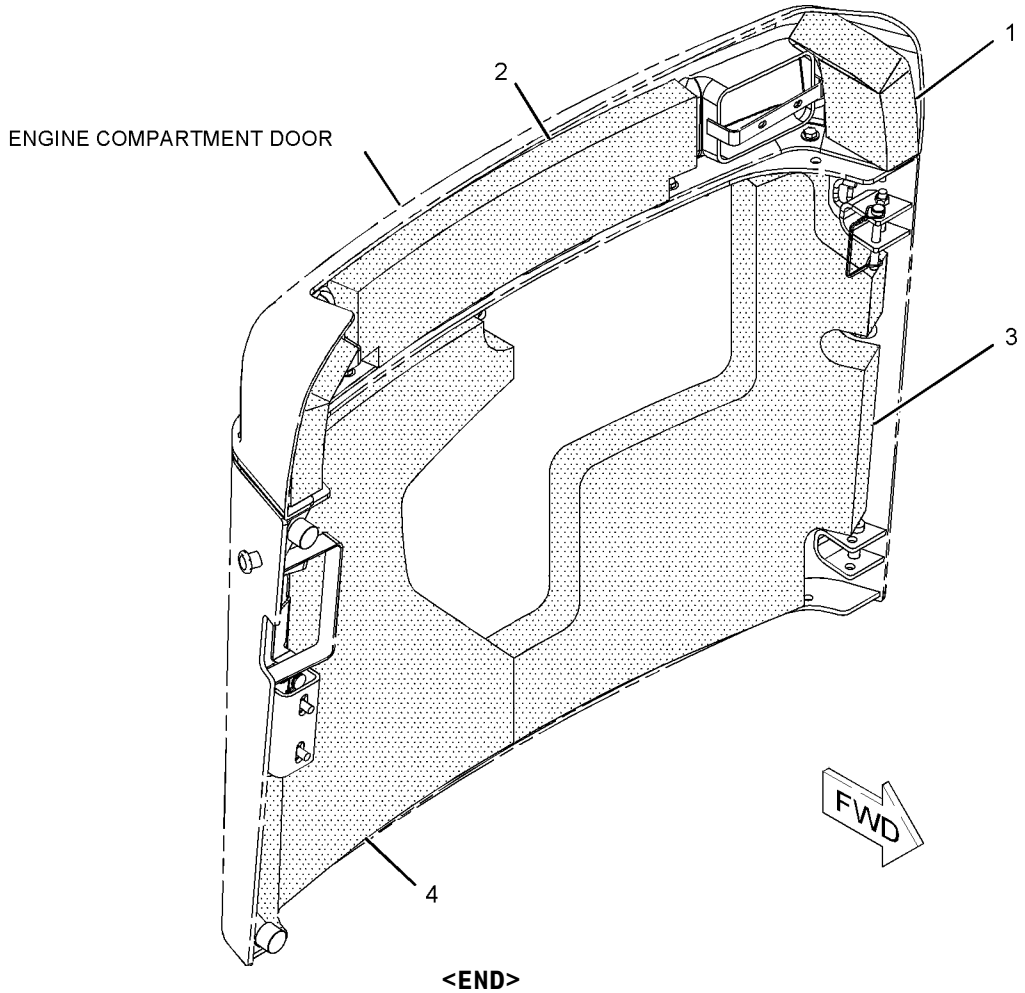

GRAPHIC #1 **<END>** g01018949

193-0447 ACCUMULATOR & MTG GP-HYDRAULIC

S/N: BXM4225-UP

PART OF 278-1243 HYDRAULIC AR

SMCS-5077 **i02565521**

NOTE	REF NO	GRAPHIC REF	PART NUMBER	QTY	PART NAME 1 2 3 4 5 6 (PRODUCT LEVEL)	SEE PAGE
	1	1	*149-0686*	1	ACCUMULATOR GP-HYDRAULIC (CHARGED)	
		1	**227-8807**	1	ACCUMULATOR GP-HYDRAULIC (UNCHARGED)	
	2	1	*194-7632*	1	ELBOW AS	
		1	**3K-0360**	1	SEAL-O-RING	
		1	**194-7631**	1	ELBOW	
	3	1	**3K-0360**	1	SEAL-O-RING	

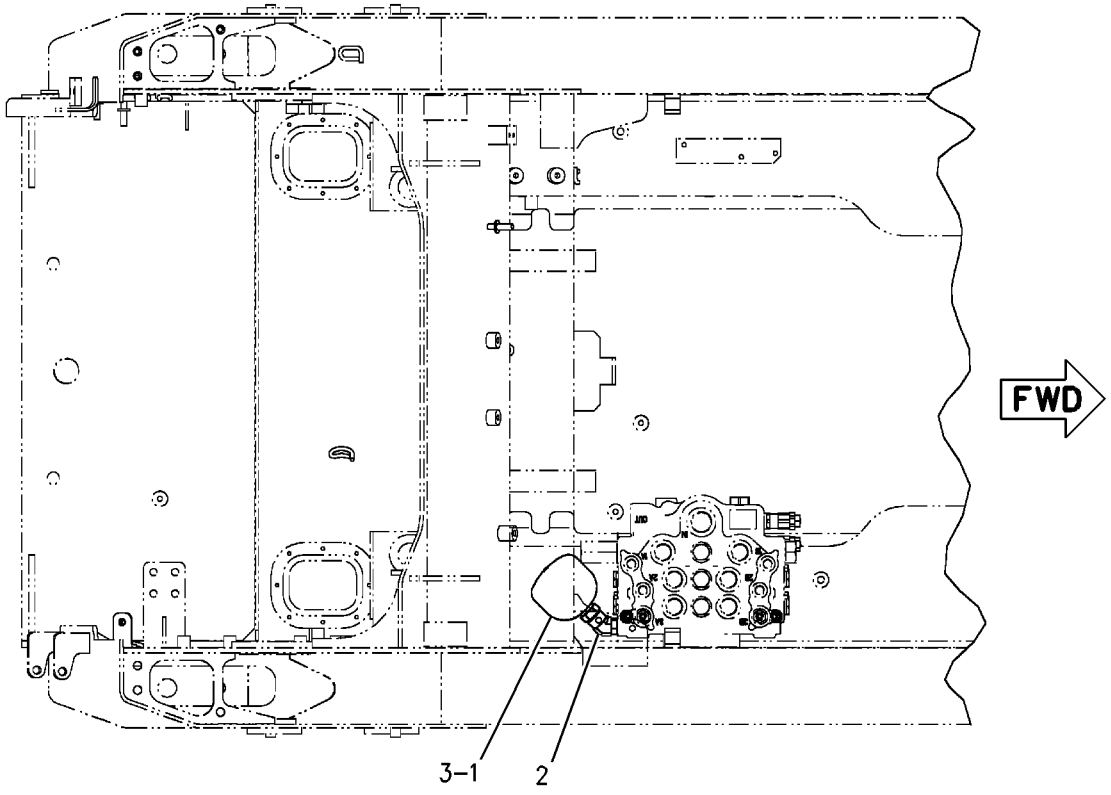

TOP VIEW

GRAPHIC #1 **<END>** g00902240

HYDRAULIC SYSTEM

179-7001 ADAPTER GP-OIL LINE

S/N: BXM4225-UP

PART OF 218-6503 LINES GP-PILOT

SMCS-5057 **i01836385**

NOTE	REF NO	GRAPHIC REF	PART NUMBER	QTY	PART NAME 1 2 3 4 5 6 (PRODUCT LEVEL)	SEE PAGE
	1	1	**179-7002**	1	ADAPTER AS	
	2	1	**214-7568**	1	SEAL-O-RING	

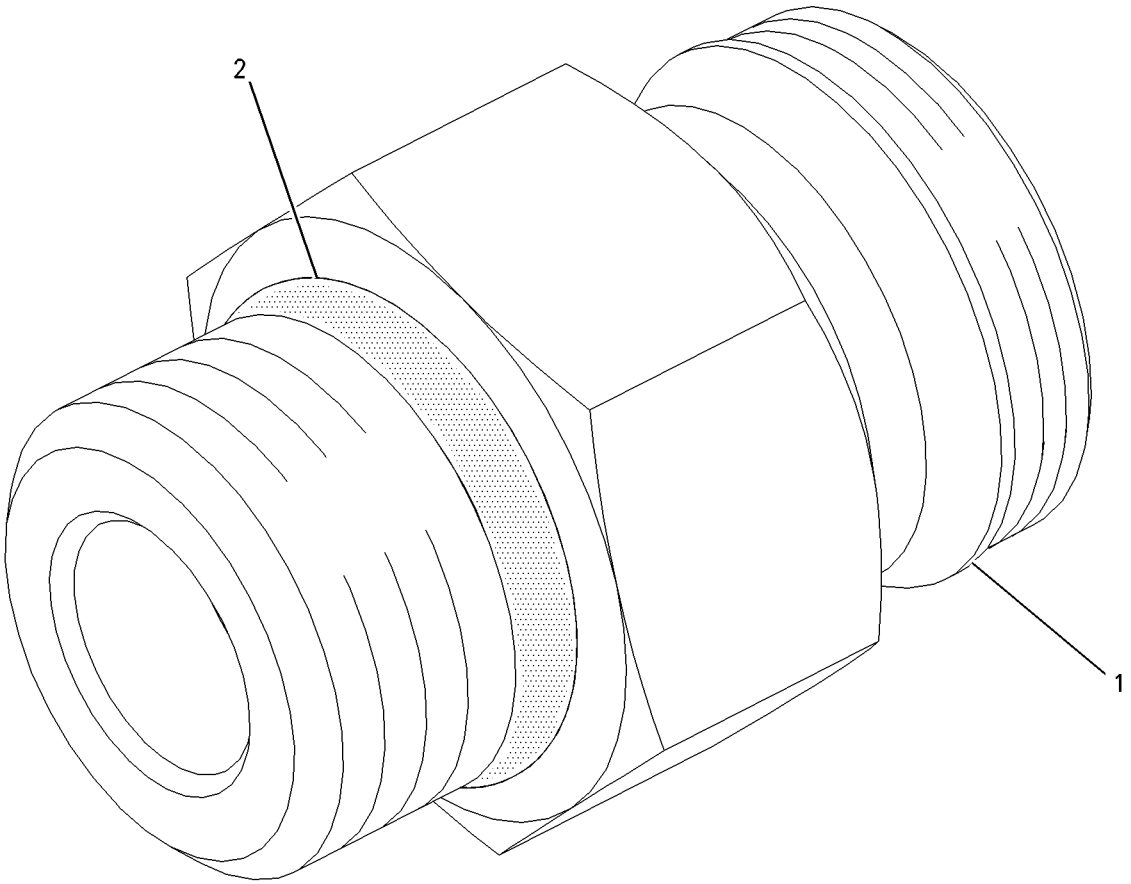

GRAPHIC #1 **<END>** g00938522

230-5406 CYLINDER & MTG GP-ANGLE BLADE

S/N: BXM4225-UP

PART OF 177-1989, 177-1990 BLADE AR

AN ATTACHMENT

SMCS-6701 **i01860855**

NOTE	REF NO	GRAPHIC REF	PART NUMBER	QTY	PART NAME 1 2 3 4 5 6 (PRODUCT LEVEL)	SEE PAGE
	1	1	**064-3843**	1	RING-SNAP	
	2	1	**210-0855**	1	PIN AS	
	3	1	**213-3943**	1	BUSHING	
Y	4	1	**225-9521**	1	CYLINDER GP-HYDRAULIC (ANGLE BLADE)	263
	5	1	**3B-8489**	1	FITTING-GREASE	
	6	1	**7X-7729**	1	WASHER (11X25X3-MM THK)	
M	7	1	**8T-4137**	1	BOLT (M10X1.5X20-MM)	

M-METRIC PART
Y-SEPARATE ILLUSTRATION

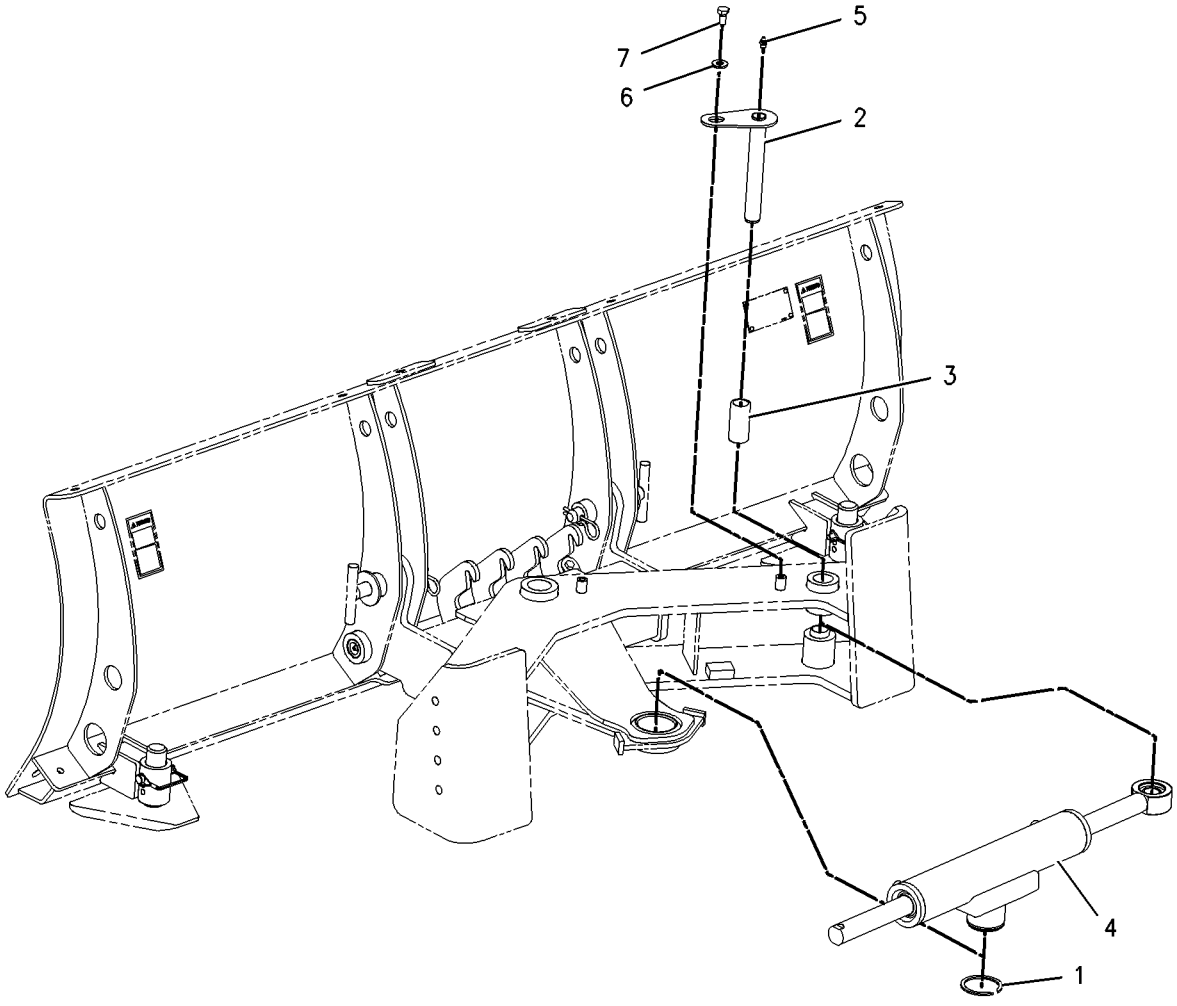

GRAPHIC #1 **<END>** g00978845

HYDRAULIC SYSTEM

231-5274 CYLINDER & MTG GP-ANGLE BLADE

S/N: BXM4225-UP

PART OF 231-5275, 231-5277 BLADE AR

AN ATTACHMENT

SMCS-6701 **i02785772**

NOTE	REF NO	GRAPHIC REF	PART NUMBER	QTY	PART NAME 1 2 3 4 5 6 (PRODUCT LEVEL)	SEE PAGE
CJY	1	1	**274-9930**	2	CYLINDER GP-HYDRAULIC (LOWER RADIATOR)	265
CJY	2	1	**274-9931**	1	CYLINDER GP-HYDRAULIC (UPPER)	266
	3	1	**231-5266**	6	PIN AS	
	4	1	**238-0999**	12	SPACER (25.4X28.4X13-MM THK)	
M	5	1	**8T-4200**	6	BOLT (M8X1.25X16-MM)	
	6	1	**6V-8397**	6	SEAL-O-RING	
	7	1	**8T-4224**	6	WASHER-HARD (8.8X16X2-MM THK)	
	8	1	**244-1370**	6	SPACER (8.2X13X6-MM THK)	
					AVAILABLE REPAIR KIT(S):	
J			**266-6140**	1	KIT-SEAL (SWING CYLINDER)	
					(INCLUDES RINGS, SEALS & SETSCREW)	

C-CHANGE FROM PREVIOUS TYPE
J-KIT MARKED J AVAILABLE FOR PART(S) MARKED J
M-METRIC PART
Y-SEPARATE ILLUSTRATION

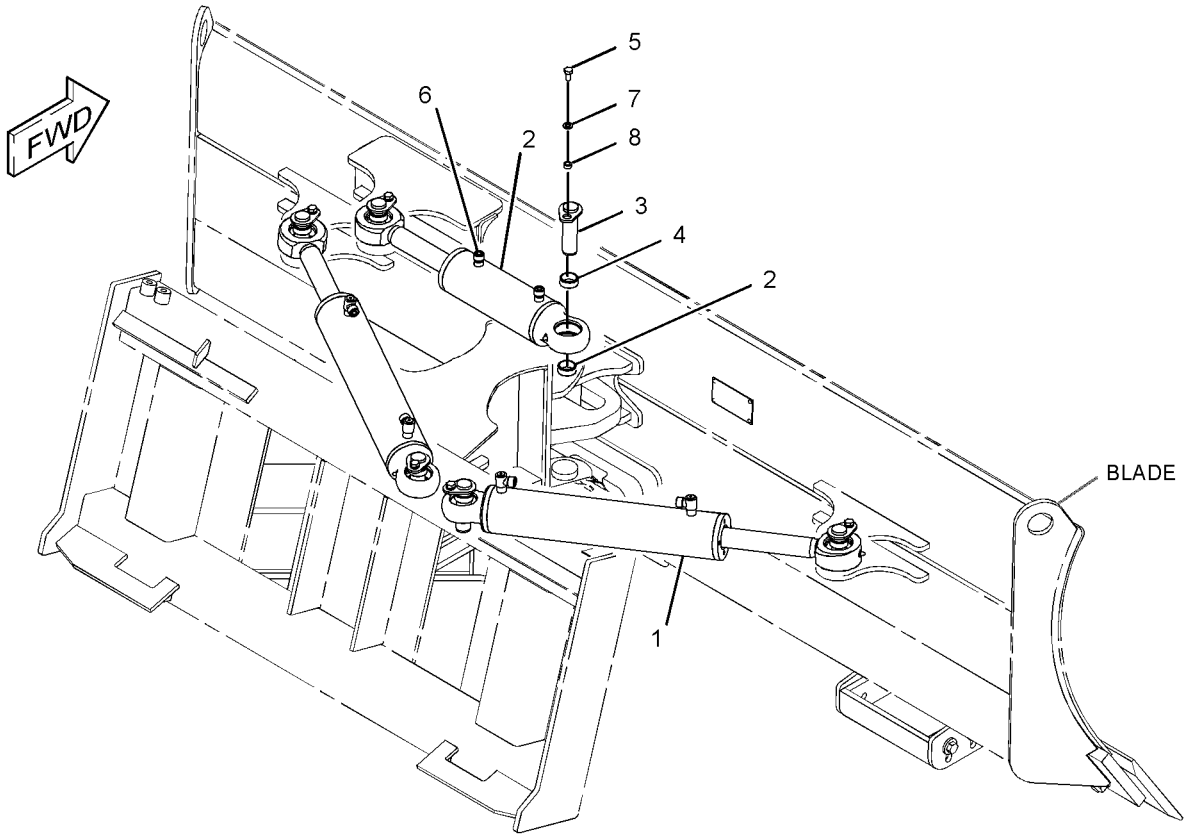

GRAPHIC #1 **<END>** g01270108

HYDRAULIC SYSTEM

286-9248 CYLINDER & MTG GP-BUCKET

S/N: BXM4225-UP

PART OF 286-9300, 286-9301 BUCKET AR-GRAPPLE

AN ATTACHMENT

SMCS-5457 **i02723716**

NOTE	REF NO	GRAPHIC REF	PART NUMBER	QTY	PART NAME 1 2 3 4 5 6 (PRODUCT LEVEL)	SEE PAGE
	1	1	**157-0941**	2	PIN	
	2	1	**157-0942**	2	PIN	
	3	1	**286-9273**	2	PLATE	
	4	1	**286-9289**	2	PLATE AS	
	5	1	**3B-8489**	2	FITTING-GREASE	
	6	1	**4M-5285**	4	RING-RETAINING (EXTERNAL)	
M	7	1	**6V-9189**	2	LOCKNUT (M8X1.25-THD)	
	8	1	**7X-7729**	8	WASHER (11X25X3-MM THK)	
M	9	1	**8T-4195**	8	BOLT (M10X1.5X30-MM)	
M	10	1	**8T-6869**	2	BOLT (M8X1.25X60-MM)	
	11	1	**9X-6274**	4	WASHER (32.5X50X1.6-MM THK)	

M-METRIC PART

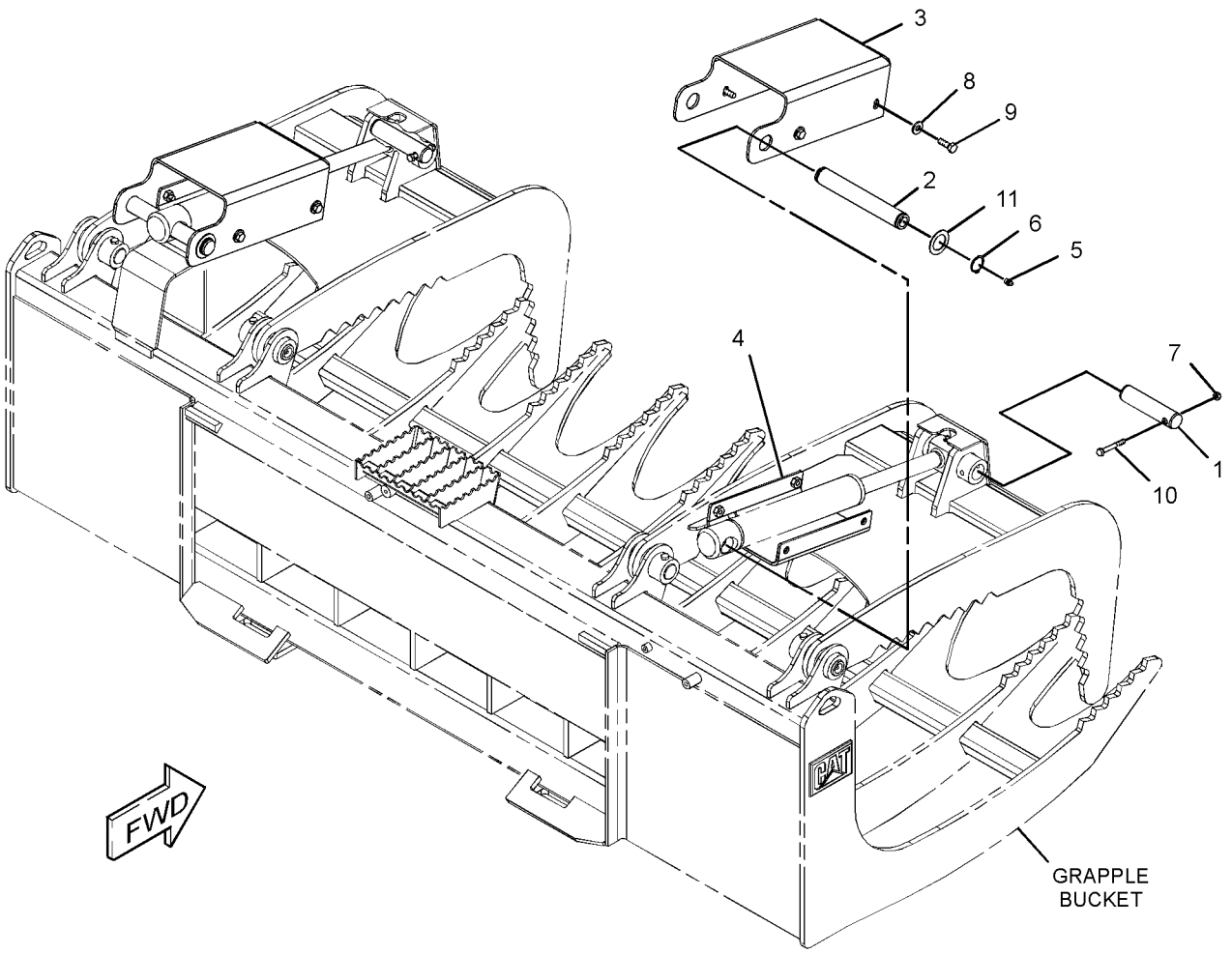

GRAPHIC #1 **<END>** g01372951

HYDRAULIC SYSTEM

218-6899 CYLINDER & MTG GP-LIFT ARM

S/N: BXM4225-UP

PART OF 295-7210 CHASSIS AR

SMCS-5102, 5104, 6118, 6119 **i02779207**

NOTE	REF NO	GRAPHIC REF	PART NUMBER	QTY	PART NAME 1 2 3 4 5 6 (PRODUCT LEVEL)	SEE PAGE
	1	1	**119-4594**	10	WASHER (41X64X1-MM THK)	
	2	1	**142-8791**	2	PIN AS	
	3	1	**142-8793**	2	PIN	
	4	1	**142-8832**	2	PIN AS	
	5	1	**190-7967**	2	SPACER (38.35X48.35X23.5-MM THK)	
	6	1	**190-7979**	2	BOLT (M8X1.25X80-MM)	
	7	1	**190-8038**	2	PIN AS	
	8	1	**191-9588**	2	PIN AS	
	9	1	**191-9589**	1	SUPPORT AS	
	10	1	**191-9635**	2	PIN	
	11	1	**191-9636**	2	PIN	
	12	1	**191-9637**	2	PIN AS	
	13	1	**191-9638**	2	PIN AS	
Y	14	1	**230-3684**	1	CYLINDER GP-TILT (LH)	270
Y	15	1	**230-3694**	1	CYLINDER GP-TILT (RH)	271
Y	16	1	**230-3703**	2	CYLINDER GP-LIFT	269
	17	1	**238-7720**	2	LINK AS	
					(EACH INCLUDES)	
		1	**191-9633**	2	BEARING-SLEEVE	
	18	1	**190-7971**	2	WASHER-HARD (11X64X6-MM THK)	
	19	1	**2K-5964**	2	RING-RETAINING	
	20	1	**3B-8488**	2	FITTING-GREASE	
	21	1	**3B-8489**	10	FITTING-GREASE	
	22	1	**4M-5285**	8	RING-RETAINING (EXTERNAL)	
	23	1	**5B-0651**	2	FITTING-STRAIGHT	
	24	1	**7X-7729**	10	WASHER (11X25X3-MM THK)	
	25	1	**7X-0595**	2	WASHER-HARD (17X30X8-MM THK)	
M	27	1	**8T-4186**	2	BOLT (M10X1.5X40-MM)	
M	28	1	**8T-4191**	10	BOLT (M10X1.5X16-MM)	
	30	1	**8T-4224**	2	WASHER-HARD (8.8X16X2-MM THK)	

M-METRIC PART
Y-SEPARATE ILLUSTRATION

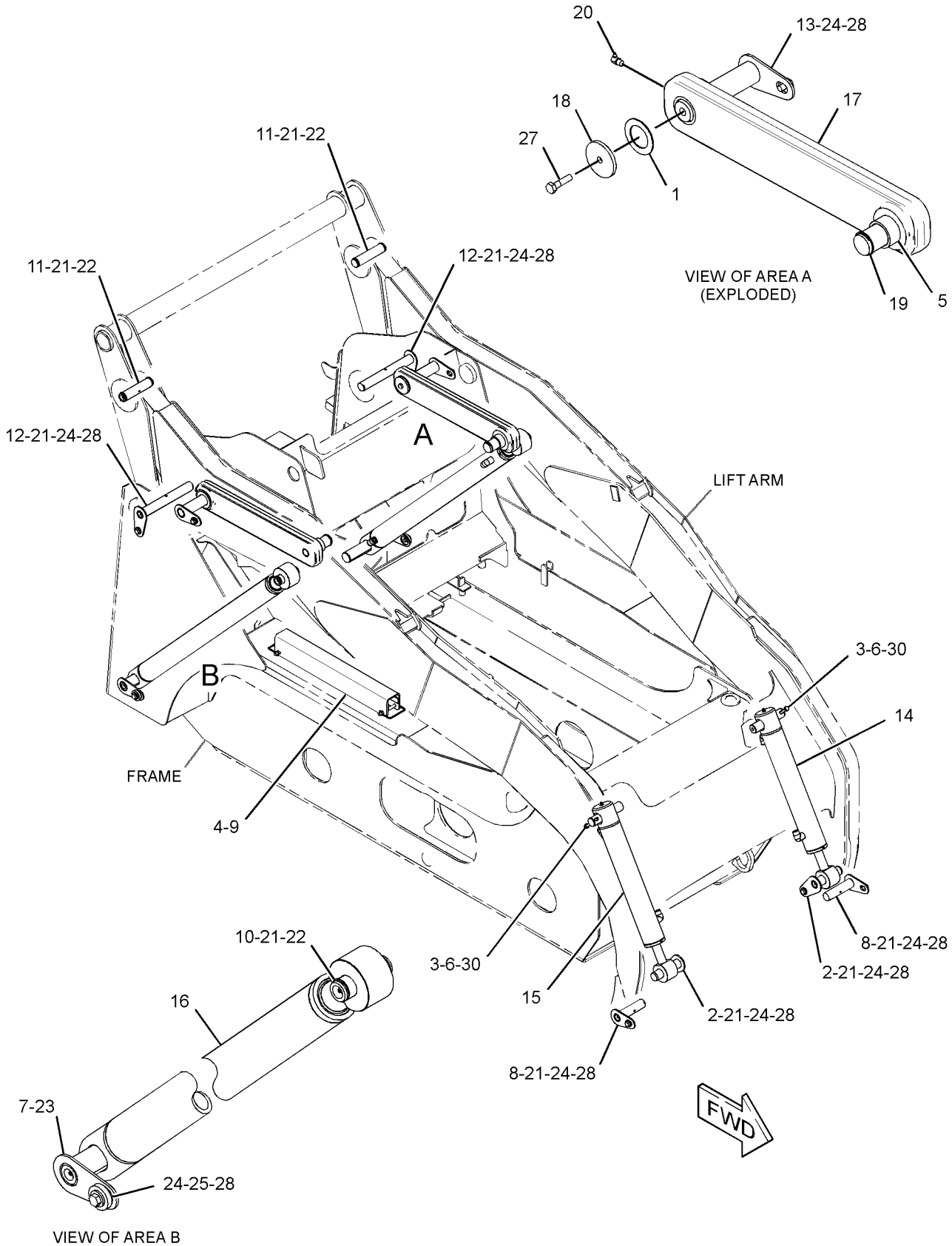

GRAPHIC #1 **<END>** g01389045

HYDRAULIC SYSTEM

293-6264 CYLINDER GP-BUCKET

S/N: BXM4225-UP
50-MM (2-IN) BORE X 225-MM (8.9-IN) STROKE
PART OF 286-9300, 286-9301 BUCKET AR-GRAPPLE
AN ATTACHMENT

SMCS-5498 **i02723730**

NOTE	REF NO	GRAPHIC REF	PART NUMBER	QTY	PART NAME 1 2 3 4 5 6 (PRODUCT LEVEL)	SEE PAGE
	1	1	**6B-6682**	1	NUT-FULL (3/4-16-THD)	
	2	1	**3B-8489**	1	FITTING-GREASE	
	3	1	**7J-0204**	2	SEAL-O-RING	
	4	1	**9S-8007**	2	PLUG	
					AVAILABLE REPAIR KIT(S):	
			262-0941	1	KIT-SEAL	
					(INCLUDES RINGS, SEALS & SEAL O-RINGS)	

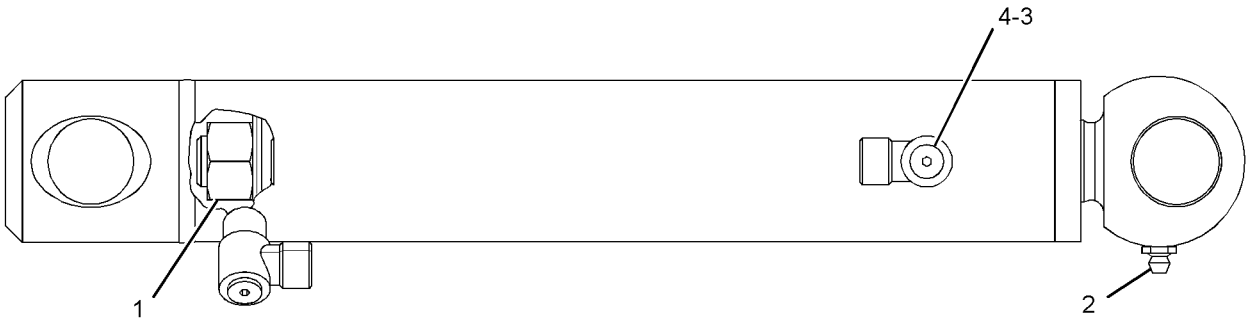

GRAPHIC #1 **<END>** g01373044

164-9295 CYLINDER GP-GRAPPLE

S/N: BXM4225-UP
40-MM (1.58-IN) BORE X 200-MM (7.7-IN) STROKE
PART OF 285-6116 GRAPPLE GP-UTILITY
AN ATTACHMENT

SMCS-5457 **i01217084**

NOTE	REF NO	GRAPHIC REF	PART NUMBER	QTY	PART NAME 1 2 3 4 5 6 (PRODUCT LEVEL)	SEE PAGE
	1	1	**3B-8489**	1	FITTING-GREASE	
					AVAILABLE REPAIR KIT(S):	
			172-5285	1	KIT-SEAL	
					(INCLUDES WIPER RING, PISTON GUIDE RING, PISTON SEAL AND O-RINGS)	

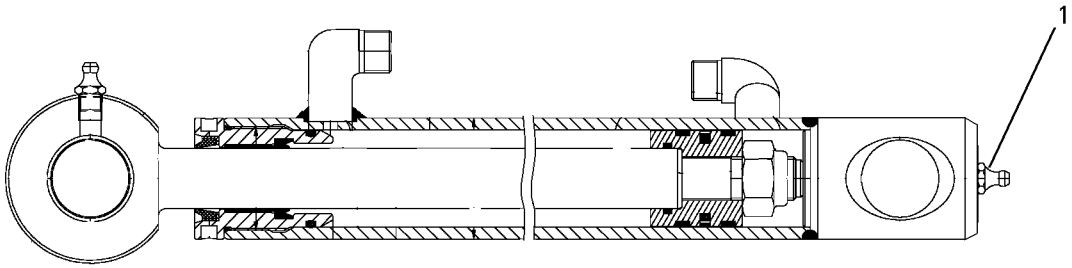

GRAPHIC #1 **<END>** g00604934

192-2640 CYLINDER GP-HYDRAULIC–COUPLER

S/N: BXM4225-UP
35-MM (1.4-IN) BORE X 103.5-MM (4.14-IN) STROKE
PART OF 215-3962, 215-3963 CYLINDER & LINK GP-COUPLER, 218-5957 KIT-QUICK COUPLER CONVERSION
AN ATTACHMENT

SMCS-5362, 7562 **i01672784**

NOTE	PART NUMBER	QTY	PART NAME 1 2 3 4 5 6 (PRODUCT LEVEL)	SEE PAGE
			(NO SERVICED PARTS)	

<END>

225-9521 CYLINDER GP-HYDRAULIC–ANGLE BLADE

S/N: BXM4225-UP
63-MM (2.48-IN) BORE X 300-MM (11.81-IN) STROKE
PART OF 230-5406 CYLINDER & MTG GP-ANGLE BLADE
AN ATTACHMENT

SMCS-5362, 7562 **i02757293**

NOTE	REF NO	GRAPHIC REF	PART NUMBER	QTY	PART NAME 1 2 3 4 5 6 (PRODUCT LEVEL)	SEE PAGE
	1	1	**214-5555**	1	ROD END AS	
					AVAILABLE REPAIR KIT(S):	
			177-1958	1	KIT-SEAL	
					(INCLUDES O-RINGS,SEALS,BACK RINGS,PISTON GUIDE RING.ROD GUIDE RING AND WIPER RINGS)	

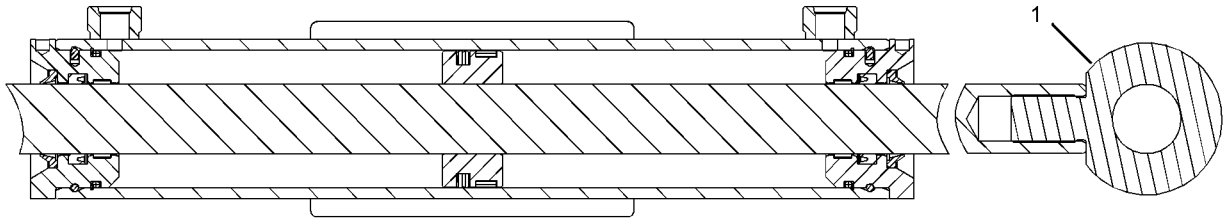

GRAPHIC #1 **<END>** g01282929

HYDRAULIC SYSTEM

255-0943 CYLINDER GP-HYDRAULIC

S/N: BXM4225-UP

PART OF 285-6116 GRAPPLE GP-UTILITY

AN ATTACHMENT

SMCS-5362, 7562 **i02888528**

NOTE	REF NO	GRAPHIC REF	PART NUMBER	QTY	PART NAME 1 2 3 4 5 6 (PRODUCT LEVEL)	SEE PAGE
	1	1	**254-9097**	1	BEARING-SLEEVE	
	2	1	**3B-8489**	2	FITTING-GREASE	
	3	1	**7J-0204**	2	SEAL-O-RING	
	4	1	**9S-8007**	2	PLUG	
	5	1	**2K-4821**	1	LOCKNUT (5/8-18-THD)	
					AVAILABLE REPAIR KIT(S):	
			286-3591	1	KIT-SEAL	
					(INCLUDES SEALS, SEAL-O-RINGS & RING BACK-UPS)	

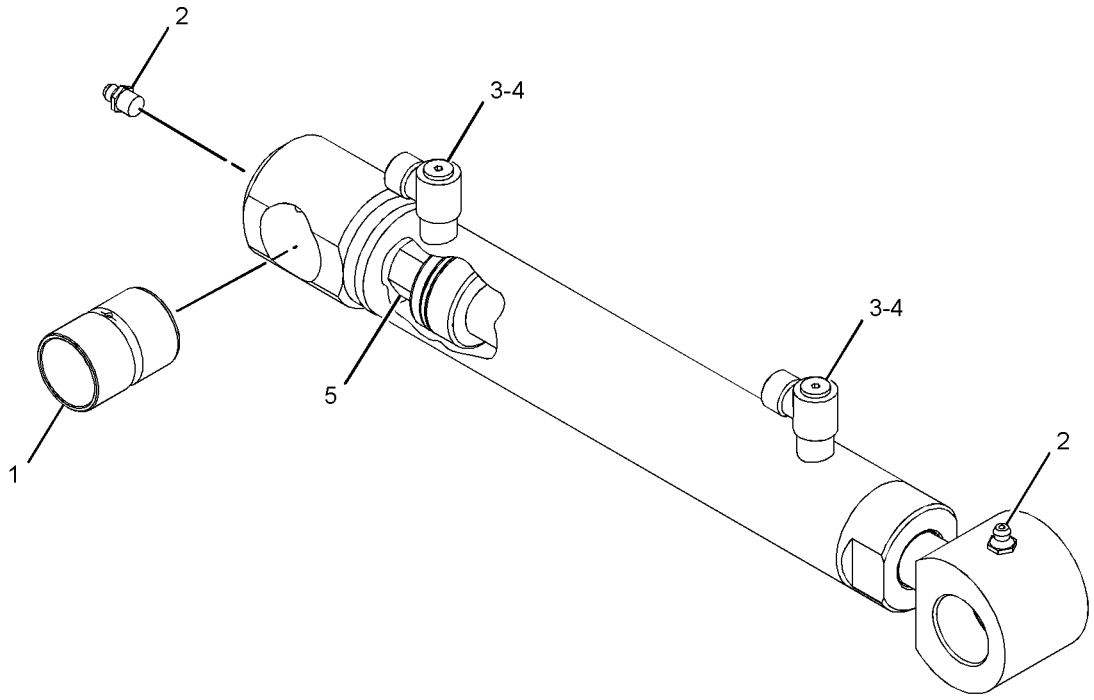

GRAPHIC #1 **<END>** g01439380

274-9930 CYLINDER GP-HYDRAULIC

S/N: BXM4225-UP
70-MM (2.75-IN) BORE X 314-MM (12.36-IN) STROKE
PART OF 231-5274 CYLINDER & MTG GP-ANGLE BLADE
AN ATTACHMENT

SMCS-5362, 7562 **i02785773**

NOTE	REF NO	GRAPHIC REF	PART NUMBER	QTY	PART NAME 1 2 3 4 5 6 (PRODUCT LEVEL)	SEE PAGE
	1	1	**7D-8508**	1	NUT-FULL (7/8-14-THD)	
	2	1	**8Q-6027**	2	BEARING-SPHERICAL	
	3	1	**027-1287**	2	FITTING-GREASE	
	4	1	**278-4524**	1	ROD AS	
	5	1	**278-4875**	2	RING-RETAINING	
	6	1	**7J-0204**	2	SEAL-O-RING	
	7	1	**9S-8007**	2	PLUG	
					AVAILABLE REPAIR KIT(S):	
			266-6140	1	KIT-SEAL (SWING CYLINDER)	
					(INCLUDES SEALS, RINGS & SETSCREW)	

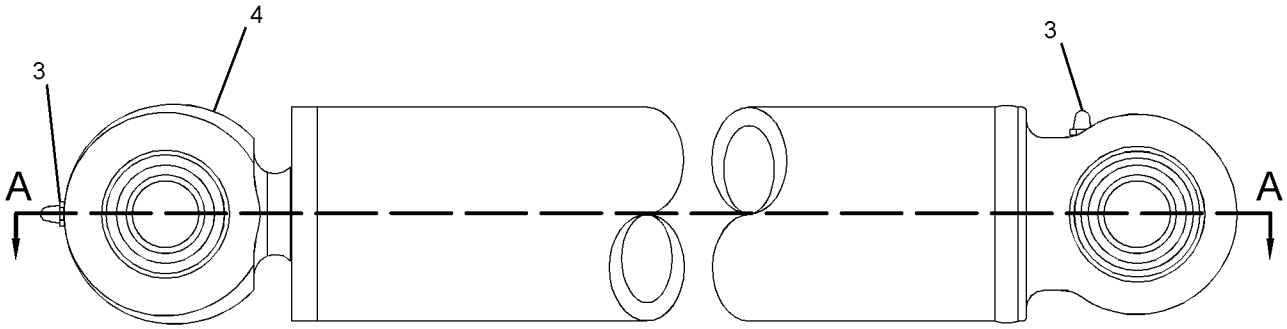

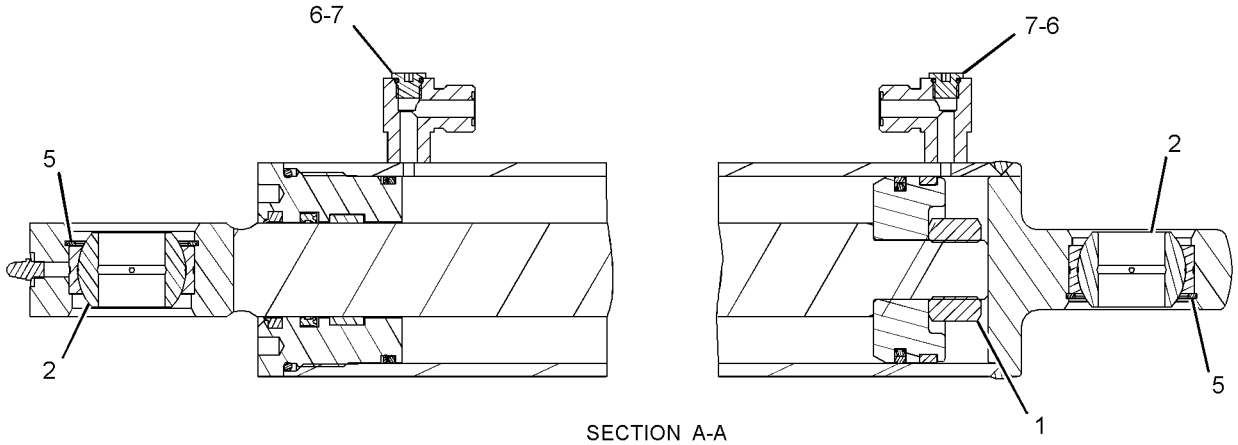

SECTION A-A

GRAPHIC #1 **<END>** g01305293

274-9931 CYLINDER GP-HYDRAULIC

S/N: BXM4225-UP
70-MM (2.75-IN) BORE X 120-MM (4.72-IN) STROKE
PART OF 231-5274 CYLINDER & MTG GP-ANGLE BLADE
AN ATTACHMENT

SMCS-5362, 7562 **i02785774**

NOTE	REF NO	GRAPHIC REF	PART NUMBER	QTY	PART NAME 1 2 3 4 5 6 (PRODUCT LEVEL)	SEE PAGE
	1	1	**7D-8508**	1	NUT-FULL (7/8-14-THD)	
	2	1	**8Q-6027**	2	BEARING-SPHERICAL	
	3	1	**027-1287**	2	FITTING-GREASE	
	4	1	**278-4525**	1	ROD AS	
	5	1	**278-4875**	2	RING-RETAINING	
					AVAILABLE REPAIR KIT(S):	
			266-6140	1	KIT-SEAL	
					(INCLUDES RINGS, SEALS & SCREW)	

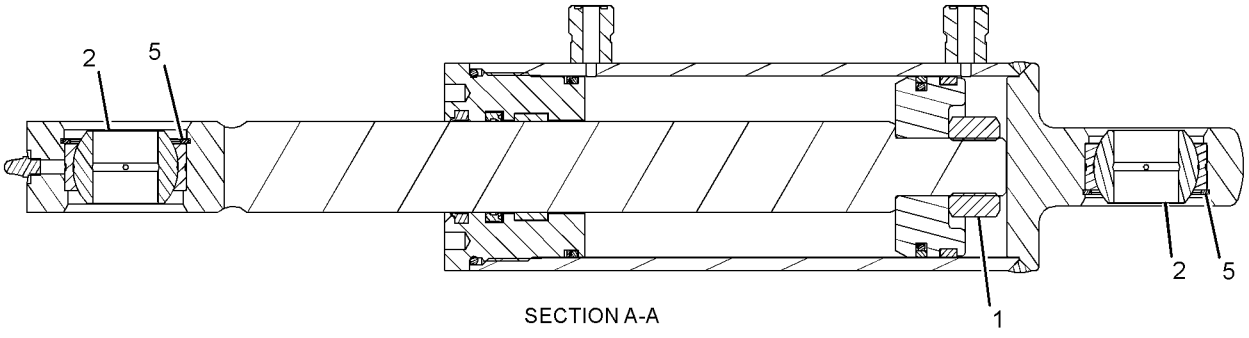

SECTION A-A

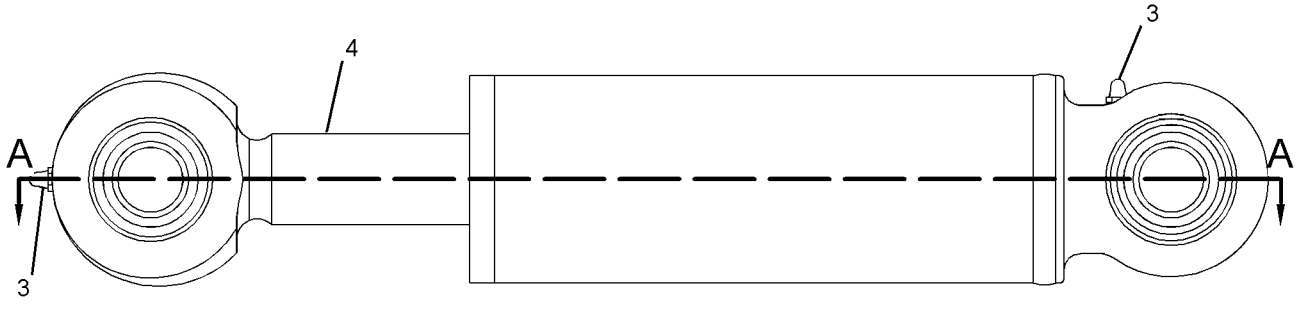

GRAPHIC #1 **<END>** g01270194

278-1969 CYLINDER GP-HYDRAULIC

S/N: BXM4225-UP
60-MM (2.36-IN) BORE X 200-MM (7.9-IN) STROKE
PART OF 279-5382, 279-5390, 279-5398, 279-5403 BUCKET AR-MULTIPURPOSE AN ATTACHMENT

SMCS-5362, 7562 **i02712982**

NOTE	REF NO	GRAPHIC REF	PART NUMBER	QTY	PART NAME 1 2 3 4 5 6 (PRODUCT LEVEL)	SEE PAGE
	1	1	**7D-8508**	1	NUT-FULL (7/8-14-THD)	
	2	1	**254-9097**	1	BEARING-SLEEVE	
	3	1	**3B-8489**	1	FITTING-GREASE	
					AVAILABLE REPAIR KIT(S):	
			278-1970	1	KIT-SEAL (HYDRAULIC CYLINDER)	
					(INCLUDES RINGS & SEALS)	

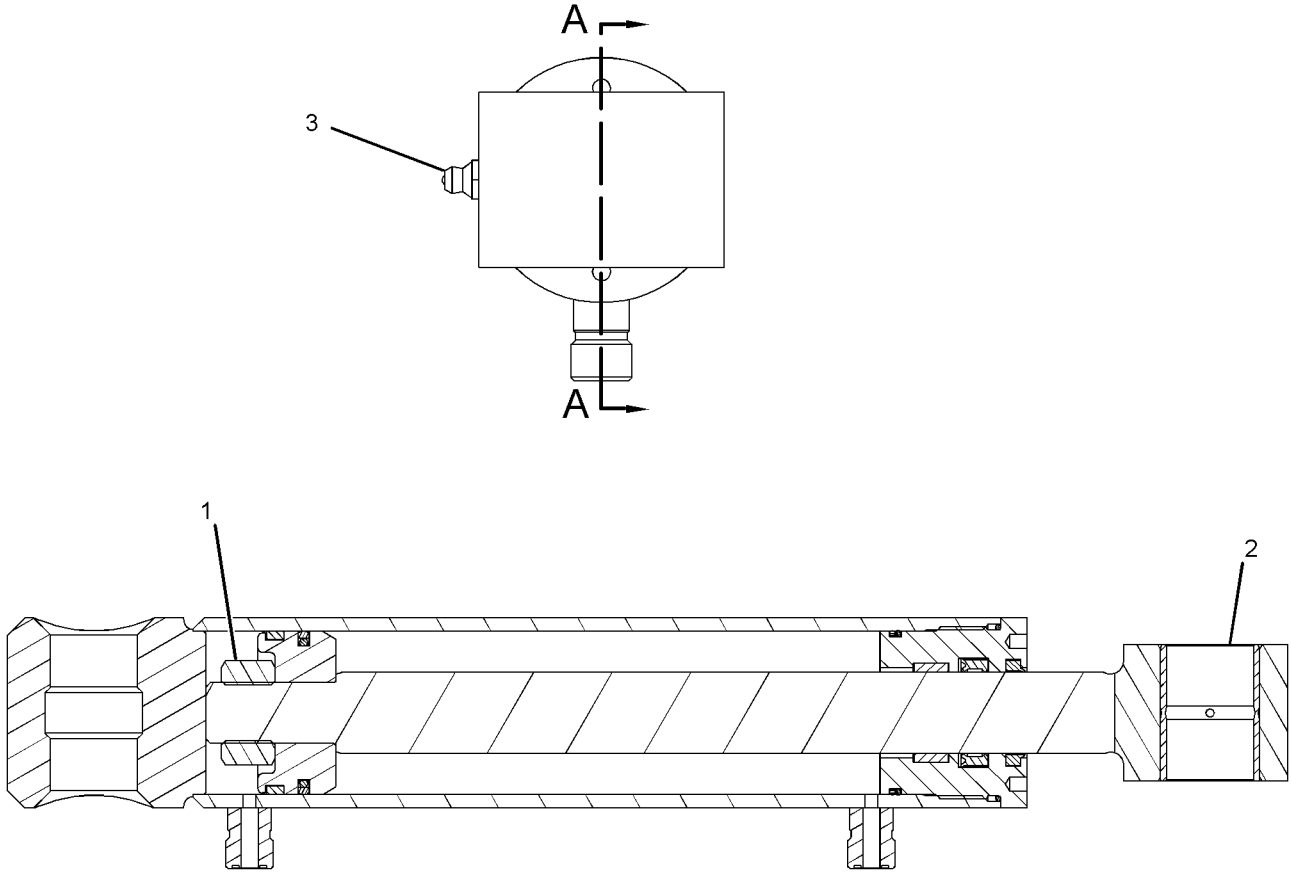

SECTION A-A

GRAPHIC #1 **<END>** g01281180

HYDRAULIC SYSTEM

278-1975 CYLINDER GP-HYDRAULIC

S/N: BXM4225-UP
60-MM (2.3-IN) BORE X 200-MM (7.7-IN) STROKE
PART OF 157-7223, 157-7224, 157-7225 BUCKET AR-GRAPPLE, 279-5350, 279-5360 FORK AR-GRAPPLE
AN ATTACHMENT

SMCS-5362, 7562 **i02712984**

NOTE	REF NO	GRAPHIC REF	PART NUMBER	QTY	PART NAME 1 2 3 4 5 6 (PRODUCT LEVEL)	SEE PAGE
	1	1	**7D-8508**	1	NUT-FULL (7/8-14-THD)	
	2	1	**254-9097**	1	BEARING-SLEEVE	
	3	1	**255-0942**	1	BEARING-SLEEVE	
	4	1	**3B-8489**	1	FITTING-GREASE	
	5	1	**7J-0204**	2	SEAL-O-RING	
	6	1	**9S-8007**	2	PLUG	
					AVAILABLE REPAIR KIT(S):	
			278-1970	1	KIT-SEAL (HYDRAULIC CYLINDER)	
					(INCLUDES RINGS, SEALS & SEAL-O-RINGS)	

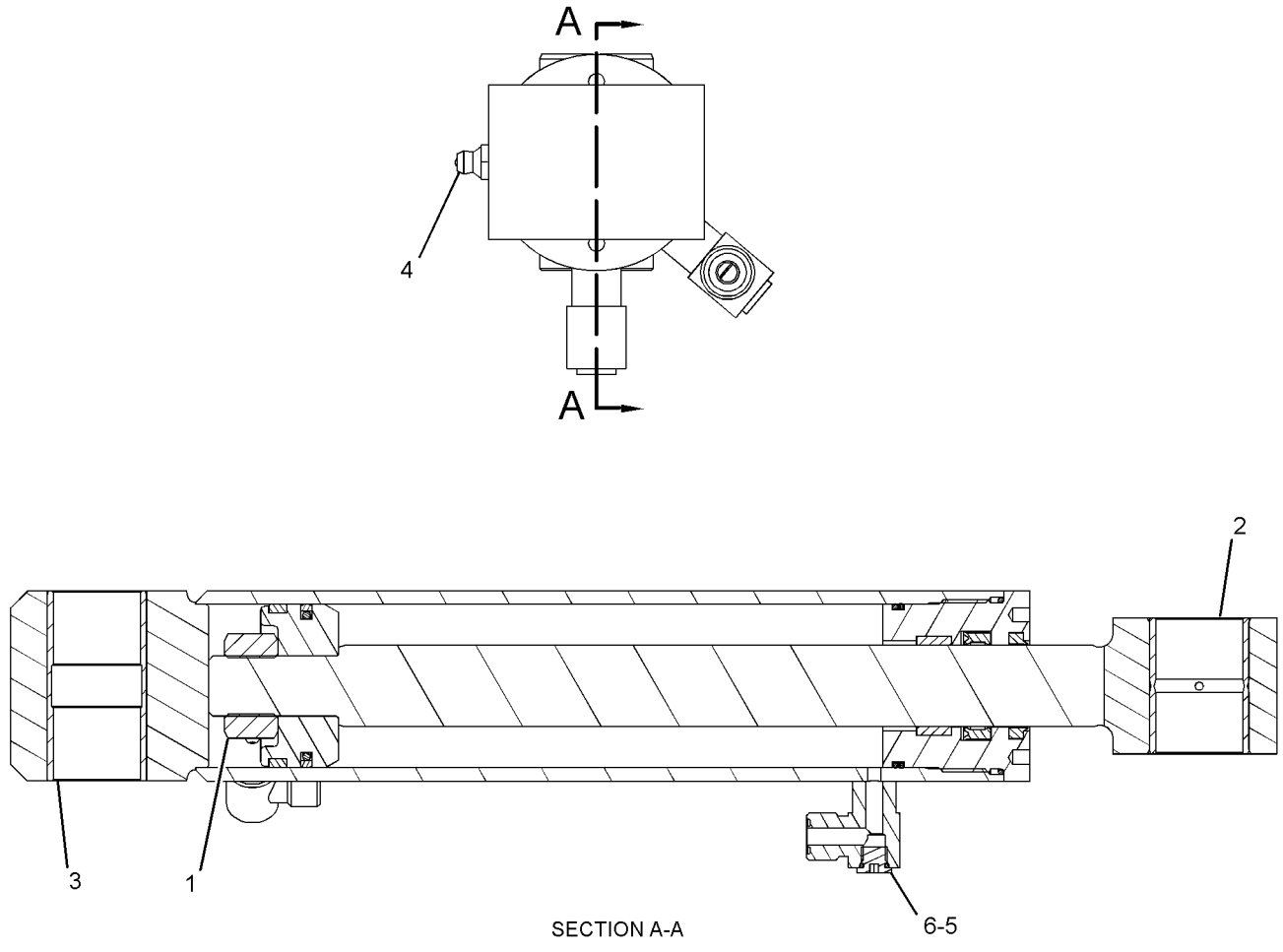

SECTION A-A

GRAPHIC #1 **<END>** g01280909

HYDRAULIC SYSTEM

230-3703 CYLINDER GP-LIFT

S/N: BXM4225-UP
60-MM (2.36-IN) BORE X 797-MM (31.38-IN) STROKE
PART OF 218-6899 CYLINDER & MTG GP-LIFT ARM

SMCS-5102 **i01974878**

NOTE	REF NO	GRAPHIC REF	PART NUMBER	QTY	PART NAME 1 2 3 4 5 6 (PRODUCT LEVEL)	SEE PAGE
					AVAILABLE REPAIR KIT(S):	
			218-6827	1	KIT-SEAL	
					(INCLUDES PISTON SEAL, PISTON WEAR BAND, O-RINGS, BACK-UP RING, WIPER SEAL AND ROD SEAL)	

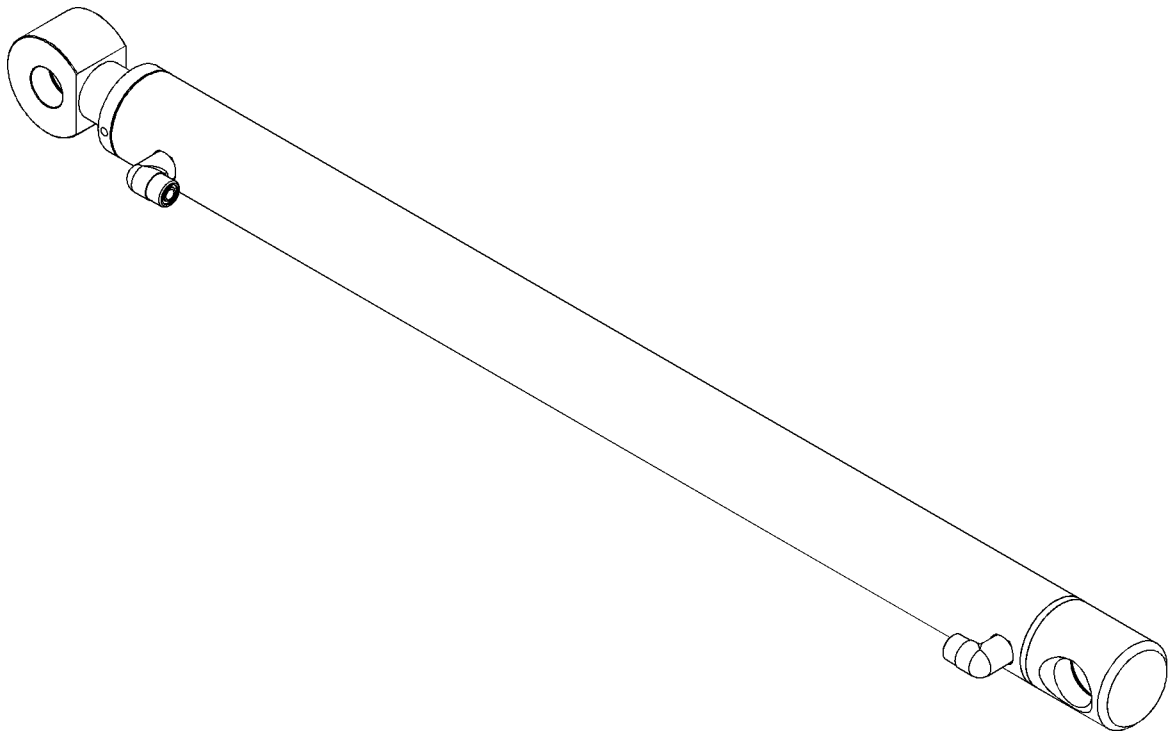

GRAPHIC #1 **<END>** g01027811

230-3684 CYLINDER GP-TILT–BUCKET EJECTOR, LH

S/N: BXM4225-UP

65-MM (2.556-IN) BORE X 295-MM (11.61-IN) STROKE

PART OF 218-6899 CYLINDER & MTG GP-LIFT ARM

SMCS-5104 **i01934882**

NOTE	REF NO	GRAPHIC REF	PART NUMBER	QTY	PART NAME 1 2 3 4 5 6 (PRODUCT LEVEL)	SEE PAGE
	1	1	**3B-8489**	1	FITTING-GREASE	
					AVAILABLE REPAIR KIT(S):	
			218-6825	1	KIT-SEAL	
					(INCLUDES PISTON SEAL, PISTON WEAR BAND, O-RINGS, BACK UP RINGS, WIPER SEAL & ROD SEAL)	

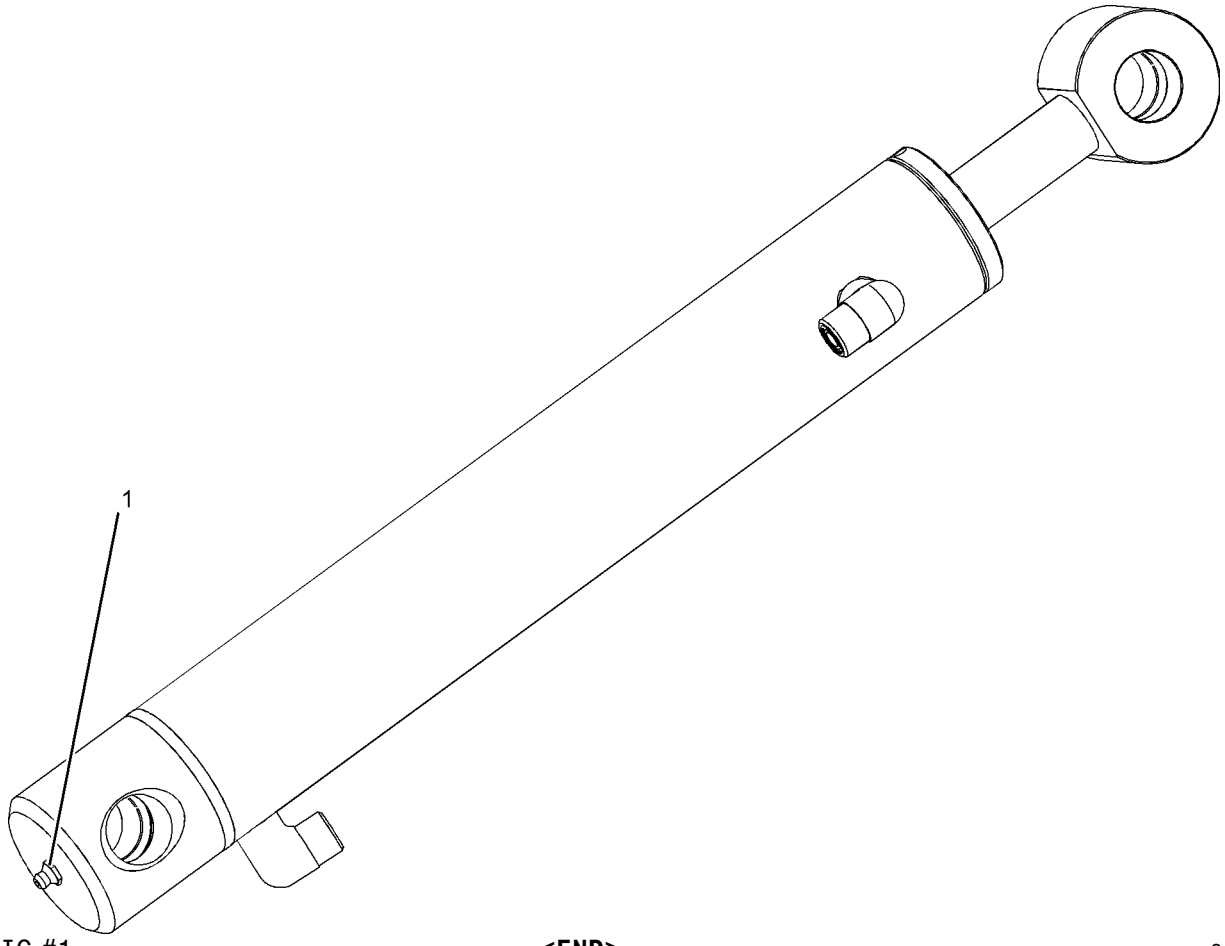

GRAPHIC #1 **<END>** g01012081

230-3694 CYLINDER GP-TILT–BUCKET EJECTOR, RH

S/N: BXM4225-UP

65-MM (2.56-IN) BORE X 295-MM (11.61-IN) STROKE

PART OF 218-6899 CYLINDER & MTG GP-LIFT ARM

SMCS-5104 **i01934887**

NOTE	REF NO	GRAPHIC REF	PART NUMBER	QTY	PART NAME 1 2 3 4 5 6 (PRODUCT LEVEL)	SEE PAGE
F		1	**3B-8489**	1	FITTING-GREASE	
					AVAILABLE REPAIR KIT(S):	
			218-6825	1	KIT-SEAL	
					(INCLUDES SEAL, PISTON WEAR BAND, O-RINGS & BACK UP RINGS)	

F-NOT SHOWN

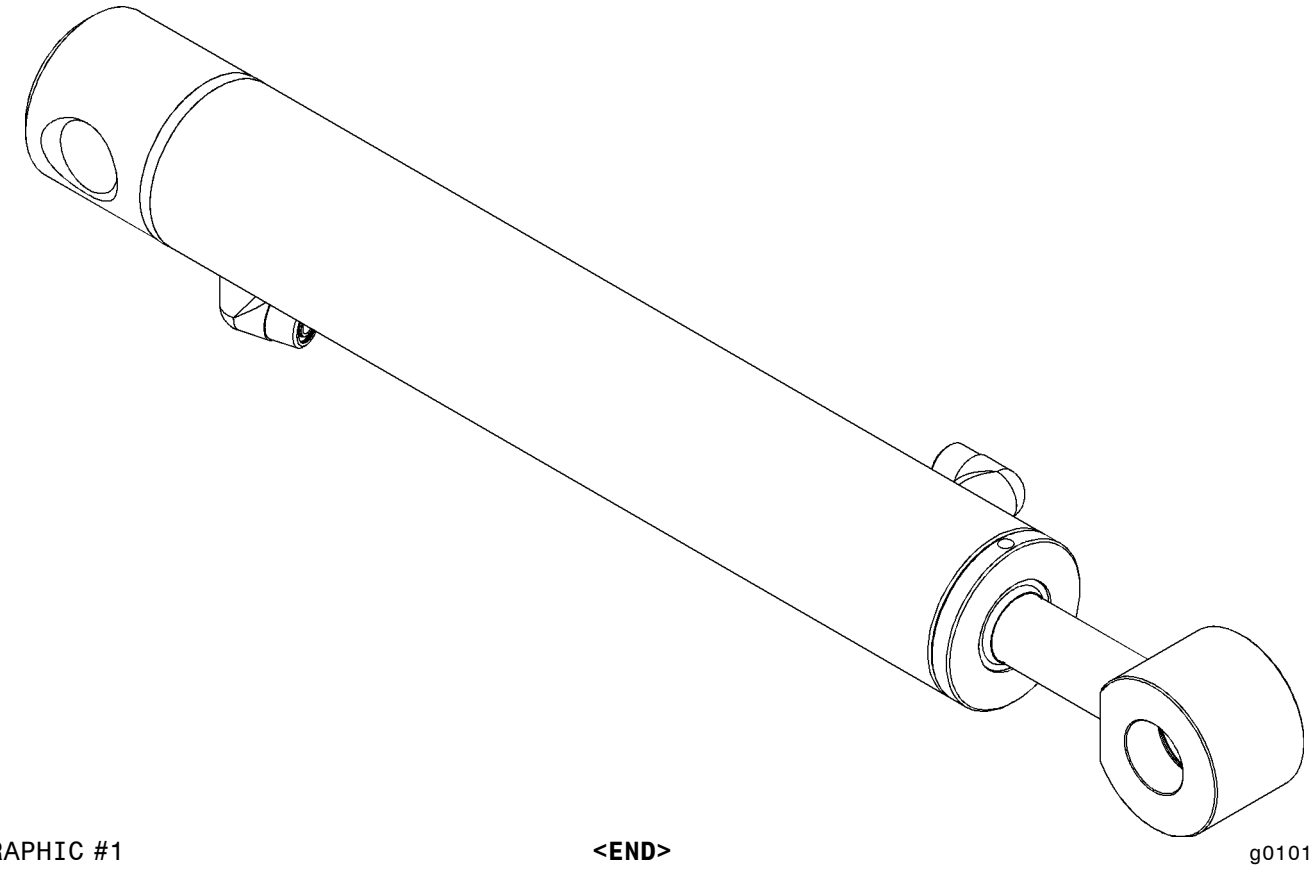

GRAPHIC #1 **<END>** g01010855

218-5840 FITTING GP-HYDRAULIC–
QUICK DISCONNECT, MALE, HIGH FLOW
S/N: BXM4225-UP

PART OF 218-6738 KIT-HIGH FLOW CONVERSION, 218-6312 LINES GP-WORK TOOL AN ATTACHMENT

SMCS-5057 **i01974387**

NOTE	REF NO	GRAPHIC REF	PART NUMBER	QTY	PART NAME 1 2 3 4 5 6 (PRODUCT LEVEL)	SEE PAGE
	1	1	**218-5843**	1	FITTING AS (QUICK DISCONNECT, MALE)	
	2	1	**218-5844**	1	FITTING AS (QUICK DISCONNECT, MALE)	
	3	1	**2M-9780**	1	SEAL-O-RING	
	4	1	**6V-8640**	1	CONNECTOR	
	5	1	**6V-9746**	1	SEAL-O-RING	

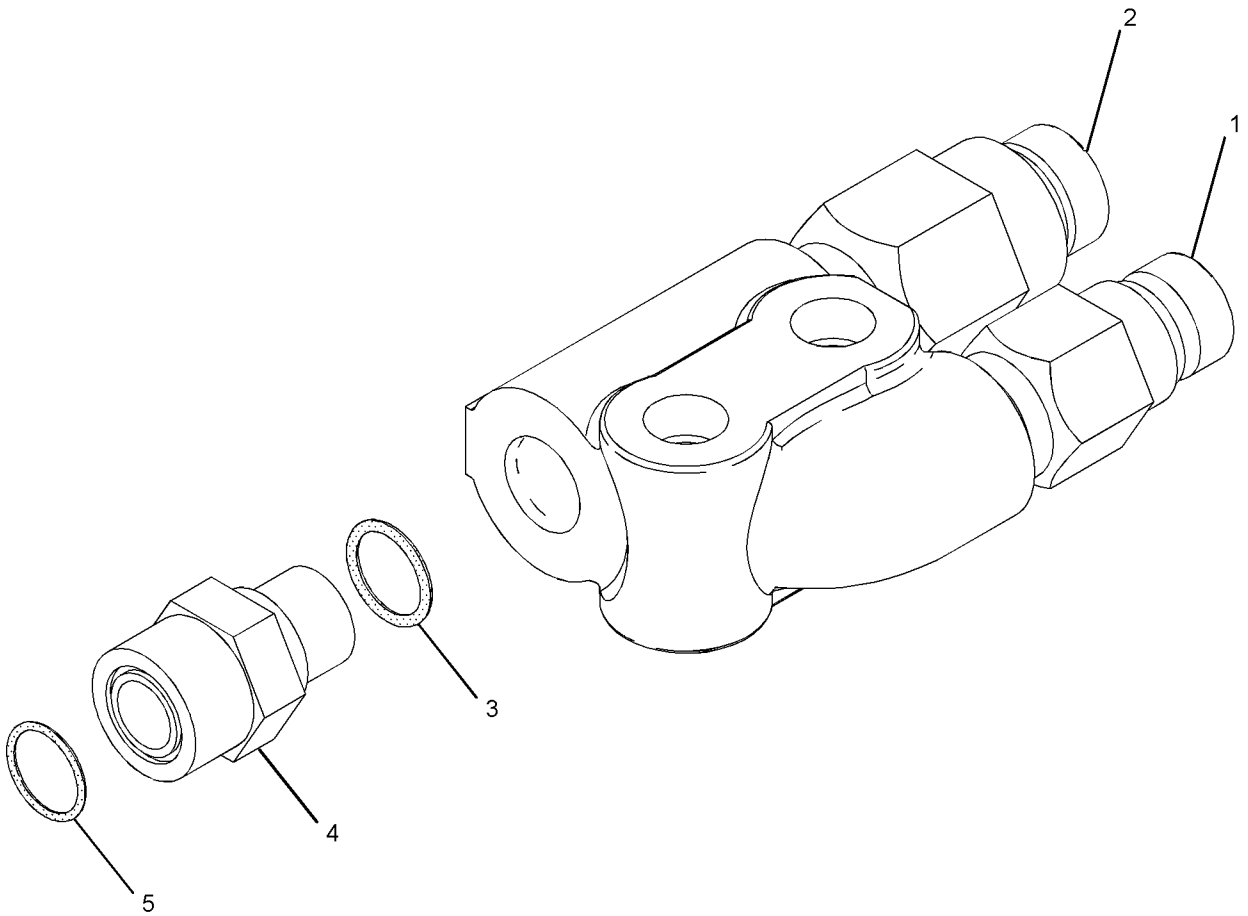

GRAPHIC #1 **<END>** g01026062

218-5841 FITTING GP-HYDRAULIC–
QUICK DISCONNECT, FEMALE, HIGH FLOW
S/N: BXM4225-UP

PART OF 218-6738 KIT-HIGH FLOW CONVERSION, 218-6312 LINES GP-WORK TOOL AN ATTACHMENT

SMCS-5057 **i02129402**

NOTE	REF NO	GRAPHIC REF	PART NUMBER	QTY	PART NAME 1 2 3 4 5 6 (PRODUCT LEVEL)	SEE PAGE
	1	1	**218-5845**	1	FITTING AS (QUICK DISCONNECT, FEMALE)	
	2	1	**218-5846**	1	FITTING AS (QUICK DISCONNECT, FEMALE)	
	3	1	**2M-9780**	1	SEAL-O-RING	
	4	1	**6V-8640**	1	CONNECTOR	
	5	1	**6V-9746**	1	SEAL-O-RING	

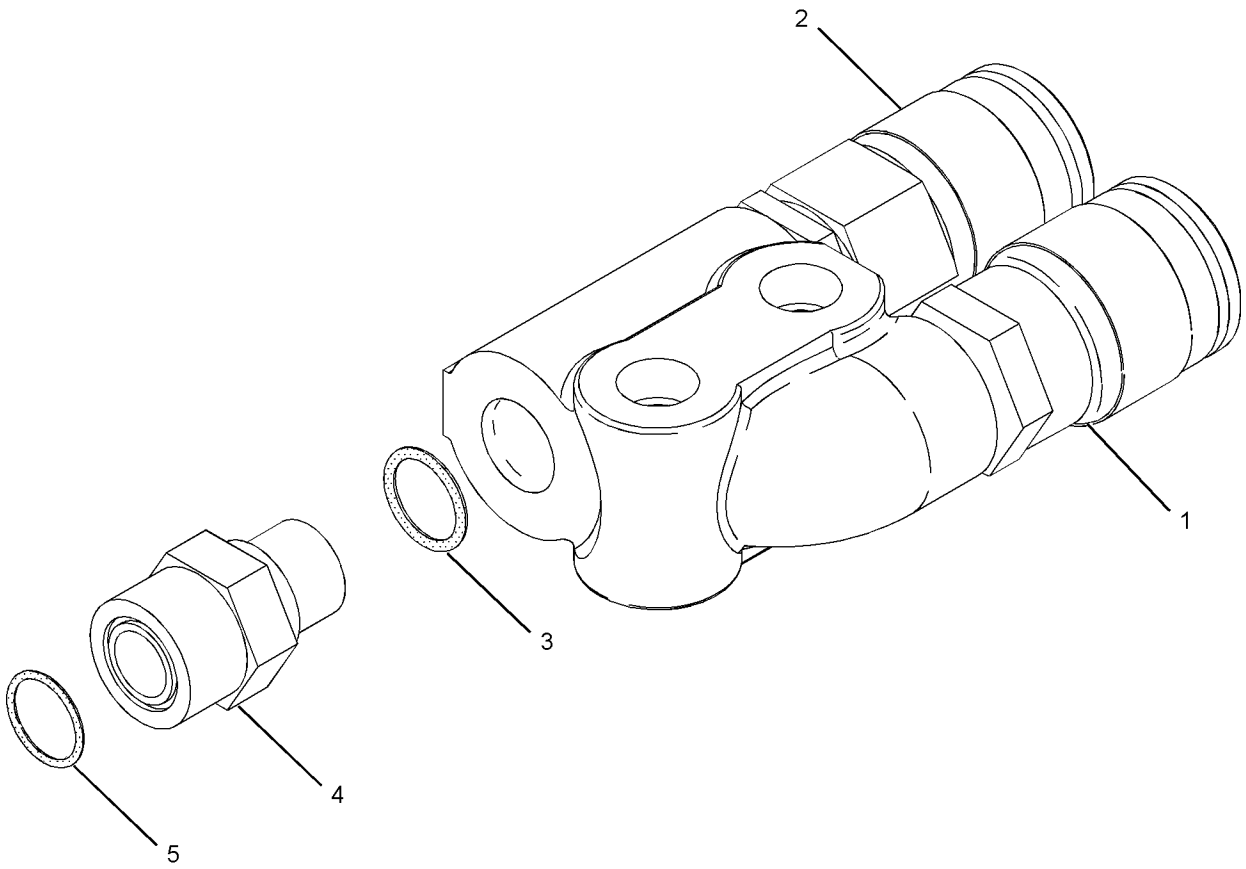

GRAPHIC #1 **<END>** g01084158

HYDRAULIC SYSTEM

218-5709 HYDRAULIC AR

S/N: BXM4225-UP
WITH WORK TOOL POSITIONER
CANNOT BE USED WITH 218-6640—PAGE 274
AN ATTACHMENT

SMCS-5050 **i02360655**

NOTE	PART NUMBER	QTY	PART NAME 1 2 3 4 5 6 (PRODUCT LEVEL)	SEE PAGE
Y	*218-5707*	1	LINES GP-LIFT CYLINDER	311
Y	*218-5708*	1	LINES GP-TILT CYLINDER	325
Y	*191-9652*	1	MANIFOLD & MTG GP-CONTROL	339
	142-9116	1	SWITCH GP-ROCKER (WORK TOOL POSITIONER)	
	111-7899	1	GASKET	
			(LOCATE IN SECOND SLOT FROM REAR ON LH INSTRUMENT PANEL)	

Y-SEPARATE ILLUSTRATION

<END>

218-6640 HYDRAULIC AR

S/N: BXM4225-UP
WITHOUT WORK TOOL POSITIONER
AN ATTACHMENT

SMCS-5050 **i01958533**

NOTE	PART NUMBER	QTY	PART NAME 1 2 3 4 5 6 (PRODUCT LEVEL)	SEE PAGE
Y	*218-6604*	1	LINES GP-LIFT CYLINDER	313
Y	*218-6607*	1	LINES GP-TILT CYLINDER	327

Y-SEPARATE ILLUSTRATION

<END>

218-6760 HYDRAULIC AR

S/N: BXM4225-UP
AN ATTACHMENT

SMCS-5050 **i01958549**

NOTE	PART NUMBER	QTY	PART NAME 1 2 3 4 5 6 (PRODUCT LEVEL)	SEE PAGE
Y	*218-6311*	1	LINES GP-WORK TOOL	329
Y	*218-5901*	1	LINES GP-PUMP	321
Y	*218-6175*	1	PUMP & MTG GP-WORK TOOL	362

Y-SEPARATE ILLUSTRATION

<END>

HYDRAULIC SYSTEM

218-6762 HYDRAULIC AR

S/N: BXM4225-UP
HIGH FLOW
AN ATTACHMENT

SMCS-5050 **i02469372**

NOTE	PART NUMBER	QTY	PART NAME 1 2 3 4 5 6 (PRODUCT LEVEL)	SEE PAGE
Y	*218-5903*	1	LINES GP-PUMP	323
Y	*218-6312*	1	LINES GP-WORK TOOL	331
Y	*218-5812*	1	MANIFOLD & MTG GP-CONTROL	340
Y	*218-6079*	1	PUMP & MTG GP-WORK TOOL	361
	236-4706	1	FILM GP	
	236-4707	2	FILM (HIGH FLOW)	
Y-SEPARATE ILLUSTRATION				

<END>

261-6142 HYDRAULIC AR—SOUND SUPPRESSION

S/N: BXM4225-UP
CANNOT BE USED WITH SOUND SUPPRESSION, 261-6149 HYDRAULIC AR, 218-6760 HYDRAULIC AR, HIGH FLOW, 218-6762 HYDRAULIC AR
AN ATTACHMENT

SMCS-5050 **i02449595**

NOTE	PART NUMBER	QTY	PART NAME 1 2 3 4 5 6 (PRODUCT LEVEL)	SEE PAGE
Y	*218-5901*	1	LINES GP-PUMP	321
Y	*218-6311*	1	LINES GP-WORK TOOL	329
Y	*261-6094*	1	PUMP & MTG GP-WORK TOOL	363
Y-SEPARATE ILLUSTRATION				

<END>

261-6149 HYDRAULIC AR—HIGH FLOW, SOUND SUPPRESSION

S/N: BXM4225-UP
CANNOT BE USED WITH 218-6760 HYDRAULIC AR, HIGH FLOW, 218-6762 HYDRAULIC AR, SOUND SUPPRESSION, 261-6142 HYDRAULIC AR
AN ATTACHMENT

SMCS-5050 **i02453734**

NOTE	PART NUMBER	QTY	PART NAME 1 2 3 4 5 6 (PRODUCT LEVEL)	SEE PAGE
Y	*218-5812*	1	MANIFOLD & MTG GP-CONTROL	340
Y	*218-5903*	1	LINES GP-PUMP	323
Y	*218-6312*	1	LINES GP-WORK TOOL	331
Y	*261-6095*	1	PUMP & MTG GP-WORK TOOL	364
	236-4706	1	FILM GP	
	236-4707	2	FILM (HIGH FLOW)	
			(1- ON BOTH SIDES OF THE MACHINE, BOTTOM EDGE OF THE DECAL IS TO BE 403.34-MM FROM BOTTOM EDGE OF UPPER FRAME, LEFT	
			SIDE OF THE DECAL IS TO BE 47.87-MM FROM BACK EDGE OF UPPER FRAME)	
Y-SEPARATE ILLUSTRATION				

<END>

HYDRAULIC SYSTEM

278-1243 HYDRAULIC AR

S/N: BXM4225-UP

PART OF 295-7242, 295-7243 COMMON AR

SMCS-5050 **i02437702**

NOTE	PART NUMBER	QTY	PART NAME 1 2 3 4 5 6 (PRODUCT LEVEL)	SEE PAGE
Y	*193-0447*	1	ACCUMULATOR & MTG GP-HYDRAULIC	253
Y	*218-6536*	1	MANIFOLD & LINES GP-CONTROL (PARKING BRAKE)	335
Y	*218-6545*	1	FILTER & LINES GP-HYDRAULIC	186
Y	*218-6541*	1	LINES GP-HYDRAULIC OIL COOLER	310
Y	*218-6506*	1	LINES GP-HYDROSTATIC	192
Y	*218-6503*	1	LINES GP-PILOT	317
Y	*234-0788*	1	LINES GP-PILOT	319
Y	*233-5980*	1	TANK & MTG GP-HYDRAULIC	367
Y	*218-6783*	1	VALVE & MTG GP-CONTROL	373
Y-SEPARATE ILLUSTRATION				

<END>

295-7505 HYDRAULIC AR—HIGH FLOW

S/N: BXM4225-UP

AN ATTACHMENT

SMCS-5050 **i02736395**

NOTE	PART NUMBER	QTY	PART NAME 1 2 3 4 5 6 (PRODUCT LEVEL)	SEE PAGE
Y	*218-5947*	1	CONTROL GP-PILOT OPERATED HYD (HYDROSTATIC)	534
Y	*218-6571*	1	CONTROL GP-PILOT OPERATED HYD (WORK TOOL)	536
Y	*218-5903*	1	LINES GP-PUMP	323
Y	*218-6312*	1	LINES GP-WORK TOOL	331
Y	*218-5812*	1	MANIFOLD & MTG GP-CONTROL	340
Y	*218-6079*	1	PUMP & MTG GP-WORK TOOL	361
	295-7418	1	FILM GP	
	295-7438	2	FILM-IDENTIFICATION (HIGH FLOW)	
Y-SEPARATE ILLUSTRATION				

<END>

295-7508 HYDRAULIC AR—HIGH FLOW

S/N: BXM4225-UP

AN ATTACHMENT

SMCS-5050 **i02736390**

NOTE	PART NUMBER	QTY	PART NAME 1 2 3 4 5 6 (PRODUCT LEVEL)	SEE PAGE
Y	*218-5947*	1	CONTROL GP-PILOT OPERATED HYD (HYDROSTATIC)	534
Y	*218-6571*	1	CONTROL GP-PILOT OPERATED HYD (WORK TOOL)	536
Y	*218-5903*	1	LINES GP-PUMP	323
Y	*218-6312*	1	LINES GP-WORK TOOL	331
Y	*218-5812*	1	MANIFOLD & MTG GP-CONTROL	340
Y	*261-6095*	1	PUMP & MTG GP-WORK TOOL	364
	295-7418	1	FILM GP	
	295-7438	2	FILM-IDENTIFICATION (HIGH FLOW)	
Y-SEPARATE ILLUSTRATION				

<END>

HYDRAULIC SYSTEM

218-6738 KIT-HIGH FLOW CONVERSION–KIT

S/N: BXM4225-UP
HIGH FLOW
AN ATTACHMENT

SMCS-1408, 5057, 5264, 5705 **i02795994**

NOTE	PART NUMBER	QTY	PART NAME 1 2 3 4 5 6 (PRODUCT LEVEL)	SEE PAGE
Y	**231-4259**	1	CONTROL GP-HANDLE (RH)	516
Y	**218-5840**	1	FITTING GP-HYDRAULIC (QUICK DISCONNECT, MALE)	272
Y	**218-5841**	1	FITTING GP-HYDRAULIC (QUICK DISCONNECT, FEMALE)	273
Y	**248-7696**	1	MANIFOLD GP-CONTROL (BOOSTED AUXILIARY HYD FLOW)	346
Y	**225-9238**	1	PUMP GP-GEAR (WORK TOOL, HIGH FLOW)	365
	218-6598	1	ADAPTER	
	257-5877	2	ADAPTER	
	285-9287	3	BLOCK	
M	**8T-4136**	4	BOLT (M10X1.5X25-MM)	
M	**8T-4137**	3	BOLT (M10X1.5X20-MM)	
M	**8T-4194**	2	BOLT (M12X1.75X50-MM)	
M	**8T-4195**	2	BOLT (M10X1.5X30-MM)	
M	**8T-4198**	2	BOLT (M10X1.5X100-MM)	
M	**8T-4908**	3	BOLT (M8X1.25X25-MM)	
M	**8T-4956**	2	BOLT (M12X1.75X35-MM)	
M	**8T-6869**	1	BOLT (M8X1.25X60-MM)	
M	**8T-7547**	4	BOLT (M8X1.25X30-MM)	
M	**096-5866**	2	BOLT (M8X1.25X75-MM)	
M	**108-2989**	3	BOLT (M8X1.25X130-MM)	
M	**8T-0269**	3	BOLT-SOCKET HEAD (M6X1X20-MM)	
M	**8T-0341**	4	BOLT-SOCKET HEAD (M10X1.5X60-MM)	
	218-5926	1	BRACKET AS	
	218-5927	1	BRACKET AS	
	218-6727	1	BRACKET AS	
	2S-3440	6	CLAMP-HOSE	
	5P-2230	3	CLAMP-HOSE	
	180-3007	3	CLAMP-HOSE	
	1S-1409	1	CLIP	
	4D-6466	2	CLIP	
	4P-7581	1	CLIP	
	4P-8134	1	CLIP	
	5M-8429	1	CLIP	
	5P-7466	4	CLIP (SLOT)	
	5P-7467	4	CLIP (TAB)	
	5P-9297	2	CLIP	
	6D-4244	2	CLIP	
	8T-1887	2	CLIP (SLOT)	
	8T-1888	2	CLIP (TAB)	
	9F-2947	2	CLIP	
	215-3935	3	CLIP	
	218-6176	1	CLIP	
	148-8327	2	CONNECTOR AS	
			(EACH INCLUDES)	
	3D-2824	1	SEAL-O-RING	
	6V-8637	1	CONNECTOR	
	6V-9746	1	SEAL-O-RING	
	148-8336	2	CONNECTOR AS	
			(EACH INCLUDES)	
	3J-1907	1	SEAL-O-RING	
	6V-8397	1	SEAL-O-RING	
	6V-8636	1	CONNECTOR	
	148-8340	3	CONNECTOR AS	
			(EACH INCLUDES)	
	3K-0360	1	SEAL-O-RING	

218-6738 KIT-HIGH FLOW CONVERSION *(contd.)* i02795994

NOTE	PART NUMBER	QTY	PART NAME 1 2 3 4 5 6 (PRODUCT LEVEL)	SEE PAGE
	6V-8398	1	SEAL-O-RING	
	6V-8639	1	CONNECTOR	
	176-4074	1	CONNECTOR GP	
	2S-4078	1	SEAL-O-RING	
	177-9567	1	TEE AS	
	218-6776	1	COVER AS	
	236-4707	2	FILM (HIGH FLOW)	
	270-8667	1	FILM-INSTRUCTION (MACHINE CONTROL)	
	229-5468	1	FITTING AS (QUICK DISCONNECT, MALE)	
	229-5471	1	FITTING AS (QUICK DISCONNECT, FEMALE)	
	229-5473	1	FITTING AS (QUICK DISCONNECT, MALE)	
	9U-6993	1	FITTING GP	
	9U-6994	2	FITTING GP	
	1P-4574	2	FLANGE-HALF	
	5P-8112	4	GROMMET	
	225-8005	1	HARNESS AS-OPERATOR CONTROLS (HIGH FLOW)	
	225-8009	1	HARNESS AS-OPERATOR CONTROLS (JOYSTICK)	
	218-6142	1	HOSE	
	218-6568	1	HOSE	
	218-6596	1	HOSE	
	218-6597	1	HOSE	
I	**218-6319**	1	HOSE AS	
I	**218-6323**	2	HOSE AS	
I	**233-5895**	1	HOSE AS	
I	**233-5966**	2	HOSE AS	
I	**233-5967**	1	HOSE AS	
I	**290-8208**	2	HOSE AS	
	133-9931	1	JUMPER AS	
	102-8803	1	KIT-RECEPTACLE (3-PIN)	
			(INCLUDES RECEPTACLE AS & WEDGE)	
	5P-5677		WIRE (18-GA, BLACK) (0.1-M)	
	186-3735	2	PIN-CONNECTOR (16-GA TO 18-GA)	
	8T-8737	1	PLUG-SEAL	
M	**8T-4133**	1	NUT (M10X1.5-THD)	
M	**8T-4244**	4	NUT (M12X1.75-THD)	
M	**095-1207**	1	NUT (M12X1.75-THD)	
	218-5764	3	PLATE	
	218-6599	1	PLATE	
	219-4377	1	PLATE	
	115-1615	2	RELAY AS (12-VOLT)	
	4J-0522	1	SEAL-O-RING	
	4J-5140	1	SEAL-O-RING	
	4J-5267	1	SEAL-O-RING	
	6V-8397	2	SEAL-O-RING	
	6V-8398	2	SEAL-O-RING	
	6V-9746	4	SEAL-O-RING	
	8T-5049	1	SEAL-O-RING	
	110-8760	1	STRAP	
	7K-1181	6	STRAP-CABLE	
M	**101-3129**	3	STUD (M10X1.5-THD)	
	223-5942	1	SWITCH GP-ROCKER (HIGH FLOW)	
	111-7899	1	GASKET	
	214-4253	1	TEE AS	
	4J-5477	1	SEAL-O-RING	
	6V-8398	1	SEAL-O-RING	
	214-4252	1	TEE	
	218-6326	1	TUBE AS	
	218-6327	1	TUBE AS	
	218-6349	1	TUBE AS	

218-6738 KIT-HIGH FLOW CONVERSION *(contd.)* i02795994

NOTE	PART NUMBER	QTY	PART NAME 1 2 3 4 5 6 (PRODUCT LEVEL)	SEE PAGE
	218-6553	1	TUBE AS	
	218-6554	1	TUBE AS	
	218-6555	1	TUBE AS	
	218-6558	1	TUBE AS	
	290-8081	1	TUBE AS	
	290-8082	1	TUBE AS	
	294-7667	1	TUBE AS	
	8T-4121	15	WASHER-HARD (11X21X2.5-MM THK)	
	8T-4205	3	WASHER-HARD (7.2X14.5X2-MM THK)	
	8T-4223	8	WASHER-HARD (13.5X25.5X3-MM THK)	
	8T-4224	13	WASHER-HARD (8.8X16X2-MM THK)	

I-REFER TO HYDRAULIC INFORMATION SYSTEM
M-METRIC PART
Y-SEPARATE ILLUSTRATION

<END>

HYDRAULIC SYSTEM

218-5957 KIT-QUICK COUPLER CONVERSION–KIT

S/N: BXM4225-UP

AN ATTACHMENT

SMCS-5057, 5133, 5479, 6129 **i02183180**

NOTE	REF NO	GRAPHIC REF	PART NUMBER	QTY	PART NAME 1 2 3 4 5 6 (PRODUCT LEVEL)	SEE PAGE
	1	1	**2K-5232**	2	SPACER (0.406X0.75X1.81-IN THK)	
	2	1	**3S-2093**	3	STRAP-CABLE	
	3	1	**113-8490**	1	FUSE (10-AMPERE)	
	4	1	**124-2456**	1	FILM-INSTRUCTION (NO STEP)	
	5	1	**166-2560**	2	PIN-SPRING	
Y	6	1	**192-2640**	2	CYLINDER GP-HYDRAULIC	262
	7	1	**195-6754**	2	PIN-SPRING	
	8	1	**207-9737**	1	BRACKET AS	
M		1	**8T-3612**	2	NUT-WELD (M8X1.25-THD)	
I	9	1	**207-9756**	4	HOSE AS	
	10	1	**207-9785**	2	PIN	
	11	1	**212-6521**	1	SWITCH AS-ROCKER (QUICK COUPLER)	
		1	**111-7899**	1	GASKET	
	12	1	**212-6690**	1	GUARD	
Y	13	1	*215-3957*	2	LINK GP-COUPLER	477
I	14	1	**218-6241**	1	HOSE AS	
	15	1	**218-6334**	1	BRACKET AS	
M		1	**9R-2672**	1	BOSS (M10X1.5X20-MM)	
	16	1	**218-6335**	1	BRACKET AS	
I	17	1	**219-4335**	2	HOSE AS	
Y	18	1	**233-7128**	1	MANIFOLD GP-CONTROL (QUICK COUPLER)	345
	19	1	**238-7741**	1	TUBE AS	
	20	1	**238-7742**	1	TUBE AS	
I	21	1	**238-7743**	2	HOSE AS	
I	22	1	**238-7748**	1	HOSE AS	
	23	1	**238-7749**	1	BRACKET	
	24	1	*148-8325*	4	CONNECTOR AS	
					(EACH INCLUDES)	
		1	**6V-8641**	1	CONNECTOR	
		1	**3J-1907**	1	SEAL-O-RING	
		1	**4J-5477**	1	SEAL-O-RING	
	25	1	*148-8336*	2	CONNECTOR AS	
					(EACH INCLUDES)	
		1	**6V-8636**	1	CONNECTOR	
		1	**3J-1907**	1	SEAL-O-RING	
		1	**6V-8397**	1	SEAL-O-RING	
	26	1	*148-8353*	1	ELBOW AS	
		1	**3J-1907**	1	SEAL-O-RING	
		1	**6V-8397**	1	SEAL-O-RING	
	27	1	*148-8378*	1	ELBOW AS	
		1	**6V-8724**	1	ELBOW	
		1	**3J-1907**	1	SEAL-O-RING	
		1	**6V-8397**	1	SEAL-O-RING	
	28	1	*148-8446*	1	TEE AS-SWIVEL	
		1	**6V-9838**	1	TEE-SWIVEL	
		1	**7J-9108**	2	SEAL-O-RING	
	29	1	*150-4034*	2	TEE AS	
					(EACH INCLUDES)	
		1	**8T-0379**	1	TEE-BULKHEAD	
		1	**6V-8397**	3	SEAL-O-RING	
	30	1	*156-4282*	1	REDUCER AS	
		1	**6V-8938**	1	REDUCER-O-RING	
		1	**6V-8397**	1	SEAL-O-RING	
	31	1	**164-4225**	2	CLIP	
	32	1	**3B-4628**	2	PIN-COTTER	
	33	1	**4P-7581**	1	CLIP	

218-5957 KIT-QUICK COUPLER CONVERSION *(contd.)* i02183180

NOTE	REF NO	GRAPHIC REF	PART NUMBER	QTY	PART NAME 1 2 3 4 5 6 (PRODUCT LEVEL)	SEE PAGE
M	34	1	**5C-7261**	1	NUT (M8X1.25-THD)	
	35	1	**5K-8451**	1	CLIP	
	36	1	**5P-0372**	2	LOCK PIN	
	37	1	**6K-8178**	2	CLIP	
	38	1	**6V-8397**	4	SEAL-O-RING	
	39	1	**9X-6581**	1	NUT-O-RING SEAL (1-14-THD)	
	40	1	**6V-9168**	2	NUT (11/16-16-THD)	
	41	1	**7G-2950**	1	CLIP (SLOT)	
	42	1	**7G-2951**	1	CLIP (TAB)	
	43	1	**7H-7055**	6	CLIP	
	44	1	**7X-7729**	6	WASHER (11X25X3-MM THK)	
	45	1	**8L-5188**	2	PIN	
	46	1	**8T-4121**	18	WASHER-HARD (11X21X2.5-MM THK)	
M	47	1	**8T-4133**	8	NUT (M10X1.5-THD)	
M	48	1	**8T-4136**	1	BOLT (M10X1.5X25-MM)	
M	49	1	**8T-4189**	2	BOLT (M8X1.25X20-MM)	
M	50	1	**8T-4191**	2	BOLT (M10X1.5X16-MM)	
M	51	1	**8T-4196**	4	BOLT (M10X1.5X35-MM)	
M	52	1	**8T-4201**	4	BOLT-LOCKING (M10X1.5X20-MM)	
	53	1	**8T-4224**	4	WASHER-HARD (8.8X16X2-MM THK)	
M	54	1	**8T-4908**	1	BOLT (M8X1.25X25-MM)	
M	55	1	**8T-5005**	4	BOLT (M10X1.5X70-MM)	
	56	1	**9M-8406**	3	CLIP	
	57	1	**9R-1004**	1	CLIP (TAB)	
	58	1	**9R-1005**	1	CLIP (SLOT)	
	59	1	**9T-7303**	4	SPACER (16X28X1.5-MM THK)	

I-REFER TO HYDRAULIC INFORMATION SYSTEM
M-METRIC PART
Y-SEPARATE ILLUSTRATION

218-5957 KIT-QUICK COUPLER CONVERSION *(contd.)* i02183180

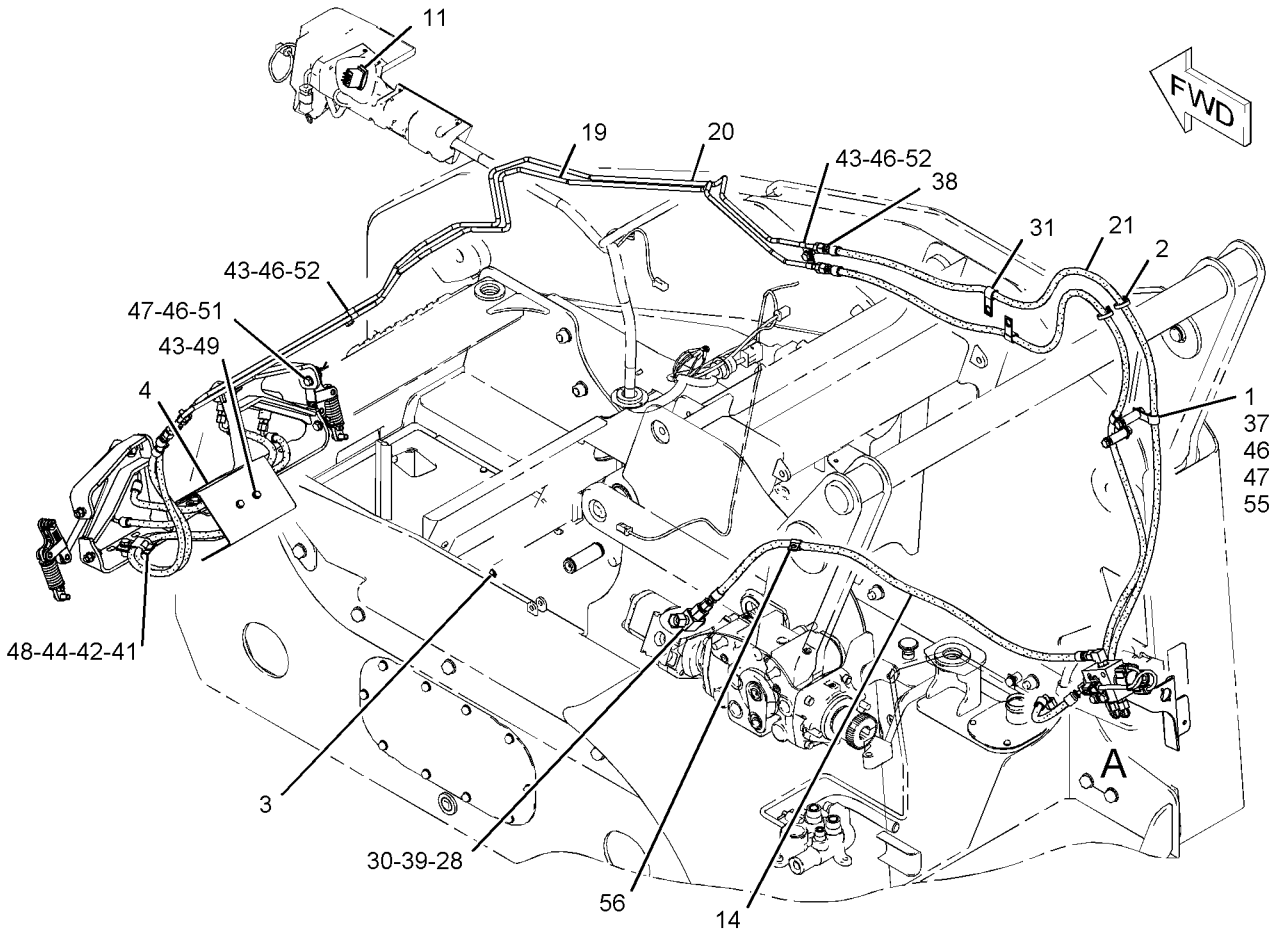

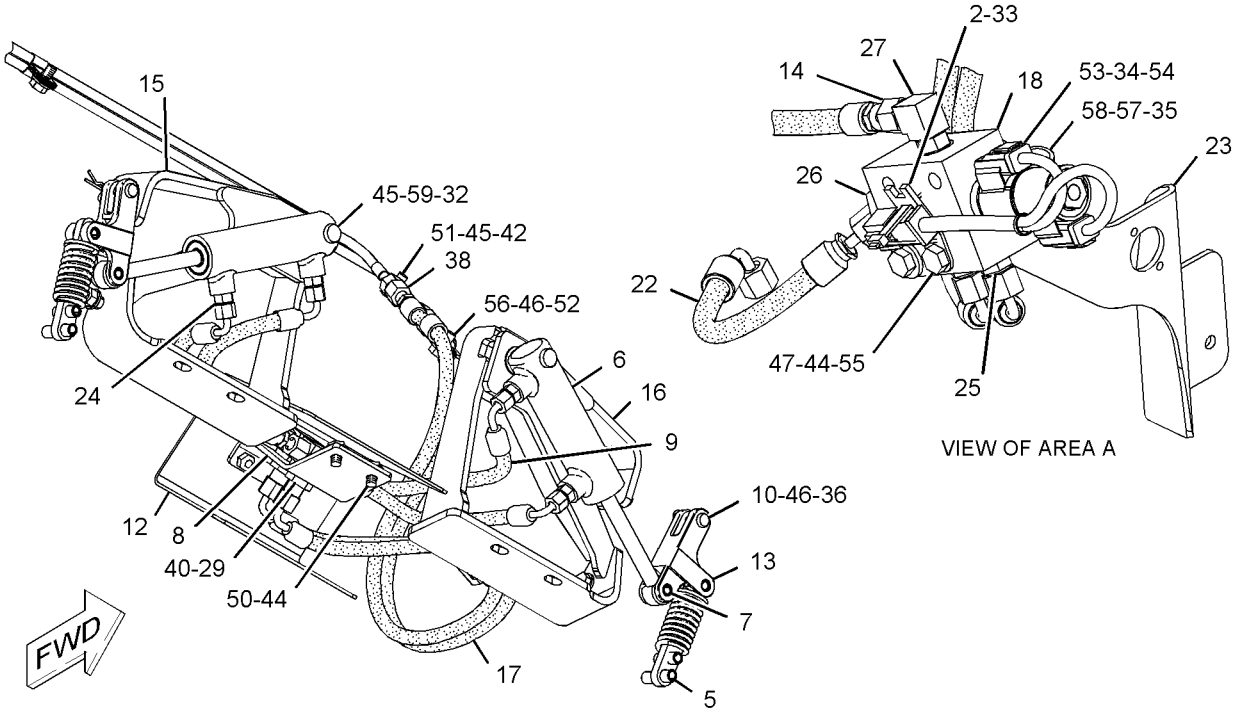

GRAPHIC #1 **<END>** g01130759

HYDRAULIC SYSTEM

279-5412 LINES GP-BUCKET—INDUSTRIAL

S/N: BXM4225-UP

PART OF 279-5350, 279-5360 FORK AR-GRAPPLE

AN ATTACHMENT

SMCS-5057 **i02616554**

NOTE	REF NO	GRAPHIC REF	PART NUMBER	QTY	PART NAME 1 2 3 4 5 6 (PRODUCT LEVEL)	SEE PAGE
	1	1	**3E-7404**	2	CLAMP-HOSE	
I	2	1	**294-5503**	1	HOSE AS	
	3	1	**153-2994**	1	COUPLING AS-QUICK DISCONNECT (FEMALE)	
	4	1	**153-2995**	1	FITTING AS (QUICK DISCONNECT, MALE)	
	5	1	**161-0185**	1	TUBE AS	
	6	1	**161-0186**	1	TUBE AS	
	7	1	**161-0188**	2	TUBE AS	
I	8	1	**161-0189**	2	HOSE AS	
I	9	1	**161-0190**	2	HOSE AS	
	10	1	**163-1385**	1	ELBOW	
I	11	1	**294-5502**	1	HOSE AS	
	12	1	*148-8319*	2	CONNECTOR AS	
					(EACH INCLUDES)	
		1	**2M-9780**	1	SEAL-O-RING	
		1	**6V-8397**	1	SEAL-O-RING	
		1	**6V-8715**	1	CONNECTOR	
	13	1	**2V-3216**	6	CLIP	
	14	1	**6V-8397**	13	SEAL-O-RING	
	15	1	**7S-3916**	2	CLIP (TAB)	
	16	1	**7S-3919**	2	CLIP (SLOT)	
	17	1	**8T-4121**	2	WASHER-HARD (11X21X2.5-MM THK)	
M	18	1	**8T-4136**	2	BOLT (M10X1.5X25-MM)	
M	19	1	**8T-4171**	4	BOLT (M6X1X12-MM)	
	20	1	**9R-2004**	2	BLOCK	

I-REFER TO HYDRAULIC INFORMATION SYSTEM
M-METRIC PART

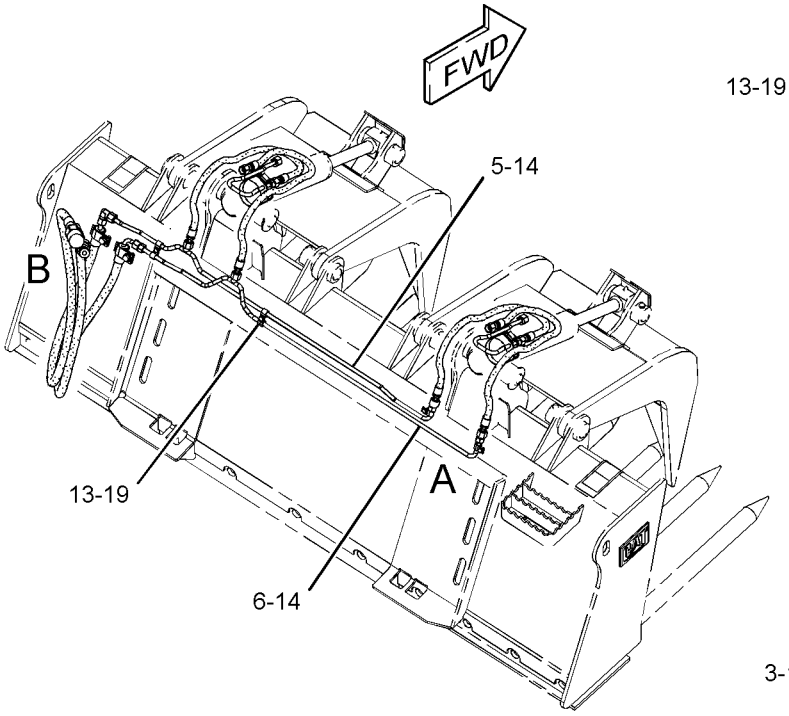

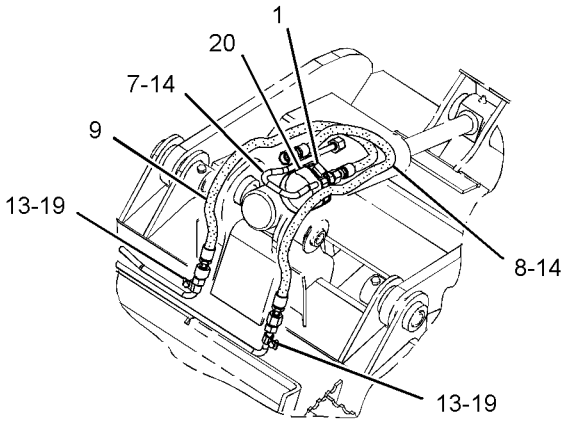

VIEW OF AREA A

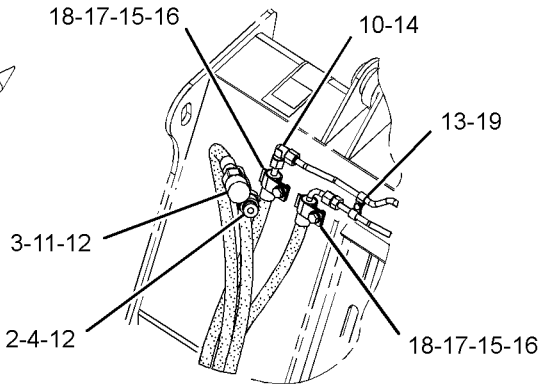

VIEW OF AREA B

GRAPHIC #1 **<END>** g01280859

HYDRAULIC SYSTEM

279-5413 LINES GP-BUCKET

S/N: BXM4225-UP

PART OF 279-5382 BUCKET AR-MULTIPURPOSE

AN ATTACHMENT

SMCS-5057 **i02552042**

NOTE	REF NO	GRAPHIC REF	PART NUMBER	QTY	PART NAME 1 2 3 4 5 6 (PRODUCT LEVEL)	SEE PAGE
	1	1	**153-2994**	1	COUPLING AS-QUICK DISCONNECT (FEMALE)	
I	2	1	**154-5020**	2	HOSE AS	
I	3	1	**154-5021**	1	HOSE AS	
I	4	1	**154-5022**	1	HOSE AS	
		1	**163-8811**	2	CLAMP	
	5	1	**163-1386**	1	TEE-UNION	
	6	1	**185-7887**	1	COUPLING AS-QUICK DISCONNECT (MALE)	
I	7	1	**279-5417**	1	HOSE AS	
I	8	1	**279-5418**	1	HOSE AS	
	9	1	*148-8319*	2	CONNECTOR AS	
					(EACH INCLUDES)	
		1	**2M-9780**	1	SEAL-O-RING	
		1	**6V-8397**	1	SEAL-O-RING	
		1	**6V-8715**	1	CONNECTOR	
	10	1	*150-3056*	1	TEE AS	
		1	**6V-8397**	3	SEAL-O-RING	
		1	**6V-8788**	1	TEE	
	11	1	**1S-0994**	1	CLIP	
	12	1	**6D-4247**	3	CLIP	
	13	1	**6V-8397**	7	SEAL-O-RING	
M	14	1	**8T-4189**	4	BOLT (M8X1.25X20-MM)	
	15	1	**8T-4224**	4	WASHER-HARD (8.8X16X2-MM THK)	
B	16	1	**9X-6273**	2	WASHER (32.5X50X0.8-MM THK)	
B	17	1	**9X-6274**	2	WASHER (32.5X50X1.6-MM THK)	

B-USE AS REQUIRED
I-REFER TO HYDRAULIC INFORMATION SYSTEM
M-METRIC PART

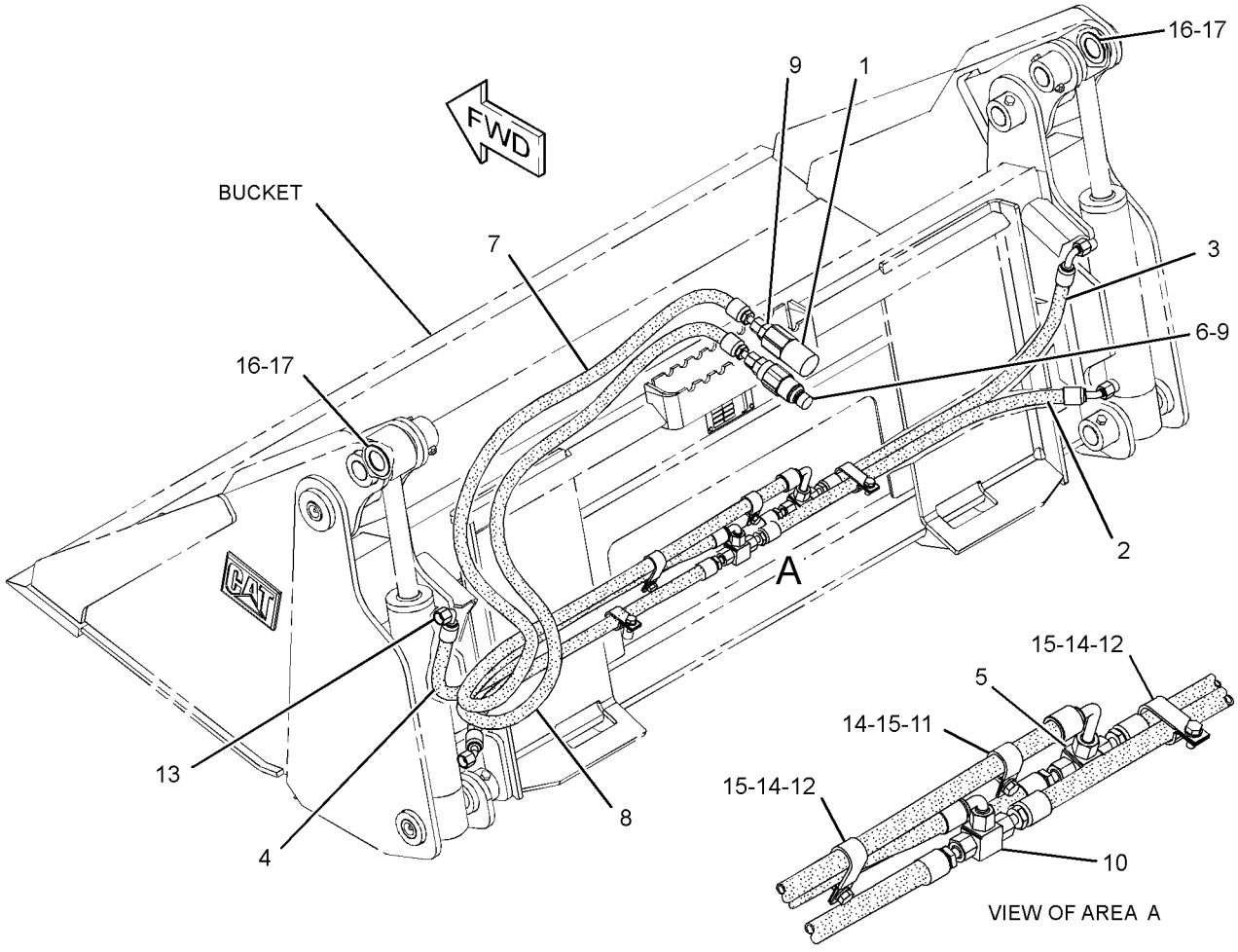

GRAPHIC #1 **<END>** g01278435

HYDRAULIC SYSTEM

279-5414 LINES GP-BUCKET

S/N: BXM4225-UP

PART OF 279-5390 BUCKET AR-MULTIPURPOSE

AN ATTACHMENT

SMCS-5057 **i02664837**

NOTE	REF NO	GRAPHIC REF	PART NUMBER	QTY	PART NAME 1 2 3 4 5 6 (PRODUCT LEVEL)	SEE PAGE
	1	1	**153-2994**	1	COUPLING AS-QUICK DISCONNECT (FEMALE)	
I	2	1	**156-5508**	1	HOSE AS	
I	3	1	**156-5509**	2	HOSE AS	
I	4	1	**156-5510**	1	HOSE AS	
	5	1	**163-1386**	1	TEE-UNION	
	6	1	**185-7887**	1	COUPLING AS-QUICK DISCONNECT (MALE)	
I	7	1	**279-5417**	1	HOSE AS	
I	8	1	**279-5418**	1	HOSE AS	
	9	1	*148-8319*	2	CONNECTOR AS	
					(EACH INCLUDES)	
		1	**2M-9780**	1	SEAL-O-RING	
		1	**6V-8397**	1	SEAL-O-RING	
		1	**6V-8715**	1	CONNECTOR	
	10	1	*150-3056*	1	TEE AS	
		1	**6V-8397**	3	SEAL-O-RING	
		1	**6V-8788**	1	TEE	
	11	1	**1S-0994**	1	CLIP	
	12	1	**6D-4247**	3	CLIP	
	13	1	**6V-8397**	7	SEAL-O-RING	
M	14	1	**8T-4189**	4	BOLT (M8X1.25X20-MM)	
	15	1	**8T-4224**	4	WASHER-HARD (8.8X16X2-MM THK)	
B	16	1	**9X-6273**	2	WASHER (32.5X50X0.8-MM THK)	
B	17	1	**9X-6274**	2	WASHER (32.5X50X1.6-MM THK)	

B-USE AS REQUIRED
I-REFER TO HYDRAULIC INFORMATION SYSTEM
M-METRIC PART

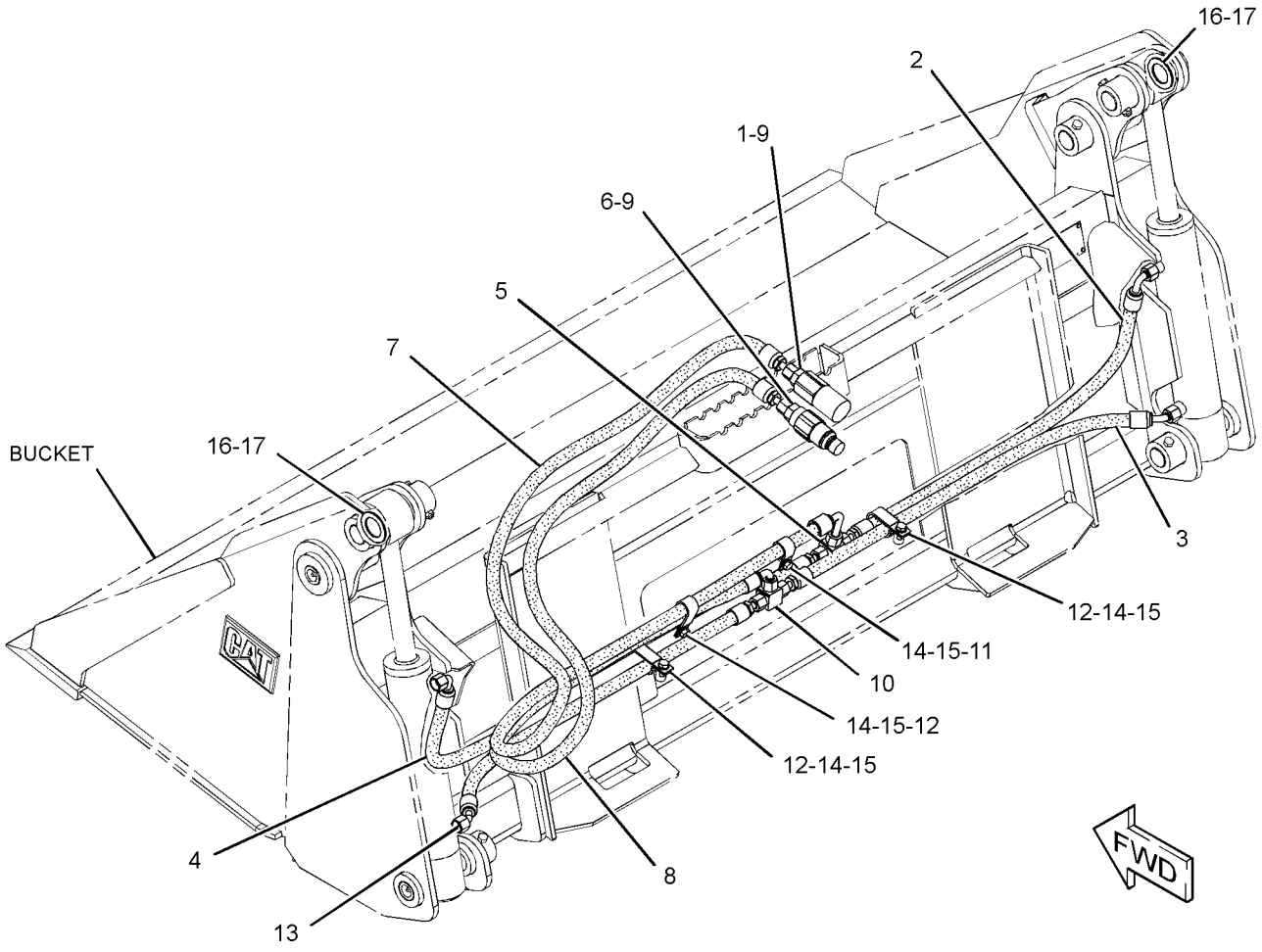

GRAPHIC #1 **<END>** g01339126

HYDRAULIC SYSTEM

279-5415 LINES GP-BUCKET

S/N: BXM4225-UP

PART OF 279-5398 BUCKET AR-MULTIPURPOSE

AN ATTACHMENT

SMCS-5057 **i02552160**

NOTE	REF NO	GRAPHIC REF	PART NUMBER	QTY	PART NAME 1 2 3 4 5 6 (PRODUCT LEVEL)	SEE PAGE
	1	1	**153-2994**	1	COUPLING AS-QUICK DISCONNECT (FEMALE)	
I	2	1	**159-4535**	1	HOSE AS	
I	3	1	**159-4536**	2	HOSE AS	
I	4	1	**159-4537**	1	HOSE AS	
	5	1	**163-1386**	1	TEE-UNION	
	6	1	**185-7887**	1	COUPLING AS-QUICK DISCONNECT (MALE)	
I	7	1	**279-5417**	1	HOSE AS	
I	8	1	**279-5418**	1	HOSE AS	
	9	1	*148-8319*	2	CONNECTOR AS	
					(EACH INCLUDES)	
		1	**2M-9780**	1	SEAL-O-RING	
		1	**6V-8397**	1	SEAL-O-RING	
		1	**6V-8715**	1	CONNECTOR	
	10	1	*150-3056*	1	TEE AS	
		1	**6V-8397**	3	SEAL-O-RING	
		1	**6V-8788**	1	TEE	
	11	1	**1S-0994**	1	CLIP	
	12	1	**6D-4247**	3	CLIP	
	13	1	**6V-8397**	7	SEAL-O-RING	
M	14	1	**8T-4189**	4	BOLT (M8X1.25X20-MM)	
	15	1	**8T-4224**	4	WASHER-HARD (8.8X16X2-MM THK)	
B	16	1	**9X-6273**	2	WASHER (32.5X50X0.8-MM THK)	
B	17	1	**9X-6274**	2	WASHER (32.5X50X1.6-MM THK)	

B-USE AS REQUIRED
I-REFER TO HYDRAULIC INFORMATION SYSTEM
M-METRIC PART

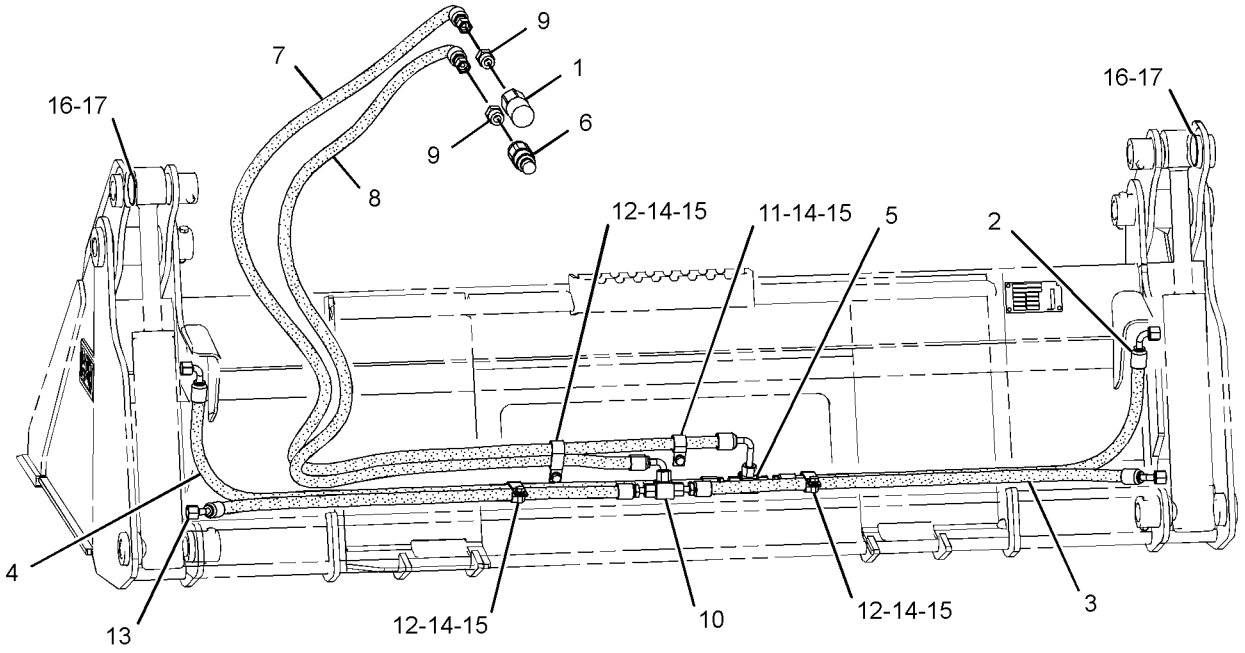

REAR VIEW
(UPPER LEFT)

GRAPHIC #1 **<END>** g01280163

HYDRAULIC SYSTEM

279-5416 LINES GP-BUCKET

S/N: BXM4225-UP

PART OF 279-5403 BUCKET AR-MULTIPURPOSE

AN ATTACHMENT

SMCS-5057 **i02552257**

NOTE	REF NO	GRAPHIC REF	PART NUMBER	QTY	PART NAME 1 2 3 4 5 6 (PRODUCT LEVEL)	SEE PAGE
	1	1	**153-2994**	1	COUPLING AS-QUICK DISCONNECT (FEMALE)	
	2	1	**163-1386**	1	TEE-UNION	
	3	1	**185-7887**	1	COUPLING AS-QUICK DISCONNECT (MALE)	
I	4	1	**199-8309**	1	HOSE AS	
I	5	1	**199-8310**	2	HOSE AS	
I	6	1	**199-8311**	1	HOSE AS	
I	7	1	**279-5417**	1	HOSE AS	
I	8	1	**279-5418**	1	HOSE AS	
	9	1	*148-8319*	2	CONNECTOR AS	
					(EACH INCLUDES)	
		1	**2M-9780**	1	SEAL-O-RING	
		1	**6V-8397**	1	SEAL-O-RING	
		1	**6V-8715**	1	CONNECTOR	
	10	1	*150-3056*	1	TEE AS	
		1	**6V-8397**	3	SEAL-O-RING	
		1	**6V-8788**	1	TEE	
	11	1	**1S-0994**	1	CLIP	
	12	1	**6D-4247**	3	CLIP	
	13	1	**6V-8397**	7	SEAL-O-RING	
M	14	1	**8T-4189**	4	BOLT (M8X1.25X20-MM)	
	15	1	**8T-4224**	4	WASHER-HARD (8.8X16X2-MM THK)	
B	16	1	**9X-6273**	2	WASHER (32.5X50X0.8-MM THK)	
B	17	1	**9X-6274**	2	WASHER (32.5X50X1.6-MM THK)	

B-USE AS REQUIRED
I-REFER TO HYDRAULIC INFORMATION SYSTEM
M-METRIC PART

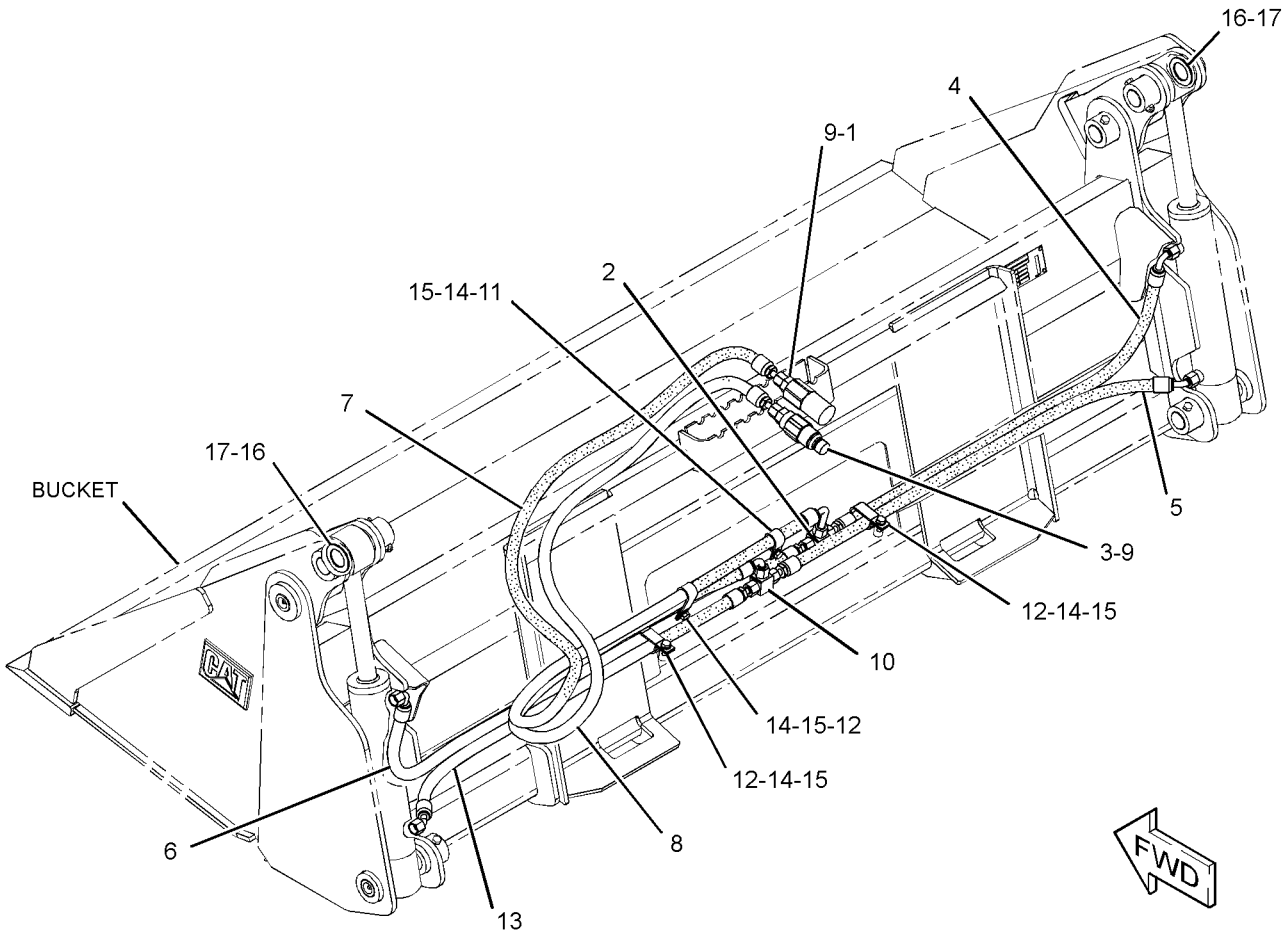

GRAPHIC #1 **<END>** g01278627

HYDRAULIC SYSTEM

285-6113 LINES GP-BUCKET

S/N: BXM4225-UP
PART OF 285-6116 GRAPPLE GP-UTILITY
AN ATTACHMENT
TYPE 1

SMCS-5057 **i02645962**

NOTE	REF NO	GRAPHIC REF	PART NUMBER	QTY	PART NAME 1 2 3 4 5 6 (PRODUCT LEVEL)	SEE PAGE
	1	1	**2J-6540**	1	CLAMP (HOSE)	
	2	1	**153-2994**	1	COUPLING AS-QUICK DISCONNECT (FEMALE)	
	3	1	**153-2995**	1	FITTING AS (QUICK DISCONNECT, MALE)	
	4	1	**174-2388**	1	TUBE AS	
	5	1	**174-2389**	1	TUBE AS	
I	6	1	**174-2393**	2	HOSE AS	
	7	1	**174-3097**	1	TUBE AS	
	8	1	*183-4085*	1	ELBOW AS	
		1	**6V-8397**	2	SEAL-O-RING	
		1	**183-4084**	1	ELBOW	
I	9	1	**294-5504**	1	HOSE AS	
I	10	1	**294-5505**	1	HOSE AS	
	11	1	*148-8319*	2	CONNECTOR AS	
					(EACH INCLUDES)	
		1	**2M-9780**	1	SEAL-O-RING	
		1	**6V-8397**	1	SEAL-O-RING	
		1	**6V-8715**	1	CONNECTOR	
	12	1	**6V-8397**	6	SEAL-O-RING	
	13	1	**7S-3912**	2	CLIP (TAB)	
	14	1	**7S-3913**	2	CLIP (SLOT)	
	15	1	**8T-1893**	2	CLIP (SLOT)	
	16	1	**8T-1894**	2	CLIP (TAB)	
	17	1	**8T-4121**	6	WASHER-HARD (11X21X2.5-MM THK)	
M	18	1	**8T-4137**	4	BOLT (M10X1.5X20-MM)	
	19	1	**9R-2004**	1	BLOCK	

I-REFER TO HYDRAULIC INFORMATION SYSTEM
M-METRIC PART

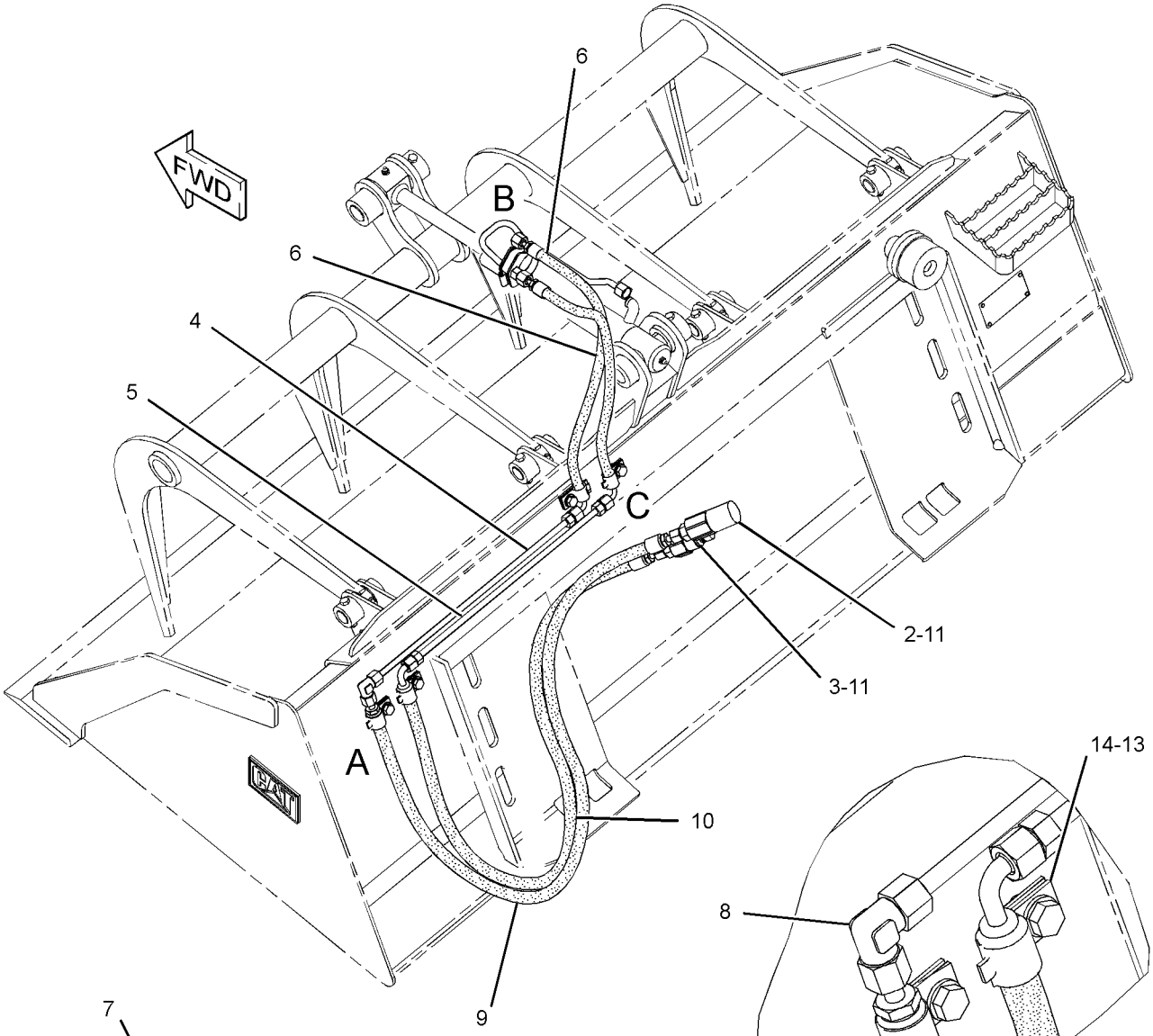

GRAPHIC #1

<END>

g01279537

HYDRAULIC SYSTEM

285-6113 LINES GP-BUCKET

S/N: BXM4225-UP
PART OF 285-6116 GRAPPLE GP-UTILITY
AN ATTACHMENT
TYPE 2

SMCS-5057 **i02888539**

NOTE	PART NUMBER	QTY	PART NAME 1 2 3 4 5 6 (PRODUCT LEVEL)	SEE PAGE
M	**8T-4137**	4	BOLT (M10X1.5X20-MM)	
	7S-3912	2	CLIP (TAB)	
	7S-3913	2	CLIP (SLOT)	
	8T-1893	2	CLIP (SLOT)	
	8T-1894	2	CLIP (TAB)	
	148-8319	2	CONNECTOR AS	
			(EACH INCLUDES)	
	2M-9780	1	SEAL-O-RING	
	6V-8397	1	SEAL-O-RING	
	6V-8715	1	CONNECTOR	
	153-2994	1	COUPLING AS-QUICK DISCONNECT (FEMALE)	
	183-4085	1	ELBOW AS	
	6V-8397	2	SEAL-O-RING	
	183-4084	1	ELBOW	
	153-2995	1	FITTING AS (QUICK DISCONNECT, MALE)	
CI	**307-3808**	1	HOSE AS	
CI	**174-2393**	1	HOSE AS	
I	**294-5504**	1	HOSE AS	
I	**294-5505**	1	HOSE AS	
C	**6V-8397**	5	SEAL-O-RING	
	174-2388	1	TUBE AS	
	174-2389	1	TUBE AS	
	8T-4121	6	WASHER-HARD (11X21X2.5-MM THK)	

C-CHANGE FROM PREVIOUS TYPE
I-REFER TO HYDRAULIC INFORMATION SYSTEM
M-METRIC PART

<END>

HYDRAULIC SYSTEM

177-1986 LINES GP-CONNECTING

S/N: BXM4225-UP

PART OF 177-1989, 177-1990 BLADE AR

AN ATTACHMENT

SMCS-5057 **i01928980**

NOTE	REF NO	GRAPHIC REF	PART NUMBER	QTY	PART NAME 1 2 3 4 5 6 (PRODUCT LEVEL)	SEE PAGE
	1	1	**153-2994**	1	COUPLING AS-QUICK DISCONNECT (FEMALE)	
	2	1	**153-2995**	1	FITTING AS (QUICK DISCONNECT, MALE)	
	3	1	**163-1385**	2	ELBOW	
I	4	1	**177-1910**	2	HOSE AS	
I	5	1	**177-1911**	1	HOSE AS	
I	6	1	**177-1912**	1	HOSE AS	
	7	1	*148-8319*	2	CONNECTOR AS	
					(EACH INCLUDES)	
		1	**2M-9780**	1	SEAL-O-RING	
		1	**6V-8397**	1	SEAL-O-RING	
		1	**6V-8715**	1	CONNECTOR	
	8	1	**148-8378**	2	ELBOW AS	
					(EACH INCLUDES)	
		1	**3J-1907**	1	SEAL-O-RING	
		1	**6V-8397**	1	SEAL-O-RING	
		1	**6V-8724**	1	ELBOW	
	9	1	**6V-8397**	4	SEAL-O-RING	
	10	1	**8T-4121**	4	WASHER-HARD (11X21X2.5-MM THK)	
M	11	1	**8T-4133**	2	NUT (M10X1.5-THD)	
M	12	1	**8T-4185**	1	BOLT (M10X1.5X50-MM)	
M	13	1	**8T-4195**	1	BOLT (M10X1.5X30-MM)	
	14	1	**8T-8192**	2	CLIP (SLOT)	
	15	1	**8T-8193**	2	CLIP (TAB)	

I-REFER TO HYDRAULIC INFORMATION SYSTEM
M-METRIC PART

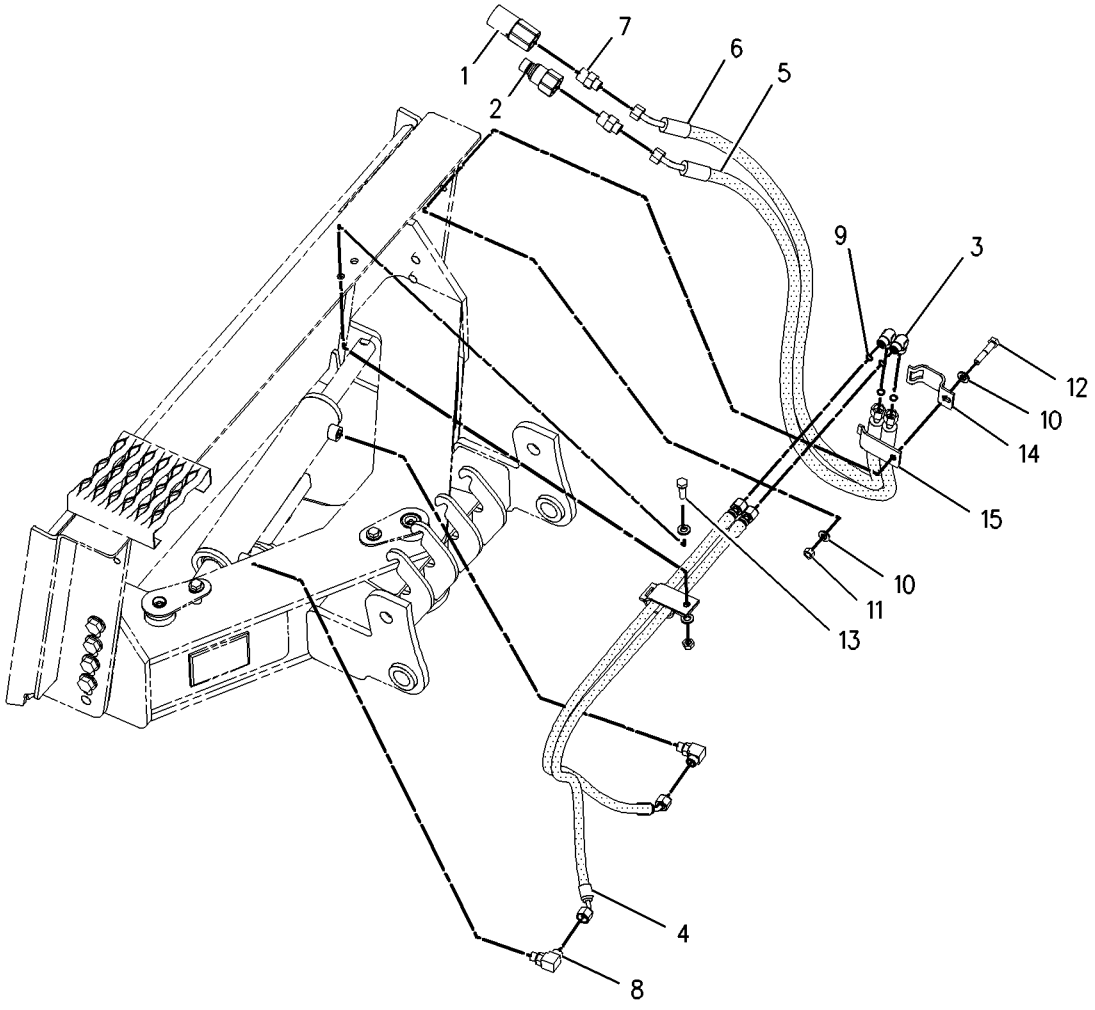

GRAPHIC #1 **<END>** g00978933

HYDRAULIC SYSTEM

231-5273 LINES GP-CONNECTING

S/N: BXM4225-UP

PART OF 231-5275, 231-5277 BLADE AR

AN ATTACHMENT

SMCS-5057 **i01964116**

NOTE	REF NO	GRAPHIC REF	PART NUMBER	QTY	PART NAME 1 2 3 4 5 6 (PRODUCT LEVEL)	SEE PAGE
	1	1	**153-2994**	1	COUPLING AS-QUICK DISCONNECT (FEMALE)	
	2	1	**153-2995**	1	FITTING AS (QUICK DISCONNECT, MALE)	
I	3	1	**231-0124**	2	HOSE AS	
I	4	1	**231-0125**	1	HOSE AS	
I	5	1	**231-0126**	2	HOSE AS	
I	6	1	**231-0127**	2	HOSE AS	
I	7	1	**238-1003**	1	HOSE AS	
	8	1	*148-8315*	2	CONNECTOR AS	
					(EACH INCLUDES)	
		1	**2M-9780**	1	SEAL-O-RING	
		1	**6V-8642**	1	CONNECTOR	
		1	**7J-9108**	1	SEAL-O-RING	
	9	1	*148-8336*	6	CONNECTOR AS	
					(EACH INCLUDES)	
		1	**3J-1907**	1	SEAL-O-RING	
		1	**6V-8397**	1	SEAL-O-RING	
		1	**6V-8636**	1	CONNECTOR	
	10	1	*148-8342*	2	CONNECTOR AS	
					(EACH INCLUDES)	
		1	**3K-0360**	1	SEAL-O-RING	
		1	**6V-8632**	1	CONNECTOR	
		1	**7J-9108**	1	SEAL-O-RING	
	11	1	**5P-1076**	2	WASHER-HARD (13.5X30X4-MM THK)	
	12	1	**7G-5984**	1	CLIP (TAB)	
	13	1	**7G-5985**	1	CLIP (SLOT)	
	14	1	**7G-5986**	1	GROMMET	
M	15	1	**8T-4139**	2	BOLT (M12X1.75X30-MM)	

I-REFER TO HYDRAULIC INFORMATION SYSTEM
M-METRIC PART

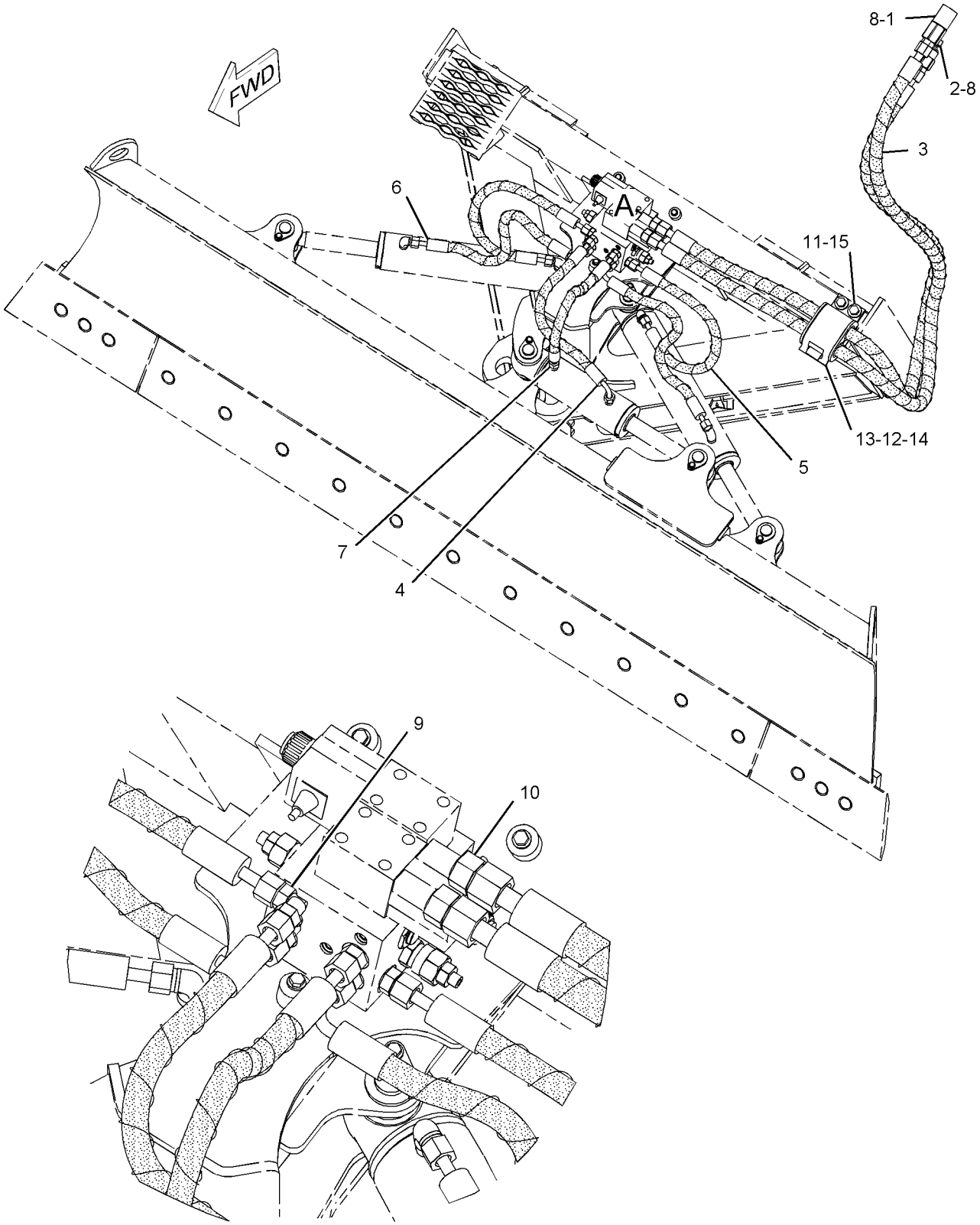

VIEW OF AREA A

GRAPHIC #1 **<END>** g01041993

HYDRAULIC SYSTEM

161-0187 LINES GP-GRAPPLE

S/N: BXM4225-UP
INDUSTRIAL
PART OF 157-7223, 157-7224, 157-7225 BUCKET AR-GRAPPLE
AN ATTACHMENT

SMCS-5057, 5555 **i01928983**

NOTE	REF NO	GRAPHIC REF	PART NUMBER	QTY	PART NAME 1 2 3 4 5 6 (PRODUCT LEVEL)	SEE PAGE
	1	1	**3E-7404**	2	CLAMP-HOSE	
	2	1	**153-2994**	1	COUPLING AS-QUICK DISCONNECT (FEMALE)	
	3	1	**153-2995**	1	FITTING AS (QUICK DISCONNECT, MALE)	
	4	1	**161-0185**	1	TUBE AS	
	5	1	**161-0186**	1	TUBE AS	
	6	1	**161-0188**	2	TUBE AS	
I	7	1	**161-0189**	2	HOSE AS	
I	8	1	**161-0190**	2	HOSE AS	
	9	1	**163-1385**	1	ELBOW	
I	10	1	**163-9320**	1	HOSE AS	
I	11	1	**166-9312**	1	HOSE AS	
	12	1	*148-8319*	2	CONNECTOR AS	
					(EACH INCLUDES)	
		1	**2M-9780**	1	SEAL-O-RING	
		1	**6V-8397**	1	SEAL-O-RING	
		1	**6V-8715**	1	CONNECTOR	
	13	1	**2V-3216**	6	CLIP	
	14	1	**6V-8397**	13	SEAL-O-RING	
	15	1	**7S-3916**	2	CLIP (TAB)	
	16	1	**7S-3919**	2	CLIP (SLOT)	
	17	1	**8T-4121**	2	WASHER-HARD (11X21X2.5-MM THK)	
M	18	1	**8T-4136**	2	BOLT (M10X1.5X25-MM)	
M	19	1	**8T-4171**	4	BOLT (M6X1X12-MM)	
	20	1	**9R-2004**	2	BLOCK	

I-REFER TO HYDRAULIC INFORMATION SYSTEM
M-METRIC PART

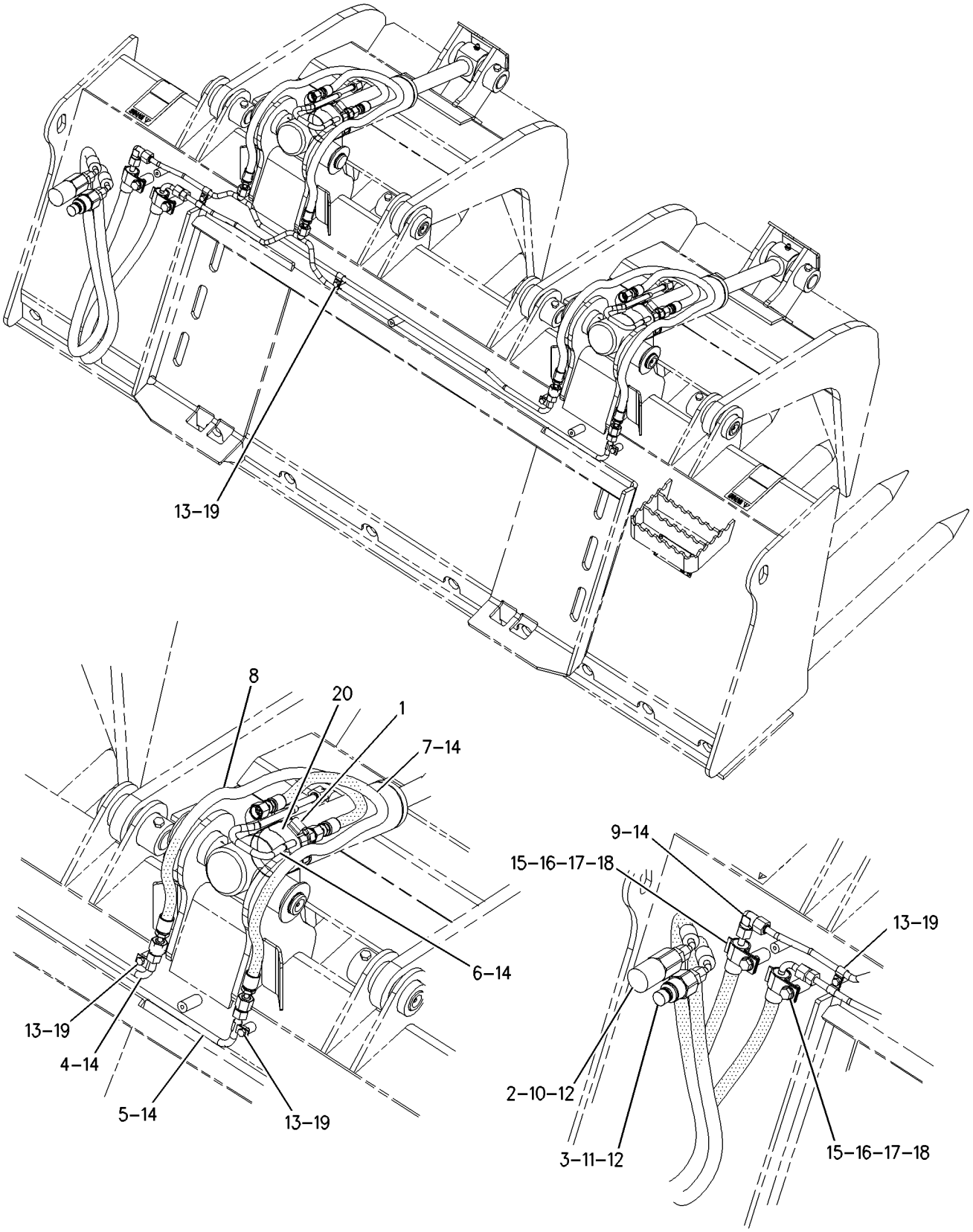

GRAPHIC #1 **<END>** g00733464

HYDRAULIC SYSTEM

286-9250 LINES GP-GRAPPLE

S/N: BXM4225-UP
2134-MM (84-IN)
PART OF 286-9301 BUCKET AR-GRAPPLE
AN ATTACHMENT

SMCS-5057, 5555 **i02742008**

NOTE	REF NO	GRAPHIC REF	PART NUMBER	QTY	PART NAME 1 2 3 4 5 6 (PRODUCT LEVEL)	SEE PAGE
	1	1	**2H-7829**	10	CLIP	
	2	1	**9S-4200**	2	CLIP	
	3	1	**153-2994**	1	COUPLING AS-QUICK DISCONNECT (FEMALE)	
I	4	1	**161-0189**	2	HOSE AS	
	5	1	**163-1385**	1	ELBOW	
I	6	1	**177-1911**	2	HOSE AS	
	7	1	**185-7887**	1	COUPLING AS-QUICK DISCONNECT (MALE)	
I	8	1	**286-9263**	2	HOSE AS	
	9	1	**286-9265**	1	TUBE AS	
	10	1	**286-9266**	1	TUBE AS	
	11	1	**286-9267**	1	TUBE AS	
	12	1	**286-9268**	1	TUBE AS	
	13	1	**286-9271**	1	GUARD	
	14	1	*148-8319*	2	CONNECTOR AS	
					(EACH INCLUDES)	
		1	**2M-9780**	1	SEAL-O-RING	
		1	**6V-8397**	1	SEAL-O-RING	
		1	**6V-8715**	1	CONNECTOR	
	15	1	**5P-4116**	6	WASHER-HARD (8.8X20.5X2-MM THK)	
	16	1	**6V-8397**	13	SEAL-O-RING	
	17	1	**7S-3916**	2	CLIP (TAB)	
	18	1	**7S-3919**	2	CLIP (SLOT)	
	19	1	**7X-7729**	5	WASHER (11X25X3-MM THK)	
M	20	1	**8T-4195**	5	BOLT (M10X1.5X30-MM)	
M	21	1	**8T-4200**	6	BOLT (M8X1.25X16-MM)	

I-REFER TO HYDRAULIC INFORMATION SYSTEM
M-METRIC PART

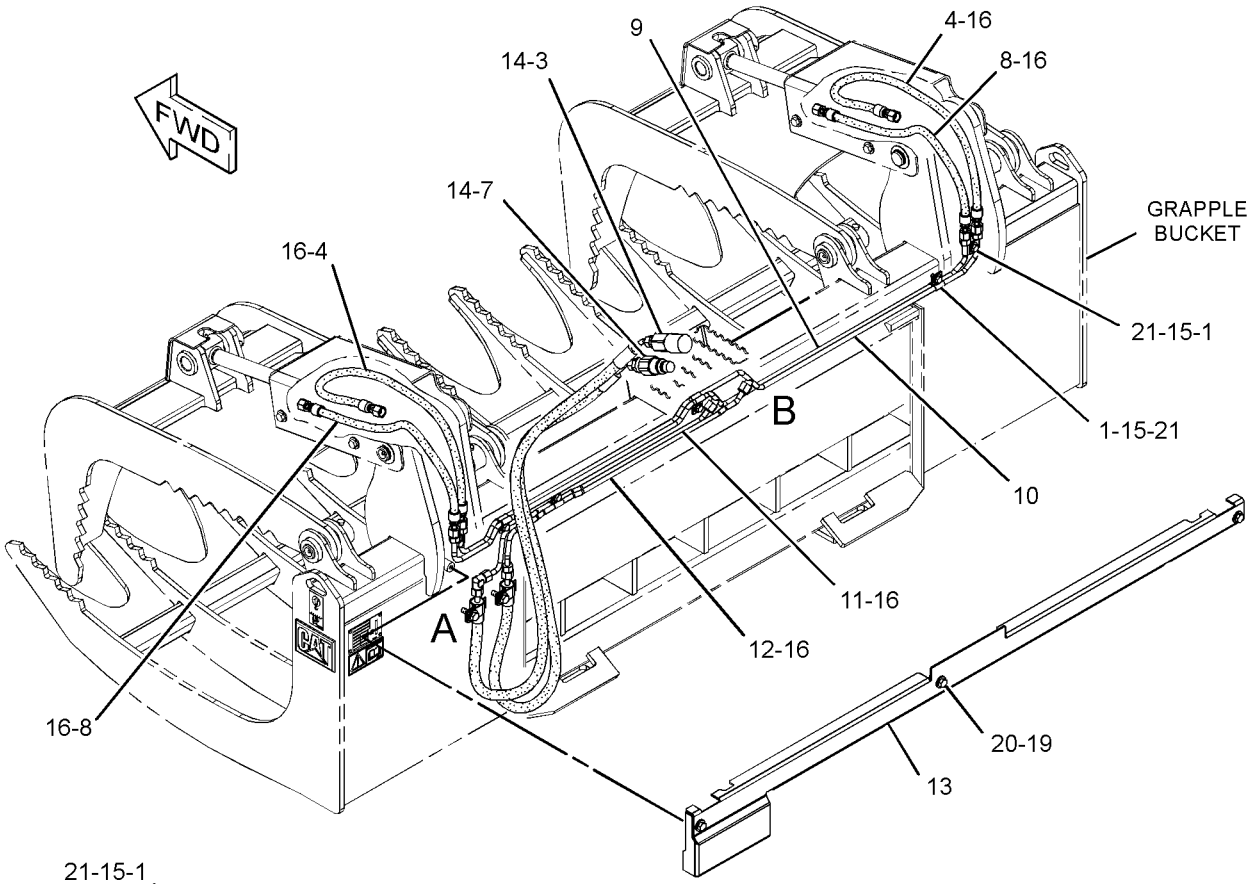

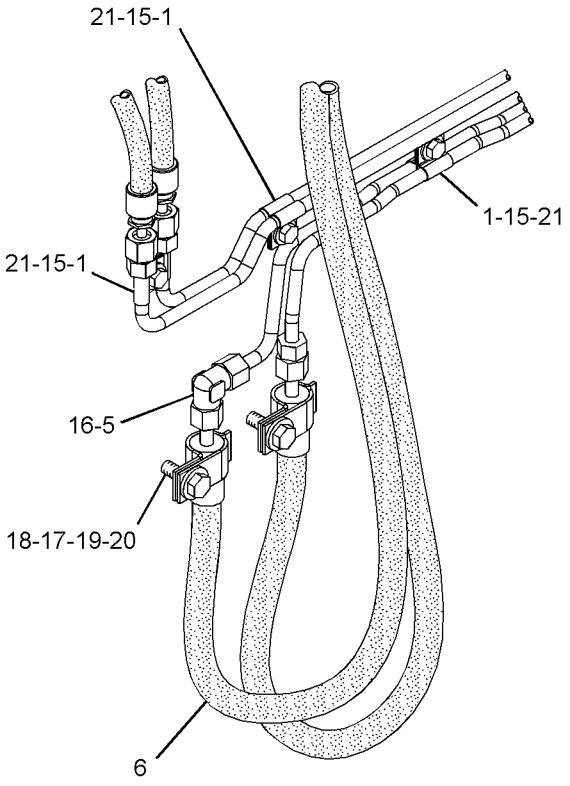

VIEW OF AREA A

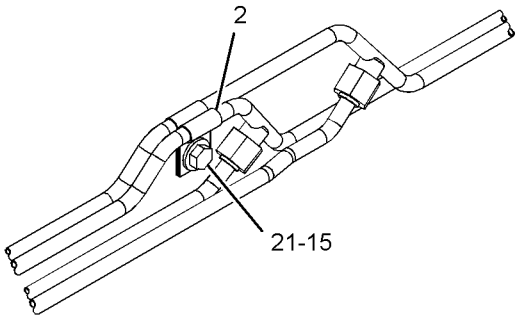

VIEW OF AREA B

GRAPHIC #1 **<END>** g01373025

HYDRAULIC SYSTEM

286-9279 LINES GP-GRAPPLE

S/N: BXM4225-UP
1829-MM (72-IN)
PART OF 286-9300 BUCKET AR-GRAPPLE
AN ATTACHMENT

SMCS-5057, 5555 **i02723728**

NOTE	REF NO	GRAPHIC REF	PART NUMBER	QTY	PART NAME 1 2 3 4 5 6 (PRODUCT LEVEL)	SEE PAGE
	1	1	**2H-7829**	10	CLIP	
	2	1	**9S-4200**	2	CLIP	
	3	1	**153-2994**	1	COUPLING AS-QUICK DISCONNECT (FEMALE)	
I	4	1	**161-0189**	2	HOSE AS	
	5	1	**163-1385**	1	ELBOW	
I	6	1	*177-1911*	2	HOSE AS	
	7	1	**185-7887**	1	COUPLING AS-QUICK DISCONNECT (MALE)	
	8	1	**286-9249**	1	GUARD	
I	9	1	*286-9263*	2	HOSE AS	
	10	1	**286-9267**	1	TUBE AS	
	11	1	**286-9268**	1	TUBE AS	
	12	1	**286-9280**	1	TUBE AS	
	13	1	**286-9281**	1	TUBE AS	
	14	1	*148-8319*	2	CONNECTOR AS	
					(EACH INCLUDES)	
		1	**2M-9780**	1	SEAL-O-RING	
		1	**6V-8397**	1	SEAL-O-RING	
		1	**6V-8715**	1	CONNECTOR	
	15	1	**5P-4116**	6	WASHER-HARD (8.8X20.5X2-MM THK)	
	16	1	**6V-8397**	13	SEAL-O-RING	
	17	1	**7S-3916**	2	CLIP (TAB)	
	18	1	**7S-3919**	2	CLIP (SLOT)	
	19	1	**7X-7729**	5	WASHER (11X25X3-MM THK)	
M	20	1	**8T-4195**	5	BOLT (M10X1.5X30-MM)	
M	21	1	**8T-4200**	6	BOLT (M8X1.25X16-MM)	

I-REFER TO HYDRAULIC INFORMATION SYSTEM
M-METRIC PART

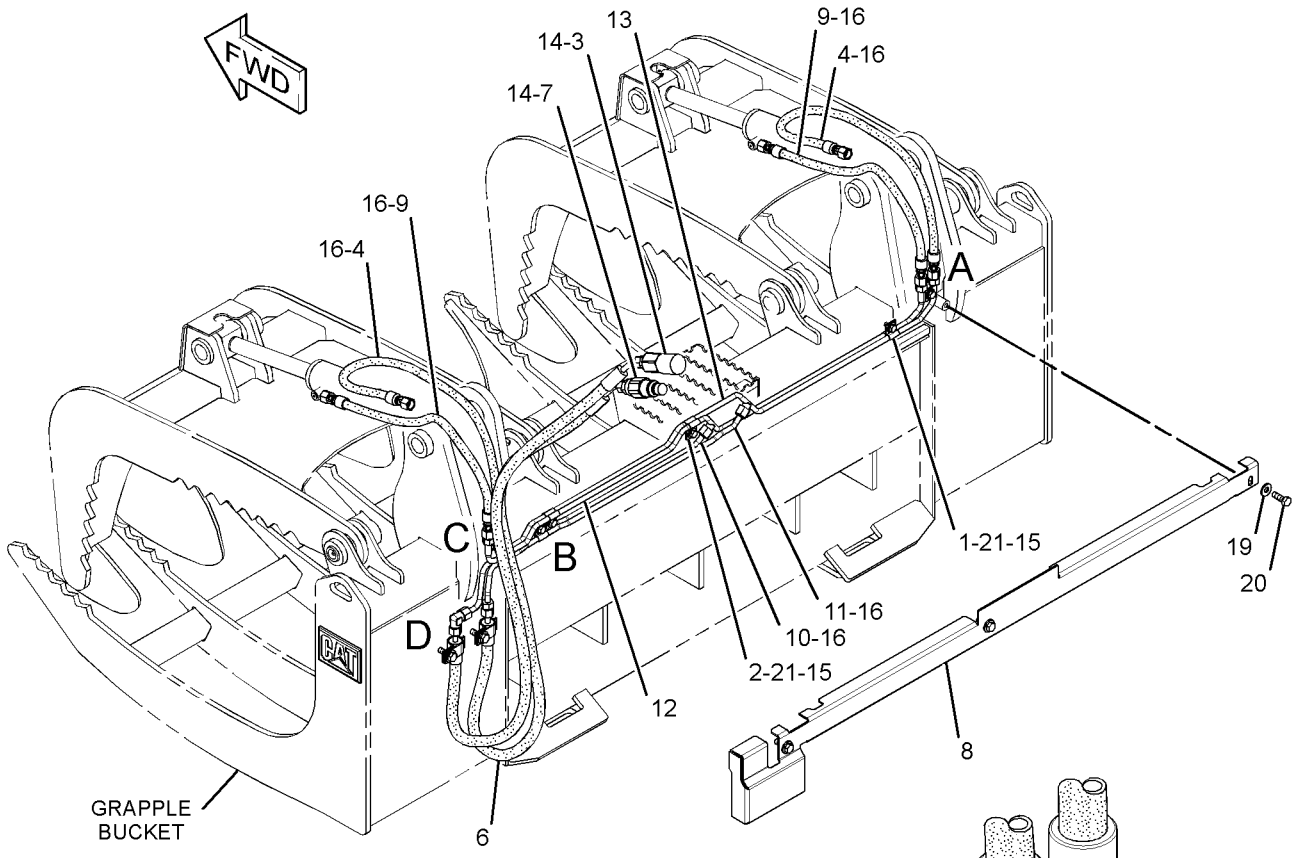

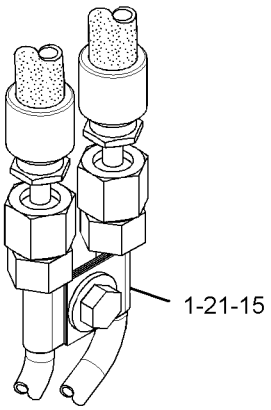

VIEW OF AREA A

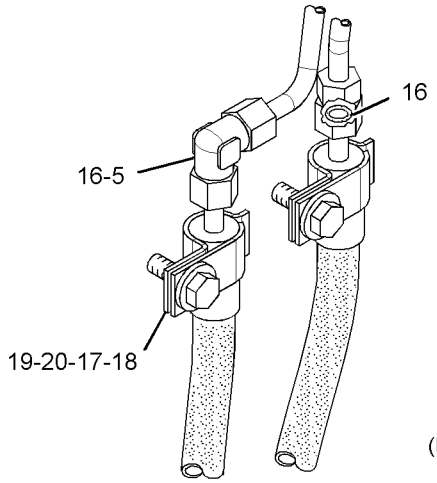

VIEW OF AREA D

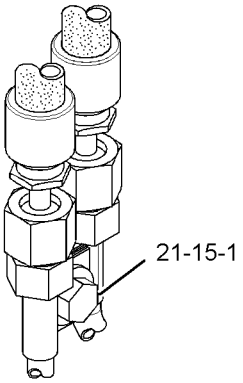

VIEW OF AREA C
(HOSES REMOVED FOR CLARITY)

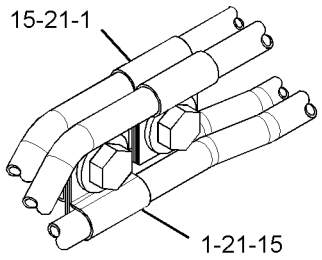

VIEW OF AREA B

GRAPHIC #1 **<END>** g01373354

HYDRAULIC SYSTEM

218-6528 LINES GP-HYDRAULIC FAN

S/N: BXM4225-UP

PART OF 218-6703 HEATER AR-CAB, 218-6701 INSTALLATION GP

AN ATTACHMENT

SMCS-5057 **i02820503**

NOTE	REF NO	GRAPHIC REF	PART NUMBER	QTY	PART NAME 1 2 3 4 5 6 (PRODUCT LEVEL)	SEE PAGE
C	1	1	**7K-1181**	4	STRAP-CABLE	
	2	1	**8C-3451**	1	CAP-DUST	
I	3	1	**218-6063**	1	HOSE AS	
CI	4	1	**311-3890**	1	HOSE AS	
	5	1	*229-5466*	1	FITTING AS	
		1	**229-5465**	2	FITTING	
		1	**3J-7354**	2	SEAL-O-RING	
	6	1	*148-8315*	1	CONNECTOR AS	
		1	**6V-8642**	1	CONNECTOR	
		1	**2M-9780**	1	SEAL-O-RING	
		1	**7J-9108**	1	SEAL-O-RING	
	7	1	*148-8316*	1	CONNECTOR AS	
		1	**6V-8647**	1	CONNECTOR	
		1	**3J-7354**	1	SEAL-O-RING	
		1	**4J-5477**	1	SEAL-O-RING	
	8	1	*148-8369*	1	ELBOW AS	
		1	**6V-8628**	1	ELBOW	
		1	**3J-7354**	1	SEAL-O-RING	
		1	**4J-5477**	1	SEAL-O-RING	
	9	1	*153-6256*	1	ELBOW AS	
		1	**8C-7563**	1	ELBOW	
		1	**7J-9108**	1	SEAL-O-RING	
	10	1	**5P-6994**	1	CLIP	
	11	1	**6V-9829**	1	CAP AS	
	12	1	**7X-7729**	2	WASHER (11X25X3-MM THK)	
M	13	1	**8T-4133**	1	NUT (M10X1.5-THD)	
M	14	1	**101-3129**	1	STUD (M10X1.5-THD)	

C-CHANGE FROM PREVIOUS TYPE
I-REFER TO HYDRAULIC INFORMATION SYSTEM
M-METRIC PART

218-6528 **LINES GP-HYDRAULIC FAN** *(contd.)* **i02820503**

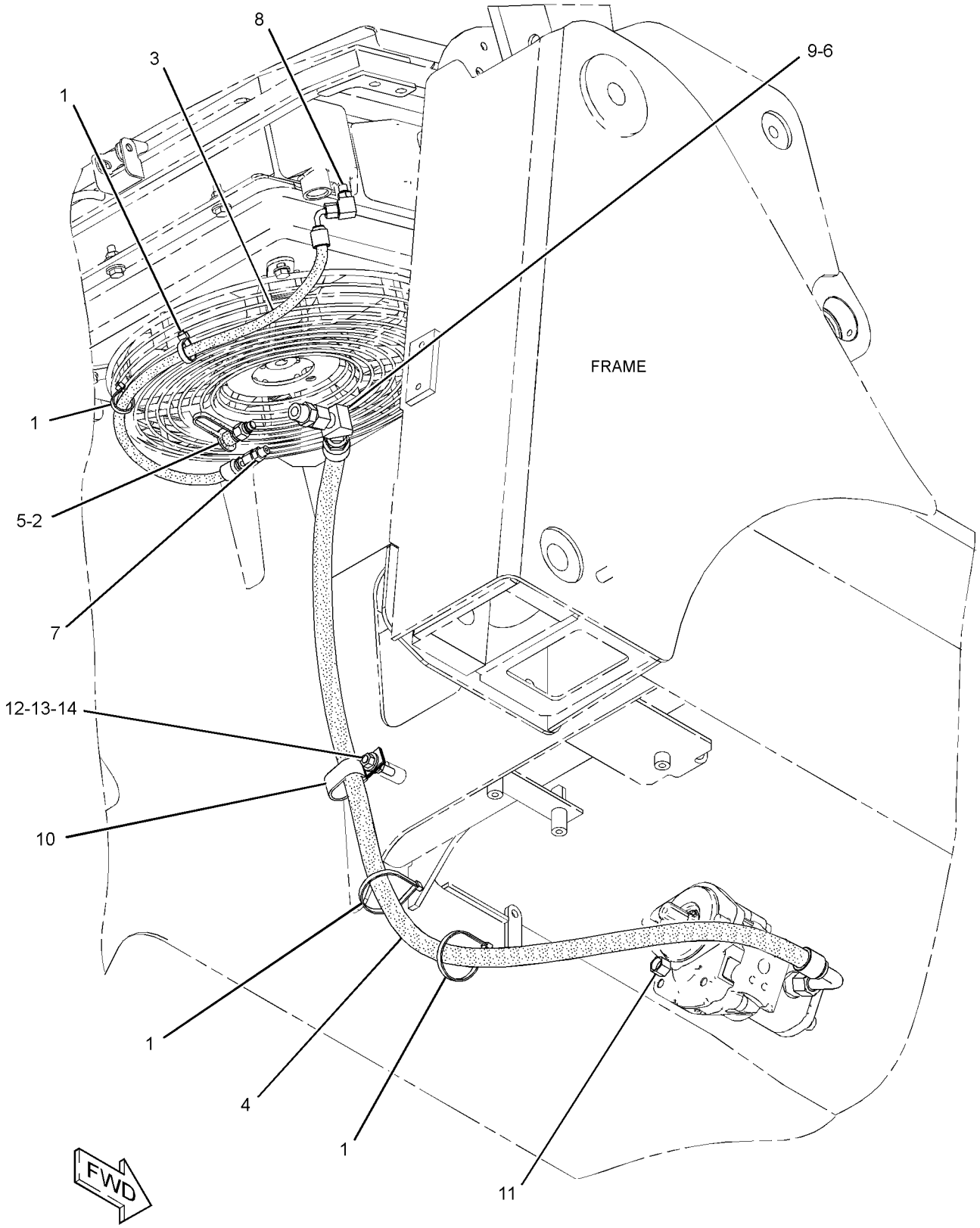

GRAPHIC #1 **<END>** g01408938

HYDRAULIC SYSTEM

218-6533 LINES GP-HYDRAULIC FAN

S/N: BXM4225-UP
PART OF 218-6302 AIR CONDITIONER AR
AN ATTACHMENT

SMCS-5057 **i02820504**

NOTE	REF NO	GRAPHIC REF	PART NUMBER	QTY	PART NAME 1 2 3 4 5 6 (PRODUCT LEVEL)	SEE PAGE
C	1	1	**7K-1181**	4	STRAP-CABLE	
	2	1	**8C-3451**	1	CAP-DUST	
I	3	1	**218-6063**	1	HOSE AS	
CI	4	1	**311-3889**	1	HOSE AS	
I	5	1	**218-6534**	1	HOSE AS	
I	6	1	**218-6535**	1	HOSE AS	
	7	1	**229-5466**	1	FITTING AS	
		1	**229-5465**	1	FITTING	
		1	**3J-7354**	1	SEAL-O-RING	
	8	1	*148-8315*	3	CONNECTOR AS	
					(EACH INCLUDES)	
		1	**6V-8642**	1	CONNECTOR	
		1	**2M-9780**	1	SEAL-O-RING	
		1	**7J-9108**	1	SEAL-O-RING	
	9	1	*148-8316*	1	CONNECTOR AS	
		1	**6V-8647**	1	CONNECTOR	
		1	**3J-7354**	1	SEAL-O-RING	
		1	**4J-5477**	1	SEAL-O-RING	
	10	1	*148-8326*	1	CONNECTOR AS	
		1	**6V-9872**	1	CONNECTOR	
		1	**3J-7354**	1	SEAL-O-RING	
		1	**6V-8397**	1	SEAL-O-RING	
	11	1	*148-8369*	1	ELBOW AS	
		1	**6V-8628**	1	ELBOW	
		1	**3J-7354**	1	SEAL-O-RING	
		1	**4J-5477**	1	SEAL-O-RING	
	12	1	*153-6256*	1	ELBOW AS	
		1	**8C-7563**	1	ELBOW	
		1	**7J-9108**	1	SEAL-O-RING	
	13	1	**5P-6994**	1	CLIP	
	14	1	**7X-7729**	2	WASHER (11X25X3-MM THK)	
M	15	1	**8T-4133**	1	NUT (M10X1.5-THD)	
M	16	1	**101-3129**	1	STUD (M10X1.5-THD)	

C-CHANGE FROM PREVIOUS TYPE
I-REFER TO HYDRAULIC INFORMATION SYSTEM
M-METRIC PART

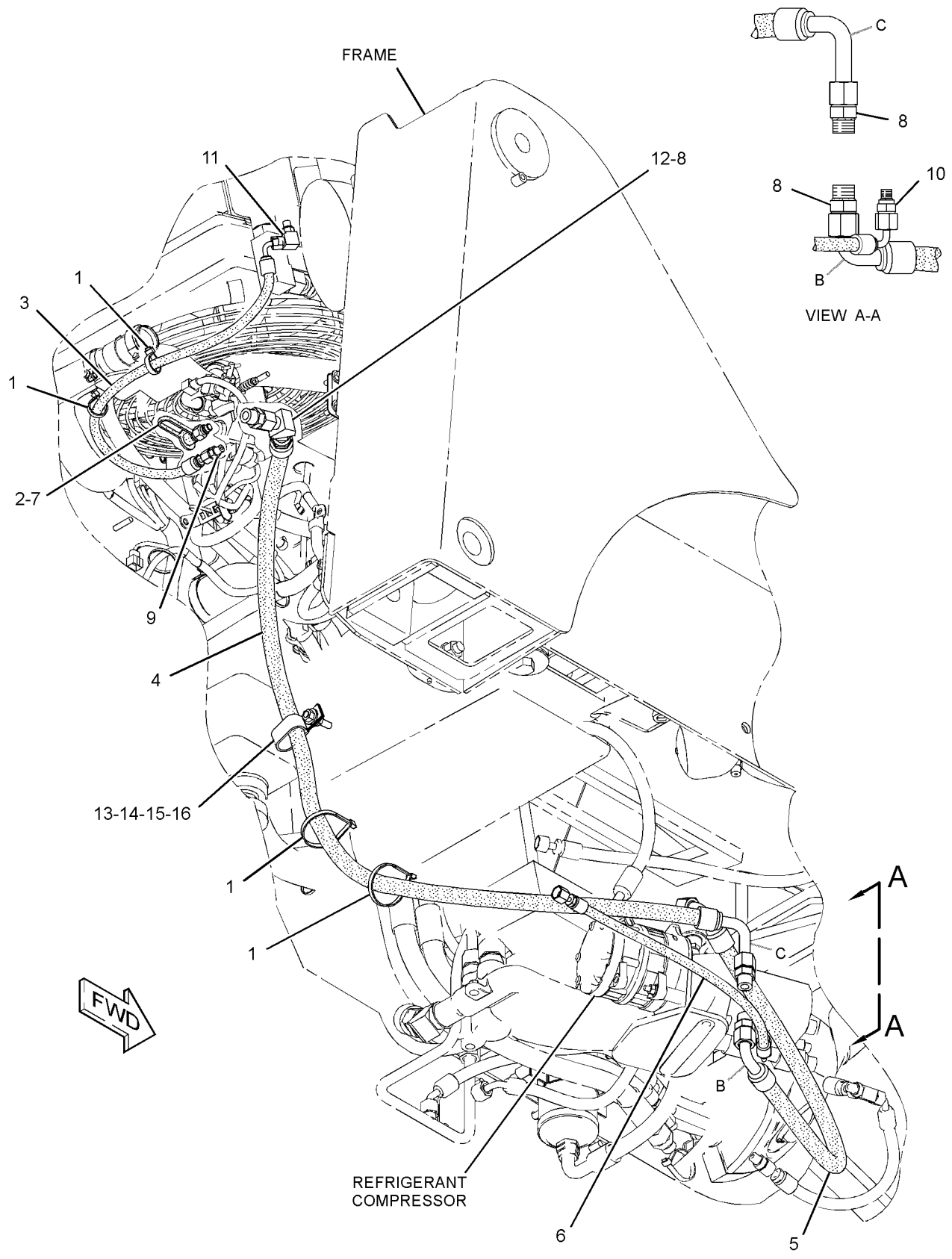

GRAPHIC #1 **<END>** g01409055

218-6541 LINES GP-HYDRAULIC OIL COOLER

S/N: BXM4225-UP

PART OF 278-1243 HYDRAULIC AR

SMCS-5057 **i02820488**

NOTE	REF NO	GRAPHIC REF	PART NUMBER	QTY	PART NAME 1 2 3 4 5 6 (PRODUCT LEVEL)	SEE PAGE
M	1	1	**8T-4196**	1	BOLT (M10X1.5X35-MM)	
	2	1	*106-8715*	2	ELBOW AS	
					(EACH INCLUDES)	
		1	**3D-2824**	1	SEAL-O-RING	
		1	**6V-9746**	1	SEAL-O-RING	
		1	**8C-8400**	1	ELBOW	
	3	1	**218-6539**	1	PLATE	
CI	4	1	**311-3884**	1	HOSE AS	
CI	5	1	**311-3885**	1	HOSE AS	
C	6	1	**5D-0718**	4	CLIP	
	7	1	**6V-1889**	1	CLIP	
	8	1	**7X-7729**	1	WASHER (11X25X3-MM THK)	
C	9	1	**8T-4121**	3	WASHER-HARD (11X21X2.5-MM THK)	
CM	10	1	**8T-4133**	1	NUT (M10X1.5-THD)	
M	11	1	**8T-4136**	1	BOLT (M10X1.5X25-MM)	
M	12	1	**8T-4195**	1	BOLT (M10X1.5X30-MM)	
C	13	1	**7K-1181**	1	STRAP-CABLE	

C-CHANGE FROM PREVIOUS TYPE
I-REFER TO HYDRAULIC INFORMATION SYSTEM
M-METRIC PART

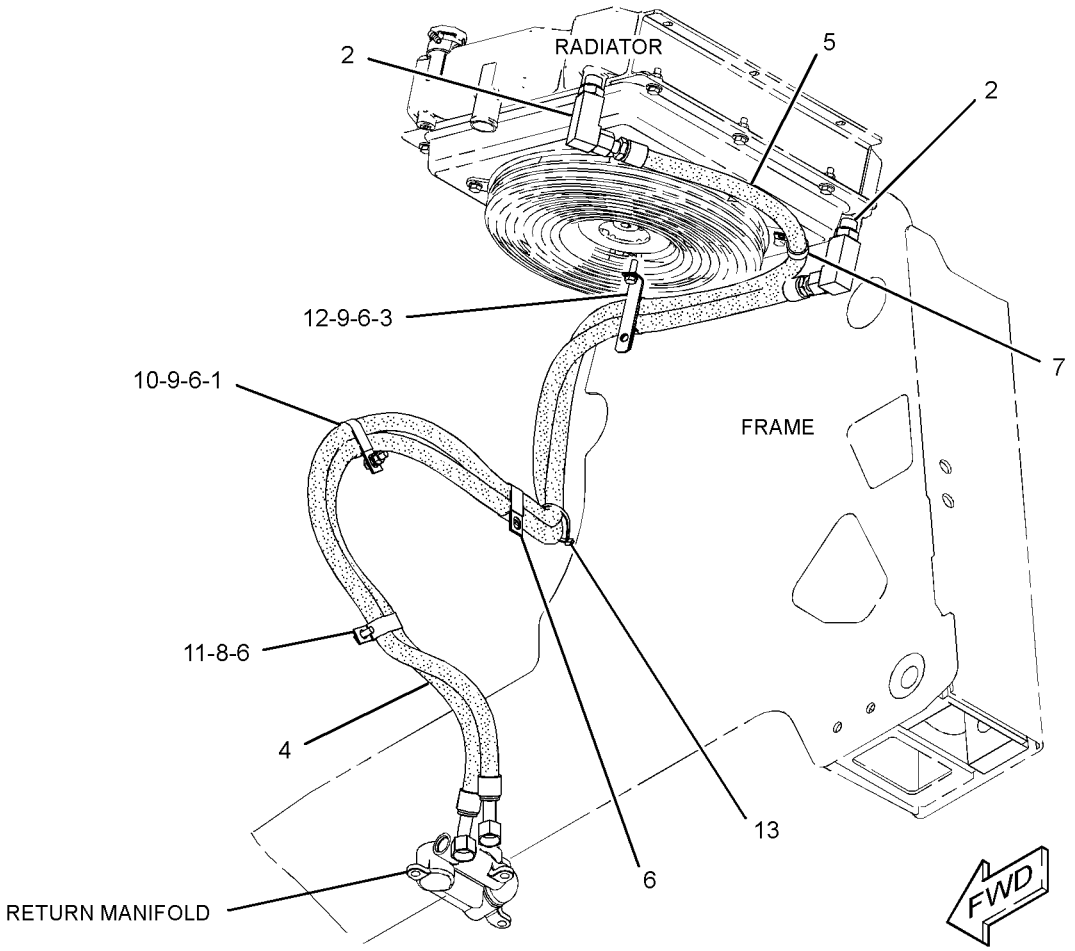

GRAPHIC #1 **<END>** g01409044

218-5707 LINES GP-LIFT CYLINDER

S/N: BXM4225-UP
PART OF 218-5709 HYDRAULIC AR
FOR USE WITH WORK TOOL POSITIONER
AN ATTACHMENT

SMCS-5057, 5102 **i02646708**

NOTE	REF NO	GRAPHIC REF	PART NUMBER	QTY	PART NAME 1 2 3 4 5 6 (PRODUCT LEVEL)	SEE PAGE
C	1	1	**4P-8134**	1	CLIP	
	2	1	**6V-3582**	2	CLAMP-HOSE	
	3	1	**142-8997**	2	BLOCK	
	4	1	**212-6525**	1	TUBE AS	
	5	1	**212-6526**	1	TUBE AS	
	6	1	**218-5764**	1	PLATE	
	7	1	**285-9286**	1	BLOCK	
C	8	1	**290-3333**	1	TUBE AS	
C	9	1	**290-3334**	1	TUBE AS	
C	10	1	**290-3335**	1	TUBE AS	
C	11	1	**290-3336**	1	TUBE AS	
CI	12	1	**290-3382**	2	HOSE AS	
CI	13	1	**290-3395**	2	HOSE AS	
CI	14	1	**291-1297**	1	HOSE AS	
C	15	1	**292-3081**	1	TUBE AS	
	16	1	*148-8341*	2	CONNECTOR AS	
					(EACH INCLUDES)	
		1	**3D-2824**	1	SEAL-O-RING	
		1	**6V-8713**	1	CONNECTOR	
		1	**7J-9108**	1	SEAL-O-RING	
	17	1	*148-8345*	1	CONNECTOR AS	
		1	**2M-9780**	1	SEAL-O-RING	
		1	**6V-8398**	1	SEAL-O-RING	
		1	**6V-8638**	1	CONNECTOR	
	18	1	*148-8390*	1	ELBOW AS	
		1	**2M-9780**	1	SEAL-O-RING	
		1	**6V-8626**	1	ELBOW	
		1	**7J-9108**	1	SEAL-O-RING	
C	19	1	**6V-8398**	9	SEAL-O-RING	
C	20	1	**7J-9108**	6	SEAL-O-RING	
	21	1	**8T-4121**	2	WASHER-HARD (11X21X2.5-MM THK)	
M	22	1	**8T-4136**	2	BOLT (M10X1.5X25-MM)	

C-CHANGE FROM PREVIOUS TYPE
I-REFER TO HYDRAULIC INFORMATION SYSTEM
M-METRIC PART

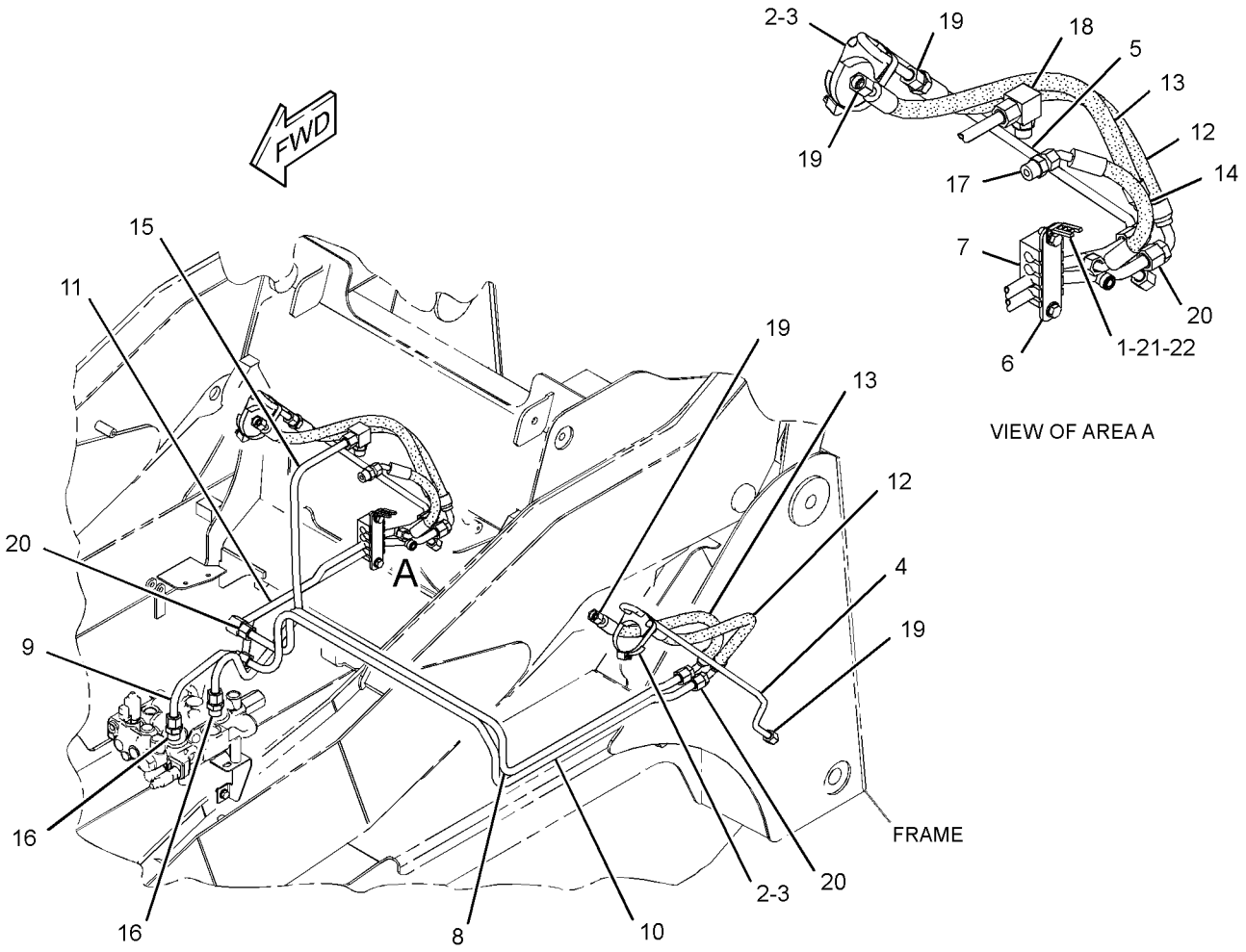

GRAPHIC #1 **<END>** g01327132

218-6604 LINES GP-LIFT CYLINDER

S/N: BXM4225-UP
PART OF 218-6640 HYDRAULIC AR
AN ATTACHMENT

SMCS-5057, 5102 **i02649037**

NOTE	REF NO	GRAPHIC REF	PART NUMBER	QTY	PART NAME 1 2 3 4 5 6 (PRODUCT LEVEL)	SEE PAGE
C	1	1	**4P-8134**	1	CLIP	
	2	1	**6V-3582**	2	CLAMP-HOSE	
	3	1	**142-8997**	2	BLOCK	
	4	1	**212-6525**	1	TUBE AS	
	5	1	**212-6526**	1	TUBE AS	
	6	1	**218-5764**	1	PLATE	
	7	1	**285-9286**	1	BLOCK	
C	8	1	**290-3337**	1	TUBE AS	
C	9	1	**290-3338**	1	TUBE AS	
C	10	1	**290-3339**	1	TUBE AS	
C	11	1	**290-3340**	1	TUBE AS	
CI	12	1	**290-3382**	2	HOSE AS	
I	13	1	**290-3395**	2	HOSE AS	
	14	1	*148-8341*	2	CONNECTOR AS	
					(EACH INCLUDES)	
		1	**3D-2824**	1	SEAL-O-RING	
		1	**6V-8713**	1	CONNECTOR	
		1	**7J-9108**	1	SEAL-O-RING	
C	15	1	**6V-8398**	7	SEAL-O-RING	
C	16	1	**7J-9108**	6	SEAL-O-RING	
	17	1	**8T-4121**	2	WASHER-HARD (11X21X2.5-MM THK)	
M	18	1	**8T-4136**	2	BOLT (M10X1.5X25-MM)	

C-CHANGE FROM PREVIOUS TYPE
I-REFER TO HYDRAULIC INFORMATION SYSTEM
M-METRIC PART

218-6604 **LINES GP-LIFT CYLINDER** *(contd.)* **i02649037**

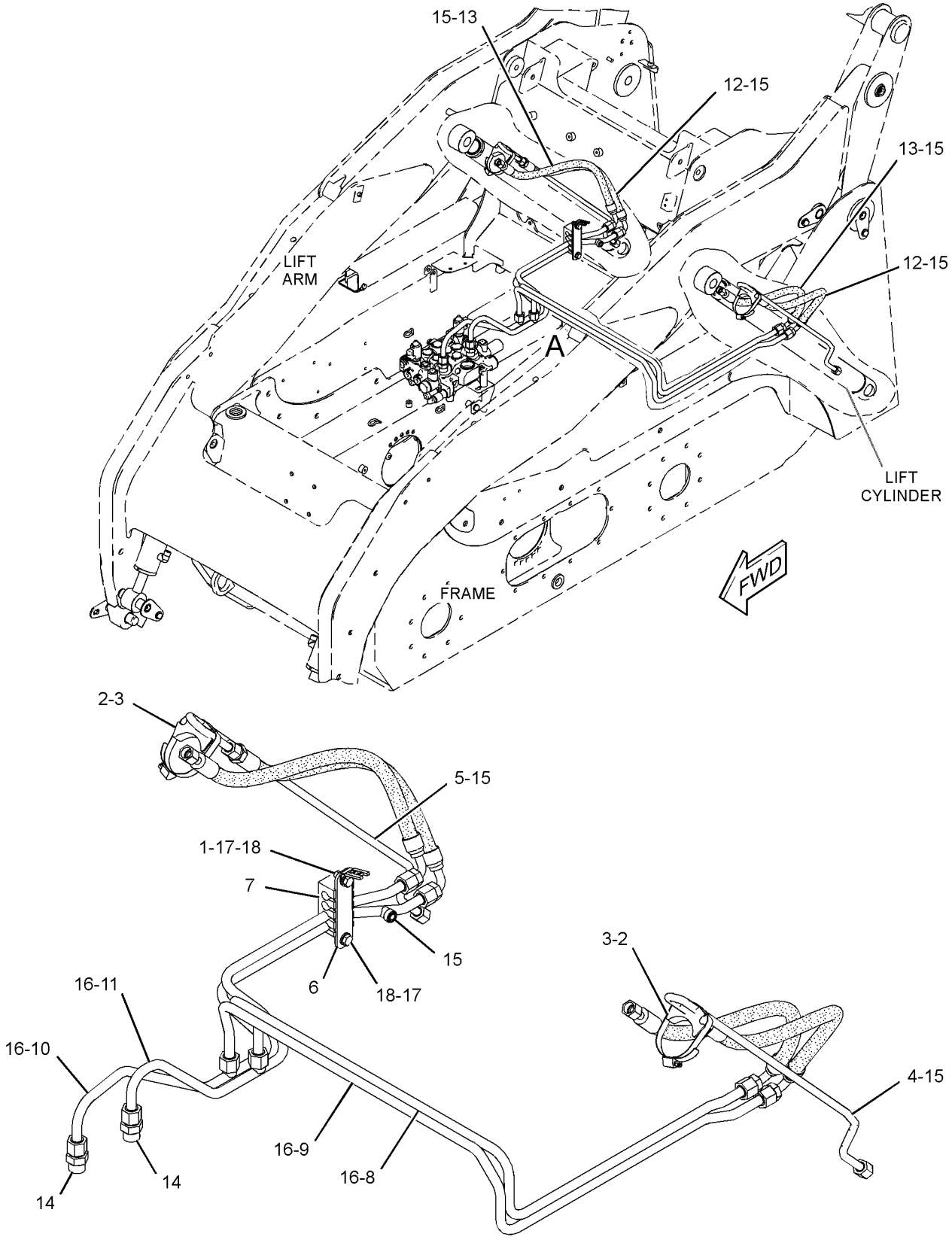

VIEW OF AREA A

GRAPHIC #1 **<END>** g01329917

HYDRAULIC SYSTEM

218-5882 LINES GP-LOWERING CONTROL

S/N: BXM4225-UP
MANUAL LOWERING CONTROL
PART OF 218-6721 COUPLER AR-QUICK
AN ATTACHMENT

SMCS-5057, 5147, 5154 **i02752324**

NOTE	REF NO	GRAPHIC REF	PART NUMBER	QTY	PART NAME 1 2 3 4 5 6 (PRODUCT LEVEL)	SEE PAGE
Y	1	1	**112-1817**	1	VALVE GP-MANUAL (LOWERING CONTROL)	376
	2	1	**238-7745**	1	BRACKET	
	3	1	**238-7746**	1	TUBE AS	
	4	1	**269-9404**	1	BRACKET	
	5	1	**270-0216**	1	BRACKET	
CY	6	1	*298-7198*	1	CABLE GP-CONTROL (MANUAL LOWERING)	504
I	7	1	**291-3756**	1	HOSE AS	
	8	1	**283-9264**	1	BRACKET	
	9	1	*148-8365*	1	ELBOW AS	
		1	**3J-1907**	1	SEAL-O-RING	
		1	**8T-6876**	1	ELBOW	
		1	**6V-8398**	1	SEAL-O-RING	
	10	1	*148-8378*	1	ELBOW AS	
		1	**3J-1907**	1	SEAL-O-RING	
		1	**6V-8397**	1	SEAL-O-RING	
		1	**6V-8724**	1	ELBOW	
	11	1	**1F-7567**	1	CLIP	
	12	1	**4B-4274**	1	WASHER (5.5X13X1.2-MM THK)	
	13	1	**6V-8397**	2	SEAL-O-RING	
M	14	1	**8T-0287**	1	BOLT (M5X0.8X10-MM)	
	15	1	**6V-9829**	1	CAP AS	
	16	1	**8M-4791**	2	WASHER-HARD (13.5X27X3-MM THK)	
M	17	1	**8T-0285**	4	SCREW-MACHINE (M4X0.7X12-MM)	
	18	1	**8T-4121**	5	WASHER-HARD (11X21X2.5-MM THK)	
M	19	1	**8T-4133**	2	NUT (M10X1.5-THD)	
M	20	1	**8T-4189**	2	BOLT (M8X1.25X20-MM)	
M	21	1	**8T-4191**	1	BOLT (M10X1.5X16-MM)	
M	22	1	**8T-4136**	2	BOLT (M10X1.5X25-MM)	
	23	1	**8T-4224**	2	WASHER-HARD (8.8X16X2-MM THK)	
	24	1	**9X-1481**	1	WASHER (13X25.4X1.6-MM THK)	
	25	1	**6K-8178**	1	CLIP	

C-CHANGE FROM PREVIOUS TYPE
I-REFER TO HYDRAULIC INFORMATION SYSTEM
M-METRIC PART
Y-SEPARATE ILLUSTRATION

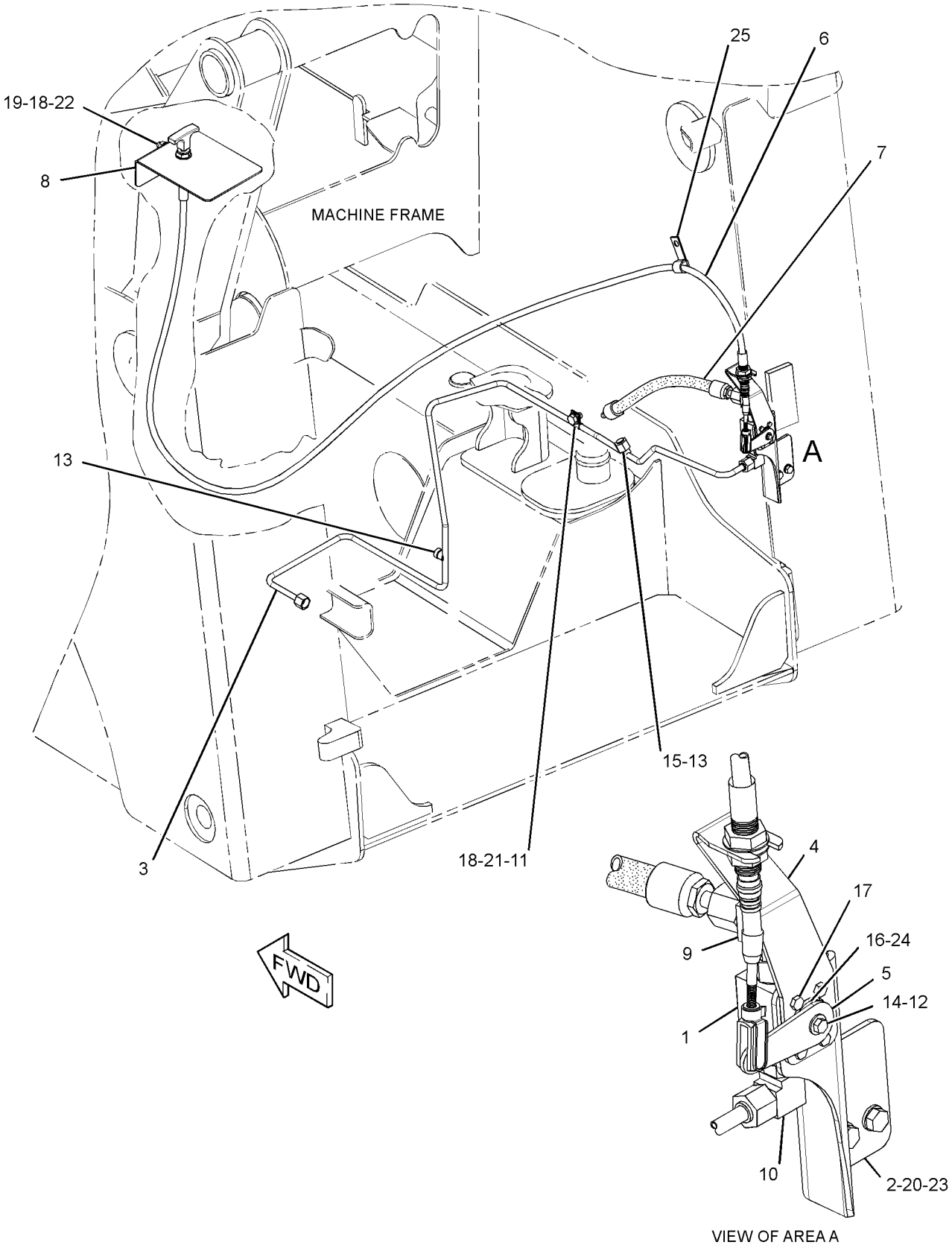

GRAPHIC #1 **<END>** g01368649

218-6503 LINES GP-PILOT—WORK TOOL

S/N: BXM4225-UP

PART OF 278-1243 HYDRAULIC AR

SMCS-5057, 5059 **i02890428**

NOTE	REF NO	GRAPHIC REF	PART NUMBER	QTY	PART NAME 1 2 3 4 5 6 (PRODUCT LEVEL)	SEE PAGE
Y	1	1	*179-7001*	1	ADAPTER GP-OIL LINE	254
	2	1	**195-6768**	1	SCREEN (HYDRAULIC)	
	3	1	**195-6769**	1	WASHER (6.99X12.7X5.46-MM THK)	
	4	1	**218-5704**	1	HOSE AS	
	5	1	**218-5571**	2	HOSE AS	
	6	1	**218-5572**	2	HOSE AS	
I	7	1	**193-8313**	1	HOSE AS	
	8	1	**123-4750**	1	VALVE-CHECK	
	9	1	*148-8325*	9	CONNECTOR AS	
					(EACH INCLUDES)	
		1	**3J-1907**	1	SEAL-O-RING	
		1	**4J-5477**	1	SEAL-O-RING	
		1	**6V-8641**	1	CONNECTOR	
	10	1	*148-8435*	1	TEE AS	
		1	**3J-1907**	1	SEAL-O-RING	
		1	**6V-8397**	2	SEAL-O-RING	
		1	**6V-8781**	1	TEE-FACE SEAL	
	11	1	*150-4027*	1	TEE AS	
		1	**3E-2310**	1	TEE	
		1	**3J-1907**	1	SEAL-O-RING	
		1	**6V-8397**	1	SEAL-O-RING	
I	12	1	**190-7453**	1	HOSE AS	
	13	1	**6D-3479**	1	CLIP	
	14	1	**8T-4121**	1	WASHER-HARD (11X21X2.5-MM THK)	
M	15	1	**8T-4191**	1	BOLT (M10X1.5X16-MM)	

I-REFER TO HYDRAULIC INFORMATION SYSTEM
M-METRIC PART
Y-SEPARATE ILLUSTRATION

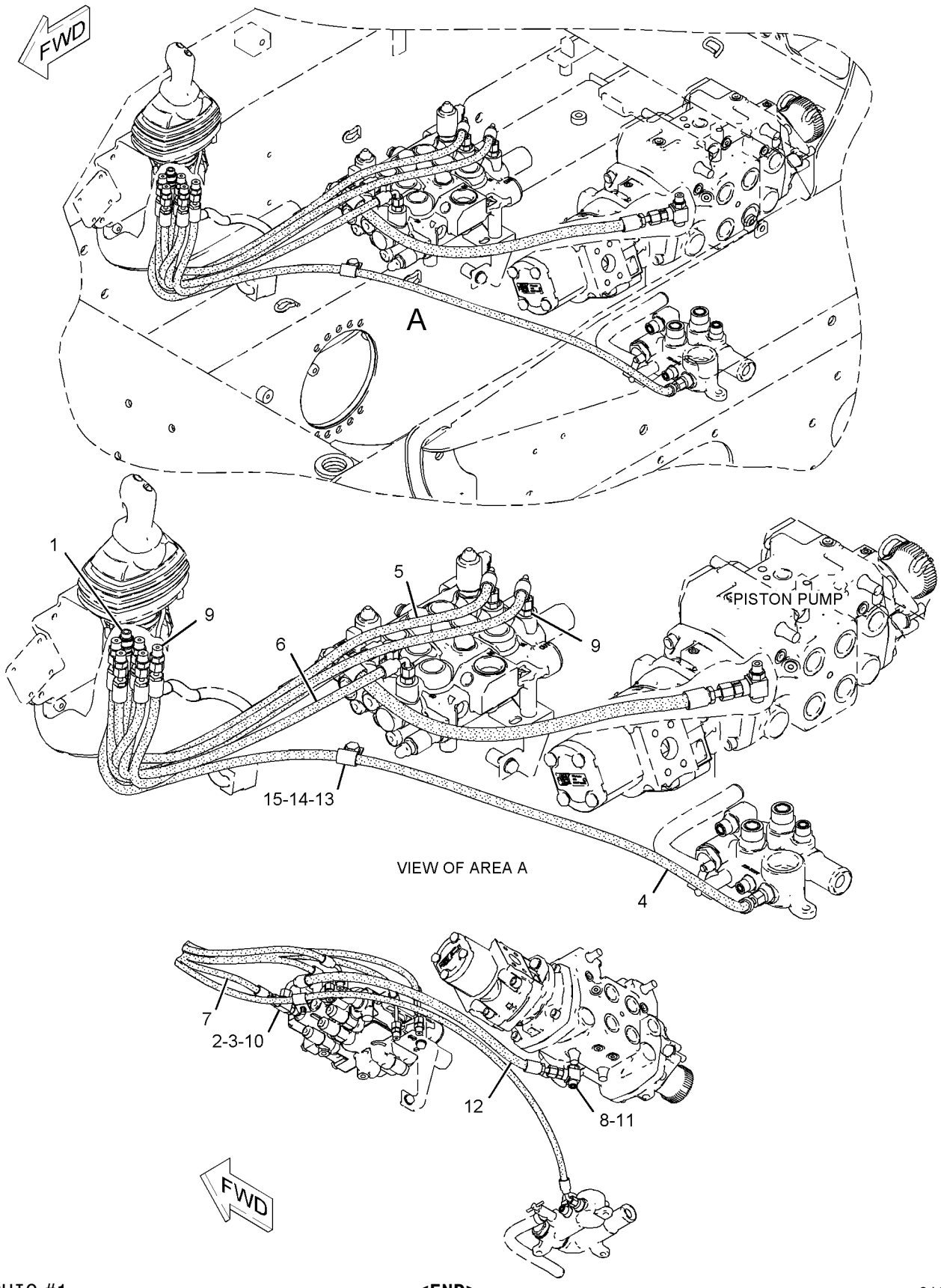

GRAPHIC #1 **<END>** g01037049

234-0788 LINES GP-PILOT—DIRECTION, SPEED

S/N: BXM4225-UP

PART OF 278-1243 HYDRAULIC AR

SMCS-5057, 5059 **i02319861**

NOTE	REF NO	GRAPHIC REF	PART NUMBER	QTY	PART NAME 1 2 3 4 5 6 (PRODUCT LEVEL)	SEE PAGE
	1	1	**6V-0852**	1	CAP-DUST	
	2	1	**7K-1181**	1	STRAP-CABLE	
	3	1	*148-8423*	1	TEE AS	
		1	**3J-1907**	1	SEAL-O-RING	
		1	**4J-5477**	1	SEAL-O-RING	
		1	**8T-3311**	1	TEE	
	4	1	*164-5567*	1	COUPLER AS-QUICK	
		1	**3J-1907**	1	SEAL-O-RING	
		1	**6V-3965**	1	COUPLER-QUICK DISCONNECT	
	5	1	**218-5968**	1	BRACKET	
	6	1	**218-6864**	1	HOSE AS	
	7	1	**193-8392**	2	HOSE AS	
	8	1	**234-0786**	1	HOSE AS	
	9	1	*148-8316*	2	CONNECTOR AS	
					(EACH INCLUDES)	
		1	**3J-7354**	1	SEAL-O-RING	
		1	**4J-5477**	1	SEAL-O-RING	
		1	**6V-8647**	1	CONNECTOR	
	10	1	*148-8325*	5	CONNECTOR AS	
					(EACH INCLUDES)	
		1	**3J-1907**	1	SEAL-O-RING	
		1	**4J-5477**	1	SEAL-O-RING	
		1	**6V-8641**	1	CONNECTOR	
	11	1	*148-8369*	2	ELBOW AS	
					(EACH INCLUDES)	
		1	**3J-7354**	1	SEAL-O-RING	
		1	**4J-5477**	1	SEAL-O-RING	
		1	**6V-8628**	1	ELBOW	
	12	1	*150-4043*	1	CONNECTOR AS	
		1	**3J-1907**	1	SEAL-O-RING	
		1	**6V-8398**	1	SEAL-O-RING	
		1	**6V-9873**	1	CONNECTOR	
	13	1	**193-8393**	2	HOSE AS	

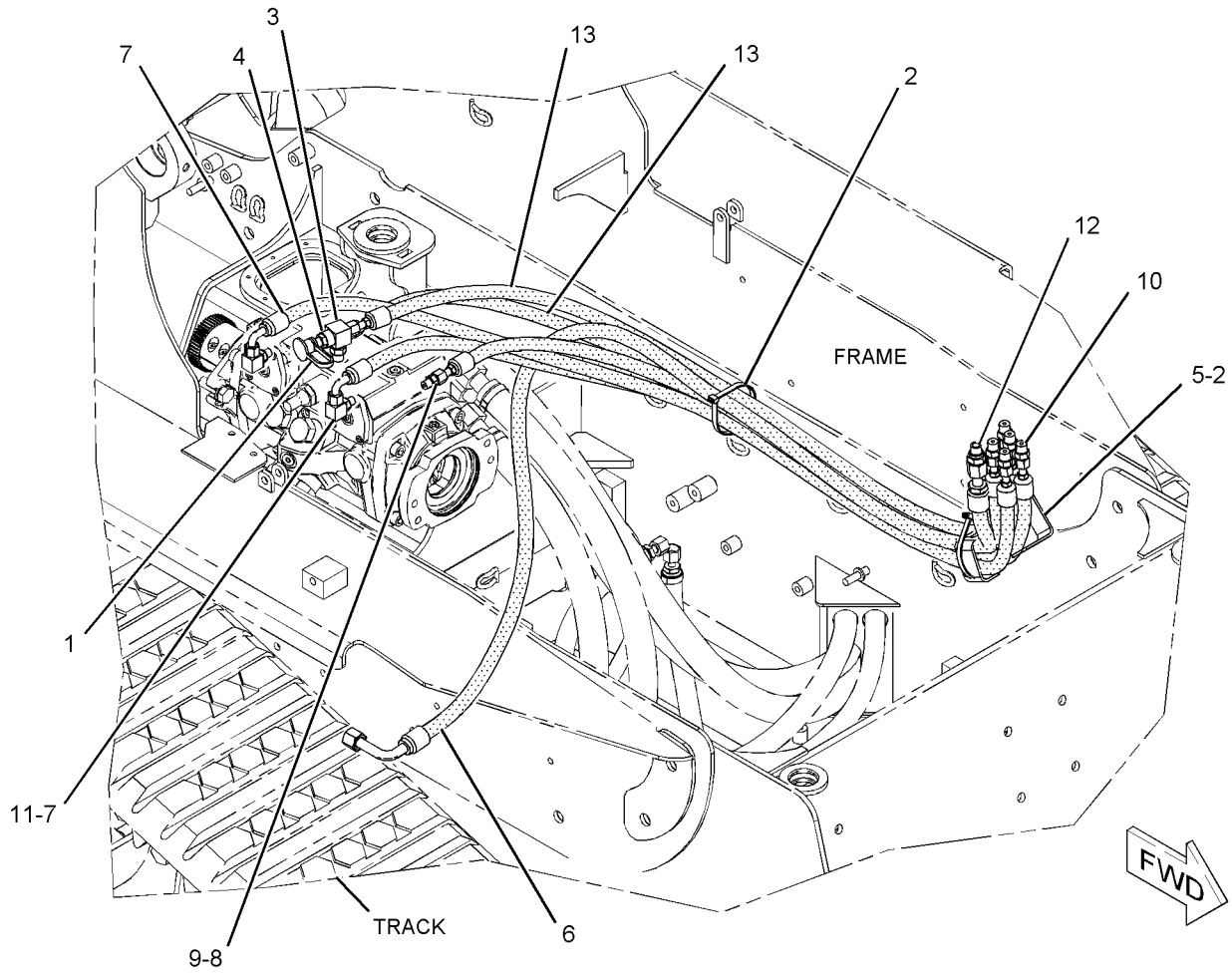

GRAPHIC #1 **<END>** g01093958

HYDRAULIC SYSTEM

218-5901 LINES GP-PUMP

S/N: BXM4225-UP
PART OF 218-6760, 261-6142 HYDRAULIC AR
AN ATTACHMENT

SMCS-5057 **i02474808**

NOTE	REF NO	GRAPHIC REF	PART NUMBER	QTY	PART NAME 1 2 3 4 5 6 (PRODUCT LEVEL)	SEE PAGE
	1	1	**2S-3440**	2	CLAMP-HOSE	
	2	1	**6V-0852**	1	CAP-DUST	
	3	1	**9U-6994**	1	FITTING GP	
		1	**7M-8485**	1	SEAL-O-RING	
	4	1	**9U-6995**	1	FITTING GP-HYDRAULIC	
		1	**2S-4078**		SEAL-O-RING	
	5	1	**159-5740**	1	HOSE	
	6	1	*164-5567*	1	COUPLER AS-QUICK	
		1	**3J-1907**	1	SEAL-O-RING	
		1	**6V-3965**	1	COUPLER-QUICK DISCONNECT	
	7	1	**283-9478**	1	HOSE	
	8	1	**193-8308**	1	ADAPTER	
I	9	1	**193-8321**	1	HOSE AS	
	10	1	**218-5637**	1	HOSE	
	11	1	**218-6137**	1	TUBE	
	12	1	**218-6593**	1	HOSE	
	13	1	*148-8315*	1	CONNECTOR AS	
		1	**2M-9780**	1	SEAL-O-RING	
		1	**6V-8642**	1	CONNECTOR	
		1	**7J-9108**	1	SEAL-O-RING	
	14	1	*148-8360*	1	ELBOW AS	
		1	**6V-9182**	1	ELBOW	
		1	**6V-9746**	1	SEAL-O-RING	
		1	**7M-8485**	1	SEAL-O-RING	
	15	1	**1P-4578**	2	FLANGE-HALF	
	16	1	**4J-0522**	1	SEAL-O-RING	
	17	1	**4J-5267**	1	SEAL-O-RING	
	18	1	**180-3007**	3	CLAMP-HOSE	
	19	1	**5P-2230**	3	CLAMP-HOSE	
	20	1	**8C-3205**	2	FLANGE-HALF	
	21	1	**8T-4121**	8	WASHER-HARD (11X21X2.5-MM THK)	
M	22	1	**8T-4196**	8	BOLT (M10X1.5X35-MM)	

I-REFER TO HYDRAULIC INFORMATION SYSTEM
M-METRIC PART

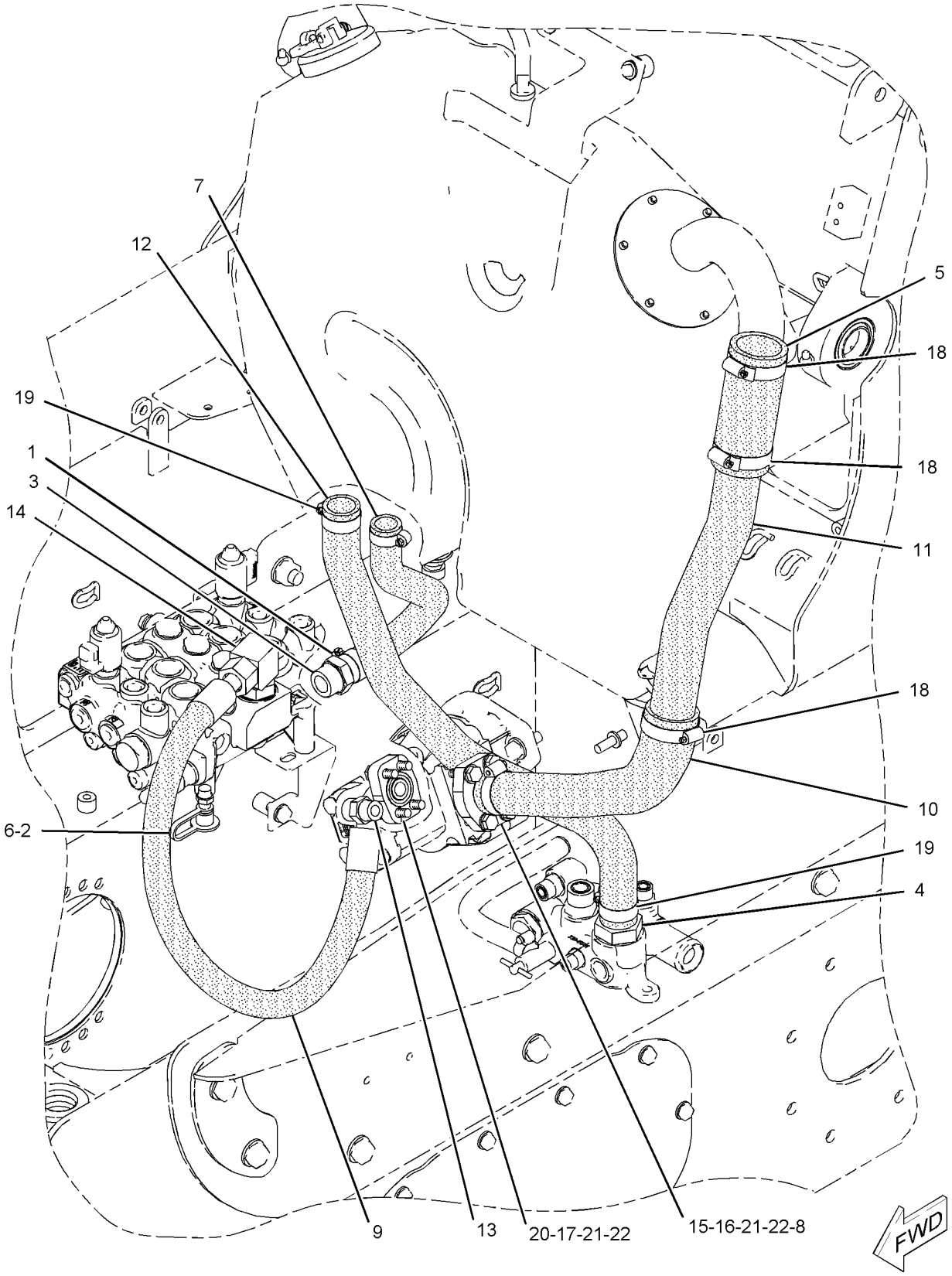

GRAPHIC #1 **<END>** g01036317

HYDRAULIC SYSTEM

218-5903 LINES GP-PUMP

S/N: BXM4225-UP

PART OF 218-6762, 261-6149, 295-7505, 295-7508 HYDRAULIC AR

AN ATTACHMENT

SMCS-5057 **i02448004**

NOTE	REF NO	GRAPHIC REF	PART NUMBER	QTY	PART NAME 1 2 3 4 5 6 (PRODUCT LEVEL)	SEE PAGE
	1	1	**2S-3440**	4	CLAMP-HOSE	
	2	1	**6V-0852**	1	CAP-DUST	
	3	1	**9U-6994**	2	FITTING GP	
					(EACH INCLUDES)	
		1	**7M-8485**	1	SEAL-O-RING	
	4	1	**159-5740**	1	HOSE	
	5	1	*164-5567*	1	COUPLER AS-QUICK	
		1	**3J-1907**	1	SEAL-O-RING	
		1	**6V-3965**	1	COUPLER-QUICK DISCONNECT	
	6	1	*176-4074*	1	CONNECTOR GP	
		1	**2S-4078**	1	SEAL-O-RING	
		1	**177-9567**	1	TEE AS	
	7	1	**180-3007**	3	CLAMP-HOSE	
	8	1	**283-9478**	1	HOSE	
I	9	1	**193-8321**	1	HOSE AS	
	10	1	**218-6137**	1	TUBE	
	11	1	**218-6142**	1	HOSE	
	12	1	**218-6596**	1	HOSE	
	13	1	**218-6597**	1	HOSE	
	14	1	**218-6598**	1	ADAPTER	
	15	1	*148-8315*	1	CONNECTOR AS	
		1	**2M-9780**	1	SEAL-O-RING	
		1	**6V-8642**	1	CONNECTOR	
		1	**7J-9108**	1	SEAL-O-RING	
	16	1	*148-8360*	1	ELBOW AS	
		1	**6V-9182**	1	ELBOW	
		1	**6V-9746**	1	SEAL-O-RING	
		1	**7M-8485**	1	SEAL-O-RING	
	17	1	**1P-4578**	2	FLANGE-HALF	
	18	1	**4J-0522**	1	SEAL-O-RING	
	19	1	**4J-5267**	1	SEAL-O-RING	
	20	1	**5P-2230**	3	CLAMP-HOSE	
	21	1	**8C-3205**	2	FLANGE-HALF	
	22	1	**8T-4121**	8	WASHER-HARD (11X21X2.5-MM THK)	
M	23	1	**8T-4196**	8	BOLT (M10X1.5X35-MM)	

I-REFER TO HYDRAULIC INFORMATION SYSTEM
M-METRIC PART

218-5903 **LINES GP-PUMP** *(contd.)* **i02448004**

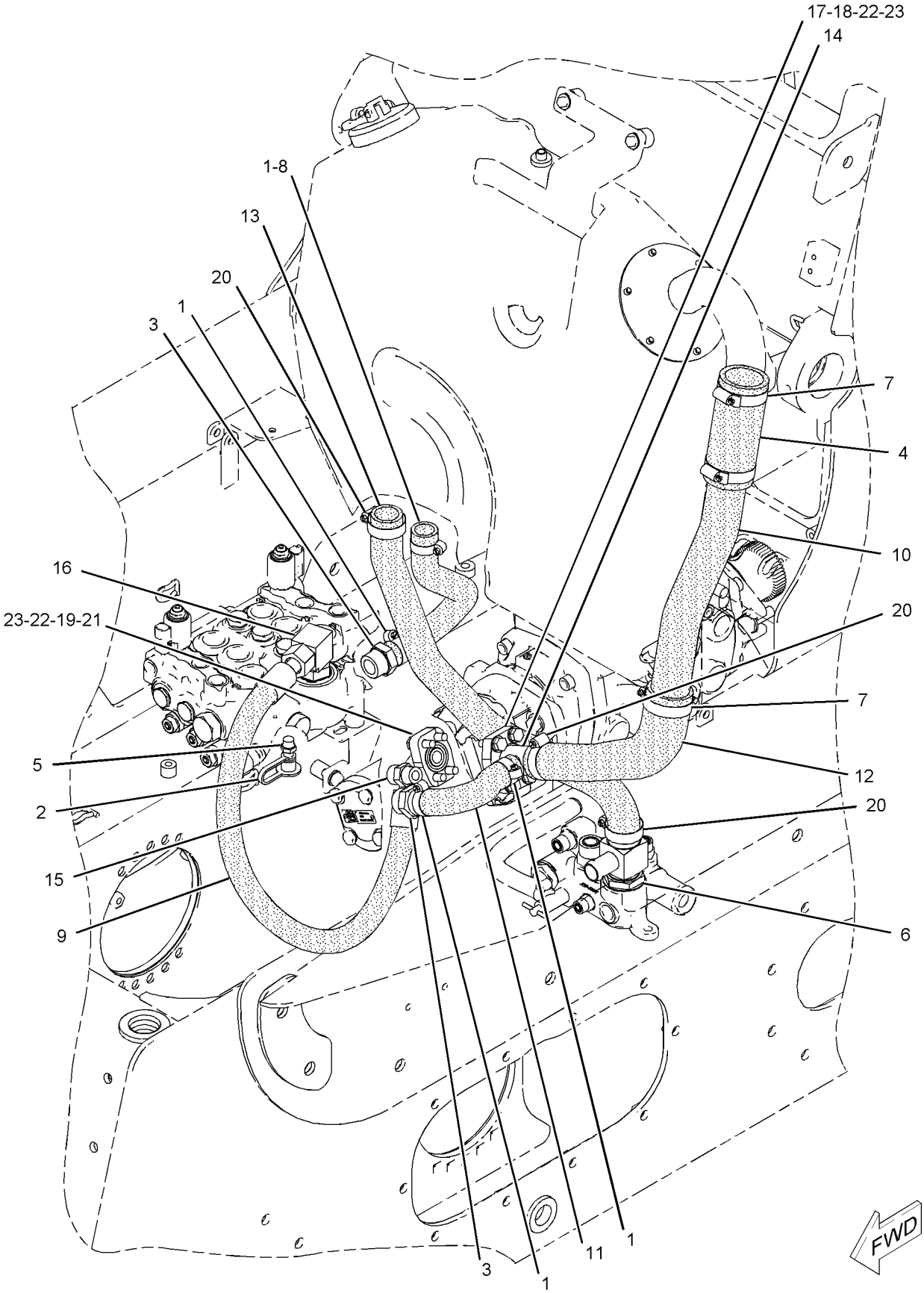

GRAPHIC #1 **<END>** g01037652

HYDRAULIC SYSTEM

218-5708 LINES GP-TILT CYLINDER

S/N: BXM4225-UP
PART OF 218-5709 HYDRAULIC AR
FOR USE WITH WORK TOOL POSITIONER
AN ATTACHMENT

SMCS-5057, 5104 **i02710129**

NOTE	REF NO	GRAPHIC REF	PART NUMBER	QTY	PART NAME 1 2 3 4 5 6 (PRODUCT LEVEL)	SEE PAGE
I	1	1	**142-9234**	4	HOSE AS	
	2	1	**193-0474**	1	PLATE	
CI	3	1	**290-8481**	2	HOSE AS	
C	4	1	**291-0513**	1	TUBE AS	
C	5	1	**291-0514**	1	TUBE AS	
	6	1	**215-3935**	3	CLIP	
	7	1	**252-0331**	1	TUBE AS	
	8	1	**252-0332**	1	TUBE AS	
	9	1	**219-4377**	1	PLATE	
CI	10	1	**291-0507**	1	HOSE AS	
M	11	1	**096-5866**	2	BOLT (M8X1.25X75-MM)	
	12	1	*148-8315*	2	CONNECTOR AS	
					(EACH INCLUDES)	
		1	**2M-9780**	1	SEAL-O-RING	
		1	**6V-8642**	1	CONNECTOR	
		1	**7J-9108**	1	SEAL-O-RING	
	13	1	*148-8390*	2	ELBOW AS	
					(EACH INCLUDES)	
		1	**2M-9780**	1	SEAL-O-RING	
		1	**6V-8626**	1	ELBOW	
		1	**7J-9108**	1	SEAL-O-RING	
	14	1	**5P-7464**	4	CLIP (SLOT)	
	15	1	**5P-7465**	4	CLIP (TAB)	
	16	1	**6V-7359**	4	GROMMET	
	17	1	**6V-8398**	8	SEAL-O-RING	
	18	1	**7J-9108**	6	SEAL-O-RING	
	19	1	**8T-4121**	2	WASHER-HARD (11X21X2.5-MM THK)	
M	20	1	**8T-4136**	2	BOLT (M10X1.5X25-MM)	
M	21	1	**8T-4139**	2	BOLT (M12X1.75X30-MM)	
M	22	1	**8T-4194**	2	BOLT (M12X1.75X50-MM)	
CI	23	1	**291-0506**	1	HOSE AS	
	24	1	**8T-4223**	6	WASHER-HARD (13.5X25.5X3-MM THK)	
C	25	1	**8T-4224**	3	WASHER-HARD (8.8X16X2-MM THK)	
M	26	1	**8T-4244**	2	NUT (M12X1.75-THD)	
M	27	1	**8T-6912**	1	BOLT (M8X1.25X50-MM)	
C	28	1	**9R-1005**	2	CLIP (SLOT)	
C	29	1	**9R-7802**	2	CLIP (SLOT)	
C	30	1	**9R-7803**	2	CLIP (TAB)	

C-CHANGE FROM PREVIOUS TYPE
I-REFER TO HYDRAULIC INFORMATION SYSTEM
M-METRIC PART

218-5708 **LINES GP-TILT CYLINDER** *(contd.)* **i02710129**

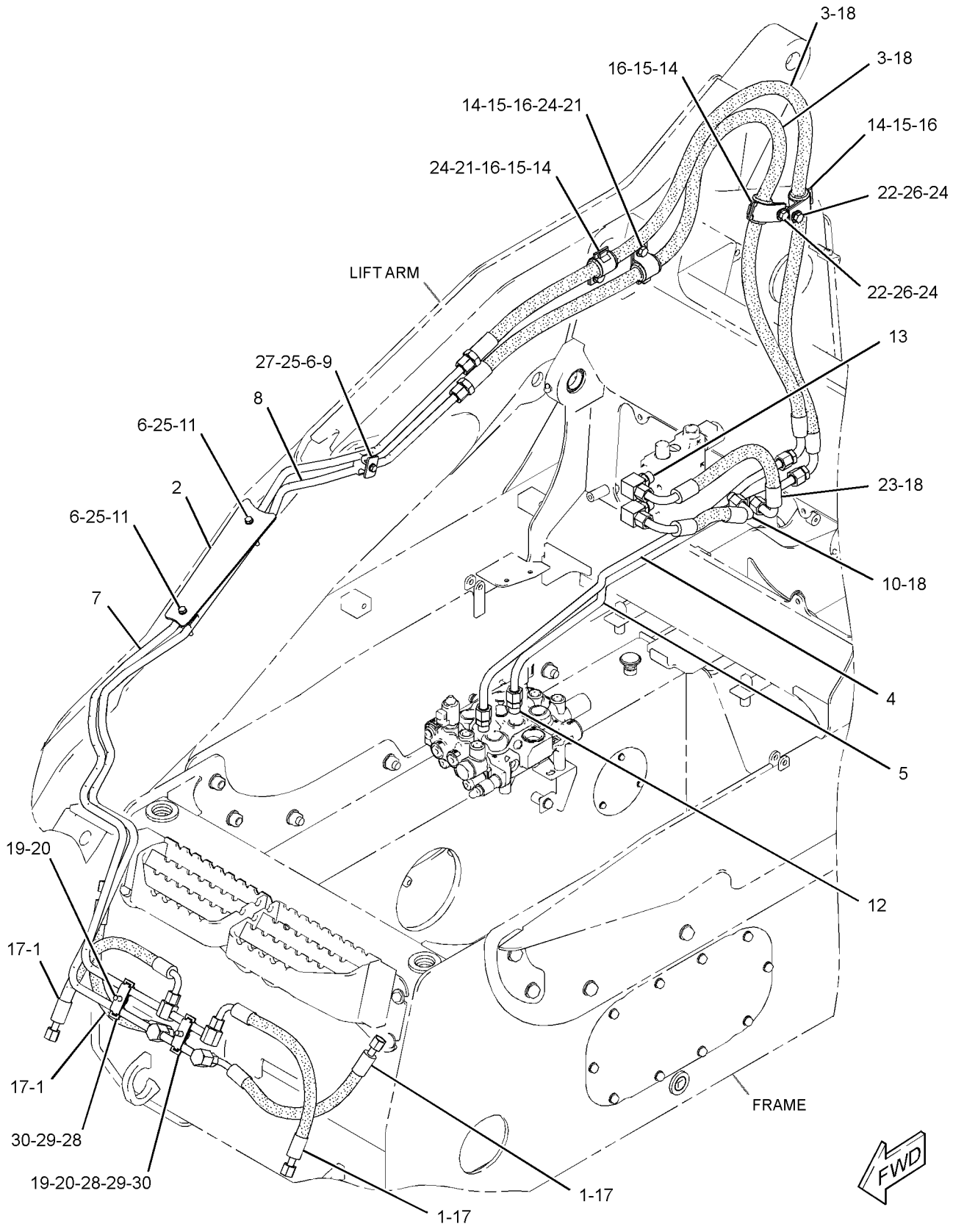

GRAPHIC #1 **<END>** g01360523

HYDRAULIC SYSTEM

218-6607 LINES GP-TILT CYLINDER

S/N: BXM4225-UP
PART OF 218-6640 HYDRAULIC AR
AN ATTACHMENT

SMCS-5057, 5104 **i02887181**

NOTE	REF NO	GRAPHIC REF	PART NUMBER	QTY	PART NAME 1 2 3 4 5 6 (PRODUCT LEVEL)	SEE PAGE
I	1	1	**142-9234**	4	HOSE AS	
	3	1	**193-0474**	1	PLATE	
CI	4	1	**290-8481**	2	HOSE AS	
	5	1	**215-3935**	3	CLIP	
	6	1	**219-4377**	1	PLATE	
	7	1	**252-0331**	1	TUBE AS	
	8	1	**252-0332**	1	TUBE AS	
C	9	1	**290-3295**	1	TUBE AS	
C	10	1	**290-3300**	1	TUBE AS	
M	11	1	**096-5866**	2	BOLT (M8X1.25X75-MM)	
	13	1	*148-8315*	2	CONNECTOR AS	
					(EACH INCLUDES)	
		1	**2M-9780**	1	SEAL-O-RING	
		1	**6V-8642**	1	CONNECTOR	
		1	**7J-9108**	1	SEAL-O-RING	
	15	1	**5P-7464**	4	CLIP (SLOT)	
	16	1	**5P-7465**	4	CLIP (TAB)	
	17	1	**6V-7359**	4	GROMMET	
	18	1	**6V-8398**	8	SEAL-O-RING	
	19	1	**7J-9108**	4	SEAL-O-RING	
	20	1	**8T-4121**	2	WASHER-HARD (11X21X2.5-MM THK)	
M	21	1	**8T-4136**	2	BOLT (M10X1.5X25-MM)	
M	22	1	**8T-4139**	2	BOLT (M12X1.75X30-MM)	
M	23	1	**8T-4194**	2	BOLT (M12X1.75X50-MM)	
	24	1	**8T-4223**	6	WASHER-HARD (13.5X25.5X3-MM THK)	
C	25	1	**8T-4224**	3	WASHER-HARD (8.8X16X2-MM THK)	
M	26	1	**8T-4244**	2	NUT (M12X1.75-THD)	
M	27	1	**8T-6912**	1	BOLT (M8X1.25X50-MM)	
C	28	1	**9R-1005**	2	CLIP (SLOT)	
C	29	1	**9R-7802**	2	CLIP (SLOT)	
C	30	1	**9R-7803**	2	CLIP (TAB)	

C-CHANGE FROM PREVIOUS TYPE
I-REFER TO HYDRAULIC INFORMATION SYSTEM
M-METRIC PART

218-6607 **LINES GP-TILT CYLINDER** *(contd.)* **i02887181**

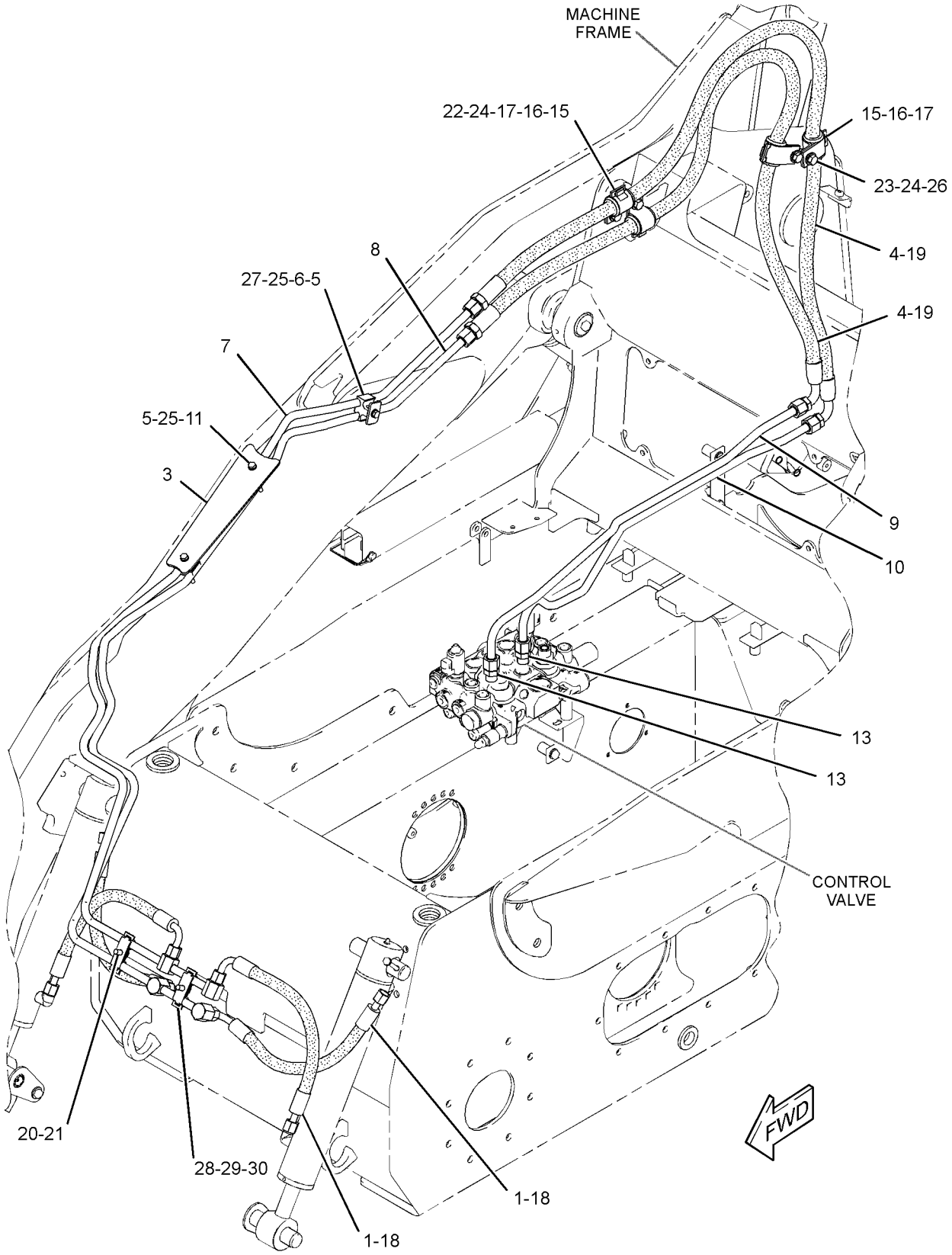

GRAPHIC #1

<END>

g01439401

HYDRAULIC SYSTEM

218-6311 LINES GP-WORK TOOL

S/N: BXM4225-UP
PART OF 218-6760, 261-6142 HYDRAULIC AR
AN ATTACHMENT

SMCS-5057 **i02514015**

NOTE	REF NO	GRAPHIC REF	PART NUMBER	QTY	PART NAME 1 2 3 4 5 6 (PRODUCT LEVEL)	SEE PAGE
M	1	1	**101-3129**	2	STUD (M10X1.5-THD)	
	2	1	*154-5232*	1	ADAPTER AS	
		1	**112-9783**	1	ADAPTER	
		1	**3K-0360**	1	SEAL-O-RING	
		1	**4J-5477**	1	SEAL-O-RING	
	3	1	**193-0474**	1	PLATE	
	4	1	**193-8334**	1	FITTING AS (QUICK DISCONNECT, MALE)	
	5	1	**193-8335**	1	FITTING AS (QUICK DISCONNECT, FEMALE)	
	6	1	**215-3935**	3	CLIP	
C	7	1	**285-9286**	3	BLOCK	
	8	1	**218-5764**	3	PLATE	
	9	1	**218-6204**	1	BRACKET	
	10	1	**218-6313**	1	TUBE AS	
	11	1	**218-6314**	1	TUBE AS	
I	12	1	**212-4091**	2	HOSE AS	
	13	1	**218-6316**	1	TUBE AS	
	14	1	**218-6317**	1	TUBE AS	
	15	1	**219-4377**	1	PLATE	
M	16	1	**096-5866**	2	BOLT (M8X1.25X75-MM)	
	17	1	*148-8341*	2	CONNECTOR AS	
					(EACH INCLUDES)	
		1	**6V-8713**	1	CONNECTOR	
		1	**3D-2824**	1	SEAL-O-RING	
		1	**7J-9108**	1	SEAL-O-RING	
	18	1	**5P-7464**	4	CLIP (SLOT)	
	19	1	**5P-7465**	4	CLIP (TAB)	
	20	1	**6V-7359**	4	GROMMET	
	21	1	**6V-9170**	2	NUT-BULKHEAD (1-14-THD)	
	22	1	**7J-9108**	6	SEAL-O-RING	
	23	1	**8T-4121**	9	WASHER-HARD (11X21X2.5-MM THK)	
M	24	1	**8T-4133**	1	NUT (M10X1.5-THD)	
M	25	1	**8T-4136**	2	BOLT (M10X1.5X25-MM)	
M	26	1	**8T-4139**	2	BOLT (M12X1.75X30-MM)	
M	27	1	**8T-4178**	2	BOLT (M10X1.5X90-MM)	
M	28	1	**8T-4194**	2	BOLT (M12X1.75X50-MM)	
	29	1	**8T-4223**	6	WASHER-HARD (13.5X25.5X3-MM THK)	
	30	1	**8T-4224**	5	WASHER-HARD (8.8X16X2-MM THK)	
M	31	1	**8T-4244**	2	NUT (M12X1.75-THD)	
M	32	1	**099-3649**	1	BOLT (M8X1.25X40-MM)	
M	33	1	**8T-6912**	1	BOLT (M8X1.25X50-MM)	
	34	1	**9R-1005**	1	CLIP (SLOT)	
	35	1	**9R-7802**	1	CLIP (SLOT)	
	36	1	**9R-7803**	1	CLIP (TAB)	
M	37	1	**8T-4195**	2	BOLT (M10X1.5X30-MM)	
	38	1	**7W-9094**	1	SPACER (10.5X20X9-MM THK)	
M	39	1	**5C-7261**	1	NUT (M8X1.25-THD)	

C-CHANGE FROM PREVIOUS TYPE
I-REFER TO HYDRAULIC INFORMATION SYSTEM
M-METRIC PART

218-6311 **LINES GP-WORK TOOL** *(contd.)* **i02514015**

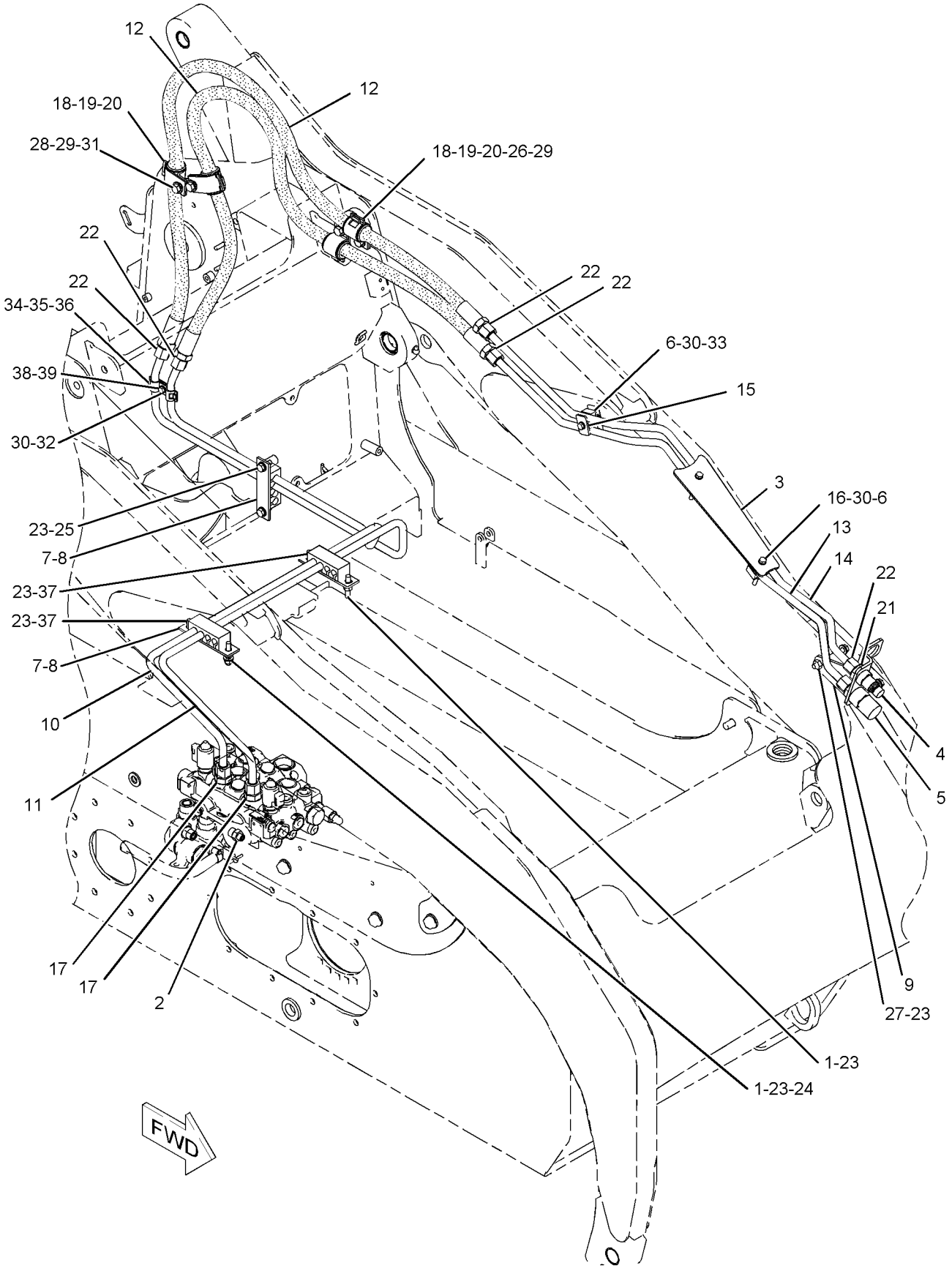

GRAPHIC #1 **<END>** g01145570

HYDRAULIC SYSTEM

218-6312 LINES GP-WORK TOOL

S/N: BXM4225-UP

PART OF 218-6762, 261-6149, 295-7505, 295-7508 HYDRAULIC AR

AN ATTACHMENT

SMCS-5057 **i02793627**

NOTE	REF NO	GRAPHIC REF	PART NUMBER	QTY	PART NAME 1 2 3 4 5 6 (PRODUCT LEVEL)	SEE PAGE
	1	2	**2S-3440**	2	CLAMP-HOSE	
	2	1,2	**7K-1181**	4	STRAP-CABLE	
	3	2	**9U-6993**	1	FITTING GP (PUMP CASE DRAIN)	
M	4	2	**101-3129**	4	STUD (M10X1.5-THD)	
	5	1	**215-3935**	3	CLIP	
	6	2	**218-5764**	3	PLATE	
Y	7	1	**218-5840**	1	FITTING GP-HYDRAULIC (QUICK DISCONNECT, MALE)	272
Y	8	1	**218-5841**	1	FITTING GP-HYDRAULIC (QUICK DISCONNECT, FEMALE)	273
	9	2	**218-5926**	1	BRACKET AS	
	10	2	**218-5927**	1	BRACKET AS	
	11	1	**218-6176**	1	CLIP	
I	12	2	*218-6319*	1	HOSE AS	
I	13	1	*218-6324*	2	HOSE AS	
I	14	1	*218-6325*	1	HOSE AS	
	15	1	**218-6328**	1	TUBE AS	
	16	1	**218-6349**	1	TUBE AS	
	17	1	**218-6553**	1	TUBE AS	
	18	1	**218-6554**	1	TUBE AS	
	19	1	**218-6555**	1	TUBE AS	
	20	1	**218-6556**	1	TUBE AS	
	21	1	**218-6558**	1	TUBE AS	
	22	2	**218-6568**	1	HOSE	
	23	1	**218-6599**	1	PLATE	
	24	1	**218-6611**	1	TUBE AS	
	25	1	**218-6727**	1	BRACKET AS	
	26	1	**218-6776**	1	COVER AS	
	27	1	**219-4377**	1	PLATE	
	28	1	**229-5468**	1	FITTING AS (QUICK DISCONNECT, MALE)	
	29	1	**229-5471**	1	FITTING AS (QUICK DISCONNECT, FEMALE)	
	30	1	**229-5473**	1	FITTING AS (QUICK DISCONNECT, MALE)	
	31	2	**257-5877**	2	ADAPTER	
	32	2	**285-9287**	3	BLOCK	
	33	2	**290-8081**	1	TUBE AS	
	34	2	**290-8082**	1	TUBE AS	
I	35	1	**290-8208**	2	HOSE AS	
	36	1	**294-7667**	1	TUBE AS	
M	37	1	**096-5866**	2	BOLT (M8X1.25X75-MM)	
	38	2	*148-8327*	2	CONNECTOR AS	
					(EACH INCLUDES)	
		2	**3D-2824**	1	SEAL-O-RING	
		2	**6V-8637**	1	CONNECTOR (SEAL)	
		2	**6V-9746**	1	SEAL-O-RING	
	39	2	*148-8336*	2	CONNECTOR AS	
					(EACH INCLUDES)	
		2	**3J-1907**	1	SEAL-O-RING	
		2	**6V-8397**	1	SEAL-O-RING	
		2	**6V-8636**	1	CONNECTOR (FACE SEAL)	
	40	2	*148-8340*	2	CONNECTOR AS	
					(EACH INCLUDES)	
		2	**3K-0360**	1	SEAL-O-RING	
		2	**6V-8398**	1	SEAL-O-RING	
		2	**6V-8639**	1	CONNECTOR (SEAL)	
	41	2	*148-8354*	1	ELBOW AS	
		2	**3K-0360**	1	SEAL-O-RING	
		2	**6V-8398**	1	SEAL-O-RING	

218-6312 **LINES GP-WORK TOOL** *(contd.)* **i02793627**

NOTE	REF NO	GRAPHIC REF	PART NUMBER	QTY	PART NAME 1 2 3 4 5 6 (PRODUCT LEVEL)	SEE PAGE
		2	**6V-9002**	1	ELBOW (45-DEG)	
	42	2	**1F-7567**	1	CLIP	
	43	2	**1P-4574**	2	FLANGE-HALF	
	44	2	**4B-0418**	1	CLIP	
	45	2	**4D-6466**	2	CLIP	
	46	2	**4J-5140**	1	SEAL-O-RING	
	47	2	**4J-5477**	1	SEAL-O-RING	
	48	1,2	**5M-8429**	2	CLIP	
	49	2	**5P-7466**	4	CLIP (SLOT)	
	50	2	**5P-7467**	4	CLIP (TAB)	
	51	2	**5P-8112**	4	GROMMET	
	52	2	**5P-9297**	2	CLIP	
	53	2	**6D-4244**	2	CLIP	
	54	1	**6V-8397**	4	SEAL-O-RING	
	55	1	**6V-8398**	3	SEAL-O-RING	
	56	1,2	**6V-9746**	4	SEAL-O-RING	
	57	2	**7B-1597**	2	CLIP	
	58	2	**7H-7055**	1	CLIP	
M	59	1	**8T-0341**	4	BOLT-SOCKET HEAD (M10X1.5X60-MM)	
	60	1,2	**8T-4121**	15	WASHER-HARD (11X21X2.5-MM THK)	
M	61	2	**8T-4133**	3	NUT (M10X1.5-THD)	
M	62	2	**8T-4136**	3	BOLT (M10X1.5X25-MM)	
M	63	2	**8T-4137**	3	BOLT (M10X1.5X20-MM)	
M	64	2	**8T-4194**	2	BOLT (M12X1.75X50-MM)	
M	65	2	**8T-4195**	2	BOLT (M10X1.5X30-MM)	
M	66	1	**8T-4198**	2	BOLT (M10X1.5X100-MM)	
	67	2	**8T-4223**	6	WASHER-HARD (13.5X25.5X3-MM THK)	
	68	1,2	**8T-4224**	9	WASHER-HARD (8.8X16X2-MM THK)	
M	69	2	**8T-4244**	4	NUT (M12X1.75-THD)	
M	70	1	**8T-4908**	2	BOLT (M8X1.25X25-MM)	
M	71	1	**8T-6869**	1	BOLT (M8X1.25X60-MM)	
M	72	2	**8T-7547**	4	BOLT (M8X1.25X30-MM)	

I-REFER TO HYDRAULIC INFORMATION SYSTEM
M-METRIC PART
Y-SEPARATE ILLUSTRATION

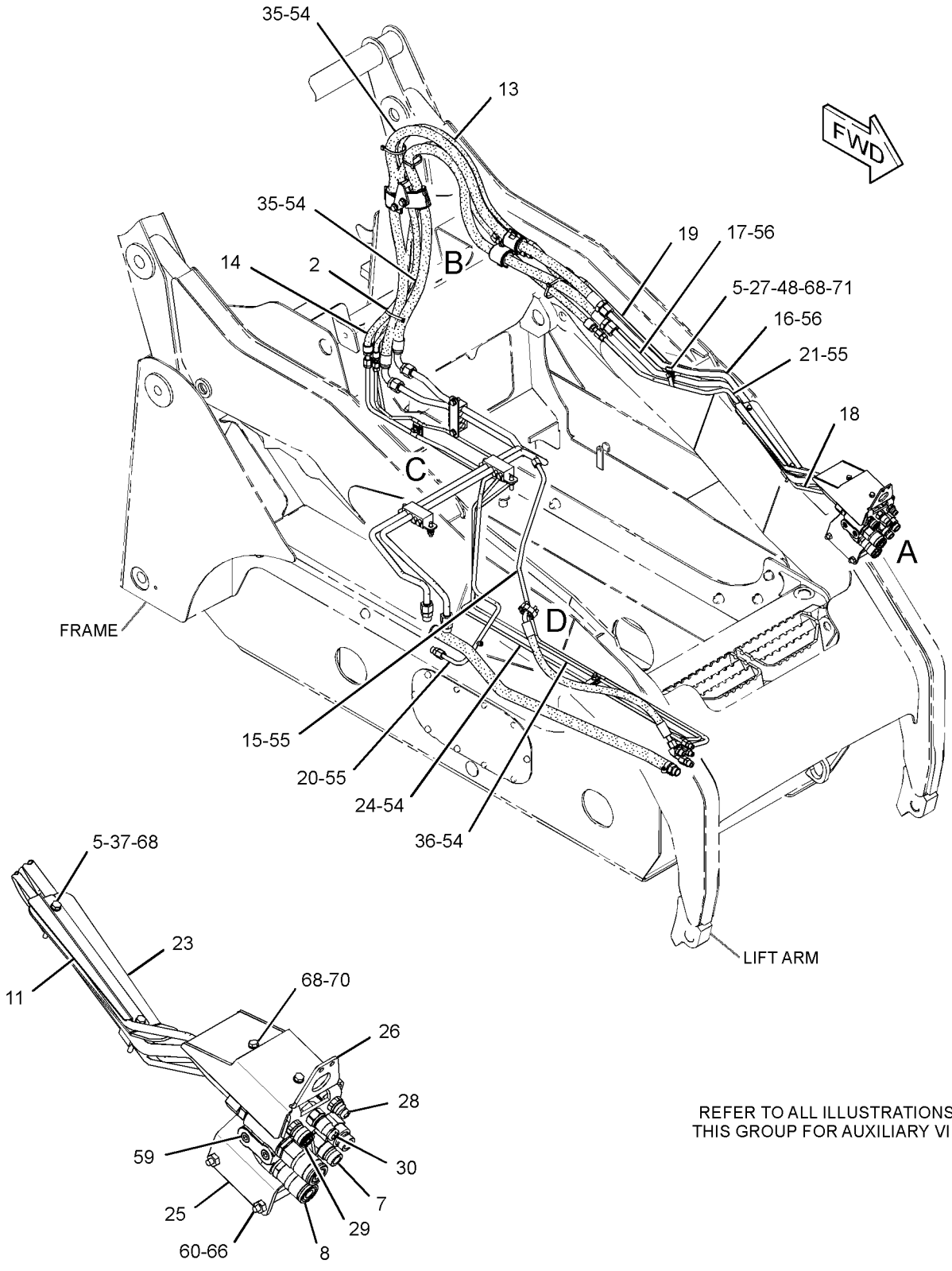

VIEW OF AREA A

GRAPHIC #1 g01396415

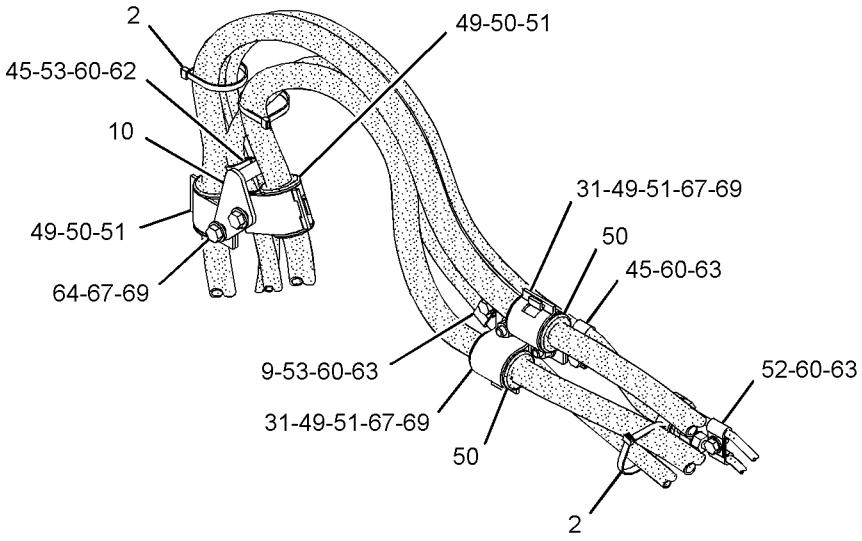

VIEW OF AREA B

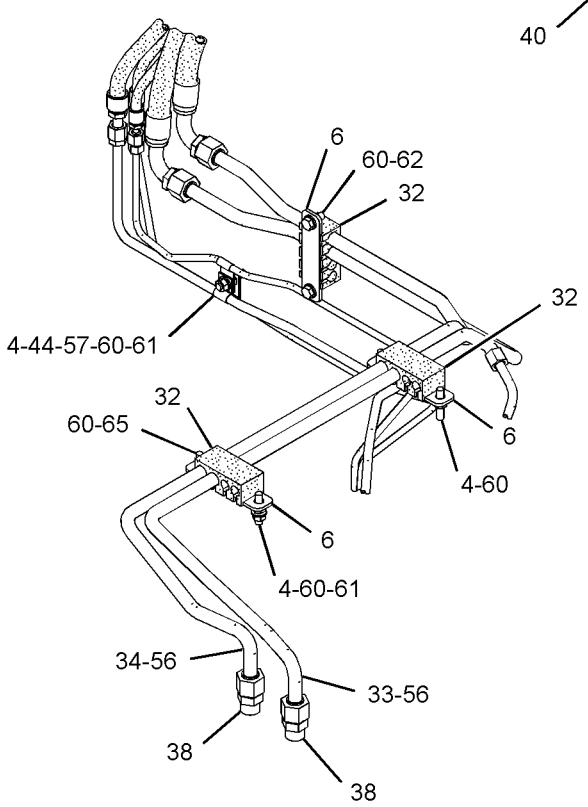

VIEW OF AREA C

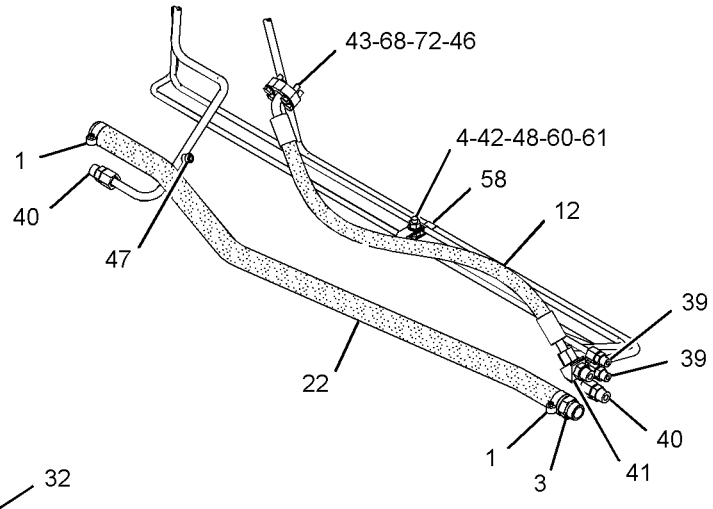

VIEW OF AREA D

GRAPHIC #2 **<END>** g01396416

218-6536 MANIFOLD & LINES GP-CONTROL—PARKING BRAKE

S/N: BXM4225-4279

PART OF 278-1243 HYDRAULIC AR

SMCS-1435, 5057, 5264 **i02595722**

NOTE	REF NO	GRAPHIC REF	PART NUMBER	QTY	PART NAME 1 2 3 4 5 6 (PRODUCT LEVEL)	SEE PAGE
I	1	1	**100-7530**	1	HOSE AS	
CY	2	1	**233-7131**	1	MANIFOLD & SOLENOID GP-CONTROL (PARKING BRAKE)	343
I	3	1	**218-5580**	1	HOSE AS	
I	4	1	**218-6231**	1	HOSE AS	
	5	1	**233-5847**	1	TUBE AS	
	6	1	*148-8336*	3	CONNECTOR AS	
					(EACH INCLUDES)	
		1	**3J-1907**	1	SEAL-O-RING	
		1	**6V-8397**	1	SEAL-O-RING	
		1	**6V-8636**	1	CONNECTOR	
	7	1	*148-8435*	1	TEE AS	
		1	**3J-1907**	1	SEAL-O-RING	
		1	**6V-8397**	2	SEAL-O-RING	
		1	**6V-8781**	1	TEE-FACE SEAL	
	8	1	*161-8560*	1	CONNECTOR AS	
		1	**3J-1907**	1	SEAL-O-RING	
		1	**7J-9108**	1	SEAL-O-RING	
		1	**8C-6758**	1	CONNECTOR	
	9	1	**6V-8398**	2	SEAL-O-RING	
	10	1	**8T-4224**	2	WASHER-HARD (8.8X16X2-MM THK)	
M	11	1	**8T-6869**	2	BOLT (M8X1.25X60-MM)	

C-CHANGE FROM PREVIOUS TYPE
I-REFER TO HYDRAULIC INFORMATION SYSTEM
M-METRIC PART
Y-SEPARATE ILLUSTRATION

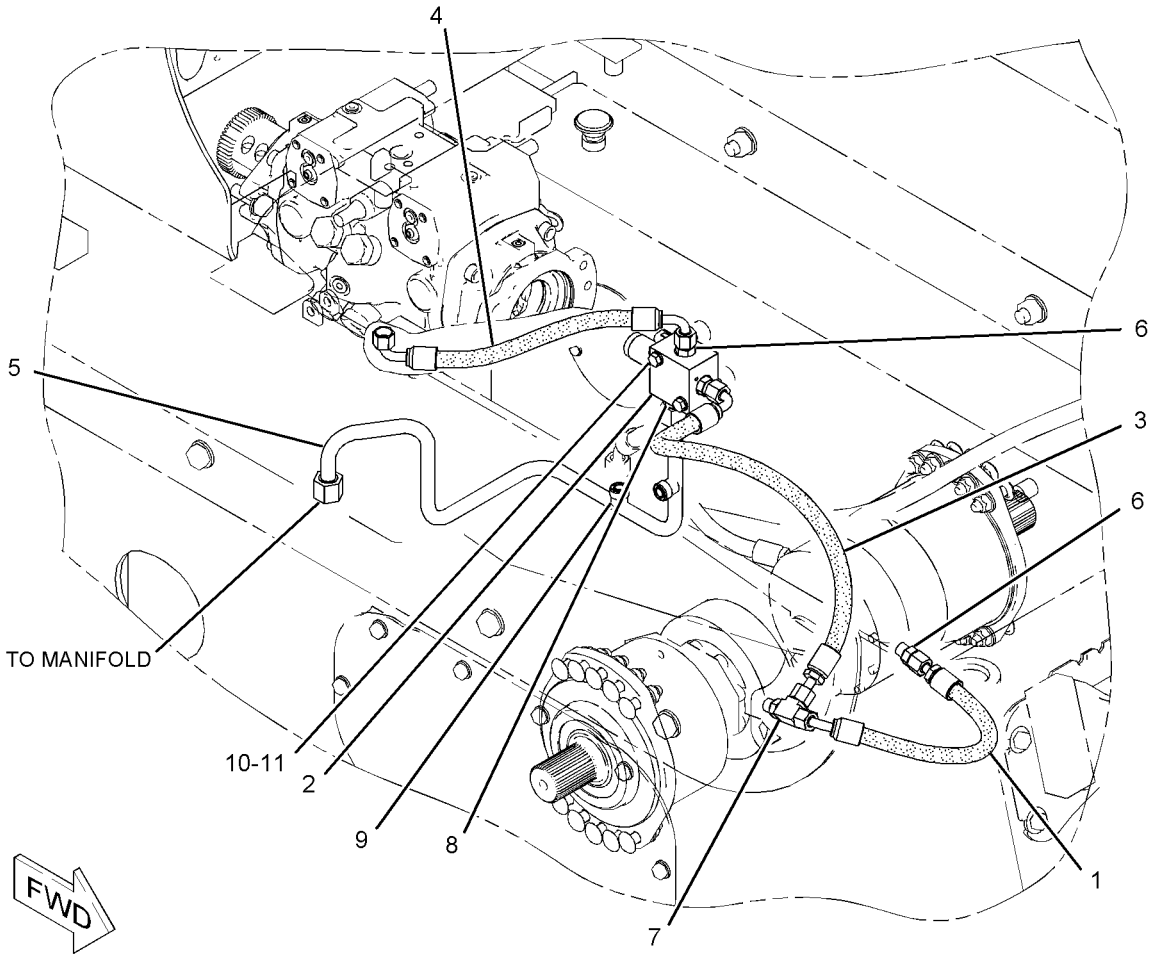

GRAPHIC #1 **<END>** g01131274

218-6536 MANIFOLD & LINES GP-CONTROL—PARKING BRAKE

S/N: BXM4280-UP

PART OF 278-1243 HYDRAULIC AR

SMCS-1435, 5057, 5264 **i02861456**

NOTE	REF NO	GRAPHIC REF	PART NUMBER	QTY	PART NAME 1 2 3 4 5 6 (PRODUCT LEVEL)	SEE PAGE
I	1	1	**100-7530**	1	HOSE AS	
CY	2	1	**248-1268**	1	MANIFOLD & SOLENOID GP-CONTROL (PARKING BRAKE)	344
I	3	1	**218-5580**	1	HOSE AS	
I	4	1	**218-6231**	1	HOSE AS	
	5	1	**233-5847**	1	TUBE AS	
	6	1	*148-8336*	3	CONNECTOR AS	
					(EACH INCLUDES)	
		1	**3J-1907**	1	SEAL-O-RING	
		1	**6V-8397**	1	SEAL-O-RING	
		1	**6V-8636**	1	CONNECTOR	
	7	1	*148-8435*	1	TEE AS	
		1	**3J-1907**	1	SEAL-O-RING	
		1	**6V-8397**	2	SEAL-O-RING	
		1	**6V-8781**	1	TEE-FACE SEAL	
	8	1	*161-8560*	1	CONNECTOR AS	
		1	**3J-1907**	1	SEAL-O-RING	
		1	**7J-9108**	1	SEAL-O-RING	
		1	**8C-6758**	1	CONNECTOR	
	9	1	**6V-8398**	2	SEAL-O-RING	
	10	1	**8T-4224**	2	WASHER-HARD (8.8X16X2-MM THK)	
M	11	1	**8T-6869**	2	BOLT (M8X1.25X60-MM)	

C-CHANGE FROM PREVIOUS TYPE
I-REFER TO HYDRAULIC INFORMATION SYSTEM
M-METRIC PART
Y-SEPARATE ILLUSTRATION

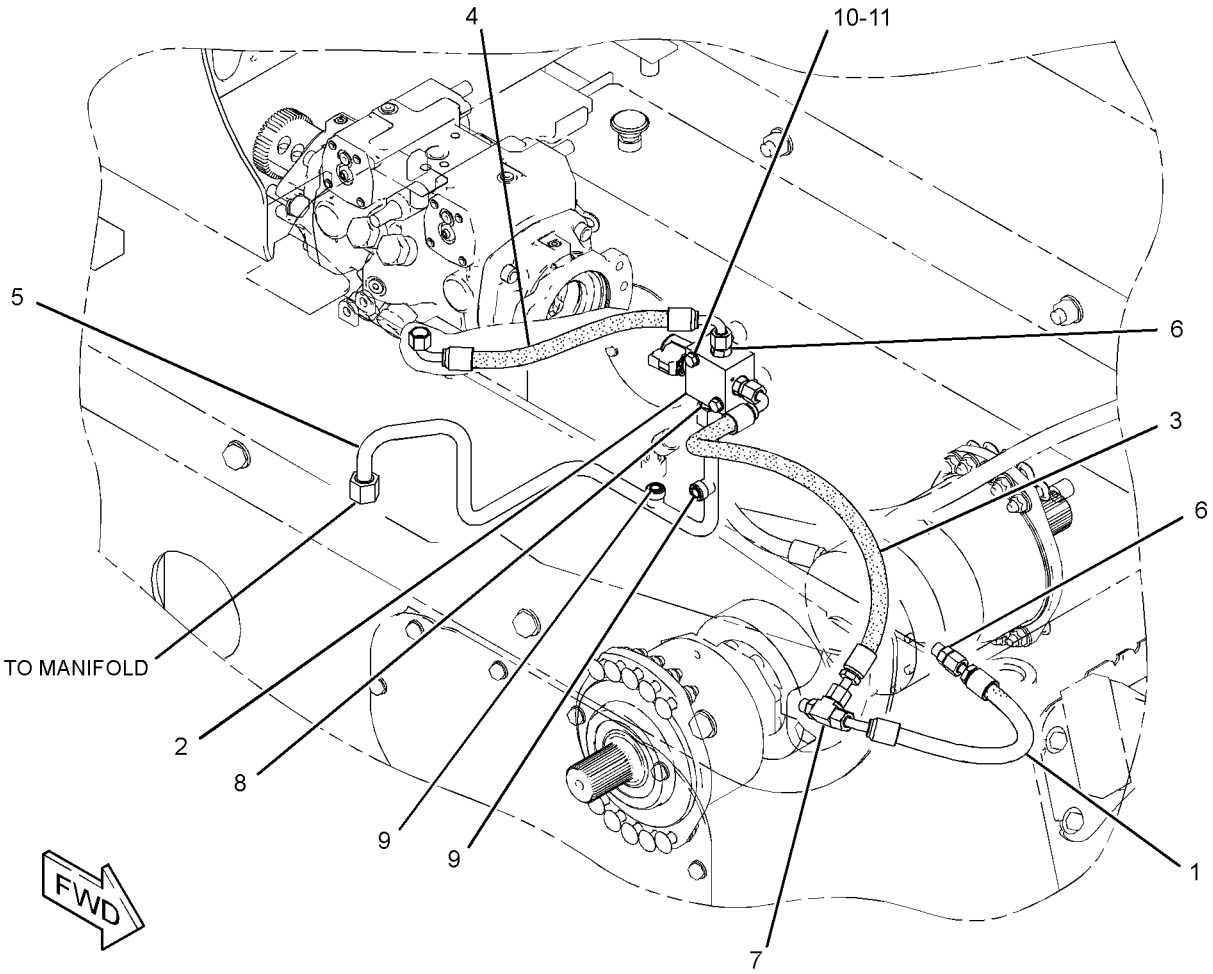

GRAPHIC #1 **<END>** g01435496

191-9652 MANIFOLD & MTG GP-CONTROL

S/N: BXM4225-UP
WORK TOOL POSITIONER
PART OF 218-5709 HYDRAULIC AR
AN ATTACHMENT

SMCS-5264 **i01999919**

NOTE	REF NO	GRAPHIC REF	PART NUMBER	QTY	PART NAME 1 2 3 4 5 6 (PRODUCT LEVEL)	SEE PAGE
Y	1	1	**223-8408**	1	MANIFOLD & SOLENOID GP-CONTROL	342
M	2	1	**7X-2535**	2	BOLT (M6X1X60-MM)	
	3	1	**8T-4205**	2	WASHER-HARD (7.2X14.5X2-MM THK)	

M-METRIC PART
Y-SEPARATE ILLUSTRATION

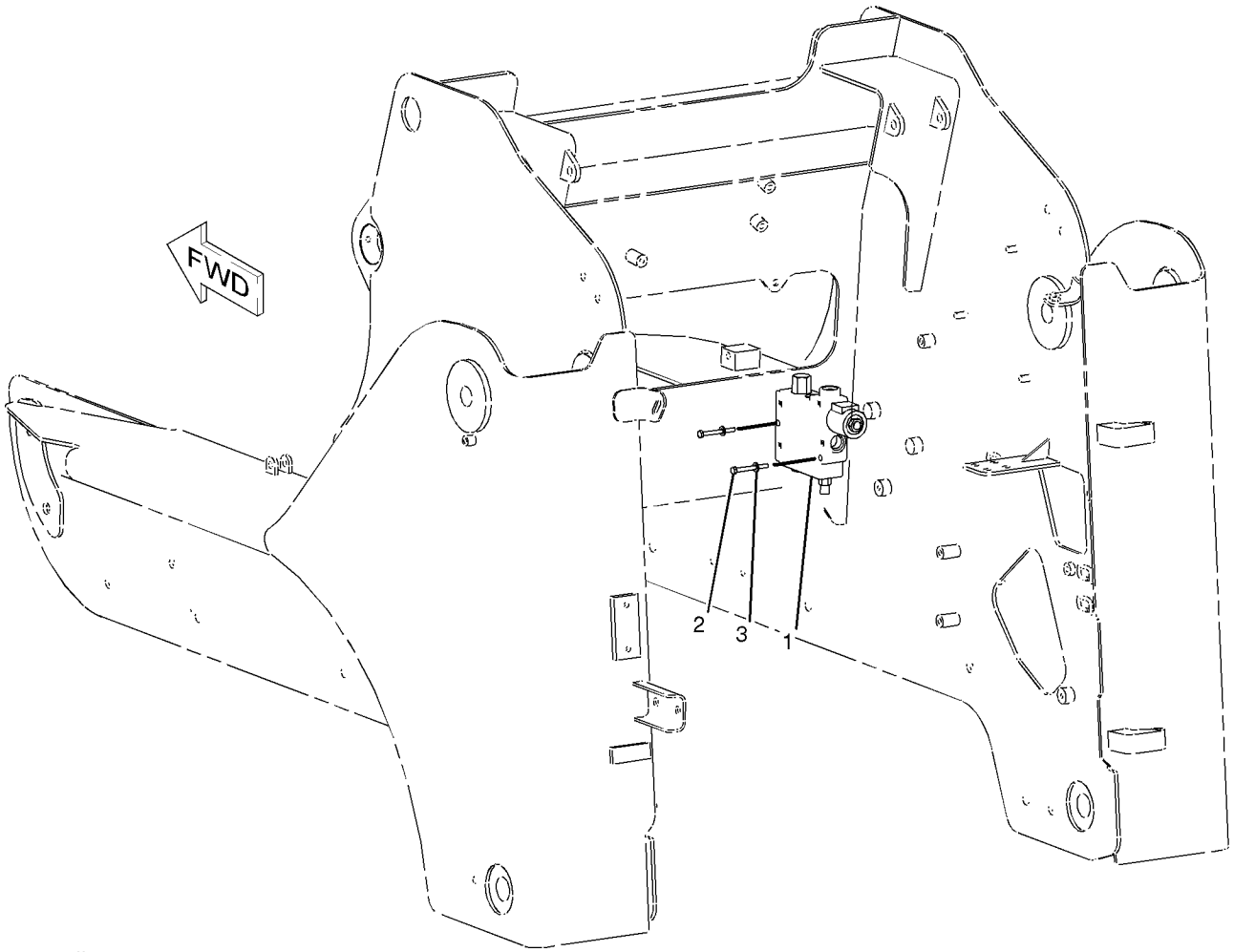

GRAPHIC #1 **<END>** g01034850

218-5812 MANIFOLD & MTG GP-CONTROL

S/N: BXM4225-UP
HIGH FLOW
PART OF 218-6762, 261-6149, 295-7505, 295-7508 HYDRAULIC AR
AN ATTACHMENT

SMCS-5264 **i02292955**

NOTE	REF NO	GRAPHIC REF	PART NUMBER	QTY	PART NAME 1 2 3 4 5 6 (PRODUCT LEVEL)	SEE PAGE
M	1	1	**108-2989**	3	BOLT (M8X1.25X130-MM)	
CY	2	1	**248-7696**	1	MANIFOLD GP-CONTROL (BOOSTED AUXILIARY HYD FLOW)	346
	3	1	**8T-4224**	3	WASHER-HARD (8.8X16X2-MM THK)	

C-CHANGE FROM PREVIOUS TYPE
M-METRIC PART
Y-SEPARATE ILLUSTRATION

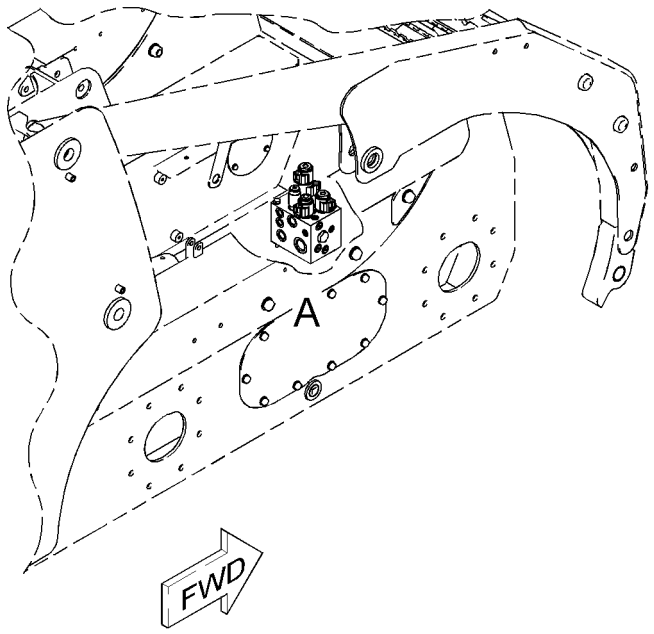

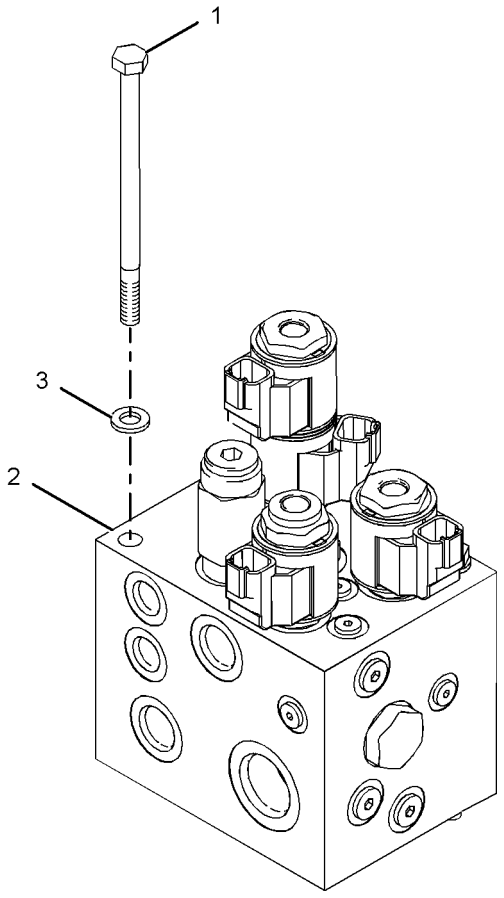

VIEW OF AREA A

GRAPHIC #1 **<END>** g01017940

231-5278 MANIFOLD & MTG GP-CONTROL–ANGLING BLADE

S/N: BXM4225-UP
PART OF 231-5275, 231-5277 BLADE AR
AN ATTACHMENT

SMCS-5264 **i02337085**

NOTE	REF NO	GRAPHIC REF	PART NUMBER	QTY	PART NAME 1 2 3 4 5 6 (PRODUCT LEVEL)	SEE PAGE
Y	1	1	**258-9011**	1	MANIFOLD GP-CONTROL (ANGLING BLADE)	347
	2	1	**231-5279**	1	COVER	
	3	1	**5P-4116**	3	WASHER-HARD (8.8X20.5X2-MM THK)	
M	4	1	**8T-4189**	2	BOLT (M8X1.25X20-MM)	
M	5	1	**8T-4200**	3	BOLT (M8X1.25X16-MM)	
	6	1	**8T-4224**	2	WASHER-HARD (8.8X16X2-MM THK)	

M-METRIC PART
Y-SEPARATE ILLUSTRATION

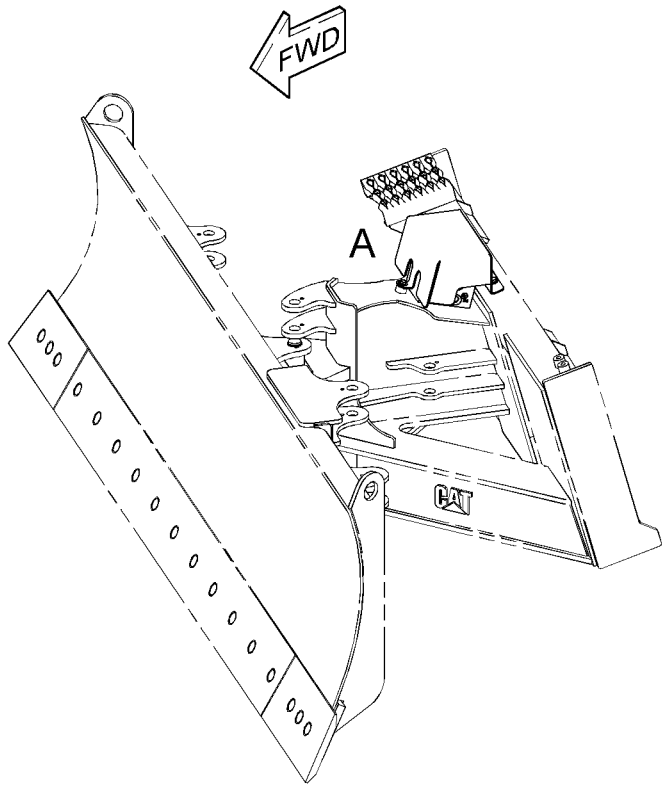

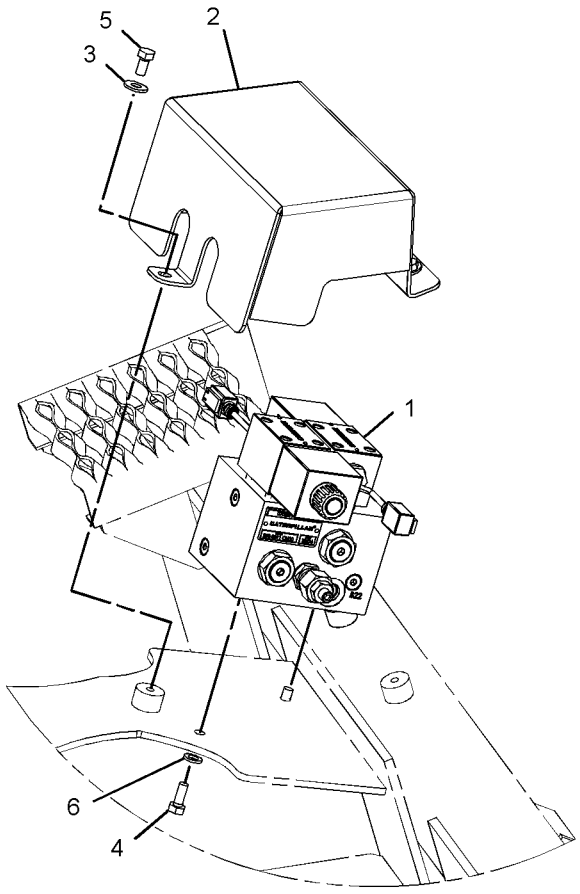

VIEW OF AREA A

GRAPHIC #1 **<END>** g01167422

223-8408 MANIFOLD & SOLENOID GP-CONTROL

S/N: BXM4225-UP

PART OF 191-9652 MANIFOLD & MTG GP-CONTROL

AN ATTACHMENT

SMCS-5264, 5479 **i02359411**

NOTE	REF NO	GRAPHIC REF	PART NUMBER	QTY	PART NAME 1 2 3 4 5 6 (PRODUCT LEVEL)	SEE PAGE
	1	1	**102-8804**	1	KIT-RECEPTACLE (4-PIN)	
					(INCLUDES RECEPTACLE AS & WEDGE)	
	2	1	**3E-3377**	1	WEDGE-RECEPTACLE LOCK (4-PIN)	
	3	1	**186-3735**	2	PIN-CONNECTOR (16-GA TO 18-GA)	
	4	1	**9G-3695**	2	PLUG	
J	5	1	**218-6858**	1	CARTRIDGE AS-VALVE	
J	6	1	**218-6857**	1	COIL AS	
					AVAILABLE REPAIR KIT(S):	
			218-6856	1	KIT-SEAL	
					(INCLUDES O-RINGS, COVER & BACK-UP RING)	
J			**155-1279**	1	KIT-SEAL	

J-KIT MARKED J SERVICES PARTS MARKED J

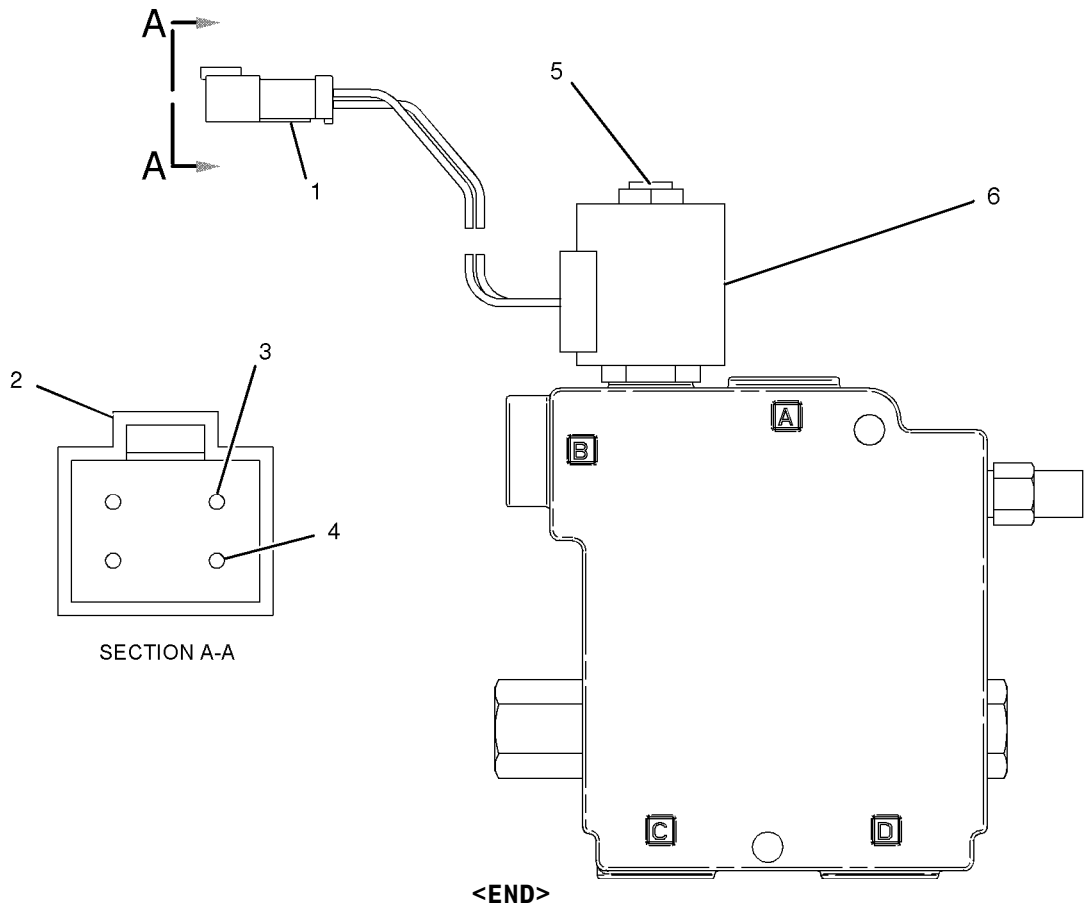

GRAPHIC #1 **<END>** g01014991

233-7131 MANIFOLD & SOLENOID GP-CONTROL—PARKING BRAKE

S/N: BXM4225-4279

PART OF 218-6536 MANIFOLD & LINES GP-CONTROL

SMCS-5264, 5479 **i02837179**

NOTE	REF NO	GRAPHIC REF	PART NUMBER	QTY	PART NAME 1 2 3 4 5 6 (PRODUCT LEVEL)	SEE PAGE
Y	1	1	**259-8194**	1	VALVE GP-SOLENOID	388
	2	1	**259-8195**	1	MANIFOLD	

Y-SEPARATE ILLUSTRATION

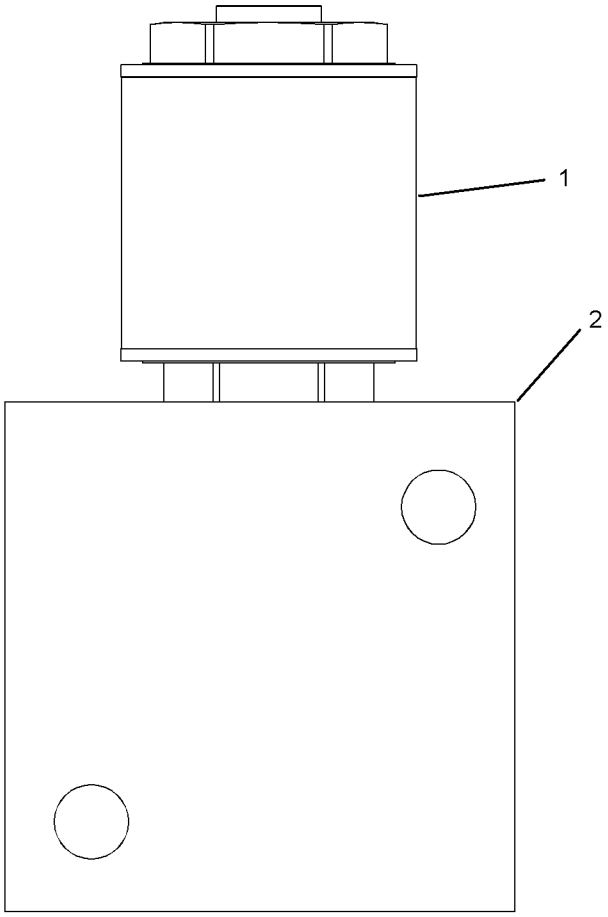

RIGHT SIDE VIEW

GRAPHIC #1

<END>

g01416438

248-1268 MANIFOLD & SOLENOID GP-CONTROL—PARKING BRAKE

S/N: BXM4280-UP

PART OF 218-6536 MANIFOLD & LINES GP-CONTROL

SMCS-5264, 5479 **i02200066**

NOTE	REF NO	GRAPHIC REF	PART NUMBER	QTY	PART NAME 1 2 3 4 5 6 (PRODUCT LEVEL)	SEE PAGE
Y	1	1	**259-8194**	1	VALVE GP-SOLENOID	388

Y-SEPARATE ILLUSTRATION

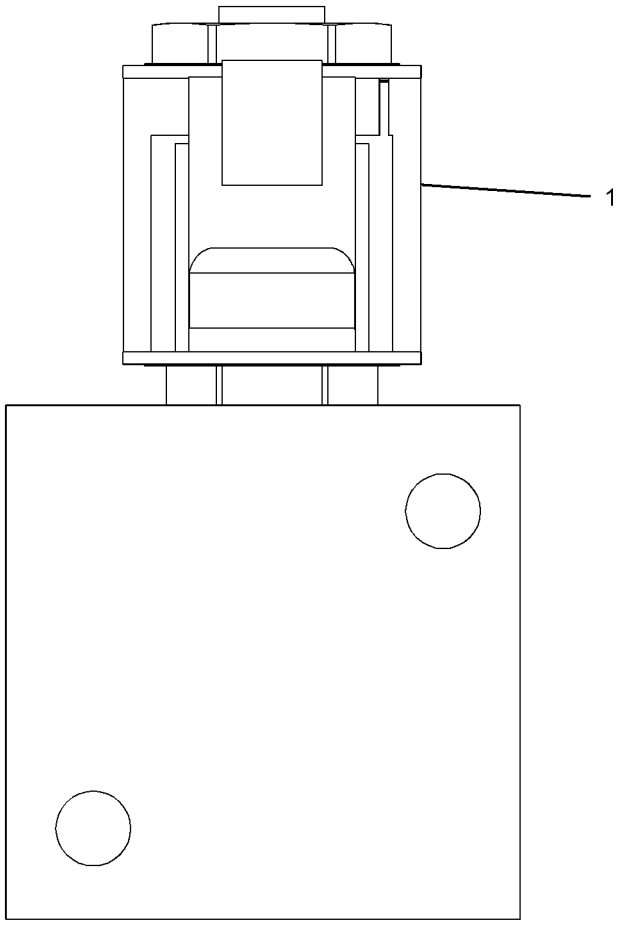

RIGHT SIDE VIEW

GRAPHIC #1 **<END>** g01132704

233-7128 MANIFOLD GP-CONTROL—QUICK COUPLER

S/N: BXM4225-UP

PART OF 218-5957 KIT-QUICK COUPLER CONVERSION, 218-6263 VALVE & LINES GP-COUPLER AN ATTACHMENT

SMCS-5117, 5264, 5479 **i02216438**

NOTE	REF NO	GRAPHIC REF	PART NUMBER	QTY	PART NAME 1 2 3 4 5 6 (PRODUCT LEVEL)	SEE PAGE
	1	1	**245-1911**	1	WIRE AS	
J	2	1	**249-7160**	1	VALVE GP-SOLENOID (QUICK COUPLER)	
		1	**238-4626**	2	COIL AS	
					AVAILABLE REPAIR KIT(S):	
J			**106-3108**	1	KIT-SEAL	

J-KIT MARKED J IS AVAILABLE FOR PART MARKED J

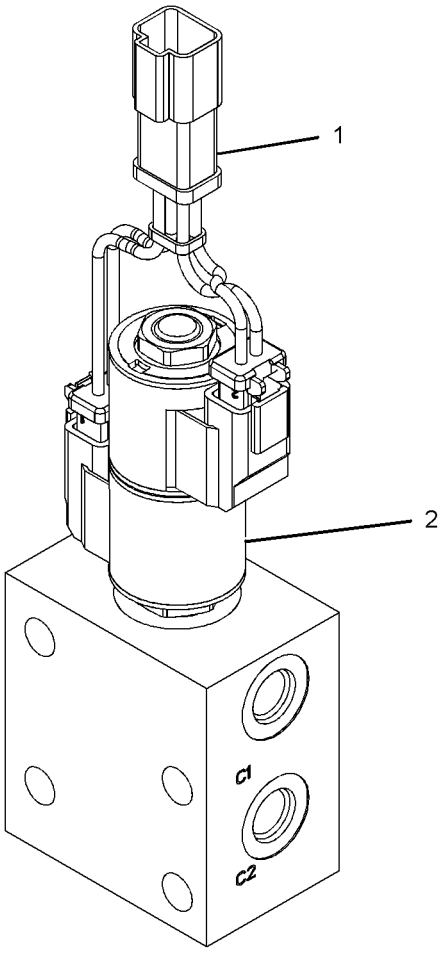

GRAPHIC #1 **<END>** g01132286

248-7696 MANIFOLD GP-CONTROL

S/N: BXM4225-UP

PART OF 218-6738 KIT-HIGH FLOW CONVERSION, 218-5812 MANIFOLD & MTG GP-CONTROL AN ATTACHMENT

SMCS-5117, 5264, 5479 **i02359407**

NOTE	REF NO	GRAPHIC REF	PART NUMBER	QTY	PART NAME 1 2 3 4 5 6 (PRODUCT LEVEL)	SEE PAGE
	1	1	**134-9911**	1	VALVE-CHECK	
	2	1	**148-9364**	1	VALVE GP-CHECK	
J	3	1	**238-4625**	1	VALVE GP-SOLENOID (HIGH FLOW)	
		1	**238-4626**	1	COIL AS	
	4	1	**238-4629**	1	VALVE GP-RELIEF	
J	5	1	**240-6866**	1	VALVE GP-SOLENOID (HIGH FLOW BOOST)	
		1	**238-4626**	1	COIL AS	
L	6	1	**249-7707**	1	VALVE GP-SOLENOID (HIGH FLOW)	
		1	**238-4628**	1	COIL AS	
	7	1	**250-7662**	1	VALVE GP-CHECK	
					AVAILABLE REPAIR KIT(S):	
J			**106-3108**	1	KIT-SEAL	
L			**141-0888**	1	KIT-SEAL	

J-KIT MARKED J AVAILABLE FOR PART(S) MARKED J
L-KIT MARKED L AVAILABLE FOR PART(S) MARKED L

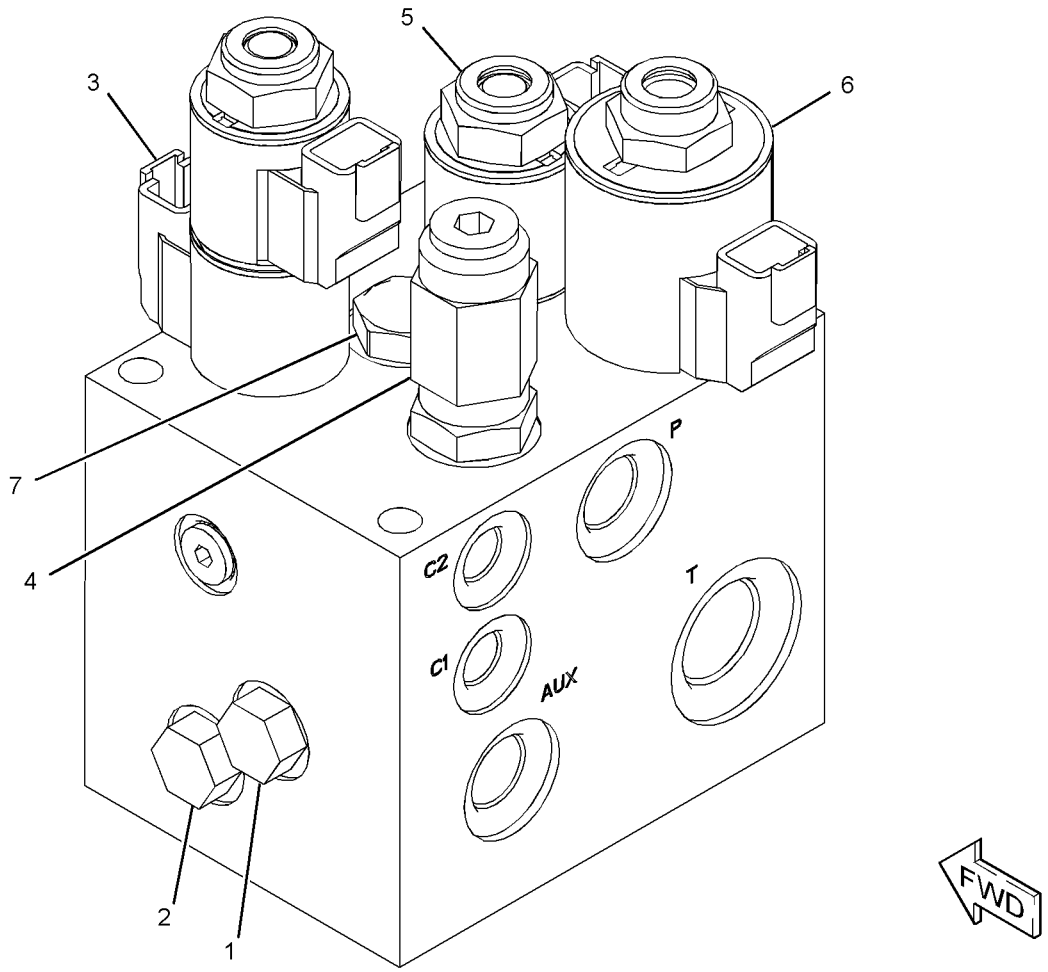

GRAPHIC #1 **<END>** g01151254

258-9011 MANIFOLD GP-CONTROL–ANGLING BLADE

S/N: BXM4225-UP

PART OF 231-5278 MANIFOLD & MTG GP-CONTROL

AN ATTACHMENT

SMCS-5117, 5264, 5479 **i02318509**

NOTE	REF NO	GRAPHIC REF	PART NUMBER	QTY	PART NAME 1 2 3 4 5 6 (PRODUCT LEVEL)	SEE PAGE
M	1	1	**9X-6615**	8	BOLT (M5X0.8X30-MM)	
	2	1	**243-5601**	7	PLUG	
	3	1	**244-1363**	1	VALVE GP-SOLENOID	
	4	1	**244-1364**	1	VALVE GP-SOLENOID	
	5	1	**244-1365**	2	VALVE GP-RELIEF	
	6	1	**266-8903**	4	VALVE GP-CHECK	
	7	1	**180-7451**	8	WASHER-HARD (5.3X8.8X2-MM THK)	

M-METRIC PART

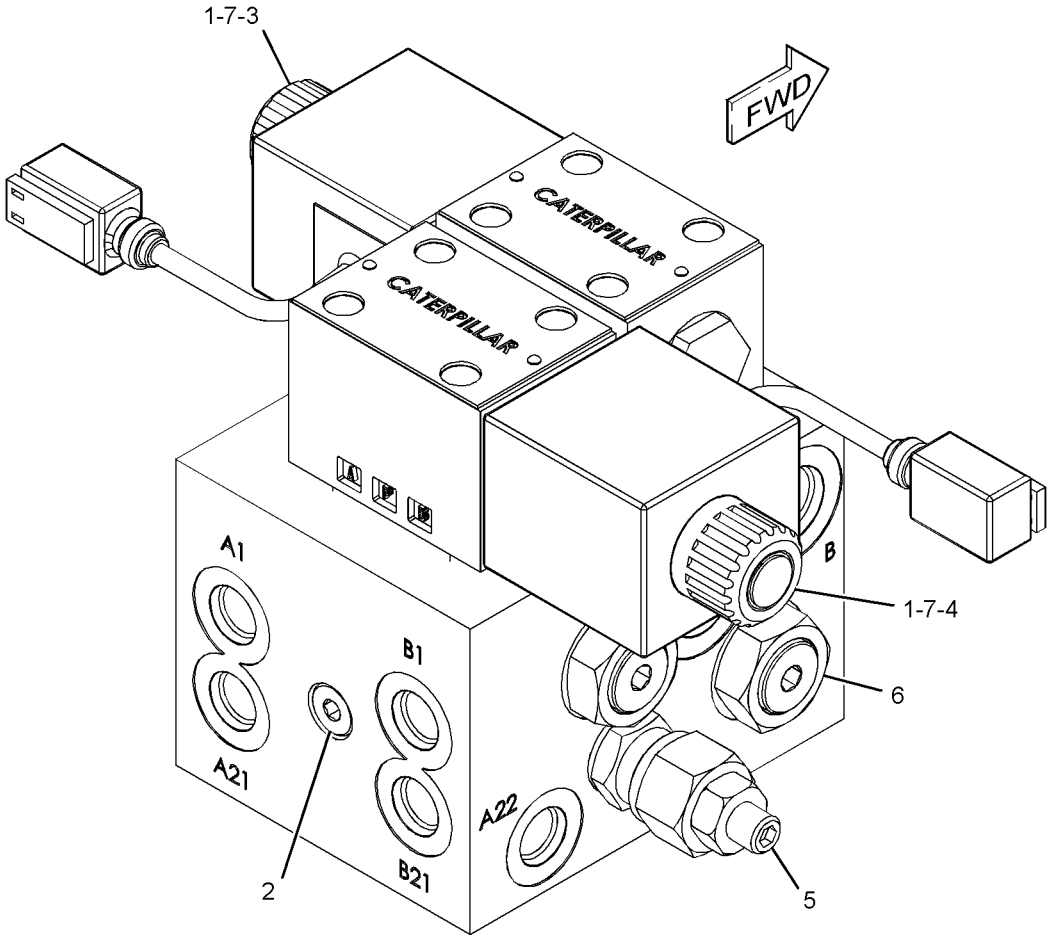

GRAPHIC #1 **<END>** g01178679

218-6058 MOTOR & MTG GP-HYDRAULIC FAN

S/N: BXM4225-4251
PART OF 261-6160 CONVERSION AR-MACHINE
AN ATTACHMENT

SMCS-1386 **i01964111**

NOTE	REF NO	GRAPHIC REF	PART NUMBER	QTY	PART NAME 1 2 3 4 5 6 (PRODUCT LEVEL)	SEE PAGE
Y	1	1	**230-3727**	1	MOTOR GP-GEAR (HYDRAULIC FAN)	352
	2	1	**8T-4121**	2	WASHER-HARD (11X21X2.5-MM THK)	
M	3	1	**8T-4196**	2	BOLT (M10X1.5X35-MM)	
	4	1	**8T-4224**	1	WASHER-HARD (8.8X16X2-MM THK)	
M	5	1	**8T-7547**	1	BOLT (M8X1.25X30-MM)	

M-METRIC PART
Y-SEPARATE ILLUSTRATION

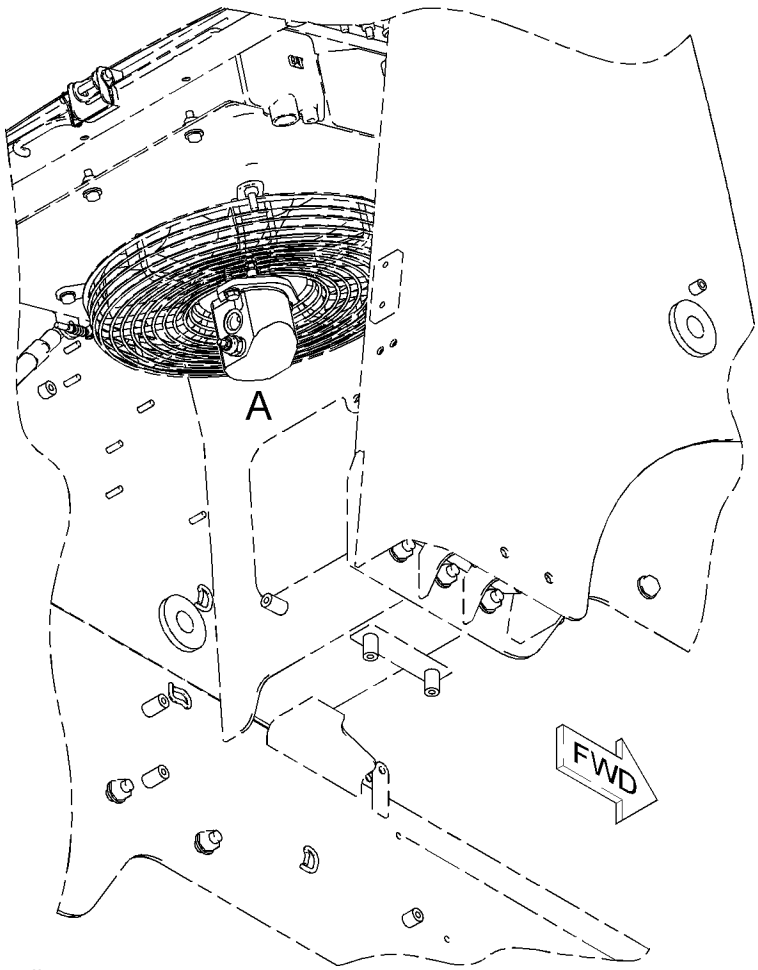

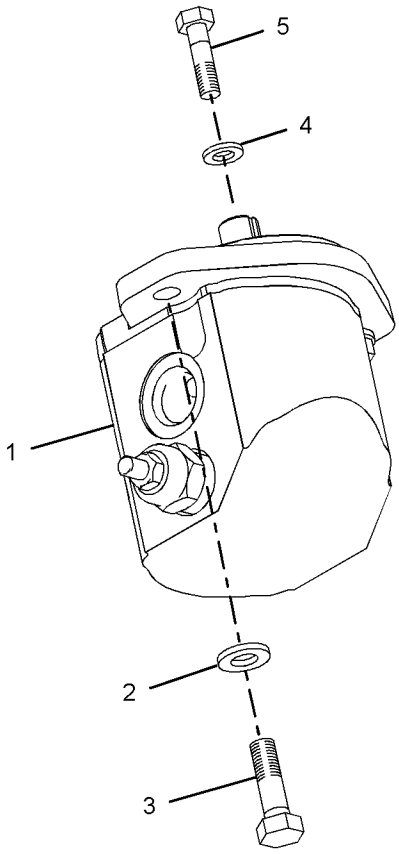

VIEW OF AREA A

GRAPHIC #1 **<END>** g01023064

218-6058 MOTOR & MTG GP-HYDRAULIC FAN

S/N: BXM4252-UP
PART OF 261-6160 CONVERSION AR-MACHINE
AN ATTACHMENT

SMCS-1386 **i02839810**

NOTE	REF NO	GRAPHIC REF	PART NUMBER	QTY	PART NAME 1 2 3 4 5 6 (PRODUCT LEVEL)	SEE PAGE
CY	1	1	**307-3036**	1	MOTOR GP-GEAR (HYDRAULIC FAN)	354
	2	1	**8T-4121**	2	WASHER-HARD (11X21X2.5-MM THK)	
M	3	1	**8T-4196**	2	BOLT (M10X1.5X35-MM)	
	4	1	**8T-4224**	1	WASHER-HARD (8.8X16X2-MM THK)	
M	5	1	**8T-7547**	1	BOLT (M8X1.25X30-MM)	

C-CHANGE FROM PREVIOUS TYPE
M-METRIC PART
Y-SEPARATE ILLUSTRATION

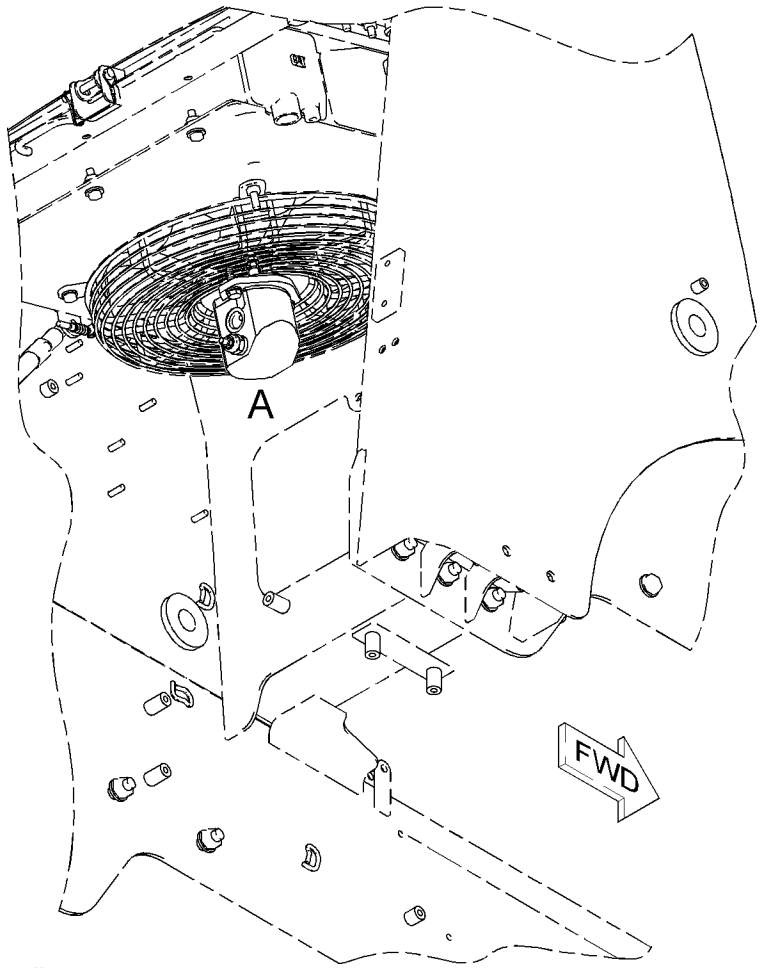

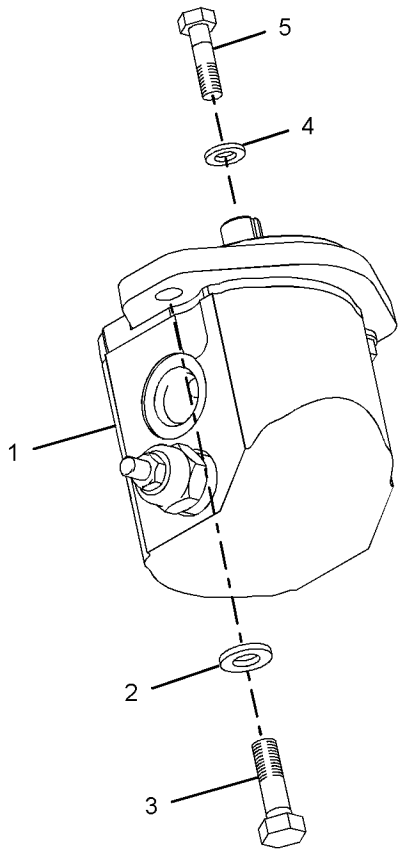

VIEW OF AREA A

GRAPHIC #1 **<END>** g01023064

HYDRAULIC SYSTEM

261-6121 MOTOR & MTG GP-HYDRAULIC FAN

S/N: BXM4225-UP
STAGE II SOUND
PART OF 261-6158, 278-1213, 278-1221, 278-1225, 278-5409, 278-5442, 295-7039, 295-7050, 295-7061, 295-7068, 295-7151, 295-7159, 295-7164, 295-7168 CONVERSION AR-MACHINE, 257-5721, 257-5722, 295-7044 CONVERSION AR-ROADING AN ATTACHMENT

SMCS-1386 **i02758768**

NOTE	REF NO	GRAPHIC REF	PART NUMBER	QTY	PART NAME 1 2 3 4 5 6 (PRODUCT LEVEL)	SEE PAGE
	1	1	**107-5630**	1	WIRE AS	
	2	1	**261-6727**	1	VALVE GP-SOLENOID	
		1	**261-6728**	1	COIL AS	
	3	1	*264-4297*	1	SENSOR GP-TEMPERATURE (HYDRAULIC OIL)	
		1	**137-6645**	1	PAD (CONNECTOR)	
Y	4	1	**307-3038**	1	MOTOR GP-GEAR (HYDRAULIC FAN)	355
	5	1	**8T-4121**	2	WASHER-HARD (11X21X2.5-MM THK)	
M	6	1	**8T-4196**	2	BOLT (M10X1.5X35-MM)	
	7	1	**8T-4224**	1	WASHER-HARD (8.8X16X2-MM THK)	
M	8	1	**8T-7547**	1	BOLT (M8X1.25X30-MM)	

M-METRIC PART
Y-SEPARATE ILLUSTRATION

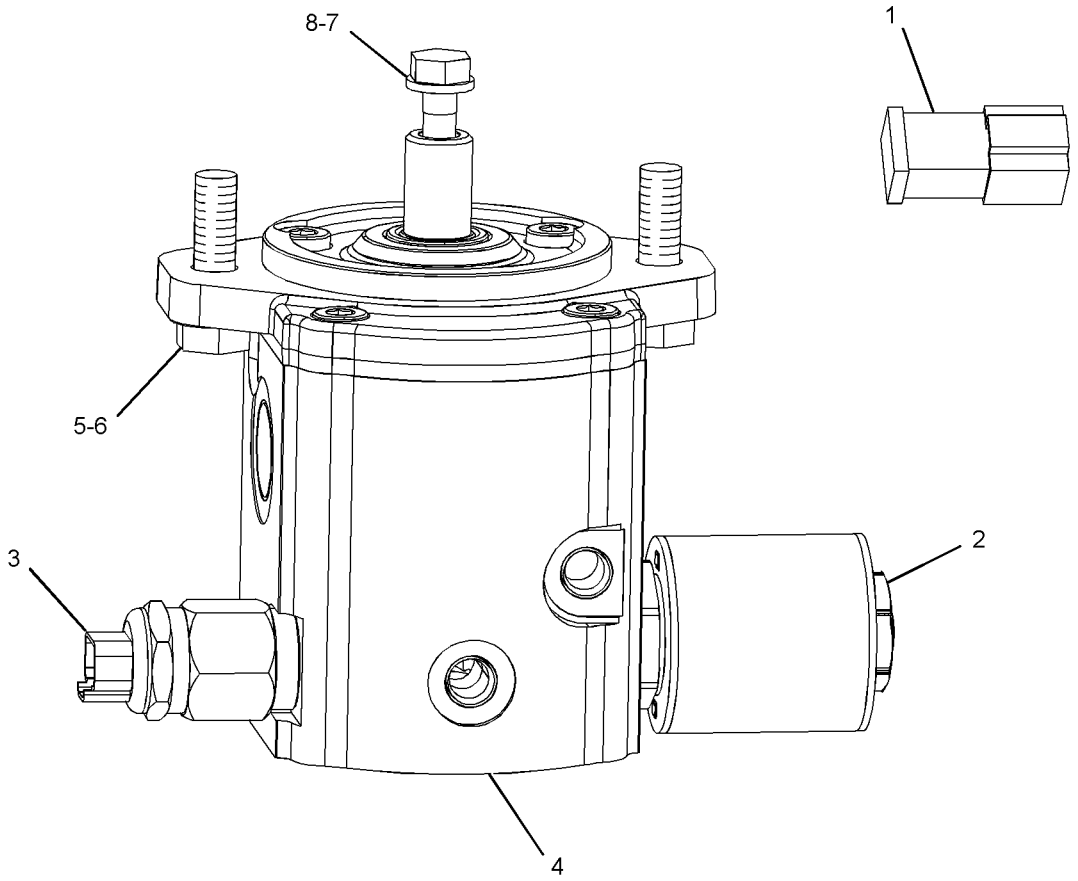

LEFT SIDE VIEW

GRAPHIC #1 **<END>** g01229655

218-6840 MOTOR GP-GEAR–A/C COMPRESSOR

S/N: BXM4225-UP

PART OF 218-6832 COMPRESSOR & MOTOR GP-REFRIG, 233-5588, 233-5589 KIT-AIR COND & HEATER INSTL

AN ATTACHMENT

SMCS-1386, 5061 **i02881089**

NOTE	REF NO	GRAPHIC REF	PART NUMBER	QTY	PART NAME 1 2 3 4 5 6 (PRODUCT LEVEL)	SEE PAGE
	1	1	**230-3726**	1	SEAL-SHAFT	
Y	2	1	**231-6287**	1	VALVE GP-SOLENOID (A/C COMPRESSOR)	387
	3	1	**096-0194**	1	RING-RETAINING	
	4	1	**2M-9780**	1	SEAL-O-RING	
	5	1	**3D-2824**	1	SEAL-O-RING	
	6	1	**9S-8006**	1	PLUG-O-RING	

Y-SEPARATE ILLUSTRATION

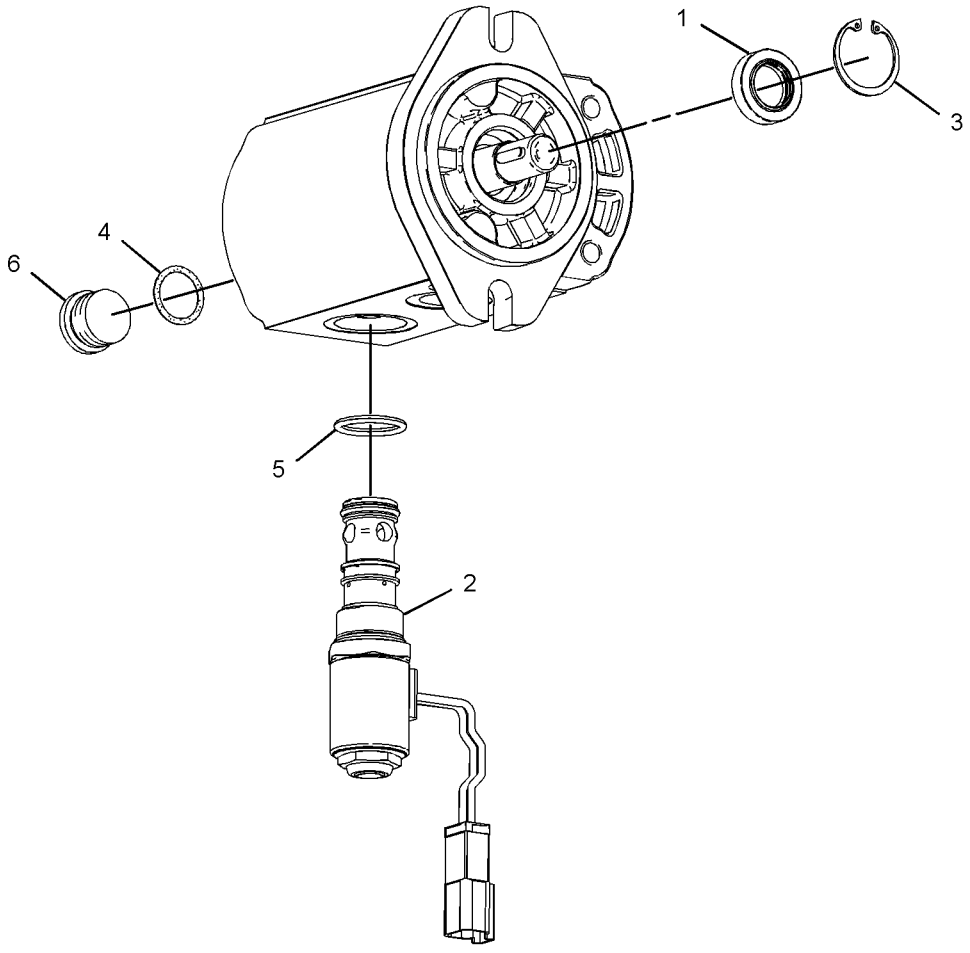

GRAPHIC #1 **<END>** g01437613

230-3727 MOTOR GP-GEAR–HYDRAULIC FAN

S/N: BXM4225-4251

PART OF 218-6058 MOTOR & MTG GP-HYDRAULIC FAN

AN ATTACHMENT

SMCS-1386, 5061 **i02633904**

NOTE	REF NO	GRAPHIC REF	PART NUMBER	QTY	PART NAME 1 2 3 4 5 6 (PRODUCT LEVEL)	SEE PAGE
	1	1	**228-9240**	1	VALVE GP-RELIEF (FAN SPEED)	
		1	**6F-6672**	1	SEAL-O-RING	
		1	**215-3277**	1	SEAL-O-RING	
					AVAILABLE REPAIR KIT(S):	
C			**278-8716**	1	KIT-SEAL (GEAR PUMP)	
					(INCLUDES SEALS, SNAP RING, SEAL BACK-UPS & AXIAL SEAL KIT)	

C-CHANGE FROM PREVIOUS TYPE

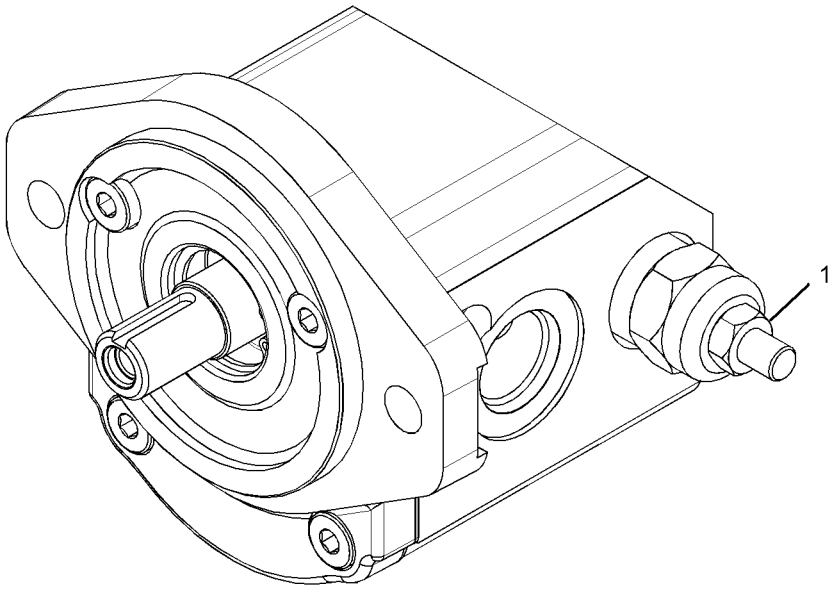

GRAPHIC #1 **<END>** g01320775

289-6360 MOTOR GP-GEAR

S/N: BXM4225-UP

PART OF 233-5588, 233-5589 KIT-AIR COND & HEATER INSTL, 307-6115 MOTOR GP-GEAR AN ATTACHMENT

SMCS-1386, 5061 **i02876777**

NOTE	REF NO	GRAPHIC REF	PART NUMBER	QTY	PART NAME 1 2 3 4 5 6 (PRODUCT LEVEL)	SEE PAGE
M	1	1	**086-2369**	4	BOLT-SOCKET HEAD (M10X1.5X130-MM)	
	2	1	**8T-5095**	4	WASHER-PLATED (11X16X2-MM THK)	
	3	1	**2M-9780**	1	SEAL-O-RING	
	4	1	**9S-8006**	1	PLUG-O-RING	
					PARTS SHOWN IN GRAPHIC(S) WITHOUT A REFERENCE NUMBER ARE NOT SERVICED SEPARATELY	
					AVAILABLE GASKET KIT(S):	
			278-8716	1	KIT-SEAL	
					(INCLUDES O-RING, E-SEAL, SHAFT SEAL, SNAP RING, & SEAL BACK-UPS)	

M-METRIC PART

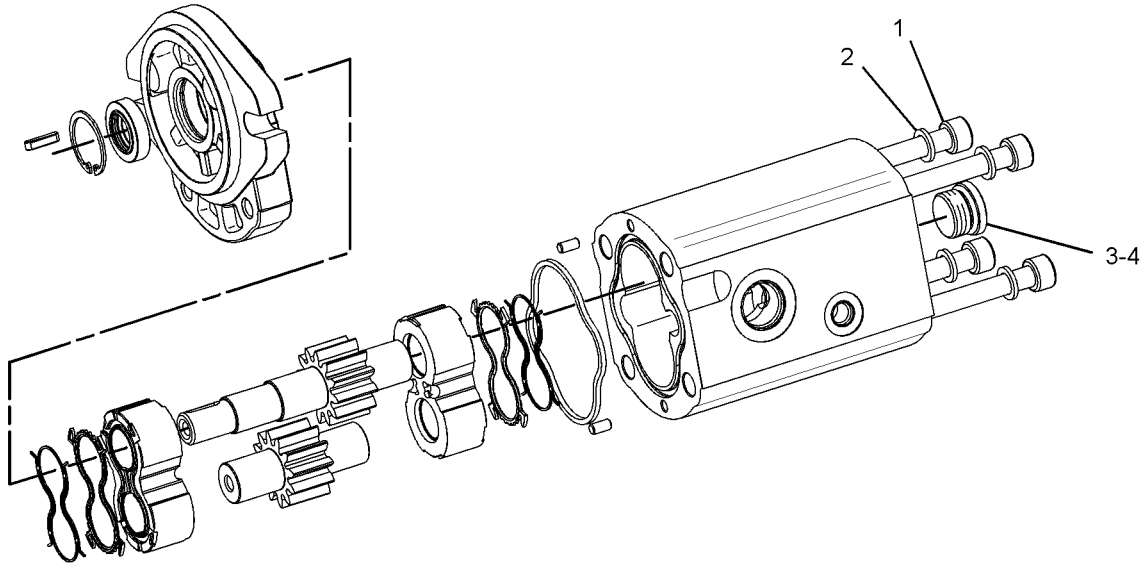

GRAPHIC #1 **<END>** g01434677

307-3036 MOTOR GP-GEAR

S/N: BXM4252-UP

PART OF 218-6058 MOTOR & MTG GP-HYDRAULIC FAN

AN ATTACHMENT

SMCS-1386, 5061 **i02839812**

NOTE	REF NO	GRAPHIC REF	PART NUMBER	QTY	PART NAME 1 2 3 4 5 6 (PRODUCT LEVEL)	SEE PAGE
	1	1	**228-9240**	1	VALVE GP-RELIEF	
		1	**6F-6672**	1	SEAL-O-RING	
		1	**215-3277**	1	SEAL-O-RING	
M	2	1	**9T-4884**	2	BOLT (M10X1.5X30-MM)	
					AVAILABLE REPAIR KIT(S):	
			278-8716	1	KIT-SEAL	
					(INCLUDES SEALS, SNAP RING, AND AXIAL SEAL KIT)	

M-METRIC PART

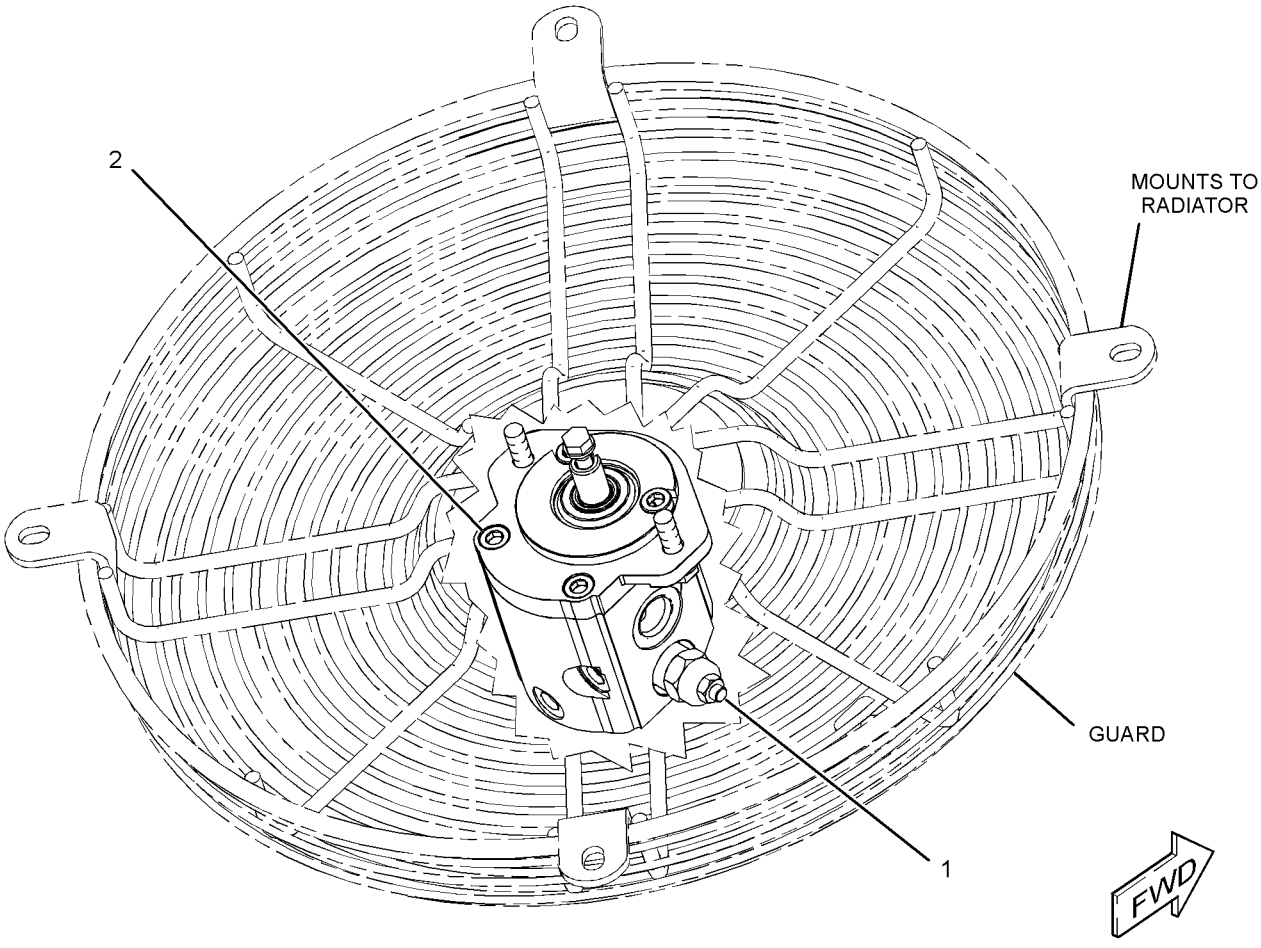

GRAPHIC #1 **<END>** g01417312

HYDRAULIC SYSTEM

307-3038 MOTOR GP-GEAR

S/N: BXM4225-UP

PART OF 261-6121 MOTOR & MTG GP-HYDRAULIC FAN

AN ATTACHMENT

SMCS-1386, 5061 **i02758769**

NOTE	REF NO	GRAPHIC REF	PART NUMBER	QTY	PART NAME 1 2 3 4 5 6 (PRODUCT LEVEL)	SEE PAGE
	1	1	**4D-2297**	1	SEAL-O-RING	
	2	1	**6V-5049**	1	SEAL-O-RING	
	3	1	**230-3686**	1	SEAL-LIP TYPE	
	4	1	**096-0194**	1	RING-RETAINING	
	5	1	**278-8713**	1	SENSOR-SPEED (FAN MOTOR)	
	6	1	**278-8717**	1	SEAL-SHAFT	
M	7	1	**9T-4884**	2	BOLT (M10X1.5X30-MM)	
					AVAILABLE REPAIR KIT(S):	
			278-8716	1	KIT-SEAL	
					(INCLUDES SEALS & RINGS)	

M-METRIC PART

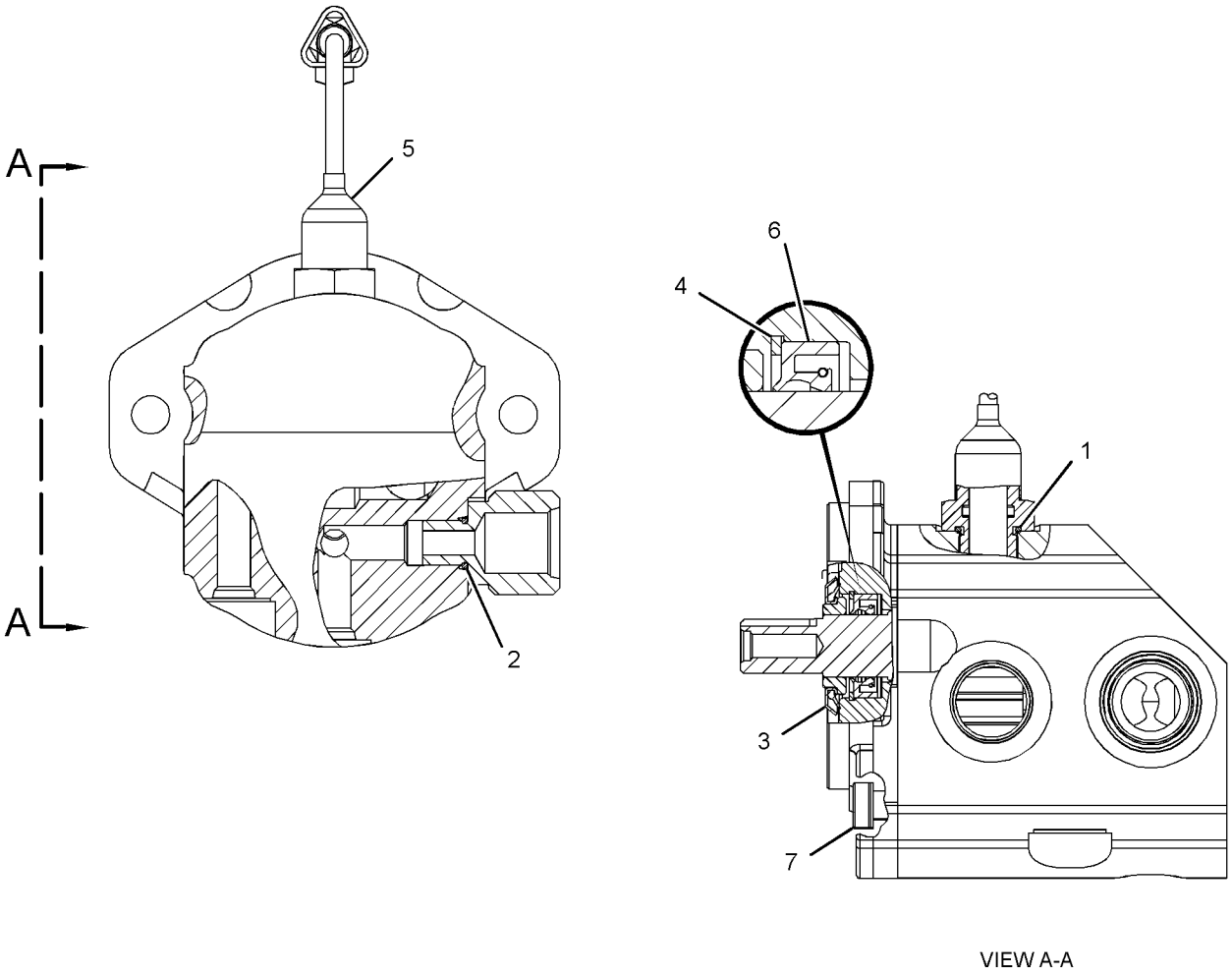

VIEW A-A

GRAPHIC #1 **<END>** g01381787

HYDRAULIC SYSTEM

307-6115 MOTOR GP-GEAR

S/N: BXM4225-UP

PART OF 218-6832 COMPRESSOR & MOTOR GP-REFRIG

AN ATTACHMENT

SMCS-1386, 5061 **i02877059**

NOTE	REF NO	GRAPHIC REF	PART NUMBER	QTY	PART NAME 1 2 3 4 5 6 (PRODUCT LEVEL)	SEE PAGE
	1	1	**283-9566**	1	VALVE GP-SOLENOID (12 VDC)	
Y	2	1	**289-6360**	1	MOTOR GP-GEAR	353

Y-SEPARATE ILLUSTRATION

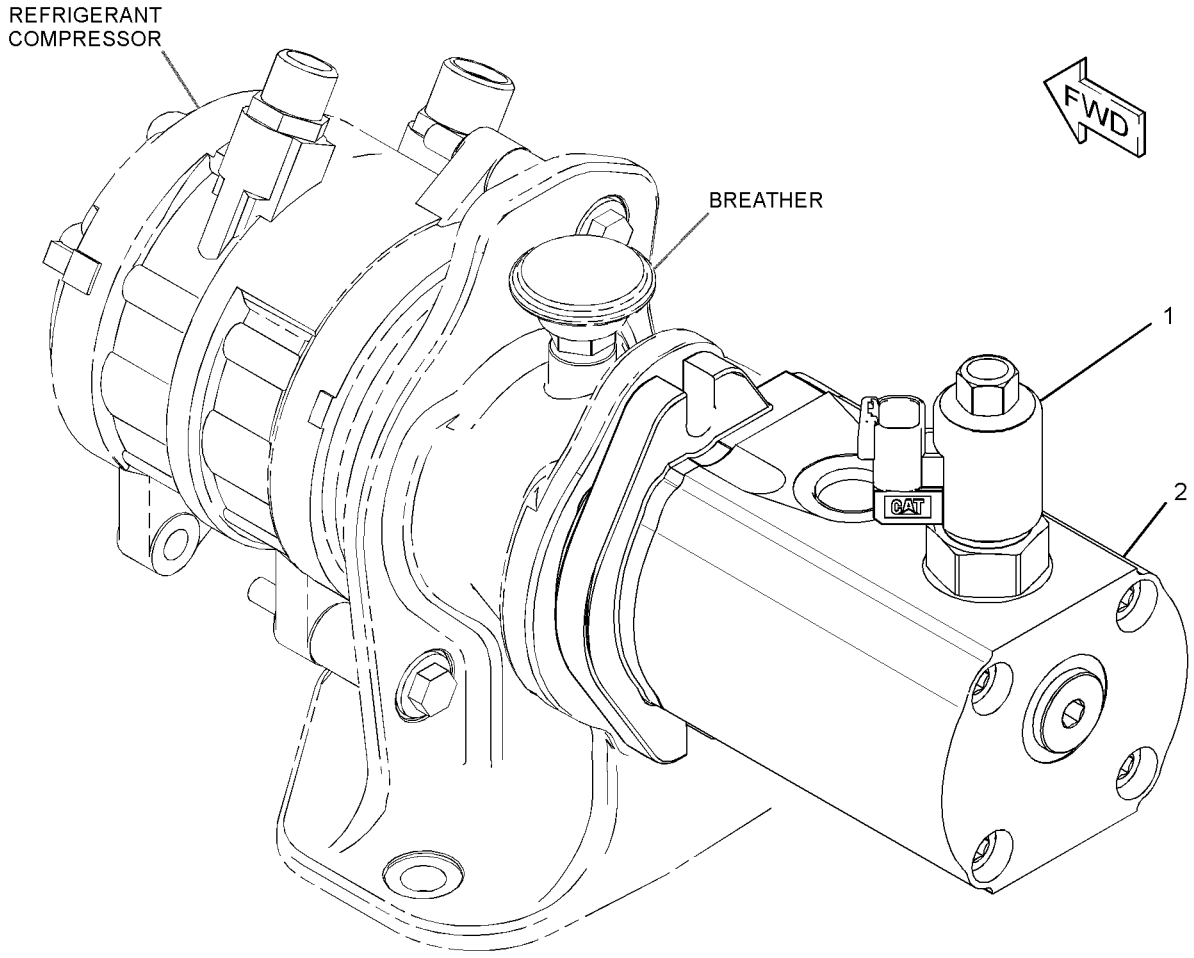

GRAPHIC #1 **<END>** g01432998

HYDRAULIC SYSTEM

154-5011 MOUNTING GP-CYLINDER

S/N: BXM4225-UP

PART OF 279-5382, 279-5390, 279-5398, 279-5403 BUCKET AR-MULTIPURPOSE AN ATTACHMENT

SMCS-5498 **i01066088**

NOTE	REF NO	GRAPHIC REF	PART NUMBER	QTY	PART NAME 1 2 3 4 5 6 (PRODUCT LEVEL)	SEE PAGE
	1	1	**154-5012**	2	PIN	
	2	1	**154-5013**	2	PIN	
	3	1	**3B-8489**	2	FITTING-GREASE	
M	4	1	**6V-9189**	4	LOCKNUT (M8X1.25-THD)	
M	5	1	**8T-6869**	4	BOLT (M8X1.25X60-MM)	

M-METRIC PART

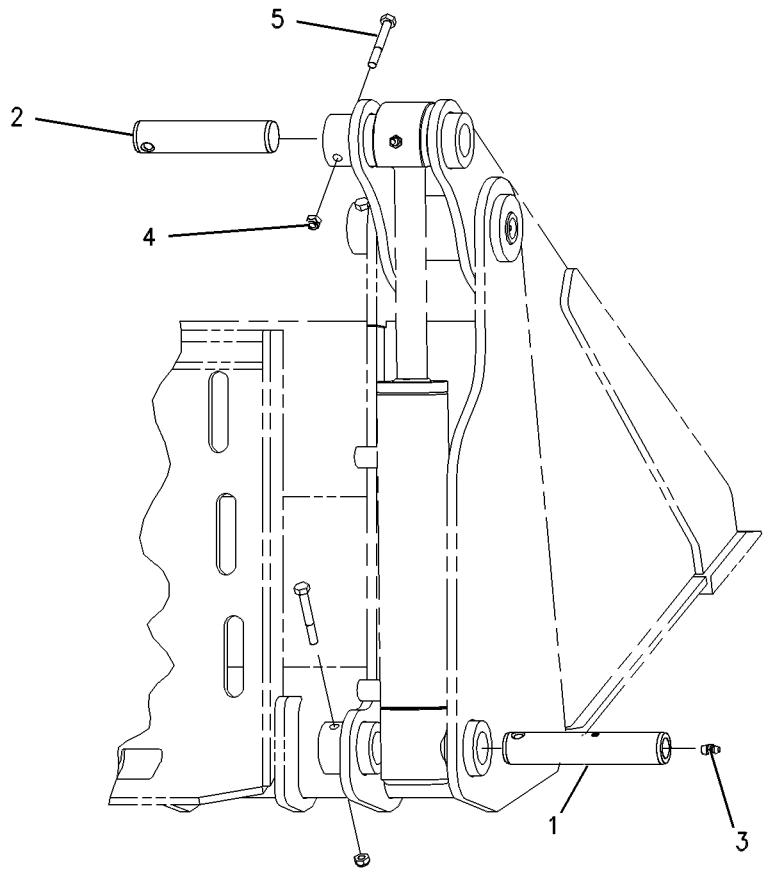

GRAPHIC #1 **<END>** g00560356

HYDRAULIC SYSTEM

156-0891 MOUNTING GP-CYLINDER

S/N: BXM4225-UP

PART OF 157-7223, 157-7224, 157-7225 BUCKET AR-GRAPPLE, 279-5350, 279-5360 FORK AR-GRAPPLE AN ATTACHMENT

SMCS-5498 **i02578037**

NOTE	REF NO	GRAPHIC REF	PART NUMBER	QTY	PART NAME 1 2 3 4 5 6 (PRODUCT LEVEL)	SEE PAGE
	1	1	**255-8058**	2	PLATE	
	2	1	**156-0913**	1	PLATE	
	3	1	**157-0941**	2	PIN	
	4	1	**157-0942**	2	PIN	
	5	1	**159-8035**	2	FILM-WARNING (CRUSH HAZARD, STAY BACK)	
	6	1	**3B-8489**	2	FITTING-GREASE	
	7	1	**4M-5285**	4	RING-RETAINING (EXTERNAL)	
M	8	1	**6V-9189**	2	LOCKNUT (M8X1.25-THD)	
M	9	1	**8T-4138**	3	BOLT (M6X1X20-MM)	
M	10	1	**8T-6869**	2	BOLT (M8X1.25X60-MM)	
	11	1	**9X-2026**	3	WASHER (6.5X17X1-MM THK)	
	12	1	**9X-6274**	4	WASHER (32.5X50X1.6-MM THK)	

M-METRIC PART

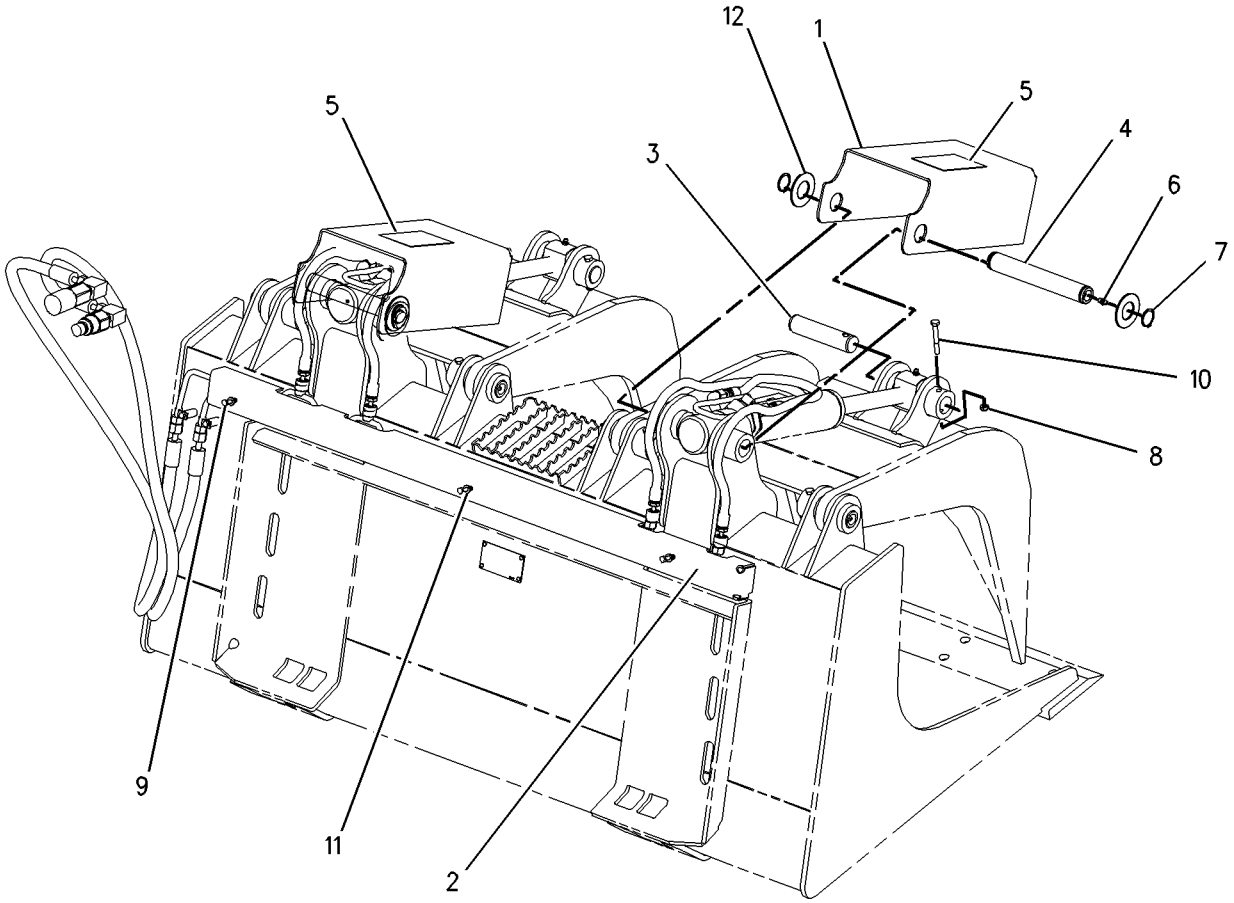

GRAPHIC #1 **<END>** g00777681

HYDRAULIC SYSTEM

165-8731 MOUNTING GP-CYLINDER

S/N: BXM4225-UP

PART OF 285-6116 GRAPPLE GP-UTILITY

AN ATTACHMENT

SMCS-5498 **i02017132**

NOTE	REF NO	GRAPHIC REF	PART NUMBER	QTY	PART NAME 1 2 3 4 5 6 (PRODUCT LEVEL)	SEE PAGE
	1	1	**154-5013**	2	PIN	
M	2	1	**6V-9189**	2	LOCKNUT (M8X1.25-THD)	
M	3	1	**8T-6869**	2	BOLT (M8X1.25X60-MM)	

M-METRIC PART

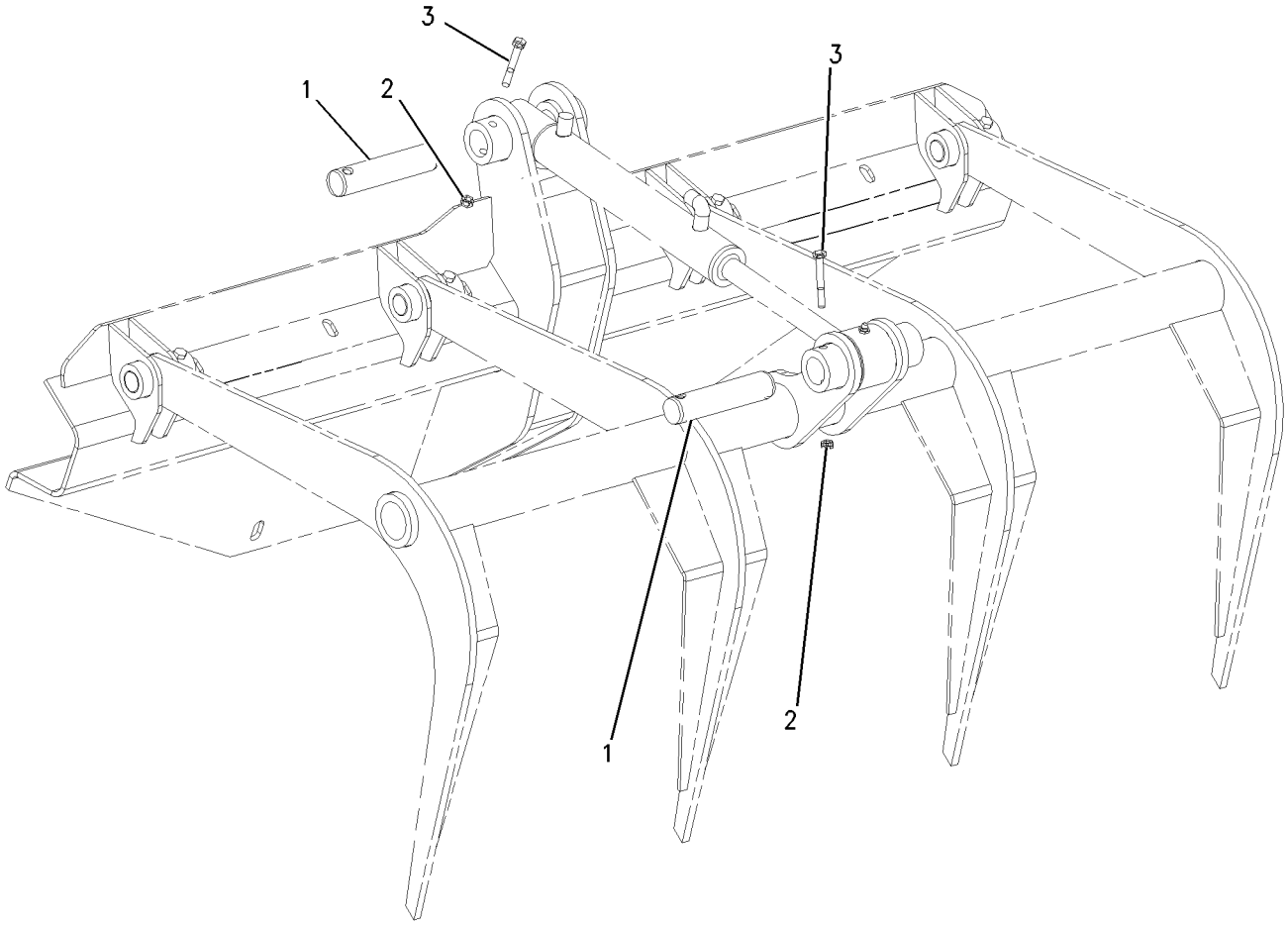

GRAPHIC #1 **<END>** g00652937

HYDRAULIC SYSTEM

142-8714 PLUG GP-PILOT VALVE

S/N: BXM4225-UP
CANNOT BE USED WITH 225-7969—PAGE 166
AN ATTACHMENT

SMCS-5059 **i01788841**

NOTE	REF NO	GRAPHIC REF	PART NUMBER	QTY	PART NAME 1 2 3 4 5 6 (PRODUCT LEVEL)	SEE PAGE
	1	1	*148-8407*	1	PLUG AS	
		1	**3J-1907**	1	SEAL-O-RING	
		1	**9S-4191**	1	PLUG-O-RING	

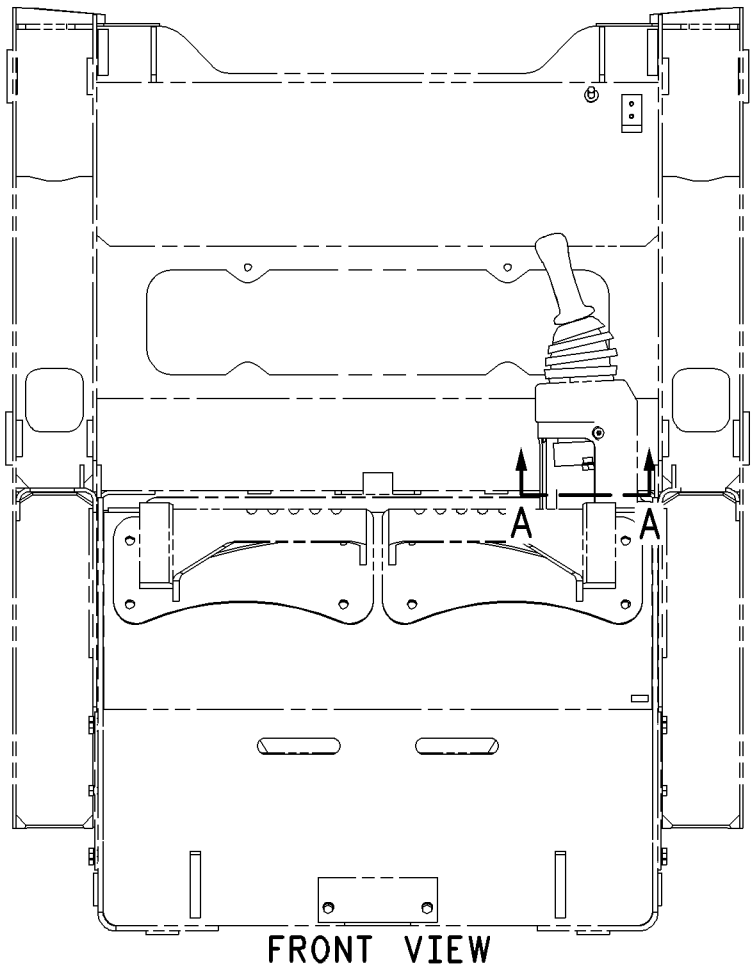

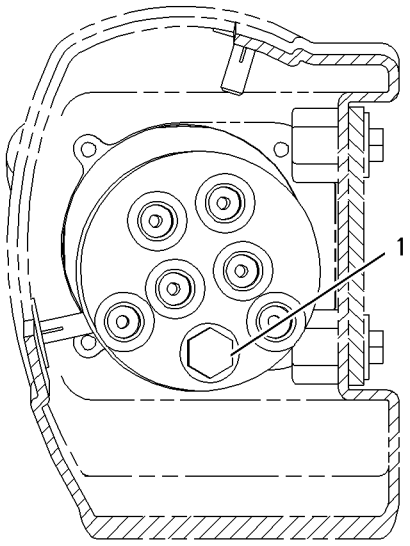

GRAPHIC #1 **<END>** g00915486

218-6079 PUMP & MTG GP-WORK TOOL

S/N: BXM4225-UP
PART OF 218-6762, 295-7505 HYDRAULIC AR
AN ATTACHMENT

SMCS-6700 **i02014441**

NOTE	REF NO	GRAPHIC REF	PART NUMBER	QTY	PART NAME 1 2 3 4 5 6 (PRODUCT LEVEL)	SEE PAGE
Y	1	1	**225-9238**	1	PUMP GP-GEAR (WORK TOOL, HIGH FLOW)	365
	2	1	**8T-4223**	2	WASHER-HARD (13.5X25.5X3-MM THK)	
M	3	1	**8T-4956**	2	BOLT (M12X1.75X35-MM)	
	4	1	**8T-5049**	1	SEAL-O-RING	

M-METRIC PART
Y-SEPARATE ILLUSTRATION

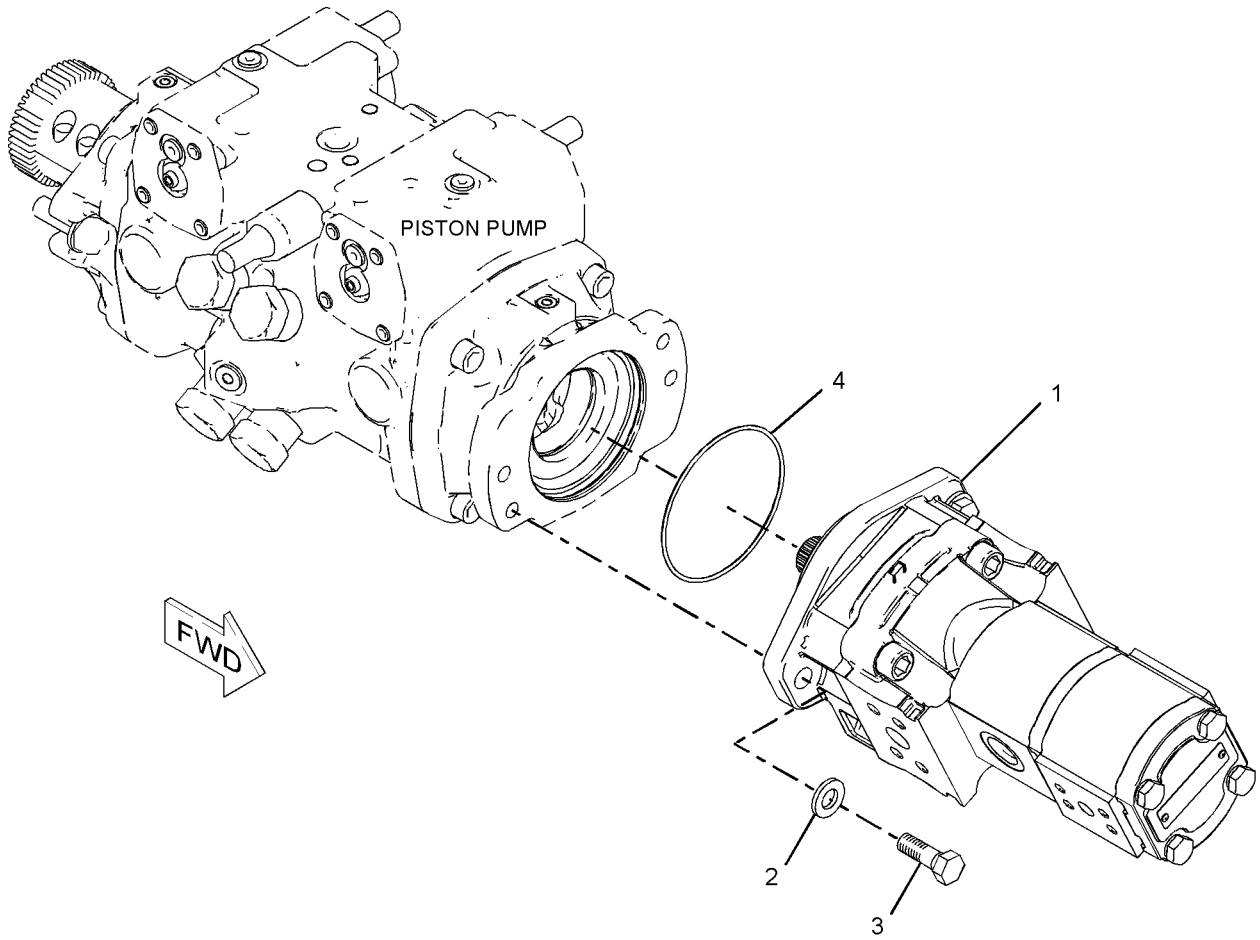

GRAPHIC #1 **<END>** g01017958

HYDRAULIC SYSTEM

218-6175 PUMP & MTG GP-WORK TOOL

S/N: BXM4225-UP
PART OF 218-6760 HYDRAULIC AR
AN ATTACHMENT

SMCS-6700 **i02478211**

NOTE	REF NO	GRAPHIC REF	PART NUMBER	QTY	PART NAME 1 2 3 4 5 6 (PRODUCT LEVEL)	SEE PAGE
CY	1	1	**269-9427**	1	PUMP GP-GEAR (WORK TOOL)	366
	2	1	**8T-4223**	2	WASHER-HARD (13.5X25.5X3-MM THK)	
M	3	1	**8T-4956**	2	BOLT (M12X1.75X35-MM)	
	4	1	**8T-5049**	1	SEAL-O-RING	

C-CHANGE FROM PREVIOUS TYPE
M-METRIC PART
Y-SEPARATE ILLUSTRATION

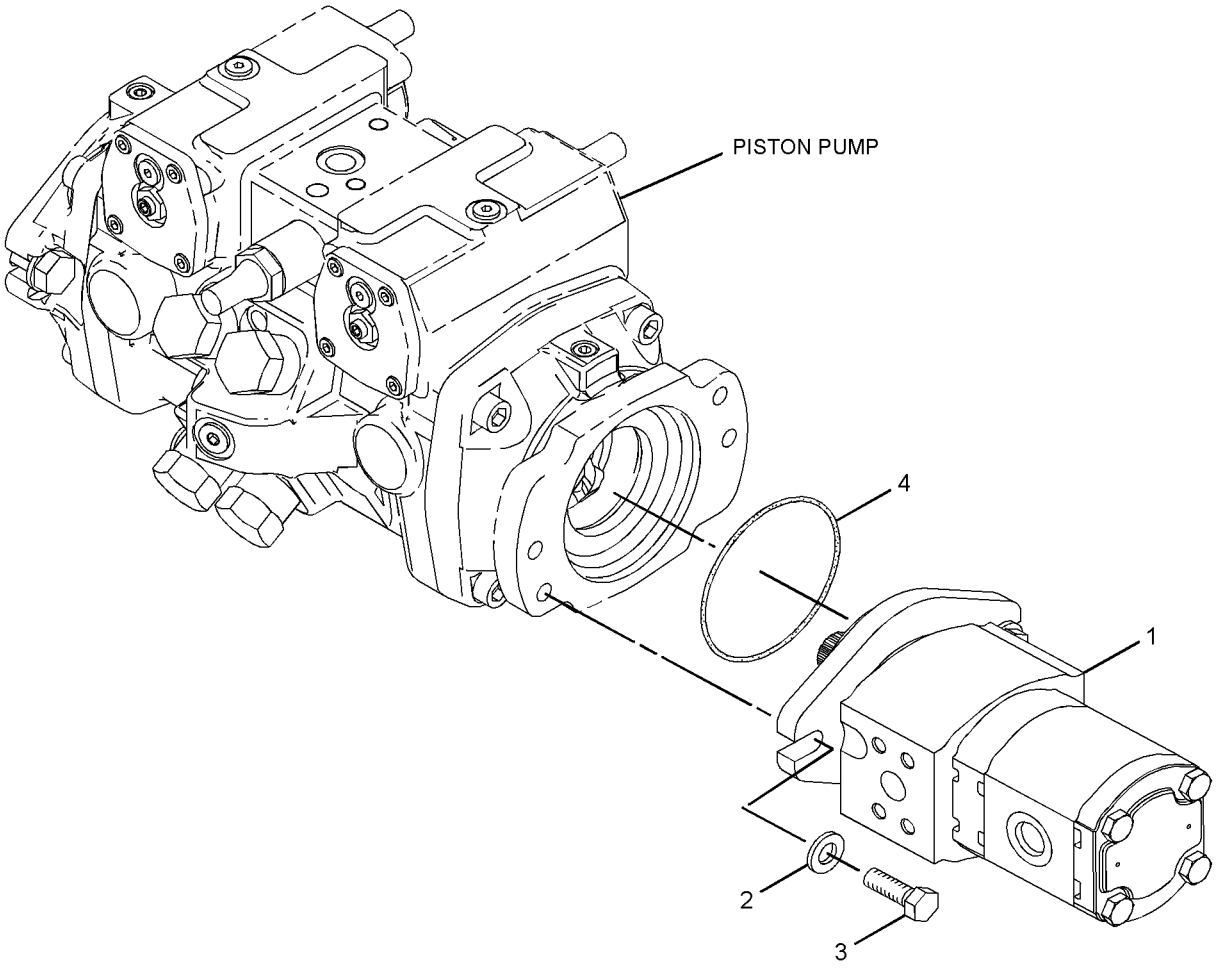

GRAPHIC #1 **<END>** g01293808

261-6094 PUMP & MTG GP-WORK TOOL

S/N: BXM4225-UP
STAGE II SOUND
PART OF 261-6142 HYDRAULIC AR
AN ATTACHMENT

SMCS-6700 **i02431671**

NOTE	REF NO	GRAPHIC REF	PART NUMBER	QTY	PART NAME 1 2 3 4 5 6 (PRODUCT LEVEL)	SEE PAGE
	1	1	**269-9462**	1	PUMP GP-GEAR	
		1	**8C-3110**	1	RING-RETAINING	
		1	**230-3757**	2	SEAL-SHAFT	
	2	1	**8T-4223**	2	WASHER-HARD (13.5X25.5X3-MM THK)	
M	3	1	**8T-4956**	2	BOLT (M12X1.75X35-MM)	
	4	1	**8T-5049**	1	SEAL-O-RING	

M-METRIC PART

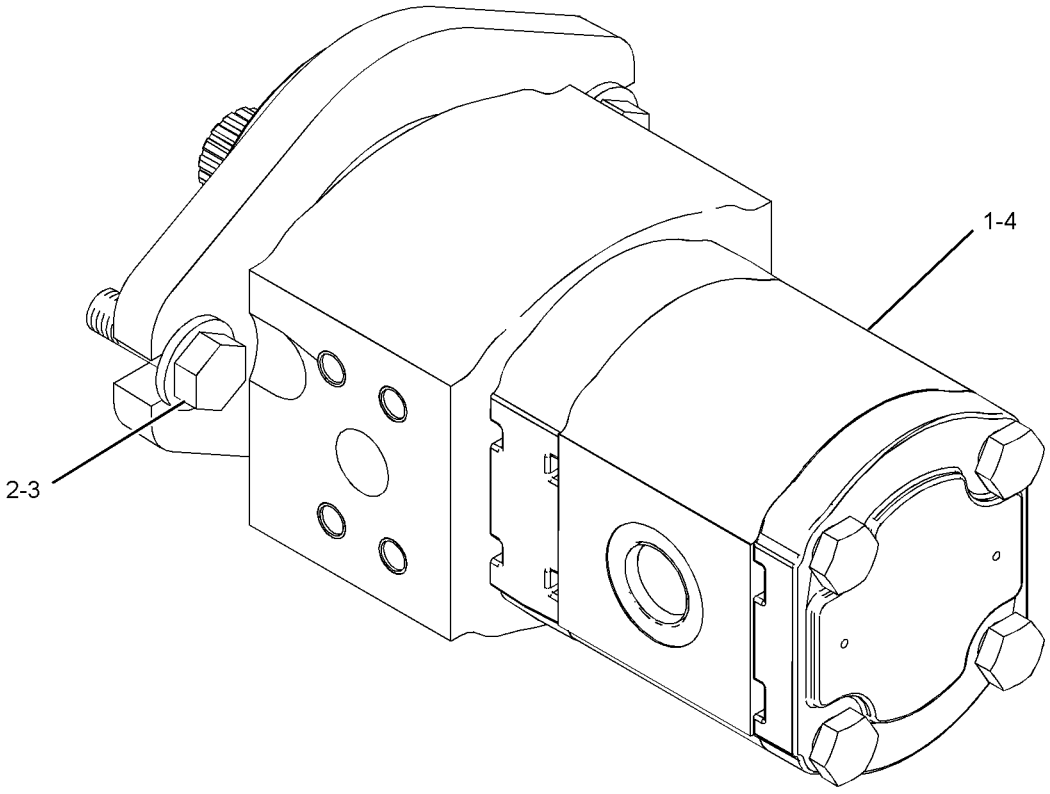

GRAPHIC #1 **<END>** g01229588

261-6095 PUMP & MTG GP-WORK TOOL

S/N: BXM4225-UP

PART OF 261-6149, 295-7508 HYDRAULIC AR

AN ATTACHMENT

SMCS-6700 **i02453730**

NOTE	REF NO	GRAPHIC REF	PART NUMBER	QTY	PART NAME 1 2 3 4 5 6 (PRODUCT LEVEL)	SEE PAGE
	1	1	**269-9465**	1	PUMP GP-GEAR	
		1	**8C-3110**	1	RING-RETAINING	
		1	**230-3757**	2	SEAL-SHAFT	
	2	1	**8T-4223**	2	WASHER-HARD (13.5X25.5X3-MM THK)	
M	3	1	**8T-4956**	2	BOLT (M12X1.75X35-MM)	
	4	1	**8T-5049**	1	SEAL-O-RING	

M-METRIC PART

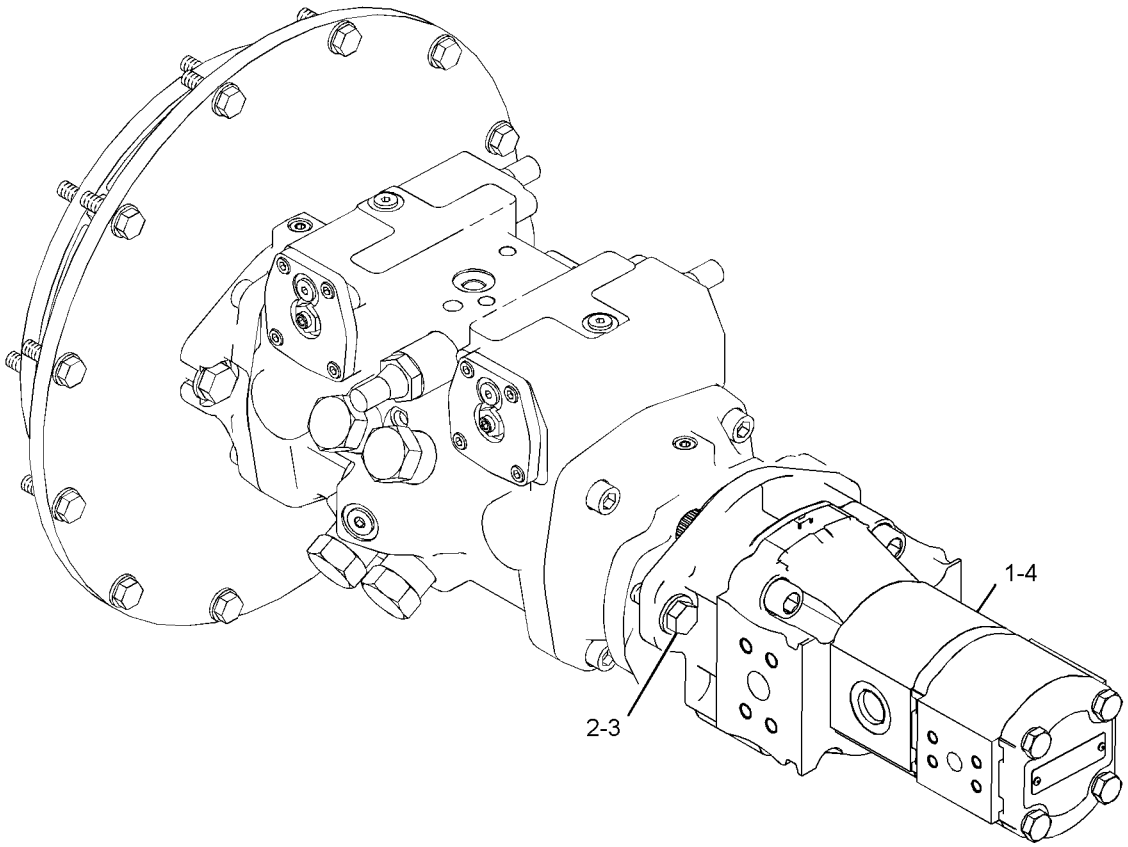

GRAPHIC #1 **<END>** g01229699

225-9238 PUMP GP-GEAR–WORK TOOL

S/N: BXM4225-UP
HIGH FLOW
PART OF 218-6738 KIT-HIGH FLOW CONVERSION, 218-6079 PUMP & MTG GP-WORK TOOL
AN ATTACHMENT

SMCS-5073 **i01964579**

NOTE	REF NO	GRAPHIC REF	PART NUMBER	QTY	PART NAME 1 2 3 4 5 6 (PRODUCT LEVEL)	SEE PAGE
	1	1	**230-3757**	2	SEAL-SHAFT	
	2	1	**8C-3110**	1	RING-RETAINING	

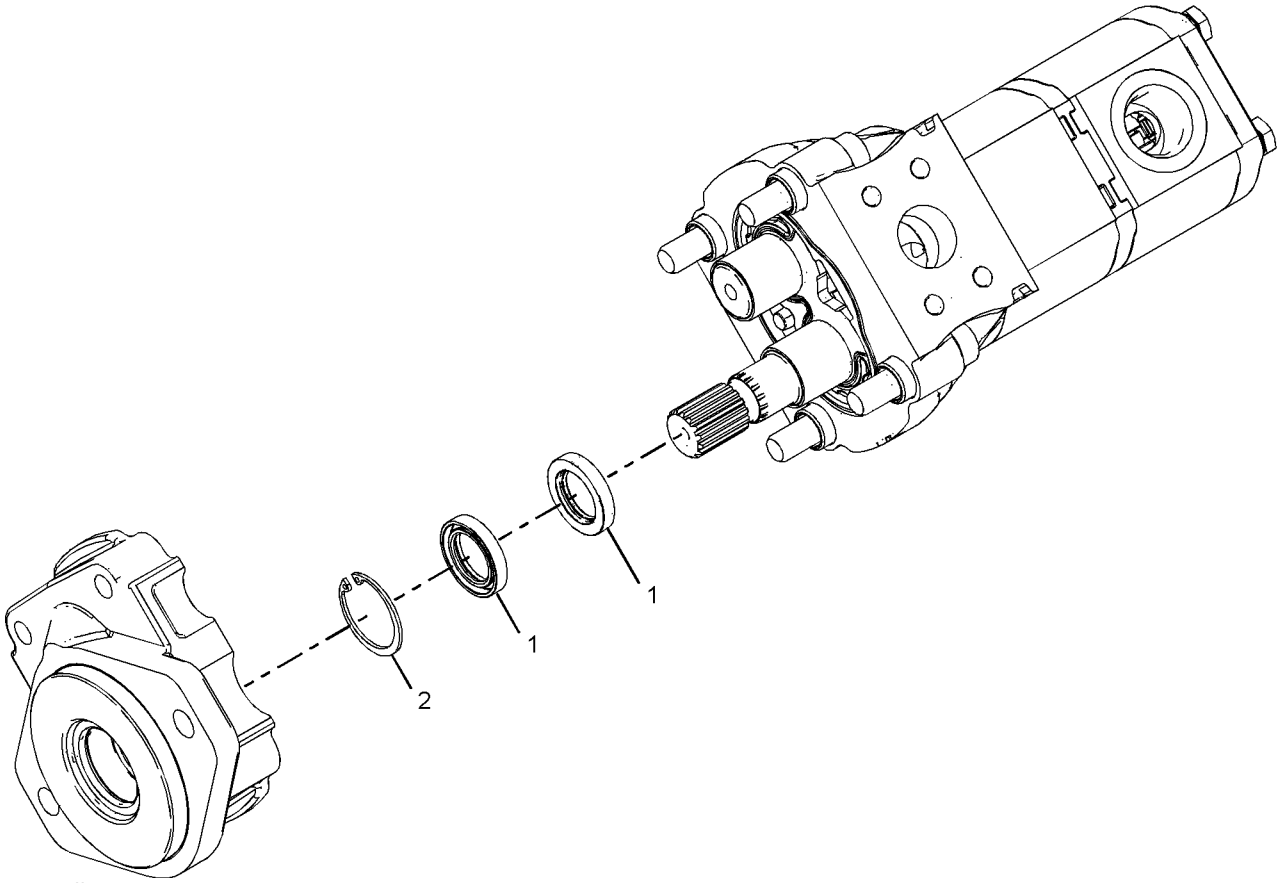

GRAPHIC #1 **<END>** g01023802

HYDRAULIC SYSTEM

269-9427 PUMP GP-GEAR

S/N: BXM4225-UP
PART OF 218-6175 PUMP & MTG GP-WORK TOOL
AN ATTACHMENT

SMCS-5073 **i02536697**

NOTE	REF NO	GRAPHIC REF	PART NUMBER	QTY	PART NAME 1 2 3 4 5 6 (PRODUCT LEVEL)	SEE PAGE
	1	1	**271-8674**	1	COUPLER	
	2	1	**8T-5095**	4	WASHER-PLATED (11X16X2-MM THK)	
	3	1	**289-6352**	4	BOLT (M10X1.5X195-MM)	
J	4	1	**096-0194**	1	RING-RETAINING	
J	5	1	**271-8661**	1	SEAL-SHAFT	
J	6	1	**230-3726**	1	SEAL-SHAFT	
					AVAILABLE REPAIR KIT(S):	
J			**289-6356**	4	KIT-SEAL	

J-KIT MARKED J SERVICES PARTS MARKED J

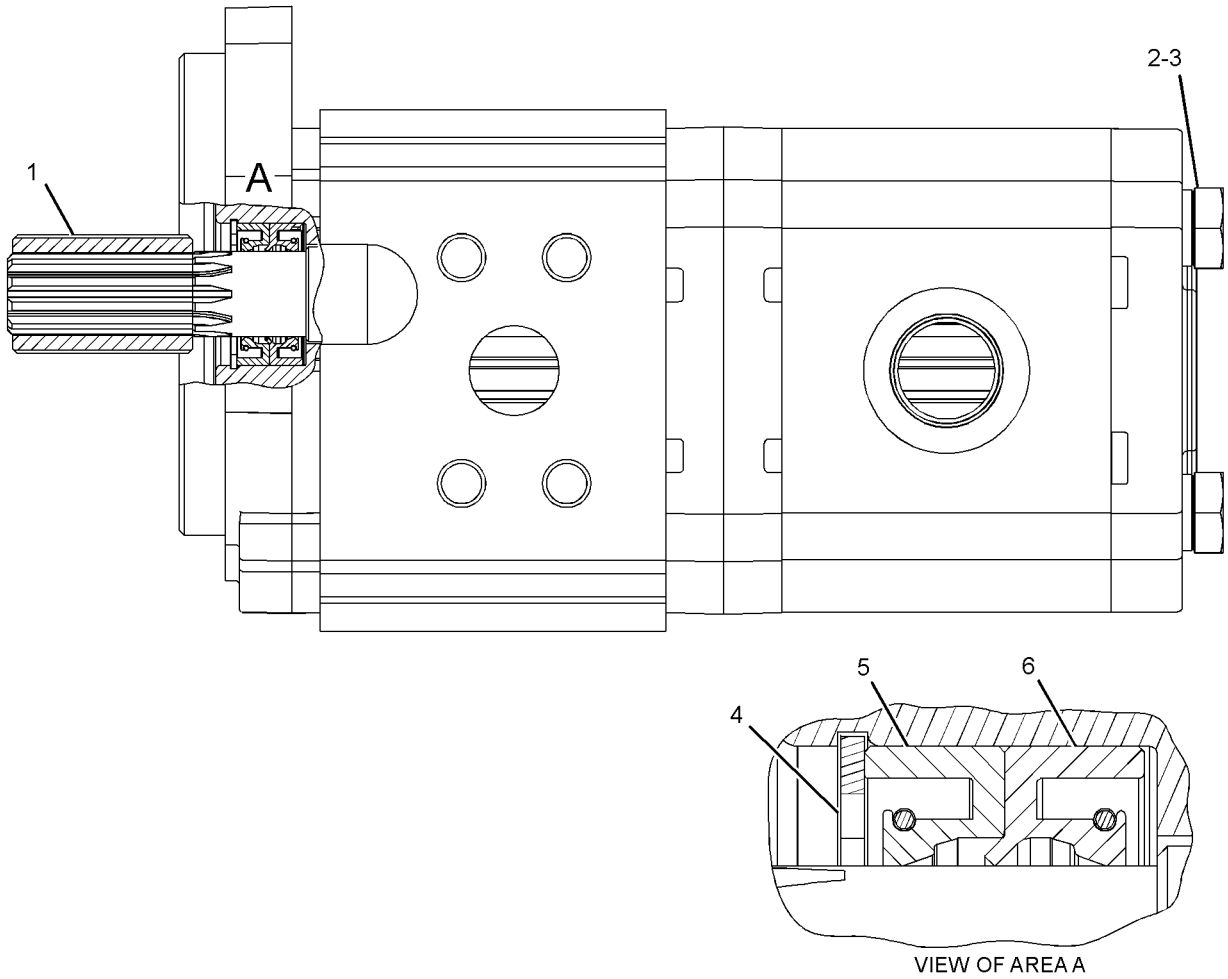

GRAPHIC #1 **<END>** g01342407

HYDRAULIC SYSTEM

233-5980 TANK & MTG GP-HYDRAULIC

S/N: BXM4225-UP

PART OF 278-1243 HYDRAULIC AR

SMCS-5056 **i02890213**

NOTE	REF NO	GRAPHIC REF	PART NUMBER	QTY	PART NAME 1 2 3 4 5 6 (PRODUCT LEVEL)	SEE PAGE
	1	1	**5P-4961**	2	CLAMP-HOSE	
	2	1	**154-4014**	1	BRACKET	
Y	3	1	**204-1491**	1	TANK GP-HYDRAULIC	368
	4	1	**207-9729**	1	BREATHER AS (INLINE) (HYDRAULIC OIL)	
B	5	1	**233-5997**	1	HOSE	
	6	1	**6D-4246**	1	CLIP	
	7	1	**8T-4121**	1	WASHER-HARD (11X21X2.5-MM THK)	
M	8	1	**8T-4136**	1	BOLT (M10X1.5X25-MM)	
M	9	1	**8T-4189**	2	BOLT (M8X1.25X20-MM)	
E	10	1	**5P-1442**		HOSE (65-CM)	

B-USE AS REQUIRED
E-ORDER BY THE CENTIMETER
M-METRIC PART
Y-SEPARATE ILLUSTRATION

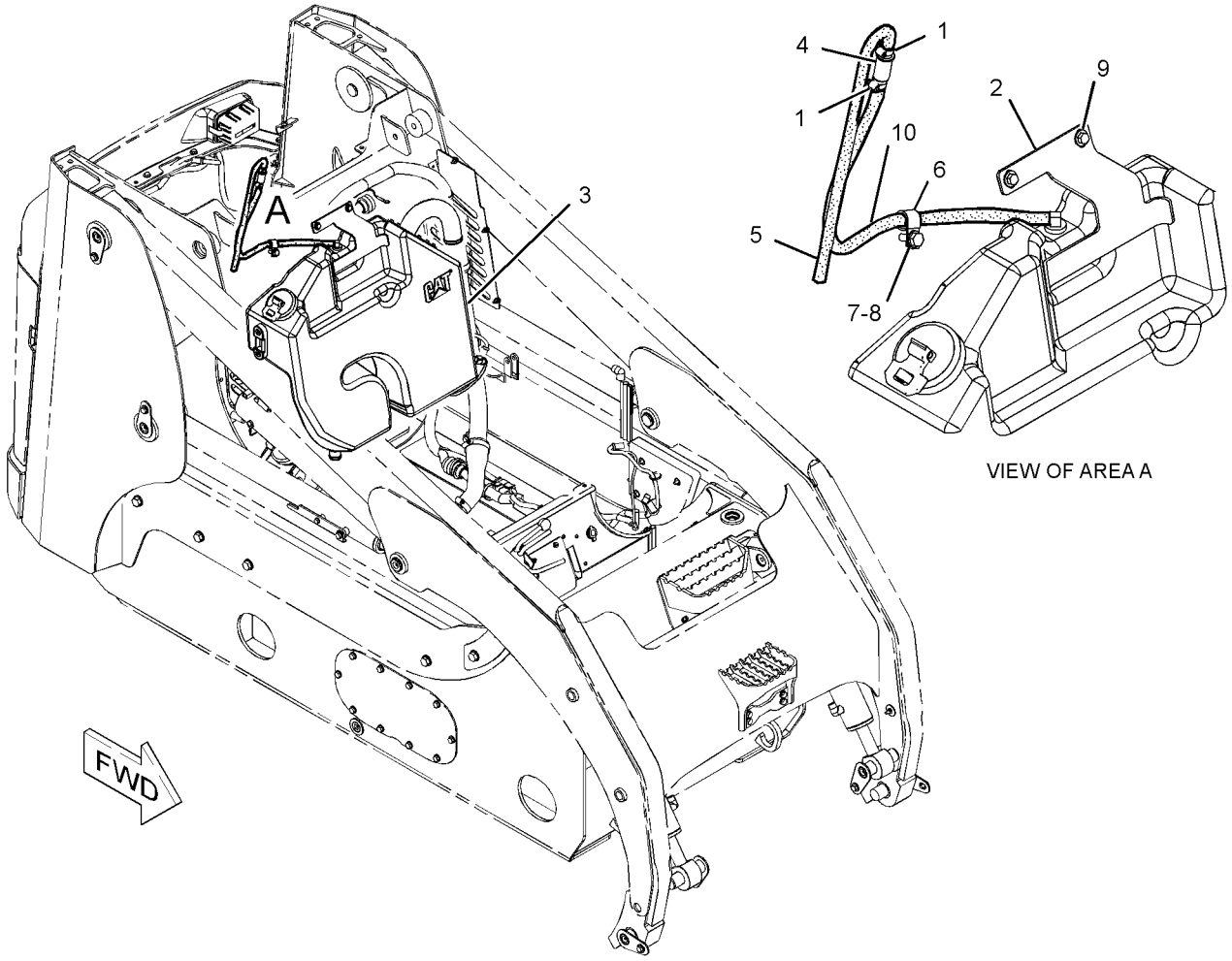

GRAPHIC #1 **<END>** g01309558

HYDRAULIC SYSTEM

204-1491 TANK GP-HYDRAULIC

S/N: BXM4225-UP

PART OF 233-5980 TANK & MTG GP-HYDRAULIC

SMCS-5056 **i02014392**

NOTE	REF NO	GRAPHIC REF	PART NUMBER	QTY	PART NAME 1 2 3 4 5 6 (PRODUCT LEVEL)	SEE PAGE
	1	1	**6W-5698**	1	GROMMET	
M	2	1	**099-2374**	6	BOLT-SOCKET HEAD (M5X0.8X12-MM)	
	3	1	**132-3056**	1	SEAL-O-RING	
	4	1	**142-8928**	1	ELBOW	
	5	1	**142-8929**	1	SCREEN-SUCTION (HYDRAULIC TANK)	
	6	1	**142-8937**	1	CAP AS-FILLER (HYDRAULIC TANK)	
	7	1	**204-1492**	1	TANK GP-HYDRAULIC	
		1	**192-2668**	1	GAUGE-SIGHT (HYDRAULIC TANK)	
	8	1	**204-1499**	1	TUBE AS	
	9	1	**236-1872**	1	SWITCH AS-TEMPERATURE (HYDRAULIC OIL)	
		1	**102-8803**	1	KIT-RECEPTACLE (3-PIN)	
	10	1	**3K-0360**	1	SEAL-O-RING	

M-METRIC PART

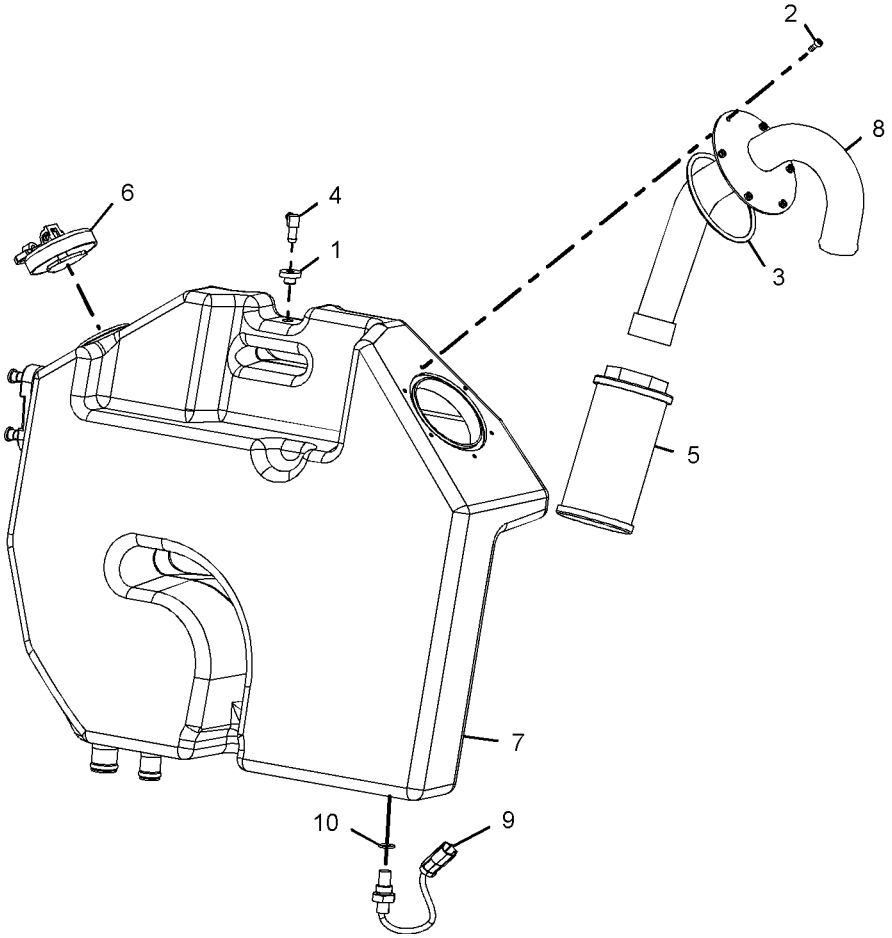

GRAPHIC #1 **<END>** g01032724

HYDRAULIC SYSTEM

218-6263 VALVE & LINES GP-COUPLER

S/N: BXM4225-UP
WITH MANUAL LOWERING CONTROL
PART OF 218-6722 COUPLER AR-QUICK
AN ATTACHMENT

SMCS-5057, 5147, 5479 **i02748069**

NOTE	REF NO	GRAPHIC REF	PART NUMBER	QTY	PART NAME 1 2 3 4 5 6 (PRODUCT LEVEL)	SEE PAGE
	1	1	**2K-5232**	2	SPACER (0.406X0.75X1.81-IN THK)	
	2	1	**3S-2093**	6	STRAP-CABLE	
	3	2	**7K-1181**	1	STRAP-CABLE	
	4	1	**9X-6581**	1	NUT-O-RING SEAL (1-14-THD)	
Y	5	2	**112-1817**	1	VALVE GP-MANUAL (LOWERING CONTROL)	376
	6	2	**124-2456**	1	FILM-INSTRUCTION (NO STEP)	
	7	2	**207-9737**	1	BRACKET AS	
I	8	2	**207-9756**	4	HOSE AS	
	9	2	**212-6690**	1	GUARD	
I	10	1	**218-6241**	1	HOSE AS	
I	11	2	**219-4335**	2	HOSE AS	
Y	12	1	**233-7128**	1	MANIFOLD GP-CONTROL (QUICK COUPLER)	345
	13	1	**238-7741**	1	TUBE AS	
	14	1	**238-7742**	1	TUBE AS	
I	15	1	**238-7743**	2	HOSE AS	
	16	1	**238-7746**	1	TUBE AS	
I	17	1	**238-7748**	1	HOSE AS	
	18	1	**238-7749**	1	BRACKET	
	19	2	**269-9404**	1	BRACKET	
	20	2	**270-0216**	1	BRACKET	
	21	1	**283-9264**	1	BRACKET	
I	22	2	**291-3756**	1	HOSE AS	
CY	23	1	*298-7198*	1	CABLE GP-CONTROL (MANUAL LOWERING)	504
	24	2	*148-8325*	4	CONNECTOR AS	
					(EACH INCLUDES)	
		2	**3J-1907**	1	SEAL-O-RING	
		2	**4J-5477**	1	SEAL-O-RING	
		2	**6V-8641**	1	CONNECTOR	
	25	1	*148-8336*	2	CONNECTOR AS	
					(EACH INCLUDES)	
		1	**3J-1907**	1	SEAL-O-RING	
		1	**6V-8397**	1	SEAL-O-RING	
		1	**6V-8636**	1	CONNECTOR	
	26	1	*148-8353*	1	ELBOW AS	
		1	**3J-1907**	1	SEAL-O-RING	
		1	**6V-8397**	1	SEAL-O-RING	
		1	**6V-9001**	1	ELBOW	
	27	1	*148-8365*	1	ELBOW AS	
		1	**3J-1907**	1	SEAL-O-RING	
		1	**6V-8398**	1	SEAL-O-RING	
		1	**8T-6876**	1	ELBOW	
	28	1,2	*148-8378*	2	ELBOW AS	
					(EACH INCLUDES)	
		1,2	**3J-1907**	1	SEAL-O-RING	
		1,2	**6V-8397**	1	SEAL-O-RING	
		1,2	**6V-8724**	1	ELBOW	
	29	1	*148-8446*	1	TEE AS-SWIVEL	
		1	**6V-9838**	1	TEE-SWIVEL	
		1	**7J-9108**	2	SEAL-O-RING	
	30	2	*150-4034*	2	TEE AS	
					(EACH INCLUDES)	
		2	**6V-8397**	3	SEAL-O-RING	
		2	**8T-0379**	1	TEE-BULKHEAD	
	31	1	*156-4282*	1	REDUCER AS	

218-6263 **VALVE & LINES GP-COUPLER** *(contd.)* **i02748069**

NOTE	REF NO	GRAPHIC REF	PART NUMBER	QTY	PART NAME 1 2 3 4 5 6 (PRODUCT LEVEL)	SEE PAGE
		1	**6V-8397**	1	SEAL-O-RING	
		1	**6V-8938**	1	REDUCER-O-RING	
	32	1	**164-4225**	2	CLIP	
	33	1	**1F-7567**	1	CLIP	
	34	2	**4B-4274**	1	WASHER (5.5X13X1.2-MM THK)	
	35	1	**4P-7581**	1	CLIP	
	36	1	**6K-8178**	3	CLIP	
	37	1	**6V-8397**	6	SEAL-O-RING	
	38	2	**6V-9168**	2	NUT (11/16-16-THD)	
	39	2	**7G-2950**	1	CLIP (SLOT)	
	40	2	**7G-2951**	1	CLIP (TAB)	
	41	1,2	**7H-7055**	6	CLIP	
	42	2	**7X-7729**	6	WASHER (11X25X3-MM THK)	
	43	2	**8M-4791**	2	WASHER-HARD (13.5X27X3-MM THK)	
M	44	2	**8T-0285**	4	SCREW-MACHINE (M4X0.7X12-MM)	
M	45	2	**8T-0287**	1	BOLT (M5X0.8X10-MM)	
	46	1,2	**8T-4121**	13	WASHER-HARD (11X21X2.5-MM THK)	
M	47	1,2	**8T-4133**	6	NUT (M10X1.5-THD)	
M	48	1,2	**8T-4136**	3	BOLT (M10X1.5X25-MM)	
M	49	1,2	**8T-4189**	4	BOLT (M8X1.25X20-MM)	
M	50	1,2	**8T-4191**	3	BOLT (M10X1.5X16-MM)	
M	51	1,2	**8T-4201**	4	BOLT-LOCKING (M10X1.5X20-MM)	
	52	1,2	**8T-4224**	4	WASHER-HARD (8.8X16X2-MM THK)	
M	53	1,2	**8T-5005**	4	BOLT (M10X1.5X70-MM)	
	54	1,2	**9M-8406**	3	CLIP	
	55	2	**9X-1481**	1	WASHER (13X25.4X1.6-MM THK)	

C-CHANGE FROM PREVIOUS TYPE
I-REFER TO HYDRAULIC INFORMATION SYSTEM
M-METRIC PART
Y-SEPARATE ILLUSTRATION

218-6263 VALVE & LINES GP-COUPLER *(contd.)* i02748069

REFER TO ALL ILLUSTRATIONS OF
THIS GROUP FOR AUXILIARY VIEWS

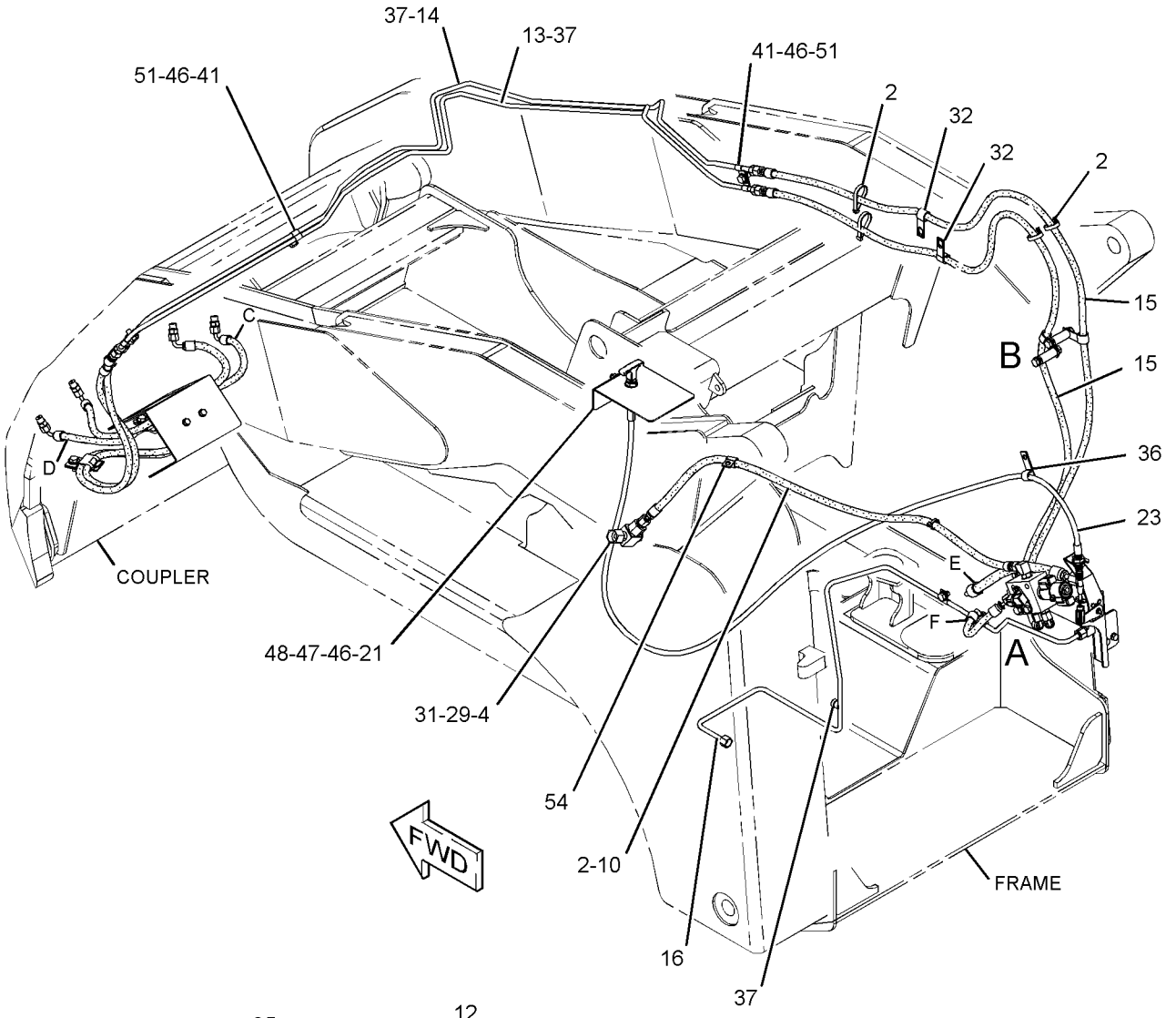

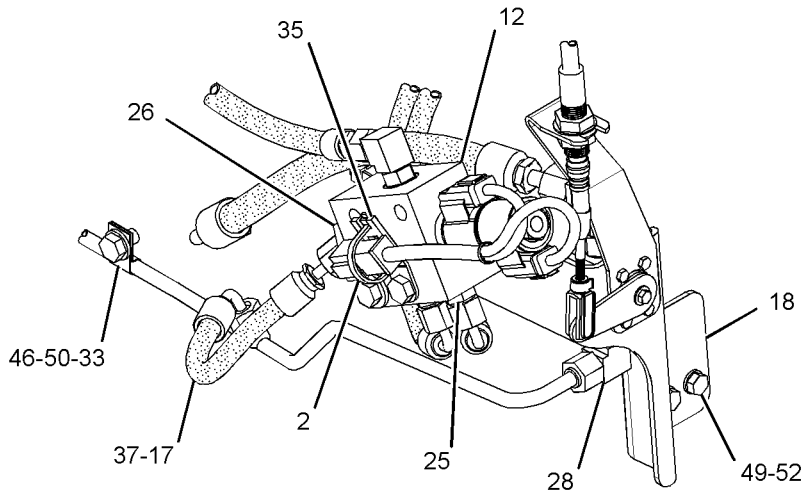

VIEW OF AREA A

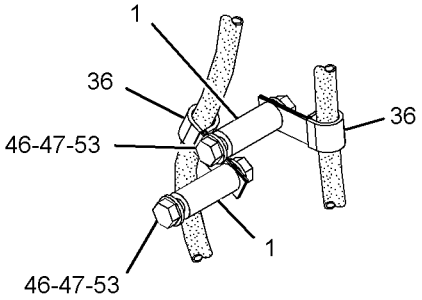

VIEW OF AREA B

GRAPHIC #1

g01377515

218-6263 **VALVE & LINES GP-COUPLER** *(contd.)* **i02748069**

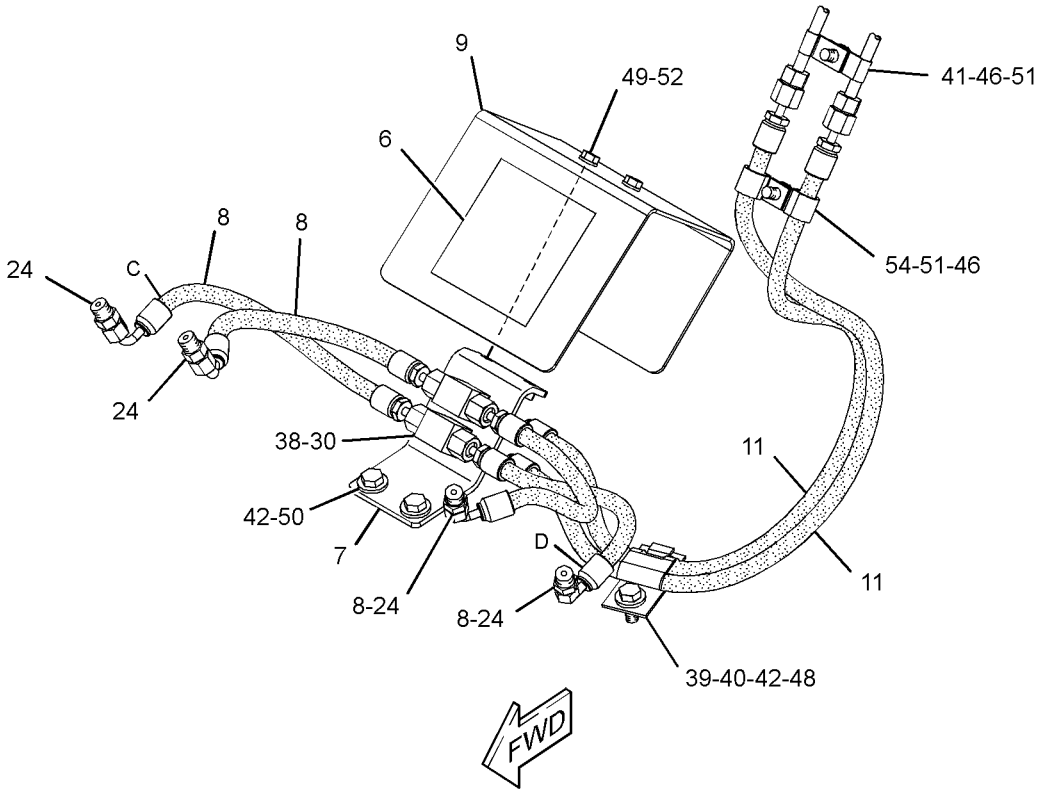

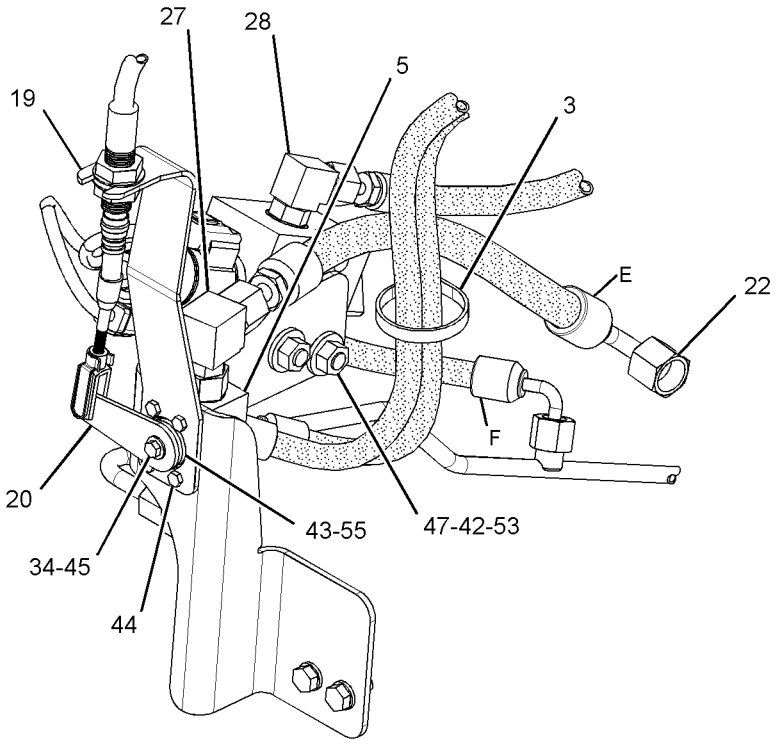

VIEW OF AREA A 90°

GRAPHIC #2 **<END>** g01377516

218-6783 VALVE & MTG GP-CONTROL

S/N: BXM4225-UP
WORK TOOL
PART OF 278-1243 HYDRAULIC AR

SMCS-5051 **i01946033**

NOTE	REF NO	GRAPHIC REF	PART NUMBER	QTY	PART NAME 1 2 3 4 5 6 (PRODUCT LEVEL)	SEE PAGE
Y	1	1	**191-9686**	1	VALVE GP-CONTROL (WORK TOOL)	374
	2	1	**218-6561**	1	BRACKET	
	3	1	**8T-4121**	4	WASHER-HARD (11X21X2.5-MM THK)	
M	4	1	**8T-4136**	2	BOLT (M10X1.5X25-MM)	
M	5	1	**8T-4137**	2	BOLT (M10X1.5X20-MM)	

M-METRIC PART
Y-SEPARATE ILLUSTRATION

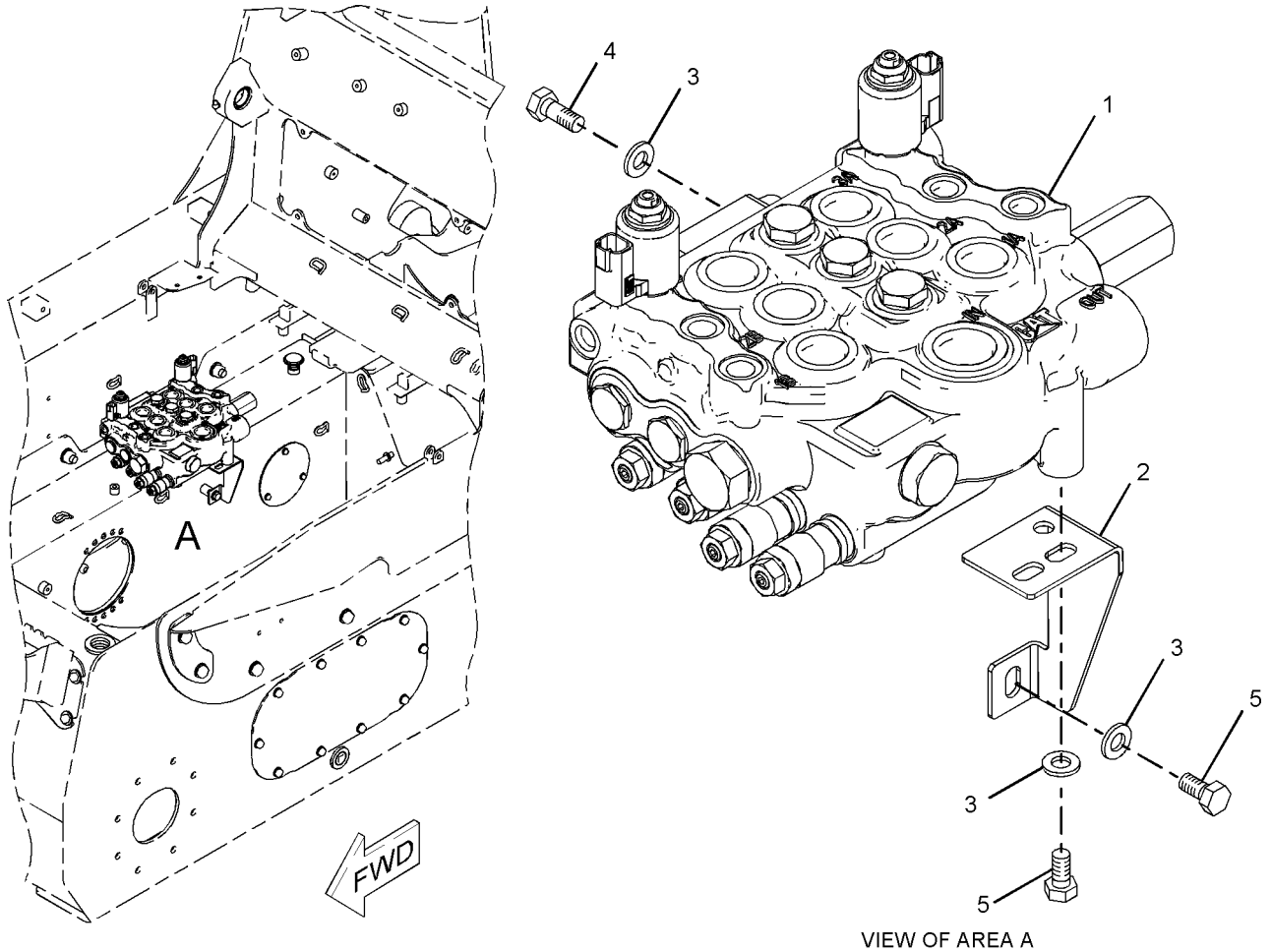

VIEW OF AREA A

GRAPHIC #1 **<END>** g01022495

HYDRAULIC SYSTEM

191-9686 VALVE GP-CONTROL

S/N: BXM4225-UP

PART OF 218-6783 VALVE & MTG GP-CONTROL

SMCS-5051 **i02637338**

NOTE	REF NO	GRAPHIC REF	PART NUMBER	QTY	PART NAME 1 2 3 4 5 6 (PRODUCT LEVEL)	SEE PAGE
CY	1	1	**298-1309**	1	VALVE GP-RELIEF (MAIN)	384
	2	1	**216-6160**	2	VALVE GP-RELIEF (TILT, AUXILARY)	
	3	1	**216-6161**	2	VALVE GP-RELIEF (LIFT)	
Y	4	1	**185-4254**	2	VALVE GP-SOLENOID (12-VOLT) (PILOT)	385
C	5	1	**4J-7533**	2	SEAL-O-RING	
	6	1	**204-1485**	6	WASHER (0.47X0.75X0.02-MM THK)	
	7	1	**204-1482**	1	SPRING	
	8	1	**204-1488**	1	SPRING	
	9	1	**204-1489**	4	SPRING	
	10	1	**204-1486**	1	WASHER (0.32X0.74X0.02-MM THK)	
	11	1	**127-6316**	1	BOLT-SHOULDER	
	12	1	**204-1476**	4	PLUG	
C	13	1	**4K-1388**	2	SEAL-O-RING	
	14	1	**204-1471**	1	CAP	
	15	1	**204-1481**	1	CAP	
	16	1	**144-4531**	3	VALVE-CHECK	
	17	1	**003-3082**	3	SPRING	
	18	1	**8I-5078**	3	SEAL-O-RING	
	19	1	**144-4532**	3	PLUG	
	20	1	**216-6156**	1	VALVE-CHECK	
	21	1	**216-6157**	1	SPRING	
C	22	1	**3J-1907**	1	SEAL-O-RING	
	23	1	**216-6159**	1	PLUG	
C	24	1	**2M-9780**	4	SEAL-O-RING	

C-CHANGE FROM PREVIOUS TYPE
Y-SEPARATE ILLUSTRATION

191-9686 VALVE GP-CONTROL *(contd.)* i02637338

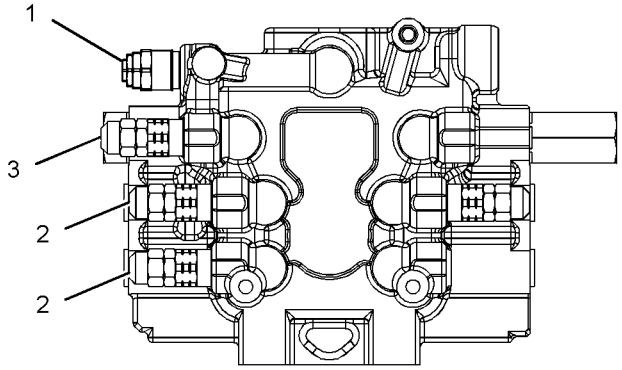

VIEW A-A

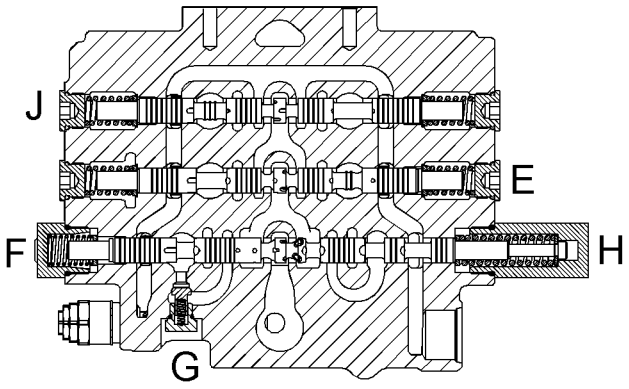

SECTION B-B

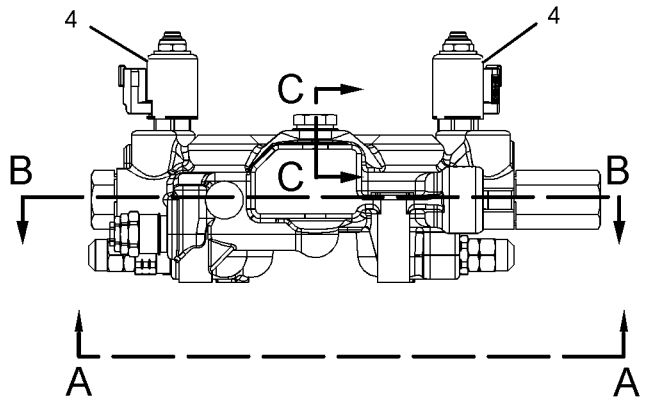

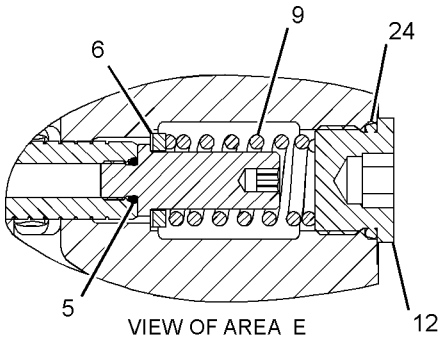

VIEW OF AREA E

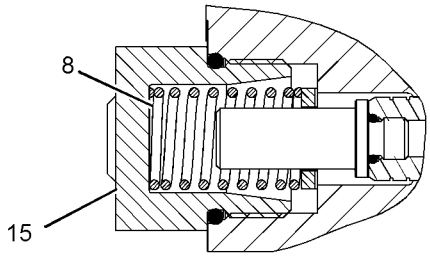

VIEW OF AREA F

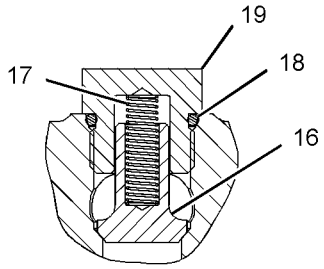

SECTION C-C

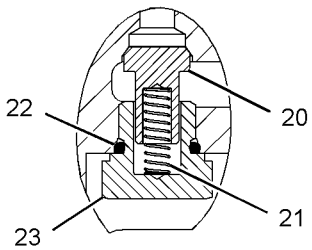

VIEW OF AREA G

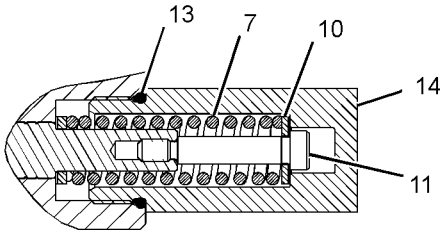

VIEW OF AREA H

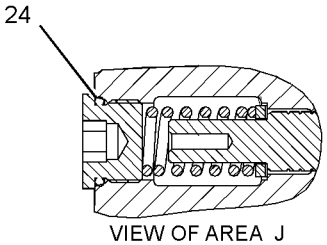

VIEW OF AREA J

GRAPHIC #1 **<END>** g01323204

HYDRAULIC SYSTEM

112-1817 VALVE GP-MANUAL

S/N: BXM4225-UP

PART OF 218-5882 LINES GP-LOWERING CONTROL, 218-6263 VALVE & LINES GP-COUPLER AN ATTACHMENT

SMCS-5147 **i02757385**

NOTE	PART NUMBER	QTY	PART NAME 1 2 3 4 5 6 (PRODUCT LEVEL)	SEE PAGE
J	*202-0671*	1	VALVE GP-MANUAL (LOWERING CONTROL)	
			—OR—	
J	*202-0673*	1	VALVE GP-MANUAL (LOWERING CONTROL)	
			—OR—	
J	*202-0674*	1	VALVE GP-MANUAL (LOWERING CONTROL)	
			AVAILABLE REPAIR KIT(S):	
J	**112-9861**	1	KIT-SEAL (DEAD ENGINE LOWERING)	
			(INCLUDES SEALS, CONNECTORS & THRUST RING)	

J-KIT MARKED J SERVICES PARTS MARKED J

<END>

218-6119 VALVE GP-PILOT

S/N: BXM4225-UP

PART OF 218-5930, 218-5931, 218-5932, 218-5947 CONTROL GP-PILOT OPERATED HYD AN ATTACHMENT

SMCS-5059, 5705 **i02513658**

NOTE	REF NO	GRAPHIC REF	PART NUMBER	QTY	PART NAME 1 2 3 4 5 6 (PRODUCT LEVEL)	SEE PAGE
Y	1	1	**195-9700**	1	VALVE GP-SOLENOID (12-VOLT)	386
M	2	1	**8T-1158**	1	BOLT-SOCKET HEAD (M8X1.25X20-MM)	
	3	1	**217-3850**	1	KIT-UNIVERSAL JOINT	
					(INCLUDES UNIVERSAL JOINT & SHIMS)	
	4	1	**122-1904**	1	PLATE	
	5	1	**289-8451**	2	KIT-PLUNGER	
					(INCLUDES PLUNGER GUIDE, PLUNGER, SNAP RING, WASHER & BUSHING)	
	6	1	**160-6778**	1	KIT-PILOT VALVE (SPRING)	
					(INCLUDES SPRINGS)	
	7	1	**289-9560**	1	KIT-SEAL	
					(INCLUDES O-RINGS, PINS & ASSEMBLY SCREW)	
	8	1	**151-4965**	1	KIT-SEAL	
					(INCLUDES O-RINGS, PIN & BOLT)	
	9	1	**282-7760**	1	VALVE GP-SHUTTLE	
					PARTS SHOWN IN GRAPHIC(S) WITHOUT A REFERENCE NUMBER ARE NOT SERVICED SEPARATELY	

M-METRIC PART
Y-SEPARATE ILLUSTRATION

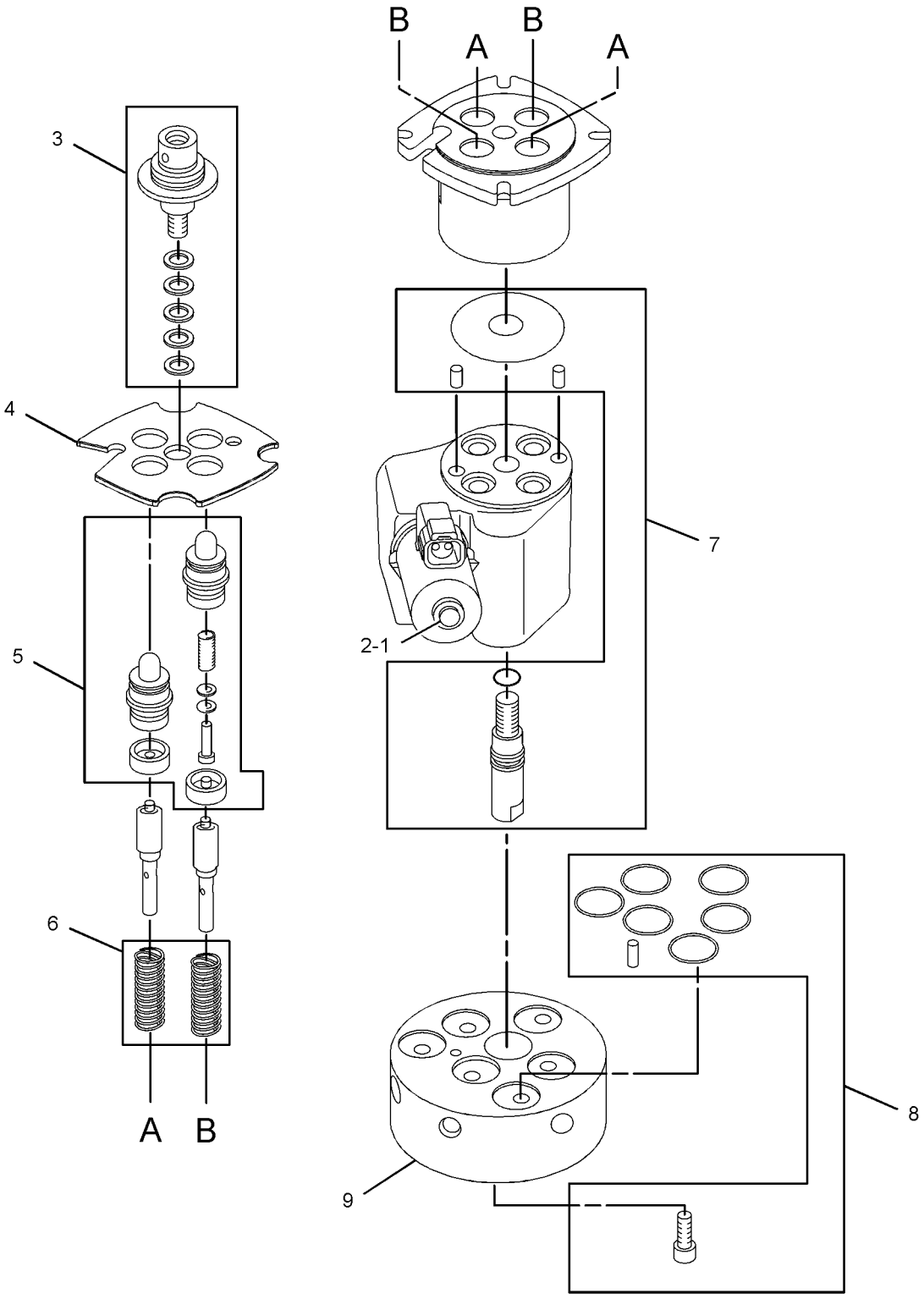

GRAPHIC #1 **<END>** g01301843

228-9228 VALVE GP-PILOT—WORK TOOL

S/N: BXM4225-4279

PART OF 218-5611, 218-5612, 218-5618, 218-6571 CONTROL GP-PILOT OPERATED HYD AN ATTACHMENT

SMCS-5059, 5705 **i02513660**

NOTE	REF NO	GRAPHIC REF	PART NUMBER	QTY	PART NAME 1 2 3 4 5 6 (PRODUCT LEVEL)	SEE PAGE
	1	1	**7K-1181**	1	STRAP-CABLE	
	2	1	**172-0970**	1	COIL AS	
		1	**102-8802**	1	KIT-RECEPTACLE (2-PIN)	
					(INCLUDES RECEPTACLE AS & WEDGE)	
		1	**8T-8729**	2	PIN-CONNECTOR (16-GA TO 18-GA)	
Y	3	1	**195-9700**	1	VALVE GP-SOLENOID (12-VOLT) (SPEED & DIRECTION)	386
M	4	1	**8T-1158**	1	BOLT-SOCKET HEAD (M8X1.25X20-MM)	
M	5	1	**8T-9405**	1	BOLT-SOCKET HEAD (M4X0.7X16-MM)	
	6	1	**102-8802**	1	KIT-RECEPTACLE (2-PIN)	
					(INCLUDES RECEPTACLE AS AND WEDGE)	
	7	1	**289-8440**	1	KIT-JOINT (PILOT VALVE)	
					(INCLUDES PLATE AS)	
	8	1	**164-9440**	1	PLATE	
	9	1	**8U-9427**	3	KIT-PLUNGER	
	10	1	**203-1100**	1	KIT-PLUNGER	
					(INCLUDES PLUNGER,GUIDE,RING,CLIP & CUP)	
	11	1	**160-6778**	1	KIT-PILOT VALVE (SPRING)	
					(INCLUDES SPRINGS)	
	12	1	**9T-2837**	1	KIT-SEAL	
					(INCLUDES PINS,SEALS & BOLT)	
					PARTS SHOWN IN GRAPHIC(S) WITHOUT A REFERENCE NUMBER ARE NOT SERVICED SEPARATELY	

M-METRIC PART
Y-SEPARATE ILLUSTRATION

228-9228 VALVE GP-PILOT *(contd.)* i02513660

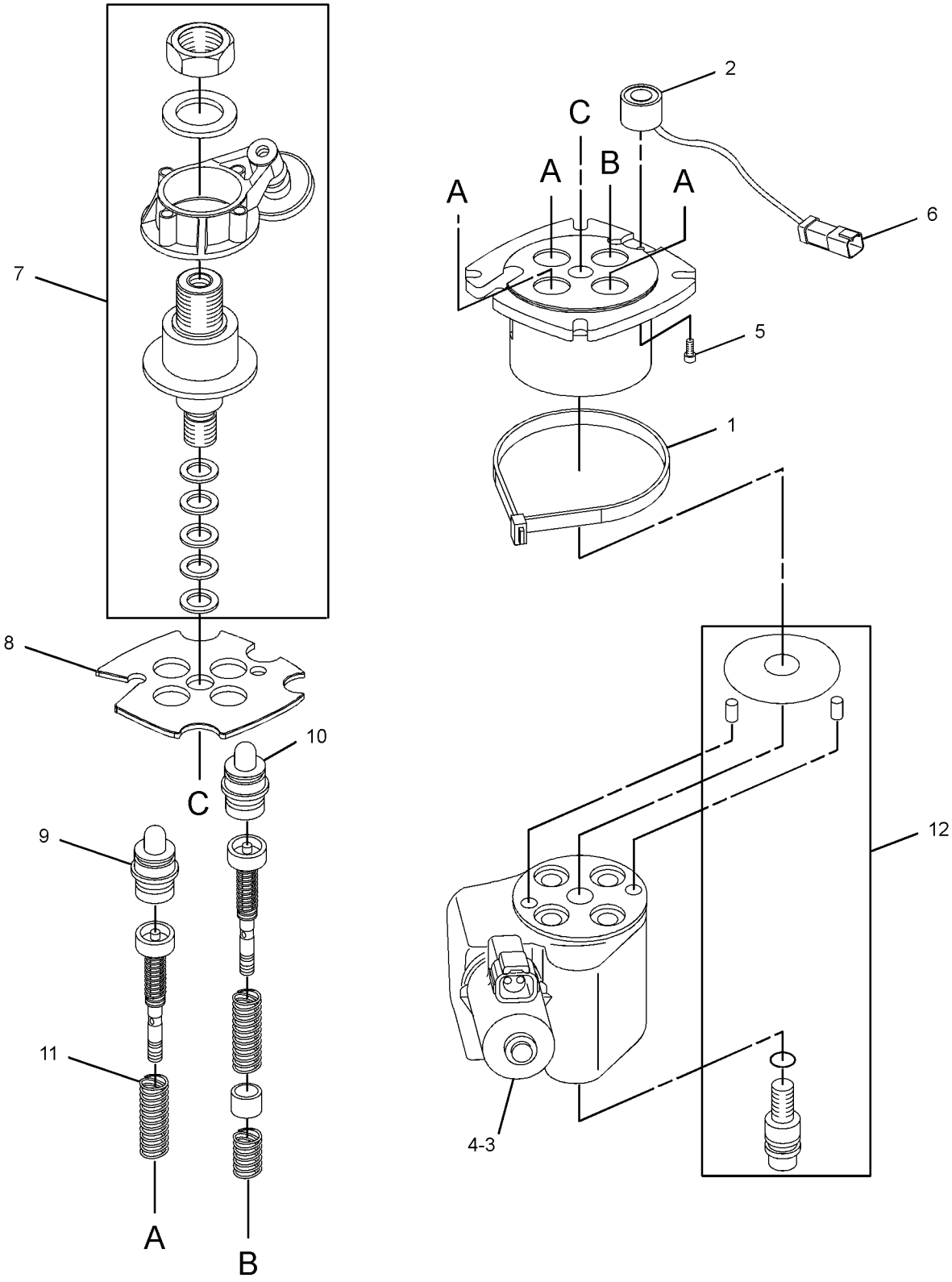

GRAPHIC #1 **<END>** g01298433

299-9116 VALVE GP-PILOT

S/N: BXM4280-UP
PART OF 218-5930 CONTROL GP-PILOT OPERATED HYD
AN ATTACHMENT

SMCS-5059, 5705 **i02890238**

NOTE	REF NO	GRAPHIC REF	PART NUMBER	QTY	PART NAME 1 2 3 4 5 6 (PRODUCT LEVEL)	SEE PAGE
Y	1	1	**195-9700**	1	VALVE GP-SOLENOID (12-VOLT)	386
M	2	1	**8T-1158**	1	BOLT-SOCKET HEAD (M8X1.25X20-MM)	
	3	1	**217-3850**	1	KIT-UNIVERSAL JOINT	
					(INCLUDES SHIMS & UNIVERSAL JOINT)	
	4	1	**299-9121**	1	PLATE	
	5	1	**289-8451**	2	KIT-PLUNGER	
					(INCLUDES PLUNGERS, RINGS, WASHERS, & BUSHINGS)	
	6	1	**160-6778**	1	KIT-PILOT VALVE (SPRING)	
					(INCLUDES SPRINGS)	
	7	1	**289-9560**	1	KIT-SEAL	
					(INCLUDES RINGS, PLUG, & SCREW)	
	8	1	**151-4965**	1	KIT-SEAL	
					(INCLUDES O-RINGS, PIN, & BOLT)	
	9	1	**312-7676**	1	VALVE GP-SHUTTLE	
					PARTS SHOWN IN GRAPHIC(S) WITHOUT A REFERENCE NUMBER ARE NOT SERVICED SEPARATELY	

M-METRIC PART
Y-SEPARATE ILLUSTRATION

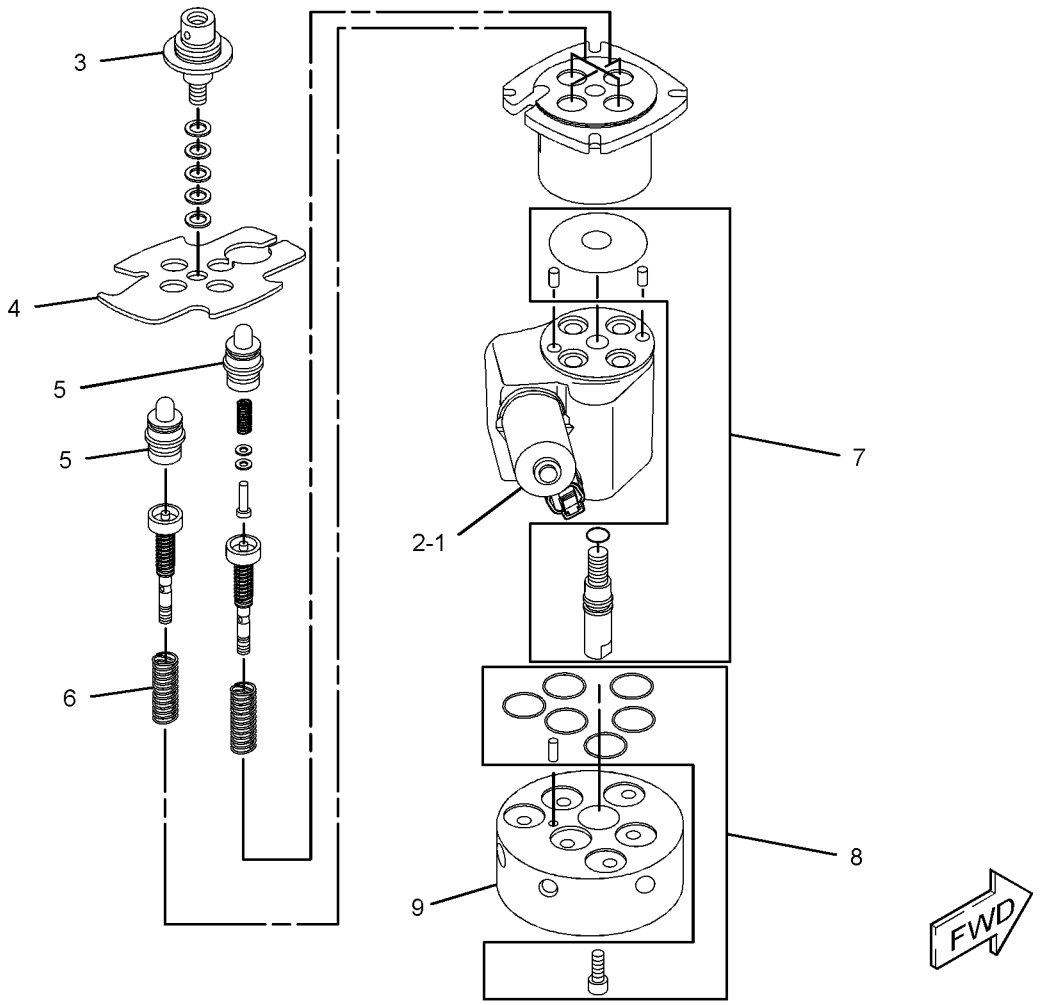

GRAPHIC #1 **<END>** g01417329

HYDRAULIC SYSTEM

299-9119 VALVE GP-PILOT

S/N: BXM4280-UP

PART OF 218-5611, 218-5612, 218-5618, 218-6571 CONTROL GP-PILOT OPERATED HYD AN ATTACHMENT

SMCS-5059, 5705 **i02890245**

NOTE	REF NO	GRAPHIC REF	PART NUMBER	QTY	PART NAME 1 2 3 4 5 6 (PRODUCT LEVEL)	SEE PAGE
	1	1	**7K-1181**	1	STRAP-CABLE	
	2	1	**172-0970**	1	COIL AS	
		1	**186-3735**	2	PIN-CONNECTOR (16-GA TO 18-GA)	
		1	**102-8802**	1	KIT-RECEPTACLE (2-PIN)	
					(INCLUDES RECEPTACLE AS & WEDGE)	
Y	3	1	**195-9700**	1	VALVE GP-SOLENOID (12-VOLT)	386
M	4	1	**8T-1158**	1	BOLT-SOCKET HEAD (M8X1.25X20-MM)	
M	5	1	**8T-9405**	1	BOLT-SOCKET HEAD (M4X0.7X16-MM)	
	6	1	**102-8802**	1	KIT-RECEPTACLE (2-PIN)	
					(INCLUDES RECEPTACLE AS & WEDGE)	
	7	1	**313-6251**	1	KIT-JOINT	
					(INCLUDES SHIMS, NUT, WASHER, DETENT ARM & CARDAN)	
	8	1	**299-9121**	1	PLATE	
	9	1	**8U-9427**	3	KIT-PLUNGER (PILOT VALVE)	
	10	1	**203-1100**	1	KIT-PLUNGER	
					(INCLUDES PLUNGERS, SNAP RINGS & RETAINERS)	
	11	1	**160-6778**	1	KIT-PILOT VALVE (SPRING)	
					(INCLUDES SPRINGS)	
	12	1	**9T-2837**	1	KIT-SEAL (PILOT VALVE)	
					(INCLUDES PINS, O-RINGS & BOLT)	

M-METRIC PART
Y-SEPARATE ILLUSTRATION

299-9119 VALVE GP-PILOT *(contd.)* **i02890245**

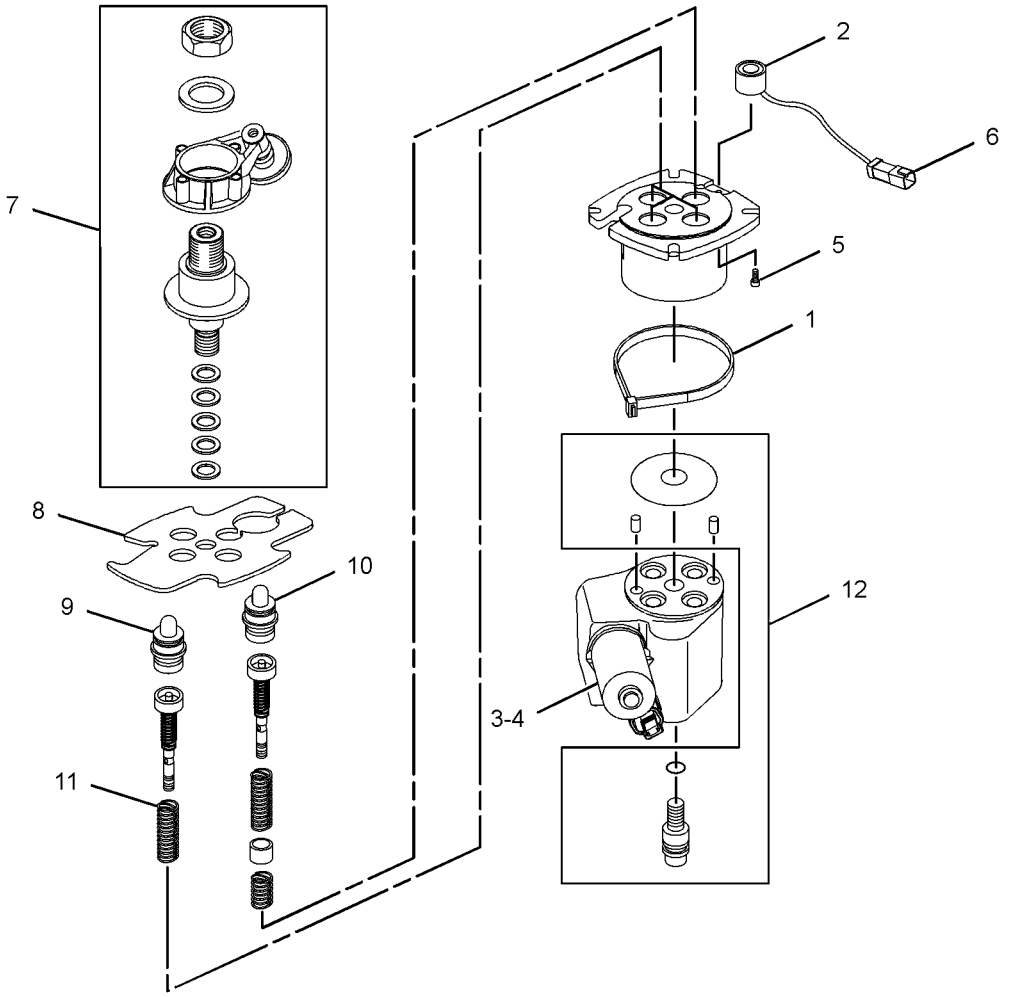

GRAPHIC #1 **<END>** g01417349

HYDRAULIC SYSTEM

298-1309 VALVE GP-RELIEF

S/N: BXM4225-UP

PART OF 191-9686 VALVE GP-CONTROL

SMCS-5069, 5117 **i02605580**

NOTE	REF NO	GRAPHIC REF	PART NUMBER	QTY	PART NAME 1 2 3 4 5 6 (PRODUCT LEVEL)	SEE PAGE
	1	1	**130-1676**	1	SEAL-O-RING	

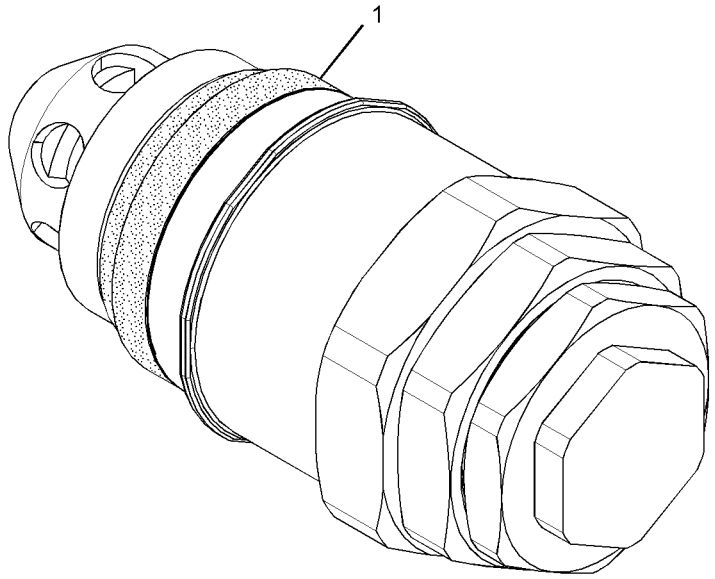

GRAPHIC #1 **<END>** g01304645

185-4254 VALVE GP-SOLENOID–AUXILIARY

S/N: BXM4225-UP

PART OF 191-9686 VALVE GP-CONTROL

SMCS-5479 **i02372783**

NOTE	REF NO	GRAPHIC REF	PART NUMBER	QTY	PART NAME 1 2 3 4 5 6 (PRODUCT LEVEL)	SEE PAGE
	1	1	**226-9629**	1	COIL AS-SOLENOID (12-VOLT)	
	2	1	**164-2108**	1	WASHER (13.03X25.4X2.38-MM THK)	
	3	1	**218-2373**	1	NUT (1/2-28-THD)	
	4	1	*185-4253*	1	VALVE AS	

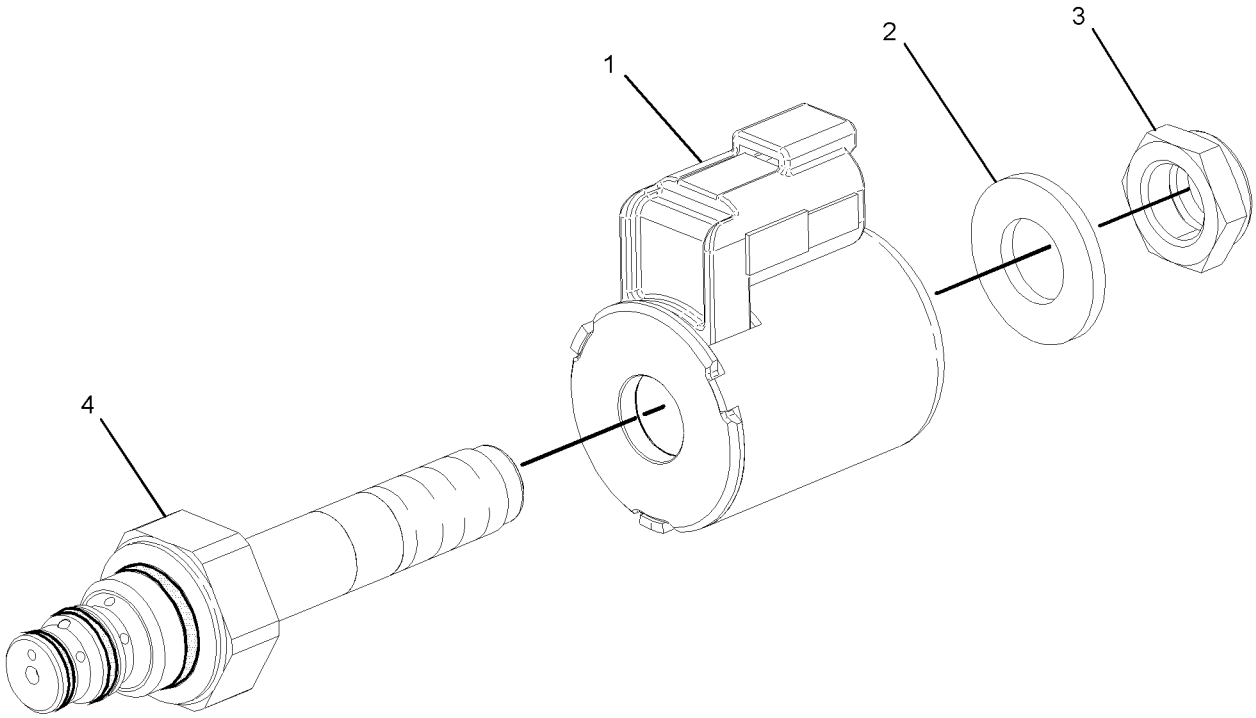

GRAPHIC #1 **<END>** g01185611

195-9700 VALVE GP-SOLENOID

S/N: BXM4225-UP

PART OF 218-6119, 228-9228, 299-9116, 299-9119 VALVE GP-PILOT

AN ATTACHMENT

SMCS-5479 **i02712998**

NOTE	REF NO	GRAPHIC REF	PART NUMBER	QTY	PART NAME 1 2 3 4 5 6 (PRODUCT LEVEL)	SEE PAGE
	1	1	**212-0061**	1	FLANGE	
					AVAILABLE REPAIR KIT(S):	
			200-2371	1	KIT-SEAL	
					(INCLUDES 3 SEALS)	

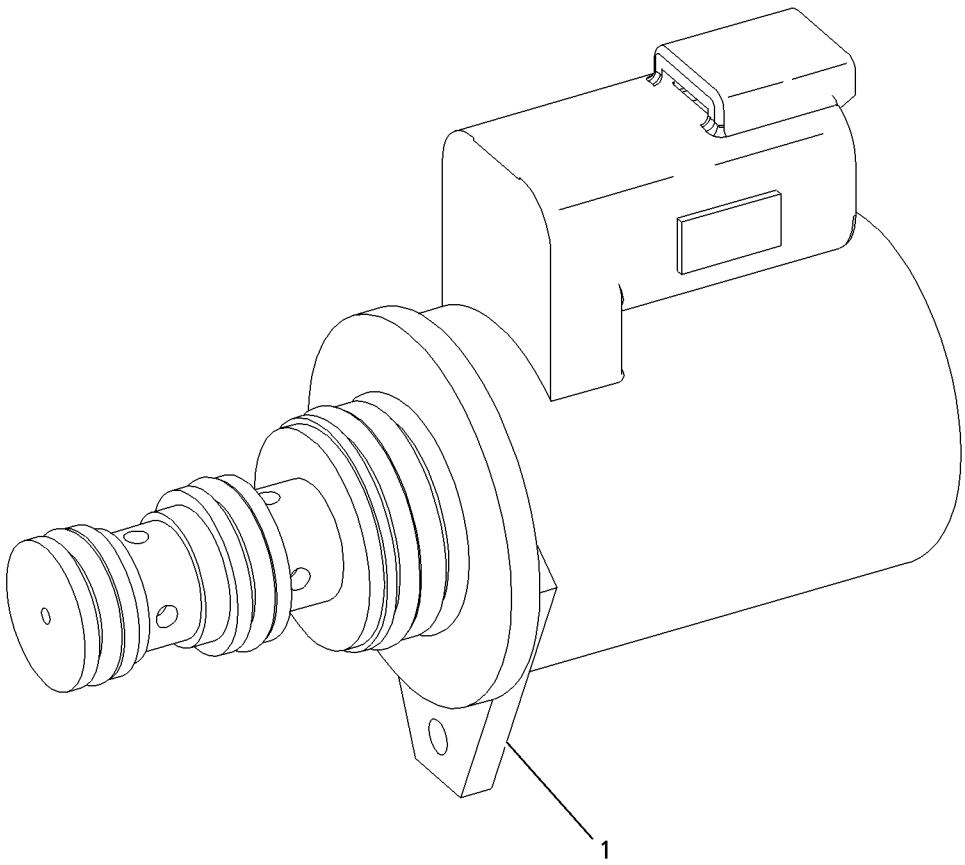

GRAPHIC #1 **<END>** g00947284

231-6287 VALVE GP-SOLENOID–A/C COMPRESSOR

S/N: BXM4225-UP
PART OF 218-6840 MOTOR GP-GEAR
AN ATTACHMENT

SMCS-5479 **i01961984**

NOTE	REF NO	GRAPHIC REF	PART NUMBER	QTY	PART NAME 1 2 3 4 5 6 (PRODUCT LEVEL)	SEE PAGE
	1	1	**3E-8621**	1	COIL AS	
		1	**1S-9593**	1	STRAP-CABLE	
		1	**3E-3365**	1	WEDGE-RECEPTACLE LOCK (2-PIN)	
		1	**186-3735**	2	PIN-CONNECTOR (16-GA TO 18-GA)	
		1	**102-8802**	1	KIT-RECEPTACLE (2-PIN)	
					(INCLUDES RECEPTACLE AS & WEDGE)	
	2	1	**156-5970**	1	NUT (1/2-20-2B-THD)	
	3	1	**231-6564**	1	CARTRIDGE AS-VALVE	
		1	**3D-2824**	1	SEAL-O-RING	
		1	**6F-6672**	1	SEAL-O-RING	
		1	**156-5970**	1	NUT (1/2-20-2B-THD)	
		1	**194-3873**	2	RING-BACKUP	
	4	1	**3D-2824**	1	SEAL-O-RING	
	5	1	**6F-6672**	1	SEAL-O-RING	

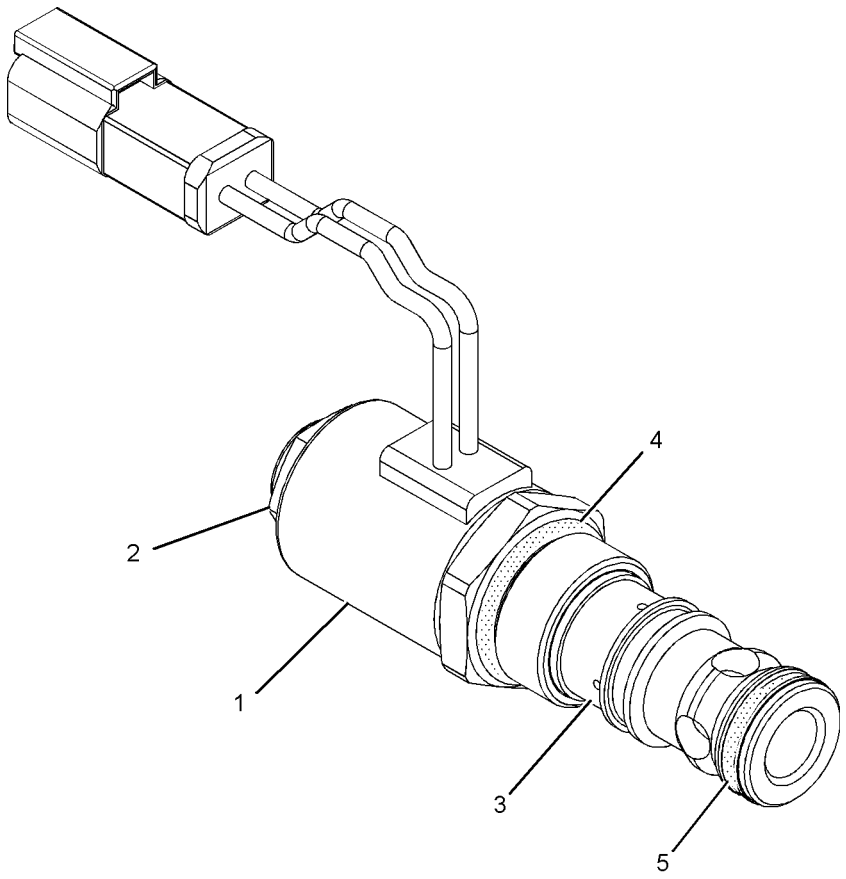

GRAPHIC #1 **<END>** g01026804

HYDRAULIC SYSTEM

259-8194 VALVE GP-SOLENOID

S/N: BXM4225-UP

PART OF 233-7131, 248-1268 MANIFOLD & SOLENOID GP-CONTROL

SMCS-5479 **i02485890**

NOTE	REF NO	GRAPHIC REF	PART NUMBER	QTY	PART NAME 1 2 3 4 5 6 (PRODUCT LEVEL)	SEE PAGE
	1	1	**238-4626**	1	COIL AS (AUXILIARY FLOW CONTROL)	

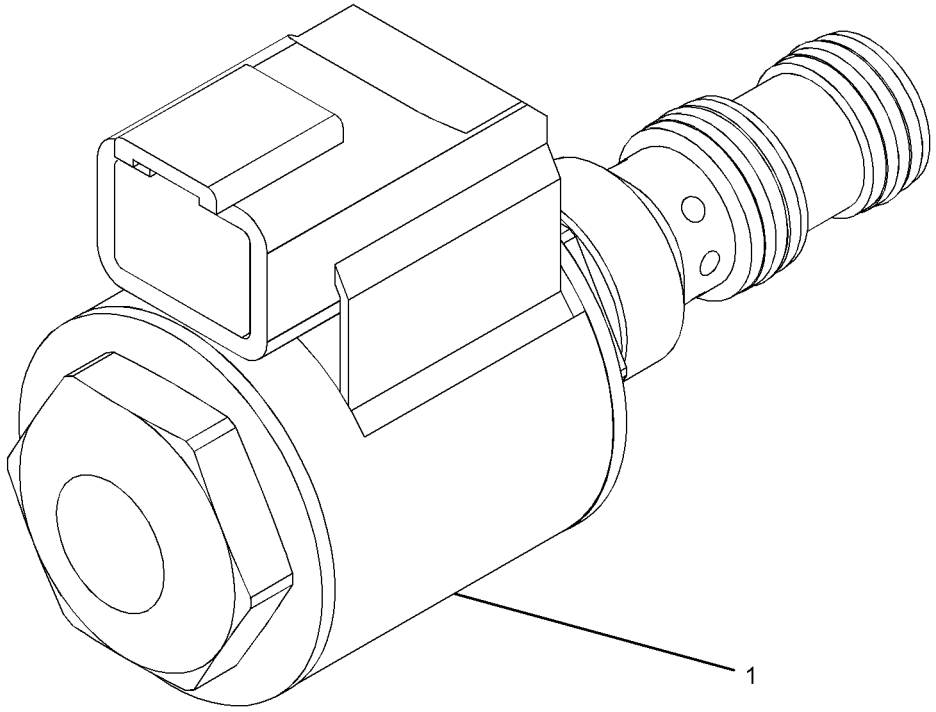

GRAPHIC #1 **<END>** g01121017

216-8756 ARM GP-MATERIAL HANDLING

S/N: BXM4225-UP
AN ATTACHMENT

SMCS-6542 **i02342557**

NOTE	REF NO	GRAPHIC REF	PART NUMBER	QTY	PART NAME 1 2 3 4 5 6 (PRODUCT LEVEL)	SEE PAGE
	1	1	**9V-2714**	1	HOOK	
	2	1	**9V-2715**	1	SHACKLE AS	
	3	1	**156-5762**	2	FILM-INFORMATION (TIE-DOWN LOCATION)	
Y	4	1	*188-7733*	1	STEP GP-MATERIAL HANDLING ARM	482
	5	1	**216-8850**	1	ARM AS	
M	6	1	**7X-2475**	1	BOLT (M16X2X130-MM)	
	7	1	**8T-4122**	1	WASHER-HARD (17X32X3.5-MM THK)	
M	8	1	**8T-1757**	1	NUT (M16X2-THD)	

M-METRIC PART
Y-SEPARATE ILLUSTRATION

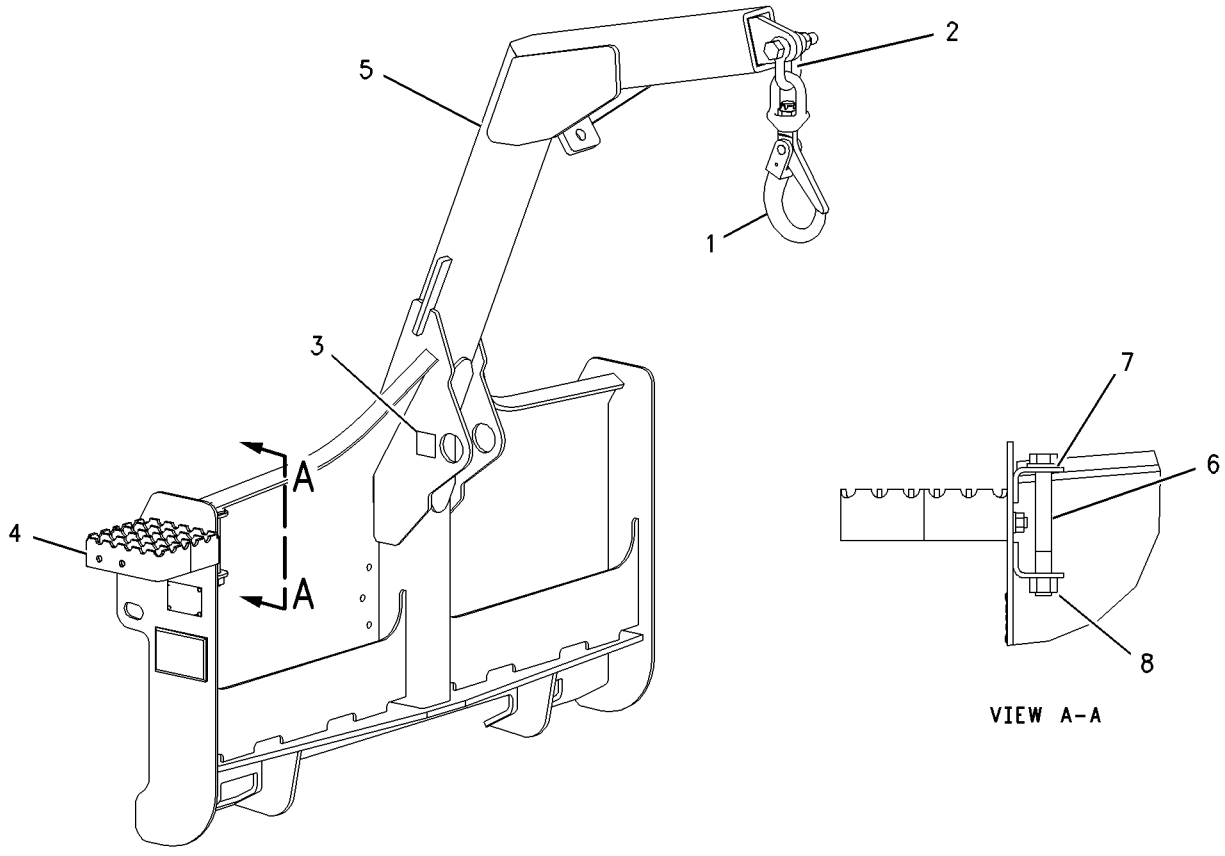

GRAPHIC #1 **<END>** g00934159

177-1989 BLADE AR—ANGLING

S/N: BXM4225-UP
1829-MM (72-IN)
AN ATTACHMENT

SMCS-6060, 6701 **i01860746**

NOTE	PART NUMBER	QTY	PART NAME 1 2 3 4 5 6 (PRODUCT LEVEL)	SEE PAGE
Y	*177-1981*	1	BLADE GP-ANGLING	393
Y	*230-5406*	1	CYLINDER & MTG GP-ANGLE BLADE	255
Y	*135-9386*	1	EDGE GP-CUTTING	453
Y	*230-5670*	1	FRAME GP-BLADE	465
Y	*177-1986*	1	LINES GP-CONNECTING	296
Y	*177-1983*	1	SPRING GP-BLADE	481

Y-SEPARATE ILLUSTRATION

<END>

177-1990 BLADE AR—ANGLING

S/N: BXM4225-UP
2134-MM (84-IN)
AN ATTACHMENT

SMCS-6060, 6701 **i01861063**

NOTE	PART NUMBER	QTY	PART NAME 1 2 3 4 5 6 (PRODUCT LEVEL)	SEE PAGE
Y	*177-1982*	1	BLADE GP-ANGLING	394
Y	*230-5406*	1	CYLINDER & MTG GP-ANGLE BLADE	255
Y	*149-5741*	1	EDGE GP-CUTTING	455
Y	*230-5670*	1	FRAME GP-BLADE	465
Y	*177-1986*	1	LINES GP-CONNECTING	296
Y	*177-1983*	1	SPRING GP-BLADE	481

Y-SEPARATE ILLUSTRATION

<END>

231-5275 BLADE AR–ANGLING

S/N: BXM4225-UP
2337-MM (92-IN)
AN ATTACHMENT

SMCS-6060, 6701 **i02752371**

NOTE	REF NO	GRAPHIC REF	PART NUMBER	QTY	PART NAME 1 2 3 4 5 6 (PRODUCT LEVEL)	SEE PAGE
	1	1	**7K-1181**	3	STRAP-CABLE	
Y	2	1	*222-7724*	1	BLADE GP-ANGLING	395
	3	1	**225-8015**	1	HARNESS AS-WORK TOOL (CONNECTING)	
Y	4	1	*231-5273*	1	LINES GP-CONNECTING	298
Y	5	1	*231-5274*	1	CYLINDER & MTG GP-ANGLE BLADE	256
Y	6	1	*231-5278*	1	MANIFOLD & MTG GP-CONTROL (ANGLING BLADE)	341
Y	7	1	*247-0678*	1	PLATE & FILM GP	639

Y-SEPARATE ILLUSTRATION

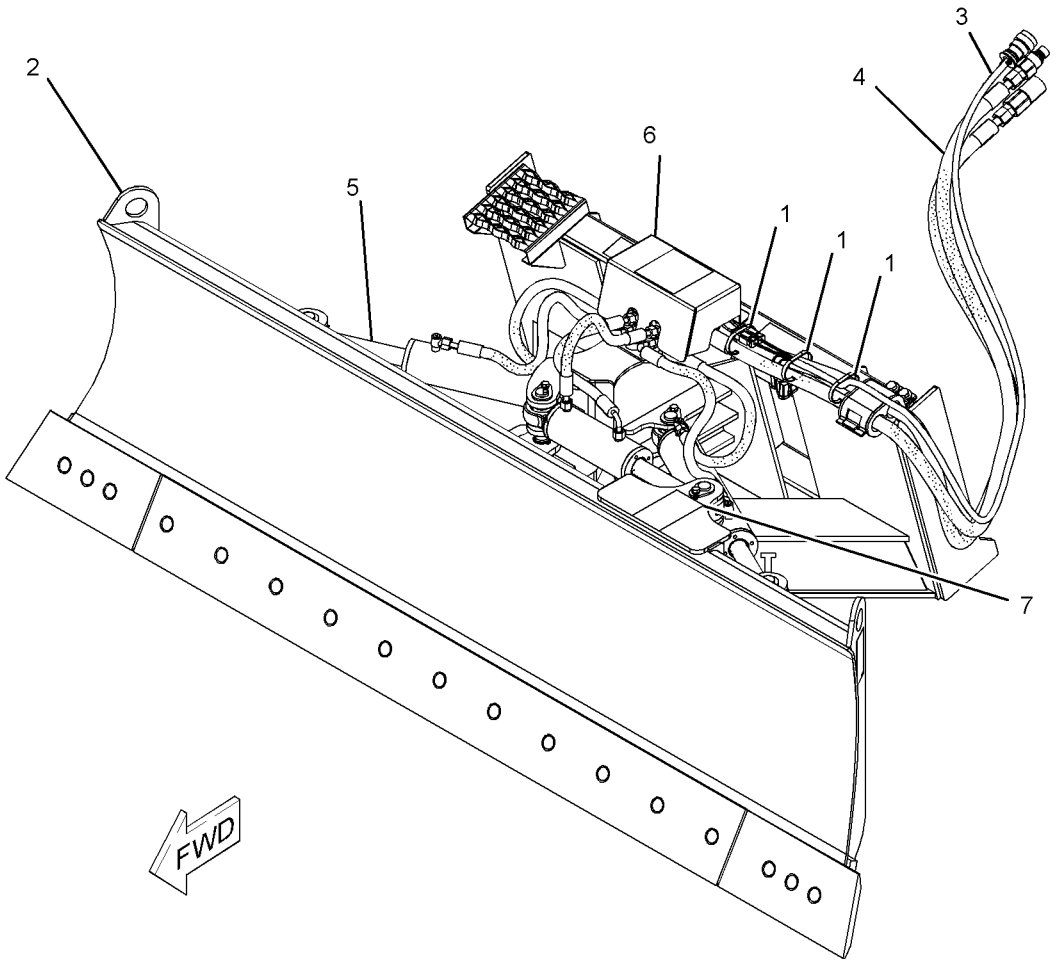

GRAPHIC #1 **<END>** g01381201

231-5277 BLADE AR—ANGLING

S/N: BXM4225-UP
2007-MM (79-IN)
AN ATTACHMENT

SMCS-6060, 6701 **i02752372**

NOTE	REF NO	GRAPHIC REF	PART NUMBER	QTY	PART NAME 1 2 3 4 5 6 (PRODUCT LEVEL)	SEE PAGE
	1	1	**7K-1181**	3	STRAP-CABLE	
	2	1	**225-8015**	1	HARNESS AS-WORK TOOL (CONNECTING)	
Y	3	1	*231-5273*	1	LINES GP-CONNECTING	298
Y	4	1	*231-5274*	1	CYLINDER & MTG GP-ANGLE BLADE	256
Y	5	1	*231-5276*	1	BLADE GP-ANGLING	396
Y	6	1	*231-5278*	1	MANIFOLD & MTG GP-CONTROL (ANGLING BLADE)	341
Y	7	1	*247-0678*	1	PLATE & FILM GP	639

Y-SEPARATE ILLUSTRATION

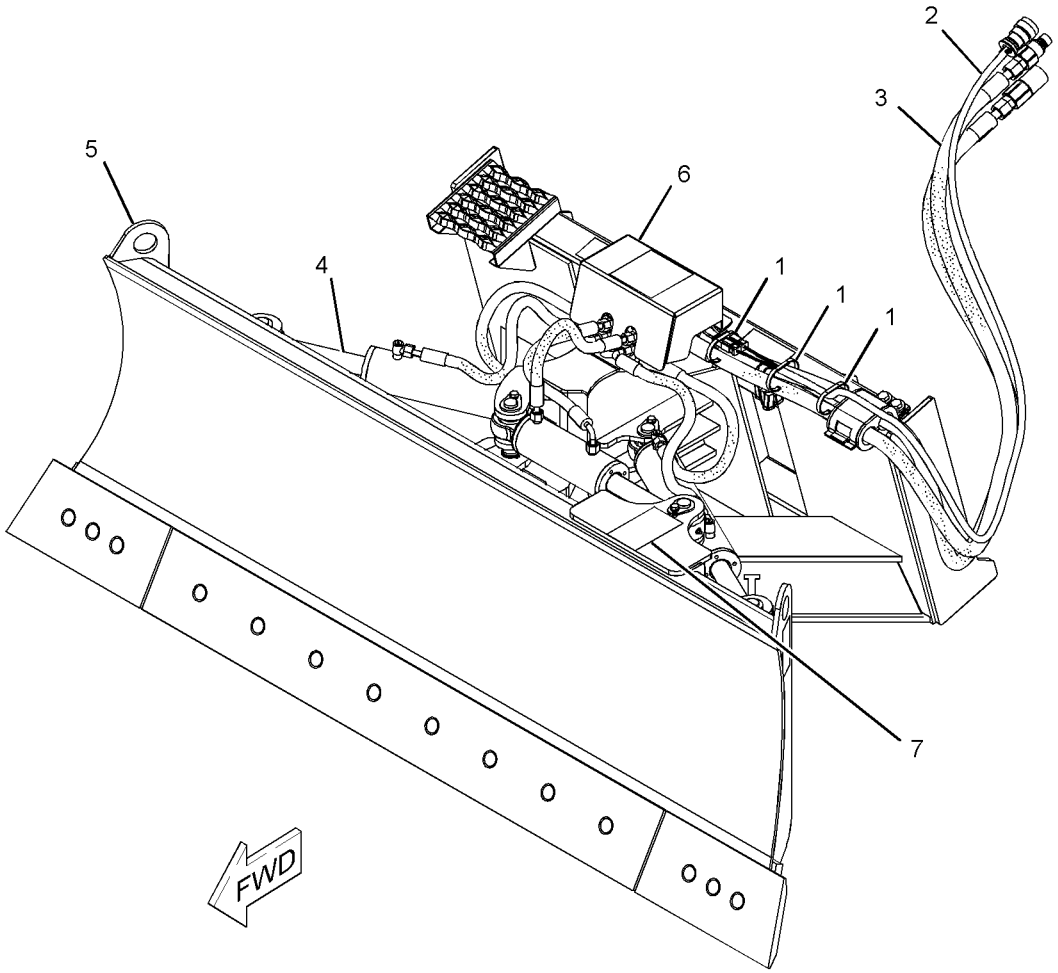

GRAPHIC #1 **<END>** g01381202

WORK TOOLS

177-1981 BLADE GP-ANGLING

S/N: BXM4225-UP
1829-MM (72-IN)
PART OF 177-1989 BLADE AR
AN ATTACHMENT

SMCS-6060, 6701 **i01905763**

NOTE	REF NO	GRAPHIC REF	PART NUMBER	QTY	PART NAME 1 2 3 4 5 6 (PRODUCT LEVEL)	SEE PAGE
	1	1	**157-0940**	2	PIN	
	2	1	**166-0319**	2	PIN AS	
	3	1	**169-4868**	2	FILM-WARNING (NO CLEARANCE, STAY BACK)	
	4	1	**177-1921**	2	PIN AS	
	5	1	**177-1972**	2	SKID AS	
	6	1	**177-1987**	1	BLADE AS	
	7	1	**3B-8489**	2	FITTING-GREASE	
M	8	1	**6V-9189**	2	LOCKNUT (M8X1.25-THD)	
M	9	1	**8T-6869**	2	BOLT (M8X1.25X60-MM)	
	10	1	**9R-2959**	2	CLIP	

M-METRIC PART

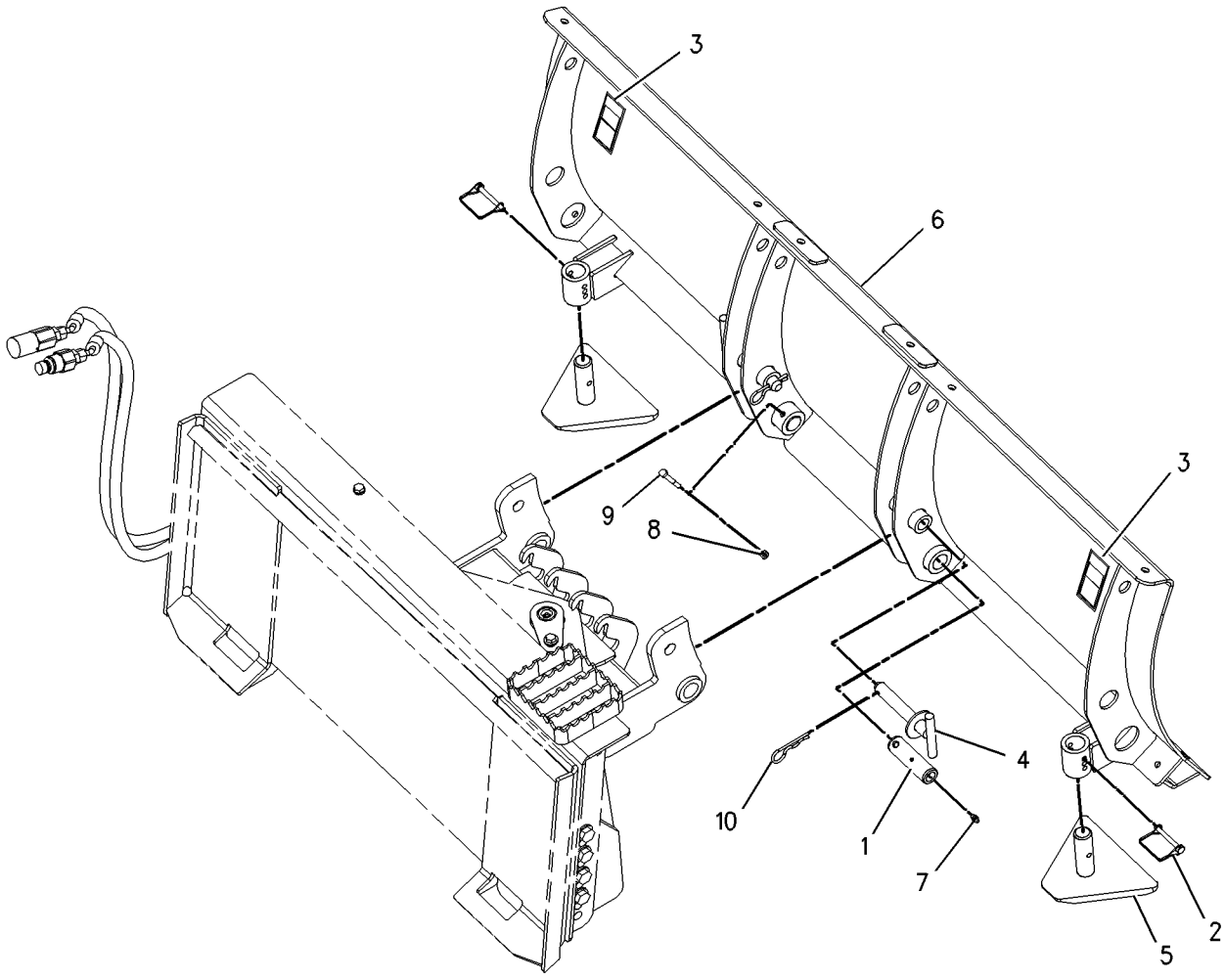

GRAPHIC #1 **<END>** g00777694

177-1982 BLADE GP-ANGLING

S/N: BXM4225-UP
2134-MM (84-IN)
PART OF 177-1990 BLADE AR
AN ATTACHMENT

SMCS-6060, 6701 **i01911992**

NOTE	REF NO	GRAPHIC REF	PART NUMBER	QTY	PART NAME 1 2 3 4 5 6 (PRODUCT LEVEL)	SEE PAGE
	1	1	**157-0940**	2	PIN	
	2	1	**166-0319**	2	PIN AS	
	3	1	**169-4868**	2	FILM-WARNING (NO CLEARANCE, STAY BACK)	
	4	1	**177-1921**	2	PIN AS	
	5	1	**177-1972**	2	SKID AS	
	6	1	**177-1988**	1	BLADE AS	
	7	1	**3B-8489**	2	FITTING-GREASE	
M	8	1	**6V-9189**	2	LOCKNUT (M8X1.25-THD)	
M	9	1	**8T-6869**	2	BOLT (M8X1.25X60-MM)	
	10	1	**9R-2959**	2	CLIP	

M-METRIC PART

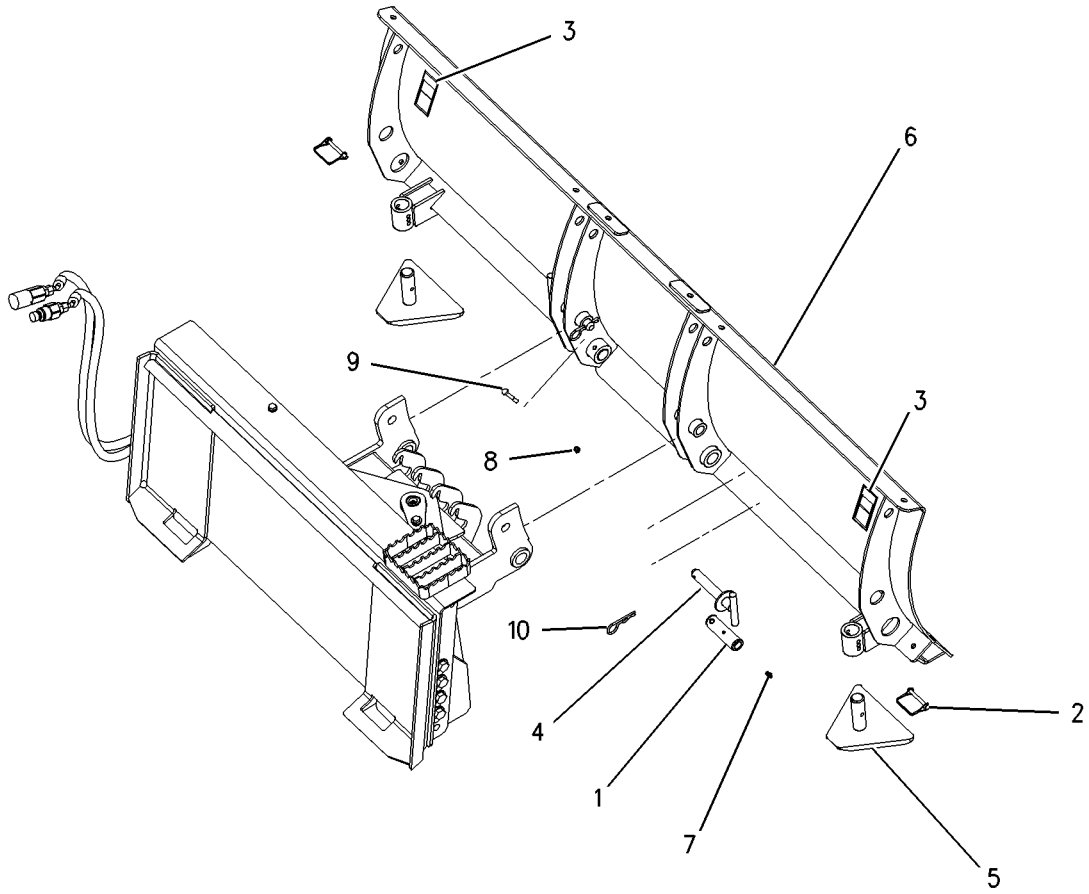

GRAPHIC #1 **<END>** g00710327

222-7724 BLADE GP-ANGLING

S/N: BXM4225-UP
2134-MM (84-IN)
PART OF 231-5275 BLADE AR
AN ATTACHMENT

SMCS-6060, 6701 **i02280909**

NOTE	REF NO	GRAPHIC REF	PART NUMBER	QTY	PART NAME 1 2 3 4 5 6 (PRODUCT LEVEL)	SEE PAGE
B	1	1	**8E-5702**	22	SHIM (0.8-MM THK)	
	2	1	**255-6540**	1	PLATE-INSTRUCTION (BUCKET SPECIFICATIONS)	
	3	1	**168-8389**	4	TACK-FASTENER	
	4	1	**222-7412**	1	BLADE AS-ANGLING	
	5	1	**222-7725**	1	FRAME GP-BLADE	
	6	1	**231-5271**	1	PIN	
	7	1	**238-1004**	2	MOUNT AS	
	8	1	**238-1005**	2	SKID AS	
	9	1	**244-1367**	1	BUSHING	
Y	10	1	*222-7546*	1	EDGE GP-BIT & CUTTING	450
	11	1	**5P-1076**	8	WASHER-HARD (13.5X30X4-MM THK)	
	12	1	**6V-7644**	2	RING-RETAINING	
M	13	1	**8C-8478**	4	BOLT (M20X2.5X140-MM)	
	14	1	**8J-2880**	1	CAP-BEARING	
	15	1	**8T-4123**	4	WASHER (22X35X3.5-MM THK)	
M	16	1	**8T-4139**	8	BOLT (M12X1.75X30-MM)	

B-USE AS REQUIRED
M-METRIC PART
Y-SEPARATE ILLUSTRATION

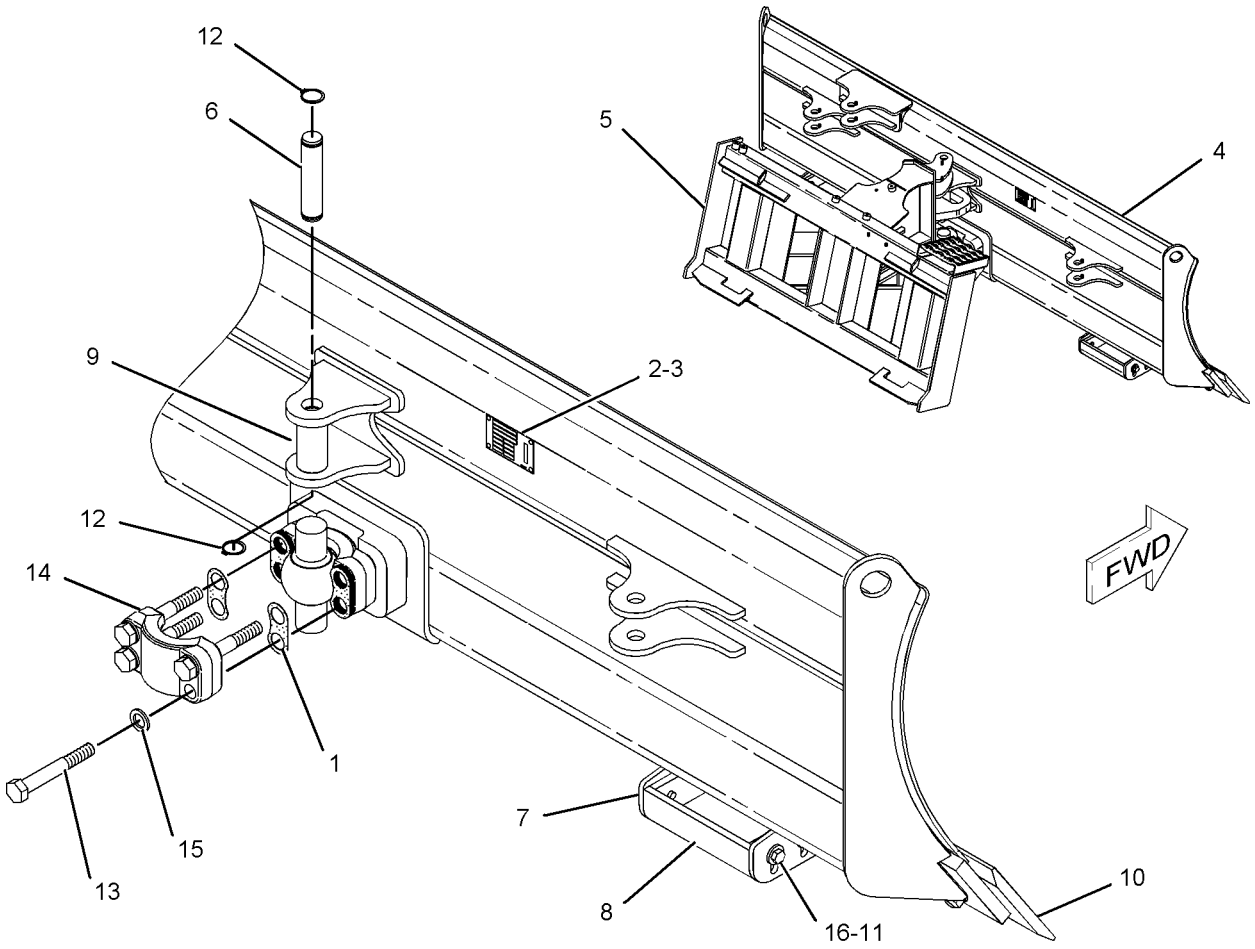

GRAPHIC #1 **<END>** g01021080

WORK TOOLS

231-5276 BLADE GP-ANGLING

S/N: BXM4225-UP
1829-MM (72-IN)
PART OF 231-5277 BLADE AR
AN ATTACHMENT

SMCS-6060, 6701 **i02280916**

NOTE	REF NO	GRAPHIC REF	PART NUMBER	QTY	PART NAME 1 2 3 4 5 6 (PRODUCT LEVEL)	SEE PAGE
B	1	1	**8E-5702**	22	SHIM (0.8-MM THK)	
	2	1	**255-6540**	1	PLATE-INSTRUCTION (BUCKET SPECIFICATIONS)	
	3	1	**168-8389**	4	TACK-FASTENER	
	4	1	**222-7725**	1	FRAME GP-BLADE	
	5	1	**230-4596**	1	BLADE AS-ANGLING	
	6	1	**231-5271**	1	PIN	
	7	1	**238-1004**	2	MOUNT AS	
	8	1	**238-1005**	2	SKID AS	
	9	1	**244-1367**	1	BUSHING	
Y	10	1	*222-7545*	1	EDGE GP-BIT & CUTTING	450
	11	1	**5P-1076**	8	WASHER-HARD (13.5X30X4-MM THK)	
	12	1	**6V-7644**	2	RING-RETAINING	
M	13	1	**8C-8478**	4	BOLT (M20X2.5X140-MM)	
	14	1	**8J-2880**	1	CAP-BEARING	
	15	1	**8T-4123**	4	WASHER (22X35X3.5-MM THK)	
M	16	1	**8T-4139**	8	BOLT (M12X1.75X30-MM)	

B-USE AS REQUIRED
M-METRIC PART
Y-SEPARATE ILLUSTRATION

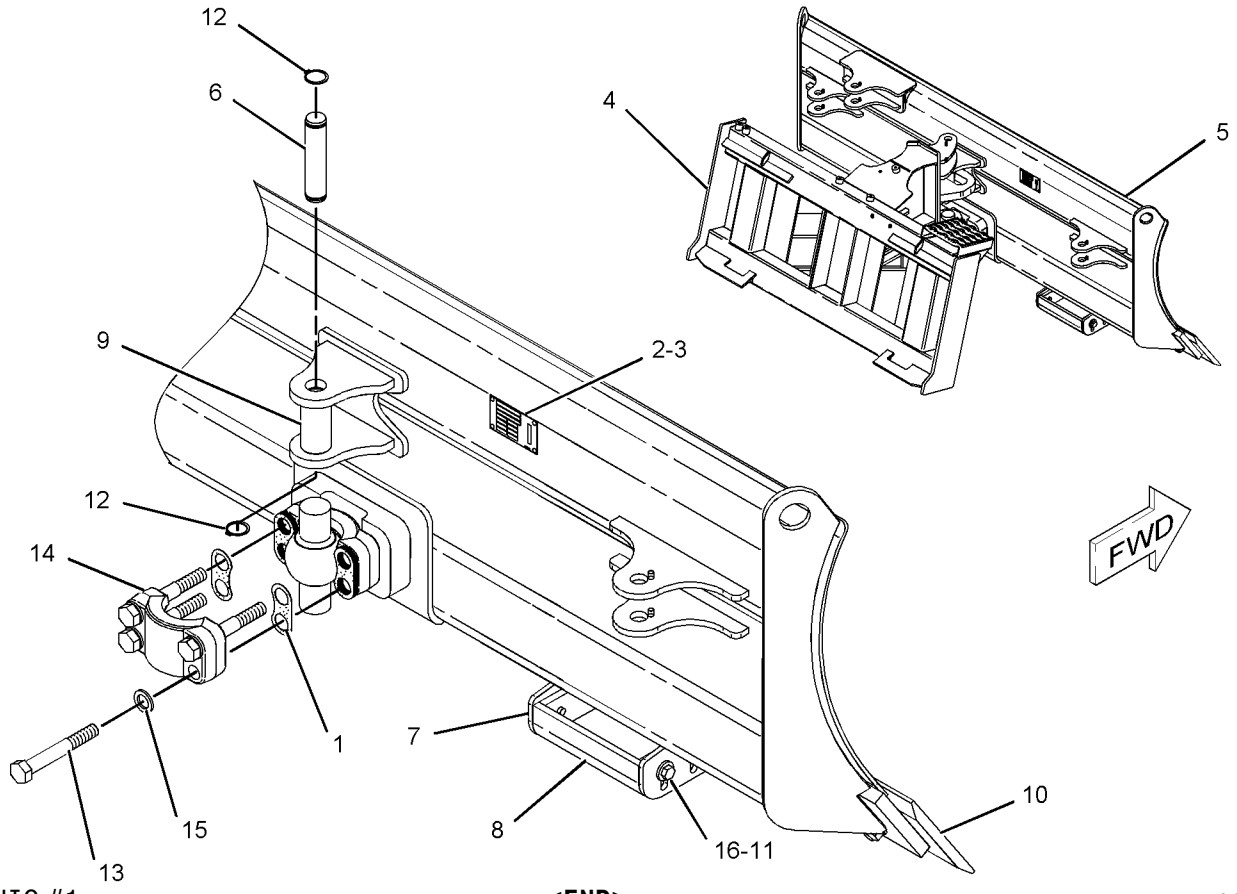

GRAPHIC #1 **<END>** g01020723

279-5384 BLADE GP-MULTIPURPOSE BUCKET

S/N: BXM4225-UP
1524-MM (60-IN)
PART OF 279-5383 BUCKET GP-MULTIPURPOSE
AN ATTACHMENT

SMCS-6060, 6104 **i02552040**

NOTE	REF NO	GRAPHIC REF	PART NUMBER	QTY	PART NAME 1 2 3 4 5 6 (PRODUCT LEVEL)	SEE PAGE
	1	1	**154-2704**	1	PLATE-INSTRUCTION (BUCKET SPECIFICATIONS)	
	2	1	**168-8389**	4	TACK-FASTENER	
	3	1	**279-5385**	1	BLADE AS	

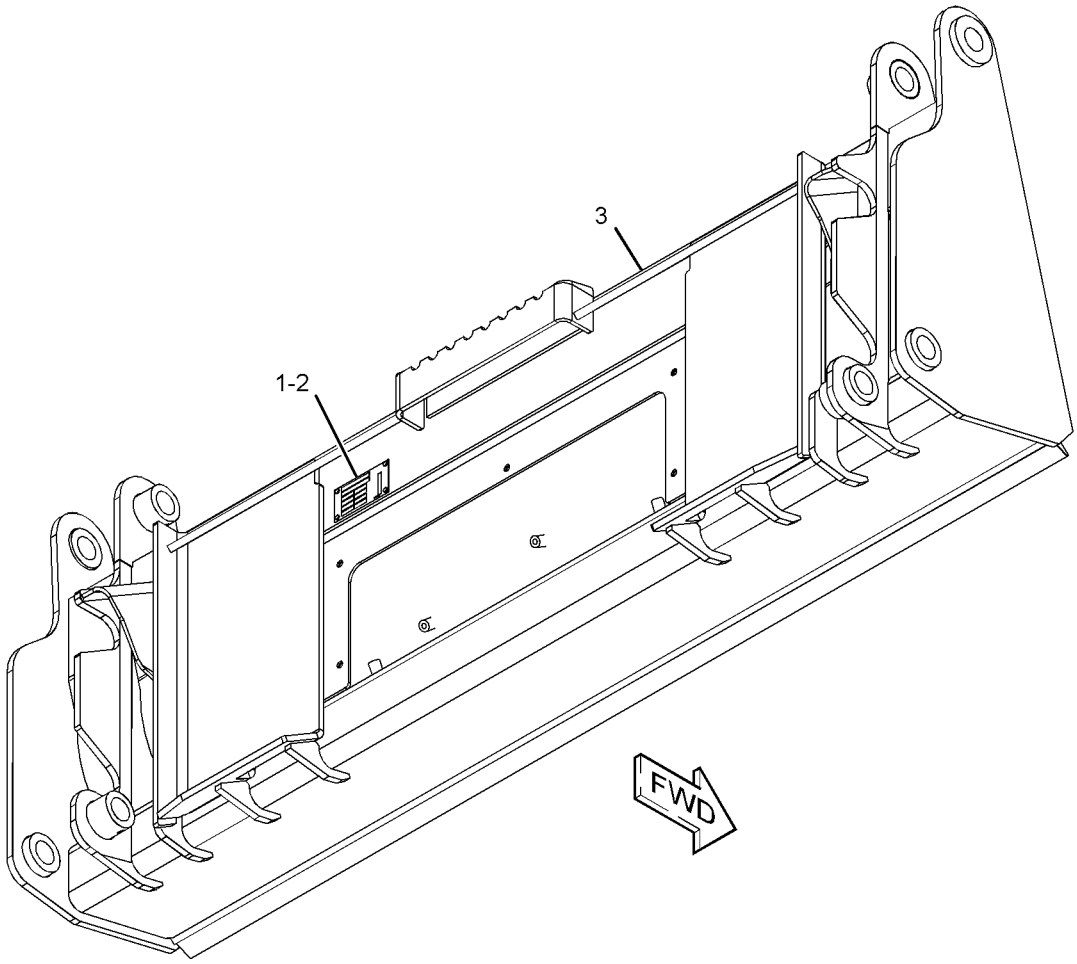

GRAPHIC #1 **<END>** g01278496

279-5388 BLADE GP-MULTIPURPOSE BUCKET

S/N: BXM4225-UP
1676-MM (66-IN)
PART OF 279-5389 BUCKET GP-MULTIPURPOSE
AN ATTACHMENT

SMCS-6060, 6104 **i02552100**

NOTE	REF NO	GRAPHIC REF	PART NUMBER	QTY	PART NAME 1 2 3 4 5 6 (PRODUCT LEVEL)	SEE PAGE
	1	1	**154-2704**	1	PLATE-INSTRUCTION (BUCKET SPECIFICATIONS)	
	2	1	**168-8389**	4	TACK-FASTENER	
	3	1	**279-5387**	1	BLADE AS	

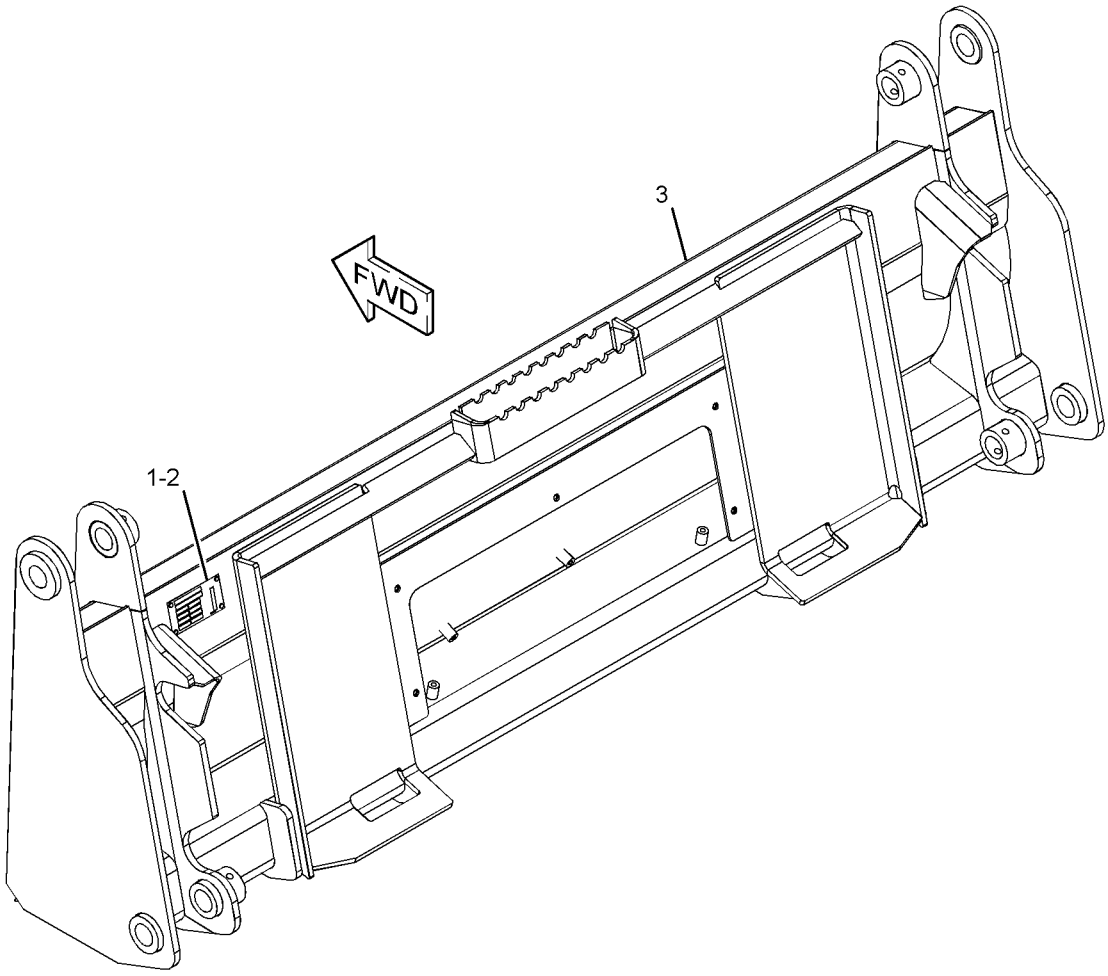

GRAPHIC #1 **<END>** g01279242

279-5396 BLADE GP-MULTIPURPOSE BUCKET

S/N: BXM4225-UP
1829-MM (72-IN)
PART OF 279-5397 BUCKET GP-MULTIPURPOSE
AN ATTACHMENT

SMCS-6060, 6104 **i02552170**

NOTE	REF NO	GRAPHIC REF	PART NUMBER	QTY	PART NAME 1 2 3 4 5 6 (PRODUCT LEVEL)	SEE PAGE
	1	1	**154-2704**	1	PLATE-INSTRUCTION (BUCKET SPECIFICATIONS)	
	2	1	**168-8389**	4	TACK-FASTENER	
	3	1	**279-5395**	1	BLADE AS	

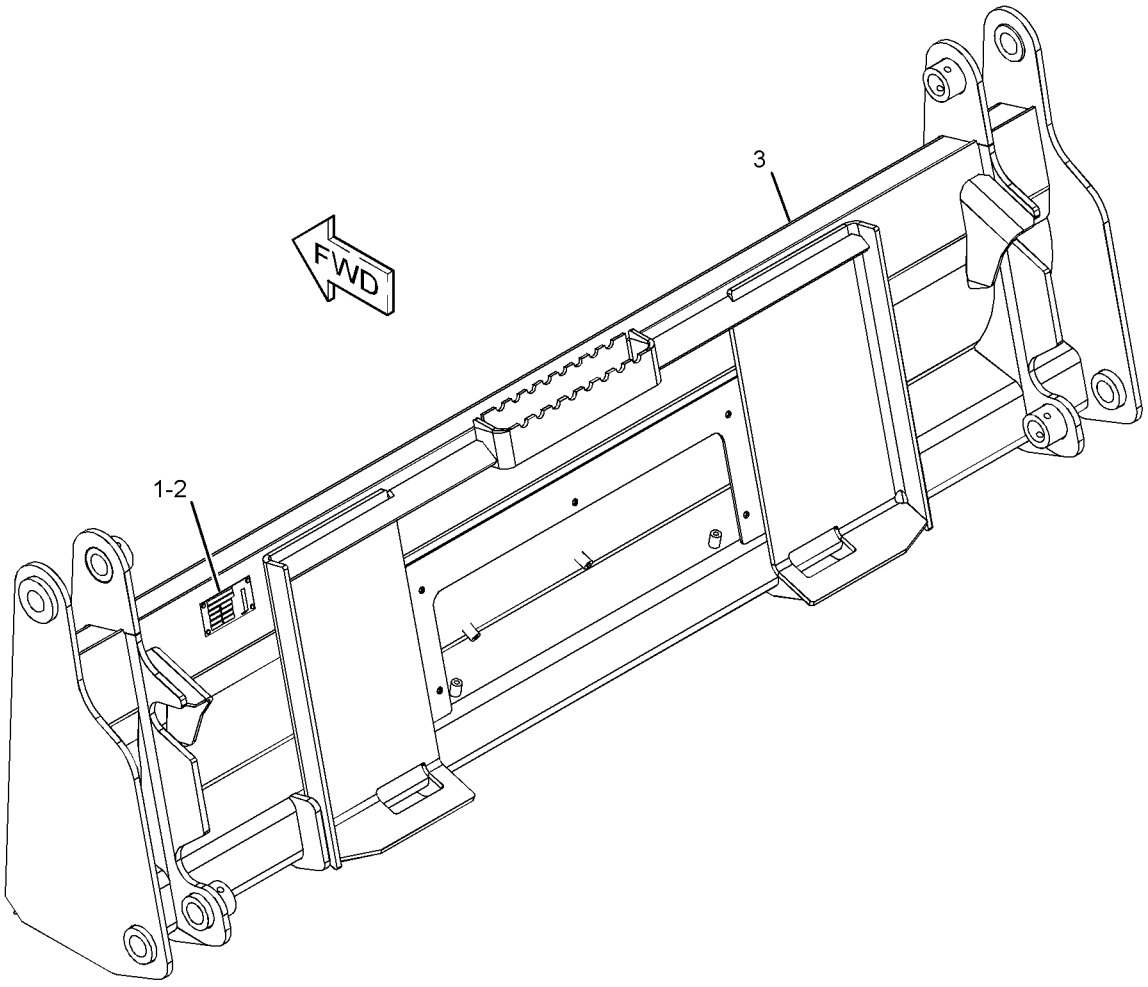

GRAPHIC #1 **<END>** g01279973

279-5405 BLADE GP-MULTIPURPOSE BUCKET

S/N: BXM4225-UP
1981-MM (78-IN)
PART OF 279-5404 BUCKET GP-MULTIPURPOSE
AN ATTACHMENT

SMCS-6060, 6104 **i02552256**

NOTE	REF NO	GRAPHIC REF	PART NUMBER	QTY	PART NAME 1 2 3 4 5 6 (PRODUCT LEVEL)	SEE PAGE
	1	1	**154-2704**	1	PLATE-INSTRUCTION (BUCKET SPECIFICATIONS)	
	2	1	**168-8389**	4	TACK-FASTENER	
	3	1	**279-5406**	1	BLADE AS	

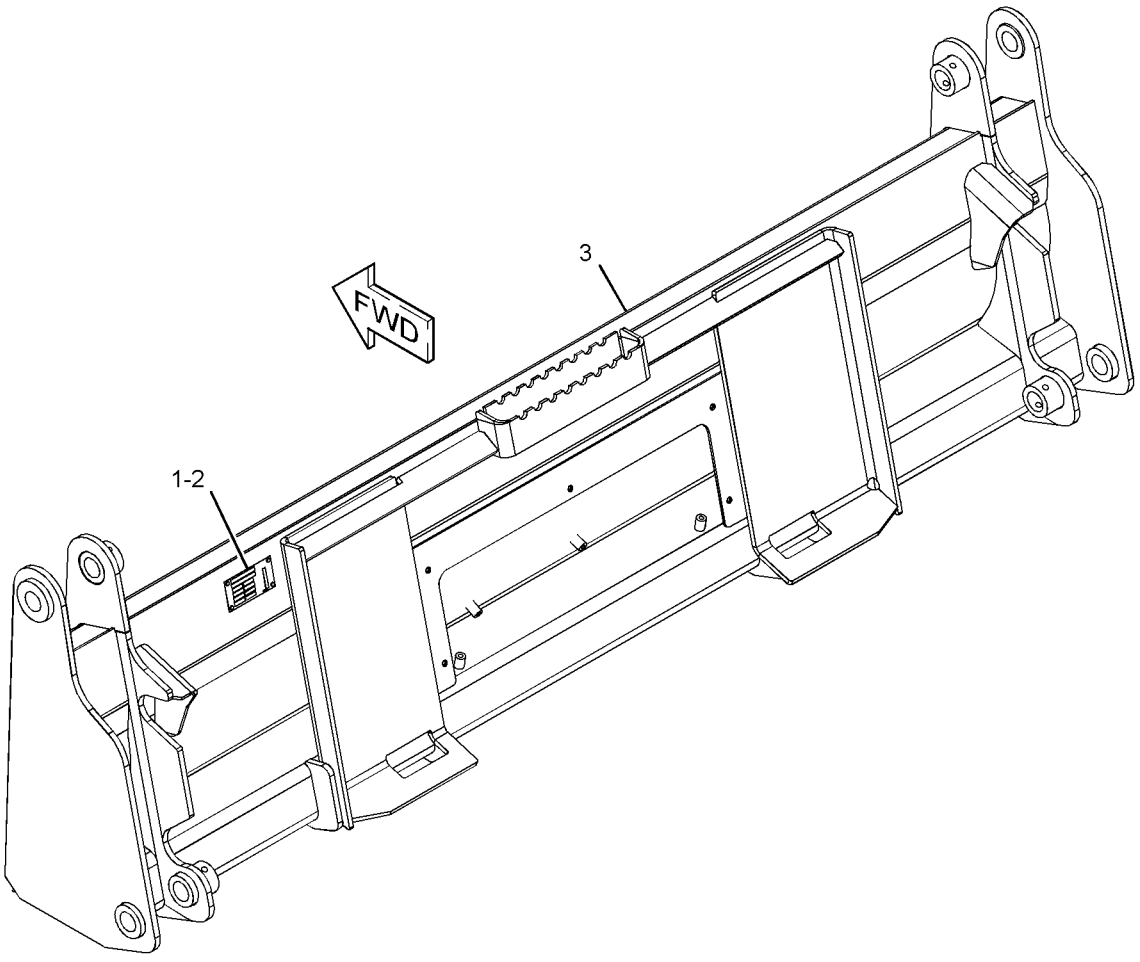

GRAPHIC #1 **<END>** g01278518

WORK TOOLS

268-4083 BUCKET AR-DIRT

S/N: BXM4225-UP
FIELD REPLACEMENT FOR 268-4084—PAGE 425
AN ATTACHMENT AND FIELD INSTALLATION

SMCS-6001 **i02539980**

NOTE	PART NUMBER	QTY	PART NAME 1 2 3 4 5 6 (PRODUCT LEVEL)	SEE PAGE
Y	**268-4084**	1	BUCKET GP-DIRT	425
Y	*135-9387*	1	EDGE GP-CUTTING	454
Y-SEPARATE ILLUSTRATION				

<END>

279-5435 BUCKET AR-DIRT

S/N: BXM4225-UP
AN ATTACHMENT

SMCS-6001 **i02552331**

NOTE	PART NUMBER	QTY	PART NAME 1 2 3 4 5 6 (PRODUCT LEVEL)	SEE PAGE
Y	**279-5434**	1	BUCKET AS-DIRT	414
Y	*135-9383*	1	EDGE GP-CUTTING	450
Y-SEPARATE ILLUSTRATION				

<END>

279-5438 BUCKET AR-DIRT

S/N: BXM4225-UP
AN ATTACHMENT

SMCS-6001 **i02571312**

NOTE	PART NUMBER	QTY	PART NAME 1 2 3 4 5 6 (PRODUCT LEVEL)	SEE PAGE
Y	**279-5437**	1	BUCKET AS-DIRT	415
Y	*135-9384*	1	EDGE GP-CUTTING	451
Y-SEPARATE ILLUSTRATION				

<END>

279-5441 BUCKET AR-DIRT

S/N: BXM4225-UP
AN ATTACHMENT

SMCS-6001 **i02571314**

NOTE	PART NUMBER	QTY	PART NAME 1 2 3 4 5 6 (PRODUCT LEVEL)	SEE PAGE
Y	**279-5440**	1	BUCKET AS-DIRT	416
Y	*135-9385*	1	EDGE GP-CUTTING	452
Y-SEPARATE ILLUSTRATION				

<END>

WORK TOOLS

285-6090 BUCKET AR-DIRT

S/N: BXM4225-UP
AN ATTACHMENT

SMCS-6001 **i02552446**

NOTE	PART NUMBER	QTY	PART NAME 1 2 3 4 5 6 (PRODUCT LEVEL)	SEE PAGE
Y	**285-6089**	1	BUCKET AS-DIRT	417
Y	*135-9386*	1	EDGE GP-CUTTING (DIRT)	453
Y-SEPARATE ILLUSTRATION				

<END>

279-5365 BUCKET AR-GENERAL PURPOSE

S/N: BXM4225-UP
AN ATTACHMENT

SMCS-6101 **i02550406**

NOTE	PART NUMBER	QTY	PART NAME 1 2 3 4 5 6 (PRODUCT LEVEL)	SEE PAGE
Y	**279-5364**	1	BUCKET AS-GENERAL PURPOSE	418
Y	*135-9384*	1	EDGE GP-CUTTING	451
Y-SEPARATE ILLUSTRATION				

<END>

279-5366 BUCKET AR-GENERAL PURPOSE

S/N: BXM4225-UP
AN ATTACHMENT

SMCS-6101 **i02550436**

NOTE	PART NUMBER	QTY	PART NAME 1 2 3 4 5 6 (PRODUCT LEVEL)	SEE PAGE
Y	**279-5364**	1	BUCKET AS-GENERAL PURPOSE	418
Y	*141-4999*	8	TOOTH GP-UNI	489
Y-SEPARATE ILLUSTRATION				

<END>

279-5369 BUCKET AR-GENERAL PURPOSE

S/N: BXM4225-UP
AN ATTACHMENT

SMCS-6101 **i02551081**

NOTE	PART NUMBER	QTY	PART NAME 1 2 3 4 5 6 (PRODUCT LEVEL)	SEE PAGE
Y	**279-5368**	1	BUCKET AS-GENERAL PURPOSE	419
Y	*135-9385*	1	EDGE GP-CUTTING	452
Y-SEPARATE ILLUSTRATION				

<END>

279-5370 BUCKET AR-GENERAL PURPOSE

S/N: BXM4225-UP
AN ATTACHMENT

SMCS-6101 **i02551084**

NOTE	PART NUMBER	QTY	PART NAME 1 2 3 4 5 6 (PRODUCT LEVEL)	SEE PAGE
Y	**279-5368**	1	BUCKET AS-GENERAL PURPOSE	419
Y	*141-4999*	8	TOOTH GP-UNI	489

Y-SEPARATE ILLUSTRATION

<END>

279-5373 BUCKET AR-GENERAL PURPOSE

S/N: BXM4225-UP
AN ATTACHMENT

SMCS-6101 **i02552012**

NOTE	PART NUMBER	QTY	PART NAME 1 2 3 4 5 6 (PRODUCT LEVEL)	SEE PAGE
Y	**279-5372**	1	BUCKET AS-GENERAL PURPOSE	420
Y	*135-9386*	1	EDGE GP-CUTTING	453

Y-SEPARATE ILLUSTRATION

<END>

279-5374 BUCKET AR-GENERAL PURPOSE

S/N: BXM4225-UP
AN ATTACHMENT

SMCS-6101 **i02552011**

NOTE	PART NUMBER	QTY	PART NAME 1 2 3 4 5 6 (PRODUCT LEVEL)	SEE PAGE
Y	**279-5372**	1	BUCKET AS-GENERAL PURPOSE	420
Y	*141-4999*	8	TOOTH GP-UNI	489

Y-SEPARATE ILLUSTRATION

<END>

279-5377 BUCKET AR-GENERAL PURPOSE

S/N: BXM4225-UP
AN ATTACHMENT

SMCS-6101 **i02552020**

NOTE	PART NUMBER	QTY	PART NAME 1 2 3 4 5 6 (PRODUCT LEVEL)	SEE PAGE
Y	**279-5376**	1	BUCKET AS-GENERAL PURPOSE	421
Y	*135-9387*	1	EDGE GP-CUTTING	454

Y-SEPARATE ILLUSTRATION

<END>

WORK TOOLS

279-5378 BUCKET AR-GENERAL PURPOSE

S/N: BXM4225-UP
AN ATTACHMENT

SMCS-6101 **i02552018**

NOTE	PART NUMBER	QTY	PART NAME 1 2 3 4 5 6 (PRODUCT LEVEL)	SEE PAGE
Y	**279-5376**	1	BUCKET AS-GENERAL PURPOSE	421
Y	*141-4999*	9	TOOTH GP-UNI	489
Y-SEPARATE ILLUSTRATION				

<END>

157-7223 BUCKET AR-GRAPPLE

S/N: BXM4225-UP
INDUSTRIAL
PART OF 157-7226 BUCKET AR-GRAPPLE
AN ATTACHMENT

SMCS-6704 **i02508973**

NOTE	PART NUMBER	QTY	PART NAME 1 2 3 4 5 6 (PRODUCT LEVEL)	SEE PAGE
Y	*156-0884*	1	BUCKET GP-GRAPPLE	426
Y	**278-1975**	2	CYLINDER GP-HYDRAULIC	268
Y	*161-0187*	1	LINES GP-GRAPPLE	300
Y	*156-0891*	1	MOUNTING GP-CYLINDER	358
Y-SEPARATE ILLUSTRATION				

<END>

157-7224 BUCKET AR-GRAPPLE

S/N: BXM4225-UP
INDUSTRIAL
PART OF 157-7227 BUCKET AR-GRAPPLE
AN ATTACHMENT

SMCS-6704 **i02508941**

NOTE	PART NUMBER	QTY	PART NAME 1 2 3 4 5 6 (PRODUCT LEVEL)	SEE PAGE
Y	*156-0885*	1	BUCKET GP-GRAPPLE	427
Y	*156-0891*	1	MOUNTING GP-CYLINDER	358
Y	**278-1975**	2	CYLINDER GP-HYDRAULIC	268
Y	*161-0187*	1	LINES GP-GRAPPLE	300
Y-SEPARATE ILLUSTRATION				

<END>

157-7225 BUCKET AR-GRAPPLE—INDUSTRIAL

S/N: BXM4225-UP
PART OF 158-6095 BUCKET AR-GRAPPLE
AN ATTACHMENT

SMCS-6704 **i02509114**

NOTE	PART NUMBER	QTY	PART NAME 1 2 3 4 5 6 (PRODUCT LEVEL)	SEE PAGE
Y	*156-0886*	1	BUCKET GP-GRAPPLE	428
Y	**278-1975**	2	CYLINDER GP-HYDRAULIC	268
Y	*161-0187*	1	LINES GP-GRAPPLE	300
Y	*156-0891*	1	MOUNTING GP-CYLINDER	358
Y-SEPARATE ILLUSTRATION				

<END>

157-7226 BUCKET AR-GRAPPLE—INDUSTRIAL

S/N: BXM4225-UP
AN ATTACHMENT

SMCS-6704 **i01788957**

NOTE	PART NUMBER	QTY	PART NAME 1 2 3 4 5 6 (PRODUCT LEVEL)	SEE PAGE
Y	**157-7223**	1	BUCKET AR-GRAPPLE	404
Y	*135-9384*	1	EDGE GP-CUTTING	451
Y-SEPARATE ILLUSTRATION				

<END>

157-7227 BUCKET AR-GRAPPLE—INDUSTRIAL

S/N: BXM4225-UP
AN ATTACHMENT

SMCS-6704 **i01788965**

NOTE	PART NUMBER	QTY	PART NAME 1 2 3 4 5 6 (PRODUCT LEVEL)	SEE PAGE
Y	**157-7224**	1	BUCKET AR-GRAPPLE	404
Y	*135-9385*	1	EDGE GP-CUTTING	452
Y-SEPARATE ILLUSTRATION				

<END>

158-6095 BUCKET AR-GRAPPLE—INDUSTRIAL

S/N: BXM4225-UP
AN ATTACHMENT

SMCS-6704 **i01060288**

NOTE	PART NUMBER	QTY	PART NAME 1 2 3 4 5 6 (PRODUCT LEVEL)	SEE PAGE
Y	**157-7225**	1	BUCKET AR-GRAPPLE	405
Y	*135-9386*	1	EDGE GP-CUTTING	453
Y-SEPARATE ILLUSTRATION				

<END>

285-6093 BUCKET AR-GRAPPLE

S/N: BXM4225-UP
AN ATTACHMENT

SMCS-6704 **i02552451**

NOTE	PART NUMBER	QTY	PART NAME 1 2 3 4 5 6 (PRODUCT LEVEL)	SEE PAGE
Y	**285-6099**	1	BUCKET GP-UTILITY (66-IN)	437
Y	*285-6116*	1	GRAPPLE GP-UTILITY	470

Y-SEPARATE ILLUSTRATION

<END>

285-6104 BUCKET AR-GRAPPLE

S/N: BXM4225-UP
AN ATTACHMENT

SMCS-6704 **i02552487**

NOTE	PART NUMBER	QTY	PART NAME 1 2 3 4 5 6 (PRODUCT LEVEL)	SEE PAGE
Y	**285-6102**	1	BUCKET GP-UTILITY (72-IN)	438
Y	*285-6116*	1	GRAPPLE GP-UTILITY	470

Y-SEPARATE ILLUSTRATION

<END>

285-6111 BUCKET AR-GRAPPLE

S/N: BXM4225-UP
AN ATTACHMENT

SMCS-6704 **i02552741**

NOTE	PART NUMBER	QTY	PART NAME 1 2 3 4 5 6 (PRODUCT LEVEL)	SEE PAGE
Y	**285-6100**	1	BUCKET AR-UTILITY	412
Y	*285-6116*	1	GRAPPLE GP-UTILITY	470

Y-SEPARATE ILLUSTRATION

<END>

285-6112 BUCKET AR-GRAPPLE

S/N: BXM4225-UP
AN ATTACHMENT

SMCS-6704 **i02552759**

NOTE	PART NUMBER	QTY	PART NAME 1 2 3 4 5 6 (PRODUCT LEVEL)	SEE PAGE
Y	**285-6101**	1	BUCKET AR-UTILITY	413
Y	*285-6116*	1	GRAPPLE GP-UTILITY	470

Y-SEPARATE ILLUSTRATION

<END>

286-9300 BUCKET AR-GRAPPLE

S/N: BXM4225-UP
AN ATTACHMENT

SMCS-6704 **i02723699**

NOTE	REF NO	GRAPHIC REF	PART NUMBER	QTY	PART NAME 1 2 3 4 5 6 (PRODUCT LEVEL)	SEE PAGE
Y	1	1	*286-9248*	1	CYLINDER & MTG GP-BUCKET	257
Y	2	1	*286-9251*	1	PLATE & FILM GP	641
Y	3	1	*286-9278*	1	BUCKET GP-GRAPPLE	430
Y	4	1	*286-9279*	1	LINES GP-GRAPPLE	304
Y	5	1	*293-6264*	2	CYLINDER GP-BUCKET	260

Y-SEPARATE ILLUSTRATION

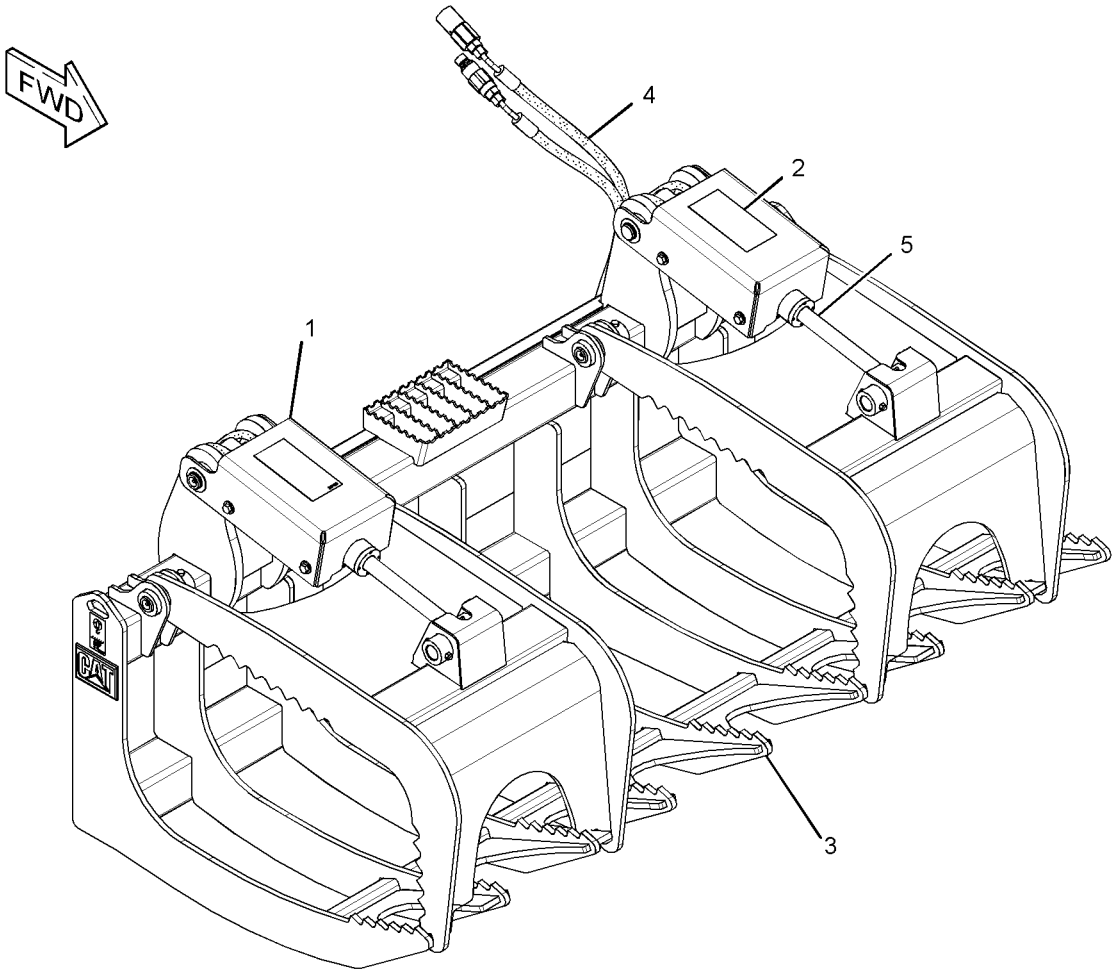

GRAPHIC #1 **<END>** g01372572

WORK TOOLS

286-9301 BUCKET AR-GRAPPLE

S/N: BXM4225-UP

AN ATTACHMENT

SMCS-6704 **i02723700**

NOTE	REF NO	GRAPHIC REF	PART NUMBER	QTY	PART NAME 1 2 3 4 5 6 (PRODUCT LEVEL)	SEE PAGE
Y	1	1	*286-9244*	1	BUCKET GP-GRAPPLE	429
Y	2	1	*286-9248*	1	CYLINDER & MTG GP-BUCKET	257
Y	3	1	*286-9250*	1	LINES GP-GRAPPLE	302
Y	4	1	*286-9251*	1	PLATE & FILM GP	641
Y	5	1	**293-6264**	2	CYLINDER GP-BUCKET	260

Y-SEPARATE ILLUSTRATION

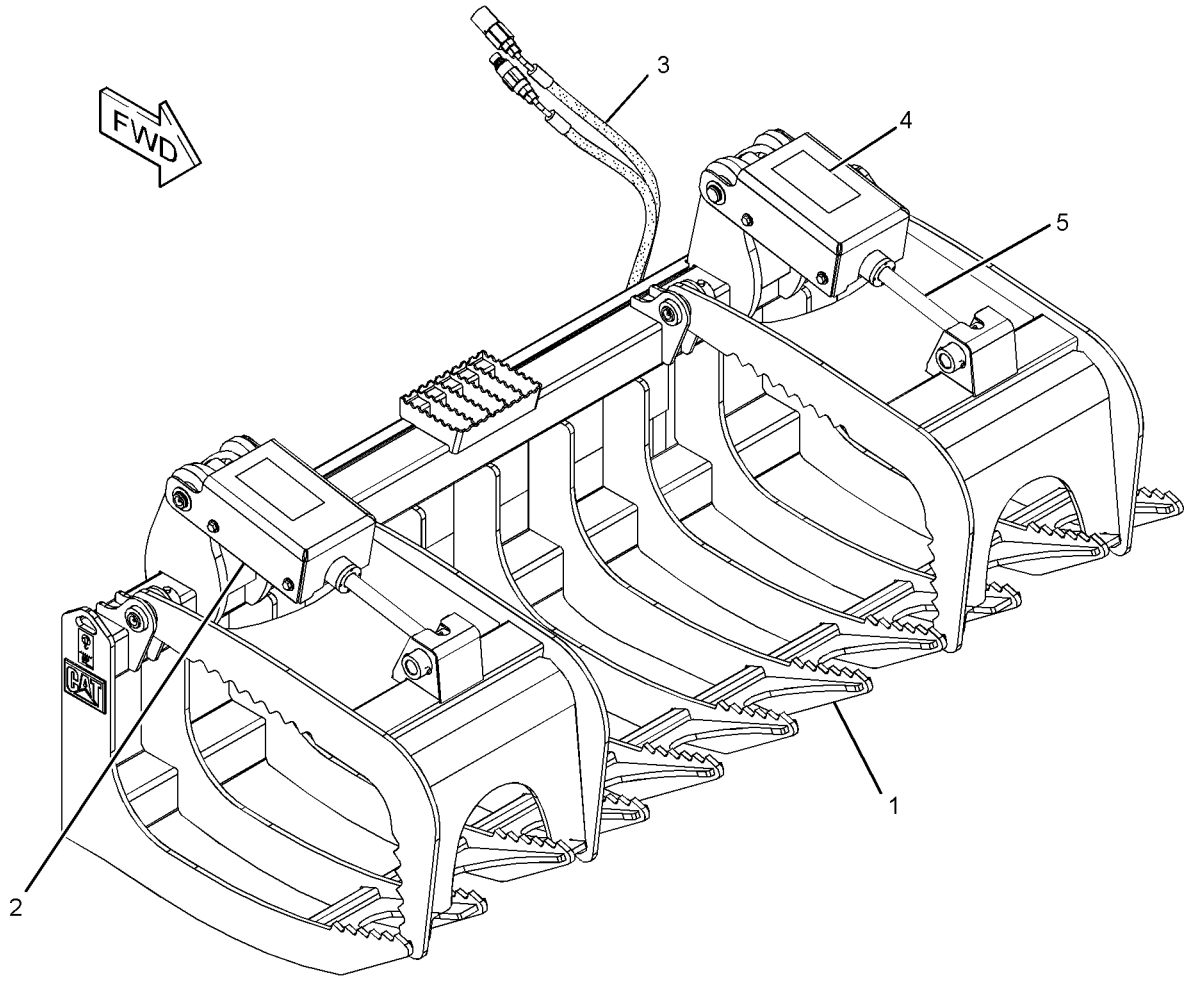

GRAPHIC #1 **<END>** g01372972

279-5420 BUCKET AR-LIGHT MATERIAL

S/N: BXM4225-UP
AN ATTACHMENT

SMCS-6103 **i02552302**

NOTE	PART NUMBER	QTY	PART NAME 1 2 3 4 5 6 (PRODUCT LEVEL)	SEE PAGE
Y	**279-5421**	1	BUCKET AS-LIGHT MATERIAL	422
Y	*135-9386*	1	EDGE GP-CUTTING	453
Y-SEPARATE ILLUSTRATION				

<END>

279-5425 BUCKET AR-LIGHT MATERIAL

S/N: BXM4225-UP
AN ATTACHMENT

SMCS-6103 **i02552308**

NOTE	PART NUMBER	QTY	PART NAME 1 2 3 4 5 6 (PRODUCT LEVEL)	SEE PAGE
Y	**279-5424**	1	BUCKET AS-LIGHT MATERIAL	423
Y	*135-9387*	1	EDGE GP-CUTTING	454
Y-SEPARATE ILLUSTRATION				

<END>

279-5430 BUCKET AR-LIGHT MATERIAL

S/N: BXM4225-UP
AN ATTACHMENT

SMCS-6103 **i02552313**

NOTE	PART NUMBER	QTY	PART NAME 1 2 3 4 5 6 (PRODUCT LEVEL)	SEE PAGE
Y	**279-5429**	1	BUCKET AS-LIGHT MATERIAL	424
Y	*195-7124*	1	EDGE GP-CUTTING	456
Y-SEPARATE ILLUSTRATION				

<END>

279-5380 BUCKET AR-MULTIPURPOSE

S/N: BXM4225-UP
AN ATTACHMENT

SMCS-6104 **i02552027**

NOTE	PART NUMBER	QTY	PART NAME 1 2 3 4 5 6 (PRODUCT LEVEL)	SEE PAGE
Y	**279-5382**	1	BUCKET AR-MULTIPURPOSE	410
Y	*141-4999*	8	TOOTH GP-UNI	489
Y-SEPARATE ILLUSTRATION				

<END>

279-5381 BUCKET AR-MULTIPURPOSE

S/N: BXM4225-UP
AN ATTACHMENT

SMCS-6104 **i02552030**

NOTE	PART NUMBER	QTY	PART NAME 1 2 3 4 5 6 (PRODUCT LEVEL)	SEE PAGE
Y	**279-5382**	1	BUCKET AR-MULTIPURPOSE	410
Y	*135-9384*	1	EDGE GP-CUTTING	451
Y-SEPARATE ILLUSTRATION				

<END>

279-5382 BUCKET AR-MULTIPURPOSE

S/N: BXM4225-UP
PART OF 279-5380, 279-5381 BUCKET AR-MULTIPURPOSE
AN ATTACHMENT

SMCS-6104 **i02770080**

NOTE	PART NUMBER	QTY	PART NAME 1 2 3 4 5 6 (PRODUCT LEVEL)	SEE PAGE
Y	*279-5383*	1	BUCKET GP-MULTIPURPOSE (60-IN)	431
Y	*162-5236*	1	COVER GP-LINES	447
Y	*278-1969*	2	CYLINDER GP-HYDRAULIC	267
Y	*279-5413*	1	LINES GP-BUCKET	285
Y	*154-5011*	1	MOUNTING GP-CYLINDER	357
Y-SEPARATE ILLUSTRATION				

<END>

279-5390 BUCKET AR-MULTIPURPOSE

S/N: BXM4225-UP
PART OF 279-5391, 279-5392 BUCKET AR-MULTIPURPOSE
AN ATTACHMENT

SMCS-6104 **i02770129**

NOTE	PART NUMBER	QTY	PART NAME 1 2 3 4 5 6 (PRODUCT LEVEL)	SEE PAGE
Y	*279-5389*	1	BUCKET GP-MULTIPURPOSE	432
Y	*162-5236*	1	COVER GP-LINES	447
Y	*278-1969*	2	CYLINDER GP-HYDRAULIC	267
Y	*279-5414*	1	LINES GP-BUCKET	287
Y	*154-5011*	1	MOUNTING GP-CYLINDER	357
Y-SEPARATE ILLUSTRATION				

<END>

279-5391 BUCKET AR-MULTIPURPOSE

S/N: BXM4225-UP
AN ATTACHMENT

SMCS-6104 **i02552078**

NOTE	PART NUMBER	QTY	PART NAME 1 2 3 4 5 6 (PRODUCT LEVEL)	SEE PAGE
Y	**279-5390**	1	BUCKET AR-MULTIPURPOSE	410
Y	*135-9385*	1	EDGE GP-CUTTING	452
Y-SEPARATE ILLUSTRATION				

<END>

279-5392 BUCKET AR-MULTIPURPOSE

S/N: BXM4225-UP
AN ATTACHMENT

SMCS-6104 **i02552071**

NOTE	PART NUMBER	QTY	PART NAME 1 2 3 4 5 6 (PRODUCT LEVEL)	SEE PAGE
Y	**279-5390**	1	BUCKET AR-MULTIPURPOSE	410
Y	*141-4999*	8	TOOTH GP-UNI	489
Y-SEPARATE ILLUSTRATION				

<END>

279-5398 BUCKET AR-MULTIPURPOSE

S/N: BXM4225-UP
PART OF 279-5400 BUCKET AR-MULTIPURPOSE, 279-5399 BUCKET GP-MULTIPURPOSE
AN ATTACHMENT

SMCS-6104 **i02770203**

NOTE	PART NUMBER	QTY	PART NAME 1 2 3 4 5 6 (PRODUCT LEVEL)	SEE PAGE
Y	*279-5397*	1	BUCKET GP-MULTIPURPOSE	433
Y	*162-5236*	1	COVER GP-LINES	447
Y	*278-1969*	2	CYLINDER GP-HYDRAULIC	267
Y	*279-5415*	1	LINES GP-BUCKET	289
Y	*154-5011*	1	MOUNTING GP-CYLINDER	357
Y-SEPARATE ILLUSTRATION				

<END>

279-5400 BUCKET AR-MULTIPURPOSE

S/N: BXM4225-UP
AN ATTACHMENT

SMCS-6104 **i02552121**

NOTE	PART NUMBER	QTY	PART NAME 1 2 3 4 5 6 (PRODUCT LEVEL)	SEE PAGE
Y	**279-5398**	1	BUCKET AR-MULTIPURPOSE	411
Y	*141-4999*	8	TOOTH GP-UNI	489
Y-SEPARATE ILLUSTRATION				

<END>

279-5401 BUCKET AR-MULTIPURPOSE

S/N: BXM4225-UP
AN ATTACHMENT

SMCS-6104 **i02552198**

NOTE	PART NUMBER	QTY	PART NAME 1 2 3 4 5 6 (PRODUCT LEVEL)	SEE PAGE
Y	**279-5403**	1	BUCKET AR-MULTIPURPOSE	412
Y	*141-4999*	9	TOOTH GP-UNI	489
Y-SEPARATE ILLUSTRATION				

<END>

WORK TOOLS

279-5402 BUCKET AR-MULTIPURPOSE

S/N: BXM4225-UP
AN ATTACHMENT

SMCS-6104 **i02552200**

NOTE	PART NUMBER	QTY	PART NAME 1 2 3 4 5 6 (PRODUCT LEVEL)	SEE PAGE
Y	**279-5403**	1	BUCKET AR-MULTIPURPOSE	412
Y	*135-9387*	1	EDGE GP-CUTTING	454
Y-SEPARATE ILLUSTRATION				

<END>

279-5403 BUCKET AR-MULTIPURPOSE

S/N: BXM4225-UP
PART OF 279-5401, 279-5402 BUCKET AR-MULTIPURPOSE
AN ATTACHMENT

SMCS-6104 **i02770224**

NOTE	PART NUMBER	QTY	PART NAME 1 2 3 4 5 6 (PRODUCT LEVEL)	SEE PAGE
Y	*279-5404*	1	BUCKET GP-MULTIPURPOSE (78-IN)	435
Y	*162-5236*	1	COVER GP-LINES	447
Y	*278-1969*	2	CYLINDER GP-HYDRAULIC	267
Y	*279-5416*	1	LINES GP-BUCKET	291
Y	*154-5011*	1	MOUNTING GP-CYLINDER	357
Y-SEPARATE ILLUSTRATION				

<END>

285-6095 BUCKET AR-UTILITY

S/N: BXM4225-UP
AN ATTACHMENT

i02552467

NOTE	PART NUMBER	QTY	PART NAME 1 2 3 4 5 6 (PRODUCT LEVEL)	SEE PAGE
Y	**285-6096**	1	BUCKET GP-UTILITY (60-IN)	436
Y	*135-9384*	1	EDGE GP-CUTTING	451
Y-SEPARATE ILLUSTRATION				

<END>

285-6100 BUCKET AR-UTILITY

S/N: BXM4225-UP
PART OF 285-6111 BUCKET AR-GRAPPLE
AN ATTACHMENT

i02552478

NOTE	PART NUMBER	QTY	PART NAME 1 2 3 4 5 6 (PRODUCT LEVEL)	SEE PAGE
Y	**285-6099**	1	BUCKET GP-UTILITY (66-IN)	437
Y	*135-9385*	1	EDGE GP-CUTTING	452
Y-SEPARATE ILLUSTRATION				

<END>

WORK TOOLS

285-6101 BUCKET AR-UTILITY

S/N: BXM4225-UP

PART OF 285-6112 BUCKET AR-GRAPPLE

AN ATTACHMENT

i02552482

NOTE	PART NUMBER	QTY	PART NAME 1 2 3 4 5 6 (PRODUCT LEVEL)	SEE PAGE
Y	**285-6102**	1	BUCKET GP-UTILITY (72-IN)	438
Y	*135-9386*	1	EDGE GP-CUTTING	453

Y-SEPARATE ILLUSTRATION

<END>

279-5434 BUCKET AS-DIRT

S/N: BXM4225-UP
1372-MM (54-IN)
PART OF 279-5435 BUCKET AR-DIRT
AN ATTACHMENT

SMCS-6001 **i02552332**

NOTE	REF NO	GRAPHIC REF	PART NUMBER	QTY	PART NAME 1 2 3 4 5 6 (PRODUCT LEVEL)	SEE PAGE
	1	1	**154-2704**	1	PLATE-INSTRUCTION (BUCKET SPECIFICATIONS)	
	2	1	**168-8389**	4	TACK-FASTENER	
					PARTS SHOWN IN GRAPHIC WITHOUT A REFERENCE NUMBER ARE NOT SERVICED SEPARATELY	

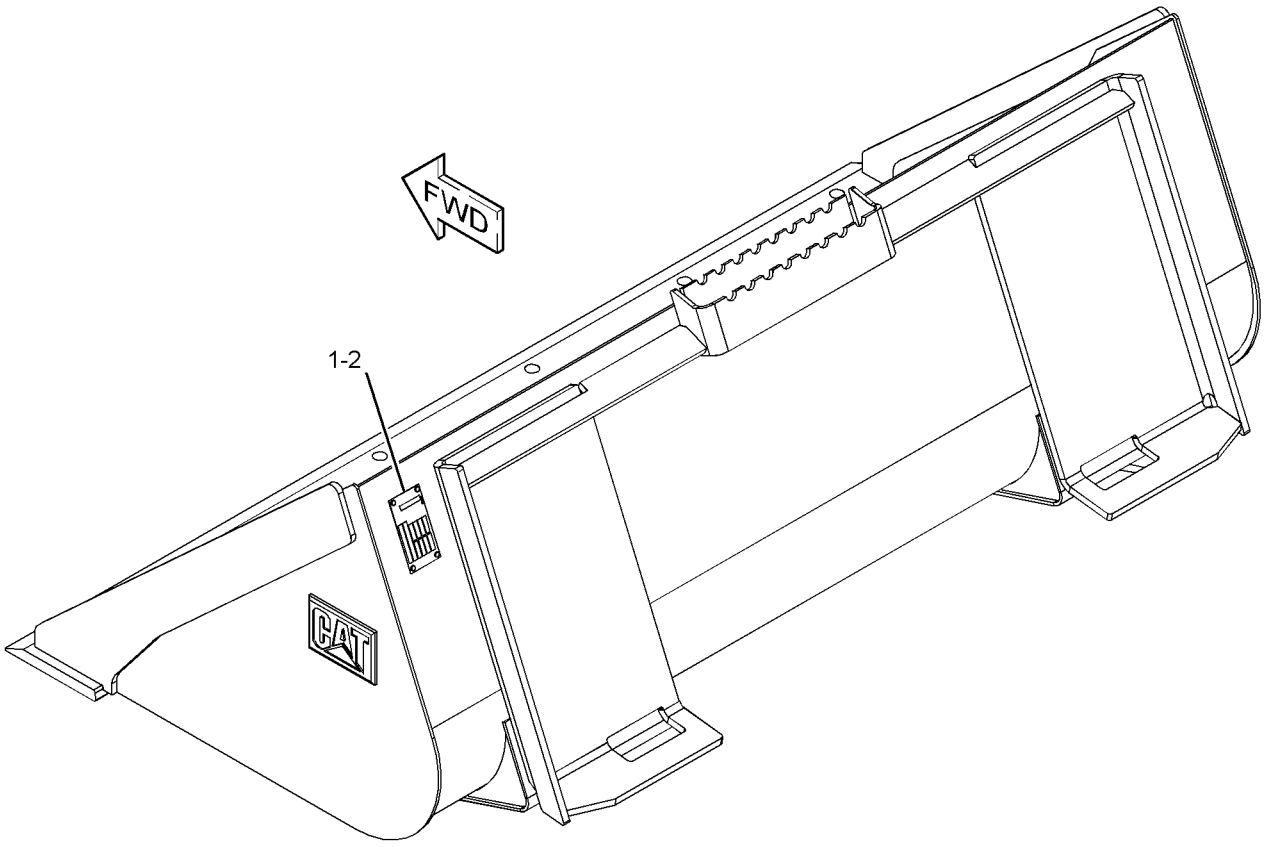

GRAPHIC #1 **<END>** g01280557

279-5437 BUCKET AS-DIRT

S/N: BXM4225-UP
1524-MM (60-IN)
PART OF 279-5438 BUCKET AR-DIRT
AN ATTACHMENT

SMCS-6001 **i02757638**

NOTE	REF NO	GRAPHIC REF	PART NUMBER	QTY	PART NAME 1 2 3 4 5 6 (PRODUCT LEVEL)	SEE PAGE
	1	1	**154-2704**	1	PLATE-INSTRUCTION (BUCKET SPECIFICATIONS)	
	2	1	**168-8389**	4	TACK-FASTENER	
					PARTS SHOWN IN GRAPHIC WITHOUT A REFERENCE NUMBER ARE NOT SERVICED SEPARATELY	

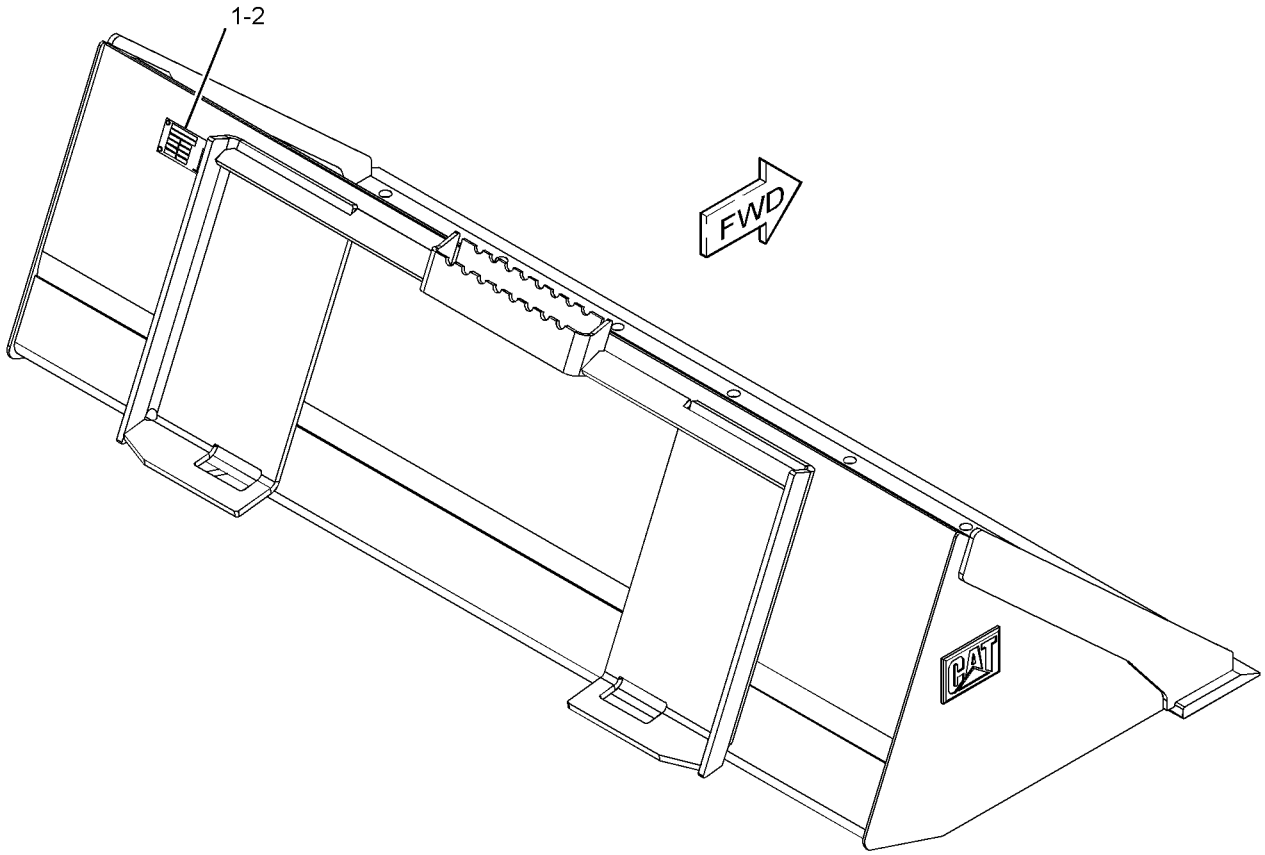

GRAPHIC #1 **<END>** g01280552

WORK TOOLS

279-5440 BUCKET AS-DIRT

S/N: BXM4225-UP
1676-MM (66-IN)
PART OF 279-5441 BUCKET AR-DIRT
AN ATTACHMENT

SMCS-6001 **i02552428**

NOTE	REF NO	GRAPHIC REF	PART NUMBER	QTY	PART NAME 1 2 3 4 5 6 (PRODUCT LEVEL)	SEE PAGE
	1	1	**154-2704**	1	PLATE-INSTRUCTION (BUCKET SPECIFICATIONS)	
	2	1	**168-8389**	4	TACK-FASTENER	
					PARTS SHOWN IN GRAPHIC WITHOUT A REFERENCE NUMBER ARE NOT SERVICED SEPARATELY	

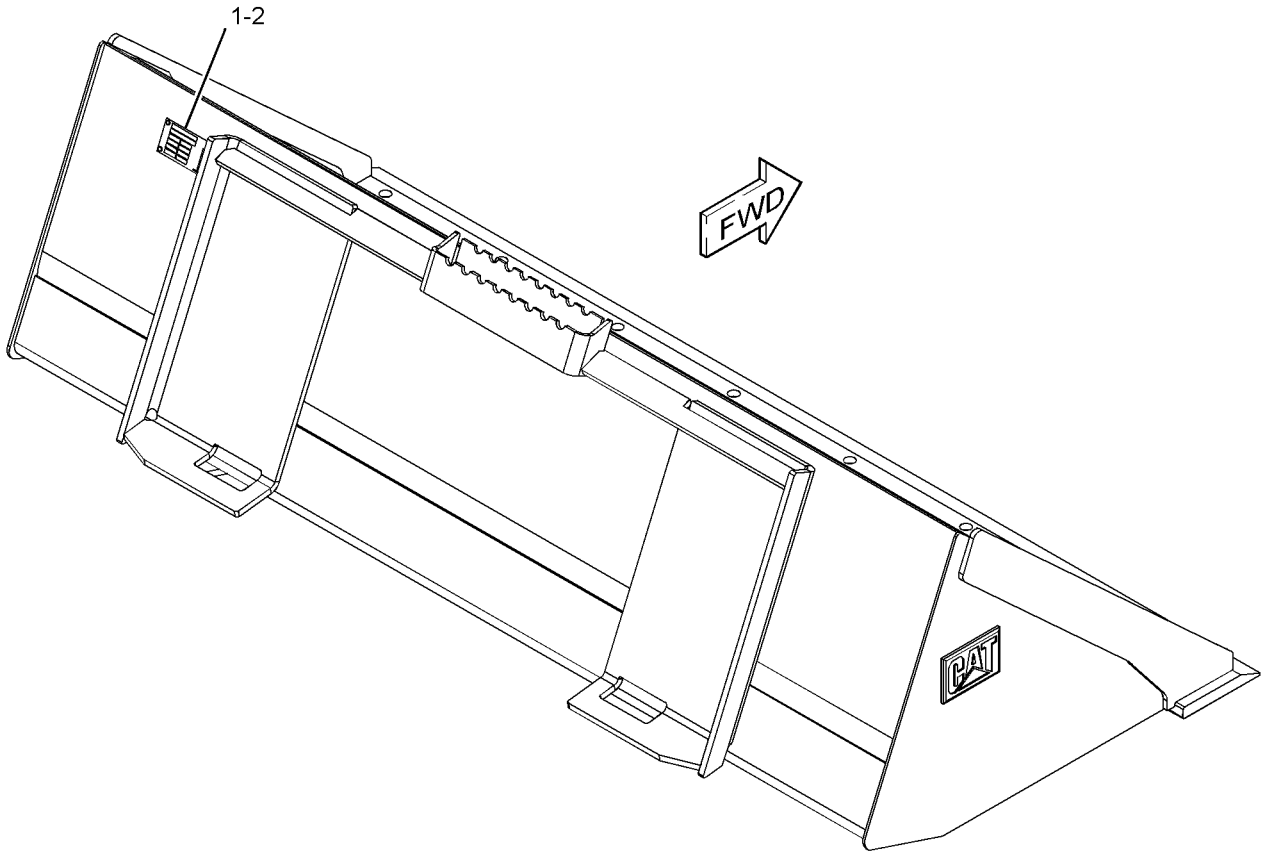

GRAPHIC #1 **<END>** g01280552

WORK TOOLS

285-6089 BUCKET AS-DIRT

S/N: BXM4225-UP
1829-MM (72-IN)
PART OF 285-6090 BUCKET AR-DIRT
AN ATTACHMENT

SMCS-6001 **i02552447**

NOTE	REF NO	GRAPHIC REF	PART NUMBER	QTY	PART NAME 1 2 3 4 5 6 (PRODUCT LEVEL)	SEE PAGE
	1	1	**154-2704**	1	PLATE-INSTRUCTION (BUCKET SPECIFICATIONS)	
	2	1	**168-8389**	4	TACK-FASTENER	
					PARTS SHOWN IN GRAPHIC(S) WITHOUT A REFERENCE NUMBER ARE NOT SERVICED SEPARATELY	

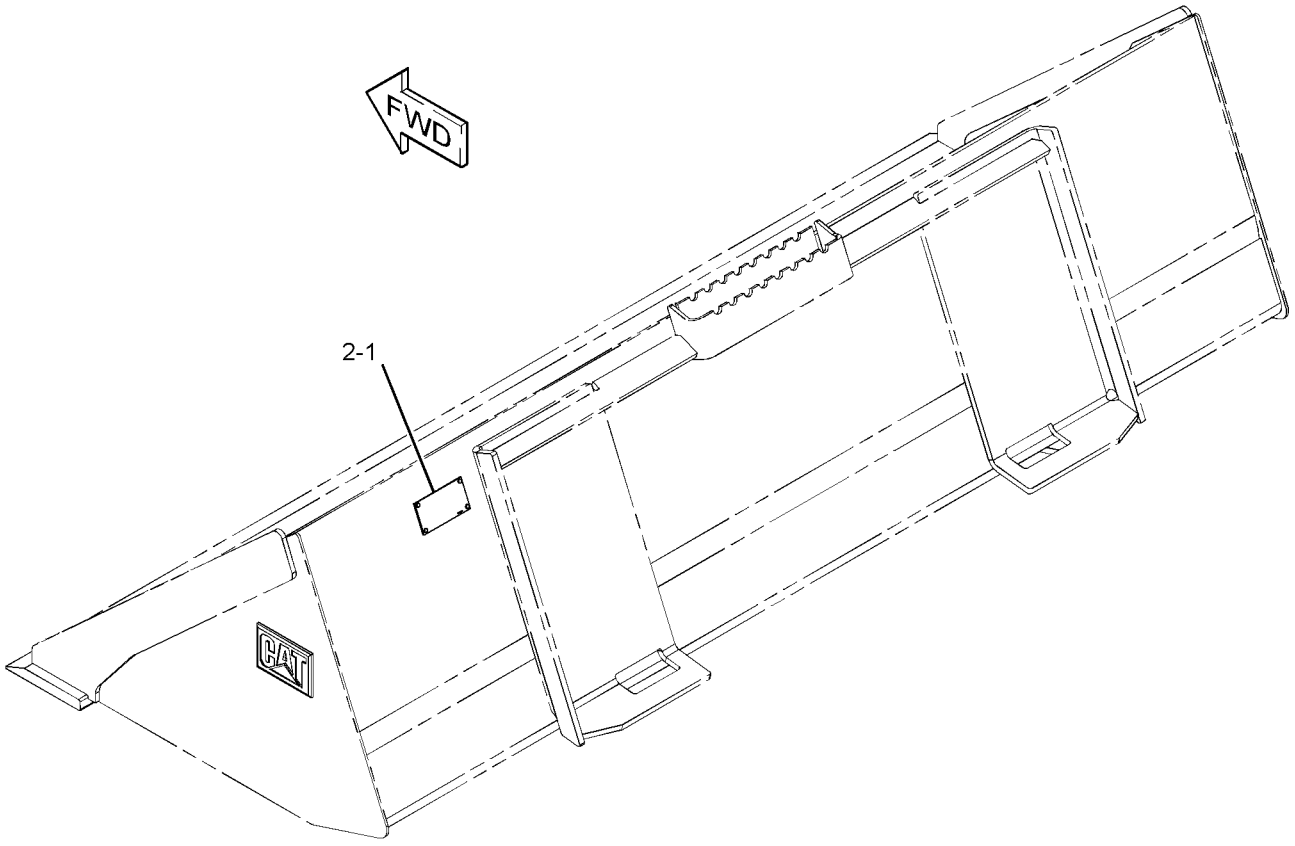

GRAPHIC #1 **<END>** g01279287

279-5364 BUCKET AS-GENERAL PURPOSE

S/N: BXM4225-UP
1524-MM (60-IN)
PART OF 279-5365, 279-5366 BUCKET AR-GENERAL PURPOSE
AN ATTACHMENT

SMCS-6101 **i02550408**

NOTE	REF NO	GRAPHIC REF	PART NUMBER	QTY	PART NAME 1 2 3 4 5 6 (PRODUCT LEVEL)	SEE PAGE
	1	1	**154-2704**	1	PLATE-INSTRUCTION (BUCKET SPECIFICATIONS)	
	2	1	**168-8389**	4	TACK-FASTENER	
					PARTS SHOWN IN GRAPHIC(S) WITHOUT A REFERENCE NUMBER ARE NOT SERVICED SEPARATELY	

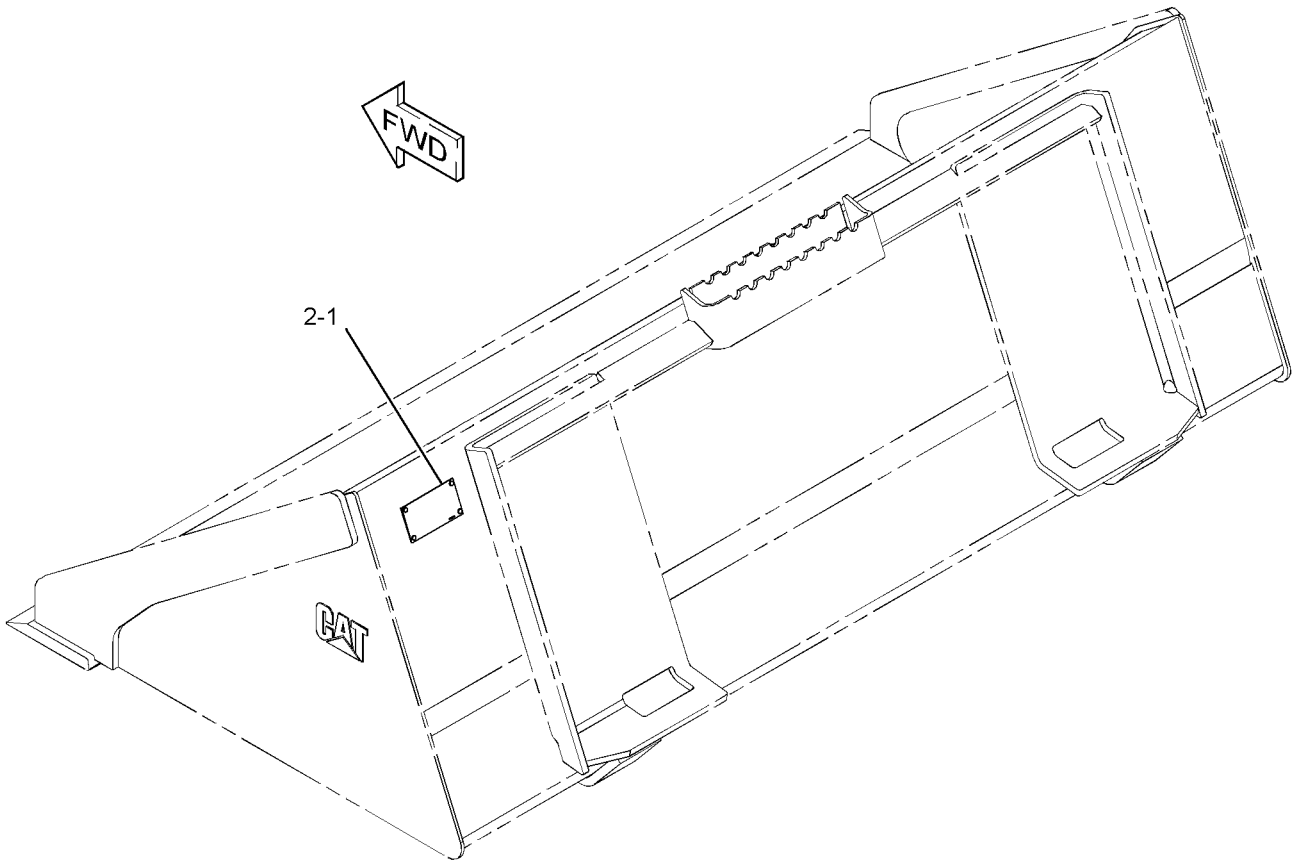

GRAPHIC #1 **<END>** g01279308

279-5368 BUCKET AS-GENERAL PURPOSE

S/N: BXM4225-UP
1676-MM (66-IN)
PART OF 279-5369, 279-5370 BUCKET AR-GENERAL PURPOSE
AN ATTACHMENT

SMCS-6101 **i02551091**

NOTE	REF NO	GRAPHIC REF	PART NUMBER	QTY	PART NAME 1 2 3 4 5 6 (PRODUCT LEVEL)	SEE PAGE
	1	1	**154-2704**	1	PLATE-INSTRUCTION (BUCKET SPECIFICATIONS)	
	2	1	**168-8389**	4	TACK-FASTENER	
					PARTS SHOWN IN GRAPHIC(S) WITHOUT A REFERENCE NUMBER ARE NOT SERVICED SEPARATELY	

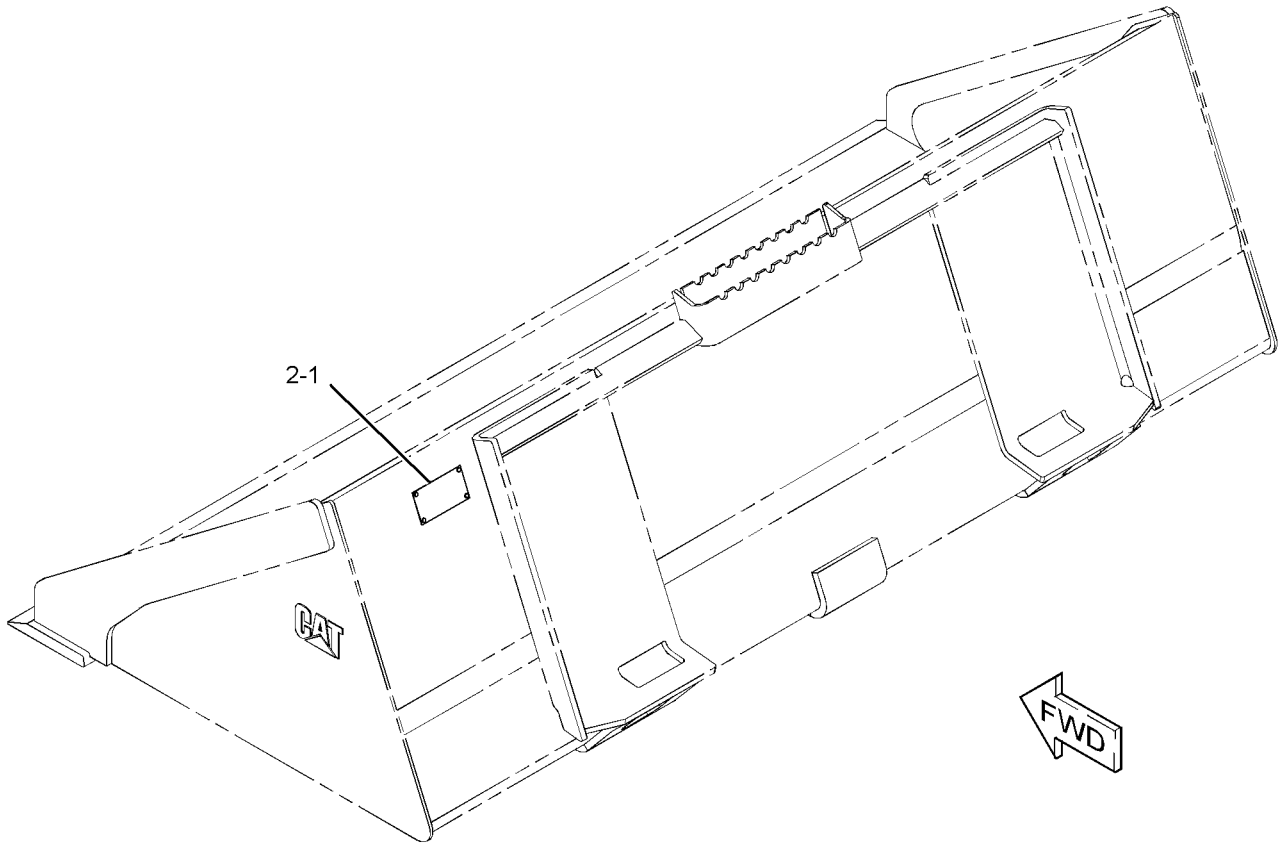

GRAPHIC #1 **<END>** g01279437

WORK TOOLS

279-5372 BUCKET AS-GENERAL PURPOSE

S/N: BXM4225-UP
1829-MM (72-IN)
PART OF 279-5373, 279-5374 BUCKET AR-GENERAL PURPOSE
AN ATTACHMENT

SMCS-6101 **i02552014**

NOTE	REF NO	GRAPHIC REF	PART NUMBER	QTY	PART NAME 1 2 3 4 5 6 (PRODUCT LEVEL)	SEE PAGE
	1	1	**154-2704**	1	PLATE-INSTRUCTION (BUCKET SPECIFICATIONS)	
	2	1	**168-8389**	4	TACK-FASTENER	
					PARTS SHOWN IN GRAPHIC(S) WITHOUT A REFERENCE NUMBER ARE NOT SERVICED SEPARATELY	

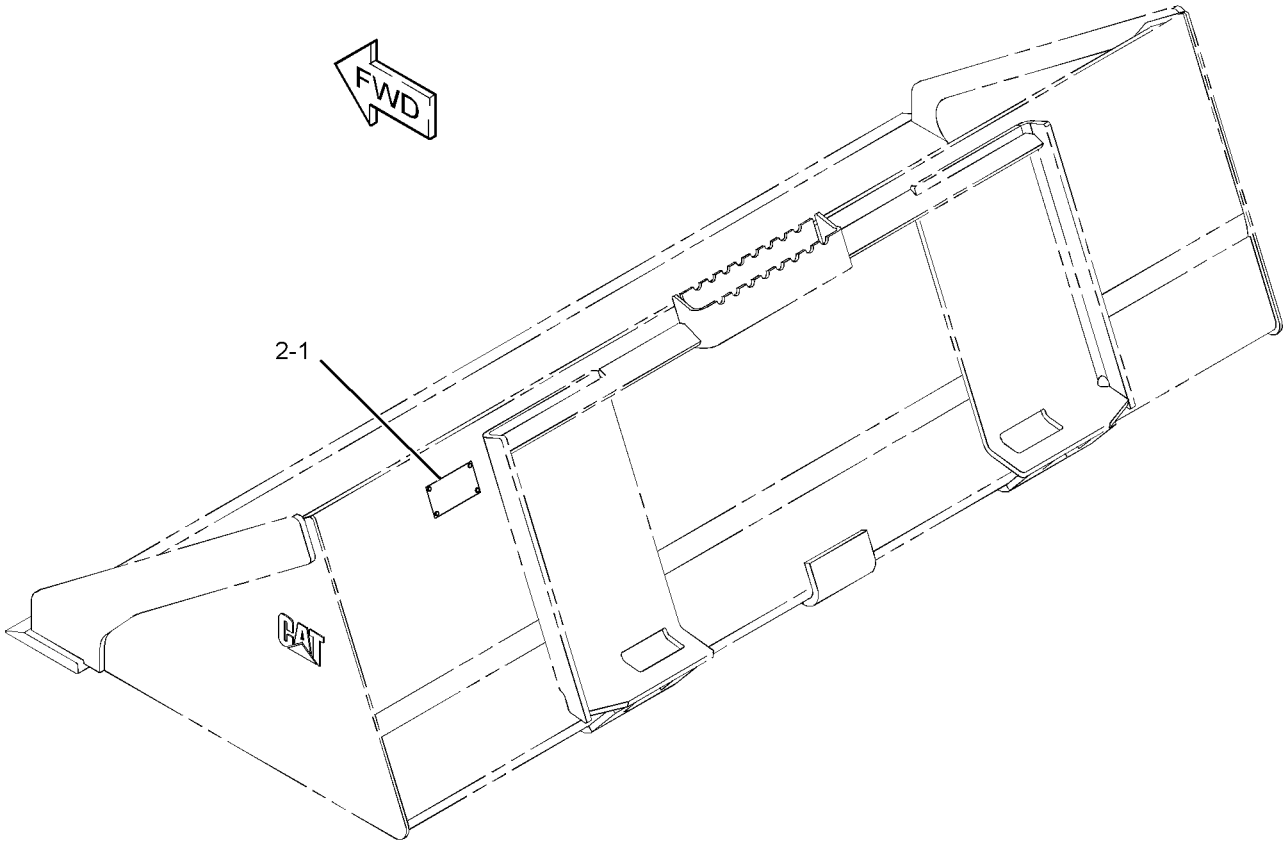

GRAPHIC #1 **<END>** g01279461

WORK TOOLS

279-5376 BUCKET AS-GENERAL PURPOSE

S/N: BXM4225-UP
1981-MM (78-IN)
PART OF 279-5377, 279-5378 BUCKET AR-GENERAL PURPOSE
AN ATTACHMENT

SMCS-6101 **i02571315**

NOTE	REF NO	GRAPHIC REF	PART NUMBER	QTY	PART NAME 1 2 3 4 5 6 (PRODUCT LEVEL)	SEE PAGE
	1	1	**154-2704**	1	PLATE-INSTRUCTION (BUCKET SPECIFICATIONS)	
	2	1	**168-8389**	4	TACK-FASTENER	
					PARTS SHOWN IN GRAPHIC(S) WITHOUT A REFERENCE NUMBER ARE NOT SERVICED SEPARATELY	

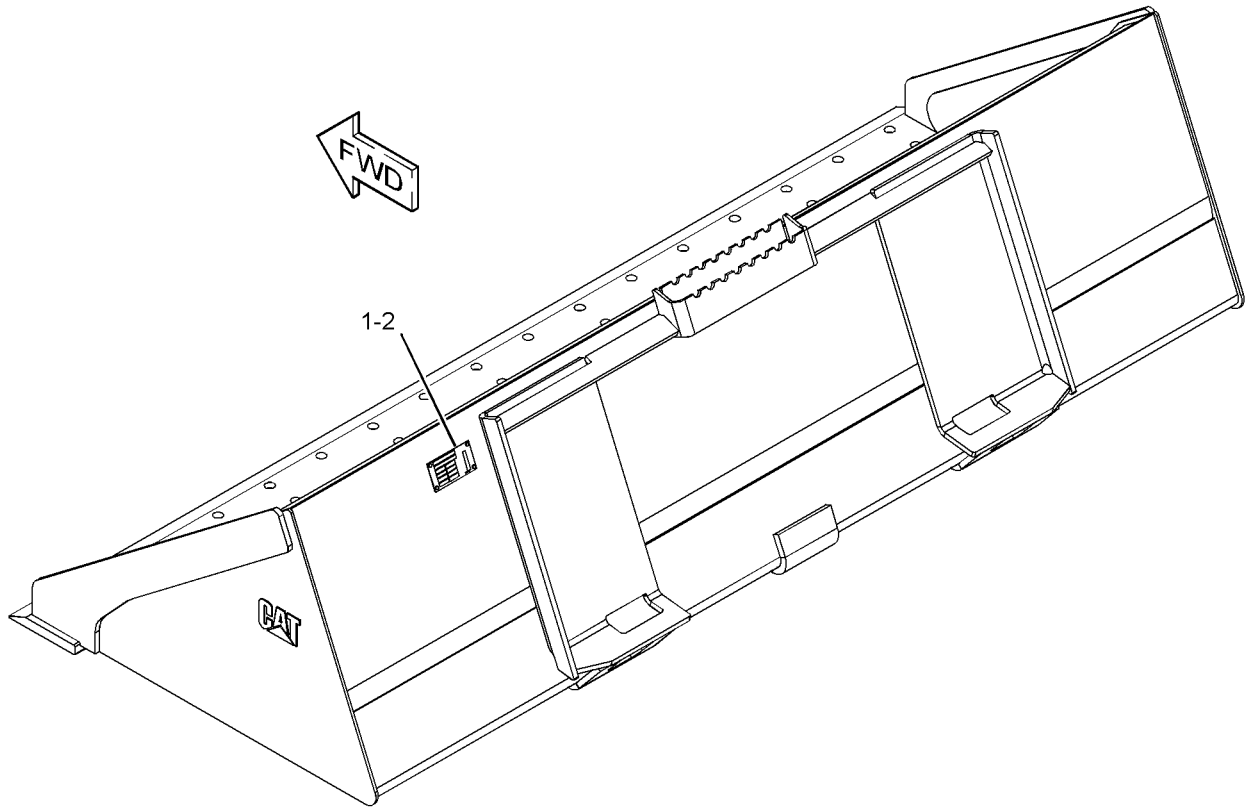

GRAPHIC #1 **<END>** g01288290

WORK TOOLS

279-5421 BUCKET AS-LIGHT MATERIAL

S/N: BXM4225-UP
1829-MM (72-IN)
PART OF 279-5420 BUCKET AR-LIGHT MATERIAL
AN ATTACHMENT

SMCS-6103 **i02571326**

NOTE	REF NO	GRAPHIC REF	PART NUMBER	QTY	PART NAME 1 2 3 4 5 6 (PRODUCT LEVEL)	SEE PAGE
	1	1	**154-2704**	1	PLATE-INSTRUCTION (BUCKET SPECIFICATIONS)	
	2	1	**168-8389**	4	TACK-FASTENER	
					PARTS SHOWN IN GRAPHIC(S) WITHOUT A REFERENCE NUMBER ARE NOT SERVICED SEPARATELY	

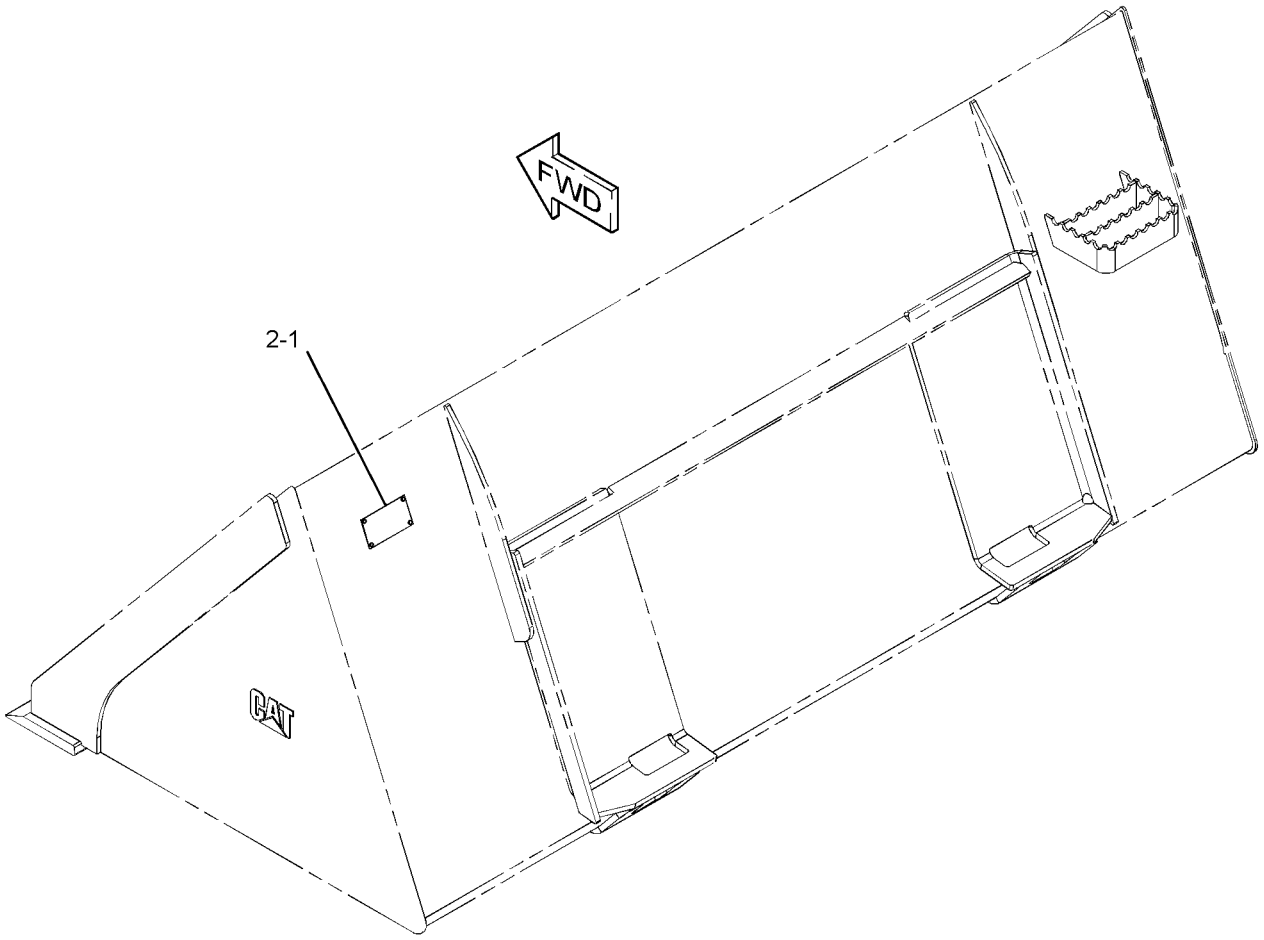

GRAPHIC #1 **<END>** g01278476

WORK TOOLS

279-5424 BUCKET AS-LIGHT MATERIAL

S/N: BXM4225-UP
1981-MM (78-IN)
PART OF 279-5425 BUCKET AR-LIGHT MATERIAL
AN ATTACHMENT

SMCS-6103 **i02571330**

NOTE	REF NO	GRAPHIC REF	PART NUMBER	QTY	PART NAME 1 2 3 4 5 6 (PRODUCT LEVEL)	SEE PAGE
	1	1	**154-2704**	1	PLATE-INSTRUCTION (BUCKET SPECIFICATIONS)	
	2	1	**168-8389**	4	TACK-FASTENER	
					PARTS SHOWN IN GRAPHIC(S) WITHOUT A REFERENCE NUMBER ARE NOT SERVICED SEPARATELY	

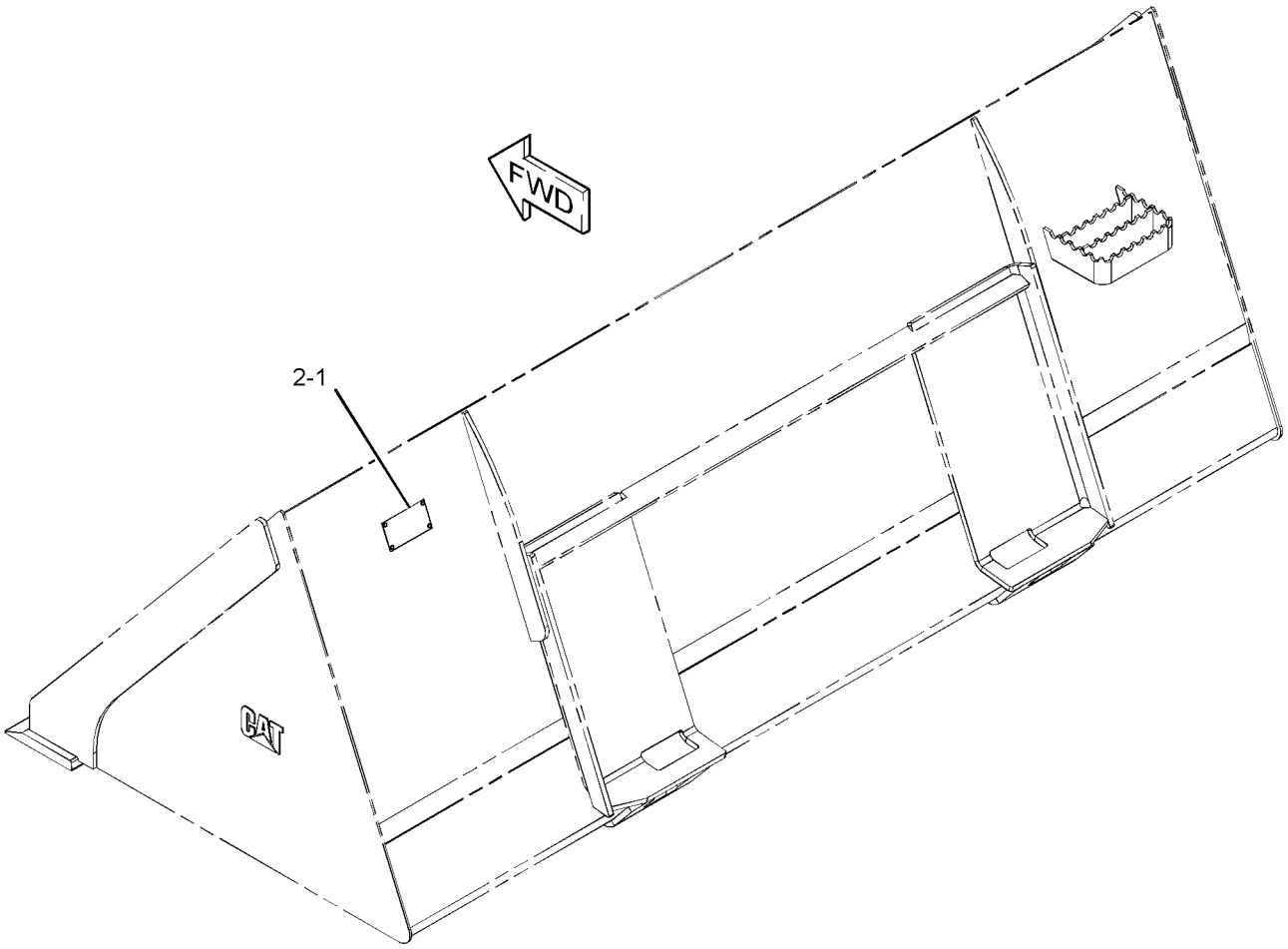

GRAPHIC #1 **<END>** g01278485

WORK TOOLS

279-5429 BUCKET AS-LIGHT MATERIAL

S/N: BXM4225-UP
2134-MM (84-IN)
PART OF 279-5430 BUCKET AR-LIGHT MATERIAL
AN ATTACHMENT

SMCS-6103 **i02571331**

NOTE	REF NO	GRAPHIC REF	PART NUMBER	QTY	PART NAME 1 2 3 4 5 6 (PRODUCT LEVEL)	SEE PAGE
	1	1	**154-2704**	1	PLATE-INSTRUCTION (BUCKET SPECIFICATIONS)	
	2	1	**168-8389**	4	TACK-FASTENER	
					PARTS SHOWN IN GRAPHIC(S) WITHOUT A REFERENCE NUMBER ARE NOT SERVICED SEPARATELY	

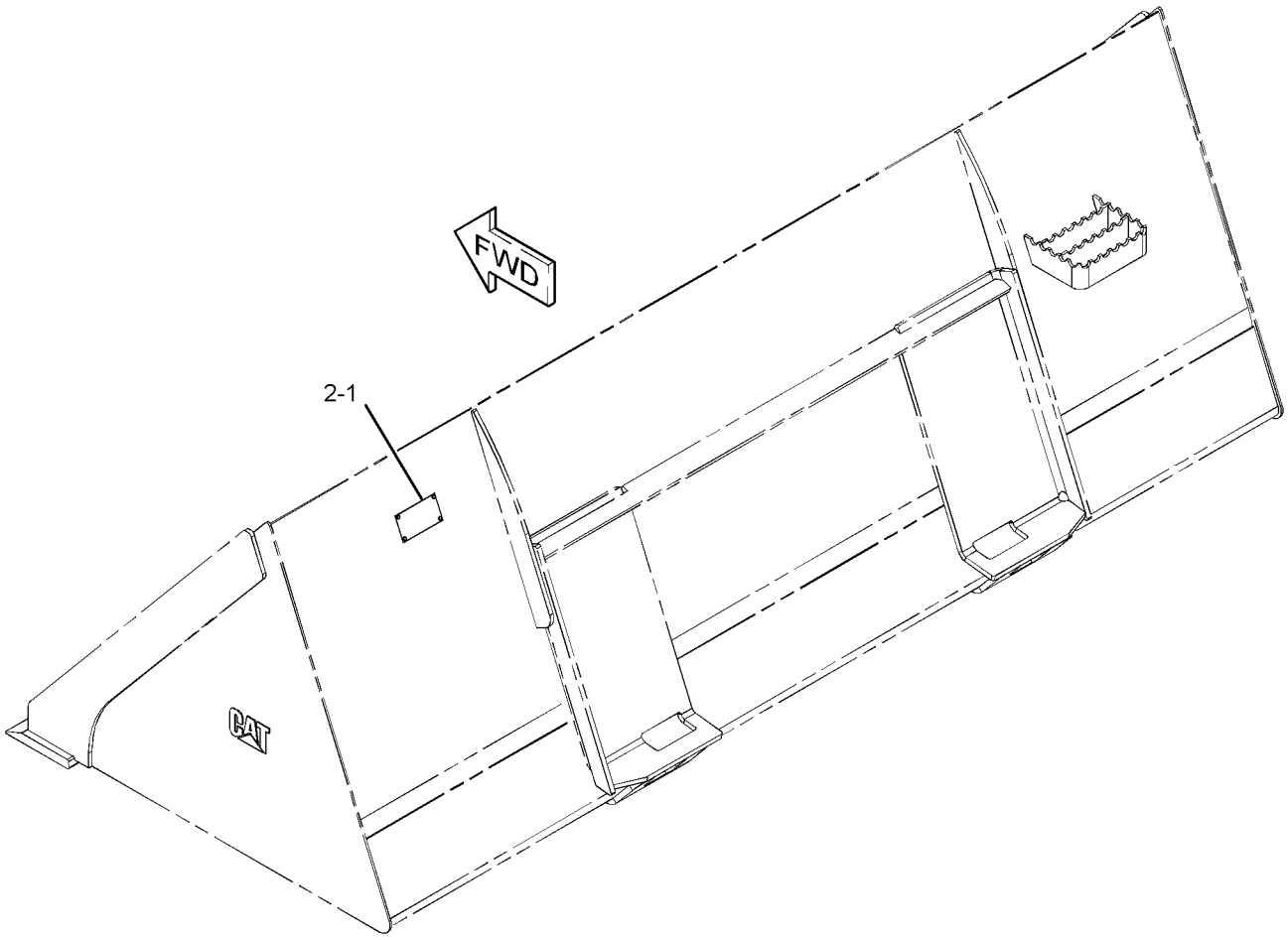

GRAPHIC #1 **<END>** g01278489

268-4084 BUCKET GP-DIRT

S/N: BXM4225-UP
1981-MM (78-IN)
PART OF 268-4083 BUCKET AR-DIRT
FIELD REPLACEMENT ORDER 268-4083—PAGE 401
AN ATTACHMENT

SMCS-6001 **i02540002**

NOTE	REF NO	GRAPHIC REF	PART NUMBER	QTY	PART NAME 1 2 3 4 5 6 (PRODUCT LEVEL)	SEE PAGE
	1	1	**154-2704**	1	PLATE-INSTRUCTION (BUCKET SPECIFICATIONS)	
	2	1	**168-8389**	4	TACK-FASTENER	
					PARTS SHOWN IN GRAPHIC(S) WITHOUT A REFERENCE NUMBER ARE NOT SERVICED SEPARATELY	

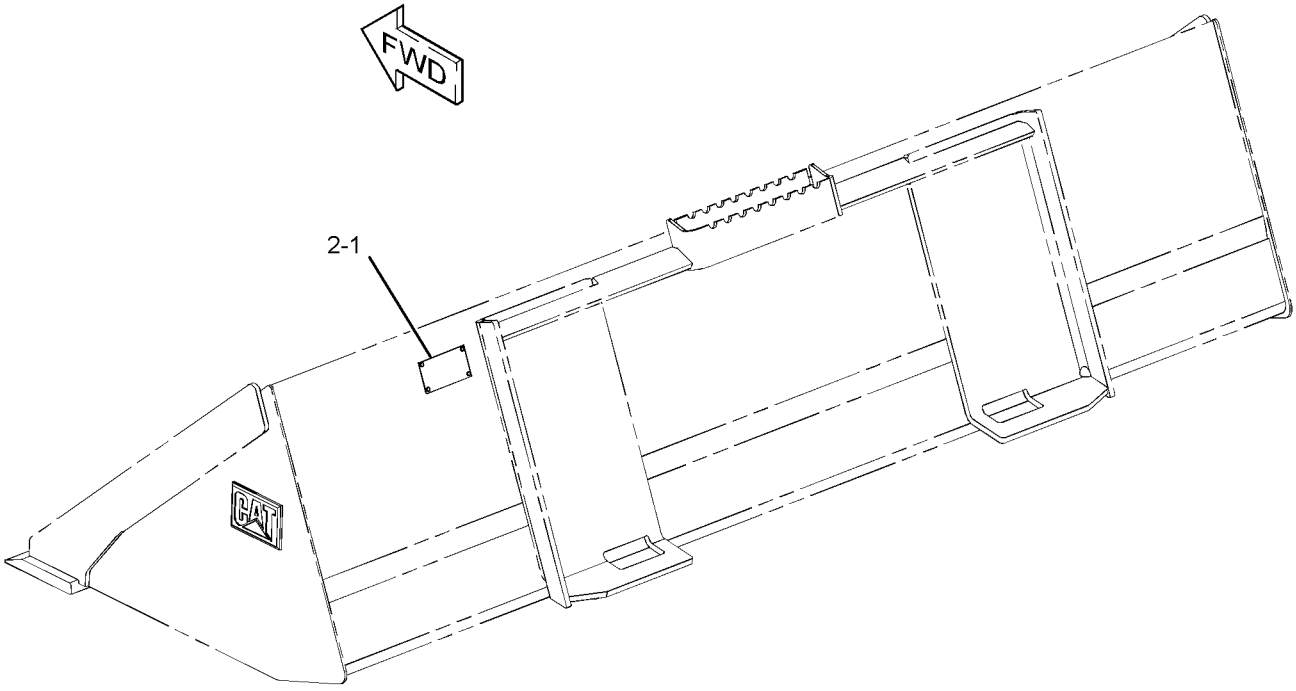

GRAPHIC #1 **<END>** g01279383

156-0884 BUCKET GP-GRAPPLE

S/N: BXM4225-UP
152.4-CM (60-IN). INDUSTRIAL
PART OF 157-7223 BUCKET AR-GRAPPLE
AN ATTACHMENT

SMCS-6704 **i02024106**

NOTE	REF NO	GRAPHIC REF	PART NUMBER	QTY	PART NAME 1 2 3 4 5 6 (PRODUCT LEVEL)	SEE PAGE
	1	1	**157-0940**	4	PIN	
	2	1	**169-8941**	1	BUCKET AS-GRAPPLE	
M		1	**8Y-4489**	2	BOSS (M10X1.5-THD)	
		1	**149-5435**	1	EDGE	
	3	1	**222-7467**	2	FORK AS	
					(EACH INCLUDES)	
		1	**158-5648**	2	BEARING-SLEEVE	
	4	1	**3B-8489**	4	FITTING-GREASE	
M	5	1	**6V-9189**	4	LOCKNUT (M8X1.25-THD)	
M	6	1	**8T-6869**	4	BOLT (M8X1.25X60-MM)	

M-METRIC PART

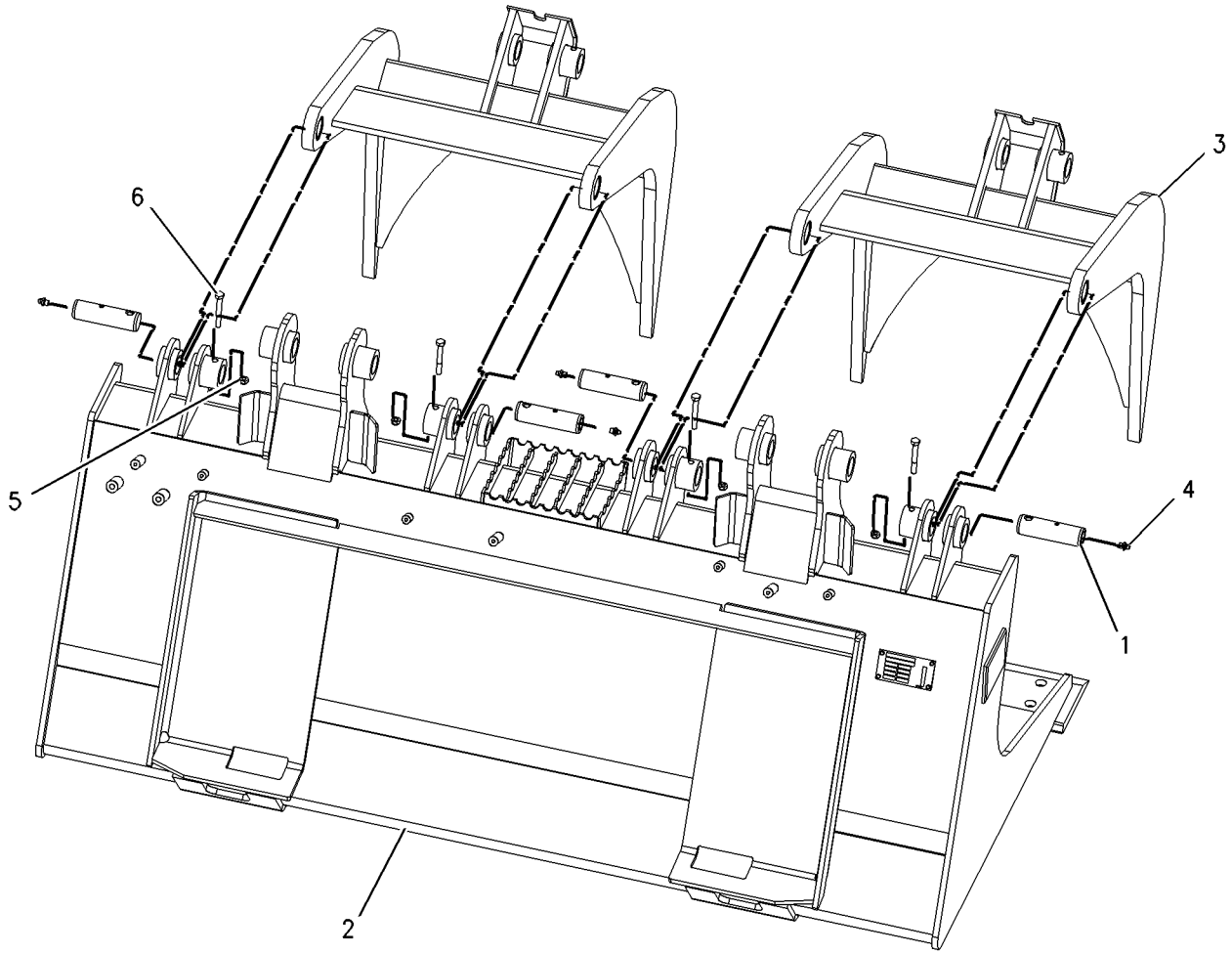

GRAPHIC #1 **<END>** g00978796

WORK TOOLS

156-0885 BUCKET GP-GRAPPLE

S/N: BXM4225-UP
1676-MM (66-IN). INDUSTRIAL
PART OF 157-7224 BUCKET AR-GRAPPLE
AN ATTACHMENT

SMCS-6704 **i01886368**

NOTE	REF NO	GRAPHIC REF	PART NUMBER	QTY	PART NAME 1 2 3 4 5 6 (PRODUCT LEVEL)	SEE PAGE
	1	1	**157-0940**	4	PIN	
	2	1	**169-8942**	1	BUCKET AS-GRAPPLE	
M		1	**8Y-4489**	2	BOSS (M10X1.5-THD)	
		1	**149-5436**	1	EDGE	
	3	1	**222-7467**	2	FORK AS	
					(EACH INCLUDES)	
		1	**158-5648**	2	BEARING-SLEEVE	
	4	1	**3B-8489**	4	FITTING-GREASE	
M	5	1	**6V-9189**	4	LOCKNUT (M8X1.25-THD)	
M	6	1	**8T-6869**	4	BOLT (M8X1.25X60-MM)	

M-METRIC PART

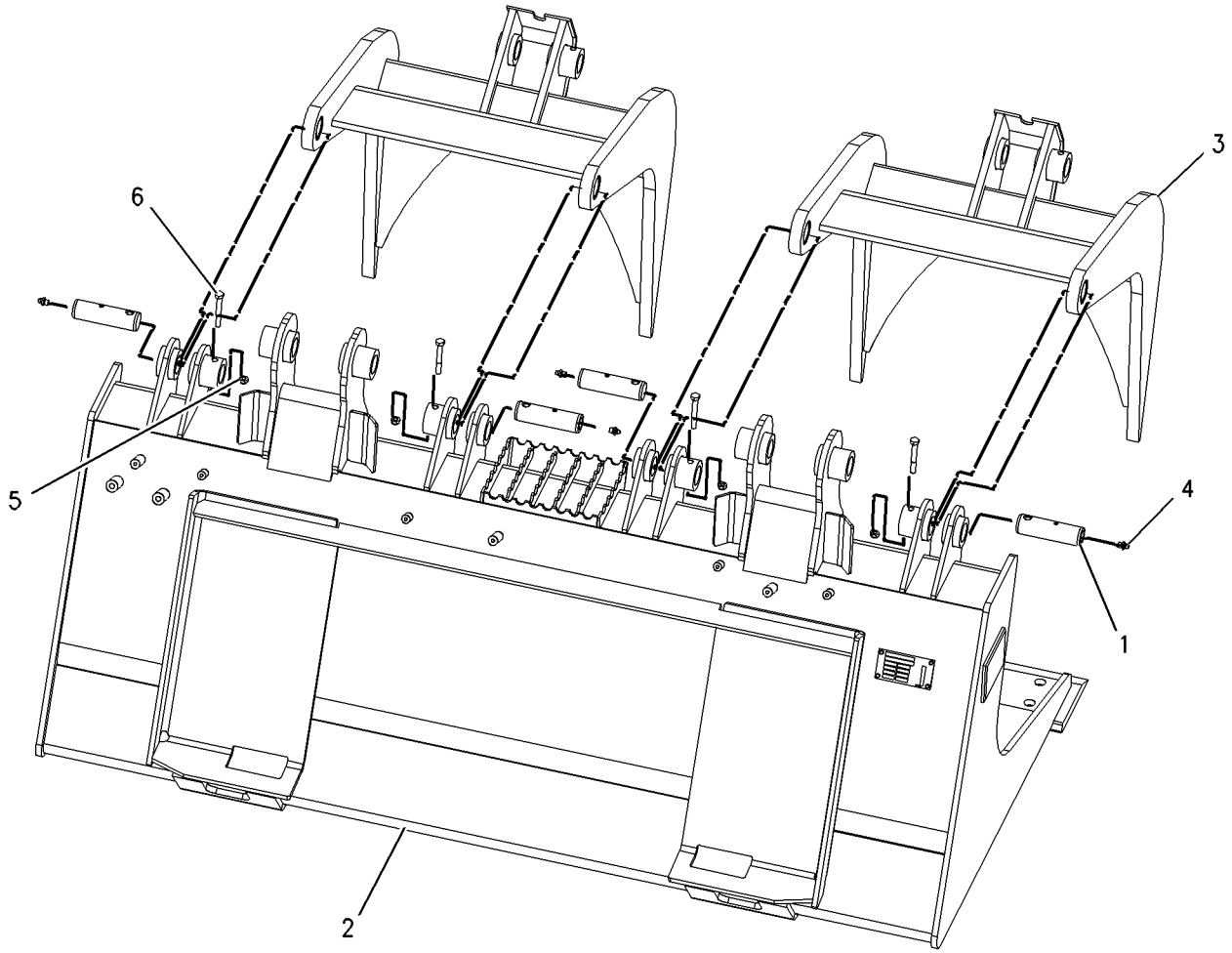

GRAPHIC #1 **<END>** g00978796

156-0886 BUCKET GP-GRAPPLE

S/N: BXM4225-UP
1829-MM (72-IN). INDUSTRIAL
PART OF 157-7225 BUCKET AR-GRAPPLE
AN ATTACHMENT

SMCS-6704 **i02359451**

NOTE	REF NO	GRAPHIC REF	PART NUMBER	QTY	PART NAME 1 2 3 4 5 6 (PRODUCT LEVEL)	SEE PAGE
	1	1	**157-0940**	4	PIN	
	2	1	**169-8943**	1	BUCKET AS-GRAPPLE (INDUSTRIAL)	
		1	**149-5437**	1	EDGE	
	3	1	**222-7467**	2	FORK AS	
					(EACH INCLUDES)	
		1	**158-5648**	2	BEARING-SLEEVE	
	4	1	**3B-8489**	4	FITTING-GREASE	
M	5	1	**6V-9189**	4	LOCKNUT (M8X1.25-THD)	
M	6	1	**8T-6869**	4	BOLT (M8X1.25X60-MM)	

M-METRIC PART

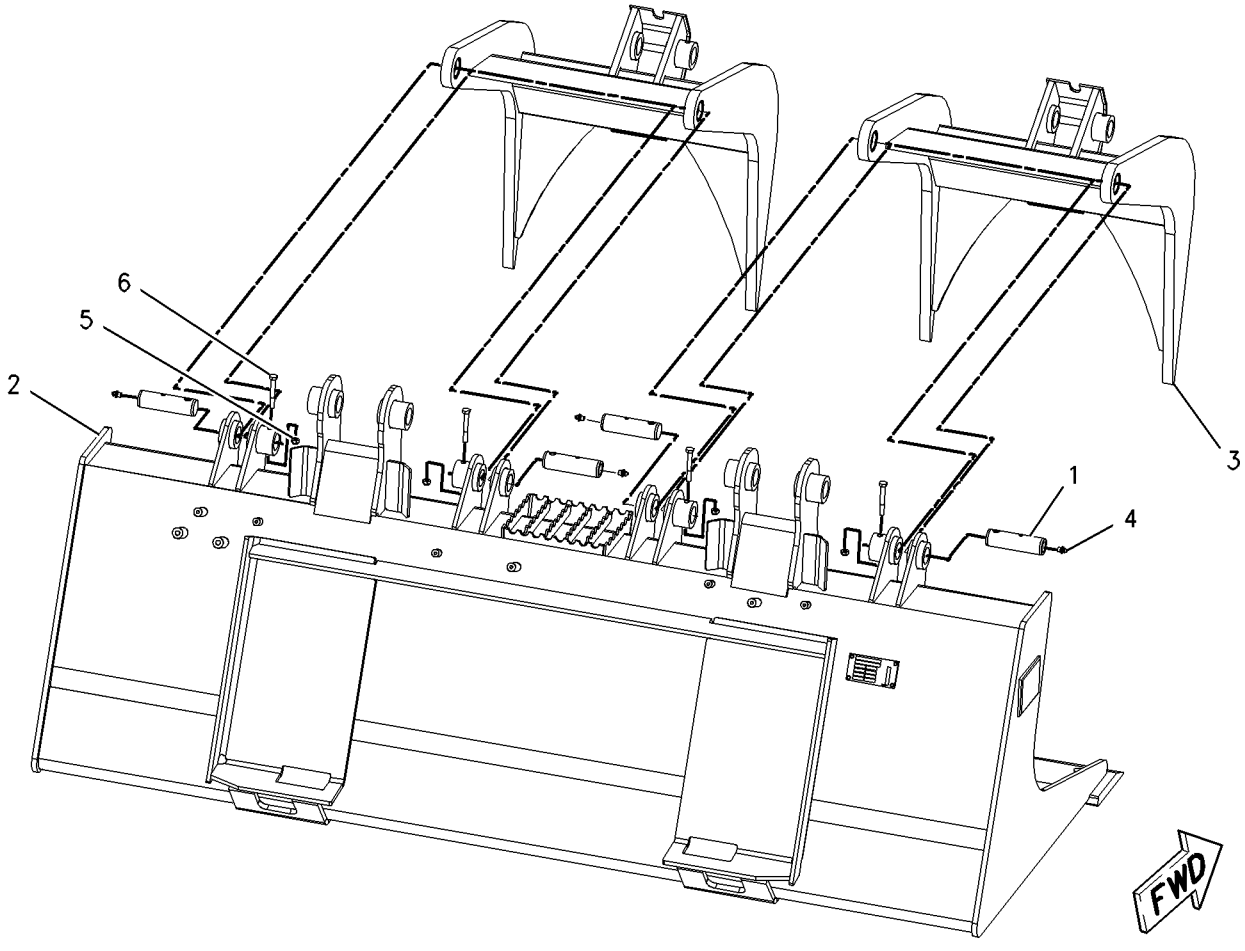

GRAPHIC #1 **<END>** g00993692

286-9244 BUCKET GP-GRAPPLE

S/N: BXM4225-UP
PART OF 286-9301 BUCKET AR-GRAPPLE
AN ATTACHMENT

SMCS-6704 **i02723701**

NOTE	REF NO	GRAPHIC REF	PART NUMBER	QTY	PART NAME 1 2 3 4 5 6 (PRODUCT LEVEL)	SEE PAGE
	1	1	**157-0940**	4	PIN	
	2	1	**286-9229**	1	TINE AS	
	3	1	**286-9243**	2	FORK AS	
					(EACH INCLUDES)	
		1	**158-5648**	2	BEARING-SLEEVE	
	4	1	**3B-8489**	4	FITTING-GREASE	
M	5	1	**6V-9189**	4	LOCKNUT (M8X1.25-THD)	
M	6	1	**8T-6869**	4	BOLT (M8X1.25X60-MM)	

M-METRIC PART

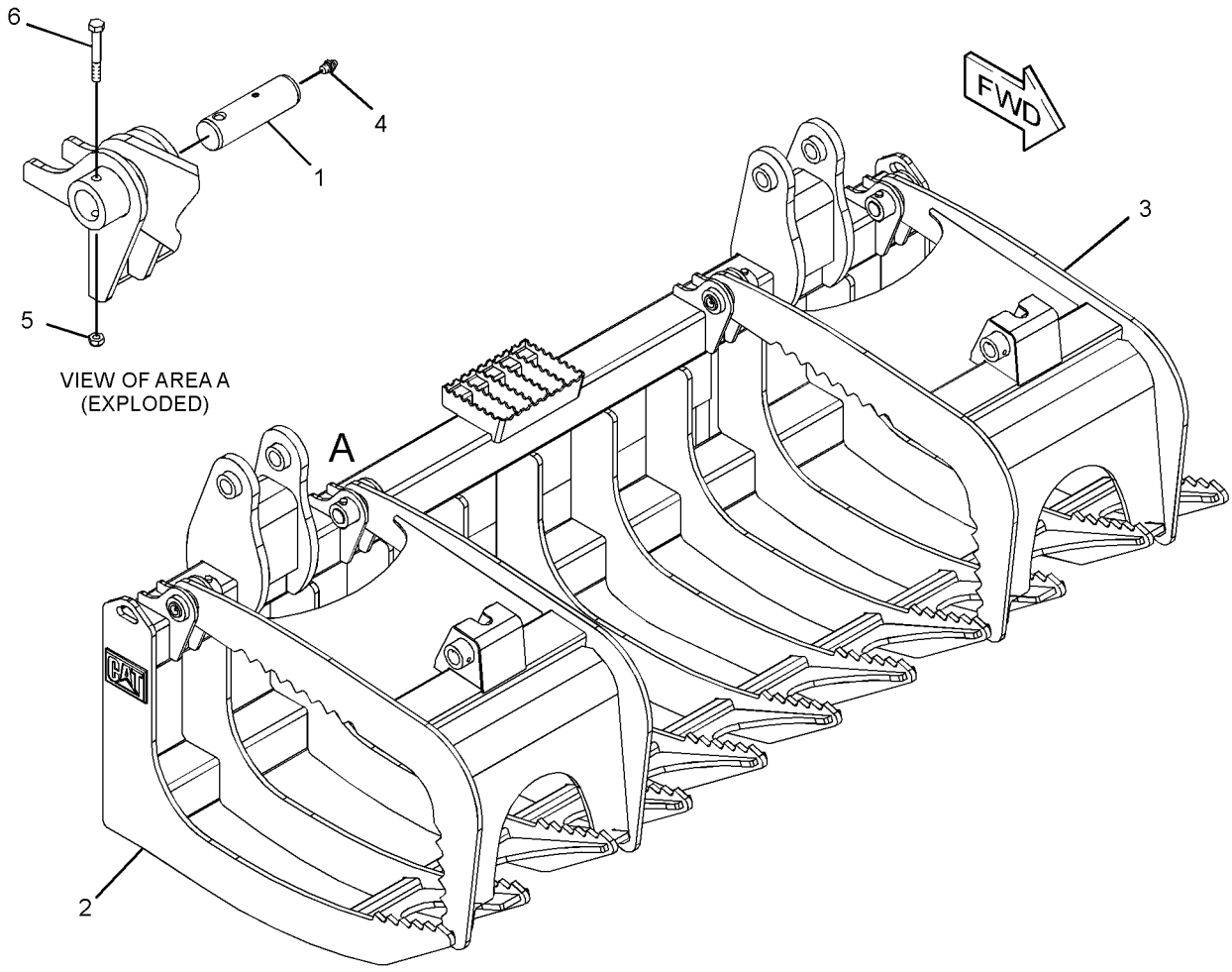

GRAPHIC #1 **<END>** g01372924

286-9278 BUCKET GP-GRAPPLE

S/N: BXM4225-UP

PART OF 286-9300 BUCKET AR-GRAPPLE

AN ATTACHMENT

SMCS-6704 **i02723727**

NOTE	REF NO	GRAPHIC REF	PART NUMBER	QTY	PART NAME 1 2 3 4 5 6 (PRODUCT LEVEL)	SEE PAGE
	1	1	**157-0940**	4	PIN	
	2	1	**286-9243**	2	FORK AS	
					(EACH INCLUDES)	
		1	**158-5648**	2	BEARING-SLEEVE	
	3	1	**286-9274**	1	TINE AS	
		1	**8R-3857**	5	BOSS (M8X1.2X12-MM)	
		1	**161-4130**	2	PLATE-IDENTIFICATION (CAT)	
	4	1	**3B-8489**	4	FITTING-GREASE	
M	5	1	**6V-9189**	4	LOCKNUT (M8X1.25-THD)	
M	6	1	**8T-6869**	4	BOLT (M8X1.25X60-MM)	

M-METRIC PART

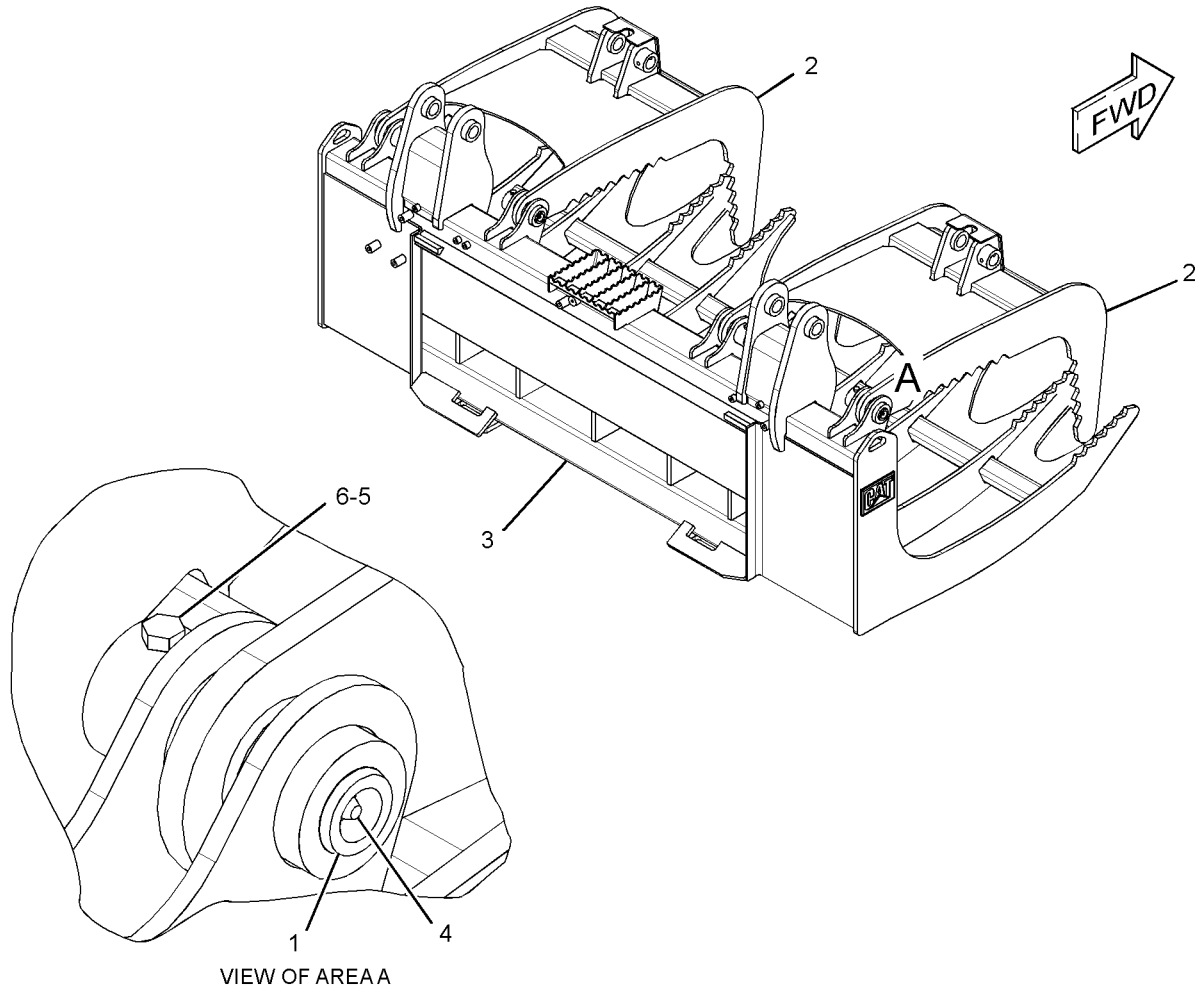

VIEW OF AREA A

GRAPHIC #1 **<END>** g01372568

279-5383 BUCKET GP-MULTIPURPOSE

S/N: BXM4225-UP
PART OF 279-5382 BUCKET AR-MULTIPURPOSE
AN ATTACHMENT

SMCS-6104 **i02772041**

NOTE	REF NO	GRAPHIC REF	PART NUMBER	QTY	PART NAME 1 2 3 4 5 6 (PRODUCT LEVEL)	SEE PAGE
	1	1	**149-4232**	1	CLAM AS	
		1	**159-8038**	2	FILM-WARNING (CRUSH HAZARD)	
	1A	1	**142-8805**	4	BEARING-SLEEVE	
	1B	1	**149-5435**	1	EDGE	
	1C	1	**161-4130**	2	PLATE-IDENTIFICATION (CAT)	
	2	1	**154-5012**	2	PIN	
	3	1	**159-8038**	2	FILM-WARNING (CRUSH HAZARD)	
Y	4	1	*279-5384*	1	BLADE GP-MULTIPURPOSE BUCKET (60-IN)	397
	5	1	**3B-8489**	2	FITTING-GREASE	
M	6	1	**6V-9189**	2	LOCKNUT (M8X1.25-THD)	
M	7	1	**8T-6869**	2	BOLT (M8X1.25X60-MM)	

M-METRIC PART
Y-SEPARATE ILLUSTRATION

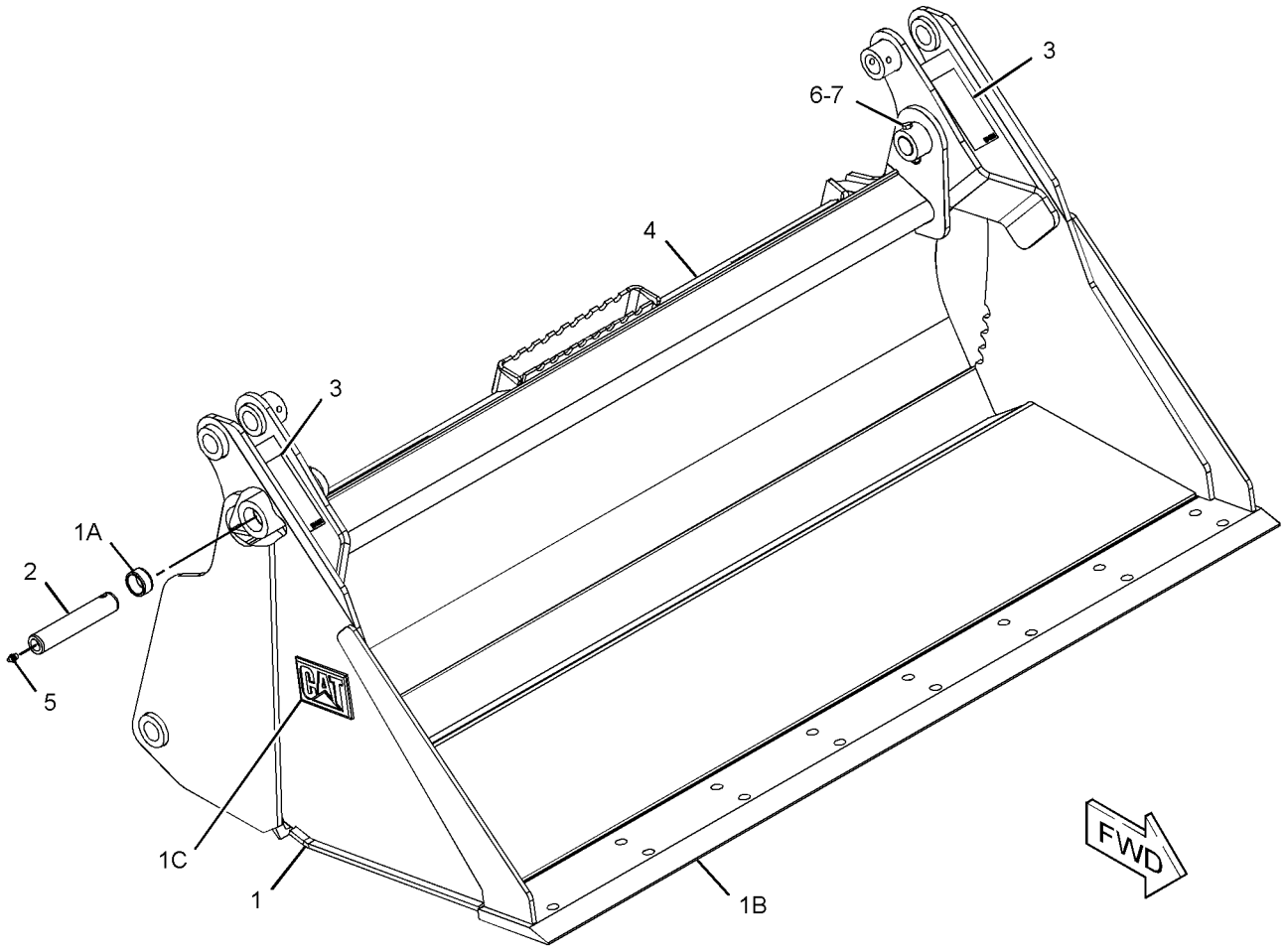

GRAPHIC #1 **<END>** g01278464

WORK TOOLS

279-5389 BUCKET GP-MULTIPURPOSE

S/N: BXM4225-UP
PART OF 279-5390 BUCKET AR-MULTIPURPOSE
AN ATTACHMENT

SMCS-6104 **i02772043**

NOTE	REF NO	GRAPHIC REF	PART NUMBER	QTY	PART NAME 1 2 3 4 5 6 (PRODUCT LEVEL)	SEE PAGE
	1	1	**154-5012**	2	PIN	
	2	1	**154-5053**	1	CLAM AS	
	2A	1	**142-8805**	4	BEARING-SLEEVE	
	2B	1	**149-5436**	1	EDGE	
	2C	1	**159-8038**	2	FILM-WARNING (CRUSH HAZARD)	
	2D	1	**161-4130**	2	PLATE-IDENTIFICATION (CAT)	
Y	3	1	*279-5388*	1	BLADE GP-MULTIPURPOSE BUCKET (66-IN)	398
	4	1	**3B-8489**	2	FITTING-GREASE	
M	5	1	**6V-9189**	2	LOCKNUT (M8X1.25-THD)	
M	6	1	**8T-6869**	2	BOLT (M8X1.25X60-MM)	

M-METRIC PART
Y-SEPARATE ILLUSTRATION

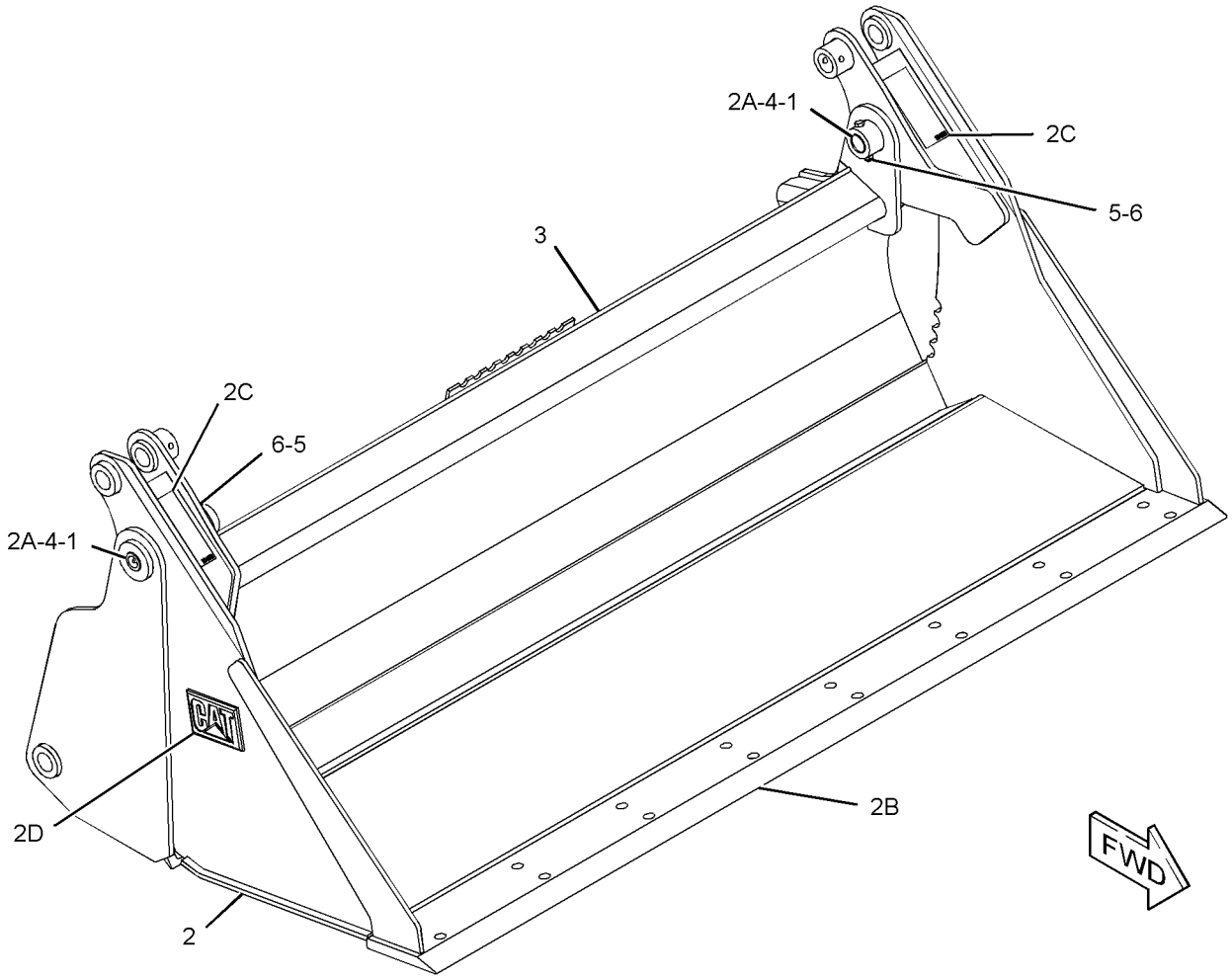

GRAPHIC #1 **<END>** g01279399

279-5397 BUCKET GP-MULTIPURPOSE

S/N: BXM4225-UP
PART OF 279-5398 BUCKET AR-MULTIPURPOSE
AN ATTACHMENT

SMCS-6104 **i02772044**

NOTE	REF NO	GRAPHIC REF	PART NUMBER	QTY	PART NAME 1 2 3 4 5 6 (PRODUCT LEVEL)	SEE PAGE
	1	1	**154-5012**	2	PIN	
	2	1	**154-5070**	1	CLAM AS	
	2A	1	**142-8805**	4	BEARING-SLEEVE	
	2B	1	**149-5437**	1	EDGE	
	2C	1	**161-4130**	2	PLATE-IDENTIFICATION (CAT)	
	2D	1	**159-8038**	2	FILM-WARNING (CRUSH HAZARD)	
M	3	1	**8T-6869**	2	BOLT (M8X1.25X60-MM)	
Y	4	1	*279-5396*	1	BLADE GP-MULTIPURPOSE BUCKET (72-IN)	399
	5	1	**3B-8489**	2	FITTING-GREASE	
M	6	1	**6V-9189**	2	LOCKNUT (M8X1.25-THD)	

M-METRIC PART
Y-SEPARATE ILLUSTRATION

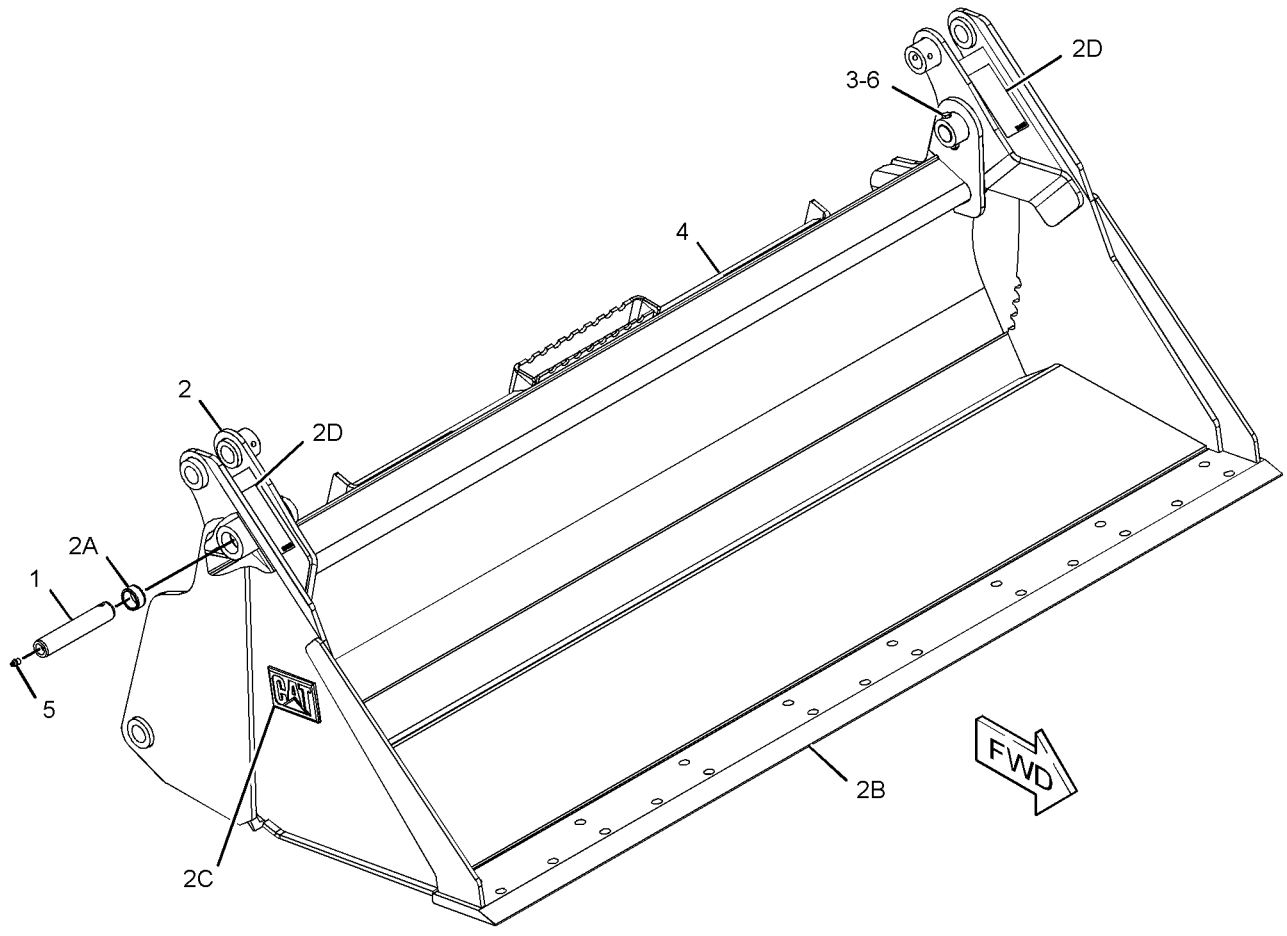

GRAPHIC #1 **<END>** g01280800

WORK TOOLS

279-5399 BUCKET GP-MULTIPURPOSE

S/N: BXM4225-UP

AN ATTACHMENT

SMCS-6104 **i02552131**

NOTE	PART NUMBER	QTY	PART NAME 1 2 3 4 5 6 (PRODUCT LEVEL)	SEE PAGE
Y	**279-5398**	1	BUCKET AR-MULTIPURPOSE	411
Y	*135-9386*	1	EDGE GP-CUTTING	453

Y-SEPARATE ILLUSTRATION

<END>

279-5404 BUCKET GP-MULTIPURPOSE

S/N: BXM4225-UP
PART OF 279-5403 BUCKET AR-MULTIPURPOSE
AN ATTACHMENT

SMCS-6104 **i02552254**

NOTE	REF NO	GRAPHIC REF	PART NUMBER	QTY	PART NAME 1 2 3 4 5 6 (PRODUCT LEVEL)	SEE PAGE
	1	1	**154-5012**	2	PIN	
	2	1	**159-8038**	2	FILM-WARNING (CRUSH HAZARD)	
	3	1	**199-8308**	1	CLAM AS	
		1	**142-8805**	4	BEARING-SLEEVE	
		1	**159-8038**	2	FILM-WARNING (CRUSH HAZARD)	
		1	**161-4130**	2	PLATE-IDENTIFICATION (CAT)	
		1	**199-7722**	1	EDGE	
		1	**199-8317**	1	EDGE	
Y	4	1	*279-5405*	1	BLADE GP-MULTIPURPOSE BUCKET (78-IN)	400
	5	1	**3B-8489**	2	FITTING-GREASE	
M	6	1	**6V-9189**	2	LOCKNUT (M8X1.25-THD)	
M	7	1	**8T-6869**	2	BOLT (M8X1.25X60-MM)	

M-METRIC PART
Y-SEPARATE ILLUSTRATION

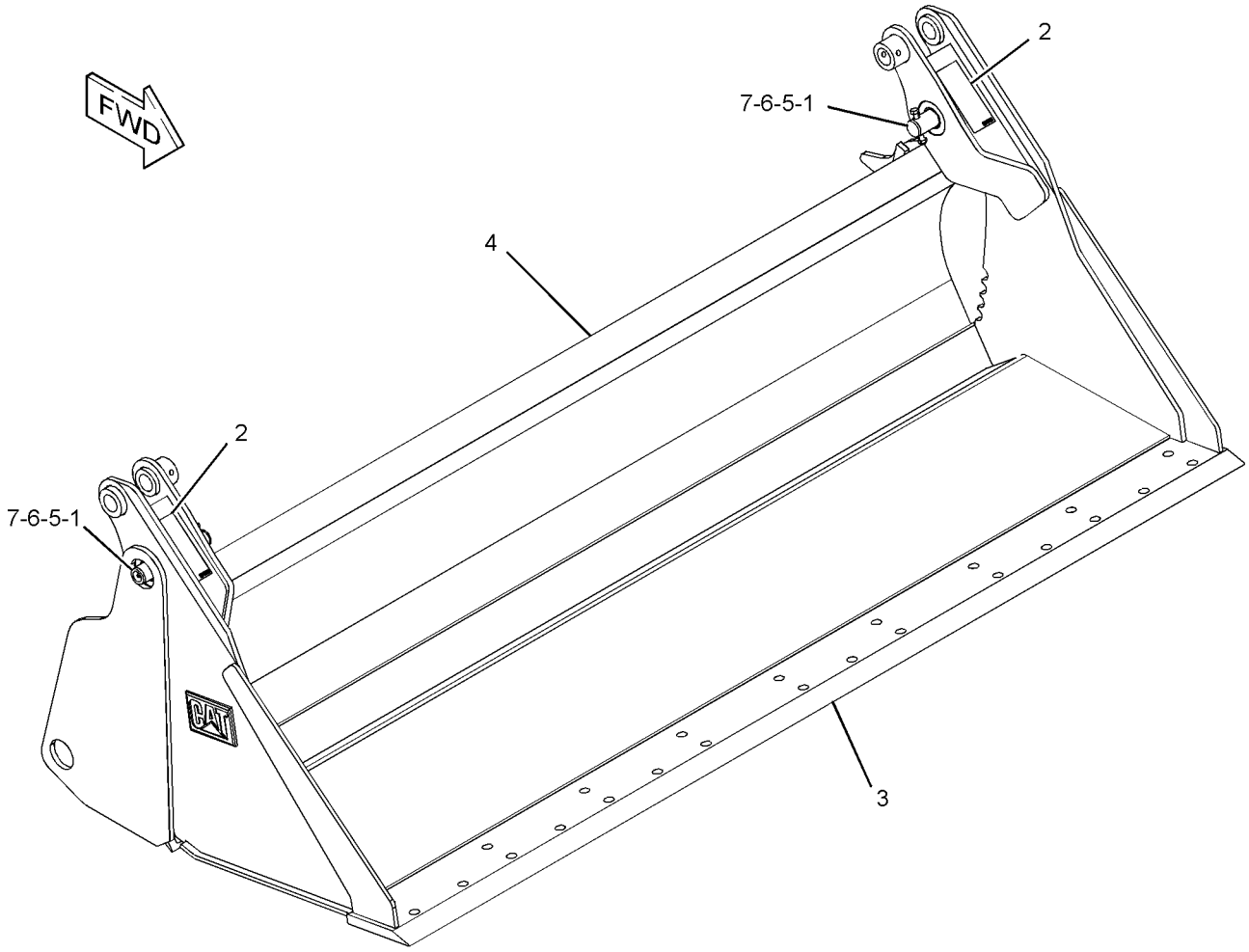

GRAPHIC #1 **<END>** g01278497

285-6096 BUCKET GP-UTILITY

S/N: BXM4225-UP
1524-MM (60-IN)
PART OF 285-6095 BUCKET AR-UTILITY
AN ATTACHMENT

SMCS-6101 **i02764095**

NOTE	REF NO	GRAPHIC REF	PART NUMBER	QTY	PART NAME 1 2 3 4 5 6 (PRODUCT LEVEL)	SEE PAGE
	1	1	**154-2704**	1	PLATE-INSTRUCTION (BUCKET SPECIFICATIONS)	
	2	1	**168-8389**	4	TACK-FASTENER	
					PARTS SHOWN IN GRAPHIC(S) WITHOUT A REFERENCE NUMBER ARE NOT SERVICED SEPARATELY	

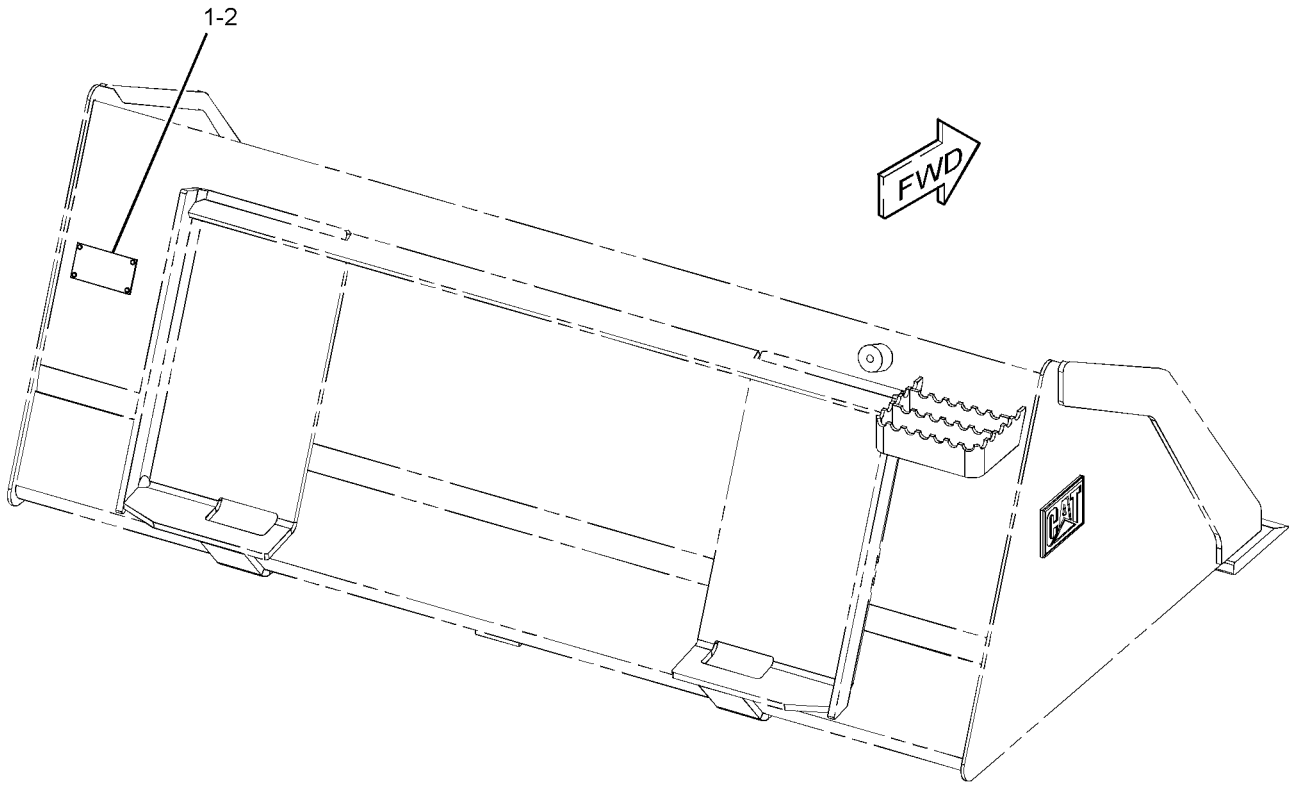

GRAPHIC #1 **<END>** g01278644

WORK TOOLS

285-6099 BUCKET GP-UTILITY

S/N: BXM4225-UP
1676-MM (66-IN)
PART OF 285-6093 BUCKET AR-GRAPPLE, 285-6100 BUCKET AR-UTILITY
AN ATTACHMENT

SMCS-6101 **i02552452**

NOTE	REF NO	GRAPHIC REF	PART NUMBER	QTY	PART NAME 1 2 3 4 5 6 (PRODUCT LEVEL)	SEE PAGE
	1	1	**154-2704**	1	PLATE-INSTRUCTION (BUCKET SPECIFICATIONS)	
	2	1	**168-8389**	4	TACK-FASTENER	
					PARTS SHOWN IN GRAPHIC(S) WITHOUT A REFERENCE NUMBER ARE NOT SERVICED SEPARATELY	

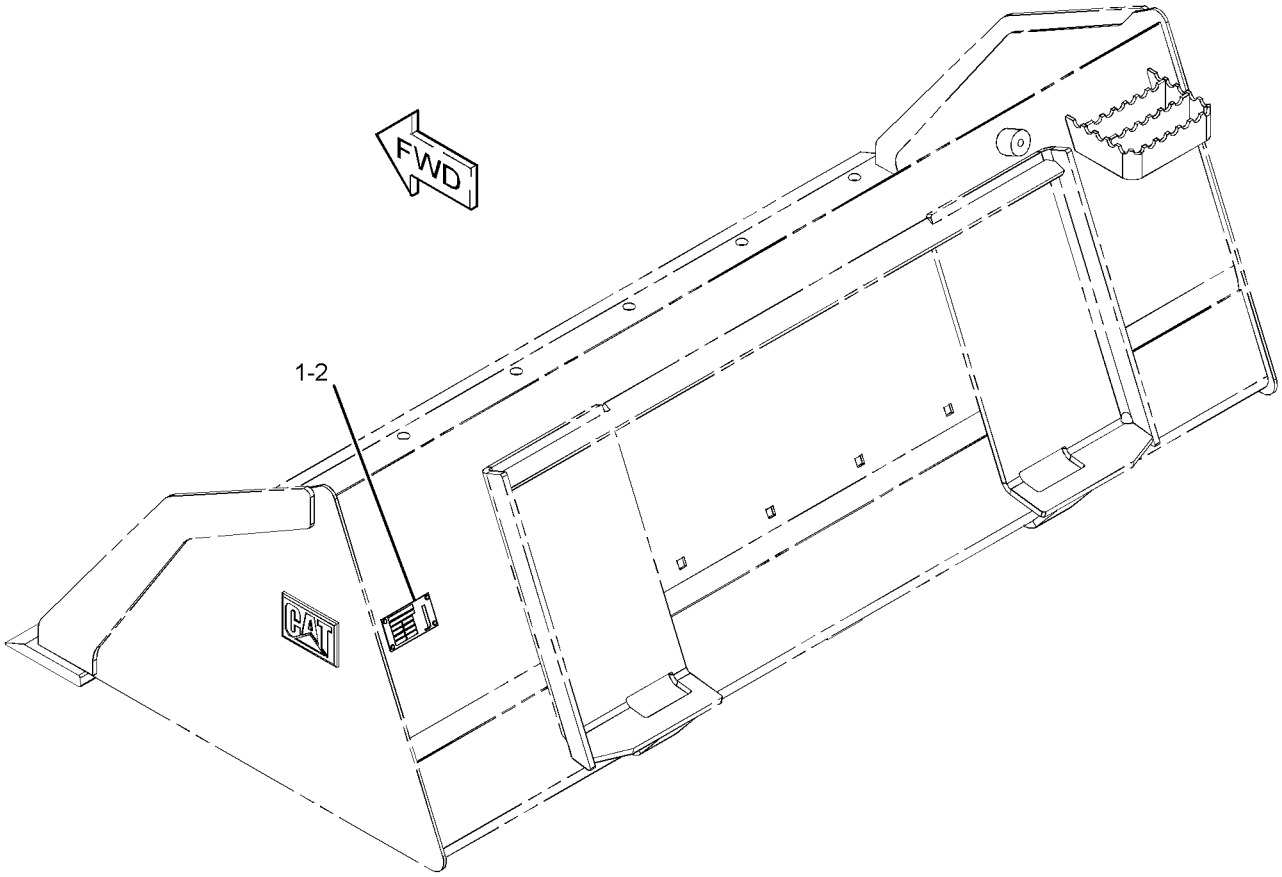

GRAPHIC #1 **<END>** g01279288

285-6102 BUCKET GP-UTILITY

S/N: BXM4225-UP
1829-MM (72-IN)
PART OF 285-6104 BUCKET AR-GRAPPLE, 285-6101 BUCKET AR-UTILITY
AN ATTACHMENT

SMCS-6101 **i02760165**

NOTE	REF NO	GRAPHIC REF	PART NUMBER	QTY	PART NAME 1 2 3 4 5 6 (PRODUCT LEVEL)	SEE PAGE
	1	1	**154-2704**	1	PLATE-INSTRUCTION (BUCKET SPECIFICATIONS)	
	2	1	**168-8389**	4	TACK-FASTENER	
					PARTS SHOWN IN GRAPHIC (S) WITHOUT A REFERENCE NUMBER ARE NOT SERVICED SEPARATELY	

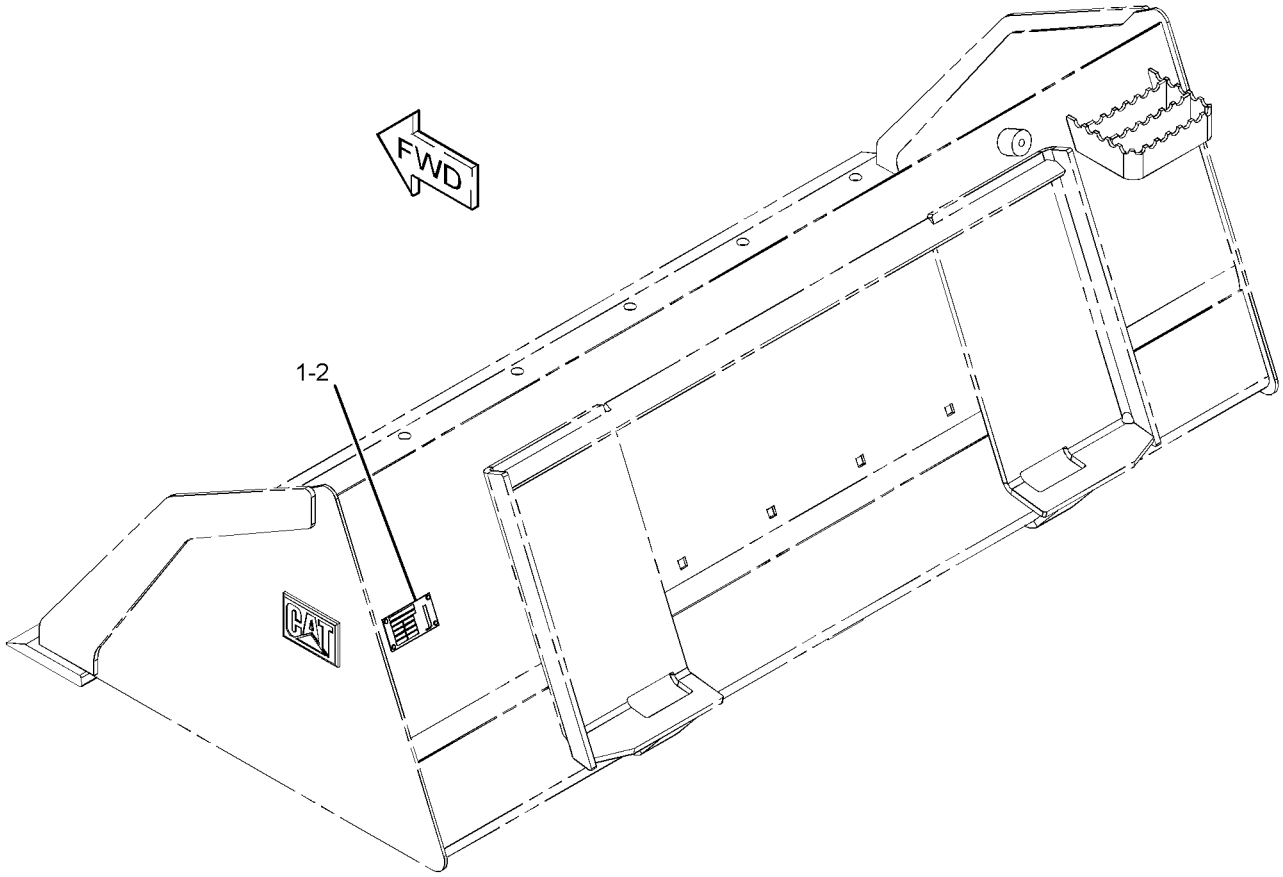

GRAPHIC #1 **<END>** g01279288

WORK TOOLS

293-9427 CARRIAGE & FORK AR

S/N: BXM4225-UP
AN ATTACHMENT

SMCS-6136, 6402 **i02628876**

NOTE	PART NUMBER	QTY	PART NAME 1 2 3 4 5 6 (PRODUCT LEVEL)	SEE PAGE
Y	**261-6681**	1	CARRIAGE GP-FORK	440
Y	**195-6943**	2	FORK GP-PALLET (36-IN)	461
Y-SEPARATE ILLUSTRATION				

<END>

293-9428 CARRIAGE & FORK AR

S/N: BXM4225-UP
AN ATTACHMENT

SMCS-6136, 6402 **i02628877**

NOTE	PART NUMBER	QTY	PART NAME 1 2 3 4 5 6 (PRODUCT LEVEL)	SEE PAGE
Y	**261-6681**	1	CARRIAGE GP-FORK	440
Y	**195-6942**	2	FORK GP-PALLET (42-IN)	461
Y-SEPARATE ILLUSTRATION				

<END>

293-9429 CARRIAGE & FORK AR

S/N: BXM4225-UP
AN ATTACHMENT

SMCS-6136, 6402 **i02628878**

NOTE	PART NUMBER	QTY	PART NAME 1 2 3 4 5 6 (PRODUCT LEVEL)	SEE PAGE
Y	**261-6681**	1	CARRIAGE GP-FORK	440
Y	**195-8545**	2	FORK GP-PALLET (48-IN)	461
Y-SEPARATE ILLUSTRATION				

<END>

WORK TOOLS

261-6681 CARRIAGE GP-FORK

S/N: BXM4225-UP

PART OF 293-9427, 293-9428, 293-9429 CARRIAGE & FORK AR, 293-9426 CARRIAGE GP-FORK

AN ATTACHMENT

SMCS-6402 **i02539756**

NOTE	REF NO	GRAPHIC REF	PART NUMBER	QTY	PART NAME 1 2 3 4 5 6 (PRODUCT LEVEL)	SEE PAGE
	1	1	**157-4835**	1	PLATE-INSTRUCTION	
	2	1	**168-8389**	4	TACK-FASTENER	
	3	1	**252-8595**	1	STEP AS	
	4	1	**8T-4121**	2	WASHER-HARD (11X21X2.5-MM THK)	
M	5	1	**8T-4133**	2	NUT (M10X1.5-THD)	
M	6	1	**8T-4136**	2	BOLT (M10X1.5X25-MM)	
					PARTS SHOWN IN GRAPHIC(S) WITHOUT A REFERENCE NUMBER ARE NOT SERVICED SEPARATELY	

M-METRIC PART

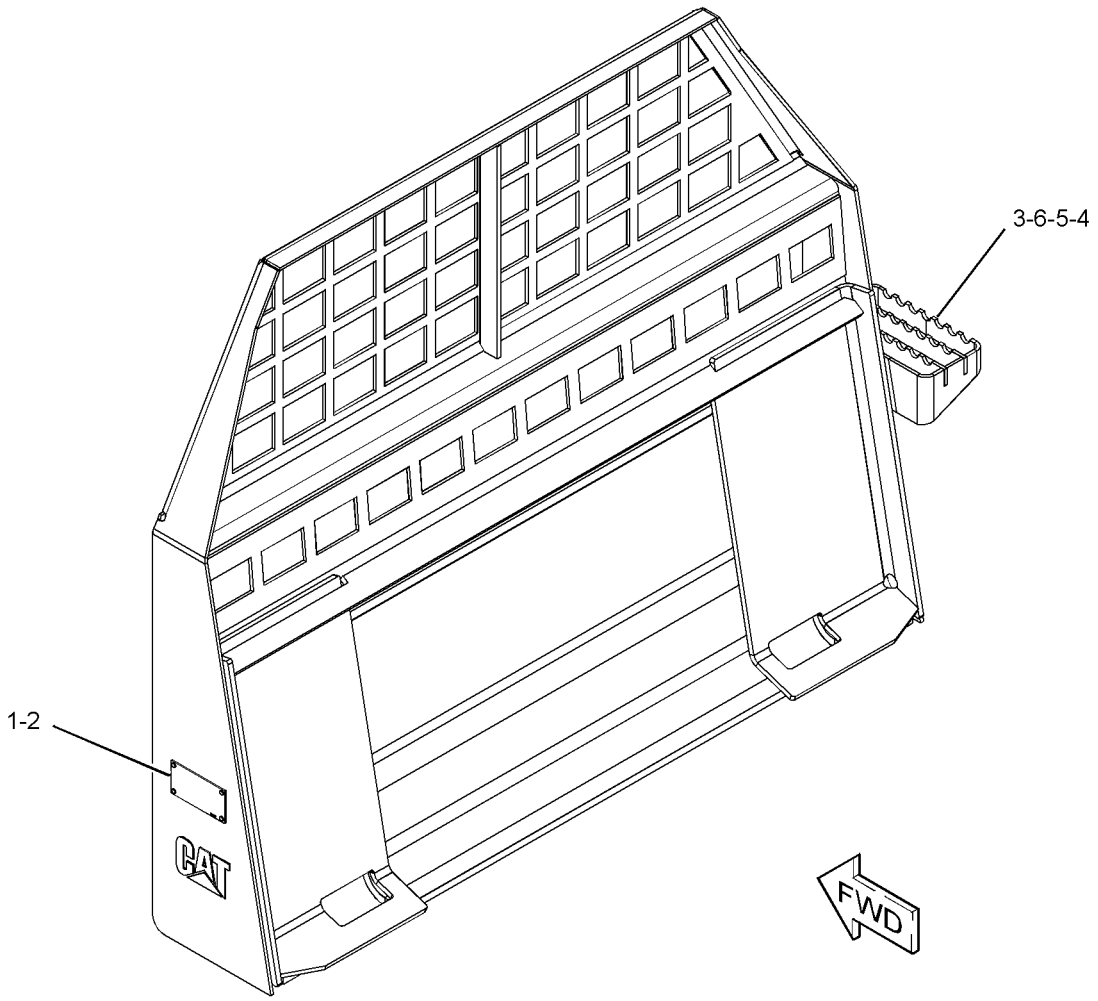

GRAPHIC #1 **<END>** g01282475

WORK TOOLS

293-9426 CARRIAGE GP-FORK

S/N: BXM4225-UP
AN ATTACHMENT

SMCS-6402 **i02628875**

NOTE	PART NUMBER	QTY	PART NAME 1 2 3 4 5 6 (PRODUCT LEVEL)	SEE PAGE
Y	**261-6681**	6	CARRIAGE GP-FORK	440

Y-SEPARATE ILLUSTRATION

<END>

WORK TOOLS

241-8672 CONVERSION GP-WORK TOOL—KIT, HIGH FLOW

S/N: BXM4225-UP

AN ATTACHMENT

SMCS-1408, 4283, 5057, 7553 **i02477946**

NOTE	REF NO	GRAPHIC REF	PART NUMBER	QTY	PART NAME 1 2 3 4 5 6 (PRODUCT LEVEL)	SEE PAGE
	1	1	**5C-8311**	1	RING	
	2	1	**142-8948**	1	FITTING AS (QUICK DISCONNECT, MALE)	
	3	1	**142-8949**	1	FITTING AS (QUICK DISCONNECT, FEMALE)	
	4	1	**152-8181**	1	FITTING AS (QUICK DISCONNECT, MALE)	
	5	1	**204-5098**	1	FITTING AS (QUICK DISCONNECT, FEMALE)	
	6	1	**225-8014**	1	HARNESS AS-WORK TOOL (POWER)	
		1	**155-2270**	6	KIT-CONNECTING PLUG (2-PIN)	
	7	1	**241-3763**	1	PLUG AS	
	8	1	**246-1501**	1	PLATE	
	9	1	**3D-2824**	4	SEAL-O-RING	
	10	1	**3J-1907**	2	SEAL-O-RING	
	11	1	**5K-9090**	2	SEAL-O-RING	
	12	1	**6V-8397**	2	SEAL-O-RING	
	13	1	**6V-8636**	2	CONNECTOR	
	14	1	**6V-8637**	2	CONNECTOR	
	15	1	**6V-8714**	2	CONNECTOR	
	16	1	**6V-9746**	2	SEAL-O-RING	

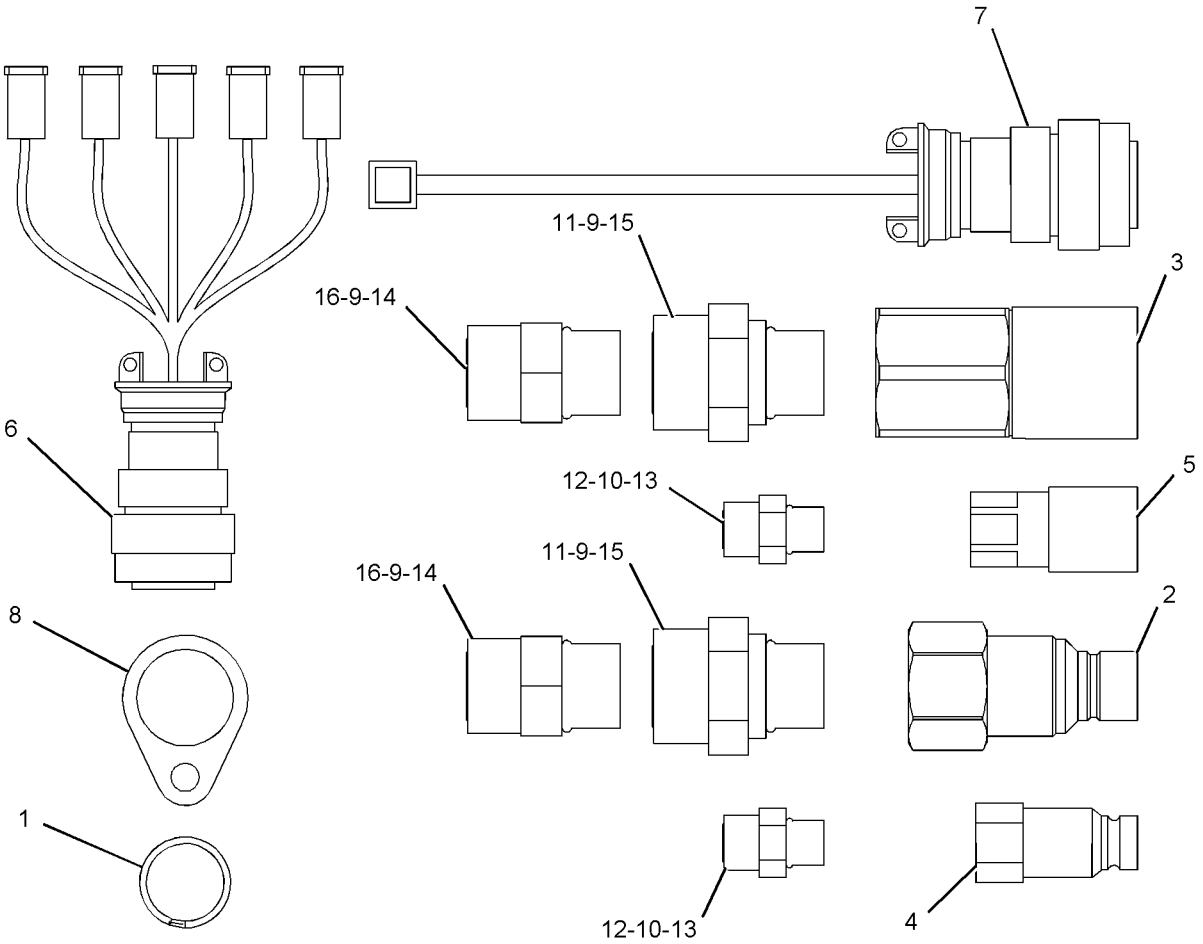

GRAPHIC #1 **<END>** g01056078

WORK TOOLS

218-6721 COUPLER AR-QUICK

S/N: BXM4225-UP
MANUAL
AN ATTACHMENT

SMCS-6129 **i01986648**

NOTE	PART NUMBER	QTY	PART NAME 1 2 3 4 5 6 (PRODUCT LEVEL)	SEE PAGE
Y	*206-3820*	1	COUPLER GP-QUICK	444
Y	*218-5882*	1	LINES GP-LOWERING CONTROL (MANUAL)	315
Y-SEPARATE ILLUSTRATION				

<END>

218-6722 COUPLER AR-QUICK

S/N: BXM4225-UP
HYDRAULIC
AN ATTACHMENT

SMCS-6129 **i01992200**

NOTE	PART NUMBER	QTY	PART NAME 1 2 3 4 5 6 (PRODUCT LEVEL)	SEE PAGE
Y	*206-3821*	1	COUPLER GP-QUICK	445
	113-8490	1	FUSE (10-AMPERE)	
	212-6521	1	SWITCH AS-ROCKER (QUICK COUPLER)	
	111-7899	1	GASKET	
			(LOCATE FOURTH SLOT FROM REAR ON LH INSTRUMENT PANEL)	
Y	*218-6263*	1	VALVE & LINES GP-COUPLER	369
Y-SEPARATE ILLUSTRATION				

<END>

WORK TOOLS

206-3820 COUPLER GP-QUICK

S/N: BXM4225-UP
PART OF 218-6721 COUPLER AR-QUICK
AN ATTACHMENT

SMCS-6129 **i02359462**

NOTE	REF NO	GRAPHIC REF	PART NUMBER	QTY	PART NAME 1 2 3 4 5 6 (PRODUCT LEVEL)	SEE PAGE
	1	1	**159-5797**	2	SPRING	
	2	1	**252-0425**	1	COUPLER AS	
		1	**126-5701**	2	PLATE-RETAINER	
Y	3	1	*215-3960*	1	HANDLE & PIN GP-COUPLER (LH)	472
Y	4	1	*215-3961*	1	HANDLE & PIN GP-COUPLER (RH)	473
	5	1	**131-5879**	2	WASHER (11X32X3-MM THK)	
	6	1	**132-7551**	2	SPACER (11X19X6-MM THK)	
	7	1	**5B-0651**	2	FITTING-STRAIGHT	
M	8	1	**6V-7744**	2	LOCKNUT (M10X1.5-THD)	
M	9	1	**7X-2621**	2	BOLT (M10X1.5X12-MM)	
	10	1	**7X-7729**	4	WASHER (11X25X3-MM THK)	
	11	1	**8T-4121**	6	WASHER-HARD (11X21X2.5-MM THK)	
M	12	1	**8T-4172**	2	BOLT (M10X1.5X80-MM)	
M	13	1	**8T-4196**	4	BOLT (M10X1.5X35-MM)	

M-METRIC PART
Y-SEPARATE ILLUSTRATION

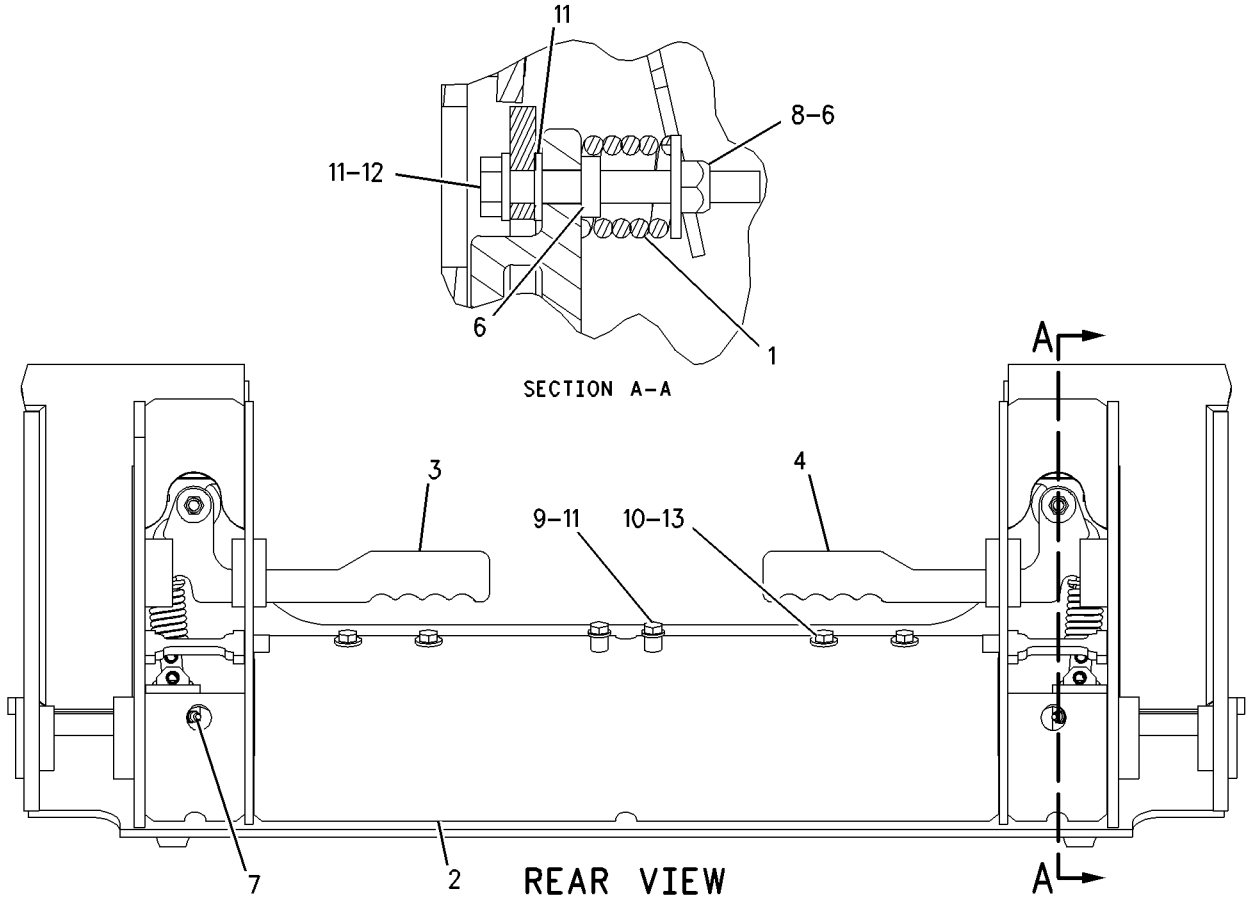

GRAPHIC #1 **<END>** g00914702

WORK TOOLS

206-3821 COUPLER GP-QUICK

S/N: BXM4225-UP
PART OF 218-6722 COUPLER AR-QUICK
AN ATTACHMENT

SMCS-6129 **i02195792**

NOTE	REF NO	GRAPHIC REF	PART NUMBER	QTY	PART NAME 1 2 3 4 5 6 (PRODUCT LEVEL)	SEE PAGE
	1	1	**5P-0372**	2	LOCK PIN	
	2	1	**252-0425**	1	COUPLER AS	
		1	**126-5701**	2	PLATE-RETAINER	
	3	1	**207-9785**	2	PIN	
Y	4	1	*215-3962*	1	CYLINDER & LINK GP-COUPLER (LH)	448
Y	5	1	*215-3963*	1	CYLINDER & LINK GP-COUPLER (RH)	449
C	6	1	**218-6334**	1	BRACKET AS (LH)	
C	7	1	**218-6335**	1	BRACKET AS (RH)	
	8	1	**3B-4628**	2	PIN-COTTER	
	9	1	**5B-0651**	2	FITTING-STRAIGHT	
	10	1	**8L-5188**	2	PIN	
	11	1	**8T-4121**	14	WASHER-HARD (11X21X2.5-MM THK)	
M	12	1	**8T-4133**	4	NUT (M10X1.5-THD)	
M	13	1	**8T-4196**	8	BOLT (M10X1.5X35-MM)	
	14	1	**9T-7303**	4	SPACER (16X28X1.5-MM THK)	

C-CHANGE FROM PREVIOUS TYPE
M-METRIC PART
Y-SEPARATE ILLUSTRATION

206-3821 **COUPLER GP-QUICK** *(contd.)* **i02195792**

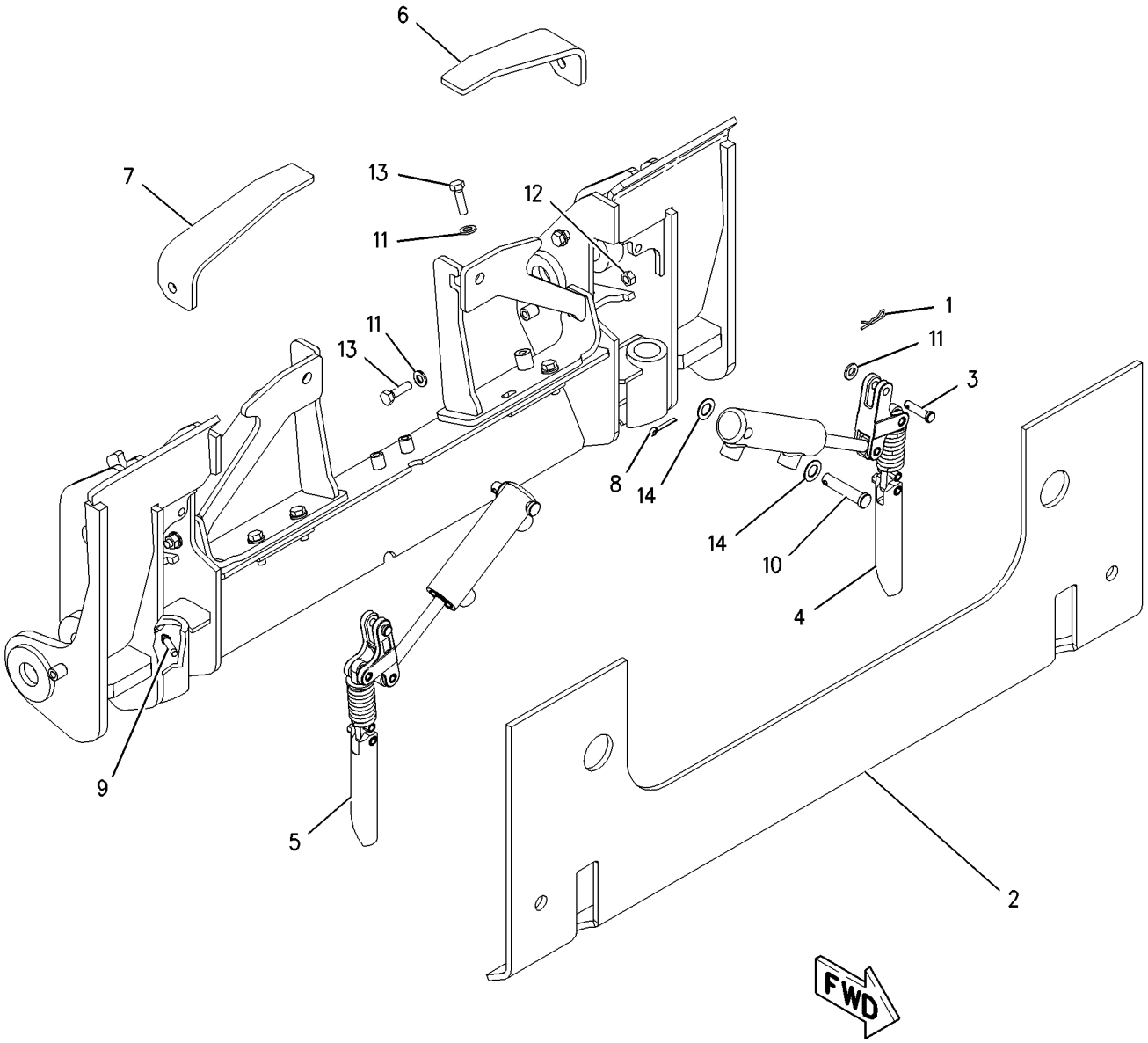

GRAPHIC #1 **<END>** g00983866

WORK TOOLS

162-5236 COVER GP-LINES

S/N: BXM4225-UP

PART OF 279-5382, 279-5390, 279-5398, 279-5403 BUCKET AR-MULTIPURPOSE AN ATTACHMENT

SMCS-5057 **i01227894**

NOTE	REF NO	GRAPHIC REF	PART NUMBER	QTY	PART NAME 1 2 3 4 5 6 (PRODUCT LEVEL)	SEE PAGE
	1	1	**161-4128**	1	PLATE	
M	2	1	**5C-9553**	5	BOLT (M6X1.0X16MM)	
	3	1	**9X-2026**	5	WASHER (1MM THK)	

M-METRIC PART

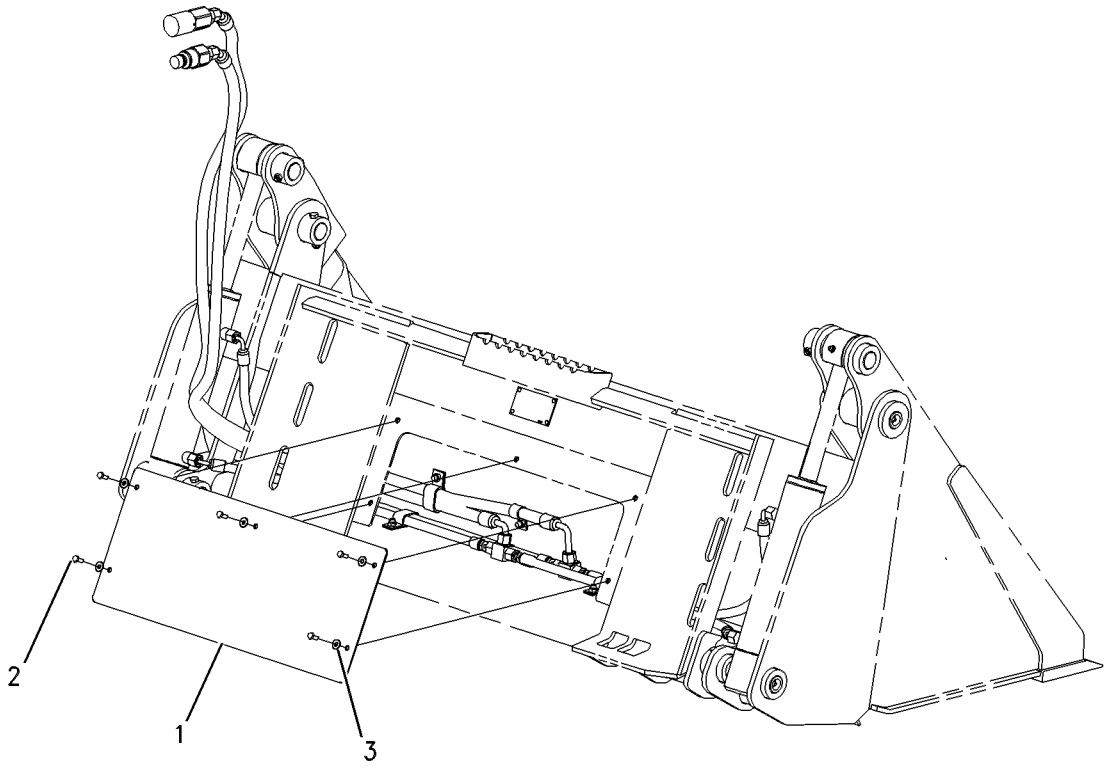

GRAPHIC #1 **<END>** g00560360

215-3962 CYLINDER & LINK GP-COUPLER—LH

S/N: BXM4225-UP
PART OF 206-3821 COUPLER GP-QUICK
AN ATTACHMENT

SMCS-5133, 6129 **i02711951**

NOTE	REF NO	GRAPHIC REF	PART NUMBER	QTY	PART NAME 1 2 3 4 5 6 (PRODUCT LEVEL)	SEE PAGE
	1	1	**166-2560**	1	PIN-SPRING	
Y	2	1	**192-2640**	1	CYLINDER GP-HYDRAULIC (COUPLER)	262
	3	1	**192-2642**	1	PIN	
	4	1	**195-6754**	1	PIN-SPRING	
Y	5	1	*215-3957*	1	LINK GP-COUPLER	477

Y-SEPARATE ILLUSTRATION

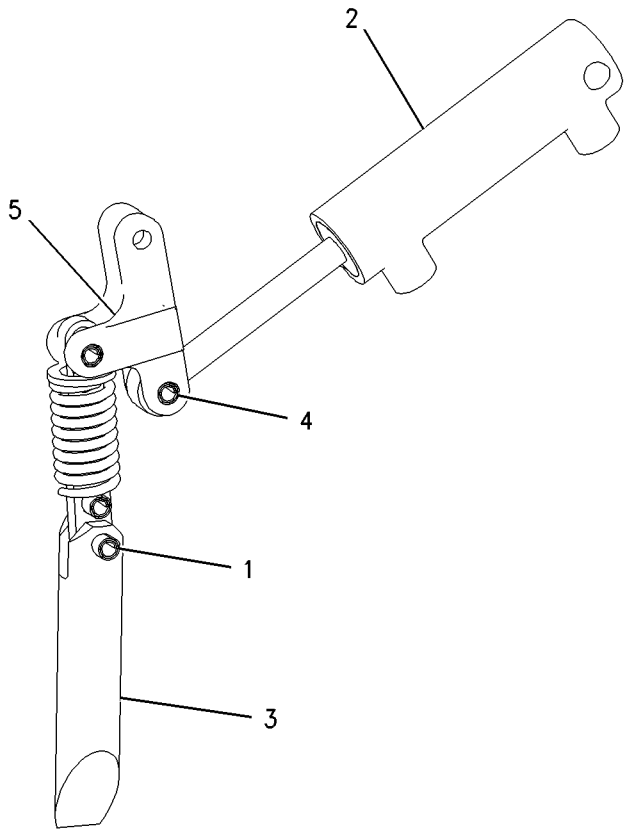

GRAPHIC #1 **<END>** g00871294

215-3963 CYLINDER & LINK GP-COUPLER–RH

S/N: BXM4225-UP
PART OF 206-3821 COUPLER GP-QUICK
AN ATTACHMENT

SMCS-5133, 6129 **i02711952**

NOTE	REF NO	GRAPHIC REF	PART NUMBER	QTY	PART NAME 1 2 3 4 5 6 (PRODUCT LEVEL)	SEE PAGE
	1	1	**166-2560**	1	PIN-SPRING	
Y	2	1	**192-2640**	1	CYLINDER GP-HYDRAULIC (COUPLER)	262
	3	1	**192-2642**	1	PIN	
	4	1	**195-6754**	1	PIN-SPRING	
Y	5	1	*215-3957*	1	LINK GP-COUPLER	477

Y-SEPARATE ILLUSTRATION

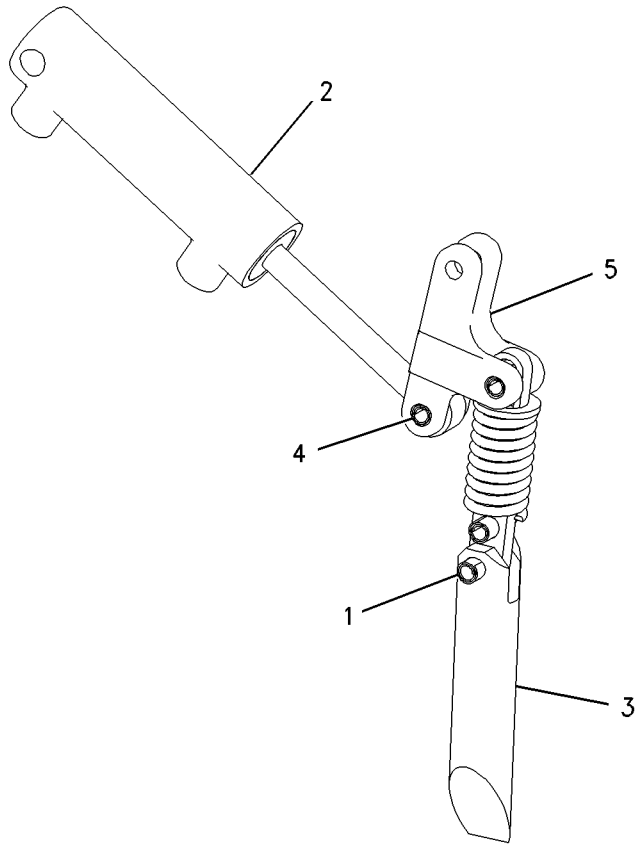

GRAPHIC #1 **<END>** g00871299

WORK TOOLS

222-7545 EDGE GP-BIT & CUTTING

S/N: BXM4225-UP
PART OF 231-5276 BLADE GP-ANGLING
AN ATTACHMENT

SMCS-6801, 6804 **i02103534**

NOTE	PART NUMBER	QTY	PART NAME 1 2 3 4 5 6 (PRODUCT LEVEL)	SEE PAGE
	6Y-5839	1	BIT-END	
	6Y-5840	1	BIT-END	
	3F-5108	10	BOLT-PLOW (5/8-11X2.25-IN)	
	4F-3658	4	BOLT-PLOW (5/8-11X3-IN)	
	142-4914	1	EDGE-CUTTING	
	4K-0367	14	NUT-FULL (5/8-11-THD)	
	5P-8247	14	WASHER-HARD (17X32X3.5-MM THK)	

<END>

222-7546 EDGE GP-BIT & CUTTING

S/N: BXM4225-UP
PART OF 222-7724 BLADE GP-ANGLING
AN ATTACHMENT

SMCS-6801, 6804 **i02571926**

NOTE	PART NUMBER	QTY	PART NAME 1 2 3 4 5 6 (PRODUCT LEVEL)	SEE PAGE
	6Y-5839	1	BIT-END	
	6Y-5840	1	BIT-END	
	3F-5108	13	BOLT-PLOW (5/8-11X2.25-IN)	
	4F-3658	4	BOLT-PLOW (5/8-11X3-IN)	
	143-3088	1	EDGE-CUTTING	
	4K-0367	17	NUT-FULL (5/8-11-THD)	
	5P-8247	17	WASHER-HARD (17X32X3.5-MM THK)	

<END>

135-9383 EDGE GP-CUTTING

S/N: BXM4225-UP
PART OF 279-5435 BUCKET AR-DIRT
FOR USE WITH 137.20-CM (54-IN) BUCKET
AN ATTACHMENT

SMCS-6801 **i02571125**

NOTE	PART NUMBER	QTY	PART NAME 1 2 3 4 5 6 (PRODUCT LEVEL)	SEE PAGE
	135-9393	1	EDGE-CUTTING	
M	**8T-4778**	6	LOCKNUT (M16X2-THD)	
M	**159-2953**	6	SCREW-FLAT HEAD (M16X2-THD)	

M-METRIC PART

<END>

WORK TOOLS

135-9384 EDGE GP-CUTTING

S/N: BXM4225-UP

PART OF 279-5438 BUCKET AR-DIRT, 279-5365 BUCKET AR-GENERAL PURPOSE, 157-7226 BUCKET AR-GRAPPLE, 279-5381 BUCKET AR-MULTIPURPOSE, 285-6095 BUCKET AR-UTILITY

FOR USE WITH 152.40-CM (60-IN) BUCKET

AN ATTACHMENT

SMCS-6801 **i01372033**

NOTE	REF NO	GRAPHIC REF	PART NUMBER	QTY	PART NAME 1 2 3 4 5 6 (PRODUCT LEVEL)	SEE PAGE
	1	1	**135-9394**	1	EDGE-CUTTING	
M	2	1	**8T-4778**	8	LOCKNUT (M16X2.00 THD)	
M	3	1	**159-2953**	8	SCREW-FLAT HEAD (M16X2.00 THD)	

M-METRIC PART

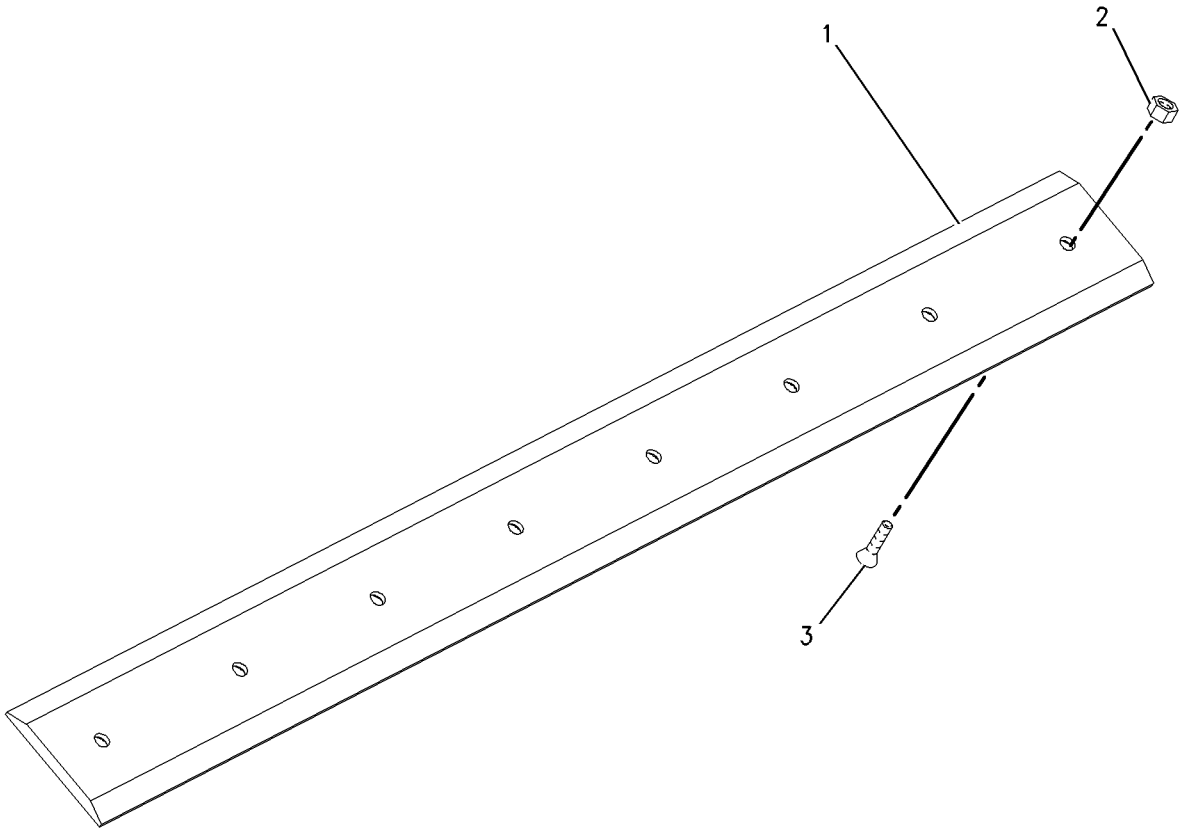

GRAPHIC #1 **<END>** g00724087

135-9385 EDGE GP-CUTTING

S/N: BXM4225-UP

PART OF 279-5441 BUCKET AR-DIRT, 279-5369 BUCKET AR-GENERAL PURPOSE, 157-7227 BUCKET AR-GRAPPLE, 279-5391 BUCKET AR-MULTIPURPOSE, 285-6100 BUCKET AR-UTILITY
FOR USE WITH 167.64-CM (66-IN) BUCKET
AN ATTACHMENT

SMCS-6801 **i01228508**

NOTE	REF NO	GRAPHIC REF	PART NUMBER	QTY	PART NAME 1 2 3 4 5 6 (PRODUCT LEVEL)	SEE PAGE
	1	1	**135-9395**	1	EDGE-CUTTING	
M	2	1	**8T-4778**	8	LOCKNUT (M16X2.00 THD)	
M	3	1	**159-2953**	8	SCREW-FLAT HEAD (M16X2.00 THD)	

M-METRIC PART

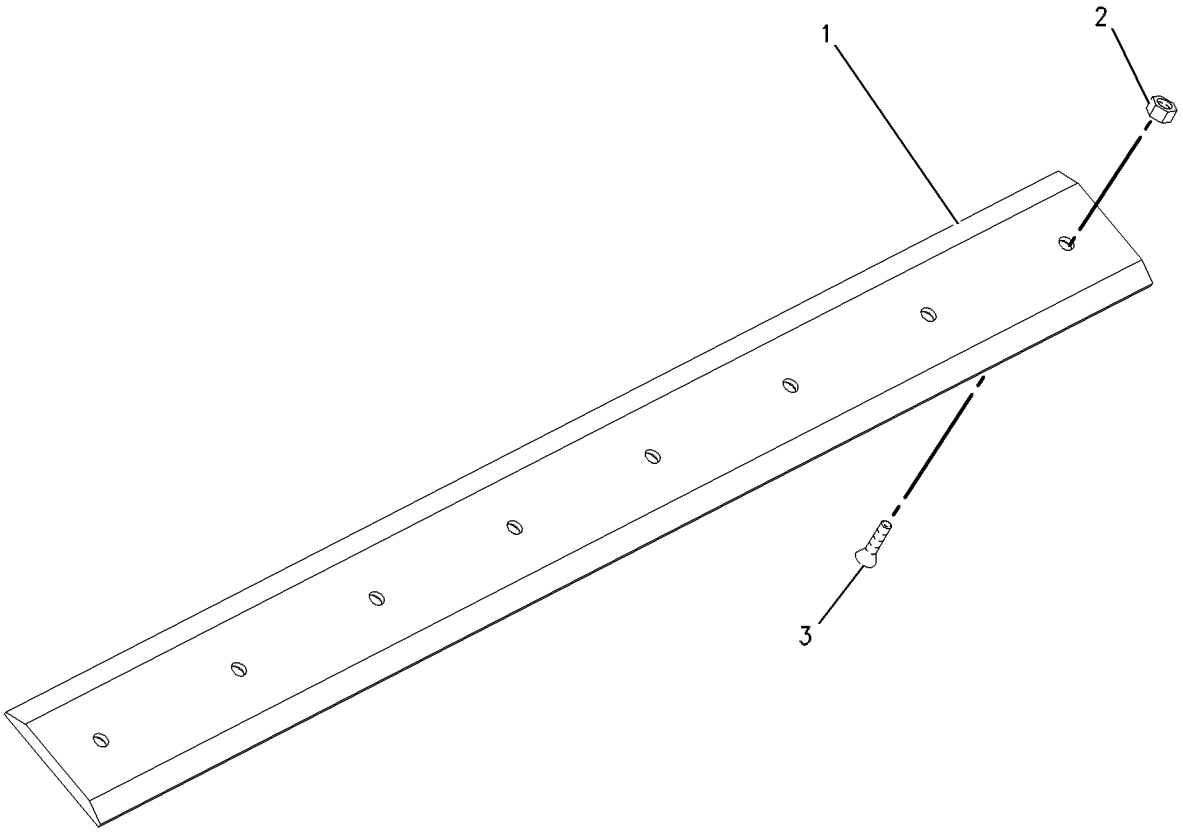

GRAPHIC #1 **<END>** g00657004

135-9386 EDGE GP-CUTTING

S/N: BXM4225-UP

PART OF 177-1989 BLADE AR, 285-6090 BUCKET AR-DIRT, 279-5373 BUCKET AR-GENERAL PURPOSE, 158-6095 BUCKET AR-GRAPPLE, 279-5420 BUCKET AR-LIGHT MATERIAL, 285-6101 BUCKET AR-UTILITY, 279-5399 BUCKET GP-MULTIPURPOSE

FOR USE WITH 182.88-CM (72-IN) BUCKET

AN ATTACHMENT

SMCS-6801 **i01372498**

NOTE	REF NO	GRAPHIC REF	PART NUMBER	QTY	PART NAME 1 2 3 4 5 6 (PRODUCT LEVEL)	SEE PAGE
	1	1	**135-9396**	1	EDGE-CUTTING	
M	2	1	**8T-4778**	11	LOCKNUT (M16X2.00 THD)	
M	3	1	**159-2953**	11	SCREW-FLAT HEAD (M16X2.00 THD)	

M-METRIC PART

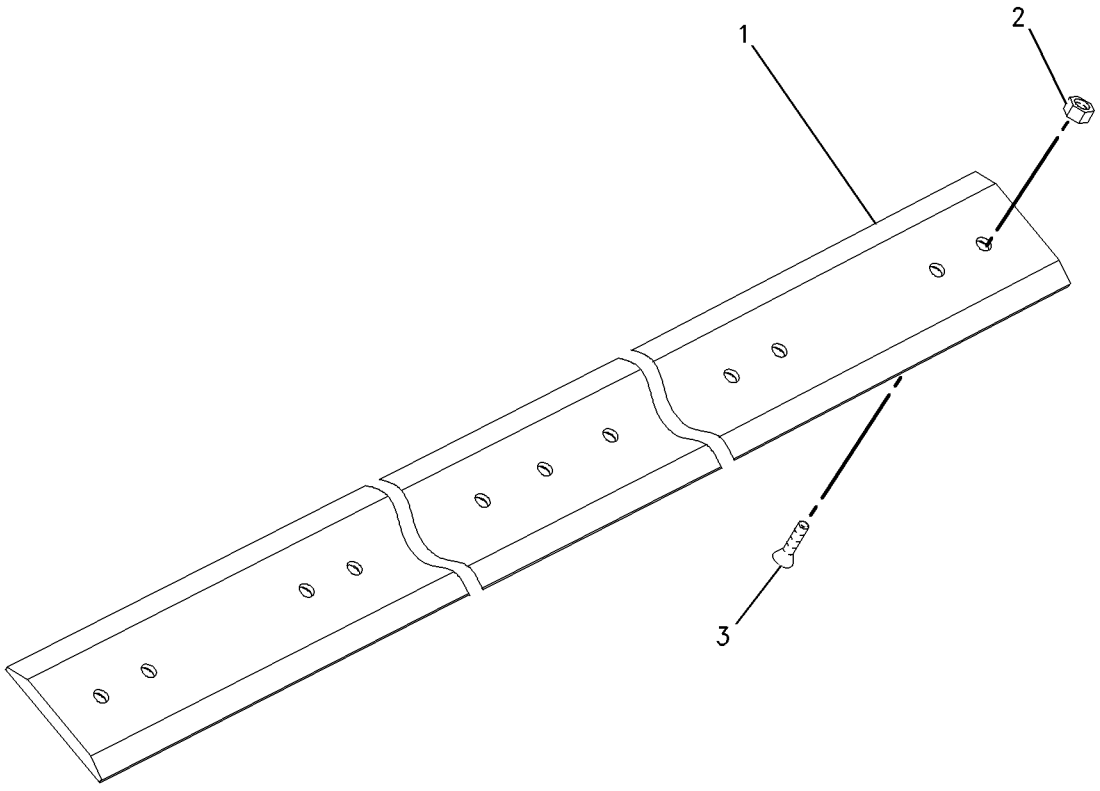

GRAPHIC #1 **<END>** g00724435

135-9387 EDGE GP-CUTTING

S/N: BXM4225-UP

PART OF 268-4083 BUCKET AR-DIRT, 279-5377 BUCKET AR-GENERAL PURPOSE, 279-5425 BUCKET AR-LIGHT MATERIAL, 279-5402 BUCKET AR-MULTIPURPOSE

FOR USE WITH 198.12-CM (78-IN) BUCKET

AN ATTACHMENT

SMCS-6801 **i01755490**

NOTE	REF NO	GRAPHIC REF	PART NUMBER	QTY	PART NAME 1 2 3 4 5 6 (PRODUCT LEVEL)	SEE PAGE
	1	1	**135-9397**	1	EDGE-CUTTING	
M	2	1	**8T-4778**	11	LOCKNUT (M16X2 THD)	
M	3	1	**159-2953**	11	SCREW-FLAT HEAD (M16X2.00 THD)	

M-METRIC PART

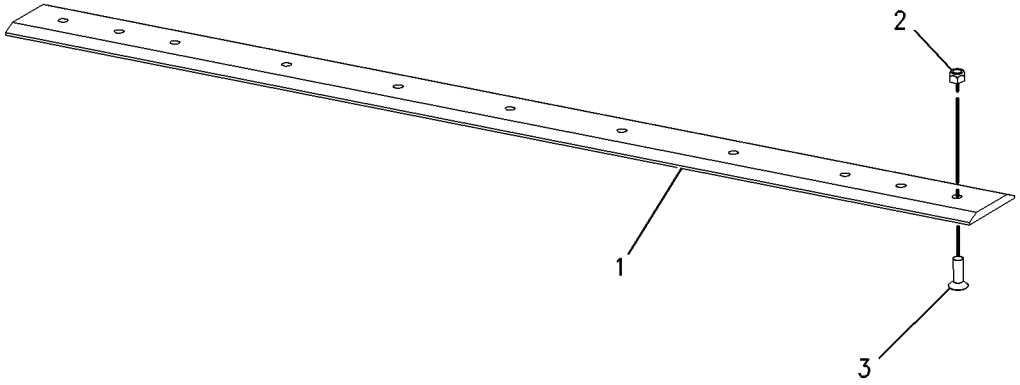

GRAPHIC #1 **<END>** g00898154

149-5741 EDGE GP-CUTTING

S/N: BXM4225-UP
PART OF 177-1990 BLADE AR
FOR USE WITH 218.9-CM (85-IN) BUCKET
AN ATTACHMENT

SMCS-6801 **i01832720**

NOTE	REF NO	GRAPHIC REF	PART NUMBER	QTY	PART NAME 1 2 3 4 5 6 (PRODUCT LEVEL)	SEE PAGE
	1	1	**195-5124**	1	EDGE-CUTTING	
M	2	1	**8T-4778**	7	LOCKNUT (M16X2 THD)	
M	3	1	**159-2953**	7	SCREW-FLAT HEAD (M16X2.00 THD)	

M-METRIC PART

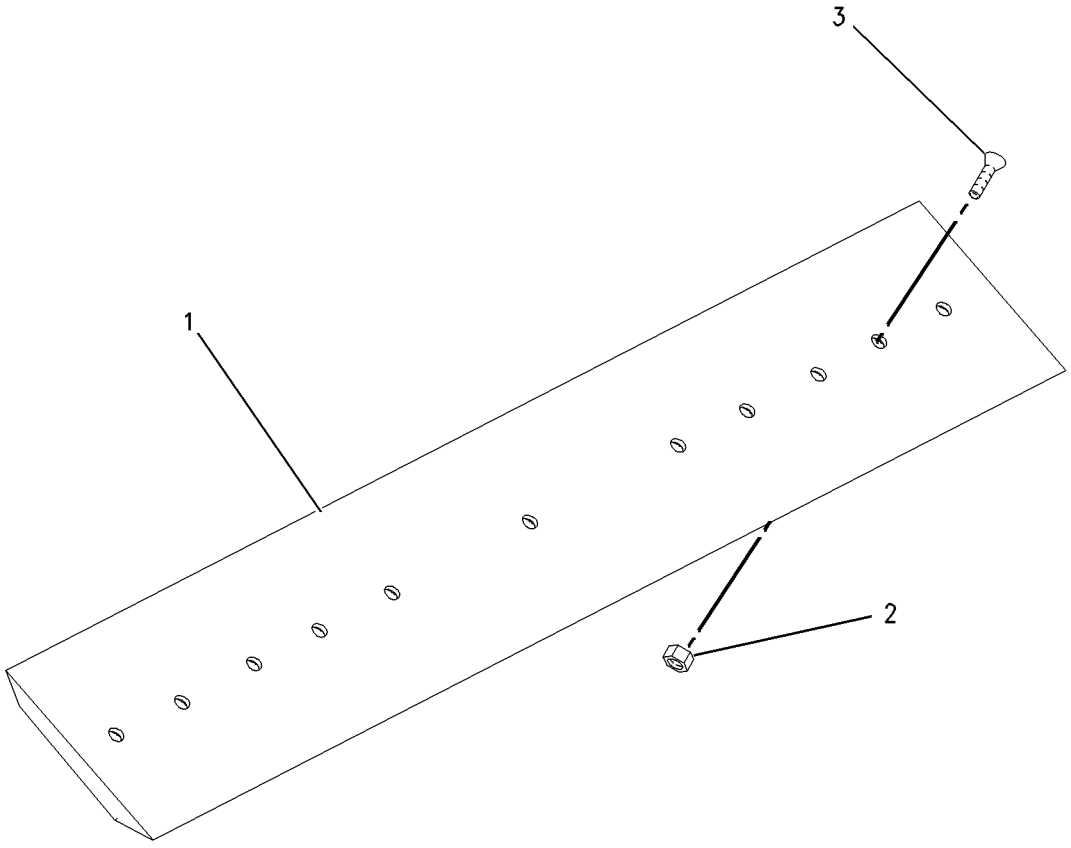

GRAPHIC #1 **<END>** g00936281

WORK TOOLS

195-7124 EDGE GP-CUTTING

S/N: BXM4225-UP
PART OF 279-5430 BUCKET AR-LIGHT MATERIAL
FOR USE WITH 213.36CM (84 IN) BUCKET
AN ATTACHMENT

SMCS-6801 **i01859534**

NOTE	PART NUMBER	QTY	PART NAME 1 2 3 4 5 6 (PRODUCT LEVEL)	SEE PAGE
	195-5124	1	EDGE-CUTTING	
M	**8T-4778**	11	LOCKNUT (M16X2 THD)	
M	**159-2953**	11	SCREW-FLAT HEAD (M16X2.00 THD)	

M-METRIC PART

<END>

279-5350 FORK AR-GRAPPLE—INDUSTRIAL

S/N: BXM4225-UP
1676-MM (66-IN)
AN ATTACHMENT

SMCS-6705 **i02715580**

NOTE	PART NUMBER	QTY	PART NAME 1 2 3 4 5 6 (PRODUCT LEVEL)	SEE PAGE
Y	**278-1975**	2	CYLINDER GP-HYDRAULIC	268
Y	*164-9614*	9	FORK GP-GRAPPLE (INDUSTRIAL)	458
Y	*279-5351*	1	FORK GP-GRAPPLE (66-IN, INDUSTRIAL)	459
Y	*279-5412*	1	LINES GP-BUCKET (INDUSTRIAL)	283
Y	*156-0891*	1	MOUNTING GP-CYLINDER (INDUSTRIAL)	358

Y-SEPARATE ILLUSTRATION

<END>

279-5360 FORK AR-GRAPPLE—INDUSTRIAL

S/N: BXM4225-UP
1829-MM (72-IN)
AN ATTACHMENT

SMCS-6705 **i02715593**

NOTE	PART NUMBER	QTY	PART NAME 1 2 3 4 5 6 (PRODUCT LEVEL)	SEE PAGE
Y	**278-1975**	2	CYLINDER GP-HYDRAULIC	268
Y	*164-9614*	2	FORK GP-GRAPPLE (INDUSTRIAL)	458
Y	*279-5359*	1	FRAME GP-GRAPPLE (72-IN, INDUSTRIAL)	468
Y	*279-5412*	1	LINES GP-BUCKET (INDUSTRIAL)	283
Y	*156-0891*	1	MOUNTING GP-CYLINDER (INDUSTRIAL)	358

Y-SEPARATE ILLUSTRATION

<END>

285-6114 FORK AR-GRAPPLE–UTILITY

S/N: BXM4225-UP
1676-MM (66-IN)
AN ATTACHMENT

SMCS-6705 **i02552497**

NOTE	PART NUMBER	QTY	PART NAME 1 2 3 4 5 6 (PRODUCT LEVEL)	SEE PAGE
Y	**285-6105**	1	FORK GP-UTILITY (66-IN)	464
Y	*285-6116*	1	GRAPPLE GP-UTILITY	470

Y-SEPARATE ILLUSTRATION

<END>

285-6115 FORK AR-GRAPPLE–UTILITY

S/N: BXM4225-UP
1829-MM(72-IN)
AN ATTACHMENT

SMCS-6705 **i02552699**

NOTE	PART NUMBER	QTY	PART NAME 1 2 3 4 5 6 (PRODUCT LEVEL)	SEE PAGE
Y	**285-6110**	1	FORK GP-GRAPPLE	460
Y	*285-6116*	1	GRAPPLE GP-UTILITY	470

Y-SEPARATE ILLUSTRATION

<END>

WORK TOOLS

164-9614 FORK GP-GRAPPLE

S/N: BXM4225-UP
PART OF 279-5350, 279-5360 FORK AR-GRAPPLE
AN ATTACHMENT

SMCS-6705 **i01075196**

NOTE	REF NO	GRAPHIC REF	PART NUMBER	QTY	PART NAME 1 2 3 4 5 6 (PRODUCT LEVEL)	SEE PAGE
	1	1	**3E-4370**	1	PIN-SPRING	
	2	1	**162-8154**	1	TINE	

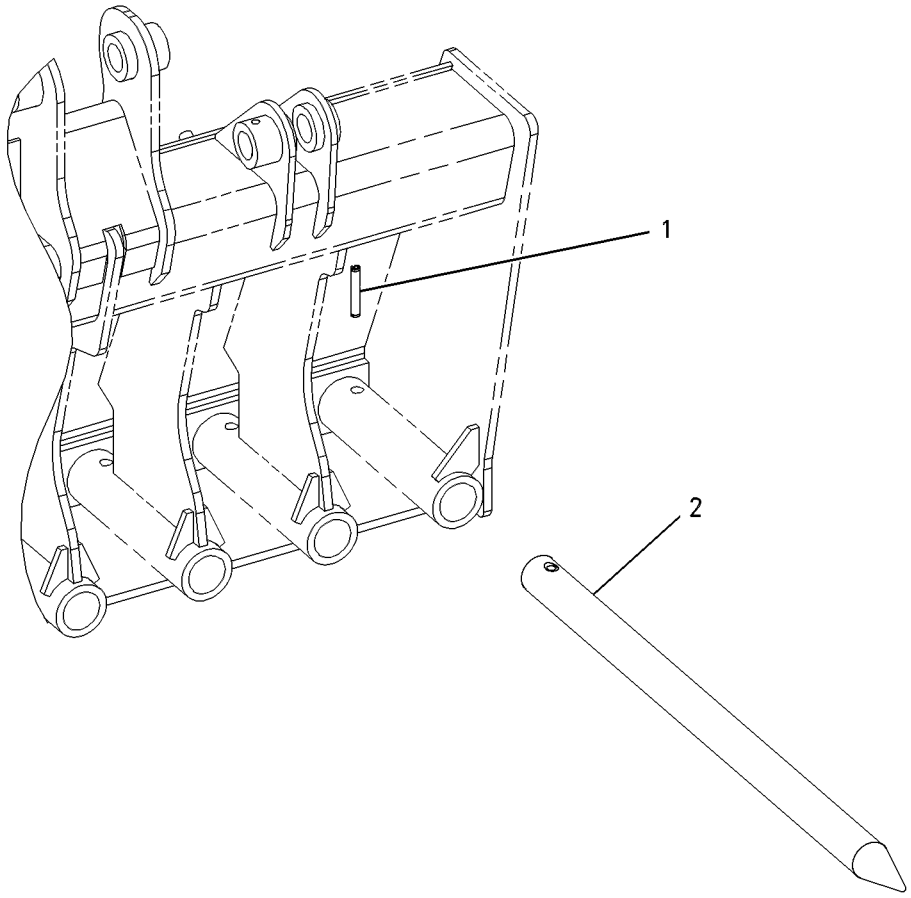

GRAPHIC #1 **<END>** g00559648

279-5351 FORK GP-GRAPPLE–INDUSTRIAL

S/N: BXM4225-UP
1676-MM (66-IN)
PART OF 279-5350 FORK AR-GRAPPLE
AN ATTACHMENT

SMCS-6705 **i02571199**

NOTE	REF NO	GRAPHIC REF	PART NUMBER	QTY	PART NAME 1 2 3 4 5 6 (PRODUCT LEVEL)	SEE PAGE
	1	1	**157-0940**	4	PIN	
	2	1	**164-9989**	2	FILM-WARNING (IMPALED POINT)	
	3	1	**222-7467**	2	FORK AS	
Y	4	1	*279-5352*	1	FRAME GP-FORK (66-IN, INDUSTRIAL)	466
	5	1	**3B-8489**	4	FITTING-GREASE	
M	6	1	**6V-9189**	4	LOCKNUT (M8X1.25-THD)	
M	7	1	**8T-6869**	4	BOLT (M8X1.25X60-MM)	

M-METRIC PART
Y-SEPARATE ILLUSTRATION

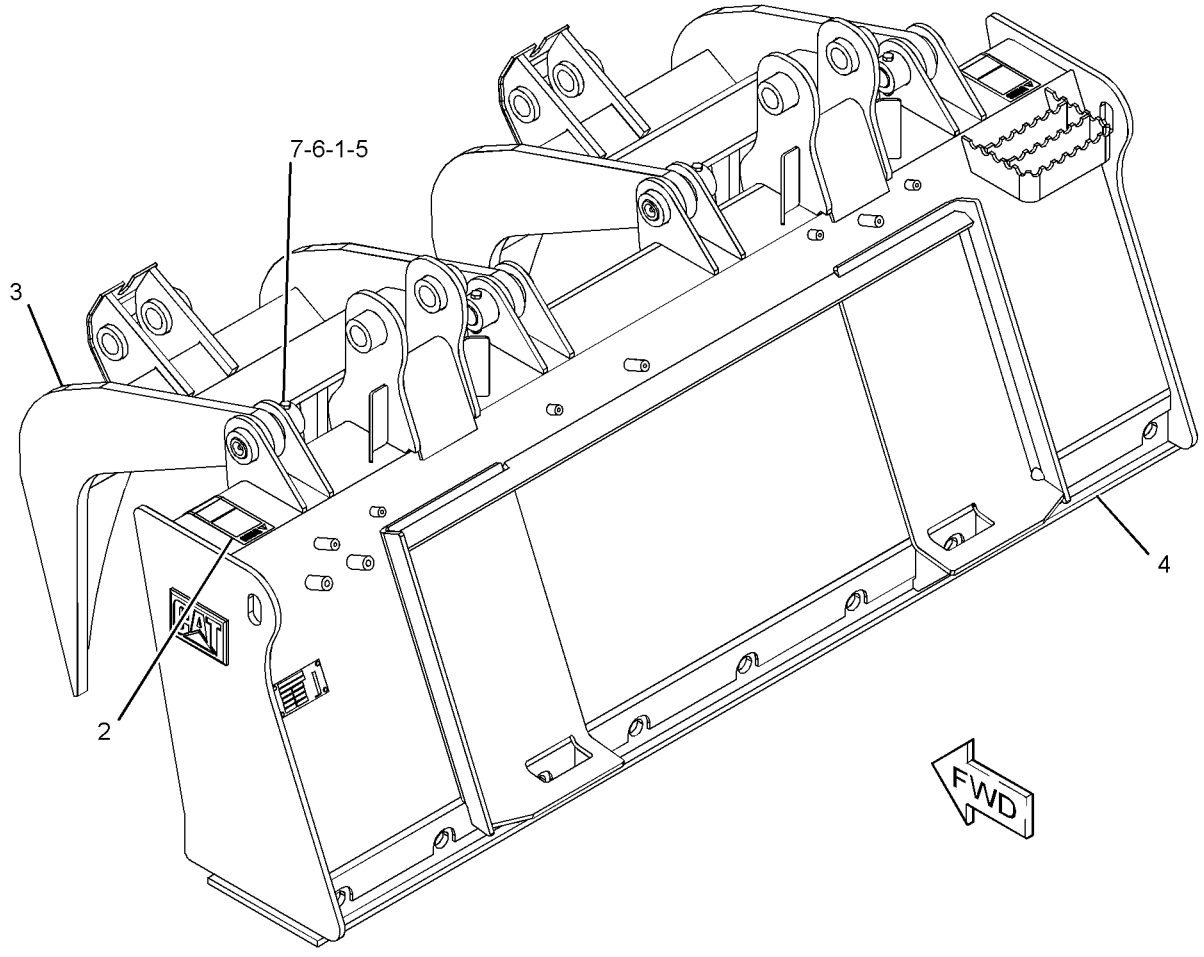

GRAPHIC #1 **<END>** g01279797

285-6110 FORK GP-GRAPPLE

S/N: BXM4225-UP
1829-MM (72-IN)
PART OF 285-6115 FORK AR-GRAPPLE
AN ATTACHMENT

SMCS-6705 **i02760170**

NOTE	REF NO	GRAPHIC REF	PART NUMBER	QTY	PART NAME 1 2 3 4 5 6 (PRODUCT LEVEL)	SEE PAGE
	1	1	**164-9989**	2	FILM-WARNING (IMPALED POINT)	
Y	2	1	*165-8732*	9	FORK GP-UTILITY	463
					PARTS SHOWN IN GRAPHIC(S) WITHOUT A REFERENCE NUMBER ARE NOT SERVICED SEPARATELY	

Y-SEPARATE ILLUSTRATION

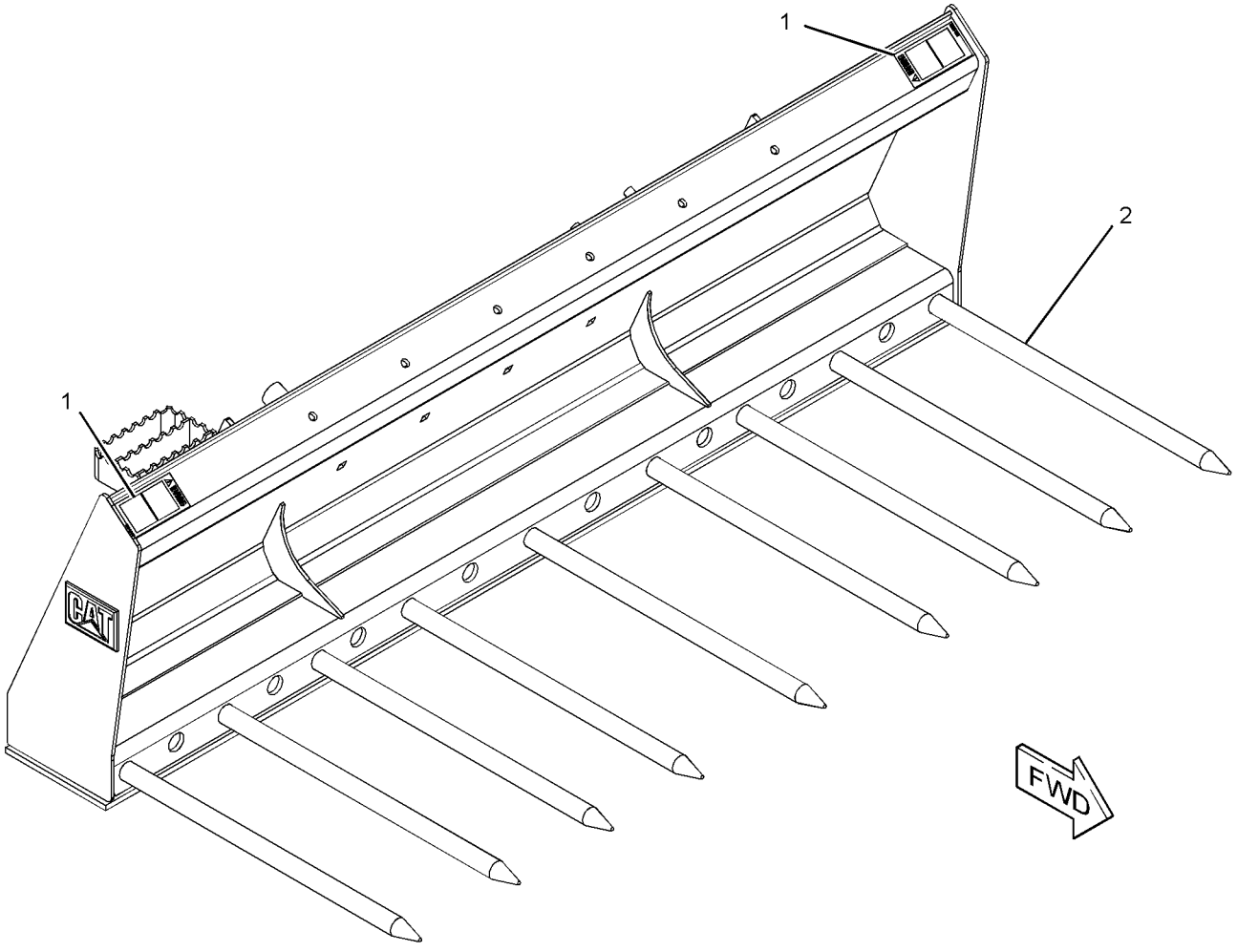

GRAPHIC #1 **<END>** g01381750

WORK TOOLS

195-6942 FORK GP-PALLET

S/N: BXM4225-UP
1067-MM (42-IN)
PART OF 293-9428 CARRIAGE & FORK AR
AN ATTACHMENT

SMCS-6136 **i02569271**

NOTE	PART NUMBER	QTY	PART NAME 1 2 3 4 5 6 (PRODUCT LEVEL)	SEE PAGE
	221-3429	1	POSITIONER GP-FORK	

<END>

195-6943 FORK GP-PALLET

S/N: BXM4225-UP
914-MM (36-IN)
PART OF 293-9427 CARRIAGE & FORK AR
AN ATTACHMENT

SMCS-6136 **i02569272**

NOTE	PART NUMBER	QTY	PART NAME 1 2 3 4 5 6 (PRODUCT LEVEL)	SEE PAGE
	221-3429	1	POSITIONER GP-FORK	

<END>

195-8545 FORK GP-PALLET

S/N: BXM4225-UP
1219-MM (48-IN)
PART OF 293-9429 CARRIAGE & FORK AR
AN ATTACHMENT

SMCS-6136 **i02569274**

NOTE	PART NUMBER	QTY	PART NAME 1 2 3 4 5 6 (PRODUCT LEVEL)	SEE PAGE
	221-3429	1	POSITIONER GP-FORK	

<END>

243-0001 FORK GP-PALLET–KIT

S/N: BXM4225-UP
914-MM (36-IN)
AN ATTACHMENT

SMCS-6136 **i01964024**

NOTE	PART NUMBER	QTY	PART NAME 1 2 3 4 5 6 (PRODUCT LEVEL)	SEE PAGE
	195-6943	12	FORK GP-PALLET (36 IN)	
			(EACH INCLUDES)	
	221-3429	1	POSITIONER GP-FORK	

<END>

WORK TOOLS

243-0002 FORK GP-PALLET–KIT

S/N: BXM4225-UP
1067-MM (42-IN)
AN ATTACHMENT

SMCS-6136 **i01964030**

NOTE	PART NUMBER	QTY	PART NAME 1 2 3 4 5 6 (PRODUCT LEVEL)	SEE PAGE
	195-6942	12	FORK GP-PALLET (42 IN)	
			(EACH INCLUDES)	
	221-3429	1	POSITIONER GP-FORK	

<END>

243-0003 FORK GP-PALLET–KIT

S/N: BXM4225-UP
1219-MM (48-IN)
AN ATTACHMENT

SMCS-6136 **i01964031**

NOTE	PART NUMBER	QTY	PART NAME 1 2 3 4 5 6 (PRODUCT LEVEL)	SEE PAGE
	195-8545	12	FORK GP-PALLET (48 IN)	
			(EACH INCLUDES)	
	221-3429	1	POSITIONER GP-FORK	

<END>

165-8732 FORK GP-UTILITY

S/N: BXM4225-UP
PART OF 285-6110 FORK GP-GRAPPLE, 285-6105 FORK GP-UTILITY
AN ATTACHMENT

SMCS-6458 **i01204324**

NOTE	REF NO	GRAPHIC REF	PART NUMBER	QTY	PART NAME 1 2 3 4 5 6 (PRODUCT LEVEL)	SEE PAGE
	1	1	**9R-2959**	1	CLIP	
	2	1	**166-4041**	1	TINE	

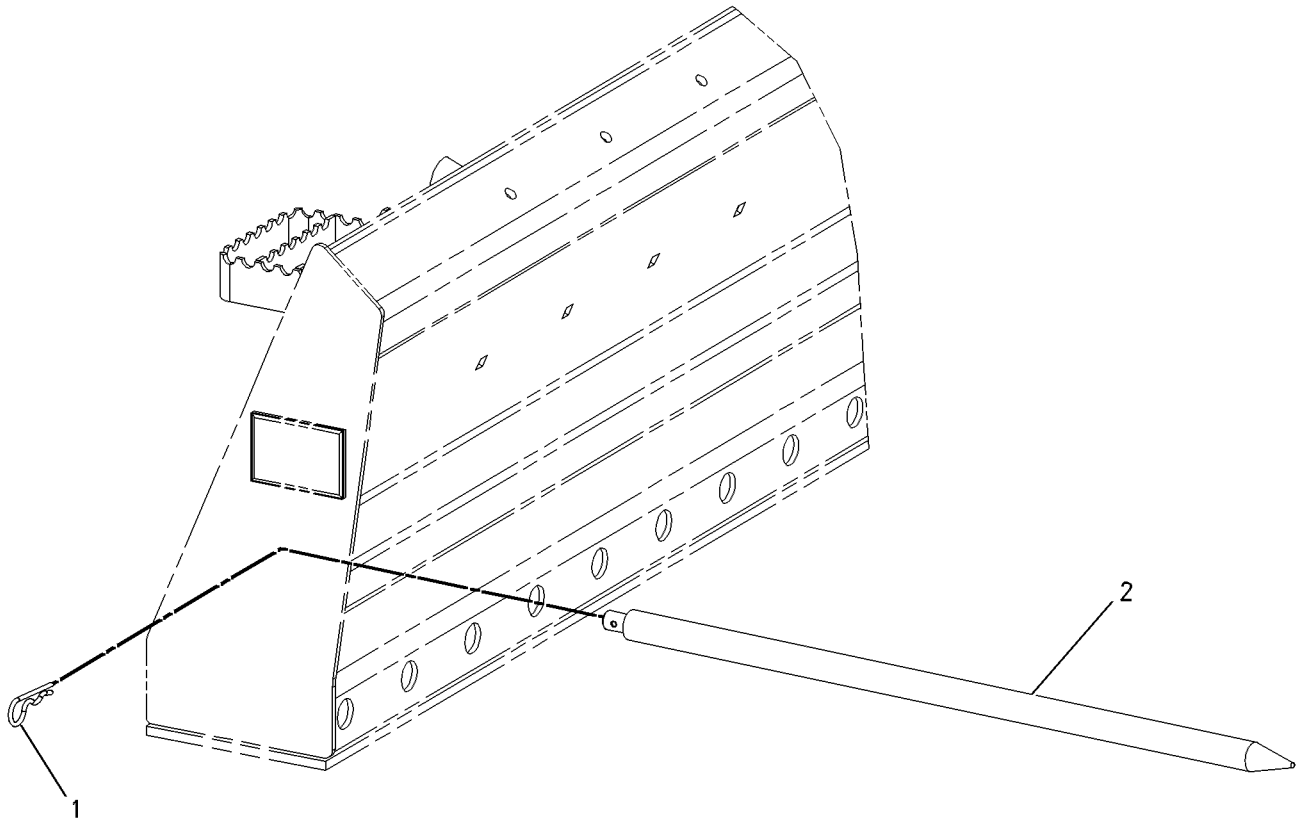

GRAPHIC #1 **<END>** g00639778

285-6105 FORK GP-UTILITY

S/N: BXM4225-UP
1676-MM (66-IN)
PART OF 285-6114 FORK AR-GRAPPLE
AN ATTACHMENT

SMCS-6458 **i02552504**

NOTE	REF NO	GRAPHIC REF	PART NUMBER	QTY	PART NAME 1 2 3 4 5 6 (PRODUCT LEVEL)	SEE PAGE
	1	1	**164-9989**	2	FILM-WARNING (IMPALED POINT)	
Y	2	1	*165-8732*	7	FORK GP-UTILITY	463
					PARTS SHOWN IN GRAPHIC(S) WITHOUT A REFERENCE NUMBER ARE NOT SERVICED SEPARATELY	

Y-SEPARATE ILLUSTRATION

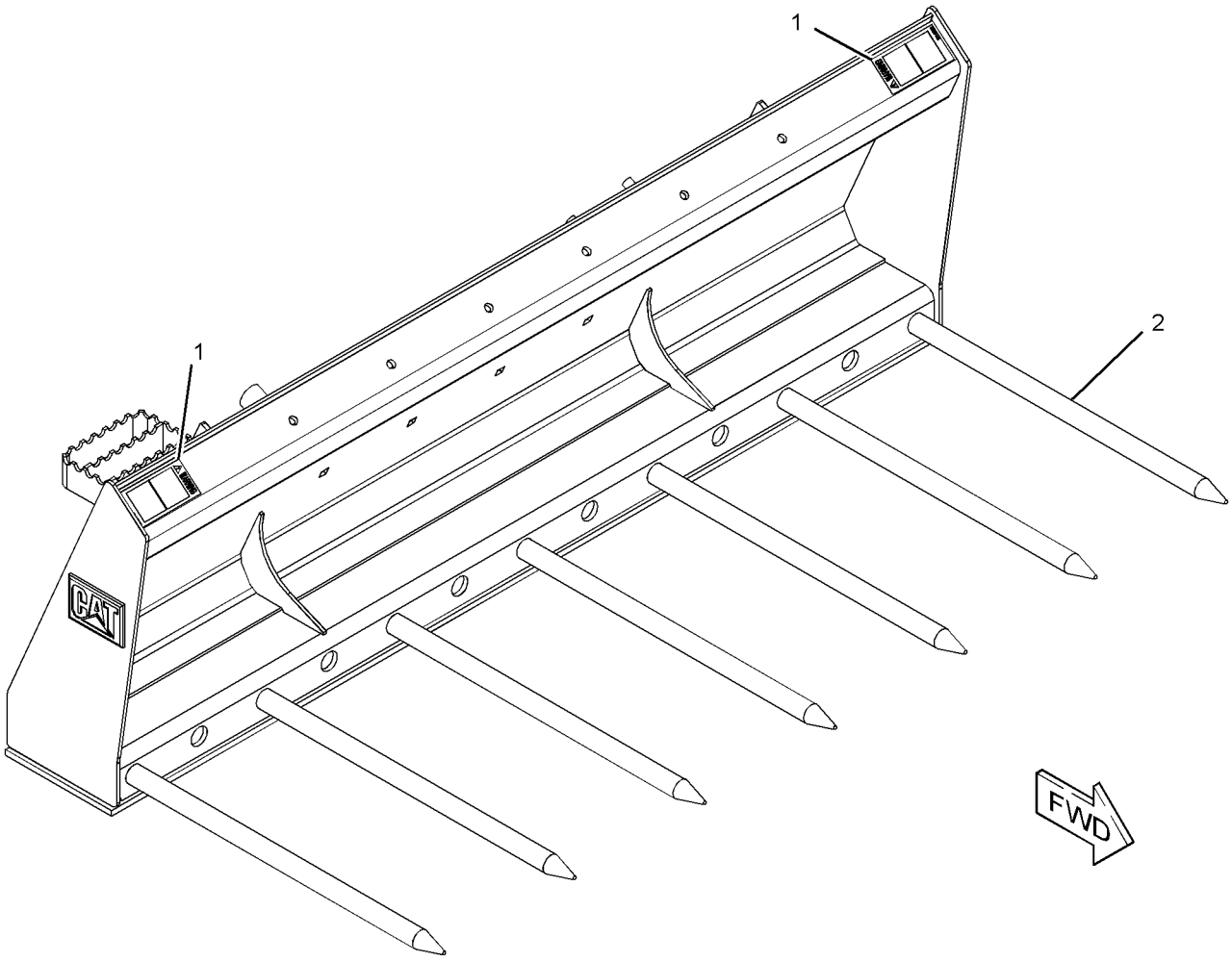

GRAPHIC #1 **<END>** g01280417

WORK TOOLS

230-5670 FRAME GP-BLADE

S/N: BXM4225-UP
PART OF 177-1989, 177-1990 BLADE AR
AN ATTACHMENT

SMCS-6060 **i01860873**

NOTE	REF NO	GRAPHIC REF	PART NUMBER	QTY	PART NAME 1 2 3 4 5 6 (PRODUCT LEVEL)	SEE PAGE
	1	1	**177-1914**	1	PIN AS	
B	2	1	**177-1955**	1	SHIM (1-MM)	
B	3	1	**177-1956**	1	SHIM (2-MM)	
B	4	1	**177-1957**	1	SHIM (3-MM)	
	5	1	**177-1971**	1	FRAME AS	
	6	1	**177-1975**	1	FRAME AS	
	7	1	**230-5407**	1	FRAME AS	
	8	1	**3B-8489**	1	FITTING-GREASE	
	9	1	**5B-0935**	1	FITTING-GREASE	
M	10	1	**7X-2553**	8	BOLT (M16X2X40-MM)	
	11	1	**7X-7729**	1	WASHER (11X25X3-MM THK)	
	12	1	**8T-4122**	8	WASHER-HARD (17X32X3.5-MM THK)	
M	13	1	**8T-4137**	1	BOLT (M10X1.5X20-MM)	

B-USE AS REQUIRED
M-METRIC PART

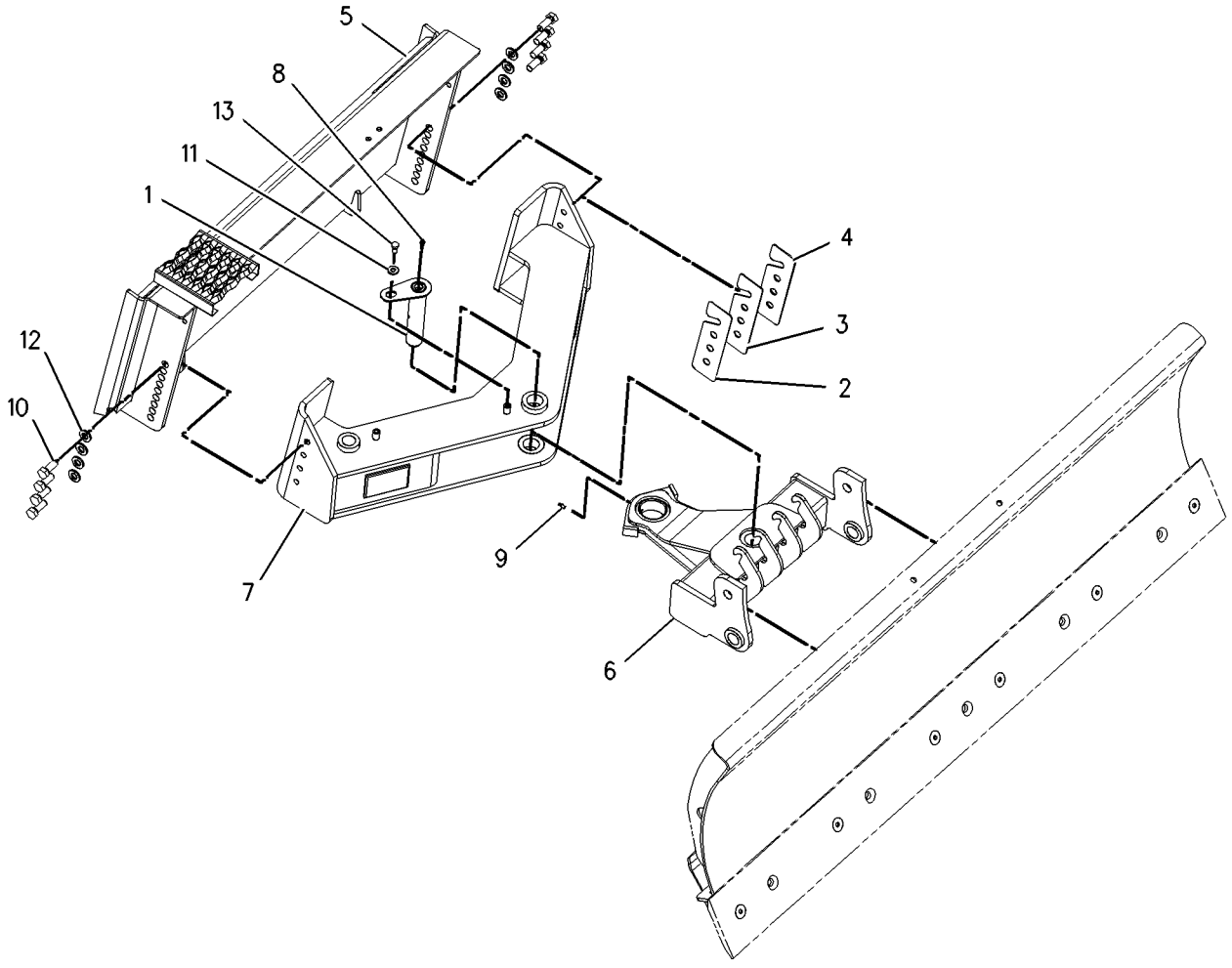

GRAPHIC #1 **<END>** g00978893

279-5352 FRAME GP-FORK–INDUSTRIAL

S/N: BXM4225-UP
PART OF 279-5351 FORK GP-GRAPPLE
AN ATTACHMENT

SMCS-6705 **i02550300**

NOTE	REF NO	GRAPHIC REF	PART NUMBER	QTY	PART NAME 1 2 3 4 5 6 (PRODUCT LEVEL)	SEE PAGE
	1	1	**154-2704**	1	PLATE-INSTRUCTION (BUCKET SPECIFICATIONS)	
	2	1	**168-8389**	4	TACK-FASTENER	
	3	1	**279-5353**	1	FORK AS	

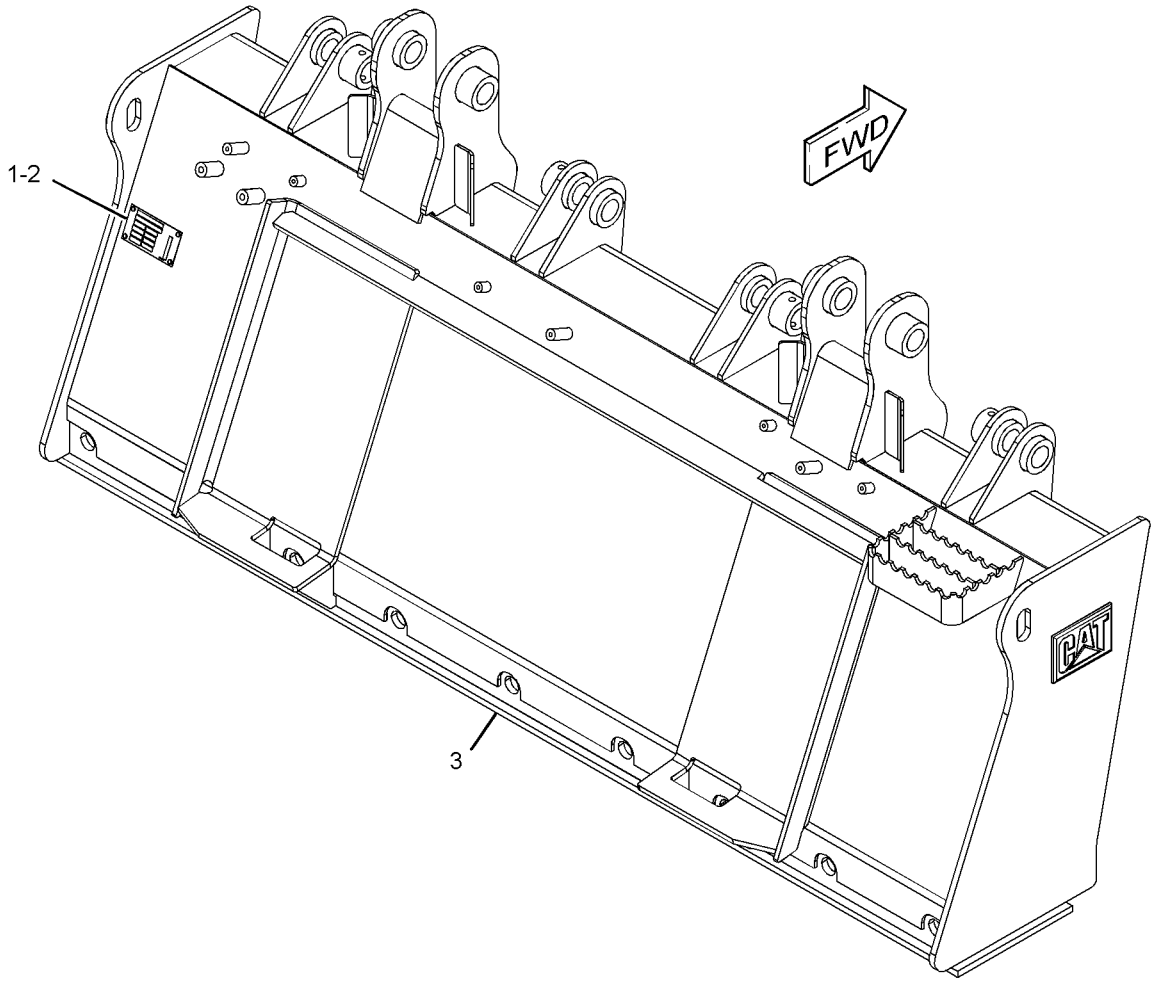

GRAPHIC #1 **<END>** g01280687

279-5358 FRAME GP-FORK–INDUSTRIAL

S/N: BXM4225-UP

PART OF 279-5359 FRAME GP-GRAPPLE

AN ATTACHMENT

SMCS-6705 **i02550334**

NOTE	REF NO	GRAPHIC REF	PART NUMBER	QTY	PART NAME 1 2 3 4 5 6 (PRODUCT LEVEL)	SEE PAGE
	1	1	**154-2704**	1	PLATE-INSTRUCTION (BUCKET SPECIFICATIONS)	
	2	1	**168-8389**	4	TACK-FASTENER	
	3	1	**279-5357**	1	FORK AS	

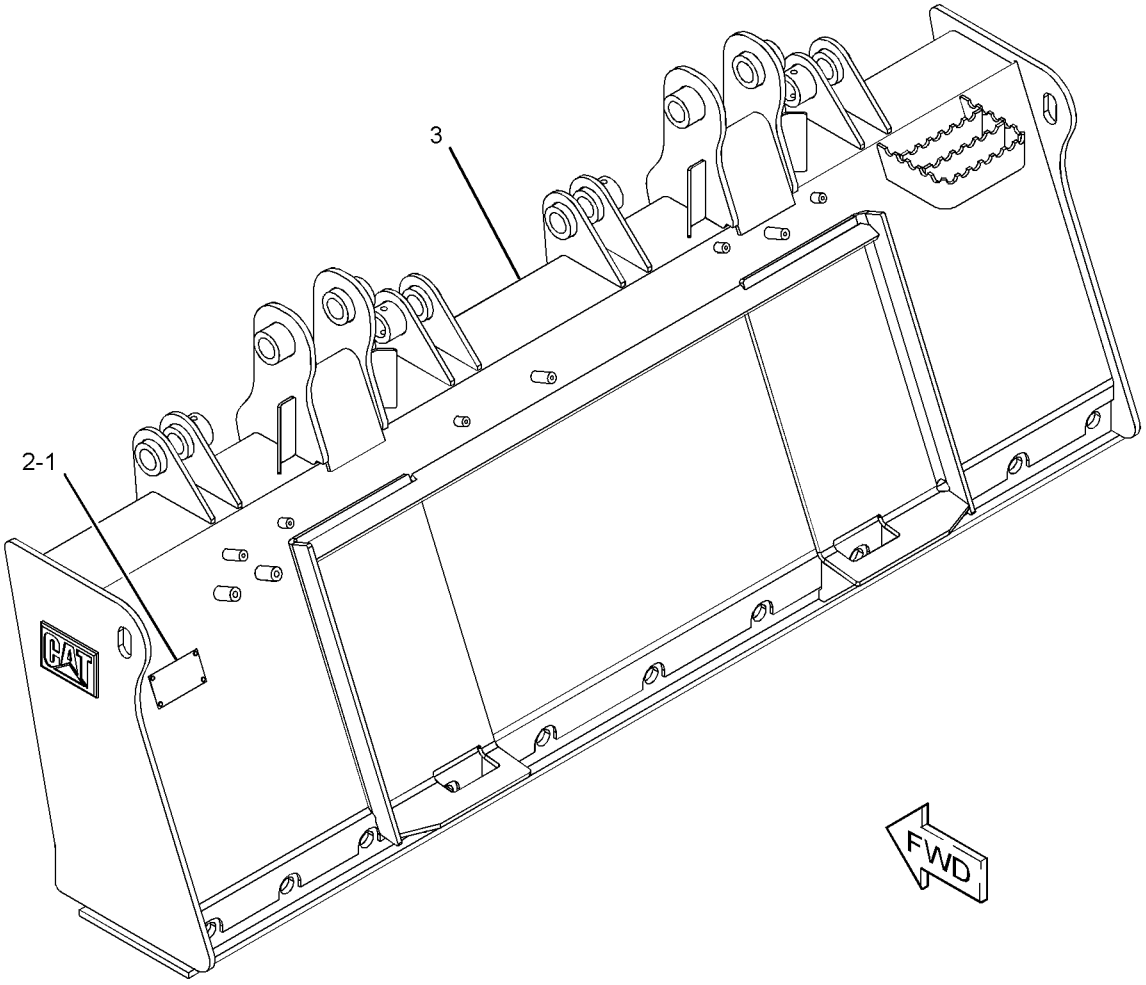

GRAPHIC #1 **<END>** g01279388

279-5359 FRAME GP-GRAPPLE–INDUSTRIAL

S/N: BXM4225-UP
PART OF 279-5360 FORK AR-GRAPPLE
AN ATTACHMENT

SMCS-6705 **i02550333**

NOTE	REF NO	GRAPHIC REF	PART NUMBER	QTY	PART NAME 1 2 3 4 5 6 (PRODUCT LEVEL)	SEE PAGE
	1	1	**157-0940**	4	PIN	
	2	1	**164-9989**	2	FILM-WARNING (IMPALED POINT)	
	3	1	**222-7467**	2	FORK AS	
Y	4	1	*279-5358*	1	FRAME GP-FORK (72-IN, INDUSTRIAL)	467
	5	1	**3B-8489**	4	FITTING-GREASE	
M	6	1	**6V-9189**	4	LOCKNUT (M8X1.25-THD)	
M	7	1	**8T-6869**	4	BOLT (M8X1.25X60-MM)	

M-METRIC PART
Y-SEPARATE ILLUSTRATION

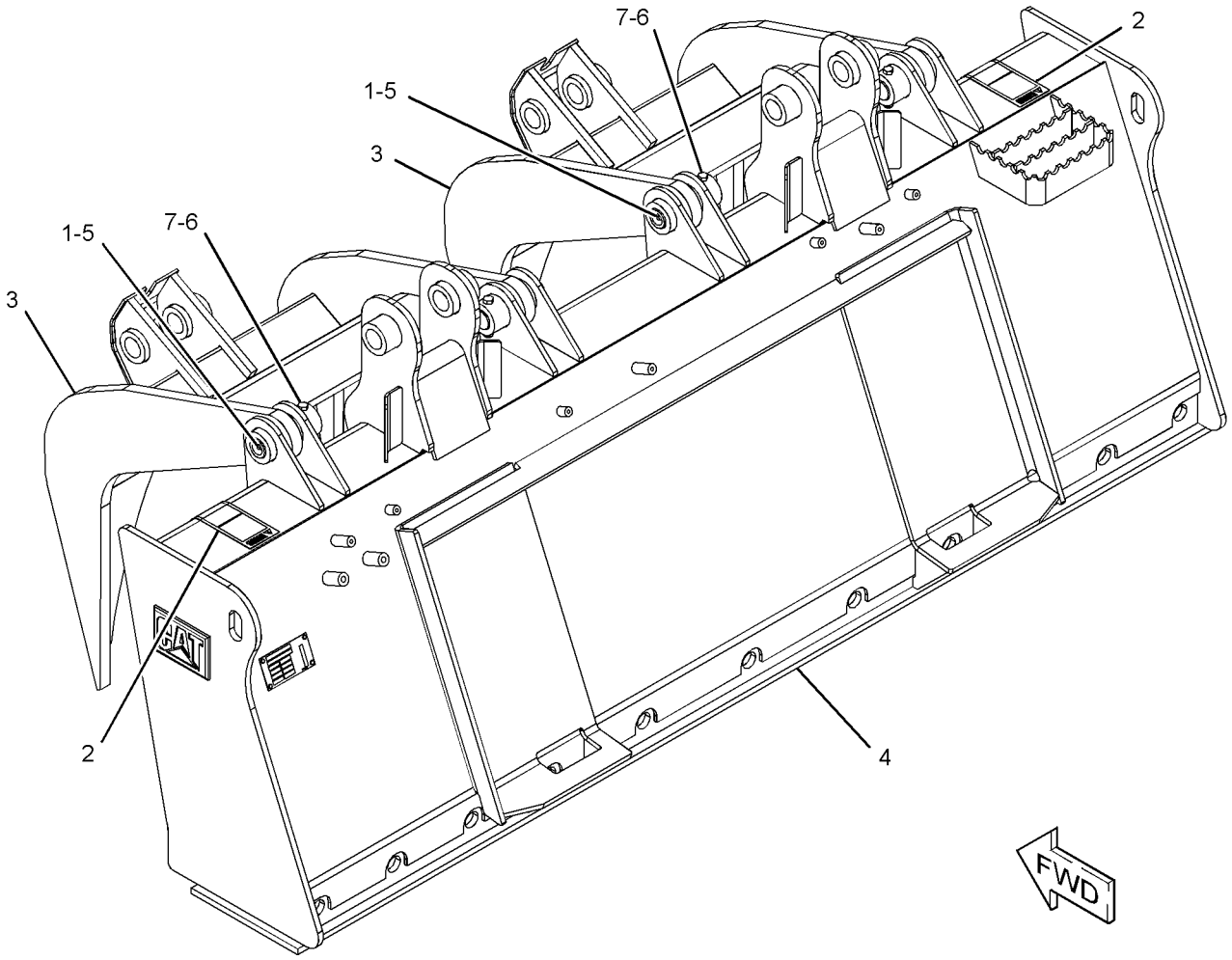

GRAPHIC #1 **<END>** g01280924

165-8740 GRAPPLE GP-UTILITY

S/N: BXM4225-UP
PART OF 285-6116 GRAPPLE GP-UTILITY
AN ATTACHMENT

SMCS-6307 **i02772047**

NOTE	REF NO	GRAPHIC REF	PART NUMBER	QTY	PART NAME 1 2 3 4 5 6 (PRODUCT LEVEL)	SEE PAGE
	1	1	**3B-8488**	4	FITTING-GREASE	
	2	1	**159-5411**	4	PIN	
	3	1	**165-8743**	1	ARM AS	
	4	1	**169-3569**	1	BRACKET AS	
		1	**159-8035**	2	FILM-WARNING (CRUSH HAZARD, STAY BACK)	
M	5	1	**6V-9189**	4	LOCKNUT (M8X1.25-THD)	
M	6	1	**8T-6912**	4	BOLT (M8X1.25X50-MM)	

M-METRIC PART

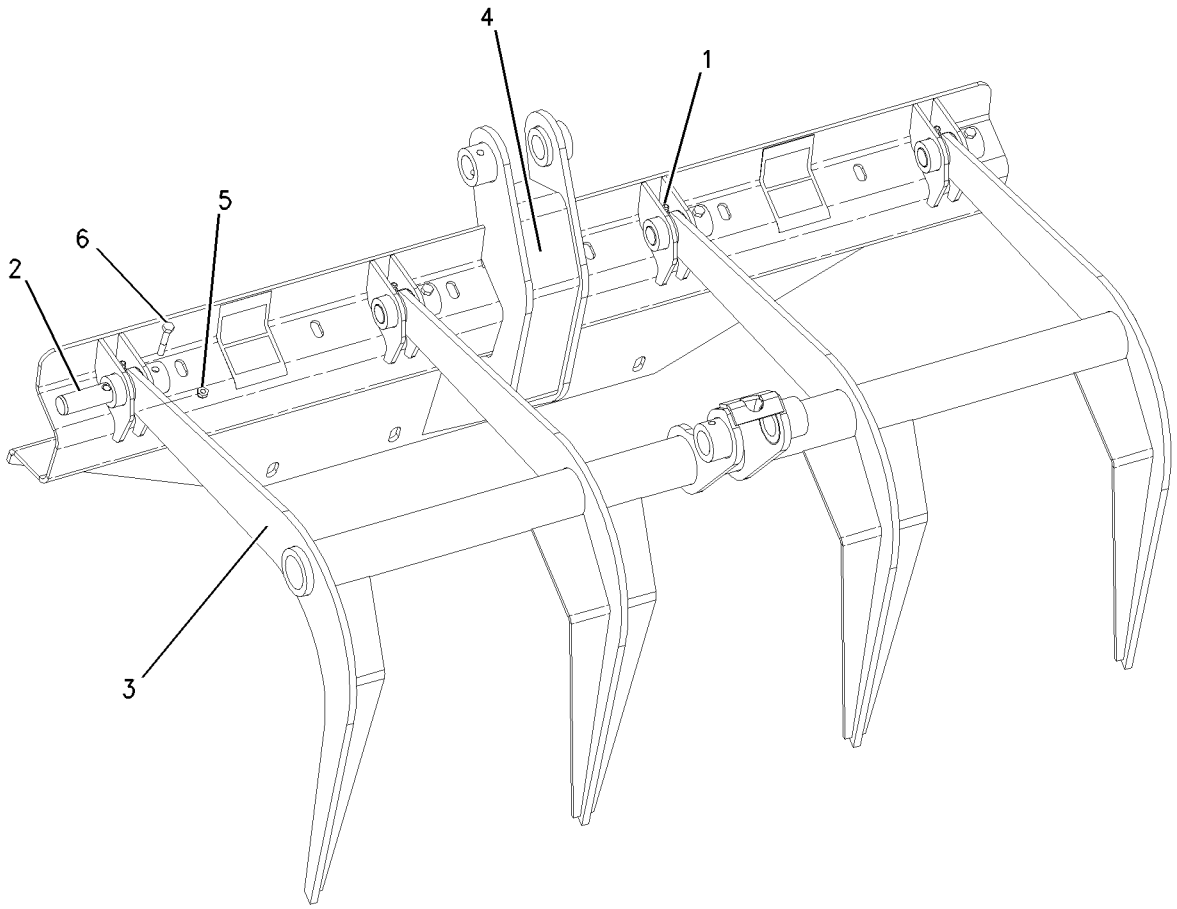

GRAPHIC #1 **<END>** g00777325

WORK TOOLS

285-6116 GRAPPLE GP-UTILITY

S/N: BXM4225-UP
PART OF 285-6093, 285-6104, 285-6111, 285-6112 BUCKET AR-GRAPPLE, 285-6114, 285-6115 FORK AR-GRAPPLE
AN ATTACHMENT
TYPE 1

SMCS-6307 **i02711972**

NOTE	REF NO	GRAPHIC REF	PART NUMBER	QTY	PART NAME 1 2 3 4 5 6 (PRODUCT LEVEL)	SEE PAGE
Y	1	1	**164-9295**	1	CYLINDER GP-GRAPPLE	261
Y	2	1	*165-8731*	1	MOUNTING GP-CYLINDER (UTILITY)	359
Y	3	1	*165-8740*	1	GRAPPLE GP-UTILITY	469
M	4	1	**170-5836**	4	BOLT	
Y	5	1	*173-7407*	1	STOP GP-GRAPPLE	483
	6	1	**239-5029**	1	GUARD	
Y	7	1	*285-6113*	1	LINES GP-BUCKET	293
	8	1	**5P-1076**	4	WASHER-HARD (13.5X30X4-MM THK)	
M	9	1	**8T-4139**	6	BOLT (M12X1.75X30-MM)	
	10	1	**8T-4223**	6	WASHER-HARD (13.5X25.5X3-MM THK)	
M	11	1	**8T-4244**	10	NUT (M12X1.75-THD)	

M-METRIC PART
Y-SEPARATE ILLUSTRATION

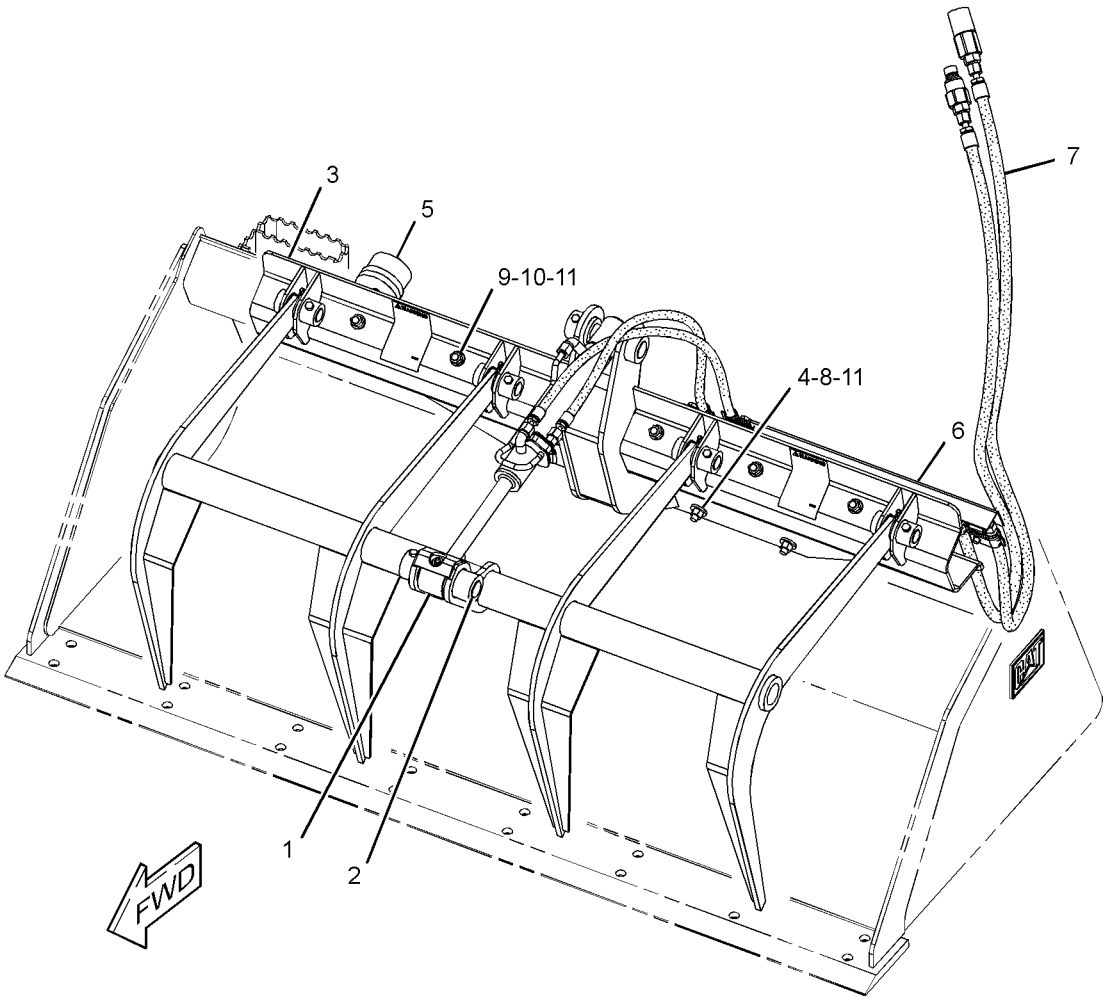

GRAPHIC #1 **<END>** g01278678

285-6116 GRAPPLE GP-UTILITY

S/N: BXM4225-UP
PART OF 285-6093, 285-6104, 285-6111, 285-6112 BUCKET AR-GRAPPLE, 285-6114, 285-6115 FORK AR-GRAPPLE
AN ATTACHMENT
TYPE 2

SMCS-6307 **i02888549**

NOTE	REF NO	GRAPHIC REF	PART NUMBER	QTY	PART NAME 1 2 3 4 5 6 (PRODUCT LEVEL)	SEE PAGE
CY	1	1	**255-0943**	1	CYLINDER GP-HYDRAULIC	264
Y	2	1	*165-8731*	1	MOUNTING GP-CYLINDER (UTILITY)	359
Y	3	1	*165-8740*	1	GRAPPLE GP-UTILITY	469
M	4	1	**170-5836**	4	BOLT	
Y	5	1	*173-7407*	1	STOP GP-GRAPPLE	483
	6	1	**239-5029**	1	GUARD	
Y	7	1	*285-6113*	1	LINES GP-BUCKET	293
	8	1	**5P-1076**	4	WASHER-HARD (13.5X30X4-MM THK)	
M	9	1	**8T-4139**	6	BOLT (M12X1.75X30-MM)	
	10	1	**8T-4223**	6	WASHER-HARD (13.5X25.5X3-MM THK)	
M	11	1	**8T-4244**	10	NUT (M12X1.75-THD)	

C-CHANGE FROM PREVIOUS TYPE
M-METRIC PART
Y-SEPARATE ILLUSTRATION

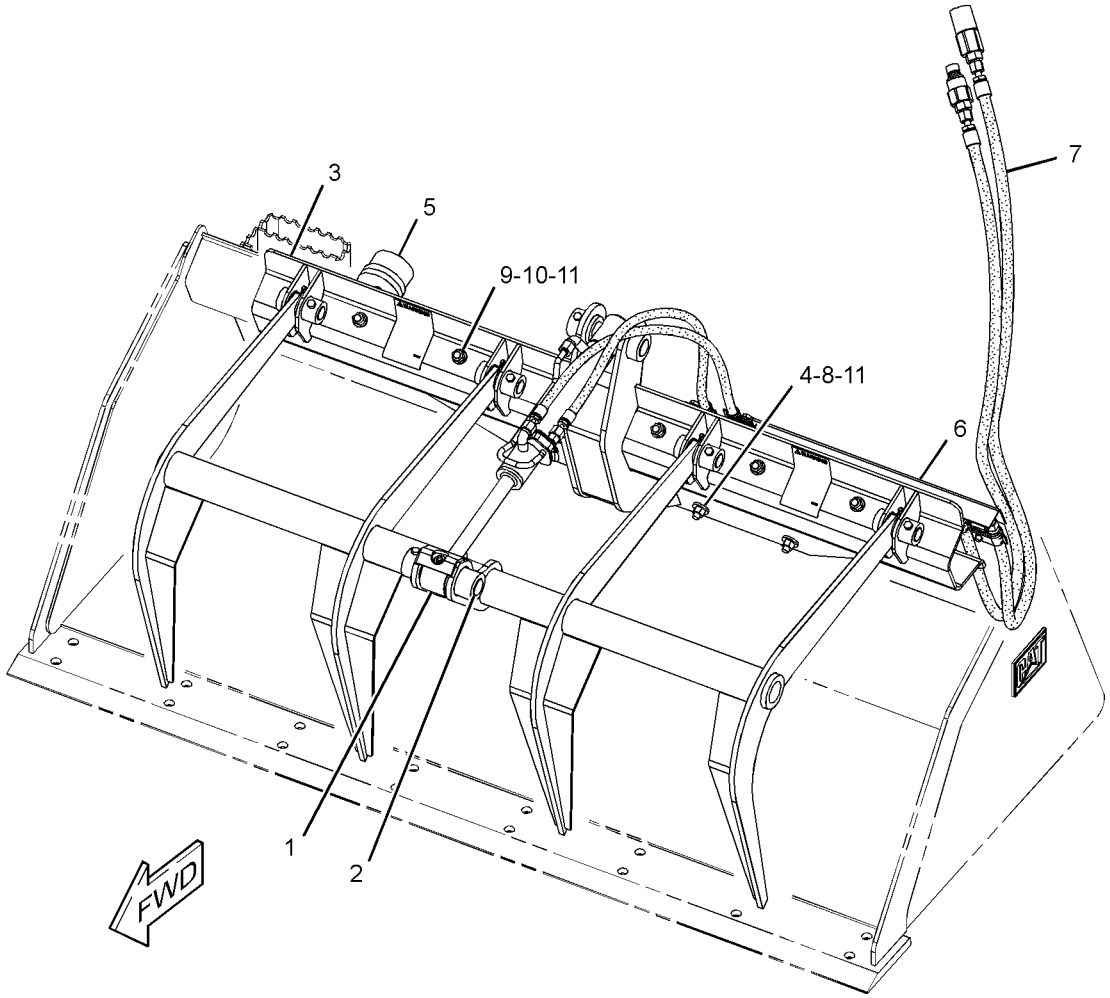

GRAPHIC #1 **<END>** g01278678

215-3960 HANDLE & PIN GP-COUPLER–LH

S/N: BXM4225-UP
PART OF 206-3820 COUPLER GP-QUICK
AN ATTACHMENT

SMCS-6129 **i01928985**

NOTE	REF NO	GRAPHIC REF	PART NUMBER	QTY	PART NAME 1 2 3 4 5 6 (PRODUCT LEVEL)	SEE PAGE
	1	1	**166-2560**	1	PIN-SPRING	
	2	1	**192-2642**	1	PIN	
Y	3	1	*215-3958*	1	HANDLE GP-COUPLER (LH)	474

Y-SEPARATE ILLUSTRATION

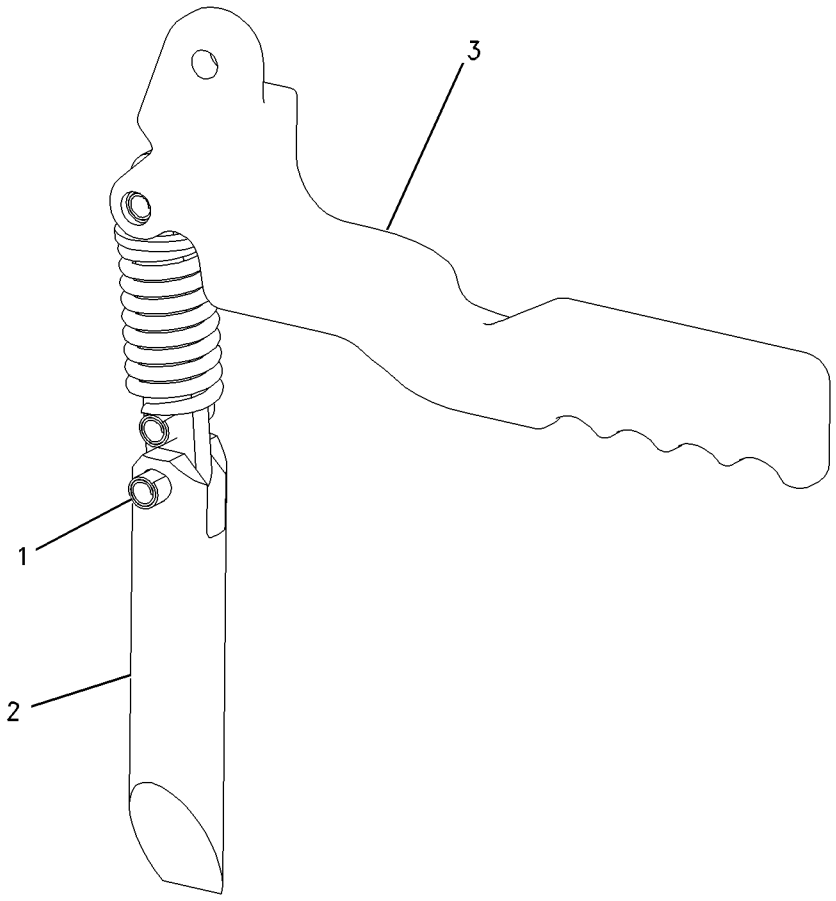

GRAPHIC #1 **<END>** g00861964

215-3961 HANDLE & PIN GP-COUPLER—RH

S/N: BXM4225-UP
PART OF 206-3820 COUPLER GP-QUICK
AN ATTACHMENT

SMCS-6129 **i01928984**

NOTE	REF NO	GRAPHIC REF	PART NUMBER	QTY	PART NAME 1 2 3 4 5 6 (PRODUCT LEVEL)	SEE PAGE
	1	1	**166-2560**	1	PIN-SPRING	
	2	1	**192-2642**	1	PIN	
Y	3	1	*215-3959*	1	HANDLE GP-COUPLER (RH)	475

Y-SEPARATE ILLUSTRATION

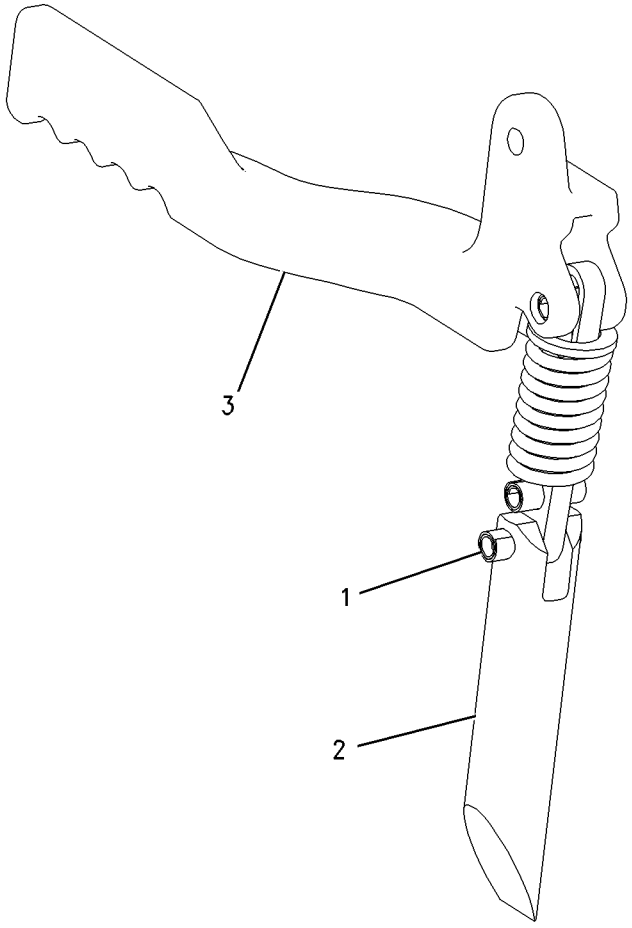

GRAPHIC #1 **<END>** g00861970

215-3958 HANDLE GP-COUPLER–LH

S/N: BXM4225-UP
PART OF 215-3960 HANDLE & PIN GP-COUPLER
AN ATTACHMENT

SMCS-6129 **i02706274**

NOTE	REF NO	GRAPHIC REF	PART NUMBER	QTY	PART NAME 1 2 3 4 5 6 (PRODUCT LEVEL)	SEE PAGE
	1	1	**192-2637**	1	PLATE	
	2	1	**238-7693**	1	SPRING	
	3	1	**258-2533**	1	HANDLE-LH	
	4	1	**195-6754**	2	PIN-SPRING	
	5	1	**8T-4123**	2	WASHER (22X35X3.5-MM THK)	

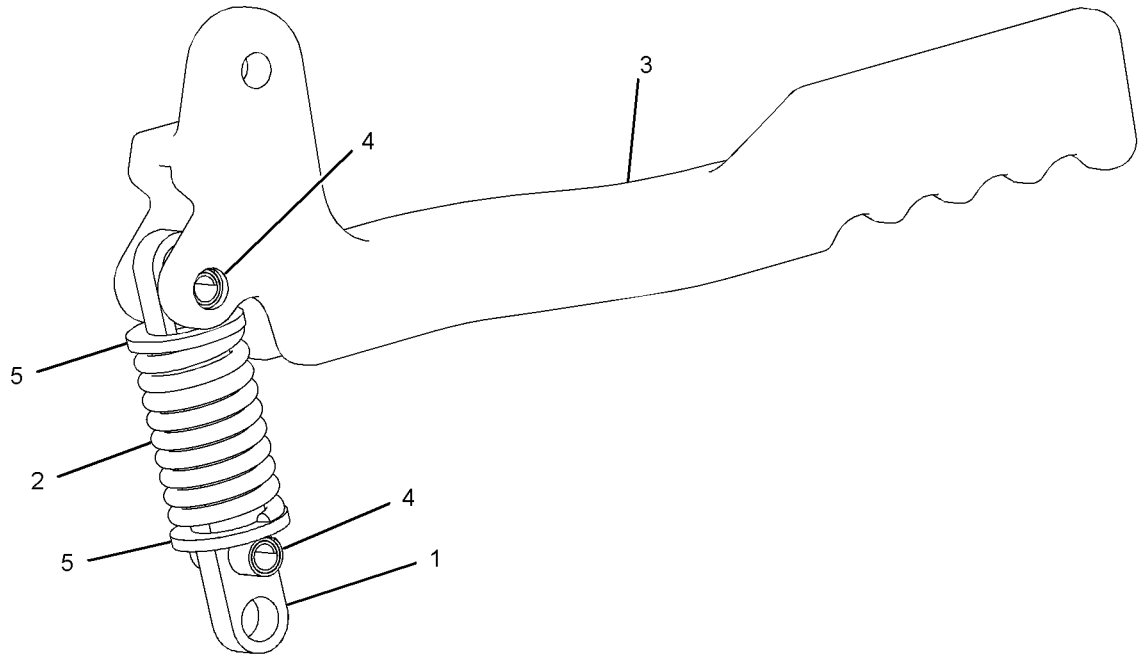

GRAPHIC #1 **<END>** g01154451

WORK TOOLS

215-3959 HANDLE GP-COUPLER–RH

S/N: BXM4225-UP
PART OF 215-3961 HANDLE & PIN GP-COUPLER
AN ATTACHMENT

SMCS-6129 **i02706275**

NOTE	REF NO	GRAPHIC REF	PART NUMBER	QTY	PART NAME 1 2 3 4 5 6 (PRODUCT LEVEL)	SEE PAGE
	1	1	**192-2637**	1	PLATE	
	2	1	**258-2534**	1	HANDLE-RH	
	3	1	**195-6754**	2	PIN-SPRING	
	4	1	**238-7693**	1	SPRING	
	5	1	**8T-4123**	2	WASHER (22X35X3.5-MM THK)	

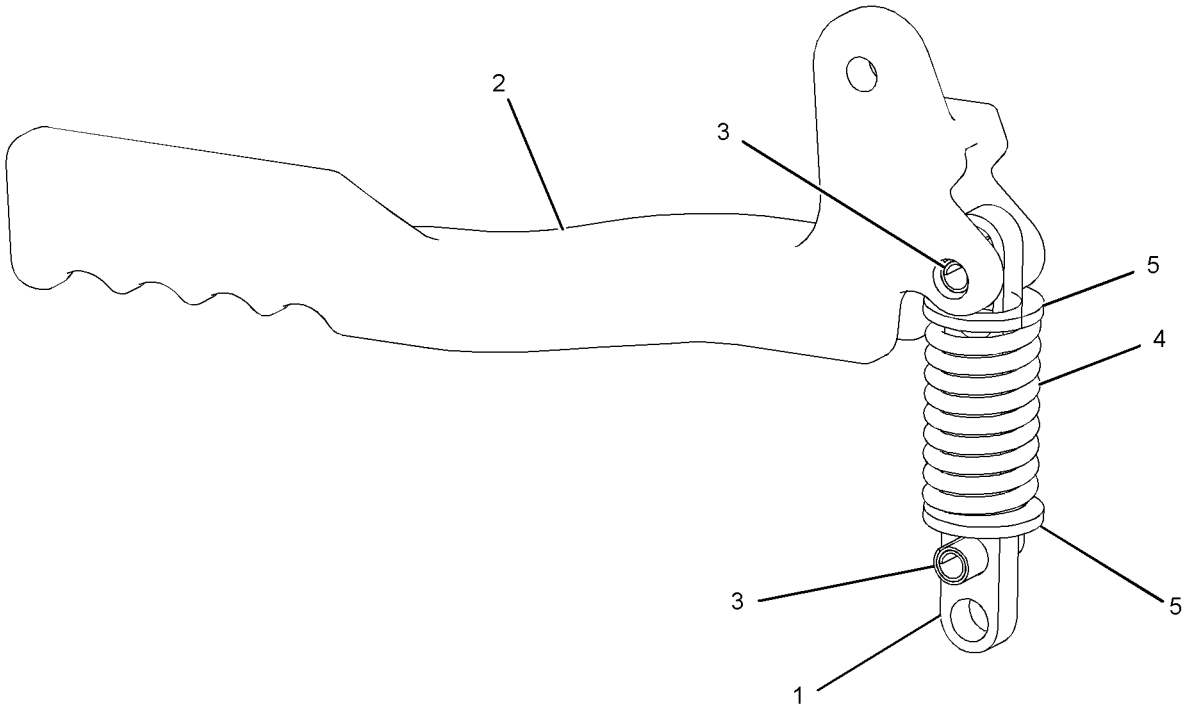

GRAPHIC #1 **<END>** g01104663

177-9152 KIT-ROADING PLATE & MOUNTING—BUCKET

S/N: BXM4225-UP

PART OF 278-1213, 278-1225, 278-5409, 278-5442, 295-7039, 295-7151, 295-7159, 295-7164, 295-7168 CONVERSION AR-MACHINE, 233-5682, 233-5683, 233-5685, 233-5686, 257-5721, 257-5722, 295-7044 CONVERSION AR-ROADING AN ATTACHMENT

SMCS-7405, 7557 **i01905397**

NOTE	REF NO	GRAPHIC REF	PART NUMBER	QTY	PART NAME 1 2 3 4 5 6 (PRODUCT LEVEL)	SEE PAGE
	1	1	**177-9153**	2	PLATE	
Y	2	1	*184-6097*	1	PLATE GP-ROADING (LH)	479
Y	3	1	*184-6098*	1	PLATE GP-ROADING (RH)	480
	4	1	**039-8557**	2	WASHER (13X26X6-MM THK)	
M	5	1	**6V-8949**	4	NUT (M10X1.5-6H THD)	
	6	1	**8T-4121**	8	WASHER-HARD (11X21X2.5-MM THK)	
M	7	1	**8T-4137**	2	BOLT (M10X1.5X20-MM)	
M	8	1	**8T-4186**	2	BOLT (M10X1.5X40-MM)	

M-METRIC PART
Y-SEPARATE ILLUSTRATION

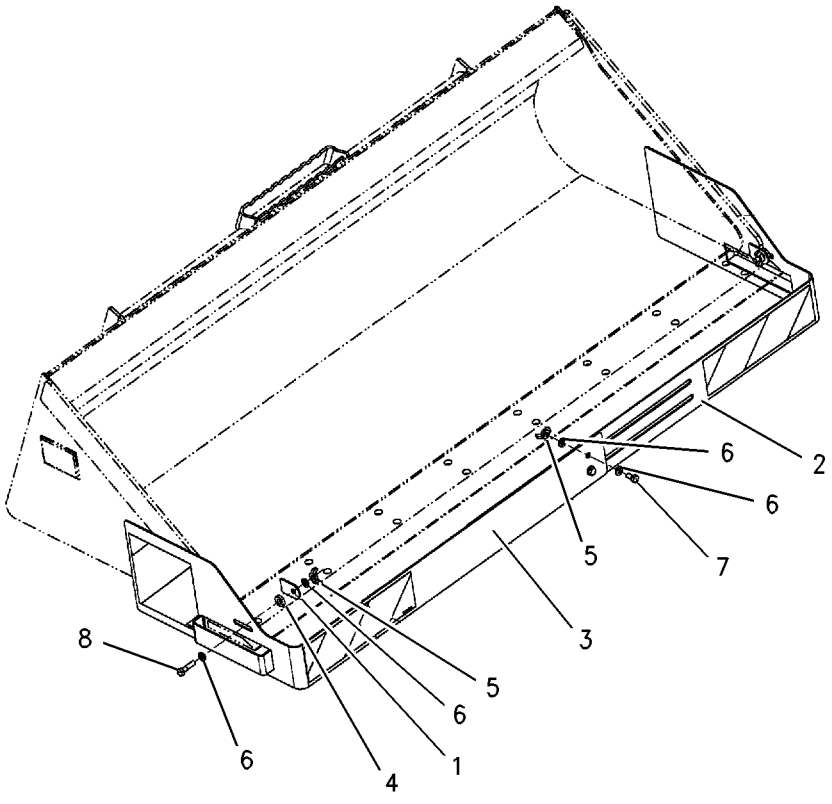

GRAPHIC #1 **<END>** g00778934

215-3957 LINK GP-COUPLER

S/N: BXM4225-UP

PART OF 215-3962, 215-3963 CYLINDER & LINK GP-COUPLER, 218-5957 KIT-QUICK COUPLER CONVERSION

AN ATTACHMENT

SMCS-6129 **i02232650**

NOTE	REF NO	GRAPHIC REF	PART NUMBER	QTY	PART NAME 1 2 3 4 5 6 (PRODUCT LEVEL)	SEE PAGE
	1	1	**192-2637**	1	PLATE	
	2	1	**192-2638**	1	BRACKET	
C	3	1	**238-7693**	1	SPRING	
	4	1	**195-6754**	2	PIN-SPRING	
C	5	1	**8T-4123**	2	WASHER (22X35X3.5-MM THK)	

C-CHANGE FROM PREVIOUS TYPE

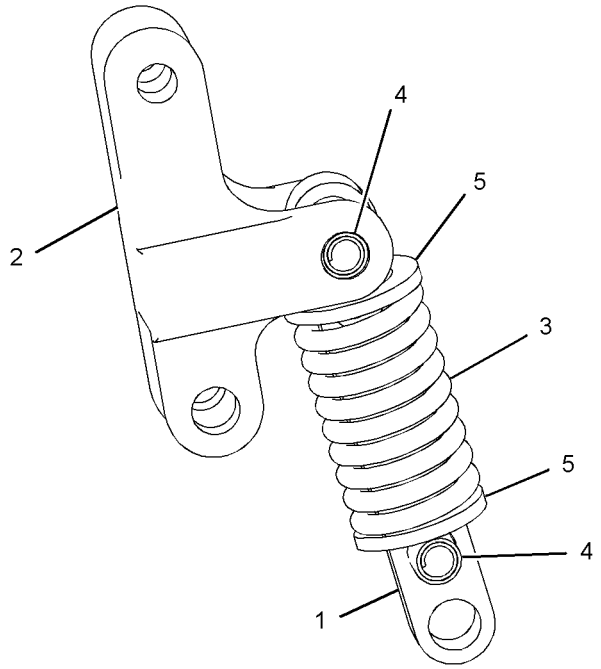

GRAPHIC #1 **<END>** g01130555

175-4238 LOCK GP-QUICK COUPLER–MECHANICAL

S/N: BXM4225-UP

PART OF 278-1213, 278-1225, 278-5409, 278-5442, 295-7039, 295-7151, 295-7159, 295-7164, 295-7168 CONVERSION AR-MACHINE, 233-5682, 233-5683, 233-5685, 233-5686, 257-5721, 257-5722, 295-7044 CONVERSION AR-ROADING AN ATTACHMENT

SMCS-6129 **i01408856**

NOTE	REF NO	GRAPHIC REF	PART NUMBER	QTY	PART NAME 1 2 3 4 5 6 (PRODUCT LEVEL)	SEE PAGE
	1	1	**9R-5301**	1	PIN-COTTER	
	2	1	**178-2247**	1	PIN	
	3	1	**9X-8257**	1	WASHER (17.5X30X3.5-MM THK)	

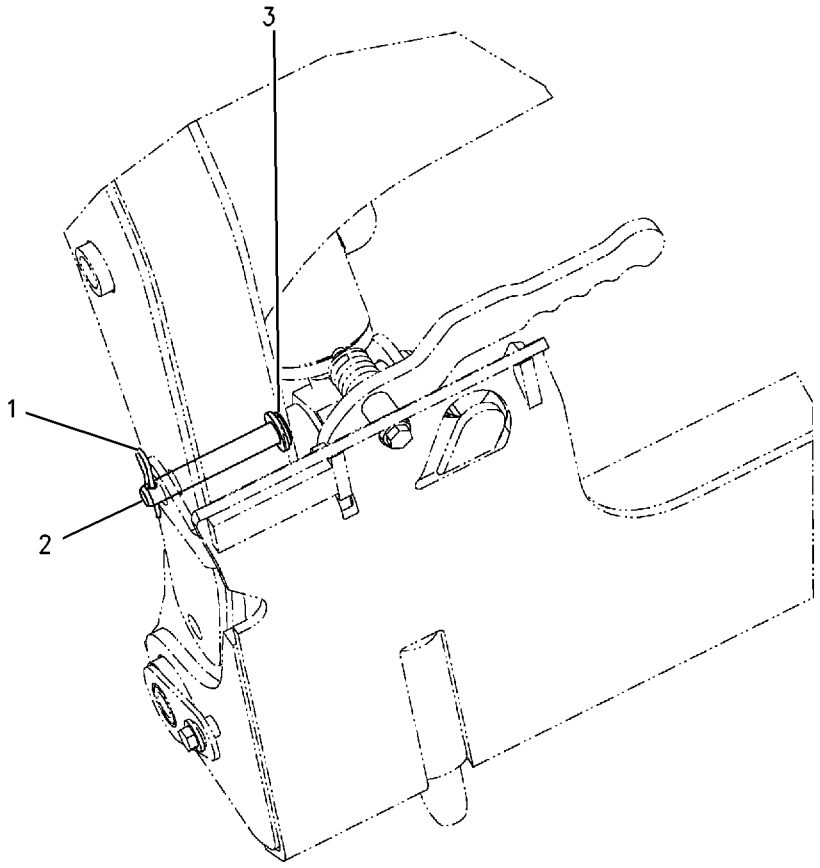

GRAPHIC #1 **<END>** g00741828

184-6097 PLATE GP-ROADING–LH

S/N: BXM4225-UP
PART OF 177-9152 KIT-ROADING PLATE & MOUNTING
AN ATTACHMENT

SMCS-7405, 7557 **i02253410**

NOTE	REF NO	GRAPHIC REF	PART NUMBER	QTY	PART NAME 1 2 3 4 5 6 (PRODUCT LEVEL)	SEE PAGE
	1	1	**177-7414**	1	FILM-STRIPE (REFLECTIVE, RED, WHITE)	
	2	1	**177-7415**	1	FILM (REFLECTIVE)	
	3	1	**177-9150**	1	PLATE AS (LH)	

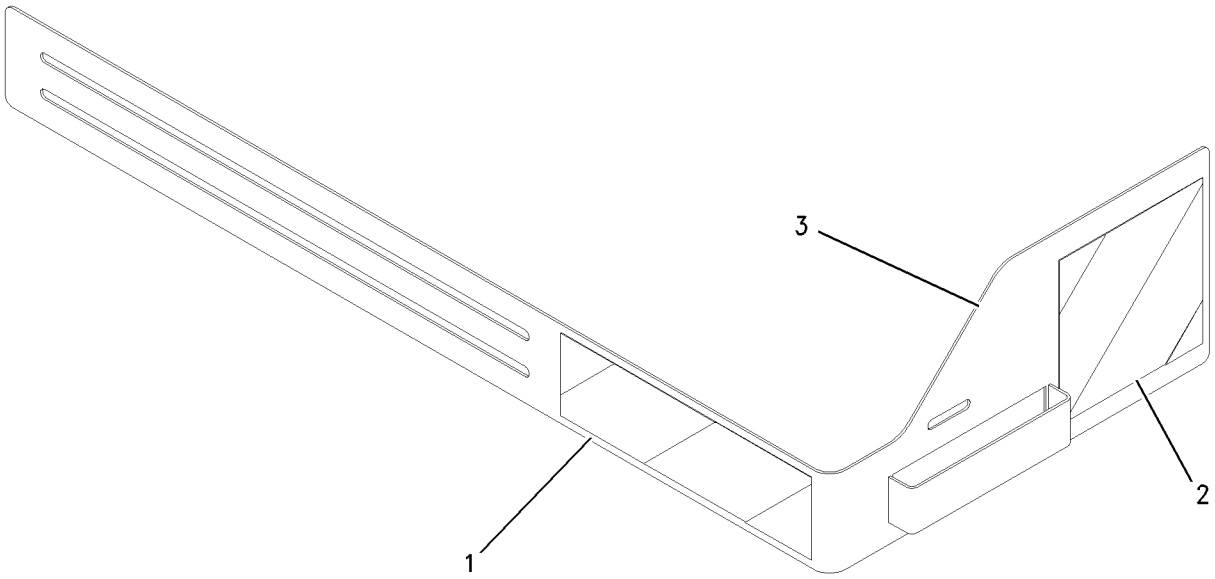

GRAPHIC #1 **<END>** g00995785

WORK TOOLS

184-6098 PLATE GP-ROADING—RH

S/N: BXM4225-UP

PART OF 177-9152 KIT-ROADING PLATE & MOUNTING

AN ATTACHMENT

SMCS-7405, 7557 **i02253411**

NOTE	REF NO	GRAPHIC REF	PART NUMBER	QTY	PART NAME 1 2 3 4 5 6 (PRODUCT LEVEL)	SEE PAGE
	1	1	**177-7414**	1	FILM-STRIPE (REFLECTIVE, RED, WHITE)	
	2	1	**177-7415**	1	FILM (REFLECTIVE)	
	3	1	**177-9151**	1	PLATE AS (RH)	

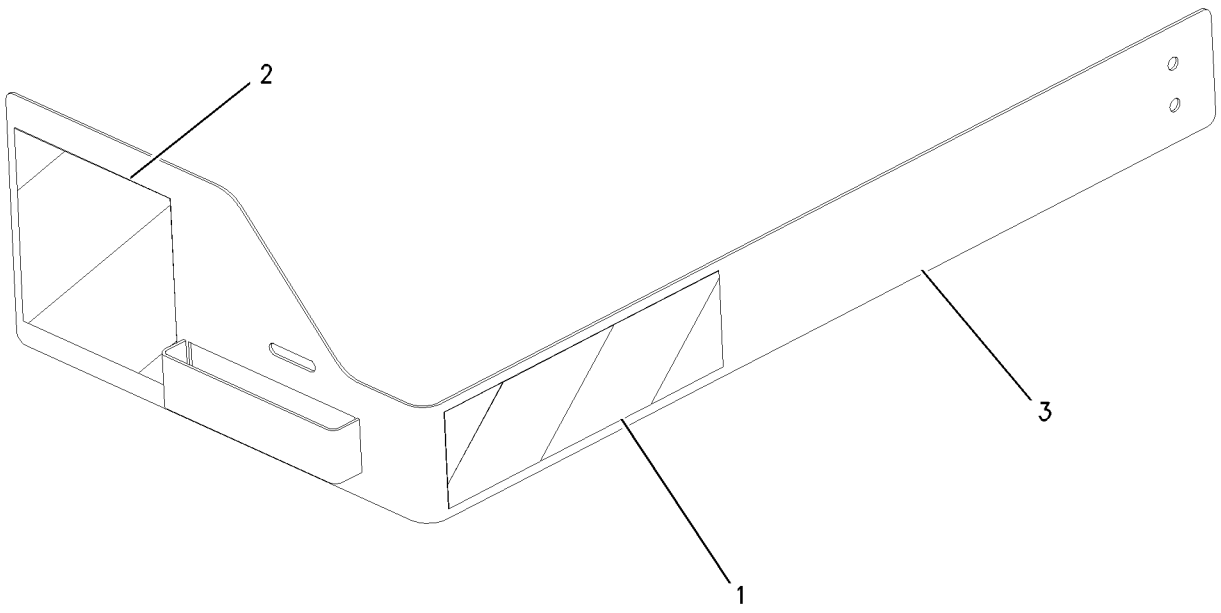

GRAPHIC #1 **<END>** g00995786

177-1983 SPRING GP-BLADE

S/N: BXM4225-UP
PART OF 177-1989, 177-1990 BLADE AR
AN ATTACHMENT

SMCS-6060 **i01497986**

NOTE	REF NO	GRAPHIC REF	PART NUMBER	QTY	PART NAME 1 2 3 4 5 6 (PRODUCT LEVEL)	SEE PAGE
	1	1	**177-1941**	4	SPRING	
	2	1	**177-1973**	1	PLATE AS	
M	3	1	**8T-4194**	2	BOLT (M12X1.75X50-MM)	
	4	1	**8T-4223**	4	WASHER-HARD (13.5X25.5X3-MM THK)	
M	5	1	**8T-4244**	2	NUT (M12X1.75-THD)	

M-METRIC PART

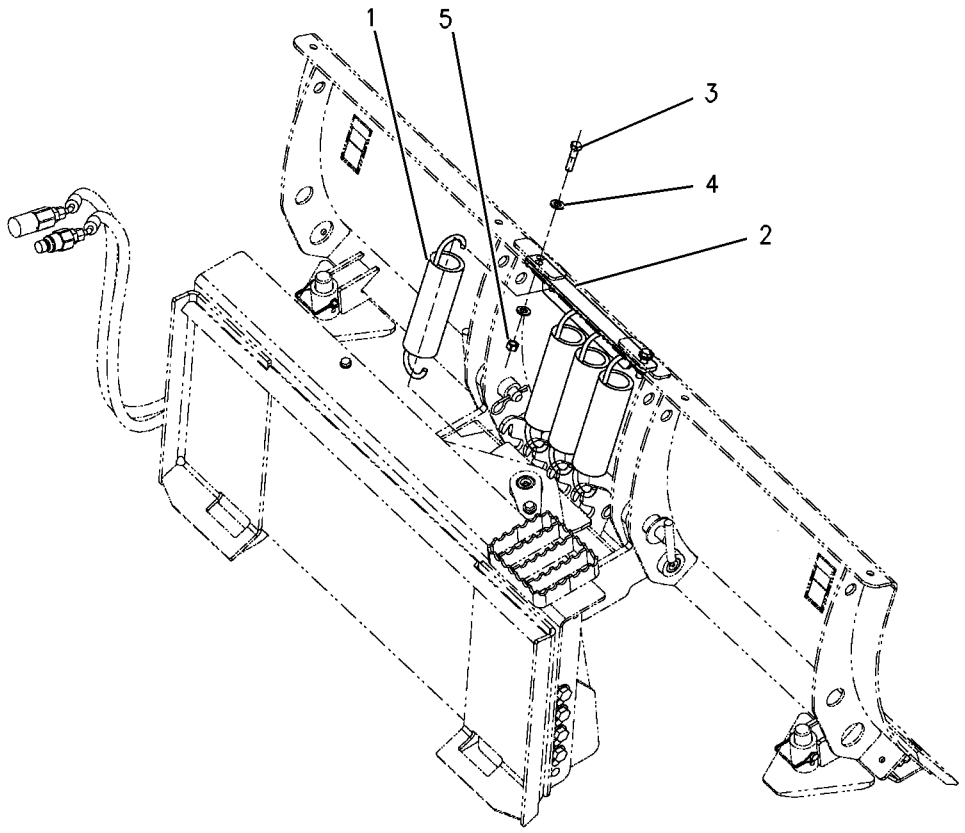

GRAPHIC #1 **<END>** g00777337

188-7733 STEP GP-MATERIAL HANDLING ARM

S/N: BXM4225-UP

PART OF 216-8756 ARM GP-MATERIAL HANDLING

AN ATTACHMENT

SMCS-6542 **i01498007**

NOTE	REF NO	GRAPHIC REF	PART NUMBER	QTY	PART NAME 1 2 3 4 5 6 (PRODUCT LEVEL)	SEE PAGE
	1	1	**186-5186**	1	STEP AS	
	2	1	**8T-4121**	2	WASHER-HARD (11X21X2.5-MM THK)	
M	3	1	**8T-4133**	2	NUT (M10X1.5-THD)	
M	4	1	**8T-4136**	2	BOLT (M10X1.5X25-MM)	

M-METRIC PART

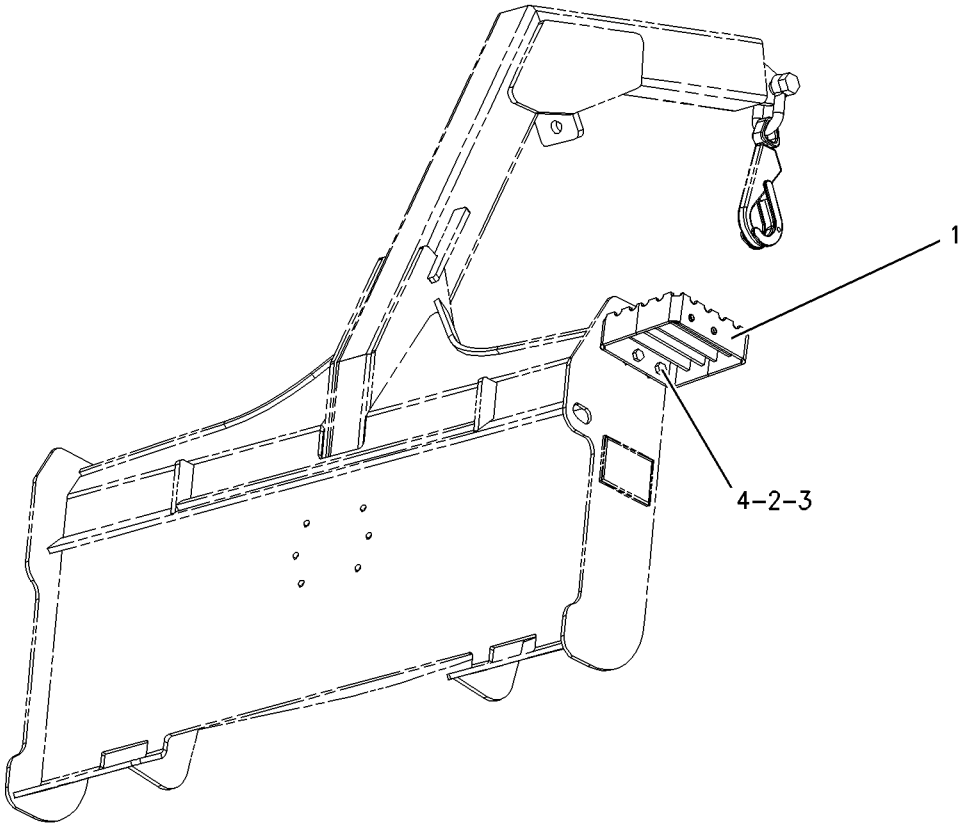

GRAPHIC #1 **<END>** g00777345

173-7407 STOP GP-GRAPPLE–UTILITY

S/N: BXM4225-UP
PART OF 285-6116 GRAPPLE GP-UTILITY
AN ATTACHMENT

SMCS-6307 **i01218895**

NOTE	REF NO	GRAPHIC REF	PART NUMBER	QTY	PART NAME 1 2 3 4 5 6 (PRODUCT LEVEL)	SEE PAGE
	1	1	**8Y-7386**	1	SPACER (12.5X17.1X16.5-MM THK)	
	2	1	**2S-6408**	2	WASHER-RETAINING (0.531X3.25X0.438-IN THK)	
	3	1	**8T-4223**	1	WASHER-HARD (13.5X25.5X3-MM THK)	
M	4	1	**8T-4910**	1	BOLT (M12X1.75X60-MM)	
	5	1	**8Y-7385**	1	STOP	

M-METRIC PART

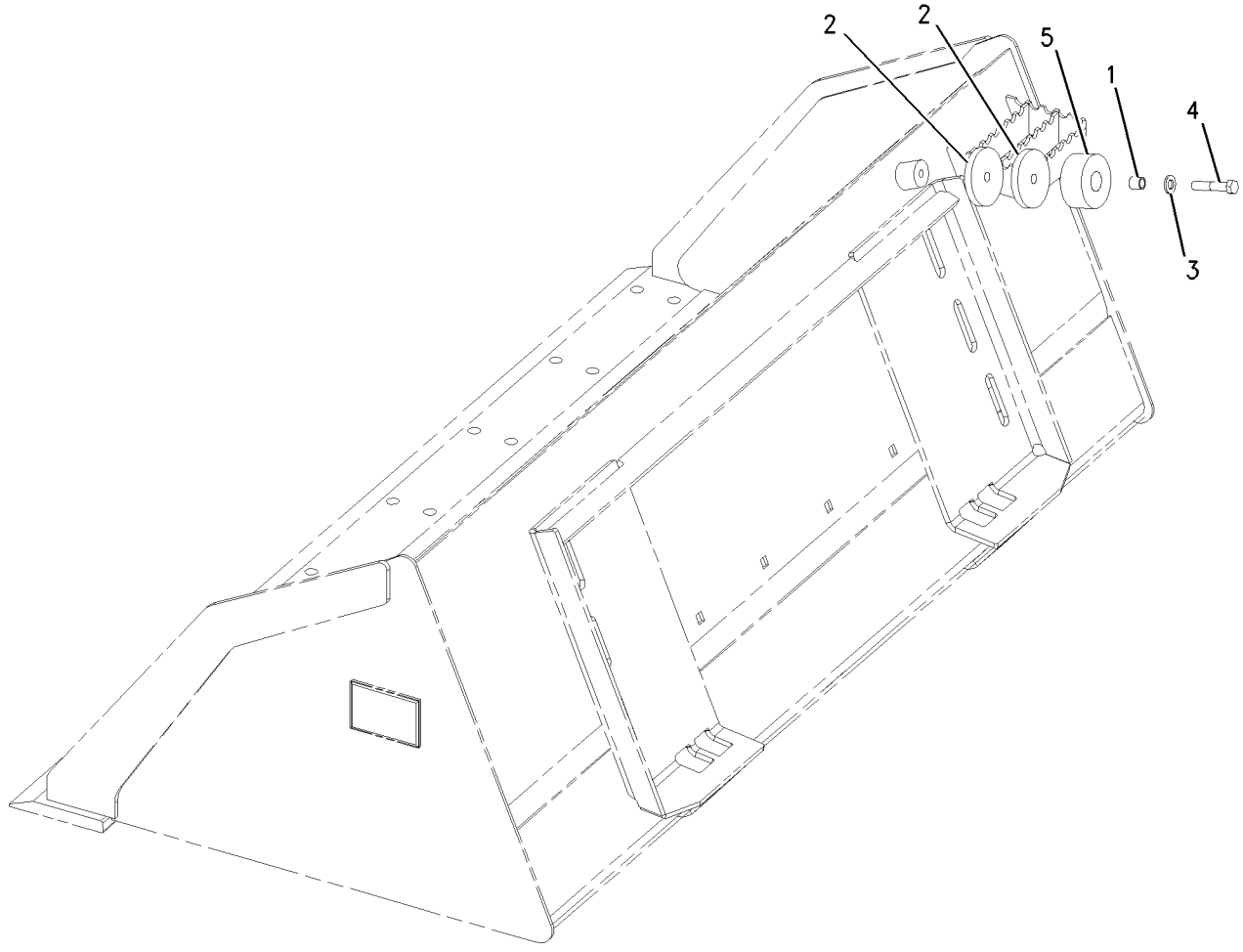

GRAPHIC #1 **<END>** g00651574

WORK TOOLS

116-2001 STRAINER GP-WATER

S/N: BXM4225-UP

PART OF 252-0386 TANK & MTG GP-WATER

AN ATTACHMENT

SMCS-5612 **i02571404**

NOTE	REF NO	GRAPHIC REF	PART NUMBER	QTY	PART NAME 1 2 3 4 5 6 (PRODUCT LEVEL)	SEE PAGE
	1	1	**119-1415**	1	GASKET	
	2	1	**119-1414**	1	SCREEN (WATER TANK)	

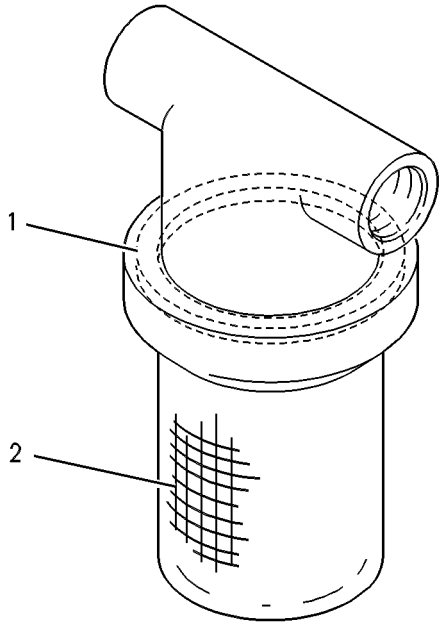

GRAPHIC #1 **<END>** g00293866

WORK TOOLS

252-0386 TANK & MTG GP-WATER

S/N: BXM4225-UP
AN ATTACHMENT

SMCS-5613 **i02571301**

NOTE	REF NO	GRAPHIC REF	PART NUMBER	QTY	PART NAME 1 2 3 4 5 6 (PRODUCT LEVEL)	SEE PAGE
	1	1	**3B-7255**	1	BUSHING-REDUCING	
	2	1	**3S-2093**	4	STRAP-CABLE	
	3	1	**4E-0724**	1	SPACER (9X20X28-MM THK)	
	4	1	**7X-0495**	1	ADAPTER	
	5	1	**8T-0737**	1	VALVE-SHUTOFF	
Y	6	1	**116-2001**	1	STRAINER GP-WATER	484
	7	1	**124-1916**	1	COUPLING-PERMANENT	
	8	1	**124-1917**	1	COUPLING-PERMANENT	
	9	1	**165-4894**	1	HARNESS AS-WORK TOOL	
		1	**102-8806**	1	KIT-RECEPTACLE (8-PIN)	
					(INCLUDES RECEPTACLE AS & WEDGE)	
		1	**155-2265**	1	KIT-CONNECTING PLUG (8-PIN)	
		1	**155-2270**	1	KIT-CONNECTING PLUG (2-PIN)	
					(EACH PLUG KIT INCLUDES PLUG AS, WEDGE & INTERFACE SEAL)	
Y	10	1	**166-2551**	1	TANK GP-WATER	488
I	11	1	**166-2552**	1	HOSE AS	
	12	1	**166-2557**	1	PLATE	
	13	1	**166-2558**	1	COUPLING	
	14	1	**166-2559**	2	BRACKET	
	15	1	**218-5847**	1	PLATE	
	16	1	**218-5975**	1	BRACKET AS	
	17	1	**233-5719**	1	PUMP GP-DIAPHRAGM	
	18	1	**233-5892**	1	PLATE AS	
	19	1	**233-5893**	1	PLATE AS	
	20	1	**003-2143**	1	ELBOW	
	21	1	**067-2551**	2	CLIP	
	22	1	**095-0912**	2	CLIP	
M	23	1	**111-4627**	4	SCREW-MACHINE (M6X1X30-MM)	
	24	1	**119-3859**	6	SCREW-PAN HEAD (10-16X0.75-IN)	
M	25	1	**129-3178**	4	LOCKNUT (M6X1-THD)	
	26	1	**1L-2279**	1	ELBOW	
M	27	1	**5C-7261**	3	NUT (M8X1.25-THD)	
	28	1	**5P-4116**	1	WASHER-HARD (8.8X20.5X2-MM THK)	
	29	1	**5P-8246**	2	WASHER-HARD (15.5X29X3-MM THK)	
	30	1	**8T-4122**	16	WASHER-HARD (17X32X3.5-MM THK)	
M	31	1	**8T-4132**	4	NUT (M16X2-THD)	
	32	1	**8T-4205**	6	WASHER-HARD (7.2X14.5X2-MM THK)	
	33	1	**8T-4224**	8	WASHER-HARD (8.8X16X2-MM THK)	
M	34	1	**8T-4779**	12	BOLT (M16X2X35-MM)	
M	35	1	**8T-4908**	6	BOLT (M8X1.25X25-MM)	
M	36	1	**8T-6869**	1	BOLT (M8X1.25X60-MM)	
G	37	1	**122-6869**		HOSE-HYDRAULIC (142-IN)	
	38	1	**142-7505**	2	PLATE AS	
	39	1	**166-2556**	1	BRACKET	
BE	40	1	**167-0608**		SEAL	
	41	1	**195-6696**	1	PLATE	
	42	1	**7K-1181**	2	STRAP-CABLE	
	43	1	**8T-4121**	7	WASHER-HARD (11X21X2.5-MM THK)	
M	44	1	**8T-4133**	2	NUT (M10X1.5-THD)	
M	45	1	**8T-4136**	2	BOLT (M10X1.5X25-MM)	
M	46	1	**8T-4137**	5	BOLT (M10X1.5X20-MM)	
M	47	1	**8T-4191**	2	BOLT (M10X1.5X16-MM)	

252-0386 TANK & MTG GP-WATER *(contd.)* i02571301

B-USE AS REQUIRED
E-ORDER BY THE CENTIMETER
G-ORDER BY THE INCH
I-REFER TO HYDRAULIC INFORMATION SYSTEM
M-METRIC PART
Y-SEPARATE ILLUSTRATION

252-0386 TANK & MTG GP-WATER *(contd.)* i02571301

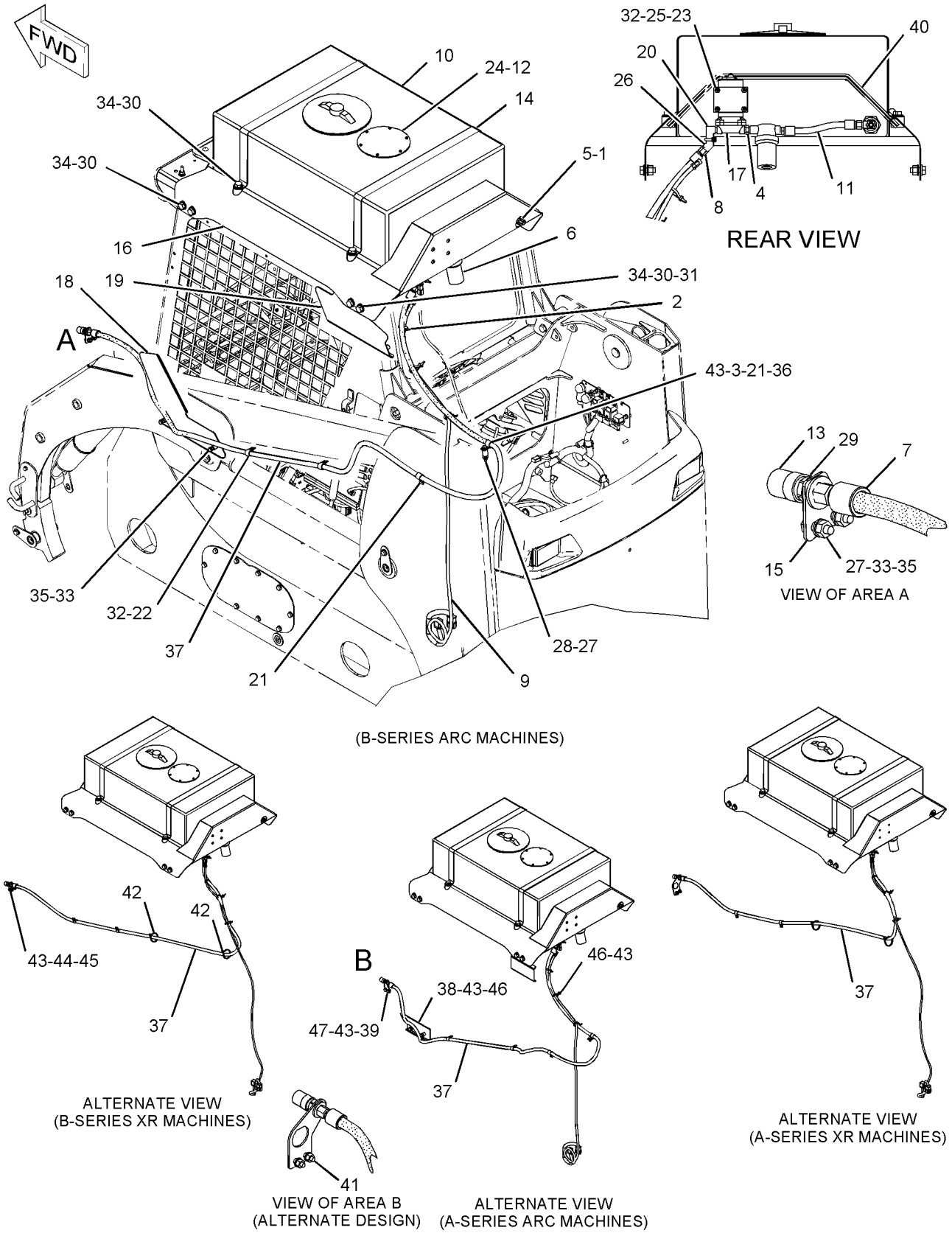

GRAPHIC #1

<END>

g01094533

WORK TOOLS

166-2551 TANK GP-WATER

S/N: BXM4225-UP
PART OF 252-0386 TANK & MTG GP-WATER
AN ATTACHMENT

SMCS-5613 **i02571400**

NOTE	REF NO	GRAPHIC REF	PART NUMBER	QTY	PART NAME 1 2 3 4 5 6 (PRODUCT LEVEL)	SEE PAGE
	1	1	**192-2606**	1	CAP AS (WATER TANK)	
	2	1	**192-2607**	1	FITTING-DRAIN	

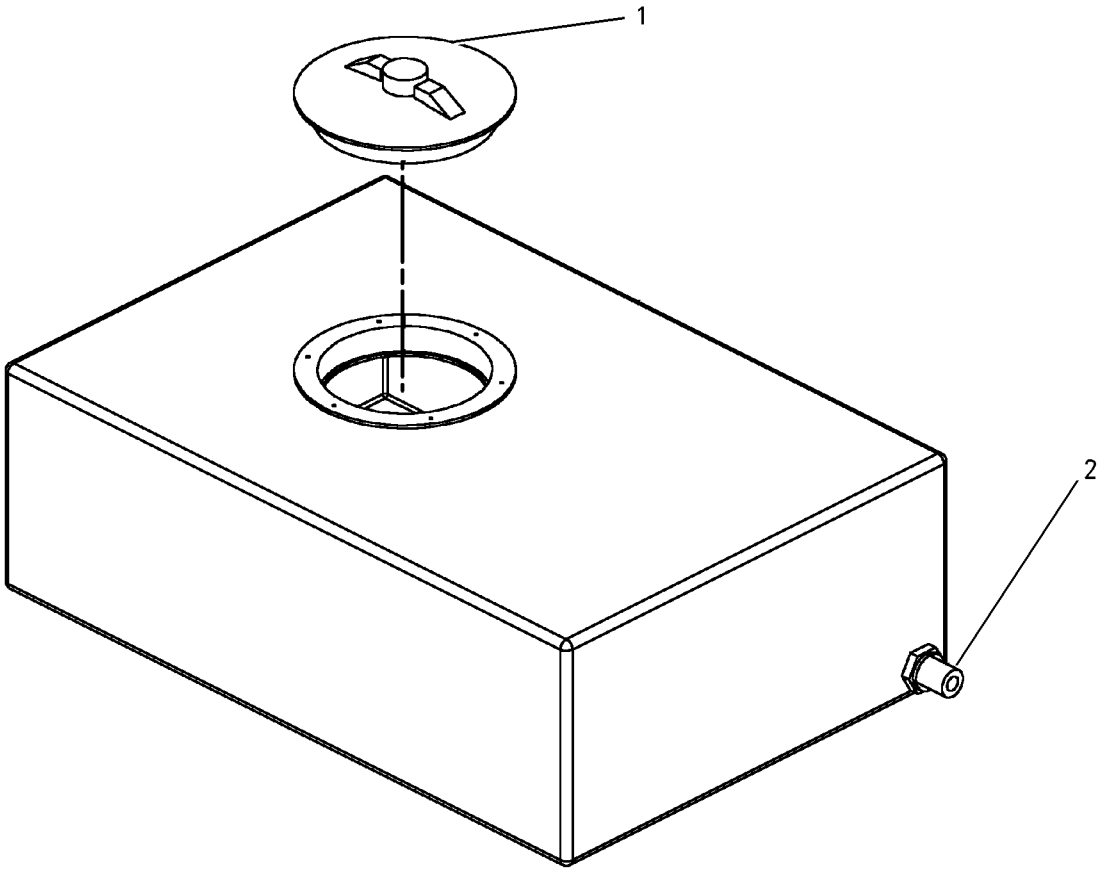

GRAPHIC #1 **<END>** g00742953

WORK TOOLS

141-4999 TOOTH GP-UNI

S/N: BXM4225-UP

PART OF 279-5366, 279-5370, 279-5374, 279-5378 BUCKET AR-GENERAL PURPOSE, 279-5380, 279-5392, 279-5400, 279-5401 BUCKET AR-MULTIPURPOSE AN ATTACHMENT

SMCS-6822 **i02163942**

NOTE	REF NO	GRAPHIC REF	PART NUMBER	QTY	PART NAME 1 2 3 4 5 6 (PRODUCT LEVEL)	SEE PAGE
	1	1	**132-4720**	1	TOOTH-UNI-SINGLE STRAP	
	2	1	**246-4349**	2	SCREW-FLAT HEAD (M16X2-THD)	
M	3	1	**8T-4778**	2	LOCKNUT (M16X2-THD)	

M-METRIC PART

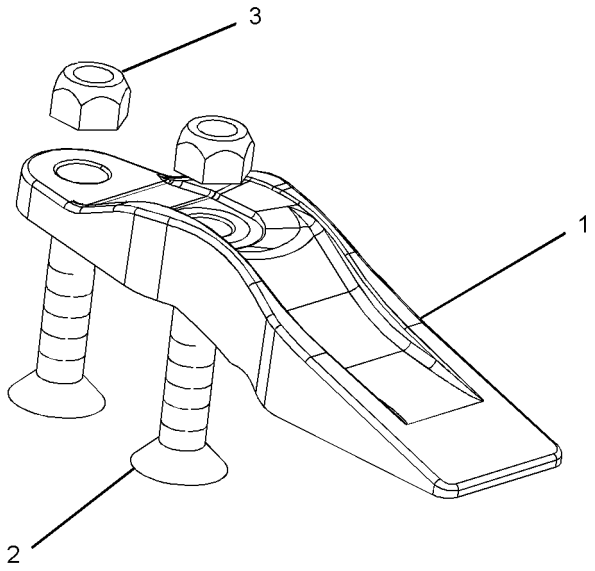

GRAPHIC #1 **<END>** g01097424

OPERATOR STATION

176-3900 ACCUMULATOR GP-REFRIGERANT—WITH DESICCANT

S/N: BXM4225-UP
PART OF 233-5588 KIT-AIR COND & HEATER INSTL
FIELD REPLACEMENT FOR 186-6190—PAGE 491
AN ATTACHMENT

SMCS-7320 **i02195254**

NOTE	REF NO	GRAPHIC REF	PART NUMBER	QTY	PART NAME 1 2 3 4 5 6 (PRODUCT LEVEL)	SEE PAGE
					(NO SERVICED PARTS)	

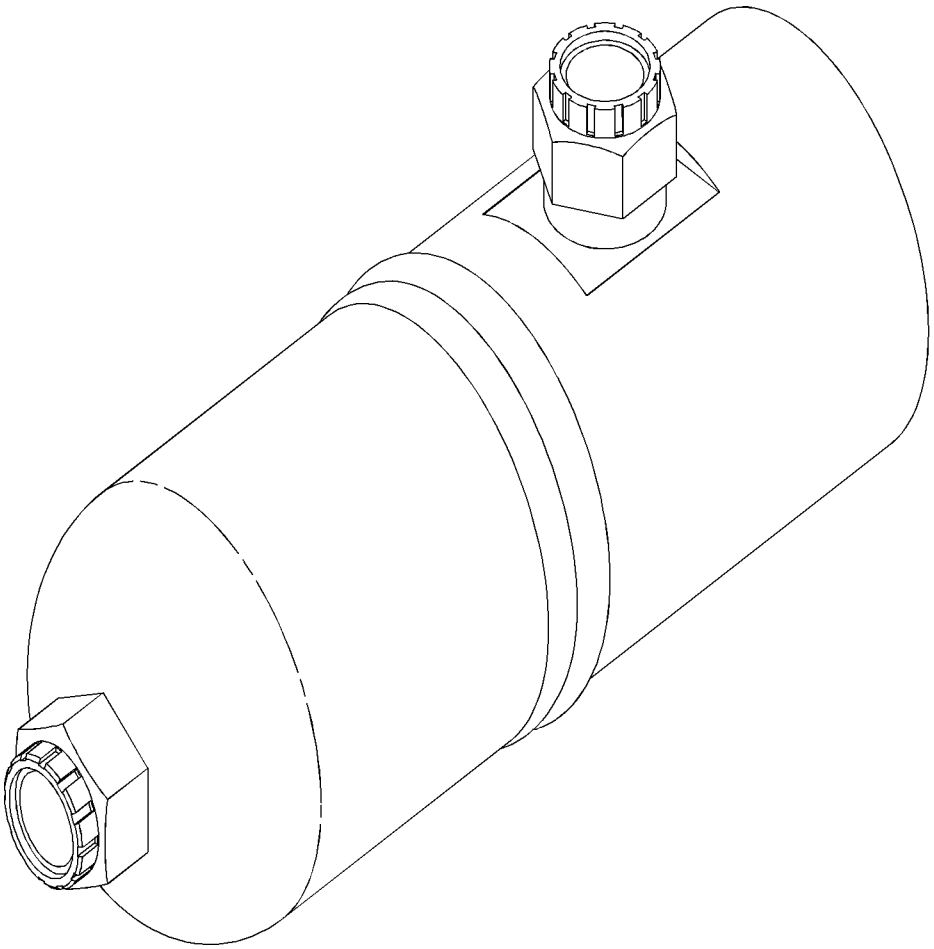

GRAPHIC #1 **<END>** g01035076

186-6190 ACCUMULATOR GP-REFRIGERANT—WITH DESICCANT

S/N: BXM4225-UP

PART OF 233-5588, 233-5589 KIT-AIR COND & HEATER INSTL, 218-6590 LINES GP-AIR CONDITIONER

FIELD REPLACEMENT ORDER 176-3900—PAGE 490

AN ATTACHMENT

SMCS-7320 **i02306357**

NOTE	REF NO	GRAPHIC REF	PART NUMBER	QTY	PART NAME 1 2 3 4 5 6 (PRODUCT LEVEL)	SEE PAGE
					(NO SERVICED PARTS)	

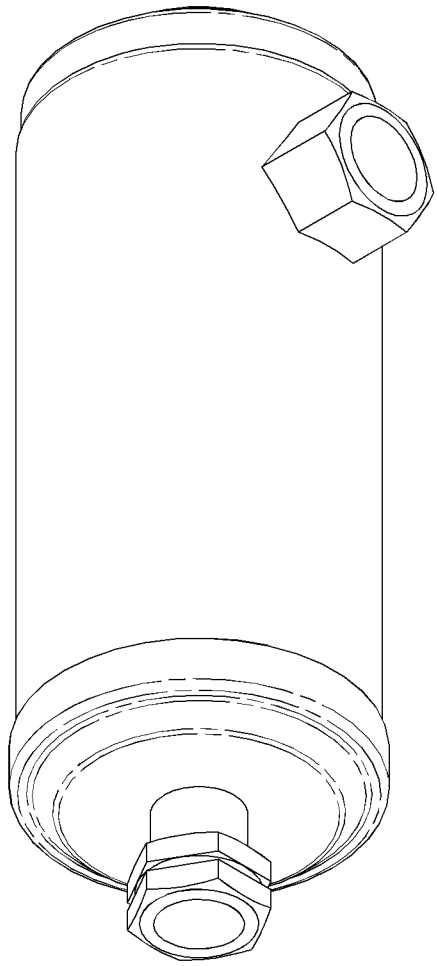

GRAPHIC #1 **<END>** g01155244

OPERATOR STATION

229-8747 AIR CONDITIONER & MOUNTING GP

S/N: BXM4225-UP

PART OF 218-6302 AIR CONDITIONER AR

AN ATTACHMENT

SMCS-7320 **i02010226**

NOTE	REF NO	GRAPHIC REF	PART NUMBER	QTY	PART NAME 1 2 3 4 5 6 (PRODUCT LEVEL)	SEE PAGE
Y	1	1	*218-6405*	1	AIR CONDITIONER GP	494
M	2	1	**7X-2537**	4	BOLT (M8X1.25X35MM)	
	3	1	**8T-4224**	4	WASHER-HARD (8.8X16X2MM THK)	

M-METRIC PART
Y-SEPARATE ILLUSTRATION

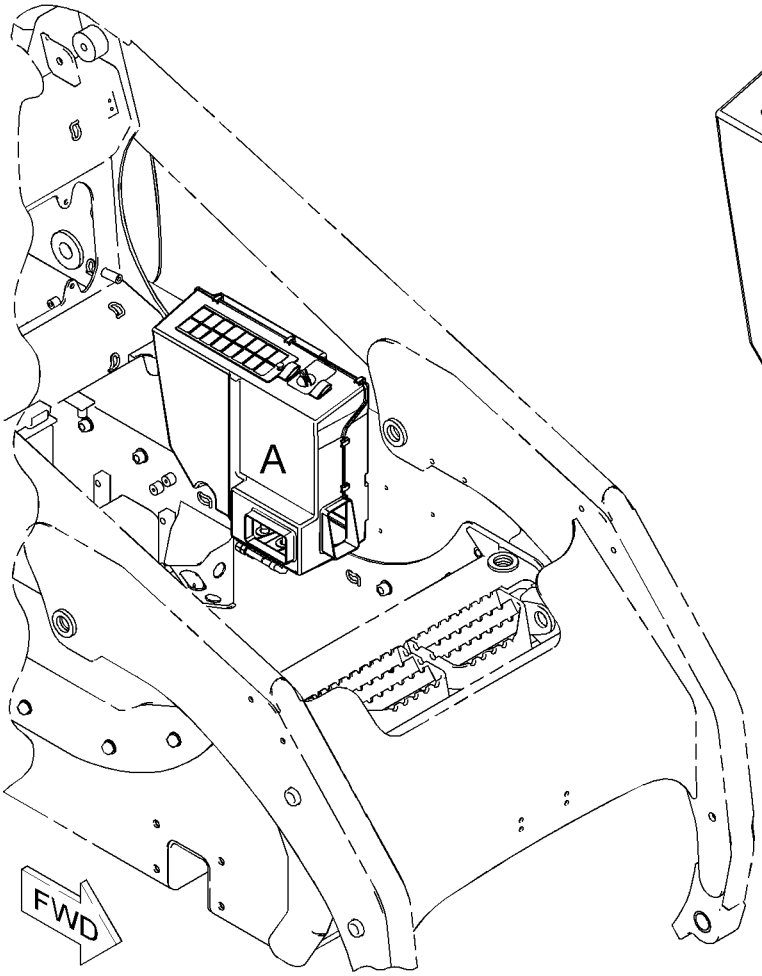

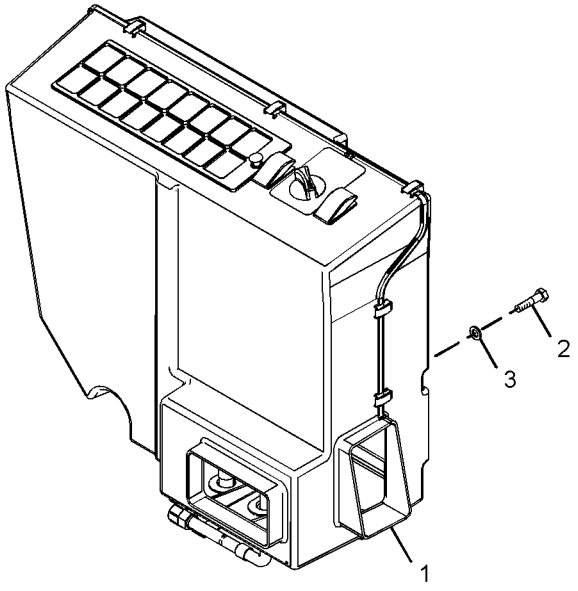

VIEW OF AREA A

GRAPHIC #1 **<END>** g01018777

OPERATOR STATION

218-6302 AIR CONDITIONER AR

S/N: BXM4225-UP
PART OF 295-7333 OPTION AR-CAB
AN ATTACHMENT

SMCS-7320 **i02820448**

NOTE	PART NUMBER	QTY	PART NAME 1 2 3 4 5 6 (PRODUCT LEVEL)	SEE PAGE
Y	*229-8747*	1	AIR CONDITIONER & MOUNTING GP	492
Y	*218-6830*	1	COMPRESSOR & MTG GP-REFRIG	508
Y	*218-6348*	1	CONDENSER & MTG GP-REFRIGERANT	509
Y	*218-6394*	1	DUCT & CONTROL GP	558
Y	*218-6590*	1	LINES GP-AIR CONDITIONER	588
Y	*311-5861*	1	LINES GP-HEATER	590
Y	*218-6533*	1	LINES GP-HYDRAULIC FAN	308
Y	*225-7948*	1	WIRING GP-AIR CONDITIONER	167

Y-SEPARATE ILLUSTRATION

<END>

OPERATOR STATION

218-6405 AIR CONDITIONER GP

S/N: BXM4225-UP

PART OF 229-8747 AIR CONDITIONER & MOUNTING GP, 233-5588, 233-5589 KIT-AIR COND & HEATER INSTL

AN ATTACHMENT

TYPE 1

SMCS-7320, 7342 **i02839369**

NOTE	REF NO	GRAPHIC REF	PART NUMBER	QTY	PART NAME 1 2 3 4 5 6 (PRODUCT LEVEL)	SEE PAGE
	1	1	**185-4015**	10	CLIP	
	2	1	**202-2284**	1	SWITCH AS-ROCKER (AIR CONDITIONER)	
	3	1	**218-6399**	1	SEAL	
	4	1	**206-7398**	1	KNOB-CONTROL (TEMPERATURE SELECT)	
	5	1	**119-9631**	1	SWITCH-TEMPERATURE (AIR CONDITIONER)	
	6	1	**305-2969**	2	THUMBSCREW	
	7	1	**231-8123**	1	COIL AS-EVAPORATOR	
	8	1	**231-8124**	1	COIL AS-HEATER	
	9	1	**295-5440**	1	MOTOR	
	10	1	**236-5067**	1	SWITCH-ROCKER (HEATER)	
	11	1	**231-8127**	2	GROMMET	
	12	1	**231-8128**	1	GRILL	
	13	1	**231-8129**	1	PIN	
	14	1	**231-8130**	1	FILTER ELEMENT-CAB AIR	
	15	1	**231-8131**	1	PLATE	
	16	1	**231-8132**	1	FILTER ELEMENT-CAB AIR	
	17	1	**231-8133**	1	PANEL	
	18	1	**231-8137**	1	FILM (TEMPERATURE CONTROL)	
	19	1	**231-8141**	1	GROMMET	
	20	1	**231-8142**	1	RETAINER	
	21	1	**236-5069**	3	RELAY AS (12-VOLT)	
	22	1	**231-8121**	1	HOUSING	
Y	23	1	**231-8122**	1	HOUSING AS-SIDE (AIR CONDITIONER, HEATER)	576
	24	1	**231-8126**	1	VALVE AS	
	25	1	**232-1384**	1	TUBE	
	26	1	**218-6948**	1	HARNESS AS-HEATER & AIR COND	

Y-SEPARATE ILLUSTRATION

218-6405 **AIR CONDITIONER GP** *(contd.)* **i02839369**

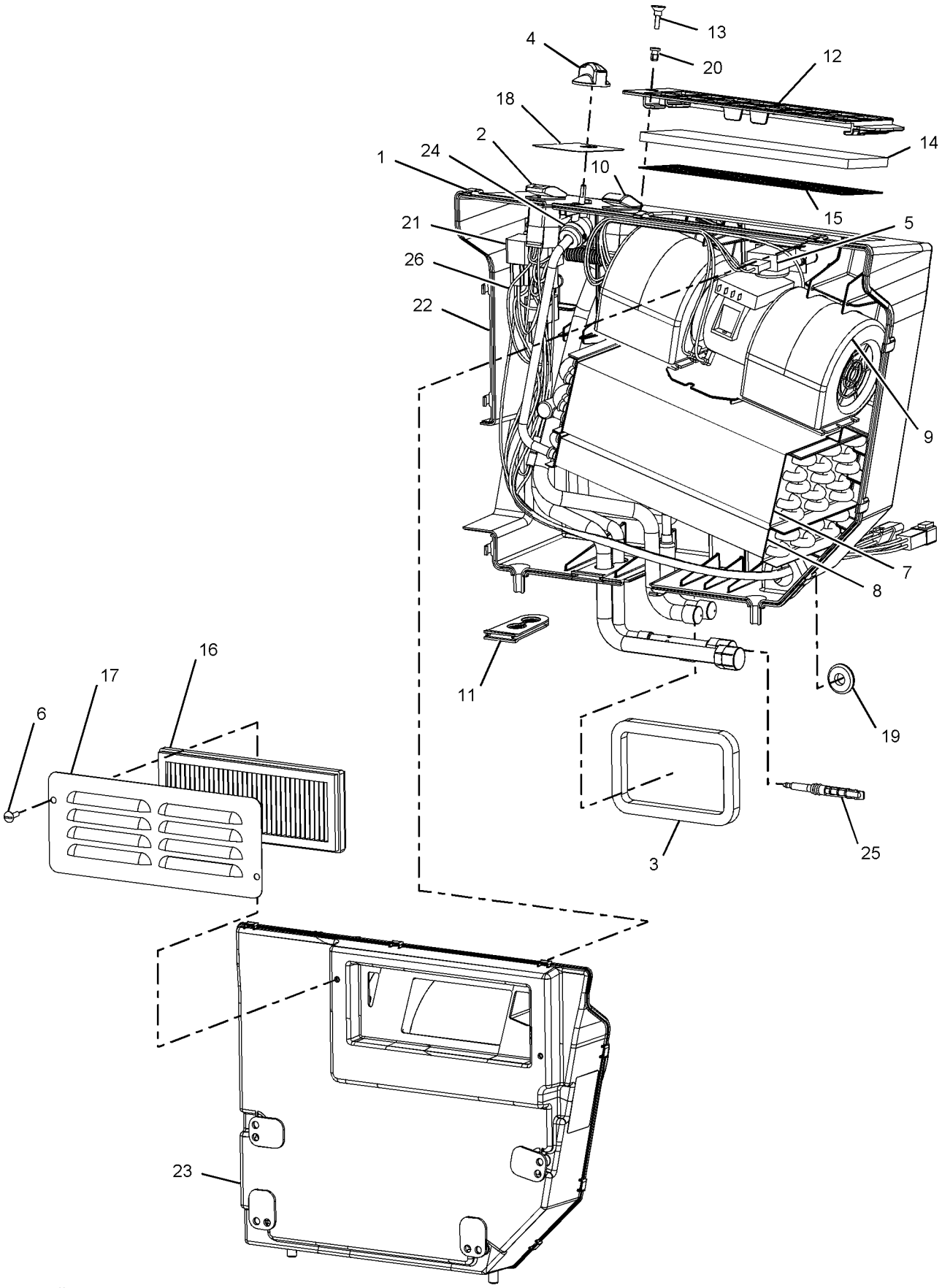

GRAPHIC #1 **<END>** g01039889

OPERATOR STATION

218-6405 AIR CONDITIONER GP

S/N: BXM4225-UP

PART OF 229-8747 AIR CONDITIONER & MOUNTING GP, 233-5588, 233-5589 KIT-AIR COND & HEATER INSTL

AN ATTACHMENT

TYPE 2

SMCS-7320, 7342 **i02839376**

NOTE	REF NO	GRAPHIC REF	PART NUMBER	QTY	PART NAME 1 2 3 4 5 6 (PRODUCT LEVEL)	SEE PAGE
	1	1	**185-4015**	10	CLIP	
	2	1	**202-2284**	1	SWITCH AS-ROCKER (AIR CONDITIONER)	
	3	1	**218-6399**	1	SEAL	
	4	1	**206-7398**	1	KNOB-CONTROL (TEMPERATURE SELECT)	
	5	1	**119-9631**	1	SWITCH-TEMPERATURE (AIR CONDITIONER)	
	6	1	**305-2969**	2	THUMBSCREW	
	7	1	**231-8123**	1	COIL AS-EVAPORATOR	
	8	1	**231-8124**	1	COIL AS-HEATER	
	9	1	**295-5440**	1	MOTOR	
	10	1	**236-5067**	1	SWITCH-ROCKER (HEATER)	
	11	1	**231-8127**	2	GROMMET	
C	12	1	**312-2635**	1	COVER GP-ACCESS	
		1	**231-8129**	1	PIN	
		1	**231-8142**	1	RETAINER	
C	14	1	**303-6658**	1	FILTER ELEMENT-CAB AIR (AIR)	
	16	1	**231-8132**	1	FILTER ELEMENT-CAB AIR	
	17	1	**231-8133**	1	PANEL	
	18	1	**231-8137**	1	FILM (TEMPERATURE CONTROL)	
	19	1	**231-8141**	1	GROMMET	
	21	1	**236-5069**	3	RELAY AS (12-VOLT)	
C	22	1	**312-1683**	1	HOUSING-COVER	
Y	23	1	**231-8122**	1	HOUSING AS-SIDE (AIR CONDITIONER, HEATER)	576
	24	1	**231-8126**	1	VALVE AS	
	25	1	**232-1384**	1	TUBE	
	26	1	**218-6948**	1	HARNESS AS-HEATER & AIR COND	

C-CHANGE FROM PREVIOUS TYPE
Y-SEPARATE ILLUSTRATION

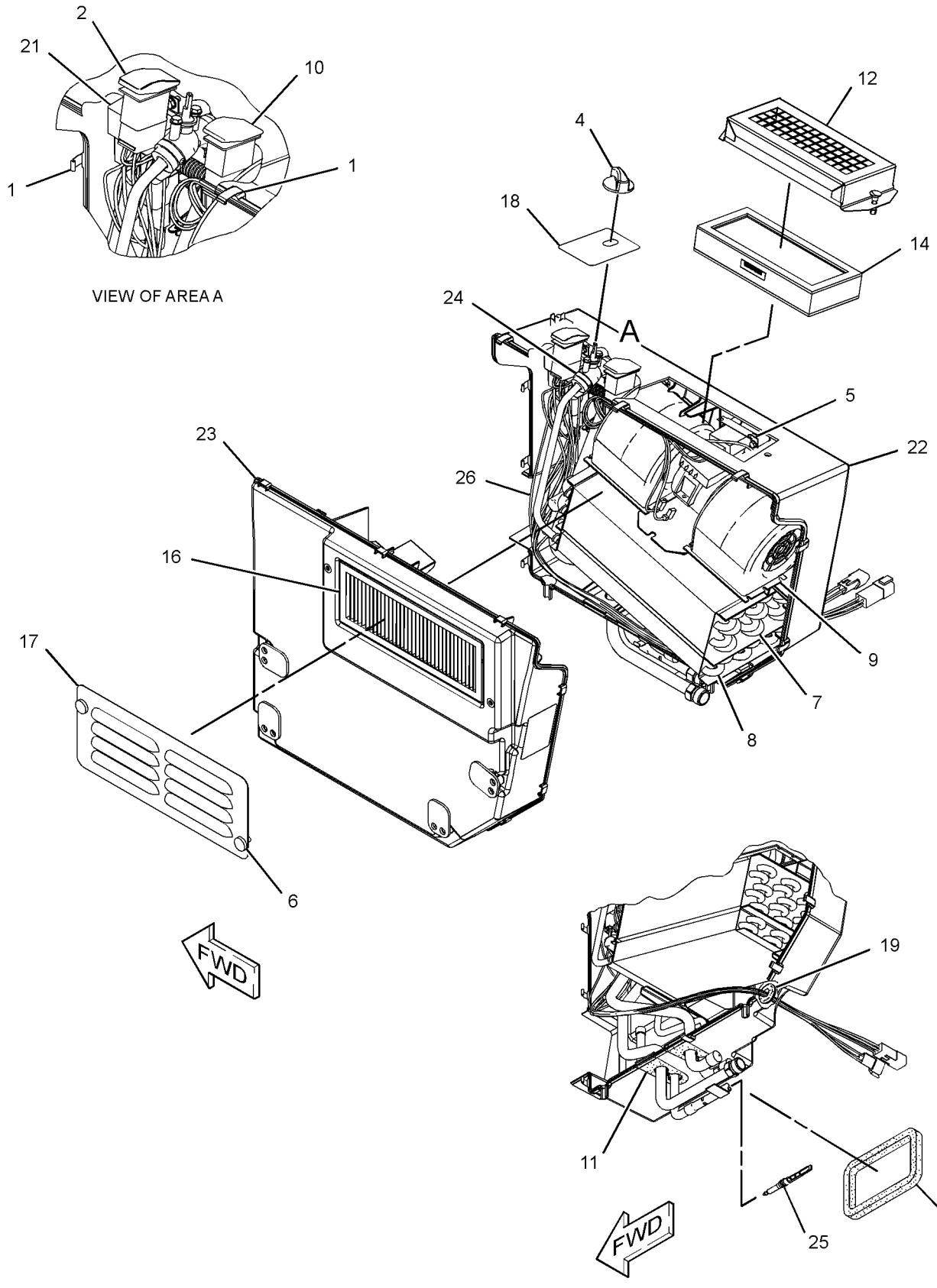

GRAPHIC #1 **<END>** g01416823

OPERATOR STATION

236-4830 ARMREST & MOUNTING GP

S/N: BXM4225-UP

PART OF 218-6350 CAB AR-ENCLOSED ROPS

SMCS-7307 **i01955195**

NOTE	REF NO	GRAPHIC REF	PART NUMBER	QTY	PART NAME 1 2 3 4 5 6 (PRODUCT LEVEL)	SEE PAGE
	1	1	**4E-1384**	2	BUMPER-CONICAL	
	2	1	**195-0939**	4	STUD	
	3	1	**218-6442**	2	PLATE	
Y	4	1	**236-4833**	1	ARMREST GP	499
M	5	1	**195-0937**	2	INSERT-THREADED (M8X1.25-THD)	
M	6	1	**5C-7261**	2	NUT (M8X1.25-THD)	
	7	1	**8T-4121**	4	WASHER-HARD (11X21X2.5-MM THK)	
M	8	1	**8T-4133**	4	NUT (M10X1.5-THD)	

M-METRIC PART
Y-SEPARATE ILLUSTRATION

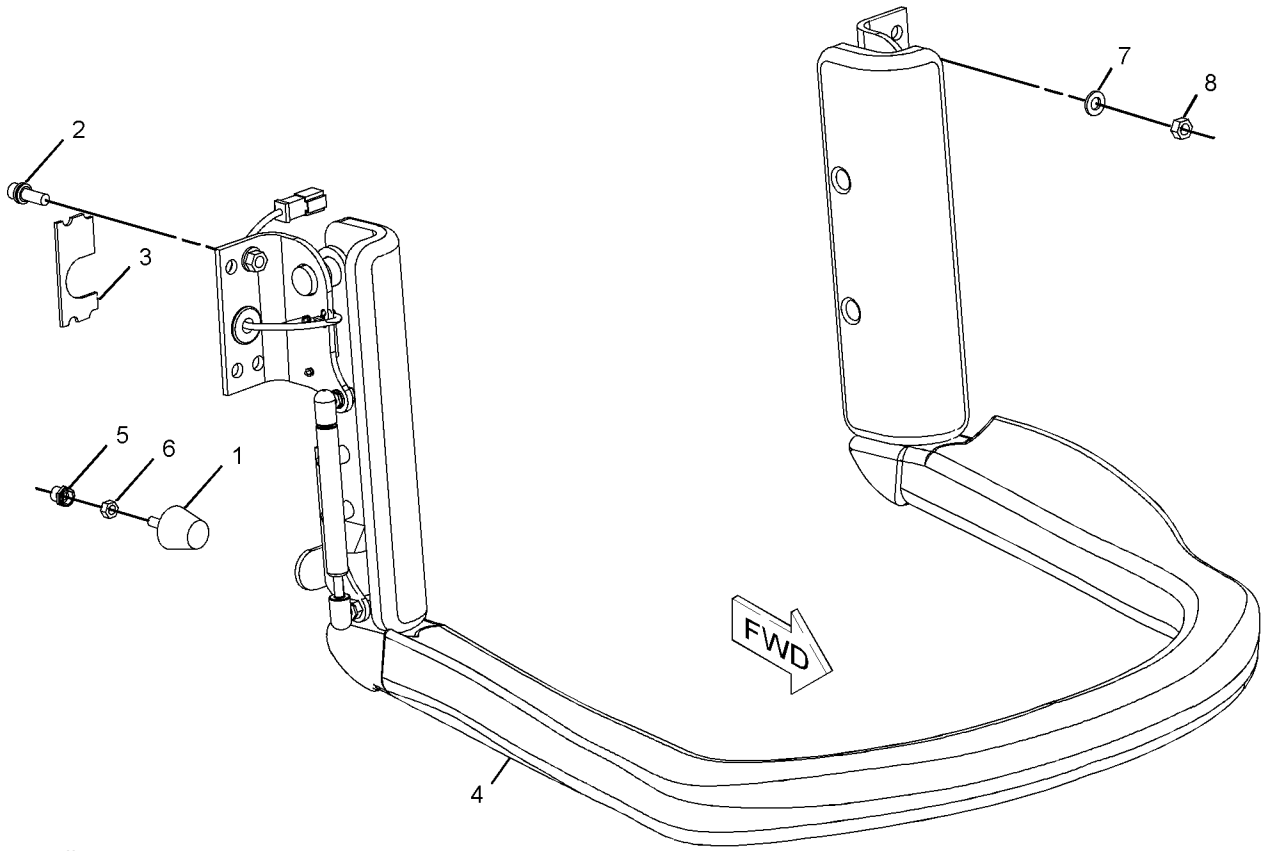

GRAPHIC #1 **<END>** g01016683

OPERATOR STATION

236-4833 ARMREST GP

S/N: BXM4225-UP

PART OF 236-4830 ARMREST & MOUNTING GP

SMCS-7307 **i01955198**

NOTE	REF NO	GRAPHIC REF	PART NUMBER	QTY	PART NAME 1 2 3 4 5 6 (PRODUCT LEVEL)	SEE PAGE
	1	1	**3S-2093**	1	STRAP-CABLE	
	2	1	**7D-8431**	2	RING-RETAINING	
	3	1	**7G-7053**	1	GROMMET	
	4	1	**9P-4609**	1	ACTUATOR-MAGNETIC	
	5	1	**9S-0285**	2	BEARING-SLEEVE	
	6	1	**130-1916**	2	STUD-BALL	
	7	1	**142-9278**	1	BRACKET AS	
	8	1	**142-9279**	1	BRACKET AS	
	9	1	**142-9287**	1	SPRING AS-GAS	
	10	1	**142-9386**	1	BRACKET AS (LH)	
	11	1	**152-4875**	2	COVER AS	
	12	1	**152-4884**	1	BRACKET AS (RH)	
	13	1	**162-0223**	1	SWITCH AS (INTERLOCK)	
		1	**3E-3374**	1	WEDGE-PLUG LOCK (4-PIN)	
		1	**186-3736**	1	SOCKET-CONNECTOR (16-GA TO 18-GA)	
		1	**9G-3695**	1	PLUG	
		1	**9X-1813**		SLEEVE (24CM)	
		1	**176-2947**	1	PLUG KIT-CONN	
	14	1	**236-4832**	1	ARMREST AS	
	15	1	**103-6262**	4	SCREW-MACHINE (4-40X0.63-IN)	
	16	1	**142-2928**	4	LOCKNUT (4-40-THD)	
M	17	1	**5C-9553**	4	BOLT (M6X1X16-MM)	
	18	1	**8T-4205**	4	WASHER-HARD (7.2X14.5X2-MM THK)	
	19	1	**8T-4224**	1	WASHER-HARD (8.8X16X2-MM THK)	
M	20	1	**9X-2042**	4	SCREW-TRUSS HEAD (M6X1X12-MM)	

M-METRIC PART

236-4833 ARMREST GP *(contd.)* **i01955198**

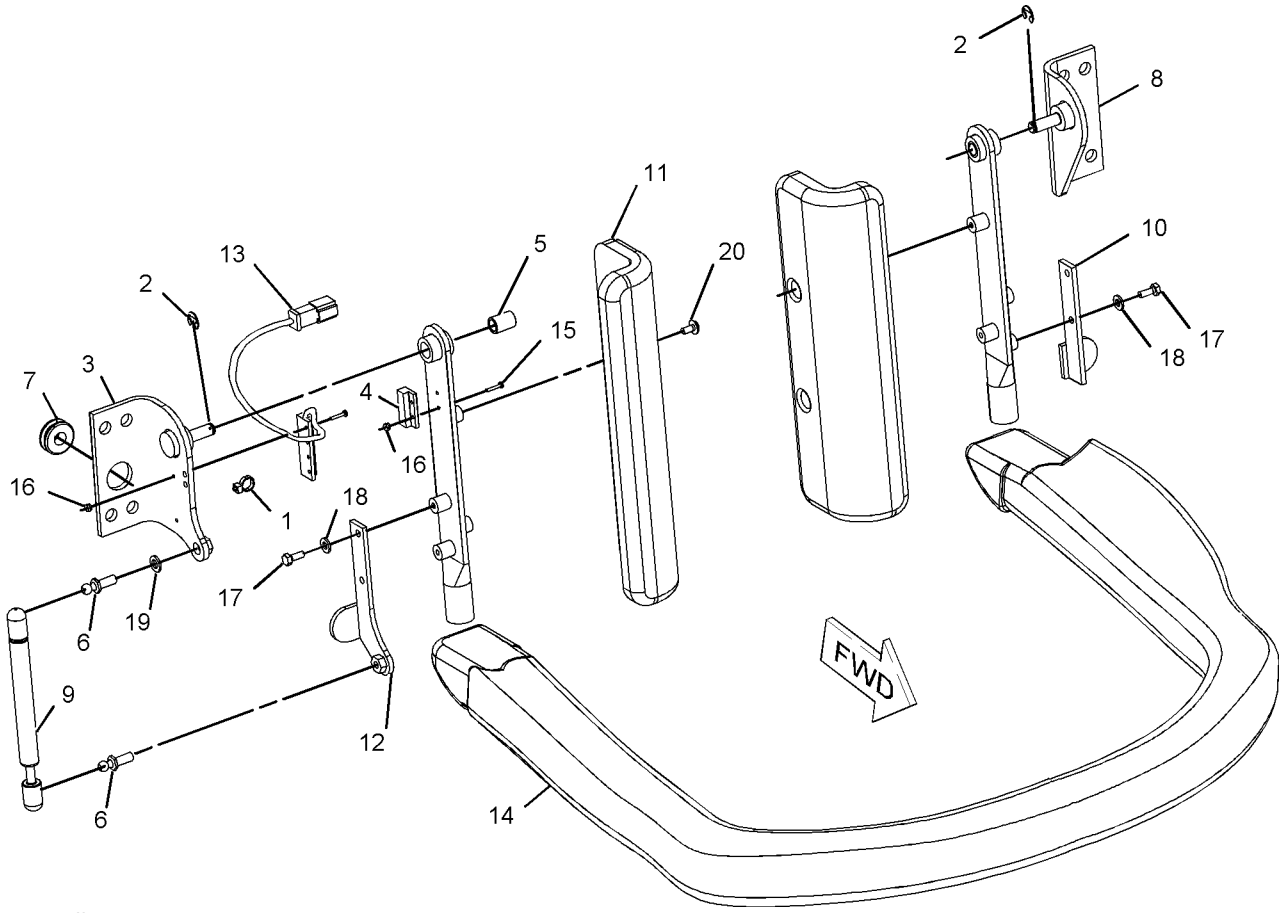

GRAPHIC #1 **<END>** g01016724

216-6146 BOX GP-STORAGE

S/N: BXM4225-UP

PART OF 261-6158, 278-1213, 278-1221, 278-1225, 278-5409, 278-5442, 295-7039, 295-7050, 295-7061, 295-7068, 295-7151, 295-7159, 295-7164, 295-7168 CONVERSION AR-MACHINE, 233-5681, 233-5682, 233-5683, 233-5684, 233-5685, 233-5686, 257-5721, 257-5722, 295-7044 CONVERSION AR-ROADING AN ATTACHMENT

SMCS-7268 **i02014480**

NOTE	REF NO	GRAPHIC REF	PART NUMBER	QTY	PART NAME 1 2 3 4 5 6 (PRODUCT LEVEL)	SEE PAGE
J	1	1	**8T-2895**	1	LOCK GP-CYLINDER	
		1	**226-0323**	1	CAM-LOCK	
		1	**226-0291**	1	LOCK AS	
	2	1	**216-6145**	1	BOX AS-STORAGE	
		1	**7G-4262**	1	HINGE	
D	3	1	**6V-1392**		SEAL (1M)	

D-ORDER BY THE METER
J-REQUIRES 5P8500 KEY

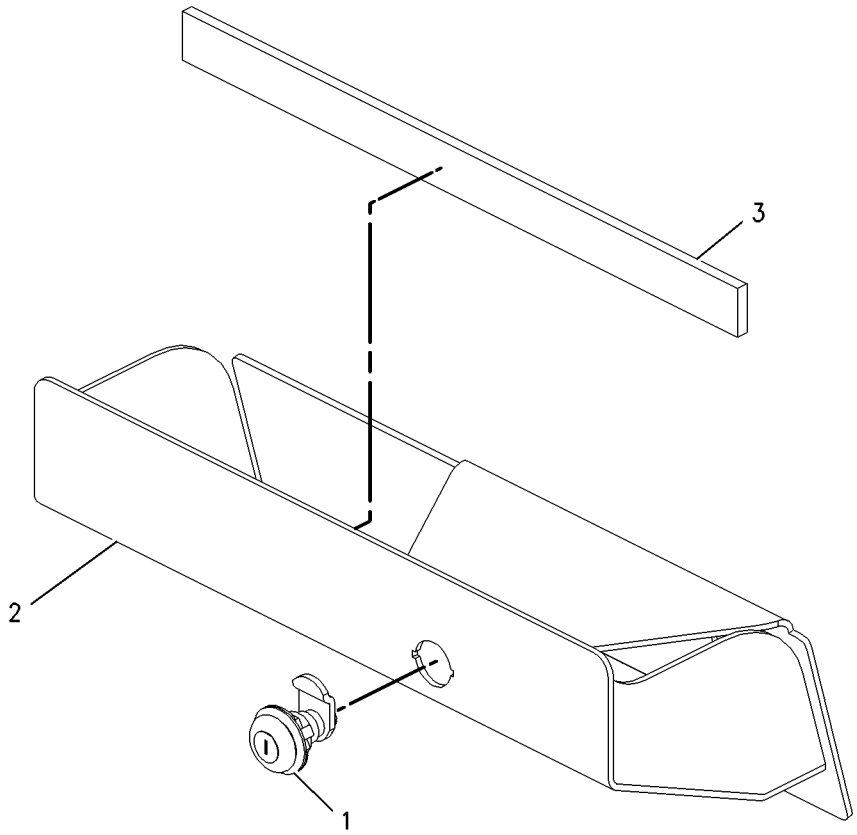

GRAPHIC #1 **<END>** g00932357

OPERATOR STATION

218-6350 CAB AR-ENCLOSED ROPS

S/N: BXM4225-UP

PART OF 295-7242, 295-7243 COMMON AR

SMCS-7301 **i02014475**

NOTE	PART NUMBER	QTY	PART NAME 1 2 3 4 5 6 (PRODUCT LEVEL)	SEE PAGE
Y	*236-4830*	1	ARMREST & MOUNTING GP	498
Y	*218-6367*	1	CAB GP-ENCLOSED ROPS	503
Y	*216-4750*	1	FASTENER GP-WIRING HARNESS	136
Y	*218-6425*	1	LIGHTING GP-FLOOD (FRONT)	153
Y	*218-6356*	1	LINER GP-CAB	586
Y	*218-6395*	1	MIRROR GP-REAR VIEW	592
Y	*218-6370*	1	MOUNTING GP-ROPS	595
Y	*218-6380*	1	SPRING GP-GAS (CAB)	616
Y	*195-6723*	1	WINDOW GP-CAB (UPPER REAR)	619
	218-6420	1	BOX GP-STORAGE (LITERATURE)	
	152-4871	1	BOX-STORAGE	
	5P-7957	1	LANYARD	
M	**9X-2042**	4	SCREW-TRUSS HEAD (M6X1X12-MM)	
	195-0935	4	INSERT-THREADED (M6X1-THD)	

M-METRIC PART
Y-SEPARATE ILLUSTRATION

<END>

OPERATOR STATION

218-6367 CAB GP-ENCLOSED ROPS

S/N: BXM4225-UP

PART OF 218-6350 CAB AR-ENCLOSED ROPS

SMCS-7301 **i02851608**

NOTE	REF NO	GRAPHIC REF	PART NUMBER	QTY	PART NAME 1 2 3 4 5 6 (PRODUCT LEVEL)	SEE PAGE
	1	1	**214-9186**	7	BUTTON	
	2	1	**280-6072**	1	WINDOW	
					PARTS SHOWN IN GRAPHIC(S) WITHOUT A REFERENCE NUMBER ARE NOT SERVICED SEPARATELY	

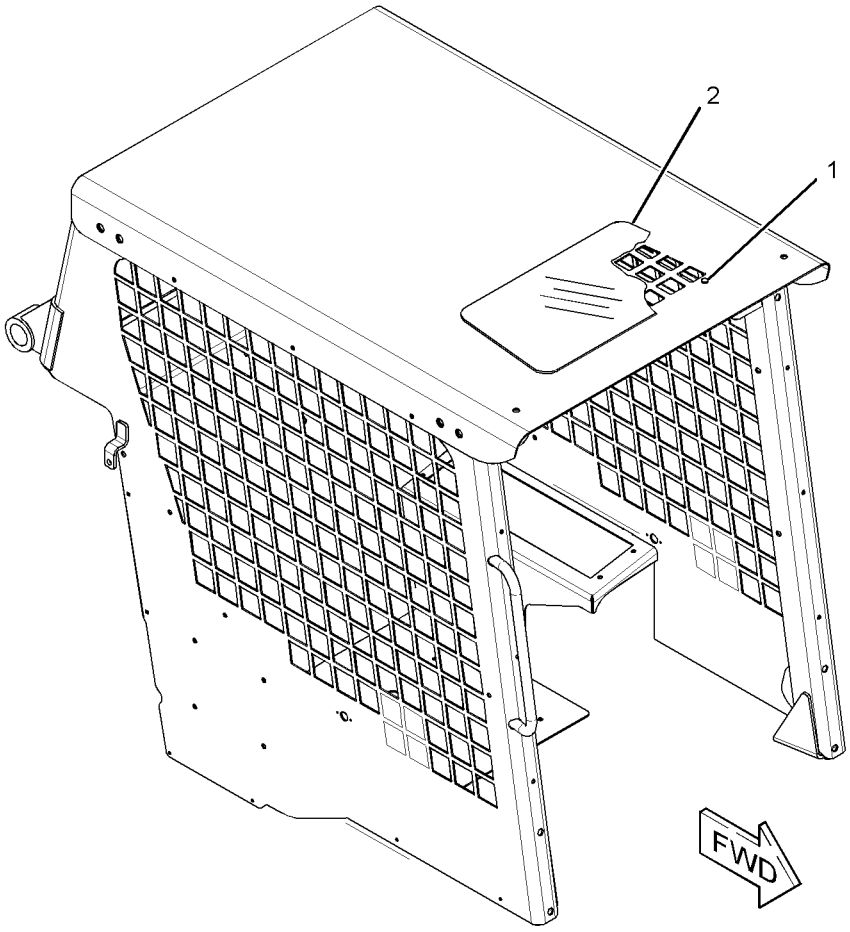

GRAPHIC #1 **<END>** g01420647

OPERATOR STATION

298-7198 CABLE GP-CONTROL—MANUAL LOWERING

S/N: BXM4225-UP

PART OF 218-5882 LINES GP-LOWERING CONTROL, 218-6263 VALVE & LINES GP-COUPLER

AN ATTACHMENT

SMCS-5154 **i02748033**

NOTE	PART NUMBER	QTY	PART NAME 1 2 3 4 5 6 (PRODUCT LEVEL)	SEE PAGE
	276-0074	1	CABLE AS	
	8T-4742	1	END-YOKE ROD	
	8T-4744	1	PIN AS-SPRING	
	298-7197	1	HANDLE GP	
	292-2437	1	NUT	
	292-2438	1	SEAL	
	284-3914	1	HANDLE	

<END>

218-6832 COMPRESSOR & MOTOR GP-REFRIG

S/N: BXM4225-UP
PART OF 218-6830 COMPRESSOR & MTG GP-REFRIG
AN ATTACHMENT
TYPE 1

SMCS-1802, 5061 **i02454674**

NOTE	REF NO	GRAPHIC REF	PART NUMBER	QTY	PART NAME 1 2 3 4 5 6 (PRODUCT LEVEL)	SEE PAGE
	1	1	**2D-5248**	1	GASKET	
	2	1	**9G-5127**	1	BREATHER (AIR CONDITIONER)	
	3	1	**9G-7101**	2	SPACER (10.5X20X30-MM THK)	
	4	1	**218-6833**	1	COMPRESSOR GP-REFRIGERANT	
Y	5	1	*276-5708*	1	COUPLING GP-DRIVE	542
Y	6	1	**218-6840**	1	MOTOR GP-GEAR	351
	7	1	**233-5590**	1	HOUSING-SUPPORT	
M	8	1	**5C-7261**	2	NUT (M8X1.25-THD)	
	9	1	**5P-4116**	2	WASHER-HARD (8.8X20.5X2-MM THK)	
	10	1	**8T-4121**	2	WASHER-HARD (11X21X2.5-MM THK)	
	11	1	**8T-4224**	2	WASHER-HARD (8.8X16X2-MM THK)	
M	12	1	**8T-6870**	2	BOLT (M8X1.25X70-MM)	
M	13	1	**9X-6032**	2	BOLT-SOCKET HEAD (M10X1.5X30-MM)	

M-METRIC PART
Y-SEPARATE ILLUSTRATION

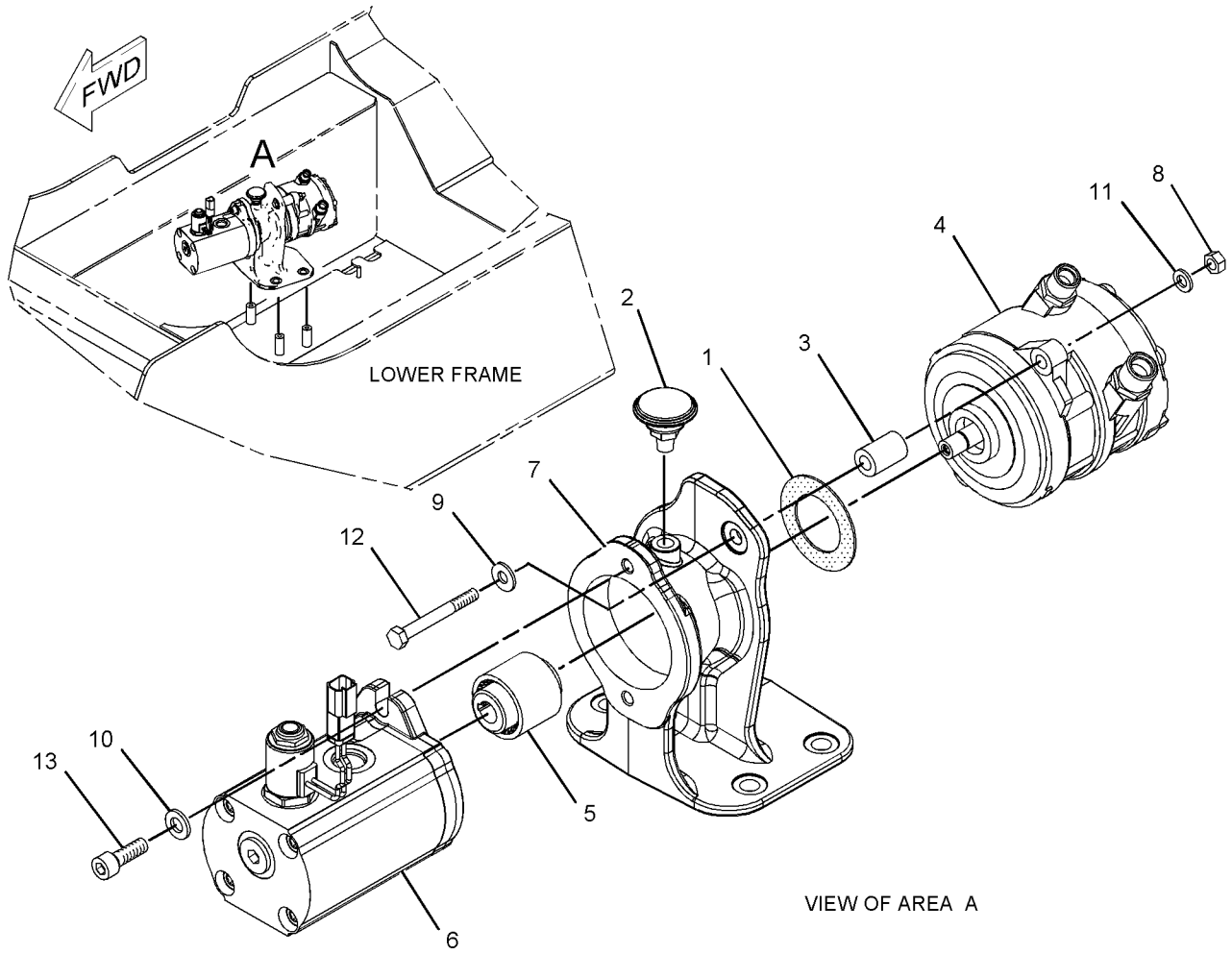

GRAPHIC #1 **<END>** g01059394

OPERATOR STATION

218-6832 COMPRESSOR & MOTOR GP-REFRIG

S/N: BXM4225-UP

PART OF 218-6830 COMPRESSOR & MTG GP-REFRIG

AN ATTACHMENT

TYPE 2

SMCS-1802, 5061 **i02877015**

NOTE	REF NO	GRAPHIC REF	PART NUMBER	QTY	PART NAME 1 2 3 4 5 6 (PRODUCT LEVEL)	SEE PAGE
	1	1	**2D-5248**	1	GASKET	
	2	1	**9G-5127**	1	BREATHER (AIR CONDITIONER)	
	3	1	**9G-7101**	2	SPACER (10.5X20X30-MM THK)	
	4	1	**218-6833**	1	COMPRESSOR GP-REFRIGERANT	
Y	5	1	*276-5708*	1	COUPLING GP-DRIVE	542
CY	6	1	**307-6115**	1	MOTOR GP-GEAR (VALVE)	356
	7	1	**233-5590**	1	HOUSING-SUPPORT	
M	8	1	**5C-7261**	2	NUT (M8X1.25-THD)	
	9	1	**5P-4116**	2	WASHER-HARD (8.8X20.5X2-MM THK)	
	10	1	**8T-4121**	2	WASHER-HARD (11X21X2.5-MM THK)	
	11	1	**8T-4224**	2	WASHER-HARD (8.8X16X2-MM THK)	
M	12	1	**8T-6870**	2	BOLT (M8X1.25X70-MM)	
M	13	1	**9X-6032**	2	BOLT-SOCKET HEAD (M10X1.5X30-MM)	

C-CHANGE FROM PREVIOUS TYPE
M-METRIC PART
Y-SEPARATE ILLUSTRATION

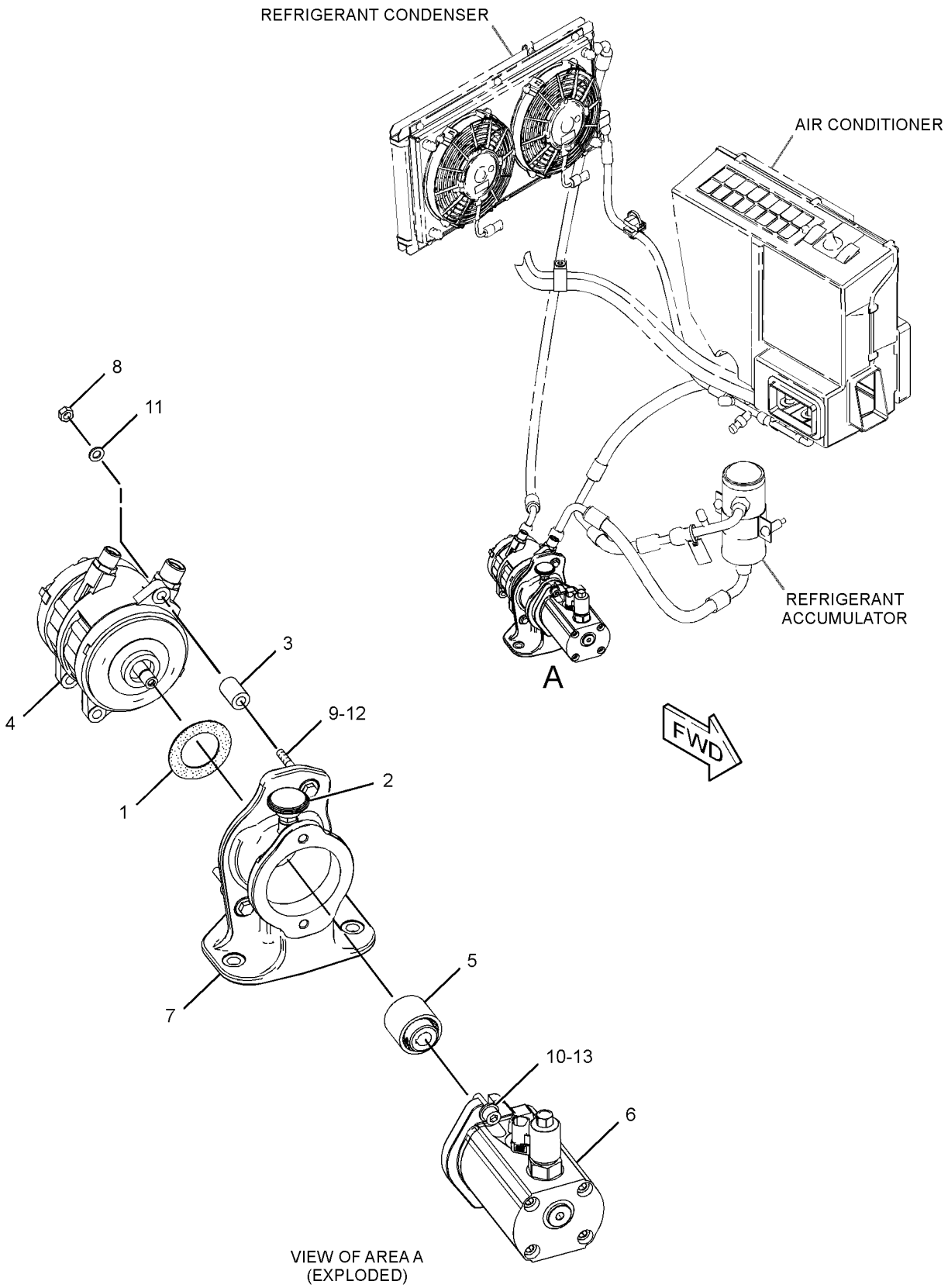

VIEW OF AREA A
(EXPLODED)

GRAPHIC #1 **<END>** g01433559

OPERATOR STATION

218-6830 COMPRESSOR & MTG GP-REFRIG

S/N: BXM4225-UP
PART OF 218-6302 AIR CONDITIONER AR
AN ATTACHMENT

SMCS-1802 **i01958280**

NOTE	REF NO	GRAPHIC REF	PART NUMBER	QTY	PART NAME 1 2 3 4 5 6 (PRODUCT LEVEL)	SEE PAGE
Y	1	1	*218-6832*	1	COMPRESSOR & MOTOR GP-REFRIG	505
	2	1	**8T-4121**	3	WASHER-HARD (11X21X2.5-MM THK)	
M	3	1	**8T-4136**	3	BOLT (M10X1.5X25-MM)	

M-METRIC PART
Y-SEPARATE ILLUSTRATION

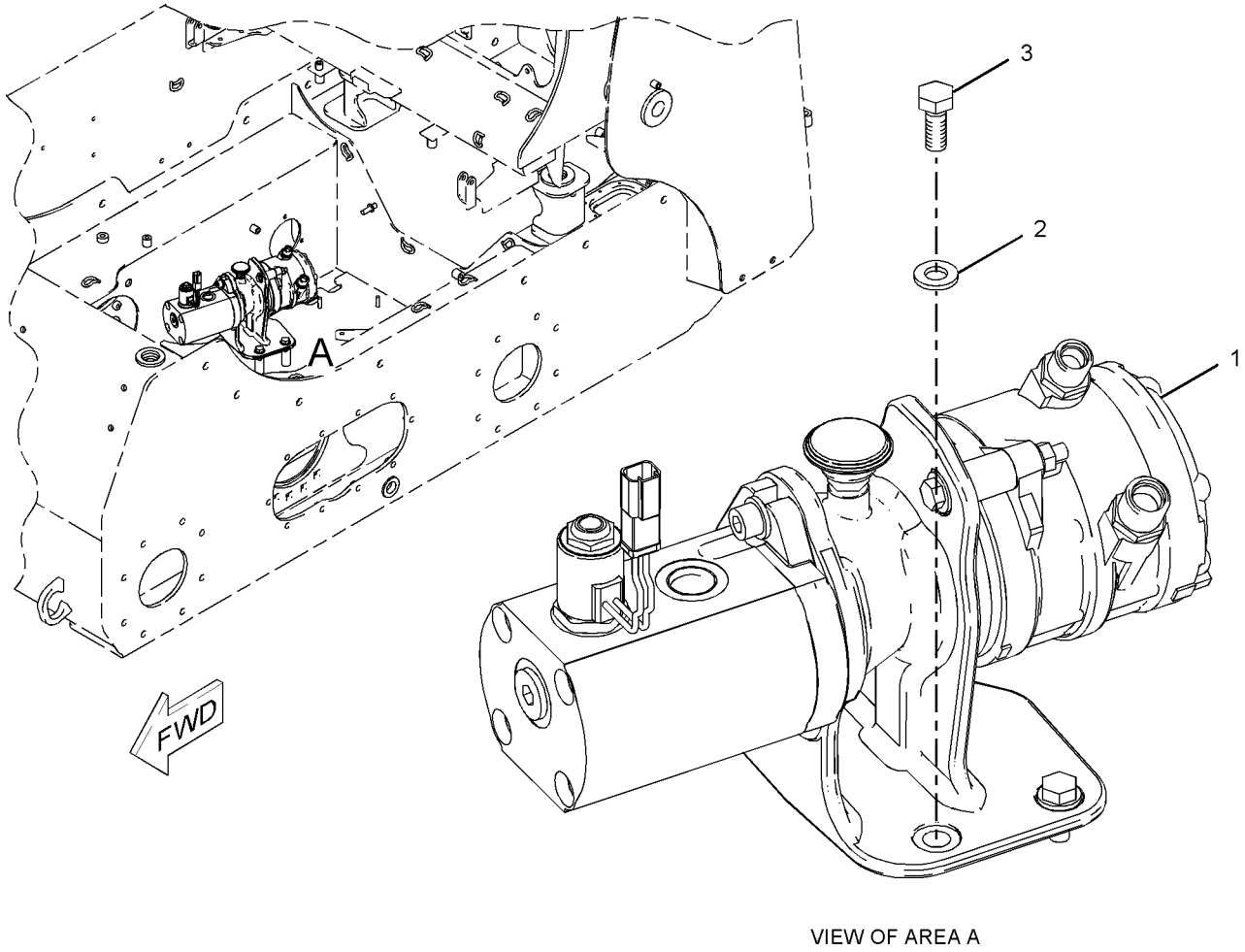

VIEW OF AREA A

GRAPHIC #1 **<END>** g01018664

218-6348 CONDENSER & MTG GP-REFRIGERANT

S/N: BXM4225-UP
PART OF 218-6302 AIR CONDITIONER AR
AN ATTACHMENT

SMCS-1805 **i02338119**

NOTE	REF NO	GRAPHIC REF	PART NUMBER	QTY	PART NAME 1 2 3 4 5 6 (PRODUCT LEVEL)	SEE PAGE
	1	1	**218-6060**	1	SHROUD AS	
	2	1	**218-6250**	2	FAN AS	
C	3	1	**233-5927**	1	COIL AS	
M	4	1	**5C-7261**	14	NUT (M8X1.25-THD)	
	5	1	**8T-4121**	4	WASHER-HARD (11X21X2.5-MM THK)	
M	6	1	**8T-4133**	4	NUT (M10X1.5-THD)	
M	7	1	**8T-4189**	14	BOLT (M8X1.25X20-MM)	
	8	1	**8T-4224**	20	WASHER-HARD (8.8X16X2-MM THK)	

C-CHANGE FROM PREVIOUS TYPE
M-METRIC PART

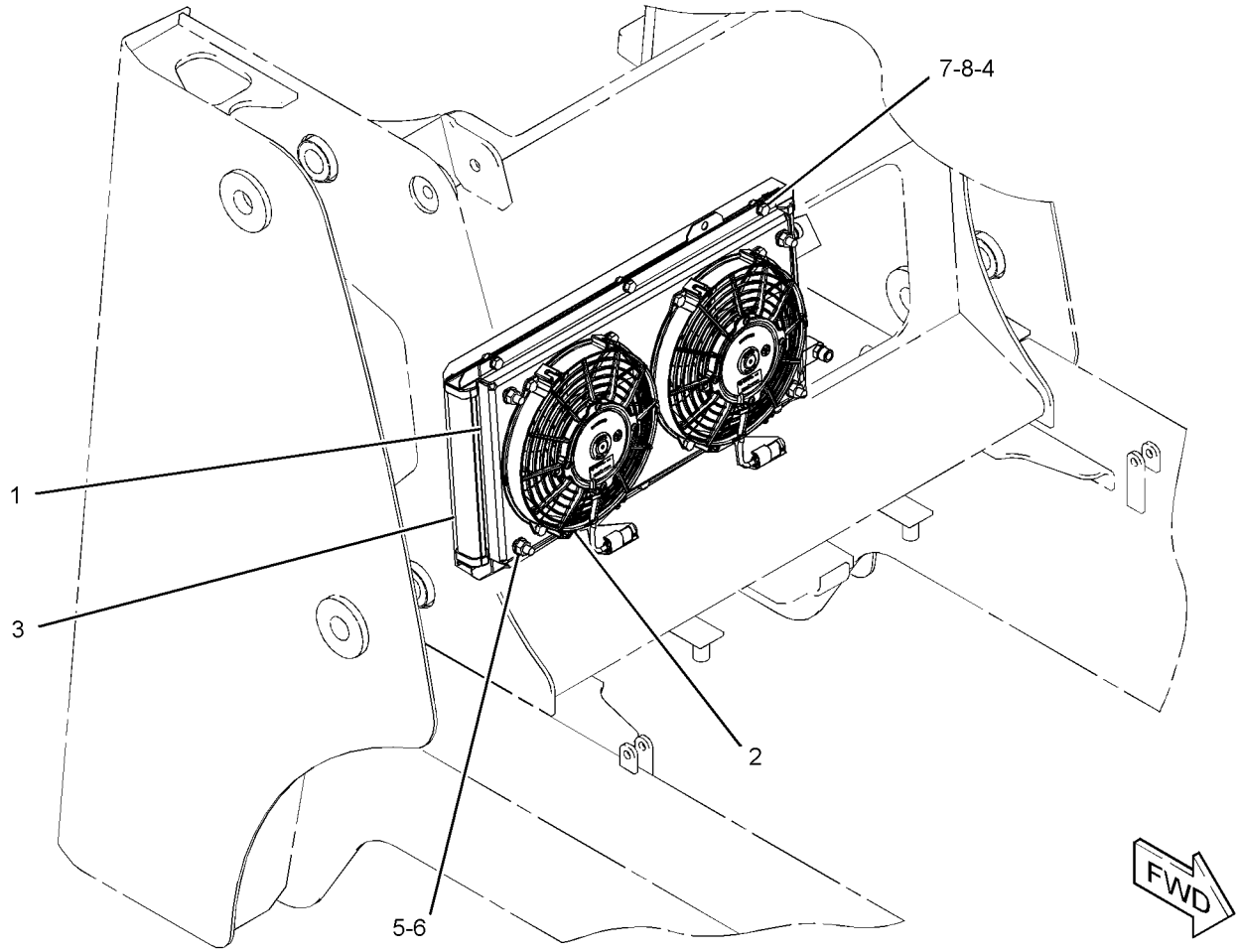

GRAPHIC #1 **<END>** g01195603

218-6480 CONTROL GP-HANDLE–DIRECTION, SPEED

S/N: BXM4225-UP

PART OF 218-5930 CONTROL GP-PILOT OPERATED HYD

AN ATTACHMENT

SMCS-5705 **i02545867**

NOTE	REF NO	GRAPHIC REF	PART NUMBER	QTY	PART NAME 1 2 3 4 5 6 (PRODUCT LEVEL)	SEE PAGE
	1	1	**173-0702**	1	BOOT	
Y	2	1	**218-6117**	1	HANDLE GP-MODULAR	566
	3	1	**158-3770**	1	KIT-PILOT VALVE (LEVER)	
					(INCLUDES NUT, LEVER & PIN)	

Y-SEPARATE ILLUSTRATION

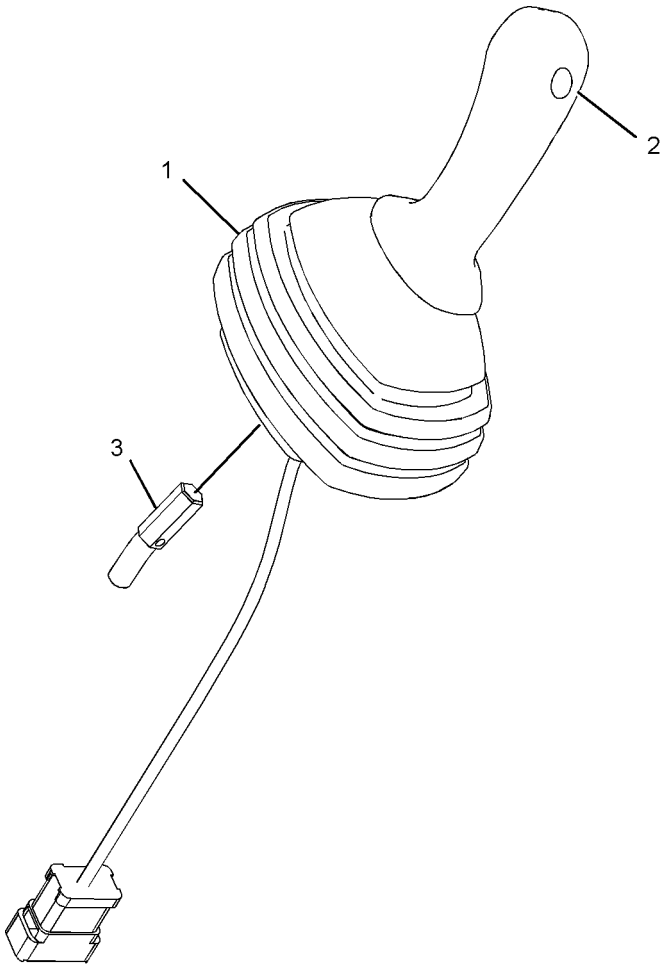

GRAPHIC #1 **<END>** g01111218

OPERATOR STATION

218-6485 CONTROL GP-HANDLE–DIRECTION, SPEED

S/N: BXM4225-UP

PART OF 218-5931 CONTROL GP-PILOT OPERATED HYD

AN ATTACHMENT

SMCS-5705 **i02545868**

NOTE	REF NO	GRAPHIC REF	PART NUMBER	QTY	PART NAME 1 2 3 4 5 6 (PRODUCT LEVEL)	SEE PAGE
	1	1	**173-0702**	1	BOOT	
Y	2	1	**218-6118**	1	HANDLE GP-MODULAR	567
	3	1	**158-3770**	1	KIT-PILOT VALVE (LEVER)	
					(INCLUDES NUT, LEVER & PIN)	

Y-SEPARATE ILLUSTRATION

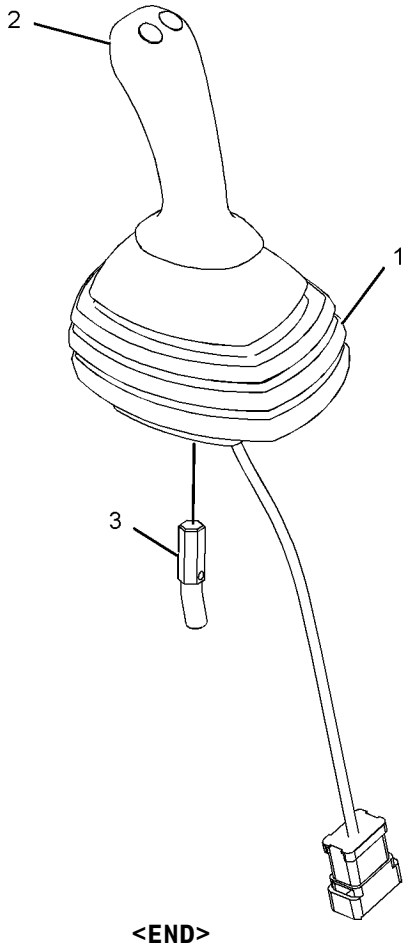

GRAPHIC #1 **<END>** g01111214

OPERATOR STATION

218-6490 CONTROL GP-HANDLE—WORK TOOL

S/N: BXM4225-UP

PART OF 218-5611 CONTROL GP-PILOT OPERATED HYD

AN ATTACHMENT

SMCS-5705 **i02545869**

NOTE	REF NO	GRAPHIC REF	PART NUMBER	QTY	PART NAME 1 2 3 4 5 6 (PRODUCT LEVEL)	SEE PAGE
	1	1	**173-0703**	1	BOOT	
Y	2	1	**218-6118**	1	HANDLE GP-MODULAR	567
	3	1	**158-3770**	1	KIT-PILOT VALVE (LEVER)	
					(INCLUDES NUT, LEVER & PIN)	

Y-SEPARATE ILLUSTRATION

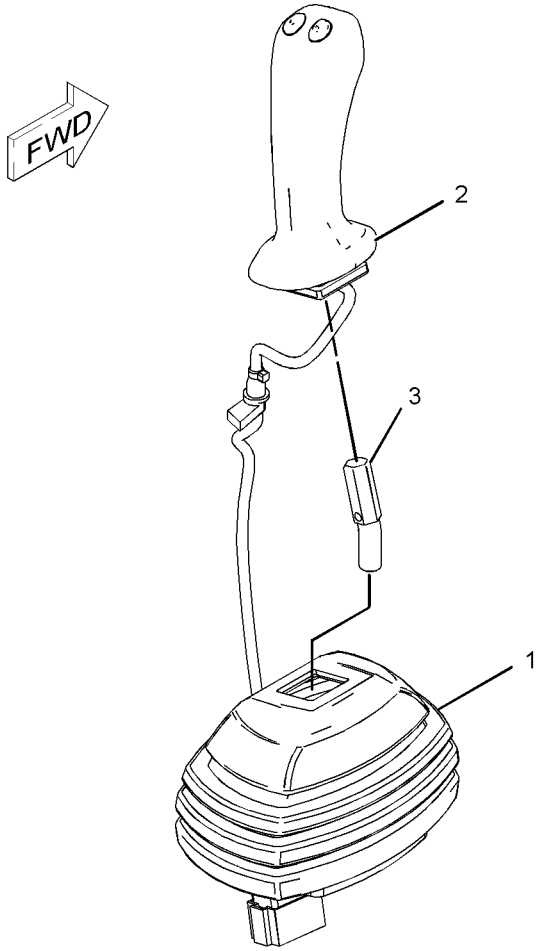

GRAPHIC #1

<END>

g01111213

231-4256 CONTROL GP-HANDLE–LH

S/N: BXM4225-UP

PART OF 218-5932 CONTROL GP-PILOT OPERATED HYD

AN ATTACHMENT

SMCS-5705 **i02189555**

NOTE	REF NO	GRAPHIC REF	PART NUMBER	QTY	PART NAME 1 2 3 4 5 6 (PRODUCT LEVEL)	SEE PAGE
	1	1	**223-3725**	1	HANDLE GP-MODULAR	
	1A	1	**186-3735**	4	PIN-CONNECTOR (16-GA TO 18-GA)	
	1B	1	**174-3091**	1	KIT-RECEPTACLE (12-PIN)	
					(INCLUDES RECEPTACLE AS & WEDGE)	
	2	1	**223-3728**	1	BOOT	
	3	1	**231-4261**	1	ADAPTER (LH)	
M	4	1	**213-7489**	3	SCREW (M4X25-MM)	
M	5	1	**178-9983**	3	LOCKNUT (M4X0.7-THD)	
	6	1	**1S-9593**	1	STRAP-CABLE	
	7	1	**8T-8737**	8	PLUG-SEAL	
	8	1	**252-6934**	1	GROMMET	

M-METRIC PART

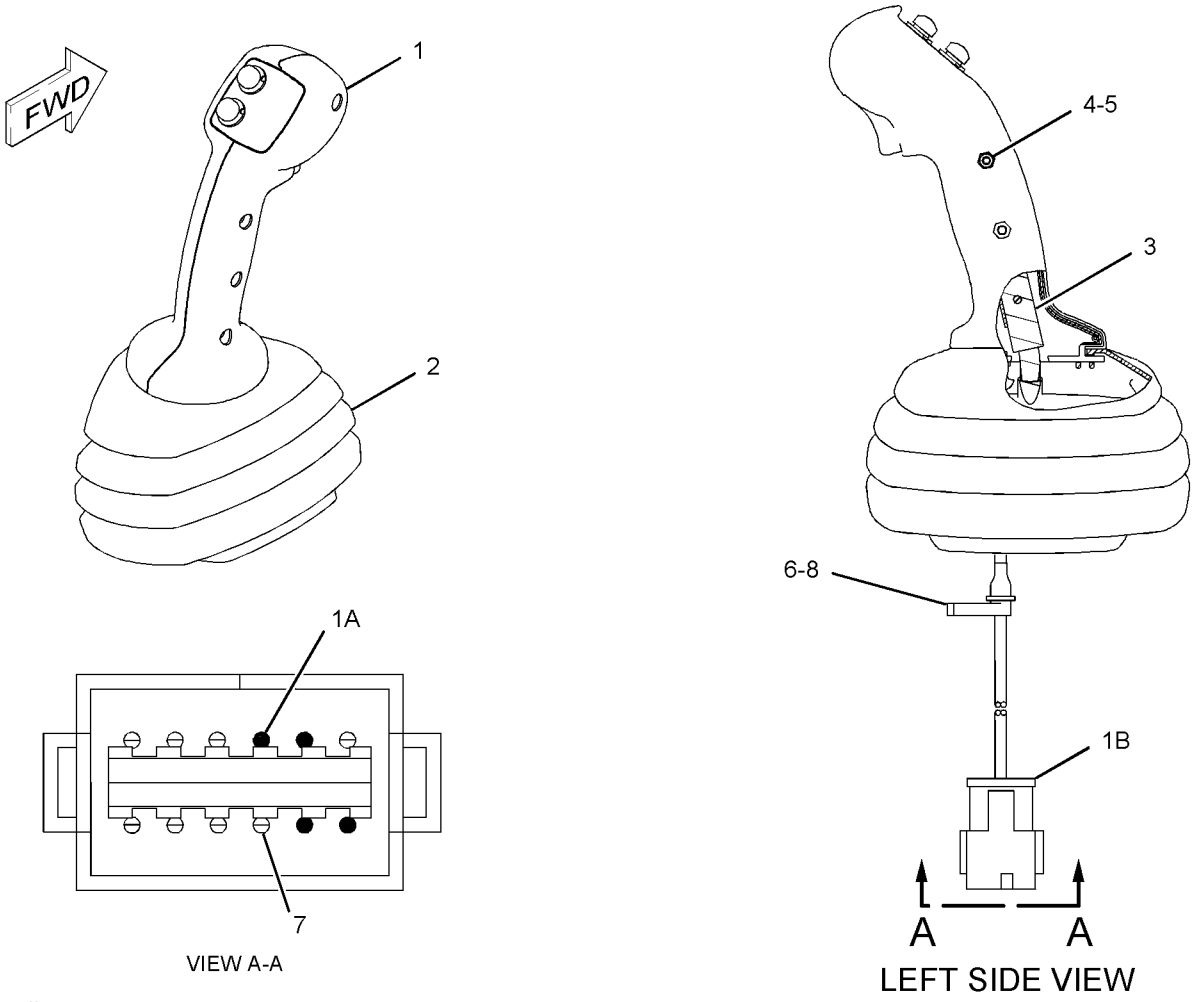

GRAPHIC #1 **<END>** g01132335

OPERATOR STATION

231-4257 CONTROL GP-HANDLE–RH

S/N: BXM4225-UP

PART OF 218-5612 CONTROL GP-PILOT OPERATED HYD

AN ATTACHMENT

SMCS-5705 **i02250695**

NOTE	REF NO	GRAPHIC REF	PART NUMBER	QTY	PART NAME 1 2 3 4 5 6 (PRODUCT LEVEL)	SEE PAGE
	1	1	**223-3725**	1	HANDLE GP-MODULAR	
	1A	1	**186-3735**	4	PIN-CONNECTOR (16-GA TO 18-GA)	
	1B	1	**174-3091**	1	KIT-RECEPTACLE (12-PIN)	
					(INCLUDES RECEPTACLE AS & WEDGE)	
	2	1	**223-3728**	1	BOOT	
	3	1	**231-4262**	1	ADAPTER (RH)	
M	4	1	**213-7489**	3	SCREW (M4X25-MM)	
M	5	1	**178-9983**	3	LOCKNUT (M4X0.7-THD)	
	6	1	**1S-9593**	1	STRAP-CABLE	
	7	1	**8T-8737**	8	PLUG-SEAL	
	8	1	**252-6934**	1	GROMMET	

M-METRIC PART

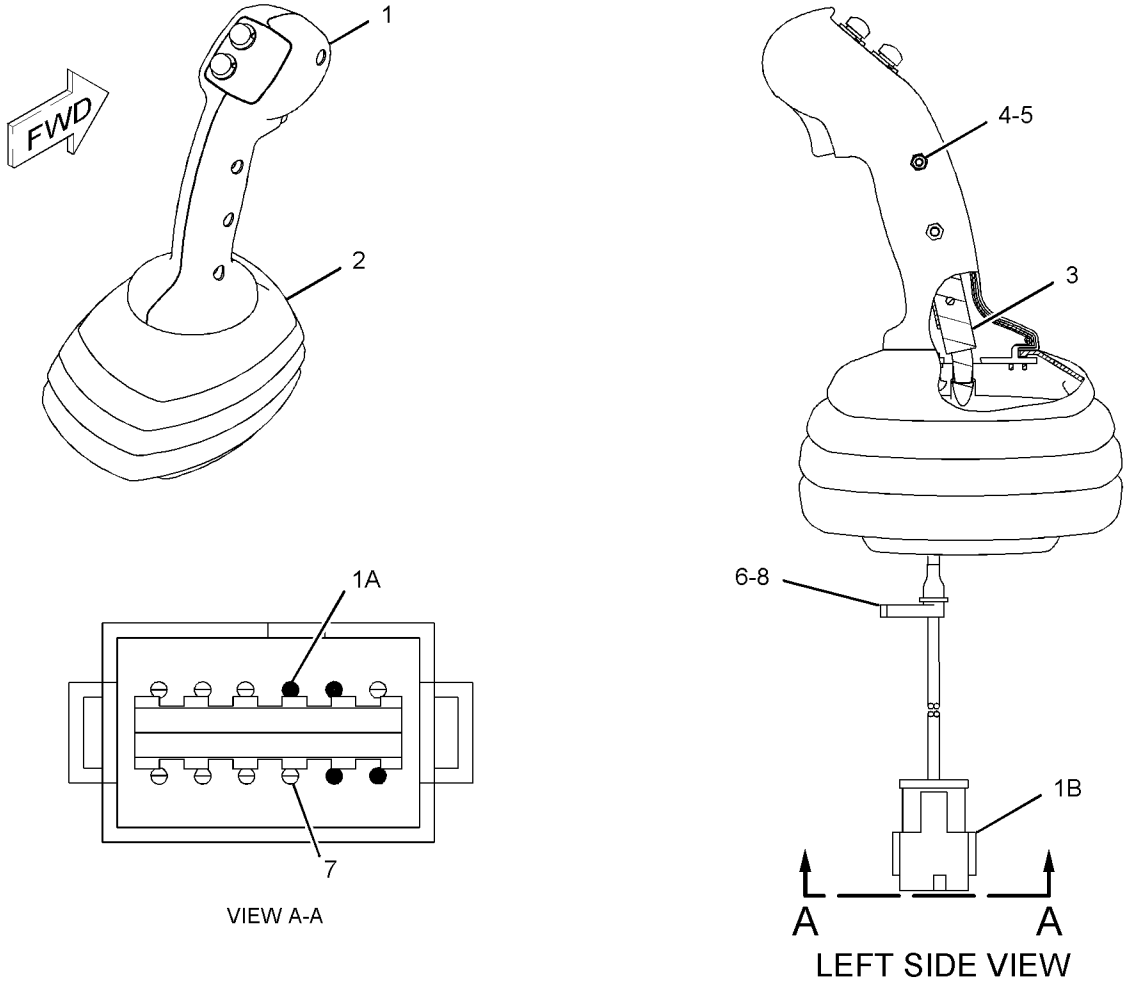

GRAPHIC #1 **<END>** g01133018

OPERATOR STATION

231-4258 CONTROL GP-HANDLE–LH

S/N: BXM4225-UP

PART OF 218-5947 CONTROL GP-PILOT OPERATED HYD, 233-5638 KIT-WORK TOOL CONTROL & WIRING AN ATTACHMENT

SMCS-5705 **i02189624**

NOTE	REF NO	GRAPHIC REF	PART NUMBER	QTY	PART NAME 1 2 3 4 5 6 (PRODUCT LEVEL)	SEE PAGE
	1	1	**223-3726**	1	HANDLE GP-MODULAR	
	1A	1	**186-3735**	7	PIN-CONNECTOR (16-GA TO 18-GA)	
	1B	1	**174-3091**	1	KIT-RECEPTACLE (12-PIN)	
					(INCLUDES RECEPTACLE AS & WEDGE)	
	2	1	**223-3728**	1	BOOT	
	3	1	**231-4261**	1	ADAPTER (LH)	
M	4	1	**213-7489**	3	SCREW (M4X25-MM)	
M	5	1	**178-9983**	3	LOCKNUT (M4X0.7-THD)	
	6	1	**1S-9593**	1	STRAP-CABLE	
	7	1	**8T-8737**	3	PLUG-SEAL	
	8	1	**252-6934**	1	GROMMET	

M-METRIC PART

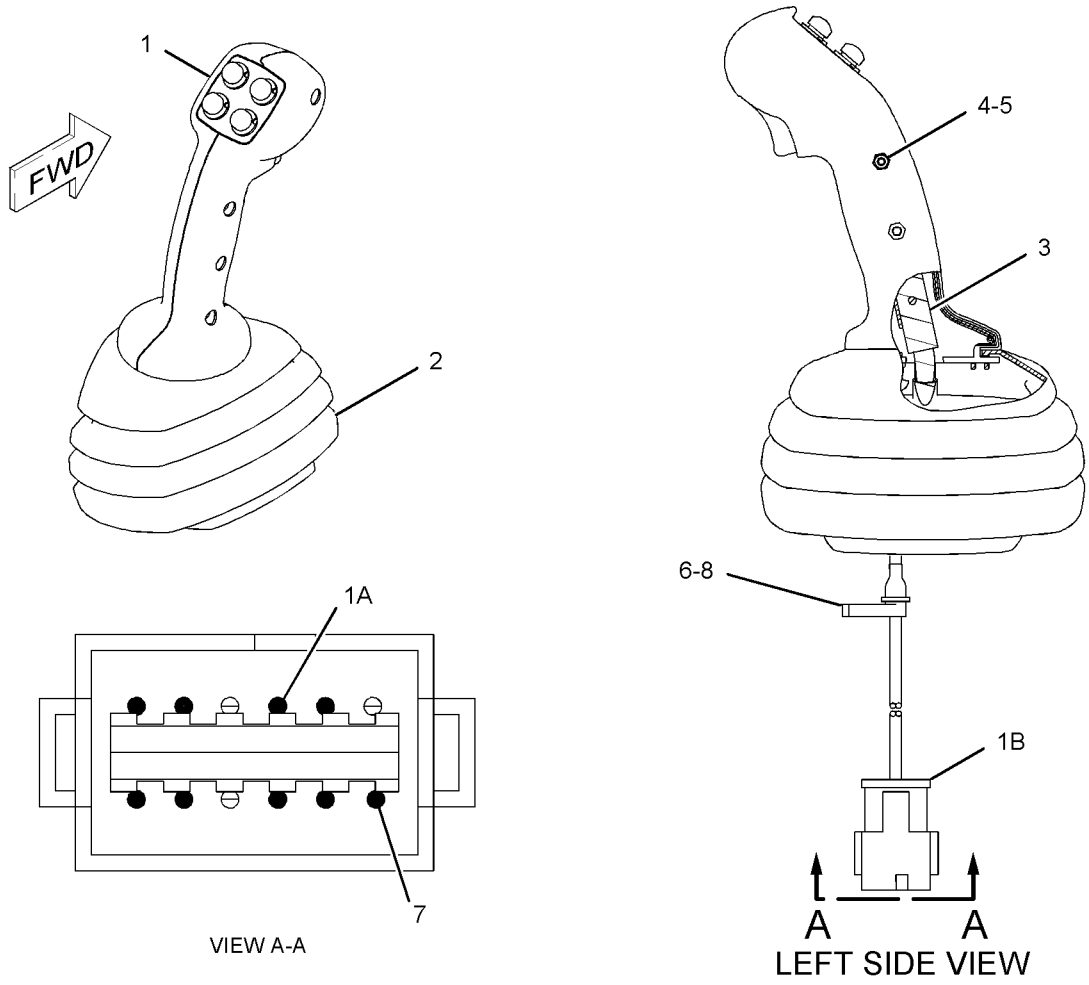

GRAPHIC #1 **<END>** g01132255

231-4259 CONTROL GP-HANDLE—WORK TOOL

S/N: BXM4225-UP

PART OF 218-6571 CONTROL GP-PILOT OPERATED HYD, 218-6738 KIT-HIGH FLOW CONVERSION

AN ATTACHMENT

SMCS-5705 **i02265596**

NOTE	REF NO	GRAPHIC REF	PART NUMBER	QTY	PART NAME 1 2 3 4 5 6 (PRODUCT LEVEL)	SEE PAGE
	1	1	**215-8308**	1	CONTROL GP-HANDLE	
	1A	1	**174-3091**	1	KIT-RECEPTACLE (12-PIN)	
	1B	1	**3E-5180**	1	WEDGE-RECEPTACLE LOCK (12-PIN)	
	1C	1	**186-3735**	11	PIN-CONNECTOR (16-GA TO 18-GA)	
	2	1	**223-3728**	1	BOOT	
	3	1	**231-4262**	1	ADAPTER (RH)	
M	4	1	**213-7489**	3	SCREW (M4X25-MM)	
M	5	1	**178-9983**	3	LOCKNUT (M4X0.7-THD)	
	6	1	**252-6934**	1	GROMMET	
	7	1	**8T-8737**	1	PLUG-SEAL	
	8	1	**1S-9593**	1	STRAP-CABLE	

M-METRIC PART

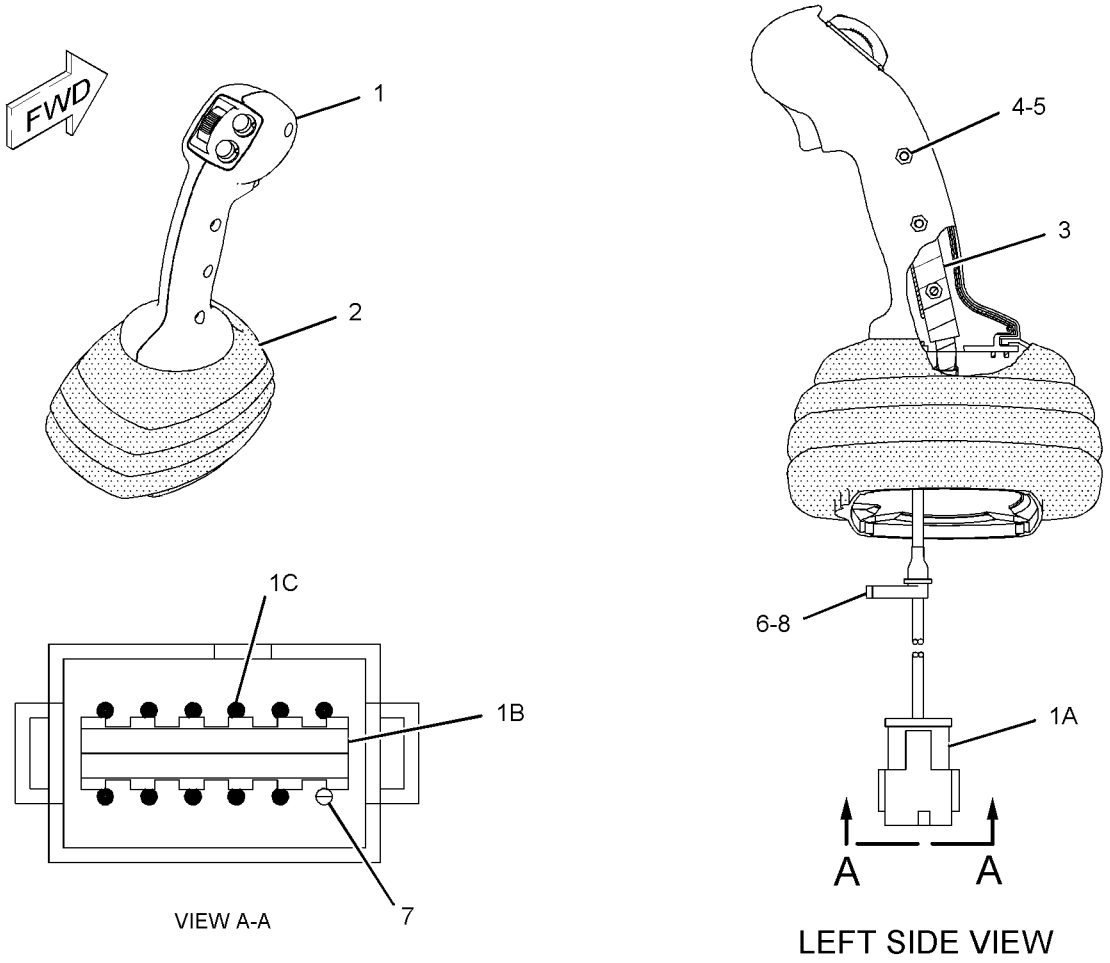

GRAPHIC #1 **<END>** g01132563

231-4260 CONTROL GP-HANDLE–RH

S/N: BXM4225-UP

PART OF 218-5618 CONTROL GP-PILOT OPERATED HYD

AN ATTACHMENT

SMCS-5705 **i02189795**

NOTE	REF NO	GRAPHIC REF	PART NUMBER	QTY	PART NAME 1 2 3 4 5 6 (PRODUCT LEVEL)	SEE PAGE
	1	1	**215-8307**	1	CONTROL GP-HANDLE	
	1A	1	**186-3735**	7	PIN-CONNECTOR (16-GA TO 18-GA)	
	1B	1	**174-3091**	1	KIT-RECEPTACLE (12-PIN)	
					(INCLUDES RECEPTACLE AS & WEDGE)	
	2	1	**223-3728**	1	BOOT	
	3	1	**231-4262**	1	ADAPTER (RH)	
M	4	1	**213-7489**	3	SCREW (M4X25-MM)	
M	5	1	**178-9983**	3	LOCKNUT (M4X0.7-THD)	
	6	1	**1S-9593**	1	STRAP-CABLE	
	7	1	**8T-8737**	5	PLUG-SEAL	
	8	1	**252-6934**	1	GROMMET	

M-METRIC PART

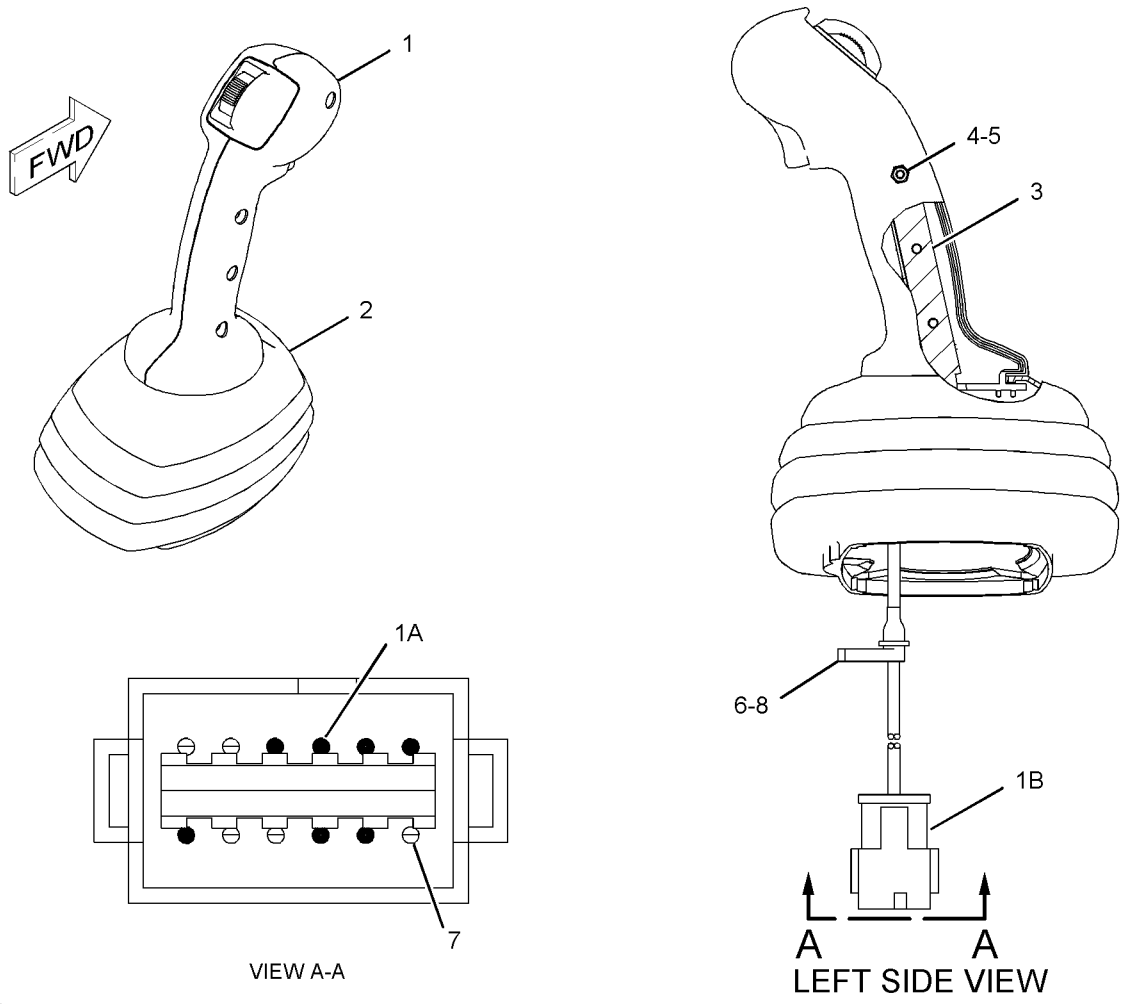

GRAPHIC #1 **<END>** g01132271

OPERATOR STATION

218-5611 CONTROL GP-PILOT OPERATED HYD

S/N: BXM4225-4279
ON/OFF AUXILIARY SWITCH
PART OF 295-7491 CONTROL AR-MACHINE
CANNOT BE USED WITH 218-5612—PAGE 522, 218-5618—PAGE 525, 218-6571—PAGE 536
AN ATTACHMENT

SMCS-5059, 5705 **i02195836**

NOTE	REF NO	GRAPHIC REF	PART NUMBER	QTY	PART NAME 1 2 3 4 5 6 (PRODUCT LEVEL)	SEE PAGE
	1	2	**8T-4205**	3	WASHER-HARD (7.2X14.5X2-MM THK)	
	2	2	**110-8760**	1	STRAP	
	3	2	**216-4704**	1	HARNESS AS-OPERATOR CONTROLS (JOYSTICK)	
		2	**155-2255**	1	KIT-CONNECTING PLUG (12-PIN)	
		2	**155-2270**	2	KIT-CONNECTING PLUG (2-PIN)	
					(EACH PLUG KIT INCLUDES PLUG AS, WEDGE & INTERFACE SEAL)	
		2	**102-8801**	1	KIT-RECEPTACLE (12-PIN)	
					(INCLUDES RECEPTACLE AS & WEDGE)	
	4	2	**218-6421**	1	BRACKET AS	
M		1	**6V-9632**	3	NUT-WELD (M6X1-THD)	
		1	**7T-1099**	1	LINK	
M		1	**8T-3612**	3	NUT-WELD (M8X1.25-THD)	
Y	5	2	**218-6490**	1	CONTROL GP-HANDLE (WORK TOOL)	512
Y	6	2	**228-9228**	1	VALVE GP-PILOT (WORK TOOL)	379
	7	1	**237-5332**	1	FILM-INSTRUCTION (MACHINE CONTROLS)	
M	8	2	**8T-0269**	3	BOLT-SOCKET HEAD (M6X1X20-MM)	

M-METRIC PART
Y-SEPARATE ILLUSTRATION

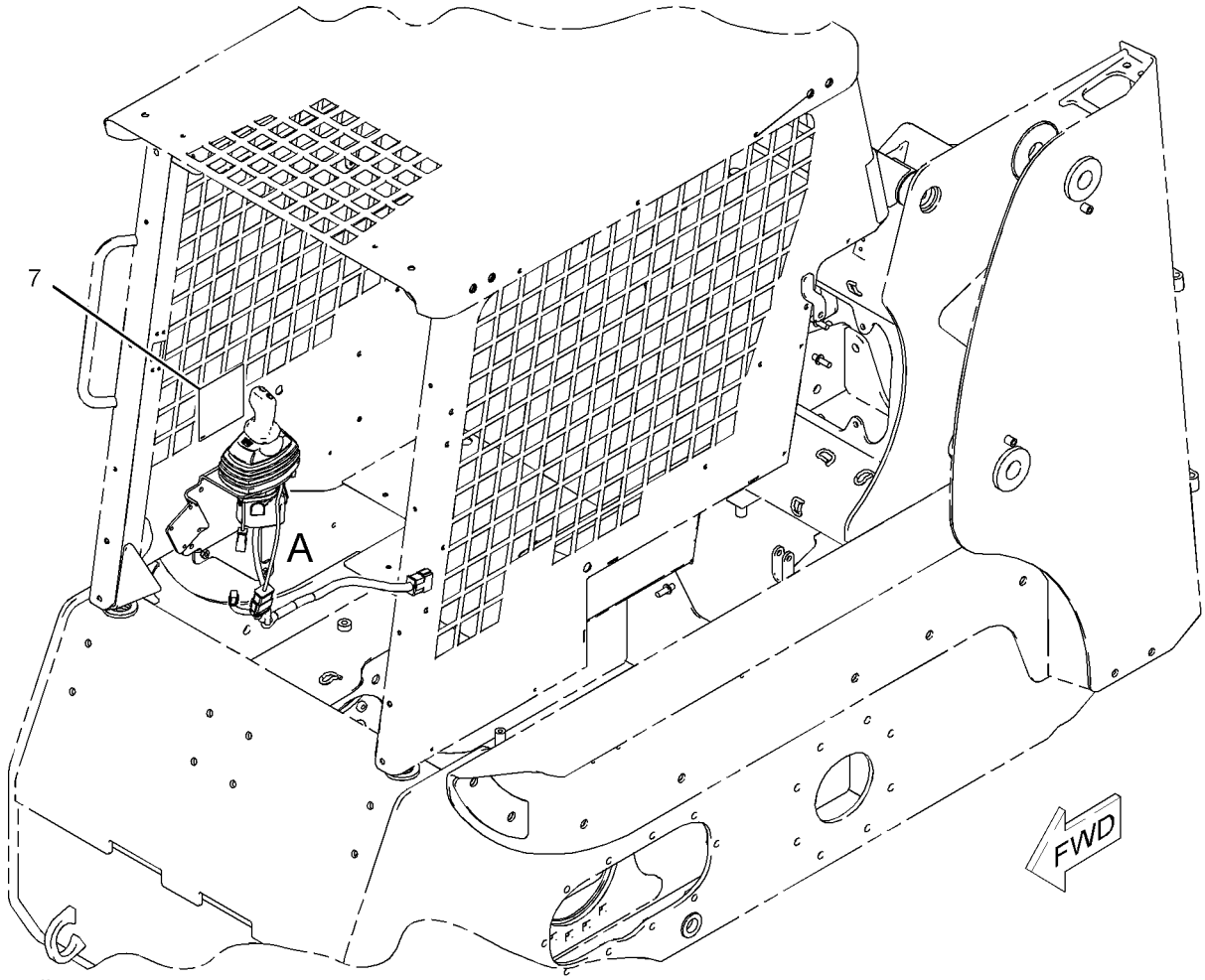

GRAPHIC #1 g01016393

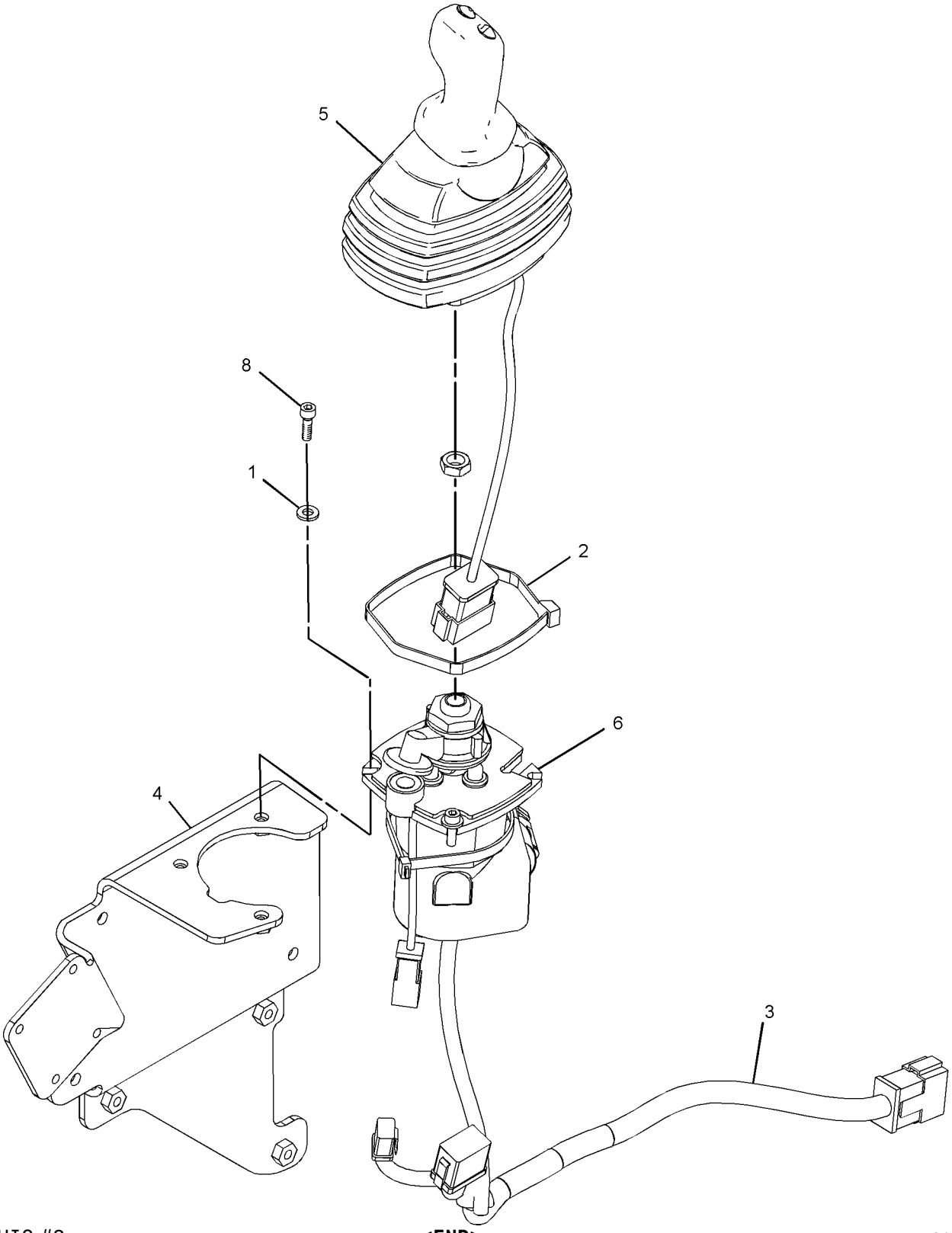

GRAPHIC #2

<END>

g01111318

218-5611 CONTROL GP-PILOT OPERATED HYD

S/N: BXM4280-UP
ON/OFF AUXILIARY SWITCH
PART OF 295-7491 CONTROL AR-MACHINE
CANNOT BE USED WITH 218-5612—PAGE 522, 218-5618—PAGE 525, 218-6571—PAGE 536
AN ATTACHMENT

SMCS-5059, 5705 **i02839671**

NOTE	REF NO	GRAPHIC REF	PART NUMBER	QTY	PART NAME 1 2 3 4 5 6 (PRODUCT LEVEL)	SEE PAGE
CY	1	1	**299-9119**	1	VALVE GP-PILOT	382
	2	1	**216-4704**	1	HARNESS AS-OPERATOR CONTROLS (JOYSTICK)	
	3	1	**218-6421**	1	BRACKET AS	
Y	4	1	**218-6490**	1	CONTROL GP-HANDLE (WORK TOOL)	512
	5	1	**237-5332**	1	FILM-INSTRUCTION (MACHINE CONTROLS)	
					CENTER FILM ON CANOPY	
M	6	1	**8T-0269**	3	BOLT-SOCKET HEAD (M6X1X20-MM)	
	7	1	**8T-4205**	3	WASHER-HARD (7.2X14.5X2-MM THK)	

C-CHANGE FROM PREVIOUS TYPE
M-METRIC PART
Y-SEPARATE ILLUSTRATION

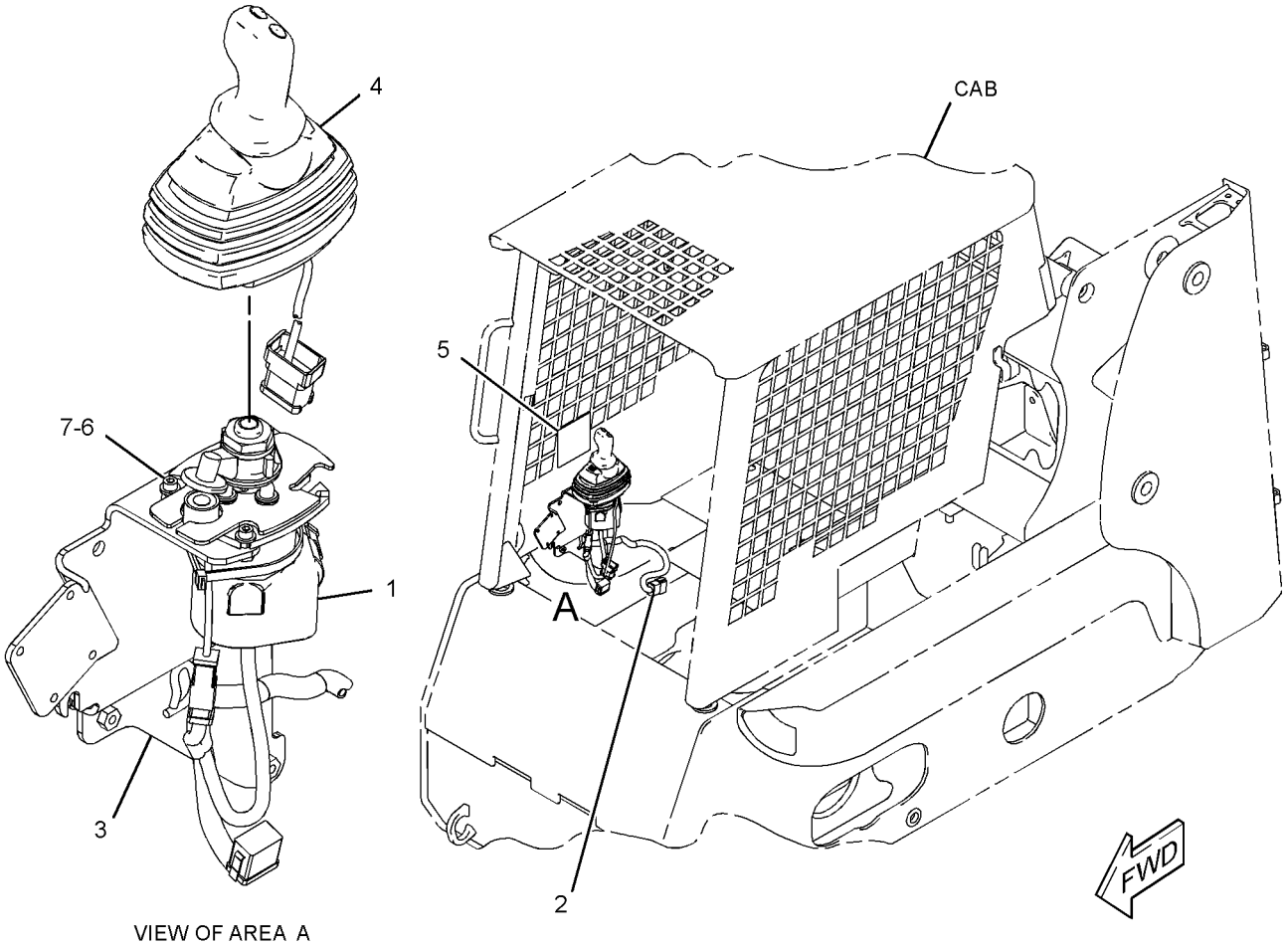

GRAPHIC #1 **<END>** g01417487

OPERATOR STATION

218-5612 CONTROL GP-PILOT OPERATED HYD

S/N: BXM4225-4279
ON/OFF AUXILIARY SWITCH
CANNOT BE USED WITH 218-5611—PAGE 518, 218-5618—PAGE 525, 218-6571—PAGE 536
AN ATTACHMENT

SMCS-5059, 5705 **i02280917**

NOTE	REF NO	GRAPHIC REF	PART NUMBER	QTY	PART NAME 1 2 3 4 5 6 (PRODUCT LEVEL)	SEE PAGE
M	1	2	**095-1207**	1	NUT (M12X1.75-THD)	
	2	2	**110-8760**	1	STRAP	
	3	2	**216-4704**	1	HARNESS AS-OPERATOR CONTROLS (JOYSTICK)	
		2	**155-2255**	1	KIT-CONNECTING PLUG (12-PIN)	
		2	**155-2270**	2	KIT-CONNECTING PLUG (2-PIN)	
					(EACH PLUG KIT INCLUDES PLUG AS, WEDGE & INTERFACE SEAL)	
		2	**102-8801**	1	KIT-RECEPTACLE (12-PIN)	
					(INCLUDES RECEPTACLE AS & WEDGE)	
	4	2	**218-6421**	1	BRACKET AS	
Y	5	2	**228-9228**	1	VALVE GP-PILOT (WORK TOOL)	379
Y	6	2	**231-4257**	1	CONTROL GP-HANDLE (RH) (WORK TOOL)	514
	7	1	**262-7668**	1	FILM-INSTRUCTION (MACHINE CONTROL, READ OMM)	
M	8	2	**8T-0269**	3	BOLT-SOCKET HEAD (M6X1X20-MM)	
	9	2	**8T-4205**	3	WASHER-HARD (7.2X14.5X2-MM THK)	

M-METRIC PART
Y-SEPARATE ILLUSTRATION

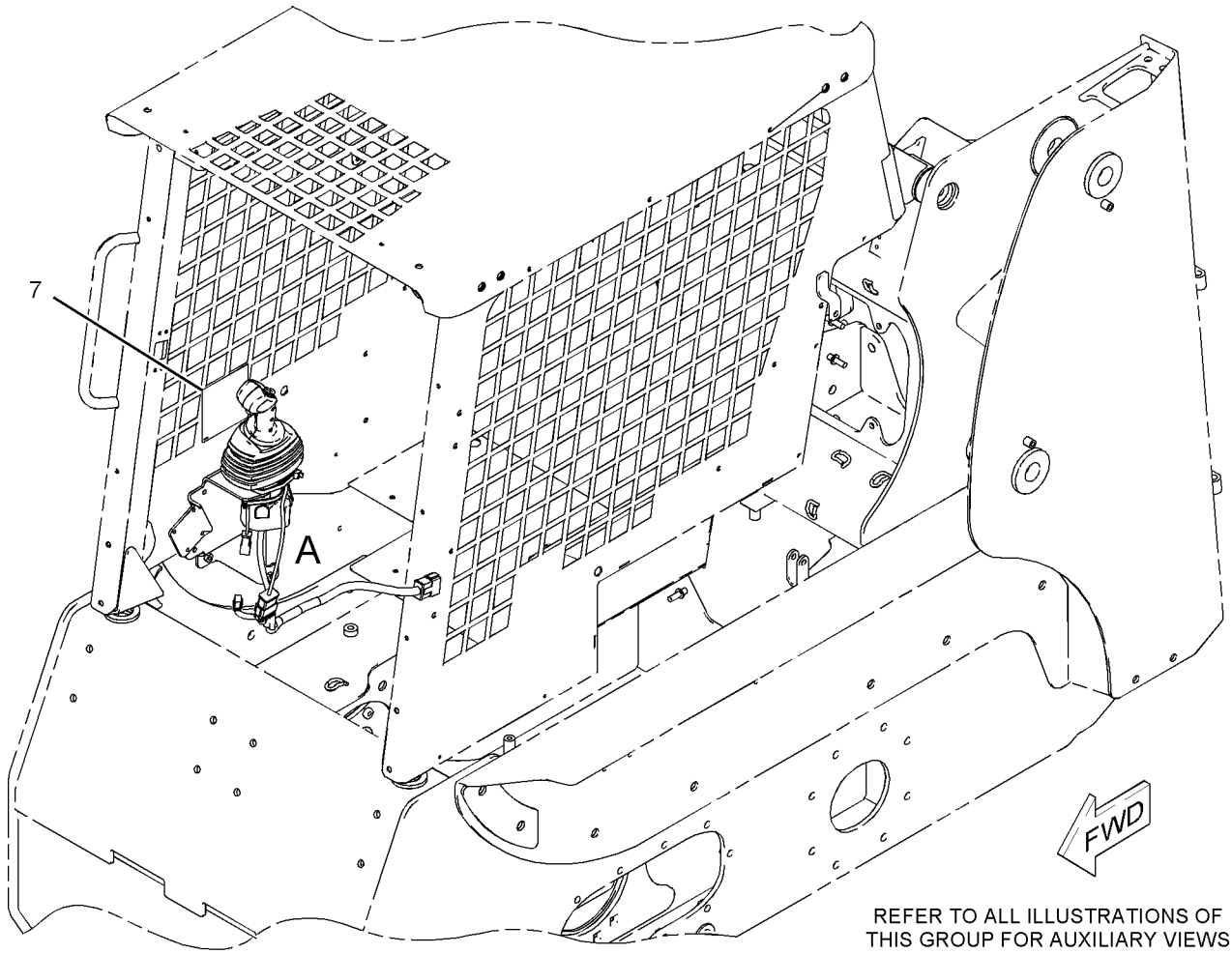

REFER TO ALL ILLUSTRATIONS OF THIS GROUP FOR AUXILIARY VIEWS

GRAPHIC #1 g01017033

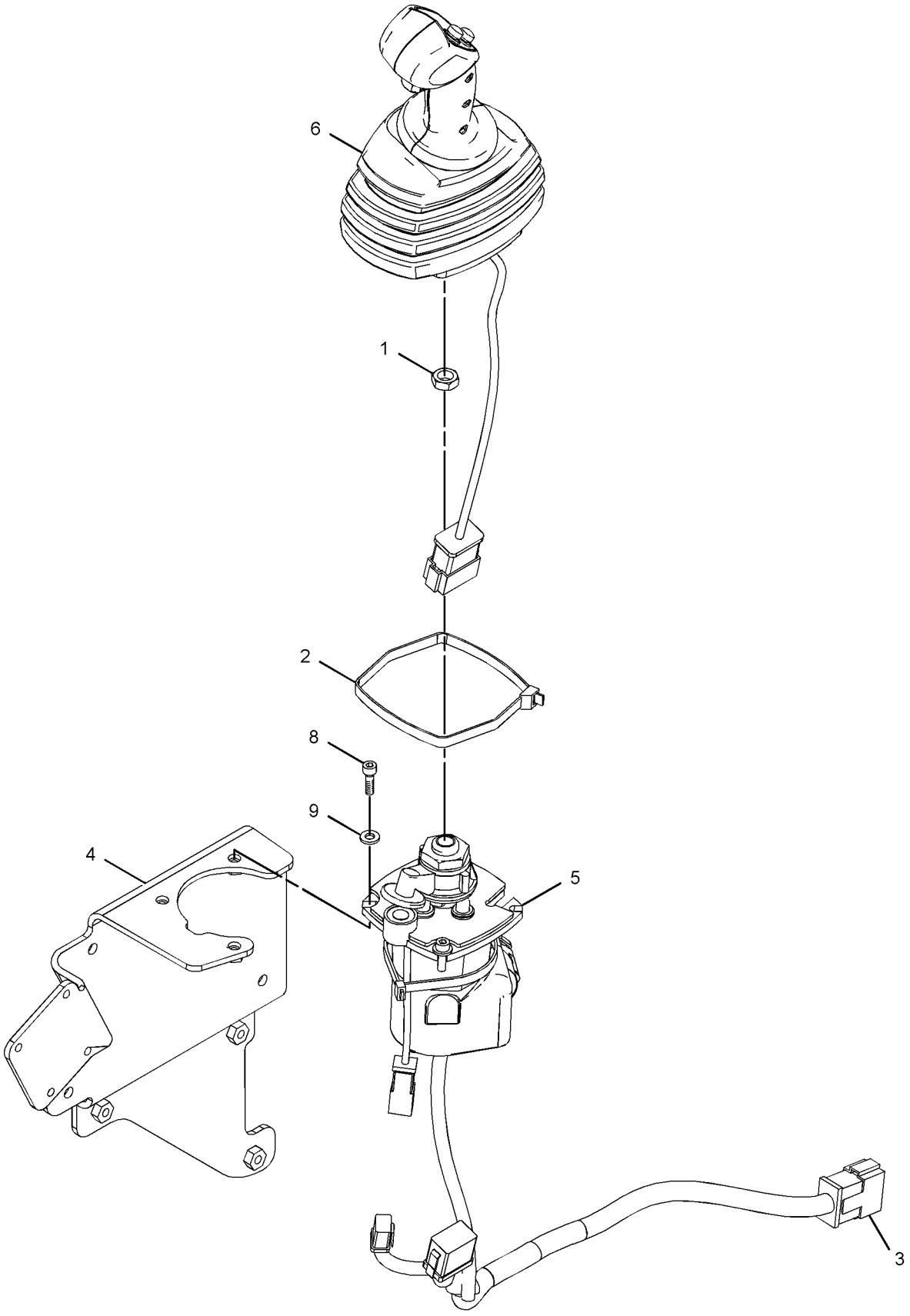

VIEW OF AREA A

GRAPHIC #2

<END>

g01017034

OPERATOR STATION

218-5612 CONTROL GP-PILOT OPERATED HYD

S/N: BXM4280-UP
ON/OFF AUXILIARY SWITCH
CANNOT BE USED WITH 218-5611—PAGE 518, 218-5618—PAGE 525, 218-6571—PAGE 536
AN ATTACHMENT

SMCS-5059, 5705 **i02839693**

NOTE	REF NO	GRAPHIC REF	PART NUMBER	QTY	PART NAME 1 2 3 4 5 6 (PRODUCT LEVEL)	SEE PAGE
M	1	1	**095-1207**	1	NUT (M12X1.75-THD)	
	2	1	**216-4704**	1	HARNESS AS-OPERATOR CONTROLS (JOYSTICK)	
	3	1	**218-6421**	1	BRACKET AS	
	4	1	**262-7668**	1	FILM-INSTRUCTION (MACHINE CONTROL, READ OMM)	
					CENTER FILM ON CANOPY	
Y	5	1	**299-9119**	1	VALVE GP-PILOT	382
Y	6	1	**231-4257**	1	CONTROL GP-HANDLE (RH) (WORK TOOL)	514
M	7	1	**8T-0269**	3	BOLT-SOCKET HEAD (M6X1X20-MM)	
	8	1	**8T-4205**	3	WASHER-HARD (7.2X14.5X2-MM THK)	

M-METRIC PART
Y-SEPARATE ILLUSTRATION

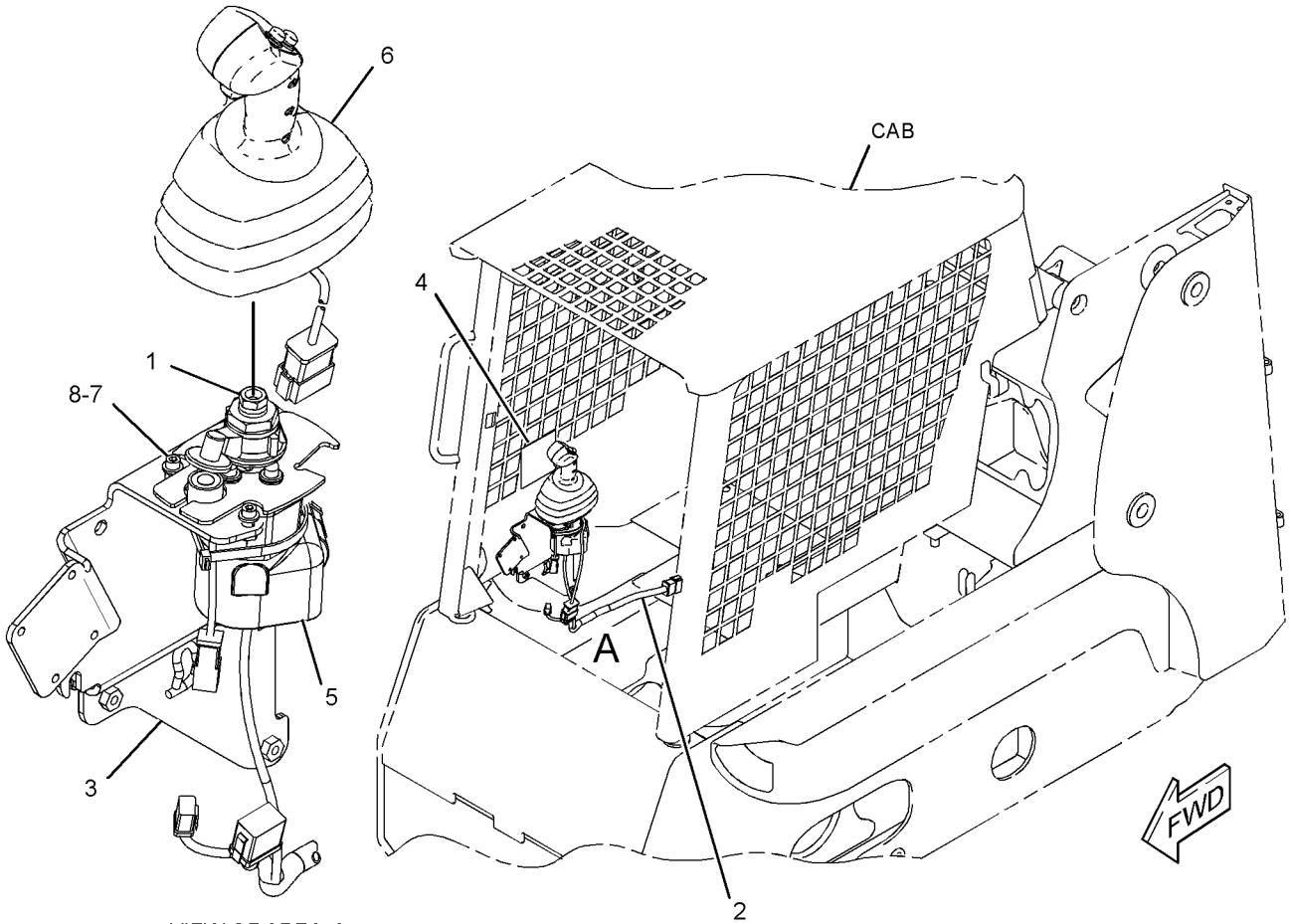

VIEW OF AREA A
(EXPLODED)

GRAPHIC #1 **<END>** g01417504

218-5618 CONTROL GP-PILOT OPERATED HYD

S/N: BXM4225-4279
PROPORTIONAL AUXILIARY SWITCH
PART OF 295-7493 CONTROL AR-MACHINE
CANNOT BE USED WITH 218-5611—PAGE 518, 218-5612—PAGE 522, 218-6571—PAGE 536
AN ATTACHMENT

SMCS-5059, 5705 **i01954541**

NOTE	REF NO	GRAPHIC REF	PART NUMBER	QTY	PART NAME 1 2 3 4 5 6 (PRODUCT LEVEL)	SEE PAGE
M	1	2	**095-1207**	1	NUT (M12X1.75-THD)	
	2	2	**110-8760**	1	STRAP	
	3	2	**216-4704**	1	HARNESS AS-OPERATOR CONTROLS (JOYSTICK)	
		2	**155-2255**	1	KIT-CONNECTING PLUG (12-PIN)	
		2	**155-2270**	2	KIT-CONNECTING PLUG (2-PIN)	
		2	**102-8801**	1	KIT-RECEPTACLE (12-PIN)	
	4	2	**218-6421**	1	BRACKET AS	
Y	5	2	**228-9228**	1	VALVE GP-PILOT (WORK TOOL)	379
Y	6	2	**231-4260**	1	CONTROL GP-HANDLE (RH) (WORK TOOL)	517
	7	1	**235-5243**	1	FILM-INSTRUCTION (MACHINE CONTROLS)	
M	8	2	**8T-0269**	3	BOLT-SOCKET HEAD (M6X1X20-MM)	
	9	2	**8T-4205**	3	WASHER-HARD (7.2X14.5X2-MM THK)	

M-METRIC PART
Y-SEPARATE ILLUSTRATION

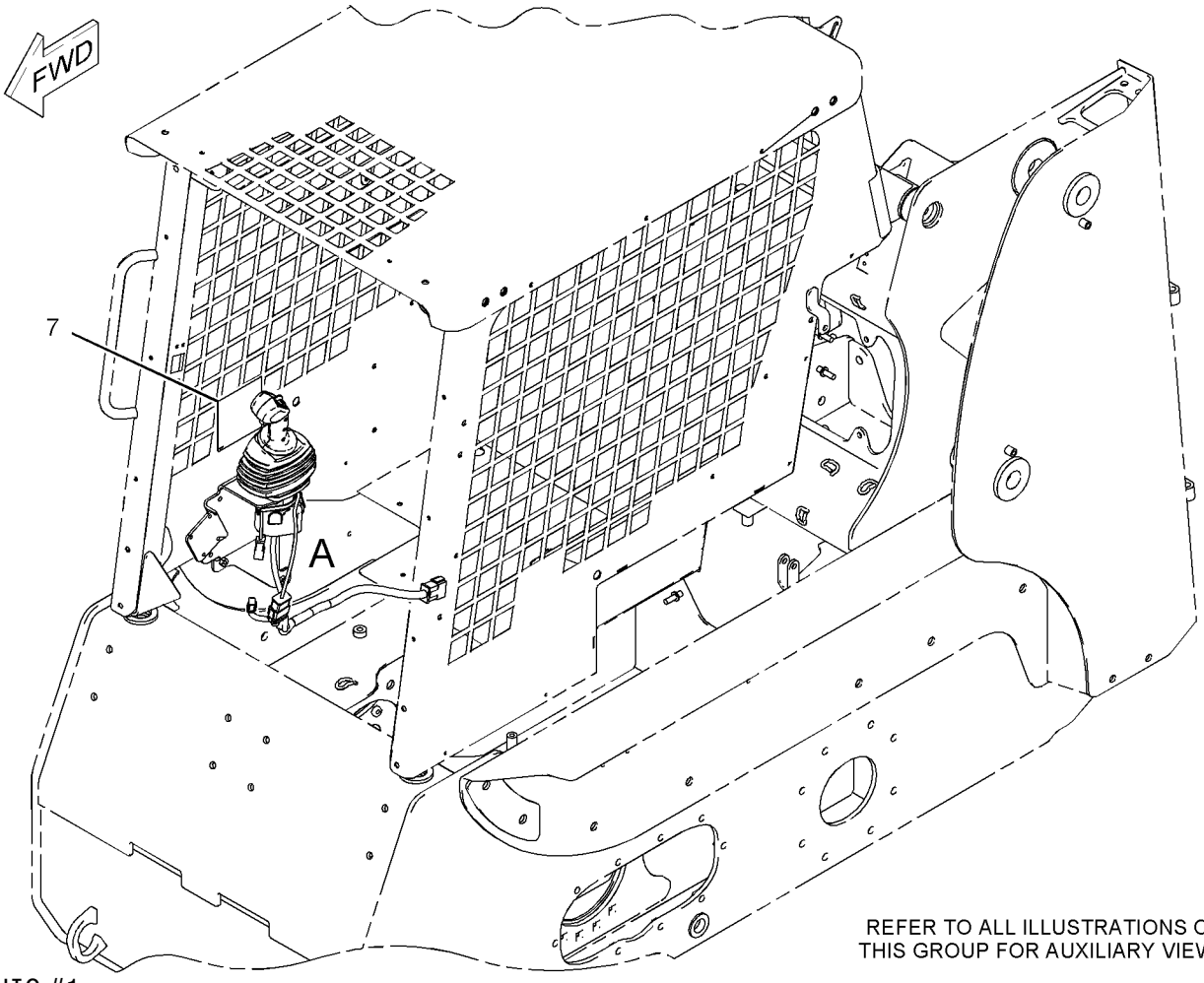

REFER TO ALL ILLUSTRATIONS OF THIS GROUP FOR AUXILIARY VIEWS

GRAPHIC #1 g01016439

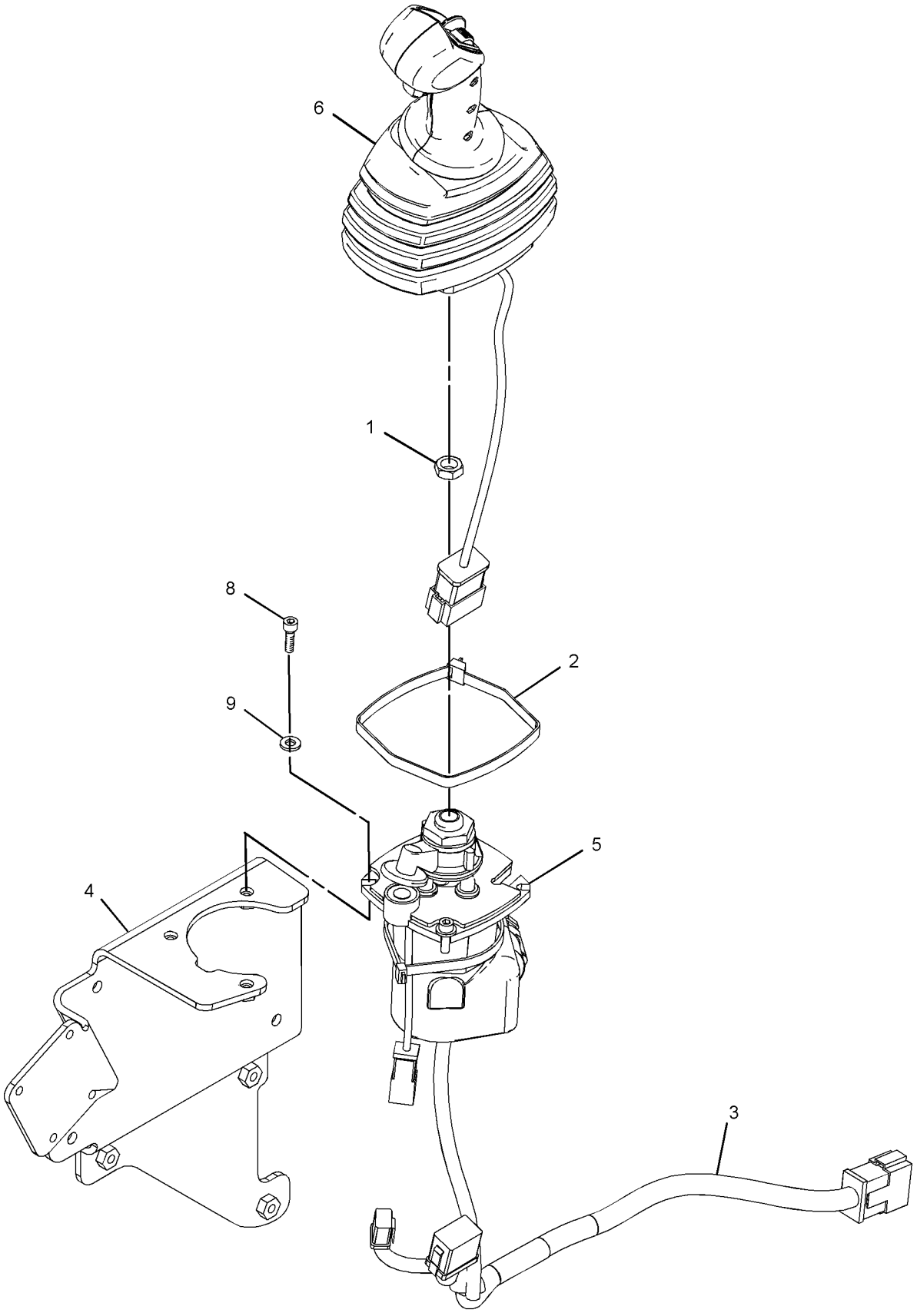

VIEW OF AREA A

GRAPHIC #2

<END>

g01016444

218-5618 CONTROL GP-PILOT OPERATED HYD

S/N: BXM4280-UP
PROPORTIONAL AUXILIARY SWITCH
PART OF 295-7493 CONTROL AR-MACHINE
CANNOT BE USED WITH 218-5611—PAGE 518, 218-5612—PAGE 522, 218-6571—PAGE 536
AN ATTACHMENT

SMCS-5059, 5705 **i02839699**

NOTE	REF NO	GRAPHIC REF	PART NUMBER	QTY	PART NAME 1 2 3 4 5 6 (PRODUCT LEVEL)	SEE PAGE
M	1	1	**095-1207**	1	NUT (M12X1.75-THD)	
	2	1	**216-4704**	1	HARNESS AS-OPERATOR CONTROLS (JOYSTICK)	
	3	1	**218-6421**	1	BRACKET AS	
CY	4	1	**299-9119**	1	VALVE GP-PILOT	382
Y	5	1	**231-4260**	1	CONTROL GP-HANDLE (RH) (WORK TOOL)	517
	6	1	**235-5243**	1	FILM-INSTRUCTION (MACHINE CONTROLS)	
					CENTER FILM ON CANOPY	
M	7	1	**8T-0269**	3	BOLT-SOCKET HEAD (M6X1X20-MM)	
	8	1	**8T-4205**	3	WASHER-HARD (7.2X14.5X2-MM THK)	

C-CHANGE FROM PREVIOUS TYPE
M-METRIC PART
Y-SEPARATE ILLUSTRATION

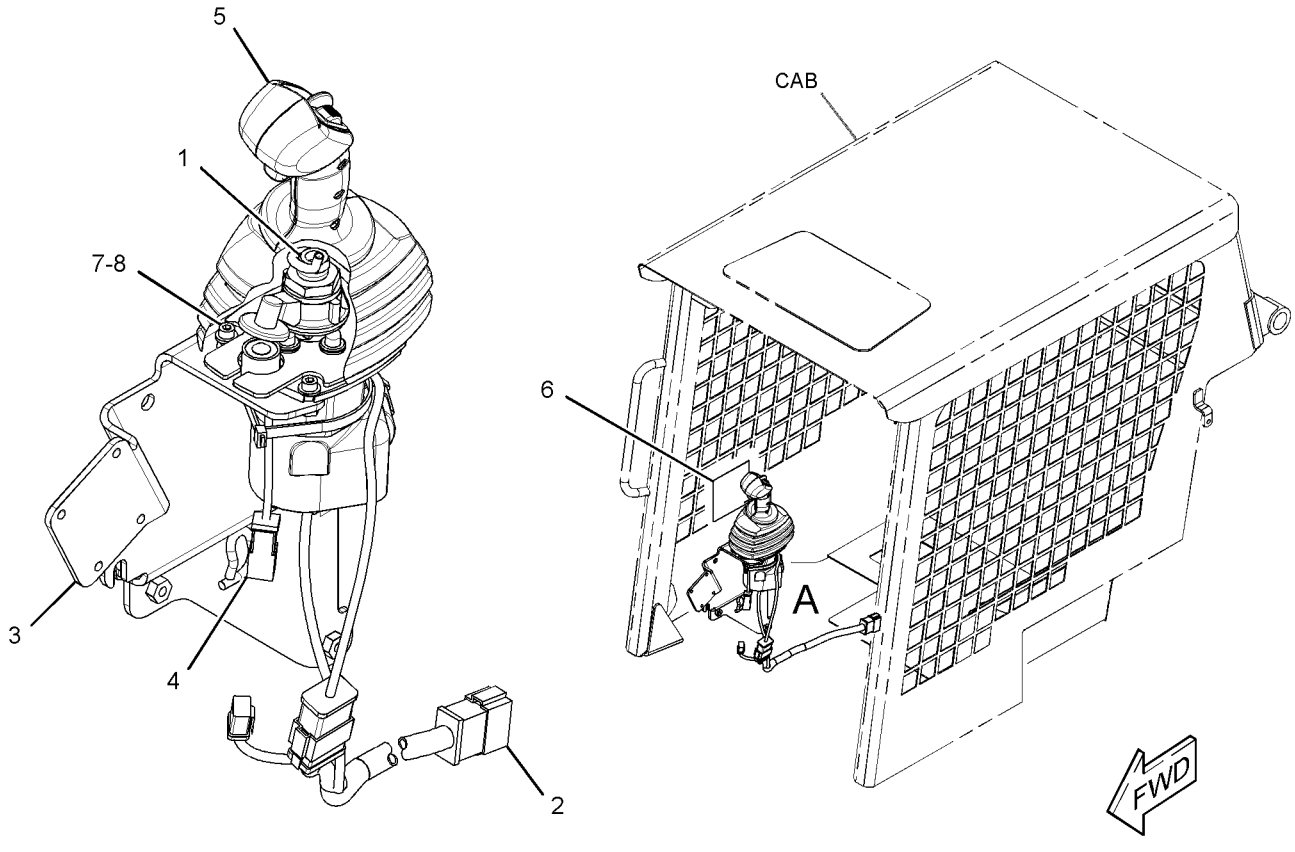

VIEW OF AREA A

GRAPHIC #1 **<END>** g01417564

OPERATOR STATION

218-5930 CONTROL GP-PILOT OPERATED HYD

S/N: BXM4225-4279

CANNOT BE USED WITH 218-5931—PAGE 531, 218-5932—PAGE 532, 218-5947—PAGE 534

AN ATTACHMENT

SMCS-5059, 5705 **i02451276**

NOTE	REF NO	GRAPHIC REF	PART NUMBER	QTY	PART NAME 1 2 3 4 5 6 (PRODUCT LEVEL)	SEE PAGE
	1	2	**110-8760**	1	STRAP	
Y	3	2	**218-6119**	1	VALVE GP-PILOT (DIRECTION, SPEED)	377
	4	2	**218-6422**	1	BRACKET AS	
Y	5	2	**218-6480**	1	CONTROL GP-HANDLE (DIRECTION, SPEED)	510
	6	1	**237-5331**	1	FILM-INSTRUCTION (MACHINE CONTROL, READ OMM)	
M	7	2	**8T-0269**	3	BOLT-SOCKET HEAD (M6X1X20-MM)	
	8	2	**8T-4205**	3	WASHER-HARD (7.2X14.5X2-MM THK)	

M-METRIC PART
Y-SEPARATE ILLUSTRATION

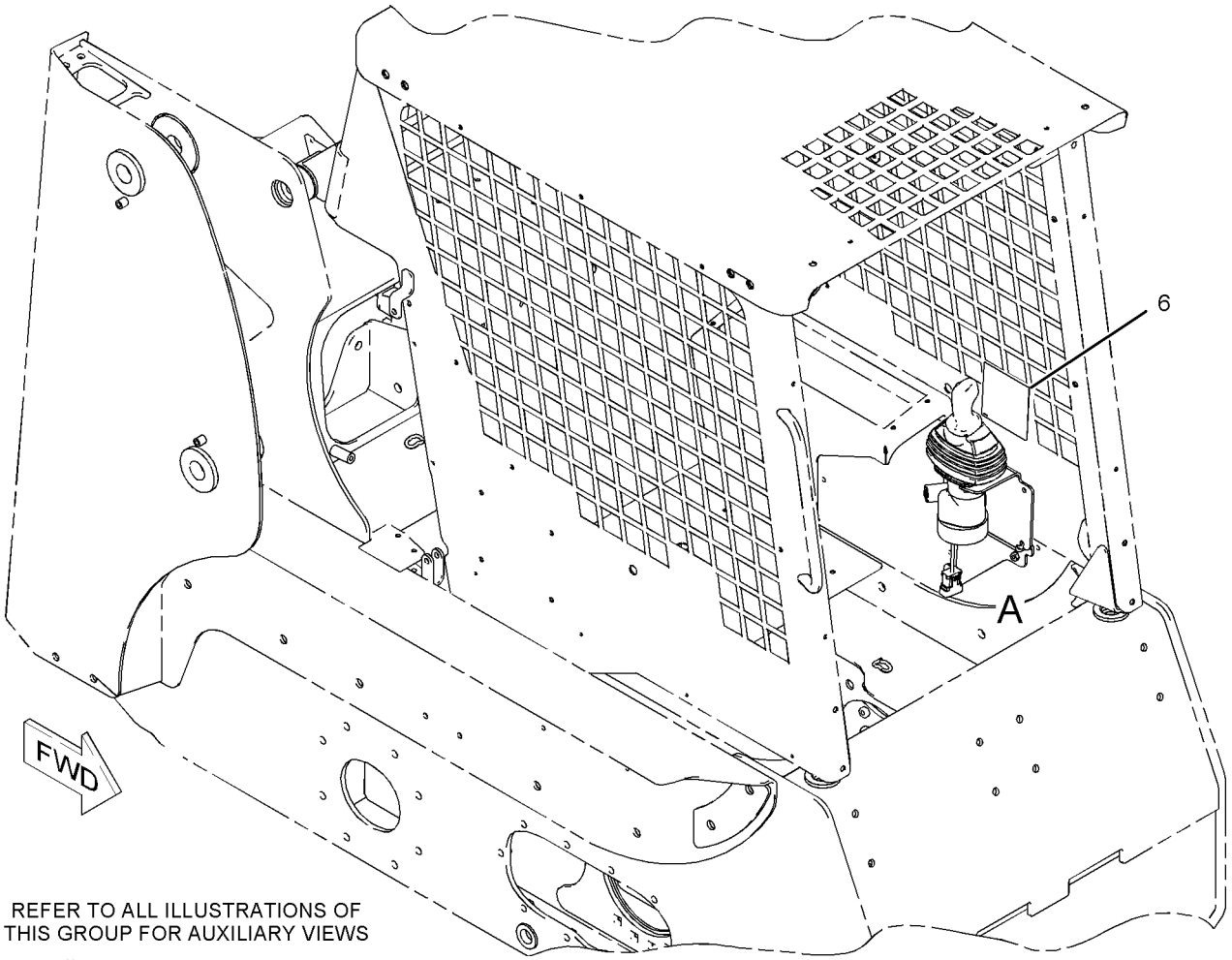

REFER TO ALL ILLUSTRATIONS OF THIS GROUP FOR AUXILIARY VIEWS

GRAPHIC #1 g01017159

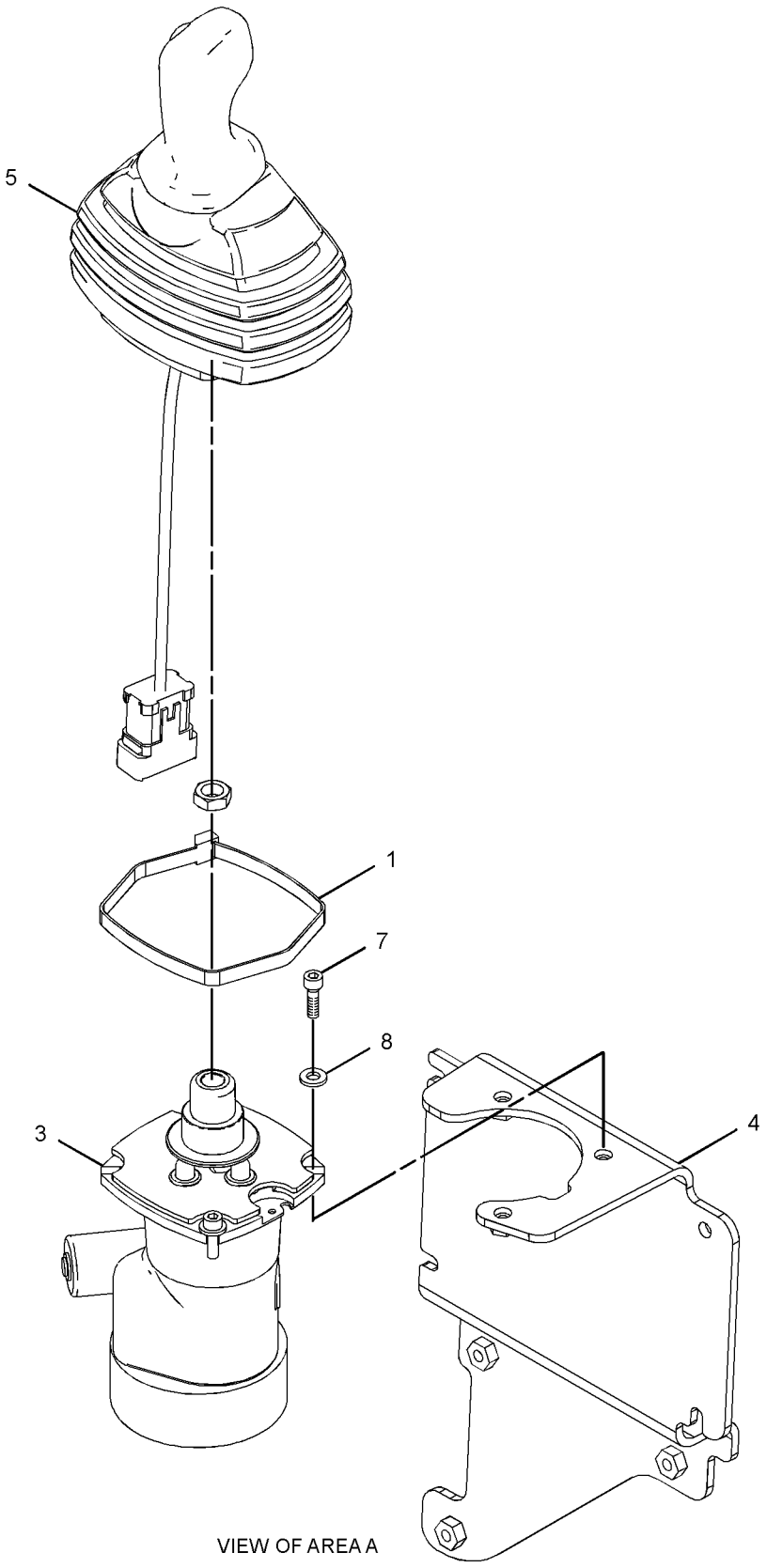

VIEW OF AREA A

GRAPHIC #2 **<END>** g01225787

OPERATOR STATION

218-5930 CONTROL GP-PILOT OPERATED HYD

S/N: BXM4280-UP

CANNOT BE USED WITH 218-5931—PAGE 531, 218-5932—PAGE 532, 218-5947—PAGE 534

AN ATTACHMENT

SMCS-5059, 5705 **i02839730**

NOTE	REF NO	GRAPHIC REF	PART NUMBER	QTY	PART NAME 1 2 3 4 5 6 (PRODUCT LEVEL)	SEE PAGE
	1	1	**218-6422**	1	BRACKET AS	
Y	2	1	**218-6480**	1	CONTROL GP-HANDLE (DIRECTION, SPEED)	510
CY	3	1	**299-9116**	1	VALVE GP-PILOT (DIRECTION, SPEED)	381
	4	1	**237-5331**	1	FILM-INSTRUCTION (MACHINE CONTROL, READ OMM)	
M	5	1	**8T-0269**	3	BOLT-SOCKET HEAD (M6X1X20-MM)	
	6	1	**8T-4205**	3	WASHER-HARD (7.2X14.5X2-MM THK)	

C-CHANGE FROM PREVIOUS TYPE
M-METRIC PART
Y-SEPARATE ILLUSTRATION

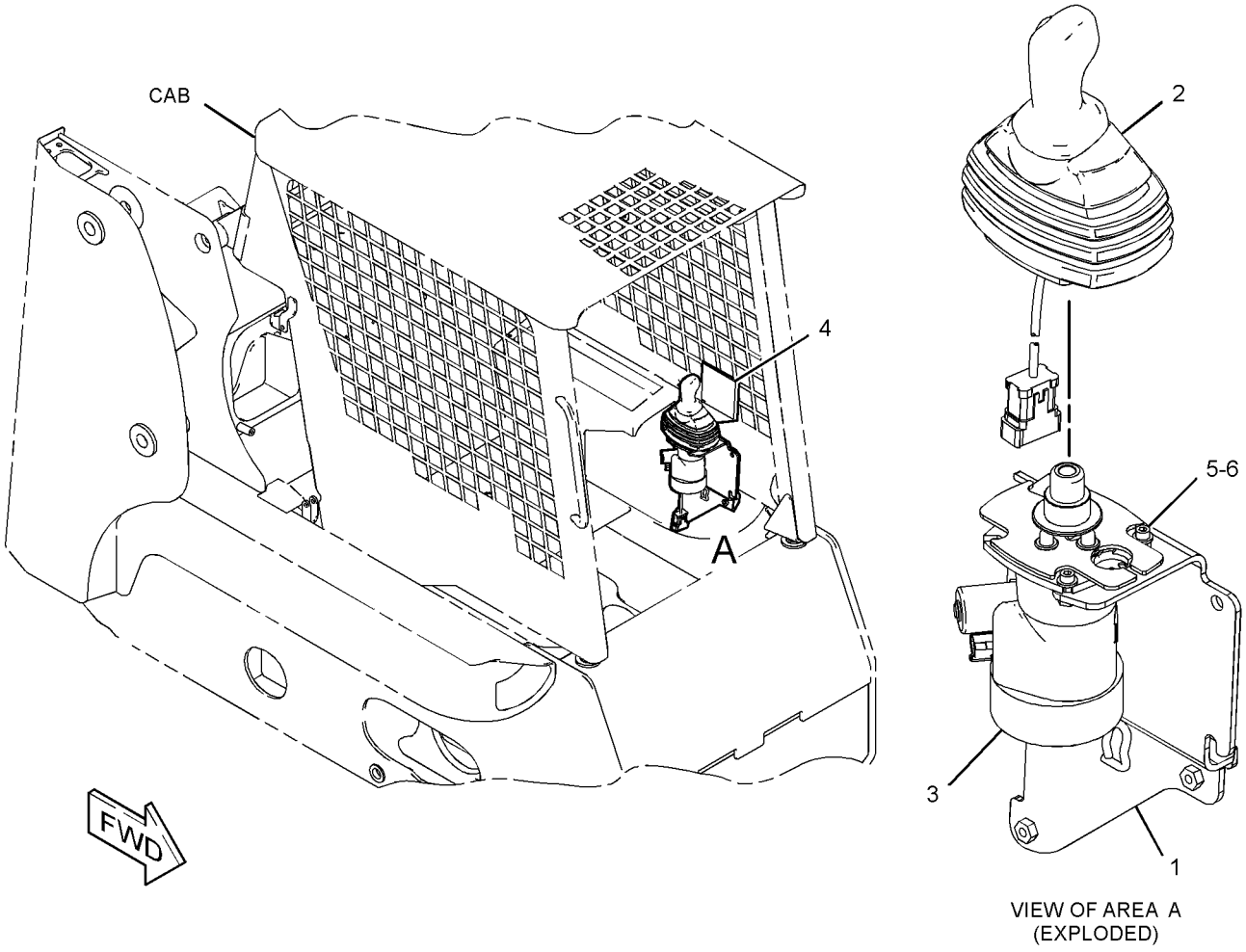

GRAPHIC #1 **<END>** g01417246

218-5931 CONTROL GP-PILOT OPERATED HYD

S/N: BXM4225-UP
HORN
PART OF 295-7491 CONTROL AR-MACHINE
CANNOT BE USED WITH 218-5930–PAGE 528, 218-5932–PAGE 532, 218-5947–PAGE 534
AN ATTACHMENT

SMCS-5059, 5705 **i02451259**

NOTE	REF NO	GRAPHIC REF	PART NUMBER	QTY	PART NAME 1 2 3 4 5 6 (PRODUCT LEVEL)	SEE PAGE
	1	1	**110-8760**	1	STRAP	
M	2	1	**8T-4137**	1	BOLT (M10X1.5X20-MM)	
	3	1	**164-9425**	1	HORN AS (LOW TONE)	
	4	1	**8T-4205**	3	WASHER-HARD (7.2X14.5X2-MM THK)	
Y	5	1	**218-6119**	1	VALVE GP-PILOT (DIRECTION, SPEED)	377
	6	1	**218-6422**	1	BRACKET AS	
Y	7	1	**218-6485**	1	CONTROL GP-HANDLE (DIRECTION, SPEED)	511
	8	1	**237-5331**	1	FILM-INSTRUCTION (MACHINE CONTROL, READ OMM)	
M	9	1	**8T-0269**	3	BOLT-SOCKET HEAD (M6X1X20-MM)	
	10	1	**8T-4121**	1	WASHER-HARD (11X21X2.5-MM THK)	

M-METRIC PART
Y-SEPARATE ILLUSTRATION

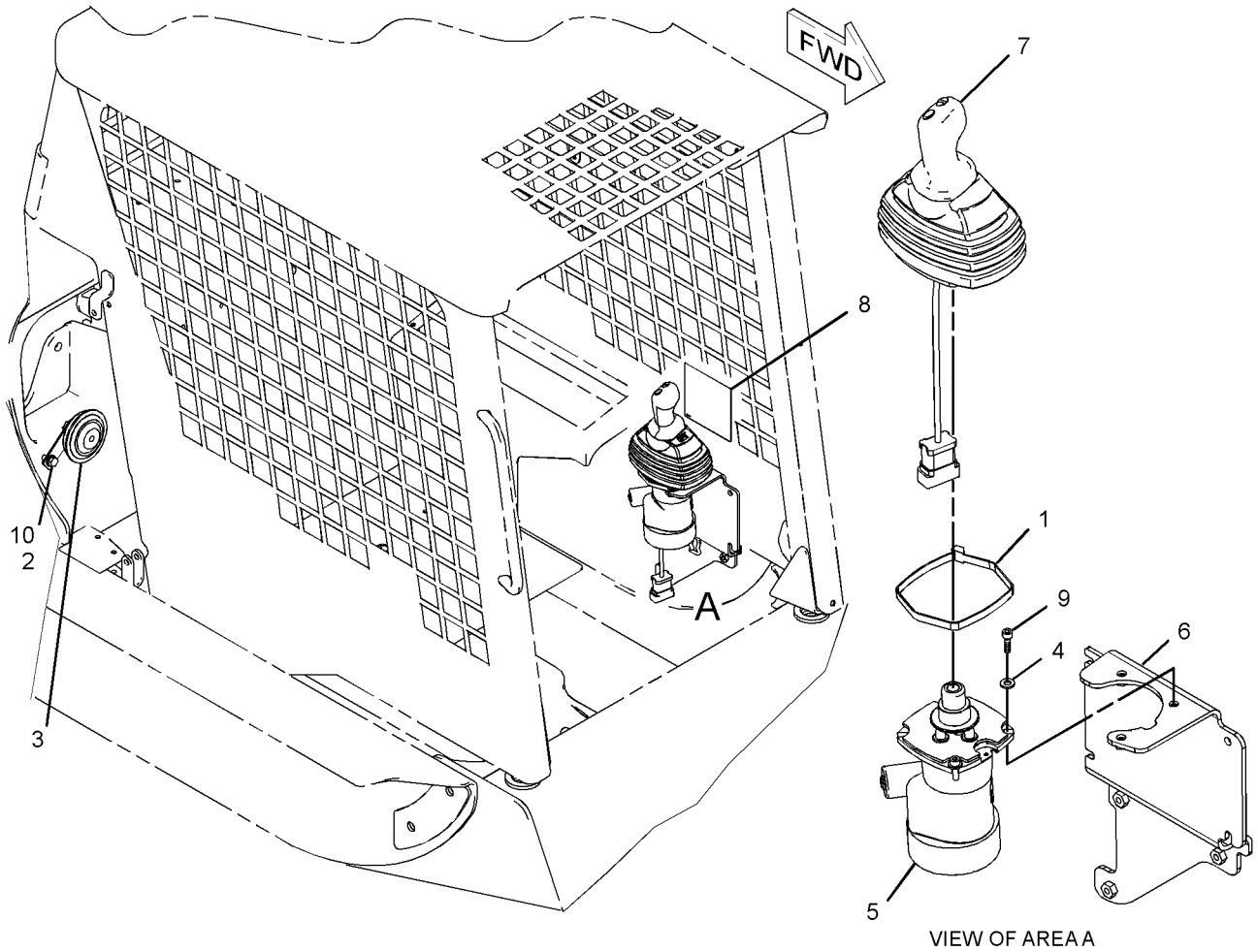

VIEW OF AREA A

GRAPHIC #1 **<END>** g01225060

OPERATOR STATION

218-5932 CONTROL GP-PILOT OPERATED HYD

S/N: BXM4225-UP
HORN
PART OF 295-7493 CONTROL AR-MACHINE
CANNOT BE USED WITH 218-5930—PAGE 528, 218-5931—PAGE 531, 218-5947—PAGE 534
AN ATTACHMENT

SMCS-5059, 5705 **i02451290**

NOTE	REF NO	GRAPHIC REF	PART NUMBER	QTY	PART NAME 1 2 3 4 5 6 (PRODUCT LEVEL)	SEE PAGE
M	1	2	**095-1207**	1	NUT (M12X1.75-THD)	
	2	2	**110-8760**	1	STRAP	
Y	3	2	**218-6119**	1	VALVE GP-PILOT (DIRECTION, SPEED)	377
	4	2	**218-6422**	1	BRACKET AS	
Y	5	2	**231-4256**	1	CONTROL GP-HANDLE (LH) (DIRECTION, SPEED)	513
	6	1	**235-5246**	1	FILM-INSTRUCTION (MACHINE CONTROL, READ OMM)	
M	7	2	**8T-0269**	3	BOLT-SOCKET HEAD (M6X1X20-MM)	
	8	2	**8T-4205**	3	WASHER-HARD (7.2X14.5X2-MM THK)	
M	9	2	**8T-4137**	1	BOLT (M10X1.5X20-MM)	
	10	2	**164-9425**	1	HORN AS (LOW TONE)	
	11	2	**8T-4121**	1	WASHER-HARD (11X21X2.5-MM THK)	

M-METRIC PART
Y-SEPARATE ILLUSTRATION

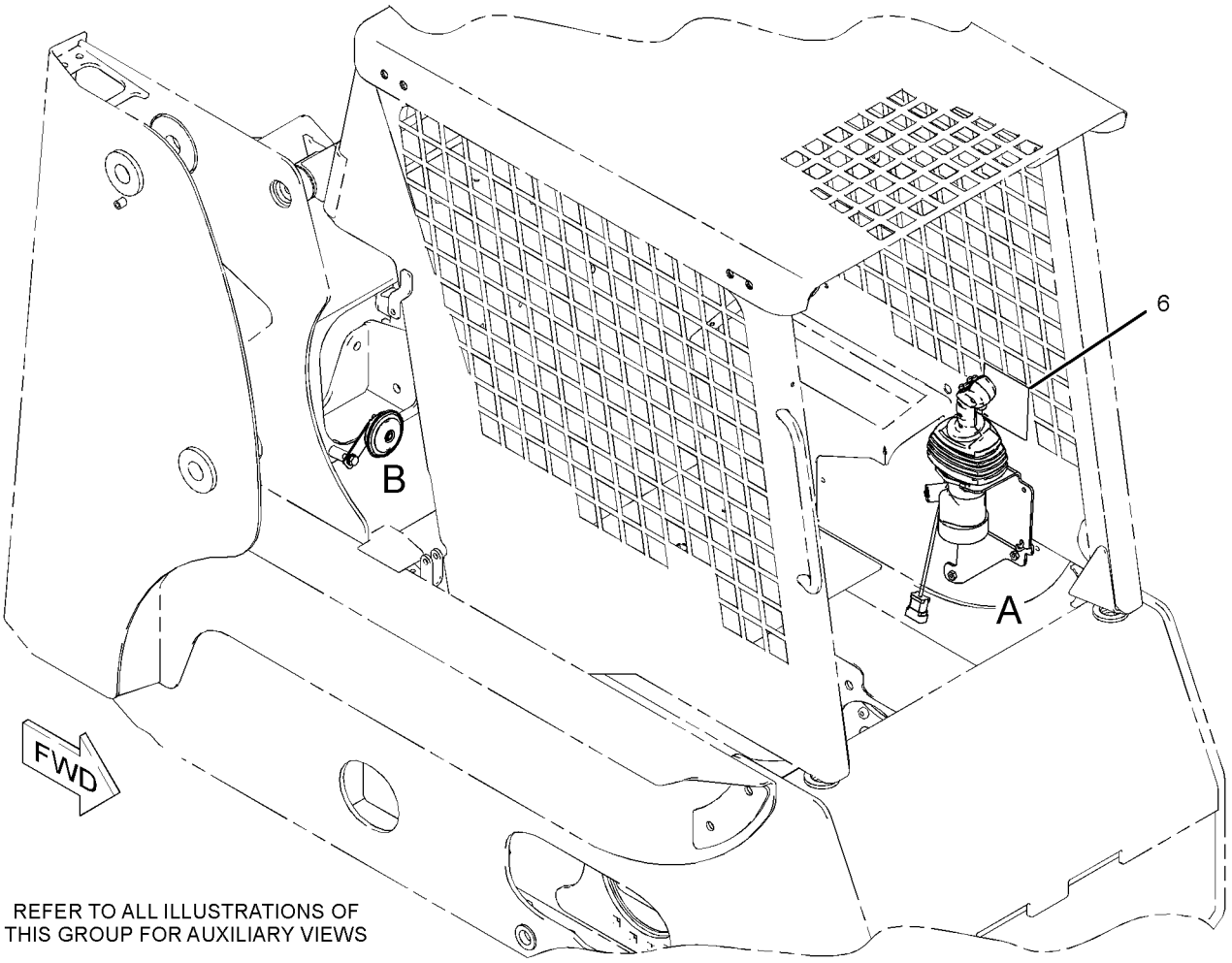

REFER TO ALL ILLUSTRATIONS OF THIS GROUP FOR AUXILIARY VIEWS

GRAPHIC #1 g01229647

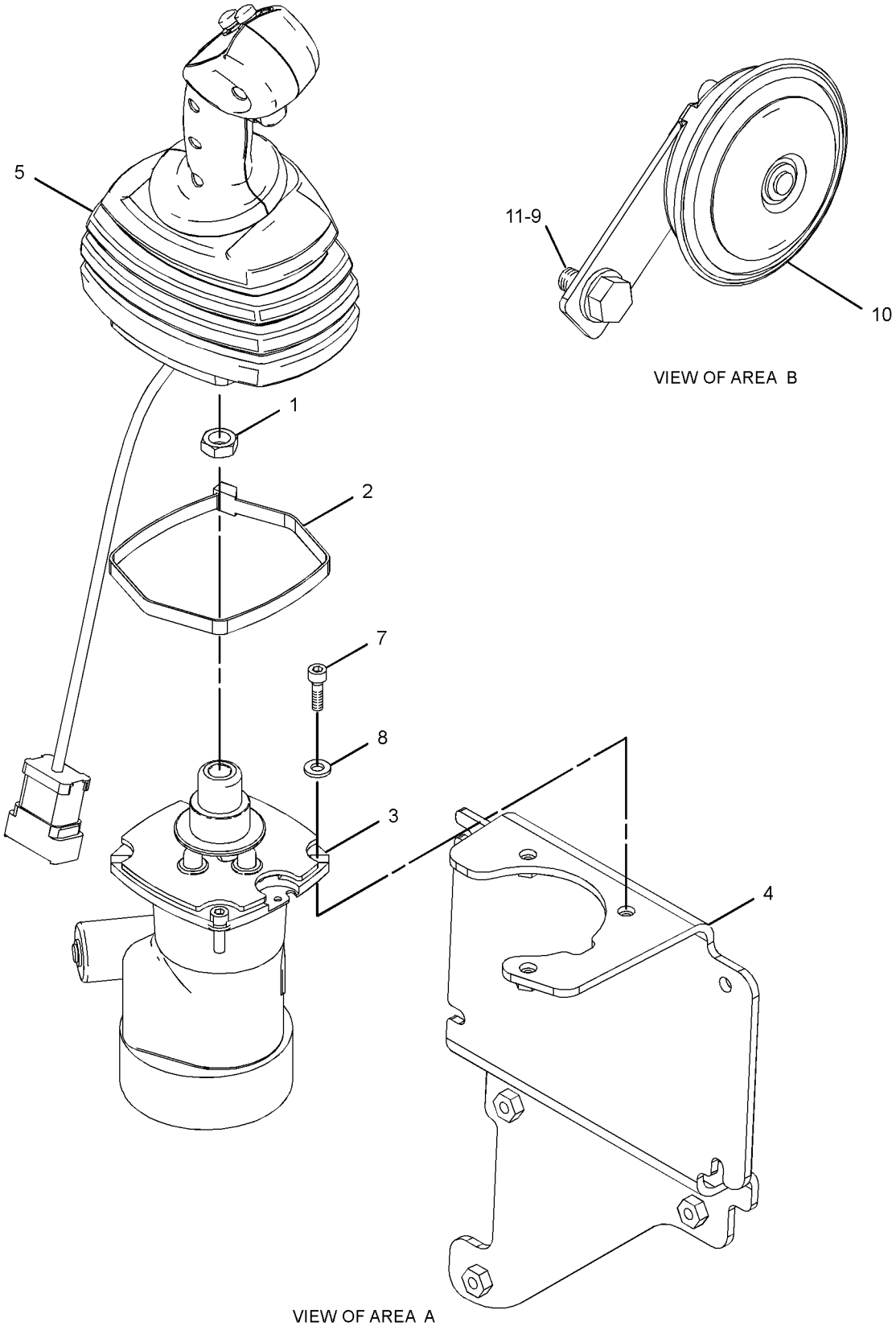

GRAPHIC #2 **<END>** g01229637

OPERATOR STATION

218-5947 CONTROL GP-PILOT OPERATED HYD

S/N: BXM4225-UP
HORN, FOURTH FUNCTION
PART OF 295-7505, 295-7508 HYDRAULIC AR
CANNOT BE USED WITH 218-5930—PAGE 528, 218-5931—PAGE 531, 218-5932—PAGE 532
AN ATTACHMENT

SMCS-5059, 5705 **i02639947**

NOTE	REF NO	GRAPHIC REF	PART NUMBER	QTY	PART NAME 1 2 3 4 5 6 (PRODUCT LEVEL)	SEE PAGE
M	1	2	**095-1207**	1	NUT (M12X1.75-THD)	
	2	2	**110-8760**	1	STRAP	
	3	2	**8T-4205**	3	WASHER-HARD (7.2X14.5X2-MM THK)	
M	4	2	**8T-0269**	3	BOLT-SOCKET HEAD (M6X1X20-MM)	
	5	1	**235-5246**	1	FILM-INSTRUCTION (MACHINE CONTROL, READ OMM)	
Y	6	1	*216-4724*	1	WIRING GP-WORK TOOL (VERTICAL LIFT)	181
Y	7	2	**218-6119**	1	VALVE GP-PILOT (DIRECTION, SPEED)	377
	8	2	**218-6422**	1	BRACKET AS	
Y	9	2	**231-4258**	1	CONTROL GP-HANDLE (LH) (DIRECTION, SPEED)	515
B	10	1	**113-8490**	1	FUSE (10-AMPERE)	
B	11	2	**164-9425**	1	HORN AS (24-VOLT, LOW TONE)	
B	12	2	**8T-4121**	1	WASHER-HARD (11X21X2.5-MM THK)	
BM	13	2	**8T-4137**	1	BOLT (M10X1.5X20-MM)	

B-USE AS REQUIRED
M-METRIC PART
Y-SEPARATE ILLUSTRATION

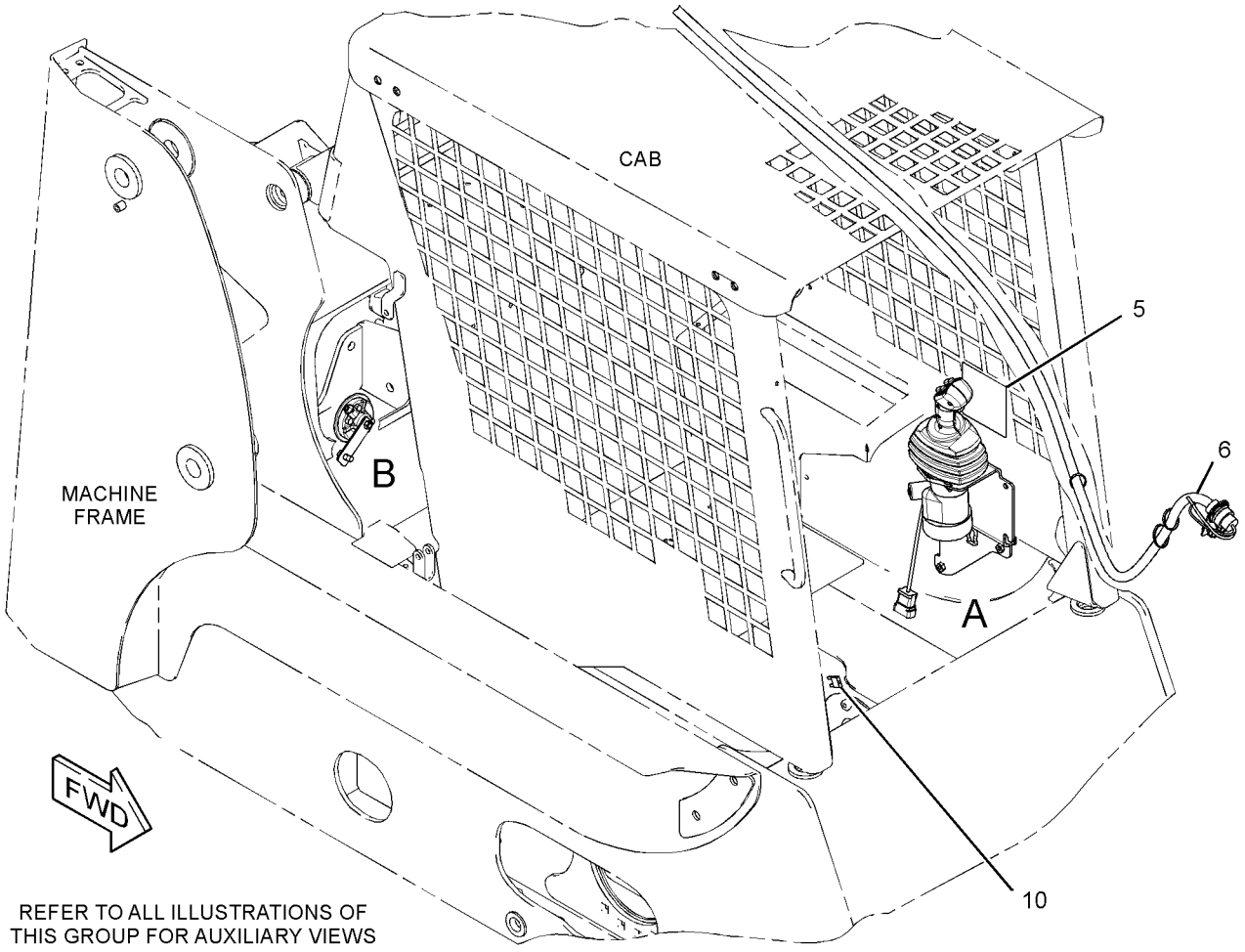

GRAPHIC #1 g01354268

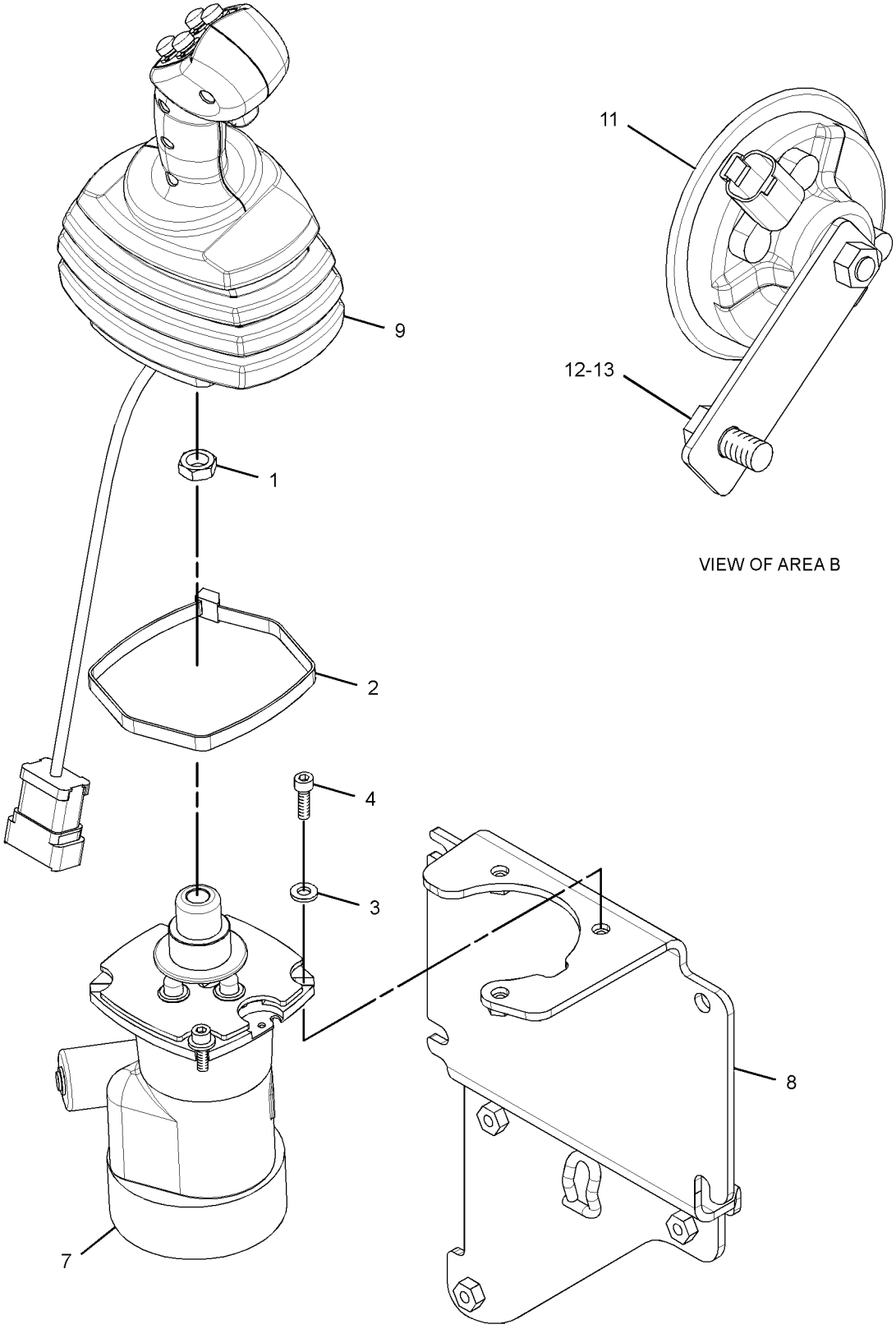

VIEW OF AREA B

VIEW OF AREA A

GRAPHIC #2 **<END>** g01354273

OPERATOR STATION

218-6571 CONTROL GP-PILOT OPERATED HYD

S/N: BXM4225-4279
HIGH FLOW, PROPORTIONAL AUXILIARY
PART OF 295-7505, 295-7508 HYDRAULIC AR
AN ATTACHMENT

SMCS-5059, 5705 **i02359323**

NOTE	REF NO	GRAPHIC REF	PART NUMBER	QTY	PART NAME 1 2 3 4 5 6 (PRODUCT LEVEL)	SEE PAGE
M	1	2	**095-1207**	1	NUT (M12X1.75-THD)	
	2	2	**110-8760**	1	STRAP	
	3	1,2	**115-1615**	1	RELAY AS (12-VOLT)	
	4	2	**133-9931**	1	JUMPER AS	
		2	**102-8803**		KIT-RECEPTACLE (3-PIN)	
					(INCLUDES RECEPTACLE AS & WEDGE)	
	5	2	**218-6421**	1	BRACKET AS	
	6	1	**223-5942**	1	SWITCH GP-ROCKER (HIGH FLOW)	
		1	**111-7899**	1	GASKET	
	7	2	**225-8005**	1	HARNESS AS-OPERATOR CONTROLS (HIGH FLOW)	
		2	**102-8802**	1	KIT-RECEPTACLE (2-PIN)	
		2	**102-8806**	1	KIT-RECEPTACLE (8-PIN)	
					(EACH KIT INCLUDES RECEPTACLE AS & WEDGE)	
		2	**155-2270**	5	KIT-CONNECTING PLUG (2-PIN)	
					(EACH KIT INCLUDES PLUG AS, WEDGE & INTERFACE SEAL)	
	8	1	**225-8009**	1	HARNESS AS-OPERATOR CONTROLS (JOYSTICK)	
		1	**155-2255**	1	KIT-CONNECTING PLUG (12-PIN)	
		1	**155-2260**	1	KIT-CONNECTING PLUG (3-PIN)	
		1	**155-2270**	2	KIT-CONNECTING PLUG (2-PIN)	
					(EACH KIT INCLUDES PLUG AS, WEDGE & INTERFACE SEAL)	
		1	**102-8802**	1	KIT-RECEPTACLE (2-PIN)	
		1	**102-8801**	1	KIT-RECEPTACLE (12-PIN)	
					(EACH KIT INCLUDES RECEPTACLE AS & WEDGE)	
Y	9	2	**228-9228**	1	VALVE GP-PILOT (WORK TOOL)	379
Y	10	2	**231-4259**	1	CONTROL GP-HANDLE (RH)	516
	11	1	**235-5243**	1	FILM-INSTRUCTION (MACHINE CONTROLS)	
M	12	2	**8T-0269**	3	BOLT-SOCKET HEAD (M6X1X20-MM)	
	13	2	**8T-4205**	3	WASHER-HARD (7.2X14.5X2-MM THK)	

M-METRIC PART
Y-SEPARATE ILLUSTRATION

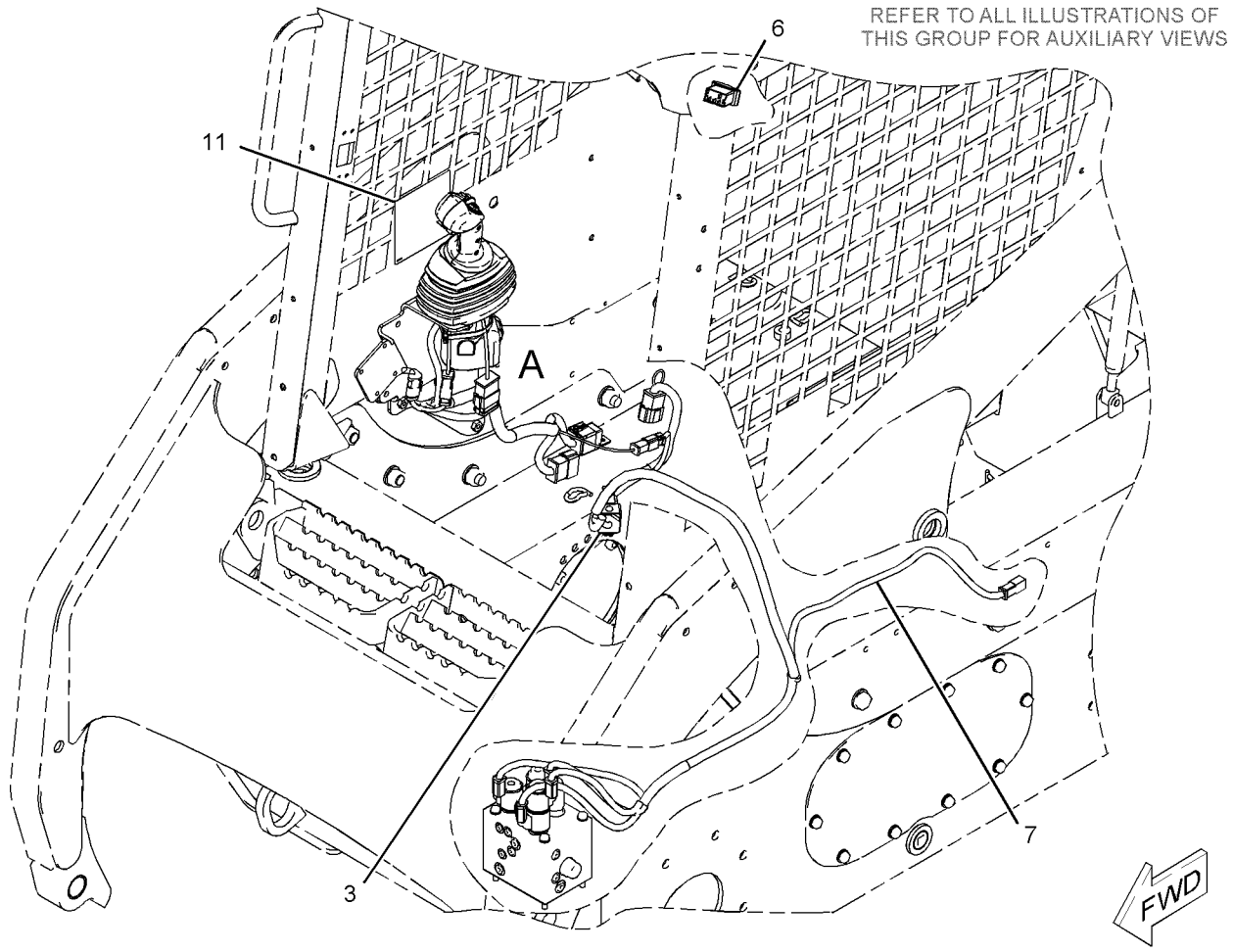

GRAPHIC #1 g01038717

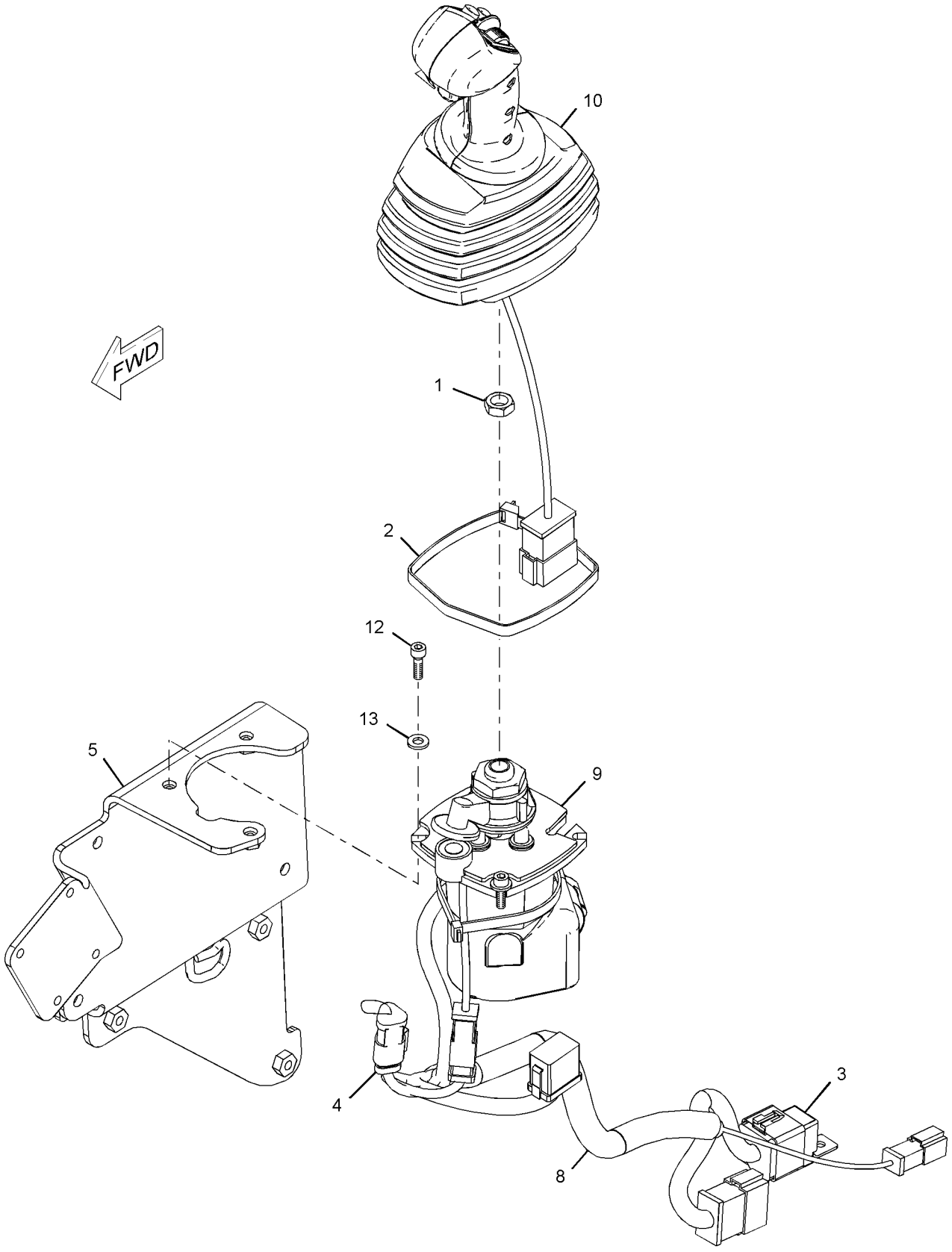

VIEW OF AREA A

GRAPHIC #2

<END>

g01038719

218-6571 CONTROL GP-PILOT OPERATED HYD

S/N: BXM4280-UP
HIGH FLOW, PROPORTIONAL AUXILIARY
PART OF 295-7505, 295-7508 HYDRAULIC AR
AN ATTACHMENT

SMCS-5059, 5705 **i02839721**

NOTE	REF NO	GRAPHIC REF	PART NUMBER	QTY	PART NAME 1 2 3 4 5 6 (PRODUCT LEVEL)	SEE PAGE
M	1	2	**095-1207**	1	NUT (M12X1.75-THD)	
	3	2	**115-1615**	1	RELAY AS (12-VOLT)	
	4	2	**133-9931**	1	JUMPER AS	
		2	**8T-8737**	1	PLUG-SEAL	
		2	**186-3735**	2	PIN-CONNECTOR (16-GA TO 18-GA)	
		2	**102-8803**	1	KIT-RECEPTACLE (3-PIN)	
					(INCLUDES RECEPTACLE AS & WEDGE)	
	5	2	**218-6421**	1	BRACKET AS	
	6	1	**223-5942**	1	SWITCH GP-ROCKER (HIGH FLOW)	
		1	**111-7899**	1	GASKET	
	7	1	**225-8005**	1	HARNESS AS-OPERATOR CONTROLS (HIGH FLOW)	
	8	2	**225-8009**	1	HARNESS AS-OPERATOR CONTROLS (JOYSTICK)	
CY	9	2	**299-9119**	1	VALVE GP-PILOT (WORK TOOL)	382
Y	10	2	**231-4259**	1	CONTROL GP-HANDLE (RH)	516
	11	1	**235-5243**	1	FILM-INSTRUCTION (MACHINE CONTROLS)	
M	12	2	**8T-0269**	3	BOLT-SOCKET HEAD (M6X1X20-MM)	
	13	2	**8T-4205**	3	WASHER-HARD (7.2X14.5X2-MM THK)	

C-CHANGE FROM PREVIOUS TYPE
M-METRIC PART
Y-SEPARATE ILLUSTRATION

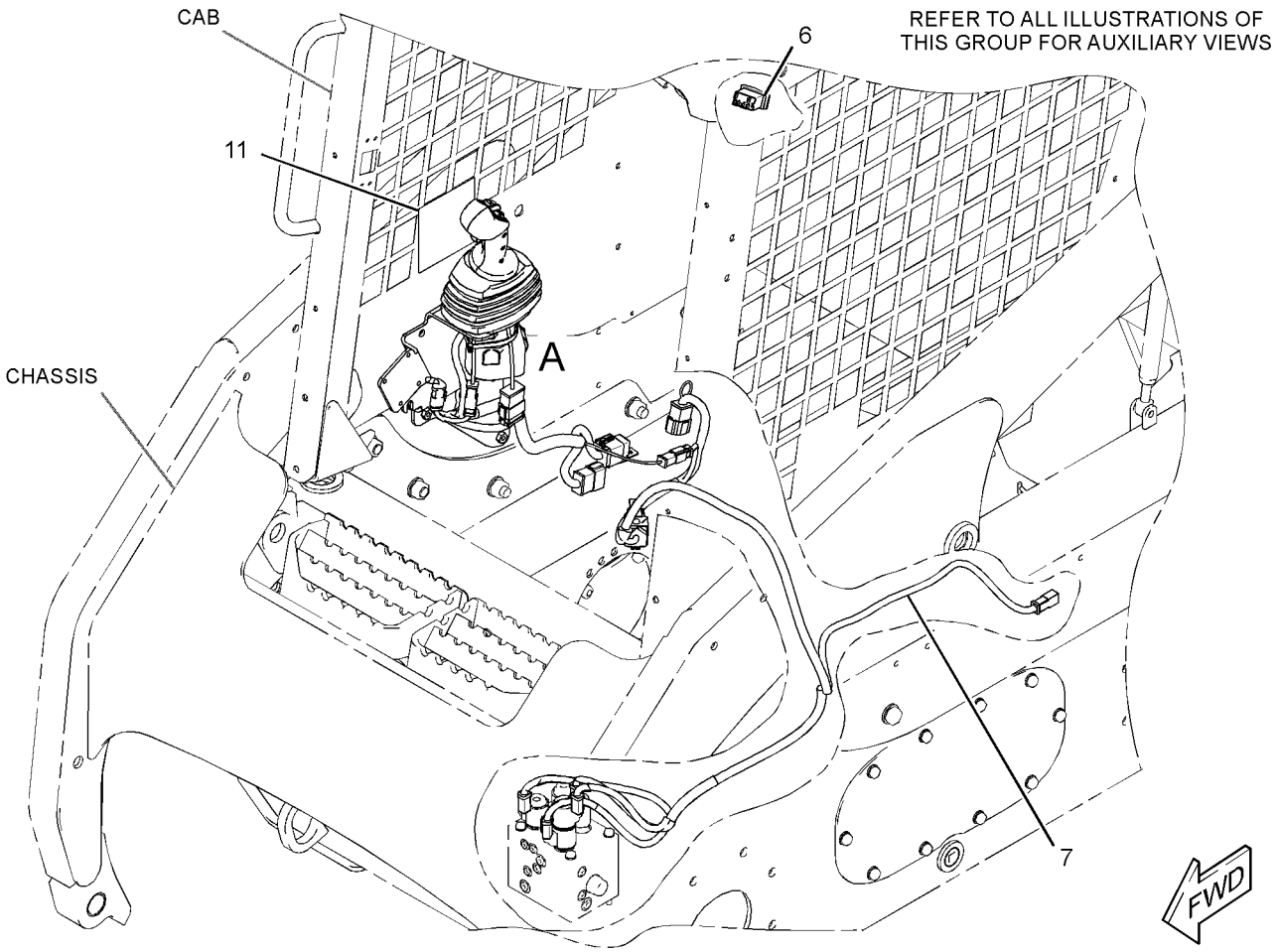

GRAPHIC #1 g01417536

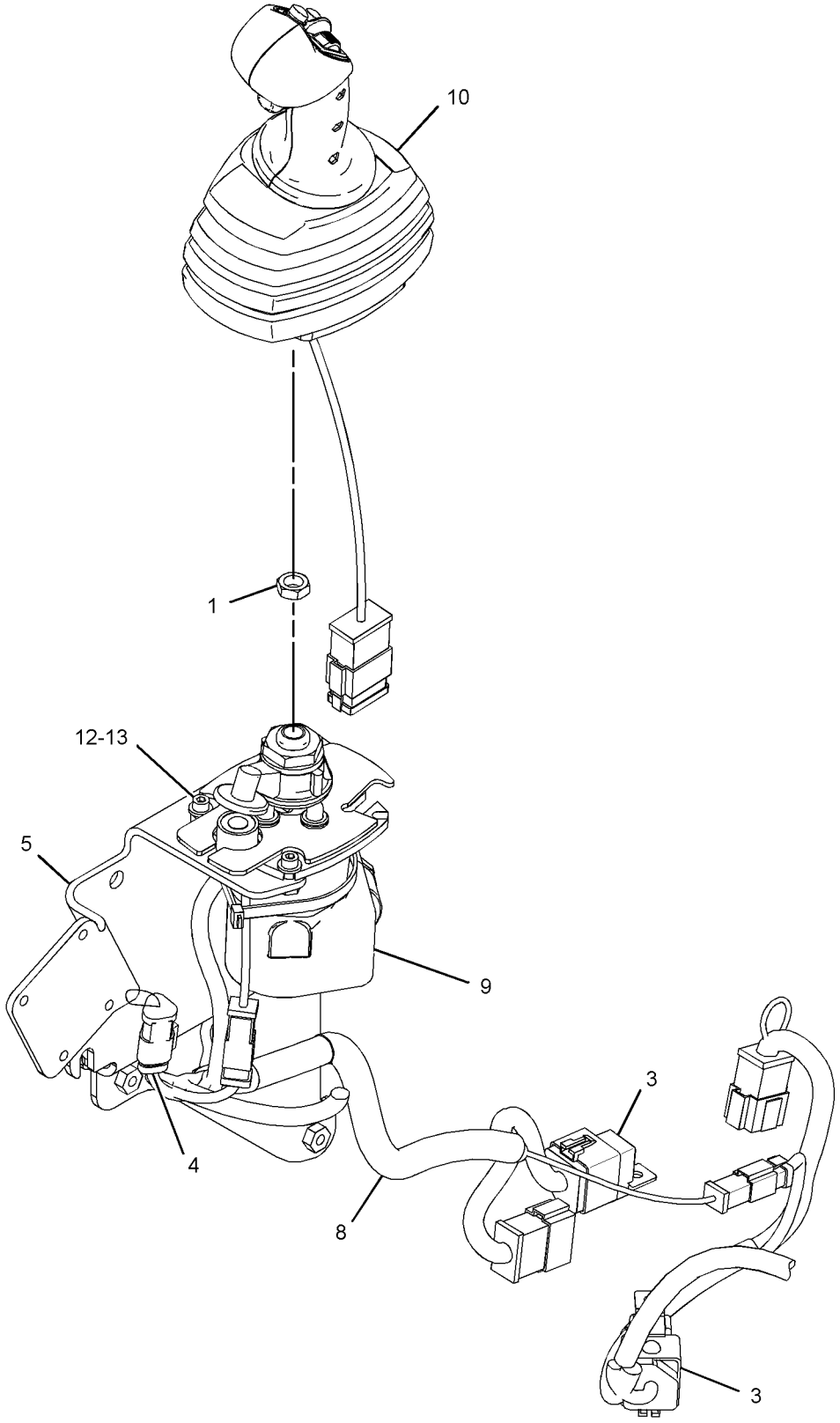

VIEW OF AREA A
(EXPLODED)

GRAPHIC #2

<END>

g01417537

OPERATOR STATION

276-5708 COUPLING GP-DRIVE

S/N: BXM4225-UP

PART OF 218-6832 COMPRESSOR & MOTOR GP-REFRIG

AN ATTACHMENT

SMCS-1802, 5061 **i02445864**

NOTE	REF NO	GRAPHIC REF	PART NUMBER	QTY	PART NAME 1 2 3 4 5 6 (PRODUCT LEVEL)	SEE PAGE
	1	1	**218-6836**	1	COUPLING GP-DRIVE	
		1	**218-6837**	1	COUPLING	
		1	**218-6838**	1	HUB (COMPRESSOR)	
		1	**276-4063**	1	HUB (MOTOR)	
M	2	1	**233-1012**	1	SETSCREW-HEX SOCKET (M5X0.8X8-MM)	

M-METRIC PART

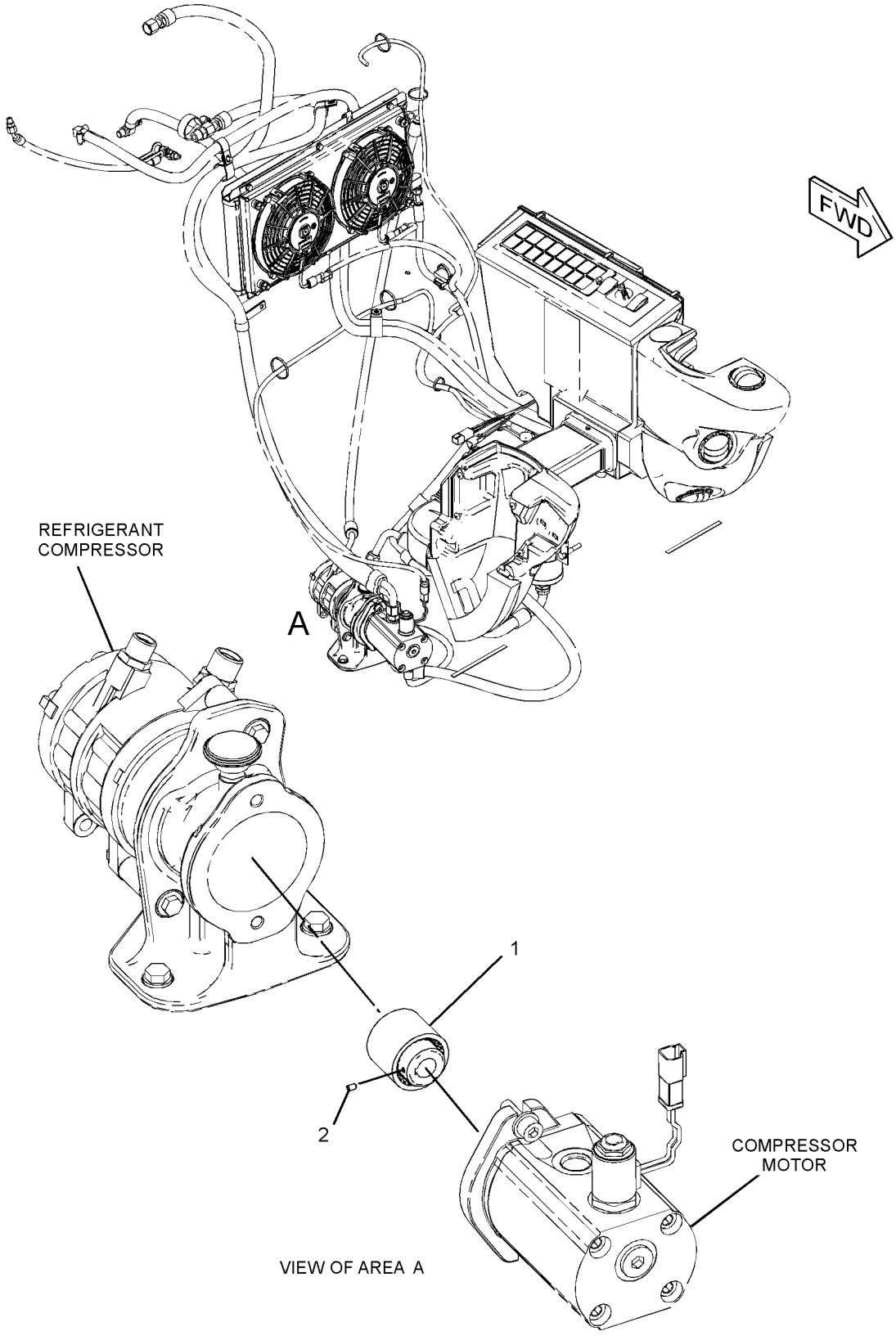

GRAPHIC #1 **<END>** g01229666

OPERATOR STATION

218-6419 COVER GP-CONSOLE

S/N: BXM4225-UP
PART OF 218-6701 INSTALLATION GP
AN ATTACHMENT

SMCS-5258 **i02392269**

NOTE	REF NO	GRAPHIC REF	PART NUMBER	QTY	PART NAME 1 2 3 4 5 6 (PRODUCT LEVEL)	SEE PAGE
	1	1	**218-6389**	1	CONSOLE (RH)	
	2	1	**218-6391**	1	CONSOLE (LH)	
M	3	1	**175-0005**	8	SCREW-BUTTON HEAD (M6X1X25-MM)	

M-METRIC PART

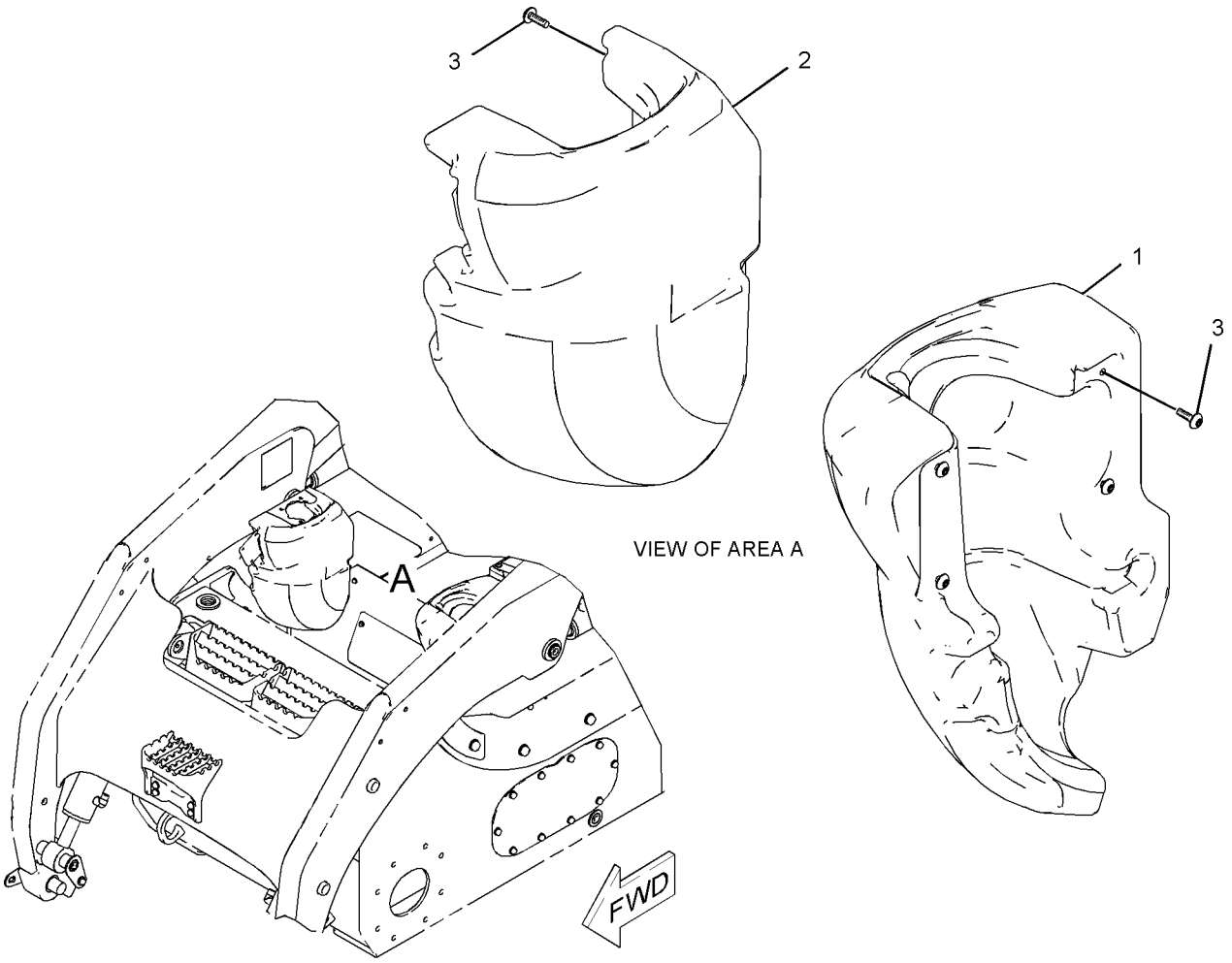

GRAPHIC #1 **<END>** g01019449

OPERATOR STATION

229-8744 COVER GP-CONSOLE

S/N: BXM4225-UP
WITHOUT HEATER & AIR COND
PART OF 218-6701 INSTALLATION GP
AN ATTACHMENT

SMCS-5258 **i02392270**

NOTE	REF NO	GRAPHIC REF	PART NUMBER	QTY	PART NAME 1 2 3 4 5 6 (PRODUCT LEVEL)	SEE PAGE
	1	1	**114-6658**	4	WASHER (6.5X17X1-MM THK)	
	2	1	**218-6386**	1	COVER AS	
	3	1	**218-6387**	1	COVER AS	
	4	1	**218-6388**	1	COVER AS	
M	5	1	**8T-4189**	2	BOLT (M8X1.25X20-MM)	
	6	1	**8T-4224**	2	WASHER-HARD (8.8X16X2-MM THK)	
M	7	1	**9X-2044**	7	SCREW-TRUSS HEAD (M6X1X16-MM)	
	8	1	**9X-6165**	1	WASHER (6.5X22X2.5-MM THK)	
BE	9	1	**124-3243**		SEAL	

B-USE AS REQUIRED
E-ORDER BY THE CENTIMETER
M-METRIC PART

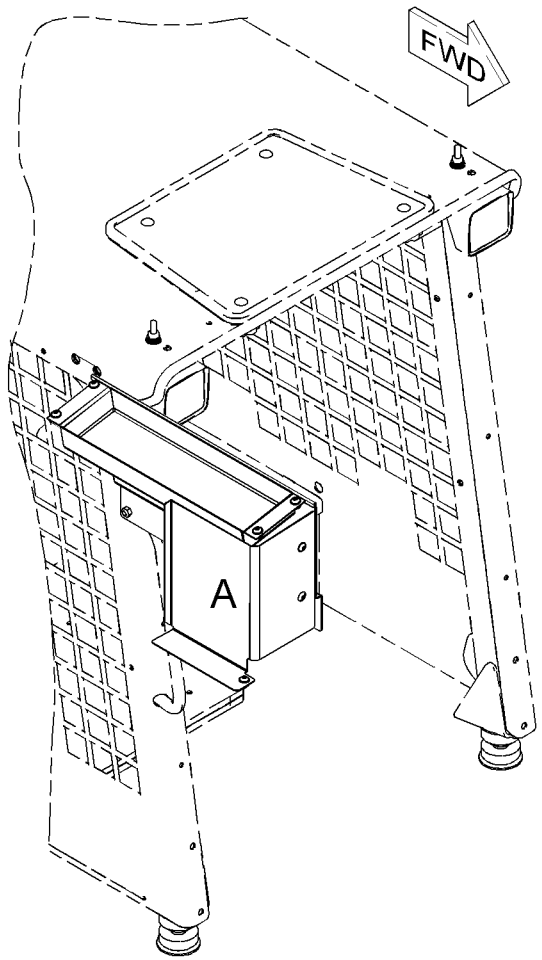

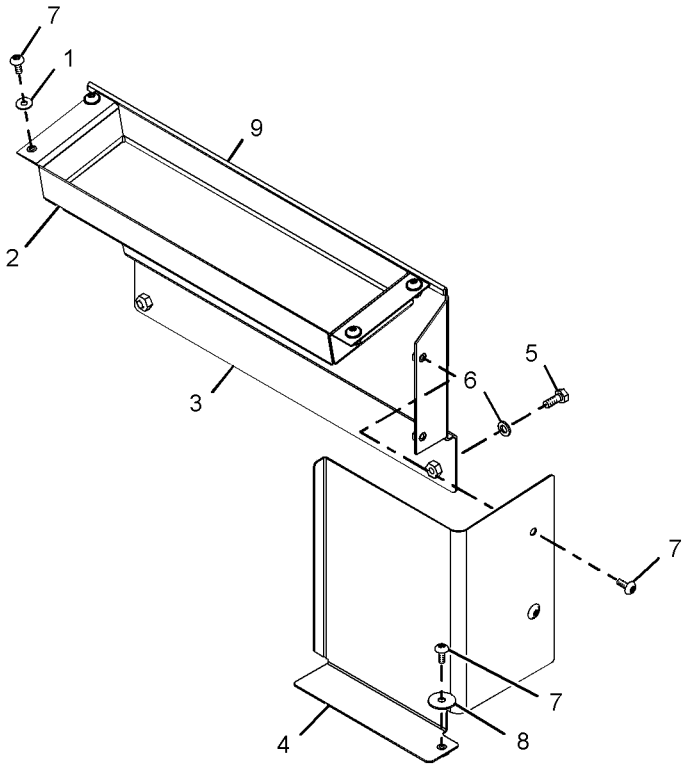

VIEW OF AREA A

GRAPHIC #1 **<END>** g01198919

OPERATOR STATION

142-9118 COVER GP-INSTRUMENT PANEL

S/N: BXM4225-UP

PART OF 216-4751, 225-7998 PANEL GP-INSTRUMENT

AN ATTACHMENT

SMCS-1408, 7451, 7478 **i02757282**

NOTE	REF NO	GRAPHIC REF	PART NUMBER	QTY	PART NAME 1 2 3 4 5 6 (PRODUCT LEVEL)	SEE PAGE
C	1	1	**106-8704**	1	SUPPRESSOR AS-ARC (HOUR METER)	
		1	**102-8802**	1	KIT-RECEPTACLE (2-PIN)	
					(INCLUDES RECEPTACLE AS & WEDGE)	
		1	**186-3735**	2	PIN-CONNECTOR (16-GA TO 18-GA)	
		1	**155-2270**	1	KIT-CONNECTING PLUG (2-PIN)	
					(INCLUDES PLUG AS, WEDGE & INTERFACE SEAL)	
	2	1	**158-6695**	1	COVER	
C	3	1	**200-5717**	1	METER GP-SERVICE	
		1	**214-2465**	1	KIT-SERVICE METER	
					(INCLUDES BOLTS, LOCKNUTS & FILM)	
C	4	1	**266-2928**	1	HARNESS AS-WIRING (SERVICE METER)	
		1	**8L-8413**	1	STRAP-CABLE	
		1	**155-2270**	1	KIT-CONNECTING PLUG (2-PIN)	
					(INCLUDES PLUG AS, WEDGE & INTERFACE SEAL)	
	5	1	**103-2006**	2	SCREW-PAN HEAD (6-19X0.37-IN)	
C	6	1	**3S-2093**	1	STRAP-CABLE	

C-CHANGE FROM PREVIOUS TYPE

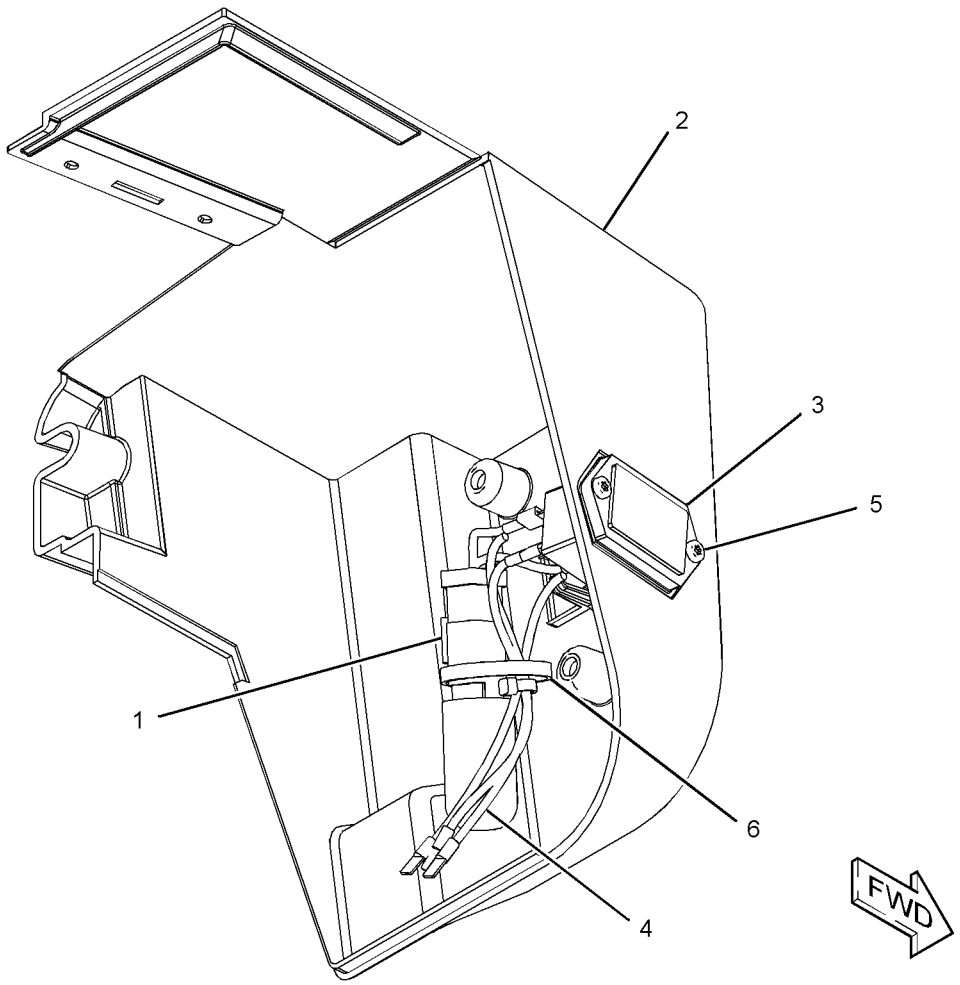

GRAPHIC #1 **<END>** g01195576

OPERATOR STATION

218-6440 DOOR & MTG GP-CAB—POLYCARBONATE

S/N: BXM4225-UP

CANNOT BE USED WITH 218-6400—PAGE 565, 223-0600—PAGE 550

AN ATTACHMENT

SMCS-7308 **i02772052**

NOTE	REF NO	GRAPHIC REF	PART NUMBER	QTY	PART NAME 1 2 3 4 5 6 (PRODUCT LEVEL)	SEE PAGE
E	1	2	**125-3518**		SEAL (6-CM EACH)	
E	2	2	**125-3518**		SEAL (65-CM)	
E	3	2	**144-0195**		HOSE (40-CM)	
D	4	2	**5P-9909**		SEAL (0.05-M EACH)	
	5	1	**5P-0372**	2	LOCK PIN	
	6	2	**8T-2444**	2	STUD-BALL	
	7	2	**8T-3848**	1	STRIKER AS-LATCH	
		2	**6V-4270**	1	LOCKWASHER	
	8	1	**9C-5344**	1	SPACER (10.5X20X18-MM THK)	
	9	1	**095-1325**	1	PIN-CLEVIS	
	10	1	**153-2683**	1	SPRING AS-GAS (LOCKING)	
	11	1	**177-3405**	1	PIN	
	12	2	**218-0728**	2	SPRING	
CY	13	2	*276-3440*	1	DOOR GP-CAB (POLYCARBONATE)	555
	14	2	**219-9739**	1	TANK AS-WINDOW WASHER	
	15	2	**221-3877**	1	HARNESS AS-WINDOW WIPER	
		2	**102-8805**	1	KIT-RECEPTACLE (6-PIN)	
					(INCLUDES RECEPTACLE AS & WEDGE)	
		2	**123-7615**	1	CONNECTOR	
		2	**5W-1987**	2	TERMINAL	
E		2	**125-7875**		TUBE-HEAT SHRINK (7.44-MM DIA) (5-CM)	
		2	**155-2274**	1	KIT-CONNECTING PLUG (6-PIN)	
					(INCLUDES PLUG AS, WEDGE & INTERFACE SEAL)	
	16	2	**280-1575**	1	PLATE AS	
	17	2	**223-0591**	1	PLATE AS	
	18	2	**223-0601**	2	PLATE AS	
	19	2	**223-0608**	1	HINGE AS	
	20	2	**223-0617**	1	MOUNT	
	21	2	**230-3214**	1	SPRING AS-GAS (CAB DOOR)	
M	22	2	**127-2170**	8	SCREW-TRUSS HEAD (M8X1.25X20-MM)	
	23	2	**142-9356**	1	BLOCK	
M	24	2	**195-0937**	8	INSERT-THREADED (M8X1.25-THD)	
	25	2	**3S-2093**	3	STRAP-CABLE	
M	26	2	**5C-2890**	13	NUT (M6X1-THD)	
D	27	2	**5P-5969**		SEAL (2.2-M)	
	28	2	**8T-4121**	4	WASHER-HARD (11X21X2.5-MM THK)	
M	29	2	**8T-4133**	4	NUT (M10X1.5-THD)	
	30	2	**8T-4205**	13	WASHER-HARD (7.2X14.5X2-MM THK)	
	31	2	**8T-4222**	1	WASHER-PLATED (11X32X2.5-MM THK)	
	32	2	**8T-4224**	2	WASHER-HARD (8.8X16X2-MM THK)	
M	33	2	**9X-2041**	4	SCREW-TRUSS HEAD (M10X1.5X20-MM)	
M	34	2	**9X-2044**	3	SCREW-TRUSS HEAD (M6X1X16-MM)	
M	35	2	**9X-2045**	4	SCREW-TRUSS HEAD (M6X1X20-MM)	
D	36	2	**5P-8309**		SEAL (0.72)	

C-CHANGE FROM PREVIOUS TYPE
D-ORDER BY THE METER
E-ORDER BY THE CENTIMETER
M-METRIC PART
Y-SEPARATE ILLUSTRATION

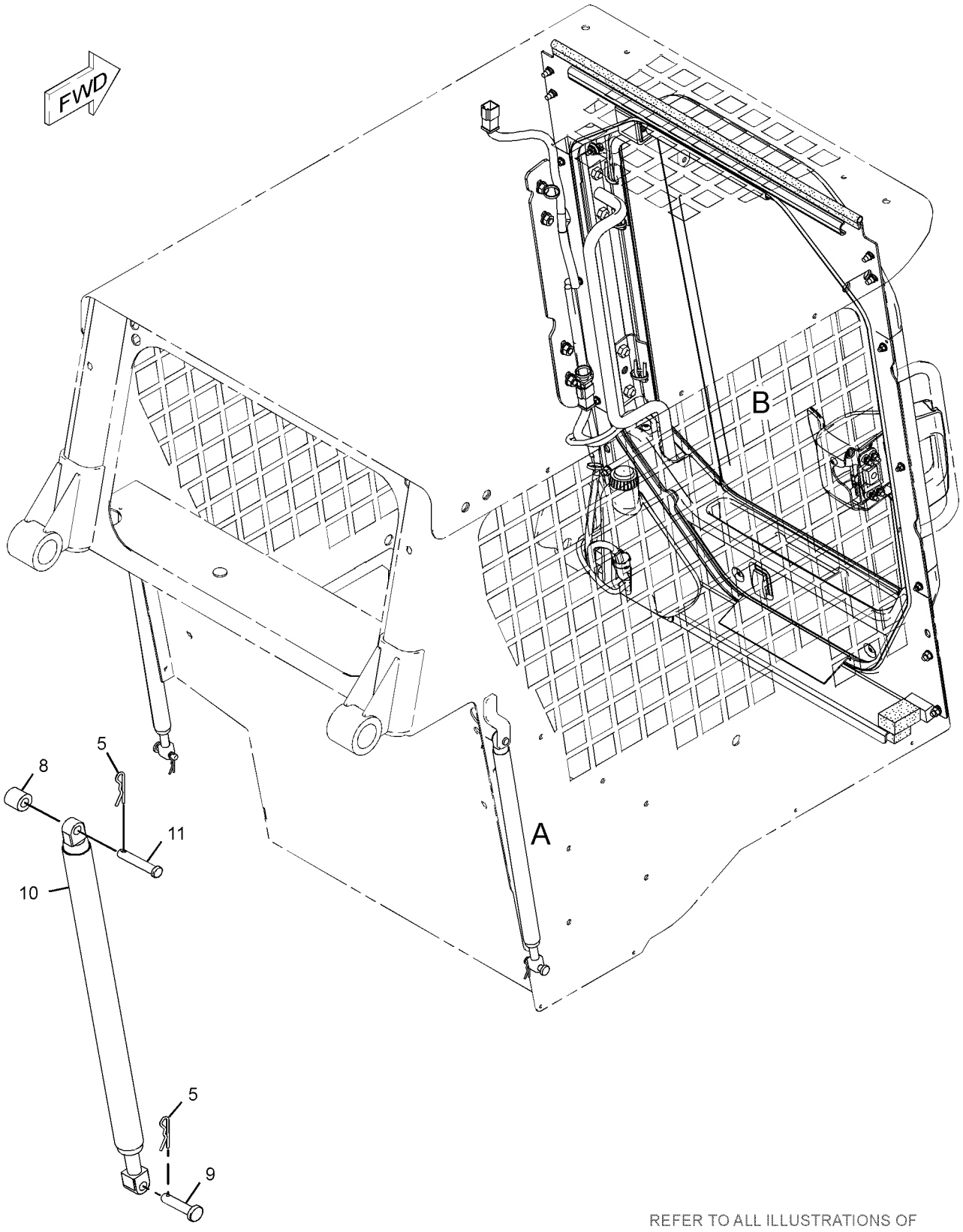

VIEW OF AREA A

REFER TO ALL ILLUSTRATIONS OF
THIS GROUP FOR AUXILIARY VIEWS

GRAPHIC #1

g01249527

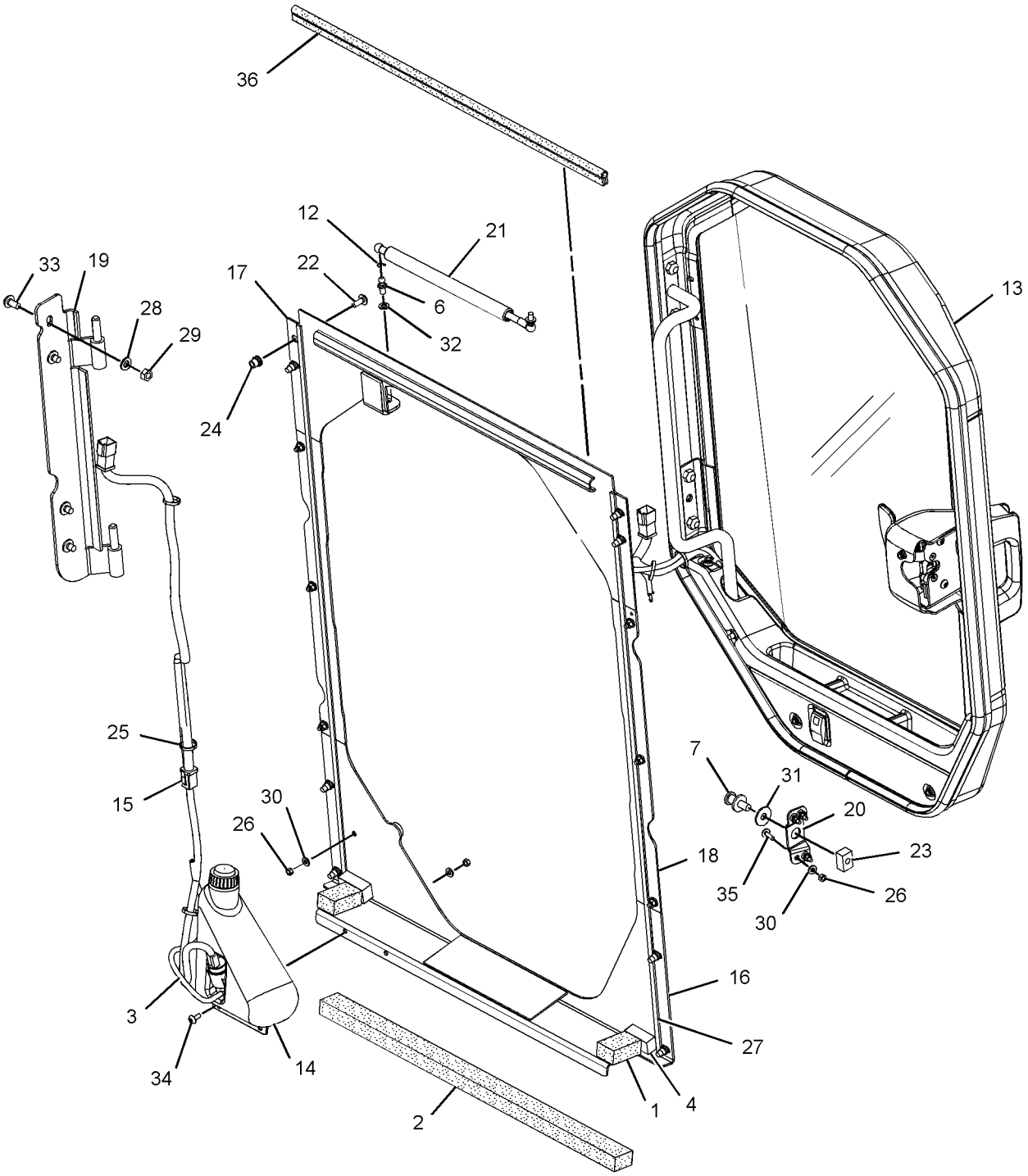

VIEW OF AREA B

GRAPHIC #2 **<END>** g01249529

OPERATOR STATION

223-0600 DOOR & MTG GP-CAB—GLASS

S/N: BXM4225-UP

CANNOT BE USED WITH 218-6400—PAGE 565, 218-6440—PAGE 547

AN ATTACHMENT

SMCS-7308 **i02545016**

NOTE	REF NO	GRAPHIC REF	PART NUMBER	QTY	PART NAME 1 2 3 4 5 6 (PRODUCT LEVEL)	SEE PAGE
D	1	1	**5P-8309**		SEAL (0.72-M)	
E	2	1	**125-3518**		SEAL (65-CM)	
E	3	1	**144-0195**		HOSE (40-CM)	
D	4	1	**5P-9909**		SEAL (.05-M EACH)	
	5	1	**5P-0372**	2	LOCK PIN	
	6	1	**8T-2444**	2	STUD-BALL	
	7	1	**8T-3848**	1	STRIKER AS-LATCH	
		1	**6V-4270**	1	LOCKWASHER	
	8	1	**9C-5344**	1	SPACER (10.5X20X18-MM THK)	
	9	1	**095-1325**	1	PIN-CLEVIS	
	10	1	**153-2683**	1	SPRING AS-GAS (LOCKING)	
	11	1	**177-3405**	1	PIN	
	12	1	**218-0728**	2	SPRING	
	13	1	**219-9739**	1	TANK AS-WINDOW WASHER	
	14	1	**221-3877**	1	HARNESS AS-WINDOW WIPER	
		1	**102-8805**	1	KIT-RECEPTACLE (6-PIN)	
					(INCLUDES RECEPTACLE AS & WEDGE)	
		1	**5W-1987**	2	TERMINAL	
E		1	**125-7875**		TUBE-HEAT SHRINK (7.44-MM DIA) (5-CM)	
		1	**155-2274**	1	KIT-CONNECTING PLUG (6-PIN)	
					(INCLUDES PLUG AS, WEDGE & INTERFACE SEAL)	
C	15	1	**280-1575**	1	PLATE AS	
	16	1	**223-0591**	1	PLATE AS	
	17	1	**223-0601**	2	PLATE AS	
	18	1	**223-0608**	1	HINGE AS	
Y	19	1	*223-0616*	1	DOOR GP-CAB (GLASS)	553
	20	1	**223-0617**	1	MOUNT	
	21	1	**230-3214**	1	SPRING AS-GAS (CAB DOOR)	
M	22	1	**127-2170**	8	SCREW-TRUSS HEAD (M8X1.25X20-MM)	
	23	1	**142-9356**	1	BLOCK	
CM	24	1	**195-0937**	8	INSERT-THREADED (M8X1.25-THD)	
	25	1	**3S-2093**	3	STRAP-CABLE	
M	26	1	**5C-2890**	13	NUT (M6X1-THD)	
	28	1	**8T-4121**	4	WASHER-HARD (11X21X2.5-MM THK)	
M	29	1	**8T-4133**	4	NUT (M10X1.5-THD)	
	30	1	**8T-4205**	13	WASHER-HARD (7.2X14.5X2-MM THK)	
B	31	1	**8T-4222**	1	WASHER-PLATED (11X32X2.5-MM THK)	
C	32	1	**8T-4224**	2	WASHER-HARD (8.8X16X2-MM THK)	
M	33	1	**9X-2041**	4	SCREW-TRUSS HEAD (M10X1.5X20-MM)	
M	34	1	**9X-2044**	3	SCREW-TRUSS HEAD (M6X1X16-MM)	
M	35	1	**9X-2045**	4	SCREW-TRUSS HEAD (M6X1X20-MM)	
E	36	1	**125-3518**		SEAL (6-CM EACH)	
CD	37	1	**5P-5969**		SEAL (1.1-M EACH)	

B-USE AS REQUIRED
C-CHANGE FROM PREVIOUS TYPE
D-ORDER BY THE METER
E-ORDER BY THE CENTIMETER
M-METRIC PART
Y-SEPARATE ILLUSTRATION

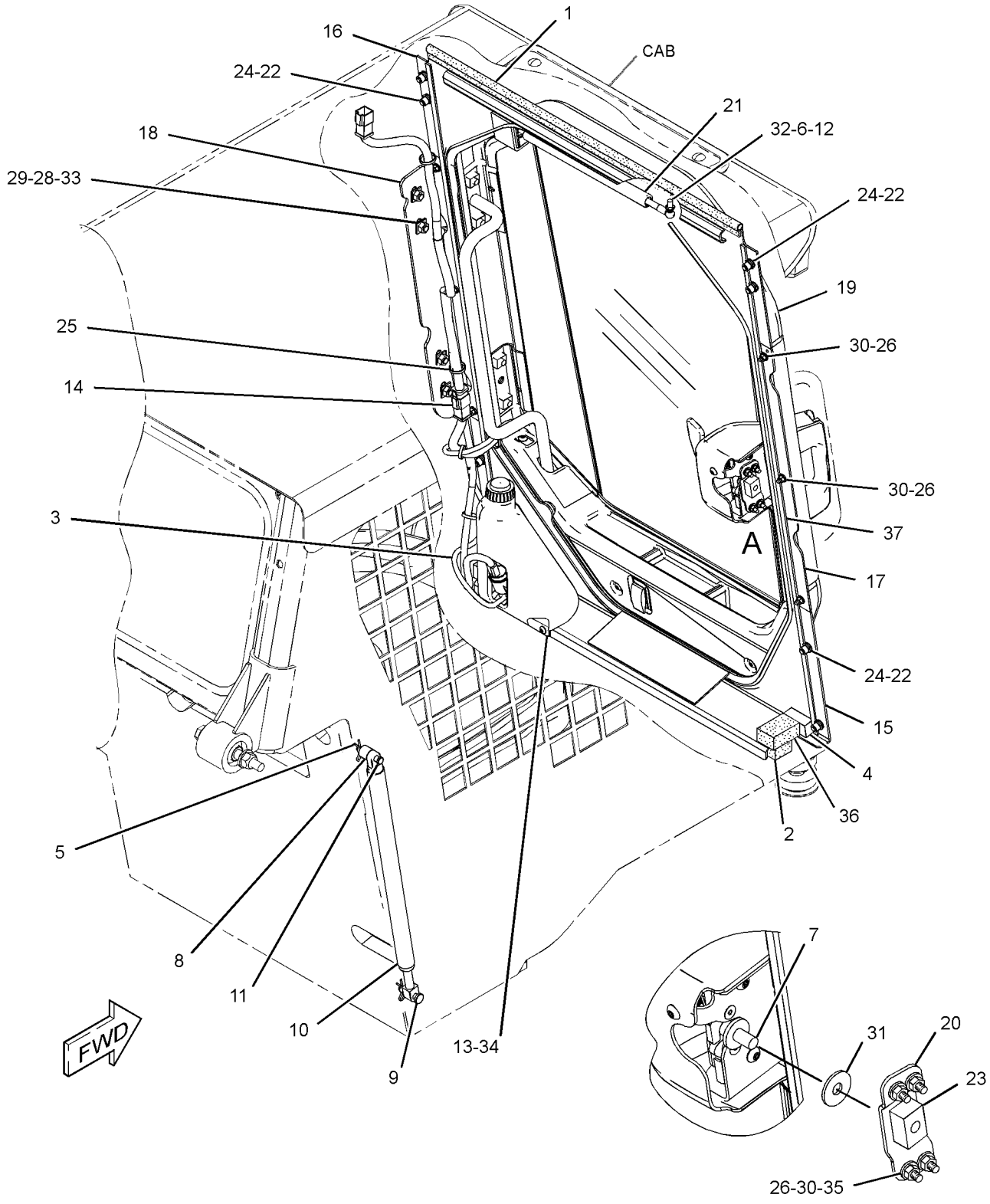

VIEW OF AREA A
(EXPLODED)

GRAPHIC #1 **<END>** g01258688

OPERATOR STATION

218-6431 DOOR GP-CAB–GLASS

S/N: BXM4225-UP
PART OF 223-0616 DOOR GP-CAB
AN ATTACHMENT

SMCS-7308 **i02619575**

NOTE	REF NO	GRAPHIC REF	PART NUMBER	QTY	PART NAME 1 2 3 4 5 6 (PRODUCT LEVEL)	SEE PAGE
	1	1	**223-0609**	1	GLASS-CAB (DOOR)	
	2	1	**223-0610**	1	GLASS-CAB (DOOR)	
	3	1	**223-0612**	1	GLASS-CAB (DOOR)	
	4	1	**282-9059**	1	FRAME AS	

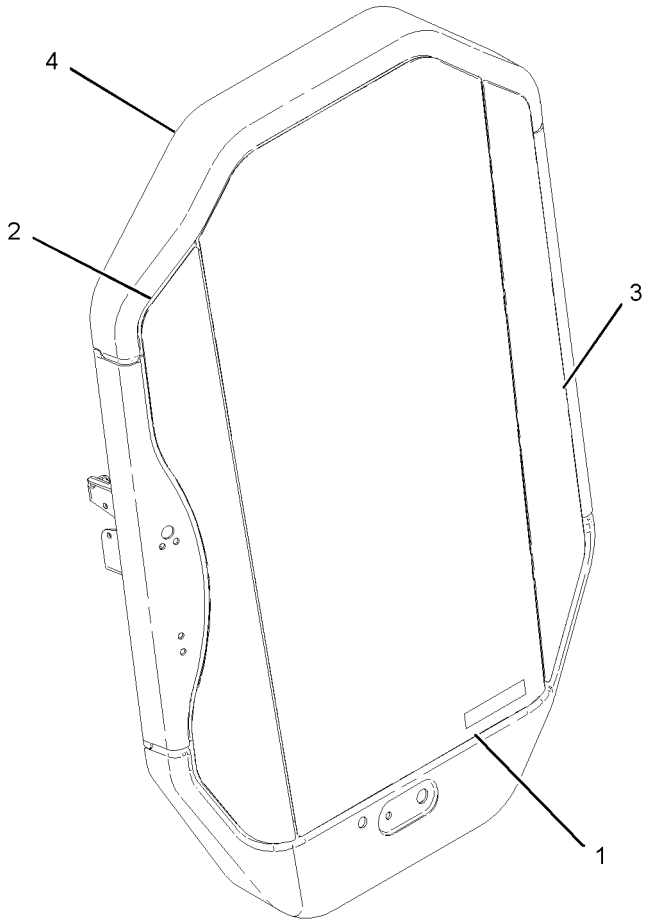

GRAPHIC #1 **<END>** g01010846

OPERATOR STATION

223-0616 DOOR GP-CAB—GLASS

S/N: BXM4225-UP

PART OF 223-0600 DOOR & MTG GP-CAB, 218-6744 KIT-CAB DOOR & MOUNTING

AN ATTACHMENT

SMCS-7308 **i02870323**

NOTE	REF NO	GRAPHIC REF	PART NUMBER	QTY	PART NAME 1 2 3 4 5 6 (PRODUCT LEVEL)	SEE PAGE
E	1	1	**124-3243**		SEAL (306-CM)	
E	2	1	**144-0195**		HOSE (73-CM)	
	3	1	**8G-1151**	2	CONNECTOR	
	4	1	**6W-3924**	1	BLADE AS-WIPER (558-MM) (FRONT, REAR)	
	6	1	**138-4883**	1	SWITCH AS-ROCKER (REAR WIPER)	
	7	1	**205-5148**	2	SCREW-FLAT HEAD (M6X1X25-MM)	
Y	8	1	*218-6431*	1	DOOR GP-CAB (GLASS)	552
	9	1	**221-3876**	1	HARNESS AS-WINDOW WIPER	
	10	1	**263-2135**	1	ARM GP-WINDOW WIPER	
		1	**136-3191**	1	NOZZLE AS-WASHER	
E		1	**194-5171**		HOSE (60-CM)	
		1	**240-8666**	2	CLIP (WASHER HOSE)	
C	11	1	**313-9185**	1	COVER AS	
	12	1	**223-8488**	1	COVER-LATCH	
	13	1	**223-8495**	1	HANDLE AS	
M		1	**6V-9632**	1	NUT-WELD (M6X1-THD)	
	14	1	**225-3187**	1	LATCH AS	
	15	1	**229-8757**	1	SWITCH AS-LIMIT (WIPER)	
	17	1	**235-4768**	2	HINGE	
	18	1	**248-2171**	1	HANDLE AS	
	19	1	**248-2376**	1	MOTOR GP-WINDOW WIPER	
		1	**102-8804**	1	KIT-RECEPTACLE (4-PIN)	
					(INCLUDES RECEPTACLE AS & WEDGE)	
		1	**186-3735**	4	PIN-CONNECTOR (16-GA TO 18-GA)	
	20	1	**032-9828**	1	GROMMET	
M	21	1	**134-8273**	4	SCREW-FLAT HEAD (M10X1.15-THD)	
	22	1	**3S-2093**	3	STRAP-CABLE	
M	23	1	**9X-2044**	14	SCREW-TRUSS HEAD (M6X1X16-MM)	
M	24	1	**9X-2045**	2	SCREW-TRUSS HEAD (M6X1X20-MM)	

C-CHANGE FROM PREVIOUS TYPE
E-ORDER BY THE CENTIMETER
M-METRIC PART
Y-SEPARATE ILLUSTRATION

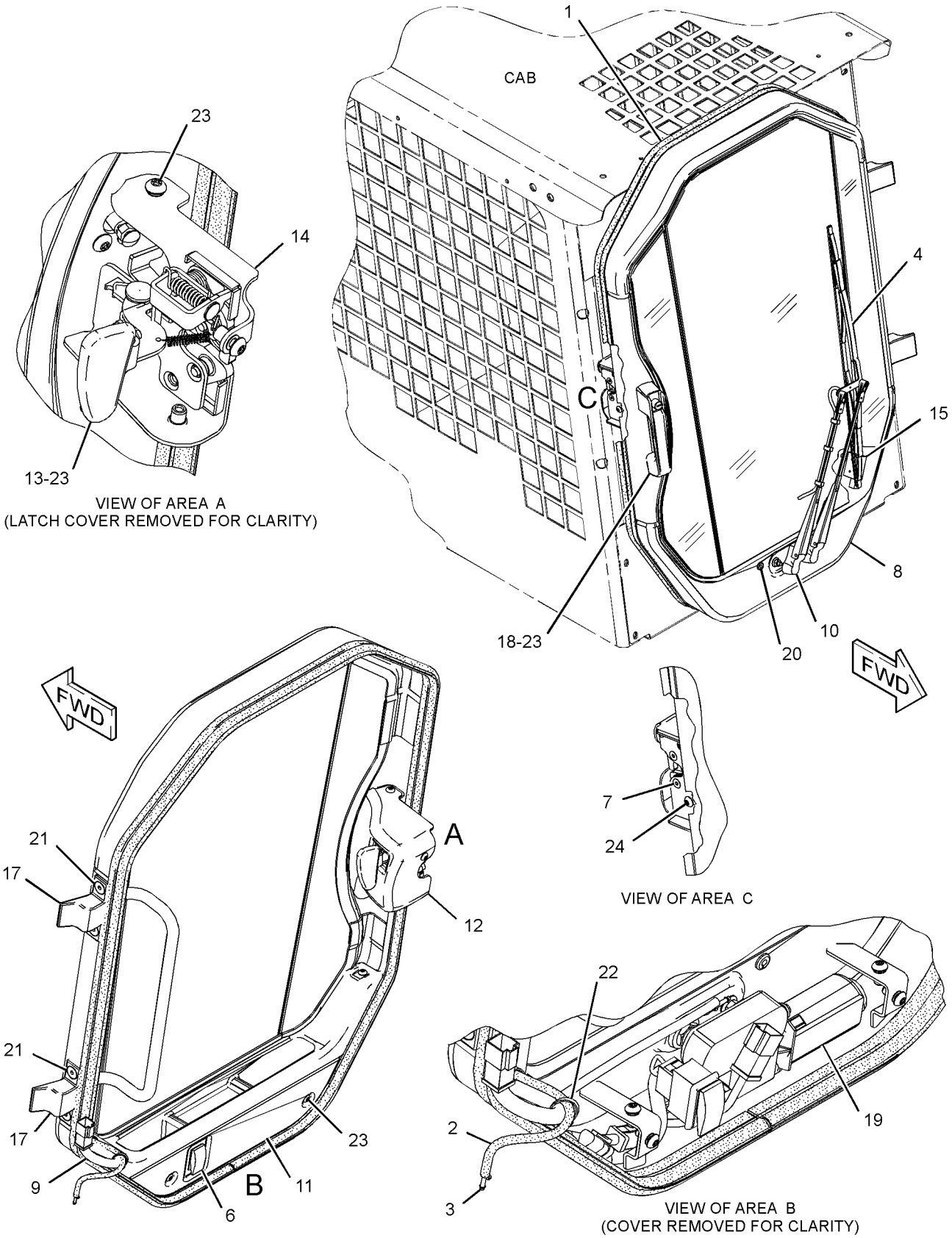

GRAPHIC #1

<END>

g01431673

OPERATOR STATION

276-3440 DOOR GP-CAB—POLYCARBONATE

S/N: BXM4225-UP

PART OF 218-6440 DOOR & MTG GP-CAB, 218-6743 KIT-CAB DOOR & MOUNTING

AN ATTACHMENT

SMCS-7308 **i02870329**

NOTE	REF NO	GRAPHIC REF	PART NUMBER	QTY	PART NAME 1 2 3 4 5 6 (PRODUCT LEVEL)	SEE PAGE
	1	1	**8G-1151**	2	CONNECTOR (HOSE)	
	2	1	**6W-3924**	1	BLADE AS-WIPER (558-MM) (CAB DOOR)	
	4	1	**138-4883**	1	SWITCH AS-ROCKER (REAR WIPER)	
	5	1	**205-5148**	2	SCREW-FLAT HEAD (M6X1X25-MM)	
	6	1	**221-3876**	1	HARNESS AS-WINDOW WIPER	
	7	1	**223-8488**	1	COVER-LATCH	
	8	1	**223-8495**	1	HANDLE AS	
M		1	**6V-9632**	1	NUT-WELD (M6X1-THD)	
	9	1	**225-3187**	1	LATCH AS	
	10	1	**229-8757**	1	SWITCH AS-LIMIT (WIPER)	
	11	1	**235-4768**	2	HINGE	
	12	1	**248-2171**	1	HANDLE AS	
	13	1	**248-2376**	1	MOTOR GP-WINDOW WIPER	
		1	**102-8802**	1	KIT-RECEPTACLE (2-PIN)	
					(INCLUDES RECEPTACLE AS & WEDGE)	
		1	**186-3735**	4	PIN-CONNECTOR (16-GA TO 18-GA)	
	14	1	**263-2135**	1	ARM GP-WINDOW WIPER (FRONT)	
		1	**136-3191**	1	NOZZLE AS-WASHER	
		1	**194-5171**		HOSE (60-CM)	
		1	**240-8666**	2	CLIP	
Y	15	1	*276-3615*	1	DOOR GP-CAB	557
	16	1	**313-9185**	1	COVER AS	
	17	1	**032-9828**	1	GROMMET	
M	18	1	**134-8273**	4	SCREW-FLAT HEAD (M10X1.15-THD)	
	19	1	**3S-2093**	3	STRAP-CABLE	
M	20	1	**9X-2044**	14	SCREW-TRUSS HEAD (M6X1X16-MM)	
M	21	1	**9X-2045**	2	SCREW-TRUSS HEAD (M6X1X20-MM)	
E	22	1	**144-0195**		HOSE (73-CM)	
E	23	1	**124-3243**		SEAL (306-CM)	

E-ORDER BY THE CENTIMETER
M-METRIC PART
Y-SEPARATE ILLUSTRATION

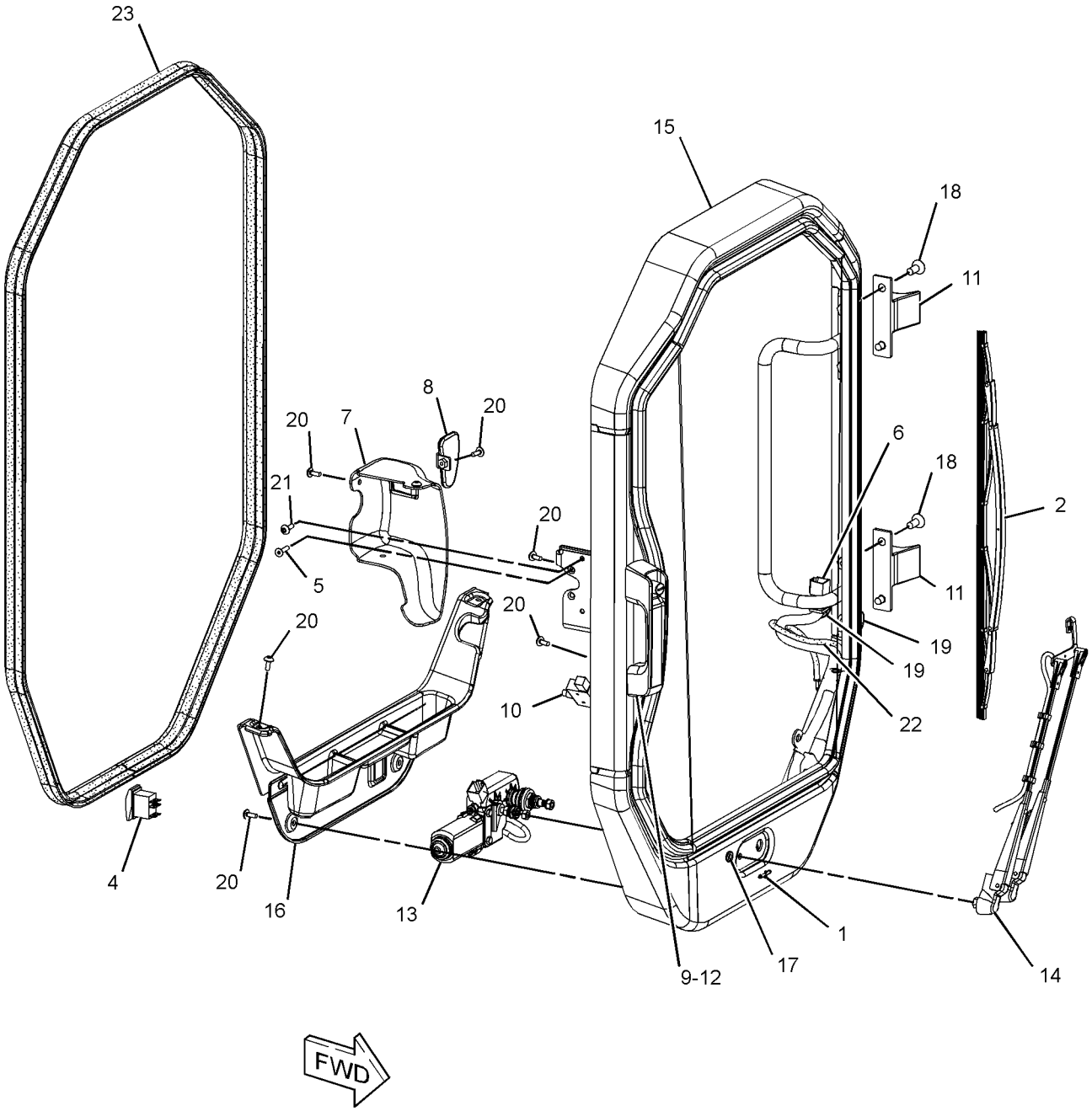

GRAPHIC #1 **<END>** g01380641

OPERATOR STATION

276-3615 DOOR GP-CAB

S/N: BXM4225-UP
PART OF 276-3440 DOOR GP-CAB
AN ATTACHMENT

SMCS-7308 **i02644469**

NOTE	REF NO	GRAPHIC REF	PART NUMBER	QTY	PART NAME 1 2 3 4 5 6 (PRODUCT LEVEL)	SEE PAGE
	1	1	**5C-8310**	1	BRACKET-RING	
	2	1	**5C-8311**	1	RING	
	3	1	**8T-6842**	1	FILM-INSTRUCTION (ALTERNATE EXIT)	
	4	1	**276-3599**	1	WINDOW (POLYCARBONATE)	
	5	1	**279-3232**	1	SEAL	
	6	1	**282-9059**	1	FRAME AS	
	7	1	**283-7554**	1	STRIP-LOCKING	

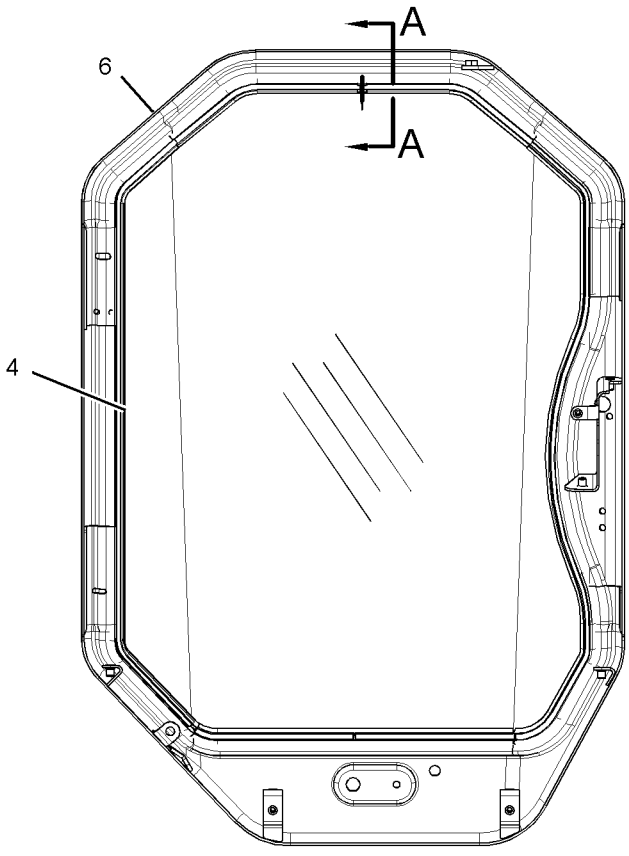

REAR VIEW

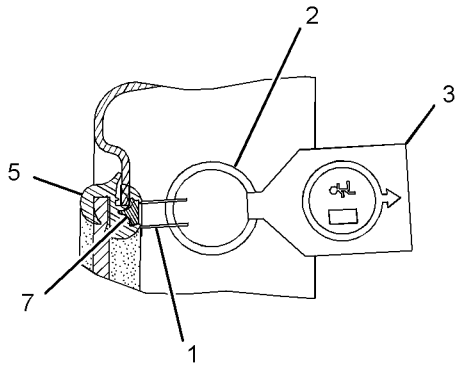

SECTION A-A

GRAPHIC #1 **<END>** g01327089

OPERATOR STATION

218-6394 DUCT & CONTROL GP

S/N: BXM4225-UP

PART OF 218-6302 AIR CONDITIONER AR, 218-6703 HEATER AR-CAB

AN ATTACHMENT

SMCS-7337, 734D **i02541254**

NOTE	REF NO	GRAPHIC REF	PART NUMBER	QTY	PART NAME 1 2 3 4 5 6 (PRODUCT LEVEL)	SEE PAGE
CD	1	1	**5P-5969**		SEAL (0.2-M EACH)	
	2	1	**146-6371**	6	LOUVER AS	
	3	1	**218-6396**	1	DUCT	
	4	1	**218-6397**	1	CONSOLE (RH)	
	5	1	**218-6398**	1	CONSOLE (LH)	
CD	6	1	**5P-7070**		INSULATION-STRIP (0.5-M)	
	7	1	**218-6414**	1	SEAL	
	8	1	**285-9133**	1	INSULATION	
M	9	1	**175-0005**	8	SCREW-BUTTON HEAD (M6X1X25-MM)	
	10	1	**285-8570**	1	INSULATION	
	11	1	**240-6877**	1	SEAL	
	12	1	**240-6878**	1	SEAL	
	13	1	**240-6879**	2	SEAL	
	14	1	**6V-6689**	2	SCREW-SELF-TAPPING (10-16X.625-IN)	
	15	1	**285-8565**	1	INSULATION	

C-CHANGE FROM PREVIOUS TYPE
D-ORDER BY THE METER
M-METRIC PART

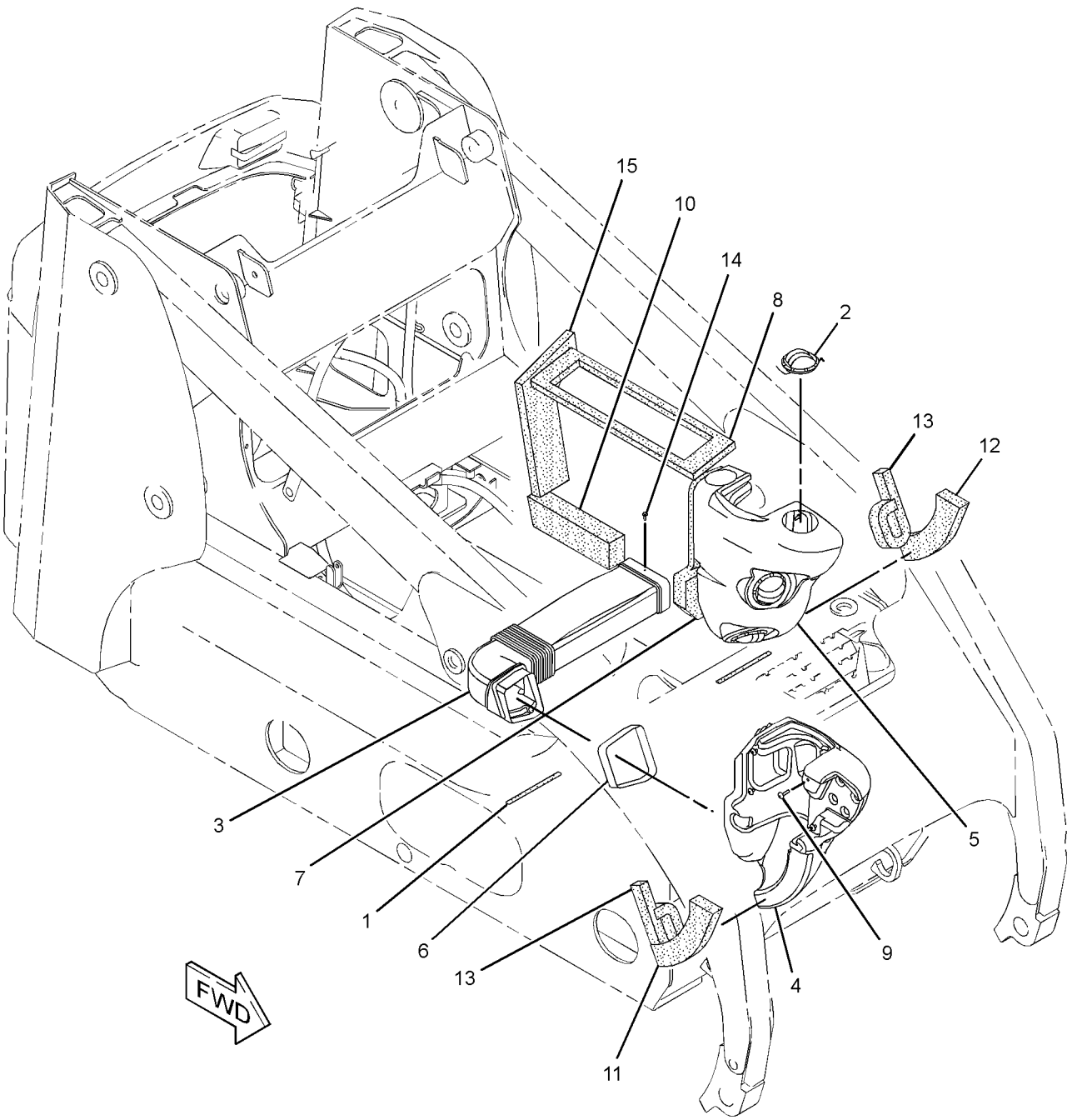

GRAPHIC #1 **<END>** g01293158

OPERATOR STATION

231-7325 FRAME GP-WINDOW–RH

S/N: BXM4225-UP
PART OF 224-7058 WINDOW GP-CAB
AN ATTACHMENT

SMCS-7310 **i02064824**

NOTE	REF NO	GRAPHIC REF	PART NUMBER	QTY	PART NAME 1 2 3 4 5 6 (PRODUCT LEVEL)	SEE PAGE
	1	1	**231-7326**	1	FRAME AS-WINDOW (RH)	
	1A	1	**5C-7682**	1	SCREW (8-32-THD)	
JZ	1B	1		1	BOLT	
JZ	1C	1		1	LATCH	
JZ	1D	1		1	SCREW	
JZ	1E	1		1	SPRING	
JZ	1F	1		2	CLIP	
JZ	1G	1		2	WASHER	
	1H	1	**231-7401**	1	HINGE	
	2	1	**239-6138**	1	BRACKET AS	
	3	1	**5C-7682**	2	SCREW (8-32-THD)	
					AVAILABLE REPAIR KIT(S):	
J			**231-7329**	1	KIT-LATCH	

J-KIT MARKED J SERVICES PART MARKED J
Z-NOT SERVICED SEPARATELY

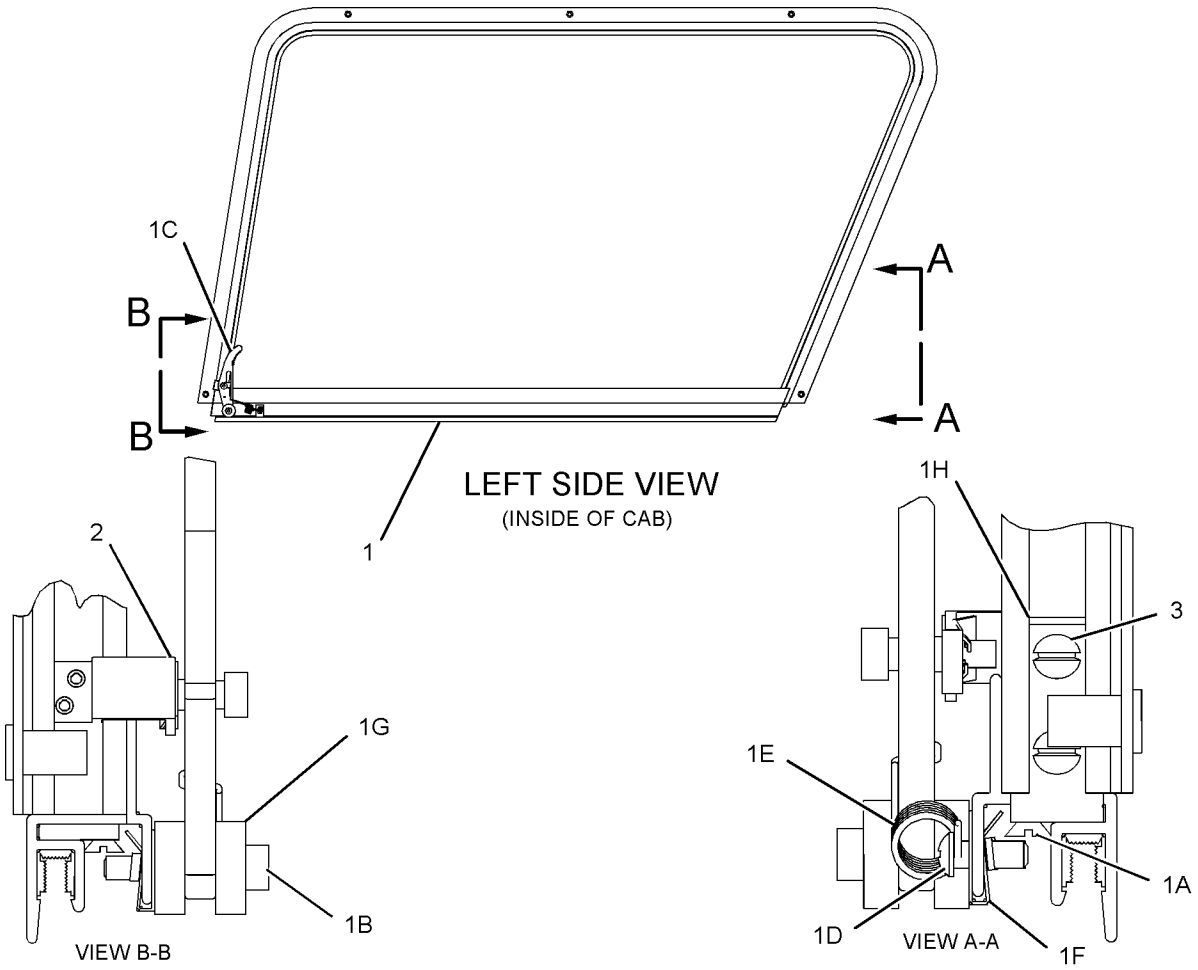

GRAPHIC #1 **<END>** g01066130

231-7327 FRAME GP-WINDOW–LH

S/N: BXM4225-UP
PART OF 224-7057 WINDOW GP-CAB
AN ATTACHMENT

SMCS-7310 **i02064823**

NOTE	REF NO	GRAPHIC REF	PART NUMBER	QTY	PART NAME 1 2 3 4 5 6 (PRODUCT LEVEL)	SEE PAGE
	1	1	**231-7328**	1	FRAME AS-WINDOW (LH)	
	1A	1	**5C-7682**	1	SCREW (8-32-THD)	
JZ	1B	1		1	BOLT	
JZ	1C	1		1	LATCH	
JZ	1D	1		1	SCREW	
JZ	1E	1		1	SPRING	
JZ	1F	1		2	CLIP	
JZ	1G	1		2	WASHER	
	1H	1	**231-7401**	1	HINGE	
	2	1	**239-6138**	1	BRACKET AS	
	3	1	**5C-7682**	2	SCREW (8-32-THD)	
					AVAILABLE REPAIR KIT(S):	
J			**231-7329**	1	KIT-LATCH	

J-KIT MARKED J SERVICES PARTS MAKED J
Z-NOT SERVICED SEPARATELY

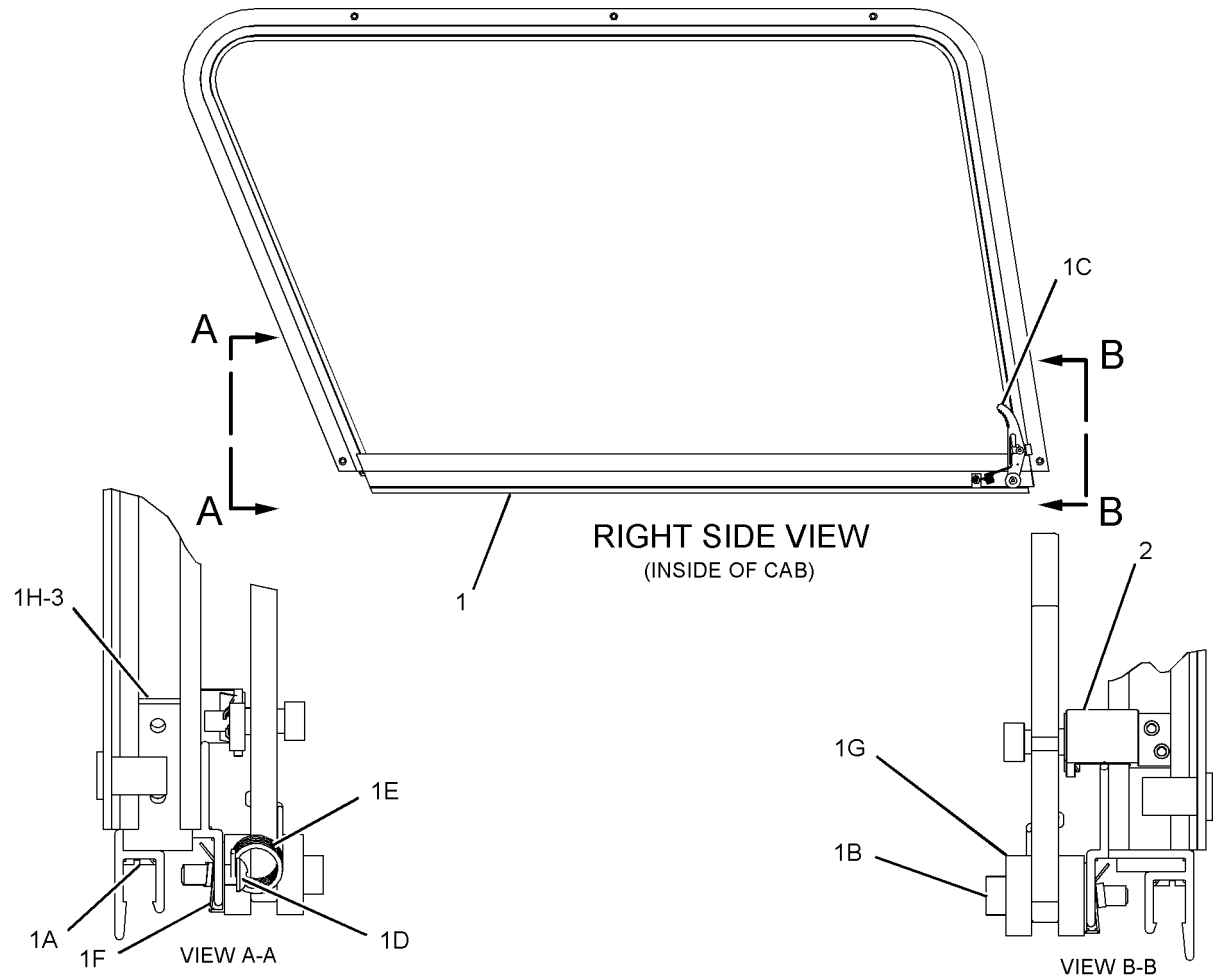

GRAPHIC #1 **<END>** g01066272

OPERATOR STATION

216-4712 GAUGE & WARNING GP–LH

S/N: BXM4225-UP

PART OF 216-4751, 225-7998 PANEL GP-INSTRUMENT

AN ATTACHMENT

SMCS-7450, 7451 **i02014376**

NOTE	REF NO	GRAPHIC REF	PART NUMBER	QTY	PART NAME 1 2 3 4 5 6 (PRODUCT LEVEL)	SEE PAGE
J	1	1	**142-8858**	1	SWITCH AS-KEY START	
		1	**167-1530**	1	NUT (1-32-THD)	
	2	1	**158-6694**	1	PANEL	
	3	1	**197-6894**	1	FILM-INSTRUCTION (INSTRUMENT PANEL)	
	4	1	**216-4753**	1	FILM (KEY SWITCH)	
Y	5	1	**223-6537**	1	MODULE GP-WARNING INDICATOR	593
	6	1	**103-2006**	2	SCREW-PAN HEAD (6-19X0.37-IN)	

J-REQUIRES 5P-8500 KEY
Y-SEPARATE ILLUSTRATION

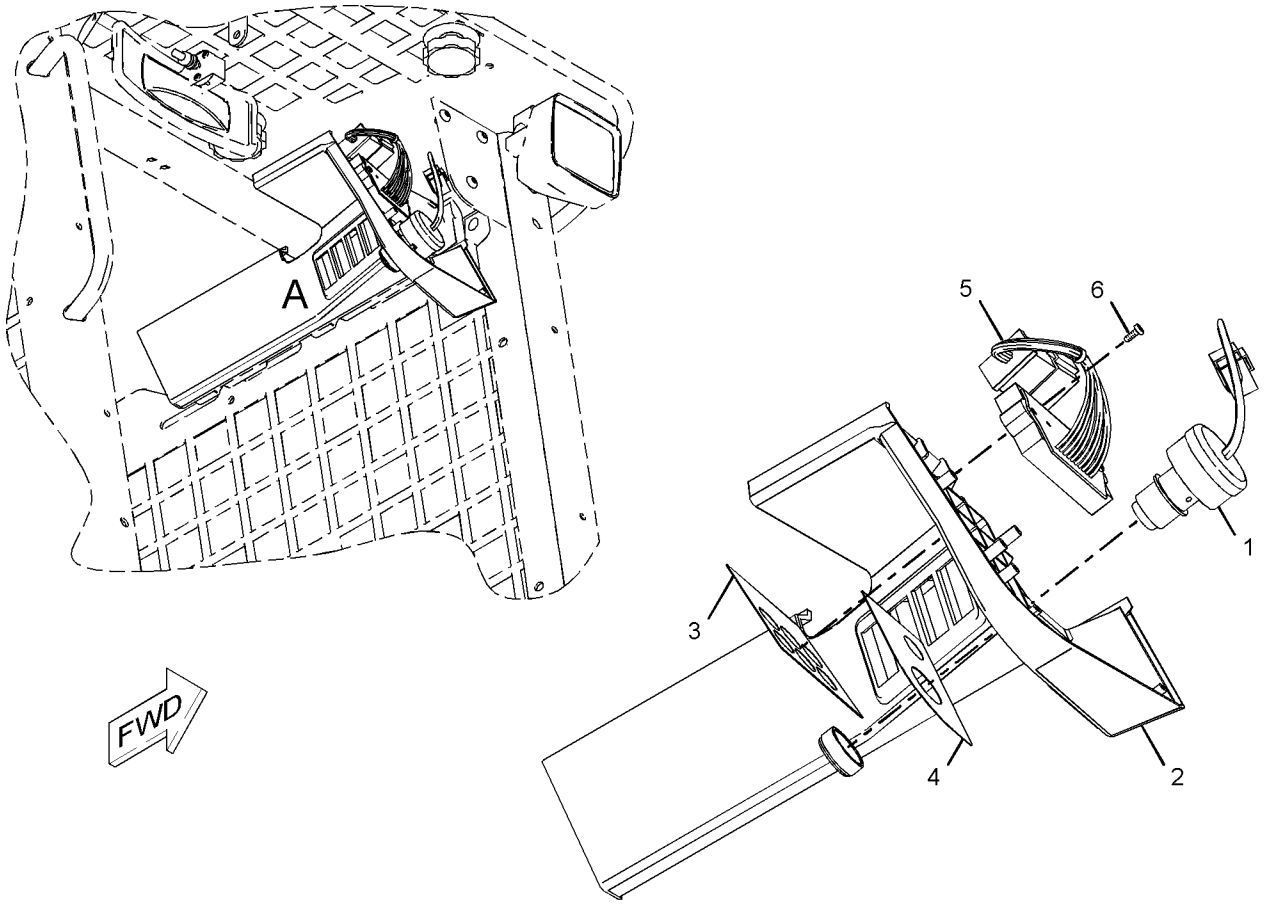

VIEW OF AREA A

GRAPHIC #1 **<END>** g01028652

OPERATOR STATION

216-4713 GAUGE & WARNING GP–RH

S/N: BXM4225-UP

PART OF 216-4751, 225-7998 PANEL GP-INSTRUMENT

AN ATTACHMENT

SMCS-7450, 7451 **i02772056**

NOTE	REF NO	GRAPHIC REF	PART NUMBER	QTY	PART NAME 1 2 3 4 5 6 (PRODUCT LEVEL)	SEE PAGE
	1	1	**084-4277**	1	LAMP GP-DOME (12-VOLT)	
		1	**6R-7490**	1	LAMP (12-VOLT, 10-WATT)	
	2	1	**158-6697**	1	PANEL	
	3	1	**216-4754**	1	FILM-INSTRUCTION (DASH)	
Y	4	1	**249-2910**	1	MODULE GP-WARNING INDICATOR	594
	5	1	**103-2006**	2	SCREW-PAN HEAD (6-19X0.37-IN)	
	6	1	**170-6305**	1	GAUGE GP-FUEL LEVEL	
		1	**4B-2043**	3	NUT (8-32-THD)	
		1	**7X-9065**	1	LAMP (12-VOLT)	
		1	**9B-7233**	3	LOCKWASHER	

Y-SEPARATE ILLUSTRATION

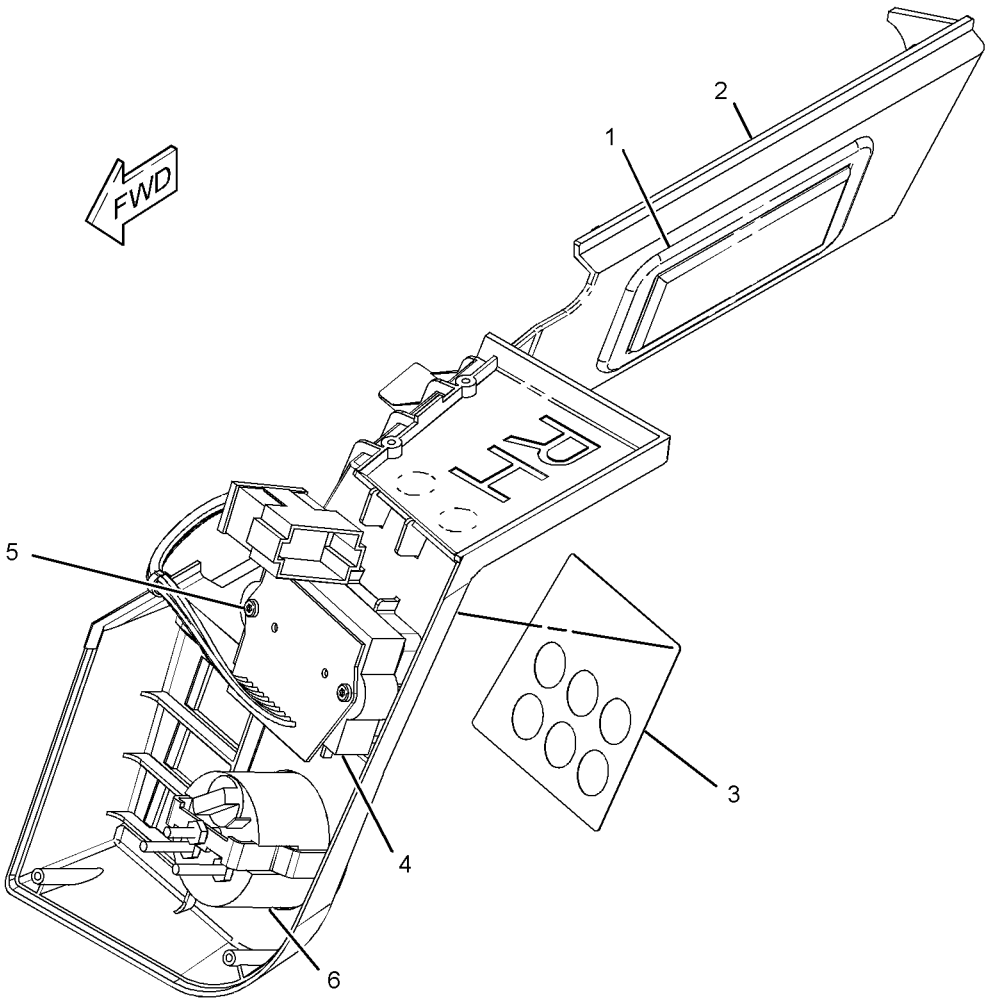

GRAPHIC #1 **<END>** g01142720

OPERATOR STATION

233-5632 GUARD GP-ROPS/FOPS

S/N: BXM4225-UP
AN ATTACHMENT

SMCS-7323 **i02866878**

NOTE	REF NO	GRAPHIC REF	PART NUMBER	QTY	PART NAME 1 2 3 4 5 6 (PRODUCT LEVEL)	SEE PAGE
	1	1	**152-1161**	1	PLATE AS-FOPS	
	2	1	**153-2683**	1	SPRING AS-GAS	
	4	1	**247-7182**	1	FILM (FOPS)	
M	5	1	**7X-2553**	8	BOLT (M16X2X40-MM)	
	6	1	**8T-4122**	12	WASHER-HARD (17X32X3.5-MM THK)	
M	7	1	**8T-4132**	4	NUT (M16X2-THD)	
D	8	1	**8T-5372**		SEAL (1.4-M)	

D-ORDER BY THE METER
M-METRIC PART

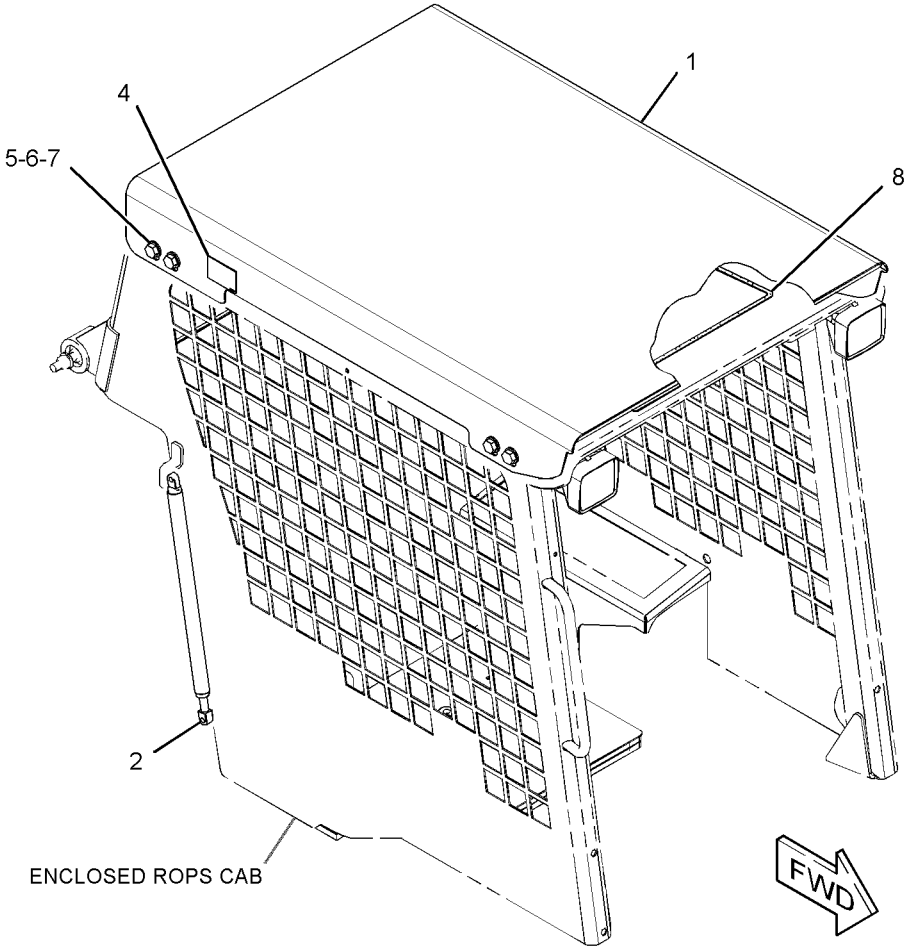

GRAPHIC #1 **<END>** g01437181

218-6400 HANDHOLD GP

S/N: BXM4225-UP
PART OF 295-7303, 295-7313 OPTION AR-CAB
CANNOT BE USED WITH 218-6440—PAGE 547, 223-0600—PAGE 550
AN ATTACHMENT

SMCS-7256 **i01908092**

NOTE	REF NO	GRAPHIC REF	PART NUMBER	QTY	PART NAME 1 2 3 4 5 6 (PRODUCT LEVEL)	SEE PAGE
	1	1	**218-6377**	1	HANDLE	
	2	1	**8T-4121**	2	WASHER-HARD (11X21X2.5-MM THK)	
M	3	1	**8T-4133**	2	NUT (M10X1.5-THD)	
M	4	1	**9X-2041**	2	SCREW-TRUSS HEAD (M10X1.5X20-MM)	

M-METRIC PART

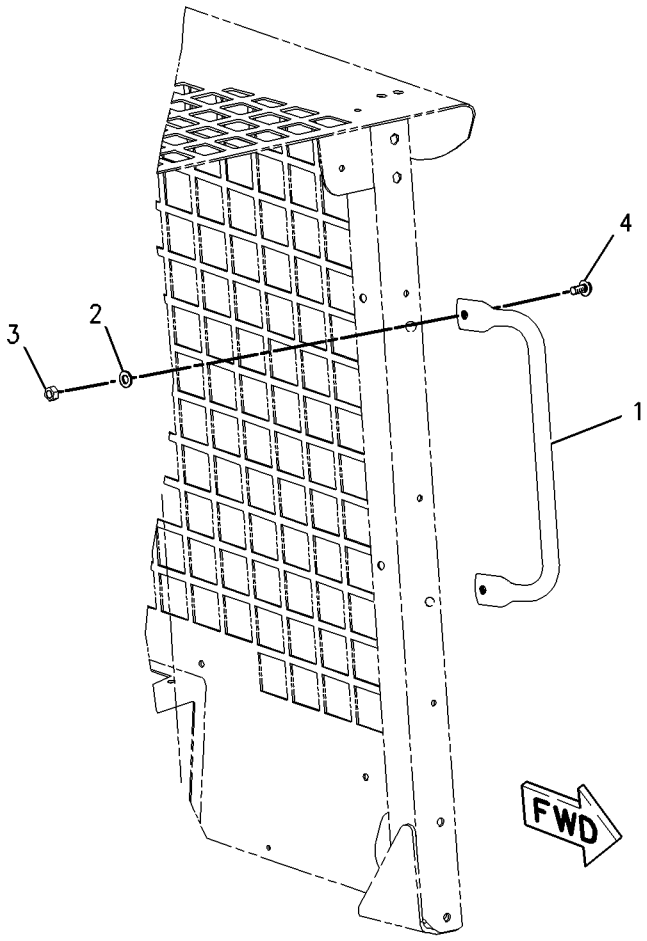

GRAPHIC #1 **<END>** g01002446

OPERATOR STATION

218-6117 HANDLE GP-MODULAR

S/N: BXM4225-UP
PART OF 218-6480 CONTROL GP-HANDLE
AN ATTACHMENT

SMCS-5705 **i02492650**

NOTE	REF NO	GRAPHIC REF	PART NUMBER	QTY	PART NAME 1 2 3 4 5 6 (PRODUCT LEVEL)	SEE PAGE
	1	1	**8L-8413**	1	STRAP-CABLE	
	2	1	**159-9853**	1	GROMMET	
	3	1	**174-3091**	1	KIT-RECEPTACLE (12-PIN)	
					(INCLUDES RECEPTACLE AS & WEDGE)	
	4	1	**186-3735**	2	PIN-CONNECTOR (16-GA TO 18-GA)	
	5	1	**8T-8737**	10	PLUG-SEAL	

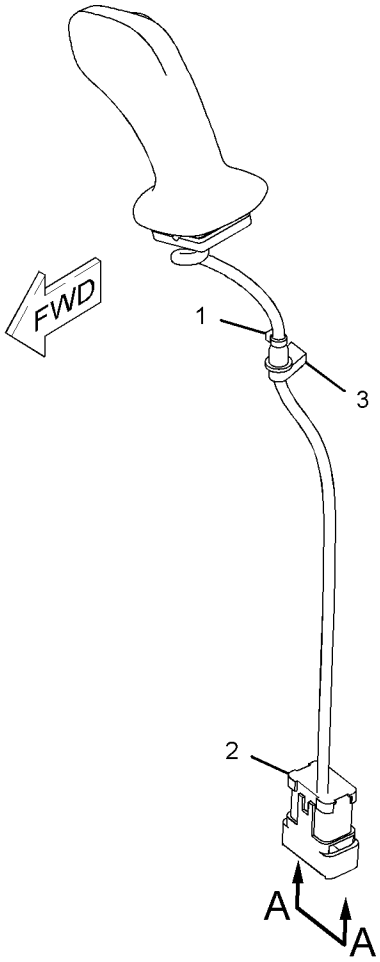

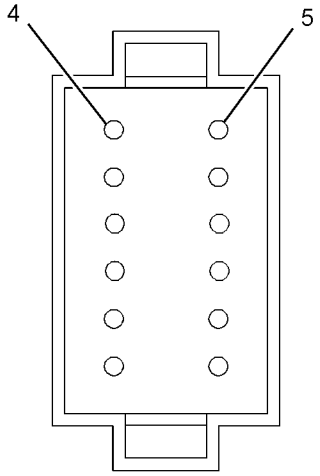

VIEW A-A

GRAPHIC #1 **<END>** g01010901

218-6118 HANDLE GP-MODULAR

S/N: BXM4225-UP
PART OF 218-6485, 218-6490 CONTROL GP-HANDLE
AN ATTACHMENT

SMCS-5705 **i02578035**

NOTE	REF NO	GRAPHIC REF	PART NUMBER	QTY	PART NAME 1 2 3 4 5 6 (PRODUCT LEVEL)	SEE PAGE
	1	1	**8L-8413**	1	STRAP-CABLE	
	2	1	**159-9853**	1	GROMMET	
	3	1	**174-3091**	1	KIT-RECEPTACLE (12-PIN)	
					(INCLUDES RECEPTACLE AS & WEDGE)	
	4	1	**186-3735**	4	PIN-CONNECTOR (16-GA TO 18-GA)	
	5	1	**8T-8737**	8	PLUG-SEAL	

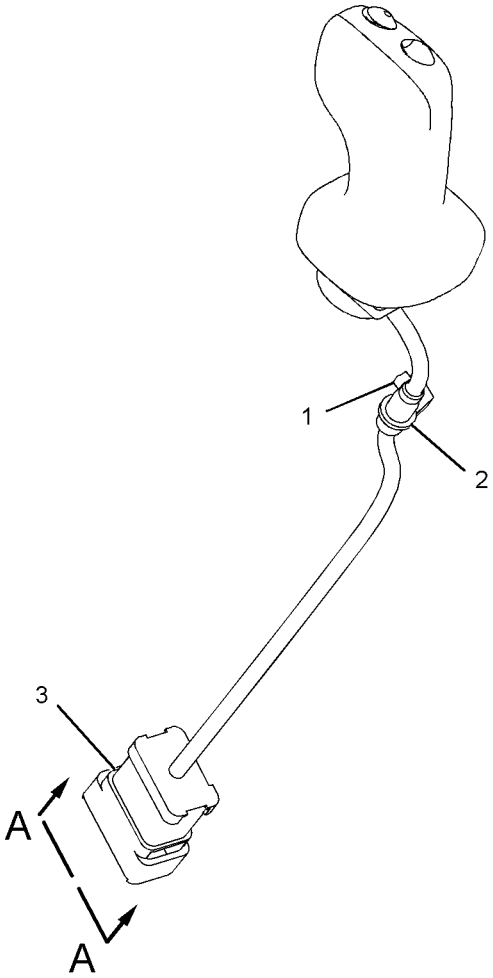

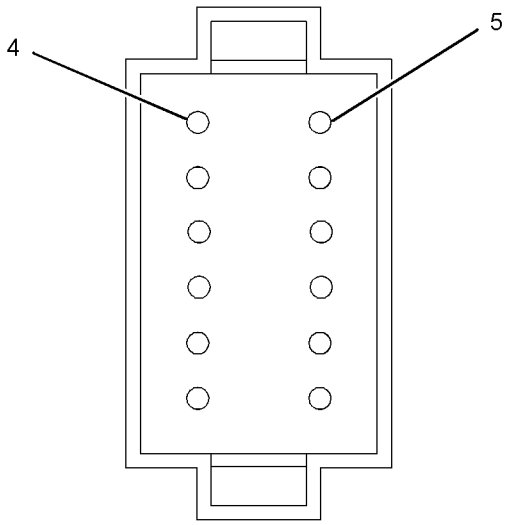

VIEW A-A

GRAPHIC #1 **<END>** g01113888

OPERATOR STATION

229-8746 HEATER & MTG GP-CAB

S/N: BXM4225-UP
PART OF 218-6703 HEATER AR-CAB
AN ATTACHMENT

SMCS-7304 **i02010980**

NOTE	REF NO	GRAPHIC REF	PART NUMBER	QTY	PART NAME 1 2 3 4 5 6 (PRODUCT LEVEL)	SEE PAGE
Y	1	1	*218-6393*	1	HEATER GP-CAB	570
M	2	1	**7X-2537**	4	BOLT (M8X1.25X35MM)	
	3	1	**8T-4224**	4	WASHER-HARD (8.8X16X2MM THK)	

M-METRIC PART
Y-SEPARATE ILLUSTRATION

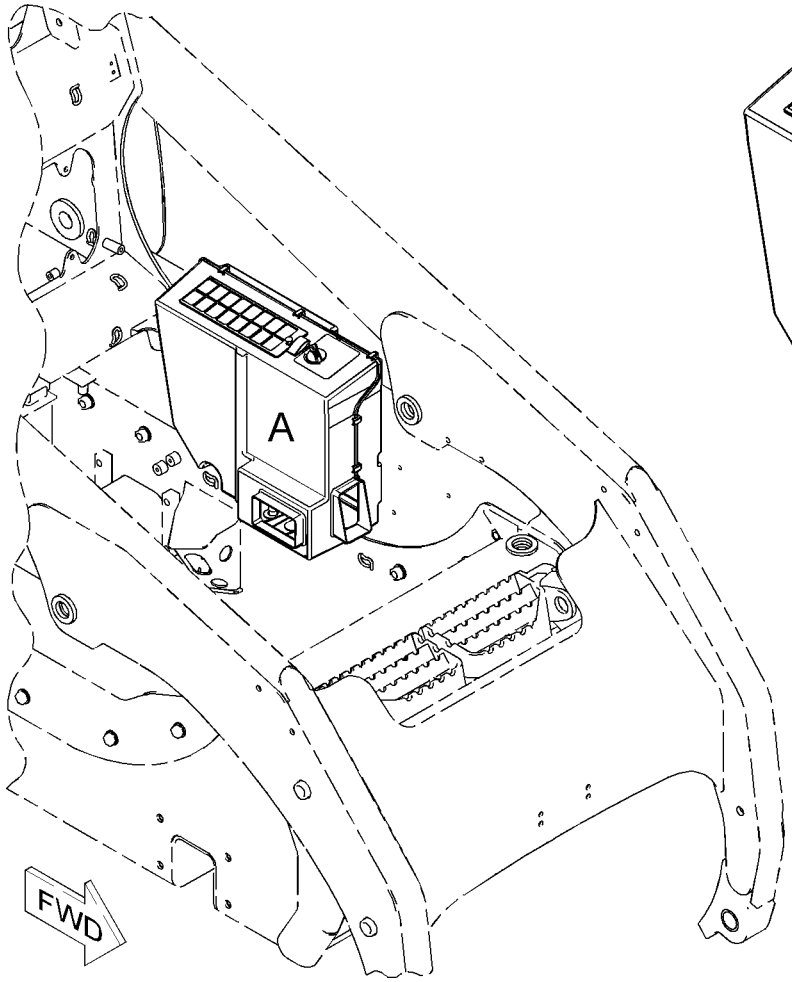

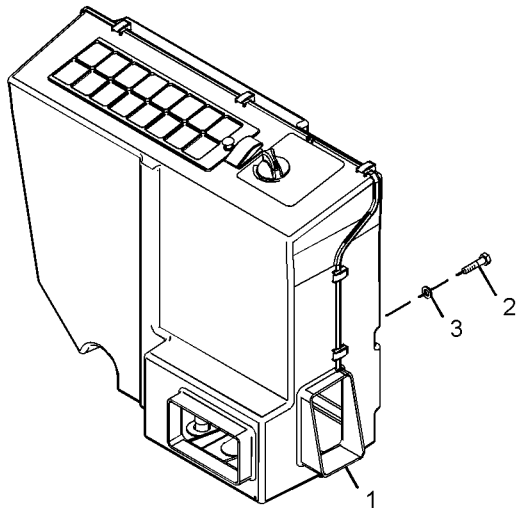

VIEW OF AREA A

GRAPHIC #1 **<END>** g01018708

OPERATOR STATION

218-6703 HEATER AR-CAB

S/N: BXM4225-UP
PART OF 295-7323 OPTION AR-CAB
AN ATTACHMENT

SMCS-7304 **i02869558**

NOTE	PART NUMBER	QTY	PART NAME 1 2 3 4 5 6 (PRODUCT LEVEL)	SEE PAGE
Y	*218-6394*	1	DUCT & CONTROL GP	558
Y	*229-8746*	1	HEATER & MTG GP-CAB	568
Y	*311-5861*	1	LINES GP-HEATER	590
Y	*218-6528*	1	LINES GP-HYDRAULIC FAN	306

Y-SEPARATE ILLUSTRATION

<END>

OPERATOR STATION

218-6393 HEATER GP-CAB

S/N: BXM4225-UP

PART OF 229-8746 HEATER & MTG GP-CAB, 218-6746 HEATER GP-CAB

AN ATTACHMENT

TYPE 1

SMCS-7304, 7342 **i02839368**

NOTE	REF NO	GRAPHIC REF	PART NUMBER	QTY	PART NAME 1 2 3 4 5 6 (PRODUCT LEVEL)	SEE PAGE
	1	1	**185-4015**	10	CLIP	
	2	1	**218-6399**	1	SEAL	
	3	1	**231-8121**	1	HOUSING	
Y	4	1	**231-8122**	1	HOUSING AS-SIDE (AIR CONDITIONER, HEATER)	576
	5	1	**231-8124**	1	COIL AS-HEATER	
	6	1	**295-5440**	1	MOTOR	
	7	1	**231-8126**	1	VALVE AS	
	8	1	**231-8127**	1	GROMMET	
	9	1	**231-8128**	1	GRILL	
	10	1	**231-8129**	1	PIN	
	11	1	**231-8130**	1	FILTER ELEMENT-CAB AIR	
	12	1	**231-8131**	1	PLATE	
	13	1	**231-8132**	1	FILTER ELEMENT-CAB AIR	
	14	1	**231-8133**	1	PANEL	
	15	1	**231-8141**	1	GROMMET	
	16	1	**231-8142**	1	RETAINER	
	17	1	**231-8143**	1	FILM (TEMPERATURE CONTROL)	
	18	1	**231-8144**	1	BAFFLE	
	19	1	**231-8145**	1	GROMMET	
	20	1	**206-7398**	1	KNOB-CONTROL (TEMPERATURE SELECT)	
	21	1	**305-2969**	2	THUMBSCREW	
	22	1	**218-6947**	1	HARNESS AS-HEATER & AIR COND	
	23	1	**236-5067**	1	SWITCH-ROCKER (HEATER)	
	24	1	**236-5069**	1	RELAY AS (12-VOLT) (HEATER)	

Y-SEPARATE ILLUSTRATION

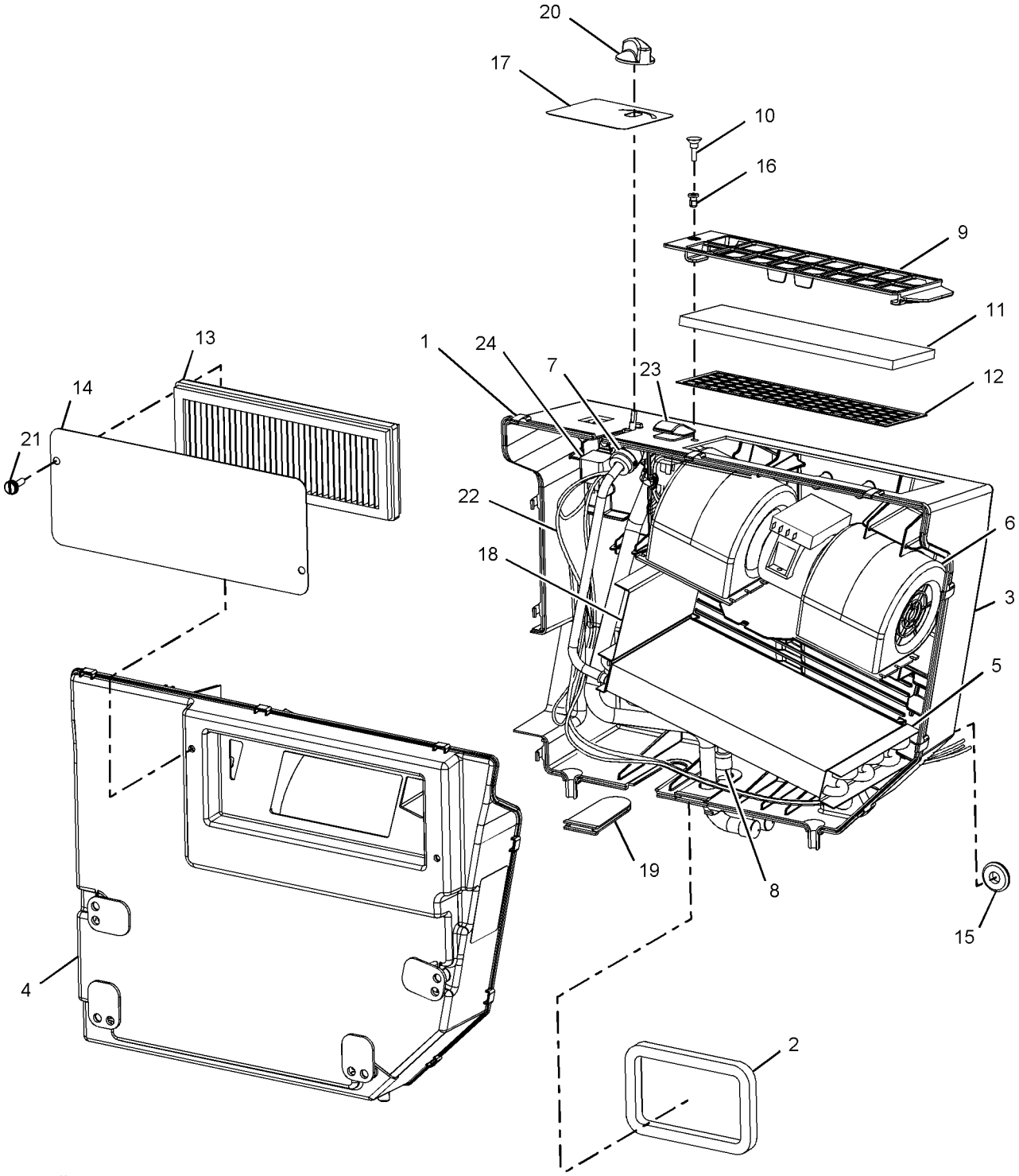

GRAPHIC #1 **<END>** g01027810

OPERATOR STATION

218-6393 HEATER GP-CAB

S/N: BXM4225-UP
PART OF 218-6746 HEATER GP-CAB
AN ATTACHMENT
TYPE 2

SMCS-7304, 7342 **i02839375**

NOTE	REF NO	GRAPHIC REF	PART NUMBER	QTY	PART NAME 1 2 3 4 5 6 (PRODUCT LEVEL)	SEE PAGE
	1	1	**185-4015**	10	CLIP	
	2	1	**218-6399**	1	SEAL	
C	3	1	**312-1683**	1	HOUSING-COVER	
Y	4	1	**231-8122**	1	HOUSING AS-SIDE (AIR CONDITIONER, HEATER)	576
	5	1	**231-8124**	1	COIL AS-HEATER	
	6	1	**295-5440**	1	MOTOR	
	7	1	**231-8126**	1	VALVE AS	
	8	1	**231-8127**	1	GROMMET	
C	9	1	**312-2635**	1	COVER GP-ACCESS	
		1	**231-8129**	2	PIN	
		1	**231-8142**	2	RETAINER	
C	11	1	**303-6658**	1	FILTER ELEMENT-CAB AIR (AIR)	
	13	1	**231-8132**	1	FILTER ELEMENT-CAB AIR	
	14	1	**231-8133**	1	PANEL	
	15	1	**231-8141**	1	GROMMET	
	17	1	**231-8143**	1	FILM (TEMPERATURE CONTROL)	
	18	1	**231-8144**	1	BAFFLE	
	19	1	**231-8145**	1	GROMMET	
	20	1	**206-7398**	1	KNOB-CONTROL (TEMPERATURE SELECT)	
	21	1	**305-2969**	2	THUMBSCREW	
	22	1	**218-6947**	1	HARNESS AS-HEATER & AIR COND	
	23	1	**236-5067**	1	SWITCH-ROCKER (HEATER)	
	24	1	**236-5069**	1	RELAY AS (12-VOLT) (HEATER)	

C-CHANGE FROM PREVIOUS TYPE
Y-SEPARATE ILLUSTRATION

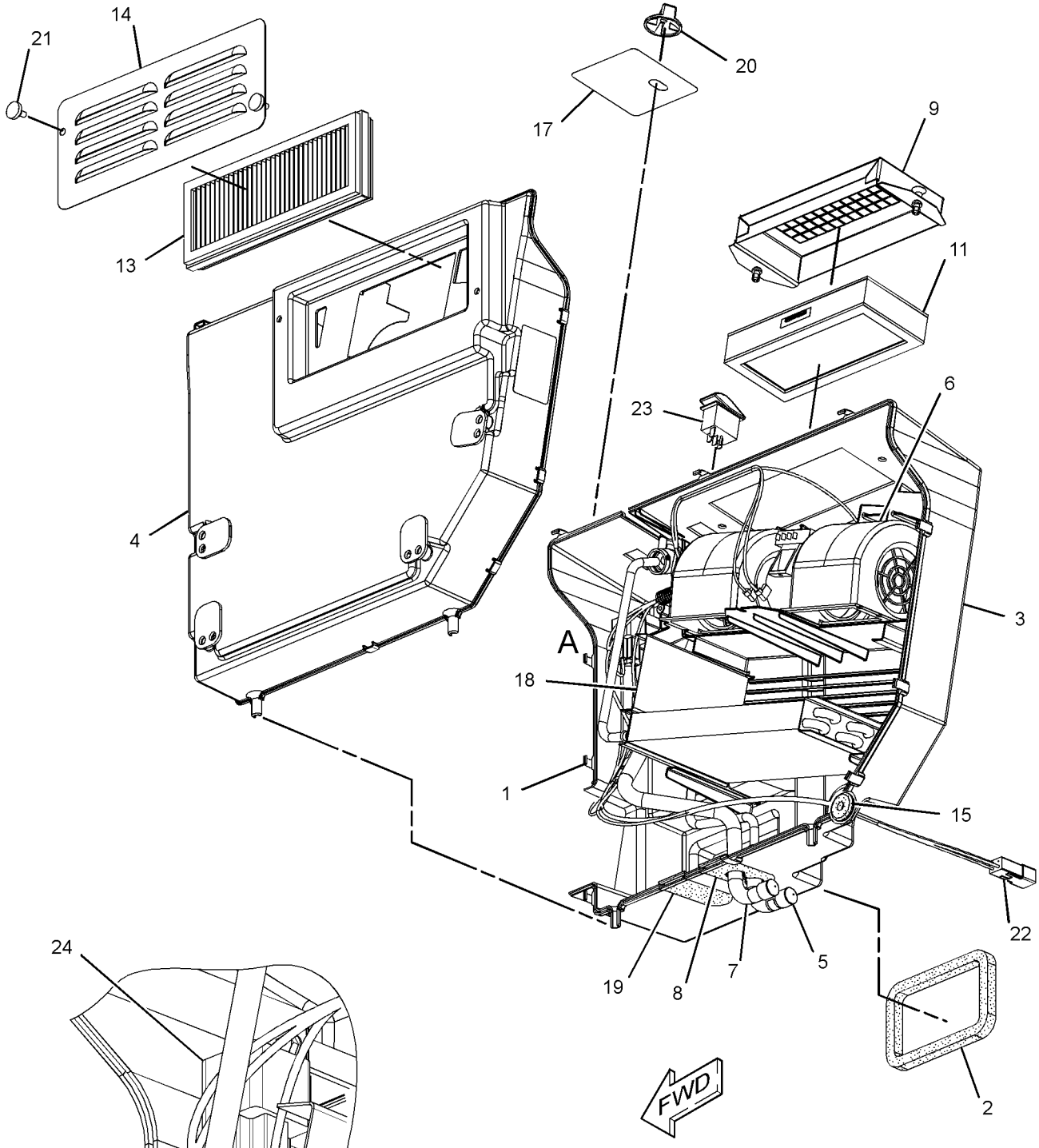

VIEW OF AREA A

GRAPHIC #1 **<END>** g01416774

OPERATOR STATION

218-6746 HEATER GP-CAB–KIT

S/N: BXM4225-UP
AN ATTACHMENT

SMCS-7304, 7342 **i02890258**

NOTE	PART NUMBER	QTY	PART NAME 1 2 3 4 5 6 (PRODUCT LEVEL)	SEE PAGE
Y	*218-6393*	1	HEATER GP-CAB	570
	218-6402	1	INSULATION AS	
	146-6371	6	LOUVER AS	
	8F-8151	1	VALVE AS-SHUTOFF (WATER)	
	150-7568	1	ADAPTER	
M	**7X-2537**	4	BOLT (M8X1.25X35-MM)	
M	**8T-4137**	1	BOLT (M10X1.5X20-MM)	
M	**8T-4189**	1	BOLT (M8X1.25X20-MM)	
M	**8T-4191**	1	BOLT (M10X1.5X16-MM)	
M	**8T-4200**	1	BOLT (M8X1.25X16-MM)	
M	**8T-6869**	4	BOLT (M8X1.25X60-MM)	
	8T-0154	4	CLAMP-HOSE	
	6D-4636	2	CLIP	
	3S-8665	1	CLIP	
	6D-1641	2	CLIP	
	6V-2235	1	CLIP	
	9X-8250	4	CLIP	
	218-6398	1	CONSOLE (LH)	
	218-6397	1	CONSOLE (RH)	
	218-6396	1	DUCT (CROSSOVER)	
	004-6810	1	ELBOW	
	218-6645	1	ELBOW	
	250-1493	1	ELBOW	
E	**206-2724**		GUARD (110-CM)	
E	**136-1953**		HOSE (387-CM)	
	176-4079	1	INSULATION	
	285-9133	1	INSULATION	
	285-8570	1	INSULATION	
	285-8565	1	INSULATION	
M	**8T-4133**	2	NUT (M10X1.5-THD)	
M	**175-0005**	8	SCREW-BUTTON HEAD (M6X1X25-MM)	
	6V-6689	2	SCREW-SELF-TAPPING (10-16X.625-IN)	
	240-6879	2	SEAL	
	240-6878	1	SEAL	
	240-6877	1	SEAL	
	218-6414	1	SEAL	
	218-6401	1	SEAL	
D	**8T-5372**		SEAL (0.4-M)	
	178-3620	2	STRAP-DUAL CLAMP (DUAL CLAMP)	
	5P-4116	1	WASHER-HARD (8.8X20.5X2-MM THK)	
	8T-4121	5	WASHER-HARD (11X21X2.5-MM THK)	
	8T-4224	5	WASHER-HARD (8.8X16X2-MM THK)	

D-ORDER BY THE METER
E-ORDER BY THE CENTIMETER
M-METRIC PART
Y-SEPARATE ILLUSTRATION

<END>

OPERATOR STATION

245-6811 HOLDER-CUP

S/N: BXM4225-UP

AN ATTACHMENT

SMCS-731C **i02825213**

NOTE	REF NO	GRAPHIC REF	PART NUMBER	QTY	PART NAME 1 2 3 4 5 6 (PRODUCT LEVEL)	SEE PAGE
					(NO SERVICED PARTS)	

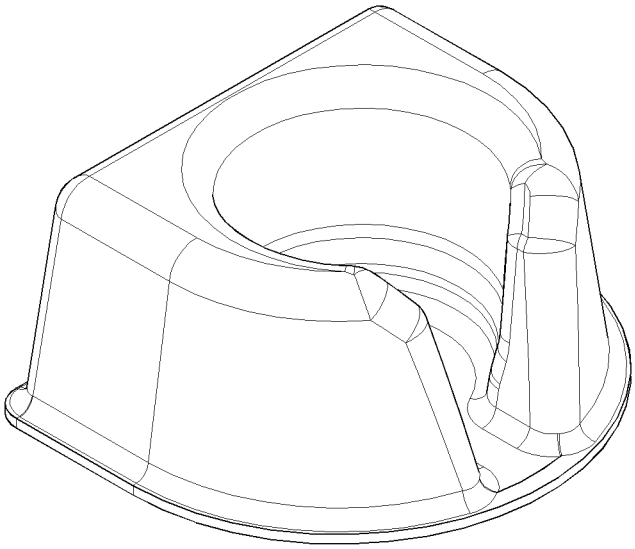

GRAPHIC #1 **<END>** g01409609

OPERATOR STATION

231-8122 HOUSING AS-SIDE–A/C, HEATER

S/N: BXM4225-UP

PART OF 218-6405 AIR CONDITIONER GP, 218-6393 HEATER GP-CAB

AN ATTACHMENT

SMCS-7320 **i02014573**

NOTE	REF NO	GRAPHIC REF	PART NUMBER	QTY	PART NAME 1 2 3 4 5 6 (PRODUCT LEVEL)	SEE PAGE
	1	1	**233-5929**	2	LOCKWASHER	
	2	1	**233-5931**	4	LOCKWASHER	
M	3	1	**131-3540**	4	LOCKNUT (M8X1.25 THD)	
	4	1	**233-5934**	4	MOUNT	
M	5	1	**129-3178**	2	LOCKNUT (M6X1 THD)	

M-METRIC PART

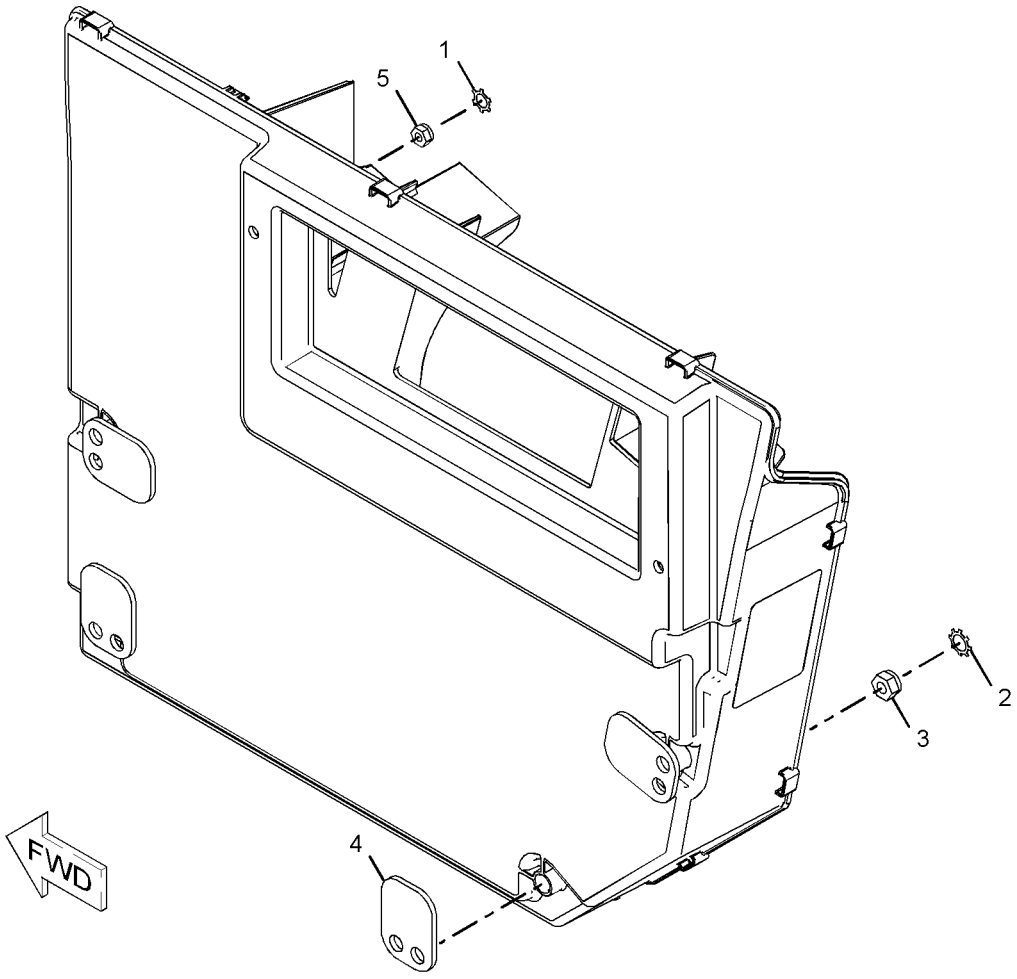

GRAPHIC #1

<END>

g01041727

OPERATOR STATION

218-6701 INSTALLATION GP

S/N: BXM4225-UP
WITHOUT HEATER OR AIR CONDITIONER
PART OF 295-7303, 295-7313 OPTION AR-CAB
AN ATTACHMENT

SMCS-5057, 5258 **i02009396**

NOTE	PART NUMBER	QTY	PART NAME 1 2 3 4 5 6 (PRODUCT LEVEL)	SEE PAGE
Y	*218-6419*	1	COVER GP-CONSOLE	544
Y	*229-8744*	1	COVER GP-CONSOLE	545
Y	*218-6528*	1	LINES GP-HYDRAULIC FAN	306
Y-SEPARATE ILLUSTRATION				

<END>

233-5588 KIT-AIR COND & HEATER INSTL

S/N: BXM4225-UP
AN ATTACHMENT

SMCS-1405, 1802, 1805, 1808, 7174, 7304, 7320, 734D **i02876738**

NOTE	PART NUMBER	QTY	PART NAME 1 2 3 4 5 6 (PRODUCT LEVEL)	SEE PAGE
Y	**176-3900**	1	ACCUMULATOR GP-REFRIGERANT (WITH DESICCANT)	490
Y	**218-6405**	1	AIR CONDITIONER GP	494
Y	**218-6840**	1	MOTOR GP-GEAR	351
			—OR—	
Y	**289-6360**	1	MOTOR GP-GEAR (REFRIGERANT COMPRESSOR)	353
	218-6833	1	COMPRESSOR GP-REFRIGERANT	
	218-6836	1	COUPLING GP-DRIVE	
	218-6837	1	COUPLING	
	218-6838		HUB (COMPRESSOR)	
	276-4063	1	HUB (MOTOR)	
	283-9566	1	VALVE GP-SOLENOID (12 VDC)	
M	**8T-4191**	1	BOLT (M10X1.5X16-MM)	
M	**085-8091**	2	BOLT (M10X1.5X55-MM)	
M	**8T-6870**	2	BOLT (M8X1.25X70-MM)	
M	**8T-4136**	3	BOLT (M10X1.5X25-MM)	
M	**8T-4189**	14	BOLT (M8X1.25X20-MM)	
M	**9X-6032**	2	BOLT-SOCKET HEAD (M10X1.5X30-MM)	
	9G-5127	1	BREATHER (AIR CONDITIONER COMPRESSOR)	
	101-8296	2	CLIP	
	4P-8134	1	CLIP	
	233-5927	1	COIL AS	
	148-8315	2	CONNECTOR AS	
			(EACH INCLUDES)	
	2M-9780	1	SEAL-O-RING	
	6V-8642	1	CONNECTOR	
	7J-9108	1	SEAL-O-RING	
	148-8326	1	CONNECTOR AS	
	3J-7354	1	SEAL-O-RING	
	6V-8397	1	SEAL-O-RING	
	6V-9872	1	CONNECTOR	
	124-2113	1	COUPLING-PERMANENT	
	124-2119	1	COUPLING-PERMANENT	
	124-2141	1	COUPLING-PERMANENT	
	124-2150	2	COUPLING-PERMANENT	
	124-2164	2	COUPLING-PERMANENT	
	124-2168	1	COUPLING-PERMANENT	
	153-6256	1	ELBOW AS	

233-5588 **KIT-AIR COND & HEATER INSTL** *(contd.)* **i02876738**

NOTE	PART NUMBER	QTY	PART NAME 1 2 3 4 5 6 (PRODUCT LEVEL)	SEE PAGE
	7J-9108	1	SEAL-O-RING	
	8C-7563	1	ELBOW	
	218-6250	2	FAN AS	
	234-0566	1	FITTING AS	
	3E-4051	1	CAP-SEAL	
	3E-4057	1	VALVE AS	
	124-3548	1	FUSE (30-AMPERE)	
	2D-5248	1	GASKET	
	242-7389	1	HARNESS AS-CHASSIS (TRANSMISSION)	
	202-2168	1	HARNESS AS-FUEL TANK	
	102-8802	1	KIT-RECEPTACLE (2-PIN)	
			(INCLUDES RECEPTACLE AS & WEDGE)	
	155-2270		KIT-CONNECTING PLUG (2-PIN)	
			(INCLUDES PLUG AS, WEDGE & INTERFACE SEAL)	
	221-3879	1	HARNESS AS-HEATER & AIR COND	
	100-6674	2	SEAL-CONNECTOR	
E	**119-3662**		TUBE-HEAT SHRINK (10.85-MM DIA) (13-CM)	
	155-2260	1	KIT-CONNECTING PLUG (3-PIN)	
	155-2270	3	KIT-CONNECTING PLUG (2-PIN)	
			(EACH PLUG KIT INCLUDES PLUG AS, WEDGE & INTERFACE SEAL)	
GI	**122-6867**		HOSE (19-IN)	
I	**233-5951**	1	HOSE AS	
	218-6584	1	HOSE AS	
I	**233-5856**	1	HOSE AS	
I	**233-5863**	1	HOSE AS	
	252-0330	1	HOSE AS	
	218-6582	1	HOSE AS	
G	**122-6871**		HOSE-HYDRAULIC (29.2-IN)	
G	**122-6871**		HOSE-HYDRAULIC (2.8-IN)	
G	**213-8711**		HOSE-HYDRAULIC (67.8-IN)	
	233-5590	1	HOUSING-SUPPORT	
M	**5C-7261**	16	NUT (M8X1.25-THD)	
M	**8T-4133**	4	NUT (M10X1.5-THD)	
	246-9039	1	PLATE-INFORMATION (AIR CONDITIONER REFRIGERANT)	
D	**5P-5924**		SEAL (0.3-M)	
	9X-7378	1	SEAL-O-RING	
	9X-7380	1	SEAL-O-RING	
	9X-7381	3	SEAL-O-RING	
	9X-7382	2	SEAL-O-RING	
	9X-7383	3	SEAL-O-RING	
M	**233-1012**	1	SETSCREW-HEX SOCKET (M5X0.8X8-MM)	
	218-6060	1	SHROUD AS	
	9C-2741	2	SPACER (13.94X17.14X34-MM THK)	
	9G-7101	2	SPACER (10.5X20X30-MM THK)	
	3S-2093	14	STRAP-CABLE	
	7K-1181	2	STRAP-CABLE	
	236-6923	1	SWITCH AS-PRESSURE (REFRIGERANT)	
	8T-4121	12	WASHER-HARD (11X21X2.5-MM THK)	
	5P-4116	2	WASHER-HARD (8.8X20.5X2-MM THK)	
	8T-4224	22	WASHER-HARD (8.8X16X2-MM THK)	

D-ORDER BY THE METER
E-ORDER BY THE CENTIMETER
G-ORDER BY THE INCH
I-REFER TO HYDRAULIC INFORMATION SYSTEM
M-METRIC PART
Y-SEPARATE ILLUSTRATION

<END>

OPERATOR STATION

233-5589 KIT-AIR COND & HEATER INSTL—A/C, HEATER

S/N: BXM4225-UP

AN ATTACHMENT

SMCS-1405, 1802, 1805, 1808, 7174, 7304, 7320, 734D **i02890500**

NOTE	PART NUMBER	QTY	PART NAME 1 2 3 4 5 6 (PRODUCT LEVEL)	SEE PAGE
Y	*186-6190*	1	ACCUMULATOR GP-REFRIGERANT (WITH DESICCANT)	491
Y	*218-6405*	1	AIR CONDITIONER GP	494
Y	**218-6840**	1	MOTOR GP-GEAR (VALVE)	351
			—OR—	
Y	**289-6360**	1	MOTOR GP-GEAR	353
	283-9566	1	VALVE GP-SOLENOID (12 VDC)	
	150-7568	1	ADAPTER	
M	**8T-4191**	2	BOLT (M10X1.5X16-MM)	
M	**085-8091**	2	BOLT (M10X1.5X55-MM)	
M	**7X-2537**	4	BOLT (M8X1.25X35-MM)	
M	**8T-4136**	3	BOLT (M10X1.5X25-MM)	
M	**8T-4189**	14	BOLT (M8X1.25X20-MM)	
M	**8T-4200**	1	BOLT (M8X1.25X16-MM)	
M	**8T-6870**	2	BOLT (M8X1.25X70-MM)	
M	**9X-6032**	2	BOLT-SOCKET HEAD (M10X1.5X30-MM)	
	9G-5127	1	BREATHER (AIR CONDITIONER COMPRESSOR)	
	8T-0154	4	CLAMP-HOSE	
	6D-4636	2	CLIP	
	101-8296	2	CLIP	
	4P-8134	1	CLIP	
	3S-8665	1	CLIP	
	6D-1641	2	CLIP	
	233-5927	1	COIL AS	
	218-6833	1	COMPRESSOR GP-REFRIGERANT	
	148-8326	1	CONNECTOR AS	
	3J-7354	1	SEAL-O-RING	
	6V-8397	1	SEAL-O-RING	
	6V-9872	1	CONNECTOR	
	148-8315	2	CONNECTOR AS	
			(EACH INCLUDES)	
	2M-9780	1	SEAL-O-RING	
	6V-8642	1	CONNECTOR	
	7J-9108	1	SEAL-O-RING	
	218-6397		CONSOLE (RH)	
	218-6398	1	CONSOLE (LH)	
	218-6836	1	COUPLING GP-DRIVE	
	218-6837	1	COUPLING	
	218-6838	1	HUB (COMPRESSOR)	
	276-4063	1	HUB (MOTOR)	
	124-2119	1	COUPLING-PERMANENT	
	124-2113	1	COUPLING-PERMANENT	
	124-2141	1	COUPLING-PERMANENT	
	124-2150	2	COUPLING-PERMANENT	
	124-2164	2	COUPLING-PERMANENT	
	124-2168	1	COUPLING-PERMANENT	
	218-6396	1	DUCT	
	250-1493	1	ELBOW	
	153-6256	1	ELBOW AS	
	7J-9108	1	SEAL-O-RING	
	8C-7563	1	ELBOW	
	218-6250	2	FAN AS	
	234-0566	1	FITTING AS	
	3E-4051	1	CAP-SEAL	
	3E-4057	1	VALVE AS	

233-5589 **KIT-AIR COND & HEATER INSTL** *(contd.)* **i02890500**

NOTE	PART NUMBER	QTY	PART NAME 1 2 3 4 5 6 (PRODUCT LEVEL)	SEE PAGE
	124-3548	1	FUSE (30-AMPERE)	
	2D-5248	1	GASKET	
	206-2724		GUARD (110-CM)	
	242-7389	1	HARNESS AS-CHASSIS (TRANSMISSION)	
	202-2168	1	HARNESS AS-FUEL TANK	
	221-3879	1	HARNESS AS-HEATER & AIR COND	
E	**136-1953**		HOSE (330-CM)	
GI	**122-6867**		HOSE (19-IN)	
	218-6582	1	HOSE AS	
	218-6584	1	HOSE AS	
I	**233-5856**	1	HOSE AS	
I	**233-5863**	1	HOSE AS	
I	**233-5951**	1	HOSE AS	
	252-0330	1	HOSE AS	
	213-8711		HOSE-HYDRAULIC (172-CM)	
E	**122-6877**		HOSE-HYDRAULIC (48-CM)	
E	**122-6871**		HOSE-HYDRAULIC (256-CM)	
	233-5590	1	HOUSING-SUPPORT	
	176-4079	1	INSULATION	
	285-8565	1	INSULATION	
	285-8570	1	INSULATION	
	285-9133	1	INSULATION	
	146-6371	6	LOUVER AS	
M	**5C-7261**	16	NUT (M8X1.25-THD)	
M	**8T-4133**	4	NUT (M10X1.5-THD)	
	246-9039	1	PLATE-INFORMATION (AIR CONDITIONER REFRIGERANT)	
M	**175-0005**	8	SCREW-BUTTON HEAD (M6X1X25-MM)	
	6V-6689	2	SCREW-SELF-TAPPING (10-16X.625-IN)	
D	**5P-5924**		SEAL (0.3-M)	
D	**8T-5372**		SEAL (0.4-M)	
	218-6401	1	SEAL	
	218-6414	1	SEAL	
	240-6877	1	SEAL	
	240-6878	1	SEAL	
	240-6879	2	SEAL	
	9X-7378	1	SEAL-O-RING	
	9X-7380	1	SEAL-O-RING	
	9X-7381	3	SEAL-O-RING	
	9X-7382	2	SEAL-O-RING	
	9X-7383	3	SEAL-O-RING	
M	**233-1012**	1	SETSCREW-HEX SOCKET (M5X0.8X8-MM)	
	218-6060	1	SHROUD AS	
	9C-2741	2	SPACER (13.94X17.14X34-MM THK)	
	9G-7101	2	SPACER (10.5X20X30-MM THK)	
	3S-2093	14	STRAP-CABLE	
	7K-1181	2	STRAP-CABLE	
	178-3620	2	STRAP-DUAL CLAMP	
	236-6923	1	SWITCH AS-PRESSURE (REFRIGERANT)	
	8F-8151	1	VALVE AS-SHUTOFF	
	8T-4121	13	WASHER-HARD (11X21X2.5-MM THK)	
	5P-4116	2	WASHER-HARD (8.8X20.5X2-MM THK)	
	8T-4224	27	WASHER-HARD (8.8X16X2-MM THK)	

D-ORDER BY THE METER
E-ORDER BY THE CENTIMETER
G-ORDER BY THE INCH
I-REFER TO HYDRAULIC INFORMATION SYSTEM
M-METRIC PART

233-5589 **KIT-AIR COND & HEATER INSTL** *(contd.)* **i02890500**

Y-SEPARATE ILLUSTRATION

<END>

OPERATOR STATION

218-6743 KIT-CAB DOOR & MOUNTING—POLYCARBONATE

S/N: BXM4225-UP

CANNOT BE USED WITH 218-6744—PAGE 583

AN ATTACHMENT

SMCS-7308 **i02772066**

NOTE	PART NUMBER	QTY	PART NAME 1 2 3 4 5 6 (PRODUCT LEVEL)	SEE PAGE
Y	*276-3440*	1	DOOR GP-CAB (POLYCARBONATE)	555
	221-3877	1	HARNESS AS-WINDOW WIPER	
E	**125-7875**		TUBE-HEAT SHRINK (7.44-MM DIA) (5-CM)	
	102-8805	1	KIT-RECEPTACLE (6-PIN)	
			(INCLUDES RECEPTACLE AS & WEDGE)	
	5W-1987	2	TERMINAL	
	123-7615	1	CONNECTOR	
	155-2274	1	KIT-CONNECTING PLUG (6-PIN)	
			(INCLUDES PLUG AS, WEDGE & INTERFACE SEAL)	
	223-0608	1	HINGE AS	
	280-1575	1	PLATE AS	
	223-0591	1	PLATE AS	
	223-0601	2	PLATE AS	
	153-2683	1	SPRING AS-GAS (LOCKING)	
	230-3214	1	SPRING AS-GAS (CAB DOOR)	
	8T-3848	1	STRIKER AS-LATCH	
	6V-4270	1	LOCKWASHER	
	219-9739	1	TANK AS-WINDOW WASHER	
	142-9356	1	BLOCK	
E	**144-0195**		HOSE (40-CM)	
M	**195-0937**	8	INSERT-THREADED (M8X1.25-THD)	
	5P-0372	2	LOCK PIN	
	223-0617	1	MOUNT	
M	**5C-2890**	13	NUT (M6X1-THD)	
M	**8T-4133**	4	NUT (M10X1.5-THD)	
	177-3405	1	PIN	
	095-1325	1	PIN-CLEVIS	
M	**9X-2041**	4	SCREW-TRUSS HEAD (M10X1.5X20-MM)	
M	**9X-2044**	3	SCREW-TRUSS HEAD (M6X1X16-MM)	
M	**9X-2045**	4	SCREW-TRUSS HEAD (M6X1X20-MM)	
M	**127-2170**	8	SCREW-TRUSS HEAD (M8X1.25X20-MM)	
D	**5P-8309**		SEAL (0.72-M)	
D	**5P-9909**		SEAL (0.1-M)	
E	**125-3518**		SEAL (77-CM)	
D	**5P-5969**		SEAL (2.2-M)	
	9C-5344	1	SPACER (10.5X20X18-MM THK)	
	218-0728	2	SPRING	
	3S-2093	3	STRAP-CABLE	
	8T-2444	2	STUD-BALL	
	8T-4121	4	WASHER-HARD (11X21X2.5-MM THK)	
	8T-4205	13	WASHER-HARD (7.2X14.5X2-MM THK)	
	8T-4224	2	WASHER-HARD (8.8X16X2-MM THK)	
	8T-4222	1	WASHER-PLATED (11X32X2.5-MM THK)	

D-ORDER BY THE METER
E-ORDER BY THE CENTIMETER
M-METRIC PART
Y-SEPARATE ILLUSTRATION

<END>

OPERATOR STATION

218-6744 KIT-CAB DOOR & MOUNTING—GLASS

S/N: BXM4225-UP
CANNOT BE USED WITH 218-6743—PAGE 582
AN ATTACHMENT

SMCS-7308 **i02772068**

NOTE	PART NUMBER	QTY	PART NAME 1 2 3 4 5 6 (PRODUCT LEVEL)	SEE PAGE
Y	*223-0616*	1	DOOR GP-CAB (GLASS)	553
	221-3877	1	HARNESS AS-WINDOW WIPER	
	102-8805	1	KIT-RECEPTACLE (6-PIN)	
			(INCLUDES RECEPTACLE AS & WEDGE)	
	5W-1987	2	TERMINAL	
	123-7615	1	CONNECTOR	
E	**125-7875**		TUBE-HEAT SHRINK (7.44-MM DIA) (5-CM)	
	155-2274	1	KIT-CONNECTING PLUG (6-PIN)	
			(INCLUDES PLUG AS, WEDGE & INTERFACE SEAL)	
	223-0608	1	HINGE AS	
	223-0591	1	PLATE AS	
	223-0601	2	PLATE AS	
C	**280-1575**	1	PLATE AS	
	153-2683	1	SPRING AS-GAS (LOCKING)	
	230-3214	1	SPRING AS-GAS (CAB DOOR)	
	8T-3848	1	STRIKER AS-LATCH	
	6V-4270	1	LOCKWASHER	
	219-9739	1	TANK AS-WINDOW WASHER	
	142-9356	1	BLOCK	
E	**144-0195**		HOSE (40-CM)	
CM	**195-0937**	8	INSERT-THREADED (M8X1.25-THD)	
	5P-0372	2	LOCK PIN	
	223-0617	1	MOUNT	
M	**5C-2890**	13	NUT (M6X1-THD)	
M	**8T-4133**	4	NUT (M10X1.5-THD)	
	177-3405	1	PIN	
	095-1325	1	PIN-CLEVIS	
M	**9X-2041**	4	SCREW-TRUSS HEAD (M10X1.5X20-MM)	
M	**9X-2044**	3	SCREW-TRUSS HEAD (M6X1X16-MM)	
M	**9X-2045**	4	SCREW-TRUSS HEAD (M6X1X20-MM)	
M	**127-2170**	8	SCREW-TRUSS HEAD (M8X1.25X20-MM)	
D	**5P-8309**		SEAL (0.72-M)	
D	**5P-9909**		SEAL (0.1-M)	
E	**125-3518**		SEAL (77-CM)	
CD	**5P-5969**		SEAL (2.2-M)	
	9C-5344	1	SPACER (10.5X20X18-MM THK)	
	218-0728	2	SPRING	
	3S-2093	3	STRAP-CABLE	
	8T-2444	2	STUD-BALL	
	8T-4121	4	WASHER-HARD (11X21X2.5-MM THK)	
	8T-4205	13	WASHER-HARD (7.2X14.5X2-MM THK)	
	8T-4224	2	WASHER-HARD (8.8X16X2-MM THK)	
	8T-4222	1	WASHER-PLATED (11X32X2.5-MM THK)	

C-CHANGE FROM PREVIOUS TYPE
D-ORDER BY THE METER
E-ORDER BY THE CENTIMETER
M-METRIC PART
Y-SEPARATE ILLUSTRATION

<END>

OPERATOR STATION

233-5864 KIT-CAB SEAL—DEBRIS BARRIER

S/N: BXM4225-UP

AN ATTACHMENT

SMCS-7301 **i02513705**

NOTE	PART NUMBER	QTY	PART NAME 1 2 3 4 5 6 (PRODUCT LEVEL)	SEE PAGE
	287-7006	1	BLOCK AS (RH)	
	287-7004	1	BLOCK AS (LH)	
M	**7X-2537**	2	BOLT (M8X1.25X35-MM)	
	189-4523	2	BOSS	
	187-3212	1	PLATE	
	187-3211	1	PLATE AS	
M	**8T-3612**	2	NUT-WELD (M8X1.25-THD)	
	288-5767	8	PLUG-BUTTON	
	3T-7856	2	PLUG-BUTTON	
	287-6603	2	PLUG-BUTTON	
E	**128-7037**		SEAL (98-CM)	
	284-3744	1	SEAL-RUBBER	
	284-3743	1	SEAL-RUBBER	
	284-3595	2	SEAL-RUBBER	
	8T-4224	2	WASHER-HARD (8.8X16X2-MM THK)	

E-ORDER BY THE CENTIMETER
M-METRIC PART

<END>

OPERATOR STATION

234-0774 LEVER GP-GOVERNOR

S/N: BXM4225-UP

PART OF 218-5565 PEDAL GP-GOVERNOR

SMCS-1265, 1276 **i01910964**

NOTE	REF NO	GRAPHIC REF	PART NUMBER	QTY	PART NAME 1 2 3 4 5 6 (PRODUCT LEVEL)	SEE PAGE
	1	1	**192-2663**	1	LEVER GP-GOVERNOR	
M		1	**8T-4971**	1	BOLT (M6X1X30-MM)	
M		1	**129-3178**	1	LOCKNUT (M6X1-THD)	
	2	1	**234-0732**	1	CABLE AS	
	3	1	**8T-4742**	1	END-YOKE ROD	
	4	1	**8T-4744**	1	PIN AS-SPRING	
M	5	1	**5C-2890**	1	NUT (M6X1-THD)	
M	6	1	**8T-4971**	1	BOLT (M6X1X30-MM)	
M	7	1	**129-3178**	1	LOCKNUT (M6X1-THD)	

M-METRIC PART

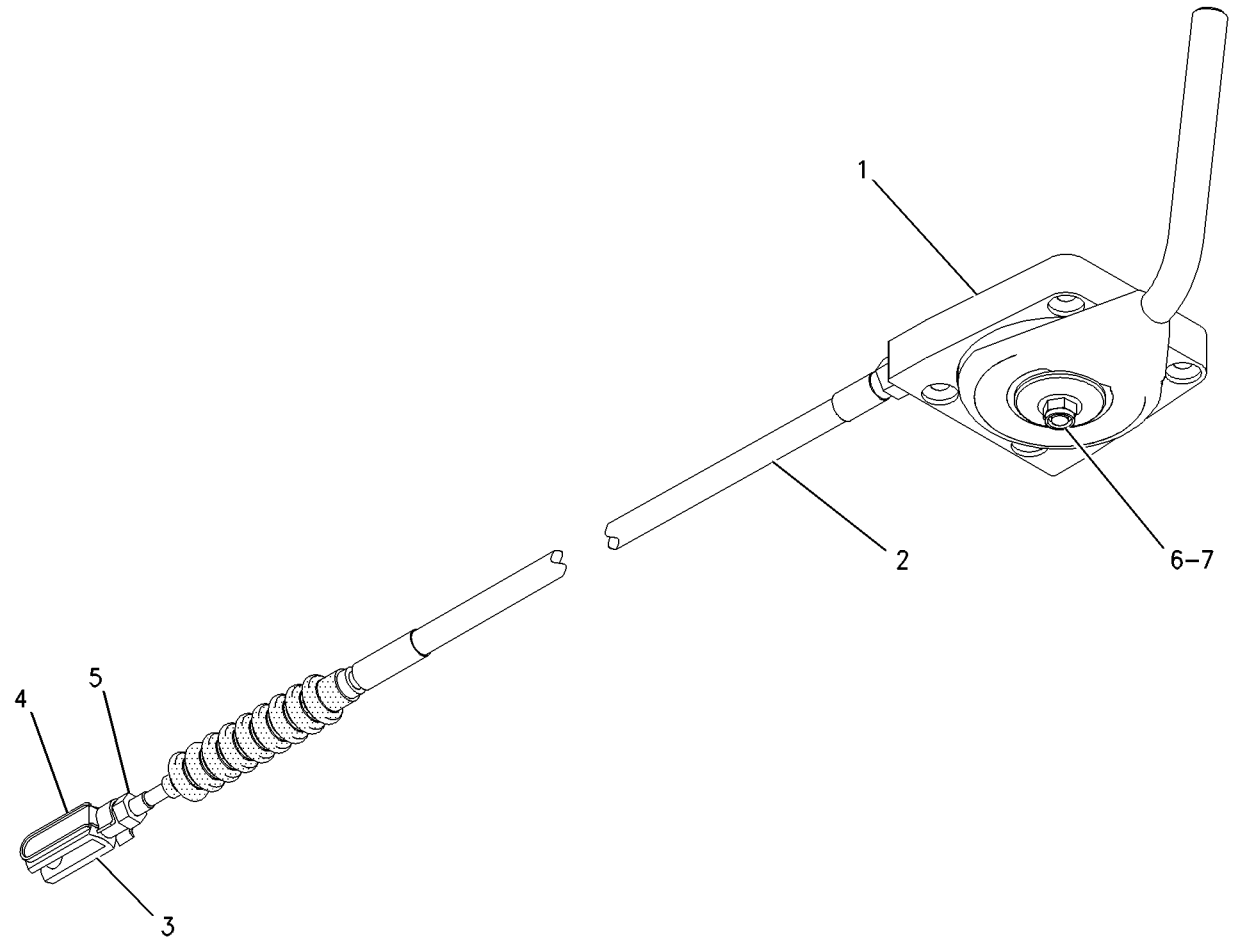

GRAPHIC #1 **<END>** g00995803

OPERATOR STATION

218-6356 LINER GP-CAB

S/N: BXM4225-UP

PART OF 218-6350 CAB AR-ENCLOSED ROPS

SMCS-7268, 7329 **i02634183**

NOTE	REF NO	GRAPHIC REF	PART NUMBER	QTY	PART NAME 1 2 3 4 5 6 (PRODUCT LEVEL)	SEE PAGE
E	1	1	**9X-2092**		STRIP-EDGE (113CM)	
	2	1	**218-6357**	1	INSULATION	
	3	1	**218-6359**	1	LINER-REAR WALL	
	4	1	**218-6436**	1	INSULATION	
	5	1	**292-3114**	2	SEAL	

E-ORDER BY THE CENTIMETER

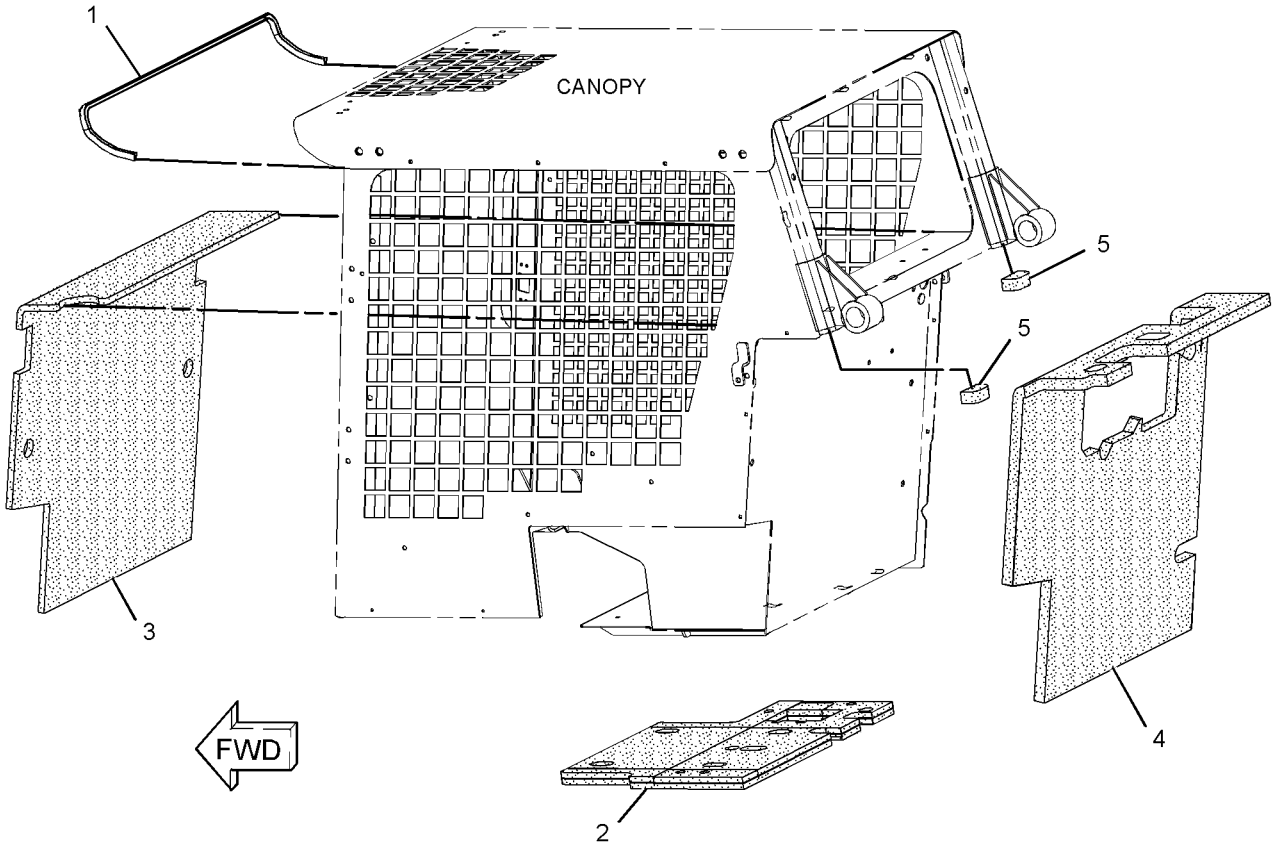

GRAPHIC #1 **<END>** g01352204

OPERATOR STATION

142-9311 LINER-CAB

S/N: BXM4225-UP

AN ATTACHMENT

SMCS-7329 **i02016735**

NOTE	REF NO	GRAPHIC REF	PART NUMBER	QTY	PART NAME 1 2 3 4 5 6 (PRODUCT LEVEL)	SEE PAGE
					(NO SERVICED PARTS)	

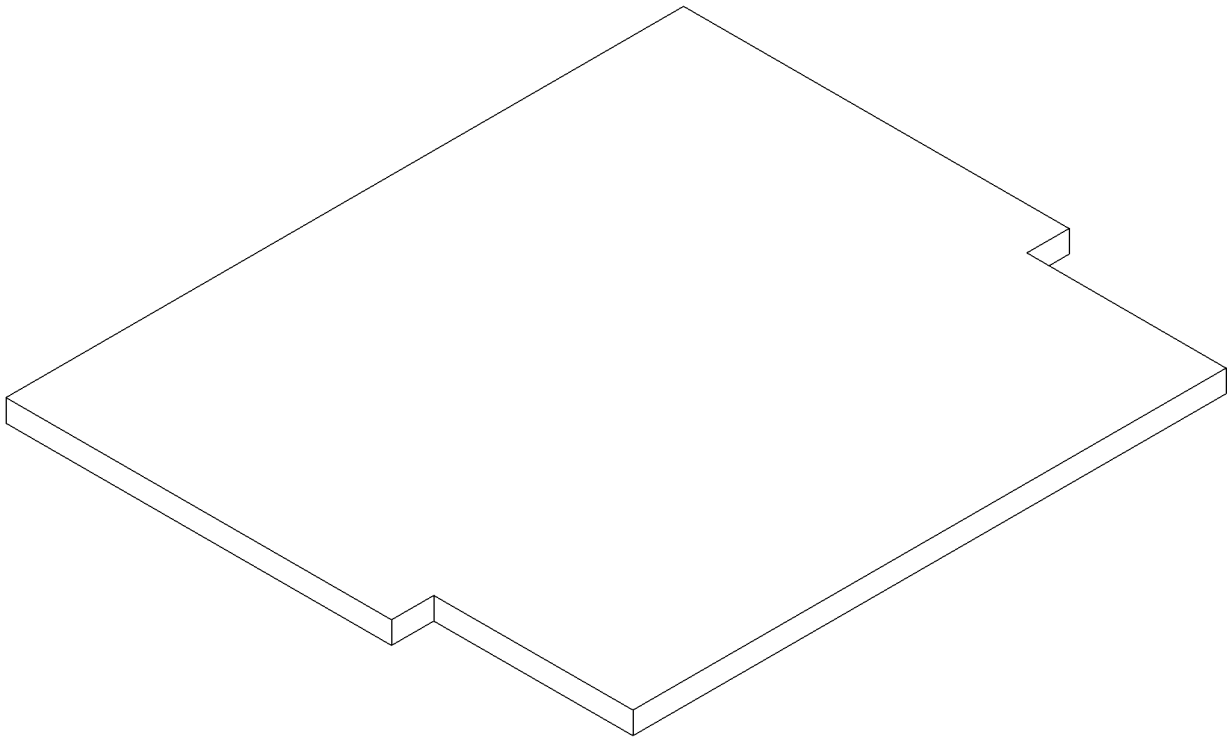

GRAPHIC #1 **<END>** g00782727

OPERATOR STATION

218-6590 LINES GP-AIR CONDITIONER

S/N: BXM4225-UP

PART OF 218-6302 AIR CONDITIONER AR

AN ATTACHMENT

SMCS-1808, 7320 **i02367123**

NOTE	REF NO	GRAPHIC REF	PART NUMBER	QTY	PART NAME 1 2 3 4 5 6 (PRODUCT LEVEL)	SEE PAGE
	1	1	**3S-2093**	2	STRAP-CABLE	
	2	1	**4P-8134**	1	CLIP	
	3	1	**236-6923**	1	SWITCH AS-PRESSURE (AIR CONDITIONER)	
M	4	1	**085-8091**	2	BOLT (M10X1.5X55-MM)	
	5	1	**101-8296**	2	CLIP	
Y	6	1	*186-6190*	1	ACCUMULATOR GP-REFRIGERANT (WITH DESICCANT)	491
CI	7	1	**233-5951**	1	HOSE AS	
	8	1	**218-6582**	1	HOSE AS	
	9	1	**252-0330**	1	HOSE AS	
CI	10	1	**233-5863**	1	HOSE AS	
	11	1	*234-0566*	1	FITTING AS	
		1	**3E-4051**	1	CAP-SEAL	
		1	**3E-4057**	1	VALVE AS	
	12	1	**246-9039**	1	PLATE-INFORMATION (AIR CONDITIONER REFRIGERANT)	
	13	1	**8T-4121**	3	WASHER-HARD (11X21X2.5-MM THK)	
M	14	1	**8T-4191**	1	BOLT (M10X1.5X16-MM)	
	15	1	**9C-2741**	2	SPACER (13.94X17.14X34-MM THK)	
	16	1	**9X-7378**	1	SEAL-O-RING	
	17	1	**9X-7380**	1	SEAL-O-RING	
	18	1	**9X-7381**	3	SEAL-O-RING	
	19	1	**9X-7382**	2	SEAL-O-RING	
	20	1	**9X-7383**	3	SEAL-O-RING	
D	21	1	**5P-5924**		SEAL (0.3-M)	

C-CHANGE FROM PREVIOUS TYPE
D-ORDER BY THE METER
I-REFER TO HYDRAULIC INFORMATION SYSTEM
M-METRIC PART
Y-SEPARATE ILLUSTRATION

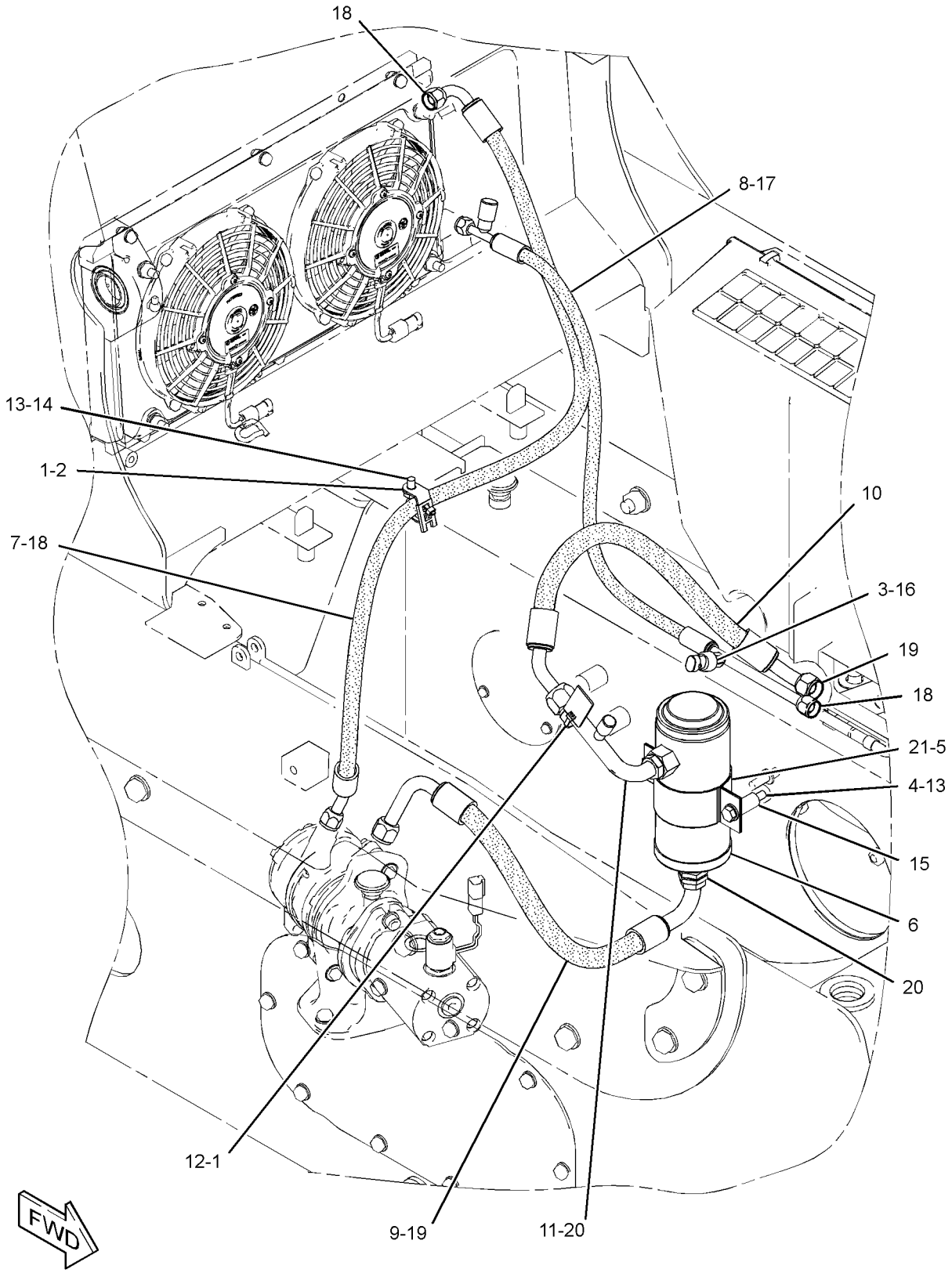

GRAPHIC #1 **<END>** g01178945

OPERATOR STATION

311-5861 LINES GP-HEATER

S/N: BXM4225-UP

PART OF 218-6302 AIR CONDITIONER AR, 218-6703 HEATER AR-CAB

AN ATTACHMENT

SMCS-1812, 7304 **i02820451**

NOTE	REF NO	GRAPHIC REF	PART NUMBER	QTY	PART NAME 1 2 3 4 5 6 (PRODUCT LEVEL)	SEE PAGE
	1	1	**8F-8151**	1	VALVE AS-SHUTOFF (CAB HEATER)	
	2	1	**8T-0154**	4	CLAMP-HOSE	
	3	1	**150-7568**	1	ADAPTER	
	4	1	**176-4079**	1	INSULATION	
	5	1	**178-3620**	2	STRAP-DUAL CLAMP	
	6	1	**250-1493**	1	ELBOW	
	7	1	**3S-8665**	1	CLIP	
	8	1	**6D-1641**	1	CLIP	
	9	1	**8T-4121**	2	WASHER-HARD (11X21X2.5-MM THK)	
M	10	1	**8T-4191**	1	BOLT (M10X1.5X16-MM)	
	11	1	**9X-8250**	2	CLIP	
E	12	1	**136-1953**		HOSE (191-CM)	
E	12A	1	**136-1953**		HOSE (152-CM)	

E-ORDER BY THE CENTIMETER
M-METRIC PART

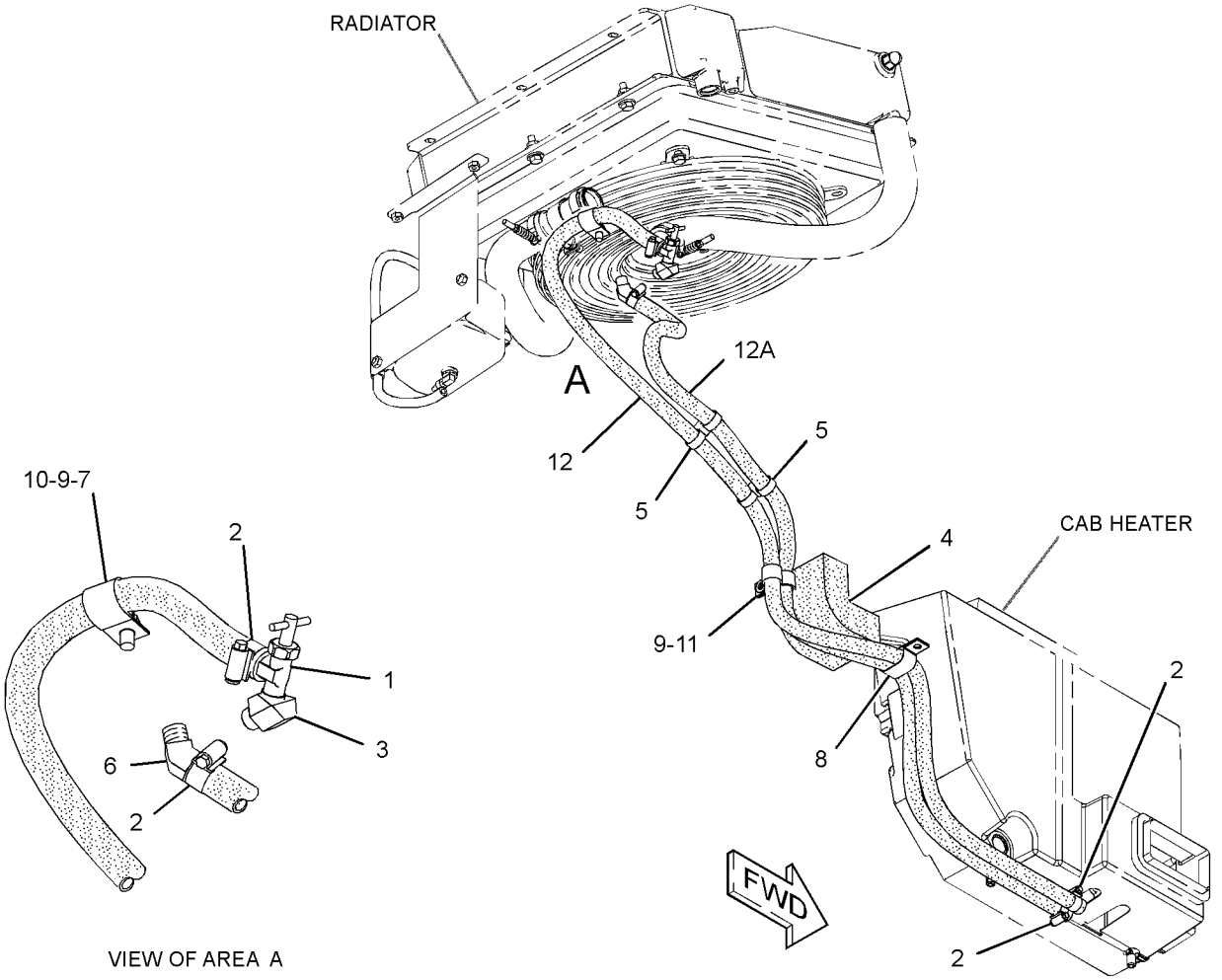

VIEW OF AREA A

GRAPHIC #1 **<END>** g01409009

OPERATOR STATION

6V-1970 LITERATURE GP

S/N: BXM4225-UP

PART OF 295-7242, 295-7243 COMMON AR

SMCS-0374, 0375, 7300 **i02831417**

NOTE	PART NUMBER	QTY	PART NAME 1 2 3 4 5 6 (PRODUCT LEVEL)	SEE PAGE
	5P-8500	2	KEY (LITERATURE COMPARTMENT)	
	5P-7958	1	SLEEVE-CABLE SPLICE	

<END>

OPERATOR STATION

218-6395 MIRROR GP-REAR VIEW

S/N: BXM4225-UP

PART OF 218-6350 CAB AR-ENCLOSED ROPS

SMCS-7319 **i02007402**

NOTE	REF NO	GRAPHIC REF	PART NUMBER	QTY	PART NAME 1 2 3 4 5 6 (PRODUCT LEVEL)	SEE PAGE
	1	1	**218-6384**	1	MIRROR AS	
	2	1	**3B-4505**	1	LOCKWASHER	
M	3	1	**5C-7261**	1	NUT (M8X1.25-THD)	
	4	1	**8T-4224**		WASHER-HARD (8.8X16X2-MM THK)	

M-METRIC PART

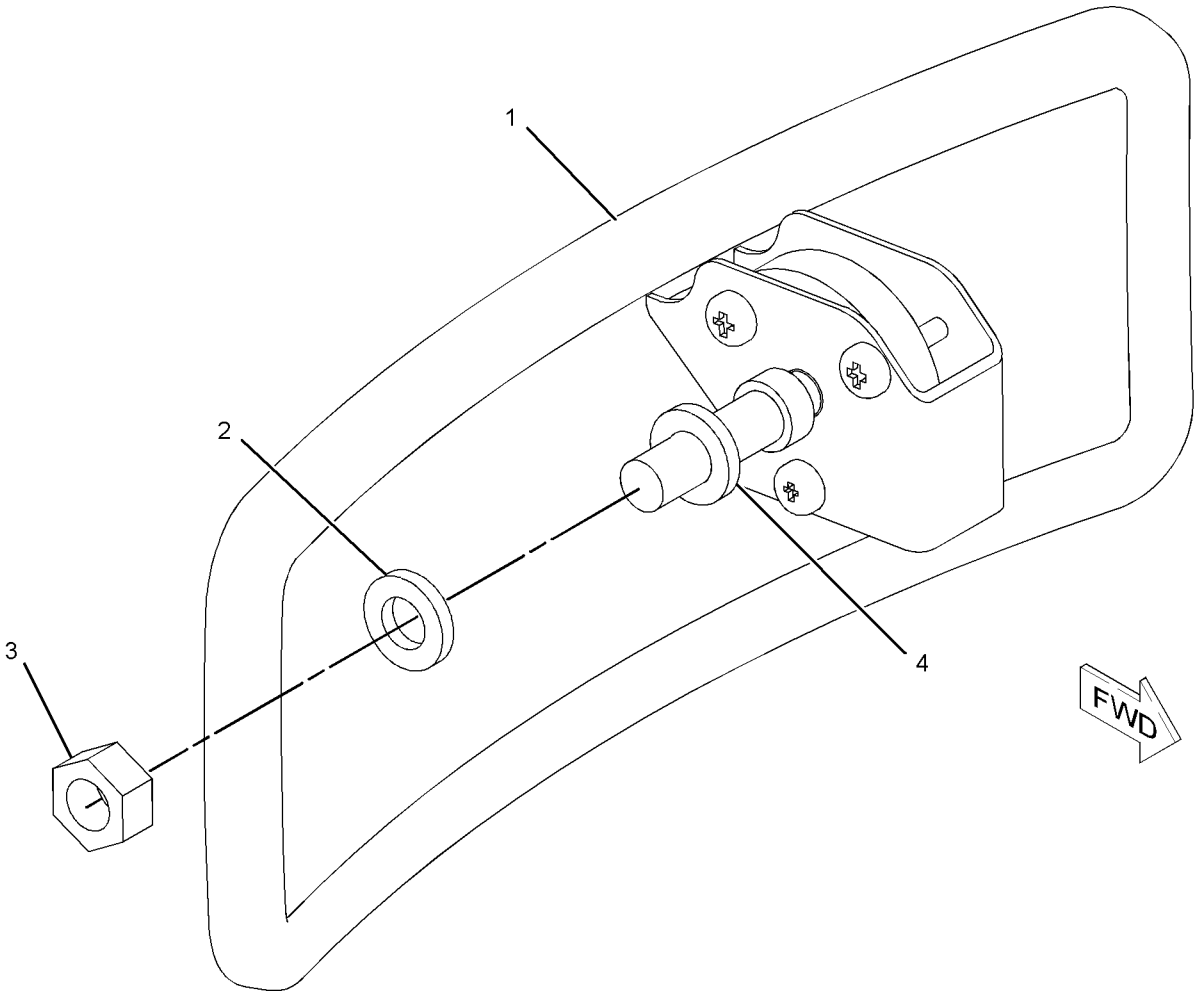

GRAPHIC #1 **<END>** g01038484

OPERATOR STATION

223-6537 MODULE GP-WARNING INDICATOR

S/N: BXM4225-UP

PART OF 216-4712 GAUGE & WARNING GP

AN ATTACHMENT

SMCS-7407, 7431 **i02492652**

NOTE	REF NO	GRAPHIC REF	PART NUMBER	QTY	PART NAME 1 2 3 4 5 6 (PRODUCT LEVEL)	SEE PAGE
	1	1	**102-8801**	1	KIT-RECEPTACLE (12-PIN)	
					(INCLUDES RECEPTACLE AS & WEDGE)	
	2	1	**232-4706**	1	GASKET	
	4	1	**186-3735**	9	PIN-CONNECTOR (16-GA TO 18-GA)	
	5	1	**8T-8737**	1	PLUG-SEAL	

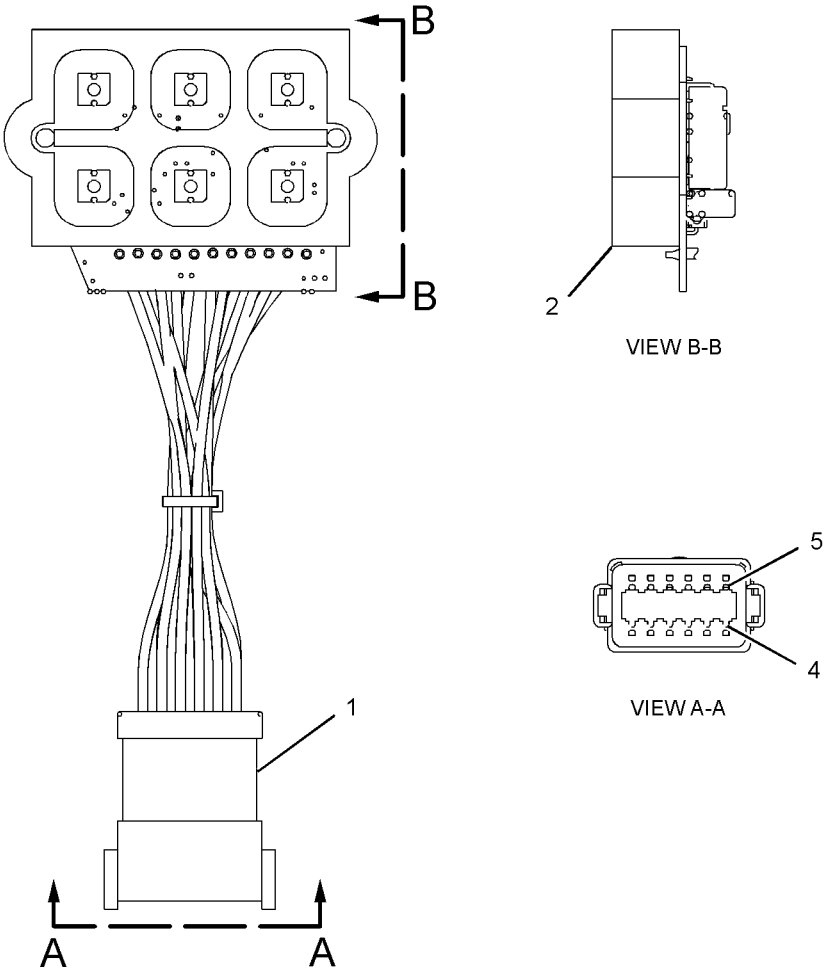

GRAPHIC #1 **<END>** g01307796

OPERATOR STATION

249-2910 MODULE GP-WARNING INDICATOR

S/N: BXM4225-UP

PART OF 216-4713 GAUGE & WARNING GP

AN ATTACHMENT

SMCS-7407, 7431 **i02757214**

NOTE	REF NO	GRAPHIC REF	PART NUMBER	QTY	PART NAME 1 2 3 4 5 6 (PRODUCT LEVEL)	SEE PAGE
	1	1	**8T-8737**	3	PLUG-SEAL	
	2	1	**232-4706**	1	GASKET	
	3	1	**186-3735**	9	PIN-CONNECTOR (16-GA TO 18-GA)	
	4	1	**102-8801**	1	KIT-RECEPTACLE (12-PIN)	
					(INCLUDES RECEPTACLE AS & WEDGE)	

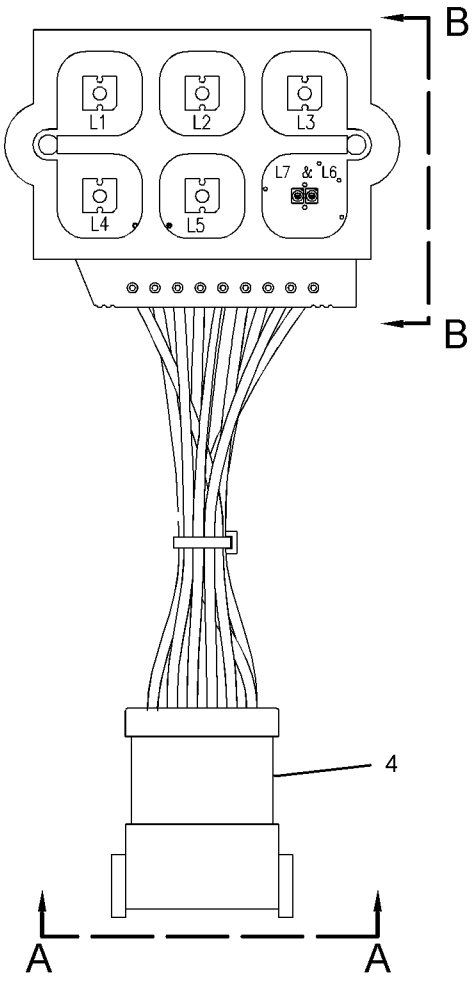

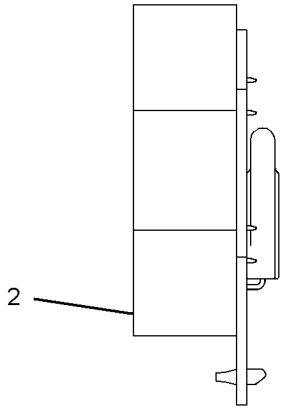

VIEW B-B

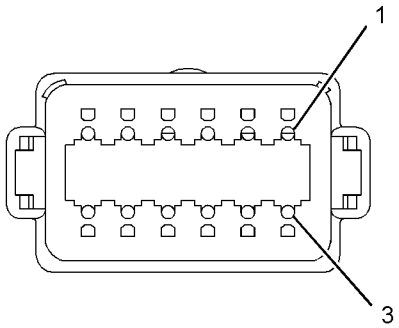

VIEW A-A

GRAPHIC #1 **<END>** g01152784

OPERATOR STATION

218-6370 MOUNTING GP-ROPS

S/N: BXM4225-UP

PART OF 218-6350 CAB AR-ENCLOSED ROPS

SMCS-7266, 7325 **i01955254**

NOTE	REF NO	GRAPHIC REF	PART NUMBER	QTY	PART NAME 1 2 3 4 5 6 (PRODUCT LEVEL)	SEE PAGE
	1	1	**152-5878**	2	MOUNT AS	
	2	1	**153-6981**	2	MOUNT	
	3	1	**159-5790**	1	BRACKET	
	4	1	**159-5792**	1	BAR AS	
	5	1	**159-5794**	1	SPRING	
	6	1	**218-6381**	2	SPACER	
	7	1	**165-7095**	4	WASHER (16.5X71.5X3-MM THK)	
	8	1	**4P-7581**	1	CLIP	
M	9	1	**6V-9805**	2	BOLT (M6X1X20-MM)	
M	10	1	**7X-2475**	2	BOLT (M16X2X130-MM)	
	11	1	**8T-4122**	4	WASHER-HARD (17X32X3.5-MM THK)	
M	12	1	**8T-4173**	2	BOLT (M16X2X110-MM)	
	13	1	**8T-4205**	2	WASHER-HARD (7.2X14.5X2-MM THK)	
M	14	1	**8T-4778**	4	LOCKNUT (M16X2-THD)	

M-METRIC PART

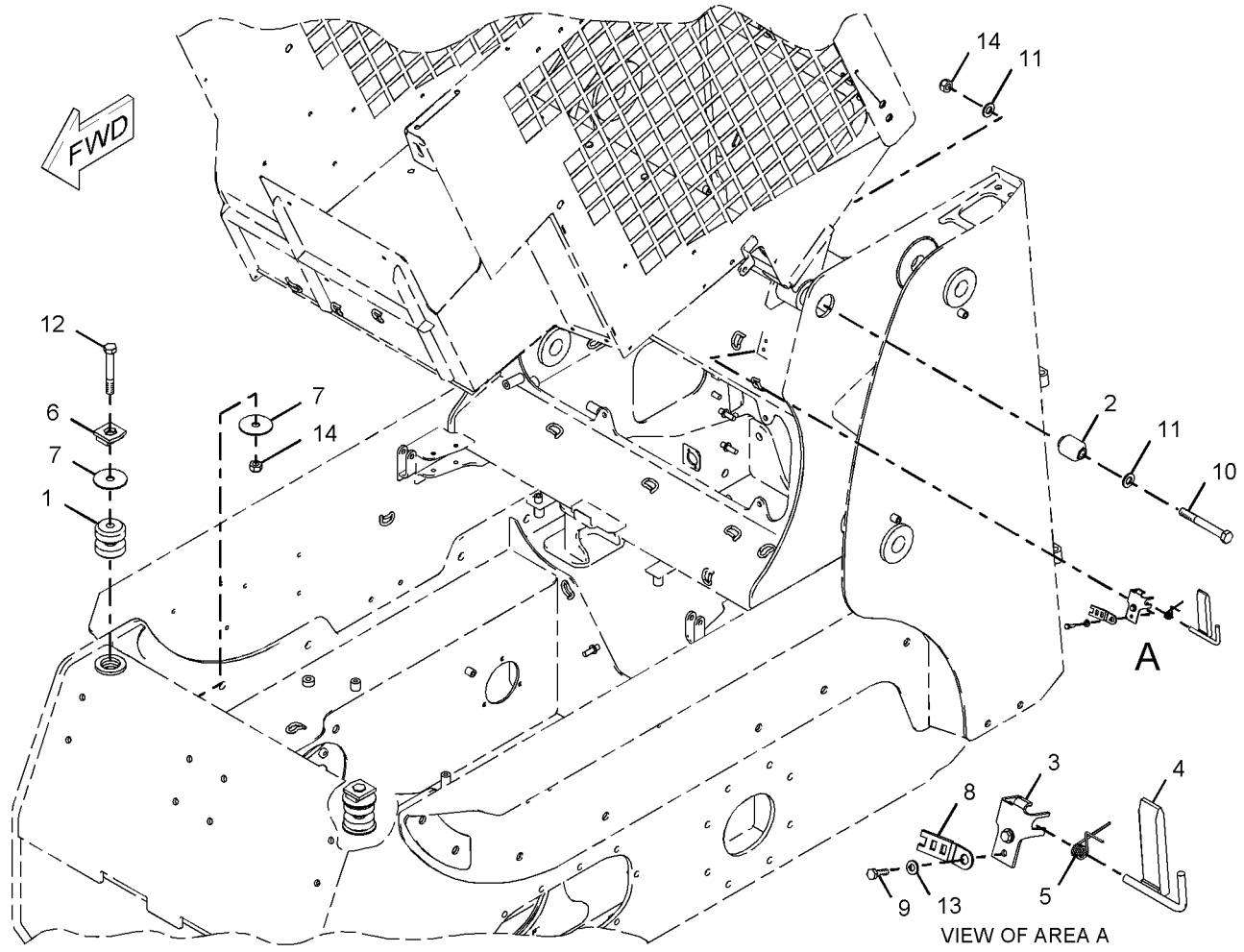

GRAPHIC #1 **<END>** g01018977

OPERATOR STATION

295-7303 OPTION AR-CAB

S/N: BXM4225-UP

AN ATTACHMENT

SMCS-7301 **i02736321**

NOTE	PART NUMBER	QTY	PART NAME 1 2 3 4 5 6 (PRODUCT LEVEL)	SEE PAGE
Y	*218-6400*	1	HANDHOLD GP	565
Y	*218-6701*	1	INSTALLATION GP (WITHOUT HEATER OR A/C)	577
Y	*218-5562*	1	SEAT GP (STATIC)	614

Y-SEPARATE ILLUSTRATION

<END>

295-7313 OPTION AR-CAB

S/N: BXM4225-UP

AN ATTACHMENT

SMCS-7301 **i02736334**

NOTE	PART NUMBER	QTY	PART NAME 1 2 3 4 5 6 (PRODUCT LEVEL)	SEE PAGE
Y	*218-6400*	1	HANDHOLD GP	565
Y	*218-6701*	1	INSTALLATION GP (WITHOUT HEATER OR A/C)	577
Y	*142-9305*	1	SEAT GP (SUSPENSION)	613
	245-6811	1	HOLDER-CUP	

Y-SEPARATE ILLUSTRATION

<END>

295-7323 OPTION AR-CAB

S/N: BXM4225-UP

AN ATTACHMENT

SMCS-7301 **i02779152**

NOTE	PART NUMBER	QTY	PART NAME 1 2 3 4 5 6 (PRODUCT LEVEL)	SEE PAGE
Y	*218-6703*	1	HEATER AR-CAB	569
Y	*218-6407*	1	SEAL GP-CAB	607
Y	*142-9305*	1	SEAT GP (SUSPENSION)	613
Y	*218-6411*	1	WINDOW GP-CAB (SIDE)	620
	245-6811	1	HOLDER-CUP	

Y-SEPARATE ILLUSTRATION

<END>

OPERATOR STATION

295-7333 OPTION AR-CAB

S/N: BXM4225-UP
AN ATTACHMENT

SMCS-7301 **i02736330**

NOTE	PART NUMBER	QTY	PART NAME 1 2 3 4 5 6 (PRODUCT LEVEL)	SEE PAGE
Y	*218-6302*	1	AIR CONDITIONER AR	493
Y	*218-6407*	1	SEAL GP-CAB	607
Y	*142-9305*	1	SEAT GP (SUSPENSION)	613
Y	*218-6411*	1	WINDOW GP-CAB (SIDE)	620
	245-6811	1	HOLDER-CUP	

Y-SEPARATE ILLUSTRATION

<END>

218-5790 PANEL AR-INSTRUMENT

S/N: BXM4225-UP
NACD
PART OF 261-6160 CONVERSION AR-MACHINE, 233-5670 CONVERSION AR-NON-ROADING
CANNOT BE USED WITH 218-5791—PAGE 597
AN ATTACHMENT

SMCS-7451 **i01957627**

NOTE	PART NUMBER	QTY	PART NAME 1 2 3 4 5 6 (PRODUCT LEVEL)	SEE PAGE
Y	**225-7998**	1	PANEL GP-INSTRUMENT	600

Y-SEPARATE ILLUSTRATION

<END>

218-5791 PANEL AR-INSTRUMENT

S/N: BXM4225-UP
EAME
PART OF 261-6158, 278-1213, 278-1221, 278-1225, 278-5409, 278-5442, 295-7039, 295-7050, 295-7061, 295-7068, 295-7151, 295-7159, 295-7164, 295-7168 CONVERSION AR-MACHINE, 233-5681, 233-5682, 233-5683, 233-5684, 233-5685, 233-5686, 257-5721, 257-5722, 295-7044 CONVERSION AR-ROADING
CANNOT BE USED WITH 218-5790—PAGE 597
AN ATTACHMENT

SMCS-7451 **i01957887**

NOTE	PART NUMBER	QTY	PART NAME 1 2 3 4 5 6 (PRODUCT LEVEL)	SEE PAGE
Y	**216-4751**	1	PANEL GP-INSTRUMENT	598

Y-SEPARATE ILLUSTRATION

<END>

OPERATOR STATION

216-4751 PANEL GP-INSTRUMENT

S/N: BXM4225-UP
EAME
PART OF 218-5791 PANEL AR-INSTRUMENT
AN ATTACHMENT

SMCS-7451 **i02360197**

NOTE	REF NO	GRAPHIC REF	PART NUMBER	QTY	PART NAME 1 2 3 4 5 6 (PRODUCT LEVEL)	SEE PAGE
	1	1	**109-2356**	5	PLUG	
Y	2	1	*142-9118*	1	COVER GP-INSTRUMENT PANEL (SERVICE METER)	546
	3	1	**142-9320**	1	SWITCH AS-ROCKER (PARKING BRAKE)	
		1	**111-7899**	1	GASKET	
	4	1	**142-9325**	1	SWITCH AS-ROCKER (COLD START)	
		1	**111-7899**	1	GASKET	
	5	1	**142-9328**	1	SWITCH AS-ROCKER (FRONT WORK LIGHT)	
		1	**111-7899**	1	GASKET	
	6	1	**158-6696**	1	COVER	
	7	1	**158-6698**	1	COVER	
	8	1	**158-6699**	1	COVER	
	9	1	**165-0312**	1	WIRE AS	
Y	10	1	*216-4712*	1	GAUGE & WARNING GP (LH)	562
Y	11	1	*216-4713*	1	GAUGE & WARNING GP (RH)	563
	12	1	**216-4752**	1	HARNESS AS-PANEL	
		1	**155-2255**	2	KIT-CONNECTING PLUG (12-PIN)	
		1	**155-2260**	1	KIT-CONNECTING PLUG (3-PIN)	
		1	**155-2270**	6	KIT-CONNECTING PLUG (2-PIN)	
		1	**155-2271**	3	KIT-CONNECTING PLUG (4-PIN)	
		1	**155-2274**	1	KIT-CONNECTING PLUG (6-PIN)	
					(EACH PLUG KIT INCLUDES PLUG AS, WEDGE & INTERFACE SEAL)	
		1	**102-8804**	2	KIT-RECEPTACLE (4-PIN)	
		1	**102-8805**	1	KIT-RECEPTACLE (6-PIN)	
		1	**102-8801**	1	KIT-RECEPTACLE (12-PIN)	
					(EACH RECEPTACLE KIT INCLUDES RECEPTACLE AS & WEDGE)	
	13	1	**223-5941**	1	SWITCH AS-ROCKER (WORK TOOL HYD PRESS RELEASE)	
		1	**111-7899**	1	GASKET	
	14	1	**226-5901**	1	SWITCH AS-ROCKER (INTERLOCK OVERRIDE)	
		1	**111-7899**	1	GASKET	
	15	1	**103-2006**	16	SCREW-PAN HEAD (6-19X0.37-IN)	

Y-SEPARATE ILLUSTRATION

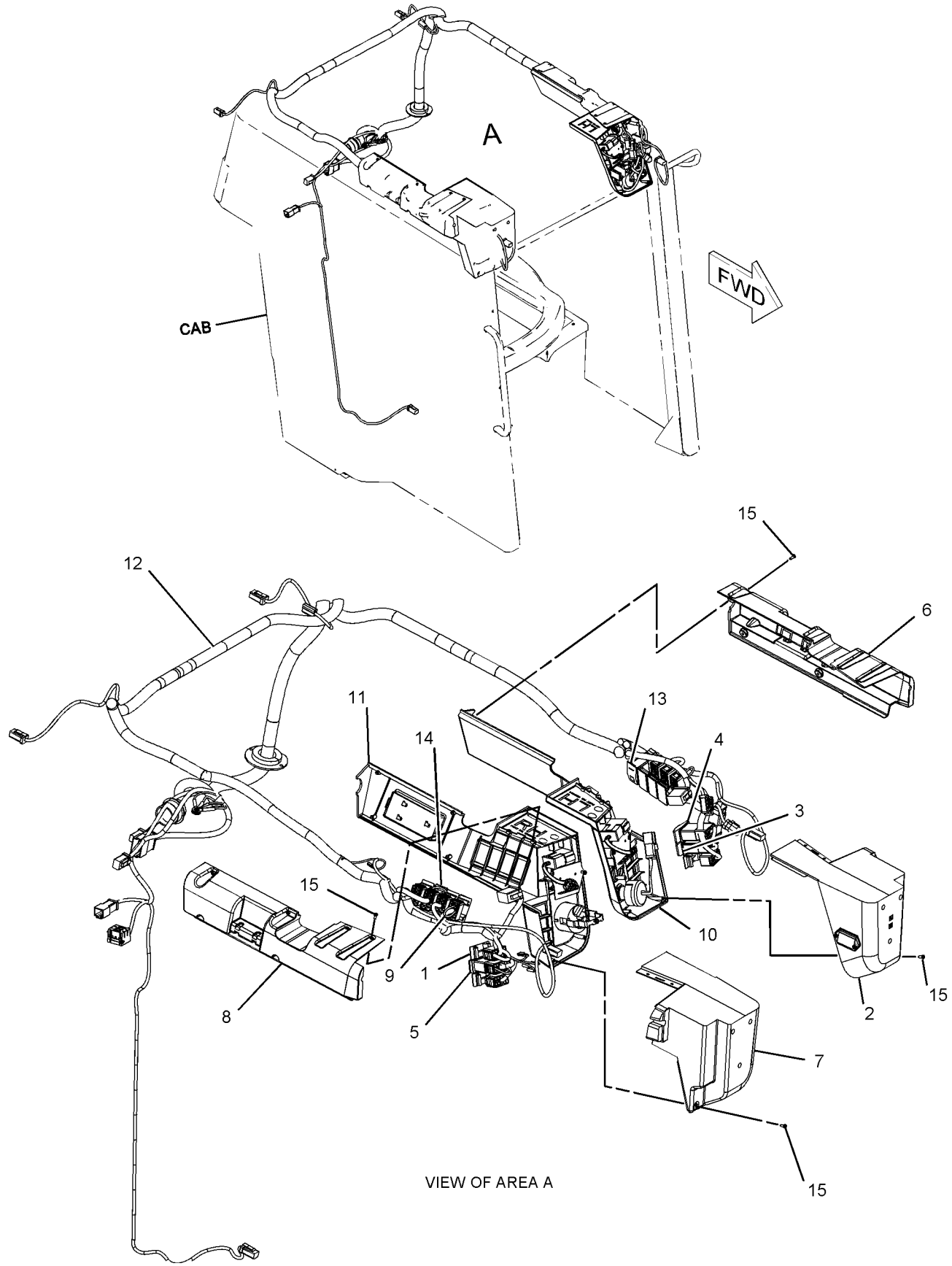

GRAPHIC #1 **<END>** g01125969

OPERATOR STATION

225-7998 PANEL GP-INSTRUMENT

S/N: BXM4225-UP
NACD
PART OF 218-5790 PANEL AR-INSTRUMENT
AN ATTACHMENT

SMCS-7451 **i02259865**

NOTE	REF NO	GRAPHIC REF	PART NUMBER	QTY	PART NAME 1 2 3 4 5 6 (PRODUCT LEVEL)	SEE PAGE
	1	1	**109-2356**	5	PLUG	
Y	2	1	*142-9118*	1	COVER GP-INSTRUMENT PANEL (SERVICE METER)	546
	3	1	**142-9320**	1	SWITCH AS-ROCKER (PARKING BRAKE)	
		1	**111-7899**	1	GASKET	
	4	1	**142-9325**	1	SWITCH AS-ROCKER (COLD START)	
		1	**111-7899**	1	GASKET	
	5	1	**142-9328**	1	SWITCH AS-ROCKER (FRONT WORK LIGHT)	
		1	**111-7899**	1	GASKET	
	6	1	**158-6696**	1	COVER	
	7	1	**158-6698**	1	COVER	
	8	1	**158-6699**	1	COVER	
Y	9	1	*216-4712*	1	GAUGE & WARNING GP (LH)	562
Y	10	1	*216-4713*	1	GAUGE & WARNING GP (RH)	563
	11	1	**223-5941**	1	SWITCH AS-ROCKER (WORK TOOL HYD PRESS RELEASE)	
		1	**111-7899**	1	GASKET	
	12	1	**225-7999**	1	HARNESS AS-PANEL	
		1	**102-8804**	2	KIT-RECEPTACLE (4-PIN)	
		1	**102-8805**	1	KIT-RECEPTACLE (6-PIN)	
		1	**102-8801**	1	KIT-RECEPTACLE (12-PIN)	
					(EACH RECEPTACLE KIT INCLUDES RECEPTACLE AS & WEDGE)	
		1	**155-2255**	1	KIT-CONNECTING PLUG (12-PIN)	
		1	**155-2271**	2	KIT-CONNECTING PLUG (4-PIN)	
		1	**155-2274**	1	KIT-CONNECTING PLUG (6-PIN)	
		1	**155-2270**	6	KIT-CONNECTING PLUG (2-PIN)	
					(EACH PLUG KIT INCLUDES PLUG AS, WEDGE, & INTERFACE SEAL)	
		1	**155-2260**	1	KIT-CONNECTING PLUG (3-PIN)	
					(INCLUDES PLUG AS, WEDGES, & INTERFACE SEAL)	
	13	1	**226-5901**	1	SWITCH AS-ROCKER (INTERLOCK OVERRIDE)	
		1	**111-7899**	1	GASKET	
	14	1	**103-2006**	16	SCREW-PAN HEAD (6-19X0.37-IN)	

Y-SEPARATE ILLUSTRATION

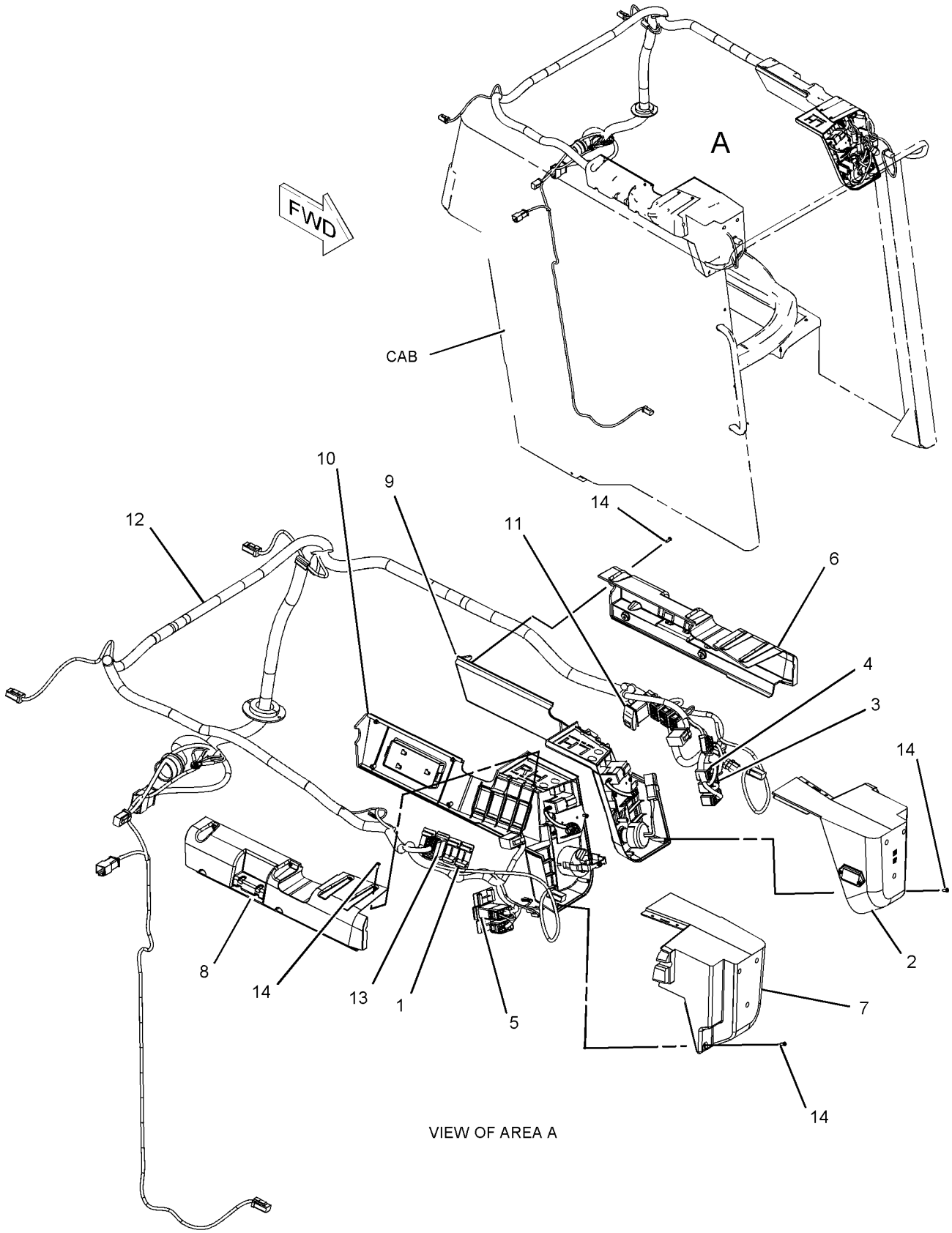

GRAPHIC #1 **<END>** g01136068

OPERATOR STATION

218-6428 PANEL GP-SIDE

S/N: BXM4225-UP

PART OF 295-7210 CHASSIS AR

SMCS-7267 **i01966886**

NOTE	REF NO	GRAPHIC REF	PART NUMBER	QTY	PART NAME 1 2 3 4 5 6 (PRODUCT LEVEL)	SEE PAGE
	1	1	**193-8385**	1	PLATE (RH)	
	2	1	**218-6434**	1	PLATE (LH)	
M	3	1	**131-3543**	5	BOLT-ROUND HEAD (M6X1-6G-THD)	
M	4	1	**5C-2890**	5	NUT (M6X1-THD)	
	5	1	**8T-4205**	5	WASHER-HARD (7.2X14.5X2-MM THK)	

M-METRIC PART

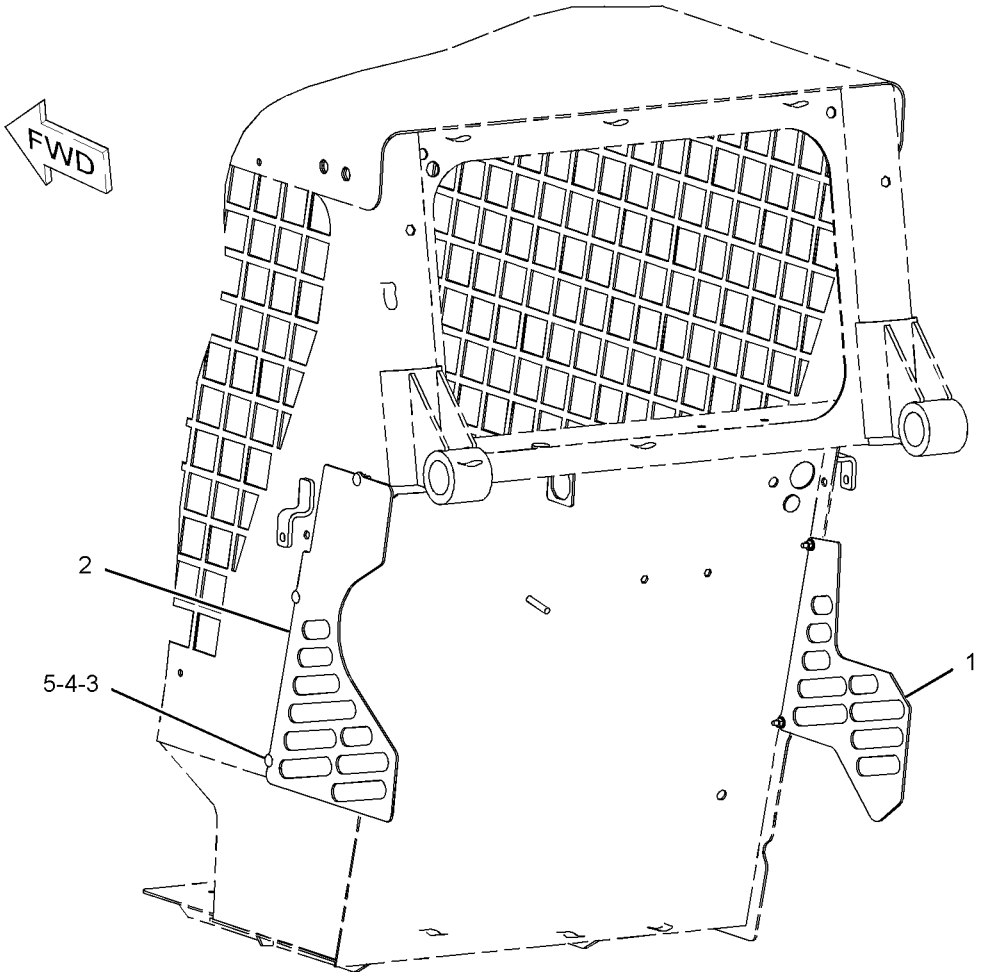

GRAPHIC #1 **<END>** g01021358

218-5565 PEDAL GP-GOVERNOR—INCLUDES LEVER

S/N: BXM4225-UP

PART OF 218-5602 CONTROL GP-GOVERNOR

SMCS-1265, 1276 **i02312058**

NOTE	REF NO	GRAPHIC REF	PART NUMBER	QTY	PART NAME 1 2 3 4 5 6 (PRODUCT LEVEL)	SEE PAGE
Y	1	1	**218-5566**	1	CABLE GP-GOVERNOR CONTROL	104
Y	2	1	**263-6688**	1	PEDAL GP-GOVERNOR	604
Y	3	1	**234-0774**	1	LEVER GP-GOVERNOR	585

Y-SEPARATE ILLUSTRATION

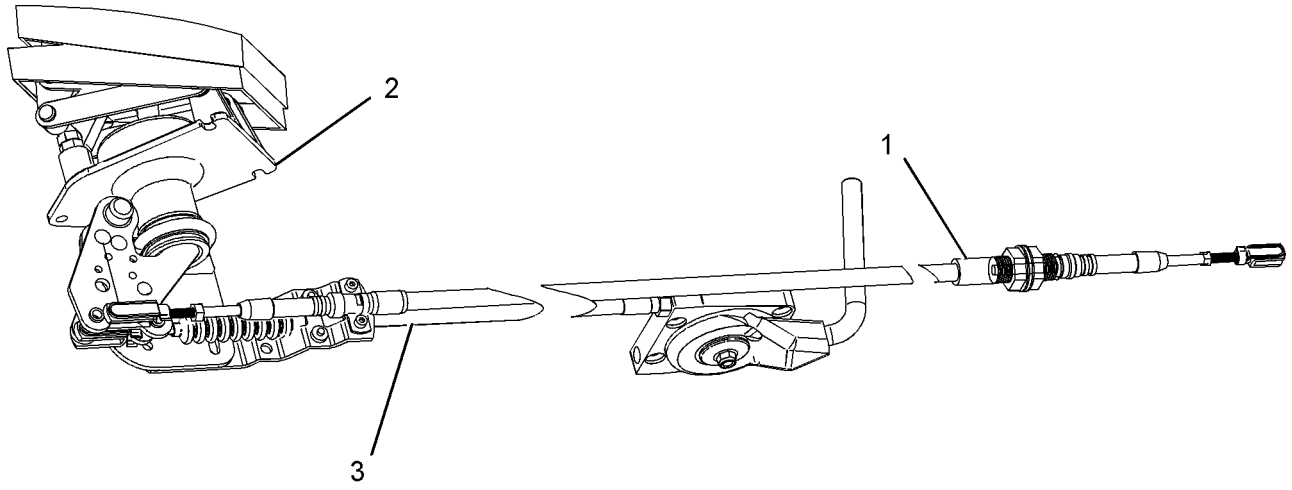

GRAPHIC #1 **<END>** g01010528

OPERATOR STATION

263-6688 PEDAL GP-GOVERNOR

S/N: BXM4225-UP

PART OF 218-5565 PEDAL GP-GOVERNOR

SMCS-1265, 1276 **i02757215**

NOTE	REF NO	GRAPHIC REF	PART NUMBER	QTY	PART NAME 1 2 3 4 5 6 (PRODUCT LEVEL)	SEE PAGE
M	1	1	**095-0641**	4	BOLT-SOCKET HEAD (M4X0.7X10-MM)	
M	2	1	**129-3178**	1	LOCKNUT (M6X1-THD)	
	3	1	**3F-9556**	2	LOCKWASHER	
M	4	1	**5C-7261**	1	NUT (M8X1.25-THD)	
M	5	1	**5C-9553**	1	BOLT (M6X1X16-MM)	
	6	1	**6V-8186**	2	NUT-FULL (5/16-24-THD)	
M	7	1	**8T-4197**	1	BOLT (M8X1.25X40-MM)	
	8	1	**8T-4205**	1	WASHER-HARD (7.2X14.5X2-MM THK)	
	9	1	**8T-6902**	1	CLIP	
					AVAILABLE REPAIR KIT(S):	
			164-1154	1	KIT-SERVICE	
					(INCLUDES CLAMPS & SCREWS)	

M-METRIC PART

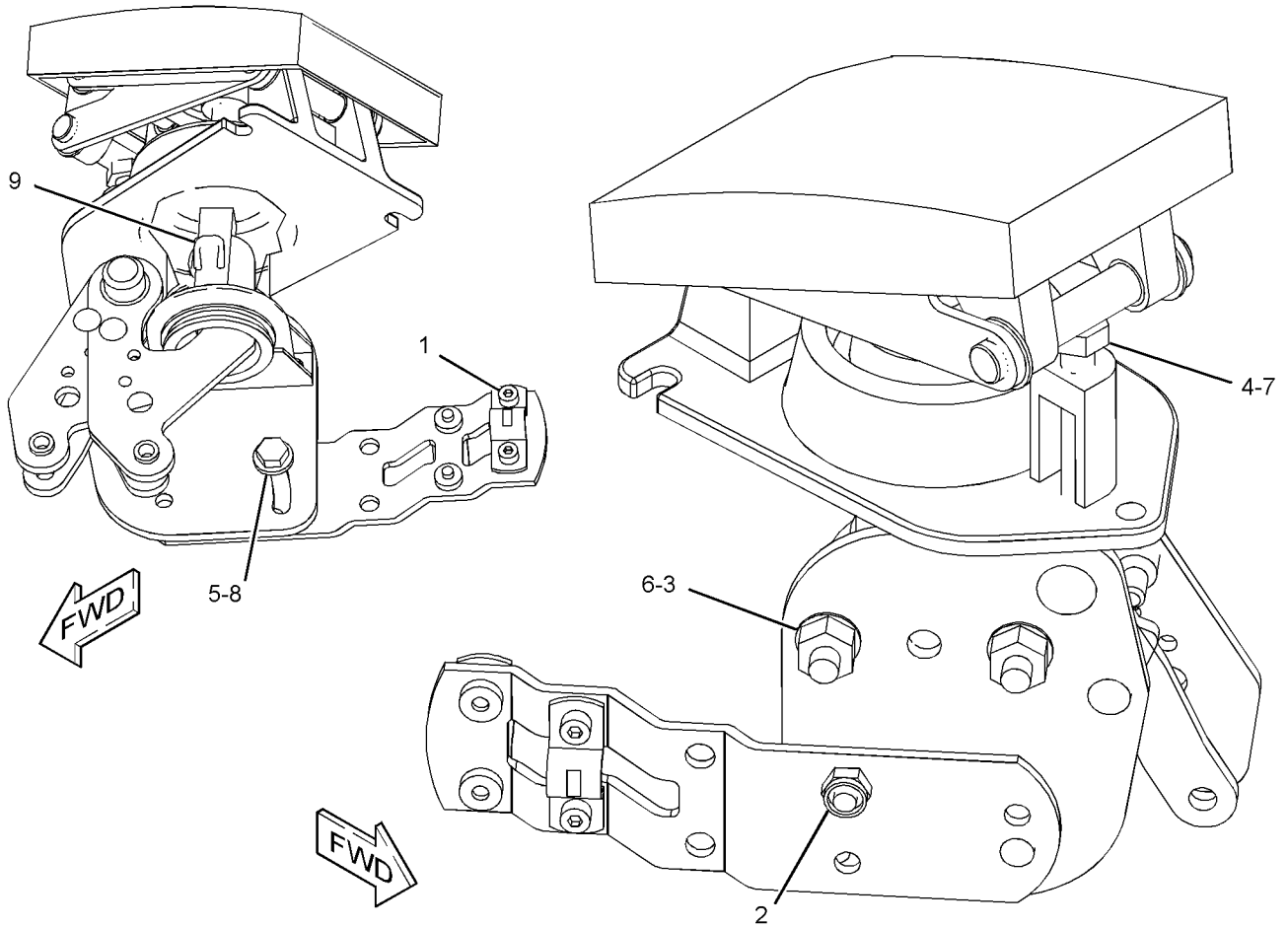

GRAPHIC #1 **<END>** g01164366

OPERATOR STATION

218-6360 PLATFORM GP-OPERATOR

S/N: BXM4225-UP

PART OF 295-7210 CHASSIS AR

SMCS-7253 **i02884780**

NOTE	REF NO	GRAPHIC REF	PART NUMBER	QTY	PART NAME 1 2 3 4 5 6 (PRODUCT LEVEL)	SEE PAGE
E	1	1	**124-3243**		SEAL (19.5-CM)	
D	2	1	**5P-5927**		SEAL (0.31-M EACH)	
	3	1	**218-6416**	1	PLATE AS	
	4	1	**218-6417**	1	FLOORPLATE AS	
	5	1	**218-6424**	1	PLATE AS	
	6	1	**218-6438**	1	SEAL	
	7	1	**101-2867**	1	WASHER-HARD (7.2X25X2-MM THK)	
M	8	1	**5C-7261**	1	NUT (M8X1.25-THD)	
EM	9	1	**5C-9553**	6	BOLT (M6X1X16-MM)	
M	10	1	**8T-4138**	2	BOLT (M6X1X20-MM)	
M	11	1	**8T-4197**	1	BOLT (M8X1.25X40-MM)	
	12	1	**8T-4205**	6	WASHER-HARD (7.2X14.5X2-MM THK)	
	13	1	**8T-4224**	10	WASHER-HARD (8.8X16X2-MM THK)	
M	14	1	**8T-4908**	8	BOLT (M8X1.25X25-MM)	
M	15	1	**9X-2045**	3	SCREW-TRUSS HEAD (M6X1X20-MM)	
	16	1	**9X-6165**	2	WASHER (6.5X22X2.5-MM THK)	
	17	1	**124-3243**		SEAL (6-CM EACH)	

D-ORDER BY THE METER
E-ORDER BY THE CENTIMETER
M-METRIC PART

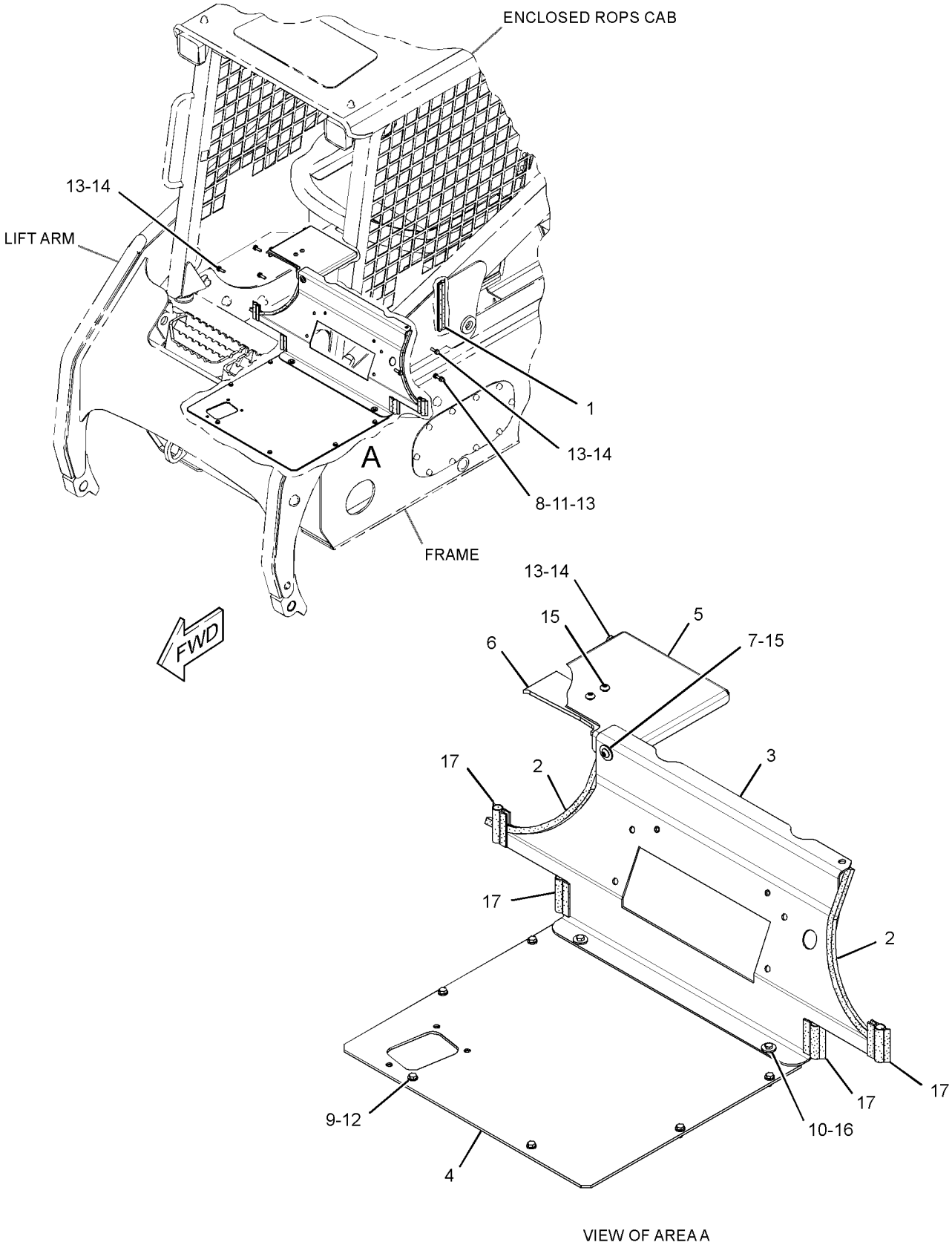

GRAPHIC #1 **<END>** g01437661

218-6407 SEAL GP-CAB—DEBRIS BARRIER

S/N: BXM4225-UP
PART OF 295-7323, 295-7333 OPTION AR-CAB
AN ATTACHMENT

SMCS-7301 **i02866081**

NOTE	REF NO	GRAPHIC REF	PART NUMBER	QTY	PART NAME 1 2 3 4 5 6 (PRODUCT LEVEL)	SEE PAGE
E	1	1	**128-7037**		SEAL (59-CM)	
E	1A	1	**128-7037**		SEAL (39-CM)	
	2	1	**187-3211**	1	PLATE AS	
M		1	**8T-3612**	2	NUT-WELD (M8X1.25-THD)	
	3	1	**187-3212**	1	PLATE	
	4	1	**284-3595**	2	SEAL-RUBBER	
	5	1	**284-3743**	2	SEAL-RUBBER	
	6	1	**284-3744**	1	SEAL-RUBBER	
B	7	1	**287-6603**	2	PLUG-BUTTON	
	8	1	**287-7004**	1	BLOCK AS (LH)	
	9	1	**287-7006**	1	BLOCK AS (RH)	
B	10	1	**288-5767**	8	PLUG-BUTTON	
	11	1	**189-4523**	2	BOSS	
M	12	1	**7X-2537**	2	BOLT (M8X1.25X35-MM)	
	13	1	**8T-4224**	2	WASHER-HARD (8.8X16X2-MM THK)	

B-USE AS REQUIRED
E-ORDER BY THE CENTIMETER
M-METRIC PART

218-6407 **SEAL GP-CAB** *(contd.)* **i02866081**

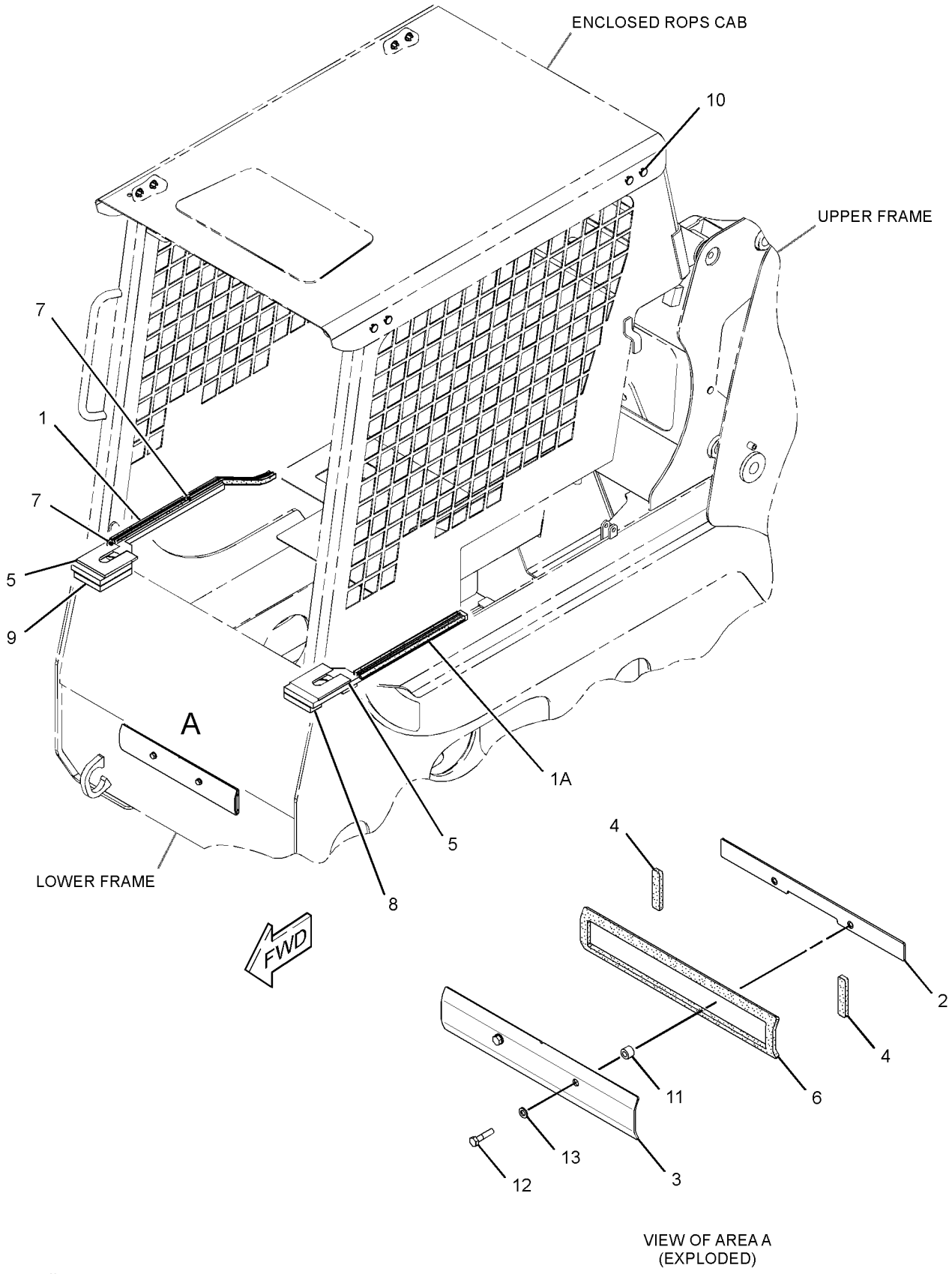

GRAPHIC #1 **<END>** g01439361

OPERATOR STATION

276-6019 SEAT BELT GP

S/N: BXM4225-UP
3-INCH, RETRACTABLE SUSPENSION
AN ATTACHMENT

SMCS-7327 **i02450731**

NOTE	REF NO	GRAPHIC REF	PART NUMBER	QTY	PART NAME 1 2 3 4 5 6 (PRODUCT LEVEL)	SEE PAGE
	1	1	**6E-6549**	2	WASHER (11X27X6-MM THK)	
	2	1	**0T-0244**	2	BOLT (7/16-20X1.25-IN)	
	3	1	**8S-0934**	2	LOCKNUT-FLANGE (7/16-20-THD)	
	4	1	**8T-4223**	2	WASHER-HARD (13.5X25.5X3-MM THK)	

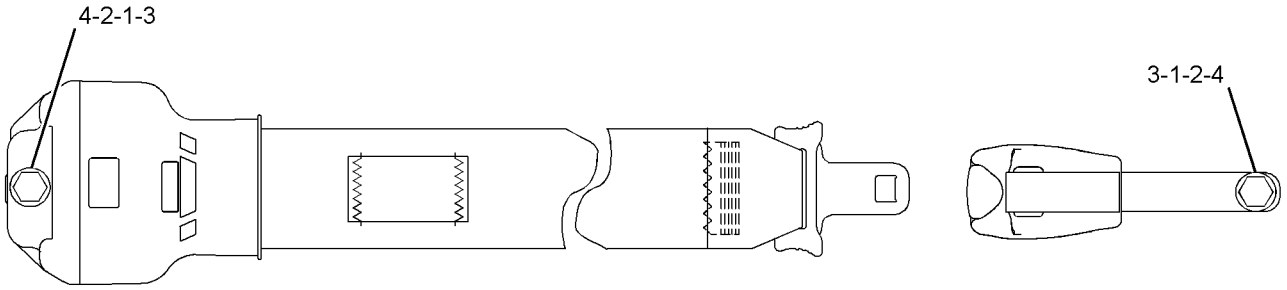

GRAPHIC #1 **<END>** g01230176

OPERATOR STATION

276-6020 SEAT BELT GP

S/N: BXM4225-UP
3-INCH, RETRACTABLE STATIC
AN ATTACHMENT

SMCS-7327 **i02718272**

NOTE	REF NO	GRAPHIC REF	PART NUMBER	QTY	PART NAME 1 2 3 4 5 6 (PRODUCT LEVEL)	SEE PAGE
	1	1	**2D-6412**	2	WASHER (7/16X15/16X1/4-IN THK)	
	2	1	**0T-0244**	2	BOLT (7/16-20X1.25-IN)	
	3	1	**8S-0934**	2	LOCKNUT-FLANGE (7/16-20-THD)	
	4	1	**8T-4223**	2	WASHER-HARD (13.5X25.5X3-MM THK)	

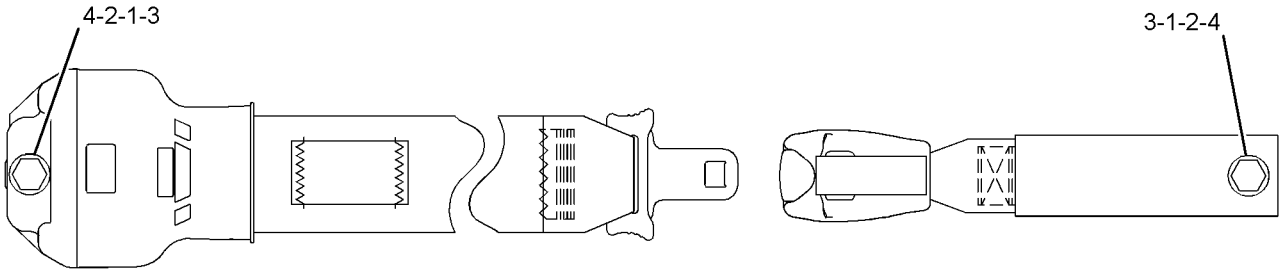

GRAPHIC #1 **<END>** g01230231

OPERATOR STATION

276-7276 SEAT BELT GP

S/N: BXM4225-UP
2-INCH, SUSPENSION
AN ATTACHMENT

SMCS-7327 **i02738465**

NOTE	REF NO	GRAPHIC REF	PART NUMBER	QTY	PART NAME 1 2 3 4 5 6 (PRODUCT LEVEL)	SEE PAGE
	1	1	**2D-6412**	2	WASHER (7/16X15/16X1/4-IN THK)	
	2	1	**0T-0244**	2	BOLT (7/16-20X1.25-IN)	
	3	1	**8S-0934**	2	LOCKNUT-FLANGE (7/16-20-THD)	
	4	1	**8T-4223**	2	WASHER-HARD (13.5X25.5X3-MM THK)	

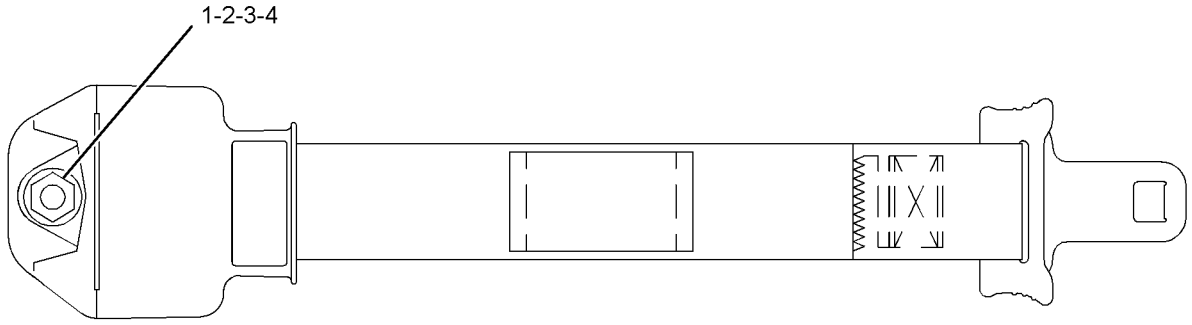

GRAPHIC #1 **<END>** g01230125

OPERATOR STATION

276-7277 SEAT BELT GP

S/N: BXM4225-UP
2-INCH, RETRACTABLE SUSPENSION
AN ATTACHMENT

SMCS-7327 **i02712903**

NOTE	REF NO	GRAPHIC REF	PART NUMBER	QTY	PART NAME 1 2 3 4 5 6 (PRODUCT LEVEL)	SEE PAGE
	1	1	**2D-6412**	2	WASHER (7/16X15/16X1/4-IN THK)	
	2	1	**0T-0244**	2	BOLT (7/16-20X1.25-IN)	
	3	1	**8S-0934**	2	LOCKNUT-FLANGE (7/16-20-THD)	
	4	1	**8T-4223**	2	WASHER-HARD (13.5X25.5X3-MM THK)	

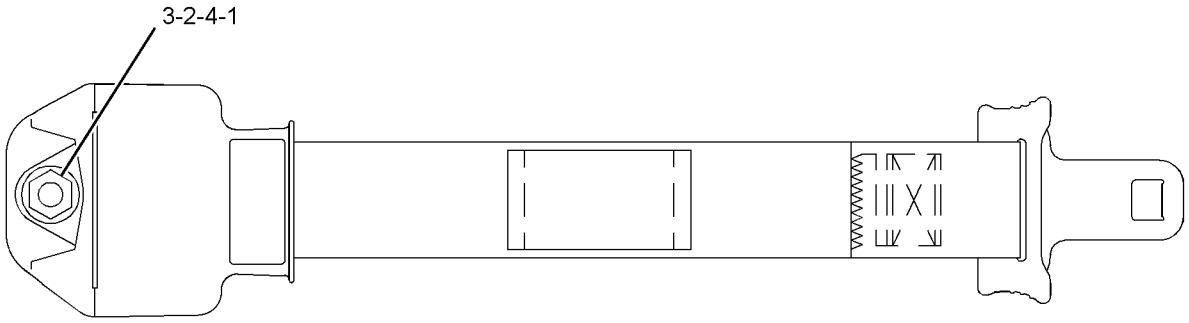

GRAPHIC #1 **<END>** g01230239

142-9305 SEAT GP–SUSPENSION

S/N: BXM4225-UP
PART OF 295-7313, 295-7323, 295-7333 OPTION AR-CAB
CANNOT BE USED WITH 218-5562–PAGE 614, 218-5611–PAGE 518, 218-5618–PAGE 525, 218-6571–PAGE 536
AN ATTACHMENT

SMCS-7312, 7324 **i02571422**

NOTE	REF NO	GRAPHIC REF	PART NUMBER	QTY	PART NAME 1 2 3 4 5 6 (PRODUCT LEVEL)	SEE PAGE
CY	1	1	**219-4380**	1	SEAT GP-ADJUSTABLE	615
M	2	1	**5C-7261**	4	NUT (M8X1.25-THD)	
	3	1	**8T-4224**	4	WASHER-HARD (8.8X16X2-MM THK)	

C-CHANGE FROM PREVIOUS TYPE
M-METRIC PART
Y-SEPARATE ILLUSTRATION

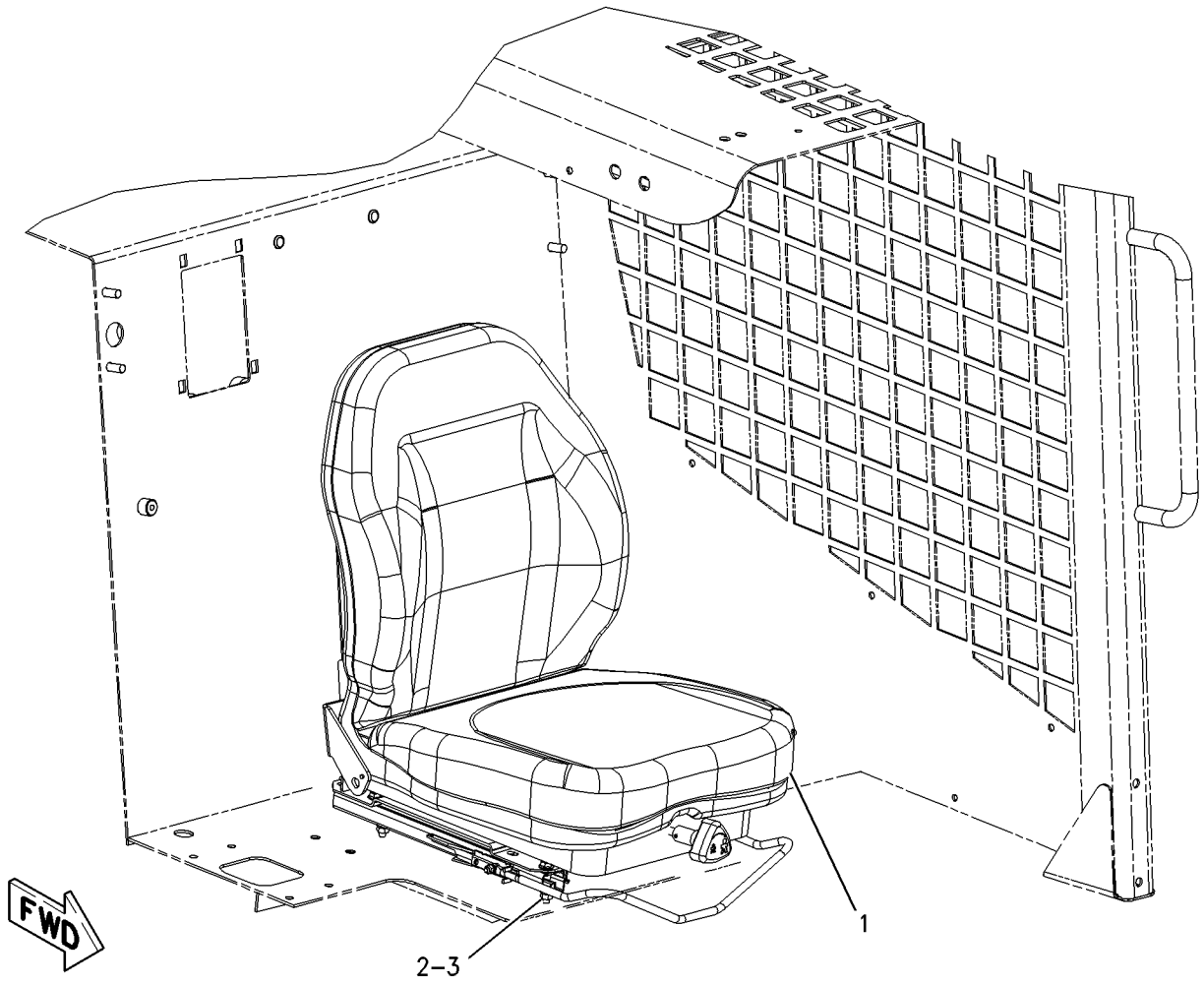

GRAPHIC #1 **<END>** g00914893

OPERATOR STATION

218-5562 SEAT GP

S/N: BXM4225-UP
STATIC
PART OF 295-7303 OPTION AR-CAB
CANNOT BE USED WITH 142-9305—PAGE 613
AN ATTACHMENT

SMCS-7312, 7324 **i02757222**

NOTE	REF NO	GRAPHIC REF	PART NUMBER	QTY	PART NAME 1 2 3 4 5 6 (PRODUCT LEVEL)	SEE PAGE
	1	1	**218-6662**	1	SEAT GP (STATIC)	
		1	**153-1260**	1	SWITCH (SEAT)	
		1	**154-3985**	1	WIRE AS	
		1	**219-4379**	1	HANDLE	
M	2	1	**5C-7261**	4	NUT (M8X1.25-THD)	
	3	1	**8T-4224**	4	WASHER-HARD (8.8X16X2-MM THK)	

M-METRIC PART

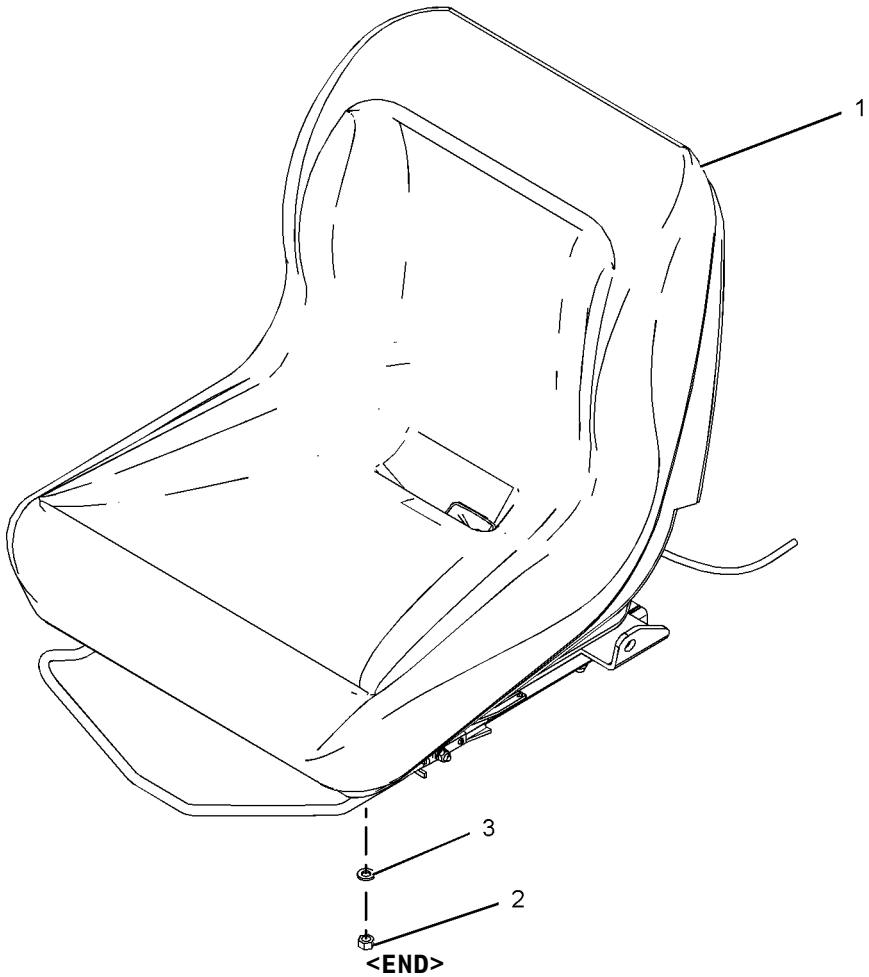

GRAPHIC #1

<END>

g01018112

OPERATOR STATION

219-4380 SEAT GP-ADJUSTABLE

S/N: BXM4225-UP
PART OF 142-9305 SEAT GP
AN ATTACHMENT

SMCS-7312, 7321 **i01901346**

NOTE	REF NO	GRAPHIC REF	PART NUMBER	QTY	PART NAME 1 2 3 4 5 6 (PRODUCT LEVEL)	SEE PAGE
	1	1	**154-3985**	1	WIRE AS	
	2	1	**154-3986**	1	SWITCH AS (SEAT)	
	3	1	**154-8711**	1	KIT-SPRING (ADJUSTABLE SEAT)	
Z		1		2	SPRING	
Z	3A	1		1	CABLE AS	
Z	3B	1		2	NUT-PUSH	
	4	1	**154-8715**	1	KIT-DAMPER (ADJUSTABLE SEAT)	
					(INCLUDES DAMPER, NUT-LOCK, WASHER & SPACER)	
	5	1	**173-2543**	1	KIT-CUSHION	
	6	1	**219-4379**	1	HANDLE	
	7	1	**219-4388**	1	KIT-HANDLE (KNOB)	
Z		1		1	KNOB	
Z	7A	1		1	SHAFT	
Z	7B	1		2	PIN-SPRING	
Z	7C	1		1	HANGER (SPRING)	
Z	7D	1		1	NUT-PUSH	
Z		1		2	SPACER	

Z-NOT SERVICED SEPARATELY

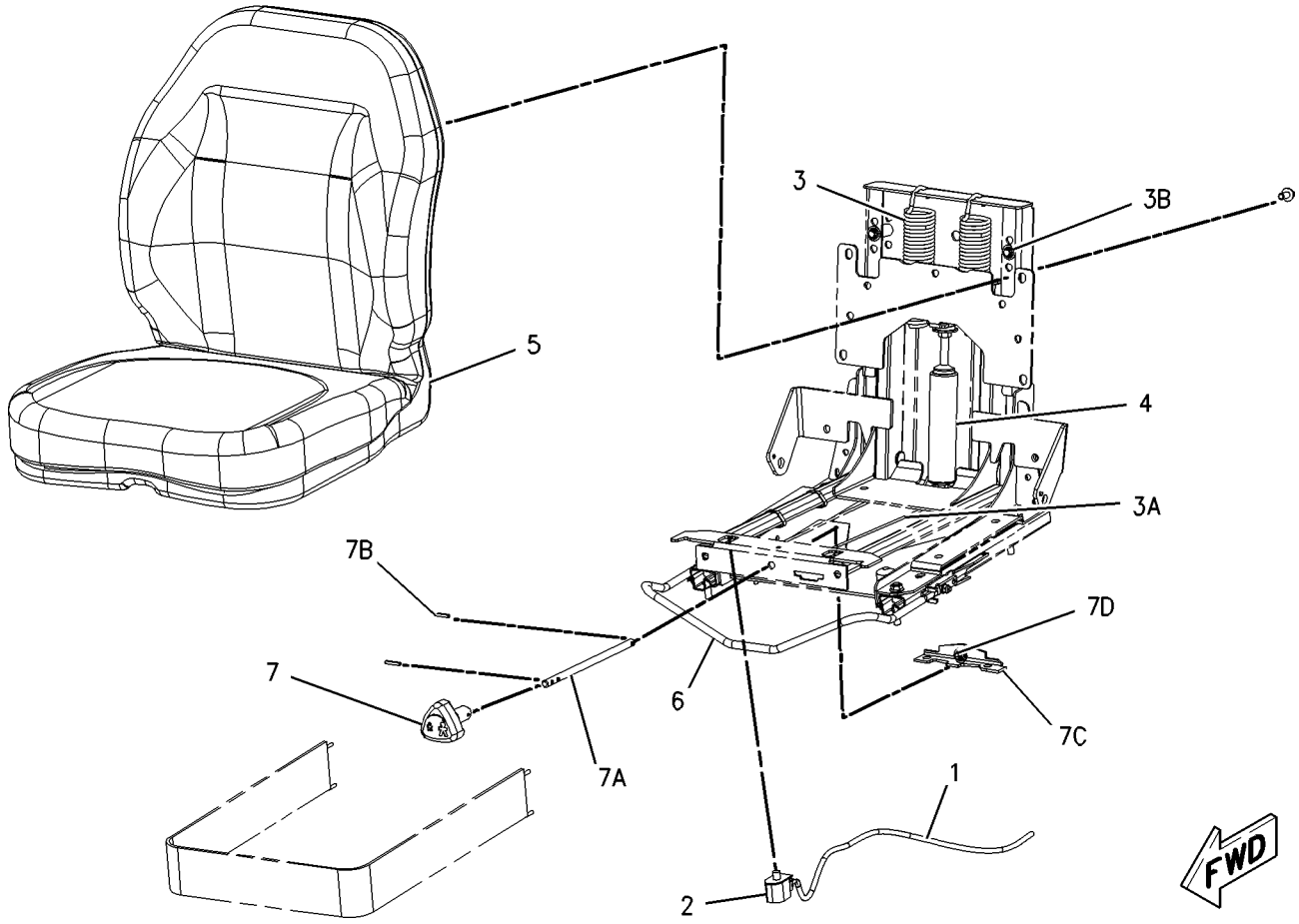

GRAPHIC #1 **<END>** g00915009

OPERATOR STATION

218-6380 SPRING GP-GAS

S/N: BXM4225-UP

PART OF 218-6350 CAB AR-ENCLOSED ROPS

SMCS-7301 **i02772071**

NOTE	REF NO	GRAPHIC REF	PART NUMBER	QTY	PART NAME 1 2 3 4 5 6 (PRODUCT LEVEL)	SEE PAGE
	1	1	**5P-0372**	2	LOCK PIN	
	2	1	**9C-5344**	1	SPACER (10.5X20X18-MM THK)	
	3	1	**095-1325**	1	PIN-CLEVIS	
	4	1	**153-2682**	1	SPRING AS-GAS (CAB)	
	5	1	**177-3405**	1	PIN	

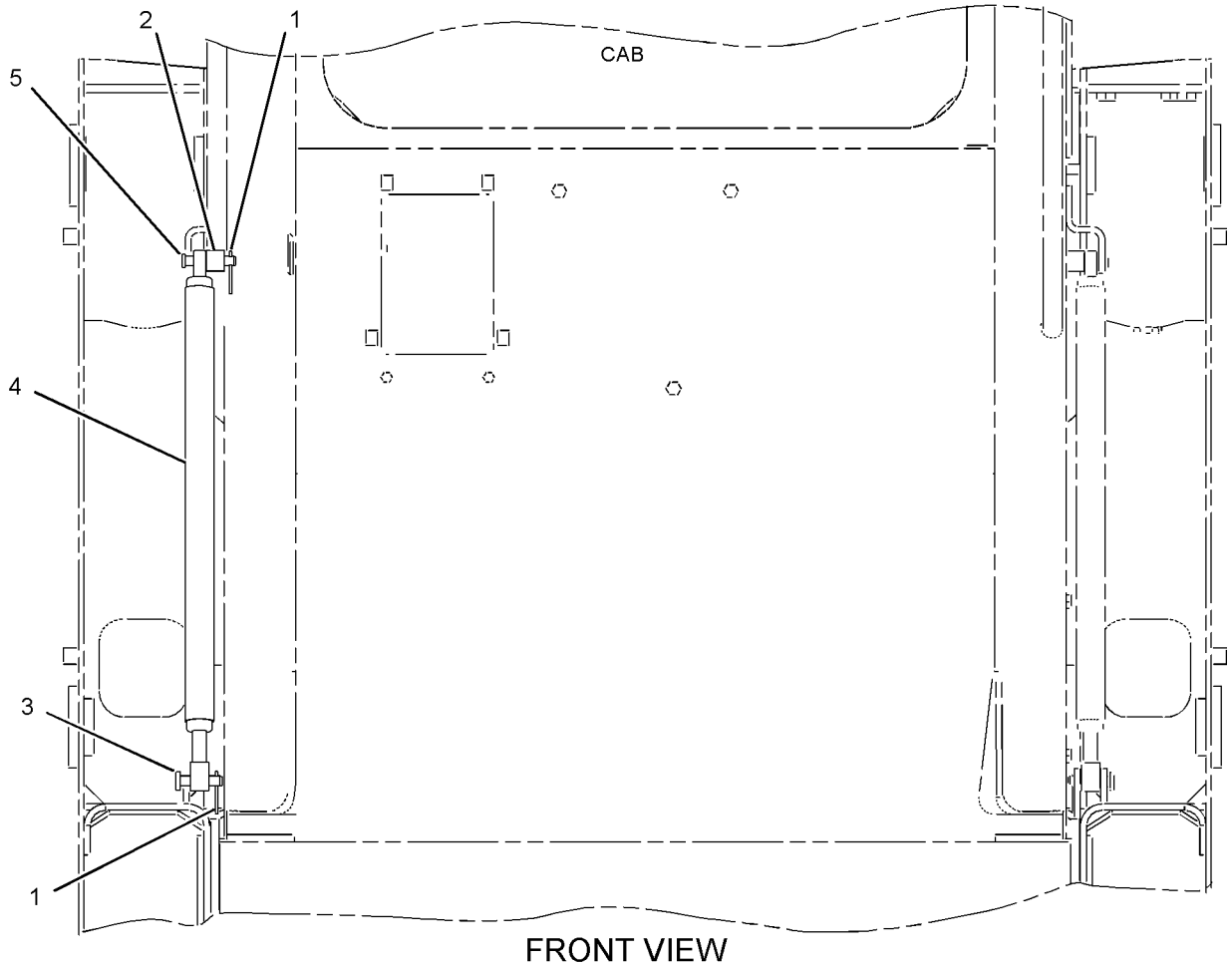

FRONT VIEW

GRAPHIC #1

<END>

g01031997

OPERATOR STATION

166-2569 VISOR GP-CAB

S/N: BXM4225-UP
PART OF 173-3022 VISOR GP-CAB
AN ATTACHMENT

SMCS-7301 **i01297216**

NOTE	REF NO	GRAPHIC REF	PART NUMBER	QTY	PART NAME 1 2 3 4 5 6 (PRODUCT LEVEL)	SEE PAGE
	1	1	**2S-5717**	1	LOCKNUT (3/8-16-THD)	
	2	1	**5T-7869**	2	CLAMP	
	3	1	**5T-7870**	1	KNOB	
	4	1	**1D-4677**	2	BOLT-ROUND HEAD (3/8-16X1-IN)	
M	5	1	**9X-2042**	4	SCREW-TRUSS HEAD (M6X1X12-MM)	

M-METRIC PART

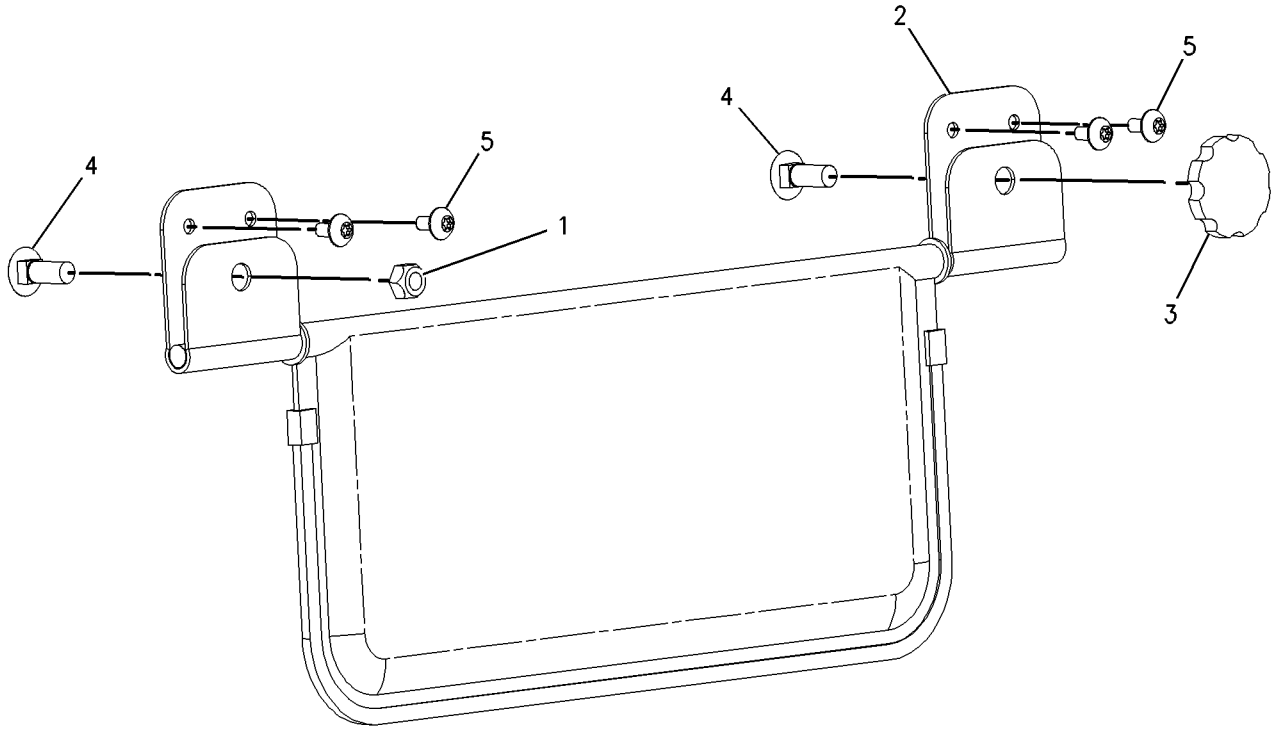

GRAPHIC #1 **<END>** g00695703

OPERATOR STATION

173-3022 VISOR GP-CAB

S/N: BXM4225-UP

PART OF 278-1225, 278-5442, 295-7164, 295-7168 CONVERSION AR-MACHINE, 233-5682, 233-5685 CONVERSION AR-ROADING

AN ATTACHMENT

SMCS-7301 **i01486233**

NOTE	REF NO	GRAPHIC REF	PART NUMBER	QTY	PART NAME 1 2 3 4 5 6 (PRODUCT LEVEL)	SEE PAGE
	1	1	**166-2562**	1	PLATE AS	
Y	2	1	**166-2569**	1	VISOR GP-CAB	617
	3	1	**195-0936**	4	INSERT-THREADED (M6X1)	
M	4	1	**9X-2045**	4	SCREW-TRUSS HEAD (M6X1X20-MM)	

M-METRIC PART
Y-SEPARATE ILLUSTRATION

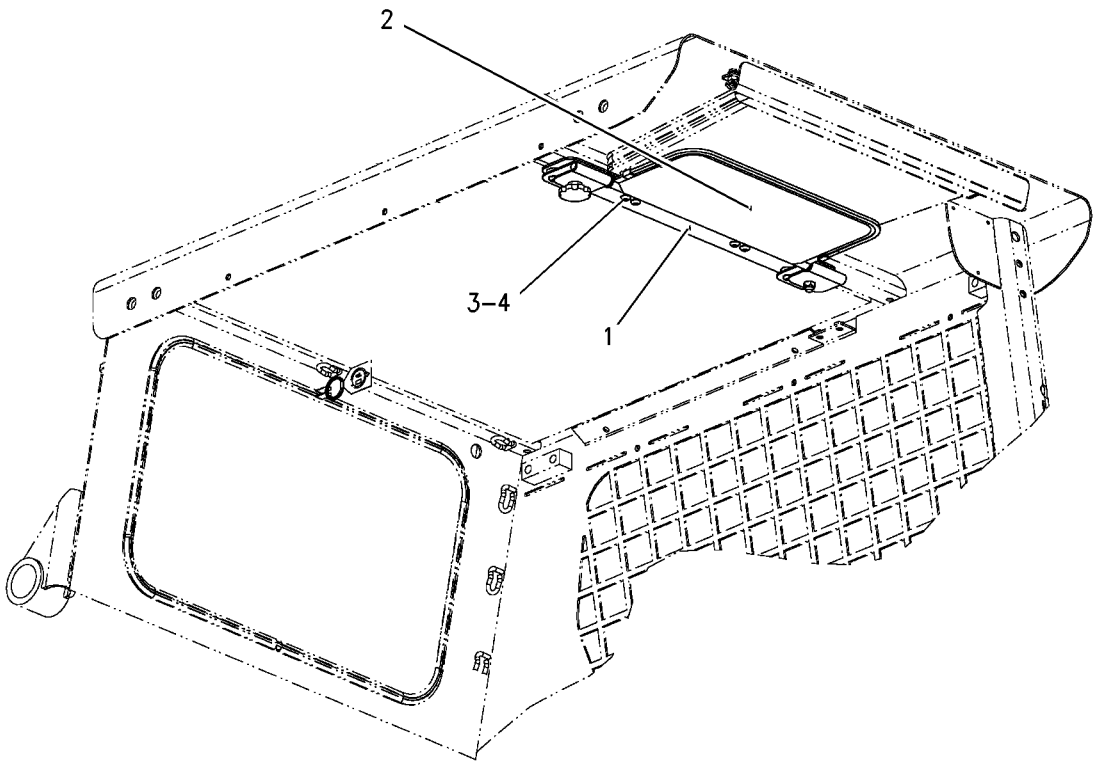

GRAPHIC #1 **<END>** g00772669

OPERATOR STATION

195-6723 WINDOW GP-CAB

S/N: BXM4225-UP

TOP & REAR

PART OF 218-6350 CAB AR-ENCLOSED ROPS

SMCS-7310 **i02534285**

NOTE	REF NO	GRAPHIC REF	PART NUMBER	QTY	PART NAME 1 2 3 4 5 6 (PRODUCT LEVEL)	SEE PAGE
	1	1	**5C-8310**	1	BRACKET-RING	
	2	1	**5C-8311**	1	RING	
	3	1	**8T-6842**	1	FILM-INSTRUCTION (ALTERNATE EXIT)	
	4	1	**142-9319**	1	WINDOW	
CE	5	1	**108-0656**		SEAL (192-CM)	
CE	6	1	**104-5957**		STRIP-LOCKING (186-CM)	

C-CHANGE FROM PREVIOUS TYPE
E-ORDER BY THE CENTIMETER

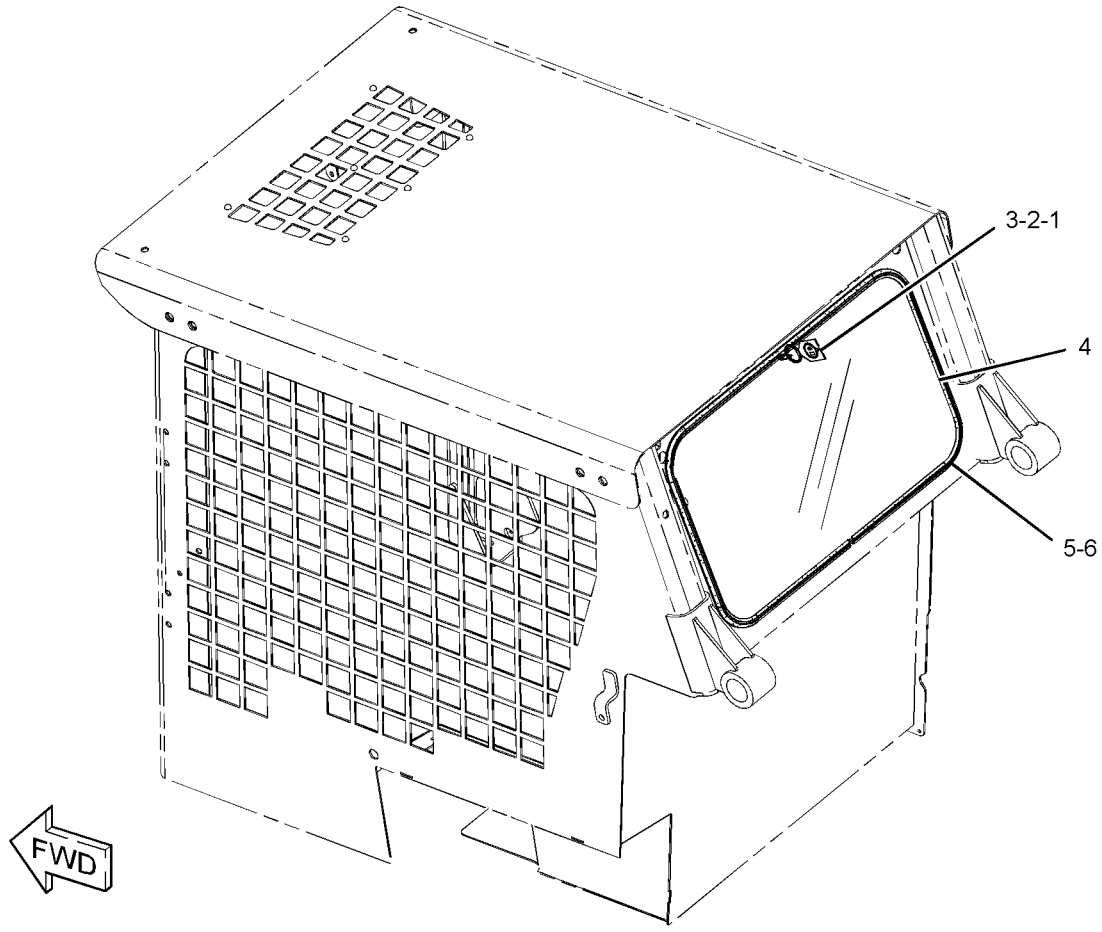

GRAPHIC #1 **<END>** g01268492

OPERATOR STATION

218-6411 WINDOW GP-CAB

S/N: BXM4225-UP
SIDE
PART OF 295-7323, 295-7333 OPTION AR-CAB
AN ATTACHMENT

SMCS-7310 **i02501965**

NOTE	REF NO	GRAPHIC REF	PART NUMBER	QTY	PART NAME 1 2 3 4 5 6 (PRODUCT LEVEL)	SEE PAGE
Y	1	1	**224-7057**	1	WINDOW GP-CAB (UPPER, LH)	622
Y	2	1	**224-7058**	1	WINDOW GP-CAB (UPPER, RH)	624
	3	1	**231-7321**	1	WINDOW AS-CAB (LOWER, RH)	
		1	**239-6109**	1	LATCH AS	
E		1	**282-6961**		SEAL (122-CM)	
	4	1	**231-7324**	1	WINDOW AS-CAB (LOWER, LH)	
		1	**239-6109**	1	LATCH AS	
E		1	**282-6961**		SEAL (122-CM)	
M	5	1	**9X-2045**	10	SCREW-TRUSS HEAD (M6X1X20-MM)	

E-ORDER BY THE CENTIMETER
M-METRIC PART
Y-SEPARATE ILLUSTRATION

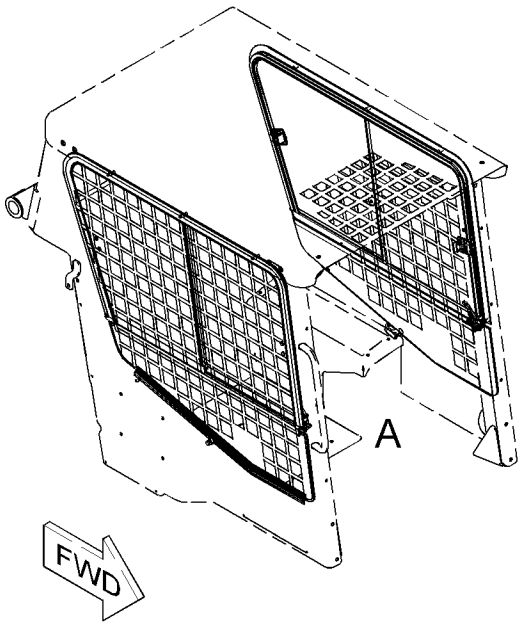

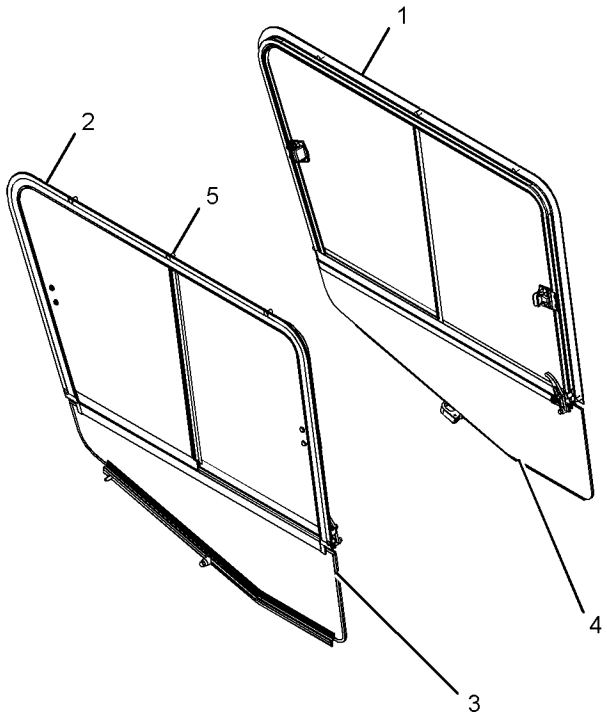

VIEW OF AREA A

GRAPHIC #1 **<END>** g01057739

218-6745 WINDOW GP-CAB—KIT

S/N: BXM4225-UP
SIDE
CANNOT BE USED WITH 218-6411—PAGE 620
AN ATTACHMENT

SMCS-7310 **i02300613**

NOTE	PART NUMBER	QTY	PART NAME 1 2 3 4 5 6 (PRODUCT LEVEL)	SEE PAGE
Y	**224-7057**	1	WINDOW GP-CAB (UPPER, LH)	622
Y	**224-7058**	1	WINDOW GP-CAB (UPPER, RH)	624
	231-7321	1	WINDOW AS-CAB (LOWER, RH)	
D	**5P-5930**		SEAL (12-M)	
	239-6109		LATCH AS	
	231-7324	1	WINDOW AS-CAB (LOWER, LH)	
	239-6109	1	LATCH AS	
D	**5P-5930**		SEAL (2-M)	
M	**9X-2045**	10	SCREW-TRUSS HEAD (M6X1X20-MM)	

D-ORDER BY THE METER
M-METRIC PART
Y-SEPARATE ILLUSTRATION

<END>

OPERATOR STATION

224-7057 WINDOW GP-CAB—UPPER,LH

S/N: BXM4225-UP

PART OF 218-6411, 218-6745 WINDOW GP-CAB

AN ATTACHMENT

SMCS-7310 **i02492653**

NOTE	REF NO	GRAPHIC REF	PART NUMBER	QTY	PART NAME 1 2 3 4 5 6 (PRODUCT LEVEL)	SEE PAGE
	1	1	**231-7322**	1	WINDOW AS-CAB (SLIDING, REAR)	
E		1	**207-0573**		SEAL (76-CM)	
		1	**231-7331**	1	LATCH AS	
	2	1	**231-7323**	1	WINDOW AS-CAB (SLIDING, FRONT)	
E		1	**207-0573**		SEAL (41-CM)	
		1	**231-7331**	1	LATCH AS	
Y	3	1	**231-7327**	1	FRAME GP-WINDOW (LH)	561
	4	1	**231-7372**	1	CATCH	
	5	1	**243-1323**	1	CATCH	
	6	1	**6D-5797**	2	SCREW-SOCKET	
	7	1	**9X-8918**	2	SCREW-FLAT HEAD (8-32X0.5-IN)	
E	8	1	**207-0539**		SEAL (125-CM)	
E	9	1	**207-0539**		SEAL (138-CM)	
E	10	1	**207-0539**		SEAL (81-CM)	
E	11	1	**207-0573**		SEAL (62-CM)	
E	12	1	**207-0573**		SEAL (80-CM)	
E	13	1	**3E-3892**		SEAL (31-CM EACH)	
E	14	1	**3E-3892**		SEAL (75-CM)	
E	15	1	**3E-3892**		SEAL (65-CM)	
E	16	1	**3E-3892**		SEAL (4-CM EACH)	

E-ORDER BY THE CENTIMETER
Y-SEPARATE ILLUSTRATION

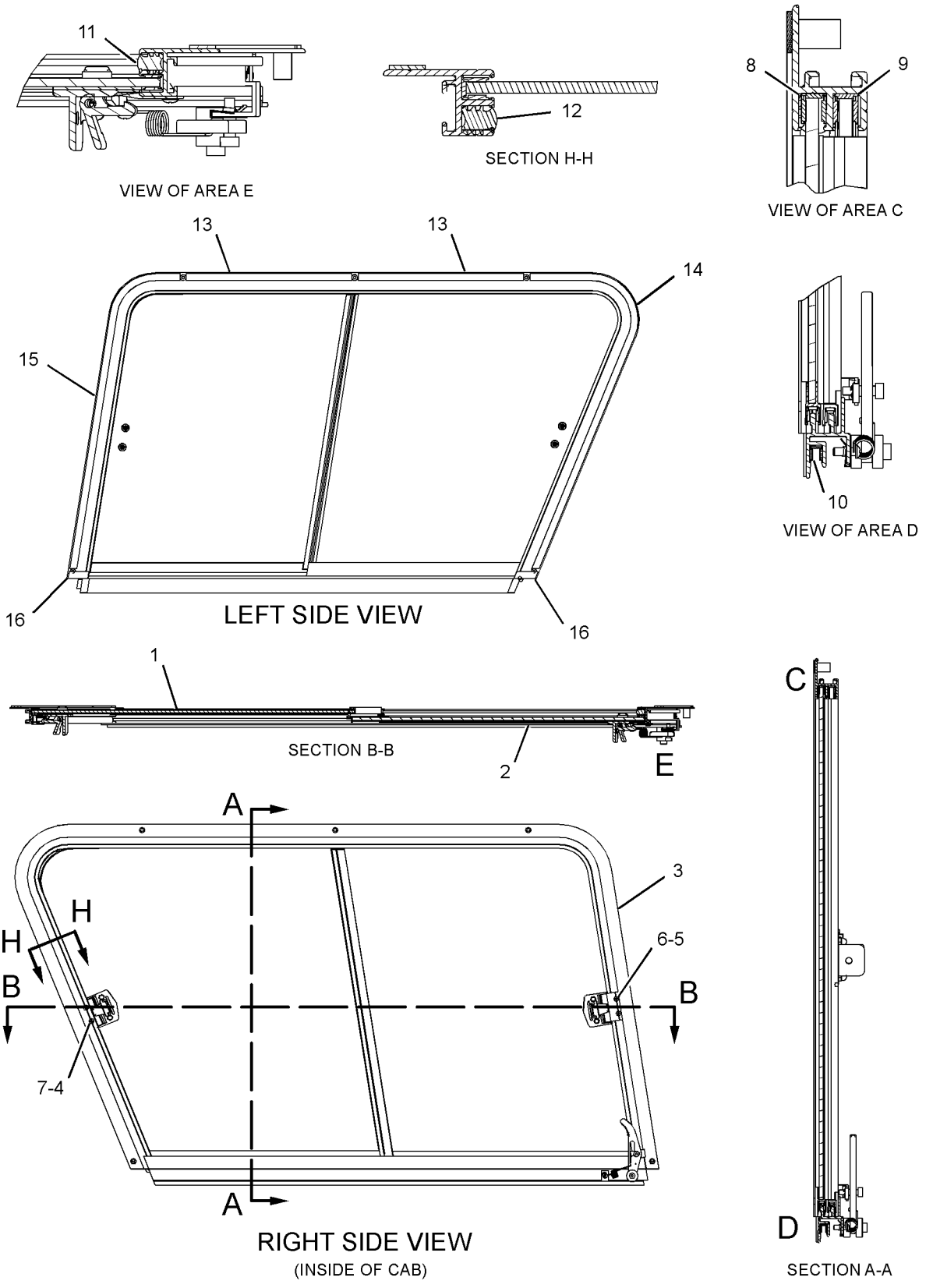

GRAPHIC #1 **<END>** g01276116

OPERATOR STATION

224-7058 WINDOW GP-CAB—RH,UPPER

S/N: BXM4225-UP

PART OF 218-6411, 218-6745 WINDOW GP-CAB

AN ATTACHMENT

SMCS-7310 **i02492654**

NOTE	REF NO	GRAPHIC REF	PART NUMBER	QTY	PART NAME 1 2 3 4 5 6 (PRODUCT LEVEL)	SEE PAGE
	1	1	**231-7319**	1	WINDOW AS-CAB (SLIDING, REAR)	
E			**207-0573**		SEAL (38-CM)	
			231-7331	1	LATCH AS	
	2	1	**231-7320**	1	WINDOW AS-CAB (SLIDING, FRONT)	
E		1	**207-0573**		SEAL (41-CM)	
		1	**231-7331**	1	LATCH AS	
Y	3	1	**231-7325**	1	FRAME GP-WINDOW (RH)	560
	4	1	**231-7372**	1	CATCH	
	5	1	**243-1323**	1	CATCH	
	6	1	**6D-5797**	2	SCREW-SOCKET	
	7	1	**9X-8918**	2	SCREW-FLAT HEAD (8-32X0.5-IN)	
E	8	1	**3E-3892**		SEAL (4-CM EACH)	
E	9	1	**3E-3892**		SEAL (31-CM EACH)	
E	10	1	**3E-3892**		SEAL (75-CM)	
E	11	1	**3E-3892**		SEAL (65-CM)	
E	12	1	**207-0539**		SEAL (81-CM)	
E	13	1	**207-0539**		SEAL (138-CM)	
E	14	1	**207-0539**		SEAL (125-CM)	
E	15	1	**207-0573**		SEAL (80-CM)	
E	16	1	**207-0573**		SEAL (62-CM)	

E-ORDER BY THE CENTIMETER
Y-SEPARATE ILLUSTRATION

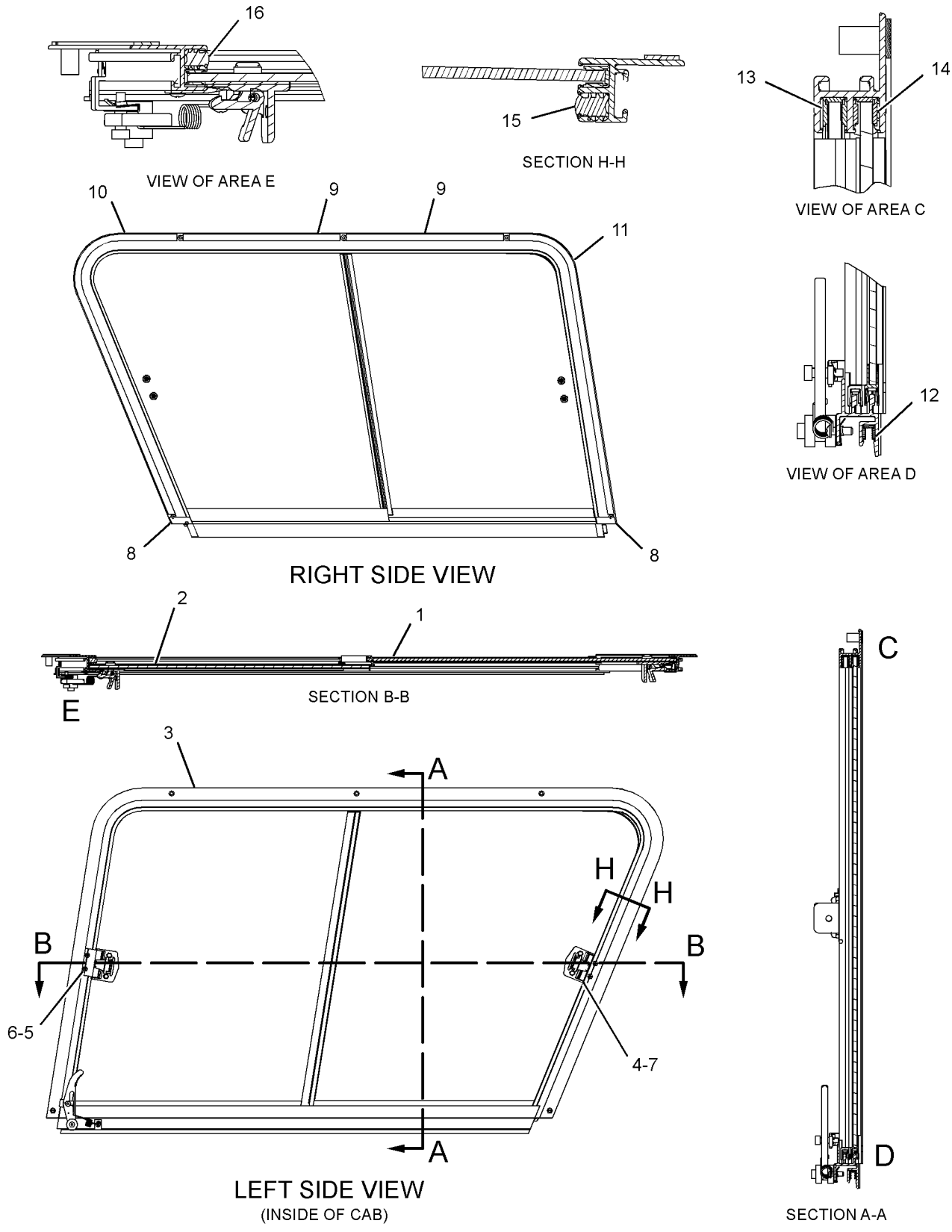

GRAPHIC #1 **<END>** g01276182

SERVICE EQUIPMENT AND SUPPLIES

191-9684 FILM GP–CLEARANCE

S/N: BXM4225-UP
PART OF 278-1221, 295-7068 CONVERSION AR-MACHINE, 233-5684 CONVERSION AR-ROADING
AN ATTACHMENT

SMCS-7557 **i01983232**

NOTE	REF NO	GRAPHIC REF	PART NUMBER	QTY	PART NAME 1 2 3 4 5 6 (PRODUCT LEVEL)	SEE PAGE
	1	1	**160-1600**	1	FILM-WARNING (CLEARANCE)	

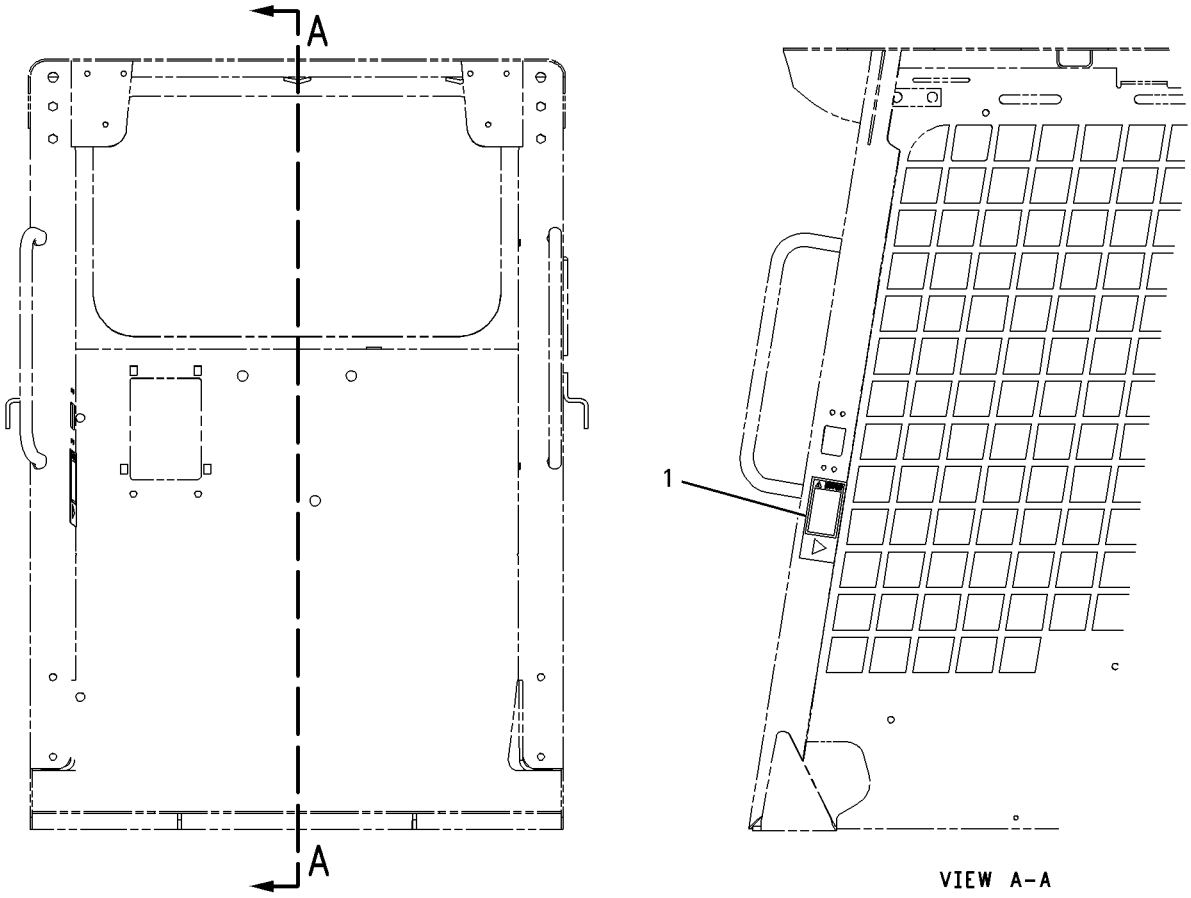

GRAPHIC #1 **<END>** g00771257

SERVICE EQUIPMENT AND SUPPLIES

238-7734 FILM GP–UN

S/N: BXM4225-UP

AN ATTACHMENT

SMCS-7557 **i02797728**

NOTE	REF NO	GRAPHIC REF	PART NUMBER	QTY	PART NAME 1 2 3 4 5 6 (PRODUCT LEVEL)	SEE PAGE
	1	1	**252-9015**	1	FILM-IDENTIFICATION (UN)	
	2	1	**252-9016**	2	FILM-IDENTIFICATION (UN)	
	3	1	**252-9017**	2	FILM-IDENTIFICATION (UN)	

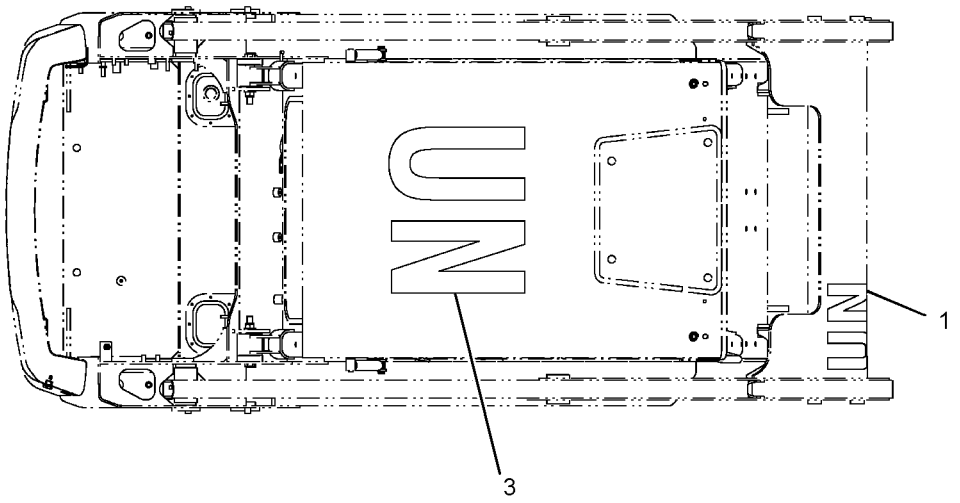

TOP VIEW FWD

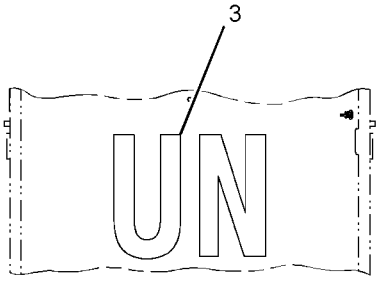

VIEW A-A

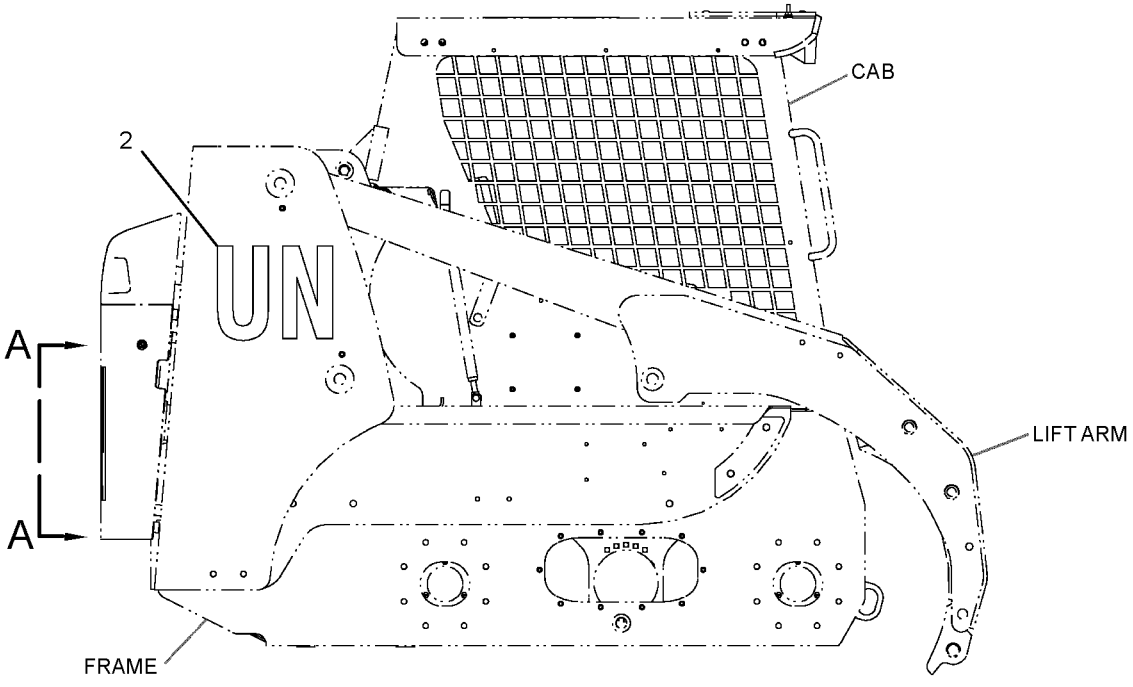

RIGHT SIDE VIEW

GRAPHIC #1

<END>

g01397986

SERVICE EQUIPMENT AND SUPPLIES

295-7142 FILM GP

S/N: BXM4225-UP

PART OF 295-7242, 295-7243 COMMON AR

SMCS-7557 **i02732940**

NOTE	REF NO	GRAPHIC REF	PART NUMBER	QTY	PART NAME 1 2 3 4 5 6 (PRODUCT LEVEL)	SEE PAGE
	1	1	**258-3423**	1	FILM-IDENTIFICATION (CATERPILLAR)	
	2	1	**258-3424**	1	FILM-IDENTIFICATION (CAT, LIFT ARM, LH)	
	3	1	**258-3425**	1	FILM-IDENTIFICATION (CAT, LIFT ARM, RH)	
	4	1	**258-3427**	1	FILM-IDENTIFICATION (CAT, REAR)	
	5	1	**295-7428**	1	FILM-IDENTIFICATION (242B2, LH)	
	6	1	**295-7429**	1	FILM-IDENTIFICATION (242B2, RH)	

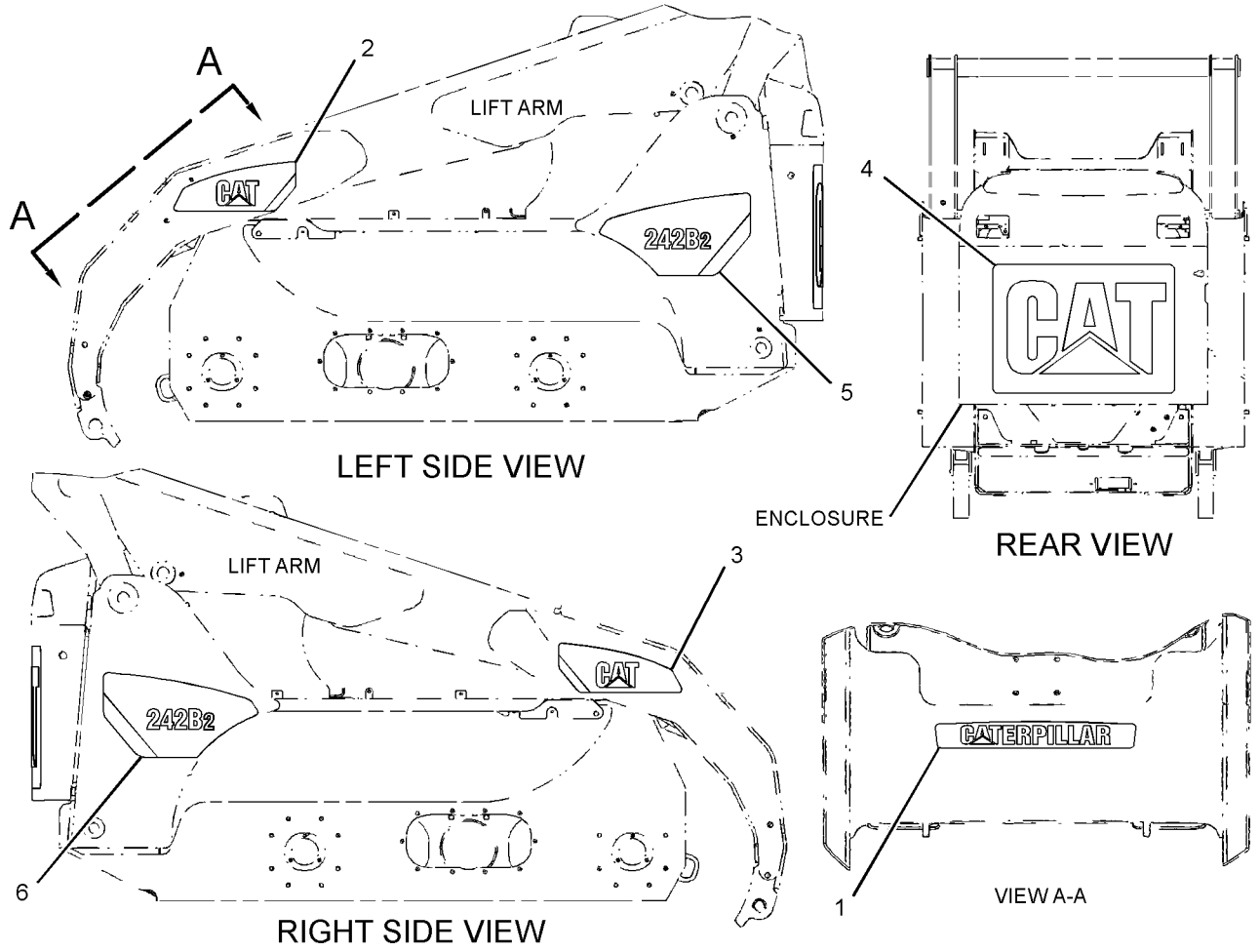

GRAPHIC #1 **<END>** g01372548

SERVICE EQUIPMENT AND SUPPLIES

317-0972 PARTS GP-MISCELLANEOUS

S/N: CYP1-UP

PART OF 292-5719 ENGINE AR-PRIMARY

AN ATTACHMENT

SMCS-1000, 7000, 7950 **i02827333**

NOTE	REF NO	GRAPHIC REF	PART NUMBER	QTY	PART NAME 1 2 3 4 5 6 (PRODUCT LEVEL)	SEE PAGE
	1	1	**5P-2369**	1	CLIP	
	2	1	**153-6375**	5	BOLT	
	3	1	**155-7984**	1	WASHER	
	4	1	**160-3550**	1	CLAMP-HOSE	
	5	1	**163-5372**	1	WASHER (8X15.4X4-MM THK)	
	6	1	**180-8579**	1	NUT	
	7	1	**183-4037**	1	CONNECTOR AS	
	8	1	**200-0807**	1	BRACKET	
	9	1	**200-5976**	1	CONNECTION	
	10	1	**205-4585**	1	HOSE	
	11	1	**217-7352**	1	COVER-VALVE	
	12	1	**225-7955**	1	CABLE AS-BATTERY (NEGATIVE)	
	13	1	**246-4318**	4	CLIP	
	14	1	**265-5624**	1	SPRING-RETURN	
	15	1	**265-5625**	1	BRACKET-THROTTLE	
	16	1	**280-8336**	1	BRACKET AS	
M	16A	1	**8T-3612**	1	NUT-WELD (M8X1.25-THD)	
	17	1	**295-8184**	1	HOSE	
	18	1	**316-6881**	1	CLAMP	

M-METRIC PART

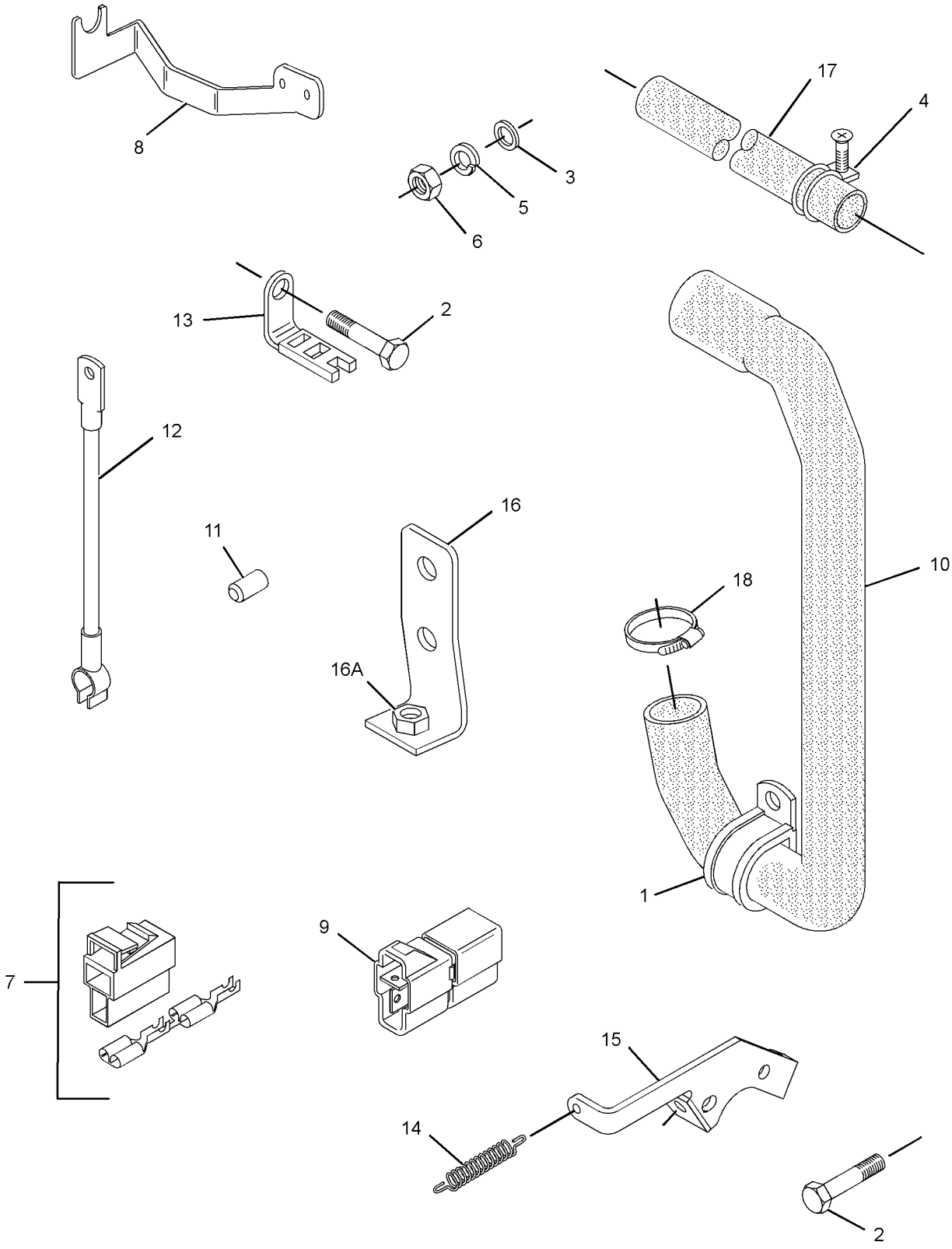

GRAPHIC #1 **<END>** g01439494

SERVICE EQUIPMENT AND SUPPLIES

195-6740 PLATE & FILM GP

S/N: BXM4225-UP

AN ATTACHMENT

SMCS-7405, 7557 **i02890284**

NOTE	REF NO	GRAPHIC REF	PART NUMBER	QTY	PART NAME 1 2 3 4 5 6 (PRODUCT LEVEL)	SEE PAGE
	1	1	**199-3410**	1	FILM-IDENTIFICATION (SYNTHETIC OIL)	

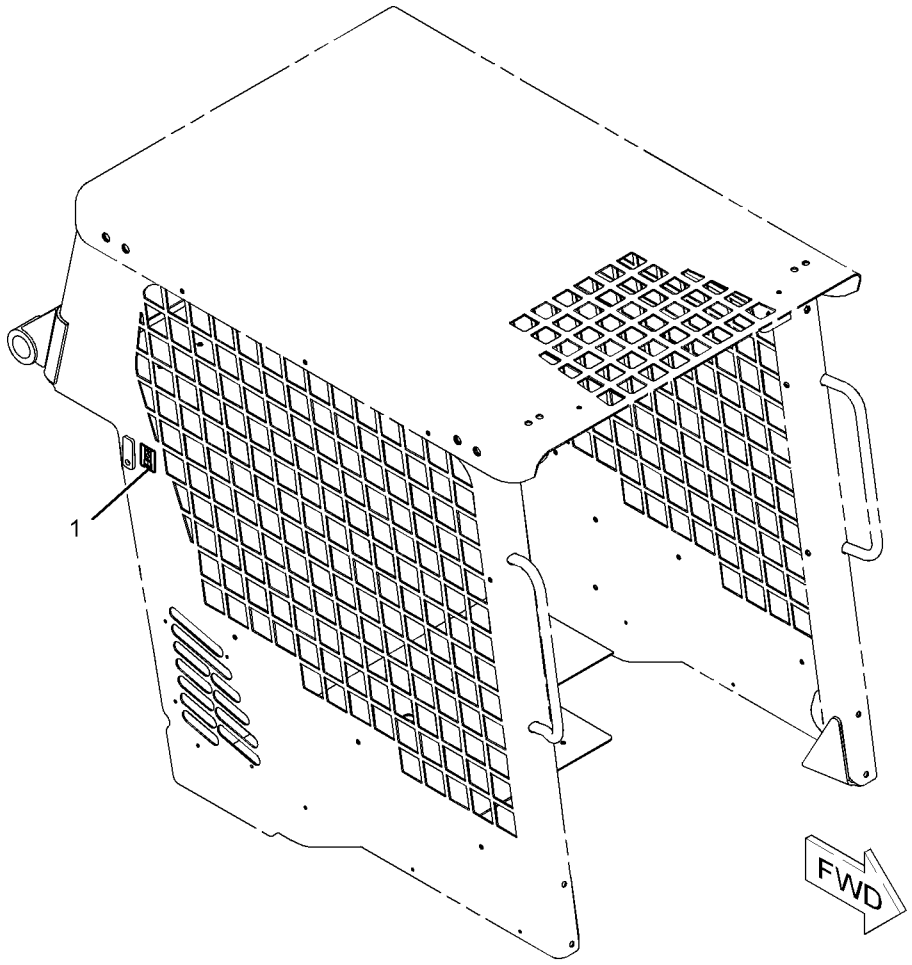

GRAPHIC #1 **<END>** g01086583

SERVICE EQUIPMENT AND SUPPLIES

218-5911 PLATE & FILM GP

S/N: BXM4225-UP

CANNOT BE USED WITH 218-6292—PAGE 636

AN ATTACHMENT

SMCS-7405, 7557 **i02593845**

NOTE	REF NO	GRAPHIC REF	PART NUMBER	QTY	PART NAME 1 2 3 4 5 6 (PRODUCT LEVEL)	SEE PAGE
	1	1	**156-5762**	4	FILM-INFORMATION (TIE-DOWN LOCATION)	
	2	1	**157-2853**	1	FILM-INFORMATION (READ OMM)	
	4	1	**224-0554**	1	FILM-WARNING (UNIVERSAL, READ OMM, INTL)	
	5	2	**224-8646**	2	FILM-WARNING (CRUSH HAZARD, STAY BACK)	
	6	1	**224-9022**	1	FILM-WARNING (SEAT BELT)	
	7	1	**234-6065**	1	FILM-CERTIFICATION (OPS, READ OMM)	
	8	2	**234-6071**	1	FILM-WARNING (LIFT ARM BRACE)	
	9	1	**234-6076**	1	FILM-WARNING (NO ACCESS)	
	10	1,2	**234-6078**	2	FILM-WARNING (CAB TILT SUPPORT)	
	11	1	**234-6081**	1	FILM-WARNING (WORK TOOL)	
	12	2	**235-1368**	1	FILM-WARNING (RADIATOR)	
	13	2	**239-6986**	1	PLATE-IDENTIFICATION (MACHINE)	
	14	2	**169-2876**	1	FILM-IDENTIFICATION (POWER RECEPTACLE, 12-VOLT)	
	15	1	**219-0302**	1	FILM-WARNING (NO WELD, NO DRILL, READ OMM)	
	16	1	**224-0672**	1	FILM-WARNING (HIGH PRESSURE, READ MANUAL)	
	17	1	**224-9855**	1	FILM-INSTRUCTION (START AID, READ OMM, INTL)	
	18	2	**225-0312**	1	FILM-WARNING (JUMP START, READ OMM, INTL)	
	19	1	**225-7976**	1	FILM-IDENTIFICATION (RELAY LAYOUT)	
	20	1	**225-7977**	1	FILM-IDENTIFICATION (RELAY LAYOUT)	
	21	2	**233-5715**	1	FILM-INSTRUCTION (SERVICE CHART)	
	22	1	**234-6069**	1	FILM-WARNING (CRUSH HAZARD)	
	23	1	**234-9575**	1	FILM-INSTRUCTION (GOVERNOR CONTROL)	
	25	2	**4P-6422**	1	FILM-WARNING (NO ETHER SPRAY/AIR INTAKE)	
	26	2	**295-2567**	1	FILM-INSTRUCTION (BUCKET LOWER)	
AF			**246-4291**	1	PLATE-SERIAL NUMBER	

A-NOT PART OF THIS GROUP
F-NOT SHOWN

REFER TO ALL ILLUSTRATIONS OF THIS GROUP FOR AUXILIARY VIEWS

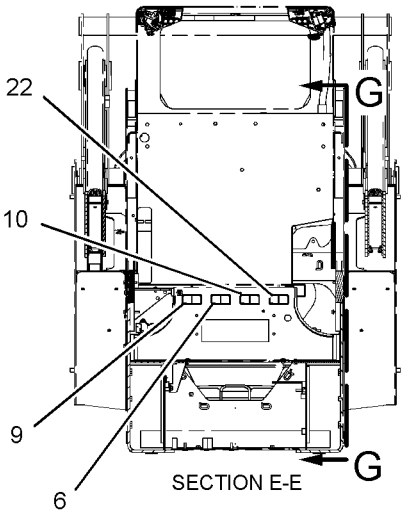

SECTION E-E

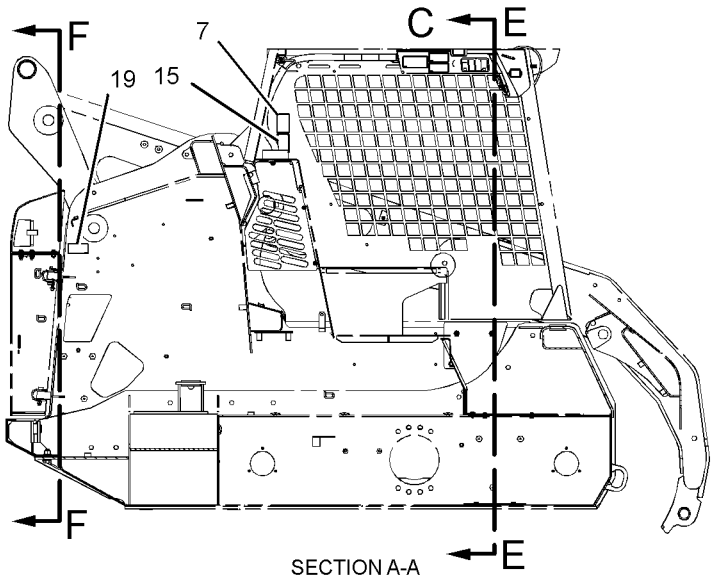

SECTION A-A

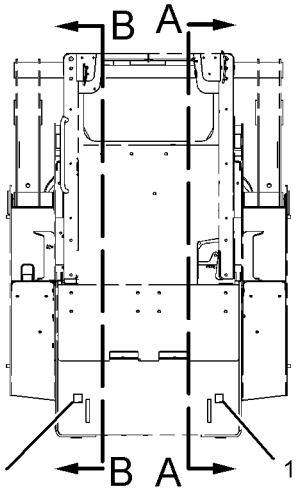

FRONT VIEW

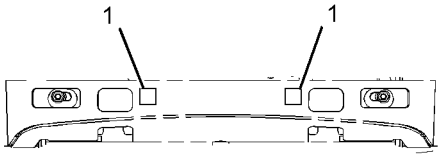

REAR VIEW

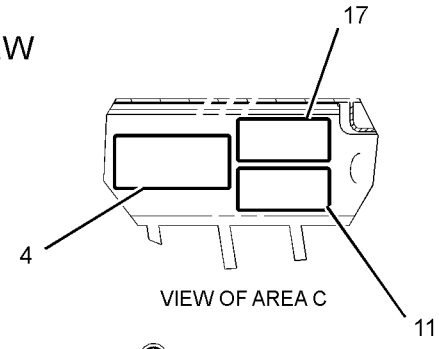

VIEW OF AREA C

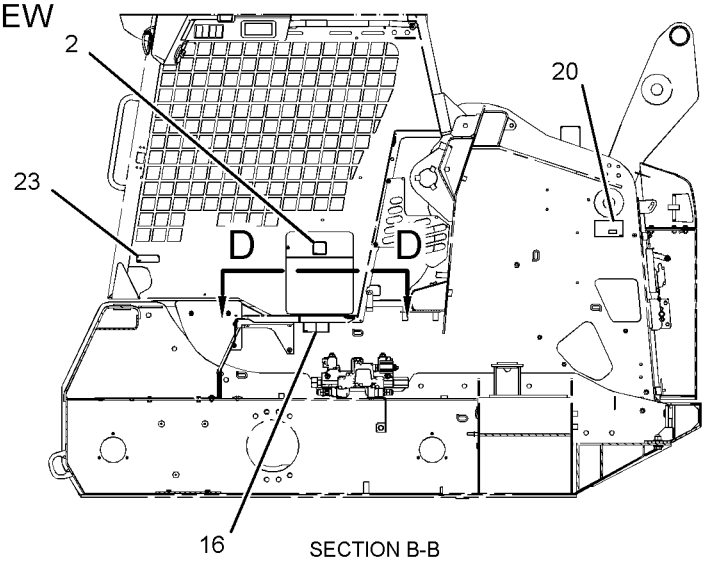

SECTION B-B

GRAPHIC #1

g01328115

REFER TO ALL ILLUSTRATIONS OF
THIS GROUP FOR AUXILIARY VIEWS

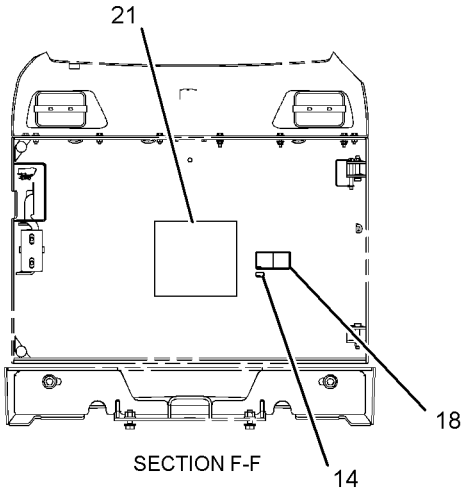

SECTION F-F

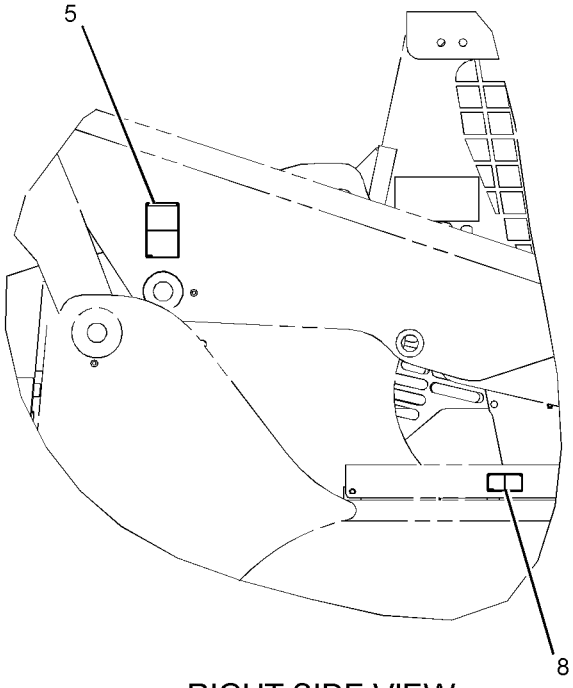

RIGHT SIDE VIEW

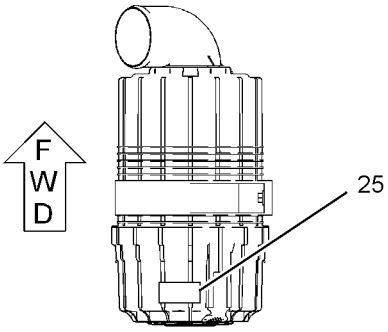

TOP VIEW
(AIR CLEANER)

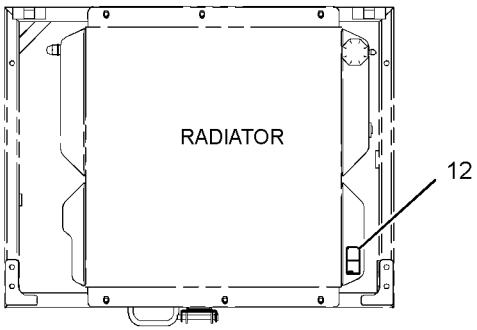

TOP VIEW

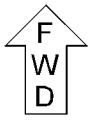

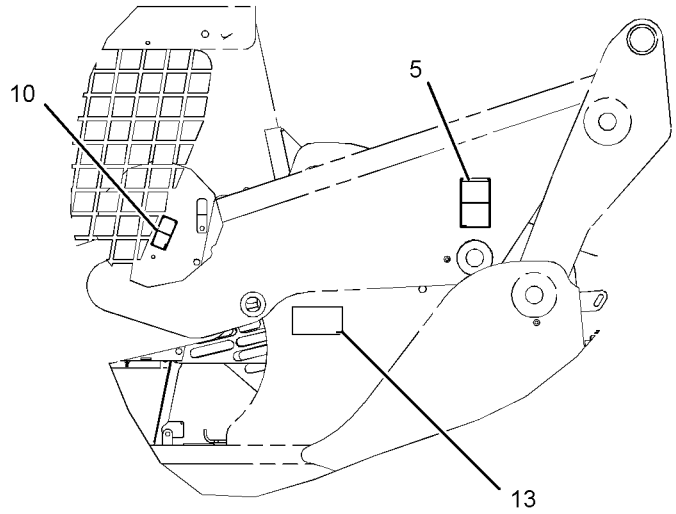

SECTION G-G

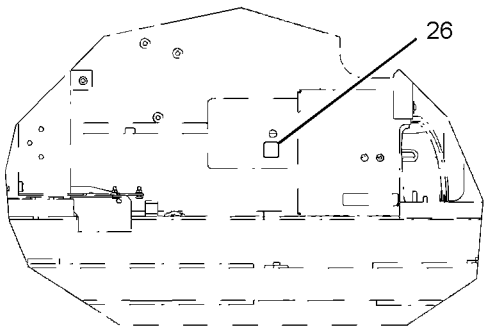

VIEW D-D

GRAPHIC #2 **<END>** g01328116

SERVICE EQUIPMENT AND SUPPLIES

218-6292 PLATE & FILM GP

S/N: BXM4225-UP

AN ATTACHMENT

SMCS-7405, 7557 **i02843437**

NOTE	REF NO	GRAPHIC REF	PART NUMBER	QTY	PART NAME 1 2 3 4 5 6 (PRODUCT LEVEL)	SEE PAGE
	1	1,2	**156-5762**	4	FILM-INFORMATION (TIE-DOWN LOCATION)	
	2	2	**157-2853**	1	FILM-INFORMATION (READ OMM)	
	3	2	**4P-6422**	1	FILM-WARNING (NO ETHER SPRAY/AIR INTAKE)	
	4	2	**224-7830**	1	FILM-WARNING (HIGH PRESSURE, READ OMM, U.S.)	
	5	1	**224-9021**	1	FILM-WARNING (SEAT BELT)	
	6	2	**225-3305**	1	FILM-WARNING (UNIVERSAL, READ OMM, U.S.)	
	7	1	**235-1365**	1	FILM-WARNING (HOT FLUID UNDER PRESSURE)	
	8	2	**234-9575**	1	FILM-INSTRUCTION (GOVERNOR CONTROL)	
	9	1	**224-8645**	2	FILM-WARNING (CRUSH HAZARD, STAY BACK)	
	10	1	**169-2876**	1	FILM-IDENTIFICATION (POWER RECEPTACLE, 12-VOLT)	
	11	2	**219-0302**	1	FILM-WARNING (NO WELD, NO DRILL, READ OMM)	
	12	2	**224-9855**	1	FILM-INSTRUCTION (START AID, READ OMM, INTL)	
	13	1	**225-0313**	1	FILM-WARNING (JUMP START, READ OMM, U.S.)	
	14	2	**225-7976**	1	FILM-IDENTIFICATION (RELAY LAYOUT)	
	15	2	**225-7977**	1	FILM-IDENTIFICATION (RELAY LAYOUT)	
	16	1	**233-5715**	1	FILM-INSTRUCTION (SERVICE CHART)	
	17	1,2	**234-6067**	2	FILM-WARNING (CRUSH HAZARD, CAB, READ OMM)	
	18	1	**234-6070**	1	FILM-WARNING (CRUSH HAZARD, CAB, READ OMM)	
	19	1	**234-6072**	1	FILM-WARNING (CRUSH HAZARD, READ OMM)	
	20	1	**234-6074**	1	FILM-WARNING (FALL/CRUSH HAZARD, NO ACCESS)	
	21	2	**234-6077**	1	FILM-WARNING (CRUSH HAZARD, READ OMM)	
	22	2	**295-2567**	1	FILM-INSTRUCTION (BUCKET LOWER)	
	23	2	**234-6065**	1	FILM-CERTIFICATION (OPS, READ OMM)	
	24	1	**239-6986**	1	PLATE-IDENTIFICATION (MACHINE)	

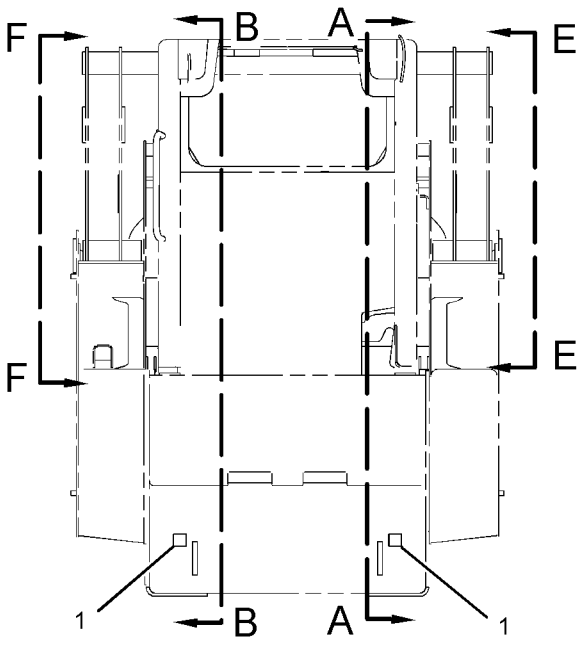

FRONT VIEW

REFER TO ALL ILLUSTRATIONS OF THIS GROUP FOR AUXILIARY VIEWS

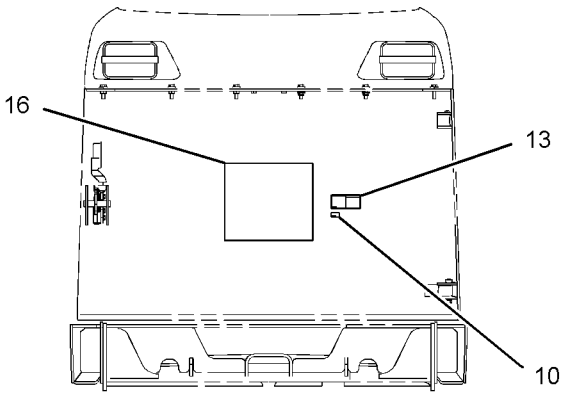

VIEW G-G

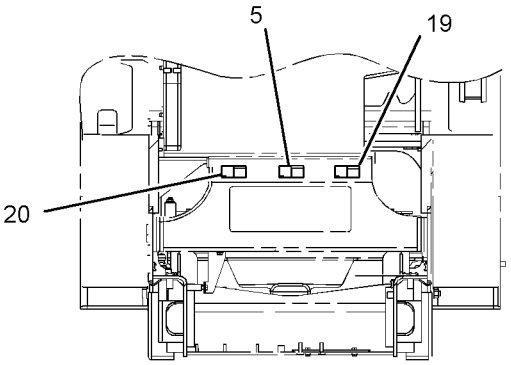

VIEW D-D

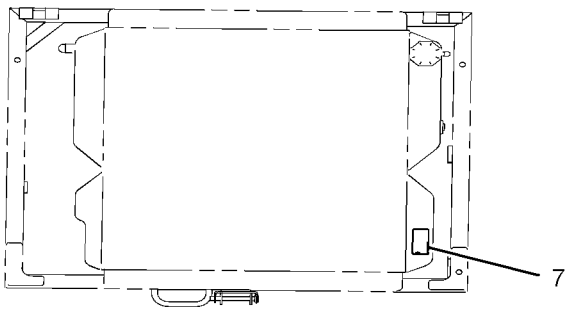

VIEW C-C

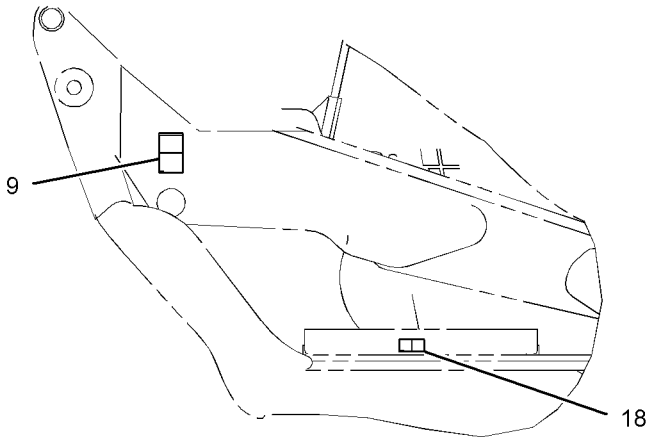

VIEW F-F

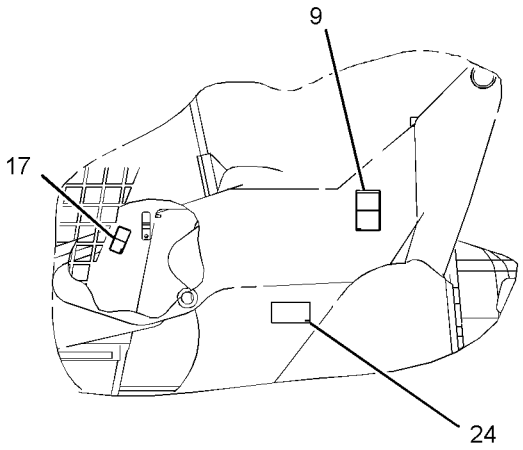

VIEW E-E

GRAPHIC #1

g01421575

REFER TO ALL ILLUSTRATIONS OF THIS GROUP FOR AUXILIARY VIEWS

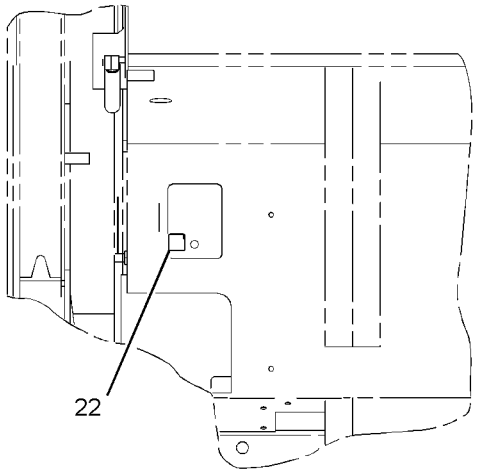

VIEW K-K

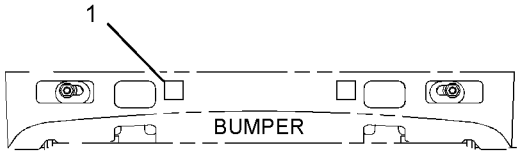

REAR VIEW

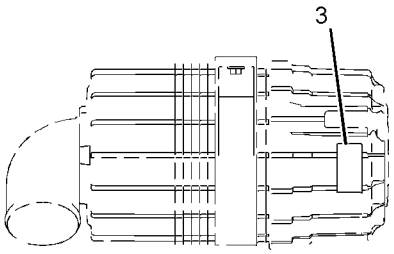

VIEW J-J

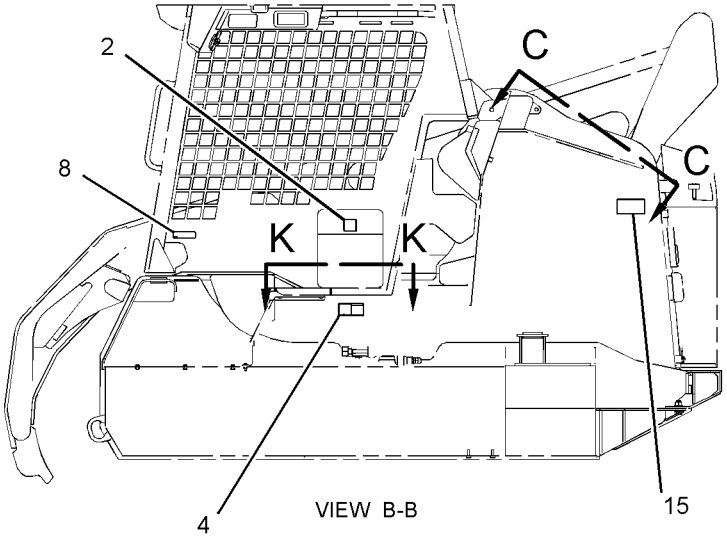

VIEW B-B

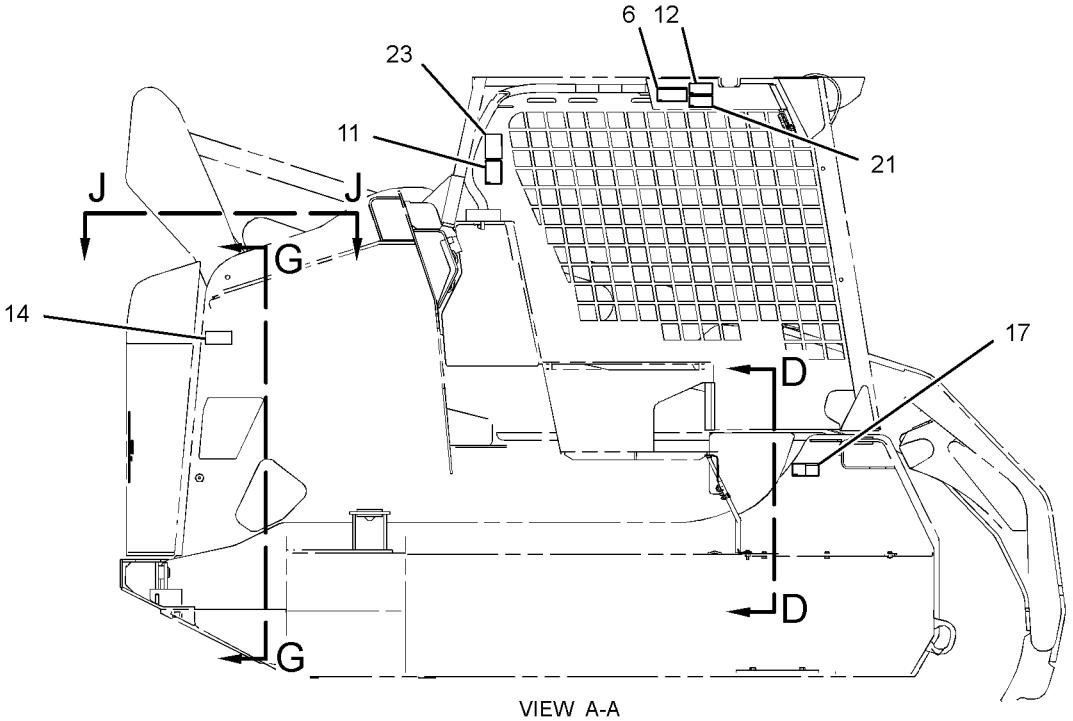

VIEW A-A

GRAPHIC #2 **<END>** g01431593

SERVICE EQUIPMENT AND SUPPLIES

247-0678 PLATE & FILM GP

S/N: BXM4225-UP
PART OF 231-5275, 231-5277 BLADE AR
AN ATTACHMENT

SMCS-7405, 7557 **i02469823**

NOTE	REF NO	GRAPHIC REF	PART NUMBER	QTY	PART NAME 1 2 3 4 5 6 (PRODUCT LEVEL)	SEE PAGE
	1	1	**7X-3229**	4	FILM-INSTRUCTION (LIFT EYE, TIE-DOWN LOCATION)	
	2	1	**226-1242**	2	FILM-WARNING (CRUSH HAZARD, STAY BACK, U.S.)	
	3	1	**228-3581**	1	FILM-WARNING (DO NOT OPERATE, READ OMM)	
	4	1	**159-8035**	1	FILM-WARNING (CRUSH HAZARD, STAY BACK)	
	5	1	**124-2456**	1	FILM-INSTRUCTION (NO STEP)	

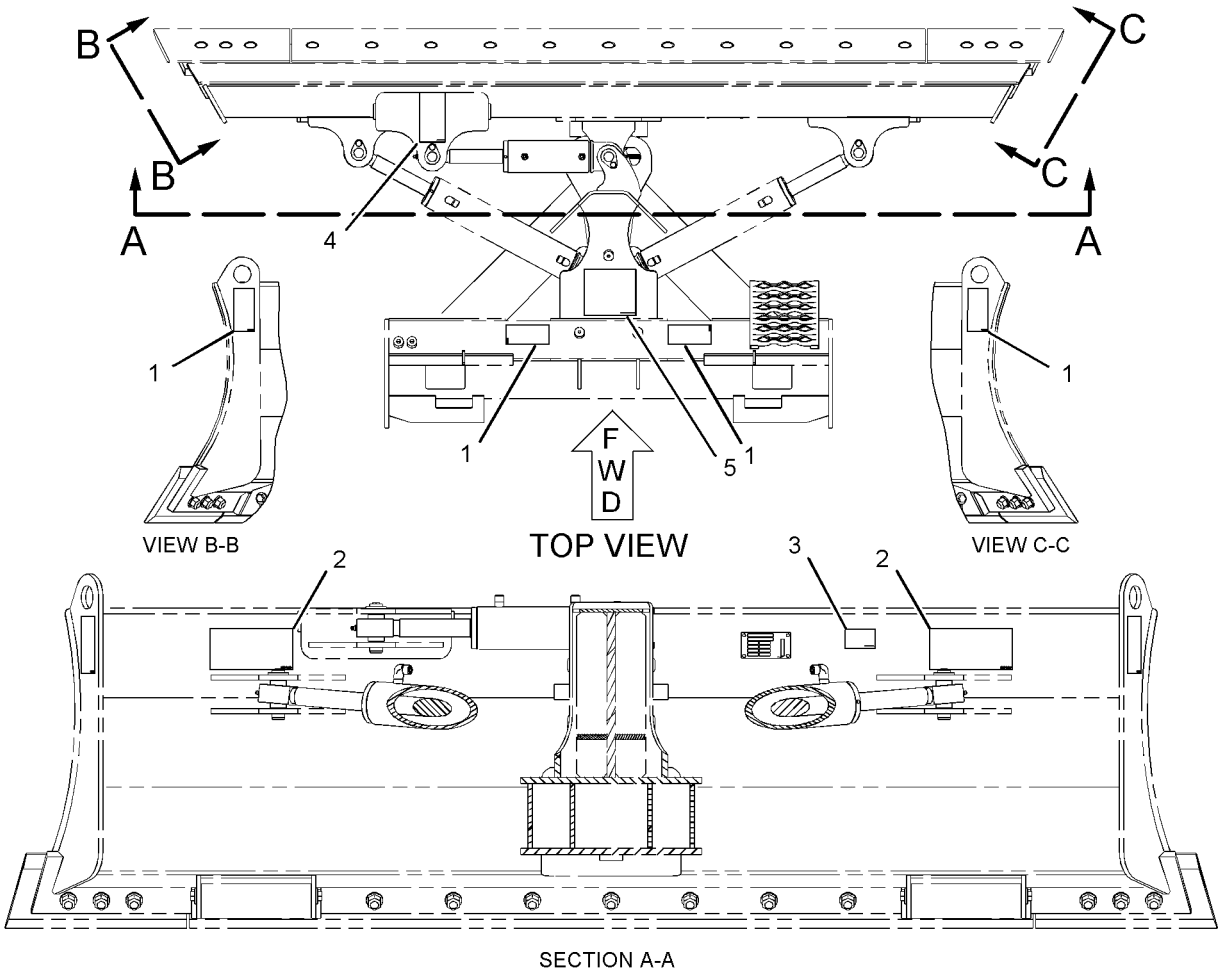

GRAPHIC #1 **<END>** g01120449

SERVICE EQUIPMENT AND SUPPLIES

286-9251 PLATE & FILM GP

S/N: BXM4225-UP

PART OF 286-9300, 286-9301 BUCKET AR-GRAPPLE

AN ATTACHMENT

SMCS-7405, 7557 **i02723719**

NOTE	REF NO	GRAPHIC REF	PART NUMBER	QTY	PART NAME 1 2 3 4 5 6 (PRODUCT LEVEL)	SEE PAGE
	1	1	**168-8389**	4	TACK-FASTENER	
	2	1	**228-3369**	1	FILM-WARNING (DO NOT OPERATE, READ OMM)	
	3	1	**247-6118**	2	FILM-WARNING (CRUSH HAZARD, STAY BACK)	
	4	1	**248-5245**	2	FILM-INFORMATION (LIFT EYE, TIE-DOWN LOCATION)	
	5	1	**255-6540**	1	PLATE-INSTRUCTION (BUCKET SPECIFICATIONS)	

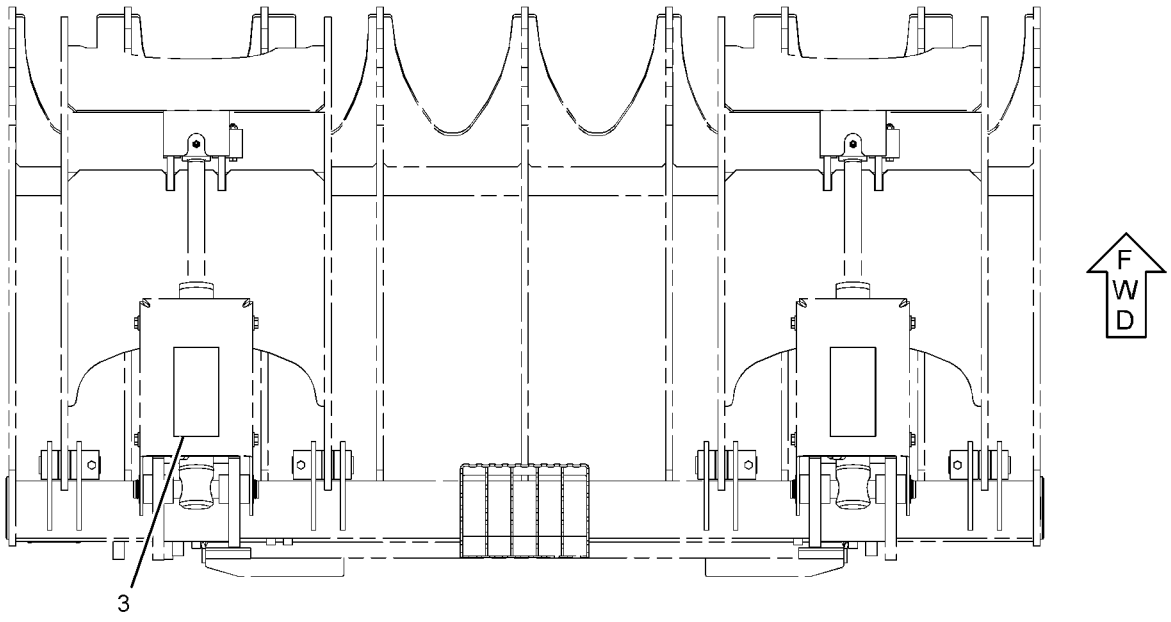

TOP VIEW

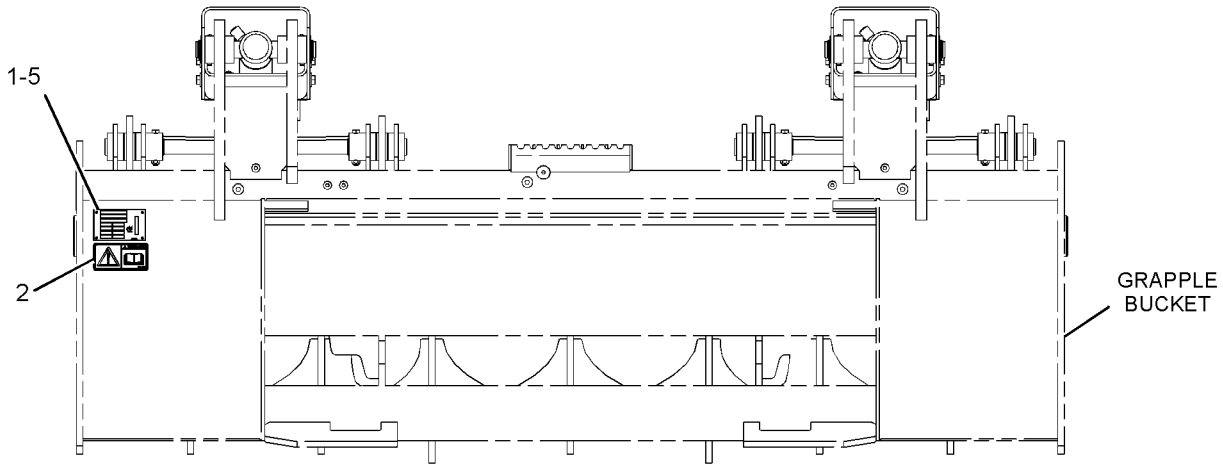

REAR VIEW

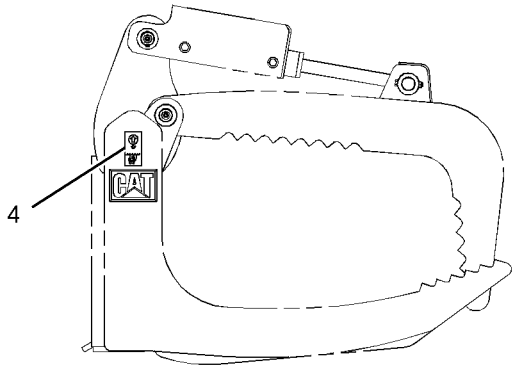

RIGHT SIDE VIEW

GRAPHIC #1

<END>

g01373367

SERVICE EQUIPMENT AND SUPPLIES

295-7192 PLATE & FILM GP

S/N: BXM4225-4774

AN ATTACHMENT

SMCS-7405, 7557 **i02796052**

NOTE	REF NO	GRAPHIC REF	PART NUMBER	QTY	PART NAME 1 2 3 4 5 6 (PRODUCT LEVEL)	SEE PAGE
	1	1	**157-2853**	1	FILM-INFORMATION (READ OMM)	
	3	2	**169-2876**	1	FILM-IDENTIFICATION (POWER RECEPTACLE, 12-VOLT)	
	4	1	**219-0302**	1	FILM-WARNING (NO WELD, NO DRILL, READ OMM)	
	5	1	**224-7830**	1	FILM-WARNING (HIGH PRESSURE, READ OMM, U.S.)	
	6	2	**224-8645**	2	FILM-WARNING (CRUSH HAZARD, STAY BACK)	
	7	2	**224-8945**	1	FILM-WARNING (DO NOT USE ETHER, U.S)	
	8	1	**224-9021**	1	FILM-WARNING (SEAT BELT)	
	9	1	**225-3305**	1	FILM-WARNING (UNIVERSAL, READ OMM, U.S.)	
	10	1	**234-6065**	1	FILM-CERTIFICATION (OPS, READ OMM)	
	11	2	**234-6070**	1	FILM-WARNING (CRUSH HAZARD, CAB, READ OMM)	
	12	1	**234-6074**	1	FILM-WARNING (FALL/CRUSH HAZARD, NO ACCESS)	
	13	1	**234-6077**	1	FILM-WARNING (CRUSH HAZARD, READ OMM)	
	15	2	**235-1365**	1	FILM-WARNING (HOT FLUID UNDER PRESSURE)	
	16	2	**239-6986**	1	PLATE-IDENTIFICATION (MACHINE)	
	17	1	**263-4836**	4	FILM-SYMBOL (TIE-DOWN)	
	18	2	**295-2567**	1	FILM-INSTRUCTION (BUCKET LOWER)	
	19	2	**295-7200**	1	FILM-INSTRUCTION	
	20	1	**224-9855**	1	FILM-INSTRUCTION (START AID, READ OMM, INTL)	
	21	2	**225-0313**	1	FILM-WARNING (JUMP START, READ OMM, U.S.)	
	22	1	**225-7976**	1	FILM-IDENTIFICATION (RELAY LAYOUT) (ALTERNATOR)	
	23	1	**225-7977**	1	FILM-IDENTIFICATION (RELAY LAYOUT) (LIGHTING)	
	24	1,2	**234-6067**	2	FILM-WARNING (CRUSH HAZARD, CAB, READ OMM)	
	25	1	**234-6072**	1	FILM-WARNING (CRUSH HAZARD, READ OMM)	
	26	1	**234-9575**	1	FILM-INSTRUCTION (GOVERNOR CONTROL)	
	27	2	**312-7747**	1	PLATE-WARNING (UNIVERSAL)	

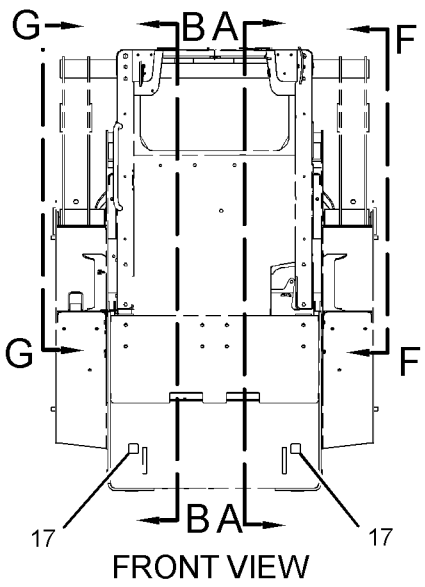

FRONT VIEW

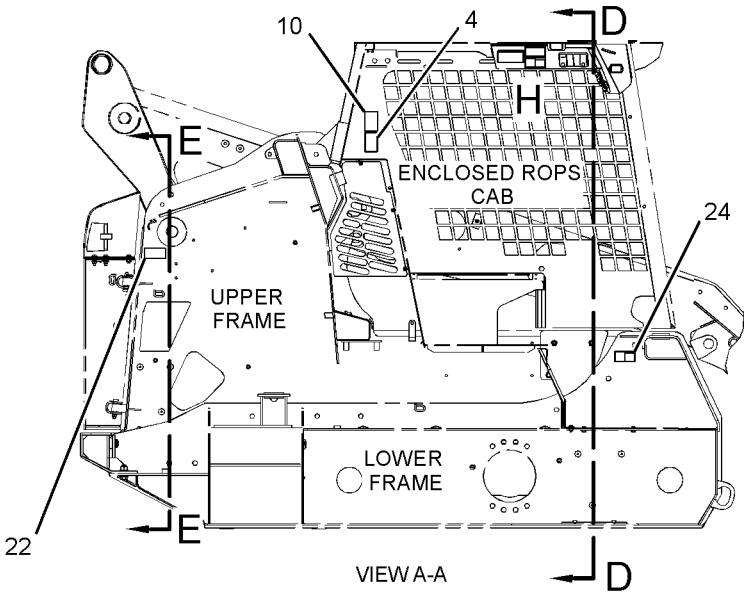

VIEW A-A

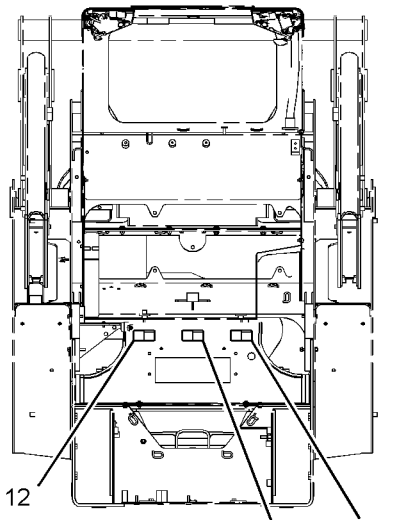

VIEW D-D

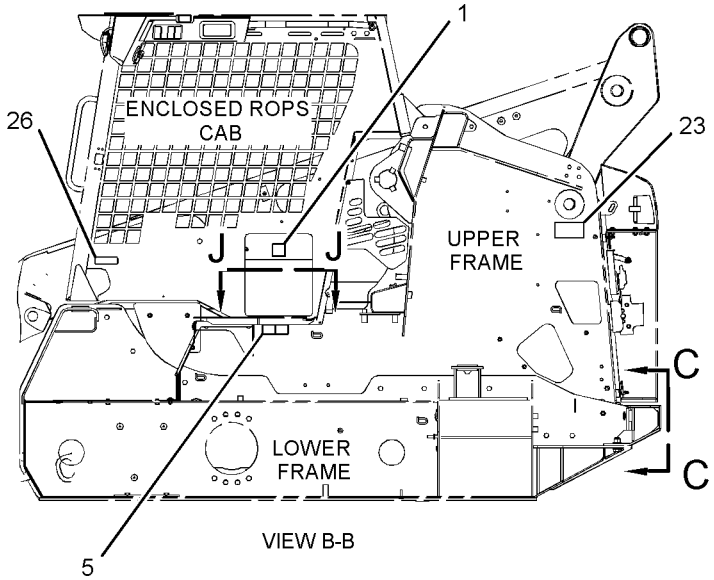

VIEW B-B

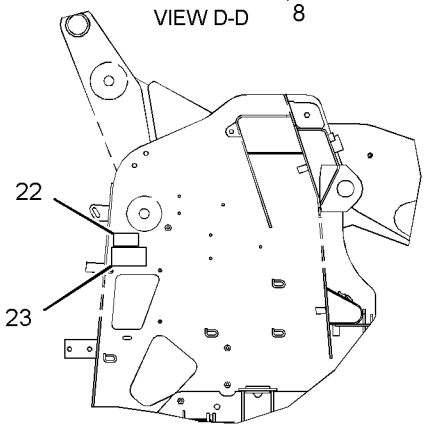

VIEW A-A
(ALTERNATE VIEW FOR ALPHA MACHINES)

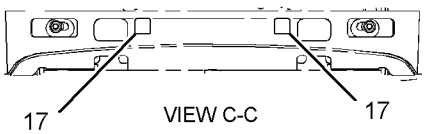

VIEW C-C

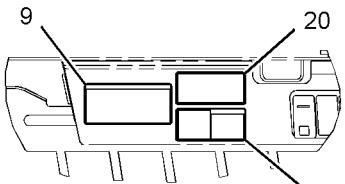

VIEW OF AREA H

REFER TO ALL ILLUSTRATIONS OF THIS GROUP FOR AUXILIARY VIEWS

GRAPHIC #1

g01417009

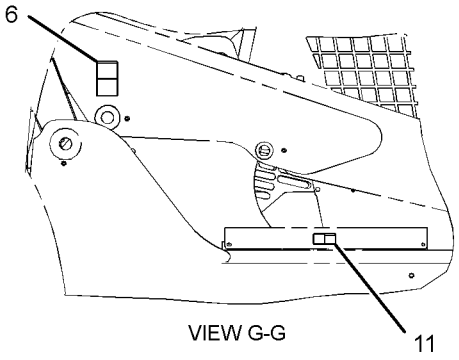

VIEW G-G

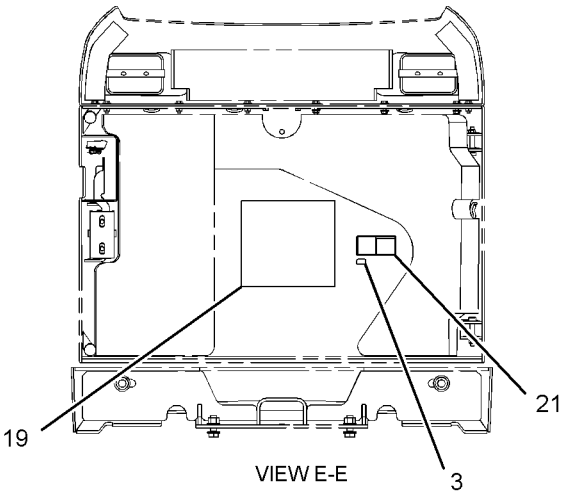

VIEW E-E

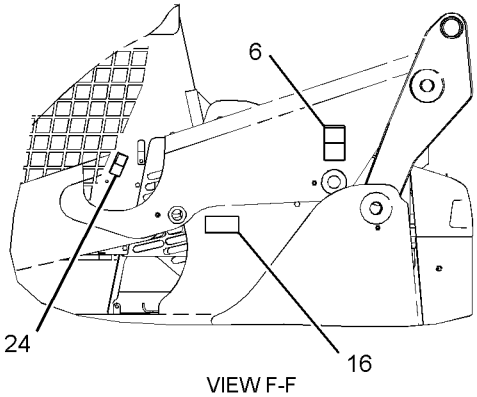

VIEW F-F

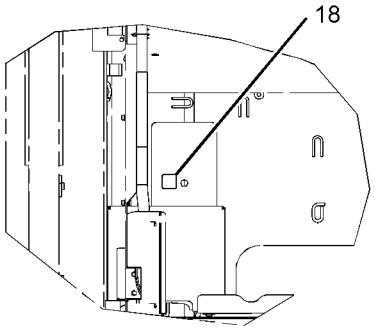

VIEW J-J

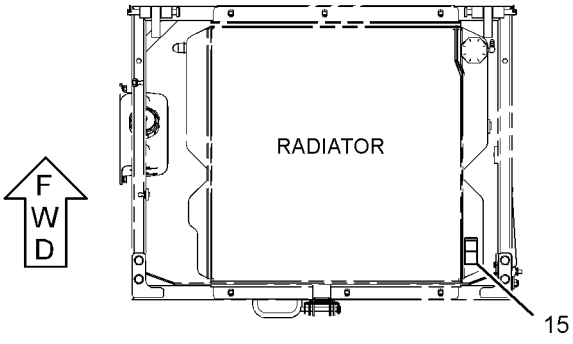

TOP VIEW

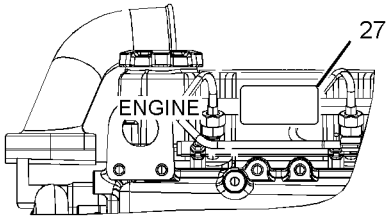

RIGHT SIDE VIEW
(FOR MODEL 252)

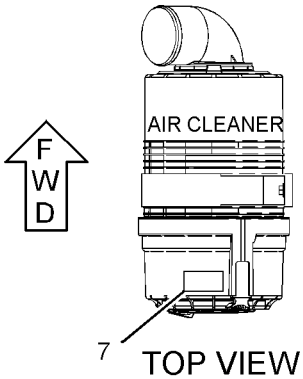

TOP VIEW

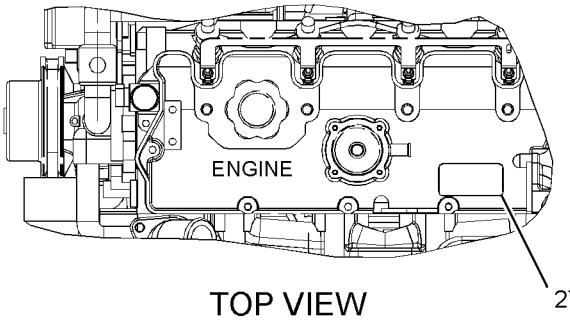

TOP VIEW
(FOR MODEL 232 & 242)

GRAPHIC #2 **<END>** g01416616

SERVICE EQUIPMENT AND SUPPLIES

295-7196 PLATE & FILM GP

S/N: BXM4225-4774

AN ATTACHMENT

SMCS-7405, 7557 **i02796057**

NOTE	REF NO	GRAPHIC REF	PART NUMBER	QTY	PART NAME 1 2 3 4 5 6 (PRODUCT LEVEL)	SEE PAGE
	1	1	**157-2853**	1	FILM-INFORMATION (READ OMM)	
	2	2	**169-2876**	1	FILM-IDENTIFICATION (POWER RECEPTACLE, 12-VOLT)	
	3	1	**219-0302**	1	FILM-WARNING (NO WELD, NO DRILL, READ OMM)	
	4	1	**234-6065**	1	FILM-CERTIFICATION (OPS, READ OMM)	
	5	1	**263-4836**	4	FILM-SYMBOL (TIE-DOWN)	
	6	2	**295-7200**	1	FILM-INSTRUCTION	
	7	1	**224-9855**	1	FILM-INSTRUCTION (START AID, READ OMM, INTL)	
	8	1	**225-7976**	1	FILM-IDENTIFICATION (RELAY LAYOUT) (ALTERNATOR)	
	9	1	**225-7977**	1	FILM-IDENTIFICATION (RELAY LAYOUT) (LIGHTING)	
	10	2	**295-2567**	1	FILM-INSTRUCTION (BUCKET LOWER)	
	11	1	**224-0554**	1	FILM-WARNING (UNIVERSAL, READ OMM, INTL)	
	12	2	**224-8946**	1	FILM-WARNING (NO ETHER SPRAY/AIR INTK, INTL)	
	13	1	**224-9022**	1	FILM-WARNING (SEAT BELT)	
	14	2	**234-6071**	1	FILM-WARNING (LIFT ARM BRACE)	
	15	1	**234-6076**	1	FILM-WARNING (NO ACCESS)	
	16	1,2	**234-6078**	2	FILM-WARNING (CAB TILT SUPPORT)	
	17	1	**234-6081**	1	FILM-WARNING (WORK TOOL)	
	18	1	**234-9575**	1	FILM-INSTRUCTION (GOVERNOR CONTROL)	
	19	2	**239-6986**	1	PLATE-IDENTIFICATION (MACHINE)	
	20	2	**225-0312**	1	FILM-WARNING (JUMP START, READ OMM, INTL)	
	21	2	**235-1368**	1	FILM-WARNING (RADIATOR)	
	22	2	**224-8646**	2	FILM-WARNING (CRUSH HAZARD, STAY BACK)	
	23	1	**224-0672**	1	FILM-WARNING (HIGH PRESSURE, READ MANUAL)	
	24	1	**234-6069**	1	FILM-WARNING (CRUSH HAZARD)	
	25	2	**312-7748**	1	PLATE-WARNING (UNIVERSAL, READ OMM)	

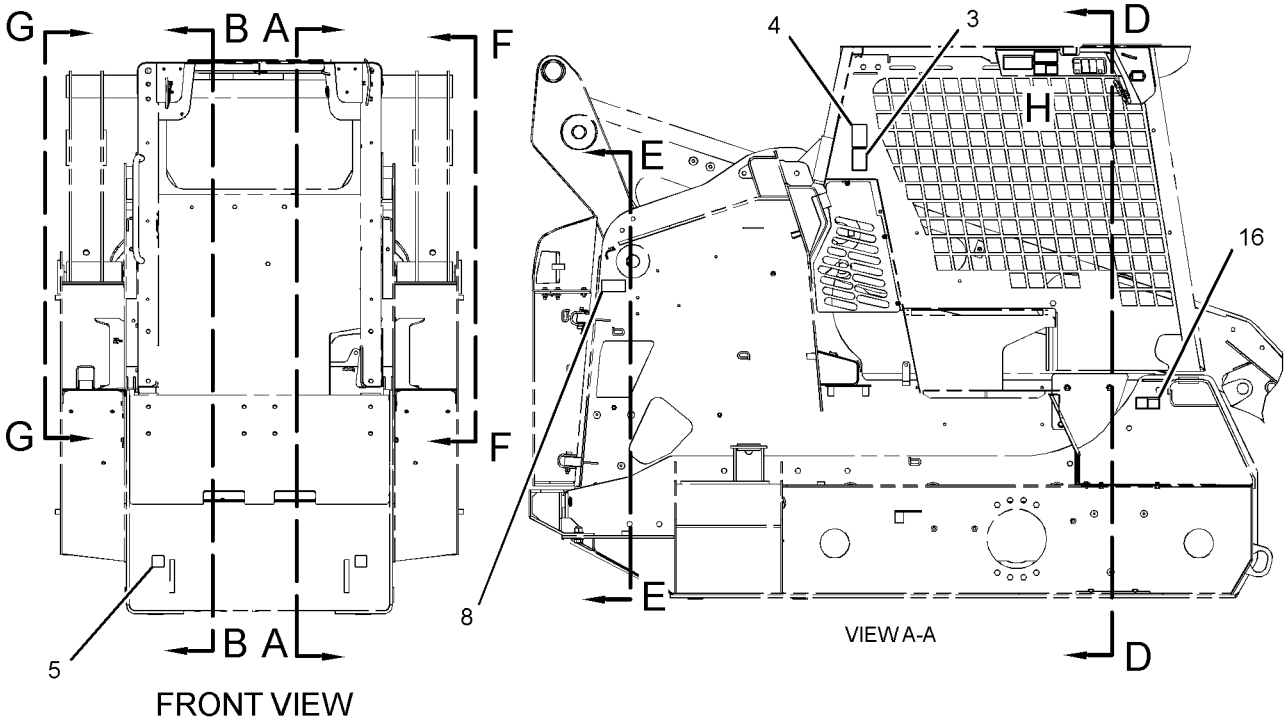

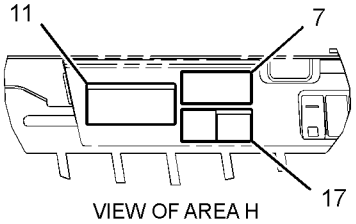

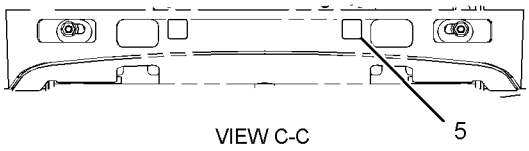

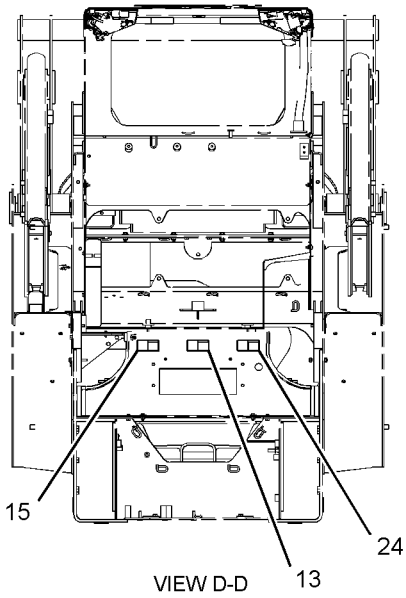

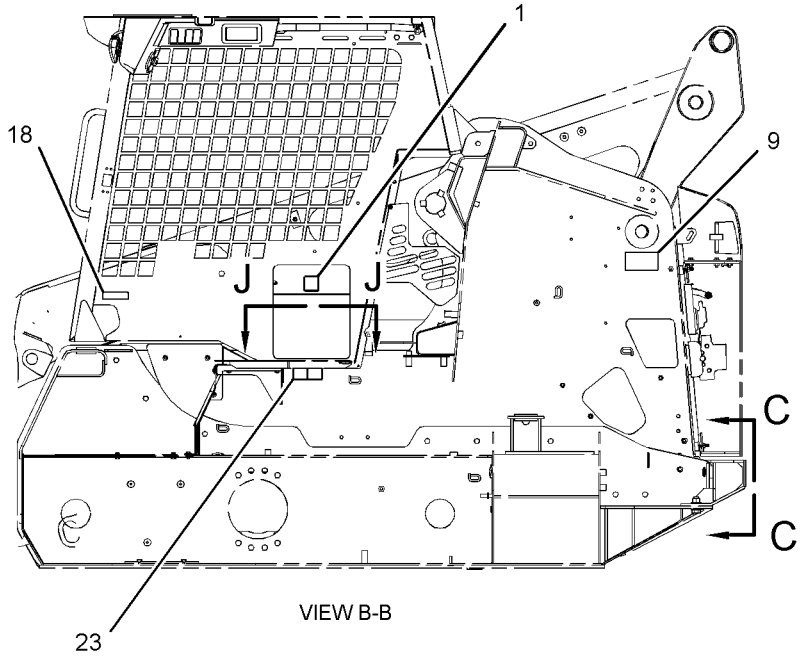

REFER TO ALL ILLUSTRATIONS OF THIS GROUP FOR AUXILIARY VIEWS

GRAPHIC #1

g01376979

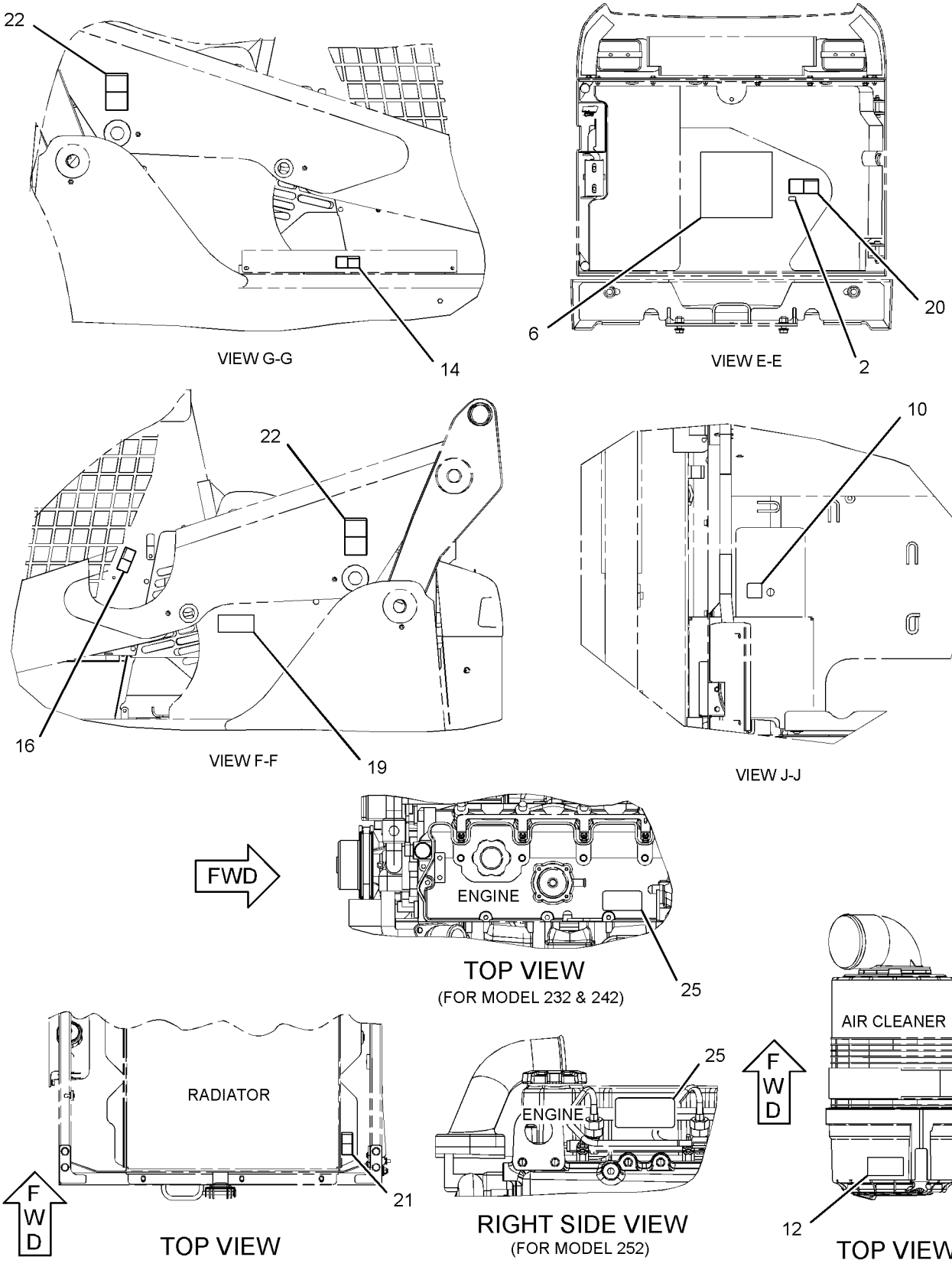

GRAPHIC #2

<END>

g01426863

SERVICE EQUIPMENT AND SUPPLIES

295-7196 PLATE & FILM GP

S/N: BXM4775-UP
AN ATTACHMENT

SMCS-7405, 7557 **i02875432**

NOTE	REF NO	GRAPHIC REF	PART NUMBER	QTY	PART NAME 1 2 3 4 5 6 (PRODUCT LEVEL)	SEE PAGE
	1	1	**157-2853**	1	FILM-INFORMATION (READ OMM)	
	2	2	**169-2876**	1	FILM-IDENTIFICATION (POWER RECEPTACLE, 12-VOLT)	
	3	1	**219-0302**	1	FILM-WARNING (NO WELD, NO DRILL, READ OMM)	
	4	1	**234-6065**	1	FILM-CERTIFICATION (OPS, READ OMM)	
	5	1	**263-4836**	4	FILM-SYMBOL (TIE-DOWN)	
	6	2	**295-7200**	1	FILM-INSTRUCTION (SERVICE CHART)	
	7	1	**224-9855**	1	FILM-INSTRUCTION (START AID, READ OMM, INTL)	
	8	1	**225-7976**	1	FILM-IDENTIFICATION (RELAY LAYOUT) (ALTERNATOR)	
	9	1	**225-7977**	1	FILM-IDENTIFICATION (RELAY LAYOUT) (LIGHTING)	
	10	2	**295-2567**	1	FILM-INSTRUCTION (BUCKET LOWER)	
	11	1	**224-0554**	1	FILM-WARNING (UNIVERSAL, READ OMM, INTL)	
	12	2	**224-8946**	1	FILM-WARNING (NO ETHER SPRAY/AIR INTK, INTL)	
	13	1	**224-9022**	1	FILM-WARNING (SEAT BELT)	
	18	1	**234-9575**	1	FILM-INSTRUCTION (GOVERNOR CONTROL)	
	19	2	**239-6986**	1	PLATE-IDENTIFICATION (MACHINE)	
	20	2	**225-0312**	1	FILM-WARNING (JUMP START, READ OMM, INTL)	
	21	2	**235-1368**	1	FILM-WARNING (RADIATOR)	
	22	2	**224-8646**	2	FILM-WARNING (CRUSH HAZARD, STAY BACK)	
	23	1	**224-0672**	1	FILM-WARNING (HIGH PRESSURE, READ MANUAL)	
	25	2	**312-7748**	1	PLATE-WARNING (UNIVERSAL, READ OMM)	
C	26	1	**295-7330**	1	FILM-WARNING (CRUSH HAZARD, READ OMM) (STATION)	
C	27	1	**295-7329**	1	FILM-WARNING (CRUSH HAZARD, READ OMM) (WORKTOOL)	
C	28	1	**295-7328**	1	FILM-WARNING (FALL/CRUSH HAZARD, NO ACCESS) (NO ACCESS)	
C	29	1	**295-7327**	1	FILM-WARNING (CRUSH HAZARD, READ OMM)	
C	30	1	**295-7325**	2	FILM-WARNING (CRUSH HAZARD, CAB, READ OMM) (CAB SUPPORT)	
C	31	2	**295-7340**	1	FILM-INSTRUCTION (FUEL, READ OMM) (LOW SULFUR DIESEL FUEL)	

C-CHANGE FROM PREVIOUS TYPE

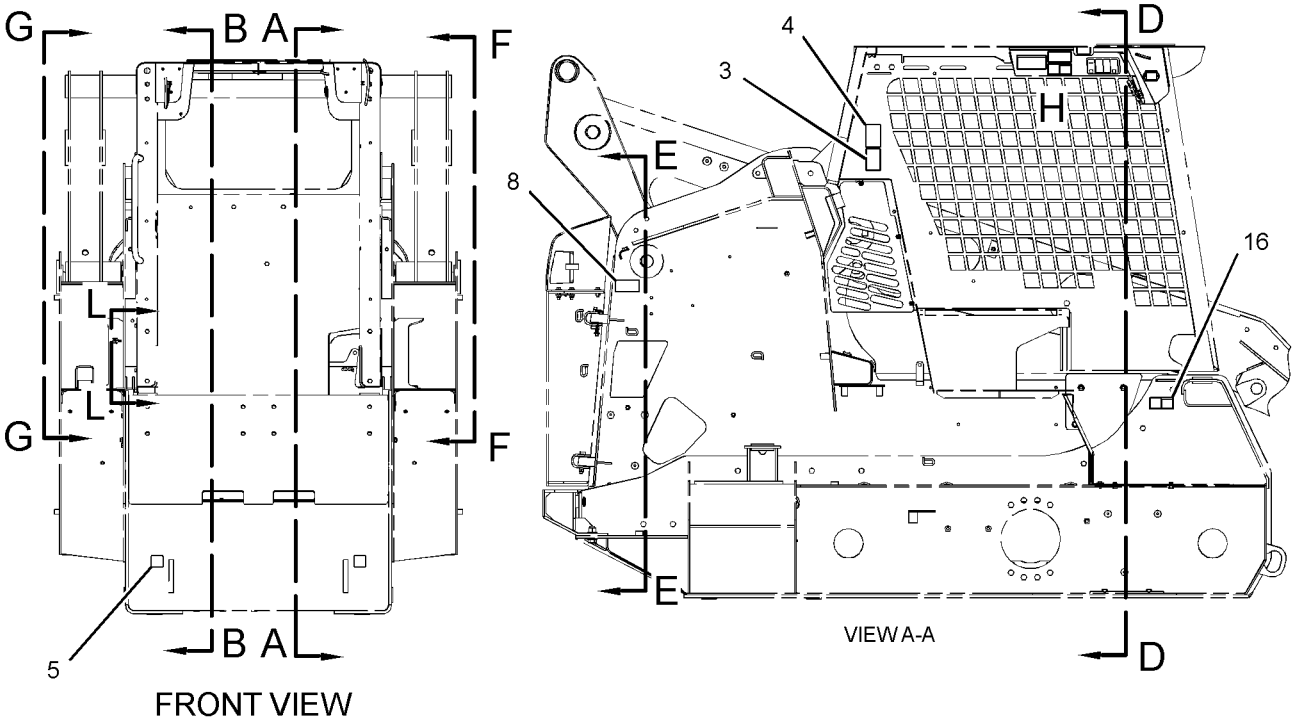

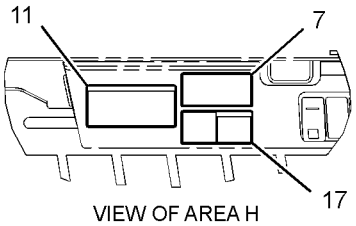

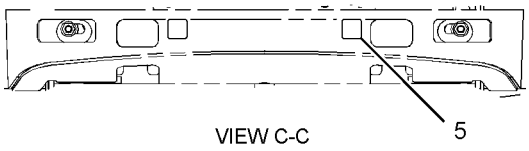

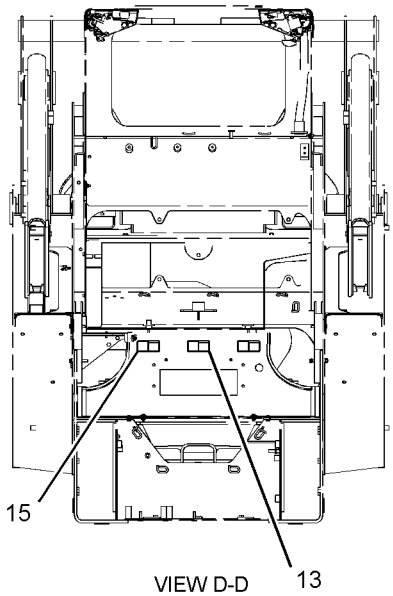

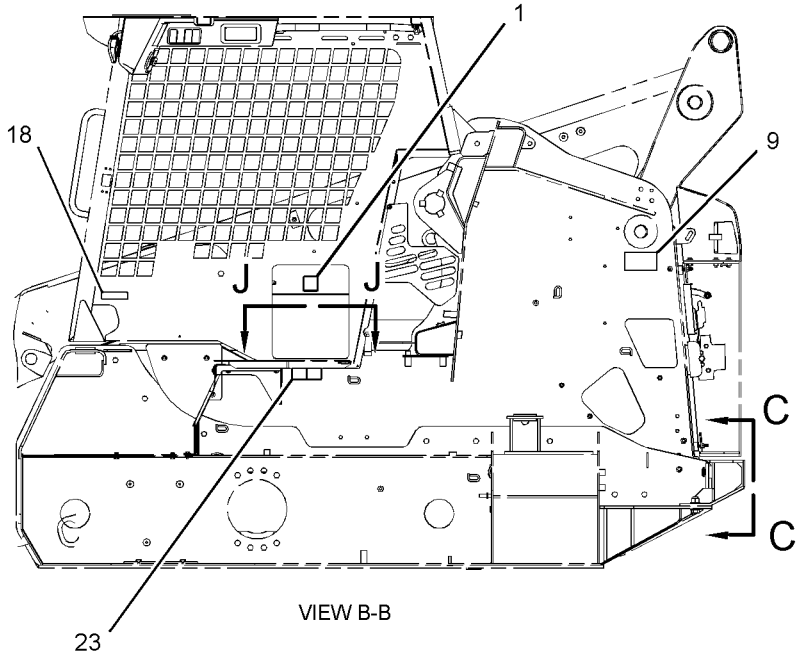

REFER TO ALL ILLUSTRATIONS OF
THIS GROUP FOR AUXILIARY VIEWS

GRAPHIC #1

g01438005

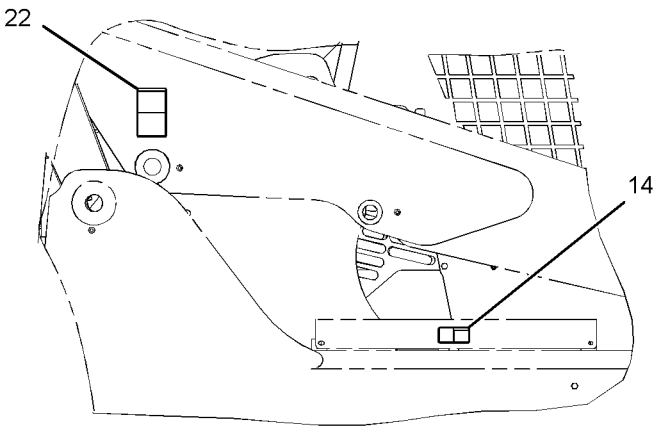

VIEW G-G

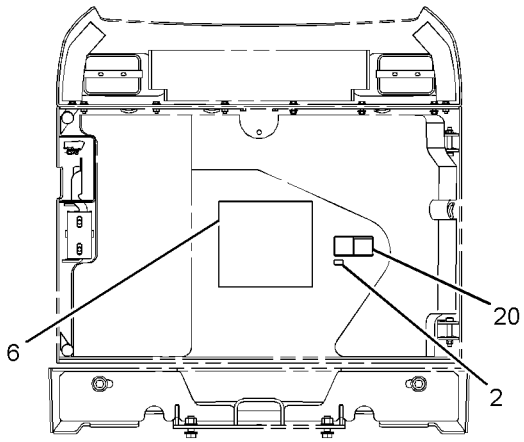

VIEW E-E

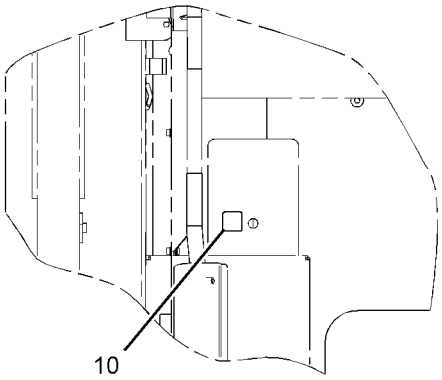

VIEW J-J

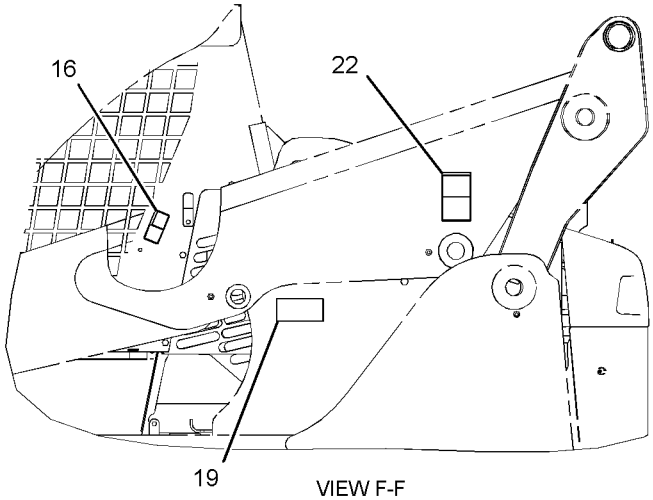

VIEW F-F

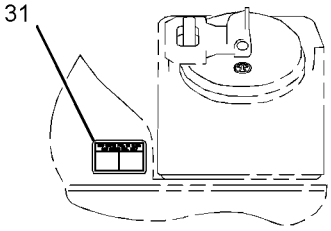

VIEW L-L

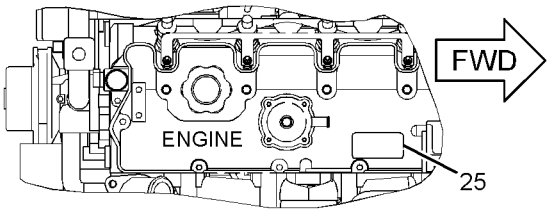

TOP VIEW
(FOR MODEL 232 & 242)

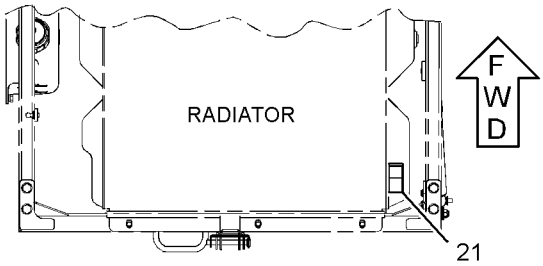

TOP VIEW

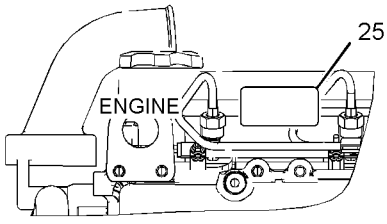

RIGHT SIDE VIEW
(FOR MODEL 252)

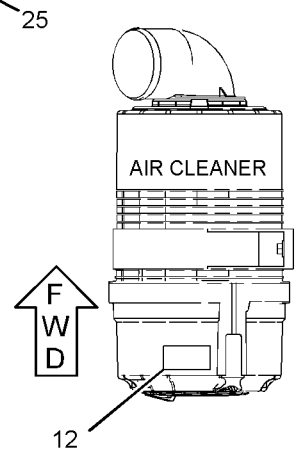

TOP VIEW

GRAPHIC #2 **<END>** g01436633

MEMORANDA

PART NUMBER INDEX

Part	Page
0	
0T-0244	609
	610
	611
	612
1	
1D-4677	617
1F-7567	315
	332
	370
1G-3410	202
1G-8878	188
1H-3244	150
	172
	175
1L-2279	485
1M-6119	123
1M-6120	123
1P-4278	88
	90
	112
1P-4574	278
	332
1P-4578	321
	323
1S-0994	285
	287
	289
	291
1S-1409	277
1S-9593	143
	144
	387
	513
	514
	515
	516
	517
2	
2D-5248	505
	506
	578
	580
2D-6412	610
	611
	612
2H-7829	302
	304
2J-6540	293
2K-4821	264
2K-4973	79
	232
2K-5232	280
	369
2K-5964	258
2M-9780	186
	192
	272
	273
	283
	285
	287
	289
	291
	293
	295
	296
	298
	300
	302
	304
	306
	308
	311
	321
	323
	325
	327
	351
	353
	374
	577
	579
2S-3440	277
	321
	323
	331
2S-4078	278
	321
	323
2S-5717	617
2S-6408	483
2V-3216	283
	300
3	
3B-4505	592
3B-4628	280
	445
3B-7255	485
3B-8488	234
	258
	469
3B-8489	255
	257
	258
	260
	261
	264
	267
	268
	270
	271
	357
	358
	393
	394
	426
	427
	428
	429
	430
	431
	432
	433
	435
	459
	465
	468
3D-2824	186
	192
	194
	277
	310
	311
	313
	329
	331
	351
	387
	442
3E-2310	317
3E-3365	163
	166
	387
3E-3374	499
3E-3377	342
3E-3383	147
3E-3389	143
	181
3E-3892	622
	624
3E-4051	578
	579
	588
3E-4057	578
	579
	588
3E-4370	458
3E-5180	516
3E-7404	112
	283
	300
3E-7584	►147
	154
	239
	242
3E-8621	387
3F-5108	450
3F-9556	604
3J-1907	163
	166
	188
	192
	194
	277
	280
	296
	298
	315
	317
	319
	321
	323
	331
	335
	337
3J-7354	202
	306
	308
	319
	577
	579
3K-0360	186
	194
	197
	253
	277
	298
	329
	331
	368
3K-0715	202
3K-8460	112
3S-2093	94
	136
	141
	143
	144
	154
	156
	167
	168
	172
	175
	177
	178
	180
	181
	224
	239
	242
	250
	280
	369
	485
	499
	546
	547
	550
	553
	555
	578
	580
	582
	583
	588
3S-6050	123
3S-8665	574
	579
	590
3S-9182	234
3T-7856	584
4	
4B-0418	332

► **PRIMARY REFERENCE**

PART NUMBER INDEX

Part	Page
4B-2043	563
4B-4274	172
	175
	315
	370
4B-4863	105
	136
	143
	144
	154
	168
	181
	224
	239
	242
	248
4D-0298	234
4D-2297	355
4D-6466	112
	277
	332
4E-0724	485
4E-1384	498
4F-3658	450
4J-0522	278
	321
	323
4J-5140	278
	332
4J-5267	278
	321
	323
4J-5477	180
	224
	239
	242
	278
	280
	306
	308
	317
	319
	329
	332
	369
4J-7533	374
4K-0367	450
4K-1388	374
4K-8864	88
	90
4M-5285	257
	258
	358
4P-6422	633
	636
4P-7581	142
	154
	156
	169
	239
	242
	277
	280
	370
	595
4P-8134	141
	169
	172
	175
	178
	277
	311
	313
	577
	579
	588

5

Part	Page
5B-0651	258
	444
	445
5B-0935	465
5C-2874	104
	172
	175
5C-2890	104
	105
	107
	110
	149
	150
	172
	175
	250
	547
	550
	582
	583
	585
	602
5C-7261	79
	92
	141
	142
	169
	172
	175
	192
	232
	281
	329
	485
	498
	505
	506
	509
	578
	580
	592
	604
	605
	613
	614
5C-7682	560
	561
5C-7883	197
5C-8310	557
	619
5C-8311	442
	557
	619
5C-8312	136
	224
	248
5C-9553	112
	143
	144
	169
	172
	175
	181
	239
	242
	246
	247
	447
	499
	604
	605
5D-0718	310
5D-1026	81
	83
5G-3244	147
5K-1787	185
5K-8451	281
5K-9090	192
	442
5L-3233	93
5L-4507	172
	175
5M-8429	277
	332
5P-0372	79
	245
	281
	445
	547
	550
	582
	583
	616
5P-0597	94
5P-1076	230
	231
	234
	298
	395
	396
	470
	471
5P-1420	88
	90
5P-1442	112
	367
5P-1505	40
	94
5P-2230	81
	277
	321
	323
5P-2369	81
	630
5P-4116	43
5P-4868	94
5P-4961	40
	94
	112
	367
5P-5677	141
	142
	278
5P-5924	578
	580
	588
5P-5927	605
5P-5930	621
5P-5969	133
	547
	550
	558
	582
	583
5P-6994	306
	308
5P-7070	558
5P-7464	325
	327
	329
5P-7465	325
	327
	329
5P-7466	277
	332
5P-7467	277
	332
5P-7814	112
5P-7957	502
5P-7958	591
5P-8112	278
	332
5P-8246	485
5P-8247	450
5P-8309	79
	547
	550
	582
	583
5P-8439	152
	153
5P-8500	226
	228

► **PRIMARY REFERENCE**

PART NUMBER INDEX

Part	Page
	591
5P-9297	277
	332
5P-9770	112
5P-9909	547
	550
	582
	583
5T-7869	617
5T-7870	617
5V-8309	79
5W-1987	547
	550
	582
	583
6	
6B-0924	29
	31
6B-6682	260
6D-1641	574
	579
	590
6D-3479	317
6D-4244	277
	332
6D-4246	94
	367
6D-4247	285
	287
	289
	291
6D-4636	186
	574
	579
6D-5797	622
	624
6E-0725	202
6E-5060	202
6E-6549	609
6F-6672	352
	354
	387
6I-0846	115
6I-1201	56
	190
6I-1418	141
	142
	168
6K-8178	281
	315
	370
6R-7490	563
6V-0852	192
	319
	321
	323
6V-1392	501
6V-1889	310
6V-1970	1
	2
	►591
6V-2235	574
6V-2317	152
6V-3582	311
	313
6V-3965	192
	319
	321
	323
6V-4270	547
	550
	582
	583
6V-5049	355
6V-5326	202
6V-5586	202
6V-5698	169
6V-6689	558
	574
	580
6V-7357	166
	234
	250
6V-7359	325
	327
	329
6V-7644	395
	396
6V-7687	196
6V-7744	444
6V-8186	604
6V-8187	172
	175
6V-8352	202
6V-8378	154
	239
	242
6V-8397	192
	194
	256
	277
	278
	280
	281
	283
	285
	287
	289
	291
	293
	295
	296
	300
	302
	304
	308
	311
	315
	317
	323
	331
	332
	335
	337
	369
	442
	577
6V-8398	186
	194
	278
	311
	313
	315
	319
	325
	327
	331
	332
	335
	337
	369
6V-8626	311
	325
6V-8628	306
	308
	319
6V-8632	194
	298
6V-8633	186
6V-8634	194
6V-8636	194
	277
	280
	298
	331
	335
	337
	369
	442
6V-8637	192
	194
	277
	331
	442
6V-8638	311
6V-8639	186
	194
	278
	331
6V-8640	192
	272
	273
6V-8641	280
	317
	319
	369
6V-8642	186
	298
	306
	308
	321
	323
	325
	327
	577
	579
6V-8647	306
	308
	319
6V-8713	311
	313
6V-8714	329
6V-8715	442
	283
	285
	287
	289
	291
	293
	295
	296
	300
	302
	304
6V-8724	280
	296
	315
	369
6V-8781	317
	335
	337
6V-8788	285
	287
	289
	291
6V-8918	199
6V-8938	280
	370
6V-8949	476
6V-8978	194
6V-9001	369
6V-9002	332
6V-9028	87
6V-9168	281
	370
6V-9170	329
6V-9182	321
	323
6V-9189	237
	257
	357
	358
	359
	393
	394
	426
	427
	428
	429
	430
	431
	432
	433
	435
	459
	468
	469
6V-9508	194
6V-9632	518
	553
	555
6V-9672	224
	248
6V-9746	192
	194
	272

► **PRIMARY REFERENCE**

PART NUMBER INDEX

Part	Page
	273
	277
	278
	310
	321
	323
	331
	332
	442
6V-9805	595
6V-9829	306
	315
6V-9838	280
	369
6V-9872	308
	577
	579
6V-9873	319
6W-3924	553
	555
6W-5698	112
	368
6Y-5839	450
6Y-5840	450
7	
7B-1597	332
7D-5473	154
	239
	242
7D-8431	499
7D-8508	265
	266
	267
	268
7E-2700	244
	245
7G-1060	136
	172
	175
7G-2950	281
	370
7G-2951	281
	370
7G-4262	501
7G-5984	298
7G-5985	298
7G-5986	298
7G-7053	136
	499
7G-8839	185
7H-7055	281
	332
	370
7J-0204	260
	264
	265
	268
7J-9108	186
	194
	280
	298
	306
	308
	311
	313
	321
	323
	325
	327
	329
	335
	337
	369
	577
	578
	579
7K-1181	105
	141
	142
	168
	172
	173
	175
	178
	194
	278
	306
	308
	310
	319
	331
	369
	379
	382
	391
	392
	485
	578
	580
7M-7410	86
	87
7M-8485	321
	323
7M-9957	248
7N-5274	123
7R-2750	168
7R-2751	168
7S-3912	293
	295
7S-3913	293
	295
7S-3916	283
	300
	302
	304
7S-3919	283
	300
	302
	304
7T-1099	518
7W-9094	329
7X-0495	485
7X-0579	141
	169
7X-0595	258
7X-0603	237
7X-0610	185
7X-0818	142
	169
	242
	247
7X-1443	88
	90
7X-2444	180
	224
	239
	242
7X-2475	389
	595
7X-2535	339
7X-2537	94
	232
	492
	568
	574
	579
	584
	607
7X-2553	465
	564
7X-2556	53
7X-2621	94
	444
7X-3229	639
7X-6312	139
7X-6315	130
	134
	135
7X-7729	79
	86
	87
	88
	90
	97
	232
	255
	257
	258
	281
	302
	304
	306
	308
	310
	370
	444
	465
7X-9065	563
8	
8C-3110	363
	364
	365
8C-3205	321
	323
8C-3445	40
8C-3446	40
8C-3451	306
	308
8C-6354	168
8C-6758	335
	337
8C-6959	112
8C-7563	306
	308
	578
	579
8C-8400	310
8C-8478	395
	396
8C-8558	169
8E-5702	395
	396
8F-1434	154
	172
	175
	239
	242
8F-8151	574
	580
	590
8F-8513	112
8G-1151	553
	555
8I-5078	374
8J-2880	395
	396
8L-2779	40
8L-5188	281
	445
8L-8413	123
	169
	172
	178
	546
	566
	567
8M-4791	315
	370
8M-4963	168
8Q-6027	265
	266
8R-3857	430
8S-0934	609
	610
	611
	612
8T-0075	192
8T-0087	149
8T-0154	574
	579
	590
8T-0267	202
8T-0269	277
	518
	521
	522
	524
	525
	527
	528
	530
	531
	532
	534

PART NUMBER INDEX

Part	Page	Part	Page	Part	Page	Part	Page
	536		94		53		583
	539		112		173	8T-4136	88
8T-0271	197		136		175		90
8T-0285	315		145		185		186
	370		153		219		234
8T-0287	315		169		234		277
	370		172		244		281
8T-0318	79		175		245		283
8T-0328	154		177		389		300
	172		186		465		310
	175		199		485		311
	239		234		564		313
	242		239		595		315
8T-0341	277		242	8T-4123	395		325
	332		246		396		327
8T-0379	280		247		474		329
	369		279		475		332
8T-0389	145		281		477		367
	147		283	8T-4132	53		370
	169		293		219		373
8T-0404	186		295		234		440
8T-0737	485		296		244		482
8T-1158	377		300		245		485
	379		310		485		508
	381		311		564		577
	382		313	8T-4133	79		579
8T-1757	389		315		86	8T-4137	88
8T-1887	154		317		87		90
	239		321		88		186
	242		323		90		232
	277		325		97		255
8T-1888	154		327		112		277
	239		329		136		293
	242		332		169		295
	277		348		172		332
8T-1893	293		349		175		373
	295		350		177		465
8T-1894	293		367		186		476
	295		370		239		485
8T-2444	547		373		242		531
	550		440		246		532
	582		444		247		534
	583		445		278		574
8T-2895	501		476		281	8T-4138	105
8T-3311	319		482		296		178
8T-3490	43		485		306		250
8T-3612	43		498		308		358
	90		505		310		605
	123		506		315	8T-4139	298
	280		508		329		325
	518		509		332		327
	584		531		370		329
	607		532		440		395
	630		534		445		396
8T-3848	547		547		482		470
	550		550		485		471
	582		565		498	8T-4159	79
	583		574		509	8T-4171	224
8T-3984	105		578		547		226
8T-3998	105		580		550		228
8T-4121	79		582		565		248
	86		583		574		283
	87		588		578		300
	88		590		580	8T-4172	444
	90	8T-4122	52		582	8T-4173	595

► **PRIMARY REFERENCE**

PART NUMBER INDEX

Part	Page
8T-4177	237
8T-4178	239
	242
	246
	247
	329
8T-4181	79
	232
8T-4185	296
8T-4186	177
	258
	476
8T-4189	43
	116
	120
	126
	127
	281
	285
	287
	289
	291
	315
	341
	367
	370
	509
	545
	574
	577
	579
8T-4191	170
	258
	281
	315
	317
	370
	485
	574
	577
	579
	588
	590
8T-4192	52
8T-4194	234
	277
	325
	327
	329
	332
	481
8T-4195	186
	257
	277
	296
	302
	304
	310
	329
	332
8T-4196	86
	87
	112
	186
	199
	281
	310
	321
	323
	348
	349
	350
	444
	445
8T-4197	604
	605
8T-4198	277
	332
8T-4200	172
	175
	256
	302
	304
	341
	574
	579
8T-4201	154
	240
	242
	281
	370
8T-4205	79
	105
	143
	144
	156
	166
	170
	172
	175
	178
	181
	224
	226
	228
	232
	234
	240
	242
	246
	247
	248
	250
	279
	339
	485
	499
	518
	521
	522
	524
	525
	527
	528
	530
	531
	532
	534
	536
	539
	547
	550
	582
	583
	595
	602
	604
	605
8T-4222	547
	550
	582
	583
8T-4223	52
	196
	279
	325
	327
	329
	332
	361
	362
	363
	364
	470
	471
	481
	483
	609
	610
	611
	612
8T-4224	86
	87
	88
	90
	152
	170
	172
	175
	237
	256
	258
	279
	281
	285
	287
	289
	291
	315
	325
	327
	329
	332
	335
	337
	340
	341
	348
	349
	350
	370
	485
	492
	499
	505
8T-4244	230
	231
	234
	278
	325
	327
	470
	471
	481
	609
8T-4742	104
	504
	585
8T-4744	104
	504
	585
8T-4778	450
	451
	452
	453
	454
	455
	456
	489
	595
8T-4779	485
8T-4908	43
	86
	87
	97
	232
	234
	277
	281
	332
	485
	605
8T-4910	230
	231
	483
8T-4956	277
	361
	362
	363
	364
8T-4970	234
8T-4971	178

PART NUMBER INDEX

Part	Page
	585
8T-5005	88
	90
	147
	281
	370
8T-5049	278
	361
	362
	363
	364
8T-5091	43
	88
	90
8T-5095	353
	366
8T-5372	564
	574
	580
8T-6466	79
	88
	90
8T-6842	557
	619
8T-6869	257
	277
	332
	335
	337
	357
	358
	359
	393
	394
	426
	427
	428
	429
	430
	431
	432
	433
	435
	459
	468
	485
	574
8T-6870	505
	506
	577
	579
8T-6876	315
	369
8T-6902	604
8T-6912	126
	325
	327
	329
	469
8T-7338	219
	234
8T-7547	242
	247
	277
	332
	348
	349
	350
8T-7970	192
8T-8192	296
8T-8193	296
8T-8729	147
	163
	166
	379
8T-8737	142
	147
	170
	178
	278
	513
	514
	515
	516
	517
	539
	566
	567
	593
	594
8T-8799	168
	172
8T-9405	379
	382
8T-9655	141
	142
	168
8U-9427	379
	382
8W-8909	154
	239
	242
8Y-4489	426
	427
8Y-7385	483
8Y-7386	483
9B-7233	563
9C-2741	578
	580
	588
9C-5344	245
	547
	550
	582
	583
	616
9F-2947	277
9G-3695	342
	499
9G-5127	234
	505
	506
	577
	579
9G-7101	505
	506
9M-8406	281
	370
9N-0869	142
9P-4609	499
9R-1004	281
9R-1005	281
	325
	327
	329
9R-1499	154
	156
	250
9R-2004	283
	293
	300
9R-2672	280
9R-2959	393
	394
	463
9R-5301	478
9R-7802	325
	327
	329
9R-7803	325
	327
	329
9R-7941	136
9R-7942	151
9R-7958	151
9R-7980	136
9S-0285	499
9S-4191	360
9S-4200	302
	304
9S-8002	202
9S-8005	197
9S-8006	351
	353
9S-8007	260
	264
	265
	268
9T-2837	379
	382
9T-4884	354
	355
9T-7303	281
	445
9U-6993	278
	331
9U-6994	278
	321
	323
9U-6995	321
9V-2714	389
9V-2715	389
9W-0607	145
	146
9W-1951	168
9W-3324	147
9W-3326	150
9X-1046	136
9X-1054	169
	578
9X-1481	580
	281
9X-1813	370
	141
	142
	499
	281
9X-2026	325
9X-2038	327
9X-2041	329
	154
	156
	250
	283
9X-2042	293
	300
	280
	393
	394
	463
	478
9X-2044	325
	327
	329
	325
	327
	329
	136
	151
9X-2045	151
	136
	499
	360
	302
	304
	202
	197
	351
	353
9X-2092	260
	264
9X-4244	265
	268
	379
9X-6032	382
	354
	355
	281
9X-6165	445
	278
9X-6273	331
	278
	321
	323
9X-6274	321
	389
	389
	145
	146
	168
9X-6581	147
	150
9X-6606	136
9X-6615	169

9

► **PRIMARY REFERENCE**

PART NUMBER INDEX

Part	Page
9X-6772	139
	140
9X-7378	578
	580
	588
9X-7380	578
	580
	588
9X-7381	578
	580
	588
9X-7382	578
	580
	588
9X-7383	578
	580
	588
9X-8118	151
9X-8121	151
9X-8139	151
9X-8250	574
	590
9X-8257	478
9X-8918	622
	624
9X-9865	147

0

Part	Page
003-2143	485
003-3082	374
004-6810	574
027-1287	265
	266
032-9828	553
	555
033-5853	197
036-1865	86
	87
039-8557	476
064-3058	98
	100
064-3843	255
067-2551	485
069-4080	86
	87
081-3698	202
084-4277	563
084-4348	149
	150
085-8091	577
	579
	588
086-2369	353
090-9434	168
	172
	175
095-0641	604
095-0733	143
	144
	169
	181
095-0912	485
095-1207	278
	522
	524
	525
	527
	532
	534
	536
	539
095-1325	245
	547
	550
	582
	583
	616
095-1517	197
096-0194	201
	351
	355
	366
096-5866	277
	325
	327
	329
	331
099-2374	368
099-3649	329
099-4691	185

1

Part	Page
100-3246	147
100-3247	147
100-3248	147
100-3250	147
100-3251	147
100-3253	147
100-3254	147
100-3255	147
100-3320	169
100-3866	185
100-6674	578
100-7530	335
	337
100-8451	123
	125
101-2867	136
	605
101-3129	278
	306
	308
	329
	331
101-8296	577
	579
	588
102-8801	141
	142
	168
	169
	172
	518
	522
	525
	536
	593
	594
	598
	600
102-8802	141
	142
	163
	166
	167
	169
	172
	175
	177
	178
	234
	379
	382
	387
	536
	546
	555
	578
102-8803	142
	169
	178
	180
	239
	278
	368
	536
	539
102-8804	141
	142
	149
	150
	169
	249
	250
	342
	553
	598
	600
102-8805	147
	154
	168
	239
	547
	550
	582
	583
	598
	600
102-8806	143
	144
	154
	168
	169
	181
	239
	485
	536
103-2006	546
	562
	563
	598
	600
103-2543	133
103-6262	499
104-5957	619
104-6202	173
	175
105-4593	194
106-3108	345
	346
106-8704	172
	175
	546
106-8715	310
107-5630	350
108-0656	619
108-2989	277
	340
108-3565	202
109-2356	598
	600
110-0885	232
110-8760	181
	278
	518
	522
	525
	528
	531
	532
	534
	536
111-4627	136
	485
111-7899	152
	154
	157
	181
	274
	278
	280
	443
	536
	539
	598
	600
112-1817	315
	369
	▶376
112-9401	106
112-9717	93
112-9783	329
112-9861	376
113-7634	226
	228
113-8490	143
	144
	166
	168
	181
	280
	443
	534
113-8491	143
	144
	167

▶ **PRIMARY REFERENCE**

PART NUMBER INDEX

Part	Page	Part	Page	Part	Page	Part	Page
	168		579	129-6262	122	138-4883	553
	181	124-2456	280	130-1676	384		555
113-8492	168		369	130-1916	499	138-7162	44
114-4516	168		639	131-3540	232		45
114-6658	545	124-3243	545		576	138-7402	44
115-1615	143		553	131-3543	602	138-7446	41
	144		555	131-5879	444		42
	168		605	132-3056	368	139-5511	107
	172	124-3548	167	132-4720	489		110
	175		168	132-5166	239	140-1802	202
	180		578		242	140-2490	197
	181		580		246	140-2492	197
	224	124-6264	88		247	140-2513	197
	239		90	132-7551	444	140-2514	197
	242	125-3518	547	133-6517	139	141-0888	346
	278		550		140	141-4999	402
	536		582	133-9931	278		403
	539		583		536		404
115-8109	142	125-7874	141		539		409
116-2001	▶484		142	134-0404	188		411
	485		168	134-4126	130		▶489
116-7471	133		169		134	141-5453	52
118-8118	106		172		135		173
118-8119	106		178	134-8273	553		175
118-9145	56		239		555	141-7562	199
	190	125-7875	168	134-9911	346	142-2928	499
119-1414	484		169	135-2655	202	142-4914	450
119-1415	484		172	135-9383	401	142-7484	▶204
119-3662	168		239		▶450		213
	169		547	135-9384	401	142-7485	204
	172		550		402		205
	178		582		405		208
	578		583		410		209
119-3859	485	126-5011	169		412		212
119-4594	258	126-5640	202		▶451	142-7486	204
119-9631	494	126-5643	202	135-9385	401	142-7490	204
	496	126-5701	444		402		205
120-4897	134		445		405		209
121-4459	202	127-2170	547		410		212
121-4480	106		550		412	142-7493	213
121-4870	202		582		▶452		214
122-1904	377		583	135-9386	390		215
122-6867	578	127-6316	374		402		216
	580	127-8281	83		403		217
122-6869	485	127-8609	140		405	142-7503	▶149
122-6871	578	128-4123	168		409		156
	580	128-6985	▶151		413	142-7505	485
122-6877	580		157		434	142-8633	143
123-4750	317		224		▶453		144
123-7615	547		227	135-9387	401		181
	582		229		403	142-8634	▶150
	583	128-7037	584		409		154
124-1916	485		607		412		239
124-1917	485	128-8614	106		▶454		242
124-2113	577	129-1854	224	135-9393	450	142-8652	3
	579		227	135-9394	451		4
124-2119	577		229	135-9395	452		8
	579	129-1855	224	135-9396	453		9
124-2141	577		227	135-9397	454		132
	579		229	136-1953	574		▶156
124-2150	577	129-3178	485		580		220
	579		576		590		221
124-2164	577		585	136-3191	553	142-8653	▶157
	579		604		555	142-8666	▶213
124-2168	577	129-6259	122	137-6645	350	142-8714	▶360

▶ **PRIMARY REFERENCE**

PART NUMBER INDEX

Part	Page
142-8719	199
142-8723	183
142-8724	183
142-8729	183
142-8731	206
	210
	211
	213
142-8732	185
142-8758	▶183
	184
142-8791	258
142-8793	258
142-8801	232
142-8805	236
	431
	432
	433
	435
142-8810	234
142-8812	79
142-8818	96
142-8823	234
142-8826	244
142-8828	112
142-8831	232
142-8832	79
	232
	258
142-8833	177
142-8858	562
142-8928	112
	368
142-8929	368
142-8937	368
142-8948	442
142-8949	442
142-8997	311
	313
142-9021	219
142-9036	185
142-9116	274
142-9118	▶546
	598
	600
142-9234	325
	327
142-9241	192
142-9278	499
142-9279	499
142-9287	499
142-9305	596
	597
	▶613
142-9311	▶587
142-9319	619
142-9320	598
	600
142-9325	598
	600
142-9326	152
142-9327	157
142-9328	598
	600
142-9329	154
	239
	242
142-9331	154
	239
	242
142-9356	547
	550
	582
	583
142-9386	499
143-3088	450
143-4535	88
	90
143-4536	88
	90
144-0195	547
	550
	553
	555
	582
	583
144-4531	374
144-4532	374
144-9962	▶106
	122
146-2438	150
146-6371	558
	574
	580
146-7808	62
146-9439	143
	144
	181
147-1773	154
	239
	242
148-2371	239
	242
	246
	247
148-2372	239
	242
	246
	247
148-8315	186
	298
	306
	308
	321
	323
	325
	327
	577
	579
148-8316	306
	308
	319
148-8318	194
148-8319	283
	285
	287
	289
	291
	293
	295
	296
	300
	302
	304
148-8322	192
148-8325	280
	317
	319
	369
148-8326	308
	577
	579
148-8327	192
	194
	277
	331
148-8328	186
148-8336	194
	277
	280
	298
	331
	335
	337
	369
148-8338	192
148-8340	186
	194
	277
	331
148-8341	311
	313
	329
148-8342	194
	298
148-8345	311
148-8353	280
	369
148-8354	331
148-8360	321
	323
148-8365	315
	369
148-8369	306
	308
	319
148-8378	280
	296
	315
	369
148-8382	186
148-8390	311
	325
148-8407	360
148-8423	319
148-8435	317
	335
	337
148-8446	280
	369
148-9364	346
149-0686	253
149-3499	139
149-3516	106
149-4232	431
149-5435	426
	431
149-5436	427
	432
149-5437	428
	433
149-5741	390
	▶455
149-7694	43
150-3056	285
	287
	289
	291
150-4027	317
150-4034	280
	331
150-4043	319
150-4385	183
150-4386	183
150-5472	183
150-6764	168
150-6765	168
150-6766	141
150-7568	574
	579
	590
150-8592	▶204
	213
150-8599	204
	205
	206
	207
	208
	209
	210
	211
	212
	213
151-1394	140
151-4965	377
	381
152-1154	245
152-1156	245
152-1157	185
152-1161	564
152-4871	502
152-4875	499
152-4884	499
152-5878	595
152-8181	442
153-1260	614
153-2682	616
153-2683	245
	547
	550
	564
	582
	583
153-2994	283
	285
	287
	289
	291
	293
	295

▶ PRIMARY REFERENCE

PART NUMBER INDEX

Part	Page
	296
	298
	300
	302
	304
153-2995	283
	293
	295
	296
	298
	300
153-5387	29
	31
153-5391	31
153-5394	29
	31
153-5395	29
	31
153-5396	29
	31
153-5402	25
	27
	29
	31
153-5518	24
	27
153-5554	33
	35
153-5556	33
	35
153-5557	33
	35
153-5558	33
	35
153-5559	33
	35
153-5573	36
	38
153-5587	70
153-5590	70
153-5592	65
	95
	100
	110
	116
	120
	125
153-5656	126
153-5933	56
	73
153-5936	56
	75
	158
	164
153-5939	22
	100
153-5960	46
	48
	81
	83
	107
	116
	120
153-5961	36
	71
	81
	83
153-5962	22
	46
	48
	100
153-6256	306
	308
	577
	579
153-6375	44
	45
	81
	100
	630
153-6412	56
	64
	116
	131
153-6415	110
153-6492	19
	20
	65
	66
153-6494	65
153-6497	65
153-6833	56
	60
153-6835	56
	60
	70
153-6838	20
	29
	31
	46
	56
	60
153-6841	56
153-6848	56
153-6849	56
	75
153-6850	56
	75
153-6851	56
	75
153-6853	56
	75
	98
	100
153-6856	46
	81
153-6868	44
	45
153-6873	114
153-6879	56
	190
153-6881	56
	75
153-6981	595
153-7640	22
	54
	55
	100
153-7920	97
153-7983	107
153-7985	46
153-7987	107
	110
153-7988	36
	71
154-0175	29
	31
154-0176	29
	31
154-0177	29
	31
154-0178	29
	31
154-0181	25
	27
154-0385	25
	27
154-0386	25
	27
154-0388	25
	27
154-0389	25
	27
154-0391	29
154-0393	29
	31
154-0867	62
	63
154-0869	62
	63
154-0870	62
	63
154-0871	62
	63
154-0873	62
	63
154-0874	62
	63
154-0888	35
154-0889	35
154-1201	▶24
	25
154-1202	24
154-1203	25
154-1230	25
	27
154-1231	25
	27
154-1240	70
154-1241	70
154-1242	70
154-1243	70
154-1246	36
	71
154-1248	36
	71
154-1249	36
	71
154-1347	22
	100
154-1396	107
154-1399	161
154-1401	107
154-1403	107
	110
154-1405	107
154-1408	107
154-1410	107
154-1411	107
154-1416	107
154-1636	107
154-1637	107
154-1638	107
154-1639	107
154-1672	46
154-1673	46
	48
154-1675	46
	48
154-1677	46
	75
154-1678	46
	75
154-1679	46
154-1680	20
	46
154-1817	81
	83
154-1822	67
	68
154-1828	78
	81
154-1831	83
154-1880	65
	66
154-1882	65
154-1942	56
	75
154-2353	56
	75
154-2394	44
	45
154-2395	44
	45
154-2403	21
	44
	45
	161
154-2405	41
	42
154-2406	41
	42
154-2427	95
	100
154-2428	95
	100
154-2433	54
	55
154-2435	16
	▶54
154-2704	397
	398
	399
	400
	414
	415
	416
	417
	418

▶ **PRIMARY REFERENCE**

PART NUMBER INDEX

Part	Page
	419
	420
	421
	422
	423
	424
	425
	436
	437
	438
	466
	467
154-2713	116
	120
154-2715	110
	116
	120
154-2716	116
	120
154-3017	116
	120
154-3018	116
154-3927	139
154-3928	140
154-3985	614
	615
154-3986	615
154-4006	219
154-4014	367
154-4233	▶130
	168
154-4504	19
154-4505	19
	20
154-4506	19
154-4507	19
154-4508	19
154-5011	▶357
	410
	411
	412
154-5012	357
	431
	432
	433
	435
154-5013	357
	359
154-5020	285
154-5021	285
154-5022	285
154-5053	432
154-5070	433
154-5232	329
154-8711	615
154-8715	615
155-1279	342
155-2255	143
	144
	168
	169
	181
	518
	522
	525
	536
	598
	600
155-2260	142
	167
	169
	178
	536
	578
	598
	600
155-2265	143
	144
	154
	168
	169
	181
	239
	485
155-2270	141
	142
	167
	168
	169
	172
	177
	178
	180
	239
	442
	485
	518
	522
	525
	536
	546
	578
	598
	600
155-2271	168
	169
	172
	178
	249
	598
	600
155-2274	154
	169
	239
	547
	550
	582
	583
	598
	600
155-7984	50
	51
	83
	98
	123
	125
	630
155-8009	100
	107
155-8076	137
155-8077	137
	138
155-8084	56
156-0884	404
	▶426
156-0885	404
	▶427
156-0886	405
	▶428
156-0891	▶358
	404
	405
	456
156-0913	358
156-1200	106
156-1458	143
	144
156-1460	143
	144
	181
156-4282	280
	369
156-5508	287
156-5509	287
156-5510	287
156-5762	389
	633
	636
156-5970	387
156-6155	135
156-6971	25
	27
156-6988	36
	38
156-6989	36
	38
156-7347	56
156-9809	1
	▶237
157-0940	393
	394
	426
	427
	428
	429
	430
	459
	468
157-0941	257
	358
157-0942	257
	358
157-2853	633
	636
	643
	646
	649
157-4835	440
157-7223	▶404
	405
157-7224	▶404
	405
157-7225	▶405
157-7226	▶405
157-7227	▶405
158-3770	510
	511
	512
158-5648	426
	427
	428
	429
	430
158-6095	▶405
158-6694	562
158-6695	546
158-6696	598
	600
158-6697	563
158-6698	598
	600
158-6699	598
	600
158-7936	107
	110
159-2953	244
	245
	450
	451
	452
	453
	454
	455
	456
159-4535	289
159-4536	289
159-4537	289
159-5411	469
159-5740	321
	323
159-5756	236
159-5761	▶213
159-5772	183
159-5790	595
159-5792	595
159-5793	185
159-5794	595
159-5797	444
159-7342	226
	227
159-8035	358
	469
	639
159-8038	431
	432
	433
	435
159-8050	123
159-8405	232
159-9322	168
159-9495	143
	144
	181
159-9496	143
	144
	181
159-9853	566
	567
160-1600	238

▶ PRIMARY REFERENCE

PART NUMBER INDEX

Part	Page	Part	Page	Part	Page	Part	Page
	626	163-1386	285	165-4894	485		400
160-3550	116		287	165-4895	149		414
	630		289	165-4898	▶214		415
160-3555	116		291	165-4901	▶206		416
	120	163-3361	▶159		214		417
160-3556	116		161	165-4902	▶206		418
	120		162		214		419
160-3557	116	163-5372	95	165-4908	204		420
	120		100		205		421
160-3558	116		116	165-4909	206		422
	120		120	165-4934	194		423
160-4150	56		123	165-5655	142		424
	75		630	165-7095	53		425
160-4151	56	163-8811	285		595		436
	75	163-9320	300	165-7098	250		437
160-4152	56	164-1154	604	165-8731	▶359		438
	75	164-2108	385		470		440
160-4153	56	164-3765	133		471		466
	75	164-4225	280	165-8732	460		467
160-4826	190		370		▶463		641
160-6778	377	164-5567	192		464	168-8999	123
	379		319	165-8740	▶469		125
	381		321		470	168-9001	78
	382		323		471		98
160-7626	46	164-7556	145	165-8743	469		100
161-0185	283		146	166-0319	393		123
	300	164-7619	56		394		125
161-0186	283		190	166-2033	180	168-9002	123
	300	164-9295	▶261		224		125
161-0187	▶300		470		239	169-2876	633
	404	164-9425	531		242		636
	405		532	166-2338	44		643
161-0188	283		534		45		646
	300	164-9440	379	166-2551	485		649
161-0189	283	164-9614	456		▶488	169-3569	469
	300		▶458	166-2552	485	169-4868	393
	302	164-9989	459	166-2556	485		394
	304		460	166-2557	485	169-6715	88
161-0190	283		464	166-2558	485		90
	300		468	166-2559	485	169-8941	426
161-2347	79	165-0142	201	166-2560	280	169-8942	427
161-2539	166	165-0312	598		448	169-8943	428
161-4128	447	165-2139	46		449	170-5836	470
161-4130	430	165-2140	22		472		471
	431		48		473	170-6305	563
	432		100	166-2561	250	171-2212	172
	433	165-2141	50	166-2562	618		175
	435		51	166-2569	▶617	172-0970	379
161-7163	25		81		618		382
161-7164	25		98	166-3678	183	172-4445	▶139
161-8560	335		100	166-4041	463	172-4446	▶140
	337		123	166-9312	300	172-4585	137
162-0223	499		125	167-0608	485		138
162-2207	107	165-2142	44	167-1530	562	172-5285	261
	110		45	167-3692	169	172-8173	197
162-5236	410	165-2602	▶214	167-3693	169	172-8175	197
	411	165-2605	▶204	167-4339	201	172-9200	172
	412		214	167-7713	202		175
	▶447	165-2606	▶205	168-8389	226	173-0702	510
162-8154	458		214		227		511
163-1385	283	165-2609	▶205		395	173-0703	512
	296		214		396	173-2543	615
	300	165-2610	▶205		397	173-3015	226
	302		214		398		228
	304	165-4891	▶214		399	173-3016	226

▶ **PRIMARY REFERENCE**

PART NUMBER INDEX

Part	Page
	228
173-3018	226
	228
173-3021	▶248
	249
173-3022	5
	7
	11
	12
	220
	222
	▶618
173-7407	470
	471
	▶483
173-8919	169
174-2388	293
	295
174-2389	293
	295
174-2393	293
	295
174-3091	513
	514
	515
	516
	517
	566
	567
174-3097	293
175-0005	544
	558
	574
	580
175-4228	▶250
175-4236	224
	248
175-4237	246
	247
175-4238	4
	5
	6
	7
	8
	10
	11
	12
	220
	221
	222
	223
	225
	▶478
175-4239	239
	242
	246
	247
176-2947	499
176-3900	▶490
	577
176-4074	278
	323
176-4079	252
	574
	580
	590
176-7711	16
	▶114
176-7719	114
	115
176-9954	112
	▶122
177-1910	296
177-1911	296
	302
	304
177-1912	296
177-1914	465
177-1921	393
	394
177-1941	481
177-1955	465
177-1956	465
177-1957	465
177-1958	263
177-1971	465
177-1972	393
	394
177-1973	481
177-1975	465
177-1981	390
	▶393
177-1982	390
	▶394
177-1983	390
	▶481
177-1986	▶296
	390
177-1987	393
177-1988	394
177-1989	▶390
177-1990	▶390
177-3405	245
	547
	550
	582
	583
	616
177-7414	479
	480
177-7415	479
	480
177-9150	479
177-9151	480
177-9152	4
	5
	6
	7
	8
	10
	11
	12
	220
	221
	222
	223
	225
	▶476
177-9153	476
177-9567	278
	323
177-9643	144
177-9644	144
177-9645	143
	144
	169
	181
177-9648	169
177-9653	168
177-9656	169
178-2247	478
178-2255	79
178-2256	▶214
178-2270	211
178-3620	170
	181
	574
	580
	590
178-7539	168
178-9983	513
	514
	515
	516
	517
179-7001	▶254
	317
179-7002	254
180-3007	112
	277
	321
	323
180-6115	65
180-6118	83
180-7451	347
180-8579	123
	630
183-1163	29
	31
183-1164	29
	31
	36
183-1165	22
	100
	164
183-1336	25
	27
183-3213	36
	38
183-3353	116
	120
183-3538	110
183-3572	98
183-4037	128
	630
183-4084	293
	295
183-4085	293
	295
183-7117	250
184-1564	▶163
	180
	224
	239
	242
184-2472	130
	135
184-6097	476
	▶479
184-6098	476
	▶480
185-4015	494
	496
	570
	572
185-4253	385
185-4254	374
	▶385
185-7887	285
	287
	289
	291
	302
	304
185-8660	▶215
185-8661	▶215
185-8663	▶215
185-8664	▶215
185-8665	▶216
185-8667	▶216
185-8668	206
	207
185-8669	207
185-8670	▶206
	215
185-8671	▶207
	215
185-8672	▶207
	215
185-8673	▶207
	215
185-8676	▶208
	215
185-8677	▶208
	215
185-8678	▶208
	215
185-8679	▶209
	215
185-9926	▶209
	216
185-9927	▶209
	216
185-9930	▶210
	216
185-9931	▶210
	216
185-9932	208
	209
185-9933	210
	211
185-9934	206
	207
185-9935	208
185-9937	208
186-0239	224
	249
186-2360	224
	227
	229

▶ PRIMARY REFERENCE

PART NUMBER INDEX

Part	Page
186-3362	177
186-3735	141
	142
	150
	172
	175
	234
	278
	342
	382
	387
	513
	514
	515
	516
	517
	539
	546
	553
	555
	566
	567
	593
	594
186-3736	142
	499
186-5186	482
186-6190	▶491
	579
	588
187-3211	584
	607
187-3212	584
	607
187-3230	213
187-3239	▶216
188-0124	▶210
	216
188-0125	▶211
	216
188-0147	3
	4
	5
	6
	7
	8
	9
	10
	11
	12
	220
	221
	222
	223
	225
	▶244
188-2008	192
188-7733	389
	▶482
189-4523	584
	607
190-3762	22
	100
190-3803	116
	120
190-7453	317
190-7967	258
190-7971	258
190-7979	258
190-8038	258
190-8962	224
	248
191-0542	107
191-2894	234
191-9293	107
191-9296	107
191-9297	107
	110
191-9566	▶230
191-9576	234
191-9588	258
191-9589	258
191-9594	236
191-9633	258
191-9635	258
191-9636	258
191-9637	258
191-9638	258
191-9650	▶196
	200
191-9652	274
	▶339
191-9659	185
191-9661	185
191-9684	4
	9
	221
	▶626
191-9686	373
	▶374
192-0104	16
	▶137
192-0105	137
	138
192-0836	166
192-2606	488
192-2607	488
192-2637	474
	475
	477
192-2638	477
192-2640	▶262
	280
	448
	449
192-2642	448
	449
	472
	473
192-2663	585
192-2668	368
193-0161	129
193-0447	▶253
	276
193-0474	325
	327
	329
193-8308	321
193-8313	317
193-8321	321
	323
193-8329	126
	127
193-8334	329
193-8335	329
193-8345	79
193-8385	602
193-8392	319
193-8393	319
194-3873	387
194-5171	553
	555
194-7631	253
194-7632	253
195-0935	154
	239
	242
	502
195-0936	136
	618
195-0937	142
	152
	498
	547
	550
	582
	583
195-0939	498
195-5124	455
	456
195-6696	485
195-6723	502
	▶619
195-6740	▶632
195-6754	280
	448
	449
	474
	475
	477
195-6768	317
195-6769	317
195-6942	439
	▶461
	462
195-6943	439
	461
195-7124	409
	▶456
195-8545	439
	▶461
	462
195-9700	377
	379
	381
	382
	▶386
195-9712	224
196-2381	168
196-2382	143
	144
	169
	181
196-2383	143
	144
	169
	181
196-2384	143
	144
	169
	181
196-2385	169
197-6894	562
197-8004	161
198-2663	56
	190
198-5389	141
	142
199-3410	632
199-5438	▶211
	214
199-5439	▶211
	214
199-5440	211
199-7722	435
199-8308	435
199-8309	291
199-8310	291
199-8311	291
199-8317	435
	2
200-0807	630
200-0999	185
200-2371	386
200-5717	546
200-5976	128
	630
202-0671	376
202-0673	376
202-0674	376
202-1196	116
	120
202-2168	167
	578
	580
202-2284	494
	496
202-6611	146
202-6614	145
203-1100	379
	382
204-1365	224
	248
204-1452	202
204-1454	202
204-1455	202
204-1456	202
204-1459	202
204-1471	374
204-1476	374
204-1481	374
204-1482	374
204-1485	374
204-1486	374
204-1488	374
204-1489	374
204-1491	367

▶ **PRIMARY REFERENCE**

PART NUMBER INDEX

Part	Page
	▶368
204-1492	368
204-1499	368
204-5098	442
205-0826	141
	142
205-3185	52
205-3727	86
	87
205-4585	81
	630
205-4726	119
205-4727	119
205-4728	119
205-4731	116
205-5148	553
	555
205-6383	88
	90
205-7048	178
205-8257	141
	142
206-1346	154
	239
	242
206-2423	178
206-2724	574
	580
206-3499	70
206-3820	443
	▶444
206-3821	443
	▶445
206-5143	196
206-5162	135
	141
206-5165	135
	141
206-7398	494
	496
	570
	572
207-0539	622
	624
207-0573	622
	624
207-3814	142
207-5262	▶135
	141
	142
207-6154	86
	87
207-9729	367
207-9731	234
207-9732	234
207-9737	280
	369
207-9756	280
	369
207-9780	224
	248
207-9785	280
	445
208-0044	43
208-6176	79
210-0855	255
211-5172	69
211-5358	169
	172
211-7739	107
211-9061	53
212-0061	386
212-0743	107
212-0744	107
212-0745	107
212-0747	107
212-4091	329
212-6521	280
	443
212-6525	311
	313
212-6526	311
	313
212-6603	194
212-6604	194
212-6627	112
212-6690	280
	369
212-6692	▶185
	200
213-0139	169
213-3943	255
213-7489	513
	514
	515
	516
	517
213-8711	578
	580
214-2465	546
214-4252	278
214-4253	278
214-5555	263
214-7568	254
214-9186	503
215-2605	56
	60
215-2617	81
	83
215-2620	29
	31
215-2621	46
215-3277	352
	354
215-3926	1
	2
	▶231
215-3927	230
	231
215-3935	277
	325
	327
	329
	331
215-3957	280
	448
	449
	▶477
215-3958	472
	▶474
215-3959	473
	▶475
215-3960	444
	▶472
215-3961	444
	▶473
215-3962	445
	▶448
215-3963	445
	▶449
215-4001	224
	248
215-5564	143
	181
215-8307	517
215-8308	516
216-0658	134
216-4703	168
216-4704	518
	521
	522
	524
	525
	527
216-4709	141
	142
216-4711	180
	224
	239
	242
216-4712	▶562
	598
	600
216-4713	▶563
	598
	600
216-4714	133
216-4716	4
	5
	6
	7
	8
	10
	11
	12
	▶154
	220
	221
	222
	223
	225
216-4724	▶181
	534
216-4725	143
	144
	181
216-4726	154
	239
	242
216-4727	154
	239
	242
216-4746	1
	2
	▶152
216-4750	▶136
	502
216-4751	597
	▶598
216-4752	598
216-4753	562
216-4754	563
216-4755	▶133
	168
216-6124	197
216-6144	5
	7
	11
	12
	220
	222
216-6145	501
216-6146	3
	4
	5
	6
	7
	8
	9
	10
	11
	12
	220
	221
	222
	223
	225
	▶501
216-6156	374
216-6157	374
216-6159	374
216-6160	374
216-6161	374
216-8756	▶389
216-8850	389
217-2752	36
	71
217-2760	116
	120
217-2761	116
	120
217-2762	116
	120
217-2763	116
	120
217-2776	65
	66
217-2777	16
	▶65
217-2778	16
	▶128
217-3850	377
	381
217-5770	29
	31
217-5771	29
217-5794	107
217-5859	22
	100
217-5861	22

▶ **PRIMARY REFERENCE**

PART NUMBER INDEX

Part	Page	Part	Page	Part	Page	Part	Page
	100	218-5618	2	218-5927	277	218-6316	329
217-5862	22		▶525		331	218-6317	329
	100		▶527	218-5930	▶528	218-6319	278
217-5864	22	218-5637	321		▶530		331
	100	218-5651	219	218-5931	2	218-6323	278
217-5884	16	218-5704	317		▶531	218-6324	331
	▶129	218-5707	274	218-5932	2	218-6325	331
217-7108	107		▶311		▶532	218-6326	278
217-7111	107	218-5708	274	218-5947	276	218-6327	278
217-7115	107		▶325		▶534	218-6328	331
	110	218-5709	▶274	218-5957	▶280	218-6334	280
217-7174	19	218-5764	278	218-5968	319		445
217-7221	16		311	218-5969	▶245	218-6335	280
	▶41		313	218-5975	485		445
217-7225	44		329	218-6058	3	218-6348	493
	45		331		▶348		▶509
217-7238	16	218-5772	1		▶349	218-6349	278
	▶44		▶219	218-6060	509		331
217-7352	56	218-5790	3		578	218-6350	1
	630		132		580		2
217-7358	56		▶597	218-6063	306		▶502
	73	218-5791	3		308	218-6356	502
217-7379	78		4	218-6079	275		▶586
	81		5		276	218-6357	586
218-0728	547		6		▶361	218-6359	586
	550		7	218-6095	192	218-6360	1
	582		8	218-6117	510		▶605
	583		9		▶566	218-6367	502
218-0919	40		10	218-6118	511		▶503
218-0933	1		11		512	218-6370	502
	▶112		12		▶567		▶595
218-2317	81		220	218-6119	▶377	218-6377	565
218-2333	56		221		528	218-6380	502
	60		222		531		▶616
218-2334	56		223		532	218-6381	595
	64		225		534	218-6384	592
218-2373	385		▶597	218-6137	321	218-6386	545
218-5562	596	218-5802	232		323	218-6387	545
	▶614	218-5803	1	218-6142	278	218-6388	545
218-5565	105		▶232		323	218-6389	544
	▶603	218-5812	275	218-6175	274	218-6391	544
218-5566	▶104		276		▶362	218-6393	568
	603		▶340	218-6176	277		▶570
218-5571	317	218-5840	▶272		331		▶572
218-5572	317		277	218-6204	329		574
218-5580	335		331	218-6231	335	218-6394	493
	337	218-5841	▶273		337		▶558
218-5601	1		277	218-6241	280		569
	2		331		369	218-6395	502
	3	218-5843	272	218-6250	509		▶592
	4	218-5844	272		578	218-6396	558
	5	218-5845	273		579		574
	6	218-5846	273	218-6263	▶369		579
	7	218-5847	485		443	218-6397	558
	220	218-5882	▶315	218-6292	▶636		574
	221		443	218-6302	▶493		579
	222	218-5901	274		597	218-6398	558
	223		275	218-6311	274		574
218-5602	1		▶321		275		579
	▶105	218-5903	275		▶329	218-6399	494
218-5611	2		276	218-6312	275		496
	▶518		▶323		276		570
	▶521	218-5911	▶633		▶331		572
218-5612	▶522	218-5926	277	218-6313	329	218-6400	▶565
	▶524		331	218-6314	329		596

▶ **PRIMARY REFERENCE**

PART NUMBER INDEX

Part	Page	Part	Page	Part	Page	Part	Page
218-6401	574	218-6534	308	218-6746	▶574		583
	580	218-6535	308	218-6760	▶274	220-1523	56
218-6402	574	218-6536	276	218-6762	▶275		189
218-6405	492		▶335	218-6776	278	221-1136	29
	▶494		▶337		331		31
	▶496	218-6539	310	218-6783	276	221-3429	461
	577	218-6541	276		▶373		462
	579		▶310	218-6825	270	221-3876	553
218-6407	596	218-6545	▶186		271		555
	597		276	218-6827	269	221-3877	547
	▶607	218-6548	186	218-6830	493		550
218-6411	596	218-6553	279		▶508		582
	597		331	218-6832	▶505		583
	▶620	218-6554	279		▶506	221-3879	167
218-6414	558		331		508		578
	574	218-6555	279	218-6833	505		580
	580		331		506	221-3880	168
218-6416	605	218-6556	331		577	221-3881	143
218-6417	605	218-6558	279		579		144
218-6419	▶544		331	218-6836	542		181
	577	218-6561	373		577	222-1178	88
218-6420	502	218-6568	278		579		90
218-6421	518		331	218-6837	542	222-3870	141
	521	218-6571	276		577		142
	522		▶536		579	222-3962	212
	524		▶539	218-6838	542	222-3963	213
	525	218-6582	578		577	222-5693	197
	527		580		579	222-5695	5
	536		588	218-6840	▶351		7
	539	218-6584	578		505		11
218-6422	528		580		577		12
	530	218-6590	493		579		220
	531		▶588	218-6856	342		222
	532	218-6593	321	218-6857	342	222-7412	395
	534	218-6596	278	218-6858	342	222-7467	426
218-6424	605		323	218-6863	192		427
218-6425	▶153	218-6597	278	218-6864	319		428
	502		323	218-6898	236		459
218-6428	1	218-6598	277	218-6899	1		468
	▶602		323		▶258	222-7545	396
218-6431	▶552	218-6599	278	218-6947	570		▶450
	553		331		572	222-7546	395
218-6434	602	218-6604	274	218-6948	494		▶450
218-6436	586		▶313		496	222-7724	391
218-6438	605	218-6607	274	219-0302	633		▶395
218-6440	▶547		▶327		636	222-7725	395
218-6442	498	218-6611	331		643		396
218-6480	▶510	218-6616	105		646	223-0591	547
	528	218-6617	105		649		550
	530	218-6640	▶274	219-4335	280		582
218-6485	▶511	218-6645	574		369		583
	531	218-6662	614	219-4377	278	223-0600	▶550
218-6490	▶512	218-6701	▶577		325	223-0601	547
	518		596		327		550
	521	218-6703	▶569		329		582
218-6503	276		596		331		583
	▶317	218-6721	▶443	219-4379	614	223-0608	547
218-6506	▶192	218-6722	▶443		615		550
	276	218-6727	277	219-4380	613		582
218-6508	192		331		▶615		583
218-6528	▶306	218-6738	▶277	219-4388	615	223-0609	552
	569	218-6742	▶144	219-6314	135	223-0610	552
	577	218-6743	▶582	219-9739	547	223-0612	552
218-6533	▶308	218-6744	▶583		550	223-0616	550
	493	218-6745	▶621		582		▶553

▶ PRIMARY REFERENCE

PART NUMBER INDEX

Part	Page
	583
223-0617	547
	550
	582
	583
223-3725	513
	514
223-3726	515
223-3728	513
	514
	515
	516
	517
223-4240	232
223-5941	598
	600
223-5942	278
	536
	539
223-6537	562
	▶593
223-8408	339
	▶342
223-8488	553
	555
223-8495	553
	555
223-9974	186
	▶188
224-0554	633
	646
	649
224-0672	633
	646
	649
224-3875	232
224-7057	620
	621
	▶622
224-7058	620
	621
	▶624
224-7830	636
	643
224-8645	636
	643
224-8646	633
	646
	649
224-8945	643
224-8946	646
	649
224-9021	636
	643
224-9022	633
	646
	649
224-9855	633
	636
	643
	646
	649
225-0312	633
	646
	649
225-0313	636
	643
225-3143	123
225-3187	553
	555
225-3305	636
	643
225-5190	168
225-5193	133
225-7948	▶167
	493
225-7950	▶126
225-7952	▶127
225-7954	172
	175
225-7955	123
	630
225-7956	123
225-7962	154
225-7963	4
	6
	10
	221
	222
	▶249
225-7964	4
	6
	10
	▶180
	221
	222
225-7969	1
	2
	▶166
225-7976	633
	636
	643
	646
	649
225-7977	633
	636
	643
	646
	649
225-7980	172
	175
225-7981	168
225-7982	168
225-7991	▶141
225-7998	597
	▶600
225-7999	600
225-8000	▶134
	168
225-8001	1
	▶168
225-8002	168
225-8005	278
	536
	539
225-8009	278
	536
	539
225-8010	17
	18
	▶172
	▶175
225-8012	143
	144
	181
225-8013	154
	239
	242
225-8014	442
225-8015	391
	392
225-8526	98
	100
225-8533	98
	100
225-9238	277
	361
	▶365
225-9521	255
	▶263
226-0291	232
	501
226-0323	501
226-1242	639
226-3736	217
226-3737	217
226-5900	154
	239
	242
226-5901	598
	600
226-9629	385
227-4315	237
227-8807	253
228-1762	17
	18
	▶79
228-1763	17
	18
	▶199
228-1764	17
	18
	▶52
228-1773	17
	18
	▶92
228-1783	3
	▶88
228-2524	96
228-3350	86
	87
228-3359	▶86
	88
228-3369	641
228-3581	639
228-3724	79
228-9228	▶379
	518
	522
	525
	536
228-9240	352
	354
228-9641	79
228-9953	43
229-5465	306
	308
229-5466	306
	308
229-5468	278
	331
229-5471	278
	331
229-5473	278
	331
229-8730	17
	18
	▶40
229-8744	▶545
	577
229-8746	▶568
	569
229-8747	▶492
	493
229-8757	553
	555
229-8796	86
	87
230-3214	547
	550
	582
	583
230-3684	258
	▶270
230-3686	355
230-3694	258
	▶271
230-3703	258
	▶269
230-3726	351
	366
230-3727	348
	▶352
230-3743	3
	4
	5
	6
	7
	8
	9
	10
	11
	12
	▶177
	220
	221
	222
	223
	225
230-3757	363
	364
	365
230-4011	178
230-4596	396
230-5406	▶255
	390
230-5407	465
230-5670	390
	▶465
230-6368	127

▶ **PRIMARY REFERENCE**

PART NUMBER INDEX

Part	Page
231-0124	298
231-0125	298
231-0126	298
231-0127	298
231-0167	93
231-0168	93
231-0169	93
231-2105	234
231-2999	158
	165
231-3041	112
231-3578	88
	90
231-3579	88
	90
231-3925	88
	90
231-4256	▶513
	532
231-4257	▶514
	522
	524
231-4258	143
	▶515
	534
231-4259	277
	▶516
	536
	539
231-4260	▶517
	525
	527
231-4261	513
	515
231-4262	514
	516
	517
231-5266	256
231-5271	395
	396
231-5273	▶298
	391
	392
231-5274	▶256
	391
	392
231-5275	▶391
231-5276	392
	▶396
231-5277	▶392
231-5278	▶341
	391
	392
231-5279	341
231-6287	351
	▶387
231-6564	387
231-7319	624
231-7320	624
231-7321	620
	621
231-7322	622
231-7323	622
231-7324	620
	621
231-7325	▶560
	624
231-7326	560
231-7327	▶561
	622
231-7328	561
231-7329	560
	561
231-7331	622
	624
231-7372	622
	624
231-7401	560
	561
231-8121	494
	570
231-8122	494
	496
	570
	572
	▶576
231-8123	494
	496
231-8124	494
	496
	570
	572
231-8126	494
	496
	570
	572
231-8127	494
	496
	570
	572
231-8128	494
	570
231-8129	494
	496
	570
	572
231-8130	494
	570
231-8131	494
	570
231-8132	494
	496
	570
	572
231-8133	494
	496
	570
	572
231-8137	494
	496
231-8141	494
	496
	570
	572
231-8142	494
	496
	570
	572
231-8143	570
	572
231-8144	570
	572
231-8145	570
	572
231-8920	56
	190
232-1384	494
	496
232-1789	79
232-4706	593
	594
232-4901	88
	90
232-6692	133
233-0695	22
	100
233-1012	542
	578
	580
233-4872	232
233-5588	▶577
233-5589	▶579
233-5590	505
	506
	578
	580
233-5616	3
	4
	5
	6
	7
	8
	9
	10
	11
	12
	220
	221
	222
	223
	225
	▶252
233-5632	▶564
233-5638	▶143
233-5670	▶132
233-5680	5
	7
	11
	12
	220
233-5681	▶220
233-5682	▶220
233-5683	▶221
233-5684	▶221
233-5685	▶222
233-5686	▶222
233-5715	633
	636
233-5716	194
233-5719	485
233-5847	335
	337
233-5856	578
	580
233-5863	578
	580
	588
233-5864	▶584
233-5892	485
233-5893	485
233-5895	278
233-5927	509
	577
	579
233-5929	576
233-5931	576
233-5934	576
233-5951	578
	580
	588
233-5966	278
233-5967	278
233-5980	276
	▶367
233-5997	367
233-6683	86
	87
233-7128	280
	▶345
	369
233-7131	335
	▶343
234-0566	578
	579
	588
234-0732	585
234-0774	▶585
	603
234-0786	319
234-0788	276
	▶319
234-0792	220
	222
	▶226
234-0793	221
	222
	▶227
234-4328	▶145
	153
234-6065	633
	636
	643
	646
	649
234-6067	636
	643
234-6069	633
	646
234-6070	636
	643
234-6071	633
	646
234-6072	636
	643
234-6074	636
	643
234-6076	633
	646
234-6077	636
	643

▶ PRIMARY REFERENCE

PART NUMBER INDEX

Part	Page
234-6078	633
	646
234-6081	633
	646
234-7727	▶146
	152
234-7730	145
234-7731	145
234-7756	146
234-7758	146
234-9575	633
	636
	643
	646
	649
235-1365	636
	643
235-1368	633
	646
	649
235-4768	553
	555
235-5243	525
	527
	536
	539
235-5246	532
	534
236-1872	368
236-4706	275
236-4707	275
	278
236-4830	▶498
	502
236-4832	499
236-4833	498
	▶499
236-5067	494
	496
	570
	572
236-5069	494
	496
	570
	572
236-5088	252
236-5127	▶35
	36
236-5816	86
	87
236-6923	578
	580
	588
236-9987	95
	100
237-0419	52
237-0420	52
237-5331	528
	530
	531
237-5332	518
	521
237-7296	105
237-9315	29
	31
	33
	35
237-9316	31
238-0112	87
238-0999	256
238-1003	298
238-1004	395
	396
238-1005	395
	396
238-1266	107
238-4625	346
238-4626	345
	346
	388
238-4628	346
238-4629	346
238-7671	4
	5
	8
	10
	11
	220
	221
	223
	▶246
238-7672	6
	7
	10
	12
	222
	223
	225
	▶247
238-7675	239
	242
	246
	247
238-7676	242
	247
238-7693	474
	475
	477
238-7720	258
238-7733	186
238-7734	▶627
238-7741	280
	369
238-7742	280
	369
238-7743	280
	369
238-7745	315
238-7746	315
	369
238-7748	280
	369
238-7749	280
	369
238-8731	22
	100
238-9137	83
238-9143	83
238-9196	95
	100
238-9198	95
	100
238-9200	95
	100
238-9289	22
	100
238-9295	22
	100
238-9348	16
	▶22
238-9349	98
	100
238-9397	172
	175
239-0187	98
	100
239-0229	98
	100
239-0230	16
	▶98
239-0232	95
	100
239-0233	16
	▶95
239-5010	▶142
239-5029	470
	471
239-6109	620
	621
239-6138	560
	561
239-6986	633
	636
	643
	646
	649
240-6866	346
240-6877	558
	574
	580
240-6878	558
	574
	580
240-6879	558
	574
	580
240-8666	553
	555
241-3394	93
241-3763	442
241-5648	252
241-5649	252
241-5789	17
	18
	▶53
241-8672	▶442
242-0171	92
	▶93
242-0172	93
242-0173	93
242-7070	159
242-7071	159
242-7073	159
242-7074	159
242-7075	159
242-7076	159
242-7077	159
242-7078	159
242-7389	578
	580
242-9000	154
	239
	242
243-0001	▶461
243-0002	▶462
243-0003	▶462
243-1323	622
	624
243-5601	347
243-6464	135
	141
244-1363	347
244-1364	347
244-1365	347
244-1367	395
	396
244-1370	256
245-1361	83
245-1362	83
245-1364	83
245-1911	345
245-6811	▶575
	596
	597
246-1501	442
246-2622	112
246-2641	226
	228
246-3198	123
246-3337	16
	▶19
246-3338	16
	▶46
246-3415	16
	▶107
246-3451	16
	▶81
246-3470	190
246-3471	190
246-4267	123
	125
246-4291	633
246-4318	123
	630
246-4319	16
	▶123
246-4349	489
246-8723	17
	18
	▶43
246-9039	578
	580
	588
246-9371	169
247-0323	16
	▶158
247-0678	391
	392
	▶639
247-4877	237

▶ **PRIMARY REFERENCE**

PART NUMBER INDEX

Part	Page
247-6118	641
247-7182	564
248-1268	337
	▶344
248-2171	553
	555
248-2376	553
	555
248-5245	641
248-7696	277
	340
	▶346
249-1486	22
	100
249-1532	98
	100
249-2910	563
	▶594
249-5541	81
	83
249-7160	345
249-7263	98
	107
249-7707	346
250-1493	574
	579
	590
250-7662	346
251-6789	67
251-6791	16
	▶67
251-7615	50
	51
251-7618	16
	▶50
252-0330	578
	580
	588
252-0331	325
	327
252-0332	325
	327
252-0344	▶216
252-0345	▶217
252-0346	▶217
252-0367	▶217
252-0368	112
252-0378	▶217
252-0386	▶485
252-0425	444
	445
252-0787	56
	190
252-0788	56
	190
252-1802	45
252-6934	513
	514
	515
	516
	517
252-8595	440
252-9015	627
252-9016	627
252-9017	627
252-9167	201
253-2111	172
	175
253-8110	178
253-8677	104
254-9097	264
	267
	268
255-0942	268
255-0943	▶264
	471
255-6540	395
	396
	641
255-8058	358
256-2084	33
	35
256-2085	33
	35
257-5721	▶223
257-5722	▶223
257-5727	▶224
257-5730	▶238
257-5877	277
	331
258-2533	474
258-2534	475
258-3423	629
258-3424	629
258-3425	629
258-3427	629
258-3849	224
	228
	229
258-9011	341
	▶347
259-8194	343
	344
	▶388
259-8195	343
261-5659	202
261-5660	200
	▶201
261-5751	1
	2
	▶200
261-6094	275
	▶363
261-6095	275
	276
	▶364
261-6101	234
261-6118	3
	4
	5
	6
	7
	8
	9
	10
	11
	12
	223
	225
	▶350
261-6142	▶275
261-6149	▶275
261-6158	▶3
261-6160	▶3
261-6201	236
261-6255	1
	▶184
261-6681	439
	▶440
	441
261-6727	350
261-6728	350
262-0941	260
262-3975	22
	100
262-7668	522
	524
263-2135	553
	555
263-4836	643
	646
	649
263-4997	201
263-6688	603
	▶604
264-4297	350
264-8106	172
265-2894	▶212
	216
265-2895	▶212
	216
265-2896	▶212
	217
265-2897	▶212
	217
265-2898	▶213
	217
265-2899	▶213
	217
265-5624	107
	630
265-5625	107
	630
265-6944	107
266-2928	546
266-6140	256
	265
	266
266-8903	347
267-0328	81
268-1929	202
268-1936	197
268-4083	▶401
268-4084	401
	▶425
268-9529	202
269-9404	315
	369
269-9427	362
	▶366
269-9462	363
269-9465	364
270-0216	315
	369
270-2702	172
270-6915	16
	▶25
270-6930	16
	▶62
270-6932	16
	▶29
270-6968	62
	63
270-6970	62
	63
270-8667	278
271-2117	116
	131
271-8661	366
271-8674	366
272-1625	3
	4
	5
	6
	7
	8
	9
	10
	11
	12
	▶178
	223
	225
272-1626	178
272-3046	▶96
	97
272-3047	3
	4
	5
	6
	7
	8
	9
	10
	11
	12
	▶97
	223
	225
272-3056	96
274-9930	256
	▶265
274-9931	256
	▶266
276-0074	504

▶ PRIMARY REFERENCE

PART NUMBER INDEX

Part	Page
276-3440	547
	▶555
	582
276-3599	557
276-3615	555
	▶557
276-4063	542
	577
	579
276-5708	505
	506
	▶542
276-6019	▶609
276-6020	▶610
276-7276	▶611
276-7277	▶612
277-0651	▶239
277-0653	▶242
278-1061	178
278-1213	▶4
278-1221	▶4
278-1225	▶5
278-1243	1
	2
	▶276
278-1292	5
	7
	11
	12
	▶228
278-1293	4
	6
	10
	▶229
278-1969	▶267
	410
	411
	412
278-1970	267
	268
278-1975	▶268
	404
	405
	456
278-4524	265
278-4525	266
278-4875	265
	266
278-5409	▶6
278-5442	▶7
278-8713	355
278-8716	352
	353
	354
	355
278-8717	355
279-0733	197
279-3232	557
279-5350	▶456
279-5351	456
	▶459
279-5352	459
	▶466
279-5353	466
279-5357	467
279-5358	▶467
	468
279-5359	456
	▶468
279-5360	▶456
279-5364	402
	▶418
279-5365	▶402
279-5366	▶402
279-5368	402
	403
	▶419
279-5369	▶402
279-5370	▶403
279-5372	403
	▶420
279-5373	▶403
279-5374	▶403
279-5376	403
	404
	▶421
279-5377	▶403
279-5378	▶404
279-5380	▶409
279-5381	▶410
279-5382	409
	410
279-5383	410
	▶431
279-5384	▶397
	431
279-5385	397
279-5387	398
279-5388	▶398
	432
279-5389	410
	▶432
279-5390	410
	411
279-5391	▶410
279-5392	▶411
279-5395	399
279-5396	▶399
	433
279-5397	411
	▶433
279-5398	411
	434
279-5399	▶434
279-5400	▶411
279-5401	▶411
279-5402	▶412
279-5403	411
	▶412
279-5404	412
	▶435
279-5405	▶400
	435
279-5406	400
279-5412	▶283
	456
279-5413	▶285
	410
279-5414	▶287
	410
279-5415	▶289
	411
279-5416	▶291
	412
279-5417	285
	287
	289
	291
279-5418	285
	287
	289
	291
279-5420	▶409
279-5421	409
	▶422
279-5424	409
	▶423
279-5425	▶409
279-5429	409
	▶424
279-5430	▶409
279-5434	401
	▶414
279-5435	▶401
279-5437	401
	▶415
279-5438	▶401
279-5440	401
	▶416
279-5441	▶401
280-1575	547
	550
	582
	583
280-6072	503
280-7805	202
280-7854	196
	▶197
280-7863	202
280-7865	202
280-8298	93
280-8310	86
280-8311	87
280-8336	123
	630
280-8341	94
280-8364	94
280-8365	17
	18
	▶94
282-6961	620
282-7760	377
282-9059	552
	557
283-7554	557
283-9264	315
	369
283-9478	321
	323
283-9566	356
	577
	579
284-3058	134
284-3059	134
284-3595	584
	607
284-3743	584
	607
284-3744	584
	607
284-3914	504
285-5794	88
	90
285-6089	402
	▶417
285-6090	▶402
285-6093	▶406
285-6095	▶412
285-6096	412
	▶436
285-6099	406
	412
	▶437
285-6100	406
	▶412
285-6101	406
	▶413
285-6102	406
	413
	▶438
285-6104	▶406
285-6105	457
	▶464
285-6110	457
	▶460
285-6111	▶406
285-6112	▶406
285-6113	▶293
	▶295
	470
	471
285-6114	▶457
285-6115	▶457
285-6116	406
	457
	▶470
	▶471
285-7970	104
285-8565	558
	574
	580
285-8570	558
	574
	580
285-9133	558
	574
	580
285-9286	311
	313
	329
285-9287	277
	331
286-3591	264
286-7495	81
	83
286-7496	81
	83
286-9229	429
286-9243	429
	430

▶ **PRIMARY REFERENCE**

PART NUMBER INDEX

Part	Page
286-9244	408
	▶429
286-9248	▶257
	407
	408
286-9249	304
286-9250	▶302
	408
286-9251	407
	408
	▶641
286-9263	302
	304
286-9265	302
286-9266	302
286-9267	302
	304
286-9268	302
	304
286-9271	302
286-9273	257
286-9274	430
286-9278	407
	▶430
286-9279	▶304
	407
286-9280	304
286-9281	304
286-9289	257
286-9300	▶407
286-9301	▶408
287-6603	584
	607
287-7004	584
	607
287-7006	584
	607
288-5767	584
	607
288-6537	33
	35
288-6593	73
289-6120	73
289-6336	197
289-6342	201
	▶202
289-6347	197
289-6352	366
289-6356	366
289-6360	▶353
	356
	577
	579
289-8440	379
289-8451	377
	381
289-9560	377
	381
290-3295	327
290-3300	327
290-3333	311
290-3334	311
290-3335	311
290-3336	311
290-3337	313
290-3338	313
290-3339	313
290-3340	313
290-3382	311
	313
290-3395	311
	313
290-8014	116
	120
290-8081	279
	331
290-8082	279
	331
290-8208	278
	331
290-8481	325
	327
291-0506	325
291-0507	325
291-0513	325
291-0514	325
291-1265	158
	164
291-1297	311
291-1808	33
	35
291-3756	315
	369
291-3781	36
292-1159	169
292-2437	504
292-2438	504
292-3081	311
292-3114	586
292-5719	▶14
	15
292-9624	178
293-2167	36
	▶70
	71
293-3319	107
293-4781	56
293-6264	▶260
	407
	408
293-9426	▶441
293-9427	▶439
293-9428	▶439
293-9429	▶439
294-4916	29
	31
294-5502	283
294-5503	283
294-5504	293
	295
294-5505	293
	295
294-7667	279
	331
295-2567	633
	636
	643
	646
	649
295-4070	114
	115
295-5440	494
	496
	570
	572
295-7023	▶15
295-7027	1
	▶17
295-7028	2
	▶18
295-7039	▶8
295-7042	234
	▶236
295-7044	▶225
295-7050	▶8
295-7061	▶9
295-7068	▶9
295-7123	▶13
295-7142	1
	2
	▶629
295-7151	▶10
295-7159	▶10
295-7164	▶11
295-7168	▶12
295-7173	236
295-7175	1
	▶234
295-7176	234
295-7192	▶643
295-7196	▶646
	▶649
295-7200	643
	646
	649
295-7210	1
	2
295-7242	▶1
295-7243	▶2
295-7303	▶596
295-7313	▶596
295-7323	▶596
295-7325	649
295-7327	649
295-7328	649
295-7329	649
295-7330	649
295-7333	▶597
295-7340	649
295-7418	276
295-7428	629
295-7429	629
295-7438	276
295-7491	▶2
295-7493	▶2
295-7505	▶276
295-7508	▶276
295-8181	16
	▶116
295-8184	116
	630
296-5162	56
297-3050	46
298-1309	374
	▶384
298-7197	504
298-7198	315
	369
	▶504
299-9116	▶381
	530
299-9119	▶382
	521
	524
	527
	539
299-9121	381
	382
300-5206	13
	▶16
302-4181	31
302-4182	31
302-7821	116
	▶119
302-7822	120
302-7823	120
303-0307	81
303-0337	16
	▶36
303-0338	33
	35
303-6658	496
	572
304-5061	95
	100
305-0584	56
	60
305-2969	494
	496
	570
	572
305-3661	125
305-4185	194
307-3036	349
	▶354
307-3038	350
	▶355
307-3808	295
307-6115	▶356
	506
307-8201	16
	▶161
307-8337	92
307-9855	62
307-9856	62
308-0421	192
	▶194
308-1222	158
	164
308-1850	31
308-1852	27
308-1853	27
308-1855	27
308-1859	▶33
	38
308-1860	33

3

▶ PRIMARY REFERENCE

PART NUMBER INDEX

Part	Page	Part	Page	Part	Page	Part	Page
308-1861	33	308-4266	110	317-0961	98		
308-1862	38	309-6728	110		100		
308-1867	75	309-6732	110	317-0962	98		
308-1869	75	310-7139	107		100		
308-1871	48	311-0023	81	317-0965	14		
308-1874	48		83		▶48		
308-1875	21	311-0655	110	317-0967	14		
	48	311-0656	48		▶110		
308-1877	110	311-1171	21	317-0971	14		
308-1878	110	311-2345	16		▶20		
308-1879	110		▶56	317-0972	14		
308-1882	110	311-2349	56		▶630		
308-1889	110		190	317-0974	14		
308-1890	110	311-3884	310		▶190		
308-1892	110	311-3885	310	317-0977	14		
308-1897	110	311-3888	186		▶120		
308-1899	110	311-3889	308	317-0979	14		
308-1900	110	311-3890	306		▶83		
308-1901	110	311-4926	218	317-0980	14		
308-1902	20	311-5861	493		▶78		
308-1903	20		569	317-0981	14		
308-1904	20		▶590		▶100		
308-1905	120	311-7561	116	317-0982	14		
308-1906	120		120		▶51		
308-1907	83	312-1683	496	317-2691	175		
308-1908	83		572	317-7195	110		
308-1910	38	312-2635	496	318-0555	175		
308-1911	38		572	318-8382	75		
308-1912	21	312-4560	56	319-3251	110		
308-1913	21		64	321-5907	31		
308-1914	131	312-7676	381				
308-1984	75	312-7747	643				
308-2281	14	312-7748	646				
	▶31		649				
308-2283	14	313-5832	110				
	▶27	313-5833	110				
308-2284	14	313-6211	110				
	▶38	313-6251	382				
308-2285	14	313-9185	553				
	▶71		555				
308-2286	14	313-9323	20				
	▶63	315-5252	14				
308-2287	14		▶64				
	▶75	315-7813	14				
308-2291	14		▶55				
	▶42	315-7814	14				
308-2293	14		▶115				
	▶162	316-1016	56				
308-2294	14		60				
	▶68	316-6881	630				
308-2297	14	316-6890	14				
	▶73		▶164				
308-2298	14	316-6896	14				
	▶189		▶138				
308-2300	14	316-6963	14				
	▶66		▶125				
308-2306	14	316-6997	14				
	▶69		▶60				
308-2307	14	316-7030	14				
	▶21		▶45				
308-2313	14	317-0690	▶218				
	▶131	317-0959	98				
308-2317	14		100				
	▶165	317-0960	98				
308-2362	27		100				

▶ **PRIMARY REFERENCE**

MEMORANDA



© 2007 Caterpillar
All Rights Reserved

Printed in U.S.A.