SEBP5917-06
May 2011

RUTHZIL TRATOR COMERCIAL DE PEÇAS LTDA 11 97083-6812 ROLANDO

Parts Manual

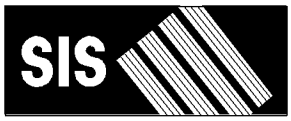

See “General Information” for New Parts Manual Features.

242B3 Skid Steer Loader

SRS1-Up (Machine)
CYM1-Up (Engine)

Powered By C3.4 IND Engine

Product and Dealer Information

Note: For product identification plate locations, see the section “Product Identification Information” in the Operation and Maintenance Manual.

Delivery Date: _____

Product Information

Model: _____

Product Identification Number: _____

Engine Serial Number: _____

Transmission Serial Number: _____

Generator Serial Number: _____

Attachment Serial Numbers: _____

Attachment Information: _____

Customer Equipment Number: _____

Dealer Equipment Number: _____

Dealer Information

Name: _____ Branch: _____

Address: _____

_____

_____

	Dealer Contact	Phone Number	Hours
Sales:	_____	_____	_____
Parts:	_____	_____	_____
Service:	_____	_____	_____

MEMORANDA

TABLE OF CONTENTS

Name	Page
GENERAL INFORMATION	A4
REPAIR ALTERNATIVES	A7
SUPPLEMENTAL COOLANT ADDITIVES	A8
MAINTENANCE PARTS	A9
INDEX	A11
MACHINE ARRANGEMENT	1
CHASSIS AR	1
COMMON AR	1
CONTROL AR-MACHINE	1
CONVERSION AR-MACHINE	3
ENGINE ARRANGEMENT	8
ENGINE AR-PRIMARY	8
INSTALLATION AR-ENGINE	10
BASIC ENGINE	11
ACCESSORY GP-ENGINE	11
BEARING GP-MAIN	12
CAMSHAFT GP	13
CONNECTING ROD GP	14
COVER GP-VALVE MECHANISM	15
CRANKSHAFT GP	16
CYLINDER BLOCK GP	17
CYLINDER HEAD GP	19
DRAIN GP-ENGINE OIL	20
FLYWHEEL GP	21
GEAR GP-FRONT	22
GUARD GP-BELT	23
HOUSING GP-FLYWHEEL	24
HOUSING GP-FRONT	26
LIFTING GP-ENGINE	28
MOUNTING GP-ENGINE	29
PAN GP-OIL	30
PISTON GP	31
PLUG GP-ENGINE	32
PULLEY GP-CRANKSHAFT	34
PULLEY GP-WATER PUMP	35
V-BELT GP	36
VALVE MECHANISM GP	37
LUBRICATION SYSTEM	38
FILTER GP-ENGINE OIL	38
LINES GP-ENGINE OIL	39
PUMP GP-ENGINE OIL	40
VALVE GP-ENGINE OIL RELIEF	41
COOLING SYSTEM	42
COOLER GP-ENGINE OIL	42
DRAIN GP-COOLANT	43
HOUSING & REGULATOR GP	44
LINES GP-WATER	45
PUMP GP-WATER	47
RADIATOR & HYD OIL COOLER GP	49
SUPPORT GP-RADIATOR	50
AIR INLET AND EXHAUST SYSTEM	52
AIR CLEANER GP	52
LINES GP-AIR	55
MANIFOLD GP-EXHAUST	58
MANIFOLD GP-INLET	59
MUFFLER & MOUNTING GP	60
MUFFLER GP	61
TURBOCHARGER GP	62
FUEL SYSTEM	64
CONTROL GP-GOVERNOR	64
LINES GP-FUEL	65
LINES GP-FUEL INJECTION	67
PUMP GP-FUEL INJECTION	69
PUMP GP-FUEL PRM & PRIM FILTER	71
ELECTRICAL AND STARTING SYSTEM	72
ALTERNATOR GP-CHARGING	72
BATTERY & WIRING GP	75
ELECTRONICS GP-MACHINE	77
GLOW PLUG GP	78
HEATER GP-JACKET WATER	79
KIT-WORK TOOL WIRING	81
LAMP GP-FLOOD	85
LAMP GP-HEAD & SIGNAL	87
LAMP GP-STOP & TAIL	88
LAMP GP-WARNING BEACON	92
LIGHTING GP-FLOOD	94
LIGHTING GP-ROADING	96
LIGHTING GP-WARNING BEACON	98
RELAY GP	99
STARTING MOTOR GP-ELECTRIC	100
SWITCH GP-PRESSURE	103
SWITCH GP-ROCKER	106
WIRING GP-CAB	107
WIRING GP-ENGINE	110
WIRING GP-HORN	112
WIRING GP-MACHINE	113
WIRING GP-WORK TOOL	117
POWER TRAIN	118
AXLE GP	118
CONTROL GP-PARKING BRAKE	120
DRIVE GP-TANDEM	124
FILTER & LINES GP-HYDRAULIC	125
FILTER GP-OIL	128
LINES GP-HYDROSTATIC	129
MANIFOLD & SOLENOID GP-CONTROL	133
MANIFOLD GP-RETURN	135

TABLE OF CONTENTS

Name	Page
MOTOR & MTG GP-HYDROSTATIC	137
MOTOR GP-PISTON	140
MOUNTING GP-PUMP	146
POWER TRAIN AR	147
PUMP & MTG GP-HYDROSTATIC	148
PUMP GP-PISTON	150
TIRE & RIM GP	154
VALVE GP-SOLENOID	162
WHEEL & TIRE AR	164
FRAME AND BODY	168
BUMPER GP	168
CONVERSION GP-ROADING	169
COUNTERWEIGHT GP	172
ENCLOSURE GP-ENGINE	173
FRAME AS-LOWER	175
FRAME AS-UPPER	177
FRAME GP-LOADER	179
FRAME GP-MACHINE	181
GUIDE GP-LINES	182
KIT-ROADING CONVERSION	183
LIFTING GP-MACHINE	186
MIRROR & MTG GP-REAR VIEW	188
MOUNTING GP-REGISTRATION	189
SUPPRESSION GP-SOUND	191
HYDRAULIC SYSTEM	193
ACCUMULATOR & MTG GP-HYDRAULIC	193
ACCUMULATOR GP-HYDRAULIC	194
ADAPTER GP-OIL LINE	196
CYLINDER & MTG GP-ANGLE BLADE	197
CYLINDER & MTG GP-LIFT ARM	199
CYLINDER GP-BUCKET	201
CYLINDER GP-GRAPPLE	203
CYLINDER GP-HYDRAULIC	205
CYLINDER GP-LIFT	210
CYLINDER GP-TILT	211
HYDRAULIC AR	215
KIT-QUICK COUPLER CONVERSION	216
LINES GP-BUCKET	219
LINES GP-CONNECTING	233
LINES GP-COUPLER	237
LINES GP-GRAPPLE	246
LINES GP-HYDRAULIC OIL COOLER	252
LINES GP-LIFT CYLINDER	254
LINES GP-PILOT	259
LINES GP-PUMP	263
LINES GP-TILT CYLINDER	265
LINES GP-WORK TOOL	269
MANIFOLD & MTG GP-CONTROL	271
MANIFOLD & SOLENOID GP-CONTROL	272
MANIFOLD GP-CONTROL	273
MOTOR & MTG GP-HYDRAULIC FAN	276
MOTOR AR-HYDRAULIC FAN	278
MOTOR GP-GEAR	279
MOUNTING GP-CYLINDER	280
PUMP & MTG GP-WORK TOOL	284
PUMP GP-GEAR	286
TANK & MTG GP-HYDRAULIC	288
TANK GP-HYDRAULIC	289
VALVE & MTG GP-CONTROL	290
VALVE GP-CONTROL	291
VALVE GP-PILOT	293
VALVE GP-RELIEF	298
VALVE GP-SOLENOID	299
IMPLEMENTS	300
BRACKET GP-SUPPORT	300
WORK TOOLS	301
ARM GP-MATERIAL HANDLING	301
BLADE AR	302
BLADE AS-ANGLING	305
BLADE GP-ANGLING	309
BLADE GP-MULTIPURPOSE BUCKET	313
BUCKET AR-DIRT	323
BUCKET AR-GENERAL PURPOSE	324
BUCKET AR-GRAPPLE	326
BUCKET AR-LIGHT MATERIAL	332
BUCKET AR-MULTIPURPOSE	333
BUCKET AR-UTILITY	336
BUCKET AS-DIRT	338
BUCKET AS-GENERAL PURPOSE	351
BUCKET AS-GRAPPLE	361
BUCKET AS-LIGHT MATERIAL	369
BUCKET AS-UTILITY	377
BUCKET GP-DIRT	380
BUCKET GP-GENERAL PURPOSE	383
BUCKET GP-GRAPPLE	384
BUCKET GP-MULTIPURPOSE	391
BUCKET GP-UTILITY	396
CARRIAGE & FORK AR	399
CARRIAGE GP-FORK	400
CLAM AS-MULTIPURPOSE BUCKET	401
CONVERSION GP-WORK TOOL	406
COUPLER AR-QUICK	407
COUPLER GP-QUICK	408
COVER GP-LINES	410
CYLINDER & LINK GP-COUPLER	411
EDGE GP-BIT & CUTTING	413
EDGE GP-CUTTING	413
FORK AR-GRAPPLE	421
FORK GP-GRAPPLE	422
FORK GP-PALLET	425
FORK GP-UTILITY	429
FRAME GP-BLADE	431
FRAME GP-FORK	432
GRAPPLE & CYLINDER GP-UTILITY	434

TABLE OF CONTENTS

Name	Page
GRAPPLE GP-UTILITY	435
HANDLE & PIN GP-COUPLER	436
KIT-ANGLE BLADE	438
KIT-ROADING PLATE & MOUNTING	442
LINK GP-COUPLER	443
LOCK GP-QUICK COUPLER	444
SPRING GP-BLADE	447
STEP GP-MATERIAL HANDLING ARM	448
STOP GP-BUCKET	449
STRAINER GP-WATER	450
TANK & MTG GP-WATER	451
TANK GP-WATER	455
TOOTH GP-UNI	456
OPERATOR STATION	457
ACCUMULATOR GP-REFRIGERANT	457
AIR CONDITIONER & MOUNTING GP	459
AIR CONDITIONER AR	460
AIR CONDITIONER GP	461
ARM GP-WINDOW WIPER	463
ARMREST & MOUNTING GP	464
ARMREST GP	465
BOX GP-STORAGE	467
CAB AR	469
CAB AR-ENCLOSED ROPS	469
CAB AR-OPEN ROPS	470
CAB AS	471
CAB GP-ENCLOSED ROPS	472
COMPRESSOR GP-REFRIGERANT	473
CONDENSER & MTG GP-REFRIGERANT	475
CONTROL GP-HANDLE	476
CONTROL GP-PILOT OPERATED HYD	481
COVER GP-CONSOLE	489
DOOR & MTG GP-CAB	490
DOOR GP-CAB	495
DUCT GP-CAB AIR	501
FRAME GP-WINDOW	503
GUARD GP-ROPS/FOPS	505
HANDHOLD GP	506
HANDLE GP-MODULAR	507
HEATER & MTG GP-CAB	508
HEATER AR-CAB	509
HEATER GP-CAB	510
HOUSING AS-SIDE	513
INSTALLATION AR	514
LEVER GP-GOVERNOR	515
LINER GP-CAB	516
LINES GP-AIR CONDITIONER	517
LINES GP-HEATER	519
MIRROR GP-REAR VIEW	520
MODULE GP-WARNING INDICATOR	521
MOTOR GP-WINDOW WIPER	523
MOUNTING GP-ROPS	524
PANEL GP-INSTRUMENT	525
PANEL GP-SIDE	528
PEDAL GP-GOVERNOR	530
PLATFORM GP-OPERATOR	532
SEAL GP-CAB	533
SEAT BELT GP	535
SEAT GP	539
SEAT GP-ADJUSTABLE	541
SPRING GP-GAS	542
VISOR GP-CAB	543
WINDOW GP-CAB	545
SERVICE EQUIPMENT AND SUPPLIES	551
FILM GP	551
PLATE & FILM GP	556
PART NUMBER INDEX	B1

GENERAL INFORMATION

1. MACHINE IDENTIFICATION

Caterpillar machines are identified by Product Identification Numbers (PIN). Some components included in a machine may be identified by Serial Numbers (S/N). Typical components that will be serialized include engines, transmissions, bulldozers, and rippers. The machine and engine are further identified by arrangement numbers and in some cases modification numbers. These numbers are shown on the product identification plate(s) and on the master plate in the operator's compartment.

Caterpillar dealers need all of these numbers to determine accurate parts identification.

SIS *New Feature*

Effective First Quarter 2001 the Caterpillar Product Identification Number (PIN) changed from 8 to 17 characters. In an effort to provide uniform equipment identification, Caterpillar and other construction equipment manufacturers are moving to comply with the latest version of the product identification numbering standard. Non-road machine PINs are defined by ISO 10261. The new PIN format will apply to all Caterpillar machines and generator sets. The PIN plates and frame marking will display the 17 character PIN. The new format will look like the following:

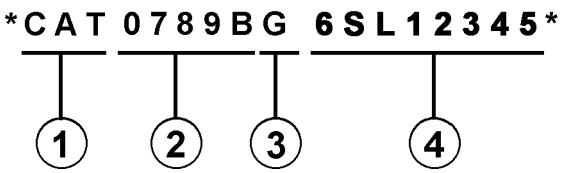

Where:

1. Caterpillar's World Manufacturing Code (characters 1-3)

2. Machine Descriptor (characters 4-8)

3. Check Character (character 9)

4. Machine Indicator Section (MIS) or Product Sequence Number (characters 10-17). These were previously referred to as the Serial Number.

Machines and generator sets produced before First Quarter 2001 will maintain their 8 character PIN format.

Components such as engines, transmissions, axles, etc. and work tools will continue to use an 8 character Serial Number (S/N).

2. ORDERING PARTS

⚠ WARNING

When replacement parts are required for this product Caterpillar recommends using Caterpillar replacement parts or parts with equivalent specifications including, but not limited to, physical dimensions, type, strength and material.

Failure to heed this warning can lead to premature failures, product damage, personal injury or death.

Quality Caterpillar replacement parts are available from Caterpillar dealers throughout the world. Their parts inventories are up to date and include all parts normally required to protect your investment in Caterpillar machines. Dealers may offer repair kits or remanufactured parts to allow selection of the most effective repair alternative for a particular situation. When ordering parts, your order should specify the quantity, part number, part name, and the serial number/product identification number of the machine for which the parts are needed.

3. PARTS MANUAL ORGANIZATION

Product information in this manual is presented as "information elements" that represent all of the components for the specific model. Engine Arrangement and Seat Group are examples of information elements. The information elements are organized alphabetically by part name and secondarily by part number within each major section of the manual.

4. TABLE OF CONTENTS

A table of contents (TOC) is found at the beginning of the manual. The TOC lists each section of the manual with a complete list of all information elements organized as they appear in the manual. Page numbers are provided for quick reference to detailed parts identification illustrations and serviceable consist lists.

5. MAINTENANCE PARTS INDEX

The Maintenance Parts Index, located near the beginning of the manual, references most frequently used maintenance part numbers, providing description, quantity, usage and page number. This information is organized alphabetically by part description.

6. INDEX

The index located near the front of the manual is an alphabetical listing of all information elements included in the manual. Page numbers are provided for quick reference to detailed parts identification illustrations and serviceable consist lists.

7. PART NUMBER INDEX

A numerical index listing all part numbers and the corresponding page number(s) appears at the back of the manual.

8. CAPTIONS

Captions located at the beginning of each information element identify the part number and part name along with additional descriptive information. PIN and S/N information found in each caption should be used to select correct information for a specific machine. Field replacement options, identification of optional attachment components, and where used ("part of") information is also provided.

The first line of a caption is shown in larger type font to indicate the beginning of an information element. Captions for additional pages that may be required to illustrate an information element will be shown in standard type font and will include the term *(contd.)* .

9. NON-SERVICED PARTS

In some instances it is necessary to display non-serviced parts that are a link to a lower level serviceable consist lists. These non-serviced part numbers are shown in *italic* type indicating that they are not available.

10. PARTS LIST REFERENCE NUMBERS

Numbers shown in the Ref No column correspond to numbers used in the associated graphic(s). An alphabetic suffix may be added to a reference number to identify lower level consist items. Numbers shown in the Graphic Ref column refer to the graphic number identifier displayed in the lower left corner of each illustration. The Graphic Ref number may be used in combination with the item Ref No to determine the correct part number. There may be intentional omission of a Ref No in a consist list as information is updated to reflect the latest serviceable part numbers.

11. INDENTED PART NAMES

When a part name is indented in a parts list, it is part of (included in) the group or assembly under which it is indented.

12. ILLUSTRATION REFERENCE LETTERS

When necessary, illustrations contain reference letters (A, B, C etc.) that are intended to track lines and harnesses from one point to another. They are also used to show where to reconnect illustrations that have been separated.

13. ABBREVIATIONS AND SYMBOLS

O.D. – Outside Diameter
I.D. – Inside Diameter
A – Not Part Of This Group
B – Use As Required
C – Change From Previous Type
D – Order By The Meter
E – Order By The Centimeter
F – Not Shown
G – Order By The Inch
I – Refer To Hydraulic Information System
M – Metric Part
R – Remfg Part May Be Available
Y – Separate Illustration
Z – Not Serviced Separately

SIS *New Feature*

14. DESCRIPTION OF TYPE CHANGES

Type - A type is defined as any configuration change that requires an additional Information Element for an Arrangement, Group, or Assembly. If serial number breaks for types are not available, a type # (Type 1, Type 2, etc.) will be displayed in the caption. These "type" changes are identified with a "C" note (change from previous type) in the Parts List. Only the "types" that apply to this Parts Manual will be included. Additional types may exist causing "C" notes to appear on an Information Element when no other types are shown.

15.<END>

This symbol indicates the end of an information element.

NOTE:

Continuing improvement and advancement of product design may cause changes to your machine which may not be included in this publication. Whenever a question arises regarding your Caterpillar product or this publication, please consult your Caterpillar dealer for the latest available information.

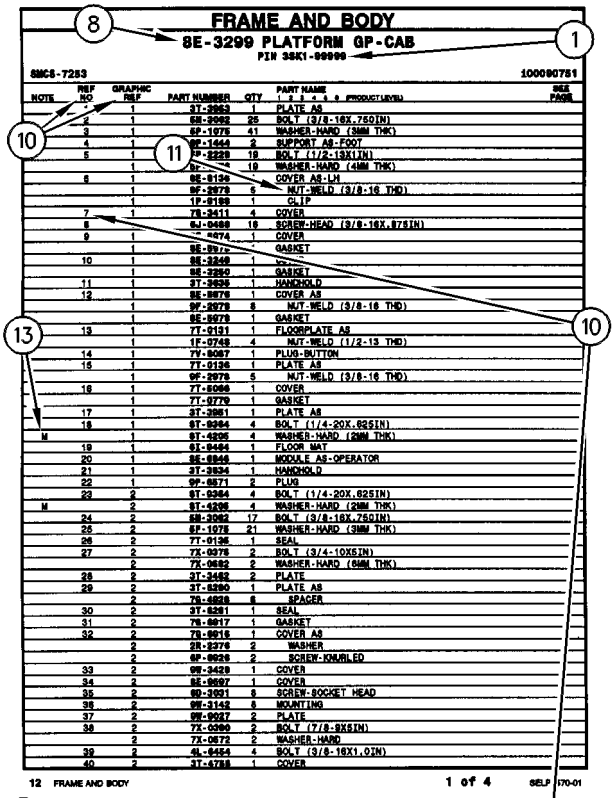

FRAME AND BODY

8E-3299 PLATFORM GP-CAB

PIN 3SK1-99999

SMCS-7283 100090751

NOTE	REF NO	GRAPHIC REF	PART NUMBER	QTY	PART NAME 1 2 3 4 5 6 (PRODUCT LEVEL)	SEE PAGE
	*	1	3T-3963	1	PLATE AS	
	2	1	6M-2062	25	BOLT (3/8-16X.750IN)	
	3	1	6P-1075	41	WASHER-HARD (3MM THK)	
	4	1	9E-1444	2	SUPPORT AS-FOOT	
	5	1	9P-2229	19	BOLT (1/2-13X1IN)	
		1	6P-[illegible]	19	WASHER-HARD (4MM THK)	
	6	1	9E-9139	*	COVER AS-LH	
		1	9F-2979	6	NUT-WELD (3/8-16 THD)	
		1	1P-0189	1	CLIP	
	7	1	7X-3411	4	COVER	
	8	1	6J-0468	18	SCREW-HEAD (3/8-16X.87SIN)	
	9	1	[illegible]-4074	1	COVER	
		1	9E-[illegible]	*	GASKET	
	10	1	9E-3249	1	[illegible]	
		1	9E-2260	1	GASKET	
	11	1	3T-3636	1	HANDHOLD	
	12	1	9E-9976	1	COVER AS	
		1	9F-2979	8	NUT-WELD (3/8-16 THD)	
		1	9E-9978	1	GASKET	
	13	1	7T-9131	1	FLOORPLATE AS	
		1	1F-0749	4	NUT-WELD (1/2-13 THD)	
	14	1	7Y-8067	1	PLUG-BUTTON	
	15	1	7T-0136	1	PLATE AS	
		1	9F-2979	5	NUT-WELD (3/8-16 THD)	
	16	1	7T-5066	1	COVER	
		1	7T-9779	1	GASKET	
	17	1	3T-3961	1	PLATE AS	
	18	1	9T-0264	4	BOLT (1/4-20X.62SIN)	
M		1	9T-4295	4	WASHER-HARD (2MM THK)	
	19	1	9X-9464	1	FLOOR MAT	
	20	1	9E-6946	1	MODULE AS-OPERATOR	
	21	1	3T-3934	1	HANDHOLD	
	22	1	9F-8871	2	PLUG	
	23	2	9T-0364	4	BOLT (1/4-20X.62SIN)	
M		2	9T-4295	4	WASHER-HARD (2MM THK)	
	24	2	6M-2062	17	BOLT (3/8-16X.75QIN)	
	25	2	6P-1075	21	WASHER-HARD (3MM THK)	
	26	2	7T-0136	1	SEAL	
	27	2	7X-0078	2	BOLT (3/4-10X5IN)	
		2	7X-0682	2	WASHER-HARD (6MM THK)	
	28	2	3T-3482	2	PLATE	
	29	2	3T-8290	1	PLATE AS	
		2	7X-4828	6	SPACER	
	30	2	3T-8281	1	SEAL	
	31	2	7X-8017	1	GASKET	
	32	2	7X-8016	1	COVER AS	
		2	5R-2276	2	WASHER	
		2	9F-9026	2	SCREW-KNURLED	
	33	2	9M-3429	1	COVER	
	34	2	8E-9697	1	COVER	
	35	2	9D-3091	8	SCREW-SOCKET HEAD	
	36	2	9M-3142	8	MOUNTING	
	37	2	9M-9017	2	PLATE	
	38	2	7X-0360	2	BOLT (7/8-9X5IN)	
		2	7X-0672	2	WASHER-HARD	
	39	2	4L-6454	4	BOLT (3/8-16X1.0IN)	
	40	2	3T-4788	1	COVER	

12 FRAME AND BODY 1 of 4 SELP4570-01

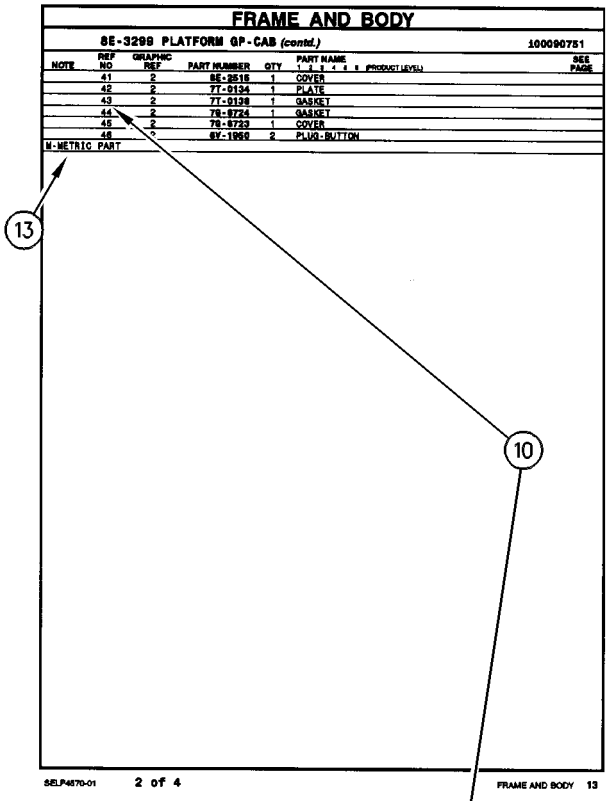

FRAME AND BODY

8E-3299 PLATFORM GP-CAB (contd.) 100090751

NOTE	REF NO	GRAPHIC REF	PART NUMBER	QTY	PART NAME 1 2 3 4 5 6 (PRODUCT LEVEL)	SEE PAGE
	41	2	8E-2515	1	COVER	
	42	2	7T-0134	1	PLATE	
	43	2	7T-0138	1	GASKET	
	44	2	7G-8724	1	GASKET	
	45	2	7G-8723	1	COVER	
	46	*	8Y-1950	2	PLUG-BUTTON	

M-METRIC PART

SELP4570-01 2 of 4 FRAME AND BODY 13

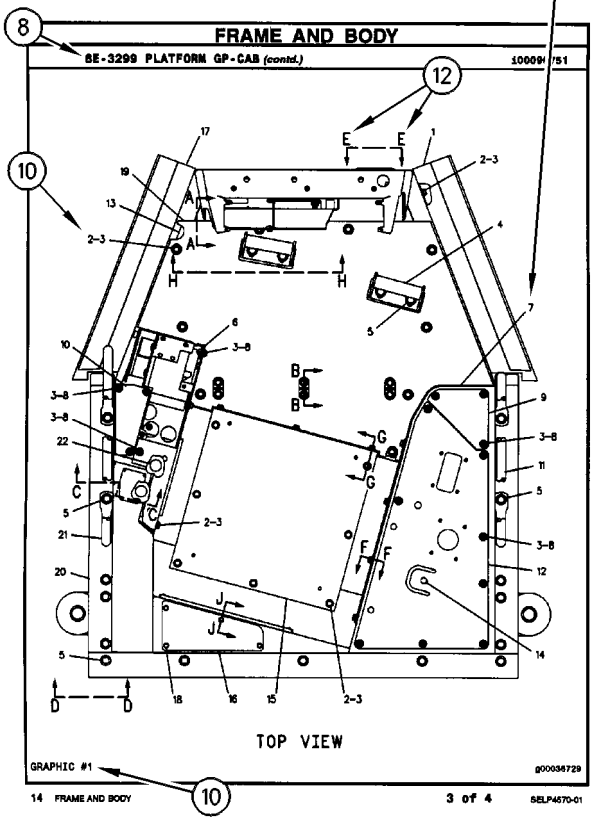

FRAME AND BODY

8E-3299 PLATFORM GP-CAB (contd.) 100090751

TOP VIEW

GRAPHIC #1 g00036729

14 FRAME AND BODY 3 of 4 SELP4570-01

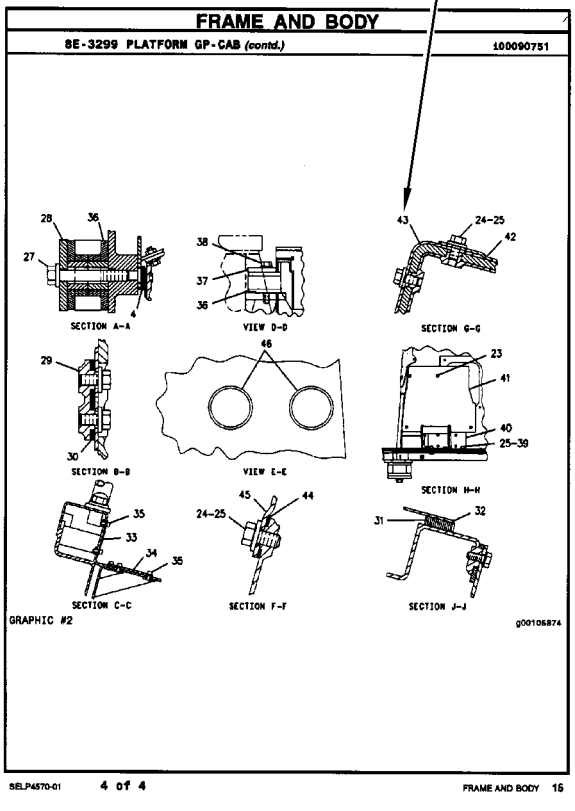

FRAME AND BODY

8E-3299 PLATFORM GP-CAB (contd.) 100090751

SECTION A-A

VIEW D-D

SECTION G-G

SECTION B-B

VIEW E-E

SECTION H-H

SECTION C-C

SECTION F-F

SECTION J-J

GRAPHIC #2 g00105874

SELP4570-01 4 of 4 FRAME AND BODY 15

REPAIR ALTERNATIVES

REMANUFACTURED COMPONENTS

As an option when making repairs consider Caterpillar Remanufactured Components. Components that are available through the Caterpillar Remanufactured Program are identified three ways in the parts book:

- with the letter R in the note field of the parts list
- with an R* at the beginning of the first line of the caption
- with an *R at the end of the first line of the caption

Typical components included in the Remanufacturing Program include:

ALTERNATORS
CONNECTING RODS
CRANKSHAFTS - UNDERSIZE
CRANKSHAFTS - UPGRADE TO NEW
CYLINDER HEADS
ELECTRONIC CONTROL MODULES (ECM)
ELECTRONIC SENSORS
FUEL INJECTORS
FUEL NOZZLES
FUEL PUMPS
GOVERNORS
OIL PUMPS
PISTONS
SHORT BLOCKS
STARTERS
TURBOCHARGERS - COMPLETE
TURBOCHARGER CARTRIDGES
WATER PUMPS

Caterpillar Remanufactured engines for many engine arrangements are also available.

SUPPLEMENTAL COOLANT ADDITIVES

CUSTOMER BENEFITS:

Protects against cavitation, foam, erosion, corrosion, and scale buildup in cooling systems.

- Provides measured coolant conditioner.

DESCRIPTION:

Additives deplete from the coolant with normal operation. For this reason, Supplemental Coolant Additives (SCA) must be added to all heavy duty coolants at regular intervals. In addition, when not using a fully formulated, pre-charged antifreeze, like Caterpillar's DEAC, an initial charge of SCA must be added to the cooling system. The amount of SCA added to the system is dependent on the capacity of the system.

The SCA for initial fill is provided as a liquid. SCA's for maintenance intervals are available in liquid form and as a spin-on element. (No Spin-on available for 3600 Family of Engines)

NOTE:

The amount of SCA added at initial fill is not the same as the amount added at maintenance intervals.

The coolant additive elements can be used with any ethylene or propylene glycol type antifreeze which meets ASTM D4985 or ASTM D5345 Specifications.

NOTE:

For use with standard heavy duty coolant only, not for use with Extended Life Coolant.

PARTS NEEDED:

Cooling System Capacity		Liquid SCA at Initial Fill	Liquid SCA at Maintenance*	Spin-on SCA Maintenance Element*
Liters	Gallons			
22-30	(6-8)	3P-2044 (1)	6V-3542 (1)	111-2370 (1)
30-38	(8-10)	3P-2044 (1) 6V-3542 (1)	111-2372 (1)	111-2369 (1)
38-49	(10-13)	3P-2044 (1) 8T-1589 (1)	111-2372 (1)	111-2369 (1)
49-64	(13-17)	3P-2044 (2)	8T-1589 (1)	9N-3368 (1)
64-83	(17-22)	3P-2044 (2) 8T-1589 (1)	111-2372 (1) 6V-3542 (1)	111-2371 (1)
83-114	(22-30)	3P-2044 (3) 8T-1589 (1)	3P-2044 (1)	9N-3718 (1)
114-163	(30-43)	3P-2044 (5)	3P-2044 (1) 6V-3542 (1)	111-2371 (2)
163-242	(43-64)	3P-2044 (8)	3P-2044 (2)	9N-3718 (2)

** Normal maintenance period is 250 hrs. See your Operation and Maintenance Manual for complete coolant maintenance instructions.*

( ) Indicates quantity required.

MAINTENANCE PARTS

DESCRIPTION	PART NUMBER	QTY	WHERE USED	PAGE
AIR INLET AND EXHAUST SYSTEM				
FILTER ELEMENT AS-AIR (PRIMARY)	110-6326	1	AIR CLEANER GP	54
FILTER ELEMENT AS-AIR (SECONDARY)	110-6331	1	AIR CLEANER GP	54
BASIC ENGINE				
CAP-OIL FILLER (ENGINE)	310-8798	1	COVER GP-VALVE MECHANISM	15
GASKET (VALVE MECHANISM)	233-5483	1	COVER GP-VALVE MECHANISM	15
V-BELT (WATER PUMP)	352-4169	1	V-BELT GP	36
COOLING SYSTEM				
CAP AS-RADIATOR	036-1865	1	RADIATOR & HYD OIL COOLER GP	49
CAP-VENTED (COOLANT RECOVERY)	169-6715	1	LINES GP-WATER	45
GASKET (WATER TEMPERATURE REGULATOR)	235-4959	1	HOUSING & REGULATOR GP	44
REGULATOR AS-WATER TEMPERATURE (THERMOSTAT)	235-4960	1	HOUSING & REGULATOR GP	44
ELECTRICAL AND STARTING SYSTEM				
BATTERY (12-VOLT, MAINTENANCE FREE)	230-6368	1	BATTERY & WIRING GP	75
BELT-DRIVE (WARNING BEACON)	9X-8139	1	LAMP GP-WARNING BEACON	92
		1	LAMP GP-WARNING BEACON	93
CAP AS	180-9900	1	WIRING GP-CAB	107
FLASHER AS (12-VOLT) (STOP LIGHT)	242-9000	1	LAMP GP-STOP & TAIL	91
		1	LIGHTING GP-ROADING	96
FUSE (10-AMPERE)	113-8490	7	WIRING GP-CAB	107
FUSE (100-AMPERE)	235-1845	1	WIRING GP-MACHINE	113
FUSE (15-AMPERE)	113-8491	10	WIRING GP-CAB	107
FUSE (20-AMPERE)	113-8492	2	WIRING GP-CAB	107
	267-2680	1	RELAY GP	99
		2	WIRING GP-CAB	107
FUSE (30-AMPERE)	124-3548	1	WIRING GP-CAB	107
FUSE (60-AMPERE)	267-2701	1	RELAY GP	99
FUSE AS (MAIN POWER)	258-4136	1	WIRING GP-CAB	107
FUSE AS (ROADING)	258-4134	1	LIGHTING GP-ROADING	96
GLOW PLUG	107-3659	4	GLOW PLUG GP	78
LAMP (12-VOLT, 21-WATT) (STOP LIGHT)	9W-3326	1	LAMP GP-STOP & TAIL	89
LAMP (12-VOLT, 21-WATT) (TURN SIGNAL)	9W-3326	1	LAMP GP-HEAD & SIGNAL	87
LAMP (12-VOLT, 4-WATT)	100-3246	1	LAMP GP-HEAD & SIGNAL	87
LAMP (12-VOLT, 5-WATT) (STOP, TAIL)	084-4348	1	LAMP GP-STOP & TAIL	88
		1	LAMP GP-STOP & TAIL	89
LAMP (12-VOLT, 55-WATT) (FLOODLIGHT)	9W-0607	1	LAMP GP-FLOOD	85
		1	LAMP GP-FLOOD	86
LAMP (12-VOLT, 55-WATT) (WARNING BEACON)	9X-8118	1	LAMP GP-WARNING BEACON	92
		1	LAMP GP-WARNING BEACON	93
LAMP-HEAD (12-VOLT, 60/55-WATT) (CLEAR)	9W-3324	1	LAMP GP-HEAD & SIGNAL	87

MAINTENANCE PARTS

DESCRIPTION	PART NUMBER	QTY	WHERE USED	PAGE
FRAME AND BODY				
FUSE AS (ROADING)	258-4134	1	KIT-ROADING CONVERSION	185
LAMP (12-VOLT, 10-WATT)	195-9712	1	KIT-ROADING CONVERSION	184
LAMP (12-VOLT, 10-WATT) (REGISTRATION PLATE)	195-9712	1	MOUNTING GP-REGISTRATION	189
PLUG-MAGNETIC (FRAME)	3S-9182	5	FRAME GP-LOADER	179
FUEL SYSTEM				
CAP-FUEL (FILLER) (WATER SEPARATOR)	304-3885	1	LINES GP-FUEL	65
HYDRAULIC SYSTEM				
BREATHER (INLINE) (HYDRAULIC OIL)	207-9729	1	TANK & MTG GP-HYDRAULIC	288
CAP AS-FILLER (HYDRAULIC TANK)	142-8937	1	TANK GP-HYDRAULIC	289
SCREEN (HYDRAULIC)	195-6768	1	LINES GP-PILOT	261
SCREEN-SUCTION (HYDRAULIC TANK)	348-4609	1	TANK GP-HYDRAULIC	289
LUBRICATION SYSTEM				
FILTER AS-ENGINE OIL	267-2528	1	FILTER GP-ENGINE OIL	38
OPERATOR STATION				
BLADE-WIPER (558-MM) (CAB DOOR)	320-1390	1	DOOR GP-CAB	498
BLADE-WIPER (558-MM) (FRONT, REAR)	320-1390	1	DOOR GP-CAB	496
FILTER ELEMENT-CAB AIR	231-8132	1	AIR CONDITIONER GP	461
		1	HEATER GP-CAB	510
	303-6658	1	AIR CONDITIONER GP	461
		1	HEATER GP-CAB	510
LAMP (12-VOLT) (DOME)	210-8754	1	PANEL GP-INSTRUMENT	525
LAMP (12-VOLT) (FUEL LEVEL INDICATOR)	7X-9065	1	PANEL GP-INSTRUMENT	526
LAMP AS (12-VOLT) (FLOODLIGHT)	330-8684	1	PANEL GP-INSTRUMENT	526
V-BELT (COMPRESSOR)	258-3539	1	COMPRESSOR GP-REFRIGERANT	474
POWER TRAIN				
FILTER-OIL (ADVANCED EFFICIENCY) (HYDRAULIC)	1G-8878	1	FILTER GP-OIL	128
WORK TOOLS				
CAP AS (WATER TANK)	192-2606	1	TANK GP-WATER	455
FUSE (10-AMPERE)	3K-8782	1	CONVERSION GP-WORK TOOL	406
SCREEN (WATER TANK)	119-1414	1	STRAINER GP-WATER	450

INDEX

Name	Page
A	
ACCESSORY GP-ENGINE	11
ACCUMULATOR & MTG GP-HYDRAULIC	193
ACCUMULATOR GP-HYDRAULIC–CHARGED	194
ACCUMULATOR GP-HYDRAULIC–UNCHARGED	195
ACCUMULATOR GP-REFRIGERANT–CHARGED	458
ACCUMULATOR GP-REFRIGERANT–UNCHARGED	457
ADAPTER GP-OIL LINE	196
AIR CLEANER GP	52
	53
	54
AIR CONDITIONER & MOUNTING GP	459
AIR CONDITIONER AR	460
AIR CONDITIONER GP	461
ALTERNATOR GP-CHARGING	72
	74
ARM GP-MATERIAL HANDLING	301
ARM GP-WINDOW WIPER	463
ARMREST & MOUNTING GP	464
ARMREST GP	465
AXLE GP	118
	119
B	
BATTERY & WIRING GP	75
BATTERY (12-VOLT, MAINTENANCE FREE)	75
BEARING GP-MAIN	12
BELT-DRIVE (WARNING BEACON)	92
	93
BLADE AR–ANGLING	302
	303
	304
BLADE AS-ANGLING	305
	306
	307
	308
BLADE GP-ANGLING	309
	310
	311
	312
BLADE GP-MULTIPURPOSE BUCKET	313
	314
	315
	316
	317
	318
	319
	320
	321
	322
BLADE-WIPER (558-MM) (CAB DOOR)	498
BLADE-WIPER (558-MM) (FRONT, REAR)	496
BOX GP-STORAGE	467
BOX GP-STORAGE–LITERATURE	468
BRACKET GP-SUPPORT	300
BREATHER (INLINE) (HYDRAULIC OIL)	288
BUCKET AR-DIRT	323
	324
BUCKET AR-GENERAL PURPOSE	324
	325
	326
BUCKET AR-GRAPPLE	326
	327
	329
	330
	331
BUCKET AR-GRAPPLE–INDUSTRIAL	327
	328
BUCKET AR-LIGHT MATERIAL	332
BUCKET AR-MULTIPURPOSE	333
	334
	335
	336
BUCKET AR-UTILITY	336
	337
BUCKET AS-DIRT	338
	339
	340
	341
	342
	343
	344
	345
	346
	347
	348
	349
	350
BUCKET AS-GENERAL PURPOSE	351
	352
	353
	354
	355
	356
	357
	358
BUCKET AS-GENERAL PURPOSE–HIGH CAPACITY	359
	360
BUCKET AS-GRAPPLE	361
	362
	363
	364
	365

INDEX

Name	Page
	366
BUCKET AS-GRAPPLE–INDUSTRIAL	367
	368
BUCKET AS-LIGHT MATERIAL	369
	370
	371
	372
	373
	374
	375
	376
BUCKET AS-UTILITY	377
	378
	379
BUCKET GP-DIRT	380
	381
	382
BUCKET GP-GENERAL PURPOSE	383
BUCKET GP-GRAPPLE	384
	385
	386
	389
	390
BUCKET GP-GRAPPLE–INDUSTRIAL	387
	388
BUCKET GP-MULTIPURPOSE	391
	392
	393
	394
	395
BUCKET GP-UTILITY	396
	397
	398
BUMPER GP	168

C

CAB AR	469
CAB AR-ENCLOSED ROPS–MECH SUSP SEAT	469
CAB AR-ENCLOSED ROPS–MECH SUSP SEAT & A/C	469
CAB AR-OPEN ROPS	470
CAB AR-OPEN ROPS–MECH SUSP SEAT	470
CAB AS	471
CAB GP-ENCLOSED ROPS	472
CAMSHAFT GP	13
CAP AS	107
CAP AS (WATER TANK)	455
CAP AS-FILLER (HYDRAULIC TANK)	289
CAP AS-RADIATOR	49
CAP-FUEL (FILLER) (WATER SEPARATOR)	65
CAP-OIL FILLER (ENGINE)	15
CAP-SEAL (LOW SIDE CHARGE PORT)	517
CAP-VENTED (COOLANT RECOVERY)	45
CARRIAGE & FORK AR	399
CARRIAGE GP-FORK	400
CHASSIS AR	1
CLAM AS-MULTIPURPOSE BUCKET	401
	402
	403
	404
	405
COIL AS-SOLENOID (12-VOLT)	162
COMMON AR	1
COMPRESSOR GP-REFRIGERANT	474
COMPRESSOR GP-REFRIGERANT–AIR CONDITIONER	473
CONDENSER & MTG GP-REFRIGERANT	475
CONNECTING ROD GP	14
CONTROL AR-MACHINE	1
CONTROL AR-MACHINE–AUX PROPORTIONAL FLOW, 1-SPEED	2
	3
CONTROL AR-MACHINE–AUX PROPORTIONAL FLOW, 2-SPEED	2
CONTROL AR-MACHINE–ON, OFF AUXILIARY CONTROL, 1-SPEED	2
CONTROL GP-GOVERNOR	64
CONTROL GP-HANDLE	480
CONTROL GP-HANDLE–DIRECTION, SPEED	476
CONTROL GP-HANDLE–LH	478
	479
CONTROL GP-HANDLE–RH	480
CONTROL GP-HANDLE–WORK TOOL	477
CONTROL GP-PARKING BRAKE	120
CONTROL GP-PARKING BRAKE–2-SPEED	122
CONTROL GP-PILOT OPERATED HYD	481
	483
	484
	485
	486
	487
	488
CONTROL GP-PILOT OPERATED HYD–AUXILIARY	482
CONTROL GP-UNPROGRAMMED (MACHINE)	77
CONVERSION AR-MACHINE	4
CONVERSION AR-MACHINE–GERMANY	5
	7
CONVERSION AR-MACHINE–NACD	6
CONVERSION AR-MACHINE–OUTSIDE NACD	3
CONVERSION GP-ROADING–GERMANY	169
CONVERSION GP-ROADING–ITALY	170
	171
CONVERSION GP-WORK TOOL–KIT, HIGH FLOW	406

INDEX

Name	Page
COOLER GP-ENGINE OIL	42
COUNTERWEIGHT GP	172
COUPLER AR-QUICK–HYDRAULIC	407
COUPLER AR-QUICK–MANUAL	407
COUPLER GP-QUICK–HYDRAULIC	409
COUPLER GP-QUICK–MECHANICAL	408
COVER GP-ACCESS	461
	510
COVER GP-CONSOLE– WITHOUT AIR CONDITIONER, HEATER	489
COVER GP-LINES	410
COVER GP-VALVE MECHANISM	15
CRANKSHAFT GP	16
CYLINDER & LINK GP-COUPLER–LH	411
CYLINDER & LINK GP-COUPLER–RH	412
CYLINDER & MTG GP-ANGLE BLADE	197
	198
CYLINDER & MTG GP-LIFT ARM	199
CYLINDER BLOCK GP	17
CYLINDER GP-BUCKET	201
	202
CYLINDER GP-GRAPPLE–INDUSTRIAL	204
CYLINDER GP-GRAPPLE–UTILITY	203
CYLINDER GP-HYDRAULIC–ANGLE BLADE	206
	207
CYLINDER GP-HYDRAULIC–BUCKET	209
CYLINDER GP-HYDRAULIC–COUPLER	205
CYLINDER GP-HYDRAULIC–TILT	208
CYLINDER GP-LIFT	210
CYLINDER GP-TILT–LH	213
CYLINDER GP-TILT–RH	211
CYLINDER HEAD GP	19

D

DOOR & MTG GP-CAB–GLASS	493
DOOR & MTG GP-CAB–POLYCARBONATE	490
DOOR GP-CAB–GLASS	495
	496
DOOR GP-CAB–POLYCARBONATE	498
	500
DRAIN GP-COOLANT	43
DRAIN GP-ENGINE OIL	20
DRIVE GP-TANDEM	124
DUCT GP-CAB AIR	501

E

EDGE GP-BIT & CUTTING	413
EDGE GP-CUTTING	332
	413
	414
	415
	416
	417
	418
	419
	420
ELECTRONICS GP-MACHINE	77
ENCLOSURE GP-ENGINE	173
ENGINE AR-PRIMARY	8
	9

F

FAN GP-BLOWER	49
FASTENER GP-FRONT COVER	26
FILM (FOPS)	505
FILM (POWER DISTRIBUTION)	107
FILM (REFLECTIVE)	442
FILM (TEMPERATURE CONTROL)	461
	510
FILM GP	553
FILM GP–TWO SPEED	555
FILM GP–UN	551
FILM-IDENTIFICATION (13-KM/H)	5
	183
FILM-IDENTIFICATION (20-KM/H)	7
	183
FILM-IDENTIFICATION (FUSE, RELAY PANEL)	108
FILM-IDENTIFICATION (POWER RECEPTACLE, 12-VOLT)	561
	564
FILM-INFORMATION (LIFT EYE LOCATION)	187
FILM-INFORMATION (TIE-DOWN LOCATION)	301
FILM-INSTRUCTION (DASH)	526
FILM-INSTRUCTION (INSTRUMENT PANEL)	526
FILM-INSTRUCTION (KEY SWITCH)	526
FILM-INSTRUCTION (MACHINE CONTROL, READ OMM)	483
	484
	485
	486
	487
	488
FILM-INSTRUCTION (MACHINE CONTROLS)	481
	482
FILM-INSTRUCTION (NO STEP)	216
	237
	240
	243
	557
FILM-INSTRUCTION (PULL RING, ALTERNATE EXIT)	500
	545
FILM-STRIPE (REFLECTIVE, RED, WHITE)	442
FILM-WARNING (CRUSH HAZARD)	388
	423
	424

INDEX

Name	Page
	430
	432
	433
FILM-WARNING (CRUSH HAZARD, STAY BACK)	281
	401
	402
	403
	404
	435
	557
	561
	564
FILM-WARNING (CRUSH HAZARD, STAY BACK, U.S.)	557
FILM-WARNING (JUMP START, READ OMM, INTL)	564
FILM-WARNING (STEERING)	169
	183
FILTER & LINES GP-HYDRAULIC	125
FILTER AS-ENGINE OIL	38
FILTER ELEMENT AS-AIR (PRIMARY)	54
FILTER ELEMENT AS-AIR (SECONDARY)	54
FILTER ELEMENT-CAB AIR	461
	510
FILTER GP-ENGINE OIL	38
FILTER GP-OIL–HYDRAULIC	128
FILTER-OIL (ADVANCED EFFICIENCY) (HYDRAULIC)	128
FITTING GP	129
	131
FITTING GP (RETURN MANIFOLD)	263
FITTING GP-HYDRAULIC	263
FLASHER AS (12-VOLT) (STOP LIGHT)	91
	96
FLOOR MAT	1
FLYWHEEL GP	21
FORK AR-GRAPPLE–INDUSTRIAL	421
FORK AR-GRAPPLE–UTILITY	421
FORK GP-GRAPPLE	422
FORK GP-GRAPPLE–INDUSTRIAL	423
FORK GP-GRAPPLE–UTILITY	424
FORK GP-PALLET	425
	426
	427
FORK GP-PALLET–KIT	428
FORK GP-UTILITY	429
	430
FRAME AS-LOWER	175
FRAME AS-UPPER	177
FRAME GP-BLADE	311
	431
FRAME GP-BLADE (WORK TOOL)	312
FRAME GP-FORK–INDUSTRIAL	432
	433
FRAME GP-LOADER	179
FRAME GP-MACHINE	181
FRAME GP-WINDOW–LH	504
FRAME GP-WINDOW–RH	503
FUSE (10-AMPERE)	107
	406
FUSE (100-AMPERE)	113
FUSE (15-AMPERE)	107
FUSE (20-AMPERE)	99
	107
FUSE (30-AMPERE)	107
FUSE (60-AMPERE)	99
FUSE AS (MAIN POWER)	107
FUSE AS (ROADING)	96
	185

G

GASKET (VALVE MECHANISM)	15
GASKET (WATER TEMPERATURE REGULATOR)	44
GAUGE GP-FUEL LEVEL	526
GAUGE GP-OIL LEVEL (DIPSTICK) (ENGINE)	30
GAUGE-SIGHT (COOLANT LEVEL)	49
GAUGE-SIGHT (HYDRAULIC TANK)	289
GEAR GP-FRONT	22
GLOW PLUG	78
GLOW PLUG GP	78
GRAPPLE & CYLINDER GP-UTILITY	434
GRAPPLE GP-UTILITY	435
GUARD GP-BELT	23
GUARD GP-ROPS/FOPS	505
GUIDE GP-LINES	182

H

HANDHOLD GP	506
HANDLE & PIN GP-COUPLER–LH	437
HANDLE & PIN GP-COUPLER–RH	436
HANDLE GP-MODULAR	478
	479
HANDLE GP-MODULAR–WORK TOOL	507
HARNESS AS-CAB (REAR)	107
HARNESS AS-CHASSIS (HORN)	112
HARNESS AS-ENGINE	110
HARNESS AS-HEATER & AIR COND	461
	510
	517
HARNESS AS-LIGHTING (REAR)	113
HARNESS AS-PANEL	525
HARNESS AS-PLATFORM	113
HARNESS AS-REAR LIGHTING	96
	185
HARNESS AS-REAR LIGHTING (RIGHT SIDE, LICENSE PLATE)	184

INDEX

Name	Page
HARNESS AS-REAR LIGHTING (RIGHT SIDE, LICENSE PLATE) (INDICATOR)	190
HARNESS AS-SOLENOID (DEMAND FAN)	116
HARNESS AS-SWITCH	125
HARNESS AS-SWITCH (REAR LIGHTS)	91, 96
HARNESS AS-WINDOW WIPER	490, 493, 496, 498
HARNESS AS-WIRING (SPEED SENSOR)	114
HARNESS AS-WORK TOOL	406
HARNESS AS-WORK TOOL (CONNECTING)	303, 304
HARNESS AS-WORK TOOL (LIFT ARM)	81, 83, 117
HARNESS AS-WORK TOOL (WATER TANK)	451
HEATER & MTG GP-CAB	508
HEATER AR-CAB	509
HEATER GP-CAB	510
HEATER GP-CAB–KIT	512
HEATER GP-JACKET WATER	79, 80
HEATER GP-JACKET WATER (120-VOLT, 530-WATT)	79
HEATER GP-JACKET WATER (240-VOLT, 530-WATT)	80
HOUSING & REGULATOR GP	44
HOUSING AS-SIDE– AIR CONDITIONER, HEATER	513
HOUSING GP-FLYWHEEL	24, 25
HOUSING GP-FRONT	26
HYDRAULIC AR	215
HYDRAULIC AR– WITH WORK TOOL POSITIONER	215

I

Name	Page
INDICATOR (AIR CLEANER)	53
INSTALLATION AR	514
INSTALLATION AR-ENGINE	10

K

Name	Page
KIT-ANGLE BLADE	438, 440
KIT-QUICK COUPLER CONVERSION– HYDRAULIC	216
KIT-ROADING CONVERSION–FRONT	185
KIT-ROADING CONVERSION–GERMANY	183
KIT-ROADING CONVERSION– ITALY, LIGHTS, SWITCHES	184
KIT-ROADING PLATE & MOUNTING– BUCKET	442
KIT-WORK TOOL WIRING	81, 83

L

Name	Page
LAMP (12-VOLT) (DOME)	525
LAMP (12-VOLT) (FUEL LEVEL INDICATOR)	526
LAMP (12-VOLT, 10-WATT)	184
LAMP (12-VOLT, 10-WATT) (REGISTRATION PLATE)	189
LAMP (12-VOLT, 21-WATT) (STOP LIGHT)	89
LAMP (12-VOLT, 21-WATT) (TURN SIGNAL)	87
LAMP (12-VOLT, 4-WATT)	87
LAMP (12-VOLT, 5-WATT) (STOP, TAIL)	88, 89
LAMP (12-VOLT, 55-WATT) (FLOODLIGHT)	85, 86
LAMP (12-VOLT, 55-WATT) (WARNING BEACON)	92, 93
LAMP AS (12-VOLT) (FLOODLIGHT)	526
LAMP GP-DOME (12-VOLT)	525
LAMP GP-FLOOD	85, 86
LAMP GP-HEAD & SIGNAL	87
LAMP GP-REGISTRATION PLATE	184, 189
LAMP GP-STOP & TAIL	88, 89
LAMP GP-STOP & TAIL–REAR	90, 91
LAMP GP-WARNING BEACON–AMBER	93
LAMP GP-WARNING BEACON– AMBER, MAGNETIC MOUNT, ROTATING	92
LAMP-HEAD (12-VOLT, 60/55-WATT) (CLEAR)	87
LEVER GP-GOVERNOR	515
LEVER GP-HAND CONTROL (GOVERNOR)	515
LIFTING GP-ENGINE	28
LIFTING GP-MACHINE–4-POINT	186
LIFTING GP-MACHINE–SINGLE POINT	187
LIGHTING GP-FLOOD–FRONT	95
LIGHTING GP-FLOOD–REAR	94
LIGHTING GP-ROADING	96
LIGHTING GP-WARNING BEACON	98
LINER GP-CAB	516
LINES GP-AIR	55, 56, 57
LINES GP-AIR CONDITIONER	517
LINES GP-BUCKET–INDUSTRIAL	219
LINES GP-BUCKET–MULTIPURPOSE	221, 223

INDEX

Name	Page
	225
	227
	231
LINES GP-BUCKET–UTILITY	229
LINES GP-CONNECTING	233
	235
LINES GP-COUPLER–HYDRAULIC	237
	240
	243
LINES GP-ENGINE OIL	39
LINES GP-FUEL	65
LINES GP-FUEL INJECTION	67
LINES GP-GRAPPLE	246
	248
	250
LINES GP-HEATER	519
LINES GP-HYDRAULIC OIL COOLER	252
LINES GP-HYDROSTATIC–AUX PROPORTIONAL FLOW, 1-SPEED	131
LINES GP-HYDROSTATIC–AUX PROPORTIONAL FLOW, 2-SPEED	129
LINES GP-LIFT CYLINDER–WITH WORK TOOL POSITIONER	254
LINES GP-LIFT CYLINDER–WITHOUT WORK TOOL POSITIONER	257
LINES GP-PILOT–DIRECTION, SPEED	259
LINES GP-PILOT–WORK TOOL	261
LINES GP-PUMP	263
LINES GP-TILT CYLINDER–WITH WORK TOOL POSITIONER	265
LINES GP-TILT CYLINDER–WITHOUT WORK TOOL POSITIONER	267
LINES GP-WATER	45
LINES GP-WORK TOOL	269
LINK GP-COUPLER	443
LITERATURE GP	1
LOCK GP (ENGINE)	173
LOCK GP-CYLINDER	467
LOCK GP-QUICK COUPLER–LH	446
LOCK GP-QUICK COUPLER–MECHANICAL	444
LOCK GP-QUICK COUPLER–RH	445

M

MANIFOLD & MTG GP-CONTROL–ANGLING BLADE	271
MANIFOLD & SOLENOID GP-CONTROL	272
MANIFOLD & SOLENOID GP-CONTROL–PARKING BRAKE	133
MANIFOLD & SOLENOID GP-CONTROL–PARKING BRAKE, 2-SPEED	134
MANIFOLD GP-CONTROL–ANGLING BLADE	274
MANIFOLD GP-CONTROL–QUICK COUPLER	273
MANIFOLD GP-EXHAUST	58
MANIFOLD GP-INLET	59
MANIFOLD GP-RETURN	135
MIRROR & MTG GP-REAR VIEW–WITH ROADING LIGHT MOUNT	188
MIRROR GP-REAR VIEW	185
	188
	520
MODULE GP-WARNING INDICATOR	521
	522
MOTOR & MTG GP-HYDRAULIC FAN	276
	277
MOTOR & MTG GP-HYDROSTATIC	138
	139
MOTOR & MTG GP-HYDROSTATIC–2-SPEED	137
MOTOR AR-HYDRAULIC FAN–NACD	278
MOTOR AR-HYDRAULIC FAN–STANDARD	278
MOTOR GP-GEAR (FAN, DEMAND)	276
MOTOR GP-GEAR–HYDRAULIC FAN	279
MOTOR GP-PISTON–2-SPEED, LH	142
MOTOR GP-PISTON–2-SPEED, RH	144
MOTOR GP-PISTON–HYDROSTATIC	140
MOTOR GP-WINDOW WIPER	523
MOUNTING GP-CYLINDER	280
	281
	282
MOUNTING GP-CYLINDER–GRAPPLE BUCKET	283
MOUNTING GP-ENGINE	29
MOUNTING GP-LICENSE PLATE	189
	190
MOUNTING GP-PUMP	146
MOUNTING GP-REGISTRATION	190
MOUNTING GP-REGISTRATION–WITH WIRING & LIGHTS	189
MOUNTING GP-ROPS	524
MUFFLER & MOUNTING GP	60
MUFFLER GP	61

O

ORIFICE AS-AIR CONDITIONER	461

P

PADLOCK GP	169
	183
PAN GP-OIL	30
PANEL GP-INSTRUMENT	525
PANEL GP-SIDE	528
PANEL GP-SIDE–WITHOUT HEATER OR A/C	529
PEDAL GP-GOVERNOR	530
	531
PISTON GP	31
PLATE & FILM GP	556

INDEX

Name	Page
	557
	559
	561
PLATE & FILM GP–INTERNATIONAL	564
PLATE AS-FOPS	505
PLATFORM GP-OPERATOR	532
PLUG GP-ENGINE	32
	33
PLUG-MAGNETIC (FRAME)	179
POSITIONER GP-FORK	425
	426
	427
POWER TRAIN AR	147
PULLEY GP-CRANKSHAFT	34
PULLEY GP-WATER PUMP	35
PUMP & MTG GP-HYDROSTATIC–1-SPEED	148
PUMP & MTG GP-HYDROSTATIC–2-SPEED	149
PUMP & MTG GP-WORK TOOL	284
	285
PUMP GP-DIAPHRAGM (WATER TANK)	451
PUMP GP-ENGINE OIL	40
PUMP GP-FUEL INJECTION	69
PUMP GP-FUEL PRM & PRIM FILTER	71
PUMP GP-GEAR	287
PUMP GP-GEAR–WORK TOOL	286
PUMP GP-PISTON	150
	152
PUMP GP-WATER	47
	48

R

RADIATOR & HYD OIL COOLER GP	49
RECOVERY GP-COOLANT	45
REGULATOR AS-ALTERNATOR	72
REGULATOR AS-WATER TEMPERATURE (THERMOSTAT)	44
RELAY AS (12-VOLT) (AIR CONDITIONER, HEATER)	461
RELAY AS (12-VOLT) (BRAKE LIGHT)	184
RELAY AS (12-VOLT) (CAB)	108
RELAY AS (12-VOLT) (COLD START)	110
RELAY AS (12-VOLT) (HEATER)	510
RELAY AS (12-VOLT) (ROADING LIGHTING)	185
RELAY AS (12-VOLT) (START)	110
RELAY AS (12-VOLT) (STOP LIGHT)	96
	105
RELAY AS (12-VOLT) (WORK TOOL)	81
	83
	117
RELAY GP–MAIN POWER	99
ROTATING GP-PUMP (LH)	150
	152
ROTATING GP-PUMP (RH)	150
	152

S

SCREEN (HYDRAULIC)	261
SCREEN (WATER TANK)	450
SCREEN-SUCTION (HYDRAULIC TANK)	289
SEAL GP-CAB–DEBRIS BARRIER	533
SEAL-CRANKSHAFT (FRONT)	26
SEAT BELT GP–RETRACTABLE, 2-IN	537
	538
SEAT BELT GP–RETRACTABLE, 3-IN	535
	536
SEAT GP–STATIC	540
SEAT GP–SUSPENSION	539
SEAT GP-ADJUSTABLE	541
SENDER AS-FUEL LEVEL	179
SENSOR AS-TEMPERATURE (HYDRAULIC OIL)	289
SENSOR GP-TEMPERATURE (ENGINE COOLANT)	110
SERVICE GP-MACHINE	77
SOFTWARE GP-MACHINE	77
SOLENOID (COLD START ADVANCE)	69
SOLENOID (FUEL SHUTOFF)	69
SOLENOID AS (SWING BOOM, WORK TOOL)	274
SPRING AS-GAS	465
	505
SPRING AS-GAS (CAB DOOR)	490
	493
SPRING AS-GAS (CAB)	187
	542
SPRING AS-GAS (GRILL)	50
SPRING AS-GAS (LOCKING)	490
	493
SPRING AS-GAS (RADIATOR)	50
SPRING GP-BLADE	447
SPRING GP-GAS–CAB, DOOR	542
STARTING MOTOR GP-ELECTRIC	100
	102
STEP GP-MATERIAL HANDLING ARM	448
STOP GP-BUCKET–UTILITY	449
STRAINER GP-WATER	450
SUN VISOR	543
	544
SUPPORT GP-RADIATOR	50
SUPPRESSION GP-SOUND	191
	192
SWITCH (SEAT)	540
SWITCH AS (INTERLOCK)	465
SWITCH AS (SEAT)	541
SWITCH AS (STARTING MOTOR)(12-VOLT)	100
SWITCH AS-LIMIT	498
SWITCH AS-LIMIT (ENGINE START, HYD LOCKOUT)	496
SWITCH AS-PRESSURE (HYDRAULIC OIL)	128
SWITCH AS-PRESSURE (REFRIGERANT)	517

INDEX

Name	Page
SWITCH AS-ROCKER (AIR CONDITIONER)	461
SWITCH AS-ROCKER (ELECTRIC POWER, WORK TOOL)	81, 83, 117
SWITCH AS-ROCKER (FRONT WORK LIGHT)	525
SWITCH AS-ROCKER (HAZARD WARNING LIGHTS)	91, 96
SWITCH AS-ROCKER (INTERLOCK OVERRIDE)	525
SWITCH AS-ROCKER (PARKING BRAKE)	525
SWITCH AS-ROCKER (QUICK COUPLER)	216, 237, 240, 243
SWITCH AS-ROCKER (REAR WINDOW WASHER, WIPER)	496, 498
SWITCH AS-ROCKER (REAR WORK LAMPS)	94
SWITCH AS-ROCKER (ROADING LIGHTS)	96, 185
SWITCH AS-ROCKER (TURN SIGNAL)	91, 96
SWITCH AS-ROCKER (WARNING BEACON)	98, 170
SWITCH AS-ROCKER (WORK TOOL HYD PRESS RELEASE)	525
SWITCH AS-START (KEY)	525
SWITCH AS-TOGGLE (IDLE SPEED)	406
SWITCH GP-PRESSURE	104, 105
SWITCH GP-PRESSURE (BACKUP ALARM)	113
SWITCH GP-PRESSURE–BRAKE LIGHT	103
SWITCH GP-ROCKER (WORK TOOL POSITIONER)	254
SWITCH GP-ROCKER– WORK TOOL POSITIONER	106
SWITCH-OIL PRESS (ENGINE)	104
SWITCH-ROCKER (HEATER)	461, 510
SWITCH-TEMPERATURE (HVAC) (AIR CONDITIONER)	461

T

Name	Page
TANK & MTG GP-HYDRAULIC	288
TANK & MTG GP-WATER–KIT	451
TANK GP-HYDRAULIC	289
TANK GP-WATER	455
TINE GP	390
TIRE & RIM GP–HEAVY-DUTY, LH	156
TIRE & RIM GP–HEAVY-DUTY, RH	156
TIRE & RIM GP–LH	154
	155, 156, 157, 158, 159, 160
TIRE & RIM GP–RH	154, 155, 157, 158, 159, 160, 161
TOOTH GP-UNI	456
TURBOCHARGER GP	62

V

Name	Page
V-BELT (COMPRESSOR)	474
V-BELT (WATER PUMP)	36
V-BELT GP	36
VALVE & MTG GP-CONTROL	290
VALVE (PRESSURE RELIEF) (ENGINE OIL PRESSURE)	41
VALVE AS (REFRIGERANT, LOW SIDE) (REFRIGERANT, LOW SIDE)	517
VALVE AS-RELIEF (REFRIGERANT COMPRESSOR)	473
VALVE GP-CHECK	274
VALVE GP-CONTROL	291
VALVE GP-ENGINE OIL RELIEF	41
VALVE GP-FLUSHING (PISTON MOTOR)	142, 144
VALVE GP-PILOT	293, 295, 296
VALVE GP-RELIEF	298
VALVE GP-RELIEF (ANGLE BLADE)	438, 440
VALVE GP-RELIEF (CHARGE)	150, 152
VALVE GP-RELIEF (CROSSOVER)	150, 152
VALVE GP-RELIEF (GEAR MOTOR)	279
VALVE GP-RELIEF (LIFT)	291
VALVE GP-RELIEF (SWING BOOM, WORK TOOL)	274
VALVE GP-RELIEF (TILT, AUXILIARY)	291
VALVE GP-SHUTTLE (DIRECTION, SPEED)	295, 296
VALVE GP-SOLENOID	162, 299
VALVE GP-SOLENOID (12-VOLT) (ANGLE)	274
VALVE GP-SOLENOID (12-VOLT) (MODULATION, AUXILIARY CIRCUIT)	291

INDEX

Name	Page	Name	Page
VALVE GP-SOLENOID (12-VOLT) (QUICK COUPLER)	273		
VALVE GP-SOLENOID (12-VOLT) (TILT)	274		
VALVE GP-SOLENOID (12-VOLT) (WORK TOOL)	293 295 296		
VALVE GP-SOLENOID (MOTOR, 2-SPEED)	134		
VALVE GP-SOLENOID (PARKING BRAKE)	134		
VALVE GP-SOLENOID (REAR AXLE FAN UNLOADER)	276		
VALVE GP-SOLENOID–PARKING BRAKE	163		
VALVE GP-SPEED CONTROL (2-SPEED)	142 144		
VALVE GP-SPEED SENSING (PISTON PUMP)	150 152		
VALVE MECHANISM GP	37		
VISOR GP-CAB	543 544		

W

WHEEL & TIRE AR	164 166		
WHEEL & TIRE AR–HEAVY DUTY	164 165 166		
WHEEL & TIRE AR–SOLID	164 167		
WINDOW GP-CAB	545		
WINDOW GP-CAB–SIDE	546		
WINDOW GP-CAB–UPPER, RH	549		
WINDOW GP-CAB–UPPER,LH	547		
WIRING GP-CAB	107		
WIRING GP-ENGINE	110		
WIRING GP-HORN–WITH MOUNTING	112		
WIRING GP-MACHINE	113		
WIRING GP-MACHINE–DEMAND FAN	116		
WIRING GP-WORK TOOL	117		

MEMORANDA

MACHINE ARRANGEMENT

326-5410 CHASSIS AR

S/N: SRS1-UP

PART OF 326-5242 COMMON AR

SMCS-7000 **i03982012**

NOTE	PART NUMBER	QTY	PART NAME 1 2 3 4 5 6 (PRODUCT LEVEL)	SEE PAGE
Y	*261-6255*	1	AXLE GP	119
Y	*328-2278*	1	BATTERY & WIRING GP	75
Y	*326-5306*	1	BUMPER GP	168
Y	*218-5602*	1	CONTROL GP-GOVERNOR	64
Y	*326-5499*	1	CYLINDER & MTG GP-LIFT ARM	199
Y	*326-5609*	1	ENCLOSURE GP-ENGINE	173
Y	*326-5575*	1	FRAME GP-LOADER	179
Y	*156-9809*	1	GUIDE GP-LINES	182
Y	*218-6428*	1	PANEL GP-SIDE	528
Y	*326-5570*	1	PLATFORM GP-OPERATOR	532
Y	*328-2274*	1	WIRING GP-MACHINE	113

Y-SEPARATE ILLUSTRATION

<END>

326-5242 COMMON AR

S/N: SRS1-UP

SMCS-7000 **i03981989**

NOTE	PART NUMBER	QTY	PART NAME 1 2 3 4 5 6 (PRODUCT LEVEL)	SEE PAGE
Y	*326-5400*	1	CAB AR	469
Y	*326-5410*	1	CHASSIS AR	1
Y	*326-5251*	1	FILM GP	553
Y	*326-5730*	1	HYDRAULIC AR	215
Y	*326-5328*	1	INSTALLATION AR-ENGINE	10
Y	*326-5250*	1	POWER TRAIN AR	147
	6V-1970	1	LITERATURE GP	
	5P-7958	1	SLEEVE-CABLE SPLICE	
	5P-8500	2	KEY	
	218-5601	1	FLOOR MAT	

Y-SEPARATE ILLUSTRATION

<END>

326-5472 CONTROL AR-MACHINE

S/N: SRS1-UP

AN ATTACHMENT

SMCS-4062, 4284, 4351, 5059, 5705 **i03982696**

NOTE	PART NUMBER	QTY	PART NAME 1 2 3 4 5 6 (PRODUCT LEVEL)	SEE PAGE
Y	*326-5797*	1	CONTROL GP-PARKING BRAKE	122
Y	*326-5265*	1	CONTROL GP-PILOT OPERATED HYD (AUXILIARY)	482
Y	*326-5267*	1	CONTROL GP-PILOT OPERATED HYD (HYDROSTATIC)	483
Y	*356-1897*	1	FILM GP (TWO SPEED)	555
Y	*326-5701*	1	LINES GP-HYDROSTATIC	129
Y	*354-6539*	1	MOTOR & MTG GP-HYDROSTATIC	137
Y	*354-6541*	1	PUMP & MTG GP-HYDROSTATIC	149

Y-SEPARATE ILLUSTRATION

<END>

MACHINE ARRANGEMENT

326-5483 CONTROL AR-MACHINE–
AUX PROPORTIONAL FLOW, 2-SPEED
S/N: SRS1-UP
AN ATTACHMENT

SMCS-4062, 4284, 4351, 5059, 5705 **i03982699**

NOTE	PART NUMBER	QTY	PART NAME 1 2 3 4 5 6 (PRODUCT LEVEL)	SEE PAGE
Y	*326-5797*	1	CONTROL GP-PARKING BRAKE	122
Y	*326-5265*	1	CONTROL GP-PILOT OPERATED HYD (AUXILIARY)	482
Y	*326-5267*	1	CONTROL GP-PILOT OPERATED HYD (HYDROSTATIC)	483
Y	*356-1897*	1	FILM GP (TWO SPEED)	555
Y	*326-5701*	1	LINES GP-HYDROSTATIC	129
Y	*354-6539*	1	MOTOR & MTG GP-HYDROSTATIC	137
Y	*354-6541*	1	PUMP & MTG GP-HYDROSTATIC	149
Y	*328-2335*	1	WIRING GP-WORK TOOL	117
Y-SEPARATE ILLUSTRATION				

<END>

354-6536 CONTROL AR-MACHINE–
ON, OFF AUXILIARY CONTROL, 1-SPEED
S/N: SRS1-UP
AN ATTACHMENT

SMCS-4062, 4284, 4351, 5059, 5705 **i03984549**

NOTE	PART NUMBER	QTY	PART NAME 1 2 3 4 5 6 (PRODUCT LEVEL)	SEE PAGE
Y	*326-5790*	1	CONTROL GP-PARKING BRAKE	120
Y	*326-5264*	1	CONTROL GP-PILOT OPERATED HYD (AUXILIARY)	481
Y	*343-5543*	1	CONTROL GP-PILOT OPERATED HYD (HYDROSTATIC)	487
Y	*326-5742*	1	LINES GP-HYDROSTATIC (AUX PROPORTIONAL FLOW, 1-SPEED)	131
Y	*356-1938*	1	MOTOR & MTG GP-HYDROSTATIC	138
Y	*354-6540*	1	PUMP & MTG GP-HYDROSTATIC (1-SPEED)	148
Y-SEPARATE ILLUSTRATION				

<END>

354-6537 CONTROL AR-MACHINE–
AUX PROPORTIONAL FLOW, 1-SPEED
S/N: SRS1-UP
AN ATTACHMENT

SMCS-4062, 4284, 4351, 5059, 5705 **i04330450**

NOTE	PART NUMBER	QTY	PART NAME 1 2 3 4 5 6 (PRODUCT LEVEL)	SEE PAGE
Y	*326-5790*	1	CONTROL GP-PARKING BRAKE	120
Y	*326-5265*	1	CONTROL GP-PILOT OPERATED HYD (AUXILIARY)	482
Y	*343-5542*	1	CONTROL GP-PILOT OPERATED HYD (HYDROSTATIC)	485
Y	*326-5742*	1	LINES GP-HYDROSTATIC (AUX PROPORTIONAL FLOW, 1-SPEED)	131
Y	*356-1938*	1	MOTOR & MTG GP-HYDROSTATIC	138
			S/N: SRS1-543	
Y	*364-1338*	1	MOTOR & MTG GP-HYDROSTATIC	139
			S/N: SRS544-UP	
Y	*354-6540*	1	PUMP & MTG GP-HYDROSTATIC (1-SPEED)	148
Y-SEPARATE ILLUSTRATION				

<END>

MACHINE ARRANGEMENT

354-6538 CONTROL AR-MACHINE–AUX PROPORTIONAL FLOW, 1-SPEED

S/N: SRS1-UP

AN ATTACHMENT

SMCS-4062, 4284, 4351, 5059, 5705 **i03984551**

NOTE	PART NUMBER	QTY	PART NAME 1 2 3 4 5 6 (PRODUCT LEVEL)	SEE PAGE
Y	*326-5790*	1	CONTROL GP-PARKING BRAKE	120
Y	*326-5265*	1	CONTROL GP-PILOT OPERATED HYD (AUXILIARY)	482
Y	*326-5267*	1	CONTROL GP-PILOT OPERATED HYD (HYDROSTATIC)	483
Y	*326-5742*	1	LINES GP-HYDROSTATIC (AUX PROPORTIONAL FLOW, 1-SPEED)	131
Y	*356-1938*	1	MOTOR & MTG GP-HYDROSTATIC	138
Y	*354-6540*	1	PUMP & MTG GP-HYDROSTATIC (1-SPEED)	148
Y	*328-2335*	1	WIRING GP-WORK TOOL	117

Y-SEPARATE ILLUSTRATION

<END>

326-5280 CONVERSION AR-MACHINE–OUTSIDE NACD

S/N: SRS1-UP

AN ATTACHMENT

SMCS-7000 **i04295289**

NOTE	PART NUMBER	QTY	PART NAME 1 2 3 4 5 6 (PRODUCT LEVEL)	SEE PAGE
Y	*216-6146*	1	BOX GP-STORAGE	467
Y	*328-2344*	1	LAMP GP-STOP & TAIL (REAR)	90
Y	*188-0147*	1	LIFTING GP-MACHINE	186
Y	*258-2579*	1	MOTOR & MTG GP-HYDRAULIC FAN	276
Y	*272-3051*	1	MUFFLER GP	61
Y	*306-8137*	1	PUMP & MTG GP-WORK TOOL	285
Y	*326-5390*	1	SUPPRESSION GP-SOUND	191
Y	*374-6497*	1	SUPPRESSION GP-SOUND	192
Y	*230-3743*	1	WIRING GP-HORN (WITH MOUNTING)	112
Y	*328-2342*	1	WIRING GP-MACHINE (DEMAND FAN)	116

Y-SEPARATE ILLUSTRATION

<END>

326-5281 CONVERSION AR-MACHINE–OUTSIDE NACD

S/N: SRS1-UP

AN ATTACHMENT

SMCS-7000 **i04295290**

NOTE	PART NUMBER	QTY	PART NAME 1 2 3 4 5 6 (PRODUCT LEVEL)	SEE PAGE
Y	*216-6146*	1	BOX GP-STORAGE	467
Y	*328-2346*	1	LAMP GP-STOP & TAIL (REAR)	91
Y	*188-0147*	1	LIFTING GP-MACHINE	186
Y	*258-2579*	1	MOTOR & MTG GP-HYDRAULIC FAN	276
Y	*272-3051*	1	MUFFLER GP	61
Y	*306-8137*	1	PUMP & MTG GP-WORK TOOL	285
Y	*326-5390*	1	SUPPRESSION GP-SOUND	191
Y	*374-6497*	1	SUPPRESSION GP-SOUND	192
Y	*230-3743*	1	WIRING GP-HORN (WITH MOUNTING)	112
Y	*328-2342*	1	WIRING GP-MACHINE (DEMAND FAN)	116

Y-SEPARATE ILLUSTRATION

<END>

MACHINE ARRANGEMENT

326-5282 CONVERSION AR-MACHINE

S/N: SRS1-UP

AN ATTACHMENT

SMCS-7000 **i04295291**

NOTE	PART NUMBER	QTY	PART NAME 1 2 3 4 5 6 (PRODUCT LEVEL)	SEE PAGE
Y	*216-6146*	1	BOX GP-STORAGE	467
Y	*278-1293*	1	CONVERSION GP-ROADING (ITALY)	170
Y	**319-9480**	1	KIT-ROADING PLATE & MOUNTING (BUCKET)	442
Y	*188-0147*	1	LIFTING GP-MACHINE	186
Y	*328-2333*	1	LIGHTING GP-ROADING	96
Y	*175-4238*	1	LOCK GP-QUICK COUPLER (MECHANICAL)	444
Y	*238-7671*	1	MIRROR & MTG GP-REAR VIEW (WITH ROADING LIGHT MOUNT)	188
Y	*258-2579*	1	MOTOR & MTG GP-HYDRAULIC FAN	276
Y	*225-7963*	1	MOUNTING GP-REGISTRATION	190
Y	*272-3051*	1	MUFFLER GP	61
Y	*306-8137*	1	PUMP & MTG GP-WORK TOOL	285
Y	*326-5390*	1	SUPPRESSION GP-SOUND	191
Y	*374-6497*	1	SUPPRESSION GP-SOUND	192
Y	*328-2348*	1	SWITCH GP-PRESSURE (BRAKE LIGHT)	105
Y	*230-3743*	1	WIRING GP-HORN (WITH MOUNTING)	112
Y	*328-2342*	1	WIRING GP-MACHINE (DEMAND FAN)	116

Y-SEPARATE ILLUSTRATION

<END>

MACHINE ARRANGEMENT

326-5284 CONVERSION AR-MACHINE–GERMANY

S/N: SRS1-UP

AN ATTACHMENT

SMCS-7000 **i04295292**

NOTE	PART NUMBER	QTY	PART NAME 1 2 3 4 5 6 (PRODUCT LEVEL)	SEE PAGE
Y	*216-6146*	1	BOX GP-STORAGE	467
Y	*222-5695*	1	BRACKET GP-SUPPORT	300
Y	*278-1292*	1	CONVERSION GP-ROADING (GERMANY)	169
Y	**319-9480**	1	KIT-ROADING PLATE & MOUNTING (BUCKET)	442
Y	*188-0147*	1	LIFTING GP-MACHINE	186
Y	*328-2333*	1	LIGHTING GP-ROADING	96
Y	*175-4238*	1	LOCK GP-QUICK COUPLER (MECHANICAL)	444
Y	*238-7671*	1	MIRROR & MTG GP-REAR VIEW (WITH ROADING LIGHT MOUNT)	188
Y	*258-2579*	1	MOTOR & MTG GP-HYDRAULIC FAN	276
Y	*272-3051*	1	MUFFLER GP	61
Y	*306-8137*	1	PUMP & MTG GP-WORK TOOL	285
Y	*326-5390*	1	SUPPRESSION GP-SOUND	191
Y	*374-6497*	1	SUPPRESSION GP-SOUND	192
Y	*173-3022*	1	VISOR GP-CAB	544
Y	*230-3743*	1	WIRING GP-HORN (WITH MOUNTING)	112
Y	*328-2342*	1	WIRING GP-MACHINE (DEMAND FAN)	116
	233-5680	3	FILM-IDENTIFICATION (13-KM/H)	
			(1-FACING THE REAR OF THE MACHINE, ON THE ENGINE ENCLOSURE, THE LEFT EDGE OF THE FILM TO BE LOCATED 18-MM FROM THE	
			VERTICAL CENTERLINE OF THE MACHINE. THE BOTTOM EDGE OF THE FILM IS 5-MM ABOVE THE SEAM BETWEEN THE HOOD & DOOR	
			ASSEMBLY)	
			(1-FACING THE RIGHT SIDE OF THE MACHINE, LOCATED ON THE LOWER FRAME ASSEMBLY, THE RIGHT EDGE OF THE FILM IS TO BE	
			661-MM FROM THE FRONT EDGE OF THE LOWER FRAME ASSEMBY.	
			THE BOTTOM EDGE OF THE FILM IS 425-MM FROM THE BOTTOM EDGE OF THE LOWER FRAME ASSEMBLY)	
			(1-FACING THE LEFT SIDE OF THE MACHINE, LOCATED ON THE LOWER FRAME ASSEMBLY, THE RIGHT EDGE OF THE FILM IS TO BE 661-MM	
			FROM THE FRONT EDGE OF THE LOWER FRAME ASSEMBLY. THE BOTTOM EDGE OF HE FILM IS 425-MM FROM THE BOTTOM EDGE OF THE LOWER	
			FRAME ASSEMBLY)	

Y-SEPARATE ILLUSTRATION

<END>

MACHINE ARRANGEMENT

326-5300 CONVERSION AR-MACHINE–NACD

S/N: SRS1-UP

AN ATTACHMENT

SMCS-7000 **i03982670**

NOTE	PART NUMBER	QTY	PART NAME 1 2 3 4 5 6 (PRODUCT LEVEL)	SEE PAGE
Y	*328-2344*	1	LAMP GP-STOP & TAIL (REAR)	90
Y	*258-2462*	1	MUFFLER & MOUNTING GP	60
Y	*190-8084*	1	PUMP & MTG GP-WORK TOOL	284

Y-SEPARATE ILLUSTRATION

<END>

MACHINE ARRANGEMENT

356-1902 CONVERSION AR-MACHINE–GERMANY

S/N: SRS1-UP

AN ATTACHMENT

SMCS-7000 **i04295329**

NOTE	PART NUMBER	QTY	PART NAME 1 2 3 4 5 6 (PRODUCT LEVEL)	SEE PAGE
Y	*216-6146*	1	BOX GP-STORAGE	467
Y	*222-5695*	1	BRACKET GP-SUPPORT	300
Y	*278-1292*	1	CONVERSION GP-ROADING (GERMANY)	169
Y	**319-9480**	1	KIT-ROADING PLATE & MOUNTING (BUCKET)	442
Y	*188-0147*	1	LIFTING GP-MACHINE	186
Y	*328-2333*	1	LIGHTING GP-ROADING	96
Y	*175-4238*	1	LOCK GP-QUICK COUPLER (MECHANICAL)	444
Y	*238-7671*	1	MIRROR & MTG GP-REAR VIEW (WITH ROADING LIGHT MOUNT)	188
Y	*258-2579*	1	MOTOR & MTG GP-HYDRAULIC FAN	276
Y	*272-3051*	1	MUFFLER GP	61
Y	*306-8137*	1	PUMP & MTG GP-WORK TOOL	285
Y	*326-5390*	1	SUPPRESSION GP-SOUND	191
Y	*374-6497*	1	SUPPRESSION GP-SOUND	192
Y	*173-3022*	1	VISOR GP-CAB	544
Y	*230-3743*	1	WIRING GP-HORN (WITH MOUNTING)	112
Y	*328-2342*	1	WIRING GP-MACHINE (DEMAND FAN)	116
	117-6558	3	FILM-IDENTIFICATION (20-KM/H)	
			(1-FACING THE REAR OF THE MACHINE, ON THE ENGINE ENCLOSURE, THE LEFT EDGE OF THE FILM TO BE LOCATED 18-MM FROM THE	
			VERTICAL CENTERLINE OF THE MACHINE. THE BOTTOM EDGE OF THE FILM IS 5-MM ABOVE THE SEAM BETWEEN THE HOOD & DOOR	
			ASSEMBLY)	
			(1-FACING THE RIGHT SIDE OF THE MACHINE, LOCATED ON THE LOWER FRAME ASSEMBLY, THE RIGHT EDGE OF THE FILM IS TO BE	
			661-MM FROM THE FRONT EDGE OF THE LOWER FRAME ASSEMBY.	
			THE BOTTOM EDGE OF THE FILM IS 425-MM FROM THE BOTTOM EDGE OF THE LOWER FRAME ASSEMBLY)	
			(1-FACING THE LEFT SIDE OF THE MACHINE, LOCATED ON THE LOWER FRAME ASSEMBLY, THE RIGHT EDGE OF THE FILM IS TO BE 661-MM	
			FROM THE FRONT EDGE OF THE LOWER FRAME ASSEMBLY. THE BOTTOM EDGE OF THE FILM IS 425-MM FROM THE BOTTOM EDGE OF THE	
			LOWER FRAME ASSEMBLY)	

Y-SEPARATE ILLUSTRATION

<END>

ENGINE ARRANGEMENT

326-5240 ENGINE AR-PRIMARY

S/N: SRS1-UP

AN ATTACHMENT

SMCS-1000 **i03984172**

NOTE	PART NUMBER	QTY	PART NAME 1 2 3 4 5 6 (PRODUCT LEVEL)	SEE PAGE
Y	**332-8660**	1	ENGINE AR-PRIMARY	9

Y-SEPARATE ILLUSTRATION

ENGINE ARRANGEMENT

332-8660 ENGINE AR-PRIMARY

S/N: CYM1-UP
55 BRAKE KW (74 BHP) AT 2500 RPM
PART OF 326-5240 ENGINE AR-PRIMARY
AN ATTACHMENT

SMCS-1000 **i04373695**

NOTE	PART NUMBER	QTY	PART NAME 1 2 3 4 5 6 (PRODUCT LEVEL)	SEE PAGE
Y	*323-2009*	1	ACCESSORY GP-ENGINE	11
Y	*315-8353*	1	ALTERNATOR GP-CHARGING	74
Y	*292-4041*	1	BEARING GP-MAIN	12
Y	*315-8329*	1	CAMSHAFT GP	13
Y	*287-4033*	1	CONNECTING ROD GP	14
Y	*361-2880*	1	COOLER GP-ENGINE OIL	42
Y	*315-7762*	1	COVER GP-VALVE MECHANISM	15
Y	*314-9860*	1	CRANKSHAFT GP	16
Y	*330-7633*	1	CYLINDER BLOCK GP	17
Y	*233-5500*	1	CYLINDER HEAD GP	19
Y	*292-4040*	1	DRAIN GP-COOLANT	43
Y	*361-3334*	1	FILTER GP-ENGINE OIL	38
Y	*314-9861*	1	FLYWHEEL GP	21
Y	*315-7766*	1	GEAR GP-FRONT	22
Y	*235-5904*	1	GLOW PLUG GP	78
Y	*315-8355*	1	HOUSING & REGULATOR GP	44
Y	*361-2874*	1	HOUSING GP-FLYWHEEL	25
			S/N: CYM1-14968	
Y	*287-3357*	1	HOUSING GP-FLYWHEEL	24
			S/N: CYM14969-UP	
Y	*315-8336*	1	HOUSING GP-FRONT	26
Y	*315-7761*	1	LIFTING GP-ENGINE	28
Y	*247-6317*	1	LINES GP-AIR	55
Y	*315-7769*	1	LINES GP-AIR	56
Y	*287-5377*	1	LINES GP-ENGINE OIL	39
Y	*315-8350*	1	LINES GP-FUEL INJECTION	67
Y	*287-5323*	1	MANIFOLD GP-EXHAUST	58
Y	*335-5750*	1	MANIFOLD GP-INLET	59
Y	*363-3884*	1	PAN GP-OIL	30
Y	*315-8348*	1	PISTON GP	31
Y	*287-2922*	1	PLUG GP-ENGINE (CYLINDER BLOCK, LH)	32
Y	*287-2983*	1	PLUG GP-ENGINE (CYLINDER BLOCK, RH)	33
Y	*301-3396*	1	PULLEY GP-CRANKSHAFT	34
Y	*287-6114*	1	PULLEY GP-WATER PUMP	35
Y	*235-5895*	1	PUMP GP-ENGINE OIL	40
Y	*315-8352*	1	PUMP GP-FUEL INJECTION	69
Y	*287-6056*	1	PUMP GP-WATER	47
Y	*287-6181*	1	STARTING MOTOR GP-ELECTRIC	102
Y	*300-1071*	1	SWITCH GP-PRESSURE (ENGINE OIL)	104
Y	*315-7768*	1	TURBOCHARGER GP	62
Y	*287-6138*	1	V-BELT GP (WATER PUMP)	36
Y	*287-5665*	1	VALVE GP-ENGINE OIL RELIEF	41
Y	*235-5880*	1	VALVE MECHANISM GP	37

Y-SEPARATE ILLUSTRATION

ENGINE ARRANGEMENT

326-5328 INSTALLATION AR-ENGINE

S/N: SRS1-UP

PART OF 326-5242 COMMON AR

SMCS-1000 **i03982010**

NOTE	PART NUMBER	QTY	PART NAME 1 2 3 4 5 6 (PRODUCT LEVEL)	SEE PAGE
Y	*326-5330*	1	AIR CLEANER GP	52
Y	*326-5349*	1	DRAIN GP-ENGINE OIL	20
Y	*280-8407*	1	GUARD GP-BELT	23
Y	*326-5338*	1	LINES GP-AIR	57
Y	*326-5344*	1	LINES GP-FUEL	65
Y	*326-5340*	1	LINES GP-WATER	45
Y	*326-5329*	1	MOUNTING GP-ENGINE	29
Y	*218-0918*	1	MOUNTING GP-PUMP	146
Y	*326-5373*	1	RADIATOR & HYD OIL COOLER GP	49
Y	*280-8260*	1	SUPPORT GP-RADIATOR	50
Y	*328-2276*	1	WIRING GP-ENGINE	110

Y-SEPARATE ILLUSTRATION

BASIC ENGINE

323-2009 ACCESSORY GP-ENGINE

S/N: CYM1-UP

PART OF 332-8660 ENGINE AR-PRIMARY

AN ATTACHMENT

SMCS-1207, 1358, 1405, 1802 **i03637509**

NOTE	PART NUMBER	QTY	PART NAME 1 2 3 4 5 6 (PRODUCT LEVEL)	SEE PAGE
			AVAILABLE REPAIR KIT(S):	
	341-3561	1	KIT-GASKET	
			KIT HAS ALL SEALING GASKET FOR WHOLE ENGINE EXCEPT FOR FRONT AND REAR SEALS.	

<END>

BASIC ENGINE

292-4041 BEARING GP-MAIN

S/N: CYM1-UP
PART OF 332-8660 ENGINE AR-PRIMARY
AN ATTACHMENT

SMCS-1203 **i03790794**

NOTE	REF NO	GRAPHIC REF	PART NUMBER	QTY	PART NAME 1 2 3 4 5 6 (PRODUCT LEVEL)	SEE PAGE
	1	1	**103-9288**	3	PLATE-THRUST (STANDARD)	
AB		1	**103-9289**		PLATE-THRUST (0.15-MM OS)	
AB		1	**103-9290**		PLATE-THRUST (0.35-MM OS)	
	2	1	**233-5486**	1	BEARING-MAIN (STANDARD)	
AB		1	**294-4890**		KIT-BEARING (0.25-MM US)	
AB		1	**294-4891**		KIT-BEARING (0.5-MM US)	
AB		1	**294-4892**		KIT-BEARING (0.75-MM US)	

A-NOT PART OF THIS GROUP
B-USE AS REQUIRED

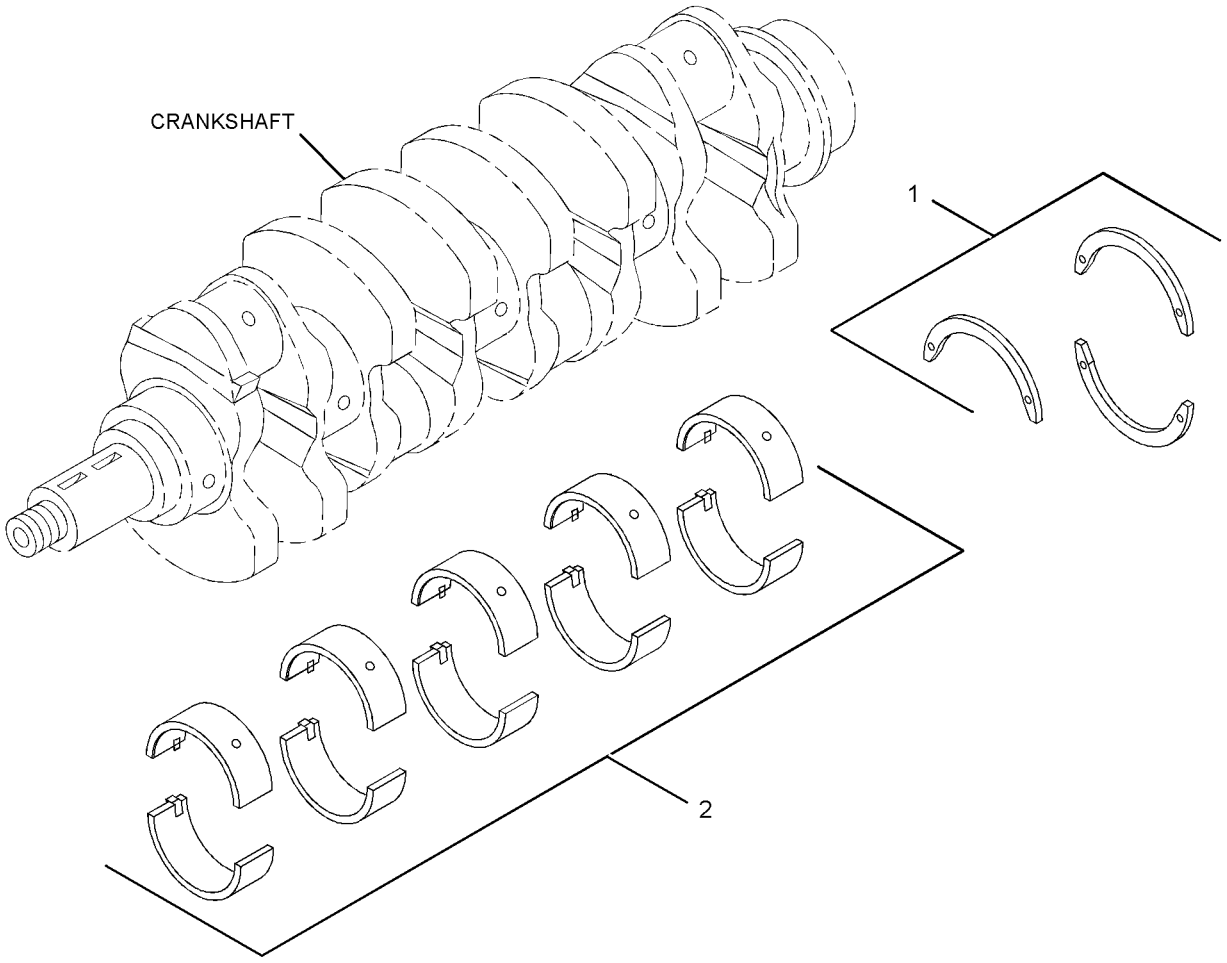

GRAPHIC #1 **<END>** g01379195

315-8329 CAMSHAFT GP

S/N: CYM1-UP
PART OF 332-8660 ENGINE AR-PRIMARY
AN ATTACHMENT

SMCS-1210, 1211, 1212 **i03606061**

NOTE	REF NO	GRAPHIC REF	PART NUMBER	QTY	PART NAME 1 2 3 4 5 6 (PRODUCT LEVEL)	SEE PAGE
	1	1	**3B-4505**	2	LOCKWASHER	
M	2	1	**8T-4200**	2	BOLT (M8X1.25X16-MM)	
	3	1	**094-4628**	1	KEY	
	4	1	**233-5485**	1	PLATE-THRUST	
	5	1	**103-9273**	8	PUSHROD	
	6	1	**103-9272**	8	TAPPET	
	7	1	**315-4664**	1	CAMSHAFT	

M-METRIC PART

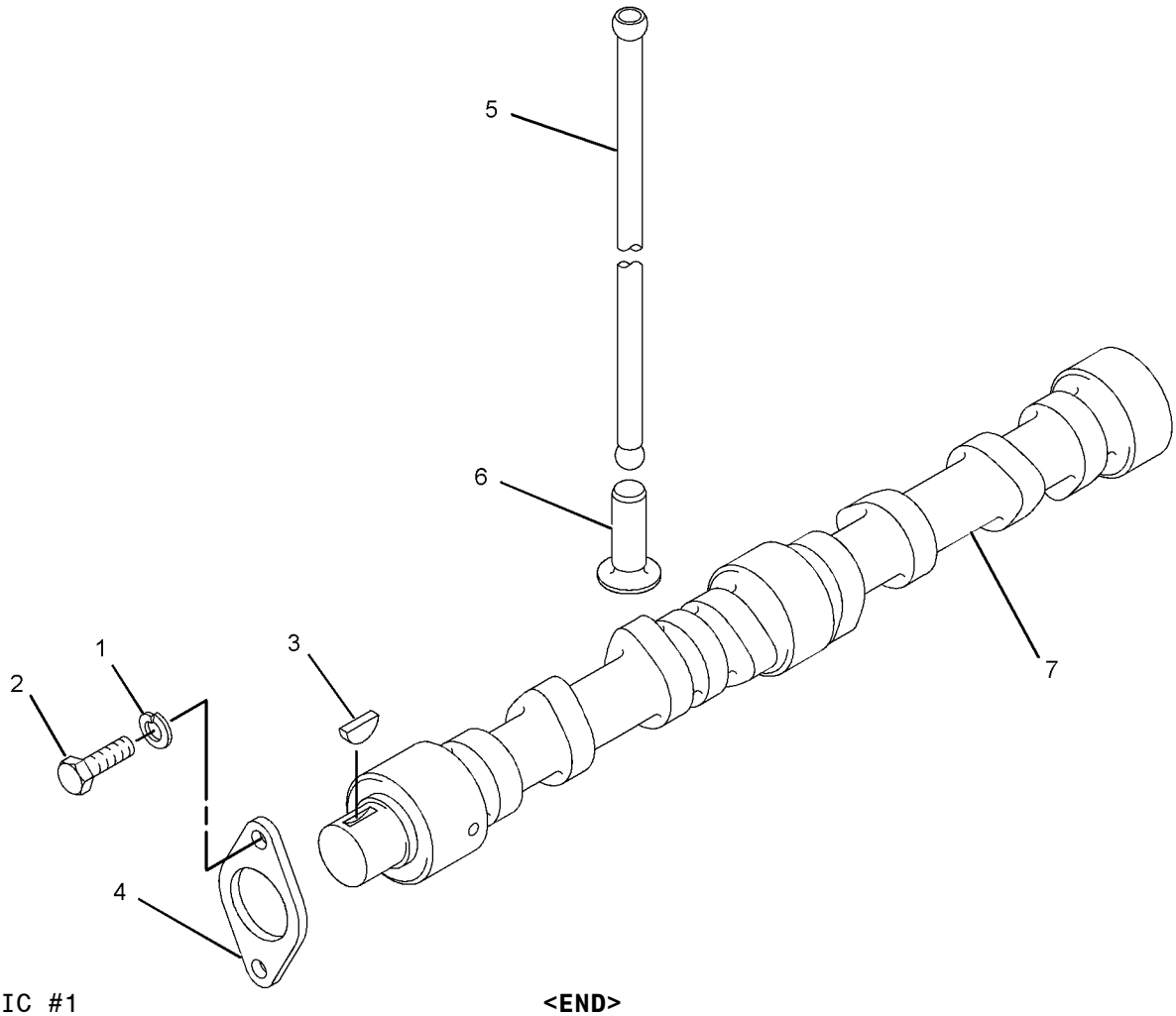

GRAPHIC #1 **<END>** g01448098

BASIC ENGINE

287-4033 CONNECTING ROD GP

S/N: CYM1-UP
PART OF 332-8660 ENGINE AR-PRIMARY
AN ATTACHMENT

SMCS-1218 **i03894132**

NOTE	REF NO	GRAPHIC REF	PART NUMBER	QTY	PART NAME 1 2 3 4 5 6 (PRODUCT LEVEL)	SEE PAGE
	1	1	**103-9680**	4	ROD AS-CONNECTING	
					(EACH INCLUDES)	
	1A	1	**128-2955**	2	BOLT-CONNECTING ROD	
	1B	1	**128-2956**	2	NUT	
	1C	1	**128-2958**	1	BUSHING	
	2	1	**238-8282**	1	SET-BEARING (STANDARD)	
					(INCLUDES A COMPLETE SET OF ROD BEARINGS)	
AB		1	**238-8283**		SET-BEARING (0.25-MM US)	
AB		1	**238-8284**		SET-BEARING (0.5-MM US)	
AB		1	**238-8285**		SET-BEARING (0.75-MM US)	

A-NOT PART OF THIS GROUP
B-USE AS REQUIRED

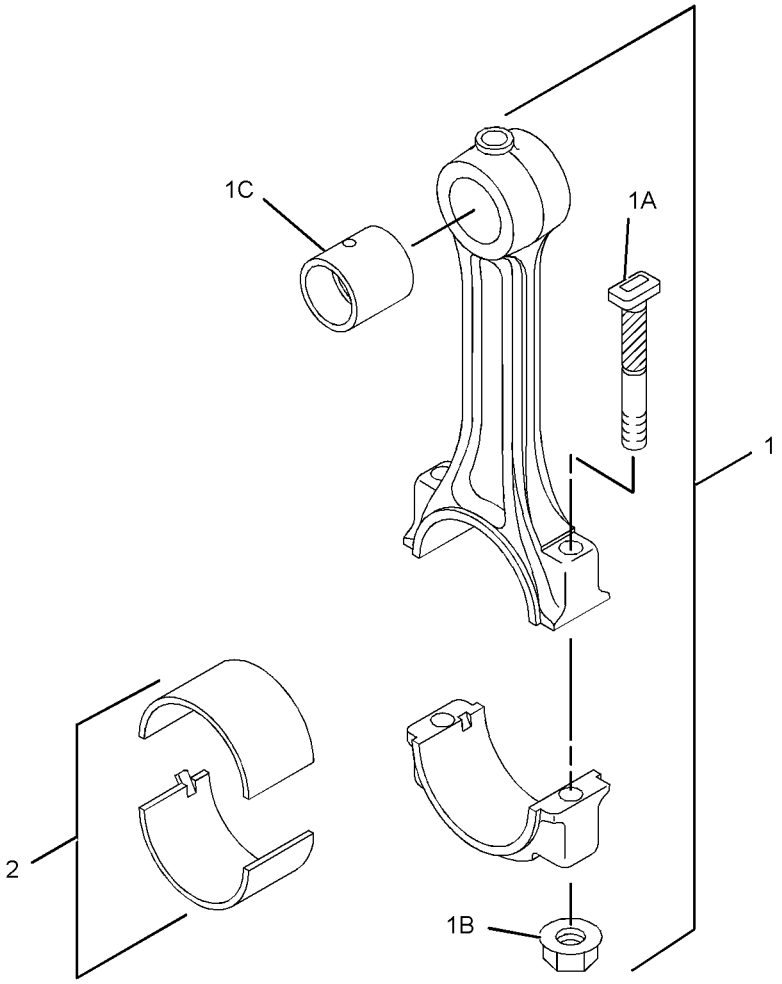

GRAPHIC #1 **<END>** g01380324

315-7762 COVER GP-VALVE MECHANISM

S/N: CYM1-UP
PART OF 332-8660 ENGINE AR-PRIMARY
AN ATTACHMENT

SMCS-1107 **i03649086**

NOTE	REF NO	GRAPHIC REF	PART NUMBER	QTY	PART NAME 1 2 3 4 5 6 (PRODUCT LEVEL)	SEE PAGE
	1	1	**3B-4505**	5	LOCKWASHER	
M	2	1	**099-3649**	5	BOLT (M8X1.25X40-MM)	
	3	1	**233-5483**	1	GASKET (VALVE MECHANISM)	
	4	1	**348-7676**	1	COVER-VALVE MECHANISM	
	5	1	**310-8798**	1	CAP-OIL FILLER (ENGINE)	

M-METRIC PART

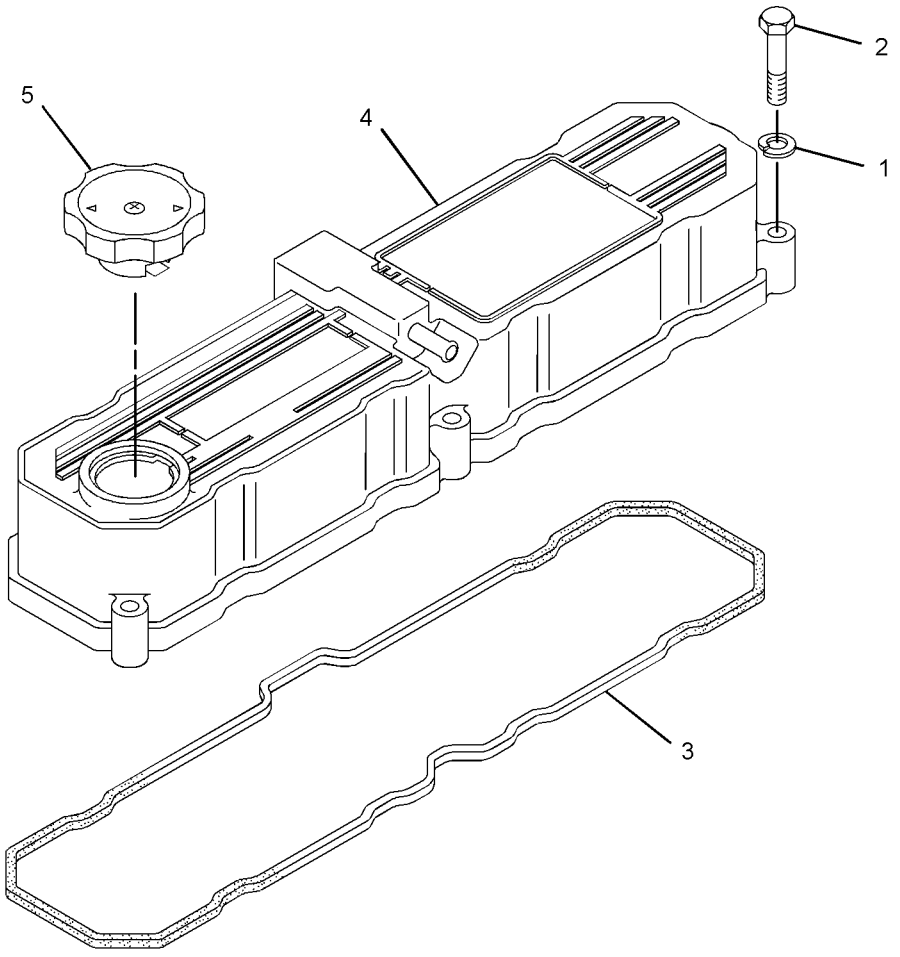

GRAPHIC #1 **<END>** g01400933

314-9860 CRANKSHAFT GP

S/N: CYM1-UP
PART OF 332-8660 ENGINE AR-PRIMARY
AN ATTACHMENT

SMCS-1202 **i02822912**

NOTE	REF NO	GRAPHIC REF	PART NUMBER	QTY	PART NAME 1 2 3 4 5 6 (PRODUCT LEVEL)	SEE PAGE
	1	1	**085-9513**	2	PIN	
	2	1	**094-4628**	2	KEY	
	3	1	**130-7596**	1	NUT	
	4	1	**294-7922**	1	CRANKSHAFT	

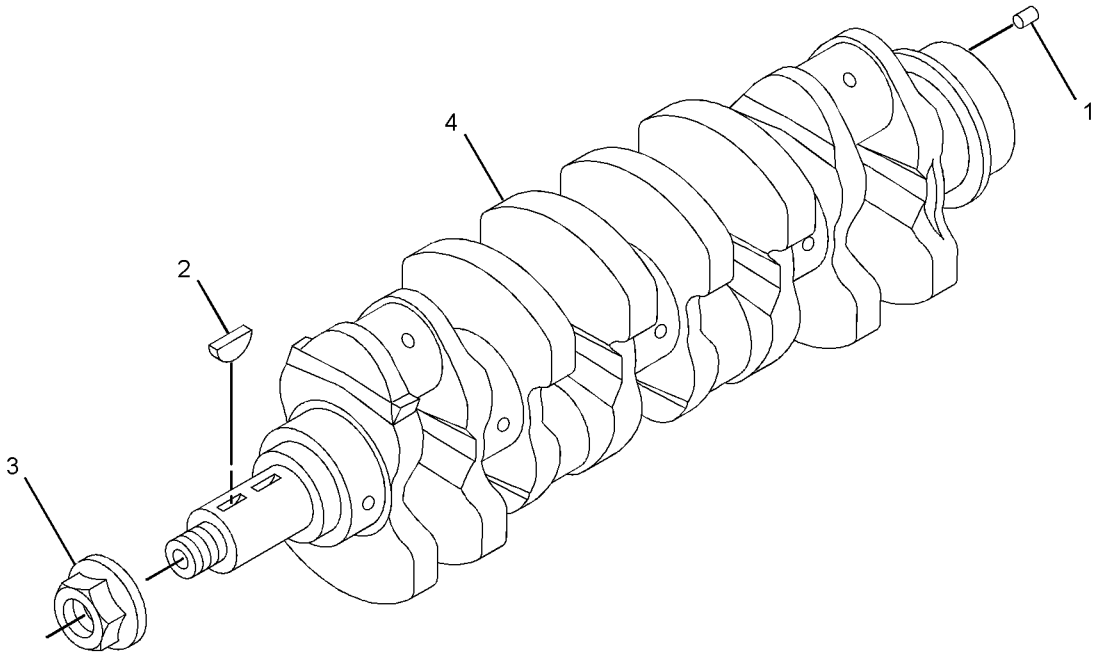

GRAPHIC #1 **<END>** g01392963

330-7633 CYLINDER BLOCK GP

S/N: CYM1-UP
PART OF 332-8660 ENGINE AR-PRIMARY
AN ATTACHMENT

SMCS-1201 **i03098184**

NOTE	REF NO	GRAPHIC REF	PART NUMBER	QTY	PART NAME 1 2 3 4 5 6 (PRODUCT LEVEL)	SEE PAGE
	1	1	**5I-7525**	1	PLUG	
	2	1	**096-3741**	5	CAP	
	3	1	**099-4420**	2	PIN	
	4	1	**103-9279**	2	SEAL-SIDE	
	5	1	**103-9703**	1	SHAFT-IDLER	
	6	1	**183-5916**	6	PIN-SPRING	
	7	1	**104-1218**	2	DOWEL	
	8	1	**233-5457**	4	ORIFICE-JET (OIL PISTON COOLING)	
	9	1	**233-5488**	2	PIN	
	10	1	**310-2682**	2	PLUG	
	11	1	**314-9938**	1	BUSHING	
	12	1	**330-7634**	1	CYLINDER BLOCK GP	
	12A	1	**3P-1896**	10	PLUG-CUP	
	12B	1	**096-3741**	5	CAP	
	12C	1	**103-9276**	10	BOLT	

330-7633 **CYLINDER BLOCK GP** *(contd.)* **i03098184**

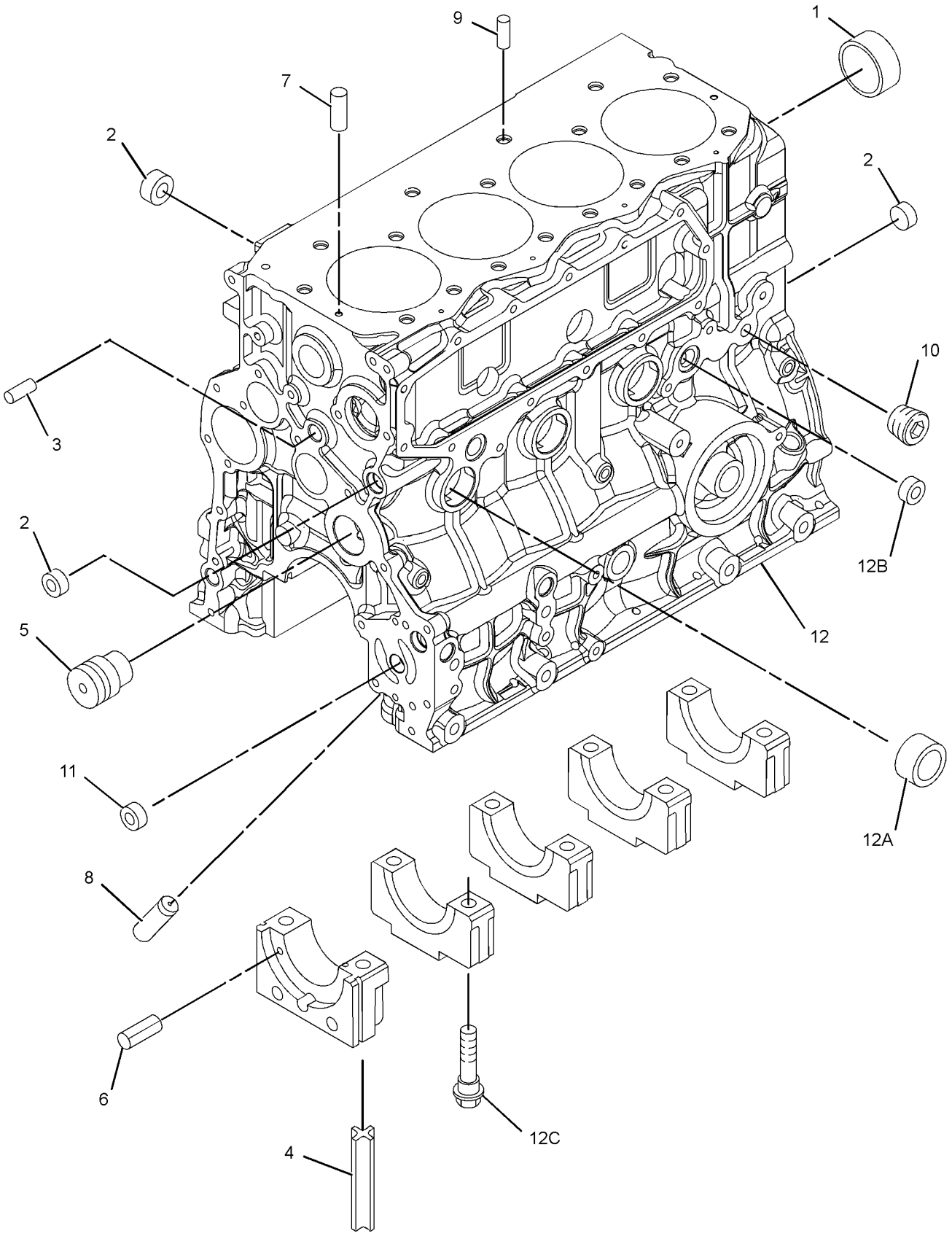

GRAPHIC #1 **<END>** g01562194

233-5500 CYLINDER HEAD GP

S/N: CYM1-UP
PART OF 332-8660 ENGINE AR-PRIMARY
AN ATTACHMENT

SMCS-1100, 1101, 1103, 1104, 1105, 1108, 1109, 1115, 1117, 1121, 1124, 1125

i03536270

NOTE	REF NO	GRAPHIC REF	PART NUMBER	QTY	PART NAME 1 2 3 4 5 6 (PRODUCT LEVEL)	SEE PAGE
	1	1	**103-9246**	17	BOLT-CYLINDER HEAD	
	2	1	**299-4645**	1	GASKET-HEAD	
C	3	1	**319-7263**	1	CYLINDER HEAD AS	
	4	1	**319-7262**	1	STUD	
	5	1	**103-9252**	4	SEAT-VALVE (INLET)	
	6	1	**103-9253**	4	SEAT-VALVE (EXHAUST)	
	7	1	**103-9247**	8	GUIDE-VALVE	

C-CHANGE FROM PREVIOUS TYPE

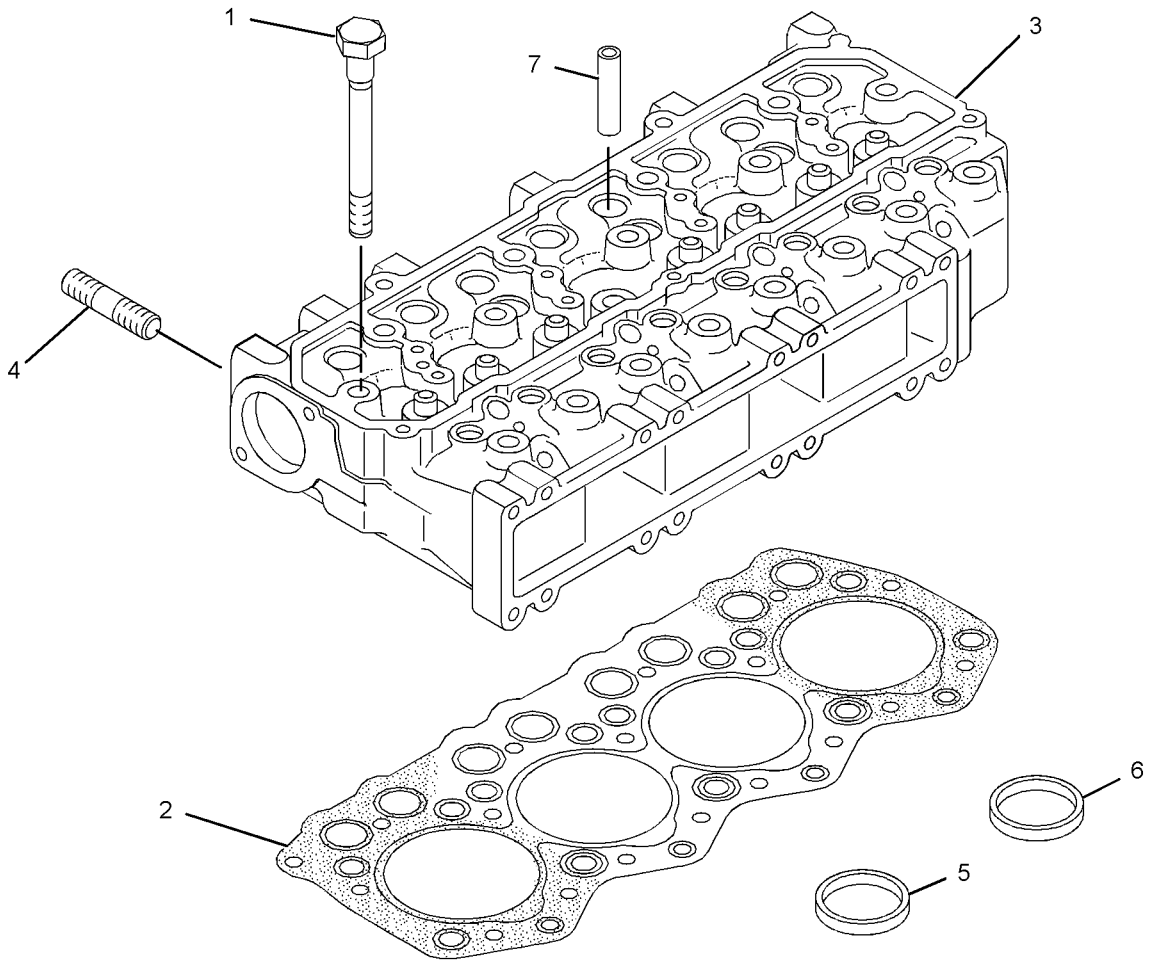

GRAPHIC #1

<END>

g01869753

326-5349 DRAIN GP-ENGINE OIL

S/N: SRS1-UP

PART OF 326-5328 INSTALLATION AR-ENGINE

SMCS-1302 **i03982092**

NOTE	REF NO	GRAPHIC REF	PART NUMBER	QTY	PART NAME 1 2 3 4 5 6 (PRODUCT LEVEL)	SEE PAGE
	1	1	**1P-4278**	1	CLAMP-HOSE	
	2	1	**110-2570**	1	CAP	
	3	1	**159-0186**	1	CLAMP-HOSE	
	4	1	**326-5336**	1	GUARD AS	
M	5	1	**8T-4179**	1	BOLT (M12X1.75X20-MM)	
M	6	1	**8T-4189**	1	BOLT (M8X1.25X20-MM)	
	7	1	**8T-4223**	1	WASHER-HARD (13.5X25.5X3-MM THK)	
	8	1	**8T-4224**	1	WASHER-HARD (8.8X16X2-MM THK)	
E	9	1	**146-7453**		HOSE (34-CM)	
E	10	1	**5P-1442**		HOSE (81-CM)	

E-ORDER BY THE CENTIMETER
M-METRIC PART

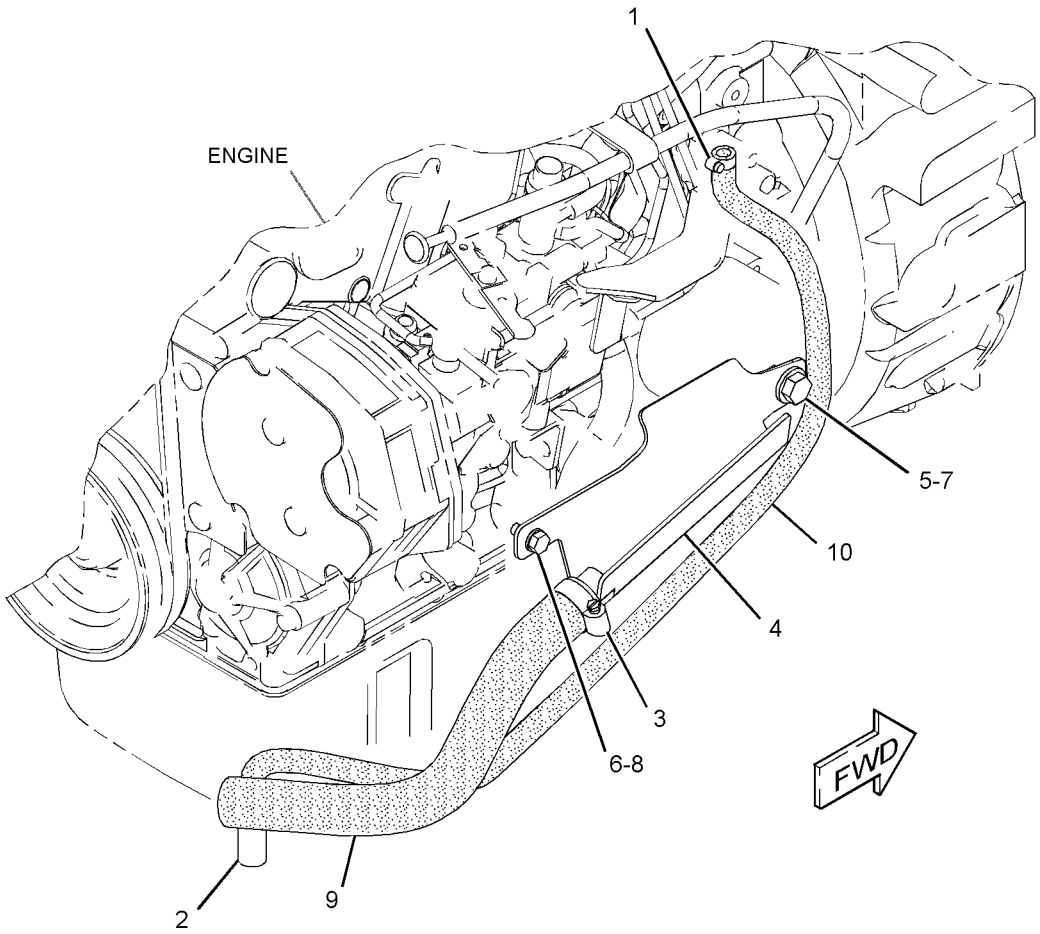

GRAPHIC #1 **<END>** g02173246

314-9861 FLYWHEEL GP

S/N: CYM1-UP
PART OF 332-8660 ENGINE AR-PRIMARY
AN ATTACHMENT

SMCS-1156, 1158 **i02824838**

NOTE	REF NO	GRAPHIC REF	PART NUMBER	QTY	PART NAME 1 2 3 4 5 6 (PRODUCT LEVEL)	SEE PAGE
M	1	1	**226-3693**	6	BOLT (M12X1.25X30-MM)	
	2	1	**234-4791**	1	FLYWHEEL AS	
	2A	1	**032-8139**	1	GEAR-STARTER (112-TEETH)	

M-METRIC PART

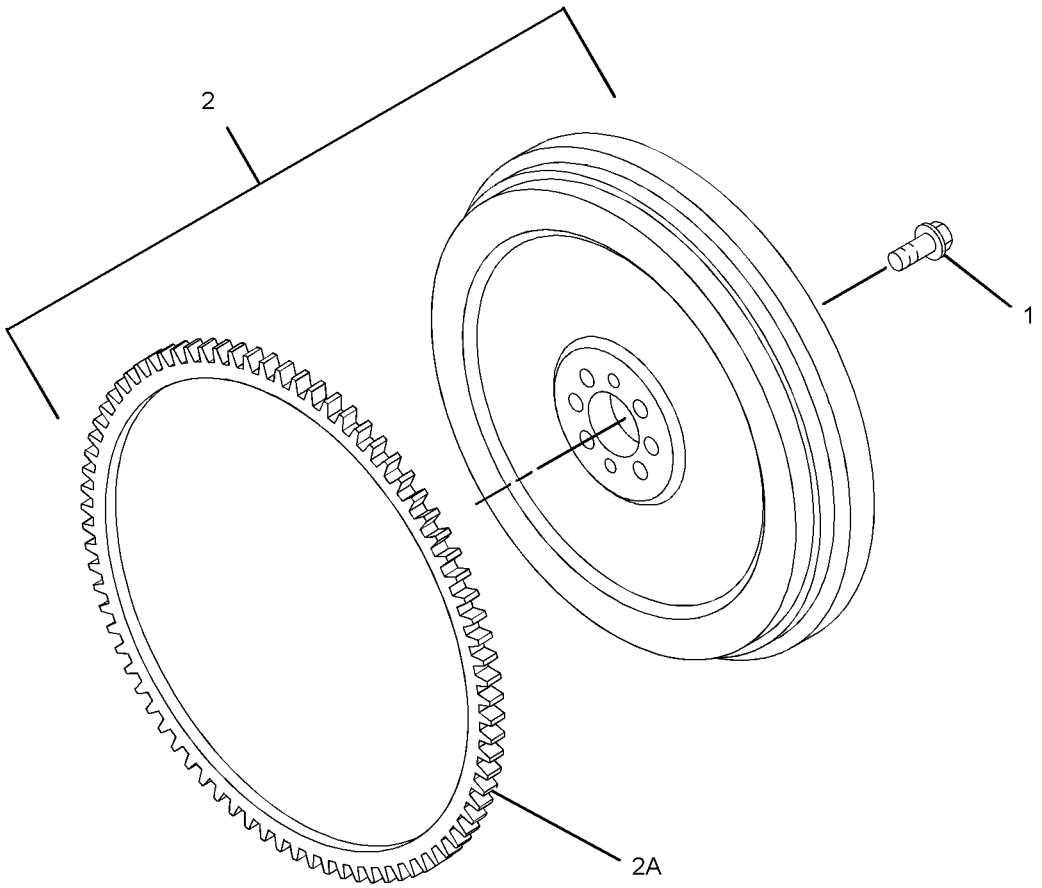

GRAPHIC #1 **<END>** g01394554

BASIC ENGINE

315-7766 GEAR GP-FRONT

S/N: CYM1-UP
PART OF 332-8660 ENGINE AR-PRIMARY
AN ATTACHMENT

SMCS-1206, 1212, 1234, 1288, 1313 **i04199430**

NOTE	REF NO	GRAPHIC REF	PART NUMBER	QTY	PART NAME 1 2 3 4 5 6 (PRODUCT LEVEL)	SEE PAGE
M	1	1	**5I-4936**	1	BOLT (M10X1.25X20-MM)	
	2	1	**5I-7543**	1	PLATE	
	3	1	**8T-4121**	1	WASHER-HARD (11X21X2.5-MM THK)	
	4	1	**117-2827**	1	GEAR (46-TEETH)	
	5	1	**117-2829**	1	GEAR (23-TEETH)	
	6	1	**117-3285**	1	GEAR-PUMP (OIL, 31-TEETH)	
	7	1	**239-4292**	1	GEAR	
	8	1	**322-3150**	1	GEAR-IDLER	

M-METRIC PART

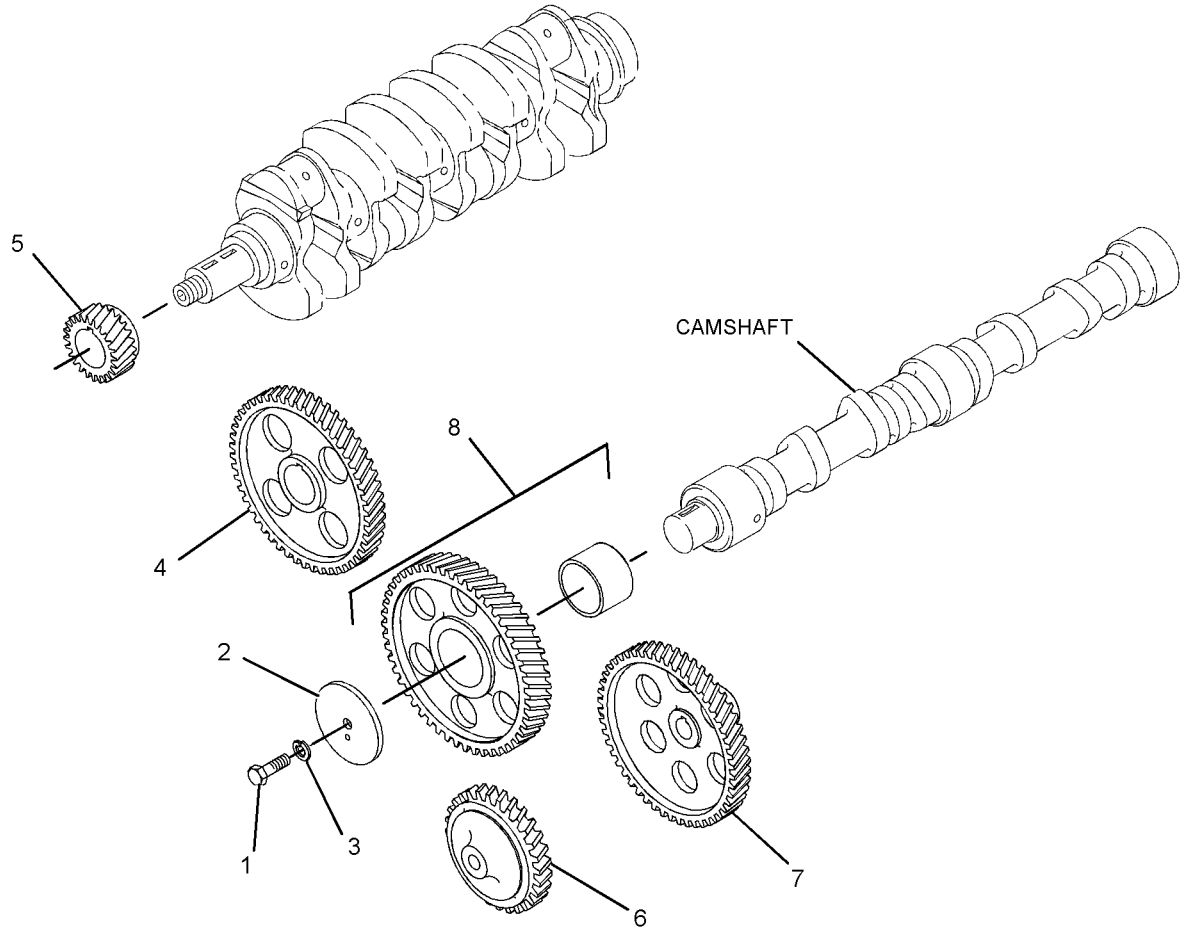

GRAPHIC #1 **<END>** g02395036

280-8407 GUARD GP-BELT

S/N: SRS1-UP

PART OF 326-5328 INSTALLATION AR-ENGINE

SMCS-7174 **i03902842**

NOTE	REF NO	GRAPHIC REF	PART NUMBER	QTY	PART NAME 1 2 3 4 5 6 (PRODUCT LEVEL)	SEE PAGE
	1	1	**280-8307**	1	BRACKET AS	
	2	1	**280-8314**	1	BRACKET AS	
	3	1	**280-8335**	2	SPACER (6.5X12X4.5-MM THK)	
	4	1	**280-8408**	1	GUARD-BELT	
	5	1	**280-8409**	1	BRACKET AS	
M		1	**6V-9632**	2	NUT-WELD (M6X1-THD)	
M		1	**8T-3612**	2	NUT-WELD (M8X1.25-THD)	
	6	1	**280-8417**	8	NUT-PUSH ON	
	7	1	**354-6574**	5	BOLT-SPECIAL	
M	8	1	**134-7722**	2	BOLT-LOCKING (M8X1.25X16-MM)	
	9	1	**5P-4116**	7	WASHER-HARD (8.8X20.5X2-MM THK)	
M	10	1	**6V-7357**	2	BOLT (M6X1X25-MM)	
M	11	1	**8T-4908**	2	BOLT (M8X1.25X25-MM)	
	12	1	**8T-7934**	2	WASHER-HARD (11X21X5-MM THK)	

M-METRIC PART

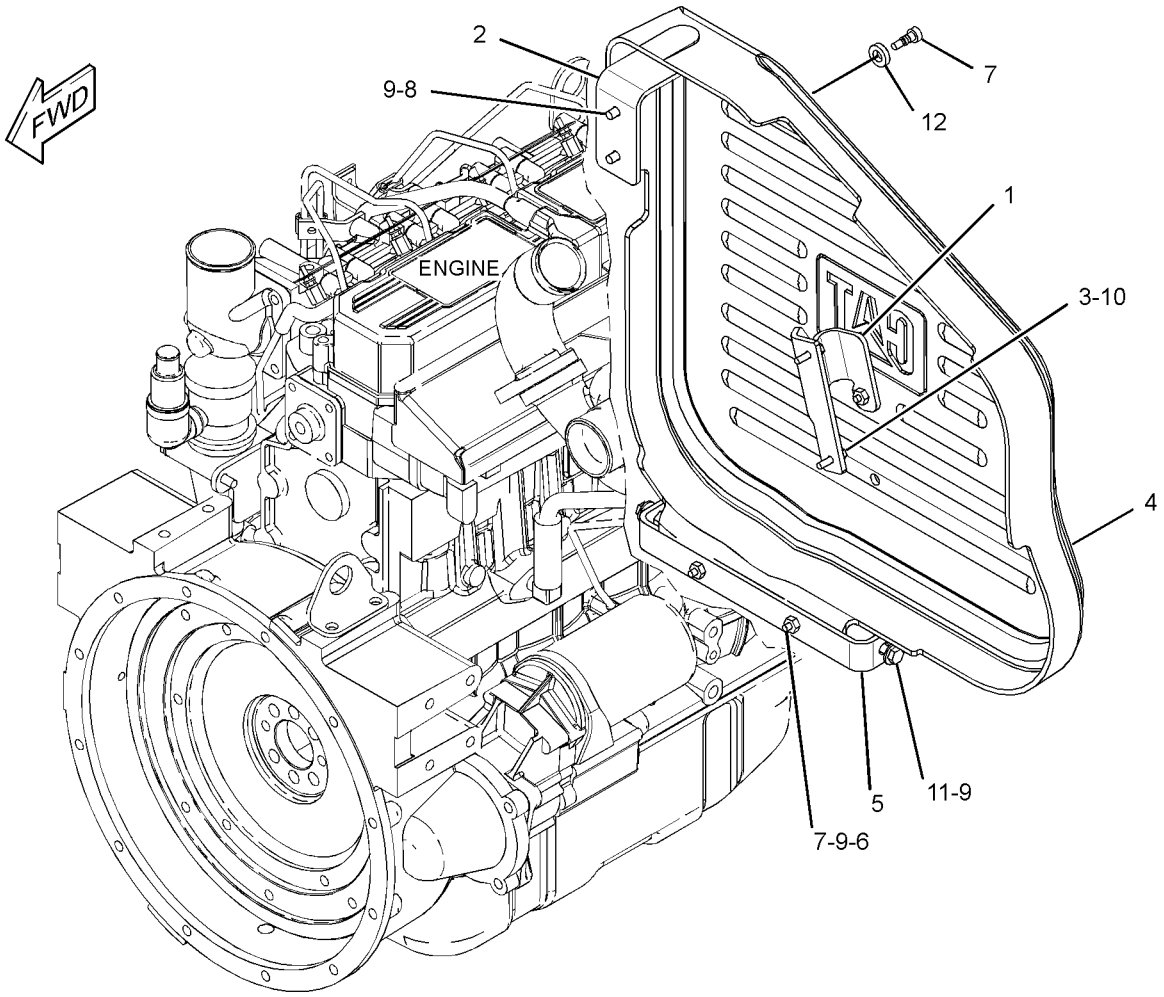

GRAPHIC #1 **<END>** g02146743

BASIC ENGINE

287-3357 HOUSING GP-FLYWHEEL

S/N: CYM14969-UP
PART OF 332-8660 ENGINE AR-PRIMARY
AN ATTACHMENT

SMCS-1157 **i02877118**

NOTE	REF NO	GRAPHIC REF	PART NUMBER	QTY	PART NAME 1 2 3 4 5 6 (PRODUCT LEVEL)	SEE PAGE
	1	1	**096-4415**	2	LOCKWASHER	
	2	1	**103-9280**	1	GASKET-REAR	
	3	1	**117-5015**	1	SEAL AS-OIL	
M	4	1	**185-8182**	2	BOLT (M10X1.5X20-MM)	
	5	1	**199-2354**	10	BOLT (M10X1.25X25-MM)	
	6	1	**212-8499**	3	STUD	
M	7	1	**212-8510**	3	NUT (M10X1.25 THD)	
M	8	1	**9X-8912**	2	BOLT (M10X1.25X30-MM)	
	9	1	**233-5482**	1	EYE	
	10	1	**315-7703**	1	HOUSING-FLYWHEEL	
	11	1	**5I-7628**	1	GASKET	
	12	1	**5I-8056**	1	PLUG	

M-METRIC PART

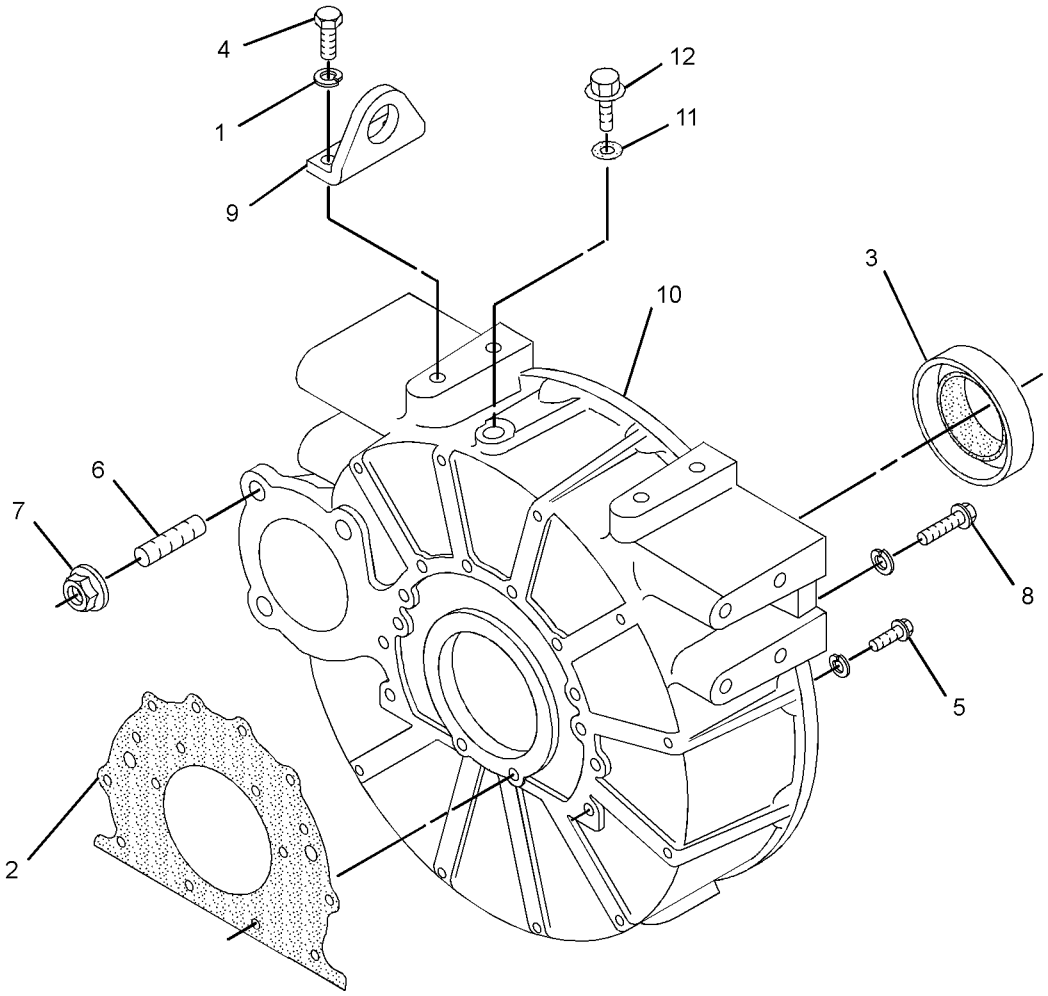

GRAPHIC #1 **<END>** g01442694

361-2874 HOUSING GP-FLYWHEEL

S/N: CYM1-14968
PART OF 332-8660 ENGINE AR-PRIMARY
AN ATTACHMENT

SMCS-1157 **i03937751**

NOTE	PART NUMBER	QTY	PART NAME 1 2 3 4 5 6 (PRODUCT LEVEL)	SEE PAGE
M	**8T-4137**	2	BOLT (M10X1.5X20-MM)	
M	**8T-4195**	2	BOLT (M10X1.5X30-MM)	
M	**140-5217**	10	BOLT (M10X1.25X25-MM)	
	233-5482	1	EYE	
	5I-7628	1	GASKET	
	103-9280	1	GASKET-REAR	
M	**212-8510**	3	NUT (M10X1.25-THD)	
	5I-8056	1	PLUG	
	117-5015	1	SEAL AS-OIL	
	212-8499	3	STUD	
	8T-4896	14	WASHER-HARD (10.2X18.5X2.5-MM THK)	

M-METRIC PART

<END>

BASIC ENGINE

315-8336 HOUSING GP-FRONT

S/N: CYM1-UP

PART OF 332-8660 ENGINE AR-PRIMARY

AN ATTACHMENT

SMCS-1151, 1160, 1162, 1166, 3108 **i04204981**

NOTE	REF NO	GRAPHIC REF	PART NUMBER	QTY	PART NAME 1 2 3 4 5 6 (PRODUCT LEVEL)	SEE PAGE
	1	1	**3B-4505**	5	LOCKWASHER	
M	2	1	**6V-7357**	2	BOLT (M6X1X25-MM)	
M	3	1	**8T-4200**	5	BOLT (M8X1.25X16-MM)	
	4	1	**8T-4224**	15	WASHER-HARD (8.8X16X2-MM THK)	
M	5	1	**8T-7329**	11	BOLT (M8X1.25X55-MM)	
	6	1	**9X-8256**	6	WASHER (6.6X12X2-MM THK)	
	7	1	**096-2500**	2	LOCKWASHER	
	8	1	**096-9529**	1	SEAL-O-RING	
	9	1	**199-2212**	4	BOLT (M6X1X18-MM)	
	11	1	**246-1259**	1	COVER-INSULATION (LH)	
	12	1	**246-1260**	1	COVER-INSULATION (RH)	
	13	1	**285-9066**	4	BOLT (M8X1.25X65-MM)	
	14	1	**314-9947**	1	GASKET	
	15	1	**314-9948**	1	FASTENER GP-FRONT COVER	
	17	1	**315-4667**	1	GASKET	
	18	1	**360-2177**	1	PLATE	
	19	1	**315-4686**	1	HOUSING-FRONT	
	20	1	**315-4687**	1	COVER	
	21	1	**239-8429**	1	SEAL-CRANKSHAFT (FRONT)	

M-METRIC PART

315-8336 **HOUSING GP-FRONT** *(contd.)* **i04204981**

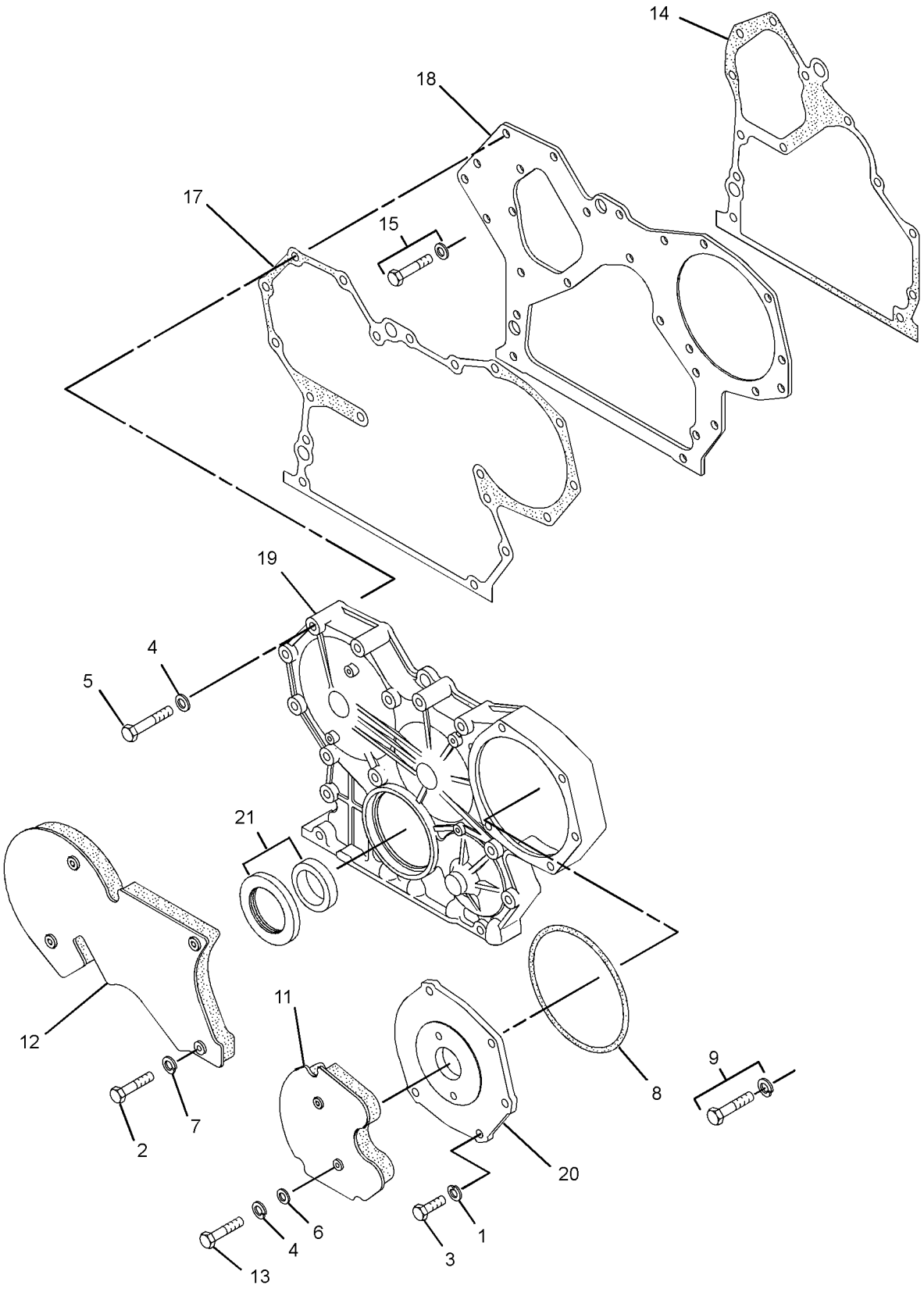

GRAPHIC #1 **<END>** g01658277

315-7761 LIFTING GP-ENGINE

S/N: CYM1-UP
PART OF 332-8660 ENGINE AR-PRIMARY
AN ATTACHMENT

SMCS-1122 **i02864974**

NOTE	REF NO	GRAPHIC REF	PART NUMBER	QTY	PART NAME 1 2 3 4 5 6 (PRODUCT LEVEL)	SEE PAGE
	1	1	**3B-4505**	4	LOCKWASHER	
M	2	1	**8T-4200**	4	BOLT (M8X1.25X16-MM)	
	3	1	**233-5466**	1	EYE	
	4	1	**233-5468**	1	GASKET	
	5	1	**315-7704**	1	COVER	

M-METRIC PART

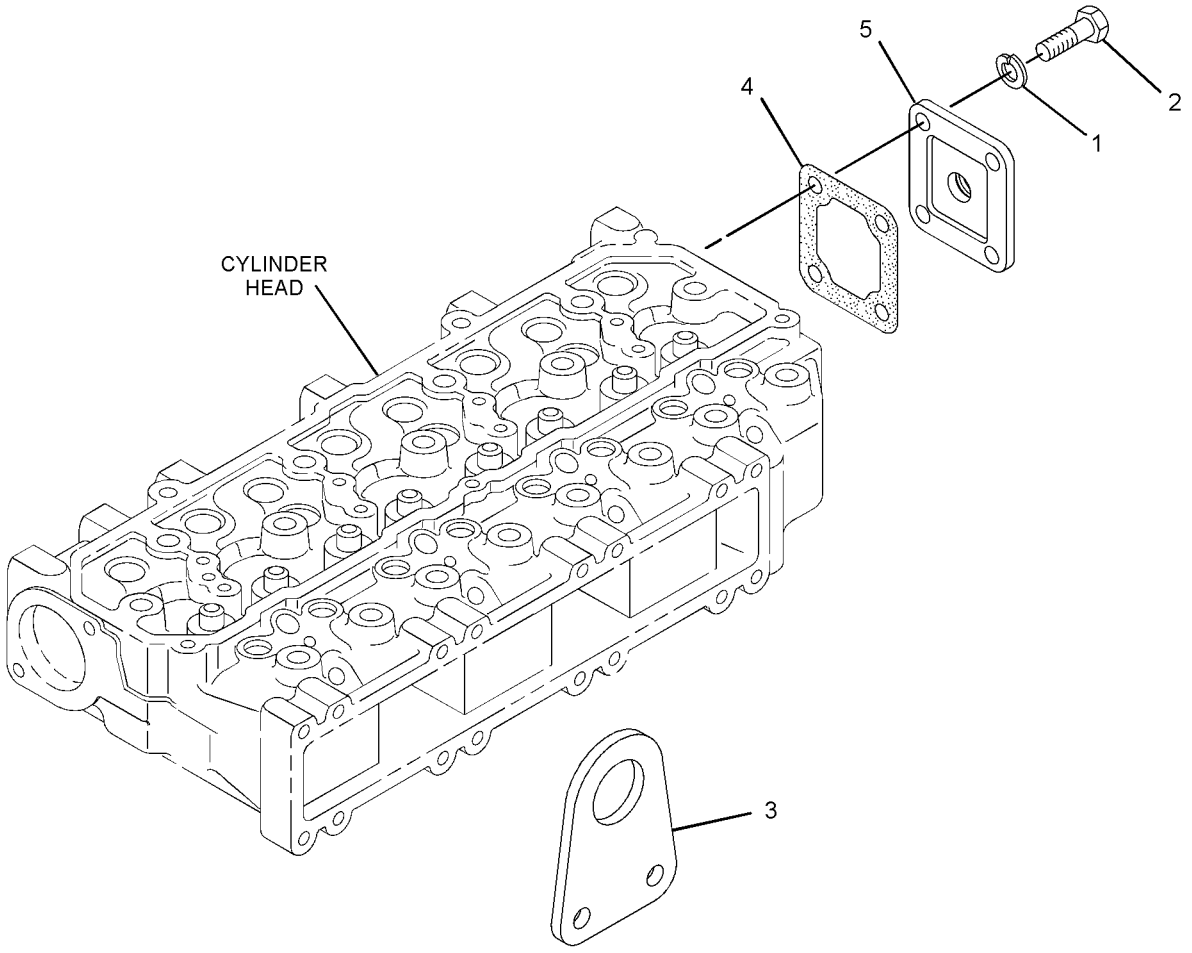

GRAPHIC #1 **<END>** g01430113

326-5329 MOUNTING GP-ENGINE

S/N: SRS1-UP

PART OF 326-5328 INSTALLATION AR-ENGINE

SMCS-1152, 1153, 1154 **i03902847**

NOTE	REF NO	GRAPHIC REF	PART NUMBER	QTY	PART NAME 1 2 3 4 5 6 (PRODUCT LEVEL)	SEE PAGE
	1	1	**118-2990**	2	MOUNT AS	
	2	1	**230-3621**	1	MOUNT AS	
		1	**149-3488**	2	MOUNT-ENGINE	
		1	**241-6397**	1	SLEEVE	
	3	1	**258-2448**	1	BRACKET AS	
	4	1	**326-5358**	2	BRACKET AS	
M	5	1	**129-3180**	1	LOCKNUT (M12X1.75-THD)	
	6	1	**165-7095**	4	WASHER (16.5X71.5X3-MM THK)	
	7	1	**5P-1076**	2	WASHER-HARD (13.5X30X4-MM THK)	
M	8	1	**7X-2556**	2	BOLT (M16X2X100-MM)	
	9	1	**8T-4122**	2	WASHER-HARD (17X32X3.5-MM THK)	
M	10	1	**8T-4132**	2	NUT (M16X2-THD)	
M	11	1	**8T-4176**	1	BOLT (M12X1.75X90-MM)	
M	12	1	**8T-4192**	16	BOLT (M12X1.75X25-MM)	
	13	1	**8T-4223**	16	WASHER-HARD (13.5X25.5X3-MM THK)	

M-METRIC PART

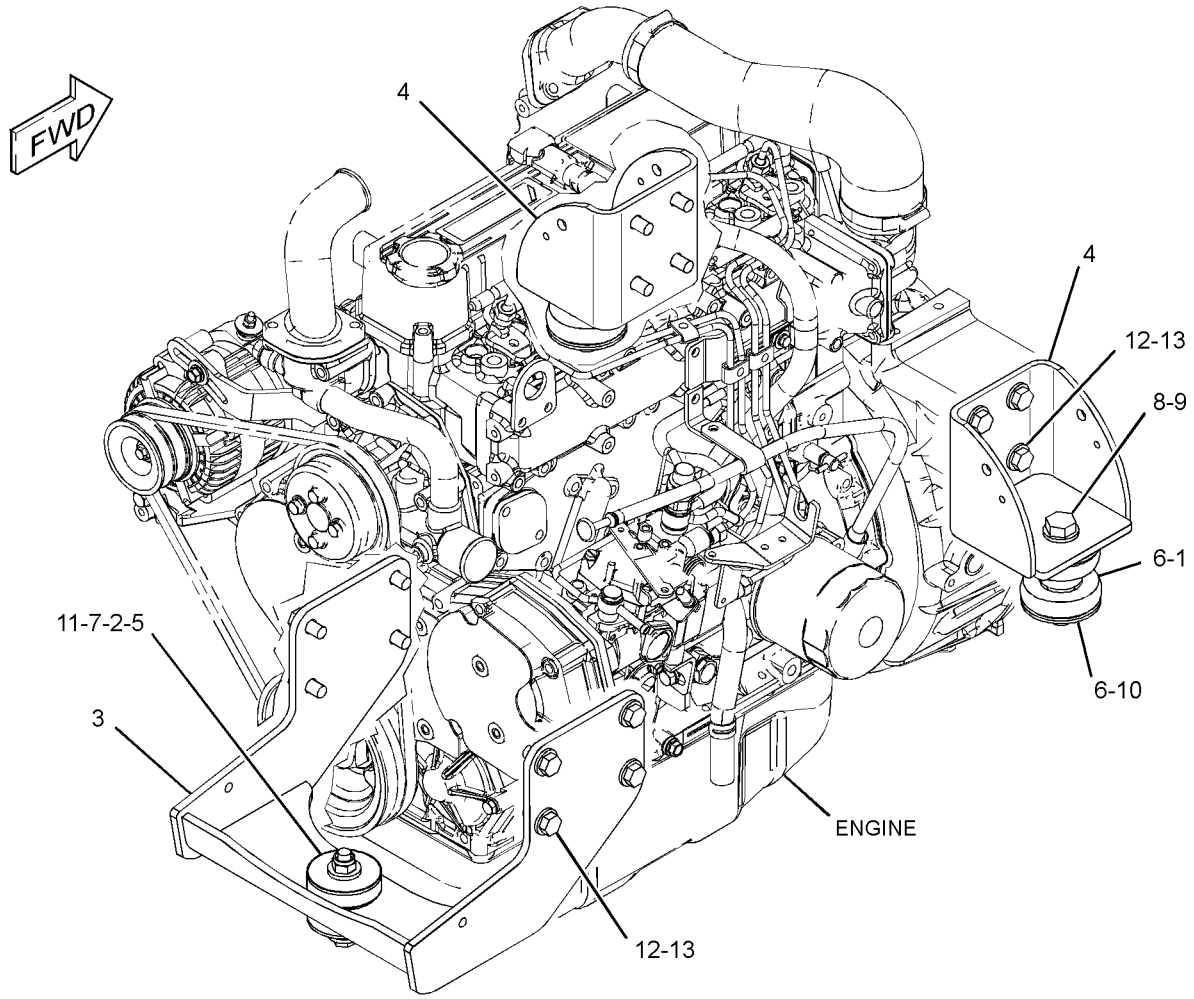

GRAPHIC #1 **<END>** g02146775

BASIC ENGINE

363-3884 PAN GP-OIL

S/N: CYM1-UP
PART OF 332-8660 ENGINE AR-PRIMARY
AN ATTACHMENT

SMCS-1302 **i03990518**

NOTE	PART NUMBER	QTY	PART NAME 1 2 3 4 5 6 (PRODUCT LEVEL)	SEE PAGE
M	**8T-4200**	25	BOLT (M8X1.25X16-MM)	
M	**195-8403**	1	BOLT AS	
	325-5905	1	BRACKET	
	309-8909	1	GAUGE GP-OIL LEVEL (DIPSTICK) (ENGINE)	
	234-4812	1	GUIDE	
	315-2356	1	GUIDE	
	3B-4505	25	LOCKWASHER	
	363-3885	1	PAN-OIL	
	5I-4993	2	SEAL	

M-METRIC PART

<END>

315-8348 PISTON GP

S/N: CYM1-UP
PART OF 332-8660 ENGINE AR-PRIMARY
AN ATTACHMENT

SMCS-1214, 1215 **i02883796**

NOTE	REF NO	GRAPHIC REF	PART NUMBER	QTY	PART NAME 1 2 3 4 5 6 (PRODUCT LEVEL)	SEE PAGE
	1	1	**212-8597**	8	RING	
	2	1	**234-4815**	4	PIN-PISTON	
	3	1	**314-9962**	4	RING-PISTON (STANDARD)	
AB		1	**314-9964**	1	RING-PISTON (0.25-MM OS)	
AB		1	**314-9963**	1	RING-PISTON (0.5-MM OS)	
	4	1	**315-4669**	4	PISTON (STANDARD)	
AB		1	**315-4670**	1	PISTON (0.25-MM OS)	
AB		1	**315-4671**	1	PISTON (0.50-MM OS)	

A-NOT PART OF THIS GROUP
B-USE AS REQUIRED

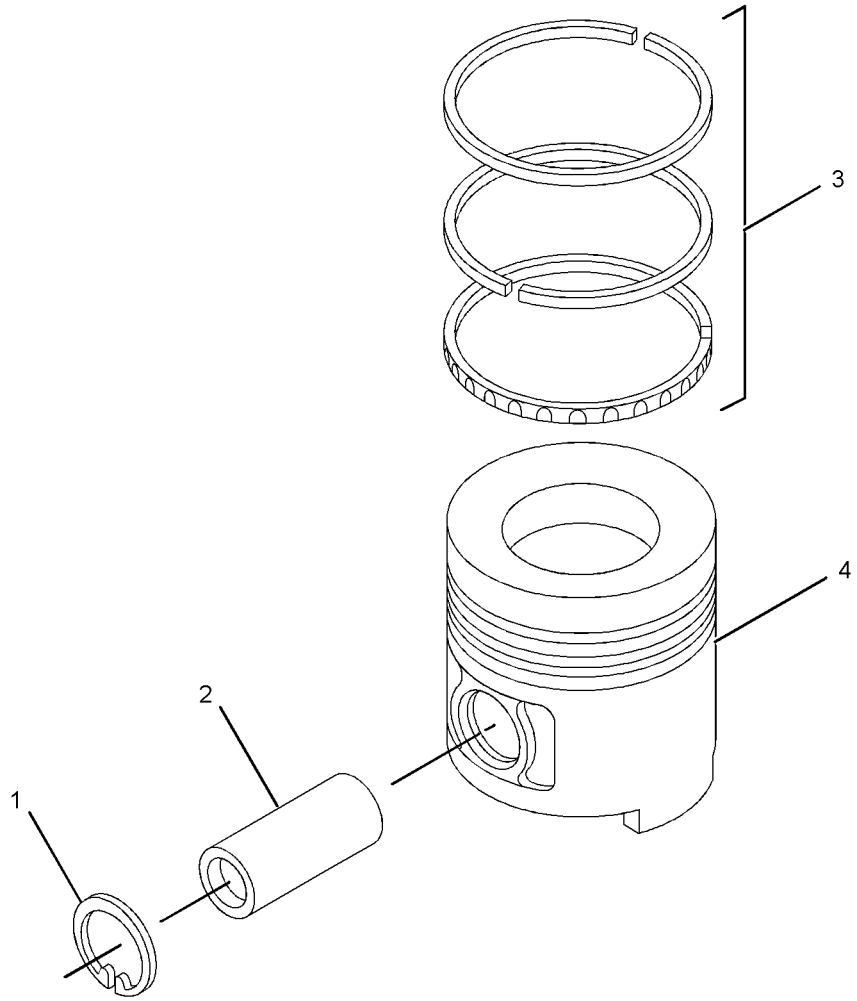

GRAPHIC #1 **<END>** g01445478

BASIC ENGINE

287-2922 PLUG GP-ENGINE

S/N: CYM1-UP
PART OF 332-8660 ENGINE AR-PRIMARY
AN ATTACHMENT

SMCS-1000 **i02568378**

NOTE	REF NO	GRAPHIC REF	PART NUMBER	QTY	PART NAME 1 2 3 4 5 6 (PRODUCT LEVEL)	SEE PAGE
	1	1	**5I-7505**	6	PLUG	

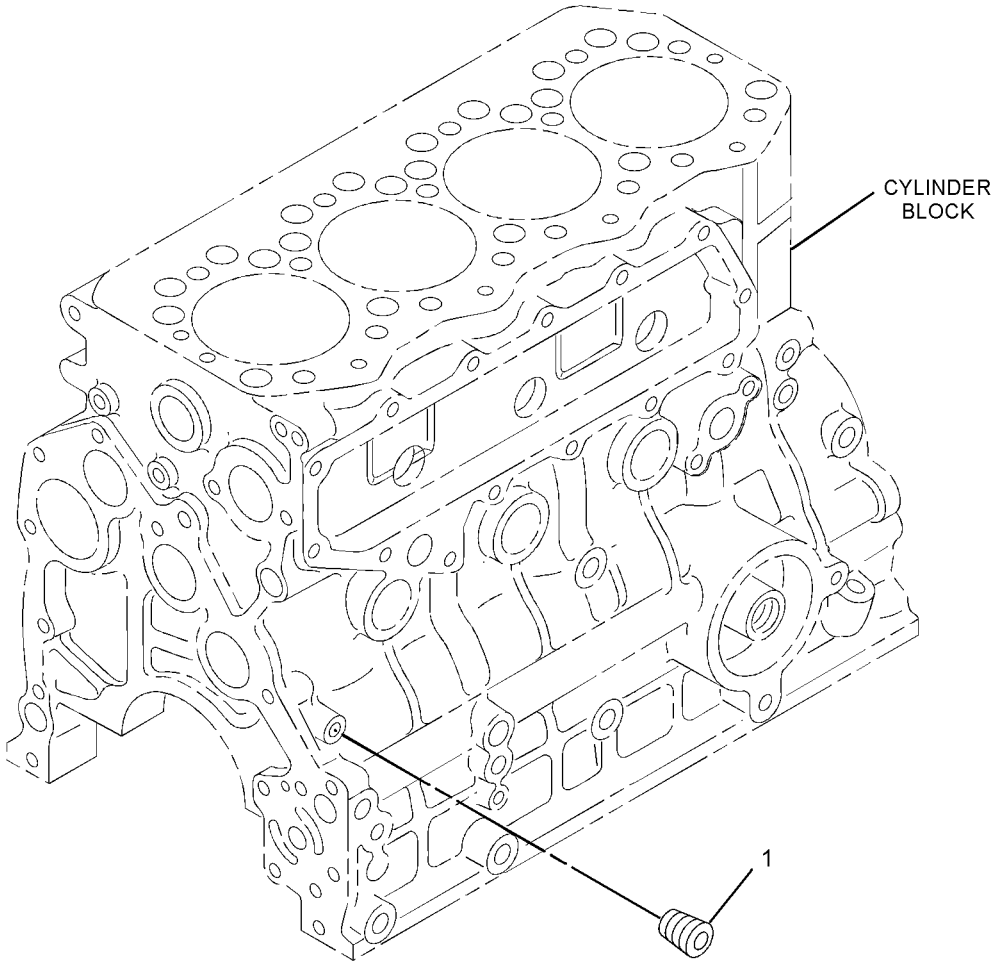

GRAPHIC #1 **<END>** g01325237

287-2983 PLUG GP-ENGINE

S/N: CYM1-UP
PART OF 332-8660 ENGINE AR-PRIMARY
AN ATTACHMENT

SMCS-1000 **i02616574**

NOTE	REF NO	GRAPHIC REF	PART NUMBER	QTY	PART NAME 1 2 3 4 5 6 (PRODUCT LEVEL)	SEE PAGE
	1	1	**195-8211**	1	PLUG	

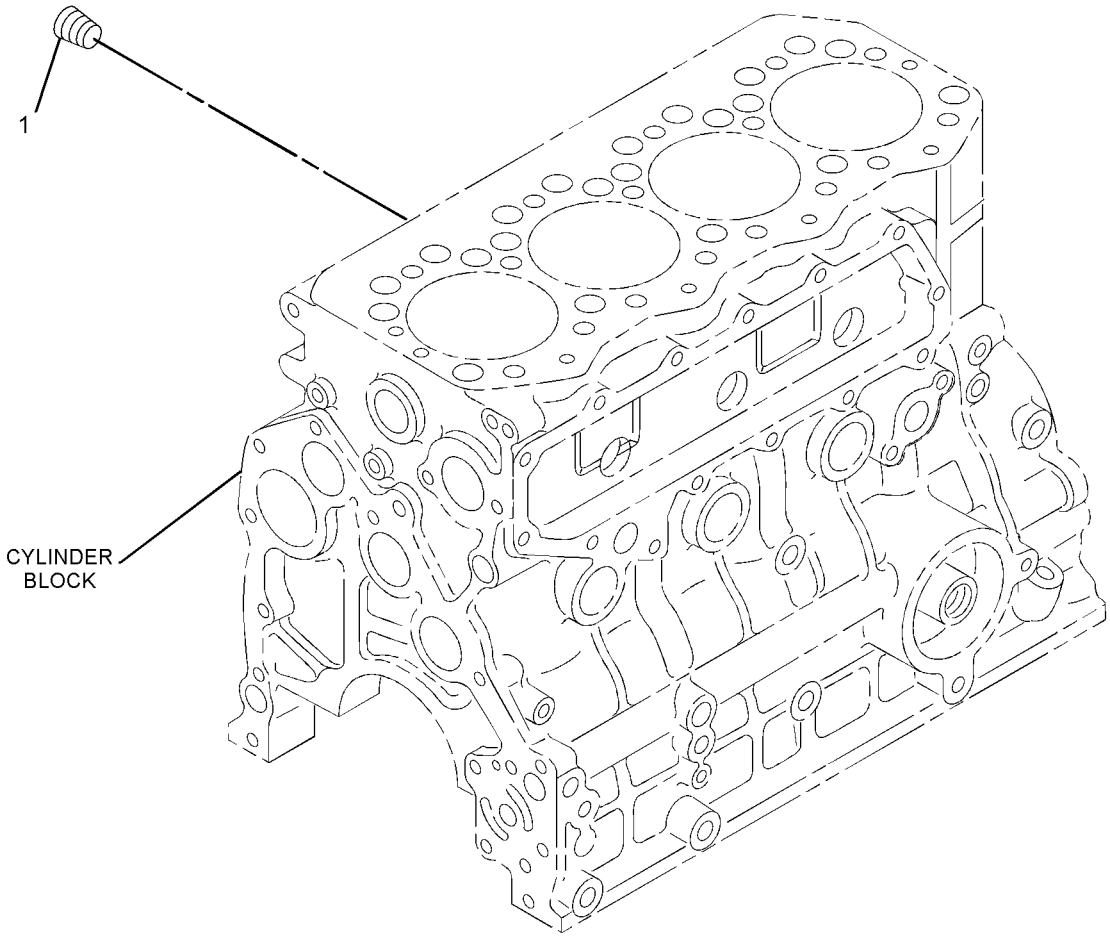

GRAPHIC #1 **<END>** g01325240

BASIC ENGINE

301-3396 PULLEY GP-CRANKSHAFT

S/N: CYM1-UP
PART OF 332-8660 ENGINE AR-PRIMARY
AN ATTACHMENT

SMCS-1205 **i02864961**

NOTE	REF NO	GRAPHIC REF	PART NUMBER	QTY	PART NAME 1 2 3 4 5 6 (PRODUCT LEVEL)	SEE PAGE
	1	1	**301-3397**	1	PULLEY-CRANKSHAFT (2-GROOVE)	

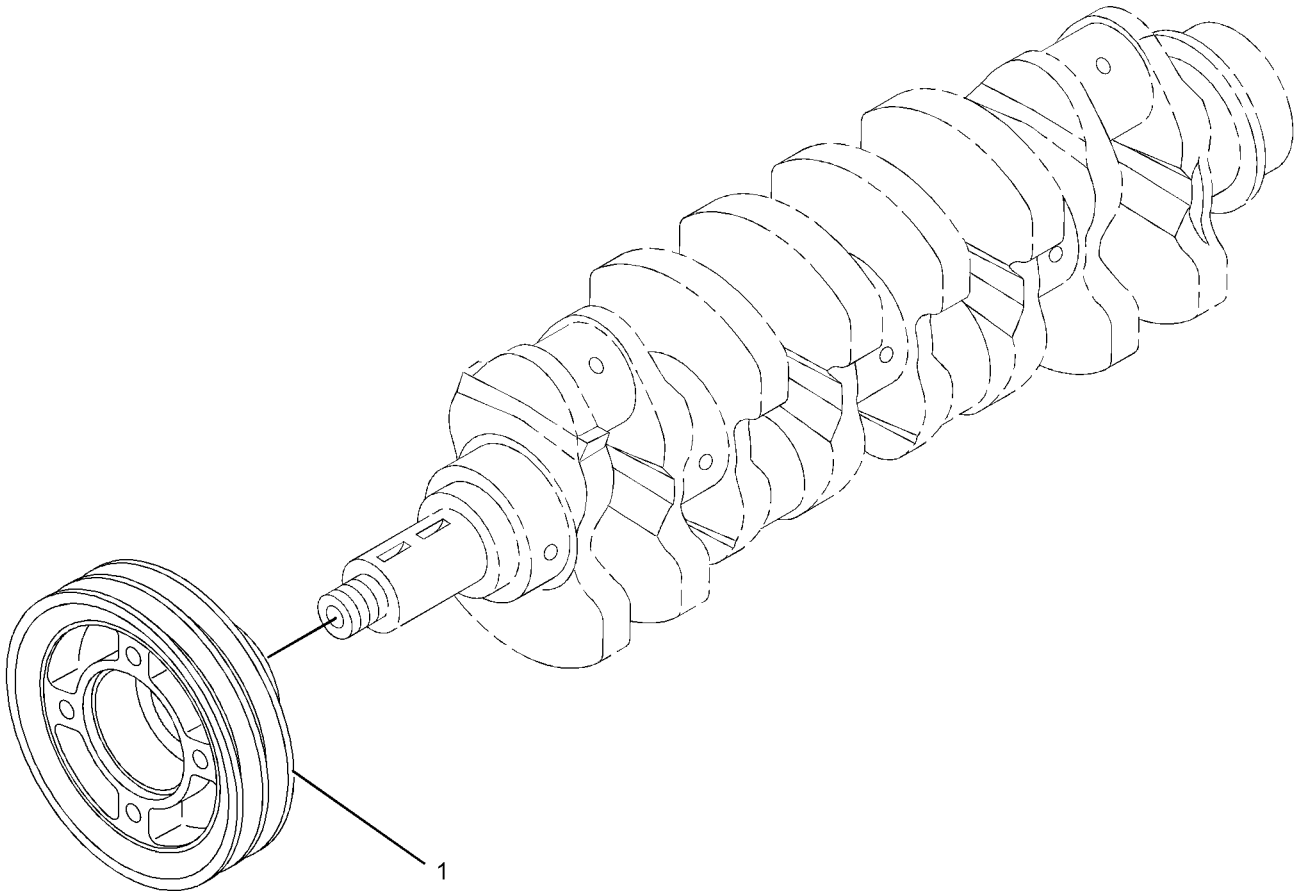

GRAPHIC #1 **<END>** g01351097

287-6114 PULLEY GP-WATER PUMP

S/N: CYM1-UP
PART OF 332-8660 ENGINE AR-PRIMARY
AN ATTACHMENT

SMCS-1384 **i03552847**

NOTE	REF NO	GRAPHIC REF	PART NUMBER	QTY	PART NAME 1 2 3 4 5 6 (PRODUCT LEVEL)	SEE PAGE
M	1	1	**8T-0642**	4	BOLT (M8X1.25X14-MM)	
	2	1	**9M-1974**	4	WASHER-HARD (8.8X16X2-MM THK)	
	3	1	**234-4807**	1	PULLEY (1-GROOVE)	

M-METRIC PART

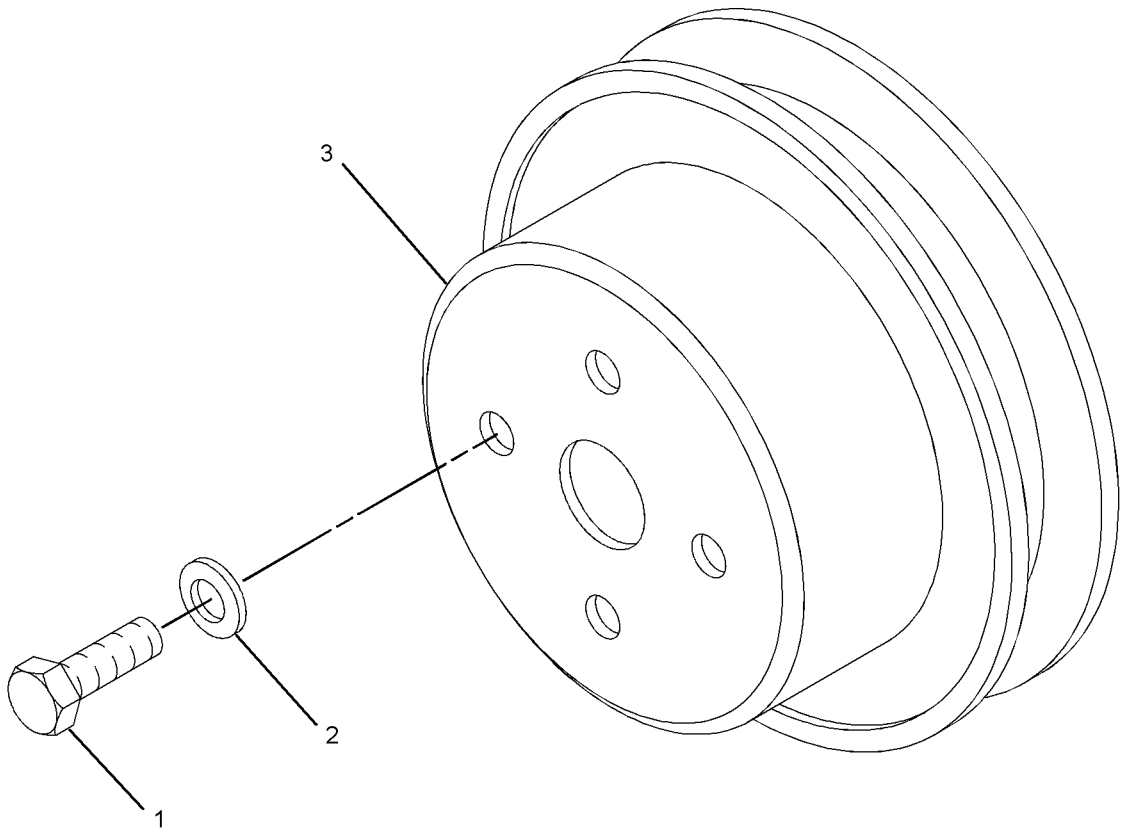

GRAPHIC #1 **<END>** g01326766

BASIC ENGINE

287-6138 V-BELT GP

S/N: CYM1-UP
WATER PUMP
PART OF 332-8660 ENGINE AR-PRIMARY
AN ATTACHMENT

SMCS-1357 **i03880351**

NOTE	REF NO	GRAPHIC REF	PART NUMBER	QTY	PART NAME 1 2 3 4 5 6 (PRODUCT LEVEL)	SEE PAGE
	1	1	**352-4169**	1	V-BELT (WATER PUMP)	

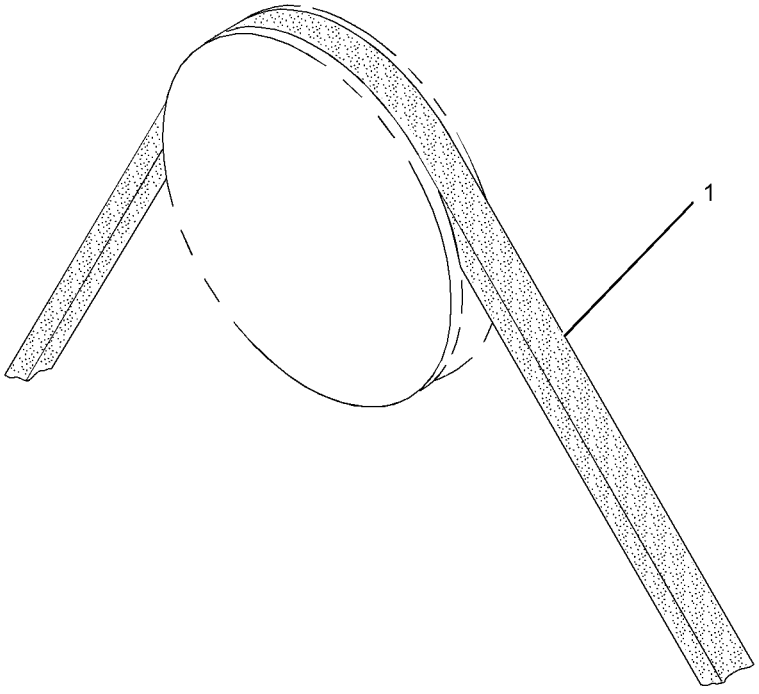

GRAPHIC #1 **<END>** g01321905

BASIC ENGINE

235-5880 VALVE MECHANISM GP

S/N: CYM1-UP

PART OF 332-8660 ENGINE AR-PRIMARY

AN ATTACHMENT

SMCS-1102, 1112, 1121, 1123, 1208, 1209 **i04204989**

NOTE	PART NUMBER	QTY	PART NAME 1 2 3 4 5 6 (PRODUCT LEVEL)	SEE PAGE
M	**6V-3940**	4	BOLT (M8X1.25X25-MM)	
	103-9268	4	BOLT	
M	**8T-4908**	4	BOLT (M8X1.25X25-MM)	
	233-5477	4	BRACKET	
	5I-7630	8	CAP	
	5I-7625	8	RETAINER	
	5I-7719	16	RETAINER	
	195-8324	2	RING-SNAP	
	221-5245	8	ROCKER AS	
			(EACH INCLUDES)	
M	**160-8500**	1	NUT (M8X1.25-THD)	
	103-9260	8	SEAL-VALVE STEM	
	233-5476	1	SHAFT AS	
	095-2005	1	CAP	
	103-2782	8	SPRING	
	221-5250	3	SPRING	
	233-5470	4	VALVE-EXHAUST	
	233-5469	4	VALVE-INLET	
	9M-1974	8	WASHER-HARD (8.8X16X2-MM THK)	

M-METRIC PART

<END>

LUBRICATION SYSTEM

361-3334 FILTER GP-ENGINE OIL

S/N: CYM1-UP
PART OF 332-8660 ENGINE AR-PRIMARY
AN ATTACHMENT

SMCS-1308 **i03907399**

NOTE	REF NO	GRAPHIC REF	PART NUMBER	QTY	PART NAME 1 2 3 4 5 6 (PRODUCT LEVEL)	SEE PAGE
	1	1	**253-0244**	1	BUSHING-THREADED	
	2	1	**267-2528**	1	FILTER AS-ENGINE OIL	

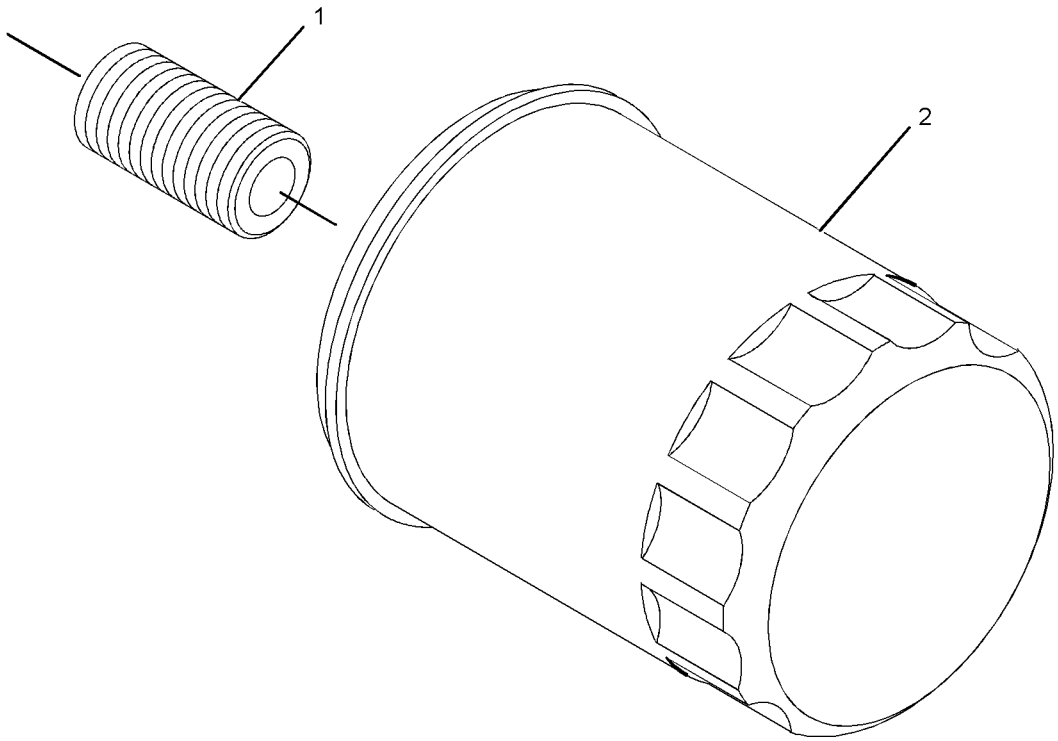

GRAPHIC #1 **<END>** g02150821

287-5377 LINES GP-ENGINE OIL

S/N: CYM1-UP
PART OF 332-8660 ENGINE AR-PRIMARY
AN ATTACHMENT

SMCS-1307 **i02555558**

NOTE	REF NO	GRAPHIC REF	PART NUMBER	QTY	PART NAME 1 2 3 4 5 6 (PRODUCT LEVEL)	SEE PAGE
M	1	1	**6V-5215**	3	BOLT (M8X1.25X16-MM)	
	2	1	**9M-1974**	3	WASHER-HARD (8.8X16X2-MM THK)	
	3	1	**233-5494**	1	STRAINER AS-OIL (ENGINE)	
	4	1	**239-8513**	1	SEAL-O-RING	

M-METRIC PART

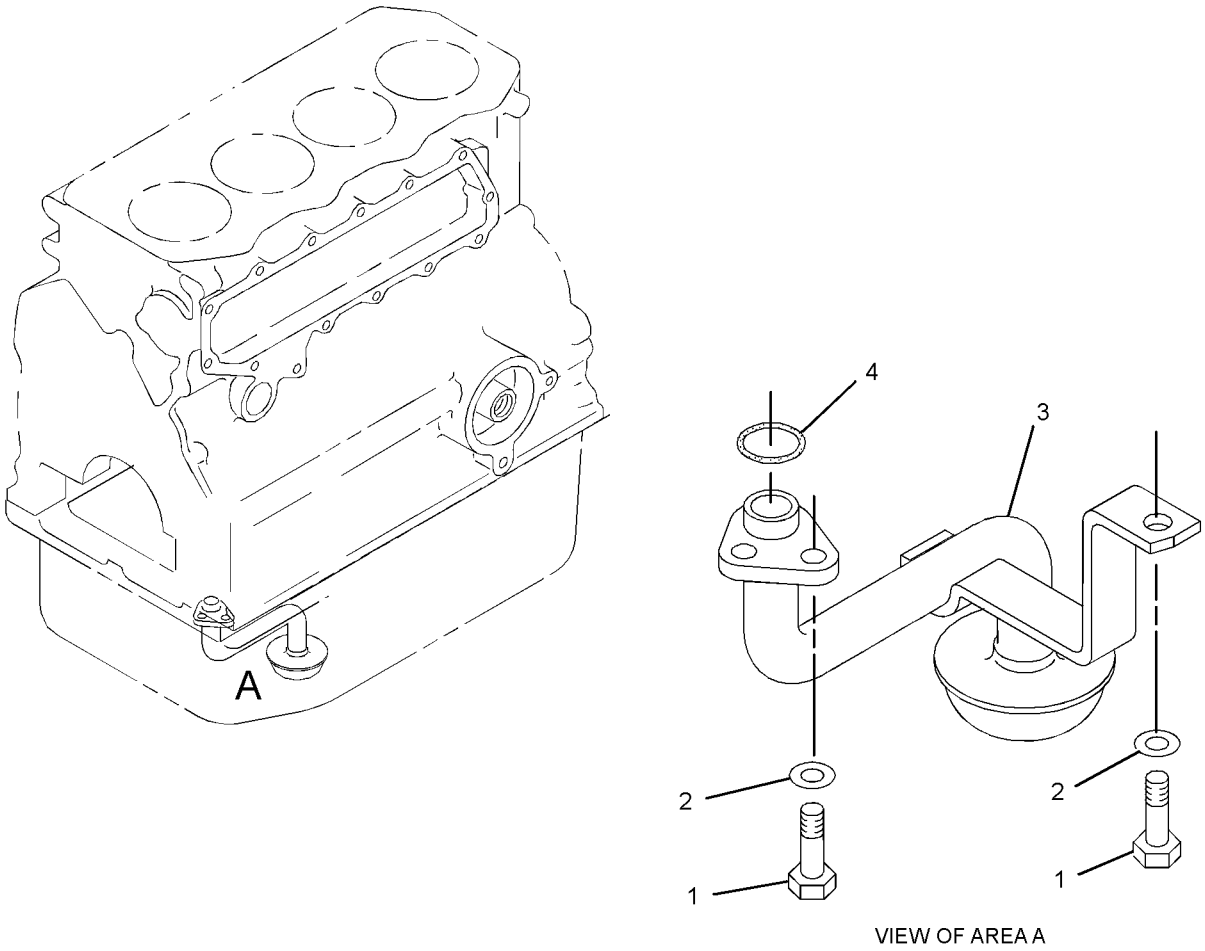

VIEW OF AREA A

GRAPHIC #1 **<END>** g01342337

235-5895 PUMP GP-ENGINE OIL

S/N: CYM1-UP
PART OF 332-8660 ENGINE AR-PRIMARY
AN ATTACHMENT

SMCS-1304, 1315 **i02524390**

NOTE	REF NO	GRAPHIC REF	PART NUMBER	QTY	PART NAME 1 2 3 4 5 6 (PRODUCT LEVEL)	SEE PAGE
M	1	1	**6V-5217**	4	BOLT (M8X1.25X20-MM)	
	2	1	**9M-1974**	4	WASHER-HARD (8.8X16X2-MM THK)	
	3	1	**113-1141**	1	PUMP AS-OIL	
	4	1	**101-6544**	1	NUT	
	5	1	**6V-5839**	1	WASHER (11X21X2.5-MM THK)	
	6	1	**103-9083**	1	SEAL-O-RING	

M-METRIC PART

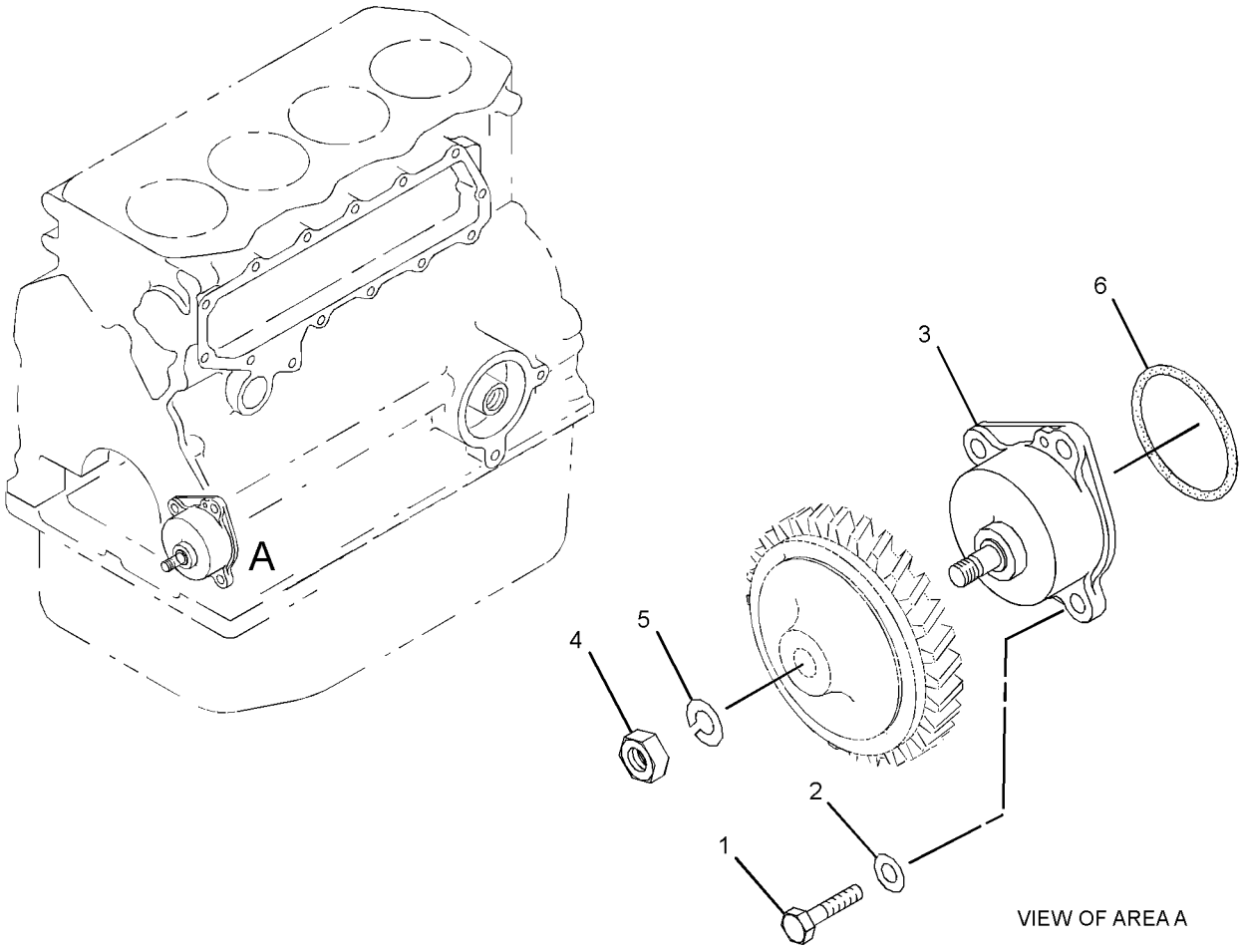

GRAPHIC #1 **<END>** g01348493

287-5665 VALVE GP-ENGINE OIL RELIEF

S/N: CYM1-UP
PART OF 332-8660 ENGINE AR-PRIMARY
AN ATTACHMENT

SMCS-1315 **i02961094**

NOTE	REF NO	GRAPHIC REF	PART NUMBER	QTY	PART NAME 1 2 3 4 5 6 (PRODUCT LEVEL)	SEE PAGE
	1	1	**294-1767**	1	VALVE (PRESSURE RELIEF) (ENGINE OIL PRESSURE)	
	2	1	**103-9725**	1	VALVE AS (RELIEF) (ENGINE)	
	3	1	**233-5496**	1	GASKET	
	4	1	**234-4796**	1	GASKET	

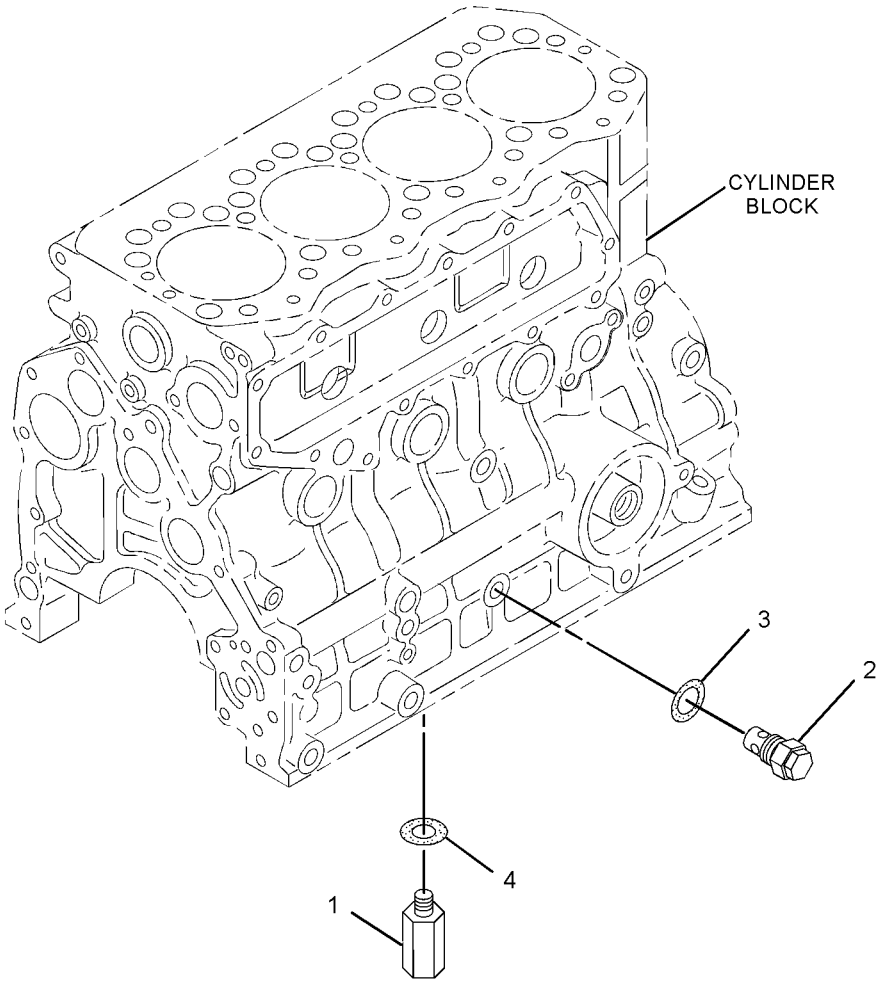

GRAPHIC #1 **<END>** g01323255

COOLING SYSTEM

361-2880 COOLER GP-ENGINE OIL

S/N: CYM1-UP
PART OF 332-8660 ENGINE AR-PRIMARY
AN ATTACHMENT

SMCS-1378 **i03937750**

NOTE	PART NUMBER	QTY	PART NAME 1 2 3 4 5 6 (PRODUCT LEVEL)	SEE PAGE
	336-9857	15	BOLT	
	195-8356	1	BOLT AS	
	234-4803	2	COOLER AS	
	234-4801	1	COVER	
	234-4802	1	COVER AS	
	234-4800	1	GASKET	
	336-9856	1	GASKET	
M	**178-3336**	5	NUT-HEX FLANGE (M8X1.25-THD)	
	4I-9404	2	SEAL-O-RING	
	095-1513	4	SEAL-O-RING	
	239-8513	2	SEAL-O-RING	
	234-4798	1	STUD	

M-METRIC PART

<END>

292-4040 DRAIN GP-COOLANT

S/N: CYM1-UP

PART OF 332-8660 ENGINE AR-PRIMARY

AN ATTACHMENT

SMCS-1380, 1395 **i03552850**

NOTE	REF NO	GRAPHIC REF	PART NUMBER	QTY	PART NAME 1 2 3 4 5 6 (PRODUCT LEVEL)	SEE PAGE
	1	1	**238-8278**	1	VALVE AS-DRAIN (WATER)	

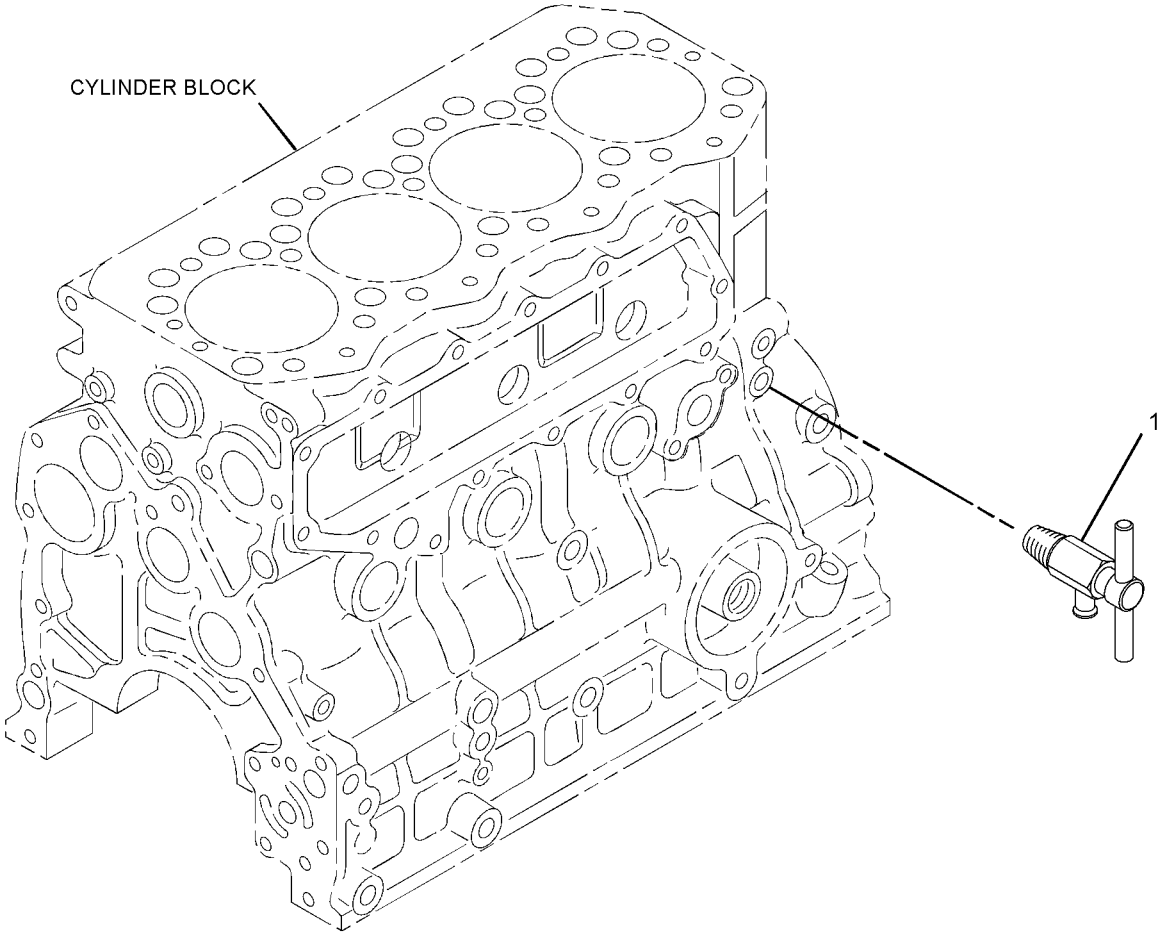

GRAPHIC #1 **<END>** g01354785

315-8355 HOUSING & REGULATOR GP

S/N: CYM1-UP
PART OF 332-8660 ENGINE AR-PRIMARY
AN ATTACHMENT

SMCS-1355, 1393 **i03672028**

NOTE	REF NO	GRAPHIC REF	PART NUMBER	QTY	PART NAME 1 2 3 4 5 6 (PRODUCT LEVEL)	SEE PAGE
	1	1	**294-7915**	1	HOUSING AS	
	2	1	**235-4960**	1	REGULATOR AS-WATER TEMPERATURE (THERMOSTAT)	
	3	1	**235-4959**	1	GASKET (WATER TEMPERATURE REGULATOR)	
	4	1	**234-4831**	1	COVER	
	5	1	**096-8475**	2	BOLT (25-MM LG)	
	6	1	**303-6257**	1	GASKET	
	7	1	**257-8739**	2	CLAMP-HOSE	
	8	1	**246-8315**	1	HOSE-BYPASS	
M	9	1	**6V-5221**	1	BOLT (M8X1.25X80-MM)	
M	10	1	**8T-0276**	1	BOLT (M8X1.25X45-MM)	
	11	1	**5I-8056**	1	PLUG	
	12	1	**5I-7628**	1	GASKET	
	13	1	**234-4809**	1	WASHER-SPECIAL	
	14	1	**315-7700**	1	PLUG	
	15	1	**9M-1974**	2	WASHER-HARD (8.8X16X2-MM THK)	

M-METRIC PART

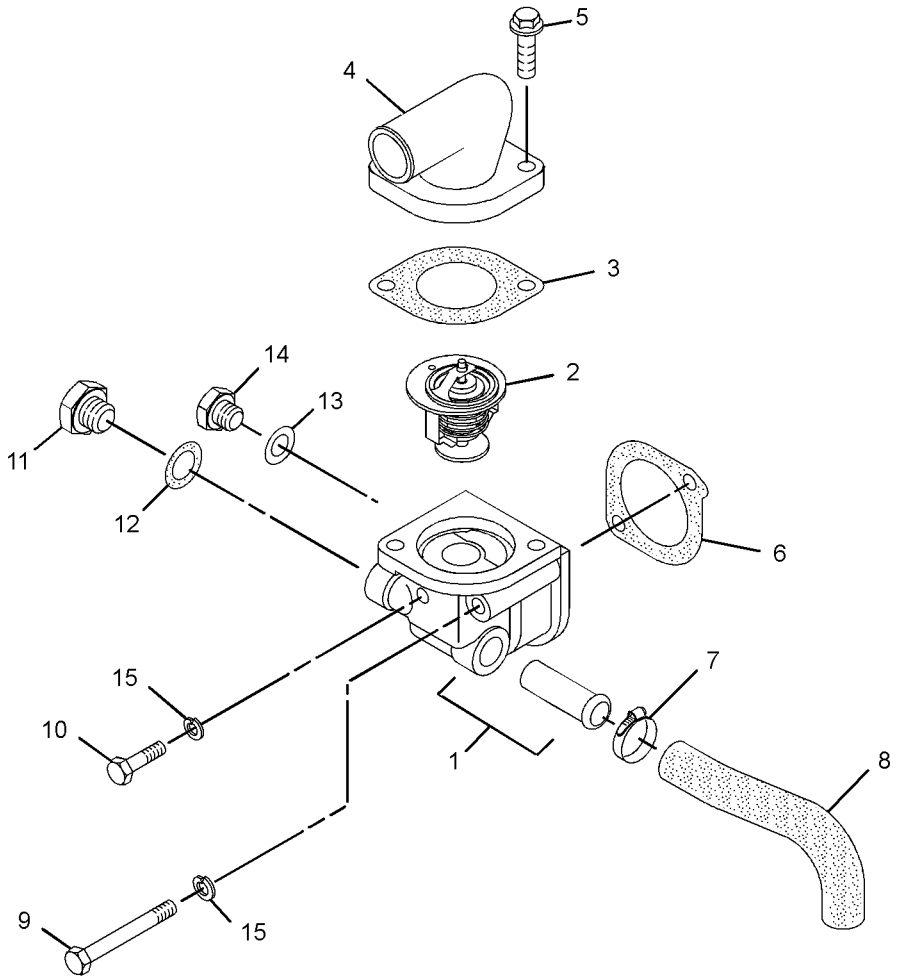

GRAPHIC #1 **<END>** g01943155

326-5340 LINES GP-WATER

S/N: SRS1-UP

PART OF 326-5328 INSTALLATION AR-ENGINE

SMCS-1355, 1380, 1393 **i04394800**

NOTE	REF NO	GRAPHIC REF	PART NUMBER	QTY	PART NAME 1 2 3 4 5 6 (PRODUCT LEVEL)	SEE PAGE
	1	1	**1P-4278**	2	CLAMP-HOSE	
	2	1	**7X-1443**	6	PROTECTOR	
	3	1	**222-1178**	4	CLAMP	
	4	1	**285-5794**	1	RECOVERY GP-COOLANT	
		1	**169-6715**	1	CAP-VENTED (COOLANT RECOVERY)	
	5	1	**326-5341**	1	HOSE	
	6	1	**326-5342**	1	HOSE	
	7	1	**326-5343**	1	TUBE AS	
	8	1	**326-5347**	1	HOSE	
	9	1	**326-5356**	1	BRACKET AS	
M	10	1	**131-3540**	2	LOCKNUT (M8X1.25-THD)	
M	11	1	**5C-7261**	2	NUT (M8X1.25-THD)	
	12	1	**5P-4116**	2	WASHER-HARD (8.8X20.5X2-MM THK)	
	13	1	**5P-7468**	2	CLIP (SLOT)	
	14	1	**5P-7469**	2	CLIP (TAB)	
	15	1	**8T-2525**	2	GROMMET	
	16	1	**8T-4121**	2	WASHER-HARD (11X21X2.5-MM THK)	
M	17	1	**8T-4133**	2	NUT (M10X1.5-THD)	
	18	1	**8T-4224**	2	WASHER-HARD (8.8X16X2-MM THK)	
E	19	1	**5P-1420**		HOSE (117-CM)	
	20	1	**232-4901**	2	CLAMP	

E-ORDER BY THE CENTIMETER
M-METRIC PART

326-5340 **LINES GP-WATER** *(contd.)* **i04394800**

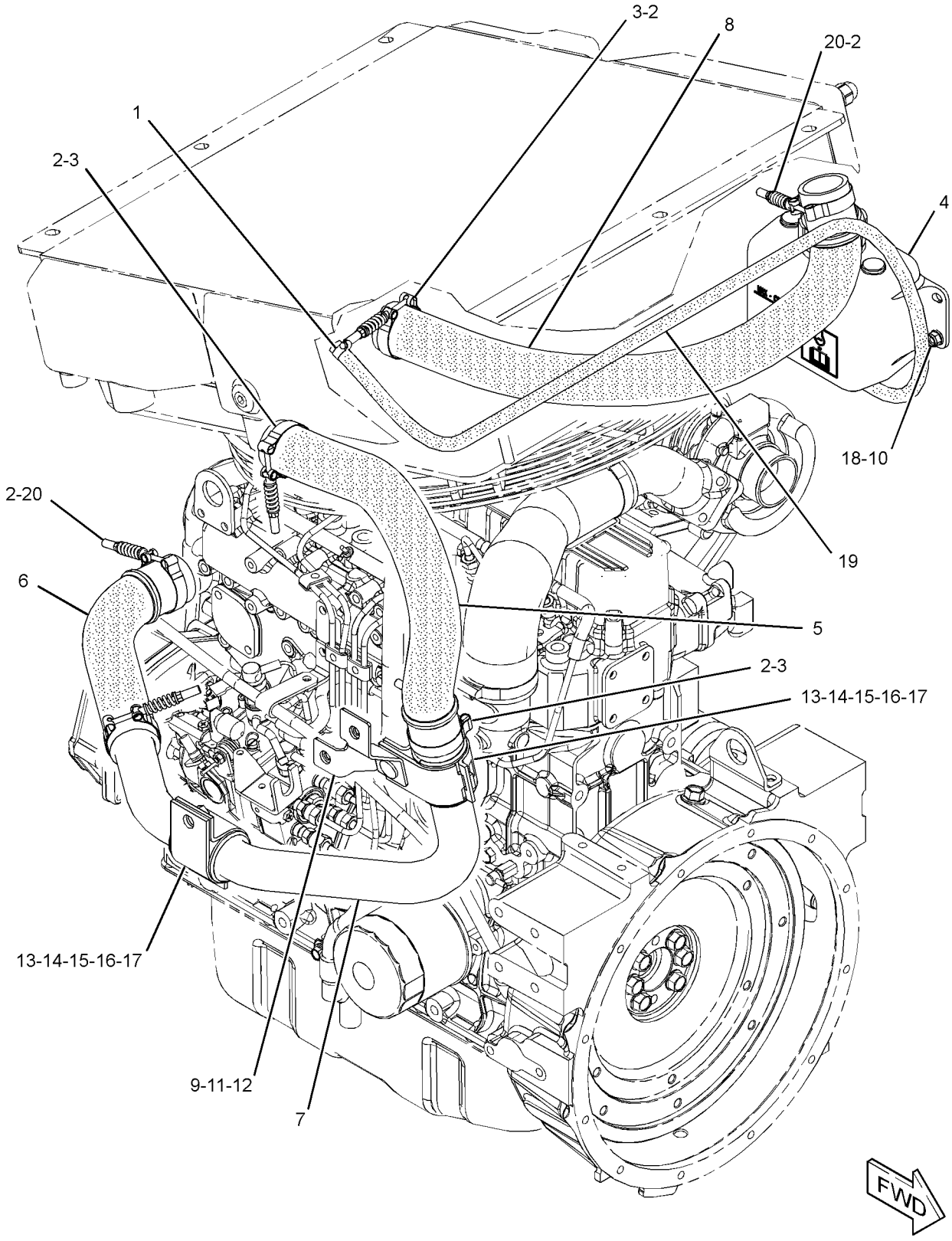

GRAPHIC #1 **<END>** g02573028

287-6056 PUMP GP-WATER

S/N: CYM1-UP
PART OF 332-8660 ENGINE AR-PRIMARY
AN ATTACHMENT

SMCS-1355, 1361 **i03355624**

NOTE	REF NO	GRAPHIC REF	PART NUMBER	QTY	PART NAME 1 2 3 4 5 6 (PRODUCT LEVEL)	SEE PAGE
	1	1	**8T-4224**	5	WASHER-HARD (8.8X16X2-MM THK)	
	2	1	**285-9066**	1	BOLT (M8X1.25X65-MM)	
Y	3	1	**335-9117**	1	PUMP GP-WATER	48
	4	1	**335-9125**	1	GASKET	
M	5	1	**7X-0818**	4	BOLT (M8X1.25X45-MM)	

M-METRIC PART
Y-SEPARATE ILLUSTRATION

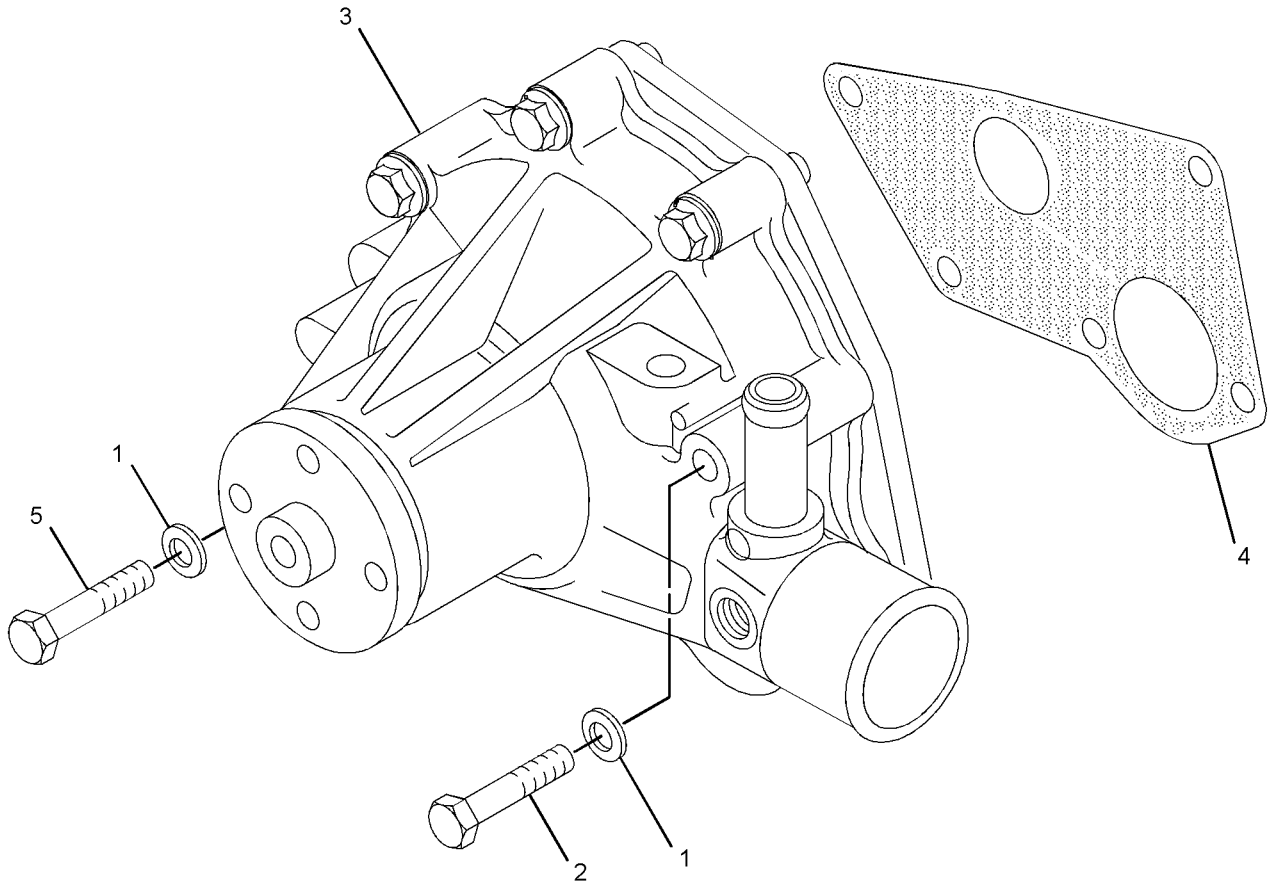

GRAPHIC #1 **<END>** g01757413

COOLING SYSTEM

335-9117 PUMP GP-WATER

S/N: CYM1-UP
PART OF 287-6056 PUMP GP-WATER
AN ATTACHMENT

SMCS-1355, 1361 **i03562121**

NOTE	REF NO	GRAPHIC REF	PART NUMBER	QTY	PART NAME 1 2 3 4 5 6 (PRODUCT LEVEL)	SEE PAGE
M	1	1	**6V-3940**	2	BOLT (M8X1.25X25-MM)	
M	2	1	**7X-2537**	1	BOLT (M8X1.25X35-MM)	
	3	1	**9M-1974**	2	WASHER-HARD (8.8X16X2-MM THK)	
	4	1	**103-9747**	1	COVER-PUMP	
	5	1	**195-8460**	1	PLUG	
	6	1	**335-9124**	1	GASKET	

M-METRIC PART

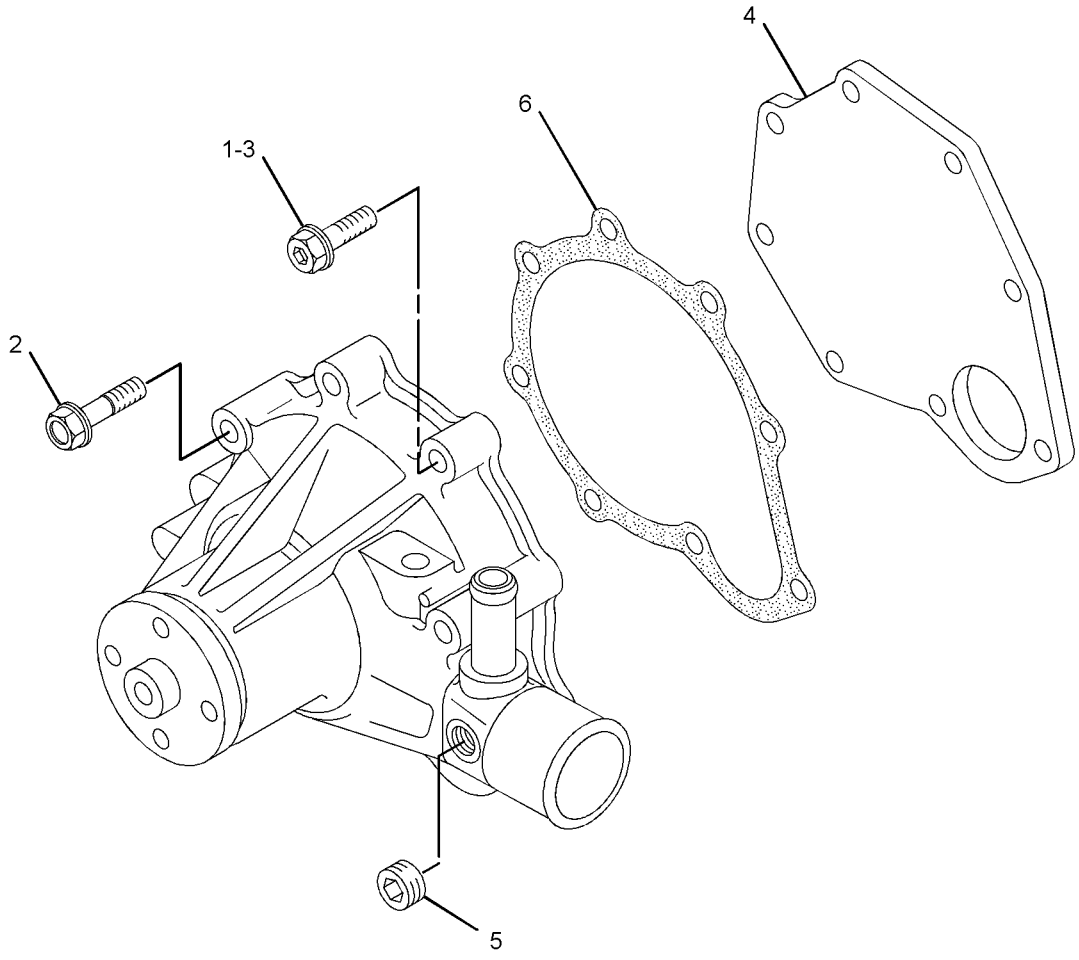

GRAPHIC #1 **<END>** g01757556

326-5373 RADIATOR & HYD OIL COOLER GP

S/N: SRS1-UP

PART OF 326-5328 INSTALLATION AR-ENGINE

SMCS-1351, 1356, 1386 **i03982094**

NOTE	REF NO	GRAPHIC REF	PART NUMBER	QTY	PART NAME 1 2 3 4 5 6 (PRODUCT LEVEL)	SEE PAGE
	1	1	**036-1865**	1	CAP AS-RADIATOR	
	2	1	**069-4080**	1	FITTING	
	3	1	**207-6154**	1	GAUGE-SIGHT (COOLANT LEVEL)	
	4	1	*217-3572*	1	FAN GP-BLOWER	
		1	**8T-4224**	4	WASHER-HARD (8.8X16X2-MM THK)	
M		1	**8T-4908**	4	BOLT (M8X1.25X25-MM)	
		1	**203-4827**	1	FAN AS (7-BLADE)	
		1	**229-8796**	1	ADAPTER	
	5	1	**218-0926**	1	GUARD AS	
	6	1	**220-1043**	1	SHROUD AS	
M	7	1	**227-6715**	2	STUD (M10X1.5X30-MM)	
	8	1	**280-8312**	1	RADIATOR & HYD OIL COOLER AS	
	9	1	**4K-8864**	2	CLIP	
	10	1	**7M-7410**	1	PLUG-PIPE	
	11	1	**7X-7729**	12	WASHER (11X25X3-MM THK)	
	12	1	**8T-4121**	4	WASHER-HARD (11X21X2.5-MM THK)	
M	13	1	**8T-4133**	6	NUT (M10X1.5-THD)	
M	14	1	**8T-4196**	8	BOLT (M10X1.5X35-MM)	

M-METRIC PART

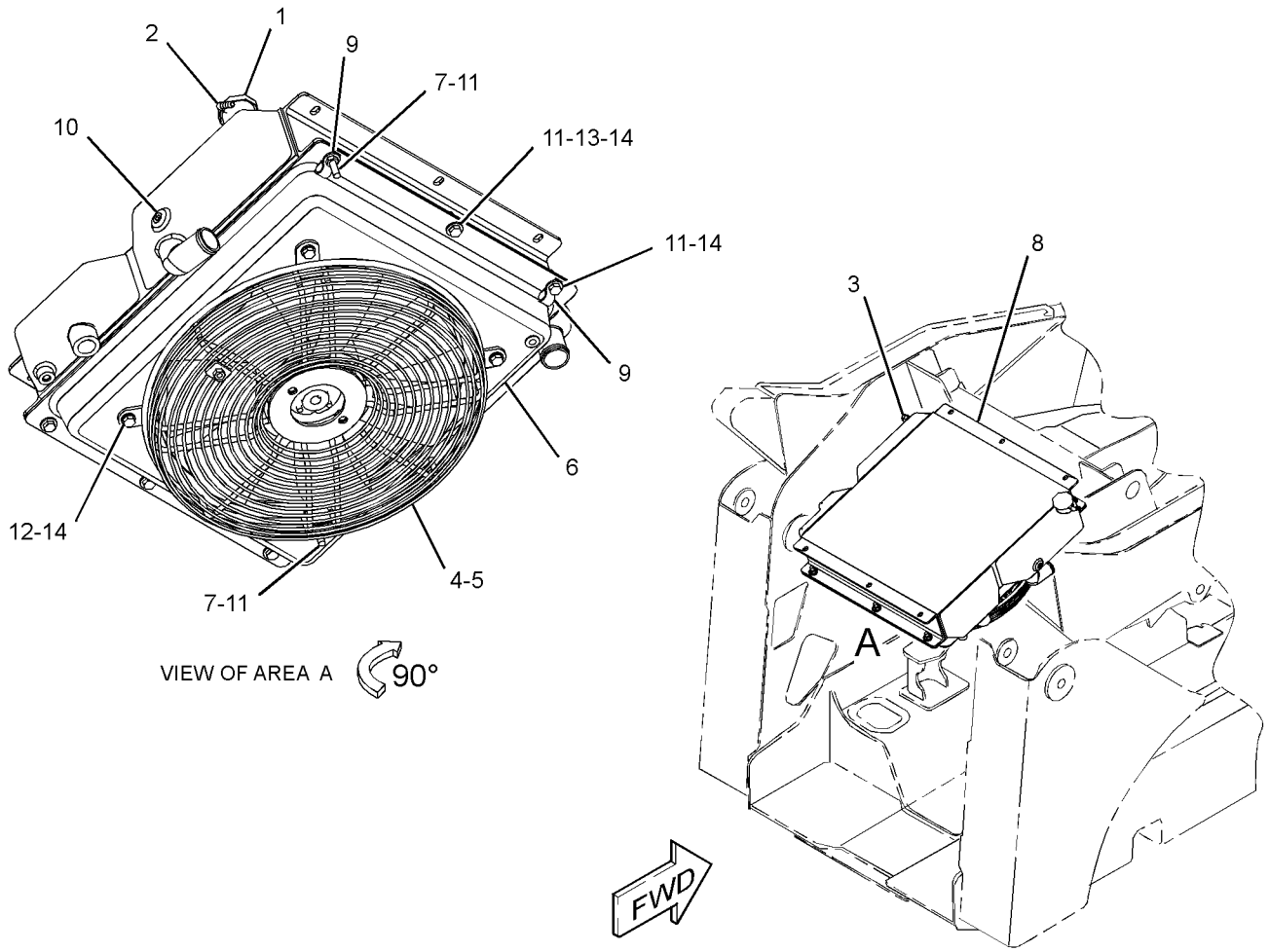

GRAPHIC #1 **<END>** g02172654

280-8260 SUPPORT GP-RADIATOR

S/N: SRS1-UP

PART OF 326-5328 INSTALLATION AR-ENGINE

SMCS-1351, 1353 **i03982090**

NOTE	REF NO	GRAPHIC REF	PART NUMBER	QTY	PART NAME 1 2 3 4 5 6 (PRODUCT LEVEL)	SEE PAGE
	1	1	**142-8832**	1	PIN AS	
	2	1	**208-6176**	4	STUD-BALL	
	3	1	**280-8261**	1	GRILL AS	
M		1	**159-9540**	1	NUT-WELD (M8X1.25-THD)	
	4	1	**280-8262**	1	SUPPORT AS	
	5	1	**280-8263**	1	SUPPORT AS	
M		1	**159-9540**	4	NUT-WELD (M8X1.25-THD)	
M		1	**159-9541**	3	NUT-WELD (M10X1.5-THD)	
	6	1	**280-8328**	1	STRIKER AS	
	7	1	**326-5354**	1	SPRING AS-GAS (RADIATOR)	
	8	1	**178-2255**	2	PIN	
	9	1	**193-8345**	1	SPRING AS-GAS (GRILL)	
	10	1	**223-4275**	1	LATCH AS	
	11	1	**2K-4973**	1	LOCKNUT (3/8-16-THD)	
M	12	1	**5C-7261**	1	NUT (M8X1.25-THD)	
	13	1	**5P-0372**	2	LOCK PIN	
	14	1	**7X-7729**	10	WASHER (11X25X3-MM THK)	
M	15	1	**8T-4133**	3	NUT (M10X1.5-THD)	
	16	1	**8T-4159**	1	BUMPER	
M	17	1	**8T-4181**	3	BOLT (M6X1X20-MM)	
M	18	1	**8T-4196**	3	BOLT (M10X1.5X35-MM)	
	19	1	**8T-4205**	3	WASHER-HARD (7.2X14.5X2-MM THK)	
	20	1	**8T-4224**	4	WASHER-HARD (8.8X16X2-MM THK)	
M	21	1	**8T-4908**	4	BOLT (M8X1.25X25-MM)	
M	22	1	**8T-5005**	1	BOLT (M10X1.5X70-MM)	
M	23	1	**8T-6466**	2	BOLT (M10X1.5X60-MM)	
D	24	1	**5P-8309**		SEAL (0.6-M EACH)	

D-ORDER BY THE METER
M-METRIC PART

280-8260 **SUPPORT GP-RADIATOR** *(contd.)* **i03982090**

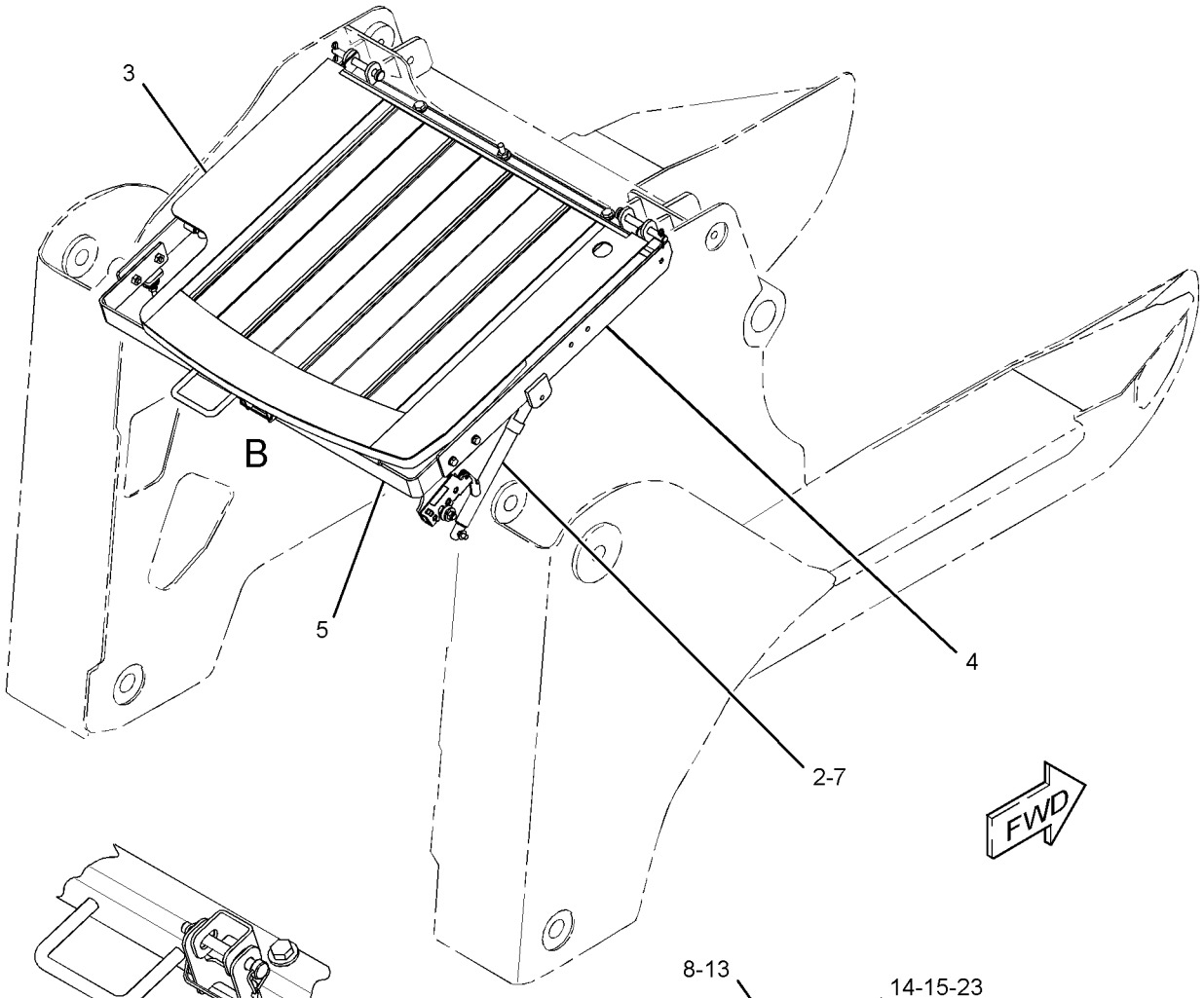

VIEW OF AREA B
(COMPONENTS REMOVED FOR CLARITY)

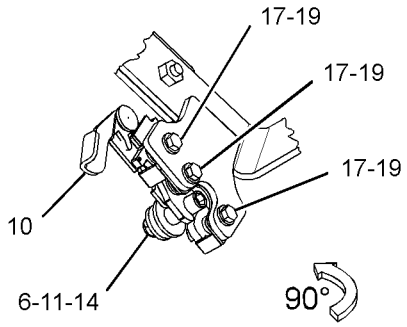

VIEW OF AREA A

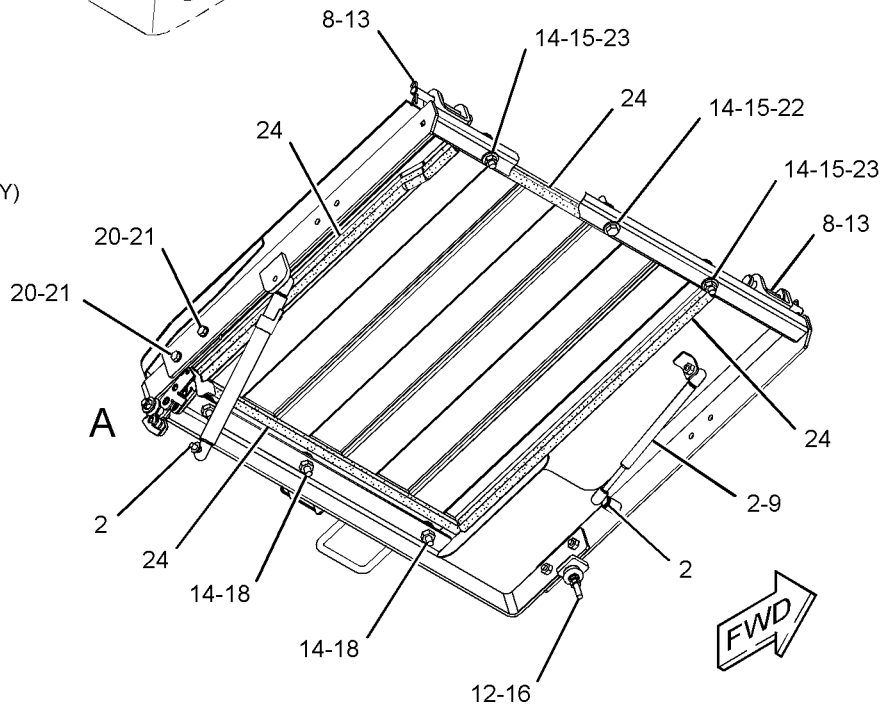

GRAPHIC #1 **<END>** g02173717

AIR INLET AND EXHAUST SYSTEM

326-5330 AIR CLEANER GP

S/N: SRS1-UP

PART OF 326-5328 INSTALLATION AR-ENGINE

SMCS-1051, 1054 **i03982091**

NOTE	REF NO	GRAPHIC REF	PART NUMBER	QTY	PART NAME 1 2 3 4 5 6 (PRODUCT LEVEL)	SEE PAGE
Y	1	1	*326-5331*	1	AIR CLEANER GP	53
	2	1	**326-5335**	1	PLATE	
	3	1	**326-5353**	1	PLATE	
	4	1	**8T-4224**	4	WASHER-HARD (8.8X16X2-MM THK)	
M	5	1	**8T-4908**	4	BOLT (M8X1.25X25-MM)	

M-METRIC PART
Y-SEPARATE ILLUSTRATION

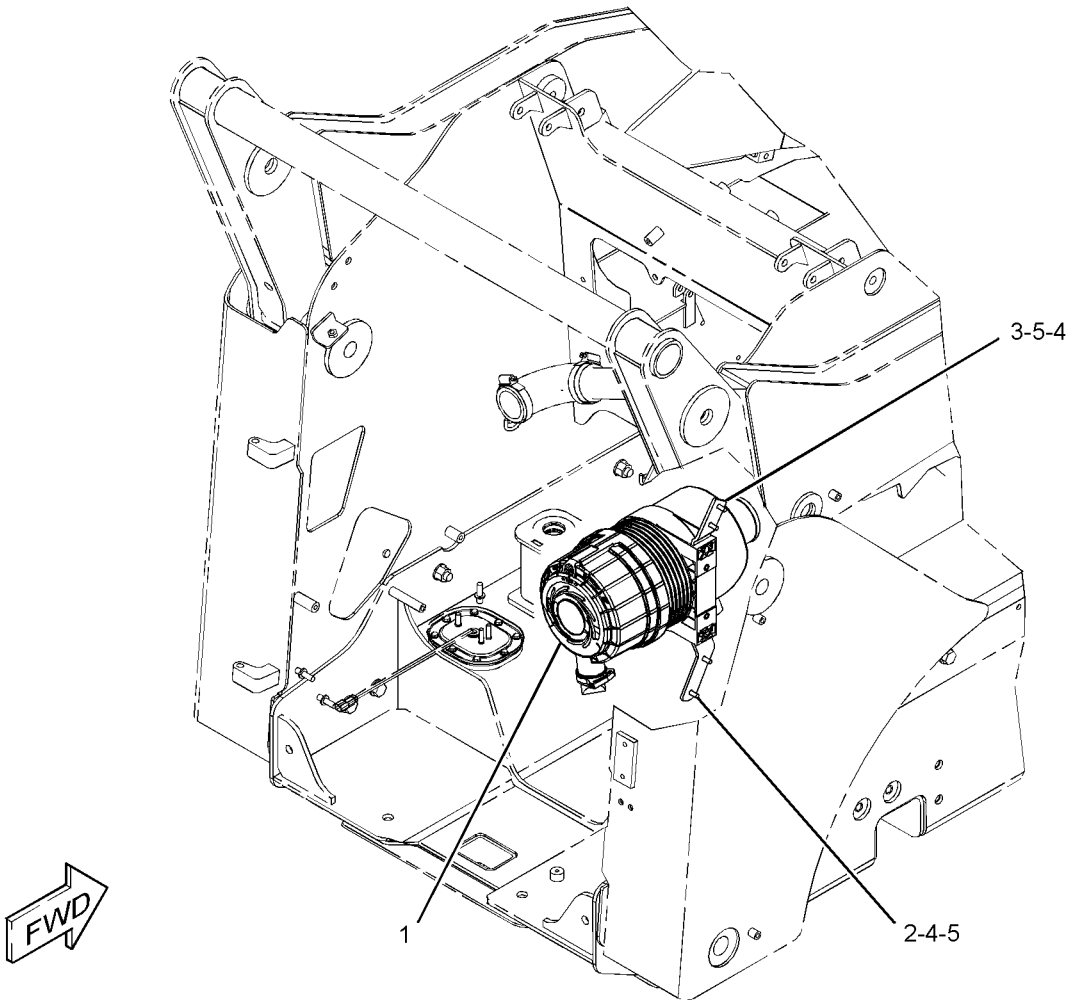

GRAPHIC #1 **<END>** g02173697

AIR INLET AND EXHAUST SYSTEM

326-5331 AIR CLEANER GP

S/N: SRS1-UP

PART OF 326-5330 AIR CLEANER GP

SMCS-1051, 1054 **i03996420**

NOTE	REF NO	GRAPHIC REF	PART NUMBER	QTY	PART NAME 1 2 3 4 5 6 (PRODUCT LEVEL)	SEE PAGE
	1	1	**152-4898**	1	BAND-MOUNTING	
	2	1	**237-7325**	1	INDICATOR (AIR CLEANER)	
Y	3	1	**326-5332**	1	AIR CLEANER GP	54

Y-SEPARATE ILLUSTRATION

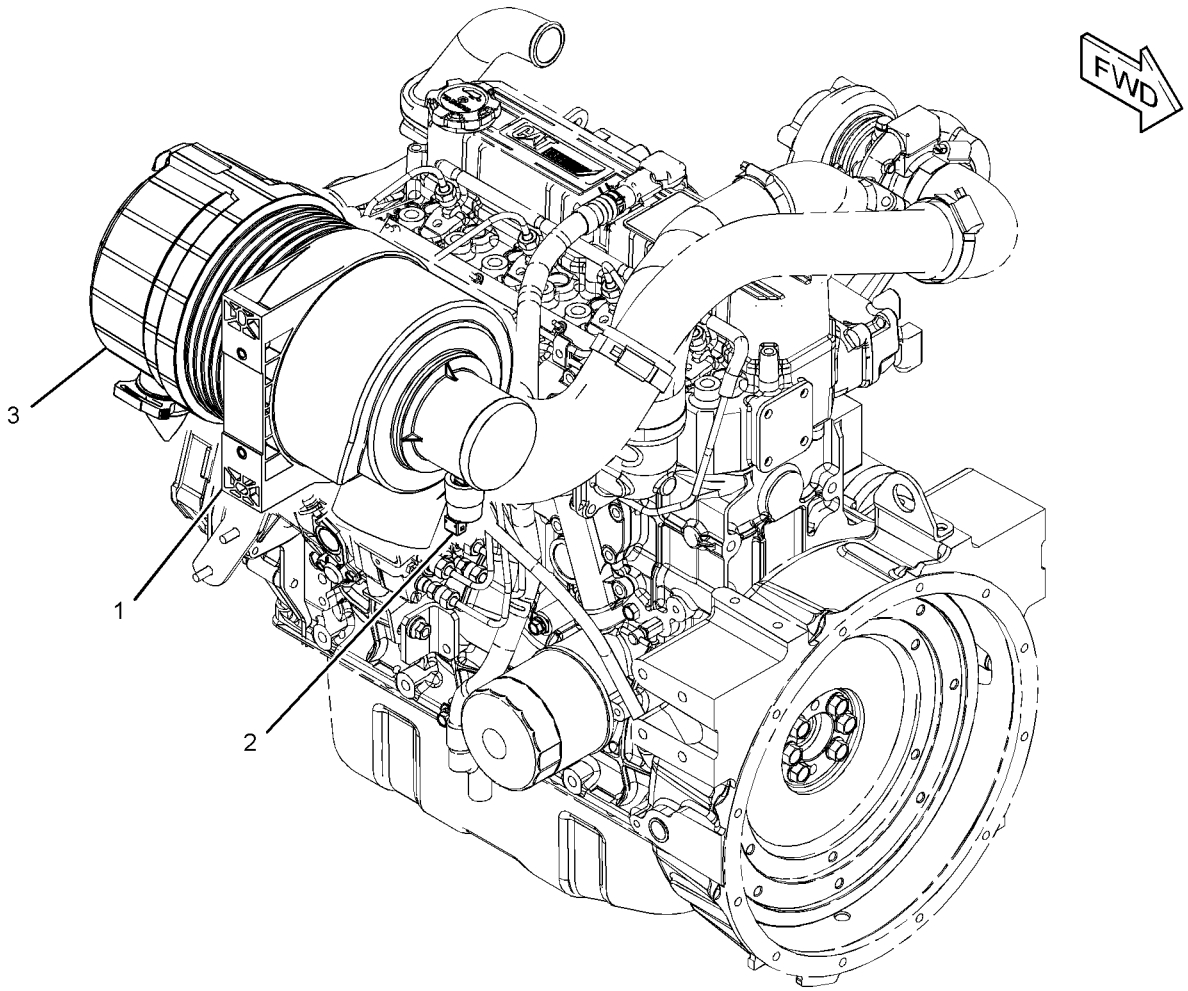

GRAPHIC #1 **<END>** g02173665

AIR INLET AND EXHAUST SYSTEM

326-5332 AIR CLEANER GP

S/N: SRS1-UP

PART OF 326-5331 AIR CLEANER GP

SMCS-1051, 1054 **i03982193**

NOTE	REF NO	GRAPHIC REF	PART NUMBER	QTY	PART NAME 1 2 3 4 5 6 (PRODUCT LEVEL)	SEE PAGE
	1	1	**112-9717**	1	VALVE-DUST (AIR CLEANER)	
	2	1	**243-0407**	1	COVER AS	
	3	1	**280-8298**	1	CLAMP	
F			**110-6326**	1	FILTER ELEMENT AS-AIR (PRIMARY)	
F			**110-6331**	1	FILTER ELEMENT AS-AIR (SECONDARY)	

F-NOT SHOWN

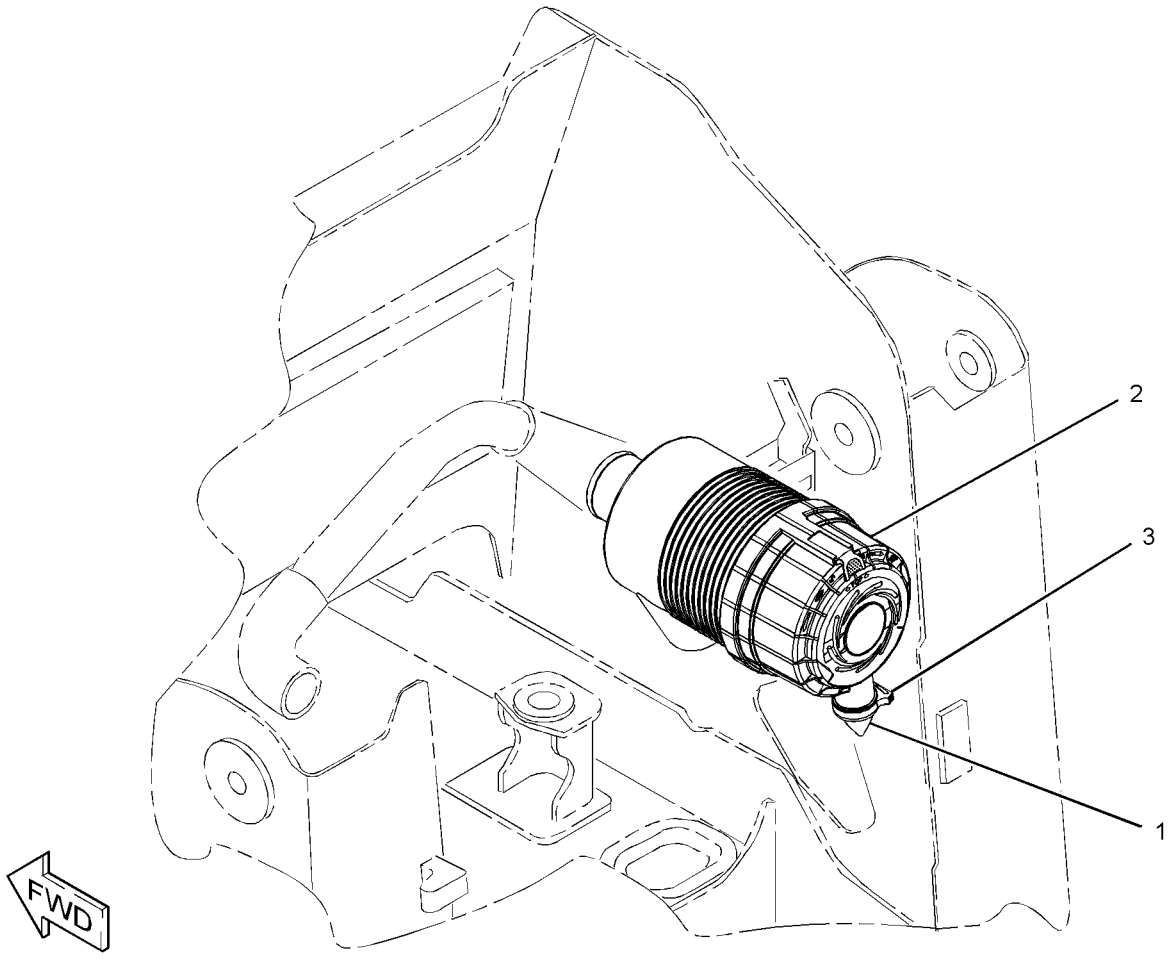

GRAPHIC #1 **<END>** g02173638

AIR INLET AND EXHAUST SYSTEM

247-6317 LINES GP-AIR

S/N: CYM1-UP

PART OF 332-8660 ENGINE AR-PRIMARY

AN ATTACHMENT

SMCS-1071 **i02712952**

NOTE	REF NO	GRAPHIC REF	PART NUMBER	QTY	PART NAME 1 2 3 4 5 6 (PRODUCT LEVEL)	SEE PAGE
M	1	1	**6V-3940**	4	BOLT (M8X1.25X25-MM)	
	2	1	**9M-1974**	4	WASHER-HARD (8.8X16X2-MM THK)	
	3	1	**5I-7678**	1	GASKET	
	4	1	**5I-8021**	1	ELBOW AS	
		1	**5I-8023**	1	PLUG	

M-METRIC PART

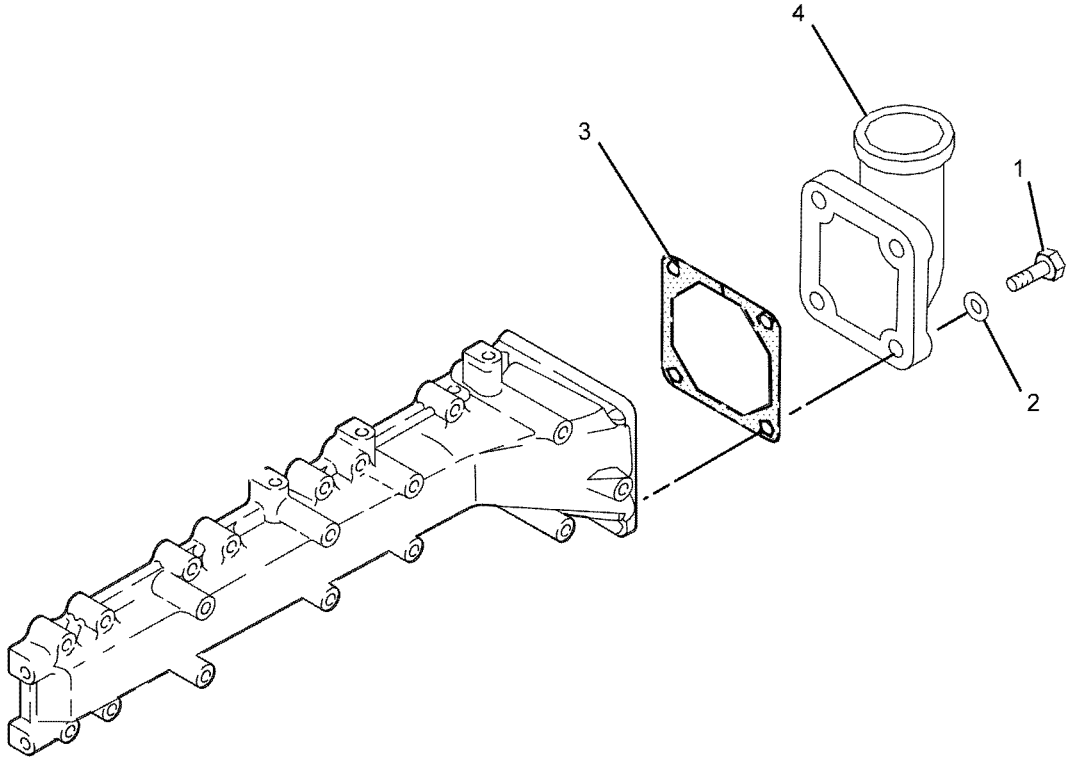

GRAPHIC #1 **<END>** g01048173

AIR INLET AND EXHAUST SYSTEM

315-7769 LINES GP-AIR

S/N: CYM1-UP

PART OF 332-8660 ENGINE AR-PRIMARY

AN ATTACHMENT

SMCS-1071 **i04373712**

NOTE	REF NO	GRAPHIC REF	PART NUMBER	QTY	PART NAME 1 2 3 4 5 6 (PRODUCT LEVEL)	SEE PAGE
	1	1	**373-9662**	1	HOSE-BREATHER	
	2	1	**330-7622**	2	CLIP	
M	3	1	**5C-9553**	2	BOLT (M6X1X16-MM)	
	4	1	**9X-8256**	2	WASHER (6.6X12X2-MM THK)	
	5	1	**315-8697**	1	CLIP HOSE	
	6	1	**253-5512**	1	CLIP	
	7	1	**315-7701**	2	SCREW	
	8	1	**315-8698**	2	RETAINER-WASHER	
	9	1	**373-9653**	1	CLIP-HOSE	
	10	1	**330-7620**	1	BRACKET-SUPPORT	
	11	1	**3B-4504**	2	LOCKWASHER	

M-METRIC PART

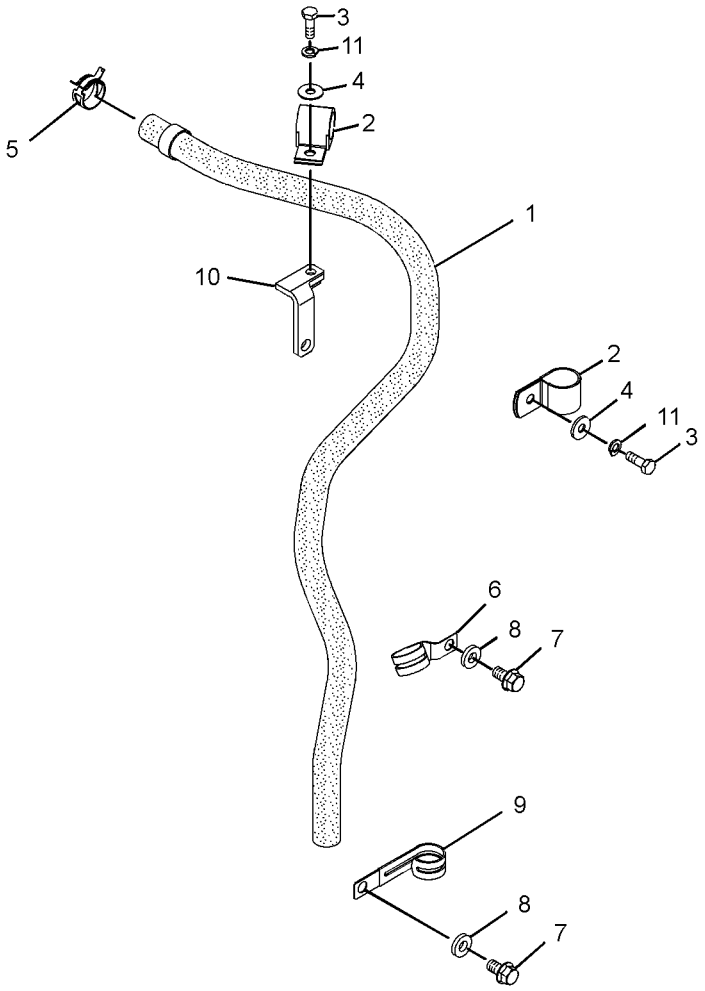

GRAPHIC #1 **<END>** g01802753

AIR INLET AND EXHAUST SYSTEM

326-5338 LINES GP-AIR

S/N: SRS1-UP

PART OF 326-5328 INSTALLATION AR-ENGINE

SMCS-1071 **i03982633**

NOTE	REF NO	GRAPHIC REF	PART NUMBER	QTY	PART NAME 1 2 3 4 5 6 (PRODUCT LEVEL)	SEE PAGE
	1	1	**5P-4868**	1	CLAMP-HOSE	
	2	1	**326-5339**	1	HOSE AS	
	3	1	**8T-6726**	1	CLAMP-HOSE	

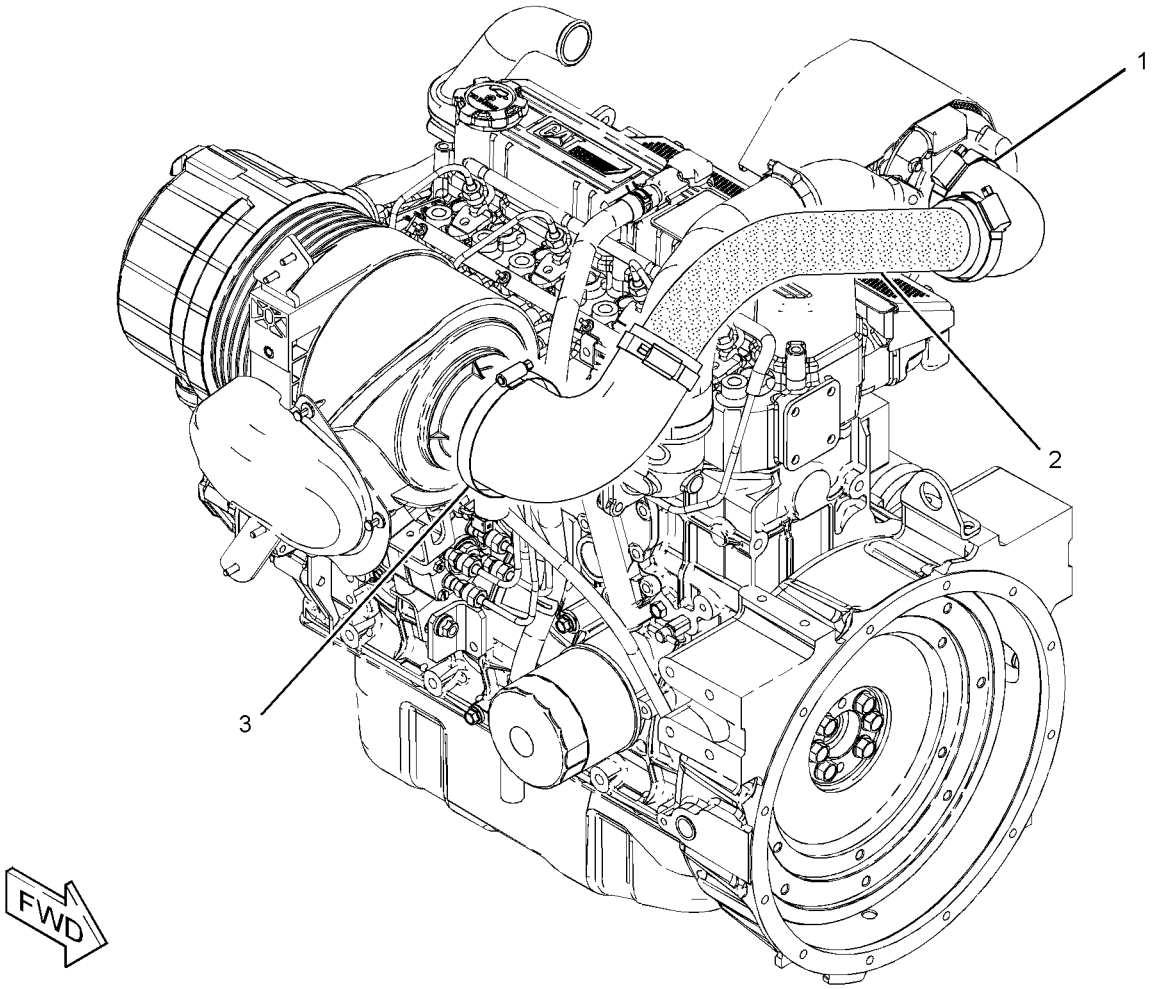

GRAPHIC #1 **<END>** g02173451

AIR INLET AND EXHAUST SYSTEM

287-5323 MANIFOLD GP-EXHAUST

S/N: CYM1-UP

PART OF 332-8660 ENGINE AR-PRIMARY

AN ATTACHMENT

SMCS-1059 **i03041710**

NOTE	REF NO	GRAPHIC REF	PART NUMBER	QTY	PART NAME 1 2 3 4 5 6 (PRODUCT LEVEL)	SEE PAGE
	1	1	**5I-7931**	4	STUD	
	2	1	**195-8260**	8	NUT (M8X1.25-THD)	
	3	1	**233-5460**	8	BOLT	
	4	1	**328-5192**	1	MANIFOLD-EXHAUST	
	5	1	**234-4824**	1	GASKET-MANIFOLD	

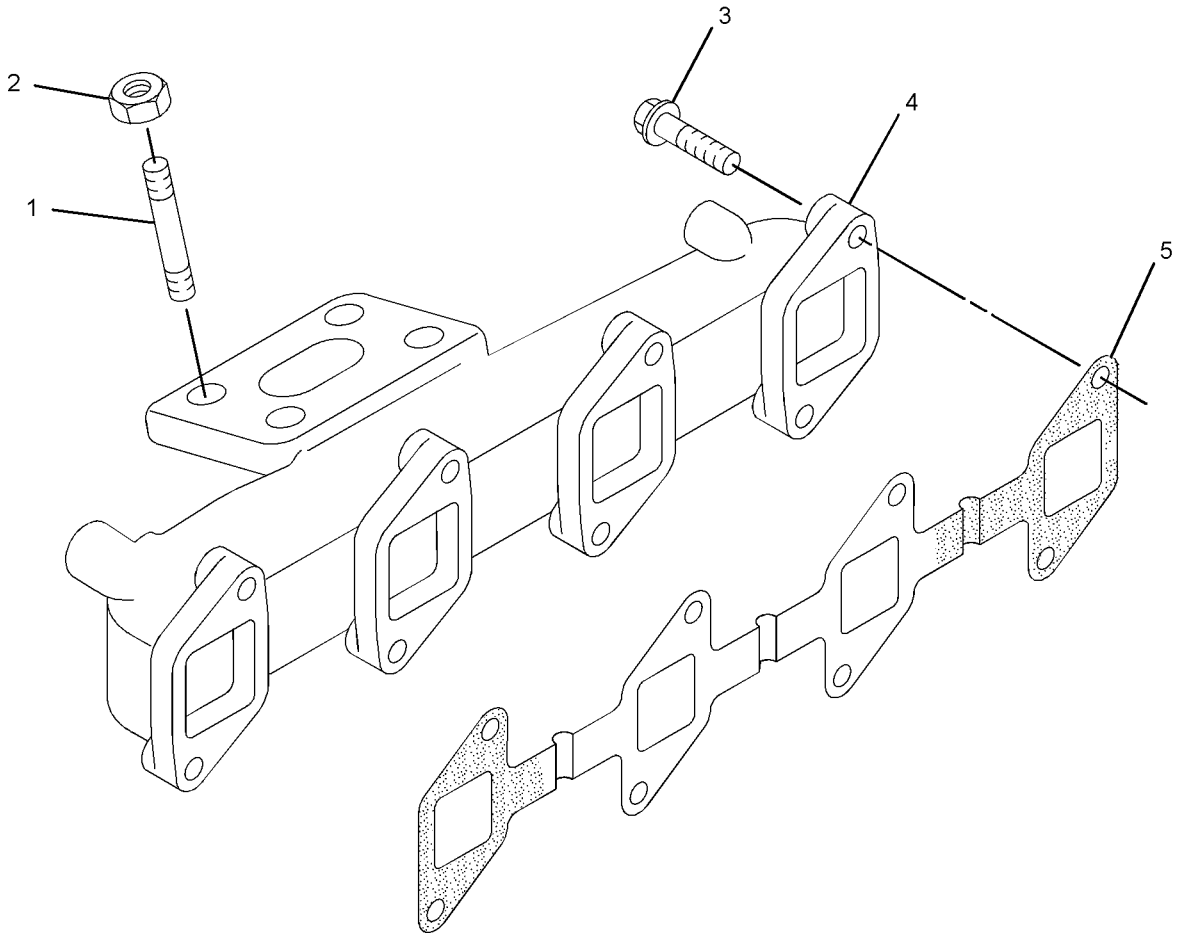

GRAPHIC #1 **<END>** g01327717

335-5750 MANIFOLD GP-INLET

S/N: CYM1-UP

PART OF 332-8660 ENGINE AR-PRIMARY

AN ATTACHMENT

SMCS-1058 **i03254952**

NOTE	REF NO	GRAPHIC REF	PART NUMBER	QTY	PART NAME 1 2 3 4 5 6 (PRODUCT LEVEL)	SEE PAGE
	1	1	**3B-4505**	13	LOCKWASHER	
M	2	1	**7X-0818**	3	BOLT (M8X1.25X45-MM)	
M	3	1	**8T-4177**	2	BOLT (M8X1.25X90-MM)	
	4	1	**8T-4224**	3	WASHER-HARD (8.8X16X2-MM THK)	
M	5	1	**099-3649**	11	BOLT (M8X1.25X40-MM)	
	6	1	**234-4805**	1	MANIFOLD-INLET	
	7	1	**234-4806**	1	GASKET	

M-METRIC PART

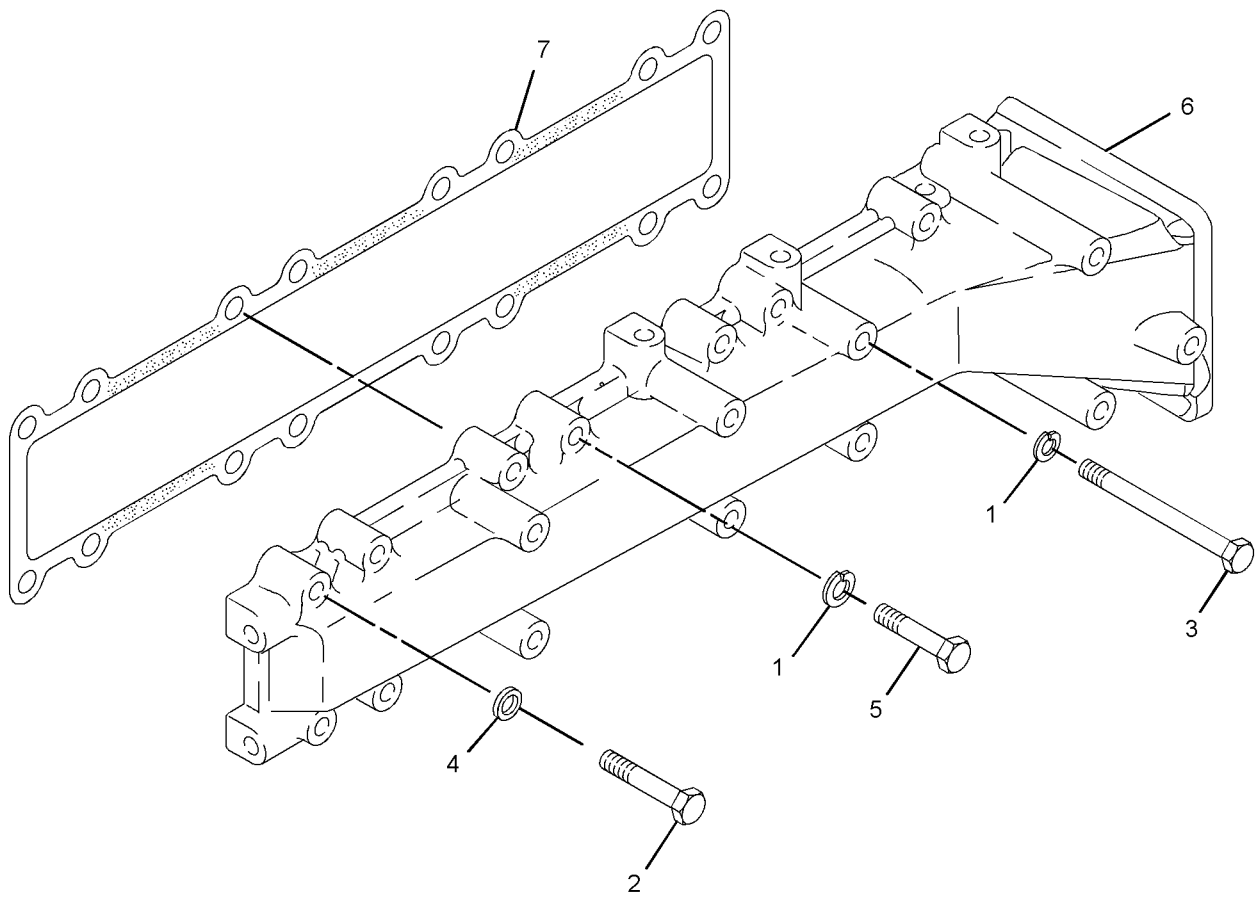

GRAPHIC #1 **<END>** g01664575

AIR INLET AND EXHAUST SYSTEM

258-2462 MUFFLER & MOUNTING GP

S/N: SRS1-UP
PART OF 326-5300 CONVERSION AR-MACHINE
AN ATTACHMENT

SMCS-1062 **i02930638**

NOTE	REF NO	GRAPHIC REF	PART NUMBER	QTY	PART NAME 1 2 3 4 5 6 (PRODUCT LEVEL)	SEE PAGE
	1	1	**5I-8111**	1	GASKET	
	2	1	**198-4776**	3	WASHER-HARD (8.8X20X8-MM THK)	
	3	1	**258-2419**	1	MUFFLER AS	
	4	1	**280-8240**	1	PLATE	
	5	1	**232-3121**	1	NUT (M10X1.25-THD)	
	6	1	**280-8341**	2	SPACER (8.7X15.8X21.1-MM THK)	
M	7	1	**8T-7547**	3	BOLT (M8X1.25X30-MM)	
	8	1	**280-8377**	1	SPACER (11.1X19.1X25-MM THK)	
M	9	1	**305-5385**	2	BOLT (M8X1.25X50-MM)	

M-METRIC PART

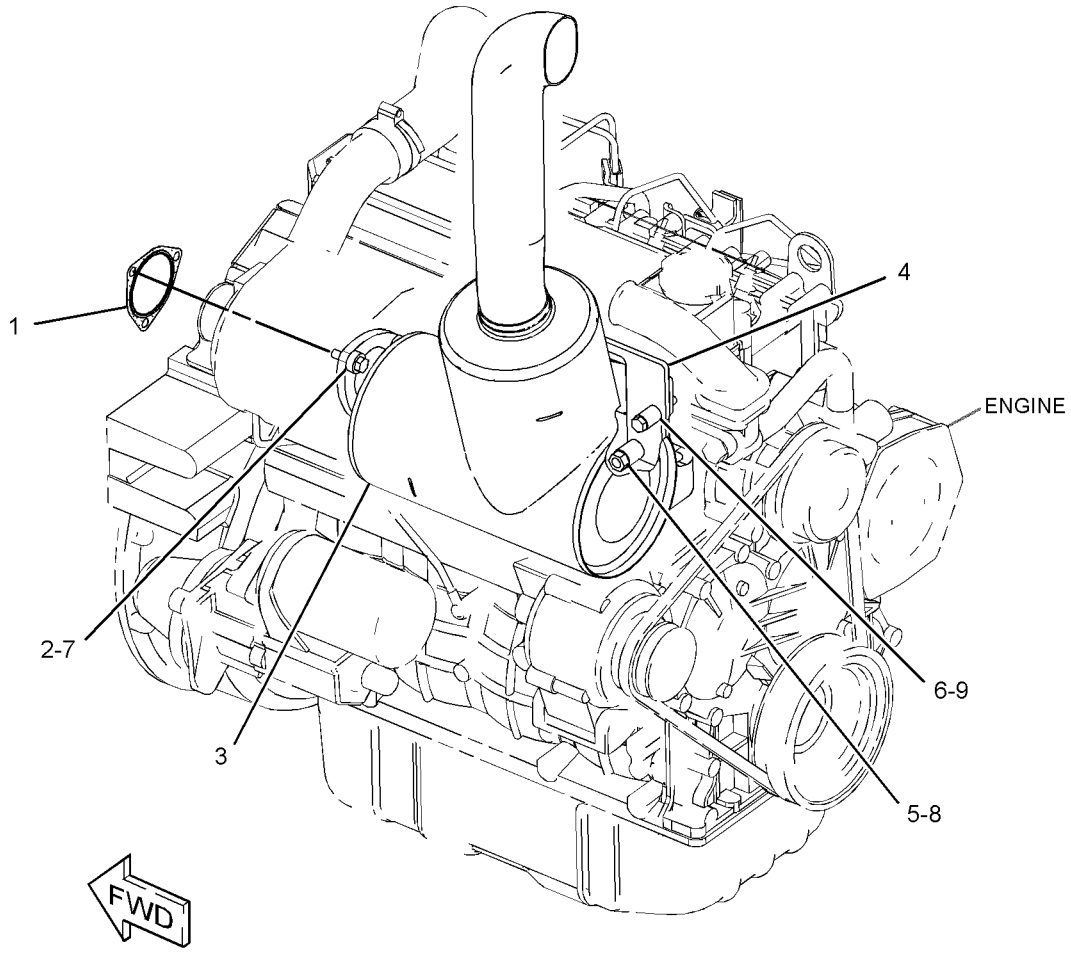

GRAPHIC #1 **<END>** g01457027

AIR INLET AND EXHAUST SYSTEM

272-3051 MUFFLER GP

S/N: SRS1-UP
STAGE II SOUND
PART OF 326-5280, 326-5281, 326-5282, 326-5284, 356-1902 CONVERSION
AR-MACHINE
FOR USE WITH EUROPEAN MARKET ONLY
AN ATTACHMENT

SMCS-1062 **i02906348**

NOTE	REF NO	GRAPHIC REF	PART NUMBER	QTY	PART NAME 1 2 3 4 5 6 (PRODUCT LEVEL)	SEE PAGE
	1	1	**5I-8111**	1	GASKET	
	2	1	**198-4776**	3	WASHER-HARD (8.8X20X8-MM THK)	
	3	1	**280-8240**	1	PLATE	
	4	1	**272-3050**	1	MUFFLER AS	
	5	1	**232-3121**	1	NUT (M10X1.25-THD)	
	6	1	**280-8341**	2	SPACER (8.7X15.8X21.1-MM THK)	
M	7	1	**8T-7547**	3	BOLT (M8X1.25X30-MM)	
	8	1	**280-8377**	1	SPACER (11.1X19.1X25-MM THK)	
M	9	1	**305-5385**	2	BOLT (M8X1.25X50-MM)	

M-METRIC PART

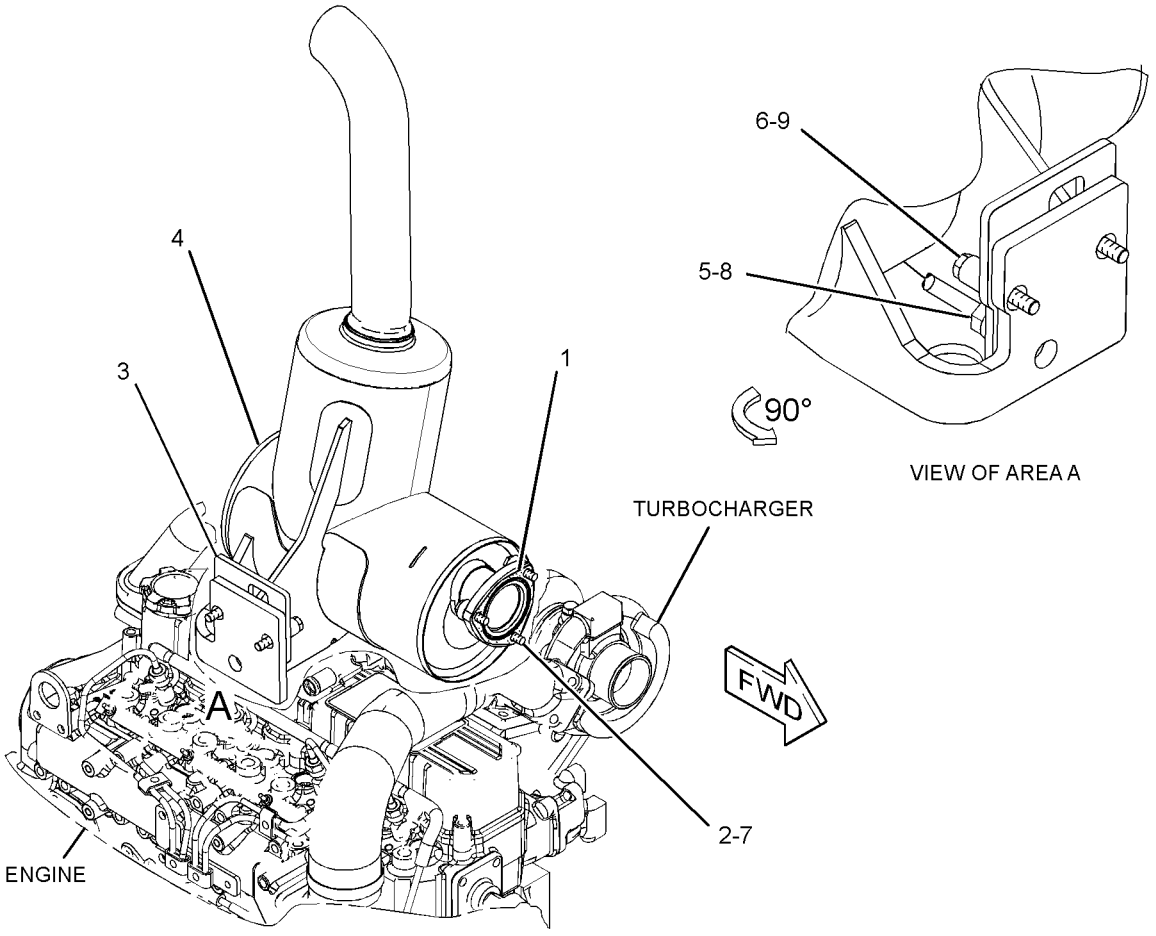

GRAPHIC #1 **<END>** g01448328

AIR INLET AND EXHAUST SYSTEM

315-7768 TURBOCHARGER GP

S/N: CYM1-UP
PART OF 332-8660 ENGINE AR-PRIMARY
AN ATTACHMENT

SMCS-1052, 1053 **i04204991**

NOTE	REF NO	GRAPHIC REF	PART NUMBER	QTY	PART NAME 1 2 3 4 5 6 (PRODUCT LEVEL)	SEE PAGE
M	1	1	**5C-2890**	1	NUT (M6X1-THD)	
M	2	1	**5C-9553**	2	BOLT (M6X1X16-MM)	
	3	1	**5I-5077**	2	CLAMP	
	4	1	**5I-7623**	1	BOLT (M10X1.25X20-MM)	
	5	1	**371-0907**	1	GASKET	
	6	1	**5I-7933**	1	GASKET	
	7	1	**5I-8109**	1	HOSE	
	8	1	**5I-8110**	1	ELBOW	
M	9	1	**6V-2317**	2	BOLT (M8X1.25X30-MM)	
M	10	1	**6V-7357**	1	BOLT (M6X1X25-MM)	
	11	1	**9M-1974**	2	WASHER-HARD (8.8X16X2-MM THK)	
	12	1	**096-2500**	3	LOCKWASHER	
	13	1	**191-3206**	4	GASKET	
	14	1	**5P-0597**	1	CLAMP-HOSE	
	15	1	**5P-4868**	1	CLAMP-HOSE (U.S. SOURCED)	
	16	1	**234-4818**	1	GASKET	
	17	1	**234-4820**	1	PIPE	
	18	1	**234-4821**	1	PIPE	
	19	1	**234-4822**	2	CLAMP	
	20	1	**296-4812**	1	BOLT	
	21	1	**235-4967**	1	CONNECTOR	
	22	1	**235-4968**	1	PIPE	
	23	1	**314-9972**	1	TURBOCHARGER AS	
	24	1	**314-9974**	1	HOSE-AIR	

M-METRIC PART

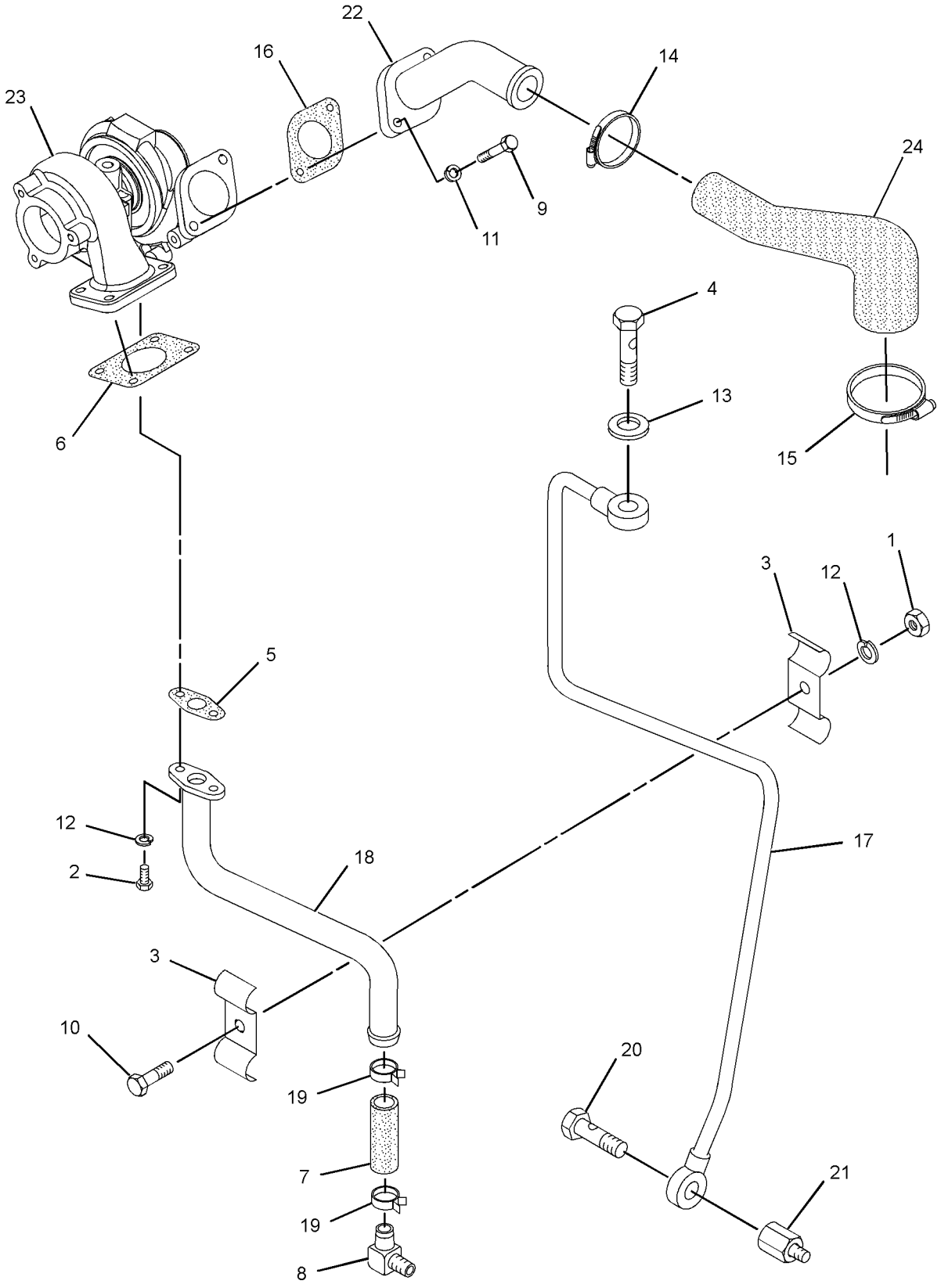

GRAPHIC #1 **<END>** g01445155

FUEL SYSTEM

218-5602 CONTROL GP-GOVERNOR

S/N: SRS1-UP

PART OF 326-5410 CHASSIS AR

SMCS-1265, 1276 **i03809973**

NOTE	REF NO	GRAPHIC REF	PART NUMBER	QTY	PART NAME 1 2 3 4 5 6 (PRODUCT LEVEL)	SEE PAGE
	1	1	**7K-1181**	1	STRAP-CABLE	
	2	1	**262-6518**	1	BRACKET AS	
	3	1	**262-6480**	1	BRACKET-STOP	
CY	4	1	**327-8939**	1	PEDAL GP-GOVERNOR	531
	5	1	**237-7296**	4	SCREW-FLAT HEAD (M6X1X35-MM)	
	6	1	**8T-4205**	9	WASHER-HARD (7.2X14.5X2-MM THK)	
M	7	1	**5C-2890**	4	NUT (M6X1-THD)	
	8	1	**8T-3984**	1	KNOB	
M	9	1	**6V-5683**	2	BOLT (M6X1X16-MM)	
M	10	1	**8T-4138**	3	BOLT (M6X1X20-MM)	

C-CHANGE FROM PREVIOUS TYPE
M-METRIC PART
Y-SEPARATE ILLUSTRATION

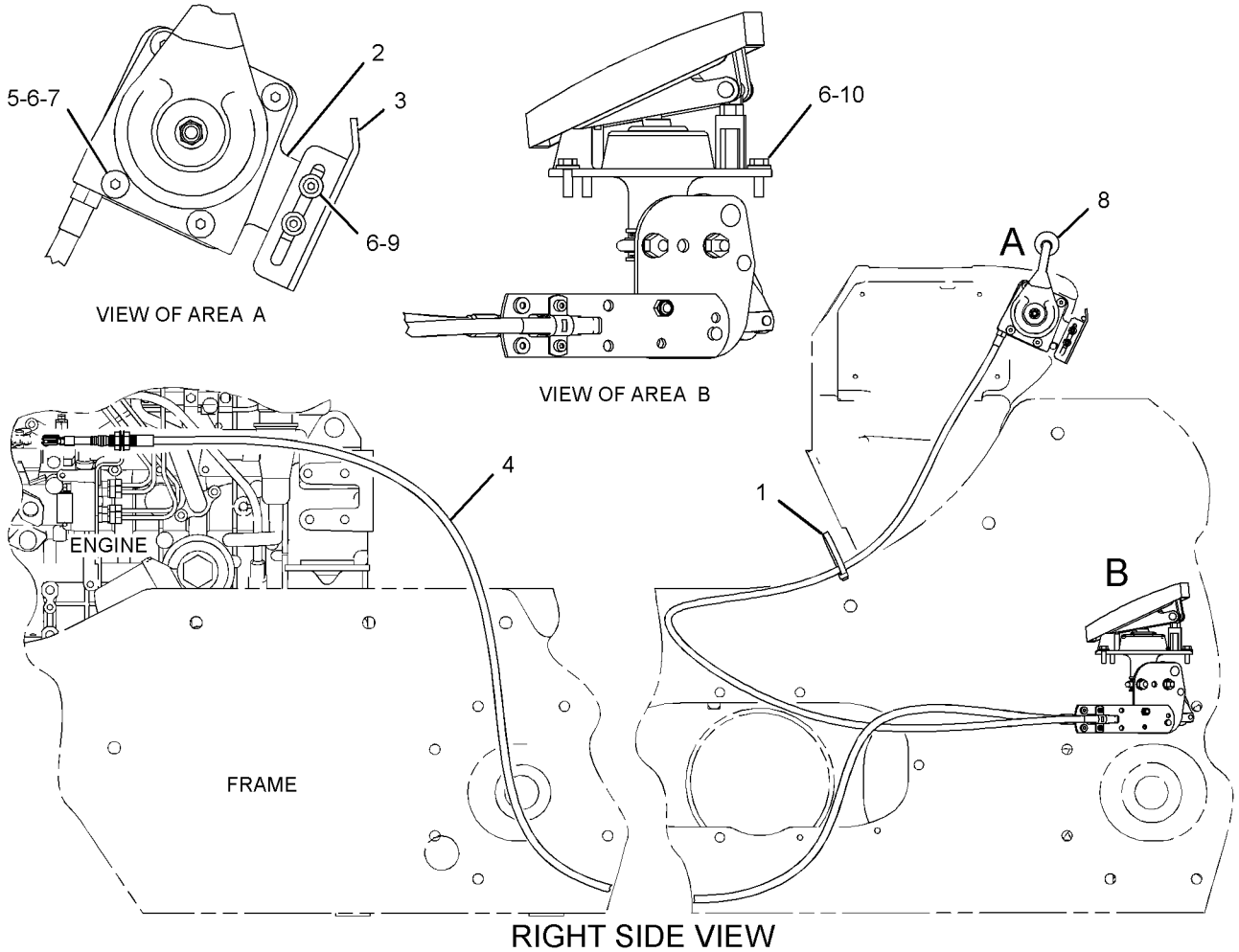

RIGHT SIDE VIEW

GRAPHIC #1 **<END>** g01927600

FUEL SYSTEM

326-5344 LINES GP-FUEL

S/N: SRS1-UP

PART OF 326-5328 INSTALLATION AR-ENGINE

SMCS-1274 **i04132732**

NOTE	REF NO	GRAPHIC REF	PART NUMBER	QTY	PART NAME 1 2 3 4 5 6 (PRODUCT LEVEL)	SEE PAGE
	1	1	**1P-4278**	10	CLAMP-HOSE	
	2	1	**3E-7404**	1	CLAMP-HOSE	
	3	1	**5P-4961**	2	CLAMP-HOSE	
	4	1	**7K-1181**	1	STRAP-CABLE	
	5	1	**069-4080**	1	FITTING	
	6	1	**178-3620**	1	STRAP-DUAL CLAMP	
	7	1	**180-3007**	1	CLAMP-HOSE	
	8	1	**195-8372**	1	CLIP	
	9	1	**212-6627**	1	HOSE	
	10	1	**246-2622**	2	ELBOW	
	11	1	**252-0368**	1	GUARD AS (FUEL FILLER)	
		1	**6W-5698**	1	GROMMET	
		1	**142-8928**	1	ELBOW	
	12	1	**256-2155**	1	TEE	
Y	13	1	**349-5327**	1	PUMP GP-FUEL PRM & PRIM FILTER (WATER SEPARATOR)	71
	15	1	**304-3885**	1	CAP-FUEL (FILLER) (WATER SEPARATOR)	
	16	1	**312-2179**	2	BRACKET AS	
	18	1	**326-5346**	1	HOSE	
	19	1	**326-5348**	1	BRACKET AS	
M		1	**159-9541**	2	NUT-WELD (M10X1.5-THD)	
	20	1	**212-0431**	2	STUD (M10X1.5-THD)	
	21	1	**260-6688**	1	BOLT (M6X1X30-MM)	
	22	1	**4B-9302**	1	CLIP	
	23	1	**4D-6466**	6	CLIP	
	24	1	**4P-7581**	1	CLIP	
M	25	1	**5C-2890**	1	NUT (M6X1-THD)	
M	26	1	**5C-9553**	2	BOLT (M6X1X16-MM)	
	27	1	**5K-4778**	1	CLIP	
	28	1	**5P-4116**	4	WASHER-HARD (8.8X20.5X2-MM THK)	
	29	1	**6D-3479**	2	CLIP	
	30	1	**8T-4121**	10	WASHER-HARD (11X21X2.5-MM THK)	
M	31	1	**8T-4133**	4	NUT (M10X1.5-THD)	
M	32	1	**8T-4136**	3	BOLT (M10X1.5X25-MM)	
M	33	1	**8T-4191**	1	BOLT (M10X1.5X16-MM)	
M	34	1	**8T-4196**	2	BOLT (M10X1.5X35-MM)	
M	35	1	**8T-4908**	4	BOLT (M8X1.25X25-MM)	
	36	1	**9X-2038**	4	WASHER (7X19X2-MM THK)	
E	37	1	**5P-1420**		HOSE (66-CM)	
E	37A	1	**5P-1420**		HOSE (15-CM)	
E	37B	1	**5P-1420**		HOSE (52-CM)	
E	37C	1	**5P-1420**		HOSE (21-CM)	
E	38	1	**5P-1442**		HOSE (129-CM)	
E	39	1	**8C-6959**		HOSE (33-CM)	

E-ORDER BY THE CENTIMETER
M-METRIC PART
Y-SEPARATE ILLUSTRATION

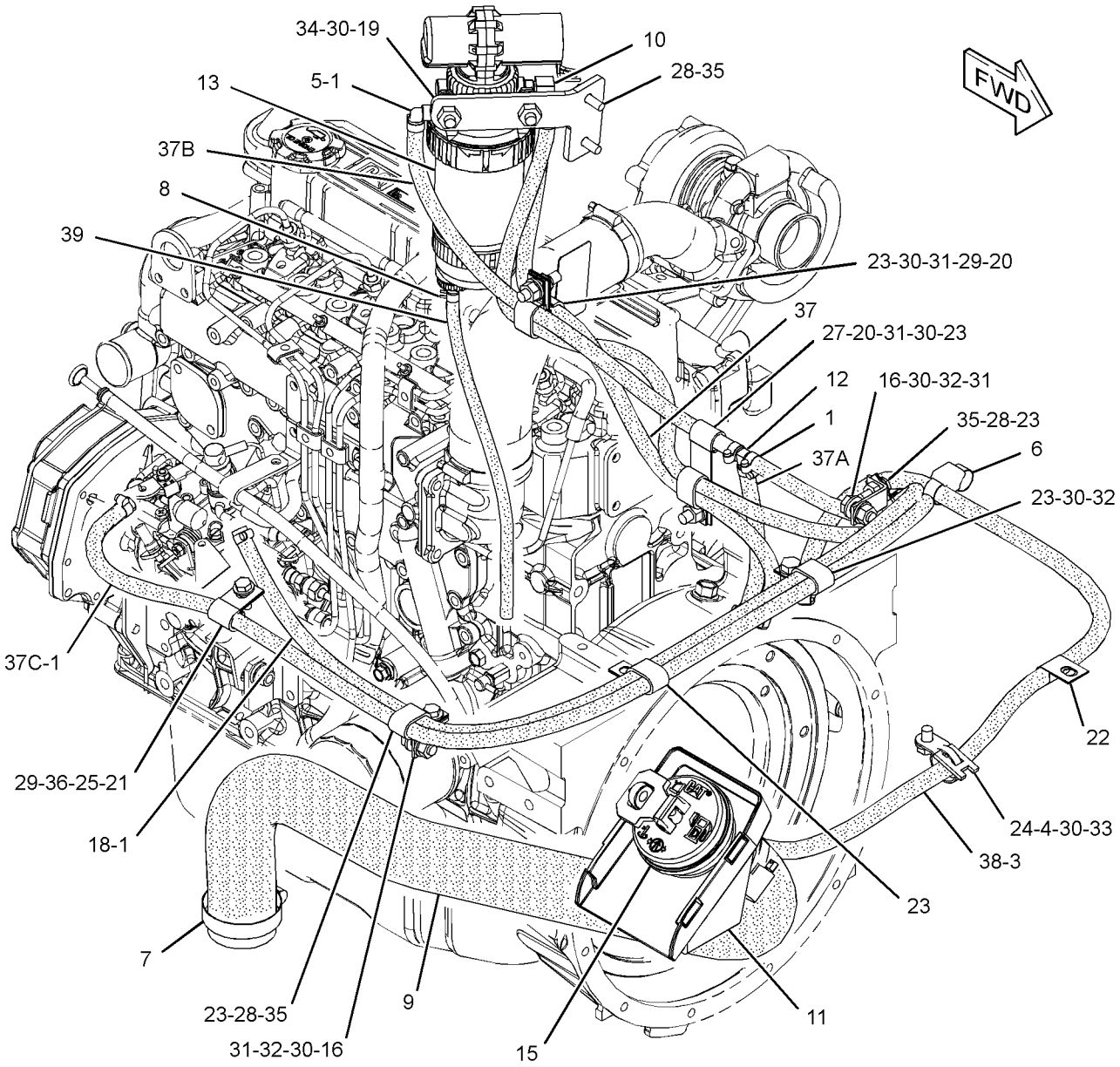

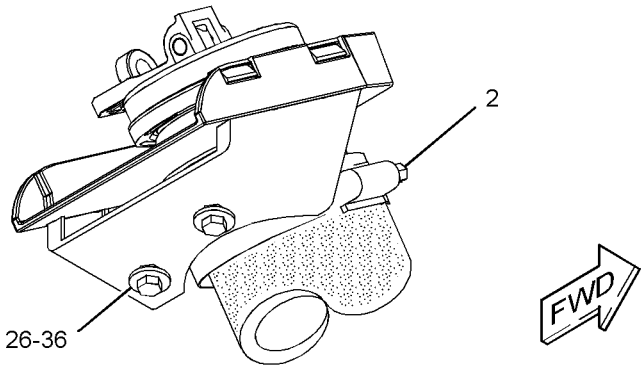

GRAPHIC #1 **<END>** g02174181

315-8350 LINES GP-FUEL INJECTION

S/N: CYM1-UP
PART OF 332-8660 ENGINE AR-PRIMARY
AN ATTACHMENT

SMCS-1252, 1254 **i02883793**

NOTE	REF NO	GRAPHIC REF	PART NUMBER	QTY	PART NAME 1 2 3 4 5 6 (PRODUCT LEVEL)	SEE PAGE
	1	1	**3B-4505**	2	LOCKWASHER	
M	2	1	**6V-2317**	4	BOLT (M8X1.25X30-MM)	
M	3	1	**8T-4200**	2	BOLT (M8X1.25X16-MM)	
	4	1	**9M-1974**	4	WASHER-HARD (8.8X16X2-MM THK)	
	5	1	**094-7235**	1	CAP	
	6	1	**113-0363**	4	SUPPORT	
	7	1	**113-0364**	4	HOSE	
	8	1	**122-8948**	6	CLAMP	
	9	1	**122-8949**	2	CLAMP	
M	10	1	**195-8364**	4	BOLT AS	
	11	1	**196-8356**	8	CLIP	
	12	1	**314-9980**	1	TUBE (CYL NO. 1)	
	13	1	**314-9981**	1	TUBE (CYL NO. 2)	
	14	1	**314-9982**	1	TUBE (CYL NO. 3)	
	15	1	**314-9983**	1	TUBE (CYL NO. 4)	
	16	1	**314-9984**	4	WASHER	
	17	1	**314-9985**	4	INJECTOR AS	
					(EACH INCLUDES)	
		1	**314-9986**	1	NOZZLE AS-FUEL INJECTION	
	18	1	**314-9987**	1	TUBE	
	19	1	**314-9988**	1	BRACKET	
	20	1	**314-9989**	1	HOSE	

M-METRIC PART

315-8350 **LINES GP-FUEL INJECTION** *(contd.)* **i02883793**

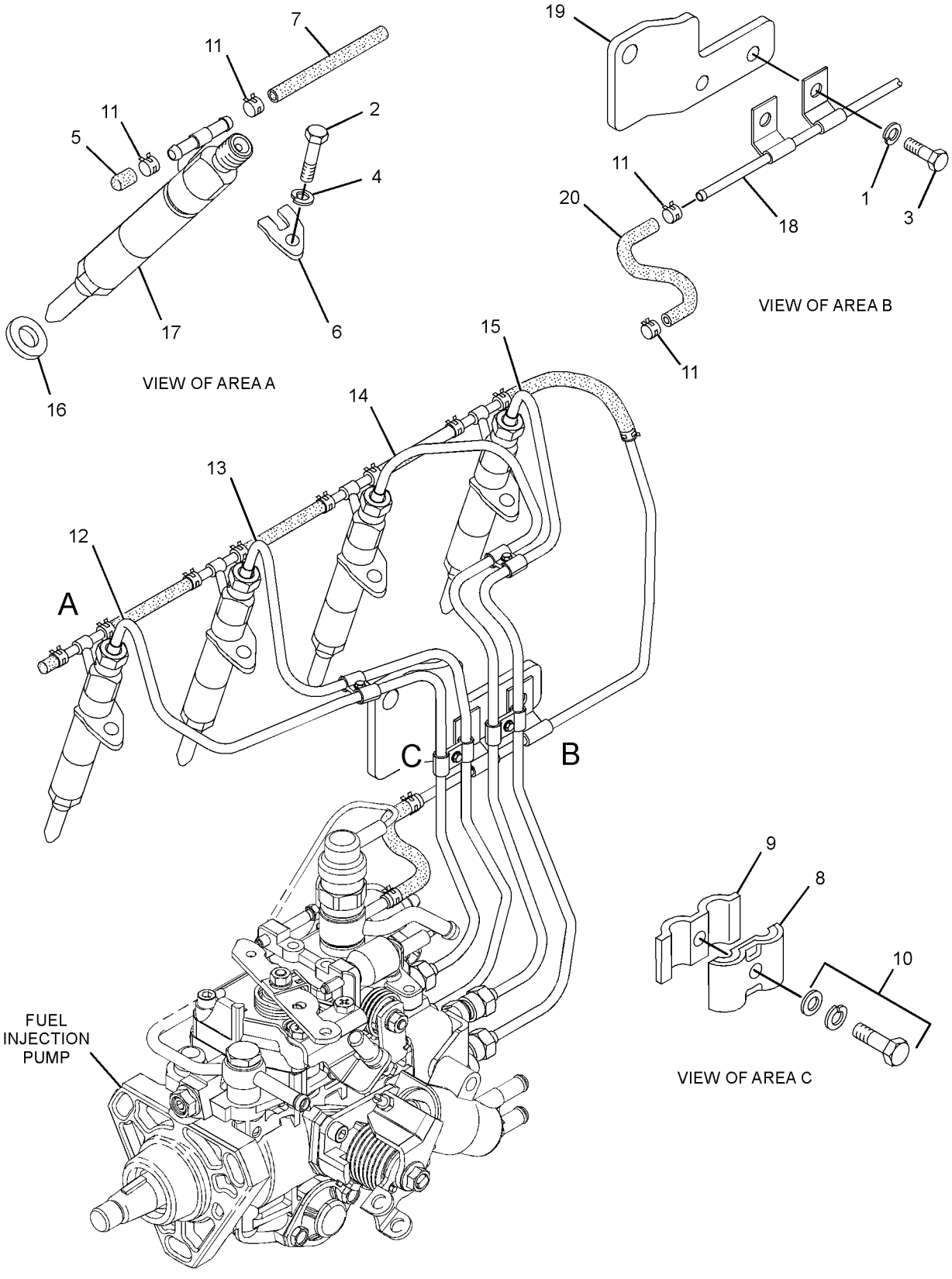

GRAPHIC #1 **<END>** g01395214

315-8352 PUMP GP-FUEL INJECTION

S/N: CYM1-UP
PART OF 332-8660 ENGINE AR-PRIMARY
AN ATTACHMENT

SMCS-1251, 1290, 5479 **i04130135**

NOTE	REF NO	GRAPHIC REF	PART NUMBER	QTY	PART NAME 1 2 3 4 5 6 (PRODUCT LEVEL)	SEE PAGE
M	1	1	**6V-5217**	1	BOLT (M8X1.25X20-MM)	
	2	1	**7X-0796**	1	LOCKWASHER	
	3	1	**8T-4121**	2	WASHER-HARD (11X21X2.5-MM THK)	
M	4	1	**8T-4137**	1	BOLT (M10X1.5X20-MM)	
	5	1	**8T-4896**	1	WASHER-HARD (10.2X18.5X2.5-MM THK)	
	6	1	**9M-1974**	1	WASHER-HARD (8.8X16X2-MM THK)	
M	7	1	**140-5217**	1	BOLT (M10X1.25X25-MM)	
M	9	1	**212-8510**	1	NUT (M10X1.25-THD)	
	10	1	**225-5249**	1	RETAINER	
	11	1	**234-4835**	3	STUD	
	12	1	**241-6010**	1	BOLT (M8X1.25X18-MM)	
	13	1	**244-7127**	3	NUT-FLANGE (M8X1.25-THD)	
	14	1	**294-5060**	1	SEAL-O-RING	
	15	1	**300-3988**	1	SEAL-O-RING	
	16	1	**300-3867**	1	WASHER	
	17	1	**314-9991**	1	FLANGE	
	18	1	**314-9992**	1	BRACKET	
C	20	1	**336-9190**	1	PUMP GP-FUEL INJECTION	
	20A	1	**335-5735**	1	SOLENOID (FUEL SHUTOFF)	
	20B	1	**352-3694**	1	SOLENOID (COLD START ADVANCE)	
	21	1	**351-6835**	1	BRACKET	
	22	1	**314-9999**	1	NUT	
	23	1	**364-3919**	2	BOLT	

C-CHANGE FROM PREVIOUS TYPE
M-METRIC PART

315-8352 **PUMP GP-FUEL INJECTION** *(contd.)* **i04130135**

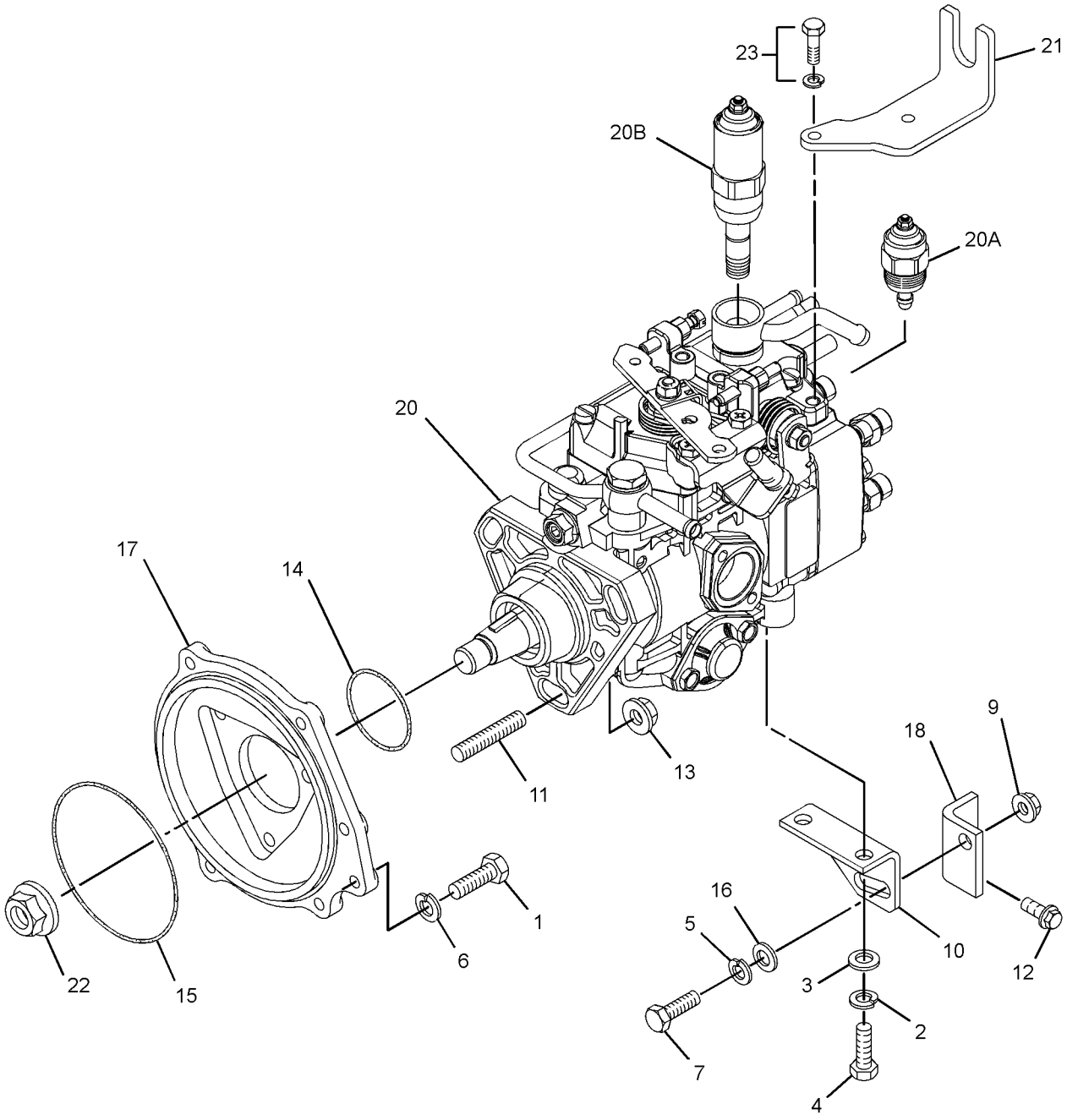

GRAPHIC #1 **<END>** g02153915

349-5327 PUMP GP-FUEL PRM & PRIM FILTER

S/N: SRS1-UP

PART OF 326-5344 LINES GP-FUEL

SMCS-1258, 1261, 1263 **i04132891**

NOTE	REF NO	GRAPHIC REF	PART NUMBER	QTY	PART NAME 1 2 3 4 5 6 (PRODUCT LEVEL)	SEE PAGE
J	1	1	**112-9401**	1	BOWL AS-WATER COLLECTION	
	2	1	**118-8118**	1	RING-RETAINING	
	3	1	**228-9132**	1	FITTING (FUEL PUMP)	
	4	1	**361-9555**	1	FILTER ELEMENT-WTR SEP & FUEL	
					PARTS SHOWN IN GRAPHIC(S) WITHOUT A REFERENCE NUMBER ARE NOT SERVICED SEPARATELY	
					AVAILABLE REPAIR KIT(S):	
J			**128-8614**	1	KIT-SEAL (WATER SEPARATOR)	
					(INCLUDES SEALS)	

J-KIT MARKED J SERVICES PARTS MARKED J

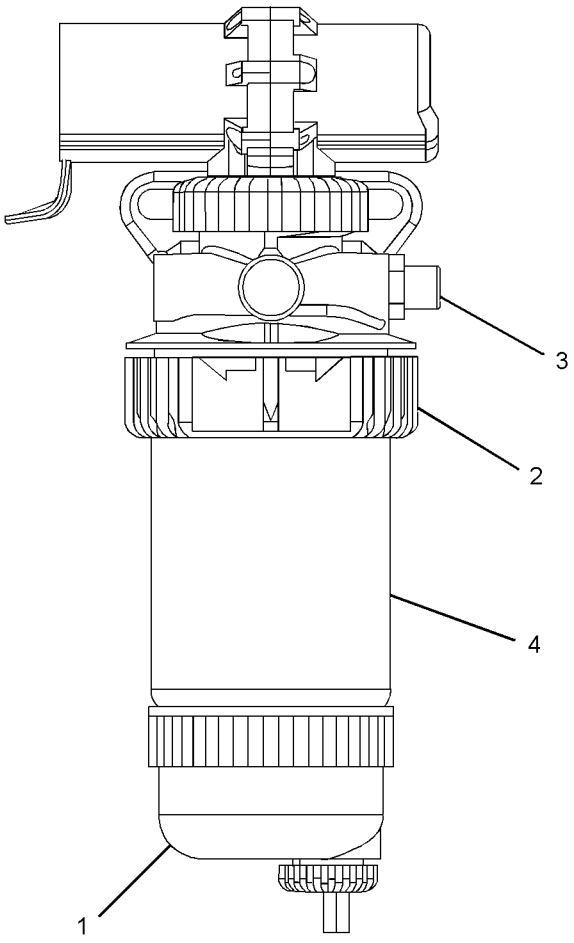

GRAPHIC #1 **<END>** g02151099

ELECTRICAL AND STARTING SYSTEM

105-2814 ALTERNATOR GP-CHARGING*R

S/N: CYM1-UP
12 VOLT, 90 AMPERE
PART OF 315-8353 ALTERNATOR GP-CHARGING
AN ATTACHMENT

SMCS-1405 **i03552882**

NOTE	REF NO	GRAPHIC REF	PART NUMBER	QTY	PART NAME 1 2 3 4 5 6 (PRODUCT LEVEL)	SEE PAGE
	1	1	**113-4458**	1	PULLEY-ALTERNATOR (2-GROOVE)	
	2	1	**113-4459**	1	FRAME AS-ALTERNATOR	
	3	1	**113-4460**	1	ROTOR AS-ALTERNATOR	
	4	1	**113-4461**	1	FRAME AS-ALTERNATOR	
	5	1	**113-4462**	1	REGULATOR AS-ALTERNATOR	
	6	1	**113-4463**	1	RECTIFIER AS-ALTERNATOR	
	7	1	**113-4464**	1	COVER-ALTERNATOR	
	8	1	**113-4469**	4	BUSHING-ALTERNATOR	
	9	1	**113-4470**	1	BUSHING-ALTERNATOR	
M	10	1	**5C-2890**	1	NUT (M6X1-THD)	
	11	1	**8T-4205**	1	WASHER-HARD (7.2X14.5X2-MM THK)	
	12	1	**1H-3244**	1	LOCKWASHER	
					AVAILABLE REPAIR KIT(S):	
			113-4465	1	KIT-ALTERNATOR BEARING	
					(INCLUDES COVERS, BEARINGS & WASHERS)	
			113-4466	1	KIT-REPAIR (ALTERNATOR BRUSHES)	
					(INCLUDES HOLDER ASSEMBLY & SEALS)	
			113-4467	1	KIT-ALTERNATOR TERMINAL	
					(INCLUDES SCREWS, PLATE & NUTS)	
			113-4468	1	KIT-ALTERNATOR HARDWARE	
					(INCLUDES SCREWS)	

M-METRIC PART

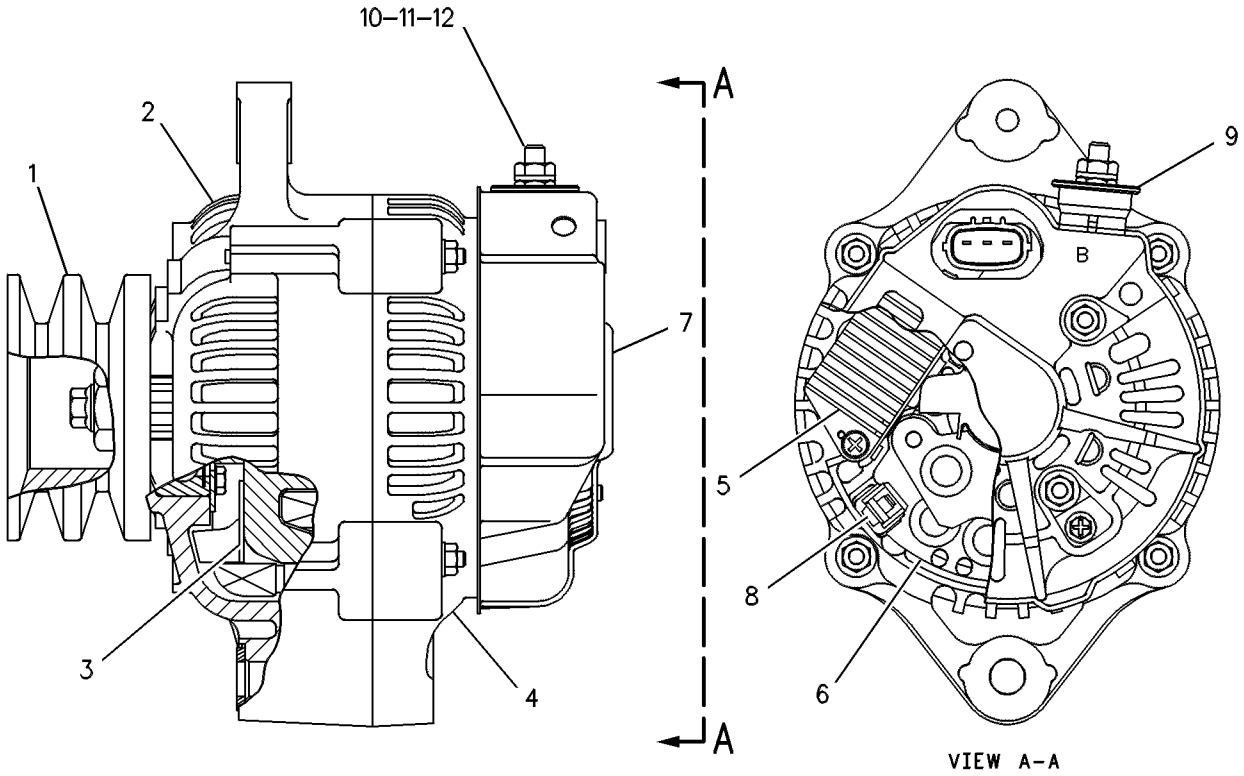

GRAPHIC #1 **<END>** g00128916

315-8353 ALTERNATOR GP-CHARGING

S/N: CYM1-UP
PART OF 332-8660 ENGINE AR-PRIMARY
AN ATTACHMENT

SMCS-1405 **i03077440**

NOTE	REF NO	GRAPHIC REF	PART NUMBER	QTY	PART NAME 1 2 3 4 5 6 (PRODUCT LEVEL)	SEE PAGE
	1	1	**294-7916**	1	BRACKET	
M	2	1	**6V-5217**	1	BOLT (M8X1.25X20-MM)	
C	3	1	**241-6010**	3	BOLT	
	4	1	**8T-4896**	1	WASHER-HARD (10.2X18.5X2.5-MM THK)	
	5	1	**9M-1974**	1	WASHER-HARD (8.8X16X2-MM THK)	
	6	1	**235-4962**	1	PLATE	
	7	1	**235-4973**	1	BOLT (M10X1.5X90-MM)	
YR	8	1	**105-2814**	1	ALTERNATOR GP-CHARGING	72

C-CHANGE FROM PREVIOUS TYPE
M-METRIC PART
R-REMFG PART MAY BE AVAILABLE
Y-SEPARATE ILLUSTRATION

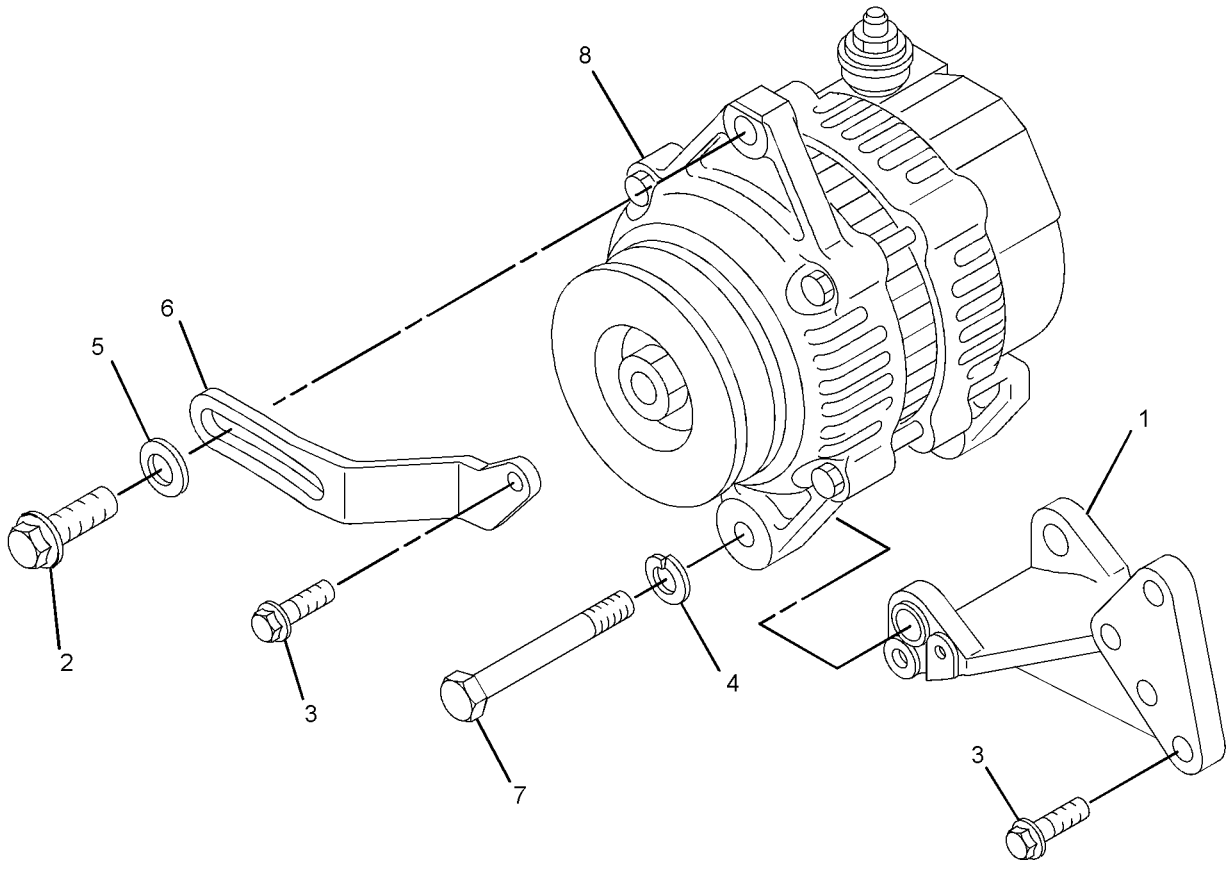

GRAPHIC #1 **<END>** g01567413

ELECTRICAL AND STARTING SYSTEM

328-2278 BATTERY & WIRING GP

S/N: SRS1-UP

PART OF 326-5410 CHASSIS AR

SMCS-1401, 1402 **i03969170**

NOTE	REF NO	GRAPHIC REF	PART NUMBER	QTY	PART NAME 1 2 3 4 5 6 (PRODUCT LEVEL)	SEE PAGE
	1	1	**7K-1181**	5	STRAP-CABLE	
	2	1	**178-3620**	2	STRAP-DUAL CLAMP	
	3	1	**193-8329**	1	CLAMP	
	4	1	**230-6368**	1	BATTERY (12-VOLT, MAINTENANCE FREE)	
	5	1	**328-2279**	1	CABLE AS-BATTERY (POSITIVE)	
E		1	**159-8049**		CABLE (00-GA, RED) (179-CM)	
		1	**8N-0869**	1	COVER-TERMINAL (RED)	
		1	**8N-1725**	1	COVER AS-TERMINAL (RED)	
		1	**3S-6049**	1	TERMINAL AS-BATTERY (POSITIVE)	
		1	**1M-6119**	1	BOLT (5/16-18X1.375-IN)	
		1	**1M-6120**	1	NUT (5/16-18-THD)	
		1	**276-7278**	1	TERMINAL-RING	
	6	1	**328-2280**	1	CABLE AS-BATTERY (GROUND)	
E		1	**159-8050**		CABLE (00-GA, BLACK) (61-CM)	
		1	**9G-0005**	1	COVER AS-TERMINAL (BLACK)	
		1	**8C-5918**	1	TERMINAL AS (NEGATIVE)	
		1	**1M-6119**	1	BOLT (5/16-18X1.375-IN)	
		1	**1M-6120**	1	NUT (5/16-18-THD)	
		1	**216-7790**	1	TERMINAL-CABLE (00-GA, 3/8-IN SCREW)	
	7	1	**328-2281**	2	BRACKET AS	
					(EACH INCLUDES)	
M		1	**159-9540**	1	NUT-WELD (M8X1.25-THD)	
	8	1	**328-2337**	1	CABLE AS-BATTERY (NEGATIVE)	
E		1	**159-8050**		CABLE (00-GA, BLACK) (26-CM)	
		1	**216-7790**	1	TERMINAL-CABLE (00-GA, 3/8-IN SCREW)	
		1	**315-0180**	1	TERMINAL-RING	
	9	1	**132-5789**	4	CLIP	
	10	1	**277-1873**	1	CLIP	
	11	1	**5P-4116**	4	WASHER-HARD (8.8X20.5X2-MM THK)	
	12	1	**8T-4121**	2	WASHER-HARD (11X21X2.5-MM THK)	
M	13	1	**8T-4133**	2	NUT (M10X1.5-THD)	
M	14	1	**8T-4189**	2	BOLT (M8X1.25X20-MM)	
M	15	1	**8T-4200**	2	BOLT (M8X1.25X16-MM)	
	16	1	**8X-5489**	5	SLEEVE	

E-ORDER BY THE CENTIMETER
M-METRIC PART

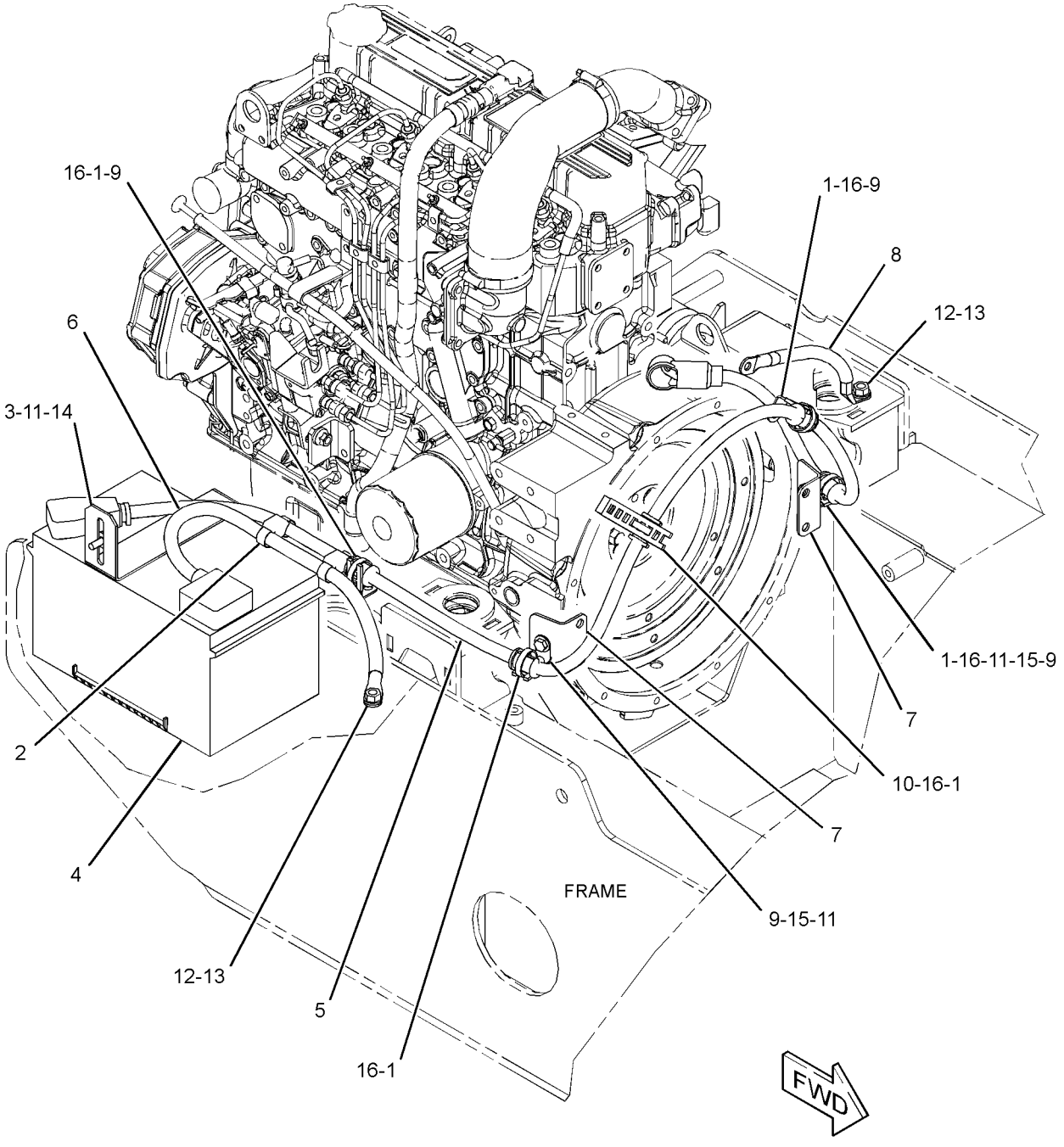

GRAPHIC #1 **<END>** g02148204

328-2345 ELECTRONICS GP-MACHINE

S/N: SRS1-UP

PART OF 328-2272 WIRING GP-CAB

SMCS-7610, 7620 **i04142649**

NOTE	PART NUMBER	QTY	PART NAME 1 2 3 4 5 6 (PRODUCT LEVEL)	SEE PAGE
	368-3210	1	SOFTWARE GP-MACHINE	
			—OR—	
	329-2576	1	CONTROL GP-UNPROGRAMMED (MACHINE)	
			—OR—	
	368-3293	1	SERVICE GP-MACHINE	
			(OPTIONAL SERVICE REPLACEMENT)(INCLUDES CONTROL GP & SOFTWARE)	

<END>

235-5904 GLOW PLUG GP

S/N: CYM1-UP
PART OF 332-8660 ENGINE AR-PRIMARY
AN ATTACHMENT

SMCS-1412 **i02162785**

NOTE	REF NO	GRAPHIC REF	PART NUMBER	QTY	PART NAME 1 2 3 4 5 6 (PRODUCT LEVEL)	SEE PAGE
	1	1	**107-3659**	4	GLOW PLUG	
	2	1	**257-8390**	1	PLATE-CONNECTION	

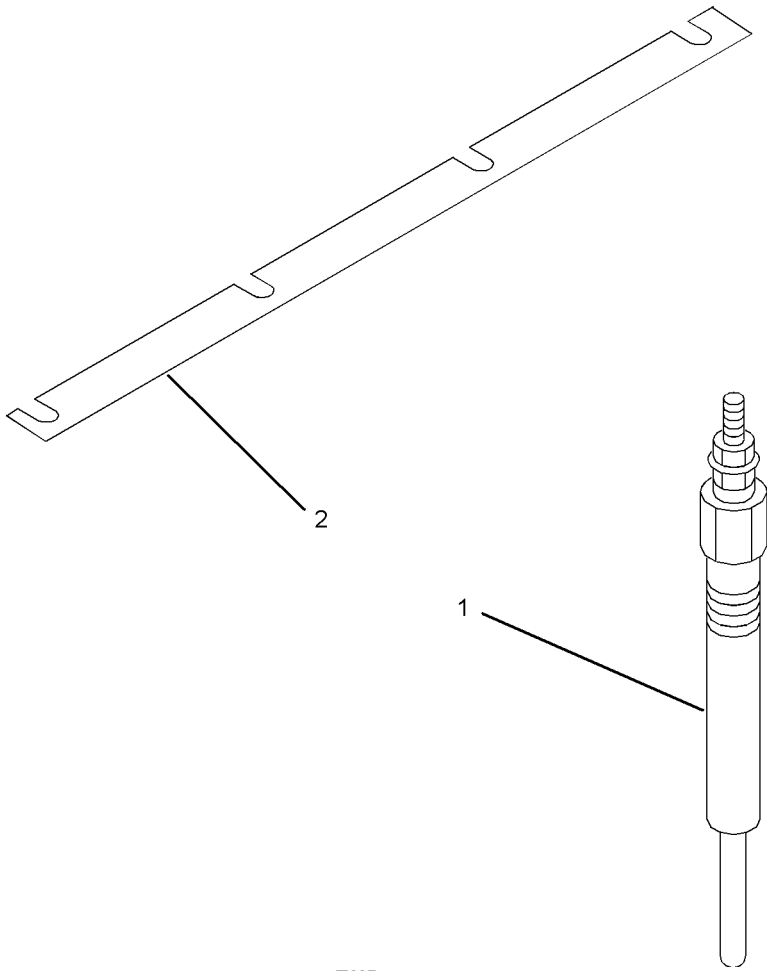

GRAPHIC #1 **<END>** g01011629

218-0942 HEATER GP-JACKET WATER

S/N: SRS1-UP
120-VOLT, 530-WATT
AN ATTACHMENT

SMCS-1383 **i03969178**

NOTE	REF NO	GRAPHIC REF	PART NUMBER	QTY	PART NAME 1 2 3 4 5 6 (PRODUCT LEVEL)	SEE PAGE
	1	1	**9X-6772**	2	STRAP-CABLE	
	2	1	*225-5642*	1	HEATER GP-JACKET WATER (120-VOLT, 530-WATT)	
	2A	1	**7X-6312**	1	CORD AS-HEATER ELEMENT (120-VOLT, 15-AMPERE)	
	2B	1	**225-5541**	1	ELEMENT AS-JACKET WATER HEATER (120-VOLT, 530-WATT)	
		1	**133-6517**	1	CAP AS-DUST	
	2C	1	**232-4703**	1	GASKET	

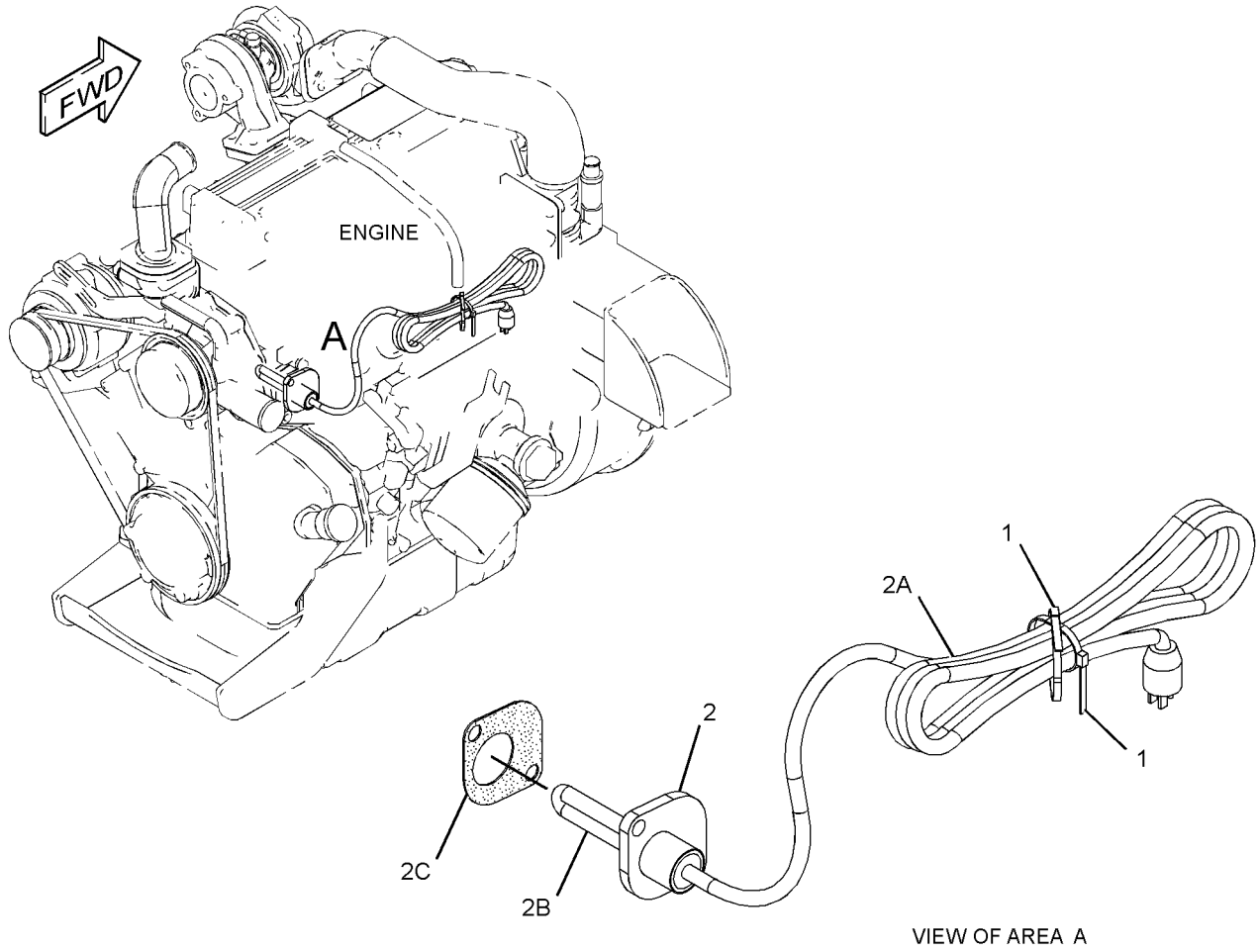

GRAPHIC #1 **<END>** g01335541

218-0943 HEATER GP-JACKET WATER

S/N: SRS1-UP
240-VOLT, 530-WATT
AN ATTACHMENT

SMCS-1383 **i03775170**

NOTE	REF NO	GRAPHIC REF	PART NUMBER	QTY	PART NAME 1 2 3 4 5 6 (PRODUCT LEVEL)	SEE PAGE
	1	1	**9X-6772**	2	STRAP-CABLE	
	2	1	*225-5644*	1	HEATER GP-JACKET WATER (240-VOLT, 530-WATT)	
	2A	1	**217-5912**	1	CORD AS	
	2B	1	**225-5535**	1	ELEMENT AS-JACKET WATER HEATER (240-VOLT, 530-WATT)	
		1	**133-6517**	1	CAP AS-DUST	
	2C	1	**232-4703**	1	GASKET	

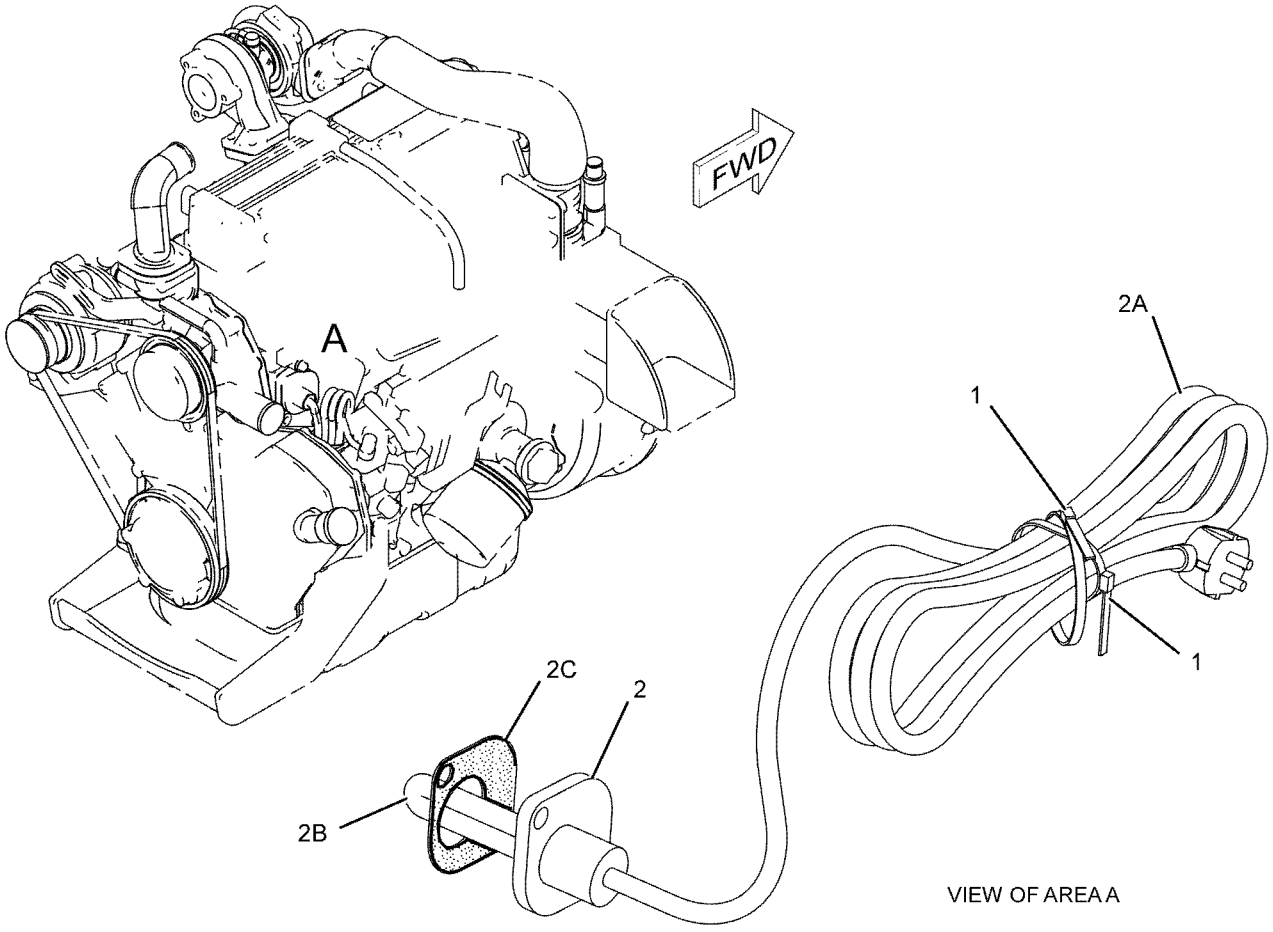

GRAPHIC #1 **<END>** g01108040

361-0452 KIT-WORK TOOL WIRING

S/N: SRS1-UP
AN ATTACHMENT

SMCS-1408 **i04041102**

NOTE	REF NO	GRAPHIC REF	PART NUMBER	QTY	PART NAME 1 2 3 4 5 6 (PRODUCT LEVEL)	SEE PAGE
	1	1	**216-4725**	1	HARNESS AS-WORK TOOL (LIFT ARM)	
		1	**156-1458**	1	COVER	
		1	**7T-0093**	8	PIN-CONNECTOR (12-GA TO 14-GA)	
		1	**9W-0852**	8	PIN-CONNECTOR (14-GA TO 16-GA)	
		1	**156-1460**	1	RECEPTACLE (8-PIN)	
		1	**1S-9593**	1	STRAP-CABLE	
	2	1	**146-9439**	5	RELAY AS (12-VOLT) (WORK TOOL)	
	3	1	**142-8633**	1	SWITCH AS-ROCKER (ELECTRIC POWER, WORK TOOL)	
		1	**111-7899**	1	GASKET	
	4	1	**110-8760**	1	STRAP	
	5	1	**3S-2093**	3	STRAP-CABLE	
	6	1	**178-3620**	1	STRAP-DUAL CLAMP	
	7	1	**102-8806**	1	KIT-RECEPTACLE (8-PIN)	
					(INCLUDES RECEPTACLE AS & WEDGE)	
	8	1	**159-9495**	1	NUT (1-1/2-18-THD)	
	9	1	**159-9496**	1	LOCKWASHER	

361-0452 KIT-WORK TOOL WIRING *(contd.)* i04041102

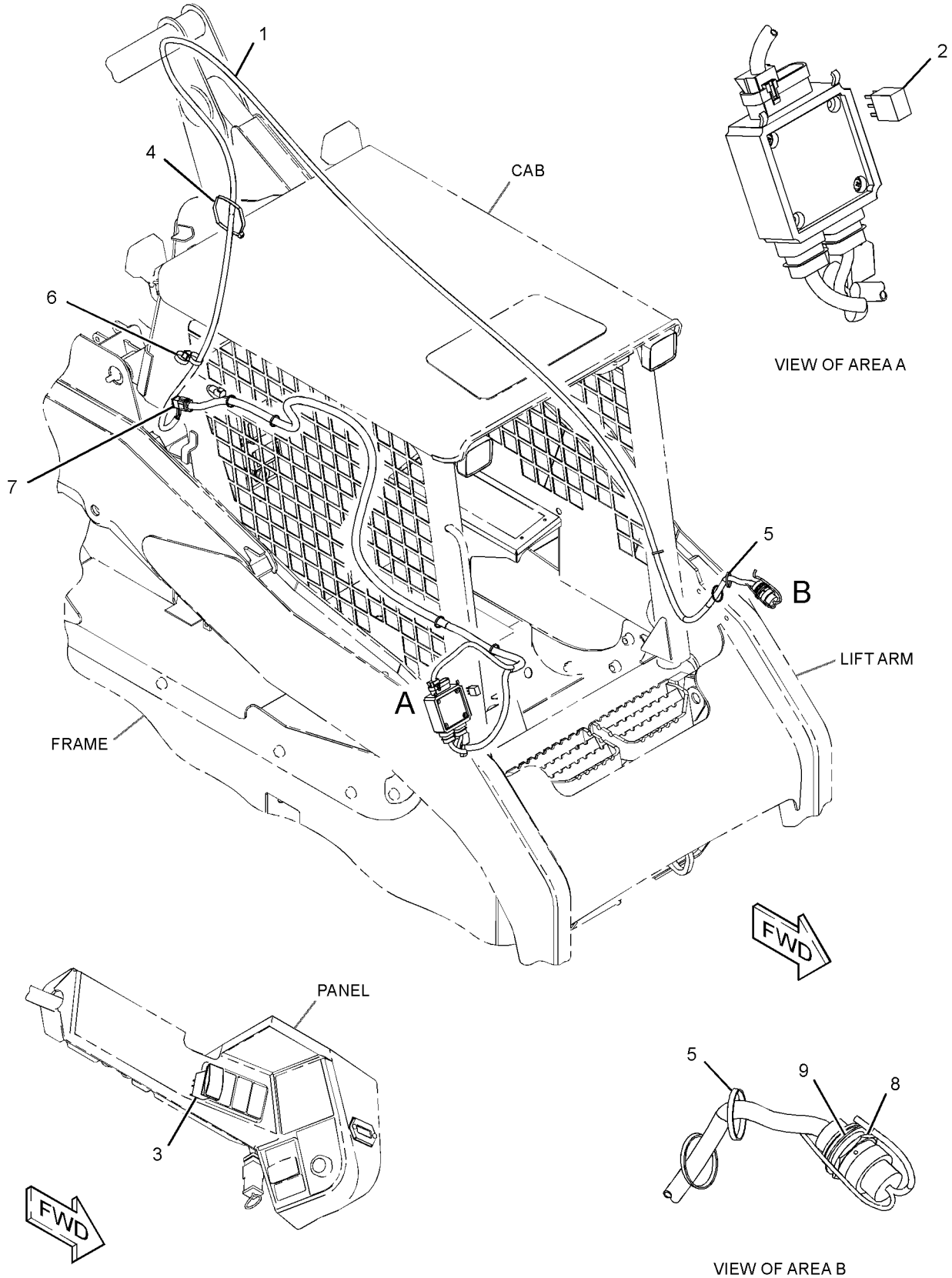

GRAPHIC #1 **<END>** g02471777

361-0454 KIT-WORK TOOL WIRING

S/N: SRS1-UP
AN ATTACHMENT

SMCS-1408 **i04041103**

NOTE	REF NO	GRAPHIC REF	PART NUMBER	QTY	PART NAME 1 2 3 4 5 6 (PRODUCT LEVEL)	SEE PAGE
	1	1	**216-4725**	1	HARNESS AS-WORK TOOL (LIFT ARM)	
		1	**156-1458**	1	COVER	
		1	**7T-0093**	8	PIN-CONNECTOR (12-GA TO 14-GA)	
		1	**9W-0852**	8	PIN-CONNECTOR (14-GA TO 16-GA)	
		1	**156-1460**	1	RECEPTACLE (8-PIN)	
		1	**1S-9593**	1	STRAP-CABLE	
	2	1	**146-9439**	5	RELAY AS (12-VOLT) (WORK TOOL)	
	3	1	**142-8633**	1	SWITCH AS-ROCKER (ELECTRIC POWER, WORK TOOL)	
		1	**111-7899**	1	GASKET	
	4	1	**110-8760**	1	STRAP	
	5	1	**3S-2093**	3	STRAP-CABLE	
	6	1	**178-3620**	1	STRAP-DUAL CLAMP	
	7	1	**102-8806**	1	KIT-RECEPTACLE (8-PIN)	
					(INCLUDES RECEPTACLE AS & WEDGE)	
	8	1	**159-9495**	1	NUT (1-1/2-18-THD)	
	9	1	**159-9496**	1	LOCKWASHER	
FY			**231-4258**	1	CONTROL GP-HANDLE (LH)	479

F-NOT SHOWN
Y-SEPARATE ILLUSTRATION

361-0454 KIT-WORK TOOL WIRING *(contd.)* i04041103

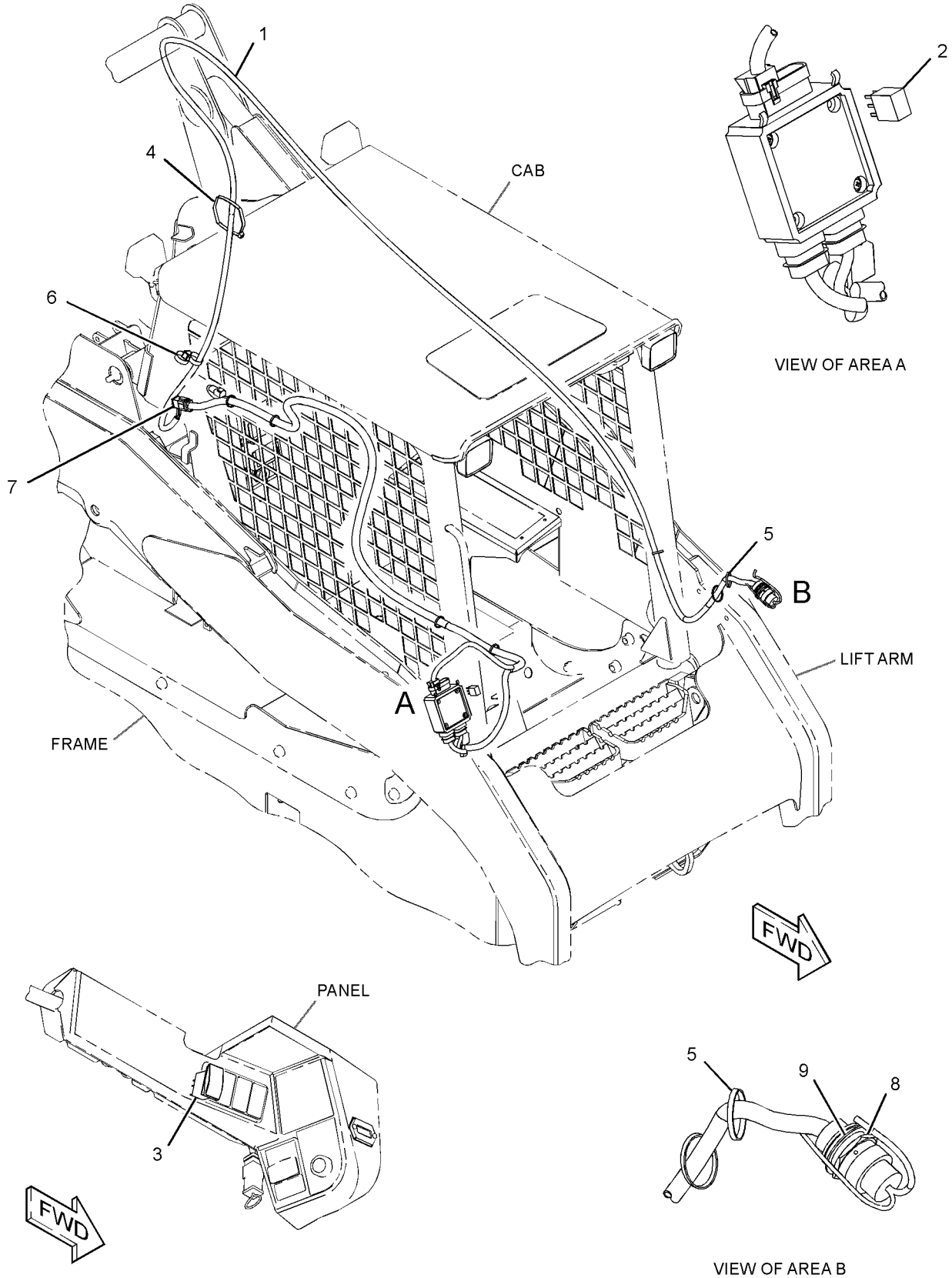

GRAPHIC #1 **<END>** g02471777

234-4328 LAMP GP-FLOOD

S/N: SRS1-UP
12-VOLT
PART OF 218-6425 LIGHTING GP-FLOOD

SMCS-1434 **i03969175**

NOTE	REF NO	GRAPHIC REF	PART NUMBER	QTY	PART NAME 1 2 3 4 5 6 (PRODUCT LEVEL)	SEE PAGE
	1	1	**9W-0607**	1	LAMP (12-VOLT, 55-WATT) (FLOODLIGHT)	
M	2	1	**8T-0389**	1	LOCKNUT (M10X1.5-THD)	
	3	1	**9X-4244**	2	SCREW-SPECIAL (M4X1.79X25-MM)	
	4	1	**202-6614**	1	LENS AS (FLOODLIGHT)	
	5	1	**234-7730**	1	BODY AS (FLOODLIGHT)	
	6	1	**164-7556**	1	BRACKET (LAMP RETAINING)	
	7	1	**234-7731**	1	BRACKET AS	
	8	1	**8T-4121**	1	WASHER-HARD (11X21X2.5-MM THK)	

M-METRIC PART

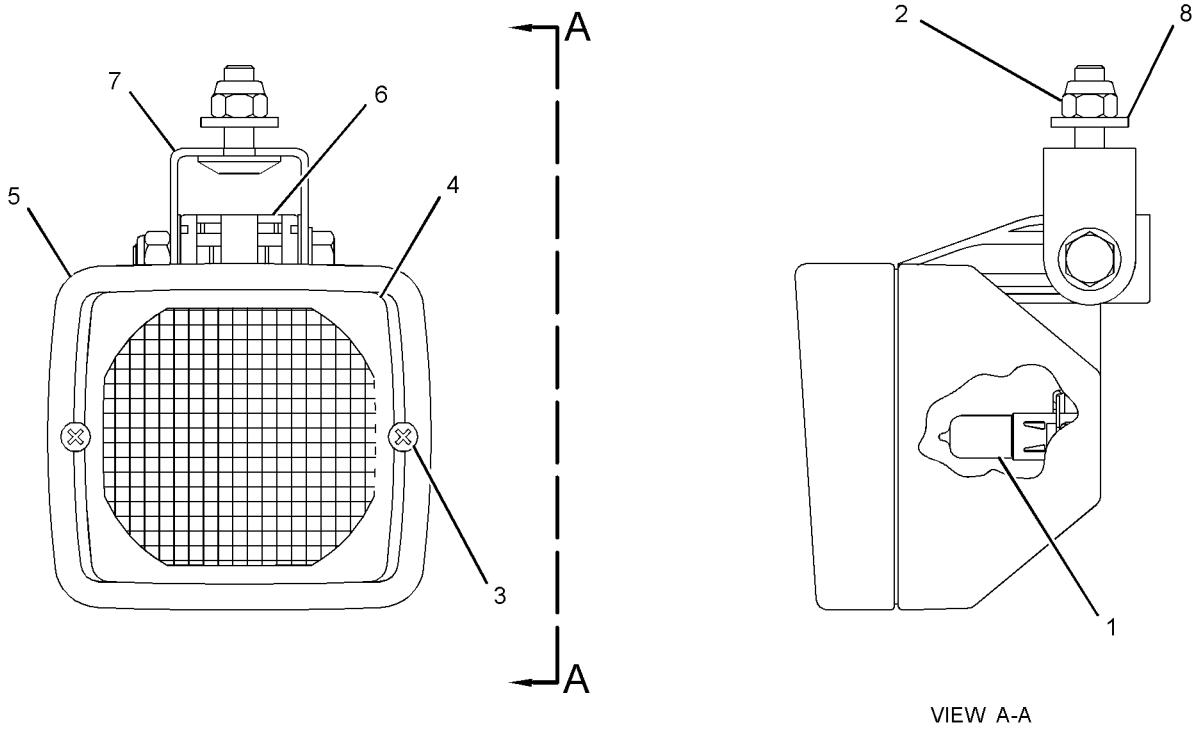

GRAPHIC #1 **<END>** g01283627

234-7727 LAMP GP-FLOOD

S/N: SRS1-UP
12-VOLT
PART OF 216-4746 LIGHTING GP-FLOOD

SMCS-1434 **i03686766**

NOTE	REF NO	GRAPHIC REF	PART NUMBER	QTY	PART NAME 1 2 3 4 5 6 (PRODUCT LEVEL)	SEE PAGE
	1	1	**9W-0607**	1	LAMP (12-VOLT, 55-WATT) (FLOODLIGHT)	
	2	1	**9X-4244**	2	SCREW-SPECIAL (M4X1.79X25-MM)	
	3	1	**202-6611**	1	LENS AS (FLOODLIGHT)	
	4	1	**234-7758**	1	BODY AS	
	5	1	**164-7556**	1	BRACKET (LAMP RETAINING)	
	6	1	**234-7756**	1	BRACKET-MOUNTING	

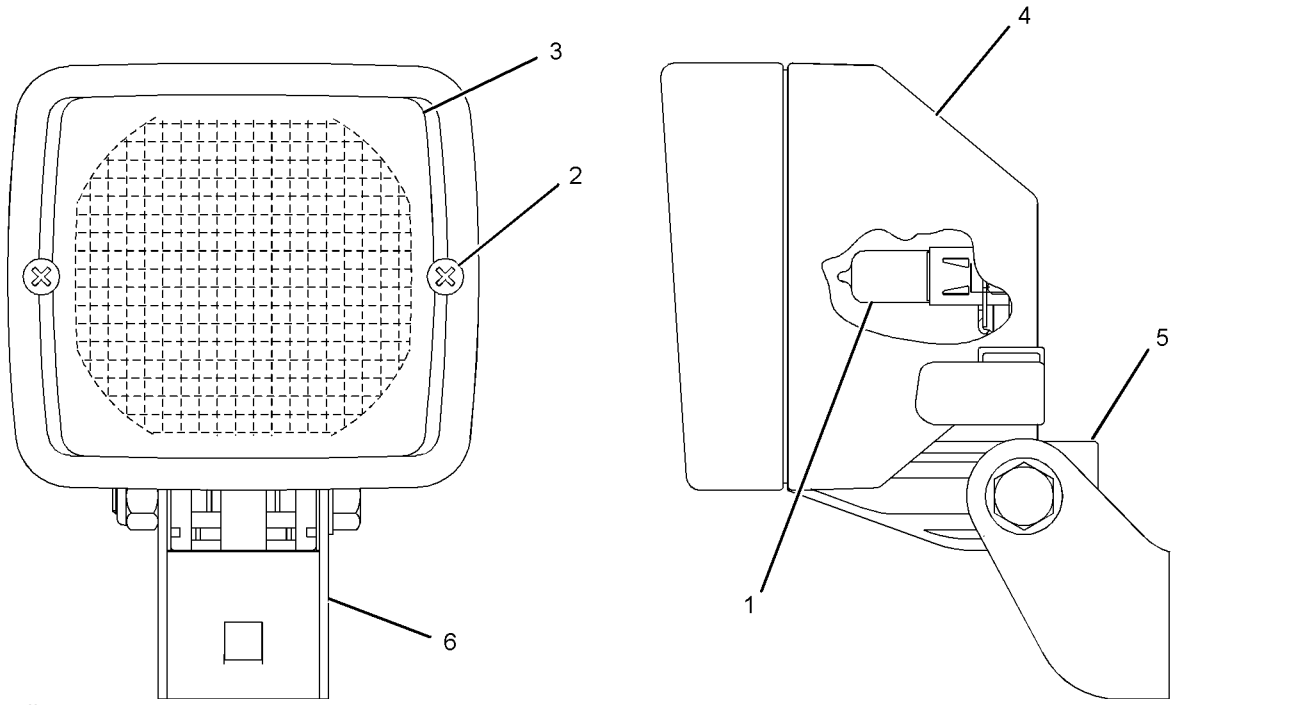

GRAPHIC #1 **<END>** g01017848

3E-7584 LAMP GP-HEAD & SIGNAL

S/N: SRS1-UP
12-VOLT
PART OF 358-6921 KIT-ROADING CONVERSION, 328-2333 LIGHTING GP-ROADING AN ATTACHMENT

SMCS-1429, 1430 **i03971099**

NOTE	REF NO	GRAPHIC REF	PART NUMBER	QTY	PART NAME 1 2 3 4 5 6 (PRODUCT LEVEL)	SEE PAGE
	1	1	**9X-4244**	4	SCREW-SPECIAL (M4X1.79X25-MM)	
	2	1	**100-3251**	2	SCREW-LENS	
	3	1	**9X-9865**	1	SEAL	
	4	1	**100-3248**	1	LENS AS (HEADLIGHT) (HIGH, LOW BEAM)	
	5	1	**9W-3324**	1	LAMP-HEAD (12-VOLT, 60/55-WATT) (CLEAR)	
	6	1	**100-3247**	1	BODY AS-LAMP	
M	7	1	**8T-5005**	1	BOLT (M10X1.5X70-MM)	
M	8	1	**8T-0389**	1	LOCKNUT (M10X1.5-THD)	
	9	1	**100-3253**	1	SPACER (SPHERICAL)	
	10	1	**100-3254**	1	SPACER (SPHERICAL)	
	11	1	**100-3255**	1	WASHER (SPHERICAL)	
	12	1	**102-8805**	1	KIT-RECEPTACLE (6-PIN)	
					(INCLUDES RECEPTACLE AS & WEDGE)	
	13	1	**8T-8729**	5	PIN-CONNECTOR (16-GA TO 18-GA)	
	14	1	**100-3250**	1	LENS (AMBER) (FRONT TURN)	
	15	1	**8T-8737**	1	PLUG-SEAL	
	16	1	**100-3246**	1	LAMP (12-VOLT, 4-WATT)	
	17	1	**9W-3326**	1	LAMP (12-VOLT, 21-WATT) (TURN SIGNAL)	

M-METRIC PART

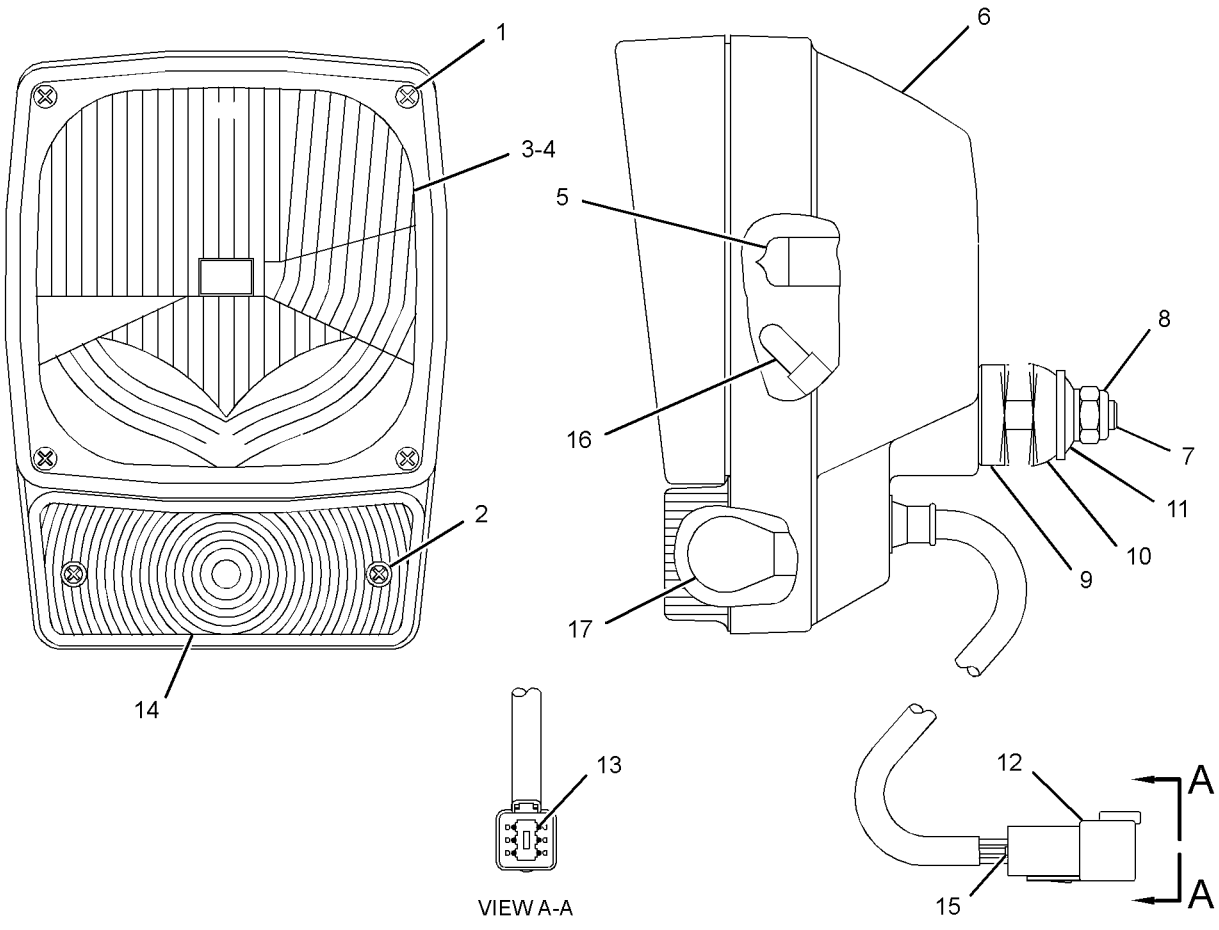

GRAPHIC #1 **<END>** g01953367

142-7503 LAMP GP-STOP & TAIL

S/N: SRS1-UP
12-VOLT
PART OF 328-2344 LAMP GP-STOP & TAIL
AN ATTACHMENT

SMCS-1432 **i04035778**

NOTE	REF NO	GRAPHIC REF	PART NUMBER	QTY	PART NAME 1 2 3 4 5 6 (PRODUCT LEVEL)	SEE PAGE
	1	1	**084-4348**	1	LAMP (12-VOLT, 5-WATT) (STOP, TAIL)	
	2	1	**102-8804**	1	KIT-RECEPTACLE (4-PIN)	
					(INCLUDES RECEPTACLE AS & WEDGE)	
	3	1	**165-4895**	1	LENS	
M	4	1	**5C-2890**	2	NUT (M6X1-THD)	
	5	1	**8T-0087**	2	LOCKWASHER	

M-METRIC PART

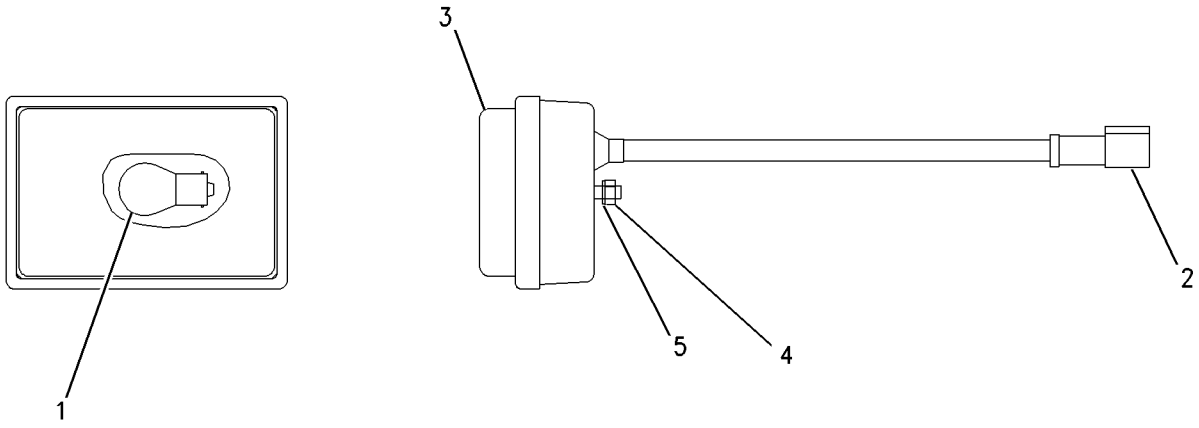

GRAPHIC #1 **<END>** g00669668

142-8634 LAMP GP-STOP & TAIL

S/N: SRS1-UP
12-VOLT
PART OF 328-2346 LAMP GP-STOP & TAIL, 328-2333 LIGHTING GP-ROADING AN ATTACHMENT

SMCS-1432 **i04368915**

NOTE	REF NO	GRAPHIC REF	PART NUMBER	QTY	PART NAME 1 2 3 4 5 6 (PRODUCT LEVEL)	SEE PAGE
	1	1	**9W-3326**	1	LAMP (12-VOLT, 21-WATT) (STOP LIGHT)	
	2	1	**084-4348**	1	LAMP (12-VOLT, 5-WATT) (STOP, TAIL)	
	3	1	**102-8804**	1	KIT-RECEPTACLE (4-PIN)	
					(INCLUDES RECEPTACLE AS & WEDGE)	
	4	1	**146-2438**	1	LENS (REAR)	
M	5	1	**5C-2890**	2	NUT (M6X1-THD)	
	6	1	**1H-3244**	2	LOCKWASHER	
	7	1	**8T-8729**	4	PIN-CONNECTOR (16-GA TO 18-GA)	

M-METRIC PART

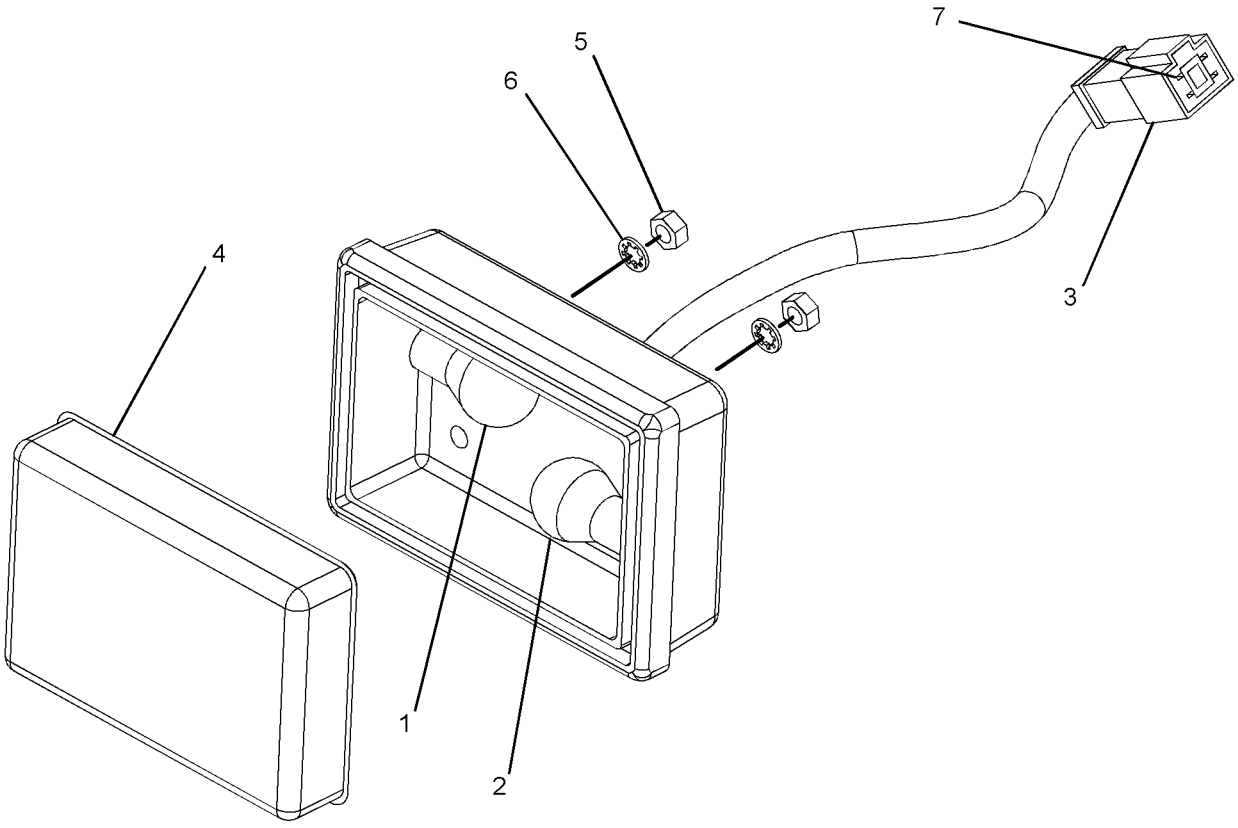

GRAPHIC #1 **<END>** g01212497

328-2344 LAMP GP-STOP & TAIL–REAR

S/N: SRS1-UP
PART OF 326-5280, 326-5300 CONVERSION AR-MACHINE
AN ATTACHMENT

SMCS-1432 **i04048549**

NOTE	REF NO	GRAPHIC REF	PART NUMBER	QTY	PART NAME 1 2 3 4 5 6 (PRODUCT LEVEL)	SEE PAGE
	1	1	**9R-1499**	2	REFLECTOR	
Y	2	1	**142-7503**	1	LAMP GP-STOP & TAIL (12-VOLT) (LH)	88
Y	2A	1	**142-7503**	1	LAMP GP-STOP & TAIL (12-VOLT) (RH)	88
	3	1	**8T-4205**	4	WASHER-HARD (7.2X14.5X2-MM THK)	
	4	1	**7K-1181**	1	STRAP-CABLE	

Y-SEPARATE ILLUSTRATION

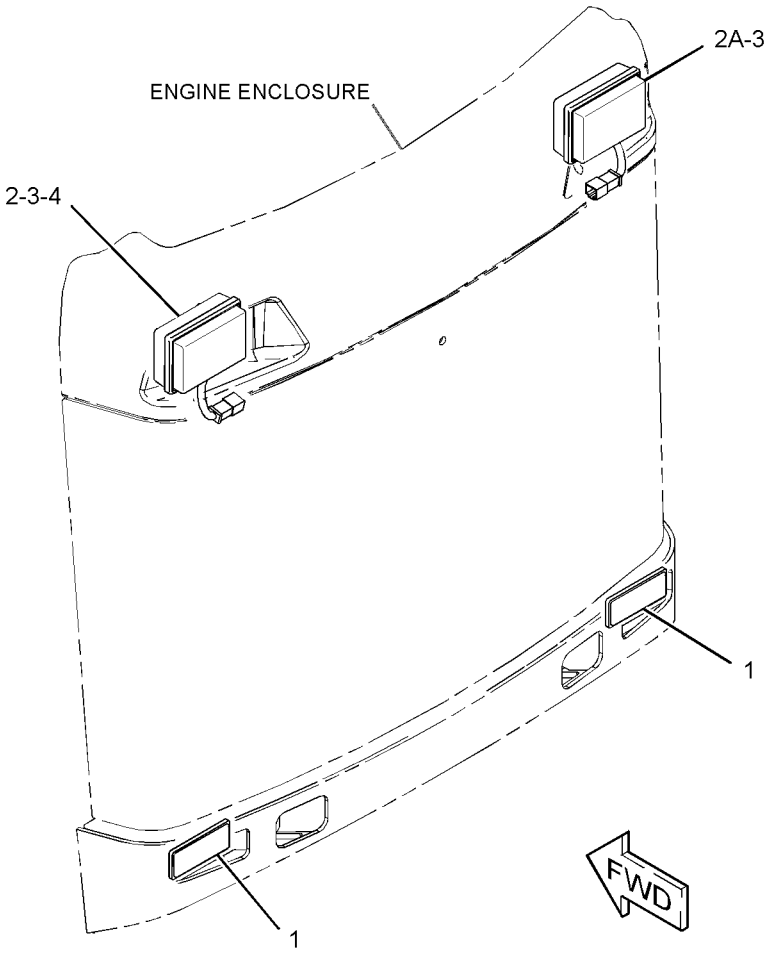

GRAPHIC #1 **<END>** g02471697

328-2346 LAMP GP-STOP & TAIL–REAR

S/N: SRS1-UP
PART OF 326-5281 CONVERSION AR-MACHINE
AN ATTACHMENT

SMCS-1432 **i04048550**

NOTE	REF NO	GRAPHIC REF	PART NUMBER	QTY	PART NAME 1 2 3 4 5 6 (PRODUCT LEVEL)	SEE PAGE
	1	1	**9R-1499**	2	REFLECTOR	
Y	2	1	**142-8634**	1	LAMP GP-STOP & TAIL (12-VOLT) (LH)	89
Y	2A	1	**142-8634**	1	LAMP GP-STOP & TAIL (12-VOLT) (RH)	89
	3	1	**142-9331**	1	SWITCH AS-ROCKER (HAZARD WARNING LIGHTS)	
	4	1	**226-5900**	1	SWITCH AS-ROCKER (TURN SIGNAL)	
					(EACH SWITCH AS-ROCKER INCLUDES)	
		1	**111-7899**	1	GASKET	
	5	1	**242-9000**	1	FLASHER AS (12-VOLT) (STOP LIGHT)	
	6	1	**328-2343**	1	HARNESS AS-SWITCH (REAR LIGHTS)	
		1	**8T-8729**	3	PIN-CONNECTOR (16-GA TO 18-GA)	
		1	**7R-2751**	3	PLUG-CONNECTOR	
		1	**102-8803**	1	KIT-RECEPTACLE (3-PIN)	
					(INCLUDES RECEPTACLE AS & WEDGE)	
		1	**7R-2750**	3	SEAL-CONNECTOR	
		1	**202-0314**	3	TERMINAL AS	
					(EACH INCLUDES)	
		1	**128-4123**	1	SEAL	
		1	**3S-2093**	1	STRAP-CABLE	
	7	1	**7K-1181**	2	STRAP-CABLE	

Y-SEPARATE ILLUSTRATION

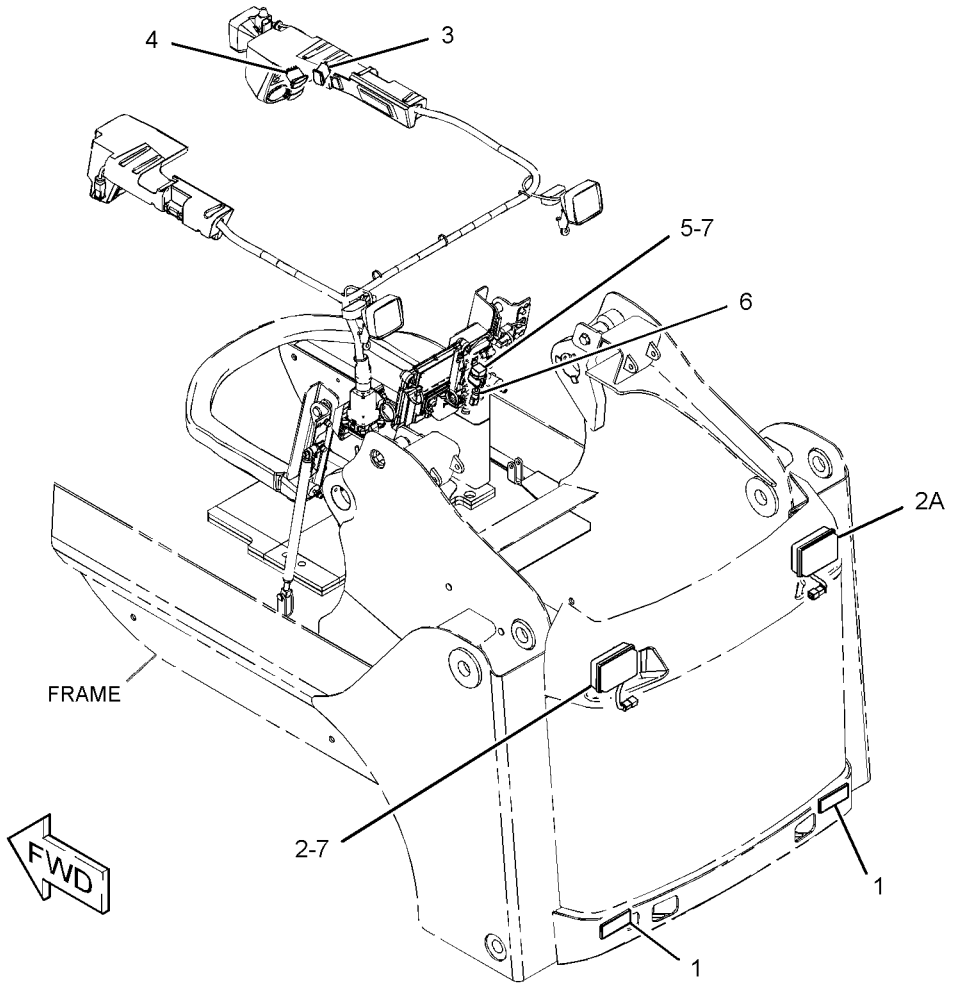

GRAPHIC #1 **<END>** g02494276

128-6985 LAMP GP-WARNING BEACON–

AMBER, MAGNETIC MOUNT, ROTATING
S/N: SRS1-UP
12-VOLT
PART OF 142-8653 LIGHTING GP-WARNING BEACON
AN ATTACHMENT

SMCS-1431 **i03748186**

NOTE	REF NO	GRAPHIC REF	PART NUMBER	QTY	PART NAME 1 2 3 4 5 6 (PRODUCT LEVEL)	SEE PAGE
	1	1	**9X-8121**	1	LENS (AMBER, WARNING BEACON)	
	2	1	**9X-8118**	1	LAMP (12-VOLT, 55-WATT) (WARNING BEACON)	
	3	1	**9X-8139**	1	BELT-DRIVE (WARNING BEACON)	
	4	1	**9R-7958**	1	CORD AS	
		1	**9R-7942**	1	PLUG AS	

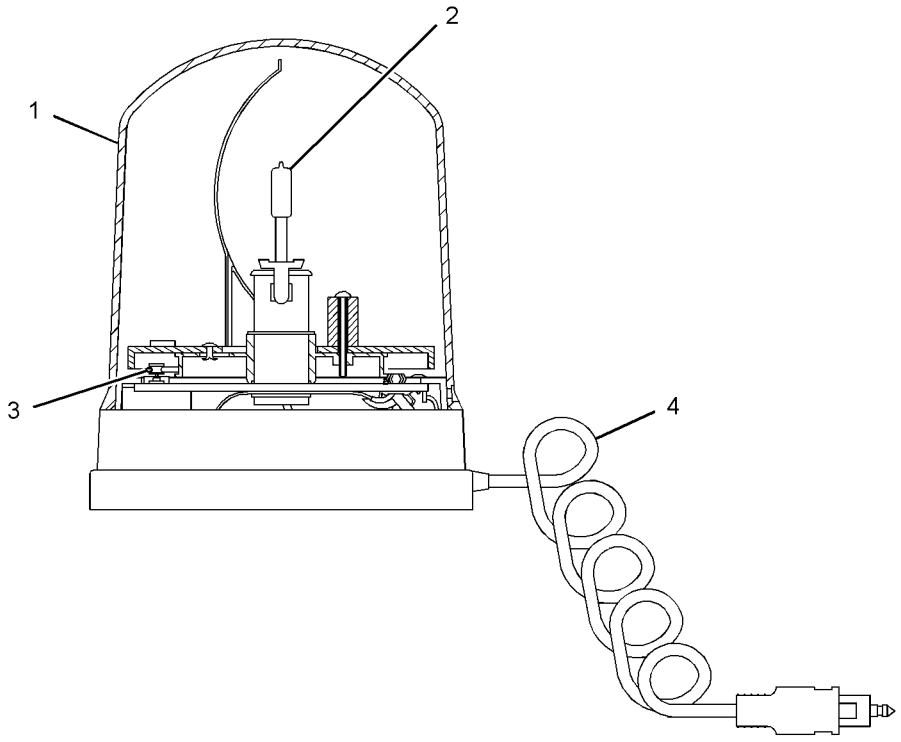

GRAPHIC #1 **<END>** g01567653

309-1325 LAMP GP-WARNING BEACON–AMBER

S/N: SRS1-UP
12-VOLT
PART OF 278-1293 CONVERSION GP-ROADING, 358-6919 KIT-ROADING CONVERSION AN ATTACHMENT

SMCS-1431 **i03686768**

NOTE	REF NO	GRAPHIC REF	PART NUMBER	QTY	PART NAME 1 2 3 4 5 6 (PRODUCT LEVEL)	SEE PAGE
	1	1	**272-9800**	1	LENS (AMBER) (WARNING BEACON)	
	2	1	**9X-8118**	1	LAMP (12-VOLT, 55-WATT) (WARNING BEACON)	
	3	1	**9X-8139**	1	BELT-DRIVE (WARNING BEACON)	
	4	1	**9R-7958**	1	CORD AS	
	4A	1	**9R-7942**	1	PLUG AS	

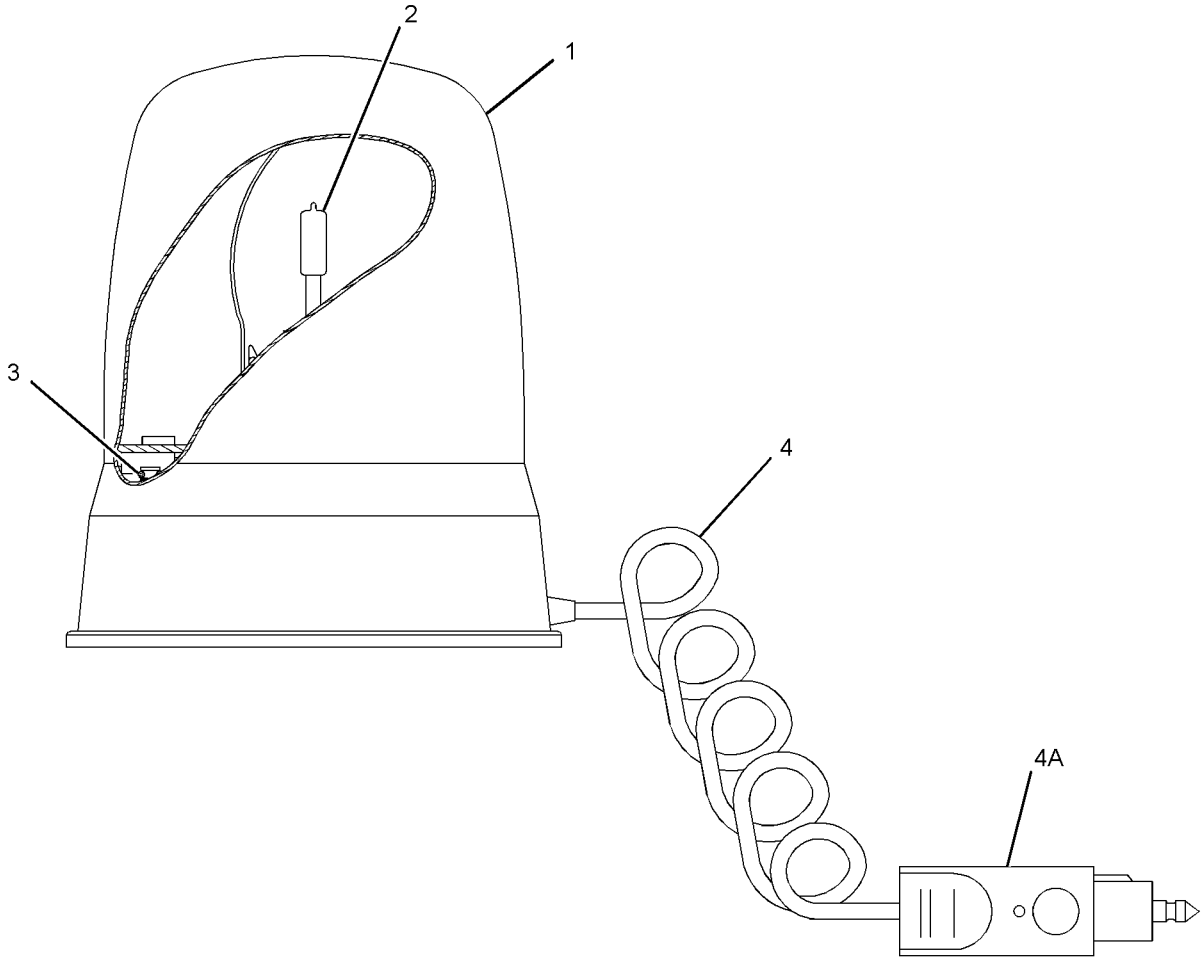

GRAPHIC #1 **<END>** g01382357

216-4746 LIGHTING GP-FLOOD–REAR

S/N: SRS1-UP

PART OF 326-5400 CAB AR

SMCS-1434 **i04369573**

NOTE	REF NO	GRAPHIC REF	PART NUMBER	QTY	PART NAME 1 2 3 4 5 6 (PRODUCT LEVEL)	SEE PAGE
	1	1	**142-9326**	1	SWITCH AS-ROCKER (REAR WORK LAMPS)	
		1	**111-7899**	1	GASKET	
Y	2	1	**234-7727**	2	LAMP GP-FLOOD (12-VOLT)	86
M	3	1	**195-0937**	2	INSERT-THREADED (M8X1.25-THD)	
	4	1	**5P-8439**	2	GROMMET	
M	5	1	**6V-2317**	2	BOLT (M8X1.25X30-MM)	
	6	1	**8T-4224**	4	WASHER-HARD (8.8X16X2-MM THK)	

M-METRIC PART
Y-SEPARATE ILLUSTRATION

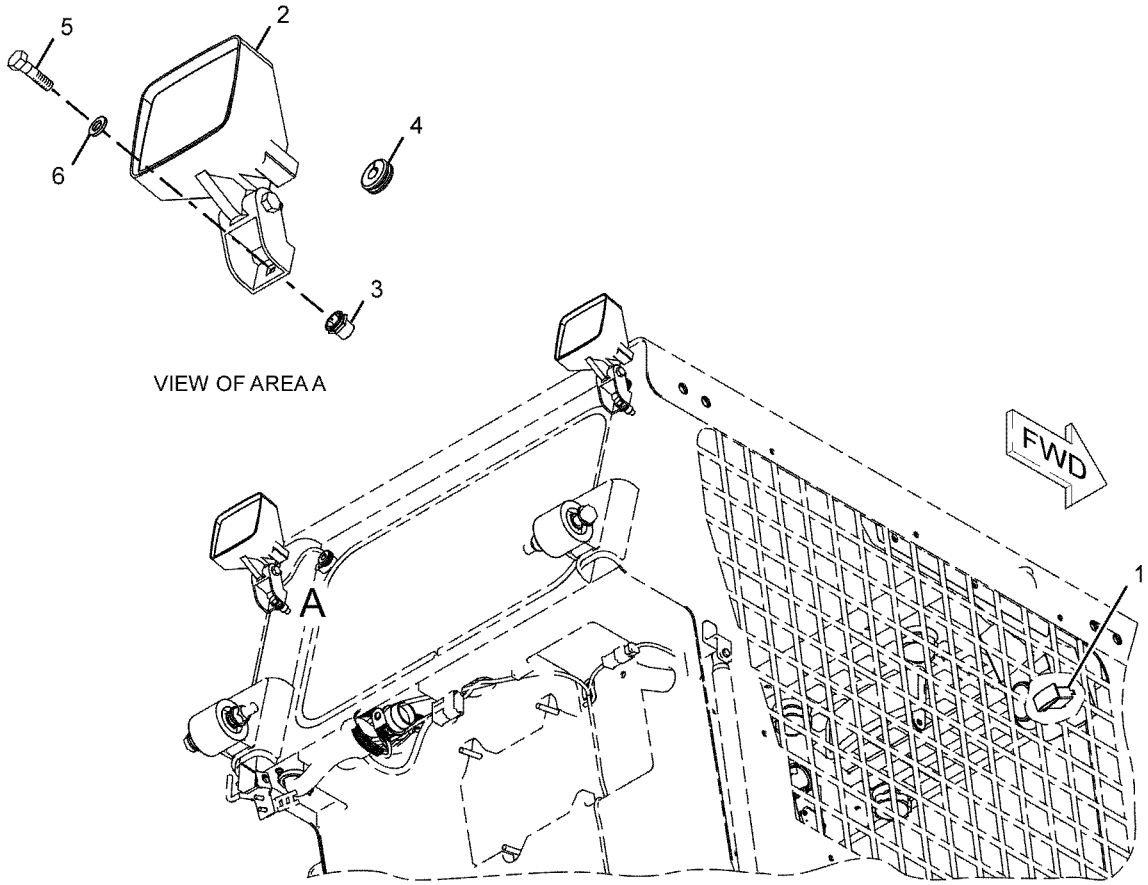

GRAPHIC #1 **<END>** g01136313

218-6425 LIGHTING GP-FLOOD–FRONT

S/N: SRS1-UP

PART OF 326-5400 CAB AR

SMCS-1434 **i03961871**

NOTE	REF NO	GRAPHIC REF	PART NUMBER	QTY	PART NAME 1 2 3 4 5 6 (PRODUCT LEVEL)	SEE PAGE
Y	1		**234-4328**	2	LAMP GP-FLOOD (12-VOLT)	85
	2		**5P-8439**	2	GROMMET	
	3		**8T-4121**	4	WASHER-HARD (11X21X2.5-MM THK)	

Y-SEPARATE ILLUSTRATION

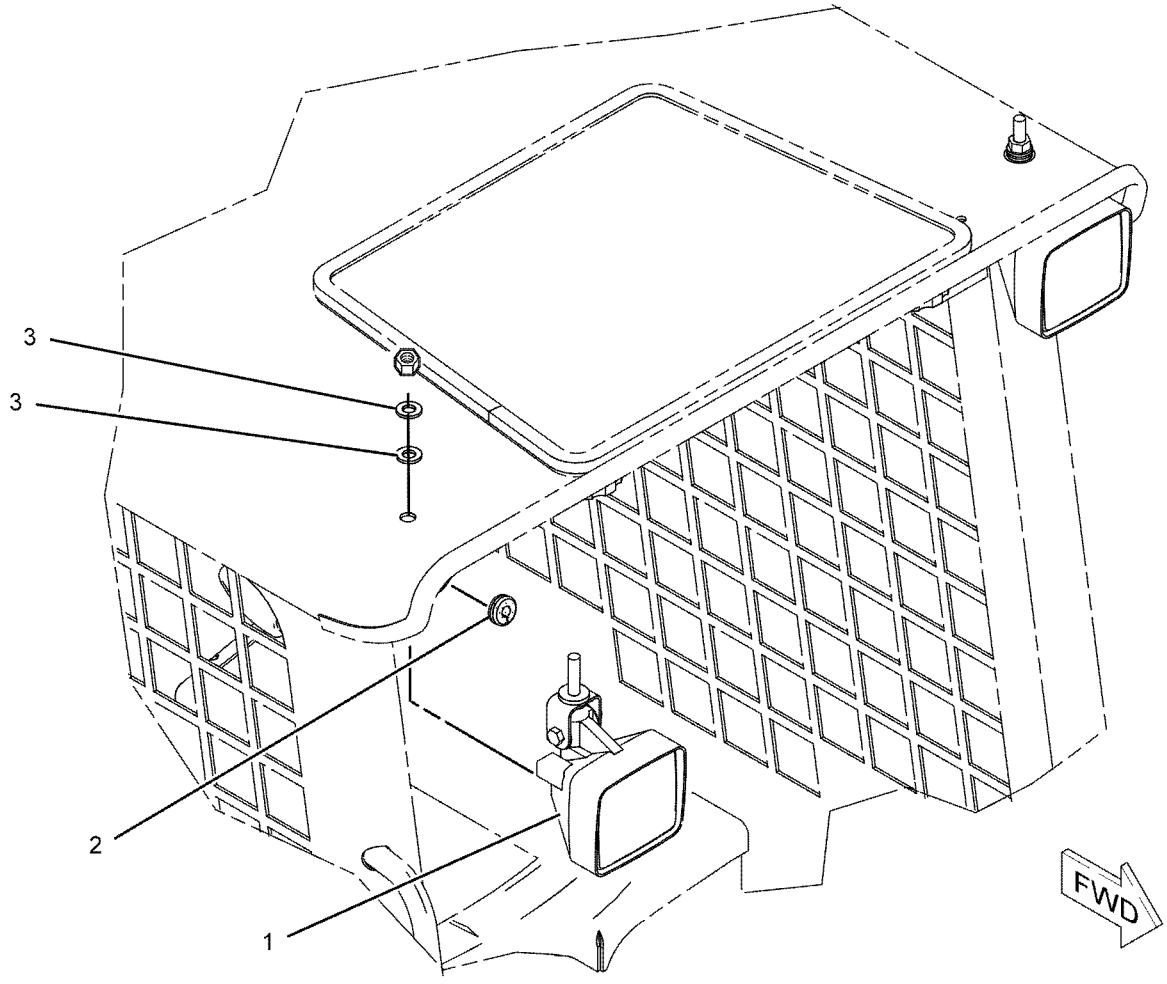

GRAPHIC #1 **<END>** g01040888

ELECTRICAL AND STARTING SYSTEM

328-2333 LIGHTING GP-ROADING

S/N: SRS1-UP
PART OF 326-5282, 326-5284, 356-1902 CONVERSION AR-MACHINE
AN ATTACHMENT

SMCS-1429 **i03973030**

NOTE	REF NO	GRAPHIC REF	PART NUMBER	QTY	PART NAME 1 2 3 4 5 6 (PRODUCT LEVEL)	SEE PAGE
Y	1	1	**3E-7584**	2	LAMP GP-HEAD & SIGNAL (12-VOLT)	87
	2	1	**7K-1181**	1	STRAP-CABLE	
	3	1	**9R-1499**	2	REFLECTOR	
Y	4	1	**142-8634**	2	LAMP GP-STOP & TAIL (12-VOLT)	89
	5	1	**142-9329**	1	SWITCH AS-ROCKER (ROADING LIGHTS)	
	6	1	**142-9331**	1	SWITCH AS-ROCKER (HAZARD WARNING LIGHTS)	
					(EACH SWITCH AS INCLUDES)	
		1	**111-7899**	1	GASKET	
	7	1	**146-9439**	1	RELAY AS (12-VOLT) (STOP LIGHT)	
	8	1	**226-5900**	1	SWITCH AS-ROCKER (TURN SIGNAL)	
		1	**111-7899**	1	GASKET	
	9	1	**242-9000**	1	FLASHER AS (12-VOLT) (STOP LIGHT)	
	10	1	**258-4134**	1	FUSE AS (ROADING)	
	11	1	**328-2334**	1	HARNESS AS-REAR LIGHTING	
		1	**186-3735**	7	PIN-CONNECTOR (16-GA TO 18-GA)	
		1	**9W-0852**	1	PIN-CONNECTOR (14-GA TO 16-GA)	
		1	**155-2265**	1	KIT-CONNECTING PLUG (8-PIN)	
		1	**155-2274**	2	KIT-CONNECTING PLUG (6-PIN)	
					(EACH PLUG KIT INCLUDES PLUG AS, WEDGE & INTERFACE SEAL)	
		1	**8T-8737**	5	PLUG-SEAL	
		1	**102-8806**	1	KIT-RECEPTACLE (8-PIN)	
					(INCLUDES RECEPTACLE AS & WEDEG)	
		1	**186-3736**	14	SOCKET-CONNECTOR (16-GA TO 18-GA)	
		1	**9W-0844**	1	SOCKET-CONNECTOR (14-GA TO 16-GA)	
		1	**3S-2093**	1	STRAP-CABLE	
E		1	**125-7874**		TUBE-HEAT SHRINK (5.72-MM DIA) (30-CM)	
	12	1	**328-2343**	1	HARNESS AS-SWITCH (REAR LIGHTS)	
		1	**186-3735**	3	PIN-CONNECTOR (16-GA TO 18-GA)	
		1	**7R-2751**	3	PLUG-CONNECTOR	
		1	**102-8803**	1	KIT-RECEPTACLE (3-PIN)	
					(INCLUDES RECEPTACLE AS & WEDEG)	
		1	**7R-2750**	3	SEAL-CONNECTOR	
		1	**202-0314**	3	TERMINAL AS	
					(EACH INCLUDES)	
		1	**128-4123**	1	SEAL	
		1	**3S-2093**	1	STRAP-CABLE	
	13	1	**206-1346**	2	STRAP-CABLE	
	14	1	**3S-2093**	18	STRAP-CABLE	
	15	1	**4P-7581**	1	CLIP	
	16	1	**8T-1887**	2	CLIP (SLOT)	
	17	1	**8T-1888**	2	CLIP (TAB)	
M	18	1	**8T-4201**	1	BOLT-LOCKING (M10X1.5X20-MM)	
	19	1	**8W-8909**	2	SLEEVE	

E-ORDER BY THE CENTIMETER
M-METRIC PART
Y-SEPARATE ILLUSTRATION

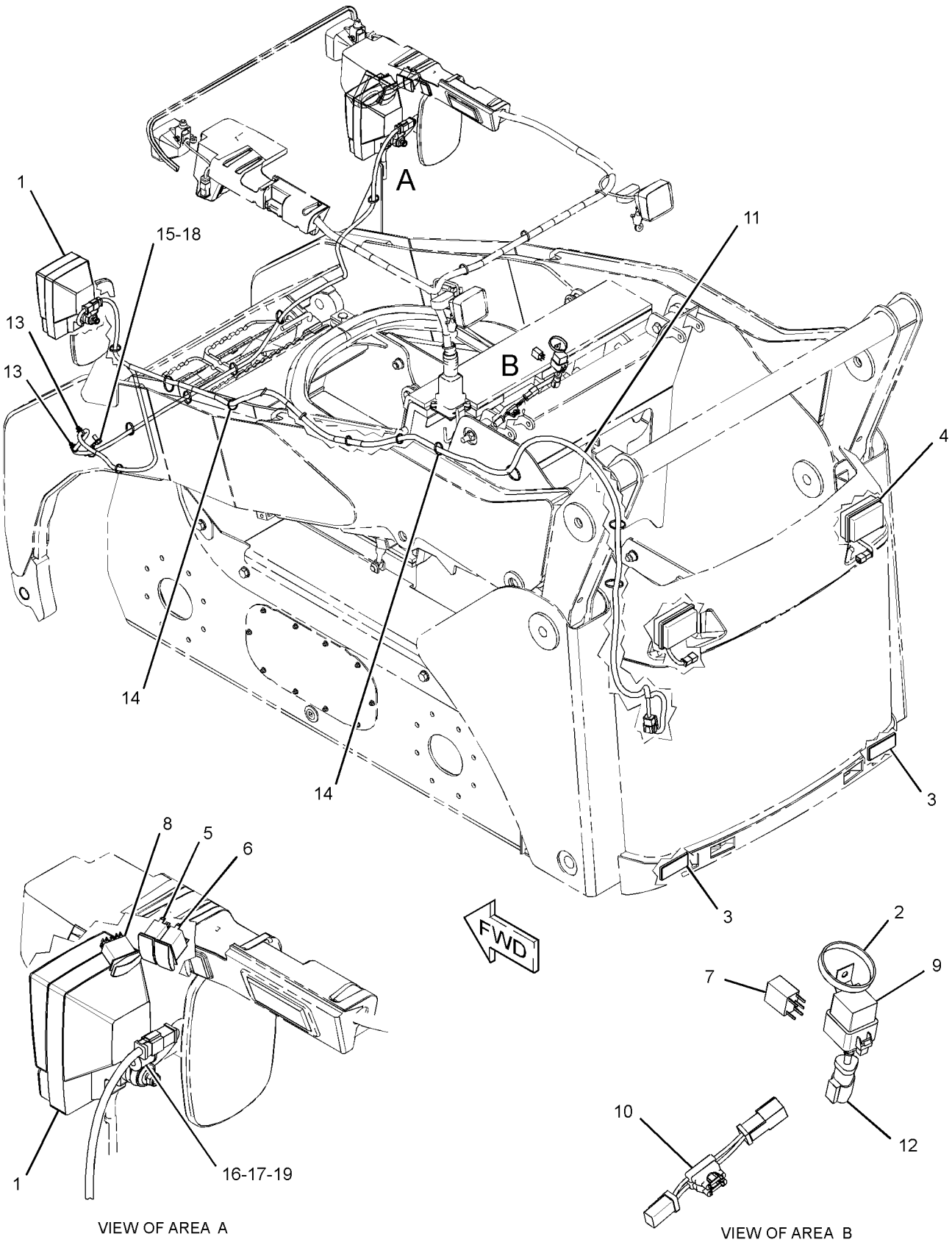

GRAPHIC #1 **<END>** g02147897

ELECTRICAL AND STARTING SYSTEM

142-8653 LIGHTING GP-WARNING BEACON

S/N: SRS1-UP

AN ATTACHMENT

SMCS-1431 **i02262621**

NOTE	REF NO	GRAPHIC REF	PART NUMBER	QTY	PART NAME 1 2 3 4 5 6 (PRODUCT LEVEL)	SEE PAGE
Y	1	1	**128-6985**	1	LAMP GP-WARNING BEACON (12-VOLT, AMBER)	92
	2	1	**142-9327**	1	SWITCH AS-ROCKER (WARNING BEACON)	
		1	**111-7899**	1	GASKET	

Y-SEPARATE ILLUSTRATION

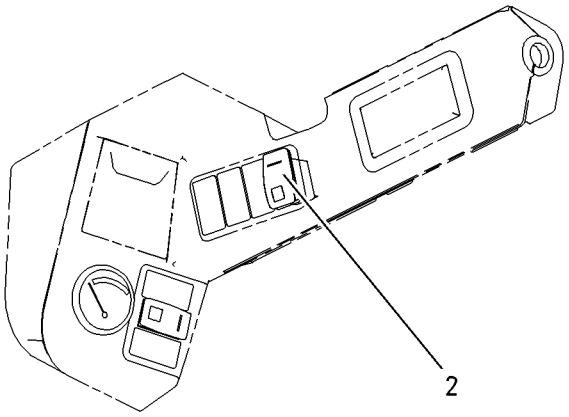

RH CONTROL PANEL

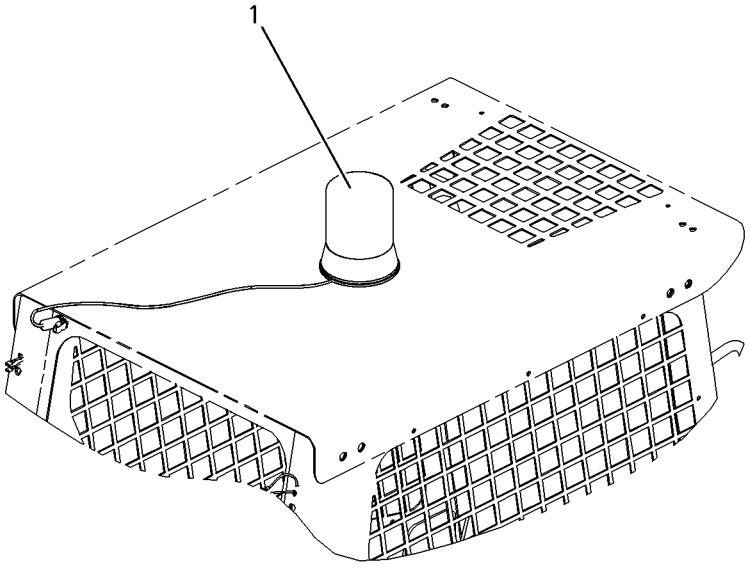

GRAPHIC #1 **<END>** g00867567

258-4135 RELAY GP–MAIN POWER

S/N: SRS1-UP
12-VOLT
PART OF 328-2272 WIRING GP-CAB

SMCS-1422, 4493 **i03959893**

NOTE	REF NO	GRAPHIC REF	PART NUMBER	QTY	PART NAME 1 2 3 4 5 6 (PRODUCT LEVEL)	SEE PAGE
M	1	1	**5C-2890**	2	NUT (M6X1-THD)	
	2	1	**8T-4205**	2	WASHER-HARD (7.2X14.5X2-MM THK)	
	3	1	**1H-3244**	2	LOCKWASHER	
M	4	1	**5C-7261**	1	NUT (M8X1.25-THD)	
	5	1	**8T-4224**	1	WASHER-HARD (8.8X16X2-MM THK)	
	6	1	**267-5213**	1	COVER (FUSE)	
	7	1	**267-5211**	1	SEAL	
	8	1	**267-2680**	1	FUSE (20-AMPERE)	
	9	1	**267-2701**	1	FUSE (60-AMPERE)	

M-METRIC PART

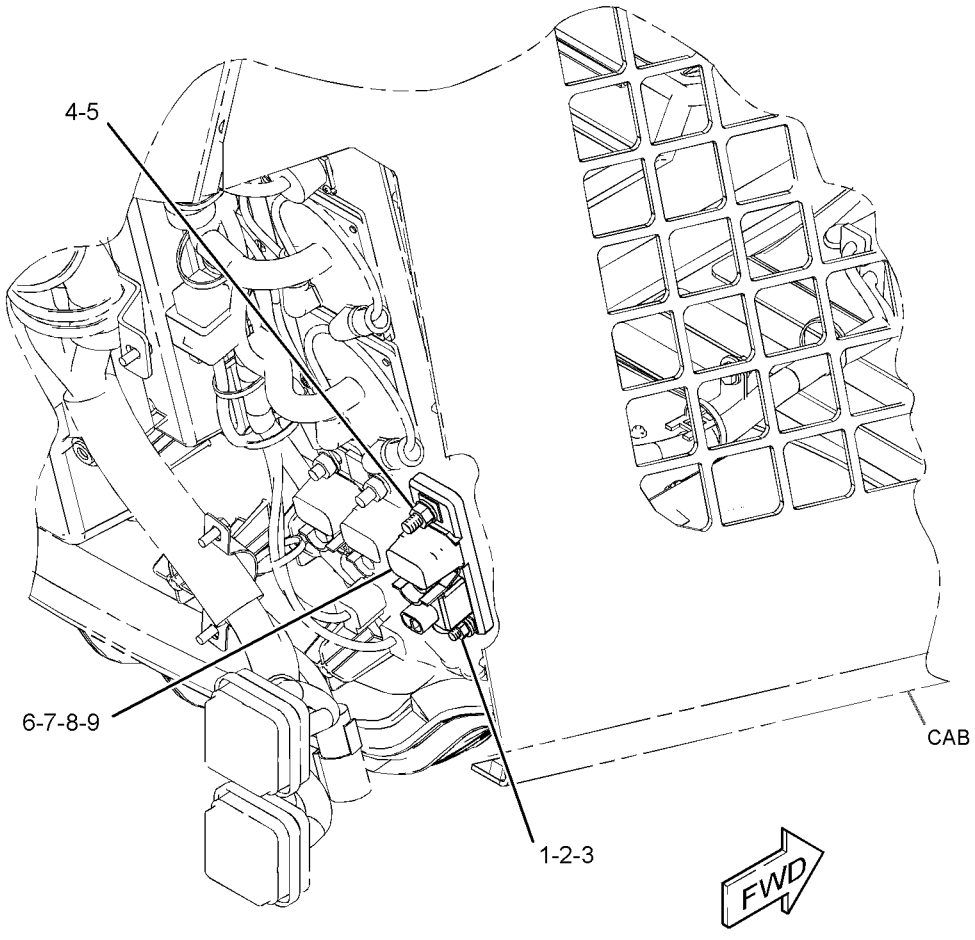

GRAPHIC #1 **<END>** g01328212

ELECTRICAL AND STARTING SYSTEM

143-0539 STARTING MOTOR GP-ELECTRIC*R

S/N: CYM1-UP
12-VOLT
PART OF 287-6181 STARTING MOTOR GP-ELECTRIC
AN ATTACHMENT

SMCS-1453 **i02712964**

NOTE	REF NO	GRAPHIC REF	PART NUMBER	QTY	PART NAME 1 2 3 4 5 6 (PRODUCT LEVEL)	SEE PAGE
	1	1	**8C-9778**	1	PLUNGER AS	
	2	1	**8C-9783**	1	GASKET	
	3	1	**2P-8104**	1	BEARING	
	4	1	**7T-6092**	1	HOLDER AS-BRUSH	
M	5	1	**8T-4133**	2	NUT (M10X1.5-THD)	
	6	1	**7T-6088**	1	BEARING AS	
	7	1	**7T-6087**	1	WASHER (15.2X40X0.5-MM THK)	
	8	1	**7T-6093**	1	CLUTCH AS	
	9	1	**8J-4455**	1	BALL	
	10	1	**7T-6090**	1	SPRING	
	11	1	**8T-4121**	2	WASHER-HARD (11X21X2.5-MM THK)	
	12	1	**3E-5153**	1	COVER-STARTING MOTOR	
M	13	1	**9X-2036**	1	SCREW-PAN HEAD	
	14	1	**8F-1434**	1	LOCKWASHER	
	15	1	**100-4113**	1	SWITCH AS (STARTING MOTOR)(12-VOLT)	
	16	1	**100-4119**	1	ARMATURE AS	
	17	1	**100-4118**	1	CASE AS-STARTING MOTOR	
	18	1	**100-4115**	1	HOUSING-STARTING MOTOR	
	19	1	**143-1344**	1	FRAME-STARTER	
	20	1	**100-3685**	1	CAP	
	21	1	**3E-5154**	1	BUSHING-STARTING MOTOR	
					AVAILABLE REPAIR KIT(S):	
			7T-6099	1	KIT-GEAR (STARTING MOTOR)	
					(INCLUDES RETAINER, PINION & ROLLERS)	
			146-6729	1	KIT-HARDWARE (STARTING MOTOR)	
					(INCLUDES BOLTS, SCREWS, SCREW ASSEMBLIES & PLATE)	
			100-4112	1	KIT-CONTACT (STARTING MOTOR)	
					(INCLUDES NUT, WASHERS, SEAL, BUSHINGS, PLATE & BOLT)	

M-METRIC PART

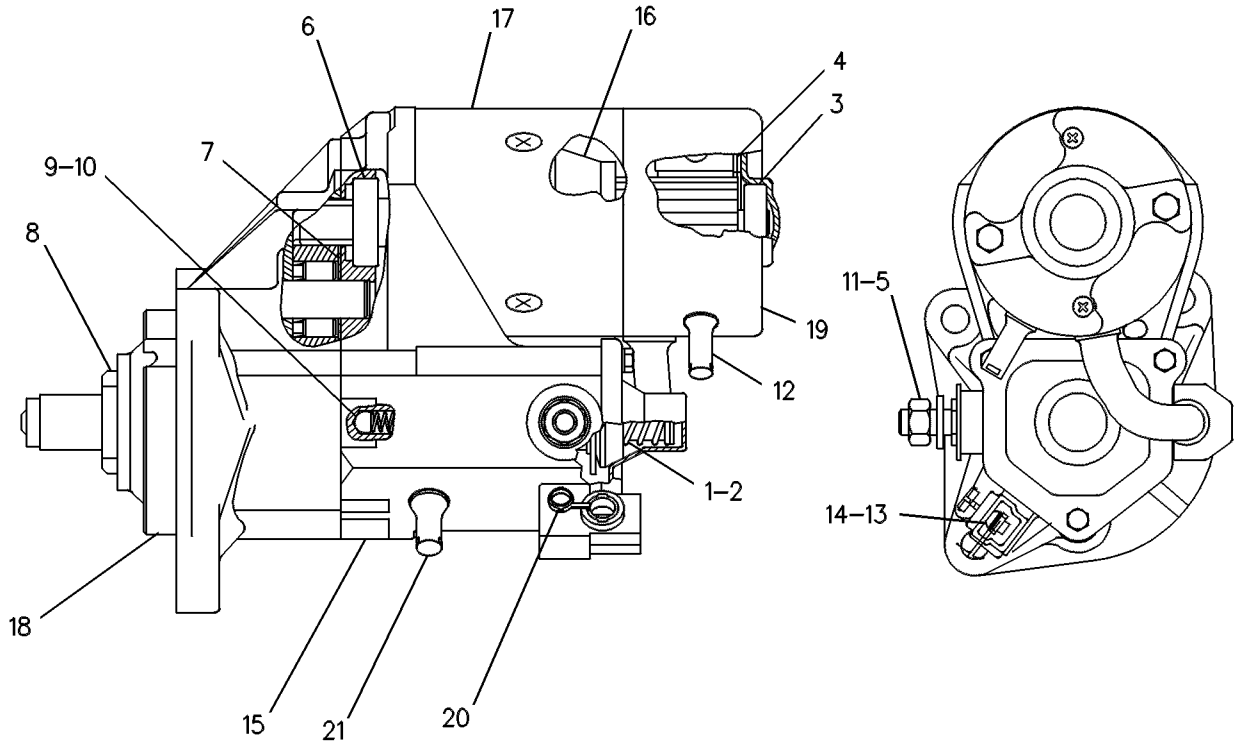

GRAPHIC #1 **<END>** g00131126

ELECTRICAL AND STARTING SYSTEM

287-6181 STARTING MOTOR GP-ELECTRIC

S/N: CYM1-UP
12-VOLT
PART OF 332-8660 ENGINE AR-PRIMARY
AN ATTACHMENT

SMCS-1453 **i02568571**

NOTE	REF NO	GRAPHIC REF	PART NUMBER	QTY	PART NAME 1 2 3 4 5 6 (PRODUCT LEVEL)	SEE PAGE
YR	1	1	**143-0539**	1	STARTING MOTOR GP-ELECTRIC	100

R-REMFG PART MAY BE AVAILABLE
Y-SEPARATE ILLUSTRATION

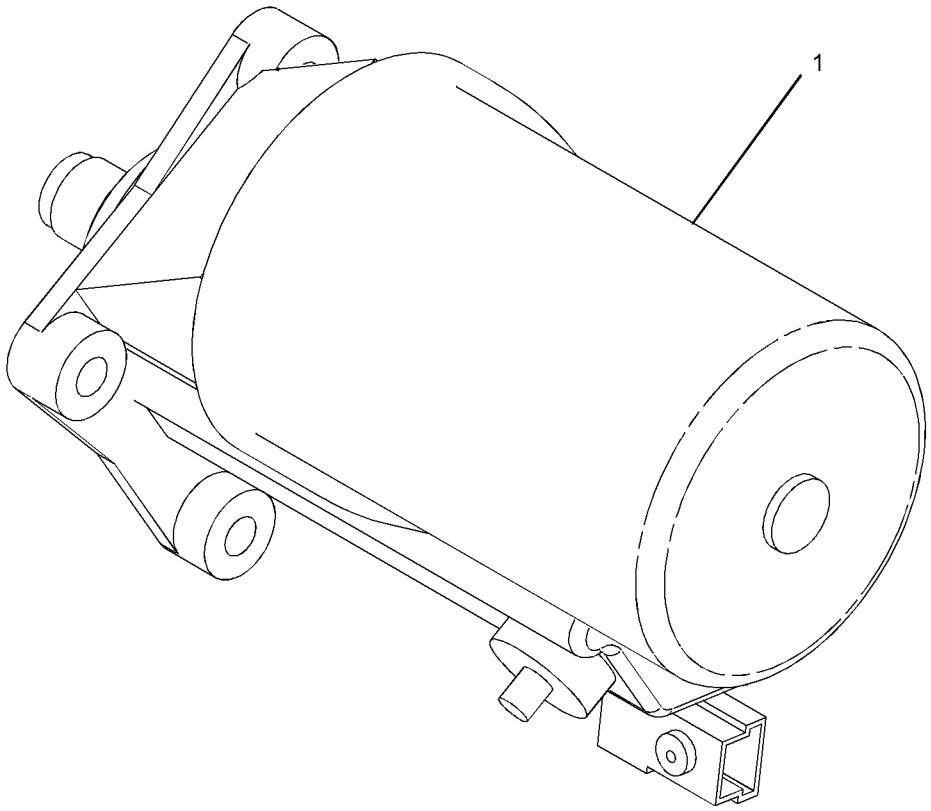

GRAPHIC #1 **<END>** g01345353

184-1564 SWITCH GP-PRESSURE–BRAKE LIGHT

S/N: SRS1-UP

PART OF 358-6919 KIT-ROADING CONVERSION, 328-2348 SWITCH GP-PRESSURE AN ATTACHMENT

SMCS-1435, 7400 **i03647947**

NOTE	REF NO	GRAPHIC REF	PART NUMBER	QTY	PART NAME 1 2 3 4 5 6 (PRODUCT LEVEL)	SEE PAGE
E	1	1	**9X-1813**		SLEEVE (19-CM)	
	2	1	**102-8802**	1	KIT-RECEPTACLE (2-PIN)	
					(INCLUDES RECECPTACLE AS & WEDGE)	
	3	1	**8T-8729**	2	PIN-CONNECTOR (16-GA TO 18-GA)	
	4	1	**3J-1907**	1	SEAL-O-RING	
E-ORDER BY THE CENTIMETER						

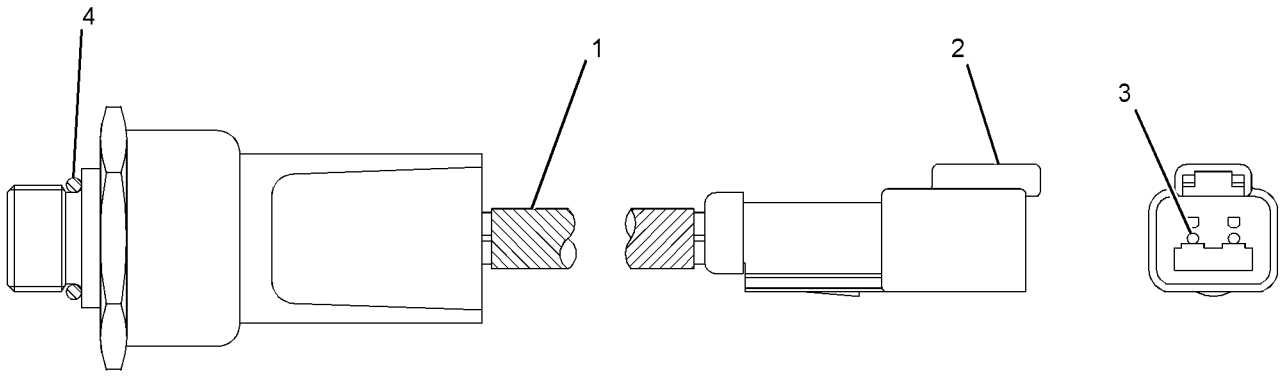

GRAPHIC #1 **<END>** g01957820

300-1071 SWITCH GP-PRESSURE

S/N: CYM1-UP
PART OF 332-8660 ENGINE AR-PRIMARY
AN ATTACHMENT

SMCS-1435, 7400 **i02974920**

NOTE	REF NO	GRAPHIC REF	PART NUMBER	QTY	PART NAME 1 2 3 4 5 6 (PRODUCT LEVEL)	SEE PAGE
	1	1	**327-0752**	1	SWITCH-OIL PRESS (ENGINE)	

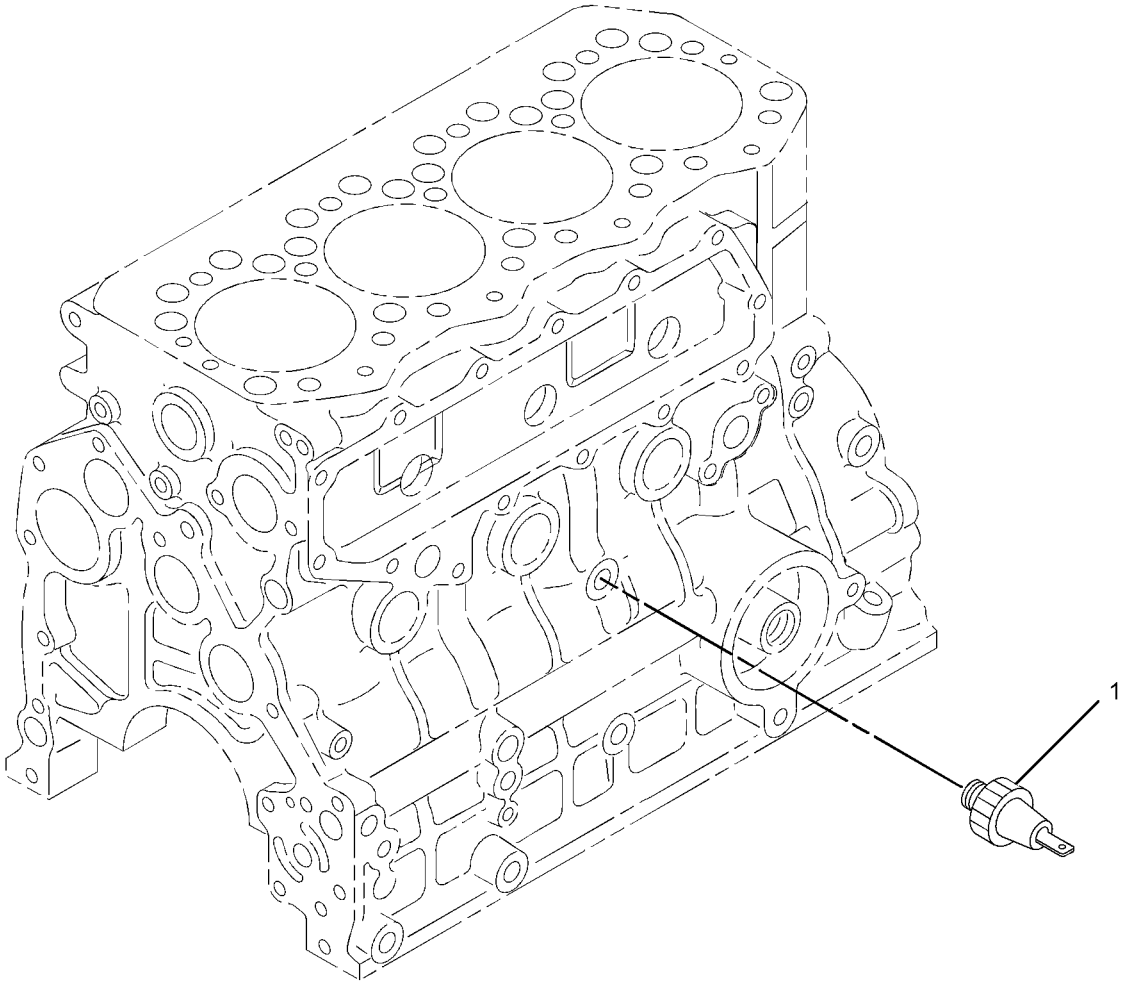

GRAPHIC #1 **<END>** g01345516

328-2348 SWITCH GP-PRESSURE

S/N: SRS1-UP
PART OF 326-5282 CONVERSION AR-MACHINE
AN ATTACHMENT

SMCS-1435, 7400 **i03971117**

NOTE	REF NO	GRAPHIC REF	PART NUMBER	QTY	PART NAME 1 2 3 4 5 6 (PRODUCT LEVEL)	SEE PAGE
	1	1	**146-9439**	1	RELAY AS (12-VOLT) (STOP LIGHT)	
	2	1	*166-2033*	2	TEE AS	
					(EACH INCLUDES)	
		1	**4J-5477**	1	SEAL-O-RING	
		1	**7X-2444**	1	TEE-SWIVEL	
Y	3	1	**184-1564**	2	SWITCH GP-PRESSURE (BRAKE LIGHT)	103
	4	1	**3S-2093**	2	STRAP-CABLE	

Y-SEPARATE ILLUSTRATION

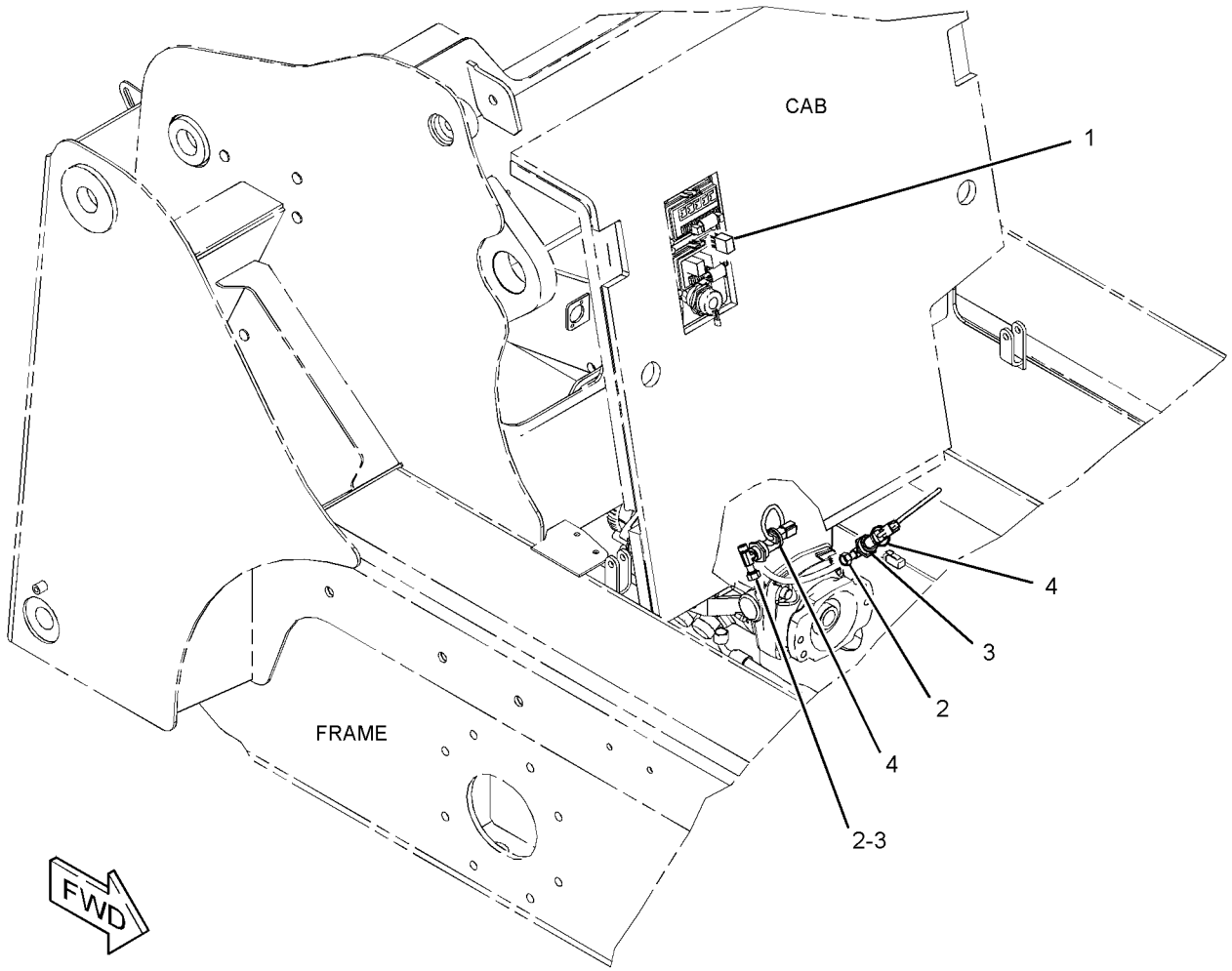

GRAPHIC #1 **<END>** g02149267

142-9116 SWITCH GP-ROCKER—WORK TOOL POSITIONER

S/N: SRS1-UP
PART OF 326-5738 LINES GP-LIFT CYLINDER
AN ATTACHMENT

SMCS-1435, 7332 **i04039845**

NOTE	REF NO	GRAPHIC REF	PART NUMBER	QTY	PART NAME 1 2 3 4 5 6 (PRODUCT LEVEL)	SEE PAGE
F		1	**111-7899**	1	GASKET (MODE SELECT)	

F-NOT SHOWN

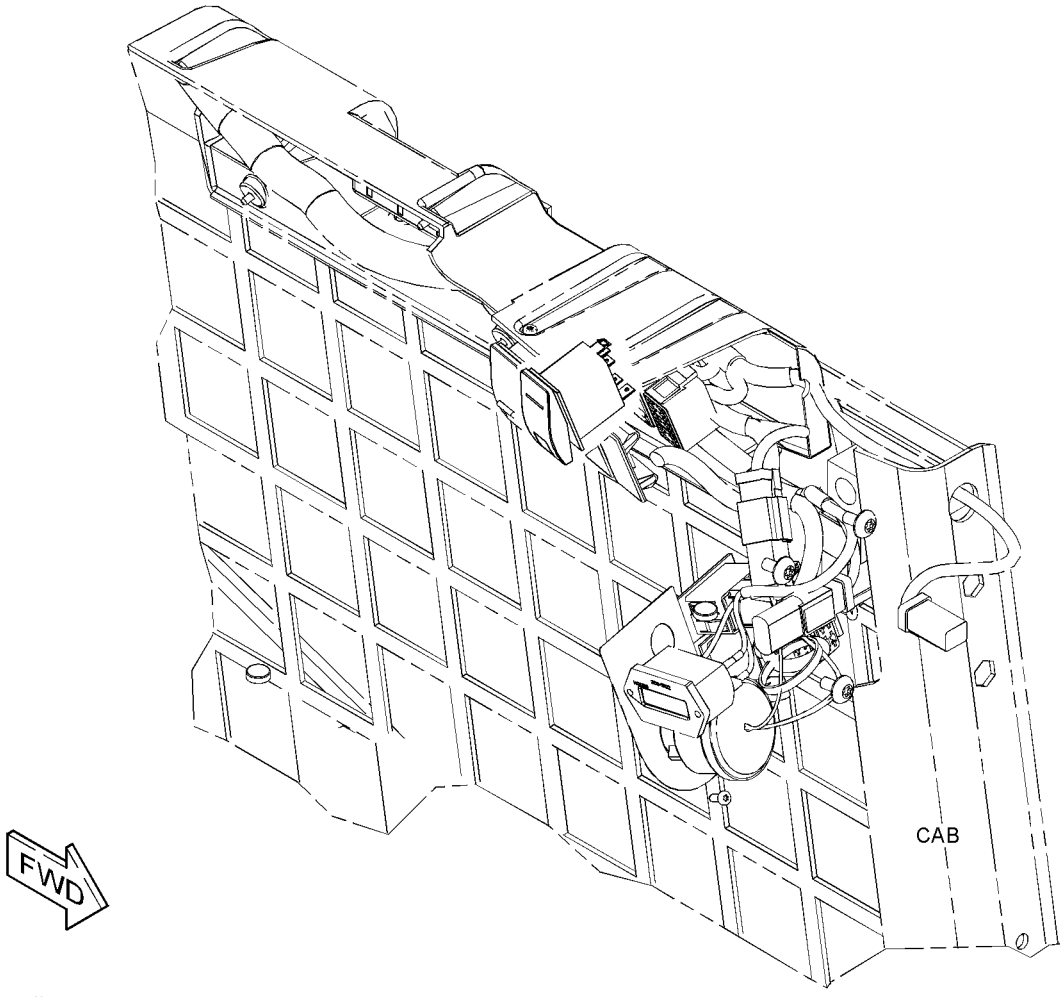

GRAPHIC #1 **<END>** g02266493

ELECTRICAL AND STARTING SYSTEM

328-2272 WIRING GP-CAB

S/N: SRS1-UP

PART OF 326-5400 CAB AR

SMCS-1408, 7301 **i04159147**

NOTE	REF NO	GRAPHIC REF	PART NUMBER	QTY	PART NAME 1 2 3 4 5 6 (PRODUCT LEVEL)	SEE PAGE
	1	1	**6I-1418**	4	SPACER (8.2X12.7X28.7-MM THK)	
	2	1	**7G-1060**	1	STRAP AS-GROUND	
	3	1	**7K-1181**	11	STRAP-CABLE	
	4	1	**8T-9655**	8	MOUNT-ISOLATION	
	5	1	**116-7471**	1	PULLER-MINIFUSE	
	6	1	**180-9900**	1	CAP AS	
		1	**5P-7958**	1	SLEEVE-CABLE SPLICE	
		1	**8C-6354**	1	CAP-RECEPTACLE	
		1	**179-9392**	1	LANYARD	
Y	7	1	**258-4135**	2	RELAY GP (12-VOLT) (MAIN POWER)	99
	8	1	**258-4136**	1	FUSE AS (MAIN POWER)	
		1	**267-2680**	2	FUSE (20-AMPERE)	
		1	**267-5211**	1	SEAL	
		1	**267-5213**	1	COVER	
	9	1	**258-4138**	1	FILM (POWER DISTRIBUTION)	
	10	1	**258-4143**	1	BAR-BUS	
	11	1	**258-4196**	2	WIRE AS	
	12	1	**267-2680**	2	FUSE (20-AMPERE)	
	13	1	**328-2273**	1	HARNESS AS-CAB (REAR)	
		1	**275-7878**	2	BLOCK AS-FUSE	
					(EACH INCLUDES)	
M		1	**5C-2890**	2	NUT (M6X1-THD)	
		1	**8C-3398**	2	LOCKWASHER	
		1	**8T-4205**	2	WASHER-HARD (7.2X14.5X2-MM THK)	
		1	**306-0350**	1	COVER	
		1	**306-0351**	1	SEAL-COVER	
		1	**8T-8799**	6	BOOT	
		1	**274-3775**	1	CAP-CONNECTOR	
E		1	**283-0632**		CONDUIT (112-CM)	
E		1	**283-4198**		CONDUIT (14-CM)	
		1	**126-1774**	1	COVER-CONNECTOR	
		1	**124-3548**	1	FUSE (30-AMPERE)	
		1	**113-8490**	7	FUSE (10-AMPERE)	
		1	**113-8491**	10	FUSE (15-AMPERE)	
		1	**113-8492**	2	FUSE (20-AMPERE)	
		1	**203-9007**	1	NUT (1-1/2-18-THD)	
		1	**213-0139**	11	PIN	
		1	**8N-1548**	1	PIN-CONNECTOR (4-GA)	
		1	**186-3735**	23	PIN-CONNECTOR (16-GA TO 18-GA)	
		1	**9X-3401**	17	PIN-CONNECTOR (16-GA TO 18-GA)	
		1	**155-2260**	3	KIT-CONNECTING PLUG (3-PIN)	
		1	**155-2270**	2	KIT-CONNECTING PLUG (2-PIN)	
					(EACH PLUG KIT INCLUDES PLUG AS, WEDGE & INTERFACE SEAL)	
		1	**160-7689**	1	PLUG AS-CONNECTOR (70-PIN)	
		1	**159-9322**	1	SEAL-O-RING	
		1	**230-4011**	2	PLUG AS-CONNECTOR (2-PIN)	
					(EACH INCLUDES)	
		1	**264-7029**	1	SEAL-CONNECTOR	
		1	**7R-2751**	25	PLUG-CONNECTOR	
		1	**8T-8737**	33	PLUG-SEAL	
		1	**102-8802**	1	KIT-RECEPTACLE (2-PIN)	
		1	**102-8804**	1	KIT-RECEPTACLE (4-PIN)	
					(EACH RECEPTACLE KIT INCLUDES RECEPTACLE AS & WEDGE)	
		1	**127-5484**	1	RECEPTACLE AS-CONNECTOR (1-PIN)	

328-2272 **WIRING GP-CAB** *(contd.)* **i04159147**

NOTE	REF NO	GRAPHIC REF	PART NUMBER	QTY	PART NAME 1 2 3 4 5 6 (PRODUCT LEVEL)	SEE PAGE
		1	**134-2540**	2	RESISTOR AS-CONNECTION (3-PIN)	
		1	**167-3692**	1	RECEPTACLE AS-CONNECTOR (31-PIN)	
		1	**225-3861**	1	RECEPTACLE AS (31-PIN)	
		1	**146-9439**	3	RELAY AS (12-VOLT) (CAB)	
		1	**128-5016**	25	SEAL-CABLE	
		1	**7R-2750**	19	SEAL-CONNECTOR	
		1	**186-3736**	27	SOCKET-CONNECTOR (16-GA TO 18-GA)	
		1	**9W-0844**	11	SOCKET-CONNECTOR (14-GA TO 16-GA)	
		1	**9X-3402**	54	SOCKET-CONNECTOR (16-GA TO 18-GA)	
		1	**180-9340**	16	SOCKET-CONNECTOR (14-GA TO 18-GA)	
		1	**202-0313**	26	TERMINAL AS	
					(EACH INCLUDES)	
		1	**128-5016**	1	SEAL-CABLE	
		1	**202-0314**	19	TERMINAL AS	
					(EACH INCLUDES)	
		1	**128-4123**	1	SEAL	
		1	**275-0601**	20	SOCKET-CONNECTOR	
		1	**3S-2093**	26	STRAP-CABLE	
		1	**9X-6772**	2	STRAP-CABLE	
		1	**2L-8069**	2	TERMINAL-RING (2-GA TO 10-GA, 3/8-IN SCREW)	
		1	**2L-8067**	6	TERMINAL-RING (10-GA TO 12-GA, 1/4-IN SCREW)	
		1	**2L-8077**	2	TERMINAL-RING (14-GA TO 16-GA, 1/4-IN SCREW)	
E		1	**125-7876**		TUBE-HEAT SHRINK (17.78-MM DIA) (4-CM)	
E		1	**119-3662**		TUBE-HEAT SHRINK (10.85-MM DIA) (20-CM)	
E		1	**125-7874**		TUBE-HEAT SHRINK (5.72-MM DIA) (70-CM)	
E		1	**125-7875**		TUBE-HEAT SHRINK (7.44-MM DIA) (20-CM)	
		1	**270-2679**	1	LOCKWASHER	
Y	14	1	*328-2345*	1	ELECTRONICS GP-MACHINE	77
	15	1	**343-6022**	1	FILM-IDENTIFICATION (FUSE, RELAY PANEL)	
	16	1	**343-6885**	1	FILM-IDENTIFICATION (FUSE, RELAY PANEL)	
	17	1	**4P-7581**	3	CLIP	
	18	1	**4P-8134**	2	CLIP	
M	19	1	**5C-2890**	10	NUT (M6X1-THD)	
M	20	1	**5C-7261**	7	NUT (M8X1.25-THD)	
	21	1	**5P-7162**	8	SCREW-MACHINE (10-32X0.5-IN)	
M	22	1	**6V-7728**	3	BOLT (M6X1X45-MM)	
	23	1	**7X-0579**	4	WASHER-HARD (8.8X25.5X2-MM THK)	
	24	1	**8C-3398**	6	LOCKWASHER	
	25	1	**8T-4205**	13	WASHER-HARD (7.2X14.5X2-MM THK)	
	26	1	**8T-4224**	3	WASHER-HARD (8.8X16X2-MM THK)	
E	27	1	**103-2543**		SEAL (3-CM EACH)	
M	28	1	**8T-4133**	1	NUT (M10X1.5-THD)	
	29	1	**8T-4122**	1	WASHER-HARD (17X32X3.5-MM THK)	
	30	1	**7G-7053**	1	GROMMET	
	31	1	**3S-2093**	3	STRAP-CABLE	
E	32	1	**9X-2092**		TRIM-EDGE (15-CM)	

E-ORDER BY THE CENTIMETER
M-METRIC PART
Y-SEPARATE ILLUSTRATION

328-2272 **WIRING GP-CAB** *(contd.)* **i04159147**

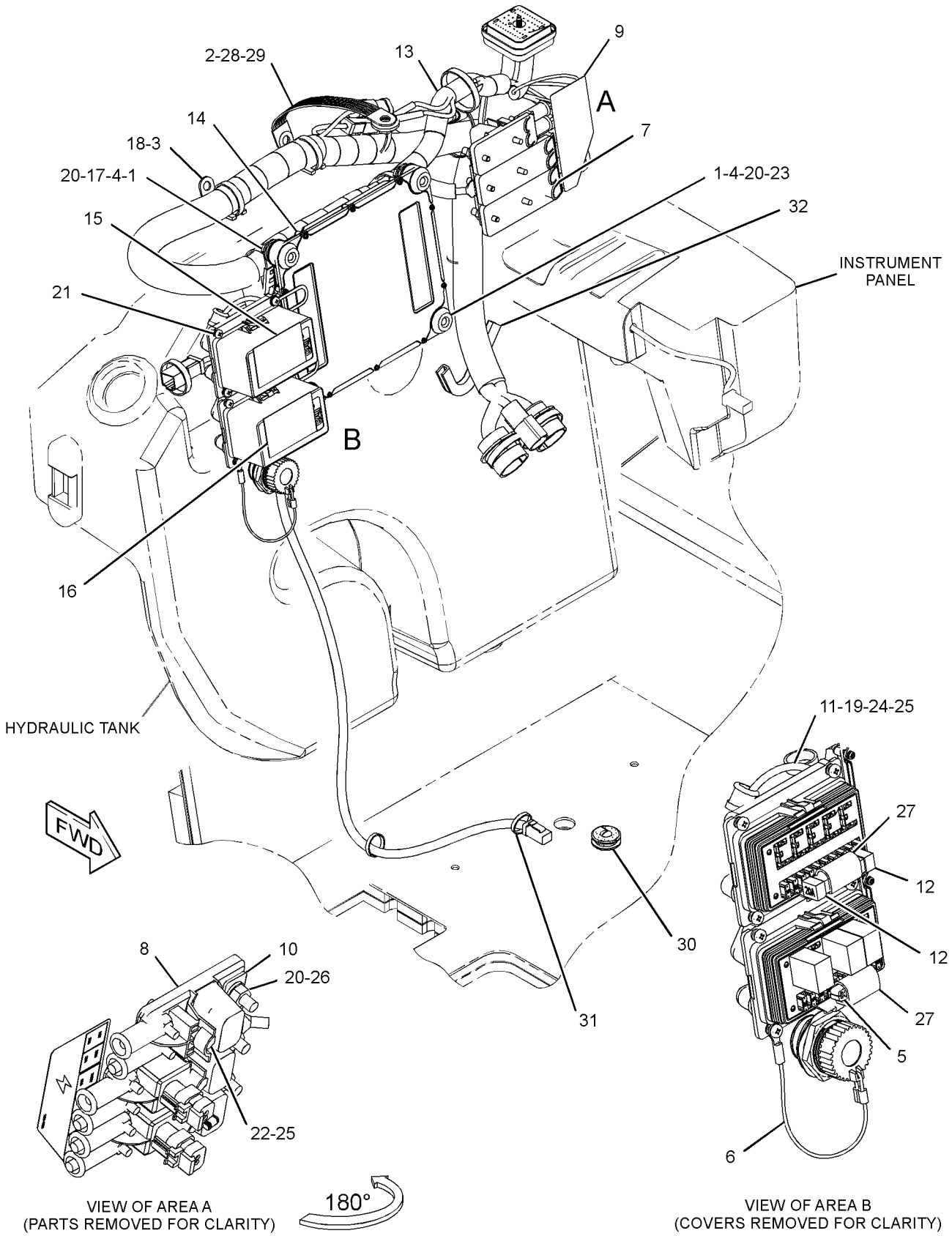

GRAPHIC #1

<END>

g02470444

ELECTRICAL AND STARTING SYSTEM

328-2276 WIRING GP-ENGINE

S/N: SRS1-UP

PART OF 326-5328 INSTALLATION AR-ENGINE

SMCS-1000, 1408, 1420 **i04394801**

NOTE	REF NO	GRAPHIC REF	PART NUMBER	QTY	PART NAME 1 2 3 4 5 6 (PRODUCT LEVEL)	SEE PAGE
	1	1	**7K-1181**	5	STRAP-CABLE	
	2	1	**238-0112**	1	SENSOR GP-TEMPERATURE (ENGINE COOLANT)	
B	3	1	**274-3774**	2	CAP-CONNECTOR	
	4	1	**328-2277**	1	HARNESS AS-ENGINE	
		1	**8T-8799**	1	BOOT	
E		1	**211-5358**		CONDUIT-FLEXIBLE (55-CM)	
		1	**107-3134**	1	HOUSING-CONNECTOR	
		1	**186-3735**	4	PIN-CONNECTOR (16-GA TO 18-GA)	
		1	**9X-3401**	9	PIN-CONNECTOR (16-GA TO 18-GA)	
		1	**176-1477**	1	PLUG AS (2-PIN)	
		1	**9X-1054**	2	PLUG AS-CONNECTOR (4-PIN)	
		1	**155-2270**	2	KIT-CONNECTING PLUG (2-PIN)	
					(EACH INCLUDES PLUG AS, WEDGE & INTERFACE SEAL)	
		1	**230-4011**	1	PLUG AS-CONNECTOR (2-PIN)	
		1	**264-7029**	1	SEAL-CONNECTOR	
		1	**8T-8737**	1	PLUG-SEAL	
		1	**107-3136**	5	PLUG-SEAL	
		1	**102-8801**	1	KIT-RECEPTACLE (12-PIN)	
		1	**102-8802**	1	KIT-RECEPTACLE (2-PIN)	
					(EACH RECEPTACLE KIT INCLUDES RECEPTACLE AS & WEDGE)	
		1	**185-1861**	2	SEAL-WIRE	
		1	**186-3736**	4	SOCKET-CONNECTOR (16-GA TO 18-GA)	
		1	**9X-3402**	2	SOCKET-CONNECTOR (16-GA TO 18-GA)	
		1	**3S-2093**	9	STRAP-CABLE	
		1	**030-1712**	1	TERMINAL-RING (2-GA, 1/4-IN SCREW)	
		1	**9G-4336**	1	TERMINAL-RING (4-GA)	
		1	**2L-8065**	1	TERMINAL-RING (10-GA TO 12-GA, NO. 8 SCREW)	
		1	**5P-4571**	1	TERMINAL-BLADE (14-GA TO 16-GA)	
		1	**5P-1478**	1	TERMINAL-FORK (10-GA TO 12-GA, NO. 10 SCREW)	
		1	**9G-4336**	2	TERMINAL-RING (4-GA)	
		1	**107-3135**	3	TERMINAL (16-GA TO 20-GA)	
		1	**9X-1055**	4	TERMINAL-RECEPTACLE (12-GA)	
		1	**9X-1056**	4	TERMINAL-RECEPTACLE (14-GA TO 16-GA)	
E		1	**119-3662**		TUBE-HEAT SHRINK (10.85-MM DIA) (7-CM)	
E		1	**125-7874**		TUBE-HEAT SHRINK (5.72-MM DIA) (10-CM)	
	5	1	**115-1615**	1	RELAY AS (12-VOLT) (COLD START)	
	5A	1	**115-1615**	1	RELAY AS (12-VOLT) (START)	
	6	1	**208-9277**	2	BOLT-FLANGE HEAD (M8X1X25-MM)	
	7	1	**3S-2093**	5	STRAP-CABLE	
	8	1	**4P-7429**	2	CLIP	
	9	1	**4P-7581**	1	CLIP	
	10	1	**4P-8134**	6	CLIP	
M	11	1	**5C-7261**	1	NUT (M8X1.25-THD)	
	12	1	**5P-4116**	2	WASHER-HARD (8.8X20.5X2-MM THK)	
	13	1	**6V-9028**	1	SEAL-O-RING	
	14	1	**7X-0608**	1	WASHER-HARD (10.2X16X2-MM THK)	
M	15	1	**7X-2548**	1	BOLT (M12X1.75X16-MM)	
	16	1	**8T-4121**	4	WASHER-HARD (11X21X2.5-MM THK)	
M	17	1	**8T-4136**	3	BOLT (M10X1.5X25-MM)	
M	18	1	**8T-4200**	2	BOLT (M8X1.25X16-MM)	
	20	1	**9F-5644**	1	LOCKWASHER	
M	21	1	**8T-4133**	1	NUT (M10X1.5-THD)	

328-2276 **WIRING GP-ENGINE** *(contd.)* **i04394801**

B-USE AS REQUIRED
E-ORDER BY THE CENTIMETER
M-METRIC PART

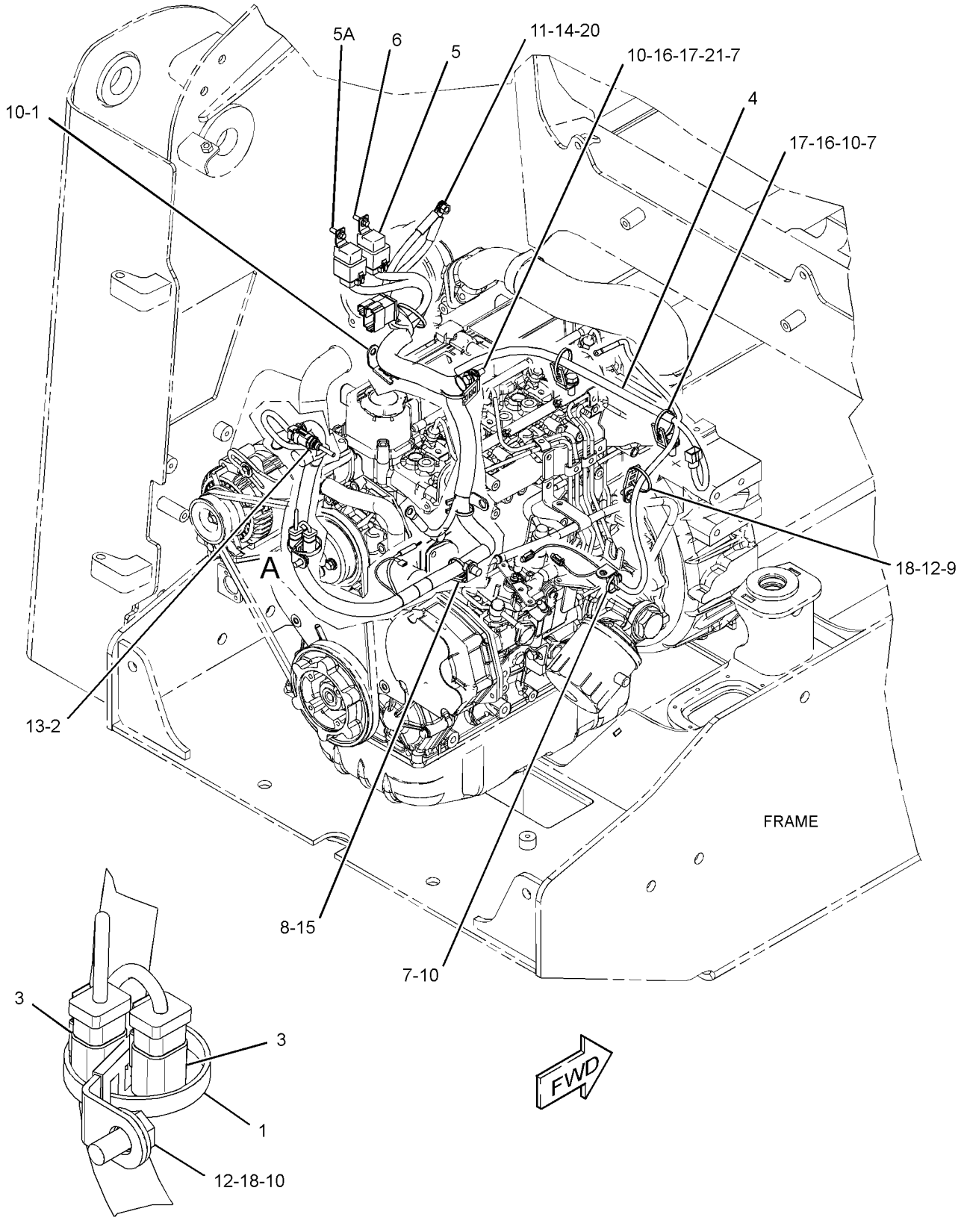

VIEW OF AREA A

GRAPHIC #1 **<END>** g02585038

230-3743 WIRING GP-HORN—WITH MOUNTING

S/N: SRS1-UP
PART OF 326-5280, 326-5281, 326-5282, 326-5284, 356-1902 CONVERSION
AR-MACHINE
AN ATTACHMENT

SMCS-1408, 7402 **i03971120**

NOTE	REF NO	GRAPHIC REF	PART NUMBER	QTY	PART NAME 1 2 3 4 5 6 (PRODUCT LEVEL)	SEE PAGE
	1	1	**3S-2093**	5	STRAP-CABLE	
M	2	1	**8T-4186**	1	BOLT (M10X1.5X40-MM)	
	3	1	**142-8833**	1	SPACER (11X14.3X9-MM THK)	
M	4	1	**8T-4133**	1	NUT (M10X1.5-THD)	
	5	1	**186-3362**	1	HARNESS AS-CHASSIS (HORN)	
		1	**144-1636**	2	PIN-CONNECTOR (14-GA TO 18-GA)	
		1	**126-1766**	2	SOCKET-CONNECTOR (14-GA TO 18-GA)	
		1	**102-8802**	1	KIT-RECEPTACLE (2-PIN)	
					(INCLUDES RECEPTACLE AS & WEDGE)	
		1	**155-2270**	1	KIT-CONNECTING PLUG (2-PIN)	
					(INCLUDES PLUG AS, WEDGE & INTERFACE SEAL)	
	6	1	**8T-4121**	3	WASHER-HARD (11X21X2.5-MM THK)	

M-METRIC PART

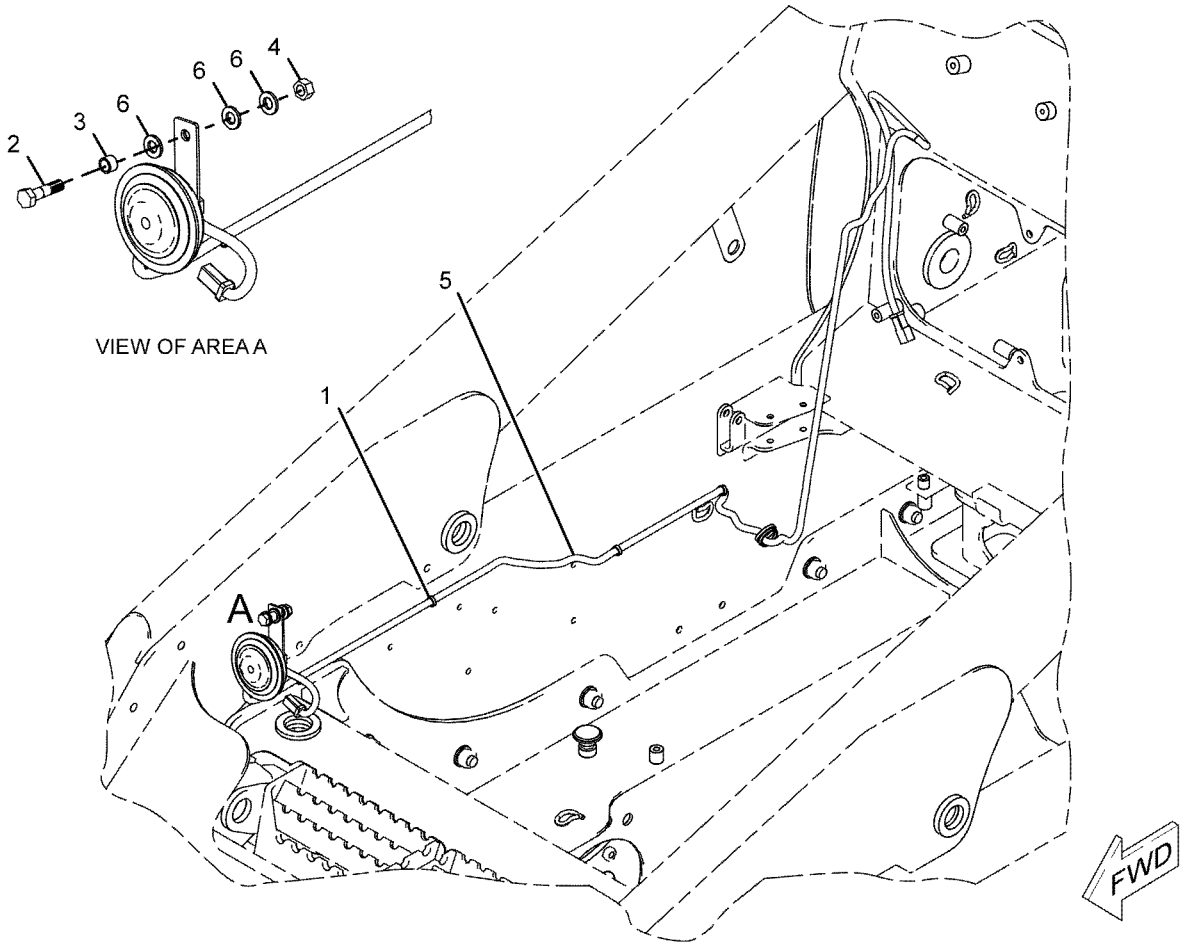

GRAPHIC #1 **<END>** g01037702

328-2274 WIRING GP-MACHINE

S/N: SRS1-UP

PART OF 326-5410 CHASSIS AR

SMCS-1408 **i04171436**

NOTE	REF NO	GRAPHIC REF	PART NUMBER	QTY	PART NAME 1 2 3 4 5 6 (PRODUCT LEVEL)	SEE PAGE
	1	1	**7K-1181**	23	STRAP-CABLE	
	2	1	**8M-4963**	1	STRAP AS-GROUND	
	3	1	**161-2539**	1	ALARM AS	
		1	**4B-2043**	2	NUT (8-32-THD)	
	4	1	**178-3620**	1	STRAP-DUAL CLAMP	
	5	1	**178-7539**	1	RECEPTACLE AS (POWER SUPPLY)	
	6	1	**192-0836**	1	SWITCH GP-PRESSURE (BACKUP ALARM)	
		1	**102-8802**	1	KIT-RECEPTACLE (2-PIN)	
					(INCLUDES RECEPTACLE AS & WEDGE)	
		1	**3J-1907**	1	SEAL-O-RING	
		1	**8T-8729**	2	PIN-CONNECTOR (16-GA TO 18-GA)	
	7	1	**235-1845**	1	FUSE (100-AMPERE)	
	8	1	**267-2744**	1	HOLDER AS-FUSE	
M		1	**5C-7261**	2	NUT (M8X1.25-THD)	
		1	**7X-0608**	2	WASHER-HARD (10.2X16X2-MM THK)	
		1	**9F-5644**	2	LOCKWASHER	
		1	**267-2746**	1	COVER AS	
B	9	1	**274-3774**	3	CAP-CONNECTOR	
B	10	1	**274-3776**	3	CAP-SEAL	
B	11	1	**274-3778**	1	CAP-SEAL	
	12	1	**328-2275**	1	HARNESS AS-PLATFORM	
		1	**102-8802**	2	KIT-RECEPTACLE (2-PIN)	
					(EACH INCLUDES RECEPTACLE AS & WEDGE)	
		1	**155-2265**	2	KIT-CONNECTING PLUG (8-PIN)	
		1	**155-2255**	3	KIT-CONNECTING PLUG (12-PIN)	
		1	**155-2270**	16	KIT-CONNECTING PLUG (2-PIN)	
		1	**155-2271**	3	KIT-CONNECTING PLUG (4-PIN)	
					(EACH PLUG KIT INCLUDES PLUG AS , WEDGE & INTERFACE SEAL)	
		1	**8T-8729**	16	PIN-CONNECTOR (16-GA TO 18-GA)	
		1	**180-9340**	61	SOCKET-CONNECTOR (14-GA TO 18-GA)	
		1	**8T-8730**	47	SOCKET-CONNECTOR (16-GA TO 18-GA)	
		1	**9W-0852**	7	PIN-CONNECTOR (14-GA TO 16-GA)	
		1	**9W-0844**	12	SOCKET-CONNECTOR (14-GA TO 16-GA)	
		1	**9X-3401**	8	PIN-CONNECTOR (16-GA TO 18-GA)	
		1	**274-3774**	2	CAP-CONNECTOR	
E		1	**283-0632**		CONDUIT (14-CM)	
		1	**127-5483**	1	PLUG AS-CONNECTOR (1-PIN)	
		1	**167-3693**	1	PLUG AS-CONNECTOR (31-PIN)	
		1	**225-3854**	1	PLUG AS	
		1	**8T-8737**	11	PLUG-SEAL	
		1	**9W-0844**	12	SOCKET-CONNECTOR (14-GA TO 16-GA)	
		1	**8N-1549**	1	SOCKET-CONNECTOR (4-GA)	
		1	**3S-2093**	40	STRAP-CABLE	
		1	**2L-8069**	2	TERMINAL-RING (2-GA TO 10-GA, 3/8-IN SCREW)	
		1	**2L-8079**	2	TERMINAL-RING (14-GA TO 16-GA, 3/8-IN SCREW)	
		1	**5P-4571**	2	TERMINAL-BLADE (14-GA TO 16-GA)	
		1	**9G-4336**	1	TERMINAL-RING (4-GA)	
E		1	**119-3662**		TUBE-HEAT SHRINK (10.85-MM DIA) (20-CM)	
E		1	**125-7874**		TUBE-HEAT SHRINK (5.72-MM DIA) (35-CM)	
	13	1	**328-2340**	1	HARNESS AS-LIGHTING (REAR)	
		1	**8T-8729**	6	PIN-CONNECTOR (16-GA TO 18-GA)	
		1	**9W-0852**	1	PIN-CONNECTOR (14-GA TO 16-GA)	

328-2274 **WIRING GP-MACHINE** *(contd.)* **i04171436**

NOTE	REF NO	GRAPHIC REF	PART NUMBER	QTY	PART NAME 1 2 3 4 5 6 (PRODUCT LEVEL)	SEE PAGE
		1	**155-2271**	2	KIT-CONNECTING PLUG (4-PIN)	
					(EACH INCLUDES PLUG AS, WEDGE & INTERFACE SEAL)	
		1	**8T-8737**	1	PLUG-SEAL	
		1	**102-8806**	1	KIT-RECEPTACLE (8-PIN)	
					(INCLUDES RECEPTACLE AS & WEDGE)	
		1	**3S-2093**	2	STRAP-CABLE	
		1	**8T-8730**	8	SOCKET-CONNECTOR (16-GA TO 18-GA)	
E		1	**125-7874**		TUBE-HEAT SHRINK (5.72-MM DIA) (10-CM)	
		1	**7N-9017**	2	TERMINAL-RING (18-GA TO 22-GA, NO. 10 SCREW)	
	14	1	**132-5789**	3	CLIP	
	15	1	**155-2270**	1	KIT-CONNECTING PLUG (2-PIN)	
					(INCLUDES PLUG AS, WEDGE & INTERFACE SEAL)	
	16	1	**208-9277**	2	BOLT-FLANGE HEAD (M8X1X25-MM)	
	17	1	**3S-2093**	15	STRAP-CABLE	
	18	1	**4P-7581**	1	CLIP	
M	19	1	**5C-7261**	1	NUT (M8X1.25-THD)	
	20	1	**5P-4115**	2	WASHER-HARD (7.2X19X2-MM THK)	
M	21	1	**6V-7728**	2	BOLT (M6X1X45-MM)	
	22	1	**7X-0608**	1	WASHER-HARD (10.2X16X2-MM THK)	
	23	1	**8T-4121**	3	WASHER-HARD (11X21X2.5-MM THK)	
M	24	1	**8T-4133**	3	NUT (M10X1.5-THD)	
	25	1	**9F-5644**	1	LOCKWASHER	
	26	1	**189-0852**	2	HARNESS AS-WIRING (SPEED SENSOR)	
					(EACH INCLUDES)	
		1	**9X-3401**	2	PIN-CONNECTOR (16-GA TO 18-GA)	
		1	**155-2270**	1	KIT-CONNECTING PLUG (2-PIN)	
					(INCLUDES PLUG AS, WEDGE & INTERFACE SEAL)	
		1	**102-8802**	1	KIT-RECEPTACLE (2-PIN)	
					(INCLUDES RECEPTACLE AS & WEDGE)	
E		1	**9X-1813**		SLEEVE (16-CM)	
		1	**180-9340**	2	SOCKET-CONNECTOR (14-GA TO 18-GA)	

B-USE AS REQUIRED
E-ORDER BY THE CENTIMETER
M-METRIC PART

328-2274 **WIRING GP-MACHINE** *(contd.)* **i04171436**

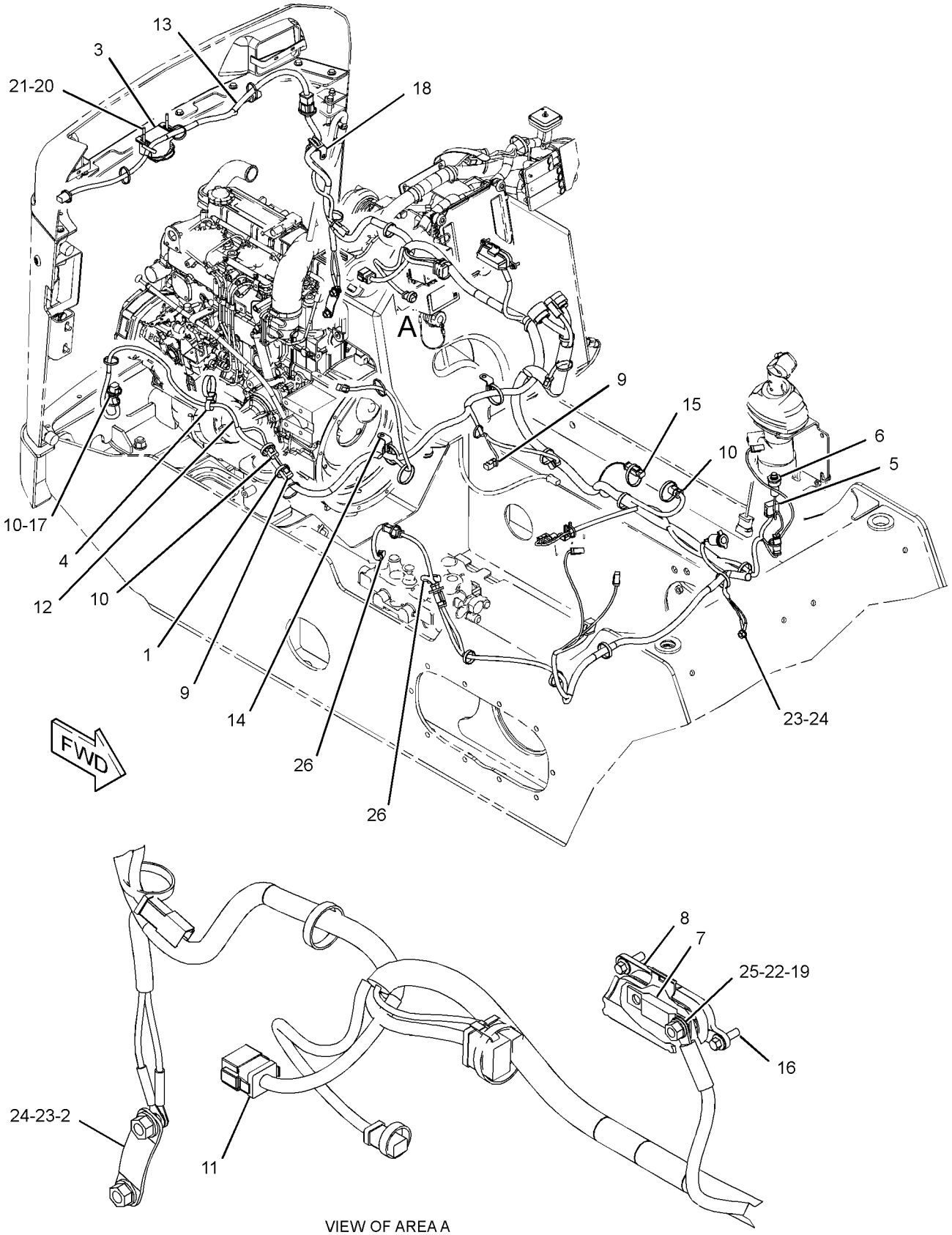

VIEW OF AREA A

GRAPHIC #1 **<END>** g02470979

328-2342 WIRING GP-MACHINE–DEMAND FAN

S/N: SRS1-UP

PART OF 326-5280, 326-5281, 326-5282, 326-5284, 356-1902 CONVERSION AR-MACHINE, 356-1901 MOTOR AR-HYDRAULIC FAN AN ATTACHMENT

SMCS-1408 **i04048570**

NOTE	REF NO	GRAPHIC REF	PART NUMBER	QTY	PART NAME 1 2 3 4 5 6 (PRODUCT LEVEL)	SEE PAGE
	1	1	**328-2341**	1	HARNESS AS-SOLENOID (DEMAND FAN)	
		1	**8T-8729**	2	PIN-CONNECTOR (16-GA TO 18-GA)	
		1	**155-2270**	1	KIT-CONNECTING PLUG (2-PIN)	
					(INCLUDES PLUG AS, WEDGE & INTERFACE SEAL)	
		1	**102-8802**	1	KIT-RECEPTACLE (2-PIN)	
					(INCLUDES RECEPTACLE AS & WEDGE)	
		1	**8T-8730**	2	SOCKET-CONNECTOR (16-GA TO 18-GA)	
	2	1	**3S-2093**	5	STRAP-CABLE	
	3	1	**4P-8134**	1	CLIP	
	4	1	**8T-4121**	1	WASHER-HARD (11X21X2.5-MM THK)	
M	5	1	**8T-4133**	1	NUT (M10X1.5-THD)	

M-METRIC PART

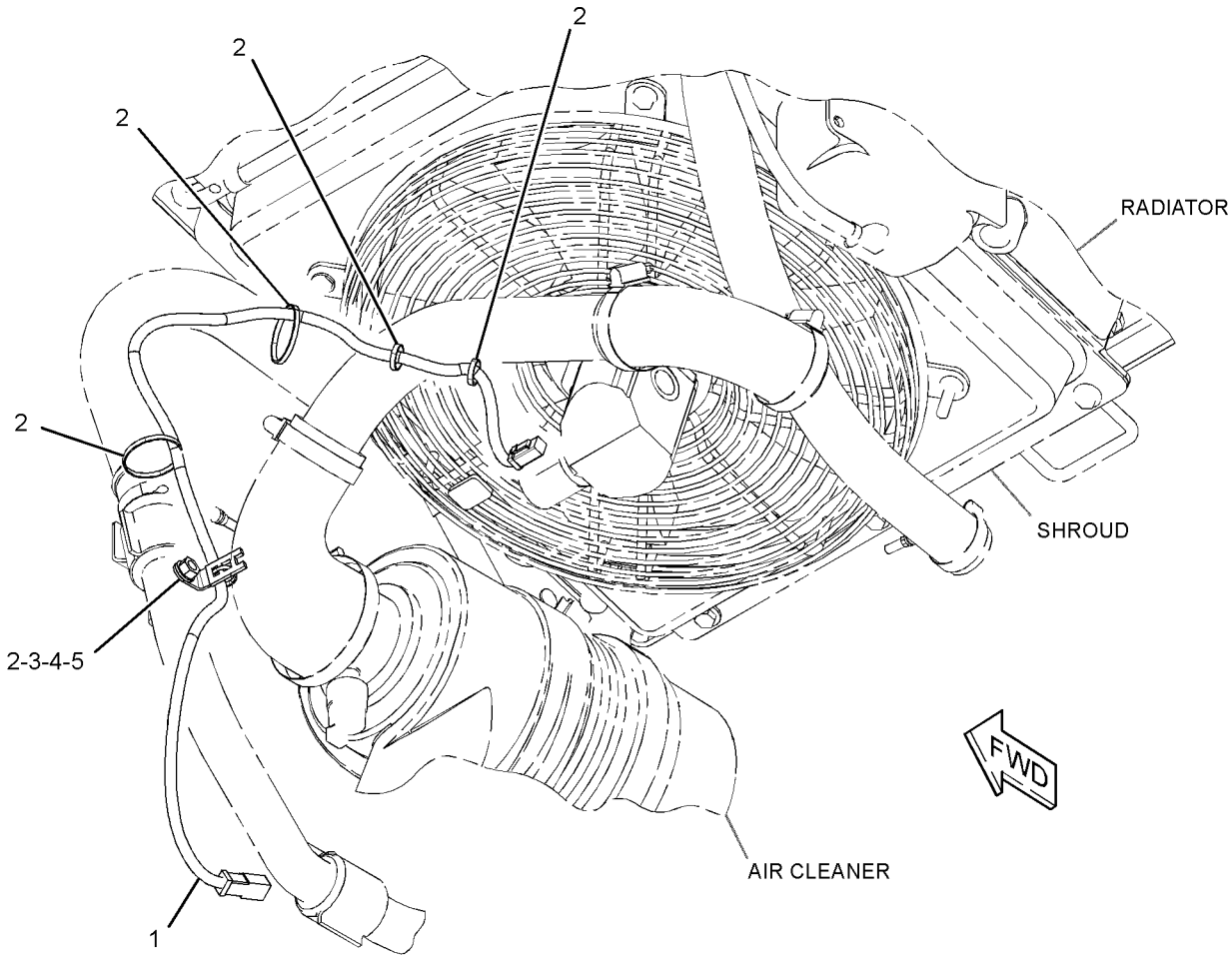

GRAPHIC #1 **<END>** g02470477

328-2335 WIRING GP-WORK TOOL

S/N: SRS1-UP
PART OF 326-5483, 354-6538 CONTROL AR-MACHINE
AN ATTACHMENT

SMCS-1408 **i03902930**

NOTE	REF NO	GRAPHIC REF	PART NUMBER	QTY	PART NAME 1 2 3 4 5 6 (PRODUCT LEVEL)	SEE PAGE
	1	1	**110-8760**	1	STRAP	
	2	1	**142-8633**	1	SWITCH AS-ROCKER (ELECTRIC POWER, WORK TOOL)	
		1	**111-7899**	1	GASKET	
	3	1	**146-9439**	5	RELAY AS (12-VOLT) (WORK TOOL)	
	4	1	**159-9495**	1	NUT (1-1/2-18-THD)	
	5	1	**178-3620**	1	STRAP-DUAL CLAMP	
	6	1	**216-4725**	1	HARNESS AS-WORK TOOL (LIFT ARM)	
		1	**1S-9593**	1	STRAP-CABLE	
		1	**7T-0093**	8	PIN-CONNECTOR (12-GA TO 14-GA)	
		1	**9W-0852**	8	PIN-CONNECTOR (14-GA TO 16-GA)	
		1	**156-1458**	1	COVER	
		1	**156-1460**	1	RECEPTACLE (8-PIN)	
	7	1	**159-9496**	1	LOCKWASHER	
	8	1	**102-8806**	1	KIT-RECEPTACLE (8-PIN)	
					(INCLUDES RECEPTACLE AS & WEDGE)	
	9	1	**3S-2093**	3	STRAP-CABLE	

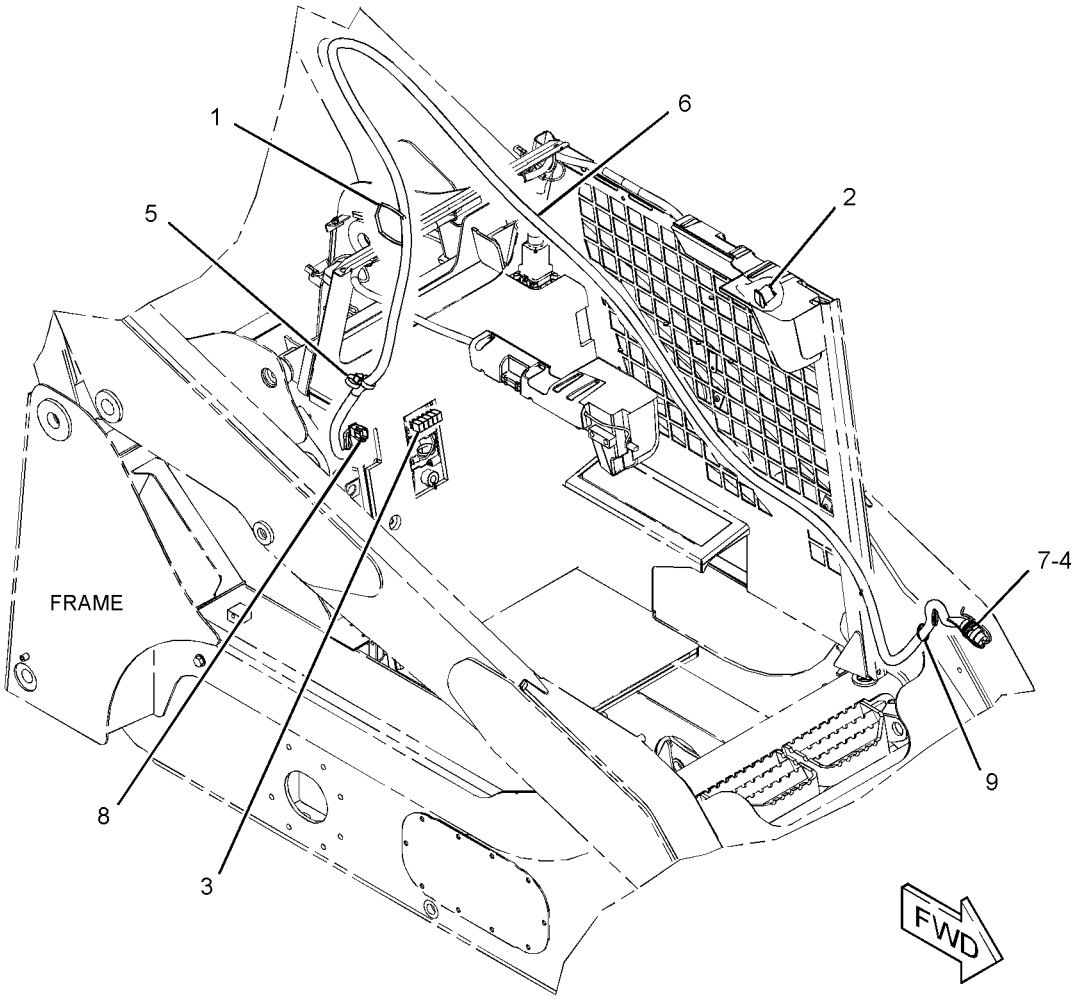

GRAPHIC #1 **<END>** g02150595

142-8758 AXLE GP

S/N: SRS1-UP

PART OF 261-6255 AXLE GP

SMCS-3278 **i01790260**

NOTE	REF NO	GRAPHIC REF	PART NUMBER	QTY	PART NAME 1 2 3 4 5 6 (PRODUCT LEVEL)	SEE PAGE
	1	1	**142-8723**	1	HOUSING-AXLE	
	2	1	**142-8724**	1	SPINDLE-WHEEL	
	3	1	**142-8729**	1	SPACER (32.045 MM THK)	
	4	1	**150-4385**	2	CONE	
	5	1	**150-4386**	2	CUP	
	6	1	**150-5472**	1	SEAL-LIP TYPE	
	7	1	**159-5772**	8	STUD (9/16-18-2A THD)	
	8	1	**166-3678**	1	SEAL-LIP TYPE	

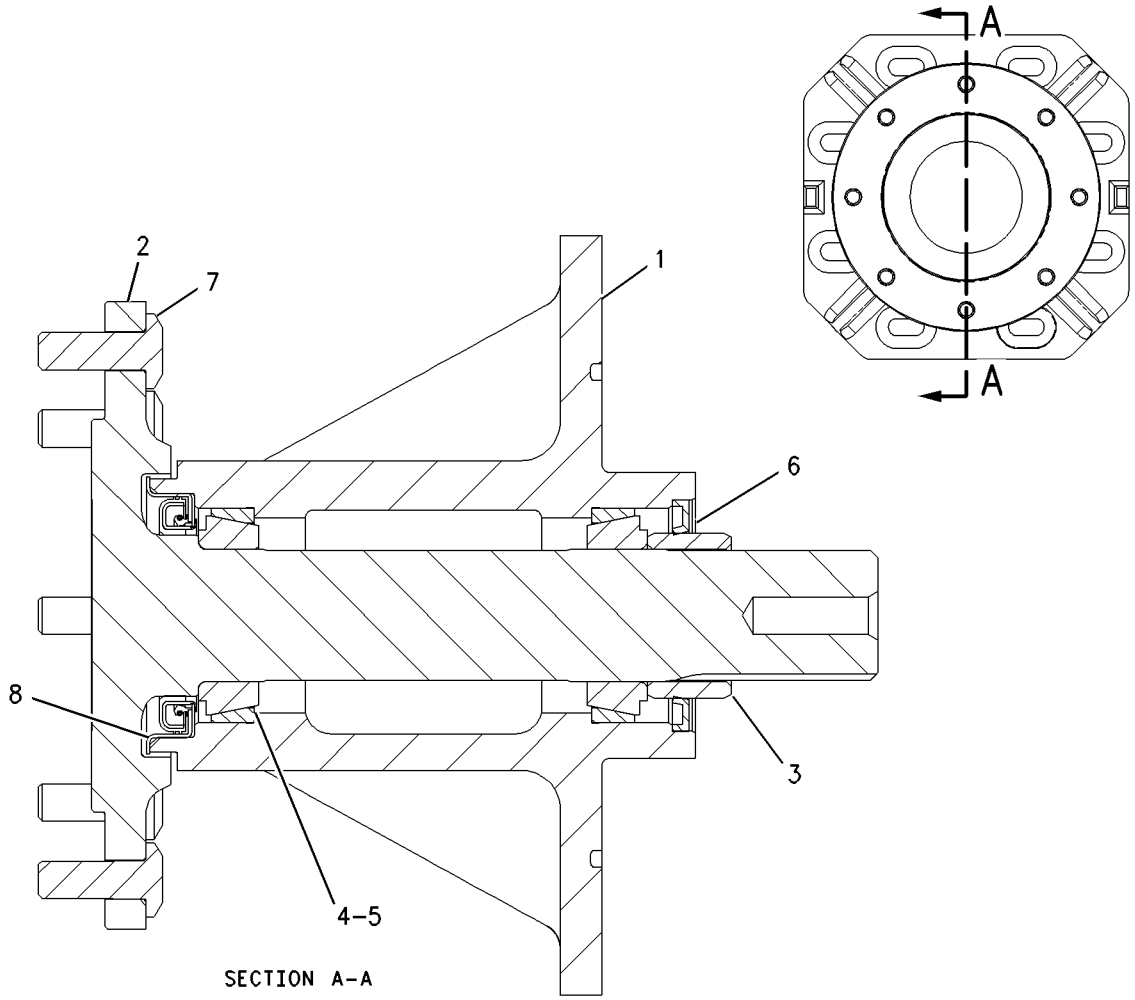

GRAPHIC #1 **<END>** g00916188

POWER TRAIN

261-6255 AXLE GP

S/N: SRS1-UP

PART OF 326-5410 CHASSIS AR

SMCS-3278 **i02476310**

NOTE	PART NUMBER	QTY	PART NAME 1 2 3 4 5 6 (PRODUCT LEVEL)	SEE PAGE
Y	**142-8758**	4	AXLE GP	118

Y-SEPARATE ILLUSTRATION

<END>

326-5790 CONTROL GP-PARKING BRAKE

S/N: SRS1-UP

PART OF 354-6536, 354-6537, 354-6538 CONTROL AR-MACHINE

AN ATTACHMENT

SMCS-4284 **i04171210**

NOTE	REF NO	GRAPHIC REF	PART NUMBER	QTY	PART NAME 1 2 3 4 5 6 (PRODUCT LEVEL)	SEE PAGE
I	1	1	**100-7530**	1	HOSE AS	
I	2	1	**148-7027**	1	HOSE AS	
I	3	1	**245-3867**	1	HOSE AS	
Y	4	1	**248-1268**	1	MANIFOLD & SOLENOID GP-CONTROL (PARKING BRAKE)	133
	5	1	**326-5789**	1	TUBE AS	
	6	1	*148-8336*	2	CONNECTOR AS	
					(EACH INCLUDES)	
		1	**3J-1907**	1	SEAL-O-RING	
		1	**6V-8397**	1	SEAL-O-RING	
		1	**6V-8636**	1	CONNECTOR	
	7	1	*148-8353*	1	ELBOW AS	
		1	**3J-1907**	1	SEAL-O-RING	
		1	**6V-8397**	1	SEAL-O-RING	
		1	**6V-9001**	1	ELBOW	
	8	1	*148-8435*	1	TEE AS	
		1	**3J-1907**	1	SEAL-O-RING	
		1	**6V-8397**	2	SEAL-O-RING	
		1	**6V-8781**	1	TEE	
	9	1	*161-8560*	1	CONNECTOR AS	
		1	**3J-1907**	1	SEAL-O-RING	
		1	**7J-9108**	1	SEAL-O-RING	
		1	**8C-6758**	1	CONNECTOR	
	10	1	**6V-8398**	2	SEAL-O-RING	
	11	1	**8T-4224**	2	WASHER-HARD (8.8X16X2-MM THK)	
M	12	1	**8T-6869**	2	BOLT (M8X1.25X60-MM)	

I-REFER TO HYDRAULIC INFORMATION SYSTEM
M-METRIC PART
Y-SEPARATE ILLUSTRATION

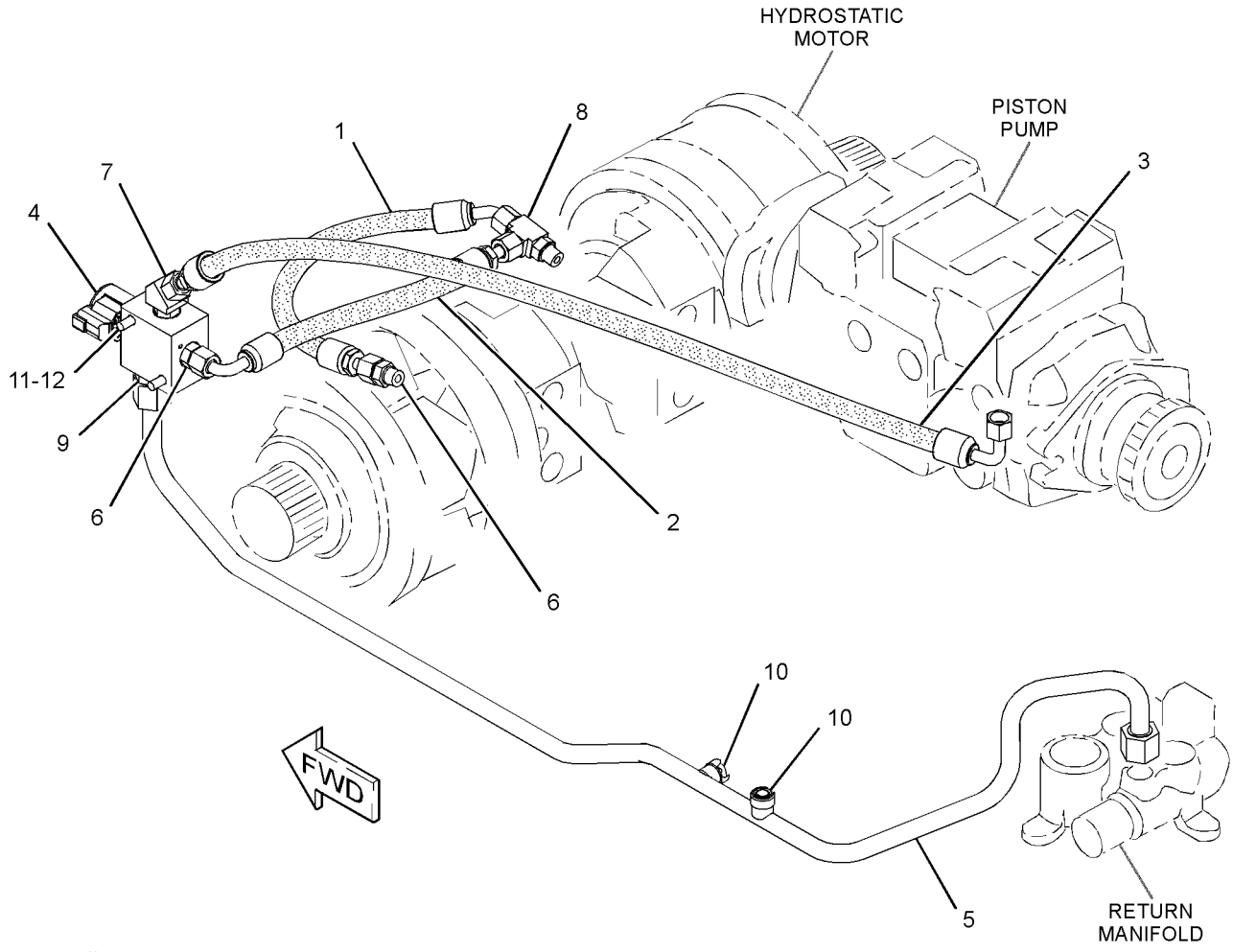

GRAPHIC #1 **<END>** g02471436

326-5797 CONTROL GP-PARKING BRAKE–2-SPEED

S/N: SRS1-UP
PART OF 326-5472, 326-5483 CONTROL AR-MACHINE
AN ATTACHMENT

SMCS-4284 **i04171209**

NOTE	REF NO	GRAPHIC REF	PART NUMBER	QTY	PART NAME 1 2 3 4 5 6 (PRODUCT LEVEL)	SEE PAGE
I	1	1	**9U-4148**	1	HOSE AS	
I	2	1	**218-6298**	1	HOSE AS	
I	3	1	**243-0564**	1	HOSE AS	
I	4	1	**245-3867**	1	HOSE AS	
Y	5	1	**293-6591**	1	MANIFOLD & SOLENOID GP-CONTROL (PARKING BRAKE, 2-SPEED)	134
I	6	1	**326-5712**	1	HOSE AS	
	7	1	**326-5789**	1	TUBE AS	
	8	1	*148-8318*	2	CONNECTOR AS	
					(EACH INCLUDES)	
		1	**3K-0360**	1	SEAL-O-RING	
		1	**6V-8397**	1	SEAL-O-RING	
		1	**6V-8634**	1	CONNECTOR	
	9	1	*148-8336*	1	CONNECTOR AS	
		1	**3J-1907**	1	SEAL-O-RING	
		1	**6V-8397**	1	SEAL-O-RING	
		1	**6V-8636**	1	CONNECTOR	
	10	1	*148-8374*	1	ELBOW AS	
		1	**3K-0360**	1	SEAL-O-RING	
		1	**6V-8397**	1	SEAL-O-RING	
		1	**6V-8723**	1	ELBOW	
	11	1	*148-8353*	1	ELBOW AS	
		1	**3J-1907**	1	SEAL-O-RING	
		1	**6V-8397**	1	SEAL-O-RING	
		1	**6V-9001**	1	ELBOW	
	12	1	*148-8428*	1	TEE AS	
		1	**3K-0360**	1	SEAL-O-RING	
		1	**6V-8398**	2	SEAL-O-RING	
		1	**6V-8782**	1	TEE	
	13	1	*148-8435*	1	TEE AS	
		1	**3J-1907**	1	SEAL-O-RING	
		1	**6V-8397**	2	SEAL-O-RING	
		1	**6V-8781**	1	TEE	
	14	1	*161-8560*	1	CONNECTOR AS	
		1	**3J-1907**	1	SEAL-O-RING	
		1	**7J-9108**	1	SEAL-O-RING	
		1	**8C-6758**	1	CONNECTOR	
	15	1	**6V-8398**	2	SEAL-O-RING	
M	16	1	**7X-2539**	2	BOLT (M8X1.25X110-MM)	
	17	1	**8T-4224**	2	WASHER-HARD (8.8X16X2-MM THK)	

I-REFER TO HYDRAULIC INFORMATION SYSTEM
M-METRIC PART
Y-SEPARATE ILLUSTRATION

326-5797 **CONTROL GP-PARKING BRAKE** *(contd.)* **i04171209**

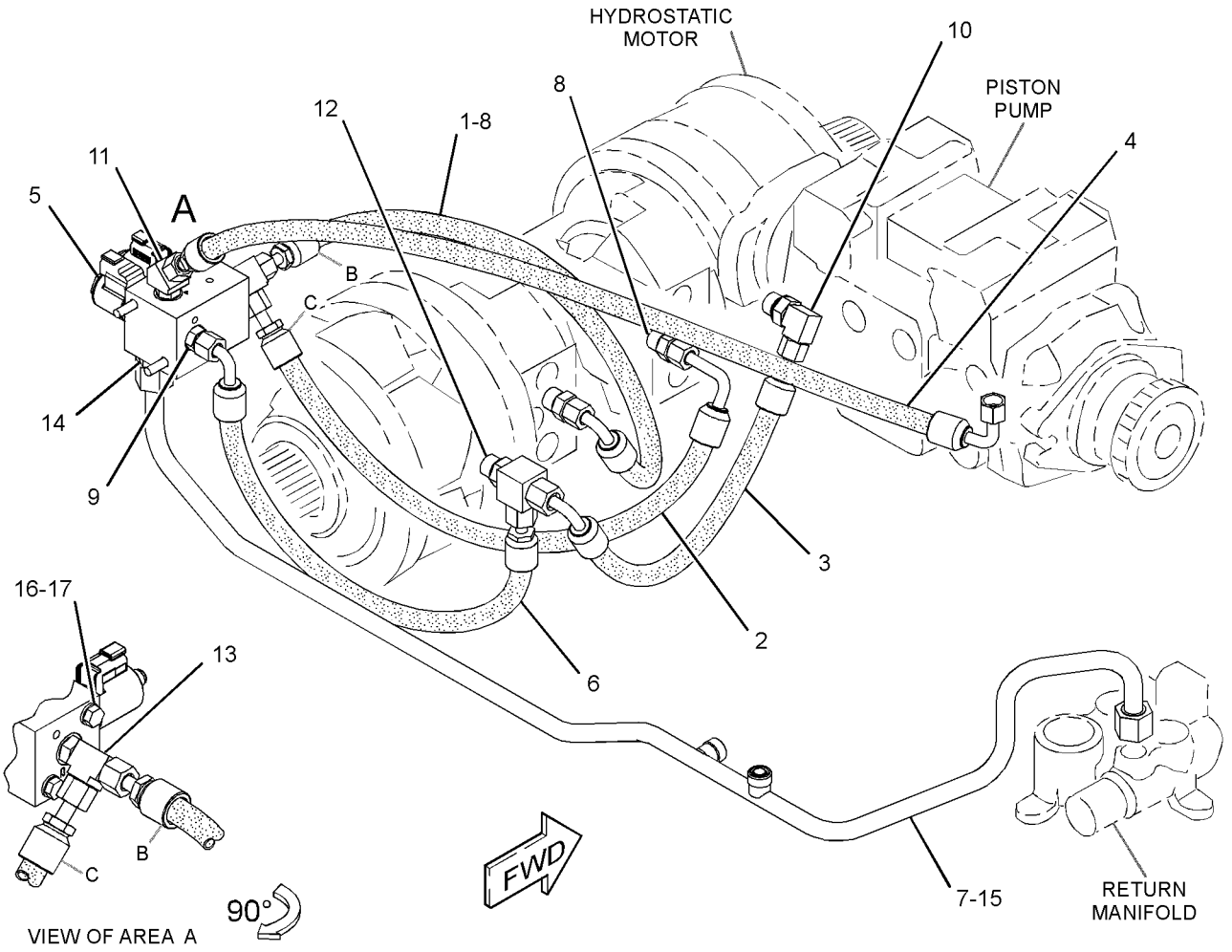

GRAPHIC #1

<END>

g02472557

POWER TRAIN

354-6543 DRIVE GP-TANDEM

S/N: SRS1-UP

PART OF 326-5250 POWER TRAIN AR

SMCS-4062 **i03988529**

NOTE	REF NO	GRAPHIC REF	PART NUMBER	QTY	PART NAME 1 2 3 4 5 6 (PRODUCT LEVEL)	SEE PAGE
	1	1	**142-8732**	4	SPROCKET (12-TEETH)	
	2	1	**152-1157**	32	WASHER (15.5X32X8-MM THK)	
	3	1	**200-0999**	32	STUD	
	4	1	**354-6545**	4	SPROCKET-AXLE (37-TEETH)	
	5	1	**354-6546**	4	CHAIN AS	
M	6	1	**099-4691**	2	BOLT-LOCKING (M12X1.75X25-MM)	
M	7	1	**100-3866**	4	BOLT-SELF-LOCKING (M16X2X40-MM)	
	8	1	**142-9036**	32	NUT (9/16-18-THD)	
	9	1	**5K-1787**	4	SEAL-O-RING	
	10	1	**7G-8839**	2	SPACER (13.5X57X6-MM THK)	
	11	1	**7X-0610**	4	WASHER-HARD (20X75X6-MM THK)	
	12	1	**8T-4122**	4	WASHER-HARD (17X32X3.5-MM THK)	

M-METRIC PART

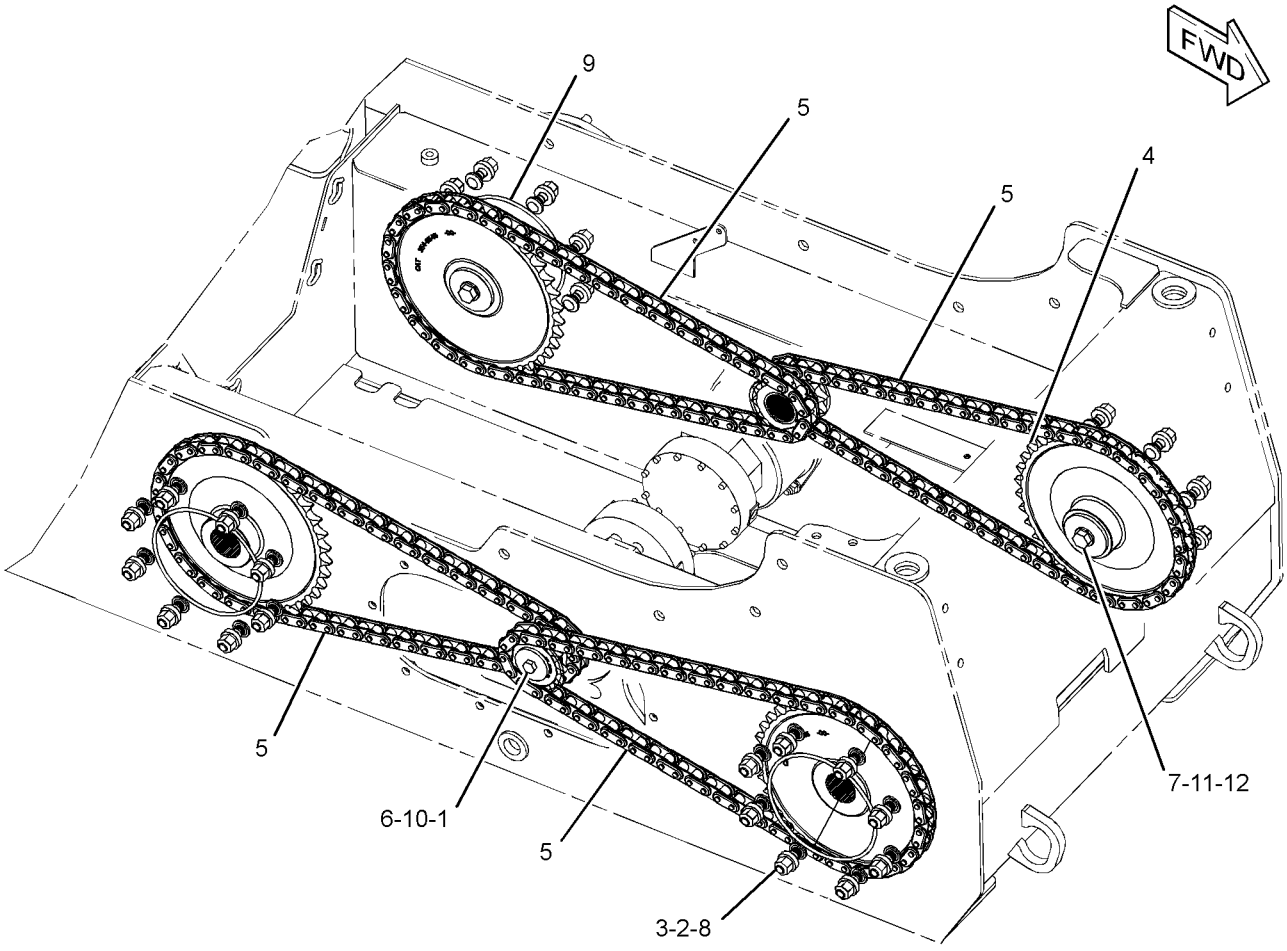

GRAPHIC #1 **<END>** g02171777

326-5739 FILTER & LINES GP-HYDRAULIC

S/N: SRS1-UP

PART OF 326-5730 HYDRAULIC AR

SMCS-5057, 5068 **i04032460**

NOTE	REF NO	GRAPHIC REF	PART NUMBER	QTY	PART NAME 1 2 3 4 5 6 (PRODUCT LEVEL)	SEE PAGE
	1	1	**7K-1181**	1	STRAP-CABLE	
	2	1	**178-3620**	3	STRAP-DUAL CLAMP	
Y	3	1	**223-9974**	1	FILTER GP-OIL (HYDRAULIC)	128
	4	1	*241-6228*	1	CONNECTOR AS	
		1	**3K-0360**	1	SEAL-O-RING	
		1	**7J-9108**	1	SEAL-O-RING	
		1	**156-9791**	1	CONNECTOR-SPECIAL	
	5	1	**326-5607**	1	PLATE	
I	6	1	**326-5695**	1	HOSE AS	
I	7	1	**326-5782**	1	HOSE AS	
I	8	1	**326-5783**	1	HOSE AS	
	9	1	**326-5798**	1	BRACKET AS	
M		1	**159-9540**	2	NUT-WELD (M8X1.25-THD)	
	10	1	**328-2353**	1	HARNESS AS-SWITCH	
		1	**155-2270**	1	KIT-CONNECTING PLUG (2-PIN)	
					(INCLUDES PLUG AS, WEDGE & INTERFACE SEAL)	
		1	**9W-0844**	1	SOCKET-CONNECTOR (14-GA TO 16-GA)	
		1	**180-9340**	1	SOCKET-CONNECTOR (14-GA TO 18-GA)	
		1	**2L-8069**	1	TERMINAL-RING (2-GA TO 10-GA, 3/8-IN SCREW)	
		1	**7N-9017**	1	TERMINAL-RING (18-GA TO 22-GA, NO. 10 SCREW)	
I	11	1	**360-1352**	1	HOSE AS	
	12	1	*148-8315*	1	CONNECTOR AS	
		1	**2M-9780**	1	SEAL-O-RING	
		1	**6V-8642**	1	CONNECTOR	
		1	**7J-9108**	1	SEAL-O-RING	
	13	1	*148-8316*	1	CONNECTOR AS	
		1	**3J-7354**	1	SEAL-O-RING	
		1	**4J-5477**	1	SEAL-O-RING	
		1	**6V-8647**	1	CONNECTOR	
	14	1	*148-8369*	1	ELBOW AS	
		1	**3J-7354**	1	SEAL-O-RING	
		1	**4J-5477**	1	SEAL-O-RING	
		1	**6V-8628**	1	ELBOW	
	15	1	*148-8382*	2	ELBOW AS	
					(EACH INCLUDES)	
		1	**3D-2824**	1	SEAL-O-RING	
		1	**7J-9108**	1	SEAL-O-RING	
		1	**8T-0404**	1	ELBOW	
	16	1	*148-8390*	1	ELBOW AS	
		1	**2M-9780**	1	SEAL-O-RING	
		1	**6V-8626**	1	ELBOW	
		1	**7J-9108**	1	SEAL-O-RING	
	17	1	*164-5590*	1	VALVE AS-FLUID SAMPLING (HYDRAULIC OIL)	
		1	**3J-7354**	1	SEAL-O-RING	
		1	**8C-3446**	1	VALVE-FLUID SAMPLING	
	18	1	**223-3490**	1	CLIP	
M	19	1	**266-3315**	1	BOLT-FLANGE HEAD (M8X1.25X25.5-MM)	
	20	1	**3E-4321**	4	CLIP	
	21	1	**3S-2093**	1	STRAP-CABLE	
M	22	1	**5C-2890**	2	NUT (M6X1-THD)	
M	23	1	**5C-7261**	2	NUT (M8X1.25-THD)	
	24	1	**5P-4115**	2	WASHER-HARD (7.2X19X2-MM THK)	
	25	1	**5P-4116**	5	WASHER-HARD (8.8X20.5X2-MM THK)	
	26	1	**6D-4244**	1	CLIP	

326-5739 **FILTER & LINES GP-HYDRAULIC** *(contd.)* **i04032460**

NOTE	REF NO	GRAPHIC REF	PART NUMBER	QTY	PART NAME 1 2 3 4 5 6 (PRODUCT LEVEL)	SEE PAGE
	27	1	**6V-1889**	2	CLIP	
	28	1	**8C-3451**	1	CAP-DUST	
	29	1	**8T-4121**	8	WASHER-HARD (11X21X2.5-MM THK)	
M	30	1	**8T-4136**	1	BOLT (M10X1.5X25-MM)	
M	31	1	**8T-4137**	6	BOLT (M10X1.5X20-MM)	
M	32	1	**8T-4185**	1	BOLT (M10X1.5X50-MM)	
M	33	1	**8T-4189**	2	BOLT (M8X1.25X20-MM)	
	34	1	**6B-7469**	1	SPACER (0.406X0.875X0.875-IN THK)	
	35	1	*155-3503*	1	TEE AS	
		1	**2M-9780**	1	SEAL-O-RING	
		1	**6V-8776**	1	TEE-FACE SEAL	
		1	**7J-9108**	2	SEAL-O-RING	

I-REFER TO HYDRAULIC INFORMATION SYSTEM
M-METRIC PART
Y-SEPARATE ILLUSTRATION

326-5739 **FILTER & LINES GP-HYDRAULIC** *(contd.)* **i04032460**

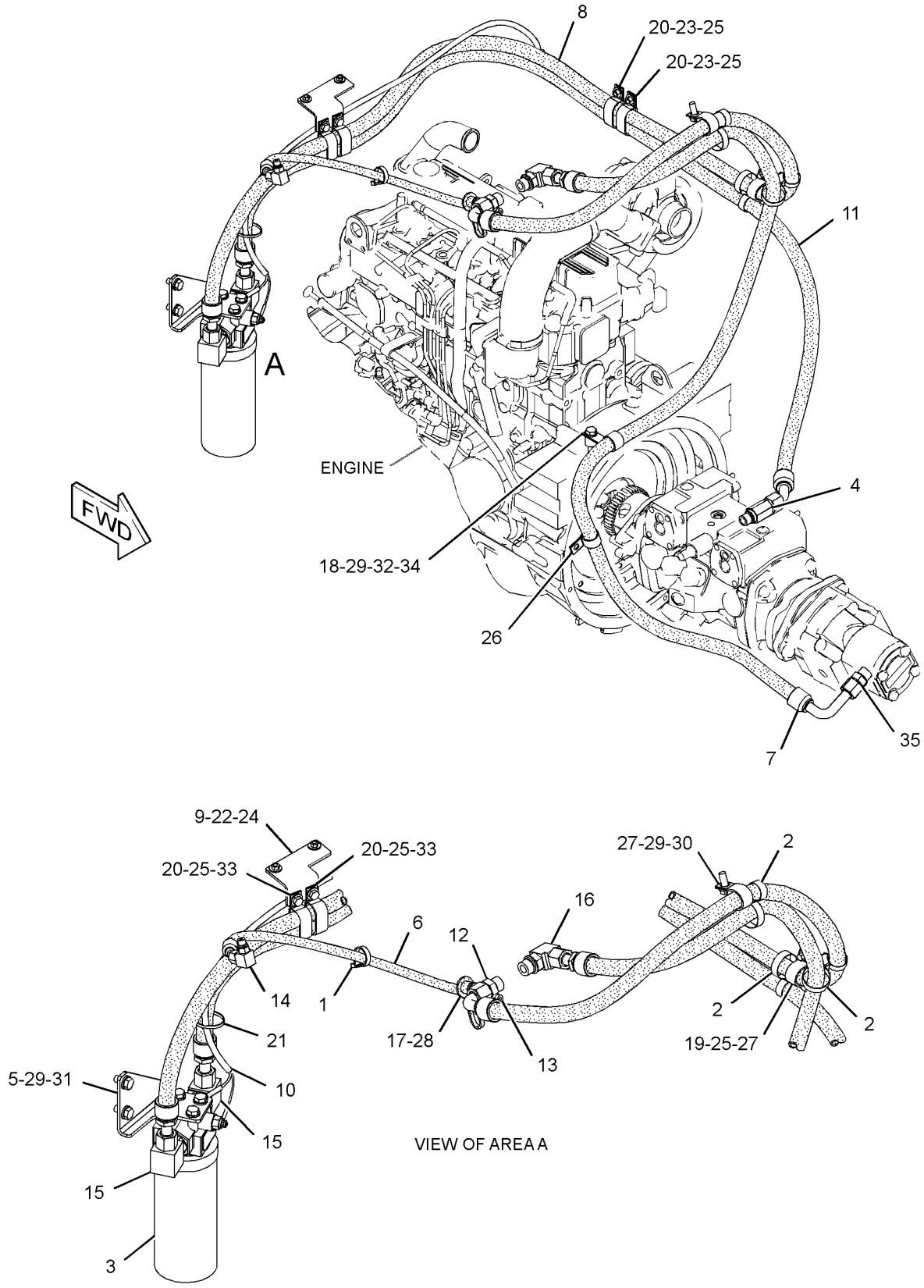

GRAPHIC #1 **<END>** g02177974

223-9974 FILTER GP-OIL–HYDRAULIC

S/N: SRS1-UP

PART OF 326-5739 FILTER & LINES GP-HYDRAULIC

SMCS-5068 **i02469830**

NOTE	REF NO	GRAPHIC REF	PART NUMBER	QTY	PART NAME 1 2 3 4 5 6 (PRODUCT LEVEL)	SEE PAGE
	1	1	**3J-1907**	1	SEAL-O-RING	
	2	1	**134-0404**	1	SWITCH AS-PRESSURE (HYDRAULIC OIL)	
	3	1	**1G-8878**	1	FILTER-OIL (ADVANCED EFFICIENCY) (HYDRAULIC)	

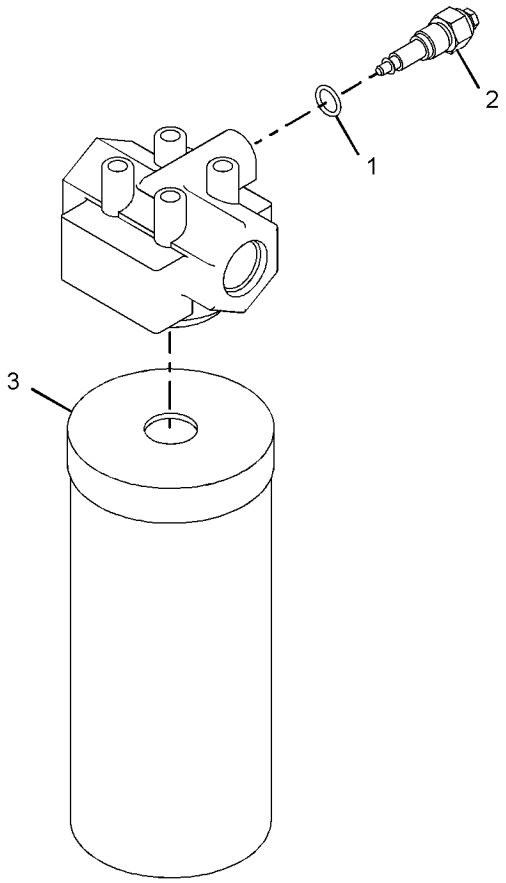

GRAPHIC #1 **<END>** g01035150

326-5701 LINES GP-HYDROSTATIC–
AUX PROPORTIONAL FLOW, 2-SPEED
S/N: SRS1-UP
PART OF 326-5472, 326-5483 CONTROL AR-MACHINE
AN ATTACHMENT

SMCS-3154 **i04077089**

NOTE	REF NO	GRAPHIC REF	PART NUMBER	QTY	PART NAME 1 2 3 4 5 6 (PRODUCT LEVEL)	SEE PAGE
	1	1	**6V-0852**	3	CAP-DUST	
I	2	1	**8E-5502**	1	HOSE AS	
	3	1	**9U-6998**	2	FITTING GP	
					(EACH INCLUDES)	
		1	**3D-2824**	1	SEAL-O-RING	
		1	**3E-4041**	1	ELBOW	
I	4	1	**123-9788**	1	HOSE AS	
Y	5	1	*308-0421*	1	MANIFOLD GP-RETURN	135
I	6	1	**326-5791**	1	HOSE AS	
I	7	1	**326-5793**	1	HOSE AS	
	8	1	**349-1143**	1	HOSE	
	9	1	*148-8327*	7	CONNECTOR AS	
					(EACH INCLUDES)	
		1	**3D-2824**	1	SEAL-O-RING	
		1	**6V-8637**	1	CONNECTOR	
		1	**6V-9746**	1	SEAL-O-RING	
	10	1	*148-8345*	2	CONNECTOR AS	
					(EACH INCLUDES)	
		1	**2M-9780**	1	SEAL-O-RING	
		1	**6V-8398**	1	SEAL-O-RING	
		1	**6V-8638**	1	CONNECTOR	
	11	1	*164-5567*	3	COUPLER AS-QUICK DISCONNECT (MALE)	
					(EACH INCLUDES)	
		1	**6V-3965**	1	FITTING (QUICK DISCONNECT)	
		1	**214-7568**	1	SEAL-O-RING	
	12	1	**284-3502**	2	CLAMP-BAND	
M	13	1	**5C-7261**	3	NUT (M8X1.25-THD)	
	14	1	**5P-4116**	3	WASHER-HARD (8.8X20.5X2-MM THK)	
	15	1	*148-8347*	1	ELBOW AS	
		1	**3D-2824**	1	SEAL-O-RING	
		1	**6V-9007**	1	ELBOW	
		1	**6V-9746**	1	SEAL-O-RING	
I	16	1	**218-6095**	1	HOSE AS	
I	17	1	**364-1339**	1	HOSE AS	

I-REFER TO HYDRAULIC INFORMATION SYSTEM
M-METRIC PART
Y-SEPARATE ILLUSTRATION

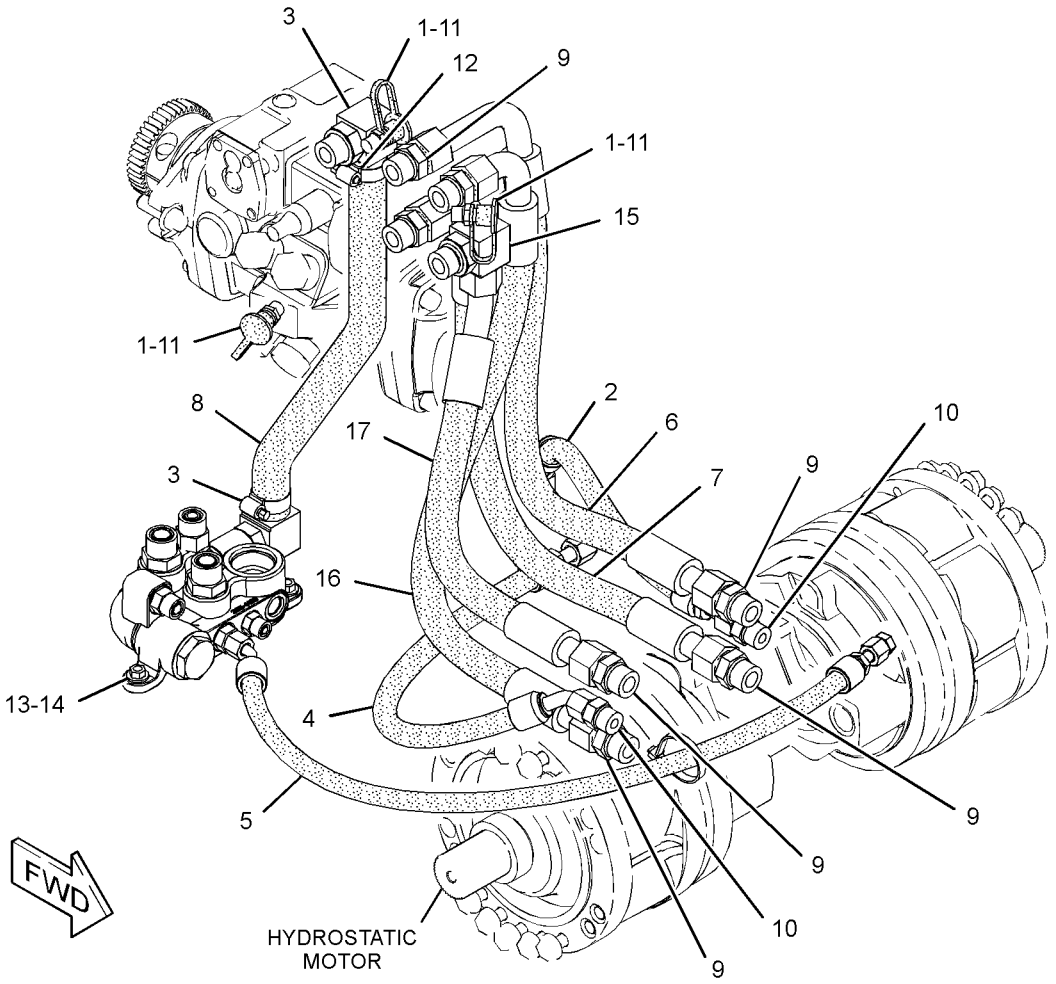

GRAPHIC #1 **<END>** g02472856

326-5742 LINES GP-HYDROSTATIC–
AUX PROPORTIONAL FLOW, 1-SPEED
S/N: SRS1-UP
PART OF 354-6536, 354-6537, 354-6538 CONTROL AR-MACHINE
AN ATTACHMENT

SMCS-3154 **i03984053**

NOTE	REF NO	GRAPHIC REF	PART NUMBER	QTY	PART NAME 1 2 3 4 5 6 (PRODUCT LEVEL)	SEE PAGE
	1	1	**6V-0852**	3	CAP-DUST	
	2	1	**9U-6998**	2	FITTING GP	
					(EACH INCLUDES)	
		1	**3D-2824**	1	SEAL-O-RING	
		1	**3E-4041**	1	ELBOW	
I	3	1	**218-6508**	1	HOSE AS	
I	4	1	**218-6863**	1	HOSE AS	
Y	5	1	*308-0421*	1	MANIFOLD GP-RETURN	135
I	6	1	**326-5791**	2	HOSE AS	
I	7	1	**326-5793**	2	HOSE AS	
	8	1	**349-1143**	1	HOSE	
	9	1	*148-8322*	4	CONNECTOR AS	
					(EACH INCLUDES)	
		1	**2M-9780**	1	SEAL-O-RING	
		1	**6V-8640**	1	CONNECTOR	
		1	**6V-9746**	1	SEAL-O-RING	
	10	1	*148-8327*	4	CONNECTOR AS	
					(EACH INCLUDES)	
		1	**3D-2824**	1	SEAL-O-RING	
		1	**6V-8637**	1	CONNECTOR	
		1	**6V-9746**	1	SEAL-O-RING	
	11	1	*148-8338*	2	CONNECTOR AS	
					(EACH INCLUDES)	
		1	**3J-1907**	1	SEAL-O-RING	
		1	**6V-8397**	1	SEAL-O-RING	
		1	**8T-0075**	1	CONNECTOR	
	12	1	*164-5567*	3	COUPLER AS-QUICK DISCONNECT (MALE)	
					(EACH INCLUDES)	
		1	**6V-3965**	1	FITTING (QUICK DISCONNECT)	
		1	**214-7568**	1	SEAL-O-RING	
	13	1	**284-3502**	2	CLAMP-BAND	
M	14	1	**5C-7261**	3	NUT (M8X1.25-THD)	
	15	1	**5P-4116**	3	WASHER-HARD (8.8X20.5X2-MM THK)	

I-REFER TO HYDRAULIC INFORMATION SYSTEM
M-METRIC PART
Y-SEPARATE ILLUSTRATION

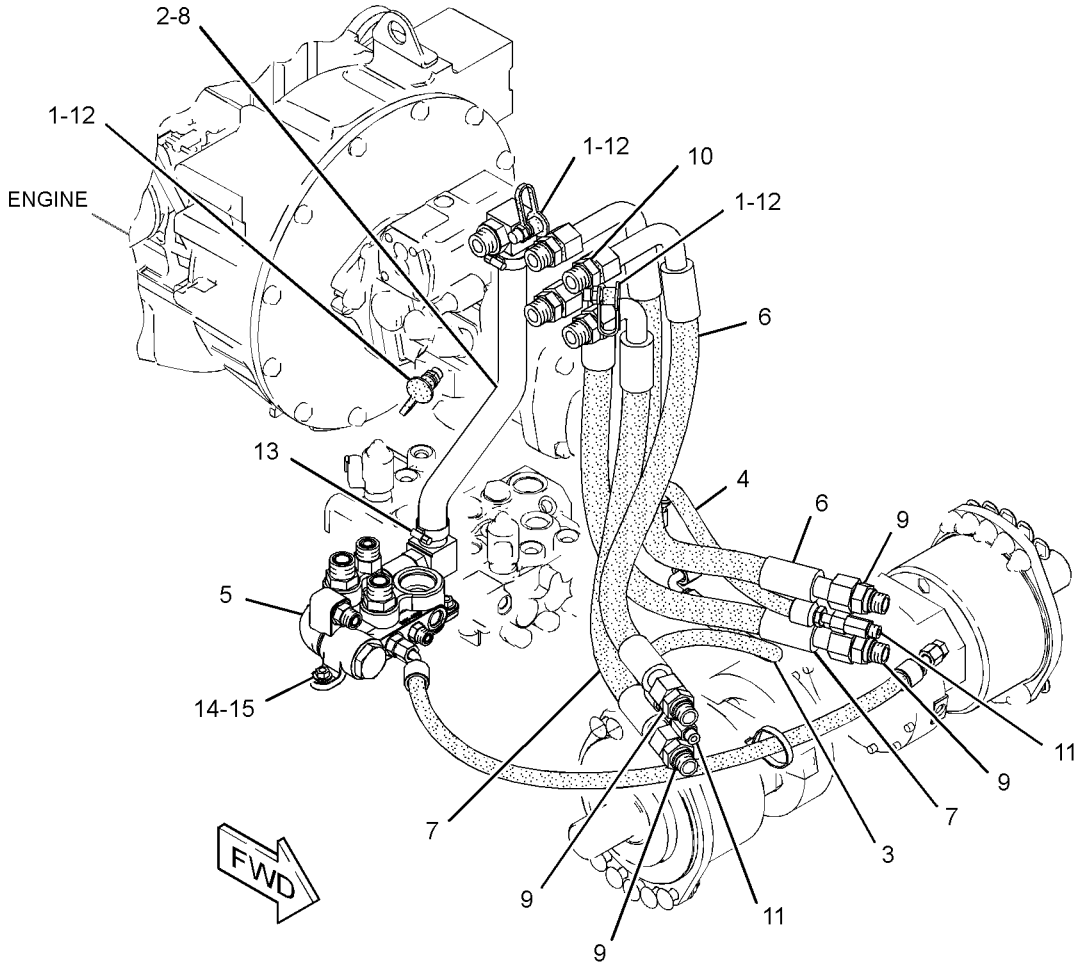

GRAPHIC #1 **<END>** g02173838

248-1268 MANIFOLD & SOLENOID GP-CONTROL–

PARKING BRAKE

S/N: SRS1-UP

PART OF 326-5790 CONTROL GP-PARKING BRAKE

AN ATTACHMENT

SMCS-5264, 5479 **i02200066**

NOTE	REF NO	GRAPHIC REF	PART NUMBER	QTY	PART NAME 1 2 3 4 5 6 (PRODUCT LEVEL)	SEE PAGE
Y	1	1	**259-8194**	1	VALVE GP-SOLENOID	163

Y-SEPARATE ILLUSTRATION

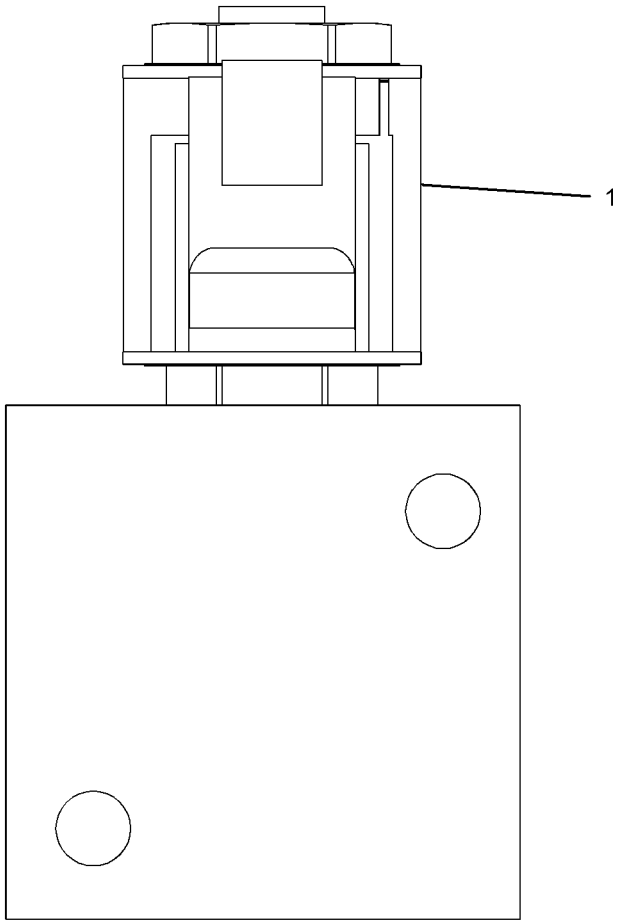

RIGHT SIDE VIEW

GRAPHIC #1 **<END>** g01132704

293-6591 MANIFOLD & SOLENOID GP-CONTROL–

PARKING BRAKE, 2-SPEED
S/N: SRS1-UP
12-VOLT
PART OF 326-5797 CONTROL GP-PARKING BRAKE
AN ATTACHMENT

SMCS-5264, 5479 **i03990953**

NOTE	REF NO	GRAPHIC REF	PART NUMBER	QTY	PART NAME 1 2 3 4 5 6 (PRODUCT LEVEL)	SEE PAGE
Y	1	1	**216-0610**	1	VALVE GP-SOLENOID (MOTOR, 2-SPEED)	162
Y	2	1	**259-8194**	1	VALVE GP-SOLENOID (PARKING BRAKE)	163

Y-SEPARATE ILLUSTRATION

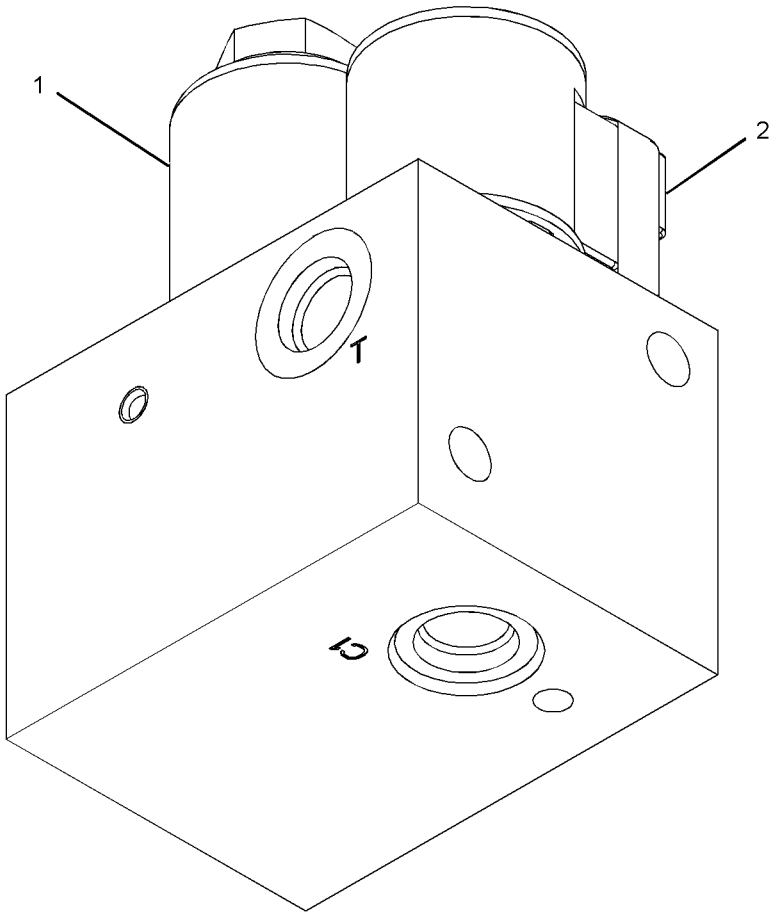

GRAPHIC #1 **<END>** g02174716

308-0421 MANIFOLD GP-RETURN

S/N: SRS1-UP
PART OF 326-5701, 326-5742 LINES GP-HYDROSTATIC
AN ATTACHMENT

SMCS-5264 **i02730543**

NOTE	REF NO	GRAPHIC REF	PART NUMBER	QTY	PART NAME 1 2 3 4 5 6 (PRODUCT LEVEL)	SEE PAGE
	1	1	**7K-1181**	1	STRAP-CABLE	
	2	1	**105-4593**	1	POPPET	
	3	1	**212-6603**	1	PLUG AS	
		1	**6V-8978**	1	SEAL-O-RING	
	4	1	**212-6604**	1	SPRING	
I	5	1	**233-5716**	1	HOSE AS	
	6	1	**305-4185**	1	BLOCK	
	7	1	*148-8318*	1	CONNECTOR AS	
		1	**3K-0360**	1	SEAL-O-RING	
		1	**6V-8397**	1	SEAL-O-RING	
		1	**6V-8634**	1	CONNECTOR	
	8	1	*148-8327*	2	CONNECTOR AS	
					(EACH INCLUDES)	
		1	**3D-2824**	1	SEAL-O-RING	
		1	**6V-8637**	1	CONNECTOR	
		1	**6V-9746**	1	SEAL-O-RING	
	9	1	*148-8336*	1	CONNECTOR AS	
		1	**3J-1907**	1	SEAL-O-RING	
		1	**6V-8397**	1	SEAL-O-RING	
		1	**6V-8636**	1	CONNECTOR	
	10	1	*148-8340*	1	CONNECTOR AS	
		1	**3K-0360**	1	SEAL-O-RING	
		1	**6V-8398**	1	SEAL-O-RING	
		1	**6V-8639**	1	CONNECTOR	
	11	1	*148-8342*	1	CONNECTOR AS	
		1	**3K-0360**	1	SEAL-O-RING	
		1	**6V-8632**	1	CONNECTOR	
		1	**7J-9108**	1	SEAL-O-RING	
	12	1	*165-4934*	1	PLUG AS	
		1	**6V-8397**	1	SEAL-O-RING	
		1	**6V-9508**	1	PLUG (11/16-16-THD)	

I-REFER TO HYDRAULIC INFORMATION SYSTEM

308-0421 **MANIFOLD GP-RETURN** *(contd.)* **i02730543**

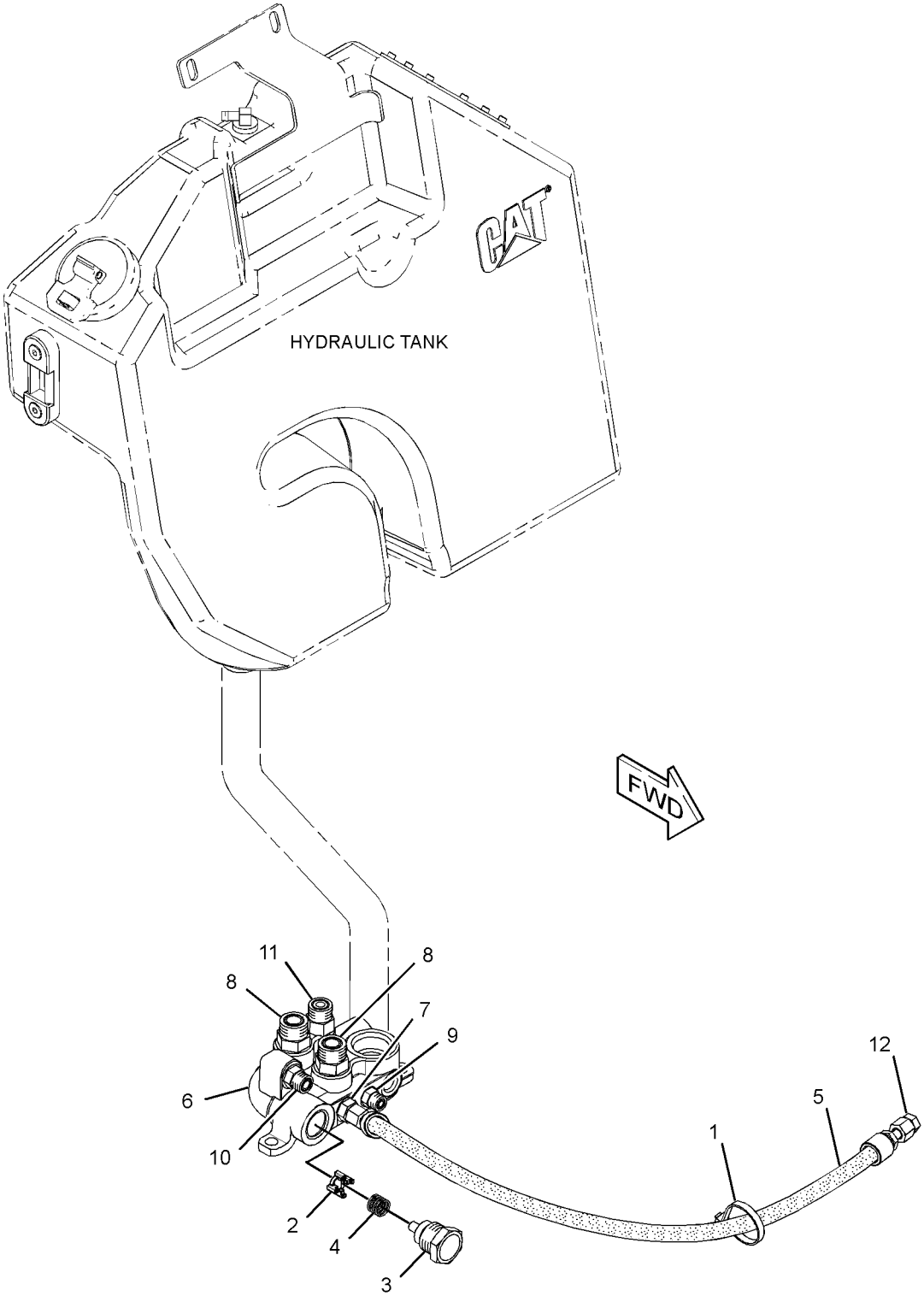

GRAPHIC #1 **<END>** g01380873

354-6539 MOTOR & MTG GP-HYDROSTATIC–2-SPEED

S/N: SRS1-UP
PART OF 326-5472, 326-5483 CONTROL AR-MACHINE
AN ATTACHMENT

SMCS-5058 **i04169595**

NOTE	REF NO	GRAPHIC REF	PART NUMBER	QTY	PART NAME 1 2 3 4 5 6 (PRODUCT LEVEL)	SEE PAGE
Y	1	1	**307-3071**	1	MOTOR GP-PISTON (2-SPEED, LH)	142
Y	2	1	**307-3073**	1	MOTOR GP-PISTON (2-SPEED, RH)	144
	3	1	**354-6547**	2	SPACER	
	4	1	**356-1906**	2	PLATE	
	5	1	**171-2438**	8	BOLT-12 POINT HEAD (M12X1.75X30-MM)	
	6	1	**6F-4718**	2	SEAL-O-RING	
M	7	1	**8T-4183**	16	BOLT (M12X1.75X40-MM)	
	8	1	**8T-4223**	4	WASHER-HARD (13.5X25.5X3-MM THK)	
M	9	1	**8T-4244**	4	NUT (M12X1.75-THD)	
M	10	1	**8T-4910**	8	BOLT (M12X1.75X60-MM)	
	11	1	**8T-7971**	24	WASHER-HARD (13.5X25.5X5-MM THK)	

M-METRIC PART
Y-SEPARATE ILLUSTRATION

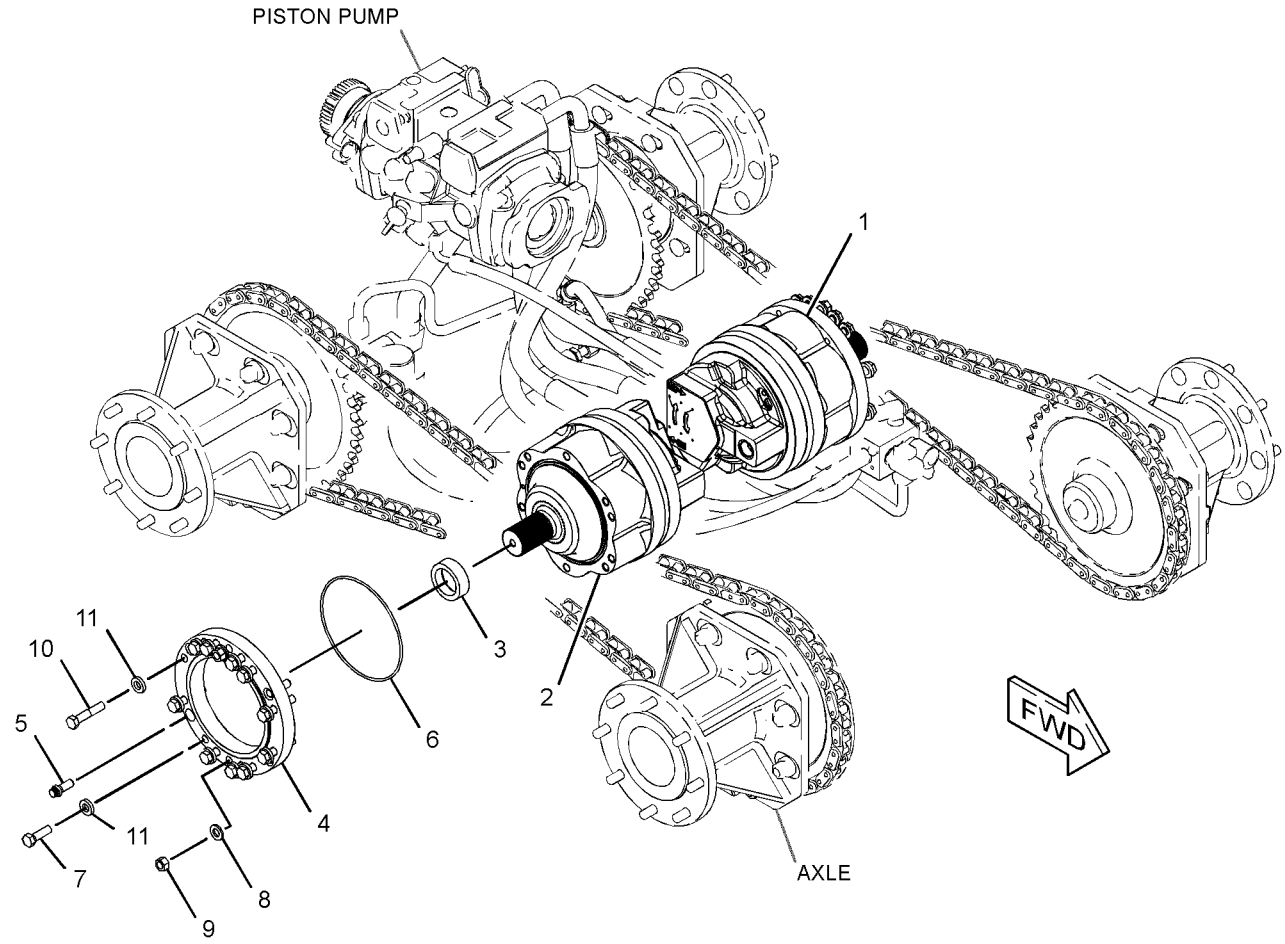

GRAPHIC #1 **<END>** g02475339

356-1938 MOTOR & MTG GP-HYDROSTATIC

S/N: SRS1-UP

PART OF 354-6536, 354-6537, 354-6538 CONTROL AR-MACHINE

AN ATTACHMENT

SMCS-5058 **i04300409**

NOTE	REF NO	GRAPHIC REF	PART NUMBER	QTY	PART NAME 1 2 3 4 5 6 (PRODUCT LEVEL)	SEE PAGE
	1	1	**159-5793**	2	SPACER	
	2	1	**306-4247**	20	BOLT-ROUND HEAD (M12X1.75X60-MM)	
YR	3	1	**280-7854**	2	MOTOR GP-PISTON (HYDROSTATIC)	140
M	4	1	**8T-4244**	20	NUT (M12X1.75-THD)	
	5	1	**1S-4305**	20	WASHER (0.531X1X0.56-IN THK)	

M-METRIC PART
R-REMFG PART MAY BE AVAILABLE
Y-SEPARATE ILLUSTRATION

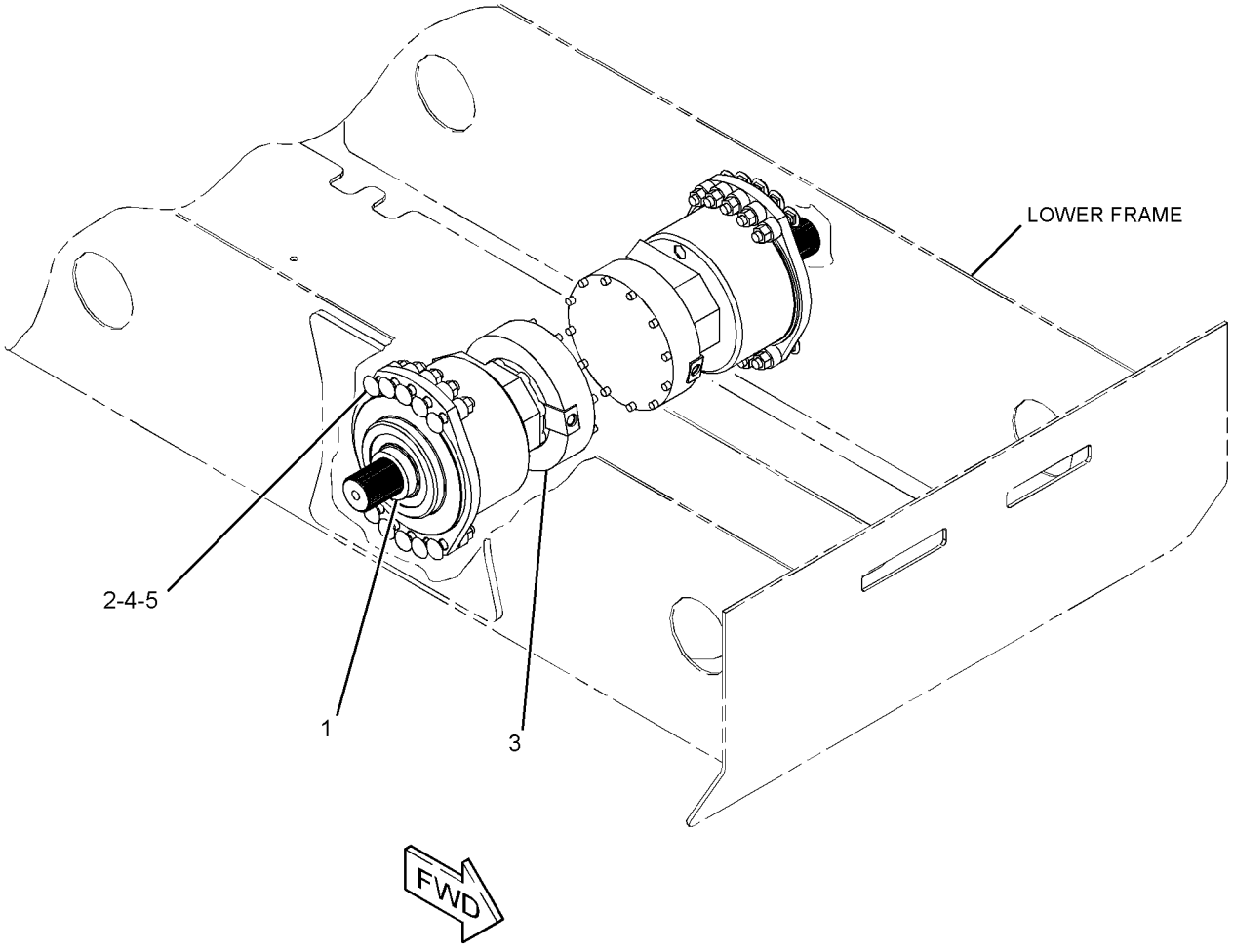

GRAPHIC #1 **<END>** g02486022

364-1338 MOTOR & MTG GP-HYDROSTATIC

S/N: SRS544-UP
PART OF 354-6537 CONTROL AR-MACHINE
AN ATTACHMENT

SMCS-5058 **i04330470**

NOTE	REF NO	GRAPHIC REF	PART NUMBER	QTY	PART NAME 1 2 3 4 5 6 (PRODUCT LEVEL)	SEE PAGE
	1	1	**1S-4305**	20	WASHER (0.531X1X0.56-IN THK)	
	2	1	**159-5793**	2	SPACER	
YR	3	1	**280-7854**	2	MOTOR GP-PISTON (HYDROSTATIC)	140
	4	1	**364-1357**	8	PLUG	
	5	1	**306-4247**	20	BOLT-ROUND HEAD (M12X1.75X60-MM)	
M	6	1	**8T-4244**	20	NUT (M12X1.75-THD)	

M-METRIC PART
R-REMFG PART MAY BE AVAILABLE
Y-SEPARATE ILLUSTRATION

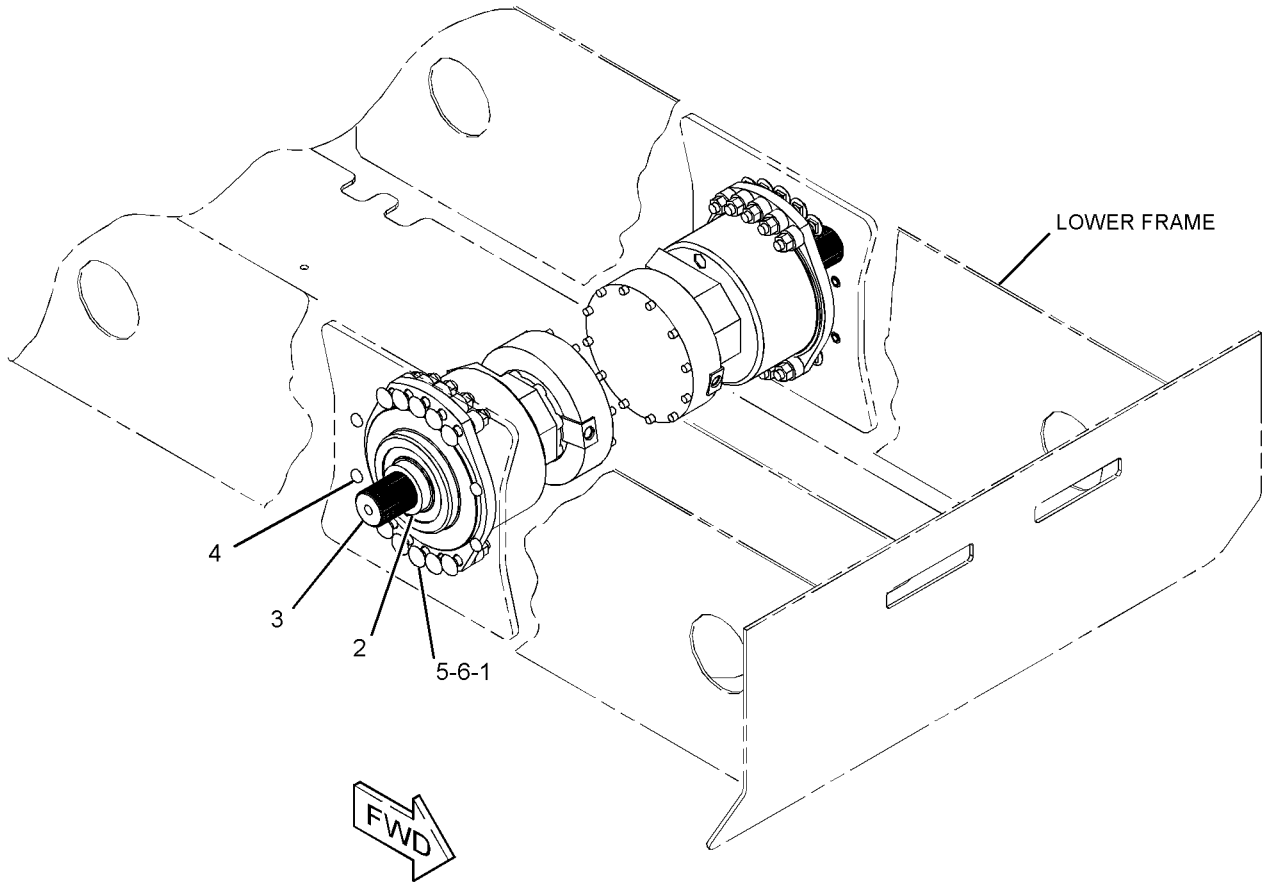

GRAPHIC #1 **<END>** g02497836

280-7854 MOTOR GP-PISTON–HYDROSTATIC*R

S/N: SRS1-UP

PART OF 356-1938, 364-1338 MOTOR & MTG GP-HYDROSTATIC

AN ATTACHMENT

SMCS-4351, 5058 **i04367473**

NOTE	REF NO	GRAPHIC REF	PART NUMBER	QTY	PART NAME 1 2 3 4 5 6 (PRODUCT LEVEL)	SEE PAGE
	1	1	**140-2490**	1	RING-SPLIT	
	2	1	**3K-0360**	1	SEAL-O-RING	
	3	1	**279-0733**	1	KIT-SHIM (PISTON MOTOR)	
					(INCLUDES WASHERS)	
J	4	1	**033-5853**	1	SEAL-O-RING	
	5	1	**172-8175**	13	DISC-BRAKE (INNER)	
	6	1	**216-6124**	1	PLUG	
J	7	1	**095-1517**	1	SEAL-O-RING	
M	8	1	**5C-7883**	12	BOLT-SOCKET HEAD (M6X1X16-MM)	
	9	1	**222-5693**	1	PLUG-O-RING	
	10	1	**172-8173**	15	DISC-BRAKE (OUTER)	
M	11	1	**8T-0271**	5	BOLT-SOCKET HEAD (M10X1.5X35-MM)	
	12	1	**140-2492**	1	BEARING	
	13	1	**268-1936**	1	BEARING AS-TAPERED ROLLER	
	14	1	**140-2513**	1	SHIM (0.01-MM THK)	
	15	1	**140-2514**	2	SHIM (0.3-MM THK)	
	16	1	**9S-8005**	1	PLUG-O-RING	
M	17	1	**289-6347**	6	BOLT-SOCKET HEAD (M12X1.75X55-MM)	
	18	1	**307-3039**	1	RING-SEAL	
	19	1	**320-0650**	1	RING-RETAINING	
					AVAILABLE REPAIR KIT(S):	
J			**289-6336**	1	KIT-SEAL (PISTON MOTOR)	
					(INCLUDES O-RING SEALS, GASKET & SEALS)	

J-KIT MARKED J SERVICE(S) PARTS MARKED J
M-METRIC PART

280-7854 MOTOR GP-PISTON *(contd.)* **i04367473**

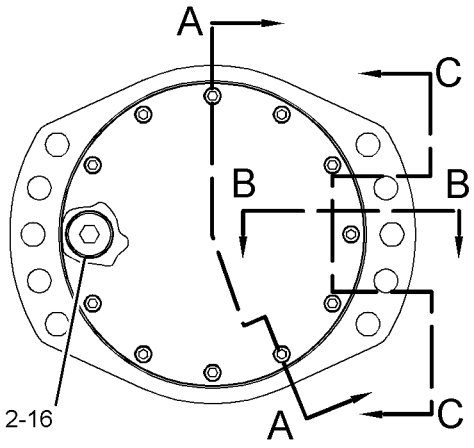

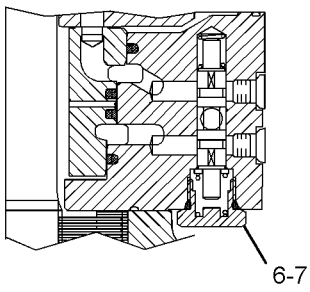

SECTION B-B

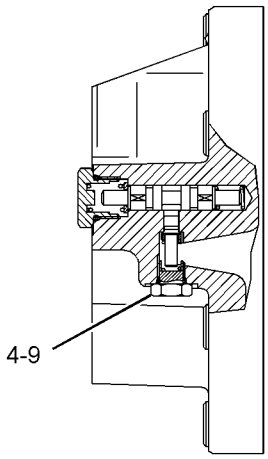

SECTION C-C

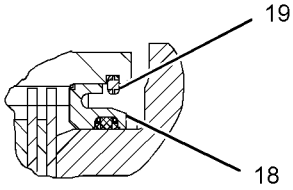

VIEW OF AREA D

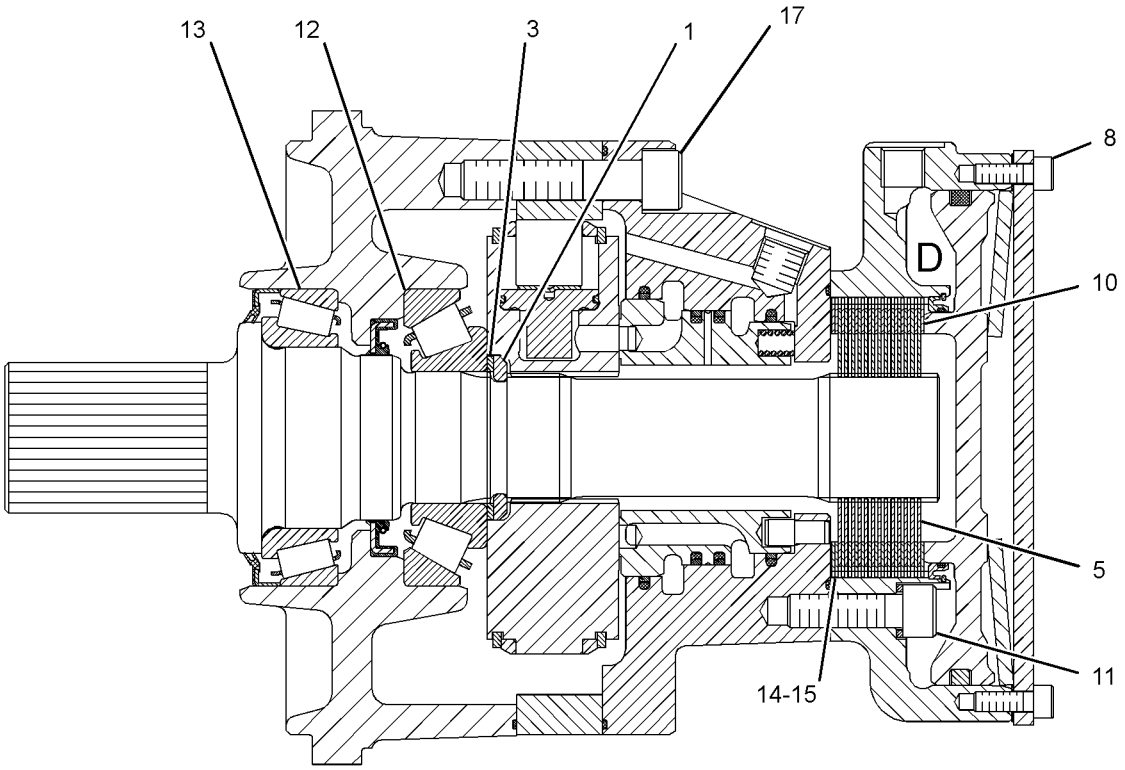

SECTION A-A

GRAPHIC #1 **<END>** g01469767

307-3071 MOTOR GP-PISTON–2-SPEED, LH

S/N: SRS1-UP

PART OF 354-6539 MOTOR & MTG GP-HYDROSTATIC

AN ATTACHMENT

SMCS-4351, 5058 **i03984055**

NOTE	REF NO	GRAPHIC REF	PART NUMBER	QTY	PART NAME 1 2 3 4 5 6 (PRODUCT LEVEL)	SEE PAGE
	1	1	**341-7647**	1	VALVE GP-SPEED CONTROL (2-SPEED)	
	2	1	**280-7850**	1	KIT-VALVE (DISTRIBUTION)	
					(INCLUDES VALVE BODY, PIN, RINGS, SPRINGS & SEAL)	
	3	1	**280-7838**	1	KIT-BEARING (PISTON MOTOR)	
					(INCLUDES SEALS, TAPERED ROLLER BEARINGS, WASHER & RING)	
	4	1	**280-7840**	1	KIT-BRAKE (PISTON MOTOR)	
					(INCLUDES STEEL BRAKE PISTON, SEALS,SPRINGS & PARTS MARKED K IN THE GRAPHIC)	
	5	1	**272-1882**	2	STUD-TAPERLOCK	
	6	1	**341-7649**	1	SHAFT-DRIVE	
	7	1	**280-7848**	1	VALVE GP-FLUSHING (PISTON MOTOR)	
					PARTS SHOWN IN GRAPHIC(S) WITHOUT A REFERENCE NUMBER ARE NOT SERVICED SEPARATELY	
					AVAILABLE REPAIR KIT(S):	
			280-7849		KIT-VALVE (PISTON MOTOR)	
					(INCLUDES DUST SEAL, SHAFT SEAL, O-RINGS, SINUS SEAL, BACKUP RINGS, PLUG SEAL, RETAINING PIN, RETAINING RING,	
					DOWEL PIN, SEAL RING SET & ALSO INCLUDES PARTS MARKED J IN GRAPHIC)	

307-3071 MOTOR GP-PISTON *(contd.)* **i03984055**

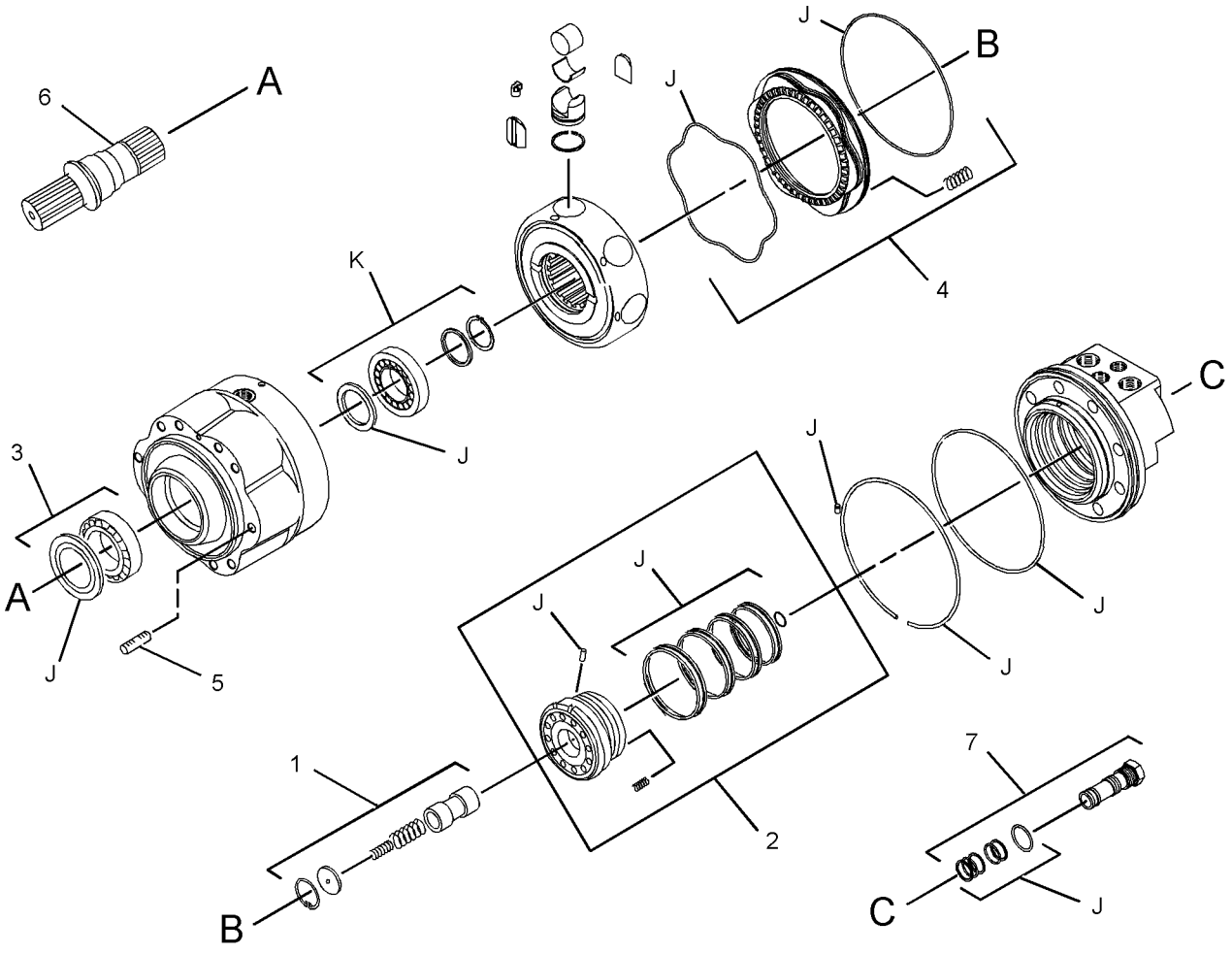

GRAPHIC #1 **<END>** g02174138

307-3073 MOTOR GP-PISTON–2-SPEED, RH

S/N: SRS1-UP

PART OF 354-6539 MOTOR & MTG GP-HYDROSTATIC

AN ATTACHMENT

SMCS-4351, 5058 **i03984050**

NOTE	REF NO	GRAPHIC REF	PART NUMBER	QTY	PART NAME 1 2 3 4 5 6 (PRODUCT LEVEL)	SEE PAGE
	1	1	**341-7647**	1	VALVE GP-SPEED CONTROL (2-SPEED)	
	2	1	**280-7850**	1	KIT-VALVE (DISTRIBUTION)	
					(INCLUDES VALVE BODY, PIN, RINGS, SPRINGS & SEAL)	
	3	1	**280-7838**	1	KIT-BEARING (PISTON MOTOR)	
					(INCLUDES SEALS, TAPERED ROLLER BEARINGS, WASHER, RING & PARTS MARKED K IN GRAPHIC)	
	4	1	**280-7840**	1	KIT-BRAKE (PISTON MOTOR)	
					(INCLUDES STEEL BRAKE PISTON, SEALS & SPRINGS)	
	5	1	**272-1882**	2	STUD-TAPERLOCK	
	6	1	**341-7649**	1	SHAFT-DRIVE	
	7	1	**280-7848**	1	VALVE GP-FLUSHING (PISTON MOTOR)	
					PARTS SHOWN IN GRAPHIC(S) WITHOUT A REFERENCE NUMBER ARE NOT SERVICED SEPARATELY	
					AVAILABLE REPAIR KIT(S):	
			280-7849		KIT-VALVE (PISTON MOTOR)	
					(INCLUDES DUST SEAL, SHAFT SEAL, O-RINGS, SINUS SEAL, BACK UP RINGS, PLUG SEAL, RETAINING PIN, RETAINING RING,	
					DOWEL PIN, SEAL RING SET & PARTS MARKED J IN GRAPHIC)	

307-3073 MOTOR GP-PISTON *(contd.)* **i03984050**

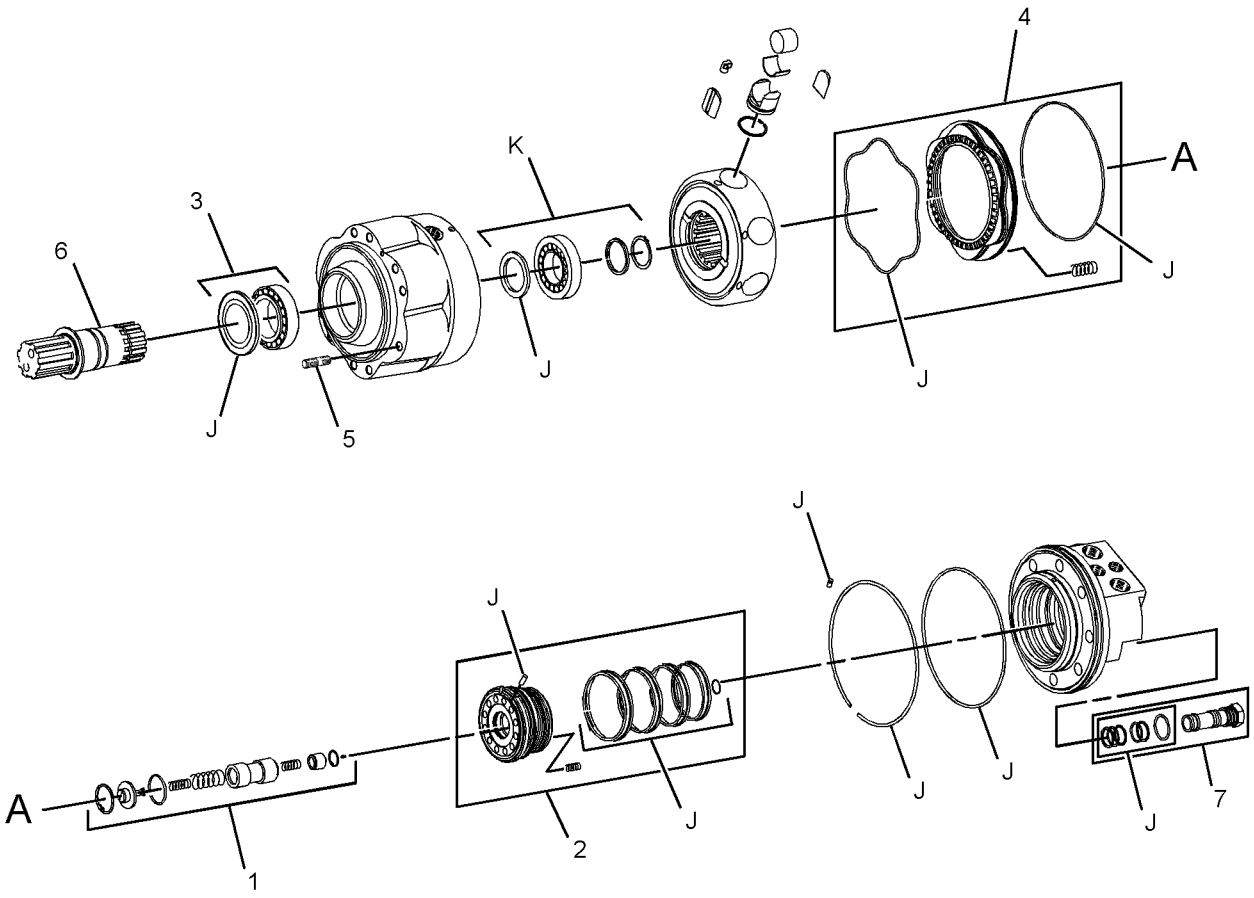

GRAPHIC #1 **<END>** g02178574

218-0918 MOUNTING GP-PUMP

S/N: SRS1-UP

PART OF 326-5328 INSTALLATION AR-ENGINE

SMCS-3203, 5062, 5070 **i01971011**

NOTE	REF NO	GRAPHIC REF	PART NUMBER	QTY	PART NAME 1 2 3 4 5 6 (PRODUCT LEVEL)	SEE PAGE
	1	1	**142-8719**	1	PLATE-ADAPTER	
	2	1	**226-7635**	1	FLANGE	
	3	1	**8T-4121**	12	WASHER-HARD (11X21X2.5-MM THK)	
M	4	1	**8T-4195**	8	BOLT (M10X1.5X30-MM)	
M	5	1	**8T-4196**	12	BOLT (M10X1.5X35-MM)	

M-METRIC PART

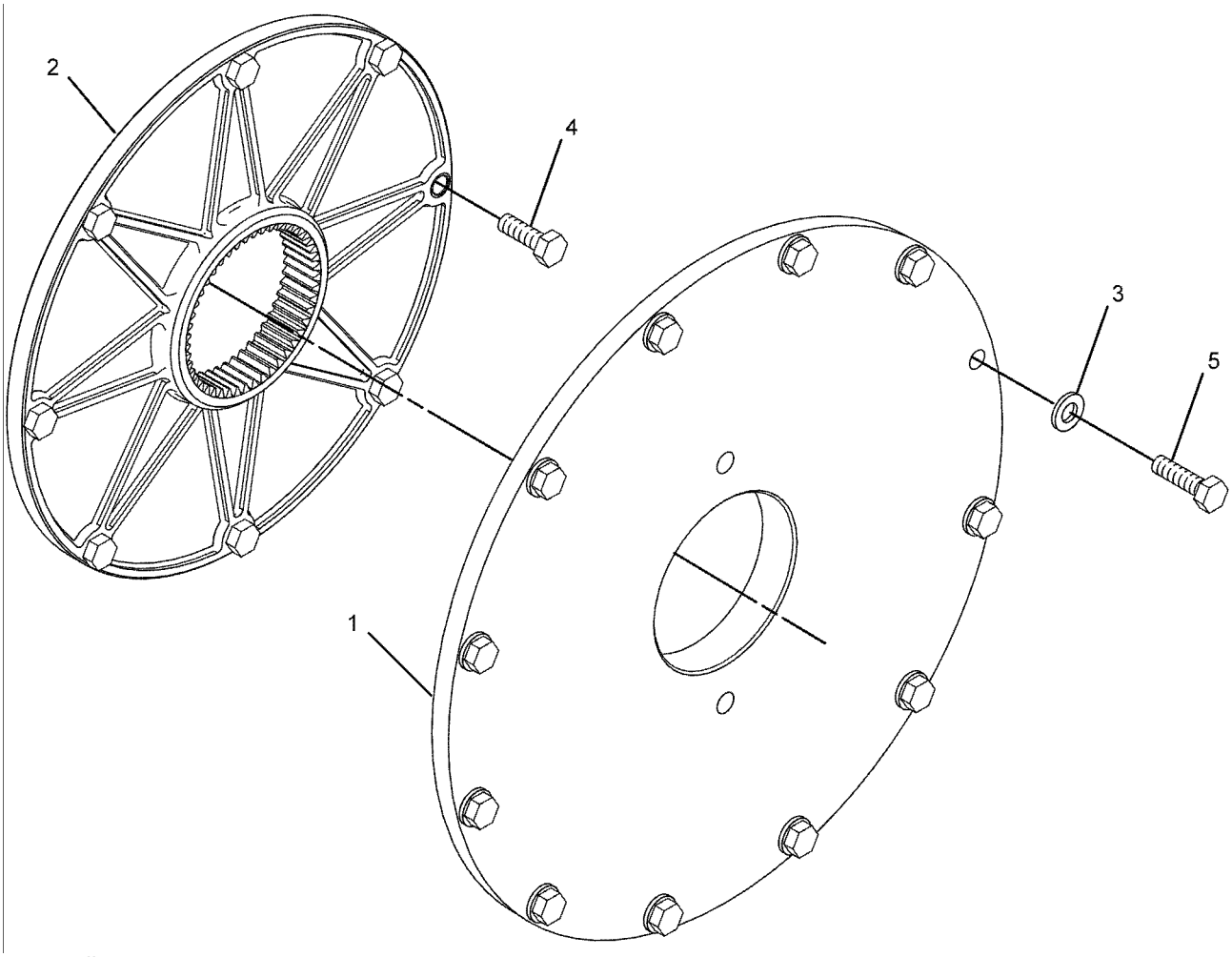

GRAPHIC #1 **<END>** g01024585

326-5250 POWER TRAIN AR

S/N: SRS1-UP

PART OF 326-5242 COMMON AR

SMCS-3203, 4062, 5058, 5070 **i03982011**

NOTE	PART NUMBER	QTY	PART NAME 1 2 3 4 5 6 (PRODUCT LEVEL)	SEE PAGE
Y	*354-6543*	1	DRIVE GP-TANDEM	124
Y-SEPARATE ILLUSTRATION				

<END>

354-6540 PUMP & MTG GP-HYDROSTATIC–1-SPEED

S/N: SRS1-UP

PART OF 354-6536, 354-6537, 354-6538 CONTROL AR-MACHINE

AN ATTACHMENT

SMCS-3203, 5070 **i04142682**

NOTE	REF NO	GRAPHIC REF	PART NUMBER	QTY	PART NAME 1 2 3 4 5 6 (PRODUCT LEVEL)	SEE PAGE
	1	1	**165-0142**	2	WASHER-HARD (14.8X27X3-MM THK)	
	2	1	**252-9197**	1	BOLT-SOCKET HEAD (M12X1.75X35-MM)	
	3	1	**263-4996**	1	HUB AS-COUPLING	
		1	**096-0194**	1	RING-RETAINING	
Y	4	1	**341-7642**	1	PUMP GP-PISTON (2-SPEED)	150
	5	1	**361-2657**	2	BOLT-12 POINT HEAD (M14X2X40-MM)	

Y-SEPARATE ILLUSTRATION

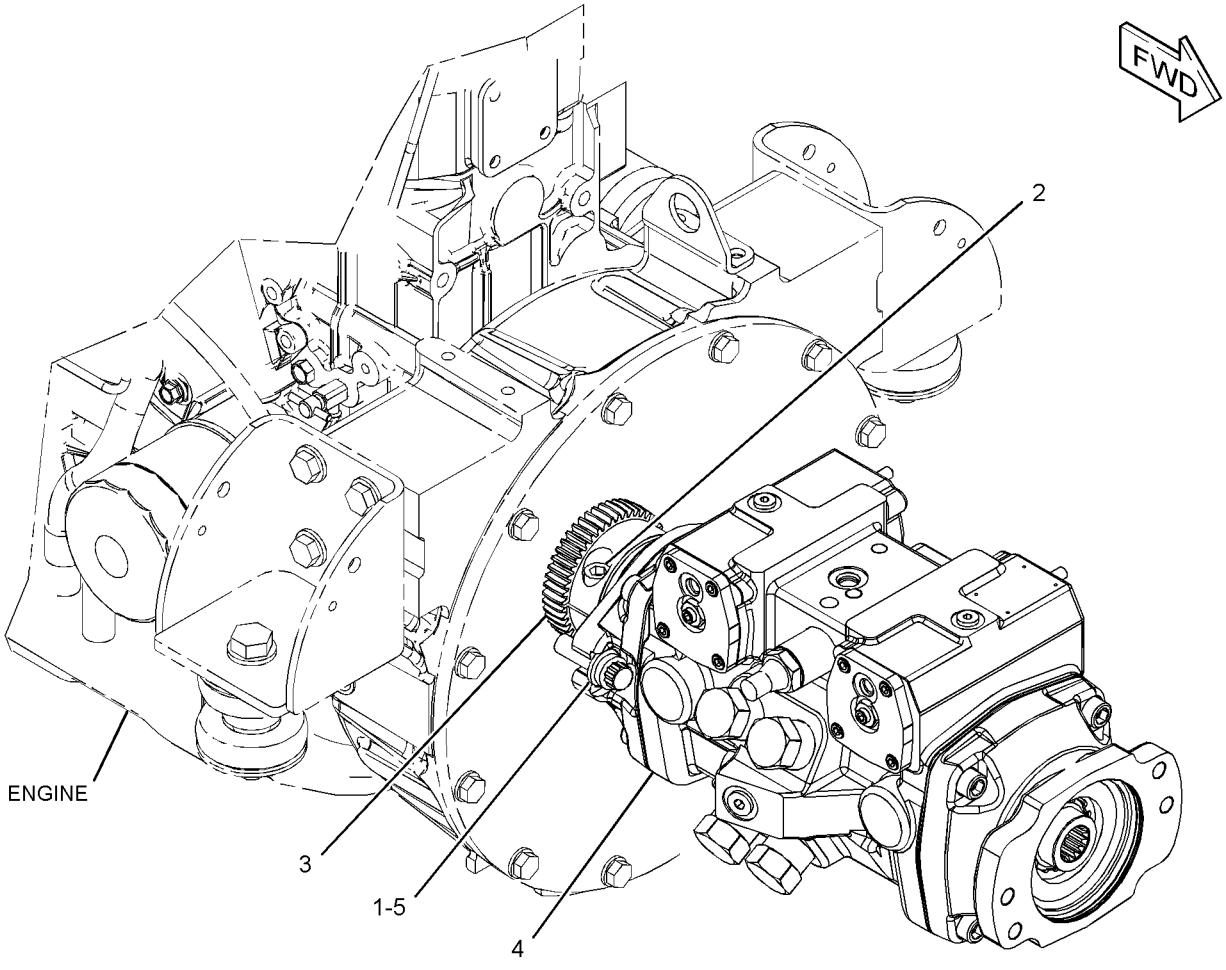

GRAPHIC #1 **<END>** g02342196

354-6541 PUMP & MTG GP-HYDROSTATIC—2-SPEED

S/N: SRS1-UP

PART OF 326-5472, 326-5483 CONTROL AR-MACHINE

AN ATTACHMENT

SMCS-3203, 5070 **i04142683**

NOTE	REF NO	GRAPHIC REF	PART NUMBER	QTY	PART NAME 1 2 3 4 5 6 (PRODUCT LEVEL)	SEE PAGE
	1	1	**165-0142**	2	WASHER-HARD (14.8X27X3-MM THK)	
	2	1	**252-9197**	1	BOLT-SOCKET HEAD (M12X1.75X35-MM)	
	3	1	**263-4996**	1	HUB AS-COUPLING	
		1	**096-0194**	1	RING-RETAINING	
Y	4	1	**341-7665**	1	PUMP GP-PISTON (2-SPEED)	152
	5	1	**361-2657**	2	BOLT-12 POINT HEAD (M14X2X40-MM)	

Y-SEPARATE ILLUSTRATION

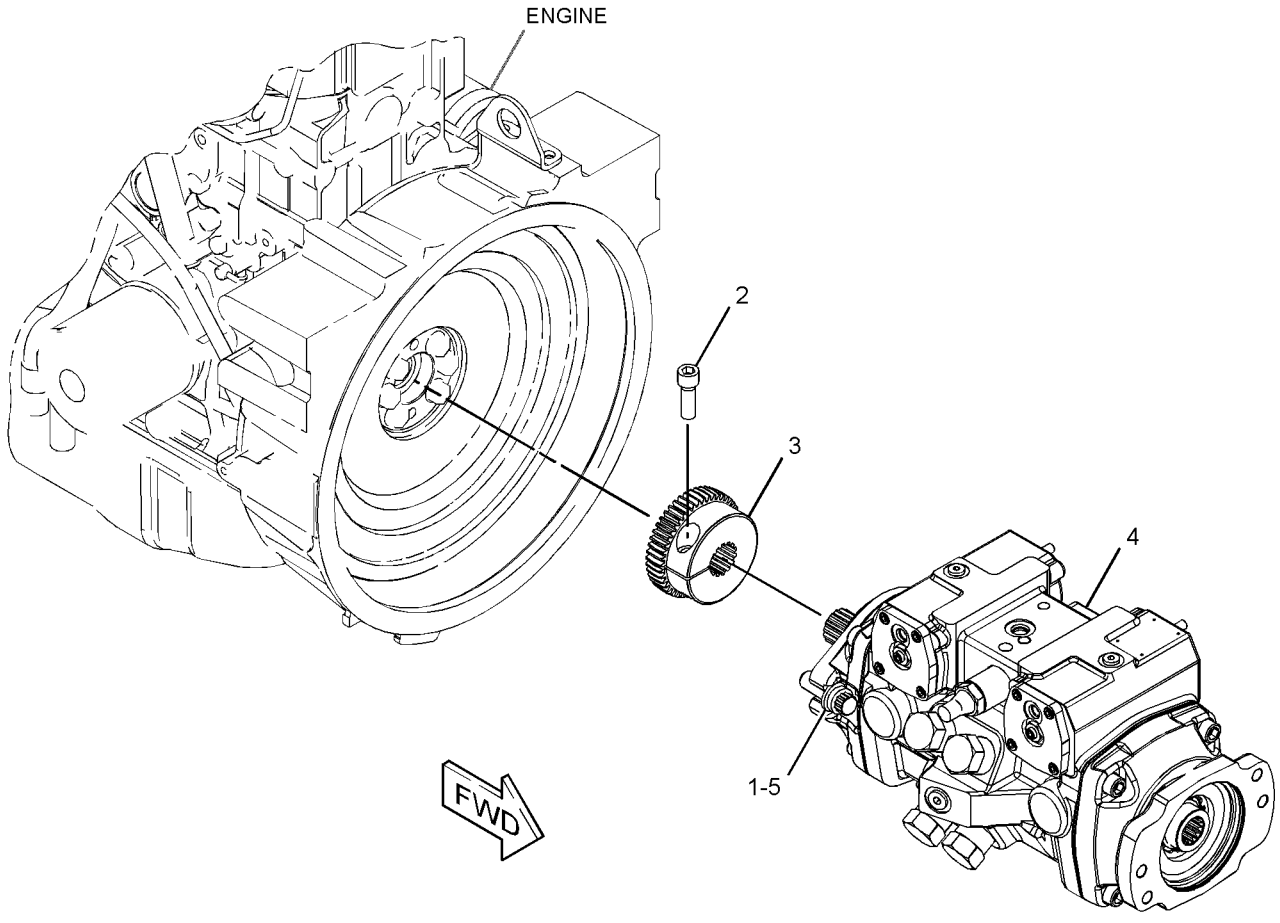

GRAPHIC #1 **<END>** g02342176

341-7642 PUMP GP-PISTON

S/N: SRS1-UP

PART OF 354-6540 PUMP & MTG GP-HYDROSTATIC

AN ATTACHMENT

SMCS-3203, 5070, 5117, 5455, 5479 **i03984308**

NOTE	REF NO	GRAPHIC REF	PART NUMBER	QTY	PART NAME 1 2 3 4 5 6 (PRODUCT LEVEL)	SEE PAGE
	1	1	**6E-5060**	3	CAP AS	
J	2	1	**112-4719**	4	RING-BACKUP	
	3	1	**121-4459**	2	BEARING-ROLLER	
	4	1	**108-3565**	2	CLIP	
	5	1	**204-1454**	2	PIN-THREADED	
JM	6	1	**9T-4817**	2	NUT (M8X1-THD)	
	7	1	**215-7697**	1	KIT-SHIM (INCLUDES 4-SHIMS)	
	8	1	**204-1457**	1	VALVE GP-SPEED SENSING (PISTON PUMP)	
	9	1	**204-1458**	4	VALVE GP-RELIEF (CROSSOVER)	
	10	1	**204-1459**	1	VALVE GP-RELIEF (CHARGE)	
J	11	1	**135-2655**	2	SEAL-O-RING	
	12	1	**3J-7354**	2	SEAL-O-RING	
J	13	1	**3K-0715**	1	SEAL-O-RING	
J	14	1	**6V-5326**	4	SEAL-O-RING	
J	15	1	**6V-5586**	2	SEAL-O-RING	
J	16	1	**6V-8352**	1	SEAL-O-RING	
M	17	1	**8T-0267**	8	BOLT-SOCKET HEAD (M6X1X12-MM)	
	18	1	**9S-8002**	2	PLUG-O-RING	
M	19	1	**9X-6606**	2	NUT-HEX (M10X1-THD)	
	20	1	**268-1929**	2	CRADLE	
	21	1	**081-3698**	2	BEARING	
	22	1	**140-1739**	3	RING-RETAINING	
J	23	1	**233-9744**	1	SEAL-LIP TYPE	
	24	1	**307-3075**	2	RACE-BEARING	
	25	1	**280-7865**	1	ROTATING GP-PUMP (LH)	
	26	1	**280-7863**	1	ROTATING GP-PUMP (RH)	
M	27	1	**8T-0273**	8	BOLT-SOCKET HEAD (M12X1.75X40-MM)	
	28	1	**307-3074**	2	BEARING-ROLLER	
					AVAILABLE REPAIR KIT(S):	
J			**268-9529**	1	KIT-SEAL	
					(ALSO INCLUDES O-RINGS, LOCK NUT SEALS, SPACERS, SHAFT SEAL, SEALS & RING)	

J-KIT MARKED J SERVICES PARTS MARKED J
M-METRIC PART

341-7642 PUMP GP-PISTON *(contd.)* **i03984308**

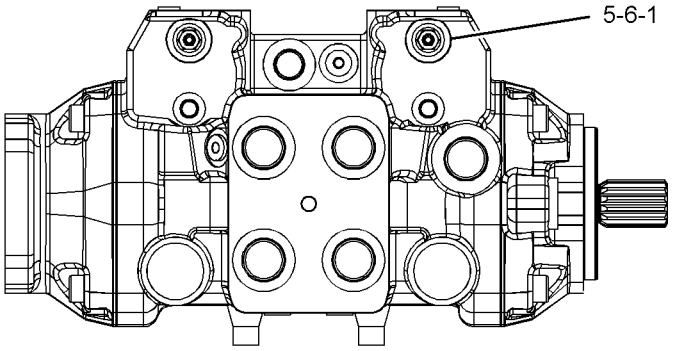

VIEW E-E

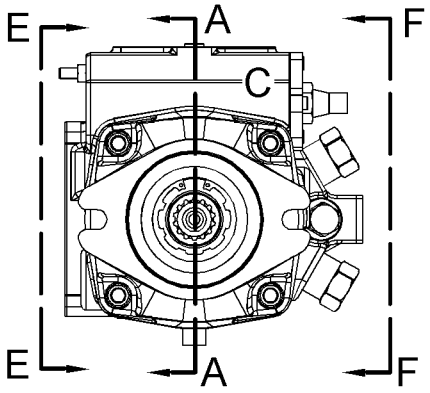

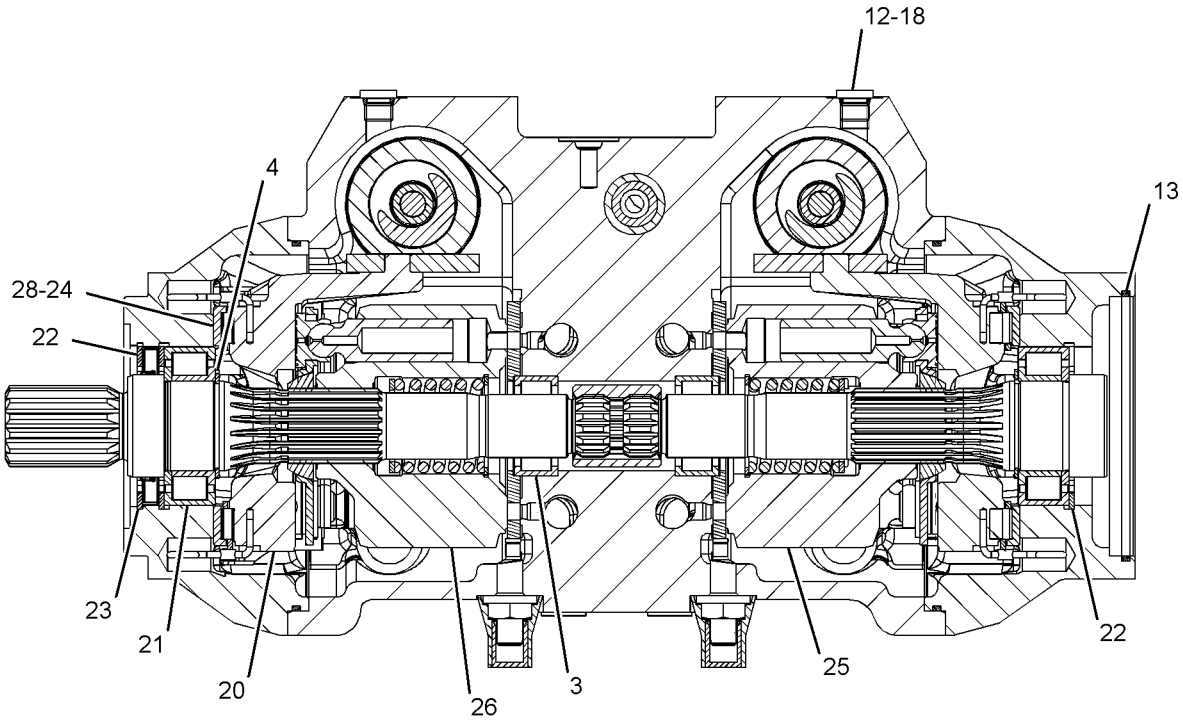

SECTION A-A

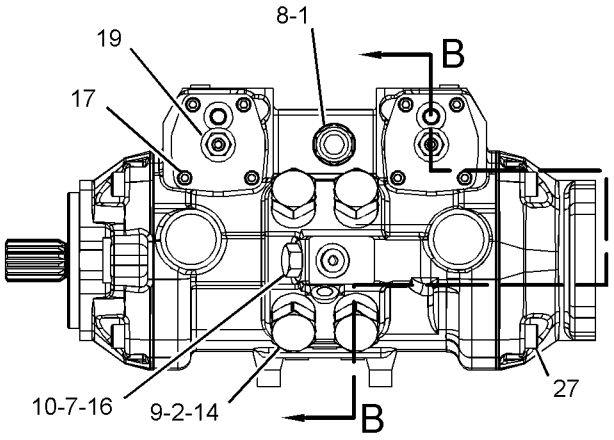

VIEW F-F

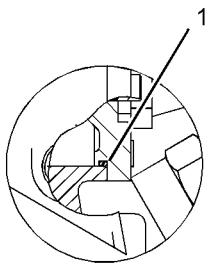

VIEW OF AREA C

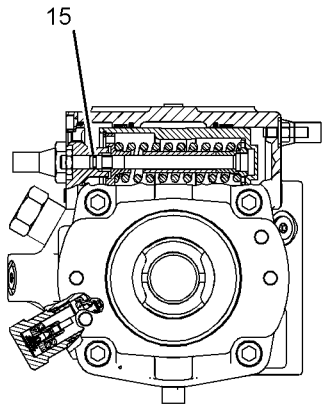

SECTION B-B

GRAPHIC #1 **<END>** g02174215

341-7665 PUMP GP-PISTON

S/N: SRS1-UP

PART OF 354-6541 PUMP & MTG GP-HYDROSTATIC

AN ATTACHMENT

SMCS-3203, 5070, 5117, 5455, 5479 **i04032639**

NOTE	REF NO	GRAPHIC REF	PART NUMBER	QTY	PART NAME 1 2 3 4 5 6 (PRODUCT LEVEL)	SEE PAGE
	1	1	**6E-5060**	3	CAP AS	
J	2	1	**112-4719**	4	RING-BACKUP	
	3	1	**121-4459**	2	BEARING-ROLLER	
	4	1	**108-3565**	2	CLIP	
	5	1	**204-1454**	2	PIN-THREADED	
JM	6	1	**9T-4817**	2	NUT (M8X1-THD)	
	7	1	**215-7697**	1	KIT-SHIM (INCLUDES 4-SHIMS)	
	8	1	**204-1457**	1	VALVE GP-SPEED SENSING (PISTON PUMP)	
	9	1	**204-1458**	4	VALVE GP-RELIEF (CROSSOVER)	
	10	1	**204-1459**	1	VALVE GP-RELIEF (CHARGE)	
J	11	1	**135-2655**	2	SEAL-O-RING	
	12	1	**3J-7354**	2	SEAL-O-RING	
J	13	1	**3K-0715**	1	SEAL-O-RING	
J	14	1	**6V-5326**	4	SEAL-O-RING	
J	15	1	**6V-5586**	2	SEAL-O-RING	
J	16	1	**6V-8352**	1	SEAL-O-RING	
M	17	1	**8T-0267**	8	BOLT-SOCKET HEAD (M6X1X12-MM)	
	18	1	**9S-8002**	2	PLUG-O-RING	
M	19	1	**9X-6606**	2	NUT-HEX (M10X1-THD)	
	20	1	**268-1929**	2	CRADLE	
	21	1	**081-3698**	1	BEARING	
	22	1	**140-1739**	3	RING-RETAINING	
J	23	1	**233-9744**	1	SEAL-LIP TYPE	
	24	1	**307-3075**	2	RACE-BEARING	
	25	1	**280-7865**	1	ROTATING GP-PUMP (LH)	
	26	1	**280-7863**	1	ROTATING GP-PUMP (RH)	
M	27	1	**8T-0273**	8	BOLT-SOCKET HEAD (M12X1.75X40-MM)	
	28	1	**307-3074**	2	BEARING-ROLLER	
					AVAILABLE GASKET KIT(S):	
J			**268-9529**	1	KIT-SEAL (PISTON PUMP)	
					(ALSO INCLUDES O-RINGS, LOCKNUT SEALS, SPACERS, RETAINING RING, SHAFT SEAL & SEALS)	

J-KIT MARKED J SERVICES PARTS MARKED J
M-METRIC PART

341-7665 PUMP GP-PISTON *(contd.)* **i04032639**

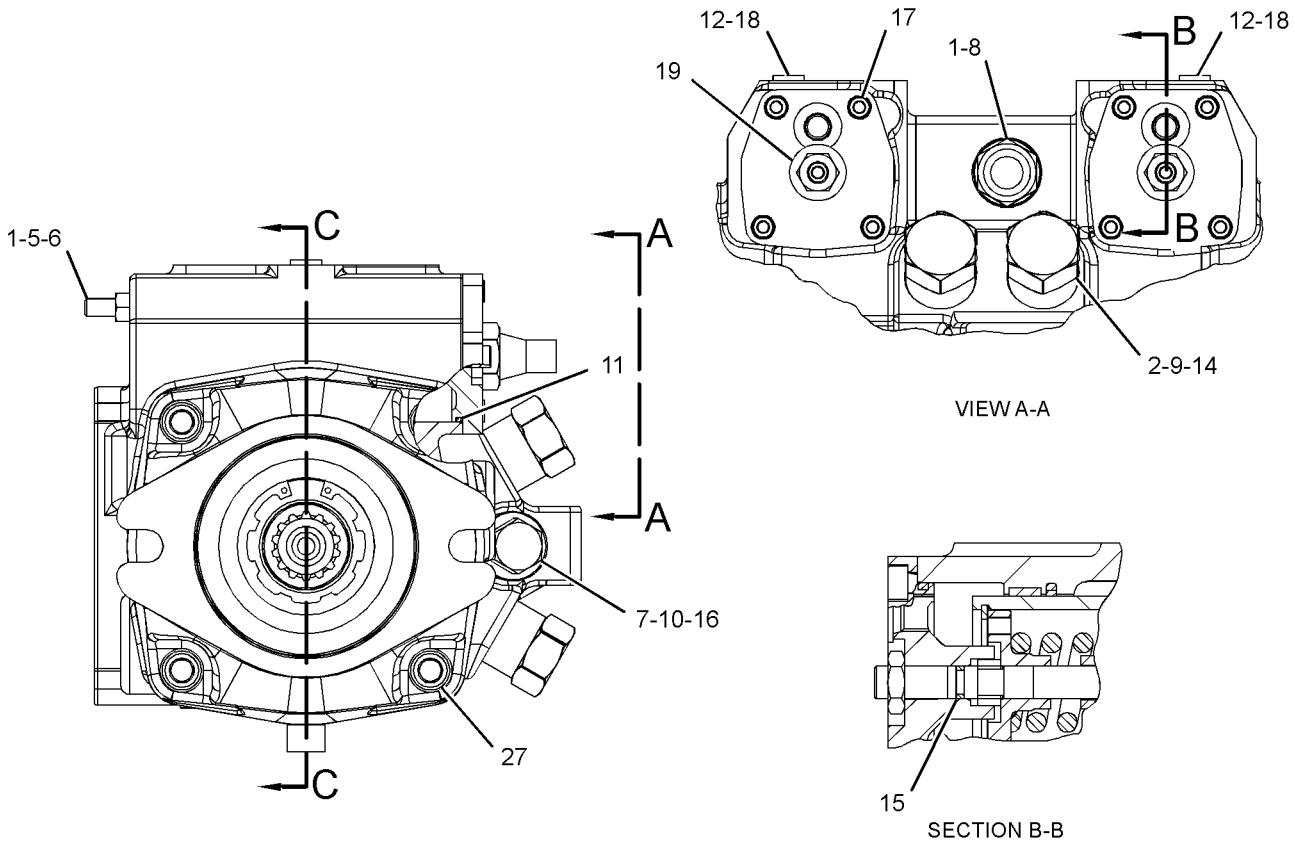

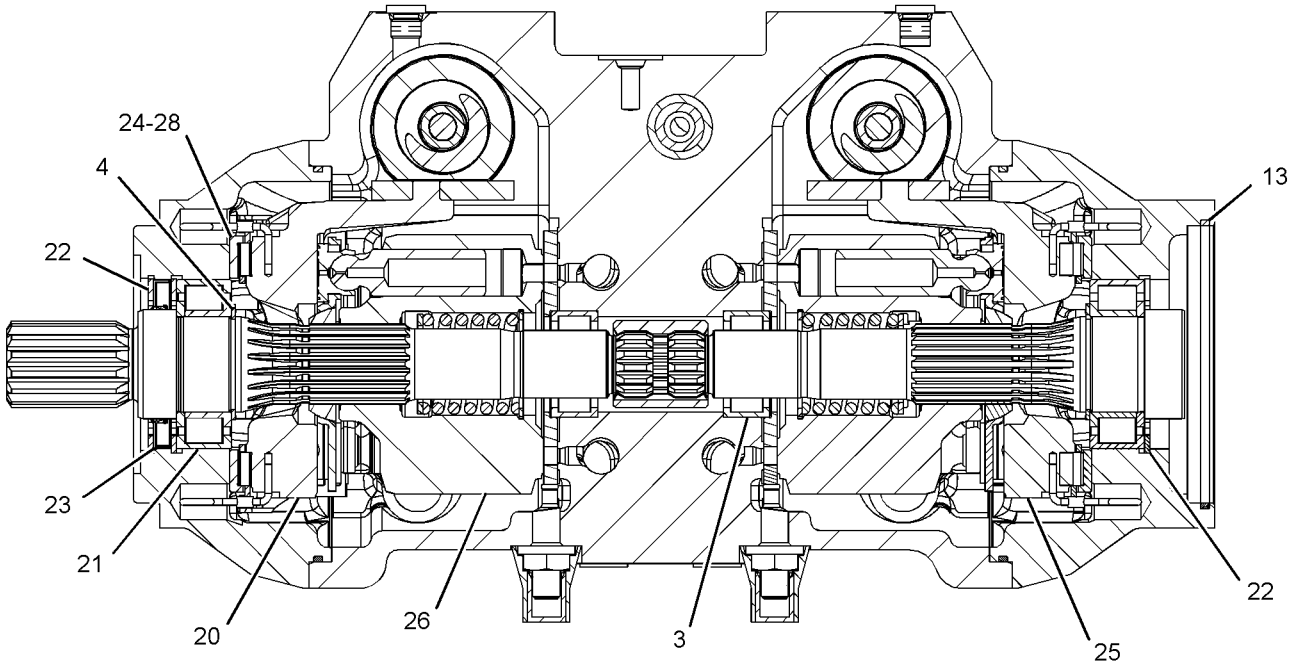

SECTION C-C

GRAPHIC #1 **<END>** g02173898

142-7484 TIRE & RIM GP–LH

S/N: SRS1-UP
(16.5X8.25). DIRECTIONAL TIRE
PART OF 142-8666 WHEEL & TIRE AR
AN ATTACHMENT

SMCS-4202 **i02578088**

NOTE	PART NUMBER	QTY	PART NAME 1 2 3 4 5 6 (PRODUCT LEVEL)	SEE PAGE
	150-8599	1	VALVE AS-TIRE	
	142-7485	1	WHEEL AS	
	142-7486	1	TIRE (10-16.5)	

<END>

150-8592 TIRE & RIM GP–RH

S/N: SRS1-UP
(16.5X8.25). DIRECTIONAL TIRE
PART OF 142-8666 WHEEL & TIRE AR
AN ATTACHMENT

SMCS-4202 **i02578156**

NOTE	PART NUMBER	QTY	PART NAME 1 2 3 4 5 6 (PRODUCT LEVEL)	SEE PAGE
	150-8599	1	VALVE AS-TIRE	
	142-7485	1	WHEEL AS	
	142-7486	1	TIRE (10-16.5)	

<END>

165-2605 TIRE & RIM GP–LH

S/N: SRS1-UP
(16.5X8.25). DIRECTIONAL TIRE
PART OF 165-2602 WHEEL & TIRE AR
AN ATTACHMENT

SMCS-4202 **i02362220**

NOTE	PART NUMBER	QTY	PART NAME 1 2 3 4 5 6 (PRODUCT LEVEL)	SEE PAGE
	150-8599	1	VALVE AS-TIRE	
	142-7490	1	WHEEL AS	
	165-4908	1	TIRE (10-16.5)	

<END>

165-2606 TIRE & RIM GP–RH

S/N: SRS1-UP
(16.5X8.25). DIRECTIONAL TIRE
PART OF 165-2602 WHEEL & TIRE AR
AN ATTACHMENT

SMCS-4202 **i02362218**

NOTE	PART NUMBER	QTY	PART NAME 1 2 3 4 5 6 (PRODUCT LEVEL)	SEE PAGE
	150-8599	1	VALVE AS-TIRE	
	142-7490	1	WHEEL AS	
	165-4908	1	TIRE (10-16.5)	

<END>

165-2609 TIRE & RIM GP–LH

S/N: SRS1-UP
(16.5X8.25). DIRECTIONAL TIRE
PART OF 165-4891 WHEEL & TIRE AR
AN ATTACHMENT

SMCS-4202 **i02362238**

NOTE	PART NUMBER	QTY	PART NAME 1 2 3 4 5 6 (PRODUCT LEVEL)	SEE PAGE
	150-8599	1	VALVE AS-TIRE	
	142-7485	1	WHEEL AS	
	165-4908	1	TIRE (10-16.5)	

<END>

165-2610 TIRE & RIM GP–RH

S/N: SRS1-UP
(16.5X8.25). DIRECTIONAL TIRE
PART OF 165-4891 WHEEL & TIRE AR
AN ATTACHMENT

SMCS-4202 **i02362235**

NOTE	PART NUMBER	QTY	PART NAME 1 2 3 4 5 6 (PRODUCT LEVEL)	SEE PAGE
	150-8599	1	VALVE AS-TIRE	
	142-7485	1	WHEEL AS	
	165-4908	1	TIRE (10-16.5)	

<END>

165-4901 TIRE & RIM GP—HEAVY-DUTY, LH

S/N: SRS1-UP
(16.5X9.75). DIRECTIONAL TIRE
PART OF 165-4898 WHEEL & TIRE AR
AN ATTACHMENT

SMCS-4202 **i02474449**

NOTE	PART NUMBER	QTY	PART NAME 1 2 3 4 5 6 (PRODUCT LEVEL)	SEE PAGE
	150-8599	1	VALVE AS-TIRE	
	142-8731	1	WHEEL AS	
	165-4909	1	TIRE (12-16.5)	

<END>

165-4902 TIRE & RIM GP—HEAVY-DUTY, RH

S/N: SRS1-UP
(16.5X9.75). DIRECTIONAL TIRE
PART OF 165-4898 WHEEL & TIRE AR
AN ATTACHMENT

SMCS-4202 **i02474458**

NOTE	PART NUMBER	QTY	PART NAME 1 2 3 4 5 6 (PRODUCT LEVEL)	SEE PAGE
	150-8599	1	VALVE AS-TIRE	
	142-8731	1	WHEEL AS	
	165-4909	1	TIRE (12-16.5)	

<END>

185-8678 TIRE & RIM GP—LH

S/N: SRS1-UP
(16.5X8.25). DIRECTIONAL TIRE
PART OF 185-8664 WHEEL & TIRE AR
AN ATTACHMENT

SMCS-4202 **i02361343**

NOTE	PART NUMBER	QTY	PART NAME 1 2 3 4 5 6 (PRODUCT LEVEL)	SEE PAGE
	150-8599	1	VALVE AS-TIRE	
	142-7485	1	WHEEL AS	
	185-9932	1	TIRE (10-16.5)	

<END>

185-8679 TIRE & RIM GP–RH

S/N: SRS1-UP
(16.5X8.25). DIRECTIONAL TIRE
PART OF 185-8664 WHEEL & TIRE AR
AN ATTACHMENT

SMCS-4202 **i02361345**

NOTE	PART NUMBER	QTY	PART NAME 1 2 3 4 5 6 (PRODUCT LEVEL)	SEE PAGE
	150-8599	1	VALVE AS-TIRE	
	142-7485	1	WHEEL AS	
	185-9932	1	TIRE (10-16.5)	

<END>

185-9926 TIRE & RIM GP–LH

S/N: SRS1-UP
(16.5X8.25). DIRECTIONAL TIRE
PART OF 185-8665 WHEEL & TIRE AR
AN ATTACHMENT

SMCS-4202 **i02362228**

NOTE	PART NUMBER	QTY	PART NAME 1 2 3 4 5 6 (PRODUCT LEVEL)	SEE PAGE
	150-8599	1	VALVE AS-TIRE	
	142-7490	1	WHEEL AS	
	185-9932	1	TIRE (10-16.5)	

<END>

185-9927 TIRE & RIM GP–RH

S/N: SRS1-UP
(16.5X8.25). DIRECTIONAL TIRE
PART OF 185-8665 WHEEL & TIRE AR
AN ATTACHMENT

SMCS-4202 **i02362230**

NOTE	PART NUMBER	QTY	PART NAME 1 2 3 4 5 6 (PRODUCT LEVEL)	SEE PAGE
	150-8599	1	VALVE AS-TIRE	
	142-7490	1	WHEEL AS	
	185-9932	1	TIRE (10-16.5)	

<END>

185-9930 TIRE & RIM GP–LH

S/N: SRS1-UP
(16.5X9.75). DIRECTIONAL TIRE
PART OF 185-8667 WHEEL & TIRE AR
AN ATTACHMENT

SMCS-4202 **i02362232**

NOTE	PART NUMBER	QTY	PART NAME 1 2 3 4 5 6 (PRODUCT LEVEL)	SEE PAGE
	150-8599	1	VALVE AS-TIRE	
	142-8731	1	WHEEL AS	
	185-9933	1	TIRE (12-16.5)	

<END>

185-9931 TIRE & RIM GP–RH

S/N: SRS1-UP
(16.5X9.75). DIRECTIONAL TIRE
PART OF 185-8667 WHEEL & TIRE AR
AN ATTACHMENT

SMCS-4202 **i02362236**

NOTE	PART NUMBER	QTY	PART NAME 1 2 3 4 5 6 (PRODUCT LEVEL)	SEE PAGE
	150-8599	1	VALVE AS-TIRE	
	142-8731	1	WHEEL AS	
	185-9933	1	TIRE (12-16.5)	

<END>

199-5438 TIRE & RIM GP–LH

S/N: SRS1-UP
(16.5X12). DIRECTIONAL TIRE
PART OF 178-2256 WHEEL & TIRE AR
AN ATTACHMENT

SMCS-4202 **i02362244**

NOTE	PART NUMBER	QTY	PART NAME 1 2 3 4 5 6 (PRODUCT LEVEL)	SEE PAGE
	150-8599	1	VALVE AS-TIRE	
	178-2270	1	WHEEL AS	
	199-5440	1	TIRE (33/15.5-16.5)	

<END>

199-5439 TIRE & RIM GP–RH

S/N: SRS1-UP
(16.5X12). DIRECTIONAL TIRE
PART OF 178-2256 WHEEL & TIRE AR
AN ATTACHMENT

SMCS-4202 **i02362243**

NOTE	PART NUMBER	QTY	PART NAME 1 2 3 4 5 6 (PRODUCT LEVEL)	SEE PAGE
	150-8599	1	VALVE AS-TIRE	
	178-2270	1	WHEEL AS	
	199-5440	1	TIRE (33/15.5-16.5)	

<END>

265-2894 TIRE & RIM GP–LH

S/N: SRS1-UP
(10X16.5)
PART OF 252-0344 WHEEL & TIRE AR
AN ATTACHMENT

SMCS-4202 **i02279688**

NOTE	PART NUMBER	QTY	PART NAME 1 2 3 4 5 6 (PRODUCT LEVEL)	SEE PAGE
	150-8599	1	VALVE AS-TIRE	
	142-7490	1	WHEEL AS	
	222-3962	1	TIRE (10-16.5)	

<END>

265-2895 TIRE & RIM GP–RH

S/N: SRS1-UP
(10X16.5)
PART OF 252-0344 WHEEL & TIRE AR
AN ATTACHMENT

SMCS-4202 **i02279722**

NOTE	PART NUMBER	QTY	PART NAME 1 2 3 4 5 6 (PRODUCT LEVEL)	SEE PAGE
	150-8599	1	VALVE AS-TIRE	
	142-7490	1	WHEEL AS	
	222-3962	1	TIRE (10-16.5)	

<END>

265-2896 TIRE & RIM GP–LH

S/N: SRS1-UP
(10X16.5)
PART OF 252-0345 WHEEL & TIRE AR
AN ATTACHMENT

SMCS-4202 **i02279732**

NOTE	PART NUMBER	QTY	PART NAME 1 2 3 4 5 6 (PRODUCT LEVEL)	SEE PAGE
	150-8599	1	VALVE AS-TIRE	
	142-7485	1	WHEEL AS	
	222-3962	1	TIRE (10-16.5)	

<END>

265-2897 TIRE & RIM GP–RH

S/N: SRS1-UP
(10X16.5)
PART OF 252-0345 WHEEL & TIRE AR
AN ATTACHMENT

SMCS-4202 **i04367598**

NOTE	PART NUMBER	QTY	PART NAME 1 2 3 4 5 6 (PRODUCT LEVEL)	SEE PAGE
	150-8599	1	VALVE AS-TIRE	
	142-7485	1	WHEEL AS	
	222-3962	1	TIRE (10-16.5)	

<END>

265-2898 TIRE & RIM GP–LH

S/N: SRS1-UP
(16.5X9.75)
PART OF 252-0346 WHEEL & TIRE AR
AN ATTACHMENT

SMCS-4202 **i04367600**

NOTE	PART NUMBER	QTY	PART NAME 1 2 3 4 5 6 (PRODUCT LEVEL)	SEE PAGE
	150-8599	1	VALVE AS-TIRE	
	142-8731	1	WHEEL AS	
	222-3963	1	TIRE (12-16.5)	

<END>

265-2899 TIRE & RIM GP–RH

S/N: SRS1-UP
(16.5X9.75)
PART OF 252-0346 WHEEL & TIRE AR
AN ATTACHMENT

SMCS-4202 **i04367601**

NOTE	PART NUMBER	QTY	PART NAME 1 2 3 4 5 6 (PRODUCT LEVEL)	SEE PAGE
	150-8599	1	VALVE AS-TIRE	
	142-8731	1	WHEEL AS	
	222-3963	1	TIRE (12-16.5)	

<END>

216-0610 VALVE GP-SOLENOID

S/N: SRS1-UP
12-VOLT
PART OF 293-6591 MANIFOLD & SOLENOID GP-CONTROL
AN ATTACHMENT

SMCS-5479 **i02772040**

NOTE	REF NO	GRAPHIC REF	PART NUMBER	QTY	PART NAME 1 2 3 4 5 6 (PRODUCT LEVEL)	SEE PAGE
	1	1	**226-9629**	1	COIL AS-SOLENOID (12-VOLT)	
	2	1	**164-2108**	1	WASHER (13.03X25.4X2.38-MM THK)	
	3	1	**218-2373**	1	NUT (1/2-28-THD)	
					AVAILABLE REPAIR KIT(S):	
			175-3892	1	KIT-SEAL	
					(INCLUDES SEAL-O-RINGS)	

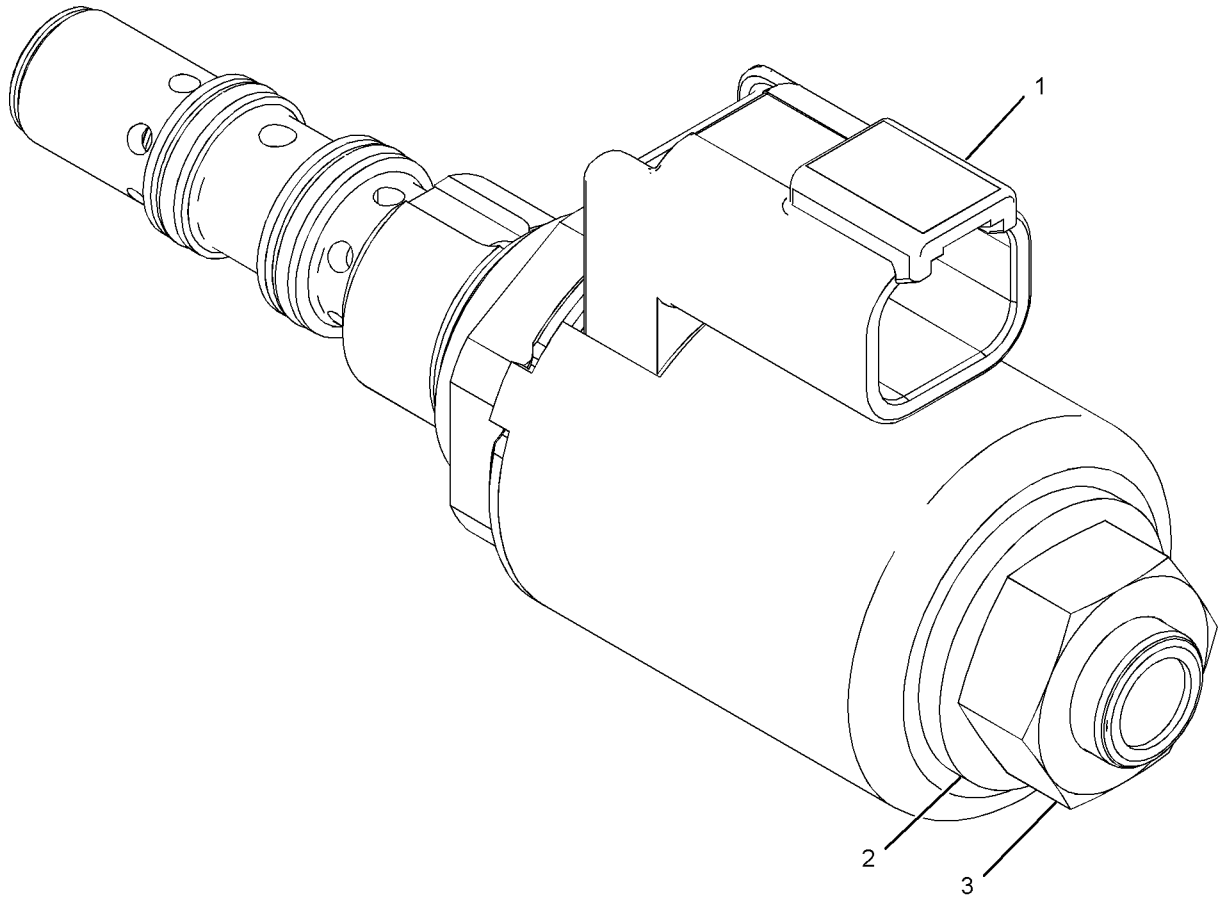

GRAPHIC #1 **<END>** g01112141

259-8194 VALVE GP-SOLENOID—PARKING BRAKE

S/N: SRS1-UP
12-VOLT
PART OF 248-1268, 293-6591 MANIFOLD & SOLENOID GP-CONTROL
AN ATTACHMENT

SMCS-5479 **i02485890**

NOTE	REF NO	GRAPHIC REF	PART NUMBER	QTY	PART NAME 1 2 3 4 5 6 (PRODUCT LEVEL)	SEE PAGE
	1	1	**238-4626**	1	COIL AS (AUXILIARY FLOW CONTROL)	

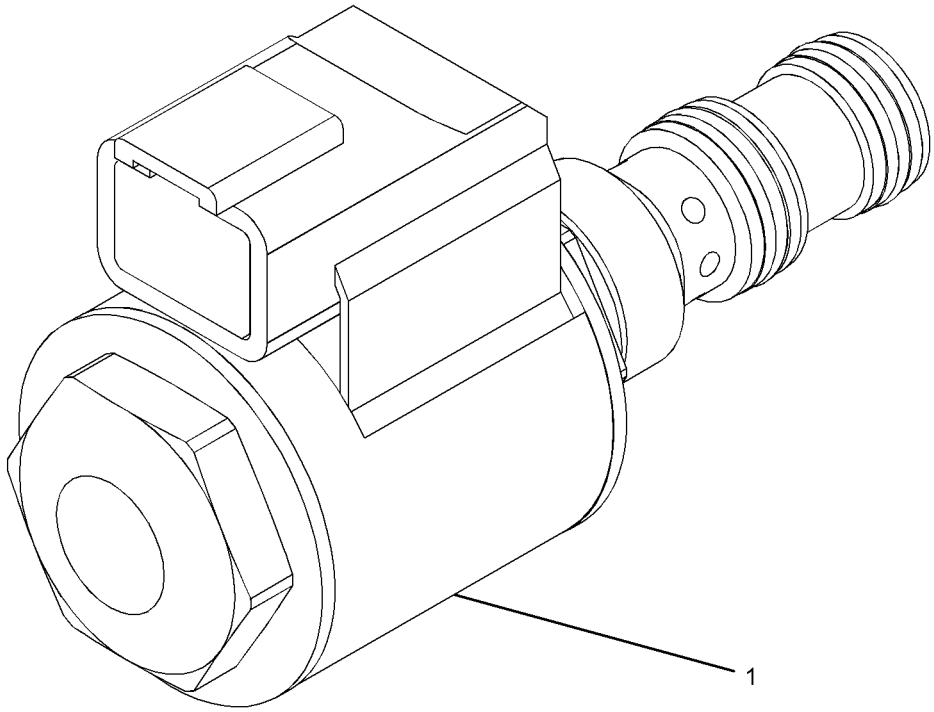

GRAPHIC #1 **<END>** g01121017

POWER TRAIN

142-8666 WHEEL & TIRE AR

S/N: SRS1-UP

AN ATTACHMENT

SMCS-4200, 4201, 4203 **i02361114**

NOTE	PART NUMBER	QTY	PART NAME 1 2 3 4 5 6 (PRODUCT LEVEL)	SEE PAGE
Y	*142-7484*	2	TIRE & RIM GP (LH)	154
Y	*150-8592*	2	TIRE & RIM GP (RH)	154
	142-7493	32	NUT-LUG (9/16-18-2B THD)	

Y-SEPARATE ILLUSTRATION

<END>

159-5761 WHEEL & TIRE AR—SOLID

S/N: SRS1-UP

AN ATTACHMENT

SMCS-4200, 4201, 4203 **i02361156**

NOTE	PART NUMBER	QTY	PART NAME 1 2 3 4 5 6 (PRODUCT LEVEL)	SEE PAGE
	142-7493	32	NUT-LUG (9/16-18-THD)	
	187-3230	4	TIRE-SOLID (33X6X8)	

<END>

165-2602 WHEEL & TIRE AR—HEAVY DUTY

S/N: SRS1-UP

AN ATTACHMENT

SMCS-4200, 4201, 4203 **i02361177**

NOTE	PART NUMBER	QTY	PART NAME 1 2 3 4 5 6 (PRODUCT LEVEL)	SEE PAGE
Y	*165-2605*	2	TIRE & RIM GP (LH)	154
Y	*165-2606*	2	TIRE & RIM GP (RH)	155
	142-7493	32	NUT-LUG (9/16-18-2B THD)	

Y-SEPARATE ILLUSTRATION

<END>

165-4891 WHEEL & TIRE AR—HEAVY DUTY

S/N: SRS1-UP

AN ATTACHMENT

SMCS-4200, 4201, 4203 **i02361179**

NOTE	PART NUMBER	QTY	PART NAME 1 2 3 4 5 6 (PRODUCT LEVEL)	SEE PAGE
Y	*165-2609*	2	TIRE & RIM GP (LH)	155
Y	*165-2610*	2	TIRE & RIM GP (RH)	155
	142-7493	32	NUT-LUG (9/16-18-2B THD)	

Y-SEPARATE ILLUSTRATION

<END>

165-4898 WHEEL & TIRE AR—HEAVY DUTY

S/N: SRS1-UP
AN ATTACHMENT

SMCS-4200, 4201, 4203 **i02361187**

NOTE	PART NUMBER	QTY	PART NAME 1 2 3 4 5 6 (PRODUCT LEVEL)	SEE PAGE
Y	*165-4901*	2	TIRE & RIM GP (LH)	156
Y	*165-4902*	2	TIRE & RIM GP (RH)	156
	142-7493	32	NUT-LUG (9/16-18-2B THD)	

Y-SEPARATE ILLUSTRATION

<END>

178-2256 WHEEL & TIRE AR—HEAVY DUTY

S/N: SRS1-UP
AN ATTACHMENT

SMCS-4200, 4201, 4203 **i02361189**

NOTE	PART NUMBER	QTY	PART NAME 1 2 3 4 5 6 (PRODUCT LEVEL)	SEE PAGE
Y	*199-5438*	2	TIRE & RIM GP (LH)	158
Y	*199-5439*	2	TIRE & RIM GP (RH)	159
	142-7493	32	NUT-LUG (9/16-18-2B THD)	

Y-SEPARATE ILLUSTRATION

<END>

185-8664 WHEEL & TIRE AR—HEAVY DUTY

S/N: SRS1-UP
AN ATTACHMENT

SMCS-4200, 4201, 4203 **i02361199**

NOTE	PART NUMBER	QTY	PART NAME 1 2 3 4 5 6 (PRODUCT LEVEL)	SEE PAGE
Y	*185-8678*	2	TIRE & RIM GP (LH)	156
Y	*185-8679*	2	TIRE & RIM GP (RH)	157
	142-7493	32	NUT-LUG (9/16-18-2B THD)	

Y-SEPARATE ILLUSTRATION

<END>

185-8665 WHEEL & TIRE AR—HEAVY DUTY

S/N: SRS1-UP
AN ATTACHMENT

SMCS-4200, 4201, 4203 **i02361201**

NOTE	PART NUMBER	QTY	PART NAME 1 2 3 4 5 6 (PRODUCT LEVEL)	SEE PAGE
Y	*185-9926*	2	TIRE & RIM GP (LH)	157
Y	*185-9927*	2	TIRE & RIM GP (RH)	157
	142-7493	32	NUT-LUG (9/16-18-2B THD)	

Y-SEPARATE ILLUSTRATION

<END>

185-8667 WHEEL & TIRE AR—HEAVY DUTY

S/N: SRS1-UP
AN ATTACHMENT

SMCS-4200, 4201, 4203 **i02361203**

NOTE	PART NUMBER	QTY	PART NAME 1 2 3 4 5 6 (PRODUCT LEVEL)	SEE PAGE
Y	*185-9930*	2	TIRE & RIM GP (LH)	158
Y	*185-9931*	2	TIRE & RIM GP (RH)	158
	142-7493	32	NUT-LUG (9/16-18-2B THD)	

Y-SEPARATE ILLUSTRATION

<END>

252-0344 WHEEL & TIRE AR

S/N: SRS1-UP
AN ATTACHMENT

SMCS-4200, 4201, 4203 **i02279641**

NOTE	PART NUMBER	QTY	PART NAME 1 2 3 4 5 6 (PRODUCT LEVEL)	SEE PAGE
Y	**265-2895**	2	TIRE & RIM GP (RH)	159
Y	**265-2894**	2	TIRE & RIM GP (LH)	159
	142-7493	32	NUT-LUG (9/16-18-2B THD)	

Y-SEPARATE ILLUSTRATION

<END>

252-0345 WHEEL & TIRE AR

S/N: SRS1-UP
AN ATTACHMENT

SMCS-4200, 4201, 4203 **i02279670**

NOTE	PART NUMBER	QTY	PART NAME 1 2 3 4 5 6 (PRODUCT LEVEL)	SEE PAGE
Y	**265-2896**	2	TIRE & RIM GP (LH)	160
Y	**265-2897**	2	TIRE & RIM GP (RH)	160
	142-7493	32	NUT-LUG (9/16-18-2B THD)	

Y-SEPARATE ILLUSTRATION

<END>

252-0346 WHEEL & TIRE AR

S/N: SRS1-UP
AN ATTACHMENT

SMCS-4200, 4201, 4203 **i02279611**

NOTE	PART NUMBER	QTY	PART NAME 1 2 3 4 5 6 (PRODUCT LEVEL)	SEE PAGE
Y	**265-2899**	2	TIRE & RIM GP (RH)	161
Y	**265-2898**	2	TIRE & RIM GP (LH)	160
	142-7493	32	NUT-LUG (9/16-18-2B THD)	

Y-SEPARATE ILLUSTRATION

<END>

252-0367 WHEEL & TIRE AR—SOLID

S/N: SRS1-UP
AN ATTACHMENT

SMCS-4200, 4201, 4203 **i02279677**

NOTE	PART NUMBER	QTY	PART NAME 1 2 3 4 5 6 (PRODUCT LEVEL)	SEE PAGE
	142-7493	32	NUT-LUG (9/16-18-2B THD)	
	226-3736	2	TIRE-SOLID (31X6X10)	
	226-3737	2	TIRE-SOLID (31X6X10)	

<END>

252-0378 WHEEL & TIRE AR—SOLID

S/N: SRS1-UP
AN ATTACHMENT

SMCS-4200, 4201, 4203 **i02279683**

NOTE	PART NUMBER	QTY	PART NAME 1 2 3 4 5 6 (PRODUCT LEVEL)	SEE PAGE
	142-7493	32	NUT-LUG (9/16-18-2B THD)	
	226-3736	2	TIRE-SOLID (31X6X10)	
	226-3737	2	TIRE-SOLID (31X6X10)	

<END>

326-5306 BUMPER GP

S/N: SRS1-UP

PART OF 326-5410 CHASSIS AR

SMCS-7156 **i03982354**

NOTE	REF NO	GRAPHIC REF	PART NUMBER	QTY	PART NAME 1 2 3 4 5 6 (PRODUCT LEVEL)	SEE PAGE
	1	1	**142-9021**	2	STUD	
	2	1	**154-4006**	2	BOSS	
	3	1	**326-5301**	1	BUMPER AS	
	4	1	**8T-4122**	6	WASHER-HARD (17X32X3.5-MM THK)	
M	5	1	**8T-4132**	4	NUT (M16X2-THD)	
M	6	1	**8T-7338**	2	BOLT (M16X2X45-MM)	

M-METRIC PART

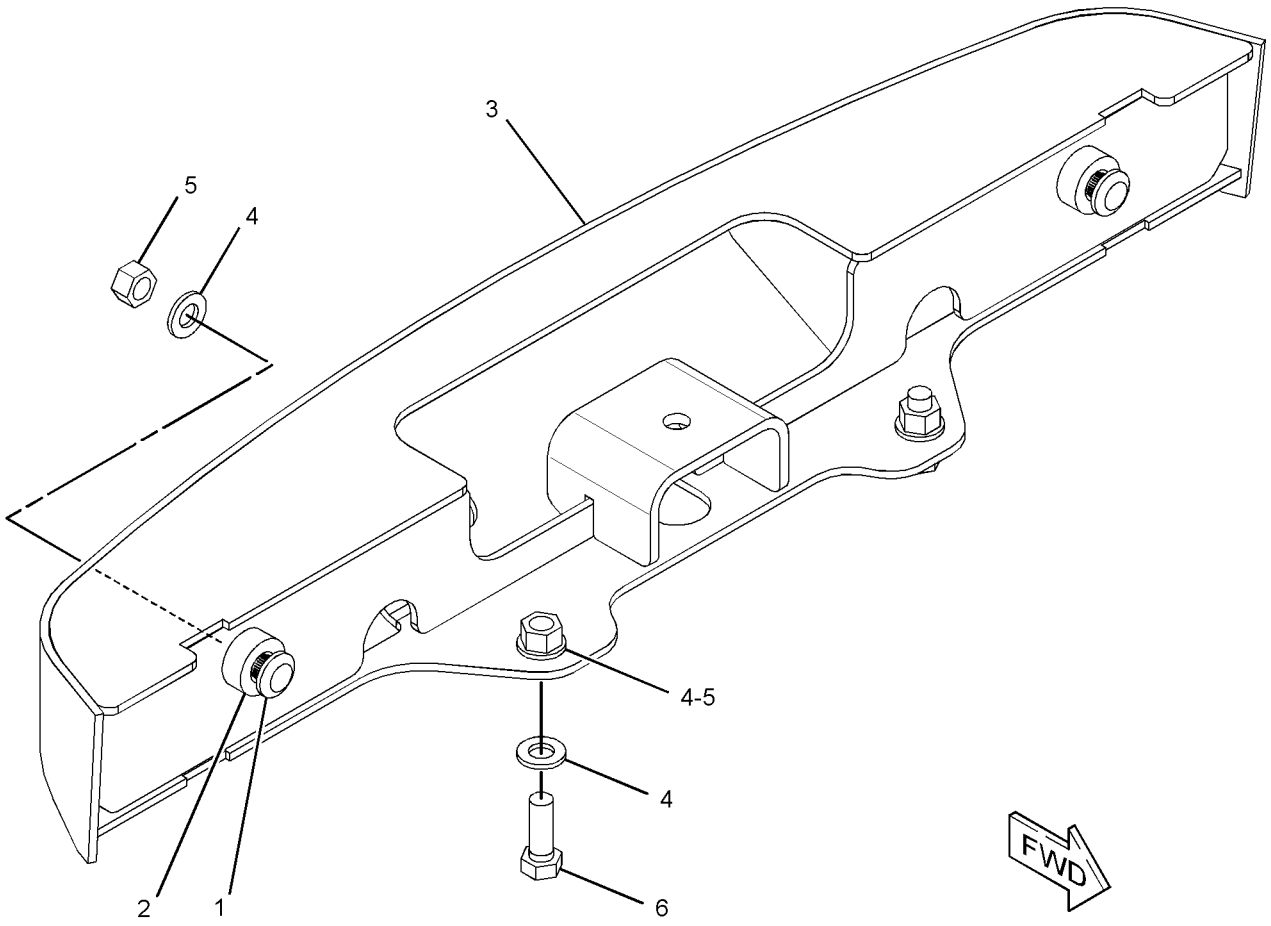

GRAPHIC #1 **<END>** g02173380

278-1292 CONVERSION GP-ROADING—GERMANY

S/N: SRS1-UP

PART OF 326-5284, 356-1902 CONVERSION AR-MACHINE

AN ATTACHMENT

SMCS-7000 **i03971192**

NOTE	REF NO	GRAPHIC REF	PART NUMBER	QTY	PART NAME 1 2 3 4 5 6 (PRODUCT LEVEL)	SEE PAGE
	1	1	**246-2641**	1	PADLOCK GP	
		1	**5P-8500**	1	KEY	
	2	1	**113-7634**	1	FILM-WARNING (STEERING)	
	3	1	**258-3849**	1	PLATE-IDENTIFICATION (ENGLISH, GERMAN, ITALIAN)	
	4	1	**8T-4205**	5	WASHER-HARD (7.2X14.5X2-MM THK)	
	5	1	**173-3015**	1	BRACKET AS	
	6	1	**173-3016**	1	CHOCK	
	7	1	**173-3018**	1	BRACKET	
M	8	1	**8T-4171**	5	BOLT (M6X1X12-MM)	

M-METRIC PART

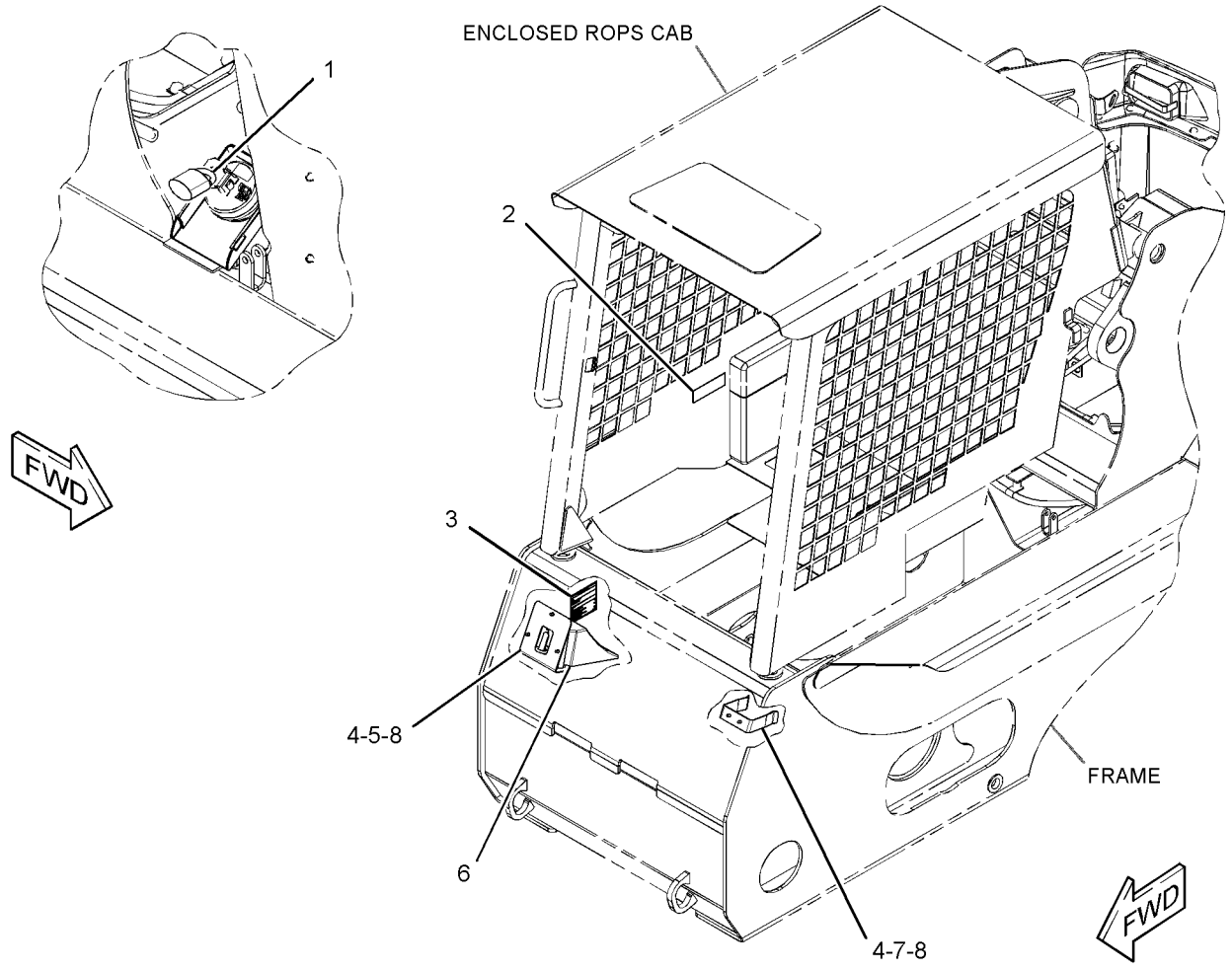

GRAPHIC #1 **<END>** g02162519

278-1293 CONVERSION GP-ROADING–ITALY

S/N: SRS1-317
PART OF 326-5282 CONVERSION AR-MACHINE
AN ATTACHMENT

SMCS-7000 **i03644781**

NOTE	REF NO	GRAPHIC REF	PART NUMBER	QTY	PART NAME 1 2 3 4 5 6 (PRODUCT LEVEL)	SEE PAGE
C	1	1	**142-9327**	1	SWITCH AS-ROCKER (WARNING BEACON)	
		1	**111-7899**	1	GASKET	
	2	1	**186-2360**	4	COVER AS	
					(EACH INCLUDES)	
E		1	**129-1854**		FASTENER-LOOP (10-CM)	
E		1	**129-1855**		FASTENER-HOOK (10-CM)	
	3	1	**258-3849**	1	PLATE-IDENTIFICATION (ENGLISH, GERMAN, ITALIAN)	
CY	4	1	**309-1325**	1	LAMP GP-WARNING BEACON (12-VOLT, AMBER)	93

C-CHANGE FROM PREVIOUS TYPE
E-ORDER BY THE CENTIMETER
Y-SEPARATE ILLUSTRATION

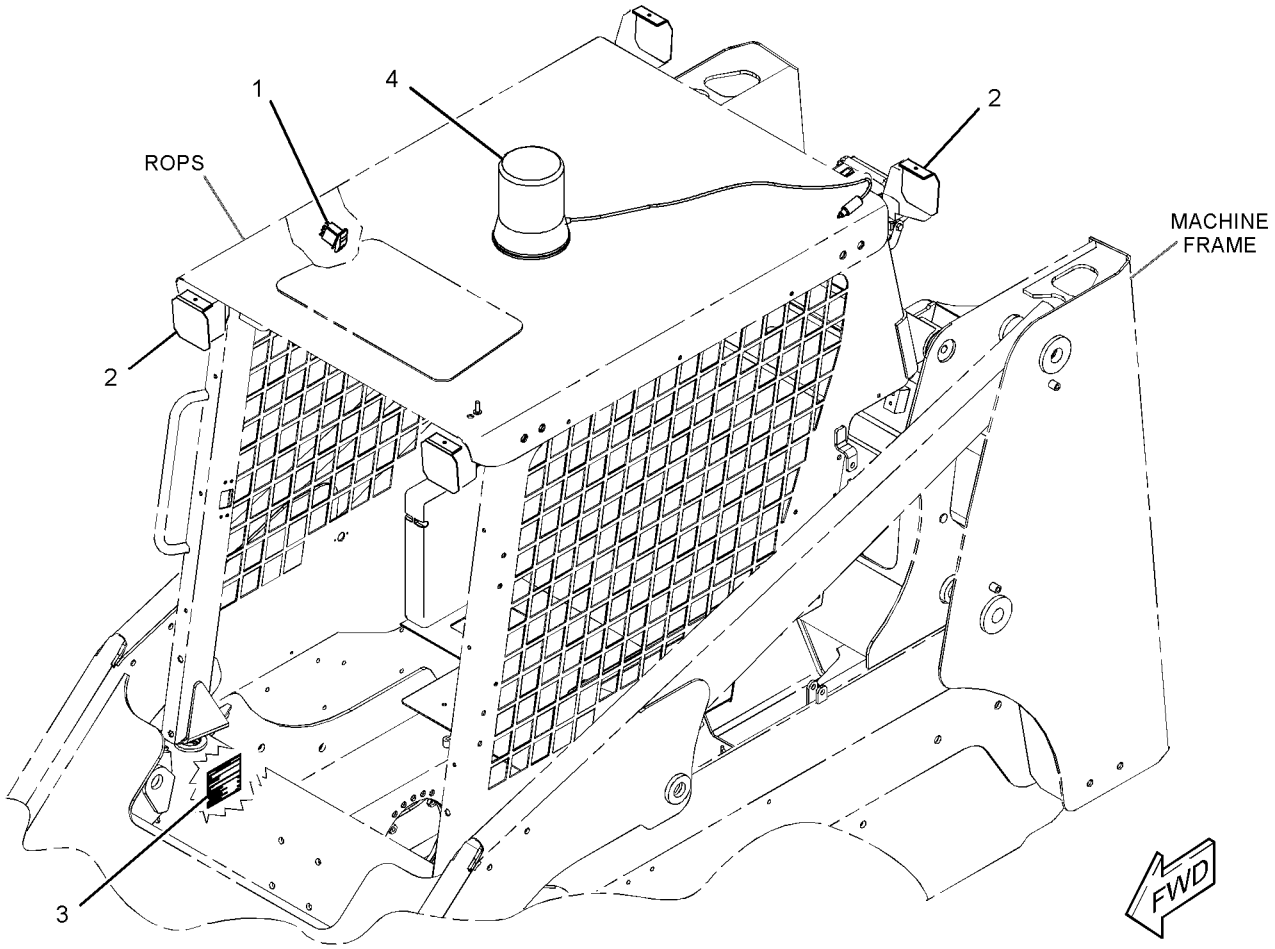

GRAPHIC #1 **<END>** g01956132

278-1293 CONVERSION GP-ROADING–ITALY

S/N: SRS318-UP
PART OF 326-5282 CONVERSION AR-MACHINE
AN ATTACHMENT

SMCS-7000 **i04029672**

NOTE	REF NO	GRAPHIC REF	PART NUMBER	QTY	PART NAME 1 2 3 4 5 6 (PRODUCT LEVEL)	SEE PAGE
	1	1	**258-3849**	1	PLATE-IDENTIFICATION (ENGLISH, GERMAN, ITALIAN)	
Y	2	1	**309-1325**	1	LAMP GP-WARNING BEACON (12-VOLT, AMBER)	93

Y-SEPARATE ILLUSTRATION

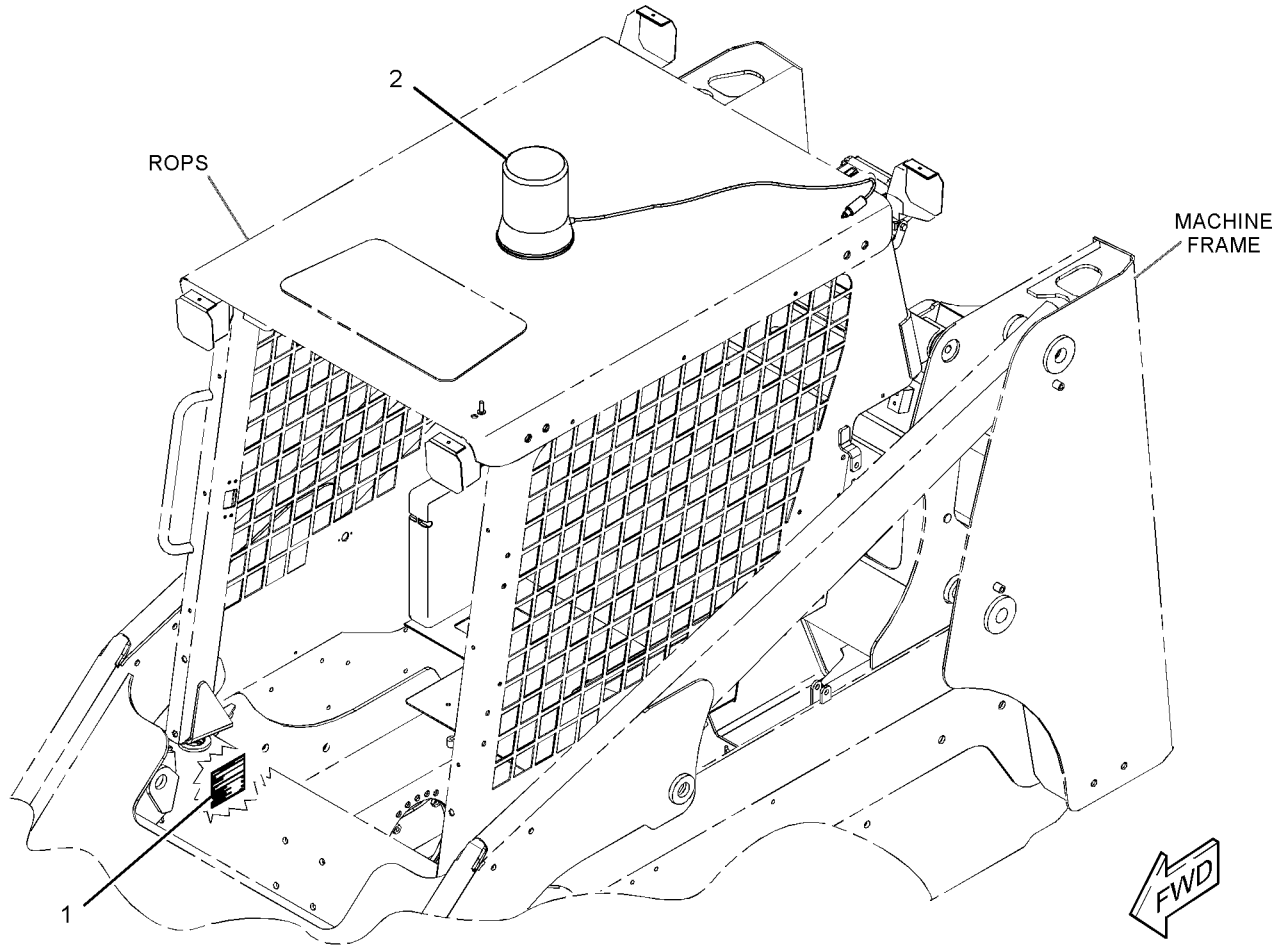

GRAPHIC #1 **<END>** g02282733

FRAME AND BODY

215-3926 COUNTERWEIGHT GP

S/N: SRS1-UP
37-KG (81.5-LBS)
AN ATTACHMENT

SMCS-7056 **i01749135**

NOTE	REF NO	GRAPHIC REF	PART NUMBER	QTY	PART NAME 1 2 3 4 5 6 (PRODUCT LEVEL)	SEE PAGE
	1	1	**215-3927**	4	PLATE	
	2	1	**5P-1076**	12	WASHER-HARD (13.5X30X4-MM THK)	
M	3	1	**8T-4244**	6	NUT (M12X1.75-THD)	
M	4	1	**8T-4910**	6	BOLT (M12X1.75X60-MM)	

M-METRIC PART

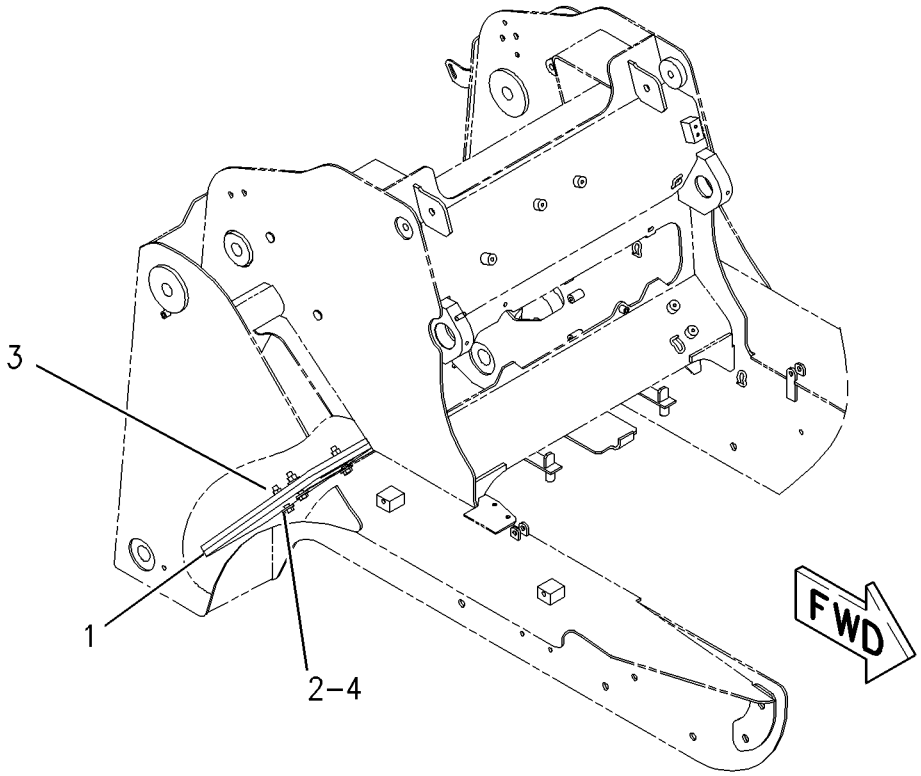

GRAPHIC #1 **<END>** g00888360

326-5609 ENCLOSURE GP-ENGINE

S/N: SRS1-UP

PART OF 326-5410 CHASSIS AR

SMCS-7263, 7273 **i03959950**

NOTE	REF NO	GRAPHIC REF	PART NUMBER	QTY	PART NAME 1 2 3 4 5 6 (PRODUCT LEVEL)	SEE PAGE
	1	1	**142-8801**	1	HOOD AS	
	2	1	**142-8831**	1	STRIKER AS	
	3	1	**142-8832**	1	PIN AS	
	4	1	**159-8405**	2	BOLT-SPECIAL	
	5	1	**223-4240**	1	LATCH AS	
	6	1	*224-3875*	1	LOCK GP (ENGINE)	
J		1	**226-0291**	1	LOCK AS	
		1	**233-4872**	1	CAM	
	7	1	**308-6767**	2	BUMPER AS	
	8	1	**326-5610**	1	DOOR AS-ACCESS	
M	9	1	**131-3540**	3	LOCKNUT (M8X1.25-THD)	
	10	1	**2K-4973**	2	LOCKNUT (3/8-16-THD)	
M	11	1	**5C-7261**	2	NUT (M8X1.25-THD)	
	12	1	**5P-4116**	11	WASHER-HARD (8.8X20.5X2-MM THK)	
M	13	1	**7X-2537**	3	BOLT (M8X1.25X35-MM)	
	14	1	**7X-7729**	2	WASHER (11X25X3-MM THK)	
M	15	1	**8T-4137**	2	BOLT (M10X1.5X20-MM)	
M	16	1	**8T-4181**	4	BOLT (M6X1X20-MM)	
	17	1	**8T-4205**	4	WASHER-HARD (7.2X14.5X2-MM THK)	
M	18	1	**8T-4908**	5	BOLT (M8X1.25X25-MM)	

J-REQUIRES CORPORATE KEY
M-METRIC PART

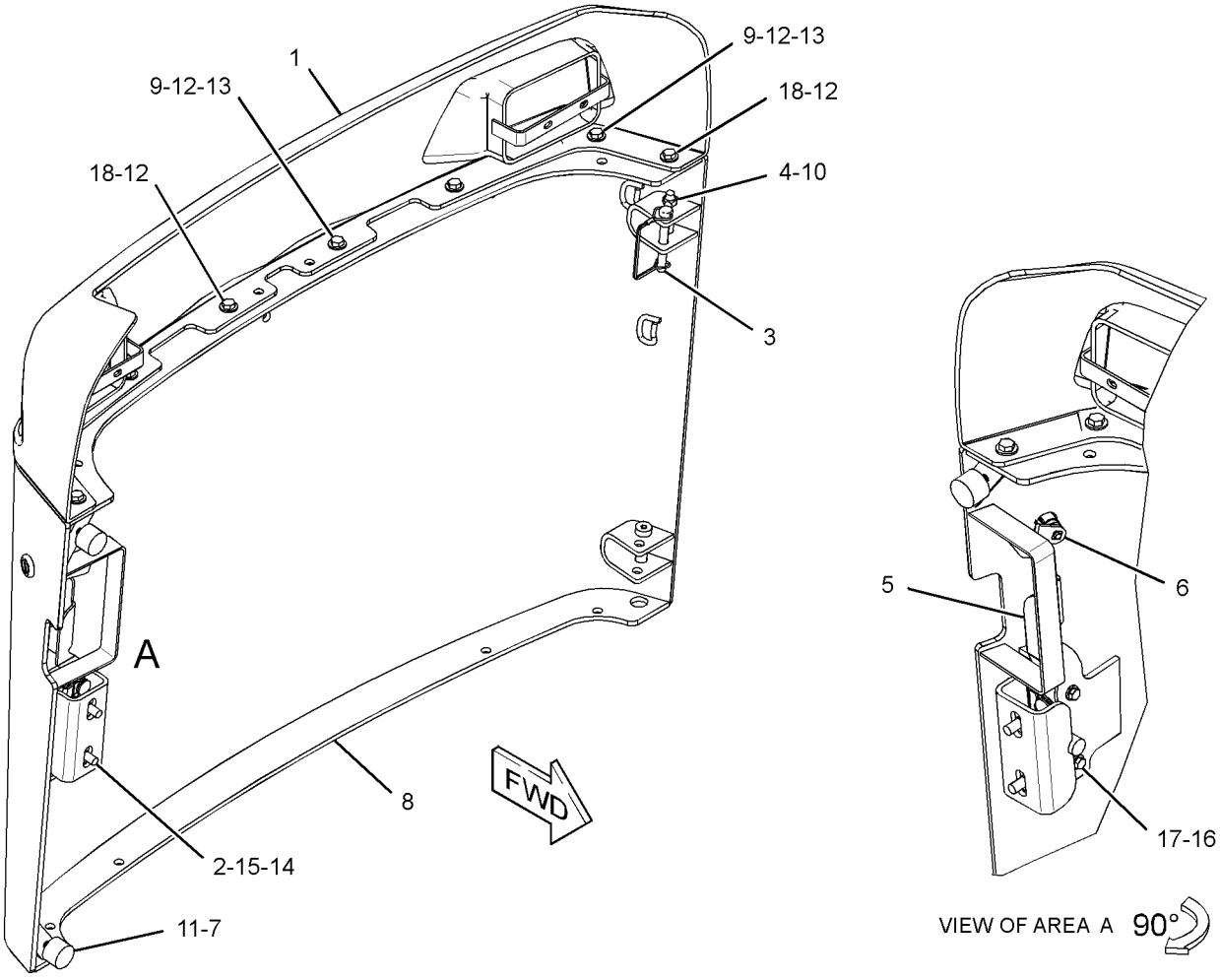

GRAPHIC #1 **<END>** g02146601

FRAME AND BODY

326-5573 FRAME AS-LOWER

S/N: SRS1-UP

PART OF 326-5442 FRAME GP-MACHINE

SMCS-7050 **i03996297**

NOTE	REF NO	GRAPHIC REF	PART NUMBER	QTY	PART NAME 1 2 3 4 5 6 (PRODUCT LEVEL)	SEE PAGE
	1	1	**238-7716**	5	BOSS	
M	2	1	**110-2023**	4	STUD-WELD (M10X1.5X25-MM)	
	3	1	**118-3094**	2	BOSS-THREADED (M8X1.25-THD)	
	4	1	**183-7602**	1	BOSS-THREADED (M10X1.5-THD)	
M	5	1	**6V-9632**	10	NUT-WELD (M6X1-THD)	
	6	1	**7T-1099**	8	LINK	
	7	1	**8R-3857**	2	BOSS (M8X1.25X12-MM)	
M	8	1	**8T-3612**	4	NUT-WELD (M8X1.25-THD)	
M	9	1	**9R-2672**	6	BOSS-THREADED (M10X1.5-THD)	
	10	1	**9R-9282**	1	BOSS (M10X1.5-THD)	

M-METRIC PART

326-5573 FRAME AS-LOWER *(contd.)* **i03996297**

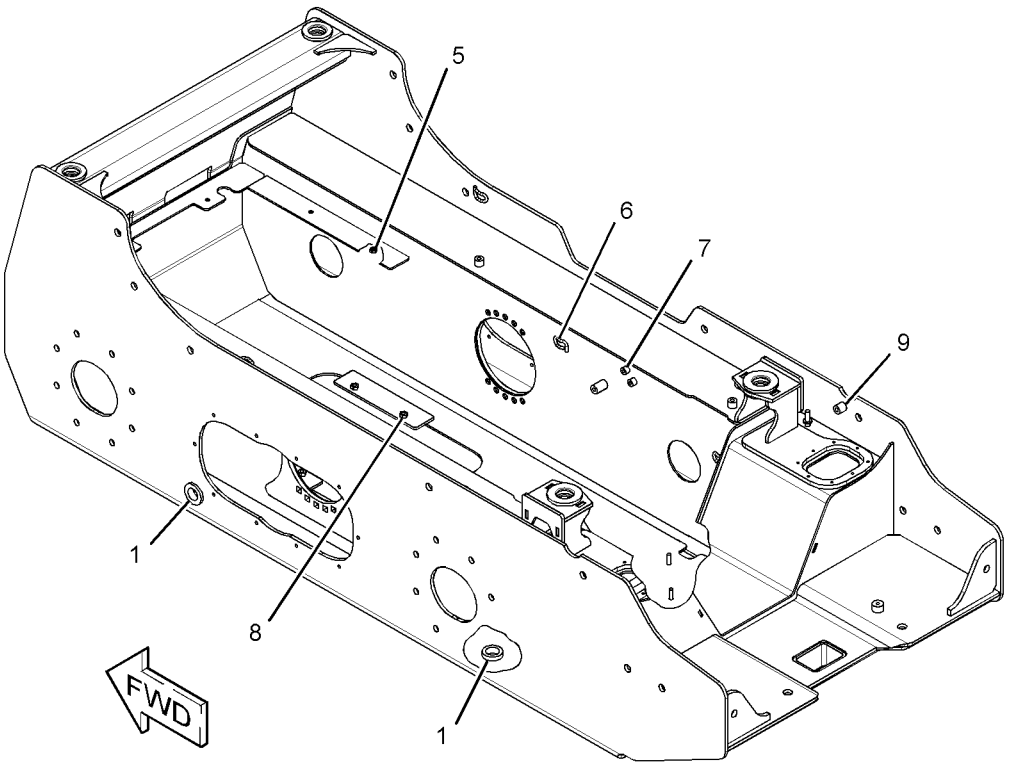

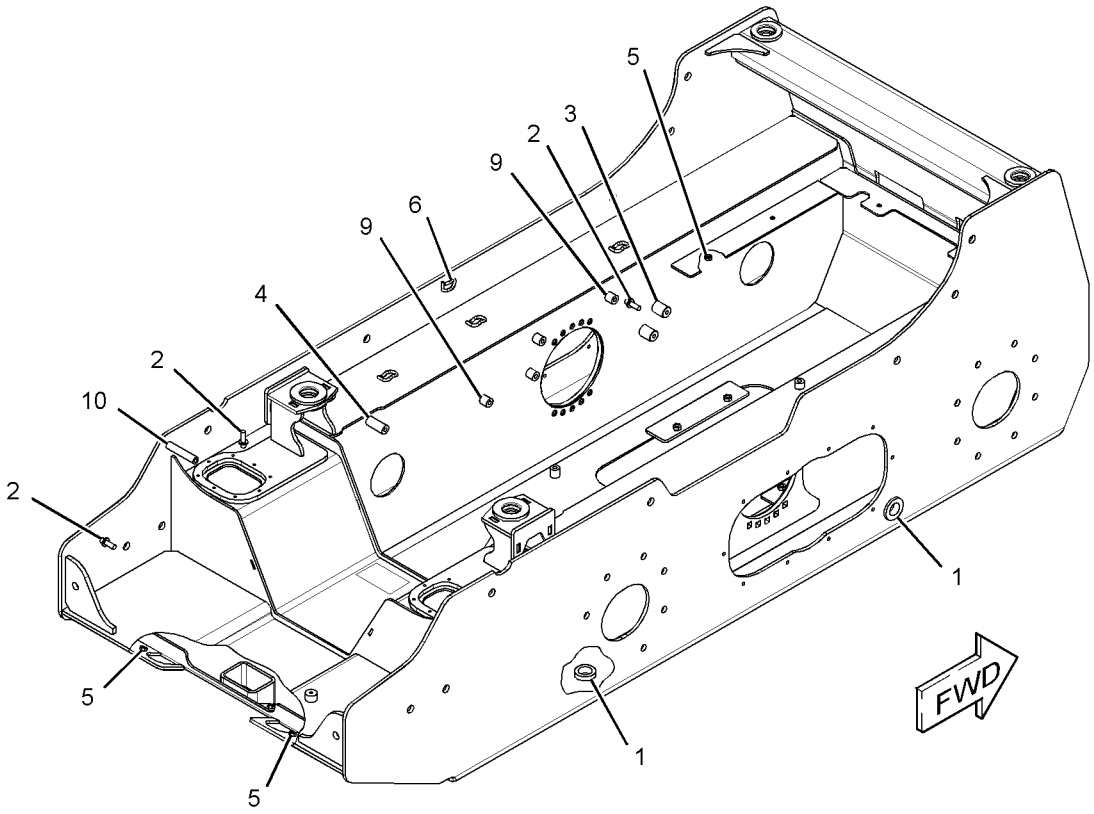

GRAPHIC #1 **<END>** g02174105

FRAME AND BODY

326-5474 FRAME AS-UPPER

S/N: SRS1-UP

PART OF 326-5442 FRAME GP-MACHINE

SMCS-7050 **i03983689**

NOTE	REF NO	GRAPHIC REF	PART NUMBER	QTY	PART NAME 1 2 3 4 5 6 (PRODUCT LEVEL)	SEE PAGE
M	1	1	**9R-2672**	1	BOSS-THREADED (M10X1.5-THD)	
	2	1	**208-4555**	4	BOSS-SPECIAL	
M	3	1	**110-2023**	1	STUD-WELD (M10X1.5X25-MM)	
	4	1	**118-3094**	1	BOSS-THREADED (M8X1.25-THD)	
	5	1	**183-7602**	1	BOSS-THREADED (M10X1.5-THD)	
M	6	1	**6V-9632**	6	NUT-WELD (M6X1-THD)	
	7	1	**7T-1099**	12	LINK	
M	8	1	**8T-3612**	10	NUT-WELD (M8X1.25-THD)	
M	9	1	**9R-9866**	1	BOSS-THREADED (M10X1.5-THD)	

M-METRIC PART

326-5474 FRAME AS-UPPER *(contd.)* **i03983689**

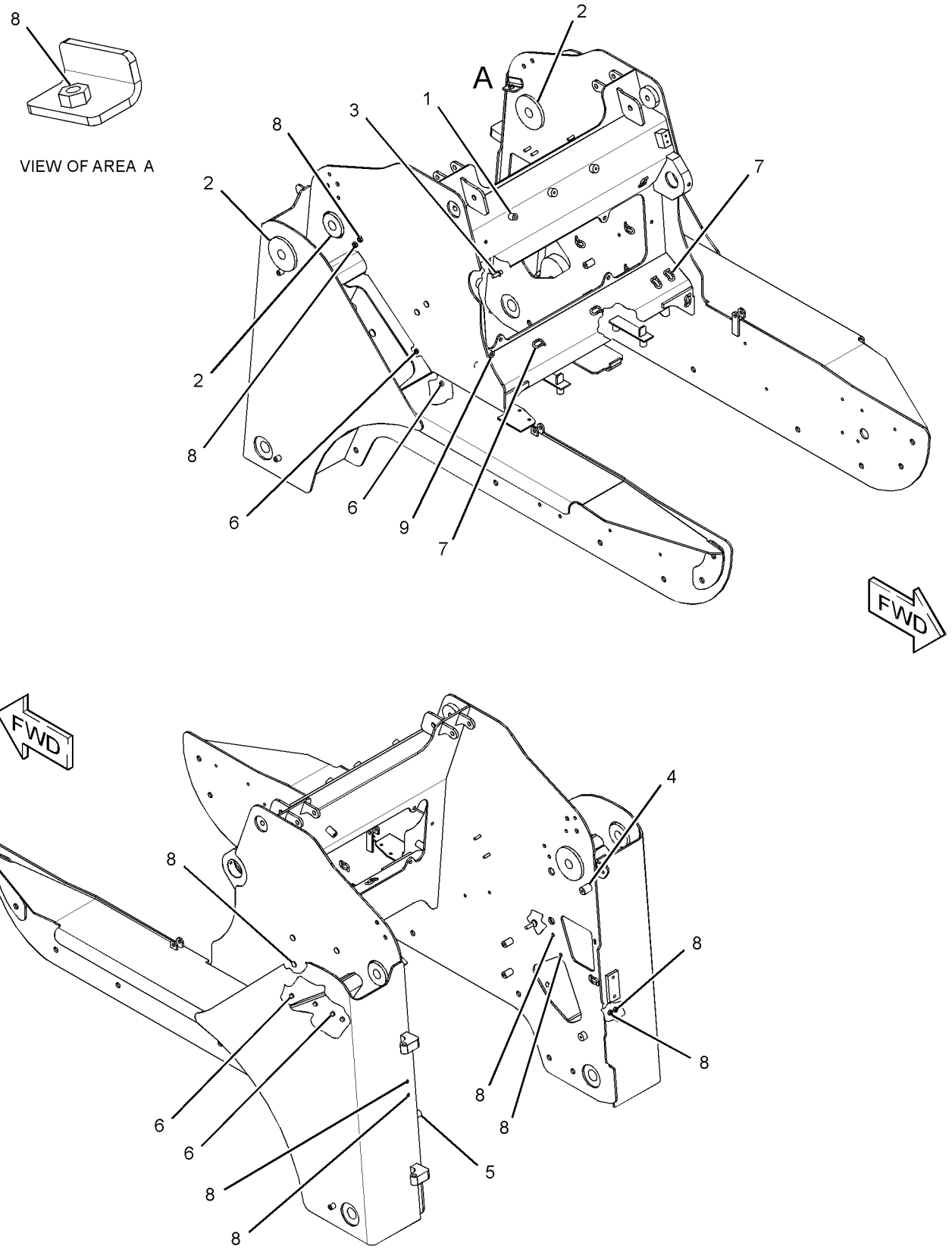

GRAPHIC #1 **<END>** g02173448

326-5575 FRAME GP-LOADER

S/N: SRS1-UP

PART OF 326-5410 CHASSIS AR

SMCS-7054 **i04096511**

NOTE	REF NO	GRAPHIC REF	PART NUMBER	QTY	PART NAME 1 2 3 4 5 6 (PRODUCT LEVEL)	SEE PAGE
	1	1	**3S-9182**	5	PLUG-MAGNETIC (FRAME)	
	2	1	**4D-0298**	2	BEARING	
	3	1	**142-8810**	1	PLATE AS	
	4	1	**142-8823**	2	GASKET	
	5	1	**191-2894**	2	PLATE	
	6	1	**191-9576**	1	COVER AS	
	7	1	**207-9731**	1	STEP AS (LH)	
	8	1	**207-9732**	1	STEP AS (RH)	
	9	1	**231-2105**	1	SENDER AS-FUEL LEVEL	
		1	**102-8802**	1	KIT-RECEPTACLE (2-PIN)	
					(INCLUDES RECEPTACLE AS & WEDGE)	
		1	**8T-8729**	2	PIN-CONNECTOR (16-GA TO 18-GA)	
	10	1	**261-6101**	4	COVER	
	11	1	**295-7176**	1	PLATE	
	12	1	**326-5311**	1	PLATE	
Y	13	1	*326-5442*	1	FRAME GP-MACHINE (LIFT ARM)	181
M	14	1	**266-3315**	20	BOLT-FLANGE HEAD (M8X1.25X25.5-MM)	
	15	1	**3B-8488**	2	FITTING-GREASE	
	16	1	**5P-1076**	14	WASHER-HARD (13.5X30.0X4.0-MM THK)	
	17	1	**5P-4116**	4	WASHER-HARD (8.8X20.5X2-MM THK)	
M	18	1	**6V-7357**	4	BOLT (M6X1X25-MM)	
	19	1	**8T-4122**	28	WASHER-HARD (17.0X32.0X3.5-MM THK)	
M	20	1	**8T-4132**	14	NUT (M16X2-THD)	
M	21	1	**8T-4194**	6	BOLT (M12X1.75X50-MM)	
	22	1	**8T-4205**	20	WASHER-HARD (7.2X14.5X2-MM THK)	
M	23	1	**8T-4244**	8	NUT (M12X1.75-THD)	
M	24	1	**8T-4908**	4	BOLT (M8X1.25X25-MM)	
M	25	1	**8T-4970**	16	BOLT (M6X1X14-MM)	
M	26	1	**8T-7338**	14	BOLT (M16X2X45-MM)	
	27	1	**7X-0579**	20	WASHER-HARD (8.8X25.5X2-MM THK)	
	28	1	**206-5143**	2	BOLT (M12X1.75X42.5-MM)	
BF			**228-9222**	1	SHIM (3.0-MM THK)	

B-USE AS REQUIRED
F-NOT SHOWN
M-METRIC PART
Y-SEPARATE ILLUSTRATION

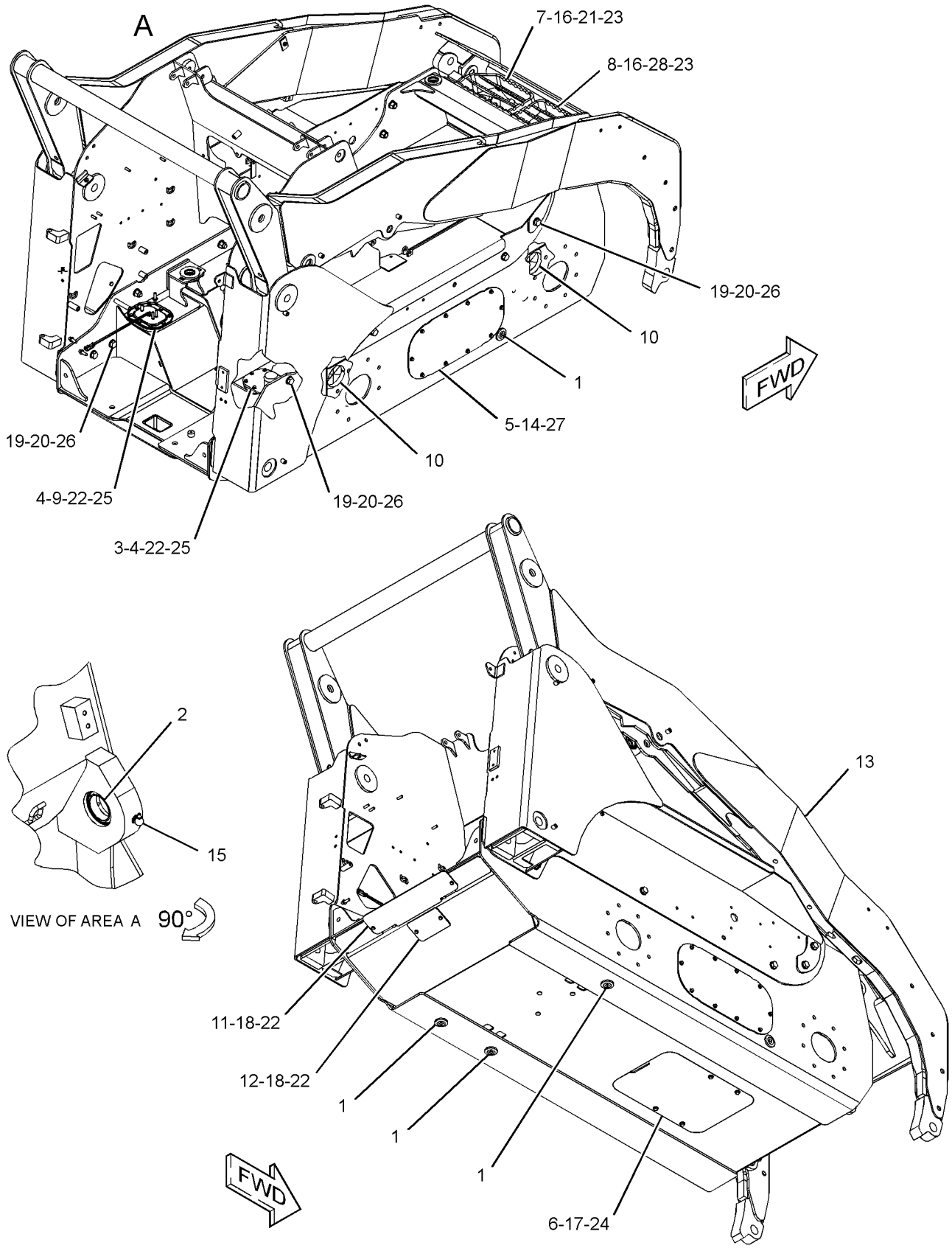

GRAPHIC #1 **<END>** g02306813

326-5442 FRAME GP-MACHINE

S/N: SRS1-UP

PART OF 326-5575 FRAME GP-LOADER

SMCS-6119, 7050 **i03983669**

NOTE	PART NUMBER	QTY	PART NAME 1 2 3 4 5 6 (PRODUCT LEVEL)	SEE PAGE
Y	**326-5474**	1	FRAME AS-UPPER	177
Y	**326-5573**	1	FRAME AS-LOWER	175
	191-9594	1	LINK AS	
	326-5498	1	ARM AS-LIFT	
	142-8805	4	BUSHING	
	159-5756	2	BUSHING	

Y-SEPARATE ILLUSTRATION

<END>

FRAME AND BODY

156-9809 GUIDE GP-LINES

S/N: SRS1-UP

PART OF 326-5410 CHASSIS AR

SMCS-5057 **i02059887**

NOTE	REF NO	GRAPHIC REF	PART NUMBER	QTY	PART NAME 1 2 3 4 5 6 (PRODUCT LEVEL)	SEE PAGE
	1	1	**227-4315**	1	PLATE AS	
	2	1	**247-4877**	1	BOLT (M8X1.25X12-MM)	
M	3	1	**6V-9189**	1	LOCKNUT (M8X1.25-THD)	
	4	1	**7X-0603**	2	WASHER-HARD (9.9X35X2.5-MM THK)	
M	5	1	**8T-4177**	1	BOLT (M8X1.25X90-MM)	
	6	1	**8T-4224**	1	WASHER-HARD (8.8X16X2-MM THK)	

M-METRIC PART

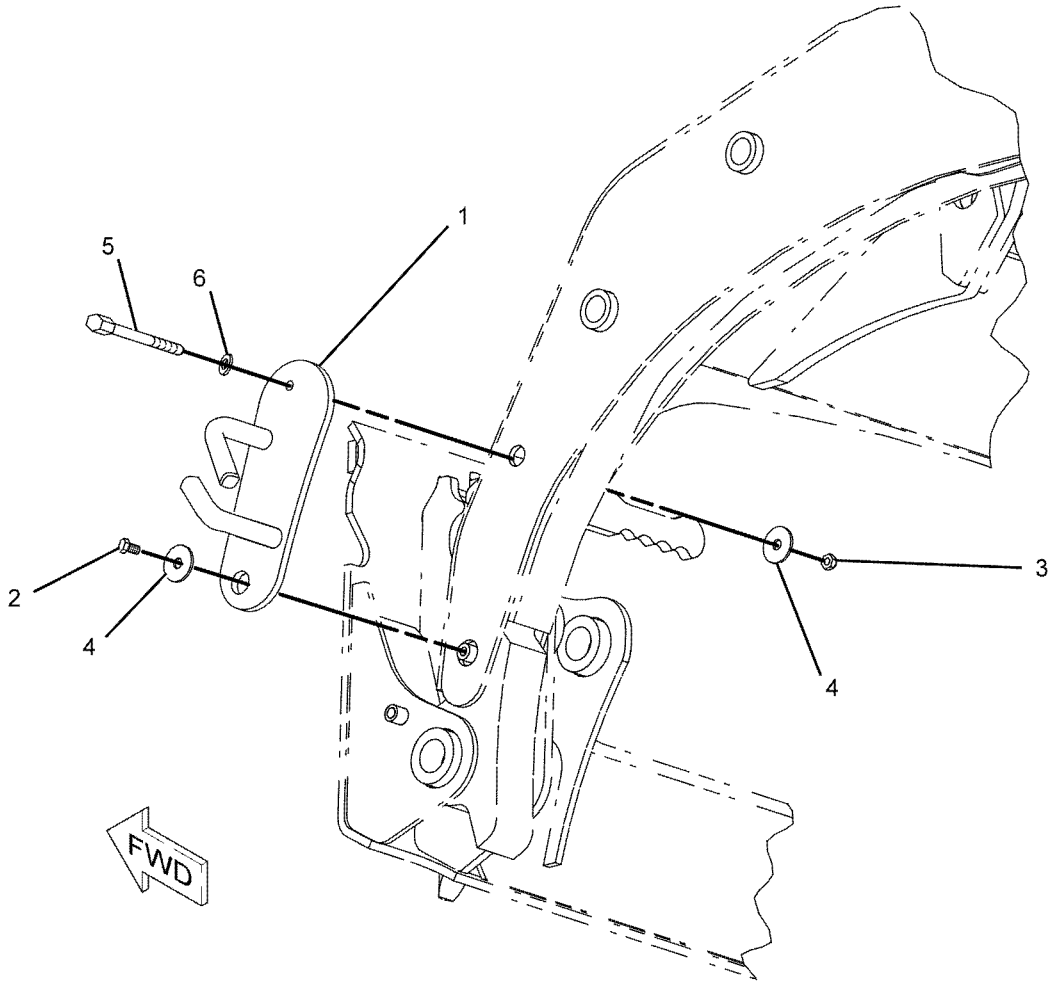

GRAPHIC #1 **<END>** g01056800

340-7724 KIT-ROADING CONVERSION—GERMANY

S/N: SRS1-UP

AN ATTACHMENT

SMCS-1408, 1429, 1430, 1432, 7000, 7319 **i04367463**

NOTE	PART NUMBER	QTY	PART NAME 1 2 3 4 5 6 (PRODUCT LEVEL)	SEE PAGE
Y	**166-2569**	1	VISOR GP-CAB	543
	246-2641	1	PADLOCK GP	
	5P-8500	1	KEY	
	175-4237	1	BLOCK AS	
	173-3015	1	BRACKET AS	
	216-6144	1	BRACKET AS	
	166-2562	1	PLATE AS	
M	**8T-4171**	5	BOLT (M6X1X12-MM)	
	173-3018	1	BRACKET	
	173-3016	1	CHOCK	
	117-6558	3	FILM-IDENTIFICATION (20-KM/H)	
	233-5680	3	FILM-IDENTIFICATION (13-KM/H)	
	113-7634	1	FILM-WARNING (STEERING)	
	195-0936	4	INSERT-THREADED (M6X1-THD)	
	178-2247	1	PIN	
	9R-5301	1	PIN-COTTER	
	258-3849	1	PLATE-IDENTIFICATION (ENGLISH, GERMAN, ITALIAN)	
M	**9X-2045**	4	SCREW-TRUSS HEAD (M6X1X20-MM)	
	9X-8257	1	WASHER (17.5X30X3.5-MM THK)	
	8T-4205	5	WASHER-HARD (7.2X14.5X2-MM THK)	

M-METRIC PART
Y-SEPARATE ILLUSTRATION

<END>

358-6919 KIT-ROADING CONVERSION–
ITALY, LIGHTS, SWITCHES
S/N: SRS1-UP
AN ATTACHMENT

SMCS-1408, 1429, 1430, 1432, 7000, 7319 **i04004363**

NOTE	PART NUMBER	QTY	PART NAME 1 2 3 4 5 6 (PRODUCT LEVEL)	SEE PAGE
Y	**309-1325**	1	LAMP GP-WARNING BEACON (12-VOLT, AMBER)	93
Y	**184-1564**	2	SWITCH GP-PRESSURE (BRAKE LIGHT)	103
	190-8962	1	LAMP GP-REGISTRATION PLATE	
	195-9712	1	LAMP (12-VOLT, 10-WATT)	
	175-4237	1	BLOCK AS	
	207-9780	1	BRACKET AS (REGISTRATION PLATE)	
	186-0239	1	HARNESS AS-REAR LIGHTING (RIGHT SIDE, LICENSE PLATE)	
	9X-3401	4	PIN-CONNECTOR (16-GA TO 18-GA)	
	155-2271	1	KIT-CONNECTING PLUG (4-PIN)	
			(INCLUDES PLUG AS, WEDGE & INTERFACE SEAL)	
	102-8804	1	KIT-RECEPTACLE (4-PIN)	
			(INCLUDES RECEPTACLE AS & WEDGE)	
	180-9340	4	SOCKET-CONNECTOR (14-GA TO 18-GA)	
E	**125-7874**		TUBE-HEAT SHRINK (5.72-MM DIA) (10-CM)	
	5P-4571	2	TERMINAL-BLADE (14-GA TO 16-GA)	
	146-9439	1	RELAY AS (12-VOLT) (BRAKE LIGHT)	
	166-2033	2	TEE AS	
			(EACH INCLUDES)	
	4J-5477	1	SEAL-O-RING	
	7X-2444	1	TEE-SWIVEL	
M	**8T-4171**	3	BOLT (M6X1X12-MM)	
M	**5C-8312**	2	NUT (M4X0.7-THD)	
	178-2247	1	PIN	
	9R-5301	1	PIN-COTTER	
	175-4236	1	PLATE	
	204-1365	1	PLATE	
	215-4001	1	PLATE	
	258-3849	1	PLATE-IDENTIFICATION (ENGLISH, GERMAN, ITALIAN)	
M	**6V-9672**	2	SCREW-MACHINE (M4X0.7X16-MM)	
	3S-2093	2	STRAP-CABLE	
	4B-4863	2	WASHER (4.7X11X1.2-MM THK)	
	9X-8257	1	WASHER (17.5X30X3.5-MM THK)	
	8T-4205	3	WASHER-HARD (7.2X14.5X2-MM THK)	

E-ORDER BY THE CENTIMETER
M-METRIC PART
Y-SEPARATE ILLUSTRATION

<END>

FRAME AND BODY

358-6921 KIT-ROADING CONVERSION—FRONT

S/N: SRS1-UP
AN ATTACHMENT

SMCS-1408, 1429, 1430, 1432, 7000, 7319 **i04004361**

NOTE	PART NUMBER	QTY	PART NAME 1 2 3 4 5 6 (PRODUCT LEVEL)	SEE PAGE
Y	**3E-7584**	2	LAMP GP-HEAD & SIGNAL (12-VOLT)	87
	132-5166	2	MIRROR GP-REAR VIEW	
			(EACH INCLUDES)	
	148-2371	1	CLAMP (TOP)	
	148-2372	1	CLAMP (BOTTOM)	
	175-4239	2	BRACKET AS	
B	**238-7676**	1	BRACKET AS	
	258-4134	1	FUSE AS (ROADING)	
	328-2334	1	HARNESS AS-REAR LIGHTING	
	186-3735	7	PIN-CONNECTOR (16-GA TO 18-GA)	
	9W-0852	1	PIN-CONNECTOR (14-GA TO 16-GA)	
	155-2265	1	KIT-CONNECTING PLUG (8-PIN)	
	155-2274	2	KIT-CONNECTING PLUG (6-PIN)	
			(EACH PLUG KIT INCLUDES PLUG AS, WEDGE & INTERFACE SEAL)	
	8T-8737	5	PLUG-SEAL	
	102-8806	1	KIT-RECEPTACLE (8-PIN)	
			(INCLUDES RECEPTACLE AS & WEDGE)	
	186-3736	14	SOCKET-CONNECTOR (16-GA TO 18-GA)	
	9W-0844	1	SOCKET-CONNECTOR (14-GA TO 16-GA)	
	3S-2093	1	STRAP-CABLE	
E	**125-7874**		TUBE-HEAT SHRINK (5.72-MM DIA) (30-CM)	
	146-9439	1	RELAY AS (12-VOLT) (ROADING LIGHTING)	
	142-9329	1	SWITCH AS-ROCKER (ROADING LIGHTS)	
	111-7899	1	GASKET	
M	**5C-9553**	4	BOLT (M6X1X16-MM)	
BM	**7X-0818**	1	BOLT (M8X1.25X45-MM)	
BM	**8T-4178**	2	BOLT (M10X1.5X90-MM)	
BM	**8T-6685**	4	BOLT (M10X1.5X110-MM)	
BM	**8T-7547**	1	BOLT (M8X1.25X30-MM)	
M	**8T-4201**	1	BOLT-LOCKING (M10X1.5X20-MM)	
	4P-7581	1	CLIP	
	8T-1887	2	CLIP (SLOT)	
	8T-1888	2	CLIP (TAB)	
M	**8T-4133**	2	NUT (M10X1.5-THD)	
B	**238-7637**	2	PLATE	
B	**238-7675**	2	PLATE	
	8W-8909	2	SLEEVE	
	3S-2093	18	STRAP-CABLE	
	206-1346	2	STRAP-CABLE	
	8T-4121	4	WASHER-HARD (11X21X2.5-MM THK)	
	8T-4205	4	WASHER-HARD (7.2X14.5X2-MM THK)	

B-USE AS REQUIRED
E-ORDER BY THE CENTIMETER
M-METRIC PART
Y-SEPARATE ILLUSTRATION

<END>

188-0147 LIFTING GP-MACHINE–4-POINT

S/N: SRS1-UP
PART OF 326-5280, 326-5281, 326-5282, 326-5284, 356-1902 CONVERSION
AR-MACHINE
AN ATTACHMENT

SMCS-1122, 6459, 7000 **i02571185**

NOTE	REF NO	GRAPHIC REF	PART NUMBER	QTY	PART NAME 1 2 3 4 5 6 (PRODUCT LEVEL)	SEE PAGE
	1	1	**7E-2700**	4	FILM-INFORMATION (LIFT EYE LOCATION)	
	2	1	**142-8826**	4	PLATE-LIFT	
M	3	1	**159-2953**	8	SCREW-FLAT HEAD (M16X2-THD)	
	4	1	**8T-4122**	4	WASHER-HARD (17X32X3.5-MM THK)	
M	5	1	**8T-4132**	4	NUT (M16X2-THD)	

M-METRIC PART

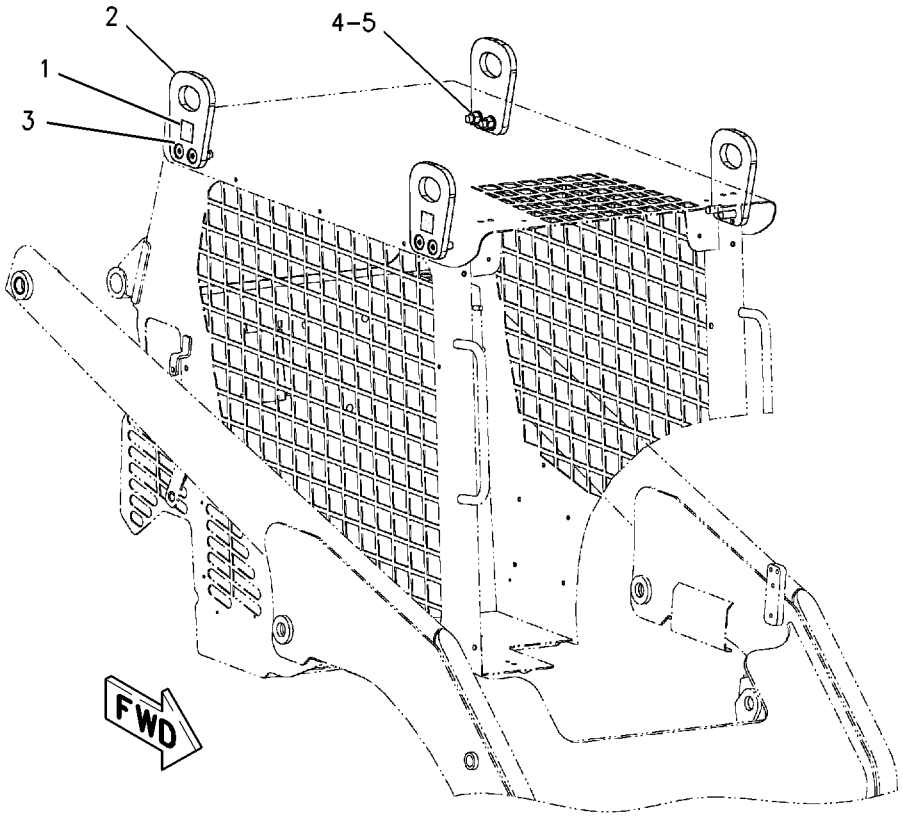

GRAPHIC #1 **<END>** g00902178

218-5969 LIFTING GP-MACHINE—SINGLE POINT

S/N: SRS1-UP

CANNOT BE USED WITH 188-0147—PAGE 186

AN ATTACHMENT

SMCS-1122, 6459, 7000 **i03973390**

NOTE	REF NO	GRAPHIC REF	PART NUMBER	QTY	PART NAME 1 2 3 4 5 6 (PRODUCT LEVEL)	SEE PAGE
	1	1	**5P-0372**	2	LOCK PIN	
	2	1	**7E-2700**	2	FILM-INFORMATION (LIFT EYE LOCATION)	
	3	1	**9C-5344**	1	SPACER (10.5X20X18-MM THK)	
	4	1	**095-1325**	1	PIN-CLEVIS	
	5	1	**152-1154**	1	BRACKET AS-LIFT	
	6	1	**152-1156**	4	PLATE	
	7	1	**153-2683**	1	SPRING AS-GAS (CAB)	
	8	1	**177-3405**	1	PIN	
M	9	1	**159-2953**	8	SCREW-FLAT HEAD (M16X2-THD)	
	10	1	**8T-4122**	4	WASHER-HARD (17X32X3.5-MM THK)	
M	11	1	**8T-4132**	4	NUT (M16X2-THD)	

M-METRIC PART

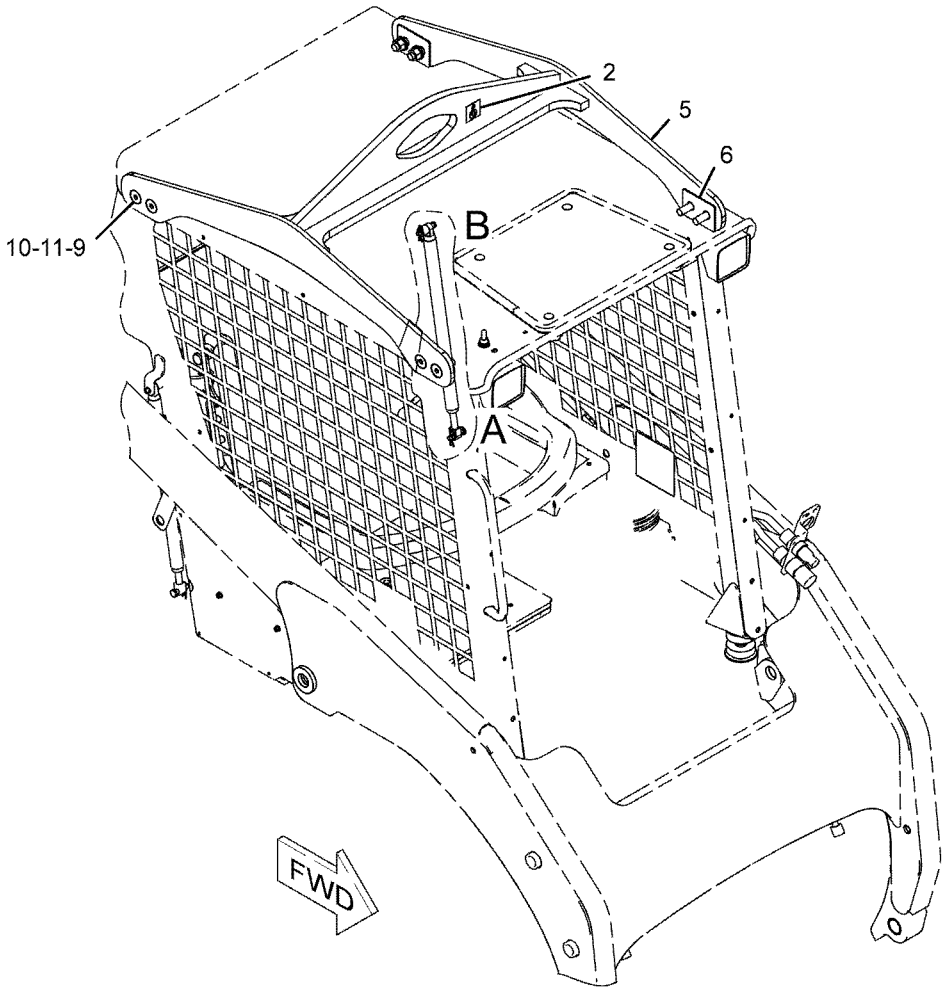

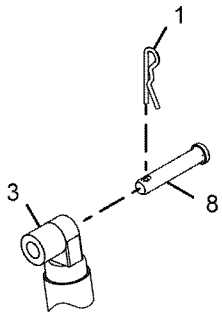

VIEW OF AREA B

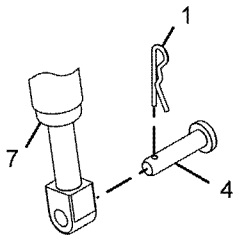

VIEW OF AREA A

GRAPHIC #1 **<END>** g01033956

238-7671 MIRROR & MTG GP-REAR VIEW–
WITH ROADING LIGHT MOUNT
S/N: SRS1-UP
PART OF 326-5282, 326-5284, 356-1902 CONVERSION AR-MACHINE
AN ATTACHMENT

SMCS-7319 **i03971217**

NOTE	REF NO	GRAPHIC REF	PART NUMBER	QTY	PART NAME 1 2 3 4 5 6 (PRODUCT LEVEL)	SEE PAGE
	1	1	**132-5166**	2	MIRROR GP-REAR VIEW	
					(EACH INCLUDES)	
		1	**148-2371**	1	CLAMP (TOP)	
		1	**148-2372**	1	CLAMP (BOTTOM)	
	2	1	**175-4237**	1	BLOCK AS	
	3	1	**175-4239**	2	BRACKET AS	
	4	1	**238-7675**	2	PLATE	
M	5	1	**5C-9553**	4	BOLT (M6X1X16-MM)	
	6	1	**8T-4121**	4	WASHER-HARD (11X21X2.5-MM THK)	
M	7	1	**8T-4133**	2	NUT (M10X1.5-THD)	
M	8	1	**8T-4178**	2	BOLT (M10X1.5X90-MM)	
	9	1	**8T-4205**	4	WASHER-HARD (7.2X14.5X2-MM THK)	

M-METRIC PART

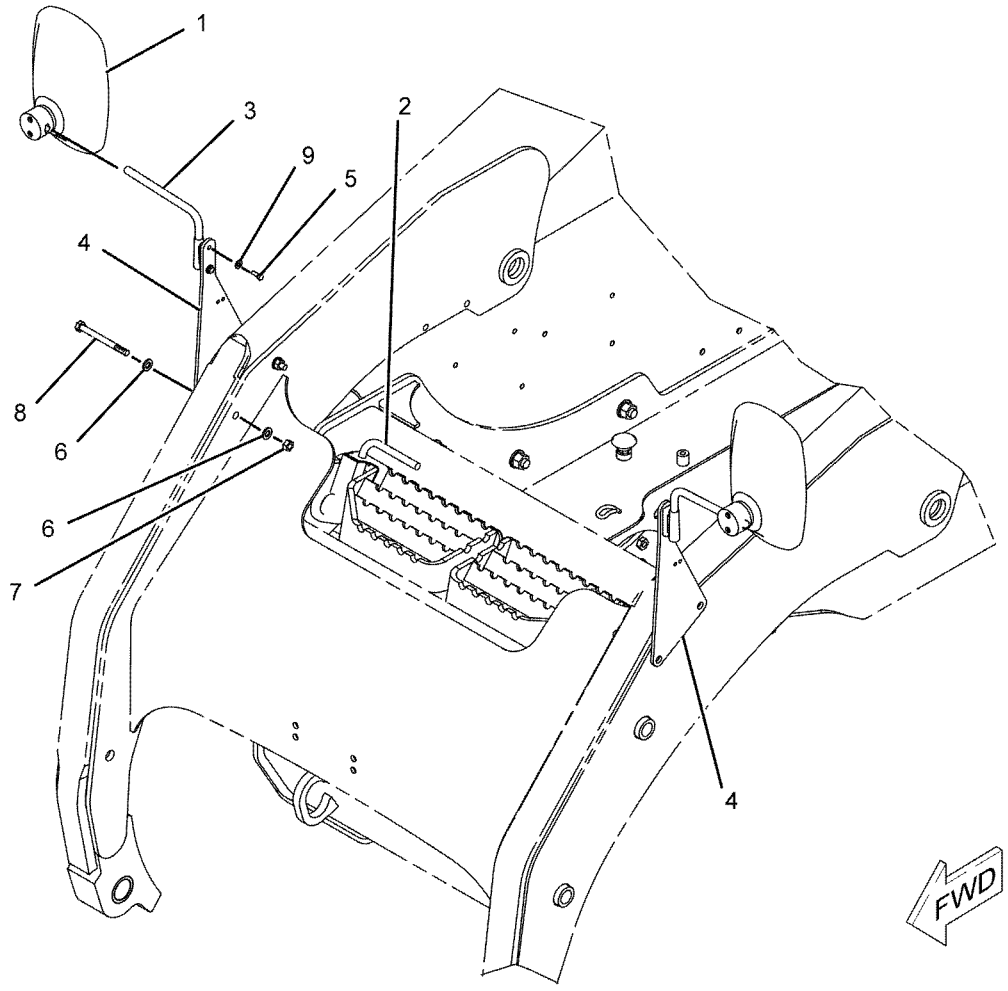

GRAPHIC #1 **<END>** g01017865

173-3021 MOUNTING GP-REGISTRATION–

WITH WIRING & LIGHTS

S/N: SRS1-UP

PART OF 225-7963 MOUNTING GP-REGISTRATION

AN ATTACHMENT

SMCS-1408, 1429, 7050 **i04358202**

NOTE	REF NO	GRAPHIC REF	PART NUMBER	QTY	PART NAME 1 2 3 4 5 6 (PRODUCT LEVEL)	SEE PAGE
	1	1	**175-4236**	1	PLATE	
	2	1	**190-8962**	1	LAMP GP-REGISTRATION PLATE	
		1	**195-9712**	1	LAMP (12-VOLT, 10-WATT) (REGISTRATION PLATE)	
	3	1	**204-1365**	1	PLATE	
	4	1	**207-9780**	1	BRACKET AS (REGISTRATION PLATE)	
	5	1	**215-4001**	1	PLATE	
	6	1	**4B-4863**	2	WASHER (4.7X11X1.2-MM THK)	
M	7	1	**5C-8312**	2	NUT (M4X0.7-THD)	
M	8	1	**6V-9672**	2	SCREW-MACHINE (M4X0.7X16-MM)	
M	9	1	**8T-4171**	3	BOLT (M6X1X12-MM)	
	10	1	**8T-4205**	3	WASHER-HARD (7.2X14.5X2-MM THK)	

M-METRIC PART

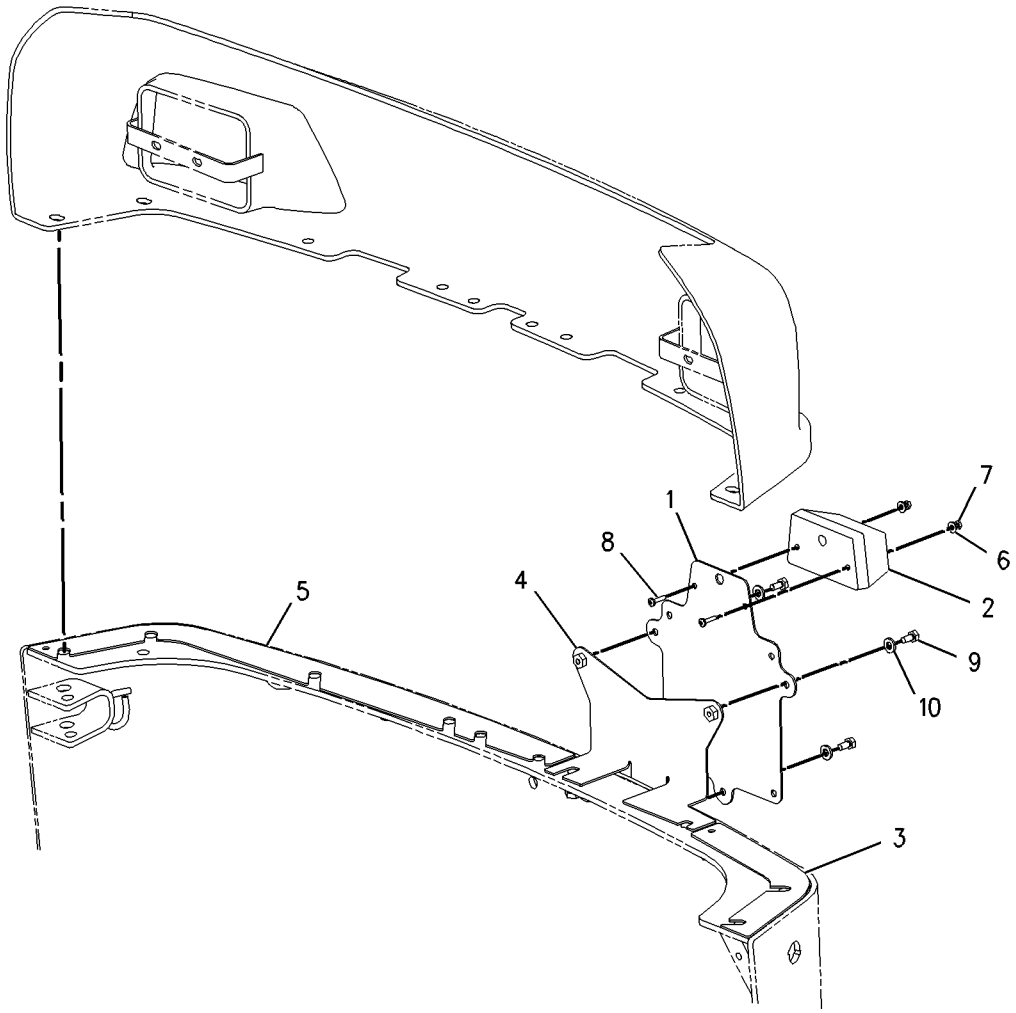

GRAPHIC #1 **<END>** g00874745

225-7963 MOUNTING GP-REGISTRATION

S/N: SRS1-UP
PART OF 326-5282 CONVERSION AR-MACHINE
AN ATTACHMENT

SMCS-1408, 1429, 7050 **i03613860**

NOTE	REF NO	GRAPHIC REF	PART NUMBER	QTY	PART NAME 1 2 3 4 5 6 (PRODUCT LEVEL)	SEE PAGE
Y	1	1	*173-3021*	1	MOUNTING GP-REGISTRATION (WITH WIRING, LIGHTS)	189
	2	1	**186-0239**	1	HARNESS AS-REAR LIGHTING (RIGHT SIDE, LICENSE PLATE) (INDICATOR)	
		1	**9X-3401**	4	PIN-CONNECTOR (16-GA TO 18-GA)	
		1	**126-1767**	4	PIN-CONNECTOR (14-GA TO 16-GA)	
		1	**180-9340**	4	SOCKET-CONNECTOR (14-GA TO 18-GA)	
		1	**5P-4571**	2	TERMINAL-BLADE (14-GA TO 16-GA)	
E		1	**125-7874**		TUBE-HEAT SHRINK (5.72-MM DIA) (10-CM)	
		1	**102-8804**	1	KIT-RECEPTACLE (4-PIN)	
					(INCLUDES RECEPTACLE AS & WEDGE)	
		1	**155-2271**	1	KIT-CONNECTING PLUG (4-PIN)	
					(INCLUDES PLUG AS, WEDGE & INTERFACE SEAL)	

E-ORDER BY THE CENTIMETER
Y-SEPARATE ILLUSTRATION

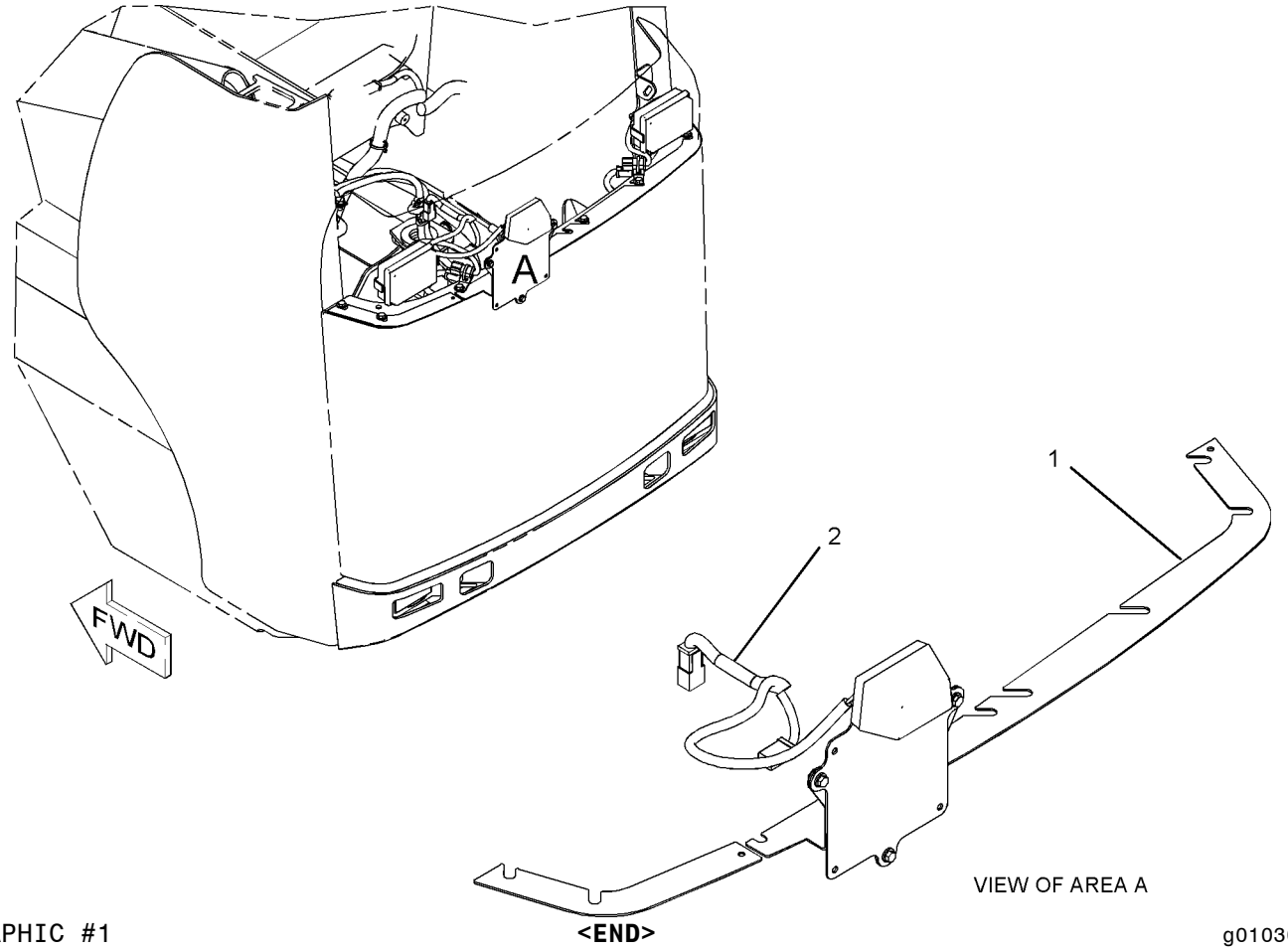

GRAPHIC #1

<END>

g01030726

326-5390 SUPPRESSION GP-SOUND

S/N: SRS1-UP
PART OF 326-5280, 326-5281, 326-5282, 326-5284, 356-1902 CONVERSION
AR-MACHINE
AN ATTACHMENT

SMCS-1801, 7076 **i03983734**

NOTE	REF NO	GRAPHIC REF	PART NUMBER	QTY	PART NAME 1 2 3 4 5 6 (PRODUCT LEVEL)	SEE PAGE
	1	1	**176-4079**	2	INSULATION	
	2	1	**326-5392**	1	INSULATION	
	3	1	**326-5393**	1	INSULATION	
	4	1	**326-5397**	1	INSULATION	
	5	1	**236-5088**	2	INSULATION	

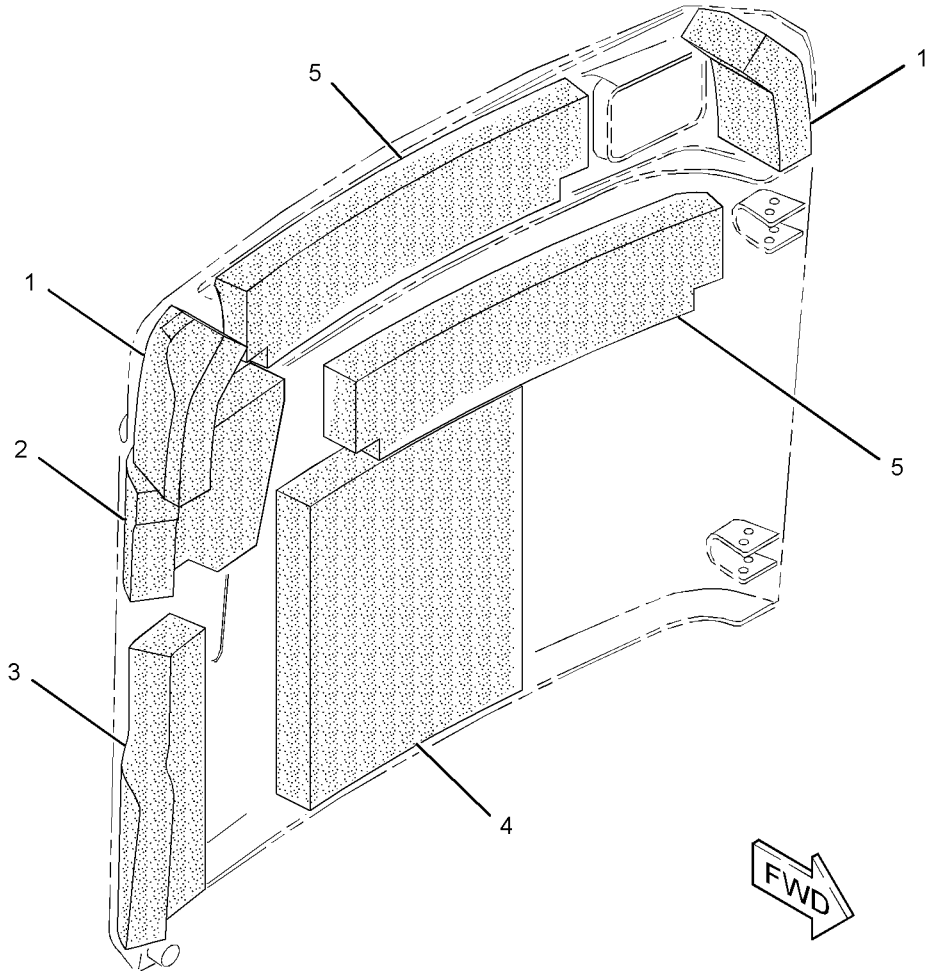

GRAPHIC #1 **<END>** g02173356

374-6497 SUPPRESSION GP-SOUND

S/N: SRS1-UP
PART OF 326-5280, 326-5281, 326-5282, 326-5284, 356-1902 CONVERSION
AR-MACHINE
AN ATTACHMENT

SMCS-1801, 7076 **i04295309**

NOTE	REF NO	GRAPHIC REF	PART NUMBER	QTY	PART NAME 1 2 3 4 5 6 (PRODUCT LEVEL)	SEE PAGE
	1	1	**176-4079**	2	INSULATION	
	2	1	**236-5088**	1	INSULATION	
	3	1	**261-6379**	2	INSULATION	

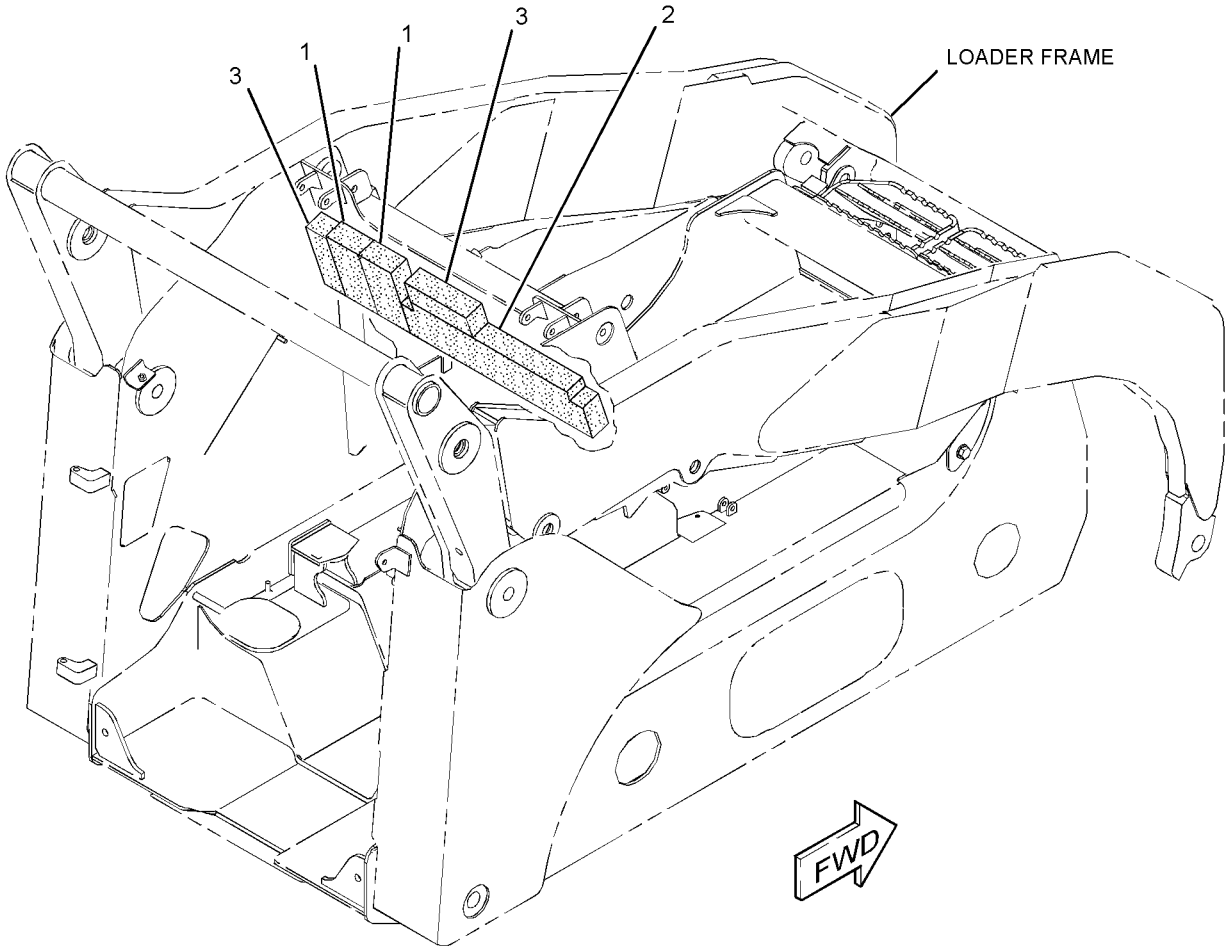

GRAPHIC #1 **<END>** g02478120

193-0447 ACCUMULATOR & MTG GP-HYDRAULIC

S/N: SRS1-UP

PART OF 326-5730 HYDRAULIC AR

SMCS-5077 **i03587742**

NOTE	REF NO	GRAPHIC REF	PART NUMBER	QTY	PART NAME 1 2 3 4 5 6 (PRODUCT LEVEL)	SEE PAGE
Y	1	1	*149-0686*	1	ACCUMULATOR GP-HYDRAULIC (CHARGED)	194
	2	1	*194-7632*	1	ELBOW AS	
		1	**3K-0360**	1	SEAL-O-RING	
		1	**194-7631**	1	ELBOW	
	3	1	**3K-0360**	1	SEAL-O-RING	

Y-SEPARATE ILLUSTRATION

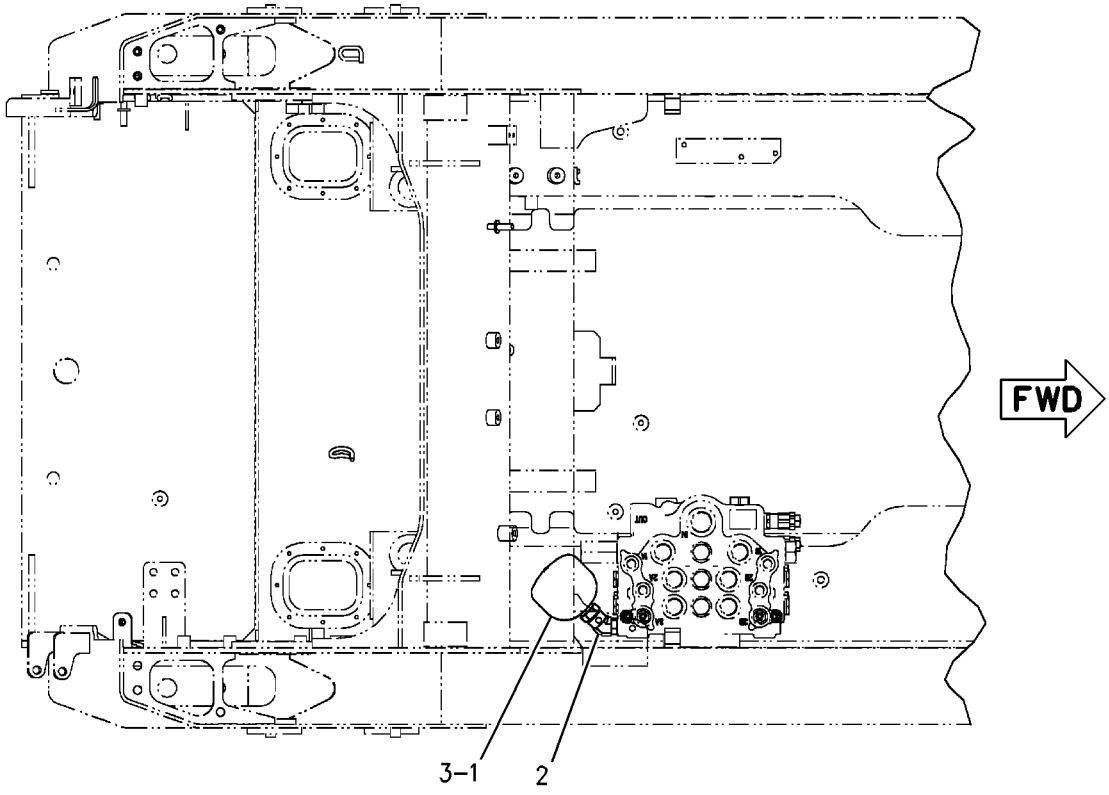

TOP VIEW

GRAPHIC #1 **<END>** g00902240

HYDRAULIC SYSTEM

149-0686 ACCUMULATOR GP-HYDRAULIC—CHARGED

S/N: SRS1-UP

PART OF 193-0447 ACCUMULATOR & MTG GP-HYDRAULIC

FIELD REPLACEMENT ORDER 227-8807—PAGE 195

SMCS-5077 **i03971211**

NOTE	REF NO	GRAPHIC REF	PART NUMBER	QTY	PART NAME 1 2 3 4 5 6 (PRODUCT LEVEL)	SEE PAGE
					(NO SERVICED PARTS)	

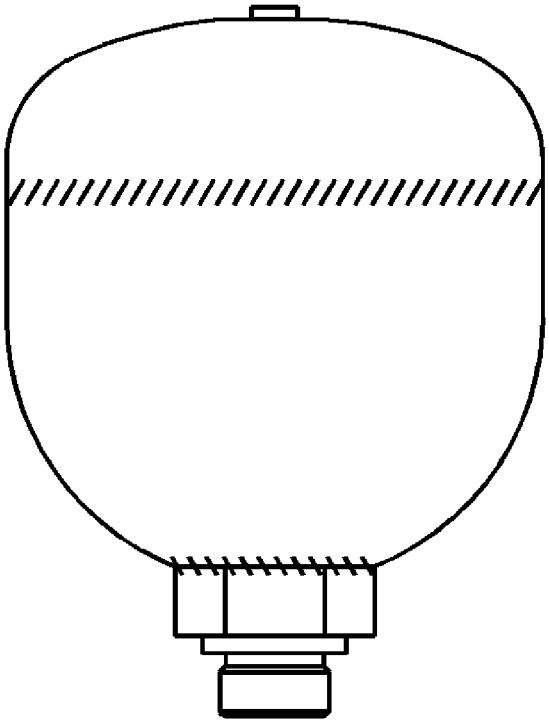

GRAPHIC #1 **<END>** g02162624

HYDRAULIC SYSTEM

227-8807 ACCUMULATOR GP-HYDRAULIC—UNCHARGED

S/N: SRS1-UP

FIELD REPLACEMENT FOR 149-0686—PAGE 194

SMCS-5077 **i03971213**

NOTE	REF NO	GRAPHIC REF	PART NUMBER	QTY	PART NAME 1 2 3 4 5 6 (PRODUCT LEVEL)	SEE PAGE
					(NO SERVICED PARTS)	

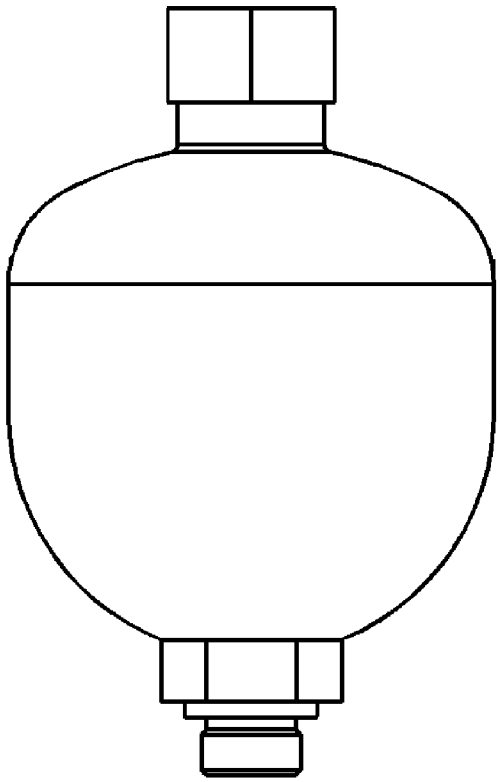

GRAPHIC #1 **<END>** g02162620

HYDRAULIC SYSTEM

179-7001 ADAPTER GP-OIL LINE

S/N: SRS1-UP

PART OF 326-5734 LINES GP-PILOT

SMCS-5057 **i01836385**

NOTE	REF NO	GRAPHIC REF	PART NUMBER	QTY	PART NAME 1 2 3 4 5 6 (PRODUCT LEVEL)	SEE PAGE
	1	1	**179-7002**	1	ADAPTER AS	
	2	1	**214-7568**	1	SEAL-O-RING	

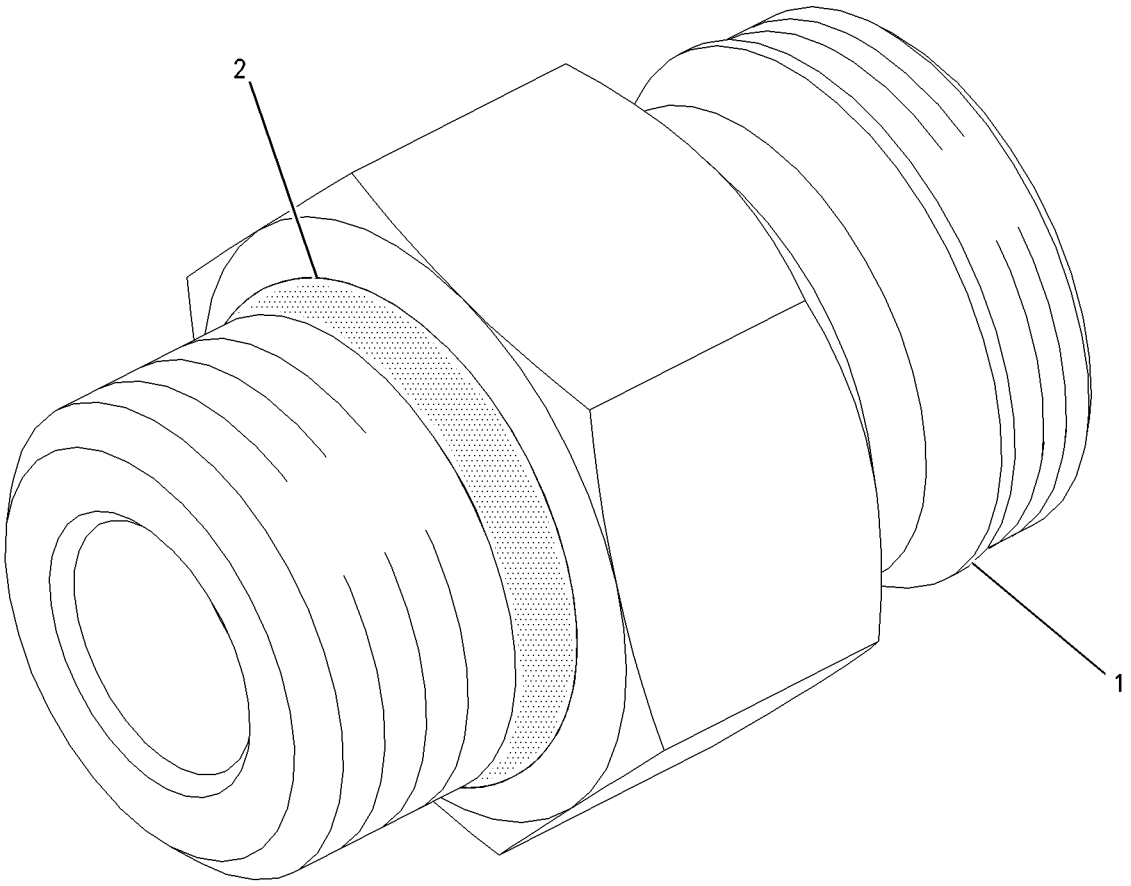

GRAPHIC #1 **<END>** g00938522

230-5406 CYLINDER & MTG GP-ANGLE BLADE

S/N: SRS1-UP
PART OF 177-1989, 177-1990 BLADE AR
AN ATTACHMENT

SMCS-6701 **i01860855**

NOTE	REF NO	GRAPHIC REF	PART NUMBER	QTY	PART NAME 1 2 3 4 5 6 (PRODUCT LEVEL)	SEE PAGE
	1	1	**064-3843**	1	RING-SNAP	
	2	1	**210-0855**	1	PIN AS	
	3	1	**213-3943**	1	BUSHING	
Y	4	1	**225-9521**	1	CYLINDER GP-HYDRAULIC (ANGLE BLADE)	206
	5	1	**3B-8489**	1	FITTING-GREASE	
	6	1	**7X-7729**	1	WASHER (11X25X3-MM THK)	
M	7	1	**8T-4137**	1	BOLT (M10X1.5X20-MM)	

M-METRIC PART
Y-SEPARATE ILLUSTRATION

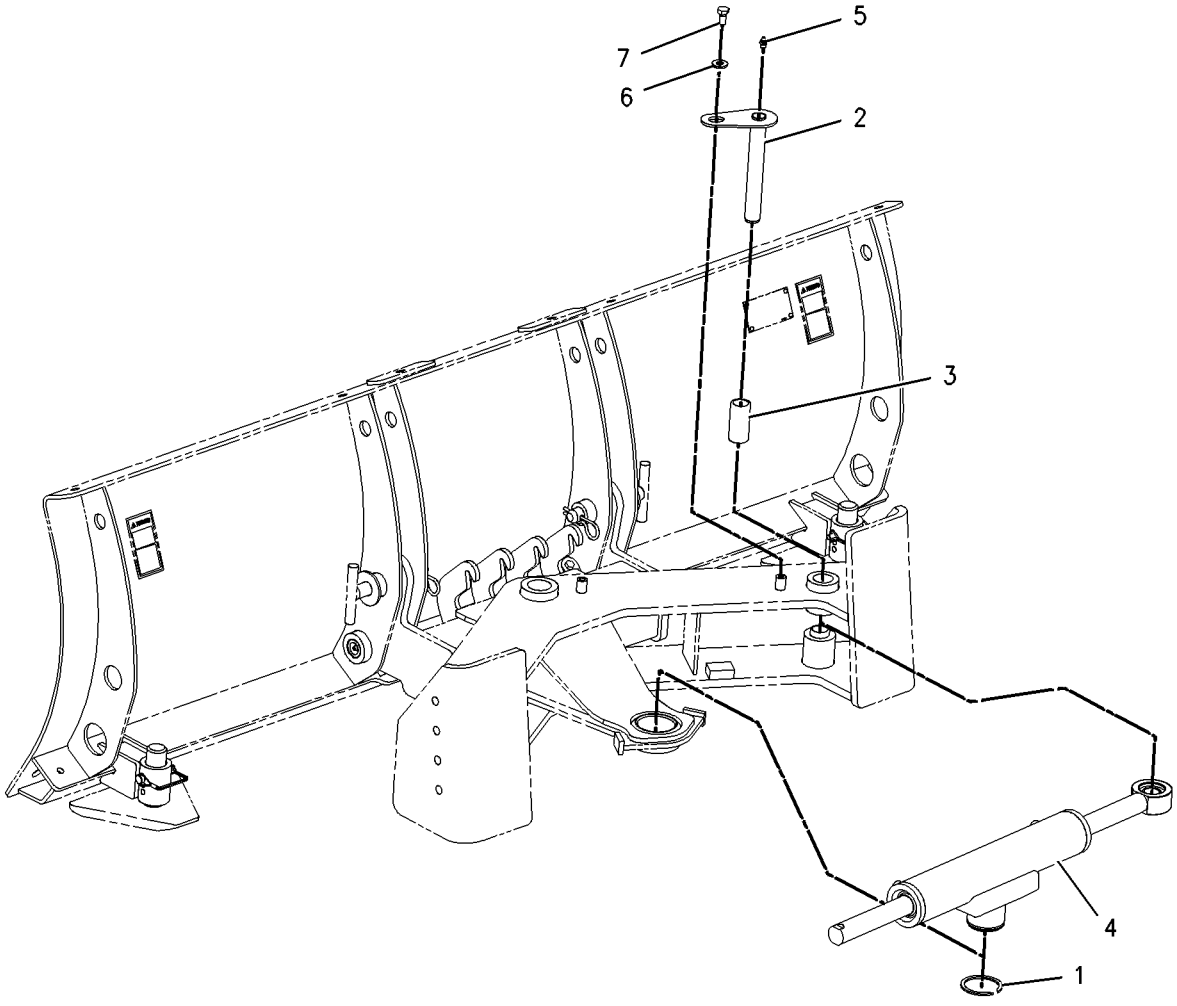

GRAPHIC #1 **<END>** g00978845

HYDRAULIC SYSTEM

231-5274 CYLINDER & MTG GP-ANGLE BLADE

S/N: SRS1-UP
PART OF 231-5275, 231-5277 BLADE AR
AN ATTACHMENT

SMCS-6701 **i04358472**

NOTE	REF NO	GRAPHIC REF	PART NUMBER	QTY	PART NAME 1 2 3 4 5 6 (PRODUCT LEVEL)	SEE PAGE
CY	1	1	**274-9930**	2	CYLINDER GP-HYDRAULIC (ANGLE BLADE)	207
CY	2	1	**274-9931**	1	CYLINDER GP-HYDRAULIC (TILT)	208
	3	1	**231-5266**	6	PIN AS	
	4	1	**238-0999**	12	SPACER (25.4X28.4X13-MM THK)	
M	5	1	**8T-4200**	6	BOLT (M8X1.25X16-MM)	
	6	1	**6V-8397**	6	SEAL-O-RING	
	7	1	**8T-4224**	6	WASHER-HARD (8.8X16X2-MM THK)	
	8	1	**244-1370**	6	SPACER (8.2X13X6-MM THK)	

C-CHANGE FROM PREVIOUS TYPE
M-METRIC PART
Y-SEPARATE ILLUSTRATION

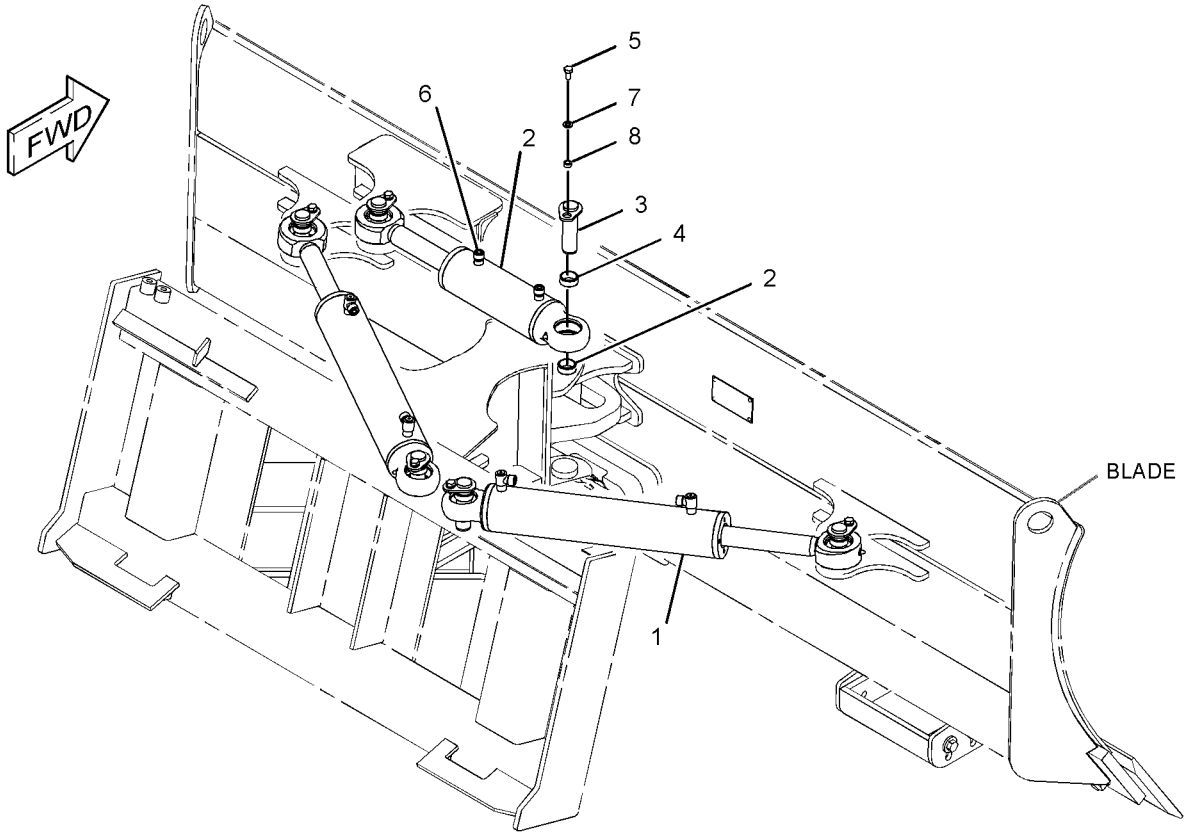

GRAPHIC #1 **<END>** g01270108

326-5499 CYLINDER & MTG GP-LIFT ARM

S/N: SRS1-UP

PART OF 326-5410 CHASSIS AR

SMCS-5102, 5104, 6118, 6119 **i04059710**

NOTE	REF NO	GRAPHIC REF	PART NUMBER	QTY	PART NAME 1 2 3 4 5 6 (PRODUCT LEVEL)	SEE PAGE
B	1	1	**119-4594**	10	WASHER (41X64X1-MM THK)	
	2	1	**142-8791**	2	PIN AS	
	3	1	**142-8793**	2	PIN	
	4	1	**142-8832**	2	PIN AS	
	5	1	**190-7967**	2	SPACER (38.35X48.35X23.5-MM THK)	
	6	1	**190-7979**	2	BOLT (M8X1.25X80-MM)	
	7	1	**190-8038**	2	PIN AS	
	8	1	**191-9588**	2	PIN AS	
	9	1	**191-9589**	1	SUPPORT AS	
	10	1	**191-9636**	2	PIN	
	11	1	**191-9637**	2	PIN AS	
	12	1	**191-9638**	2	PIN AS	
	13	1	**360-9539**	2	LINK AS	
					(EACH INCLUDES)	
	13A	1	**191-9633**	2	BUSHING	
	14	1	**326-5388**	2	PIN AS	
Y	15	1	**329-4953**	1	CYLINDER GP-TILT (RH)	211
Y	16	1	**329-4954**	1	CYLINDER GP-TILT (LH)	213
Y	17	1	**329-4955**	2	CYLINDER GP-LIFT	210
	18	1	**190-7971**	2	WASHER-HARD (11X64X6-MM THK)	
	19	1	**2K-5964**	2	RING-RETAINING	
	20	1	**3B-8488**	2	FITTING-GREASE	
	21	1	**3B-8489**	10	FITTING-GREASE	
	22	1	**4M-5285**	4	RING-RETAINING (EXTERNAL)	
	23	1	**5B-0651**	2	FITTING-STRAIGHT	
	24	1	**7X-0515**	2	WASHER-HARD (17X35X5-MM THK)	
	25	1	**7X-0595**	2	WASHER-HARD (17X30X8-MM THK)	
	26	1	**7X-7729**	12	WASHER (11X25X3-MM THK)	
M	27	1	**8T-4186**	2	BOLT (M10X1.5X40-MM)	
M	28	1	**8T-4191**	12	BOLT (M10X1.5X16-MM)	
	29	1	**8T-4224**	2	WASHER-HARD (8.8X16X2-MM THK)	

B-USE AS REQUIRED
M-METRIC PART
Y-SEPARATE ILLUSTRATION

326-5499 **CYLINDER & MTG GP-LIFT ARM** *(contd.)* **i04059710**

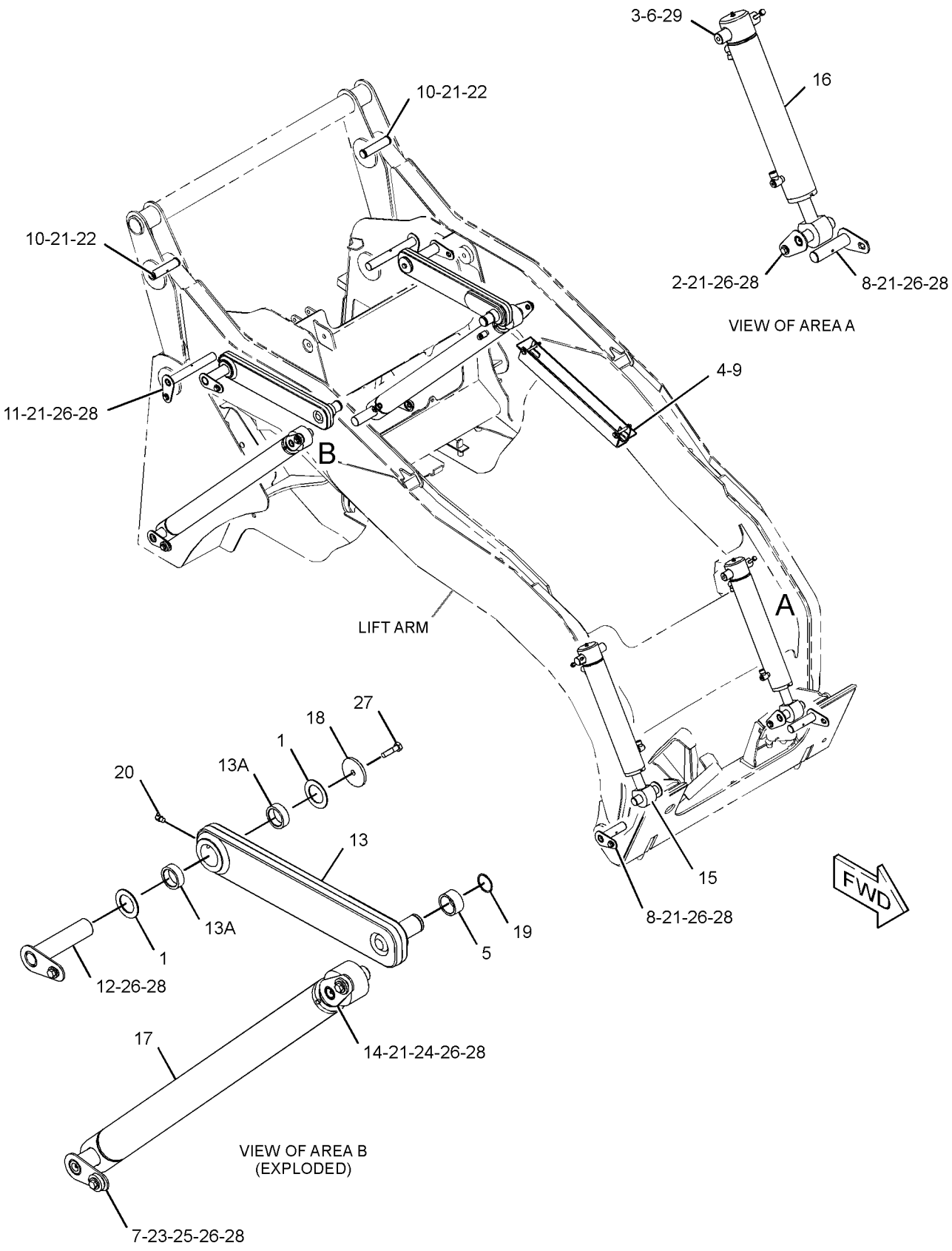

GRAPHIC #1 **<END>** g02472576

154-5018 CYLINDER GP-BUCKET

S/N: SRS1-UP
60-MM (2.4-IN) BORE X 200-MM (7.9-IN) STROKE
PART OF 279-5382 BUCKET AR-MULTIPURPOSE
AN ATTACHMENT

SMCS-5498 **i04038460**

NOTE	REF NO	GRAPHIC REF	PART NUMBER	QTY	PART NAME 1 2 3 4 5 6 (PRODUCT LEVEL)	SEE PAGE
	1	1	**3B-8489**	1	FITTING-GREASE	
					AVAILABLE REPAIR KIT(S):	
			164-3213	1	KIT-SEAL	
					(INCLUDES O-RINGS, SEAL, BACKUP RING, PISTON GUIDE RINGS, SET SCREW,PISTON SEAL & WIPER RING)	

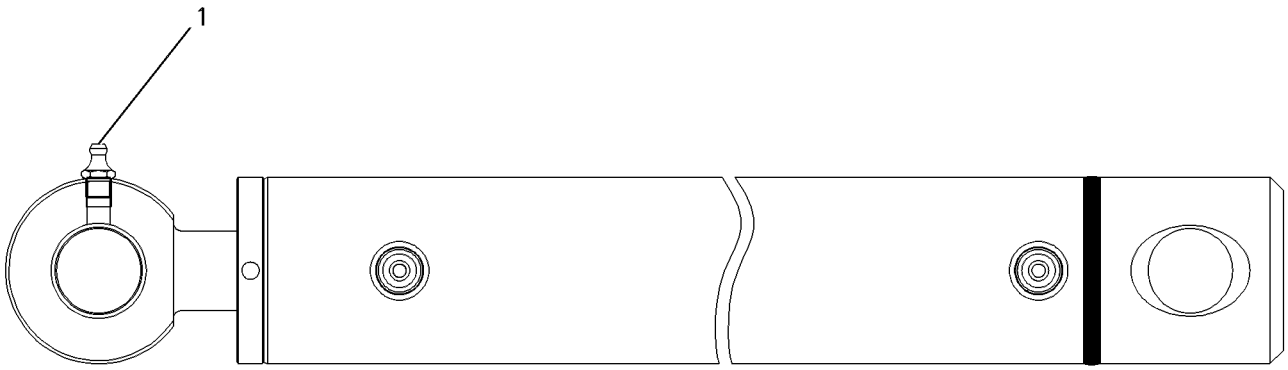

GRAPHIC #1 **<END>** g00564347

HYDRAULIC SYSTEM

293-6264 CYLINDER GP-BUCKET

S/N: SRS1-UP
50-MM (2-IN) BORE X 225-MM (8.9-IN) STROKE
PART OF 286-9300, 286-9301 BUCKET AR-GRAPPLE
AN ATTACHMENT

SMCS-5498 **i04038470**

NOTE	REF NO	GRAPHIC REF	PART NUMBER	QTY	PART NAME 1 2 3 4 5 6 (PRODUCT LEVEL)	SEE PAGE
	1	1	**6B-6682**	1	NUT-FULL (3/4-16-THD)	
	2	1	**3B-8489**	1	FITTING-GREASE	
	3	1	**7J-0204**	2	SEAL-O-RING	
	4	1	**9S-8007**	2	PLUG	
					AVAILABLE REPAIR KIT(S):	
			262-0941	1	KIT-SEAL (BUCKET CYLINDER)	
					(INCLUDES PISTON SEAL, PISTON WEAR RING, ROD O-RING, O-RING, BACKUP RING, DUST RING, WIPER SEAL	
					& ROD SEAL)	

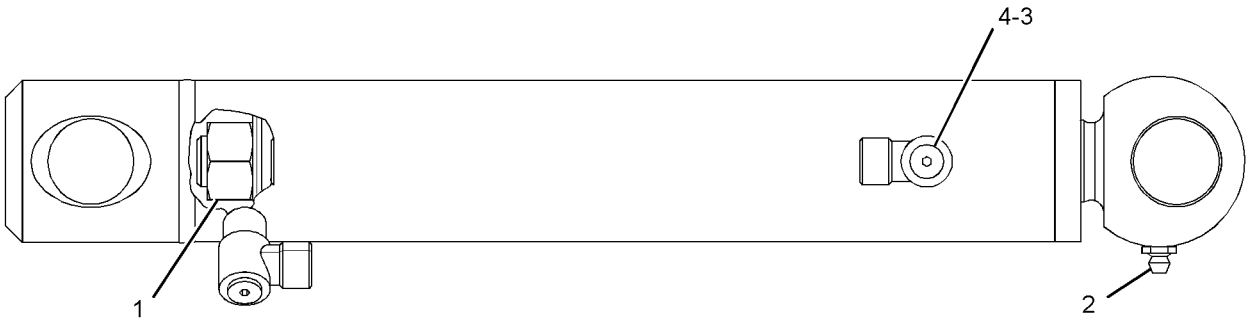

GRAPHIC #1 **<END>** g01373044

255-0943 CYLINDER GP-GRAPPLE–UTILITY

S/N: SRS1-UP
40-MM (1.6-IN) BORE X 200-MM (7.9-IN) STROKE
PART OF 285-6116 GRAPPLE & CYLINDER GP-UTILITY
AN ATTACHMENT

SMCS-5457 **i04362956**

NOTE	REF NO	GRAPHIC REF	PART NUMBER	QTY	PART NAME 1 2 3 4 5 6 (PRODUCT LEVEL)	SEE PAGE
	1	1	**254-9097**	1	BUSHING	
	2	1	**3B-8489**	2	FITTING-GREASE	
	3	1	**7J-0204**	2	SEAL-O-RING	
	4	1	**9S-8007**	2	PLUG	
	5	1	**2K-4821**	1	LOCKNUT (5/8-18-THD)	
					AVAILABLE REPAIR KIT(S):	
			286-3591	1	KIT-SEAL (HYDRAULIC CYLINDER)	
					(INCLUDES SEAL, O-RING SEALS, U-CUP SEAL, WIPER SEAL & BACKUP RING)	

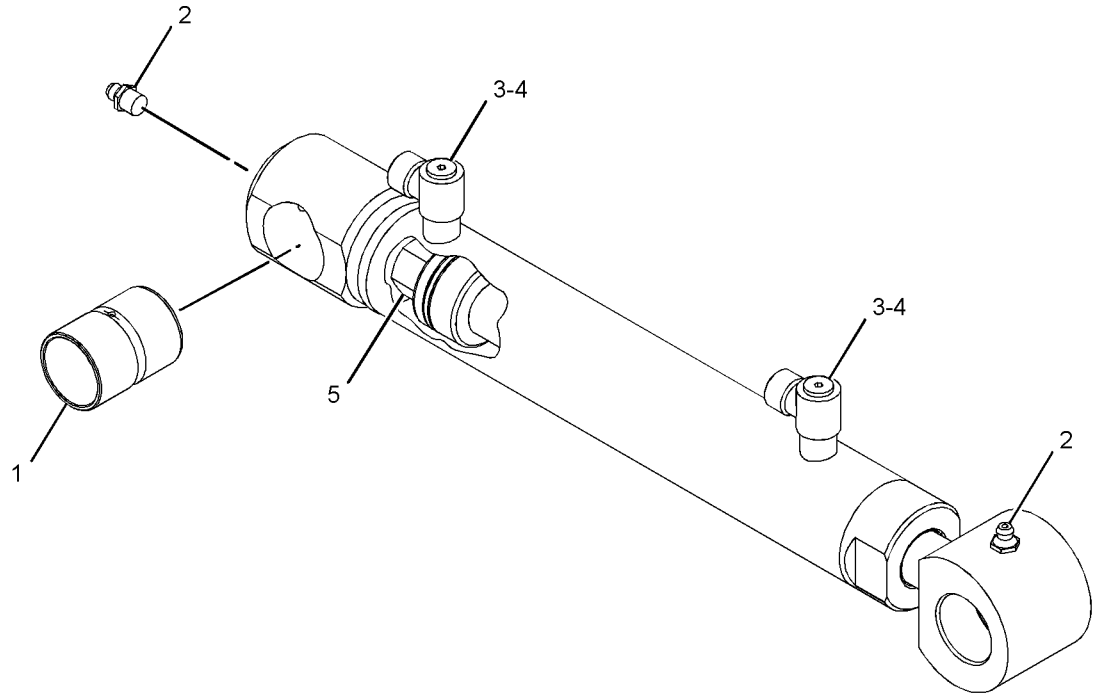

GRAPHIC #1 **<END>** g01439380

278-1975 CYLINDER GP-GRAPPLE–INDUSTRIAL

S/N: SRS1-UP
60-MM (2.4-IN) BORE X 200-MM (7.9-IN) STROKE
PART OF 157-7223, 157-7224, 157-7225, 217-6229 BUCKET AR-GRAPPLE, 279-5350, 279-5360 FORK AR-GRAPPLE
AN ATTACHMENT

SMCS-5457 **i04038469**

NOTE	REF NO	GRAPHIC REF	PART NUMBER	QTY	PART NAME 1 2 3 4 5 6 (PRODUCT LEVEL)	SEE PAGE
	1	1	**7D-8508**	1	NUT-FULL (7/8-14-THD)	
	2	1	**254-9097**	1	BUSHING	
	3	1	**255-0942**	1	BUSHING	
	4	1	**3B-8489**	1	FITTING-GREASE	
	5	1	**7J-0204**	2	SEAL-O-RING	
	6	1	**9S-8007**	2	PLUG	
					AVAILABLE REPAIR KIT(S):	
			278-1970	1	KIT-SEAL (HYDRAULIC CYLINDER)	
					(INCLUDES O-RINGS, WEAR RINGS, BACKUP RING, U-CUP SEAL & SEAL)	

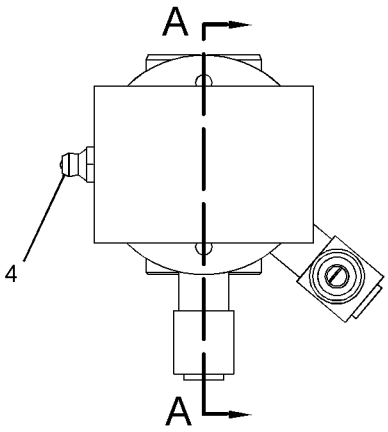

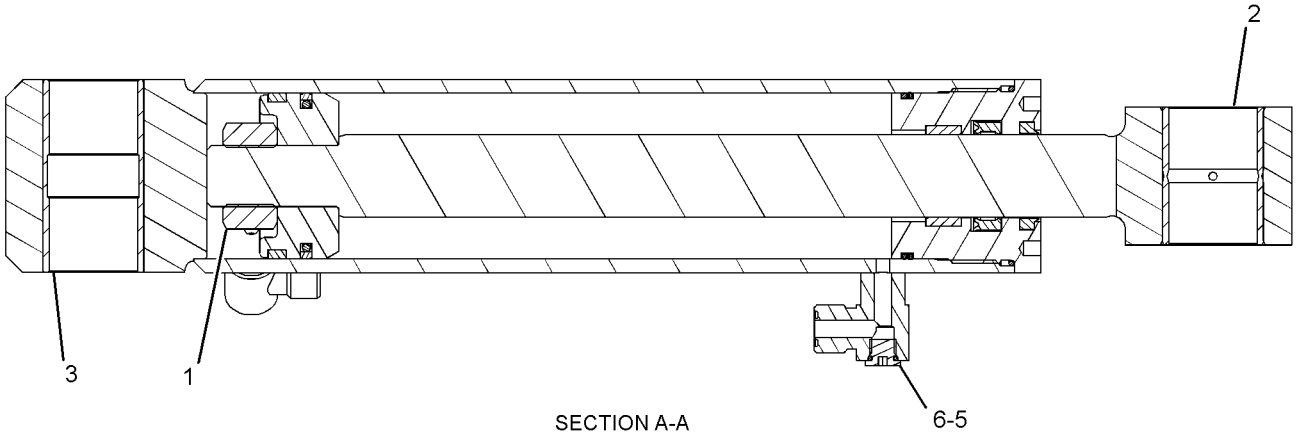

SECTION A-A

GRAPHIC #1 **<END>** g01280909

192-2640 CYLINDER GP-HYDRAULIC–COUPLER

S/N: SRS1-UP
35-MM (1.4-IN) BORE X 103.5-MM (4.1-IN) STROKE
PART OF 215-3962, 215-3963 CYLINDER & LINK GP-COUPLER, 364-1351 KIT-QUICK COUPLER CONVERSION
AN ATTACHMENT

SMCS-5362, 7562 **i03435422**

NOTE	REF NO	GRAPHIC REF	PART NUMBER	QTY	PART NAME 1 2 3 4 5 6 (PRODUCT LEVEL)	SEE PAGE
					(NO SERVICED PARTS)	

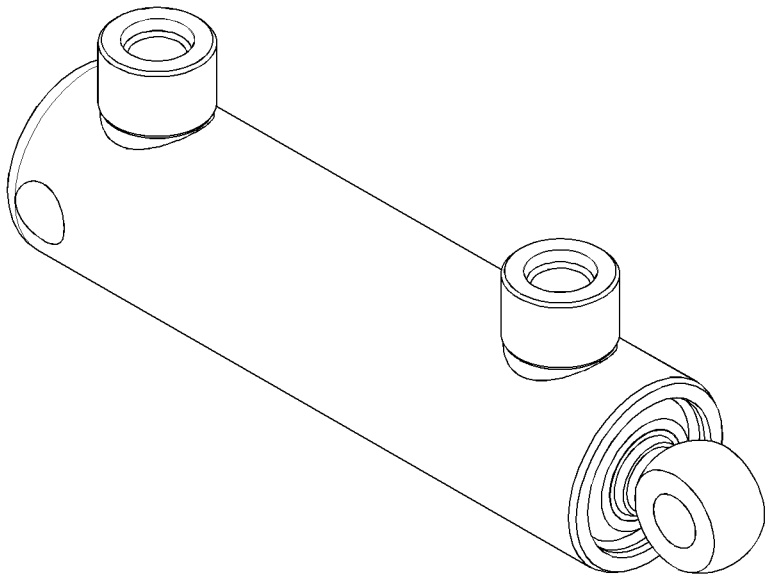

GRAPHIC #1 **<END>** g01787137

225-9521 CYLINDER GP-HYDRAULIC—ANGLE BLADE

S/N: SRS1-UP
63-MM (2.5-IN) BORE X 300-MM (11.8-IN) STROKE
PART OF 230-5406 CYLINDER & MTG GP-ANGLE BLADE
AN ATTACHMENT

SMCS-5362, 7562 **i04038465**

NOTE	REF NO	GRAPHIC REF	PART NUMBER	QTY	PART NAME 1 2 3 4 5 6 (PRODUCT LEVEL)	SEE PAGE
	1	1	**214-5555**	1	ROD END AS	
					AVAILABLE REPAIR KIT(S):	
			177-1958	1	KIT-SEAL	
					(INCLUDES O-RINGS, SEALS, BACKUP RINGS, PISTON SEAL, PISTON GUIDE RING, ROD GUIDE RING & WIPER RINGS)	

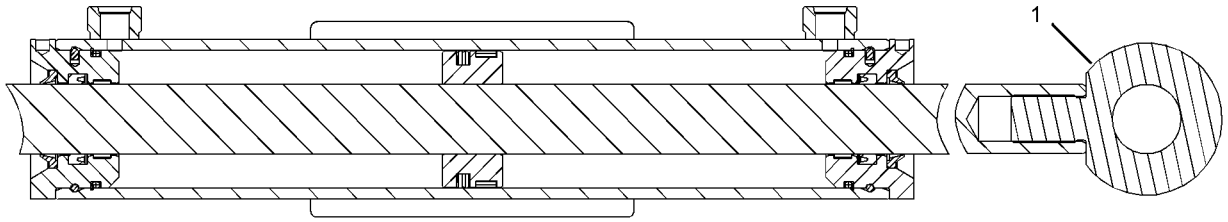

GRAPHIC #1 **<END>** g01282929

274-9930 CYLINDER GP-HYDRAULIC–ANGLE BLADE

S/N: SRS1-UP
70-MM (2.8-IN) BORE X 314-MM (12.4-IN) STROKE
PART OF 231-5274 CYLINDER & MTG GP-ANGLE BLADE
AN ATTACHMENT

SMCS-5362, 7562 **i03590840**

NOTE	REF NO	GRAPHIC REF	PART NUMBER	QTY	PART NAME 1 2 3 4 5 6 (PRODUCT LEVEL)	SEE PAGE
	1	1	**7D-8508**	1	NUT-FULL (7/8-14-THD)	
	2	1	**8Q-6027**	2	BEARING-SPHERICAL	
	3	1	**027-1287**	2	FITTING-GREASE	
	4	1	**278-4524**	1	ROD AS	
	5	1	**278-4875**	2	RING-RETAINING	
	6	1	**7J-0204**	2	SEAL-O-RING	
	7	1	**9S-8007**	2	PLUG	
					AVAILABLE REPAIR KIT(S):	
			266-6140	1	KIT-SEAL (SWING CYLINDER)	
					(INCLUDES SEAL-O-RINGS, WEAR RINGS, BACKUP RING, SEAL-U CUP, SEAL & SETSCREW)	

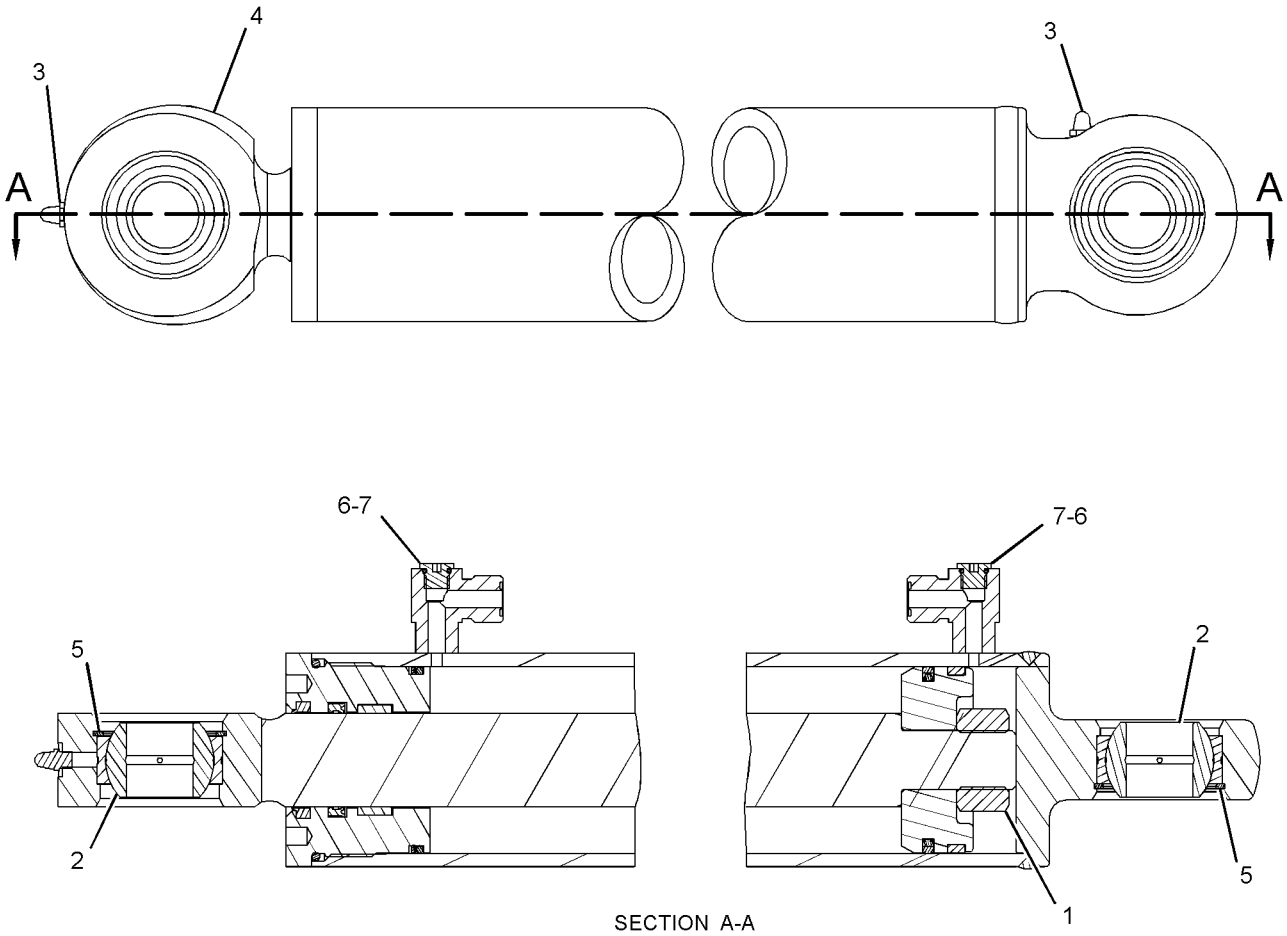

SECTION A-A

GRAPHIC #1 **<END>** g01305293

274-9931 CYLINDER GP-HYDRAULIC–TILT

S/N: SRS1-UP
70-MM (2.8-IN) BORE X 120-MM (4.7-IN) STROKE
PART OF 231-5274 CYLINDER & MTG GP-ANGLE BLADE
AN ATTACHMENT

SMCS-5362, 7562 **i03690346**

NOTE	REF NO	GRAPHIC REF	PART NUMBER	QTY	PART NAME 1 2 3 4 5 6 (PRODUCT LEVEL)	SEE PAGE
	1	1	**7D-8508**	1	NUT-FULL (7/8-14-THD)	
	2	1	**8Q-6027**	2	BEARING-SPHERICAL	
	3	1	**027-1287**	2	FITTING-GREASE	
	4	1	**278-4525**	1	ROD AS	
	5	1	**278-4875**	2	RING-RETAINING	
					AVAILABLE REPAIR KIT(S):	
			266-6140	1	KIT-SEAL (SWING CYLINDER)	
					(INCLUDES SEAL-O-RINGS, WEAR RINGS, BACKUP RING, SEAL-U CUP, SEAL & SETSCREW)	

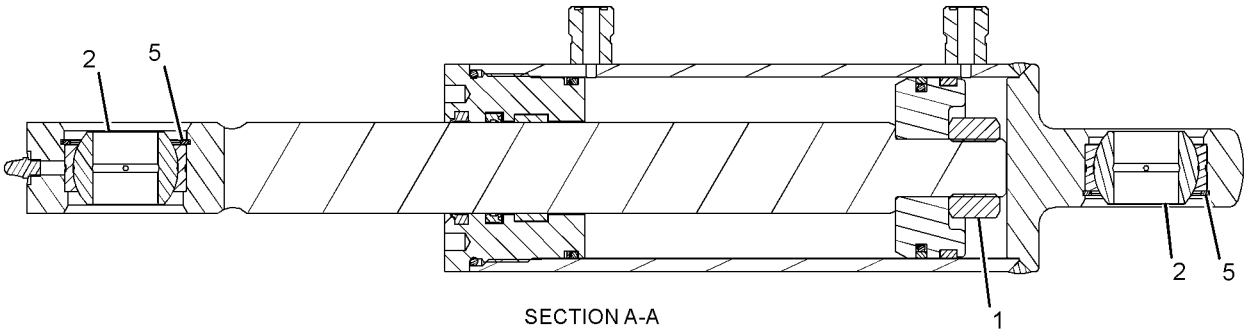

SECTION A-A

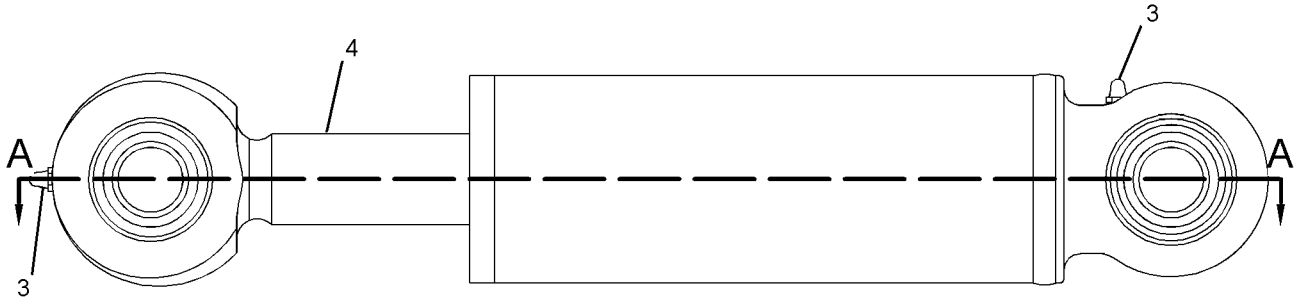

GRAPHIC #1 **<END>** g01270194

278-1969 CYLINDER GP-HYDRAULIC—BUCKET

S/N: SRS1-UP
60-MM (2.4-IN) BORE X 200-MM (7.9-IN) STROKE
PART OF 279-5390, 279-5398, 279-5403, 293-0139 BUCKET AR-MULTIPURPOSE AN ATTACHMENT

SMCS-5362, 7562 **i04038468**

NOTE	REF NO	GRAPHIC REF	PART NUMBER	QTY	PART NAME 1 2 3 4 5 6 (PRODUCT LEVEL)	SEE PAGE
	1	1	**7D-8508**	1	NUT-FULL (7/8-14-THD)	
	2	1	**254-9097**	1	BUSHING	
	3	1	**3B-8489**	1	FITTING-GREASE	
					AVAILABLE REPAIR KIT(S):	
			278-1970	1	KIT-SEAL (HYDRAULIC CYLINDER)	
					(INCLUDES O-RINGS, WEAR RINGS, BACKUP RING, U-CUP SEAL, WIPER SEAL & SEAL)	

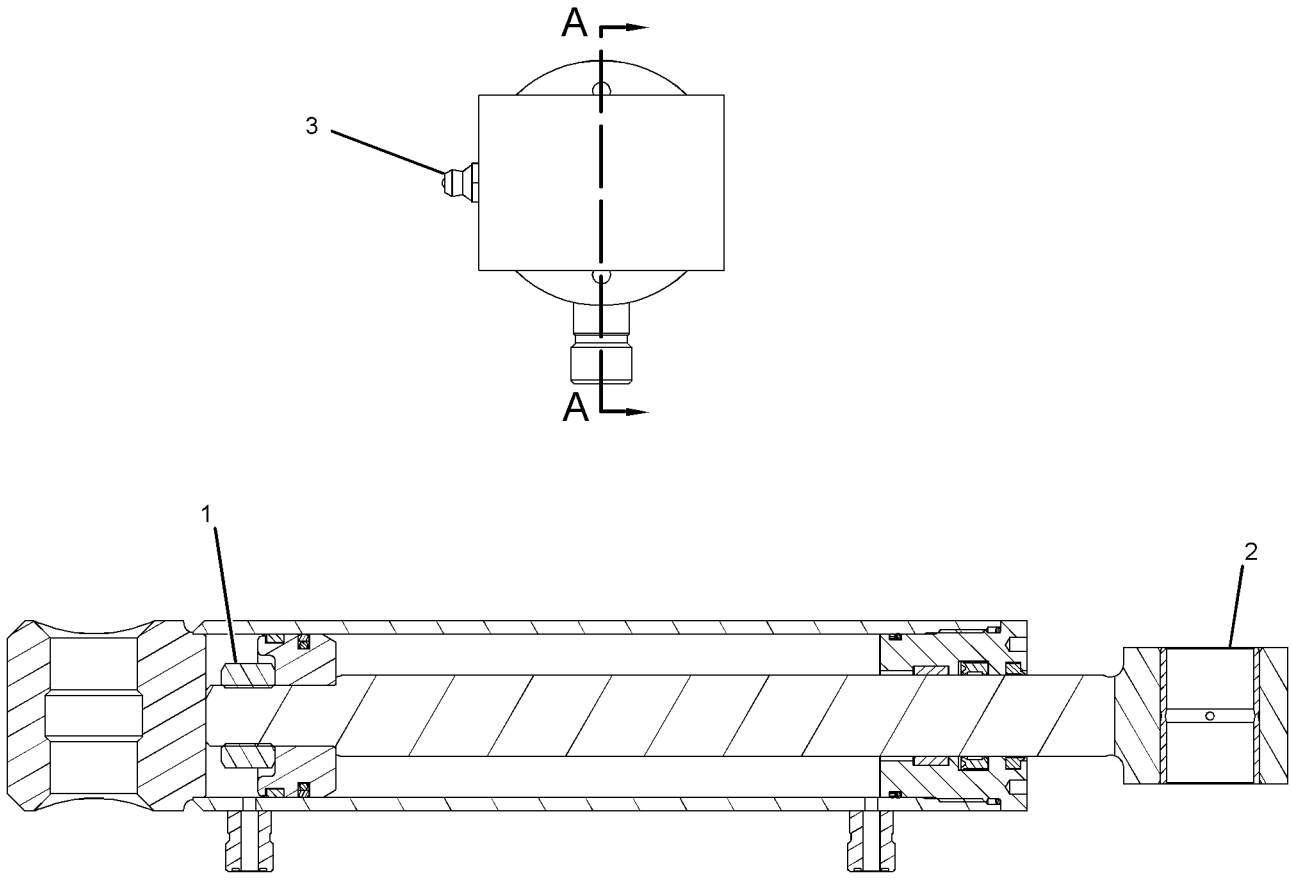

SECTION A-A

GRAPHIC #1 **<END>** g01281180

HYDRAULIC SYSTEM

329-4955 CYLINDER GP-LIFT

S/N: SRS1-UP
65-MM (2.6-IN) BORE X 802-MM (31.6-IN) STROKE
PART OF 326-5499 CYLINDER & MTG GP-LIFT ARM

SMCS-5102 **i04026401**

NOTE	REF NO	GRAPHIC REF	PART NUMBER	QTY	PART NAME 1 2 3 4 5 6 (PRODUCT LEVEL)	SEE PAGE
	1	1	**4J-0527**	1	SEAL-O-RING	
	2	1	**141-0713**	1	SEAL-LIP TYPE	
	3	1	**295-8096**	1	HEAD	
	4	1	**295-8097**	1	PISTON	
	5	1	**296-5141**	1	RING-WEAR	
	6	1	**330-7381**	1	CYLINDER AS	
	7	1	**330-7386**	1	ROD AS	
	8	1	**144-9491**	1	RING-WEAR	
	9	1	**161-7144**	1	SEAL-PISTON	
	10	1	**298-6947**	1	SEAL-U-CUP	
	11	1	**329-2588**	1	RING-BACKUP	
	12	1	**8C-3081**	1	SEAL-O-RING	
M	13	1	**9X-6611**	1	SETSCREW-SOCKET (M10X1.5X16-MM)	
	14	1	**6V-8398**	2	SEAL-O-RING	
	15	1	*162-0177*	2	PLUG AS	
					(EACH INCLUDES)	
		1	**3J-1907**	1	SEAL-O-RING	
		1	**9S-8004**	1	PLUG-O-RING	

M-METRIC PART

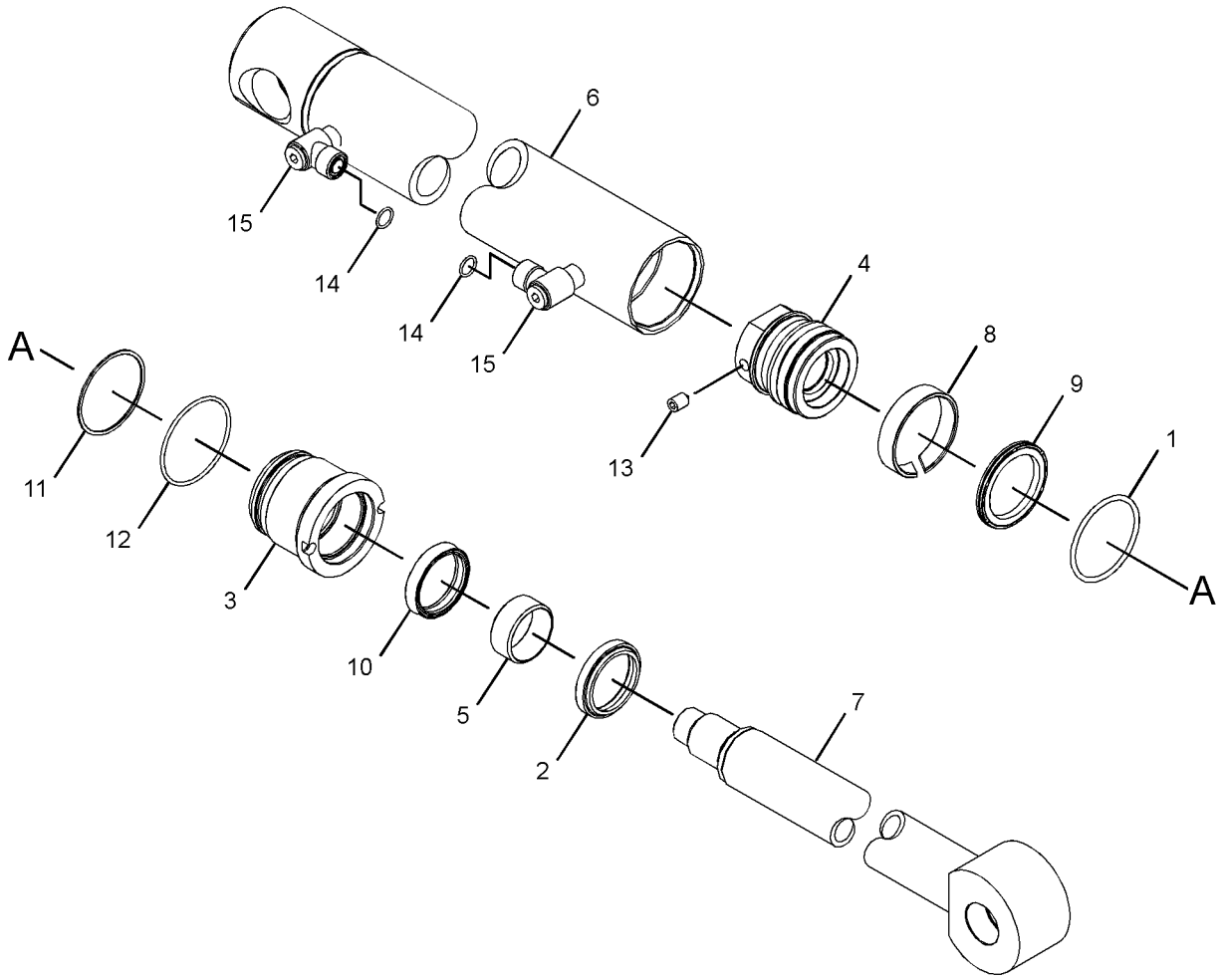

GRAPHIC #1 **<END>** g02472710

329-4953 CYLINDER GP-TILT–RH

S/N: SRS1-UP
70-MM (2.8-IN) BORE X 295-MM (11.6-IN) STROKE
PART OF 326-5499 CYLINDER & MTG GP-LIFT ARM

SMCS-5104 **i04156399**

NOTE	REF NO	GRAPHIC REF	PART NUMBER	QTY	PART NAME 1 2 3 4 5 6 (PRODUCT LEVEL)	SEE PAGE
	1	1	**3B-8489**	1	FITTING-GREASE	
	2	1	**140-2392**	1	SEAL-LIP TYPE	
	3	1	**296-5140**	1	RING-WEAR	
	4	1	**297-8515**	1	HEAD	
	5	1	**297-8516**	1	PISTON	
	6	1	**297-8523**	1	STOP	
	7	1	**330-7383**	1	CYLINDER AS	
	8	1	**330-7387**	1	ROD AS	
	9	1	**107-4057**	1	SEAL-O-RING	
	10	1	**151-2566**	1	RING-WEAR	
	11	1	**161-7145**	1	SEAL-PISTON	
	12	1	**299-1379**	1	SEAL-U-CUP	
	13	1	**329-2589**	2	RING-BACKUP	
	14	1	**3P-0439**	2	SEAL-O-RING	
M	15	1	**9X-6611**	1	SETSCREW-SOCKET (M10X1.5X16-MM)	
	16	1	**6V-8398**	2	SEAL-O-RING	
	17	1	*162-0177*	2	PLUG AS	
					(EACH INCLUDES)	
		1	**3J-1907**	1	SEAL-O-RING	
		1	**9S-8004**	1	PLUG-O-RING	
F			**142-8805**	2	BUSHING	

F-NOT SHOWN
M-METRIC PART

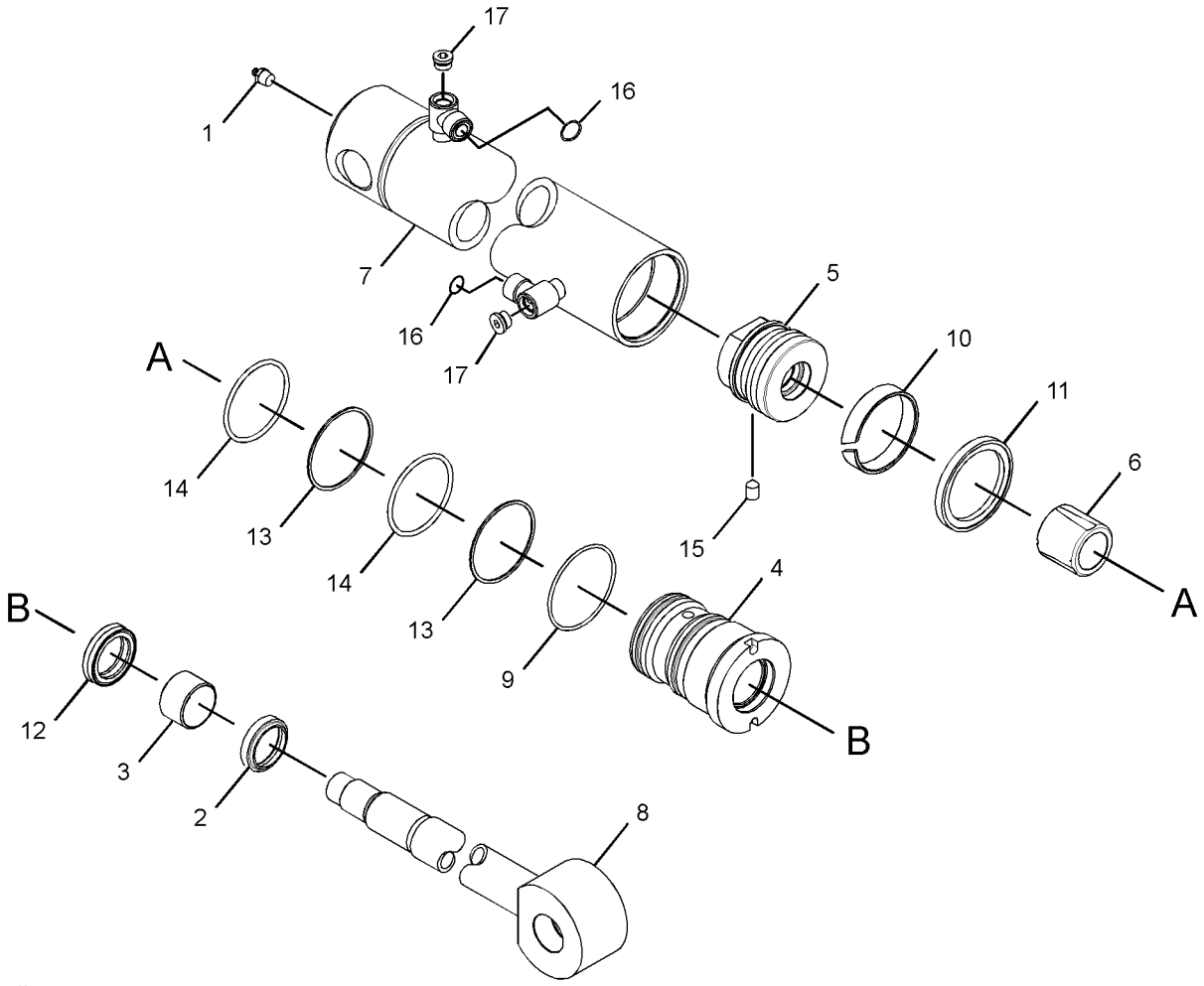

GRAPHIC #1 **<END>** g02352657

329-4954 CYLINDER GP-TILT–LH

S/N: SRS1-UP
70-MM (2.8-IN) BORE X 295-MM (11.6-IN) STROKE
PART OF 326-5499 CYLINDER & MTG GP-LIFT ARM

SMCS-5104 **i04156400**

NOTE	REF NO	GRAPHIC REF	PART NUMBER	QTY	PART NAME 1 2 3 4 5 6 (PRODUCT LEVEL)	SEE PAGE
	1	1	**3B-8489**	1	FITTING-GREASE	
	2	1	**140-2392**	1	SEAL-LIP TYPE	
	3	1	**296-5140**	1	RING-WEAR	
	4	1	**297-8515**	1	HEAD	
	5	1	**297-8516**	1	PISTON	
	6	1	**297-8523**	1	STOP	
	7	1	**330-7382**	1	CYLINDER AS	
	8	1	**330-7387**	1	ROD AS	
	9	1	**107-4057**	1	SEAL-O-RING	
	10	1	**151-2566**	1	RING-WEAR	
	11	1	**161-7145**	1	SEAL-PISTON	
	12	1	**299-1379**	1	SEAL-U-CUP	
	13	1	**329-2589**	2	RING-BACKUP	
	14	1	**3P-0439**	2	SEAL-O-RING	
M	15	1	**9X-6611**	1	SETSCREW-SOCKET (M10X1.5X16-MM)	
	16	1	**6V-8398**	2	SEAL-O-RING	
	17	1	*162-0177*	2	PLUG AS	
					(EACH INCLUDES)	
		1	**3J-1907**	1	SEAL-O-RING	
		1	**9S-8004**	1	PLUG-O-RING	
F			**142-8805**	2	BUSHING	

F-NOT SHOWN
M-METRIC PART

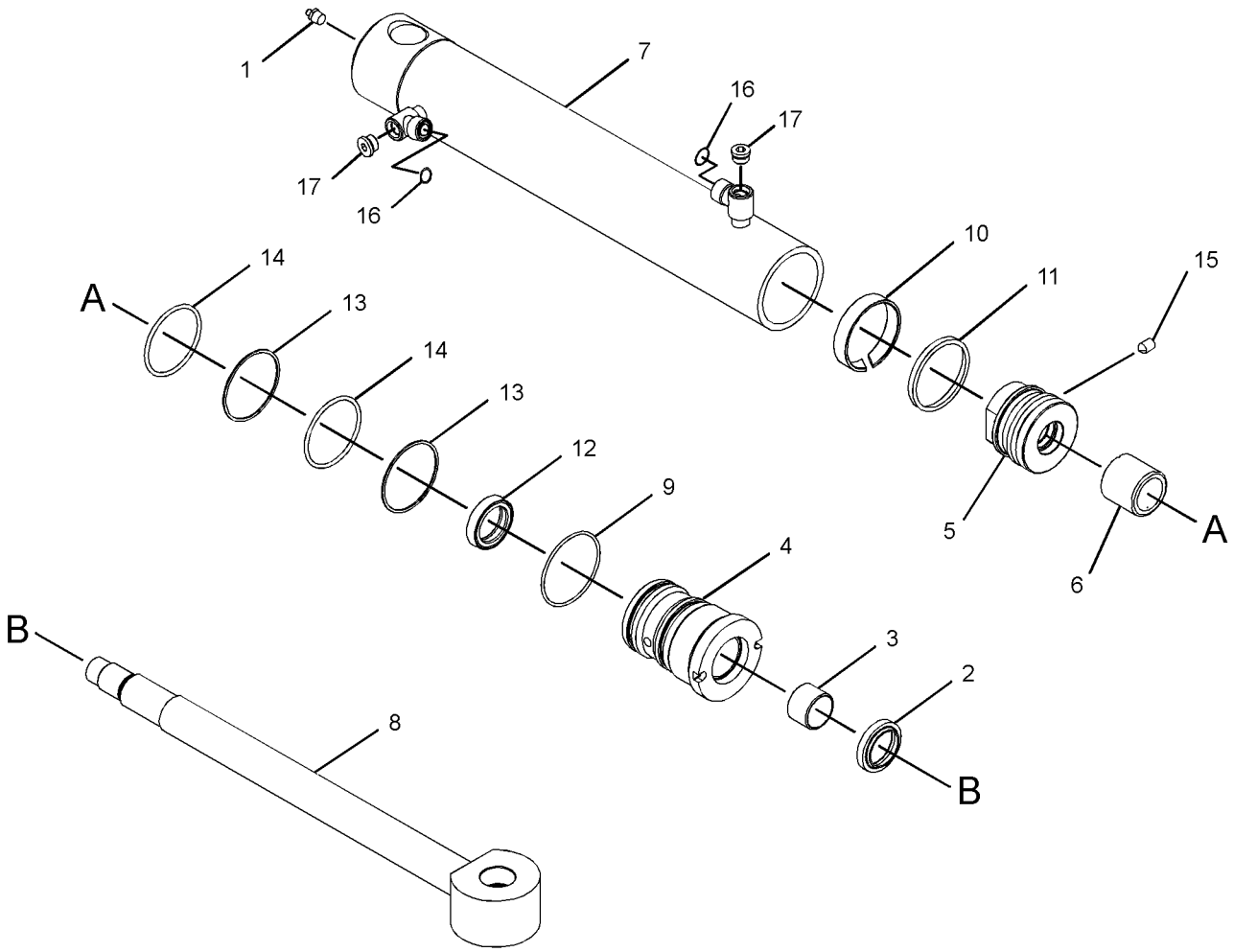

GRAPHIC #1 **<END>** g02351519

HYDRAULIC SYSTEM

326-5670 HYDRAULIC AR

S/N: SRS1-UP
AN ATTACHMENT

SMCS-5050 **i03982703**

NOTE	PART NUMBER	QTY	PART NAME 1 2 3 4 5 6 (PRODUCT LEVEL)	SEE PAGE
Y	*326-5758*	1	LINES GP-LIFT CYLINDER	257
Y	*326-5778*	1	LINES GP-TILT CYLINDER	267

Y-SEPARATE ILLUSTRATION

<END>

326-5730 HYDRAULIC AR

S/N: SRS1-UP
PART OF 326-5242 COMMON AR

SMCS-5050 **i03982014**

NOTE	PART NUMBER	QTY	PART NAME 1 2 3 4 5 6 (PRODUCT LEVEL)	SEE PAGE
Y	*193-0447*	1	ACCUMULATOR & MTG GP-HYDRAULIC (WORK TOOL)	193
Y	*326-5739*	1	FILTER & LINES GP-HYDRAULIC	125
Y	*354-6551*	1	LINES GP-WORK TOOL	269
Y	*326-5731*	1	LINES GP-HYDRAULIC OIL COOLER	252
Y	*234-0788*	1	LINES GP-PILOT (DIRECTION, SPEED)	259
Y	*326-5734*	1	LINES GP-PILOT (WORK TOOL)	261
Y	*326-5746*	1	LINES GP-PUMP	263
Y	*326-5780*	1	TANK & MTG GP-HYDRAULIC	288
Y	*218-6725*	1	VALVE & MTG GP-CONTROL (WORK TOOL)	290

Y-SEPARATE ILLUSTRATION

<END>

326-5770 HYDRAULIC AR—WITH WORK TOOL POSITIONER

S/N: SRS1-UP
AN ATTACHMENT

SMCS-5050 **i03984131**

NOTE	PART NUMBER	QTY	PART NAME 1 2 3 4 5 6 (PRODUCT LEVEL)	SEE PAGE
Y	*326-5738*	1	LINES GP-LIFT CYLINDER (WITH WORK TOOL POSITIONER)	254
Y	*326-5737*	1	LINES GP-TILT CYLINDER (WITH WORK TOOL POSITIONER)	265

Y-SEPARATE ILLUSTRATION

<END>

HYDRAULIC SYSTEM

364-1351 KIT-QUICK COUPLER CONVERSION—HYDRAULIC

S/N: SRS1-UP

AN ATTACHMENT

SMCS-5057, 5133, 5479, 6129 **i04381663**

NOTE	REF NO	GRAPHIC REF	PART NUMBER	QTY	PART NAME 1 2 3 4 5 6 (PRODUCT LEVEL)	SEE PAGE
	1	1	**2K-5232**	2	SPACER (0.406X0.75X1.81-IN THK)	
	2	1	**3S-2093**	5	STRAP-CABLE	
	3	1	**7K-1181**	3	STRAP-CABLE	
	4	1	**9X-6581**	1	NUT-O-RING SEAL (1-14-THD)	
	5	1	**124-2456**	1	FILM-INSTRUCTION (NO STEP)	
Y	6	1	**192-2640**	2	CYLINDER GP-HYDRAULIC (QUICK COUPLER)	205
	7	1	**192-2645**	2	SPRING	
	8	1	**207-9737**	1	BRACKET AS	
I	9	1	**207-9756**	4	HOSE AS	
	10	1	**207-9785**	2	PIN	
	11	1	**212-6521**	1	SWITCH AS-ROCKER (QUICK COUPLER)	
		1	**111-7899**	1	GASKET	
	12	1	**212-6690**	1	GUARD	
	13	1	**218-6334**	1	BRACKET AS	
	14	1	**218-6335**	1	BRACKET AS	
I	15	1	**219-4335**	2	HOSE AS	
Y	16	1	**233-7128**	1	MANIFOLD GP-CONTROL (QUICK COUPLER)	273
	17	1	**238-7741**	1	TUBE AS	
	18	1	**238-7742**	1	TUBE AS	
	19	1	**303-8767**	2	PIN-SPRING	
	20	1	**303-8768**	4	PIN-SPRING	
	21	1	**310-6660**	2	PIN-SPRING	
	22	1	**311-9240**	2	PLATE	
M	23	1	**315-5493**	4	WASHER-HARD (22.5X35X4.5-MM THK)	
	24	1	**319-2137**	2	BRACKET	
	25	1	**326-5762**	1	BRACKET AS	
M		1	**8T-3490**	4	NUT-WELD (M10X1.5-THD)	
I	26	1	**326-5765**	2	HOSE AS	
I	27	1	**361-0457**	1	HOSE AS	
	28	1	**124-2113**	1	COUPLING-PERMANENT	
	29	1	**124-2129**	1	COUPLING-PERMANENT	
	30	1	*148-8325*	4	CONNECTOR AS	
					(EACH INCLUDES)	
		1	**3J-1907**	1	SEAL-O-RING	
		1	**4J-5477**	1	SEAL-O-RING	
		1	**6V-8641**	1	CONNECTOR	
	31	1	*148-8336*	2	CONNECTOR AS	
					(EACH INCLUDES)	
		1	**3J-1907**	1	SEAL-O-RING	
		1	**6V-8397**	1	SEAL-O-RING	
		1	**6V-8636**	1	CONNECTOR	
	32	1	*148-8353*	1	ELBOW AS	
		1	**3J-1907**	1	SEAL-O-RING	
		1	**6V-8397**	1	SEAL-O-RING	
		1	**6V-9001**	1	ELBOW	
	33	1	*148-8378*	1	ELBOW AS	
		1	**3J-1907**	1	SEAL-O-RING	
		1	**6V-8397**	1	SEAL-O-RING	
		1	**6V-8724**	1	ELBOW	
	34	1	*148-8433*	1	TEE AS	
		1	**6V-8397**	2	SEAL-O-RING	
		1	**6V-9836**	1	TEE-SWIVEL	
	35	1	*150-4034*	2	TEE AS	
					(EACH INCLUDES)	
		1	**6V-8397**	3	SEAL-O-RING	
		1	**8T-0379**	1	TEE-BULKHEAD	

364-1351 KIT-QUICK COUPLER CONVERSION *(contd.)* i04381663

NOTE	REF NO	GRAPHIC REF	PART NUMBER	QTY	PART NAME 1 2 3 4 5 6 (PRODUCT LEVEL)	SEE PAGE
	36	1	*155-3503*	1	TEE AS	
		1	**2M-9780**	1	SEAL-O-RING	
		1	**6V-8776**	1	TEE-FACE SEAL	
		1	**7J-9108**	2	SEAL-O-RING	
	37	1	*156-4282*	1	REDUCER AS	
		1	**6V-8397**	1	SEAL-O-RING	
		1	**6V-8938**	1	REDUCER-O-RING	
	38	1	**164-4225**	2	CLIP	
	39	1	**3B-4628**	2	PIN-COTTER	
	40	1	**4P-7581**	1	CLIP	
	41	1	**5P-0372**	2	LOCK PIN	
	42	1	**6K-8178**	2	CLIP	
	43	1	**6V-8397**	4	SEAL-O-RING	
	44	1	**6V-9168**	2	NUT (11/16-16-THD)	
	45	1	**7G-2950**	1	CLIP (SLOT)	
	46	1	**7G-2951**	1	CLIP (TAB)	
	47	1	**7H-7055**	6	CLIP	
	48	1	**7X-7729**	5	WASHER (11X25X3-MM THK)	
	49	1	**8L-5188**	2	PIN	
	50	1	**8T-4121**	18	WASHER-HARD (11X21X2.5-MM THK)	
M	51	1	**8T-4133**	6	NUT (M10X1.5-THD)	
M	52	1	**8T-4136**	1	BOLT (M10X1.5X25-MM)	
M	53	1	**8T-4189**	2	BOLT (M8X1.25X20-MM)	
M	54	1	**8T-4191**	2	BOLT (M10X1.5X16-MM)	
M	55	1	**8T-4196**	4	BOLT (M10X1.5X35-MM)	
M	56	1	**8T-4201**	4	BOLT-LOCKING (M10X1.5X20-MM)	
	57	1	**8T-4224**	4	WASHER-HARD (8.8X16X2-MM THK)	
M	58	1	**8T-4908**	2	BOLT (M8X1.25X25-MM)	
M	59	1	**8T-5005**	4	BOLT (M10X1.5X70-MM)	
	60	1	**9M-8406**	3	CLIP	
	61	1	**9T-7303**	4	SPACER (16X28X1.5-MM THK)	
E	62	1	**213-8708**		HOSE-HYDRAULIC (172-CM)	

E-ORDER BY THE CENTIMETER
I-REFER TO HYDRAULIC INFORMATION SYSTEM
M-METRIC PART
Y-SEPARATE ILLUSTRATION

364-1351 KIT-QUICK COUPLER CONVERSION *(contd.)* i04381663

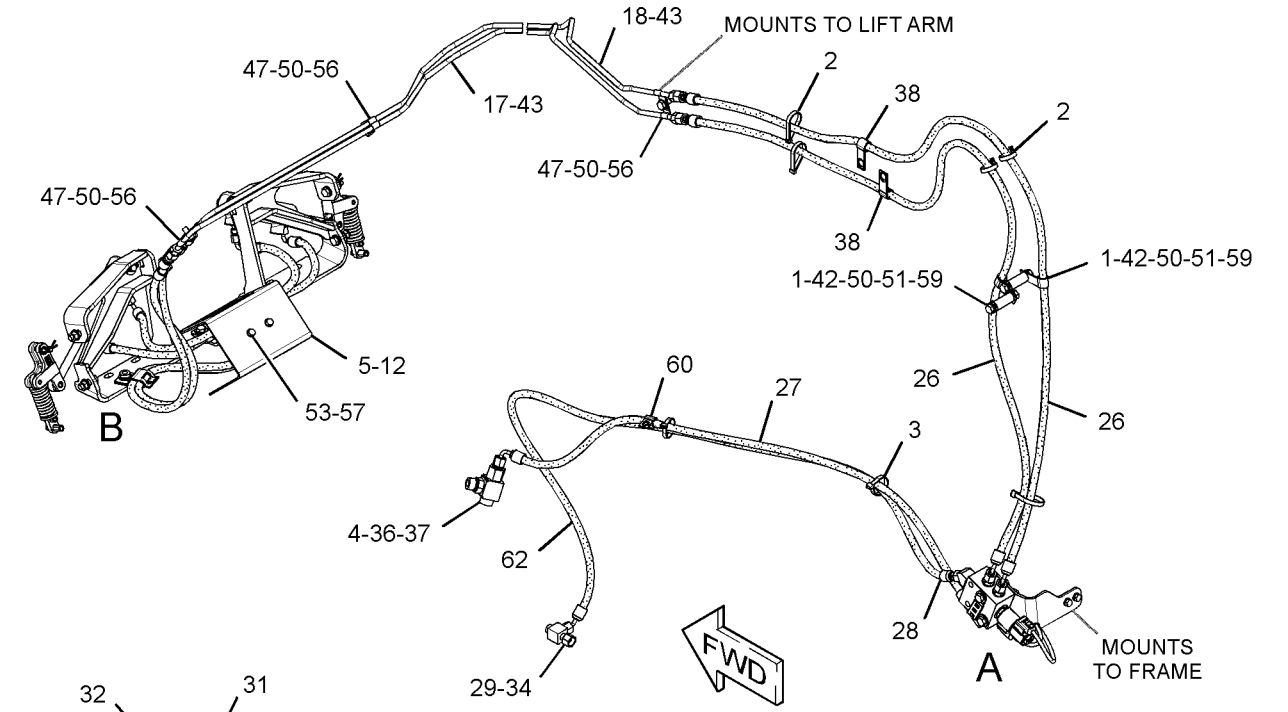

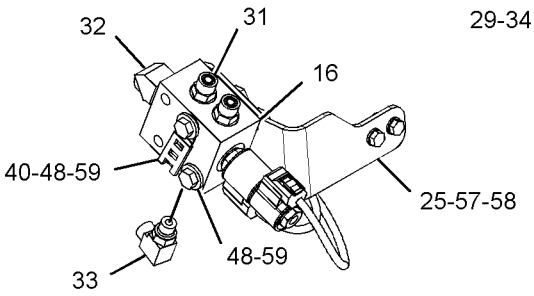

VIEW OF AREA A
(HOSES REMOVED FOR CLARITY)

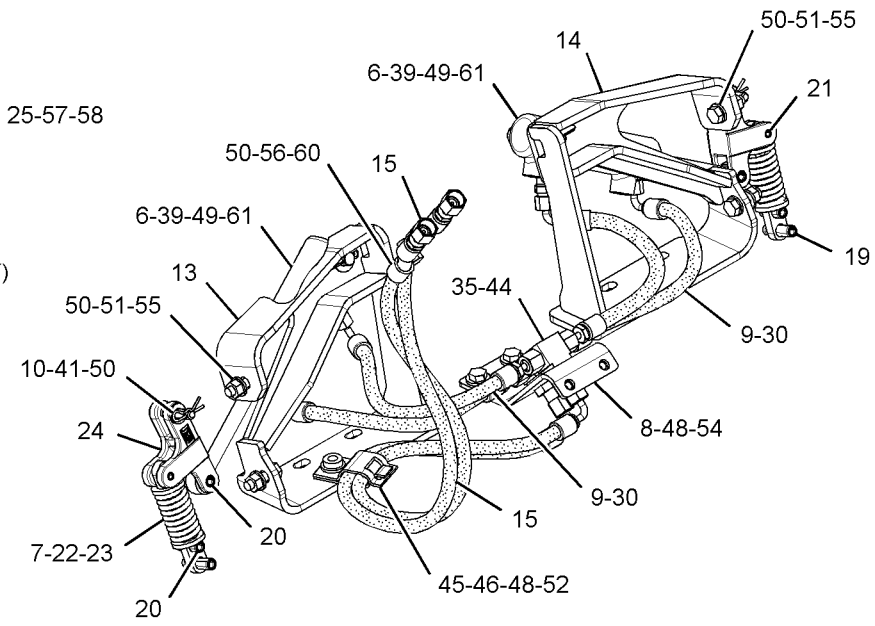

VIEW OF AREA B
(PARTS REMOVED FOR CLARITY)

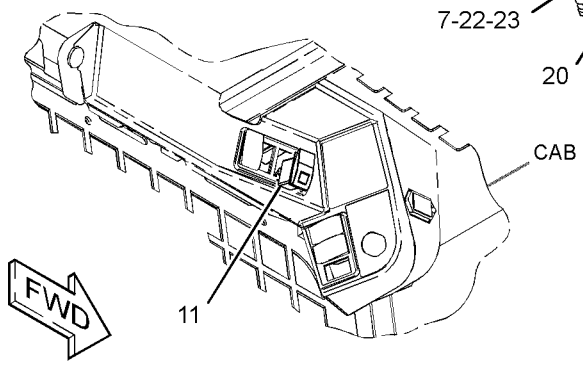

GRAPHIC #1 **<END>** g02561338

HYDRAULIC SYSTEM

279-5412 LINES GP-BUCKET—INDUSTRIAL

S/N: SRS1-UP

PART OF 279-5350, 279-5360 FORK AR-GRAPPLE

AN ATTACHMENT

SMCS-5057 **i02616554**

NOTE	REF NO	GRAPHIC REF	PART NUMBER	QTY	PART NAME 1 2 3 4 5 6 (PRODUCT LEVEL)	SEE PAGE
	1	1	**3E-7404**	2	CLAMP-HOSE	
I	2	1	**294-5503**	1	HOSE AS	
	3	1	**153-2994**	1	COUPLER AS-QUICK DISCONNECT (FEMALE)	
	4	1	**153-2995**	1	FITTING AS (QUICK DISCONNECT, MALE)	
	5	1	**161-0185**	1	TUBE AS	
	6	1	**161-0186**	1	TUBE AS	
	7	1	**161-0188**	2	TUBE AS	
I	8	1	**161-0189**	2	HOSE AS	
I	9	1	**161-0190**	2	HOSE AS	
	10	1	**163-1385**	1	ELBOW	
I	11	1	**294-5502**	1	HOSE AS	
	12	1	*148-8319*	2	CONNECTOR AS	
					(EACH INCLUDES)	
		1	**2M-9780**	1	SEAL-O-RING	
		1	**6V-8397**	1	SEAL-O-RING	
		1	**6V-8715**	1	CONNECTOR	
	13	1	**2V-3216**	6	CLIP	
	14	1	**6V-8397**	13	SEAL-O-RING	
	15	1	**7S-3916**	2	CLIP (TAB)	
	16	1	**7S-3919**	2	CLIP (SLOT)	
	17	1	**8T-4121**	2	WASHER-HARD (11X21X2.5-MM THK)	
M	18	1	**8T-4136**	2	BOLT (M10X1.5X25-MM)	
M	19	1	**8T-4171**	4	BOLT (M6X1X12-MM)	
	20	1	**9R-2004**	2	BLOCK	

I-REFER TO HYDRAULIC INFORMATION SYSTEM
M-METRIC PART

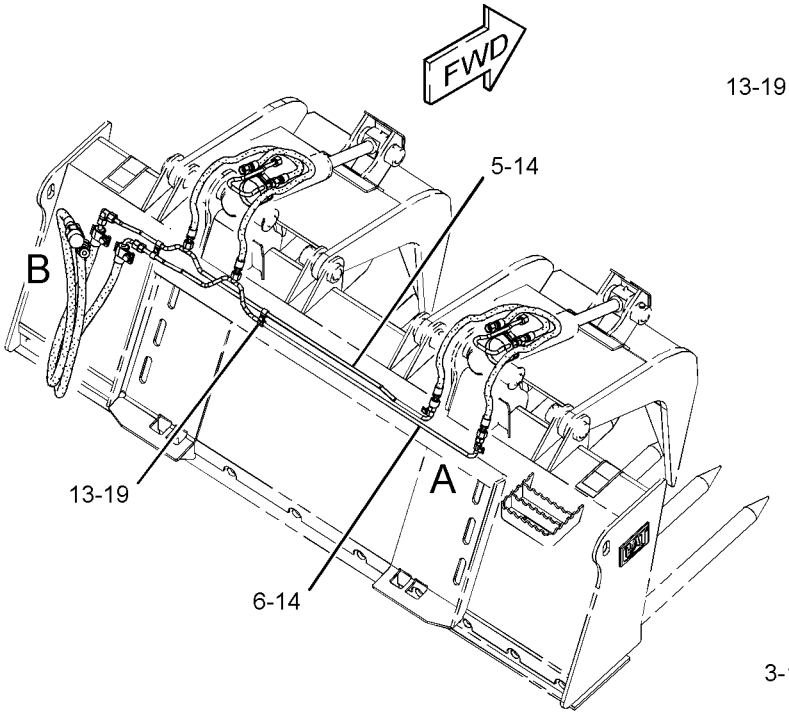

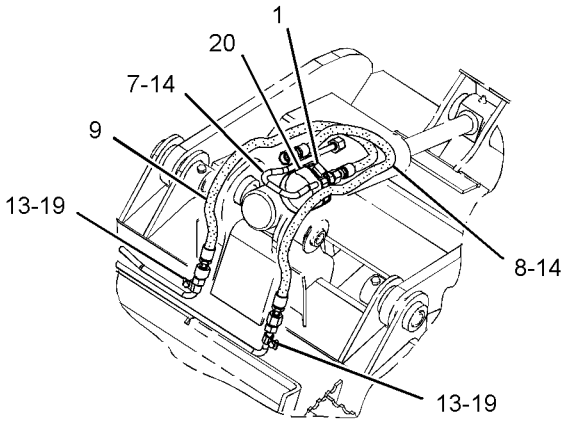

VIEW OF AREA A

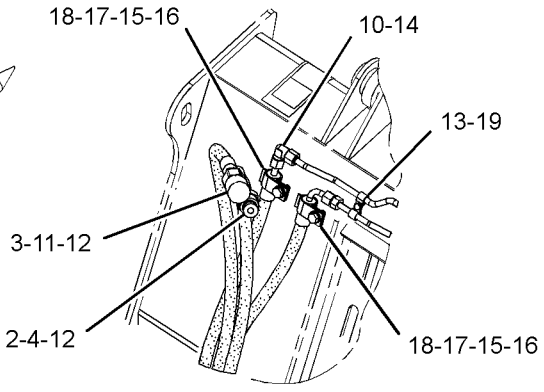

VIEW OF AREA B

GRAPHIC #1 **<END>** g01280859

HYDRAULIC SYSTEM

279-5413 LINES GP-BUCKET—MULTIPURPOSE

S/N: SRS1-UP
PART OF 279-5382 BUCKET AR-MULTIPURPOSE
AN ATTACHMENT

SMCS-5057 **i03641721**

NOTE	REF NO	GRAPHIC REF	PART NUMBER	QTY	PART NAME 1 2 3 4 5 6 (PRODUCT LEVEL)	SEE PAGE
	1	1	**153-2994**	1	COUPLER AS-QUICK DISCONNECT (FEMALE)	
I	2	1	**154-5020**	2	HOSE AS	
I	3	1	**154-5021**	1	HOSE AS	
I	4	1	**154-5022**	1	HOSE AS	
	5	1	**163-1386**	1	TEE-UNION	
	6	1	**185-7887**	1	COUPLER AS-QUICK DISCONNECT (MALE)	
I	7	1	**279-5417**	1	HOSE AS	
I	8	1	**279-5418**	1	HOSE AS	
	9	1	*148-8319*	2	CONNECTOR AS	
					(EACH INCLUDES)	
		1	**2M-9780**	1	SEAL-O-RING	
		1	**6V-8397**	1	SEAL-O-RING	
		1	**6V-8715**	1	CONNECTOR	
	10	1	*150-3056*	1	TEE AS	
		1	**6V-8397**	3	SEAL-O-RING	
		1	**6V-8788**	1	TEE	
	11	1	**1S-0994**	1	CLIP	
	12	1	**6D-4247**	3	CLIP	
	13	1	**6V-8397**	7	SEAL-O-RING	
M	14	1	**8T-4189**	4	BOLT (M8X1.25X20-MM)	
	15	1	**8T-4224**	4	WASHER-HARD (8.8X16X2-MM THK)	
B	16	1	**9X-6273**	2	WASHER (32.5X50X0.8-MM THK)	
B	17	1	**9X-6274**	2	WASHER (32.5X50X1.6-MM THK)	

B-USE AS REQUIRED
I-REFER TO HYDRAULIC INFORMATION SYSTEM
M-METRIC PART

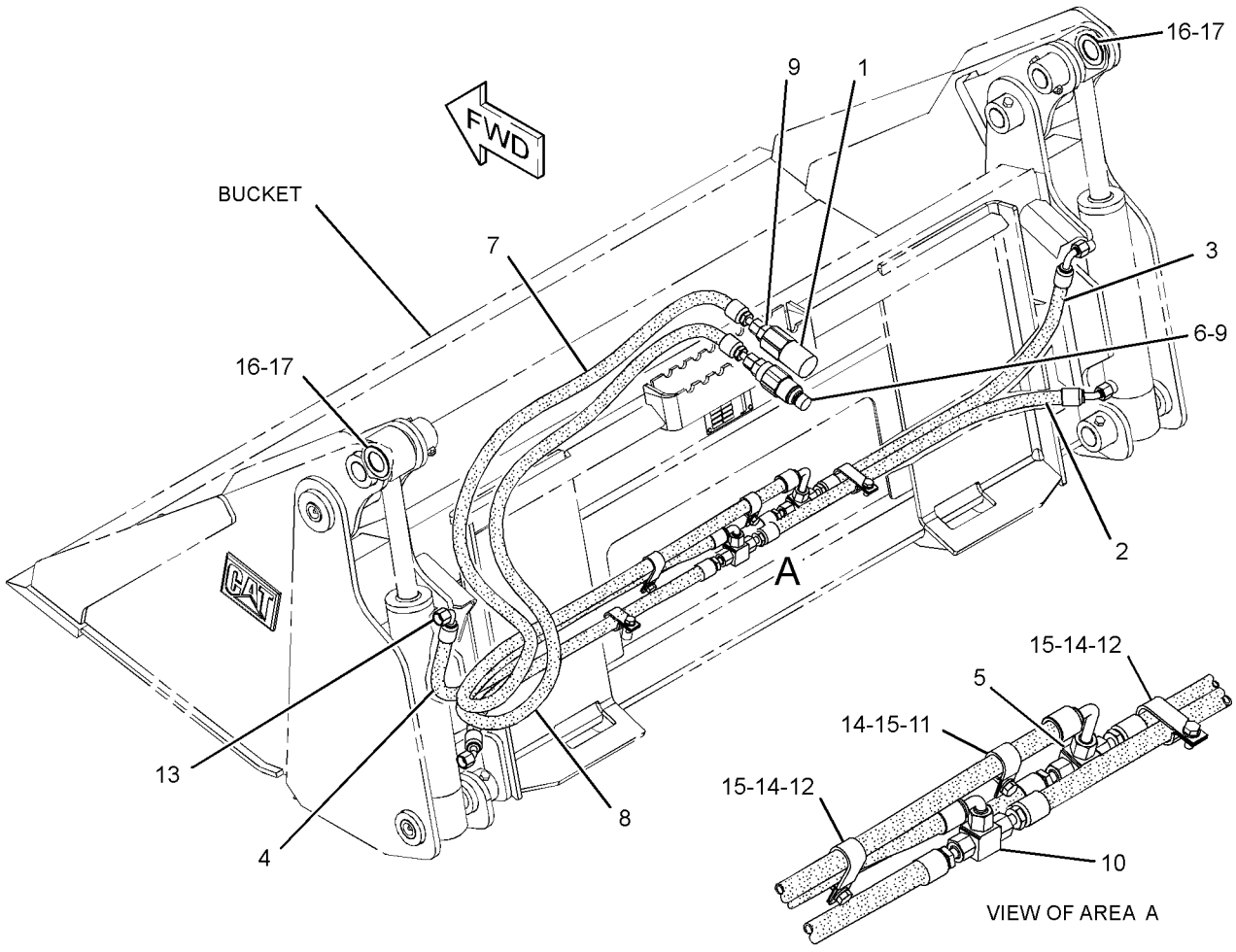

GRAPHIC #1 **<END>** g01278435

HYDRAULIC SYSTEM

279-5414 LINES GP-BUCKET—MULTIPURPOSE

S/N: SRS1-UP
PART OF 279-5390 BUCKET AR-MULTIPURPOSE
AN ATTACHMENT

SMCS-5057 **i02664837**

NOTE	REF NO	GRAPHIC REF	PART NUMBER	QTY	PART NAME 1 2 3 4 5 6 (PRODUCT LEVEL)	SEE PAGE
	1	1	**153-2994**	1	COUPLER AS-QUICK DISCONNECT (FEMALE)	
I	2	1	**156-5508**	1	HOSE AS	
I	3	1	**156-5509**	2	HOSE AS	
I	4	1	**156-5510**	1	HOSE AS	
	5	1	**163-1386**	1	TEE-UNION	
	6	1	**185-7887**	1	COUPLER AS-QUICK DISCONNECT (MALE)	
I	7	1	**279-5417**	1	HOSE AS	
I	8	1	**279-5418**	1	HOSE AS	
	9	1	*148-8319*	2	CONNECTOR AS	
					(EACH INCLUDES)	
		1	**2M-9780**	1	SEAL-O-RING	
		1	**6V-8397**	1	SEAL-O-RING	
		1	**6V-8715**	1	CONNECTOR	
	10	1	*150-3056*	1	TEE AS	
		1	**6V-8397**	3	SEAL-O-RING	
		1	**6V-8788**	1	TEE	
	11	1	**1S-0994**	1	CLIP	
	12	1	**6D-4247**	3	CLIP	
	13	1	**6V-8397**	7	SEAL-O-RING	
M	14	1	**8T-4189**	4	BOLT (M8X1.25X20-MM)	
	15	1	**8T-4224**	4	WASHER-HARD (8.8X16X2-MM THK)	
B	16	1	**9X-6273**	2	WASHER (32.5X50X0.8-MM THK)	
B	17	1	**9X-6274**	2	WASHER (32.5X50X1.6-MM THK)	

B-USE AS REQUIRED
I-REFER TO HYDRAULIC INFORMATION SYSTEM
M-METRIC PART

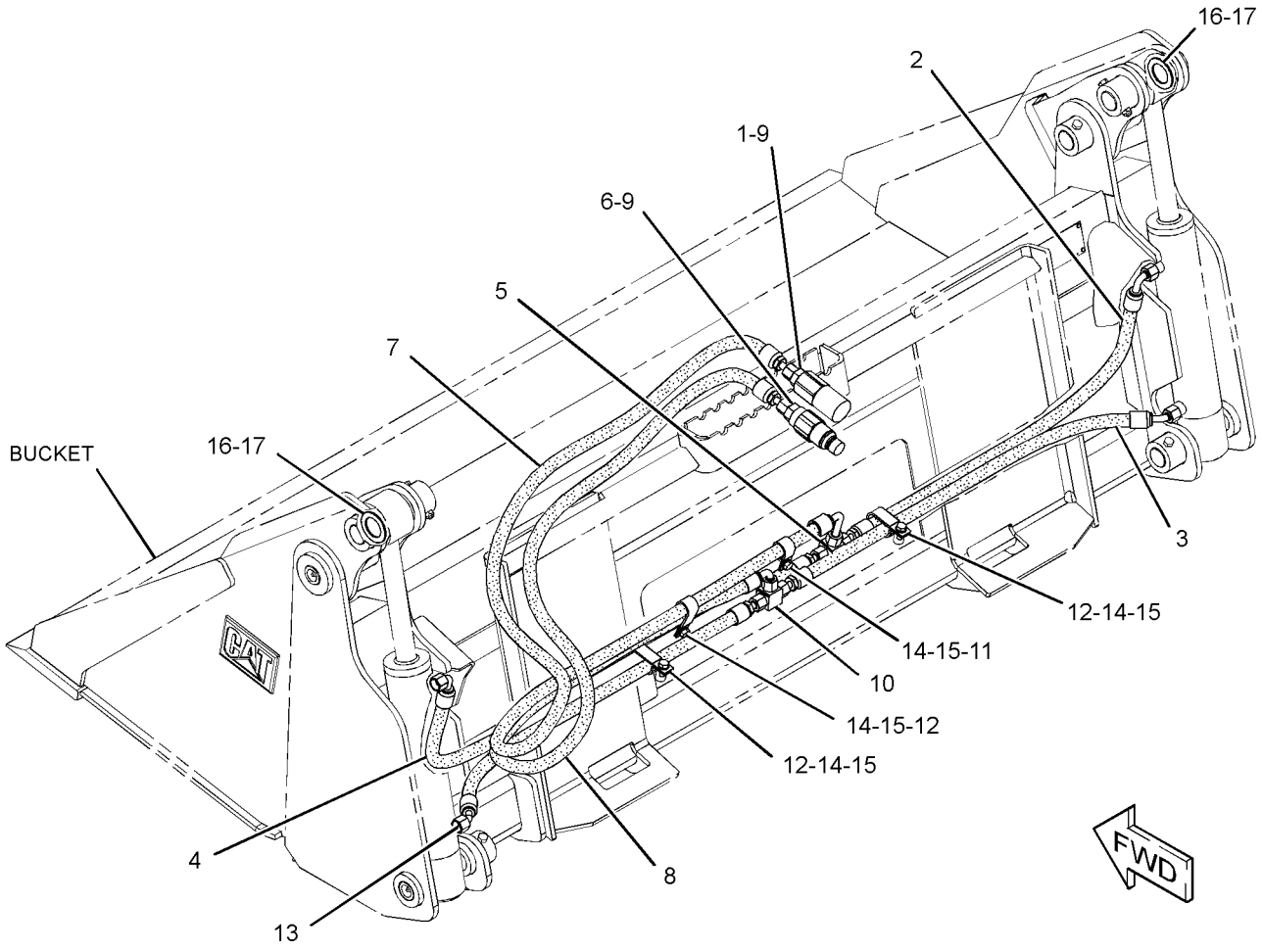

GRAPHIC #1 **<END>** g01339126

279-5415 LINES GP-BUCKET—MULTIPURPOSE

S/N: SRS1-UP
PART OF 279-5398 BUCKET AR-MULTIPURPOSE
AN ATTACHMENT

SMCS-5057 **i02552160**

NOTE	REF NO	GRAPHIC REF	PART NUMBER	QTY	PART NAME 1 2 3 4 5 6 (PRODUCT LEVEL)	SEE PAGE
	1	1	**153-2994**	1	COUPLER AS-QUICK DISCONNECT (FEMALE)	
I	2	1	**159-4535**	1	HOSE AS	
I	3	1	**159-4536**	2	HOSE AS	
I	4	1	**159-4537**	1	HOSE AS	
	5	1	**163-1386**	1	TEE-UNION	
	6	1	**185-7887**	1	COUPLER AS-QUICK DISCONNECT (MALE)	
I	7	1	**279-5417**	1	HOSE AS	
I	8	1	**279-5418**	1	HOSE AS	
	9	1	*148-8319*	2	CONNECTOR AS	
					(EACH INCLUDES)	
		1	**2M-9780**	1	SEAL-O-RING	
		1	**6V-8397**	1	SEAL-O-RING	
		1	**6V-8715**	1	CONNECTOR	
	10	1	*150-3056*	1	TEE AS	
		1	**6V-8397**	3	SEAL-O-RING	
		1	**6V-8788**	1	TEE	
	11	1	**1S-0994**	1	CLIP	
	12	1	**6D-4247**	3	CLIP	
	13	1	**6V-8397**	7	SEAL-O-RING	
M	14	1	**8T-4189**	4	BOLT (M8X1.25X20-MM)	
	15	1	**8T-4224**	4	WASHER-HARD (8.8X16X2-MM THK)	
B	16	1	**9X-6273**	2	WASHER (32.5X50X0.8-MM THK)	
B	17	1	**9X-6274**	2	WASHER (32.5X50X1.6-MM THK)	

B-USE AS REQUIRED
I-REFER TO HYDRAULIC INFORMATION SYSTEM
M-METRIC PART

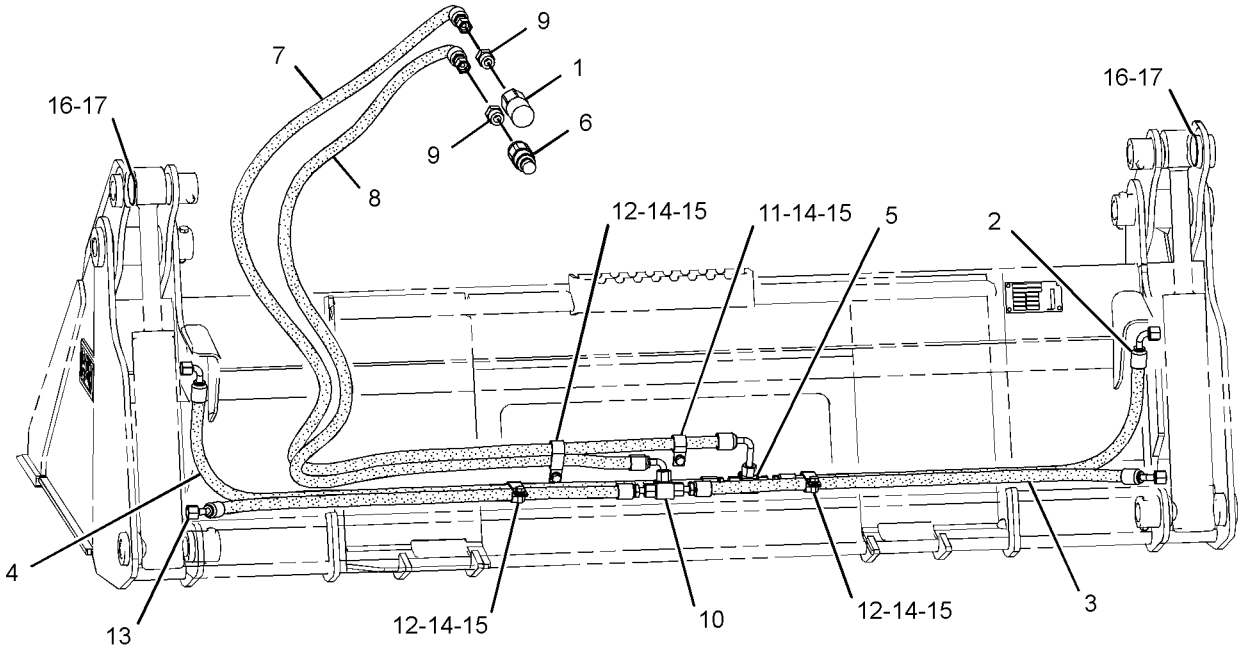

REAR VIEW
(UPPER LEFT)

GRAPHIC #1 **<END>** g01280163

279-5416 LINES GP-BUCKET—MULTIPURPOSE

S/N: SRS1-UP
PART OF 279-5403 BUCKET AR-MULTIPURPOSE
AN ATTACHMENT

SMCS-5057 **i02552257**

NOTE	REF NO	GRAPHIC REF	PART NUMBER	QTY	PART NAME 1 2 3 4 5 6 (PRODUCT LEVEL)	SEE PAGE
	1	1	**153-2994**	1	COUPLER AS-QUICK DISCONNECT (FEMALE)	
	2	1	**163-1386**	1	TEE-UNION	
	3	1	**185-7887**	1	COUPLER AS-QUICK DISCONNECT (MALE)	
I	4	1	**199-8309**	1	HOSE AS	
I	5	1	**199-8310**	2	HOSE AS	
I	6	1	**199-8311**	1	HOSE AS	
I	7	1	**279-5417**	1	HOSE AS	
I	8	1	**279-5418**	1	HOSE AS	
	9	1	*148-8319*	2	CONNECTOR AS	
					(EACH INCLUDES)	
		1	**2M-9780**	1	SEAL-O-RING	
		1	**6V-8397**	1	SEAL-O-RING	
		1	**6V-8715**	1	CONNECTOR	
	10	1	*150-3056*	1	TEE AS	
		1	**6V-8397**	3	SEAL-O-RING	
		1	**6V-8788**	1	TEE	
	11	1	**1S-0994**	1	CLIP	
	12	1	**6D-4247**	3	CLIP	
	13	1	**6V-8397**	7	SEAL-O-RING	
M	14	1	**8T-4189**	4	BOLT (M8X1.25X20-MM)	
	15	1	**8T-4224**	4	WASHER-HARD (8.8X16X2-MM THK)	
B	16	1	**9X-6273**	2	WASHER (32.5X50X0.8-MM THK)	
B	17	1	**9X-6274**	2	WASHER (32.5X50X1.6-MM THK)	

B-USE AS REQUIRED
I-REFER TO HYDRAULIC INFORMATION SYSTEM
M-METRIC PART

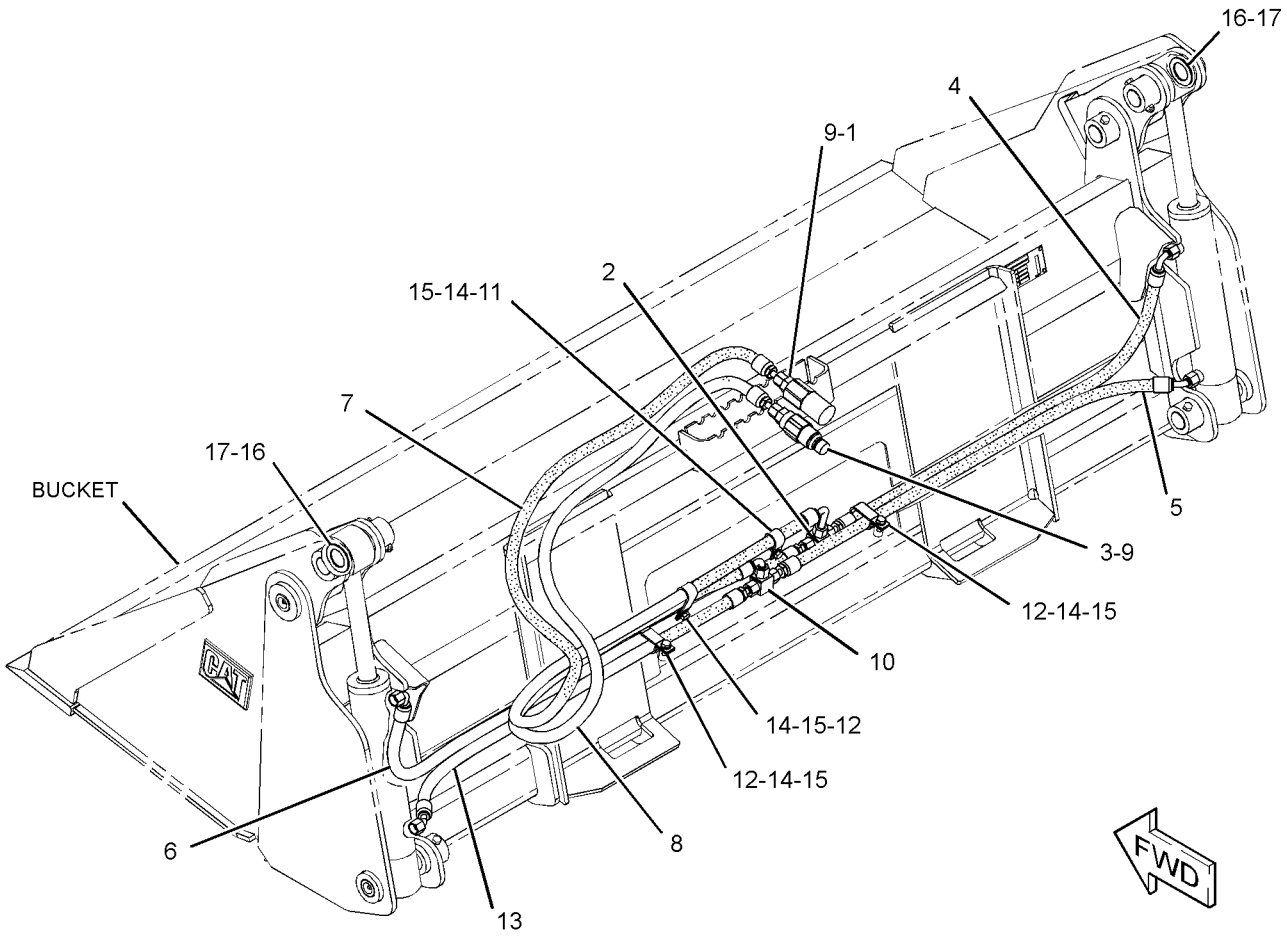

GRAPHIC #1 **<END>** g01278627

HYDRAULIC SYSTEM

285-6113 LINES GP-BUCKET—UTILITY

S/N: SRS1-UP

PART OF 285-6116 GRAPPLE & CYLINDER GP-UTILITY

AN ATTACHMENT

SMCS-5057 **i02890974**

NOTE	REF NO	GRAPHIC REF	PART NUMBER	QTY	PART NAME 1 2 3 4 5 6 (PRODUCT LEVEL)	SEE PAGE
	1	1	**153-2994**	1	COUPLER AS-QUICK DISCONNECT (FEMALE)	
	2	1	**153-2995**	1	FITTING AS (QUICK DISCONNECT, MALE)	
	3	1	**174-2388**	1	TUBE AS	
	4	1	**174-2389**	1	TUBE AS	
CI	5	1	**174-2393**	1	HOSE AS	
	6	1	*183-4085*	1	ELBOW AS	
		1	**6V-8397**	2	SEAL-O-RING	
		1	**183-4084**	1	ELBOW	
I	7	1	**294-5504**	1	HOSE AS	
I	8	1	**294-5505**	1	HOSE AS	
CI	9	1	**307-3808**	1	HOSE AS	
	10	1	*148-8319*	2	CONNECTOR AS	
					(EACH INCLUDES)	
		1	**2M-9780**	1	SEAL-O-RING	
		1	**6V-8397**	1	SEAL-O-RING	
		1	**6V-8715**	1	CONNECTOR	
C	11	1	**6V-8397**	5	SEAL-O-RING	
	12	1	**7S-3912**	2	CLIP (TAB)	
	13	1	**7S-3913**	2	CLIP (SLOT)	
	14	1	**8T-1893**	2	CLIP (SLOT)	
	15	1	**8T-1894**	2	CLIP (TAB)	
	16	1	**8T-4121**	6	WASHER-HARD (11X21X2.5-MM THK)	
M	17	1	**8T-4137**	4	BOLT (M10X1.5X20-MM)	

C-CHANGE FROM PREVIOUS TYPE
I-REFER TO HYDRAULIC INFORMATION SYSTEM
M-METRIC PART

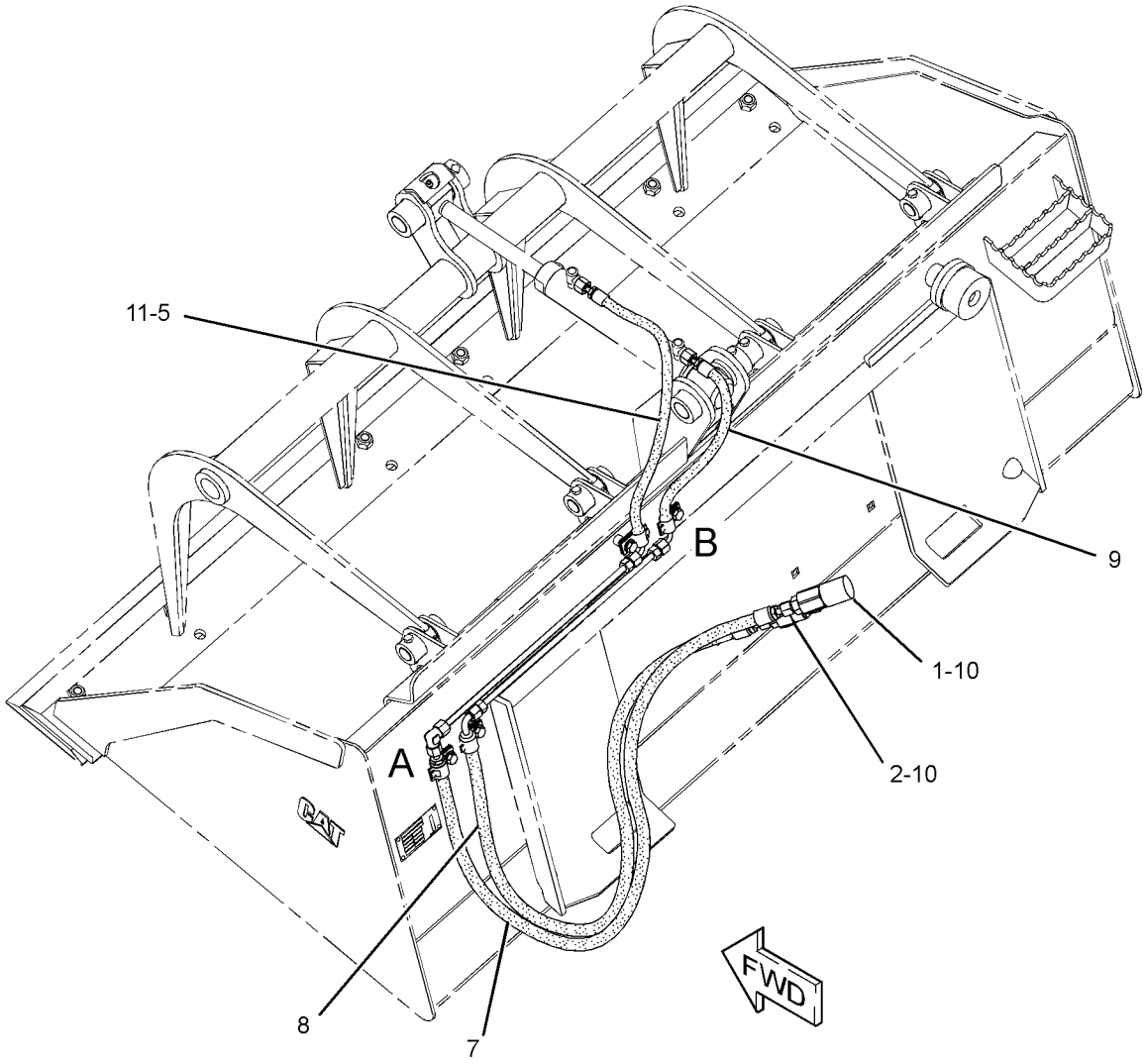

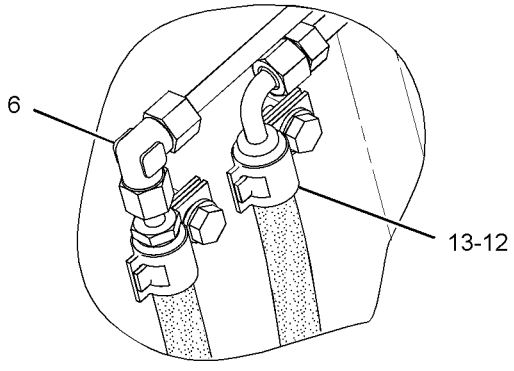

VIEW OF AREA A

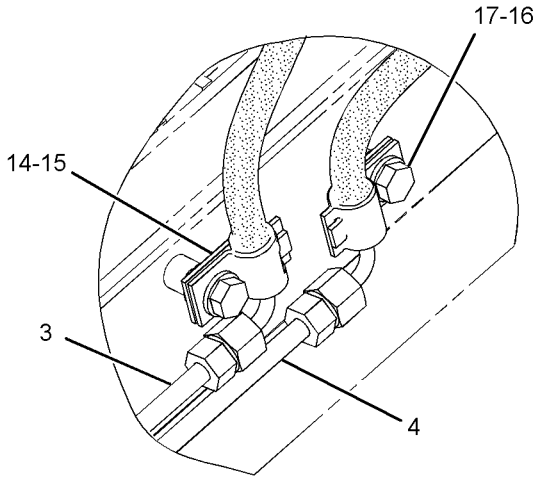

VIEW OF AREA B

GRAPHIC #1 **<END>** g01439824

293-0140 LINES GP-BUCKET—MULTIPURPOSE

S/N: SRS1-UP
PART OF 293-0139 BUCKET AR-MULTIPURPOSE
AN ATTACHMENT

SMCS-5057 **i02636472**

NOTE	REF NO	GRAPHIC REF	PART NUMBER	QTY	PART NAME 1 2 3 4 5 6 (PRODUCT LEVEL)	SEE PAGE
	1	1	**153-2994**	1	COUPLER AS-QUICK DISCONNECT (FEMALE)	
	2	1	**163-1386**	1	TEE-UNION	
	3	1	**185-7887**	1	COUPLER AS-QUICK DISCONNECT (MALE)	
I	4	1	**199-8309**	1	HOSE AS	
I	5	1	**199-8311**	1	HOSE AS	
I	6	1	**279-5417**	1	HOSE AS	
I	7	1	**279-5418**	1	HOSE AS	
I	8	1	**293-0152**	2	HOSE AS	
	9	1	*148-8319*	2	CONNECTOR AS	
					(EACH INCLUDES)	
		1	**2M-9780**	1	SEAL-O-RING	
		1	**6V-8397**	1	SEAL-O-RING	
		1	**6V-8715**	1	CONNECTOR	
	10	1	*150-3056*	1	TEE AS	
		1	**6V-8397**	3	SEAL-O-RING	
		1	**6V-8788**	1	TEE	
	11	1	**1S-0994**	1	CLIP	
	12	1	**6D-4247**	3	CLIP	
	13	1	**6V-8397**	7	SEAL-O-RING	
M	14	1	**8T-4189**	4	BOLT (M8X1.25X20-MM)	
	15	1	**8T-4224**	4	WASHER-HARD (8.8X16X2-MM THK)	
B	16	1	**9X-6273**	2	WASHER (32.5X50X0.8-MM THK)	
B	17	1	**9X-6274**	2	WASHER (32.5X50X1.6-MM THK)	

B-USE AS REQUIRED
I-REFER TO HYDRAULIC INFORMATION SYSTEM
M-METRIC PART

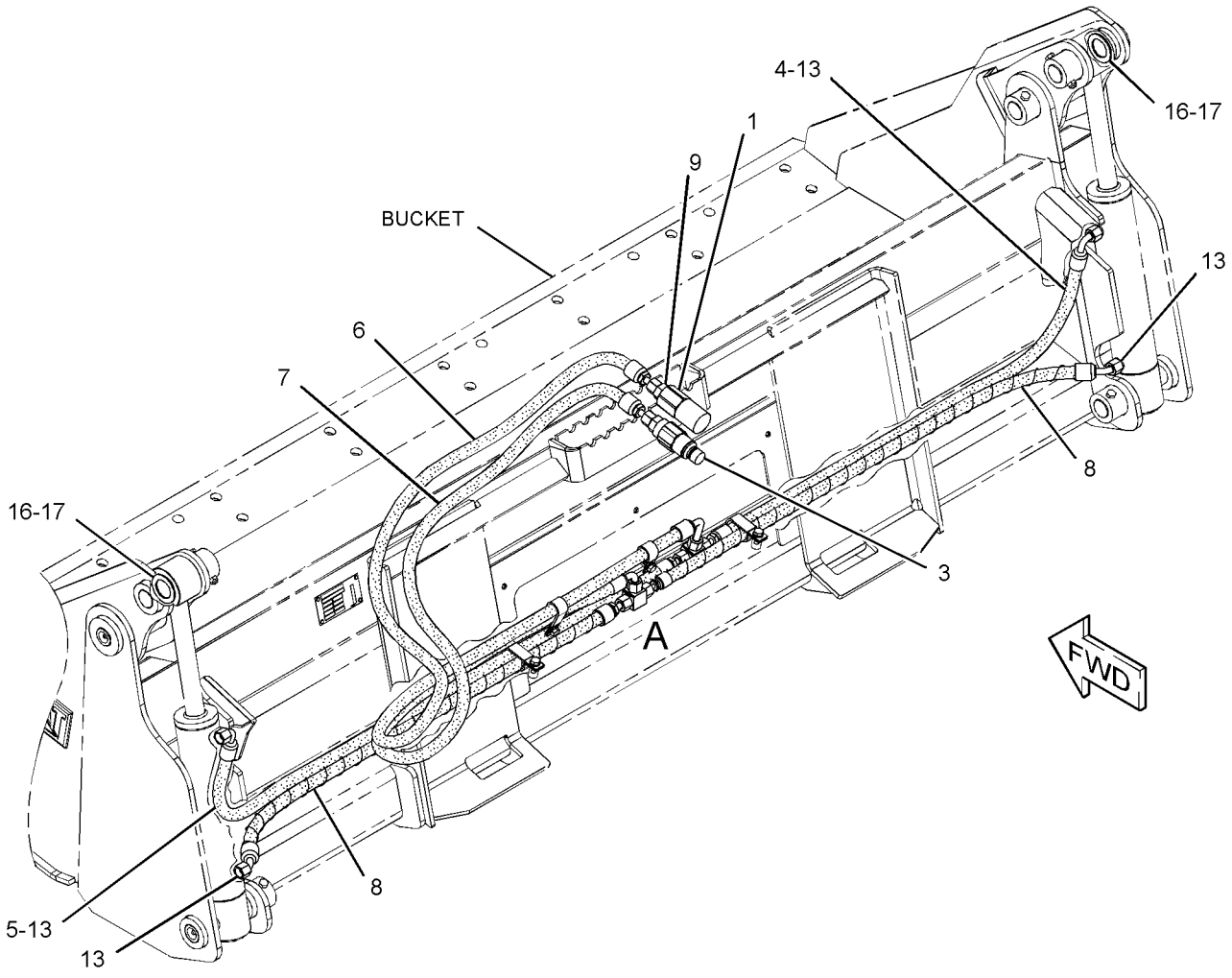

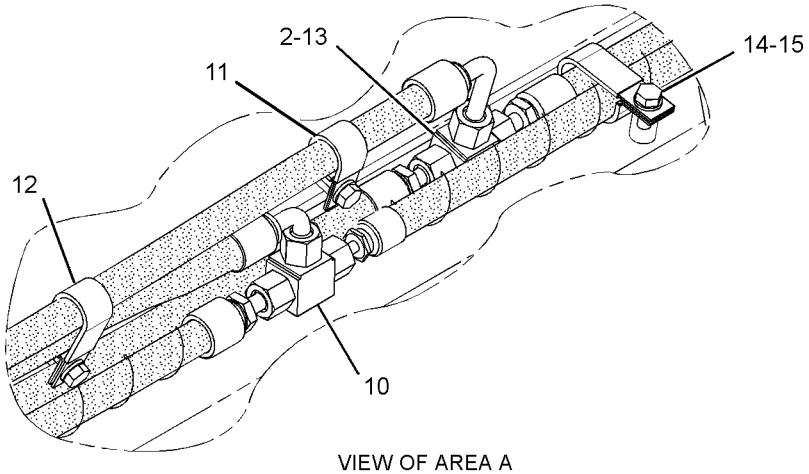

VIEW OF AREA A

GRAPHIC #1 **<END>** g01327736

177-1986 LINES GP-CONNECTING

S/N: SRS1-UP

PART OF 177-1989, 177-1990 BLADE AR

AN ATTACHMENT

SMCS-5057 **i01928980**

NOTE	REF NO	GRAPHIC REF	PART NUMBER	QTY	PART NAME 1 2 3 4 5 6 (PRODUCT LEVEL)	SEE PAGE
	1	1	**153-2994**	1	COUPLER AS-QUICK DISCONNECT (FEMALE)	
	2	1	**153-2995**	1	FITTING AS (QUICK DISCONNECT, MALE)	
	3	1	**163-1385**	2	ELBOW	
I	4	1	**177-1910**	2	HOSE AS	
I	5	1	**177-1911**	1	HOSE AS	
I	6	1	**177-1912**	1	HOSE AS	
	7	1	*148-8319*	2	CONNECTOR AS	
					(EACH INCLUDES)	
		1	**2M-9780**	1	SEAL-O-RING	
		1	**6V-8397**	1	SEAL-O-RING	
		1	**6V-8715**	1	CONNECTOR	
	8	1	**148-8378**	2	ELBOW AS	
					(EACH INCLUDES)	
		1	**3J-1907**	1	SEAL-O-RING	
		1	**6V-8397**	1	SEAL-O-RING	
		1	**6V-8724**	1	ELBOW	
	9	1	**6V-8397**	4	SEAL-O-RING	
	10	1	**8T-4121**	4	WASHER-HARD (11X21X2.5-MM THK)	
M	11	1	**8T-4133**	2	NUT (M10X1.5-THD)	
M	12	1	**8T-4185**	1	BOLT (M10X1.5X50-MM)	
M	13	1	**8T-4195**	1	BOLT (M10X1.5X30-MM)	
	14	1	**8T-8192**	2	CLIP (SLOT)	
	15	1	**8T-8193**	2	CLIP (TAB)	

I-REFER TO HYDRAULIC INFORMATION SYSTEM
M-METRIC PART

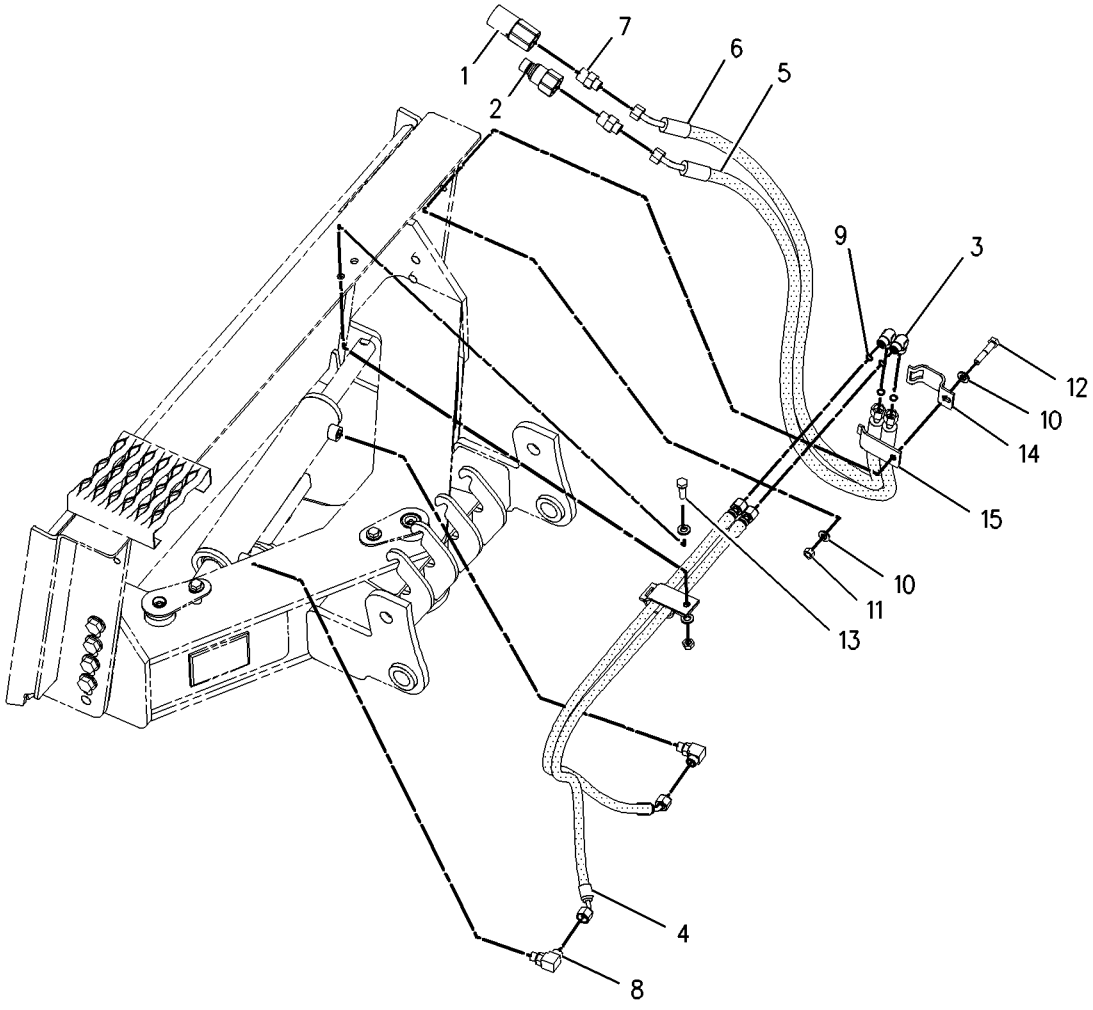

GRAPHIC #1 **<END>** g00978933

HYDRAULIC SYSTEM

231-5273 LINES GP-CONNECTING

S/N: SRS1-UP

PART OF 231-5275, 231-5277 BLADE AR

AN ATTACHMENT

SMCS-5057 **i01964116**

NOTE	REF NO	GRAPHIC REF	PART NUMBER	QTY	PART NAME 1 2 3 4 5 6 (PRODUCT LEVEL)	SEE PAGE
	1	1	**153-2994**	1	COUPLER AS-QUICK DISCONNECT (FEMALE)	
	2	1	**153-2995**	1	FITTING AS (QUICK DISCONNECT, MALE)	
I	3	1	**231-0124**	2	HOSE AS	
I	4	1	**231-0125**	1	HOSE AS	
I	5	1	**231-0126**	2	HOSE AS	
I	6	1	**231-0127**	2	HOSE AS	
I	7	1	**238-1003**	1	HOSE AS	
	8	1	*148-8315*	2	CONNECTOR AS	
					(EACH INCLUDES)	
		1	**2M-9780**	1	SEAL-O-RING	
		1	**6V-8642**	1	CONNECTOR	
		1	**7J-9108**	1	SEAL-O-RING	
	9	1	*148-8336*	6	CONNECTOR AS	
					(EACH INCLUDES)	
		1	**3J-1907**	1	SEAL-O-RING	
		1	**6V-8397**	1	SEAL-O-RING	
		1	**6V-8636**	1	CONNECTOR	
	10	1	*148-8342*	2	CONNECTOR AS	
					(EACH INCLUDES)	
		1	**3K-0360**	1	SEAL-O-RING	
		1	**6V-8632**	1	CONNECTOR	
		1	**7J-9108**	1	SEAL-O-RING	
	11	1	**5P-1076**	2	WASHER-HARD (13.5X30X4-MM THK)	
	12	1	**7G-5984**	1	CLIP (TAB)	
	13	1	**7G-5985**	1	CLIP (SLOT)	
	14	1	**7G-5986**	1	GROMMET	
M	15	1	**8T-4139**	2	BOLT (M12X1.75X30-MM)	

I-REFER TO HYDRAULIC INFORMATION SYSTEM
M-METRIC PART

231-5273 **LINES GP-CONNECTING** *(contd.)* **i01964116**

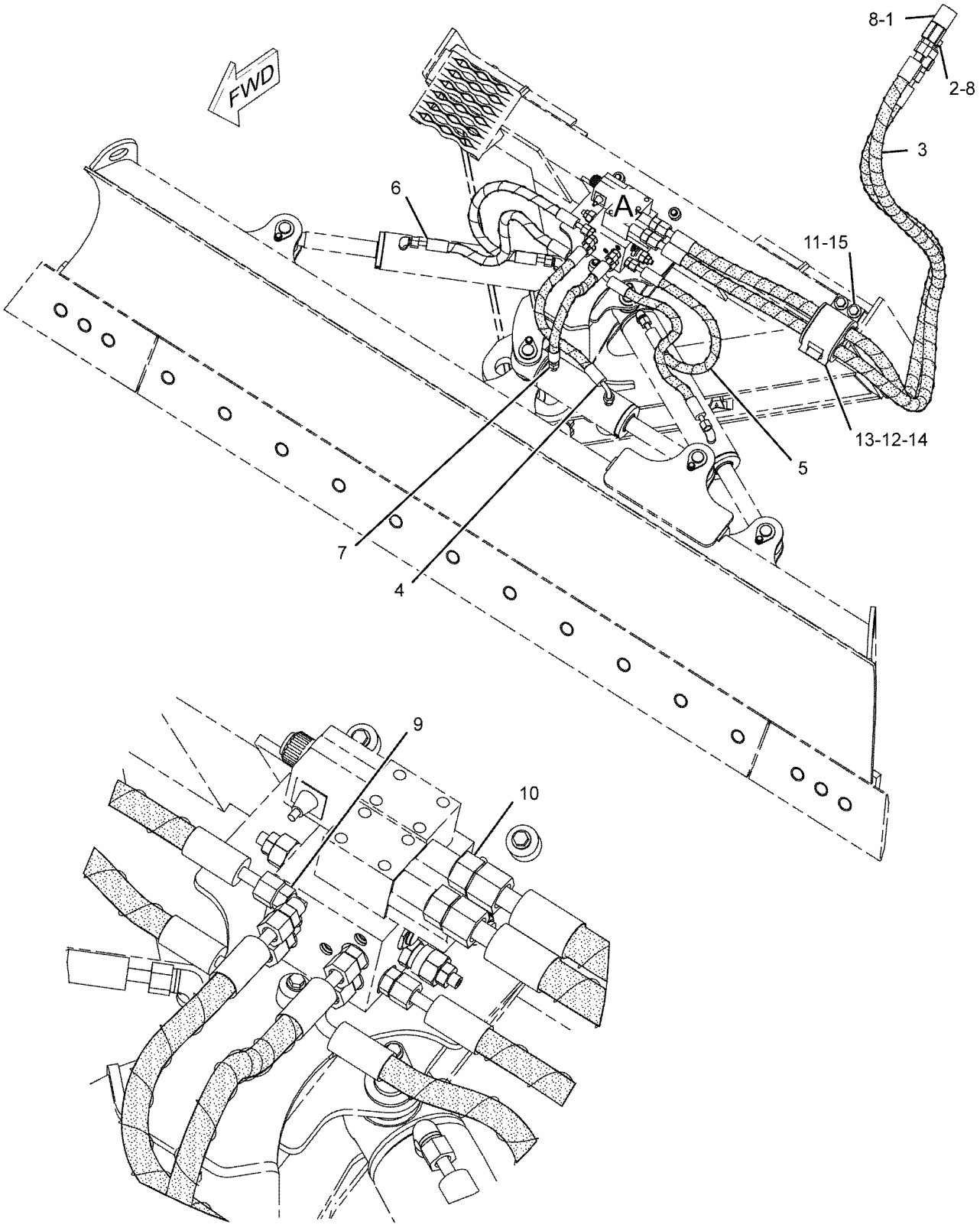

VIEW OF AREA A

GRAPHIC #1 **<END>** g01041993

HYDRAULIC SYSTEM

326-5751 LINES GP-COUPLER—HYDRAULIC

S/N: SRS1-352
PART OF 326-5750 COUPLER AR-QUICK
AN ATTACHMENT

SMCS-5057, 6129 **i03984109**

NOTE	REF NO	GRAPHIC REF	PART NUMBER	QTY	PART NAME 1 2 3 4 5 6 (PRODUCT LEVEL)	SEE PAGE
	1	1	**2K-5232**	2	SPACER (0.406X0.75X1.81-IN THK)	
	2	1	**3S-2093**	5	STRAP-CABLE	
	3	1	**7K-1181**	1	STRAP-CABLE	
	4	1	**9X-6581**	1	NUT-O-RING SEAL (1-14-THD)	
	5	1	**124-2456**	1	FILM-INSTRUCTION (NO STEP)	
	6	1	**207-9737**	1	BRACKET AS	
I	7	1	**207-9756**	4	HOSE AS	
	8	1	**212-6521**	1	SWITCH AS-ROCKER (QUICK COUPLER)	
		1	**111-7899**	1	GASKET	
	9	1	**212-6690**	1	GUARD	
I	10	1	**219-4335**	2	HOSE AS	
Y	11	1	**233-7128**	1	MANIFOLD GP-CONTROL (QUICK COUPLER)	273
	12	1	**238-7741**	1	TUBE AS	
	13	1	**238-7742**	1	TUBE AS	
	14	1	**326-5762**	1	BRACKET AS	
M		1	**8T-3490**	4	NUT-WELD (M10X1.5-THD)	
I	15	1	**326-5763**	1	HOSE AS	
I	16	1	**326-5764**	1	HOSE AS	
I	17	1	**326-5765**	2	HOSE AS	
	18	1	*148-8325*	4	CONNECTOR AS	
					(EACH INCLUDES)	
		1	**3J-1907**	1	SEAL-O-RING	
		1	**4J-5477**	1	SEAL-O-RING	
		1	**6V-8641**	1	CONNECTOR	
	19	1	*148-8336*	2	CONNECTOR AS	
					(EACH INCLUDES)	
		1	**3J-1907**	1	SEAL-O-RING	
		1	**6V-8397**	1	SEAL-O-RING	
		1	**6V-8636**	1	CONNECTOR	
	20	1	*148-8353*	1	ELBOW AS	
		1	**3J-1907**	1	SEAL-O-RING	
		1	**6V-8397**	1	SEAL-O-RING	
		1	**6V-9001**	1	ELBOW	
	21	1	*148-8378*	1	ELBOW AS	
		1	**3J-1907**	1	SEAL-O-RING	
		1	**6V-8397**	1	SEAL-O-RING	
		1	**6V-8724**	1	ELBOW	
	22	1	*148-8433*	1	TEE AS	
		1	**6V-8397**	2	SEAL-O-RING	
		1	**6V-9836**	1	TEE-SWIVEL	
	23	1	*148-8446*	1	TEE AS-SWIVEL	
		1	**6V-9838**	1	TEE-SWIVEL	
		1	**7J-9108**	2	SEAL-O-RING	
	24	1	*150-4034*	2	TEE AS	
					(EACH INCLUDES)	
		1	**6V-8397**	3	SEAL-O-RING	
		1	**8T-0379**	1	TEE-BULKHEAD	
	25	1	*156-4282*	1	REDUCER AS	
		1	**6V-8397**	1	SEAL-O-RING	
		1	**6V-8938**	1	REDUCER-O-RING	
	26	1	**164-4225**	2	CLIP	
	27	1	**4P-7581**	1	CLIP	
	28	1	**6K-8178**	2	CLIP	
	29	1	**6V-8397**	4	SEAL-O-RING	
	30	1	**6V-9168**	2	NUT (11/16-16-THD)	

326-5751 **LINES GP-COUPLER** *(contd.)* **i03984109**

NOTE	REF NO	GRAPHIC REF	PART NUMBER	QTY	PART NAME 1 2 3 4 5 6 (PRODUCT LEVEL)	SEE PAGE
	31	1	**7G-2950**	1	CLIP (SLOT)	
	32	1	**7G-2951**	1	CLIP (TAB)	
	33	1	**7H-7055**	6	CLIP	
	34	1	**7X-7729**	5	WASHER (11X25X3-MM THK)	
	35	1	**8T-4121**	9	WASHER-HARD (11X21X2.5-MM THK)	
M	36	1	**8T-4133**	2	NUT (M10X1.5-THD)	
M	37	1	**8T-4136**	1	BOLT (M10X1.5X25-MM)	
M	38	1	**8T-4189**	2	BOLT (M8X1.25X20-MM)	
M	39	1	**8T-4191**	3	BOLT (M10X1.5X16-MM)	
M	40	1	**8T-4201**	4	BOLT-LOCKING (M10X1.5X20-MM)	
	41	1	**8T-4224**	4	WASHER-HARD (8.8X16X2-MM THK)	
M	42	1	**8T-4908**	2	BOLT (M8X1.25X25-MM)	
M	43	1	**8T-5005**	4	BOLT (M10X1.5X70-MM)	
	44	1	**9M-8406**	4	CLIP	

I-REFER TO HYDRAULIC INFORMATION SYSTEM
M-METRIC PART
Y-SEPARATE ILLUSTRATION

326-5751 **LINES GP-COUPLER** ***(contd.)*** **i03984109**

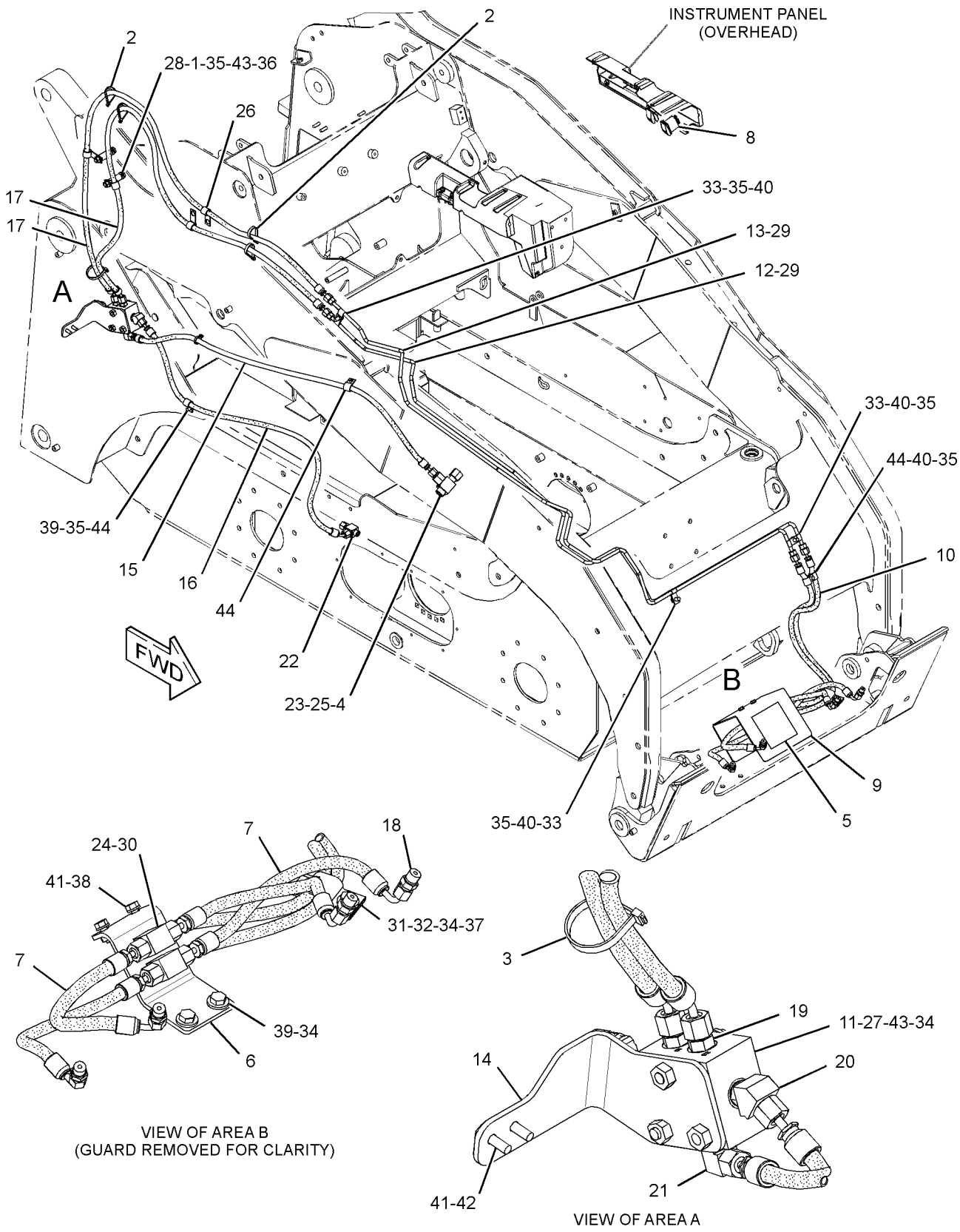

GRAPHIC #1 **<END>** g02173232

HYDRAULIC SYSTEM

326-5751 LINES GP-COUPLER—HYDRAULIC

S/N: SRS353-UP
PART OF 326-5750 COUPLER AR-QUICK
AN ATTACHMENT
TYPE 1

SMCS-5057, 6129 **i04029676**

NOTE	REF NO	GRAPHIC REF	PART NUMBER	QTY	PART NAME 1 2 3 4 5 6 (PRODUCT LEVEL)	SEE PAGE
	1	1	**2K-5232**	2	SPACER (0.406X0.75X1.81-IN THK)	
	2	1	**3S-2093**	5	STRAP-CABLE	
	3	1	**7K-1181**	1	STRAP-CABLE	
	4	1	**9X-6581**	1	NUT-O-RING SEAL (1-14-THD)	
	5	1	**124-2456**	1	FILM-INSTRUCTION (NO STEP)	
	6	1	**207-9737**	1	BRACKET AS	
I	7	1	**207-9756**	4	HOSE AS	
	8	1	**212-6521**	1	SWITCH AS-ROCKER (QUICK COUPLER)	
		1	**111-7899**	1	GASKET	
	9	1	**212-6690**	1	GUARD	
I	10	1	**219-4335**	2	HOSE AS	
Y	11	1	**233-7128**	1	MANIFOLD GP-CONTROL (QUICK COUPLER)	273
	12	1	**238-7741**	1	TUBE AS	
	13	1	**238-7742**	1	TUBE AS	
	14	1	**326-5762**	1	BRACKET AS	
M		1	**8T-3490**	4	NUT-WELD (M10X1.5-THD)	
CI	15	1	**361-0457**	1	HOSE AS	
I	16	1	**326-5764**	1	HOSE AS	
I	17	1	**326-5765**	2	HOSE AS	
	18	1	*148-8325*	4	CONNECTOR AS	
					(EACH INCLUDES)	
		1	**3J-1907**	1	SEAL-O-RING	
		1	**4J-5477**	1	SEAL-O-RING	
		1	**6V-8641**	1	CONNECTOR	
	19	1	*148-8336*	2	CONNECTOR AS	
					(EACH INCLUDES)	
		1	**3J-1907**	1	SEAL-O-RING	
		1	**6V-8397**	1	SEAL-O-RING	
		1	**6V-8636**	1	CONNECTOR	
	20	1	*148-8353*	1	ELBOW AS	
		1	**3J-1907**	1	SEAL-O-RING	
		1	**6V-8397**	1	SEAL-O-RING	
		1	**6V-9001**	1	ELBOW	
	21	1	*148-8378*	1	ELBOW AS	
		1	**3J-1907**	1	SEAL-O-RING	
		1	**6V-8397**	1	SEAL-O-RING	
		1	**6V-8724**	1	ELBOW	
	22	1	*148-8433*	1	TEE AS	
		1	**6V-8397**	2	SEAL-O-RING	
		1	**6V-9836**	1	TEE-SWIVEL	
	24	1	*150-4034*	2	TEE AS	
					(EACH INCLUDES)	
		1	**6V-8397**	3	SEAL-O-RING	
		1	**8T-0379**	1	TEE-BULKHEAD	
	25	1	*156-4282*	1	REDUCER AS	
		1	**6V-8397**	1	SEAL-O-RING	
		1	**6V-8938**	1	REDUCER-O-RING	
	26	1	**164-4225**	2	CLIP	
	27	1	**4P-7581**	1	CLIP	
	28	1	**6K-8178**	2	CLIP	
	29	1	**6V-8397**	4	SEAL-O-RING	
	30	1	**6V-9168**	2	NUT (11/16-16-THD)	
	31	1	**7G-2950**	1	CLIP (SLOT)	
	32	1	**7G-2951**	1	CLIP (TAB)	

326-5751 **LINES GP-COUPLER** ***(contd.)*** **i04029676**

NOTE	REF NO	GRAPHIC REF	PART NUMBER	QTY	PART NAME 1 2 3 4 5 6 (PRODUCT LEVEL)	SEE PAGE
	33	1	**7H-7055**	6	CLIP	
	34	1	**7X-7729**	5	WASHER (11X25X3-MM THK)	
	35	1	**8T-4121**	9	WASHER-HARD (11X21X2.5-MM THK)	
M	36	1	**8T-4133**	2	NUT (M10X1.5-THD)	
M	37	1	**8T-4136**	1	BOLT (M10X1.5X25-MM)	
M	38	1	**8T-4189**	2	BOLT (M8X1.25X20-MM)	
M	39	1	**8T-4191**	3	BOLT (M10X1.5X16-MM)	
M	40	1	**8T-4201**	4	BOLT-LOCKING (M10X1.5X20-MM)	
	41	1	**8T-4224**	4	WASHER-HARD (8.8X16X2-MM THK)	
M	42	1	**8T-4908**	2	BOLT (M8X1.25X25-MM)	
M	43	1	**8T-5005**	4	BOLT (M10X1.5X70-MM)	
	44	1	**9M-8406**	4	CLIP	

C-CHANGE FROM PREVIOUS TYPE
I-REFER TO HYDRAULIC INFORMATION SYSTEM
M-METRIC PART
Y-SEPARATE ILLUSTRATION

326-5751 **LINES GP-COUPLER** *(contd.)* **i04029676**

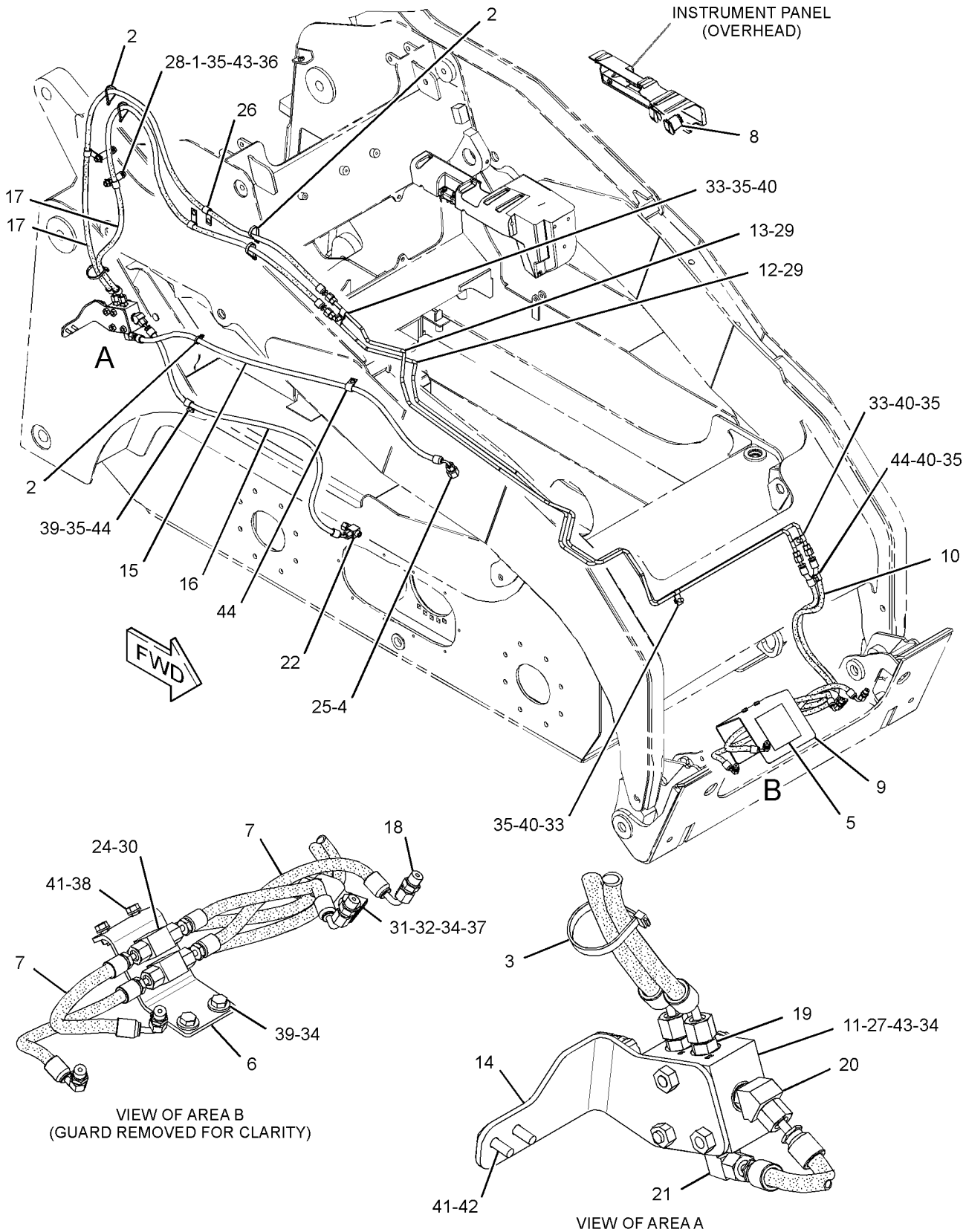

VIEW OF AREA B
(GUARD REMOVED FOR CLARITY)

VIEW OF AREA A

GRAPHIC #1 **<END>** g02371876

326-5751 LINES GP-COUPLER—HYDRAULIC

S/N: SRS353-UP
PART OF 326-5750 COUPLER AR-QUICK
AN ATTACHMENT
TYPE 2

SMCS-5057, 6129 **i04394804**

NOTE	REF NO	GRAPHIC REF	PART NUMBER	QTY	PART NAME 1 2 3 4 5 6 (PRODUCT LEVEL)	SEE PAGE
	1	1	**2K-5232**	2	SPACER (0.406X0.75X1.81-IN THK)	
	2	1	**3S-2093**	5	STRAP-CABLE	
	3	1	**7K-1181**	1	STRAP-CABLE	
	4	1	**9X-6581**	1	NUT-O-RING SEAL (1-14-THD)	
	5	1	**124-2456**	1	FILM-INSTRUCTION (NO STEP)	
	6	1	**207-9737**	1	BRACKET AS	
I	7	1	**207-9756**	4	HOSE AS	
	8	1	**212-6521**	1	SWITCH AS-ROCKER (QUICK COUPLER)	
		1	**111-7899**	1	GASKET	
	9	1	**212-6690**	1	GUARD	
I	10	1	**219-4335**	2	HOSE AS	
Y	11	1	**233-7128**	1	MANIFOLD GP-CONTROL (QUICK COUPLER)	273
	12	1	**238-7741**	1	TUBE AS	
	13	1	**238-7742**	1	TUBE AS	
	14	1	**326-5762**	1	BRACKET AS	
M		1	**8T-3490**	4	NUT-WELD (M10X1.5-THD)	
I	15	1	**361-0457**	1	HOSE AS	
C	16	1	**364-1348**	1	TUBE AS	
I	17	1	**326-5765**	2	HOSE AS	
	18	1	*148-8325*	4	CONNECTOR AS	
					(EACH INCLUDES)	
		1	**3J-1907**	1	SEAL-O-RING	
		1	**4J-5477**	1	SEAL-O-RING	
		1	**6V-8641**	1	CONNECTOR	
	19	1	*148-8336*	2	CONNECTOR AS	
					(EACH INCLUDES)	
		1	**3J-1907**	1	SEAL-O-RING	
		1	**6V-8397**	1	SEAL-O-RING	
		1	**6V-8636**	1	CONNECTOR	
	20	1	*148-8353*	1	ELBOW AS	
		1	**3J-1907**	1	SEAL-O-RING	
		1	**6V-8397**	1	SEAL-O-RING	
		1	**6V-9001**	1	ELBOW	
	21	1	*148-8378*	1	ELBOW AS	
		1	**3J-1907**	1	SEAL-O-RING	
		1	**6V-8397**	1	SEAL-O-RING	
		1	**6V-8724**	1	ELBOW	
	22	1	*148-8433*	1	TEE AS	
		1	**6V-8397**	2	SEAL-O-RING	
		1	**6V-9836**	1	TEE-SWIVEL	
	24	1	*150-4034*	2	TEE AS	
					(EACH INCLUDES)	
		1	**6V-8397**	3	SEAL-O-RING	
		1	**8T-0379**	1	TEE-BULKHEAD	
	25	1	*156-4282*	1	REDUCER AS	
		1	**6V-8397**	1	SEAL-O-RING	
		1	**6V-8938**	1	REDUCER-O-RING	
	26	1	**164-4225**	2	CLIP	
	27	1	**4P-7581**	1	CLIP	
	28	1	**6K-8178**	2	CLIP	
	29	1	**6V-8397**	4	SEAL-O-RING	
	30	1	**6V-9168**	2	NUT (11/16-16-THD)	
	31	1	**7G-2950**	1	CLIP (SLOT)	
	32	1	**7G-2951**	1	CLIP (TAB)	

326-5751 **LINES GP-COUPLER** *(contd.)* **i04394804**

NOTE	REF NO	GRAPHIC REF	PART NUMBER	QTY	PART NAME 1 2 3 4 5 6 (PRODUCT LEVEL)	SEE PAGE
C	33	1	**7H-7055**	7	CLIP	
	34	1	**7X-7729**	5	WASHER (11X25X3-MM THK)	
	35	1	**8T-4121**	9	WASHER-HARD (11X21X2.5-MM THK)	
M	36	1	**8T-4133**	2	NUT (M10X1.5-THD)	
M	37	1	**8T-4136**	1	BOLT (M10X1.5X25-MM)	
M	38	1	**8T-4189**	2	BOLT (M8X1.25X20-MM)	
M	39	1	**8T-4191**	3	BOLT (M10X1.5X16-MM)	
M	40	1	**8T-4201**	4	BOLT-LOCKING (M10X1.5X20-MM)	
	41	1	**8T-4224**	4	WASHER-HARD (8.8X16X2-MM THK)	
M	42	1	**8T-4908**	2	BOLT (M8X1.25X25-MM)	
M	43	1	**8T-5005**	4	BOLT (M10X1.5X70-MM)	
C	44	1	**9M-8406**	3	CLIP	

C-CHANGE FROM PREVIOUS TYPE
I-REFER TO HYDRAULIC INFORMATION SYSTEM
M-METRIC PART
Y-SEPARATE ILLUSTRATION

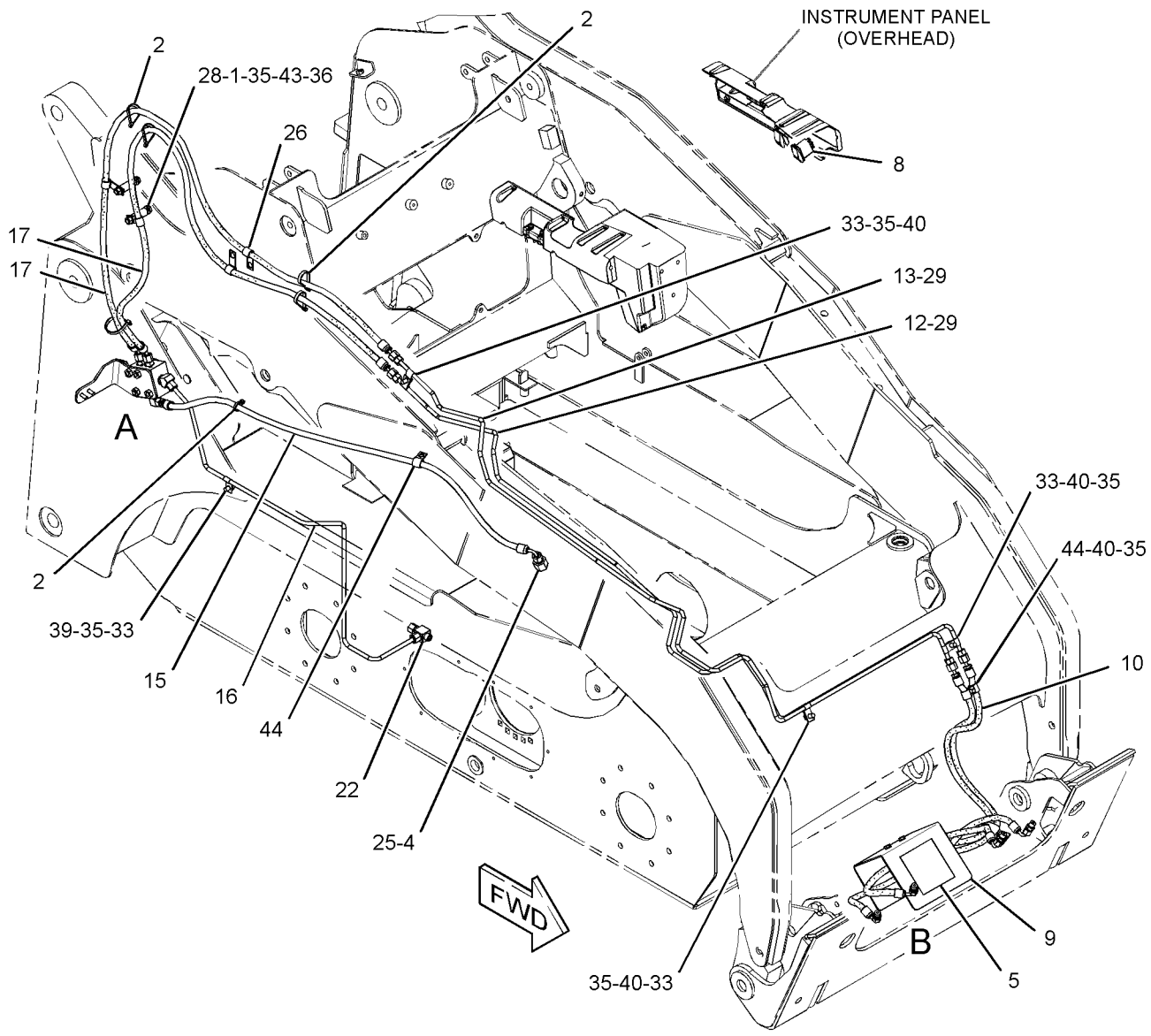

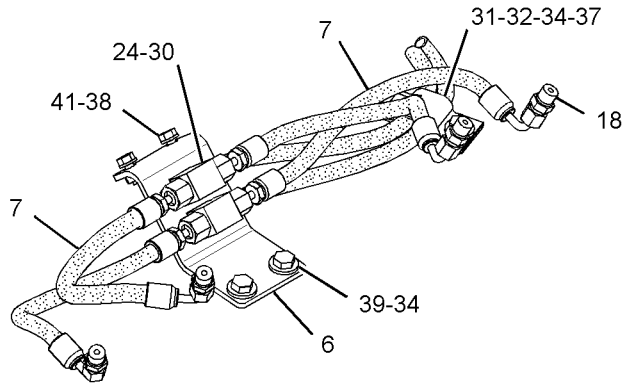

VIEW OF AREA B
(GUARD REMOVED FOR CLARITY)

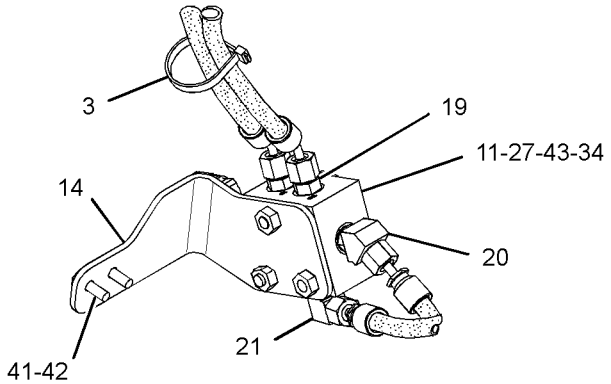

VIEW OF AREA A

GRAPHIC #1 **<END>** g02583657

HYDRAULIC SYSTEM

161-0187 LINES GP-GRAPPLE

S/N: SRS1-UP

PART OF 157-7223, 157-7224, 157-7225, 217-6229 BUCKET AR-GRAPPLE

AN ATTACHMENT

SMCS-5057, 5555 **i01928983**

NOTE	REF NO	GRAPHIC REF	PART NUMBER	QTY	PART NAME 1 2 3 4 5 6 (PRODUCT LEVEL)	SEE PAGE
	1	1	**3E-7404**	2	CLAMP-HOSE	
	2	1	**153-2994**	1	COUPLER AS-QUICK DISCONNECT (FEMALE)	
	3	1	**153-2995**	1	FITTING AS (QUICK DISCONNECT, MALE)	
	4	1	**161-0185**	1	TUBE AS	
	5	1	**161-0186**	1	TUBE AS	
	6	1	**161-0188**	2	TUBE AS	
I	7	1	**161-0189**	2	HOSE AS	
I	8	1	**161-0190**	2	HOSE AS	
	9	1	**163-1385**	1	ELBOW	
I	10	1	**163-9320**	1	HOSE AS	
I	11	1	**166-9312**	1	HOSE AS	
	12	1	*148-8319*	2	CONNECTOR AS	
					(EACH INCLUDES)	
		1	**2M-9780**	1	SEAL-O-RING	
		1	**6V-8397**	1	SEAL-O-RING	
		1	**6V-8715**	1	CONNECTOR	
	13	1	**2V-3216**	6	CLIP	
	14	1	**6V-8397**	13	SEAL-O-RING	
	15	1	**7S-3916**	2	CLIP (TAB)	
	16	1	**7S-3919**	2	CLIP (SLOT)	
	17	1	**8T-4121**	2	WASHER-HARD (11X21X2.5-MM THK)	
M	18	1	**8T-4136**	2	BOLT (M10X1.5X25-MM)	
M	19	1	**8T-4171**	4	BOLT (M6X1X12-MM)	
	20	1	**9R-2004**	2	BLOCK	

I-REFER TO HYDRAULIC INFORMATION SYSTEM
M-METRIC PART

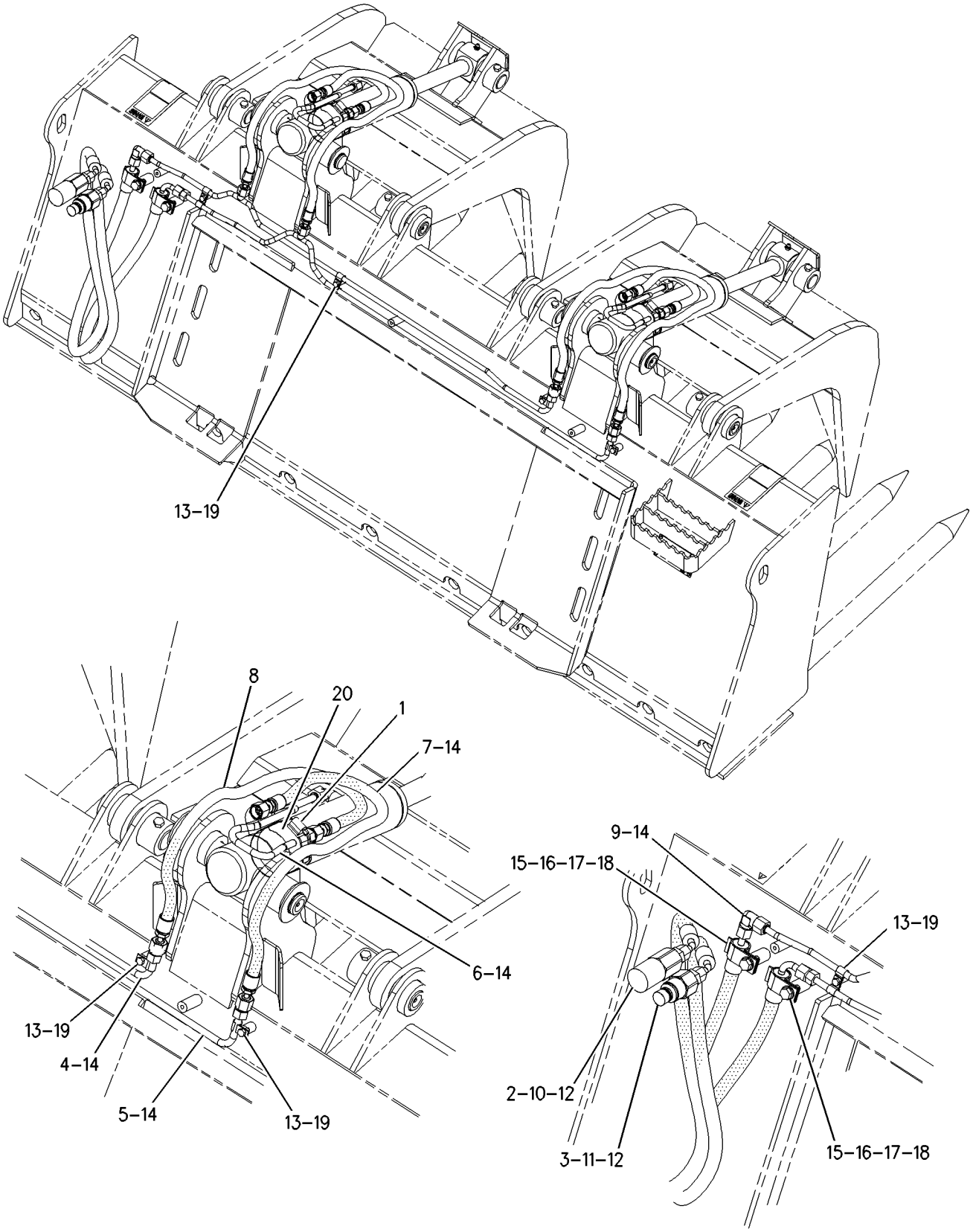

GRAPHIC #1 **<END>** g00733464

HYDRAULIC SYSTEM

286-9250 LINES GP-GRAPPLE

S/N: SRS1-UP
2134-MM (84-IN)
PART OF 286-9301 BUCKET AR-GRAPPLE
AN ATTACHMENT

SMCS-5057, 5555 **i02941543**

NOTE	REF NO	GRAPHIC REF	PART NUMBER	QTY	PART NAME 1 2 3 4 5 6 (PRODUCT LEVEL)	SEE PAGE
	1	1	**2H-7829**	10	CLIP	
	2	1	**9S-4200**	2	CLIP	
	3	1	**153-2994**	1	COUPLER AS-QUICK DISCONNECT (FEMALE)	
I	4	1	**161-0189**	2	HOSE AS	
	5	1	**163-1385**	1	ELBOW	
I	6	1	**177-1911**	2	HOSE AS	
	7	1	**185-7887**	1	COUPLER AS-QUICK DISCONNECT (MALE)	
I	8	1	**286-9263**	2	HOSE AS	
	9	1	**286-9265**	1	TUBE AS	
	10	1	**286-9266**	1	TUBE AS	
	11	1	**286-9267**	1	TUBE AS	
	12	1	**286-9268**	1	TUBE AS	
	13	1	**286-9271**	1	GUARD	
	14	1	*148-8319*	2	CONNECTOR AS	
					(EACH INCLUDES)	
		1	**2M-9780**	1	SEAL-O-RING	
		1	**6V-8397**	1	SEAL-O-RING	
		1	**6V-8715**	1	CONNECTOR	
	15	1	**8T-4224**	6	WASHER-HARD (8.8X16X2-MM THK)	
	16	1	**6V-8397**	13	SEAL-O-RING	
	17	1	**7S-3916**	2	CLIP (TAB)	
	18	1	**7S-3919**	2	CLIP (SLOT)	
	19	1	**7X-7729**	5	WASHER (11X25X3-MM THK)	
M	20	1	**8T-4195**	5	BOLT (M10X1.5X30-MM)	
M	21	1	**8T-4200**	6	BOLT (M8X1.25X16-MM)	
	22	1	**5P-5148**	2	STRAP-TIE	

I-REFER TO HYDRAULIC INFORMATION SYSTEM
M-METRIC PART

286-9250 **LINES GP-GRAPPLE** *(contd.)* **i02941543**

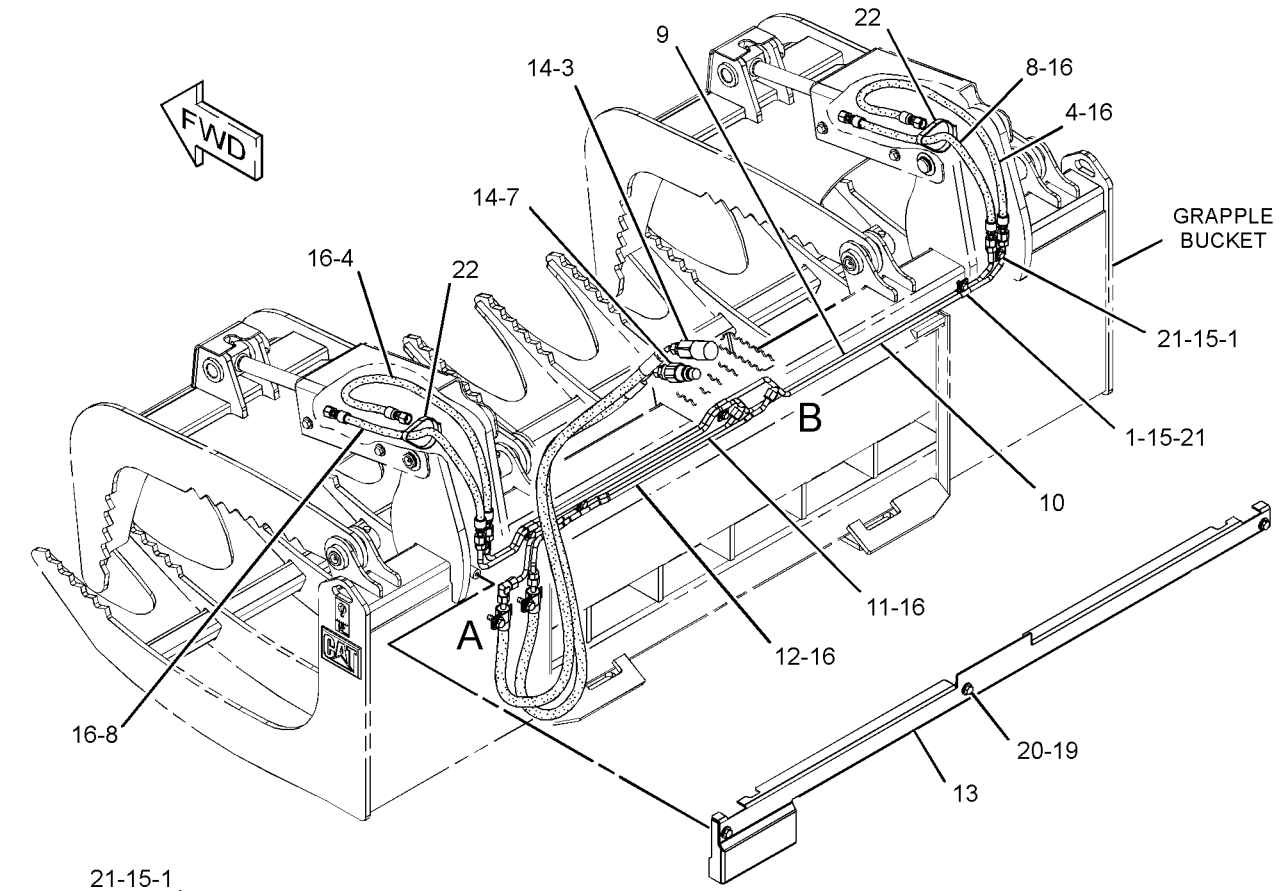

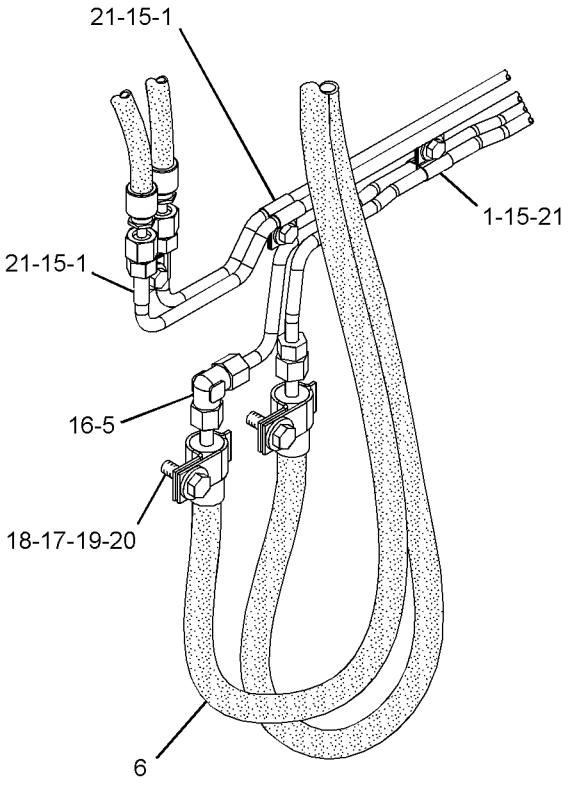

VIEW OF AREA A

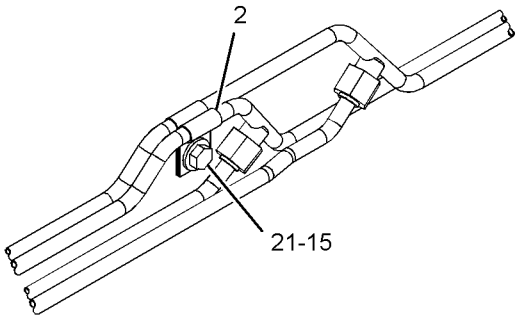

VIEW OF AREA B

GRAPHIC #1 **<END>** g01514424

HYDRAULIC SYSTEM

286-9279 LINES GP-GRAPPLE

S/N: SRS1-UP
1829-MM (72-IN)
PART OF 286-9300 BUCKET AR-GRAPPLE
AN ATTACHMENT

SMCS-5057, 5555 **i02914649**

NOTE	REF NO	GRAPHIC REF	PART NUMBER	QTY	PART NAME 1 2 3 4 5 6 (PRODUCT LEVEL)	SEE PAGE
	1	1	**2H-7829**	10	CLIP	
	2	1	**9S-4200**	2	CLIP	
	3	1	**153-2994**	1	COUPLER AS-QUICK DISCONNECT (FEMALE)	
I	4	1	**161-0189**	2	HOSE AS	
	5	1	**163-1385**	1	ELBOW	
I	6	1	**177-1911**	2	HOSE AS	
	7	1	**185-7887**	1	COUPLER AS-QUICK DISCONNECT (MALE)	
	8	1	**286-9249**	1	GUARD	
I	9	1	**286-9263**	2	HOSE AS	
	10	1	**286-9267**	1	TUBE AS	
	11	1	**286-9268**	1	TUBE AS	
	12	1	**286-9280**	1	TUBE AS	
	13	1	**286-9281**	1	TUBE AS	
	14	1	*148-8319*	2	CONNECTOR AS	
					(EACH INCLUDES)	
		1	**2M-9780**	1	SEAL-O-RING	
		1	**6V-8397**	1	SEAL-O-RING	
		1	**6V-8715**	1	CONNECTOR	
	15	1	**8T-4224**	6	WASHER-HARD (8.8X16X2-MM THK)	
	16	1	**6V-8397**	13	SEAL-O-RING	
	17	1	**7S-3916**	2	CLIP (TAB)	
	18	1	**7S-3919**	2	CLIP (SLOT)	
	19	1	**7X-7729**	5	WASHER (11X25X3-MM THK)	
M	20	1	**8T-4195**	5	BOLT (M10X1.5X30-MM)	
M	21	1	**8T-4200**	6	BOLT (M8X1.25X16-MM)	
	22	1	**5P-5148**	2	STRAP-TIE	

I-REFER TO HYDRAULIC INFORMATION SYSTEM
M-METRIC PART

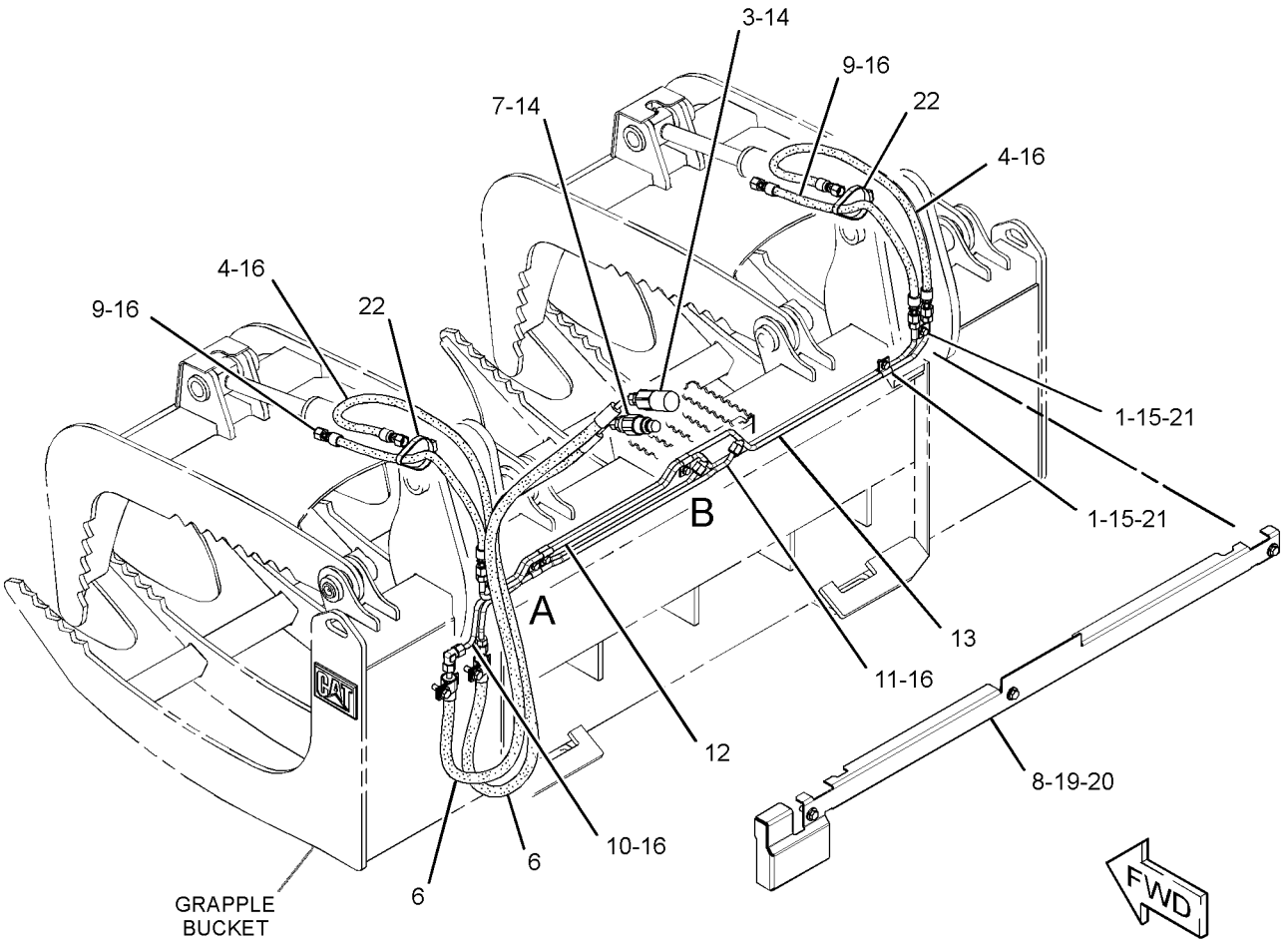

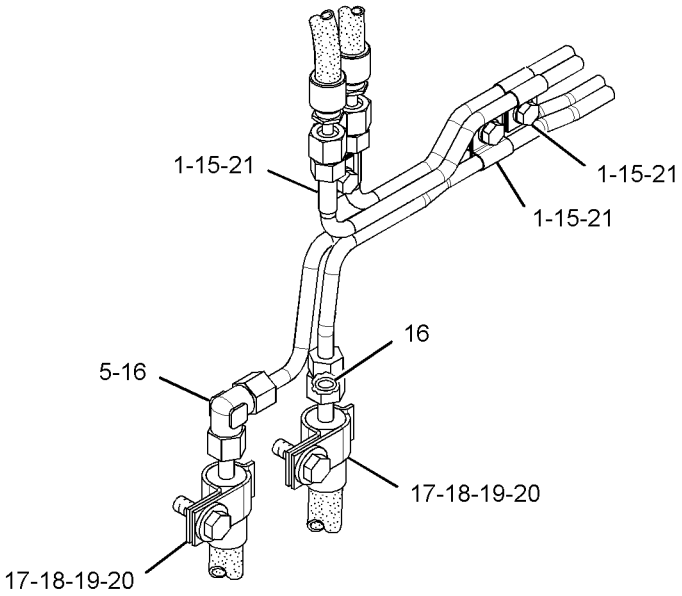

VIEW OF AREA A
(HOSES REMOVED FOR CLARITY)

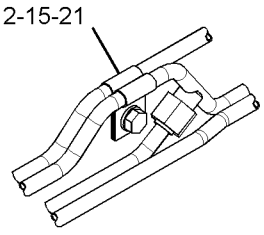

VIEW OF AREA B

GRAPHIC #1 **<END>** g01453768

HYDRAULIC SYSTEM

326-5731 LINES GP-HYDRAULIC OIL COOLER

S/N: SRS1-UP

PART OF 326-5730 HYDRAULIC AR

SMCS-5057 **i04175409**

NOTE	REF NO	GRAPHIC REF	PART NUMBER	QTY	PART NAME 1 2 3 4 5 6 (PRODUCT LEVEL)	SEE PAGE
	1	1	**6R-3320**	1	COVER	
	2	1	**258-3850**	2	CLAMP-HALF	
M	3	1	**303-8205**	1	BOLT (M8X1.25X60-MM)	
I	4	1	**326-5732**	1	HOSE AS	
I	5	1	**326-5733**	1	HOSE AS	
	6	1	**326-5749**	1	BRACKET AS	
		1	**154-4886**	1	PLATE AS	
M		1	**159-9540**	2	NUT-WELD (M8X1.25-THD)	
	7	1	*148-8347*	2	ELBOW AS	
					(EACH INCLUDES)	
		1	**3D-2824**	1	SEAL-O-RING	
		1	**6V-9007**	1	ELBOW	
		1	**6V-9746**	1	SEAL-O-RING	
	8	1	**5D-0718**	2	CLIP	
	9	1	**6V-1889**	1	CLIP	
	10	1	**7X-7729**	1	WASHER (11X25X3-MM THK)	
	11	1	**8T-4121**	2	WASHER-HARD (11X21X2.5-MM THK)	
M	12	1	**8T-4133**	1	NUT (M10X1.5-THD)	
M	13	1	**8T-4196**	2	BOLT (M10X1.5X35-MM)	
	14	1	**8T-4224**	2	WASHER-HARD (8.8X16X2-MM THK)	
M	15	1	**8T-7547**	2	BOLT (M8X1.25X30-MM)	
E	16	1	**9X-2092**		TRIM-EDGE (30-CM)	
	17	1	**7K-1181**	1	STRAP-CABLE	
	18	1	**161-3357**	1	SPACER (12X20X10-MM THK)	
	19	1	**132-5789**	1	CLIP	

E-ORDER BY THE CENTIMETER
I-REFER TO HYDRAULIC INFORMATION SYSTEM
M-METRIC PART

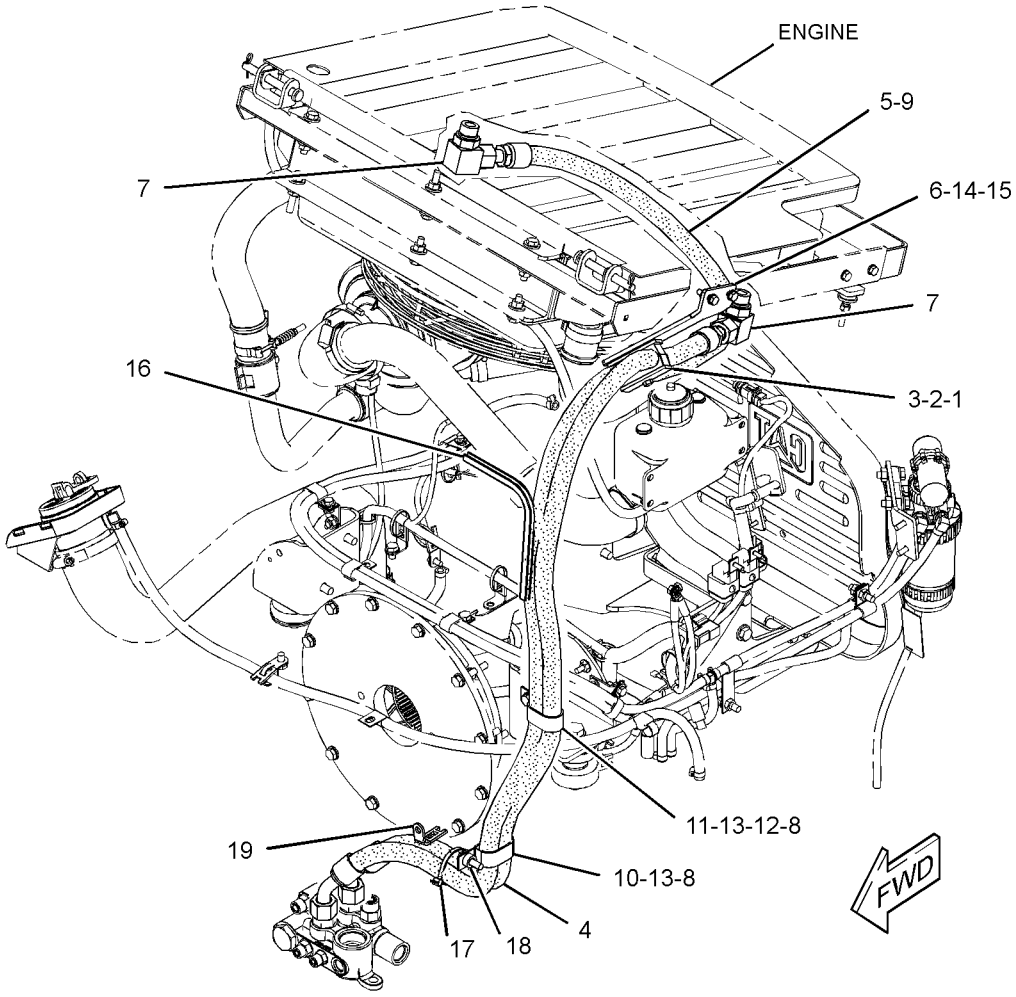

GRAPHIC #1 **<END>** g02370357

HYDRAULIC SYSTEM

326-5738 LINES GP-LIFT CYLINDER–
WITH WORK TOOL POSITIONER
S/N: SRS1-UP
PART OF 326-5770 HYDRAULIC AR
AN ATTACHMENT

SMCS-5057, 5102 **i04091757**

NOTE	REF NO	GRAPHIC REF	PART NUMBER	QTY	PART NAME 1 2 3 4 5 6 (PRODUCT LEVEL)	SEE PAGE
	1	1	**6V-3582**	2	CLAMP-HOSE	
J	2	1	**112-1817**	1	VALVE GP-MANUAL (LIFT CYLINDER)	
	3	1	**142-8997**	2	BLOCK	
Y	4	1	**142-9116**	1	SWITCH GP-ROCKER (WORK TOOL POSITIONER)	106
		1	**111-7899**	1	GASKET	
	5	1	**212-6525**	1	TUBE AS	
	6	1	**212-6526**	1	TUBE AS	
	7	1	**218-5764**	1	PLATE	
	8	1	**218-6438**	1	SEAL	
Y	9	1	**223-8418**	1	MANIFOLD & SOLENOID GP-CONTROL (WORK TOOL POSITIONER)	272
	10	1	**285-9286**	1	BLOCK	
I	11	1	**290-3382**	2	HOSE AS	
I	12	1	**290-3395**	2	HOSE AS	
I	13	1	**326-5612**	1	HOSE AS	
I	14	1	**326-5613**	1	HOSE AS	
	15	1	**326-5614**	1	HANDLE AS	
	16	1	**326-5625**	1	BRACKET AS	
M		1	**6V-9632**	3	NUT-WELD (M6X1-THD)	
M		1	**8T-3612**	3	NUT-WELD (M8X1.25-THD)	
	17	1	**326-5634**	1	BRUSH AS	
I	18	1	**326-5752**	1	HOSE AS	
	19	1	**326-5773**	1	TUBE AS	
	20	1	**326-5774**	1	TUBE AS	
	21	1	**348-8820**	1	TUBE AS	
	22	1	**354-6556**	1	TUBE AS	
	23	1	**354-6557**	1	TUBE AS	
	24	1	**101-2867**	1	WASHER-HARD (7.2X25X2-MM THK)	
	25	1	*148-8341*	2	CONNECTOR AS	
					(EACH INCLUDES)	
		1	**3D-2824**	1	SEAL-O-RING	
		1	**6V-8713**	1	CONNECTOR	
		1	**7J-9108**	1	SEAL-O-RING	
	26	1	*148-8345*	1	CONNECTOR AS	
		1	**2M-9780**	1	SEAL-O-RING	
		1	**6V-8398**	1	SEAL-O-RING	
		1	**6V-8638**	1	CONNECTOR	
	27	1	*148-8370*	1	ELBOW AS	
		1	**6V-8398**	1	SEAL-O-RING	
		1	**6V-9851**	1	ELBOW	
	28	1	*148-8378*	2	ELBOW AS	
					(EACH INCLUDES)	
		1	**3J-1907**	1	SEAL-O-RING	
		1	**6V-8397**	1	SEAL-O-RING	
		1	**6V-8724**	1	ELBOW	
	29	1	*148-8390*	1	ELBOW AS	
		1	**2M-9780**	1	SEAL-O-RING	
		1	**6V-8626**	1	ELBOW	
		1	**7J-9108**	1	SEAL-O-RING	
M	30	1	**271-9408**	3	SCREW-TRUSS HEAD (M5X0.8X10-MM)	
	31	1	**4B-4863**	4	WASHER (4.7X11X1.2-MM THK)	
	32	1	**4P-8134**	1	CLIP	
M	33	1	**5C-2874**	2	NUT (M5X0.8-THD)	
	34	1	**6V-8397**	1	SEAL-O-RING	

326-5738 **LINES GP-LIFT CYLINDER** *(contd.)* **i04091757**

NOTE	REF NO	GRAPHIC REF	PART NUMBER	QTY	PART NAME 1 2 3 4 5 6 (PRODUCT LEVEL)	SEE PAGE
	35	1	**6V-8398**	7	SEAL-O-RING	
	36	1	**7J-9108**	6	SEAL-O-RING	
M	37	1	**7X-2535**	2	BOLT (M6X1X60-MM)	
M	38	1	**8T-7852**	4	BOLT (M4X0.7X10-MM)	
	39	1	**8T-4121**	1	WASHER-HARD (11X21X2.5-MM THK)	
M	40	1	**8T-4136**	2	BOLT (M10X1.5X25-MM)	
	41	1	**8T-4205**	2	WASHER-HARD (7.2X14.5X2-MM THK)	
	42	1	**8T-4224**	3	WASHER-HARD (8.8X16X2-MM THK)	
M	43	1	**8T-4908**	3	BOLT (M8X1.25X25-MM)	
M	44	1	**9X-2043**	3	SCREW-TRUSS HEAD (M6X1X14-MM)	
					AVAILABLE REPAIR KIT(S):	
J			**112-9861**		KIT-SEAL	
					(INCLUDES SEALS, O-RINGS & THRUST RING)	

I-REFER TO HYDRAULIC INFORMATION SYSTEM
J-KIT MARKED J SERVICES PARTS MARKED J
M-METRIC PART
Y-SEPARATE ILLUSTRATION

326-5738 **LINES GP-LIFT CYLINDER** *(contd.)* **i04091757**

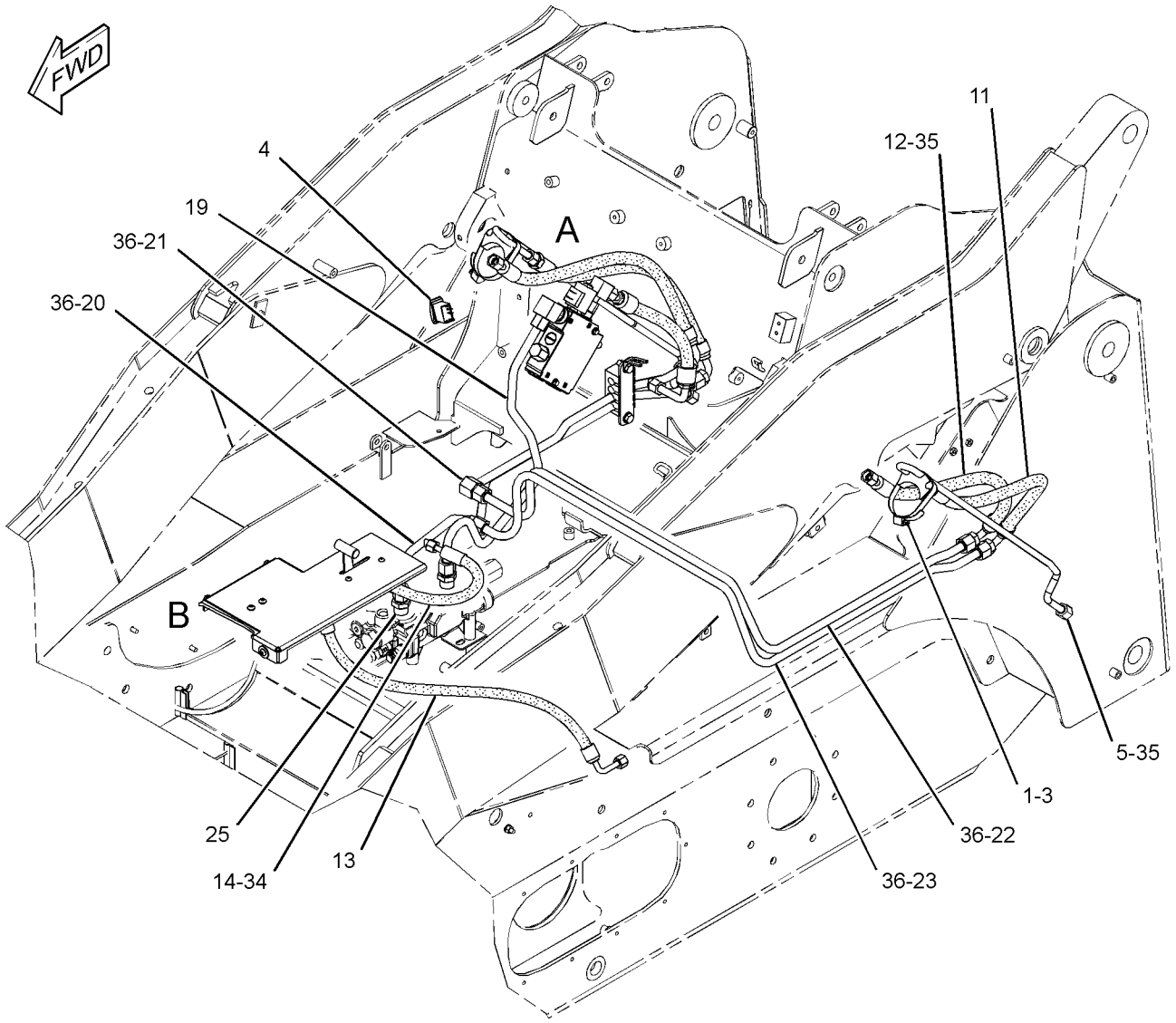

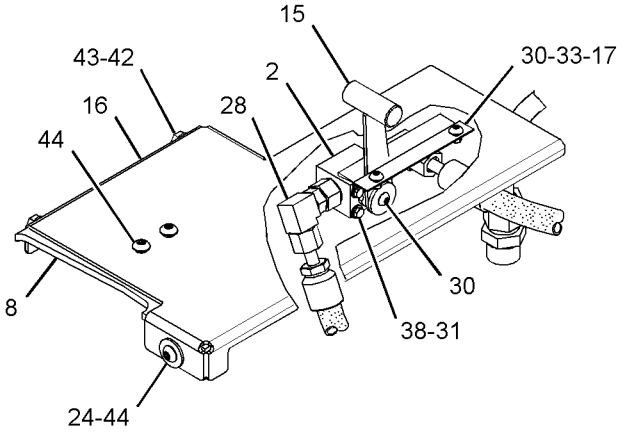

VIEW OF AREA B

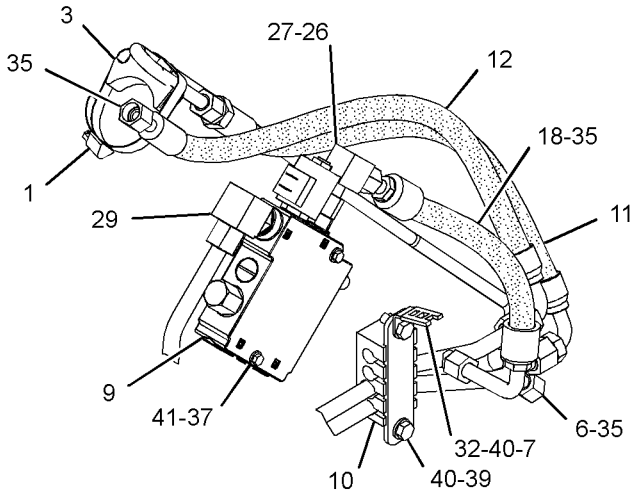

VIEW OF AREA A

GRAPHIC #1 **<END>** g02173202

HYDRAULIC SYSTEM

326-5758 LINES GP-LIFT CYLINDER–
WITHOUT WORK TOOL POSITIONER
S/N: SRS1-UP
PART OF 326-5670 HYDRAULIC AR
AN ATTACHMENT

SMCS-5057, 5102 **i04092425**

NOTE	REF NO	GRAPHIC REF	PART NUMBER	QTY	PART NAME 1 2 3 4 5 6 (PRODUCT LEVEL)	SEE PAGE
	1	1	**6V-3582**	2	CLAMP-HOSE	
J	2	1	**112-1817**	1	VALVE GP-MANUAL (LIFT CYLINDER)	
	3	1	**142-8997**	2	BLOCK	
	4	1	**212-6525**	1	TUBE AS	
	5	1	**212-6526**	1	TUBE AS	
	6	1	**218-5764**	1	PLATE	
	7	1	**218-6438**	1	SEAL	
	8	1	**285-9286**	1	BLOCK	
	9	1	**290-3340**	1	TUBE AS	
I	10	1	**290-3382**	2	HOSE AS	
I	11	1	**290-3395**	2	HOSE AS	
I	12	1	**326-5612**	1	HOSE AS	
I	13	1	**326-5613**	1	HOSE AS	
	14	1	**326-5614**	1	HANDLE AS	
	15	1	**326-5625**	1	BRACKET AS	
M		1	**6V-9632**	3	NUT-WELD (M6X1-THD)	
M		1	**8T-3612**	3	NUT-WELD (M8X1.25-THD)	
	16	1	**326-5634**	1	BRUSH AS	
	17	1	**326-5759**	1	TUBE AS	
	18	1	**354-6554**	1	TUBE AS	
	19	1	**354-6555**	1	TUBE AS	
	20	1	**101-2867**	1	WASHER-HARD (7.2X25X2-MM THK)	
	21	1	*148-8341*	2	CONNECTOR AS	
					(EACH INCLUDES)	
		1	**3D-2824**	1	SEAL-O-RING	
		1	**6V-8713**	1	CONNECTOR	
		1	**7J-9108**	1	SEAL-O-RING	
	22	1	*148-8378*	2	ELBOW AS	
					(EACH INCLUDES)	
		1	**3J-1907**	1	SEAL-O-RING	
		1	**6V-8397**	1	SEAL-O-RING	
		1	**6V-8724**	1	ELBOW	
M	23	1	**271-9408**	3	SCREW-TRUSS HEAD (M5X0.8X10-MM)	
	24	1	**4B-4863**	4	WASHER (4.7X11X1.2-MM THK)	
	25	1	**4P-8134**	1	CLIP	
M	26	1	**5C-2874**	2	NUT (M5X0.8-THD)	
	27	1	**6V-8397**	1	SEAL-O-RING	
	28	1	**6V-8398**	6	SEAL-O-RING	
	29	1	**7J-9108**	6	SEAL-O-RING	
M	30	1	**8T-7852**	4	BOLT (M4X0.7X10-MM)	
	31	1	**8T-4121**	1	WASHER-HARD (11X21X2.5-MM THK)	
M	32	1	**8T-4136**	2	BOLT (M10X1.5X25-MM)	
	33	1	**8T-4224**	3	WASHER-HARD (8.8X16X2-MM THK)	
M	34	1	**8T-4908**	3	BOLT (M8X1.25X25-MM)	
M	35	1	**9X-2043**	3	SCREW-TRUSS HEAD (M6X1X14-MM)	
					AVAILABLE REPAIR KIT(S):	
J			**112-9861**	1	KIT-SEAL	
					(INCLUDES THRUST RING, O-RINGS & SEALS)	

I-REFER TO HYDRAULIC INFORMATION SYSTEM
J-KIT MARKED J SERVICES PARTS MARKED J
M-METRIC PART

326-5758 **LINES GP-LIFT CYLINDER** *(contd.)* **i04092425**

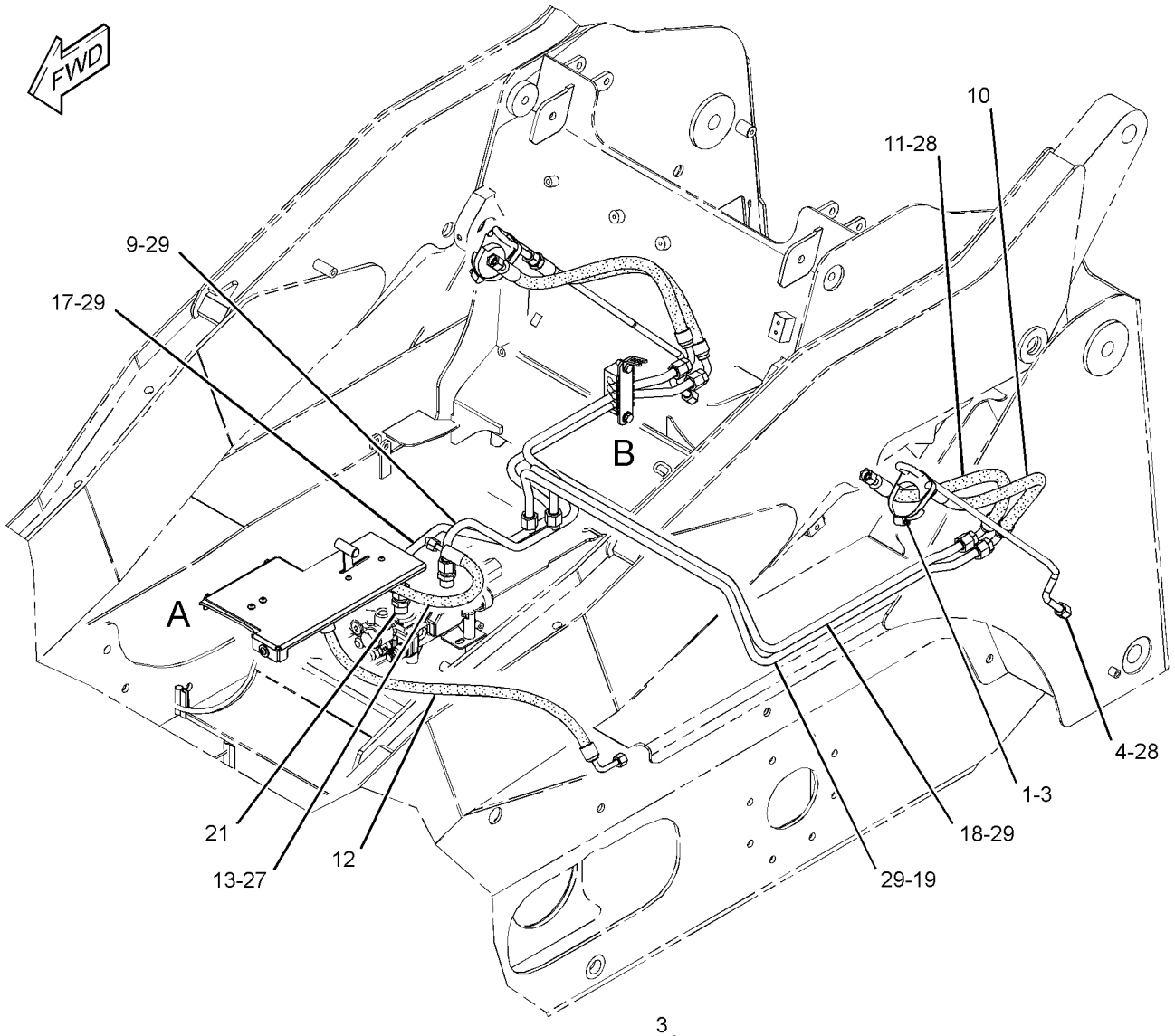

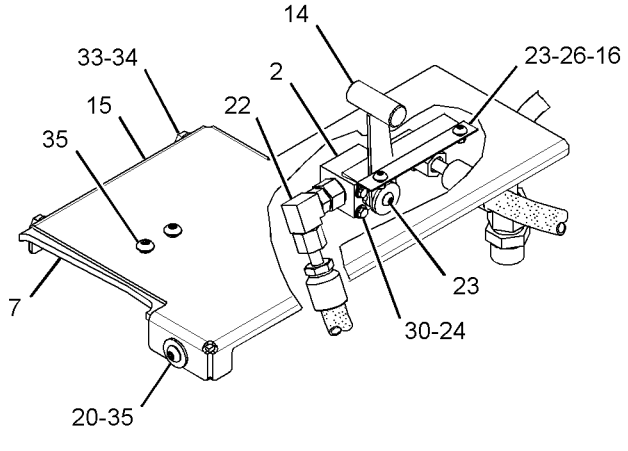

VIEW OF AREA A

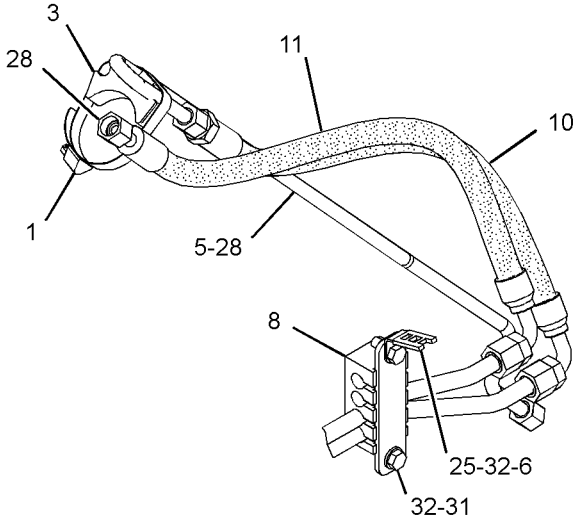

VIEW OF AREA B

GRAPHIC #1 **<END>** g02173227

234-0788 LINES GP-PILOT—DIRECTION, SPEED

S/N: SRS1-UP

PART OF 326-5730 HYDRAULIC AR

SMCS-5057, 5059 **i04370556**

NOTE	REF NO	GRAPHIC REF	PART NUMBER	QTY	PART NAME 1 2 3 4 5 6 (PRODUCT LEVEL)	SEE PAGE
	1	1	**6V-0852**	1	CAP-DUST	
	2	1	**7K-1181**	1	STRAP-CABLE	
	3	1	*148-8423*	1	TEE AS	
		1	**3J-1907**	1	SEAL-O-RING	
		1	**4J-5477**	1	SEAL-O-RING	
		1	**8T-3311**	1	TEE	
	4	1	*164-5567*	1	COUPLER AS-QUICK DISCONNECT (MALE)	
		1	**214-7568**	1	SEAL-O-RING	
		1	**6V-3965**	1	FITTING (QUICK DISCONNECT)	
	5	1	**218-5968**	1	BRACKET	
	6	1	**218-6864**	1	HOSE AS	
	7	1	**193-8392**	2	HOSE AS	
	8	1	**234-0786**	1	HOSE AS	
	9	1	*148-8316*	2	CONNECTOR AS	
					(EACH INCLUDES)	
		1	**3J-7354**	1	SEAL-O-RING	
		1	**4J-5477**	1	SEAL-O-RING	
		1	**6V-8647**	1	CONNECTOR	
	10	1	*148-8325*	5	CONNECTOR AS	
					(EACH INCLUDES)	
		1	**3J-1907**	1	SEAL-O-RING	
		1	**4J-5477**	1	SEAL-O-RING	
		1	**6V-8641**	1	CONNECTOR	
	11	1	*148-8369*	2	ELBOW AS	
					(EACH INCLUDES)	
		1	**3J-7354**	1	SEAL-O-RING	
		1	**4J-5477**	1	SEAL-O-RING	
		1	**6V-8628**	1	ELBOW	
	12	1	*150-4043*	1	CONNECTOR AS	
		1	**3J-1907**	1	SEAL-O-RING	
		1	**6V-8398**	1	SEAL-O-RING	
		1	**6V-9873**	1	CONNECTOR	
	13	1	**193-8393**	2	HOSE AS	

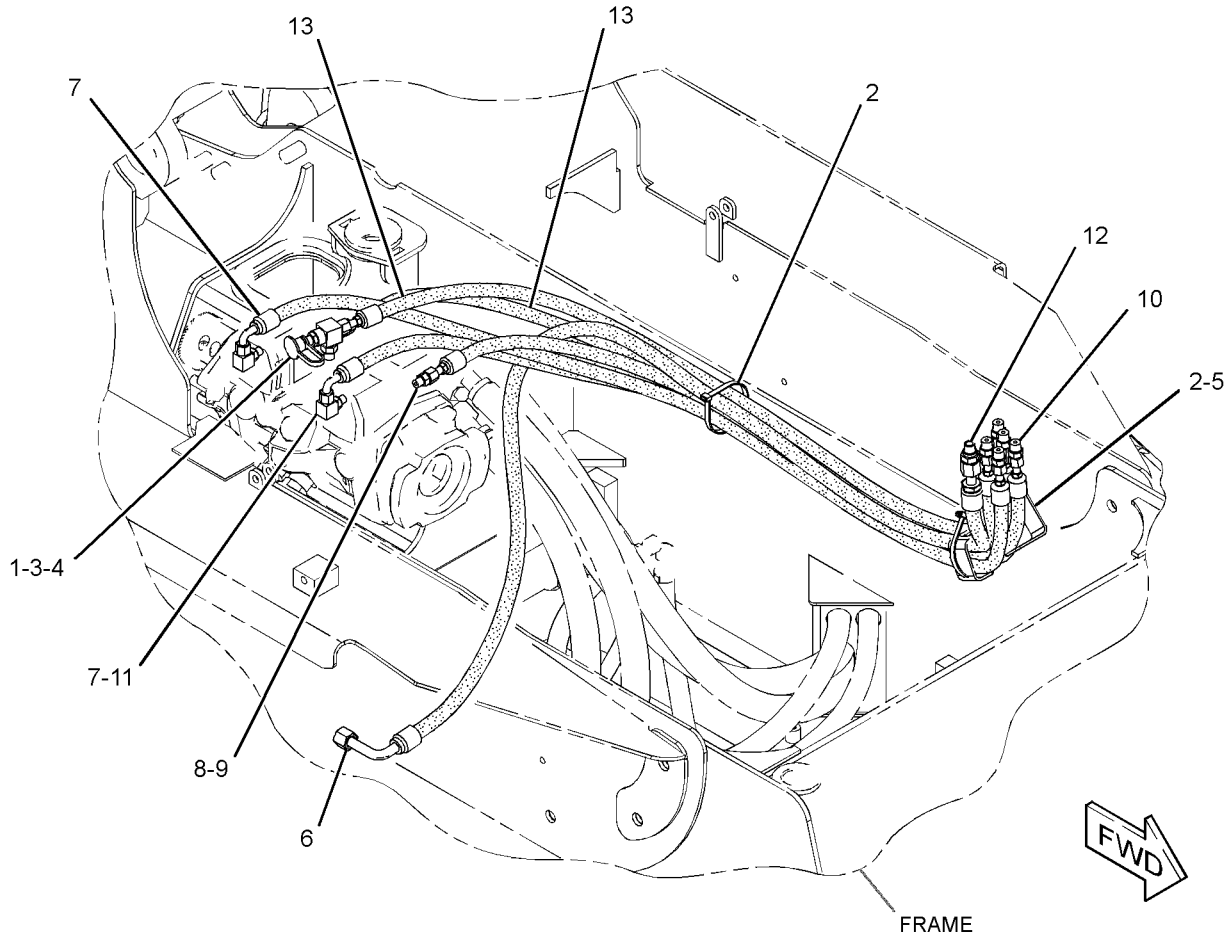

GRAPHIC #1 **<END>** g01928461

326-5734 LINES GP-PILOT–WORK TOOL

S/N: SRS1-UP

PART OF 326-5730 HYDRAULIC AR

SMCS-5057, 5059 **i03984038**

NOTE	REF NO	GRAPHIC REF	PART NUMBER	QTY	PART NAME 1 2 3 4 5 6 (PRODUCT LEVEL)	SEE PAGE
	1	1	**123-4750**	1	VALVE-CHECK (HOIST PILOT OIL)	
	2	1	*154-5232*	1	ADAPTER AS	
		1	**3K-0360**	1	SEAL-O-RING	
		1	**4J-5477**	1	SEAL-O-RING	
		1	**112-9783**	1	ADAPTER	
Y	3	1	*179-7001*	1	ADAPTER GP-OIL LINE (PILOT)	196
I	4	1	**193-8313**	1	HOSE AS	
	5	1	**195-6768**	1	SCREEN (HYDRAULIC)	
	6	1	**195-6769**	1	WASHER (6.99X12.7X5.46-MM THK)	
I	7	1	**218-5571**	2	HOSE AS	
I	8	1	**218-5572**	2	HOSE AS	
I	9	1	**218-5704**	1	HOSE AS	
I	10	1	**326-5736**	1	HOSE AS	
	11	1	*148-8325*	9	CONNECTOR AS	
					(EACH INCLUDES)	
		1	**3J-1907**	1	SEAL-O-RING	
		1	**4J-5477**	1	SEAL-O-RING	
		1	**6V-8641**	1	CONNECTOR	
	12	1	*148-8435*	1	TEE AS	
		1	**3J-1907**	1	SEAL-O-RING	
		1	**6V-8397**	2	SEAL-O-RING	
		1	**6V-8781**	1	TEE	
	13	1	*150-4027*	1	TEE AS	
		1	**3E-2310**	1	TEE	
		1	**3J-1907**	1	SEAL-O-RING	
		1	**6V-8397**	1	SEAL-O-RING	
	14	1	**6D-3479**	1	CLIP	
	15	1	**8T-4121**	1	WASHER-HARD (11X21X2.5-MM THK)	
M	16	1	**8T-4191**	1	BOLT (M10X1.5X16-MM)	

I-REFER TO HYDRAULIC INFORMATION SYSTEM
M-METRIC PART
Y-SEPARATE ILLUSTRATION

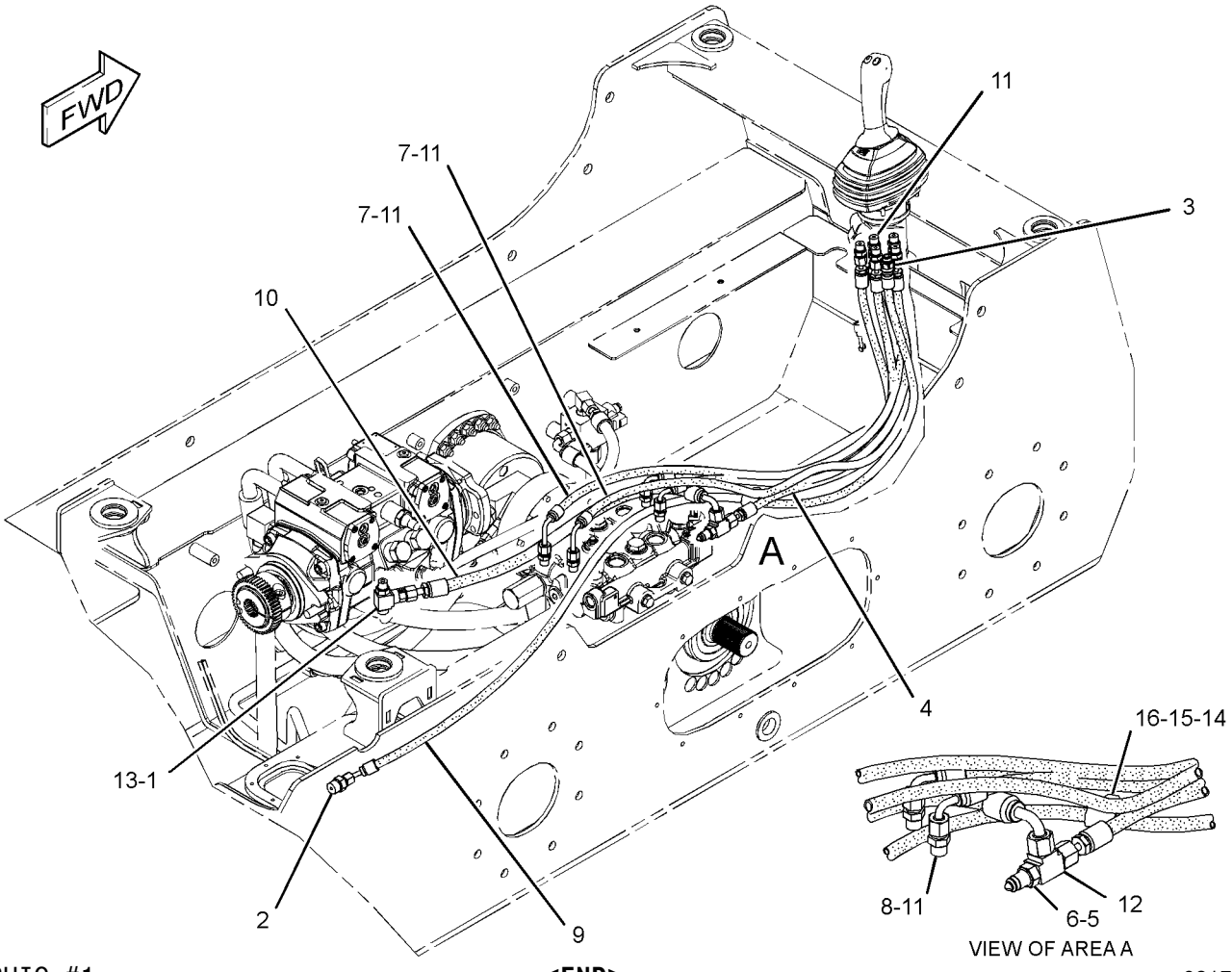

GRAPHIC #1 **<END>** g02173373

HYDRAULIC SYSTEM

326-5746 LINES GP-PUMP

S/N: SRS1-UP

PART OF 326-5730 HYDRAULIC AR

SMCS-5057 **i04002035**

NOTE	REF NO	GRAPHIC REF	PART NUMBER	QTY	PART NAME 1 2 3 4 5 6 (PRODUCT LEVEL)	SEE PAGE
	1	1	**2S-3440**	2	CLAMP-HOSE	
	2	1	**5P-2230**	3	CLAMP-HOSE	
	3	1	**6V-0852**	1	CAP-DUST	
	4	1	**9U-6994**	1	FITTING GP (RETURN MANIFOLD)	
		1	**5P-4362**	1	CONNECTOR	
		1	**7M-8485**	1	SEAL-O-RING	
	5	1	**9U-6995**	1	FITTING GP-HYDRAULIC	
		1	**2S-4078**	1	SEAL-O-RING	
	6	1	**180-3007**	1	CLAMP-HOSE	
	7	1	**193-8308**	1	ADAPTER	
	8	1	**218-6593**	1	HOSE	
	9	1	**364-1337**	1	HOSE	
I	10	1	**326-5795**	1	HOSE AS	
	11	1	**347-4038**	1	HOSE	
	12	1	*148-8360*	1	ELBOW AS	
		1	**6V-9182**	1	ELBOW	
		1	**6V-9746**	1	SEAL-O-RING	
		1	**7M-8485**	1	SEAL-O-RING	
	13	1	*164-5567*	1	COUPLER AS-QUICK DISCONNECT (MALE)	
		1	**6V-3965**	1	FITTING (QUICK DISCONNECT)	
		1	**214-7568**	1	SEAL-O-RING	
	14	1	**1P-4578**	2	FLANGE-HALF	
	15	1	**4J-0522**	1	SEAL-O-RING	
	16	1	**4J-5267**	1	SEAL-O-RING	
	17	1	**8C-3205**	2	FLANGE-HALF	
	18	1	**8T-4121**	8	WASHER-HARD (11X21X2.5-MM THK)	
M	19	1	**8T-4196**	8	BOLT (M10X1.5X35-MM)	

I-REFER TO HYDRAULIC INFORMATION SYSTEM
M-METRIC PART

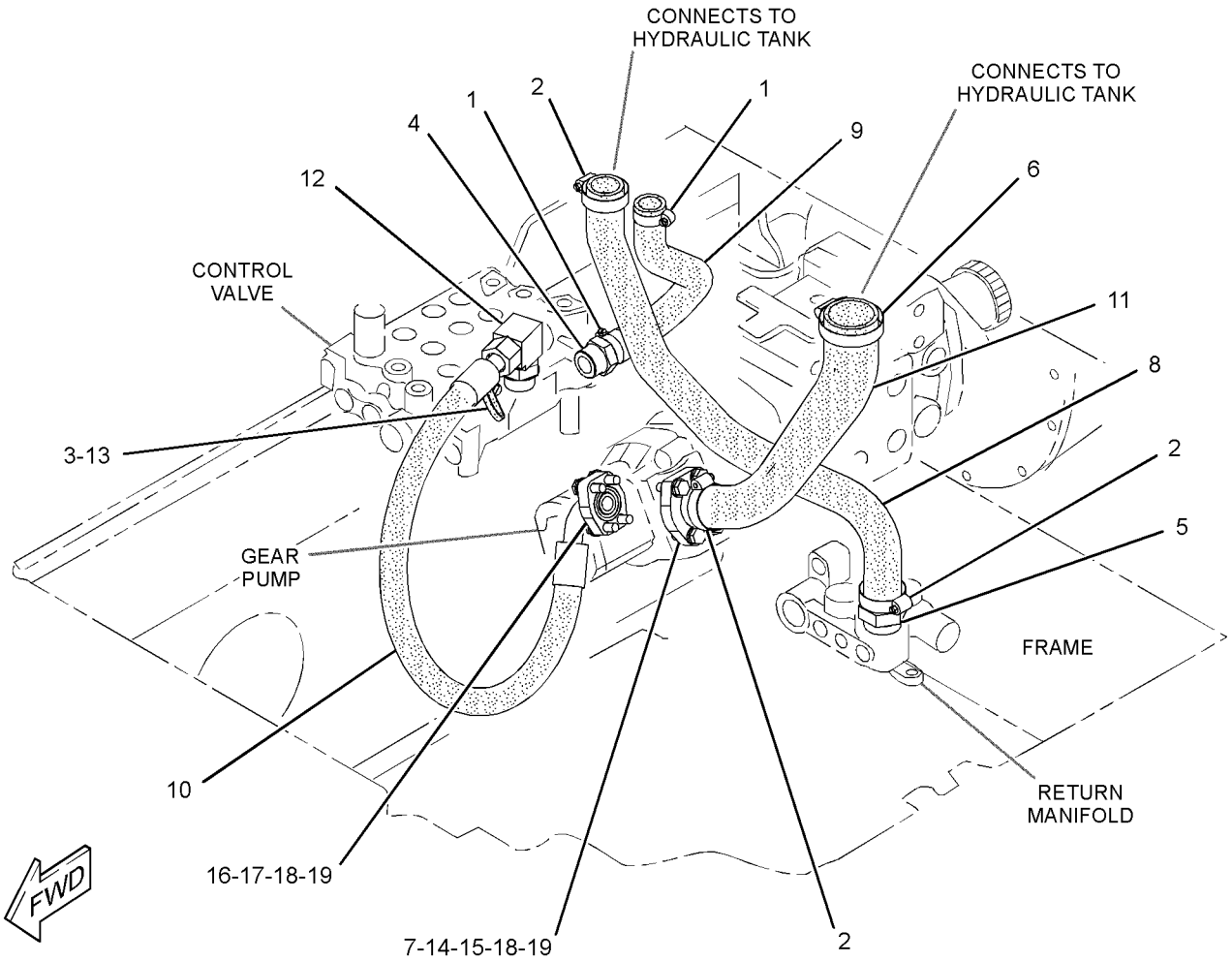

GRAPHIC #1 **<END>** g02172773

326-5737 LINES GP-TILT CYLINDER–
WITH WORK TOOL POSITIONER
S/N: SRS1-UP
PART OF 326-5770 HYDRAULIC AR
AN ATTACHMENT

SMCS-5057, 5104 **i03984170**

NOTE	REF NO	GRAPHIC REF	PART NUMBER	QTY	PART NAME 1 2 3 4 5 6 (PRODUCT LEVEL)	SEE PAGE
I	1	1	**142-9234**	4	HOSE AS	
	2	1	**193-0474**	1	PLATE	
	3	1	**215-3935**	3	CLIP	
	4	1	**219-4377**	1	PLATE	
	5	1	**252-0331**	1	TUBE AS	
	6	1	**252-0332**	1	TUBE AS	
I	7	1	**290-8481**	2	HOSE AS	
I	8	1	**326-5753**	1	HOSE AS	
I	9	1	**326-5754**	1	HOSE AS	
	10	1	**326-5771**	1	TUBE AS	
	11	1	**326-5772**	1	TUBE AS	
M	12	1	**096-5866**	2	BOLT (M8X1.25X75-MM)	
	13	1	*148-8315*	2	CONNECTOR AS	
					(EACH INCLUDES)	
		1	**2M-9780**	1	SEAL-O-RING	
		1	**6V-8642**	1	CONNECTOR	
		1	**7J-9108**	1	SEAL-O-RING	
	14	1	*148-8372*	2	ELBOW AS	
					(EACH INCLUDES)	
		1	**2M-9780**	1	SEAL-O-RING	
		1	**6V-8398**	1	SEAL-O-RING	
		1	**6V-8721**	1	ELBOW	
	15	1	**5P-7464**	4	CLIP (SLOT)	
	16	1	**5P-7465**	4	CLIP (TAB)	
	17	1	**6V-7359**	4	GROMMET	
	18	1	**6V-8398**	10	SEAL-O-RING	
	19	1	**7J-9108**	4	SEAL-O-RING	
	20	1	**8T-4121**	2	WASHER-HARD (11X21X2.5-MM THK)	
M	21	1	**8T-4136**	2	BOLT (M10X1.5X25-MM)	
M	22	1	**8T-4139**	2	BOLT (M12X1.75X30-MM)	
M	23	1	**8T-4194**	2	BOLT (M12X1.75X50-MM)	
	24	1	**8T-4223**	6	WASHER-HARD (13.5X25.5X3-MM THK)	
	25	1	**8T-4224**	3	WASHER-HARD (8.8X16X2-MM THK)	
M	26	1	**8T-4244**	2	NUT (M12X1.75-THD)	
M	27	1	**8T-6912**	1	BOLT (M8X1.25X50-MM)	
	28	1	**9R-1005**	2	CLIP (SLOT)	
	29	1	**9R-7802**	2	CLIP (SLOT)	
	30	1	**9R-7803**	2	CLIP (TAB)	

I-REFER TO HYDRAULIC INFORMATION SYSTEM
M-METRIC PART

326-5737 **LINES GP-TILT CYLINDER** *(contd.)* **i03984170**

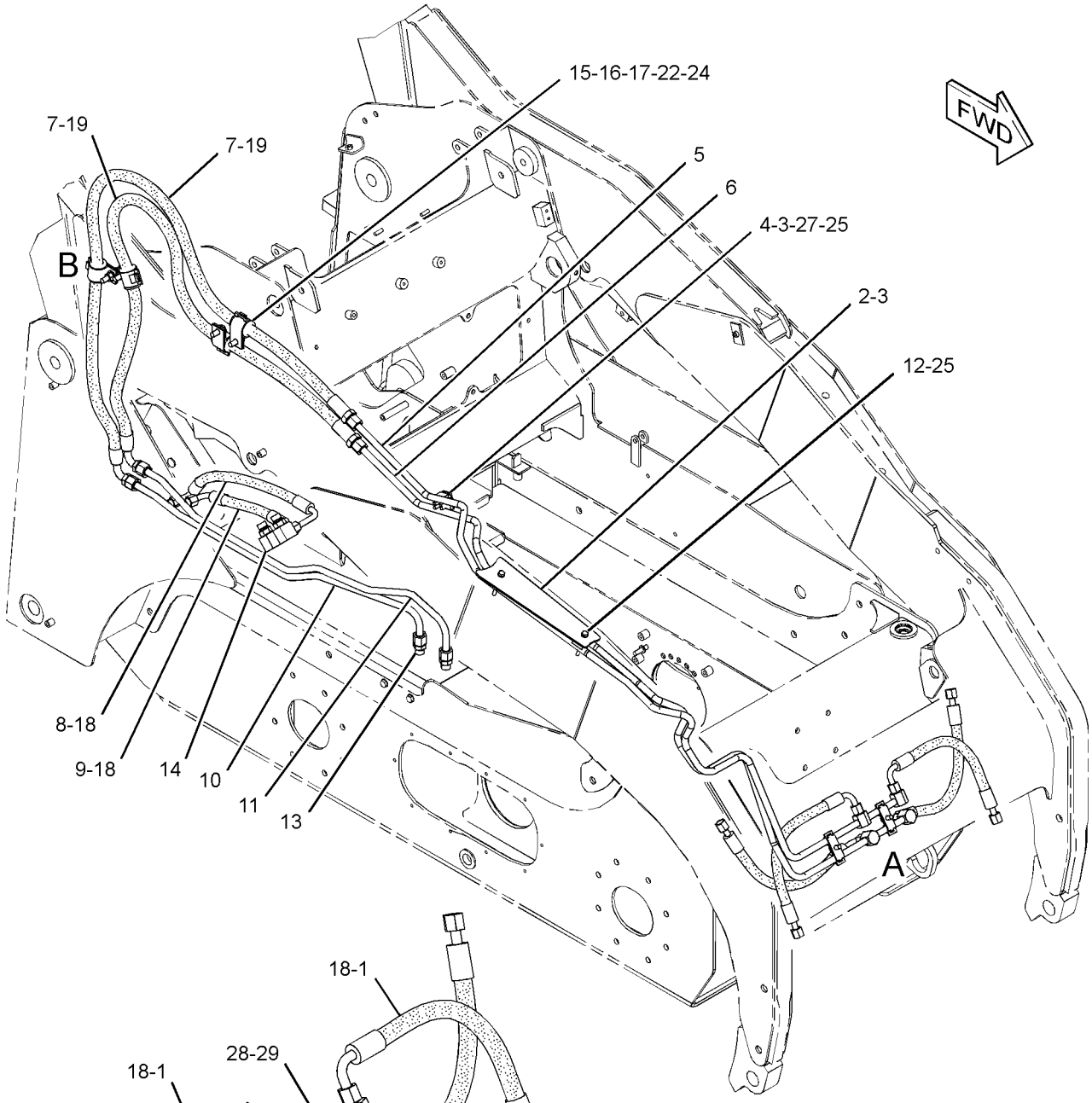

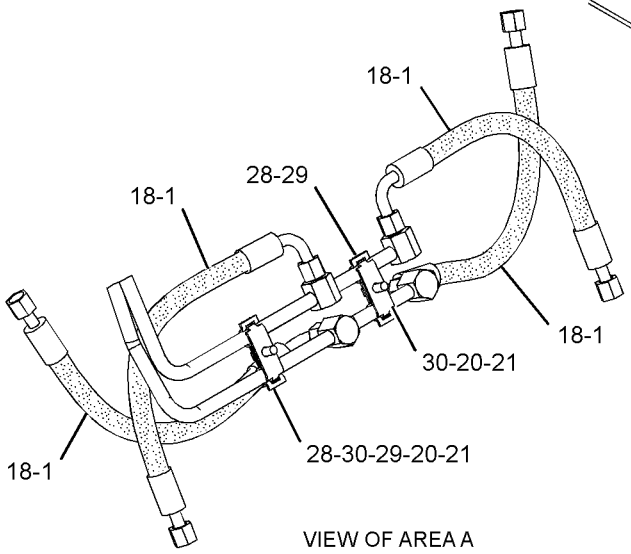

VIEW OF AREA A

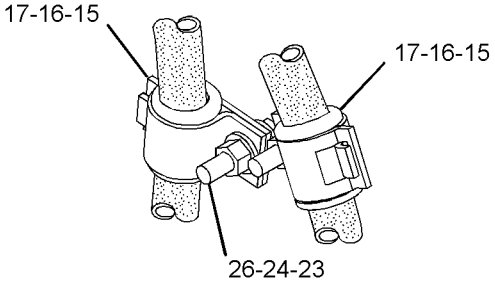

VIEW OF AREA B

GRAPHIC #1 **<END>** g02172975

HYDRAULIC SYSTEM

326-5778 LINES GP-TILT CYLINDER–

WITHOUT WORK TOOL POSITIONER

S/N: SRS1-UP

PART OF 326-5670 HYDRAULIC AR

AN ATTACHMENT

SMCS-5057, 5104 **i03983752**

NOTE	REF NO	GRAPHIC REF	PART NUMBER	QTY	PART NAME 1 2 3 4 5 6 (PRODUCT LEVEL)	SEE PAGE
I	1	1	**142-9234**	4	HOSE AS	
	2	1	**193-0474**	1	PLATE	
	3	1	**215-3935**	3	CLIP	
	4	1	**219-4377**	1	PLATE	
	5	1	**252-0331**	1	TUBE AS	
	6	1	**252-0332**	1	TUBE AS	
I	7	1	**290-8481**	2	HOSE AS	
	8	1	**326-5771**	1	TUBE AS	
	9	1	**326-5772**	1	TUBE AS	
M	10	1	**096-5866**	2	BOLT (M8X1.25X75-MM)	
	11	1	*148-8315*	2	CONNECTOR AS	
					(EACH INCLUDES)	
		1	**2M-9780**	1	SEAL-O-RING	
		1	**6V-8642**	1	CONNECTOR	
		1	**7J-9108**	1	SEAL-O-RING	
	12	1	**5P-7464**	4	CLIP (SLOT)	
	13	1	**5P-7465**	4	CLIP (TAB)	
	14	1	**6V-7359**	4	GROMMET	
	15	1	**6V-8398**	10	SEAL-O-RING	
	16	1	**6V-9830**	2	CAP AS	
	17	1	**7J-9108**	4	SEAL-O-RING	
	18	1	**8T-4121**	2	WASHER-HARD (11X21X2.5-MM THK)	
M	19	1	**8T-4136**	2	BOLT (M10X1.5X25-MM)	
M	20	1	**8T-4139**	2	BOLT (M12X1.75X30-MM)	
M	21	1	**8T-4194**	2	BOLT (M12X1.75X50-MM)	
	22	1	**8T-4223**	6	WASHER-HARD (13.5X25.5X3-MM THK)	
	23	1	**8T-4224**	3	WASHER-HARD (8.8X16X2-MM THK)	
M	24	1	**8T-4244**	2	NUT (M12X1.75-THD)	
M	25	1	**8T-6912**	1	BOLT (M8X1.25X50-MM)	
	26	1	**9R-1005**	2	CLIP (SLOT)	
	27	1	**9R-7802**	2	CLIP (SLOT)	
	28	1	**9R-7803**	2	CLIP (TAB)	

I-REFER TO HYDRAULIC INFORMATION SYSTEM
M-METRIC PART

326-5778 **LINES GP-TILT CYLINDER** *(contd.)* **i03983752**

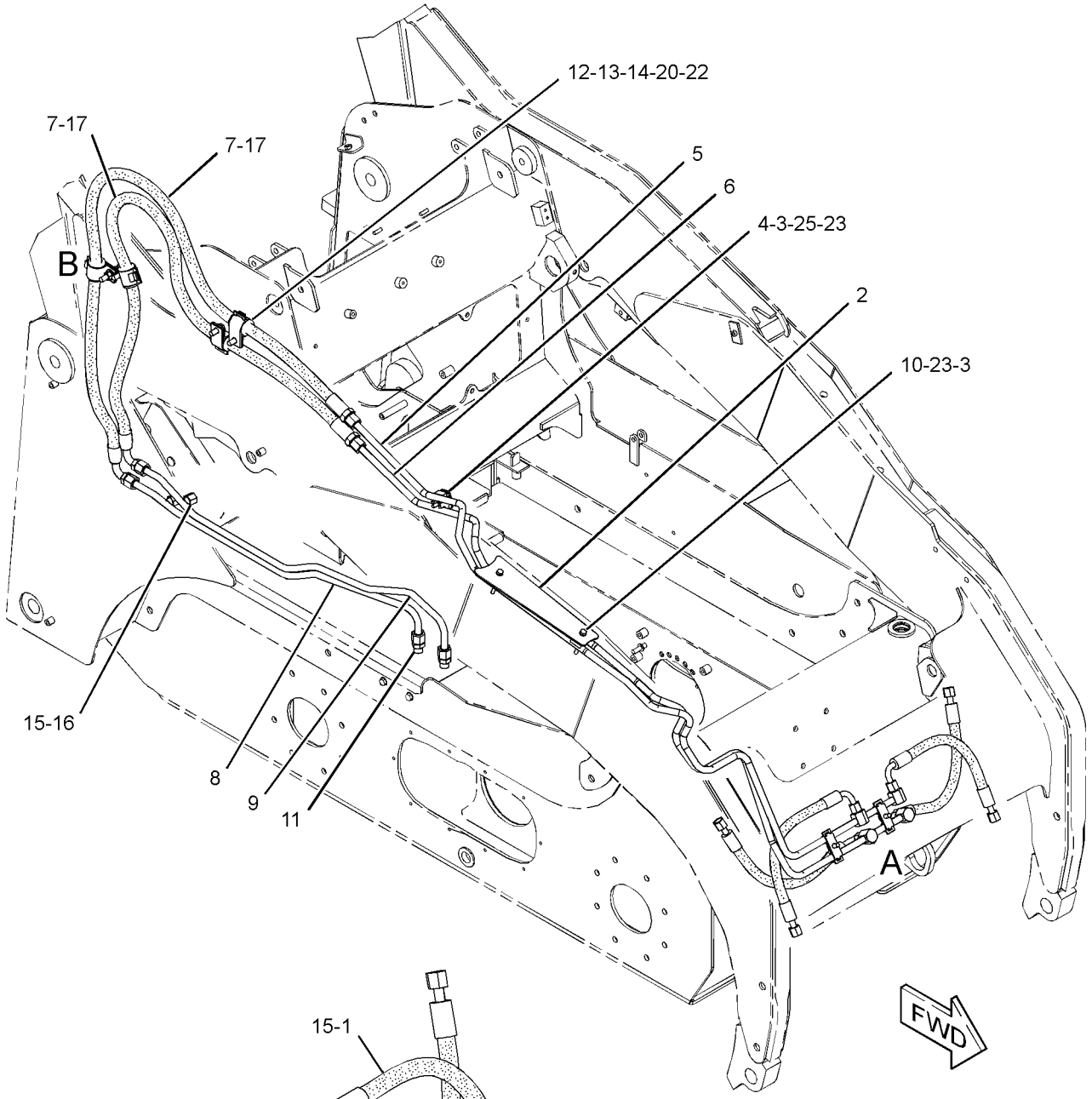

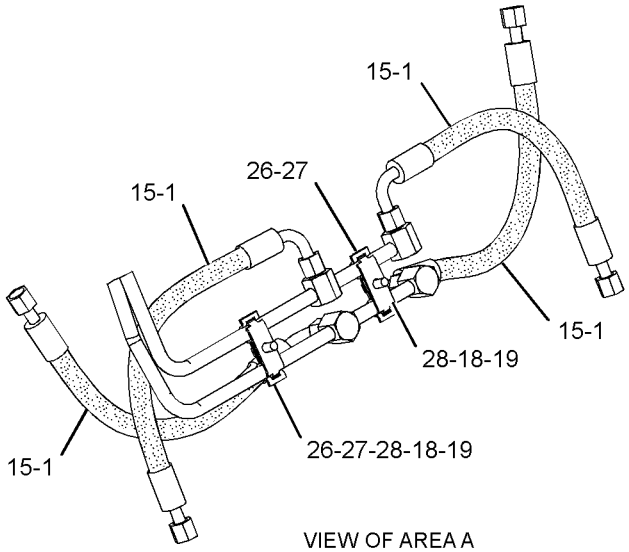

VIEW OF AREA A

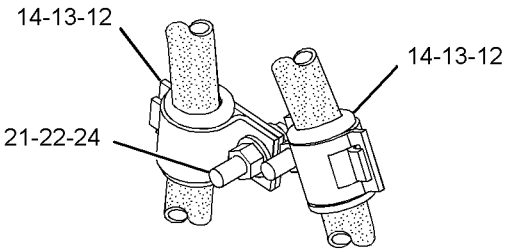

VIEW OF AREA B

GRAPHIC #1 **<END>** g02173155

HYDRAULIC SYSTEM

354-6551 LINES GP-WORK TOOL

S/N: SRS1-UP

PART OF 326-5730 HYDRAULIC AR

SMCS-5057 **i03988349**

NOTE	REF NO	GRAPHIC REF	PART NUMBER	QTY	PART NAME 1 2 3 4 5 6 (PRODUCT LEVEL)	SEE PAGE
M	1	1	**101-3129**	2	STUD (M10X1.5-THD)	
	2	1	**193-0474**	1	PLATE	
	3	1	**215-3935**	3	CLIP	
	4	1	**218-5764**	3	PLATE	
	5	1	**218-6204**	1	BRACKET AS	
	6	1	**219-4377**	1	PLATE	
	7	1	**285-9286**	3	BLOCK	
I	8	1	**290-8481**	2	HOSE AS	
	9	1	**291-6812**	1	TUBE AS	
	10	1	**291-6813**	1	TUBE AS	
	11	1	**354-6552**	1	TUBE AS	
	12	1	**354-6553**	1	TUBE AS	
M	13	1	**096-5866**	2	BOLT (M8X1.25X75-MM)	
	14	1	*148-8341*	2	CONNECTOR AS	
					(EACH INCLUDES)	
		1	**3D-2824**	1	SEAL-O-RING	
		1	**6V-8713**	1	CONNECTOR	
		1	**7J-9108**	1	SEAL-O-RING	
	15	1	**347-4431**	1	COUPLER-QUICK DISCONNECT (FEMALE)	
	16	1	**347-4432**	1	COUPLER-QUICK DISCONNECT (MALE)	
	17	1	**5P-7464**	4	CLIP (SLOT)	
	18	1	**5P-7465**	4	CLIP (TAB)	
	19	1	**6V-7359**	4	GROMMET	
	20	1	**6V-9170**	2	NUT-BULKHEAD (1-14-THD)	
	21	1	**7J-9108**	6	SEAL-O-RING	
	22	1	**8T-4121**	9	WASHER-HARD (11X21X2.5-MM THK)	
M	23	1	**8T-4133**	1	NUT (M10X1.5-THD)	
M	24	1	**8T-4136**	2	BOLT (M10X1.5X25-MM)	
M	25	1	**8T-4139**	2	BOLT (M12X1.75X30-MM)	
	26	1	**8T-4167**	2	WASHER-HARD (26X44X4-MM THK)	
M	27	1	**8T-4178**	2	BOLT (M10X1.5X90-MM)	
M	28	1	**8T-4194**	2	BOLT (M12X1.75X50-MM)	
M	29	1	**8T-4195**	2	BOLT (M10X1.5X30-MM)	
	30	1	**8T-4223**	6	WASHER-HARD (13.5X25.5X3-MM THK)	
	31	1	**8T-4224**	3	WASHER-HARD (8.8X16X2-MM THK)	
M	32	1	**8T-4244**	2	NUT (M12X1.75-THD)	
M	33	1	**8T-6912**	1	BOLT (M8X1.25X50-MM)	

I-REFER TO HYDRAULIC INFORMATION SYSTEM
M-METRIC PART

354-6551 **LINES GP-WORK TOOL** *(contd.)* **i03988349**

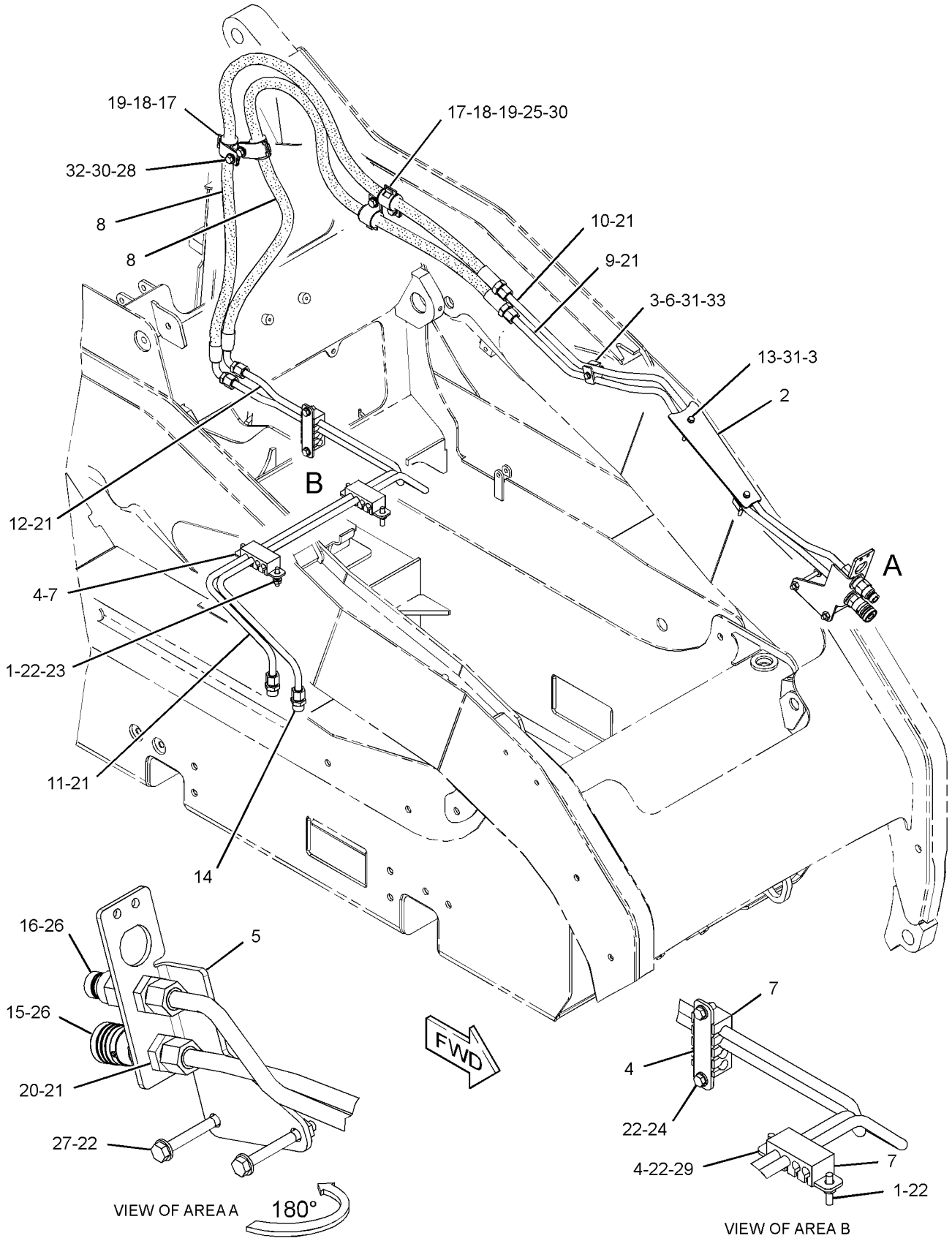

GRAPHIC #1 **<END>** g02173076

231-5278 MANIFOLD & MTG GP-CONTROL–ANGLING BLADE

S/N: SRS1-UP
PART OF 231-5275, 231-5277 BLADE AR
AN ATTACHMENT

SMCS-5264 **i02337085**

NOTE	REF NO	GRAPHIC REF	PART NUMBER	QTY	PART NAME 1 2 3 4 5 6 (PRODUCT LEVEL)	SEE PAGE
Y	1	1	**258-9011**	1	MANIFOLD GP-CONTROL (ANGLING BLADE)	274
	2	1	**231-5279**	1	COVER	
	3	1	**5P-4116**	3	WASHER-HARD (8.8X20.5X2-MM THK)	
M	4	1	**8T-4189**	2	BOLT (M8X1.25X20-MM)	
M	5	1	**8T-4200**	3	BOLT (M8X1.25X16-MM)	
	6	1	**8T-4224**	2	WASHER-HARD (8.8X16X2-MM THK)	

M-METRIC PART
Y-SEPARATE ILLUSTRATION

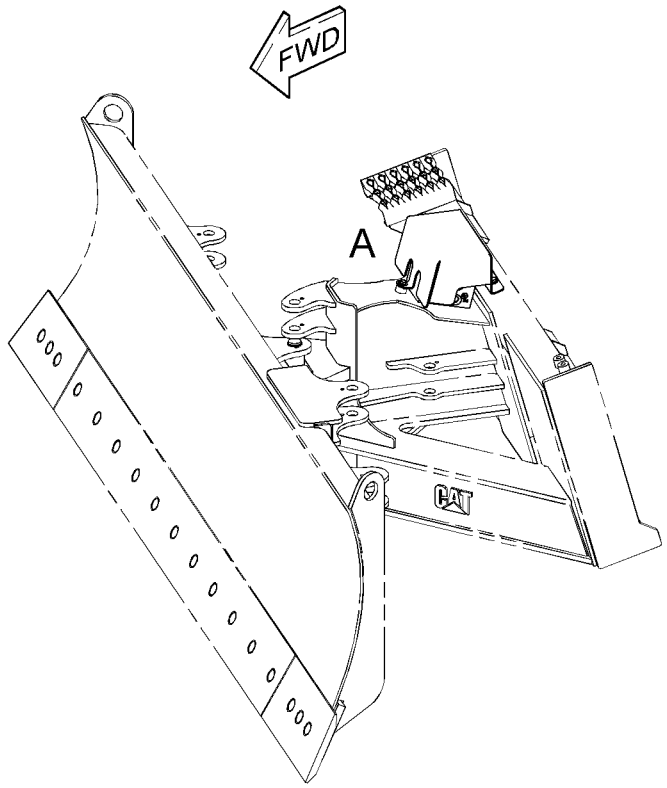

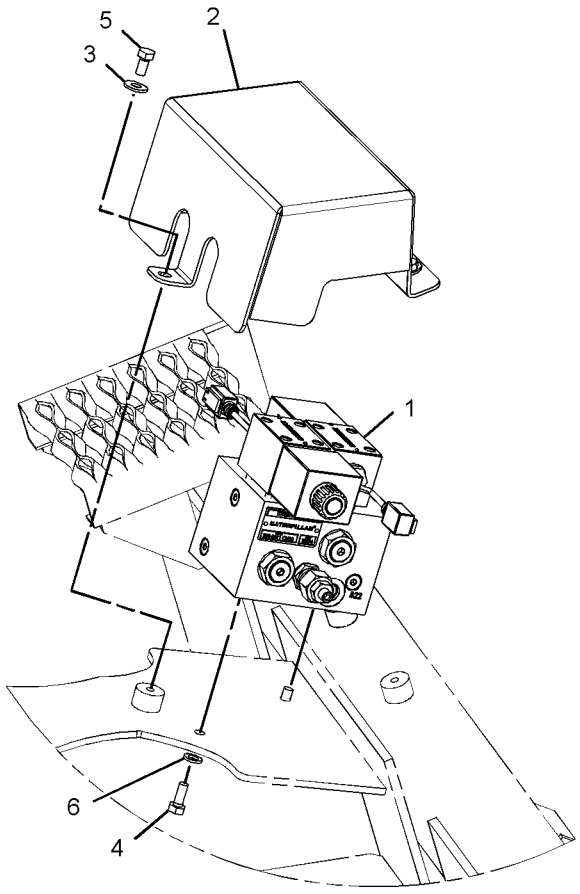

VIEW OF AREA A

GRAPHIC #1 **<END>** g01167422

HYDRAULIC SYSTEM

223-8418 MANIFOLD & SOLENOID GP-CONTROL

S/N: SRS1-UP
PART OF 326-5738 LINES GP-LIFT CYLINDER
AN ATTACHMENT

SMCS-5264, 5479 **i03971114**

NOTE	REF NO	GRAPHIC REF	PART NUMBER	QTY	PART NAME 1 2 3 4 5 6 (PRODUCT LEVEL)	SEE PAGE
	1	1	**102-8804**	1	KIT-RECEPTACLE (4-PIN)	
					(INCLUDES RECEPTACLE AS & WEDGE)	
J	2	1	**218-6858**	1	CARTRIDGE AS-VALVE	
	3	1	**9G-3695**	2	PLUG-SEAL	
	4	1	**126-1767**	1	PIN-CONNECTOR (14-GA TO 16-GA)	
J	5	1	**218-6857**	1	COIL AS	
					AVAILABLE REPAIR KIT(S):	
			218-6856	1	KIT-SEAL	
					(INCLUDES O-RINGS, COVER & BACKUP WASHER)	
J			**155-1279**	1	KIT-SEAL	
					(ALSO INCLUDES O-RINGS & BACKUP RING)	

J-KIT MARKED J SERVICES PARTS MARKED J

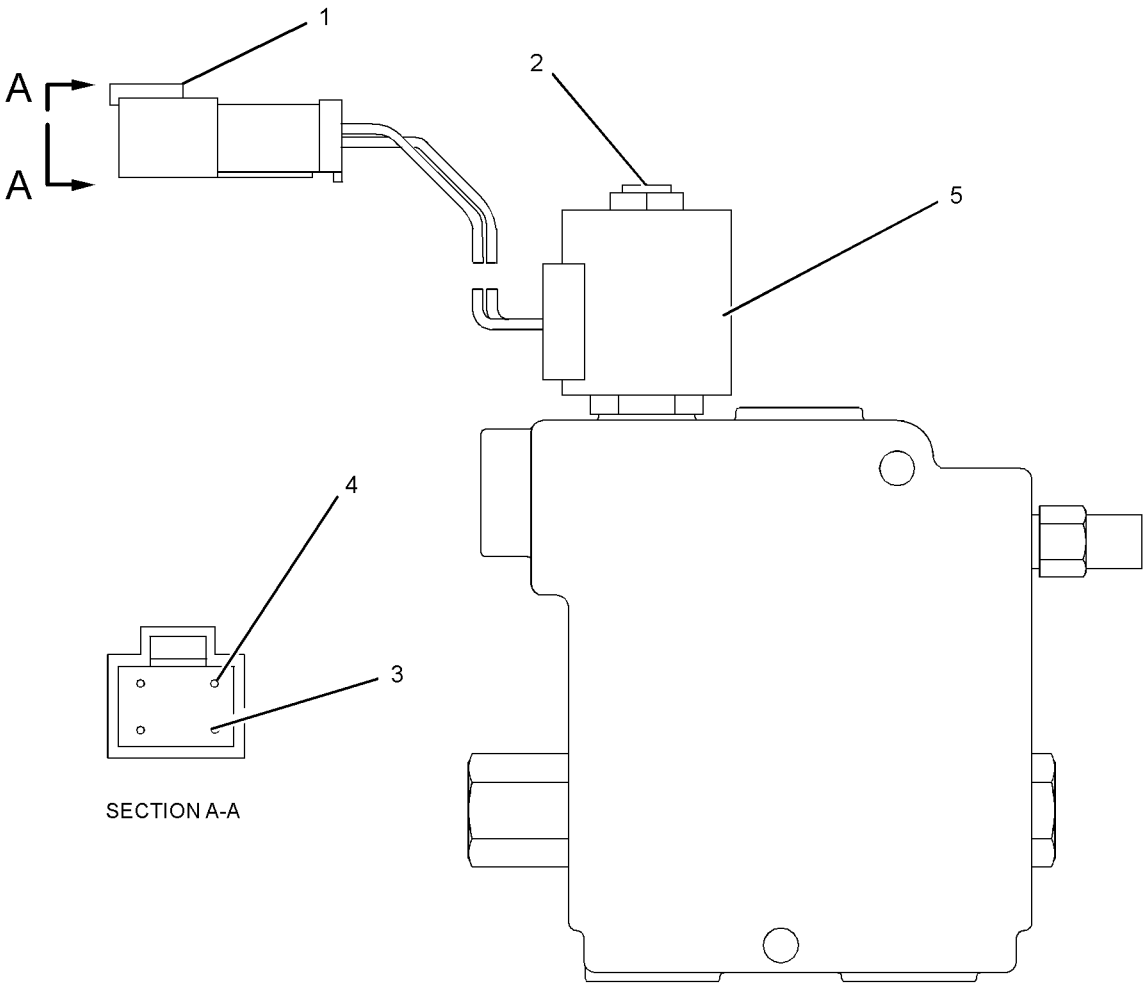

GRAPHIC #1 **<END>** g02162622

233-7128 MANIFOLD GP-CONTROL–QUICK COUPLER

S/N: SRS1-UP

PART OF 364-1351 KIT-QUICK COUPLER CONVERSION, 326-5751 LINES GP-COUPLER AN ATTACHMENT

SMCS-5117, 5264, 5479 **i04077324**

NOTE	REF NO	GRAPHIC REF	PART NUMBER	QTY	PART NAME 1 2 3 4 5 6 (PRODUCT LEVEL)	SEE PAGE
	1	1	**245-1911**	1	WIRE AS	
	2	1	**249-7160**	1	VALVE GP-SOLENOID (12-VOLT) (QUICK COUPLER)	
		1	**238-4626**	2	COIL AS	

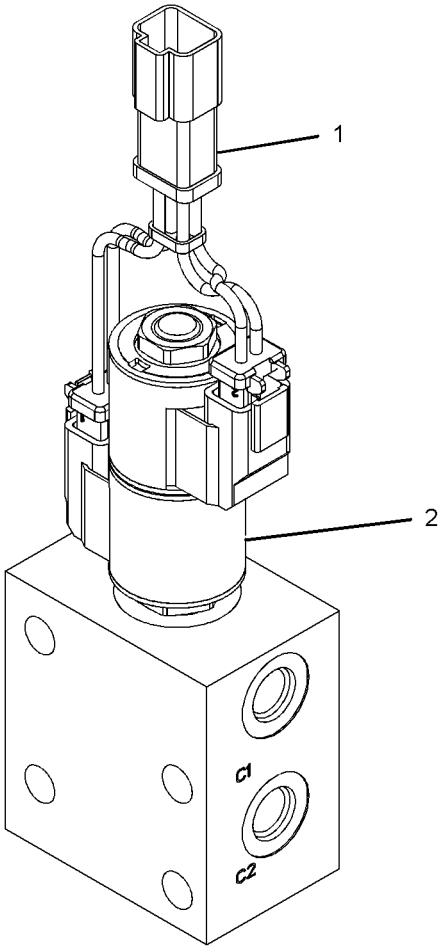

GRAPHIC #1 **<END>** g01132286

258-9011 MANIFOLD GP-CONTROL—ANGLING BLADE

S/N: SRS1-UP
PART OF 231-5278 MANIFOLD & MTG GP-CONTROL
AN ATTACHMENT

SMCS-5117, 5264, 5479 **i04280581**

NOTE	REF NO	GRAPHIC REF	PART NUMBER	QTY	PART NAME 1 2 3 4 5 6 (PRODUCT LEVEL)	SEE PAGE
M	1	1	**9X-6615**	8	BOLT (M5X0.8X30-MM)	
	2	1	**243-5601**	7	PLUG	
J	3	1	**244-1363**	1	VALVE GP-SOLENOID (12-VOLT) (ANGLE)	
		1	**227-7025**	1	SOLENOID AS (SWING BOOM, WORK TOOL)	
		1	**215-3273**	1	CARTRIDGE AS-VALVE	
		1	**6V-8399**	1	SEAL-O-RING	
		1	**215-3274**	1	SEAL & RETAINER AS	
		1	**217-3875**	1	SEAL-O-RING	
		1	**212-4114**	1	SEAL-O-RING	
J	4	1	**244-1364**	1	VALVE GP-SOLENOID (12-VOLT) (TILT)	
		1	**227-7025**	1	SOLENOID AS (SWING BOOM, WORK TOOL)	
		1	**215-3273**	1	CARTRIDGE AS-VALVE	
		1	**6V-8399**	1	SEAL-O-RING	
		1	**215-3274**	1	SEAL & RETAINER AS	
		1	**217-3875**	1	SEAL-O-RING	
		1	**212-4114**	1	SEAL-O-RING	
	5	1	**244-1365**	2	VALVE GP-RELIEF (SWING BOOM, WORK TOOL)	
					(EACH INCLUDES)	
		1	**192-7508**	1	SEAL-O-RING	
	6	1	**266-8903**	4	VALVE GP-CHECK	
					(EACH INCLUDES)	
		1	**2M-9780**	1	SEAL-O-RING	
		1	**7J-9108**	1	SEAL-O-RING	
	7	1	**180-7451**	8	WASHER-HARD (5.3X8.8X2-MM THK)	
					AVAILABLE REPAIR KIT(S):	
J			**215-3275**	1	KIT-SEAL	
					(INLCUDES O-RING SEALS)	

J-KIT MARKED J SERVICES PARTS MARKED J
M-METRIC PART

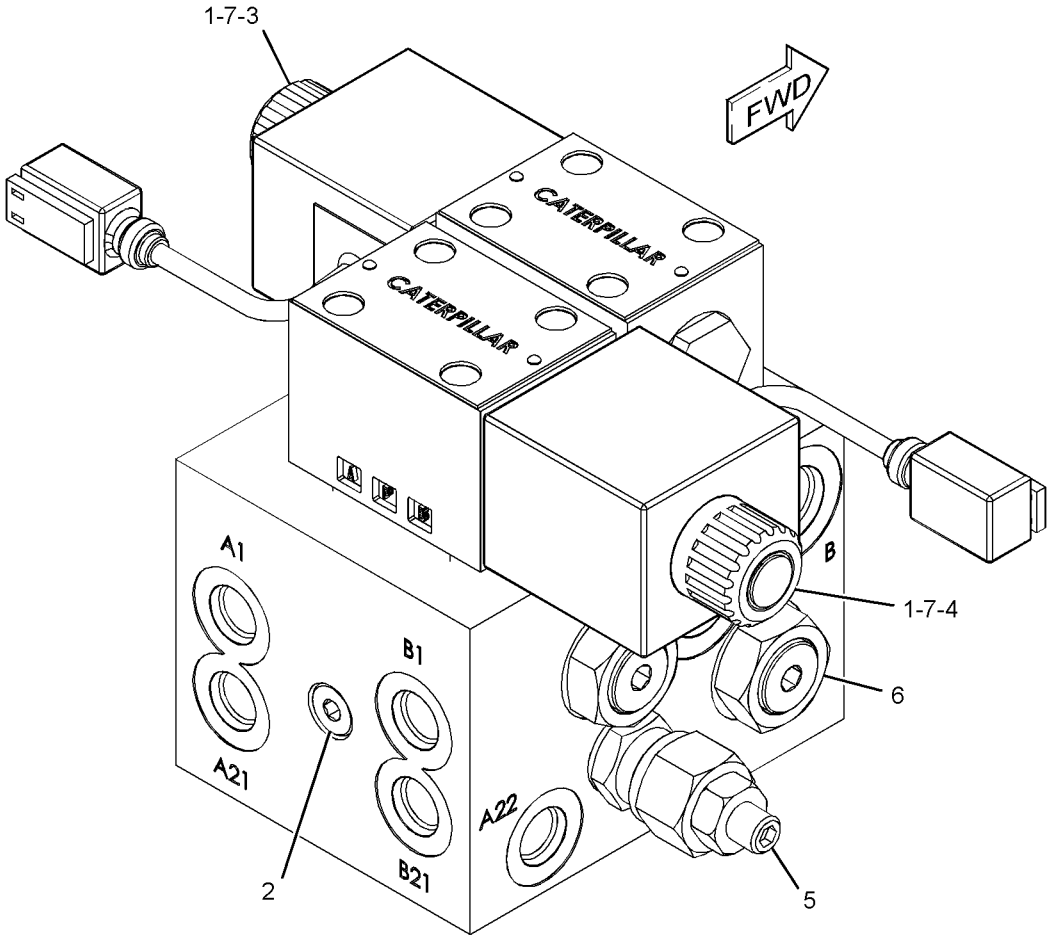

GRAPHIC #1 **<END>** g01178679

258-2579 MOTOR & MTG GP-HYDRAULIC FAN

S/N: SRS1-UP
PART OF 326-5280, 326-5281, 326-5282, 326-5284, 356-1902 CONVERSION AR-MACHINE, 356-1901 MOTOR AR-HYDRAULIC FAN AN ATTACHMENT

SMCS-1386 **i03970896**

NOTE	REF NO	GRAPHIC REF	PART NUMBER	QTY	PART NAME 1 2 3 4 5 6 (PRODUCT LEVEL)	SEE PAGE
J	1	1	**258-2577**	1	MOTOR GP-GEAR (FAN, DEMAND)	
M		1	**8T-0271**	2	BOLT-SOCKET HEAD (M10X1.5X35-MM)	
M		1	**9T-4884**	2	BOLT (M10X1.5X30-MM)	
	2	1	**277-8862**	1	VALVE GP-SOLENOID (REAR AXLE FAN UNLOADER)	
		1	**238-4628**	1	COIL AS (12-VOLT)	
	3	1	**8T-4121**	2	WASHER-HARD (11X21X2.5-MM THK)	
	4	1	**8T-4224**	1	WASHER-HARD (8.8X16X2-MM THK)	
M	5	1	**8T-7547**	1	BOLT (M8X1.25X30-MM)	
M	6	1	**9X-6032**	2	BOLT-SOCKET HEAD (M10X1.5X30-MM)	
					AVAILABLE REPAIR KIT(S):	
J			**278-8716**	1	KIT-SEAL	
					(INCLUDES E-SEALS, O-RINGS, SHAFT SEAL, SNAP RING, BACKUP SEALS, AXIAL SEAL KIT & SEALS)	

J-KIT MARKED J SERVICES PARTS MARKED J
M-METRIC PART

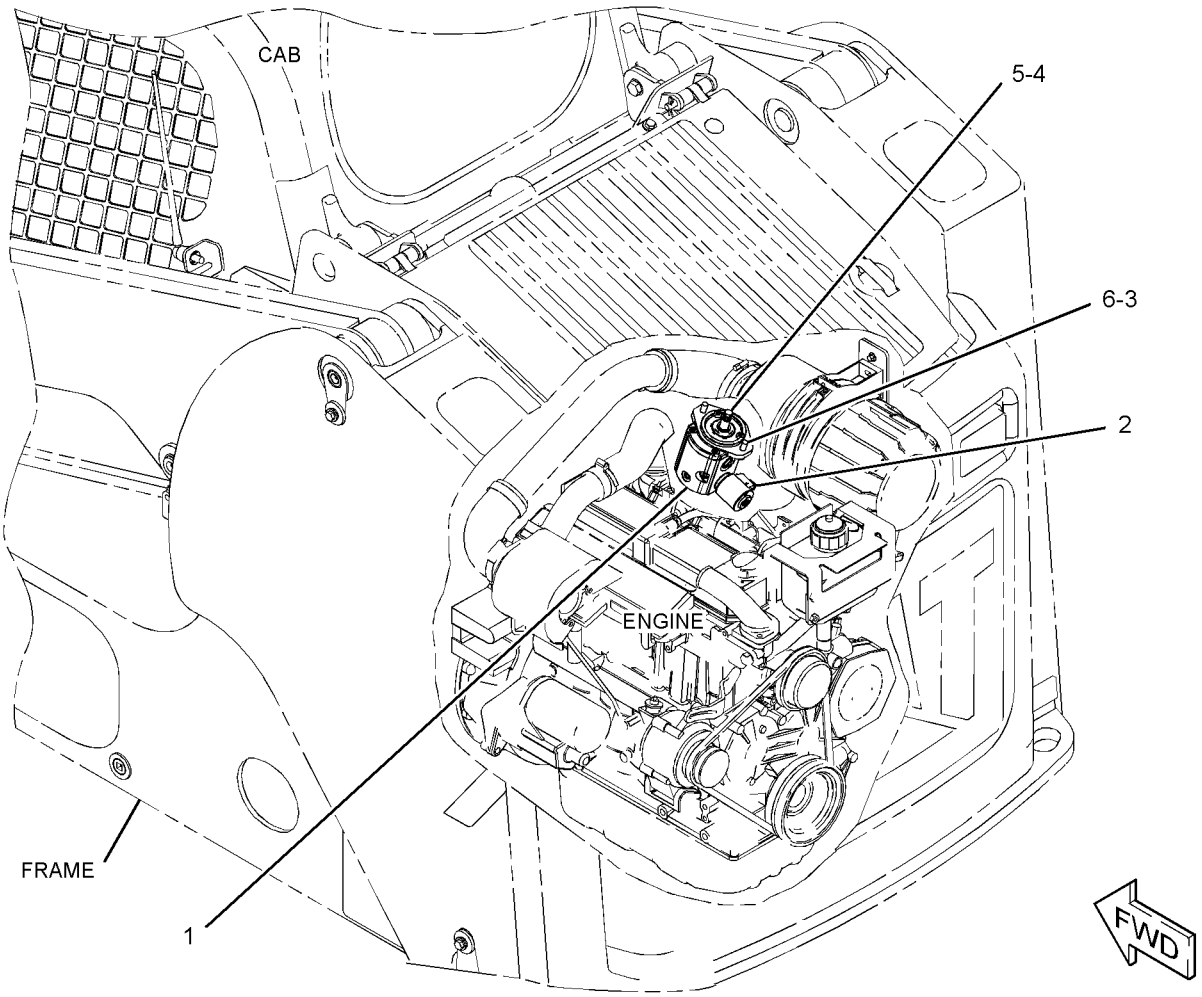

GRAPHIC #1 **<END>** g01315096

295-7221 MOTOR & MTG GP-HYDRAULIC FAN

S/N: SRS1-UP

PART OF 356-1900 MOTOR AR-HYDRAULIC FAN

AN ATTACHMENT

SMCS-1386 **i03990789**

NOTE	REF NO	GRAPHIC REF	PART NUMBER	QTY	PART NAME 1 2 3 4 5 6 (PRODUCT LEVEL)	SEE PAGE
CY	1	1	**307-3036**	1	MOTOR GP-GEAR (HYDRAULIC FAN)	279
	2	1	**8T-4121**	2	WASHER-HARD (11X21X2.5-MM THK)	
	3	1	**8T-4224**	1	WASHER-HARD (8.8X16X2-MM THK)	
M	4	1	**8T-7547**	1	BOLT (M8X1.25X30-MM)	
M	5	1	**9X-6032**	2	BOLT-SOCKET HEAD (M10X1.5X30-MM)	

C-CHANGE FROM PREVIOUS TYPE
M-METRIC PART
Y-SEPARATE ILLUSTRATION

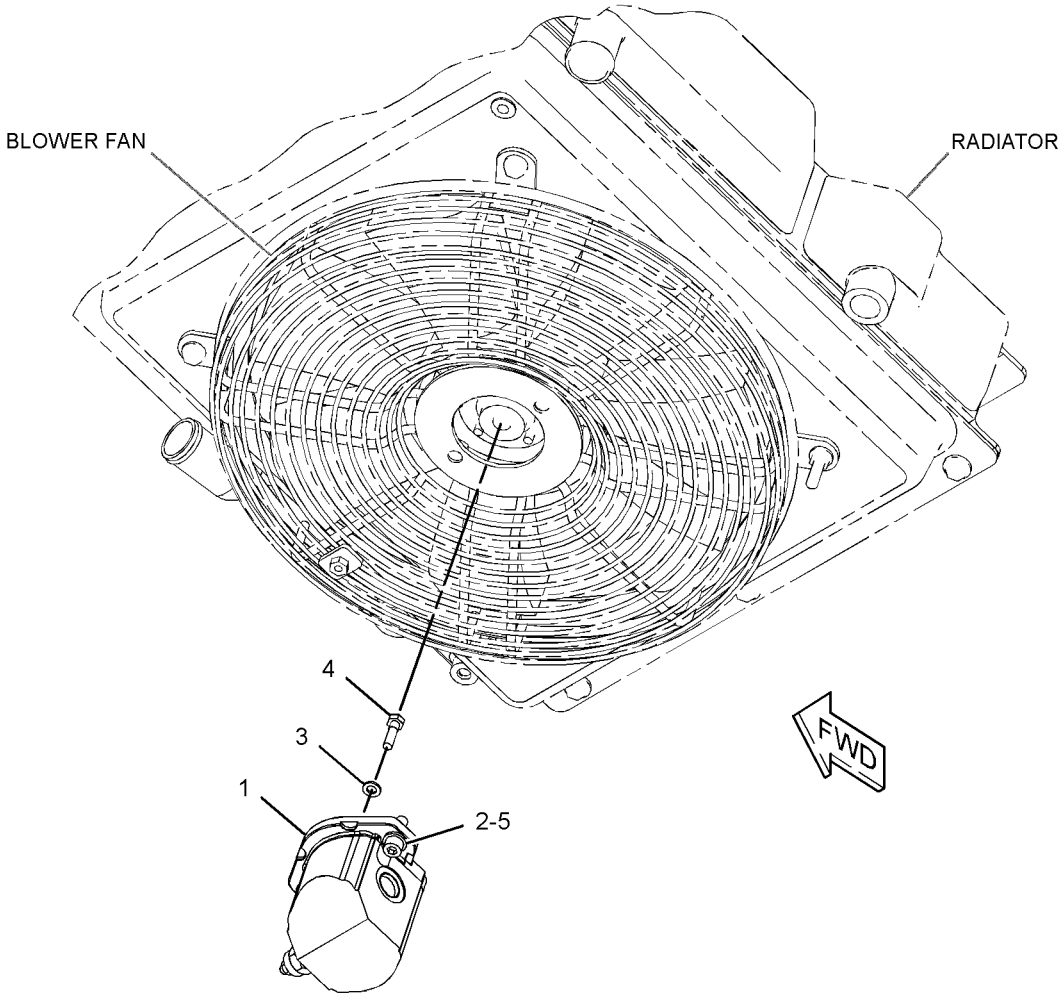

GRAPHIC #1 **<END>** g02174707

HYDRAULIC SYSTEM

356-1900 MOTOR AR-HYDRAULIC FAN—STANDARD

S/N: SRS1-UP

AN ATTACHMENT

SMCS-1386 **i03901812**

NOTE	PART NUMBER	QTY	PART NAME 1 2 3 4 5 6 (PRODUCT LEVEL)	SEE PAGE
Y	*295-7221*	1	MOTOR & MTG GP-HYDRAULIC FAN	277

Y-SEPARATE ILLUSTRATION

<END>

356-1901 MOTOR AR-HYDRAULIC FAN—NACD

S/N: SRS1-UP

AN ATTACHMENT

SMCS-1386 **i03901813**

NOTE	PART NUMBER	QTY	PART NAME 1 2 3 4 5 6 (PRODUCT LEVEL)	SEE PAGE
Y	*258-2579*	1	MOTOR & MTG GP-HYDRAULIC FAN	276
Y	*328-2342*	1	WIRING GP-MACHINE (DEMAND FAN)	116

Y-SEPARATE ILLUSTRATION

<END>

307-3036 MOTOR GP-GEAR–HYDRAULIC FAN

S/N: SRS1-UP
PART OF 295-7221 MOTOR & MTG GP-HYDRAULIC FAN
AN ATTACHMENT

SMCS-1386, 5061 **i03970898**

NOTE	REF NO	GRAPHIC REF	PART NUMBER	QTY	PART NAME 1 2 3 4 5 6 (PRODUCT LEVEL)	SEE PAGE
	1	1	**228-9240**	1	VALVE GP-RELIEF (GEAR MOTOR)	
		1	**6F-6672**	1	SEAL-O-RING	
		1	**215-3277**	1	SEAL-O-RING	
M	2	1	**9T-4884**	2	BOLT (M10X1.5X30-MM)	
M	3	1	**8T-0271**	2	BOLT-SOCKET HEAD (M10X1.5X35-MM)	
					PARTS SHOWN IN GRAPHIC(S) WITHOUT A REFERENCE NUMBER ARE NOT SERVICED SEPARATELY	
					AVAILABLE REPAIR KIT(S):	
			278-8716	1	KIT-SEAL (GEAR MOTOR)	
					(INCLUDES O-RINGS, E-SEALS, SHAFT SEAL, SNAP RING, BACKUP SEALS, AXIAL SEAL KIT & SEALS)	

M-METRIC PART

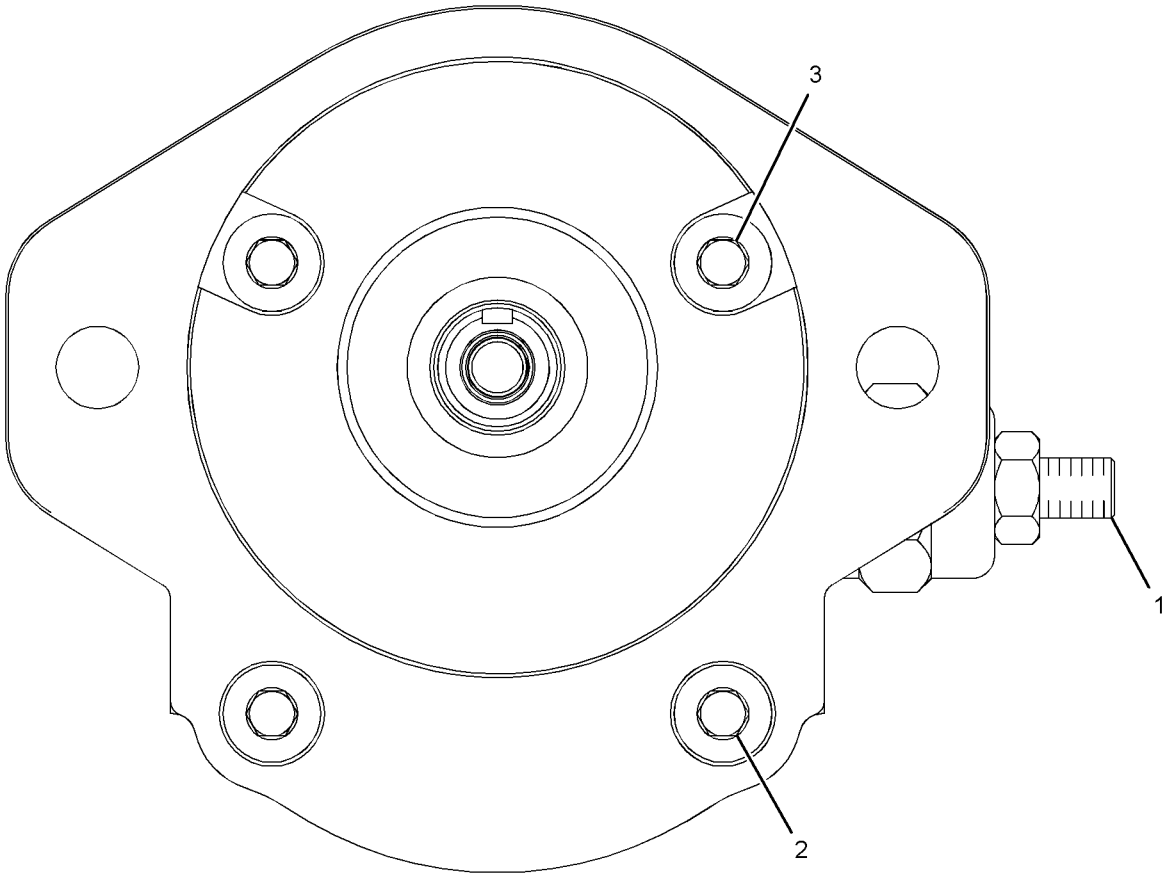

GRAPHIC #1 **<END>** g01761253

HYDRAULIC SYSTEM

154-5011 MOUNTING GP-CYLINDER

S/N: SRS1-UP
PART OF 279-5382, 279-5390, 279-5398, 279-5403, 293-0139 BUCKET
AR-MULTIPURPOSE
AN ATTACHMENT

SMCS-5498 **i01066088**

NOTE	REF NO	GRAPHIC REF	PART NUMBER	QTY	PART NAME 1 2 3 4 5 6 (PRODUCT LEVEL)	SEE PAGE
	1	1	**154-5012**	2	PIN	
	2	1	**154-5013**	2	PIN	
	3	1	**3B-8489**	2	FITTING-GREASE	
M	4	1	**6V-9189**	4	LOCKNUT (M8X1.25-THD)	
M	5	1	**8T-6869**	4	BOLT (M8X1.25X60-MM)	

M-METRIC PART

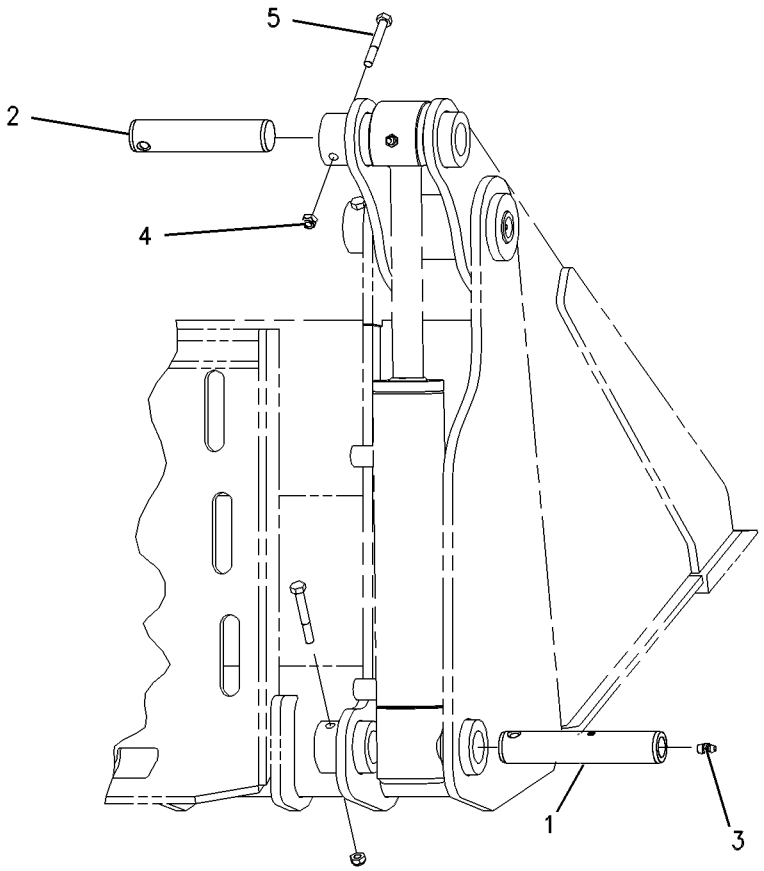

GRAPHIC #1 **<END>** g00560356

156-0891 MOUNTING GP-CYLINDER

S/N: SRS1-UP

PART OF 157-7223, 157-7224, 157-7225, 217-6229 BUCKET AR-GRAPPLE, 279-5350, 279-5360 FORK AR-GRAPPLE

AN ATTACHMENT

SMCS-5498 **i02578037**

NOTE	REF NO	GRAPHIC REF	PART NUMBER	QTY	PART NAME 1 2 3 4 5 6 (PRODUCT LEVEL)	SEE PAGE
	1	1	**255-8058**	2	PLATE	
	2	1	**156-0913**	1	PLATE	
	3	1	**157-0941**	2	PIN	
	4	1	**157-0942**	2	PIN	
	5	1	**159-8035**	2	FILM-WARNING (CRUSH HAZARD, STAY BACK)	
	6	1	**3B-8489**	2	FITTING-GREASE	
	7	1	**4M-5285**	4	RING-RETAINING (EXTERNAL)	
M	8	1	**6V-9189**	2	LOCKNUT (M8X1.25-THD)	
M	9	1	**8T-4138**	3	BOLT (M6X1X20-MM)	
M	10	1	**8T-6869**	2	BOLT (M8X1.25X60-MM)	
	11	1	**9X-2026**	3	WASHER (6.5X17X1-MM THK)	
	12	1	**9X-6274**	4	WASHER (32.5X50X1.6-MM THK)	

M-METRIC PART

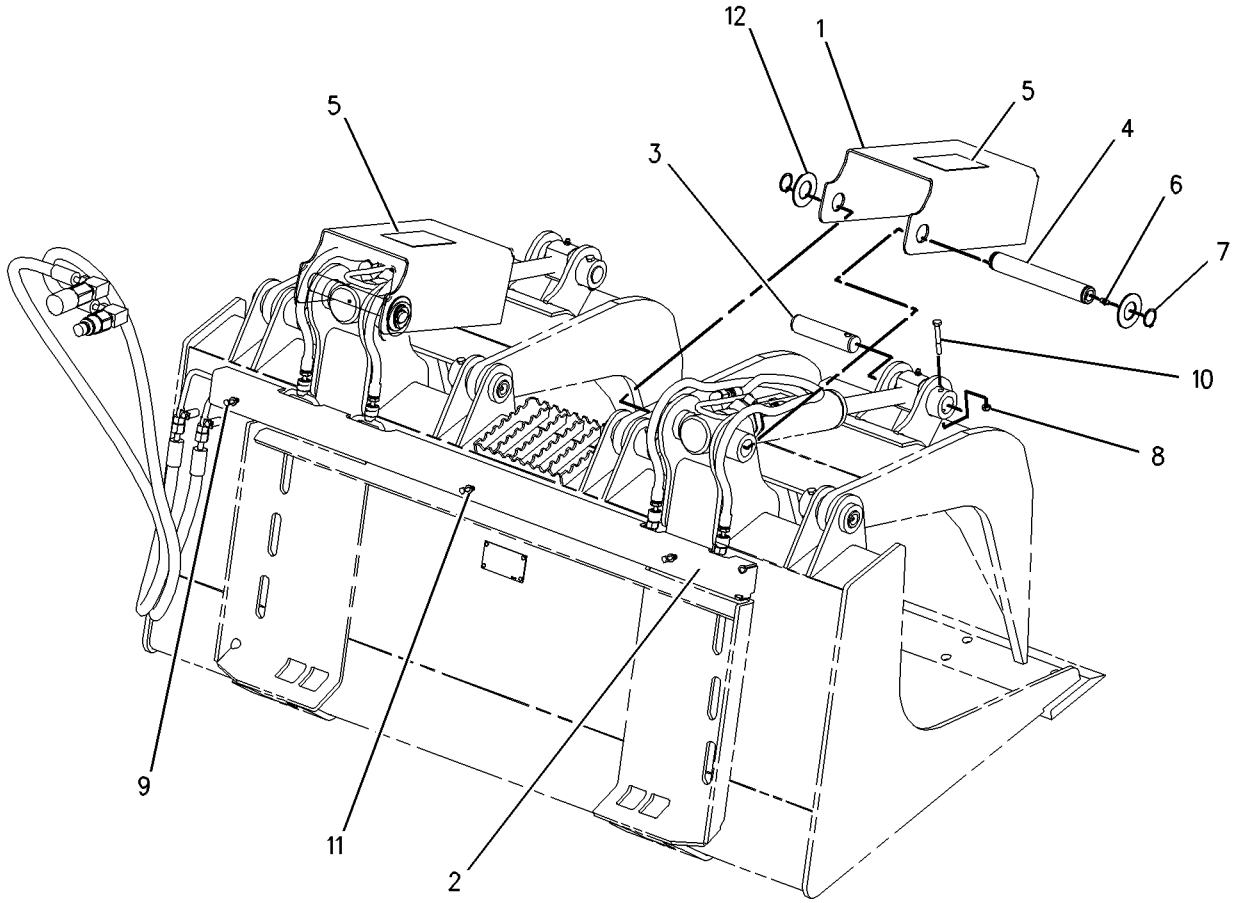

GRAPHIC #1 **<END>** g00777681

HYDRAULIC SYSTEM

165-8731 MOUNTING GP-CYLINDER

S/N: SRS1-UP
PART OF 285-6116 GRAPPLE & CYLINDER GP-UTILITY
AN ATTACHMENT

SMCS-5498 **i02017132**

NOTE	REF NO	GRAPHIC REF	PART NUMBER	QTY	PART NAME 1 2 3 4 5 6 (PRODUCT LEVEL)	SEE PAGE
	1	1	**154-5013**	2	PIN	
M	2	1	**6V-9189**	2	LOCKNUT (M8X1.25-THD)	
M	3	1	**8T-6869**	2	BOLT (M8X1.25X60-MM)	

M-METRIC PART

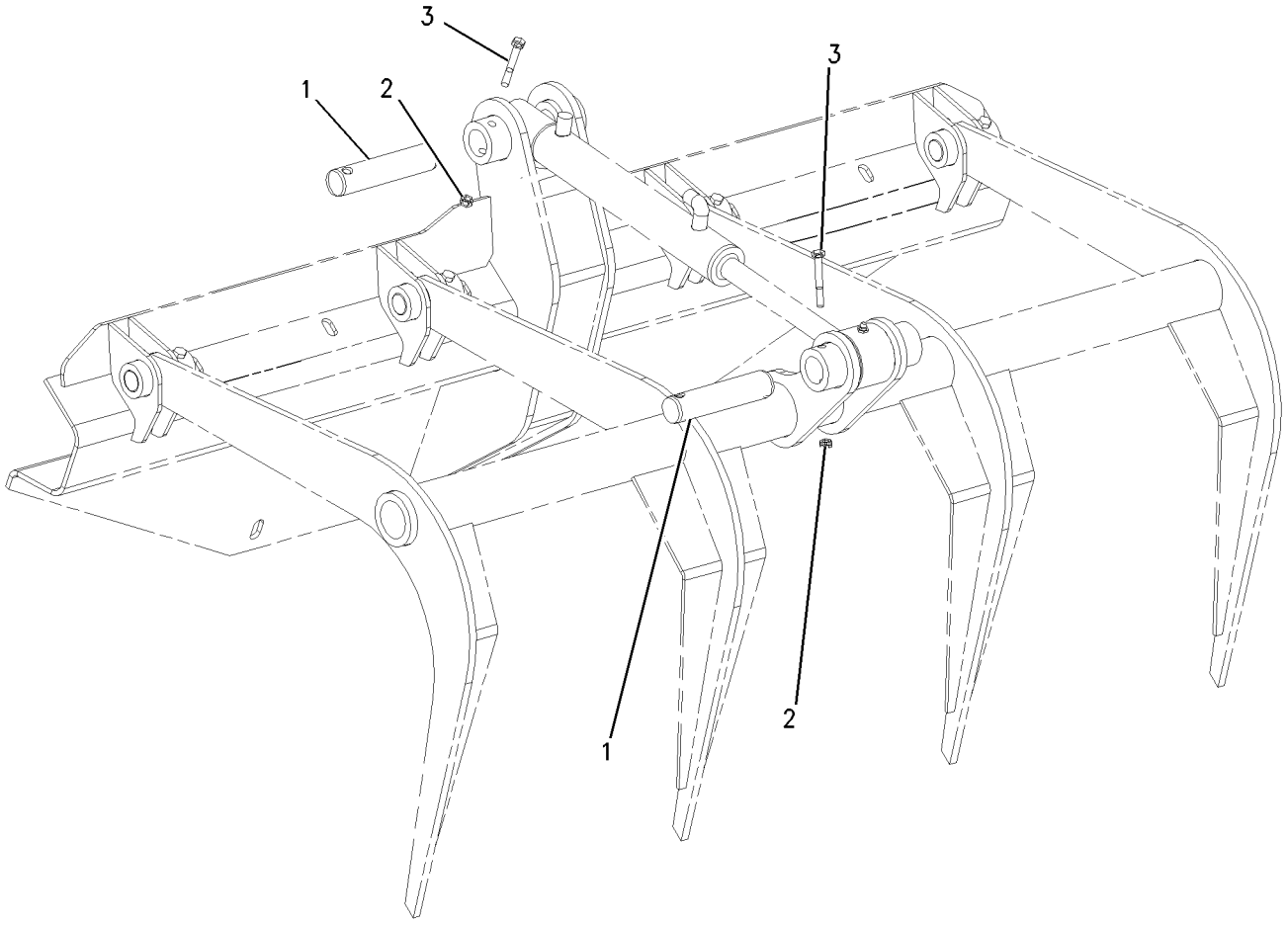

GRAPHIC #1 **<END>** g00652937

HYDRAULIC SYSTEM

286-9248 MOUNTING GP-CYLINDER—GRAPPLE BUCKET

S/N: SRS1-UP

PART OF 286-9300, 286-9301 BUCKET AR-GRAPPLE

AN ATTACHMENT

SMCS-5498 **i02723716**

NOTE	REF NO	GRAPHIC REF	PART NUMBER	QTY	PART NAME 1 2 3 4 5 6 (PRODUCT LEVEL)	SEE PAGE
	1	1	**157-0941**	2	PIN	
	2	1	**157-0942**	2	PIN	
	3	1	**286-9273**	2	PLATE	
	4	1	**286-9289**	2	PLATE AS	
	5	1	**3B-8489**	2	FITTING-GREASE	
	6	1	**4M-5285**	4	RING-RETAINING (EXTERNAL)	
M	7	1	**6V-9189**	2	LOCKNUT (M8X1.25-THD)	
	8	1	**7X-7729**	8	WASHER (11X25X3-MM THK)	
M	9	1	**8T-4195**	8	BOLT (M10X1.5X30-MM)	
M	10	1	**8T-6869**	2	BOLT (M8X1.25X60-MM)	
	11	1	**9X-6274**	4	WASHER (32.5X50X1.6-MM THK)	

M-METRIC PART

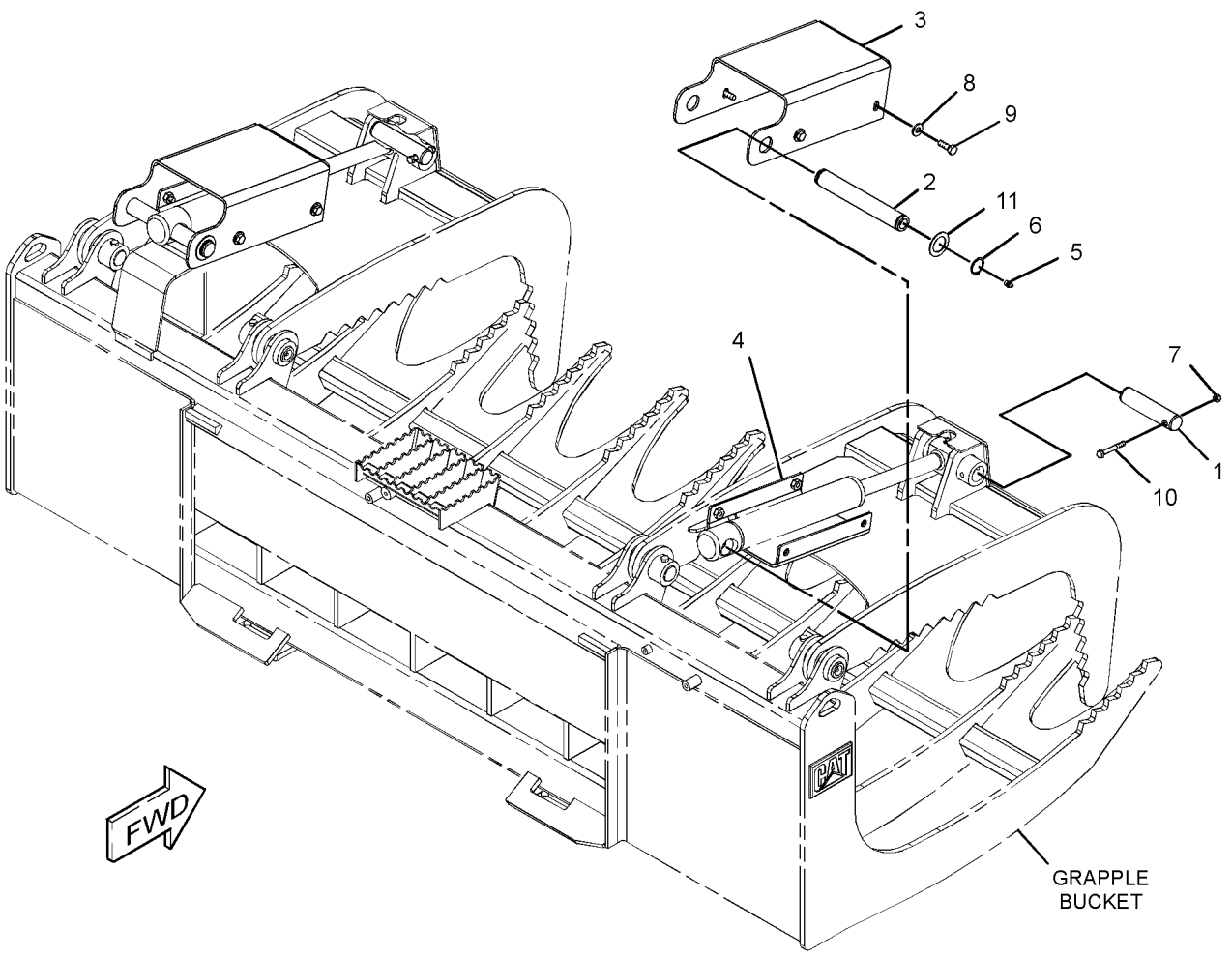

GRAPHIC #1 **<END>** g01372951

HYDRAULIC SYSTEM

190-8084 PUMP & MTG GP-WORK TOOL

S/N: SRS1-UP
PART OF 326-5300 CONVERSION AR-MACHINE
AN ATTACHMENT

SMCS-6700 **i02212112**

NOTE	REF NO	GRAPHIC REF	PART NUMBER	QTY	PART NAME 1 2 3 4 5 6 (PRODUCT LEVEL)	SEE PAGE
CY	1	1	**238-7642**	1	PUMP GP-GEAR	286
	2	1	**8T-4223**	2	WASHER-HARD (13.5X25.5X3-MM THK)	
M	3	1	**8T-4956**	2	BOLT (M12X1.75X35-MM)	
	4	1	**8T-5049**	1	SEAL-O-RING	

C-CHANGE FROM PREVIOUS TYPE
M-METRIC PART
Y-SEPARATE ILLUSTRATION

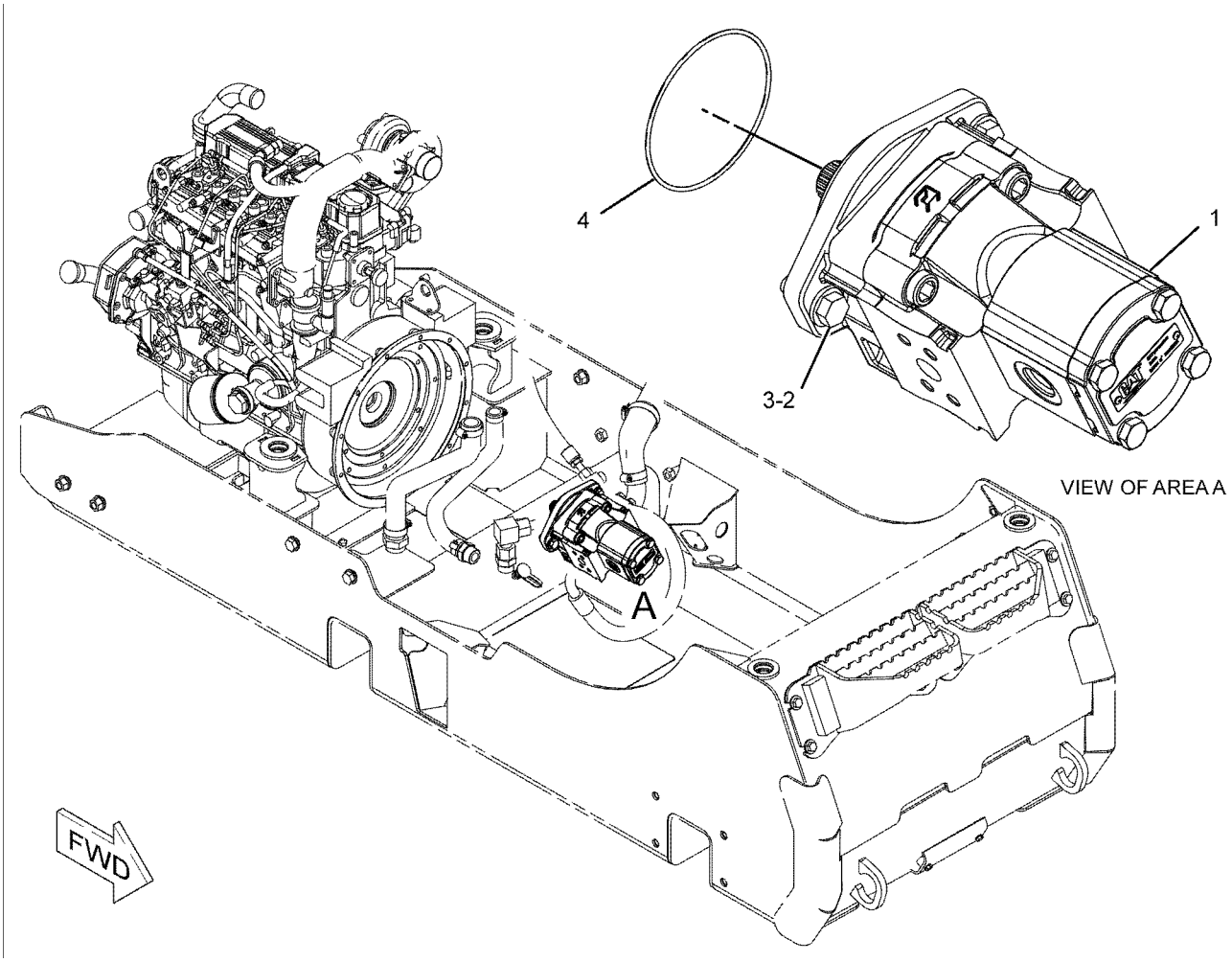

GRAPHIC #1 **<END>** g01131877

306-8137 PUMP & MTG GP-WORK TOOL

S/N: SRS1-UP
PART OF 326-5280, 326-5281, 326-5282, 326-5284, 356-1902 CONVERSION
AR-MACHINE
AN ATTACHMENT

SMCS-6700 **i02731045**

NOTE	REF NO	GRAPHIC REF	PART NUMBER	QTY	PART NAME 1 2 3 4 5 6 (PRODUCT LEVEL)	SEE PAGE
Y	1	1	**289-6358**	1	PUMP GP-GEAR	287
	2	1	**8T-4223**	2	WASHER-HARD (13.5X25.5X3-MM THK)	
M	3	1	**8T-4956**	2	BOLT (M12X1.75X35-MM)	
	4	1	**8T-5049**	1	SEAL-O-RING	

M-METRIC PART
Y-SEPARATE ILLUSTRATION

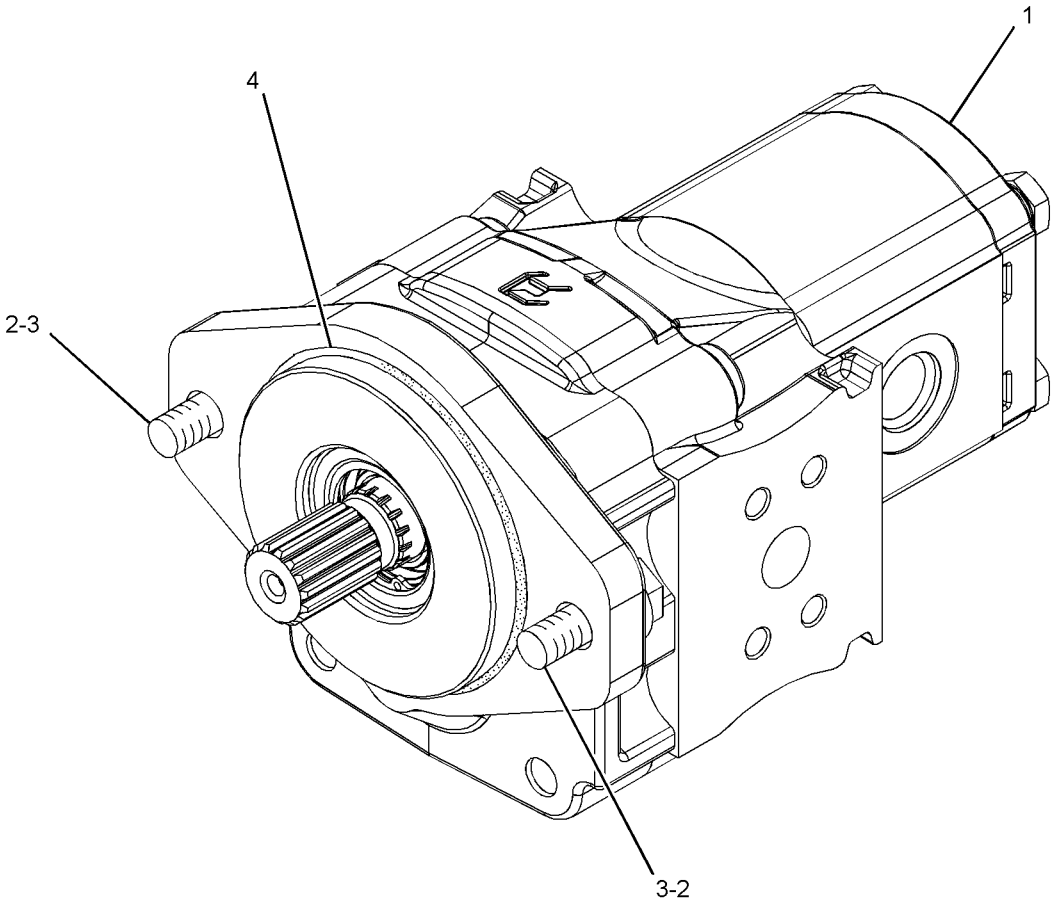

GRAPHIC #1 **<END>** g01372516

238-7642 PUMP GP-GEAR–WORK TOOL

S/N: SRS1-UP
PART OF 190-8084 PUMP & MTG GP-WORK TOOL
AN ATTACHMENT

SMCS-5073 **i03767049**

NOTE	REF NO	GRAPHIC REF	PART NUMBER	QTY	PART NAME 1 2 3 4 5 6 (PRODUCT LEVEL)	SEE PAGE
J	1	1	**230-3757**	2	SEAL-SHAFT	
	2	1	**8C-3110**	1	RING-RETAINING	
	3	1	**313-5646**	4	BOLT	
	4	1	**271-2360**	4	WASHER-HARD (15X22X2.5-MM THK)	
M	5	1	**8T-4198**	4	BOLT (M10X1.5X100-MM)	
	6	1	**8T-5095**	4	WASHER-PLATED (11X16X2-MM THK)	
					AVAILABLE REPAIR KIT(S):	
J			**278-8714**	1	KIT-SEAL	
					(INCLUDES E-SEALS, SEAL-O-RINGS, SNAP RING & BACKUP SEALS)	

J-KIT MARKED J SERVICES PARTS MARKED J
M-METRIC PART

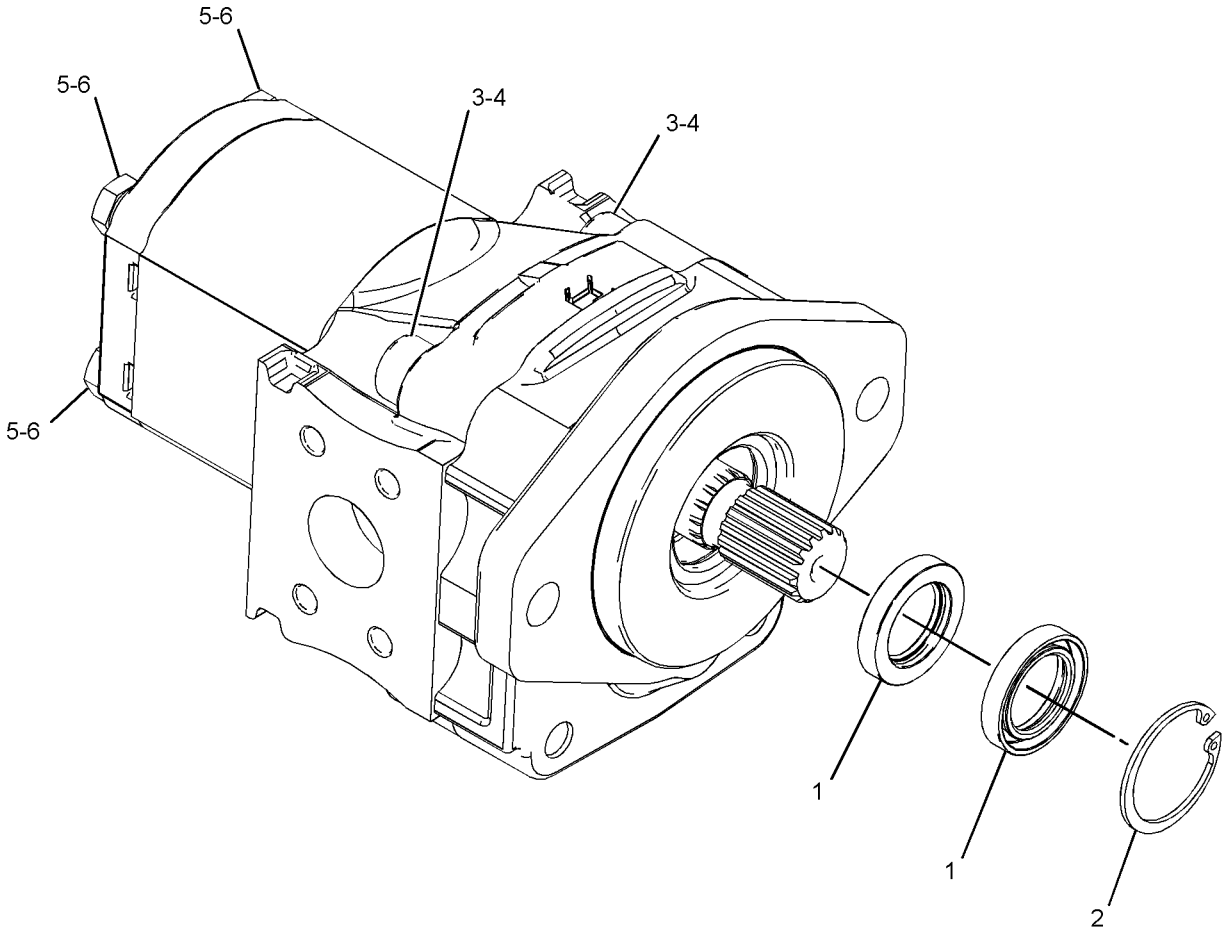

GRAPHIC #1 **<END>** g01442438

289-6358 PUMP GP-GEAR

S/N: SRS1-UP
PART OF 306-8137 PUMP & MTG GP-WORK TOOL
AN ATTACHMENT

SMCS-5073 **i02731047**

NOTE	REF NO	GRAPHIC REF	PART NUMBER	QTY	PART NAME 1 2 3 4 5 6 (PRODUCT LEVEL)	SEE PAGE
J	1	1	**230-3757**	2	SEAL-SHAFT	
J	2	1	**8C-3110**	1	RING-RETAINING	
	3	1	**8T-5095**	4	WASHER-PLATED (11X16X2-MM THK)	
M	4	1	**8T-4198**	4	BOLT (M10X1.5X100-MM)	
	5	1	**271-2360**	4	WASHER-HARD (15X22X2.5-MM THK)	
M	6	1	**095-0690**	4	BOLT-SOCKET HEAD (M14X2X60-MM)	
					PARTS SHOWN IN GRAPHIC(S) WITHOUT A REFERENCE NUMBER ARE NOT SERVICED SEPARATELY	
					AVAILABLE REPAIR KIT(S):	
J			**278-8714**	1	KIT-SEAL (GEAR PUMP)	
					(INCLUDES E-SEALS, SEAL-O-RINGS, SHAFT SEALS, SNAP RING & SEAL BACKUP)	

J-`(KIT MARKED J SERVICES PART MARKED J)
M-METRIC PART

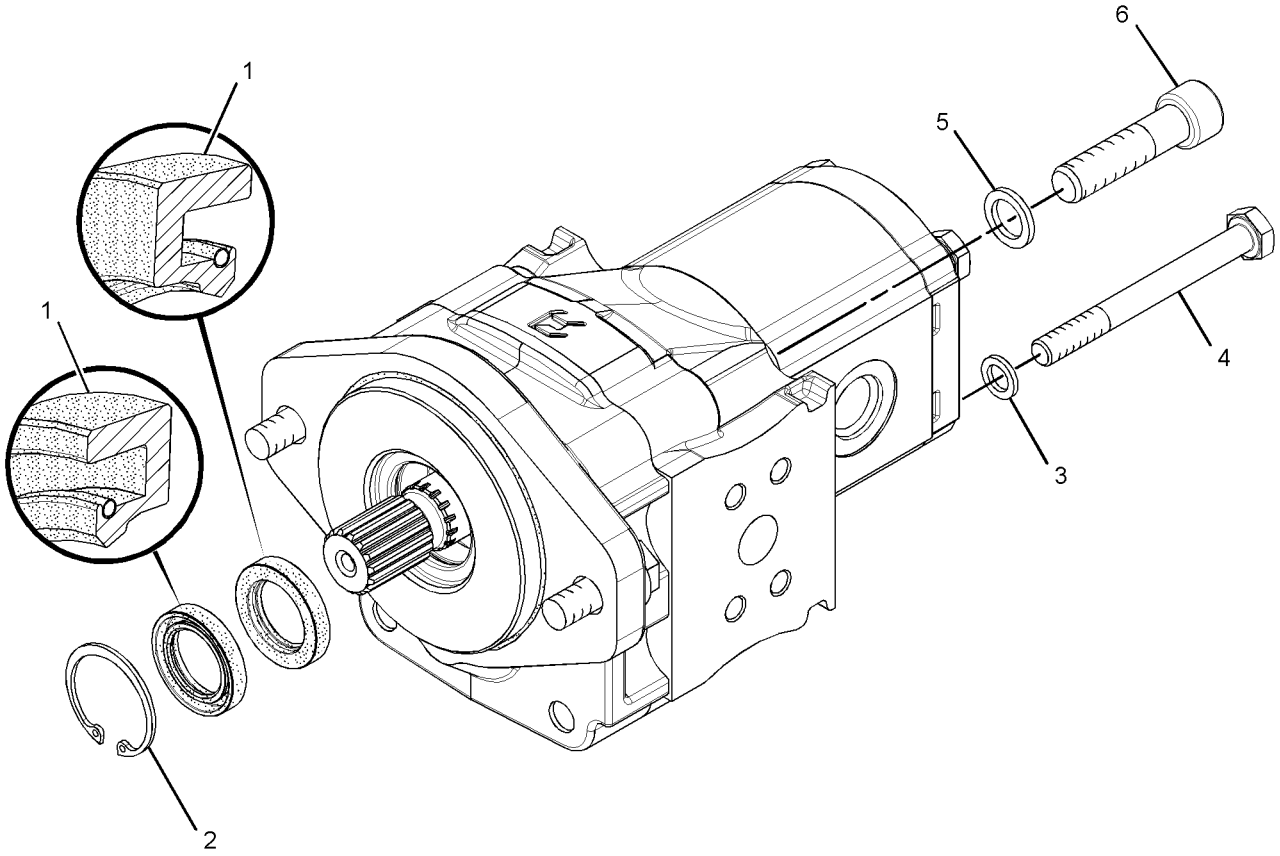

GRAPHIC #1 **<END>** g01372557

HYDRAULIC SYSTEM

326-5780 TANK & MTG GP-HYDRAULIC

S/N: SRS1-UP

PART OF 326-5730 HYDRAULIC AR

SMCS-5056 **i04397703**

NOTE	REF NO	GRAPHIC REF	PART NUMBER	QTY	PART NAME 1 2 3 4 5 6 (PRODUCT LEVEL)	SEE PAGE
	1	1	**5P-4961**	2	CLAMP-HOSE	
	2	1	**154-4014**	1	BRACKET	
	3	1	**207-9729**	1	BREATHER (INLINE) (HYDRAULIC OIL)	
	4	1	**233-5997**	1	HOSE	
Y	5	1	*326-5781*	1	TANK GP-HYDRAULIC	289
	6	1	**4P-7581**	1	CLIP	
	7	1	**8T-4121**	1	WASHER-HARD (11X21X2.5-MM THK)	
M	8	1	**8T-4137**	1	BOLT (M10X1.5X20-MM)	
M	9	1	**8T-4189**	2	BOLT (M8X1.25X20-MM)	
E	10	1	**5P-1442**		HOSE (65-CM)	
	11	1	**3S-2093**	1	STRAP-CABLE	

E-ORDER BY THE CENTIMETER
M-METRIC PART
Y-SEPARATE ILLUSTRATION

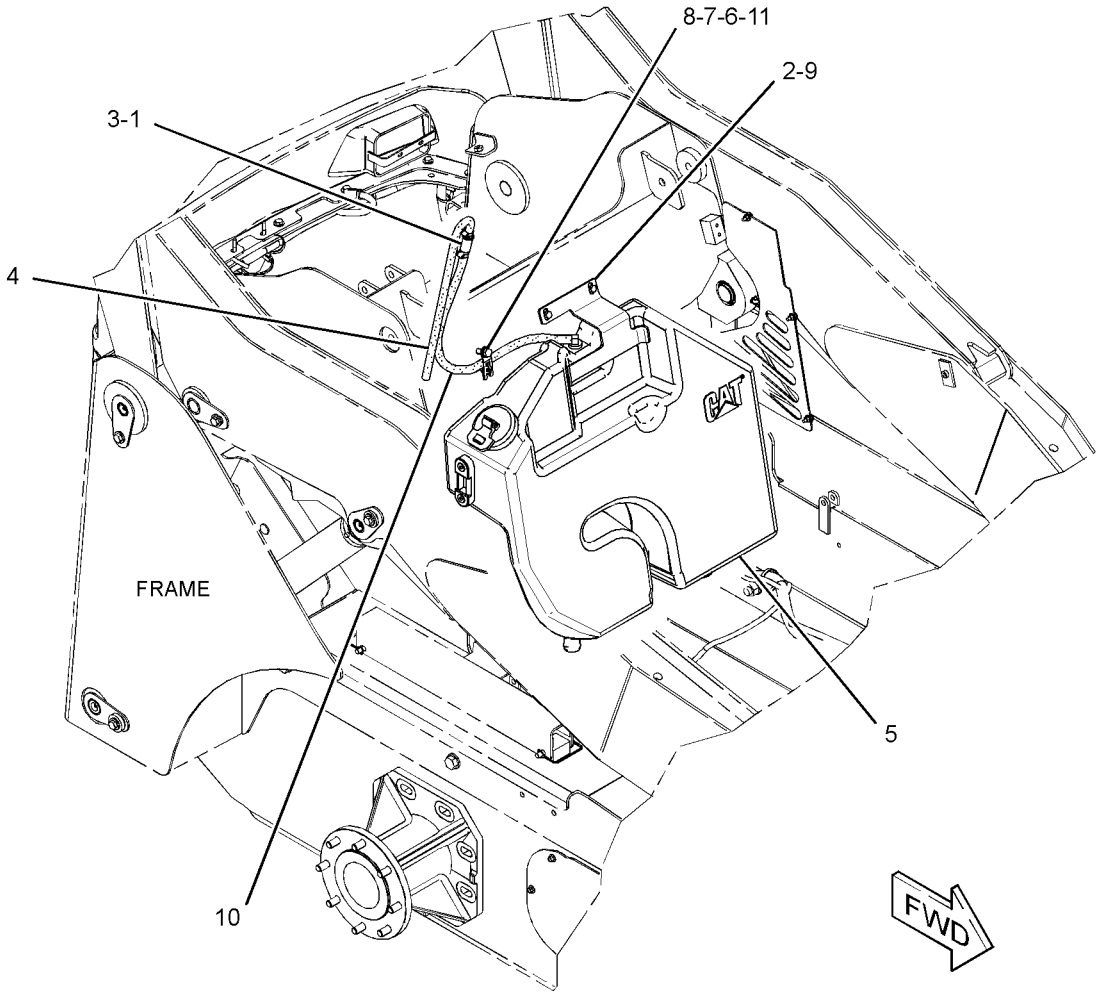

GRAPHIC #1 **<END>** g02327762

HYDRAULIC SYSTEM

326-5781 TANK GP-HYDRAULIC

S/N: SRS1-UP

PART OF 326-5780 TANK & MTG GP-HYDRAULIC

SMCS-5056 **i03902802**

NOTE	REF NO	GRAPHIC REF	PART NUMBER	QTY	PART NAME 1 2 3 4 5 6 (PRODUCT LEVEL)	SEE PAGE
	1	1	**6W-5698**	1	GROMMET	
	2	1	**142-8928**	1	ELBOW	
	3	1	**142-8937**	1	CAP AS-FILLER (HYDRAULIC TANK)	
	4	1	**264-4297**	1	SENSOR AS-TEMPERATURE (HYDRAULIC OIL)	
		1	**137-6645**	1	PAD-CONNECTOR	
	5	1	**347-5346**	1	TANK GP-HYDRAULIC	
		1	**317-3128**	1	GAUGE-SIGHT (HYDRAULIC TANK)	
		1	**348-4609**	1	SCREEN-SUCTION (HYDRAULIC TANK)	
		1	**5W-6388**	1	SEAL-O-RING	
	6	1	**3K-0360**	1	SEAL-O-RING	

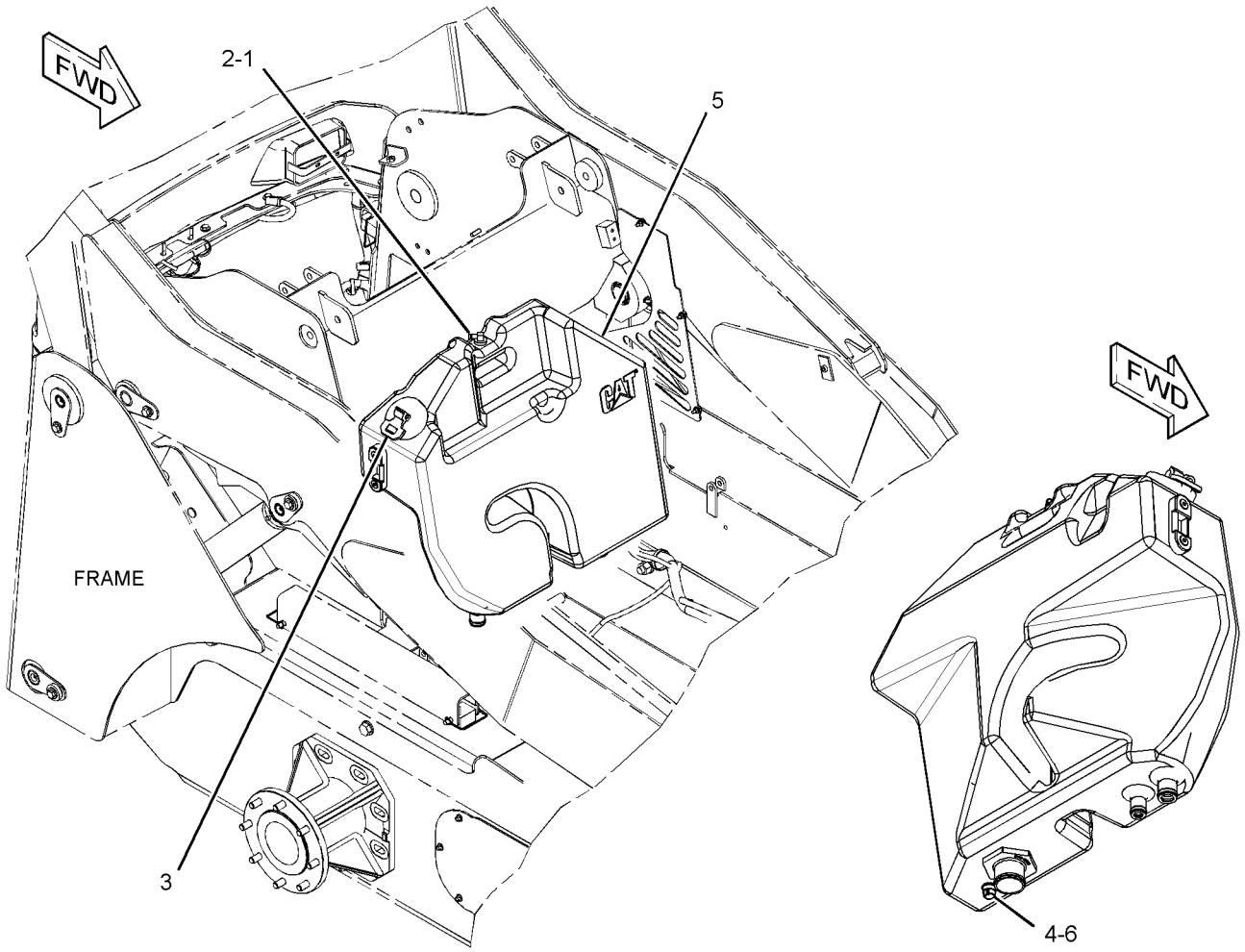

GRAPHIC #1 **<END>** g02146395

HYDRAULIC SYSTEM

218-6725 VALVE & MTG GP-CONTROL

S/N: SRS1-UP

PART OF 326-5730 HYDRAULIC AR

SMCS-5051 **i03875940**

NOTE	REF NO	GRAPHIC REF	PART NUMBER	QTY	PART NAME 1 2 3 4 5 6 (PRODUCT LEVEL)	SEE PAGE
CY	1	1	**336-1320**	1	VALVE GP-CONTROL (WORKTOOL)	291
	2	1	**218-6561**	1	BRACKET	
	3	1	**8T-4121**	4	WASHER-HARD (11X21X2.5-MM THK)	
M	4	1	**8T-4136**	2	BOLT (M10X1.5X25-MM)	
M	5	1	**8T-4137**	2	BOLT (M10X1.5X20-MM)	

C-CHANGE FROM PREVIOUS TYPE
M-METRIC PART
Y-SEPARATE ILLUSTRATION

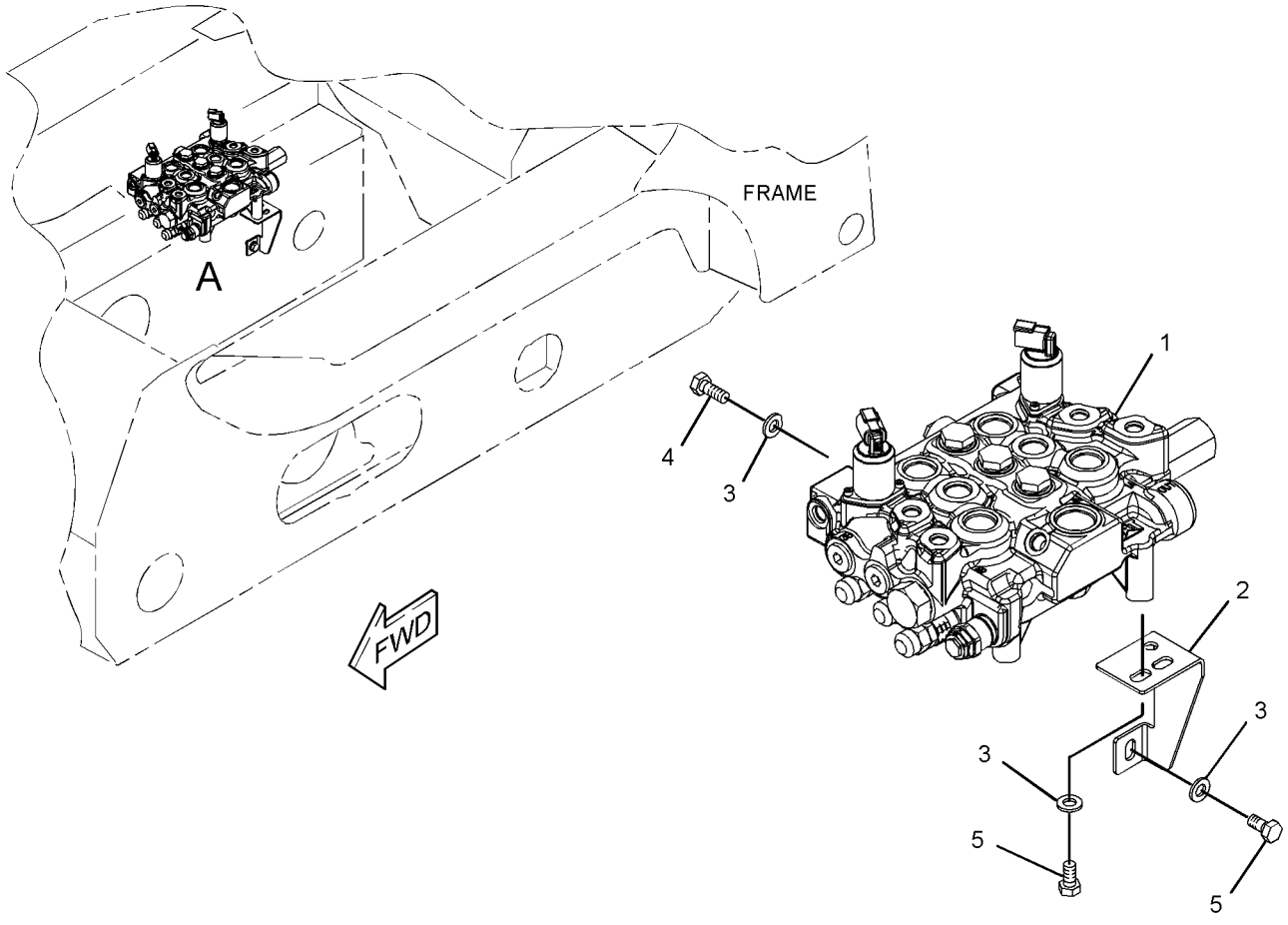

VIEW OF AREA A
(EXPLODED)

GRAPHIC #1 **<END>** g02124034

336-1320 VALVE GP-CONTROL

S/N: SRS1-UP

PART OF 218-6725 VALVE & MTG GP-CONTROL

SMCS-5051 **i03875948**

NOTE	REF NO	GRAPHIC REF	PART NUMBER	QTY	PART NAME 1 2 3 4 5 6 (PRODUCT LEVEL)	SEE PAGE
Y	1	1	**295-1799**	1	VALVE GP-RELIEF (MAIN)	298
	2	1	**216-6160**	2	VALVE GP-RELIEF (TILT, AUXILIARY)	
	3	1	**216-6161**	2	VALVE GP-RELIEF (LIFT)	
	4	1	**358-5951**	2	VALVE GP-SOLENOID (12-VOLT) (MODULATION, AUXILIARY CIRCUIT)	
	5	1	**4J-7533**	1	SEAL-O-RING	
	6	1	**204-1485**	6	WASHER (0.47X0.75X0.02-MM THK)	
	7	1	**204-1482**	1	SPRING	
	8	1	**204-1488**	1	SPRING	
	9	1	**204-1489**	4	SPRING	
	10	1	**204-1486**	1	WASHER (0.32X0.74X0.02-MM THK)	
	11	1	**127-6316**	1	BOLT-SPECIAL	
	12	1	**180-8071**	4	PLUG-HEX SOCKET	
	13	1	**291-8148**	2	SEAL-O-RING	
	14	1	**204-1471**	1	CAP	
	15	1	**204-1481**	1	CAP	
	16	1	**144-4531**	3	VALVE-CHECK	
	17	1	**003-3082**	3	SPRING	
	18	1	**8I-5078**	3	SEAL-O-RING	
	19	1	**144-4532**	3	PLUG	
	20	1	**216-6156**	1	VALVE-CHECK	
	21	1	**216-6157**	1	SPRING	
	22	1	**3J-1907**	1	SEAL-O-RING	
	23	1	**216-6159**	1	PLUG	
	24	1	**2M-9780**	4	SEAL-O-RING	
M	25	1	**095-0641**	4	BOLT-SOCKET HEAD (M4X0.7X10-MM)	

M-METRIC PART
Y-SEPARATE ILLUSTRATION

336-1320 VALVE GP-CONTROL *(contd.)* i03875948

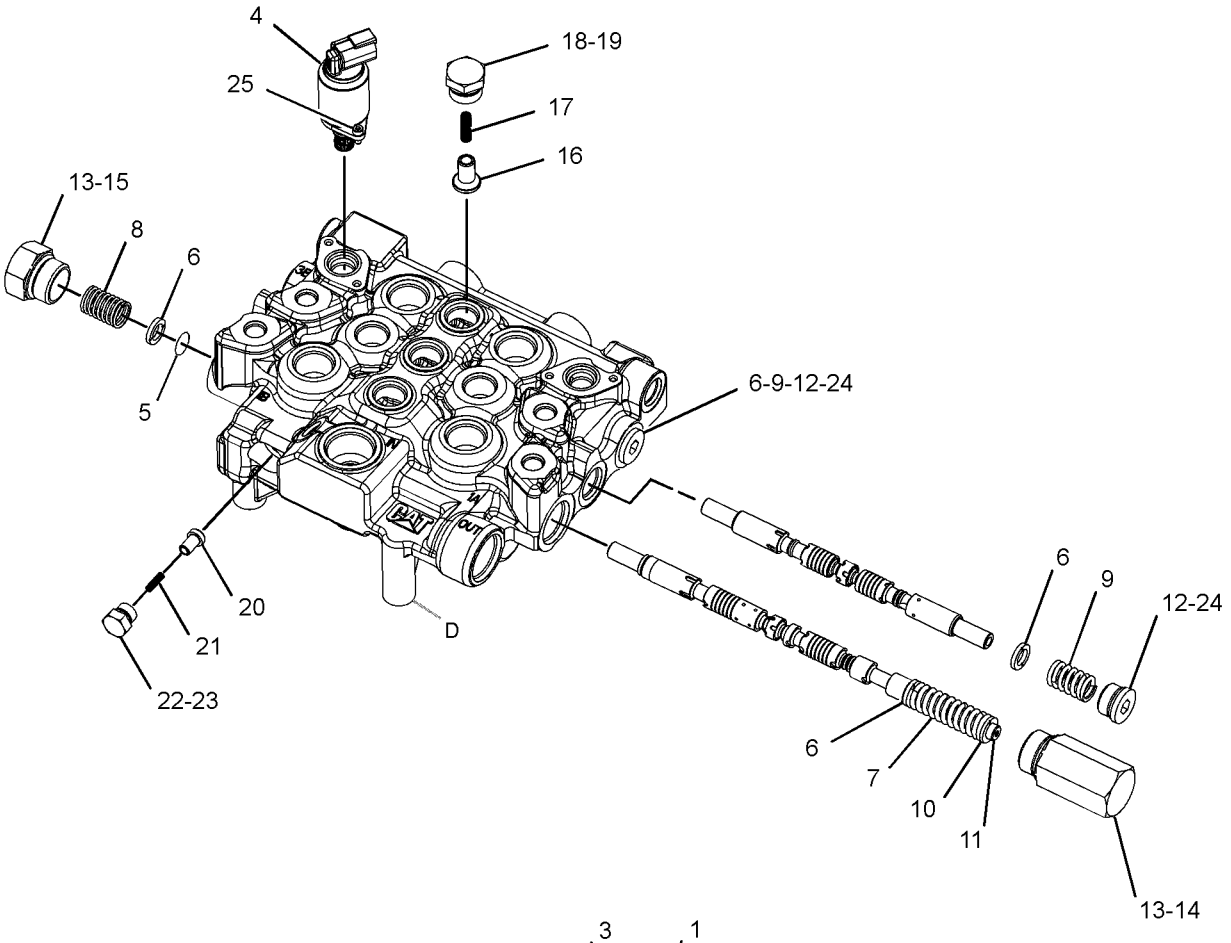

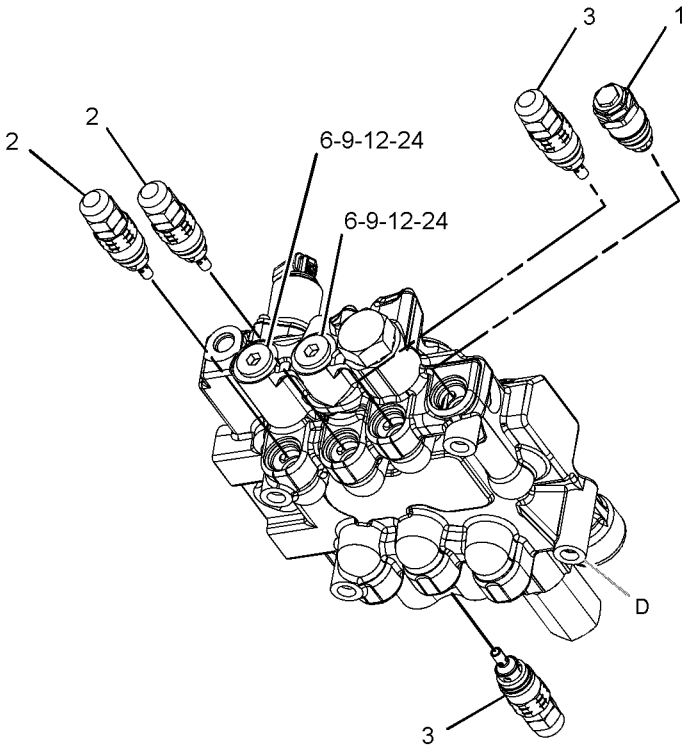

GRAPHIC #1 **<END>** g02124493

299-9119 VALVE GP-PILOT

S/N: SRS1-UP

PART OF 326-5264, 326-5265 CONTROL GP-PILOT OPERATED HYD AN ATTACHMENT

SMCS-5059, 5705 **i04367467**

NOTE	REF NO	GRAPHIC REF	PART NUMBER	QTY	PART NAME 1 2 3 4 5 6 (PRODUCT LEVEL)	SEE PAGE
	1	1	**7K-1181**	1	STRAP-CABLE	
	2	1	**172-0970**	1	COIL AS (12-VDC)	
		1	**8T-8729**	2	PIN-CONNECTOR (16-GA TO 18-GA)	
		1	**102-8802**	1	KIT-RECEPTACLE (2-PIN)	
					(INCLUDES RECEPTACLE AS & WEDGE)	
Y	3	1	**195-9700**	1	VALVE GP-SOLENOID (12-VOLT) (WORK TOOL)	299
M	4	1	**8T-1158**	1	BOLT-SOCKET HEAD (M8X1.25X20-MM)	
M	5	1	**8T-9405**	1	BOLT-SOCKET HEAD (M4X0.7X16-MM)	
	6	1	**102-8802**	1	KIT-RECEPTACLE (2-PIN)	
					(INCLUDES RECEPTACLE AS & WEDGE)	
	7	1	**313-6251**	1	KIT-JOINT	
					(INCLUDES SHIMS, NUT, WASHER, DETENT ARM & CARDAN)	
	8	1	**299-9121**	1	PLATE	
	9	1	**198-1076**	3	KIT-PLUNGER (PILOT VALVE)	
					(INCLUDES PLUNGERS, SNAP RINGS, CAPS & WASHERS)	
	10	1	**203-1100**	1	KIT-PLUNGER (TILT BACK)	
					(INCLUDES PLUNGERS, SNAP RINGS & RETAINERS)	
	11	1	**160-6778**	1	KIT-PILOT VALVE (SPRING)	
					(INCLUDES SPRINGS)	
	12	1	**9T-2837**	1	KIT-SEAL (PILOT VALVE)	
					(INCLUDES PINS, O-RINGS & BOLT)	

M-METRIC PART
Y-SEPARATE ILLUSTRATION

299-9119 VALVE GP-PILOT *(contd.)* **i04367467**

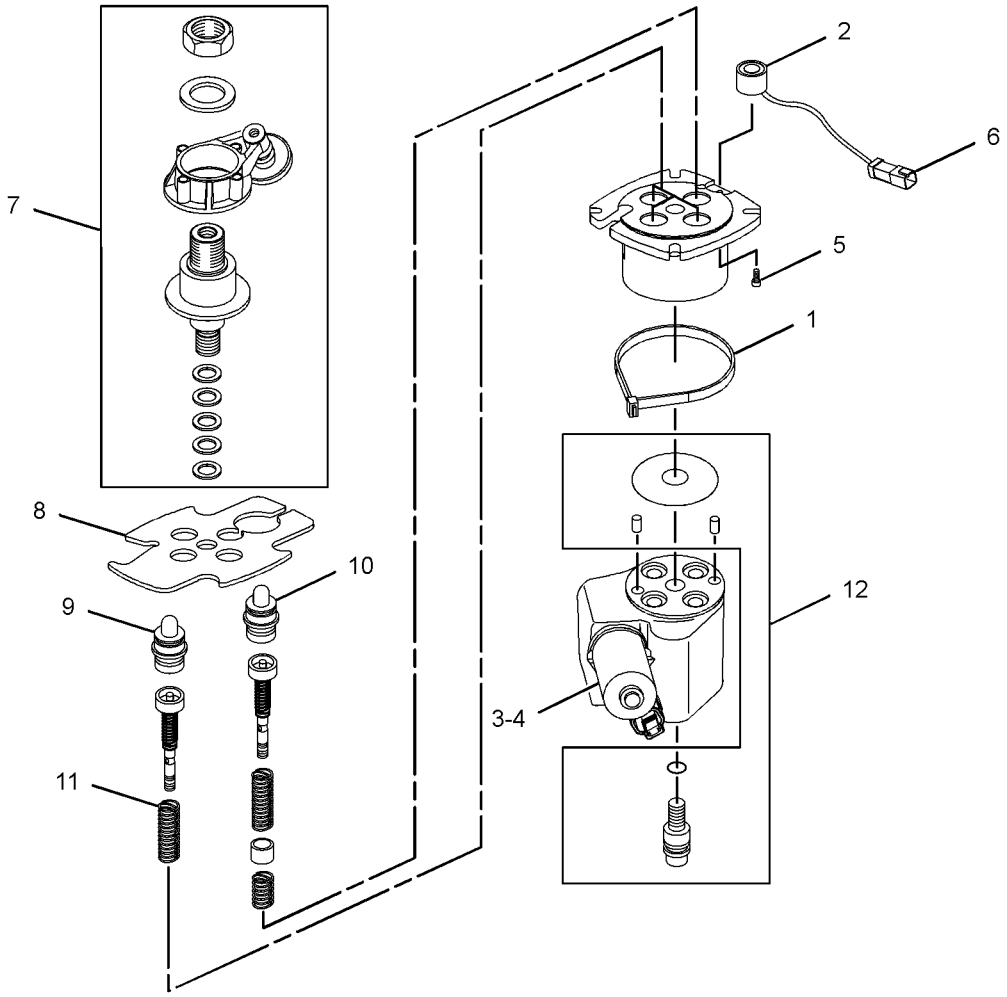

GRAPHIC #1 **<END>** g01417349

343-0868 VALVE GP-PILOT

S/N: SRS1-UP

PART OF 326-5267, 343-5542, 343-5543 CONTROL GP-PILOT OPERATED HYD AN ATTACHMENT

SMCS-5059, 5705 **i03960217**

NOTE	REF NO	GRAPHIC REF	PART NUMBER	QTY	PART NAME 1 2 3 4 5 6 (PRODUCT LEVEL)	SEE PAGE
Y	1	1	**195-9700**	1	VALVE GP-SOLENOID (12-VOLT) (WORK TOOL)	299
M	2	1	**8T-1158**	1	BOLT-SOCKET HEAD (M8X1.25X20-MM)	
	3	1	**217-3850**	1	KIT-UNIVERSAL JOINT (PILOT VALVE)	
					(INCLUDES UNIVERSAL JOINT & SHIMS)	
	4	1	**299-9121**	1	PLATE	
	5	1	**198-1076**	2	KIT-PLUNGER (PILOT VALVE)	
					(EACH INCLUDES PLUNGERS, PLUNGER GUIDES, SNAP RINGS, CAPS & WASHERS)	
	6	1	**160-6778**	1	KIT-PILOT VALVE (SPRING)	
					(INCLUDE SPRINGS)	
	7	1	**289-9560**	1	KIT-SEAL (PILOT VALVE)	
					(INCLUDES O-RINGS, PINS & SCREW AS)	
	8	1	**151-4965**	1	KIT-SEAL (PILOT VALVE)	
					(INCLUDES O-RINGS, PIN & BOLT)	
	9	1	**343-0877**	1	VALVE GP-SHUTTLE (DIRECTION, SPEED)	
					PARTS SHOWN IN GRAPHIC(S) WITHOUT A REFERENCE NUMBER ARE NOT SERVICED SEPARATELY	

M-METRIC PART
Y-SEPARATE ILLUSTRATION

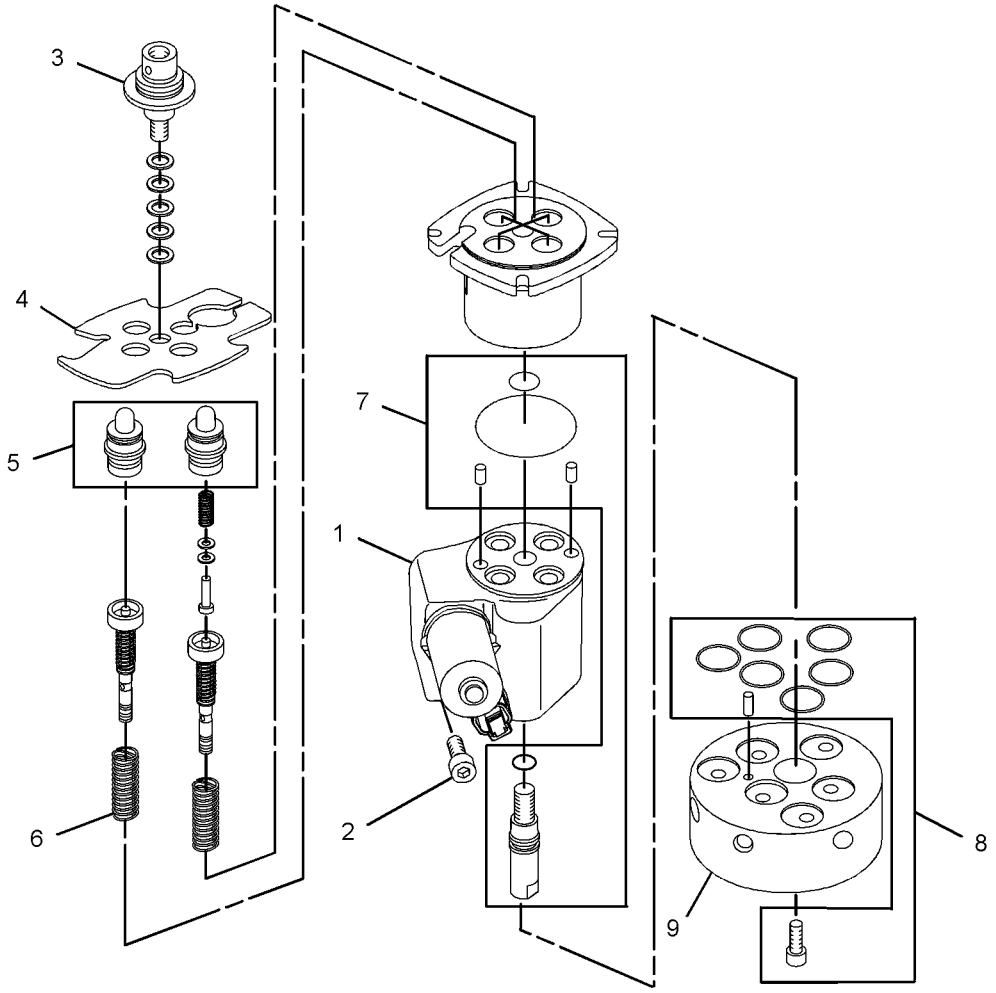

GRAPHIC #1 **<END>** g01943777

HYDRAULIC SYSTEM

356-5008 VALVE GP-PILOT

S/N: SRS1-UP

PART OF 326-5267, 343-5542, 343-5543 CONTROL GP-PILOT OPERATED HYD AN ATTACHMENT

SMCS-5059, 5705 **i04185430**

NOTE	REF NO	GRAPHIC REF	PART NUMBER	QTY	PART NAME 1 2 3 4 5 6 (PRODUCT LEVEL)	SEE PAGE
Y	1	1	**195-9700**	1	VALVE GP-SOLENOID (12-VOLT) (WORK TOOL)	299
M	2	1	**8T-1158**	1	BOLT-SOCKET HEAD (M8X1.25X20-MM)	
	3	1	**217-3850**	1	KIT-UNIVERSAL JOINT (PILOT VALVE)	
					(INCLUDES SHIMS & UNIVERSAL JOINT)	
	4	1	**299-9121**	1	PLATE	
	5	1	**198-1076**	2	KIT-PLUNGER (PILOT VALVE)	
					(INCLUDES PLUNGERS, PLUNGER GUIDES, SNAP RINGS, CAPS & WASHERS)	
	6	1	**160-6778**	1	KIT-PILOT VALVE (SPRING)	
					(INCLUDES SPRINGS)	
	7	1	**289-9560**	1	KIT-SEAL (PILOT VALVE)	
					(INCLUDES O-RINGS, PINS & SCREW AS)	
	8	1	**151-4965**	1	KIT-SEAL (PILOT VALVE)	
					(INCLUDES O-RINGS, PIN & BOLT)	
	9	1	**356-5011**	1	VALVE GP-SHUTTLE (DIRECTION, SPEED)	
		1	**8C-3131**	8	SEAL-O-RING	
		1	**192-7116**	4	SEAL-O-RING	
					PARTS SHOWN IN GRAPHIC(S) WITHOUT A REFERENCE NUMBER ARE NOT SERVICED SEPARATELY	

M-METRIC PART
Y-SEPARATE ILLUSTRATION

356-5008 VALVE GP-PILOT *(contd.)* **i04185430**

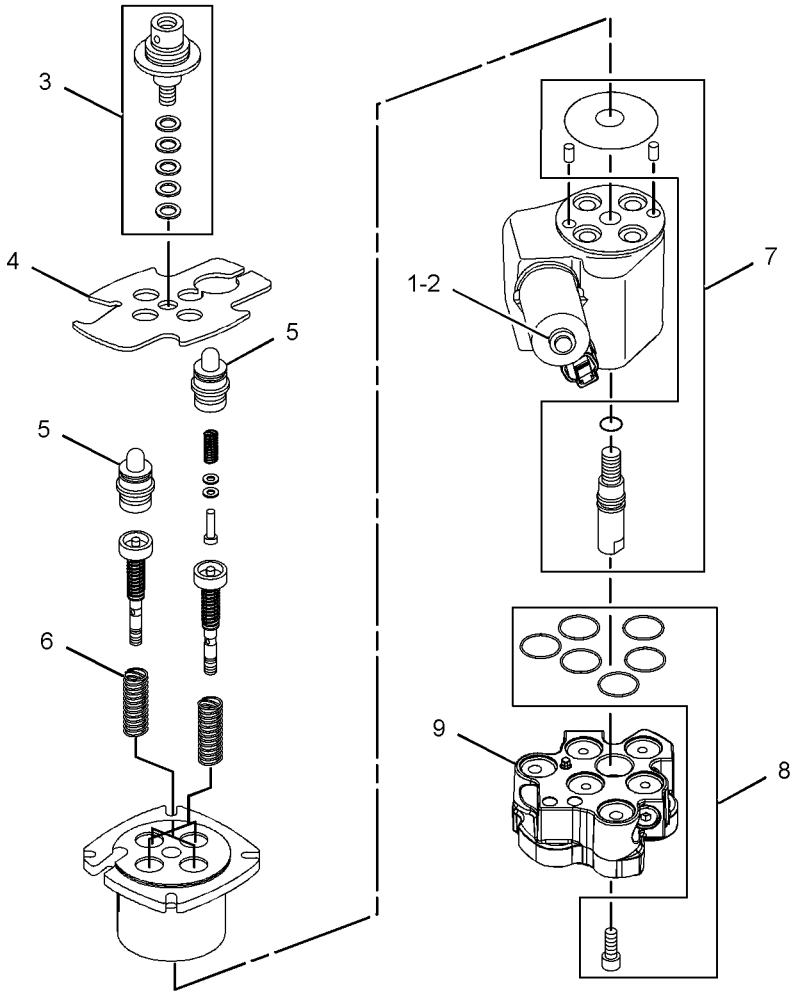

GRAPHIC #1 **<END>** g02459086

HYDRAULIC SYSTEM

295-1799 VALVE GP-RELIEF

S/N: SRS1-UP

PART OF 336-1320 VALVE GP-CONTROL

SMCS-5069, 5117 **i02605603**

NOTE	REF NO	GRAPHIC REF	PART NUMBER	QTY	PART NAME 1 2 3 4 5 6 (PRODUCT LEVEL)	SEE PAGE
	1	1	**130-1676**	1	SEAL-O-RING	

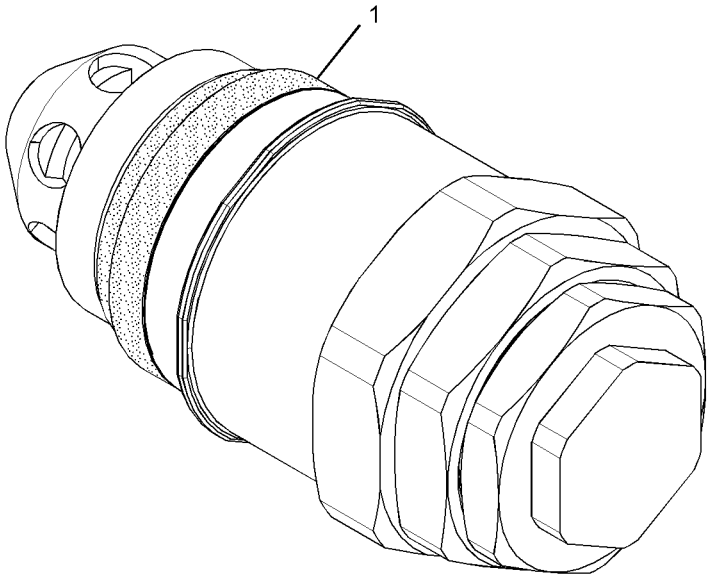

GRAPHIC #1 **<END>** g01304645

195-9700 VALVE GP-SOLENOID

S/N: SRS1-UP
12-VOLT
PART OF 299-9119, 343-0868, 356-5008 VALVE GP-PILOT
AN ATTACHMENT

SMCS-5479 **i04368906**

NOTE	REF NO	GRAPHIC REF	PART NUMBER	QTY	PART NAME 1 2 3 4 5 6 (PRODUCT LEVEL)	SEE PAGE
	1	1	**212-0061**	1	FLANGE	
					AVAILABLE REPAIR KIT(S):	
			200-2371	1	KIT-SEAL (SOLENOID VALVE)	
					(INCLUDES O-RING SEALS)	

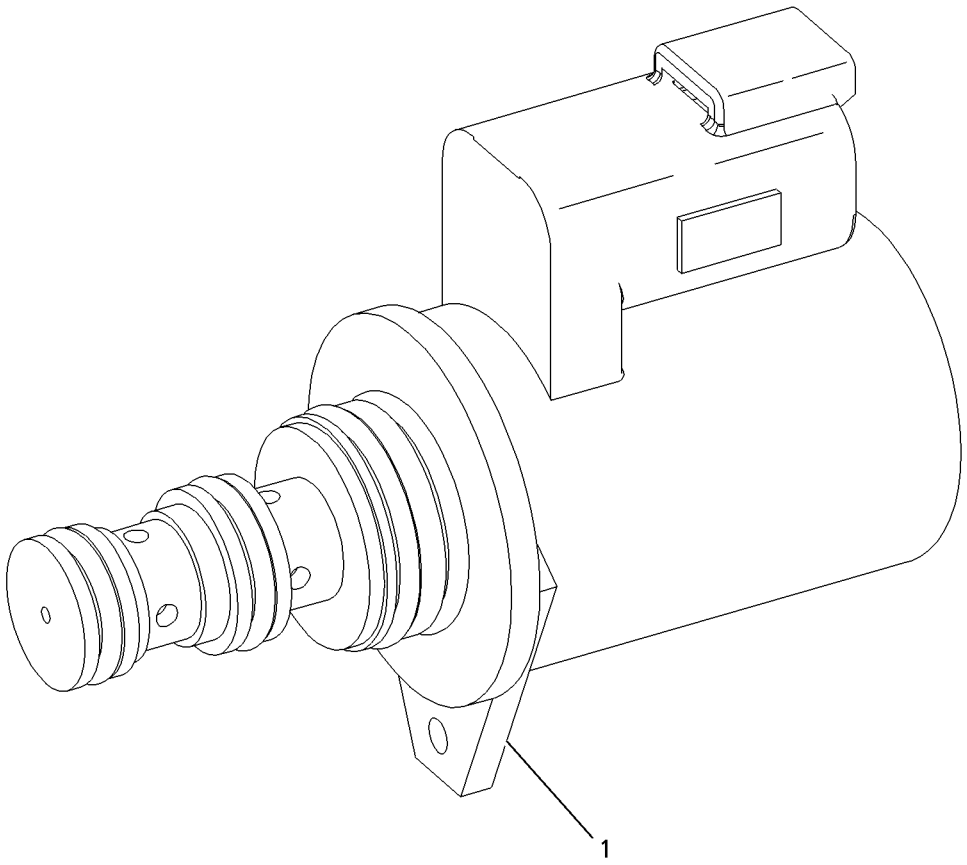

GRAPHIC #1 **<END>** g00947284

222-5695 BRACKET GP-SUPPORT

S/N: SRS1-UP
PART OF 326-5284, 356-1902 CONVERSION AR-MACHINE
AN ATTACHMENT

SMCS-1408, 6107 **i03620360**

NOTE	REF NO	GRAPHIC REF	PART NUMBER	QTY	PART NAME 1 2 3 4 5 6 (PRODUCT LEVEL)	SEE PAGE
	1	1	**216-6144**	1	BRACKET AS	

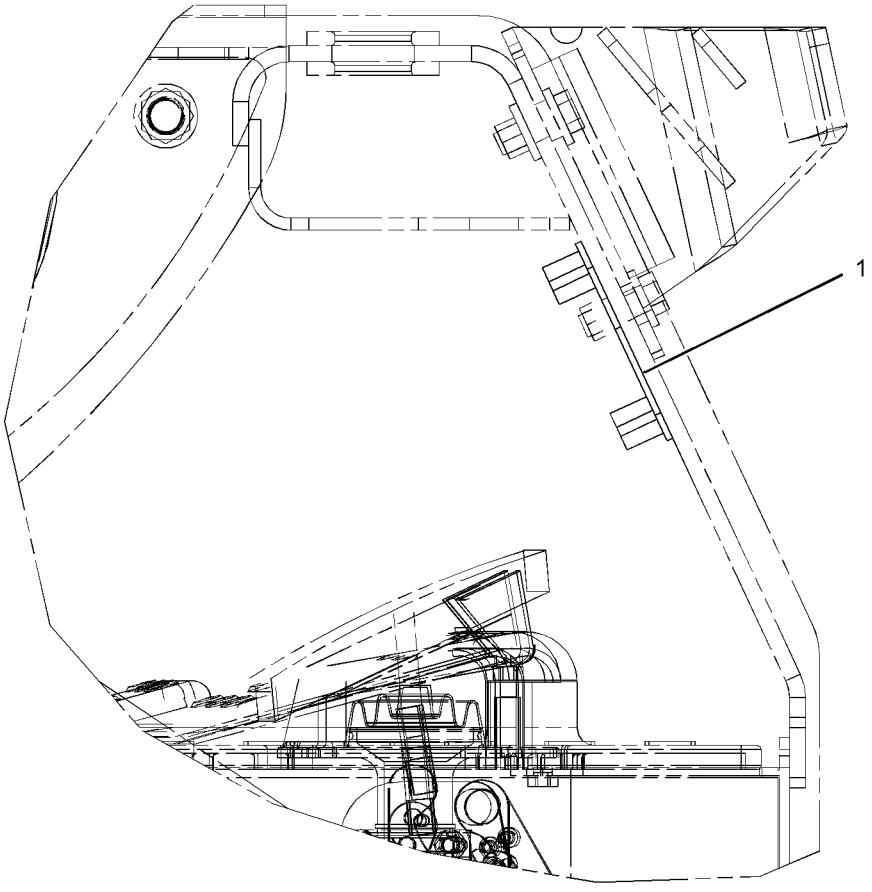

RIGHT SIDE VIEW

GRAPHIC #1 **<END>** g01944375

WORK TOOLS

216-8756 ARM GP-MATERIAL HANDLING

S/N: SRS1-UP

AN ATTACHMENT

SMCS-6542 **i04358453**

NOTE	REF NO	GRAPHIC REF	PART NUMBER	QTY	PART NAME 1 2 3 4 5 6 (PRODUCT LEVEL)	SEE PAGE
	1	1	**9V-2714**	1	HOOK	
	2	1	**9V-2715**	1	SHACKLE AS	
	3	1	**156-5762**	2	FILM-INFORMATION (TIE-DOWN LOCATION)	
Y	4	1	*188-7733*	1	STEP GP-MATERIAL HANDLING ARM	448
	5	1	**216-8850**	1	ARM AS	
M	6	1	**7X-2475**	1	BOLT (M16X2X130-MM)	
	7	1	**8T-4122**	1	WASHER-HARD (17X32X3.5-MM THK)	
M	8	1	**8T-1757**	1	NUT (M16X2-THD)	
	9	1	**358-4945**	1	PLATE-IDENTIFICATION	
	10	1	**168-8389**	4	TACK-FASTENER	

M-METRIC PART
Y-SEPARATE ILLUSTRATION

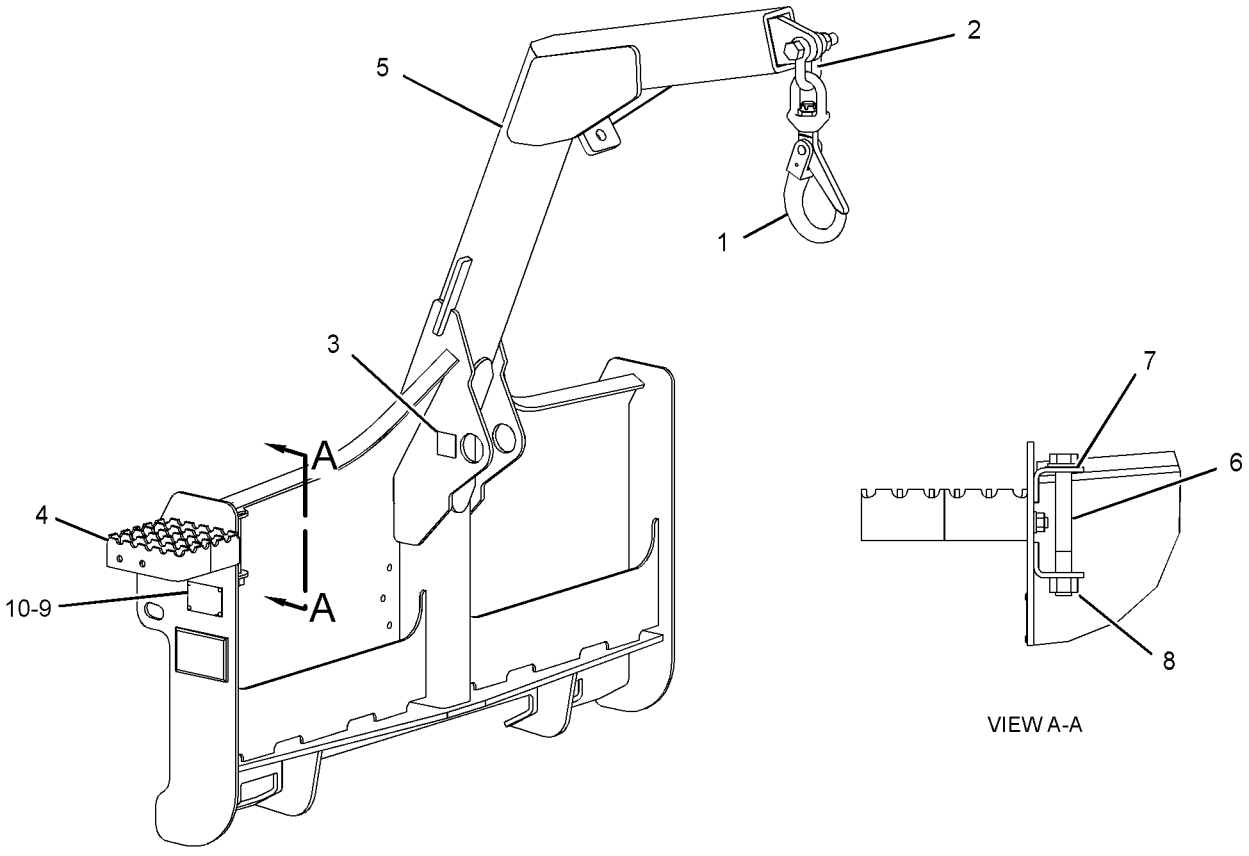

GRAPHIC #1 **<END>** g02511800

WORK TOOLS

177-1989 BLADE AR—ANGLING

S/N: SRS1-UP

AN ATTACHMENT

SMCS-6060, 6701 **i01860746**

NOTE	PART NUMBER	QTY	PART NAME 1 2 3 4 5 6 (PRODUCT LEVEL)	SEE PAGE
Y	*177-1981*	1	BLADE GP-ANGLING	309
Y	*230-5406*	1	CYLINDER & MTG GP-ANGLE BLADE	197
Y	*135-9386*	1	EDGE GP-CUTTING	416
Y	*230-5670*	1	FRAME GP-BLADE	431
Y	*177-1986*	1	LINES GP-CONNECTING	233
Y	*177-1983*	1	SPRING GP-BLADE	447

Y-SEPARATE ILLUSTRATION

<END>

177-1990 BLADE AR—ANGLING

S/N: SRS1-UP

AN ATTACHMENT

SMCS-6060, 6701 **i01861063**

NOTE	PART NUMBER	QTY	PART NAME 1 2 3 4 5 6 (PRODUCT LEVEL)	SEE PAGE
Y	*177-1982*	1	BLADE GP-ANGLING	310
Y	*230-5406*	1	CYLINDER & MTG GP-ANGLE BLADE	197
Y	*149-5741*	1	EDGE GP-CUTTING	418
Y	*230-5670*	1	FRAME GP-BLADE	431
Y	*177-1986*	1	LINES GP-CONNECTING	233
Y	*177-1983*	1	SPRING GP-BLADE	447

Y-SEPARATE ILLUSTRATION

<END>

WORK TOOLS

231-5275 BLADE AR–ANGLING

S/N: SRS1-UP

AN ATTACHMENT

SMCS-6060, 6701 **i04040817**

NOTE	REF NO	GRAPHIC REF	PART NUMBER	QTY	PART NAME 1 2 3 4 5 6 (PRODUCT LEVEL)	SEE PAGE
	1	1	**7K-1181**	3	STRAP-CABLE	
Y	2	1	*222-7724*	1	BLADE GP-ANGLING	311
	3	1	**225-8015**	1	HARNESS AS-WORK TOOL (CONNECTING)	
		1	**213-0139**	6	PIN	
		1	**172-3998**	1	PLUG AS	
		1	**155-2270**	8	KIT-CONNECTING PLUG (2-PIN)	
					(EACH INCLUDES PLUG AS, WEDGE & INTERFACE SEAL)	
		1	**9W-0844**	9	SOCKET-CONNECTOR (14-GA TO 16-GA)	
		1	**180-9340**	7	SOCKET-CONNECTOR (14-GA TO 18-GA)	
		1	**8L-8413**	10	STRAP-CABLE	
		1	**189-3158**	2	SUPPRESSOR-ARC	
E		1	**119-3662**		TUBE-HEAT SHRINK (10.85-MM DIA) (13-CM)	
E		1	**125-7874**		TUBE-HEAT SHRINK (5.72-MM DIA) (5-CM)	
E		1	**125-7875**		TUBE-HEAT SHRINK (7.44-MM DIA) (10-CM)	
Y	4	1	*231-5273*	1	LINES GP-CONNECTING	235
Y	5	1	*231-5274*	1	CYLINDER & MTG GP-ANGLE BLADE	198
Y	6	1	*231-5278*	1	MANIFOLD & MTG GP-CONTROL (ANGLING BLADE)	271
Y	7	1	*247-0678*	1	PLATE & FILM GP	557

E-ORDER BY THE CENTIMETER
Y-SEPARATE ILLUSTRATION

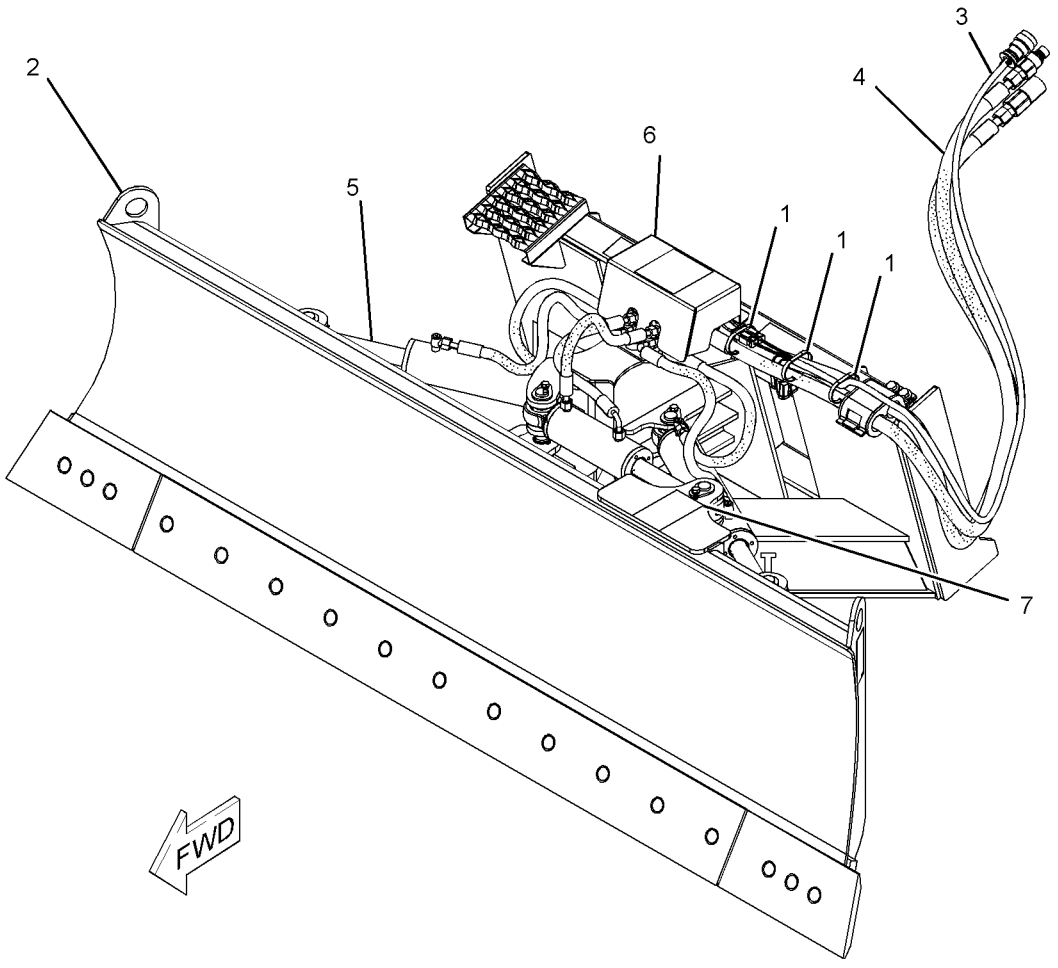

GRAPHIC #1 **<END>** g01381201

WORK TOOLS

231-5277 BLADE AR—ANGLING

S/N: SRS1-UP
AN ATTACHMENT

SMCS-6060, 6701 **i03571243**

NOTE	REF NO	GRAPHIC REF	PART NUMBER	QTY	PART NAME 1 2 3 4 5 6 (PRODUCT LEVEL)	SEE PAGE
	1	1	**7K-1181**	3	STRAP-CABLE	
	2	1	**225-8015**	1	HARNESS AS-WORK TOOL (CONNECTING)	
		1	**213-0139**	6	PIN	
		1	**172-3998**	1	PLUG AS	
		1	**155-2270**	8	KIT-CONNECTING PLUG (2-PIN)	
					(EACH INCLUDES PLUG AS, WEDGE & INTERFACE SEAL)	
		1	**9W-0844**	9	SOCKET-CONNECTOR (14-GA TO 16-GA)	
		1	**180-9340**	7	SOCKET-CONNECTOR (14-GA TO 18-GA)	
		1	**8L-8413**	10	STRAP-CABLE	
		1	**189-3158**	2	SUPPRESSOR-ARC	
E		1	**119-3662**		TUBE-HEAT SHRINK (10.85-MM DIA) (13-CM)	
E		1	**125-7874**		TUBE-HEAT SHRINK (5.72-MM DIA) (5-CM)	
E		1	**125-7875**		TUBE-HEAT SHRINK (7.44-MM DIA) (15-CM)	
Y	3	1	*231-5273*	1	LINES GP-CONNECTING	235
Y	4	1	*231-5274*	1	CYLINDER & MTG GP-ANGLE BLADE	198
Y	5	1	*231-5276*	1	BLADE GP-ANGLING	312
Y	6	1	*231-5278*	1	MANIFOLD & MTG GP-CONTROL (ANGLING BLADE)	271
Y	7	1	*247-0678*	1	PLATE & FILM GP	557

E-ORDER BY THE CENTIMETER
Y-SEPARATE ILLUSTRATION

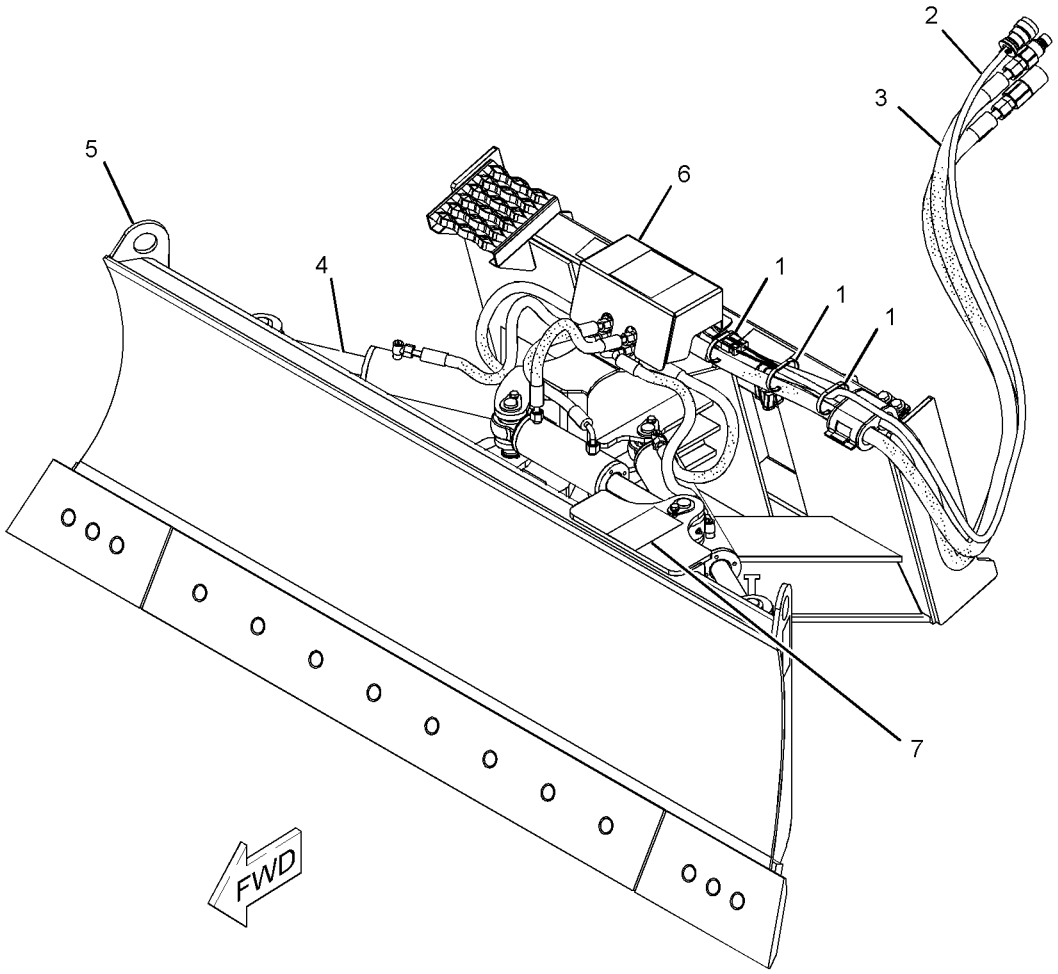

GRAPHIC #1 **<END>** g01381202

177-1987 BLADE AS-ANGLING

S/N: SRS1-UP
1829-MM (72-IN)
PART OF 177-1981 BLADE GP-ANGLING
AN ATTACHMENT

SMCS-6052, 6060 **i04156267**

NOTE	REF NO	GRAPHIC REF	PART NUMBER	QTY	PART NAME 1 2 3 4 5 6 (PRODUCT LEVEL)	SEE PAGE
	1	1	**358-4944**	1	PLATE-IDENTIFICATION (BUCKET SPECIFICATIONS)	
	2	1	**168-8389**	4	TACK-FASTENER	

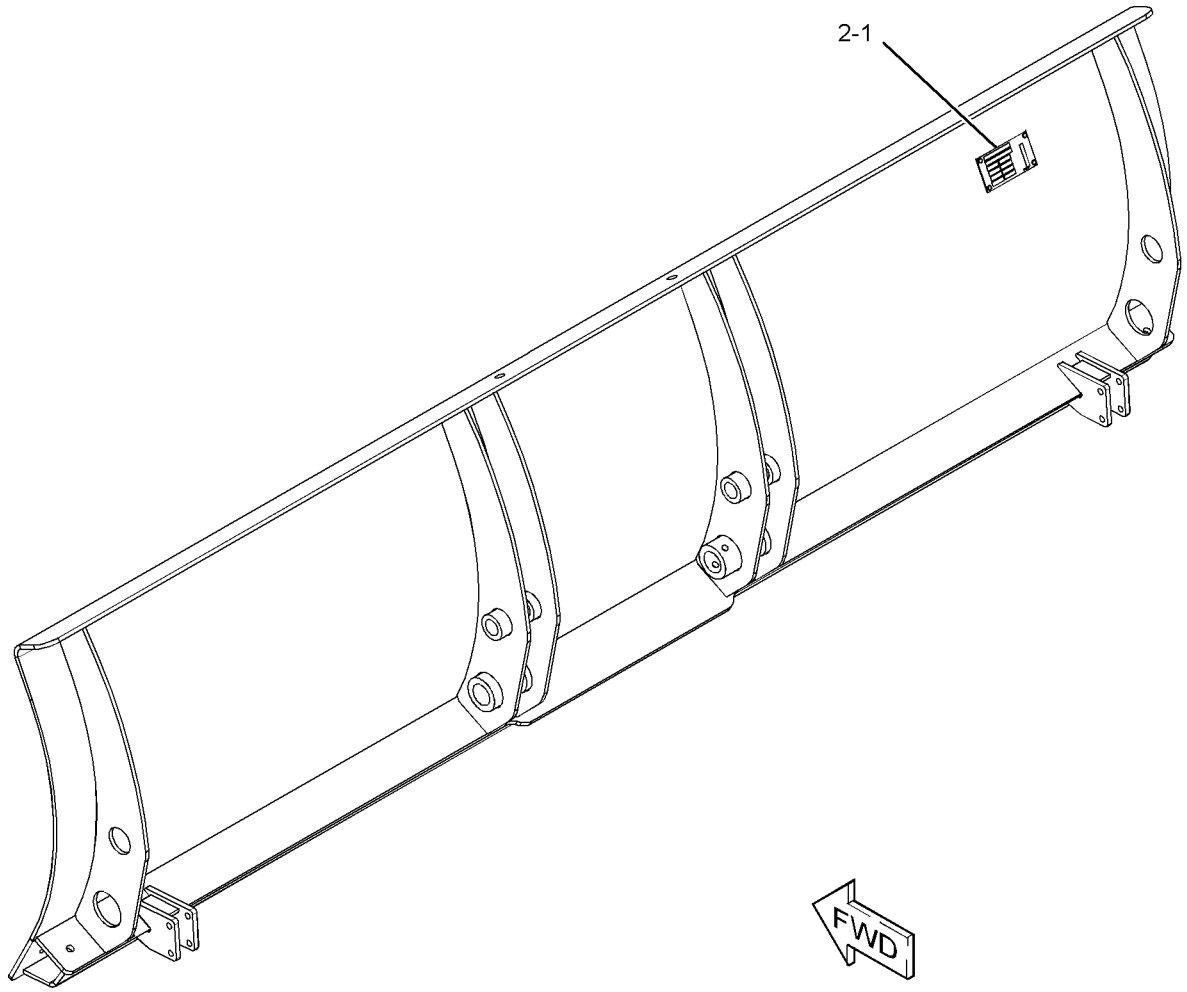

GRAPHIC #1 **<END>** g02351902

WORK TOOLS

177-1988 BLADE AS-ANGLING

S/N: SRS1-UP
2134-MM (84-IN)
PART OF 177-1982 BLADE GP-ANGLING
AN ATTACHMENT

SMCS-6052, 6060 **i04154471**

NOTE	REF NO	GRAPHIC REF	PART NUMBER	QTY	PART NAME 1 2 3 4 5 6 (PRODUCT LEVEL)	SEE PAGE
	1	1	**358-4944**	1	PLATE-IDENTIFICATION (BUCKET SPECIFICATIONS)	
	2	1	**168-8389**	4	TACK-FASTENER	

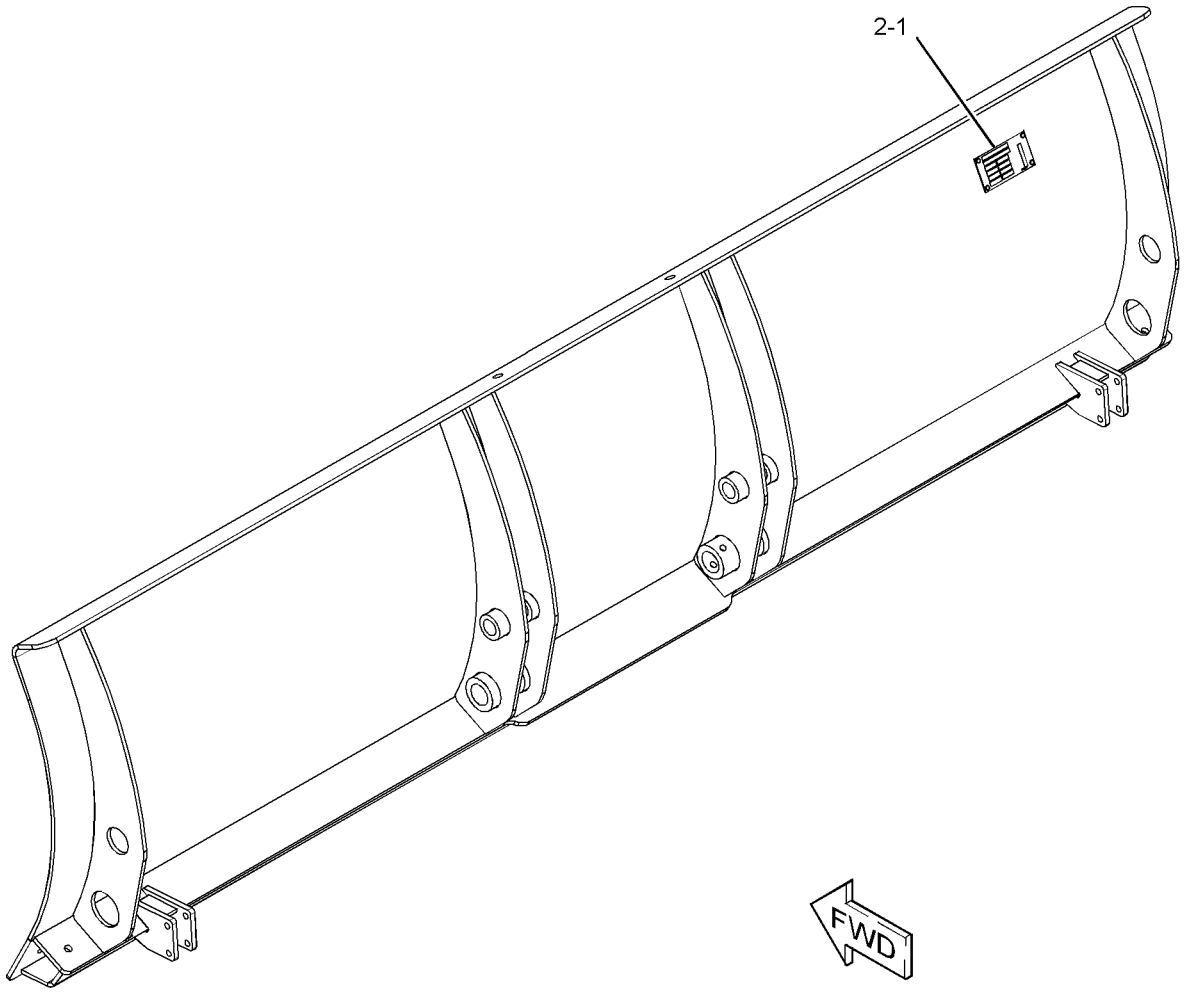

GRAPHIC #1 **<END>** g02351903

222-7412 BLADE AS-ANGLING

S/N: SRS1-UP
2337-MM (92-IN)
PART OF 222-7724 BLADE GP-ANGLING
AN ATTACHMENT

SMCS-6052, 6060 **i03646971**

NOTE	REF NO	GRAPHIC REF	PART NUMBER	QTY	PART NAME 1 2 3 4 5 6 (PRODUCT LEVEL)	SEE PAGE
	1	1	**222-7421**	1	TRUNNION AS	
	2	1	**222-7479**	1	PLATE AS	
	3	1	**222-7728**	1	PLATE AS	

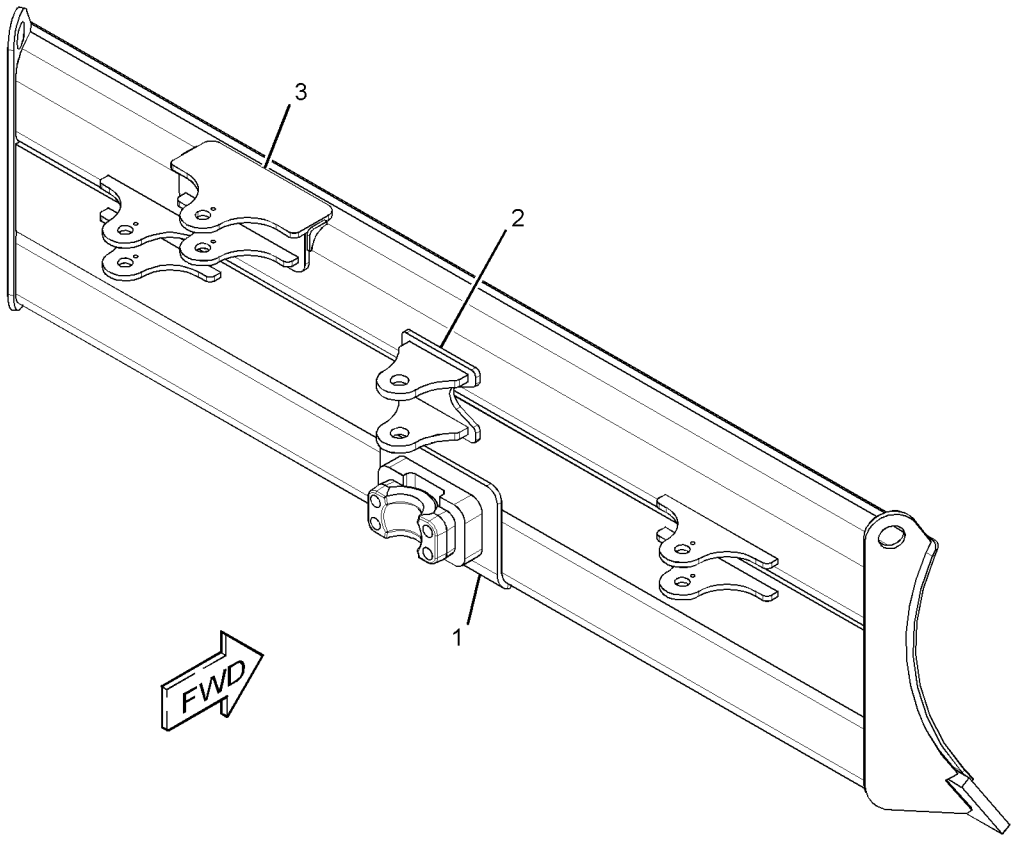

GRAPHIC #1 **<END>** g01960536

230-4596 BLADE AS-ANGLING

S/N: SRS1-UP
2007-MM (79-IN)
PART OF 231-5276 BLADE GP-ANGLING
AN ATTACHMENT

SMCS-6052, 6060 **i03646970**

NOTE	REF NO	GRAPHIC REF	PART NUMBER	QTY	PART NAME 1 2 3 4 5 6 (PRODUCT LEVEL)	SEE PAGE
	1	1	**222-7421**	1	TRUNNION AS	
	2	1	**222-7479**	1	PLATE AS	
	3	1	**222-7728**	1	PLATE AS	

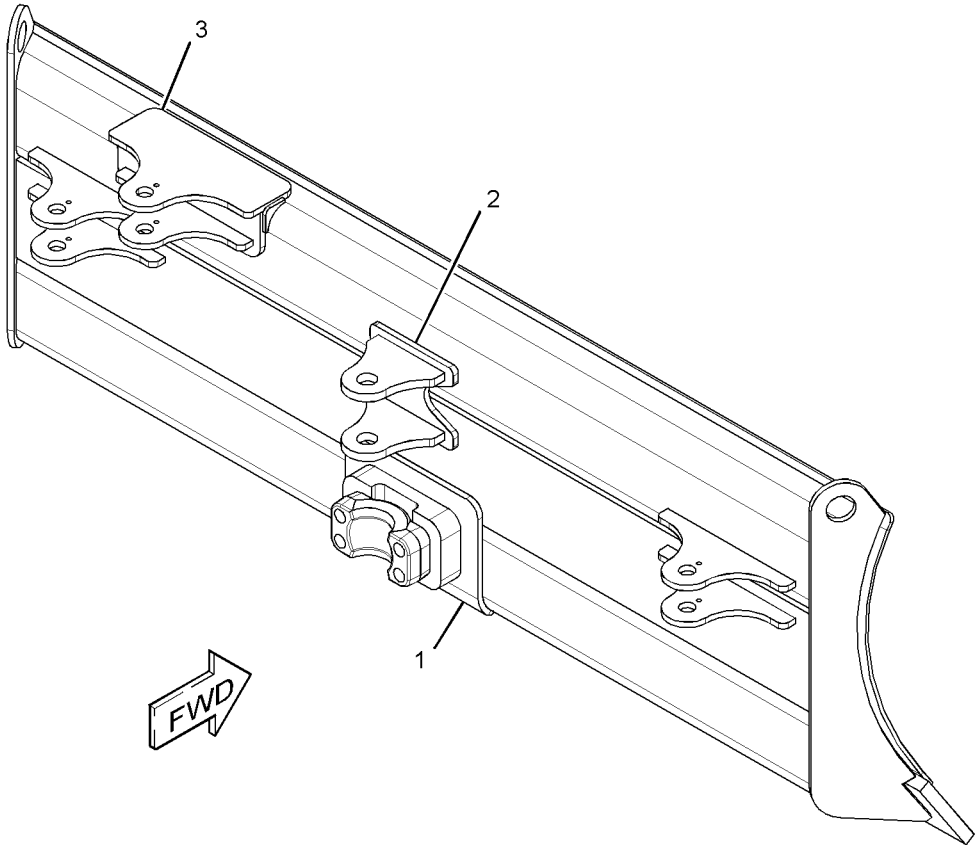

GRAPHIC #1 **<END>** g01960542

177-1981 BLADE GP-ANGLING

S/N: SRS1-UP
PART OF 177-1989 BLADE AR
AN ATTACHMENT

SMCS-6060, 6701 **i03930872**

NOTE	REF NO	GRAPHIC REF	PART NUMBER	QTY	PART NAME 1 2 3 4 5 6 (PRODUCT LEVEL)	SEE PAGE
	1	1	**157-0940**	2	PIN	
	2	1	**166-0319**	2	PIN AS	
	3	1	**9R-2959**	2	CLIP	
	4	1	**177-1921**	2	PIN AS	
	5	1	**177-1972**	2	SKID AS	
Y	6	1	**177-1987**	1	BLADE AS-ANGLING	305
	7	1	**3B-8489**	2	FITTING-GREASE	
M	8	1	**6V-9189**	2	LOCKNUT (M8X1.25-THD)	
M	9	1	**8T-6869**	2	BOLT (M8X1.25X60-MM)	

M-METRIC PART
Y-SEPARATE ILLUSTRATION

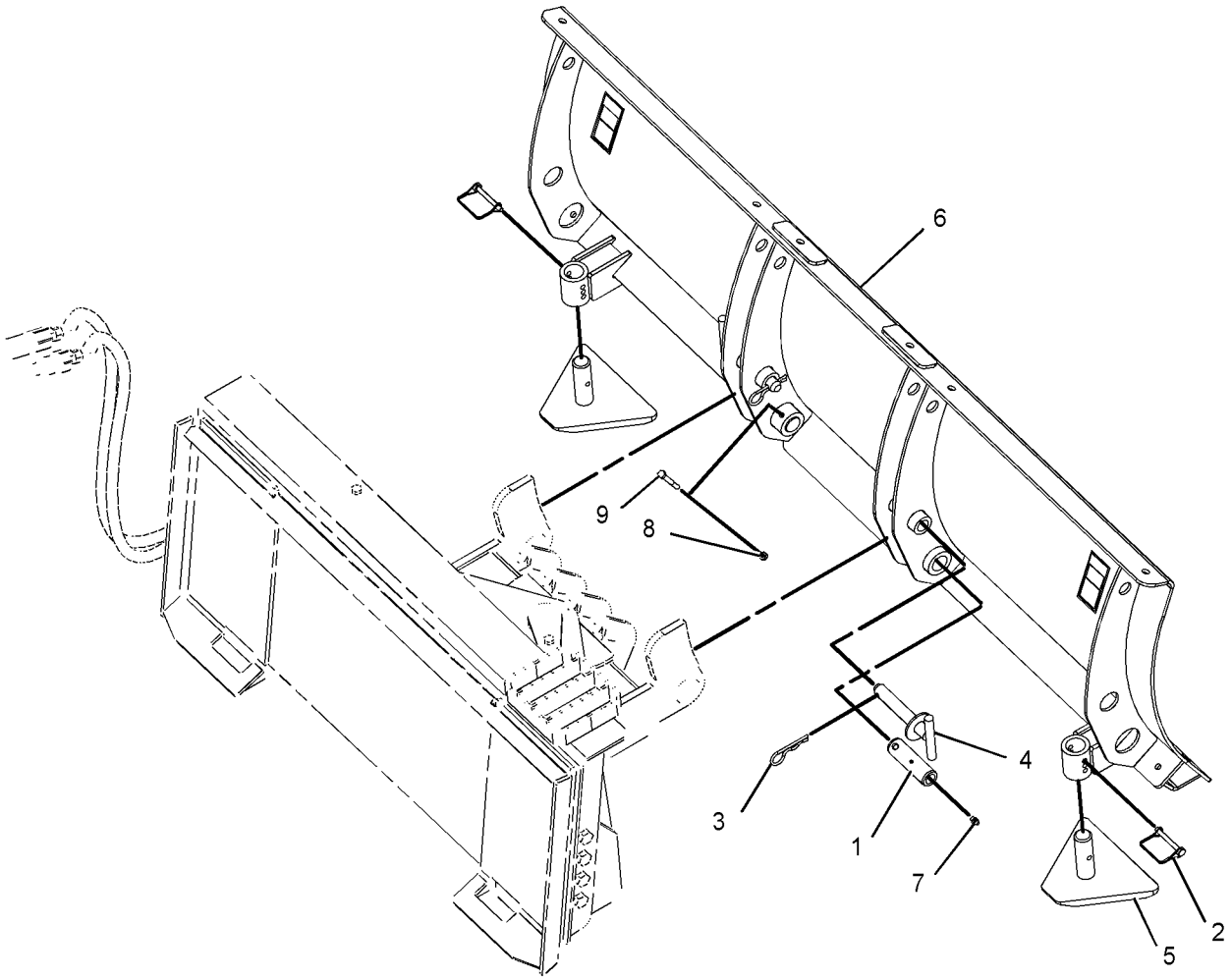

GRAPHIC #1 **<END>** g01960538

WORK TOOLS

177-1982 BLADE GP-ANGLING

S/N: SRS1-UP
PART OF 177-1990 BLADE AR
AN ATTACHMENT

SMCS-6060, 6701 **i03930949**

NOTE	REF NO	GRAPHIC REF	PART NUMBER	QTY	PART NAME 1 2 3 4 5 6 (PRODUCT LEVEL)	SEE PAGE
	1	1	**157-0940**	2	PIN	
	2	1	**166-0319**	2	PIN AS	
	3	1	**9R-2959**	2	CLIP	
	4	1	**177-1921**	2	PIN AS	
	5	1	**177-1972**	2	SKID AS	
Y	6	1	**177-1988**	1	BLADE AS-ANGLING	306
	7	1	**3B-8489**	2	FITTING-GREASE	
M	8	1	**6V-9189**	2	LOCKNUT (M8X1.25-THD)	
M	9	1	**8T-6869**	2	BOLT (M8X1.25X60-MM)	

M-METRIC PART
Y-SEPARATE ILLUSTRATION

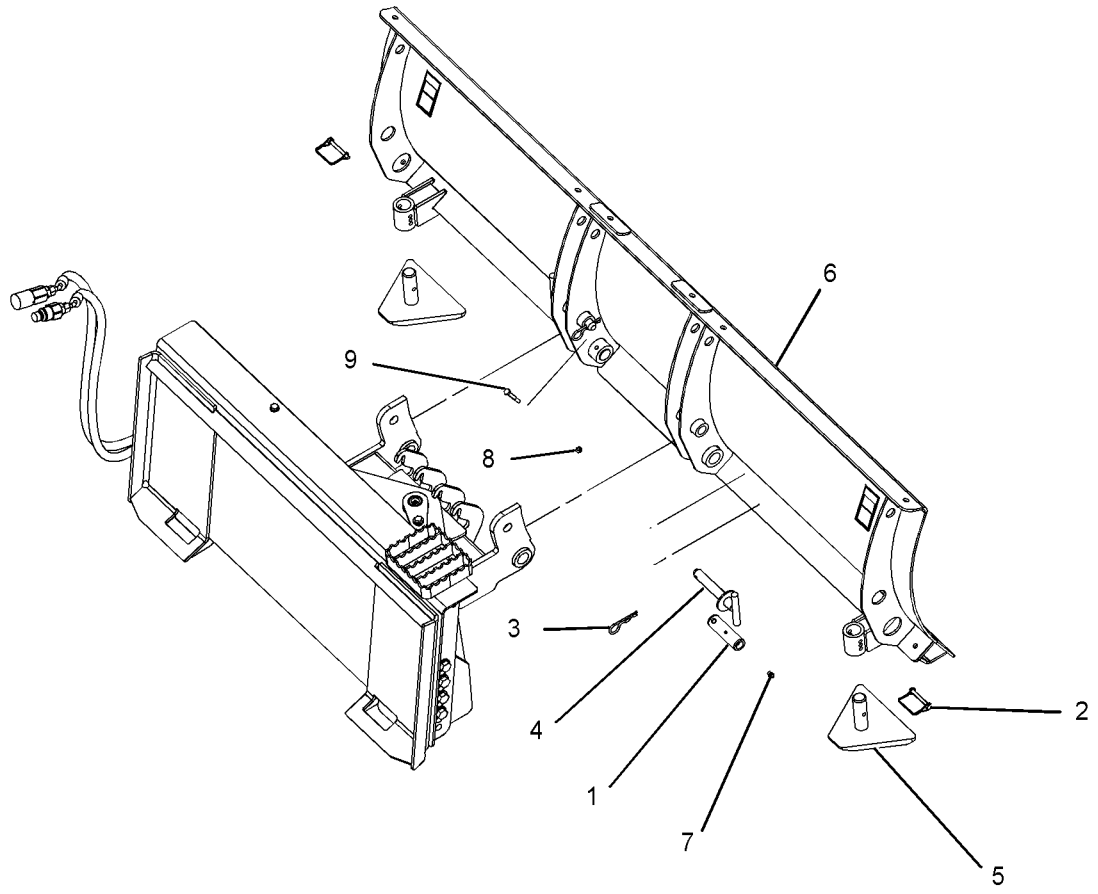

GRAPHIC #1 **<END>** g01960539

WORK TOOLS

222-7724 BLADE GP-ANGLING

S/N: SRS1-UP
PART OF 231-5275 BLADE AR
AN ATTACHMENT

SMCS-6060, 6701 **i04156826**

NOTE	REF NO	GRAPHIC REF	PART NUMBER	QTY	PART NAME 1 2 3 4 5 6 (PRODUCT LEVEL)	SEE PAGE
B	1	1	**8E-5702**	22	SHIM (0.8-MM THK)	
	2	1	**358-4944**	1	PLATE-IDENTIFICATION (BUCKET SPECIFICATIONS)	
	3	1	**168-8389**	4	TACK-FASTENER	
Y	4	1	**222-7412**	1	BLADE AS-ANGLING	307
	5	1	**222-7725**	1	FRAME GP-BLADE	
	6	1	**231-5271**	1	PIN	
	7	1	**238-1004**	2	MOUNT AS	
	8	1	**238-1005**	2	SKID AS	
	9	1	**244-1367**	1	BUSHING	
Y	10	1	*222-7546*	1	EDGE GP-BIT & CUTTING	413
	11	1	**5P-1076**	8	WASHER-HARD (13.5X30X4-MM THK)	
	12	1	**6V-7644**	2	RING-RETAINING	
M	13	1	**8C-8478**	4	BOLT (M20X2.5X140-MM)	
	14	1	**8J-2880**	1	CAP-BEARING	
	15	1	**8T-4123**	4	WASHER (22X35X3.5-MM THK)	
M	16	1	**8T-4139**	8	BOLT (M12X1.75X30-MM)	

B-USE AS REQUIRED
M-METRIC PART
Y-SEPARATE ILLUSTRATION

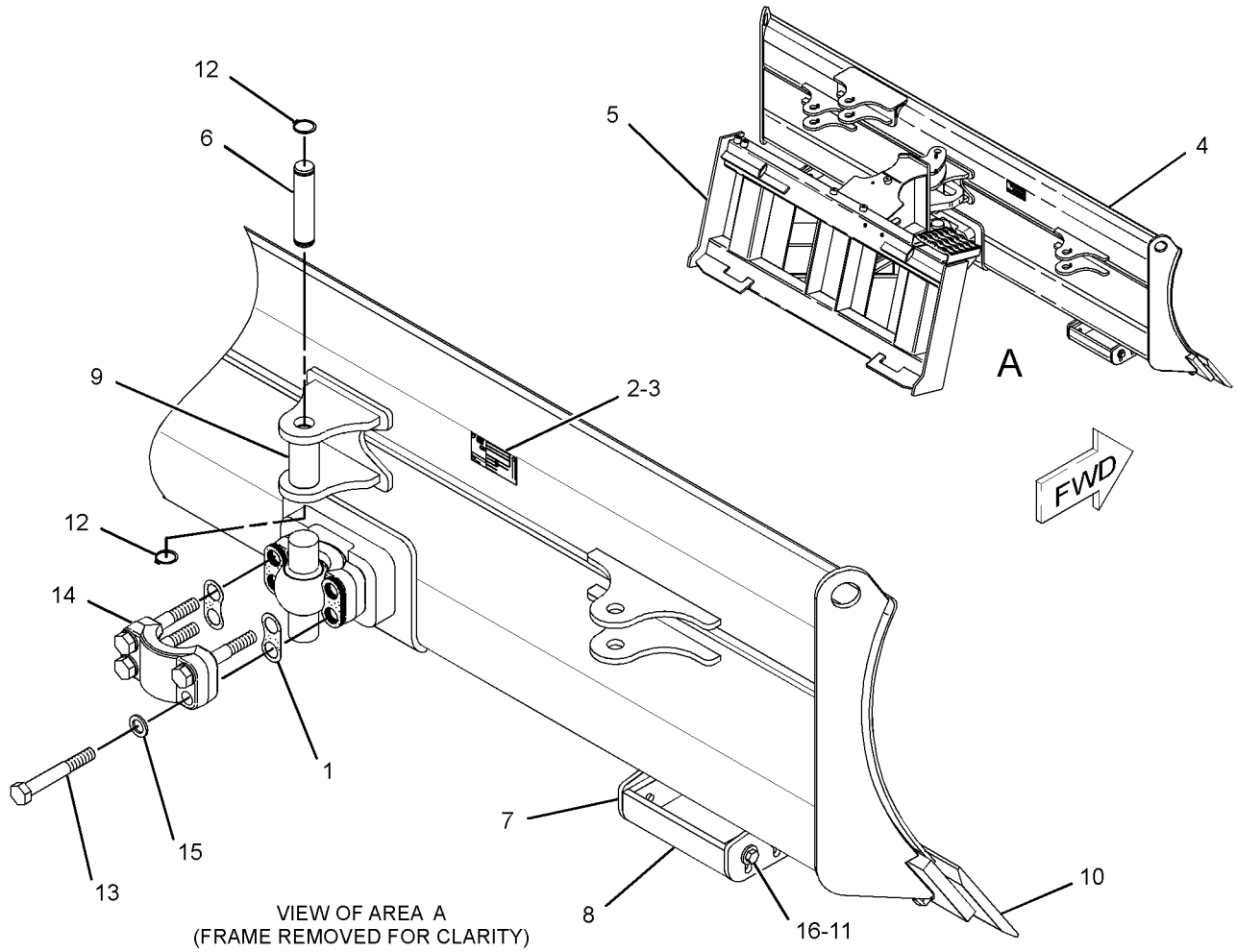

GRAPHIC #1 **<END>** g02379077

WORK TOOLS

231-5276 BLADE GP-ANGLING

S/N: SRS1-UP
PART OF 231-5277 BLADE AR
AN ATTACHMENT

SMCS-6060, 6701 **i04319649**

NOTE	REF NO	GRAPHIC REF	PART NUMBER	QTY	PART NAME 1 2 3 4 5 6 (PRODUCT LEVEL)	SEE PAGE
B	1	1	**8E-5702**	22	SHIM (0.8-MM THK)	
	2	1	**358-4944**	1	PLATE-IDENTIFICATION (BUCKET SPECIFICATIONS)	
	3	1	**168-8389**	4	TACK-FASTENER	
	4	1	**222-7725**	1	FRAME GP-BLADE (WORK TOOL)	
Y	5	1	**230-4596**	1	BLADE AS-ANGLING	308
	6	1	**231-5271**	1	PIN	
	7	1	**238-1004**	2	MOUNT AS	
	8	1	**238-1005**	2	SKID AS	
	9	1	**244-1367**	1	BUSHING	
Y	10	1	*222-7545*	1	EDGE GP-BIT & CUTTING	413
	11	1	**5P-1076**	8	WASHER-HARD (13.5X30X4-MM THK)	
	12	1	**6V-7644**	2	RING-RETAINING	
M	13	1	**8C-8478**	4	BOLT (M20X2.5X140-MM)	
	14	1	**8J-2880**	1	CAP-BEARING	
	15	1	**8T-4123**	4	WASHER (22X35X3.5-MM THK)	
M	16	1	**8T-4139**	8	BOLT (M12X1.75X30-MM)	

B-USE AS REQUIRED
M-METRIC PART
Y-SEPARATE ILLUSTRATION

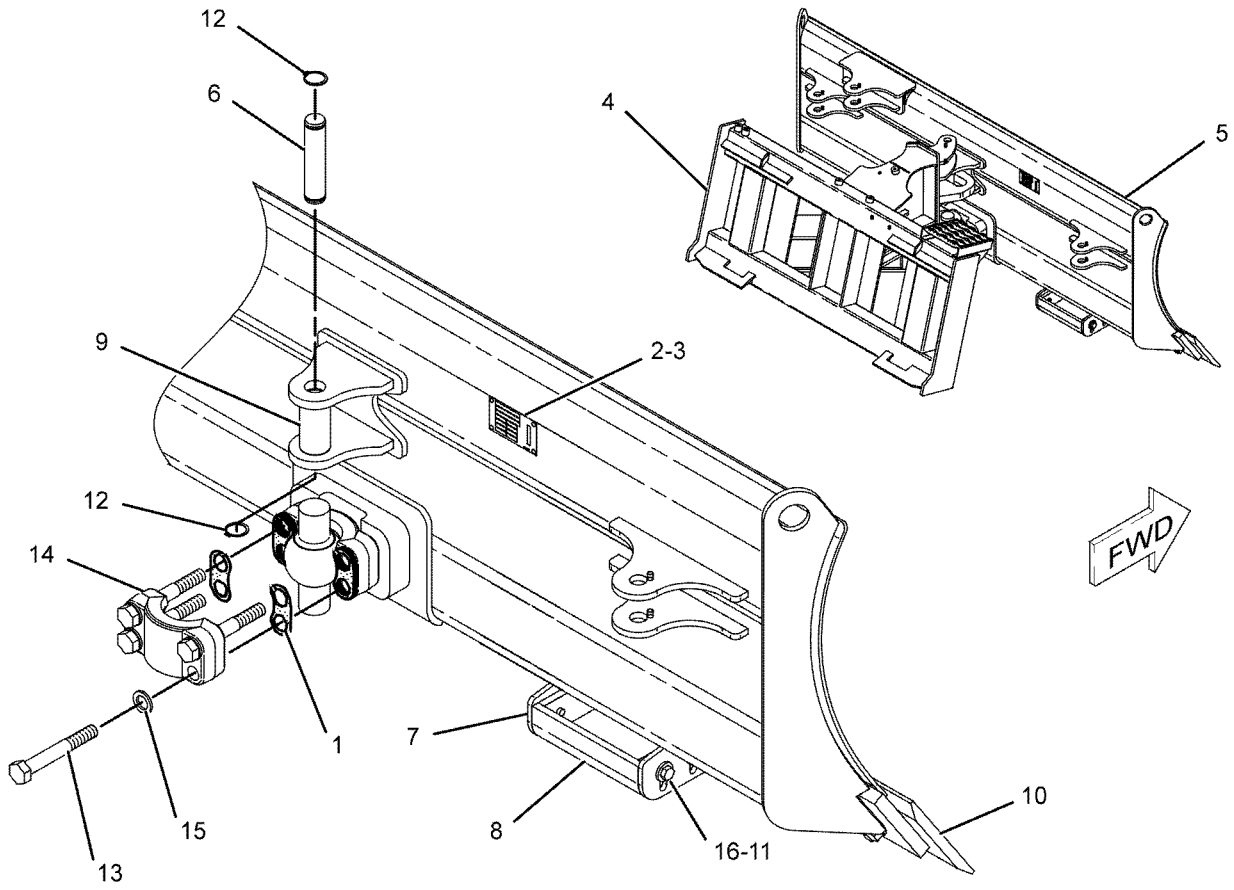

GRAPHIC #1 **<END>** g01020723

279-5384 BLADE GP-MULTIPURPOSE BUCKET

S/N: SRS1-UP
PART OF 279-5383 BUCKET GP-MULTIPURPOSE
AN ATTACHMENT

SMCS-6060, 6104 **i04156276**

NOTE	REF NO	GRAPHIC REF	PART NUMBER	QTY	PART NAME 1 2 3 4 5 6 (PRODUCT LEVEL)	SEE PAGE
	1	1	**358-4944**	1	PLATE-IDENTIFICATION (BUCKET SPECIFICATIONS)	
	2	1	**168-8389**	4	TACK-FASTENER	
Y	3	1	**279-5385**	1	BLADE GP-MULTIPURPOSE BUCKET (60-IN)	314

Y-SEPARATE ILLUSTRATION

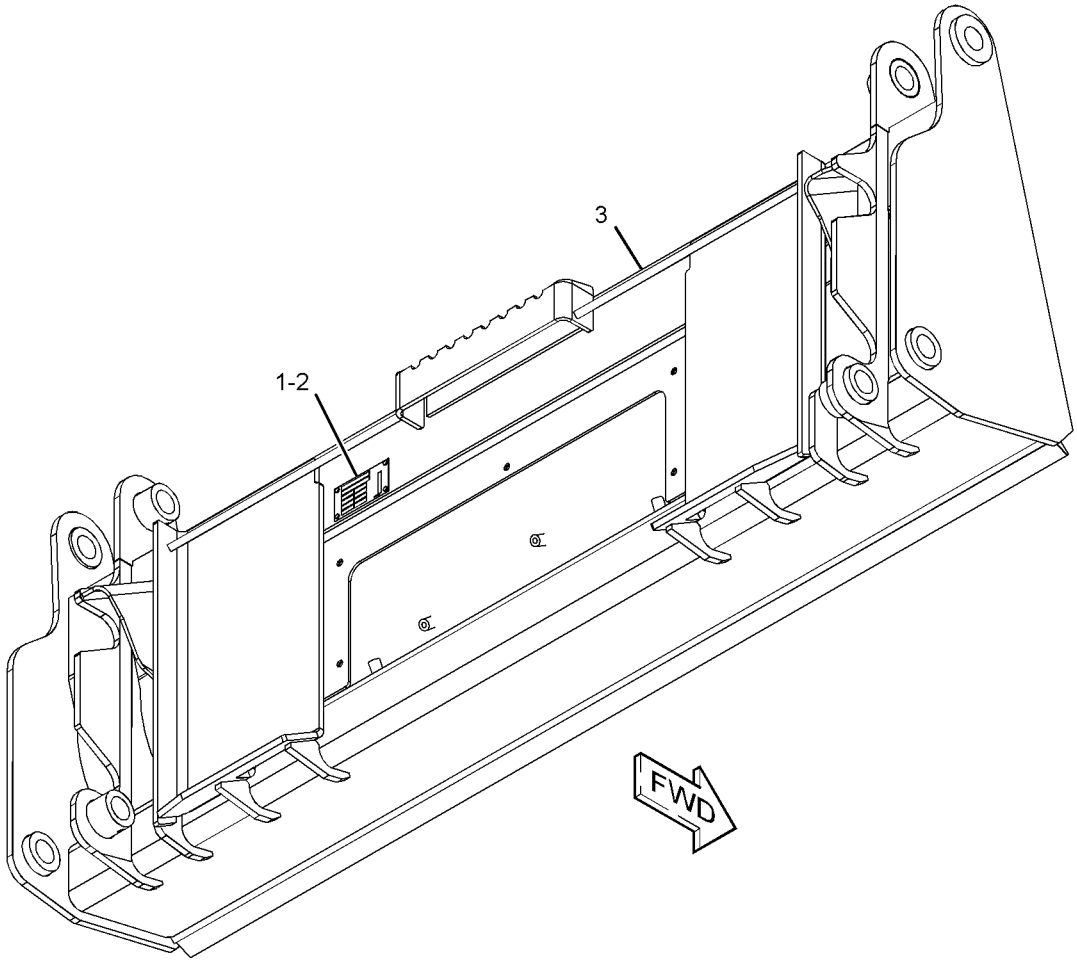

GRAPHIC #1 **<END>** g01278496

WORK TOOLS

279-5385 BLADE GP-MULTIPURPOSE BUCKET

S/N: SRS1-UP
1524-MM (60-IN)
PART OF 279-5384 BLADE GP-MULTIPURPOSE BUCKET
AN ATTACHMENT

SMCS-6060, 6104 **i03638431**

NOTE	REF NO	GRAPHIC REF	PART NUMBER	QTY	PART NAME 1 2 3 4 5 6 (PRODUCT LEVEL)	SEE PAGE
	1	1	**154-5037**	1	EDGE	

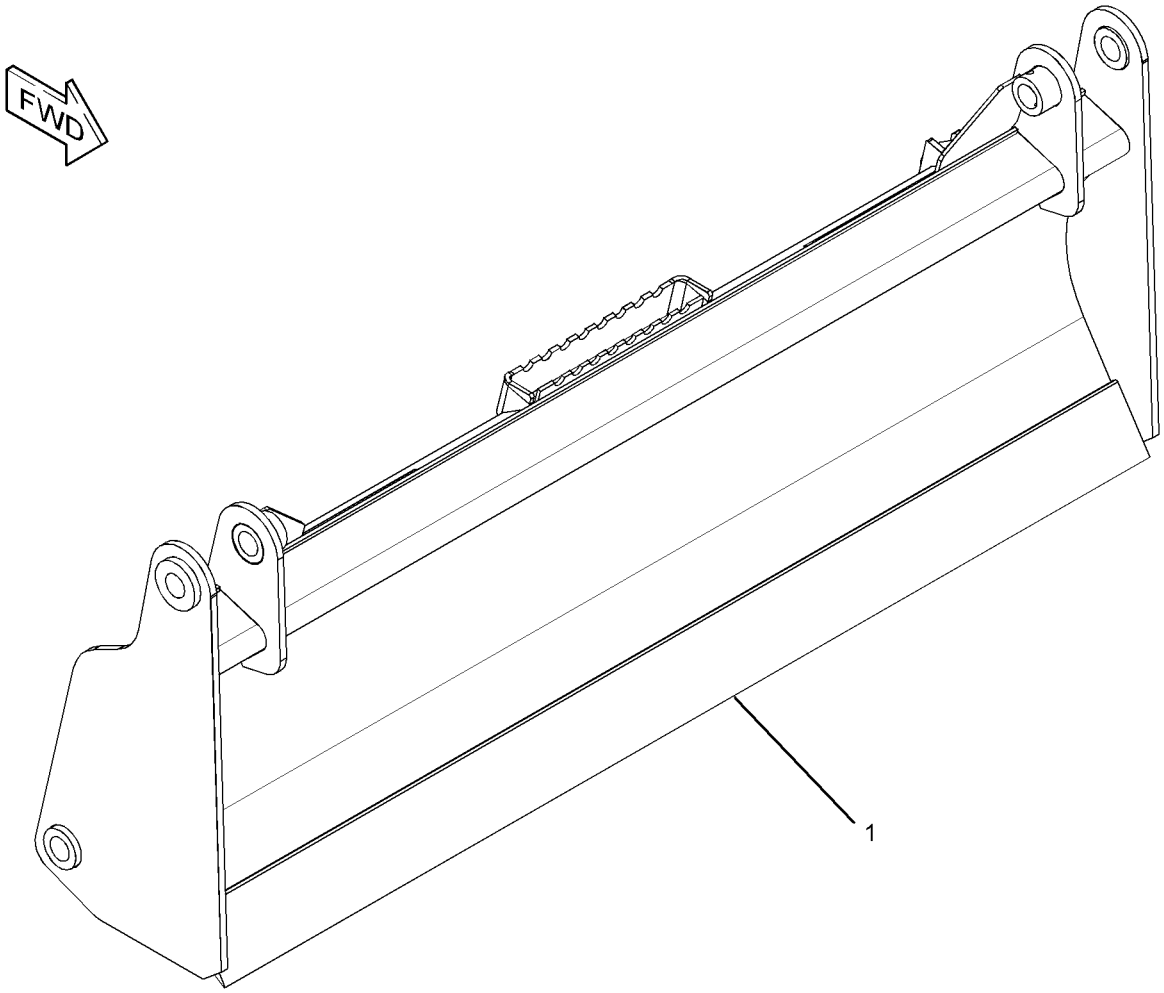

GRAPHIC #1 **<END>** g01953861

279-5387 BLADE GP-MULTIPURPOSE BUCKET

S/N: SRS1-UP
1676-MM (66-IN)
PART OF 279-5388 BLADE GP-MULTIPURPOSE BUCKET
AN ATTACHMENT

SMCS-6060, 6104 **i03646985**

NOTE	REF NO	GRAPHIC REF	PART NUMBER	QTY	PART NAME 1 2 3 4 5 6 (PRODUCT LEVEL)	SEE PAGE
	1	1	**154-5059**	1	EDGE	

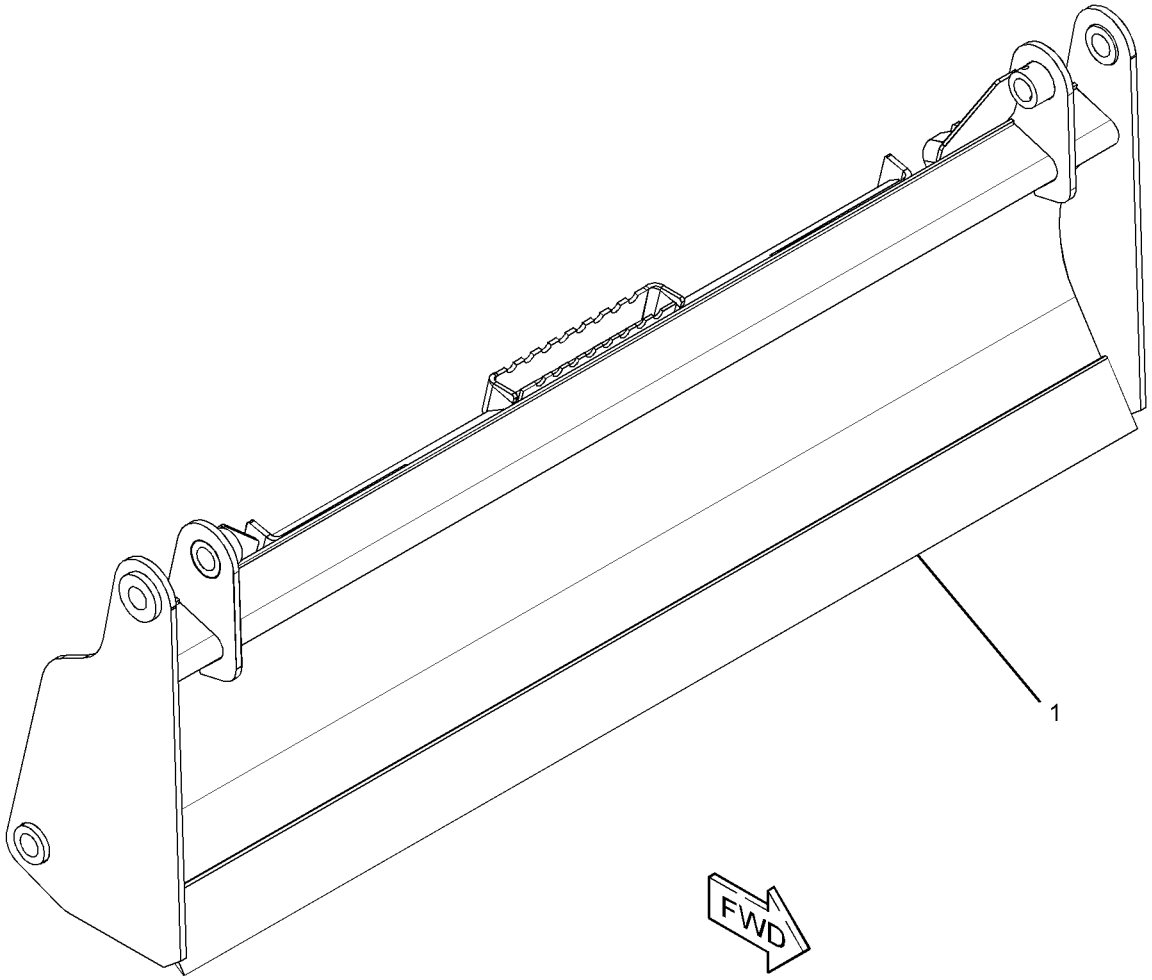

GRAPHIC #1 **<END>** g01960204

279-5388 BLADE GP-MULTIPURPOSE BUCKET

S/N: SRS1-UP
PART OF 279-5389 BUCKET GP-MULTIPURPOSE
AN ATTACHMENT

SMCS-6060, 6104 **i04156275**

NOTE	REF NO	GRAPHIC REF	PART NUMBER	QTY	PART NAME 1 2 3 4 5 6 (PRODUCT LEVEL)	SEE PAGE
	1	1	**358-4944**	1	PLATE-IDENTIFICATION (BUCKET SPECIFICATIONS)	
	2	1	**168-8389**	4	TACK-FASTENER	
Y	3	1	**279-5387**	1	BLADE GP-MULTIPURPOSE BUCKET (66-IN)	315

Y-SEPARATE ILLUSTRATION

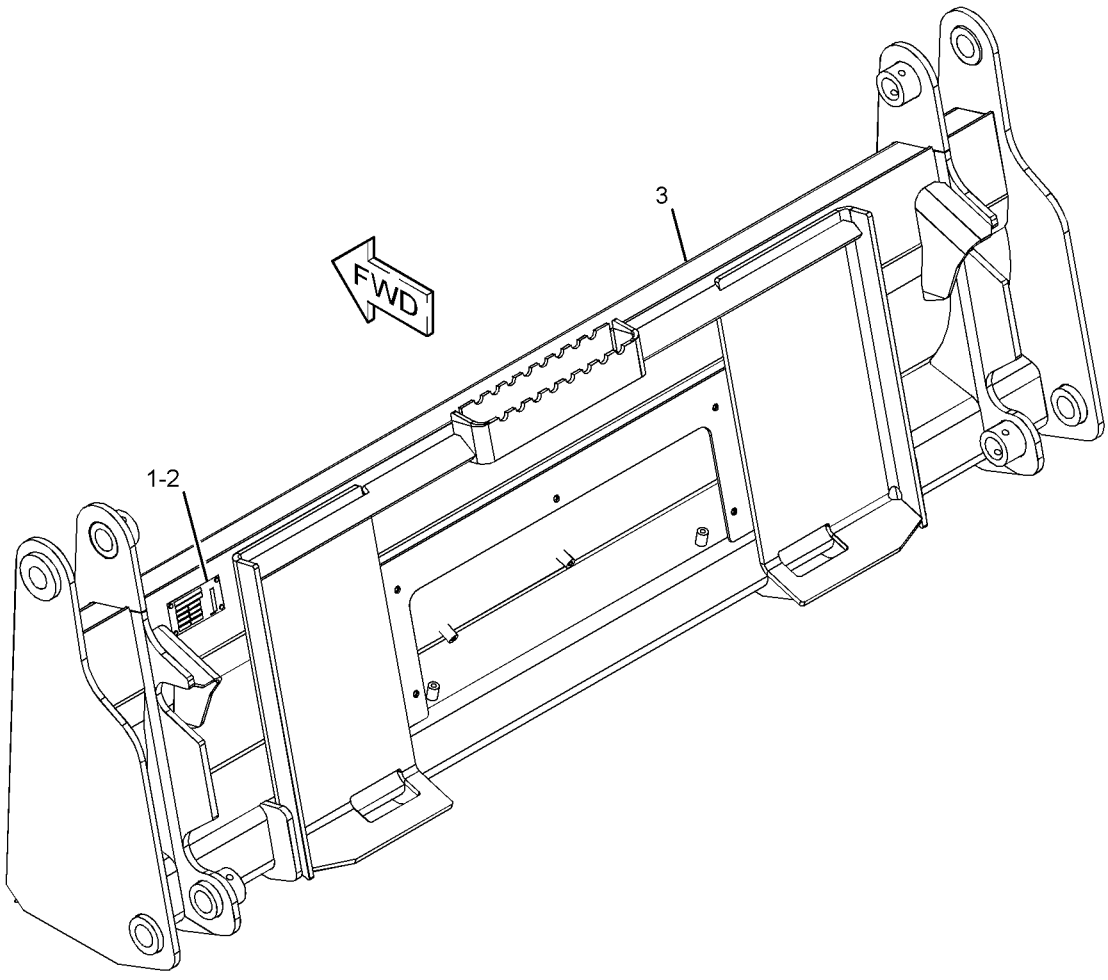

GRAPHIC #1 **<END>** g01279242

279-5395 BLADE GP-MULTIPURPOSE BUCKET

S/N: SRS1-UP
1829-MM (72-IN)
PART OF 279-5396 BLADE GP-MULTIPURPOSE BUCKET
AN ATTACHMENT

SMCS-6060, 6104 **i03646984**

NOTE	REF NO	GRAPHIC REF	PART NUMBER	QTY	PART NAME 1 2 3 4 5 6 (PRODUCT LEVEL)	SEE PAGE
	1	1	**154-5077**	1	EDGE	

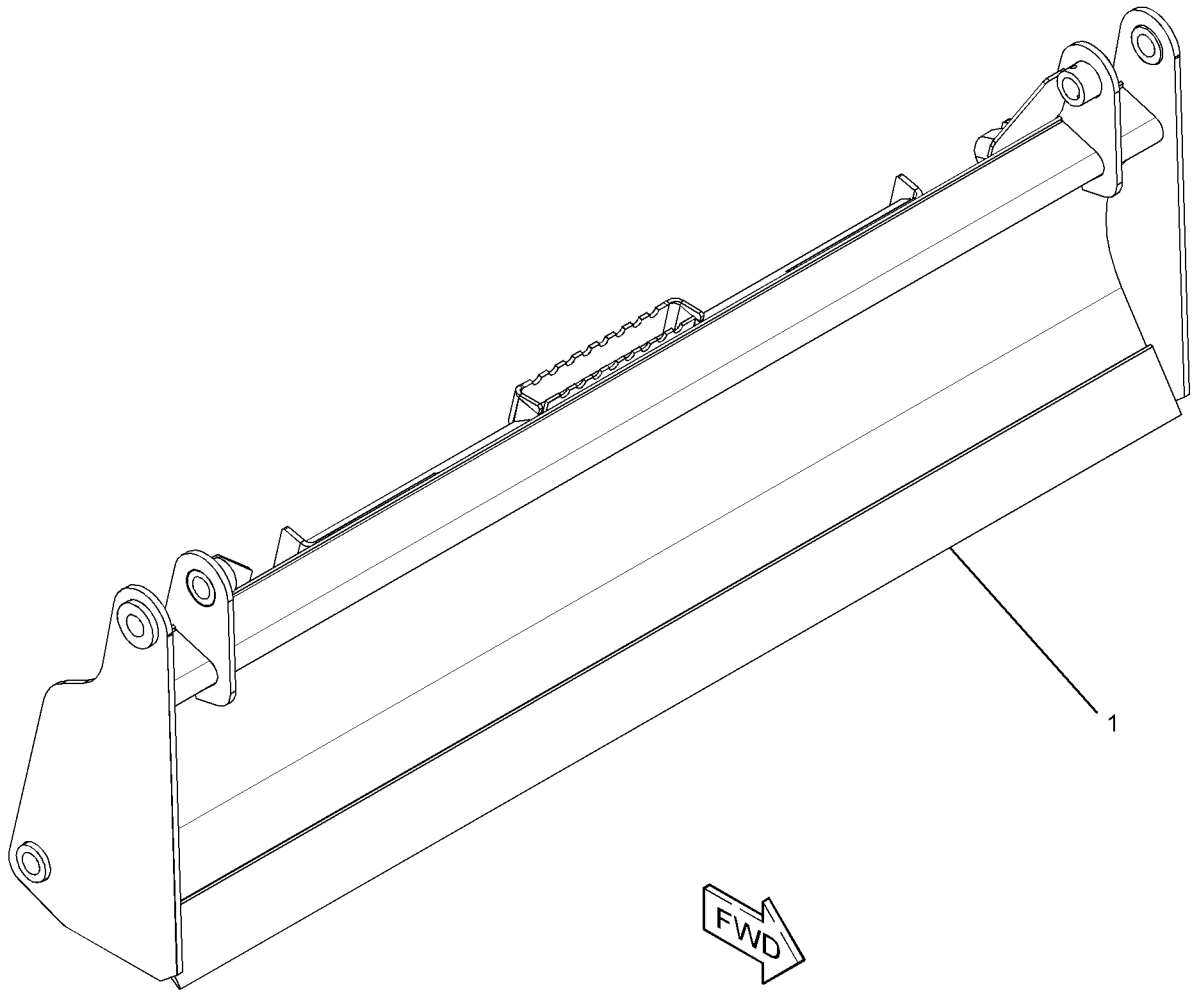

GRAPHIC #1 **<END>** g01960206

279-5396 BLADE GP-MULTIPURPOSE BUCKET

S/N: SRS1-UP
PART OF 279-5397 BUCKET GP-MULTIPURPOSE
AN ATTACHMENT

SMCS-6060, 6104 **i04156274**

NOTE	REF NO	GRAPHIC REF	PART NUMBER	QTY	PART NAME 1 2 3 4 5 6 (PRODUCT LEVEL)	SEE PAGE
	1	1	**358-4944**	1	PLATE-IDENTIFICATION (BUCKET SPECIFICATIONS)	
	2	1	**168-8389**	4	TACK-FASTENER	
Y	3	1	**279-5395**	1	BLADE GP-MULTIPURPOSE BUCKET (72-IN)	317

Y-SEPARATE ILLUSTRATION

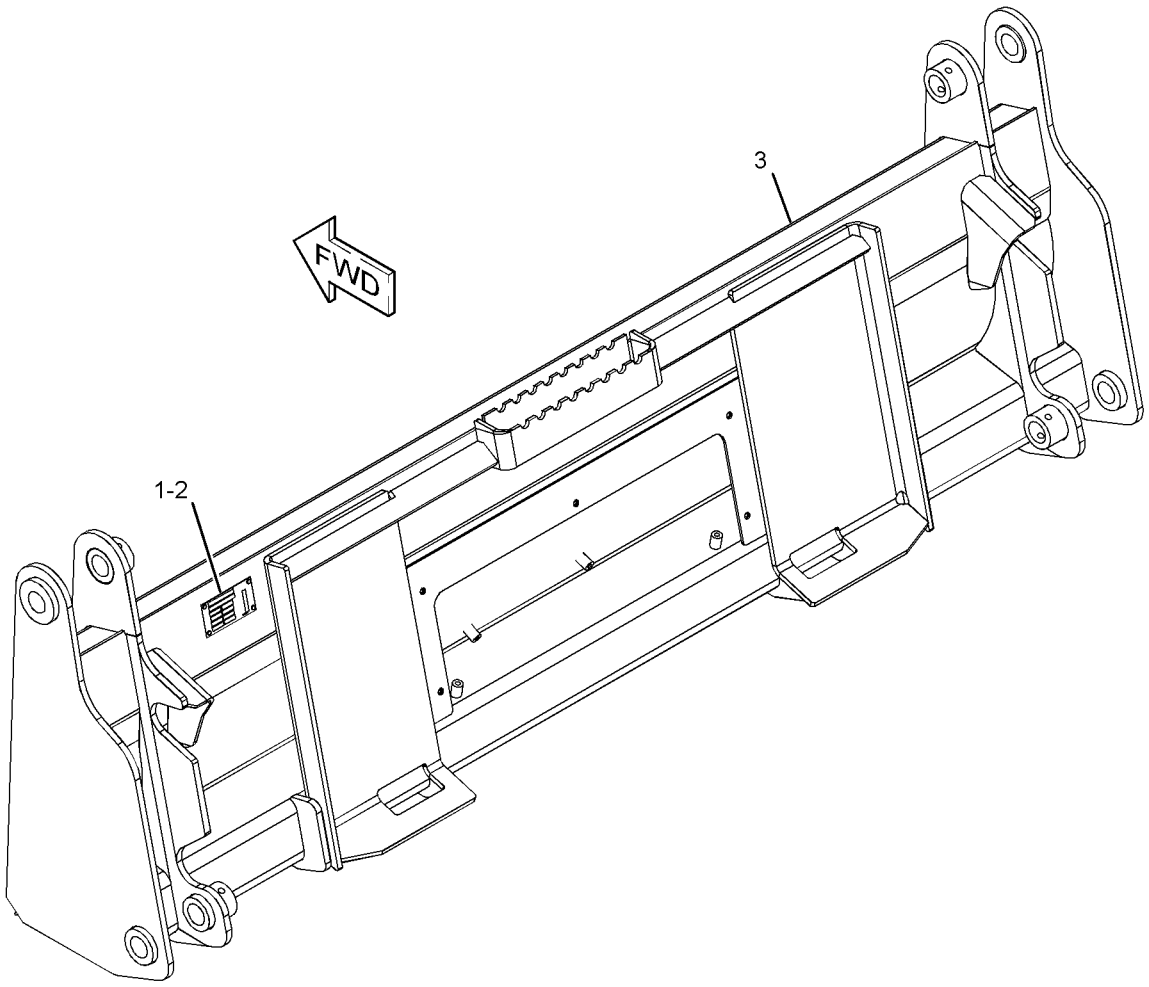

GRAPHIC #1 **<END>** g01279973

WORK TOOLS

279-5405 BLADE GP-MULTIPURPOSE BUCKET

S/N: SRS1-UP

PART OF 279-5404 BUCKET GP-MULTIPURPOSE

AN ATTACHMENT

SMCS-6060, 6104 **i04156277**

NOTE	REF NO	GRAPHIC REF	PART NUMBER	QTY	PART NAME 1 2 3 4 5 6 (PRODUCT LEVEL)	SEE PAGE
	1	1	**358-4944**	1	PLATE-IDENTIFICATION (BUCKET SPECIFICATIONS)	
	2	1	**168-8389**	4	TACK-FASTENER	
Y	3	1	**279-5406**	1	BLADE GP-MULTIPURPOSE BUCKET (78-IN)	320

Y-SEPARATE ILLUSTRATION

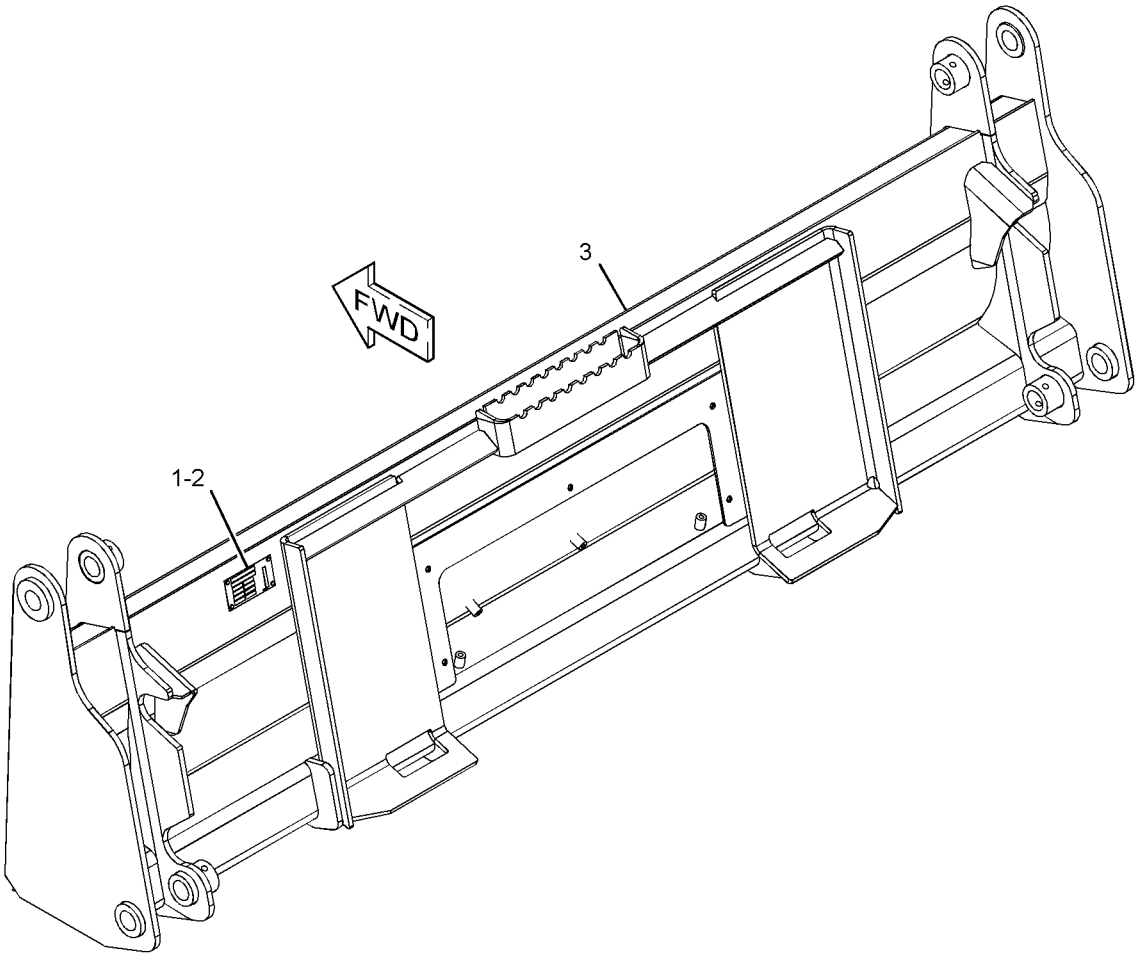

GRAPHIC #1 **<END>** g01278518

279-5406 BLADE GP-MULTIPURPOSE BUCKET

S/N: SRS1-UP
1981-MM (78-IN)
PART OF 279-5405 BLADE GP-MULTIPURPOSE BUCKET
AN ATTACHMENT

SMCS-6060, 6104 **i03638465**

NOTE	REF NO	GRAPHIC REF	PART NUMBER	QTY	PART NAME 1 2 3 4 5 6 (PRODUCT LEVEL)	SEE PAGE
	1	1	**199-8316**	1	EDGE	

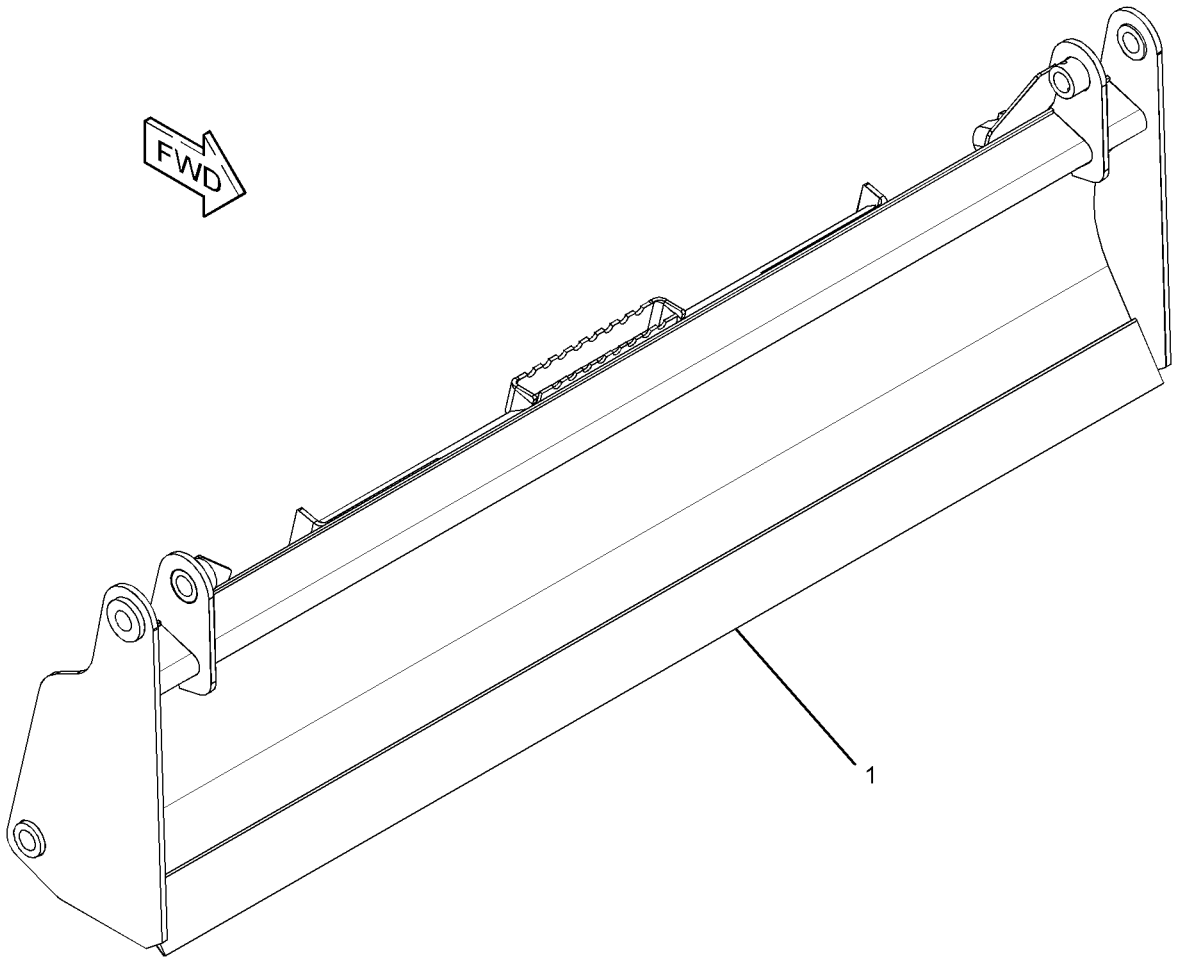

GRAPHIC #1 **<END>** g01954566

293-0142 BLADE GP-MULTIPURPOSE BUCKET

S/N: SRS1-UP
2134-MM (84-IN)
PART OF 293-0141 BUCKET GP-MULTIPURPOSE
AN ATTACHMENT

SMCS-6060, 6104 **i04276741**

NOTE	REF NO	GRAPHIC REF	PART NUMBER	QTY	PART NAME 1 2 3 4 5 6 (PRODUCT LEVEL)	SEE PAGE
	1	1	**358-4944**	1	PLATE-IDENTIFICATION (BUCKET SPECIFICATIONS)	
	2	1	**168-8389**	4	TACK-FASTENER	
Y	3	1	**293-0143**	1	BLADE GP-MULTIPURPOSE BUCKET (84-IN)	322

Y-SEPARATE ILLUSTRATION

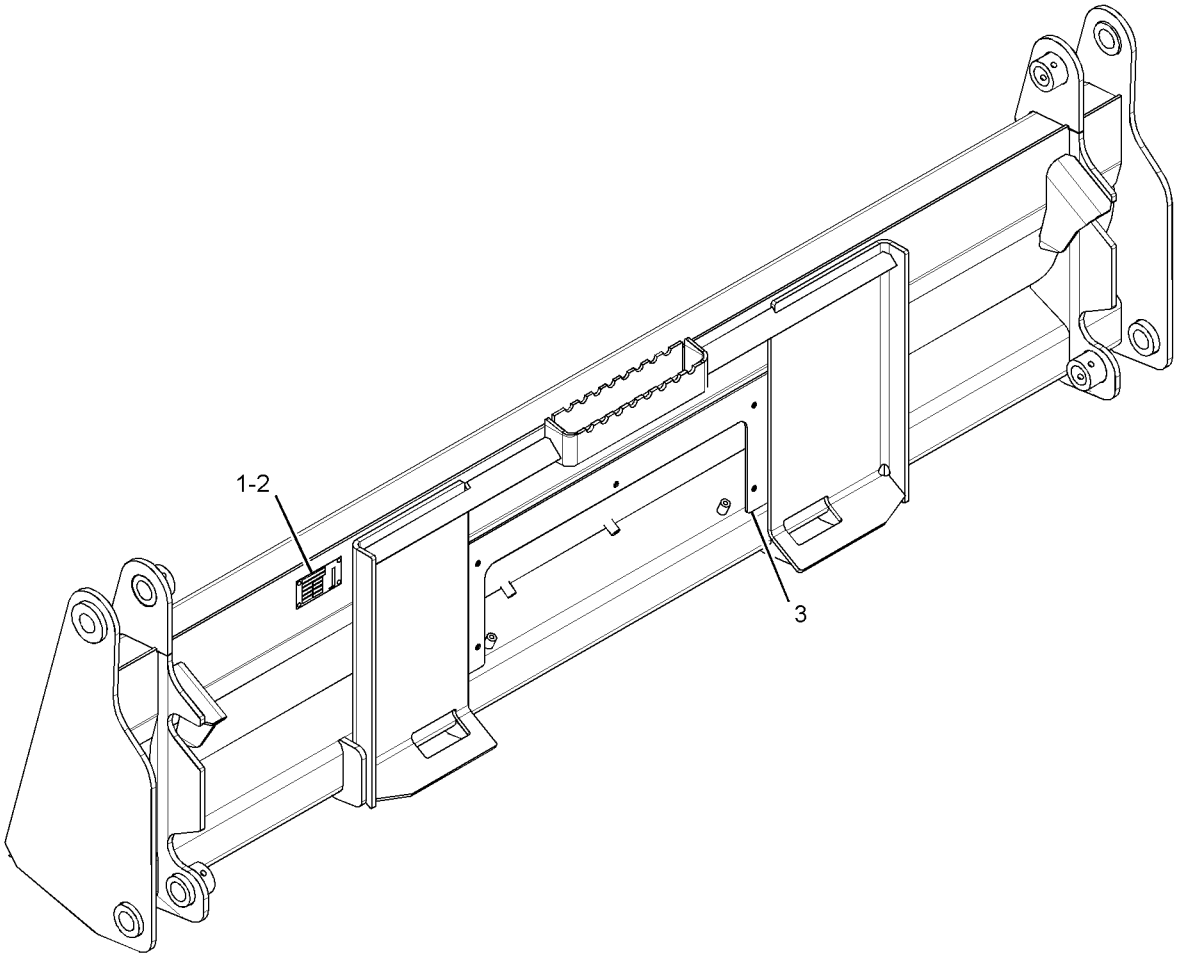

GRAPHIC #1 **<END>** g01327412

293-0143 BLADE GP-MULTIPURPOSE BUCKET

S/N: SRS1-UP
2133.6-MM (84-IN)
PART OF 293-0142 BLADE GP-MULTIPURPOSE BUCKET
AN ATTACHMENT

SMCS-6060, 6104 **i04267991**

NOTE	REF NO	GRAPHIC REF	PART NUMBER	QTY	PART NAME 1 2 3 4 5 6 (PRODUCT LEVEL)	SEE PAGE
	1	1	**293-0144**	1	EDGE	

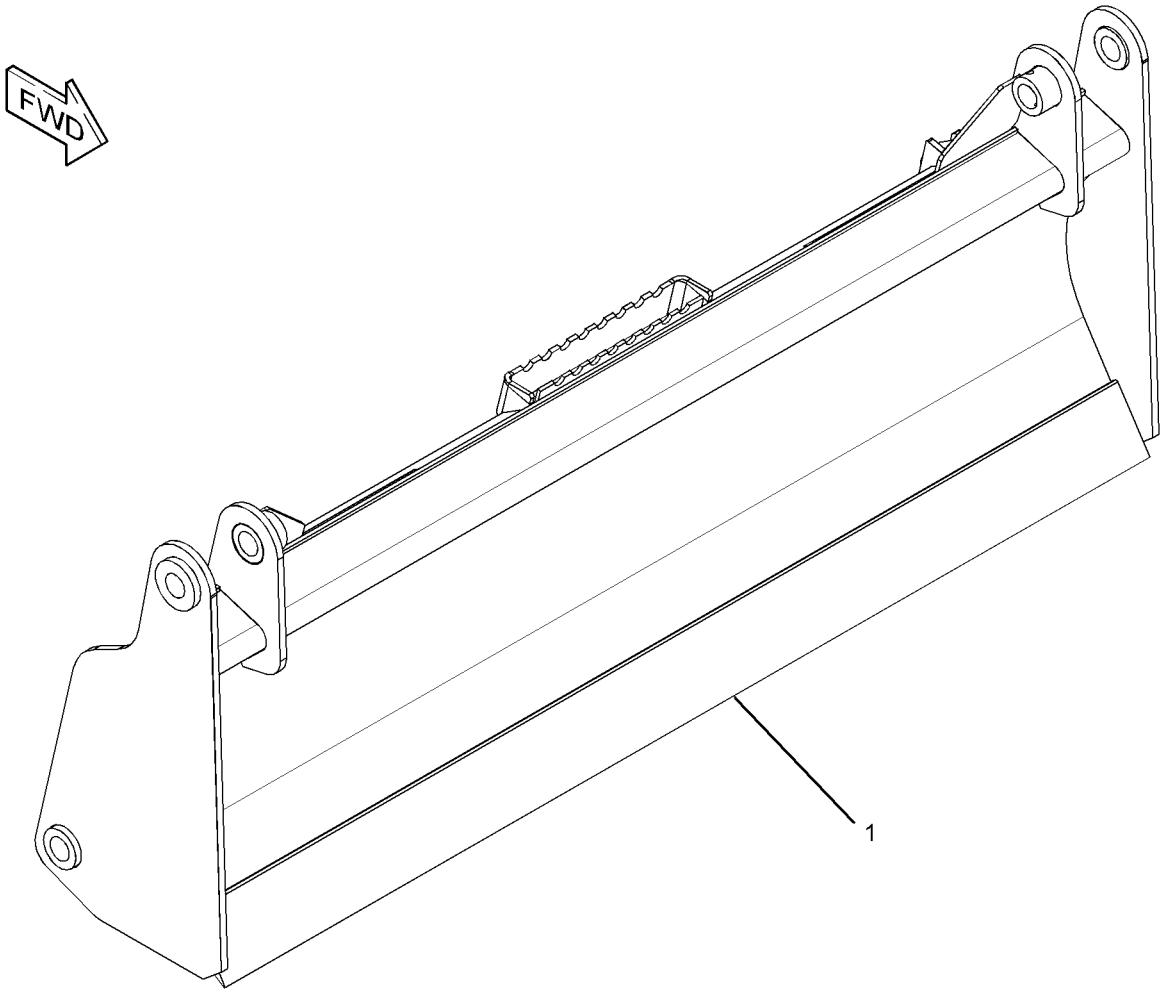

GRAPHIC #1 **<END>** g01953861

WORK TOOLS

268-4083 BUCKET AR-DIRT

S/N: SRS1-UP
AN ATTACHMENT

SMCS-6001 **i02539980**

NOTE	PART NUMBER	QTY	PART NAME 1 2 3 4 5 6 (PRODUCT LEVEL)	SEE PAGE
Y	**268-4084**	1	BUCKET GP-DIRT	382
Y	*135-9387*	1	EDGE GP-CUTTING	417
Y-SEPARATE ILLUSTRATION				

<END>

279-5435 BUCKET AR-DIRT

S/N: SRS1-UP
AN ATTACHMENT

SMCS-6001 **i02552331**

NOTE	PART NUMBER	QTY	PART NAME 1 2 3 4 5 6 (PRODUCT LEVEL)	SEE PAGE
Y	**279-5434**	1	BUCKET AS-DIRT	344
Y	*135-9383*	1	EDGE GP-CUTTING	413
Y-SEPARATE ILLUSTRATION				

<END>

279-5438 BUCKET AR-DIRT

S/N: SRS1-UP
AN ATTACHMENT

SMCS-6001 **i02571312**

NOTE	PART NUMBER	QTY	PART NAME 1 2 3 4 5 6 (PRODUCT LEVEL)	SEE PAGE
Y	**279-5437**	1	BUCKET AS-DIRT	346
Y	*135-9384*	1	EDGE GP-CUTTING	414
Y-SEPARATE ILLUSTRATION				

<END>

279-5441 BUCKET AR-DIRT

S/N: SRS1-UP
AN ATTACHMENT

SMCS-6001 **i02571314**

NOTE	PART NUMBER	QTY	PART NAME 1 2 3 4 5 6 (PRODUCT LEVEL)	SEE PAGE
Y	**279-5440**	1	BUCKET AS-DIRT	348
Y	*135-9385*	1	EDGE GP-CUTTING	415
Y-SEPARATE ILLUSTRATION				

<END>

WORK TOOLS

285-6090 BUCKET AR-DIRT

S/N: SRS1-UP
AN ATTACHMENT

SMCS-6001 **i02552446**

NOTE	PART NUMBER	QTY	PART NAME 1 2 3 4 5 6 (PRODUCT LEVEL)	SEE PAGE
Y	**285-6089**	1	BUCKET AS-DIRT	350
Y	*135-9386*	1	EDGE GP-CUTTING (DIRT)	416
Y-SEPARATE ILLUSTRATION				

<END>

279-5365 BUCKET AR-GENERAL PURPOSE

S/N: SRS1-UP
AN ATTACHMENT

SMCS-6101 **i02550406**

NOTE	PART NUMBER	QTY	PART NAME 1 2 3 4 5 6 (PRODUCT LEVEL)	SEE PAGE
Y	**279-5364**	1	BUCKET AS-GENERAL PURPOSE	352
Y	*135-9384*	1	EDGE GP-CUTTING	414
Y-SEPARATE ILLUSTRATION				

<END>

279-5366 BUCKET AR-GENERAL PURPOSE

S/N: SRS1-UP
AN ATTACHMENT

SMCS-6101 **i03922634**

NOTE	PART NUMBER	QTY	PART NAME 1 2 3 4 5 6 (PRODUCT LEVEL)	SEE PAGE
Y	**279-5364**	1	BUCKET AS-GENERAL PURPOSE	352
Y	*141-4999*	8	TOOTH GP-UNI	456
Y-SEPARATE ILLUSTRATION				

<END>

279-5369 BUCKET AR-GENERAL PURPOSE

S/N: SRS1-UP
AN ATTACHMENT

SMCS-6101 **i02551081**

NOTE	PART NUMBER	QTY	PART NAME 1 2 3 4 5 6 (PRODUCT LEVEL)	SEE PAGE
Y	**279-5368**	1	BUCKET AS-GENERAL PURPOSE	354
Y	*135-9385*	1	EDGE GP-CUTTING	415
Y-SEPARATE ILLUSTRATION				

<END>

279-5370 BUCKET AR-GENERAL PURPOSE

S/N: SRS1-UP
AN ATTACHMENT

SMCS-6101 **i03922636**

NOTE	PART NUMBER	QTY	PART NAME 1 2 3 4 5 6 (PRODUCT LEVEL)	SEE PAGE
Y	**279-5368**	1	BUCKET AS-GENERAL PURPOSE	354
Y	*141-4999*	8	TOOTH GP-UNI	456

Y-SEPARATE ILLUSTRATION

<END>

279-5373 BUCKET AR-GENERAL PURPOSE

S/N: SRS1-UP
AN ATTACHMENT

SMCS-6101 **i02552012**

NOTE	PART NUMBER	QTY	PART NAME 1 2 3 4 5 6 (PRODUCT LEVEL)	SEE PAGE
Y	**279-5372**	1	BUCKET AS-GENERAL PURPOSE	356
Y	*135-9386*	1	EDGE GP-CUTTING	416

Y-SEPARATE ILLUSTRATION

<END>

279-5374 BUCKET AR-GENERAL PURPOSE

S/N: SRS1-UP
AN ATTACHMENT

SMCS-6101 **i03922635**

NOTE	PART NUMBER	QTY	PART NAME 1 2 3 4 5 6 (PRODUCT LEVEL)	SEE PAGE
Y	**279-5372**	1	BUCKET AS-GENERAL PURPOSE	356
Y	*141-4999*	8	TOOTH GP-UNI	456

Y-SEPARATE ILLUSTRATION

<END>

279-5377 BUCKET AR-GENERAL PURPOSE

S/N: SRS1-UP
AN ATTACHMENT

SMCS-6101 **i02552020**

NOTE	PART NUMBER	QTY	PART NAME 1 2 3 4 5 6 (PRODUCT LEVEL)	SEE PAGE
Y	**279-5376**	1	BUCKET AS-GENERAL PURPOSE	358
Y	*135-9387*	1	EDGE GP-CUTTING	417

Y-SEPARATE ILLUSTRATION

<END>

279-5378 BUCKET AR-GENERAL PURPOSE

S/N: SRS1-UP

AN ATTACHMENT

SMCS-6101 **i03922637**

NOTE	PART NUMBER	QTY	PART NAME 1 2 3 4 5 6 (PRODUCT LEVEL)	SEE PAGE
Y	**279-5376**	1	BUCKET AS-GENERAL PURPOSE	358
Y	*141-4999*	9	TOOTH GP-UNI	456
Y-SEPARATE ILLUSTRATION				

<END>

296-8192 BUCKET AR-GENERAL PURPOSE

S/N: SRS1-UP

AN ATTACHMENT

SMCS-6101 **i02636478**

NOTE	PART NUMBER	QTY	PART NAME 1 2 3 4 5 6 (PRODUCT LEVEL)	SEE PAGE
Y	**292-9270**	1	BUCKET AS-GENERAL PURPOSE	359
Y	*195-7124*	1	EDGE GP-CUTTING	419
Y-SEPARATE ILLUSTRATION				

<END>

157-7223 BUCKET AR-GRAPPLE

S/N: SRS1-UP

PART OF 157-7226 BUCKET AR-GRAPPLE

AN ATTACHMENT

SMCS-6704 **i03636369**

NOTE	PART NUMBER	QTY	PART NAME 1 2 3 4 5 6 (PRODUCT LEVEL)	SEE PAGE
Y	*156-0884*	1	BUCKET GP-GRAPPLE (INDUSTRIAL)	384
Y	**278-1975**	2	CYLINDER GP-GRAPPLE (INDUSTRIAL)	204
Y	*161-0187*	1	LINES GP-GRAPPLE (INDUSTRIAL)	246
Y	*156-0891*	1	MOUNTING GP-CYLINDER (INDUSTRIAL)	281
Y-SEPARATE ILLUSTRATION				

<END>

157-7224 BUCKET AR-GRAPPLE

S/N: SRS1-UP

PART OF 157-7227 BUCKET AR-GRAPPLE

AN ATTACHMENT

SMCS-6704 **i03636379**

NOTE	PART NUMBER	QTY	PART NAME 1 2 3 4 5 6 (PRODUCT LEVEL)	SEE PAGE
Y	*156-0885*	1	BUCKET GP-GRAPPLE (INDUSTRIAL)	385
Y	*156-0891*	1	MOUNTING GP-CYLINDER (INDUSTRIAL)	281
Y	**278-1975**	2	CYLINDER GP-GRAPPLE (INDUSTRIAL)	204
Y	*161-0187*	1	LINES GP-GRAPPLE (INDUSTRIAL)	246
Y-SEPARATE ILLUSTRATION				

<END>

157-7225 BUCKET AR-GRAPPLE—INDUSTRIAL

S/N: SRS1-UP
PART OF 158-6095 BUCKET AR-GRAPPLE
AN ATTACHMENT

SMCS-6704 **i03636381**

NOTE	PART NUMBER	QTY	PART NAME 1 2 3 4 5 6 (PRODUCT LEVEL)	SEE PAGE
Y	*156-0886*	1	BUCKET GP-GRAPPLE (INDUSTRIAL)	386
Y	**278-1975**	2	CYLINDER GP-GRAPPLE (INDUSTRIAL)	204
Y	*161-0187*	1	LINES GP-GRAPPLE (INDUSTRIAL)	246
Y	*156-0891*	1	MOUNTING GP-CYLINDER (INDUSTRIAL)	281
Y-SEPARATE ILLUSTRATION				

<END>

157-7226 BUCKET AR-GRAPPLE

S/N: SRS1-UP
AN ATTACHMENT

SMCS-6704 **i01788957**

NOTE	PART NUMBER	QTY	PART NAME 1 2 3 4 5 6 (PRODUCT LEVEL)	SEE PAGE
Y	**157-7223**	1	BUCKET AR-GRAPPLE	326
Y	*135-9384*	1	EDGE GP-CUTTING	414
Y-SEPARATE ILLUSTRATION				

<END>

157-7227 BUCKET AR-GRAPPLE

S/N: SRS1-UP
AN ATTACHMENT

SMCS-6704 **i01788965**

NOTE	PART NUMBER	QTY	PART NAME 1 2 3 4 5 6 (PRODUCT LEVEL)	SEE PAGE
Y	**157-7224**	1	BUCKET AR-GRAPPLE	326
Y	*135-9385*	1	EDGE GP-CUTTING	415
Y-SEPARATE ILLUSTRATION				

<END>

158-6095 BUCKET AR-GRAPPLE

S/N: SRS1-UP
AN ATTACHMENT

SMCS-6704 **i01060288**

NOTE	PART NUMBER	QTY	PART NAME 1 2 3 4 5 6 (PRODUCT LEVEL)	SEE PAGE
Y	**157-7225**	1	BUCKET AR-GRAPPLE	327
Y	*135-9386*	1	EDGE GP-CUTTING	416
Y-SEPARATE ILLUSTRATION				

<END>

217-6229 BUCKET AR-GRAPPLE–INDUSTRIAL

S/N: SRS1-UP
PART OF 217-6230 BUCKET AR-GRAPPLE
AN ATTACHMENT

SMCS-6704 **i03636392**

NOTE	REF NO	GRAPHIC REF	PART NUMBER	QTY	PART NAME 1 2 3 4 5 6 (PRODUCT LEVEL)	SEE PAGE
Y	1	1	*156-0891*	1	MOUNTING GP-CYLINDER (INDUSTRIAL)	281
Y	2	1	*161-0187*	1	LINES GP-GRAPPLE (INDUSTRIAL)	246
Y	3	1	*217-6228*	1	BUCKET GP-GRAPPLE (INDUSTRIAL)	387
CY	4	1	**278-1975**	2	CYLINDER GP-GRAPPLE (INDUSTRIAL)	204

C-CHANGE FROM PREVIOUS TYPE
Y-SEPARATE ILLUSTRATION

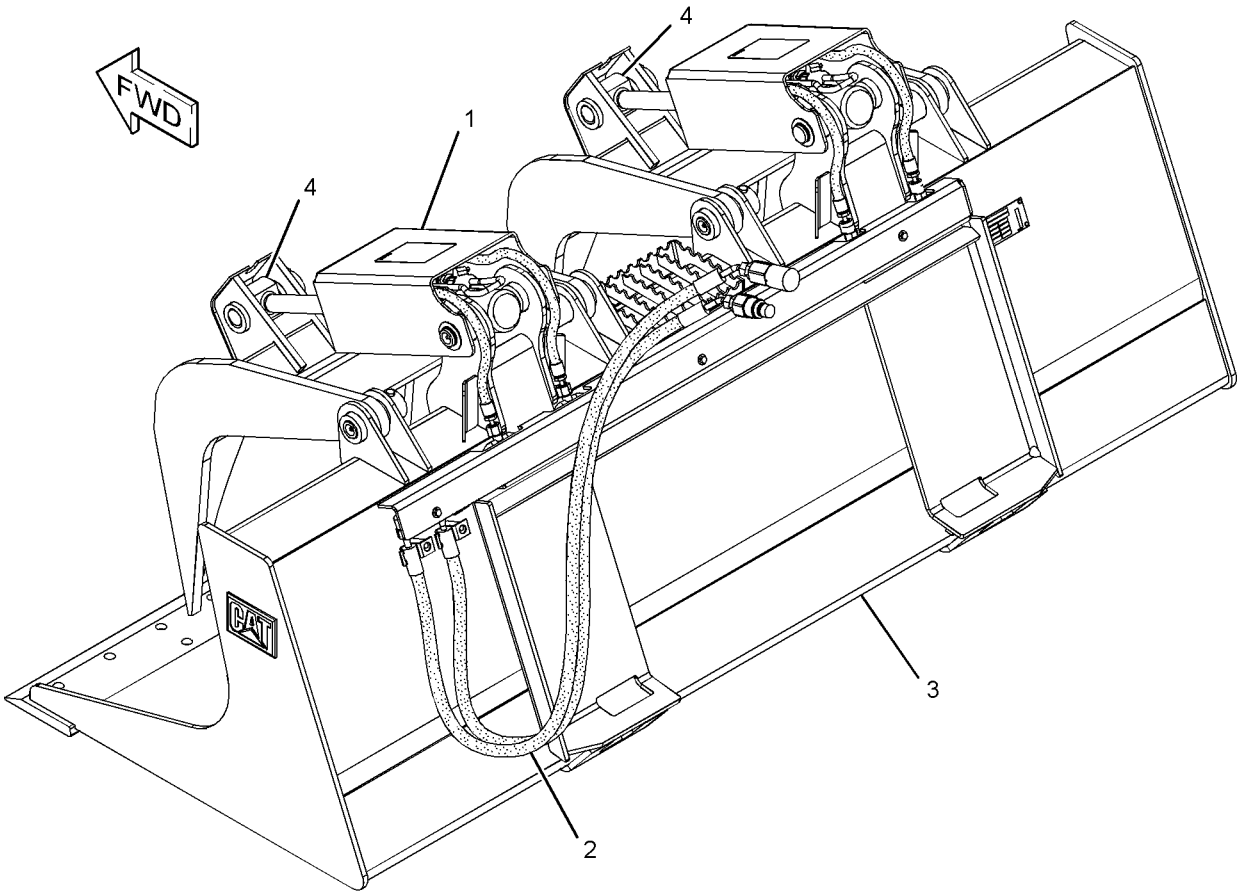

GRAPHIC #1 **<END>** g01281607

217-6230 BUCKET AR-GRAPPLE

S/N: SRS1-UP
AN ATTACHMENT

SMCS-6704 **i01877714**

NOTE	PART NUMBER	QTY	PART NAME 1 2 3 4 5 6 (PRODUCT LEVEL)	SEE PAGE
Y	**217-6229**	1	BUCKET AR-GRAPPLE (INDUSTRIAL)	328
Y	*135-9387*	1	EDGE GP-CUTTING	417
Y-SEPARATE ILLUSTRATION				

<END>

285-6111 BUCKET AR-GRAPPLE

S/N: SRS1-UP
AN ATTACHMENT

SMCS-6704 **i04041120**

NOTE	PART NUMBER	QTY	PART NAME 1 2 3 4 5 6 (PRODUCT LEVEL)	SEE PAGE
Y	**285-6100**	1	BUCKET AR-UTILITY	337
Y	**285-6116**	1	GRAPPLE & CYLINDER GP-UTILITY	434
Y-SEPARATE ILLUSTRATION				

<END>

285-6112 BUCKET AR-GRAPPLE

S/N: SRS1-UP
AN ATTACHMENT

SMCS-6704 **i04041121**

NOTE	PART NUMBER	QTY	PART NAME 1 2 3 4 5 6 (PRODUCT LEVEL)	SEE PAGE
Y	**285-6101**	1	BUCKET AR-UTILITY	337
Y	**285-6116**	1	GRAPPLE & CYLINDER GP-UTILITY	434
Y-SEPARATE ILLUSTRATION				

<END>

WORK TOOLS

286-9300 BUCKET AR-GRAPPLE

S/N: SRS1-UP

AN ATTACHMENT

SMCS-6704 **i04268010**

NOTE	REF NO	GRAPHIC REF	PART NUMBER	QTY	PART NAME 1 2 3 4 5 6 (PRODUCT LEVEL)	SEE PAGE
Y	1	1	*286-9248*	1	MOUNTING GP-CYLINDER (GRAPPLE BUCKET)	283
Y	2	1	*286-9251*	1	PLATE & FILM GP	559
Y	3	1	*286-9278*	1	BUCKET GP-GRAPPLE	390
Y	4	1	*286-9279*	1	LINES GP-GRAPPLE	250
Y	5	1	**293-6264**	2	CYLINDER GP-BUCKET	202

Y-SEPARATE ILLUSTRATION

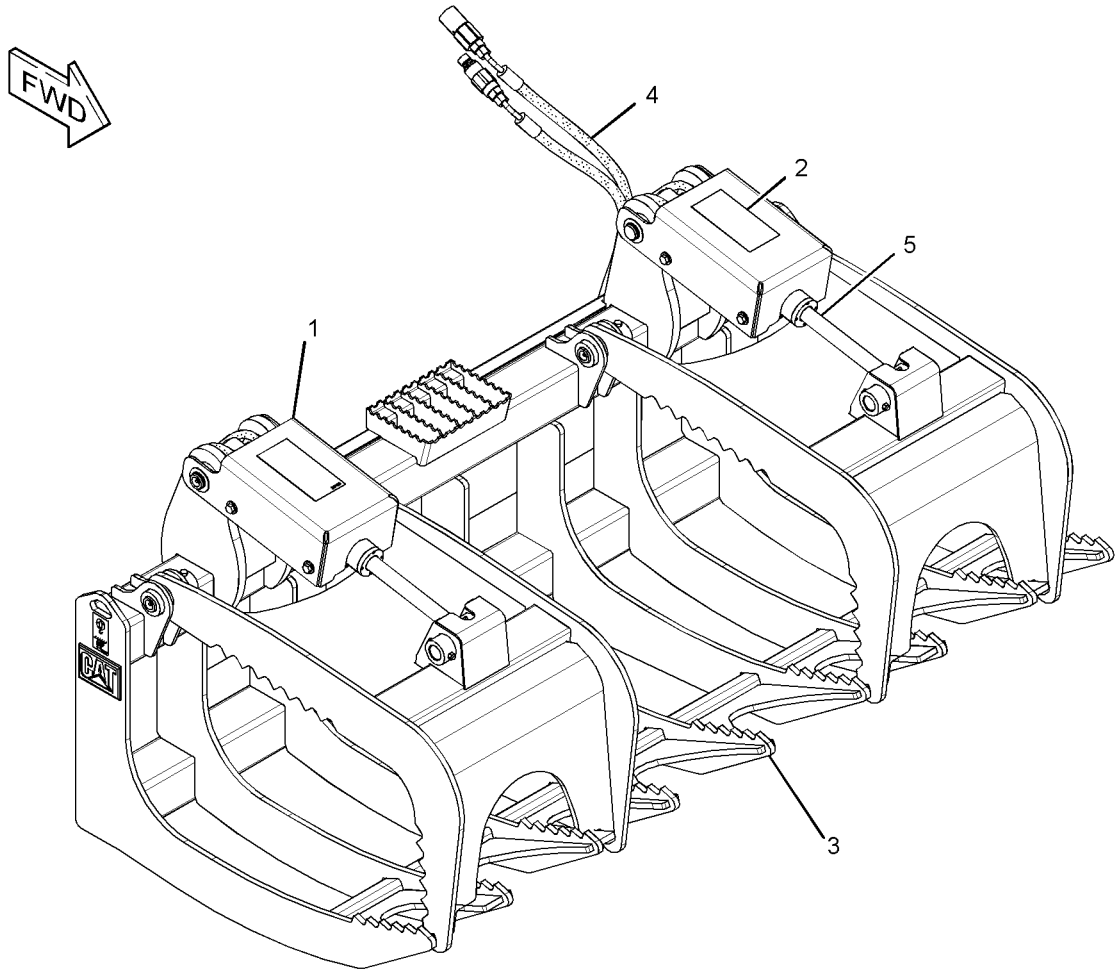

GRAPHIC #1 **<END>** g01372572

WORK TOOLS

286-9301 BUCKET AR-GRAPPLE

S/N: SRS1-UP

AN ATTACHMENT

SMCS-6704 **i02723700**

NOTE	REF NO	GRAPHIC REF	PART NUMBER	QTY	PART NAME 1 2 3 4 5 6 (PRODUCT LEVEL)	SEE PAGE
Y	1	1	*286-9244*	1	BUCKET GP-GRAPPLE	389
Y	2	1	*286-9248*	1	MOUNTING GP-CYLINDER (GRAPPLE BUCKET)	283
Y	3	1	*286-9250*	1	LINES GP-GRAPPLE	248
Y	4	1	*286-9251*	1	PLATE & FILM GP	559
Y	5	1	**293-6264**	2	CYLINDER GP-BUCKET	202

Y-SEPARATE ILLUSTRATION

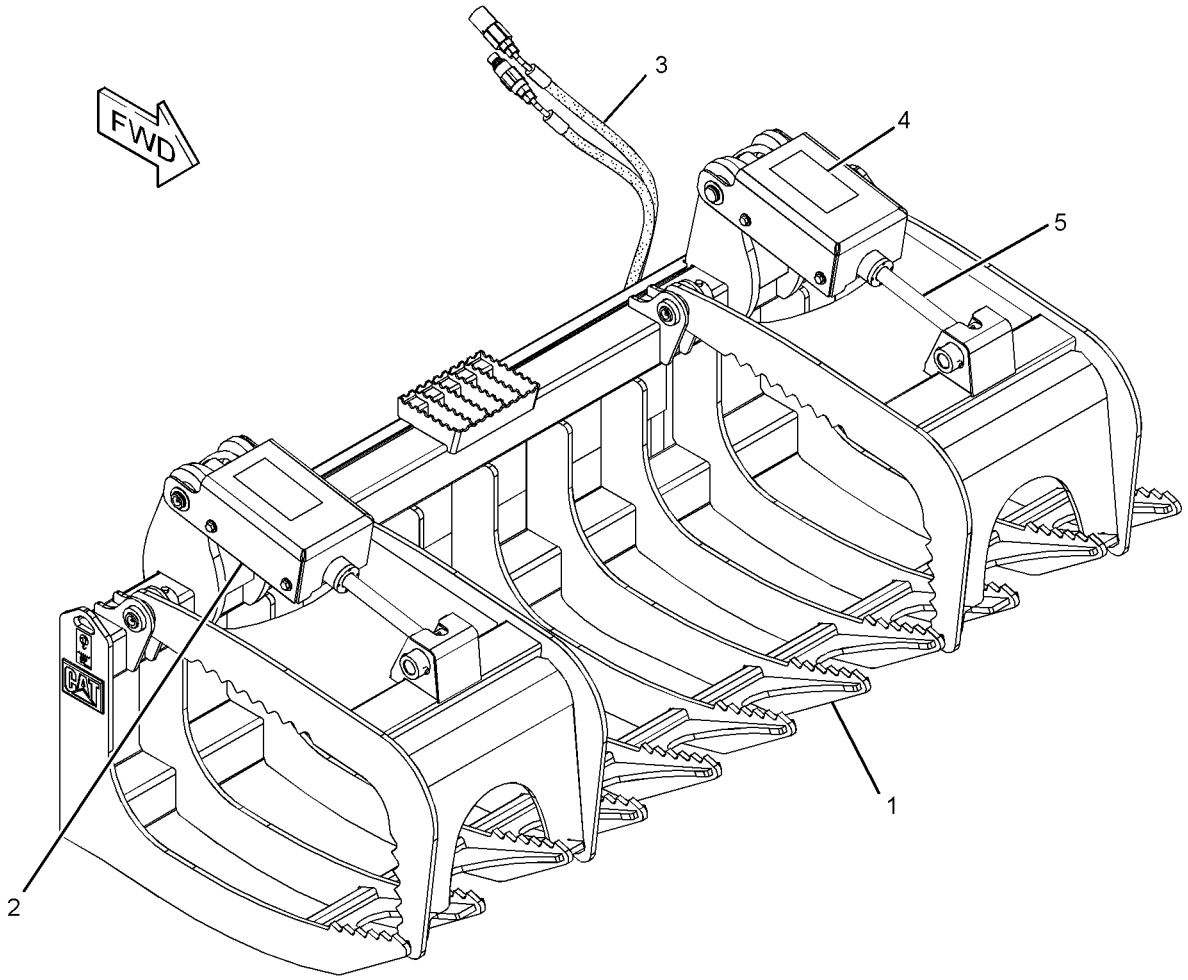

GRAPHIC #1 **<END>** g01372972

WORK TOOLS

279-5420 BUCKET AR-LIGHT MATERIAL

S/N: SRS1-UP

AN ATTACHMENT

SMCS-6103 **i02552302**

NOTE	PART NUMBER	QTY	PART NAME 1 2 3 4 5 6 (PRODUCT LEVEL)	SEE PAGE
Y	**279-5421**	1	BUCKET AS-LIGHT MATERIAL	369
Y	*135-9386*	1	EDGE GP-CUTTING	416
Y-SEPARATE ILLUSTRATION				

<END>

279-5425 BUCKET AR-LIGHT MATERIAL

S/N: SRS1-UP

AN ATTACHMENT

SMCS-6103 **i02552308**

NOTE	PART NUMBER	QTY	PART NAME 1 2 3 4 5 6 (PRODUCT LEVEL)	SEE PAGE
Y	**279-5424**	1	BUCKET AS-LIGHT MATERIAL	372
Y	*135-9387*	1	EDGE GP-CUTTING	417
Y-SEPARATE ILLUSTRATION				

<END>

279-5430 BUCKET AR-LIGHT MATERIAL

S/N: SRS1-UP

AN ATTACHMENT

SMCS-6103 **i02552313**

NOTE	PART NUMBER	QTY	PART NAME 1 2 3 4 5 6 (PRODUCT LEVEL)	SEE PAGE
Y	**279-5429**	1	BUCKET AS-LIGHT MATERIAL	374
Y	*195-7124*	1	EDGE GP-CUTTING	419
Y-SEPARATE ILLUSTRATION				

<END>

296-7597 BUCKET AR-LIGHT MATERIAL

S/N: SRS1-UP

AN ATTACHMENT

SMCS-6103 **i03624568**

NOTE	PART NUMBER	QTY	PART NAME 1 2 3 4 5 6 (PRODUCT LEVEL)	SEE PAGE
Y	*292-9223*	1	BUCKET AS-LIGHT MATERIAL	375
Y	*296-7680*	1	EDGE GP-CUTTING	420
Y-SEPARATE ILLUSTRATION				

<END>

WORK TOOLS

279-5380 BUCKET AR-MULTIPURPOSE

S/N: SRS1-UP

AN ATTACHMENT

SMCS-6104 **i03922638**

NOTE	PART NUMBER	QTY	PART NAME 1 2 3 4 5 6 (PRODUCT LEVEL)	SEE PAGE
Y	**279-5382**	1	BUCKET AR-MULTIPURPOSE	333
Y	*141-4999*	8	TOOTH GP-UNI	456
Y-SEPARATE ILLUSTRATION				

<END>

279-5381 BUCKET AR-MULTIPURPOSE

S/N: SRS1-UP

AN ATTACHMENT

SMCS-6104 **i02552030**

NOTE	PART NUMBER	QTY	PART NAME 1 2 3 4 5 6 (PRODUCT LEVEL)	SEE PAGE
Y	**279-5382**	1	BUCKET AR-MULTIPURPOSE	333
Y	*135-9384*	1	EDGE GP-CUTTING	414
Y-SEPARATE ILLUSTRATION				

<END>

279-5382 BUCKET AR-MULTIPURPOSE

S/N: SRS1-UP

PART OF 279-5380, 279-5381 BUCKET AR-MULTIPURPOSE

AN ATTACHMENT

SMCS-6104 **i02561093**

NOTE	PART NUMBER	QTY	PART NAME 1 2 3 4 5 6 (PRODUCT LEVEL)	SEE PAGE
Y	*279-5383*	1	BUCKET GP-MULTIPURPOSE (60-IN)	391
Y	*162-5236*	1	COVER GP-LINES	410
Y	**154-5018**	2	CYLINDER GP-BUCKET	201
Y	*279-5413*	1	LINES GP-BUCKET	221
Y	*154-5011*	1	MOUNTING GP-CYLINDER	280
Y-SEPARATE ILLUSTRATION				

<END>

279-5390 BUCKET AR-MULTIPURPOSE

S/N: SRS1-UP

PART OF 279-5391, 279-5392 BUCKET AR-MULTIPURPOSE

AN ATTACHMENT

SMCS-6104 **i03647000**

NOTE	PART NUMBER	QTY	PART NAME 1 2 3 4 5 6 (PRODUCT LEVEL)	SEE PAGE
Y	**279-5389**	1	BUCKET GP-MULTIPURPOSE	392
Y	*162-5236*	1	COVER GP-LINES	410
Y	**154-5018**	2	CYLINDER GP-BUCKET	201
			—OR—	
Y	**278-1969**	2	CYLINDER GP-HYDRAULIC	209
Y	*279-5414*	1	LINES GP-BUCKET	223
Y	*154-5011*	1	MOUNTING GP-CYLINDER	280
Y-SEPARATE ILLUSTRATION				

<END>

279-5391 BUCKET AR-MULTIPURPOSE

S/N: SRS1-UP
AN ATTACHMENT

SMCS-6104 **i02552078**

NOTE	PART NUMBER	QTY	PART NAME 1 2 3 4 5 6 (PRODUCT LEVEL)	SEE PAGE
Y	**279-5390**	1	BUCKET AR-MULTIPURPOSE	333
Y	*135-9385*	1	EDGE GP-CUTTING	415
Y-SEPARATE ILLUSTRATION				

<END>

279-5392 BUCKET AR-MULTIPURPOSE

S/N: SRS1-UP
AN ATTACHMENT

SMCS-6104 **i03922639**

NOTE	PART NUMBER	QTY	PART NAME 1 2 3 4 5 6 (PRODUCT LEVEL)	SEE PAGE
Y	**279-5390**	1	BUCKET AR-MULTIPURPOSE	333
Y	*141-4999*	8	TOOTH GP-UNI	456
Y-SEPARATE ILLUSTRATION				

<END>

279-5398 BUCKET AR-MULTIPURPOSE

S/N: SRS1-UP
PART OF 279-5399, 279-5400 BUCKET AR-MULTIPURPOSE
AN ATTACHMENT

SMCS-6104 **i03647001**

NOTE	PART NUMBER	QTY	PART NAME 1 2 3 4 5 6 (PRODUCT LEVEL)	SEE PAGE
Y	**279-5397**	1	BUCKET GP-MULTIPURPOSE	393
Y	*162-5236*	1	COVER GP-LINES	410
Y	**154-5018**	2	CYLINDER GP-BUCKET	201
			—OR—	
Y	**278-1969**	2	CYLINDER GP-HYDRAULIC	209
Y	*279-5415*	1	LINES GP-BUCKET	225
Y	*154-5011*	1	MOUNTING GP-CYLINDER	280
Y-SEPARATE ILLUSTRATION				

<END>

279-5399 BUCKET AR-MULTIPURPOSE

S/N: SRS1-UP
AN ATTACHMENT

SMCS-6104 **i02552131**

NOTE	PART NUMBER	QTY	PART NAME 1 2 3 4 5 6 (PRODUCT LEVEL)	SEE PAGE
Y	**279-5398**	1	BUCKET AR-MULTIPURPOSE	334
Y	*135-9386*	1	EDGE GP-CUTTING	416
Y-SEPARATE ILLUSTRATION				

<END>

WORK TOOLS

279-5400 BUCKET AR-MULTIPURPOSE

S/N: SRS1-UP
AN ATTACHMENT

SMCS-6104 **i03922640**

NOTE	PART NUMBER	QTY	PART NAME 1 2 3 4 5 6 (PRODUCT LEVEL)	SEE PAGE
Y	**279-5398**	1	BUCKET AR-MULTIPURPOSE	334
Y	*141-4999*	8	TOOTH GP-UNI	456

Y-SEPARATE ILLUSTRATION

<END>

279-5401 BUCKET AR-MULTIPURPOSE

S/N: SRS1-UP
AN ATTACHMENT

SMCS-6104 **i03922641**

NOTE	PART NUMBER	QTY	PART NAME 1 2 3 4 5 6 (PRODUCT LEVEL)	SEE PAGE
Y	**279-5403**	1	BUCKET AR-MULTIPURPOSE	335
Y	*141-4999*	9	TOOTH GP-UNI	456

Y-SEPARATE ILLUSTRATION

<END>

279-5402 BUCKET AR-MULTIPURPOSE

S/N: SRS1-UP
AN ATTACHMENT

SMCS-6104 **i02552200**

NOTE	PART NUMBER	QTY	PART NAME 1 2 3 4 5 6 (PRODUCT LEVEL)	SEE PAGE
Y	**279-5403**	1	BUCKET AR-MULTIPURPOSE	335
Y	*135-9387*	1	EDGE GP-CUTTING	417

Y-SEPARATE ILLUSTRATION

<END>

279-5403 BUCKET AR-MULTIPURPOSE

S/N: SRS1-UP
PART OF 279-5401, 279-5402 BUCKET AR-MULTIPURPOSE
AN ATTACHMENT

SMCS-6104 **i03647004**

NOTE	PART NUMBER	QTY	PART NAME 1 2 3 4 5 6 (PRODUCT LEVEL)	SEE PAGE
Y	**279-5404**	1	BUCKET GP-MULTIPURPOSE (78-IN)	394
Y	*162-5236*	1	COVER GP-LINES	410
Y	**154-5018**	2	CYLINDER GP-BUCKET	201
			—OR—	
Y	**278-1969**	2	CYLINDER GP-HYDRAULIC	209
Y	*279-5416*	1	LINES GP-BUCKET	227
Y	*154-5011*	1	MOUNTING GP-CYLINDER	280

Y-SEPARATE ILLUSTRATION

<END>

WORK TOOLS

293-0139 BUCKET AR-MULTIPURPOSE

S/N: SRS1-UP
PART OF 296-8055, 296-8057 BUCKET AR-MULTIPURPOSE
AN ATTACHMENT

SMCS-6104 **i04358203**

NOTE	PART NUMBER	QTY	PART NAME 1 2 3 4 5 6 (PRODUCT LEVEL)	SEE PAGE
Y	*293-0141*	1	BUCKET GP-MULTIPURPOSE	395
Y	*162-5236*	1	COVER GP-LINES	410
Y	**154-5018**	2	CYLINDER GP-BUCKET	201
			—OR—	
Y	**278-1969**	2	CYLINDER GP-HYDRAULIC	209
Y	*293-0140*	1	LINES GP-BUCKET	231
Y	*154-5011*	1	MOUNTING GP-CYLINDER	280

Y-SEPARATE ILLUSTRATION

<END>

296-8055 BUCKET AR-MULTIPURPOSE

S/N: SRS1-UP
AN ATTACHMENT

SMCS-6104 **i03922643**

NOTE	PART NUMBER	QTY	PART NAME 1 2 3 4 5 6 (PRODUCT LEVEL)	SEE PAGE
Y	**293-0139**	1	BUCKET AR-MULTIPURPOSE	336
Y	*141-4999*	9	TOOTH GP-UNI	456

Y-SEPARATE ILLUSTRATION

<END>

296-8057 BUCKET AR-MULTIPURPOSE

S/N: SRS1-UP
AN ATTACHMENT

SMCS-6104 **i03647006**

NOTE	PART NUMBER	QTY	PART NAME 1 2 3 4 5 6 (PRODUCT LEVEL)	SEE PAGE
Y	**293-0139**	1	BUCKET AR-MULTIPURPOSE	336
Y	*195-7124*	1	EDGE GP-CUTTING	419

Y-SEPARATE ILLUSTRATION

<END>

285-6095 BUCKET AR-UTILITY

S/N: SRS1-UP
AN ATTACHMENT

i02552467

NOTE	PART NUMBER	QTY	PART NAME 1 2 3 4 5 6 (PRODUCT LEVEL)	SEE PAGE
Y	**285-6096**	1	BUCKET GP-UTILITY (60-IN)	396
Y	*135-9384*	1	EDGE GP-CUTTING	414

Y-SEPARATE ILLUSTRATION

<END>

WORK TOOLS

285-6100 BUCKET AR-UTILITY

S/N: SRS1-UP
PART OF 285-6111 BUCKET AR-GRAPPLE
AN ATTACHMENT

i02552478

NOTE	PART NUMBER	QTY	PART NAME 1 2 3 4 5 6 (PRODUCT LEVEL)	SEE PAGE
Y	**285-6099**	1	BUCKET GP-UTILITY (66-IN)	397
Y	*135-9385*	1	EDGE GP-CUTTING	415
Y-SEPARATE ILLUSTRATION				

<END>

285-6101 BUCKET AR-UTILITY

S/N: SRS1-UP
PART OF 285-6112 BUCKET AR-GRAPPLE
AN ATTACHMENT

i02552482

NOTE	PART NUMBER	QTY	PART NAME 1 2 3 4 5 6 (PRODUCT LEVEL)	SEE PAGE
Y	**285-6102**	1	BUCKET GP-UTILITY (72-IN)	398
Y	*135-9386*	1	EDGE GP-CUTTING	416
Y-SEPARATE ILLUSTRATION				

<END>

WORK TOOLS

141-6704 BUCKET AS-DIRT

S/N: SRS1-UP
1676-MM (66-IN)
PART OF 165-6157 BUCKET AS-DIRT
AN ATTACHMENT

SMCS-6001 **i03638866**

NOTE	REF NO	GRAPHIC REF	PART NUMBER	QTY	PART NAME 1 2 3 4 5 6 (PRODUCT LEVEL)	SEE PAGE
	1	1	**149-5436**	1	EDGE	

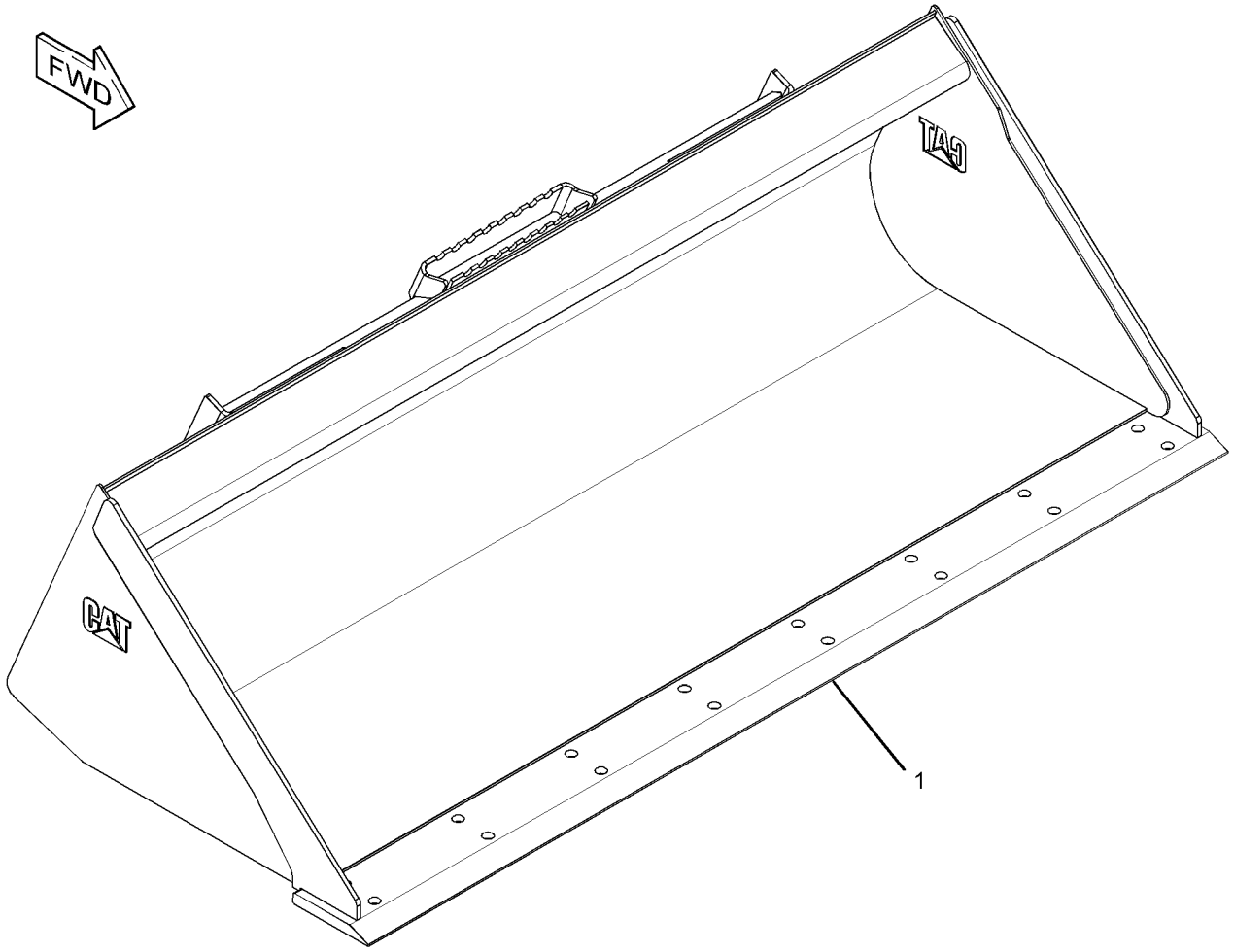

GRAPHIC #1 **<END>** g01953854

WORK TOOLS

152-0227 BUCKET AS-DIRT

S/N: SRS1-UP
1524-MM (60-IN)
PART OF 165-6156 BUCKET AS-DIRT
AN ATTACHMENT

SMCS-6001 **i03638850**

NOTE	REF NO	GRAPHIC REF	PART NUMBER	QTY	PART NAME 1 2 3 4 5 6 (PRODUCT LEVEL)	SEE PAGE
	1	1	**149-5435**	1	EDGE	

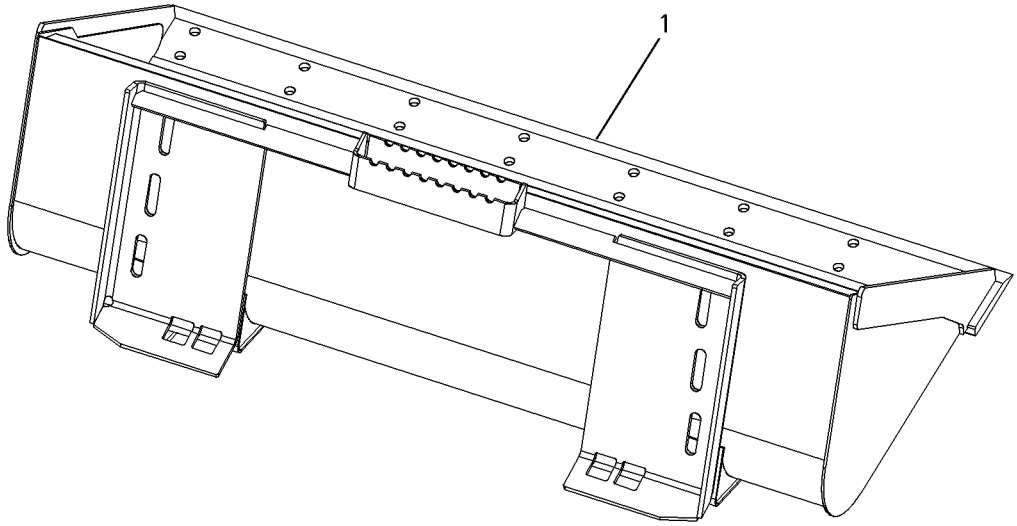

GRAPHIC #1 **<END>** g00651083

165-6156 BUCKET AS-DIRT

S/N: SRS1-UP
PART OF 152-0231 BUCKET GP-DIRT
AN ATTACHMENT

SMCS-6001 **i03638322**

NOTE	REF NO	GRAPHIC REF	PART NUMBER	QTY	PART NAME 1 2 3 4 5 6 (PRODUCT LEVEL)	SEE PAGE
Y	1	1	*152-0227*	1	BUCKET AS-DIRT (60-IN)	339
	2	1	**154-2704**	1	PLATE-INSTRUCTION (BUCKET SPECIFICATIONS)	
	3	1	**168-8389**	4	TACK-FASTENER	

Y-SEPARATE ILLUSTRATION

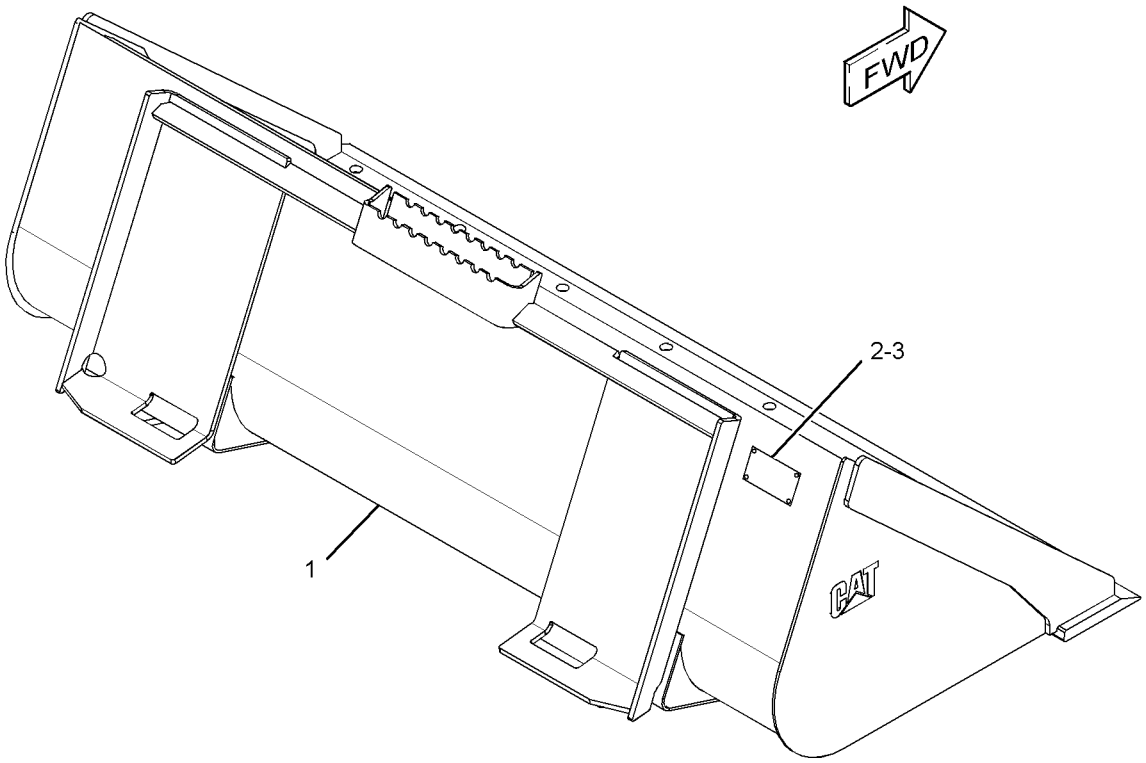

GRAPHIC #1 **<END>** g01954030

165-6157 BUCKET AS-DIRT

S/N: SRS1-UP
PART OF 152-0232 BUCKET GP-DIRT
AN ATTACHMENT

SMCS-6001 **i03638323**

NOTE	REF NO	GRAPHIC REF	PART NUMBER	QTY	PART NAME 1 2 3 4 5 6 (PRODUCT LEVEL)	SEE PAGE
Y	1	1	*141-6704*	1	BUCKET AS-DIRT	338
	2	1	**154-2704**	1	PLATE-INSTRUCTION (BUCKET SPECIFICATIONS)	
	3	1	**168-8389**	4	TACK-FASTENER	

Y-SEPARATE ILLUSTRATION

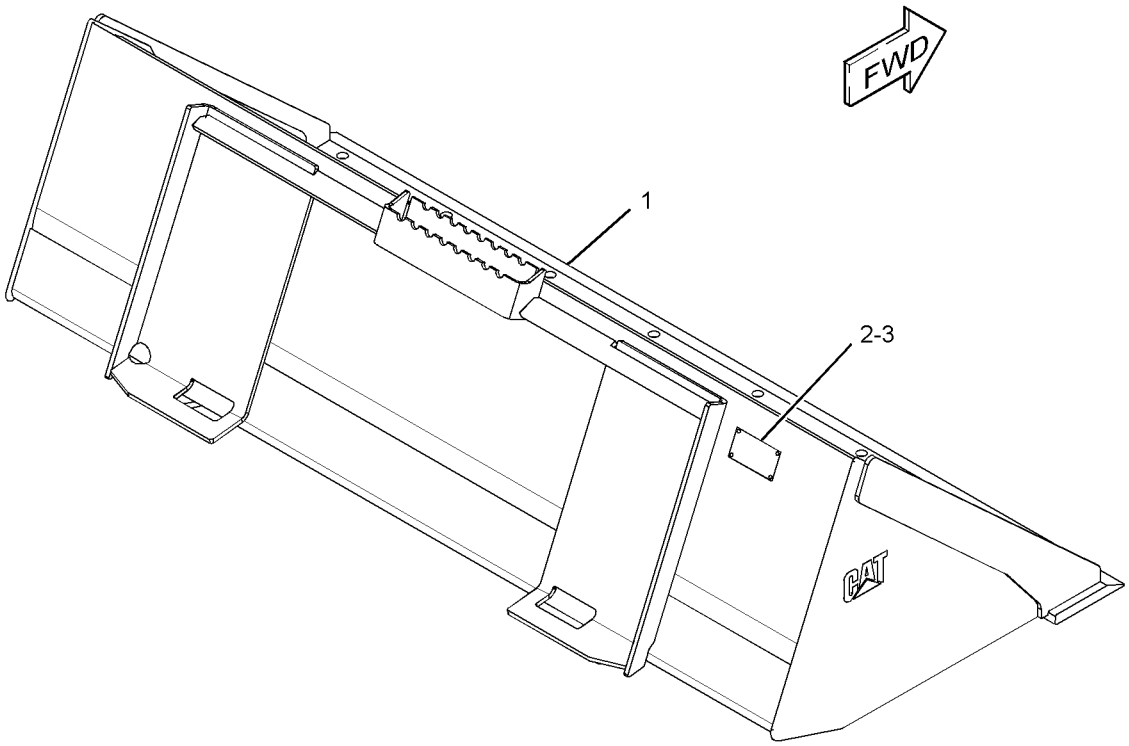

GRAPHIC #1 **<END>** g01953993

WORK TOOLS

268-4089 BUCKET AS-DIRT

S/N: SRS1-UP
1981-MM (78-IN)
PART OF 268-4084 BUCKET GP-DIRT
AN ATTACHMENT

SMCS-6001 **i03647015**

NOTE	REF NO	GRAPHIC REF	PART NUMBER	QTY	PART NAME 1 2 3 4 5 6 (PRODUCT LEVEL)	SEE PAGE
	1	1	**199-7722**	1	EDGE	

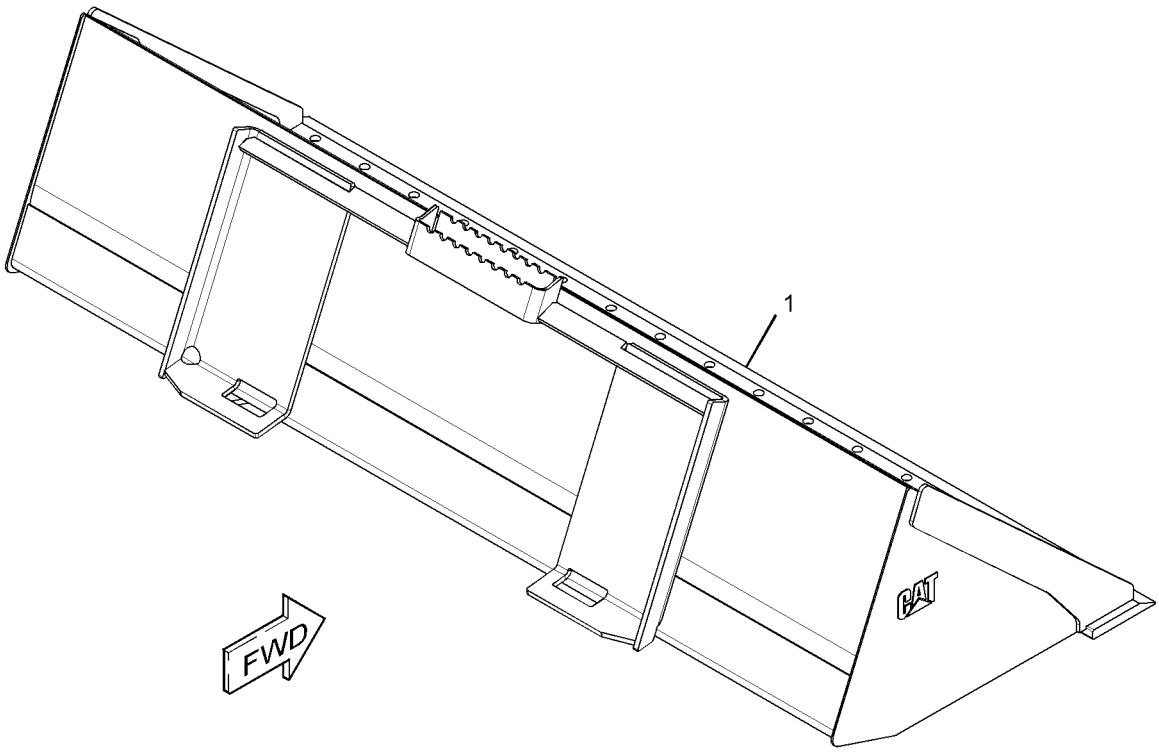

GRAPHIC #1 **<END>** g01958544

WORK TOOLS

279-5433 BUCKET AS-DIRT

S/N: SRS1-UP
1372-MM (54-IN)
PART OF 279-5434 BUCKET AS-DIRT
AN ATTACHMENT

SMCS-6001 **i03635729**

NOTE	REF NO	GRAPHIC REF	PART NUMBER	QTY	PART NAME 1 2 3 4 5 6 (PRODUCT LEVEL)	SEE PAGE
	1	1	**149-5434**	1	EDGE	

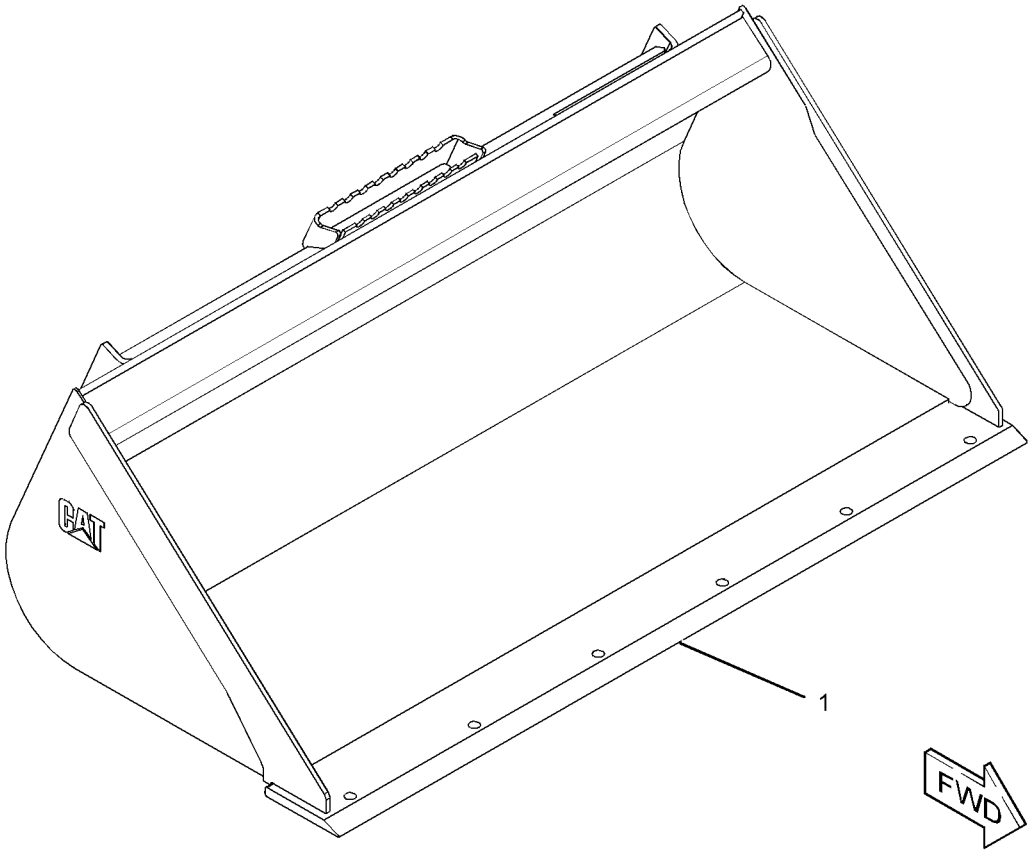

GRAPHIC #1 **<END>** g01953755

WORK TOOLS

279-5434 BUCKET AS-DIRT

S/N: SRS1-UP
PART OF 279-5435 BUCKET AR-DIRT
AN ATTACHMENT

SMCS-6001 **i03636082**

NOTE	REF NO	GRAPHIC REF	PART NUMBER	QTY	PART NAME 1 2 3 4 5 6 (PRODUCT LEVEL)	SEE PAGE
	1	1	**154-2704**	1	PLATE-INSTRUCTION (BUCKET SPECIFICATIONS)	
	2	1	**168-8389**	4	TACK-FASTENER	
Y	3	1	*279-5433*	1	BUCKET AS-DIRT	343

Y-SEPARATE ILLUSTRATION

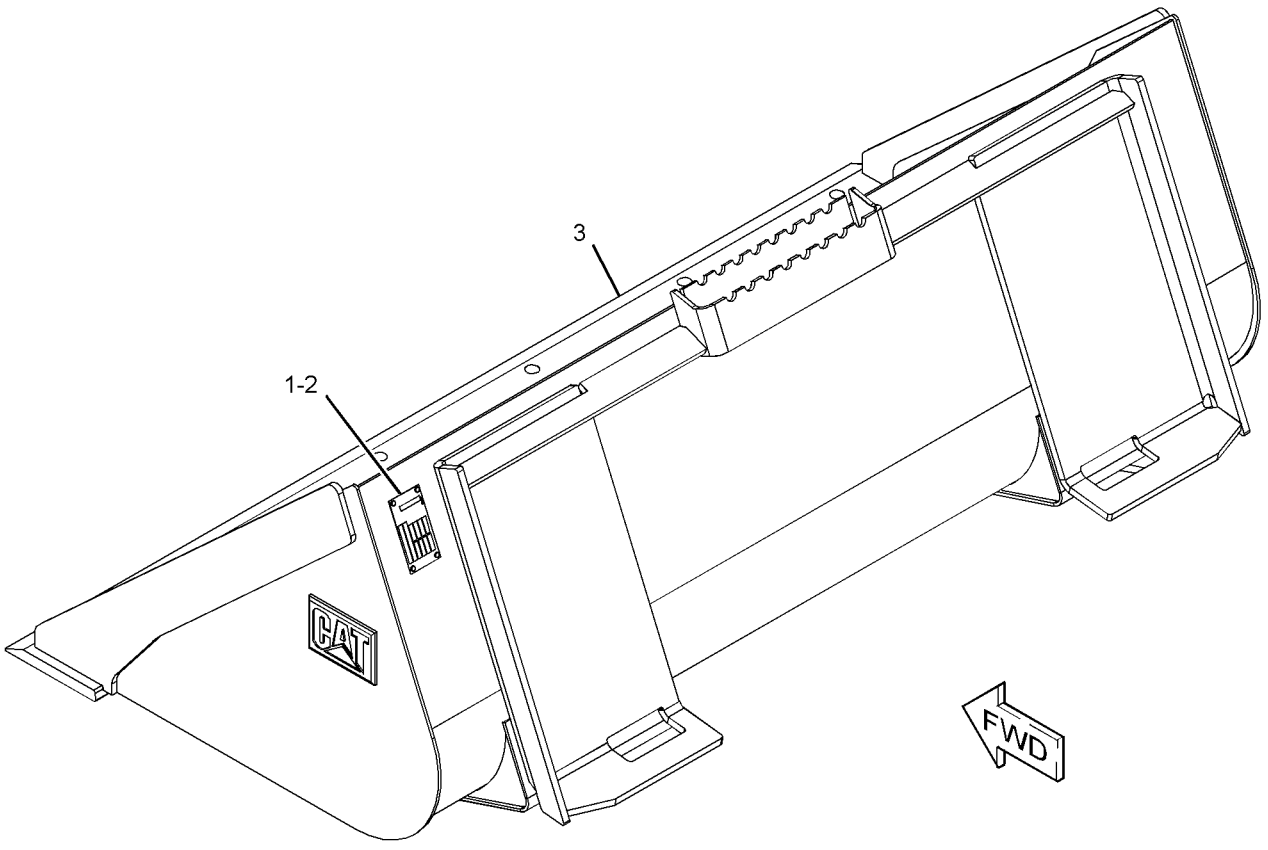

GRAPHIC #1 **<END>** g01951568

WORK TOOLS

279-5436 BUCKET AS-DIRT

S/N: SRS1-UP
1524-MM (60-IN)
PART OF 279-5437 BUCKET AS-DIRT
AN ATTACHMENT

SMCS-6001 **i03635731**

NOTE	REF NO	GRAPHIC REF	PART NUMBER	QTY	PART NAME 1 2 3 4 5 6 (PRODUCT LEVEL)	SEE PAGE
	1	1	**149-5435**	1	EDGE	

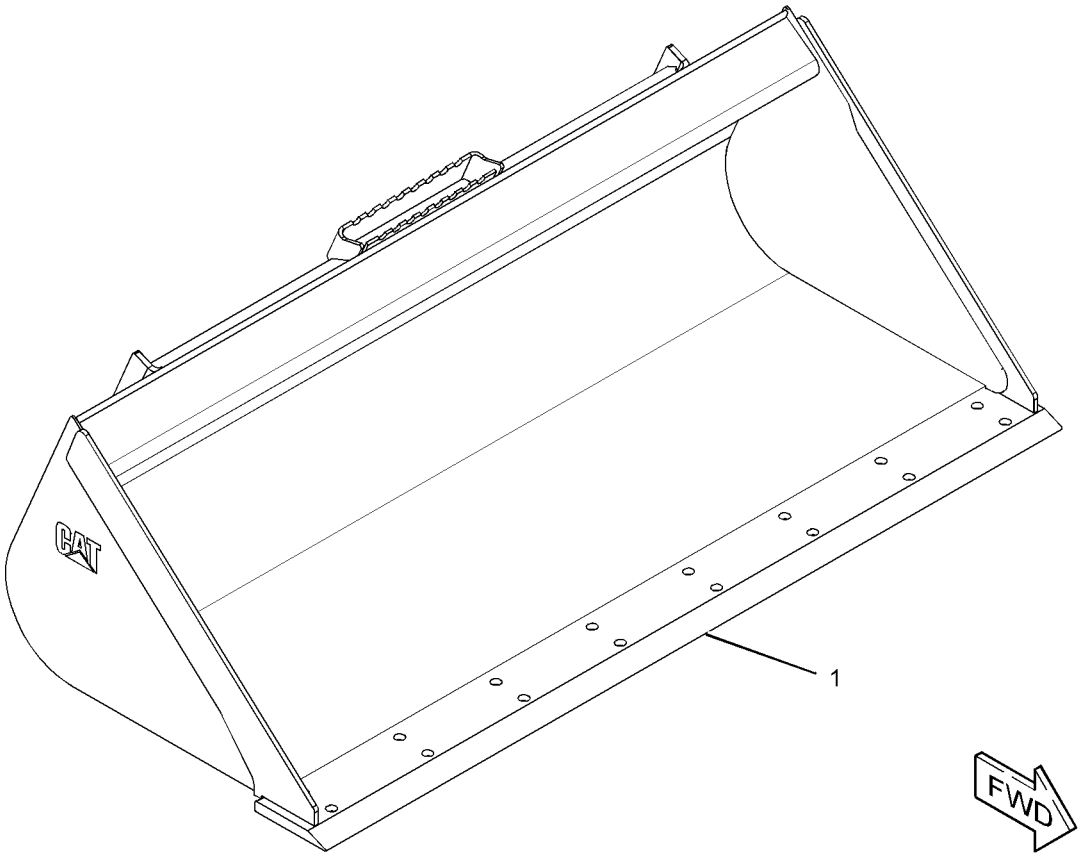

GRAPHIC #1 **<END>** g01953749

279-5437 BUCKET AS-DIRT

S/N: SRS1-UP
PART OF 279-5438 BUCKET AR-DIRT
AN ATTACHMENT

SMCS-6001 **i03648372**

NOTE	REF NO	GRAPHIC REF	PART NUMBER	QTY	PART NAME 1 2 3 4 5 6 (PRODUCT LEVEL)	SEE PAGE
	1	1	**154-2704**	1	PLATE-INSTRUCTION (BUCKET SPECIFICATIONS)	
	2	1	**168-8389**	4	TACK-FASTENER	
Y	3	1	*279-5436*	1	BUCKET AS-DIRT (60-IN)	345

Y-SEPARATE ILLUSTRATION

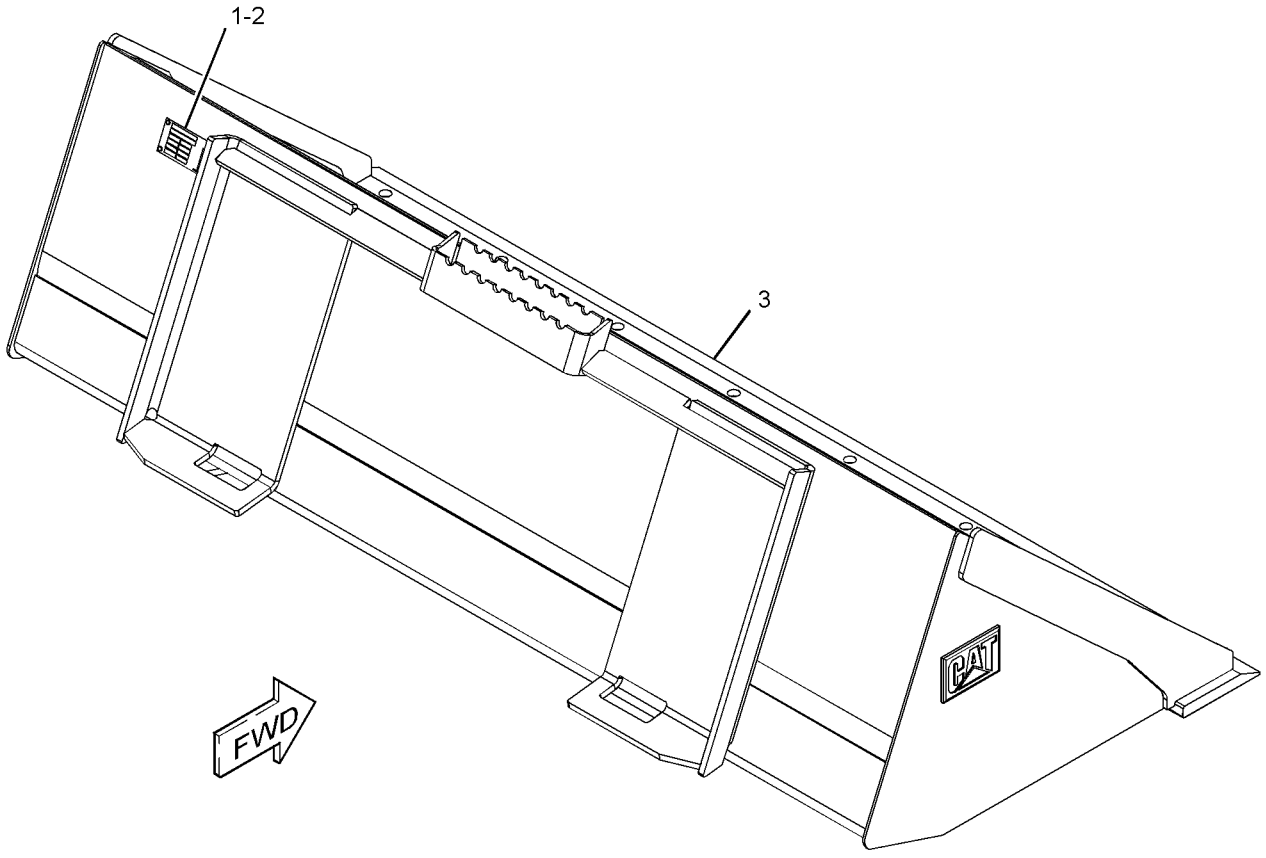

GRAPHIC #1 **<END>** g01951590

WORK TOOLS

279-5439 BUCKET AS-DIRT

S/N: SRS1-UP
1676-MM (66-IN)
PART OF 279-5440 BUCKET AS-DIRT
AN ATTACHMENT

SMCS-6001 **i03635763**

NOTE	REF NO	GRAPHIC REF	PART NUMBER	QTY	PART NAME 1 2 3 4 5 6 (PRODUCT LEVEL)	SEE PAGE
	1	1	**149-5436**	1	EDGE	

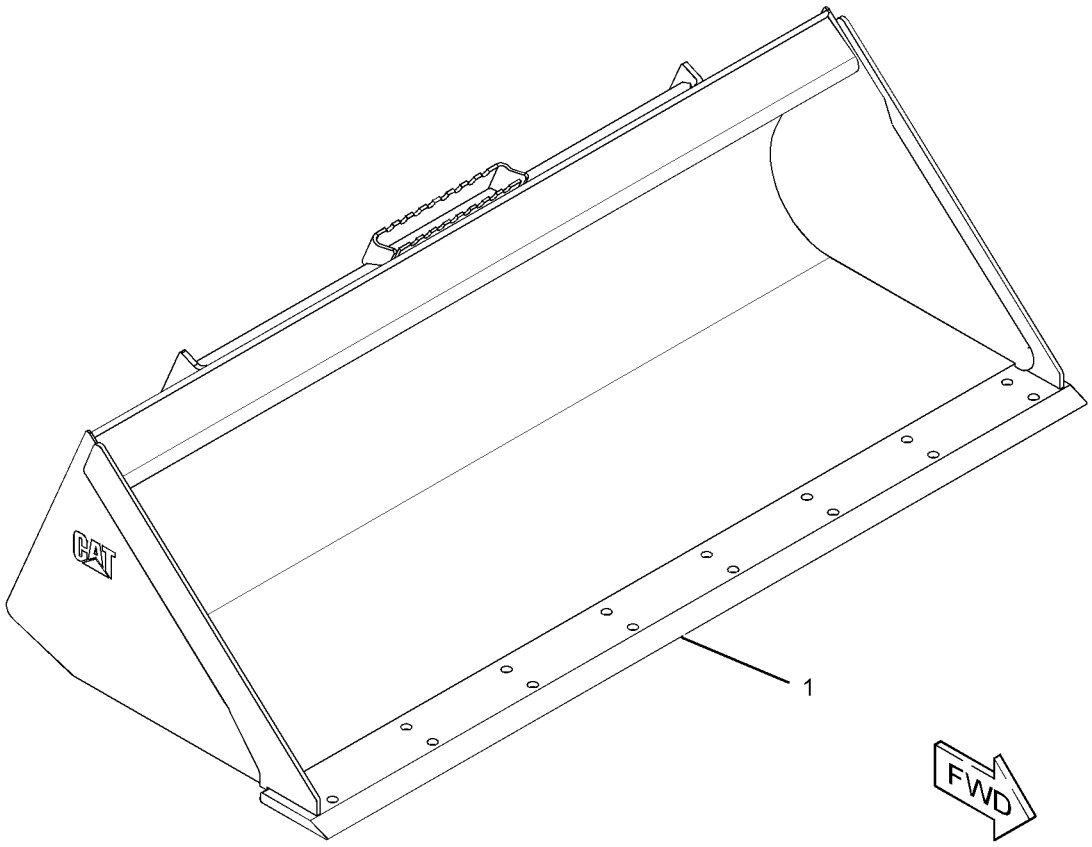

GRAPHIC #1 **<END>** g01953842

WORK TOOLS

279-5440 BUCKET AS-DIRT

S/N: SRS1-UP
PART OF 279-5441 BUCKET AR-DIRT
AN ATTACHMENT

SMCS-6001 **i03648373**

NOTE	REF NO	GRAPHIC REF	PART NUMBER	QTY	PART NAME 1 2 3 4 5 6 (PRODUCT LEVEL)	SEE PAGE
	1	1	**154-2704**	1	PLATE-INSTRUCTION (BUCKET SPECIFICATIONS)	
	2	1	**168-8389**	4	TACK-FASTENER	
Y	3	1	*279-5439*	1	BUCKET AS-DIRT (66-IN)	347

Y-SEPARATE ILLUSTRATION

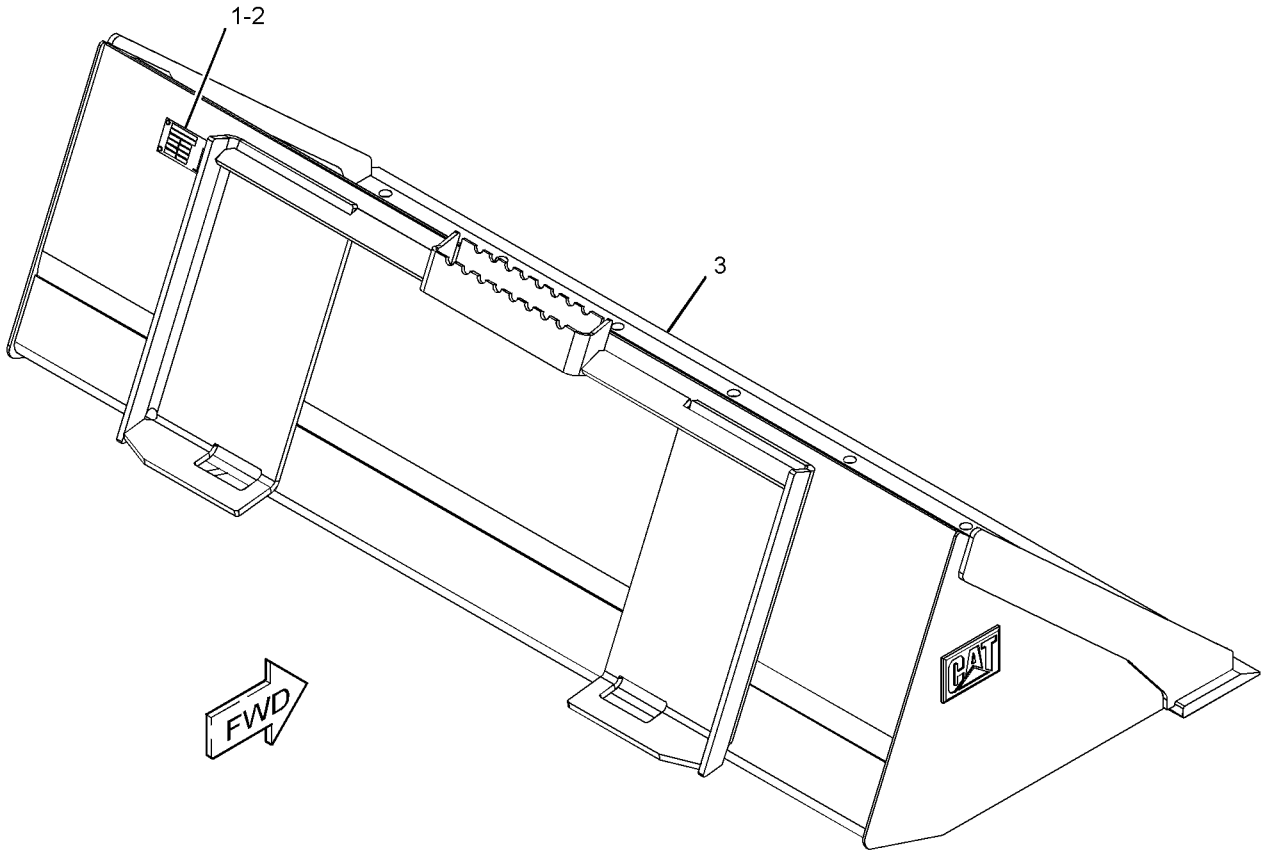

GRAPHIC #1 **<END>** g01951588

WORK TOOLS

285-6088 BUCKET AS-DIRT

S/N: SRS1-UP
1829-MM (72-IN)
PART OF 285-6089 BUCKET AS-DIRT
AN ATTACHMENT

SMCS-6001 **i03635778**

NOTE	REF NO	GRAPHIC REF	PART NUMBER	QTY	PART NAME 1 2 3 4 5 6 (PRODUCT LEVEL)	SEE PAGE
	1	1	**149-5437**	1	EDGE	

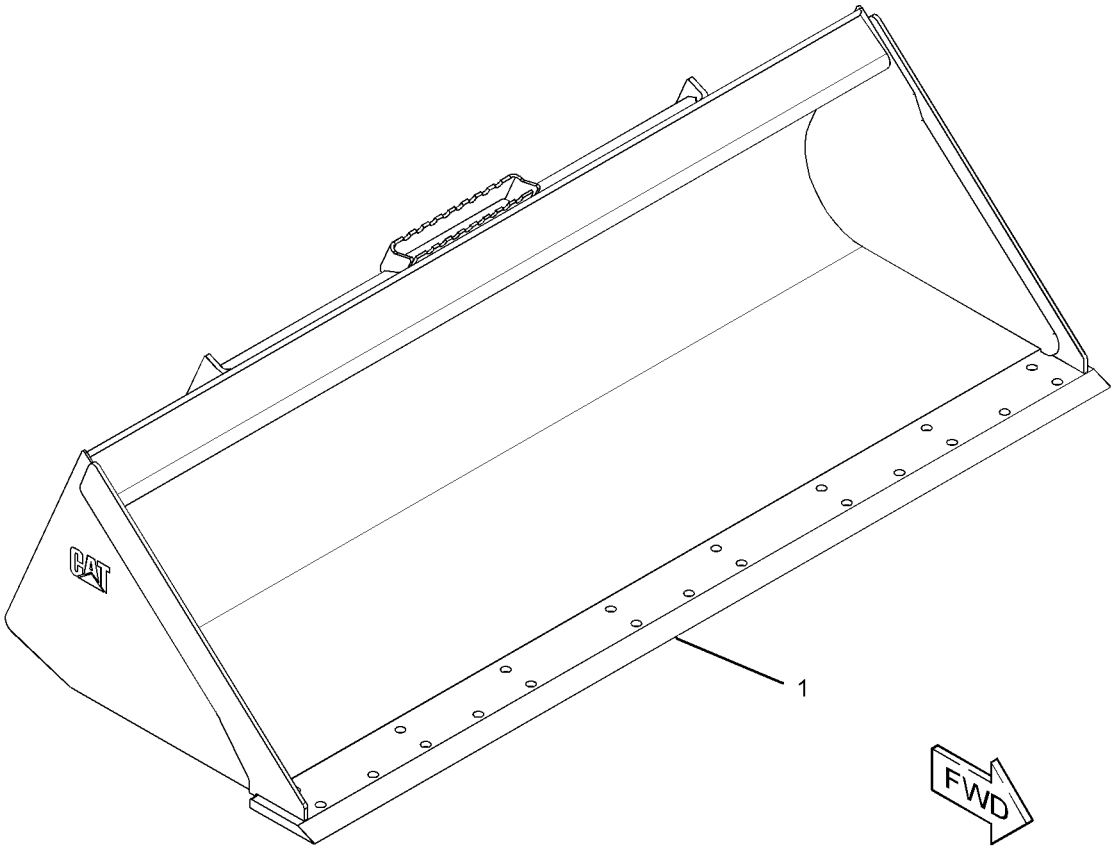

GRAPHIC #1 **<END>** g01953863

WORK TOOLS

285-6089 BUCKET AS-DIRT

S/N: SRS1-UP
PART OF 285-6090 BUCKET AR-DIRT
AN ATTACHMENT

SMCS-6001 **i03648374**

NOTE	REF NO	GRAPHIC REF	PART NUMBER	QTY	PART NAME 1 2 3 4 5 6 (PRODUCT LEVEL)	SEE PAGE
	1	1	**154-2704**	1	PLATE-INSTRUCTION (BUCKET SPECIFICATIONS)	
	2	1	**168-8389**	4	TACK-FASTENER	
Y	3	1	*285-6088*	1	BUCKET AS-DIRT (72-IN)	349

Y-SEPARATE ILLUSTRATION

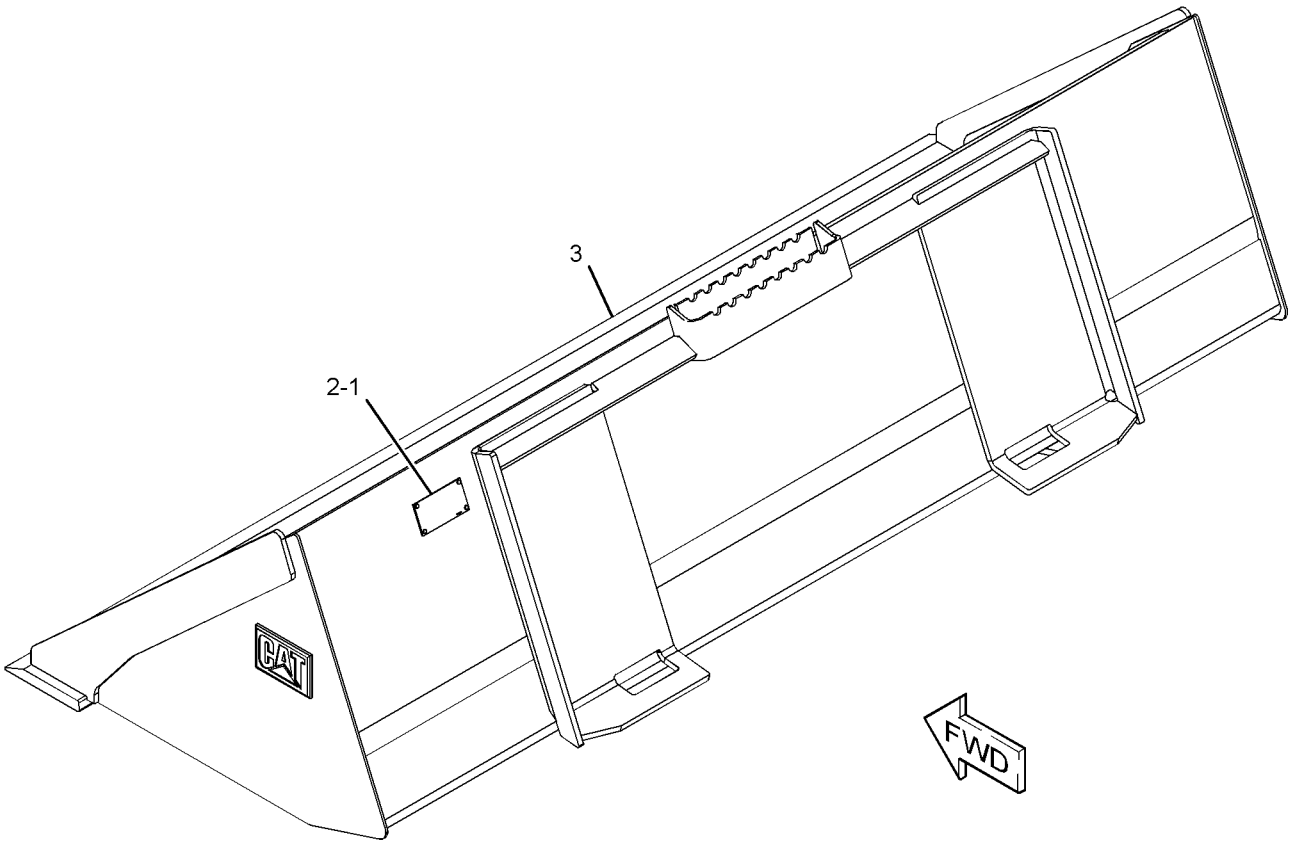

GRAPHIC #1 **<END>** g01951563

279-5363 BUCKET AS-GENERAL PURPOSE

S/N: SRS1-UP
1524-MM (60-IN)
PART OF 279-5364 BUCKET AS-GENERAL PURPOSE
AN ATTACHMENT

SMCS-6101 **i03635782**

NOTE	REF NO	GRAPHIC REF	PART NUMBER	QTY	PART NAME 1 2 3 4 5 6 (PRODUCT LEVEL)	SEE PAGE
	1	1	**149-5435**	1	EDGE	

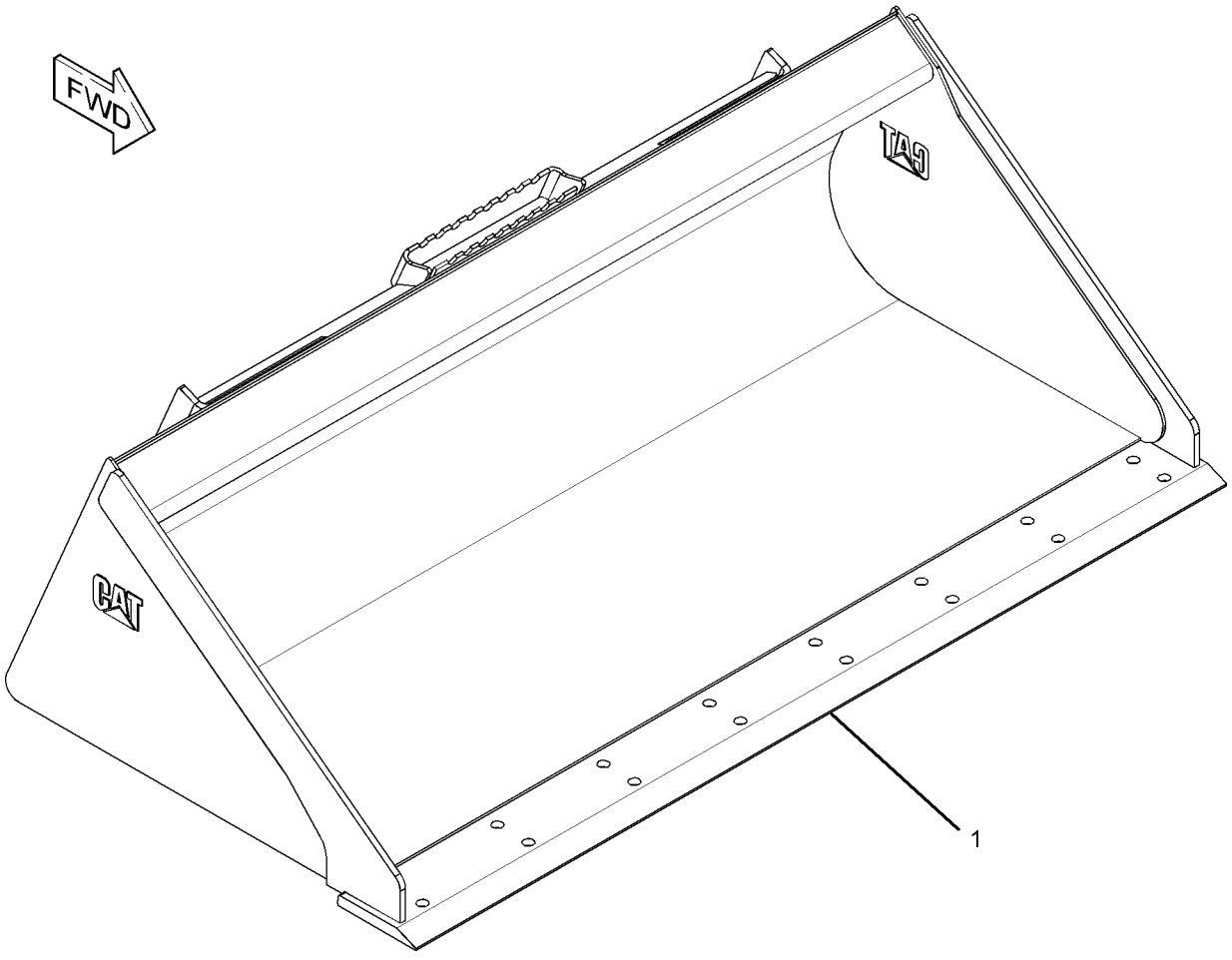

GRAPHIC #1 **<END>** g01951959

279-5364 BUCKET AS-GENERAL PURPOSE

S/N: SRS1-UP

PART OF 279-5365, 279-5366 BUCKET AR-GENERAL PURPOSE AN ATTACHMENT

SMCS-6101 **i03648359**

NOTE	REF NO	GRAPHIC REF	PART NUMBER	QTY	PART NAME 1 2 3 4 5 6 (PRODUCT LEVEL)	SEE PAGE
	1	1	**154-2704**	1	PLATE-INSTRUCTION (BUCKET SPECIFICATIONS)	
	2	1	**168-8389**	4	TACK-FASTENER	
Y	3	1	*279-5363*	1	BUCKET AS-GENERAL PURPOSE (60-IN)	351

Y-SEPARATE ILLUSTRATION

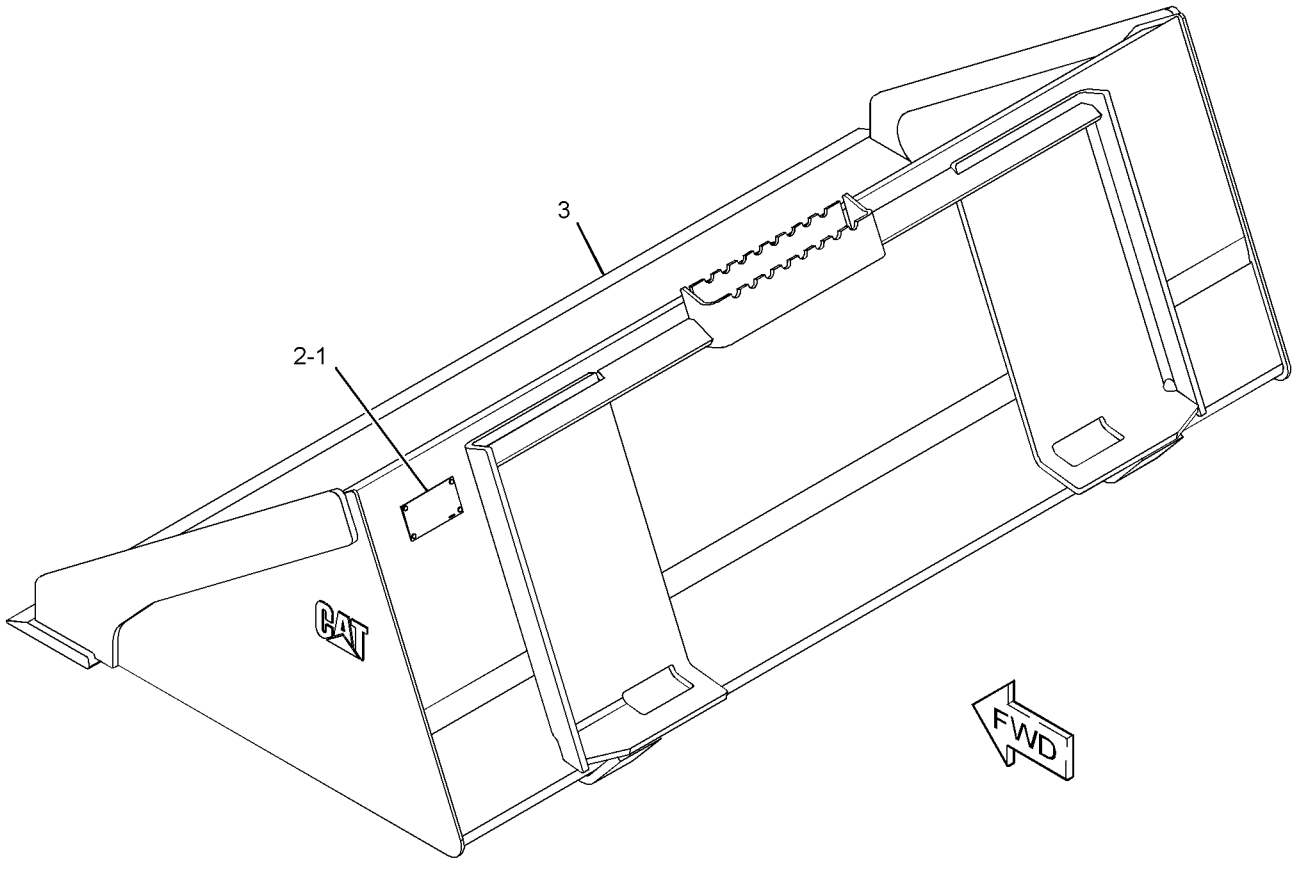

GRAPHIC #1 **<END>** g01951595

279-5367 BUCKET AS-GENERAL PURPOSE

S/N: SRS1-UP
1676-MM (66-IN)
PART OF 279-5368 BUCKET AS-GENERAL PURPOSE
AN ATTACHMENT

SMCS-6101 **i03635793**

NOTE	REF NO	GRAPHIC REF	PART NUMBER	QTY	PART NAME 1 2 3 4 5 6 (PRODUCT LEVEL)	SEE PAGE
	1	1	**149-5436**	1	EDGE	

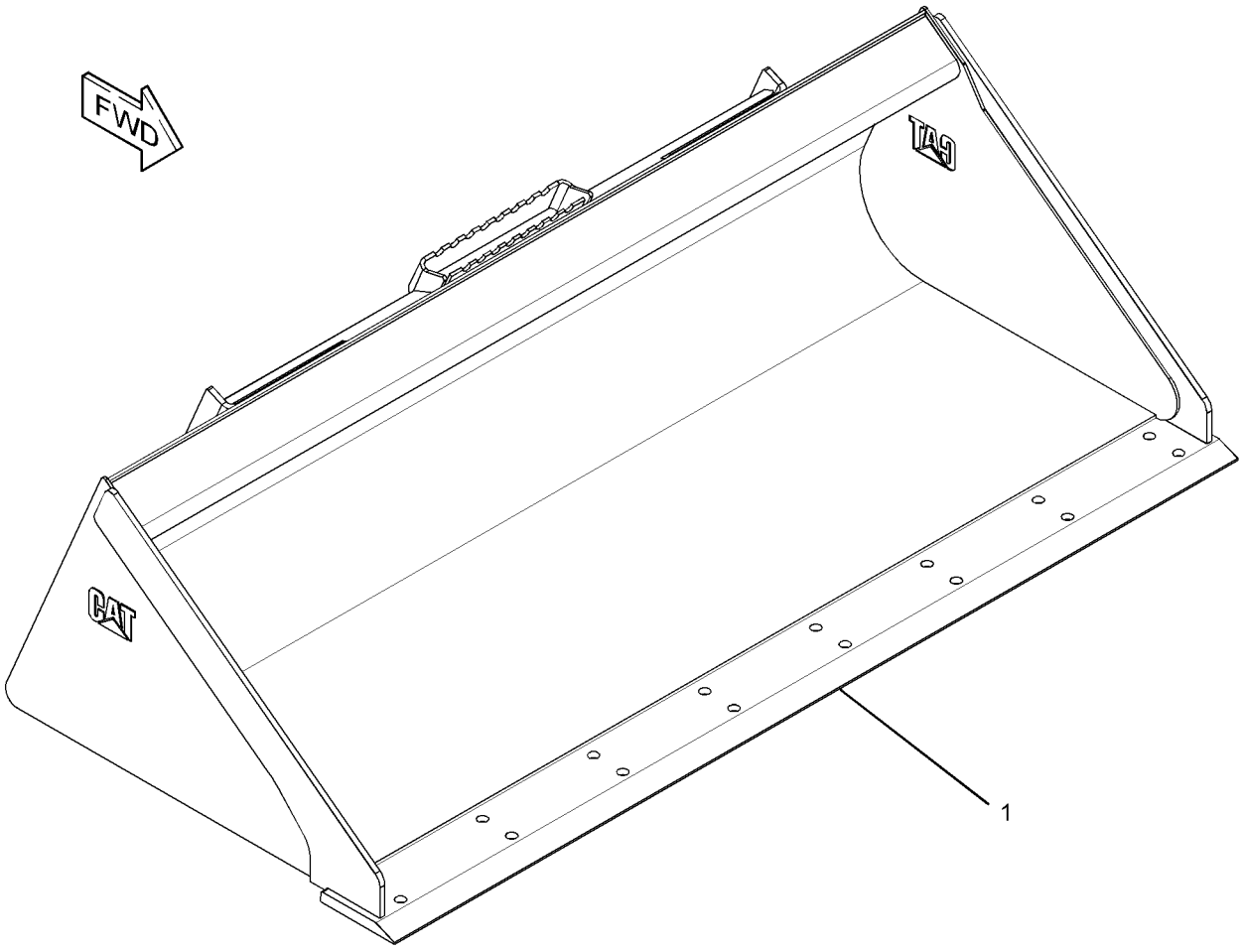

GRAPHIC #1 **<END>** g01951953

279-5368 BUCKET AS-GENERAL PURPOSE

S/N: SRS1-UP

PART OF 279-5369, 279-5370 BUCKET AR-GENERAL PURPOSE AN ATTACHMENT

SMCS-6101 **i03648360**

NOTE	REF NO	GRAPHIC REF	PART NUMBER	QTY	PART NAME 1 2 3 4 5 6 (PRODUCT LEVEL)	SEE PAGE
	1	1	**154-2704**	1	PLATE-INSTRUCTION (BUCKET SPECIFICATIONS)	
	2	1	**168-8389**	4	TACK-FASTENER	
Y	3	1	*279-5367*	1	BUCKET AS-GENERAL PURPOSE (66-IN)	353

Y-SEPARATE ILLUSTRATION

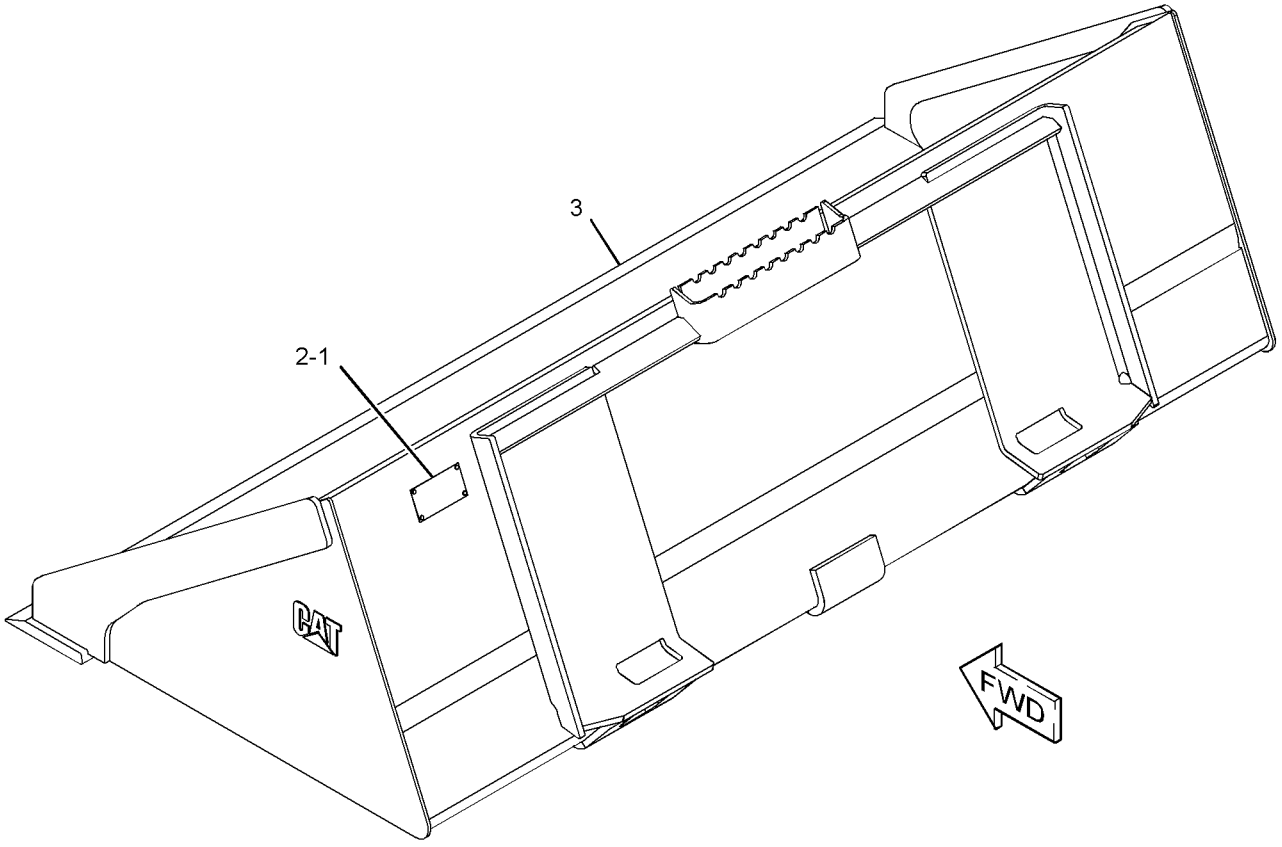

GRAPHIC #1 **<END>** g01951562

WORK TOOLS

279-5371 BUCKET AS-GENERAL PURPOSE

S/N: SRS1-UP
1829-MM (72-IN)
PART OF 279-5372 BUCKET AS-GENERAL PURPOSE
AN ATTACHMENT

SMCS-6101 **i03635988**

NOTE	REF NO	GRAPHIC REF	PART NUMBER	QTY	PART NAME 1 2 3 4 5 6 (PRODUCT LEVEL)	SEE PAGE
	1	1	**149-5437**	1	EDGE	

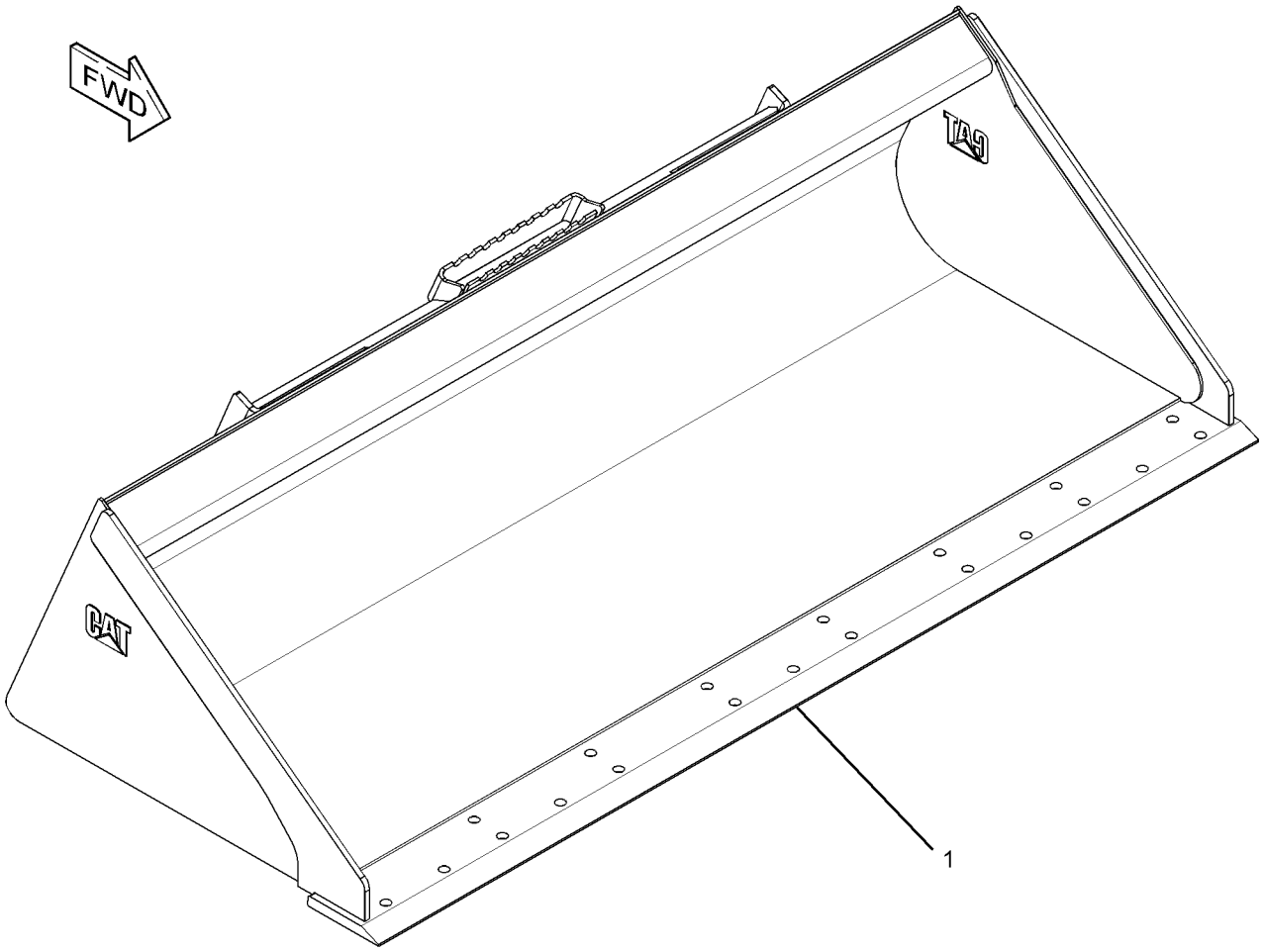

GRAPHIC #1 **<END>** g01952024

279-5372 BUCKET AS-GENERAL PURPOSE

S/N: SRS1-UP

PART OF 279-5373, 279-5374 BUCKET AR-GENERAL PURPOSE AN ATTACHMENT

SMCS-6101 **i03648361**

NOTE	REF NO	GRAPHIC REF	PART NUMBER	QTY	PART NAME 1 2 3 4 5 6 (PRODUCT LEVEL)	SEE PAGE
	1	1	**154-2704**	1	PLATE-INSTRUCTION (BUCKET SPECIFICATIONS)	
	2	1	**168-8389**	4	TACK-FASTENER	
Y	3	1	*279-5371*	1	BUCKET AS-GENERAL PURPOSE (72-IN)	355

Y-SEPARATE ILLUSTRATION

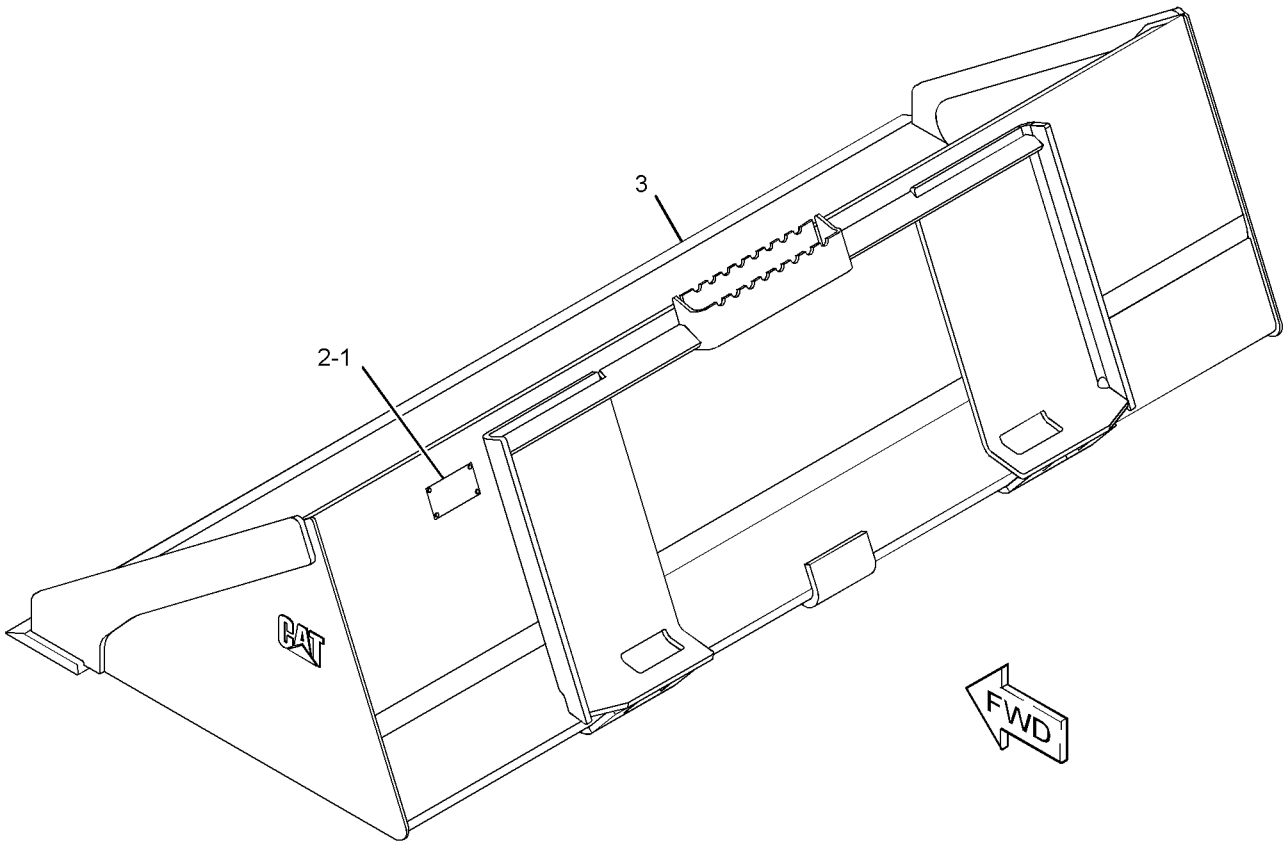

GRAPHIC #1 **<END>** g01951593

279-5375 BUCKET AS-GENERAL PURPOSE

S/N: SRS1-UP
1981-MM (78-IN)
PART OF 279-5376 BUCKET AS-GENERAL PURPOSE
AN ATTACHMENT

SMCS-6101 **i03636000**

NOTE	REF NO	GRAPHIC REF	PART NUMBER	QTY	PART NAME 1 2 3 4 5 6 (PRODUCT LEVEL)	SEE PAGE
	1	1	**199-7722**	1	EDGE	

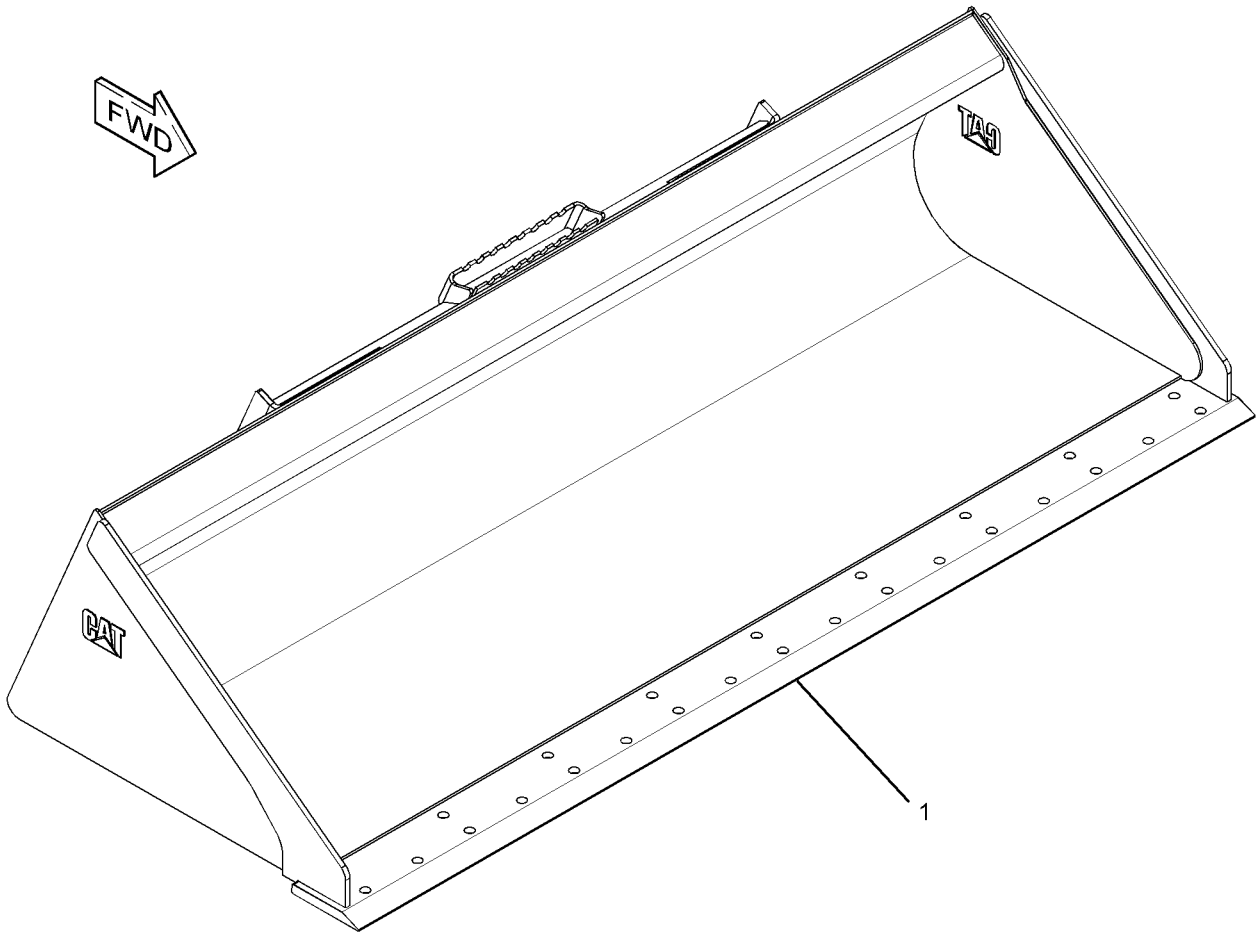

GRAPHIC #1 **<END>** g01952022

279-5376 BUCKET AS-GENERAL PURPOSE

S/N: SRS1-UP

PART OF 279-5377, 279-5378 BUCKET AR-GENERAL PURPOSE AN ATTACHMENT

SMCS-6101 **i03648369**

NOTE	REF NO	GRAPHIC REF	PART NUMBER	QTY	PART NAME 1 2 3 4 5 6 (PRODUCT LEVEL)	SEE PAGE
	1	1	**154-2704**	1	PLATE-INSTRUCTION (BUCKET SPECIFICATIONS)	
	2	1	**168-8389**	4	TACK-FASTENER	
Y	3	1	*279-5375*	1	BUCKET AS-GENERAL PURPOSE (78-IN)	357

Y-SEPARATE ILLUSTRATION

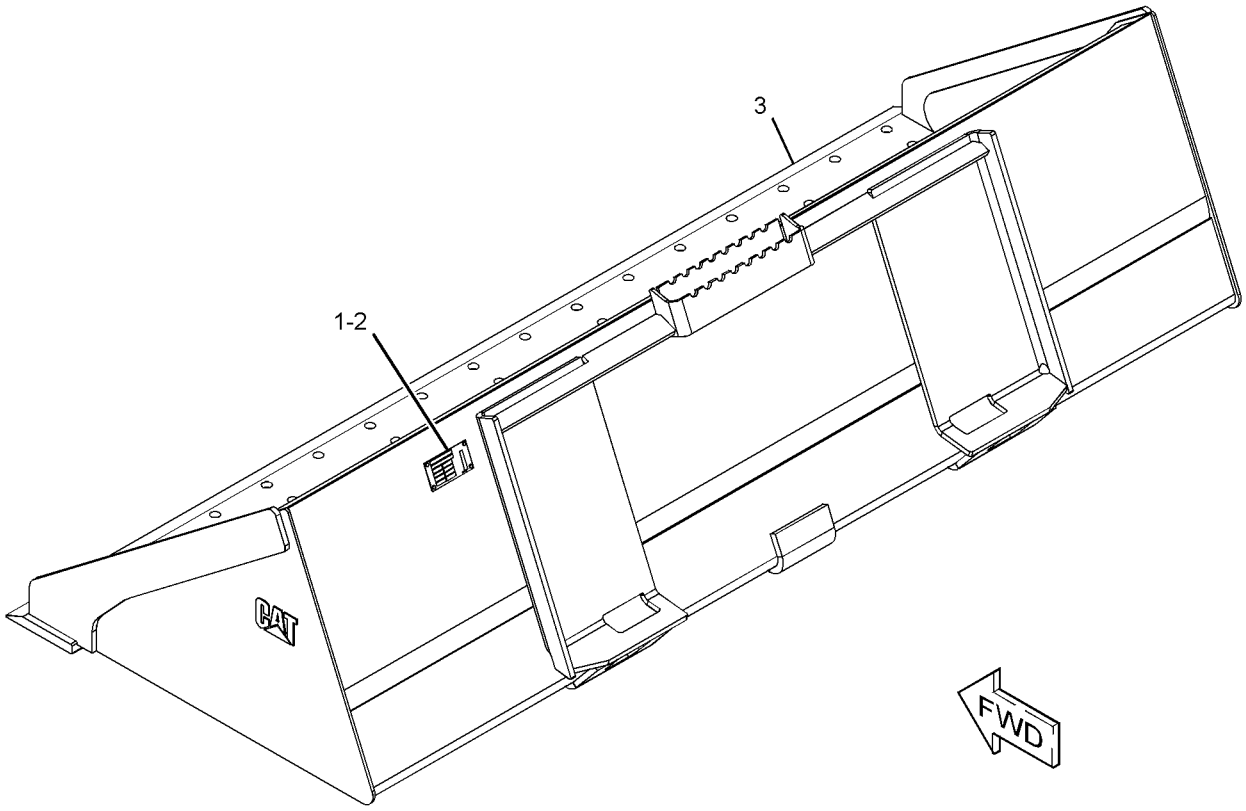

GRAPHIC #1 **<END>** g01951591

292-9270 BUCKET AS-GENERAL PURPOSE—HIGH CAPACITY

S/N: SRS1-UP

PART OF 296-8192 BUCKET AR-GENERAL PURPOSE, 296-8191 BUCKET GP-GENERAL PURPOSE

AN ATTACHMENT

SMCS-6101 **i03648482**

NOTE	REF NO	GRAPHIC REF	PART NUMBER	QTY	PART NAME 1 2 3 4 5 6 (PRODUCT LEVEL)	SEE PAGE
	1	1	**154-2704**	1	PLATE-INSTRUCTION (BUCKET SPECIFICATIONS)	
	2	1	**168-8389**	4	TACK-FASTENER	
Y	3	1	*292-9271*	1	BUCKET AS-GENERAL PURPOSE (84-IN)	360

Y-SEPARATE ILLUSTRATION

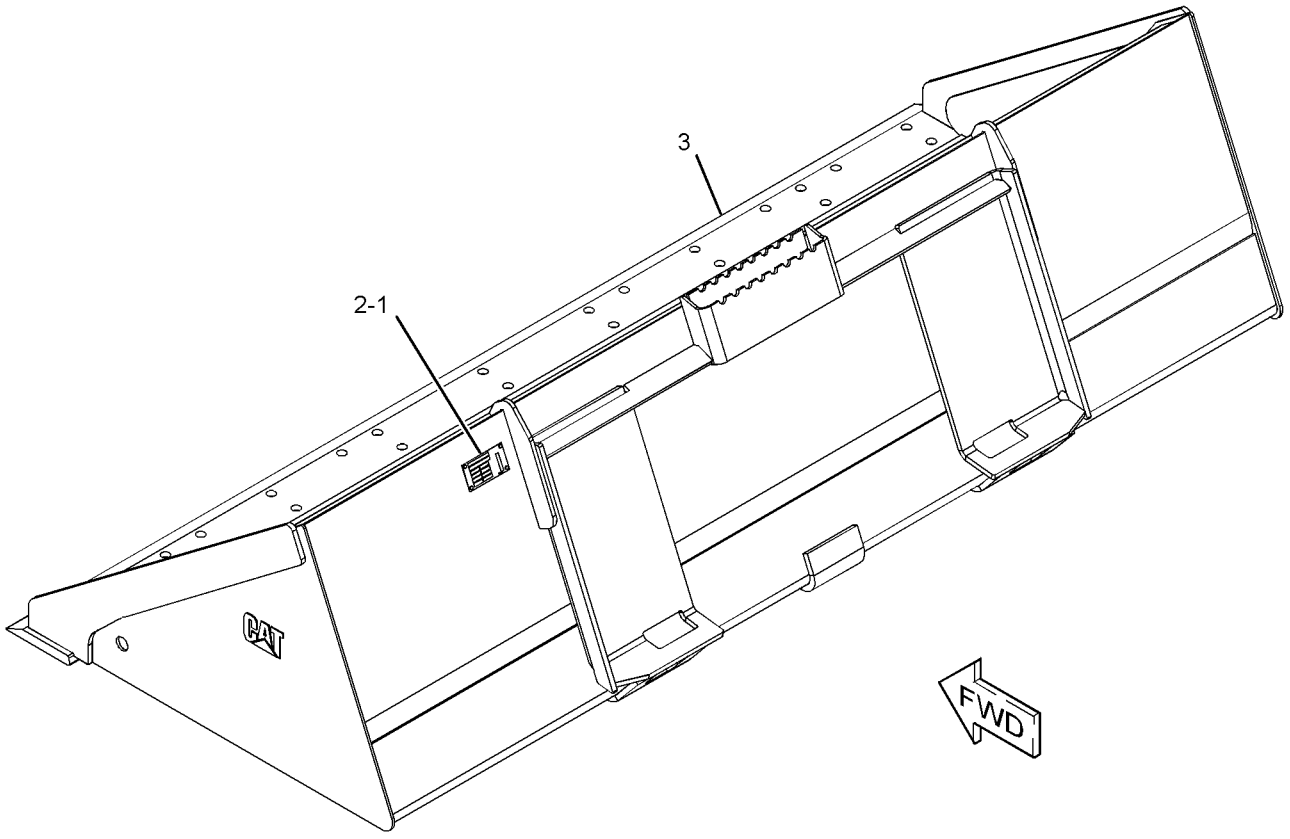

GRAPHIC #1 **<END>** g01951560

292-9271 BUCKET AS-GENERAL PURPOSE—HIGH CAPACITY

S/N: SRS1-UP
2134-MM (84-IN)
PART OF 292-9270 BUCKET AS-GENERAL PURPOSE
AN ATTACHMENT

SMCS-6101 **i03636009**

NOTE	REF NO	GRAPHIC REF	PART NUMBER	QTY	PART NAME 1 2 3 4 5 6 (PRODUCT LEVEL)	SEE PAGE
	1	1	**229-3432**	1	EDGE	

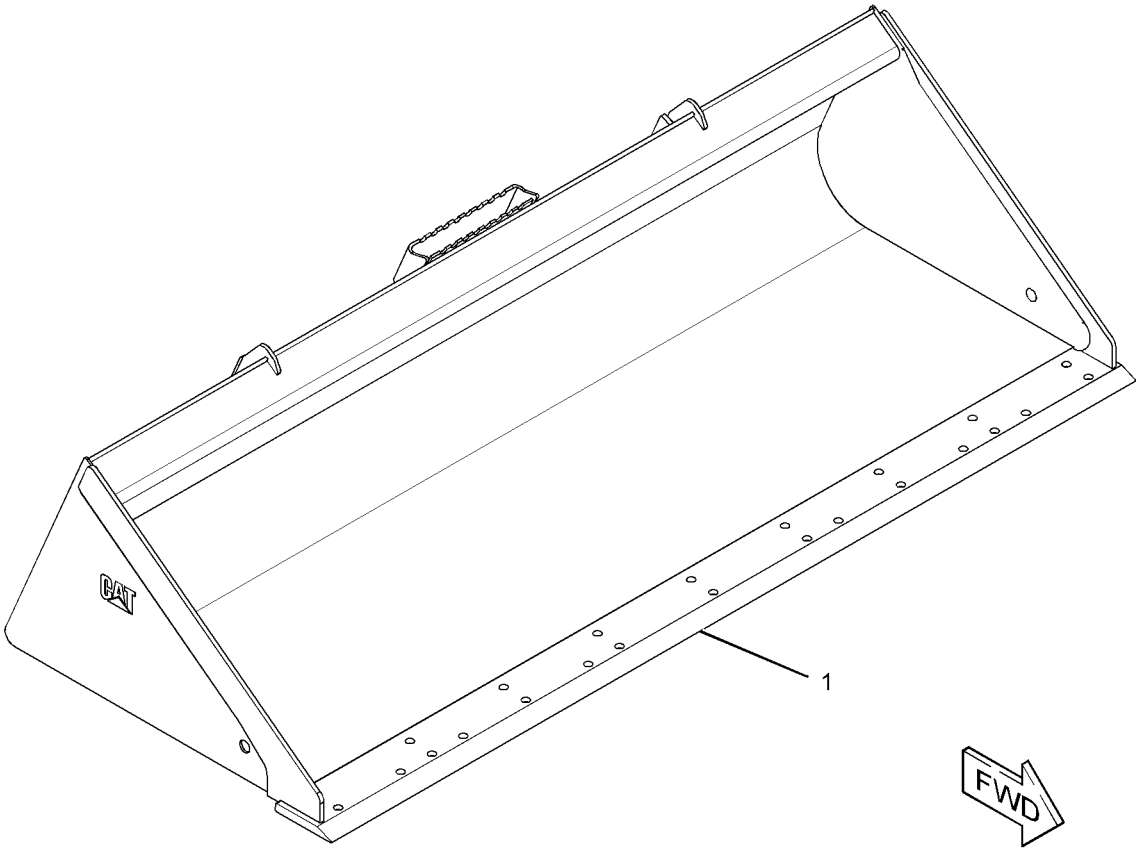

GRAPHIC #1 **<END>** g01953877

WORK TOOLS

156-0887 BUCKET AS-GRAPPLE

S/N: SRS1-UP
1524-MM (60-IN)
PART OF 169-8941 BUCKET AS-GRAPPLE
AN ATTACHMENT

SMCS-6704 **i04051089**

NOTE	REF NO	GRAPHIC REF	PART NUMBER	QTY	PART NAME 1 2 3 4 5 6 (PRODUCT LEVEL)	SEE PAGE
	1	1	**149-5435**	1	EDGE	
	2	1	**161-4130**	2	PLATE-IDENTIFICATION (CAT)	

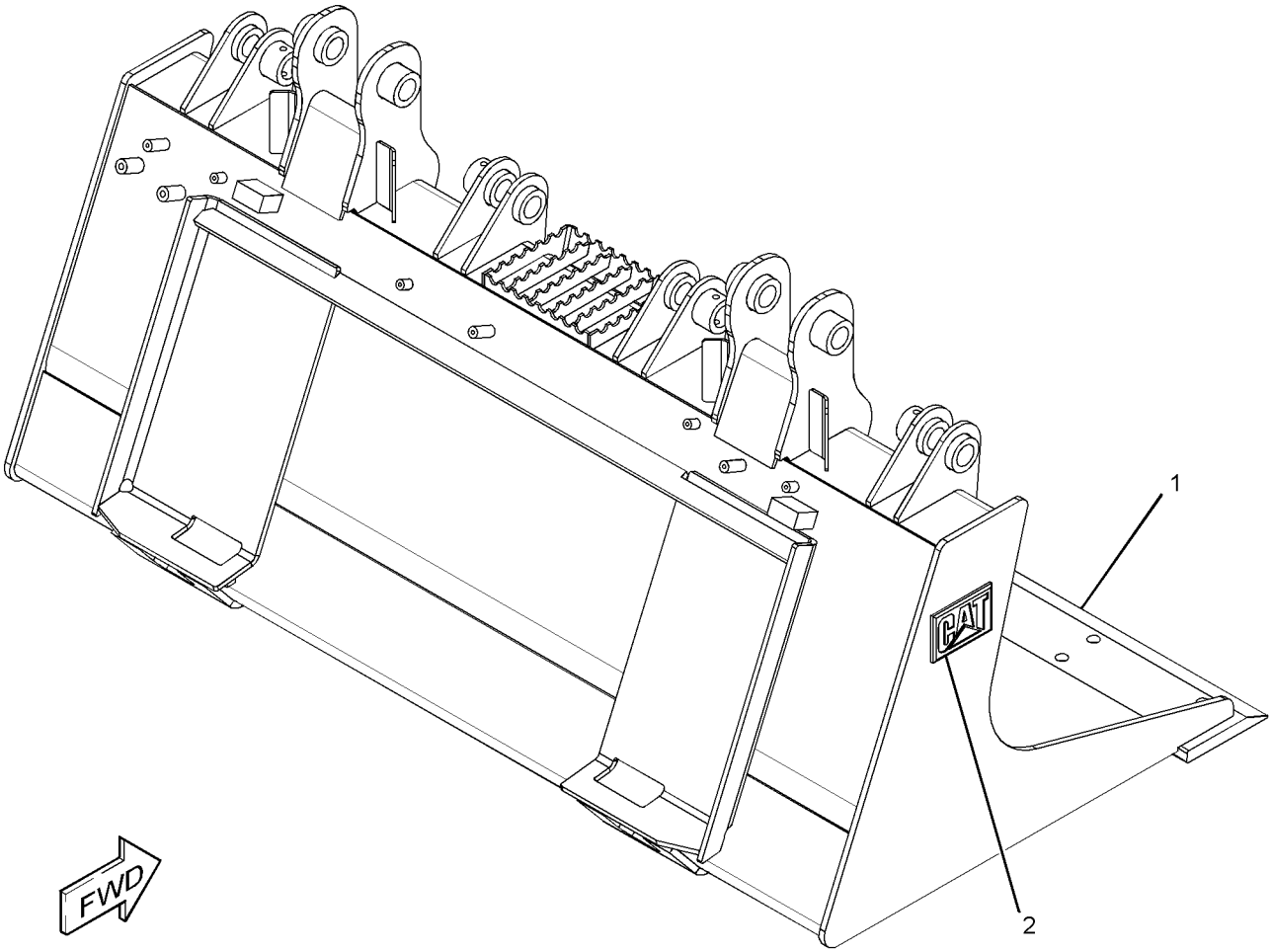

GRAPHIC #1 **<END>** g02266073

WORK TOOLS

156-0888 BUCKET AS-GRAPPLE

S/N: SRS1-UP
1676-MM (66-IN)
PART OF 169-8942 BUCKET AS-GRAPPLE
AN ATTACHMENT

SMCS-6704 **i04045350**

NOTE	REF NO	GRAPHIC REF	PART NUMBER	QTY	PART NAME 1 2 3 4 5 6 (PRODUCT LEVEL)	SEE PAGE
	1	1	**149-5436**	1	EDGE	
	2	1	**161-4130**	2	PLATE-IDENTIFICATION (CAT)	

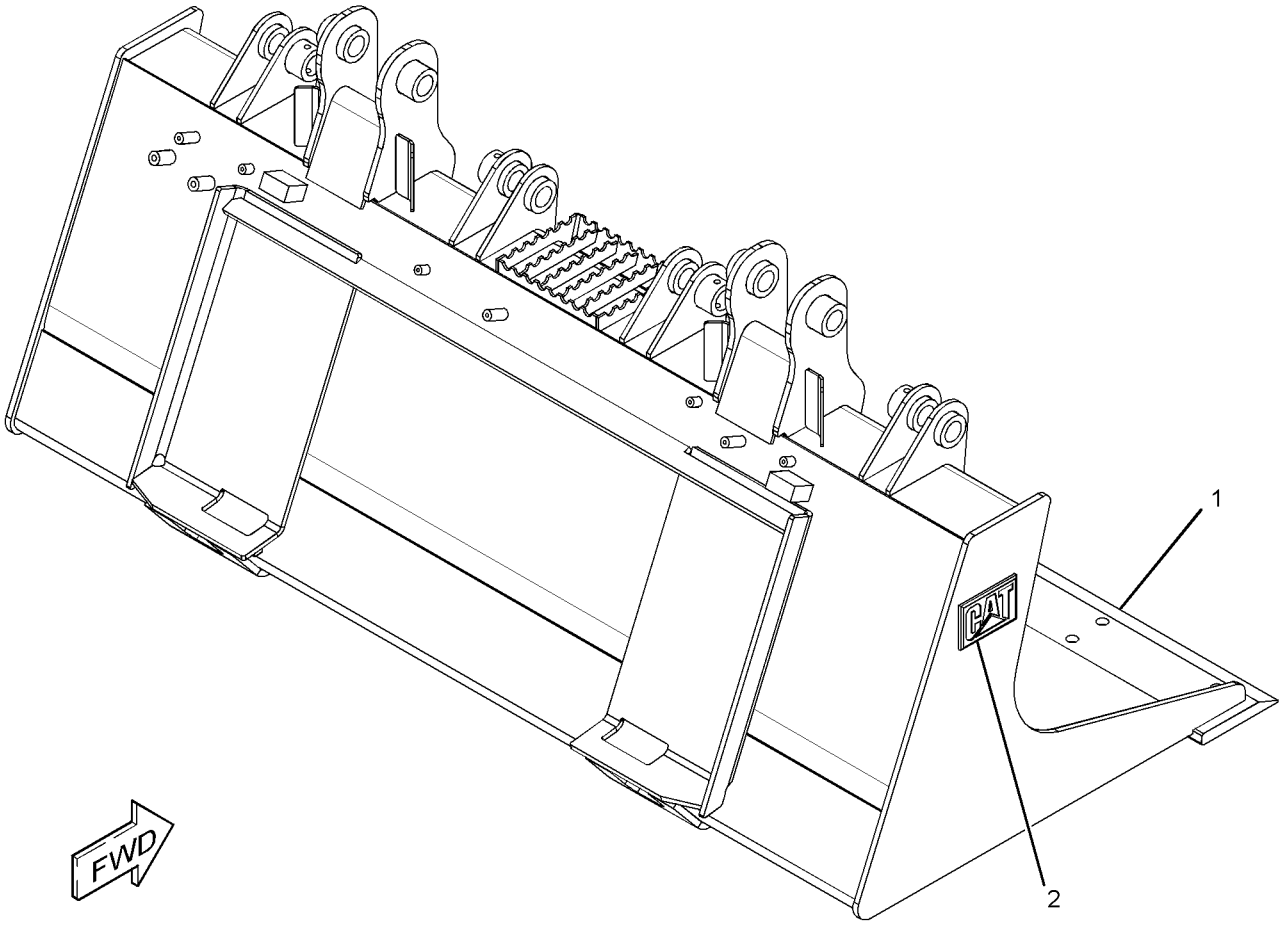

GRAPHIC #1 **<END>** g02254454

156-0889 BUCKET AS-GRAPPLE

S/N: SRS1-UP
1829-MM (72-IN)
PART OF 169-8943 BUCKET AS-GRAPPLE
AN ATTACHMENT

SMCS-6704 **i04045408**

NOTE	REF NO	GRAPHIC REF	PART NUMBER	QTY	PART NAME 1 2 3 4 5 6 (PRODUCT LEVEL)	SEE PAGE
	1	1	**149-5437**	1	EDGE	
	2	1	**161-4130**	2	PLATE-IDENTIFICATION (CAT)	

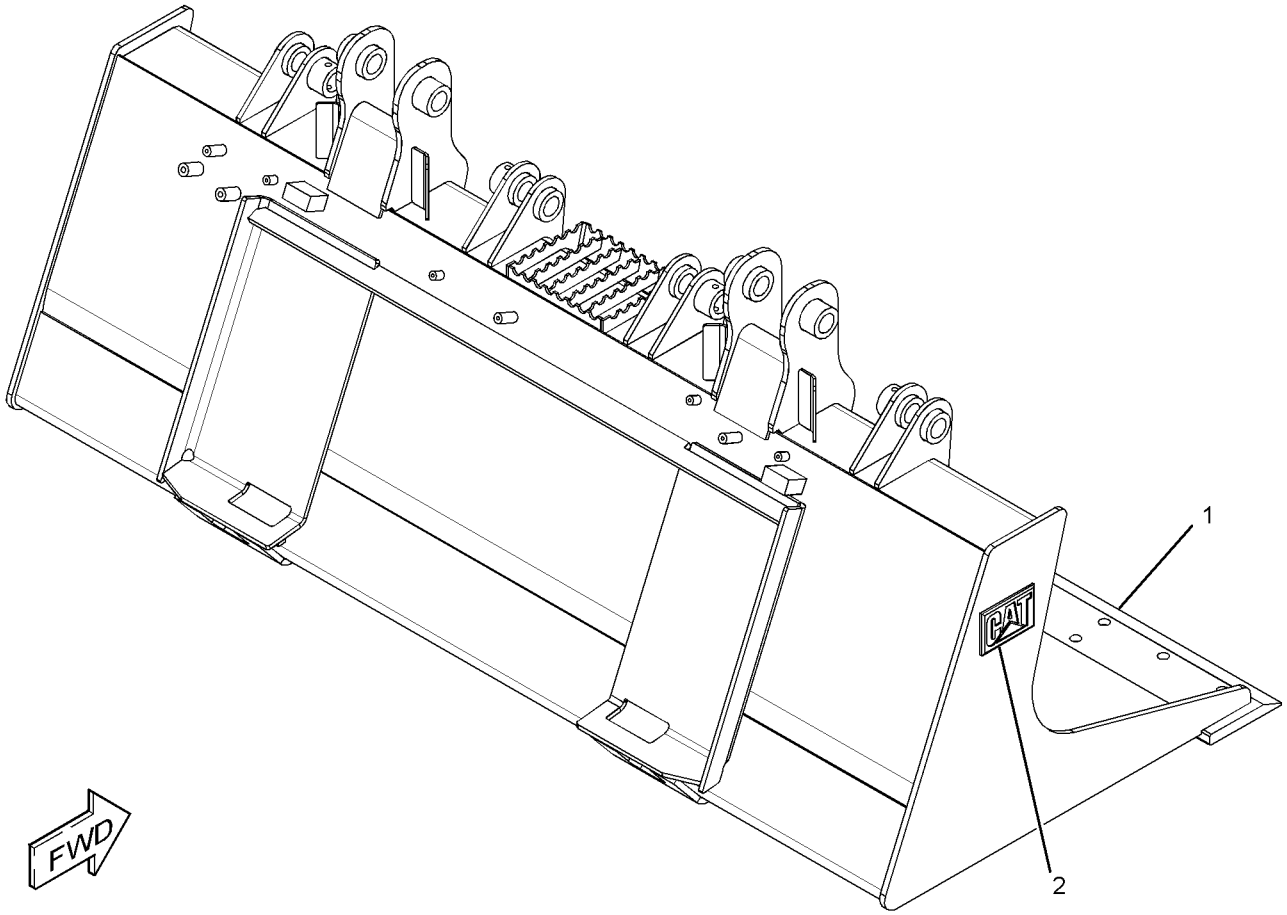

GRAPHIC #1 **<END>** g02258054

WORK TOOLS

169-8941 BUCKET AS-GRAPPLE

S/N: SRS1-UP
PART OF 156-0884 BUCKET GP-GRAPPLE
AN ATTACHMENT

SMCS-6704 **i04268089**

NOTE	REF NO	GRAPHIC REF	PART NUMBER	QTY	PART NAME 1 2 3 4 5 6 (PRODUCT LEVEL)	SEE PAGE
	1	1	**358-4944**	1	PLATE-IDENTIFICATION (BUCKET SPECIFICATIONS)	
Y	2	1	*156-0887*	1	BUCKET AS-GRAPPLE (60-IN) (INDUSTRIAL)	361
	3	1	**168-8389**	4	TACK-FASTENER	

Y-SEPARATE ILLUSTRATION

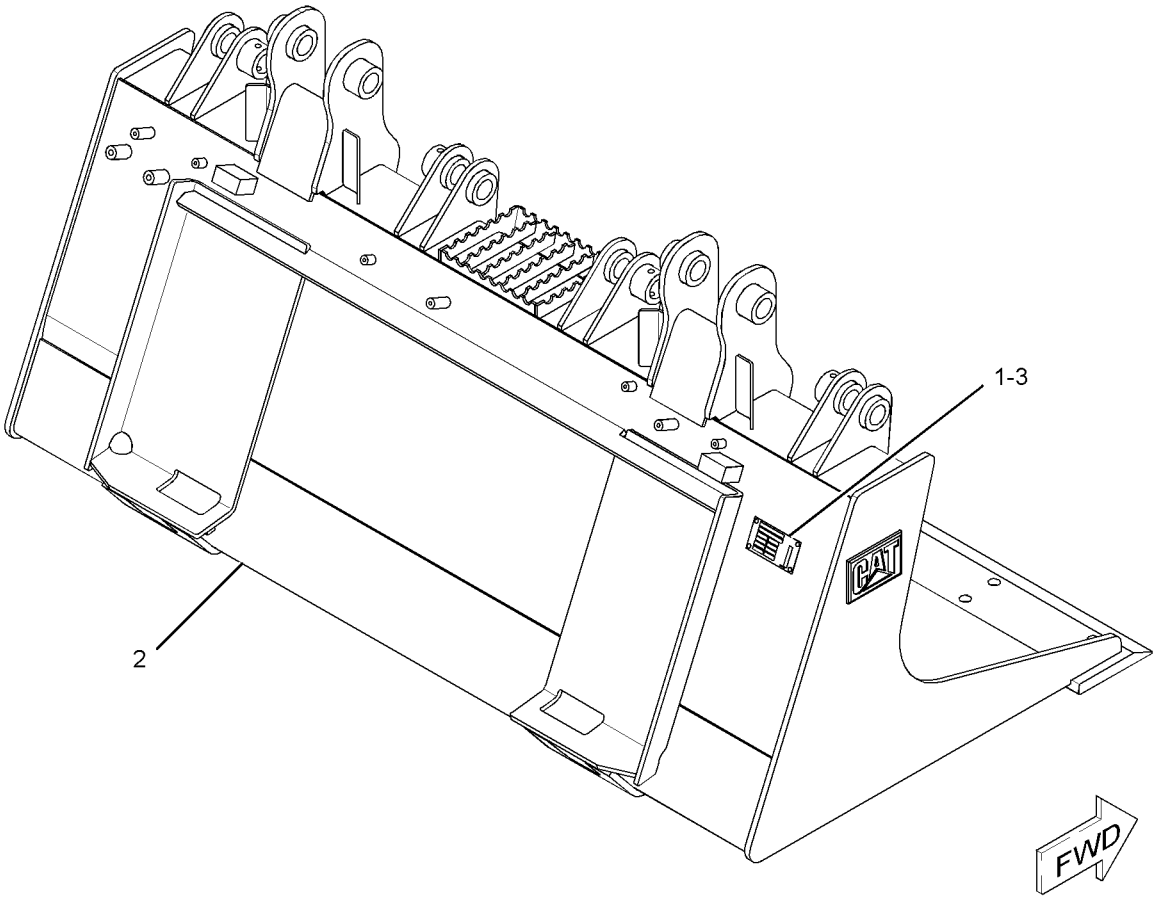

GRAPHIC #1 **<END>** g01941813

WORK TOOLS

169-8942 BUCKET AS-GRAPPLE

S/N: SRS1-UP
PART OF 156-0885 BUCKET GP-GRAPPLE
AN ATTACHMENT

SMCS-6704 **i04268090**

NOTE	REF NO	GRAPHIC REF	PART NUMBER	QTY	PART NAME 1 2 3 4 5 6 (PRODUCT LEVEL)	SEE PAGE
	1	1	**358-4944**	1	PLATE-IDENTIFICATION (BUCKET SPECIFICATIONS)	
Y	2	1	*156-0888*	1	BUCKET AS-GRAPPLE (INDUSTRIAL) (66-IN)	362
	3	1	**168-8389**	4	TACK-FASTENER	

Y-SEPARATE ILLUSTRATION

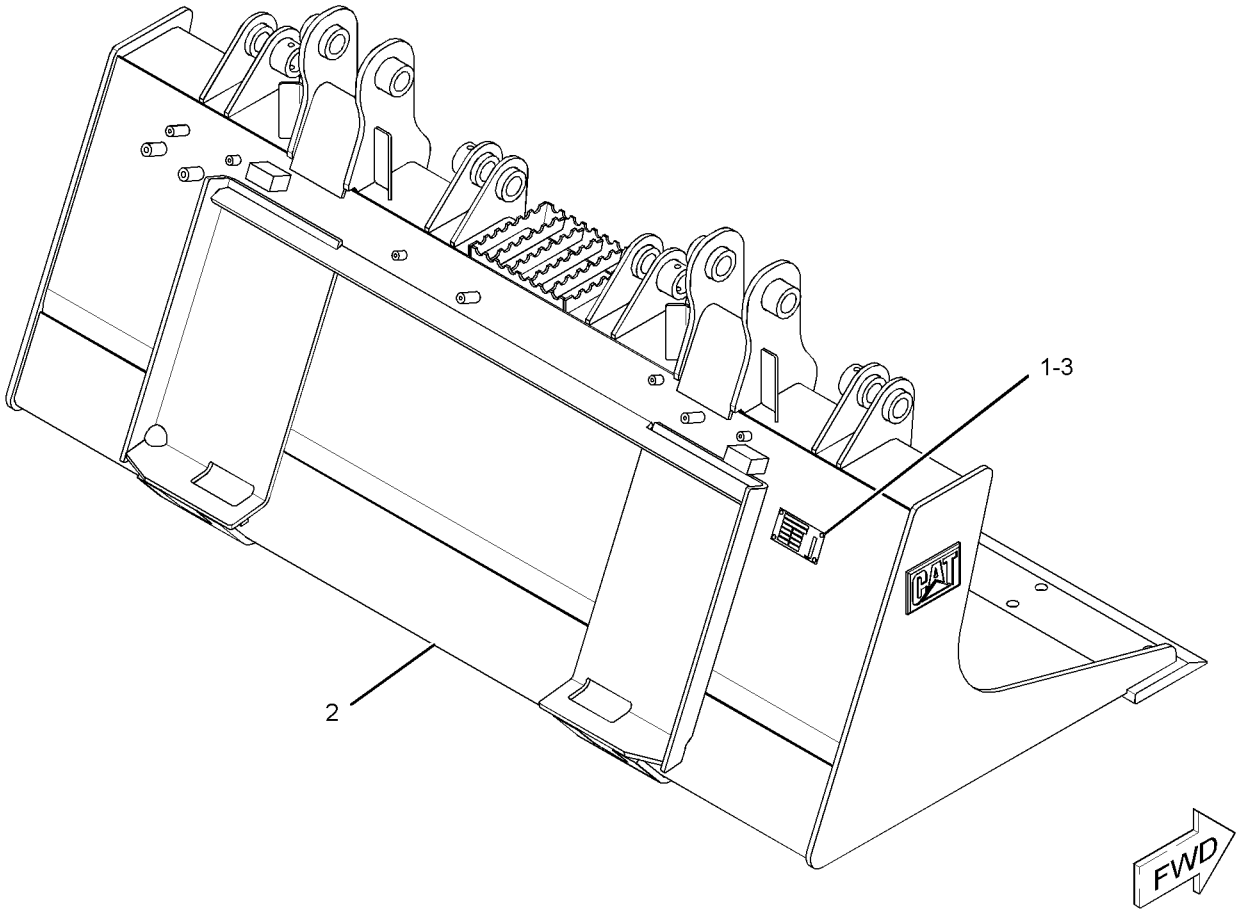

GRAPHIC #1 **<END>** g01941854

WORK TOOLS

169-8943 BUCKET AS-GRAPPLE

S/N: SRS1-UP
PART OF 156-0886 BUCKET GP-GRAPPLE
AN ATTACHMENT

SMCS-6704 **i04268091**

NOTE	REF NO	GRAPHIC REF	PART NUMBER	QTY	PART NAME 1 2 3 4 5 6 (PRODUCT LEVEL)	SEE PAGE
	1	1	**358-4944**	1	PLATE-IDENTIFICATION (BUCKET SPECIFICATIONS)	
Y	2	1	*156-0889*	1	BUCKET AS-GRAPPLE (INDUSTRIAL) (72-IN)	363
	3	1	**168-8389**	4	TACK-FASTENER	

Y-SEPARATE ILLUSTRATION

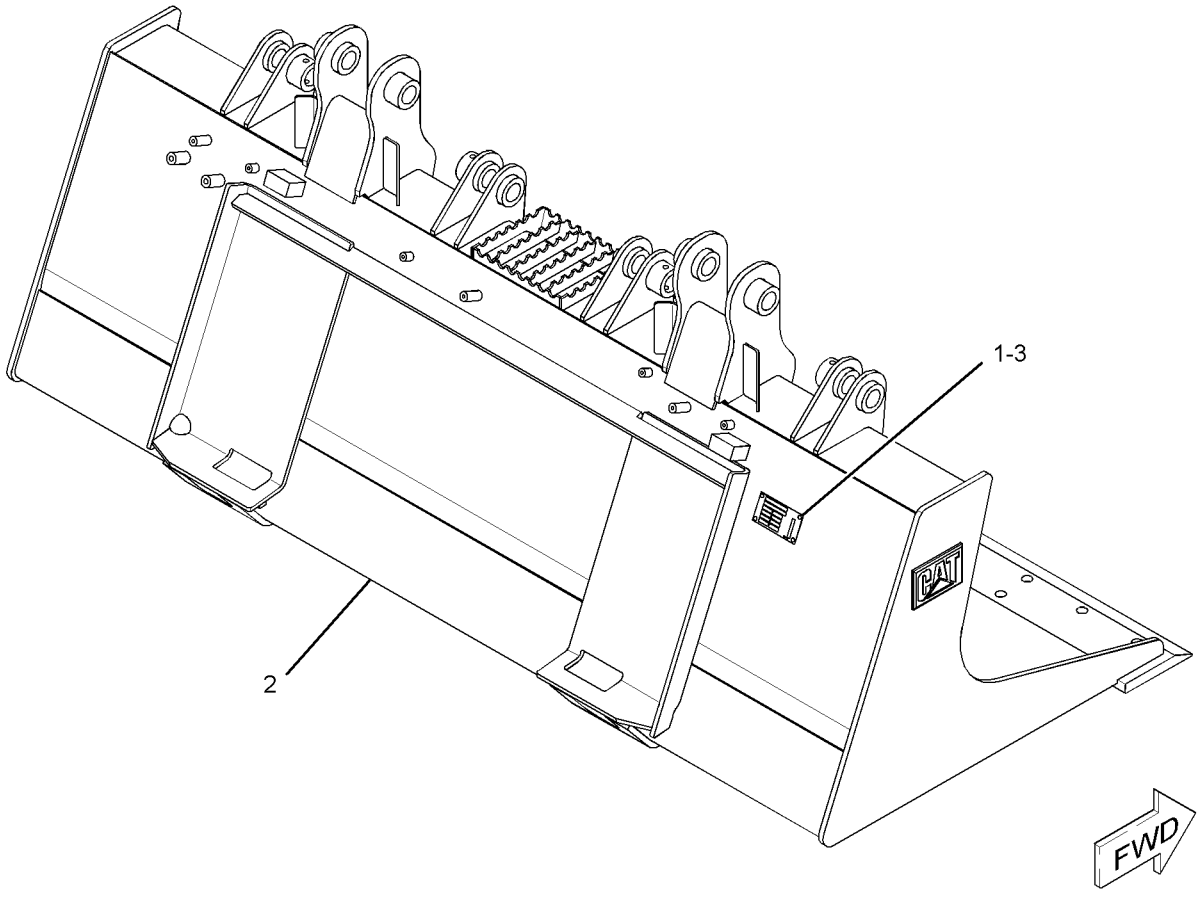

GRAPHIC #1 **<END>** g01941893

217-6226 BUCKET AS-GRAPPLE–INDUSTRIAL

S/N: SRS1-UP
1981-MM (78-IN)
PART OF 217-6227 BUCKET AS-GRAPPLE
AN ATTACHMENT

SMCS-6704 **i03638332**

NOTE	REF NO	GRAPHIC REF	PART NUMBER	QTY	PART NAME 1 2 3 4 5 6 (PRODUCT LEVEL)	SEE PAGE
	1	1	**199-7722**	1	EDGE	
	2	1	**161-4130**	2	PLATE-IDENTIFICATION (CAT)	

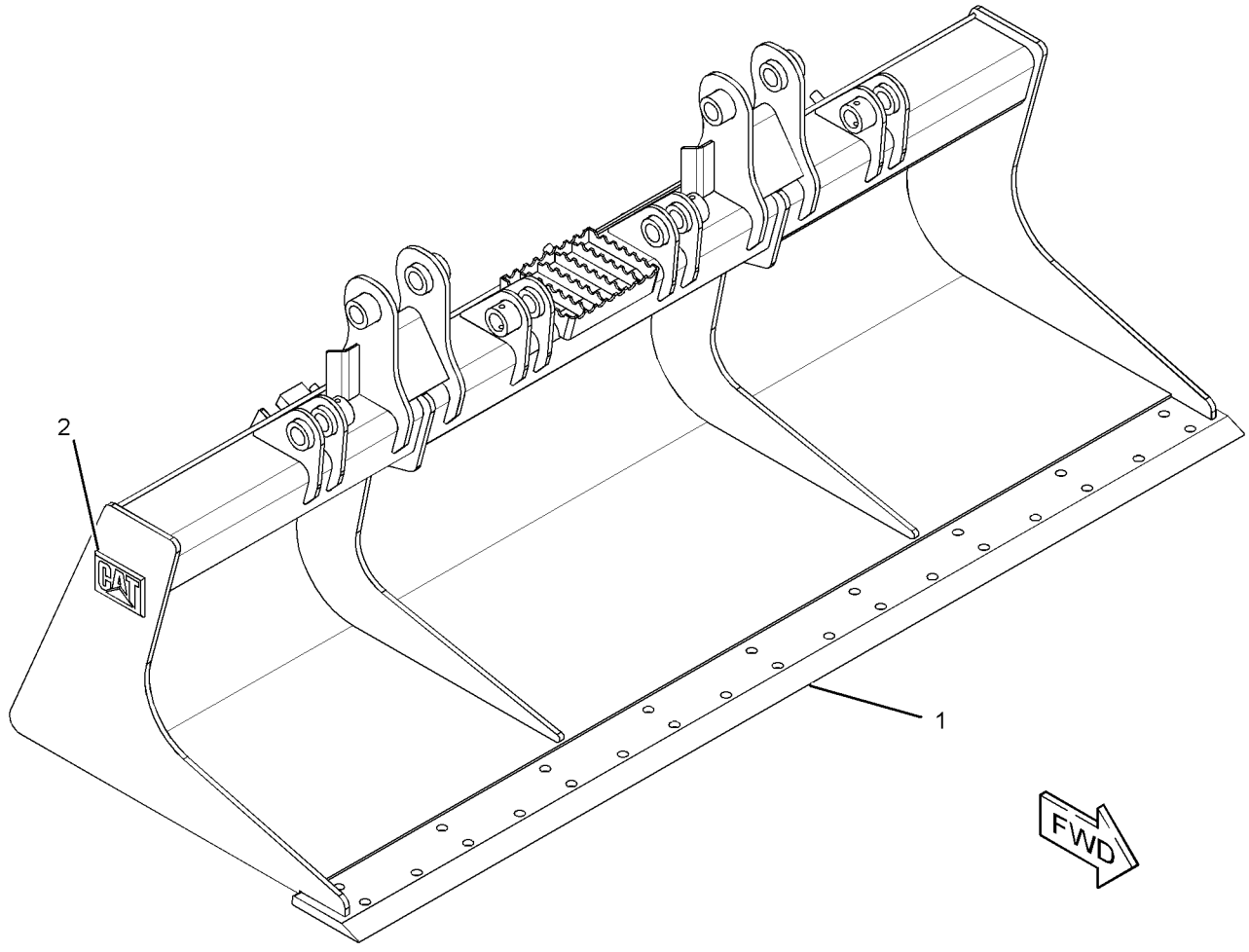

GRAPHIC #1 **<END>** g01953746

217-6227 BUCKET AS-GRAPPLE–INDUSTRIAL

S/N: SRS1-UP
PART OF 217-6228 BUCKET GP-GRAPPLE
AN ATTACHMENT

SMCS-6704 **i04156266**

NOTE	REF NO	GRAPHIC REF	PART NUMBER	QTY	PART NAME 1 2 3 4 5 6 (PRODUCT LEVEL)	SEE PAGE
	1	1	**358-4944**	1	PLATE-IDENTIFICATION (BUCKET SPECIFICATIONS)	
	2	1	**168-8389**	4	TACK-FASTENER	
Y	3	1	*217-6226*	1	BUCKET AS-GRAPPLE (INDUSTRIAL) (78-IN)	367

Y-SEPARATE ILLUSTRATION

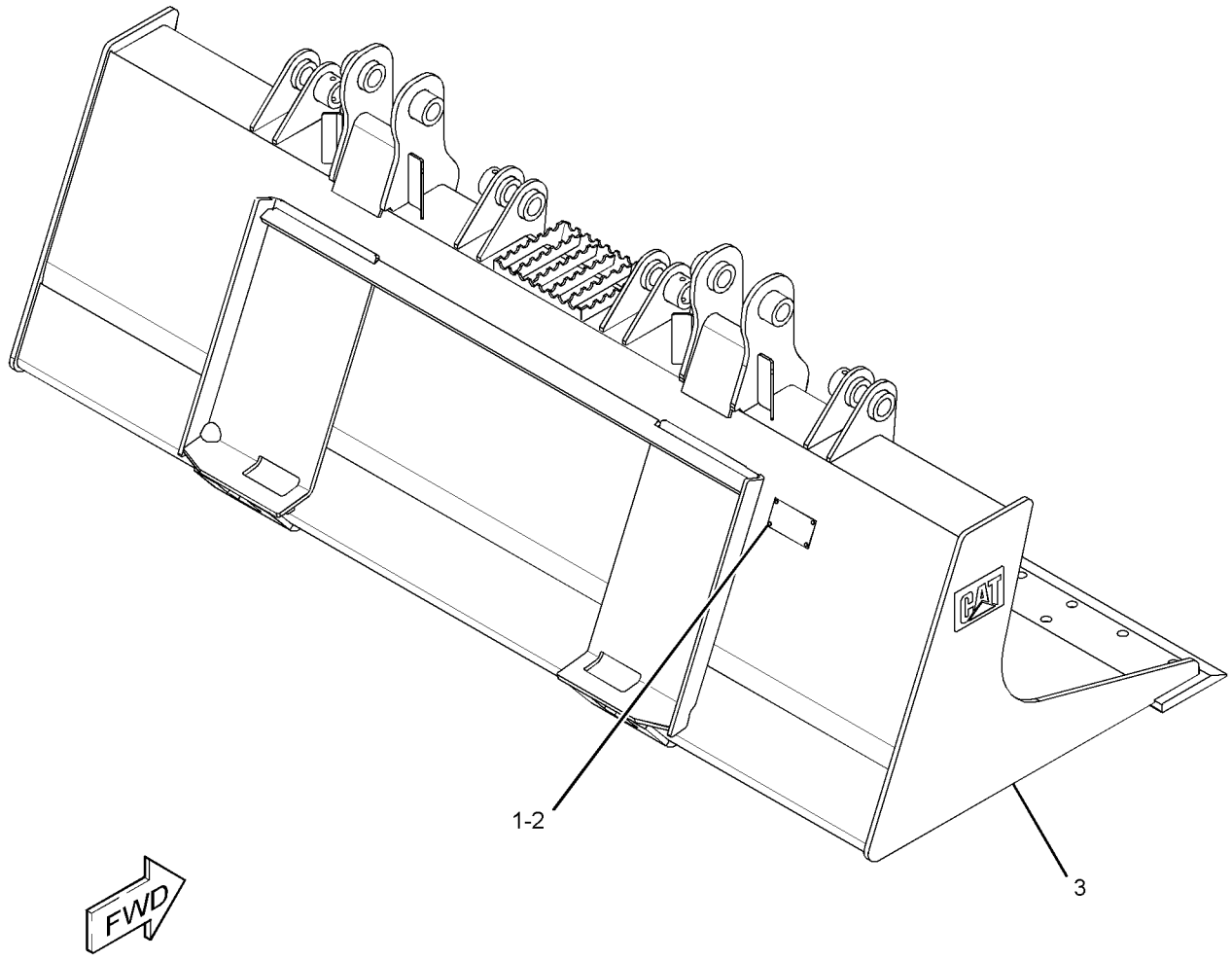

GRAPHIC #1 **<END>** g01945431

279-5421 BUCKET AS-LIGHT MATERIAL

S/N: SRS1-UP
PART OF 279-5420 BUCKET AR-LIGHT MATERIAL
AN ATTACHMENT

SMCS-6103 **i03636045**

NOTE	REF NO	GRAPHIC REF	PART NUMBER	QTY	PART NAME 1 2 3 4 5 6 (PRODUCT LEVEL)	SEE PAGE
	1	1	**154-2704**	1	PLATE-INSTRUCTION (BUCKET SPECIFICATIONS)	
	2	1	**168-8389**	4	TACK-FASTENER	
Y	3	1	*279-5422*	1	BUCKET AS-LIGHT MATERIAL (72-IN)	370

Y-SEPARATE ILLUSTRATION

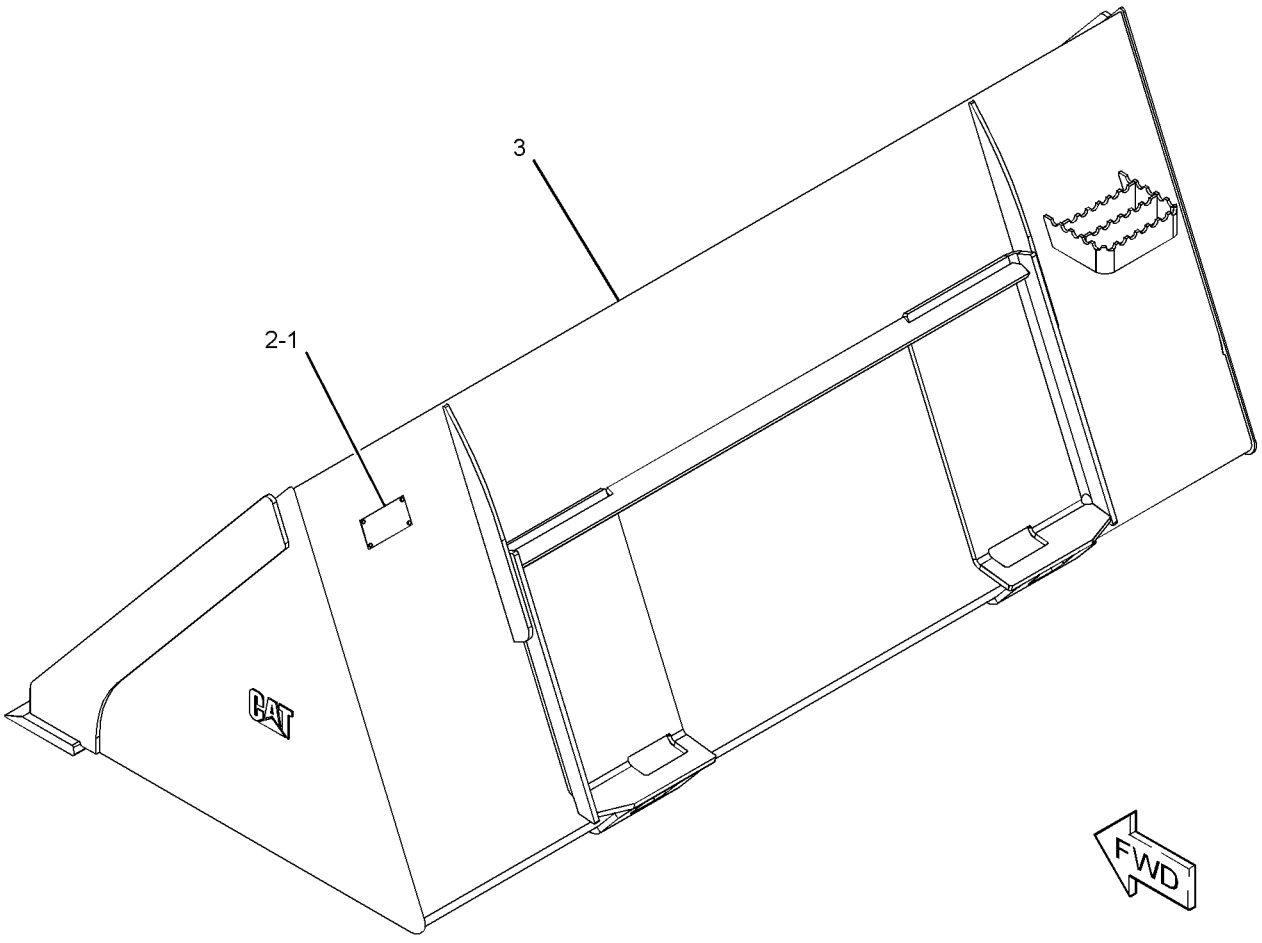

GRAPHIC #1 **<END>** g01951970

279-5422 BUCKET AS-LIGHT MATERIAL

S/N: SRS1-UP
1829-MM (72-IN)
PART OF 279-5421 BUCKET AS-LIGHT MATERIAL
AN ATTACHMENT

SMCS-6103 **i03636387**

NOTE	REF NO	GRAPHIC REF	PART NUMBER	QTY	PART NAME 1 2 3 4 5 6 (PRODUCT LEVEL)	SEE PAGE
	1	1	**149-5437**	1	EDGE	

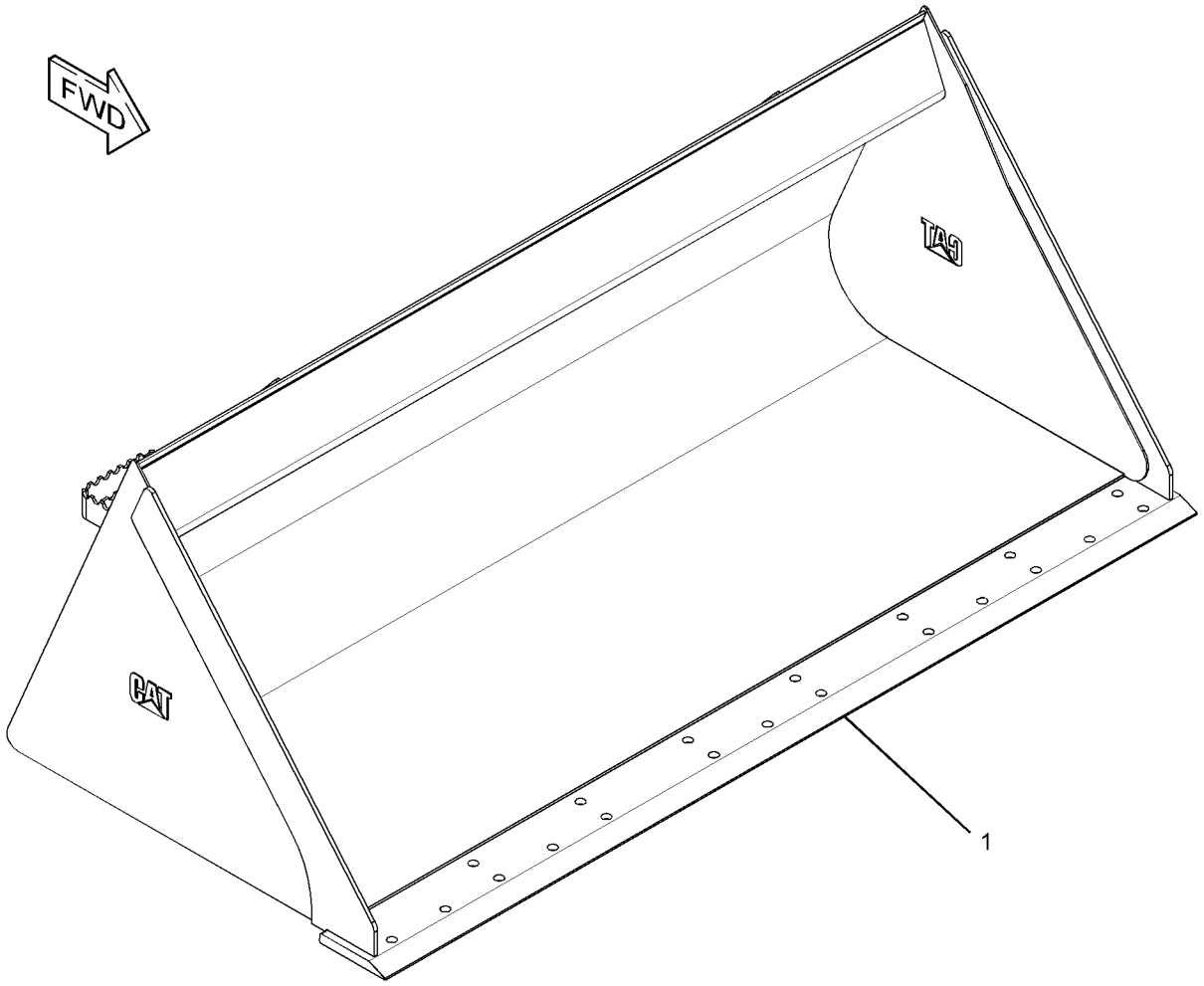

GRAPHIC #1 **<END>** g01952030

WORK TOOLS

279-5423 BUCKET AS-LIGHT MATERIAL

S/N: SRS1-UP
1981-MM (78-IN)
PART OF 279-5424 BUCKET AS-LIGHT MATERIAL
AN ATTACHMENT

SMCS-6103 **i03636382**

NOTE	REF NO	GRAPHIC REF	PART NUMBER	QTY	PART NAME 1 2 3 4 5 6 (PRODUCT LEVEL)	SEE PAGE
	1	1	**199-7722**	1	EDGE	

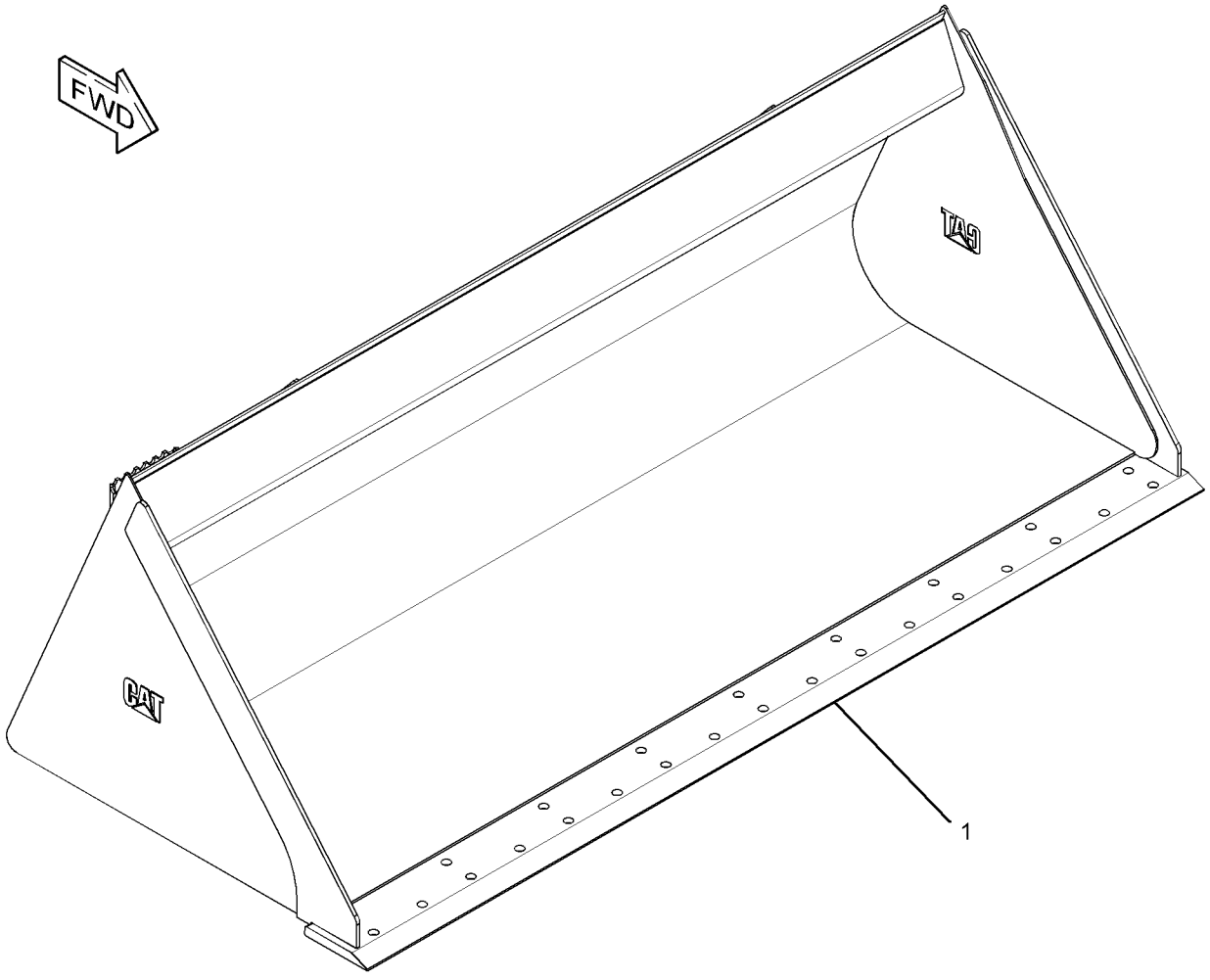

GRAPHIC #1 **<END>** g01952052

WORK TOOLS

279-5424 BUCKET AS-LIGHT MATERIAL

S/N: SRS1-UP
PART OF 279-5425 BUCKET AR-LIGHT MATERIAL
AN ATTACHMENT

SMCS-6103 **i03648370**

NOTE	REF NO	GRAPHIC REF	PART NUMBER	QTY	PART NAME 1 2 3 4 5 6 (PRODUCT LEVEL)	SEE PAGE
	1	1	**154-2704**	1	PLATE-INSTRUCTION (BUCKET SPECIFICATIONS)	
	2	1	**168-8389**	4	TACK-FASTENER	
Y	3	1	*279-5423*	1	BUCKET AS-LIGHT MATERIAL (78-IN)	371

Y-SEPARATE ILLUSTRATION

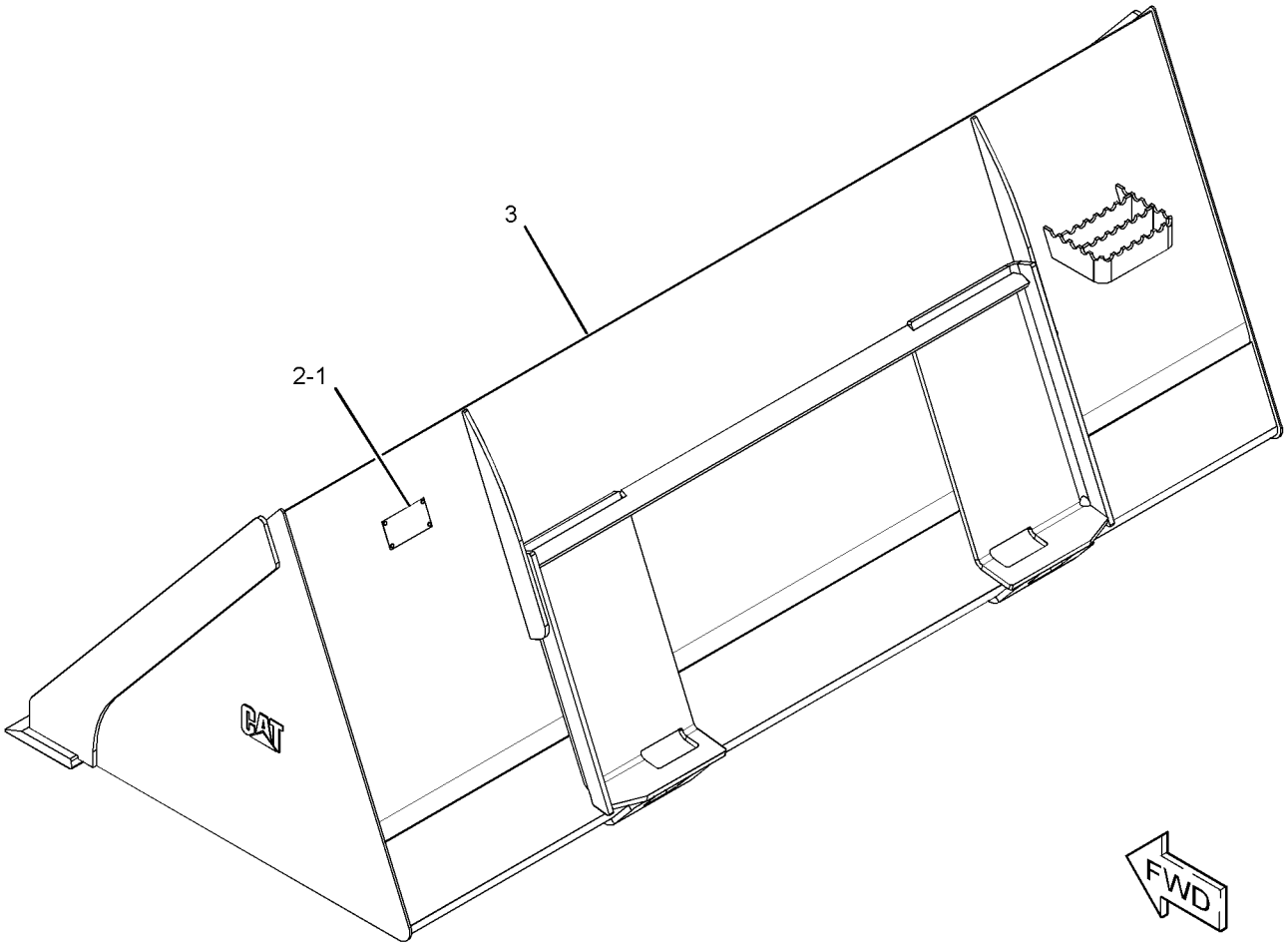

GRAPHIC #1 **<END>** g01951977

WORK TOOLS

279-5428 BUCKET AS-LIGHT MATERIAL

S/N: SRS1-UP
2134-MM (84-IN)
PART OF 279-5429 BUCKET AS-LIGHT MATERIAL
AN ATTACHMENT

SMCS-6103 **i03636386**

NOTE	REF NO	GRAPHIC REF	PART NUMBER	QTY	PART NAME 1 2 3 4 5 6 (PRODUCT LEVEL)	SEE PAGE
	1	1	**220-4982**	1	EDGE	

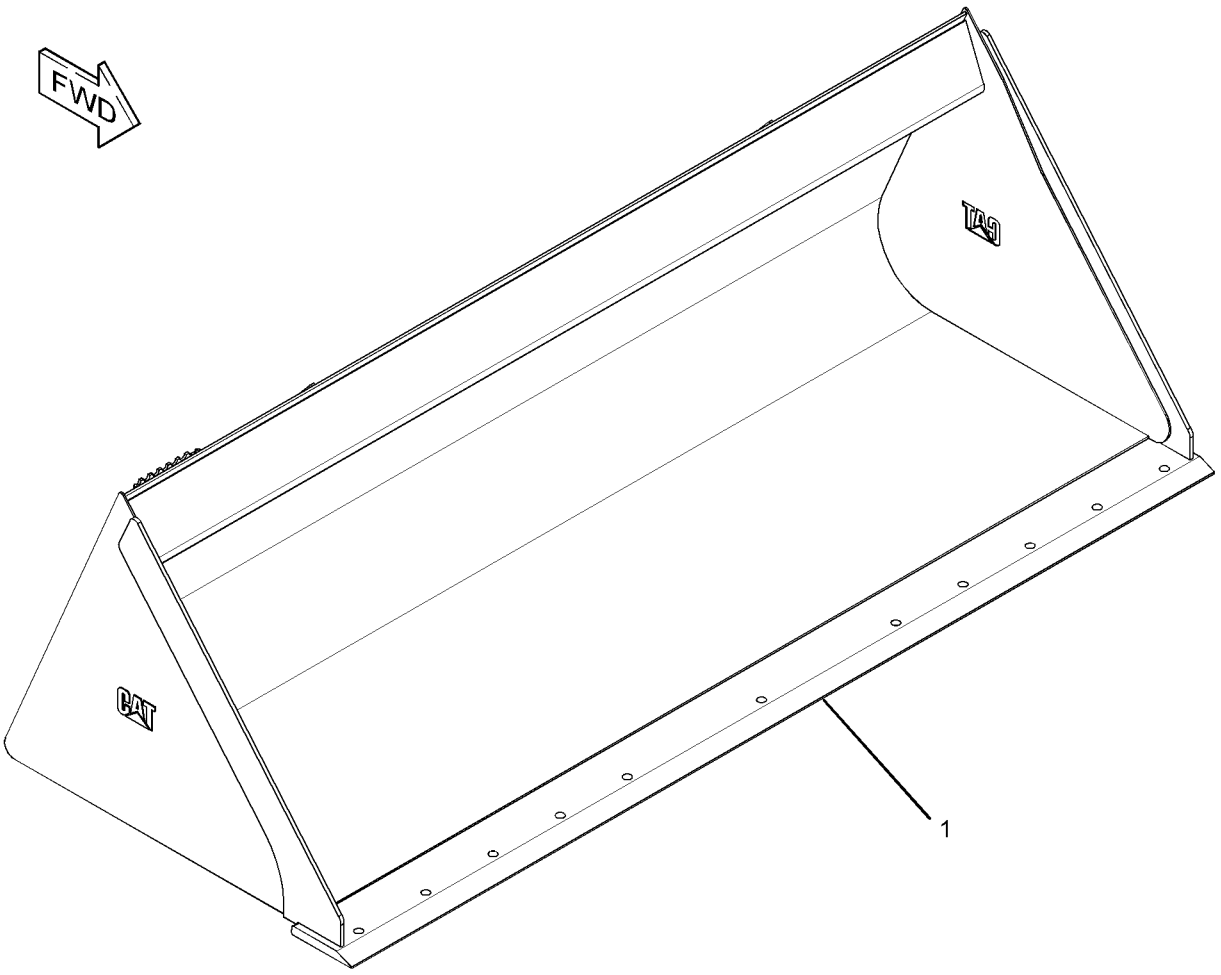

GRAPHIC #1 **<END>** g01952037

279-5429 BUCKET AS-LIGHT MATERIAL

S/N: SRS1-UP
PART OF 279-5430 BUCKET AR-LIGHT MATERIAL
AN ATTACHMENT

SMCS-6103 **i03648371**

NOTE	REF NO	GRAPHIC REF	PART NUMBER	QTY	PART NAME 1 2 3 4 5 6 (PRODUCT LEVEL)	SEE PAGE
	1	1	**154-2704**	1	PLATE-INSTRUCTION (BUCKET SPECIFICATIONS)	
	2	1	**168-8389**	4	TACK-FASTENER	
Y	3	1	*279-5428*	1	BUCKET AS-LIGHT MATERIAL (84-IN)	373

Y-SEPARATE ILLUSTRATION

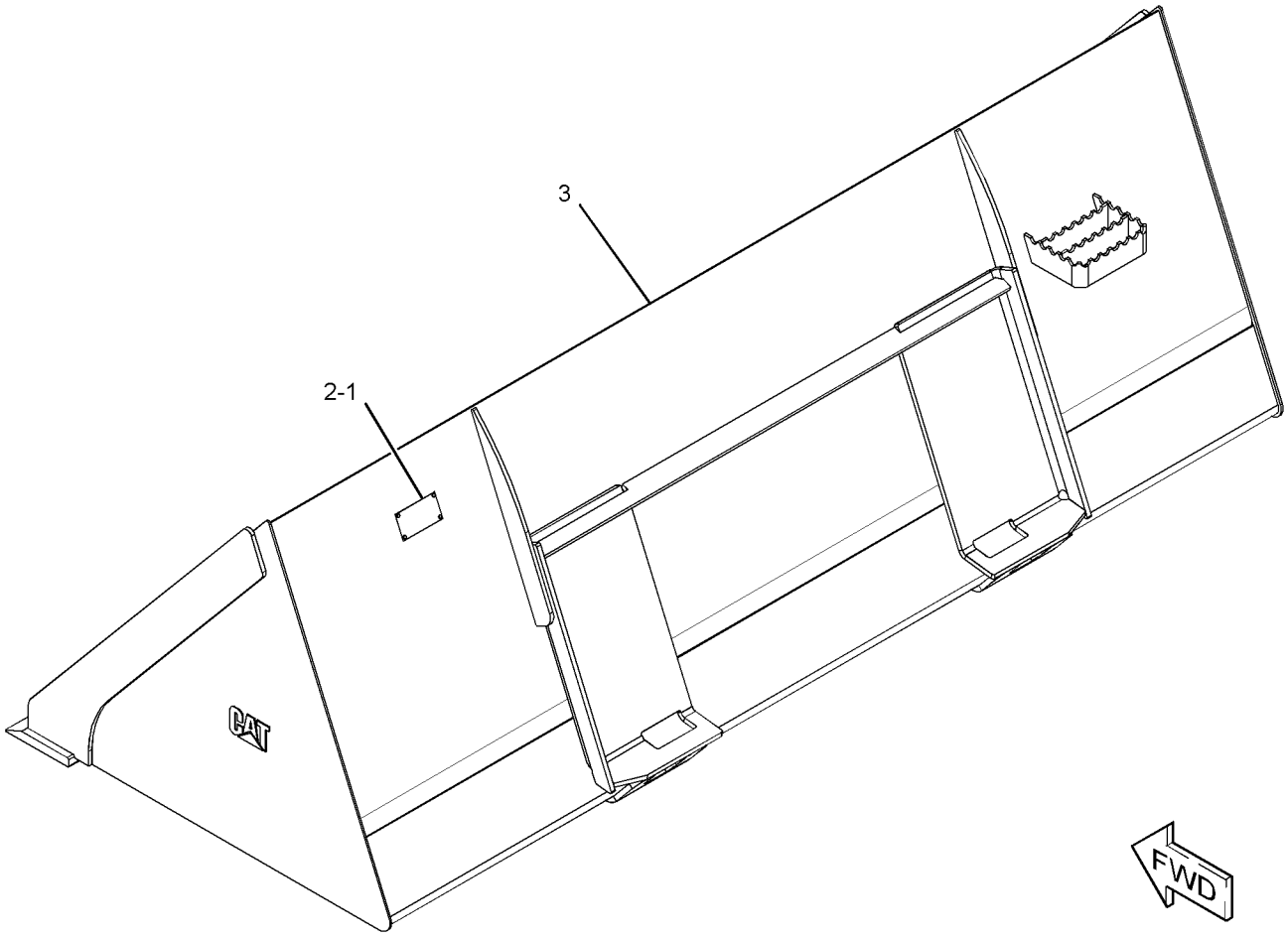

GRAPHIC #1 **<END>** g01951973

WORK TOOLS

292-9223 BUCKET AS-LIGHT MATERIAL

S/N: SRS1-UP

PART OF 296-7597 BUCKET AR-LIGHT MATERIAL

AN ATTACHMENT

SMCS-6103 **i03648378**

NOTE	REF NO	GRAPHIC REF	PART NUMBER	QTY	PART NAME 1 2 3 4 5 6 (PRODUCT LEVEL)	SEE PAGE
	1	1	**154-2704**	1	PLATE-INSTRUCTION (BUCKET SPECIFICATIONS)	
	2	1	**168-8389**	4	TACK-FASTENER	
Y	3	1	*292-9224*	1	BUCKET AS-LIGHT MATERIAL (96-IN)	376

Y-SEPARATE ILLUSTRATION

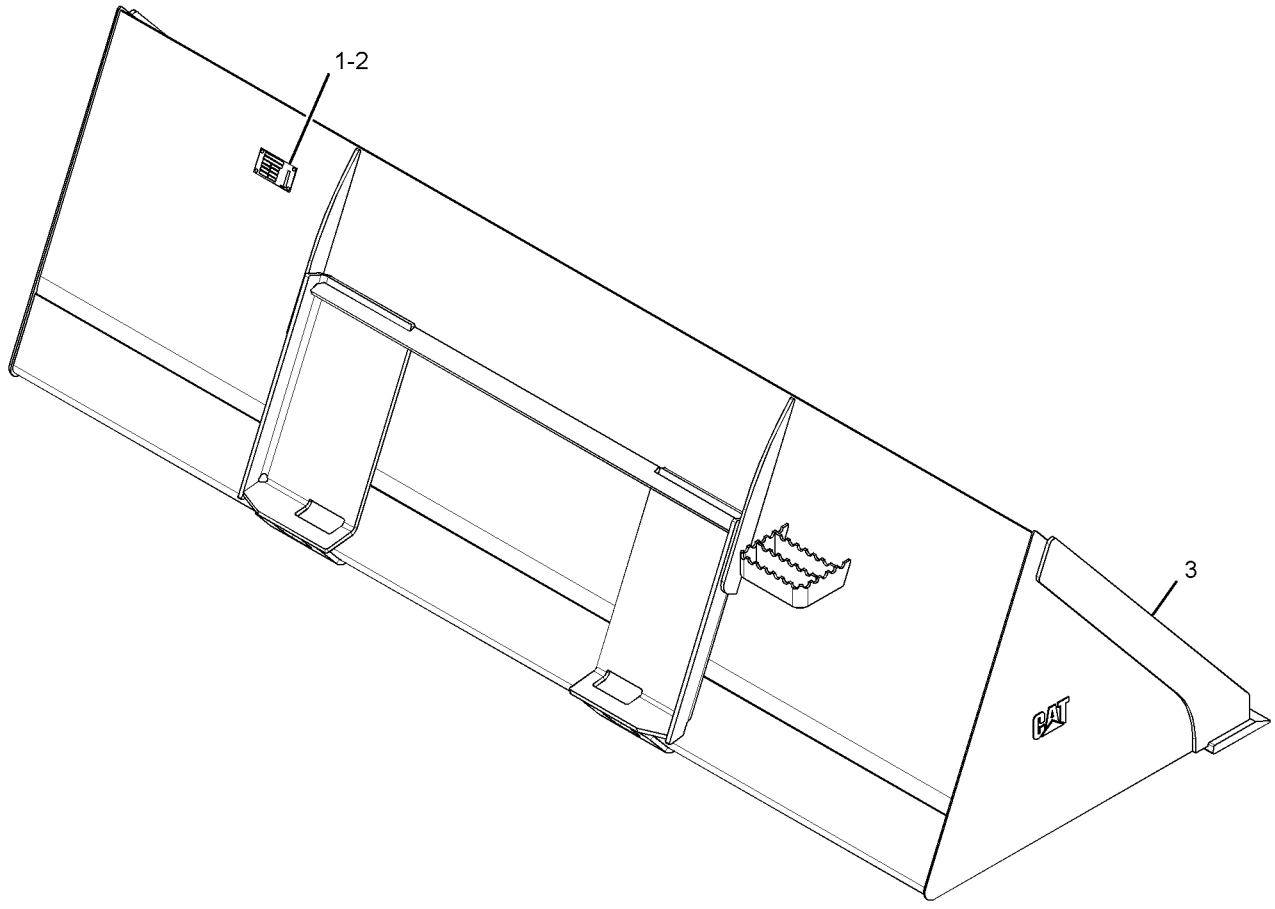

GRAPHIC #1 **<END>** g01322797

WORK TOOLS

292-9224 BUCKET AS-LIGHT MATERIAL

S/N: SRS1-UP
2438-MM (96-IN)
PART OF 292-9223 BUCKET AS-LIGHT MATERIAL
AN ATTACHMENT

SMCS-6103 **i03611760**

NOTE	REF NO	GRAPHIC REF	PART NUMBER	QTY	PART NAME 1 2 3 4 5 6 (PRODUCT LEVEL)	SEE PAGE
	1	1	**292-9257**	1	EDGE	

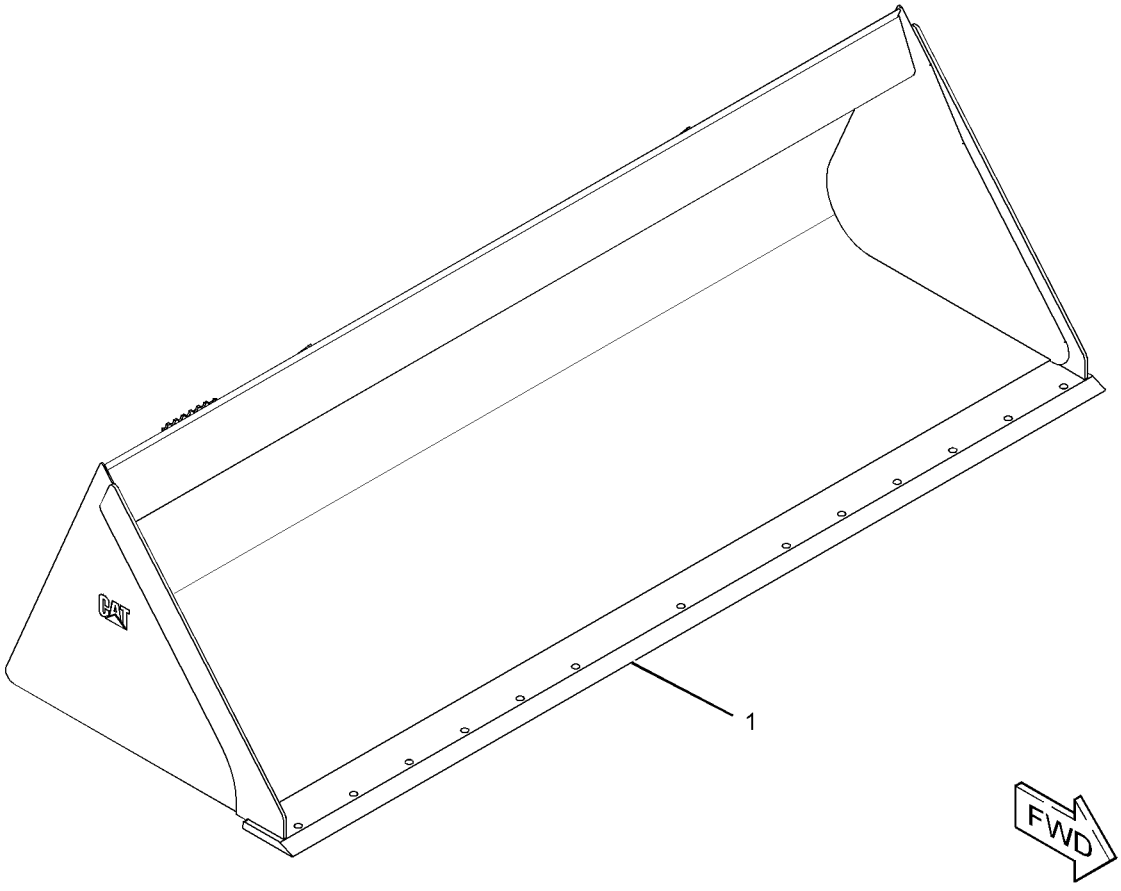

GRAPHIC #1 **<END>** g01938633

WORK TOOLS

285-6097 BUCKET AS-UTILITY

S/N: SRS1-UP
1524-MM (60-IN)
PART OF 285-6096 BUCKET GP-UTILITY
AN ATTACHMENT

SMCS-6101 **i03638905**

NOTE	REF NO	GRAPHIC REF	PART NUMBER	QTY	PART NAME 1 2 3 4 5 6 (PRODUCT LEVEL)	SEE PAGE
	1	1	**149-5435**	1	EDGE	

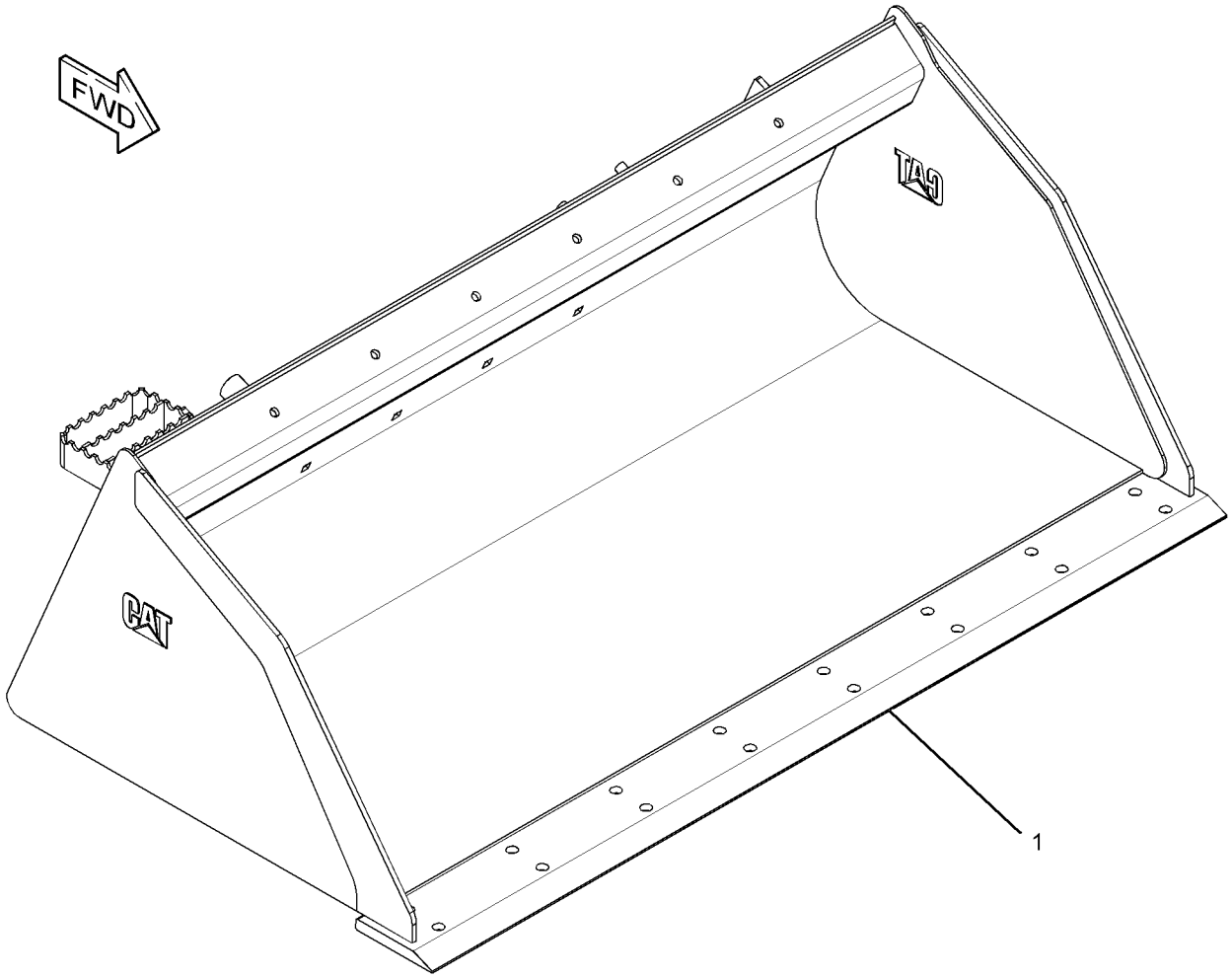

GRAPHIC #1 **<END>** g01953699

WORK TOOLS

285-6098 BUCKET AS-UTILITY

S/N: SRS1-UP
1676-MM (66-IN)
PART OF 285-6099 BUCKET GP-UTILITY
AN ATTACHMENT

SMCS-6101 **i03638906**

NOTE	REF NO	GRAPHIC REF	PART NUMBER	QTY	PART NAME 1 2 3 4 5 6 (PRODUCT LEVEL)	SEE PAGE
	1	1	**149-5436**	1	EDGE	

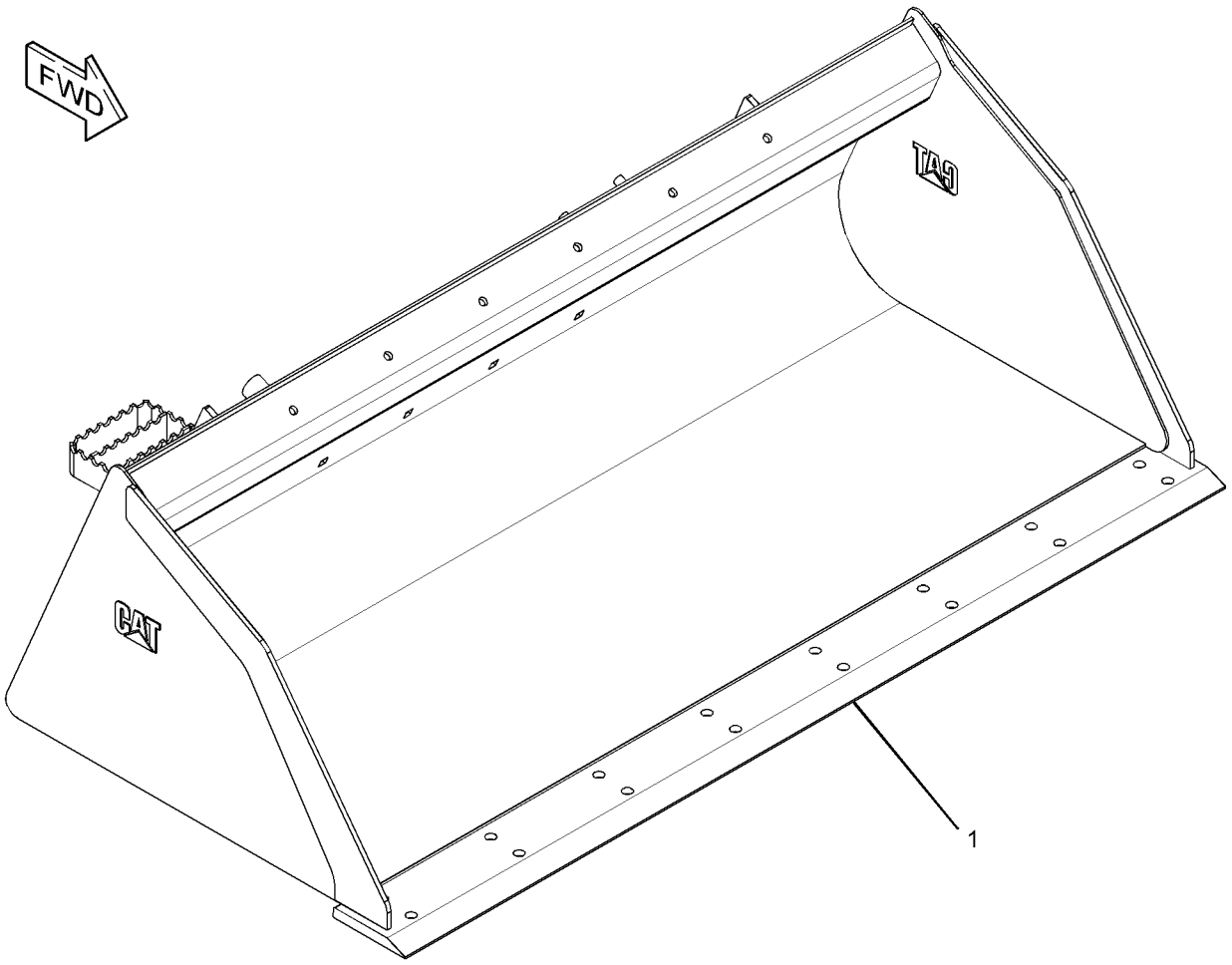

GRAPHIC #1 **<END>** g01953732

WORK TOOLS

285-6103 BUCKET AS-UTILITY

S/N: SRS1-UP
1829-MM (72-IN)
PART OF 285-6102 BUCKET GP-UTILITY
AN ATTACHMENT

SMCS-6101 **i03638909**

NOTE	REF NO	GRAPHIC REF	PART NUMBER	QTY	PART NAME 1 2 3 4 5 6 (PRODUCT LEVEL)	SEE PAGE
	1	1	**149-5437**	1	EDGE	

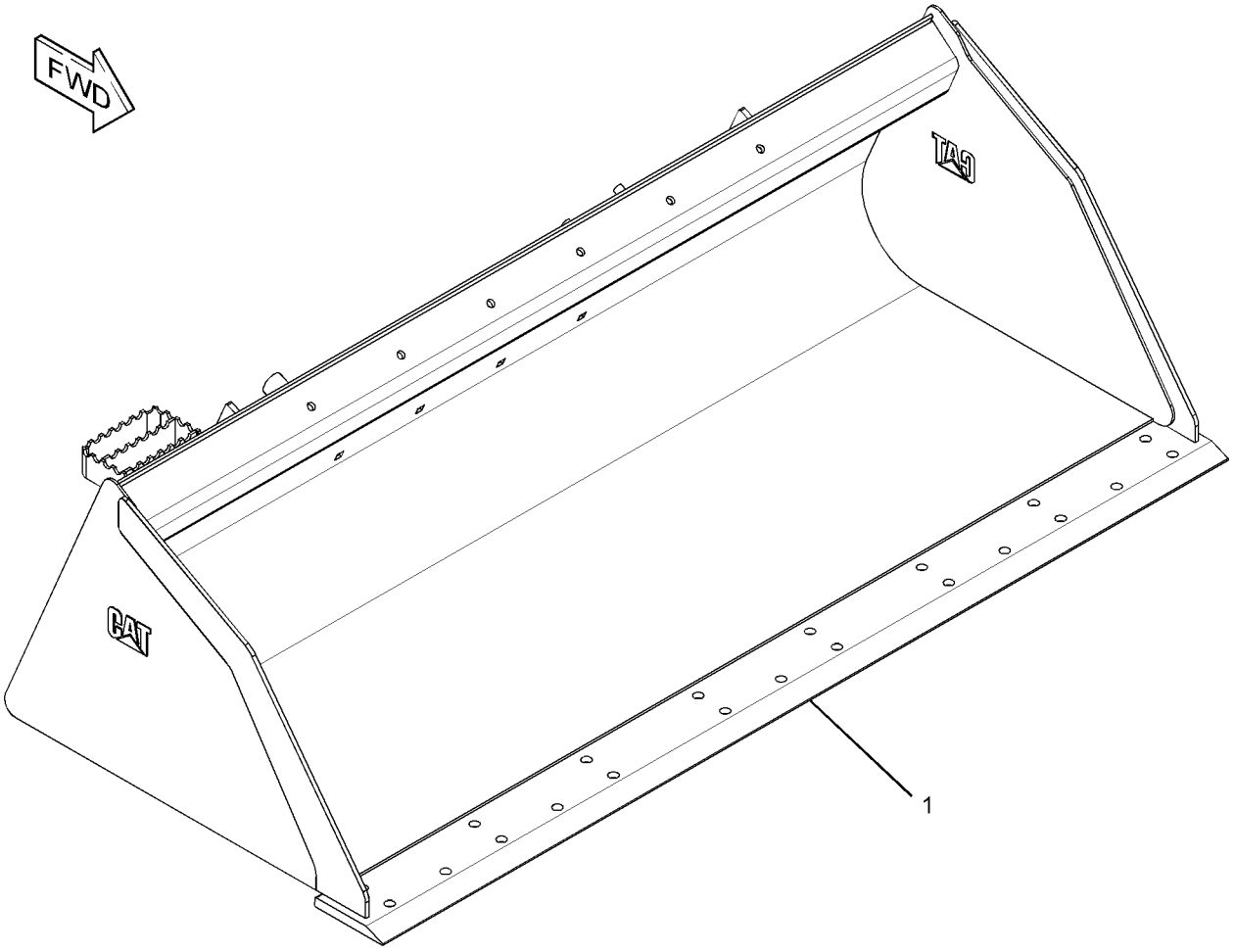

GRAPHIC #1 **<END>** g01953843

WORK TOOLS

152-0231 BUCKET GP-DIRT

S/N: SRS1-UP
FIELD REPLACEMENT FOR 165-6156 BUCKET AS-DIRT
AN ATTACHMENT

SMCS-6001 **i02962462**

NOTE	REF NO	GRAPHIC REF	PART NUMBER	QTY	PART NAME 1 2 3 4 5 6 (PRODUCT LEVEL)	SEE PAGE
Y	1	1	**165-6156**	1	BUCKET AS-DIRT	340
Y	2	1	*135-9384*	1	EDGE GP-CUTTING	414

Y-SEPARATE ILLUSTRATION

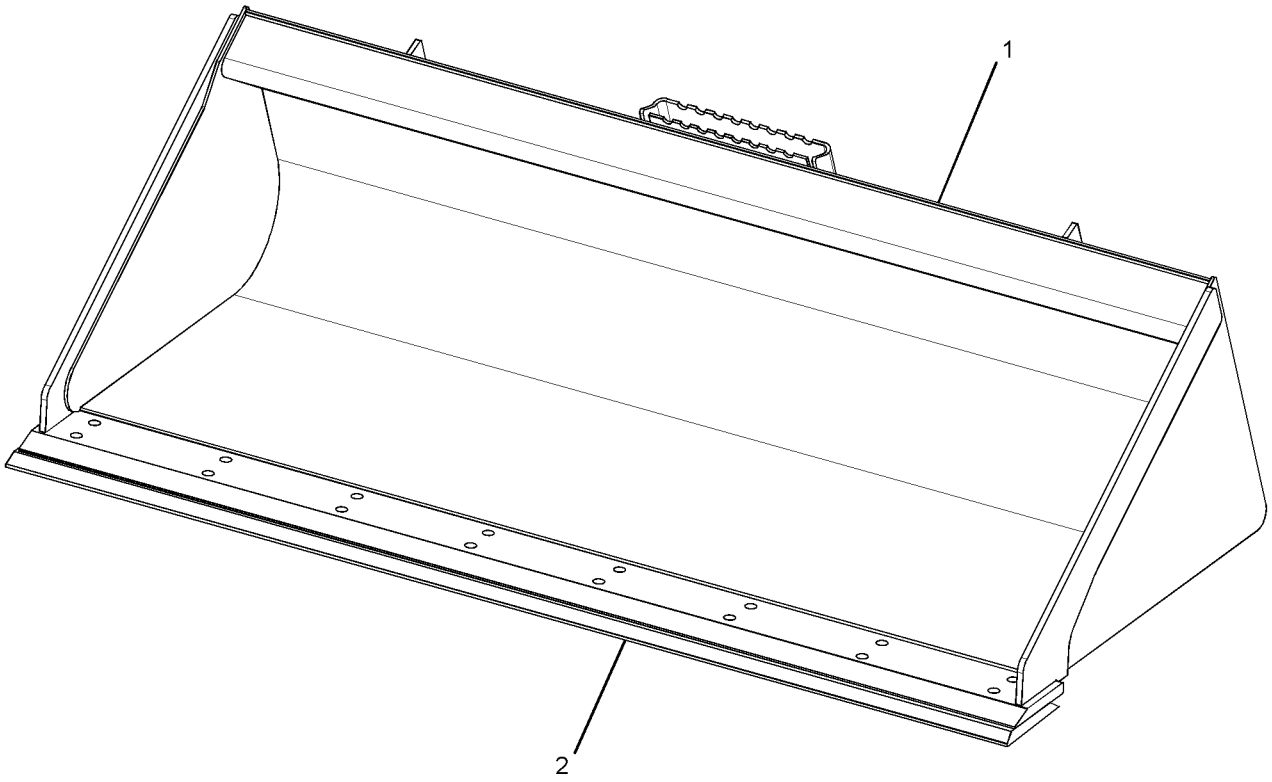

GRAPHIC #1 **<END>** g01481192

WORK TOOLS

152-0232 BUCKET GP-DIRT

S/N: SRS1-UP
FIELD REPLACEMENT FOR 165-6157 BUCKET AS-DIRT
AN ATTACHMENT

SMCS-6001 **i02961159**

NOTE	REF NO	GRAPHIC REF	PART NUMBER	QTY	PART NAME 1 2 3 4 5 6 (PRODUCT LEVEL)	SEE PAGE
Y	1	1	**165-6157**	1	BUCKET AS-DIRT	341
Y	2	1	*135-9385*	1	EDGE GP-CUTTING	415

Y-SEPARATE ILLUSTRATION

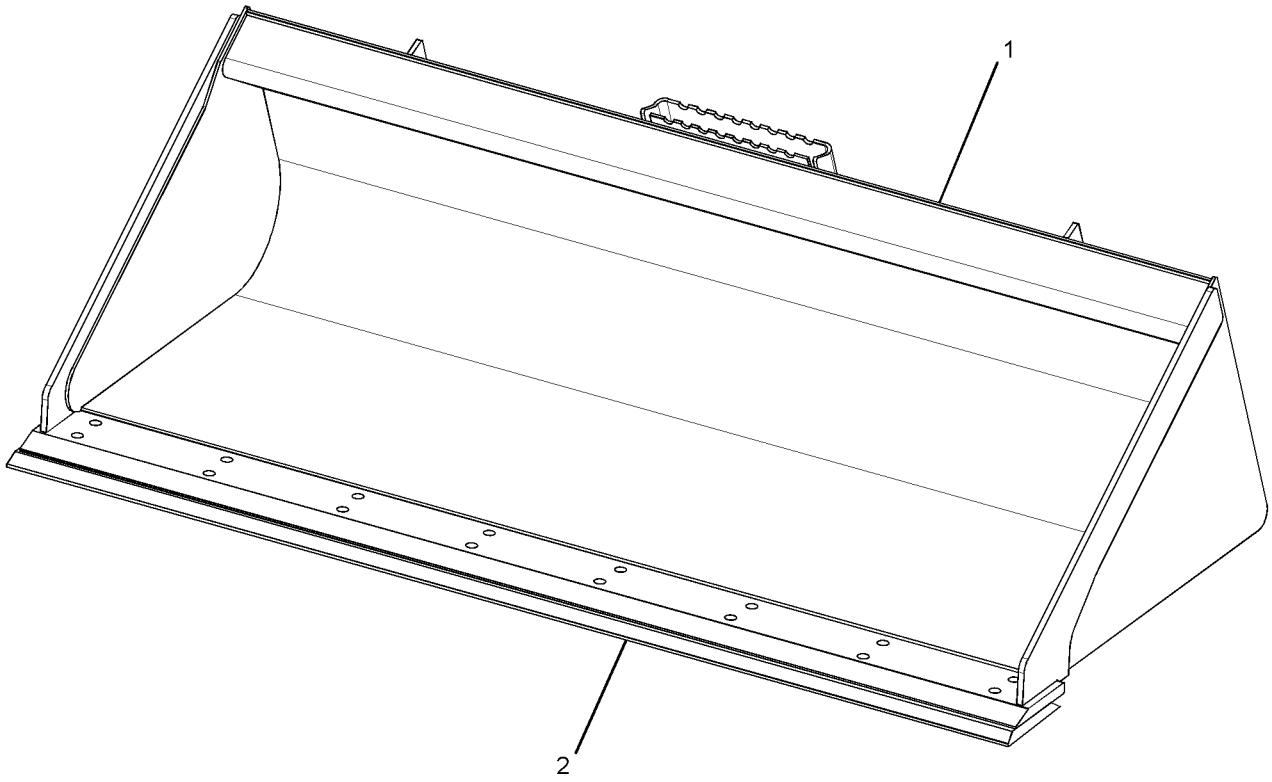

GRAPHIC #1 **<END>** g01481192

268-4084 BUCKET GP-DIRT

S/N: SRS1-UP
PART OF 268-4083 BUCKET AR-DIRT
AN ATTACHMENT

SMCS-6001 **i03647009**

NOTE	REF NO	GRAPHIC REF	PART NUMBER	QTY	PART NAME 1 2 3 4 5 6 (PRODUCT LEVEL)	SEE PAGE
	1	1	**154-2704**	1	PLATE-INSTRUCTION (BUCKET SPECIFICATIONS)	
	2	1	**168-8389**	4	TACK-FASTENER	
Y	3	1	*268-4089*	1	BUCKET AS-DIRT	342

Y-SEPARATE ILLUSTRATION

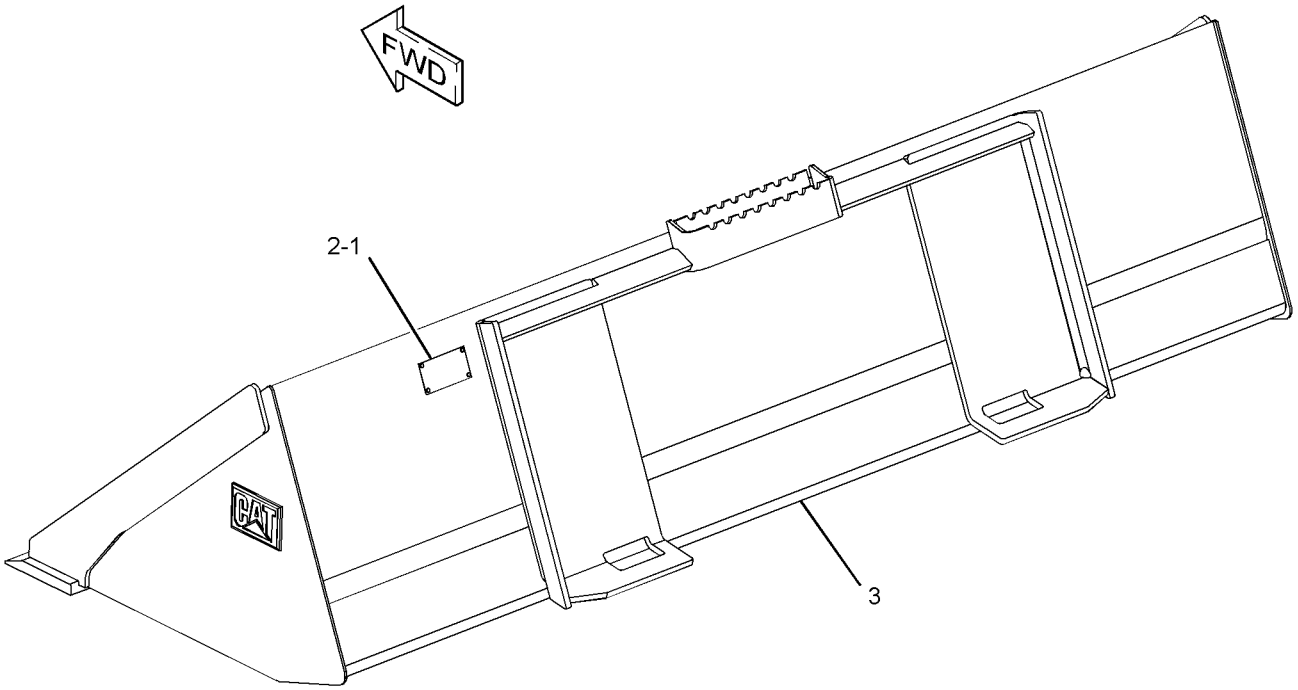

GRAPHIC #1 **<END>** g01957399

WORK TOOLS

296-8191 BUCKET GP-GENERAL PURPOSE

S/N: SRS1-UP

AN ATTACHMENT

SMCS-6101 **i03922644**

NOTE	PART NUMBER	QTY	PART NAME 1 2 3 4 5 6 (PRODUCT LEVEL)	SEE PAGE
Y	**292-9270**	1	BUCKET AS-GENERAL PURPOSE	359
Y	*141-4999*	9	TOOTH GP-UNI	456

Y-SEPARATE ILLUSTRATION

<END>

WORK TOOLS

156-0884 BUCKET GP-GRAPPLE

S/N: SRS1-UP
PART OF 157-7223 BUCKET AR-GRAPPLE
AN ATTACHMENT

SMCS-6704 **i03648335**

NOTE	REF NO	GRAPHIC REF	PART NUMBER	QTY	PART NAME 1 2 3 4 5 6 (PRODUCT LEVEL)	SEE PAGE
	1	1	**157-0940**	4	PIN	
Y	2	1	**169-8941**	1	BUCKET AS-GRAPPLE (60-IN) (INDUSTRIAL)	364
	3	1	**222-7467**	2	FORK AS	
					(EACH INCLUDES)	
		1	**158-5648**	2	BUSHING	
	4	1	**3B-8489**	4	FITTING-GREASE	
M	5	1	**6V-9189**	4	LOCKNUT (M8X1.25-THD)	
M	6	1	**8T-6869**	4	BOLT (M8X1.25X60-MM)	

M-METRIC PART
Y-SEPARATE ILLUSTRATION

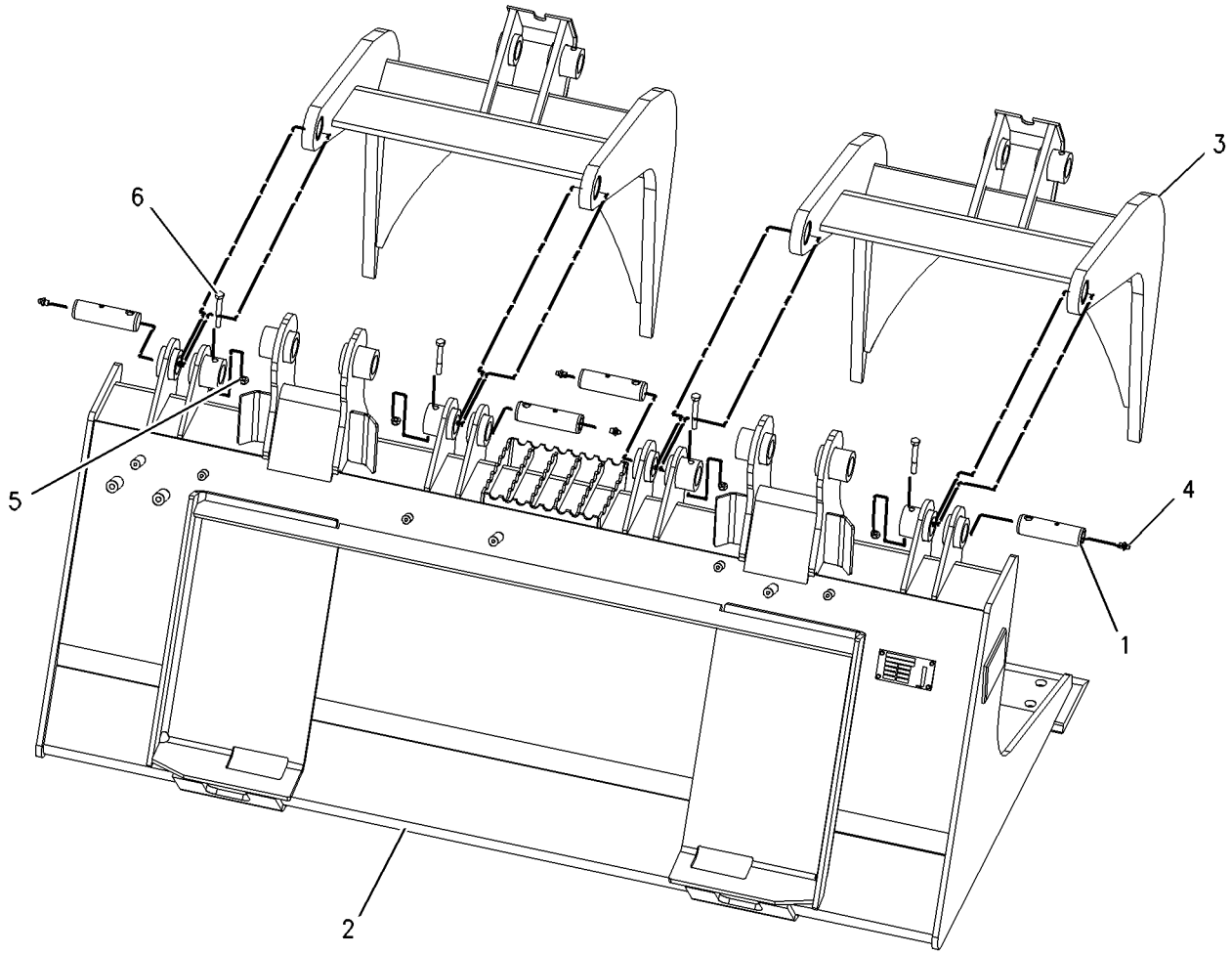

GRAPHIC #1 **<END>** g00978796

WORK TOOLS

156-0885 BUCKET GP-GRAPPLE

S/N: SRS1-UP
PART OF 157-7224 BUCKET AR-GRAPPLE
AN ATTACHMENT

SMCS-6704 **i03648337**

NOTE	REF NO	GRAPHIC REF	PART NUMBER	QTY	PART NAME 1 2 3 4 5 6 (PRODUCT LEVEL)	SEE PAGE
	1	1	**157-0940**	4	PIN	
Y	2	1	**169-8942**	1	BUCKET AS-GRAPPLE (66-IN) (INDUSTRIAL)	365
	3	1	**222-7467**	2	FORK AS	
					(EACH INCLUDES)	
		1	**158-5648**	2	BUSHING	
	4	1	**3B-8489**	4	FITTING-GREASE	
M	5	1	**6V-9189**	4	LOCKNUT (M8X1.25-THD)	
M	6	1	**8T-6869**	4	BOLT (M8X1.25X60-MM)	

M-METRIC PART
Y-SEPARATE ILLUSTRATION

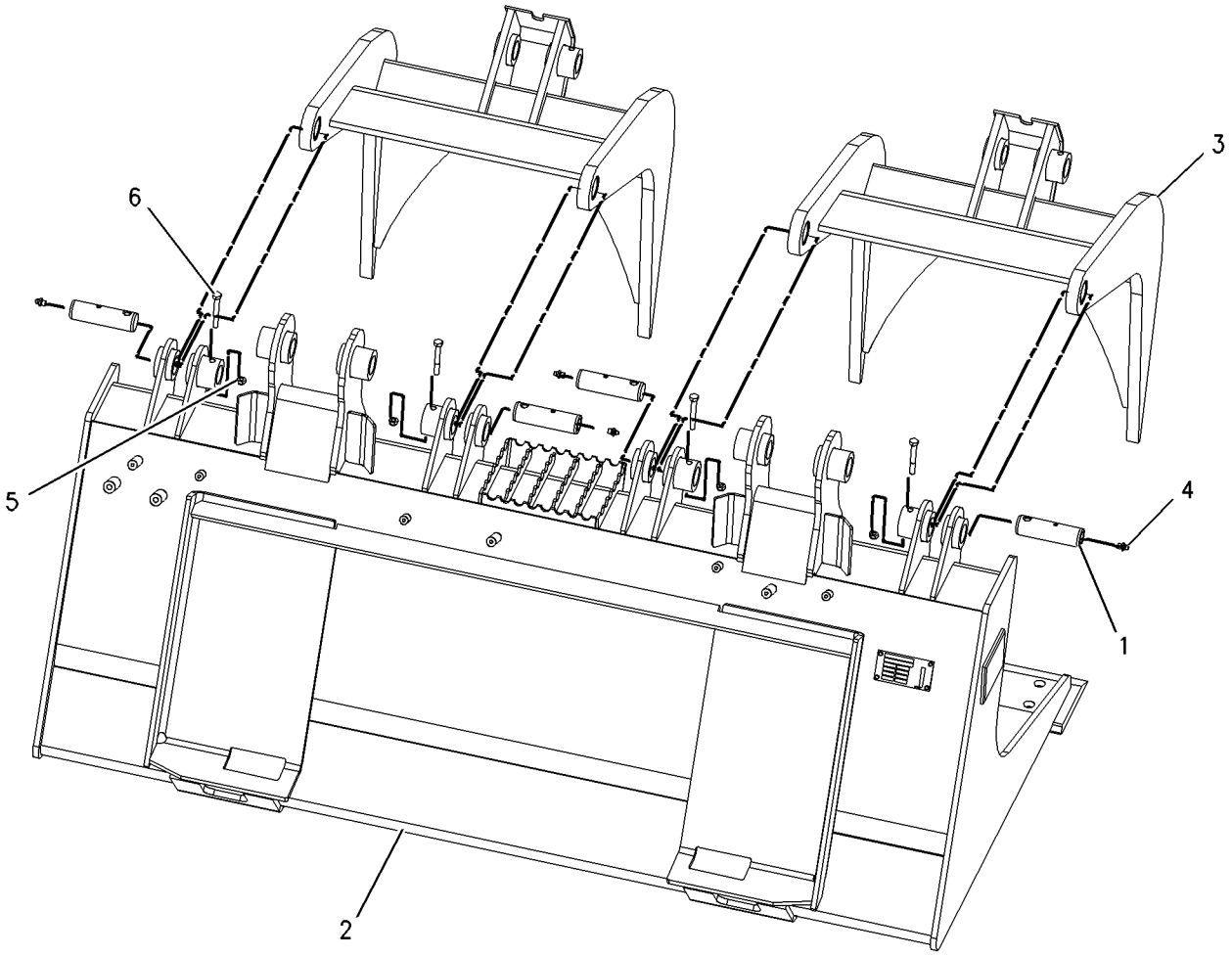

GRAPHIC #1 **<END>** g00978796

WORK TOOLS

156-0886 BUCKET GP-GRAPPLE

S/N: SRS1-UP
PART OF 157-7225 BUCKET AR-GRAPPLE
AN ATTACHMENT

SMCS-6704 **i03648343**

NOTE	REF NO	GRAPHIC REF	PART NUMBER	QTY	PART NAME 1 2 3 4 5 6 (PRODUCT LEVEL)	SEE PAGE
	1	1	**157-0940**	4	PIN	
Y	2	1	**169-8943**	1	BUCKET AS-GRAPPLE (INDUSTRIAL) (72-IN)	366
	3	1	**222-7467**	2	FORK AS	
					(EACH INCLUDES)	
		1	**158-5648**	2	BUSHING	
	4	1	**3B-8489**	4	FITTING-GREASE	
M	5	1	**6V-9189**	4	LOCKNUT (M8X1.25-THD)	
M	6	1	**8T-6869**	4	BOLT (M8X1.25X60-MM)	

M-METRIC PART
Y-SEPARATE ILLUSTRATION

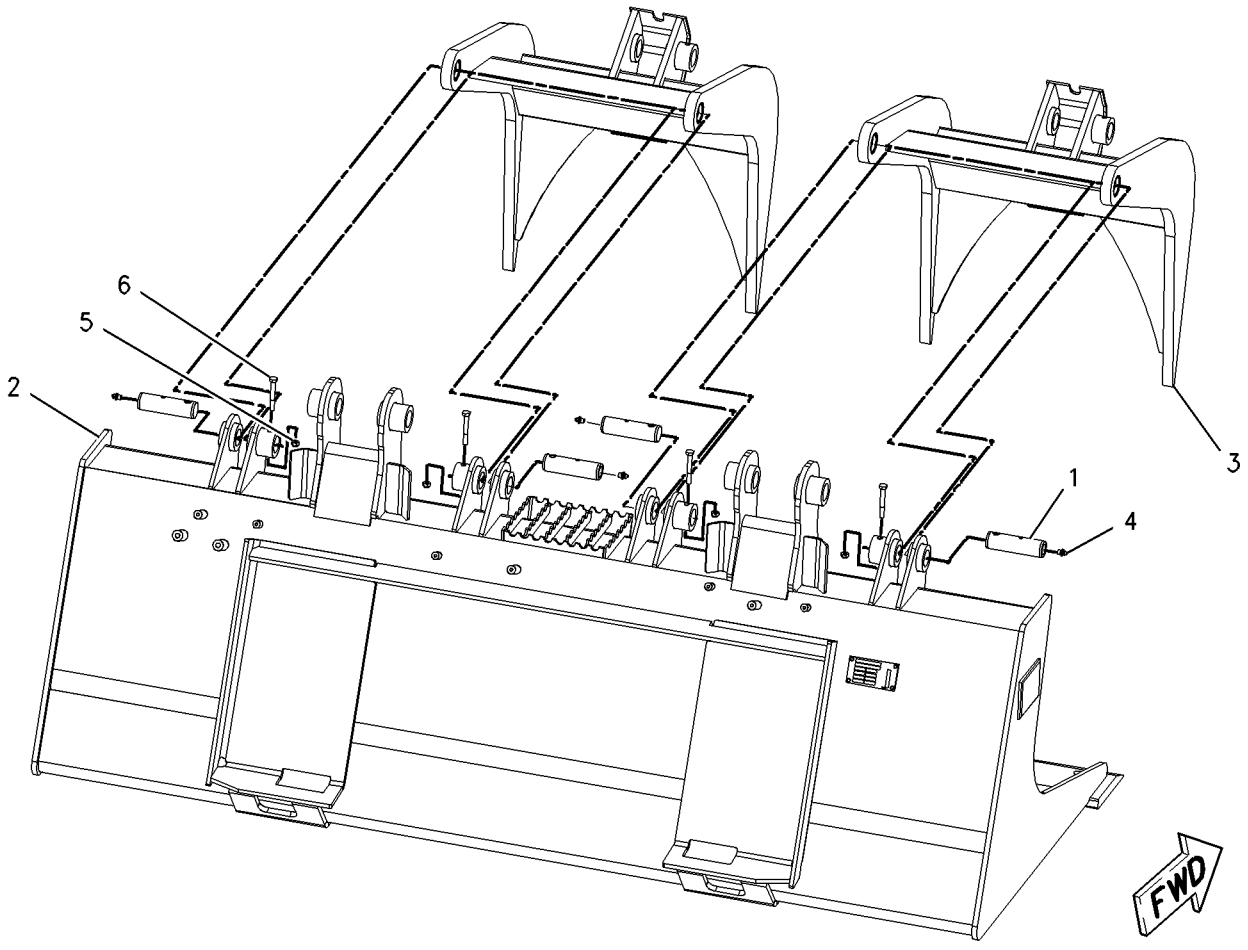

GRAPHIC #1 **<END>** g00993692

217-6228 BUCKET GP-GRAPPLE–INDUSTRIAL

S/N: SRS1-UP
PART OF 217-6229 BUCKET AR-GRAPPLE
AN ATTACHMENT

SMCS-6704 **i03648354**

NOTE	REF NO	GRAPHIC REF	PART NUMBER	QTY	PART NAME 1 2 3 4 5 6 (PRODUCT LEVEL)	SEE PAGE
	1	1	**157-0940**	4	PIN	
Y	2	1	**217-6227**	1	BUCKET AS-GRAPPLE (INDUSTRIAL) (78-IN)	368
	3	1	**222-7467**	2	FORK AS	
					(EACH INCLUDES)	
		1	**158-5648**	2	BUSHING	
	4	1	**3B-8489**	4	FITTING-GREASE	
M	5	1	**6V-9189**	4	LOCKNUT (M8X1.25-THD)	
M	6	1	**8T-6869**	4	BOLT (M8X1.25X60-MM)	

M-METRIC PART
Y-SEPARATE ILLUSTRATION

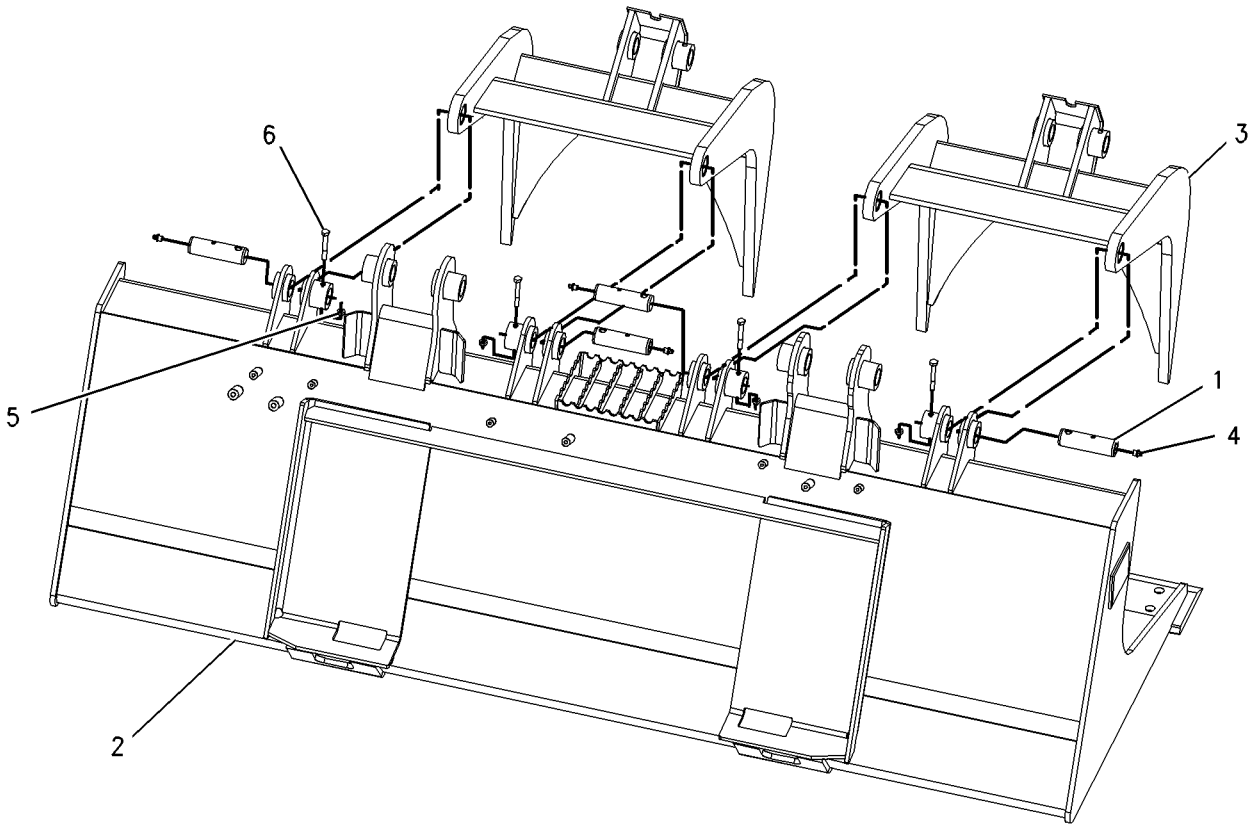

GRAPHIC #1 **<END>** g00992181

279-5359 BUCKET GP-GRAPPLE—INDUSTRIAL

S/N: SRS1-UP
1829-MM (72-IN)
PART OF 279-5360 FORK AR-GRAPPLE
AN ATTACHMENT

SMCS-6704 **i03690347**

NOTE	REF NO	GRAPHIC REF	PART NUMBER	QTY	PART NAME 1 2 3 4 5 6 (PRODUCT LEVEL)	SEE PAGE
	1	1	**157-0940**	4	PIN	
	2	1	**164-9989**	2	FILM-WARNING (CRUSH HAZARD)	
	3	1	**222-7467**	2	FORK AS	
					(EACH INCLUDES)	
		1	**158-5648**	2	BUSHING	
Y	4	1	*279-5358*	1	FRAME GP-FORK (72-IN, INDUSTRIAL)	433
	5	1	**3B-8489**	4	FITTING-GREASE	
M	6	1	**6V-9189**	4	LOCKNUT (M8X1.25-THD)	
M	7	1	**8T-6869**	4	BOLT (M8X1.25X60-MM)	

M-METRIC PART
Y-SEPARATE ILLUSTRATION

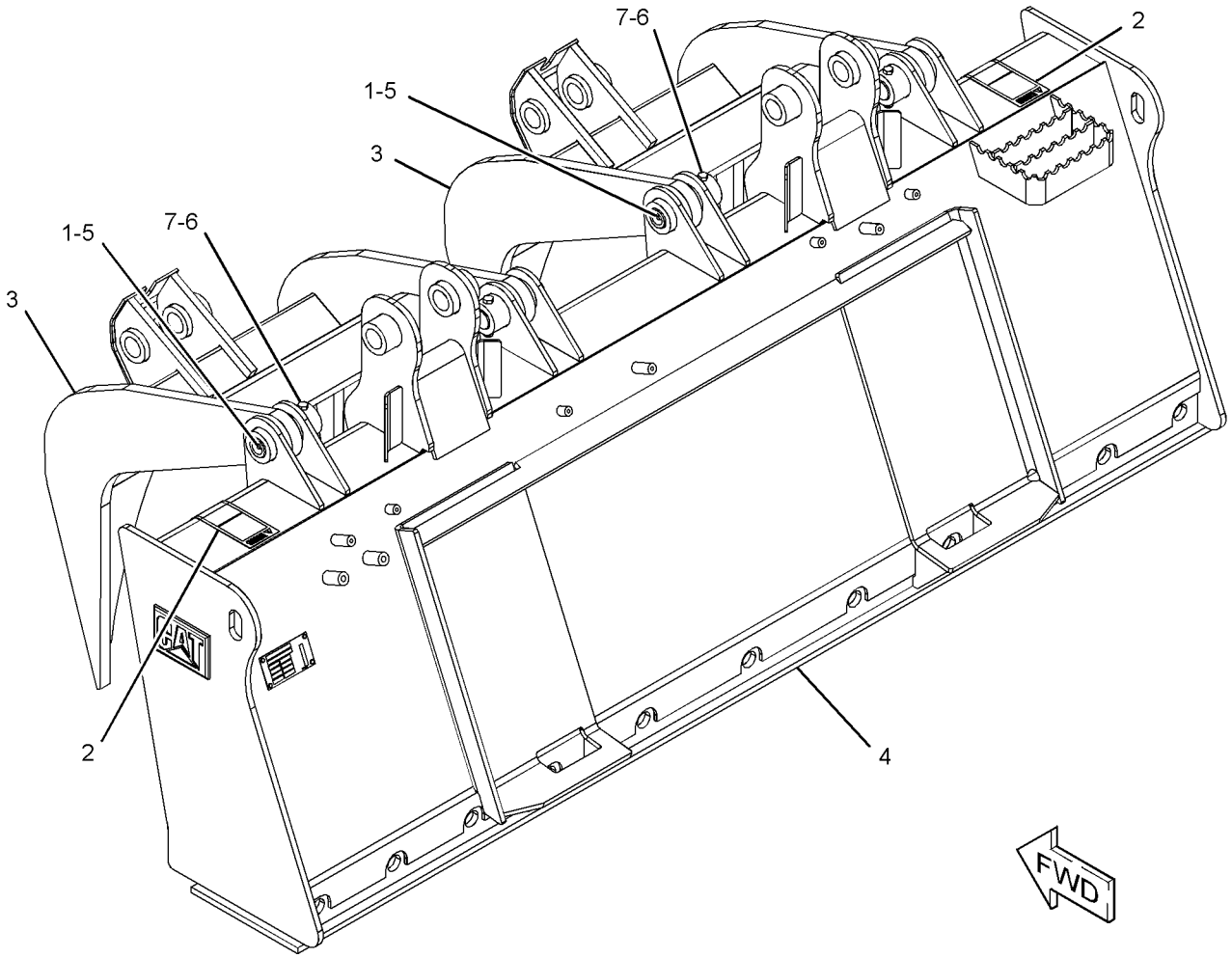

GRAPHIC #1 **<END>** g01280924

286-9244 BUCKET GP-GRAPPLE

S/N: SRS1-UP
2136-MM (84-IN)
PART OF 286-9301 BUCKET AR-GRAPPLE
AN ATTACHMENT

SMCS-6704 **i02723701**

NOTE	REF NO	GRAPHIC REF	PART NUMBER	QTY	PART NAME 1 2 3 4 5 6 (PRODUCT LEVEL)	SEE PAGE
	1	1	**157-0940**	4	PIN	
	2	1	**286-9229**	1	TINE GP	
	3	1	**286-9243**	2	FORK AS	
					(EACH INCLUDES)	
		1	**158-5648**	2	BUSHING	
	4	1	**3B-8489**	4	FITTING-GREASE	
M	5	1	**6V-9189**	4	LOCKNUT (M8X1.25-THD)	
M	6	1	**8T-6869**	4	BOLT (M8X1.25X60-MM)	

M-METRIC PART

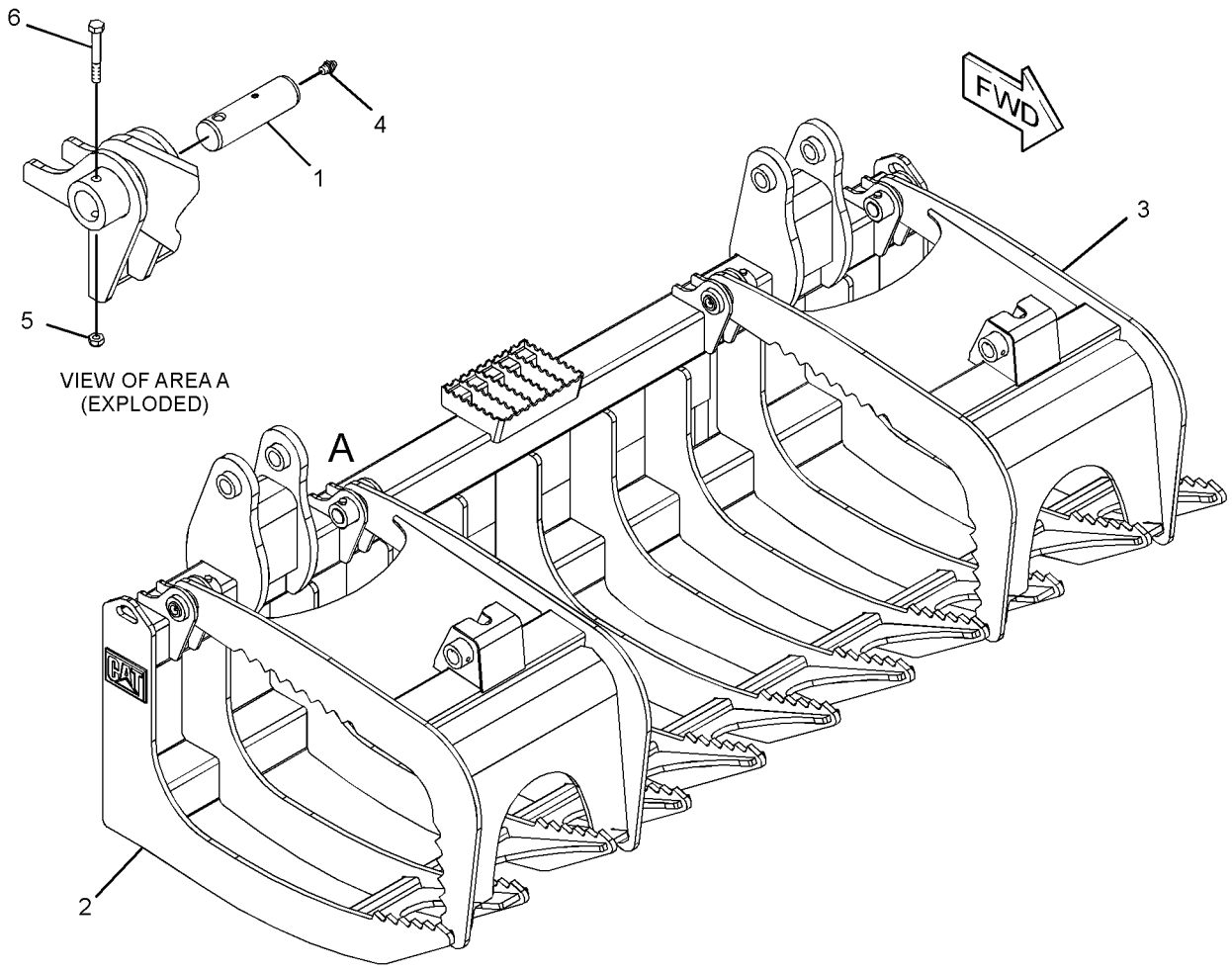

GRAPHIC #1 **<END>** g01372924

286-9278 BUCKET GP-GRAPPLE

S/N: SRS1-UP
1829-MM (72-IN)
PART OF 286-9300 BUCKET AR-GRAPPLE
AN ATTACHMENT

SMCS-6704 **i03635722**

NOTE	REF NO	GRAPHIC REF	PART NUMBER	QTY	PART NAME 1 2 3 4 5 6 (PRODUCT LEVEL)	SEE PAGE
	1	1	**157-0940**	4	PIN	
	2	1	**286-9243**	2	FORK AS	
					(EACH INCLUDES)	
		1	**158-5648**	2	BUSHING	
	3	1	**286-9274**	1	TINE GP	
	4	1	**3B-8489**	4	FITTING-GREASE	
M	5	1	**6V-9189**	4	LOCKNUT (M8X1.25-THD)	
M	6	1	**8T-6869**	4	BOLT (M8X1.25X60-MM)	

M-METRIC PART

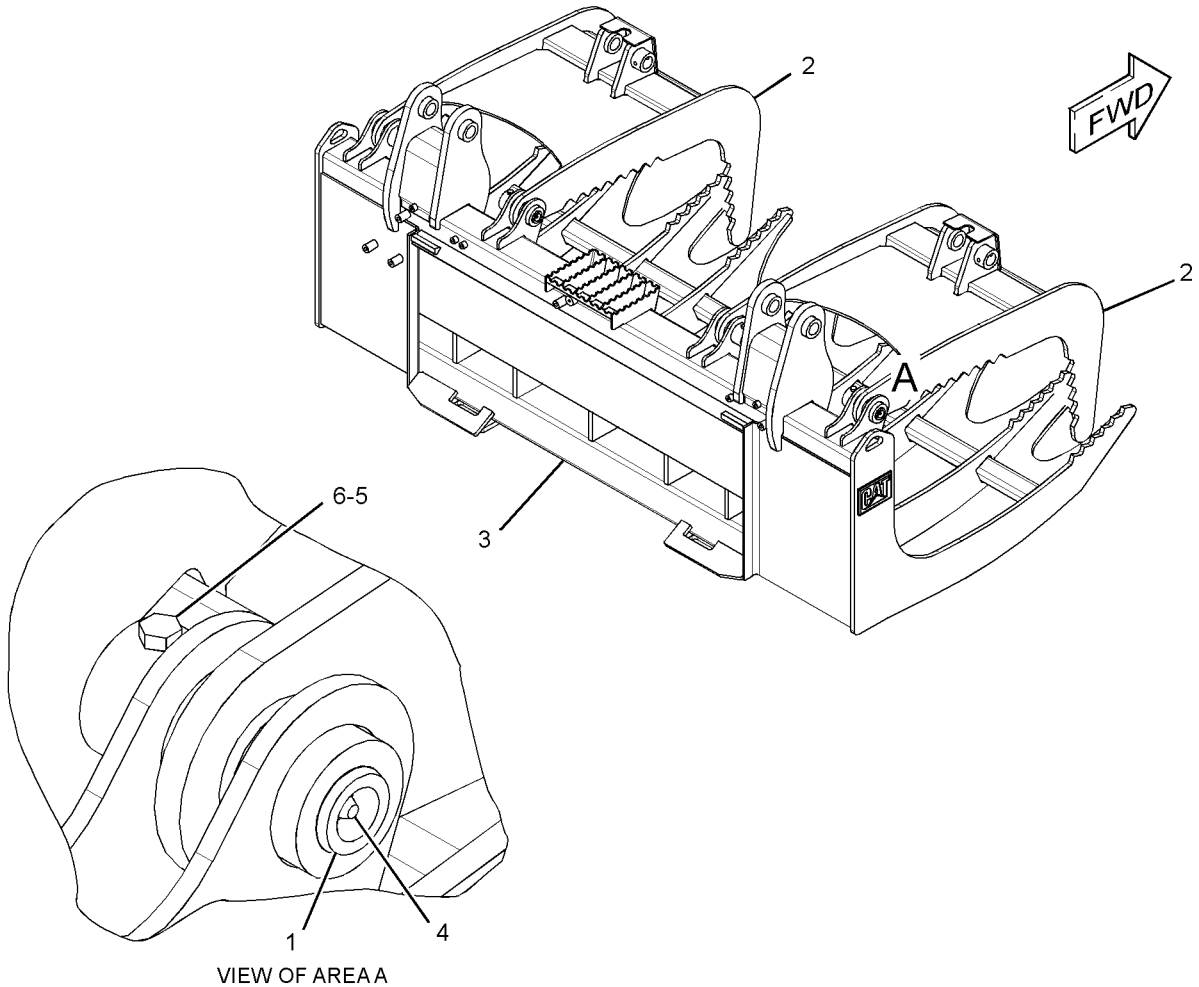

VIEW OF AREA A

GRAPHIC #1 **<END>** g01372568

WORK TOOLS

279-5383 BUCKET GP-MULTIPURPOSE

S/N: SRS1-UP
PART OF 279-5382 BUCKET AR-MULTIPURPOSE
AN ATTACHMENT

SMCS-6104 **i03622341**

NOTE	REF NO	GRAPHIC REF	PART NUMBER	QTY	PART NAME 1 2 3 4 5 6 (PRODUCT LEVEL)	SEE PAGE
Y	1	1	**149-4232**	1	CLAM AS-MULTIPURPOSE BUCKET	401
	2	1	**154-5012**	2	PIN	
M	3	1	**8T-6869**	2	BOLT (M8X1.25X60-MM)	
Y	4	1	*279-5384*	1	BLADE GP-MULTIPURPOSE BUCKET (60-IN)	313
	5	1	**3B-8489**	2	FITTING-GREASE	
M	6	1	**6V-9189**	2	LOCKNUT (M8X1.25-THD)	

M-METRIC PART
Y-SEPARATE ILLUSTRATION

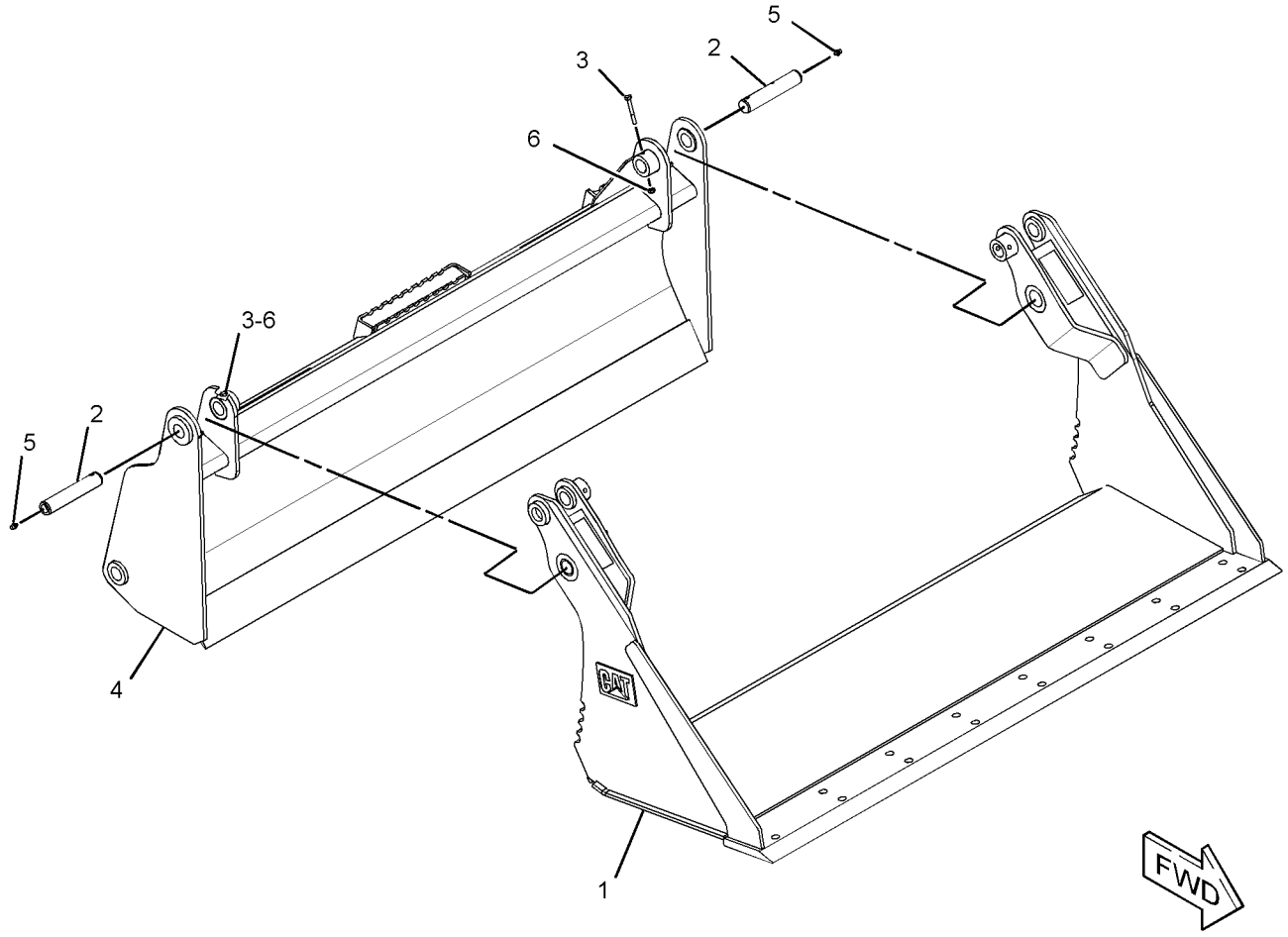

GRAPHIC #1 **<END>** g01945368

WORK TOOLS

279-5389 BUCKET GP-MULTIPURPOSE

S/N: SRS1-UP
PART OF 279-5390 BUCKET AR-MULTIPURPOSE
AN ATTACHMENT

SMCS-6104 **i03635045**

NOTE	REF NO	GRAPHIC REF	PART NUMBER	QTY	PART NAME 1 2 3 4 5 6 (PRODUCT LEVEL)	SEE PAGE
	1	1	**154-5012**	2	PIN	
Y	2	1	**154-5053**	1	CLAM AS-MULTIPURPOSE BUCKET	402
Y	3	1	*279-5388*	1	BLADE GP-MULTIPURPOSE BUCKET (66-IN)	316
	4	1	**3B-8489**	2	FITTING-GREASE	
M	5	1	**6V-9189**	2	LOCKNUT (M8X1.25-THD)	
M	6	1	**8T-6869**	2	BOLT (M8X1.25X60-MM)	

M-METRIC PART
Y-SEPARATE ILLUSTRATION

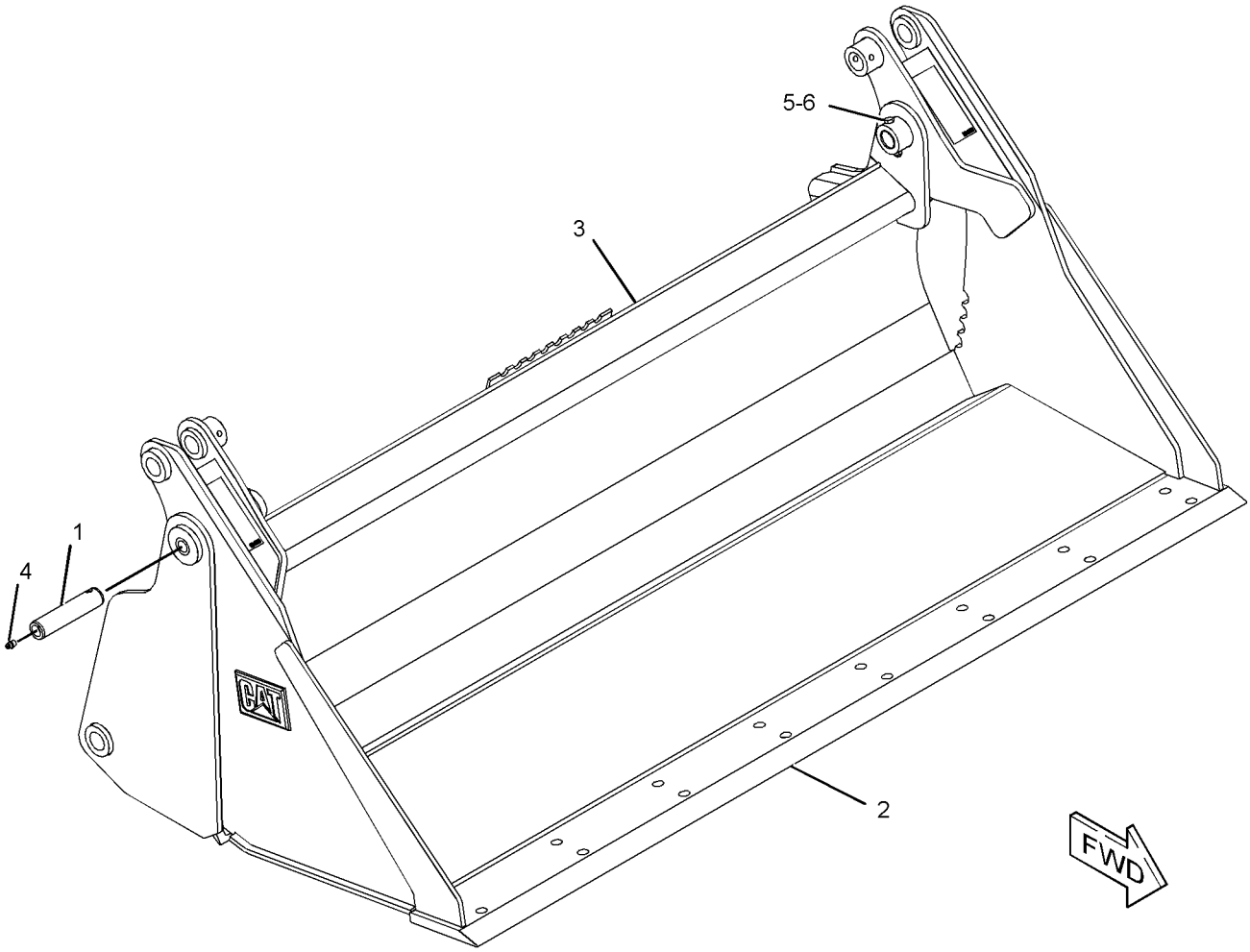

GRAPHIC #1 **<END>** g01952471

279-5397 BUCKET GP-MULTIPURPOSE

S/N: SRS1-UP
PART OF 279-5398 BUCKET AR-MULTIPURPOSE
AN ATTACHMENT

SMCS-6104 **i03635046**

NOTE	REF NO	GRAPHIC REF	PART NUMBER	QTY	PART NAME 1 2 3 4 5 6 (PRODUCT LEVEL)	SEE PAGE
	1	1	**154-5012**	2	PIN	
Y	2	1	**154-5070**	1	CLAM AS-MULTIPURPOSE BUCKET	403
M	3	1	**8T-6869**	2	BOLT (M8X1.25X60-MM)	
Y	4	1	*279-5396*	1	BLADE GP-MULTIPURPOSE BUCKET (72-IN)	318
	5	1	**3B-8489**	2	FITTING-GREASE	
M	6	1	**6V-9189**	2	LOCKNUT (M8X1.25-THD)	

M-METRIC PART
Y-SEPARATE ILLUSTRATION

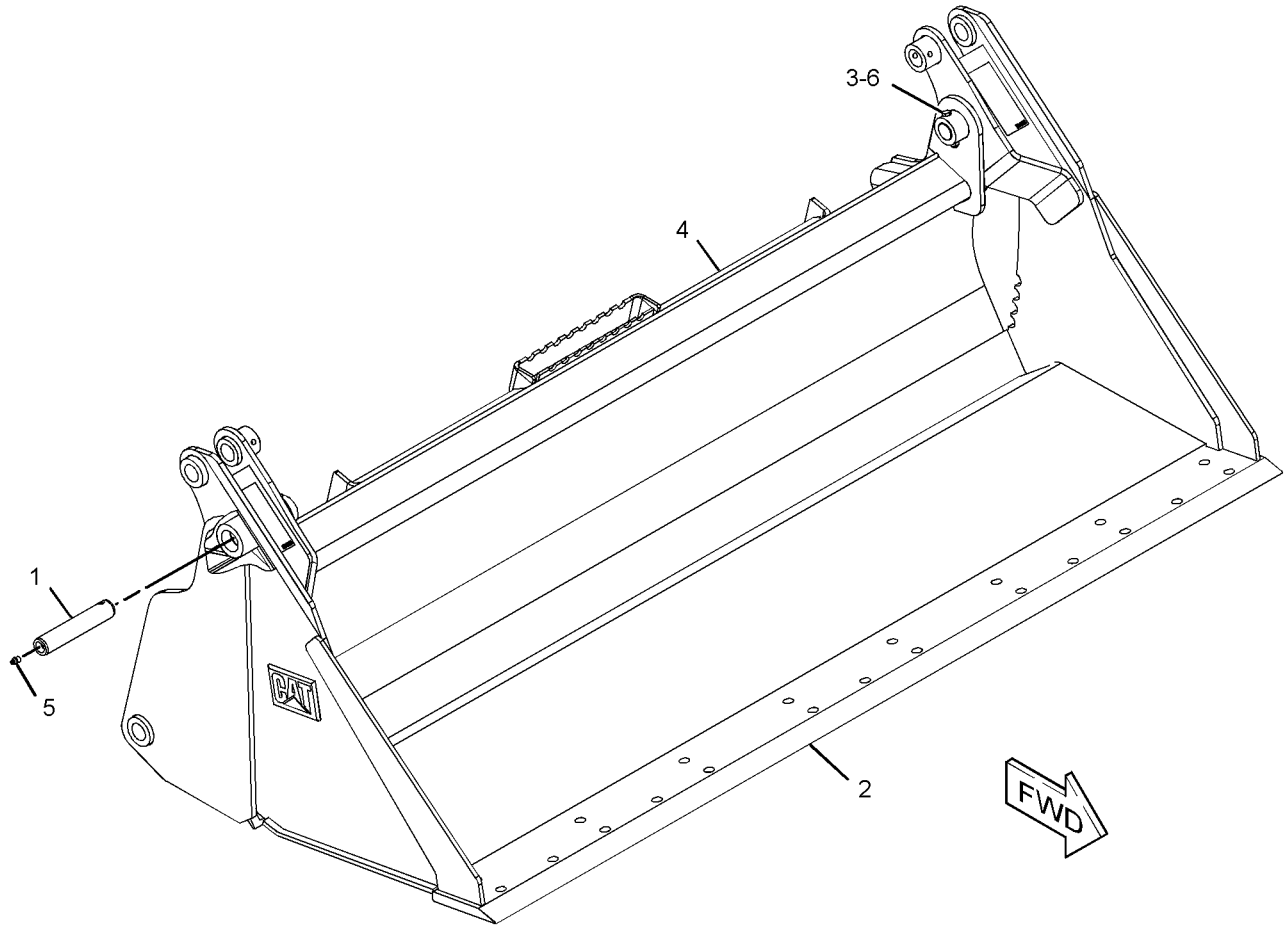

GRAPHIC #1 **<END>** g01952445

WORK TOOLS

279-5404 BUCKET GP-MULTIPURPOSE

S/N: SRS1-UP
PART OF 279-5403 BUCKET AR-MULTIPURPOSE
AN ATTACHMENT

SMCS-6104 **i03635047**

NOTE	REF NO	GRAPHIC REF	PART NUMBER	QTY	PART NAME 1 2 3 4 5 6 (PRODUCT LEVEL)	SEE PAGE
	1	1	**154-5012**	2	PIN	
M	2	1	**8T-6869**	2	BOLT (M8X1.25X60-MM)	
Y	3	1	**199-8308**	1	CLAM AS-MULTIPURPOSE BUCKET	404
Y	4	1	*279-5405*	1	BLADE GP-MULTIPURPOSE BUCKET (78-IN)	319
	5	1	**3B-8489**	2	FITTING-GREASE	
M	6	1	**6V-9189**	2	LOCKNUT (M8X1.25-THD)	

M-METRIC PART
Y-SEPARATE ILLUSTRATION

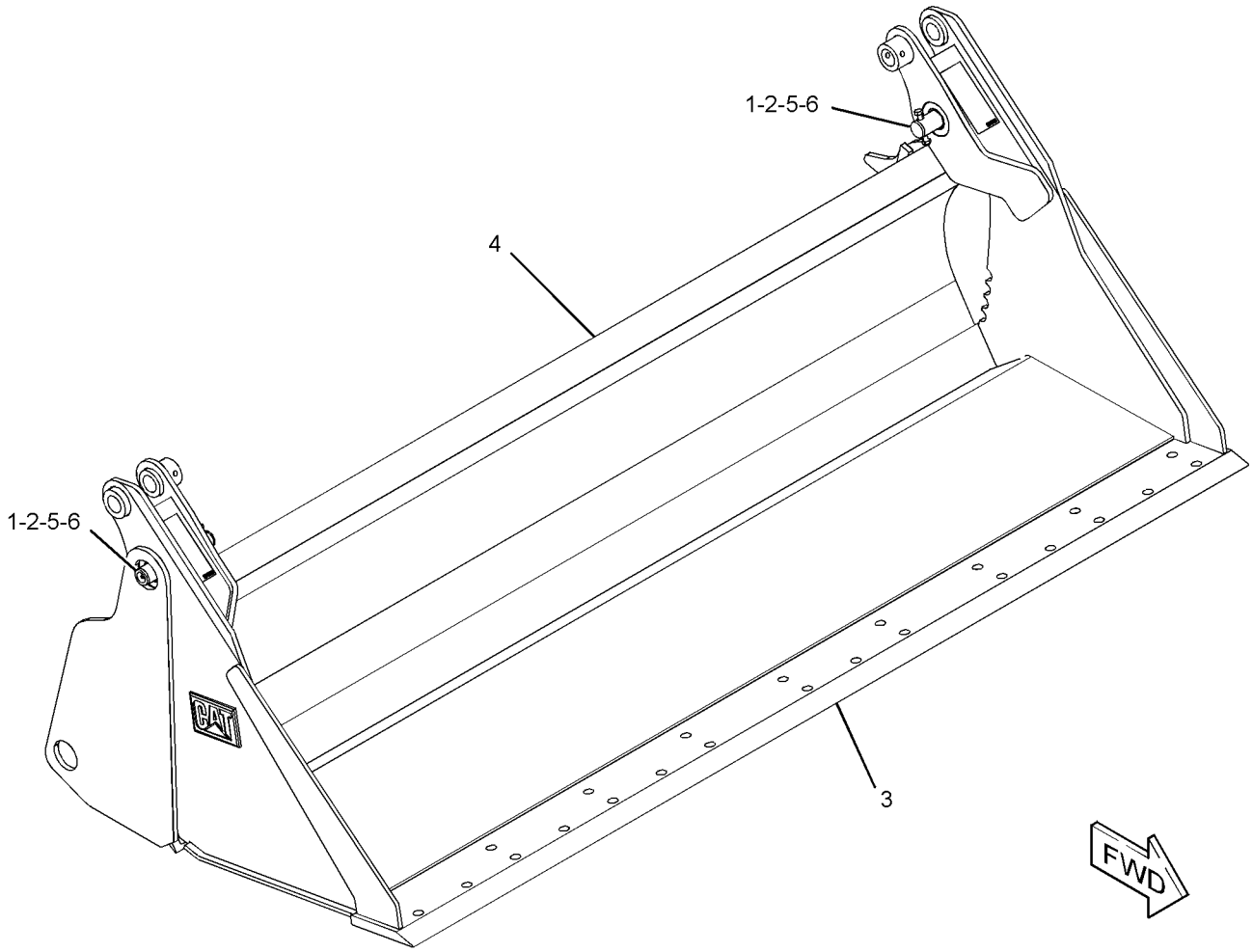

GRAPHIC #1 **<END>** g01920456

293-0141 BUCKET GP-MULTIPURPOSE

S/N: SRS1-UP
PART OF 293-0139 BUCKET AR-MULTIPURPOSE
AN ATTACHMENT

SMCS-6104 **i03647948**

NOTE	REF NO	GRAPHIC REF	PART NUMBER	QTY	PART NAME 1 2 3 4 5 6 (PRODUCT LEVEL)	SEE PAGE
	1	1	**154-5012**	2	PIN	
Y	2	1	*293-0142*	1	BLADE GP-MULTIPURPOSE BUCKET (84-IN)	321
Y	3	1	**293-0148**	1	CLAM AS-MULTIPURPOSE BUCKET	405
	4	1	**3B-8489**	2	FITTING-GREASE	
M	5	1	**6V-9189**	2	LOCKNUT (M8X1.25-THD)	
M	6	1	**8T-6869**	2	BOLT (M8X1.25X60-MM)	

M-METRIC PART
Y-SEPARATE ILLUSTRATION

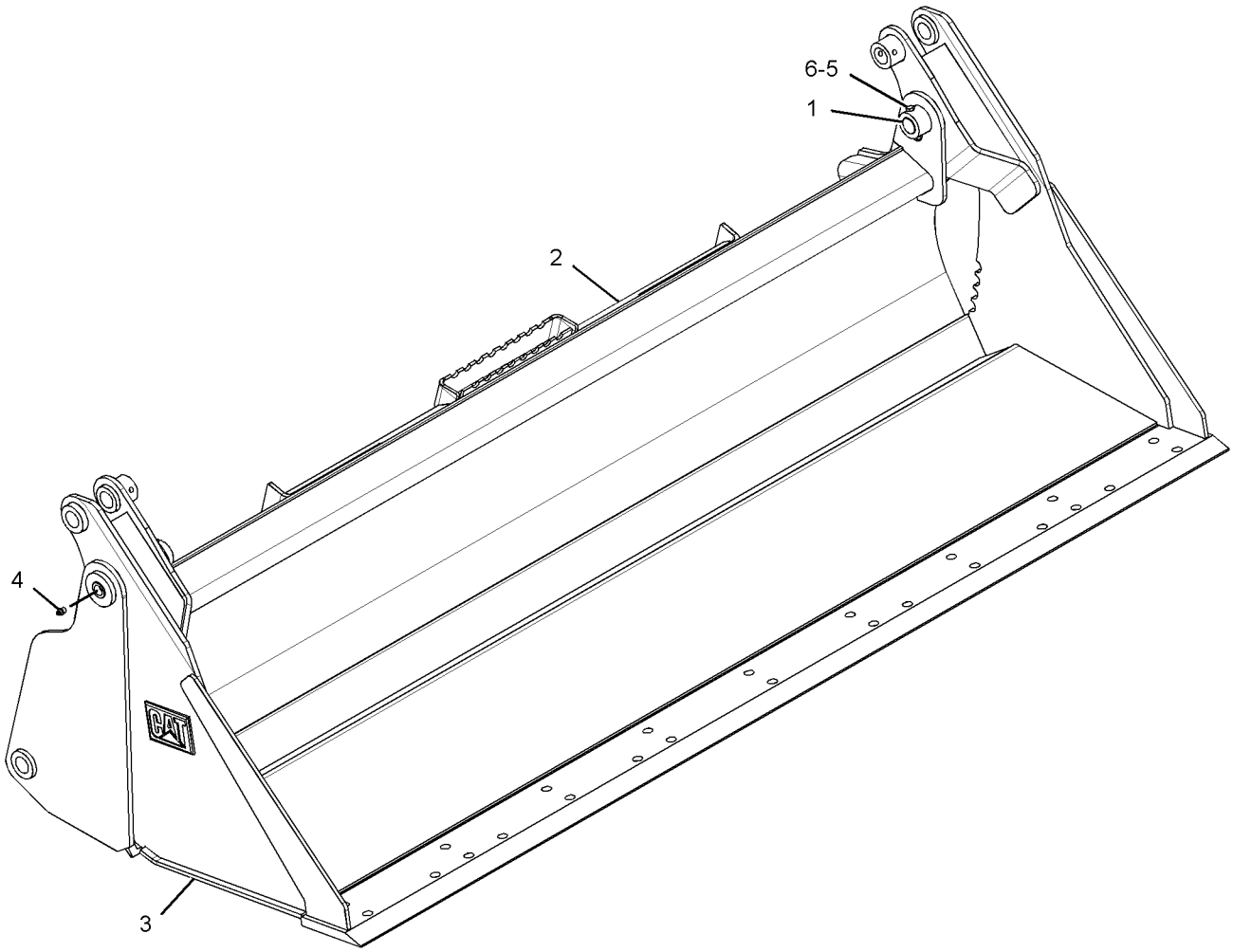

GRAPHIC #1 **<END>** g01327400

WORK TOOLS

285-6096 BUCKET GP-UTILITY

S/N: SRS1-UP
PART OF 285-6095 BUCKET AR-UTILITY
AN ATTACHMENT

SMCS-6101 **i04156280**

NOTE	REF NO	GRAPHIC REF	PART NUMBER	QTY	PART NAME 1 2 3 4 5 6 (PRODUCT LEVEL)	SEE PAGE
	1	1	**358-4944**	1	PLATE-IDENTIFICATION (BUCKET SPECIFICATIONS)	
	2	1	**168-8389**	4	TACK-FASTENER	
Y	3	1	*285-6097*	1	BUCKET AS-UTILITY	377

Y-SEPARATE ILLUSTRATION

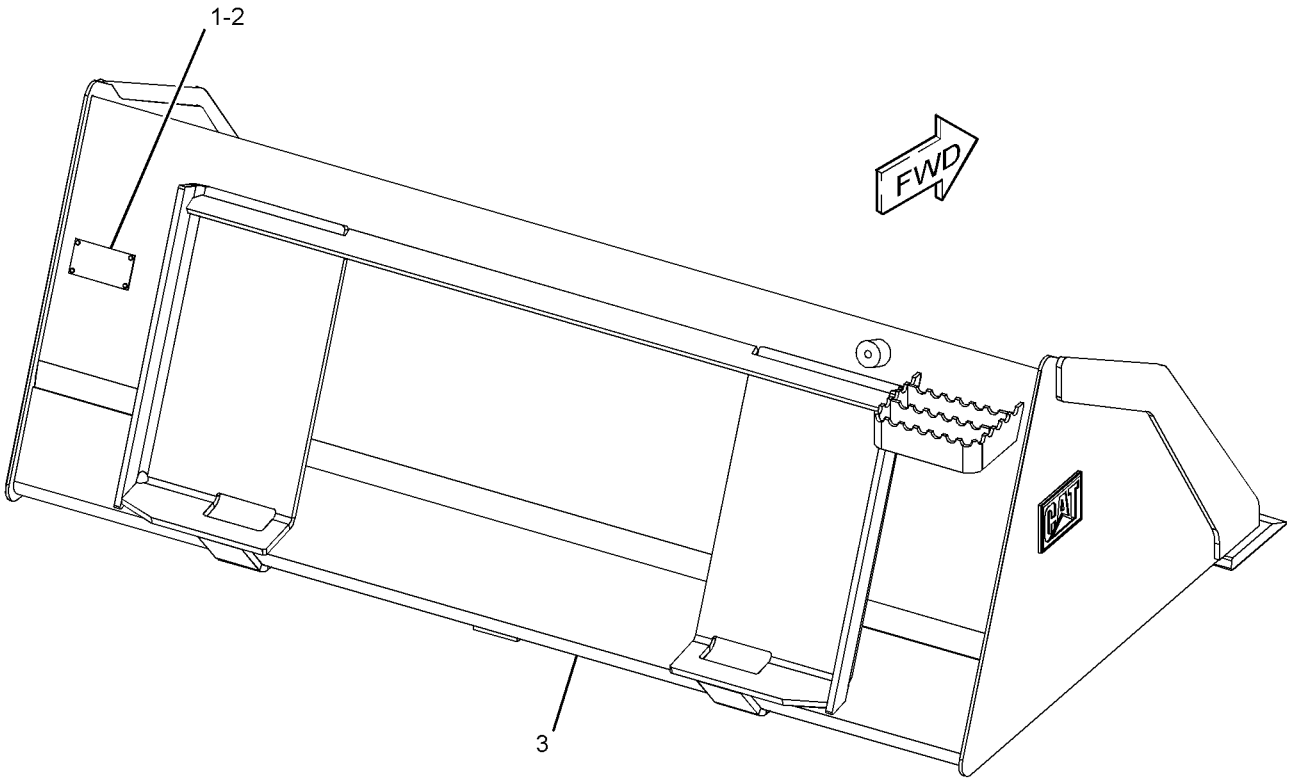

GRAPHIC #1 **<END>** g01957401

285-6099 BUCKET GP-UTILITY

S/N: SRS1-UP
PART OF 285-6100 BUCKET AR-UTILITY
AN ATTACHMENT

SMCS-6101 **i04157276**

NOTE	REF NO	GRAPHIC REF	PART NUMBER	QTY	PART NAME 1 2 3 4 5 6 (PRODUCT LEVEL)	SEE PAGE
	1	1	**358-4944**	1	PLATE-IDENTIFICATION (BUCKET SPECIFICATIONS)	
	2	1	**168-8389**	4	TACK-FASTENER	
Y	3	1	*285-6098*	1	BUCKET AS-UTILITY (66-IN)	378

Y-SEPARATE ILLUSTRATION

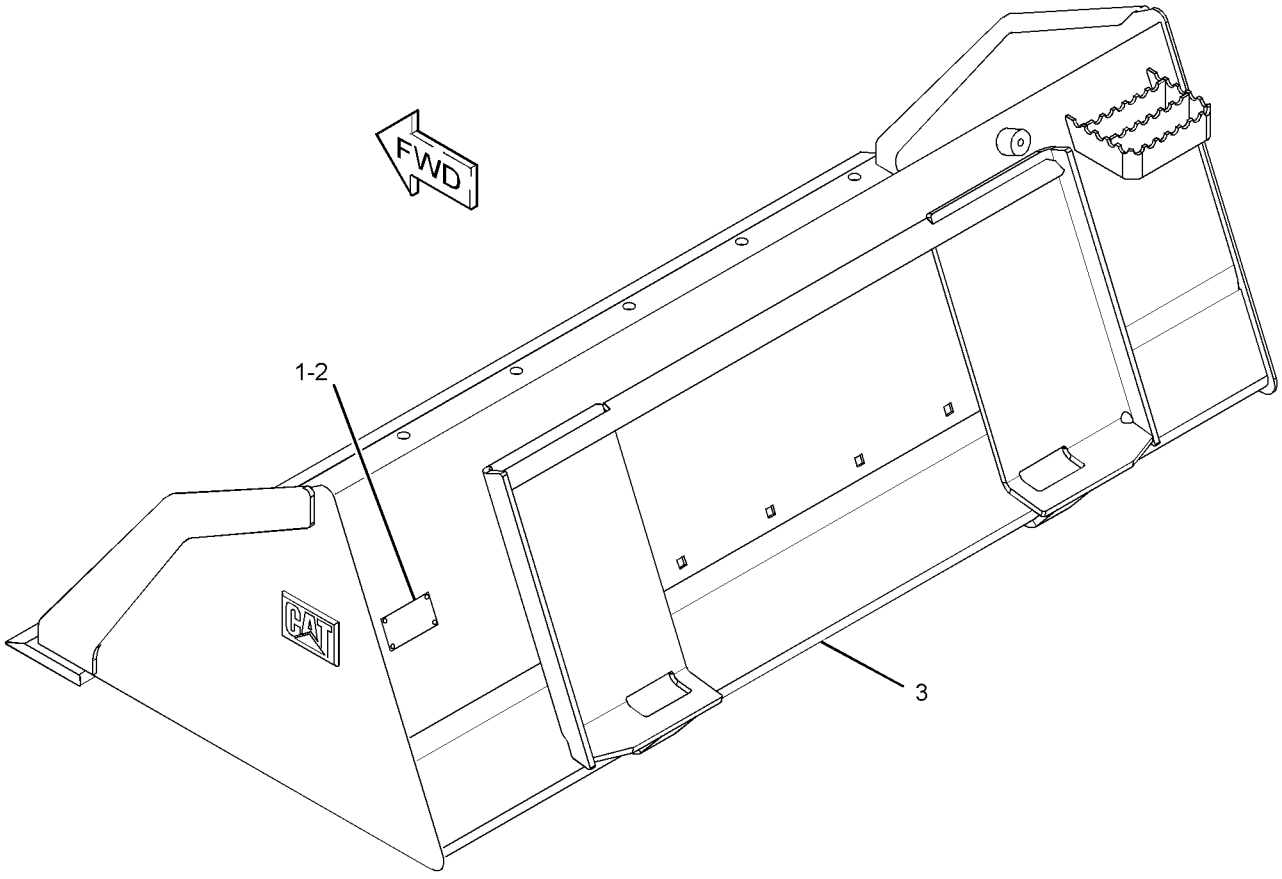

GRAPHIC #1 **<END>** g01954053

285-6102 BUCKET GP-UTILITY

S/N: SRS1-UP
PART OF 285-6101 BUCKET AR-UTILITY
AN ATTACHMENT

SMCS-6101 **i04157278**

NOTE	REF NO	GRAPHIC REF	PART NUMBER	QTY	PART NAME 1 2 3 4 5 6 (PRODUCT LEVEL)	SEE PAGE
	1	1	**358-4944**	1	PLATE-IDENTIFICATION (BUCKET SPECIFICATIONS)	
	2	1	**168-8389**	4	TACK-FASTENER	
Y	3	1	*285-6103*	1	BUCKET AS-UTILITY (72-IN)	379

Y-SEPARATE ILLUSTRATION

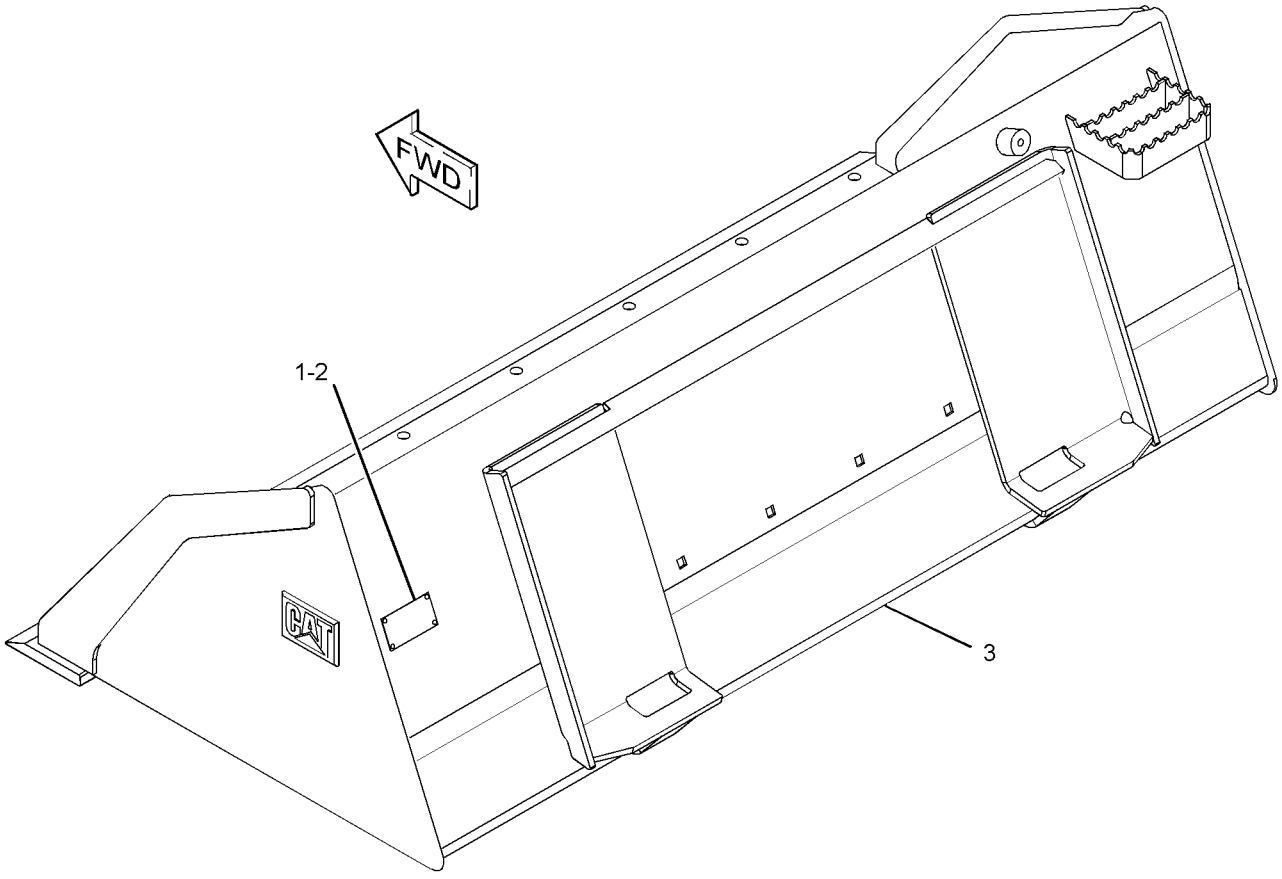

GRAPHIC #1 **<END>** g01954037

WORK TOOLS

353-1693 CARRIAGE & FORK AR

S/N: SRS1-UP
AN ATTACHMENT

SMCS-6136, 6402 **i03887511**

NOTE	PART NUMBER	QTY	PART NAME 1 2 3 4 5 6 (PRODUCT LEVEL)	SEE PAGE
Y	**351-9371**	6	CARRIAGE GP-FORK	400

Y-SEPARATE ILLUSTRATION

<END>

353-1694 CARRIAGE & FORK AR

S/N: SRS1-UP
AN ATTACHMENT

SMCS-6136, 6402 **i03887530**

NOTE	PART NUMBER	QTY	PART NAME 1 2 3 4 5 6 (PRODUCT LEVEL)	SEE PAGE
Y	**351-9371**	1	CARRIAGE GP-FORK	400
Y	**195-6943**	2	FORK GP-PALLET (36-IN)	426

Y-SEPARATE ILLUSTRATION

<END>

353-1696 CARRIAGE & FORK AR

S/N: SRS1-UP
AN ATTACHMENT

SMCS-6136, 6402 **i03887531**

NOTE	PART NUMBER	QTY	PART NAME 1 2 3 4 5 6 (PRODUCT LEVEL)	SEE PAGE
Y	**351-9371**	1	CARRIAGE GP-FORK	400
Y	**195-6942**	2	FORK GP-PALLET (42-IN)	425

Y-SEPARATE ILLUSTRATION

<END>

353-1697 CARRIAGE & FORK AR

S/N: SRS1-UP
AN ATTACHMENT

SMCS-6136, 6402 **i03887532**

NOTE	PART NUMBER	QTY	PART NAME 1 2 3 4 5 6 (PRODUCT LEVEL)	SEE PAGE
Y	**351-9371**	1	CARRIAGE GP-FORK	400
Y	**195-8545**	2	FORK GP-PALLET (48-IN)	427

Y-SEPARATE ILLUSTRATION

<END>

WORK TOOLS

351-9371 CARRIAGE GP-FORK

S/N: SRS1-UP

PART OF 353-1693, 353-1694, 353-1696, 353-1697 CARRIAGE & FORK AR

AN ATTACHMENT

SMCS-6402 **i03887529**

NOTE	REF NO	GRAPHIC REF	PART NUMBER	QTY	PART NAME 1 2 3 4 5 6 (PRODUCT LEVEL)	SEE PAGE
	1	1	**157-4835**	1	PLATE-INSTRUCTION	
	2	1	**168-8389**	4	TACK-FASTENER	
	3	1	**252-8595**	1	STEP AS	
M	4	1	**8T-4136**	2	BOLT (M10X1.5X25-MM)	
	5	1	**8T-4121**	2	WASHER-HARD (11X21X2.5-MM THK)	
M	6	1	**8T-4133**	2	NUT (M10X1.5-THD)	

M-METRIC PART

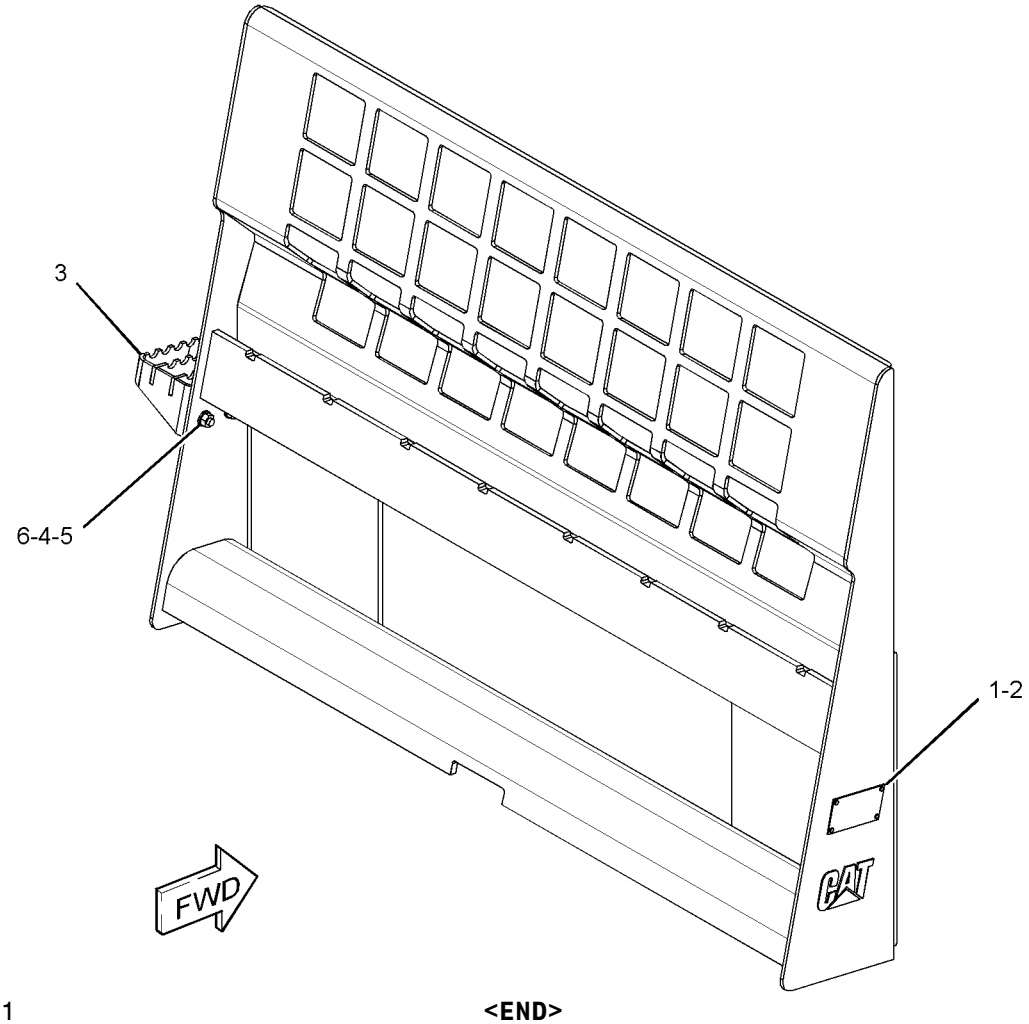

GRAPHIC #1 **<END>** g02133957

WORK TOOLS

149-4232 CLAM AS-MULTIPURPOSE BUCKET

S/N: SRS1-UP
1524-MM (60-IN)
PART OF 279-5383 BUCKET GP-MULTIPURPOSE
AN ATTACHMENT

SMCS-6104 **i03622320**

NOTE	REF NO	GRAPHIC REF	PART NUMBER	QTY	PART NAME 1 2 3 4 5 6 (PRODUCT LEVEL)	SEE PAGE
	1	1	**142-8805**	4	BEARING-SLEEVE	
	2	1	**161-4130**	2	PLATE-IDENTIFICATION (CAT)	
	3	1	**149-5435**	1	EDGE	
	4	1	**159-8038**	2	FILM-WARNING (CRUSH HAZARD, STAY BACK)	

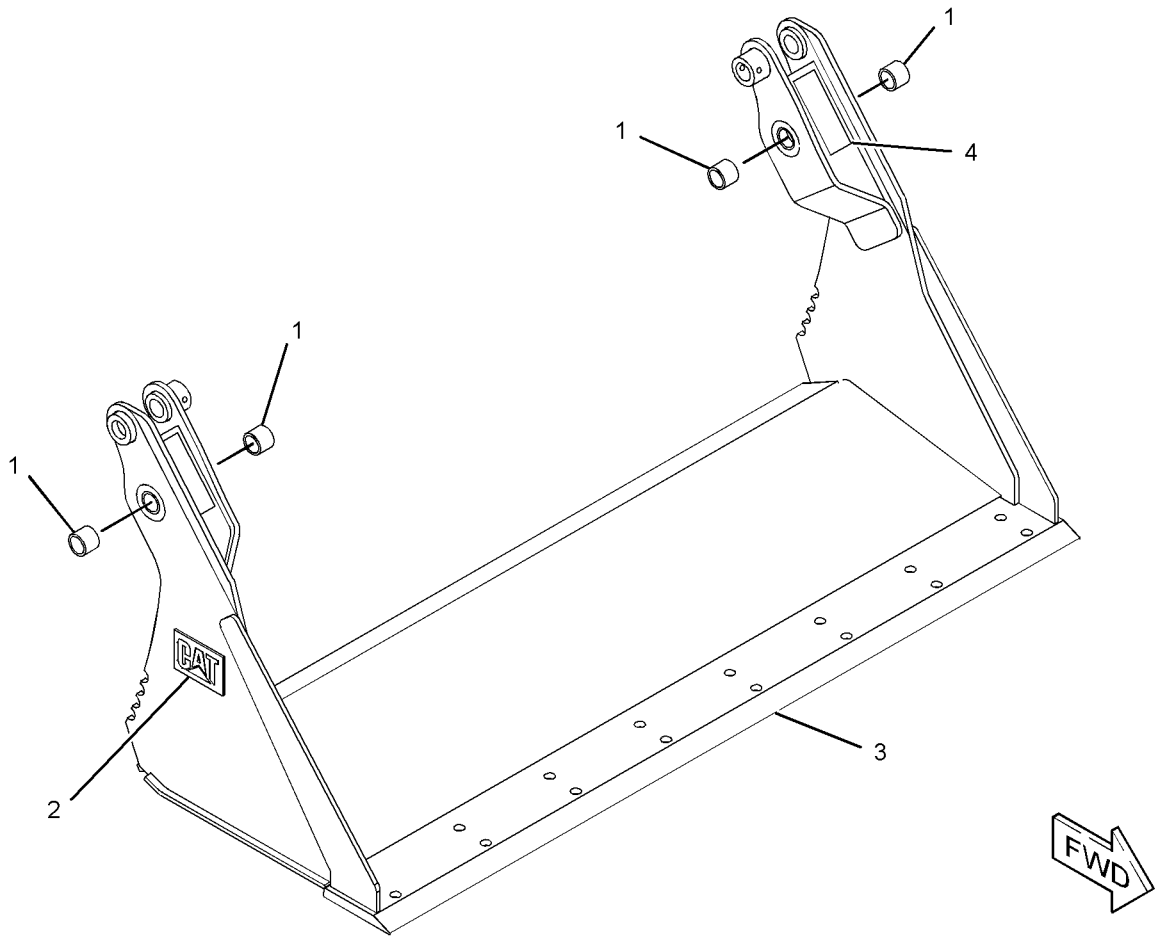

GRAPHIC #1 **<END>** g01945759

WORK TOOLS

154-5053 CLAM AS-MULTIPURPOSE BUCKET

S/N: SRS1-UP
1676-MM (66-IN)
PART OF 279-5389 BUCKET GP-MULTIPURPOSE
AN ATTACHMENT

SMCS-6104 **i03621236**

NOTE	REF NO	GRAPHIC REF	PART NUMBER	QTY	PART NAME 1 2 3 4 5 6 (PRODUCT LEVEL)	SEE PAGE
	1	1	**142-8805**	4	BEARING-SLEEVE	
	2	1	**161-4130**	2	PLATE-IDENTIFICATION (CAT)	
	3	1	**149-5436**	1	EDGE	
	4	1	**159-8038**	2	FILM-WARNING (CRUSH HAZARD, STAY BACK)	

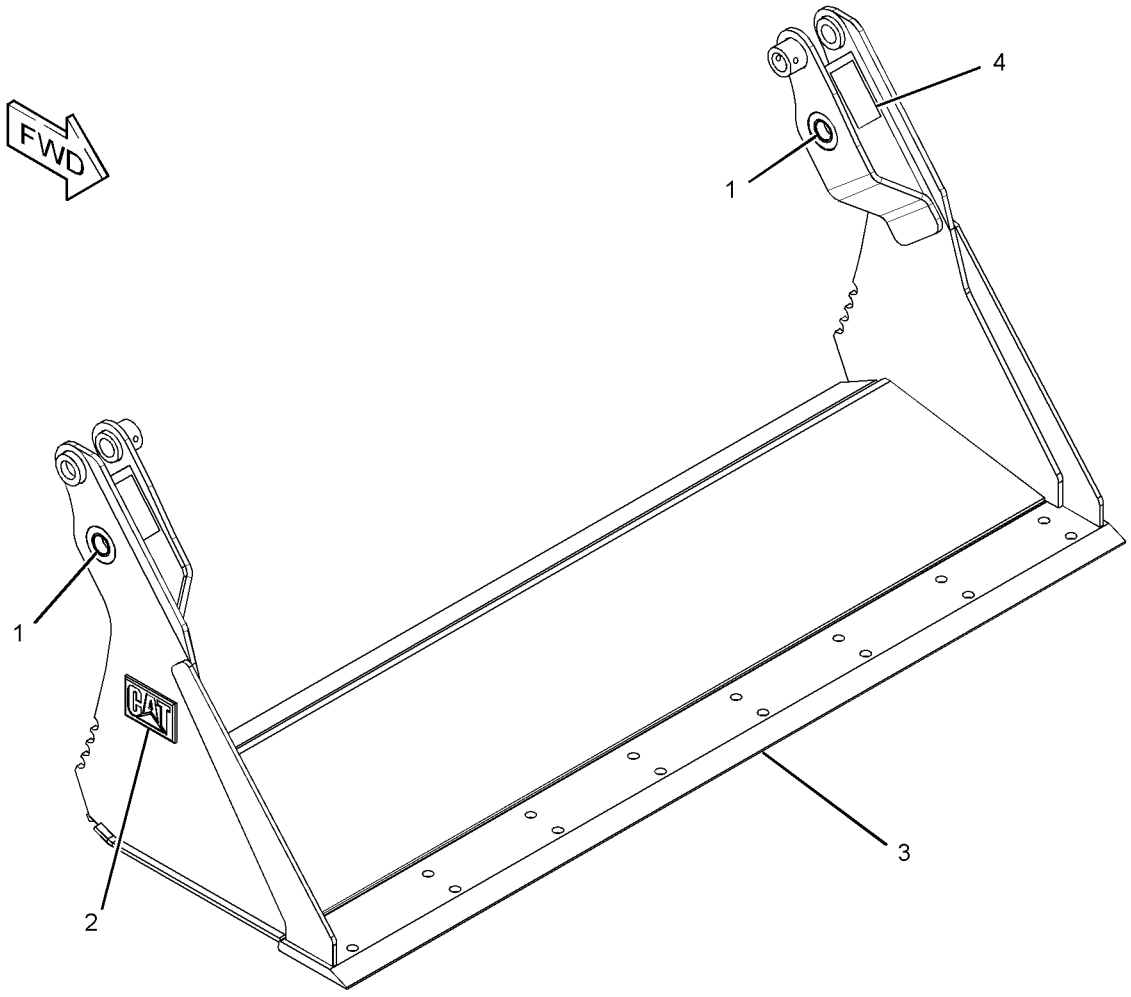

GRAPHIC #1 **<END>** g01945550

154-5070 CLAM AS-MULTIPURPOSE BUCKET

S/N: SRS1-UP
1829-MM (72-IN)
PART OF 279-5397 BUCKET GP-MULTIPURPOSE
AN ATTACHMENT

SMCS-6104 **i03621205**

NOTE	REF NO	GRAPHIC REF	PART NUMBER	QTY	PART NAME 1 2 3 4 5 6 (PRODUCT LEVEL)	SEE PAGE
	1	1	**142-8805**	4	BEARING-SLEEVE	
	2	1	**161-4130**	2	PLATE-IDENTIFICATION (CAT)	
	3	1	**149-5437**	1	EDGE	
	4	1	**159-8038**	2	FILM-WARNING (CRUSH HAZARD, STAY BACK)	

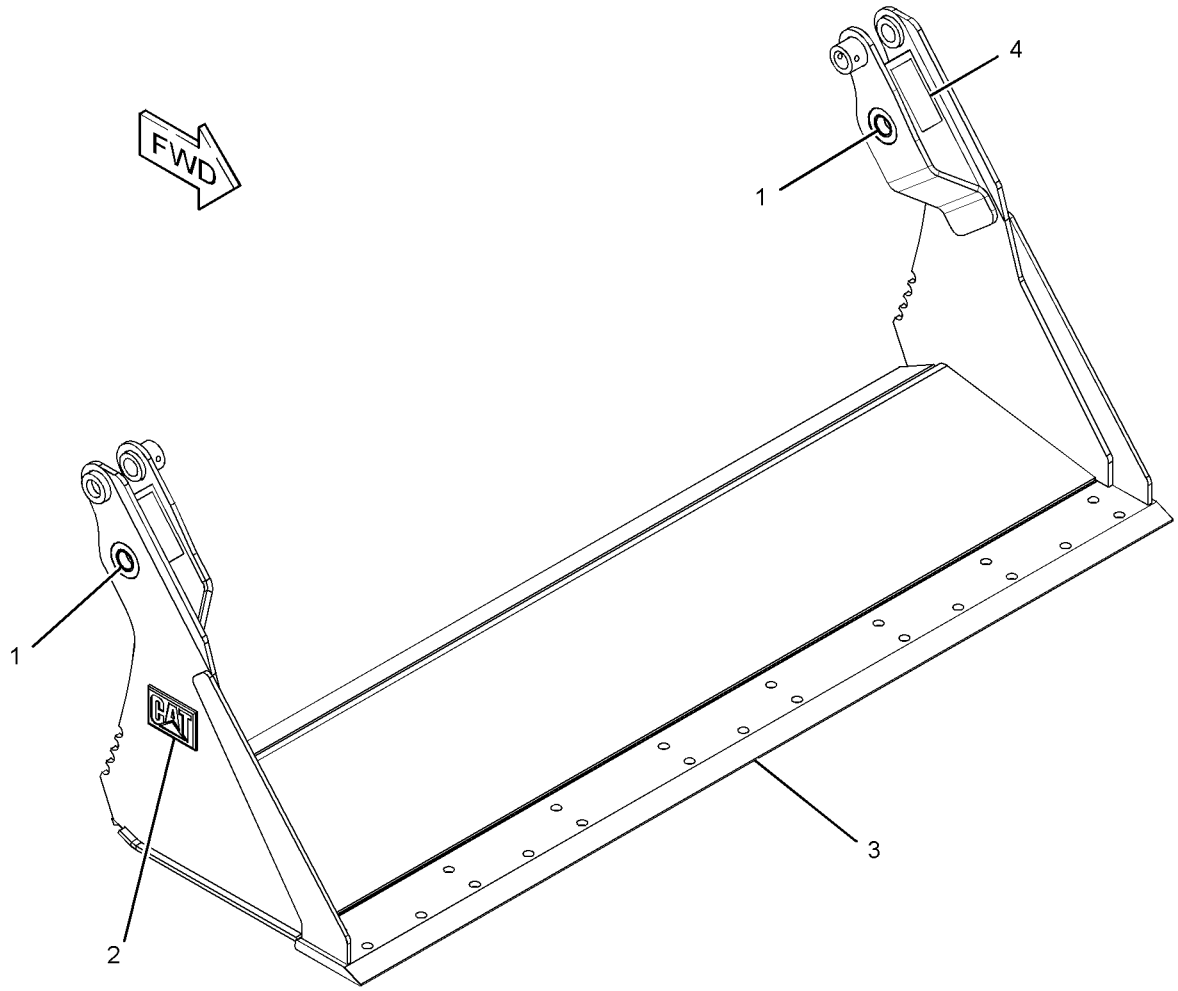

GRAPHIC #1 **<END>** g01945555

199-8308 CLAM AS-MULTIPURPOSE BUCKET

S/N: SRS1-UP
1981-MM (78-IN)
PART OF 279-5404 BUCKET GP-MULTIPURPOSE
AN ATTACHMENT

SMCS-6104 **i03621225**

NOTE	REF NO	GRAPHIC REF	PART NUMBER	QTY	PART NAME 1 2 3 4 5 6 (PRODUCT LEVEL)	SEE PAGE
	1	1	**142-8805**	4	BEARING-SLEEVE	
	2	1	**161-4130**	2	PLATE-IDENTIFICATION (CAT)	
	3	1	**199-7722**	1	EDGE	
	4	1	**199-8317**	1	EDGE	
	5	1	**159-8038**	2	FILM-WARNING (CRUSH HAZARD, STAY BACK)	

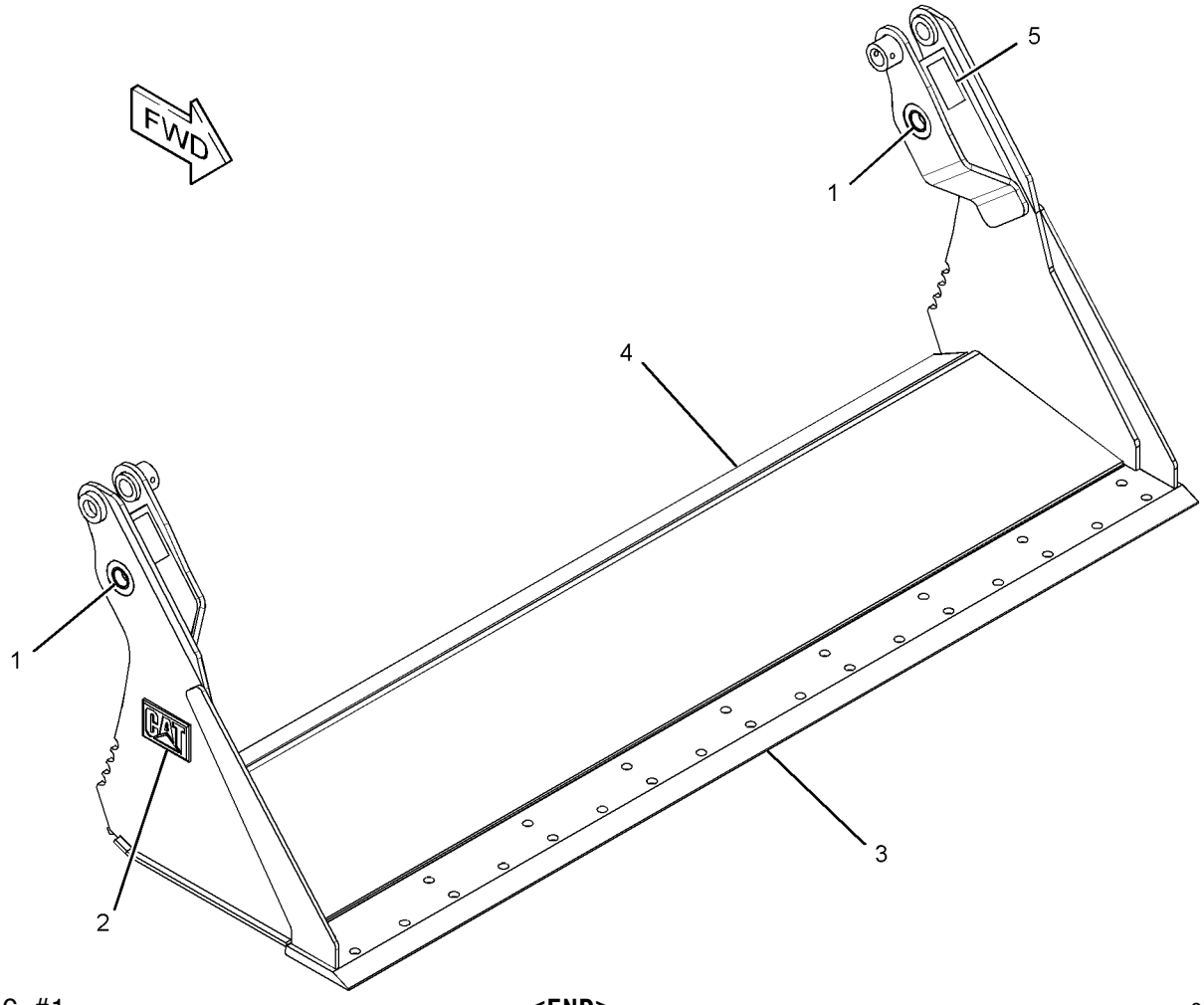

GRAPHIC #1 **<END>** g01945620

293-0148 CLAM AS-MULTIPURPOSE BUCKET

S/N: SRS1-UP
2134-MM (84-IN)
PART OF 293-0141 BUCKET GP-MULTIPURPOSE
AN ATTACHMENT

SMCS-6104 **i03621201**

NOTE	REF NO	GRAPHIC REF	PART NUMBER	QTY	PART NAME 1 2 3 4 5 6 (PRODUCT LEVEL)	SEE PAGE
	1	1	**142-8805**	4	BEARING-SLEEVE	
	2	1	**161-4130**	2	PLATE-IDENTIFICATION (CAT)	
	3	1	**229-3432**	1	EDGE	

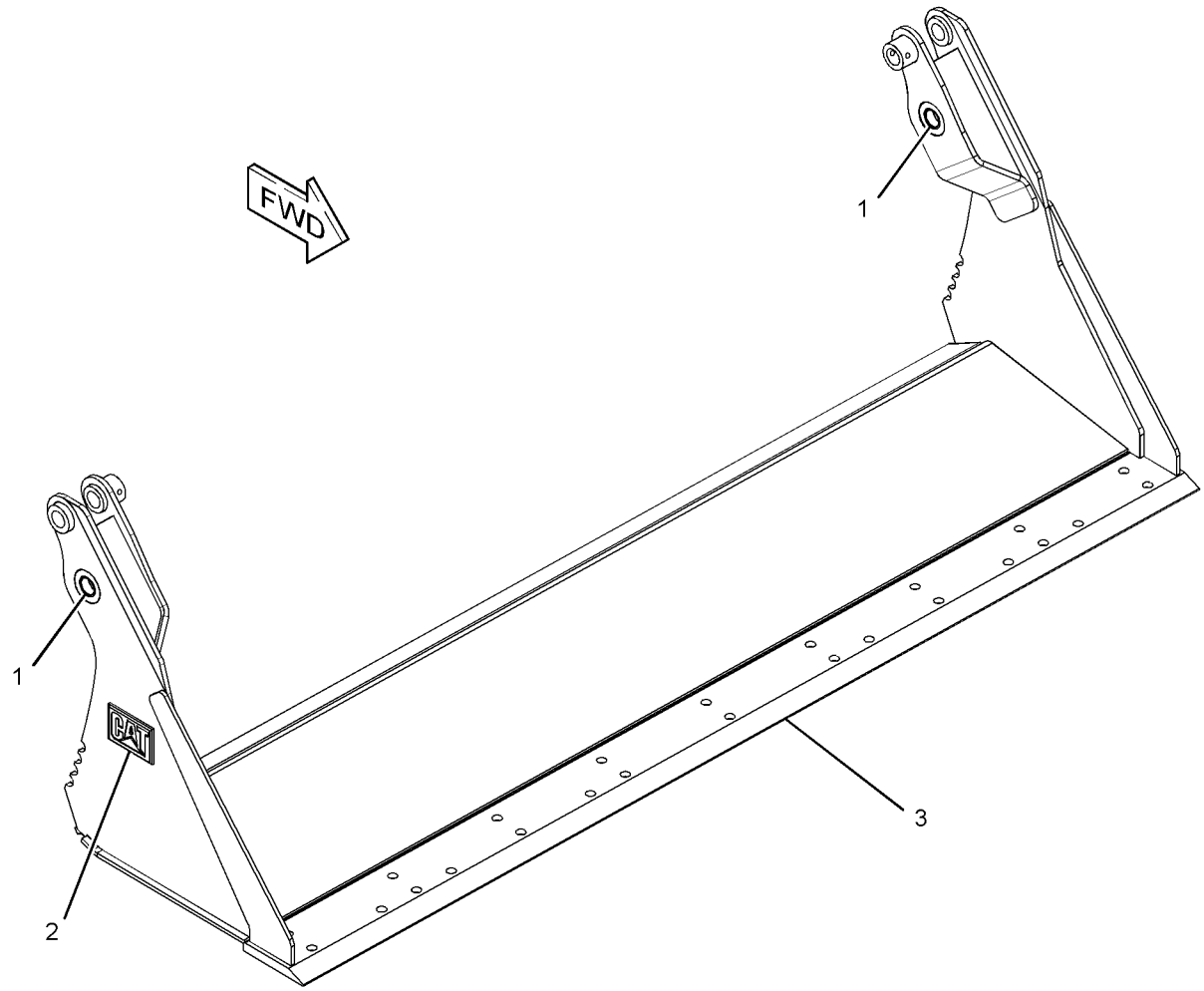

GRAPHIC #1 **<END>** g01945653

296-0582 CONVERSION GP-WORK TOOL—KIT, HIGH FLOW

S/N: SRS1-UP

AN ATTACHMENT

SMCS-1408, 4283, 5057, 7553 **i04041660**

NOTE	REF NO	GRAPHIC REF	PART NUMBER	QTY	PART NAME 1 2 3 4 5 6 (PRODUCT LEVEL)	SEE PAGE
	1	1	**258-4198**	1	HARNESS AS-WORK TOOL	
		1	**8T-8737**	5	PLUG-SEAL	
		1	**9W-0844**	2	SOCKET-CONNECTOR (14-GA TO 16-GA)	
		1	**155-2260**	1	KIT-CONNECTING PLUG (3-PIN)	
					(INCLUDES PLUG AS, WEDGE & INTERFACE SEAL)	
		1	**156-1460**	1	RECEPTACLE (8-PIN)	
		1	**179-5434**	1	PLUG AS	
		1	**3K-8782**	1	FUSE (10-AMPERE)	
		1	**180-9340**	1	SOCKET-CONNECTOR (14-GA TO 18-GA)	
	2	1	**259-1107**	1	SWITCH AS-TOGGLE (IDLE SPEED)	
		1	**102-8803**	1	KIT-RECEPTACLE (3-PIN)	
					(INCLUDES RECEPTACLE AS & WEDGE)	
		1	**8T-8729**	3	PIN-CONNECTOR (16-GA TO 18-GA)	
	3	1	**296-0583**	1	BRACKET	
	4	1	**296-0584**	1	MAGNET	
	5	1	**096-6166**	4	WASHER-HARD (4.5X9X1-MM THK)	
M	6	1	**6V-9671**	2	SCREW-MACHINE (M3X0.5X12-MM)	
M	7	1	**8T-2658**	2	LOCKNUT (M3X0.5-THD)	

M-METRIC PART

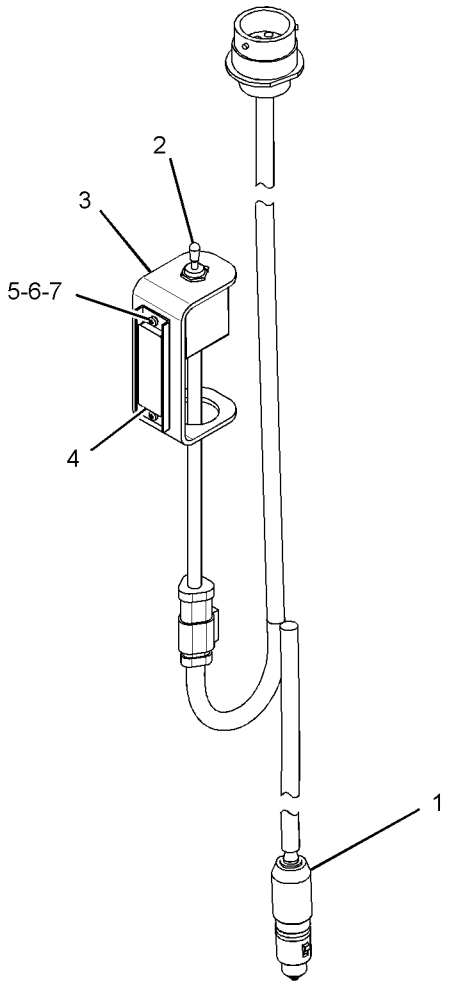

GRAPHIC #1 **<END>** g01894540

326-5700 COUPLER AR-QUICK—MANUAL

S/N: SRS1-UP
AN ATTACHMENT

SMCS-6129 **i04037735**

NOTE	PART NUMBER	QTY	PART NAME 1 2 3 4 5 6 (PRODUCT LEVEL)	SEE PAGE
Y	*360-1363*	1	COUPLER GP-QUICK (MECHANICAL)	408
B	**6V-9831**	1	CAP AS	

B-USE AS REQUIRED
Y-SEPARATE ILLUSTRATION

<END>

326-5750 COUPLER AR-QUICK—HYDRAULIC

S/N: SRS1-UP
AN ATTACHMENT

SMCS-6129 **i03984089**

NOTE	PART NUMBER	QTY	PART NAME 1 2 3 4 5 6 (PRODUCT LEVEL)	SEE PAGE
Y	*360-1364*	1	COUPLER GP-QUICK (HYDRAULIC)	409
Y	*326-5751*	1	LINES GP-COUPLER (HYDRAULIC)	237

Y-SEPARATE ILLUSTRATION

<END>

360-1363 COUPLER GP-QUICK—MECHANICAL

S/N: SRS1-UP
PART OF 326-5700 COUPLER AR-QUICK
AN ATTACHMENT

SMCS-6129 **i03933809**

NOTE	REF NO	GRAPHIC REF	PART NUMBER	QTY	PART NAME 1 2 3 4 5 6 (PRODUCT LEVEL)	SEE PAGE
	1	1	**159-5797**	2	SPRING	
Y	2	1	*258-2535*	1	LOCK GP-QUICK COUPLER (RH)	445
Y	3	1	*258-2537*	1	LOCK GP-QUICK COUPLER (LH)	446
	4	1	**361-4407**	1	COUPLER AS-QUICK	
		1	**126-5701**	2	PLATE-RETAINER	
	5	1	**131-5879**	2	WASHER (11X32X3-MM THK)	
	6	1	**132-7551**	2	SPACER (11X19X6-MM THK)	
	7	1	**5B-0651**	2	FITTING-STRAIGHT	
M	8	1	**6V-7744**	2	LOCKNUT (M10X1.5-THD)	
M	9	1	**7X-2621**	2	BOLT (M10X1.5X12-MM)	
	10	1	**7X-7729**	4	WASHER (11X25X3-MM THK)	
	11	1	**8T-4121**	6	WASHER-HARD (11X21X2.5-MM THK)	
M	12	1	**8T-4172**	2	BOLT (M10X1.5X80-MM)	
M	13	1	**8T-4196**	4	BOLT (M10X1.5X35-MM)	

M-METRIC PART
Y-SEPARATE ILLUSTRATION

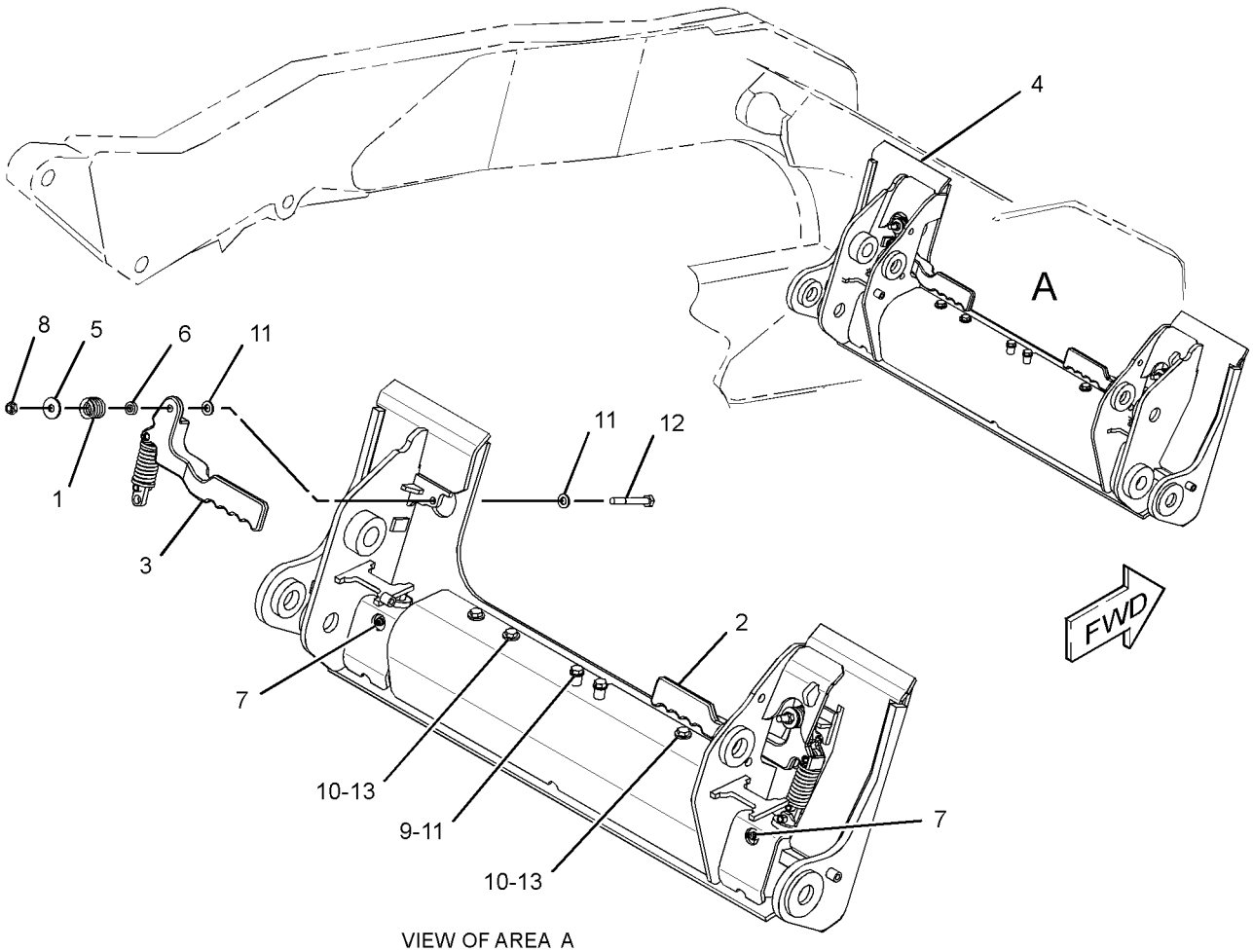

VIEW OF AREA A
(COMPONENTS REMOVED FOR CLARITY)

GRAPHIC #1 **<END>** g02155581

360-1364 COUPLER GP-QUICK–HYDRAULIC

S/N: SRS1-UP
PART OF 326-5750 COUPLER AR-QUICK
AN ATTACHMENT

SMCS-6129 **i03909543**

NOTE	REF NO	GRAPHIC REF	PART NUMBER	QTY	PART NAME 1 2 3 4 5 6 (PRODUCT LEVEL)	SEE PAGE
	1	1	**207-9785**	2	PIN	
Y	2	1	*215-3962*	1	CYLINDER & LINK GP-COUPLER (LH)	411
Y	3	1	*215-3963*	1	CYLINDER & LINK GP-COUPLER (RH)	412
	4	1	**218-6334**	1	BRACKET AS	
	5	1	**218-6335**	1	BRACKET AS	
	6	1	**361-4407**	1	COUPLER AS-QUICK	
		1	**126-5701**	2	PLATE-RETAINER	
	7	1	**3B-4628**	2	PIN-COTTER	
	8	1	**5B-0651**	2	FITTING-STRAIGHT	
	9	1	**5P-0372**	2	LOCK PIN	
	10	1	**8L-5188**	2	PIN	
	11	1	**8T-4121**	14	WASHER-HARD (11X21X2.5-MM THK)	
M	12	1	**8T-4133**	4	NUT (M10X1.5-THD)	
M	13	1	**8T-4196**	8	BOLT (M10X1.5X35-MM)	
	14	1	**9T-7303**	4	SPACER (16X28X1.5-MM THK)	

M-METRIC PART
Y-SEPARATE ILLUSTRATION

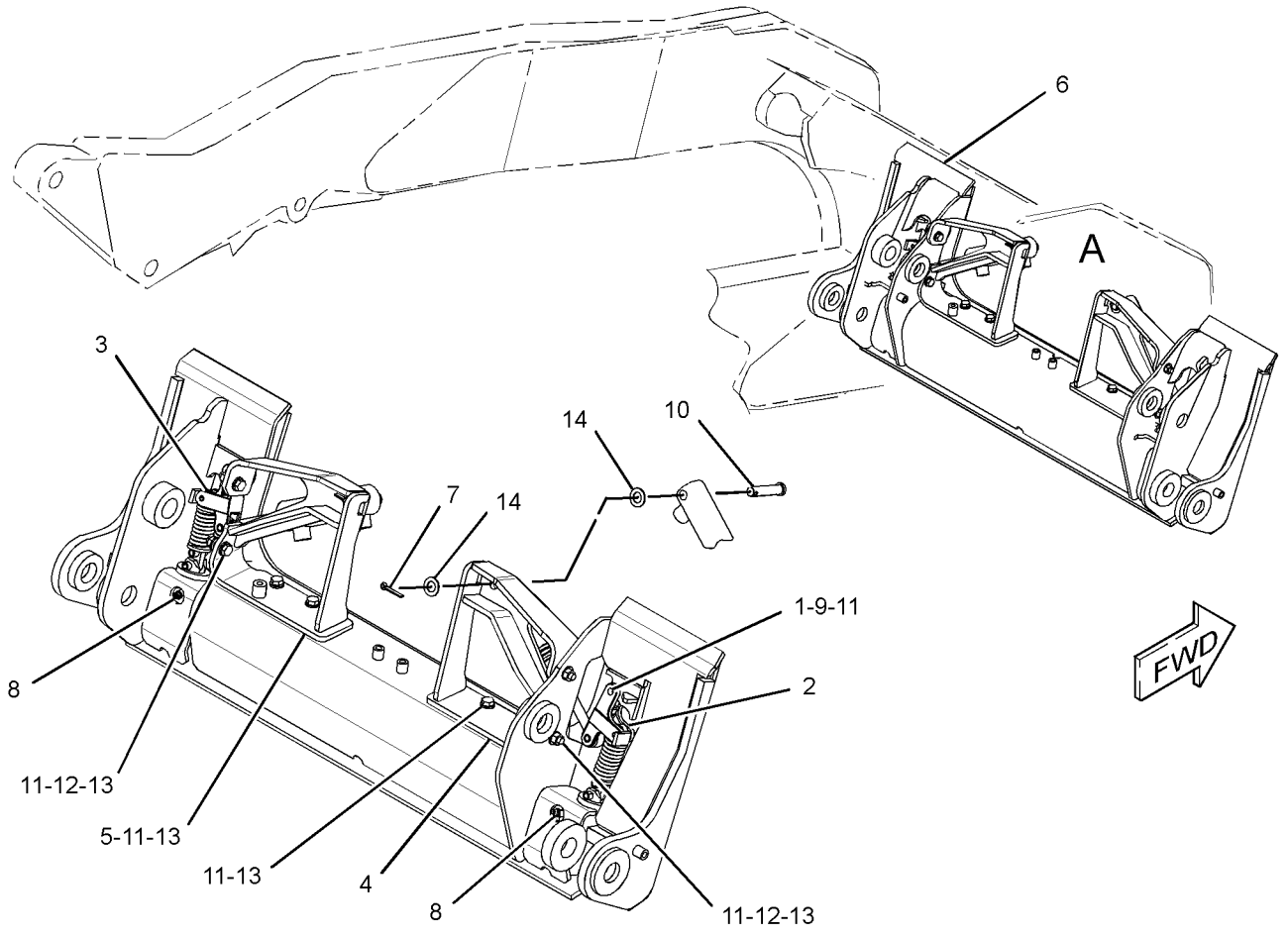

VIEW OF AREA A
(COMPONENTS REMOVED FOR CLARITY)

GRAPHIC #1 **<END>** g02149365

162-5236 COVER GP-LINES

S/N: SRS1-UP
PART OF 279-5382, 279-5390, 279-5398, 279-5403, 293-0139 BUCKET
AR-MULTIPURPOSE
AN ATTACHMENT

i04358198

NOTE	REF NO	GRAPHIC REF	PART NUMBER	QTY	PART NAME 1 2 3 4 5 6 (PRODUCT LEVEL)	SEE PAGE
	1	1	**161-4128**	1	PLATE	
M	2	1	**5C-9553**	5	BOLT (M6X1X16-MM)	
	3	1	**9X-2026**	5	WASHER (6.5X17X1-MM THK)	

M-METRIC PART

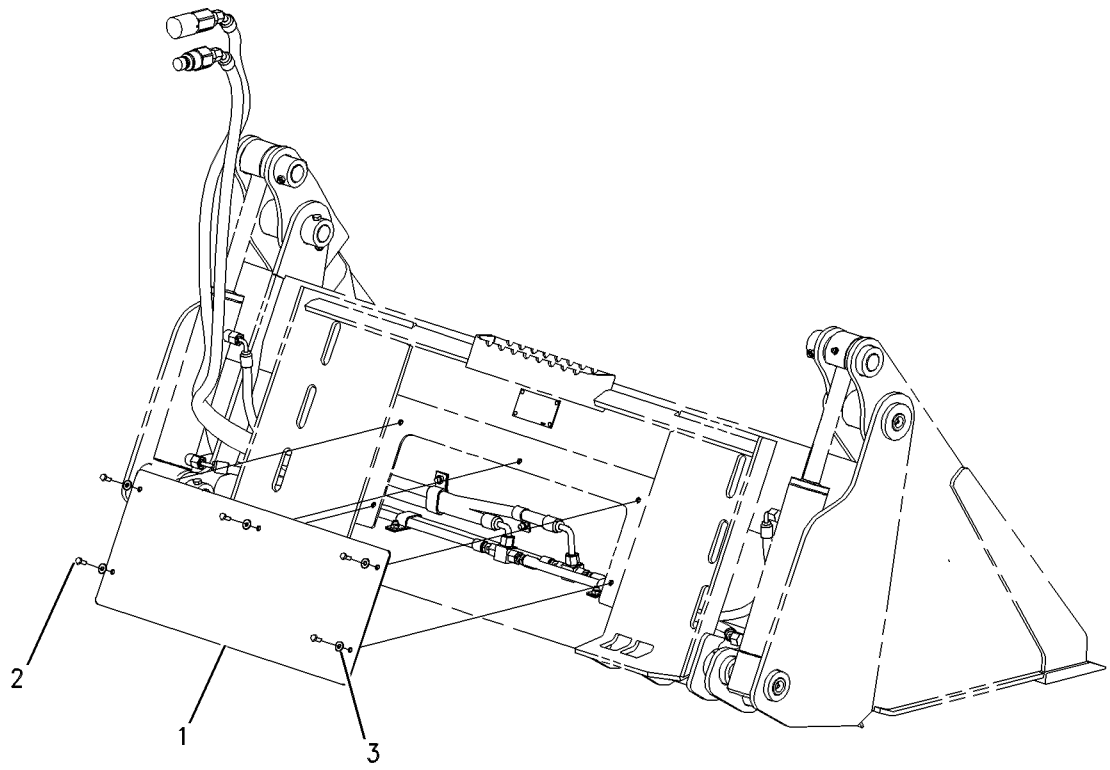

GRAPHIC #1 **<END>** g00560360

WORK TOOLS

215-3962 CYLINDER & LINK GP-COUPLER—LH

S/N: SRS1-UP
PART OF 360-1364 COUPLER GP-QUICK
AN ATTACHMENT

SMCS-5133, 6129 **i02960140**

NOTE	REF NO	GRAPHIC REF	PART NUMBER	QTY	PART NAME 1 2 3 4 5 6 (PRODUCT LEVEL)	SEE PAGE
	1	1	**303-8767**	1	PIN-SPRING	
Y	2	1	**192-2640**	1	CYLINDER GP-HYDRAULIC (COUPLER)	205
	3	1	**192-2642**	1	PIN	
	4	1	**303-8768**	1	PIN-SPRING	
Y	5	1	*215-3957*	1	LINK GP-COUPLER	443

Y-SEPARATE ILLUSTRATION

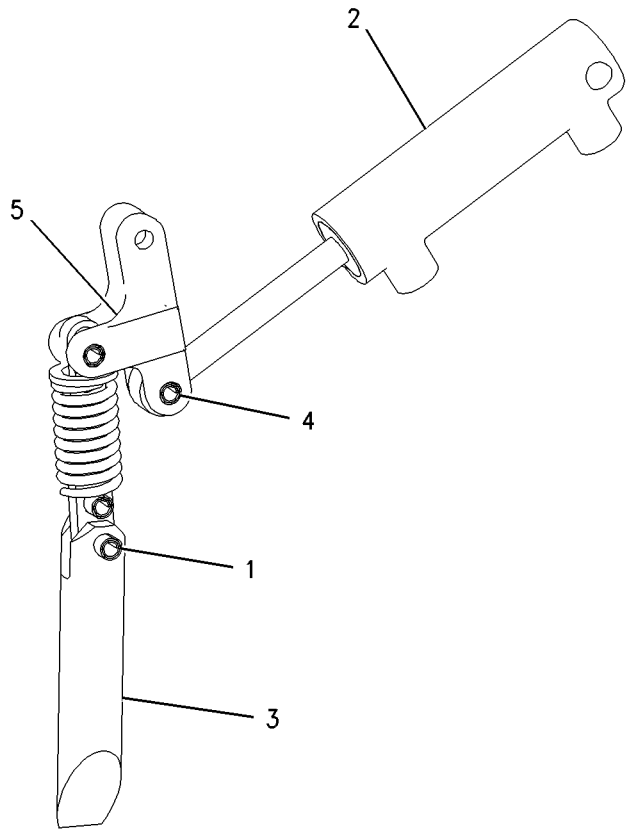

GRAPHIC #1 **<END>** g00871294

215-3963 CYLINDER & LINK GP-COUPLER–RH

S/N: SRS1-UP
PART OF 360-1364 COUPLER GP-QUICK
AN ATTACHMENT

SMCS-5133, 6129 **i02960142**

NOTE	REF NO	GRAPHIC REF	PART NUMBER	QTY	PART NAME 1 2 3 4 5 6 (PRODUCT LEVEL)	SEE PAGE
	1	1	**303-8767**	1	PIN-SPRING	
Y	2	1	**192-2640**	1	CYLINDER GP-HYDRAULIC (COUPLER)	205
	3	1	**192-2642**	1	PIN	
	4	1	**303-8768**	1	PIN-SPRING	
Y	5	1	*215-3957*	1	LINK GP-COUPLER	443

Y-SEPARATE ILLUSTRATION

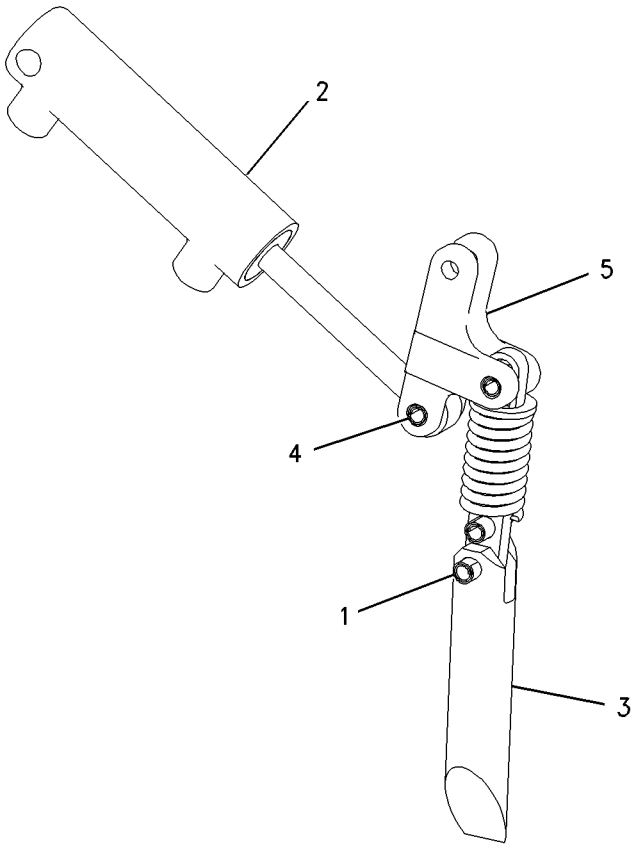

GRAPHIC #1 **<END>** g00871299

222-7545 EDGE GP-BIT & CUTTING

S/N: SRS1-UP
PART OF 231-5276 BLADE GP-ANGLING
FOR USE WITH 2007-MM (79-IN) BUCKET
AN ATTACHMENT

SMCS-6801, 6804 **i03647018**

NOTE	PART NUMBER	QTY	PART NAME 1 2 3 4 5 6 (PRODUCT LEVEL)	SEE PAGE
	6Y-5839	1	BIT-END (RH)	
	6Y-5840	1	BIT-END (LH)	
	3F-5108	10	BOLT-PLOW (5/8-11X2.25-IN)	
	4F-3658	4	BOLT-PLOW (5/8-11X3-IN)	
	142-4914	1	EDGE-CUTTING	
	4K-0367	14	NUT-FULL (5/8-11-THD)	
	5P-8247	14	WASHER-HARD (17X32X3.5-MM THK)	

<END>

222-7546 EDGE GP-BIT & CUTTING

S/N: SRS1-UP
PART OF 222-7724 BLADE GP-ANGLING
FOR USE WITH 2337-MM (92-IN) BUCKET
AN ATTACHMENT

SMCS-6801, 6804 **i03647019**

NOTE	PART NUMBER	QTY	PART NAME 1 2 3 4 5 6 (PRODUCT LEVEL)	SEE PAGE
	6Y-5839	1	BIT-END (RH)	
	6Y-5840	1	BIT-END (LH)	
	3F-5108	13	BOLT-PLOW (5/8-11X2.25-IN)	
	4F-3658	4	BOLT-PLOW (5/8-11X3-IN)	
	143-3088	1	EDGE-CUTTING	
	4K-0367	17	NUT-FULL (5/8-11-THD)	
	5P-8247	17	WASHER-HARD (17X32X3.5-MM THK)	

<END>

135-9383 EDGE GP-CUTTING

S/N: SRS1-UP
PART OF 279-5435 BUCKET AR-DIRT
FOR USE WITH 1372-MM (54-IN) BUCKET
AN ATTACHMENT

SMCS-6801 **i02571125**

NOTE	PART NUMBER	QTY	PART NAME 1 2 3 4 5 6 (PRODUCT LEVEL)	SEE PAGE
	135-9393	1	EDGE-CUTTING	
M	**8T-4778**	6	LOCKNUT (M16X2-THD)	
M	**159-2953**	6	SCREW-FLAT HEAD (M16X2-THD)	

M-METRIC PART

<END>

WORK TOOLS

135-9384 EDGE GP-CUTTING

S/N: SRS1-UP
PART OF 279-5438 BUCKET AR-DIRT, 279-5365 BUCKET AR-GENERAL PURPOSE, 157-7226 BUCKET AR-GRAPPLE, 279-5381 BUCKET AR-MULTIPURPOSE, 285-6095 BUCKET AR-UTILITY, 152-0231 BUCKET GP-DIRT
FOR USE WITH 1524-MM (60-IN) BUCKET
AN ATTACHMENT

SMCS-6801 **i01372033**

NOTE	REF NO	GRAPHIC REF	PART NUMBER	QTY	PART NAME 1 2 3 4 5 6 (PRODUCT LEVEL)	SEE PAGE
	1	1	**135-9394**	1	EDGE-CUTTING	
M	2	1	**8T-4778**	8	LOCKNUT (M16X2.00 THD)	
M	3	1	**159-2953**	8	SCREW-FLAT HEAD (M16X2.00 THD)	

M-METRIC PART

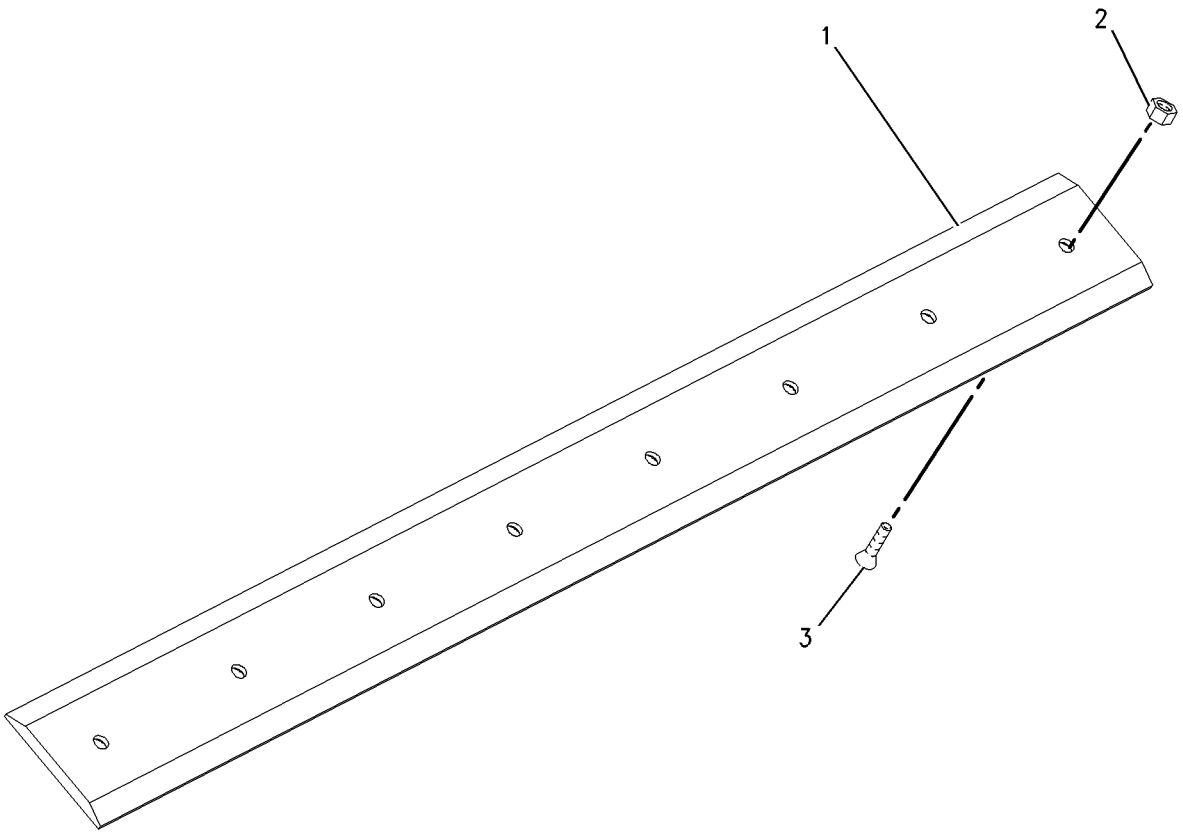

GRAPHIC #1 **<END>** g00724087

135-9385 EDGE GP-CUTTING

S/N: SRS1-UP
PART OF 279-5441 BUCKET AR-DIRT, 279-5369 BUCKET AR-GENERAL PURPOSE, 157-7227 BUCKET AR-GRAPPLE, 279-5391 BUCKET AR-MULTIPURPOSE, 285-6100 BUCKET AR-UTILITY, 152-0232 BUCKET GP-DIRT
FOR USE WITH 1676-MM (66-IN) BUCKET
AN ATTACHMENT

SMCS-6801 **i01228508**

NOTE	REF NO	GRAPHIC REF	PART NUMBER	QTY	PART NAME 1 2 3 4 5 6 (PRODUCT LEVEL)	SEE PAGE
	1	1	**135-9395**	1	EDGE-CUTTING	
M	2	1	**8T-4778**	8	LOCKNUT (M16X2.00 THD)	
M	3	1	**159-2953**	8	SCREW-FLAT HEAD (M16X2.00 THD)	

M-METRIC PART

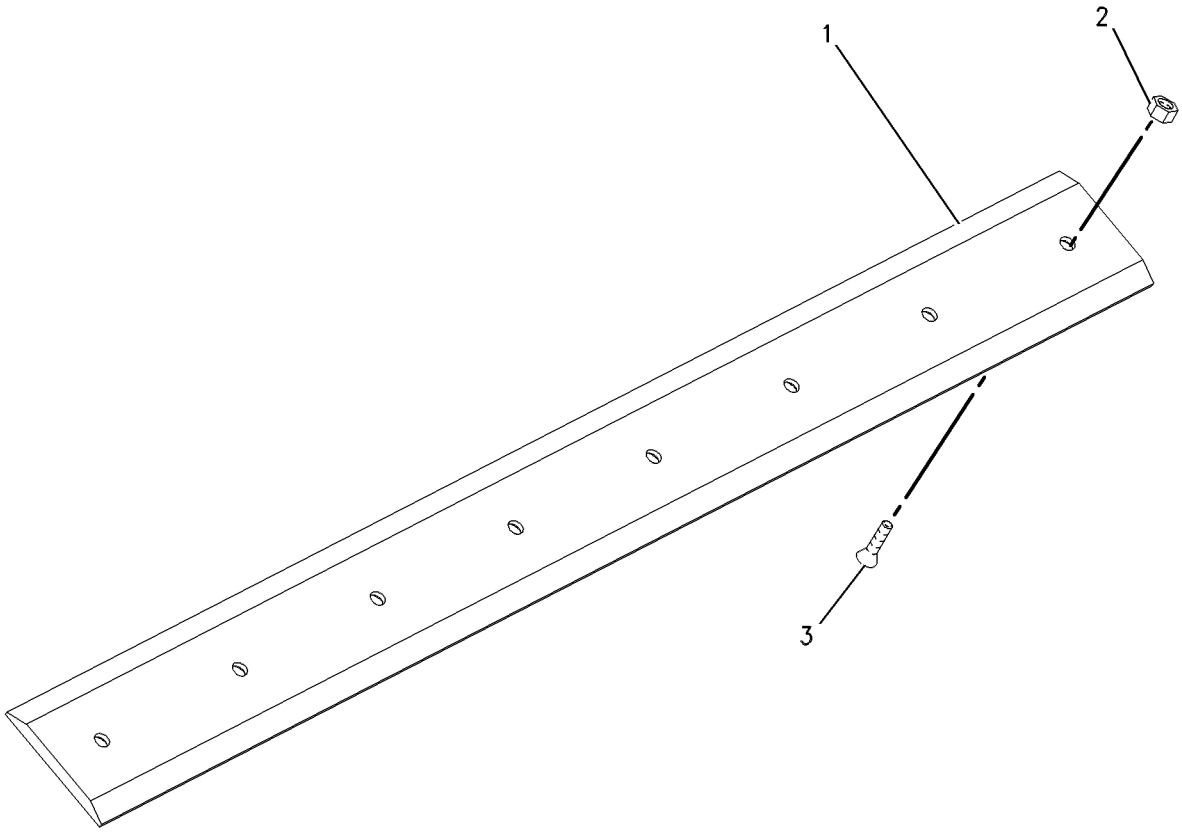

GRAPHIC #1 **<END>** g00657004

WORK TOOLS

135-9386 EDGE GP-CUTTING

S/N: SRS1-UP

PART OF 177-1989 BLADE AR, 285-6090 BUCKET AR-DIRT, 279-5373 BUCKET AR-GENERAL PURPOSE, 158-6095 BUCKET AR-GRAPPLE, 279-5420 BUCKET AR-LIGHT MATERIAL, 279-5399 BUCKET AR-MULTIPURPOSE, 285-6101 BUCKET AR-UTILITY
FOR USE WITH 1829-MM (72-IN) BUCKET
AN ATTACHMENT

SMCS-6801 **i01372498**

NOTE	REF NO	GRAPHIC REF	PART NUMBER	QTY	PART NAME 1 2 3 4 5 6 (PRODUCT LEVEL)	SEE PAGE
	1	1	**135-9396**	1	EDGE-CUTTING	
M	2	1	**8T-4778**	11	LOCKNUT (M16X2.00 THD)	
M	3	1	**159-2953**	11	SCREW-FLAT HEAD (M16X2.00 THD)	

M-METRIC PART

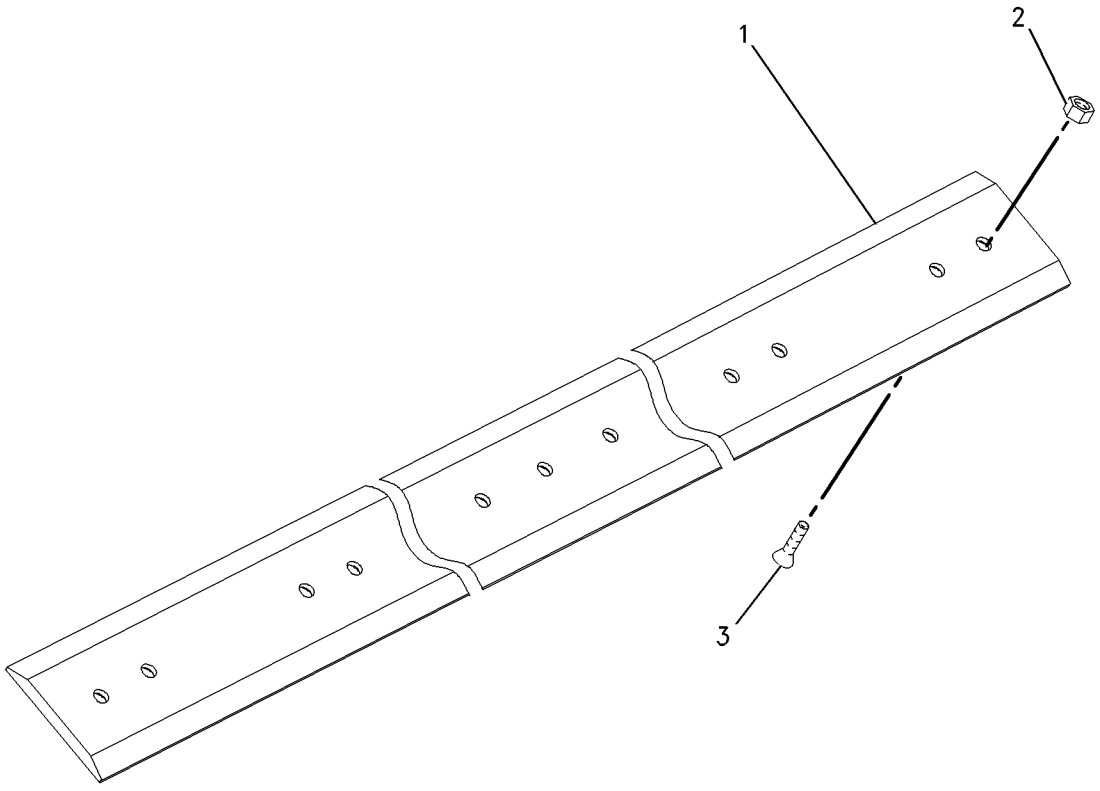

GRAPHIC #1 **<END>** g00724435

135-9387 EDGE GP-CUTTING

S/N: SRS1-UP
PART OF 268-4083 BUCKET AR-DIRT, 279-5377 BUCKET AR-GENERAL PURPOSE, 217-6230 BUCKET AR-GRAPPLE, 279-5425 BUCKET AR-LIGHT MATERIAL, 279-5402 BUCKET AR-MULTIPURPOSE
FOR USE WITH 1981-MM (78-IN) BUCKET
AN ATTACHMENT

SMCS-6801 **i01755490**

NOTE	REF NO	GRAPHIC REF	PART NUMBER	QTY	PART NAME 1 2 3 4 5 6 (PRODUCT LEVEL)	SEE PAGE
	1	1	**135-9397**	1	EDGE-CUTTING	
M	2	1	**8T-4778**	11	LOCKNUT (M16X2 THD)	
M	3	1	**159-2953**	11	SCREW-FLAT HEAD (M16X2.00 THD)	

M-METRIC PART

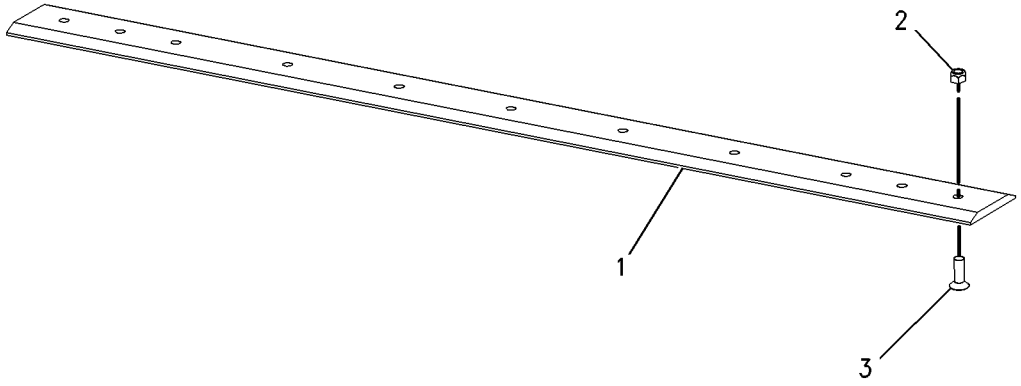

GRAPHIC #1 **<END>** g00898154

WORK TOOLS

149-5741 EDGE GP-CUTTING

S/N: SRS1-UP
PART OF 177-1990 BLADE AR
FOR USE WITH 2159-MM (85-IN) BUCKET
AN ATTACHMENT

SMCS-6801 **i01832720**

NOTE	REF NO	GRAPHIC REF	PART NUMBER	QTY	PART NAME 1 2 3 4 5 6 (PRODUCT LEVEL)	SEE PAGE
	1	1	**195-5124**	1	EDGE-CUTTING	
M	2	1	**8T-4778**	7	LOCKNUT (M16X2 THD)	
M	3	1	**159-2953**	7	SCREW-FLAT HEAD (M16X2.00 THD)	

M-METRIC PART

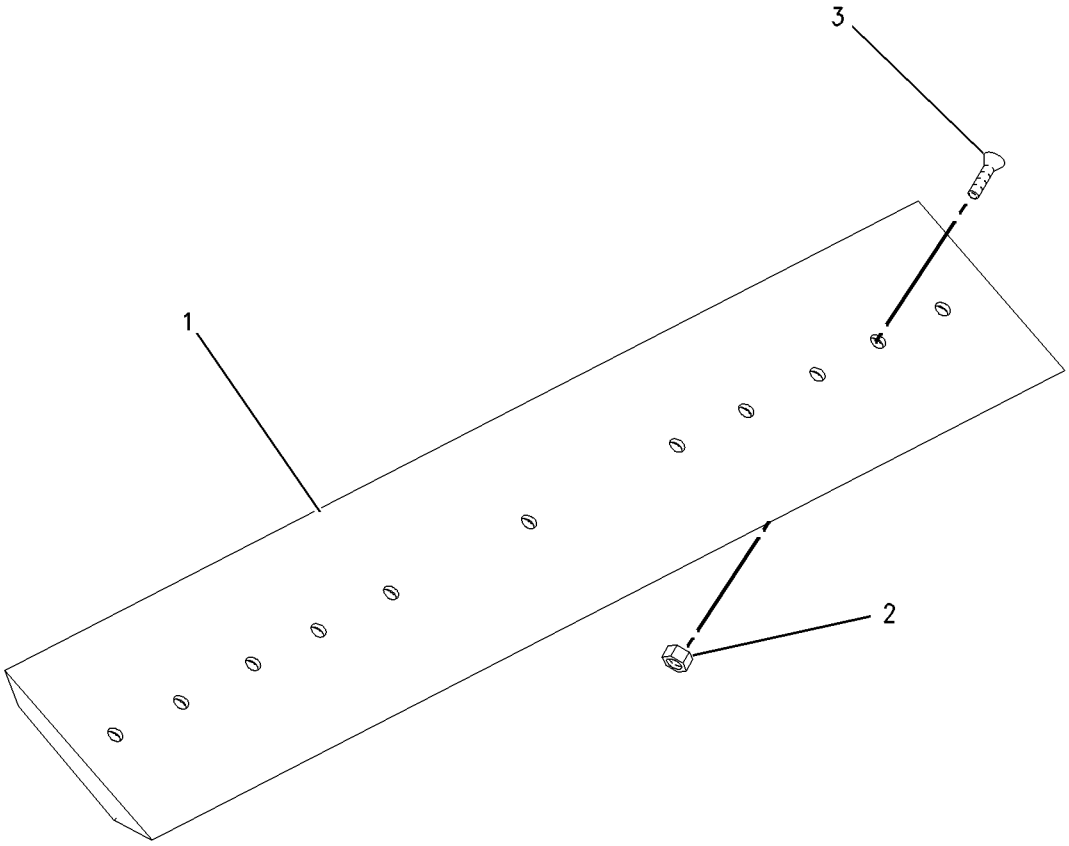

GRAPHIC #1 **<END>** g00936281

WORK TOOLS

195-7124 EDGE GP-CUTTING

S/N: SRS1-UP
PART OF 296-8192 BUCKET AR-GENERAL PURPOSE, 279-5430 BUCKET AR-LIGHT MATERIAL, 296-8057 BUCKET AR-MULTIPURPOSE
FOR USE WITH 2134-MM (84-IN) BUCKET
AN ATTACHMENT

SMCS-6801 **i01859534**

NOTE	PART NUMBER	QTY	PART NAME 1 2 3 4 5 6 (PRODUCT LEVEL)	SEE PAGE
	195-5124	1	EDGE-CUTTING	
M	**8T-4778**	11	LOCKNUT (M16X2 THD)	
M	**159-2953**	11	SCREW-FLAT HEAD (M16X2.00 THD)	

M-METRIC PART

<END>

296-7680 EDGE GP-CUTTING

S/N: SRS1-UP
PART OF 296-7597 BUCKET AR-LIGHT MATERIAL
FOR USE WITH 2438.5-MM (96-IN) BUCKET
AN ATTACHMENT

SMCS-6801 **i03508403**

NOTE	REF NO	GRAPHIC REF	PART NUMBER	QTY	PART NAME 1 2 3 4 5 6 (PRODUCT LEVEL)	SEE PAGE
	1	1	**296-7602**	1	EDGE-CUTTING	
M	2	1	**159-2953**	13	SCREW-FLAT HEAD (M16X2-THD)	
M	3	1	**8T-4778**	13	LOCKNUT (M16X2-THD)	

M-METRIC PART

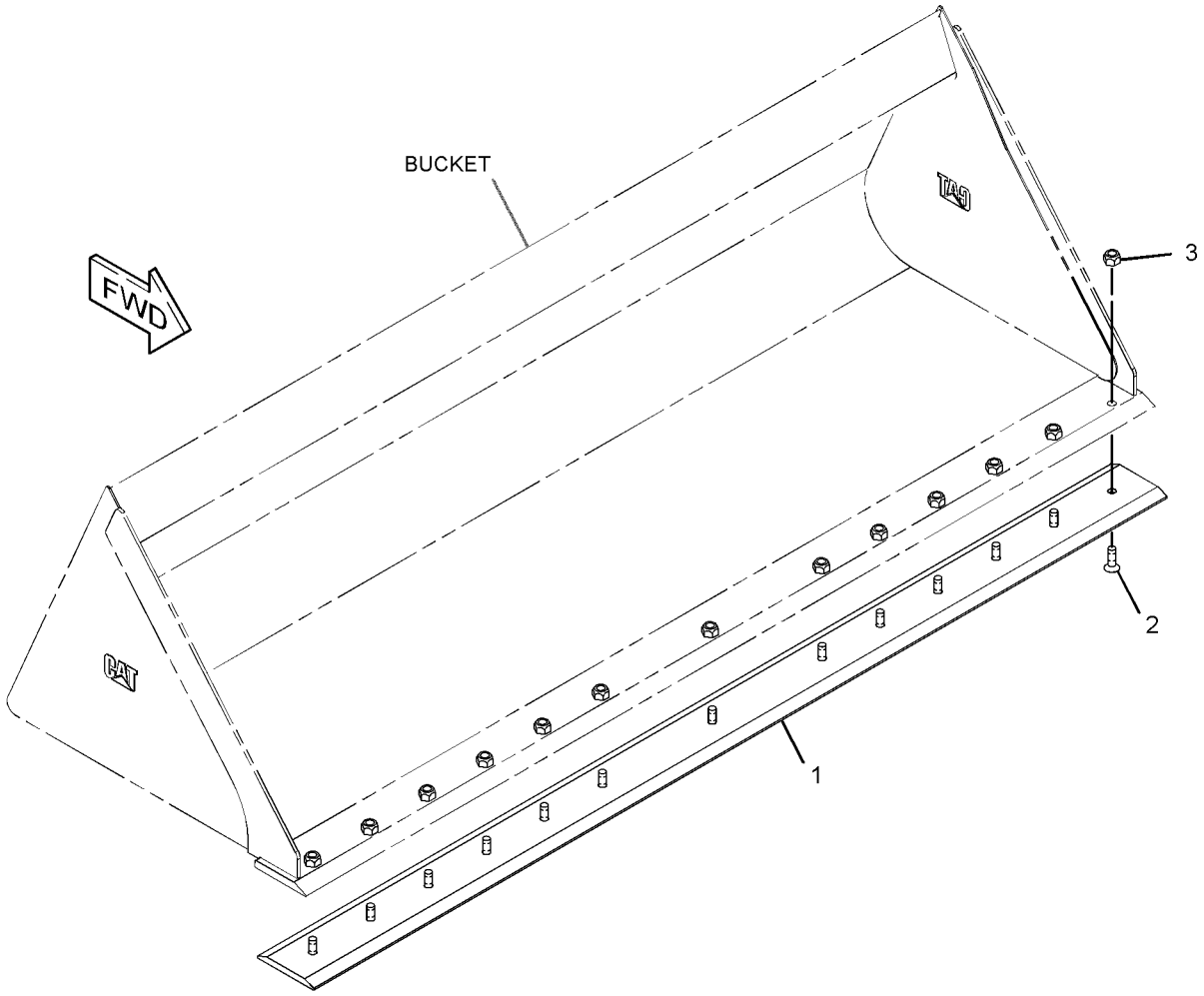

GRAPHIC #1 **<END>** g01845076

279-5350 FORK AR-GRAPPLE–INDUSTRIAL

S/N: SRS1-UP
AN ATTACHMENT

SMCS-6705 **i02715580**

NOTE	PART NUMBER	QTY	PART NAME 1 2 3 4 5 6 (PRODUCT LEVEL)	SEE PAGE
Y	**278-1975**	2	CYLINDER GP-GRAPPLE (INDUSTRIAL)	204
Y	*164-9614*	9	FORK GP-GRAPPLE (INDUSTRIAL)	422
Y	*279-5351*	1	FORK GP-GRAPPLE (66-IN, INDUSTRIAL)	423
Y	*279-5412*	1	LINES GP-BUCKET (INDUSTRIAL)	219
Y	*156-0891*	1	MOUNTING GP-CYLINDER (INDUSTRIAL)	281

Y-SEPARATE ILLUSTRATION

<END>

279-5360 FORK AR-GRAPPLE–INDUSTRIAL

S/N: SRS1-UP
AN ATTACHMENT

SMCS-6705 **i02715593**

NOTE	PART NUMBER	QTY	PART NAME 1 2 3 4 5 6 (PRODUCT LEVEL)	SEE PAGE
Y	**278-1975**	2	CYLINDER GP-GRAPPLE (INDUSTRIAL)	204
Y	*164-9614*	2	FORK GP-GRAPPLE (INDUSTRIAL)	422
Y	*279-5359*	1	BUCKET GP-GRAPPLE (72-IN, INDUSTRIAL)	388
Y	*279-5412*	1	LINES GP-BUCKET (INDUSTRIAL)	219
Y	*156-0891*	1	MOUNTING GP-CYLINDER (INDUSTRIAL)	281

Y-SEPARATE ILLUSTRATION

<END>

285-6114 FORK AR-GRAPPLE–UTILITY

S/N: SRS1-UP
AN ATTACHMENT

SMCS-6705 **i02552497**

NOTE	PART NUMBER	QTY	PART NAME 1 2 3 4 5 6 (PRODUCT LEVEL)	SEE PAGE
Y	**285-6105**	1	FORK GP-UTILITY (66-IN)	430
Y	*285-6116*	1	GRAPPLE & CYLINDER GP-UTILITY	434

Y-SEPARATE ILLUSTRATION

<END>

285-6115 FORK AR-GRAPPLE–UTILITY

S/N: SRS1-UP
AN ATTACHMENT

SMCS-6705 **i02552699**

NOTE	PART NUMBER	QTY	PART NAME 1 2 3 4 5 6 (PRODUCT LEVEL)	SEE PAGE
Y	**285-6110**	1	FORK GP-GRAPPLE	424
Y	*285-6116*	1	GRAPPLE & CYLINDER GP-UTILITY	434

Y-SEPARATE ILLUSTRATION

<END>

WORK TOOLS

164-9614 FORK GP-GRAPPLE

S/N: SRS1-UP
PART OF 279-5350, 279-5360 FORK AR-GRAPPLE
AN ATTACHMENT

SMCS-6705 **i01075196**

NOTE	REF NO	GRAPHIC REF	PART NUMBER	QTY	PART NAME 1 2 3 4 5 6 (PRODUCT LEVEL)	SEE PAGE
	1	1	**3E-4370**	1	PIN-SPRING	
	2	1	**162-8154**	1	TINE	

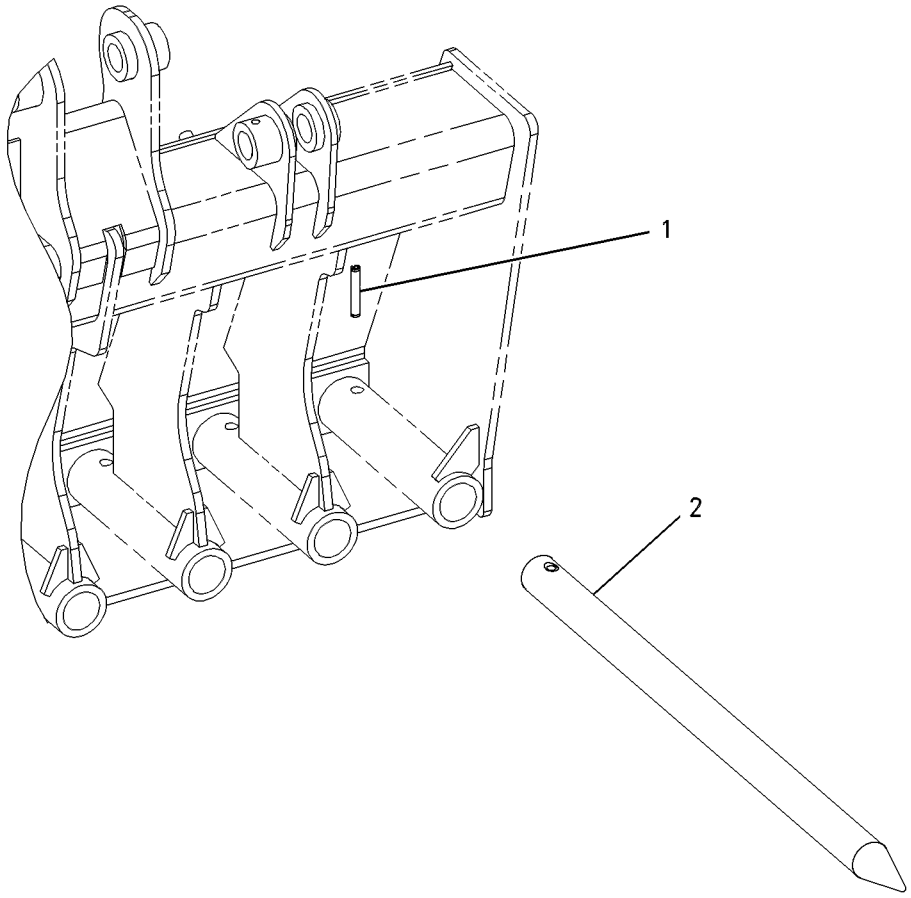

GRAPHIC #1 **<END>** g00559648

279-5351 FORK GP-GRAPPLE–INDUSTRIAL

S/N: SRS1-UP
1676-MM (66-IN)
PART OF 279-5350 FORK AR-GRAPPLE
AN ATTACHMENT

SMCS-6705 **i03647022**

NOTE	REF NO	GRAPHIC REF	PART NUMBER	QTY	PART NAME 1 2 3 4 5 6 (PRODUCT LEVEL)	SEE PAGE
	1	1	**157-0940**	4	PIN	
	2	1	**164-9989**	2	FILM-WARNING (CRUSH HAZARD)	
	3	1	**222-7467**	2	FORK AS	
					(EACH INCLUDES)	
		1	**158-5648**	2	BUSHING	
Y	4	1	**279-5352**	1	FRAME GP-FORK (66-IN, INDUSTRIAL)	432
	5	1	**3B-8489**	4	FITTING-GREASE	
M	6	1	**6V-9189**	4	LOCKNUT (M8X1.25-THD)	
M	7	1	**8T-6869**	4	BOLT (M8X1.25X60-MM)	

M-METRIC PART
Y-SEPARATE ILLUSTRATION

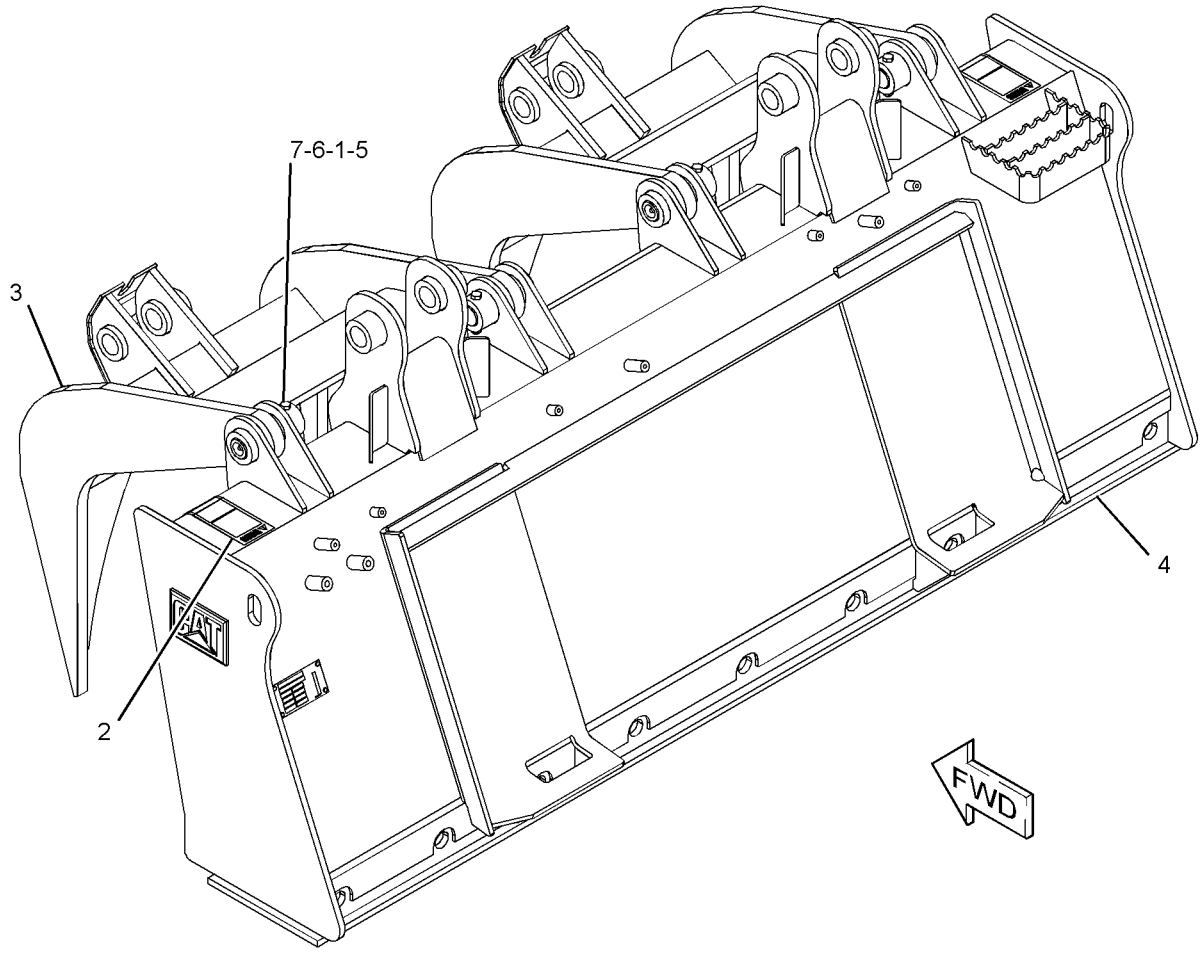

GRAPHIC #1 **<END>** g01279797

285-6110 FORK GP-GRAPPLE–UTILITY

S/N: SRS1-UP
1828.8-MM (72-IN)
PART OF 285-6115 FORK AR-GRAPPLE
AN ATTACHMENT

SMCS-6705 **i04045395**

NOTE	REF NO	GRAPHIC REF	PART NUMBER	QTY	PART NAME 1 2 3 4 5 6 (PRODUCT LEVEL)	SEE PAGE
	1	1	**164-9989**	2	FILM-WARNING (CRUSH HAZARD)	
Y	2	1	*165-8732*	9	FORK GP-UTILITY	429
	3	1	**154-2704**	1	PLATE-INSTRUCTION (BUCKET SPECIFICATIONS)	
	4	1	**168-8389**	4	TACK-FASTENER	

Y-SEPARATE ILLUSTRATION

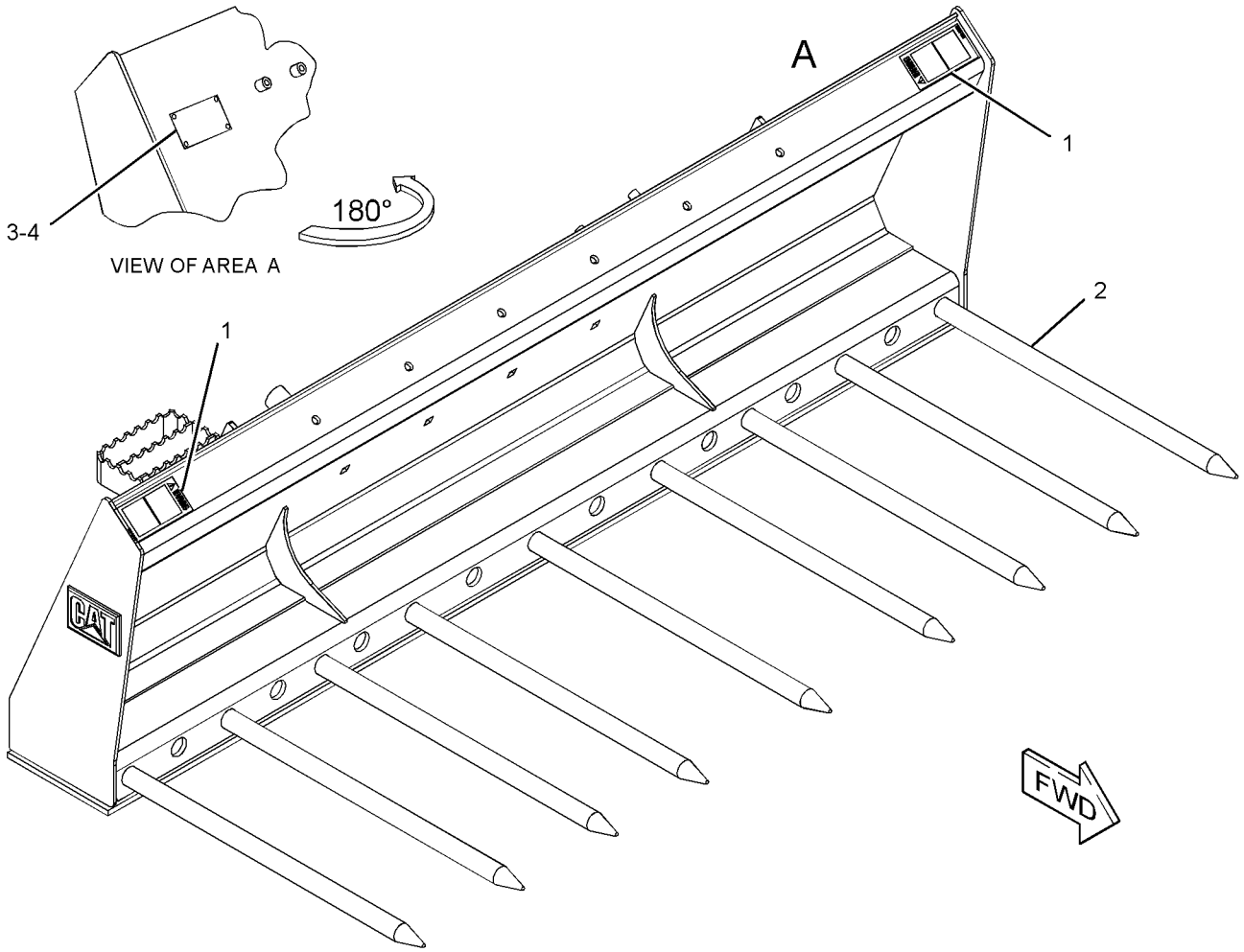

GRAPHIC #1 **<END>** g02265514

195-6942 FORK GP-PALLET

S/N: SRS1-UP
1067-MM (42-IN)
PART OF 353-1696 CARRIAGE & FORK AR, 243-0002 FORK GP-PALLET
AN ATTACHMENT

SMCS-6136 **i04045404**

NOTE	REF NO	GRAPHIC REF	PART NUMBER	QTY	PART NAME 1 2 3 4 5 6 (PRODUCT LEVEL)	SEE PAGE
	1	1	**221-3429**	1	POSITIONER GP-FORK	

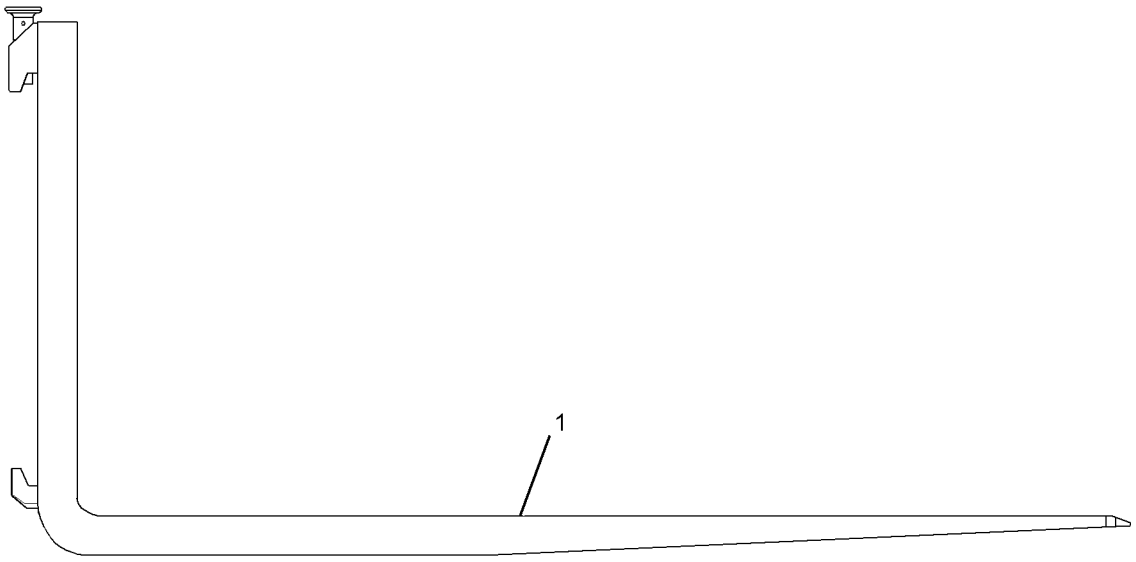

GRAPHIC #1 **<END>** g02265054

195-6943 FORK GP-PALLET

S/N: SRS1-UP
914-MM (36-IN)
PART OF 353-1694 CARRIAGE & FORK AR, 243-0001 FORK GP-PALLET
AN ATTACHMENT

SMCS-6136 **i04045403**

NOTE	REF NO	GRAPHIC REF	PART NUMBER	QTY	PART NAME 1 2 3 4 5 6 (PRODUCT LEVEL)	SEE PAGE
	1	1	**221-3429**	1	POSITIONER GP-FORK	

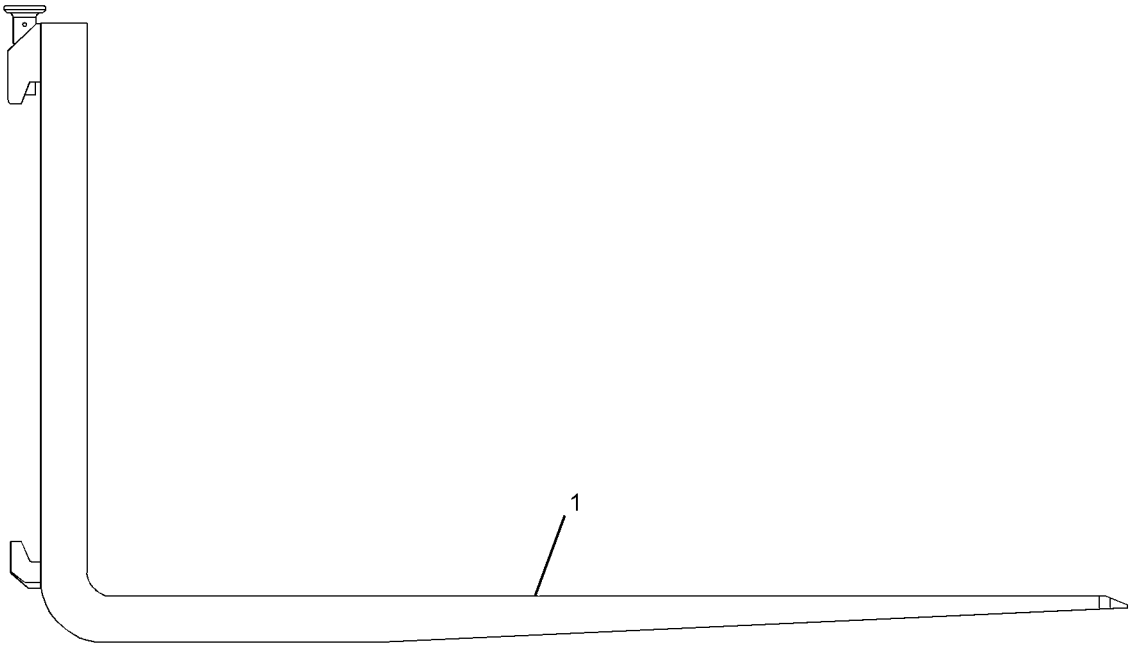

GRAPHIC #1 **<END>** g02265095

195-8545 FORK GP-PALLET

S/N: SRS1-UP
1219-MM (48-IN)
PART OF 353-1697 CARRIAGE & FORK AR, 243-0003 FORK GP-PALLET
AN ATTACHMENT

SMCS-6136 **i04045402**

NOTE	REF NO	GRAPHIC REF	PART NUMBER	QTY	PART NAME 1 2 3 4 5 6 (PRODUCT LEVEL)	SEE PAGE
	1	1	**221-3429**	1	POSITIONER GP-FORK	

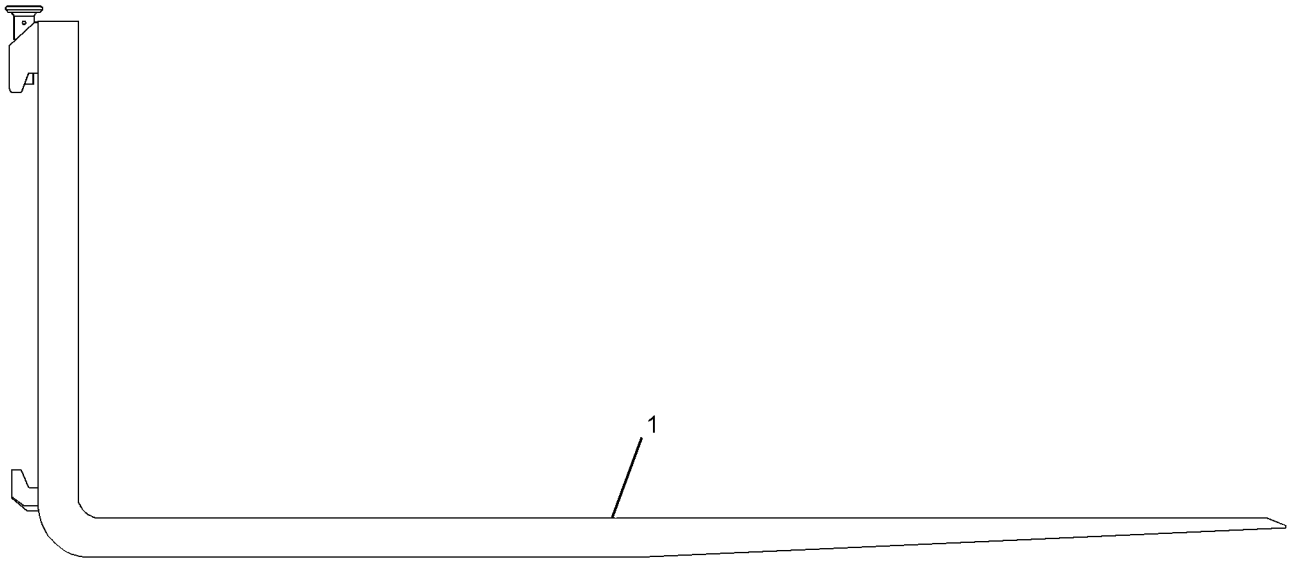

GRAPHIC #1 **<END>** g02265213

243-0001 FORK GP-PALLET–KIT

S/N: SRS1-UP
914-MM (36-IN)
AN ATTACHMENT

SMCS-6136 **i04358351**

NOTE	PART NUMBER	QTY	PART NAME 1 2 3 4 5 6 (PRODUCT LEVEL)	SEE PAGE
Y	**195-6943**	12	FORK GP-PALLET (36-IN)	426

Y-SEPARATE ILLUSTRATION

<END>

243-0002 FORK GP-PALLET–KIT

S/N: SRS1-UP
1067-MM (42-IN)
AN ATTACHMENT

SMCS-6136 **i04358352**

NOTE	PART NUMBER	QTY	PART NAME 1 2 3 4 5 6 (PRODUCT LEVEL)	SEE PAGE
Y	**195-6942**	12	FORK GP-PALLET (42-IN)	425

Y-SEPARATE ILLUSTRATION

<END>

243-0003 FORK GP-PALLET–KIT

S/N: SRS1-UP
1219-MM (48-IN)
AN ATTACHMENT

SMCS-6136 **i04358353**

NOTE	PART NUMBER	QTY	PART NAME 1 2 3 4 5 6 (PRODUCT LEVEL)	SEE PAGE
Y	**195-8545**	12	FORK GP-PALLET (48-IN)	427

Y-SEPARATE ILLUSTRATION

<END>

WORK TOOLS

165-8732 FORK GP-UTILITY

S/N: SRS1-UP
1676-MM (66-IN)
PART OF 285-6110 FORK GP-GRAPPLE, 285-6105 FORK GP-UTILITY
AN ATTACHMENT

SMCS-6458 **i01204324**

NOTE	REF NO	GRAPHIC REF	PART NUMBER	QTY	PART NAME 1 2 3 4 5 6 (PRODUCT LEVEL)	SEE PAGE
	1	1	**9R-2959**	1	CLIP	
	2	1	**166-4041**	1	TINE	

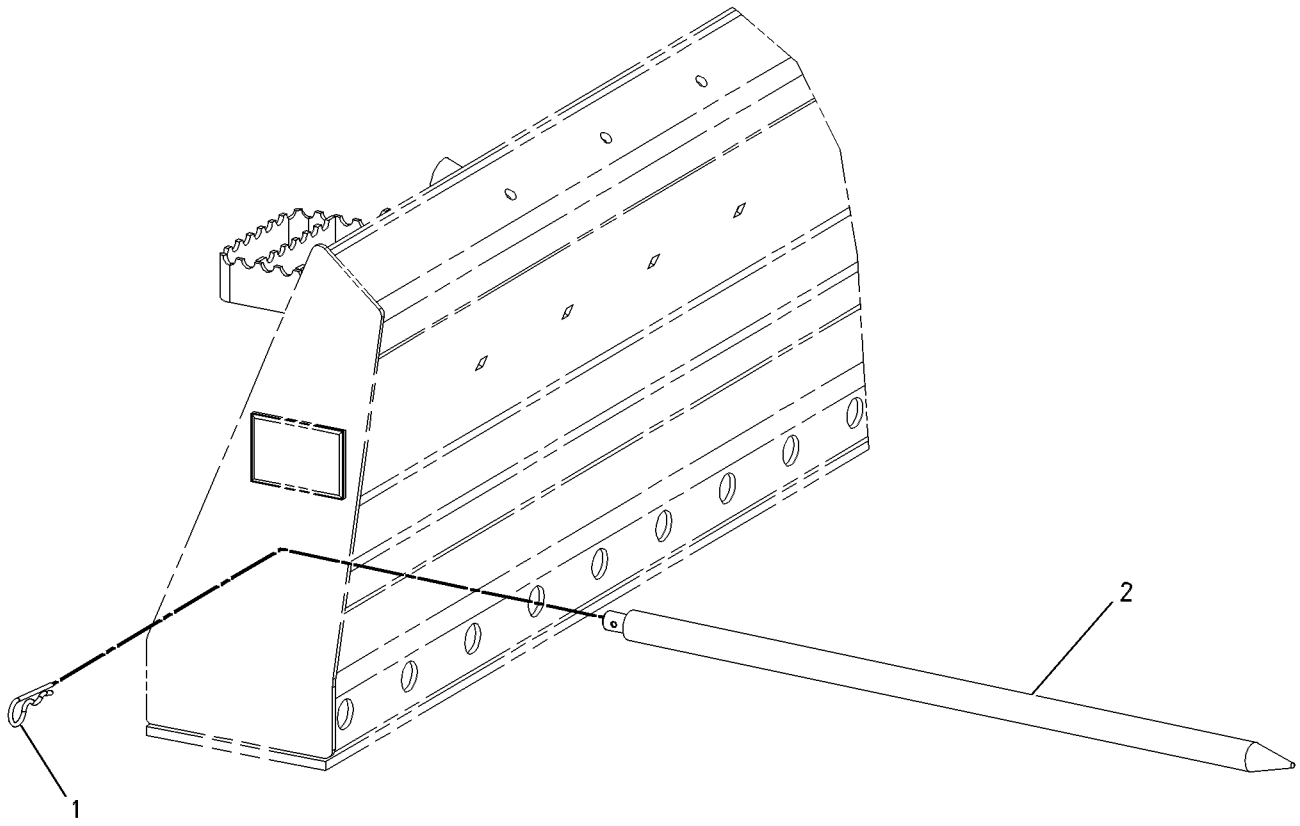

GRAPHIC #1 **<END>** g00639778

WORK TOOLS

285-6105 FORK GP-UTILITY

S/N: SRS1-UP
PART OF 285-6114 FORK AR-GRAPPLE
AN ATTACHMENT

SMCS-6458 **i04269752**

NOTE	REF NO	GRAPHIC REF	PART NUMBER	QTY	PART NAME 1 2 3 4 5 6 (PRODUCT LEVEL)	SEE PAGE
	1	1	**164-9989**	2	FILM-WARNING (CRUSH HAZARD)	
Y	2	1	*165-8732*	7	FORK GP-UTILITY	429

Y-SEPARATE ILLUSTRATION

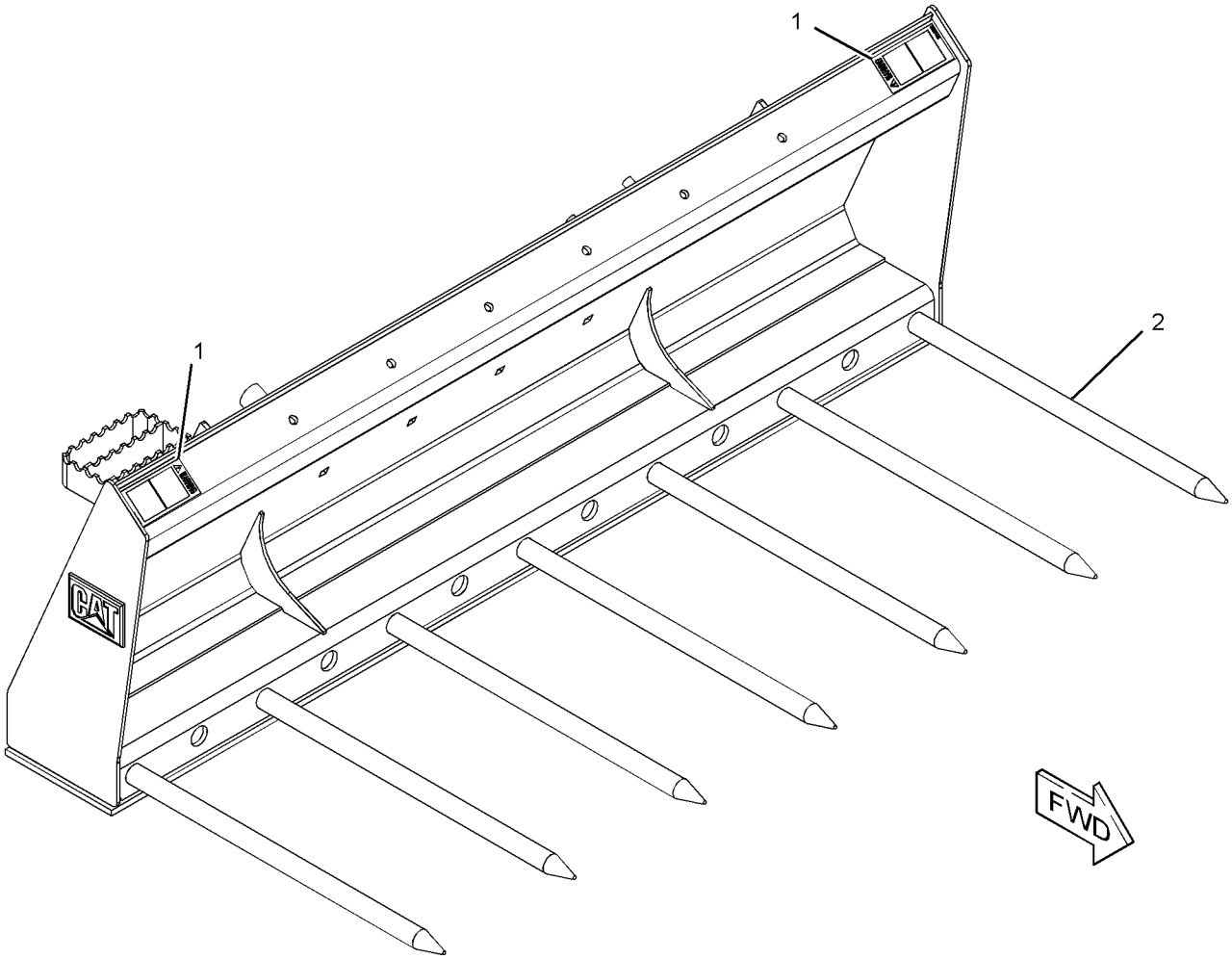

GRAPHIC #1 **<END>** g01280417

WORK TOOLS

230-5670 FRAME GP-BLADE

S/N: SRS1-UP
PART OF 177-1989, 177-1990 BLADE AR
AN ATTACHMENT

SMCS-6060 **i03637977**

NOTE	REF NO	GRAPHIC REF	PART NUMBER	QTY	PART NAME 1 2 3 4 5 6 (PRODUCT LEVEL)	SEE PAGE
	1	1	**177-1914**	1	PIN AS	
B	2	1	**177-1955**	1	SHIM (1-MM THK)	
B	3	1	**177-1956**	1	SHIM (2-MM THK)	
B	4	1	**177-1957**	1	SHIM (3-MM THK)	
	5	1	**177-1971**	1	FRAME AS	
	6	1	**177-1975**	1	FRAME AS	
	7	1	**230-5407**	1	FRAME AS	
	8	1	**3B-8489**	1	FITTING-GREASE	
	9	1	**5B-0935**	1	FITTING-GREASE	
M	10	1	**7X-2553**	8	BOLT (M16X2X40-MM)	
	11	1	**7X-7729**	1	WASHER (11X25X3-MM THK)	
	12	1	**8T-4122**	8	WASHER-HARD (17X32X3.5-MM THK)	
M	13	1	**8T-4137**	1	BOLT (M10X1.5X20-MM)	

B-USE AS REQUIRED
M-METRIC PART

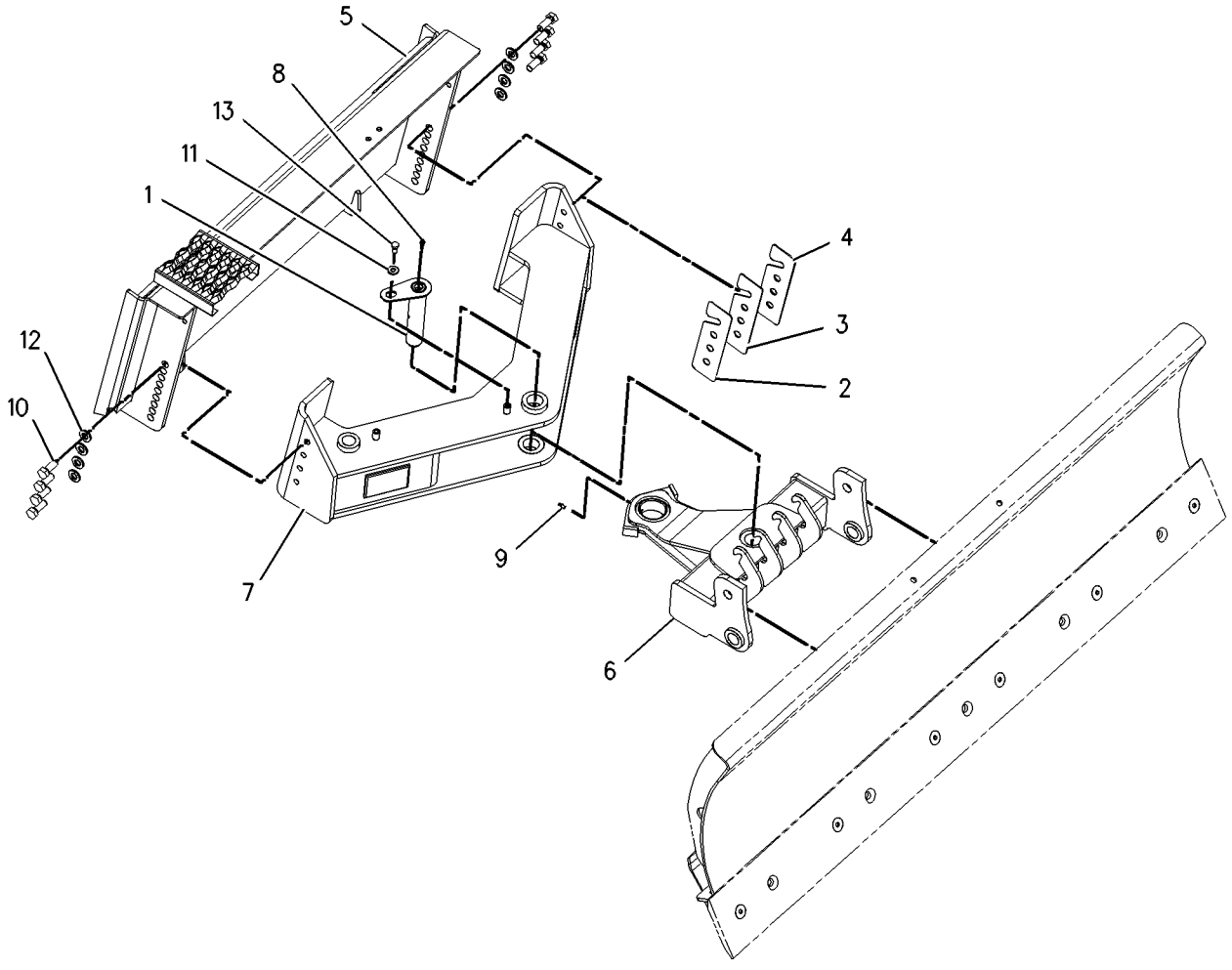

GRAPHIC #1 **<END>** g00978893

WORK TOOLS

279-5352 FRAME GP-FORK—INDUSTRIAL

S/N: SRS1-UP
1676-MM (66-IN)
PART OF 279-5351 FORK GP-GRAPPLE
AN ATTACHMENT

SMCS-6705 **i04157287**

NOTE	REF NO	GRAPHIC REF	PART NUMBER	QTY	PART NAME 1 2 3 4 5 6 (PRODUCT LEVEL)	SEE PAGE
	1	1	**358-4944**	1	PLATE-IDENTIFICATION (BUCKET SPECIFICATIONS)	
	2	1	**168-8389**	4	TACK-FASTENER	
	3	1	**279-5353**	1	FORK AS	
		1	**161-4130**	2	PLATE-IDENTIFICATION (CAT)	
F			**164-9989**	2	FILM-WARNING (CRUSH HAZARD)	

F-NOT SHOWN

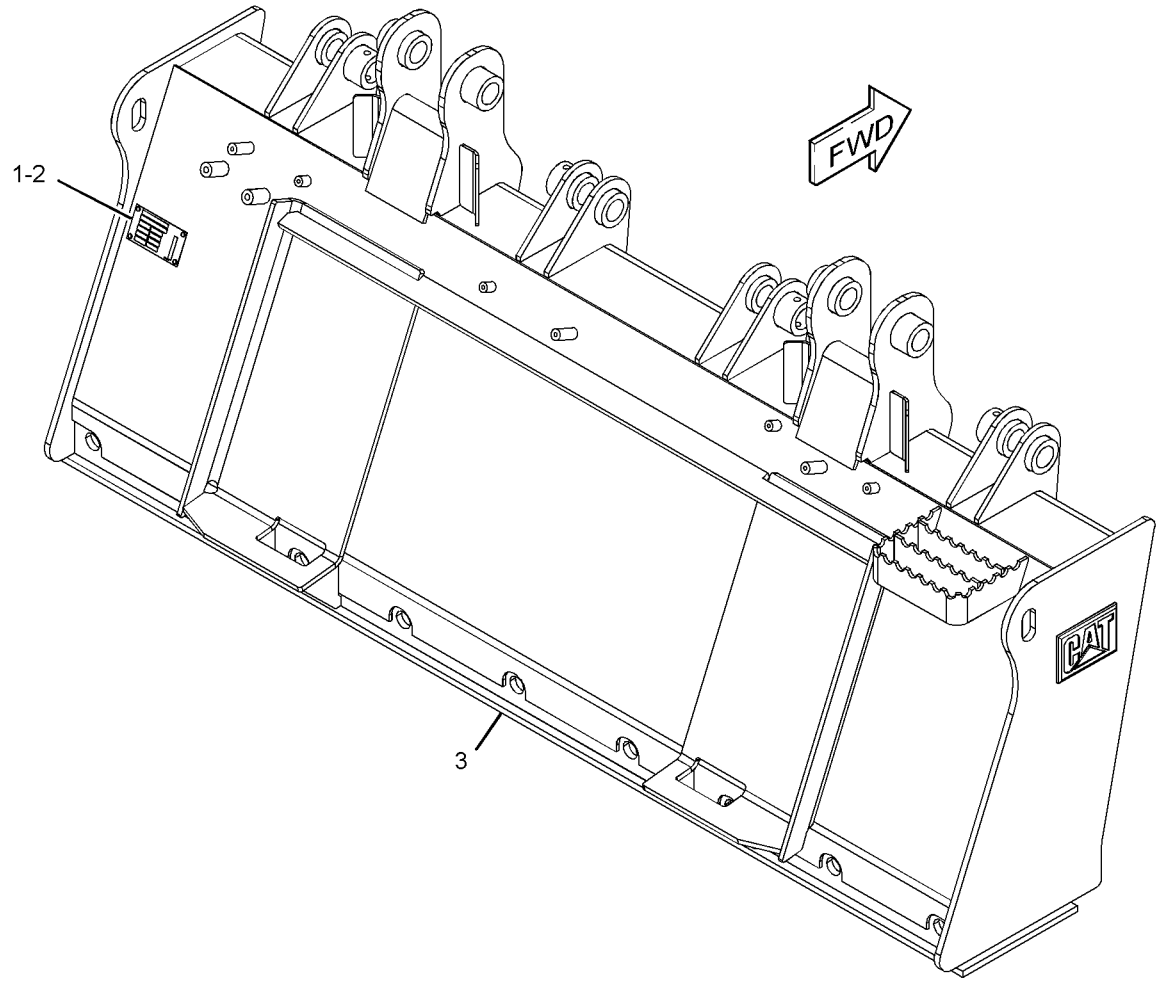

GRAPHIC #1 **<END>** g01280687

279-5358 FRAME GP-FORK–INDUSTRIAL

S/N: SRS1-UP
1829-MM (72-IN)
PART OF 279-5359 BUCKET GP-GRAPPLE
AN ATTACHMENT

SMCS-6705 **i04157292**

NOTE	REF NO	GRAPHIC REF	PART NUMBER	QTY	PART NAME 1 2 3 4 5 6 (PRODUCT LEVEL)	SEE PAGE
	1	1	**358-4944**	1	PLATE-IDENTIFICATION (BUCKET SPECIFICATIONS)	
	2	1	**168-8389**	4	TACK-FASTENER	
	3	1	**279-5357**	1	FORK AS	
		1	**161-4130**	2	PLATE-IDENTIFICATION (CAT)	
F			**164-9989**	2	FILM-WARNING (CRUSH HAZARD)	

F-NOT SHOWN

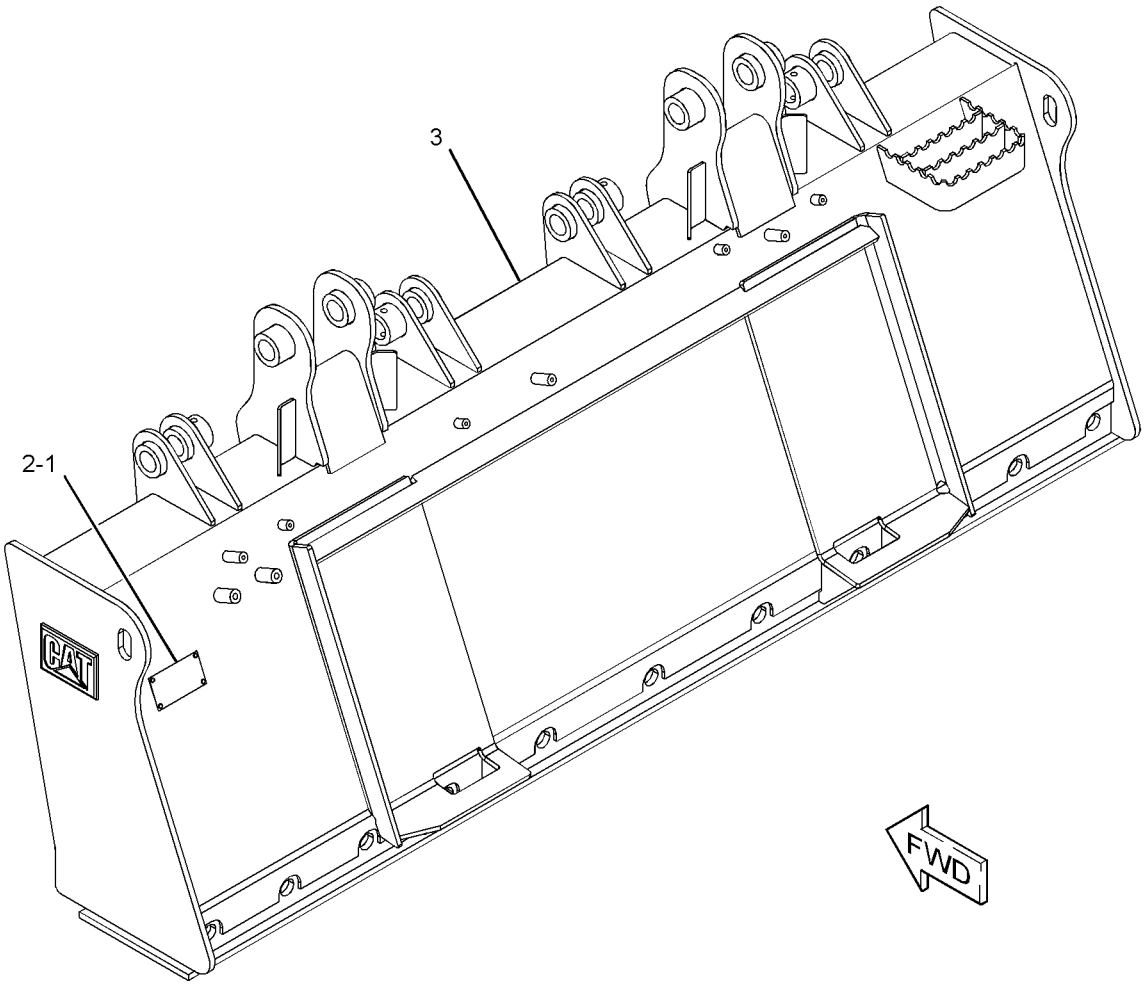

GRAPHIC #1 **<END>** g01279388

WORK TOOLS

285-6116 GRAPPLE & CYLINDER GP-UTILITY

S/N: SRS1-UP

PART OF 285-6111, 285-6112 BUCKET AR-GRAPPLE, 285-6114, 285-6115 FORK AR-GRAPPLE

AN ATTACHMENT

SMCS-5057, 5555, 6307 **i04358357**

NOTE	REF NO	GRAPHIC REF	PART NUMBER	QTY	PART NAME 1 2 3 4 5 6 (PRODUCT LEVEL)	SEE PAGE
CY	1	1	**255-0943**	1	CYLINDER GP-GRAPPLE (UTILITY)	203
Y	2	1	*165-8731*	1	MOUNTING GP-CYLINDER (UTILITY)	282
Y	3	1	*165-8740*	1	GRAPPLE GP-UTILITY	435
M	4	1	**170-5836**	4	BOLT (M12X1.75X35-MM)	
Y	5	1	*173-7407*	1	STOP GP-BUCKET (UTILITY)	449
	6	1	**239-5029**	1	GUARD	
Y	7	1	*285-6113*	1	LINES GP-BUCKET	229
	8	1	**5P-1076**	4	WASHER-HARD (13.5X30X4-MM THK)	
M	9	1	**8T-4139**	6	BOLT (M12X1.75X30-MM)	
	10	1	**8T-4223**	6	WASHER-HARD (13.5X25.5X3-MM THK)	
M	11	1	**8T-4244**	10	NUT (M12X1.75-THD)	

C-CHANGE FROM PREVIOUS TYPE
M-METRIC PART
Y-SEPARATE ILLUSTRATION

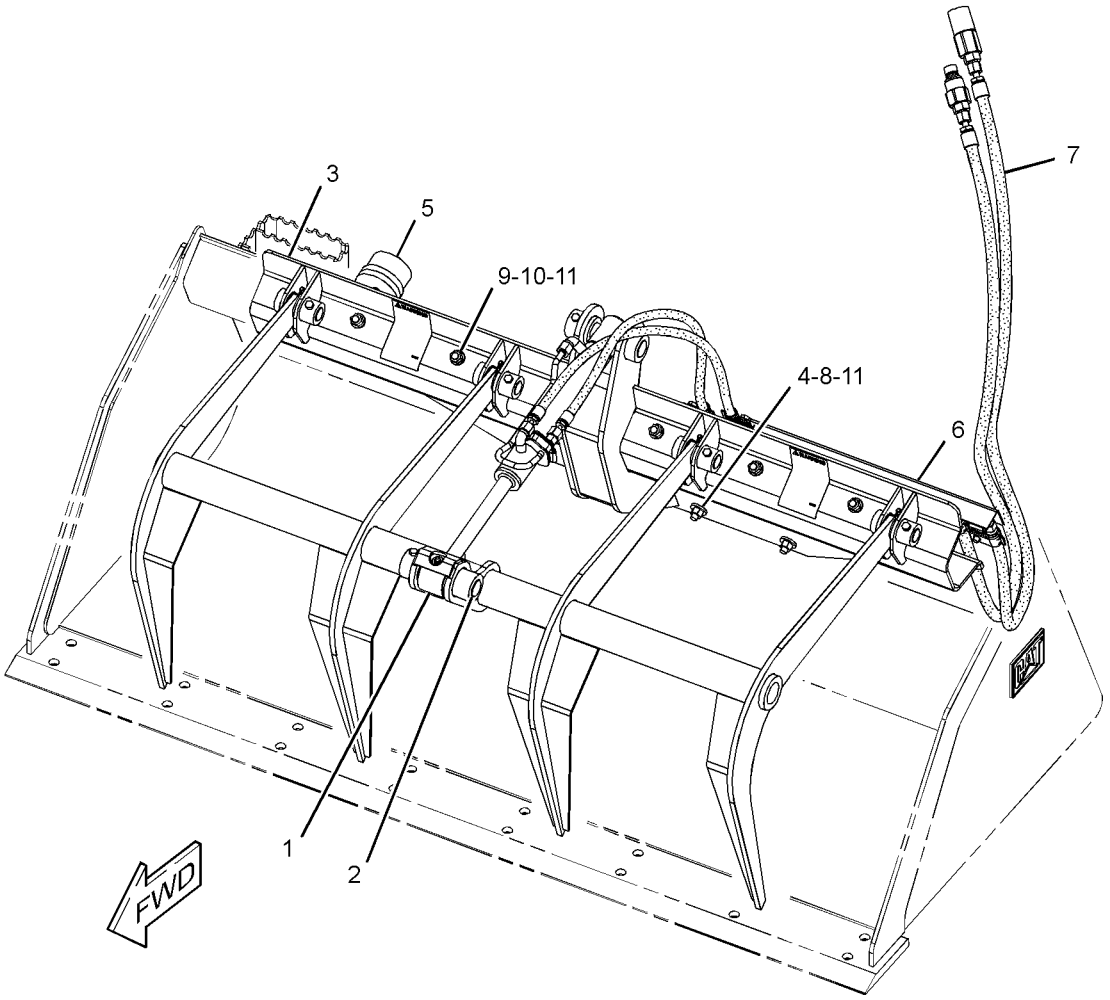

GRAPHIC #1 **<END>** g01278678

WORK TOOLS

165-8740 GRAPPLE GP-UTILITY

S/N: SRS1-UP
PART OF 285-6116 GRAPPLE & CYLINDER GP-UTILITY
AN ATTACHMENT

SMCS-6307 **i04269754**

NOTE	REF NO	GRAPHIC REF	PART NUMBER	QTY	PART NAME 1 2 3 4 5 6 (PRODUCT LEVEL)	SEE PAGE
	1	1	**3B-8488**	4	FITTING-GREASE	
	2	1	**159-5411**	4	PIN	
	3	1	**165-8743**	1	ARM AS	
	4	1	**169-3569**	1	BRACKET AS	
		1	**159-8035**	2	FILM-WARNING (CRUSH HAZARD, STAY BACK)	
M	5	1	**6V-9189**	4	LOCKNUT (M8X1.25-THD)	
M	6	1	**8T-6912**	4	BOLT (M8X1.25X50-MM)	

M-METRIC PART

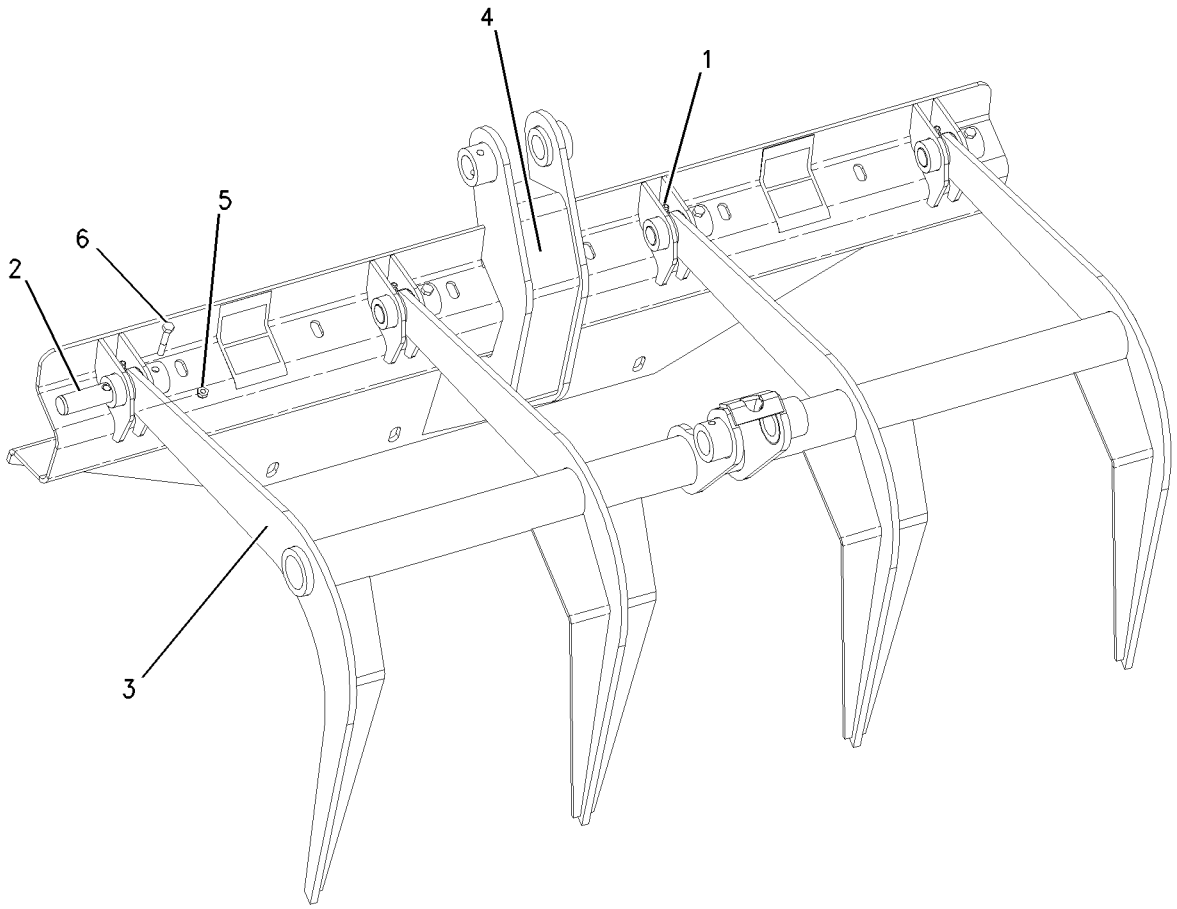

GRAPHIC #1 **<END>** g00777325

258-2536 HANDLE & PIN GP-COUPLER—RH

S/N: SRS1-UP
PART OF 258-2535 LOCK GP-QUICK COUPLER
AN ATTACHMENT

SMCS-6129 **i02960198**

NOTE	REF NO	GRAPHIC REF	PART NUMBER	QTY	PART NAME 1 2 3 4 5 6 (PRODUCT LEVEL)	SEE PAGE
	1	1	**192-2637**	1	PLATE	
	2	1	**195-6754**	2	PIN-SPRING	
	3	1	**192-2645**	1	SPRING	
	4	1	**258-2534**	1	HANDLE-RH	
M	5	1	**315-5493**	2	WASHER-HARD (22.5X35X4.5-MM THK)	

M-METRIC PART

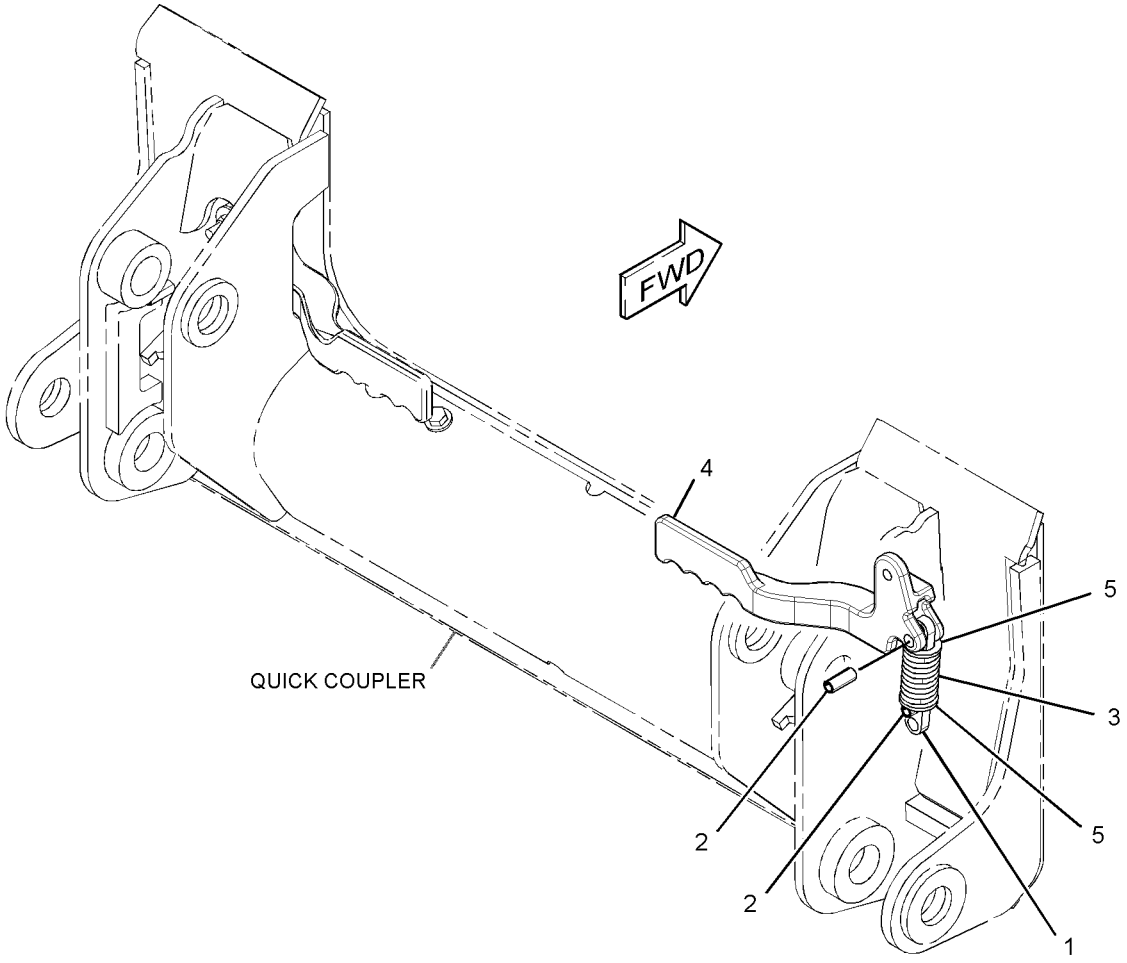

GRAPHIC #1 **<END>** g01335572

258-2538 HANDLE & PIN GP-COUPLER–LH

S/N: SRS1-UP
PART OF 258-2537 LOCK GP-QUICK COUPLER
AN ATTACHMENT

SMCS-6129 **i02960209**

NOTE	REF NO	GRAPHIC REF	PART NUMBER	QTY	PART NAME 1 2 3 4 5 6 (PRODUCT LEVEL)	SEE PAGE
	1	1	**192-2637**	1	PLATE	
	2	1	**195-6754**	2	PIN-SPRING	
	3	1	**192-2645**	1	SPRING	
	4	1	**258-2533**	1	HANDLE-LH	
M	5	1	**315-5493**	2	WASHER-HARD (22.5X35X4.5-MM THK)	

M-METRIC PART

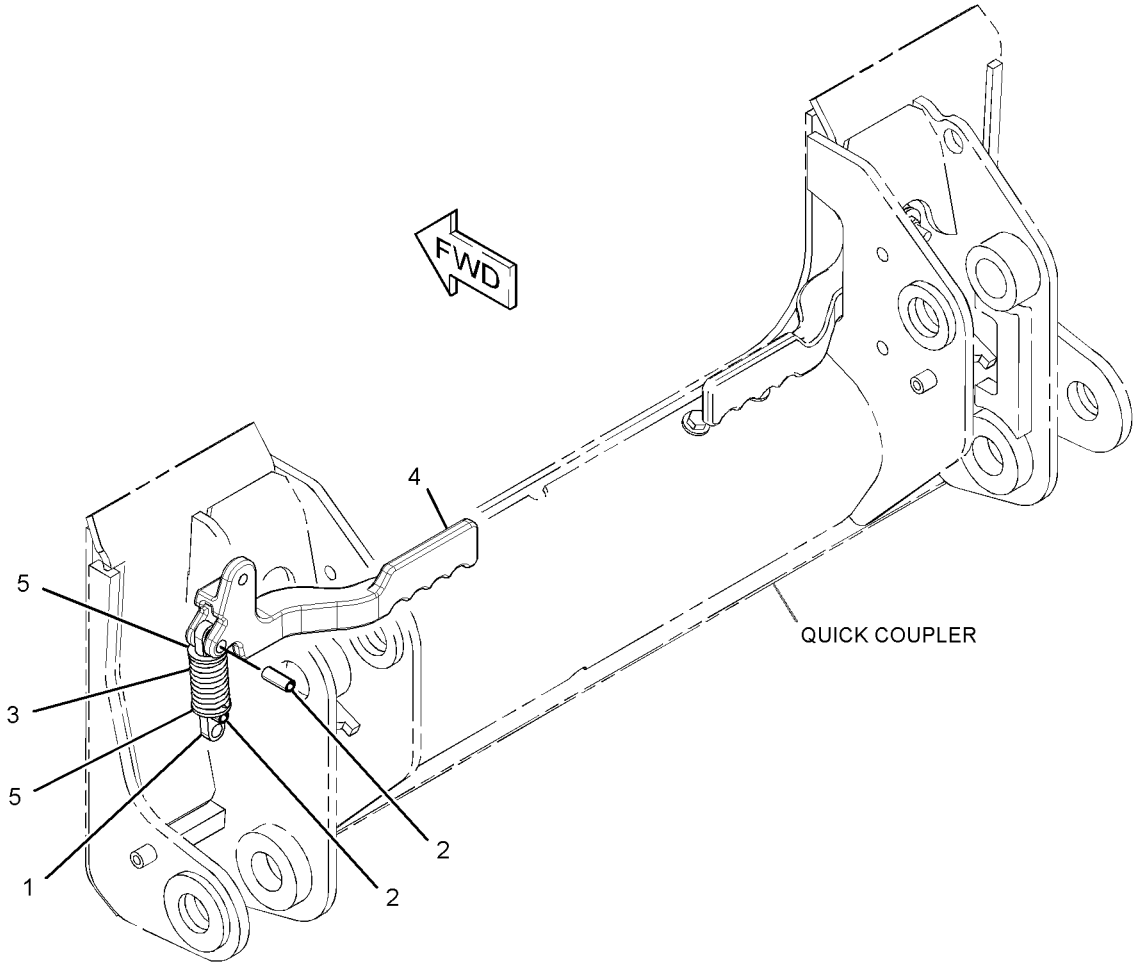

GRAPHIC #1 **<END>** g01335567

WORK TOOLS

225-9522 KIT-ANGLE BLADE

S/N: SRS1-UP
1829-MM (72-IN). SNOW AND IMPACT
FOR USE WITH 177-1989—PAGE 302
AN ATTACHMENT

SMCS-6701 **i04269769**

NOTE	REF NO	GRAPHIC REF	PART NUMBER	QTY	PART NAME 1 2 3 4 5 6 (PRODUCT LEVEL)	SEE PAGE
	1	1	**197-0882**	2	MARKER-TERMINAL	
	2	1	**197-0883**	1	GUARD AS	
	3	1	**210-0852**	1	VALVE GP-RELIEF (ANGLE BLADE)	
I	4	1	**214-5560**	2	HOSE AS	
	5	1	**3J-1907**	4	SEAL-O-RING	
M	6	1	**5C-2890**	2	NUT (M6X1-THD)	
M	7	1	**5C-7261**	4	NUT (M8X1.25-THD)	
	8	1	**6V-8397**	4	SEAL-O-RING	
	9	1	**7E-9898**	4	CONNECTOR	
M	10	1	**7X-2535**	2	BOLT (M6X1X60-MM)	
M	11	1	**8T-4139**	4	BOLT (M12X1.75X30-MM)	
	12	1	**8T-4205**	4	WASHER-HARD (7.2X14.5X2-MM THK)	
	13	1	**8T-4223**	8	WASHER-HARD (13.5X25.5X3-MM THK)	
	14	1	**8T-4224**	8	WASHER-HARD (8.8X16X2-MM THK)	
M	15	1	**8T-4244**	4	NUT (M12X1.75-THD)	
M	16	1	**8T-4908**	4	BOLT (M8X1.25X25-MM)	

I-REFER TO HYDRAULIC INFORMATION SYSTEM
M-METRIC PART

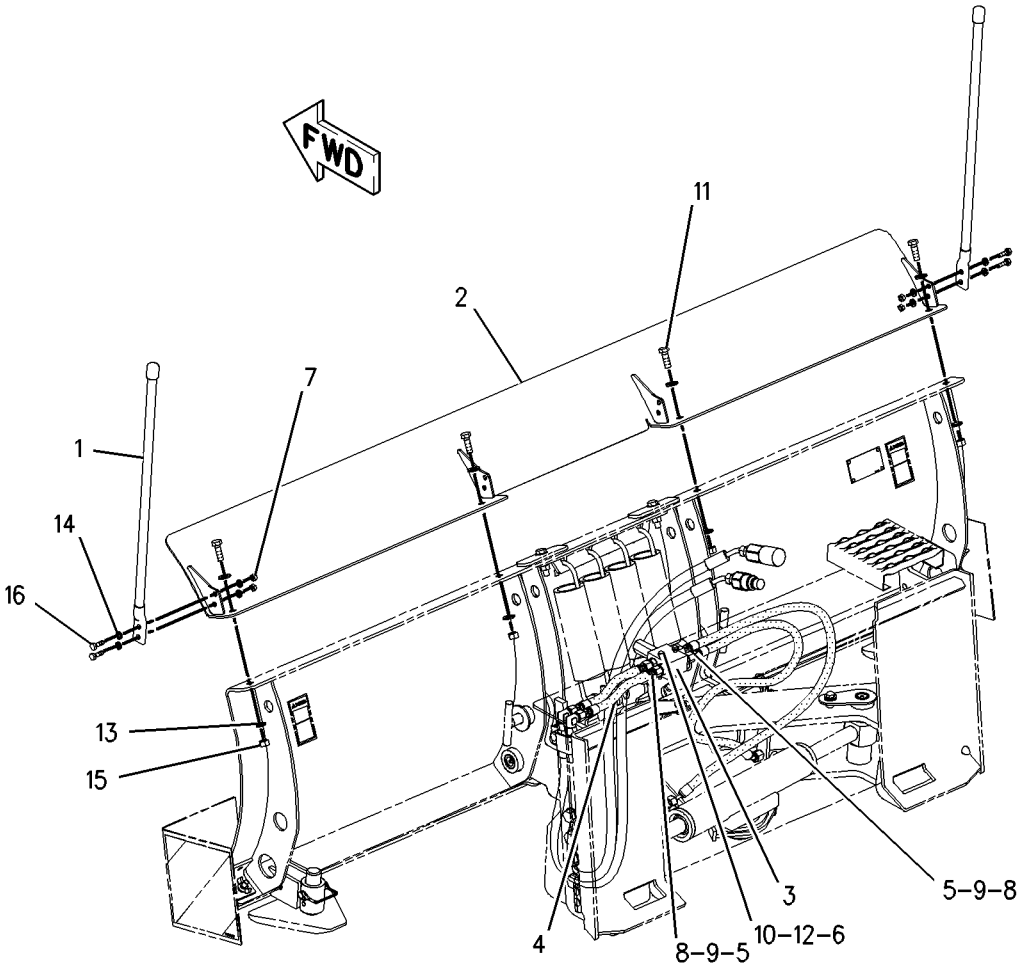

GRAPHIC #1 **<END>** g01003407

WORK TOOLS

225-9523 KIT-ANGLE BLADE

S/N: SRS1-UP
2134-MM (84-IN). SNOW AND IMPACT
FOR USE WITH 177-1990—PAGE 302
AN ATTACHMENT

SMCS-6701 **i04269789**

NOTE	REF NO	GRAPHIC REF	PART NUMBER	QTY	PART NAME 1 2 3 4 5 6 (PRODUCT LEVEL)	SEE PAGE
	1	1	**197-0882**	2	MARKER-TERMINAL	
	2	1	**197-0884**	1	GUARD AS	
	3	1	**210-0852**	1	VALVE GP-RELIEF (ANGLE BLADE)	
I	4	1	**214-5560**	2	HOSE AS	
	5	1	**3J-1907**	4	SEAL-O-RING	
M	6	1	**5C-2890**	2	NUT (M6X1-THD)	
M	7	1	**5C-7261**	4	NUT (M8X1.25-THD)	
	8	1	**6V-8397**	4	SEAL-O-RING	
	9	1	**7E-9898**	4	CONNECTOR	
M	10	1	**7X-2535**	2	BOLT (M6X1X60-MM)	
	11	1	**8T-4205**	4	WASHER-HARD (7.2X14.5X2-MM THK)	
	12	1	**8T-4223**	8	WASHER-HARD (13.5X25.5X3-MM THK)	
	13	1	**8T-4224**	8	WASHER-HARD (8.8X16X2-MM THK)	
M	14	1	**8T-4244**	4	NUT (M12X1.75-THD)	
M	15	1	**8T-4908**	4	BOLT (M8X1.25X25-MM)	
M	16	1	**8T-4956**	4	BOLT (M12X1.75X35-MM)	

I-REFER TO HYDRAULIC INFORMATION SYSTEM
M-METRIC PART

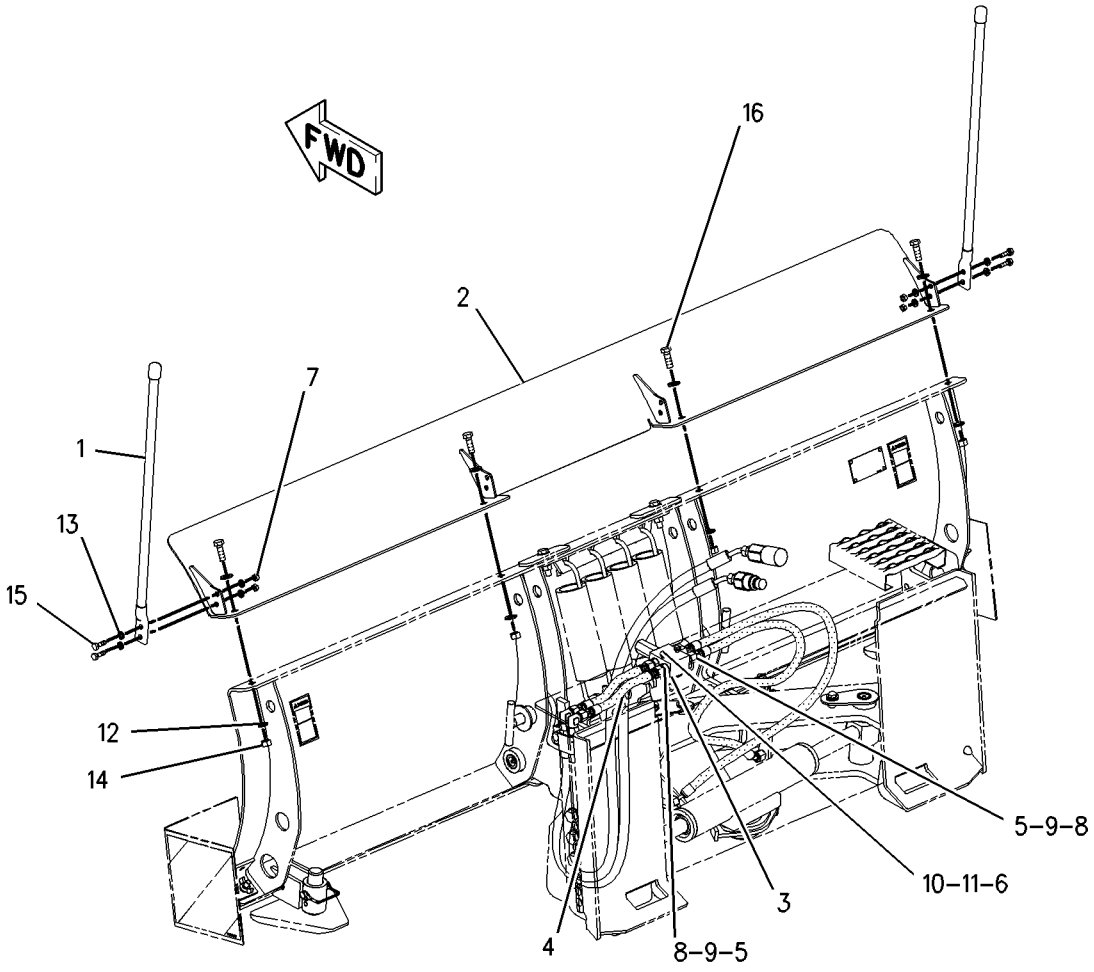

GRAPHIC #1 **<END>** g01003398

319-9480 KIT-ROADING PLATE & MOUNTING—BUCKET

S/N: SRS1-UP

PART OF 326-5282, 326-5284, 356-1902 CONVERSION AR-MACHINE

AN ATTACHMENT

SMCS-7405, 7557 **i03648540**

NOTE	PART NUMBER	QTY	PART NAME 1 2 3 4 5 6 (PRODUCT LEVEL)	SEE PAGE
	319-9481	1	PLATE AS (LH)	
	177-7414	1	FILM-STRIPE (REFLECTIVE, RED, WHITE)	
	177-7415	1	FILM (REFLECTIVE)	
	319-9483	1	PLATE AS	
	319-9482	1	PLATE AS (RH)	
	177-7414	1	FILM-STRIPE (REFLECTIVE, RED, WHITE)	
	177-7415	1	FILM (REFLECTIVE)	
	319-9484	1	PLATE AS	
	319-9490	2	STRAP AS	
M	**8T-4136**	8	BOLT (M10X1.5X25-MM)	
M	**8T-4186**	2	BOLT (M10X1.5X40-MM)	
M	**6V-8949**	8	NUT (M10X1.5-THD)	
	319-9489	2	PLATE	
	039-8557	4	WASHER (13X26X6-MM THK)	
	8T-4121	16	WASHER-HARD (11X21X2.5-MM THK)	

M-METRIC PART

<END>

215-3957 LINK GP-COUPLER

S/N: SRS1-UP

PART OF 215-3962, 215-3963 CYLINDER & LINK GP-COUPLER

AN ATTACHMENT

SMCS-6129 **i02999956**

NOTE	REF NO	GRAPHIC REF	PART NUMBER	QTY	PART NAME 1 2 3 4 5 6 (PRODUCT LEVEL)	SEE PAGE
C	1	1	**192-2645**	1	SPRING	
C	2	1	**303-8768**	1	PIN-SPRING	
C	3	1	**310-6660**	1	PIN-SPRING	
C	4	1	**311-9240**	1	PLATE	
CM	5	1	**315-5493**	2	WASHER-HARD (22.5X35X4.5-MM THK)	
C	6	1	**319-2137**	1	BRACKET	

C-CHANGE FROM PREVIOUS TYPE
M-METRIC PART

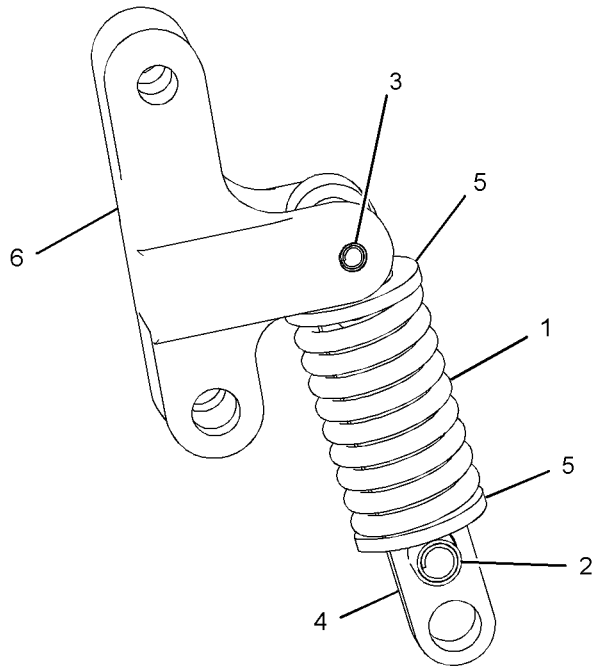

GRAPHIC #1 **<END>** g01523779

WORK TOOLS

175-4238 LOCK GP-QUICK COUPLER—MECHANICAL

S/N: SRS1-UP
PART OF 326-5282, 326-5284, 356-1902 CONVERSION AR-MACHINE
AN ATTACHMENT

SMCS-6129 **i01408856**

NOTE	REF NO	GRAPHIC REF	PART NUMBER	QTY	PART NAME 1 2 3 4 5 6 (PRODUCT LEVEL)	SEE PAGE
	1	1	**9R-5301**	1	PIN-COTTER	
	2	1	**178-2247**	1	PIN	
	3	1	**9X-8257**	1	WASHER (17.5X30X3.5-MM THK)	

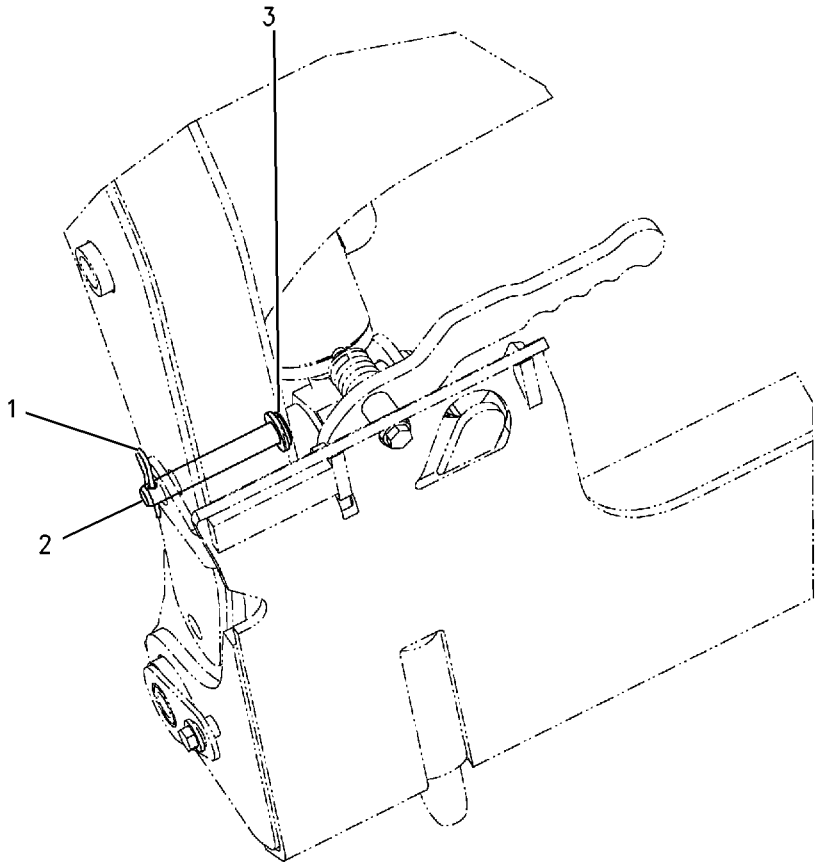

GRAPHIC #1 **<END>** g00741828

258-2535 LOCK GP-QUICK COUPLER–RH

S/N: SRS1-UP
PART OF 360-1363 COUPLER GP-QUICK
AN ATTACHMENT

SMCS-6129 **i02655596**

NOTE	REF NO	GRAPHIC REF	PART NUMBER	QTY	PART NAME 1 2 3 4 5 6 (PRODUCT LEVEL)	SEE PAGE
	1	1	**166-2560**	1	PIN-SPRING	
	2	1	**192-2642**	1	PIN	
Y	3	1	*258-2536*	1	HANDLE & PIN GP-COUPLER (RH)	436

Y-SEPARATE ILLUSTRATION

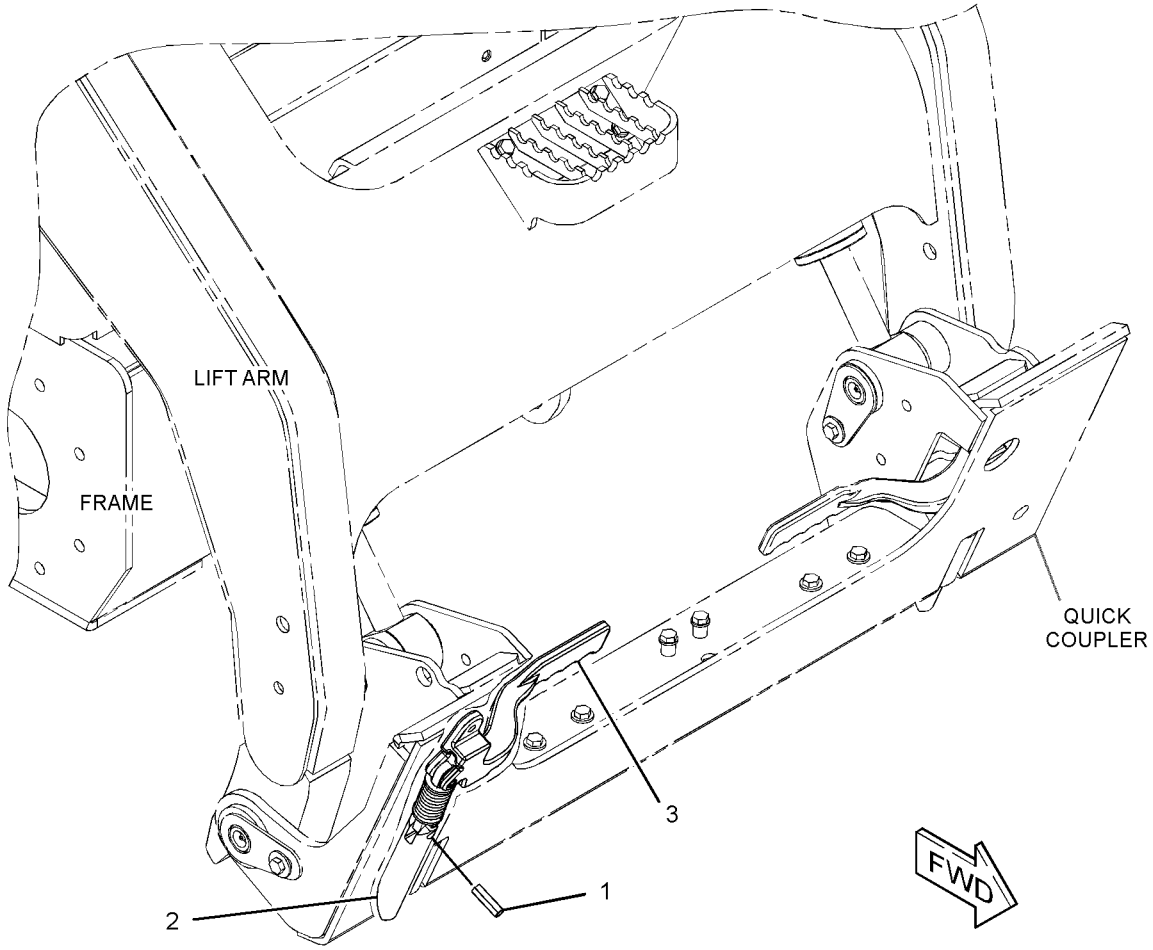

GRAPHIC #1 **<END>** g01335585

258-2537 LOCK GP-QUICK COUPLER–LH

S/N: SRS1-UP
PART OF 360-1363 COUPLER GP-QUICK
AN ATTACHMENT

SMCS-6129 **i02655597**

NOTE	REF NO	GRAPHIC REF	PART NUMBER	QTY	PART NAME 1 2 3 4 5 6 (PRODUCT LEVEL)	SEE PAGE
	1	1	**166-2560**	1	PIN-SPRING	
	2	1	**192-2642**	1	PIN	
Y	3	1	*258-2538*	1	HANDLE & PIN GP-COUPLER (LH)	437

Y-SEPARATE ILLUSTRATION

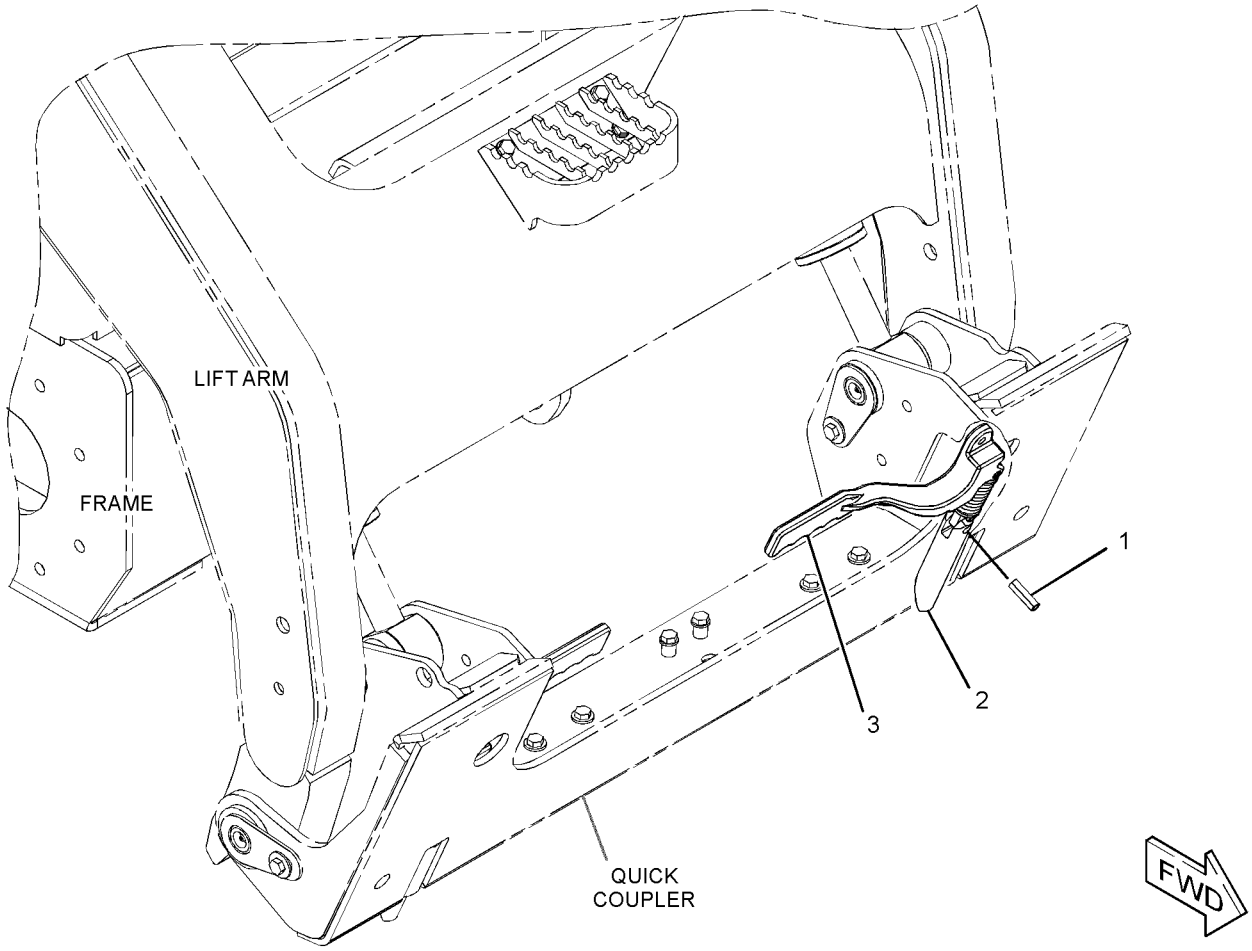

GRAPHIC #1 **<END>** g01335566

WORK TOOLS

177-1983 SPRING GP-BLADE

S/N: SRS1-UP

PART OF 177-1989, 177-1990 BLADE AR

AN ATTACHMENT

SMCS-6060 **i01497986**

NOTE	REF NO	GRAPHIC REF	PART NUMBER	QTY	PART NAME 1 2 3 4 5 6 (PRODUCT LEVEL)	SEE PAGE
	1	1	**177-1941**	4	SPRING	
	2	1	**177-1973**	1	PLATE AS	
M	3	1	**8T-4194**	2	BOLT (M12X1.75X50-MM)	
	4	1	**8T-4223**	4	WASHER-HARD (13.5X25.5X3-MM THK)	
M	5	1	**8T-4244**	2	NUT (M12X1.75-THD)	

M-METRIC PART

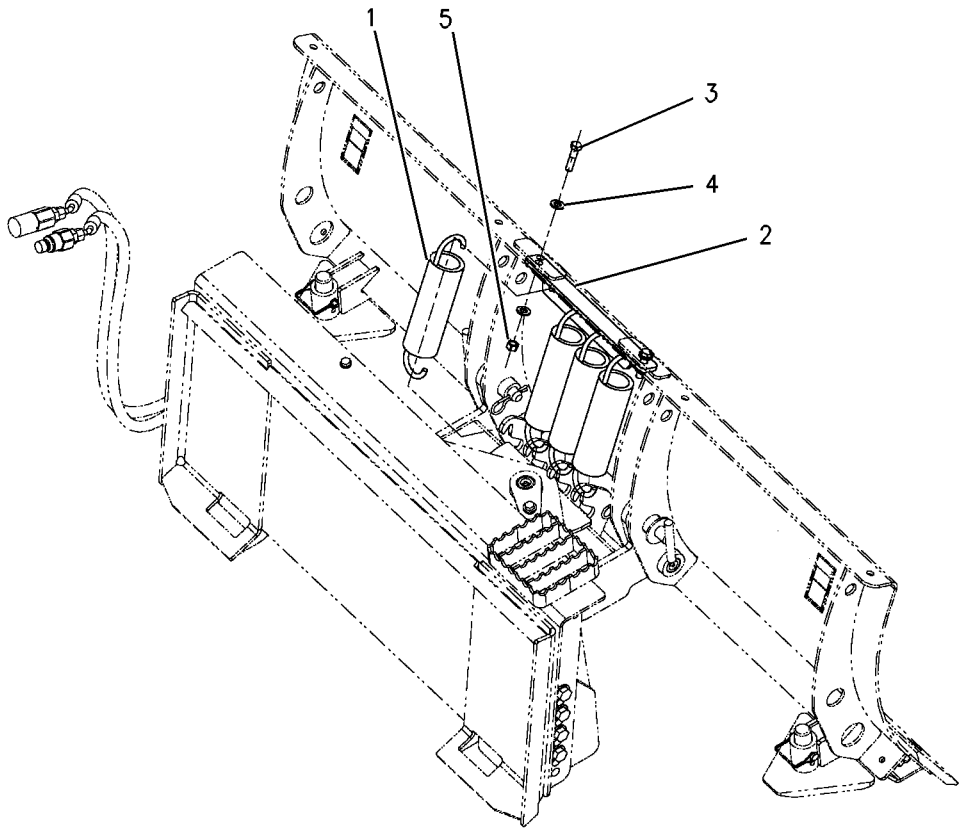

GRAPHIC #1 **<END>** g00777337

188-7733 STEP GP-MATERIAL HANDLING ARM

S/N: SRS1-UP
PART OF 216-8756 ARM GP-MATERIAL HANDLING
AN ATTACHMENT

SMCS-6542 **i01498007**

NOTE	REF NO	GRAPHIC REF	PART NUMBER	QTY	PART NAME 1 2 3 4 5 6 (PRODUCT LEVEL)	SEE PAGE
	1	1	**186-5186**	1	STEP AS	
	2	1	**8T-4121**	2	WASHER-HARD (11X21X2.5-MM THK)	
M	3	1	**8T-4133**	2	NUT (M10X1.5-THD)	
M	4	1	**8T-4136**	2	BOLT (M10X1.5X25-MM)	

M-METRIC PART

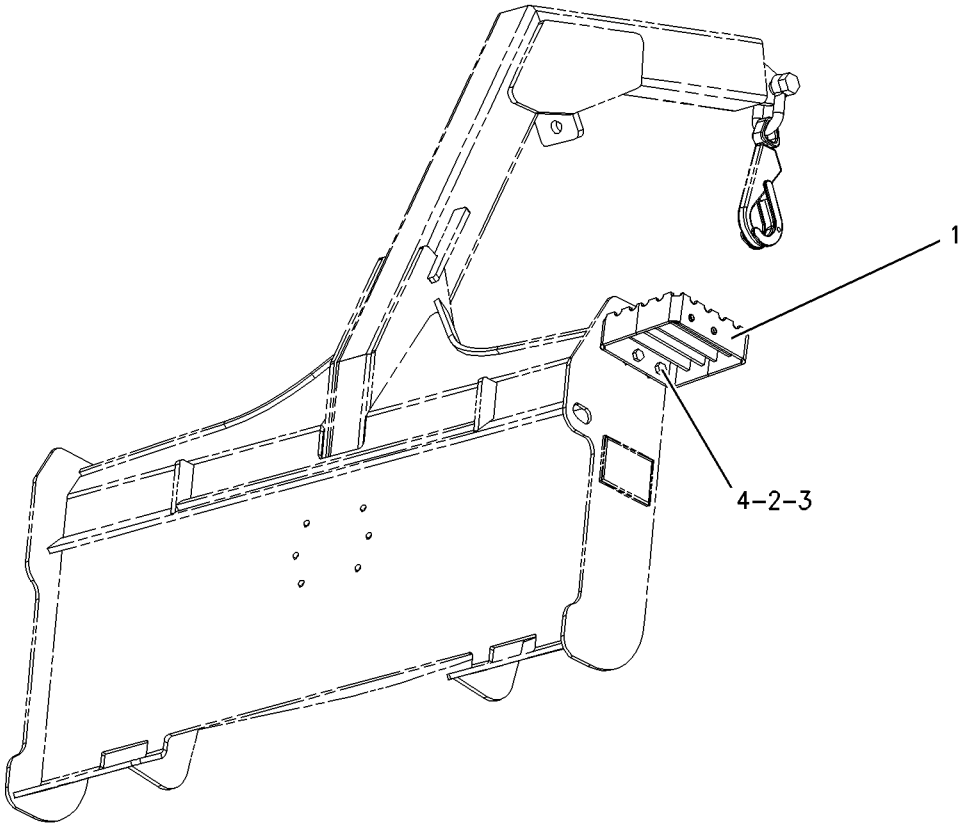

GRAPHIC #1 **<END>** g00777345

WORK TOOLS

173-7407 STOP GP-BUCKET—UTILITY

S/N: SRS1-UP

PART OF 285-6116 GRAPPLE & CYLINDER GP-UTILITY

AN ATTACHMENT

SMCS-6001, 6307 **i01218895**

NOTE	REF NO	GRAPHIC REF	PART NUMBER	QTY	PART NAME 1 2 3 4 5 6 (PRODUCT LEVEL)	SEE PAGE
	1	1	**8Y-7386**	1	SPACER (12.5X17.1X16.5-MM THK)	
	2	1	**2S-6408**	2	WASHER-RETAINING (0.531X3.25X0.438-IN THK)	
	3	1	**8T-4223**	1	WASHER-HARD (13.5X25.5X3-MM THK)	
M	4	1	**8T-4910**	1	BOLT (M12X1.75X60-MM)	
	5	1	**8Y-7385**	1	STOP	

M-METRIC PART

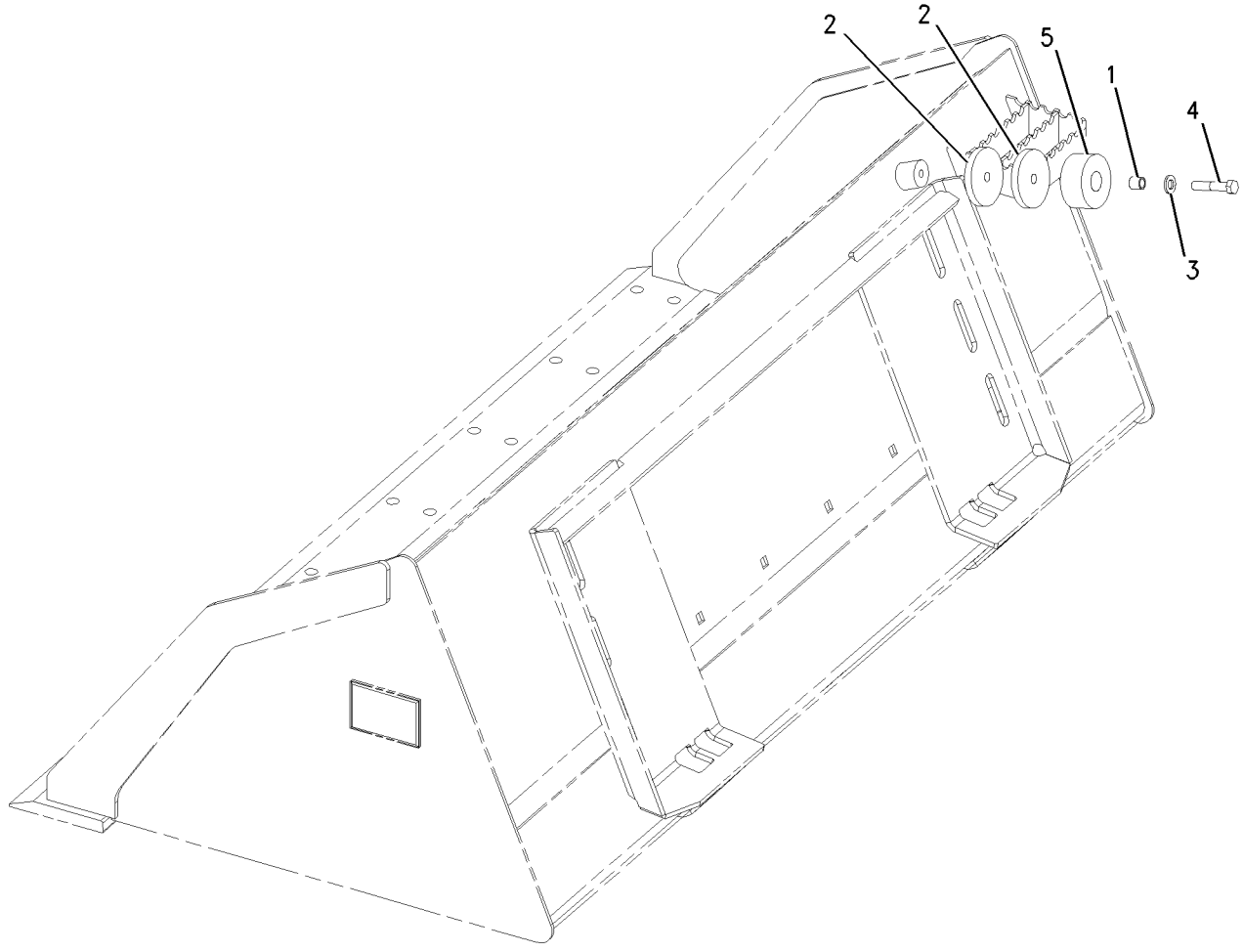

GRAPHIC #1 **<END>** g00651574

WORK TOOLS

116-2001 STRAINER GP-WATER

S/N: SRS1-UP
PART OF 346-1834 TANK & MTG GP-WATER
AN ATTACHMENT

SMCS-5612 **i02571404**

NOTE	REF NO	GRAPHIC REF	PART NUMBER	QTY	PART NAME 1 2 3 4 5 6 (PRODUCT LEVEL)	SEE PAGE
	1	1	**119-1415**	1	GASKET	
	2	1	**119-1414**	1	SCREEN (WATER TANK)	

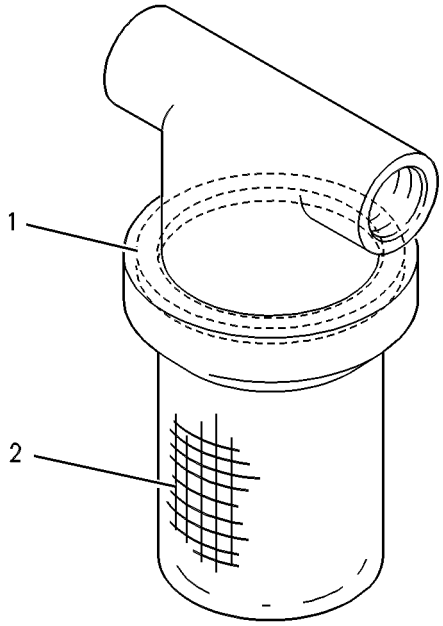

GRAPHIC #1 **<END>** g00293866

WORK TOOLS

346-1834 TANK & MTG GP-WATER—KIT

S/N: SRS1-UP

AN ATTACHMENT

SMCS-5613 **i04042230**

NOTE	REF NO	GRAPHIC REF	PART NUMBER	QTY	PART NAME 1 2 3 4 5 6 (PRODUCT LEVEL)	SEE PAGE
	1	1	**3B-7255**	1	BUSHING-REDUCING	
	2	1	**3S-2093**	4	STRAP-CABLE	
	3	1	**4E-0724**	1	SPACER (9X20X28-MM THK)	
	4	1	**7X-0495**	1	ADAPTER	
	5	1	**8T-0737**	1	VALVE-SHUTOFF (WATER TANK)	
Y	6	1	**116-2001**	1	STRAINER GP-WATER	450
	7	1	**124-1916**	1	COUPLING-PERMANENT	
	8	1	**124-1917**	1	COUPLING-PERMANENT	
	9	1	**165-4894**	1	HARNESS AS-WORK TOOL (WATER TANK)	
		1	**126-1767**	8	PIN-CONNECTOR (14-GA TO 16-GA)	
		1	**155-2270**	1	KIT-CONNECTING PLUG (2-PIN)	
		1	**155-2265**	1	KIT-CONNECTING PLUG (8-PIN)	
					(EACH PLUG KIT INCLUDES PLUG AS, WEDGE & INTERFACE SEAL)	
		1	**102-8806**	1	KIT-RECEPTACLE (8-PIN)	
					(INCLUDES RECEPTACLE AS & WEDGE)	
		1	**126-1768**	10	SOCKET-CONNECTOR (14-GA TO 16-GA)	
E		1	**119-3662**		TUBE-HEAT SHRINK (10.85-MM DIA) (13-CM)	
Y	10	1	**166-2551**	1	TANK GP-WATER	455
I	11	1	**166-2552**	1	HOSE AS	
	12	1	**166-2557**	1	PLATE	
	13	1	**166-2558**	1	COUPLING	
	14	1	**166-2559**	2	BRACKET	
	15	1	**218-5847**	1	PLATE	
	16	1	**233-5892**	1	PLATE AS	
	17	1	**233-5893**	1	PLATE AS	
	18	1	**346-1832**	1	PUMP GP-DIAPHRAGM (WATER TANK)	
	19	1	**346-1836**	1	BRACKET AS	
	20	1	**003-2143**	1	ELBOW	
	21	1	**067-2551**	2	CLIP	
	22	1	**095-0912**	2	CLIP	
	23	1	**101-2867**	4	WASHER-HARD (7.2X25X2-MM THK)	
M	24	1	**111-4627**	4	SCREW-MACHINE (M6X1X30-MM)	
	25	1	**119-3859**	6	SCREW-PAN HEAD (10-16X0.75-IN)	
M	26	1	**129-3178**	4	LOCKNUT (M6X1-THD)	
	27	1	**1L-2279**	1	ELBOW	
M	28	1	**5C-7261**	3	NUT (M8X1.25-THD)	
	29	1	**5P-4116**	1	WASHER-HARD (8.8X20.5X2-MM THK)	
	30	1	**5P-8246**	2	WASHER-HARD (15.5X29X3-MM THK)	
	31	1	**8T-4122**	16	WASHER-HARD (17X32X3.5-MM THK)	
M	32	1	**8T-4132**	4	NUT (M16X2-THD)	
	33	1	**8T-4205**	2	WASHER-HARD (7.2X14.5X2-MM THK)	
	34	1	**8T-4224**	8	WASHER-HARD (8.8X16X2-MM THK)	
M	35	1	**8T-4779**	12	BOLT (M16X2X35-MM)	
M	36	1	**8T-4908**	6	BOLT (M8X1.25X25-MM)	
M	37	1	**8T-6869**	1	BOLT (M8X1.25X60-MM)	
BG	38	1	**122-6869**		HOSE-HYDRAULIC (140.2-IN)	
					—OR—	
BG		1	**122-6869**		HOSE-HYDRAULIC (113-IN)	
					—OR—	
BG		1	**122-6869**		HOSE-HYDRAULIC (120.1-IN)	
E	39	1	**167-0608**		SEAL (82-CM)	
	40	1	**7K-1181**	2	STRAP-CABLE	
	41	1,2	**8T-4121**	7	WASHER-HARD (11X21X2.5-MM THK)	
M	42	1	**8T-4133**	2	NUT (M10X1.5-THD)	
M	43	1	**8T-4136**	2	BOLT (M10X1.5X25-MM)	

346-1834 TANK & MTG GP-WATER *(contd.)* i04042230

NOTE	REF NO	GRAPHIC REF	PART NUMBER	QTY	PART NAME 1 2 3 4 5 6 (PRODUCT LEVEL)	SEE PAGE
	44	2	**195-6696**	1	PLATE	
	45	2	**142-7505**	2	PLATE AS	
	46	2	**166-2556**	1	BRACKET	
M	47	2	**8T-4191**	2	BOLT (M10X1.5X16-MM)	
M	48	2	**8T-4137**	5	BOLT (M10X1.5X20-MM)	

B-USE AS REQUIRED
E-ORDER BY THE CENTIMETER
G-ORDER BY THE INCH
I-REFER TO HYDRAULIC INFORMATION SYSTEM
M-METRIC PART
Y-SEPARATE ILLUSTRATION

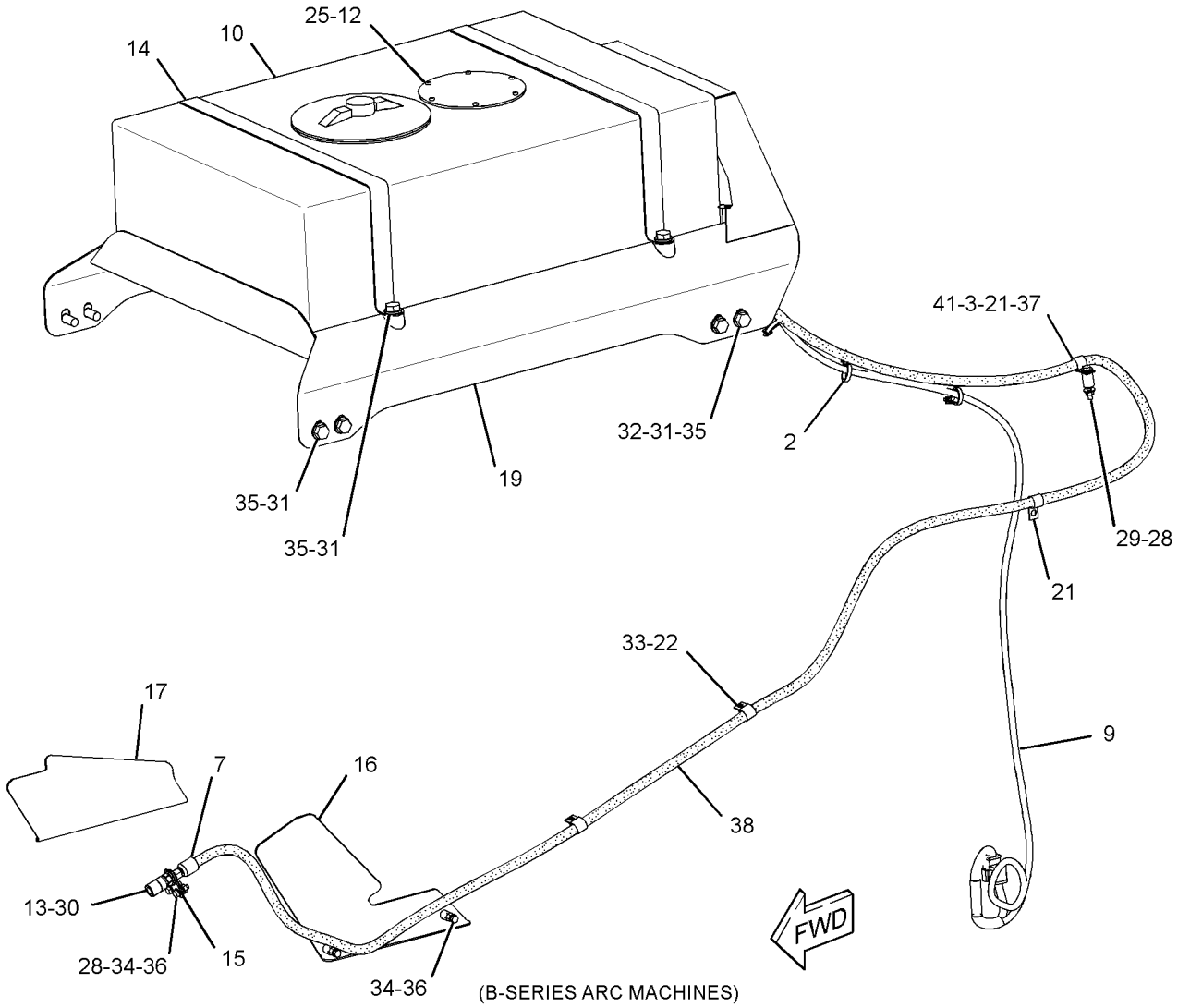

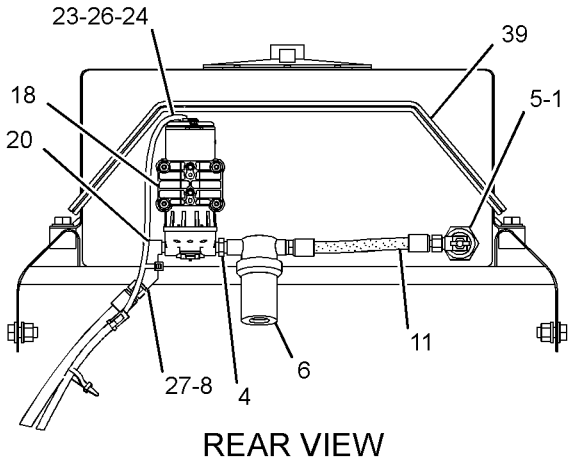

REAR VIEW

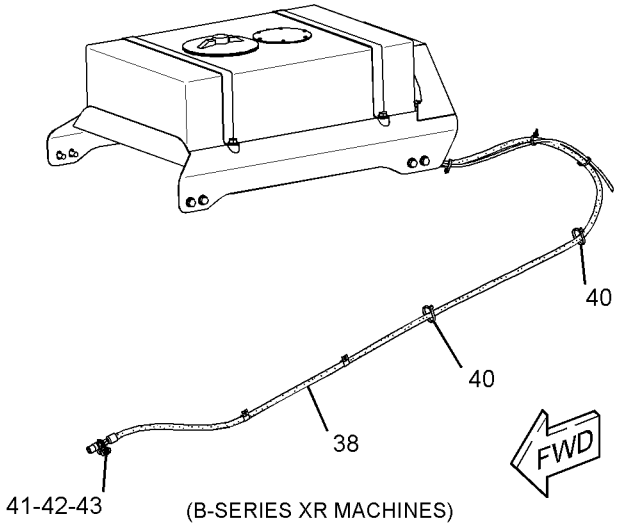

GRAPHIC #1 g02068053

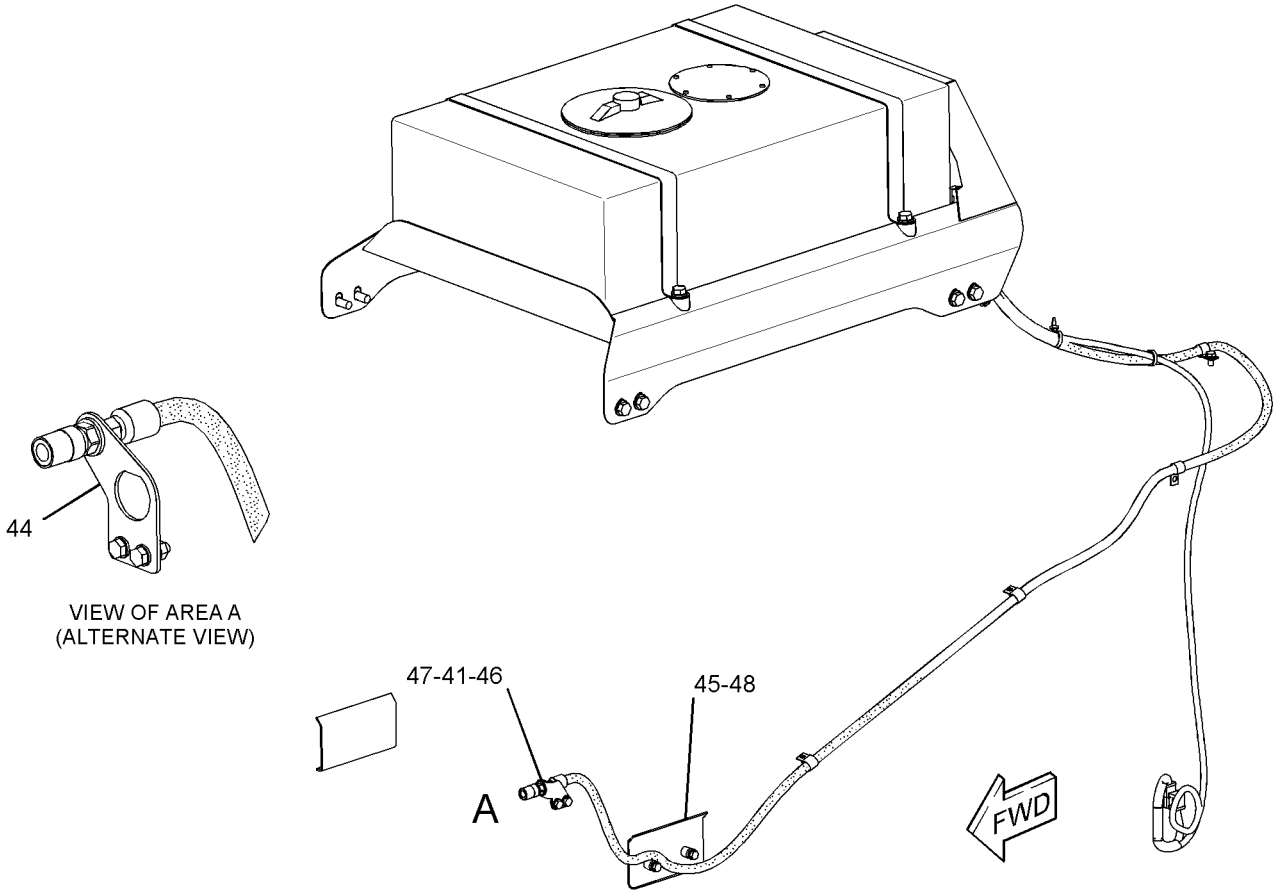

VIEW OF AREA A
(ALTERNATE VIEW)

(A-SERIES ARC MACHINES)

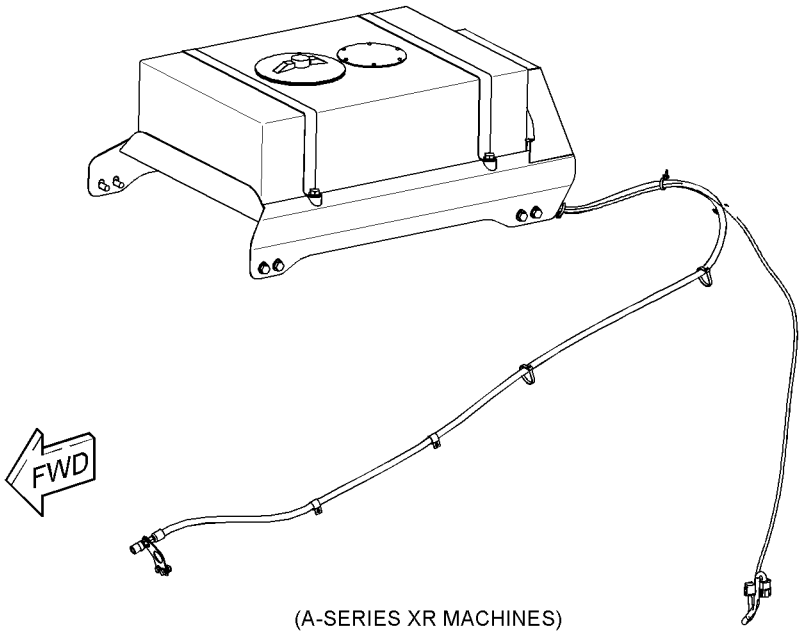

(A-SERIES XR MACHINES)

GRAPHIC #2

<END>

g02169473

WORK TOOLS

166-2551 TANK GP-WATER

S/N: SRS1-UP
PART OF 346-1834 TANK & MTG GP-WATER
AN ATTACHMENT

SMCS-5613 **i02571400**

NOTE	REF NO	GRAPHIC REF	PART NUMBER	QTY	PART NAME 1 2 3 4 5 6 (PRODUCT LEVEL)	SEE PAGE
	1	1	**192-2606**	1	CAP AS (WATER TANK)	
	2	1	**192-2607**	1	FITTING-DRAIN	

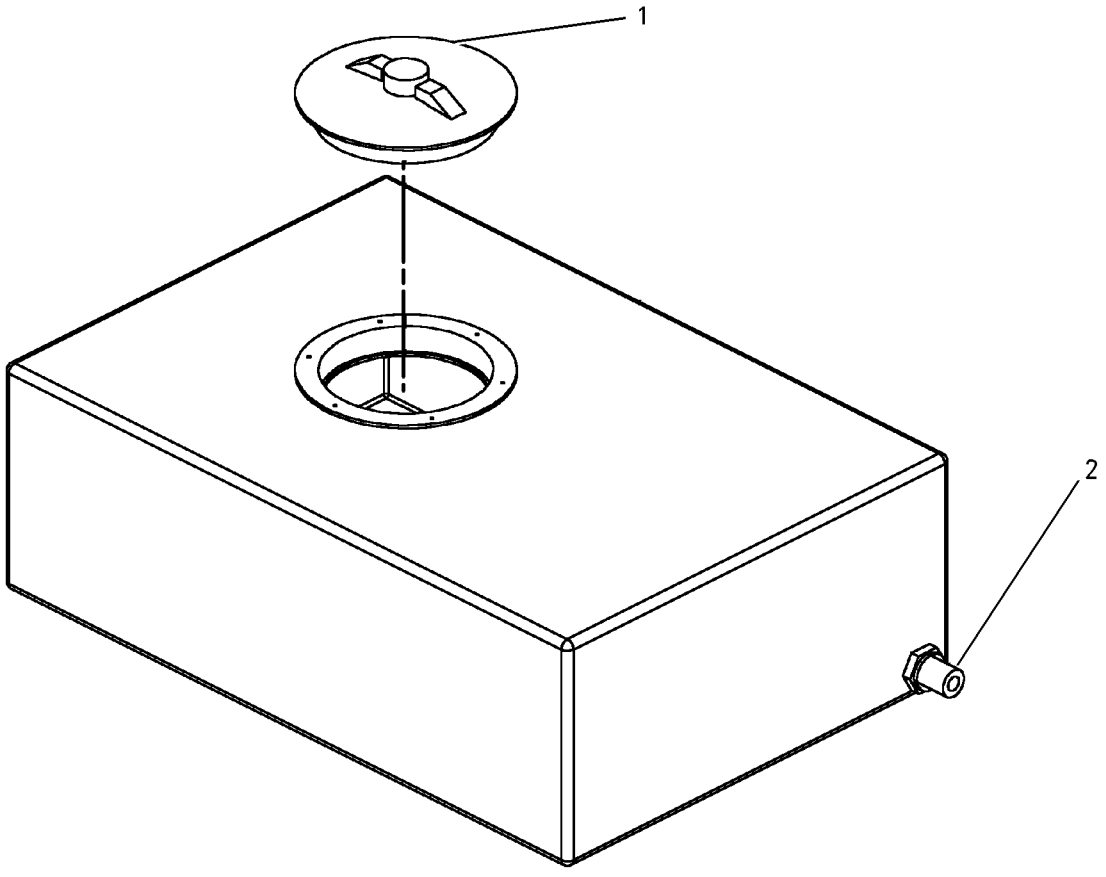

GRAPHIC #1 **<END>** g00742953

141-4999 TOOTH GP-UNI

S/N: SRS1-UP

PART OF 279-5366, 279-5370, 279-5374, 279-5378 BUCKET AR-GENERAL PURPOSE, 279-5380, 279-5392, 279-5400, 279-5401, 296-8055 BUCKET AR-MULTIPURPOSE, 296-8191 BUCKET GP-GENERAL PURPOSE

AN ATTACHMENT

SMCS-6822 **i02163942**

NOTE	REF NO	GRAPHIC REF	PART NUMBER	QTY	PART NAME 1 2 3 4 5 6 (PRODUCT LEVEL)	SEE PAGE
	1	1	**132-4720**	1	TOOTH-UNI-SINGLE STRAP	
	2	1	**246-4349**	2	SCREW-FLAT HEAD (M16X2-THD)	
M	3	1	**8T-4778**	2	LOCKNUT (M16X2-THD)	

M-METRIC PART

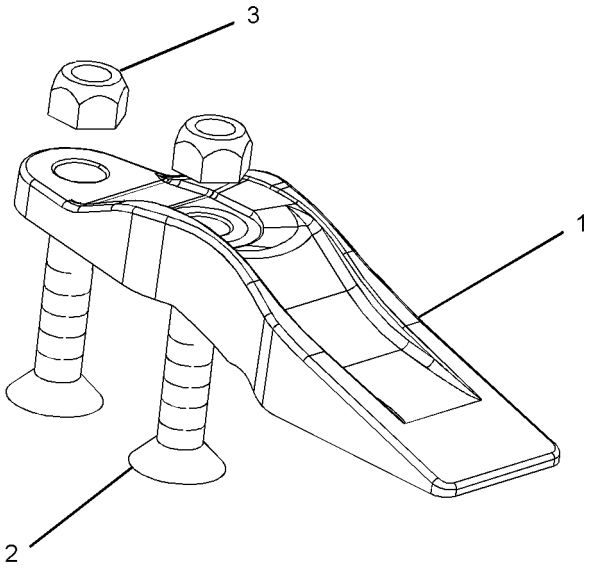

GRAPHIC #1 **<END>** g01097424

OPERATOR STATION

176-3900 ACCUMULATOR GP-REFRIGERANT—UNCHARGED

S/N: SRS1-UP

FIELD REPLACEMENT FOR 186-6190—PAGE 458

SMCS-7320 **i02195254**

NOTE	REF NO	GRAPHIC REF	PART NUMBER	QTY	PART NAME 1 2 3 4 5 6 (PRODUCT LEVEL)	SEE PAGE
					(NO SERVICED PARTS)	

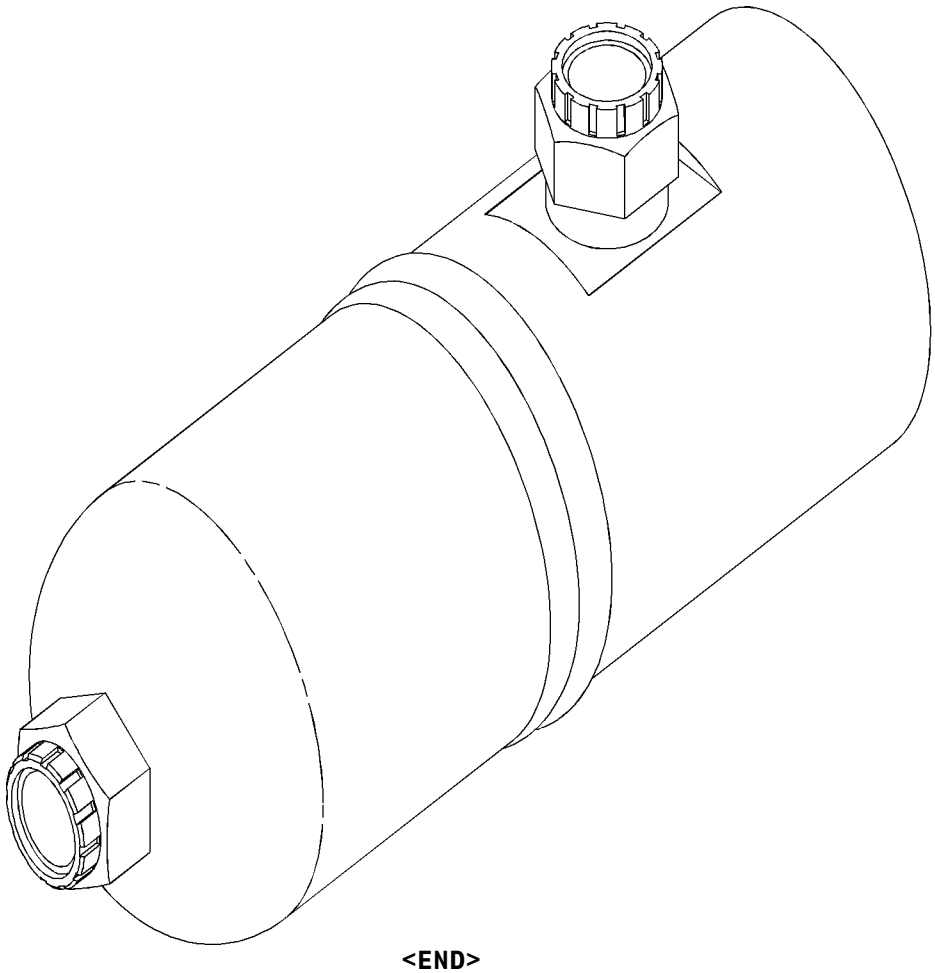

GRAPHIC #1 **<END>** g01035076

OPERATOR STATION

186-6190 ACCUMULATOR GP-REFRIGERANT—CHARGED

S/N: SRS1-UP
PART OF 326-5744 LINES GP-AIR CONDITIONER
FIELD REPLACEMENT ORDER 176-3900—PAGE 457
AN ATTACHMENT

SMCS-7320 **i02306357**

NOTE	REF NO	GRAPHIC REF	PART NUMBER	QTY	PART NAME 1 2 3 4 5 6 (PRODUCT LEVEL)	SEE PAGE
					(NO SERVICED PARTS)	

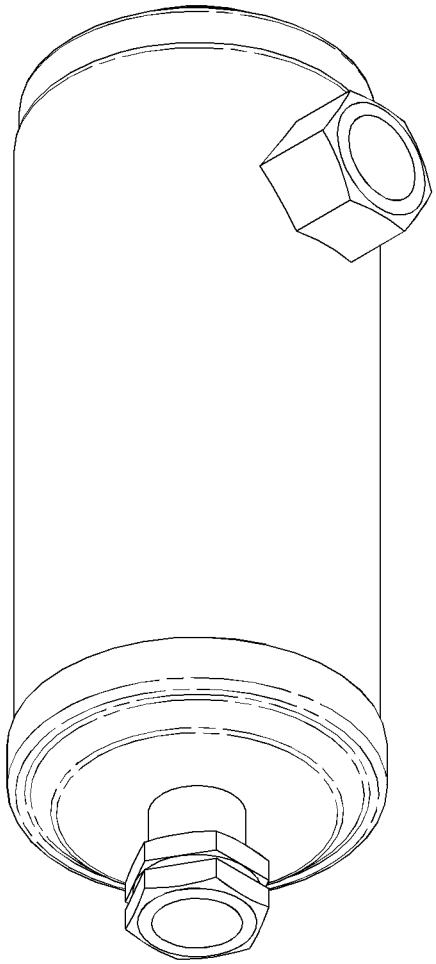

GRAPHIC #1 **<END>** g01155244

229-8747 AIR CONDITIONER & MOUNTING GP

S/N: SRS1-UP

PART OF 326-5556 AIR CONDITIONER AR

AN ATTACHMENT

SMCS-7320 **i02010226**

NOTE	REF NO	GRAPHIC REF	PART NUMBER	QTY	PART NAME 1 2 3 4 5 6 (PRODUCT LEVEL)	SEE PAGE
Y	1	1	*218-6405*	1	AIR CONDITIONER GP	461
M	2	1	**7X-2537**	4	BOLT (M8X1.25X35MM)	
	3	1	**8T-4224**	4	WASHER-HARD (8.8X16X2MM THK)	

M-METRIC PART
Y-SEPARATE ILLUSTRATION

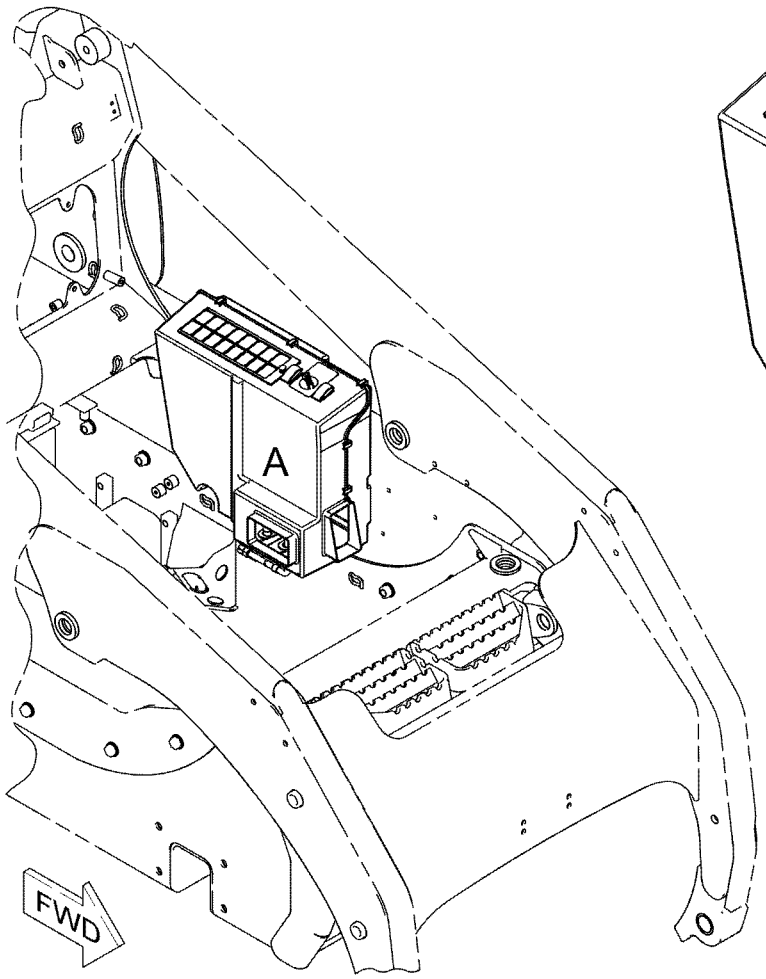

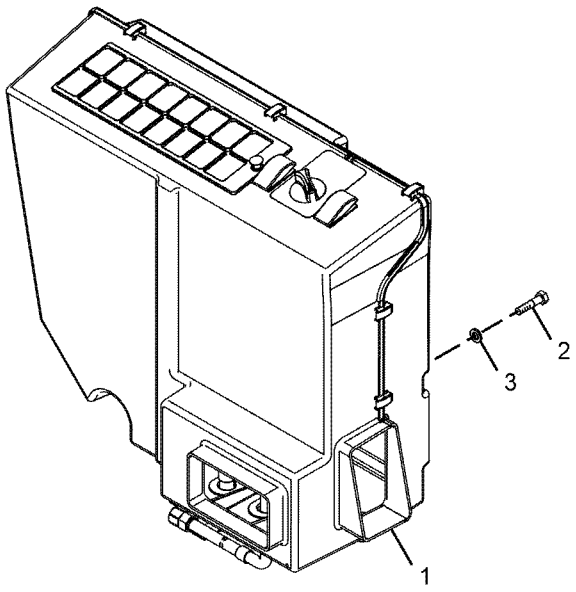

VIEW OF AREA A

GRAPHIC #1 **<END>** g01018777

OPERATOR STATION

326-5556 AIR CONDITIONER AR

S/N: SRS1-UP

PART OF 326-5553 CAB AR-ENCLOSED ROPS

AN ATTACHMENT

SMCS-7320 **i03983759**

NOTE	PART NUMBER	QTY	PART NAME 1 2 3 4 5 6 (PRODUCT LEVEL)	SEE PAGE
Y	*229-8747*	1	AIR CONDITIONER & MOUNTING GP	459
Y	*326-5357*	1	COMPRESSOR GP-REFRIGERANT	474
Y	*218-6348*	1	CONDENSER & MTG GP-REFRIGERANT	475
Y	*218-6394*	1	DUCT GP-CAB AIR	501
Y	*326-5744*	1	LINES GP-AIR CONDITIONER	517
Y	*326-5745*	1	LINES GP-HEATER	519

Y-SEPARATE ILLUSTRATION

<END>

OPERATOR STATION

218-6405 AIR CONDITIONER GP

S/N: SRS1-UP

PART OF 229-8747 AIR CONDITIONER & MOUNTING GP

AN ATTACHMENT

SMCS-7320, 7342 **i04358410**

NOTE	REF NO	GRAPHIC REF	PART NUMBER	QTY	PART NAME 1 2 3 4 5 6 (PRODUCT LEVEL)	SEE PAGE
	1	1	**185-4015**	10	CLIP	
	2	1	**202-2284**	1	SWITCH AS-ROCKER (AIR CONDITIONER)	
		1	**111-7899**	1	GASKET	
	3	1	**218-6399**	1	SEAL	
	4	1	**206-7398**	1	KNOB-CONTROL (TEMPERATURE SELECT)	
	5	1	**119-9631**	1	SWITCH-TEMPERATURE (HVAC) (AIR CONDITIONER)	
	6	1	**305-2969**	2	SCREW-THUMB	
	7	1	**231-8123**	1	COIL AS-EVAPORATOR	
	8	1	**231-8124**	1	COIL AS-HEATER	
	9	1	**295-5440**	1	MOTOR	
	10	1	**236-5067**	1	SWITCH-ROCKER (HEATER)	
	11	1	**231-8127**	2	GROMMET	
C	12	1	**312-2635**	1	COVER GP-ACCESS	
		1	**231-8129**	2	PIN	
		1	**231-8142**	2	RETAINER	
	14	1	**303-6658**	1	FILTER ELEMENT-CAB AIR	
	16	1	**231-8132**	1	FILTER ELEMENT-CAB AIR	
	17	1	**231-8133**	1	PANEL	
	18	1	**231-8137**	1	FILM (TEMPERATURE CONTROL)	
	19	1	**231-8141**	1	GROMMET	
	21	1	**236-5069**	3	RELAY AS (12-VOLT) (AIR CONDITIONER, HEATER)	
C	22	1	**312-1683**	1	HOUSING-COVER	
Y	23	1	**231-8122**	1	HOUSING AS-SIDE (AIR CONDITIONER, HEATER)	513
	24	1	**231-8126**	1	VALVE AS-WATER (AIR CONDITIONER)	
	25	1	**232-1384**	1	ORIFICE AS-AIR CONDITIONER	
	26	1	**218-6948**	1	HARNESS AS-HEATER & AIR COND	

C-CHANGE FROM PREVIOUS TYPE
Y-SEPARATE ILLUSTRATION

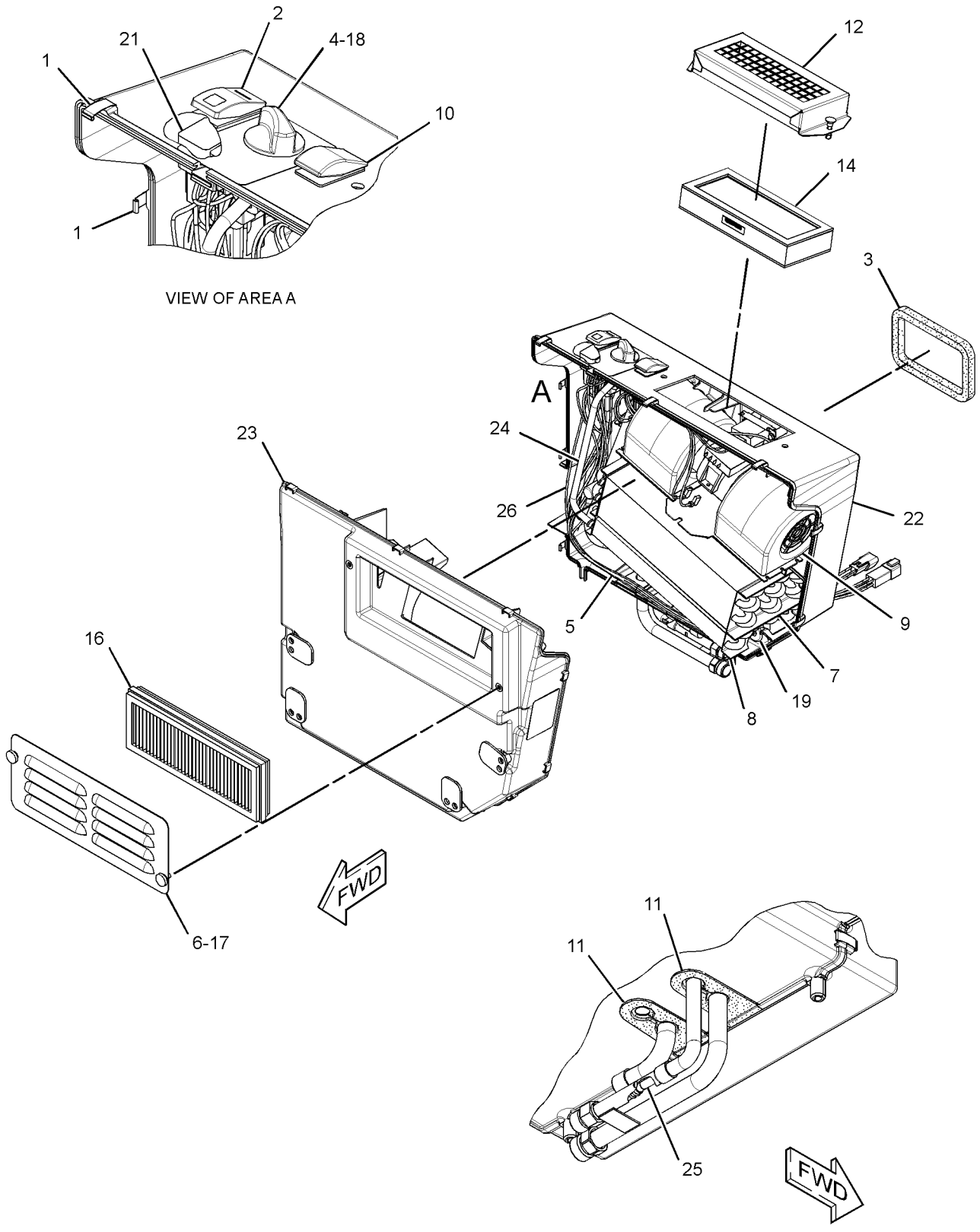

GRAPHIC #1 **<END>** g01594158

OPERATOR STATION

320-1389 ARM GP-WINDOW WIPER

S/N: SRS1-UP

PART OF 223-0616, 276-3440 DOOR GP-CAB

AN ATTACHMENT

SMCS-7305 **i03434603**

NOTE	REF NO	GRAPHIC REF	PART NUMBER	QTY	PART NAME 1 2 3 4 5 6 (PRODUCT LEVEL)	SEE PAGE
	1	1	**240-8666**	2	CLIP	
	2	1	**136-3191**	1	NOZZLE AS-WASHER	
E	3	1	**194-5171**		HOSE (60-CM)	

E-ORDER BY THE CENTIMETER

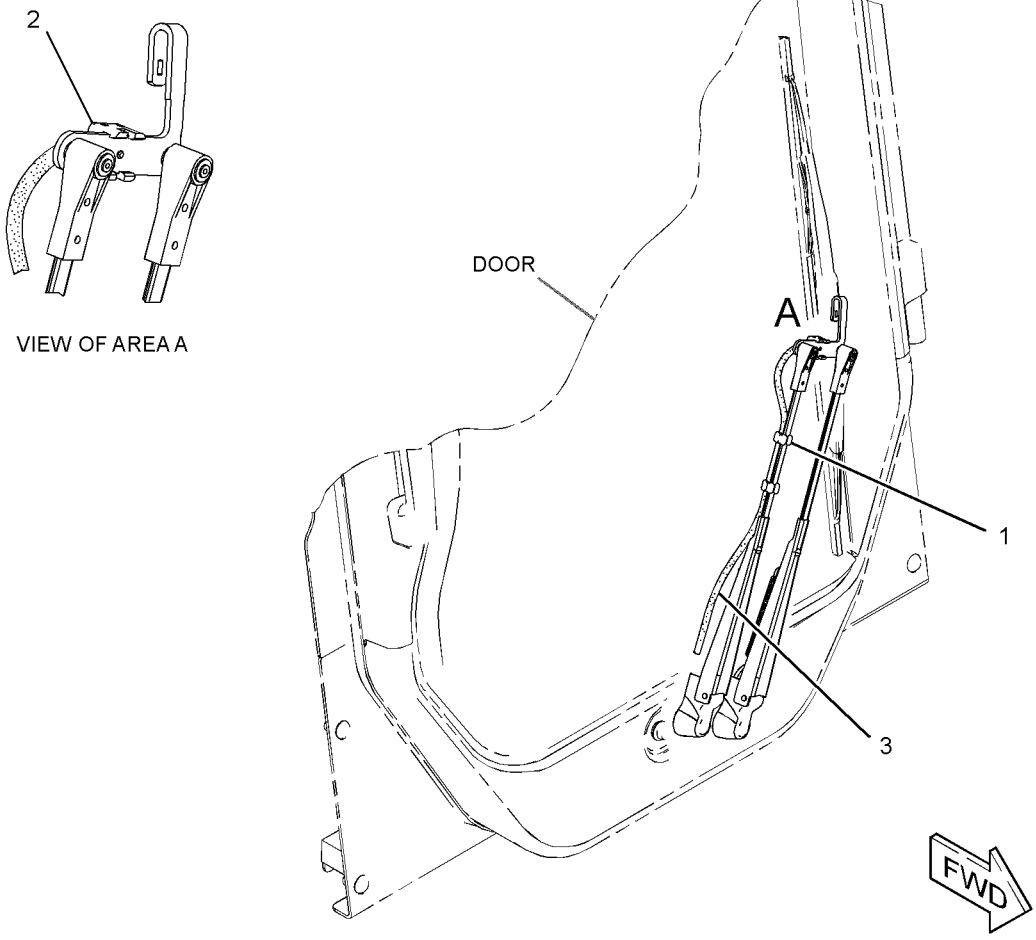

GRAPHIC #1 **<END>** g01788004

OPERATOR STATION

236-4830 ARMREST & MOUNTING GP

S/N: SRS1-UP

PART OF 326-5400 CAB AR

SMCS-7307 **i01955195**

NOTE	REF NO	GRAPHIC REF	PART NUMBER	QTY	PART NAME 1 2 3 4 5 6 (PRODUCT LEVEL)	SEE PAGE
	1	1	**4E-1384**	2	BUMPER-CONICAL	
	2	1	**195-0939**	4	STUD	
	3	1	**218-6442**	2	PLATE	
Y	4	1	**236-4833**	1	ARMREST GP	465
M	5	1	**195-0937**	2	INSERT-THREADED (M8X1.25-THD)	
M	6	1	**5C-7261**	2	NUT (M8X1.25-THD)	
	7	1	**8T-4121**	4	WASHER-HARD (11X21X2.5-MM THK)	
M	8	1	**8T-4133**	4	NUT (M10X1.5-THD)	

M-METRIC PART
Y-SEPARATE ILLUSTRATION

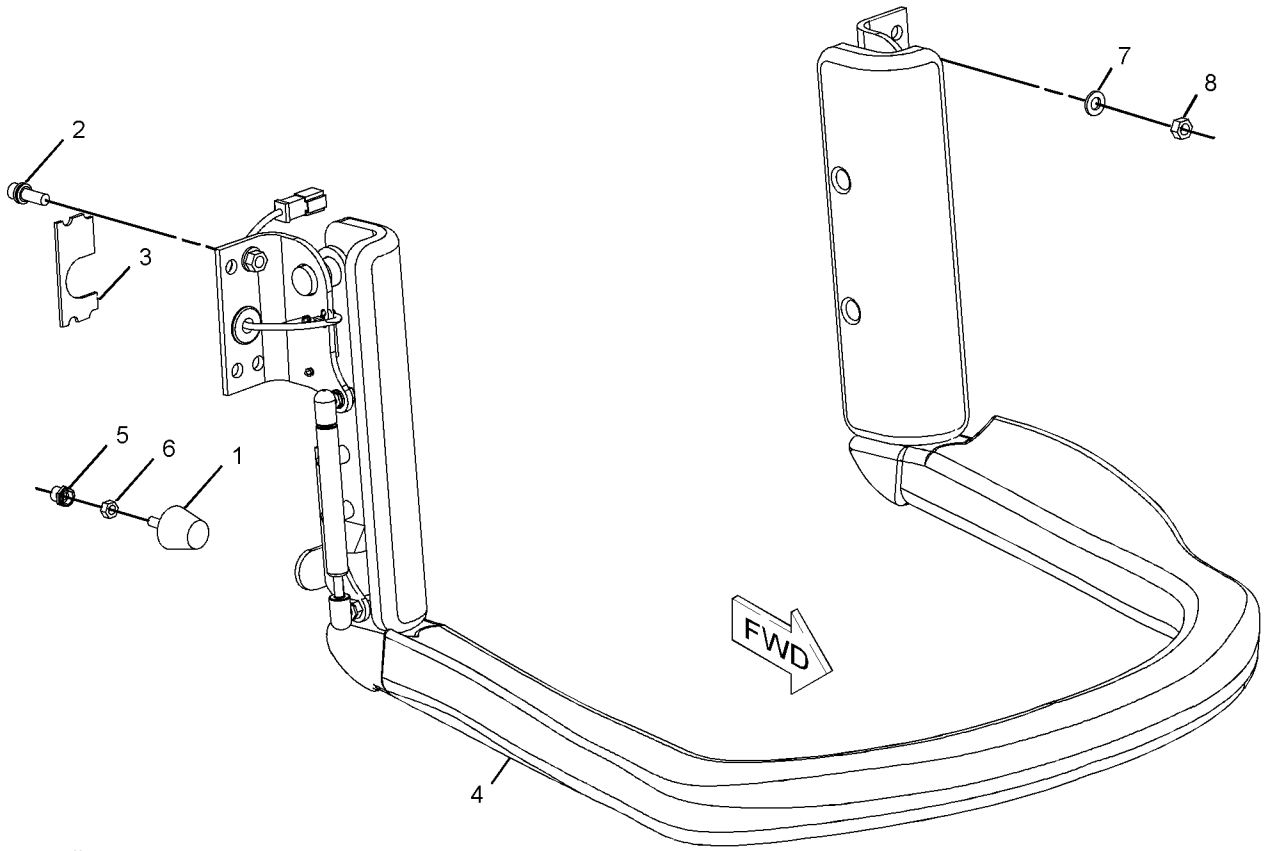

GRAPHIC #1 **<END>** g01016683

OPERATOR STATION

236-4833 ARMREST GP

S/N: SRS1-UP

PART OF 236-4830 ARMREST & MOUNTING GP

SMCS-7307 **i03647962**

NOTE	REF NO	GRAPHIC REF	PART NUMBER	QTY	PART NAME 1 2 3 4 5 6 (PRODUCT LEVEL)	SEE PAGE
	1	1	**3S-2093**	1	STRAP-CABLE	
	2	1	**7D-8431**	2	RING-RETAINING	
	3	1	**7G-7053**	1	GROMMET	
	4	1	**9P-4609**	1	PLATE (MAGNETIC)	
	5	1	**9S-0285**	2	BUSHING	
	6	1	**130-1916**	2	STUD-BALL	
	7	1	**142-9278**	1	BRACKET AS (RH)	
	8	1	**142-9279**	1	BRACKET AS (LH)	
	9	1	**142-9287**	1	SPRING AS-GAS	
	10	1	**142-9386**	1	BRACKET AS (LH)	
	11	1	**152-4875**	2	COVER AS	
	12	1	**152-4884**	1	BRACKET AS (RH)	
	13	1	**162-0223**	1	SWITCH AS (INTERLOCK)	
		1	**155-2271**	1	KIT-CONNECTING PLUG (4-PIN)	
		1	**176-2947**	1	PLUG KIT-CONN (4-PIN)	
					(EACH PLUG KIT INCLUDES PLUG AS, WEDGE & INTERFACE SEAL)	
		1	**186-3736**	3	SOCKET-CONNECTOR (16-GA TO 18-GA)	
		1	**9G-3695**	1	PLUG-SEAL	
E		1	**9X-1813**		SLEEVE (24-CM)	
	14	1	**236-4832**	1	ARMREST AS	
	15	1	**103-6262**	4	SCREW-MACHINE (4-40X0.63-IN)	
	16	1	**142-2928**	4	LOCKNUT (4-40-THD)	
M	17	1	**5C-9553**	4	BOLT (M6X1X16-MM)	
	18	1	**8T-4205**	4	WASHER-HARD (7.2X14.5X2-MM THK)	
	19	1	**8T-4224**	1	WASHER-HARD (8.8X16X2-MM THK)	
M	20	1	**9X-2042**	4	SCREW-TRUSS HEAD (M6X1X12-MM)	

E-ORDER BY THE CENTIMETER
M-METRIC PART

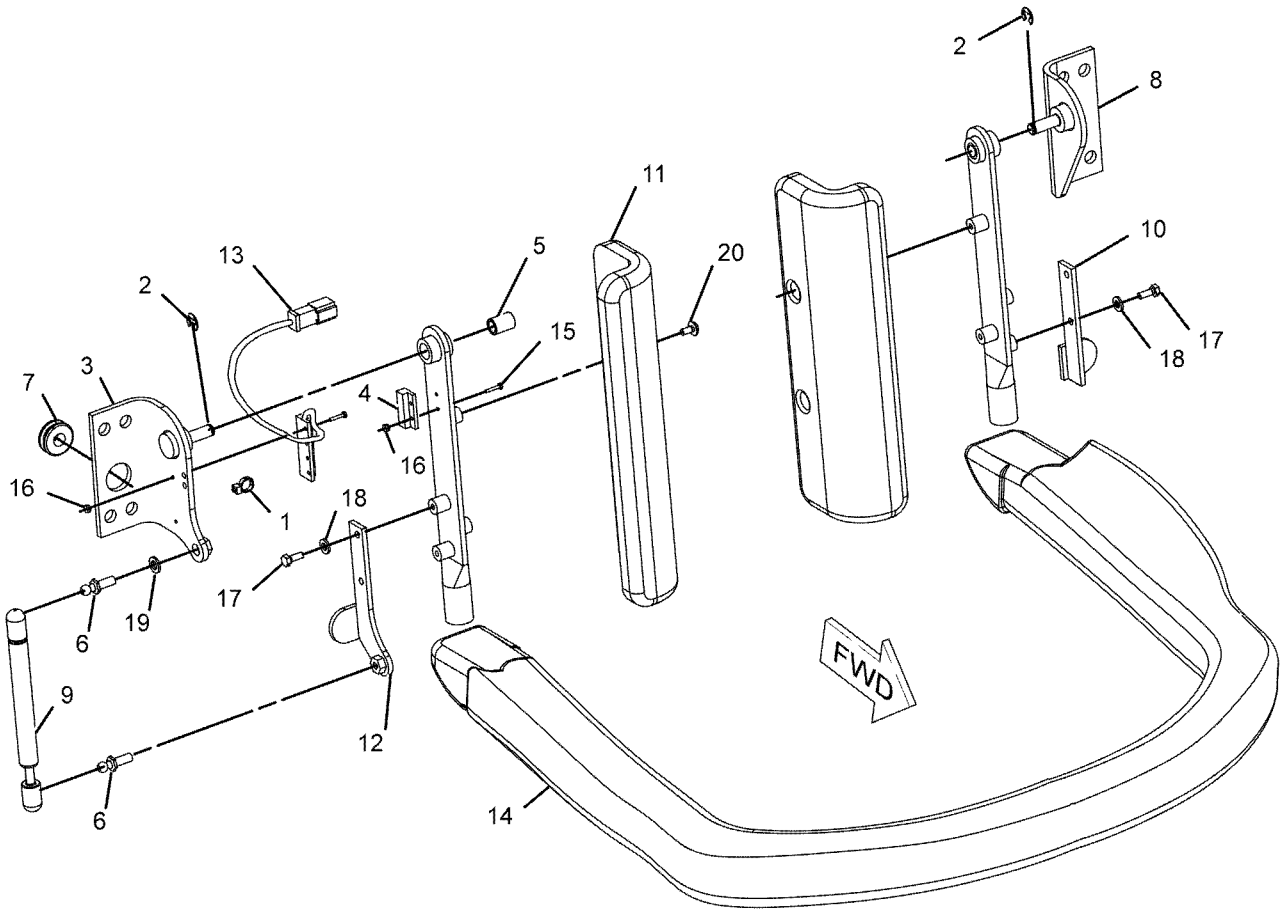

GRAPHIC #1 **<END>** g01016724

216-6146 BOX GP-STORAGE

S/N: SRS1-UP
PART OF 326-5280, 326-5281, 326-5282, 326-5284, 356-1902 CONVERSION
AR-MACHINE
AN ATTACHMENT

SMCS-7268 **i04272834**

NOTE	REF NO	GRAPHIC REF	PART NUMBER	QTY	PART NAME 1 2 3 4 5 6 (PRODUCT LEVEL)	SEE PAGE
	1	1	**8T-2895**	1	LOCK GP-CYLINDER	
		1	**226-0323**	1	CAM-LOCK	
J		1	**226-0291**	1	LOCK AS	
	2	1	**216-6145**	1	BOX AS-STORAGE	
D	3	1	**6V-1392**		SEAL (0.3-M)	

D-ORDER BY THE METER
J-REQUIRES CORPORATE KEY

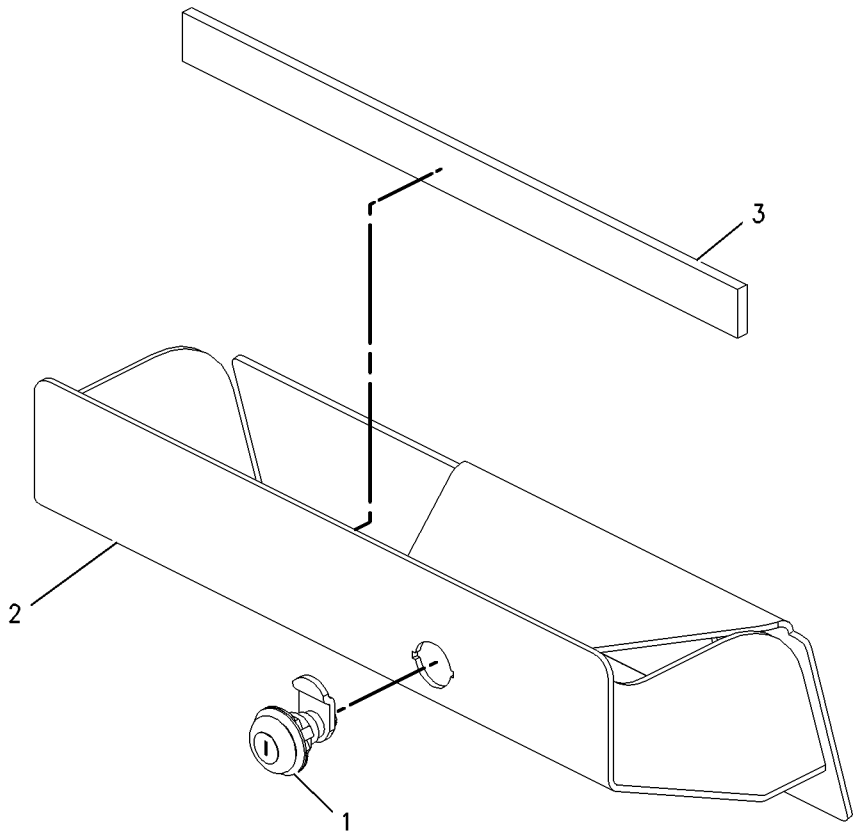

GRAPHIC #1 **<END>** g00932357

OPERATOR STATION

218-6420 BOX GP-STORAGE–LITERATURE

S/N: SRS1-UP

PART OF 326-5400 CAB AR

SMCS-7268 **i03291842**

NOTE	REF NO	GRAPHIC REF	PART NUMBER	QTY	PART NAME 1 2 3 4 5 6 (PRODUCT LEVEL)	SEE PAGE
	1	1	**5P-7957**	1	LANYARD	
	2	1	**152-4871**	1	BOX-STORAGE	
	3	1	**195-0935**	4	INSERT-THREADED (M6X1-THD)	
M	4	1	**9X-2042**	4	SCREW-TRUSS HEAD (M6X1X12-MM)	

M-METRIC PART

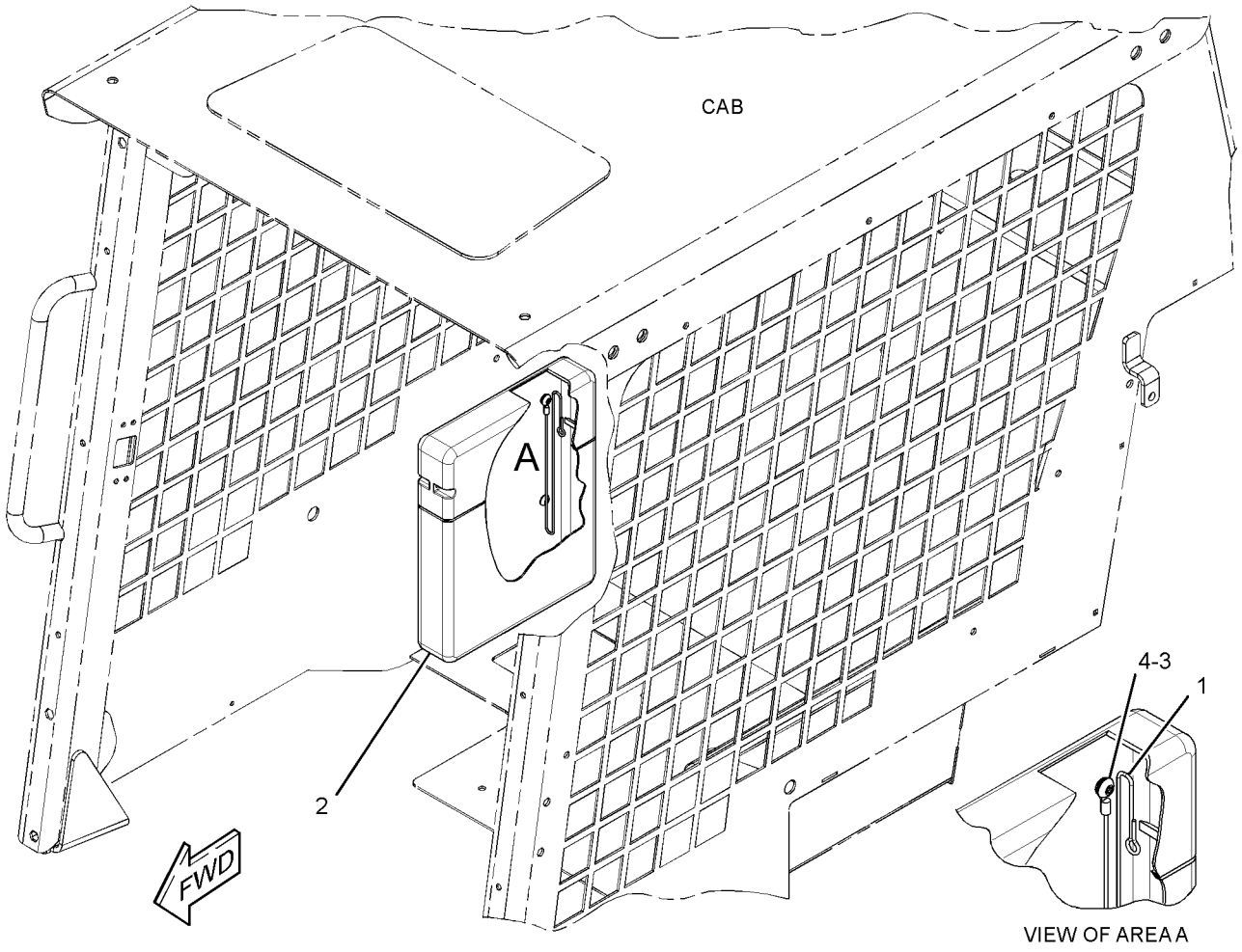

GRAPHIC #1 **<END>** g01716516

OPERATOR STATION

326-5400 CAB AR

S/N: SRS1-UP

PART OF 326-5242 COMMON AR

SMCS-7301, 7325 **i03902031**

NOTE	PART NUMBER	QTY	PART NAME 1 2 3 4 5 6 (PRODUCT LEVEL)	SEE PAGE
Y	*236-4830*	1	ARMREST & MOUNTING GP	464
Y	*218-6420*	1	BOX GP-STORAGE (LITERATURE)	468
Y	*326-5401*	1	CAB GP-ENCLOSED ROPS	472
Y	*216-4746*	1	LIGHTING GP-FLOOD (REAR)	94
Y	*218-6425*	1	LIGHTING GP-FLOOD (FRONT)	95
Y	*326-5406*	1	LINER GP-CAB	516
Y	*258-4230*	1	MIRROR GP-REAR VIEW	520
Y	*218-6370*	1	MOUNTING GP-ROPS	524
Y	*328-2270*	1	PANEL GP-INSTRUMENT	525
Y	*218-6380*	1	SPRING GP-GAS (CAB)	542
Y	*195-6723*	1	WINDOW GP-CAB	545
Y	*328-2272*	1	WIRING GP-CAB	107

Y-SEPARATE ILLUSTRATION

<END>

326-5552 CAB AR-ENCLOSED ROPS—MECH SUSP SEAT

S/N: SRS1-UP

AN ATTACHMENT

SMCS-7301 **i03982701**

NOTE	PART NUMBER	QTY	PART NAME 1 2 3 4 5 6 (PRODUCT LEVEL)	SEE PAGE
Y	*326-5555*	1	HEATER AR-CAB	509
Y	*218-6407*	1	SEAL GP-CAB	533
Y	*142-9305*	1	SEAT GP (SUSPENSION)	539
Y	*218-6411*	1	WINDOW GP-CAB (SIDE)	546
	245-6811	1	HOLDER-CUP	
	142-9311	1	LINER-CAB (GRAY)	

Y-SEPARATE ILLUSTRATION

<END>

326-5553 CAB AR-ENCLOSED ROPS—MECH SUSP SEAT & A/C

S/N: SRS1-UP

AN ATTACHMENT

SMCS-7301 **i03982702**

NOTE	PART NUMBER	QTY	PART NAME 1 2 3 4 5 6 (PRODUCT LEVEL)	SEE PAGE
Y	*326-5556*	1	AIR CONDITIONER AR	460
Y	*218-6407*	1	SEAL GP-CAB	533
Y	*142-9305*	1	SEAT GP (SUSPENSION)	539
Y	*218-6411*	1	WINDOW GP-CAB (SIDE)	546
	245-6811	1	HOLDER-CUP	
	142-9311	1	LINER-CAB (GRAY)	

Y-SEPARATE ILLUSTRATION

<END>

OPERATOR STATION

326-5550 CAB AR-OPEN ROPS

S/N: SRS1-UP

AN ATTACHMENT

SMCS-7301, 7325 **i03982698**

NOTE	PART NUMBER	QTY	PART NAME 1 2 3 4 5 6 (PRODUCT LEVEL)	SEE PAGE
Y	*218-6400*	1	HANDHOLD GP	506
Y	*326-5554*	1	INSTALLATION AR	514
Y	*218-5562*	1	SEAT GP (STATIC)	540

Y-SEPARATE ILLUSTRATION

<END>

326-5551 CAB AR-OPEN ROPS—MECH SUSP SEAT

S/N: SRS1-UP

AN ATTACHMENT

SMCS-7301, 7325 **i03982697**

NOTE	PART NUMBER	QTY	PART NAME 1 2 3 4 5 6 (PRODUCT LEVEL)	SEE PAGE
Y	*218-6400*	1	HANDHOLD GP	506
Y	*326-5554*	1	INSTALLATION AR	514
Y	*142-9305*	1	SEAT GP (SUSPENSION)	539
	142-9311	1	LINER-CAB (GRAY)	

Y-SEPARATE ILLUSTRATION

<END>

OPERATOR STATION

326-5404 CAB AS

S/N: SRS1-UP

SMCS-7301 **i03907015**

NOTE	REF NO	GRAPHIC REF	PART NUMBER	QTY	PART NAME 1 2 3 4 5 6 (PRODUCT LEVEL)	SEE PAGE
	1	1	**195-0939**	4	STUD	
	2	1	**214-9186**	7	BUTTON	
	3	1	**280-6072**	1	WINDOW	
	4	1	*326-5402*	1	CANOPY AS	
M		1	**6V-3918**	4	BOLT (M8X1.25X50-MM)	
M		1	**6V-9632**	3	NUT-WELD (M6X1-THD)	
M		1	**8T-5413**	1	STUD-WELD (M10X1.5X25-MM OAL)	
	5	1	**195-0935**	4	INSERT-THREADED (M6X1-THD)	
	6	1	**195-0936**	8	INSERT-THREADED (M6X1-THD)	
M	7	1	**195-0937**	8	INSERT-THREADED (M8X1.25-THD)	

M-METRIC PART

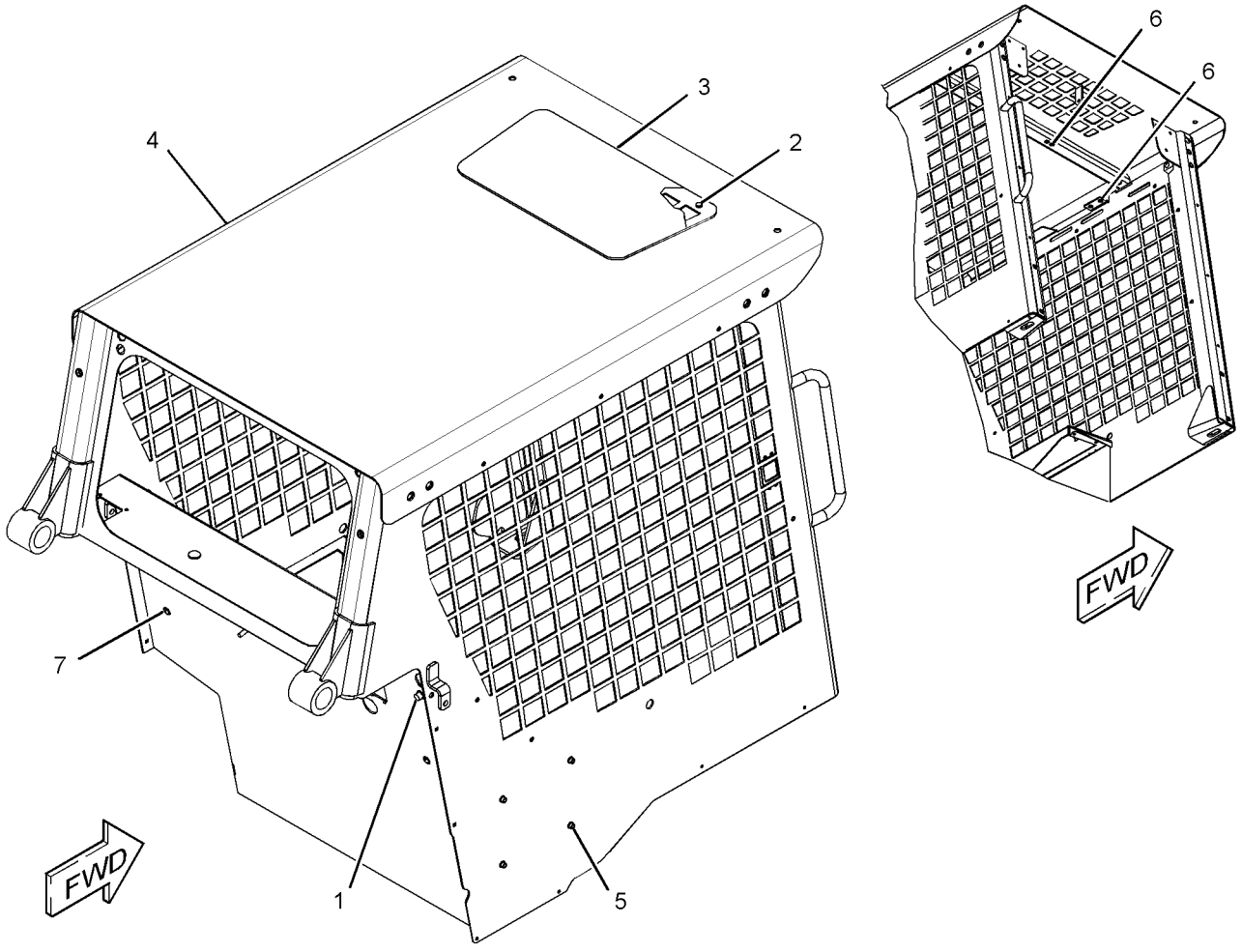

GRAPHIC #1 **<END>** g02149330

OPERATOR STATION

326-5401 CAB GP-ENCLOSED ROPS

S/N: SRS1-UP
PART OF 326-5400 CAB AR
FIELD REPLACEMENT ORDER 326-5404—PAGE 471

SMCS-7301 **i03902808**

NOTE	REF NO	GRAPHIC REF	PART NUMBER	QTY	PART NAME 1 2 3 4 5 6 (PRODUCT LEVEL)	SEE PAGE
	1	1	**214-9186**	7	BUTTON	
	2	1	**280-6072**	1	WINDOW	
	3	1	*326-5402*	1	CANOPY AS	
M		1	**6V-3918**	4	BOLT (M8X1.25X50-MM)	
M		1	**6V-9632**	3	NUT-WELD (M6X1-THD)	
M		1	**8T-5413**	1	STUD-WELD (M10X1.5X25-MM OAL)	

M-METRIC PART

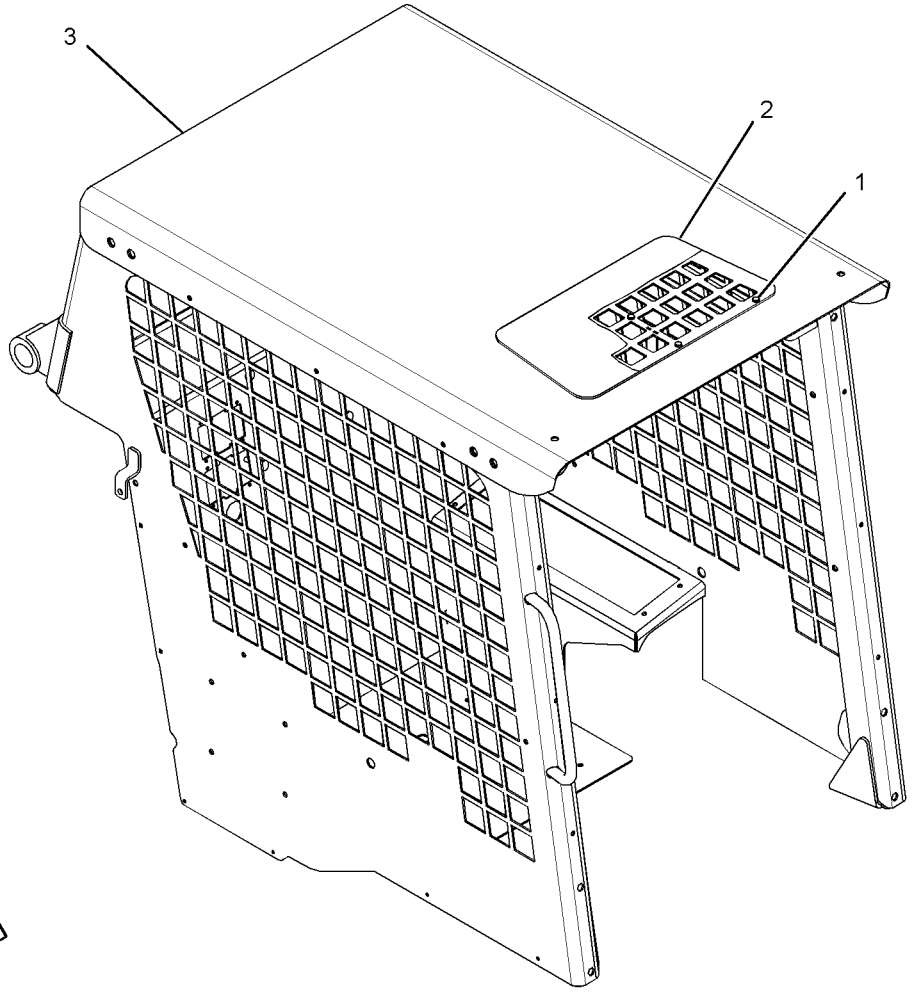

GRAPHIC #1 **<END>** g02146674

276-9875 COMPRESSOR GP-REFRIGERANT—AIR CONDITIONER

S/N: SRS1-UP

PART OF 326-5357 COMPRESSOR GP-REFRIGERANT

AN ATTACHMENT

SMCS-1802 **i04167819**

NOTE	REF NO	GRAPHIC REF	PART NUMBER	QTY	PART NAME 1 2 3 4 5 6 (PRODUCT LEVEL)	SEE PAGE
	1	1	**102-8802**	1	KIT-RECEPTACLE (2-PIN)	
					(INCLUDES RECEPTACLE AS & WEDGE)	
	2	1	**229-4896**	2	SEAL-O-RING	
	3	1	**229-7356**	1	VALVE AS-RELIEF (REFRIGERANT COMPRESSOR)	
		1	**9X-7378**	1	SEAL-O-RING	

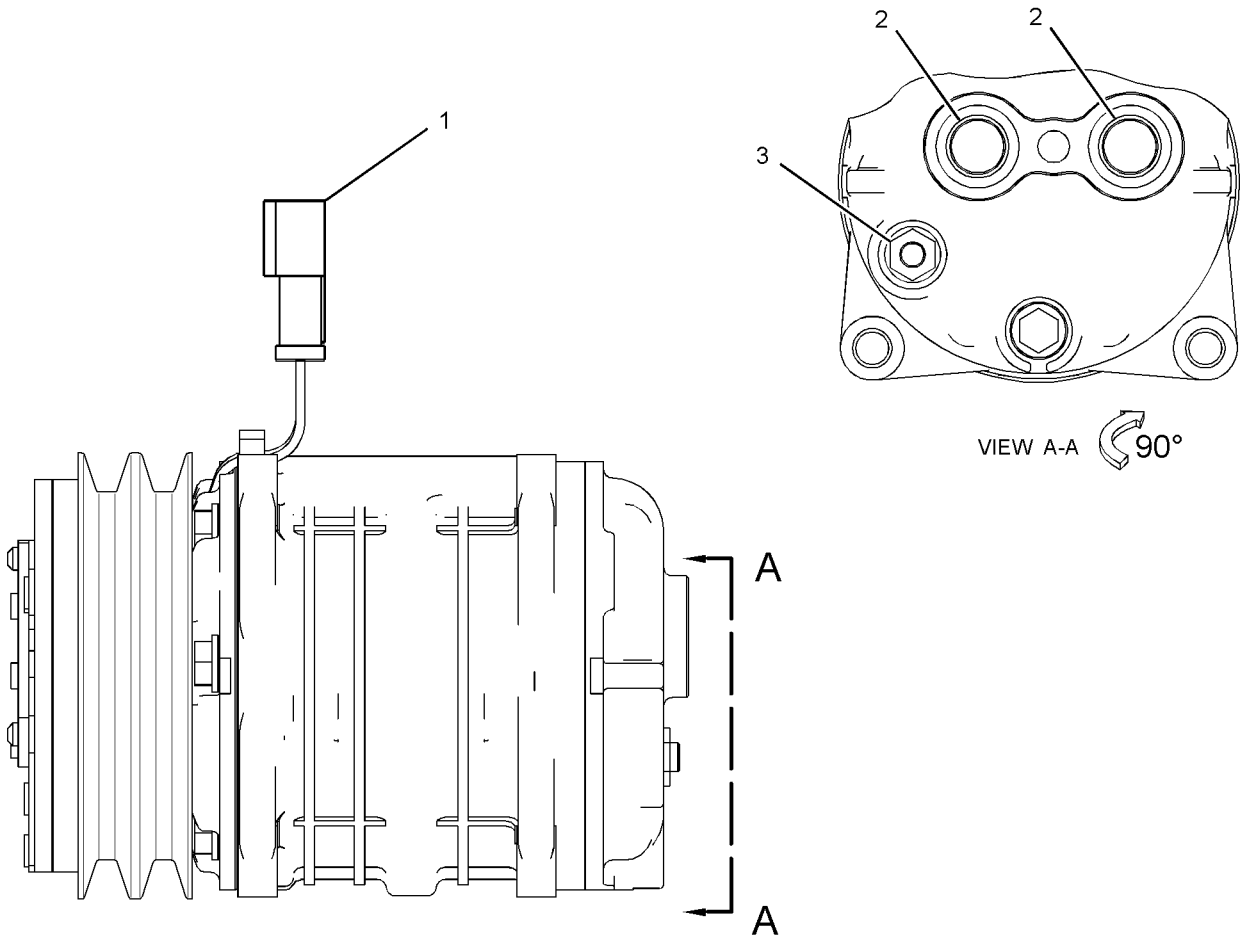

GRAPHIC #1 **<END>** g02489676

OPERATOR STATION

326-5357 COMPRESSOR GP-REFRIGERANT

S/N: SRS1-UP
PART OF 326-5556 AIR CONDITIONER AR
AN ATTACHMENT

SMCS-1802 **i04351249**

NOTE	REF NO	GRAPHIC REF	PART NUMBER	QTY	PART NAME 1 2 3 4 5 6 (PRODUCT LEVEL)	SEE PAGE
	1	1	**7K-1181**	1	STRAP-CABLE	
	2	1	**258-2466**	1	BRACKET	
	3	1	**258-3539**	1	V-BELT (COMPRESSOR)	
Y	4	1	**276-9875**	1	COMPRESSOR GP-REFRIGERANT (AIR CONDITIONER)	473
	5	1	**280-8395**	1	BRACKET	
	6	1	**113-0693**	1	LOCKWASHER	
	7	1	**4P-7429**	1	CLIP	
	8	1	**8T-4121**	8	WASHER-HARD (11X21X2.5-MM THK)	
M	9	1	**8T-4133**	3	NUT (M10X1.5-THD)	
M	10	1	**8T-4183**	3	BOLT (M12X1.75X40-MM)	
M	11	1	**8T-4196**	3	BOLT (M10X1.5X35-MM)	
	12	1	**8T-4223**	3	WASHER-HARD (13.5X25.5X3-MM THK)	
M	13	1	**8T-6685**	1	BOLT (M10X1.5X110-MM)	

M-METRIC PART
Y-SEPARATE ILLUSTRATION

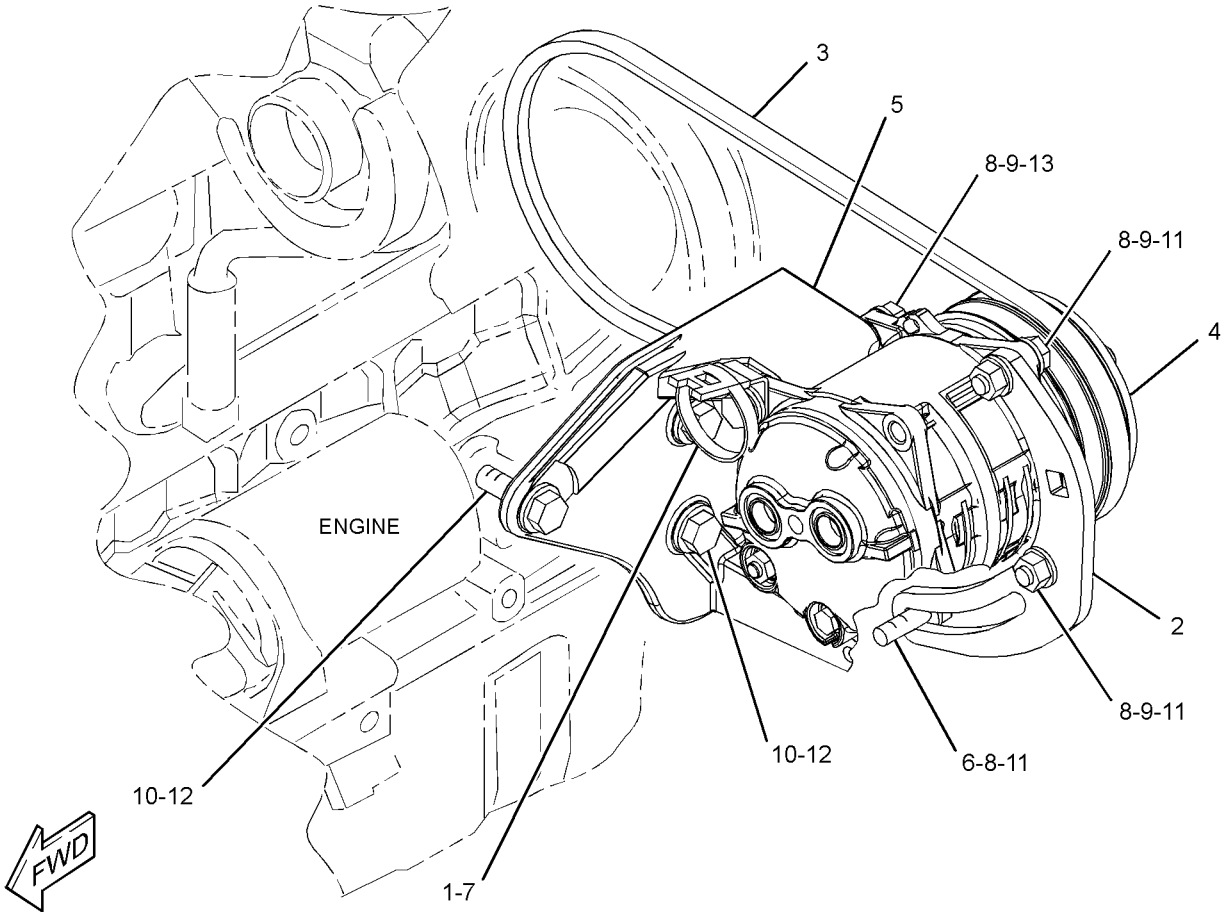

GRAPHIC #1 **<END>** g02173411

218-6348 CONDENSER & MTG GP-REFRIGERANT

S/N: SRS1-UP
PART OF 326-5556 AIR CONDITIONER AR
AN ATTACHMENT

SMCS-1805 **i02338119**

NOTE	REF NO	GRAPHIC REF	PART NUMBER	QTY	PART NAME 1 2 3 4 5 6 (PRODUCT LEVEL)	SEE PAGE
	1	1	**218-6060**	1	SHROUD AS	
	2	1	**218-6250**	2	FAN AS	
C	3	1	**233-5927**	1	COIL AS	
M	4	1	**5C-7261**	14	NUT (M8X1.25-THD)	
	5	1	**8T-4121**	4	WASHER-HARD (11X21X2.5-MM THK)	
M	6	1	**8T-4133**	4	NUT (M10X1.5-THD)	
M	7	1	**8T-4189**	14	BOLT (M8X1.25X20-MM)	
	8	1	**8T-4224**	20	WASHER-HARD (8.8X16X2-MM THK)	

C-CHANGE FROM PREVIOUS TYPE
M-METRIC PART

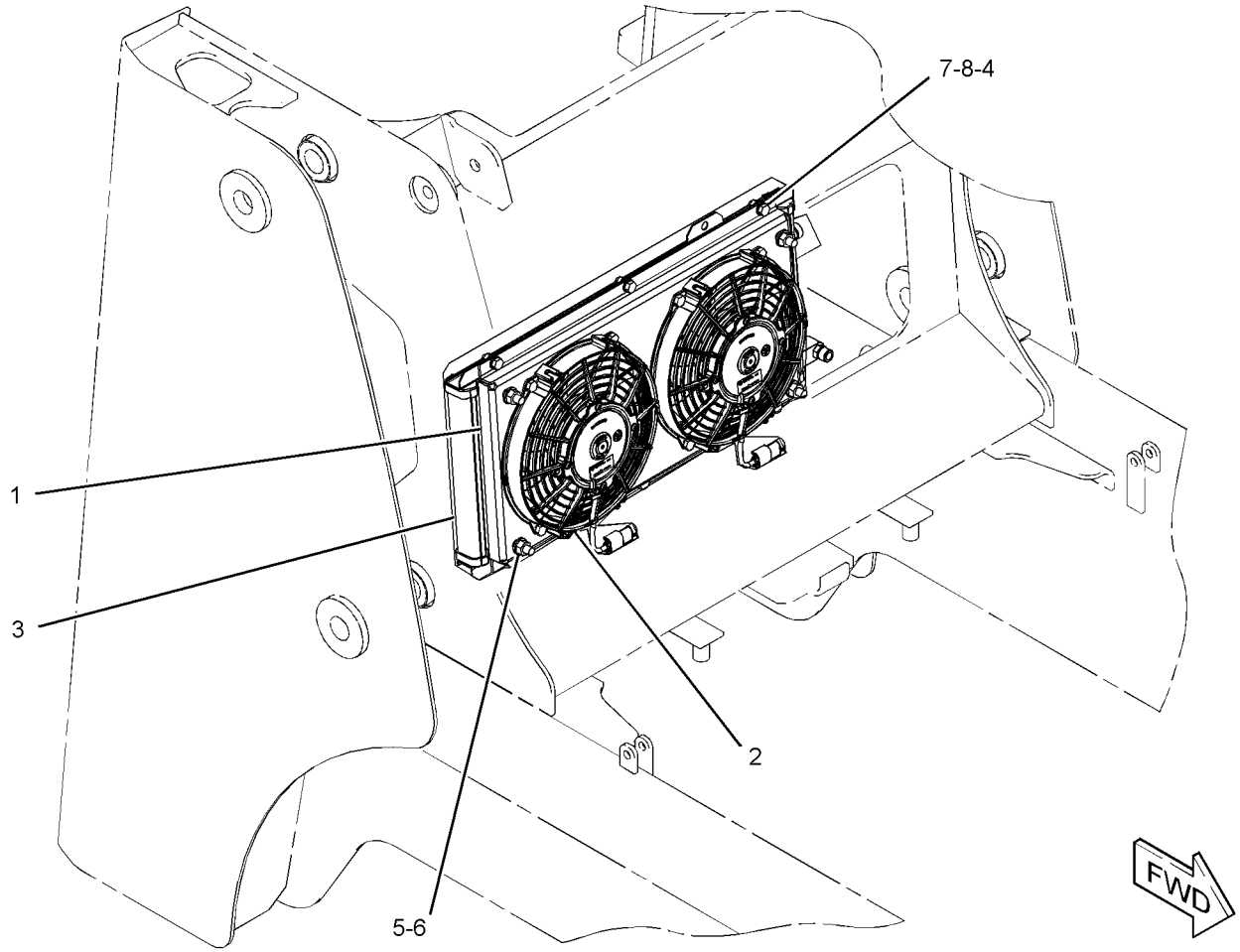

GRAPHIC #1 **<END>** g01195603

OPERATOR STATION

218-6485 CONTROL GP-HANDLE—DIRECTION, SPEED

S/N: SRS1-UP
PART OF 343-5543 CONTROL GP-PILOT OPERATED HYD
AN ATTACHMENT

SMCS-5705 **i02545868**

NOTE	REF NO	GRAPHIC REF	PART NUMBER	QTY	PART NAME 1 2 3 4 5 6 (PRODUCT LEVEL)	SEE PAGE
	1	1	**173-0702**	1	BOOT	
Y	2	1	**218-6118**	1	HANDLE GP-MODULAR	507
	3	1	**158-3770**	1	KIT-PILOT VALVE (LEVER)	
					(INCLUDES NUT, LEVER & PIN)	

Y-SEPARATE ILLUSTRATION

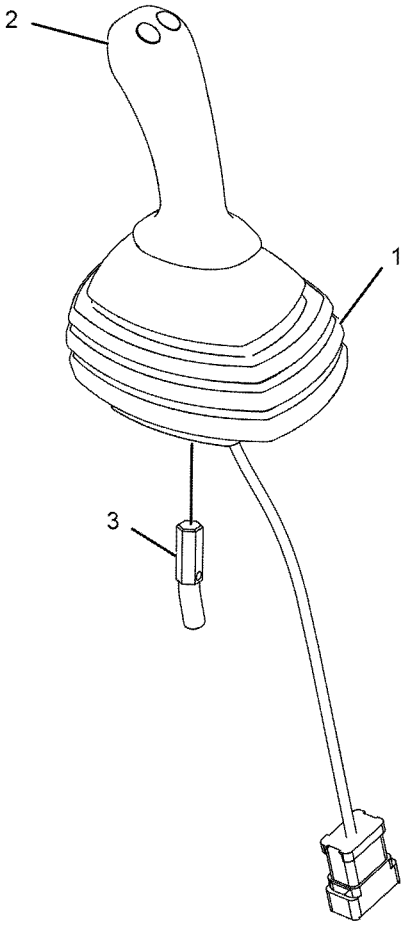

GRAPHIC #1 **<END>** g01111214

OPERATOR STATION

218-6490 CONTROL GP-HANDLE—WORK TOOL

S/N: SRS1-UP
PART OF 326-5264 CONTROL GP-PILOT OPERATED HYD
AN ATTACHMENT

SMCS-5705 **i02545869**

NOTE	REF NO	GRAPHIC REF	PART NUMBER	QTY	PART NAME 1 2 3 4 5 6 (PRODUCT LEVEL)	SEE PAGE
	1	1	**173-0703**	1	BOOT	
Y	2	1	**218-6118**	1	HANDLE GP-MODULAR	507
	3	1	**158-3770**	1	KIT-PILOT VALVE (LEVER)	
					(INCLUDES NUT, LEVER & PIN)	

Y-SEPARATE ILLUSTRATION

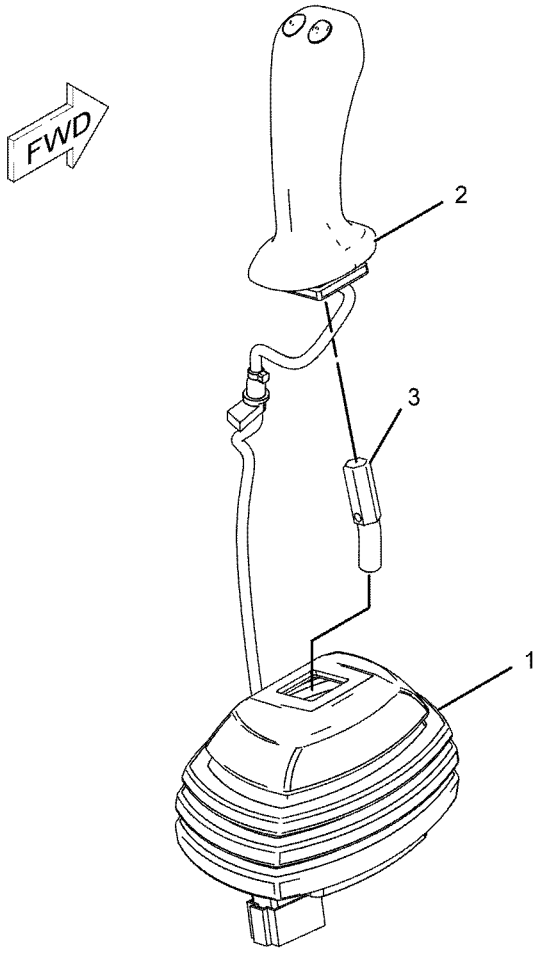

GRAPHIC #1 **<END>** g01111213

OPERATOR STATION

231-4256 CONTROL GP-HANDLE–LH

S/N: SRS1-UP
PART OF 343-5542 CONTROL GP-PILOT OPERATED HYD
AN ATTACHMENT

SMCS-5705 **i04358456**

NOTE	REF NO	GRAPHIC REF	PART NUMBER	QTY	PART NAME 1 2 3 4 5 6 (PRODUCT LEVEL)	SEE PAGE
	1	1	**223-3725**	1	HANDLE GP-MODULAR	
	1A	1	**8T-8729**	4	PIN-CONNECTOR (16-GA TO 18-GA)	
	1B	1	**174-3091**	1	KIT-RECEPTACLE (12-PIN)	
					(INCLUDES RECEPTACLE AS & WEDGE)	
	2	1	**223-3728**	1	BOOT	
	3	1	**231-4261**	1	ADAPTER (LH)	
M	4	1	**213-7489**	3	SCREW (M4X0.7X25-MM)	
M	5	1	**178-9983**	3	LOCKNUT (M4X0.7-THD)	
	6	1	**1S-9593**	1	STRAP-CABLE	
	7	1	**8T-8737**	8	PLUG-SEAL	
	8	1	**252-6934**	1	GROMMET	

M-METRIC PART

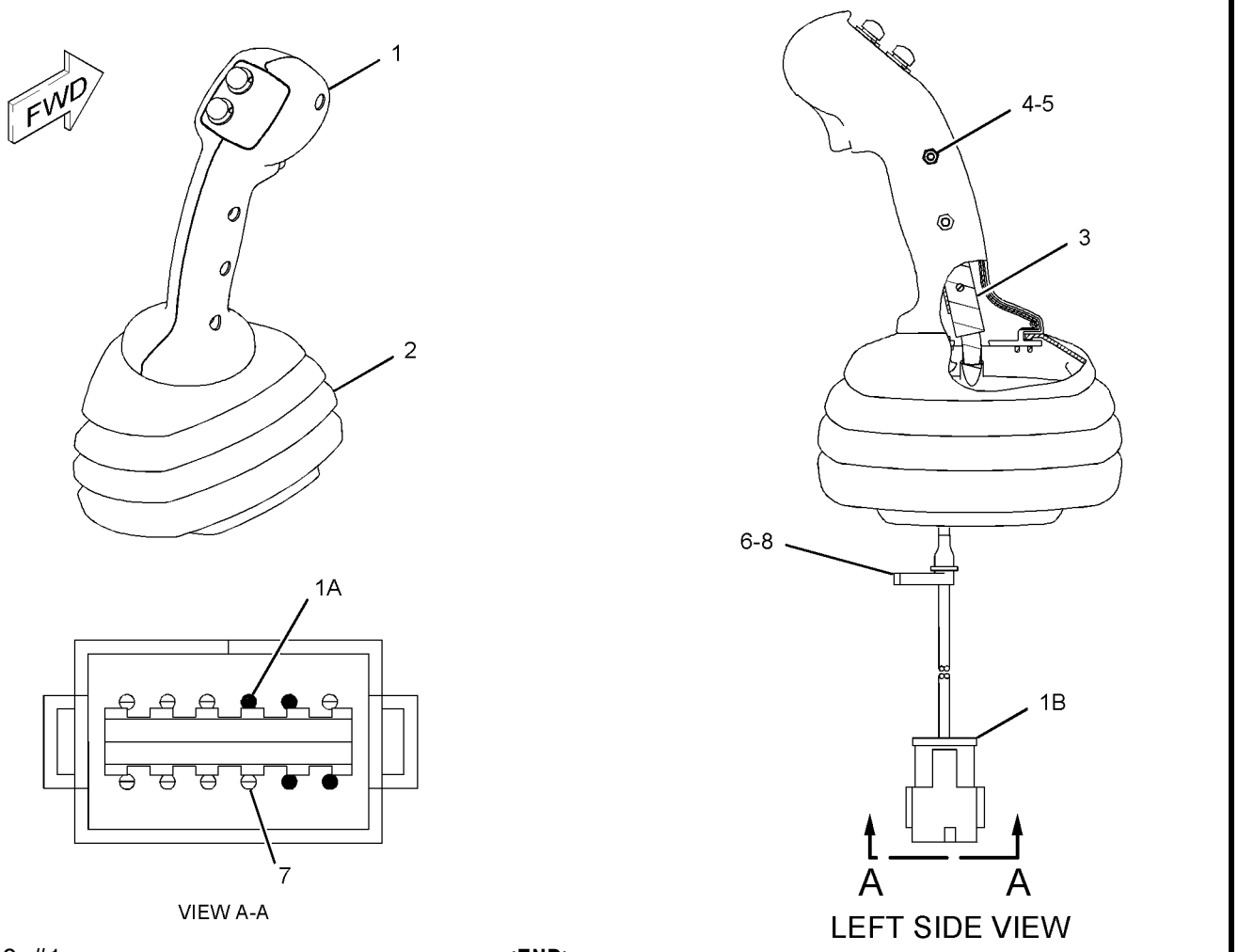

GRAPHIC #1 **<END>** g01132335

231-4258 CONTROL GP-HANDLE–LH

S/N: SRS1-UP
PART OF 326-5267 CONTROL GP-PILOT OPERATED HYD, 361-0454 KIT-WORK TOOL WIRING
AN ATTACHMENT

SMCS-5705 **i04358458**

NOTE	REF NO	GRAPHIC REF	PART NUMBER	QTY	PART NAME 1 2 3 4 5 6 (PRODUCT LEVEL)	SEE PAGE
	1	1	**223-3726**	1	HANDLE GP-MODULAR	
	1A	1	**8T-8729**	7	PIN-CONNECTOR (16-GA TO 18-GA)	
	1B	1	**174-3091**	1	KIT-RECEPTACLE (12-PIN)	
					(INCLUDES RECEPTACLE AS & WEDGE)	
	2	1	**223-3728**	1	BOOT	
	3	1	**231-4261**	1	ADAPTER (LH)	
M	4	1	**213-7489**	3	SCREW (M4X0.7X25-MM)	
M	5	1	**178-9983**	3	LOCKNUT (M4X0.7-THD)	
	6	1	**1S-9593**	1	STRAP-CABLE	
	7	1	**8T-8737**	3	PLUG-SEAL	
	8	1	**252-6934**	1	GROMMET	

M-METRIC PART

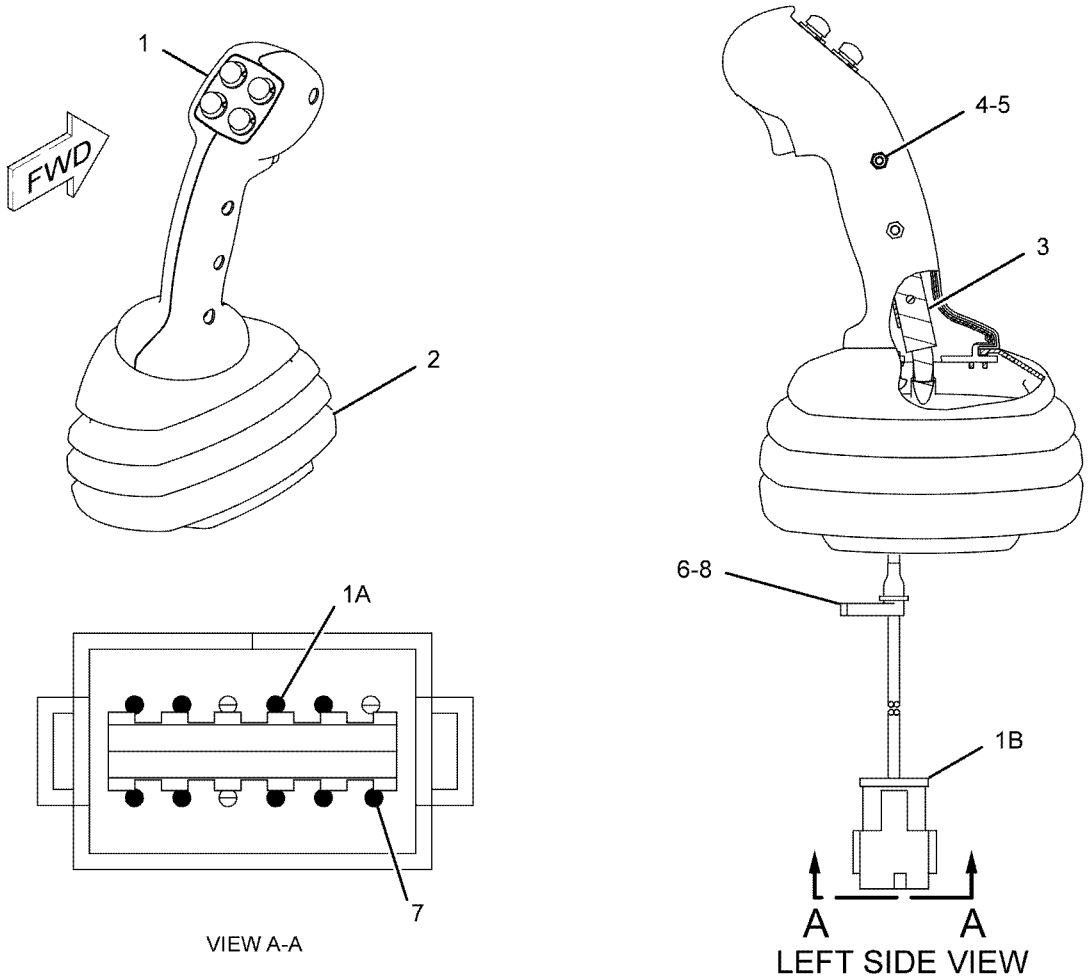

GRAPHIC #1 **<END>** g01132255

OPERATOR STATION

231-4260 CONTROL GP-HANDLE–RH

S/N: SRS1-UP
PART OF 326-5265 CONTROL GP-PILOT OPERATED HYD
AN ATTACHMENT

SMCS-5705 **i04358470**

NOTE	REF NO	GRAPHIC REF	PART NUMBER	QTY	PART NAME 1 2 3 4 5 6 (PRODUCT LEVEL)	SEE PAGE
	1	1	**215-8307**	1	CONTROL GP-HANDLE	
	1A	1	**8T-8729**	7	PIN-CONNECTOR (16-GA TO 18-GA)	
	1B	1	**174-3091**	1	KIT-RECEPTACLE (12-PIN)	
					(INCLUDES RECEPTACLE AS & WEDGE)	
	2	1	**223-3728**	1	BOOT	
	3	1	**231-4262**	1	ADAPTER (RH)	
M	4	1	**213-7489**	3	SCREW (M4X0.7X25-MM)	
M	5	1	**178-9983**	3	LOCKNUT (M4X0.7-THD)	
	6	1	**1S-9593**	1	STRAP-CABLE	
	7	1	**8T-8737**	5	PLUG-SEAL	
	8	1	**252-6934**	1	GROMMET	

M-METRIC PART

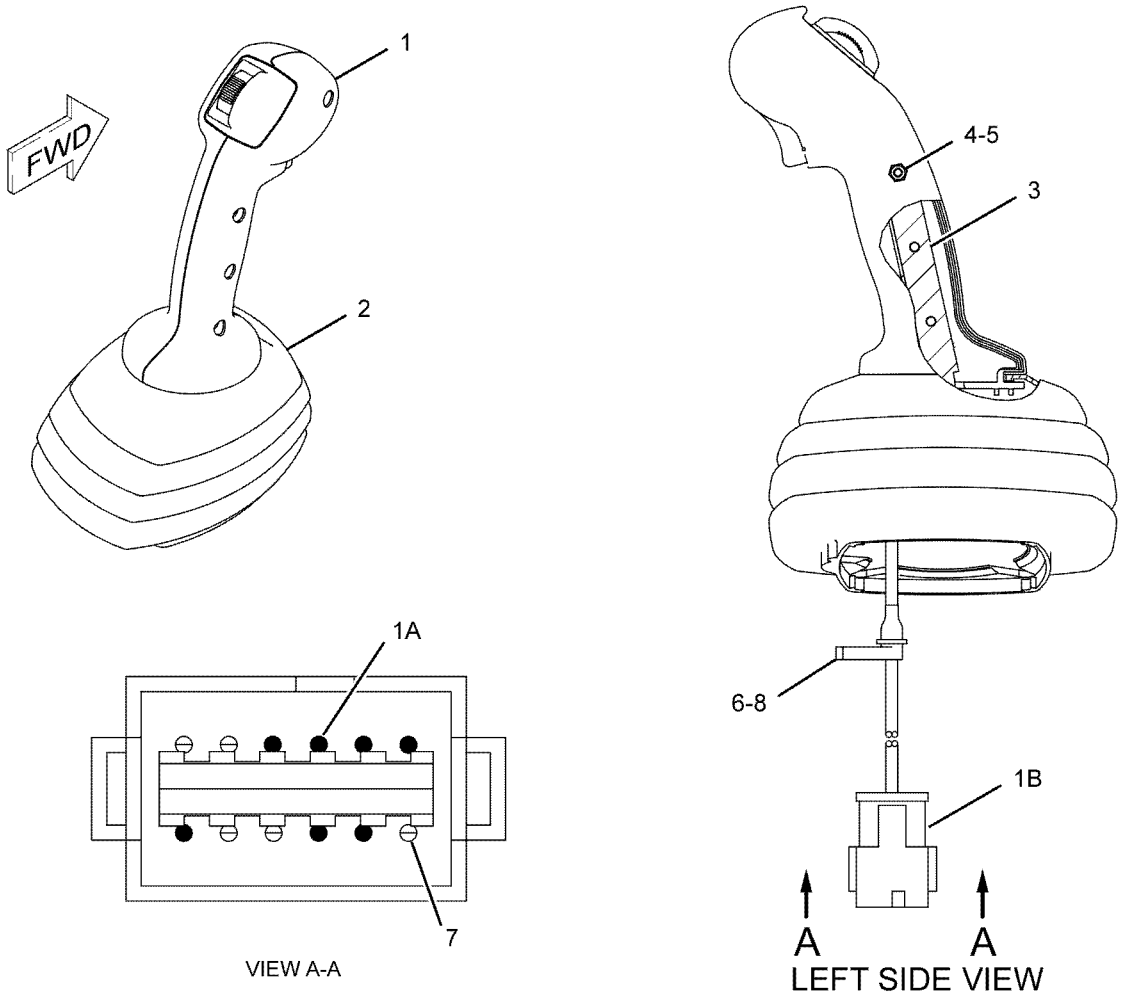

GRAPHIC #1 **<END>** g01132271

OPERATOR STATION

326-5264 CONTROL GP-PILOT OPERATED HYD

S/N: SRS1-UP
PART OF 354-6536 CONTROL AR-MACHINE
AN ATTACHMENT

SMCS-5059, 5705 **i03901799**

NOTE	REF NO	GRAPHIC REF	PART NUMBER	QTY	PART NAME 1 2 3 4 5 6 (PRODUCT LEVEL)	SEE PAGE
	1	1	**218-6421**	1	BRACKET AS	
Y	2	1	**218-6490**	1	CONTROL GP-HANDLE (WORK TOOL)	477
	3	1	**237-5332**	1	FILM-INSTRUCTION (MACHINE CONTROLS)	
Y	4	1	**299-9119**	1	VALVE GP-PILOT (WORK TOOL)	293
M	5	1	**8T-0269**	3	BOLT-SOCKET HEAD (M6X1X20-MM)	
	6	1	**8T-4205**	3	WASHER-HARD (7.2X14.5X2-MM THK)	

M-METRIC PART
Y-SEPARATE ILLUSTRATION

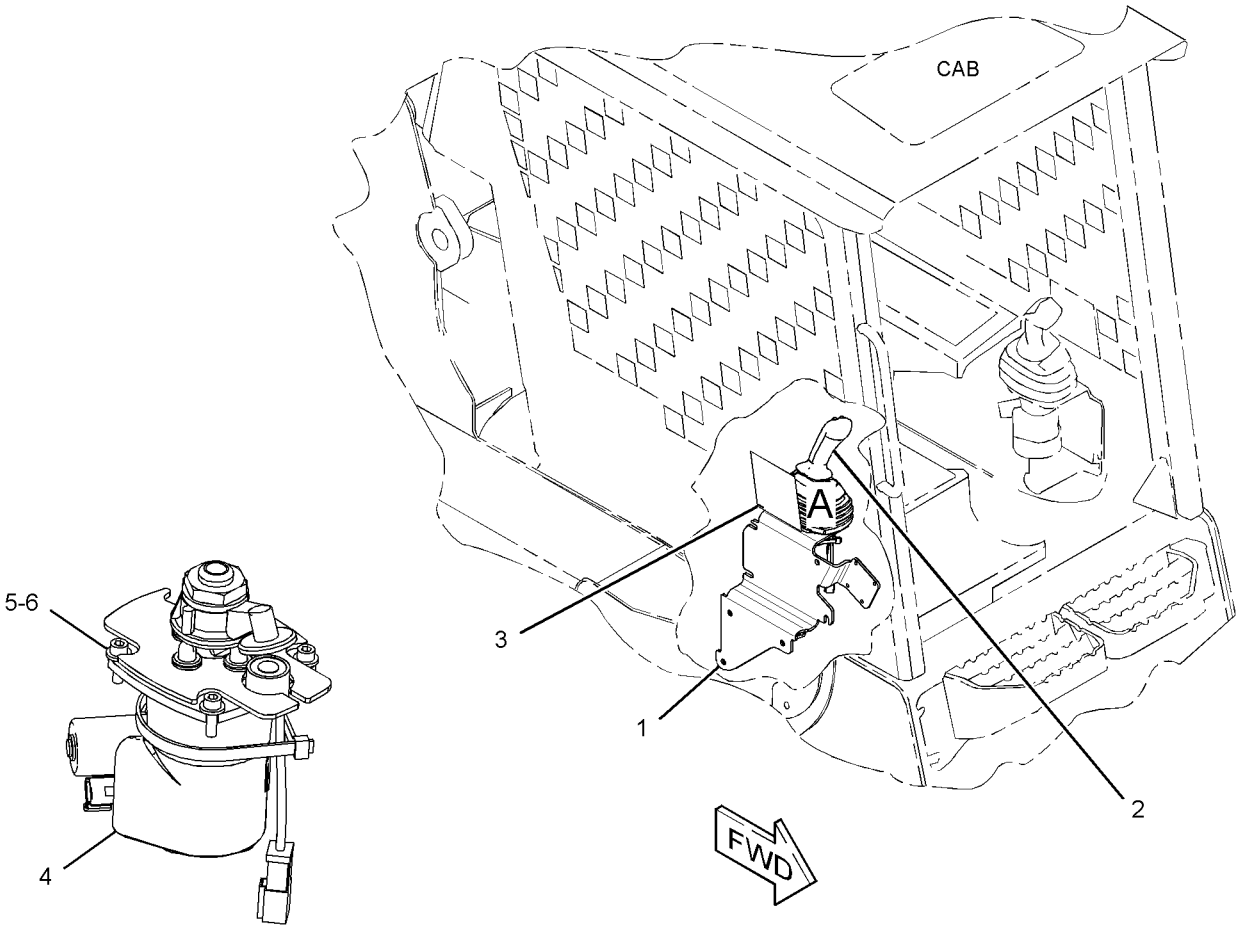

VIEW OF AREA A
(HANDLE AND BRACKET REMOVED FOR CLARITY)

GRAPHIC #1 **<END>** g02148360

OPERATOR STATION

326-5265 CONTROL GP-PILOT OPERATED HYD–AUXILIARY

S/N: SRS1-UP

PART OF 326-5472, 326-5483, 354-6537, 354-6538 CONTROL AR-MACHINE

AN ATTACHMENT

SMCS-5059, 5705 **i03901803**

NOTE	REF NO	GRAPHIC REF	PART NUMBER	QTY	PART NAME 1 2 3 4 5 6 (PRODUCT LEVEL)	SEE PAGE
	1	1	**218-6421**	1	BRACKET AS	
Y	2	1	**231-4260**	1	CONTROL GP-HANDLE (RH)	480
	3	1	**235-5243**	1	FILM-INSTRUCTION (MACHINE CONTROLS)	
Y	4	1	**299-9119**	1	VALVE GP-PILOT	293
M	5	1	**095-1207**	1	NUT (M12X1.75-THD)	
M	6	1	**8T-0269**	3	BOLT-SOCKET HEAD (M6X1X20-MM)	
	7	1	**8T-4205**	3	WASHER-HARD (7.2X14.5X2-MM THK)	

M-METRIC PART
Y-SEPARATE ILLUSTRATION

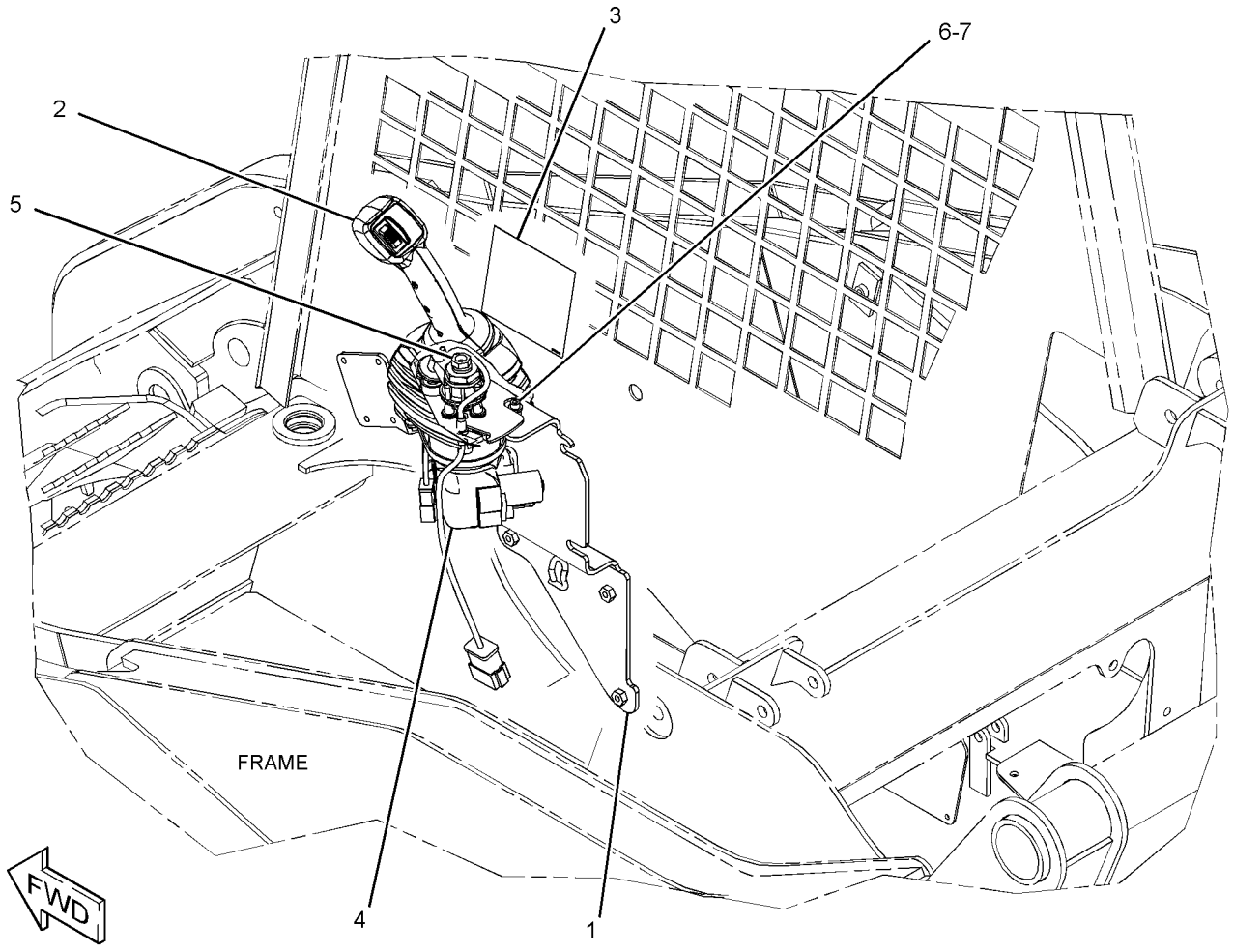

GRAPHIC #1 **<END>** g02145324

326-5267 CONTROL GP-PILOT OPERATED HYD

S/N: SRS1-UP
PART OF 326-5472, 326-5483, 354-6538 CONTROL AR-MACHINE
AN ATTACHMENT
TYPE 1

SMCS-5059, 5705 **i03901807**

NOTE	REF NO	GRAPHIC REF	PART NUMBER	QTY	PART NAME 1 2 3 4 5 6 (PRODUCT LEVEL)	SEE PAGE
	1	1	**218-6422**	1	BRACKET AS	
	2	1	**235-5246**	1	FILM-INSTRUCTION (MACHINE CONTROL, READ OMM)	
Y	3	1	**343-0868**	1	VALVE GP-PILOT (DIRECTION, SPEED)	295
M	4	1	**095-1207**	1	NUT (M12X1.75-THD)	
	5	1	**164-9425**	1	HORN AS (12-VOLT, LOW TONE)	
Y	6	1	**231-4258**	1	CONTROL GP-HANDLE (LH)	479
M	7	1	**8T-0269**	3	BOLT-SOCKET HEAD (M6X1X20-MM)	
	8	1	**8T-4121**	1	WASHER-HARD (11X21X2.5-MM THK)	
M	9	1	**8T-4137**	1	BOLT (M10X1.5X20-MM)	
	10	1	**8T-4205**	3	WASHER-HARD (7.2X14.5X2-MM THK)	

M-METRIC PART
Y-SEPARATE ILLUSTRATION

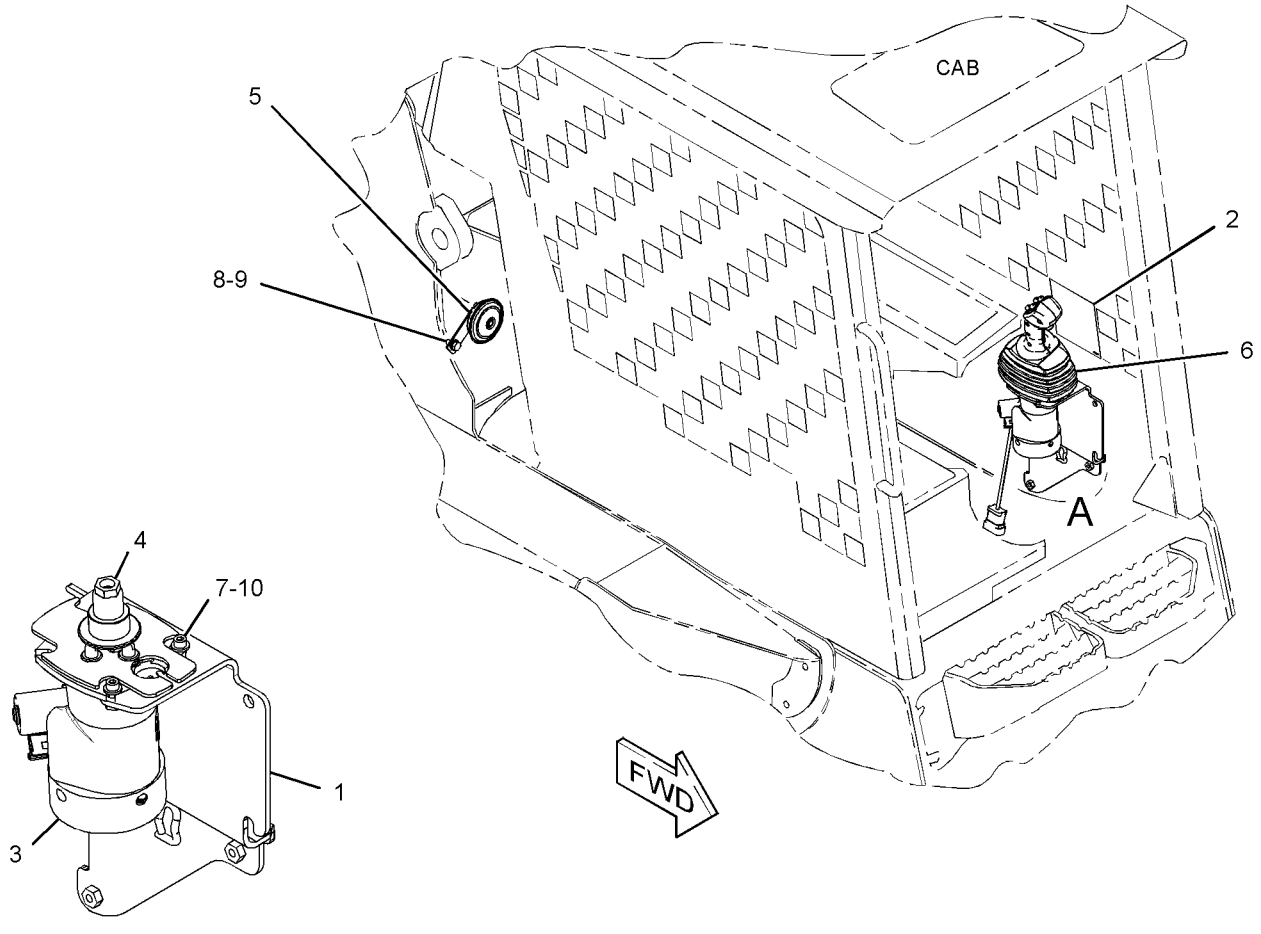

VIEW OF AREA A
(HANDLE REMOVED FOR CLARITY)

GRAPHIC #1 **<END>** g02148358

OPERATOR STATION

326-5267 CONTROL GP-PILOT OPERATED HYD

S/N: SRS1-UP
PART OF 326-5472, 326-5483, 354-6538 CONTROL AR-MACHINE
AN ATTACHMENT
TYPE 2

SMCS-5059, 5705 **i04197029**

NOTE	REF NO	GRAPHIC REF	PART NUMBER	QTY	PART NAME 1 2 3 4 5 6 (PRODUCT LEVEL)	SEE PAGE
	1	1	**218-6422**	1	BRACKET AS	
	2	1	**235-5246**	1	FILM-INSTRUCTION (MACHINE CONTROL, READ OMM)	
CY	3	1	**356-5008**	1	VALVE GP-PILOT (DIRECTION, SPEED)	296
M	4	1	**095-1207**	1	NUT (M12X1.75-THD)	
	5	1	**164-9425**	1	HORN AS (12-VOLT, LOW TONE)	
Y	6	1	**231-4258**	1	CONTROL GP-HANDLE (LH)	479
M	7	1	**8T-0269**	3	BOLT-SOCKET HEAD (M6X1X20-MM)	
	8	1	**8T-4121**	1	WASHER-HARD (11X21X2.5-MM THK)	
M	9	1	**8T-4137**	1	BOLT (M10X1.5X20-MM)	
	10	1	**8T-4205**	3	WASHER-HARD (7.2X14.5X2-MM THK)	

C-CHANGE FROM PREVIOUS TYPE
M-METRIC PART
Y-SEPARATE ILLUSTRATION

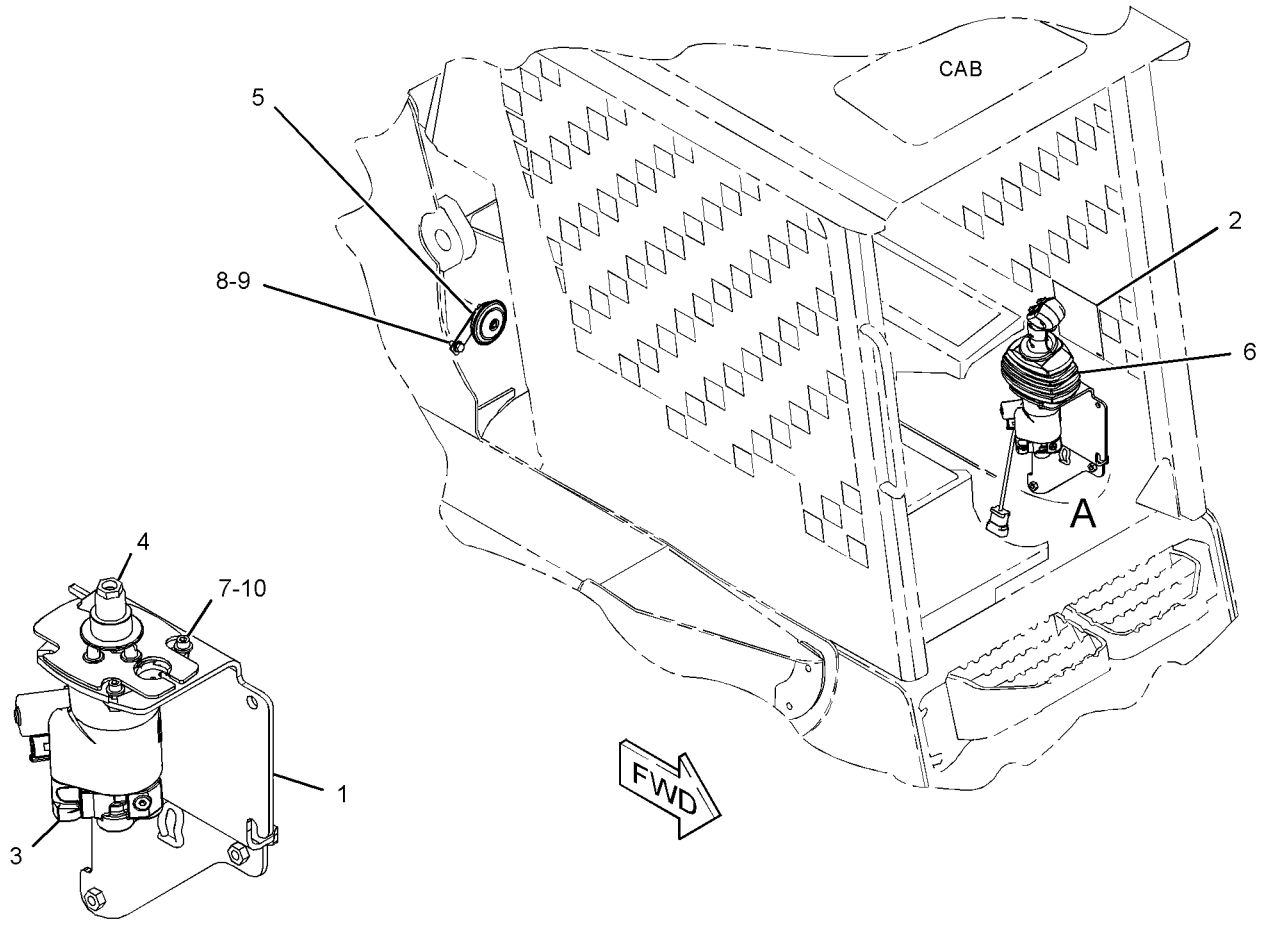

VIEW OF AREA A
(HANDLE REMOVED FOR CLARITY)

GRAPHIC #1 **<END>** g02475438

OPERATOR STATION

343-5542 CONTROL GP-PILOT OPERATED HYD

S/N: SRS1-499
PART OF 354-6537 CONTROL AR-MACHINE
AN ATTACHMENT

SMCS-5059, 5705 **i03514441**

NOTE	REF NO	GRAPHIC REF	PART NUMBER	QTY	PART NAME 1 2 3 4 5 6 (PRODUCT LEVEL)	SEE PAGE
M	1	1	**095-1207**	1	NUT (M12X1.75-THD)	
	2	1	**218-6422**	1	BRACKET AS	
Y	3	1	**343-0868**	1	VALVE GP-PILOT	295
	4	1	**164-9425**	1	HORN AS (12-VOLT, LOW TONE)	
Y	5	1	**231-4256**	1	CONTROL GP-HANDLE (LH)	478
	6	1	**235-5246**	1	FILM-INSTRUCTION (MACHINE CONTROL, READ OMM)	
M	7	1	**8T-0269**	3	BOLT-SOCKET HEAD (M6X1X20-MM)	
	8	1	**8T-4121**	1	WASHER-HARD (11X21X2.5-MM THK)	
M	9	1	**8T-4137**	1	BOLT (M10X1.5X20-MM)	
	10	1	**8T-4205**	3	WASHER-HARD (7.2X14.5X2-MM THK)	

M-METRIC PART
Y-SEPARATE ILLUSTRATION

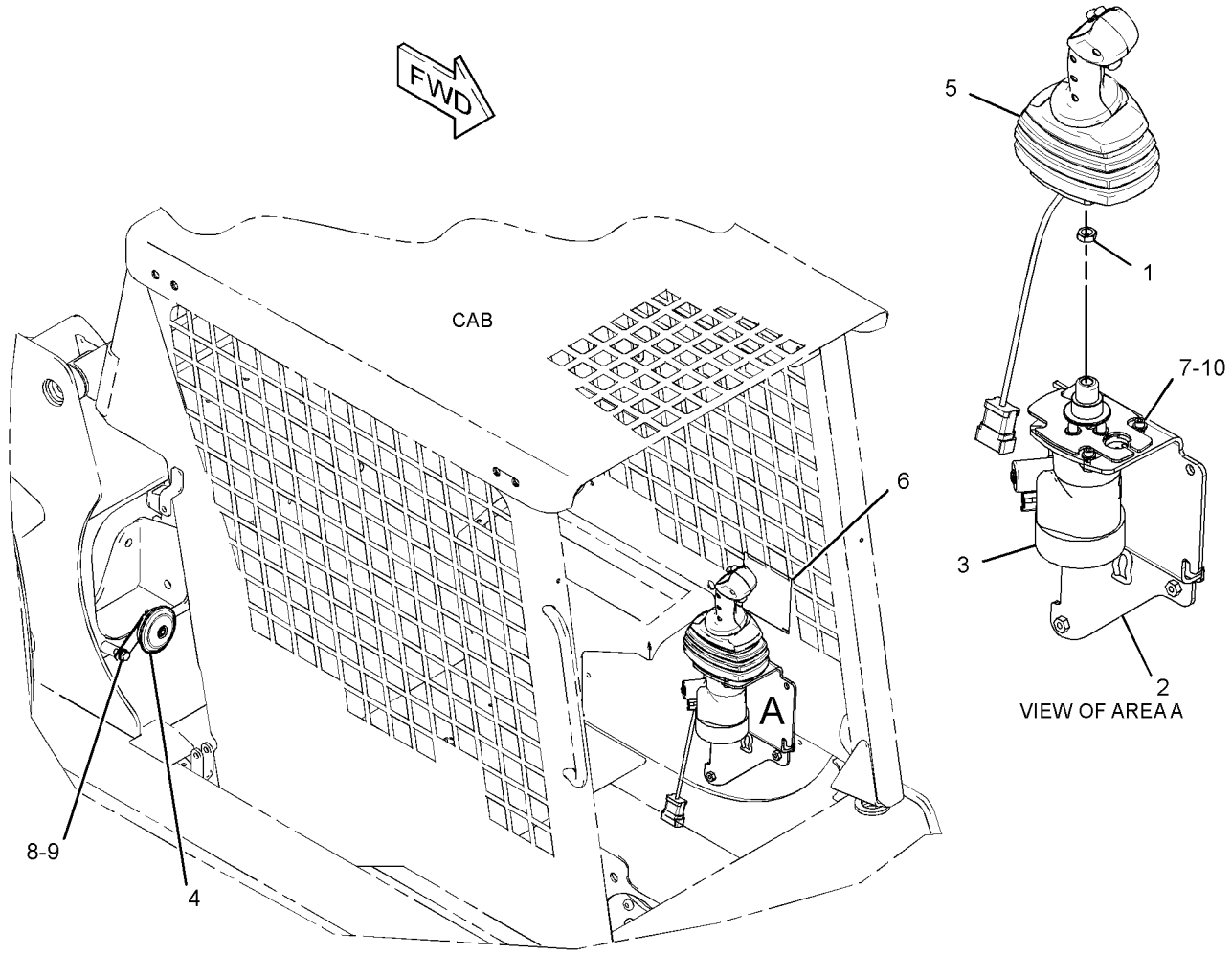

GRAPHIC #1 **<END>** g01455640

OPERATOR STATION

343-5542 CONTROL GP-PILOT OPERATED HYD

S/N: SRS500-UP
PART OF 354-6537 CONTROL AR-MACHINE
AN ATTACHMENT

SMCS-5059, 5705 **i04185493**

NOTE	REF NO	GRAPHIC REF	PART NUMBER	QTY	PART NAME 1 2 3 4 5 6 (PRODUCT LEVEL)	SEE PAGE
M	1	1	**095-1207**	1	NUT (M12X1.75-THD)	
	2	1	**218-6422**	1	BRACKET AS	
CY	3	1	**356-5008**	1	VALVE GP-PILOT (DIRECTION, SPEED)	296
	4	1	**164-9425**	1	HORN AS (12-VOLT, LOW TONE)	
Y	5	1	**231-4256**	1	CONTROL GP-HANDLE (LH)	478
	6	1	**235-5246**	1	FILM-INSTRUCTION (MACHINE CONTROL, READ OMM)	
M	7	1	**8T-0269**	3	BOLT-SOCKET HEAD (M6X1X20-MM)	
	8	1	**8T-4121**	1	WASHER-HARD (11X21X2.5-MM THK)	
M	9	1	**8T-4137**	1	BOLT (M10X1.5X20-MM)	
	10	1	**8T-4205**	3	WASHER-HARD (7.2X14.5X2-MM THK)	

C-CHANGE FROM PREVIOUS TYPE
M-METRIC PART
Y-SEPARATE ILLUSTRATION

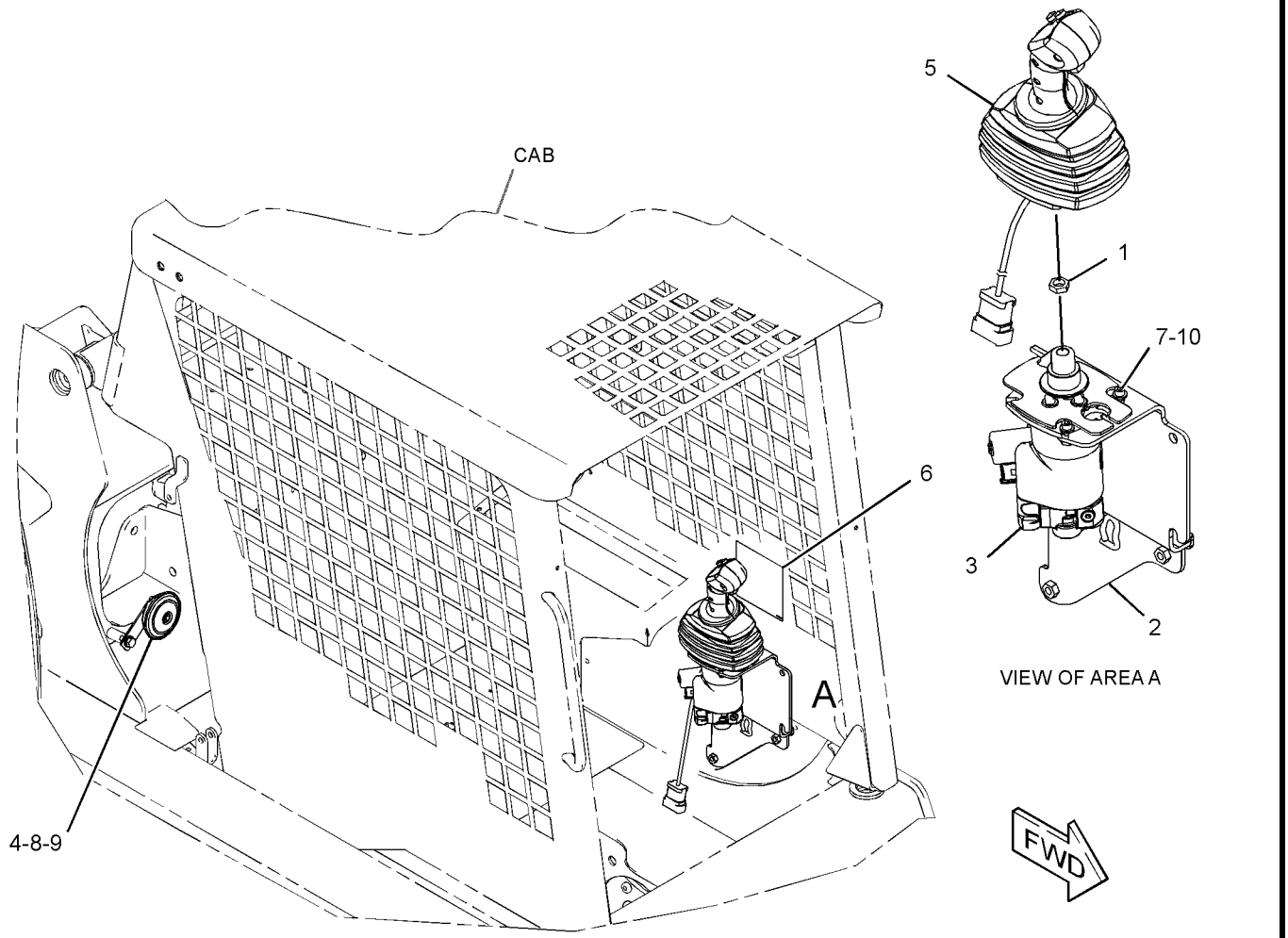

GRAPHIC #1 **<END>** g02471616

OPERATOR STATION

343-5543 CONTROL GP-PILOT OPERATED HYD

S/N: SRS1-499
PART OF 354-6536 CONTROL AR-MACHINE
AN ATTACHMENT

SMCS-5059, 5705 **i03511321**

NOTE	REF NO	GRAPHIC REF	PART NUMBER	QTY	PART NAME 1 2 3 4 5 6 (PRODUCT LEVEL)	SEE PAGE
	1	1	**218-6422**	1	BRACKET AS	
Y	2	1	**218-6485**	1	CONTROL GP-HANDLE (LH)	476
Y	3	1	**343-0868**	1	VALVE GP-PILOT	295
	4	1	**164-9425**	1	HORN AS (12-VOLT, LOW TONE)	
	5	1	**237-5331**	1	FILM-INSTRUCTION (MACHINE CONTROL, READ OMM)	
M	6	1	**8T-0269**	3	BOLT-SOCKET HEAD (M6X1X20-MM)	
	7	1	**8T-4121**	1	WASHER-HARD (11X21X2.5-MM THK)	
M	8	1	**8T-4137**	1	BOLT (M10X1.5X20-MM)	
	9	1	**8T-4205**	3	WASHER-HARD (7.2X14.5X2-MM THK)	

M-METRIC PART
Y-SEPARATE ILLUSTRATION

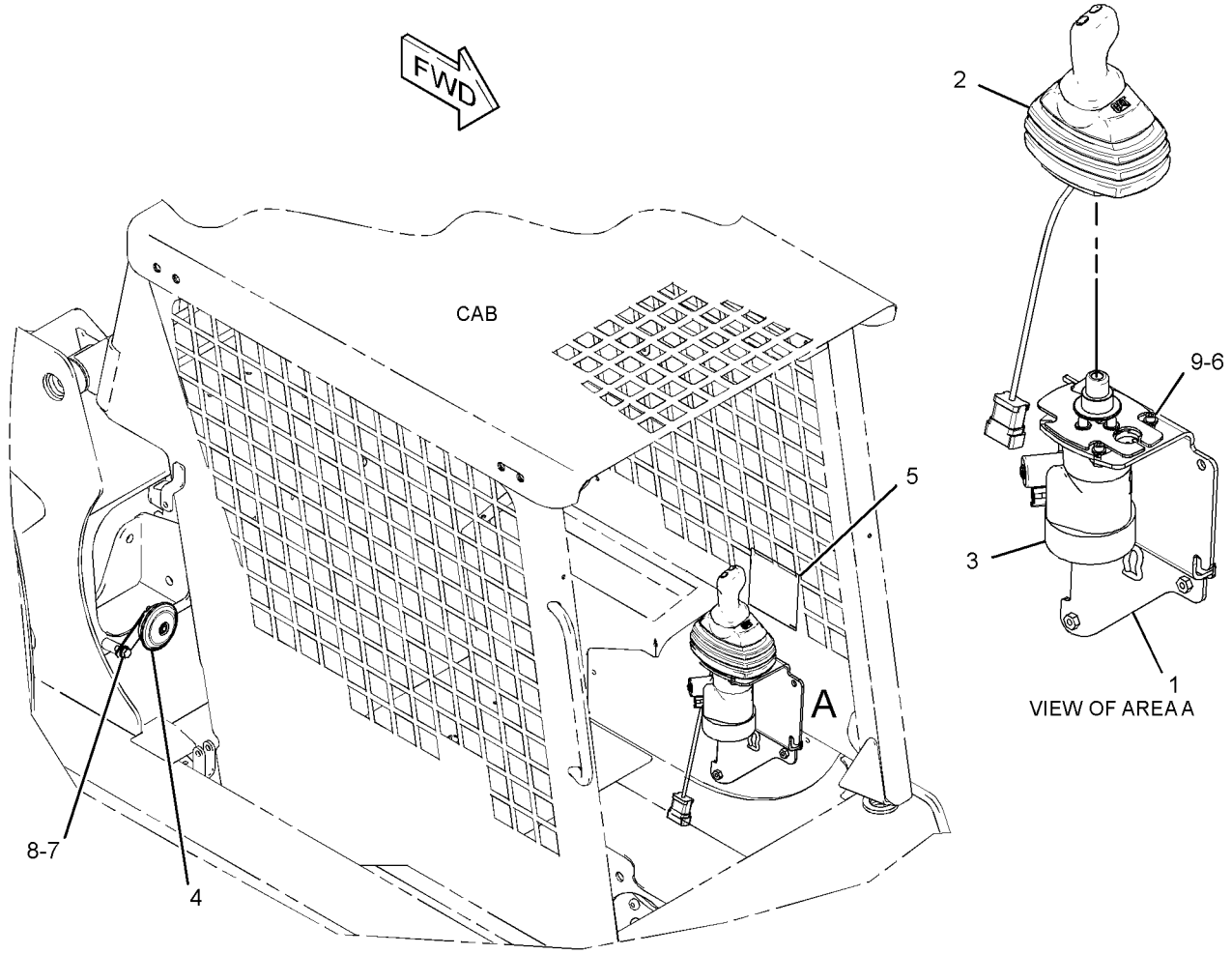

GRAPHIC #1 **<END>** g01455653

OPERATOR STATION

343-5543 CONTROL GP-PILOT OPERATED HYD

S/N: SRS500-UP
PART OF 354-6536 CONTROL AR-MACHINE
AN ATTACHMENT

SMCS-5059, 5705 **i04185426**

NOTE	REF NO	GRAPHIC REF	PART NUMBER	QTY	PART NAME 1 2 3 4 5 6 (PRODUCT LEVEL)	SEE PAGE
	1	1	**218-6422**	1	BRACKET AS	
Y	2	1	**218-6485**	1	CONTROL GP-HANDLE (LH)	476
CY	3	1	**356-5008**	1	VALVE GP-PILOT (DIRECTION, SPEED)	296
	4	1	**164-9425**	1	HORN AS (12-VOLT, LOW TONE)	
	5	1	**237-5331**	1	FILM-INSTRUCTION (MACHINE CONTROL, READ OMM)	
M	6	1	**8T-0269**	3	BOLT-SOCKET HEAD (M6X1X20-MM)	
	7	1	**8T-4121**	1	WASHER-HARD (11X21X2.5-MM THK)	
M	8	1	**8T-4137**	1	BOLT (M10X1.5X20-MM)	
	9	1	**8T-4205**	3	WASHER-HARD (7.2X14.5X2-MM THK)	

C-CHANGE FROM PREVIOUS TYPE
M-METRIC PART
Y-SEPARATE ILLUSTRATION

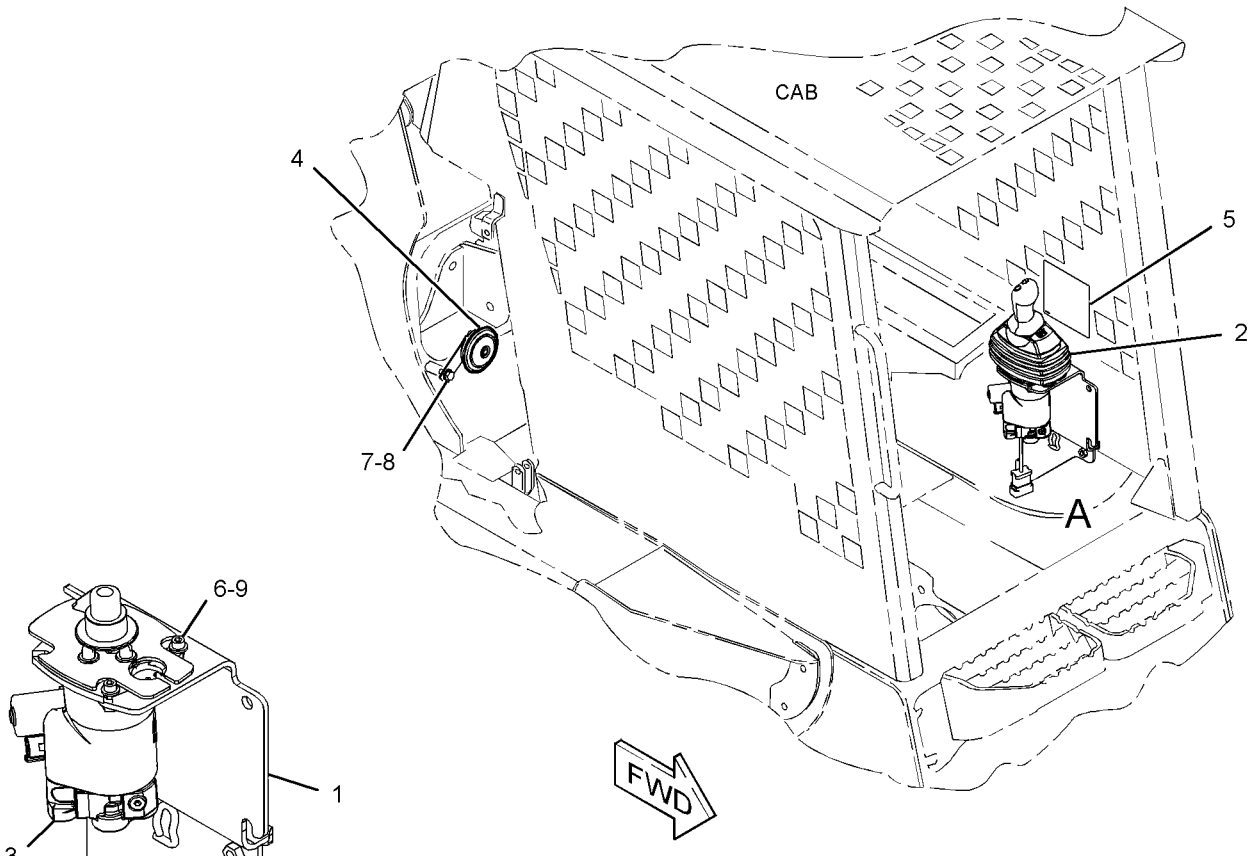

VIEW OF AREA A
(HANDLE REMOVED FOR CLARITY)

GRAPHIC #1 **<END>** g02475452

218-6419 COVER GP-CONSOLE–
WITHOUT AIR CONDITIONER, HEATER
S/N: SRS1-UP
PART OF 326-5554 INSTALLATION AR
AN ATTACHMENT

SMCS-5258 **i02392269**

NOTE	REF NO	GRAPHIC REF	PART NUMBER	QTY	PART NAME 1 2 3 4 5 6 (PRODUCT LEVEL)	SEE PAGE
	1	1	**218-6389**	1	CONSOLE (RH)	
	2	1	**218-6391**	1	CONSOLE (LH)	
M	3	1	**175-0005**	8	SCREW-BUTTON HEAD (M6X1X25-MM)	

M-METRIC PART

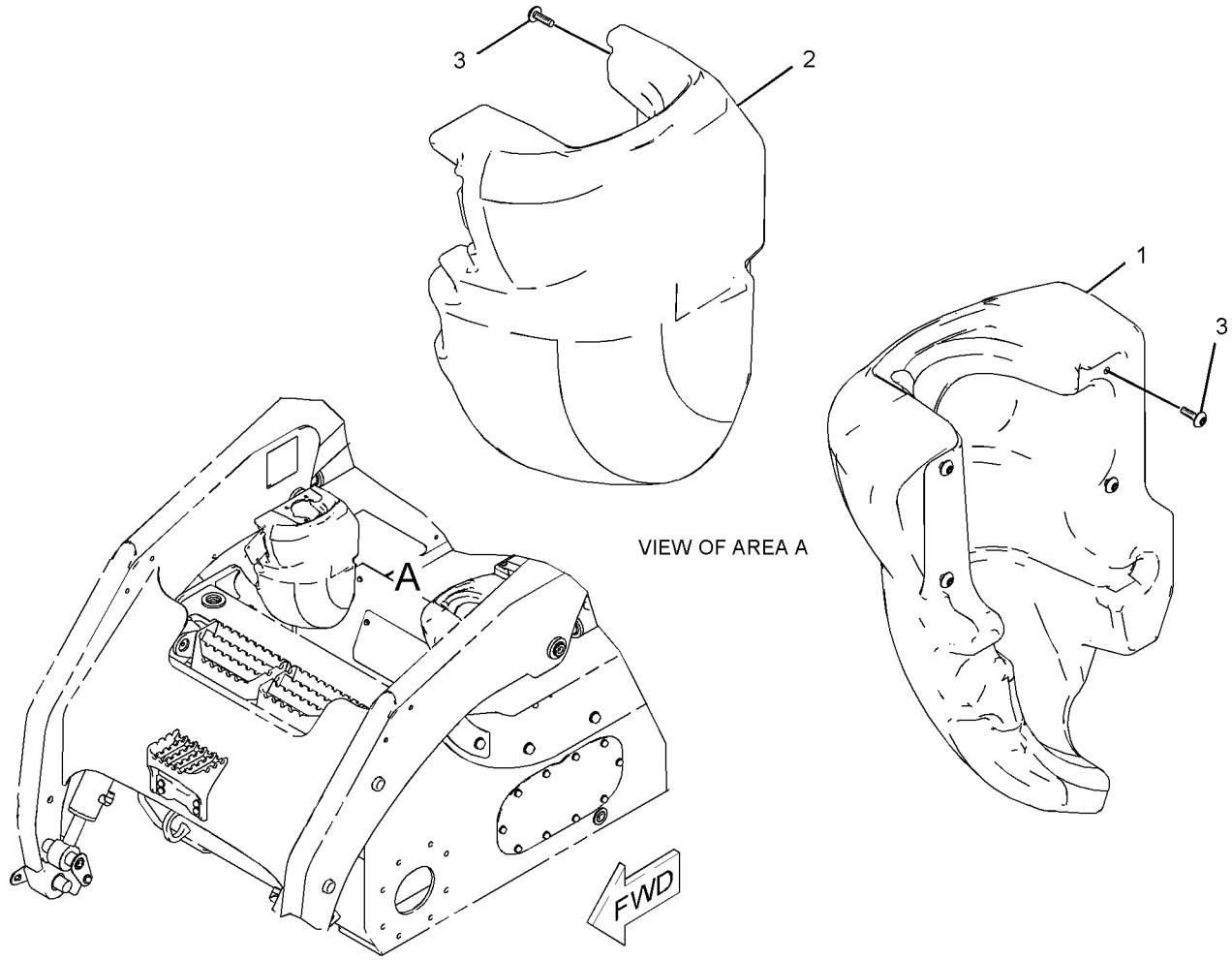

GRAPHIC #1 **<END>** g01019449

OPERATOR STATION

218-6440 DOOR & MTG GP-CAB—POLYCARBONATE

S/N: SRS1-UP

CANNOT BE USED WITH 218-6400—PAGE 506, 223-0600—PAGE 493

AN ATTACHMENT

SMCS-7308 **i03973430**

NOTE	REF NO	GRAPHIC REF	PART NUMBER	QTY	PART NAME 1 2 3 4 5 6 (PRODUCT LEVEL)	SEE PAGE
E	1	2	**125-3518**		SEAL (6-CM EACH)	
E	1A	2	**125-3518**		SEAL (65-CM)	
E	3	2	**144-0195**		HOSE (40-CM)	
D	4	2	**5P-9909**		SEAL (0.05-M EACH)	
	5	1	**5P-0372**	2	LOCK PIN	
	6	2	**8T-2444**	2	STUD-BALL	
	7	2	**8T-3848**	1	STRIKER AS-LATCH	
		2	**6V-4270**	1	LOCKWASHER	
	8	1	**9C-5344**	1	SPACER (10.5X20X18-MM THK)	
	9	1	**095-1325**	1	PIN-CLEVIS	
	10	1	**153-2683**	1	SPRING AS-GAS (LOCKING)	
	11	1	**177-3405**	1	PIN	
	12	2	**218-0728**	2	SPRING	
CY	13	2	*276-3440*	1	DOOR GP-CAB (POLYCARBONATE)	498
	14	2	**219-9739**	1	TANK AS-WINDOW WASHER	
	15	2	**221-3877**	1	HARNESS AS-WINDOW WIPER	
		2	**102-8805**	1	KIT-RECEPTACLE (6-PIN)	
					(INCLUDES RECEPTACLE AS & WEDGE)	
		2	**123-7615**	1	CONNECTOR	
		2	**8T-8737**	1	PLUG-SEAL	
		2	**5W-1987**	2	TERMINAL-BLADE (12-GA TO 16-GA)	
E		2	**125-7875**		TUBE-HEAT SHRINK (7.44-MM DIA) (5-CM)	
		2	**9X-3401**	5	PIN-CONNECTOR (16-GA TO 18-GA)	
					—OR—	
		2	**126-1767**	5	PIN-CONNECTOR (14-GA TO 16-GA)	
		2	**180-9340**	6	SOCKET-CONNECTOR (14-GA TO 18-GA)	
		2	**155-2274**	1	KIT-CONNECTING PLUG (6-PIN)	
					(INCLUDES PLUG AS, WEDGE & INTERFACE SEAL)	
	16	2	**280-1575**	1	PLATE AS	
	17	2	**223-0591**	1	PLATE AS	
	18	2	**223-0601**	2	PLATE AS	
	19	2	**223-0608**	1	HINGE AS	
	20	2	**223-0617**	1	MOUNT	
	21	2	**230-3214**	1	SPRING AS-GAS (CAB DOOR)	
M	22	2	**127-2170**	8	SCREW-TRUSS HEAD (M8X1.25X20-MM)	
	23	2	**142-9356**	1	BLOCK	
M	24	2	**195-0937**	8	INSERT-THREADED (M8X1.25-THD)	
	25	2	**3S-2093**	3	STRAP-CABLE	
M	26	2	**5C-2890**	13	NUT (M6X1-THD)	
D	27	2	**5P-5969**		SEAL (1.1-M EACH)	
	28	2	**8T-4121**	4	WASHER-HARD (11X21X2.5-MM THK)	
M	29	2	**8T-4133**	4	NUT (M10X1.5-THD)	
	30	2	**8T-4205**	13	WASHER-HARD (7.2X14.5X2-MM THK)	
	31	2	**8T-4222**	1	WASHER-PLATED (11X32X2.5-MM THK)	
	32	2	**8T-4224**	2	WASHER-HARD (8.8X16X2-MM THK)	
M	33	2	**9X-2041**	4	SCREW-TRUSS HEAD (M10X1.5X20-MM)	
M	34	2	**9X-2044**	3	SCREW-TRUSS HEAD (M6X1X16-MM)	
M	35	2	**9X-2045**	4	SCREW-TRUSS HEAD (M6X1X20-MM)	
D	36	2	**5P-8309**		SEAL (0.8-M)	

C-CHANGE FROM PREVIOUS TYPE
D-ORDER BY THE METER
E-ORDER BY THE CENTIMETER
M-METRIC PART
Y-SEPARATE ILLUSTRATION

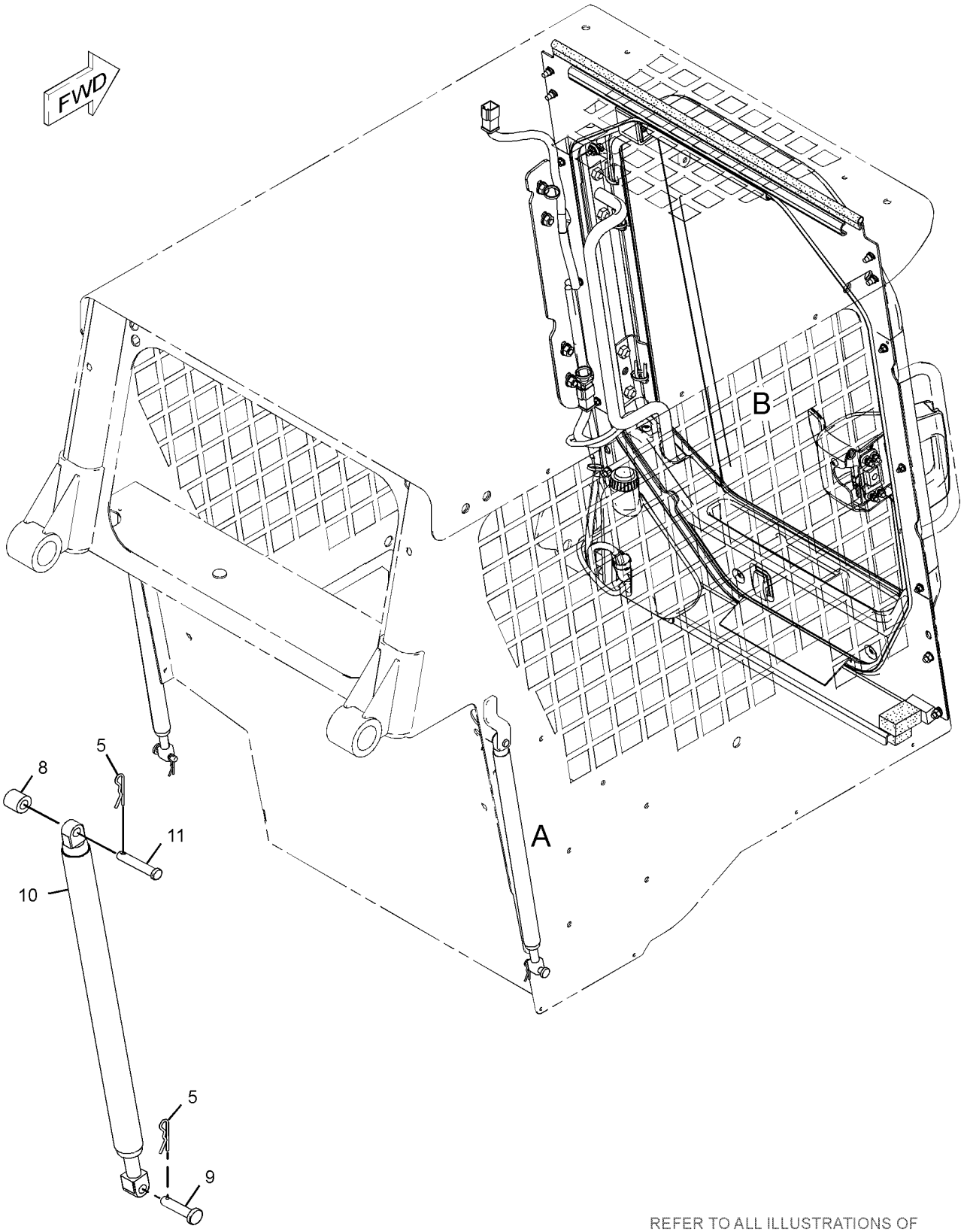

VIEW OF AREA A

REFER TO ALL ILLUSTRATIONS OF THIS GROUP FOR AUXILIARY VIEWS

GRAPHIC #1

g01249527

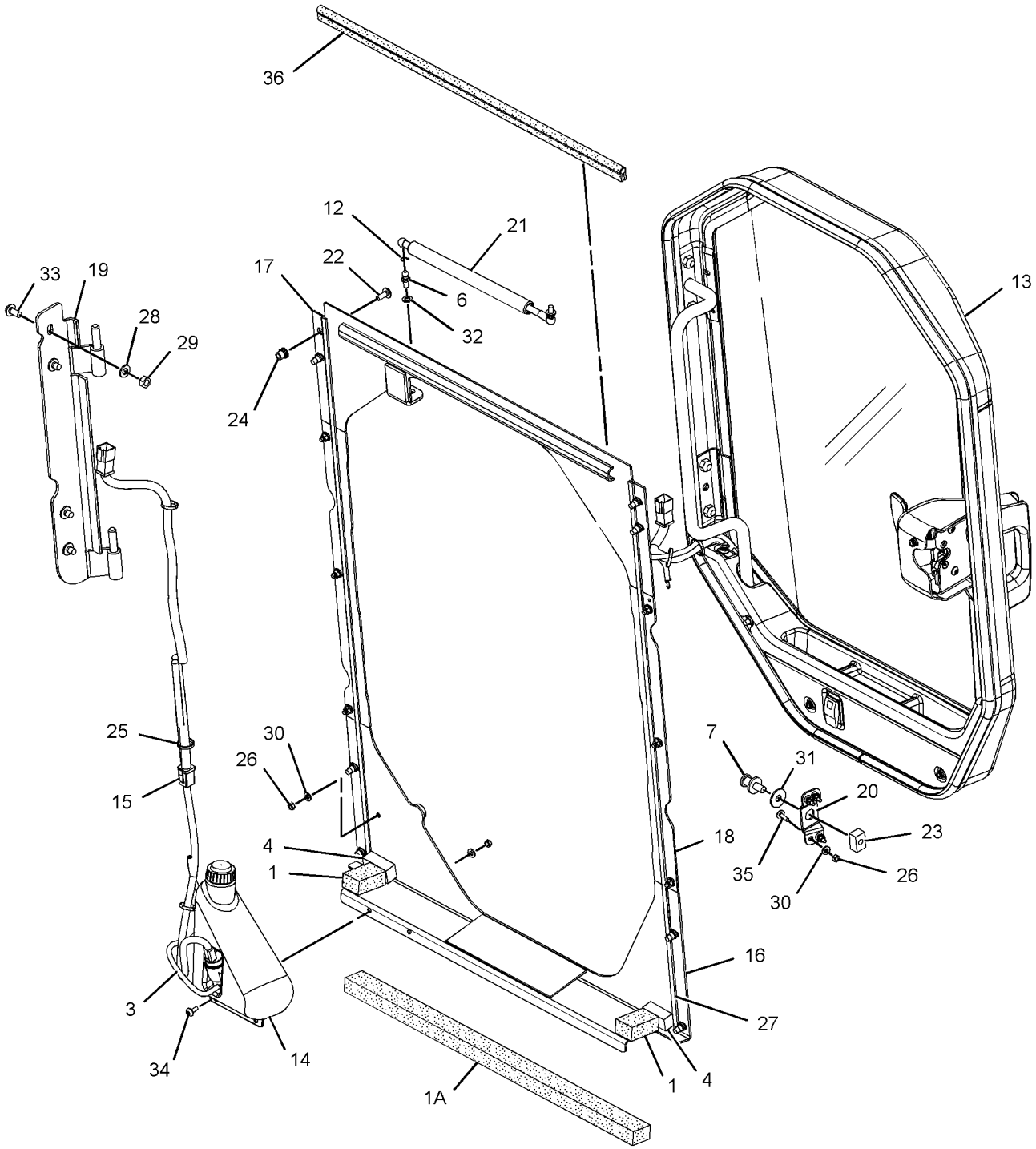

VIEW OF AREA B
(EXPLODED)

GRAPHIC #2 **<END>** g01944445

OPERATOR STATION

223-0600 DOOR & MTG GP-CAB—GLASS

S/N: SRS1-UP

CANNOT BE USED WITH 218-6400—PAGE 506, 218-6440—PAGE 490

AN ATTACHMENT

SMCS-7308 **i03973431**

NOTE	REF NO	GRAPHIC REF	PART NUMBER	QTY	PART NAME 1 2 3 4 5 6 (PRODUCT LEVEL)	SEE PAGE
D	1	1	**5P-8309**		SEAL (0.72-M)	
E	2	1	**125-3518**		SEAL (65-CM)	
E	3	1	**144-0195**		HOSE (40-CM)	
D	4	1	**5P-9909**		SEAL (0.05-M EACH)	
	5	1	**5P-0372**	2	LOCK PIN	
	6	1	**8T-2444**	2	STUD-BALL	
	7	1	**8T-3848**	1	STRIKER AS-LATCH	
		1	**6V-4270**	1	LOCKWASHER	
	8	1	**9C-5344**	1	SPACER (10.5X20X18-MM THK)	
	9	1	**095-1325**	1	PIN-CLEVIS	
	10	1	**153-2683**	1	SPRING AS-GAS (LOCKING)	
	11	1	**177-3405**	1	PIN	
	12	1	**218-0728**	2	SPRING	
	13	1	**219-9739**	1	TANK AS-WINDOW WASHER	
	14	1	**221-3877**	1	HARNESS AS-WINDOW WIPER	
		1	**9X-3401**	5	PIN-CONNECTOR (16-GA TO 18-GA)	
					—OR—	
		1	**126-1767**	5	PIN-CONNECTOR (14-GA TO 16-GA)	
		1	**123-7615**	1	CONNECTOR	
		1	**155-2274**	1	KIT-CONNECTING PLUG (6-PIN)	
					(INCLUDES PLUG AS, WEDGE & INTERFACE SEAL)	
		1	**8T-8737**	1	PLUG-SEAL	
		1	**102-8805**	1	KIT-RECEPTACLE (6-PIN)	
					(INCLUDES RECEPTACLE AS & WEDGE)	
		1	**180-9340**	6	SOCKET-CONNECTOR (14-GA TO 18-GA)	
E		1	**125-7875**		TUBE-HEAT SHRINK (7.44-MM DIA) (5-CM)	
		1	**5W-1987**	2	TERMINAL-BLADE (12-GA TO 16-GA)	
C	15	1	**280-1575**	1	PLATE AS	
	16	1	**223-0591**	1	PLATE AS	
	17	1	**223-0601**	2	PLATE AS	
	18	1	**223-0608**	1	HINGE AS	
Y	19	1	*223-0616*	1	DOOR GP-CAB (GLASS)	496
	20	1	**223-0617**	1	MOUNT	
	21	1	**230-3214**	1	SPRING AS-GAS (CAB DOOR)	
M	22	1	**127-2170**	8	SCREW-TRUSS HEAD (M8X1.25X20-MM)	
	23	1	**142-9356**	1	BLOCK	
CM	24	1	**195-0937**	8	INSERT-THREADED (M8X1.25-THD)	
	25	1	**3S-2093**	3	STRAP-CABLE	
M	26	1	**5C-2890**	13	NUT (M6X1-THD)	
	28	1	**8T-4121**	4	WASHER-HARD (11X21X2.5-MM THK)	
M	29	1	**8T-4133**	4	NUT (M10X1.5-THD)	
	30	1	**8T-4205**	13	WASHER-HARD (7.2X14.5X2-MM THK)	
B	31	1	**8T-4222**	1	WASHER-PLATED (11X32X2.5-MM THK)	
C	32	1	**8T-4224**	2	WASHER-HARD (8.8X16X2-MM THK)	
M	33	1	**9X-2041**	4	SCREW-TRUSS HEAD (M10X1.5X20-MM)	
M	34	1	**9X-2044**	3	SCREW-TRUSS HEAD (M6X1X16-MM)	
M	35	1	**9X-2045**	4	SCREW-TRUSS HEAD (M6X1X20-MM)	
E	36	1	**125-3518**		SEAL (6-CM EACH)	
CD	37	1	**5P-5969**		SEAL (1.1-M EACH)	

B-USE AS REQUIRED
C-CHANGE FROM PREVIOUS TYPE
D-ORDER BY THE METER
E-ORDER BY THE CENTIMETER
M-METRIC PART
Y-SEPARATE ILLUSTRATION

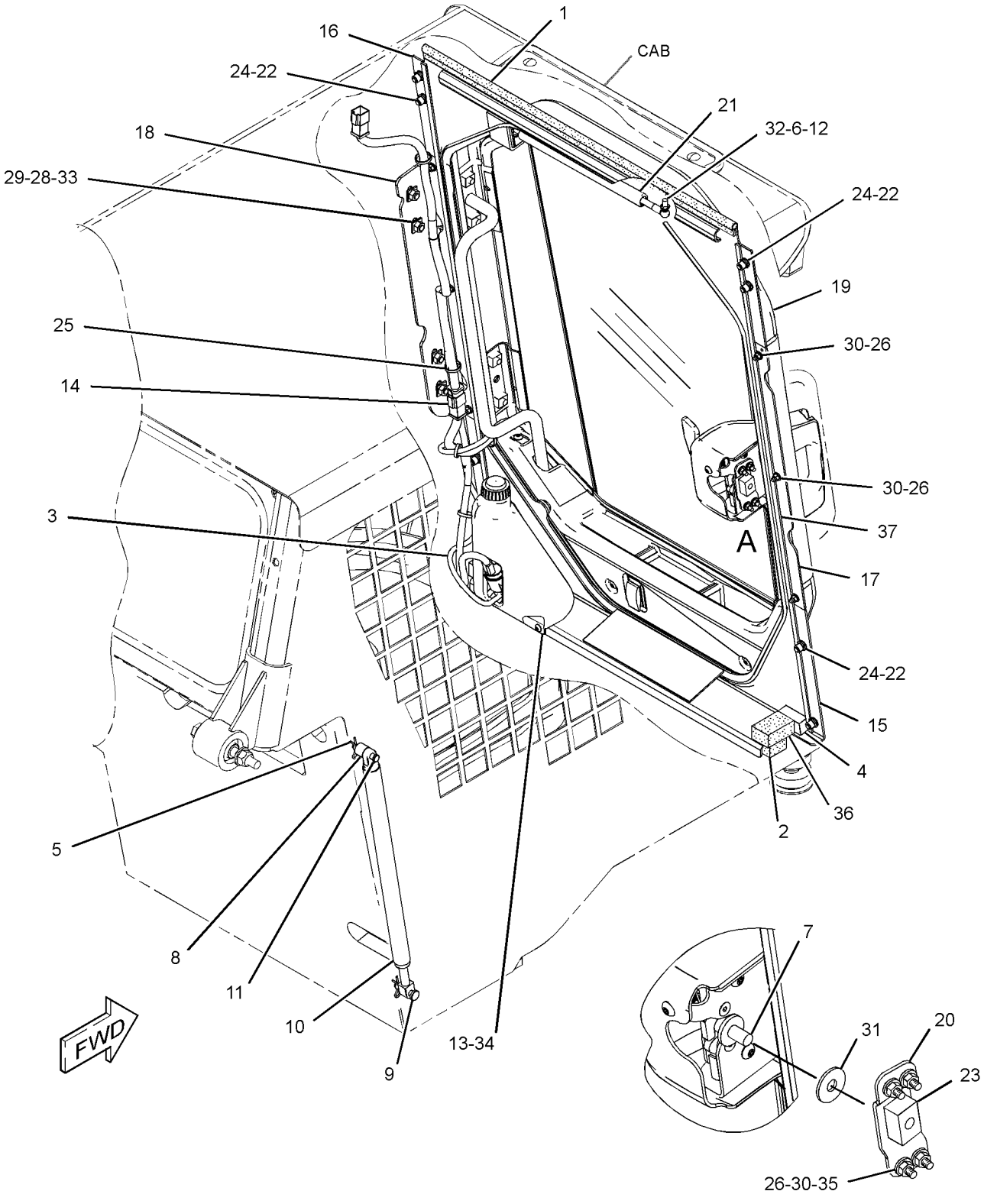

VIEW OF AREA A
(EXPLODED)

GRAPHIC #1 **<END>** g01258688

OPERATOR STATION

218-6431 DOOR GP-CAB–GLASS

S/N: SRS1-UP
PART OF 223-0616 DOOR GP-CAB
AN ATTACHMENT

SMCS-7308 **i02619575**

NOTE	REF NO	GRAPHIC REF	PART NUMBER	QTY	PART NAME 1 2 3 4 5 6 (PRODUCT LEVEL)	SEE PAGE
	1	1	**223-0609**	1	GLASS-CAB (DOOR)	
	2	1	**223-0610**	1	GLASS-CAB (DOOR)	
	3	1	**223-0612**	1	GLASS-CAB (DOOR)	
	4	1	**282-9059**	1	FRAME AS	

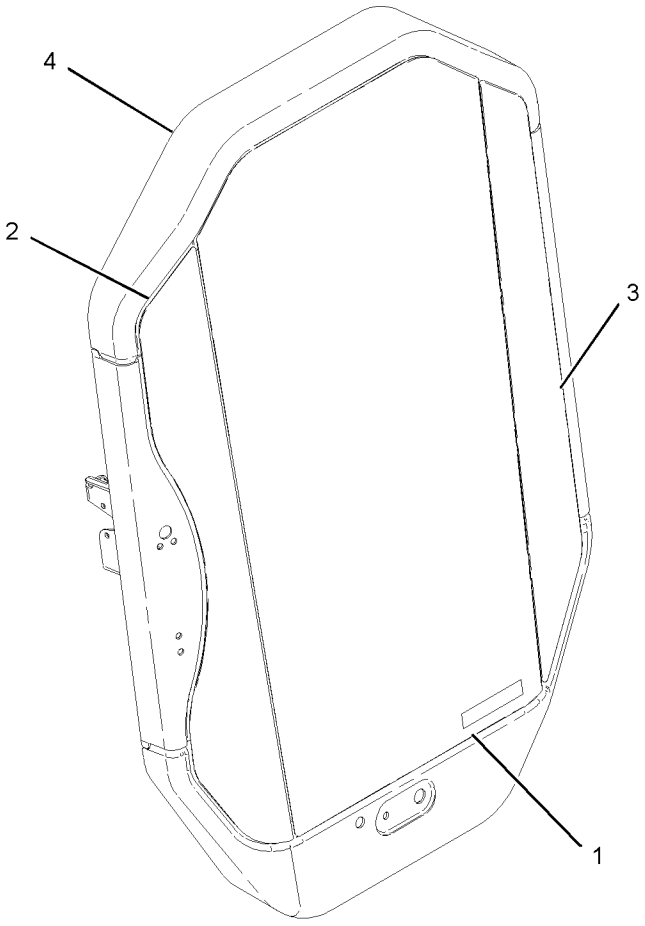

GRAPHIC #1 **<END>** g01010846

OPERATOR STATION

223-0616 DOOR GP-CAB—GLASS

S/N: SRS1-UP
PART OF 223-0600 DOOR & MTG GP-CAB
AN ATTACHMENT

SMCS-7308 **i03897524**

NOTE	REF NO	GRAPHIC REF	PART NUMBER	QTY	PART NAME 1 2 3 4 5 6 (PRODUCT LEVEL)	SEE PAGE
E	1	1	**124-3243**		SEAL (306-CM)	
E	2	1	**144-0195**		HOSE (73-CM)	
	3	1	**8G-1151**	2	CONNECTOR	
C	4	1	**320-1390**	1	BLADE-WIPER (558-MM) (FRONT, REAR)	
	6	1	**138-4883**	1	SWITCH AS-ROCKER (REAR WINDOW WASHER, WIPER)	
		1	**111-7899**	1	GASKET	
M	7	1	**260-6695**	2	SCREW-FLAT HEAD (M6X1X25-MM)	
Y	8	1	*218-6431*	1	DOOR GP-CAB (GLASS)	495
	9	1	**221-3876**	1	HARNESS AS-WINDOW WIPER	
		1	**111-7898**	1	CONNECTOR	
		1	**9X-3401**	6	PIN-CONNECTOR (16-GA TO 18-GA)	
		1	**155-2260**	1	KIT-CONNECTING PLUG (3-PIN)	
		1	**155-2271**	1	KIT-CONNECTING PLUG (4-PIN)	
					(EACH PLUG KIT INCLUDES PLUG AS, WEDGE & INTERFACE SEAL)	
		1	**102-8805**	1	KIT-RECEPTACLE (6-PIN)	
					(INCLUDES RECEPTACLE AS & WEDGE)	
		1	**9X-3402**	7	SOCKET-CONNECTOR (16-GA TO 18-GA)	
		1	**8L-8413**	8	STRAP-CABLE	
		1	**122-4406**	3	TERMINAL	
		1	**112-9611**	1	TERMINAL-BLADE	
		1	**3E-9179**	3	TERMINAL-RECEPTACLE (14-GA TO 18-GA)	
E		1	**119-3662**		TUBE-HEAT SHRINK (10.85-MM DIA) (7-CM)	
CY	10	1	**320-1389**	1	ARM GP-WINDOW WIPER (FRONT)	463
C	11	1	**313-9185**	1	COVER AS	
	12	1	**223-8488**	1	COVER-LATCH	
	13	1	**223-8495**	1	HANDLE AS	
M		1	**6V-9632**	1	NUT-WELD (M6X1-THD)	
	14	1	**225-3187**	1	LATCH AS	
	15	1	**229-8757**	1	SWITCH AS-LIMIT (ENGINE START, HYD LOCKOUT)	
		1	**102-8803**	1	KIT-RECEPTACLE (3-PIN)	
					(INCLUDES RECEPTACLE AS & WEDGE)	
		1	**186-3735**	3	PIN-CONNECTOR (16-GA TO 18-GA)	
	17	1	**235-4768**	2	HINGE	
	18	1	**248-2171**	1	HANDLE AS (PUSH BUTTON) (PUSH BUTTON)	
Y	19	1	**330-5012**	1	MOTOR GP-WINDOW WIPER	523
	20	1	**032-9828**	1	GROMMET	
M	21	1	**134-8273**	4	SCREW-FLAT HEAD (M10X1.5X25-MM)	
	22	1	**3S-2093**	3	STRAP-CABLE	
M	23	1	**9X-2044**	14	SCREW-TRUSS HEAD (M6X1X16-MM)	
M	24	1	**9X-2045**	2	SCREW-TRUSS HEAD (M6X1X20-MM)	

C-CHANGE FROM PREVIOUS TYPE
E-ORDER BY THE CENTIMETER
M-METRIC PART
Y-SEPARATE ILLUSTRATION

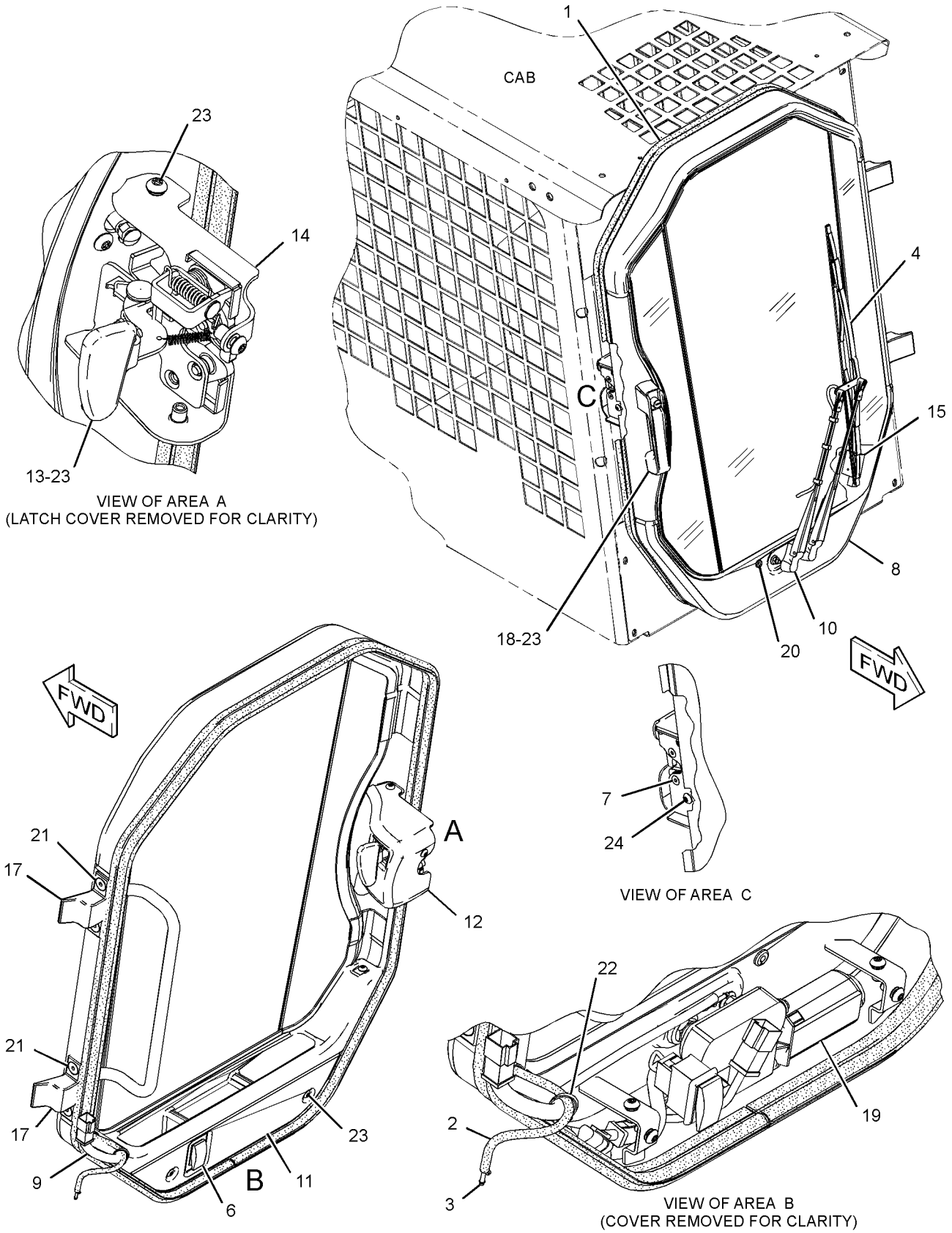

GRAPHIC #1 **<END>** g01431673

OPERATOR STATION

276-3440 DOOR GP-CAB—POLYCARBONATE

S/N: SRS1-UP
PART OF 218-6440 DOOR & MTG GP-CAB
AN ATTACHMENT

SMCS-7308 **i03970897**

NOTE	REF NO	GRAPHIC REF	PART NUMBER	QTY	PART NAME 1 2 3 4 5 6 (PRODUCT LEVEL)	SEE PAGE
	1	1	**8G-1151**	2	CONNECTOR	
C	2	1	**320-1390**	1	BLADE-WIPER (558-MM) (CAB DOOR)	
	4	1	**138-4883**	1	SWITCH AS-ROCKER (REAR WINDOW WASHER, WIPER)	
		1	**111-7899**	1	GASKET	
	5	1	**205-5148**	2	SCREW-FLAT HEAD (M6X1X25-MM)	
	6	1	**221-3876**	1	HARNESS AS-WINDOW WIPER	
		1	**111-7898**	1	CONNECTOR	
		1	**9X-3401**	6	PIN-CONNECTOR (16-GA TO 18-GA)	
		1	**155-2260**	1	KIT-CONNECTING PLUG (3-PIN)	
		1	**155-2271**	1	KIT-CONNECTING PLUG (4-PIN)	
					(EACH PLUG KIT INCLUDES PLUG AS, WEDGE & INTERFACE SEAL)	
		1	**102-8805**	1	KIT-RECEPTACLE (6-PIN)	
					(INCLUDES RECEPTACLE AS & WEDGE)	
		1	**9X-3402**	7	SOCKET-CONNECTOR (16-GA TO 18-GA)	
		1	**8L-8413**	8	STRAP-CABLE	
		1	**122-4406**	3	TERMINAL	
		1	**112-9611**	1	TERMINAL-BLADE	
		1	**3E-9179**	3	TERMINAL-RECEPTACLE (14-GA TO 18-GA)	
E		1	**119-3662**		TUBE-HEAT SHRINK (10.85-MM DIA) (7-CM)	
	7	1	**223-8488**	1	COVER-LATCH	
	8	1	**223-8495**	1	HANDLE AS	
M		1	**6V-9632**	1	NUT-WELD (M6X1-THD)	
	9	1	**225-3187**	1	LATCH AS	
	10	1	**229-8757**	1	SWITCH AS-LIMIT	
		1	**102-8803**	1	KIT-RECEPTACLE (3-PIN)	
					(INCLUDES RECEPTACLE AS & WEDGE)	
		1	**186-3735**	3	PIN-CONNECTOR (16-GA TO 18-GA)	
	11	1	**235-4768**	2	HINGE	
	12	1	**248-2171**	1	HANDLE AS (PUSH BUTTON) (PUSH BUTTON)	
Y	13	1	**330-5012**	1	MOTOR GP-WINDOW WIPER	523
CY	14	1	**320-1389**	1	ARM GP-WINDOW WIPER (FRONT)	463
Y	15	1	*276-3615*	1	DOOR GP-CAB (POLYCARBONATE)	500
	16	1	**313-9185**	1	COVER AS	
	17	1	**032-9828**	1	GROMMET	
M	18	1	**134-8273**	4	SCREW-FLAT HEAD (M10X1.5X25-MM)	
	19	1	**3S-2093**	3	STRAP-CABLE	
M	20	1	**9X-2044**	14	SCREW-TRUSS HEAD (M6X1X16-MM)	
M	21	1	**9X-2045**	2	SCREW-TRUSS HEAD (M6X1X20-MM)	
E	22	1	**144-0195**		HOSE (73-CM)	
E	23	1	**124-3243**		SEAL (306-CM)	

C-CHANGE FROM PREVIOUS TYPE
E-ORDER BY THE CENTIMETER
M-METRIC PART
Y-SEPARATE ILLUSTRATION

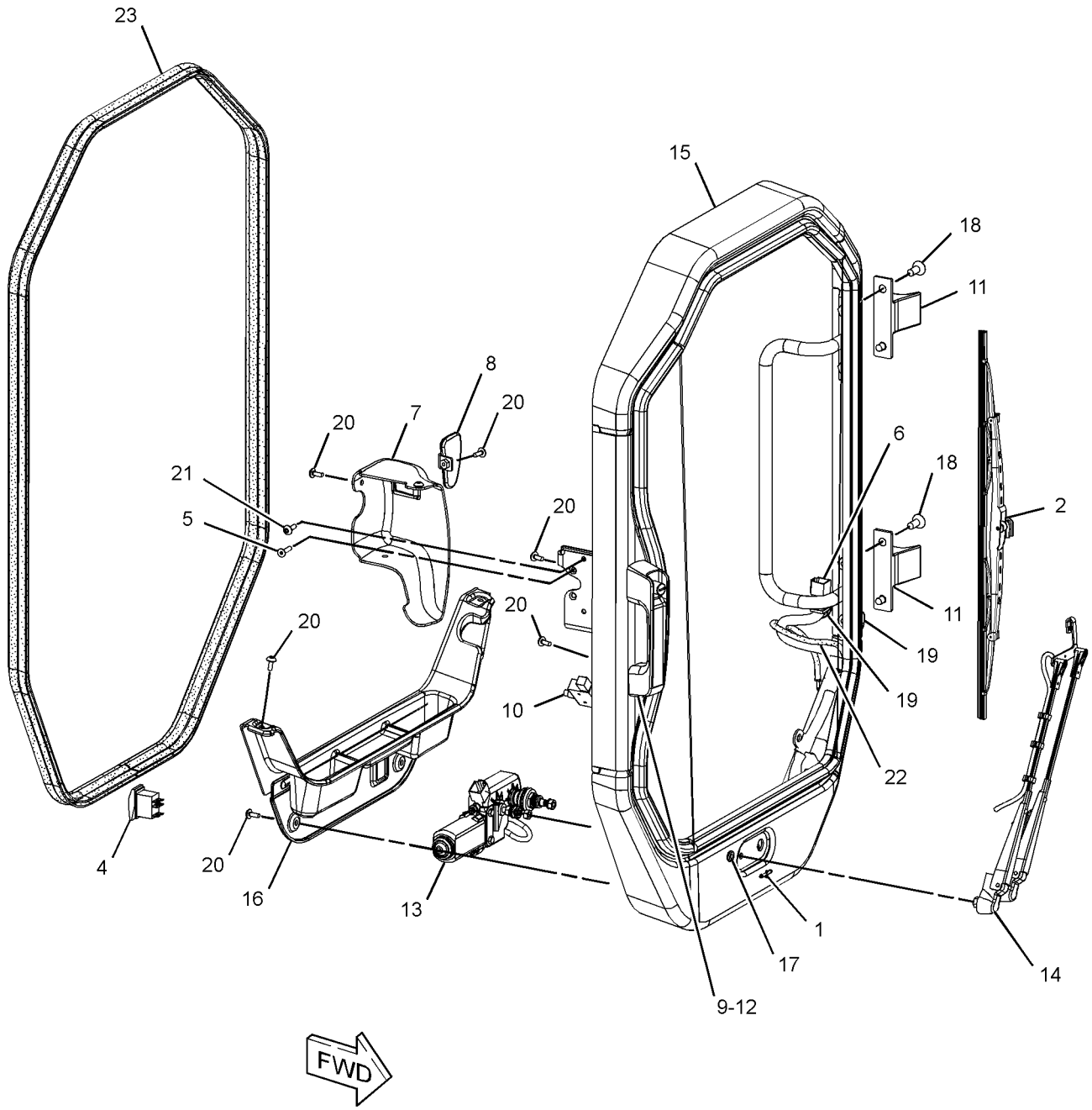

GRAPHIC #1 **<END>** g01792833

OPERATOR STATION

276-3615 DOOR GP-CAB—POLYCARBONATE

S/N: SRS1-UP
PART OF 276-3440 DOOR GP-CAB
AN ATTACHMENT

SMCS-7308 **i03076920**

NOTE	REF NO	GRAPHIC REF	PART NUMBER	QTY	PART NAME 1 2 3 4 5 6 (PRODUCT LEVEL)	SEE PAGE
	1	1	**5C-8310**	1	BRACKET-RING	
	2	1	**5C-8311**	1	RING	
	3	1	**8T-6842**	1	FILM-INSTRUCTION (PULL RING, ALTERNATE EXIT)	
	4	1	**316-1698**	1	WINDOW	
	5	1	**279-3232**	1	SEAL	
	6	1	**282-9059**	1	FRAME AS	
	7	1	**283-7554**	1	STRIP-LOCKING	

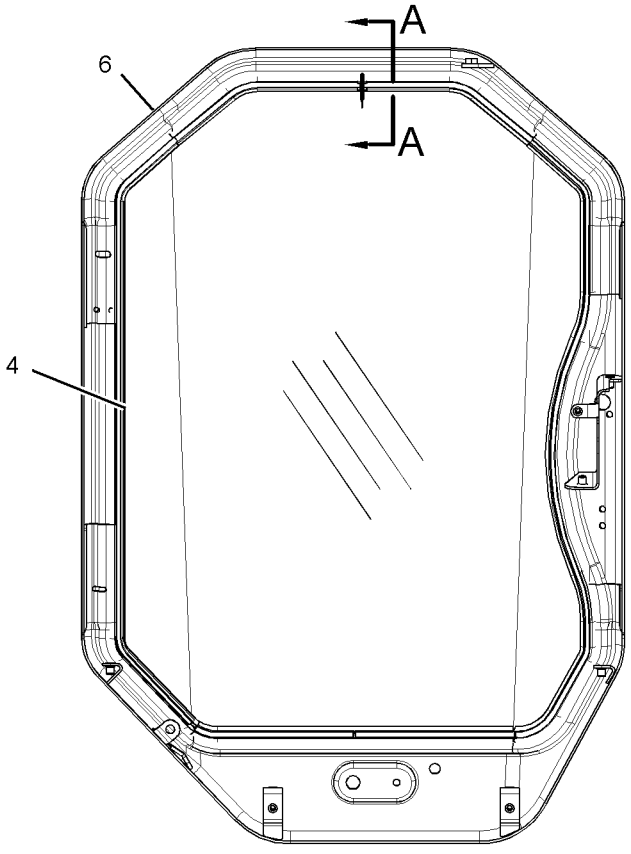

REAR VIEW

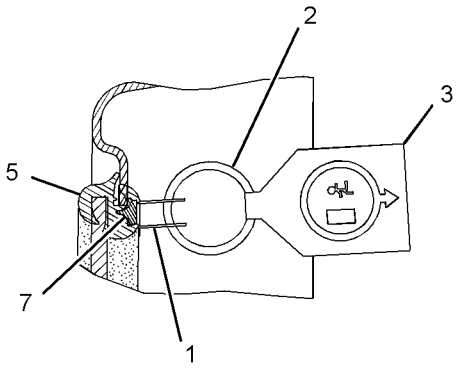

SECTION A-A

GRAPHIC #1 **<END>** g01327089

OPERATOR STATION

218-6394 DUCT GP-CAB AIR

S/N: SRS1-UP

PART OF 326-5556 AIR CONDITIONER AR, 326-5555 HEATER AR-CAB

AN ATTACHMENT

SMCS-734D **i02541254**

NOTE	REF NO	GRAPHIC REF	PART NUMBER	QTY	PART NAME 1 2 3 4 5 6 (PRODUCT LEVEL)	SEE PAGE
CD	1	1	**5P-5969**		SEAL (0.2-M EACH)	
	2	1	**146-6371**	6	LOUVER AS	
	3	1	**218-6396**	1	DUCT	
	4	1	**218-6397**	1	CONSOLE (RH)	
	5	1	**218-6398**	1	CONSOLE (LH)	
CD	6	1	**5P-7070**		INSULATION-STRIP (0.5-M)	
	7	1	**218-6414**	1	SEAL	
	8	1	**285-9133**	1	INSULATION	
M	9	1	**175-0005**	8	SCREW-BUTTON HEAD (M6X1X25-MM)	
	10	1	**285-8570**	1	INSULATION	
	11	1	**240-6877**	1	SEAL	
	12	1	**240-6878**	1	SEAL	
	13	1	**240-6879**	2	SEAL	
	14	1	**6V-6689**	2	SCREW-SELF-TAPPING (10-16X.625-IN)	
	15	1	**285-8565**	1	INSULATION	

C-CHANGE FROM PREVIOUS TYPE
D-ORDER BY THE METER
M-METRIC PART

218-6394 **DUCT GP-CAB AIR** *(contd.)* **i02541254**

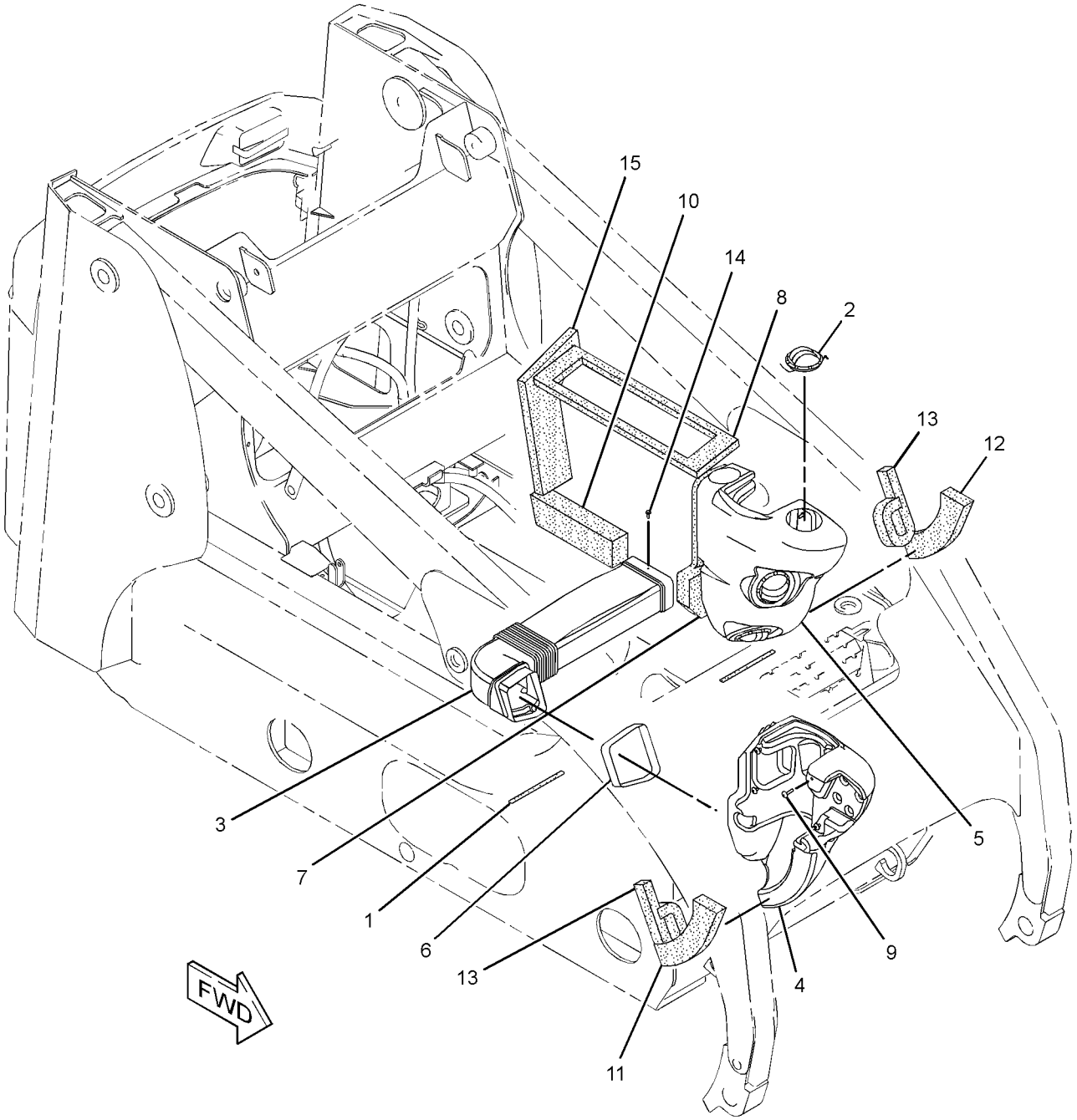

GRAPHIC #1 **<END>** g01293158

OPERATOR STATION

231-7325 FRAME GP-WINDOW—RH

S/N: SRS1-UP
PART OF 224-7058 WINDOW GP-CAB
AN ATTACHMENT

SMCS-7310 **i03971269**

NOTE	REF NO	GRAPHIC REF	PART NUMBER	QTY	PART NAME 1 2 3 4 5 6 (PRODUCT LEVEL)	SEE PAGE
	1	1	**231-7326**	1	FRAME AS-WINDOW (RH)	
	2	1	**231-7401**	1	HINGE	
	3	1	**239-6138**	1	BRACKET AS	
	4	1	**231-7329**	1	KIT-LATCH (RH)	
					(INCLUDES BOLT, LATCH, SCREW, SPRING, CLIPS & WASHERS)	
	5	1	**5C-7682**	3	SCREW (8-32X0.25-IN)	

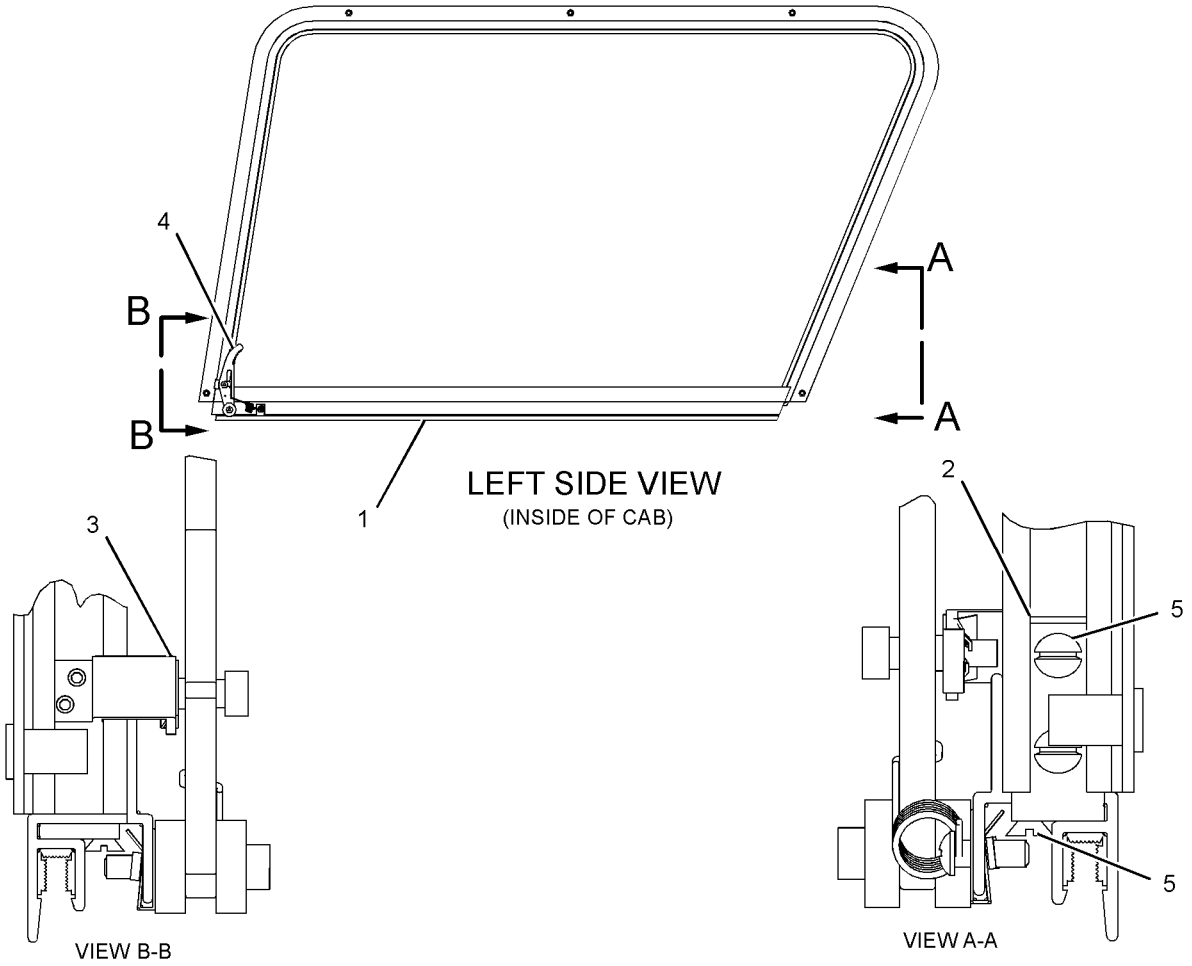

GRAPHIC #1 **<END>** g01487014

OPERATOR STATION

231-7327 FRAME GP-WINDOW–LH

S/N: SRS1-UP
PART OF 224-7057 WINDOW GP-CAB
AN ATTACHMENT

SMCS-7310 **i03971270**

NOTE	REF NO	GRAPHIC REF	PART NUMBER	QTY	PART NAME 1 2 3 4 5 6 (PRODUCT LEVEL)	SEE PAGE
	1	1	**231-7328**	1	FRAME AS-WINDOW (LH)	
	2	1	**231-7401**	1	HINGE	
	3	1	**239-6138**	1	BRACKET AS	
	4	1	**231-7329**	1	KIT-LATCH (LH)	
					(INCLUDES BOLT, LATCH, SCREW, SPRING, CLIPS & WASHERS)	
	5	1	**5C-7682**	3	SCREW (8-32X0.25-IN)	

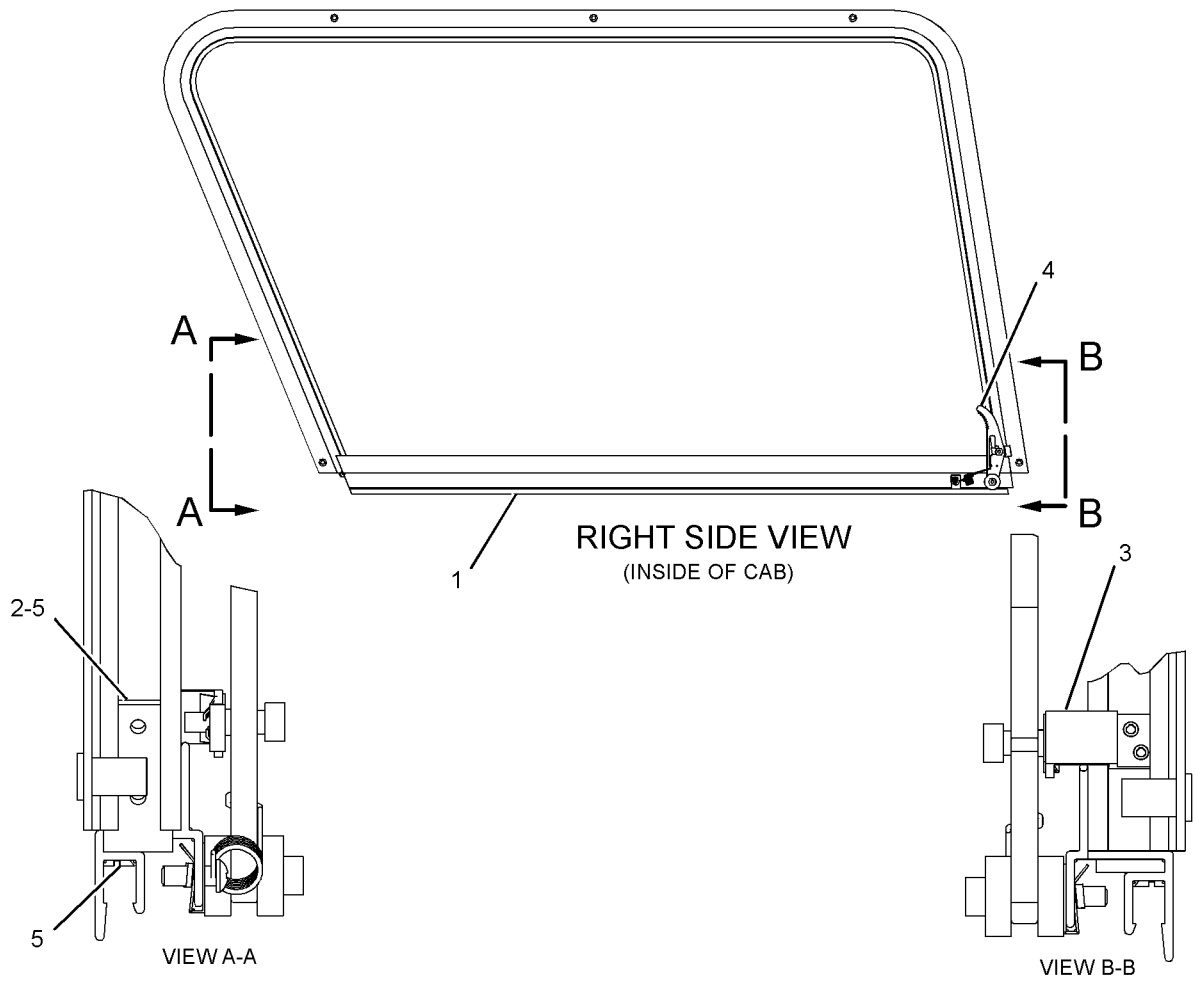

GRAPHIC #1 **<END>** g01487373

OPERATOR STATION

233-5632 GUARD GP-ROPS/FOPS

S/N: SRS1-UP

AN ATTACHMENT

SMCS-7323 **i03973432**

NOTE	REF NO	GRAPHIC REF	PART NUMBER	QTY	PART NAME 1 2 3 4 5 6 (PRODUCT LEVEL)	SEE PAGE
	1	1	**152-1161**	1	PLATE AS-FOPS	
	2	1	**153-2683**	1	SPRING AS-GAS	
	4	1	**247-7182**	1	FILM (FOPS)	
M	5	1	**7X-2553**	8	BOLT (M16X2X40-MM)	
	6	1	**8T-4122**	12	WASHER-HARD (17X32X3.5-MM THK)	
M	7	1	**8T-4132**	4	NUT (M16X2-THD)	
D	8	1	**8T-5372**		SEAL (1.4-M)	

D-ORDER BY THE METER
M-METRIC PART

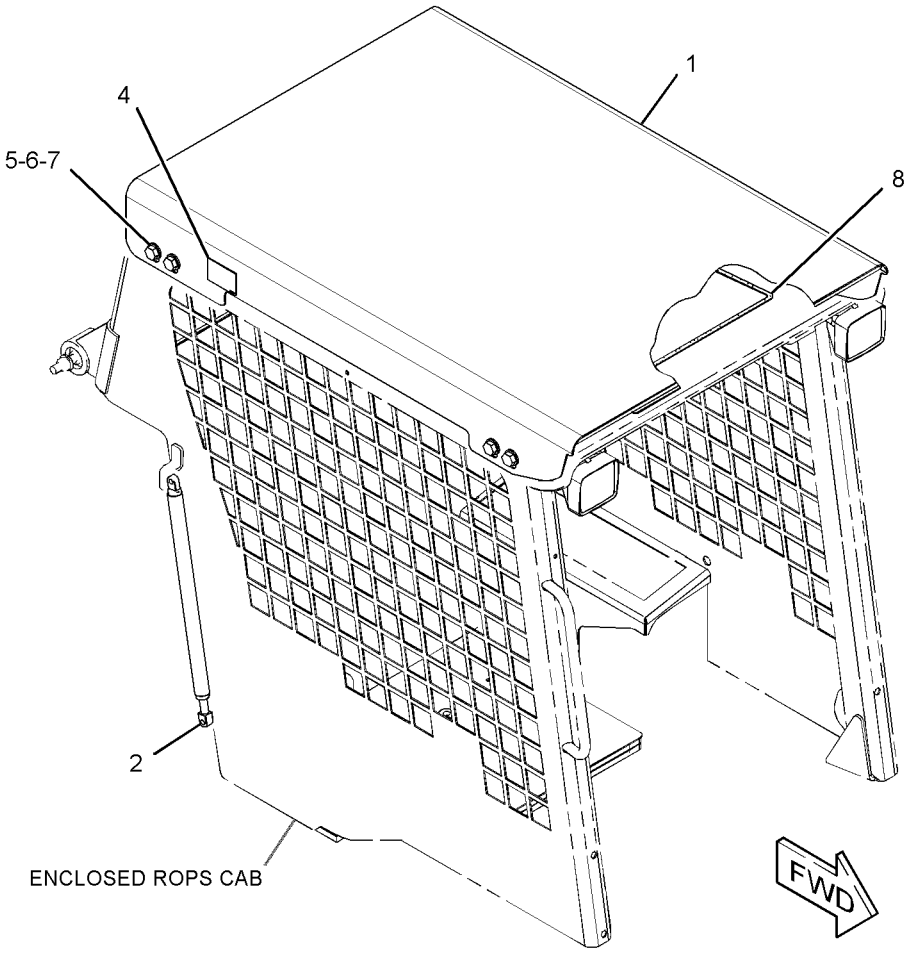

GRAPHIC #1 **<END>** g01437181

OPERATOR STATION

218-6400 HANDHOLD GP

S/N: SRS1-UP
PART OF 326-5550, 326-5551 CAB AR-OPEN ROPS
CANNOT BE USED WITH 218-6440—PAGE 490, 223-0600—PAGE 493
AN ATTACHMENT

SMCS-7256 **i01908092**

NOTE	REF NO	GRAPHIC REF	PART NUMBER	QTY	PART NAME 1 2 3 4 5 6 (PRODUCT LEVEL)	SEE PAGE
	1	1	**218-6377**	1	HANDLE	
	2	1	**8T-4121**	2	WASHER-HARD (11X21X2.5-MM THK)	
M	3	1	**8T-4133**	2	NUT (M10X1.5-THD)	
M	4	1	**9X-2041**	2	SCREW-TRUSS HEAD (M10X1.5X20-MM)	

M-METRIC PART

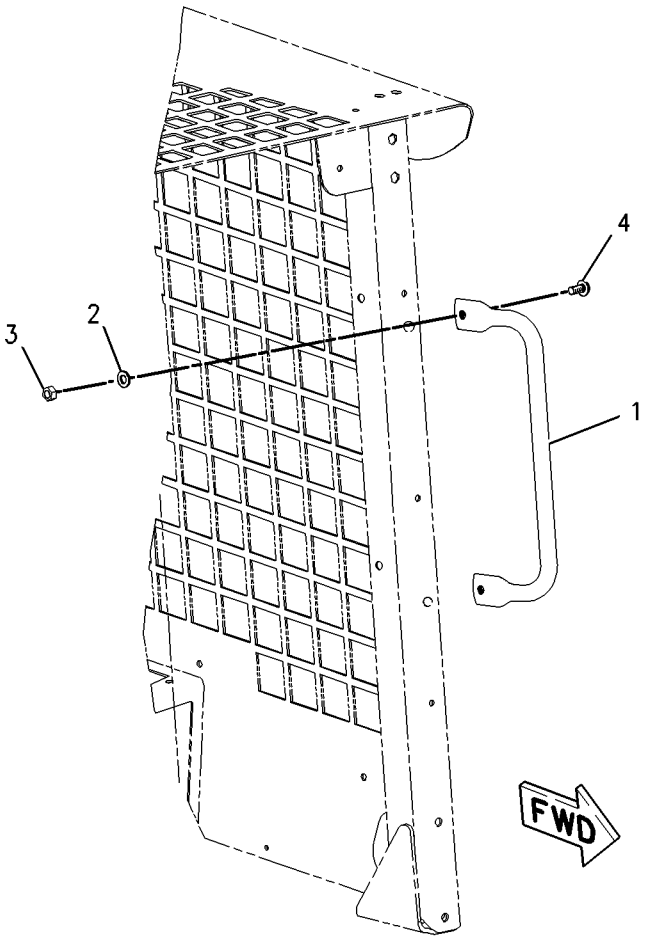

GRAPHIC #1 **<END>** g01002446

218-6118 HANDLE GP-MODULAR—WORK TOOL

S/N: SRS1-UP

PART OF 218-6485, 218-6490 CONTROL GP-HANDLE

AN ATTACHMENT

SMCS-5705 **i04045400**

NOTE	REF NO	GRAPHIC REF	PART NUMBER	QTY	PART NAME 1 2 3 4 5 6 (PRODUCT LEVEL)	SEE PAGE
	1	1	**8L-8413**	1	STRAP-CABLE	
	2	1	**159-9853**	1	GROMMET	
	3	1	**174-3091**	1	KIT-RECEPTACLE (12-PIN)	
					(INCLUDES RECEPTACLE AS & WEDGE)	
	4	1	**8T-8729**	4	PIN-CONNECTOR (16-GA TO 18-GA)	
	5	1	**8T-8737**	8	PLUG-SEAL	

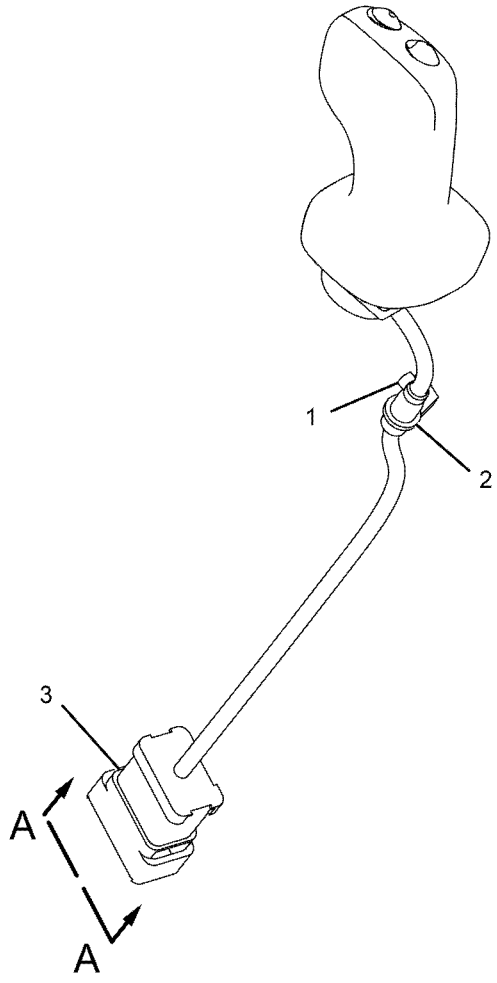

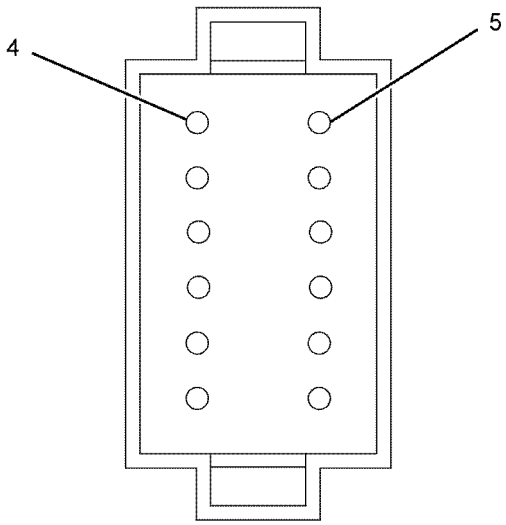

VIEW A-A

GRAPHIC #1 **<END>** g01113888

OPERATOR STATION

229-8746 HEATER & MTG GP-CAB

S/N: SRS1-UP
PART OF 326-5555 HEATER AR-CAB
AN ATTACHMENT

SMCS-7304 **i02010980**

NOTE	REF NO	GRAPHIC REF	PART NUMBER	QTY	PART NAME 1 2 3 4 5 6 (PRODUCT LEVEL)	SEE PAGE
Y	1	1	*218-6393*	1	HEATER GP-CAB	510
M	2	1	**7X-2537**	4	BOLT (M8X1.25X35MM)	
	3	1	**8T-4224**	4	WASHER-HARD (8.8X16X2MM THK)	

M-METRIC PART
Y-SEPARATE ILLUSTRATION

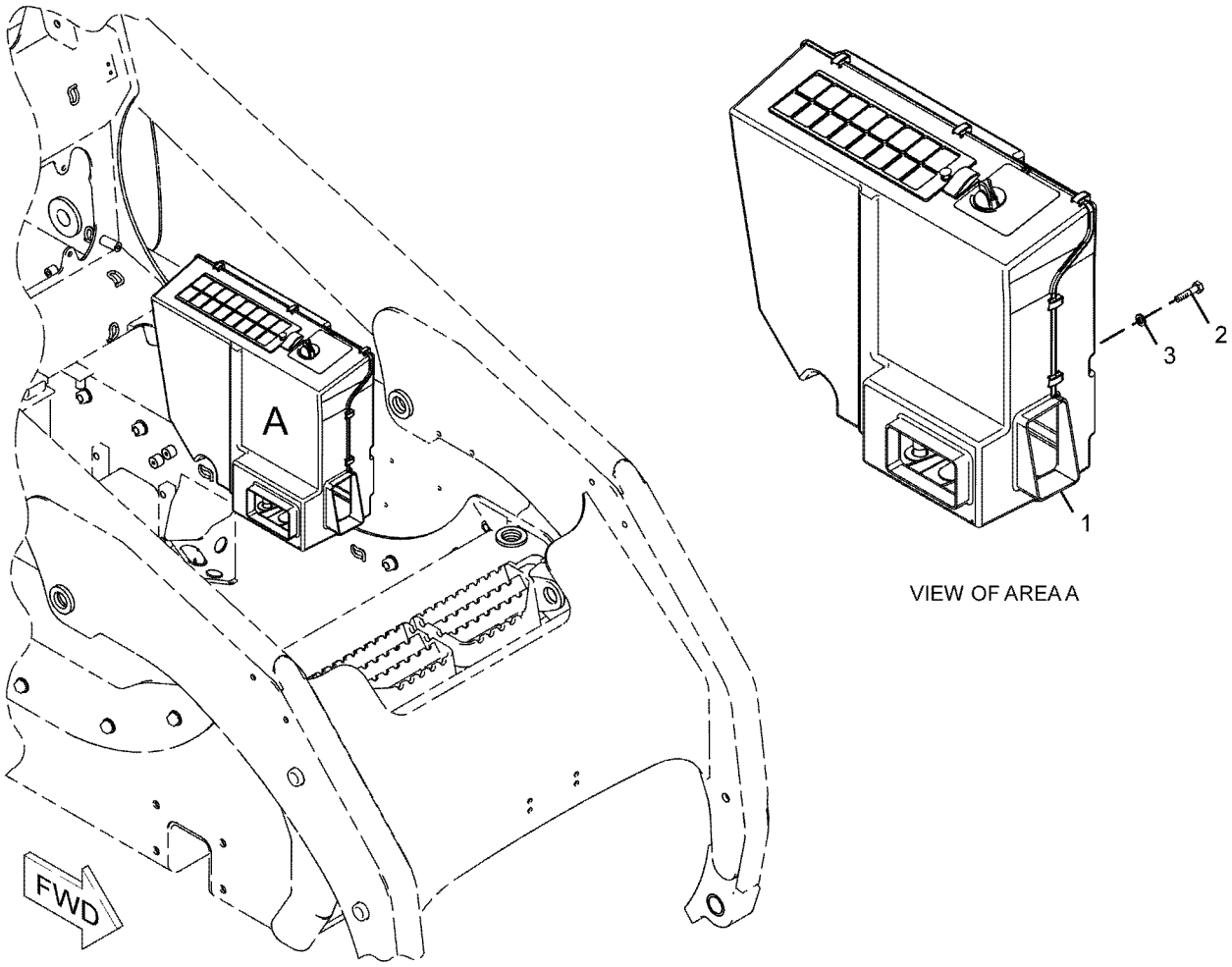

GRAPHIC #1 **<END>** g01018708

OPERATOR STATION

326-5555 HEATER AR-CAB

S/N: SRS1-UP
PART OF 326-5552 CAB AR-ENCLOSED ROPS
AN ATTACHMENT

SMCS-7304 **i03983758**

NOTE	PART NUMBER	QTY	PART NAME 1 2 3 4 5 6 (PRODUCT LEVEL)	SEE PAGE
Y	*218-6394*	1	DUCT GP-CAB AIR	501
Y	*229-8746*	1	HEATER & MTG GP-CAB	508
Y	*326-5745*	1	LINES GP-HEATER	519

Y-SEPARATE ILLUSTRATION

<END>

OPERATOR STATION

218-6393 HEATER GP-CAB

S/N: SRS1-UP

PART OF 229-8746 HEATER & MTG GP-CAB, 218-6746 HEATER GP-CAB

AN ATTACHMENT

SMCS-7304, 7342 **i04362801**

NOTE	REF NO	GRAPHIC REF	PART NUMBER	QTY	PART NAME 1 2 3 4 5 6 (PRODUCT LEVEL)	SEE PAGE
	1	1	**185-4015**	10	CLIP	
	2	1	**218-6399**	1	SEAL	
C	3	1	**312-1683**	1	HOUSING-COVER	
Y	4	1	**231-8122**	1	HOUSING AS-SIDE (AIR CONDITIONER, HEATER)	513
	5	1	**231-8124**	1	COIL AS-HEATER	
	6	1	**295-5440**	1	MOTOR	
	7	1	**231-8126**	1	VALVE AS-WATER (HEATER)	
	8	1	**231-8127**	1	GROMMET	
C	9	1	**312-2635**	1	COVER GP-ACCESS	
		1	**231-8129**	2	PIN	
		1	**231-8142**	2	RETAINER	
C	11	1	**303-6658**	1	FILTER ELEMENT-CAB AIR	
	13	1	**231-8132**	1	FILTER ELEMENT-CAB AIR	
	14	1	**231-8133**	1	PANEL	
	15	1	**231-8141**	1	GROMMET	
	17	1	**231-8143**	1	FILM (TEMPERATURE CONTROL)	
	18	1	**231-8144**	1	BAFFLE	
	19	1	**231-8145**	1	GROMMET	
	20	1	**206-7398**	1	KNOB-CONTROL (TEMPERATURE SELECT)	
	21	1	**305-2969**	2	SCREW-THUMB	
	22	1	**218-6947**	1	HARNESS AS-HEATER & AIR COND	
	23	1	**236-5067**	1	SWITCH-ROCKER (HEATER)	
	24	1	**236-5069**	1	RELAY AS (12-VOLT) (HEATER)	

C-CHANGE FROM PREVIOUS TYPE
Y-SEPARATE ILLUSTRATION

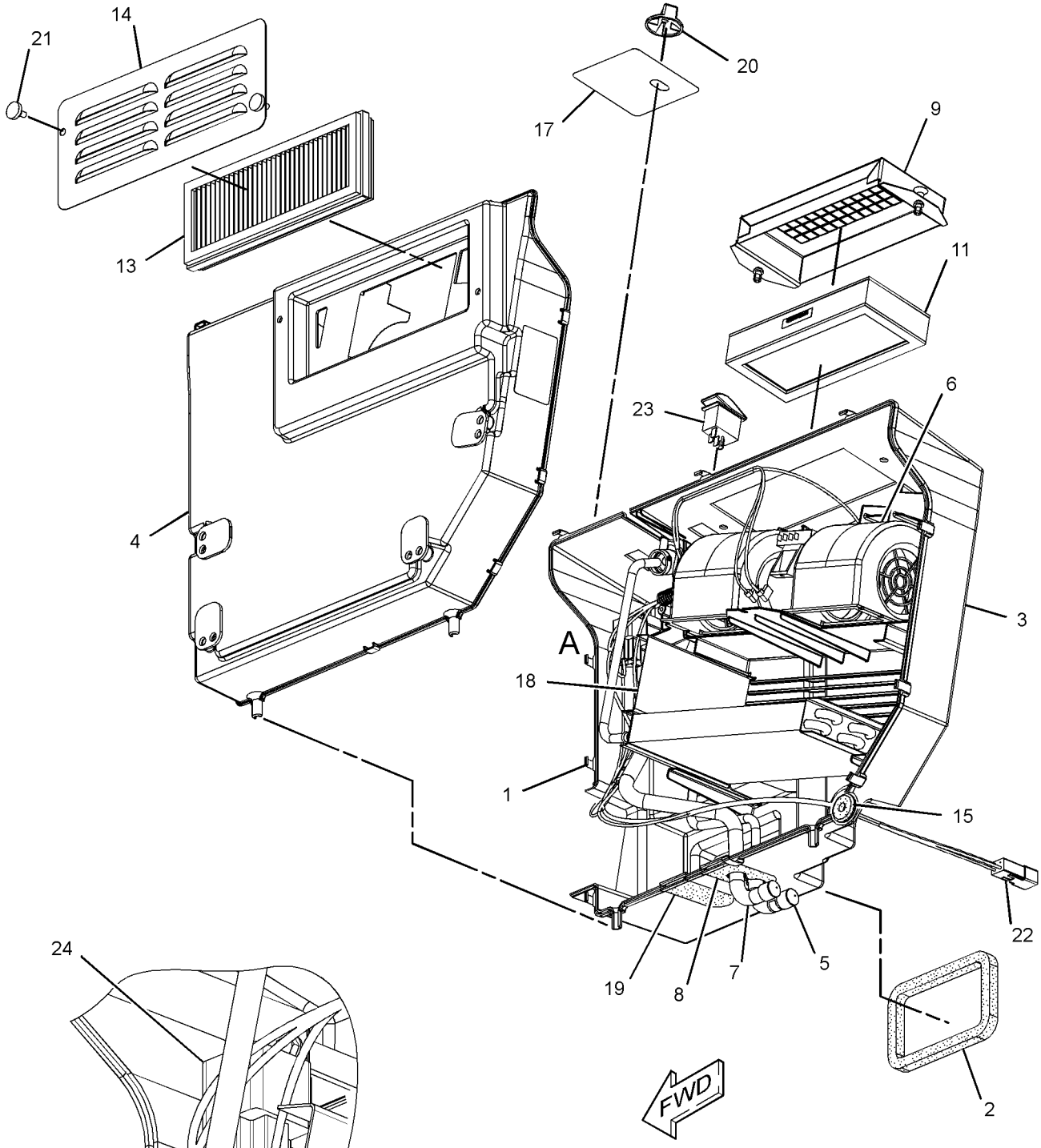

VIEW OF AREA A

GRAPHIC #1 **<END>** g01416774

OPERATOR STATION

218-6746 HEATER GP-CAB—KIT

S/N: SRS1-UP
AN ATTACHMENT

SMCS-7304, 7342 **i04156757**

NOTE	PART NUMBER	QTY	PART NAME 1 2 3 4 5 6 (PRODUCT LEVEL)	SEE PAGE
Y	*218-6393*	1	HEATER GP-CAB	510
	218-6402	1	INSULATION AS	
	146-6371	6	LOUVER AS	
	150-7568	1	ADAPTER	
M	**7X-2537**	4	BOLT (M8X1.25X35-MM)	
M	**8T-4136**	2	BOLT (M10X1.5X25-MM)	
M	**8T-4137**	1	BOLT (M10X1.5X20-MM)	
M	**8T-4189**	1	BOLT (M8X1.25X20-MM)	
M	**8T-4191**	1	BOLT (M10X1.5X16-MM)	
M	**8T-4200**	1	BOLT (M8X1.25X16-MM)	
M	**8T-6869**	4	BOLT (M8X1.25X60-MM)	
	8T-0154	4	CLAMP-HOSE	
	6D-4636	2	CLIP	
	3S-8665	1	CLIP	
	6D-1641	1	CLIP	
	9X-8250	3	CLIP	
	218-6398	1	CONSOLE (LH)	
	218-6397	1	CONSOLE (RH)	
	218-6396	1	DUCT (CROSSOVER)	
	004-6810	1	ELBOW	
	218-6645	1	ELBOW	
	250-1493	1	ELBOW	
E	**206-2724**		GUARD (110-CM)	
E	**136-1953**		HOSE (382-CM)	
	176-4079	1	INSULATION	
	285-9133	1	INSULATION	
	285-8570	1	INSULATION	
	285-8565	1	INSULATION	
M	**8T-4133**	1	NUT (M10X1.5-THD)	
M	**175-0005**	8	SCREW-BUTTON HEAD (M6X1X25-MM)	
	6V-6689	2	SCREW-SELF-TAPPING (10-16X.625-IN)	
	240-6879	2	SEAL	
	240-6878	1	SEAL	
	240-6877	1	SEAL	
	218-6414	1	SEAL	
	218-6401	1	SEAL	
D	**8T-5372**		SEAL (0.4-M)	
	7K-1181	1	STRAP-CABLE	
	178-3620	3	STRAP-DUAL CLAMP (DUAL CLAMP)	
E	**9X-2092**		TRIM-EDGE (30-CM)	
	8F-8151	1	VALVE-SHUTOFF (WATER)	
	5P-4116	1	WASHER-HARD (8.8X20.5X2-MM THK)	
	8T-4121	4	WASHER-HARD (11X21X2.5-MM THK)	
	8T-4224	5	WASHER-HARD (8.8X16X2-MM THK)	

D-ORDER BY THE METER
E-ORDER BY THE CENTIMETER
M-METRIC PART
Y-SEPARATE ILLUSTRATION

<END>

OPERATOR STATION

231-8122 HOUSING AS-SIDE—AIR CONDITIONER, HEATER

S/N: SRS1-UP

PART OF 218-6405 AIR CONDITIONER GP, 218-6393 HEATER GP-CAB

AN ATTACHMENT

SMCS-7320 **i02014573**

NOTE	REF NO	GRAPHIC REF	PART NUMBER	QTY	PART NAME 1 2 3 4 5 6 (PRODUCT LEVEL)	SEE PAGE
	1	1	**233-5929**	2	LOCKWASHER	
	2	1	**233-5931**	4	LOCKWASHER	
M	3	1	**131-3540**	4	LOCKNUT (M8X1.25 THD)	
	4	1	**233-5934**	4	MOUNT	
M	5	1	**129-3178**	2	LOCKNUT (M6X1 THD)	

M-METRIC PART

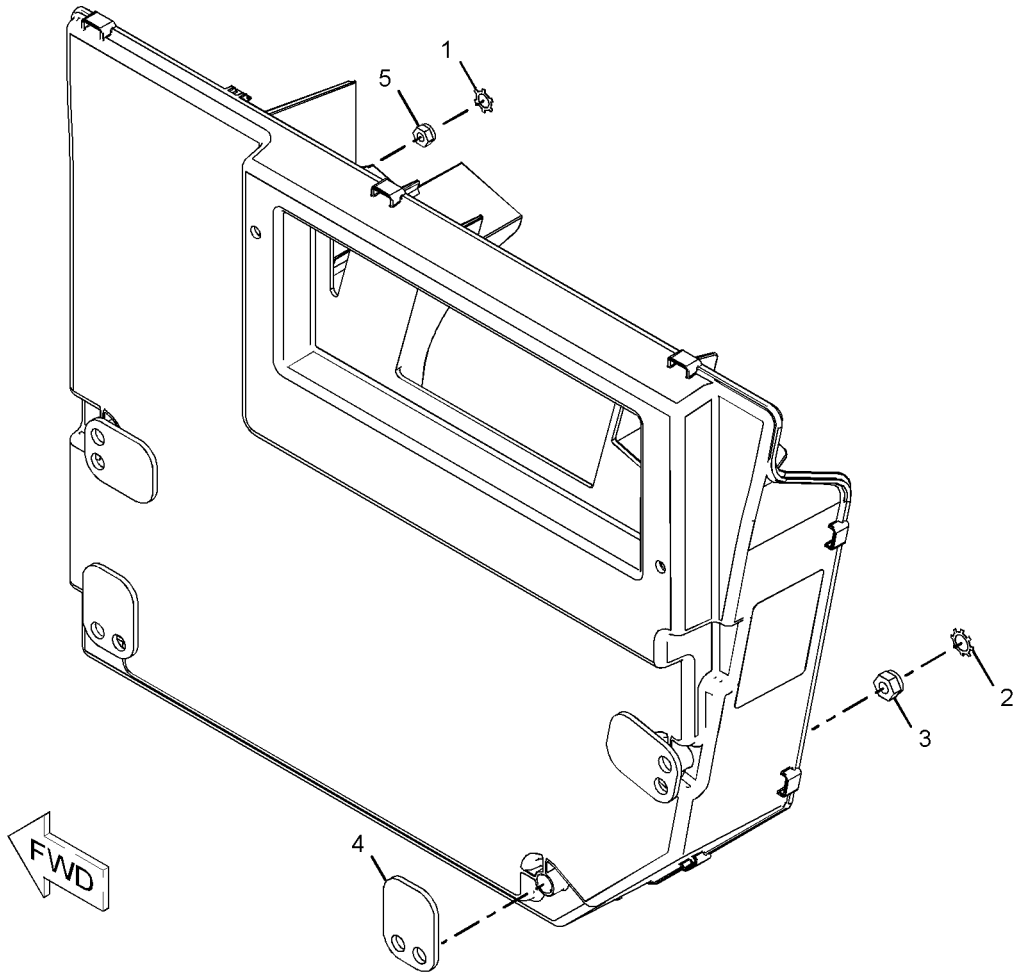

GRAPHIC #1 **<END>** g01041727

OPERATOR STATION

326-5554 INSTALLATION AR

S/N: SRS1-UP

PART OF 326-5550, 326-5551 CAB AR-OPEN ROPS

AN ATTACHMENT

SMCS-1405, 1802, 1805, 1808, 7174, 7304, 7320, 734D **i03983757**

NOTE	PART NUMBER	QTY	PART NAME 1 2 3 4 5 6 (PRODUCT LEVEL)	SEE PAGE
Y	*218-6419*	1	COVER GP-CONSOLE	489
Y	*229-8744*	1	PANEL GP-SIDE	529

Y-SEPARATE ILLUSTRATION

<END>

OPERATOR STATION

234-0774 LEVER GP-GOVERNOR

S/N: SRS1-UP

PART OF 327-8939 PEDAL GP-GOVERNOR

SMCS-1265, 1276 **i03809932**

NOTE	REF NO	GRAPHIC REF	PART NUMBER	QTY	PART NAME 1 2 3 4 5 6 (PRODUCT LEVEL)	SEE PAGE
	1	1	**192-2663**	1	LEVER GP-HAND CONTROL (GOVERNOR)	
M		1	**8T-4971**	1	BOLT (M6X1X30-MM)	
M		1	**129-3178**	1	LOCKNUT (M6X1-THD)	
	2	1	**234-0732**	1	CABLE AS	
	3	1	**8T-4742**	1	END-YOKE ROD	
	4	1	**8T-4744**	1	PIN AS-SPRING	
M	5	1	**5C-2890**	1	NUT (M6X1-THD)	

M-METRIC PART

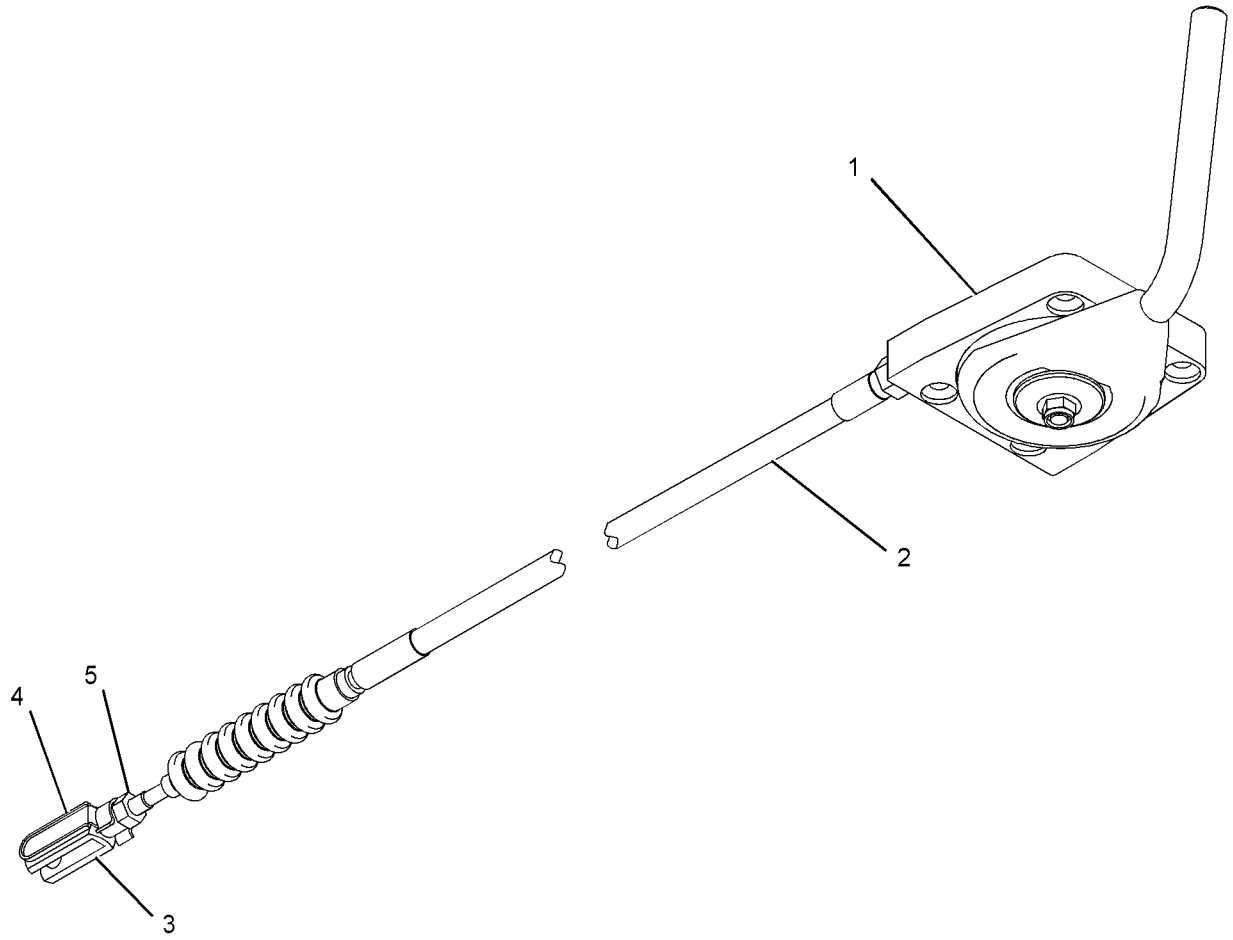

GRAPHIC #1 **<END>** g02064773

OPERATOR STATION

326-5406 LINER GP-CAB

S/N: SRS1-UP

PART OF 326-5400 CAB AR

SMCS-7268, 7329 **i03970899**

NOTE	REF NO	GRAPHIC REF	PART NUMBER	QTY	PART NAME 1 2 3 4 5 6 (PRODUCT LEVEL)	SEE PAGE
	1	1	**218-6357**	1	INSULATION	
	2	1	**292-3114**	2	SEAL	
	3	1	**326-5407**	1	LINER	
	4	1	**326-5408**	1	INSULATION	
E	5	1	**9X-2092**		TRIM-EDGE (113-CM)	

E-ORDER BY THE CENTIMETER

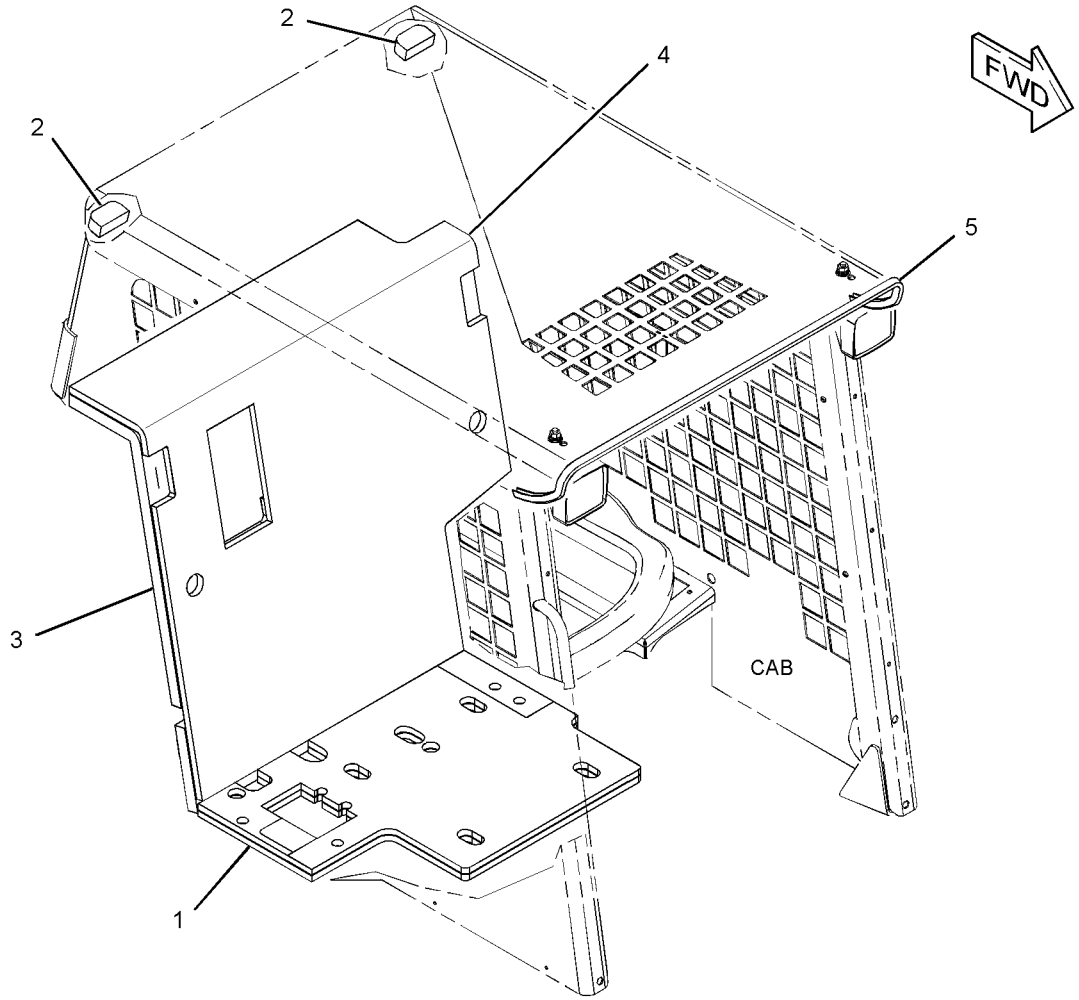

GRAPHIC #1 **<END>** g02146633

OPERATOR STATION

326-5744 LINES GP-AIR CONDITIONER

S/N: SRS1-UP

PART OF 326-5556 AIR CONDITIONER AR

AN ATTACHMENT

SMCS-1808, 7320 **i04154075**

NOTE	REF NO	GRAPHIC REF	PART NUMBER	QTY	PART NAME 1 2 3 4 5 6 (PRODUCT LEVEL)	SEE PAGE
	1	1	**7K-1181**	4	STRAP-CABLE	
	2	1	**315-7790**	1	PLATE	
	3	1	**178-3620**	2	STRAP-DUAL CLAMP	
Y	4	1	*186-6190*	1	ACCUMULATOR GP-REFRIGERANT (CHARGED)	458
	5	1	**189-3158**	1	SUPPRESSOR-ARC	
	6	1	**200-6345**	1	MOUNT (DUAL SWIVEL)	
I	7	1	**218-5686**	1	HOSE AS	
	8	1	**221-3879**	1	HARNESS AS-HEATER & AIR COND	
		1	**155-2260**	1	KIT-CONNECTING PLUG (3-PIN)	
		1	**155-2270**	3	KIT-CONNECTING PLUG (2-PIN)	
					(EACH PLUG KIT INCLUDES PLUG AS, WEDGE & INTERFACE SEAL)	
		1	**100-6674**	2	SEAL-CONNECTOR	
		1	**9W-0844**	5	SOCKET-CONNECTOR (14-GA TO 16-GA)	
		1	**180-9340**	4	SOCKET-CONNECTOR (14-GA TO 18-GA)	
		1	**124-5640**	2	TERMINAL-SOCKET	
		1	**2L-8069**	1	TERMINAL-RING (2-GA TO 10-GA, 3/8-IN SCREW)	
E		1	**119-3662**		TUBE-HEAT SHRINK (10.85-MM DIA) (13-CM)	
I	9	1	**233-5863**	1	HOSE AS	
	10	1	**236-6923**	1	SWITCH AS-PRESSURE (REFRIGERANT)	
	11	1	**312-2179**	2	BRACKET AS	
	12	1	**326-5776**	1	HOSE AS	
	13	1	**326-5777**	1	HOSE AS	
M	14	1	**085-8091**	2	BOLT (M10X1.5X55-MM)	
	15	1	**095-0913**	1	CLIP	
	16	1	**101-8296**	2	CLIP	
	17	1	**234-0566**	1	FITTING AS	
		1	**3E-4051**	1	CAP-SEAL (LOW SIDE CHARGE PORT)	
		1	**3E-4057**	1	VALVE AS (REFRIGERANT, LOW SIDE) (REFRIGERANT, LOW SIDE)	
	18	1	**246-9039**	1	PLATE-INFORMATION (AIR CONDITIONER REFRIGERANT)	
	19	1	**3S-2093**	5	STRAP-CABLE	
	20	1	**6D-4246**	1	CLIP	
	21	1	**8T-4121**	3	WASHER-HARD (11X21X2.5-MM THK)	
M	22	1	**8T-4195**	1	BOLT (M10X1.5X30-MM)	
M	23	1	**8T-4189**	2	BOLT (M8X1.25X20-MM)	
	24	1	**8T-4224**	2	WASHER-HARD (8.8X16X2-MM THK)	
	25	1	**9C-2741**	2	SPACER (13.94X17.14X34-MM THK)	
	26	1	**9X-7378**	1	SEAL-O-RING	
	27	1	**9X-7380**	1	SEAL-O-RING	
	28	1	**9X-7381**	2	SEAL-O-RING	
	29	1	**9X-7382**	1	SEAL-O-RING	
	30	1	**9X-7383**	3	SEAL-O-RING	
D	31	1	**5P-5924**		SEAL (0.15-M EACH)	

D-ORDER BY THE METER
E-ORDER BY THE CENTIMETER
I-REFER TO HYDRAULIC INFORMATION SYSTEM
M-METRIC PART
Y-SEPARATE ILLUSTRATION

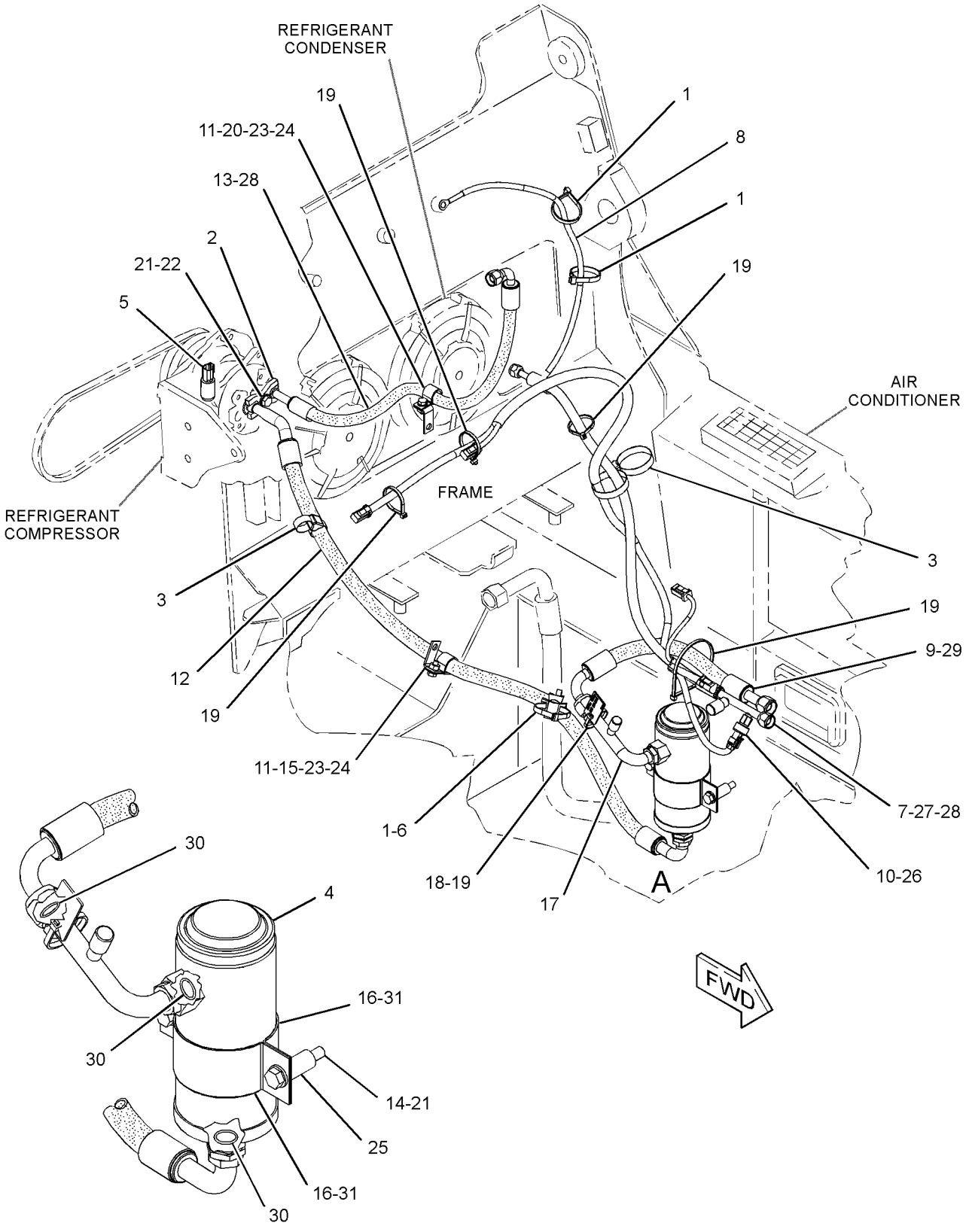

GRAPHIC #1 **<END>** g02350952

OPERATOR STATION

326-5745 LINES GP-HEATER

S/N: SRS1-UP

PART OF 326-5556 AIR CONDITIONER AR, 326-5555 HEATER AR-CAB

AN ATTACHMENT

SMCS-1812, 7304 **i04032461**

NOTE	REF NO	GRAPHIC REF	PART NUMBER	QTY	PART NAME 1 2 3 4 5 6 (PRODUCT LEVEL)	SEE PAGE
	1	1	**7K-1181**	1	STRAP-CABLE	
	2	1	**8T-0154**	4	CLAMP-HOSE	
	3	1	**004-6810**	1	ELBOW	
	4	1	**178-3620**	1	STRAP-DUAL CLAMP	
	5	1	**218-6645**	1	ELBOW	
	6	1	**6D-1641**	1	CLIP	
	7	1	**8T-4121**	4	WASHER-HARD (11X21X2.5-MM THK)	
M	8	1	**8T-4133**	1	NUT (M10X1.5-THD)	
M	9	1	**8T-4136**	2	BOLT (M10X1.5X25-MM)	
	10	1	**9X-8250**	3	CLIP	
E	11	1	**136-1953**		HOSE (217-CM)	
E	11A	1	**136-1953**		HOSE (165-CM)	
E	12	1	**9X-2092**		TRIM-EDGE (30-CM)	

E-ORDER BY THE CENTIMETER
M-METRIC PART

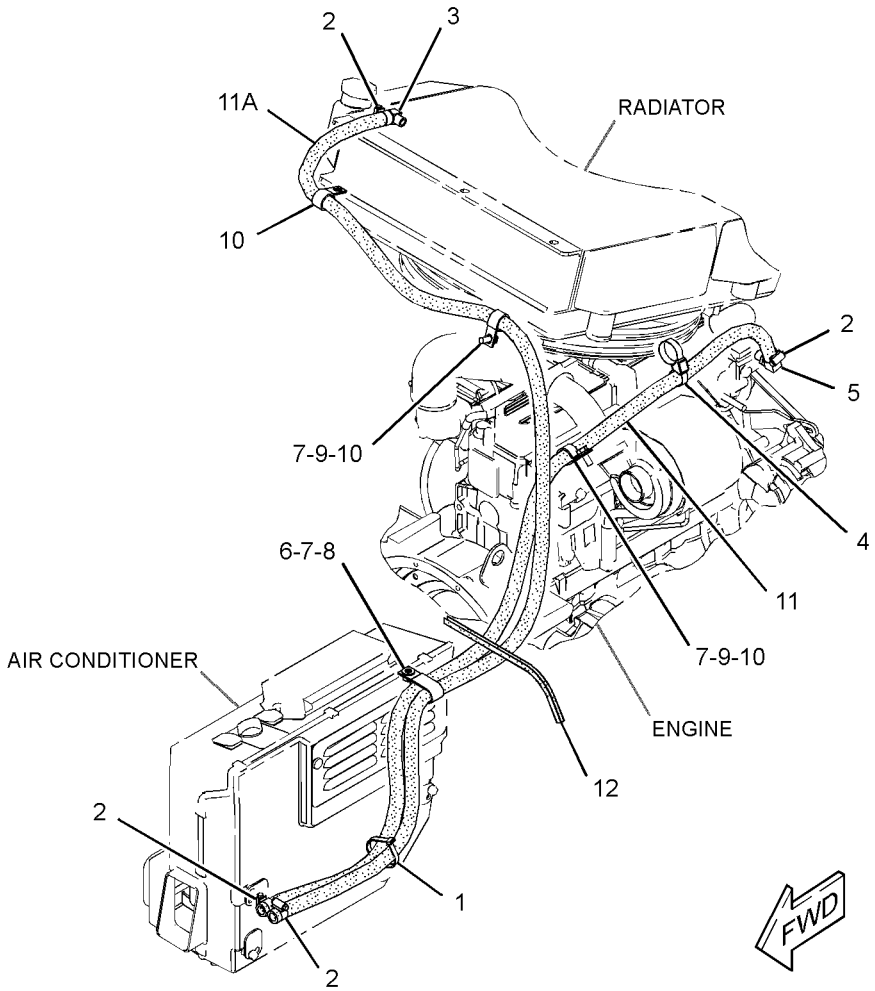

GRAPHIC #1 **<END>** g02343163

OPERATOR STATION

258-4230 MIRROR GP-REAR VIEW

S/N: SRS1-UP

PART OF 326-5400 CAB AR

SMCS-7319 **i03505726**

NOTE	REF NO	GRAPHIC REF	PART NUMBER	QTY	PART NAME 1 2 3 4 5 6 (PRODUCT LEVEL)	SEE PAGE
	1	1	**280-6070**	1	MIRROR AS (REAR VIEW)	
	2	1	**3B-4505**	1	LOCKWASHER	
M	3	1	**5C-7261**	1	NUT (M8X1.25-THD)	
	4	1	**8T-4224**	1	WASHER-HARD (8.8X16X2-MM THK)	

M-METRIC PART

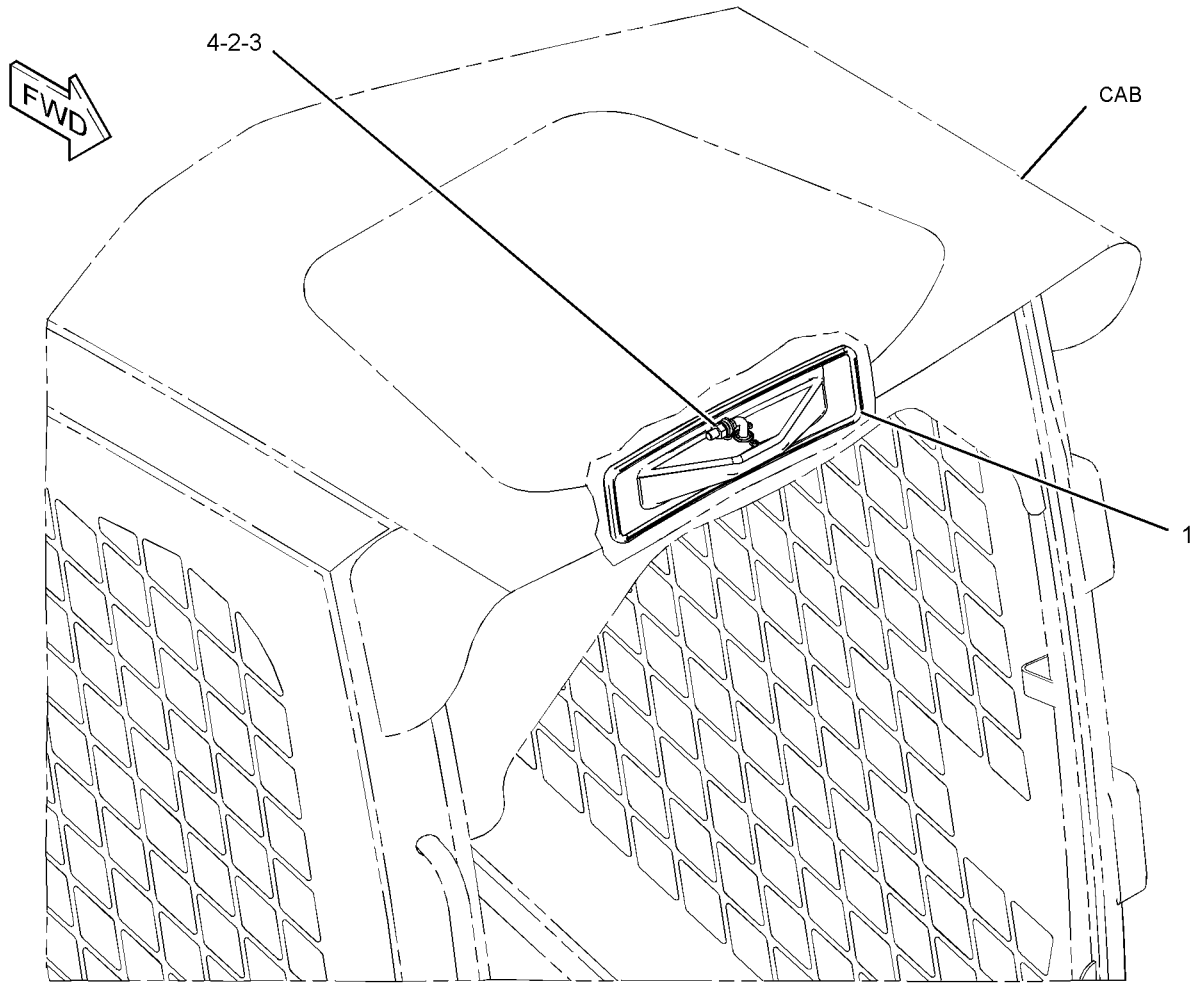

GRAPHIC #1 **<END>** g01316638

223-6537 MODULE GP-WARNING INDICATOR

S/N: SRS1-UP
12-VOLT
PART OF 328-2270 PANEL GP-INSTRUMENT

SMCS-7407, 7431 **i04362929**

NOTE	REF NO	GRAPHIC REF	PART NUMBER	QTY	PART NAME 1 2 3 4 5 6 (PRODUCT LEVEL)	SEE PAGE
	1	1	**102-8801**	1	KIT-RECEPTACLE (12-PIN)	
					(INCLUDES RECEPTACLE AS & WEDGE)	
	2	1	**232-4706**	1	GASKET	
	4	1	**8T-8729**	10	PIN-CONNECTOR (16-GA TO 18-GA)	
	5	1	**8T-8737**	2	PLUG-SEAL	

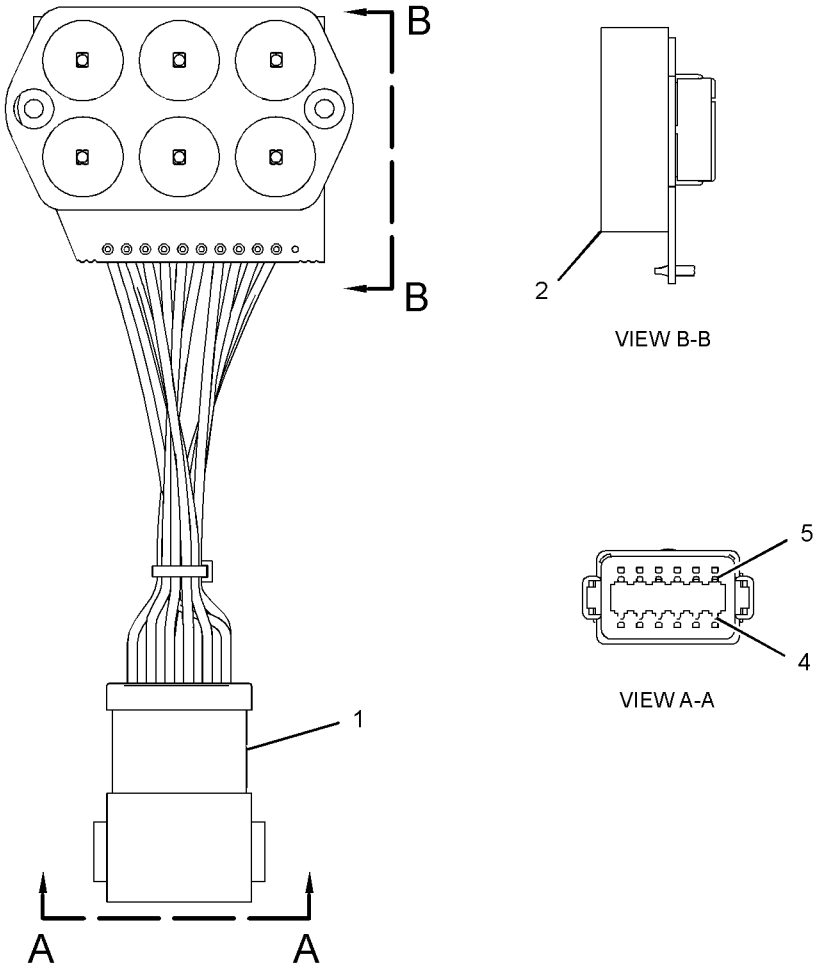

GRAPHIC #1 **<END>** g01839133

OPERATOR STATION

249-2910 MODULE GP-WARNING INDICATOR

S/N: SRS1-UP
12-VOLT
PART OF 328-2270 PANEL GP-INSTRUMENT

SMCS-7407, 7431 **i04385381**

NOTE	REF NO	GRAPHIC REF	PART NUMBER	QTY	PART NAME 1 2 3 4 5 6 (PRODUCT LEVEL)	SEE PAGE
	1	1	**8T-8737**	3	PLUG-SEAL	
	2	1	**232-4706**	1	GASKET	
	3	1	**8T-8729**	9	PIN-CONNECTOR (16-GA TO 18-GA)	
	4	1	**102-8801**	1	KIT-RECEPTACLE (12-PIN)	
					(INCLUDES RECEPTACLE AS & WEDGE)	

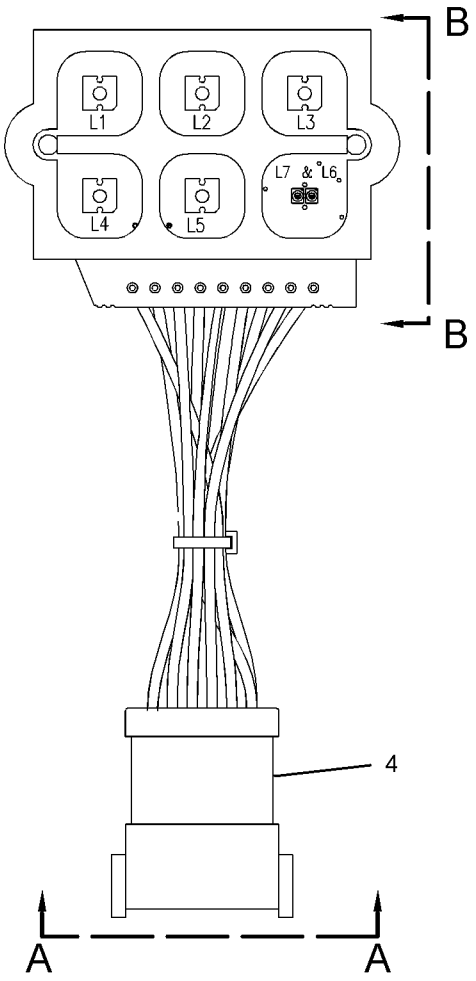

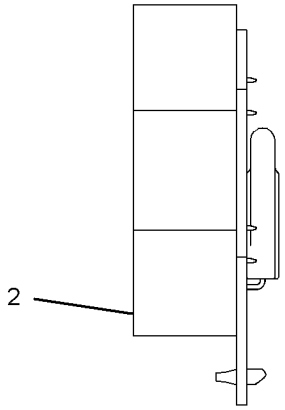

VIEW B-B

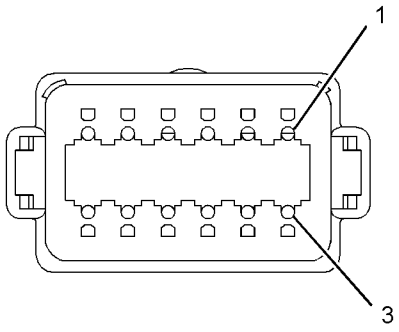

VIEW A-A

GRAPHIC #1 **<END>** g01152784

330-5012 MOTOR GP-WINDOW WIPER

S/N: SRS1-UP
12-VOLT
PART OF 223-0616, 276-3440 DOOR GP-CAB
AN ATTACHMENT

SMCS-7305 **i03644764**

NOTE	REF NO	GRAPHIC REF	PART NUMBER	QTY	PART NAME 1 2 3 4 5 6 (PRODUCT LEVEL)	SEE PAGE
	1	1	**102-8804**	1	KIT-RECEPTACLE (4-PIN)	
					(INCLUDES RECEPTACLE AS & WEDGE)	
	2	1	**186-3735**	4	PIN-CONNECTOR (16-GA TO 18-GA)	
	3	1	**263-3823**	1	CAP-WIPER	
	4	1	**3F-9556**	1	LOCKWASHER	
M	5	1	**5C-7261**	1	NUT (M8X1.25-THD)	

M-METRIC PART

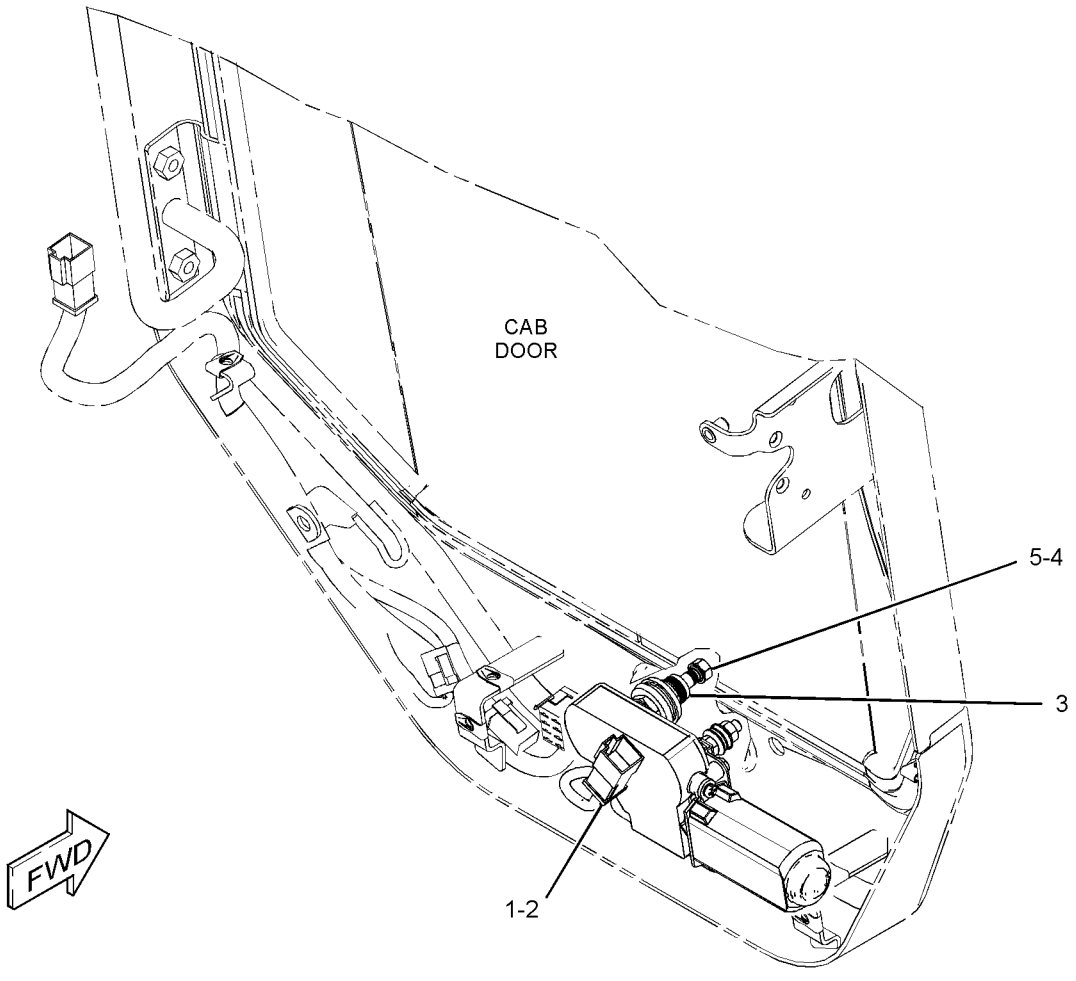

GRAPHIC #1 **<END>** g01956124

OPERATOR STATION

218-6370 MOUNTING GP-ROPS

S/N: SRS1-UP

PART OF 326-5400 CAB AR

SMCS-7266, 7325 **i01955254**

NOTE	REF NO	GRAPHIC REF	PART NUMBER	QTY	PART NAME 1 2 3 4 5 6 (PRODUCT LEVEL)	SEE PAGE
	1	1	**152-5878**	2	MOUNT AS	
	2	1	**153-6981**	2	MOUNT	
	3	1	**159-5790**	1	BRACKET	
	4	1	**159-5792**	1	BAR AS	
	5	1	**159-5794**	1	SPRING	
	6	1	**218-6381**	2	SPACER	
	7	1	**165-7095**	4	WASHER (16.5X71.5X3-MM THK)	
	8	1	**4P-7581**	1	CLIP	
M	9	1	**6V-9805**	2	BOLT (M6X1X20-MM)	
M	10	1	**7X-2475**	2	BOLT (M16X2X130-MM)	
	11	1	**8T-4122**	4	WASHER-HARD (17X32X3.5-MM THK)	
M	12	1	**8T-4173**	2	BOLT (M16X2X110-MM)	
	13	1	**8T-4205**	2	WASHER-HARD (7.2X14.5X2-MM THK)	
M	14	1	**8T-4778**	4	LOCKNUT (M16X2-THD)	

M-METRIC PART

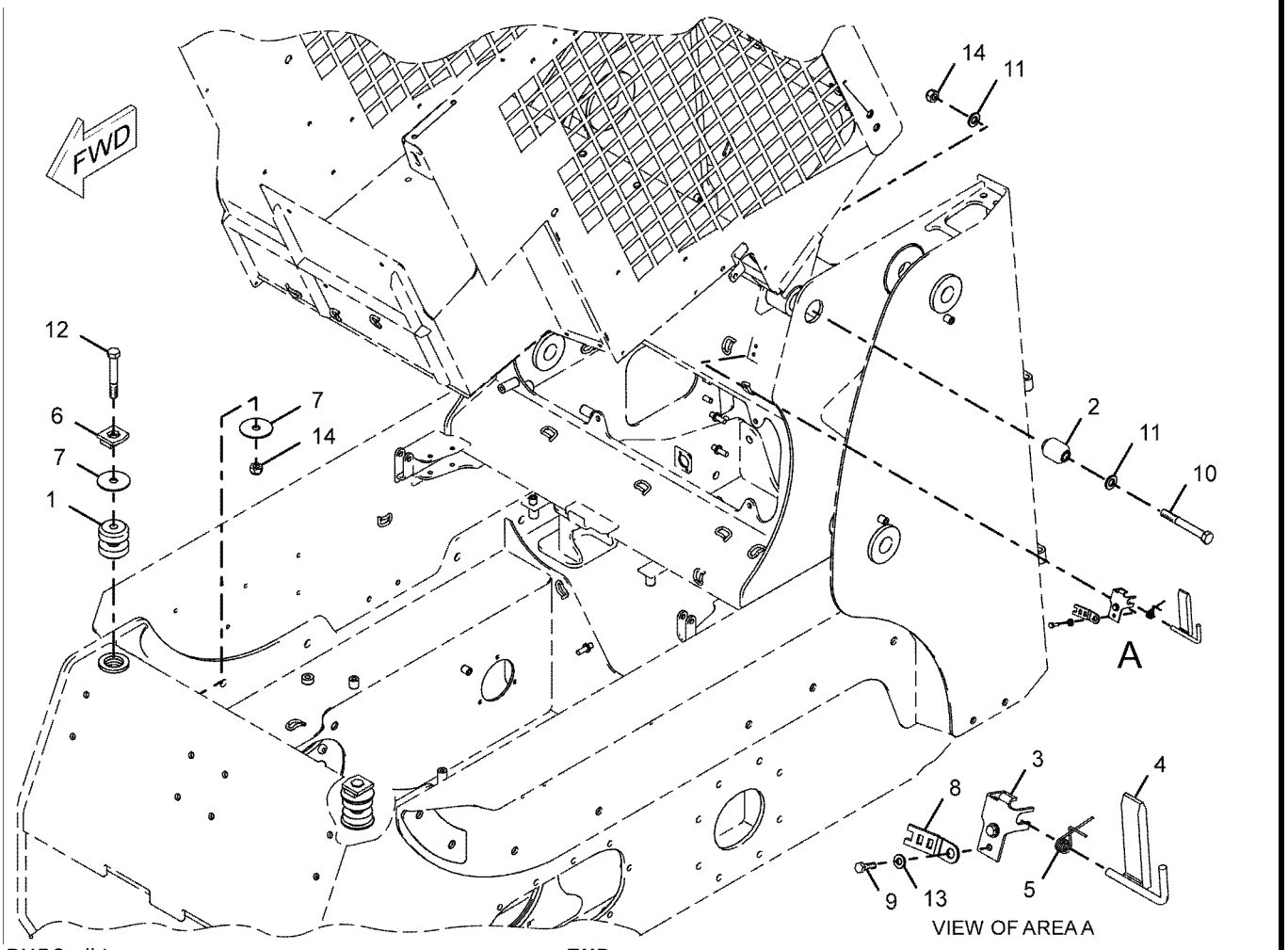

GRAPHIC #1 **<END>** g01018977

OPERATOR STATION

328-2270 PANEL GP-INSTRUMENT

S/N: SRS1-UP

PART OF 326-5400 CAB AR

SMCS-7451 **i04087650**

NOTE	REF NO	GRAPHIC REF	PART NUMBER	QTY	PART NAME 1 2 3 4 5 6 (PRODUCT LEVEL)	SEE PAGE
	1	1	**9R-7941**	1	SOCKET AS	
		1	**9R-7980**	1	COVER	
	2	2	**084-4277**	1	LAMP GP-DOME (12-VOLT)	
		2	**210-8754**	1	LAMP (12-VOLT) (DOME)	
	3	2	**109-2356**	9	PLUG	
	4	2	**110-7887**	1	SWITCH AS-START (KEY)	
		2	**7T-6799**	1	NUT-MOUNTING (1-32-THD)	
		2	**102-8804**	1	KIT-RECEPTACLE (4-PIN)	
					(INCLUDES RECEPTACLE AS & WEDGE)	
		2	**186-3735**	4	PIN-CONNECTOR (16-GA TO 18-GA)	
	5	2	**142-9320**	1	SWITCH AS-ROCKER (PARKING BRAKE)	
	6	2	**142-9328**	1	SWITCH AS-ROCKER (FRONT WORK LIGHT)	
					(EACH SWITCH AS INCLUDES)	
		2	**111-7899**	1	GASKET	
	7	2	**158-6694**	1	PANEL	
	8	1	**158-6695**	1	COVER	
	9	1	**158-6696**	1	COVER	
	10	2	**158-6697**	1	PANEL	
	11	1	**158-6698**	1	COVER	
	12	1	**158-6699**	1	COVER	
	13	2	**223-5941**	1	SWITCH AS-ROCKER (WORK TOOL HYD PRESS RELEASE)	
		2	**111-7899**	1	GASKET	
Y	14	2	**223-6537**	1	MODULE GP-WARNING INDICATOR	521
	15	2	**226-5901**	1	SWITCH AS-ROCKER (INTERLOCK OVERRIDE)	
		2	**111-7899**	1	GASKET	
Y	16	2	**249-2910**	1	MODULE GP-WARNING INDICATOR	522
	17	1	**258-4178**	1	FLANGE-MOUNTING	
	18	1	**301-7293**	1	KIT-SERVICE METER	
					(INCLUDES SERVICE METER, FILM, BOLTS & LOCK NUTS)	
	19	1	**328-2271**	1	HARNESS AS-PANEL	
		1	**123-7615**	1	CONNECTOR	
		1	**228-5856**	6	CONNECTOR	
		1	**186-3735**	11	PIN-CONNECTOR (16-GA TO 18-GA)	
		1	**9X-3401**	3	PIN-CONNECTOR (16-GA TO 18-GA)	
		1	**155-2255**	2	KIT-CONNECTING PLUG (12-PIN)	
		1	**155-2270**	5	KIT-CONNECTING PLUG (2-PIN)	
		1	**155-2271**	1	KIT-CONNECTING PLUG (4-PIN)	
		1	**155-2274**	1	KIT-CONNECTING PLUG (6-PIN)	
					(EACH PLUG KIT INCLUDES PLUG AS, WEDGE & INTERFACE SEAL)	
		1	**8T-8737**	18	PLUG-SEAL	
		1	**102-8805**	1	KIT-RECEPTACLE (6-PIN)	
					(INCLUDES RECEPTACLE AS & WEDGE)	
		1	**186-3736**	19	SOCKET-CONNECTOR (16-GA TO 18-GA)	
		1	**9W-0844**	1	SOCKET-CONNECTOR (14-GA TO 16-GA)	
		1	**180-9340**	15	SOCKET-CONNECTOR (14-GA TO 18-GA)	
		1	**3S-2093**	15	STRAP-CABLE	
		1	**189-3158**	1	SUPPRESSOR-ARC	
		1	**097-7234**	5	TERMINAL-BLADE (18-GA TO 22-GA)	
		1	**7N-7221**	1	TERMINAL-BLADE (18-GA TO 22-GA)	
		1	**091-2436**	45	TERMINAL-BLADE (18-GA TO 22-GA)	
		1	**104-1995**	20	TERMINAL-BLADE (14-GA TO 18-GA)	
E		1	**119-3662**		TUBE-HEAT SHRINK (10.85-MM DIA) (13-CM)	
E		1	**125-7874**		TUBE-HEAT SHRINK (5.72-MM DIA) (75-CM)	

328-2270 **PANEL GP-INSTRUMENT** *(contd.)* **i04087650**

NOTE	REF NO	GRAPHIC REF	PART NUMBER	QTY	PART NAME 1 2 3 4 5 6 (PRODUCT LEVEL)	SEE PAGE
E		1	**125-7875**		TUBE-HEAT SHRINK (7.44-MM DIA) (10-CM)	
E		1	**125-7876**		TUBE-HEAT SHRINK (17.78-MM DIA) (8-CM)	
	20	2	**328-2352**	1	FILM-INSTRUCTION (DASH)	
	21	2	**330-8684**	1	LAMP AS (12-VOLT) (FLOODLIGHT)	
	22	1,2	**101-2867**	4	WASHER-HARD (7.2X25X2-MM THK)	
	23	1,2	**103-2006**	22	SCREW-PAN HEAD (6-19X0.37-IN)	
	24	2	**170-6305**	1	GAUGE GP-FUEL LEVEL	
		2	**4B-2043**	3	NUT (8-32-THD)	
		2	**7X-9065**	1	LAMP (12-VOLT) (FUEL LEVEL INDICATOR)	
		2	**9B-7233**	3	LOCKWASHER	
	25	1,2	**195-0936**	4	INSERT-THREADED (M6X1-THD)	
	26	2	**197-6894**	1	FILM-INSTRUCTION (INSTRUMENT PANEL)	
	27	1,2	**198-9707**	4	SCREW-TRUSS HEAD (M6X1X35-MM)	
	28	2	**216-4753**	1	FILM-INSTRUCTION (KEY SWITCH)	
	29	1,2	**3S-2093**	7	STRAP-CABLE	
	30	1	**6V-5834**	4	SCREW-HEAD (10-14X0.75-IN)	
M	31	1	**9X-2042**	6	SCREW-TRUSS HEAD (M6X1X12-MM)	
	32	1	**9X-8256**	4	WASHER (6.6X12X2-MM THK)	

E-ORDER BY THE CENTIMETER
M-METRIC PART
Y-SEPARATE ILLUSTRATION

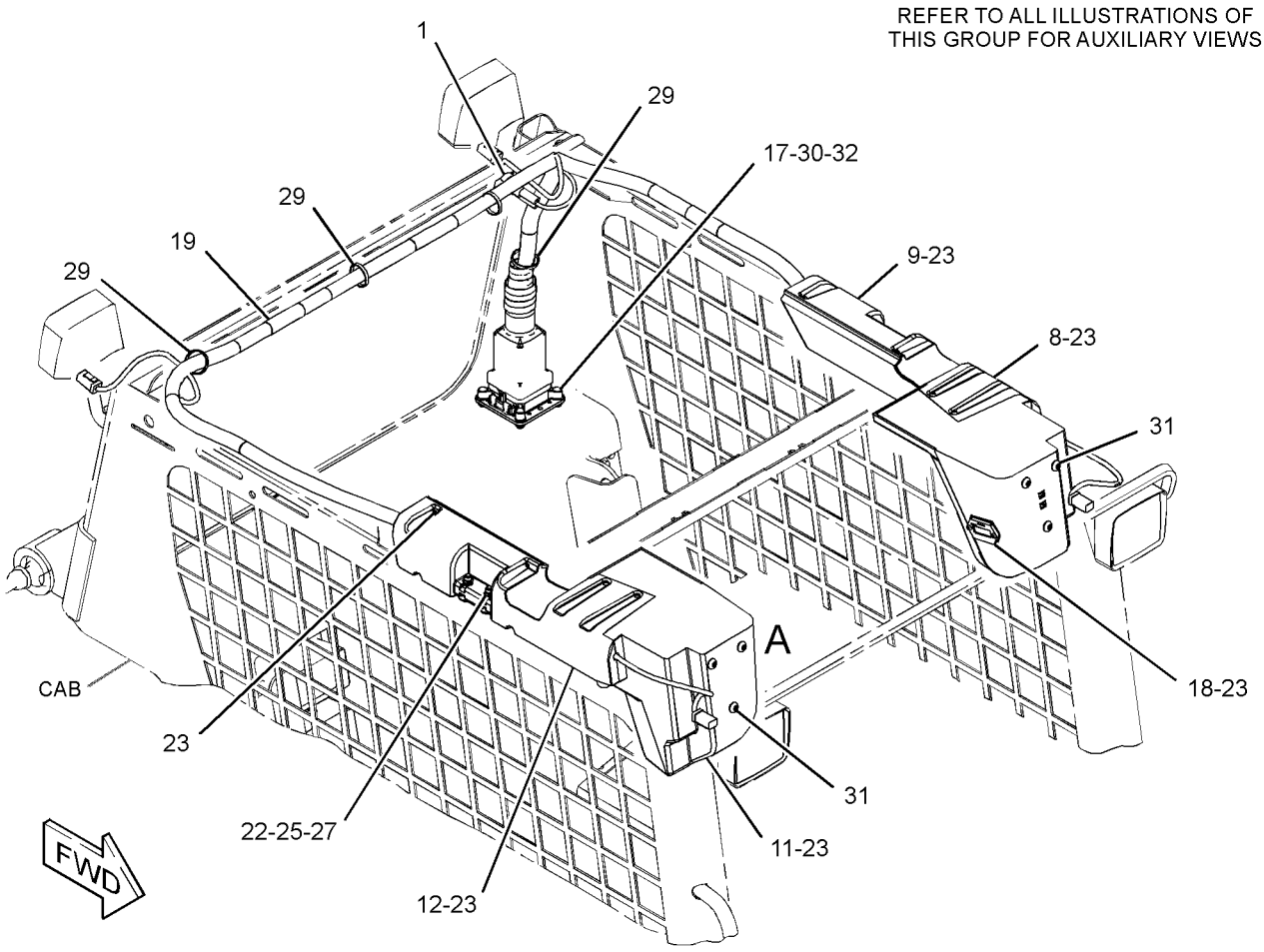

GRAPHIC #1 g02471159

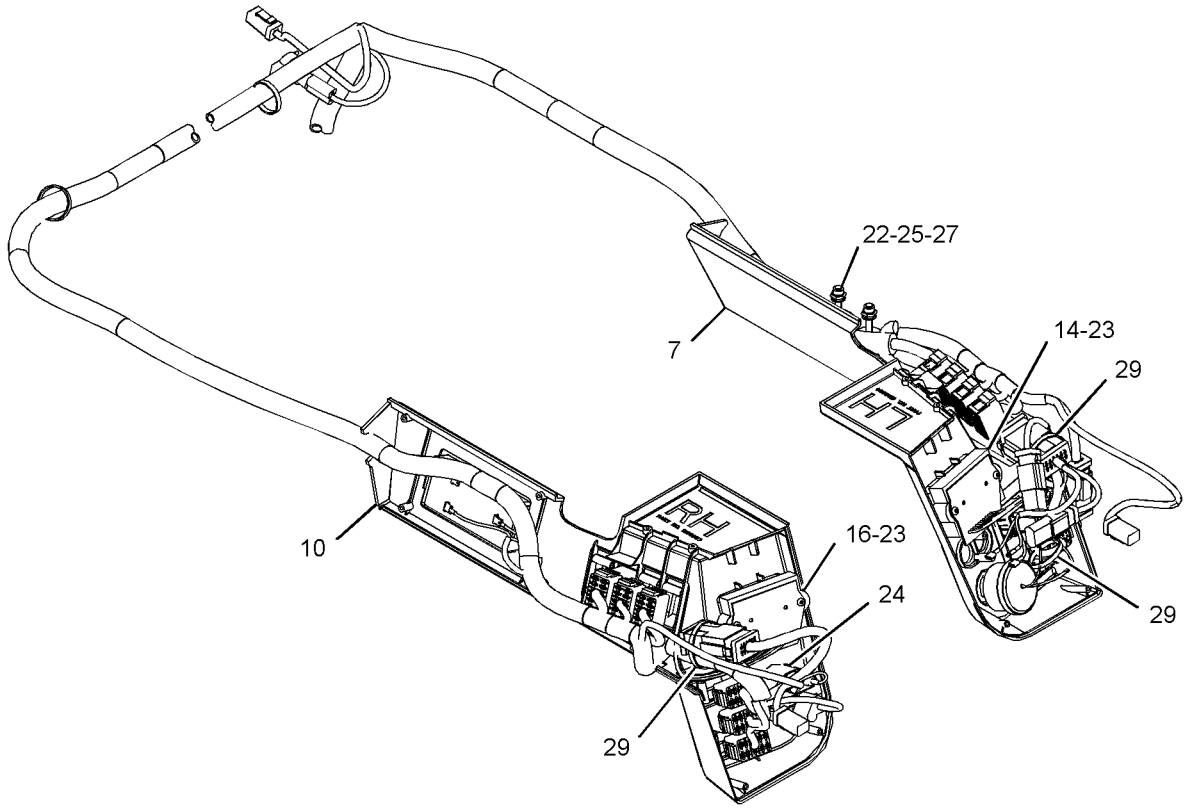

VIEW OF AREA A
(COVERS REMOVED FOR CLARITY)

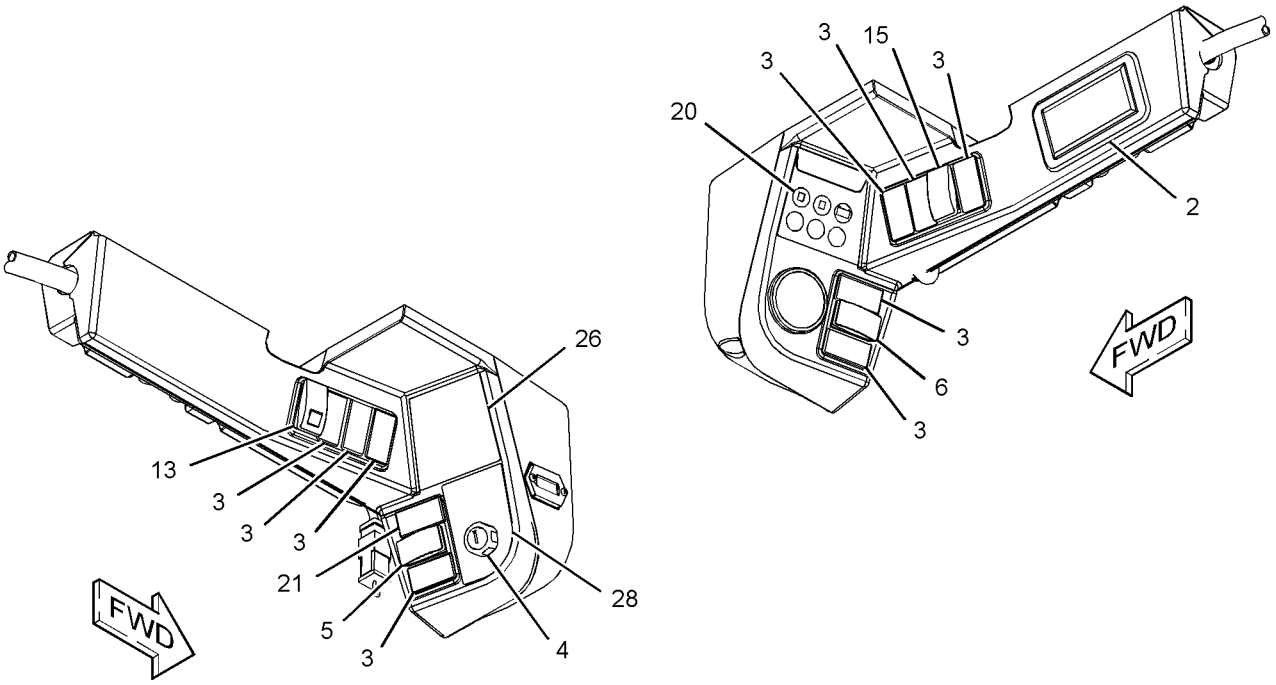

GRAPHIC #2 **<END>** g02471160

OPERATOR STATION

218-6428 PANEL GP-SIDE

S/N: SRS1-UP

PART OF 326-5410 CHASSIS AR

SMCS-7267 **i01966886**

NOTE	REF NO	GRAPHIC REF	PART NUMBER	QTY	PART NAME 1 2 3 4 5 6 (PRODUCT LEVEL)	SEE PAGE
	1	1	**193-8385**	1	PLATE (RH)	
	2	1	**218-6434**	1	PLATE (LH)	
M	3	1	**131-3543**	5	BOLT-ROUND HEAD (M6X1-6G-THD)	
M	4	1	**5C-2890**	5	NUT (M6X1-THD)	
	5	1	**8T-4205**	5	WASHER-HARD (7.2X14.5X2-MM THK)	

M-METRIC PART

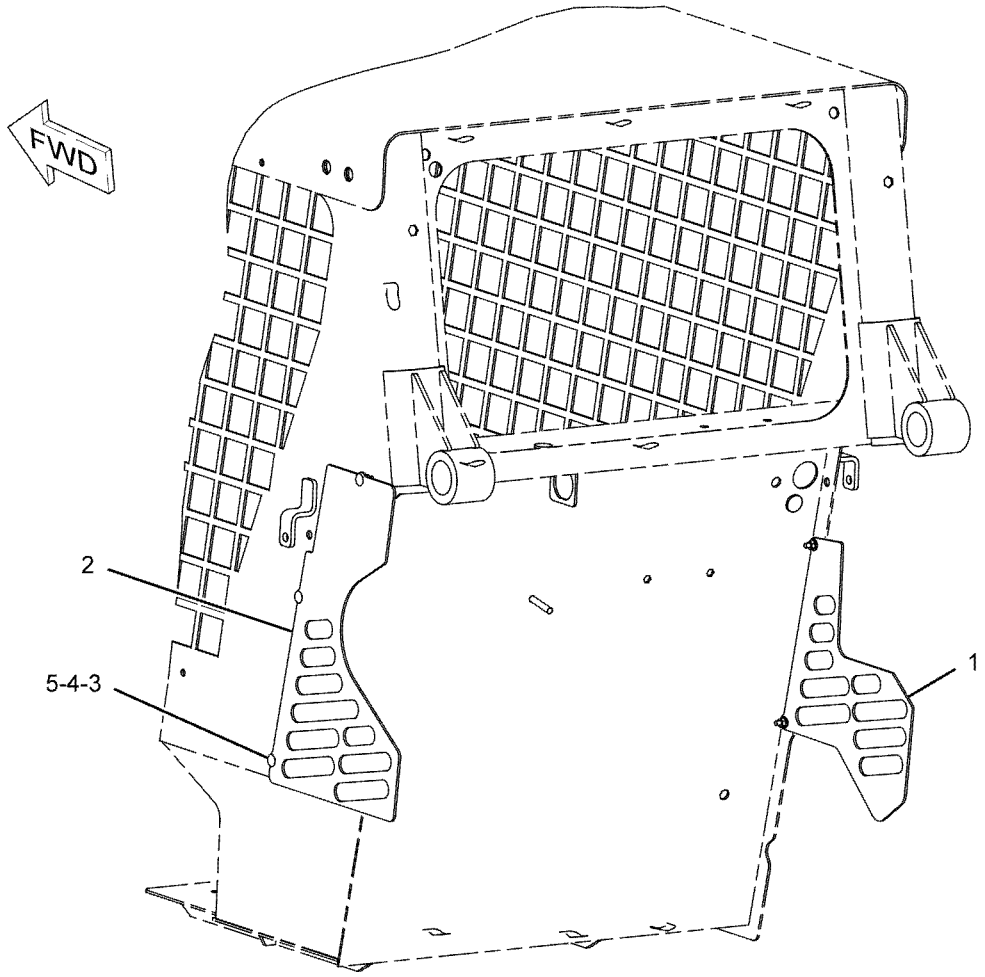

GRAPHIC #1 **<END>** g01021358

229-8744 PANEL GP-SIDE—WITHOUT HEATER OR A/C

S/N: SRS1-UP
PART OF 326-5554 INSTALLATION AR
AN ATTACHMENT

SMCS-7267 **i03769672**

NOTE	REF NO	GRAPHIC REF	PART NUMBER	QTY	PART NAME 1 2 3 4 5 6 (PRODUCT LEVEL)	SEE PAGE
	1	1	**114-6658**	4	WASHER (6.5X17X1-MM THK)	
	2	1	**218-6386**	1	COVER AS	
	3	1	**218-6387**	1	COVER AS	
	4	1	**218-6388**	1	COVER AS	
M	5	1	**8T-4189**	2	BOLT (M8X1.25X20-MM)	
	6	1	**8T-4224**	2	WASHER-HARD (8.8X16X2-MM THK)	
M	7	1	**9X-2044**	7	SCREW-TRUSS HEAD (M6X1X16-MM)	
	8	1	**9X-6165**	1	WASHER (6.5X22X2.5-MM THK)	
E	9	1	**124-3243**		SEAL (52-CM)	

E-ORDER BY THE CENTIMETER
M-METRIC PART

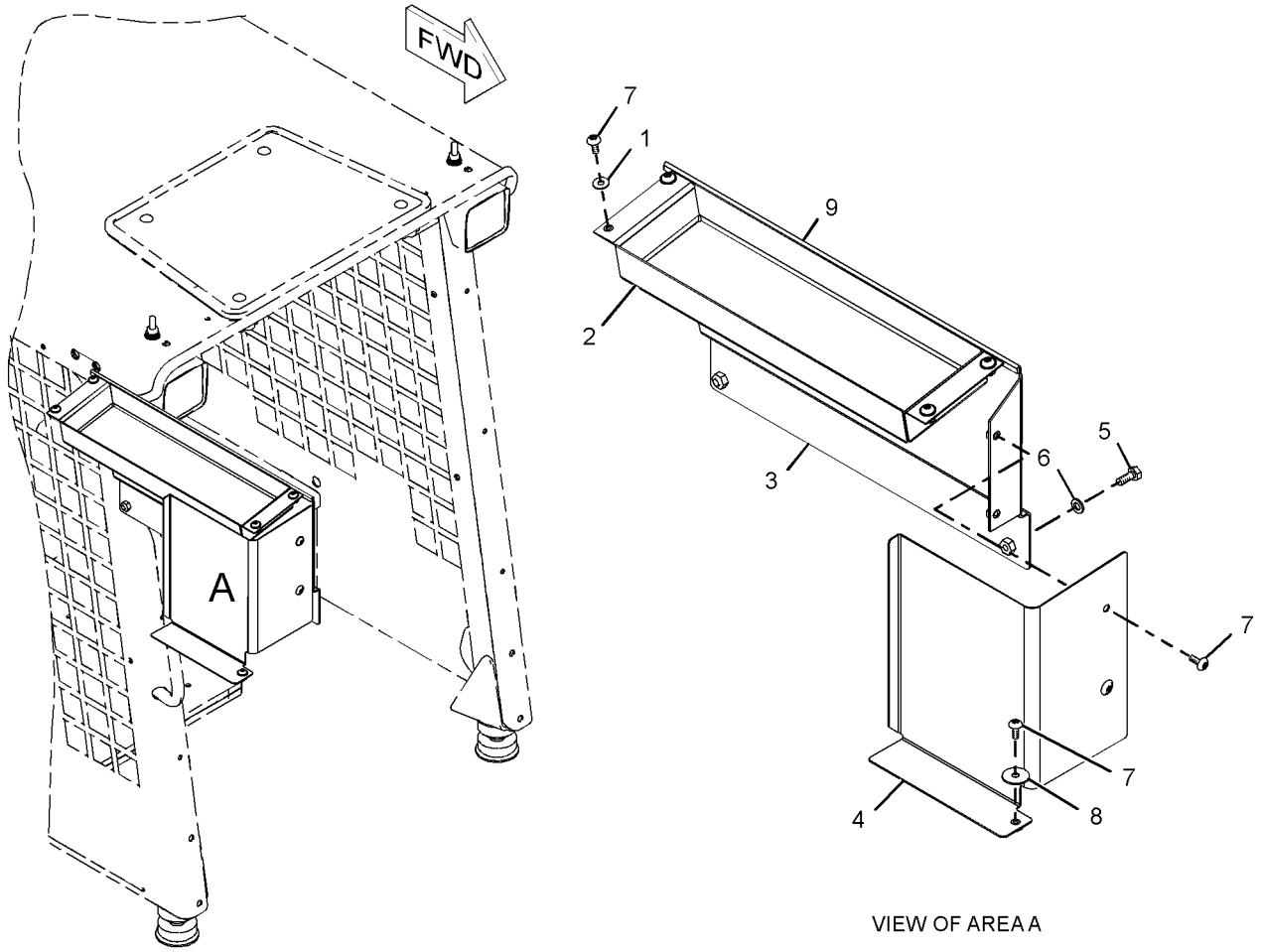

VIEW OF AREA A

GRAPHIC #1 **<END>** g01198919

OPERATOR STATION

325-8382 PEDAL GP-GOVERNOR

S/N: SRS1-UP

PART OF 327-8939 PEDAL GP-GOVERNOR

SMCS-1265, 1276 **i03755302**

NOTE	REF NO	GRAPHIC REF	PART NUMBER	QTY	PART NAME 1 2 3 4 5 6 (PRODUCT LEVEL)	SEE PAGE
M	1	1	**095-0641**	4	BOLT-SOCKET HEAD (M4X0.7X10-MM)	
M	2	1	**129-3178**	1	LOCKNUT (M6X1-THD)	
	3	1	**3F-9556**	2	LOCKWASHER	
M	4	1	**5C-7261**	1	NUT (M8X1.25-THD)	
M	5	1	**5C-9553**	1	BOLT (M6X1X16-MM)	
	6	1	**6V-8186**	2	NUT-FULL (5/16-24-THD)	
M	7	1	**8T-4197**	1	BOLT (M8X1.25X40-MM)	
	8	1	**8T-4205**	1	WASHER-HARD (7.2X14.5X2-MM THK)	
	9	1	**8T-6902**	1	CLIP	
					AVAILABLE REPAIR KIT(S):	
			164-1154	1	KIT-SERVICE (PEDAL)	
					(INCLUDES CLAMPS & SCREWS)	

M-METRIC PART

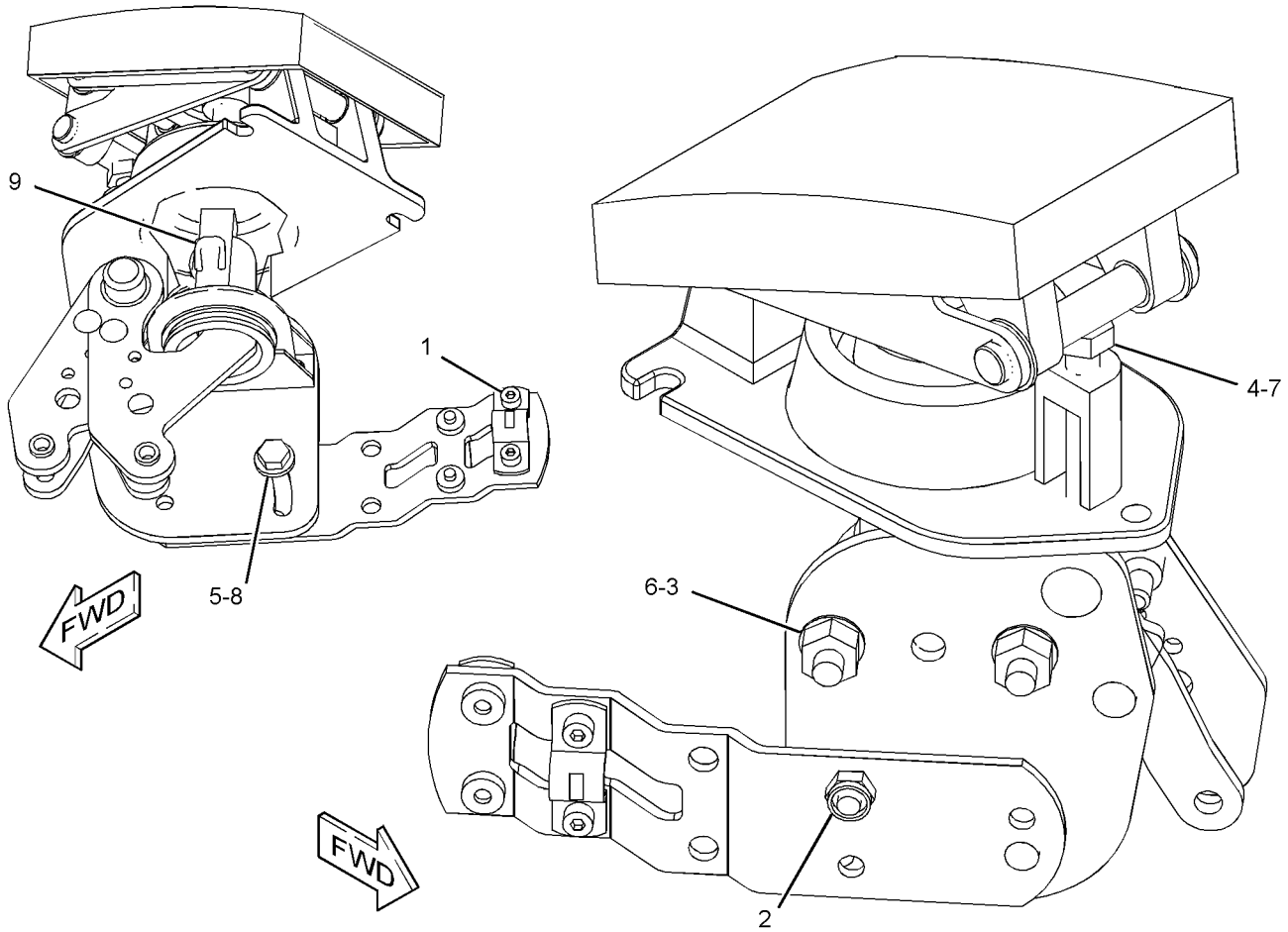

GRAPHIC #1 **<END>** g01164366

OPERATOR STATION

327-8939 PEDAL GP-GOVERNOR

S/N: SRS1-UP

PART OF 218-5602 CONTROL GP-GOVERNOR

SMCS-1265, 1276 **i03809979**

NOTE	REF NO	GRAPHIC REF	PART NUMBER	QTY	PART NAME 1 2 3 4 5 6 (PRODUCT LEVEL)	SEE PAGE
Y	1	1	**234-0774**	1	LEVER GP-GOVERNOR	515
Y	2	1	**325-8382**	1	PEDAL GP-GOVERNOR	530
	3	1	**327-8945**	1	CABLE AS	
		1	**2R-0364**	1	RING-RETAINING	
M		1	**5C-2890**	2	NUT (M6X1-THD)	
		1	**8T-4742**	2	END-YOKE ROD	
		1	**8T-4744**	2	PIN AS-SPRING	

M-METRIC PART
Y-SEPARATE ILLUSTRATION

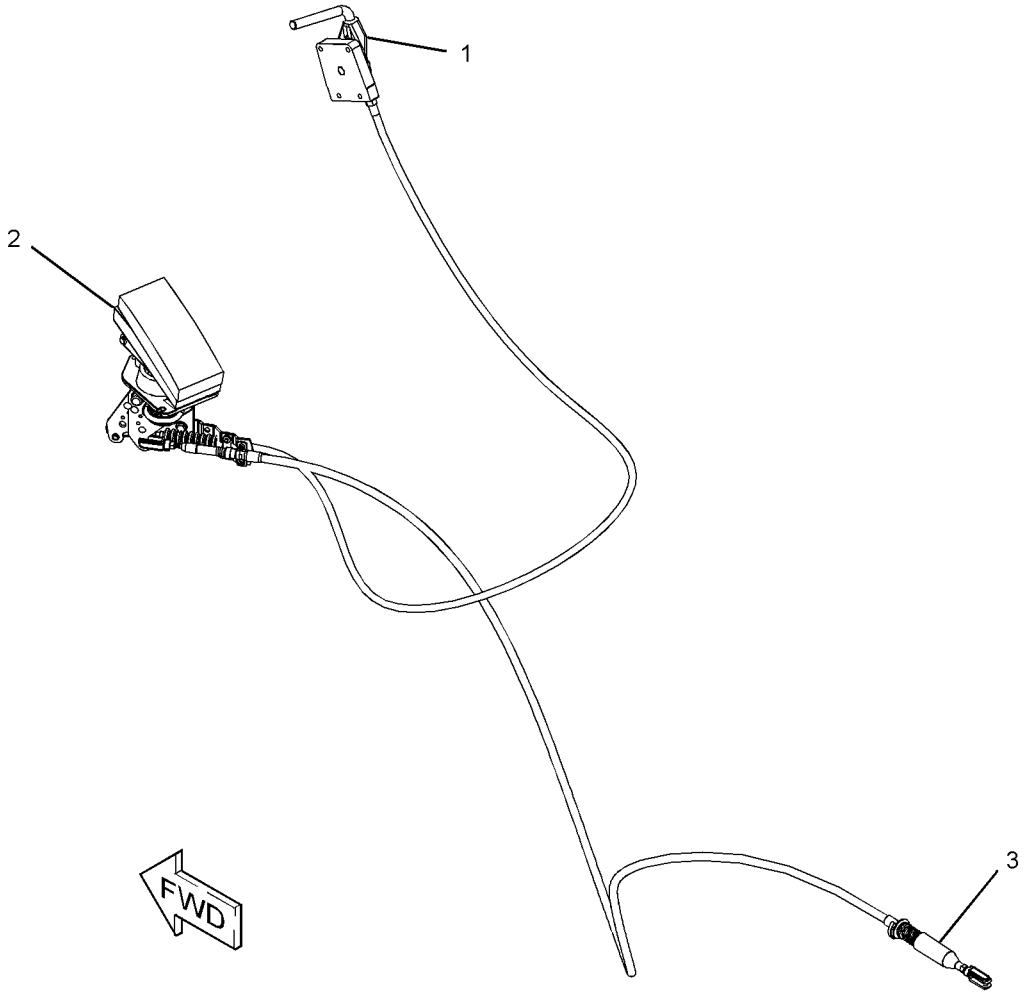

GRAPHIC #1 **<END>** g02068515

OPERATOR STATION

326-5570 PLATFORM GP-OPERATOR

S/N: SRS1-UP

PART OF 326-5410 CHASSIS AR

SMCS-7253 **i03906911**

NOTE	REF NO	GRAPHIC REF	PART NUMBER	QTY	PART NAME 1 2 3 4 5 6 (PRODUCT LEVEL)	SEE PAGE
	1	1	**218-6417**	1	FLOORPLATE AS	
	2	1	**326-5593**	1	PLATE AS	
		1	**7T-1099**	2	LINK	
M	3	1	**5C-7261**	1	NUT (M8X1.25-THD)	
M	4	1	**8T-4138**	8	BOLT (M6X1X20-MM)	
M	5	1	**8T-4197**	1	BOLT (M8X1.25X40-MM)	
	6	1	**8T-4205**	6	WASHER-HARD (7.2X14.5X2-MM THK)	
	7	1	**8T-4224**	7	WASHER-HARD (8.8X16X2-MM THK)	
M	8	1	**8T-4908**	5	BOLT (M8X1.25X25-MM)	
	9	1	**9X-6165**	2	WASHER (6.5X22X2.5-MM THK)	
D	10	1	**5P-5927**		SEAL (0.4-M EACH)	
E	11	1	**124-3243**		SEAL (19.5-CM)	
E	11A	1	**124-3243**		SEAL (6-CM EACH)	

D-ORDER BY THE METER
E-ORDER BY THE CENTIMETER
M-METRIC PART

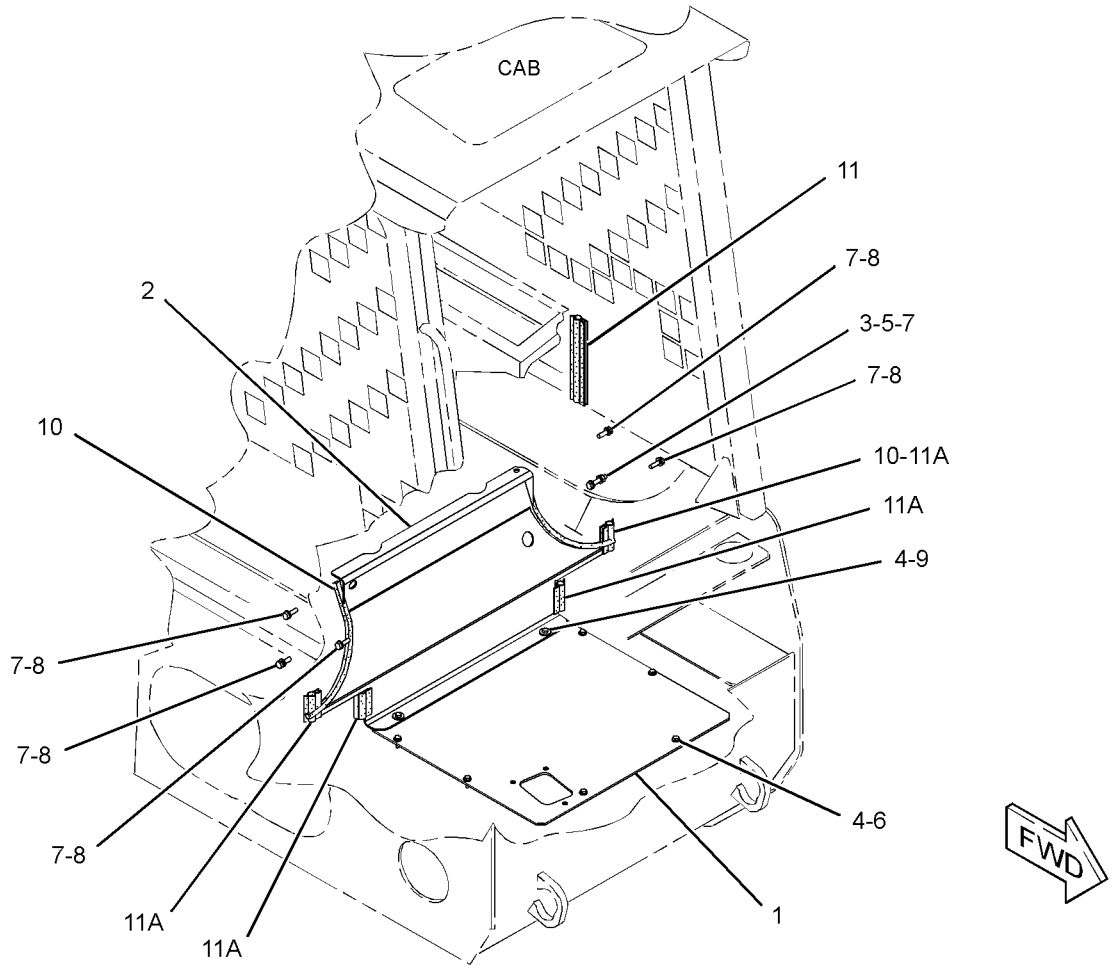

GRAPHIC #1 **<END>** g02149218

218-6407 SEAL GP-CAB—DEBRIS BARRIER

S/N: SRS1-UP
PART OF 326-5552, 326-5553 CAB AR-ENCLOSED ROPS
AN ATTACHMENT

SMCS-7301 **i04059751**

NOTE	REF NO	GRAPHIC REF	PART NUMBER	QTY	PART NAME 1 2 3 4 5 6 (PRODUCT LEVEL)	SEE PAGE
E	1	1	**128-7037**		SEAL (39-CM EACH)	
	2	1	**187-3211**	1	PLATE AS	
M		1	**8T-3612**	2	NUT-WELD (M8X1.25-THD)	
	3	1	**187-3212**	1	PLATE	
	4	1	**284-3595**	2	SEAL-RUBBER	
	5	1	**284-3743**	2	SEAL-RUBBER	
	6	1	**284-3744**	1	SEAL-RUBBER	
B	7	1	**287-6603**	2	PLUG-BUTTON	
	8	1	**287-7004**	1	BLOCK AS (LH)	
	9	1	**287-7006**	1	BLOCK AS (RH)	
B	10	1	**288-5767**	8	PLUG-BUTTON	
	11	1	**189-4523**	2	BOSS	
M	12	1	**7X-2537**	2	BOLT (M8X1.25X35-MM)	
	13	1	**8T-4224**	2	WASHER-HARD (8.8X16X2-MM THK)	

B-USE AS REQUIRED
E-ORDER BY THE CENTIMETER
M-METRIC PART

218-6407 **SEAL GP-CAB** *(contd.)* **i04059751**

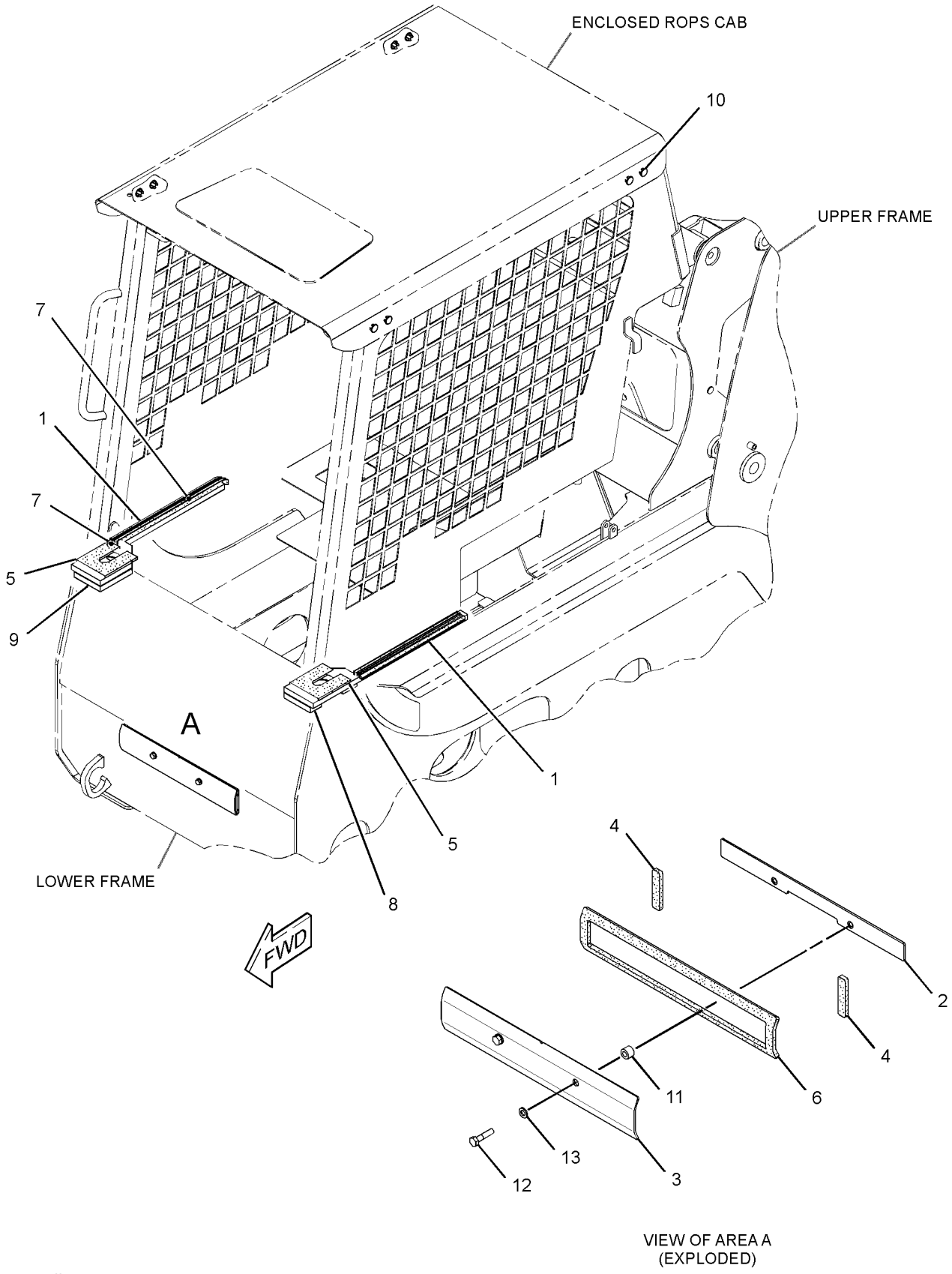

GRAPHIC #1 **<END>** g02436037

OPERATOR STATION

276-6019 SEAT BELT GP—RETRACTABLE, 3-IN

S/N: SRS1-UP
FOR USE WITH IN CALIFORNIA, WASHINGTON, AND OREGAN
AN ATTACHMENT

SMCS-7327 **i03584623**

NOTE	REF NO	GRAPHIC REF	PART NUMBER	QTY	PART NAME 1 2 3 4 5 6 (PRODUCT LEVEL)	SEE PAGE
	1	1	**2D-6412**	2	WASHER (7/16X15/16X1/4-IN THK)	
	2	1	**0T-0244**	2	BOLT (7/16-20X1.25-IN)	
	3	1	**8S-0934**	2	LOCKNUT-FLANGE (7/16-20-THD)	
	4	1	**8T-4223**	2	WASHER-HARD (13.5X25.5X3-MM THK)	

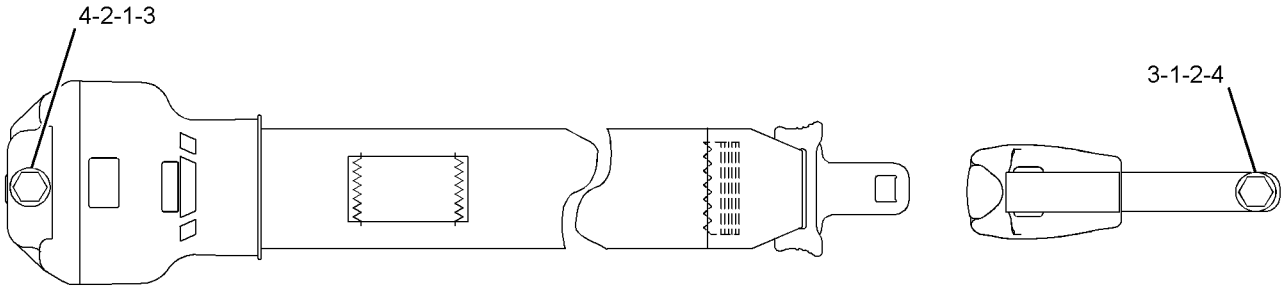

GRAPHIC #1 **<END>** g01230176

276-6020 SEAT BELT GP–RETRACTABLE, 3-IN

S/N: SRS1-UP
. SUSPENSION
AN ATTACHMENT

SMCS-7327 **i02718272**

NOTE	REF NO	GRAPHIC REF	PART NUMBER	QTY	PART NAME 1 2 3 4 5 6 (PRODUCT LEVEL)	SEE PAGE
	1	1	**2D-6412**	2	WASHER (7/16X15/16X1/4-IN THK)	
	2	1	**0T-0244**	2	BOLT (7/16-20X1.25-IN)	
	3	1	**8S-0934**	2	LOCKNUT-FLANGE (7/16-20-THD)	
	4	1	**8T-4223**	2	WASHER-HARD (13.5X25.5X3-MM THK)	

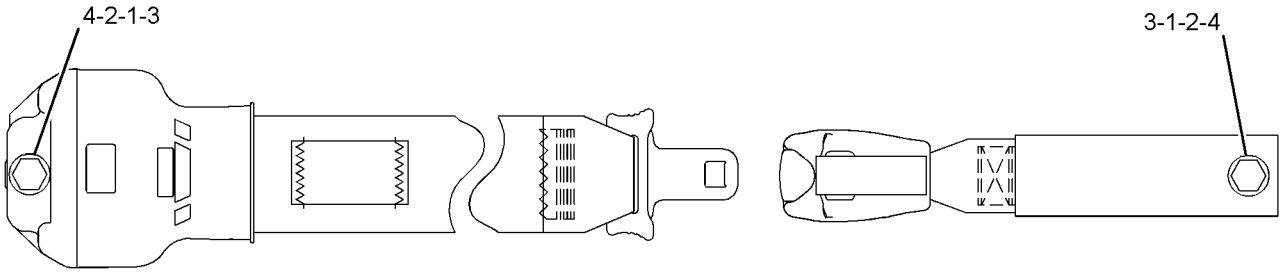

GRAPHIC #1 **<END>** g01230231

276-7276 SEAT BELT GP—RETRACTABLE, 2-IN

S/N: SRS1-UP
SUSPENSION
CANNOT BE USED WITH IN CALIFORNIA, OREGAN, AND WASHINGTON, 276-6019—PAGE 535, 276-7277—PAGE 538
AN ATTACHMENT

SMCS-7327 **i02738465**

NOTE	REF NO	GRAPHIC REF	PART NUMBER	QTY	PART NAME 1 2 3 4 5 6 (PRODUCT LEVEL)	SEE PAGE
	1	1	**2D-6412**	2	WASHER (7/16X15/16X1/4-IN THK)	
	2	1	**0T-0244**	2	BOLT (7/16-20X1.25-IN)	
	3	1	**8S-0934**	2	LOCKNUT-FLANGE (7/16-20-THD)	
	4	1	**8T-4223**	2	WASHER-HARD (13.5X25.5X3-MM THK)	

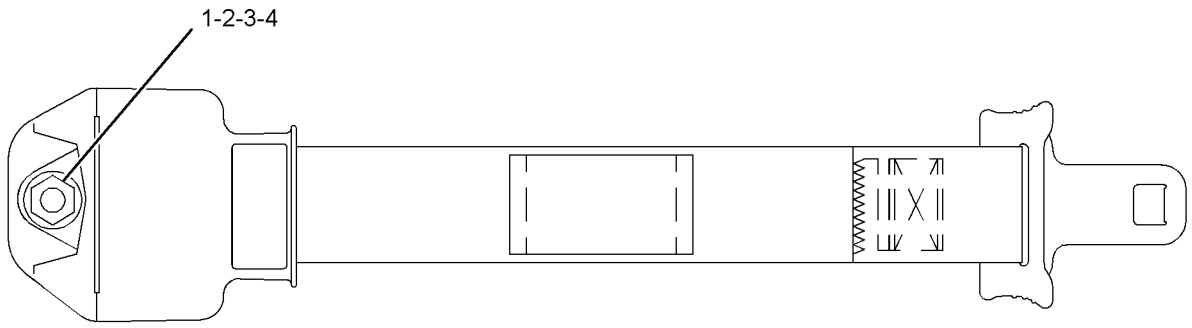

GRAPHIC #1 **<END>** g01230125

276-7277 SEAT BELT GP–RETRACTABLE, 2-IN

S/N: SRS1-UP
STATIC
CANNOT BE USED WITH 276-6019–PAGE 535, 276-7276–PAGE 537
AN ATTACHMENT

SMCS-7327 **i02712903**

NOTE	REF NO	GRAPHIC REF	PART NUMBER	QTY	PART NAME 1 2 3 4 5 6 (PRODUCT LEVEL)	SEE PAGE
	1	1	**2D-6412**	2	WASHER (7/16X15/16X1/4-IN THK)	
	2	1	**0T-0244**	2	BOLT (7/16-20X1.25-IN)	
	3	1	**8S-0934**	2	LOCKNUT-FLANGE (7/16-20-THD)	
	4	1	**8T-4223**	2	WASHER-HARD (13.5X25.5X3-MM THK)	

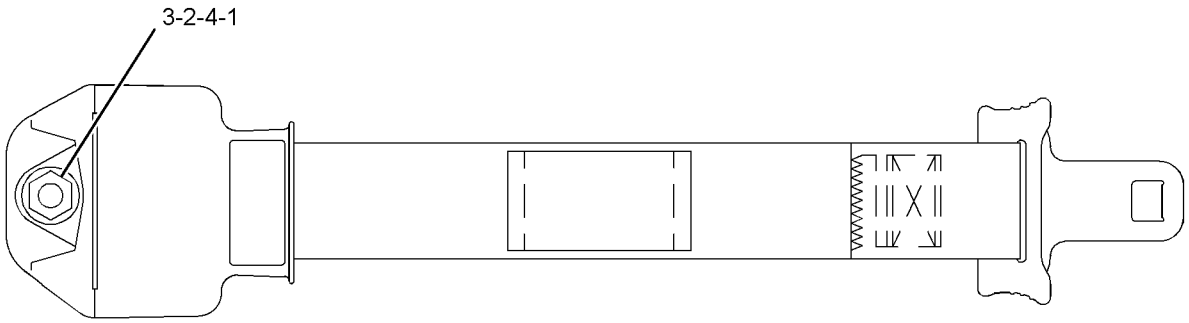

GRAPHIC #1 **<END>** g01230239

142-9305 SEAT GP–SUSPENSION

S/N: SRS1-UP

PART OF 326-5552, 326-5553 CAB AR-ENCLOSED ROPS, 326-5551 CAB AR-OPEN ROPS

CANNOT BE USED WITH 218-5562–PAGE 540

AN ATTACHMENT

SMCS-7312, 7324 **i02571422**

NOTE	REF NO	GRAPHIC REF	PART NUMBER	QTY	PART NAME 1 2 3 4 5 6 (PRODUCT LEVEL)	SEE PAGE
CY	1	1	**219-4380**	1	SEAT GP-ADJUSTABLE	541
M	2	1	**5C-7261**	4	NUT (M8X1.25-THD)	
	3	1	**8T-4224**	4	WASHER-HARD (8.8X16X2-MM THK)	

C-CHANGE FROM PREVIOUS TYPE
M-METRIC PART
Y-SEPARATE ILLUSTRATION

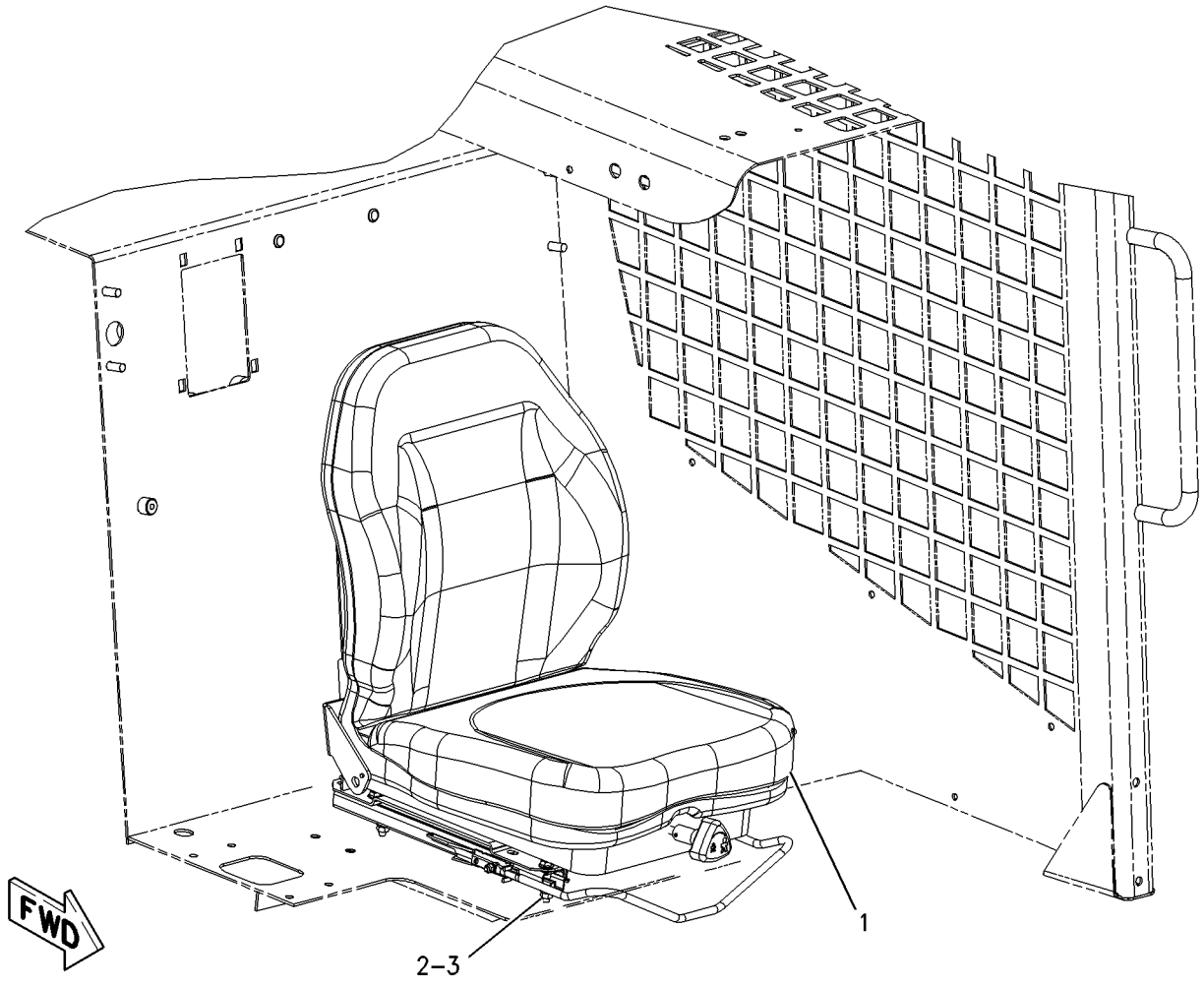

GRAPHIC #1 **<END>** g00914893

OPERATOR STATION

218-5562 SEAT GP–STATIC

S/N: SRS1-UP
PART OF 326-5550 CAB AR-OPEN ROPS
CANNOT BE USED WITH 142-9305–PAGE 539
AN ATTACHMENT

SMCS-7312, 7324 **i02757222**

NOTE	REF NO	GRAPHIC REF	PART NUMBER	QTY	PART NAME 1 2 3 4 5 6 (PRODUCT LEVEL)	SEE PAGE
	1	1	**218-6662**	1	SEAT GP (STATIC)	
		1	**153-1260**	1	SWITCH (SEAT)	
		1	**154-3985**	1	WIRE AS	
		1	**219-4379**	1	HANDLE (SEAT ADJUSTMENT)	
M	2	1	**5C-7261**	4	NUT (M8X1.25-THD)	
	3	1	**8T-4224**	4	WASHER-HARD (8.8X16X2-MM THK)	

M-METRIC PART

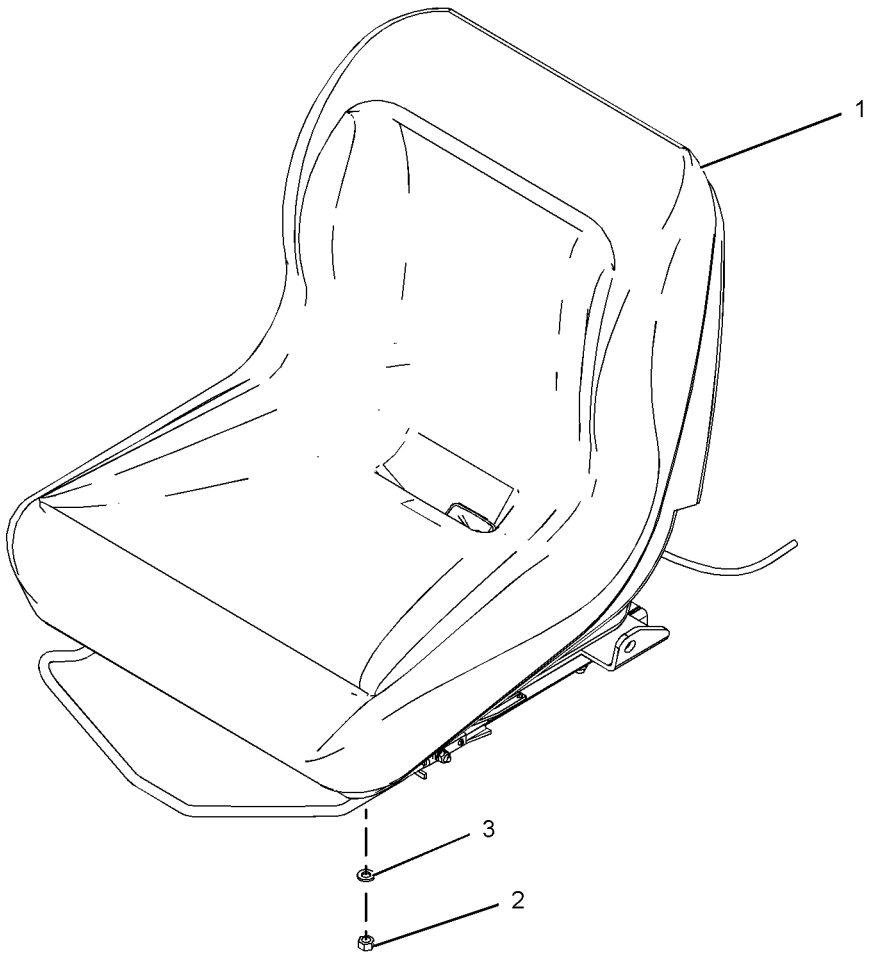

GRAPHIC #1 **<END>** g01018112

OPERATOR STATION

219-4380 SEAT GP-ADJUSTABLE

S/N: SRS1-UP
PART OF 142-9305 SEAT GP
AN ATTACHMENT

SMCS-7312, 7321 **i04045377**

NOTE	REF NO	GRAPHIC REF	PART NUMBER	QTY	PART NAME 1 2 3 4 5 6 (PRODUCT LEVEL)	SEE PAGE
	1	1	**154-3985**	1	WIRE AS	
	2	1	**154-3986**	1	SWITCH AS (SEAT)	
	3	1	**154-8711**	1	KIT-SPRING (ADJUSTABLE SEAT)	
					(INCLUDES SPRINGS, CABLE AS & PUSH NUTS)	
	4	1	**154-8715**	1	KIT-DAMPER (ADJUSTABLE SEAT)	
					(INCLUDES DAMPER, LOCK NUTS, WASHER & SPACER)	
	5	1	**173-2543**	1	KIT-CUSHION (SEAT CUSHION, BACK)	
	6	1	**219-4379**	1	HANDLE (SEAT ADJUSTMENT)	
	7	1	**219-4388**	1	KIT-HANDLE (KNOB)	
					(INCLUDES KNOB, SHAFT, SPRING PINS, HANGER SPRING, PUSH NUTS & SPACERS)	

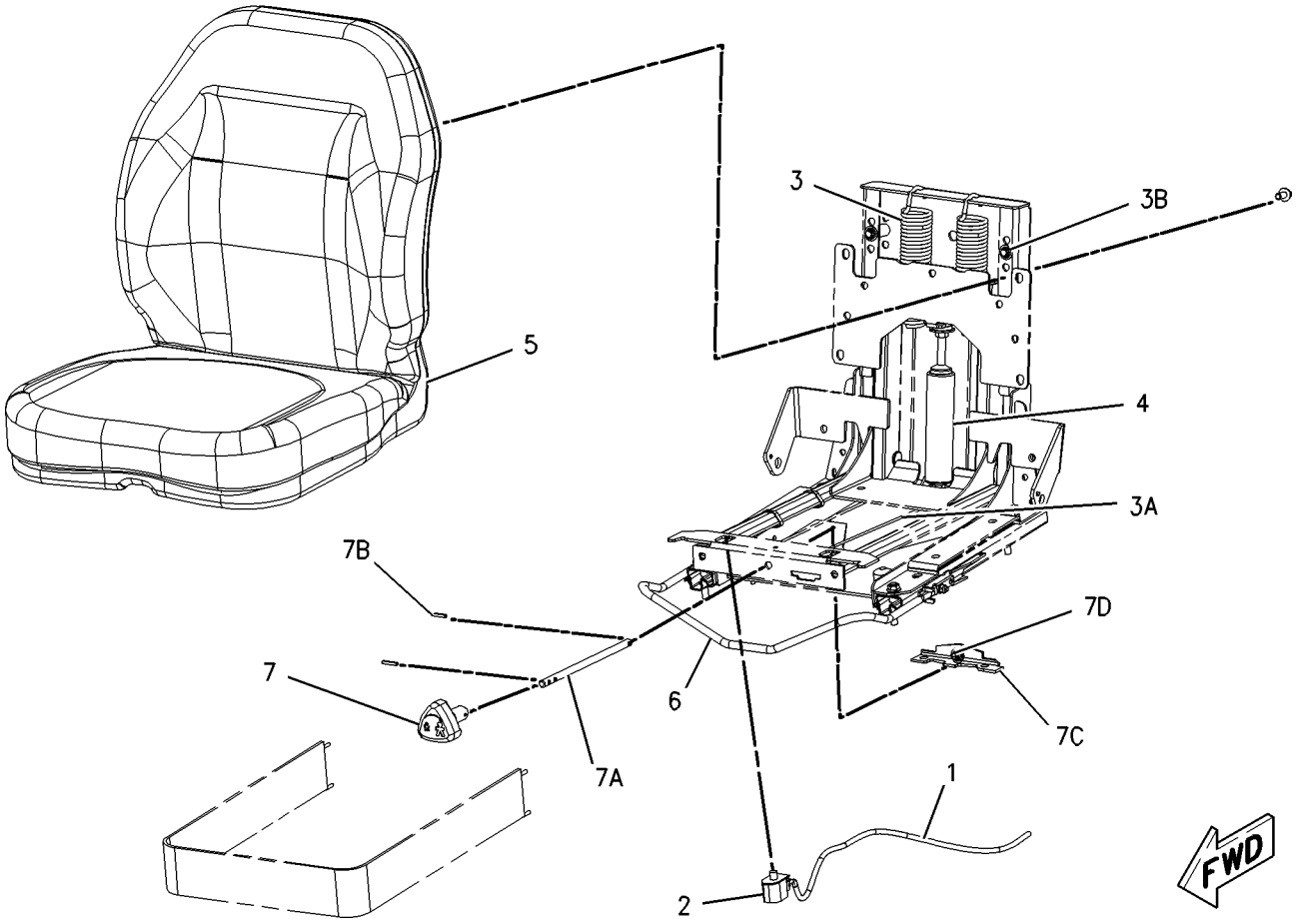

GRAPHIC #1 **<END>** g00915009

OPERATOR STATION

218-6380 SPRING GP-GAS–CAB, DOOR

S/N: SRS1-UP

PART OF 326-5400 CAB AR

SMCS-7301 **i03973391**

NOTE	REF NO	GRAPHIC REF	PART NUMBER	QTY	PART NAME 1 2 3 4 5 6 (PRODUCT LEVEL)	SEE PAGE
	1	1	**5P-0372**	2	LOCK PIN	
	2	1	**9C-5344**	1	SPACER (10.5X20X18-MM THK)	
	3	1	**095-1325**	1	PIN-CLEVIS	
	4	1	**153-2682**	1	SPRING AS-GAS (CAB)	
	5	1	**177-3405**	1	PIN	

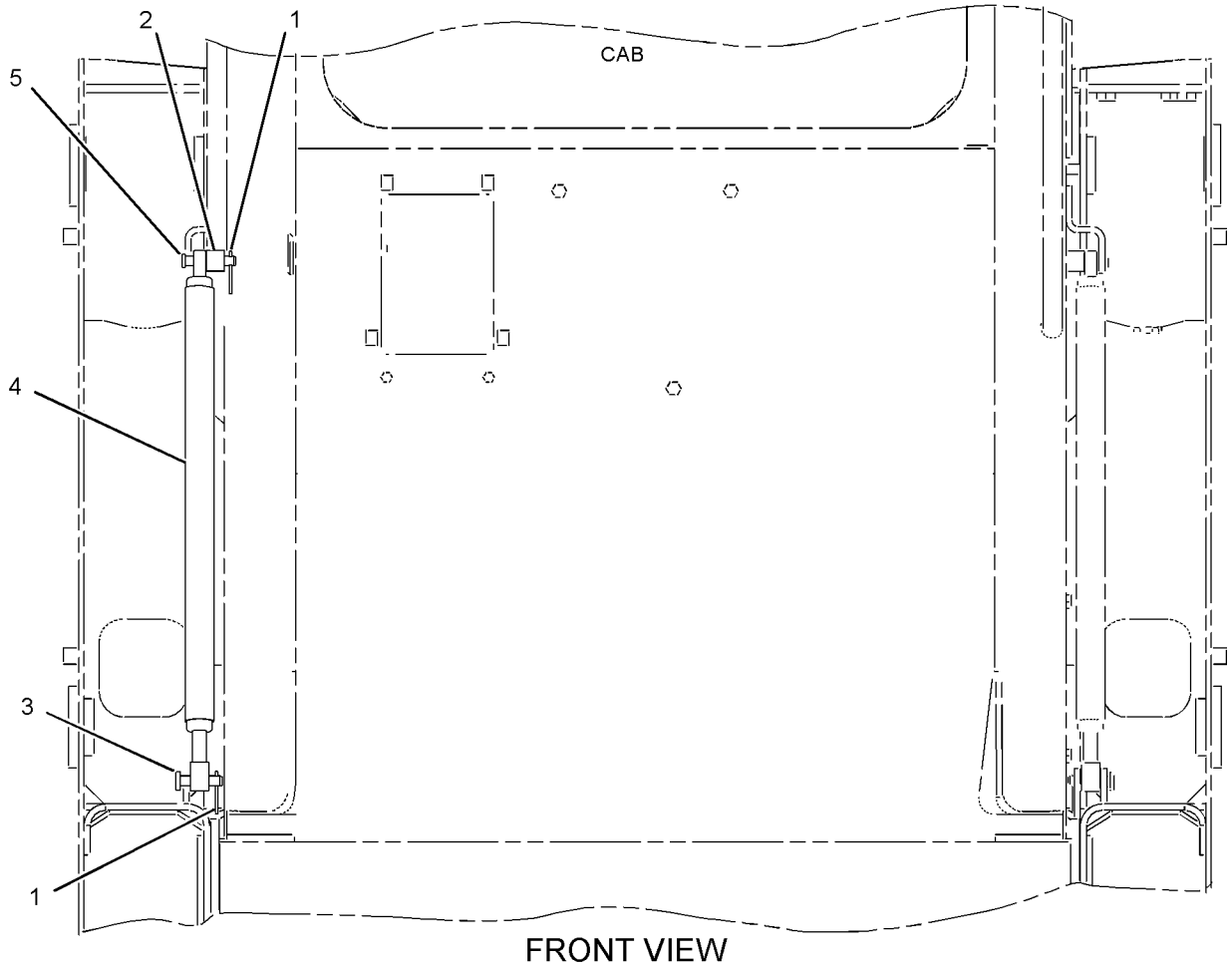

FRONT VIEW

GRAPHIC #1

<END>

g01031997

OPERATOR STATION

166-2569 VISOR GP-CAB

S/N: SRS1-UP

PART OF 340-7724 KIT-ROADING CONVERSION, 173-3022 VISOR GP-CAB

AN ATTACHMENT

SMCS-7301 **i01297216**

NOTE	REF NO	GRAPHIC REF	PART NUMBER	QTY	PART NAME 1 2 3 4 5 6 (PRODUCT LEVEL)	SEE PAGE
	1	1	**2S-5717**	1	LOCKNUT (3/8-16-THD)	
	2	1	**5T-7869**	2	CLAMP	
	3	1	**5T-7870**	1	KNOB	
	4	1	**1D-4677**	2	BOLT-ROUND HEAD (3/8-16X1-IN)	
M	5	1	**9X-2042**	4	SCREW-TRUSS HEAD (M6X1X12-MM)	

M-METRIC PART

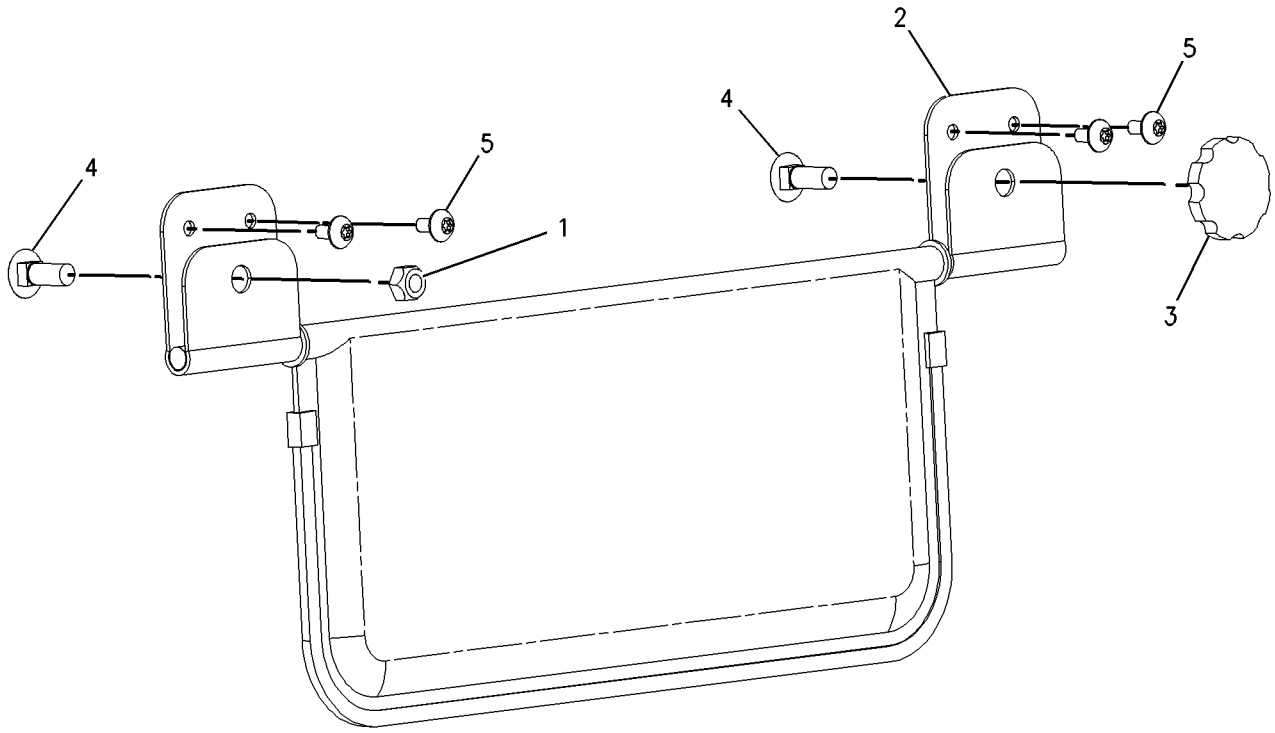

GRAPHIC #1 **<END>** g00695703

OPERATOR STATION

173-3022 VISOR GP-CAB

S/N: SRS1-UP
PART OF 326-5284, 356-1902 CONVERSION AR-MACHINE
AN ATTACHMENT

SMCS-7301 **i01486233**

NOTE	REF NO	GRAPHIC REF	PART NUMBER	QTY	PART NAME 1 2 3 4 5 6 (PRODUCT LEVEL)	SEE PAGE
	1	1	**166-2562**	1	PLATE AS	
Y	2	1	**166-2569**	1	VISOR GP-CAB	543
	3	1	**195-0936**	4	INSERT-THREADED (M6X1)	
M	4	1	**9X-2045**	4	SCREW-TRUSS HEAD (M6X1X20-MM)	

M-METRIC PART
Y-SEPARATE ILLUSTRATION

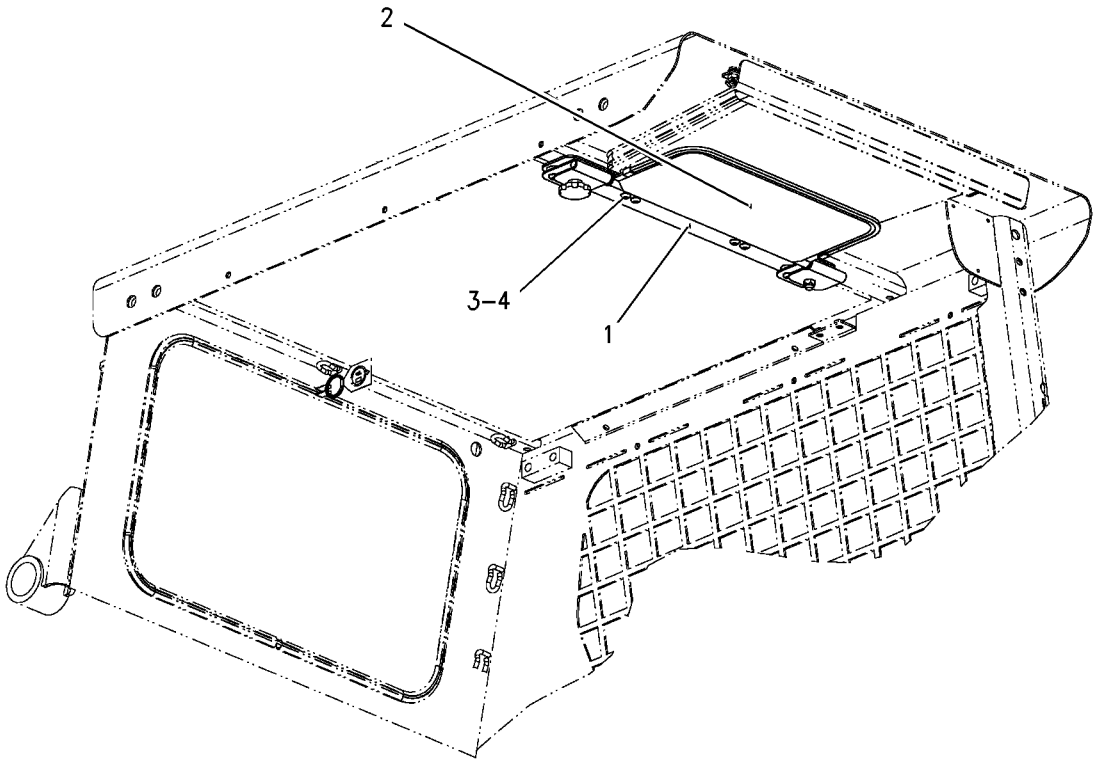

GRAPHIC #1 **<END>** g00772669

OPERATOR STATION

195-6723 WINDOW GP-CAB

S/N: SRS1-UP

PART OF 326-5400 CAB AR

SMCS-7310 **i04368940**

NOTE	REF NO	GRAPHIC REF	PART NUMBER	QTY	PART NAME 1 2 3 4 5 6 (PRODUCT LEVEL)	SEE PAGE
	1	1	**5C-8310**	1	BRACKET-RING	
	2	1	**5C-8311**	1	RING	
	3	1	**8T-6842**	1	FILM-INSTRUCTION (PULL RING, ALTERNATE EXIT)	
	4	1	**142-9319**	1	WINDOW	
CE	5	1	**108-0656**		SEAL (192-CM)	
CE	6	1	**104-5957**		STRIP-LOCKING (186-CM)	

C-CHANGE FROM PREVIOUS TYPE
E-ORDER BY THE CENTIMETER

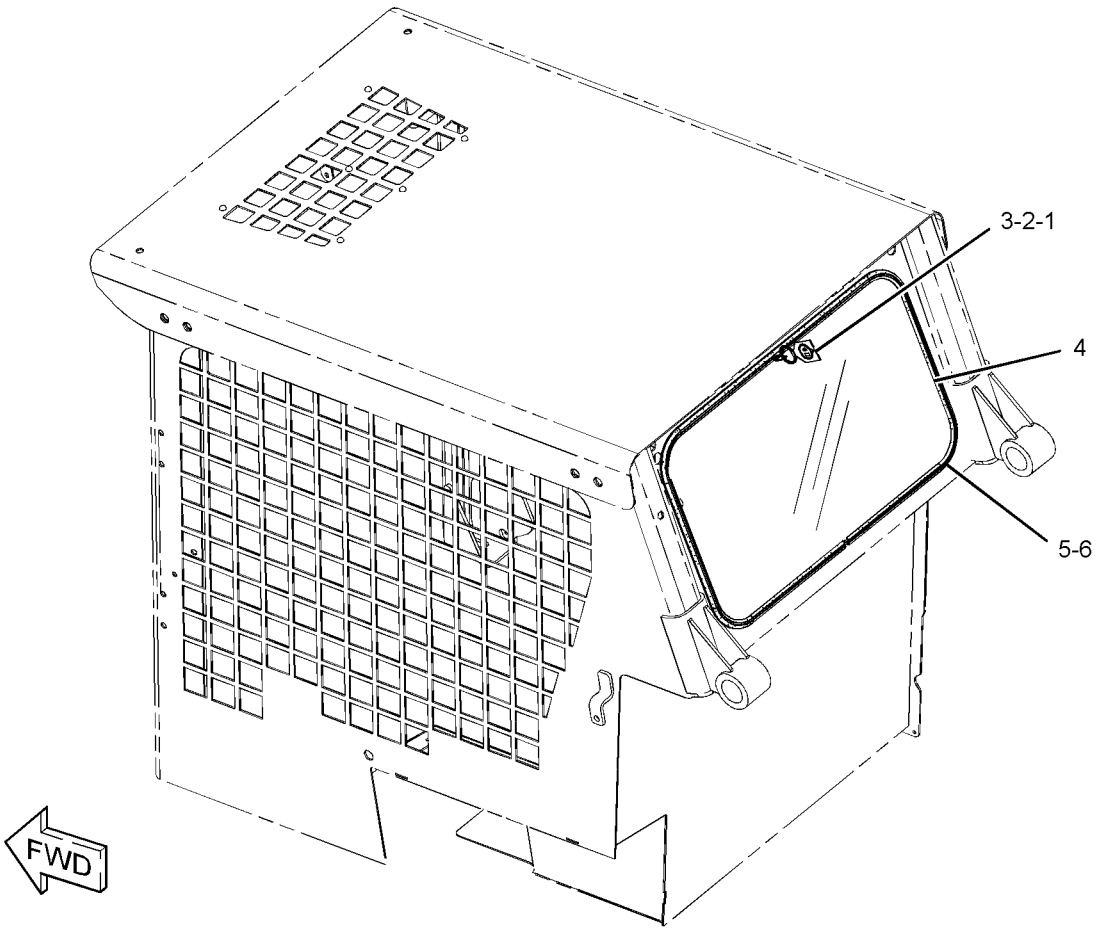

GRAPHIC #1 **<END>** g01268492

OPERATOR STATION

218-6411 WINDOW GP-CAB—SIDE

S/N: SRS1-UP
PART OF 326-5552, 326-5553 CAB AR-ENCLOSED ROPS
AN ATTACHMENT

SMCS-7310 **i04368945**

NOTE	REF NO	GRAPHIC REF	PART NUMBER	QTY	PART NAME 1 2 3 4 5 6 (PRODUCT LEVEL)	SEE PAGE
Y	1	1	**224-7057**	1	WINDOW GP-CAB (UPPER, LH)	547
Y	2	1	**224-7058**	1	WINDOW GP-CAB (UPPER, RH)	549
	3	1	**231-7321**	1	WINDOW AS-CAB (LOWER, RH)	
	4	1	**231-7324**	1	WINDOW AS-CAB (LOWER, LH)	
					(EACH WINDOW AS INCLUDES)	
		1	**239-6109**	1	LATCH AS	
E		1	**282-6961**		SEAL (122-CM)	
M	5	1	**9X-2045**	10	SCREW-TRUSS HEAD (M6X1X20-MM)	

E-ORDER BY THE CENTIMETER
M-METRIC PART
Y-SEPARATE ILLUSTRATION

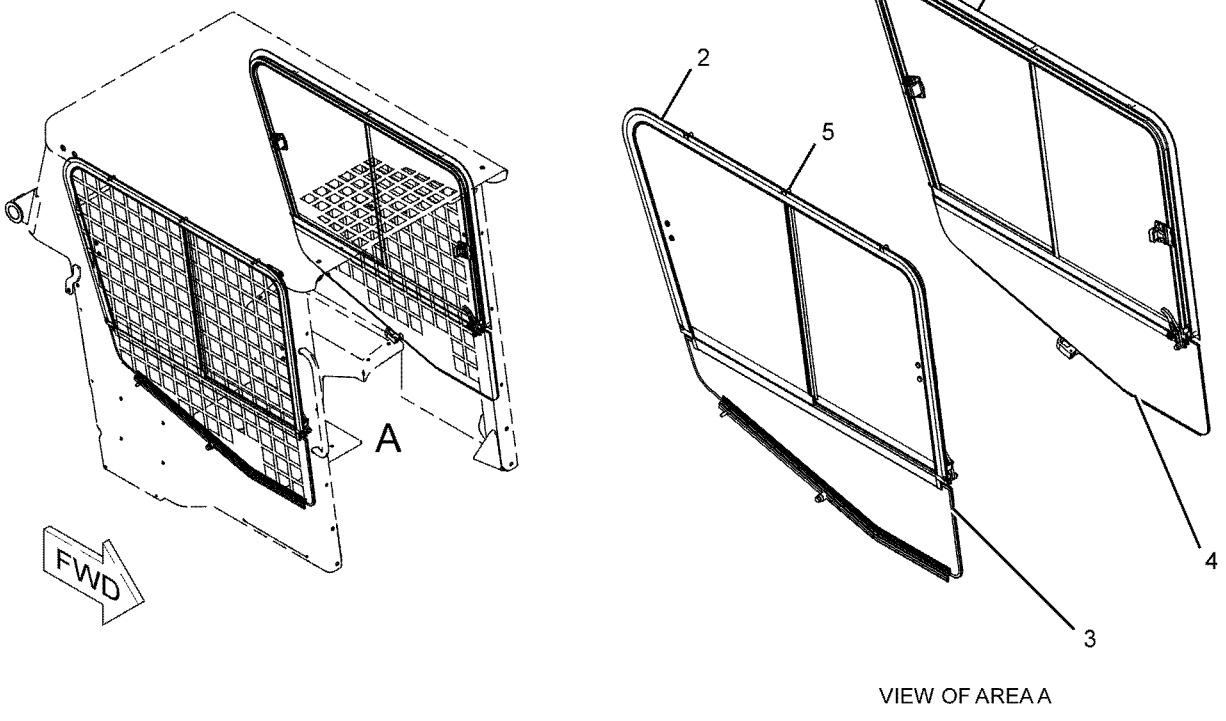

VIEW OF AREA A

GRAPHIC #1 **<END>** g01057739

OPERATOR STATION

224-7057 WINDOW GP-CAB—UPPER,LH

S/N: SRS1-UP

PART OF 218-6411 WINDOW GP-CAB

AN ATTACHMENT

SMCS-7310 **i03648870**

NOTE	REF NO	GRAPHIC REF	PART NUMBER	QTY	PART NAME 1 2 3 4 5 6 (PRODUCT LEVEL)	SEE PAGE
	1	1	**231-7322**	1	WINDOW AS-CAB (SLIDING, REAR)	
E		1	**207-0573**		SEAL (76-CM)	
		1	**231-7331**	1	LATCH AS	
	2	1	**231-7323**	1	WINDOW AS-CAB (SLIDING, FRONT)	
E		1	**207-0573**		SEAL (41-CM)	
		1	**231-7331**	1	LATCH AS	
Y	3	1	**231-7327**	1	FRAME GP-WINDOW (LH)	504
	4	1	**231-7372**	1	CATCH	
	5	1	**243-1323**	1	CATCH	
	6	1	**6D-5797**	2	SCREW-SOCKET	
	7	1	**9X-8918**	2	SCREW-FLAT HEAD (8-32X0.5-IN)	
E	8	1	**207-0539**		SEAL (125-CM)	
E	8A	1	**207-0539**		SEAL (138-CM)	
E	8B	1	**207-0539**		SEAL (81-CM)	
E	9	1	**207-0573**		SEAL (62-CM)	
E	9A	1	**207-0573**		SEAL (80-CM)	
E	10	1	**3E-3892**		SEAL (31-CM EACH)	
E	10A	1	**3E-3892**		SEAL (75-CM)	
E	10B	1	**3E-3892**		SEAL (65-CM)	
E	10C	1	**3E-3892**		SEAL (4-CM EACH)	

E-ORDER BY THE CENTIMETER
Y-SEPARATE ILLUSTRATION

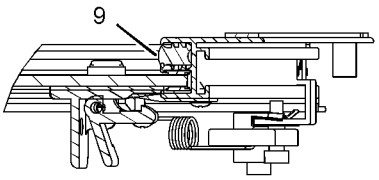

VIEW OF AREA E

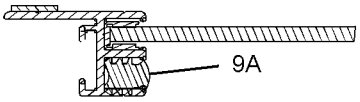

SECTION H-H

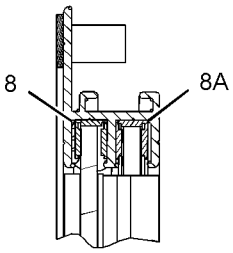

VIEW OF AREA C

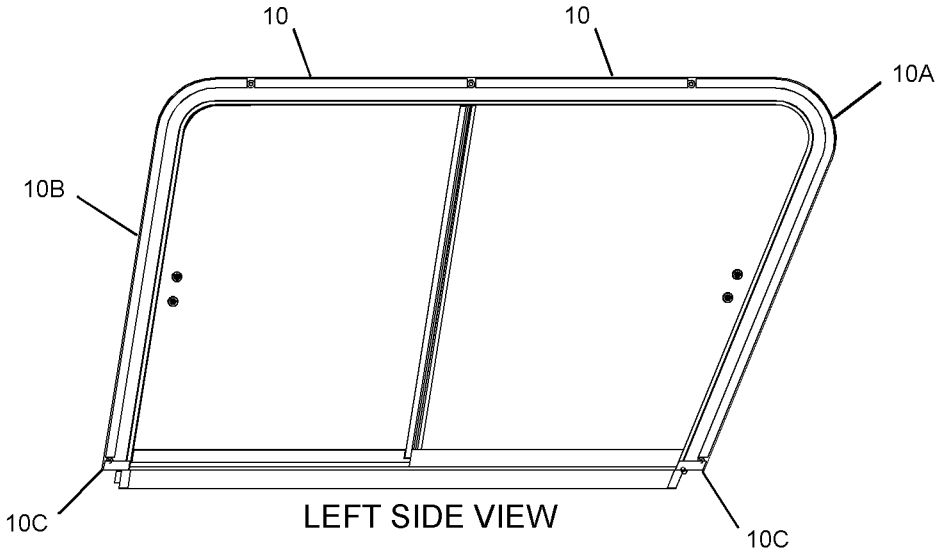

LEFT SIDE VIEW

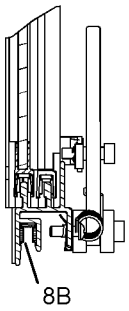

VIEW OF AREA D

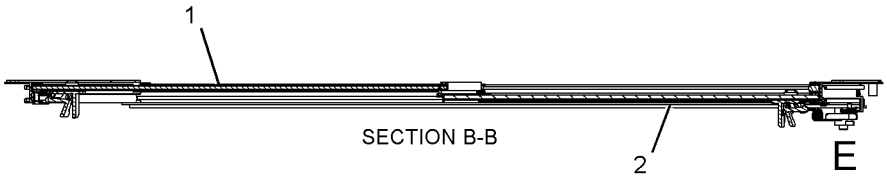

SECTION B-B

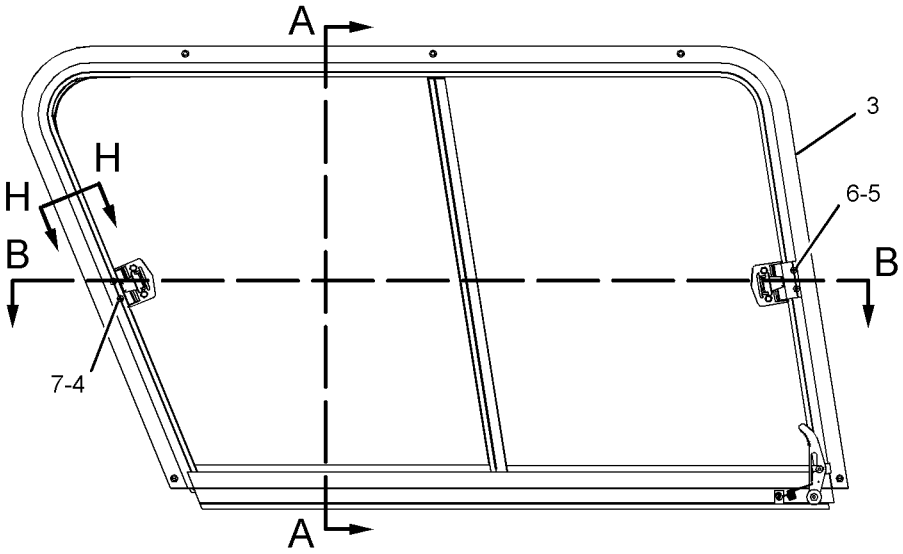

RIGHT SIDE VIEW
(INSIDE OF CAB)

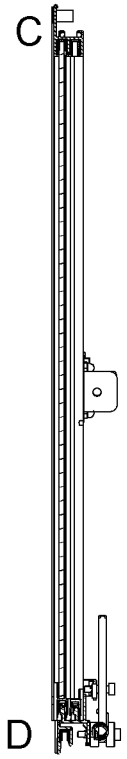

SECTION A-A

GRAPHIC #1 **<END>** g01958440

OPERATOR STATION

224-7058 WINDOW GP-CAB–UPPER, RH

S/N: SRS1-UP

PART OF 218-6411 WINDOW GP-CAB

AN ATTACHMENT

SMCS-7310 **i03648873**

NOTE	REF NO	GRAPHIC REF	PART NUMBER	QTY	PART NAME 1 2 3 4 5 6 (PRODUCT LEVEL)	SEE PAGE
	1	1	**231-7319**	1	WINDOW AS-CAB (SLIDING, REAR)	
E			**207-0573**		SEAL (76-CM)	
			231-7331	1	LATCH AS	
	2	1	**231-7320**	1	WINDOW AS-CAB (SLIDING, FRONT)	
E		1	**207-0573**		SEAL (41-CM)	
		1	**231-7331**	1	LATCH AS	
Y	3	1	**231-7325**	1	FRAME GP-WINDOW (RH)	503
	4	1	**231-7372**	1	CATCH	
	5	1	**243-1323**	1	CATCH	
	6	1	**6D-5797**	2	SCREW-SOCKET	
	7	1	**9X-8918**	2	SCREW-FLAT HEAD (8-32X0.5-IN)	
E	8	1	**3E-3892**		SEAL (4-CM EACH)	
E	8A	1	**3E-3892**		SEAL (31-CM EACH)	
E	8B	1	**3E-3892**		SEAL (75-CM)	
E	8C	1	**3E-3892**		SEAL (65-CM)	
E	9	1	**207-0539**		SEAL (81-CM)	
E	9A	1	**207-0539**		SEAL (138-CM)	
E	9B	1	**207-0539**		SEAL (125-CM)	
E	10	1	**207-0573**		SEAL (80-CM)	
E	10A	1	**207-0573**		SEAL (62-CM)	

E-ORDER BY THE CENTIMETER
Y-SEPARATE ILLUSTRATION

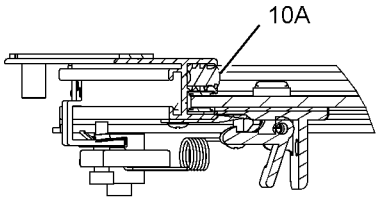

VIEW OF AREA E

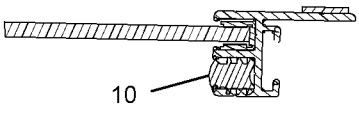

SECTION H-H

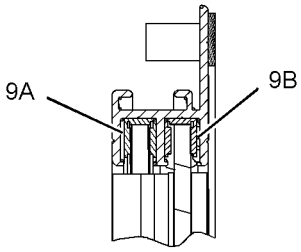

VIEW OF AREA C

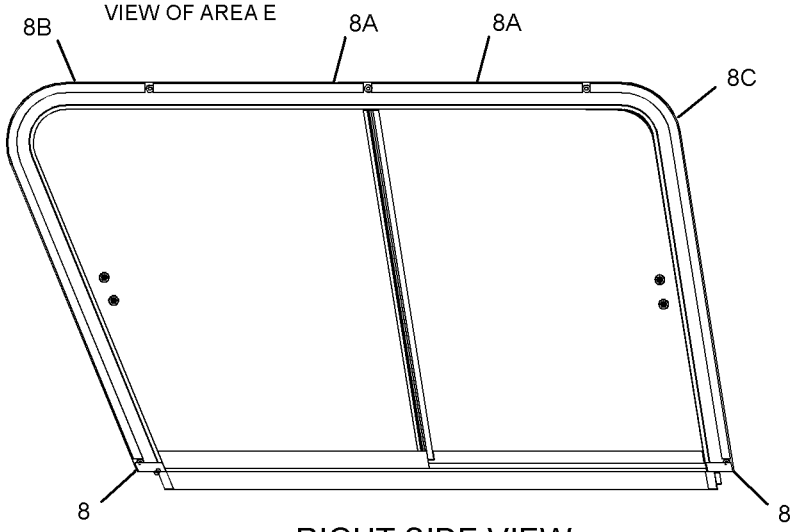

RIGHT SIDE VIEW

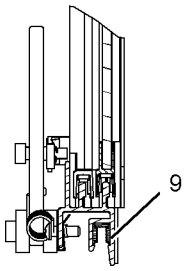

VIEW OF AREA D

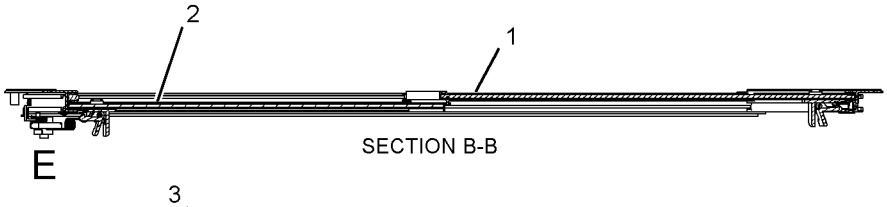

SECTION B-B

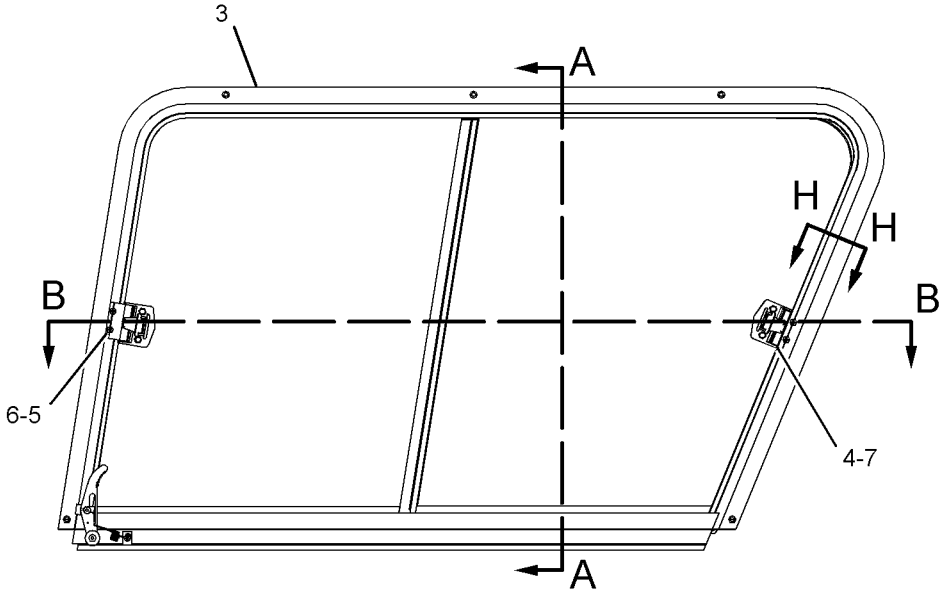

LEFT SIDE VIEW
(INSIDE OF CAB)

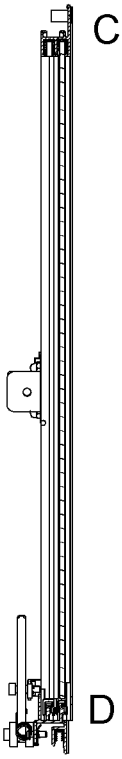

SECTION A-A

GRAPHIC #1 **<END>** g01958448

SERVICE EQUIPMENT AND SUPPLIES

238-7734 FILM GP–UN

S/N: SRS1-UP

AN ATTACHMENT

SMCS-7557 **i03775033**

NOTE	REF NO	GRAPHIC REF	PART NUMBER	QTY	PART NAME 1 2 3 4 5 6 (PRODUCT LEVEL)	SEE PAGE
	1	1	**252-9015**	1	FILM-IDENTIFICATION (UN) (FRONT)	
	2	1	**252-9016**	2	FILM-IDENTIFICATION (UN) (SIDE)	
	3	1	**252-9017**	2	FILM-IDENTIFICATION (UN) (REAR)	

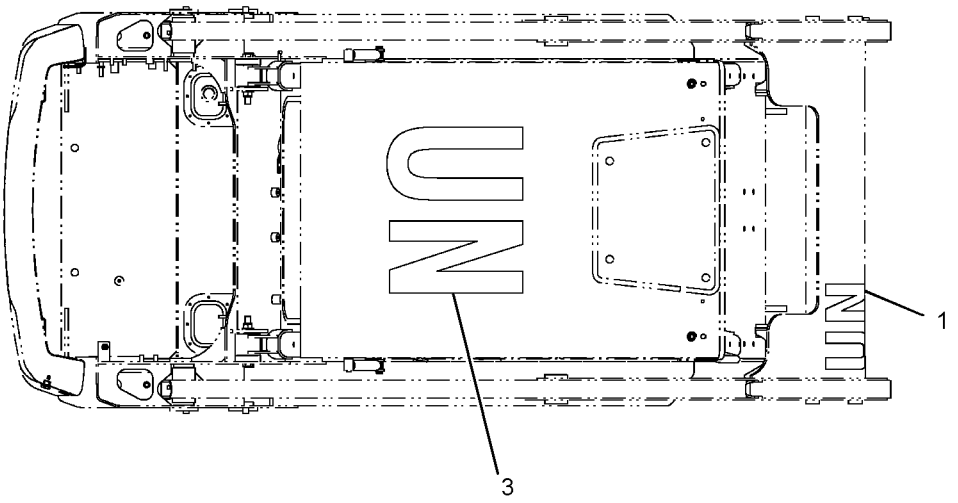

TOP VIEW FWD

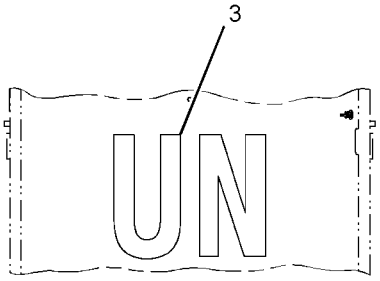

VIEW A-A

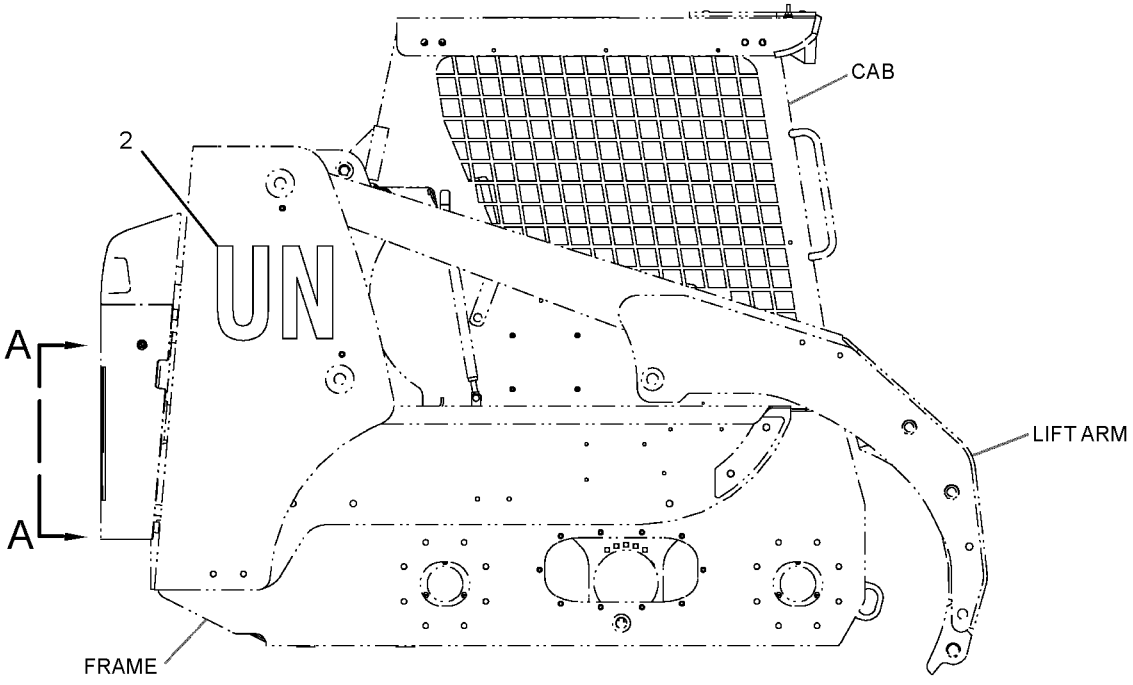

RIGHT SIDE VIEW

GRAPHIC #1

<END>

g01397986

SERVICE EQUIPMENT AND SUPPLIES

326-5251 FILM GP

S/N: SRS1-UP

PART OF 326-5242 COMMON AR

SMCS-7557 **i03982013**

NOTE	REF NO	GRAPHIC REF	PART NUMBER	QTY	PART NAME 1 2 3 4 5 6 (PRODUCT LEVEL)	SEE PAGE
	1	1	**258-3423**	1	FILM-IDENTIFICATION (CATERPILLAR)	
	2	1	**258-3424**	1	FILM-IDENTIFICATION (CAT, LH)	
	3	1	**258-3425**	1	FILM-IDENTIFICATION (CAT, RH)	
	4	1	**258-3427**	1	FILM-IDENTIFICATION (CAT)	
	5	1	**326-5252**	1	FILM-IDENTIFICATION (242B3, LH)	
	6	1	**326-5253**	1	FILM-IDENTIFICATION (242B3, RH)	

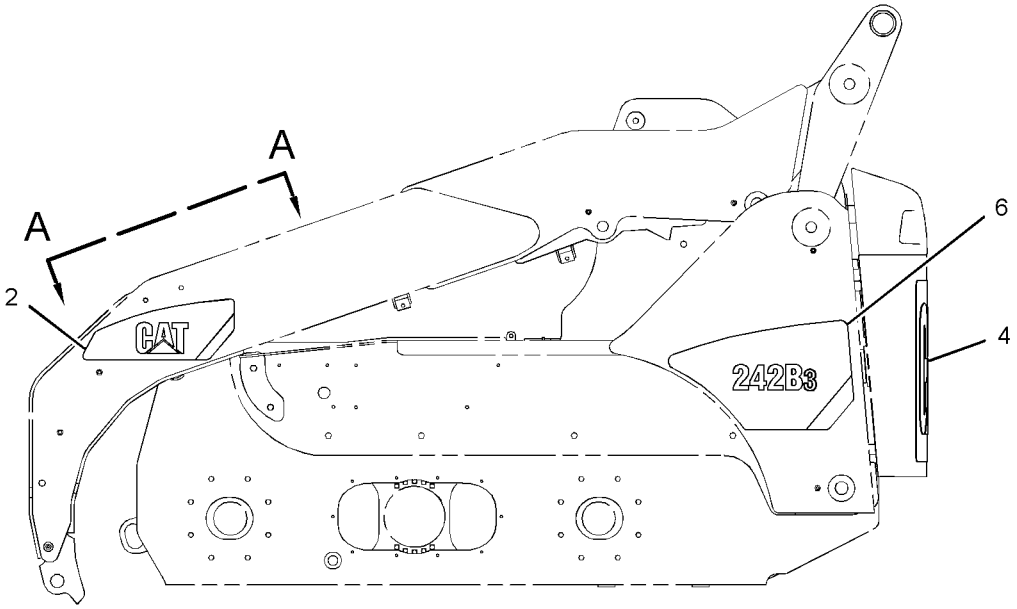

LEFT SIDE VIEW

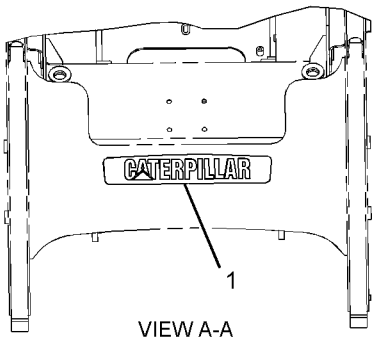

VIEW A-A

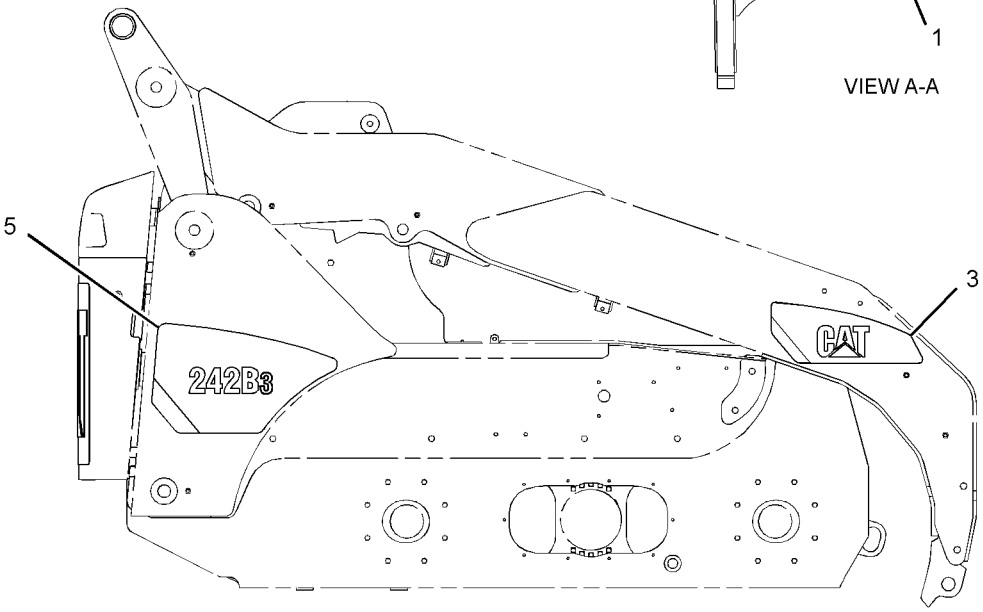

RIGHT SIDE VIEW

GRAPHIC #1 **<END>** g02173013

356-1897 FILM GP–TWO SPEED

S/N: SRS1-UP
PART OF 326-5472, 326-5483 CONTROL AR-MACHINE
AN ATTACHMENT

SMCS-7557 **i03905410**

NOTE	REF NO	GRAPHIC REF	PART NUMBER	QTY	PART NAME 1 2 3 4 5 6 (PRODUCT LEVEL)	SEE PAGE
	1	1	**290-2110**	2	FILM-IDENTIFICATION (TWO SPEED)	

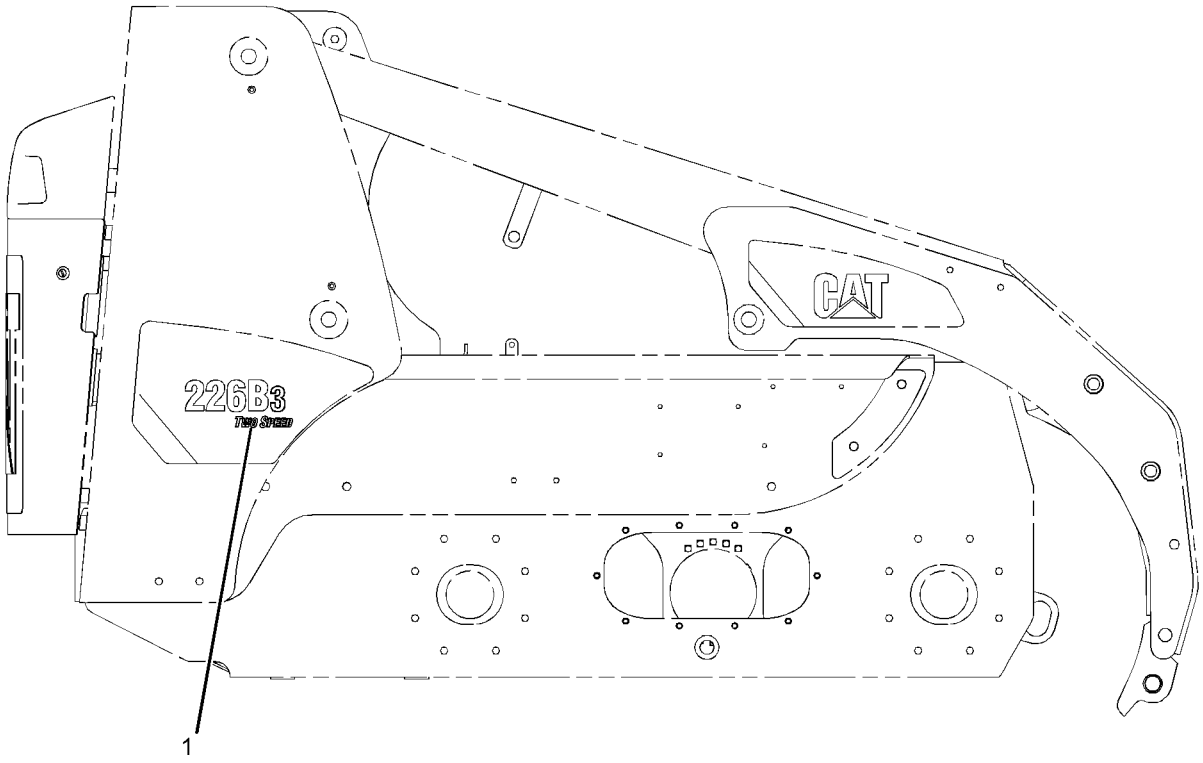

RIGHT SIDE VIEW

GRAPHIC #1 **<END>** g02147978

SERVICE EQUIPMENT AND SUPPLIES

195-6740 PLATE & FILM GP

S/N: SRS1-UP

AN ATTACHMENT

SMCS-7405, 7557 **i02890284**

NOTE	REF NO	GRAPHIC REF	PART NUMBER	QTY	PART NAME 1 2 3 4 5 6 (PRODUCT LEVEL)	SEE PAGE
	1	1	**199-3410**	1	FILM-IDENTIFICATION (SYNTHETIC HYD OIL, READ OMM)	

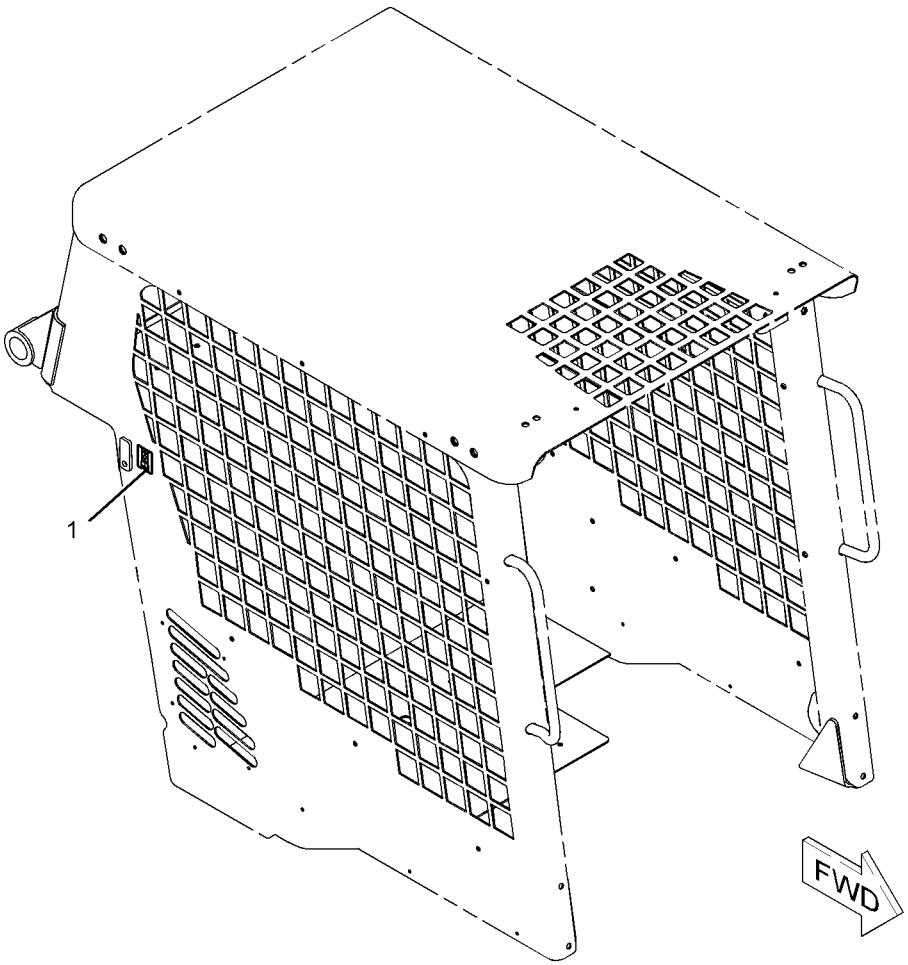

GRAPHIC #1 **<END>** g01086583

SERVICE EQUIPMENT AND SUPPLIES

247-0678 PLATE & FILM GP

S/N: SRS1-UP
PART OF 231-5275, 231-5277 BLADE AR
AN ATTACHMENT

SMCS-7405, 7557 **i02469823**

NOTE	REF NO	GRAPHIC REF	PART NUMBER	QTY	PART NAME 1 2 3 4 5 6 (PRODUCT LEVEL)	SEE PAGE
	1	1	**7X-3229**	4	FILM-INSTRUCTION (LIFT EYE, TIE-DOWN LOCATION)	
	2	1	**226-1242**	2	FILM-WARNING (CRUSH HAZARD, STAY BACK, U.S.)	
	3	1	**228-3581**	1	FILM-WARNING (DO NOT OPERATE, READ OMM)	
	4	1	**159-8035**	1	FILM-WARNING (CRUSH HAZARD, STAY BACK)	
	5	1	**124-2456**	1	FILM-INSTRUCTION (NO STEP)	

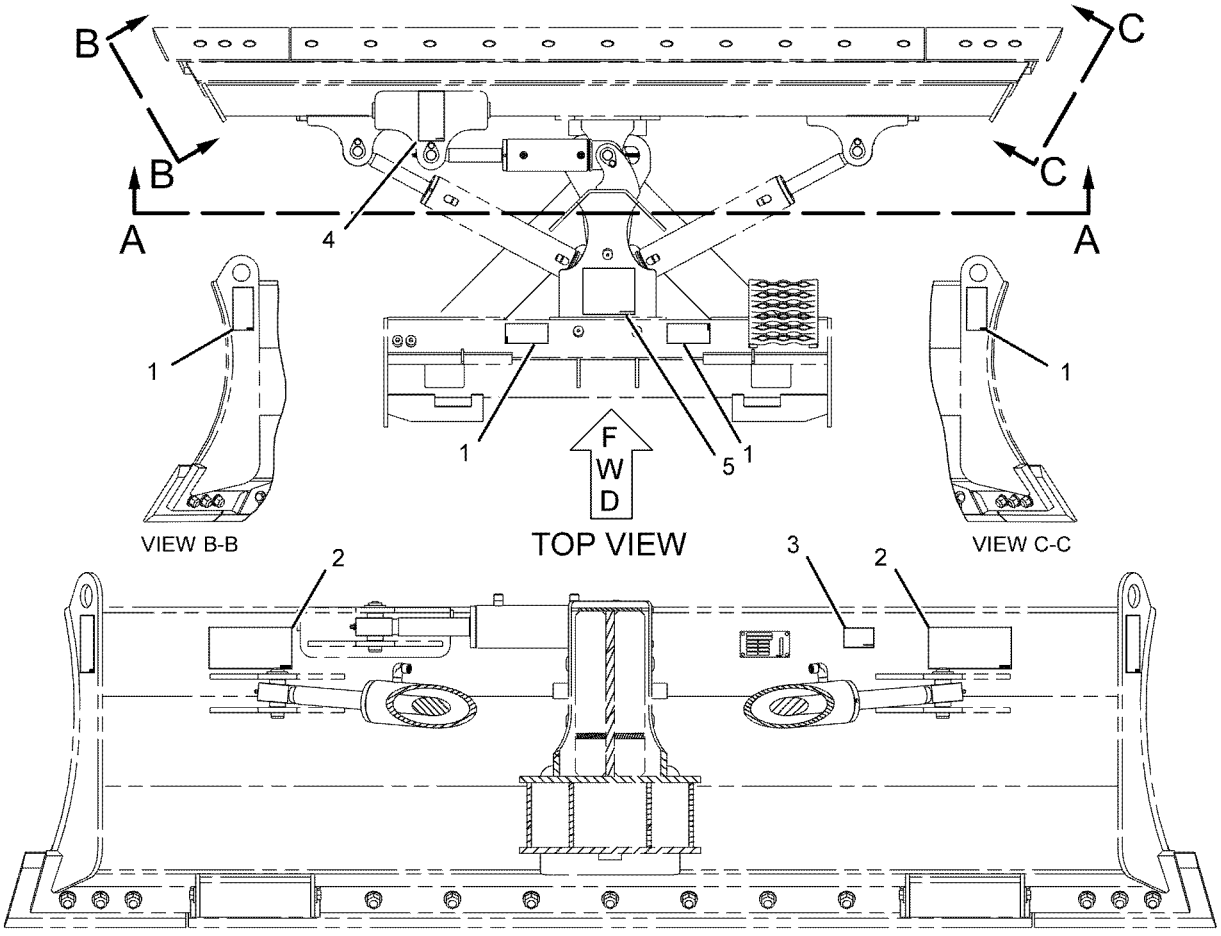

SECTION A-A

GRAPHIC #1 **<END>** g01120449

SERVICE EQUIPMENT AND SUPPLIES

286-9251 PLATE & FILM GP

S/N: SRS1-UP

PART OF 286-9300, 286-9301 BUCKET AR-GRAPPLE

AN ATTACHMENT

SMCS-7405, 7557 **i04157320**

NOTE	REF NO	GRAPHIC REF	PART NUMBER	QTY	PART NAME 1 2 3 4 5 6 (PRODUCT LEVEL)	SEE PAGE
	1	1	**168-8389**	4	TACK-FASTENER	
	2	1	**228-3369**	1	FILM-WARNING (DO NOT OPERATE, READ OMM)	
	3	1	**247-6118**	2	FILM-WARNING (CRUSH HAZARD, STAY BACK)	
	4	1	**248-5245**	2	FILM-INFORMATION (LIFT EYE, TIE-DOWN LOCATION)	
	5	1	**358-4944**	1	PLATE-IDENTIFICATION (BUCKET SPECIFICATIONS)	

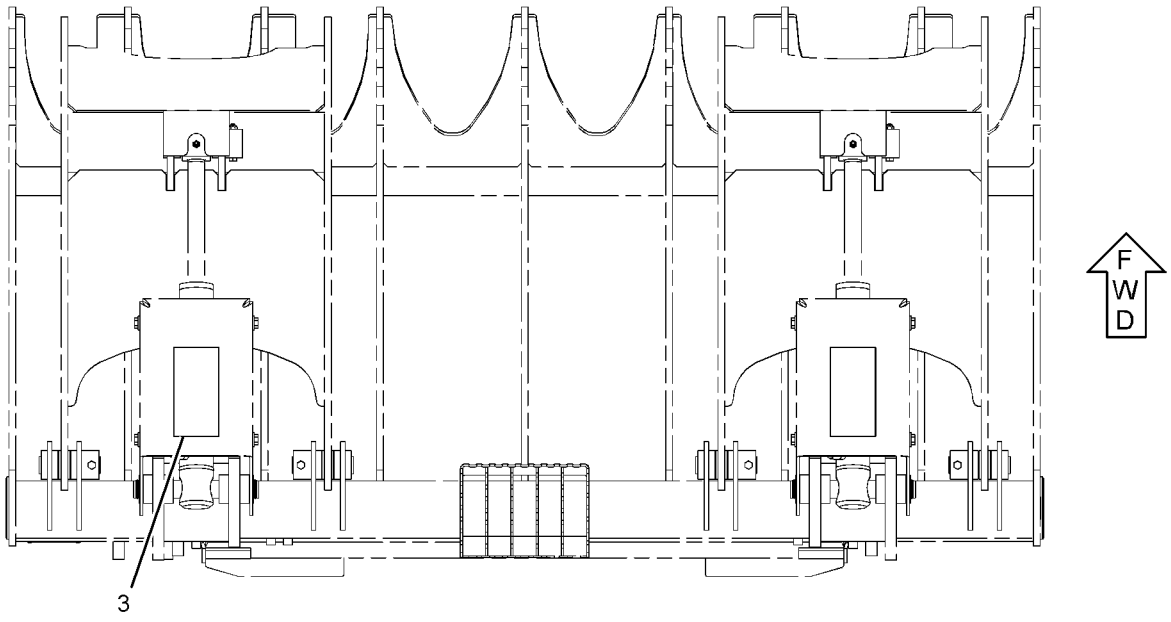

TOP VIEW

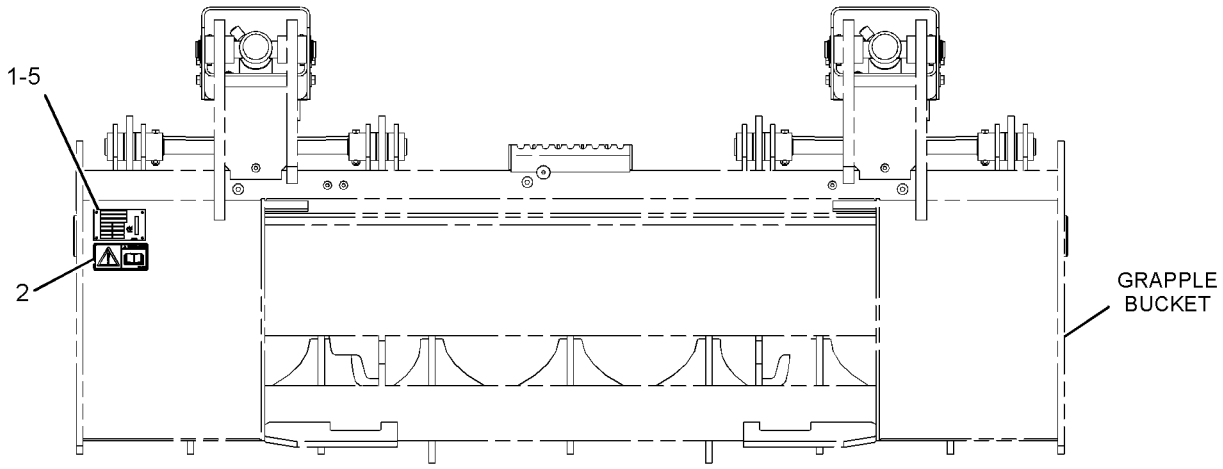

REAR VIEW

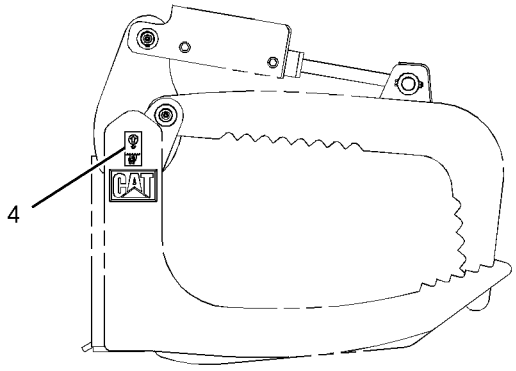

RIGHT SIDE VIEW

GRAPHIC #1

<END>

g01373367

SERVICE EQUIPMENT AND SUPPLIES

326-5682 PLATE & FILM GP

S/N: SRS1-UP

AN ATTACHMENT

SMCS-7405, 7557 **i03995040**

NOTE	REF NO	GRAPHIC REF	PART NUMBER	QTY	PART NAME 1 2 3 4 5 6 (PRODUCT LEVEL)	SEE PAGE
	1	1	**157-2853**	1	FILM-INFORMATION (READ OMM)	
	3	2	**169-2876**	1	FILM-IDENTIFICATION (POWER RECEPTACLE, 12-VOLT)	
	4	1	**219-0302**	1	FILM-WARNING (NO WELD, NO DRILL, READ OMM)	
	5	1	**239-4990**	1	FILM-WARNING (HIGH PRESSURE CYLINDER)	
	6	2	**224-8645**	2	FILM-WARNING (CRUSH HAZARD, STAY BACK)	
	7	2	**224-8945**	1	FILM-WARNING (DO NOT USE ETHER, U.S)	
	8	1	**224-9021**	1	FILM-WARNING (SEAT BELT)	
	9	1	**225-3305**	1	FILM-WARNING (UNIVERSAL, READ OMM, U.S.)	
	10	1	**361-0435**	1	FILM-CERTIFICATION (OPS, READ OMM)	
	11	2	**295-7317**	1	FILM-WARNING (CRUSH HAZARD, CAB, READ OMM)	
	12	1	**295-7318**	1	FILM-WARNING (FALL/CRUSH HAZARD, NO ACCESS)	
	13	1	**295-7319**	1	FILM-WARNING (CRUSH HAZARD, READ OMM) (WORK TOOL)	
	15	2	**235-1365**	1	FILM-WARNING (HOT FLUID UNDER PRESSURE)	
	16	2	**239-6986**	1	PLATE-IDENTIFICATION (MACHINE)	
	17	1	**263-4836**	4	FILM-SYMBOL (TIE-DOWN)	
	18	2	**356-1905**	1	FILM-INSTRUCTION (BUCKET LOWER)	
	19	2	**326-5683**	1	FILM-IDENTIFICATION (SERVICE CHART, READ OMM)	
	21	2	**225-0313**	1	FILM-WARNING (JUMP START, READ OMM, U.S.)	
	24	1,2	**295-7315**	2	FILM-WARNING (CRUSH HAZARD, CAB, READ OMM)	
	25	1	**295-7320**	1	FILM-WARNING (CRUSH HAZARD, READ OMM) (STATION)	
	26	1	**234-9575**	1	FILM-INSTRUCTION (GOVERNOR CONTROL)	
	27	2	**312-7747**	1	PLATE-WARNING (UNIVERSAL)	

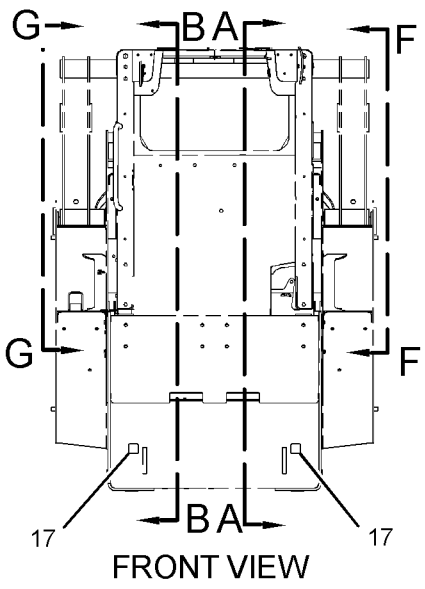

FRONT VIEW

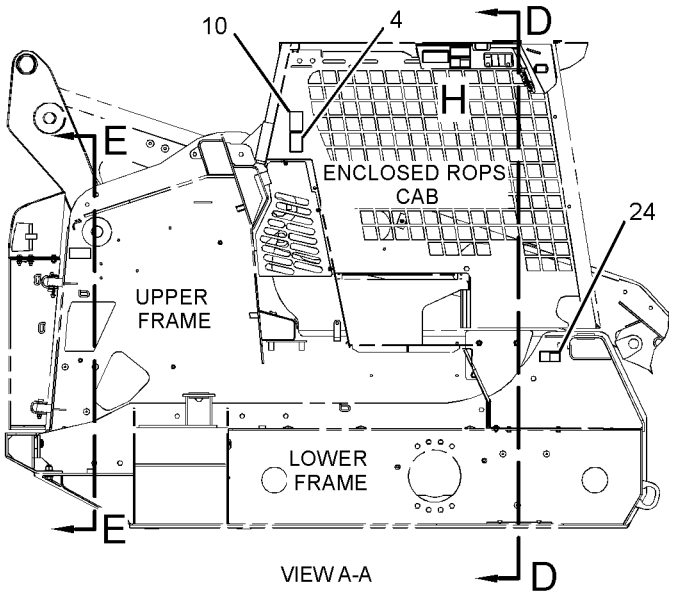

VIEW A-A

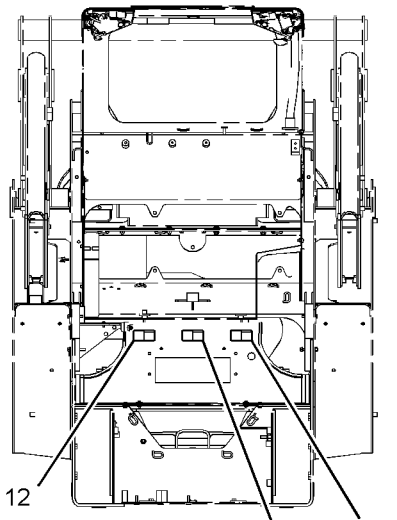

VIEW D-D

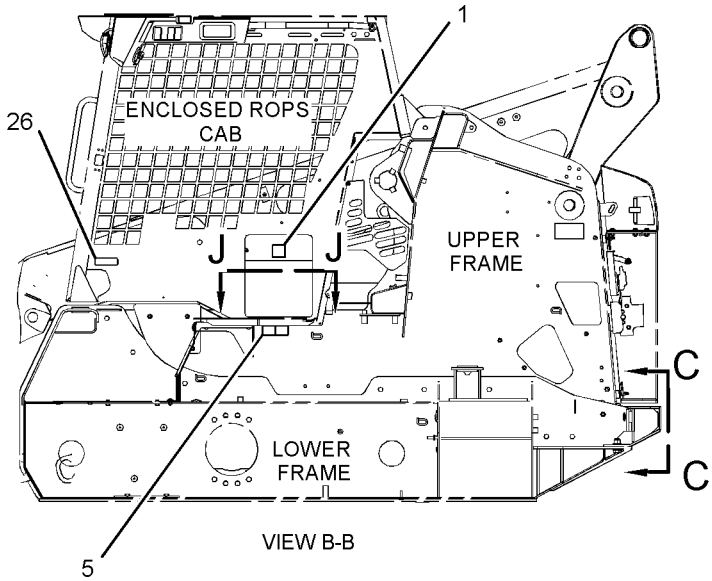

VIEW B-B

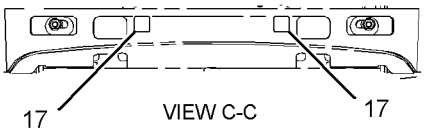

VIEW C-C

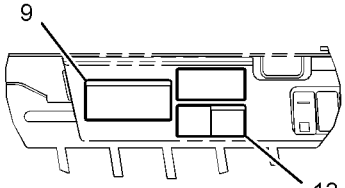

VIEW OF AREA H

REFER TO ALL ILLUSTRATIONS OF THIS GROUP FOR AUXILIARY VIEWS

GRAPHIC #1

g02149808

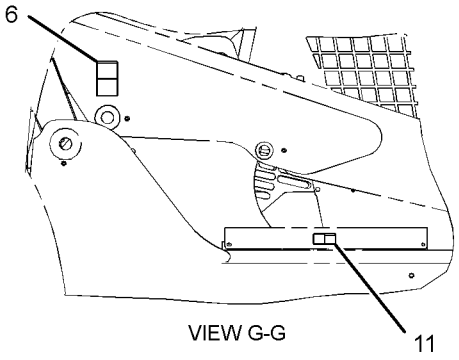

VIEW G-G

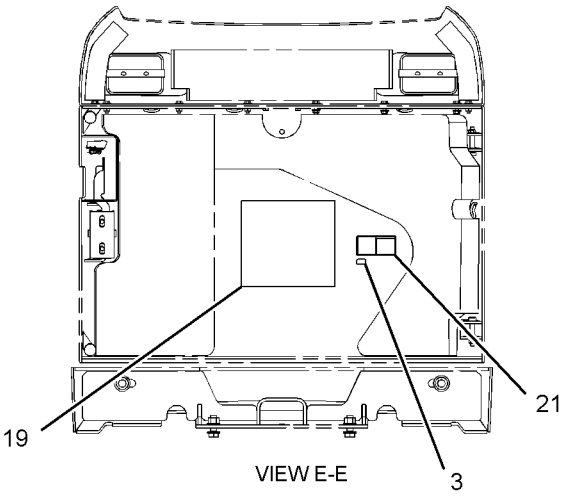

VIEW E-E

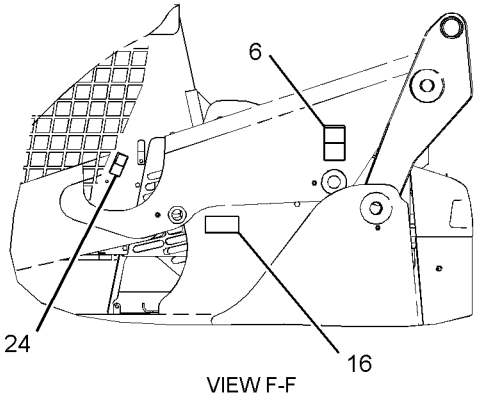

VIEW F-F

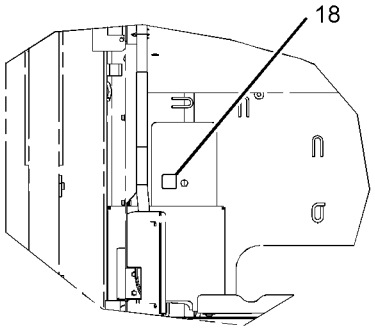

VIEW J-J

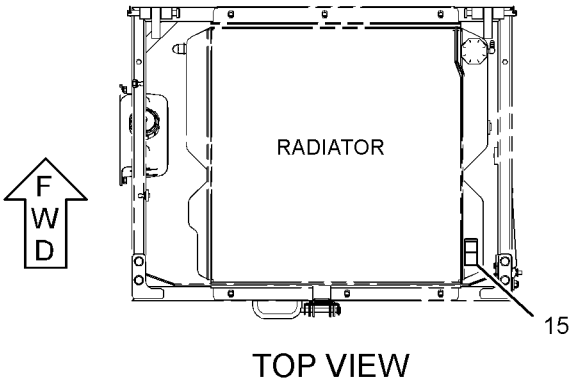

TOP VIEW

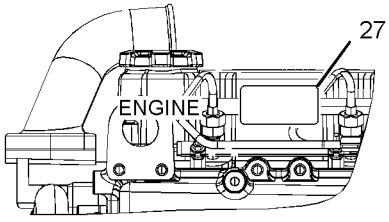

RIGHT SIDE VIEW
(FOR MODEL 252)

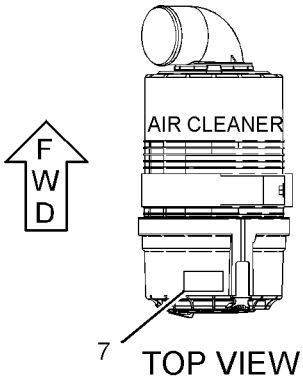

TOP VIEW

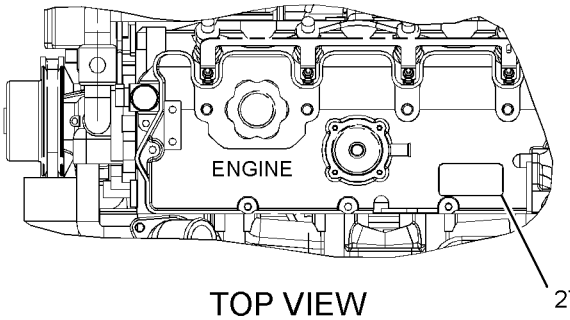

TOP VIEW
(FOR MODEL 232 & 242)

GRAPHIC #2 **<END>** g01416616

SERVICE EQUIPMENT AND SUPPLIES

326-5686 PLATE & FILM GP–INTERNATIONAL

S/N: SRS1-UP

AN ATTACHMENT

SMCS-7405, 7557 **i03990952**

NOTE	REF NO	GRAPHIC REF	PART NUMBER	QTY	PART NAME 1 2 3 4 5 6 (PRODUCT LEVEL)	SEE PAGE
	1	2	**157-2853**	1	FILM-INFORMATION (READ OMM)	
	2	1	**169-2876**	1	FILM-IDENTIFICATION (POWER RECEPTACLE, 12-VOLT)	
	3	2	**219-0302**	1	FILM-WARNING (NO WELD, NO DRILL, READ OMM)	
	4	2	**361-0435**	1	FILM-CERTIFICATION (OPS, READ OMM)	
	5	2	**263-4836**	4	FILM-SYMBOL (TIE-DOWN)	
	6	1	**326-5683**	1	FILM-IDENTIFICATION (SERVICE CHART, READ OMM)	
	7	2	**239-4991**	1	FILM-WARNING (HIGH PRESSURE CYLINDER)	
	8	2	**295-7330**	1	FILM-WARNING (CRUSH HAZARD, READ OMM)	
	9	1	**312-7748**	1	PLATE-WARNING (UNIVERSAL, READ OMM)	
	10	1	**356-1905**	1	FILM-INSTRUCTION (BUCKET LOWER)	
	11	2	**224-0554**	1	FILM-WARNING (UNIVERSAL, READ OMM, INTL)	
	12	1	**224-8946**	1	FILM-WARNING (NO ETHER SPRAY/AIR INTK, INTL)	
	13	2	**224-9022**	1	FILM-WARNING (SEAT BELT)	
	14	1	**295-7327**	1	FILM-WARNING (CRUSH HAZARD, READ OMM)	
	15	2	**295-7328**	1	FILM-WARNING (FALL/CRUSH HAZARD, NO ACCESS)	
	16	1,2	**295-7325**	2	FILM-WARNING (CRUSH HAZARD, CAB, READ OMM)	
	17	2	**295-7329**	1	FILM-WARNING (CRUSH HAZARD, READ OMM)	
	18	2	**234-9575**	1	FILM-INSTRUCTION (GOVERNOR CONTROL)	
	19	1	**239-6986**	1	PLATE-IDENTIFICATION (MACHINE)	
	20	1	**225-0312**	1	FILM-WARNING (JUMP START, READ OMM, INTL)	
	21	1	**235-1368**	1	FILM-WARNING (RADIATOR)	
	22	1	**224-8646**	2	FILM-WARNING (CRUSH HAZARD, STAY BACK)	

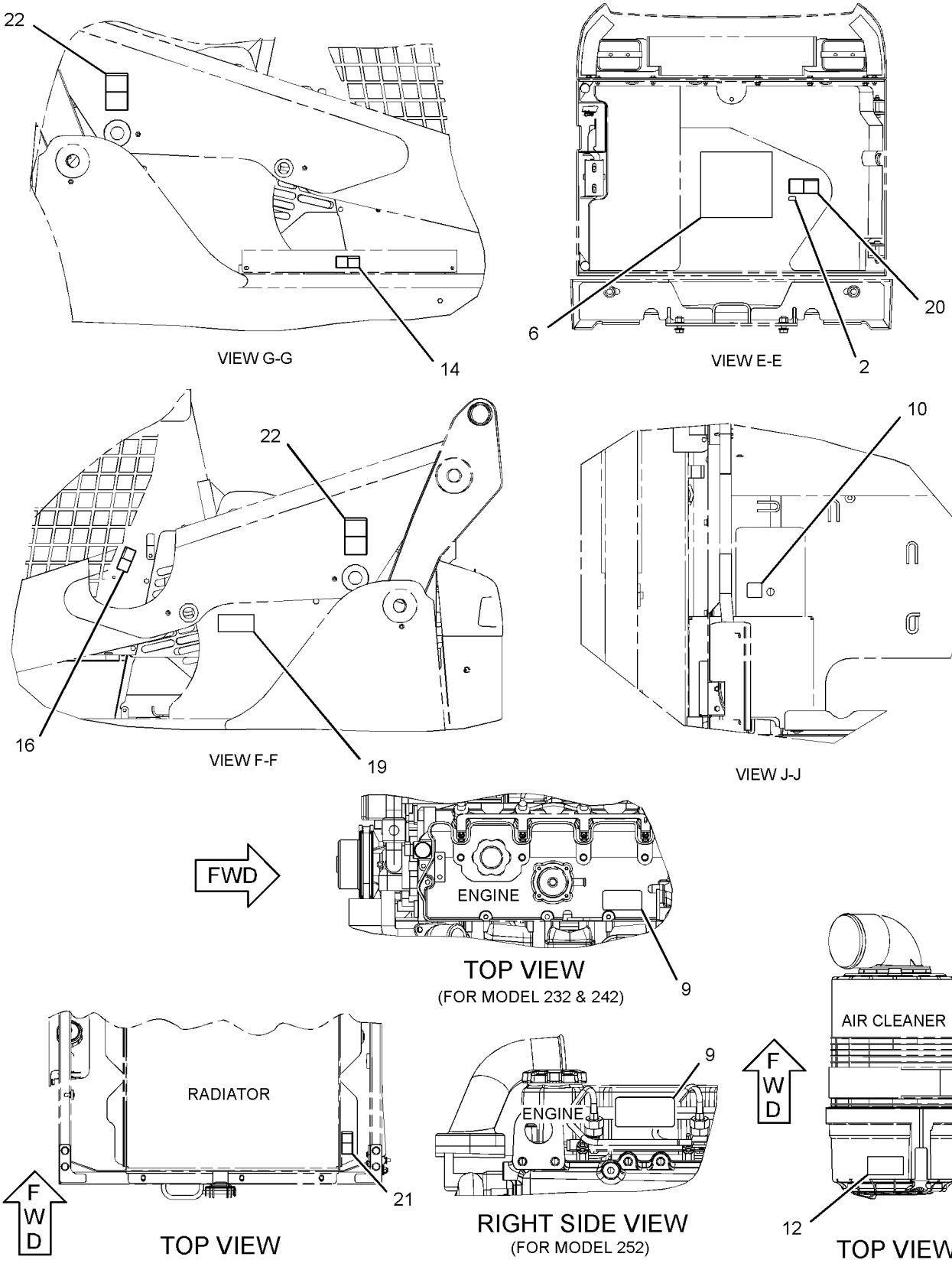

GRAPHIC #1 g02155915

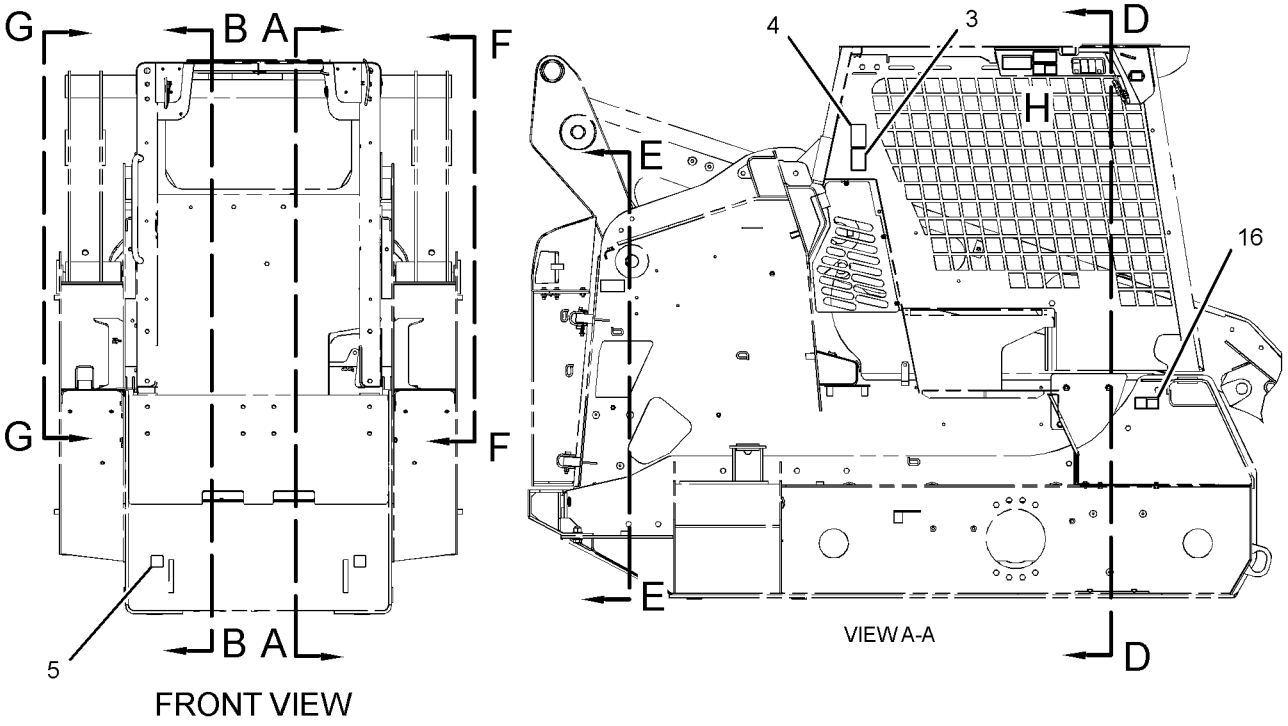

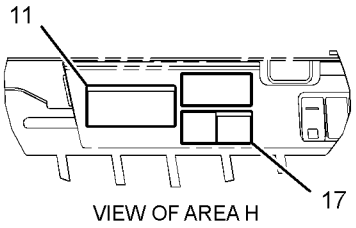

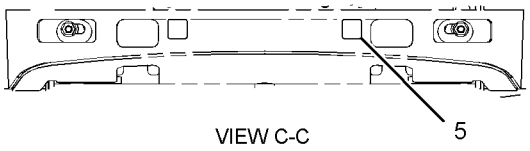

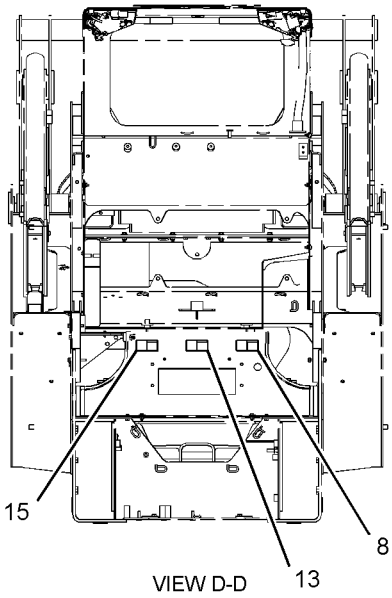

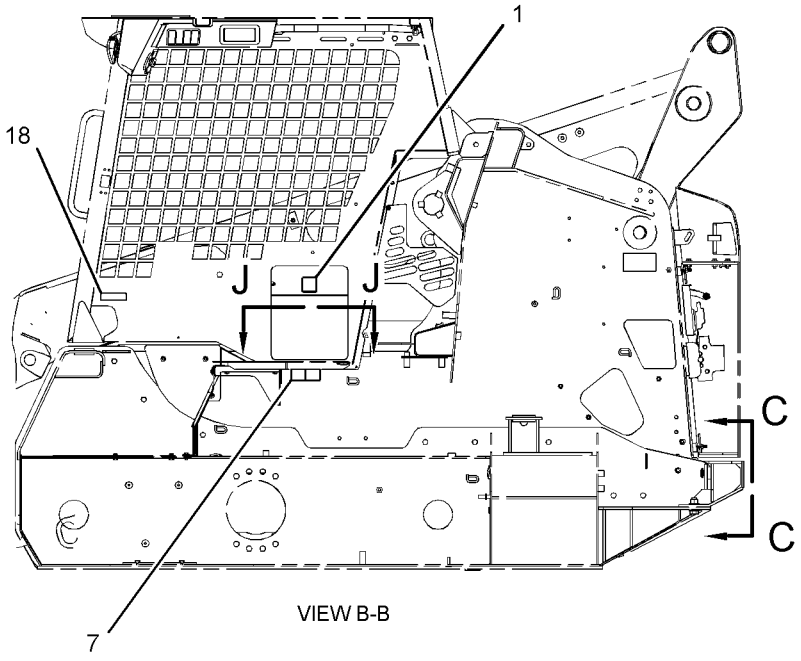

REFER TO ALL ILLUSTRATIONS OF
THIS GROUP FOR AUXILIARY VIEWS

GRAPHIC #2 **<END>** g02155916

PART NUMBER INDEX

Part	Page
0	
0T-0244	535
	536
	537
	538
1	
1D-4677	543
1G-8878	128
1H-3244	72
	89
	99
1L-2279	451
1M-6119	75
1M-6120	75
1P-4278	20
	45
	65
1P-4578	263
1S-0994	221
	223
	225
	227
	231
1S-4305	138
	139
1S-9593	81
	83
	117
	478
	479
	480
2	
2D-6412	535
	536
	537
	538
2H-7829	248
	250
2K-4821	203
2K-4973	50
	173
2K-5232	216
	237
	240
	243
2K-5964	199
2L-8065	110
2L-8067	108
2L-8069	108
	113
	125
	517
2L-8077	108
2L-8079	113
2M-9780	125
	126
	129
	131
	217
	219
	221
	223
	225
	227
	229
	231
	233
	235
	246
	248
	250
	254
	265
	267
	274
	291
2P-8104	100
2R-0364	531
2S-3440	263
2S-4078	263
2S-5717	543
2S-6408	449
2V-3216	219
	246
3	
3B-4504	56
3B-4505	13
	15
	26
	28
	30
	59
	67
	520
3B-4628	217
	409
3B-7255	451
3B-8488	179
	199
	435
3B-8489	197
	199
	201
	202
	203
	204
	209
	211
	213
	280
	281
	283
	309
	310
	384
	385
	386
	387
	388
	389
	390
	391
	392
	393
	394
	395
	423
	431
3D-2824	125
	129
	131
	135
	252
	254
	257
	269
3E-2310	261
3E-3892	547
	549
3E-4041	129
	131
3E-4051	517
3E-4057	517
3E-4321	125
3E-4370	422
3E-5153	100
3E-5154	100
3E-7404	65
	219
	246
3E-7584	►87
	96
	185
3E-9179	496
	498
3F-5108	413
3F-9556	523
	530
3J-1907	103
	113
	120
	122
	128
	131
	135
	210
	211
	213
	216
	233
	235
	237
	240
	243
	254
	257
	259
	261
	291
	438
	440
3J-7354	125
	150
	152
	259
3K-0360	122
	125
	135
	140
	193
	235
	261
	289
3K-0715	150
	152
3K-8782	406
3P-0439	211
	213
3P-1896	17
3S-2093	81
	83
	91
	96
	105
	108
	110
	112
	113
	114
	116
	117
	125
	184
	185
	216
	237
	240
	243
	288
	451
	465
	490
	493
	496
	498
	517
	525
	526
3S-6049	75
3S-8665	512
3S-9182	179
4	
4B-2043	113
	526
4B-4863	184
	189
	254
	257
4B-9302	65
4D-0298	179
4D-6466	65
4E-0724	451
4E-1384	464
4F-3658	413
4I-9404	42
4J-0522	263
4J-0527	210
4J-5267	263

► **PRIMARY REFERENCE**

PART NUMBER INDEX

Part	Page
4J-5477	105
	125
	184
	216
	237
	240
	243
	259
	261
4J-7533	291
4K-0367	413
4K-8864	49
4M-5285	199
	281
	283
4P-7429	110
	474
4P-7581	65
	96
	108
	110
	114
	185
	217
	237
	240
	243
	288
	524
4P-8134	108
	110
	116
	254
	257
5	
5B-0651	199
	408
	409
5B-0935	431
5C-2874	254
	257
5C-2890	62
	64
	65
	72
	88
	89
	99
	107
	108
	125
	438
	440
	490
	493
	515
	528
	531
5C-7261	45
	50
	99
	108
	110
	113
	114
	125
	129
	131
	173
	438
	440
	451
	464
	475
	520
	523
	530
	532
	539
	540
5C-7682	503
	504
5C-7883	140
5C-8310	500
	545
5C-8311	500
	545
5C-8312	184
	189
5C-9553	56
	62
	65
	185
	188
	410
	465
	530
5D-0718	252
5I-4936	22
5I-4993	30
5I-5077	62
5I-7505	32
5I-7525	17
5I-7543	22
5I-7623	62
5I-7625	37
5I-7628	24
	25
	44
5I-7630	37
5I-7678	55
5I-7719	37
5I-7931	58
5I-7933	62
5I-8021	55
5I-8023	55
5I-8056	24
	25
	44
5I-8109	62
5I-8110	62
5I-8111	60
	61
5K-1787	124
5K-4778	65
5P-0372	50
	187
5P-0597	62
5P-1076	29
	172
	179
	235
	311
	312
	434
5P-1420	45
	65
5P-1442	20
	65
	288
5P-1478	110
5P-2230	263
5P-4115	114
	125
5P-4116	23
	45
	65
	75
	110
	125
	129
	131
	173
	179
	271
	451
	512
5P-4362	263
5P-4571	110
	113
	184
	190
5P-4868	57
	62
5P-4961	65
	288
5P-5148	248
	250
5P-5924	517
5P-5927	532
5P-5969	490
	493
	501
5P-7070	501
5P-7162	108
5P-7464	265
	267
	269
5P-7465	265
	267
	269
5P-7468	45
5P-7469	45
5P-7957	468
5P-7958	1
	107
5P-8246	451
	217
	409
	490
	493
	542
5P-8247	413
5P-8309	50
	490
	493
5P-8439	94
	95
5P-8500	1
	169
	183
5P-9909	490
	493
5T-7869	543
5T-7870	543
5W-1987	490
	493
5W-6388	289
6	
6B-6682	202
6B-7469	126
6D-1641	512
	519
6D-3479	65
	261
6D-4244	125
6D-4246	517
6D-4247	221
	223
	225
	227
	231
6D-4636	512
6D-5797	547
	549
6E-5060	150
	152
6F-4718	137
6F-6672	279
6I-1418	107
6K-8178	217
	237
	240
	243
6R-3320	252
6V-0852	129
	131
	259
	263
6V-1392	467
6V-1889	126
	252
6V-1970	1
6V-2317	62
	67
	94
6V-3582	254
	257
6V-3918	471
	472
6V-3940	37
	48
	55
6V-3965	129

PART NUMBER INDEX

Part	Page	Part	Page	Part	Page	Part	Page
	131		210		243		498
	259		211		254	6V-9671	406
	263		213		257	6V-9672	184
6V-4270	490		254	6V-8776	126		189
	493		255		217	6V-9746	129
6V-5215	39		257	6V-8781	120		131
6V-5217	40		259		122		135
	69		265		261		252
	74		267	6V-8782	122		263
6V-5221	44	6V-8399	274	6V-8788	221	6V-9805	524
6V-5326	150	6V-8626	125		223	6V-9830	267
	152		254		225	6V-9831	407
6V-5586	150	6V-8628	125		227	6V-9836	216
	152		259		231		237
6V-5683	64	6V-8632	135	6V-8938	217		240
6V-5834	526		235		237		243
6V-5839	40	6V-8634	122		240	6V-9838	237
6V-6689	501		135		243	6V-9851	254
	512	6V-8636	120	6V-8949	442	6V-9873	259
6V-7357	23		122	6V-8978	135	6W-5698	65
	26		135	6V-9001	120		289
	62		216		122	6Y-5839	413
	179		235		216	6Y-5840	413
6V-7359	265		237		237		
	267		240		240		
	269		243		243	**7**	
6V-7644	311	6V-8637	129	6V-9007	129		
	312		131		252	7D-8431	465
6V-7728	108		135	6V-9028	110	7D-8508	204
	114	6V-8638	129	6V-9168	217		207
6V-7744	408		254		237		208
6V-8186	530	6V-8639	135		240		209
6V-8352	150	6V-8640	131		243	7E-2700	186
	152	6V-8641	216	6V-9170	269		187
6V-8397	120		237	6V-9182	263	7E-9898	438
	122		240	6V-9189	182		440
	131		243		280	7G-1060	107
	135		259		281	7G-2950	217
	198		261		282		238
	216	6V-8642	125		283		240
	217		235		309		243
	219		265		310	7G-2951	217
	221		267		384		238
	223	6V-8647	125		385		240
	225		259		386		243
	227	6V-8713	254		387	7G-5984	235
	229		257		388	7G-5985	235
	231		269		389	7G-5986	235
	233	6V-8715	219		390	7G-7053	108
	235		221		391		465
	237		223		392	7G-8839	124
	240		225		393	7H-7055	217
	243		227		394		238
	246		229		395		241
	248		231		423		244
	250		233		435	7J-0204	202
	254		246	6V-9508	135		203
	257		248	6V-9632	23		204
	261		250		175		207
	438	6V-8721	265		177	7J-9108	120
	440	6V-8723	122		254		122
6V-8398	120	6V-8724	216		257		125
	122		233		471		126
	129		237		472		135
	135		240		496		217

► **PRIMARY REFERENCE**

PART NUMBER INDEX

Part	Page
	235
	237
	254
	255
	257
	265
	267
	269
	274
7K-1181	64
	65
	75
	90
	91
	96
	107
	110
	113
	125
	135
	216
	237
	240
	243
	252
	259
	293
	303
	304
	451
	474
	512
	517
	519
7M-7410	49
7M-8485	263
7N-7221	525
7N-9017	114
	125
7R-2750	91
	96
	108
7R-2751	91
	96
	107
7S-3912	229
7S-3913	229
7S-3916	219
	246
	248
	250
7S-3919	219
	246
	248
	250
7T-0093	81
	83
	117
7T-1099	175
	177
	532
7T-6087	100
7T-6088	100
7T-6090	100
7T-6092	100
7T-6093	100
7T-6099	100
7T-6799	525
7X-0495	451
7X-0515	199
7X-0579	108
	179
7X-0595	199
7X-0603	182
7X-0608	110
	113
	114
7X-0610	124
7X-0796	69
7X-0818	47
	59
	185
7X-1443	45
7X-2444	105
	184
7X-2475	301
	524
7X-2535	255
	438
	440
7X-2537	48
	173
	459
	508
	512
	533
7X-2539	122
7X-2548	110
7X-2553	431
	505
7X-2556	29
7X-2621	408
7X-3229	557
7X-6312	79
7X-7729	49
	50
	173
	197
	199
	217
	238
	241
	244
	248
	250
	252
	283
	408
	431
7X-9065	526
	8
8C-3081	210
8C-3110	286
	287
8C-3131	296
8C-3205	263
8C-3398	107
	108
8C-3446	125
8C-3451	126
8C-5918	75
8C-6354	107
8C-6758	120
	122
8C-6959	65
8C-8478	311
	312
8C-9778	100
8C-9783	100
8E-5502	129
8E-5702	311
	312
8F-1434	100
8F-8151	512
8G-1151	496
	498
8I-5078	291
8J-2880	311
	312
8J-4455	100
8L-5188	217
	409
8L-8413	303
	304
	496
	498
	507
8M-4963	113
8N-0869	75
8N-1548	107
8N-1549	113
8N-1725	75
8Q-6027	207
	208
8R-3857	175
8S-0934	535
	536
	537
	538
8T-0075	131
8T-0087	88
8T-0154	512
	519
8T-0267	150
	152
8T-0269	481
	482
	483
	484
	485
	486
	487
	488
8T-0271	140
	276
	279
8T-0273	150
	152
8T-0276	44
8T-0379	216
	237
	240
	243
8T-0389	85
	87
8T-0404	125
8T-0642	35
8T-0737	451
8T-1158	293
	295
	296
8T-1757	301
8T-1887	96
	185
8T-1888	96
	185
8T-1893	229
8T-1894	229
8T-2444	490
	493
8T-2525	45
8T-2658	406
8T-2895	467
8T-3311	259
8T-3490	216
	237
	240
	243
8T-3612	23
	175
	177
	254
	257
	533
8T-3848	490
	493
8T-3984	64
8T-4121	22
	45
	49
	65
	69
	75
	85
	95
	100
	110
	112
	114
	116
	126
	146
	185
	188
	217
	219
	229
	233
	238
	241
	244
	246
	252
	255
	257
	261
	263

PART NUMBER INDEX

Part	Page	Part	Page	Part	Page	Part	Page
	265		241	8T-4159	50		283
	267		244	8T-4167	269		517
	269		252	8T-4171	169	8T-4196	49
	276		269		183		50
	277		400		184		65
	288		409		189		146
	290		448		219		217
	400		451		246		252
	408		464	8T-4172	408		263
	409		474	8T-4173	524		408
	442		475	8T-4176	29		409
	448		490	8T-4177	59		474
	451		493		182	8T-4197	530
	464		506	8T-4178	185		532
	474		512		188	8T-4198	286
	475		519		269		287
	483	8T-4136	65	8T-4179	20	8T-4200	13
	484		110	8T-4181	50		26
	485		126		173		28
	486		217	8T-4183	137		30
	487		219		474		67
	488		238	8T-4185	126		75
	490		241		233		110
	493		244	8T-4186	112		198
	506		246		199		248
	512		255		442		250
	517		257	8T-4189	20		271
	519		265		75		512
8T-4122	29		267		126	8T-4201	96
	108		269		217		185
	124		290		221		217
	168		400		223		238
	179		442		225		241
	186		448		227		244
	187		451		231	8T-4205	50
	301		512		238		64
	431		519		241		72
	451	8T-4137	25		244		90
	505		69		271		99
	524		126		288		107
8T-4123	311		173		475		108
	312		197		512		169
8T-4132	29		229		517		173
	168		288		529		179
	179		290	8T-4191	65		183
	186		431		199		184
	187		452		217		185
	451		483		238		188
	505		484		241		189
8T-4133	45		485		244		255
	49		486		261		438
	50		487		452		440
	65		488		512		451
	75		512	8T-4192	29		465
	100	8T-4138	64	8T-4194	179		481
	108		281		265		482
	110		532		267		483
	112	8T-4139	235		269		484
	114		265		447		485
	116		267	8T-4195	25		486
	185		269		146		487
	188		311		233		488
	217		312		248		490
	233		434		250		493
	238		438		269		524

► **PRIMARY REFERENCE**

PART NUMBER INDEX

Part	Page
	528
	530
	532
8T-4222	490
	493
8T-4223	20
	29
	137
	265
	267
	269
	284
	285
	434
	438
	440
	447
	449
	474
	535
	536
	537
	538
8T-4224	20
	26
	45
	47
	49
	50
	52
	59
	94
	99
	108
	120
	122
	182
	198
	199
	217
	221
	223
	225
	227
	231
	238
	241
	244
	248
	250
	252
	255
	257
	265
	267
	269
	271
	276
	277
	438
	440
	451
	459
	465
	475
	490
	493
	508
	512
	517
	520
	529
	532
	533
	539
	540
8T-4244	137
	138
	139
	172
	179
	265
	267
	269
	434
	438
	440
	447
8T-4742	515
	531
8T-4744	515
	531
8T-4778	413
	414
	415
	416
	417
	418
	419
	420
	456
	524
8T-4779	451
8T-4896	25
	69
	74
8T-4908	23
	37
	49
	50
	52
	65
	173
	179
	217
	238
	241
	244
	255
	257
	438
	440
	451
	532
8T-4910	137
	172
	449
8T-4956	284
	285
	440
8T-4970	179
8T-4971	515
8T-5005	50
	87
	217
	238
	241
	244
8T-5049	284
	285
8T-5095	286
	287
8T-5372	505
	512
8T-5413	471
	472
8T-6466	50
8T-6685	185
	474
8T-6726	57
8T-6842	500
	545
8T-6869	120
	280
	281
	282
	283
	309
	310
	384
	385
	386
	387
	388
	389
	390
	391
	392
	393
	394
	395
	423
	451
	512
8T-6902	530
8T-6912	265
	267
	269
	435
8T-7329	26
8T-7338	168
	179
8T-7547	60
	61
	185
	252
	276
	277
8T-7852	255
	257
8T-7934	23
8T-7971	137
8T-8192	233
8T-8193	233
8T-8729	87
	89
	91
	103
	113
	116
	179
	293
	406
	478
	479
	480
	507
	521
	522
8T-8730	113
	114
	116
8T-8737	87
	96
	107
	110
	113
	114
	185
	406
	478
	479
	480
	490
	493
	507
	521
	522
	525
8T-8799	107
	110
8T-9405	293
8T-9655	107
8W-8909	96
	185
8X-5489	75
8Y-7385	449
8Y-7386	449
9	
9B-7233	526
9C-2741	517
9C-5344	187
	490
	493
	542
9F-5644	110
	113
	114
9G-0005	75
9G-3695	272
	465
9G-4336	110
	113
9M-1974	35
	37
	39
	40

PART NUMBER INDEX

Part	Page
	44
	48
	55
	62
	67
	69
	74
9M-8406	217
	238
	241
	244
9P-4609	465
9R-1005	265
	267
9R-1499	90
	91
	96
9R-2004	219
	246
9R-2672	175
	177
9R-2959	309
	310
	429
9R-5301	183
	184
	444
9R-7802	265
	267
9R-7803	265
	267
9R-7941	525
9R-7942	92
	93
9R-7958	92
	93
9R-7980	525
9R-9282	175
9R-9866	177
9S-0285	465
9S-4200	248
	250
9S-8002	150
	152
9S-8004	210
	211
	213
9S-8005	140
9S-8007	202
	203
	204
	207
9T-2837	293
9T-4817	150
	152
9T-4884	276
	279
9T-7303	217
	409
9U-4148	122
9U-6994	263
9U-6995	263
9U-6998	129
	131
9V-2714	301
9V-2715	301
9W-0607	85
	86
9W-0844	96
	108
	113
	125
	185
	303
	304
	406
	517
	525
9W-0852	81
	83
	96
	113
	117
	185
9W-3324	87
9W-3326	87
	89
9X-1054	110
9X-1055	110
9X-1056	110
9X-1813	103
	114
	465
9X-2026	281
	410
9X-2036	100
9X-2038	65
9X-2041	490
	493
	506
9X-2042	465
	468
	526
	543
9X-2043	255
	257
9X-2044	490
	493
	496
	498
	529
9X-2045	183
	490
	493
	496
	498
	544
	546
9X-2092	108
	252
	512
	516
	519
9X-3401	107
	110
	113
	114
	184
	190
	490
	493
	496
	498
	525
9X-3402	108
	110
	496
	498
9X-4244	85
	86
	87
9X-6032	276
	277
9X-6165	529
	532
9X-6273	221
	223
	225
	227
	231
9X-6274	221
	223
	225
	227
	231
	281
	283
9X-6581	216
	237
	240
	243
9X-6606	150
	152
9X-6611	210
	211
	213
9X-6615	274
9X-6772	79
	80
	108
9X-7378	473
	517
9X-7380	517
9X-7381	517
9X-7382	517
9X-7383	517
9X-8118	92
	93
9X-8121	92
9X-8139	92
	93
9X-8250	512
	519
9X-8256	26
	56
	526
9X-8257	183
	184
	444
9X-8912	24
9X-8918	547
	549
9X-9865	87

PART NUMBER INDEX

Part	Page
1	
100-3246	87
100-3247	87
100-3248	87
100-3250	87
100-3251	87
100-3253	87
100-3254	87
100-3255	87
100-3685	100
100-3866	124
100-4112	100
100-4113	100
100-4115	100
100-4118	100
100-4119	100
100-6674	517
100-7530	120
101-2867	254
	257
	451
	526
101-3129	269
101-6544	40
101-8296	517
102-8801	110
	521
	522
102-8802	103
	107
	110
	112
	113
	114
	116
	179
	293
	473
102-8803	91
	96
	406
	496
	498
102-8804	88
	89
	107
	184
	190
	272
	523
	525
102-8805	87
	490
	493
	496
	498
	525
102-8806	81
	83
	96
	114
	117
	185
	451
103-2006	526
103-2543	108
103-2782	37
103-6262	465
103-9083	40
103-9246	19
103-9247	19
103-9252	19
103-9253	19
103-9260	37
103-9268	37
103-9272	13
103-9273	13
103-9276	17
103-9279	17
103-9280	24
	25
103-9288	12
103-9289	12
103-9290	12
103-9680	14
103-9703	17
103-9725	41
103-9747	48
104-1218	17
104-1995	525
104-5957	545
105-2814	▶72
	74
105-4593	135
107-3134	110
107-3135	110
107-3136	110
107-3659	78
107-4057	211
	213
108-0656	545
108-3565	150
	152
109-2356	525
110-2023	175
	177
110-2570	20
110-6326	54
110-6331	54
110-7887	525
110-8760	81
	83
	117
111-4627	451
111-7898	496
	498
111-7899	81
	83
	91
	94
	96
	98
	106
	117
	170
	185
	216
	237
	240
	243
	254
	461
	496
	498
	525
112-1817	254
	257
112-4719	150
	152
112-9401	71
112-9611	496
	498
112-9717	54
112-9783	261
112-9861	255
	257
113-0363	67
113-0364	67
113-0693	474
113-1141	40
113-4458	72
113-4459	72
113-4460	72
113-4461	72
113-4462	72
113-4463	72
113-4464	72
113-4465	72
113-4466	72
113-4467	72
113-4468	72
113-4469	72
113-4470	72
113-7634	169
	183
113-8490	107
113-8491	107
113-8492	107
114-6658	529
115-1615	110
116-2001	▶450
	451
116-7471	107
117-2827	22
117-2829	22
117-3285	22
117-5015	24
	25
117-6558	7
	183
118-2990	29
118-3094	175
	177
118-8118	71
119-1414	450
119-1415	450
119-3662	108
	110
	113
	303
	304
	451
	496
	498
	517
	525
119-3859	451
119-4594	199
119-9631	461
121-4459	150
	152
122-4406	496
	498
122-6869	451
122-8948	67
122-8949	67
123-4750	261
123-7615	490
	493
	525
123-9788	129
124-1916	451
124-1917	451
124-2113	216
124-2129	216
124-2456	216
	237
	240
	243
	557
124-3243	496
	498
	529
	532
124-3548	107
124-5640	517
125-3518	490
	493
125-7874	96
	108
	110
	113
	114
	184
	185
	190
	303
	304
	525
125-7875	108
	303
	304
	490
	493
	526
125-7876	108
	526
126-1766	112
126-1767	190
	272
	451
	490
	493
126-1768	451
126-1774	107
126-5701	408
	409
127-2170	490
	493

▶ **PRIMARY REFERENCE**

PART NUMBER INDEX

Part	Page	Part	Page	Part	Page	Part	Page
127-5483	113		332		83		96
127-5484	107		334		117	142-9356	490
127-6316	291		337	142-8634	▶89		493
128-2955	14		▶416		91	142-9386	465
128-2956	14	135-9387	323		96	143-0539	▶100
128-2958	14		325	142-8653	▶98		102
128-4123	91		329	142-8666	▶164	143-1344	100
	96		332	142-8719	146	143-3088	413
	108		335	142-8723	118	144-0195	490
128-5016	108		▶417	142-8724	118		493
128-6985	▶92	135-9393	413	142-8729	118		496
	98	135-9394	414	142-8731	156		498
128-7037	533	135-9395	415		158	144-1636	112
128-8614	71	135-9396	416		160	144-4531	291
129-1854	170	135-9397	417		161	144-4532	291
129-1855	170	136-1953	512	142-8732	124	144-9491	210
129-3178	451		519	142-8758	▶118	146-2438	89
	513	136-3191	463		119	146-6371	501
	515	137-6645	289	142-8791	199		512
	530	138-4883	496	142-8793	199	146-6729	100
129-3180	29		498	142-8801	173	146-7453	20
130-1676	298	140-1739	150	142-8805	181	146-9439	81
130-1916	465		152		211		83
130-7596	16	140-2392	211		213		96
131-3540	45		213		401		105
	173	140-2490	140		402		108
	513	140-2492	140		403		117
131-3543	528	140-2513	140		404		184
131-5879	408	140-2514	140		405		185
132-4720	456	140-5217	25	142-8810	179	148-2371	185
132-5166	185		69	142-8823	179		188
	188	141-0713	210	142-8826	186	148-2372	185
132-5789	75	141-4999	324	142-8831	173		188
	114		325	142-8832	50	148-7027	120
	252		326		173	148-8315	125
132-7551	408		333		199		235
133-6517	79		334	142-8833	112		265
	80		335	142-8928	65		267
134-0404	128		336		289	148-8316	125
134-2540	108		383	142-8937	289		259
134-7722	23		▶456	142-8997	254	148-8318	122
134-8273	496	141-6704	▶338		257		135
	498		341	142-9021	168	148-8319	219
135-2655	150	142-2928	465	142-9036	124		221
	152	142-4914	413	142-9116	▶106		223
135-9383	323	142-7484	▶154		254		225
	▶413		164	142-9234	265		227
135-9384	323	142-7485	154		267		229
	324		155	142-9278	465		231
	327		156	142-9279	465		233
	333		157	142-9287	465		246
	336		160	142-9305	469		248
	380	142-7486	154		470		250
	▶414	142-7490	154		▶539	148-8322	131
135-9385	323		155	142-9311	469	148-8325	216
	324		157		470		237
	327		159	142-9319	545		240
	334	142-7493	164	142-9320	525		243
	337		165	142-9326	94		259
	381		166	142-9327	98		261
	▶415		167		170	148-8327	129
135-9386	302	142-7503	▶88	142-9328	525		131
	324		90	142-9329	96		135
	325	142-7505	452		185	148-8336	120
	327	142-8633	81	142-9331	91		122

▶ **PRIMARY REFERENCE**

PART NUMBER INDEX

Part	Page
	135
	216
	235
	237
	240
	243
148-8338	131
148-8340	135
148-8341	254
	257
	269
148-8342	135
	235
148-8345	129
	254
148-8347	129
	252
148-8353	120
	122
	216
	237
	240
	243
148-8360	263
148-8369	125
	259
148-8370	254
148-8372	265
148-8374	122
148-8378	216
	233
	237
	240
	243
	254
	257
148-8382	125
148-8390	125
	254
148-8423	259
148-8428	122
148-8433	216
	237
	240
	243
148-8435	120
	122
	261
148-8446	237
149-0686	193
	▶194
149-3488	29
149-4232	391
	▶401
149-5434	343
149-5435	339
	345
	351
	361
	377
	401
149-5436	338
	347
	353
	362
	378
	402
149-5437	349
	355
	363
	370
	379
	403
149-5741	302
	▶418
150-3056	221
	223
	225
	227
	231
150-4027	261
150-4034	216
	237
	240
	243
150-4043	259
150-4385	118
150-4386	118
150-5472	118
150-7568	512
150-8592	▶154
	164
150-8599	154
	155
	156
	157
	158
	159
	160
	161
151-2566	211
	213
151-4965	295
	296
152-0227	▶339
	340
152-0231	▶380
152-0232	▶381
152-1154	187
152-1156	187
152-1157	124
152-1161	505
152-4871	468
152-4875	465
152-4884	465
152-4898	53
152-5878	524
153-1260	540
153-2682	542
153-2683	187
	490
	493
	505
153-2994	219
	221
	223
	225
	227
	229
	231
	233
	235
	246
	248
	250
153-2995	219
	229
	233
	235
	246
153-6981	524
154-2704	340
	341
	344
	346
	348
	350
	352
	354
	356
	358
	359
	369
	372
	374
	375
	382
	424
154-3985	540
	541
154-3986	541
154-4006	168
154-4014	288
154-4886	252
154-5011	▶280
	333
	334
	335
	336
154-5012	280
	391
	392
	393
	394
	395
154-5013	280
	282
154-5018	▶201
	333
	334
	335
	336
154-5020	221
154-5021	221
154-5022	221
154-5037	314
154-5053	392
	▶402
154-5059	315
154-5070	393
	▶403
154-5077	317
154-5232	261
154-8711	541
154-8715	541
155-1279	272
155-2255	113
	525
155-2260	107
	406
	496
	498
	517
155-2265	96
	113
	185
	451
155-2270	107
	110
	112
	113
	114
	116
	125
	303
	304
	451
	517
	525
155-2271	113
	114
	184
	190
	465
	496
	498
	525
155-2274	96
	185
	490
	493
	525
155-3503	126
	217
156-0884	326
	▶384
156-0885	326
	▶385
156-0886	327
	▶386
156-0887	▶361
	364
156-0888	▶362
	365
156-0889	▶363
	366
156-0891	▶281
	326
	327
	328
	421
156-0913	281
156-1458	81
	83
	117
156-1460	81
	83
	117
	406
156-4282	217

▶ PRIMARY REFERENCE

PART NUMBER INDEX

Part	Page
	237
	240
	243
156-5508	223
156-5509	223
156-5510	223
156-5762	301
156-9791	125
156-9809	1
	▶182
157-0940	309
	310
	384
	385
	386
	387
	388
	389
	390
	423
157-0941	281
	283
157-0942	281
	283
157-2853	561
	564
157-4835	400
157-7223	▶326
	327
157-7224	▶326
	327
157-7225	▶327
157-7226	▶327
157-7227	▶327
158-3770	476
	477
158-5648	384
	385
	386
	387
	388
	389
	390
	423
158-6095	▶327
158-6694	525
158-6695	525
158-6696	525
158-6697	525
158-6698	525
158-6699	525
159-0186	20
159-2953	186
	187
	413
	414
	415
	416
	417
	418
	419
	420
159-4535	225
159-4536	225
159-4537	225
159-5411	435
159-5756	181
159-5761	▶164
159-5772	118
159-5790	524
159-5792	524
159-5793	138
	139
159-5794	524
159-5797	408
159-8035	281
	435
	557
159-8038	401
	402
	403
	404
159-8049	75
159-8050	75
159-8405	173
159-9322	107
159-9495	81
	83
	117
159-9496	81
	83
	117
159-9540	50
	75
	125
	252
159-9541	50
	65
159-9853	507
160-6778	293
	295
	296
160-7689	107
160-8500	37
161-0185	219
	246
161-0186	219
	246
161-0187	▶246
	326
	327
	328
161-0188	219
	246
161-0189	219
	246
	248
	250
161-0190	219
	246
161-2539	113
161-3357	252
161-4128	410
161-4130	361
	362
	363
	367
	401
	402
	403
161-7144	210
161-7145	211
	213
161-8560	120
	122
162-0177	210
	211
	213
162-0223	465
162-5236	333
	334
	335
	336
	▶410
162-8154	422
163-1385	219
	233
	246
	248
	250
163-1386	221
	223
	225
	227
	231
163-9320	246
164-1154	530
164-2108	162
164-3213	201
164-4225	217
	237
	240
	243
164-5567	129
	131
	259
	263
164-5590	125
164-7556	85
	86
164-9425	483
	484
	485
	486
	487
	488
164-9614	421
	▶422
164-9989	388
	423
	424
	430
	432
	433
165-0142	148
	149
165-2602	▶164
165-2605	▶154
	164
165-2606	▶155
	164
165-2609	▶155
	164
165-2610	▶155
	164
165-4891	▶164
165-4894	451
165-4895	88
165-4898	▶165
165-4901	▶156
	165
165-4902	▶156
	165
165-4908	154
	155
165-4909	156
165-4934	135
165-6156	▶340
	380
165-6157	▶341
	381
165-7095	29
	524
165-8731	▶282
	434
165-8732	424
	▶429
	430
165-8740	434
	▶435
165-8743	435
166-0319	309
	310
166-2033	105
	184
166-2551	451
	▶455
166-2552	451
166-2556	452
166-2557	451
166-2558	451
166-2559	451
166-2560	445
	446
166-2562	183
	544
166-2569	183
	▶543
	544
166-3678	118
166-4041	429
166-9312	246
167-0608	451
167-3692	108
167-3693	113
168-8389	301
	305
	306
	311
	312
	313
	316
	318
	319
	321
	340

▶ **PRIMARY REFERENCE**

PART NUMBER INDEX

Part	Page
	341
	344
	346
	348
	350
	352
	354
	356
	358
	359
	364
	365
	366
	368
	369
	372
	374
	375
	382
	396
	397
	398
	400
	424
	432
	433
	559
169-2876	561
	564
169-3569	435
169-6715	45
169-8941	▶364
	384
169-8942	▶365
	385
169-8943	▶366
	386
170-5836	434
170-6305	526
171-2438	137
172-0970	293
172-3998	303
	304
172-8173	140
172-8175	140
173-0702	476
173-0703	477
173-2543	541
173-3015	169
	183
173-3016	169
	183
173-3018	169
	183
173-3021	▶189
	190
173-3022	5
	7
	▶544
173-7407	434
	▶449
174-2388	229
174-2389	229
174-2393	229
174-3091	478
	479
	480
	507
175-0005	489
	501
	512
175-3892	162
175-4236	184
	189
175-4237	183
	184
	188
175-4238	4
	5
	7
	▶444
175-4239	185
	188
176-1477	110
176-2947	465
176-3900	▶457
176-4079	191
	192
	512
177-1910	233
177-1911	233
	248
	250
177-1912	233
177-1914	431
177-1921	309
	310
177-1941	447
177-1955	431
177-1956	431
177-1957	431
177-1958	206
177-1971	431
177-1972	309
	310
177-1973	447
177-1975	431
177-1981	302
	▶309
177-1982	302
	▶310
177-1983	302
	▶447
177-1986	▶233
	302
177-1987	▶305
	309
177-1988	▶306
	310
177-1989	▶302
177-1990	▶302
177-3405	187
	490
	493
	542
177-7414	442
177-7415	442
178-2247	183
	184
	444
178-2255	50
178-2256	▶165
178-2270	158
	159
178-3336	42
178-3620	65
	75
	81
	83
	113
	117
	125
	512
	517
	519
178-7539	113
178-9983	478
	479
	480
179-5434	406
179-7001	▶196
	261
179-7002	196
179-9392	107
180-3007	65
	263
180-7451	274
180-8071	291
180-9340	108
	113
	114
	125
	184
	190
	303
	304
	406
	490
	493
	517
	525
180-9900	107
183-4084	229
183-4085	229
183-5916	17
183-7602	175
	177
184-1564	▶103
	105
	184
185-1861	110
185-4015	461
	510
185-7887	221
	223
	225
	227
	231
	248
	250
185-8182	24
185-8664	▶165
185-8665	▶165
185-8667	▶166
185-8678	▶156
	165
185-8679	▶157
	165
185-9926	▶157
	165
185-9927	▶157
	165
185-9930	▶158
	166
185-9931	▶158
	166
185-9932	156
	157
185-9933	158
186-0239	184
	190
186-2360	170
186-3362	112
186-3735	96
	107
	110
	185
	496
	498
	523
	525
186-3736	96
	108
	110
	185
	465
	525
186-5186	448
186-6190	▶458
	517
187-3211	533
187-3212	533
187-3230	164
188-0147	3
	4
	5
	7
	▶186
188-7733	301
	▶448
189-0852	114
189-3158	303
	304
	517
	525
189-4523	533
190-7967	199
190-7971	199
190-7979	199
190-8038	199
190-8084	6
	▶284
190-8962	184
	189
191-2894	179
191-3206	62
191-9576	179
191-9588	199
191-9589	199
191-9594	181

▶ **PRIMARY REFERENCE**

PART NUMBER INDEX

Part	Page	Part	Page	Part	Page	Part	Page
191-9633	199	195-6943	399	200-6345	517	212-0431	65
191-9636	199		▶426	202-0313	108	212-4114	274
191-9637	199		428	202-0314	91	212-6521	216
191-9638	199	195-7124	326		96		237
192-0836	113		332		108		240
192-2606	455		336	202-2284	461		243
192-2607	455		▶419	202-6611	86	212-6525	254
192-2637	436	195-8211	33	202-6614	85		257
	437	195-8260	58	203-1100	293	212-6526	254
192-2640	▶205	195-8324	37	203-4827	49		257
	216	195-8356	42	203-9007	107	212-6603	135
	411	195-8364	67	204-1365	184	212-6604	135
	412	195-8372	65		189	212-6627	65
192-2642	411	195-8403	30	204-1454	150	212-6690	216
	412	195-8460	48		152		237
	445	195-8545	399	204-1457	150		240
	446		▶427		152		243
192-2645	216		428	204-1458	150	212-8499	24
	436	195-9700	293		152		25
	437		295	204-1459	150	212-8510	24
	443		296		152		25
192-2663	515		▶299	204-1471	291		69
192-7116	296	195-9712	184	204-1481	291	212-8597	31
192-7508	274		189	204-1482	291	213-0139	107
193-0447	▶193	196-8356	67	204-1485	291		303
	215	197-0882	438	204-1486	291		304
193-0474	265		440	204-1488	291	213-3943	197
	267	197-0883	438	204-1489	291	213-7489	478
	269	197-0884	440	205-5148	498		479
193-8308	263	197-6894	526	206-1346	96		480
193-8313	261	198-1076	293		185	213-8708	217
193-8329	75		295	206-2724	512	214-5555	206
193-8345	50		296	206-5143	179	214-5560	438
193-8385	528	198-4776	60	206-7398	461		440
193-8392	259		61		510	214-7568	129
193-8393	259	198-9707	526	207-0539	547		131
194-5171	463	199-2212	26		549		196
194-7631	193	199-2354	24	207-0573	547		259
194-7632	193	199-3410	556		549		263
195-0935	468	199-5438	▶158	207-6154	49	214-9186	471
	471		165	207-9729	288		472
195-0936	183	199-5439	▶159	207-9731	179	215-3273	274
	471		165	207-9732	179	215-3274	274
	526	199-5440	158	207-9737	216	215-3275	274
	544		159		237	215-3277	279
195-0937	94	199-7722	342		240	215-3926	▶172
	464		357		243	215-3927	172
	471		367	207-9756	216	215-3935	265
	490		371		237		267
	493		404		240		269
195-0939	464	199-8308	394		243	215-3957	411
	471		▶404	207-9780	184		412
195-5124	418	199-8309	227		189		▶443
	419		231	207-9785	216	215-3962	409
195-6696	452	199-8310	227		409		▶411
195-6723	469	199-8311	227	208-4555	177	215-3963	409
	▶545		231	208-6176	50		▶412
195-6740	▶556	199-8316	320	208-9277	110	215-4001	184
195-6754	436	199-8317	404		114		189
	437			210-0852	438	215-7697	150
195-6768	261				440		152
195-6769	261			210-0855	197	215-8307	480
195-6942	399			210-8754	525	216-0610	134
	▶425	200-0999	124	211-5358	110		▶162
	428	200-2371	299	212-0061	299	216-4725	81

2

▶ **PRIMARY REFERENCE**

PART NUMBER INDEX

Part	Page
	83
	117
216-4746	▶94
	469
216-4753	526
216-6124	140
216-6144	183
	300
216-6145	467
216-6146	3
	4
	5
	7
	▶467
216-6156	291
216-6157	291
216-6159	291
216-6160	291
216-6161	291
216-7790	75
216-8756	▶301
216-8850	301
217-3572	49
217-3850	295
	296
217-3875	274
217-5912	80
217-6226	▶367
	368
217-6227	▶368
	387
217-6228	328
	▶387
217-6229	▶328
	329
217-6230	▶329
218-0728	490
	493
218-0918	10
	▶146
218-0926	49
218-0942	▶79
218-0943	▶80
218-2373	162
218-5562	470
	▶540
218-5571	261
218-5572	261
218-5601	1
218-5602	1
	▶64
218-5686	517
218-5704	261
218-5764	254
	257
	269
218-5847	451
218-5968	259
218-5969	▶187
218-6060	475
218-6095	129
218-6118	476
	477
	▶507
218-6204	269
218-6250	475
218-6298	122
218-6334	216
	409
218-6335	216
	409
218-6348	460
	▶475
218-6357	516
218-6370	469
	▶524
218-6377	506
218-6380	469
	▶542
218-6381	524
218-6386	529
218-6387	529
218-6388	529
218-6389	489
218-6391	489
218-6393	508
	▶510
	512
218-6394	460
	▶501
	509
218-6396	501
	512
218-6397	501
	512
218-6398	501
	512
218-6399	461
	510
218-6400	470
	▶506
218-6401	512
218-6402	512
218-6405	459
	▶461
218-6407	469
	▶533
218-6411	469
	▶546
218-6414	501
	512
218-6417	532
218-6419	▶489
	514
218-6420	▶468
	469
218-6421	481
	482
218-6422	483
	484
	485
	486
	487
	488
218-6425	▶95
	469
218-6428	1
	▶528
218-6431	▶495
	496
218-6434	528
218-6438	254
	257
218-6440	▶490
218-6442	464
218-6485	▶476
	487
	488
218-6490	▶477
	481
218-6508	131
218-6561	290
218-6593	263
218-6645	512
	519
218-6662	540
218-6725	215
	▶290
218-6746	▶512
218-6856	272
218-6857	272
218-6858	272
218-6863	131
218-6864	259
218-6947	510
218-6948	461
219-0302	561
	564
219-4335	216
	237
	240
	243
219-4377	265
	267
	269
219-4379	540
	541
219-4380	539
	▶541
219-4388	541
219-9739	490
	493
220-1043	49
220-4982	373
221-3429	425
	426
	427
221-3876	496
	498
221-3877	490
	493
221-3879	517
221-5245	37
221-5250	37
222-1178	45
222-3962	159
	160
222-3963	160
	161
222-5693	140
222-5695	5
	7
	▶300
222-7412	▶307
	311
222-7421	307
	308
222-7467	384
	385
	386
	387
	388
	423
222-7479	307
	308
222-7545	312
	▶413
222-7546	311
	▶413
222-7724	303
	▶311
222-7725	311
	312
222-7728	307
	308
223-0591	490
	493
223-0600	▶493
223-0601	490
	493
223-0608	490
	493
223-0609	495
223-0610	495
223-0612	495
223-0616	493
	▶496
223-0617	490
	493
223-3490	125
223-3725	478
223-3726	479
223-3728	478
	479
	480
223-4240	173
223-4275	50
223-5941	525
223-6537	▶521
	525
223-8418	254
	▶272
223-8488	496
	498
223-8495	496
	498
223-9974	125
	▶128
224-0554	564
224-3875	173
224-7057	546
	▶547
224-7058	546
	▶549
224-8645	561
224-8646	564
224-8945	561
224-8946	564
224-9021	561
224-9022	564

▶ **PRIMARY REFERENCE**

PART NUMBER INDEX

Part	Page	Part	Page	Part	Page	Part	Page
225-0312	564	230-4011	107		510		243
225-0313	561		110		▶513		▶273
225-3187	496	230-4596	▶308	231-8123	461	233-9744	150
	498		312	231-8124	461		152
225-3305	561	230-5406	▶197		510	234-0566	517
225-3854	113		302	231-8126	461	234-0732	515
225-3861	108	230-5407	431		510	234-0774	▶515
225-5249	69	230-5670	302	231-8127	461		531
225-5535	80		▶431		510	234-0786	259
225-5541	79	230-6368	75	231-8129	461	234-0788	215
225-5642	79	231-0124	235		510		▶259
225-5644	80	231-0125	235	231-8132	461	234-4328	▶85
225-7963	4	231-0126	235		510		95
	▶190	231-0127	235	231-8133	461	234-4791	21
225-8015	303	231-2105	179		510	234-4796	41
	304	231-4256	▶478	231-8137	461	234-4798	42
225-9521	197		485	231-8141	461	234-4800	42
	▶206		486		510	234-4801	42
225-9522	▶438	231-4258	83	231-8142	461	234-4802	42
225-9523	▶440		▶479		510	234-4803	42
226-0291	173		483	231-8143	510	234-4805	59
	467		484	231-8144	510	234-4806	59
226-0323	467	231-4260	▶480	231-8145	510	234-4807	35
226-1242	557		482	232-1384	461	234-4809	44
226-3693	21	231-4261	478	232-3121	60	234-4812	30
226-3736	167		479		61	234-4815	31
226-3737	167	231-4262	480	232-4703	79	234-4818	62
226-5900	91	231-5266	198		80	234-4820	62
	96	231-5271	311	232-4706	521	234-4821	62
226-5901	525		312		522	234-4822	62
226-7635	146	231-5273	▶235	232-4901	45	234-4824	58
226-9629	162		303	233-4872	173	234-4831	44
227-4315	182		304	233-5457	17	234-4835	69
227-6715	49	231-5274	▶198	233-5460	58	234-7727	▶86
227-7025	274		303	233-5466	28		94
227-8807	▶195		304	233-5468	28	234-7730	85
228-3369	559	231-5275	▶303	233-5469	37	234-7731	85
228-3581	557	231-5276	304	233-5470	37	234-7756	86
228-5856	525		▶312	233-5476	37	234-7758	86
228-9132	71	231-5277	▶304	233-5477	37	234-9575	561
228-9222	179	231-5278	▶271	233-5482	24		564
228-9240	279		303		25	235-1365	561
229-3432	360		304	233-5483	15	235-1368	564
	405	231-5279	271	233-5485	13	235-1845	113
229-4896	473	231-7319	549	233-5486	12	235-4768	496
229-7356	473	231-7320	549	233-5488	17		498
229-8744	514	231-7321	546	233-5494	39	235-4959	44
	▶529	231-7322	547	233-5496	41	235-4960	44
229-8746	▶508	231-7323	547	233-5500	9	235-4962	74
	509	231-7324	546		▶19	235-4967	62
229-8747	▶459	231-7325	▶503	233-5632	▶505	235-4968	62
	460		549	233-5680	5	235-4973	74
229-8757	496	231-7326	503		183	235-5243	482
	498	231-7327	▶504	233-5716	135	235-5246	483
229-8796	49		547	233-5863	517		484
230-3214	490	231-7328	504	233-5892	451		485
	493	231-7329	503	233-5893	451		486
230-3621	29		504	233-5927	475	235-5880	9
230-3743	3	231-7331	547	233-5929	513		▶37
	4		549	233-5931	513	235-5895	9
	5	231-7372	547	233-5934	513		▶40
	7		549	233-5997	288	235-5904	9
	▶112	231-7401	503	233-7128	216		▶78
230-3757	286		504		237	236-4830	▶464
	287	231-8122	461		240		469

▶ **PRIMARY REFERENCE**

PART NUMBER INDEX

Part	Page
236-4832	465
236-4833	464
	▶465
236-5067	461
	510
236-5069	461
	510
236-5088	191
	192
236-6923	517
237-5331	487
	488
237-5332	481
237-7296	64
237-7325	53
238-0112	110
238-0999	198
238-1003	235
238-1004	311
	312
238-1005	311
	312
238-4626	163
	273
238-4628	276
238-7637	185
238-7642	284
	▶286
238-7671	4
	5
	7
	▶188
238-7675	185
	188
238-7676	185
238-7716	175
238-7734	▶551
238-7741	216
	237
	240
	243
238-7742	216
	237
	240
	243
238-8278	43
238-8282	14
238-8283	14
238-8284	14
238-8285	14
239-4292	22
239-4990	561
239-4991	564
239-5029	434
239-6109	546
239-6138	503
	504
239-6986	561
	564
239-8429	26
239-8513	39
	42
240-6877	501
	512
240-6878	501
	512
240-6879	501
	512
240-8666	463
241-6010	69
	74
241-6228	125
241-6397	29
242-9000	91
	96
243-0001	▶428
243-0002	▶428
243-0003	▶428
243-0407	54
243-0564	122
243-1323	547
243-5601	274
244-1363	274
244-1364	274
244-1365	274
244-1367	311
	312
244-1370	198
244-7127	69
245-1911	273
245-3867	120
	122
245-6811	469
246-1259	26
246-1260	26
246-2622	65
246-2641	169
	183
246-4349	456
246-8315	44
246-9039	517
247-0678	303
	304
	▶557
247-4877	182
247-6118	559
247-6317	9
	▶55
247-7182	505
248-1268	120
	▶133
248-2171	496
	498
248-5245	559
249-2910	▶522
	525
249-7160	273
250-1493	512
252-0331	265
	267
252-0332	265
	267
252-0344	▶166
252-0345	▶166
252-0346	▶166
252-0367	▶167
252-0368	65
252-0378	▶167
252-6934	478
	479
	480
252-8595	400
252-9015	551
252-9016	551
252-9017	551
252-9197	148
	149
253-0244	38
253-5512	56
254-9097	203
	204
	209
255-0942	204
255-0943	▶203
	434
255-8058	281
256-2155	65
257-8390	78
257-8739	44
258-2419	60
258-2448	29
258-2462	6
	▶60
258-2466	474
258-2533	437
258-2534	436
258-2535	408
	▶445
258-2536	▶436
	445
258-2537	408
	▶446
258-2538	▶437
	446
258-2577	276
258-2579	3
	4
	5
	7
	▶276
	278
258-3423	553
258-3424	553
258-3425	553
258-3427	553
258-3539	474
258-3849	169
	170
	171
	183
	184
258-3850	252
258-4134	96
	185
258-4135	▶99
	107
258-4136	107
258-4138	107
258-4143	107
258-4178	525
258-4196	107
258-4198	406
258-4230	469
	▶520
258-9011	271
	▶274
259-1107	406
259-8194	133
	134
	▶163
260-6688	65
260-6695	496
261-6101	179
261-6255	1
	▶119
261-6379	192
262-0941	202
262-6480	64
262-6518	64
263-3823	523
263-4836	561
	564
263-4996	148
	149
264-4297	289
264-7029	107
	110
265-2894	▶159
	166
265-2895	▶159
	166
265-2896	▶160
	166
265-2897	▶160
	166
265-2898	▶160
	166
265-2899	▶161
	166
266-3315	125
	179
266-6140	207
	208
266-8903	274
267-2528	38
267-2680	99
	107
267-2701	99
267-2744	113
267-2746	113
267-5211	99
	107
267-5213	99
	107
268-1929	150
	152
268-1936	140
268-4083	▶323
268-4084	323
	▶382
268-4089	▶342
	382
268-9529	150
	152
270-2679	108
271-2360	286
	287
271-9408	254
	257

▶ **PRIMARY REFERENCE**

PART NUMBER INDEX

Part	Page
272-1882	142
	144
272-3050	61
272-3051	3
	4
	5
	7
	▶61
272-9800	93
274-3774	110
	113
274-3775	107
274-3776	113
274-3778	113
274-9930	198
	▶207
274-9931	198
	▶208
275-0601	108
275-7878	107
276-3440	490
	▶498
276-3615	498
	▶500
276-6019	▶535
276-6020	▶536
276-7276	▶537
276-7277	▶538
276-7278	75
276-9875	▶473
	474
277-1873	75
277-8862	276
278-1292	5
	7
	▶169
278-1293	4
	▶170
	▶171
278-1969	▶209
	333
	334
	335
	336
278-1970	204
	209
278-1975	▶204
	326
	327
	328
	421
278-4524	207
278-4525	208
278-4875	207
	208
278-8714	286
	287
278-8716	276
	279
279-0733	140
279-3232	500
279-5350	▶421
279-5351	421
	▶423
279-5352	423
279-5353	432
279-5357	433
279-5358	388
	▶433
279-5359	▶388
	421
279-5360	▶421
279-5363	▶351
	352
279-5364	324
	▶352
279-5365	▶324
279-5366	▶324
279-5367	▶353
	354
279-5368	324
	325
	▶354
279-5369	▶324
279-5370	▶325
279-5371	▶355
	356
279-5372	325
	▶356
279-5373	▶325
279-5374	▶325
279-5375	▶357
	358
279-5376	325
	326
	▶358
279-5377	▶325
279-5378	▶326
279-5380	▶333
279-5381	▶333
279-5382	▶333
279-5383	333
	▶391
279-5384	▶313
	391
279-5385	313
	▶314
279-5387	▶315
	316
279-5388	▶316
	392
279-5389	333
	▶392
279-5390	▶333
	334
279-5391	▶334
279-5392	▶334
279-5395	▶317
	318
279-5396	▶318
	393
279-5397	334
	▶393
279-5398	▶334
	335
279-5399	▶334
279-5400	▶335
279-5401	▶335
279-5402	▶335
279-5403	▶335
	335
279-5404	▶394
279-5405	▶319
	394
279-5406	319
	▶320
279-5412	▶219
	421
279-5413	▶221
	333
279-5414	▶223
	333
279-5415	▶225
	334
279-5416	▶227
	335
279-5417	221
	223
	225
	227
	231
279-5418	221
	223
	225
	227
	231
279-5420	▶332
279-5421	332
	▶369
279-5422	369
	▶370
279-5423	▶371
	372
279-5424	332
	▶372
279-5425	▶332
279-5428	▶373
	374
279-5429	332
	▶374
279-5430	▶332
279-5433	▶343
	344
279-5434	323
	▶344
279-5435	▶323
279-5436	▶345
	346
279-5437	323
	▶346
279-5438	▶323
279-5439	▶347
	348
279-5440	323
	▶348
279-5441	▶323
280-1575	490
	493
280-6070	520
280-6072	471
	472
280-7838	142
	144
280-7840	142
280-7848	142
	144
280-7849	142
	144
280-7850	142
	144
280-7854	138
	139
	▶140
280-7863	150
	152
280-7865	150
	152
280-8240	60
	61
280-8260	10
	▶50
280-8261	50
280-8262	50
280-8263	50
280-8298	54
280-8307	23
280-8312	49
280-8314	23
280-8328	50
280-8335	23
280-8341	60
	61
280-8377	60
	61
280-8395	474
280-8407	10
	▶23
280-8408	23
280-8409	23
280-8417	23
282-6961	546
282-9059	495
	500
283-0632	107
	113
283-4198	107
283-7554	500
284-3502	129
	131
284-3595	533
284-3743	533
284-3744	533
285-5794	45
285-6088	▶349
	350
285-6089	324
	▶350
285-6090	▶324
285-6095	▶336
285-6096	336
	▶396
285-6097	▶377
	396
285-6098	▶378
	397
285-6099	337
	▶397
285-6100	329

▶ **PRIMARY REFERENCE**

PART NUMBER INDEX

Part	Page
	▶337
285-6101	329
	▶337
285-6102	337
	▶398
285-6103	▶379
	398
285-6105	421
	▶430
285-6110	421
	▶424
285-6111	▶329
285-6112	▶329
285-6113	▶229
	434
285-6114	▶421
285-6115	▶421
285-6116	329
	421
	▶434
285-8565	501
	512
285-8570	501
	512
285-9066	26
	47
285-9133	501
	512
285-9286	254
	257
	269
286-3591	203
286-9229	389
286-9243	389
	390
286-9244	331
	▶389
286-9248	▶283
	330
	331
286-9249	250
286-9250	▶248
	331
286-9251	330
	331
	▶559
286-9263	248
	250
286-9265	248
286-9266	248
286-9267	248
	250
286-9268	248
	250
286-9271	248
286-9273	283
286-9274	390
286-9278	330
	▶390
286-9279	▶250
	330
286-9280	250
286-9281	250
286-9289	283
286-9300	▶330
286-9301	▶331
287-2922	9
	▶32
287-2983	9
	▶33
287-3357	9
	▶24
287-4033	9
	▶14
287-5323	9
	▶58
287-5377	9
	▶39
287-5665	9
	▶41
287-6056	9
	▶47
287-6114	9
	▶35
287-6138	9
	▶36
287-6181	9
	▶102
287-6603	533
287-7004	533
287-7006	533
288-5767	533
289-6336	140
289-6347	140
289-6358	285
	▶287
289-9560	295
	296
290-2110	555
290-3340	257
290-3382	254
	257
290-3395	254
	257
290-8481	265
	267
	269
291-6812	269
291-6813	269
291-8148	291
292-3114	516
292-4040	9
	▶43
292-4041	9
	▶12
292-9223	332
	▶375
292-9224	375
	▶376
292-9257	376
292-9270	326
	▶359
	383
292-9271	359
	▶360
293-0139	336
293-0140	▶231
	336
293-0141	336
	▶395
293-0142	▶321
	395
293-0143	321
	▶322
293-0144	322
293-0148	395
	▶405
293-0152	231
293-6264	▶202
	330
	331
293-6591	122
	▶134
294-1767	41
294-4890	12
294-4891	12
294-4892	12
294-5060	69
294-5502	219
294-5503	219
294-5504	229
294-5505	229
294-7915	44
294-7916	74
294-7922	16
295-1799	291
	▶298
295-5440	461
	510
295-7176	179
295-7221	▶277
	278
295-7315	561
295-7317	561
295-7318	561
295-7319	561
295-7320	561
295-7325	564
295-7327	564
295-7328	564
295-7329	564
295-7330	564
295-8096	210
295-8097	210
296-0582	▶406
296-0583	406
296-0584	406
296-4812	62
296-5140	211
	213
296-5141	210
296-7597	▶332
296-7602	420
296-7680	332
	▶420
296-8055	▶336
296-8057	▶336
296-8191	▶383
296-8192	▶326
297-8515	211
	213
297-8516	211
	213
297-8523	211
	213
298-6947	210
299-1379	211
	213
299-4645	19
299-9119	▶293
	481
	482
299-9121	293
	295
	296
3	
300-1071	9
	▶104
300-3867	69
300-3988	69
301-3396	9
	▶34
301-3397	34
301-7293	525
303-6257	44
303-6658	461
	510
303-8205	252
303-8767	216
	411
	412
303-8768	216
	411
	412
	443
304-3885	65
305-2969	461
	510
305-4185	135
305-5385	60
	61
306-0350	107
306-0351	107
306-4247	138
	139
306-8137	3
	4
	5
	7
	▶285
307-3036	277
	▶279
307-3039	140
307-3071	137
	▶142
307-3073	137
	▶144
307-3074	150
	152
307-3075	150
	152
307-3808	229
308-0421	129
	131
	▶135
308-6767	173
309-1325	▶93

▶ **PRIMARY REFERENCE**

PART NUMBER INDEX

Part	Page
	170
	171
	184
309-8909	30
310-2682	17
310-6660	216
	443
310-8798	15
311-9240	216
	443
312-1683	461
	510
312-2179	65
	517
312-2635	461
	510
312-7747	561
312-7748	564
313-5646	286
313-6251	293
313-9185	496
	498
314-9860	9
	▶16
314-9861	9
	▶21
314-9938	17
314-9947	26
314-9948	26
314-9962	31
314-9963	31
314-9964	31
314-9972	62
314-9974	62
314-9980	67
314-9981	67
314-9982	67
314-9983	67
314-9984	67
314-9985	67
314-9986	67
314-9987	67
314-9988	67
314-9989	67
314-9991	69
314-9992	69
314-9999	69
315-0180	75
315-2356	30
315-4664	13
315-4667	26
315-4669	31
315-4670	31
315-4671	31
315-4686	26
315-4687	26
315-5493	216
	436
	437
	443
315-7700	44
315-7701	56
315-7703	24
315-7704	28
315-7761	9
	▶28
315-7762	9
	▶15
315-7766	9
	▶22
315-7768	9
	▶62
315-7769	9
	▶56
315-7790	517
315-8329	9
	▶13
315-8336	9
	▶26
315-8348	9
	▶31
315-8350	9
	▶67
315-8352	9
	▶69
315-8353	9
	▶74
315-8355	9
	▶44
315-8697	56
315-8698	56
316-1698	500
317-3128	289
319-2137	216
	443
319-7262	19
319-7263	19
319-9480	4
	5
	7
	▶442
319-9481	442
319-9482	442
319-9483	442
319-9484	442
319-9489	442
319-9490	442
320-0650	140
320-1389	▶463
	496
	498
320-1390	496
	498
322-3150	22
323-2009	9
	▶11
325-5905	30
325-8382	▶530
	531
326-5240	▶8
326-5242	▶1
326-5250	1
	▶147
326-5251	1
	▶553
326-5252	553
326-5253	553
326-5264	2
	▶481
326-5265	1
	2
	3
	▶482
326-5267	1
	2
	3
	▶483
	▶484
326-5280	▶3
326-5281	▶3
326-5282	▶4
326-5284	▶5
326-5300	▶6
326-5301	168
326-5306	1
	▶168
326-5311	179
326-5328	1
	▶10
326-5329	10
	▶29
326-5330	10
	▶52
326-5331	52
	▶53
326-5332	53
	▶54
326-5335	52
326-5336	20
326-5338	10
	▶57
326-5339	57
326-5340	10
	▶45
326-5341	45
326-5342	45
326-5343	45
326-5344	10
	▶65
326-5346	65
326-5347	45
326-5348	65
326-5349	10
	▶20
326-5353	52
326-5354	50
326-5356	45
326-5357	460
	▶474
326-5358	29
326-5373	10
	▶49
326-5388	199
326-5390	3
	4
	5
	7
	▶191
326-5392	191
326-5393	191
326-5397	191
326-5400	1
	▶469
326-5401	469
	▶472
326-5402	471
	472
326-5404	▶471
326-5406	469
	▶516
326-5407	516
326-5408	516
326-5410	1
326-5442	179
	▶181
326-5472	▶1
326-5474	▶177
	181
326-5483	▶2
326-5498	181
326-5499	1
	▶199
326-5550	▶470
326-5551	▶470
326-5552	▶469
326-5553	▶469
326-5554	470
	▶514
326-5555	469
	▶509
326-5556	▶460
	469
326-5570	1
	▶532
326-5573	▶175
	181
326-5575	1
	▶179
326-5593	532
326-5607	125
326-5609	1
	▶173
326-5610	173
326-5612	254
	257
326-5613	254
	257
326-5614	254
	257
326-5625	254
	257
326-5634	254
	257
326-5670	▶215
326-5682	▶561
326-5683	561
	564
326-5686	▶564
326-5695	125
326-5700	▶407
326-5701	1
	2
	▶129
326-5712	122
326-5730	1
	▶215
326-5731	215
	▶252
326-5732	252
326-5733	252

▶ **PRIMARY REFERENCE**

PART NUMBER INDEX

Part	Page
326-5734	215
	▶261
326-5736	261
326-5737	215
	▶265
326-5738	215
	▶254
326-5739	▶125
	215
326-5742	2
	3
	▶131
326-5744	460
	▶517
326-5745	460
	509
	▶519
326-5746	215
	▶263
326-5749	252
326-5750	▶407
326-5751	▶237
	▶240
	▶243
	407
326-5752	254
326-5753	265
326-5754	265
326-5758	215
	▶257
326-5759	257
326-5762	216
	237
	240
	243
326-5763	237
326-5764	237
	240
326-5765	216
	237
	240
	243
326-5770	▶215
326-5771	265
	267
326-5772	265
	267
326-5773	254
326-5774	254
326-5776	517
326-5777	517
326-5778	215
	▶267
326-5780	215
	▶288
326-5781	288
	▶289
326-5782	125
326-5783	125
326-5789	120
	122
326-5790	2
	3
	▶120
326-5791	129
	131
326-5793	129
	131
326-5795	263
326-5797	1
	2
	▶122
326-5798	125
327-0752	104
327-8939	64
	▶531
327-8945	531
328-2270	469
	▶525
328-2271	525
328-2272	▶107
	469
328-2273	107
328-2274	1
	▶113
328-2275	113
328-2276	10
	▶110
328-2277	110
328-2278	1
	▶75
328-2279	75
328-2280	75
328-2281	75
328-2333	4
	5
	7
	▶96
328-2334	96
	185
328-2335	2
	3
	▶117
328-2337	75
328-2340	113
328-2341	116
328-2342	3
	4
	5
	7
	▶116
	278
328-2343	91
	96
328-2344	3
	6
	▶90
328-2345	▶77
	108
328-2346	3
	▶91
328-2348	4
	▶105
328-2352	526
328-2353	125
328-5192	58
329-2576	77
329-2588	210
329-2589	211
	213
329-4953	199
	▶211
329-4954	199
	▶213
329-4955	199
	▶210
330-5012	496
	498
	▶523
330-7381	210
330-7382	213
330-7383	211
330-7386	210
330-7387	211
	213
330-7620	56
330-7622	56
330-7633	9
	▶17
330-7634	17
330-8684	526
332-8660	8
	▶9
335-5735	69
335-5750	9
	▶59
335-9117	47
	▶48
335-9124	48
335-9125	47
336-1320	290
	▶291
336-9190	69
336-9856	42
336-9857	42
340-7724	▶183
341-3561	11
341-7642	148
	▶150
341-7647	142
	144
341-7649	142
	144
341-7665	149
	▶152
343-0868	▶295
	483
	485
	487
343-0877	295
343-5542	2
	▶485
	▶486
343-5543	2
	▶487
	▶488
343-6022	108
343-6885	108
346-1832	451
346-1834	▶451
346-1836	451
347-4038	263
347-4431	269
347-4432	269
347-5346	289
348-4609	289
348-7676	15
348-8820	254
349-1143	129
	131
349-5327	65
	▶71
351-6835	69
351-9371	399
	▶400
352-3694	69
352-4169	36
353-1693	▶399
353-1694	▶399
353-1696	▶399
353-1697	▶399
354-6536	▶2
354-6537	▶2
354-6538	▶3
354-6539	1
	2
	▶137
354-6540	2
	3
	▶148
354-6541	1
	2
	▶149
354-6543	▶124
	147
354-6545	124
354-6546	124
354-6547	137
354-6551	215
	▶269
354-6552	269
354-6553	269
354-6554	257
354-6555	257
354-6556	254
354-6557	254
354-6574	23
356-1897	1
	2
	▶555
356-1900	▶278
356-1901	▶278
356-1902	▶7
356-1905	561
	564
356-1906	137
356-1938	2
	3
	▶138
356-5008	▶296
	484
	486
	488
356-5011	296
358-4944	305
	306
	311
	312
	313
	316

▶ **PRIMARY REFERENCE**

PART NUMBER INDEX

Part	Page	Part	Page	Part	Page	Part	Page
	318						
	319						
	321						
	364						
	365						
	366						
	368						
	396						
	397						
	398						
	432						
	433						
	559						
358-4945	301						
358-5951	291						
358-6919	▶184						
358-6921	▶185						
360-1352	125						
360-1363	407						
	▶408						
360-1364	407						
	▶409						
360-2177	26						
360-9539	199						
361-0435	561						
	564						
361-0452	▶81						
361-0454	▶83						
361-0457	216						
	240						
	243						
361-2657	148						
	149						
361-2874	9						
	▶25						
361-2880	9						
	▶42						
361-3334	9						
	▶38						
361-4407	408						
	409						
361-9555	71						
363-3884	9						
	▶30						
363-3885	30						
364-1337	263						
364-1338	2						
	▶139						
364-1339	129						
364-1348	243						
364-1351	▶216						
364-1357	139						
364-3919	69						
368-3210	77						
368-3293	77						
371-0907	62						
373-9653	56						
373-9662	56						
374-6497	3						
	4						
	5						
	7						
	▶192						

▶ **PRIMARY REFERENCE**

MEMORANDA



© 2011 CATERPILLAR
ALL RIGHTS
RESERVED

CAT, CATERPILLAR, THEIR RESPECTIVE LOGOS, “CATERPILLAR YELLOW” AND THE POWER EDGE TRADE DRESS, AS WELL AS CORPORATE AND PRODUCT IDENTITY USED HEREIN, ARE TRADEMARKS OF CATERPILLAR AND MAY NOT BE USED WITHOUT PERMISSION.