INTRODUCTION AND CUSTOMER INFORMATION

TP52457 -UN-27SEP96 SETEMBRO 1996

RUTHZIL TRATOR COMERCIAL DE PEÇAS LTDA 11 97083-6812 ROLANDO

244H JOHN DEERE



TP52457

SIDE VIEW OF JOHN DEERE 244H SERIES LOADER
(MANUFACTURED 1996-)

TO THE CUSTOMER

THE PART NUMBERS IN THIS PARTS CATALOG WERE CORRECT AT THE TIME YOUR CATALOG WAS PUBLISHED. IT IS OUR POLICY TO CONSTANTLY IMPROVE OUR MACHINES AND, THEREFORE, PART NUMBERS MAY CHANGE. WHEN ORDERING PARTS, VERIFY PART NUMBERS THROUGH YOUR DEALER'S MICROFICHE WHICH IS UP-TO-DATE.

(SPECIFICATIONS AND DESIGN SUBJECT TO CHANGE WITHOUT NOTICE)

SERIAL NUMBER LOCATION

EACH 244H LOADER HAS TWO SERIAL NUMBER PLATES: ONE FOR THE PRODUCT IDENTIFICATION NUMBER AND ONE FOR THE ENGINE.

THE PRODUCT IDENTIFICATION NUMBER PLATE IS LOCATED ON THE LEFT-HAND SIDE OF THE FRONT LOADER FRAME.

THE ENGINE SERIAL NUMBER PLATE IS LOCATED ON THE TOP OF THE VALVE COVER.

LEFT SIDE AND RIGHT SIDE, FRONT AND REAR OF THE LOADER ARE VIEWED BY FACING IN THE DIRECTION OF LOADER FORWARD TRAVEL.

WHENEVER SERIAL NUMBERS ARE REQUIRED ON WARRANTY CLAIMS OR CORRESPONDENCE PERTAINING TO THIS PRODUCT, IT IS EXTREMELY IMPORTANT THAT ALL CHARACTERS BE FURNISHED. THIS POINT CANNOT BE OVEREMPHASIZED.

PRODUCT IDENTIFICATION NUMBER

TP40064 -UN-01JAN94

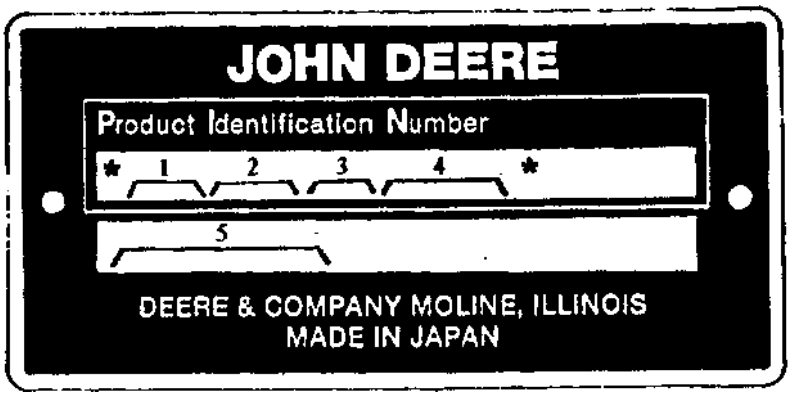

TP40064

1. DESIGNATES LOADER MANUFACTURER	T6 - FURUKAWA CO. LTD.
2. DESIGNATES LOADER MODEL	244H
3. DESIGNATES LOADER CONFIGURATION	X
4. DESIGNATES LOADER SERIAL NUMBER	123456
5. DESIGNATES UNIT TYPE	LOADER

ENGINE SERIAL NUMBER PLATE

TP40065 -UN-01JAN94

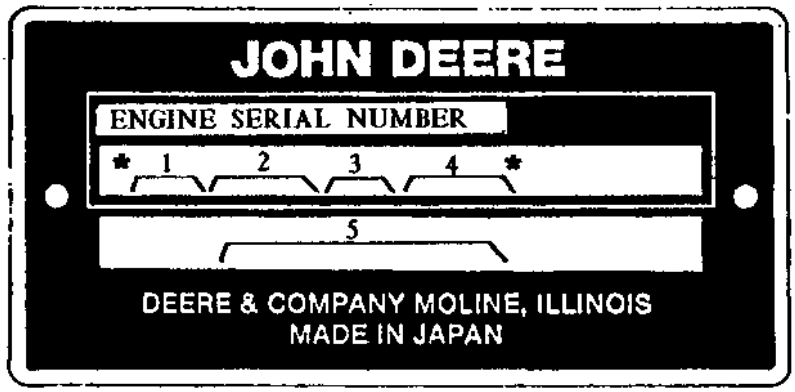

TP40065

1. DESIGNATES ENGINE MANUFACTURER — CH-YANMAR, JAPAN
2. DESIGNATES NUMBER OF CYLINDERS AND CUBIC INCH DISPLACEMENT. — 4202 (3.3L)
3. DESIGNATES FUEL TYPE OR SPECIAL CONDITION — D-DIESEL
4. DESIGNATES ENGINE SERIAL NUMBER — 123456
5. DESIGNATES THE ENGINE MODEL NUMBER — 4TNE98

ALPHABETICAL INDEX

GRID		PAGE
	A	
E9	ACCELERATOR PEDAL, ENGINE	0515 - 2
J19	ADAPTER, THIRD FUNCTION HOSE	2162 - 10
I17	ADJUSTER, SEAT	1821 - 2
E11	AIR CLEANER	0521 - 2
E11	AIR CLEANER FILTERS	0521 - 2
E11	AIR CLEANER INDICATOR	0521 - 2
E13	AIR INTAKE HOSE	0521 - 4
E13	AIR INTAKE SILENCER	0521 - 4
E13	AIR INTAKE SUPPORT STRAPS	0521 - 4
H6	ALARM, BACKUP	1674 - 6
H12	ALARM, MONITOR WARNING	1676 - 6
D21	ALTERNATOR	0423 - 2
I15	ARM, WIPER	1814 - 2
H19	ARTICULATION PIN, FRAME	1743 - 2
J17	AUXILIARY SECTION, CONTROL VALVE	2162 - 8
A15	AXLE	0201 - 2
A19	AXLE FINAL DRIVE, FRONT	0210 - 4
A19	AXLE FINAL DRIVE, REAR	0210 - 4
A15	AXLE MOUNTING HARDWARE	0201 - 2
	B	
H6	BACKUP ALARM	1674 - 6
H15	BAR LOCKING	1741 - 2
G20	BATTERY	1671 - 2
C22	BEARING CAPS, MAIN	0404 - 2
I15	BLADE, WINDSHIELD WIPER	1814 - 2
C22	BLOCK, CYLINDER	0404 - 2
C3	BLOCK, HYDROSTATIC PUMP PISTON CYLINDER	0367 - 4
K12	BOOM	3115 - 4
K10	BOOM LEVER	3115 - 2
J15	BOOM SECTION, CONTROL VALVE	2162 - 6
K10	BOOT, CONTROL LEVER	3115 - 2
G22	BRACKET, FRONT OPERATING LIGHT	1673 - 2
E7	BRACKET, RADIATOR SUPPORT	0511 - 4
I15	BRACKET, WINDOW WASHER TANK	1814 - 2
F21	BRAKE CYLINDER, MASTER	1064 - 2
G4	BRAKE LEVER, PARK	1115 - 2
G4	BRAKE LINKAGE, PARK	1115 - 2
F17	BRAKE LINKAGE, SERVICE	1062 - 2
F17	BRAKE PEDAL, SERVICE	1062 - 2
F19	BRAKE PLUMBING, SERVICE	1063 - 2
H8	BRAKE SWITCH, PARK	1676 - 2
G2	BRAKE, PARK	1111 - 2
B3	BREATHER, TRANSMISSION HOUSING	0341 - 2
K12	BUCKET	3115 - 4
K10	BUCKET LEVER	3115 - 2
J13	BUCKET SECTION, CONTROL VALVE	2162 - 4
K6	BUCKET TEETH	3102 - 2
K4	BUCKET, 1.3 YD	3101 - 2
G22	BULB, FRONT AND REAR LIGHT	1673 - 2
G22	BULB, TURN SIGNAL	1673 - 2
H12	BUZZER, MONITOR WARNING	1676 - 6
	C	
I5	CAB BODY	1810 - 4
I7	CAB DOOR AND WINDOW	1810 - 6
I11	CAB GLASS	1810 - 10
I5	CAB HANDRAIL	1810 - 4
I5	CAB INSIDE MIRROR	1810 - 4
I9	CAB INTERIOR PANELS	1810 - 8
I3	CAB MOUNTING	1810 - 2
I3	CAB OUTSIDE MIRROR	1810 - 2
I11	CAB SIDE WINDOW	1810 - 10
I11	CAB WINDSHIELD	1810 - 10
I15	CAB WINDSHIELD WIPER	1814 - 2
C20	CAMSHAFT	0402 - 4
E5	CAP, RADIATOR	0511 - 2
I7	CATCH, CAB DOOR	1810 - 6
B5	CHARGE PUMP MOUNTING	0342 - 2
C5	CHARGE PUMP, HYDROSTATIC	0367 - 6
B11	CHARGE PUMP, TRANSMISSION	0361 - 2
B15	CHECK VALVE, HYDROSTATIC LINE	0363 - 2
B17	CHECK VALVE, HYDROSTATIC LINE	0363 - 4
B9	CLUTCH DISK	0352 - 2
B9	CLUTCH PLATES	0352 - 2
B9	CLUTCH SHAFT	0352 - 2
F4	COLUMN, STEERING	0920 - 4
J11	CONTROL VALVE, THREE-SPOOL	2162 - 2
B13	CONTROL VALVE, TRANSMISSION	0362 - 2
E9	CONTROL, ENGINE SPEED	0515 - 2
E4	COOLANT HEATER	0505 - 1
E5	COOLER, OIL	0511 - 2
D17	COOLING FAN	0417 - 2
G15	COOLSCAN PLUS TEST KIT, FLUID ANALYSIS PRODUCTS	1369 - 4
H21	COUNTERWEIGHT	1749 - 2
C1	COUPLING ASSEMBLY, HST	0367 - 2
C3	COVER, HYDROSTATIC PUMP BOTTOM	0367 - 4
C7	COVER, HYDROSTATIC PUMP TOP	0367 - 8
J2	COVER, REAR FRAME	1911 - 2
C18	COVER, TIMING GEAR	0402 - 2
I5	COVER, WIRE HARNESS IN CAB	1810 - 4
C16	CRANKSHAFT	0401 - 2
K4	CUTTING EDGE	3101 - 2
K12	CUTTING EDGE, WELD ON	3115 - 4
C22	CYLINDER BLOCK	0404 - 2
D23	CYLINDER BLOCK GASKET KIT	0452 - 2
D3	CYLINDER HEAD	0409 - 2
E1	CYLINDER HEAD GASKET KIT	0452 - 4
K14	CYLINDER HOSE, LIFT AND TILT	3163 - 2
F10	CYLINDER PIN, STEERING	0963 - 2
K18	CYLINDER, LIFT	3165 - 4
F19	CYLINDER, MASTER	1063 - 2
F21	CYLINDER, MASTER BRAKE	1064 - 2
G6	CYLINDER, PARK BRAKE	1115 - 4
G6	CYLINDER, SPRING	1115 - 4
F12	CYLINDER, STEERING	0965 - 2
F14	CYLINDER, STEERING	0965 - 4
K16	CYLINDER, TILT	3165 - 2
	D	
H10	DASH WIRING	1676 - 4
G4	DECAL, PARK BRAKE BOOSTER CYLINDER	1115 - 2
G11	DECALS, CAB UNIT	1322 - 2
I21	DEFROSTER BOXES	1831 - 2
G16	DIESELSCAN TEST KIT, FLUID ANALYSIS PRODUCTS	1369 - 5
A17	DIFFERENTIAL	0210 - 2
K8	DIMENSIONS, LOADER BUCKET	3102 - 4
H2	DIODES	1674 - 2
H4	DIODES	1674 - 4
D1	DIPSTICK, ENGINE OIL	0407 - 4
B9	DISK, CLUTCH	0352 - 2
A19	DISK, FINAL DRIVE	0210 - 4
I7	DOOR CATCH, CAB	1810 - 6
I5	DOOR STRIKER, CAB	1810 - 4

ALPHABETICAL INDEX - CONTINUED

GRID		PAGE
I7	DOOR, CAB	1810 - 6
A23	DRIVE SHAFT, FRONT	0225 - 4
A21	DRIVE SHAFT, FRONT AND REAR	0225 - 2
H17	DRIVELINE FRAME SUSPENSION	1741 - 4

E

K4	EDGE, CUTTING	3101 - 2
H6	ELECTRICAL COMPONENTS	1674 - 6
J7	EMBLEM, SLOW MOVING VEHICLE	2008 - 1
C20	ENGINE CAMSHAFT	0402 - 4
D17	ENGINE COOLING FAN, PULLEY, THERMOSTAT	0417 - 2
C16	ENGINE CRANKSHAFT	0401 - 2
D15	ENGINE FUEL FILTER	0413 - 8
J4	ENGINE HOOD	1911 - 4
E17	ENGINE MOUNTING	0540 - 2
D1	ENGINE OIL SYSTEM	0407 - 4
C16	ENGINE PISTON	0401 - 2
E23	ENGINE SHUTOFF	0570 - 2
E9	ENGINE SPEED CONTROL	0515 - 2
C15	ENGINE, COMPLETE	0400 - 2
E17	ENGINE, COMPLETE	0540 - 2
D7	EXHAUST MANIFOLD	0410 - 2
E15	EXHAUST MUFFLER	0530 - 2

F

D17	FAN, COOLING	0417 - 2
H15	FENDER	1741 - 2
E11	FILTER, AIR CLEANER	0521 - 2
B19	FILTER, CHARGE PUMP TO TRANSMISSION	0363 - 6
D1	FILTER, ENGINE OIL	0407 - 4
D15	FILTER, FUEL	0413 - 8
E19	FILTER, FUEL	0560 - 2
J23	FILTER, HYDRAULIC RESERVOIR	2164 - 2
B21	FILTER, HYDROSTATIC (HST) LINE	0364 - 2
B15	FILTER, HYDROSTATIC LINE	0363 - 2
B17	FILTER, HYDROSTATIC LINE	0363 - 4
K1	FILTER, MAIN HYDRAULIC LINE	2164 - 4
B23	FILTER, TRANSMISSION (PST) LINE	0364 - 4
B3	FILTER, TRANSMISSION HOUSING OIL	0341 - 2
C5	FLANGE, HYDROSTATIC PUMP REAR	0367 - 6
I13	FLOORMAT	1812 - 2
G15	FLUID ANALYSIS PRODUCTS (COOLSCAN PLUS TEST KIT)	1369 - 4
G17	FLUID ANALYSIS PRODUCTS (CUSTOMER CONVENIENCE PACKS)	1369 - 6
G16	FLUID ANALYSIS PRODUCTS (DIESELSCAN TEST KIT)	1369 - 5
G13	FLUID ANALYSIS PRODUCTS (OILSCAN PLUS TEST KIT)	1369 - 2
C16	FLYWHEEL	0401 - 2
C24	FLYWHEEL HOUSING	0407 - 2
J2	FRAME COVER, REAR	1911 - 2
I19	FRAME STEP	1822 - 2
H15	FRAME, FRONT	1741 - 2
H15	FRAME, REAR	1741 - 2
A21	FRONT DRIVE SHAFT	0225 - 2
A23	FRONT DRIVE SHAFT	0225 - 4
D15	FUEL FILTER	0413 - 8
H8	FUEL GAUGE	1676 - 2
D13	FUEL INJECTION LINES	0413 - 6
D15	FUEL INJECTION LINES	0413 - 8
D13	FUEL INJECTION NOZZLE	0413 - 6
D15	FUEL INJECTION NOZZLE	0413 - 8
D9	FUEL INJECTION PUMP AND TRANSFER PUMP	0413 - 2
E21	FUEL LINES AND HOSES	0560 - 4
E19	FUEL TANK	0560 - 2
D11	FUEL TRANSFER PUMP	0413 - 4
H8	FUSE BOX	1676 - 2
H12	FUSE BOX	1676 - 6
H10	FUSE BOX HARNESS	1676 - 4
H8	FUSE, DASH	1676 - 2
H12	FUSES, 10 AMP, 20 AMP	1676 - 6

G

D23	GASKET KIT, CYLINDER BLOCK	0452 - 2
H8	GAUGE, HOUR METER	1676 - 2
J23	GAUGE, OIL RESERVOIR SIGHT	2164 - 2
B3	GAUGE, TRANSMISSION OIL	0341 - 2
H8	GAUGE, WATER TEMPERATURE	1676 - 2
A17	GEAR ASSEMBLY, DIFFERENTIAL	0210 - 2
J9	GEAR PUMP, TENDEM	2161 - 2
B9	GEAR, CLUTCH	0352 - 2
A17	GEAR, DIFFERENTIAL	0210 - 2
B7	GEAR, TRANSMISSION SHAFT	0350 - 2
I11	GLASS, CAB	1810 - 10
D9	GOVERNOR	0413 - 2
K9	GUARD, LOAD	3103 - 1

H

I7	HANDLE, CAB DOOR	1810 - 6
I5	HANDRAIL, CAB	1810 - 4
J4	HANDRAIL, REAR	1911 - 4
K20	HARNESS, AUTO LOAD LEVELER (R-TO-DIG)	3166 - 2
I3	HARNESS, CAB	1810 - 2
G24	HARNESS, FRONT LOADER FRAME WIRING	1673 - 4
I3	HARNESS, HEATER	1810 - 2
I21	HARNESS, HEATER	1831 - 2
H2	HARNESS, MAIN WIRING	1674 - 2
I15	HARNESS, WINDSHIELD WIPER	1814 - 2
H10	HARNESSES, DASH	1676 - 4
H4	HARNESSES, WIRING	1674 - 4
D3	HEAD, CYLINDER	0409 - 2
I9	HEADLINER PANEL, CAB	1810 - 8
I21	HEATER	1831 - 2
I23	HEATER	1831 - 4
I21	HEATER HOSE	1831 - 2
I23	HEATER SWITCH	1831 - 4
I21	HEATER WIRING HARNESS	1831 - 2
E4	HEATER, COOLANT	0505 - 1
J4	HOOD LIFTER	1911 - 4
J4	HOOD, ENGINE	1911 - 4
F4	HORN SWITCH	0920 - 4
I21	HOSE, HEATER WATER	1831 - 2
K14	HOSE, LIFT CYLINDER	3163 - 2
J21	HOSE, MAIN HYDRAULIC	2163 - 2
E5	HOSE, RADIATOR DRAIN	0511 - 2
E7	HOSE, RADIATOR TO ENGINE	0511 - 4
J19	HOSE, THIRD FUNCTION	2162 - 10
K14	HOSE, TILT CYLINDER	3163 - 2
E13	HOSE,AIR INTAKE	0521 - 4
E21	HOSES, FUEL	0560 - 4
G4	HOSES, PARK BRAKE	1115 - 2
F10	HOSES, STEERING	0963 - 2
H8	HOUR METER	1676 - 2
C24	HOUSING, FLYWHEEL	0407 - 2
A19	HOUSING, FRONT AXLE	0210 - 4

ALPHABETICAL INDEX - CONTINUED

GRID		PAGE
A19	HOUSING, REAR AXLE	0210 - 4
B3	HOUSING, TRANSMISSION	0341 - 2
C1	HST COUPLING ASSEMBLY	0367 - 2
J21	HYDRAULIC HOSE, MAIN	2163 - 2
K1	HYDRAULIC LINE FILTER, MAIN	2164 - 4
K14	HYDRAULIC LINE, BOOM	3163 - 2
J21	HYDRAULIC LINES, MAIN	2163 - 2
J9	HYDRAULIC PUMP, MAIN	2161 - 2
J17	HYDRAULIC VALVE AUXILIARY SECTION	2162 - 8
J15	HYDRAULIC VALVE BOOM SECTION	2162 - 6
J13	HYDRAULIC VALVE BUCKET SECTION	2162 - 4
C5	HYDROSTAIC PUMP RELIEF VALVE	0367 - 6
C5	HYDROSTATIC CHARGE PUMP	0367 - 6
B15	HYDROSTATIC LINE CHECK VALVE	0363 - 2
B17	HYDROSTATIC LINE CHECK VALVE	0363 - 4
B15	HYDROSTATIC LINE FILTER	0363 - 2
B17	HYDROSTATIC LINE FILTER	0363 - 4
C11	HYDROSTATIC MOTOR	0367 - 12
C1	HYDROSTATIC MOUNTING PARTS	0367 - 2
B15	HYDROSTATIC OIL LINES TO COOLER	0363 - 2
B17	HYDROSTATIC OIL LINES TO COOLER	0363 - 4
C3	HYDROSTATIC PUMP	0367 - 4
C7	HYDROSTATIC PUMP INCHING VALVE	0367 - 8
C9	HYDROSTATIC PUMP LINES	0367 - 10
C5	HYDROSTATIC PUMP REAR FLANGE	0367 - 6
C7	HYDROSTATIC PUMP SOLENOID	0367 - 8
C7	HYDROSTATIC PUMP TOP COVER	0367 - 8
B21	HYDROTATIC (HST) LINE FILTER	0364 - 2

I

C20	IDLER GEAR	0402 - 4
C7	INCHING VALVE, HYDROSTATIC PUMP	0367 - 8
E11	INDICATOR, AIR CLEANER	0521 - 2
H8	INSTRUMENT PANEL, DASH	1676 - 2
D5	INTAKE MANIFOLD	0409 - 4

K

H12	KEY	1676 - 6
D23	KIT, CYLINDER BLOCK GASKET	0452 - 2
E1	KIT, CYLINDER HEAD GASKET	0452 - 4
G17	KIT, FLUID ANALYSIS PRODUCTS (CUSTOMER CONVENIENCE PACKS)	1369 - 6
H1	KIT, FRONT AND REAR WORK LIGHT	1673 - 6

L

G11	LABELS, CAB UNIT	1322 - 2
H8	LAMPS, DASH INSTRUMENT	1676 - 2
K20	LEVELER, AUTOMATIC LOAD	3166 - 2
K10	LEVER, LOAD LOCK	3115 - 2
G4	LEVER, PARK BRAKE	1115 - 2
H12	LEVER, SHIFT	1676 - 6
K18	LIFT CYLINDER	3165 - 4
K14	LIFT CYLINDER HOSE	3163 - 2
J4	LIFTER, HOOD	1911 - 4
G22	LIGHT, FRONT AND REAR	1673 - 2
G22	LIGHT, TURN SIGNAL	1673 - 2
H1	LIGHT, WORK	1673 - 6
G24	LIGHTS, FRONT WIRING	1673 - 4
F17	LINAGE, SERVICE BRAKE	1062 - 2
K14	LINE, BOOM HYDRAULIC	3163 - 2
D13	LINE, FUEL INJECTION	0413 - 6
D15	LINE, FUEL INJECTION	0413 - 8
E21	LINES, FUEL	0560 - 4
C9	LINES, HYDROSTATIC PUMP	0367 - 10
B15	LINES, HYDROSTATIC TO COOLER OIL	0363 - 2
B17	LINES, HYDROSTATIC TO COOLER OIL	0363 - 4
J21	LINES, MAIN HYDRAULIC	2163 - 2
F19	LINES, SERVICE BRAKE	1063 - 2
F10	LINES, STEERING SYSTEM	0963 - 2
H17	LINES, SUSPENSION LUBE	1741 - 4
J19	LINES, THIRD FUNCTION	2162 - 10
B19	LINES,TRANSMISSION TO/FROM CHARGE PUMP	0363 - 6
K12	LINKAGE, BOOM	3115 - 4
K10	LINKAGE, BOOM CONTROL	3115 - 2
K12	LINKAGE, BUCKET	3115 - 4
K10	LINKAGE, BUCKET CONTROL	3115 - 2
E9	LINKAGE, ENGINE SPEED CONTROL	0515 - 2
G4	LINKAGE, PARK BRAKE	1115 - 2
K9	LOAD GUARD	3103 - 1
K10	LOAD LOCK LEVER	3115 - 2
K8	LOADER BUCKET DATA	3102 - 4
K6	LOADER BUCKET TEETH	3102 - 2
I7	LOCK, CAB DOOR	1810 - 6
H15	LOCKING BAR	1741 - 2
K9	LOG LOAD GUARD	3103 - 1
H17	LUBE LINES, SUSPENSION	1741 - 4

M

C22	MAIN BEARING CAPS	0404 - 2
H2	MAIN WIRING HARNESS	1674 - 2
H4	MAIN WIRING HARNESSES	1674 - 4
D7	MANIFOLD, EXHAUST	0410 - 2
D5	MANIFOLD, INTAKE	0409 - 4
F19	MASTER CYLINDER	1063 - 2
I13	MAT, FLOOR	1812 - 2
I5	MIRROR, CAB INSIDE	1810 - 4
I3	MIRROR, CAB OUTSIDE	1810 - 2
H12	MONITOR WARNING BUZZER	1676 - 6
C11	MOTOR, HYDROSTATIC	0367 - 12
D19	MOTOR, STARTING	0422 - 2
I15	MOTOR, WIPER	1814 - 2
A15	MOUNTING HARDWARE, AXLE	0201 - 2
C1	MOUNTING PARTS, HYDROSTATIC	0367 - 2
I3	MOUNTING, CAB	1810 - 2
B5	MOUNTING, CHARGE PUMP	0342 - 2
E17	MOUNTING, ENGINE	0540 - 2
B5	MOUNTING, TRANSMISSION	0342 - 2
E15	MUFFLER SUPPORT, EXHAUST	0530 - 2
E15	MUFFLER, EXHAUST	0530 - 2

N

D13	NOZZLE, FUEL INJECTION	0413 - 6
D15	NOZZLE, FUEL INJECTION	0413 - 8

O

E5	OIL COOLER	0511 - 2
D1	OIL FILTER, ENGINE	0407 - 4
B3	OIL FILTER, TRANSMISSION HOUSING	0341 - 2
B3	OIL GAUGE, TRANSMISSION	0341 - 2
C24	OIL PAN	0407 - 2
D1	OIL PRESSURE SWITCH	0407 - 4
B3	OIL SENSOR, TRANSMISSION	0341 - 2

ALPHABETICAL INDEX - CONTINUED

GRID		PAGE
D1	OIL SYSTEM, ENGINE	0407 - 4
J23	OIL TANK, HYDRAULIC	2164 - 2
G13	OILSCAN PLUS TEST KIT, FLUID ANALYSIS	1369 - 2
I13	OPERATOR PLATFORM	1812 - 2
I17	OPERATOR SEAT	1821 - 2

P

G2	PAD, PARK BRAKE	1111 - 2
C24	PAN, OIL	0407 - 2
H8	PANEL, DASH INSTRUMENT	1676 - 2
I15	PANEL, WIPER SWITCH	1814 - 2
I9	PANELS, CAB INTERIOR	1810 - 8
G2	PARK BRAKE	1111 - 2
G6	PARK BRAKE CYLINDER	1115 - 4
G4	PARK BRAKE DECAL, BOOSTER CYLINDER	1115 - 2
H10	PARK BRAKE HARNESS	1676 - 4
G4	PARK BRAKE HOSES AND LINKAGE	1115 - 2
G4	PARK BRAKE LINKAGE	1115 - 2
G8	PARK BRAKE SOLENOID VALVE	1115 - 6
H8	PARK BRAKE SWITCH	1676 - 2
E9	PEDAL, ACCELERATOR	0515 - 2
F17	PEDAL, SERVICE BRAKE	1062 - 2
K12	PIN, BOOM	3115 - 4
K12	PIN, BUCKET	3115 - 4
H21	PIN, COUNTERWEIGHT	1749 - 2
H19	PIN, FRAME ARTICULATION	1743 - 2
H15	PIN, LOCKING BAR	1741 - 2
F10	PIN, STEERING CYLINDER	0963 - 2
K8	PINS, LOADER BUCKET	3102 - 4
F14	PINS, STEERING CYLINDER	0965 - 4
E15	PIPE, MUFFLER EXHAUST	0530 - 2
C16	PISTON, ENGINE	0401 - 2
C11	PISTON, HYDROSTATIC MOTOR	0367 - 12
C3	PISTON, HYDROSTATIC PUMP	0367 - 4
A19	PLATE, FINAL DRIVE	0210 - 4
B9	PLATES, CLUTCH	0352 - 2
I13	PLATFORM, OPERATOR	1812 - 2
F19	PLUMBING, BRAKE	1063 - 2
F10	PLUMBING, STEERING	0963 - 2
F8	PRIORITY VALVE, STEERING	0962 - 4
D17	PULLEY, ENGINE COOLING FAN	0417 - 2
D9	PUMP, FUEL INJECTION AND TRANSFER	0413 - 2
D11	PUMP, FUEL TRANSFER	0413 - 4
C3	PUMP, HYDROSTATIC	0367 - 4
C5	PUMP, HYDROSTATIC CHARGE	0367 - 6
J9	PUMP, MAIN HYDRAULIC	2161 - 2
J9	PUMP, TANDEM GEAR	2161 - 2
B11	PUMP, TRANSMISSION CHARGE	0361 - 2
D17	PUMP, WATER	0417 - 2

R

E5	RADIATOR	0511 - 2
E5	RADIATOR DRAIN HOSE	0511 - 2
E7	RADIATOR LEAKOFF RESERVOIR	0511 - 4
E7	RADIATOR SUPPORT	0511 - 4
E7	RADIATOR SUPPORT BRACKET	0511 - 4
A21	REAR DRIVE SHAFT	0225 - 2
H4	RELAY LOCATIONS	1674 - 4
H6	RELAYS AND SWITCHES	1674 - 6
C5	RELIEF VALVE, HYDROSTATIC PUMP	0367 - 6
J11	RELIEF VALVE, MAIN CONTROL	2162 - 2
J23	RESERVOIR, HYDRAULIC	2164 - 2
E7	RESERVOIR, RADIATOR LEAKOFF	0511 - 4
K20	RETURN-TO-DIG	3166 - 2
A12	RIM, WHEEL	0110 - 2

S

F6	SEAL KIT, STEERING VALVE	0962 - 2
I17	SEAT ADJUSTER	1821 - 2
I17	SEAT SUPPORT, OPERATOR	1821 - 2
I17	SEAT, OPERATOR	1821 - 2
H6	SENDER, WATER TEMPERATURE	1674 - 6
B21	SENSOR, HST FILTER	0364 - 2
K1	SENSOR, HYDRAULIC LINE FILTER	2164 - 4
B3	SENSOR, TRANSMISSION OIL	0341 - 2
B9	SHAFT, CLUTCH	0352 - 2
A21	SHAFT, FRONT DRIVE	0225 - 2
A23	SHAFT, FRONT DRIVE	0225 - 4
C11	SHAFT, HYDROSTATIC MOTOR	0367 - 12
C3	SHAFT, HYDROSTATIC PUMP	0367 - 4
F4	SHAFT, STEERING	0920 - 4
B7	SHAFT, TRANSMISSION	0350 - 2
H12	SHIFT CONTROL LEVER	1676 - 6
E5	SHROUD, FAN	0511 - 2
B3	SHROUD, TRANSMISSION HOUSING INNER	0341 - 2
E23	SHUTOFF, ENGINE	0570 - 2
H12	SIGNALS, TURN	1676 - 6
E13	SILENCER, AIR INTAKE	0521 - 4
J7	SLOW MOVING VEHICLE EMBLEM	2008 - 1
G8	SOLENOID VALVE, PARK BRAKE	1115 - 6
C7	SOLENOID, HYDROSTATIC PUMP	0367 - 8
B13	SOLENOID, TRANSMISSION CONTROL VALVE	0362 - 2
G6	SPRING CYLINDER	1115 - 4
H12	STARTER SWITCH	1676 - 6
H10	STARTER SWITCH WIRING	1676 - 4
D19	STARTING MOTOR	0422 - 2
F4	STEERING COLUMN	0920 - 4
F12	STEERING CYLINDER	0965 - 2
F10	STEERING CYLINDER PIN	0963 - 2
F14	STEERING CYLINDER, PINS AND SUPPORT	0965 - 4
F8	STEERING PRIORITY VALVE	0962 - 4
F4	STEERING SHAFT	0920 - 4
F10	STEERING SYSTEM LINES AND HOSES	0963 - 2
F6	STEERING VALVE	0962 - 2
F6	STEERING VALVE SEAL KIT	0962 - 2
F2	STEERING WHEEL	0920 - 2
I19	STEP, FRAME	1822 - 2
E23	STOP DEVICE, ENGINE	0570 - 2
E13	STRAPS, AIR INTAKE SUPPORT	0521 - 4
E15	SUPPORT, MUFFLER	0530 - 2
I17	SUPPORT, OPERATOR SEAT	1821 - 2
E7	SUPPORT, RADIATOR	0511 - 4
F14	SUPPORT, STEERING CYLINDER	0965 - 4
H17	SUSPENSION, DRIVELINE FRAME	1741 - 4
C3	SWASH PLATE ASSEMBLY, HYDROSTATIC PUMP	0367 - 4
H4	SWITCH LOCATIONS	1674 - 4
K20	SWITCH, AUTO LOAD LEVELER (R-TO-DIG)	3166 - 2
I23	SWITCH, HEATER	1831 - 4
F4	SWITCH, HORN	0920 - 4
B21	SWITCH, HST FILTER	0364 - 2
D1	SWITCH, OIL PRESSURE	0407 - 4
H8	SWITCH, PARK BRAKE	1676 - 2
H12	SWITCH, STARTER	1676 - 6
I15	SWITCH, WIPER	1814 - 2
H6	SWITCHES AND RELAYS	1674 - 6

ALPHABETICAL INDEX - CONTINUED

GRID		PAGE
	T	
J9	TANDEM GEAR PUMP	2161 - 2
E19	TANK, FUEL	0560 - 2
J23	TANK, HYDRAULIC	2164 - 2
I15	TANK, WINDOW WASHER	1814 - 2
K6	TEETH, LOADER BUCKET	3102 - 2
H8	TEMPERATURE GAUGE, WATER	1676 - 2
G15	TEST KIT, FLUID ANALYSIS PRODUCTS (COOLSCAN)	1369 - 4
G17	TEST KIT, FLUID ANALYSIS PRODUCTS (CUSTOMER CONVENIENCE PACKS)	1369 - 6
G16	TEST KIT, FLUID ANALYSIS PRODUCTS (DIESELSCAN)	1369 - 5
G13	TEST KIT, FLUID ANALYSIS PRODUCTS (OILSCAN)	1369 - 2
D17	THERMOSTAT	0417 - 2
J19	THIRD FUNCTION LINES	2162 - 10
J11	THIRD FUNCTION VALVE	2162 - 2
J11	THREE-SPOOL CONTROL VALVE	2162 - 2
K14	TILT CYLINDER HOSE	3163 - 2
K16	TILT, CYLINDER	3165 - 2
H6	TIMER, AIR HEATER	1674 - 6
C18	TIMING GEAR COVER	0402 - 2
A12	TIRE	0110 - 2
B5	TRANMISSION AND MOUNTING	0342 - 2
B23	TRANSMISSION (PST) LINE FILTER	0364 - 4
B11	TRANSMISSION CHARGE PUMP	0361 - 2
B13	TRANSMISSION CONTROL VALVE	0362 - 2
B13	TRANSMISSION CONTROL VALVE SOLENOID	0362 - 2
B19	TRANSMISSION FILTER, CHARGE PUMP TO	0363 - 6
B3	TRANSMISSION HOUSING	0341 - 2
B3	TRANSMISSION HOUSING BREATHER	0341 - 2
B3	TRANSMISSION HOUSING OIL FILTER	0341 - 2
B19	TRANSMISSION LINES, TO/FROM CHARGE PUMP	0363 - 6
B3	TRANSMISSION OIL GAUGE	0341 - 2
B7	TRANSMISSION SHAFT	0350 - 2
B7	TRANSMISSION SHFT GEAR	0350 - 2
G22	TURN SIGNAL LIGHT	1673 - 2
H12	TURN SIGNALS	1676 - 6
	V	
J15	VALVE BOOM SECTION,CONTROL	2162 - 6
J13	VALVE BUCKET SECTION, CONTROL	2162 - 4
J17	VALVE, CONTROL, AUXILIARY SECTION	2162 - 8
C7	VALVE, HYDROSTATIC PUMP INCHING	0367 - 8
J11	VALVE, MAIN CONTROL RELIEF	2162 - 2
G8	VALVE, SOLENOID	1115 - 6
F6	VALVE, STEERING	0962 - 2
F8	VALVE, STEERING PRIORITY	0962 - 4
J11	VALVE, THIRD FUNCTION CONTROL	2162 - 2
A12	VALVE, TIRE	0110 - 2
B13	VALVE, TRANSMISSION CONTROL	0362 - 2
J7	VEHICLE EMBLEM, SLOW MOVING	2008 - 1
	W	
D17	WATER PUMP	0417 - 2
A12	WHEEL RIM	0110 - 2
F2	WHEEL, STEERING	0920 - 2
I5	WINDOW SUPPORT ROD	1810 - 4
I7	WINDOW, CAB	1810 - 6
I11	WINDOW, CAB SIDE	1810 - 10
I11	WINDSHIELD, CAB	1810 - 10
I15	WIPER SWITCH PANEL	1814 - 2
I15	WIPER, CAB WINDSHIELD	1814 - 2
I5	WIRE HARNESS COVER	1810 - 4
K20	WIRE HARNESS, RETURN-TO-DIG	3166 - 2
H4	WIRE HARNESSES	1674 - 4
H2	WIRING HARNESSES	1674 - 2
H10	WIRING, DASH FRONT CONSOLE	1676 - 4
G24	WIRING, FRONT LIGHTS AND FRAME	1673 - 4
H10	WIRING, PARK BRAKE AND FUSE BOX	1676 - 4
H10	WIRING, STARTER SWITCH	1676 - 4
H1	WORK LIGHT	1673 - 6

WHEEL RIM AND VALVE

TP40015 -UN-01JAN94

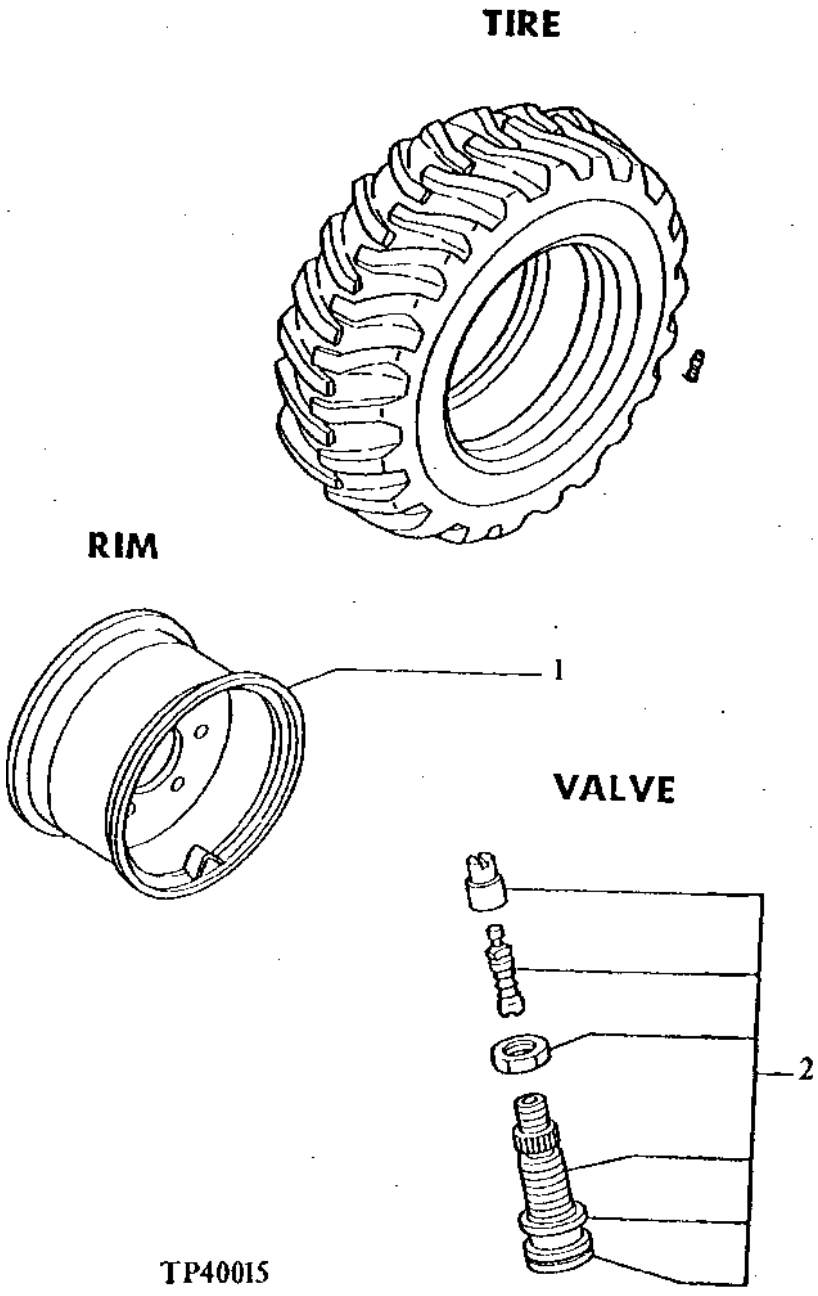

WHEEL RIM AND VALVE

KEY	PART NO.	PART NAME	QTY	SERIAL NO.	REMARKS
1	AT152959	RIM	1		
	T165227	TIRE	1		
2	AT152478	TIRE VALVE STEM	1		

AXLES

TP40012 -UN-01JAN94

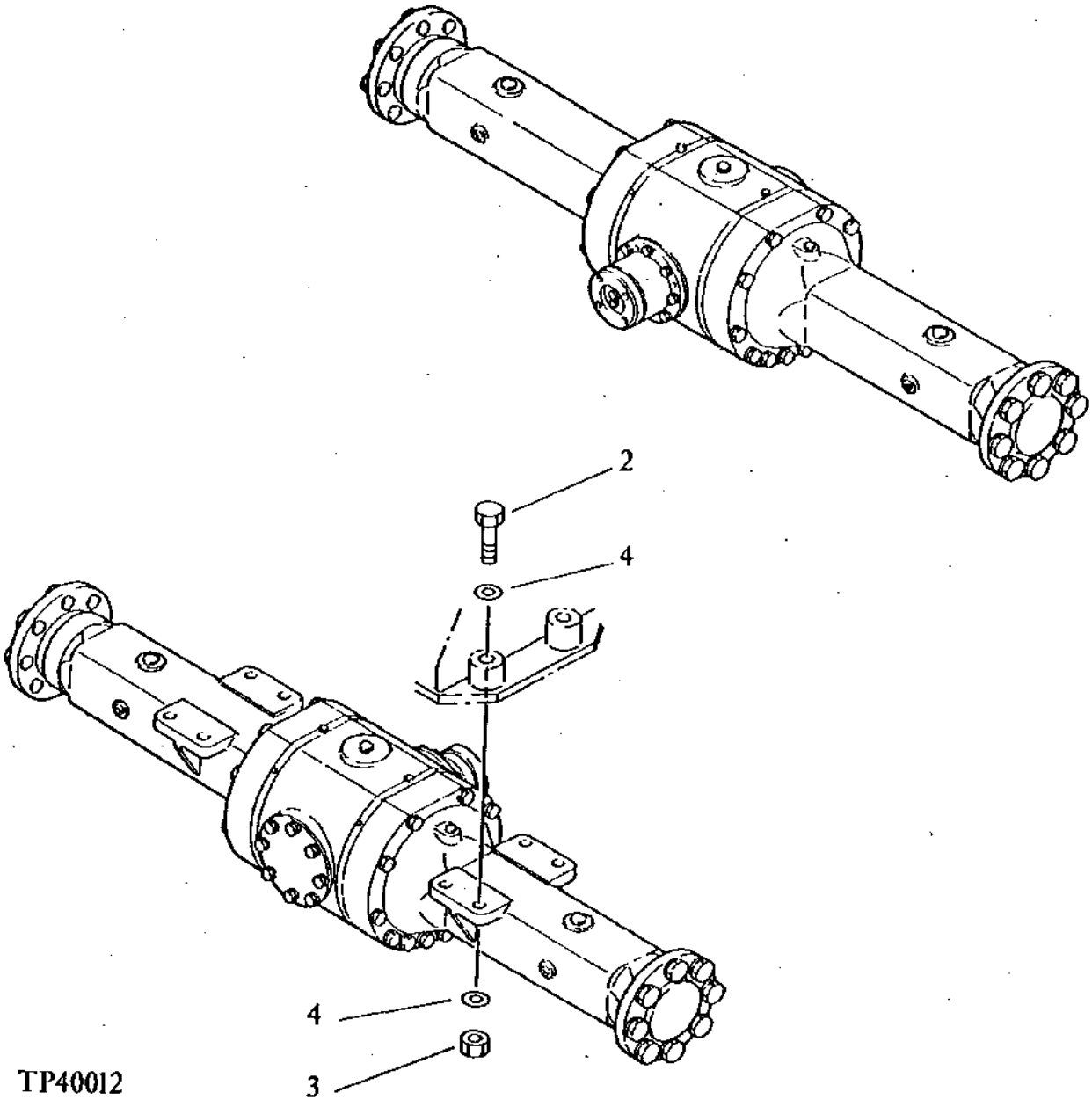

AXLES

KEY	PART NO.	PART NAME	QTY	SERIAL NO.	REMARKS
2	19M7969	CAP SCREW	8		M20 X 110, (SUB FOR AT152390)
3	14M7144	NUT	8		M20
4	24M7242	WASHER	16		21.400 X 42 X 5 MM

DIFFERENTIAL

TP40013 -UN-01JAN94

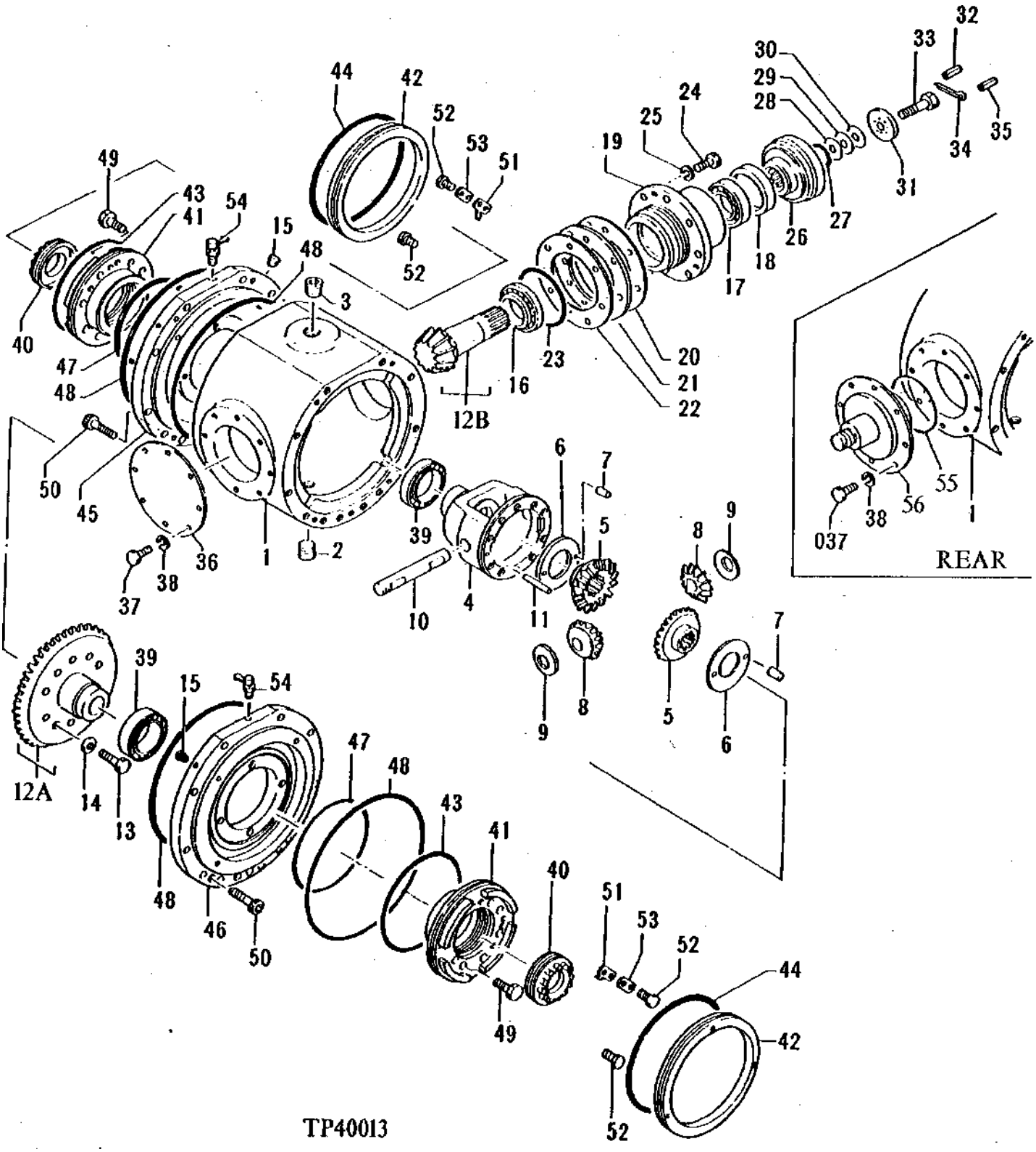

DIFFERENTIAL

KEY	PART NO.	PART NAME	QTY	SERIAL NO.	REMARKS
1	T115836	CASE	1		
2	T116054	PIPE PLUG	1		
3	T115716	PLUG	1		
4	AT152941	GEAR CASE	1		
5	T115361	GEAR	2		
6	T115838	WASHER	2		
7	34M7059	SPRING PIN	4		6 X 12 MM
8	T115362	PLANET PINION	2		
9	T115839	WASHER	2		
10	T115840	PINION SHAFT	1		
11	T115841	PIN	1		
12	AT108072	GEAR	1		
12A	.....	BEVEL GEAR	1		
12B	.....	PINION	1		ORDER AS SET
13	19M7403	CAP SCREW	10		M12 X 35
14	24M7047	WASHER	10		13 X 24 X 2.500 MM
15	TH100434	FITTING PLUG	2		(SUB FOR T116056)
16	T115842	BEARING	1		
17	JD10455	BEARING	1		(SUB FOR AT153372)
18	T116641	SEAL	1		
19	T115843	CAGE	1		
20	T115844	SHIM	3		
21	T115845	SHIM	3		
22	T115846	SHIM	3		
23	CH16109	PACKING	1		
24	19M7662	CAP SCREW	8		M10 X 30
25	12M6791	LOCK WASHER	8		10.200 MM
26	AT153371	FLANGE	1		
27	T116335	O-RING	1		
28	T115613	SPACER	3		
29	T115612	SPACER	4		
30	T115611	SPACER	5		
31	T115614	WASHER	1		
32	34M7137	SPRING PIN	2		3 X 18 MM
33	T115618	BOLT	1		
34	11M7017	COTTER PIN	1		3.200 X 32 MM
35	34M5798	SPRING PIN	1		3 X 14 MM
36	T115717	COVER	1		
37	19M7938	CAP SCREW	8		M10 X 20
38	12M6791	LOCK WASHER	8		10.200 MM
39	JD10063	ROLLER BEARING	2		
40	T115849	NUT	2		
41	T115850	CASE	2		
42	T115721	PISTON	2		
43	T115719	O-RING	2		
44	T39414	O-RING	2		(SUB FOR T115720)
45	AT153373	CASE	1		
46	AT153374	CASE	1		
47	T115718	O-RING	2		
48	T115853	O-RING	4		
50	19M8439	SCREW	4		M8 X 25
51	T115616	LOCK PLATE	2		
52	T116296	BOLT	4		
53	T115615	STRAP	2		
54	T116183	BREATHER	2		
55	CH17447	PACKING	1		
56	T115736	PIN	1		

AXLE FINAL DRIVE

TP40014 -UN-01JAN94

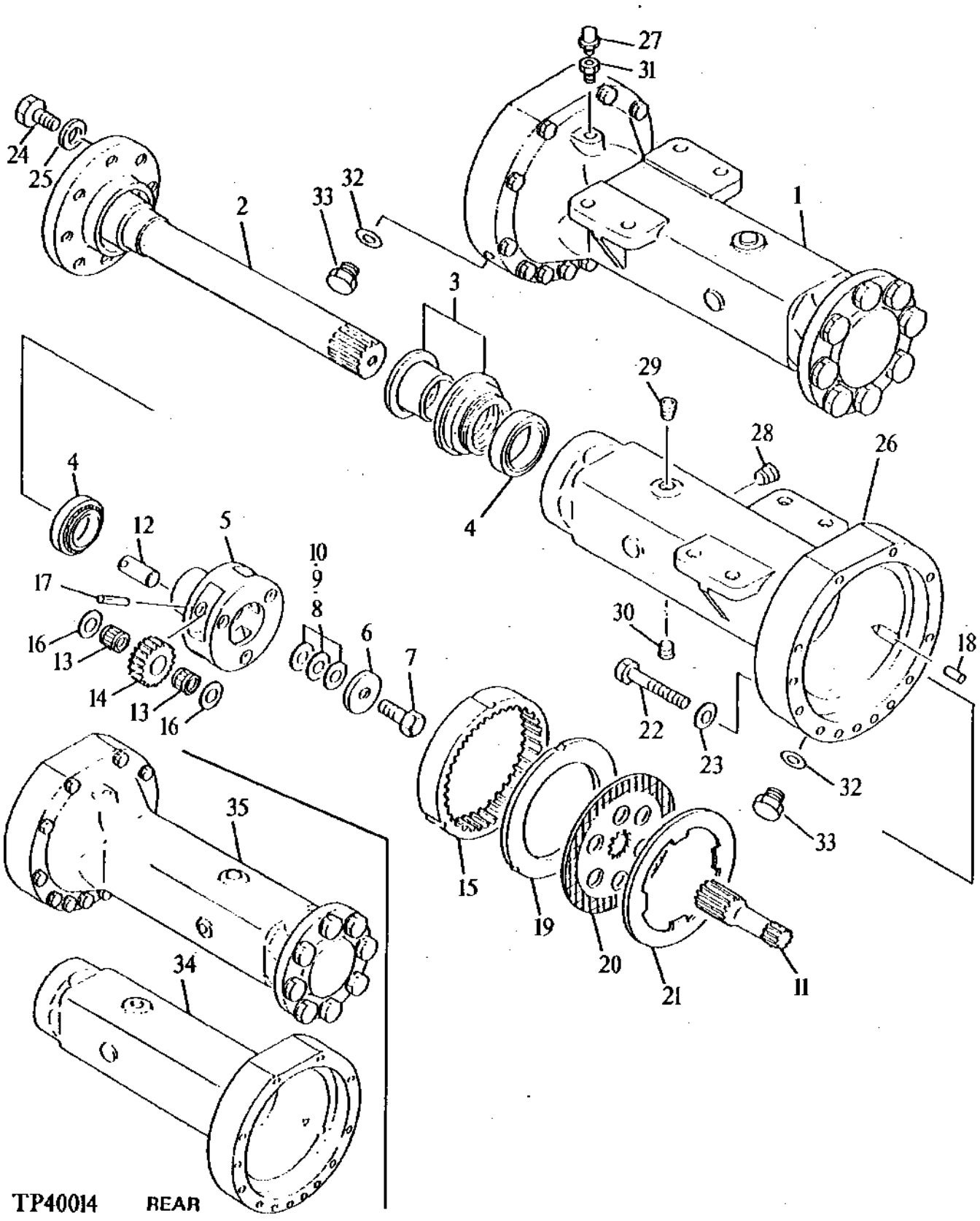

AXLE FINAL DRIVE

KEY	PART NO.	PART NAME	QTY	SERIAL NO.	REMARKS
1	.....	HOUSING	1		(FRONT-LEFT AND RIGHT)
2	T115855	SPINDLE	2		
3	T115722	SEAL	2		
4	JD10428	ROLLER BEARING	4		
5	AT152943	GEAR CASE	2		
6	T115725	WASHER	2		
7	T116332	BOLT	2		
8	T115726	SHIM	3		
9	T115727	SHIM	3		
10	T115728	SHIM	3		
11	AT152944	GEAR	2		
12	T115729	PIN	6		
13	T115730	BEARING	12		
14	AT152945	GEAR	6		
15	AT152946	GEAR	2		
16	AT152947	WASHER	12		
17	34M7030	SPRING PIN	6		5 X 20 MM
18	AT152948	PIN	6		
19	AT152949	PLATE	2		
20	AT152950	PLATE	2		
21	AT152951	PLATE	2		
22	19M6422	CAP SCREW	24		M14 X 130
23	T115619	WASHER	24		
24	T116185	BOLT	16		
25	T116186	WASHER	16		
26	AT152952	HOUSING	1		(FRONT-LEFT AND RIGHT)
27	TH105075	BREATHER	1		(SUB FOR AT152477)
28	TH100653	FITTING PLUG	2		(SUB FOR T116214)
29	T115716	PLUG	2		
30	T116054	PIPE PLUG	2		
31	TH105075	BREATHER	1		(SUB FOR AT152953)
32	AT152954	PACKING	2		
33	AT152955	PLUG	2		
34	AT152957	HOUSING	1		(REAR-LEFT AND RIGHT)
35	.....	HOUSING	1		(REAR-LEFT AND RIGHT)

FRONT AND REAR DRIVESHAFT

TP40010 -UN-01JAN94

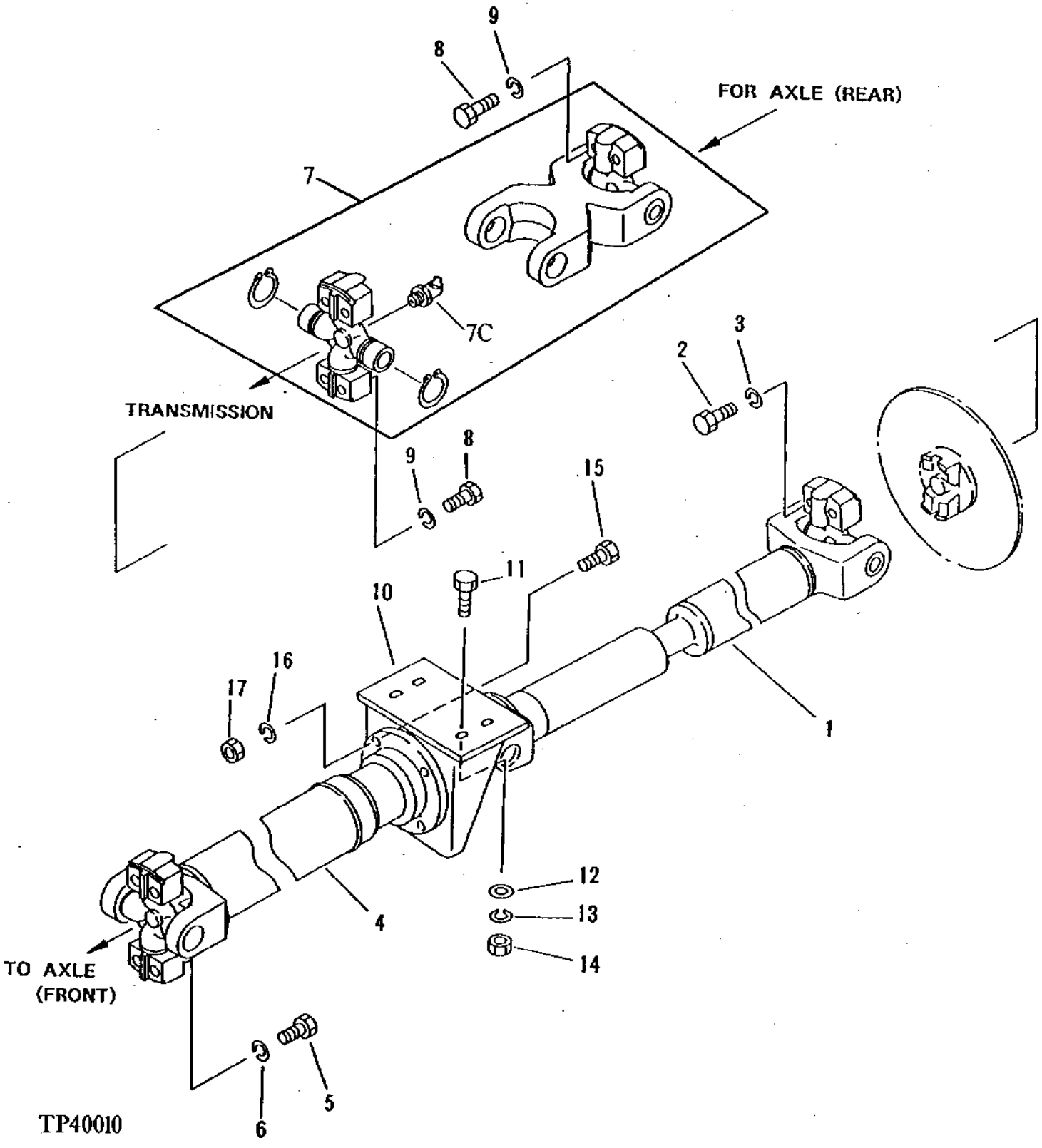

FRONT AND REAR DRIVESHAFT

KEY	PART NO.	PART NAME	QTY	SERIAL NO.	REMARKS
1	AT152926	UNIVERSAL JOINT	1		
2	AT152393	BOLT	4		
3	12M7065	LOCK WASHER	4		8 MM
4	AT152934	UNIVERSAL JOINT	1		
5	AT152393	BOLT	4		
6	12M7065	LOCK WASHER	4		8 MM
7	AT152937	UNIVERSAL JOINT	1		
7C	AT152933	LUBRICATION FITTING	2		
8	AT152393	BOLT	8		
9	12M7065	LOCK WASHER	8		8 MM
10	AT152925	BRACKET	1		
11	19M6579	CAP SCREW	4		M14 X 50
12	T115619	WASHER	4		
13	12H317	LOCK WASHER	4		9/16"
14	14M7141	NUT	4		M14
15	T114269	CAP SCREW	4		
16	12H317	LOCK WASHER	4		9/16"
17	14M7141	NUT	4		M14

FRONT DRIVESHAFT

TP40011 -UN-01JAN94

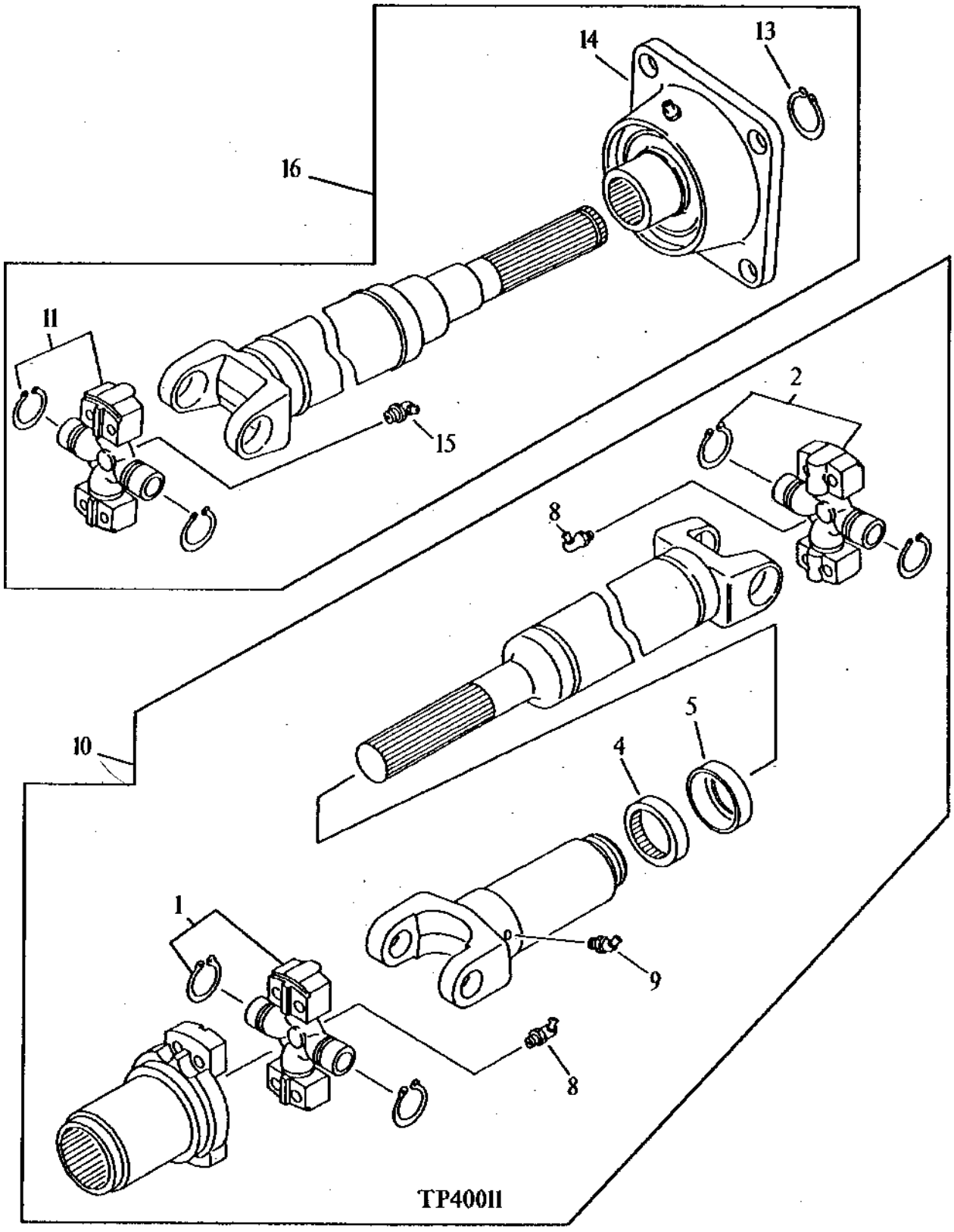

FRONT DRIVESHAFT

KEY	PART NO.	PART NAME	QTY	SERIAL NO.	REMARKS
1	AT152606	SPIDER	1		
2	AT152927	SPIDER	1		
4	AT152929	SEAL	1		
5	AT152930	COVER	1		
8	T115604	FITTING	2		
9	AT152933	LUBRICATION FITTING	1		
10	AT152926	UNIVERSAL JOINT	1		
11	AT152927	SPIDER	1		
13	40M7046	SNAP RING	1		(SUB FOR AT152405)
14	AT152936	FLANGE	1		
15	T115604	FITTING	1		
16	AT152934	UNIVERSAL JOINT	1		

TRANSMISSION HOUSING

TP80440 -UN-14FEB00

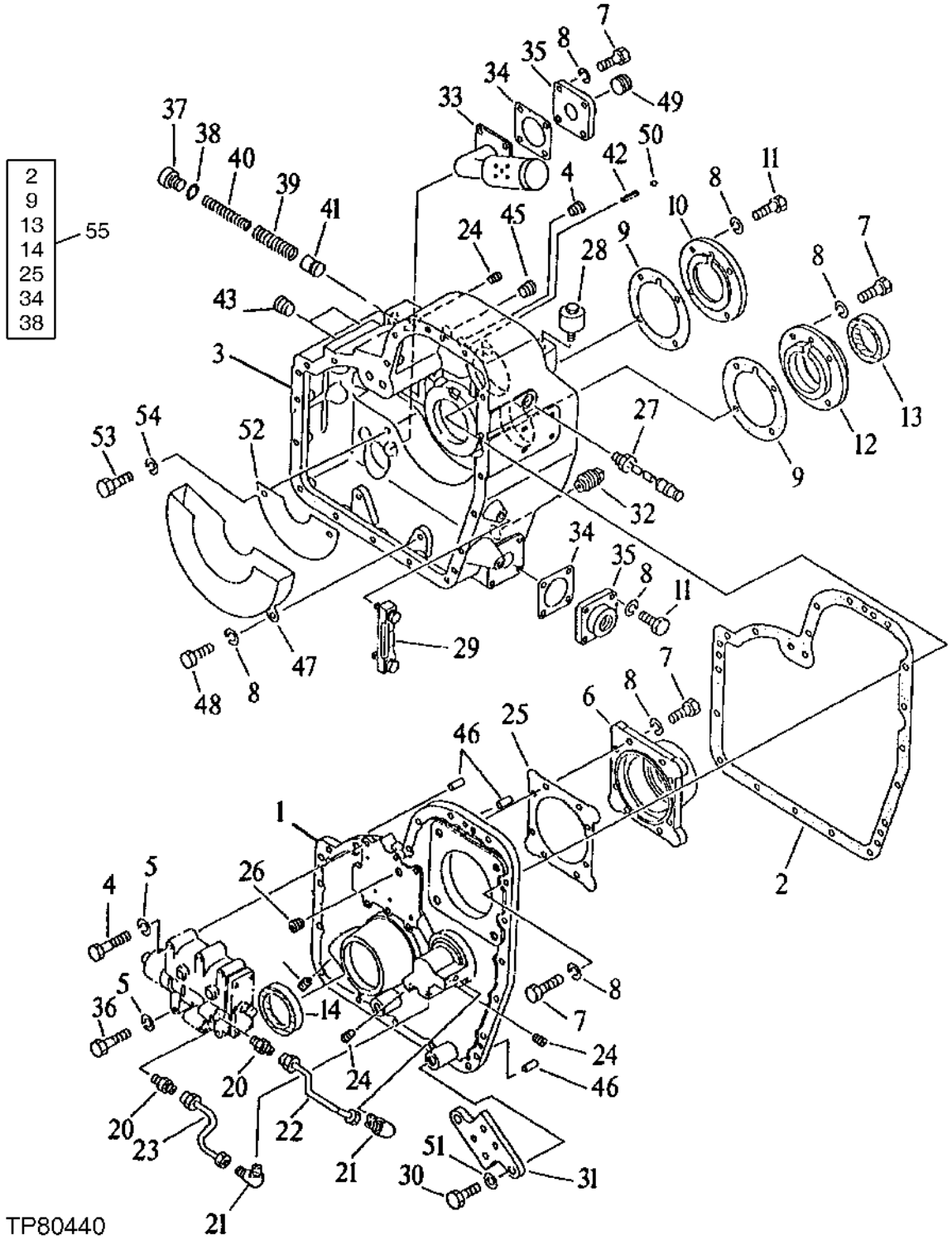

TRANSMISSION HOUSING

KEY	PART NO.	PART NAME	QTY	SERIAL NO.	REMARKS
1	AT215261	COVER	1		
2	AT152727	GASKET	1		(A)
4	AT152397	BOLT	3		
5	12M7065	LOCK WASHER	6		8 MM
6	AT152729	SUPPORT	1		
7	19M7550	CAP SCREW	30		M10 X 35
8	12M6791	LOCK WASHER	44		10.200 MM
9	.....	GASKET	2		(A)
10	AT215262	COVER	1		
11	19M7168	CAP SCREW	12		M10 X 30
12	AT152732	COVER	1		
13	AT152449	SEAL	1		(A)
14	AT152733	SEAL	1		(A)
19	AT152403	SCREW	1		
20	TH102492	FITTING	2		(SUB FOR AT152424)
21	AT152427	ELBOW FITTING	2		
22	AT152734	PIPE	1		
23	AT152735	PIPE	1		
24	AT152736	PLUG	6		
25	.....	GASKET	1		(A)
26	AT152738	CHOKE	1		
27	AT215325	SENSOR	1		(SPEED)
28	AT153342	BREATHER	1		
29	AT170432	GAUGE	1		(SUB FOR AT152740)
30	19M7489	CAP SCREW	2		M16 X 45
31	AT152741	BRACKET	1		
32	T115492	PLUG	1		
33	AT152750	STRAINER	1		
34	T145310	GASKET	2		(A) (SUB FOR AT152742)
35	AT152743	COVER	2		
36	AT152396	BOLT	3		
37	T115464	PLUG	1		
38	.....	BACK-UP RING	1		(A)
39	AT152744	SPRING	1		
40	AT152745	SPRING	1		
41	T116160	PISTON	1		
42	34M7112	SPRING PIN	1		4 X 36 MM
43	TH100648	FITTING PLUG	2		
44	AT152746	PLUG	1		
45	AT152747	PLUG	1		
46	T116148	PIN	3		
47	AT152748	SHROUD	1		
48	19M8324	CAP SCREW	2		M10 X 16
49	AT152749	CAP	3		
50	H871R	BALL	1		(SUB FOR T115553)
51	12M7069	LOCK WASHER	2		16 MM
52	AT152751	SHROUD	1		
53	19M7162	CAP SCREW	2		M8 X 16
54	12M7065	LOCK WASHER	2		8 MM
55	AT152805	SEAL KIT	1		(INCLUDES PARTS MARKED (A))

TRANSMISSION MOUNTING

TP52377 -UN-11OCT96

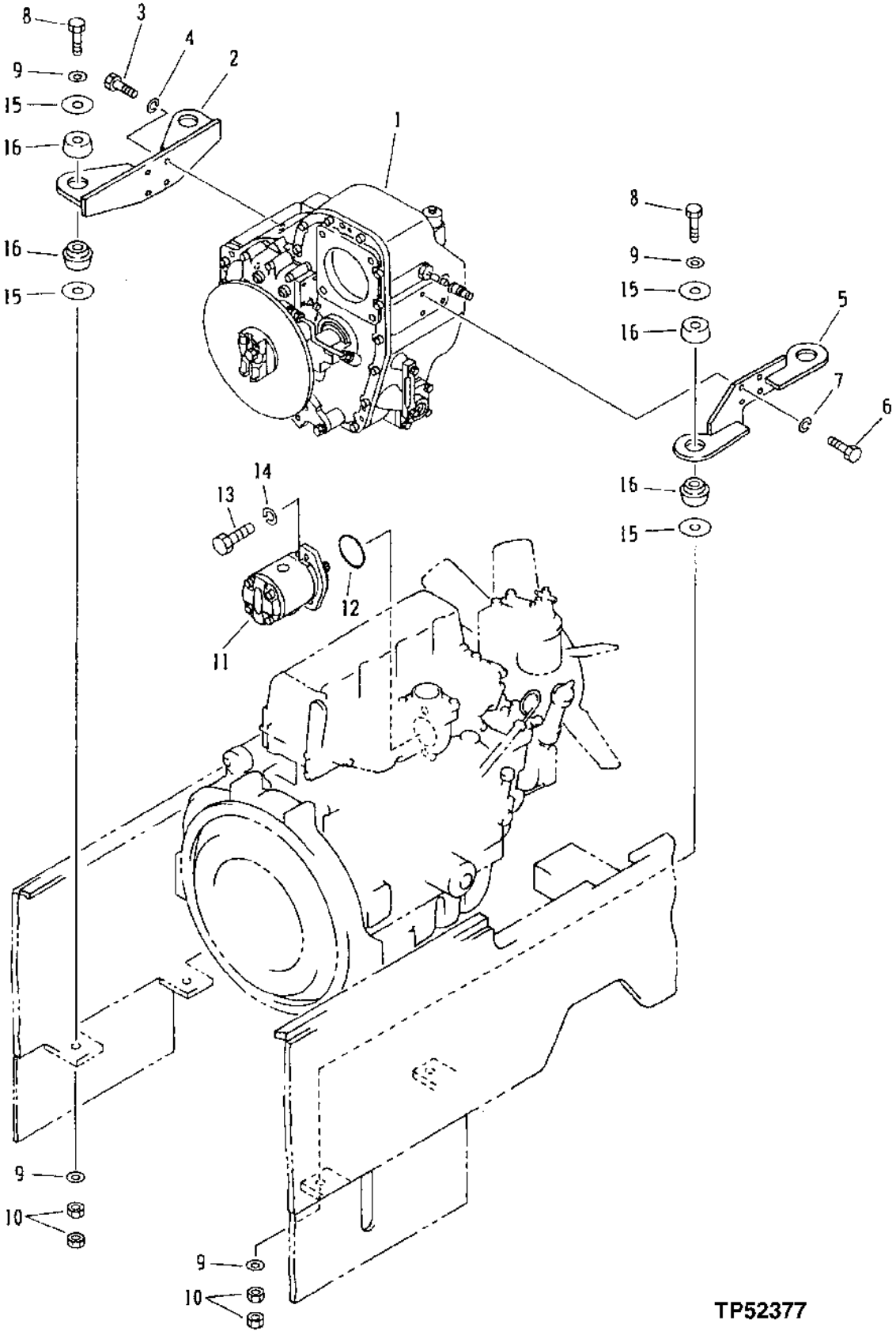

TRANSMISSION MOUNTING

KEY	PART NO.	PART NAME	QTY	SERIAL NO.	REMARKS
1	AT215321	TRANSMISSION	1		(CONVENIENCE ASSEMBLY)
2	AT215322	BRACKET	1		
3	19M8011	CAP SCREW	4		M12 X 30
4	12M7067	LOCK WASHER	4		12 MM
5	AT215323	BRACKET	1		
6	19M8011	CAP SCREW	4		M12 X 30
7	12M7067	LOCK WASHER	4		12 MM
8	19M7908	CAP SCREW	4		M12 X 110
9	24M7047	WASHER	8		13 X 24 X 2.500 MM
10	14M7275	NUT	4		M12
11	AT215327	PUMP	1		
12	U46456	O-RING	1		
13	AT152399	BOLT	2		
14	12M6791	LOCK WASHER	2		10.200 MM
15	AT152487	WASHER	8		
16	AT215324	RUBBER MOUNT	8		

TRANSMISSION SHAFT

T141876 -UN-02MAY01

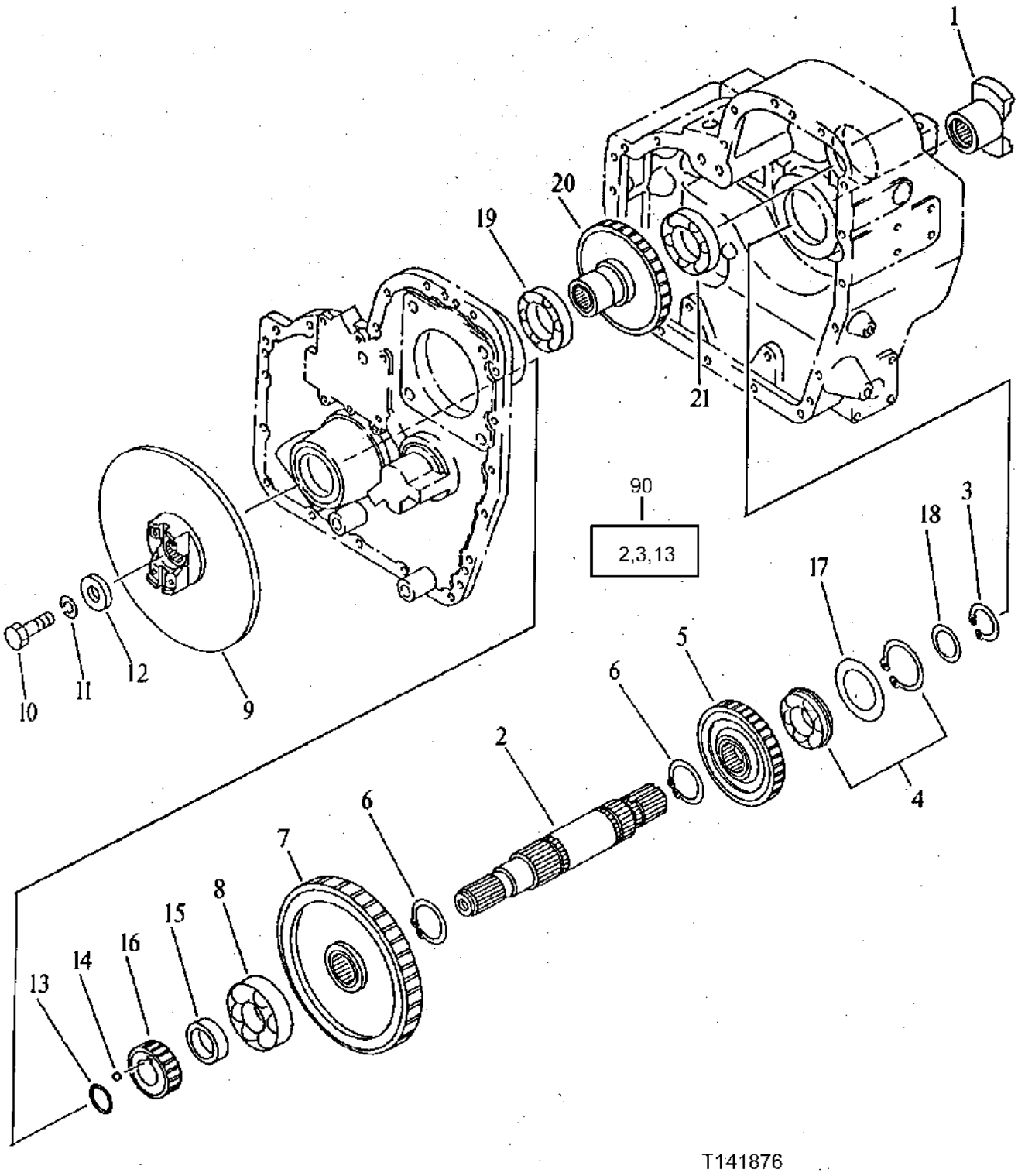

TRANSMISSION SHAFT

KEY	PART NO.	PART NAME	QTY	SERIAL NO.	REMARKS
1	AT152783	FLANGE	1		
2	AT152784	SHAFT	1		
3	.....	SNAP RING	1		(K)
4	JD7125	BALL BEARING	1		(SUB FOR AT152446)
5	AT152785	GEAR	1		
6	.....	SNAP RING	1		(K)
7	AT152786	GEAR	1		
8	JD8520	BALL BEARING	1		(SUB FOR AT152444)
9	AT152787	FLANGE	1		
10	T116284	BOLT	1		
11	12M7069	LOCK WASHER	1		16 MM
12	T115550	WASHER	1		
13	.....	O-RING	1		(K)
14	H871R	BALL	1		(SUB FOR T115553)
15	AT152789	SPACER	1		
16	AT152790	GEAR	1		
17	AT179784	SHIM	1		
18	AT152792	SHIM	1		
19	AT152447	BEARING	1		
20	AT152782	GEAR	1		
21	T144298	BALL BEARING	1		
90	AT152805	SEAL KIT	1		INCLUDES ALL (K) PARTS

CLUTCH GROUP

T141877 -UN-02MAY01

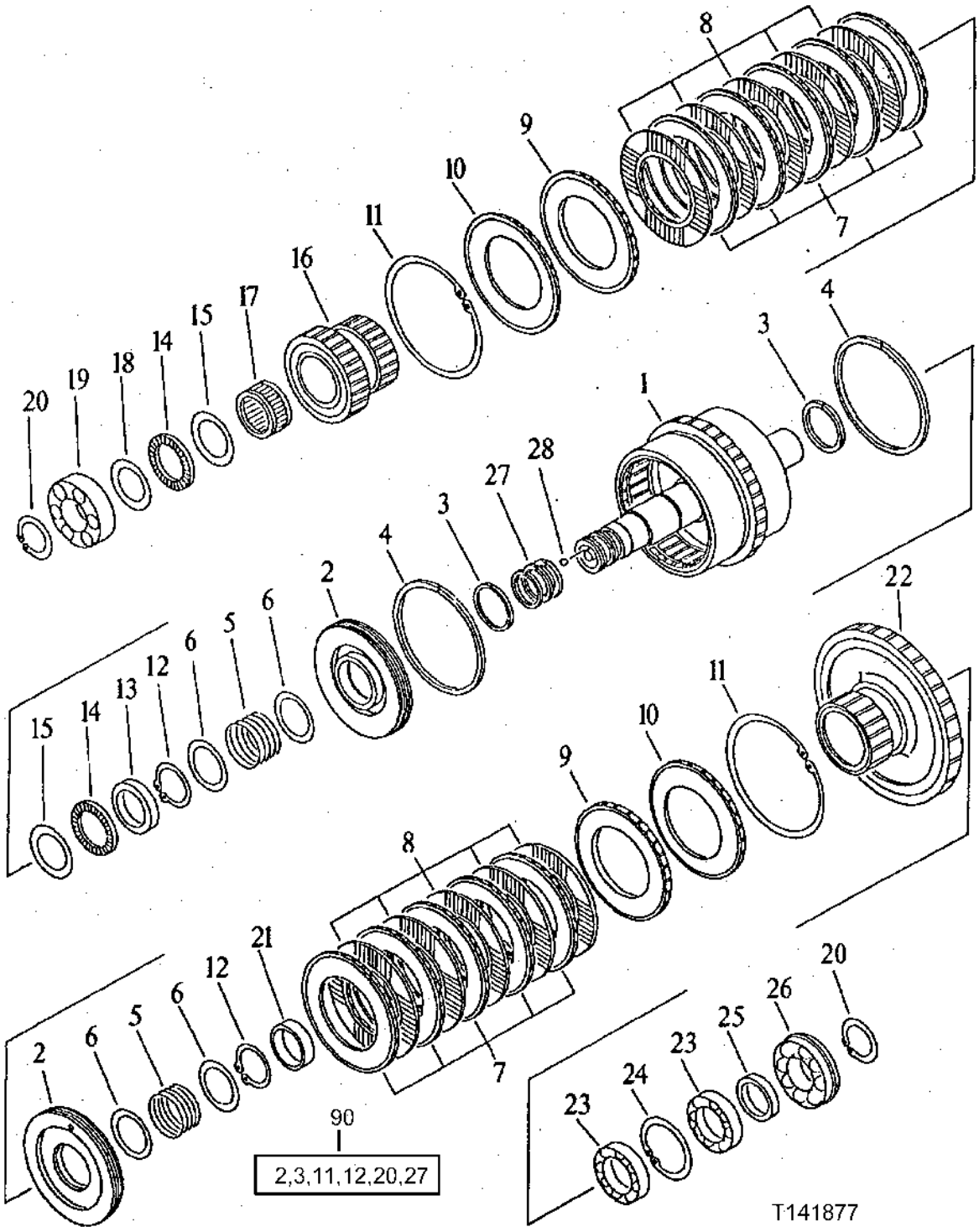

CLUTCH GROUP

KEY	PART NO.	PART NAME	QTY	SERIAL NO.	REMARKS
1	AT159041	SHAFT	1		
2	AT152753	PISTON	2		
3	.....	PISTON RING	2		(K)
4	.....	PISTON RING	2		(K)
5	AT152756	SPRING	2		
6	AT152757	WASHER	4		
7	AT152758	PLATE	10		
8	AT152759	DISK	10		
9	AT152760	PLATE	2		
9A	AT152761	PLATE	1		(6.7)
9B	AT152762	PLATE	1		(6.9)
9C	AT152763	PLATE	1		(7.1)
9D	AT152764	PLATE	1		(7.3)
9E	AT152765	PLATE	1		(7.5)
9F	AT152766	PLATE	1		(7.7)
9G	AT152767	PLATE	1		(7.9)
10	AT152768	PLATE	1		
11	AT152769	SNAP RING	1		(K)
12	40M7047	SNAP RING	2		(K)
13	T144300	WASHER	1		
14	AT176752	NEEDLE BEARING	2		(SUB FOR AT152771)
15	AT176753	PLATE	2		(SUB FOR AT152772)
16	AT159039	GEAR	1		
17	AT152774	NEEDLE BEARING	1		
18	AT152775	WASHER	1		
19	AT152448	BEARING	1		
20	40M7058	SNAP RING	2		(K)
21	T144299	WASHER	1		
22	AT159038	GEAR	1		
23	AT152445	BALL BEARING	2		
24	40M7090	SNAP RING	1		(SUB FOR AT152407)
25	AT152778	WASHER	1		
26	AT152779	BEARING	1		
27	.....	SEAL	1		(K)
28	AT152781	BALL	1		
90	AT152805	SEAL KIT	1		INCLUDES ALL (K) PARTS

TRANSMISSION CHARGE PUMP

TP52378 -UN-10OCT96

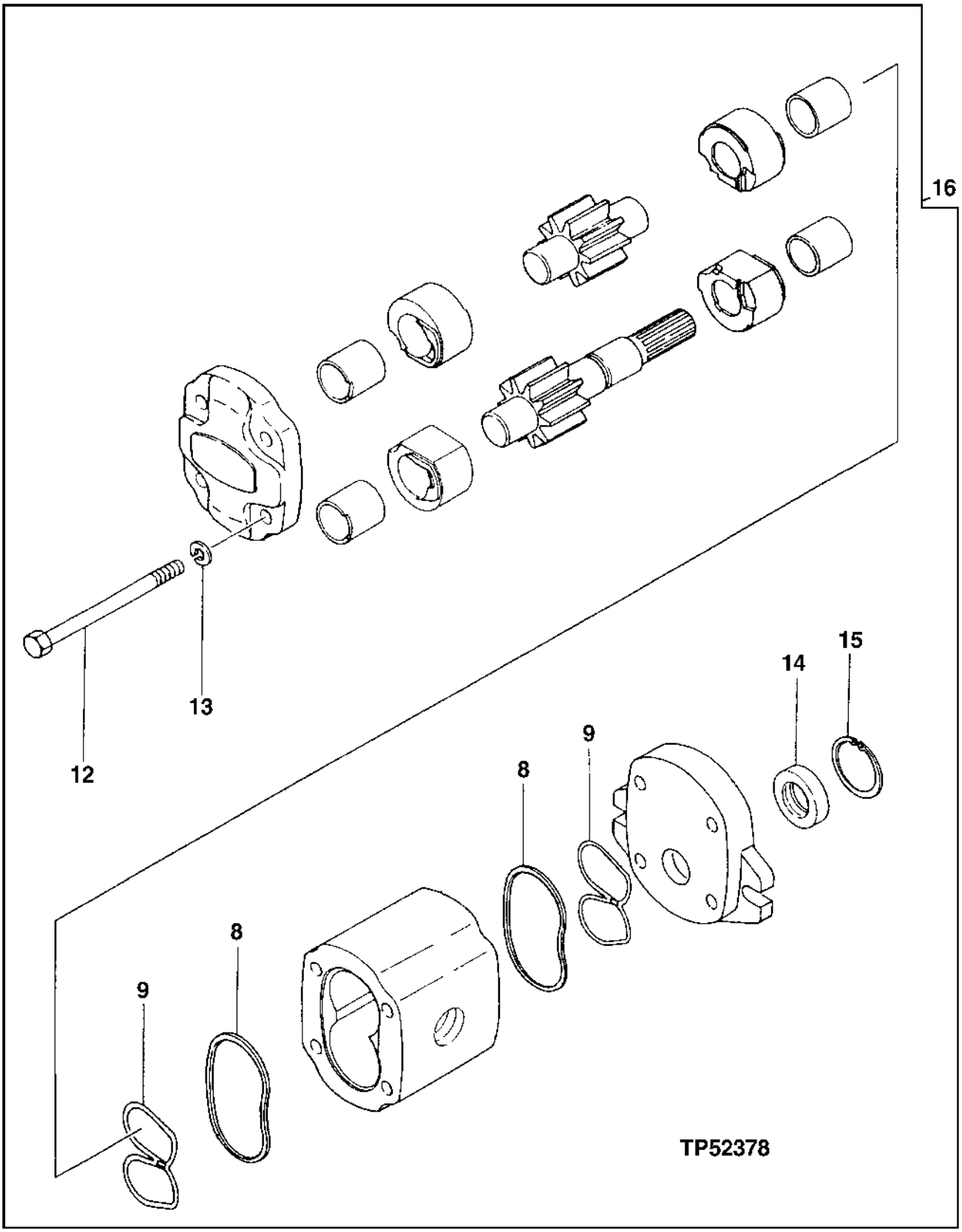

TRANSMISSION CHARGE PUMP

KEY	PART NO.	PART NAME	QTY	SERIAL NO.	REMARKS
8	AT153348	SEAL	2		
9	AT215328	SEAL	2		
12	AT215329	BOLT	4		
13	12M6791	LOCK WASHER	4		10.200 MM
14	AT152485	SEAL	1		
15	40M1856	SNAP RING	1		
16	AT215327	PUMP	1		

TRANSMISSION CONTROL VALVE

T141878 -UN-02MAY01

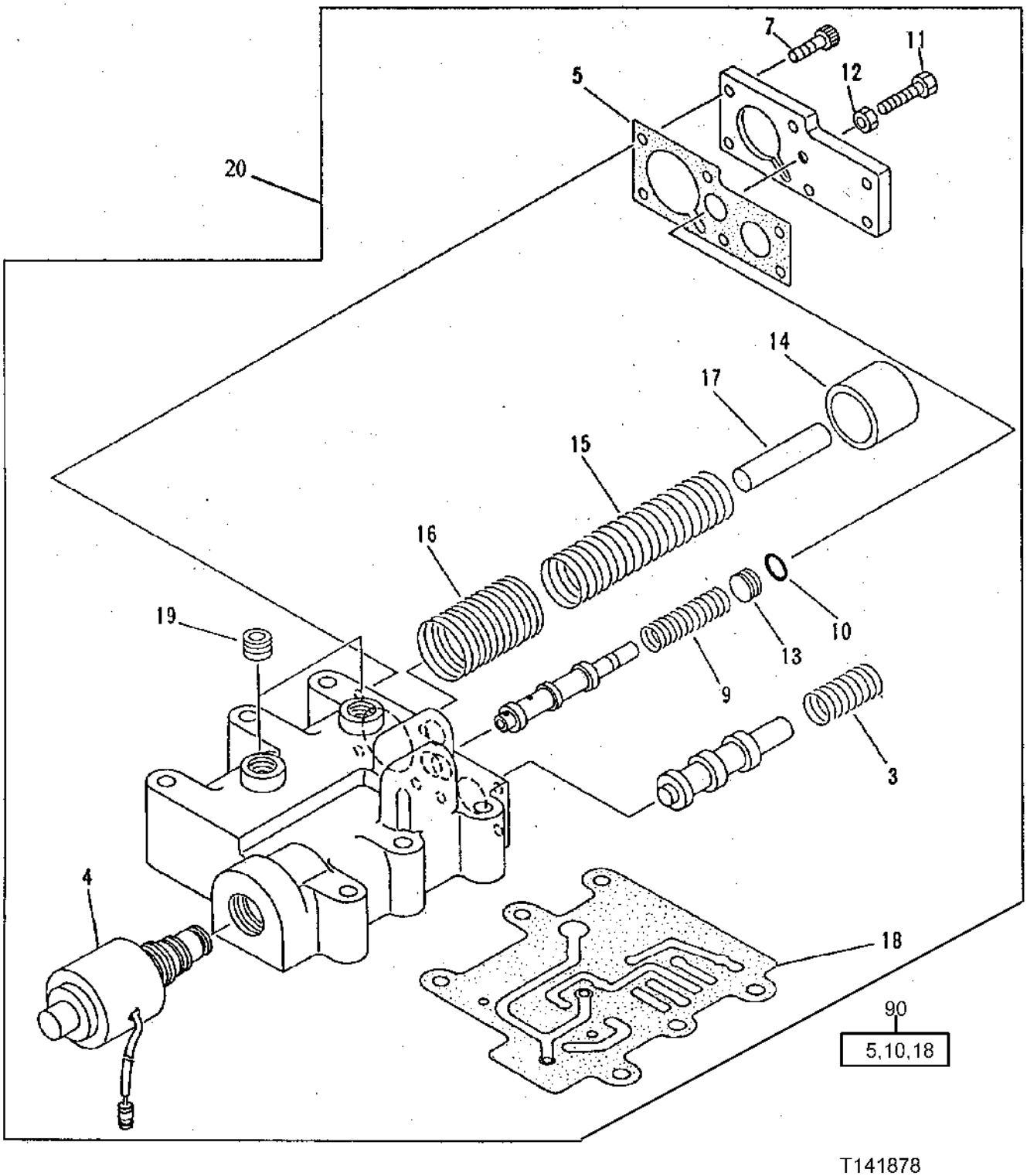

TRANSMISSION CONTROL VALVE

KEY	PART NO.	PART NAME	QTY	SERIAL NO.	REMARKS
3	AT152796	SPRING	1		
4	AT188818	SOLENOID VALVE	1		(SUB FOR AT179779)
5	AT152798	GASKET	1		(K)
7	19M8627	SCREW	6		M6 X 20
9	T115566	SPRING	1		
10	.....	PACKING	1		(K)
11	AT152801	SCREW	1		
12	14M7272	NUT	1		M6
13	T115567	GUIDE	1		
14	T115576	PISTON	1		
15	AT152802	SPRING	1		
16	AT152803	SPRING	1		
17	T115575	PIN	1		
18	.....	GASKET	1		(K)
19	TH100434	FITTING PLUG	1		(SUB FOR T116056)
20	AT152312	CONTROL VALVE	1		
90	AT152805	SEAL KIT	1		INCLUDES ALL (K) PARTS

HYDROSTATIC PUMP AND MOTOR PLUMBING

TP52385 -UN-11OCT96

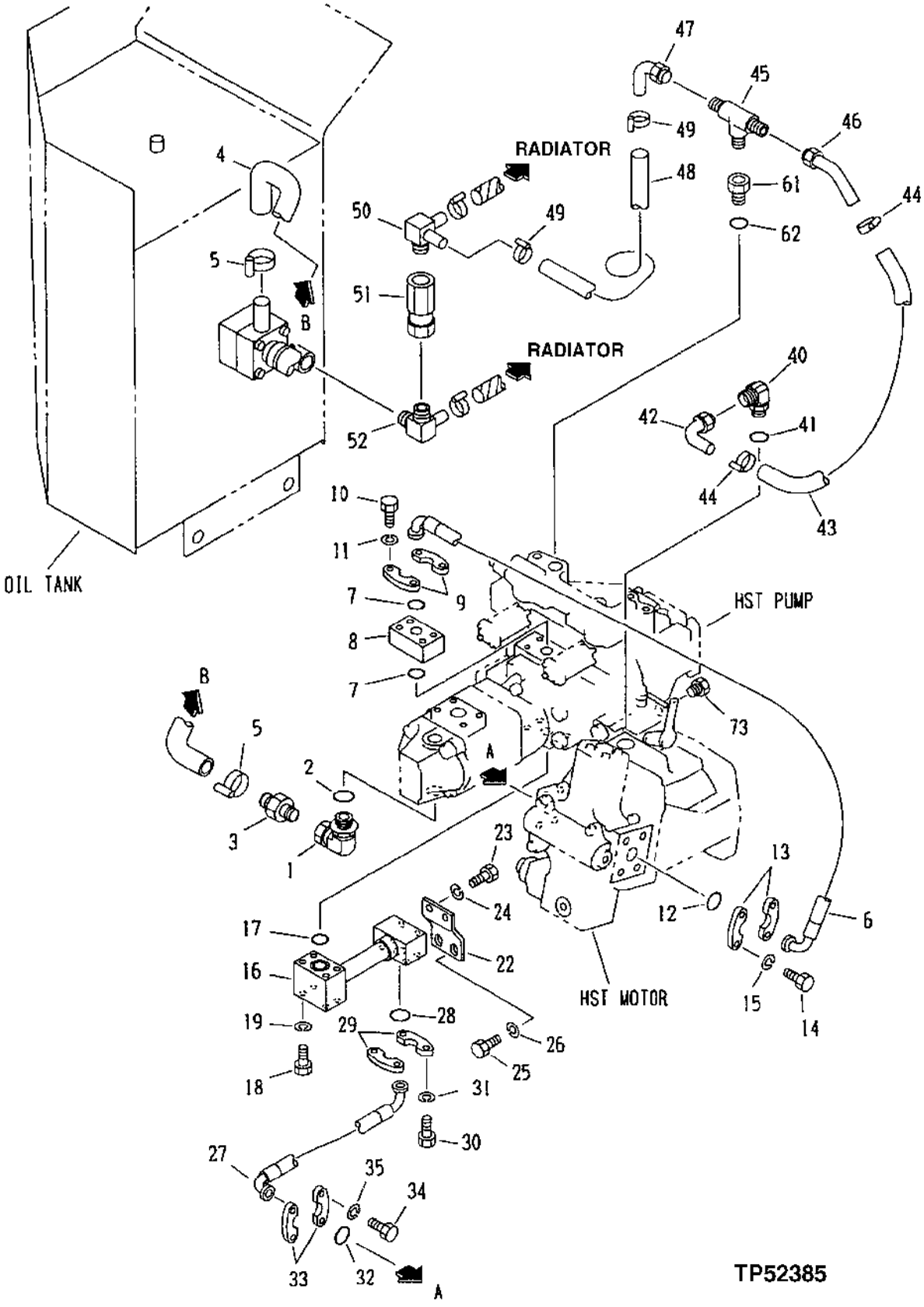

HYDROSTATIC PUMP AND MOTOR PLUMBING

KEY	PART NO.	PART NAME	QTY	SERIAL NO.	REMARKS
1	AT215259	ELBOW FITTING	1		
2	TH100055	O-RING	1		
3	AT215211	TUBE	1		
4	AT215344	HYDRAULIC HOSE	1		
5	AT145650	HOSE CLAMP	2		
6	AT215346	HYDRAULIC HOSE - FABRICATE	1		
7	U12547	O-RING	2		(SUB FOR AT152540 AND T75984)
8	AT152602	FLANGE	1		
9	T107446	FLANGE FITTING	2		
10	19M7742	CAP SCREW	4		M10 X 65
11	12M6791	LOCK WASHER	4		10.200 MM
12	T78313	O-RING	1		
13	AT152603	FLANGE	2		
14	19M7496	CAP SCREW	4		M12 X 45
15	12M7067	LOCK WASHER	4		12 MM
16	AT215345	OIL LINE	1		
17	U12547	O-RING	1		(SUB FOR AT152540 AND T75984)
18	AT152395	BOLT	4		
19	12M6791	LOCK WASHER	4		10.200 MM
22	AT152889	BRACKET	1		
23	19M7402	CAP SCREW	2		M10 X 25
24	12M6791	LOCK WASHER	2		10.200 MM
25	19M8017	CAP SCREW	2		M12 X 20
26	12M7067	LOCK WASHER	2		12 MM
27	AT215347	HYDRAULIC HOSE - FABRICATE	1		
28	U12547	O-RING	1		(SUB FOR AT152540 AND T75984)
29	T107446	FLANGE FITTING	2		
30	19M7550	CAP SCREW	4		M10 X 35
31	12M6791	LOCK WASHER	4		10.200 MM
32	T78313	O-RING	1		
33	AT152603	FLANGE	2		
34	19M7496	CAP SCREW	4		M12 X 45
35	12M7067	LOCK WASHER	4		12 MM
40	AT152516	ELBOW FITTING	1		
41	U46489	O-RING	1		17.800 X 2.400 MM (0.701" X 0.094")
42	AT152604	TUBE	1		
43	T78497	HYDRAULIC HOSE - FABRICATE	1		(CUT TO LENGTH)
44	.....	CLAMP	1		
45	AT152429	TEE FITTING	2		
46	AT152892	TUBE	1		
47	AT152604	TUBE	1		
48	T78497	HYDRAULIC HOSE - FABRICATE	1		(CUT TO LENGTH)
49	.....	CLAMP	1		
50	AT152893	TEE FITTING	1		
51	.....	CLAMP	1		
52	AT152894	TEE FITTING	1		
61	AT152472	BUSHING	1		
62	U46489	O-RING	1		
73	AT215443	BUSHING	1		

HYDROSTATIC PUMP AND MOTOR PLUMBING

TP52386 -UN-11OCT96

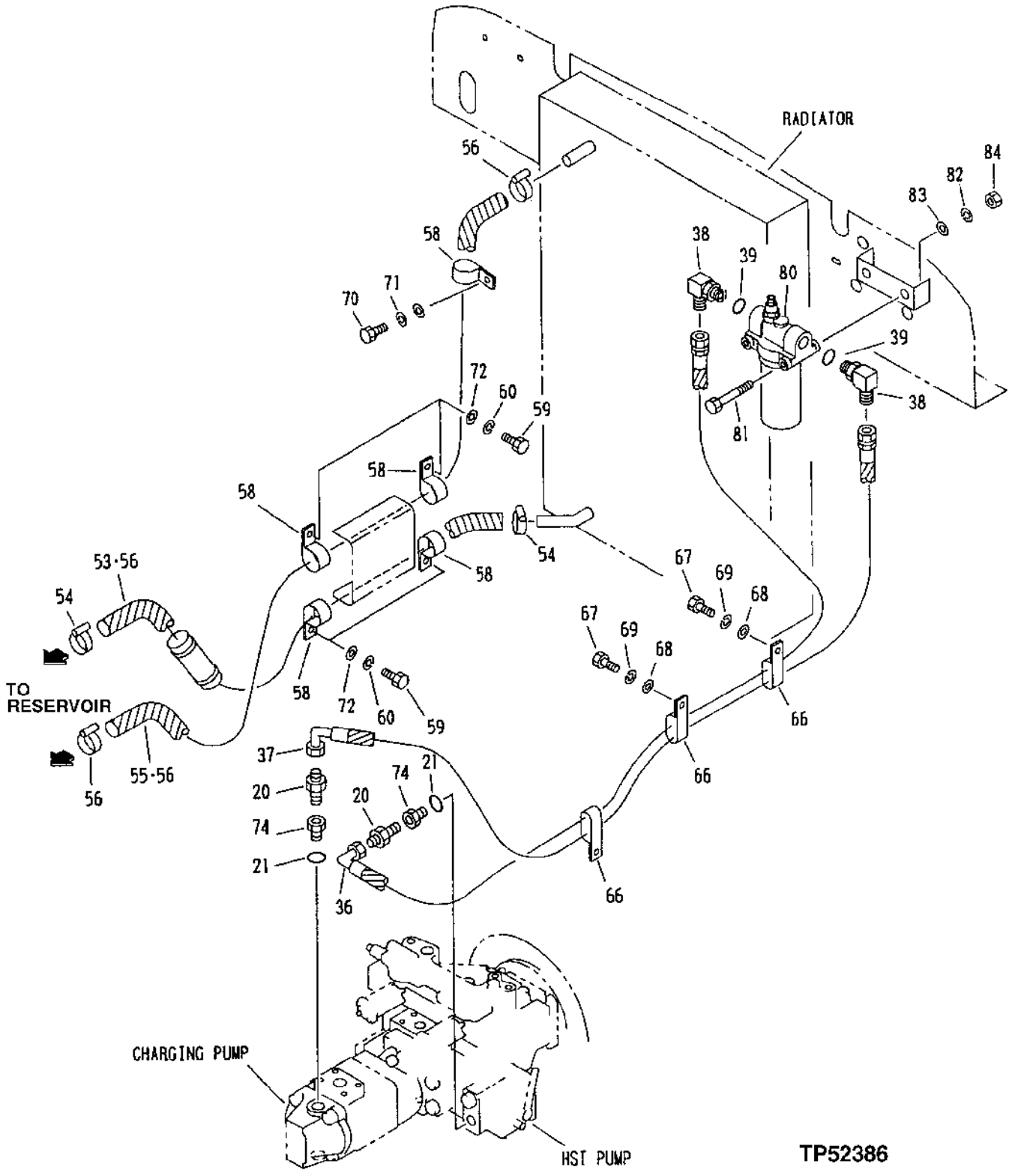

HYDROSTATIC PUMP AND MOTOR PLUMBING

KEY	PART NO.	PART NAME	QTY	SERIAL NO.	REMARKS
20	AT153170	ADAPTER	2		
21	U46489	O-RING	2		17.800 X 2.400 MM (0.701" X 0.094")
36	AT215349	HYDRAULIC HOSE	1		
37	AT215350	HYDRAULIC HOSE	1		
38	AT152911	ELBOW FITTING	2		
39	U46489	O-RING	2		17.800 X 2.400 MM (0.701" X 0.094")
53	.....	HOSE	1		(FURNISH T78497 CUT TO LENGTH)
54	.....	CLAMP	1		
55	.....	HOSE	1		(BULK)
56	.....	CLAMP	2		
58	TH110522	CLIP	5		
59	19M8324	CAP SCREW	4		M10 X 16
60	12M6791	LOCK WASHER	4		10.200 MM
66	AT153311	CLAMP	3		
67	19M8324	CAP SCREW	2		M10 X 16
68	24M7028	WASHER	2		10.500 X 20 X 2 MM
69	12M6791	LOCK WASHER	2		10.200 MM
70	19M7932	CAP SCREW	1		M8 X 16
71	12M7065	LOCK WASHER	1		8 MM
72	24M7028	WASHER	4		10.500 X 20 X 2 MM
74	AT215351	FITTING	2		
80	AT152517	FILTER	1		
81	19M8093	CAP SCREW	2		M10 X 100
82	12M6791	LOCK WASHER	2		10.200 MM
83	24M7028	WASHER	2		10.500 X 20 X 2 MM
84	14M7274	NUT	2		M10

HYDROSTATIC TRANSMISSION PLUMBING

TP52387 -UN-11OCT96

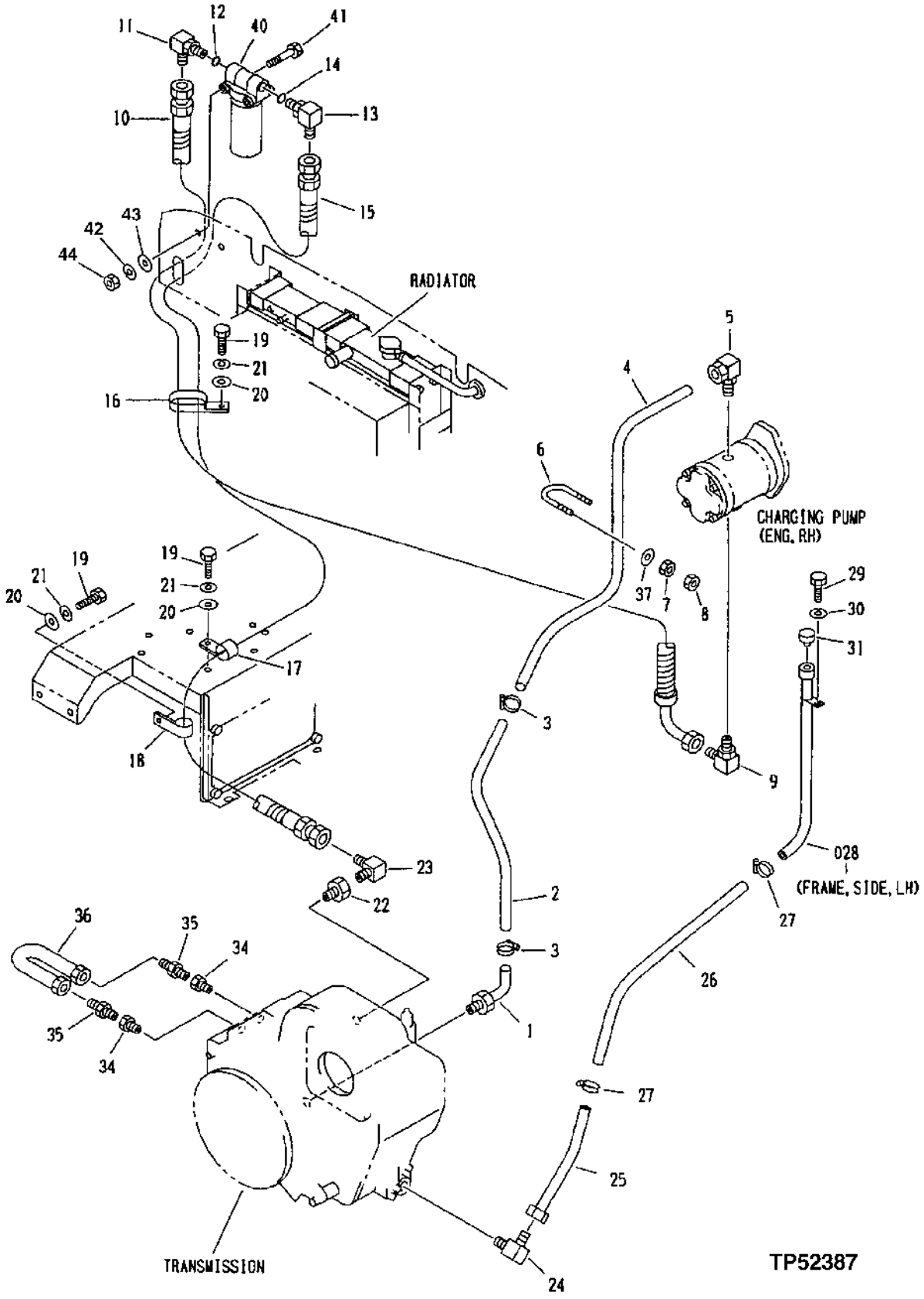

HYDROSTATIC TRANSMISSION PLUMBING

KEY	PART NO.	PART NAME	QTY	SERIAL NO.	REMARKS
1	AT152898	TUBE	1		
2	AT152557	HOSE	1		
3	AT145650	HOSE CLAMP	2		(SUB FOR AT152439)
4	AT215348	OIL LINE	1		
5	AT215456	ELBOW FITTING	1		
6	Z40879	U-BOLT	1		
7	14M7273	NUT	2		M8
8	14M7273	NUT	2		M8
9	AT215354	ELBOW FITTING	1		
10	AT215352	HYDRAULIC HOSE	1		
11	AT152911	ELBOW FITTING	1		
12	U46489	O-RING	1		
13	AT152911	ELBOW FITTING	1		
14	U46489	O-RING	1		
15	AT215353	HYDRAULIC HOSE	1		
16	TH110522	CLIP	1		
17	T116118	CLAMP	2		
18	AT153311	CLAMP	1		
19	19M8324	CAP SCREW	4		M10 X 16
20	24M7028	WASHER	4		10.500 X 20 X 2 MM
21	12M6791	LOCK WASHER	4		10.200 MM
22	TH101811	REDUCER	1		
23	AT215355	ELBOW FITTING	1		
24	AT152428	ELBOW FITTING	1		
25	AT152900	TUBE	1		
26	.....	HOSE	1		(FURNISH UN4671 CUT TO LENGTH)
27	AT145650	HOSE CLAMP	2		
28	AT152901	TUBE	1		
29	19M7402	CAP SCREW	1		M10 X 25
30	12M6791	LOCK WASHER	1		10.200 MM
31	AT152902	CAP	1		
34	AT159021	PIPE BUSHING	2		
35	AT159020	CONNECTOR	1		
36	AT159019	TUBE	1		
37	24M7055	WASHER	2		8.400 X 16 X 1.600 MM
40	AT152517	FILTER	1		
41	19M8093	CAP SCREW	2		M10 X 100
42	12M6791	LOCK WASHER	2		10.200 MM
43	24M7028	WASHER	2		10.500 X 20 X 2 MM
44	14M7274	NUT	2		M10

HYDROSTATIC (HST) LINE FILTER

TP40007 -UN-01JAN94

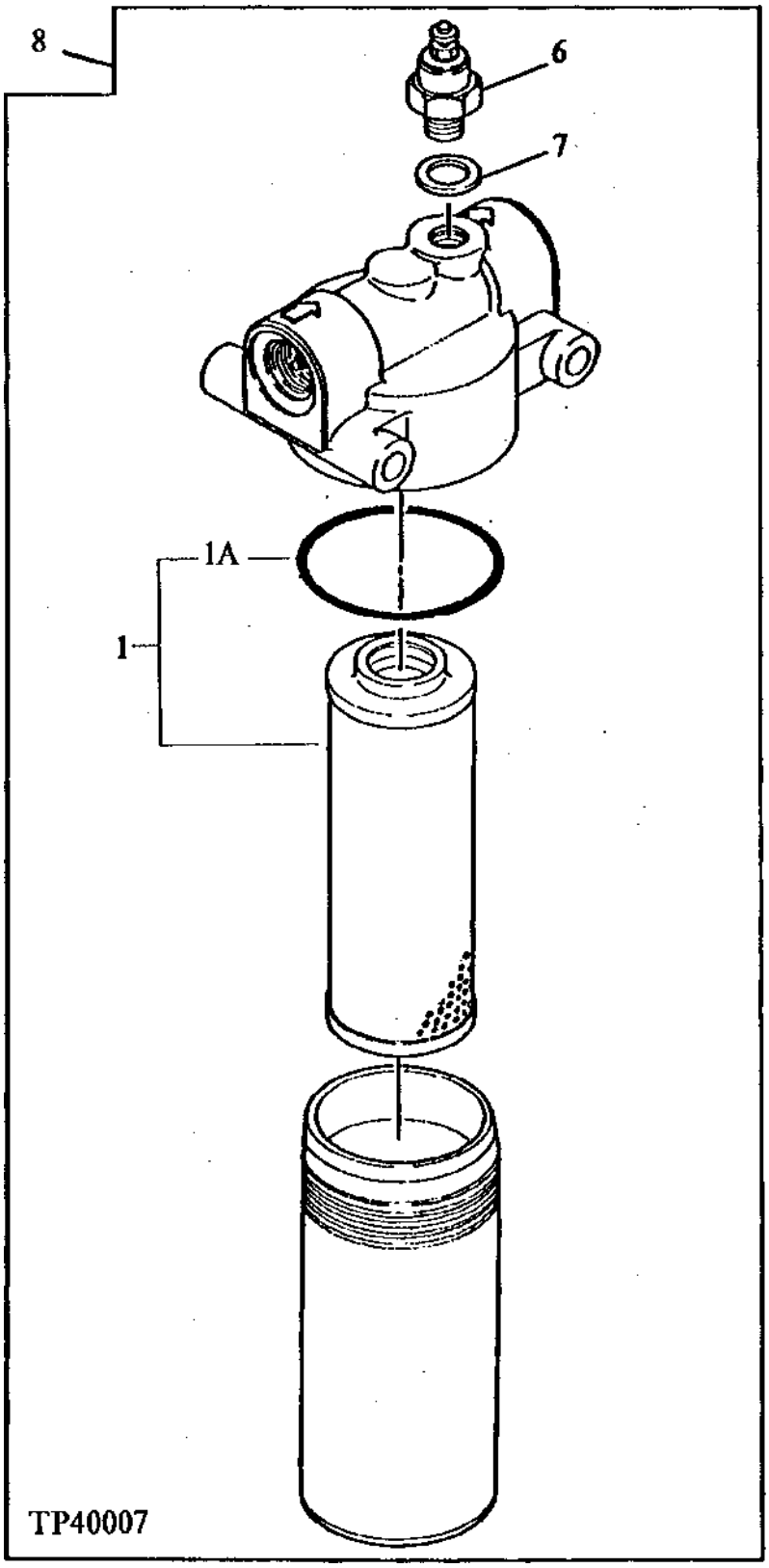

HYDROSTATIC (HST) LINE FILTER

KEY	PART NO.	PART NAME	QTY	SERIAL NO.	REMARKS
1	AT186554	FILTER ELEMENT	1		(SUB FOR AT147821)
1A	CH17154	PACKING	1		
6	AT152521	SWITCH	1		
7	AT152522	SEALING WASHER	1		
8	AT152517	FILTER	1		

TRANSMISSION(PST) LINE FILTER

TP40008 -UN-01JAN94

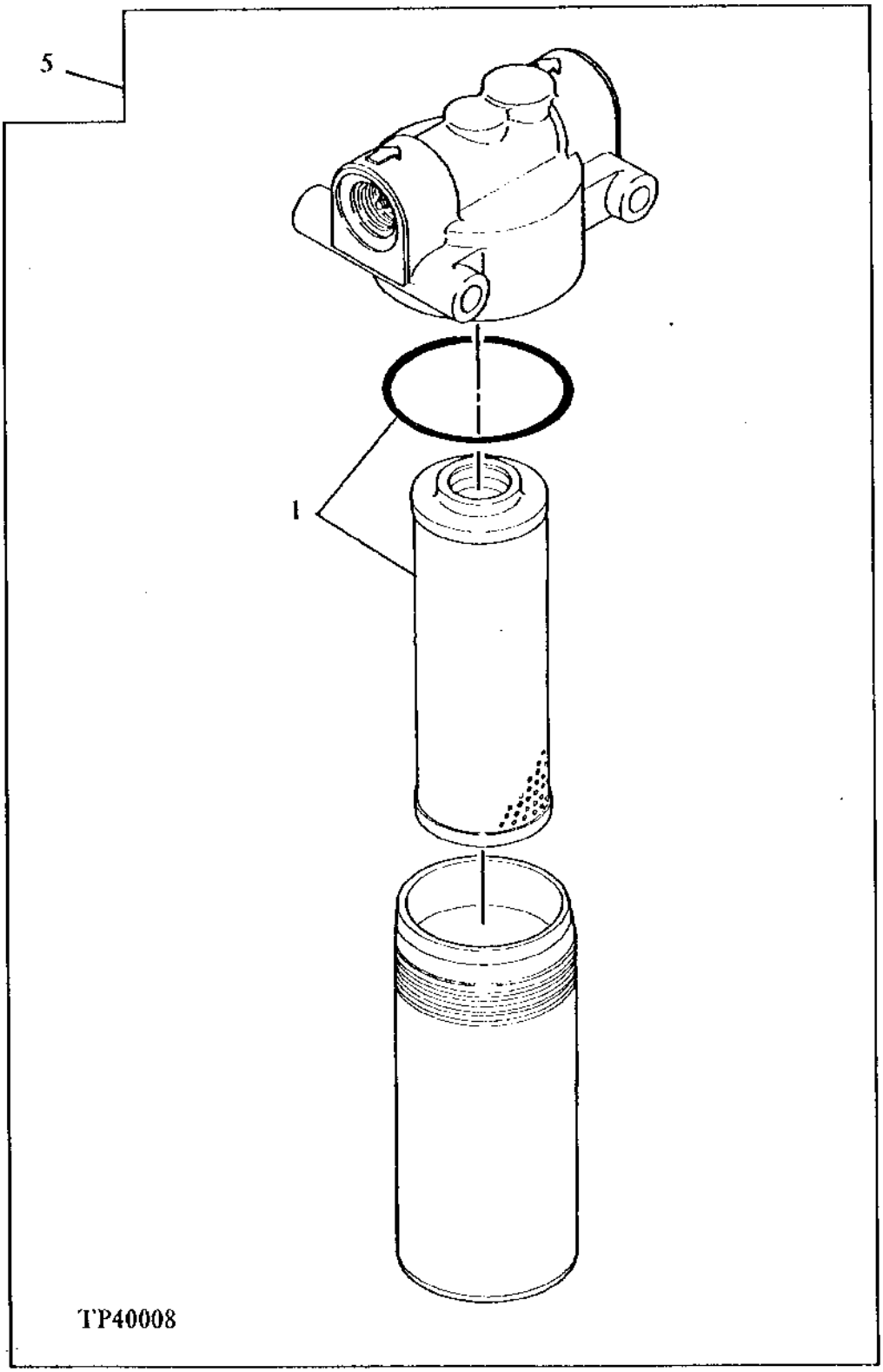

TRANSMISSION(PST) LINE FILTER

KEY	PART NO.	PART NAME	QTY	SERIAL NO.	REMARKS
1	AT186554	FILTER ELEMENT	1		(SUB FOR AT147821)
5	AT152904	FILTER	1		

HYDROSTATIC GROUP

TP52379 -UN-17OCT96

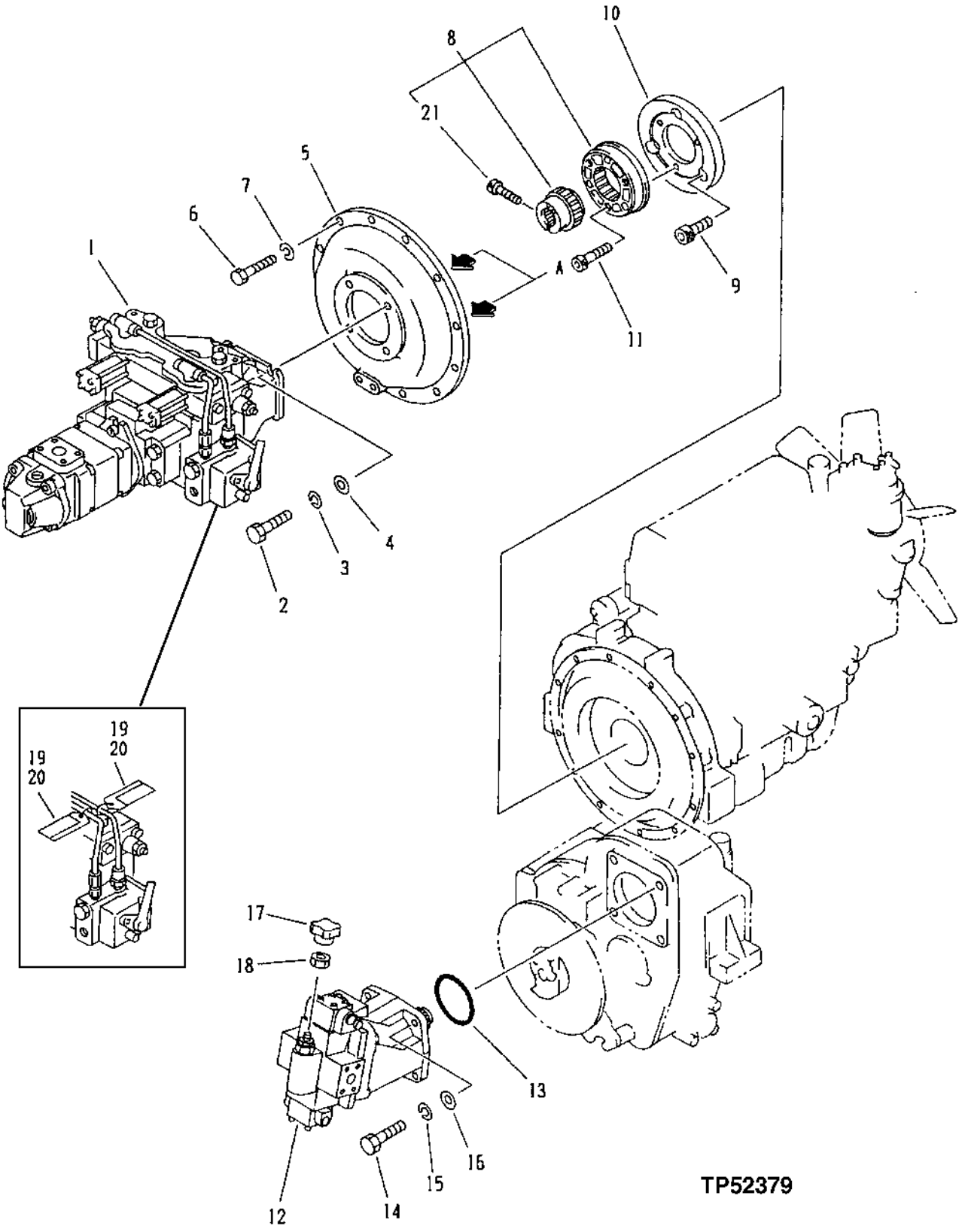

HYDROSTATIC GROUP

KEY	PART NO.	PART NAME	QTY	SERIAL NO.	REMARKS
1	AT215330	PUMP	1		
2	19M7493	CAP SCREW	4		M12 X 40
3	12M7067	LOCK WASHER	4		12 MM
4	E42967	WASHER	4		
5	AT215331	BRACKET	1		
6	19M7402	CAP SCREW	11		M10 X 25
7	12M6791	LOCK WASHER	10		10.200 MM
8	AT215332	COUPLING	1		
9	AT215136	SCREW	3		
10	AT215333	ADAPTER	1		
11	19M8448	SCREW	3		M12 X 35
12	AT215265	HYDRAULIC MOTOR	1		
13	AT215144	O-RING	1		
14	19M7489	CAP SCREW	4		M16 X 45
15	12M7069	LOCK WASHER	4		16 MM
16	24M7053	WASHER	4		17 X 30 X 3 MM
17	AT153416	KNOB	1		
18	14M7273	NUT	1		
19	AT215264	DECAL	2		
20	.....	CLAMP	2		
21	AT152399	BOLT	1		

HYDROSTATIC PUMP

T141879 -UN-02MAY01

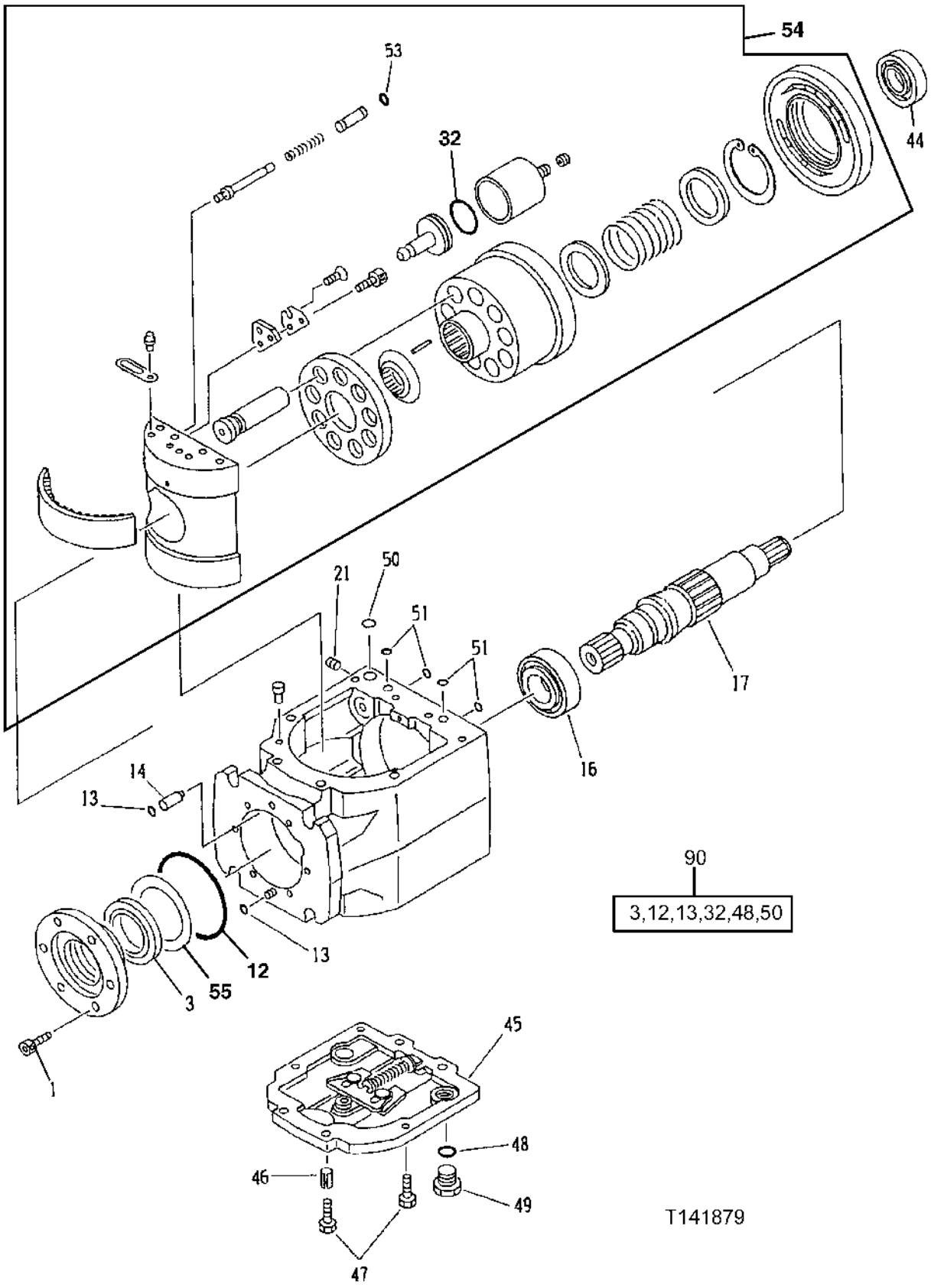

HYDROSTATIC PUMP

KEY	PART NO.	PART NAME	QTY	SERIAL NO.	REMARKS
1	AT215133	SCREW	6		
3	AT215195	SEAL	1		(K)
12	.....	O-RING	1		(K) (AT153381 NOT AVAILABLE)
13	TH102535	O-RING	2		(K)
14	AT108896	PIN	2		
16	AT215284	BEARING	1		
17	AT215334	SHAFT	1		
21	22M7111	SET SCREW	1		M6 X 6
32	.....	SEAL	4		(K) (AT153394 MOT AVAILABLE)
44	AT215286	BEARING	1		
45	AT215258	COVER	1		
46	AT108951	SPRING PIN	2		
47	19M7513	CAP SCREW	8		M8 X 30
48	.....	O-RING	2		(K)
49	AT108943	FITTING	2		
50	.....	O-RING	1		(K)
51	TH102535	O-RING	4		
53	T26257	O-RING	1		
54	AT180654	KIT	1		
55	AT180655	KIT	1		(SHIMS)
90	AT179651	SEAL KIT	1		INCLUDES ALL (K) PARTS

HYDROSTATIC CHARGE PUMP AND RELIEF VALVES

T141880 -UN-02MAY01

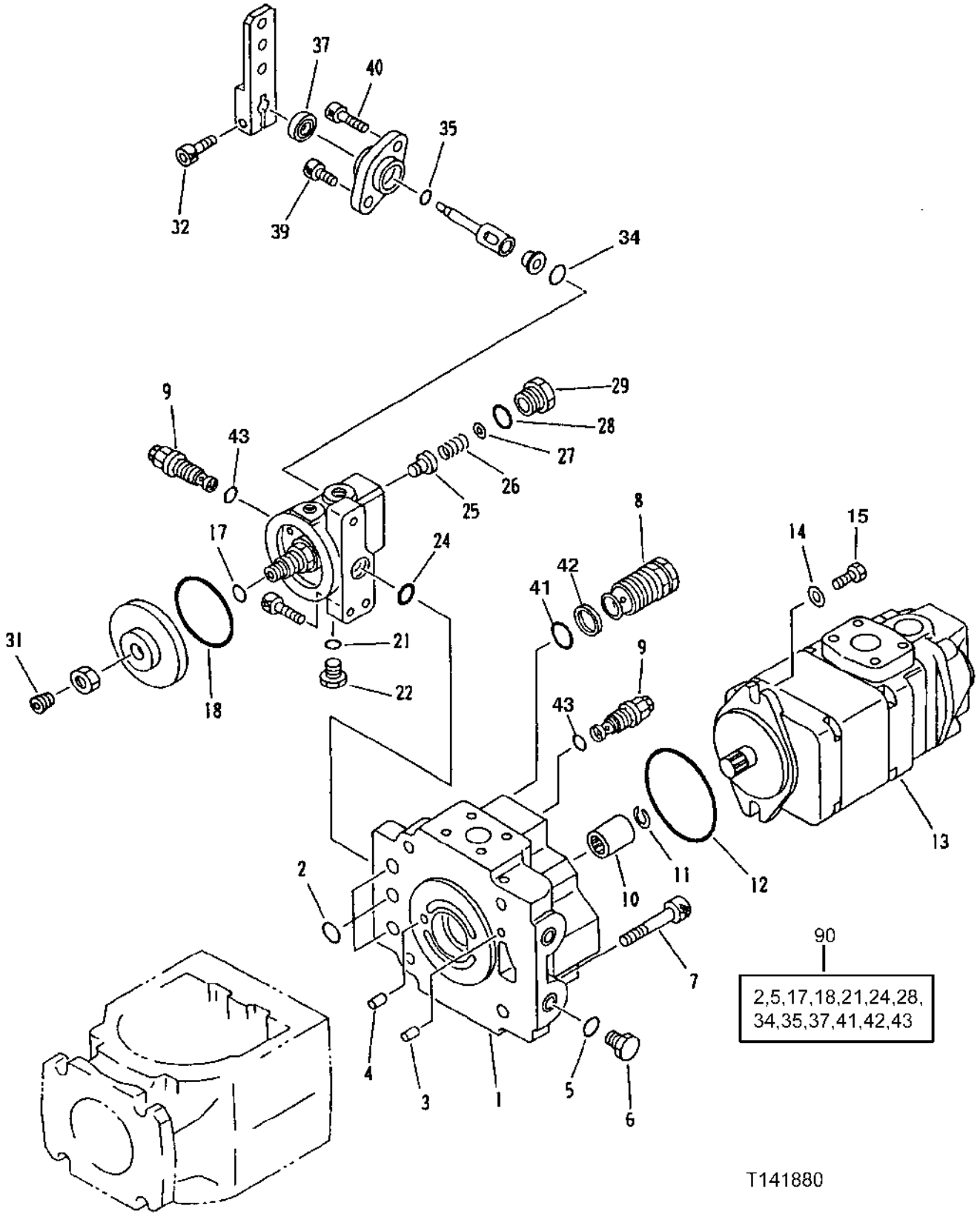

HYDROSTATIC CHARGE PUMP AND RELIEF VALVES

KEY	PART NO.	PART NAME	QTY	SERIAL NO.	REMARKS
1	AT215287	COVER	1		
2	.....	O-RING	3		(K)
3	AT215196	PIN	2		
4	AT108917	DOWEL PIN	2		
5	.....	O-RING	2		(K)
6	AT215197	FITTING PLUG	2		
7	19M8580	SCREW	4		M12 X 50
8	AT215185	RELIEF VALVE	2		
9	AT108920	RELIEF VALVE	2		
10	AT215336	COUPLING	1		
11	AT215337	SNAP RING	1		
12	.....	O-RING	2		(K) (AT152600 NOT AVAILABLE)
13	AT215338	PUMP	1		(TANDEM GEAR/CHARGE PUMP)
14	24M7028	WASHER	2		10.500 X 20 X 2 MM
15	19M7402	CAP SCREW	2		M10 X 25
17	.....	O-RING	1		(K)
18	.....	O-RING	1		(K)
21	.....	O-RING	1		(K)
22	AT215197	FITTING PLUG	1		
24	.....	O-RING	1		(K) (AT153394 NOT AVAILABLE)
25	AT215198	PISTON	1		
26	AT215339	SPRING	1		
27	12M7064	LOCK WASHER	4		5 MM
28	.....	O-RING	1		(K)
29	AT215199	FITTING PLUG	1		
31	AT215340	FITTING PLUG	1		
32	19M8627	SCREW	1		M6 X 20
34	.....	O-RING	1		(K)
35	.....	O-RING	1		(K)
37	AT215188	SEAL	1		(K)
39	AT215134	SCREW	1		
40	19M8505	SCREW	1		M6 X 25
41	.....	O-RING	1		(K) (AT153391 NOT AVAILABLE)
42	.....	BACK-UP RING	1		(K) (AT153392 NOT AVAILABLE)
43	.....	O-RING	2		(K) (AT153394 NOT AVAILABLE)
90	AT179651	SEAL KIT	1		INCLUDES ALL (K) PARTS

HYDROSTATIC PUMP TOP COVER CONTROLS

T141881 -UN-02MAY01

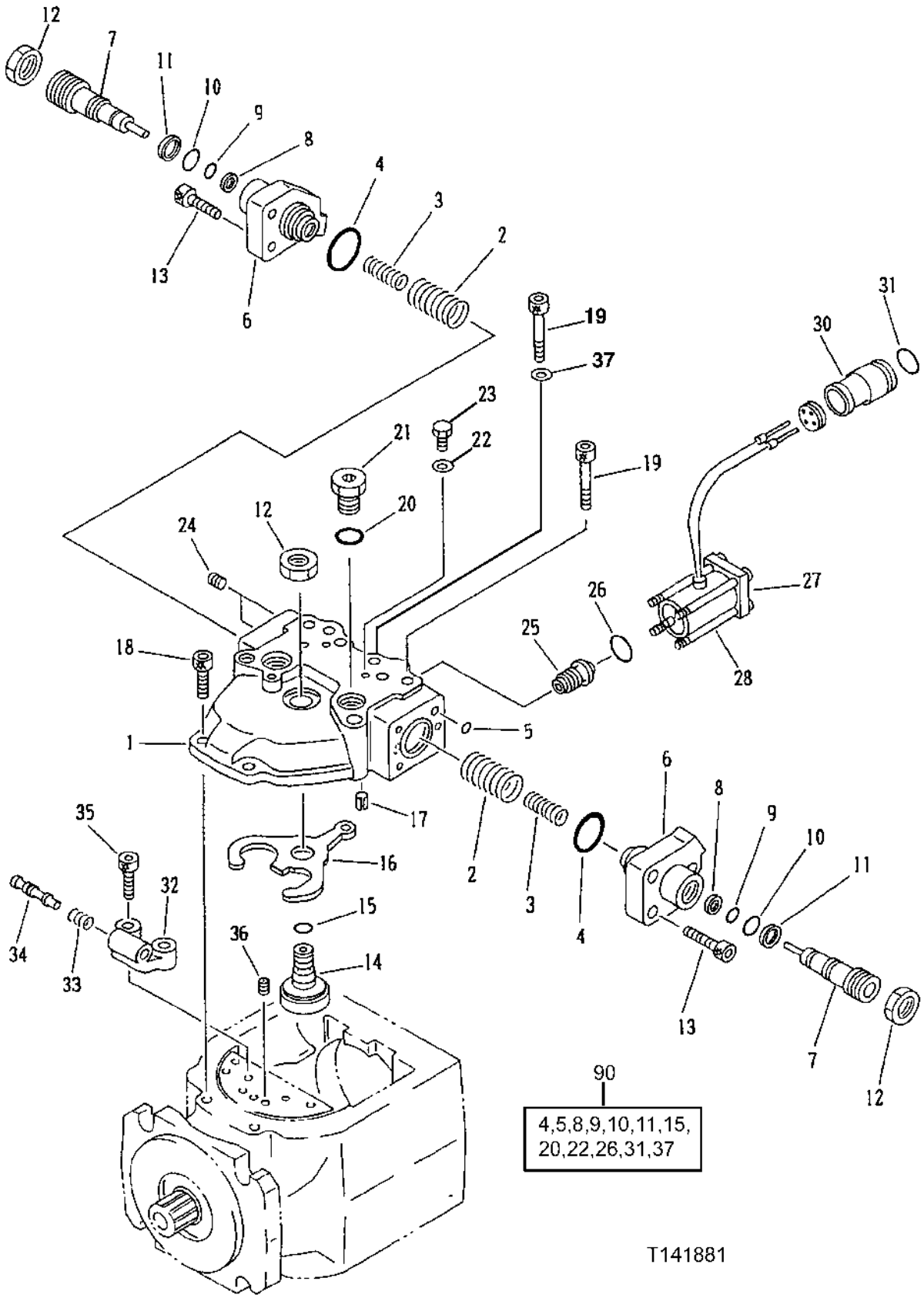

HYDROSTATIC PUMP TOP COVER CONTROLS

KEY	PART NO.	PART NAME	QTY	SERIAL NO.	REMARKS
1	AT215200	COVER	1		
2	AT215201	SPRING	2		
3	AT215202	SPRING	2		
4	.....	O-RING	2		(K)
5	.....	O-RING	2		(K)
6	AT215204	COVER	2		
7	AT179785	SCREW	2		
8	.....	BACK-UP RING	2		(K)
9	.....	O-RING	2		(K)
10	.....	O-RING	2		(K)
11	.....	BACK-UP RING	2		(K)
12	14M7158	NUT	3		M16, (SUB FOR AT215208)
13	19M8735	SCREW	6		M8 X 30
14	AT215187	SCREW	1		
15	.....	O-RING	1		(K)
16	AT215186	LEVER	1		
17	AT108951	SPRING PIN	2		
18	19M8735	SCREW	2		M8 X 30
19	19M8506	SCREW	6		
20	.....	O-RING	1		(K)
21	AT108943	FITTING	1		
22	.....	WASHER	2		(K) (AT153399 NOT AVAILABLE)
23	AT108944	PLUG	2		
24	AT215209	SET SCREW	2		
25	AT108948	CONTROL VALVE	2		
26	.....	O-RING	2		(K)
27	AT159735	SOLENOID	2		(SUB FOR AT108949) (ALSO ORDER AT159734)
28	AT159734	SCREW	8		(SUB FOR AT108950)
30	AT215189	CAP	1		
31	.....	O-RING	1		(K)
32	AT108953	HOUSING	1		
33	AT108955	SPRING	1		
34	AT108954	SPOOL	1		
35	19M8735	SCREW	2		M8 X 30, (SUB FOR AT136458)
36	AT215341	ORIFICE	2		
37	.....	WASHER	2		(K) (AT180287 NOT AVAILABLE)
90	AT179651	SEAL KIT	1		INCLUDES ALL (K) PARTS

HYDROSTATIC PUMP PLUMBING

TP52384 -UN-11OCT96

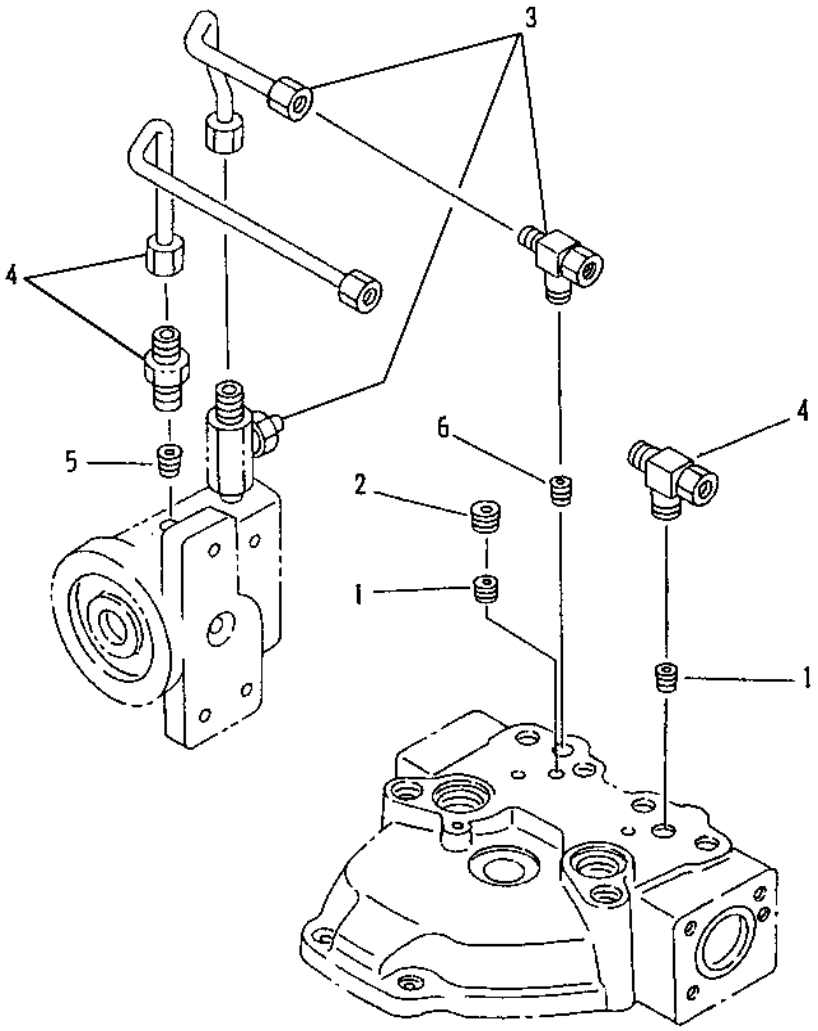

TP52384

HYDROSTATIC PUMP PLUMBING

KEY	PART NO.	PART NAME	QTY	SERIAL NO.	REMARKS
1	AT215190	ORIFICE	2		
2	TH100689	FITTING PLUG	1		
3	AT215342	OIL LINE	1		
4	AT215343	OIL LINE	1		
5	AT108968	ORIFICE	1		
6	AT215210	ORIFICE	1		

HYDROSTATIC MOTOR

T141882 -UN-02MAY01

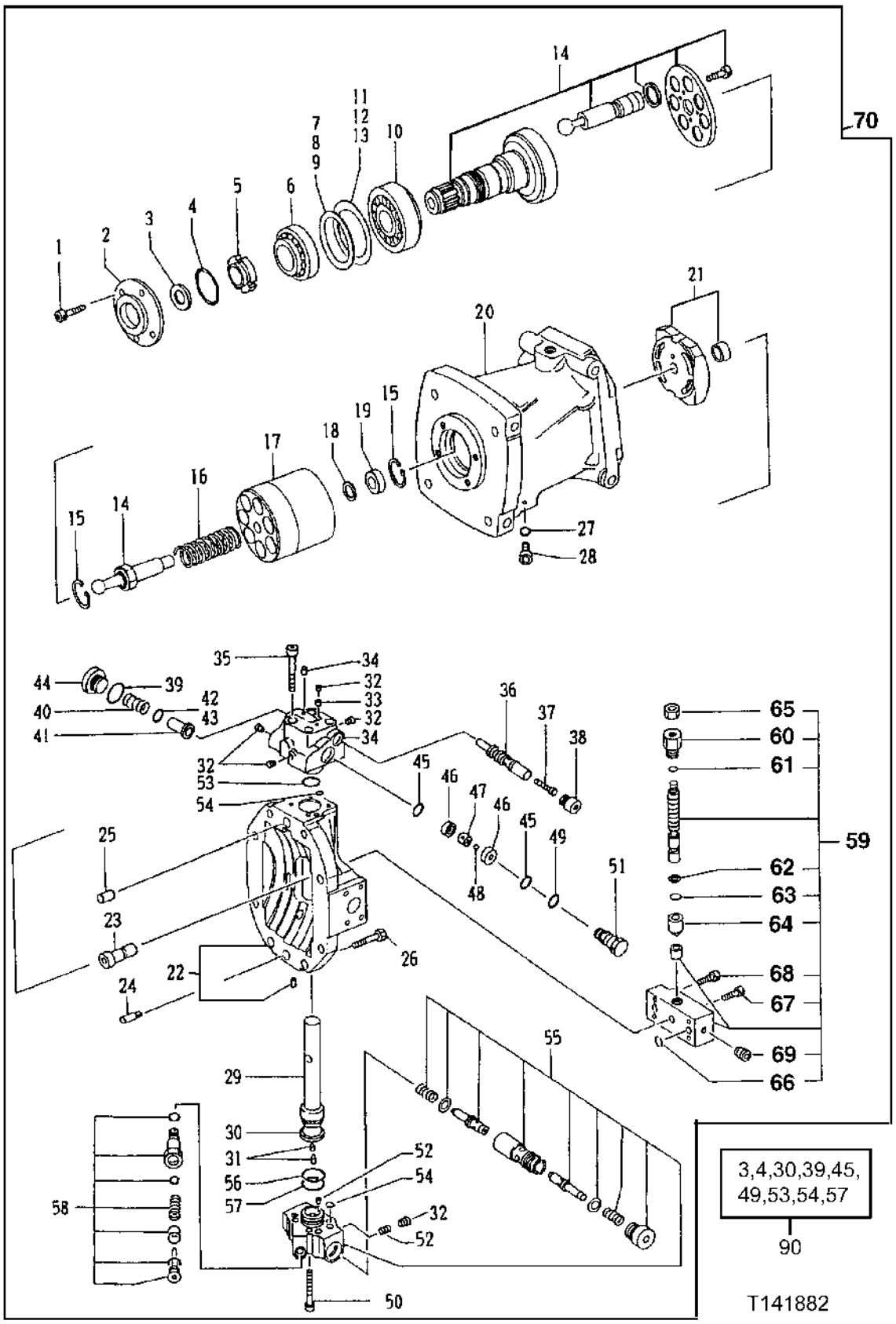

HYDROSTATIC MOTOR

KEY	PART NO.	PART NAME	QTY	SERIAL NO.	REMARKS
1	19M8505	SCREW	4		M6 X 25
2	AT152817	HOLDER	1		
3	.....	SEAL	1		(K)
4	.....	O-RING	1		(K)
5	AT152819	NUT	1		
6	AT152820	BEARING	1		
7	AT152821	PLATE	1		
8	AT152822	PLATE	1		
9	AT152823	PLATE	1		
10	AT152824	BEARING	1		
11	AT152825	PLATE	1		
12	AT152826	PLATE	1		
13	AT152827	PLATE	1		
14	AT152828	DRIVE SHAFT	1		
15	40M7225	SNAP RING	2		
16	AT152835	SPRING	1		
17	AT152836	CYLINDER BLOCK	1		
18	AT152837	PLATE	2		
19	AT152838	HOLDER	1		
20	.....	HOUSING	1		
21	AT152840	PLATE	1		
22	AT152843	HOLDER	1		
23	AT152846	PIN	1		
24	AT152507	PIN	1		
25	AT152506	PIN	1		
26	19M8580	SCREW	8		M12 X 50
27	U46489	O-RING	1		
28	AT152847	PLUG	1		
29	AT152848	PISTON	1		
30	.....	SEAL	1		(K)
31	22M7067	SET SCREW	2		M8 X 10
32	AT215209	SET SCREW	6		(SUB FOR AT152850)
33	AT152867	ORIFICE	1		
34	AT152851	CASE	1		
35	19M8506	SCREW	4		M8 X 60
36	AT152854	VALVE	1		
37	AT152855	PISTON	1		
38	AT152856	PLUG	1		
39	.....	O-RING	1		(K)
40	AT152858	SPRING	1		
41	AT152859	HOLDER	1		
42	AT152860	PLATE	1		
43	AT152861	PLATE	1		
44	AT152862	PLUG	1		
45	.....	O-RING	1		(K)
46	AT152863	SEAT	1		
47	AT152864	CASE	1		
48	R63075	BALL	1		(SUB FOR AT152865)
49	CH11570	O-RING	1		(K)
50	19M8335	SCREW	4		M8 X 55
51	AT152866	PLUG	1		
52	AT152867	ORIFICE	1		
53	.....	SEAL	1		(K)
54	TH101490	O-RING	8		(K)
55	AT152869	VALVE	1		
56	TH100044	O-RING	1		
57	.....	BACK-UP RING	1		(K)
58	AT152876	RELIEF VALVE	1		
59	AT153408	VALVE	1		
60	AT153414	RETAINER	1		
61	TH105038	O-RING	1		
62	AT153412	BACK-UP RING	1		
63	AT202454	O-RING	1		
64	AT153410	POPPET	1		
65	AT153415	NUT	1		
66	U46489	O-RING	3		
67	AT153417	BOLT	1		
68	19M8440	SCREW	1		M10 X 25
69	TH100434	FITTING PLUG	2		
70	AT215265	HYDRAULIC MOTOR	1		
90	AT152884	SEAL KIT	1		INCLUDES ALL (K) PARTS

COMPLETE ENGINE

TP52470 -UN-11OCT96

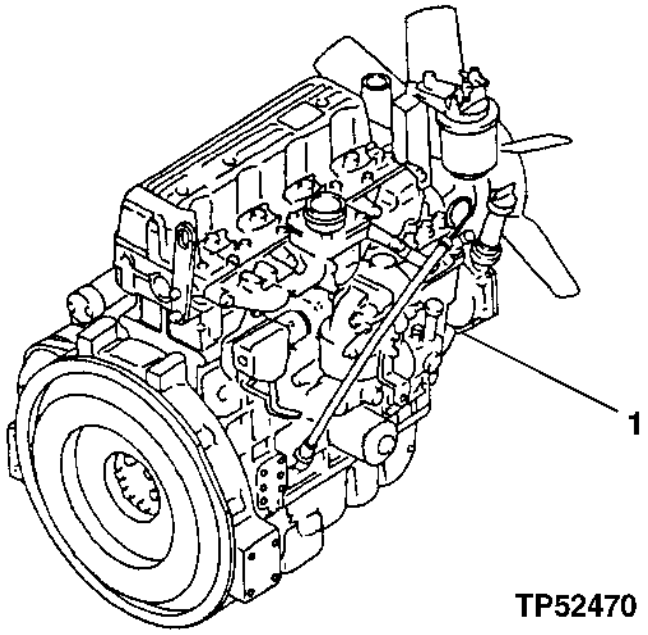

KEY	PART NO.	PART NAME	QTY	SERIAL NO.	REMARKS
1	AT179548	ENGINE	1		

MEMORANDA

CRANKSHAFT, FLYWHEEL AND PISTON

TP52436 -UN-23SEP96

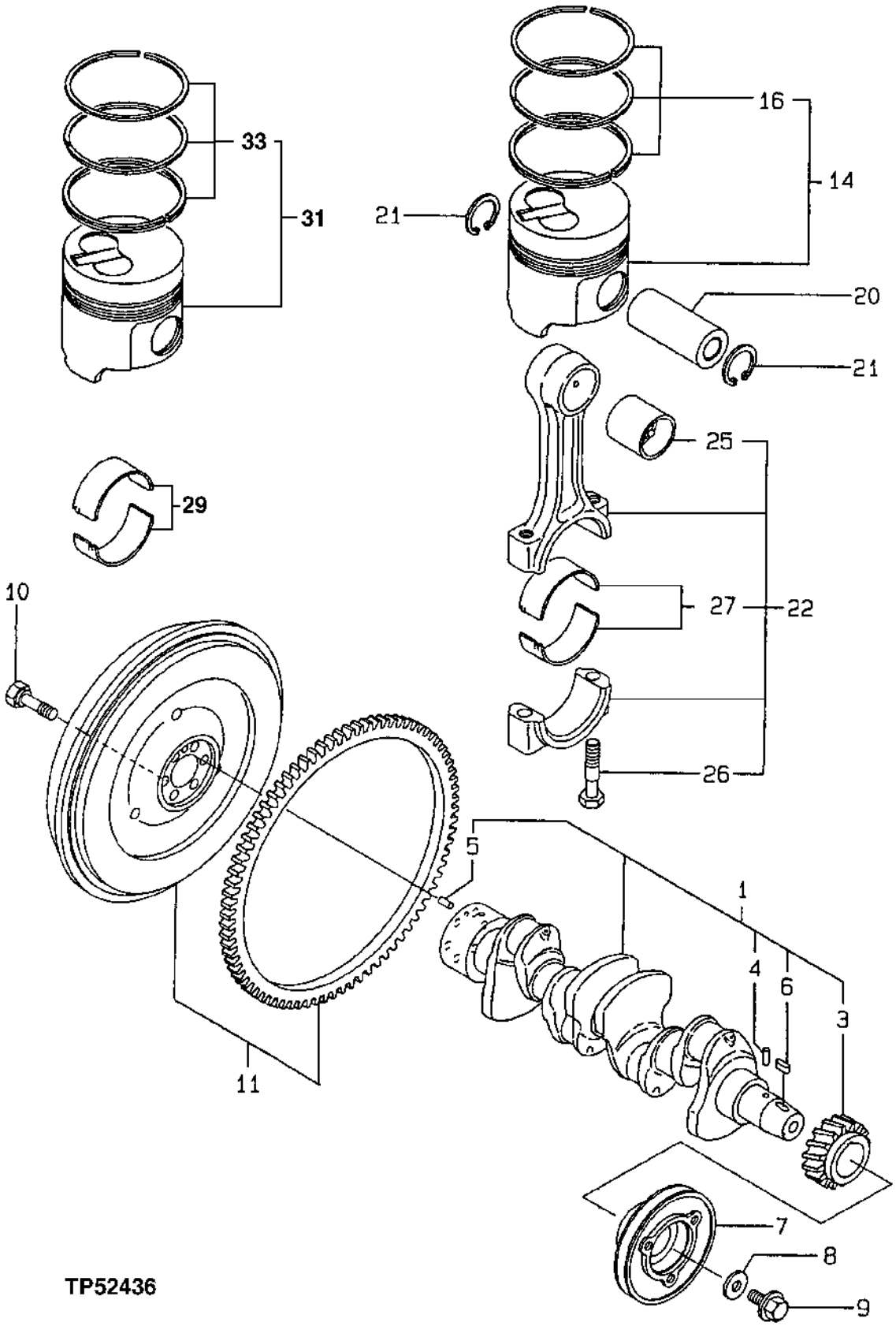

CRANKSHAFT, FLYWHEEL AND PISTON

KEY	PART NO.	PART NAME	QTY	ENGINE SERIAL NO.	REMARKS
1	AT211731	CRANKSHAFT	1		
3	AT211734	GEAR	1		
4	CH16793	PIN	1		
5	CH16730	PIN	1		
6	M801045	SHAFT KEY	1		
7	AT211736	PULLEY	1		
8	AT211735	WASHER	1		
9	CH16798	BOLT	1		
10	CH16791	BOLT	1		
11	AT211737	FLYWHEEL	1		
14	AT211740	PISTON	4		
16	AT211742	PISTON RING	4		
20	AT211746	PISTON PIN	4		
21	CH14432	RING	8		
22	AT211747	ROD	4		
25	AT211840	BUSHING	4		
26	AT211751	SCREW	8		
27	AT211752	BEARING	4		
29	AT211841	BEARING	4		(UNDERSIZE)
31	AT211842	PISTON	4		(OVERSIZE)
33	AT211843	PISTON RING KIT	4		(OVERSIZE)

TIMING GEAR COVER

TP52430 -UN-25SEP96

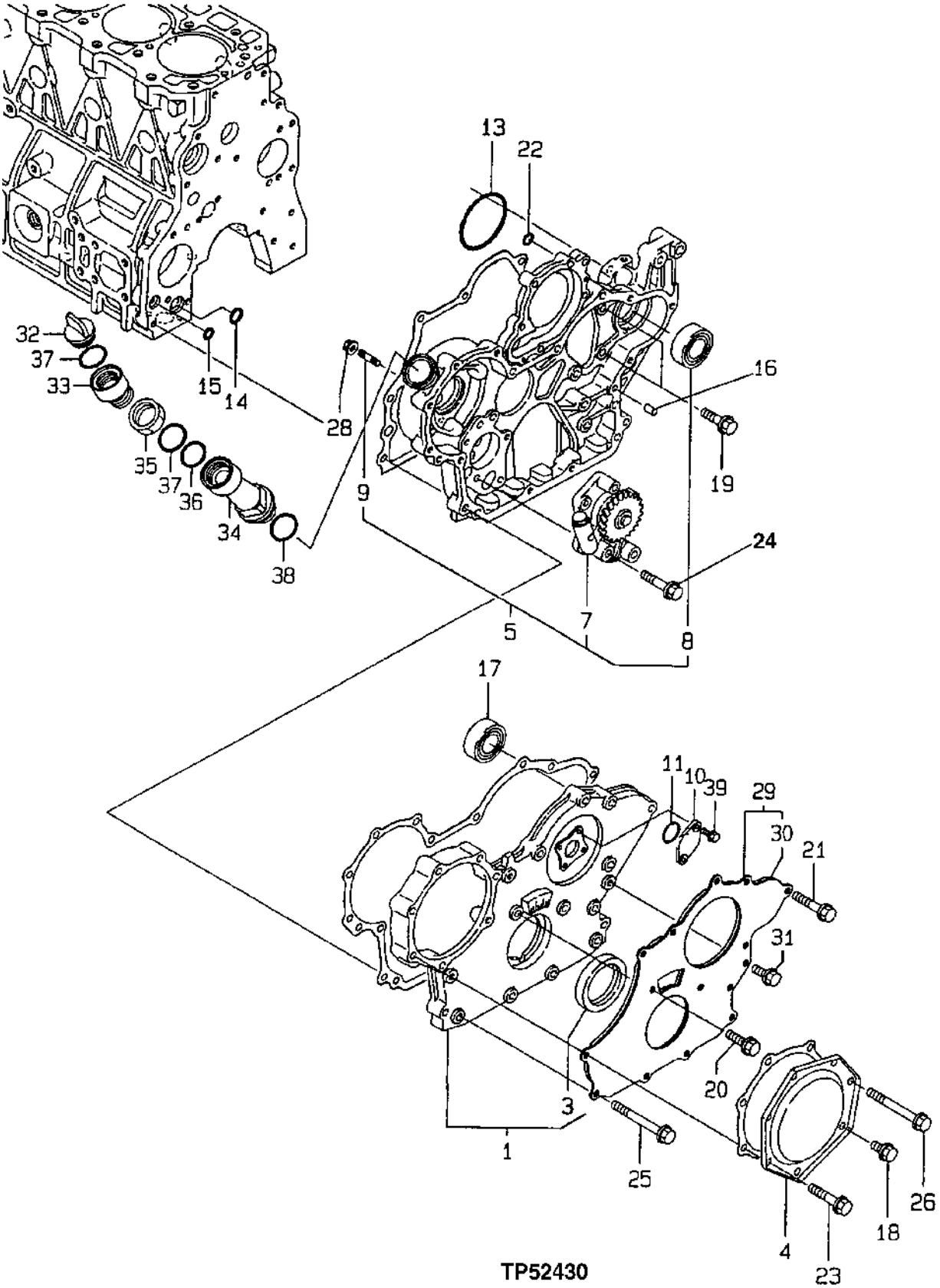

TP52430

TIMING GEAR COVER

KEY	PART NO.	PART NAME	QTY	ENGINE SERIAL NO.	REMARKS
1	AT211838	GEAR CASE	1		
3	AT211663	SEAL	1		
4	AT211662	COVER	1		
5	AT211664	GEAR CASE	1		
7	AT211668	PUMP	1		
8	AT211667	BALL BEARING	1		
9	M800056	STUD	4		
10	M87874	COVER	1		
11	CH13526	PACKING	1		
13	U46456	O-RING	1		
14	AT211670	O-RING	1		
15	AT211671	O-RING	1		
16	M802255	PIN	4		
17	AT211667	BALL BEARING	1		
18	19M7865	SCREW	2		M8 X 16
19	19M7866	SCREW	3		M8 X 20
20	19M7868	SCREW	1		M8 X 30
21	M89128	BOLT	1		
22	CH10567	PACKING	1		
23	M89128	BOLT	5		
24	CH19101	BOLT	3		
25	19M7803	SCREW	6		M8 X 70
26	19M7803	SCREW	1		M8 X 70
28	M88031	NUT	4		
29	AT211680	COVER	1		
30	AT211681	GASKET	1		
31	19M7865	SCREW	3		M8 X 16
32	M805710	FILLER CAP	1		
33	M802008	ADAPTER	1		
34	M809503	EXTENSION	1		(SUB FOR T114301)
35	M802009	NUT	1		
36	CH11566	PACKING	1		
37	M805711	PACKING	2		
38	TH100044	O-RING	1		
39	19M7775	SCREW	2		M6 X 16
40	M64850	SEALANT	1		(GASKET SEALANT-NOT SHOWN)

CAMSHAFT AND IDLER GEAR

TP52435 -UN-25SEP96

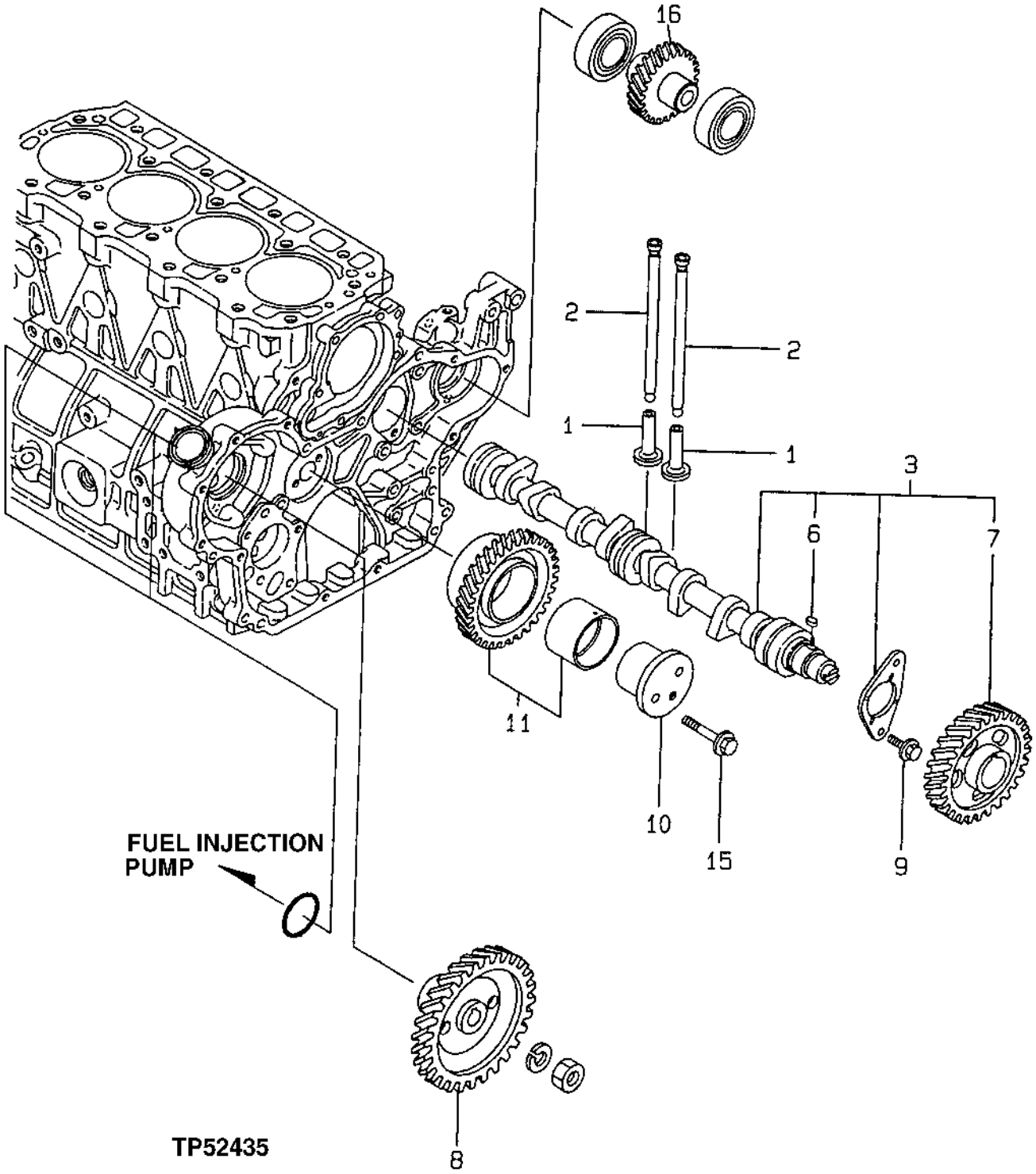

CAMSHAFT AND IDLER GEAR

KEY	PART NO.	PART NAME	QTY	ENGINE SERIAL NO.	REMARKS
1	M801046	CAM FOLLOWER	8		
2	AT211726	PUSH ROD	8		
3	AT211727	CAMSHAFT	1		
6	M801045	SHAFT KEY	1		
7	AT211730	GEAR	1		
8	AT211757	GEAR	1		
9	19M7865	SCREW	2		M8 X 16
10	AT211754	SHAFT	1		
11	AT211755	GEAR	1		
14	M801050	BUSHING	1		
15	19M7979	SCREW	2		M8 X 55
16	AT211758	GEAR	1		

CYLINDER BLOCK

TP52429 -UN-07OCT96

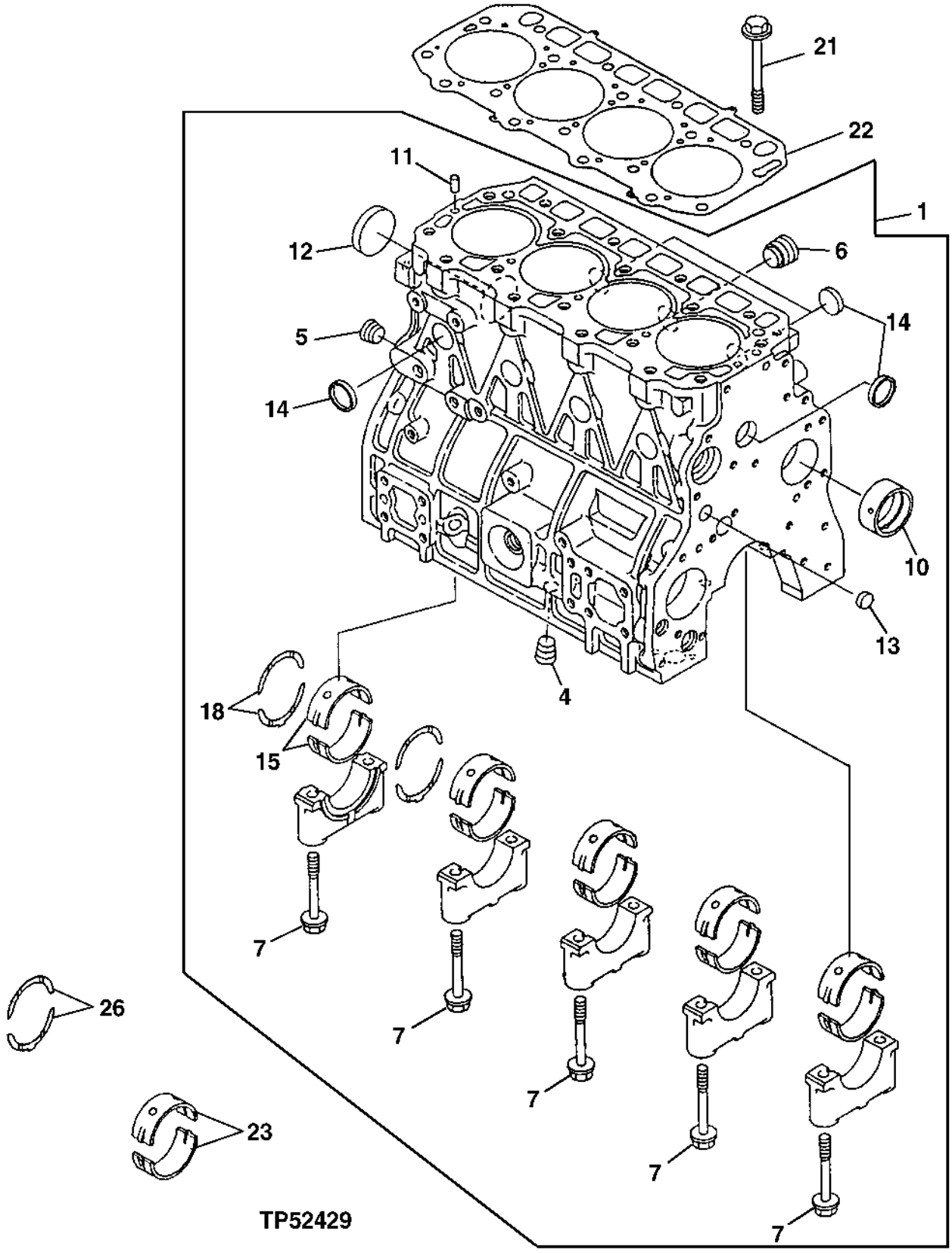

CYLINDER BLOCK

KEY	PART NO.	PART NAME	QTY	ENGINE SERIAL NO.	REMARKS
1	AT211835	CYLINDER BLOCK	1		
4	CH15002	PLUG	1		
5	CH15002	PLUG	1		
6	15H562	PIPE PLUG	1		1"
7	AT211653	BOLT	10		
10	AT211656	BUSHING	1		
11	CH18079	SPRING PIN	2		
12	AT211657	PLUG	1		
13	30M7010	CAP	1		
14	30M7023	CAP	8		
15	AT211682	BEARING CAP	5		
18	AT211691	THRUST BEARING	2		
21	AT211658	BOLT	18		
22	AT211659	ENGINE CYLINDER HEAD GASKET	1		
23	AT211836	BEARING CAP	5		(UNDERSIZE)
26	AT211837	THRUST BEARING	2		(OVERSIZE)

OIL PAN AND FLYWHEEL HOUSING

TP52445 -UN-21SEP96

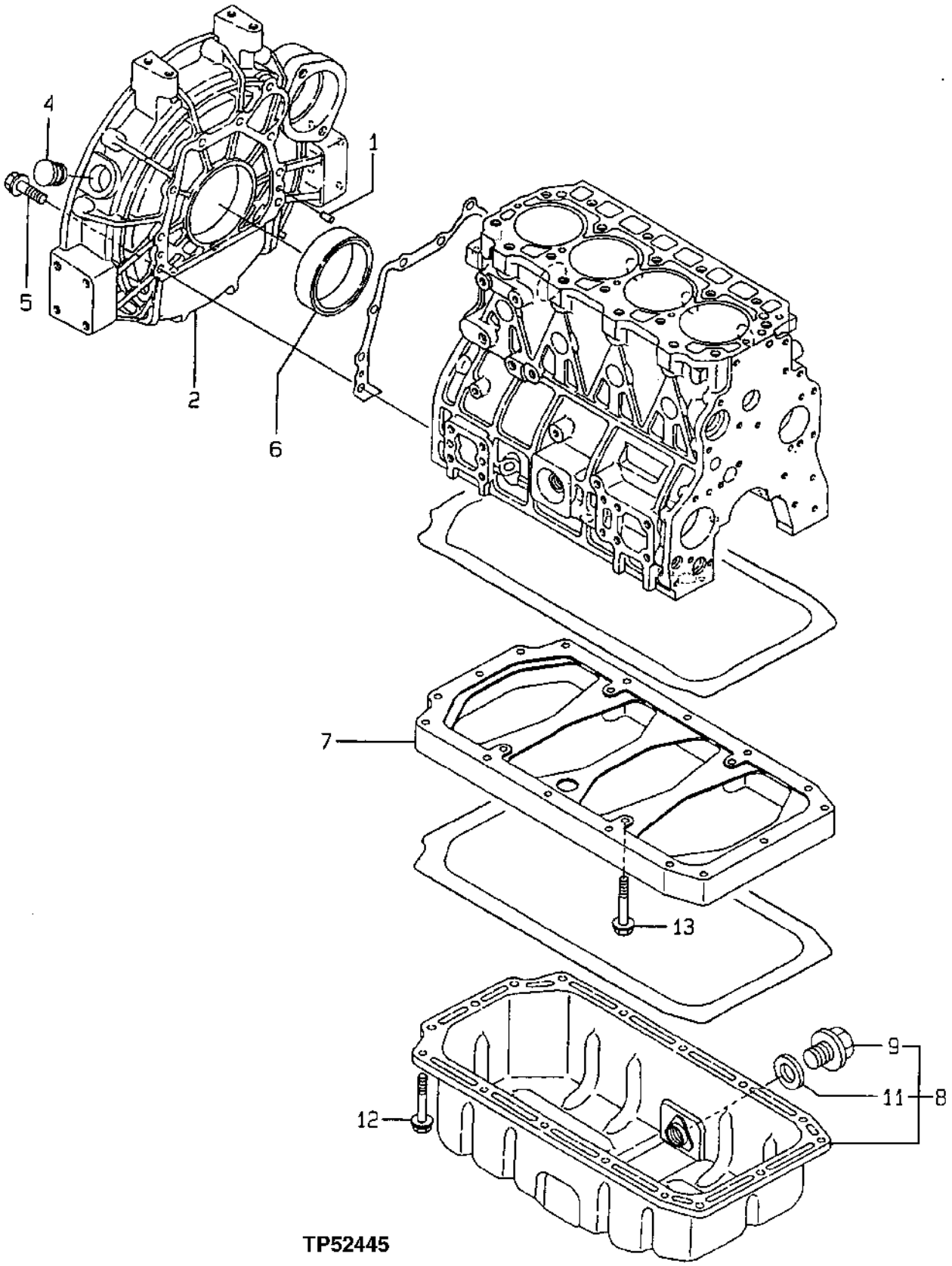

TP52445

OIL PAN AND FLYWHEEL HOUSING

KEY	PART NO.	PART NAME	QTY	ENGINE SERIAL NO.	REMARKS
1	M802255	PIN	2		
2	AT211672	COVER	1		
4	T113827	PLUG	1		
5	AT211675	CAP SCREW	9		
6	T113934	SEAL	1		
7	AT211676	FRAME	1		
8	AT211677	OIL PAN	1		
9	M806544	DRAIN PLUG	1		
11	M806545	WASHER	1		
12	19M7800	SCREW	21		M8 X 50
13	19M7800	SCREW	4		M8 X 50
14	M64850	SEALANT	1		(GASKET SEALANT-NOT SHOWN)

OIL LUBE SYSTEM

TP52437 -UN-17OCT96

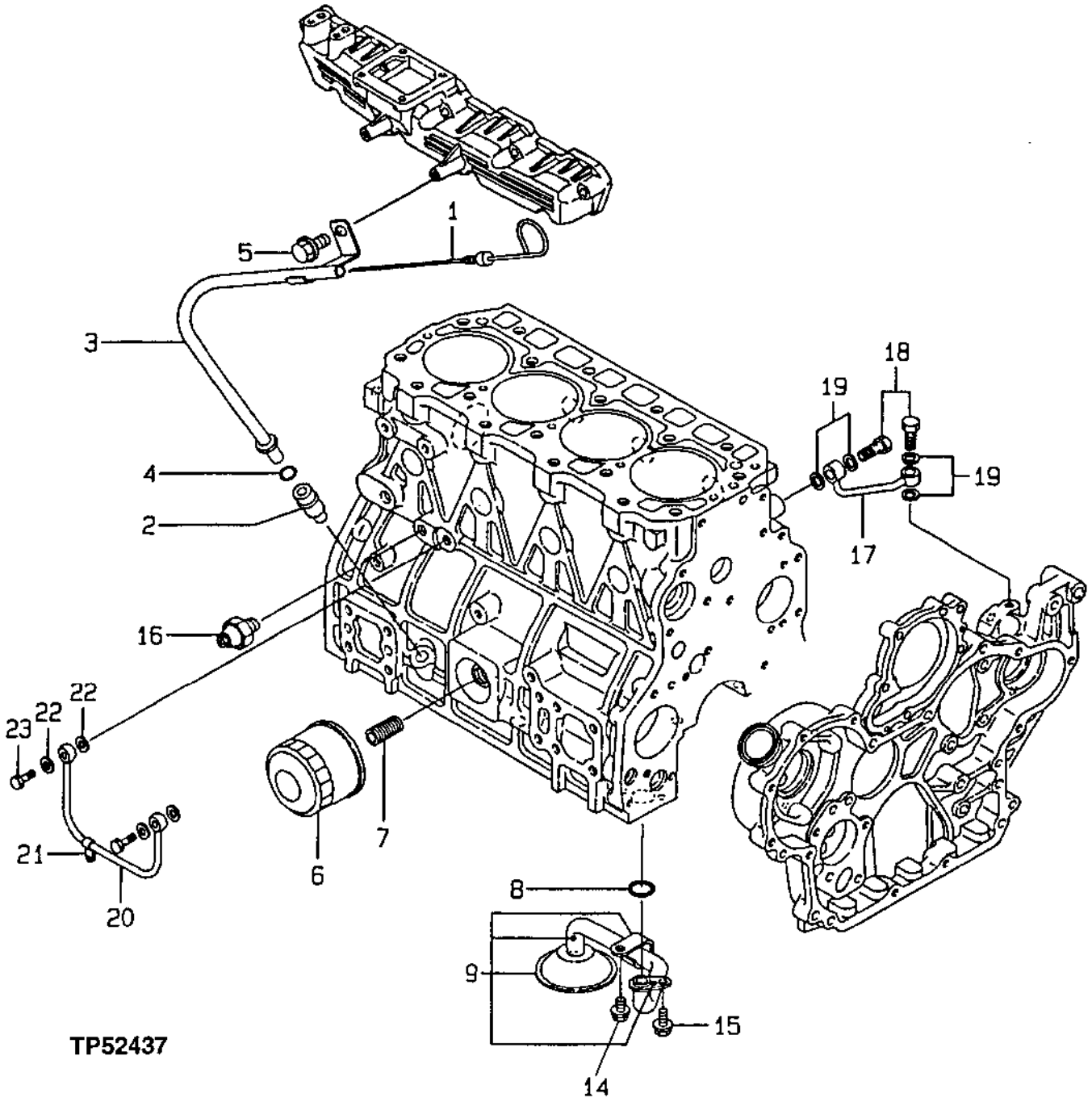

OIL LUBE SYSTEM

KEY	PART NO.	PART NAME	QTY	ENGINE SERIAL NO.	REMARKS
1	AT211760	DIPSTICK	1		
2	M89143	GUIDE	1		
3	AT211889	GUIDE	1		(SUB FOR AT211761)
4	CH10571	PACKING	1		
5	19M7865	SCREW	1		M8 X 16
6	M801209	OIL FILTER	1		
7	T113853	STUD	1		
8	AT211670	O-RING	1		
9	AT211762	PIPE	1		
14	CH19137	BOLT	1		
15	19M7865	SCREW	1		M8 X 16
16	AM100856	SWITCH	1		(ENGINE OIL PRESSURE)
17	AT211769	PIPE	1		
18	T110718	BOLT	2		
19	CH10554	PACKING	4		
20	AT211767	PIPE	1		
21	AT211768	CLAMP	1		
22	CH10554	PACKING	2		
23	CH16843	HOLLOW SCREW	1		

CYLINDER HEAD

TP52431 -UN-25SEP96

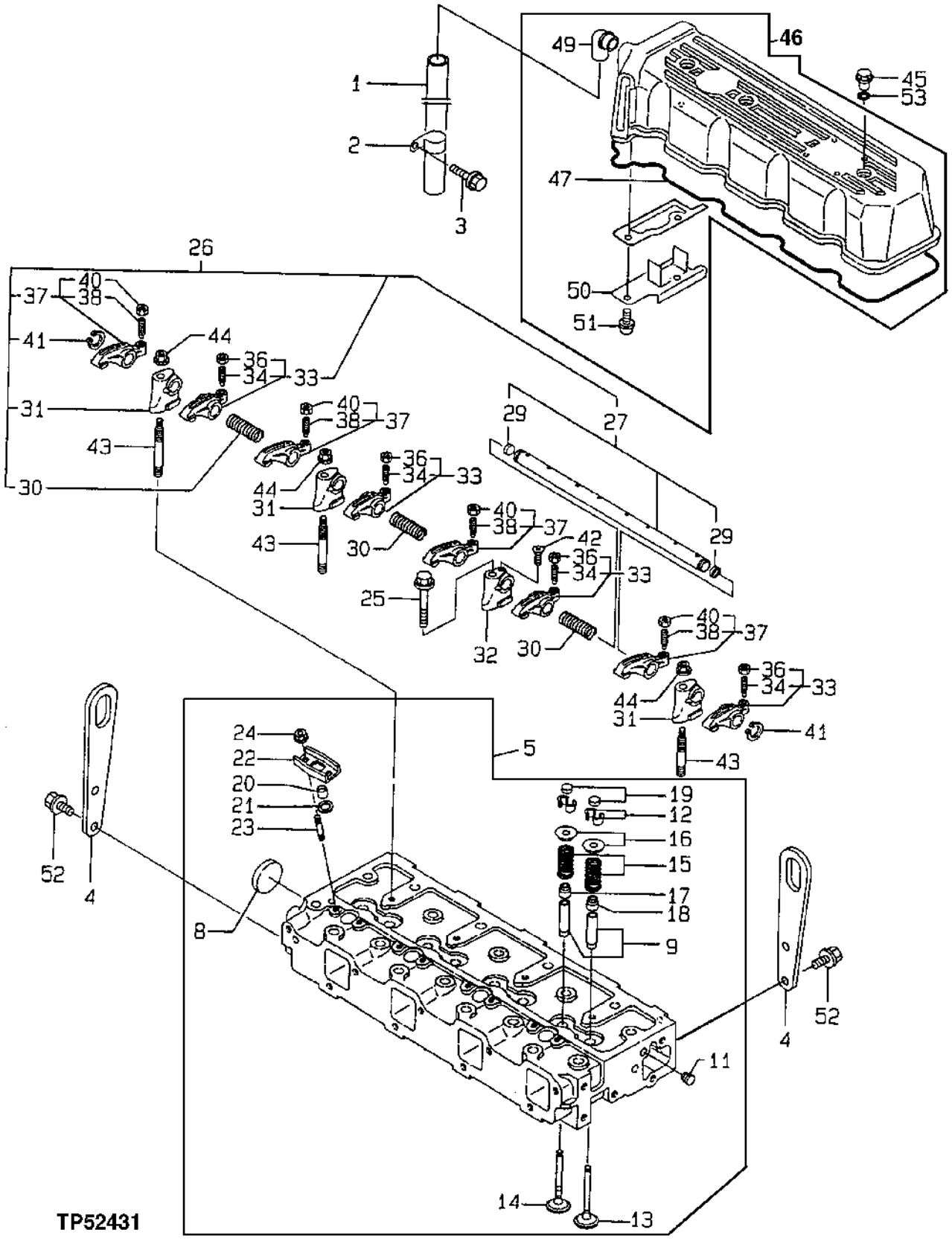

CYLINDER HEAD

KEY	PART NO.	PART NAME	QTY	ENGINE SERIAL NO.	REMARKS
1	T113872	PIPE	1		
2	M801038	CLAMP	1		
3	CH19137	BOLT	1		
4	AT211695	CROP LIFTER	2		
5	AT211839	CYLINDER HEAD	1		
8	CH16751	PLUG	1		
9	M801228	GUIDE	8		
11	AT211699	FITTING PLUG	1		
12	CH10067	RETAINER	16		
13	AT211700	INTAKE VALVE	4		
14	AT211701	EXHAUST VALVE	4		
15	AT211702	SPRING	8		
16	M801223	RETAINER	8		
17	T110650	SEAL	4		
18	CH10450	SEAL	4		
19	M801224	CAP	8		
20	M806732	GUARD	4		
21	M801017	VALVE SEAT	4		
22	M801018	RETAINER	4		
23	M801219	BOLT	8		
24	M87828	NUT	8		
25	M88666	BOLT	1		
26	AT211703	SUPPORT	1		
27	AT211704	ROCKER ARM SHAFT	1		
29	M800002	PLUG	2		
30	AT211706	SPRING	3		
31	AT211707	SUPPORT	3		
32	AT211708	SUPPORT	1		
33	AT211709	ROCKER ARM	4		
34	M801027	SCREW	4		
36	M801028	NUT	4		
37	AT211711	ROCKER ARM	4		
38	M801027	SCREW	4		
40	M801028	NUT	4		
41	T114106	RING	2		
42	AT211713	SCREW	1		
43	AT211714	STUD	3		
44	M88031	NUT	3		
45	CH10348	NUT	3		
46	AT211715	COVER	1		
47	AT211718	GASKET	1		
49	.....	ELBOW FITTING	1		(YANMAR PART NO. 11910011330)
50	AT211719	PLATE	1		
51	T110452	SCREW, WITH WASHER	2		
52	19M7865	SCREW	4		M8 X 16
53	CH10568	PACKING	3		
54	M64850	SEALANT	1		(GASKET SEALER-NOT SHOWN)

INTAKE AND EXHAUST MANIFOLD

TP52432 -UN-20SEP96

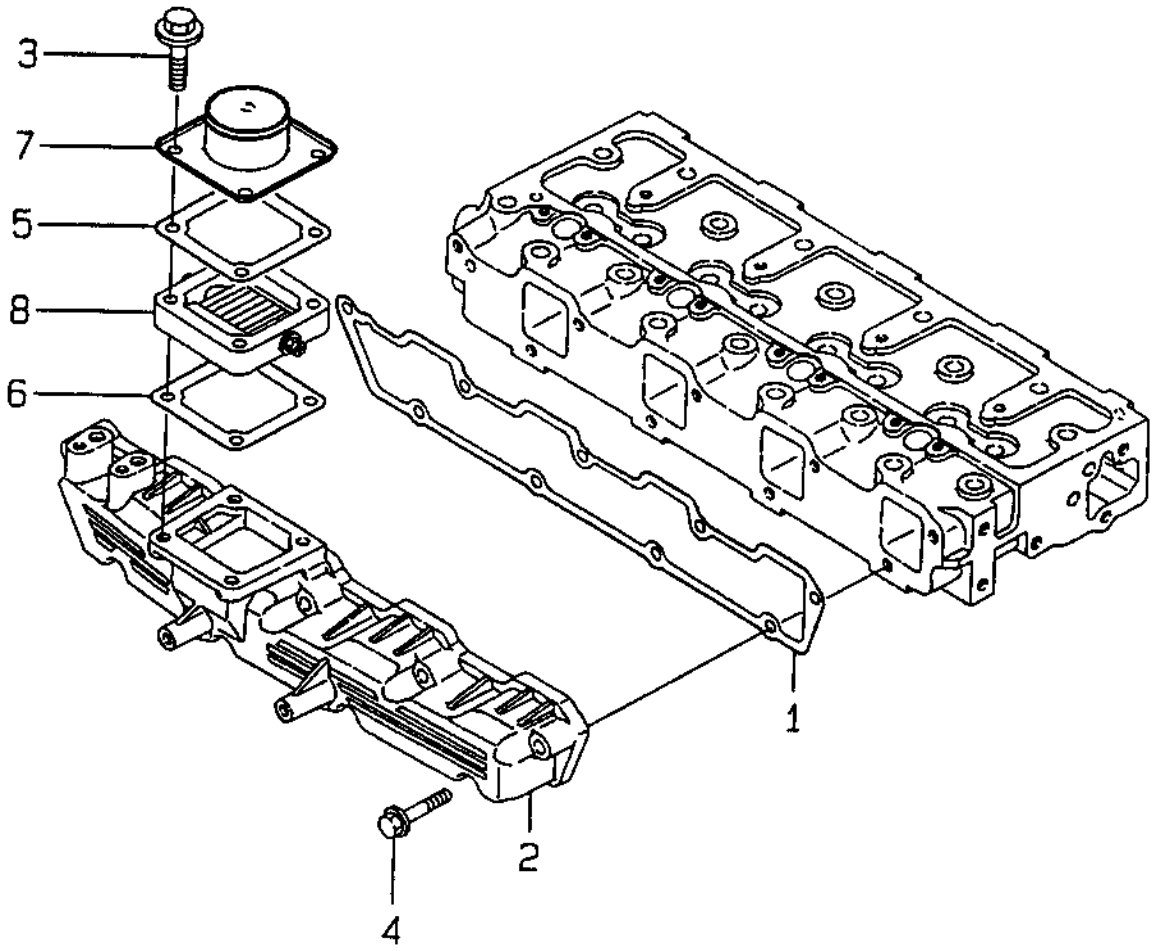

TP52432

INTAKE AND EXHAUST MANIFOLD

KEY	PART NO.	PART NAME	QTY	ENGINE SERIAL NO.	REMARKS
1	AT211720	GASKET	1		
2	AT211721	INTAKE MANIFOLD	1		
3	19M7868	SCREW	4		M8 X 30
4	CH19101	BOLT	9		
5	T113894	GASKET	4		
6	CH20252	GASKET	1		
7	CH16780	COVER	1		
8	T113905	HEATER	1		

INTAKE AND EXHAUST MANIFOLD

TP52433 -UN-20SEP96

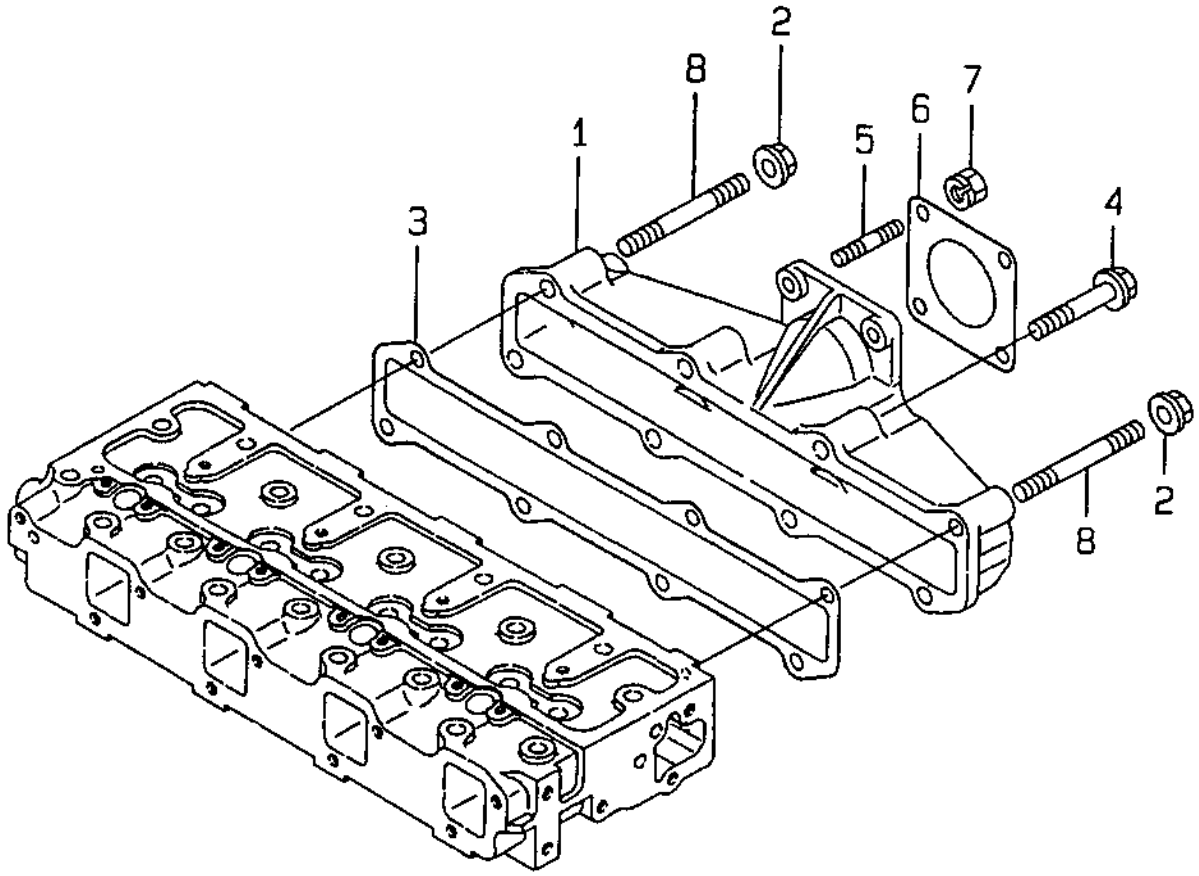

TP52433

INTAKE AND EXHAUST MANIFOLD

KEY	PART NO.	PART NAME	QTY	ENGINE SERIAL NO.	REMARKS
1	AT211723	EXHAUST MANIFOLD	1		
2	14M7298	FLANGE NUT	2		M8
3	AT211725	GASKET	1		
4	CH19101	BOLT	6		
5	CH10614	STUD	4		
6	M805838	GASKET	1		
7	14M7273	NUT	1		
8	.....	STUD	2		

FUEL INJECTION PUMP

TP52439 -UN-21SEP96

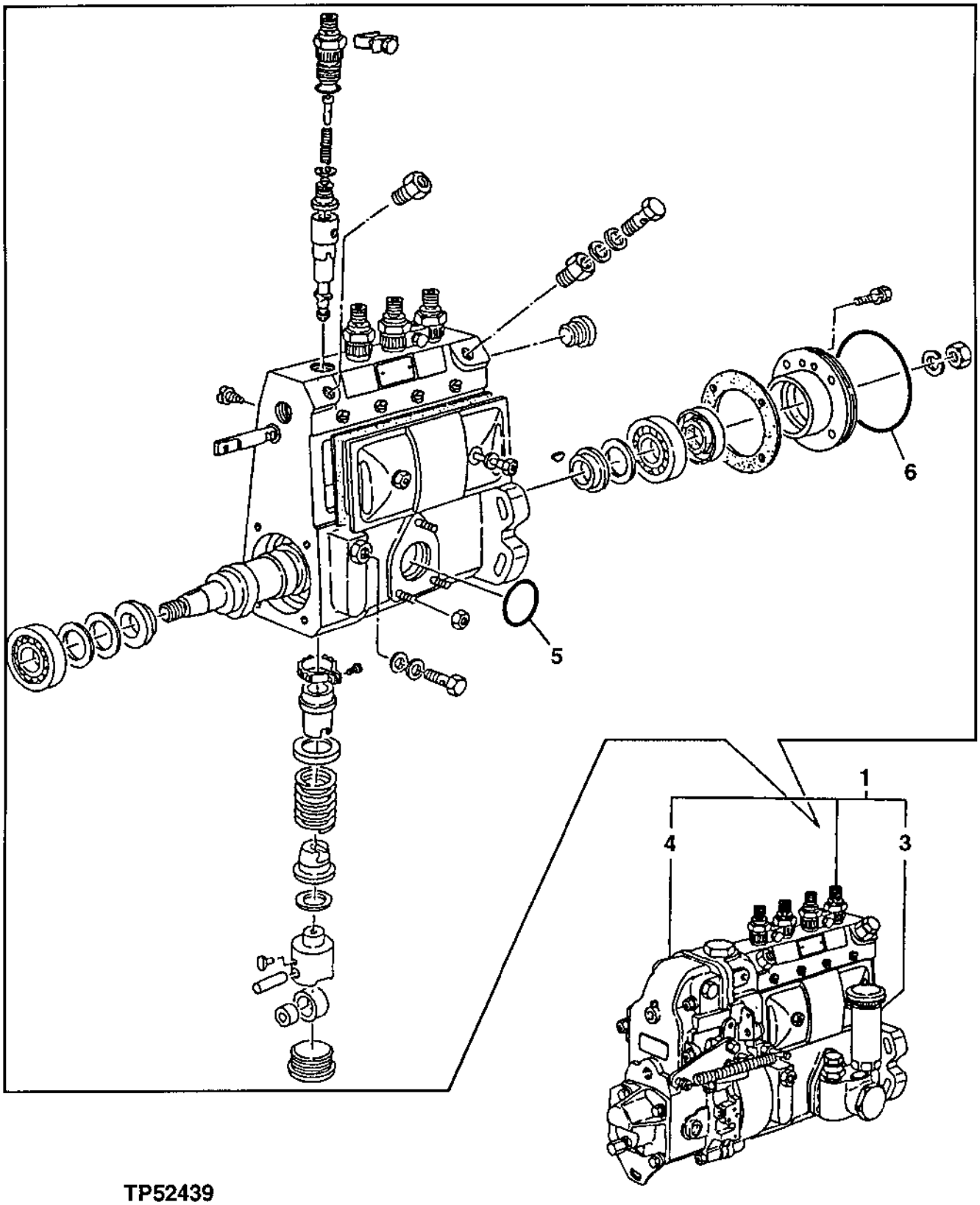

TP52439

FUEL INJECTION PUMP

KEY	PART NO.	PART NAME	QTY	ENGINE SERIAL NO.	REMARKS
1	AT211784	FUEL INJECTION PUMP	1		
3	AT211786	FUEL PUMP	1		(FUEL TRANSFER PUMP)
4	.....	GOVERNOR	1		
5	AT211847	O-RING	1		
6	AT211848	O-RING	1		

FUEL TRANSFER PUMP

TP52539 -UN-11NOV96

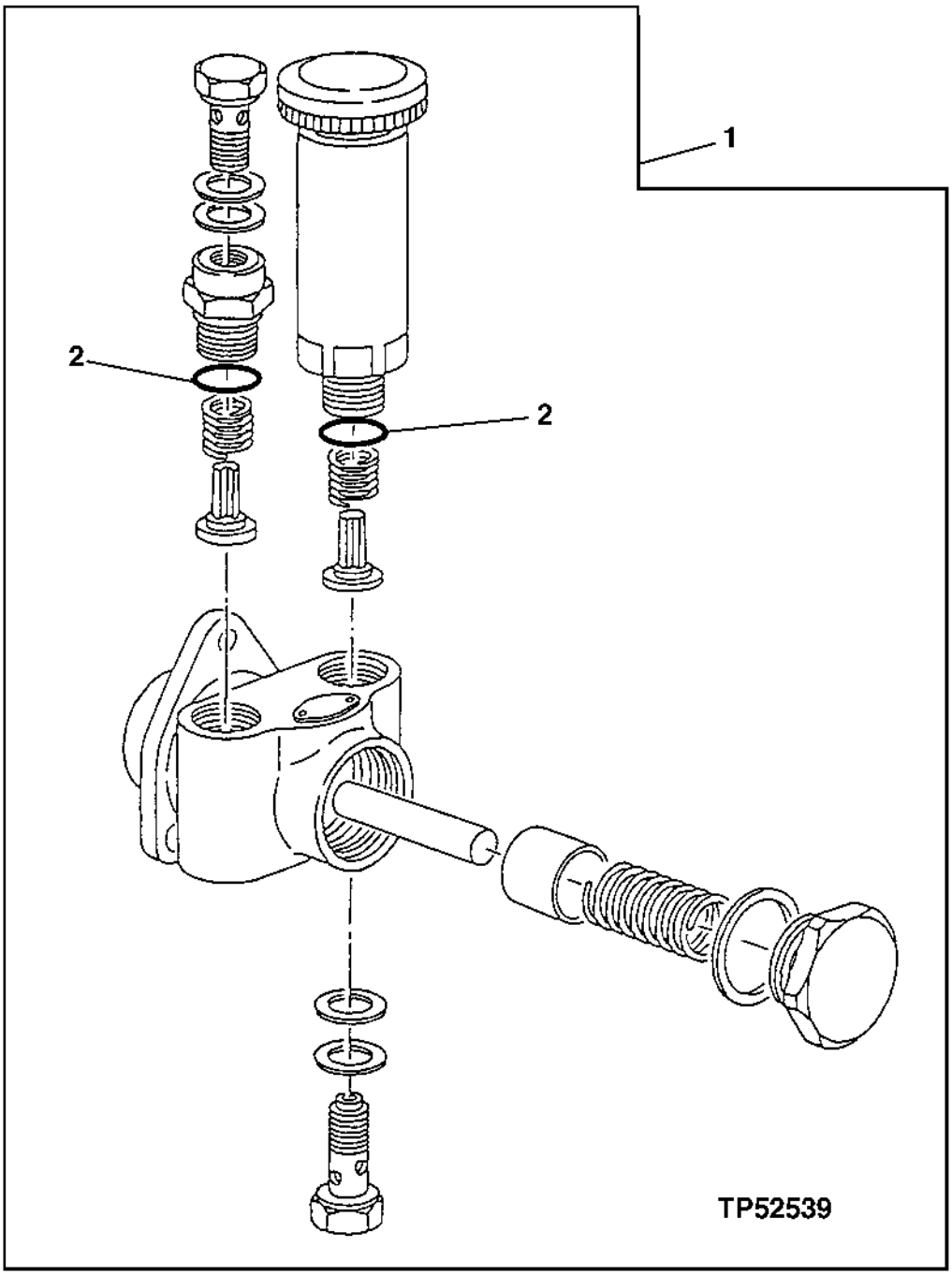

FUEL TRANSFER PUMP

KEY	PART NO.	PART NAME	QTY	ENGINE SERIAL NO.	REMARKS
1	AT211786	FUEL PUMP	1		(FUEL TRANSFER PUMP)
2	R26375	O-RING	2		

FUEL INJECTION SYSTEM

TP52441 -UN-25SEP96

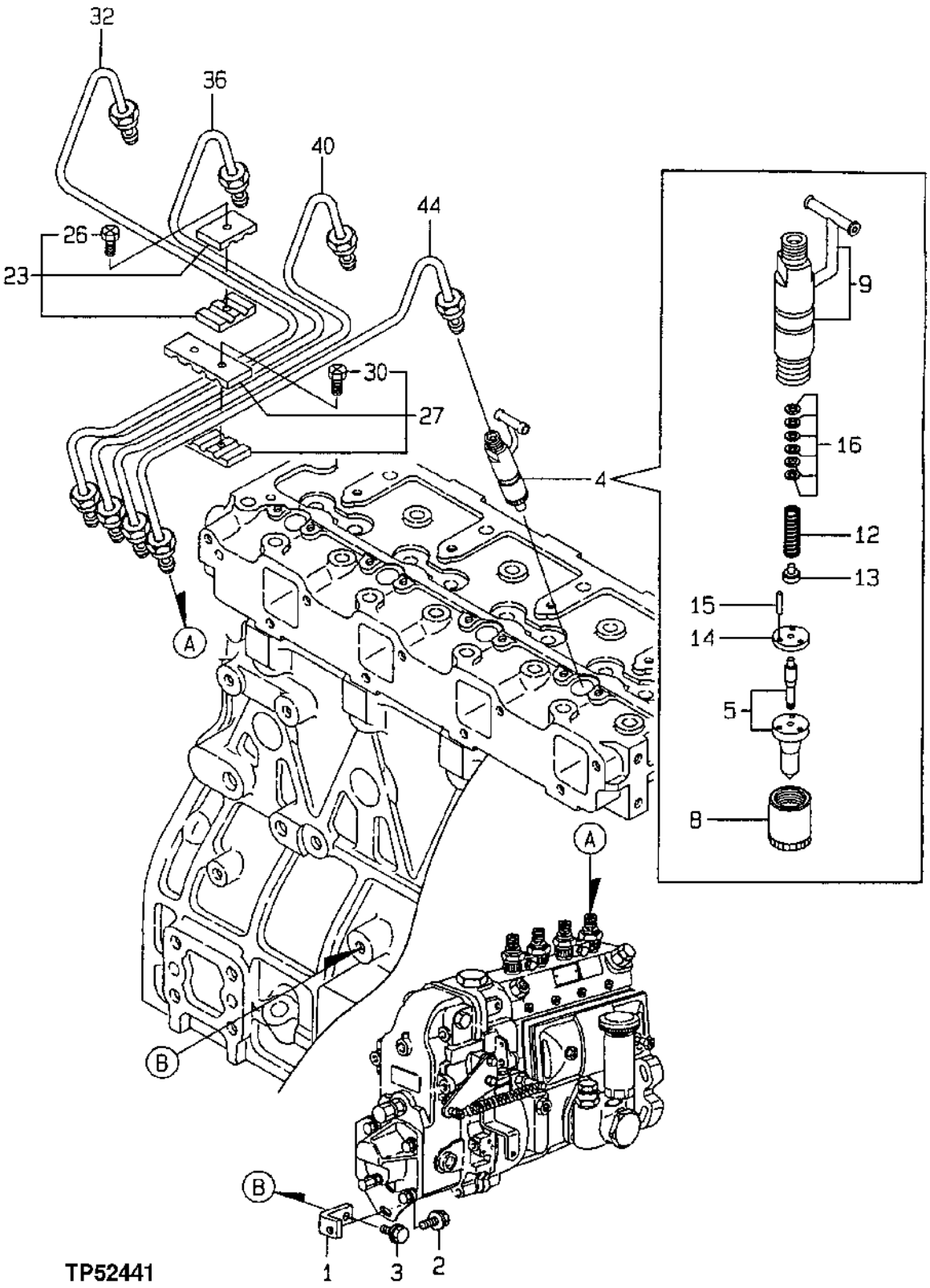

FUEL INJECTION SYSTEM

KEY	PART NO.	PART NAME	QTY	ENGINE SERIAL NO.	REMARKS
1	AT211788	ANGLE	1		
2	M803787	BOLT	1		
3	19M7866	SCREW	1		M8 X 20, NO. 1
4	AT211907	INJECTION NOZZLE	4		
5	AT211789	INJECTION NOZZLE	4		
8	M801093	NUT	4		
9	AM875330	NOZZLE HOLDER	4		
12	M801096	SPRING	4		
13	M800212	RETAINER	4		
14	M801097	VALVE SEAT INSERT	4		
15	M801098	PIN	8		
16	AM875069	SHIM	4		
23	RG60641	SUPPORT	2		
26	M806745	BOLT	2		
27	AM875413	CLAMP	1		
30	M806745	BOLT	2		
32	AT211793	PIPE	1		
36	AT211795	PIPE	1		
40	AT211797	PIPE	1		
44	AT211799	LINE	1		

FUEL INJECTION LINES

TP52442 -UN-25SEP96

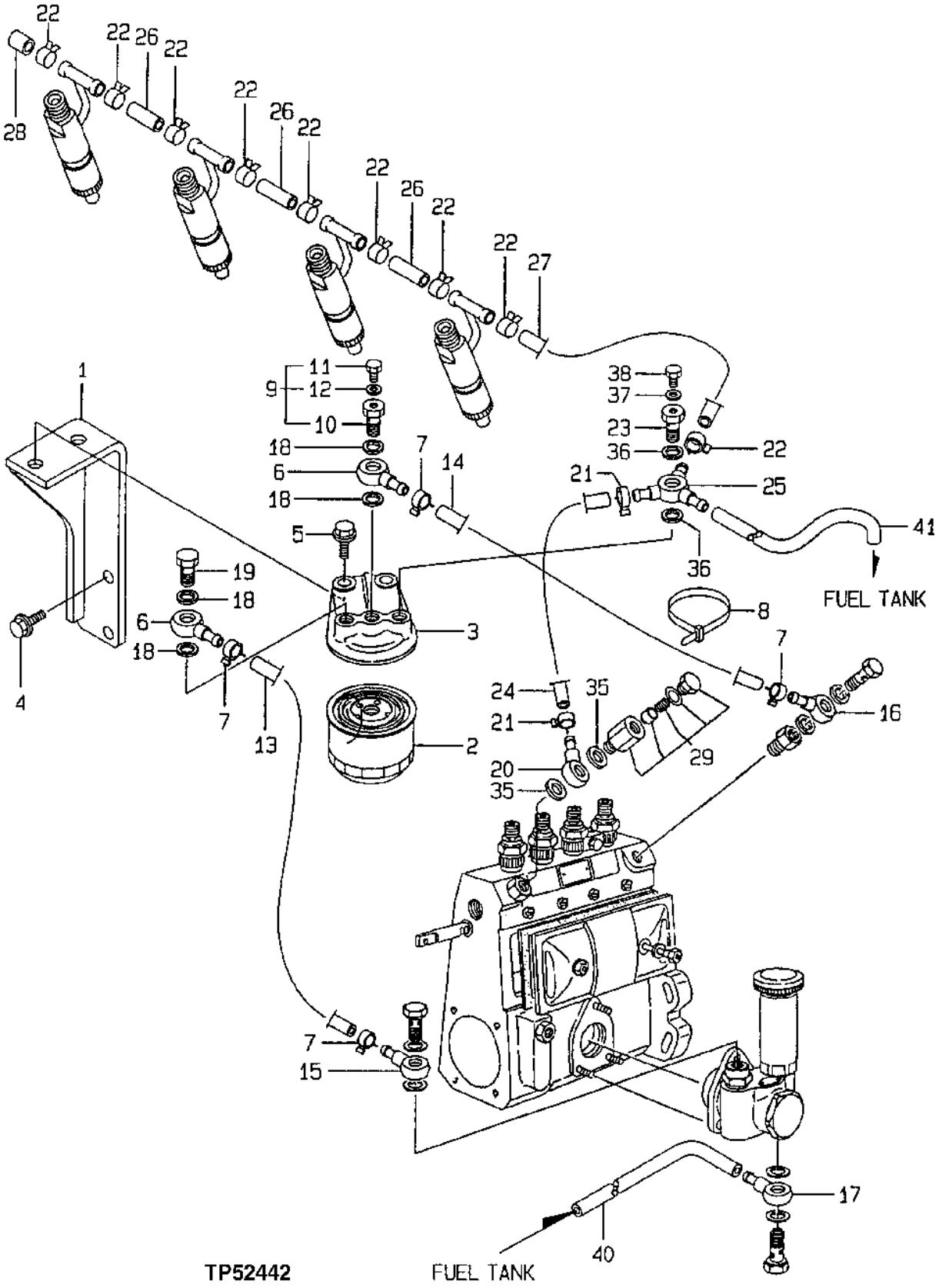

FUEL INJECTION LINES

KEY	PART NO.	PART NAME	QTY	ENGINE SERIAL NO.	REMARKS
1	AT212048	BRACKET	1		(SUB FOR AT211791 OR AT191316)
2	T113865	FUEL FILTER	1		
3	T113940	ADAPTER	1		
4	19M7865	SCREW	2		M8 X 16
5	T111563	BOLT	2		
6	CH17960	FITTING	2		
7	TY22462	CLAMP	4		(SUB FOR AR48236)
8	R44302	TIE BAND	2		
9	AM100756	BOLT	1		
10	CH17954	FITTING	1		
11	CH10319	PLUG	1		
12	M806431	WASHER	1		
13	M88753	HOSE	1		
14	AT211801	FUEL LINE	1		
15	CH10273	FITTING	1		
16	T114313	FITTING	1		
17	T114313	FITTING	1		
18	M806438	WASHER	4		
19	CH16902	BOLT	1		
20	T114313	FITTING	1		
21	TY22462	CLAMP	2		(SUB FOR AR48236)
22	CH10323	RETAINER	9		
23	T113942	UNIVERSAL JOINT	1		
24	M88753	HOSE	1		
25	T113941	UNIVERSAL JOINT	1		
26	CH10285	PIPE	3		
27	M801110	PIPE	1		
28	M801111	CAP	1		
29	AT211803	VALVE	1		
34	CH10555	PACKING	1		
35	M88046	SEALING WASHER	2		(SUB FOR AT211807)
36	M88046	SEALING WASHER	2		(SUB FOR AT211807)
37	CH10554	PACKING	1		
38	CH20044	BOLT	1		
40	.....	FUEL LINE	1		
41	.....	FUEL LINE	1		

WATER PUMP

TP52468 -UN-07OCT96

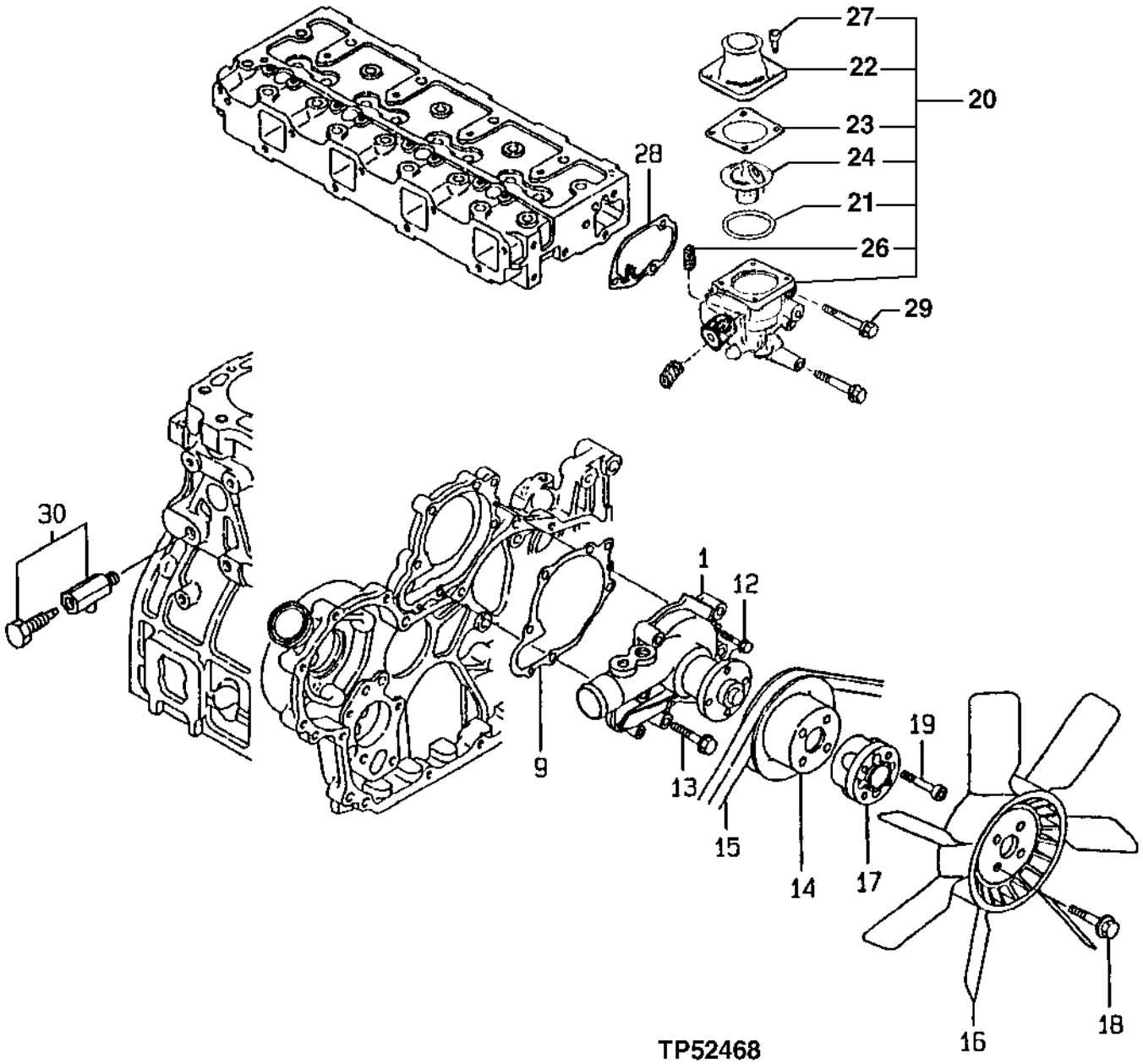

WATER PUMP

KEY	PART NO.	PART NAME	QTY	ENGINE SERIAL NO.	REMARKS
1	AT183061	WATER PUMP	1		(SUB FOR AT211770)
9	AT211775	GASKET	1		
10	CH13814	GASKET	1		
12	CH19141	BOLT	2		
13	19M7979	SCREW	5		M8 X 55
14	AT211776	PULLEY	1		
15	AT211777	BELT	1		
16	T113892	FAN	1		
17	T113893	HUB	1		
18	19M7166	CAP SCREW	4		M10 X 20
19	19M8711	SCREW	4		M8 X 50
20	AT211850	THERMOSTAT	1		
21	CH16878	GASKET	1		
22	CH16876	COVER	1		
23	CH16877	GASKET	1		
24	AT211781	THERMOSTAT	1		
26	15H666	PIPE PLUG	2		3/8"
27	TH104056	BOLT	4		
28	AT211852	GASKET	1		
29	19M7801	SCREW	3		M8 X 60
30	AM100800	DRAIN VALVE	1		
33	M800312	PLUG	1		
34	CH13814	GASKET	1		
35	M800312	PLUG	1		

STARTING MOTOR

TP61383 -UN-10NOV98

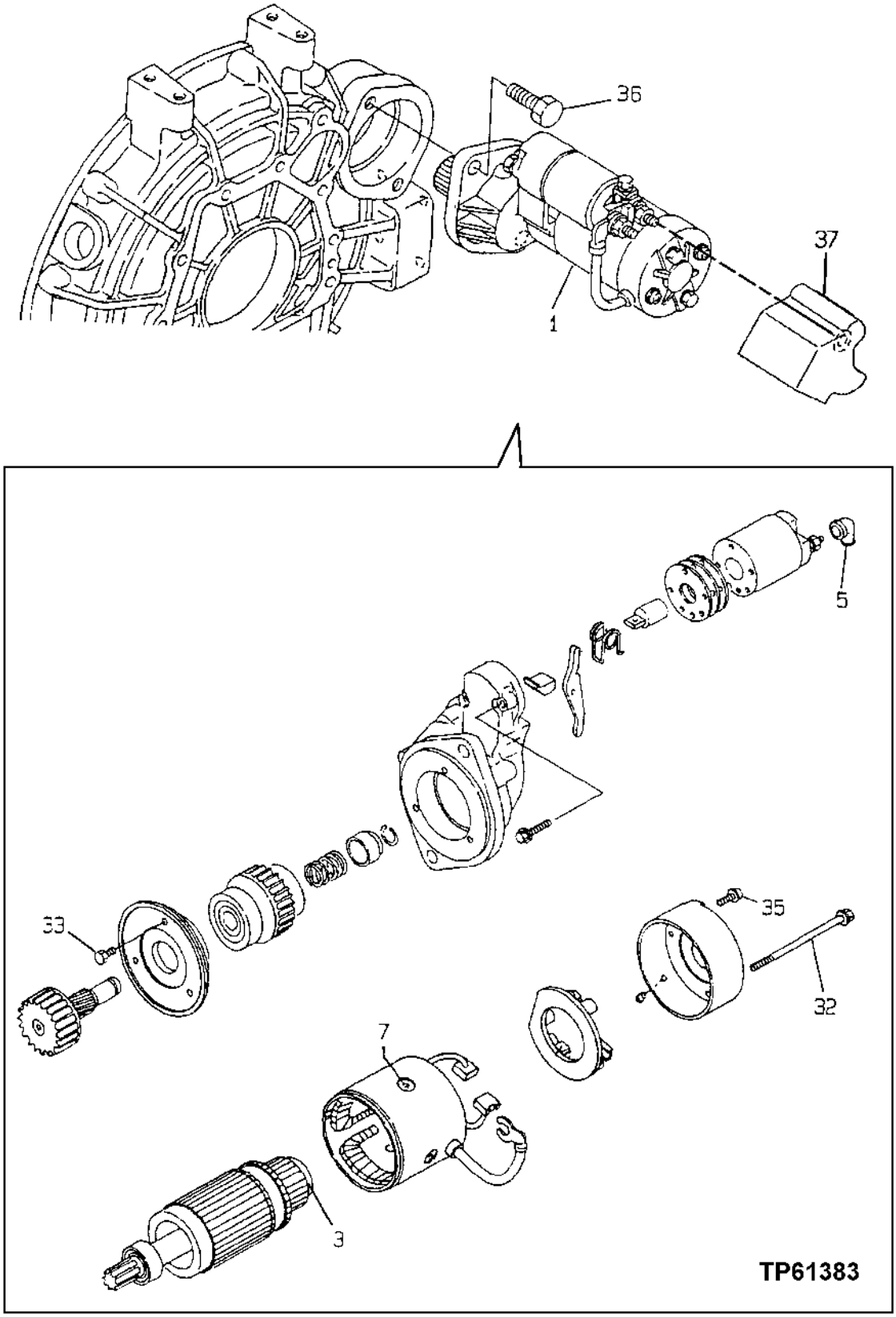

STARTING MOTOR

KEY	PART NO.	PART NAME	QTY	ENGINE SERIAL NO.	REMARKS
1	AT211816	STARTER MOTOR	1		COMPLETE MOTOR
3	AT110820	BEARING	1		
5	M802506	COVER	1		
7	T111592	SCREW	4		
32	ET14631	BOLT	2		
33	CH18443	BOLT	3		
35	21M7209	SCREW	2		M4 X 10
36	19M7285	CAP SCREW	2		M12 X 30
37	AT211846	COVER	1		(SOLENOID COVER)

ALTERNATOR

TP52446 -UN-24SEP96

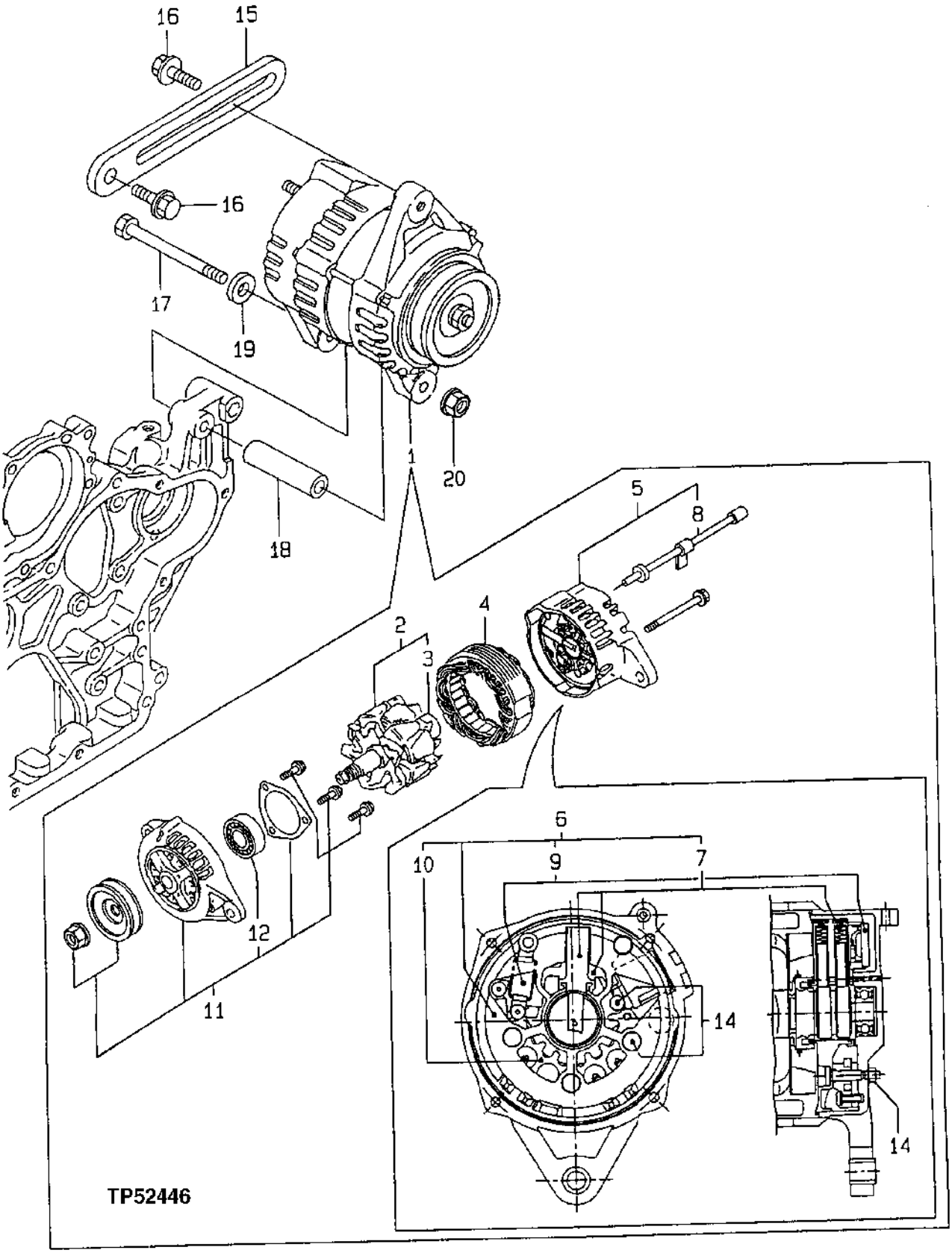

ALTERNATOR

KEY	PART NO.	PART NAME	QTY	ENGINE SERIAL NO.	REMARKS
1	AT211817	ALTERNATOR	1		
2	AT211818	ROTOR	1		
3	AT211819	BALL BEARING	1		
4	AT211822	STATOR	1		
5	AT211823	BRACKET	1		
6	AT211824	RECTIFIER	1		
7	AT211826	CARBON BRUSH HOLDER	1		
8	AT211825	WIRE	1		
9	AT211827	RECTIFIER	1		
10	AT211828	DIODE	1		
11	AT211820	BRACKET	1		
12	AT211821	BALL BEARING	1		
15	AT211830	STRAP	1		
16	24M7055	WASHER	2		8.400 X 16 X 1.600 MM
17	M803762	BOLT	1		
18	AT211829	SPACER	1		
19	24M7028	WASHER	1		
20	M88031	NUT	1		

CYLINDER BLOCK GASKET KIT

TP52447 -UN-20SEP96

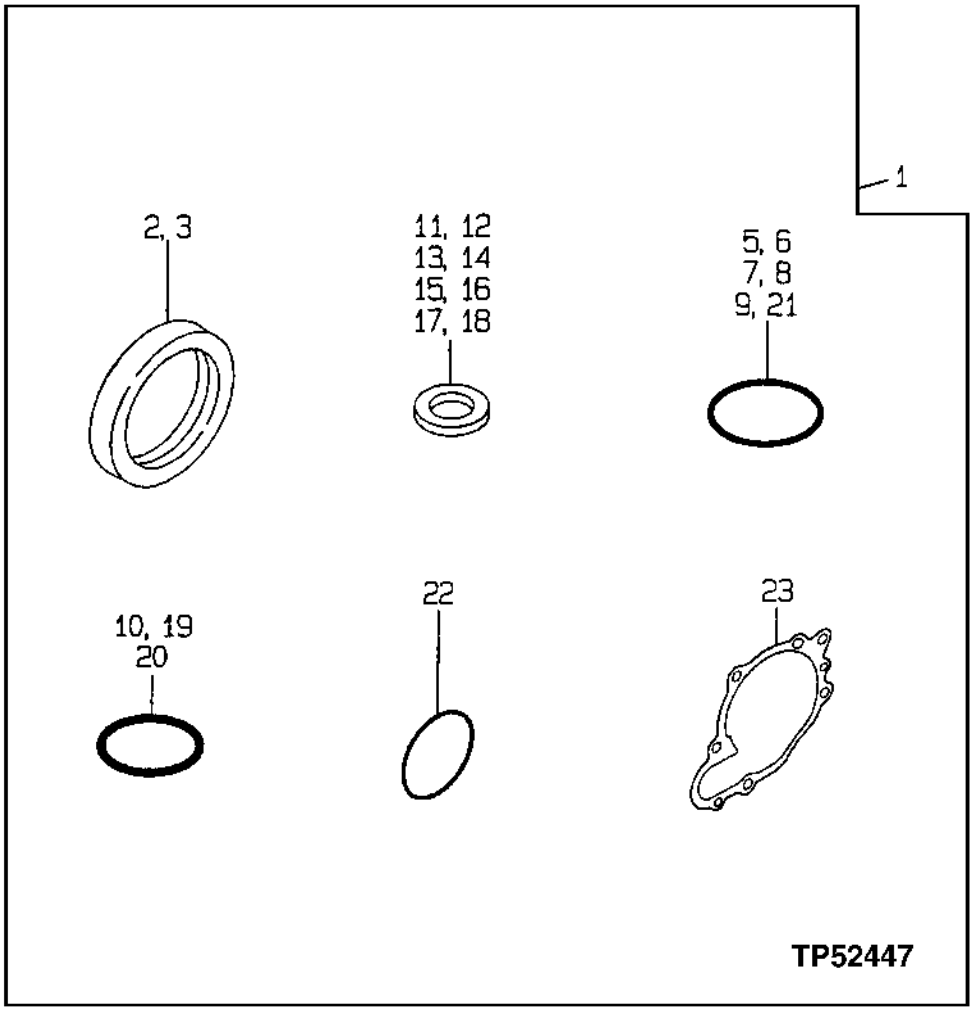

CYLINDER BLOCK GASKET KIT

KEY	PART NO.	PART NAME	QTY	ENGINE SERIAL NO.	REMARKS
1	AT211844	GASKET KIT	1		
2	AT211663	SEAL	1		
3	T113934	SEAL	1		
5	CH11566	PACKING	1		
6	M805711	PACKING	2		
7	CH10572	PACKING	1		
8	CH13526	PACKING	1		
9	CH10571	PACKING	1		
10	AT211670	O-RING	1		
11	CH10554	PACKING	2		
12	CH10554	PACKING	4		
13	M806431	WASHER	1		
14	M806438	WASHER	4		
15	CH10555	PACKING	1		
16	M88046	SEALING WASHER	2		(SUB FOR AT211807)
17	M88046	SEALING WASHER	2		(SUB FOR AT211807)
18	CH10554	PACKING	1		
19	AT211670	O-RING	1		
20	AT211671	O-RING	1		
21	CH10567	PACKING	1		
22	CH17858	PACKING	1		
23	AT211775	GASKET	1		
25	M64850	SEALANT	1		(LIQUID SEALANT-NOT SHOWN)

CYLINDER HEAD GASKET KIT

TP52448 -UN-20SEP96

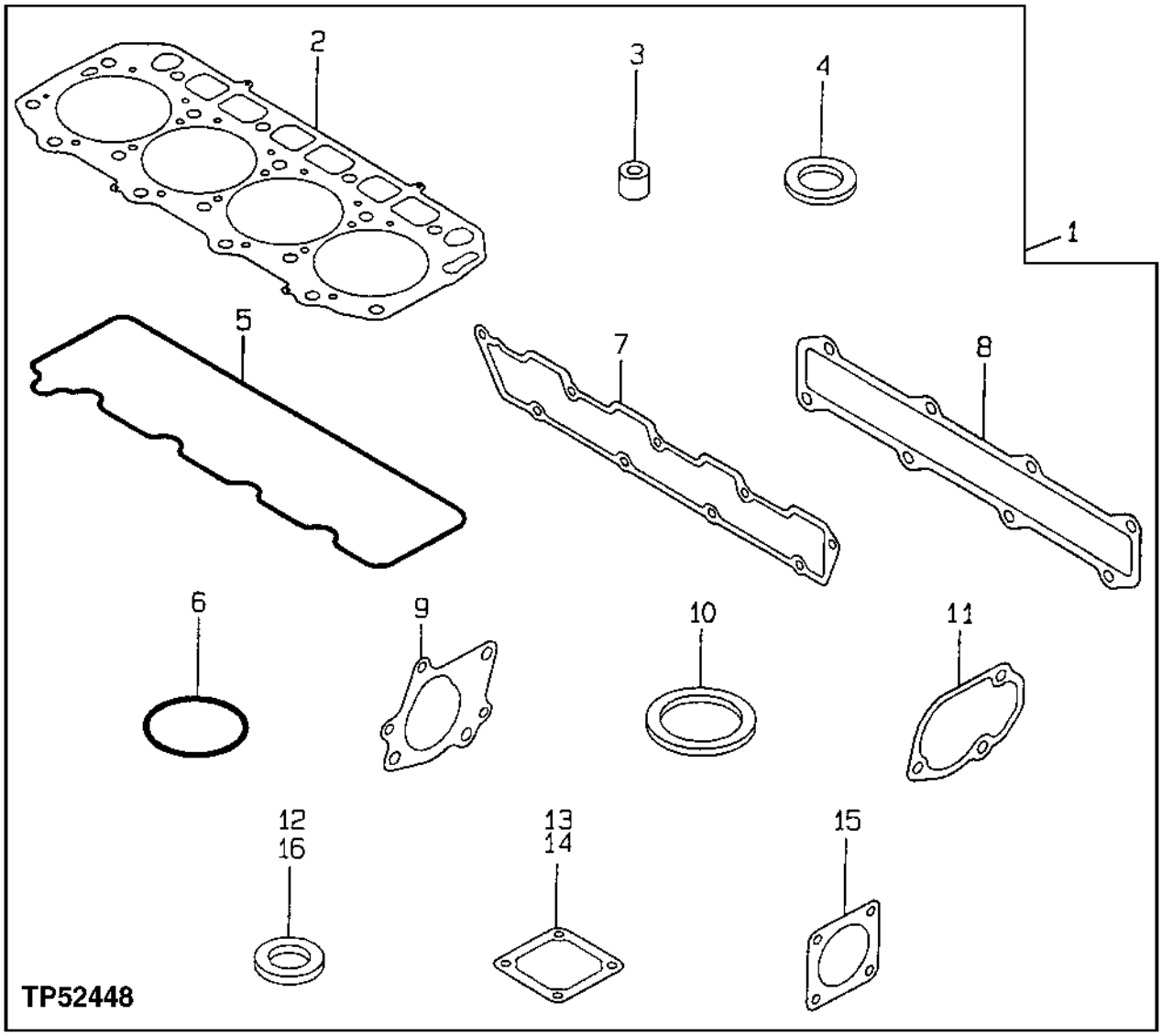

CYLINDER HEAD GASKET KIT

KEY	PART NO.	PART NAME	QTY	ENGINE SERIAL NO.	REMARKS
1	AT211845	GASKET KIT	1		
2	AT211659	ENGINE CYLINDER HEAD GASKET	1		
3	M806732	GUARD	4		
4	M801017	VALVE SEAT	4		
5	AT211718	GASKET	1		
6	CH10568	PACKING	3		
7	AT211720	GASKET	1		
8	AT211725	GASKET	1		
9	CH16877	GASKET	1		
10	CH16878	GASKET	1		
11	AT211852	GASKET	1		
12	CH13814	GASKET	2		
13	T113894	GASKET	1		
14	CH20252	GASKET	1		
15	M805838	GASKET	1		
16	T110737	GASKET	1		

MEMORANDA

COOLANT HEATER

TP23006 -UN-01JAN94

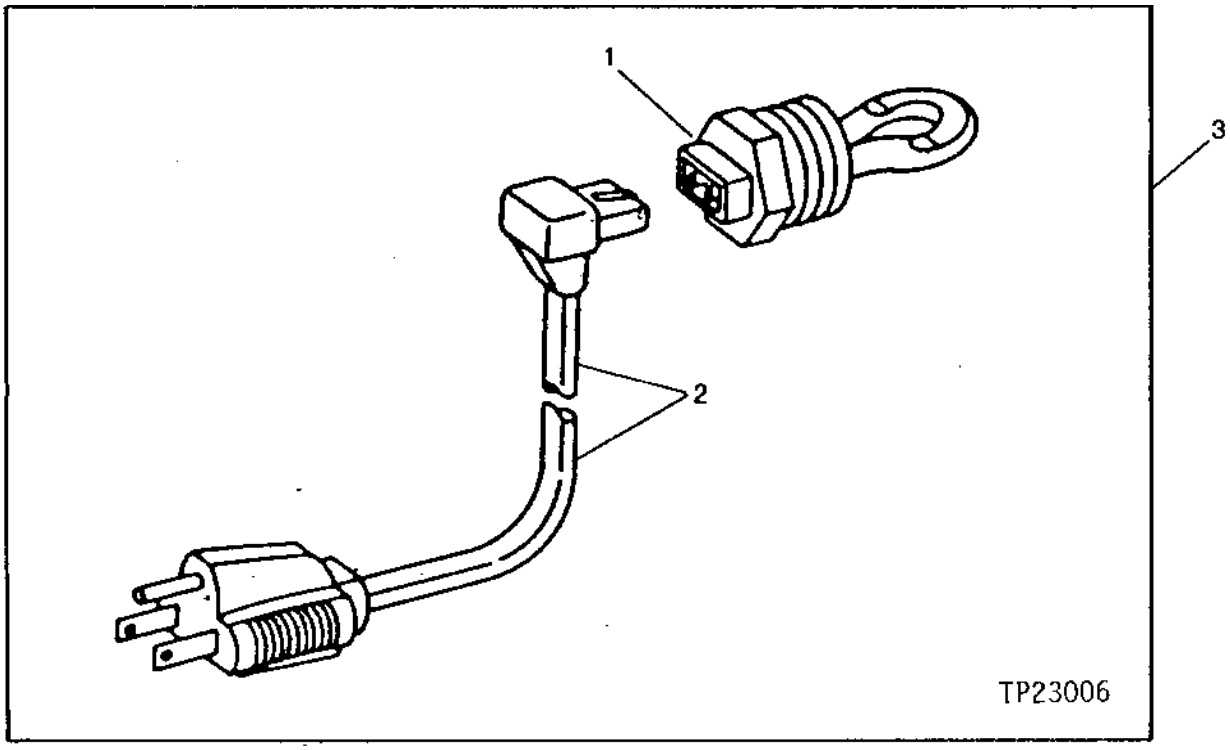

KEY	PART NO.	PART NAME	QTY	SERIAL NO.	REMARKS
1	.....	COOLANT HEATER	1		(AR87184 - USE IF AVAILABLE)
2	AR87168	POWER CORD	1		
3	AR87167	COOLANT HEATER	1		

RADIATOR

TP52363 -UN-10OCT96

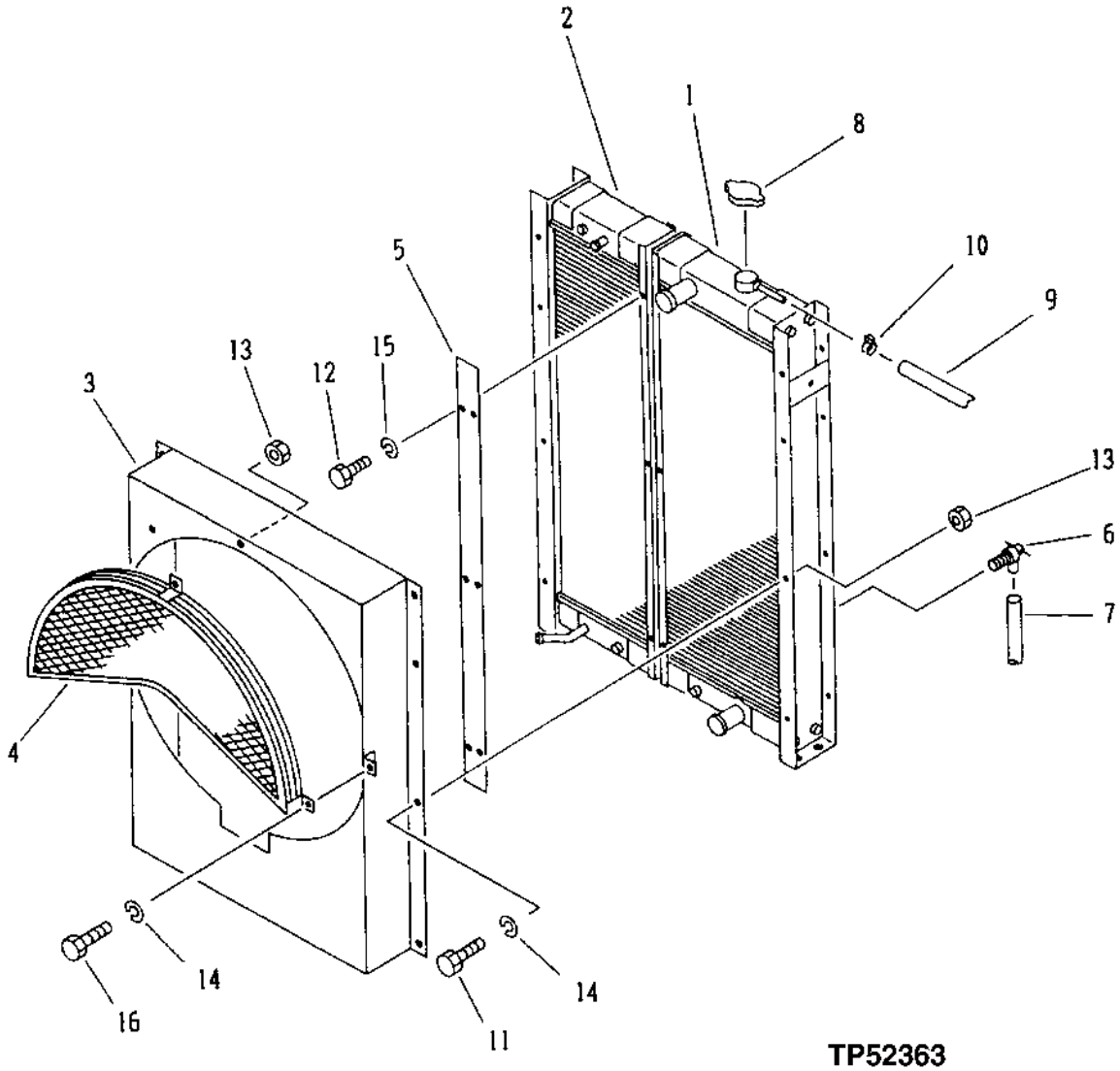

TP52363

RADIATOR

KEY	PART NO.	PART NAME	QTY	SERIAL NO.	REMARKS
1	AT216327	RADIATOR	1		
2	AT152653	OIL COOLER	1		
3	AT215296	SHROUD	1		
4	AT215297	GUARD	1		
5	AT152656	PLATE	2		
6	AT152582	DRAIN VALVE	1		
7	.....	HOSE	1		
8	AT161631	CAP	1		(SUB FOR AT152488)
9	.....	HOSE	1		(BULK, CUT-TO-LENGTH)
10	AR21836	CLAMP	1		(SUB FOR AT145649)
11	19M7932	CAP SCREW	8		M8 X 16
12	19M8425	CAP SCREW	12		M6 X 16
13	14M7273	NUT	8		M8
14	12M7065	LOCK WASHER	11		8 MM
15	12M7006	LOCK WASHER	12		6 MM
16	19M7881	SCREW	3		M8 X 20

RADIATOR SUPPORT

TP52364 -UN-10OCT96

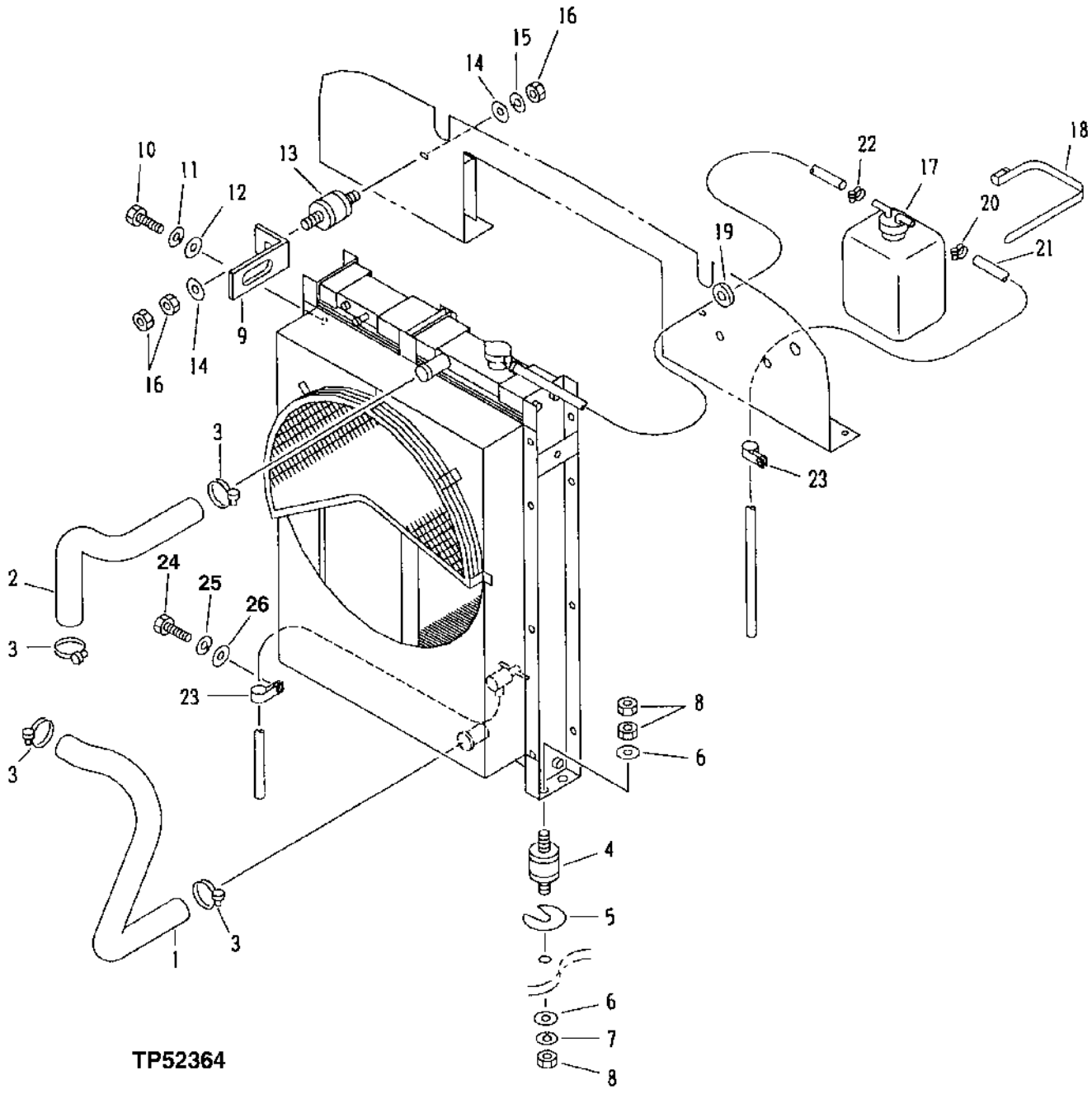

RADIATOR SUPPORT

KEY	PART NO.	PART NAME	QTY	SERIAL NO.	REMARKS
1	AT215298	RADIATOR HOSE	1		
2	AT215299	RADIATOR HOSE	1		
3	AR65293	CLAMP	4		(SUB FOR AT152433)
4	AT152490	GROMMET	4		(SUB FOR T116144)
5	T115351	SHIM	4		
6	24M7055	WASHER	8		8.400 X 16 X 1.600 MM
7	12M7065	LOCK WASHER	4		8 MM
8	14M7273	NUT	12		M8
9	AT152660	SUPPORT	2		
10	19M7872	CAP SCREW	2		M12 X 25
11	12M7067	LOCK WASHER	2		12 MM
12	24M7047	WASHER	2		13 X 24 X 2.500 MM
13	AT152490	GROMMET	2		(SUB FOR T116144)
14	24M7055	WASHER	4		8.400 X 16 X 1.600 MM
15	12M7065	LOCK WASHER	2		8 MM
16	14M7273	NUT	6		M8
17	AT152661	TANK	1		
18	AT159071	CLAMP	1		
19	AT136498	GROMMET	1		
20	.....	CLAMP	1		(AT152432 NOT AVAILABLE)
21	AT136469	HOSE	1		
22	.....	CLAMP	1		(AT152430 NOT AVAILABLE)
23	H75541	CLAMP	2		
24	19M7938	CAP SCREW	1		M10 X 20
25	12M6791	LOCK WASHER	1		10.200 MM
26	24M7028	WASHER	1		10.500 X 20 X 2 MM

ENGINE SPEED CONTROL

TP52365 -UN-10OCT96

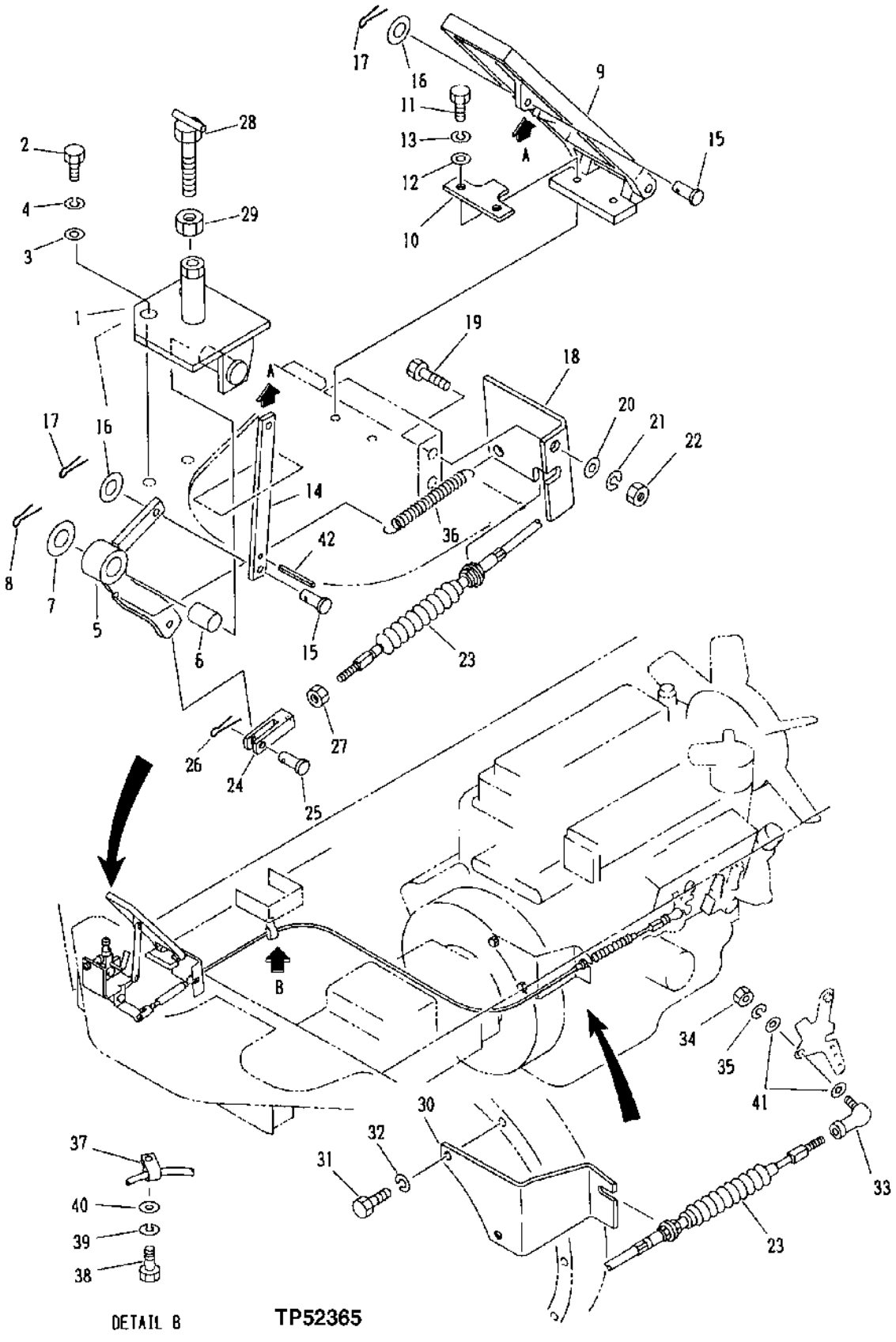

ENGINE SPEED CONTROL

KEY	PART NO.	PART NAME	QTY	SERIAL NO.	REMARKS
1	.....	BRACKET	1		
2	19M7402	CAP SCREW	1		M10 X 25
3	24M7028	WASHER	2		10.500 X 20 X 2 MM
4	12M6791	LOCK WASHER	2		10.200 MM
5	.....	LINK	1		
6	T116179	BUSHING	1		
7	24M7085	WASHER	1		15 X 28 X 2.500 MM
8	11M7083	COTTER PIN	1		3.200 X 50 MM
9	AT159194	PEDAL	1		
10	T144393	SUPPORT	1		
11	19M7077	CAP SCREW	2		M6 X 20
12	12M7054	LOCK WASHER	2		19 MM
13	12M7006	LOCK WASHER	2		6 MM
14	.....	PLATE	1		
15	45M7009	PIN	2		6 X 16 MM
16	24M7054	WASHER	2		6.400 X 12 X 1.600 MM
17	11M7005	COTTER PIN	2		1.600 X 10 MM
18	.....	PLATE	1		
19	19M7881	SCREW	2		M8 X 20
20	24M7055	WASHER	2		8.400 X 16 X 1.600 MM
21	12M7065	LOCK WASHER	2		8 MM
22	14M7273	NUT	2		M8
23	AT215300	PUSH PULL CABLE	1		
24	AT136462	YOKE	1		
25	45M7009	PIN	1		6 X 16 MM
26	11M7005	COTTER PIN	1		1.600 X 10 MM
27	14M7272	NUT	1		M6
28	T144392	PIN	1		
29	14M7444	NUT	1		M10
30	.....	BRACKET	1		
31	19M7168	CAP SCREW	2		M10 X 30
32	12M6791	LOCK WASHER	2		10.200 MM
33	T115312	END	1		
34	14M7272	NUT	1		M6
35	12M7006	LOCK WASHER	1		6 MM
36	AT215437	SPRING	1		
37	T115715	CLAMP	1		
38	19M8324	CAP SCREW	1		M10 X 16
39	12M6791	LOCK WASHER	1		10.200 MM
40	24M7028	WASHER	1		10.500 X 20 X 2 MM
41	24M7054	WASHER	2		6.400 X 12 X 1.600 MM
42	AT215142	SPRING PIN	1		

AIR CLEANER

TP29945 -UN-01JAN94

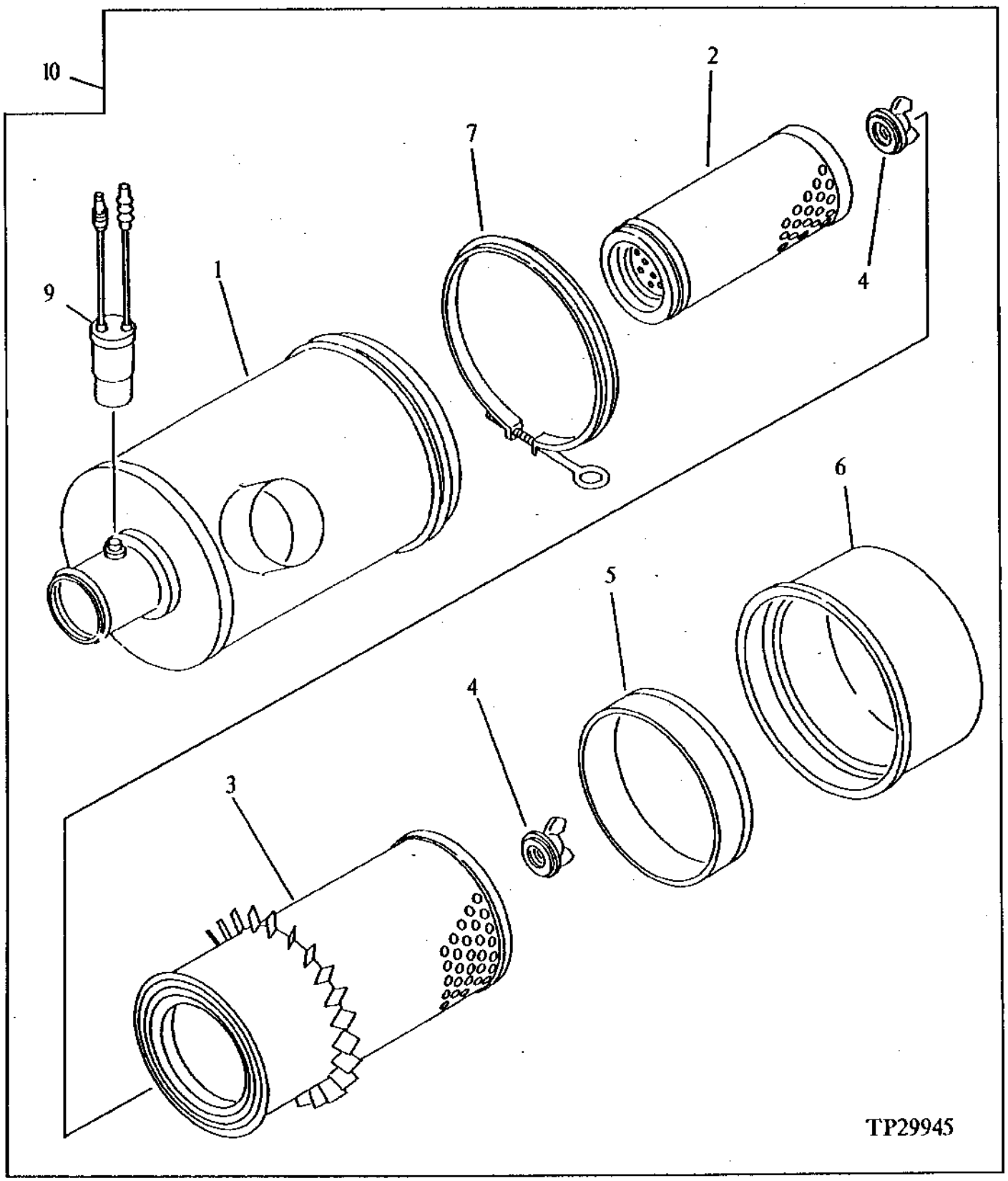

AIR CLEANER

KEY	PART NO.	PART NAME	QTY	SERIAL NO.	REMARKS
2	AN153119	FILTER ELEMENT	1		
3	AT20728	FILTER ELEMENT	1		
4	AH20849	WING NUT	2		
5	AH20857	ISOLATOR	1		
6	AH20851	BOWL	1		
7	AH20854	CLAMP	1		
9	AT136523	INDICATOR	1		
10	AT152639	AIR CLEANER	1		

AIR INTAKE SUPPORT

TP52361 -UN-10OCT96

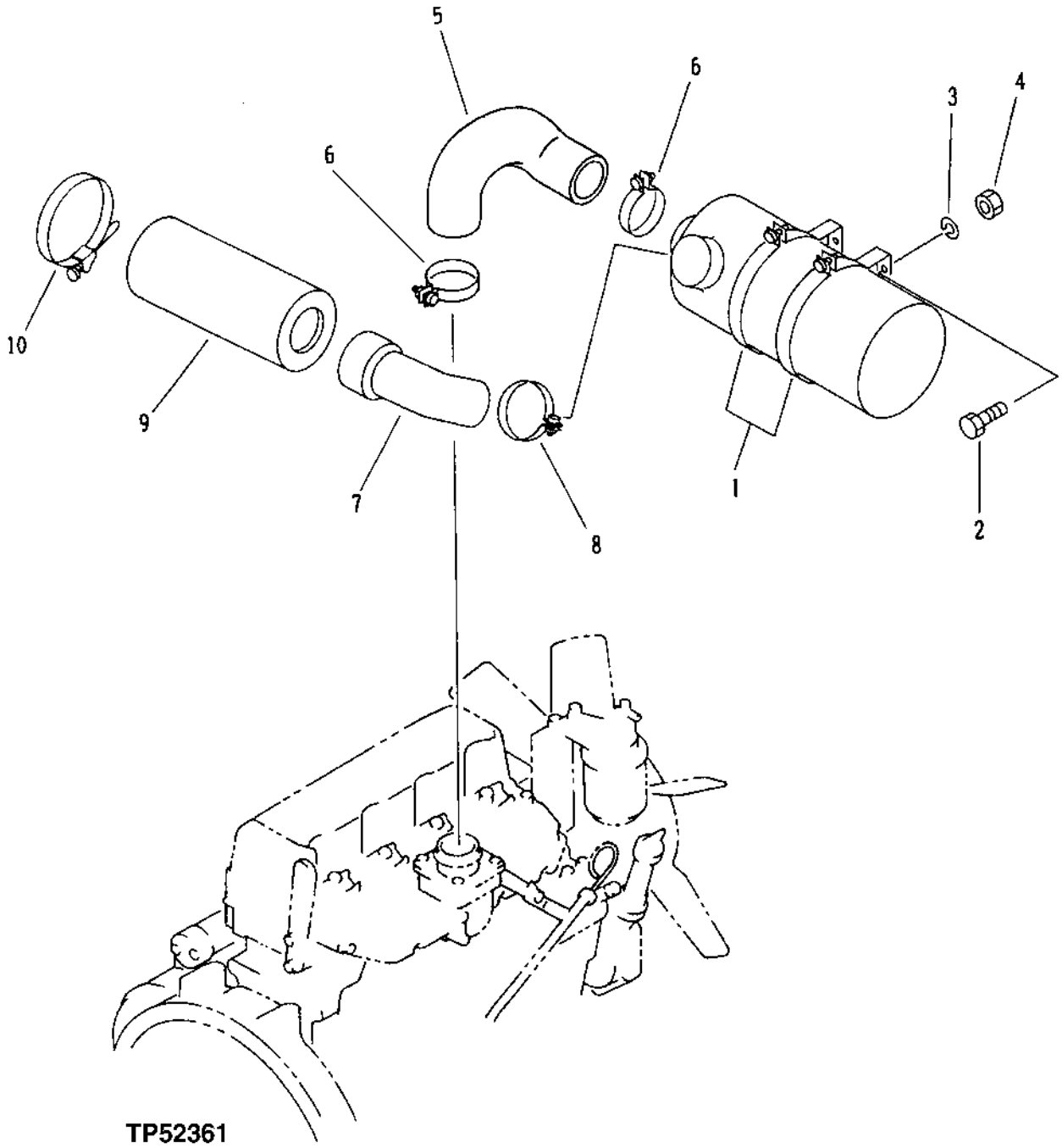

AIR INTAKE SUPPORT

KEY	PART NO.	PART NAME	QTY	SERIAL NO.	REMARKS
1	AT215459	CLAMP	1		
2	19M7938	CAP SCREW	4		M10 X 20
3	12M6791	LOCK WASHER	4		10.200 MM
4	14M7274	NUT	4		M10
5	AT215290	HYDRAULIC HOSE	1		
6	AT39141	HOSE CLAMP	2		(SUB FOR T116625)
7	AT152638	HOSE	1		
8	AT39141	HOSE CLAMP	1		(SUB FOR T116625)
9	AT215291	MUFFLER	1		
10	AT152435	HOSE CLAMP	1		

EXHAUST MUFFLER

TP52362 -UN-10OCT96

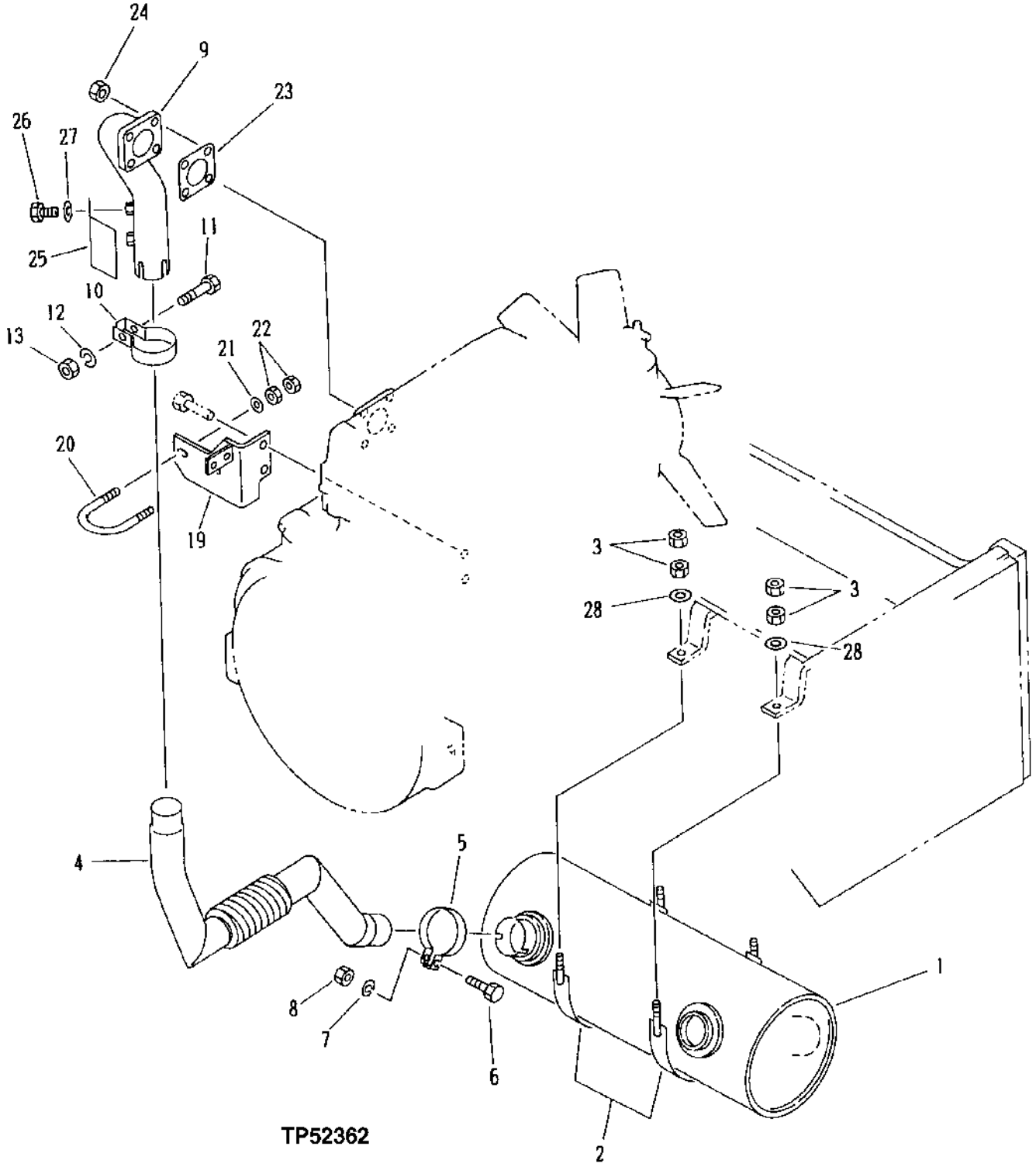

EXHAUST MUFFLER

KEY	PART NO.	PART NAME	QTY	SERIAL NO.	REMARKS
1	AT108037	MUFFLER	1		
2	AT152648	BAND	2		
3	T116331	NUT	8		
4	AT215292	EXHAUST PIPE	1		
5	T115762	CLAMP	1		
6	19M7358	CAP SCREW	1		M10 X 40
7	12M6791	LOCK WASHER	1		10.200 MM
8	14M7274	NUT	1		M10
9	AT215293	EXHAUST PIPE	1		
10	T115762	CLAMP	1		
11	19M7358	CAP SCREW	1		M10 X 40
12	12M6791	LOCK WASHER	1		10.200 MM
13	14M7274	NUT	1		M10
14	AT152646	MUFFLER	1		
15	T115763	CLAMP	1		
16	19M7358	CAP SCREW	1		M10 X 40
17	12M6791	LOCK WASHER	1		10.200 MM
18	14M7274	NUT	1		M10
19	AT215294	BRACKET	1		
20	T115761	U-BOLT	1		
21	24M7028	WASHER	2		10.500 X 20 X 2 MM
22	14M7274	NUT	4		M10
23	AT173525	GASKET	1		(SUB FOR AT152562)
24	AT152563	NUT	4		
25	AT215295	COVER	1		
26	19M7964	CAP SCREW	2		M8 X 12
27	12M7065	LOCK WASHER	2		8 MM
28	24M7028	WASHER	4		10.500 X 20 X 2 MM

ENGINE MOUNTING

TP52359 -UN-10OCT96

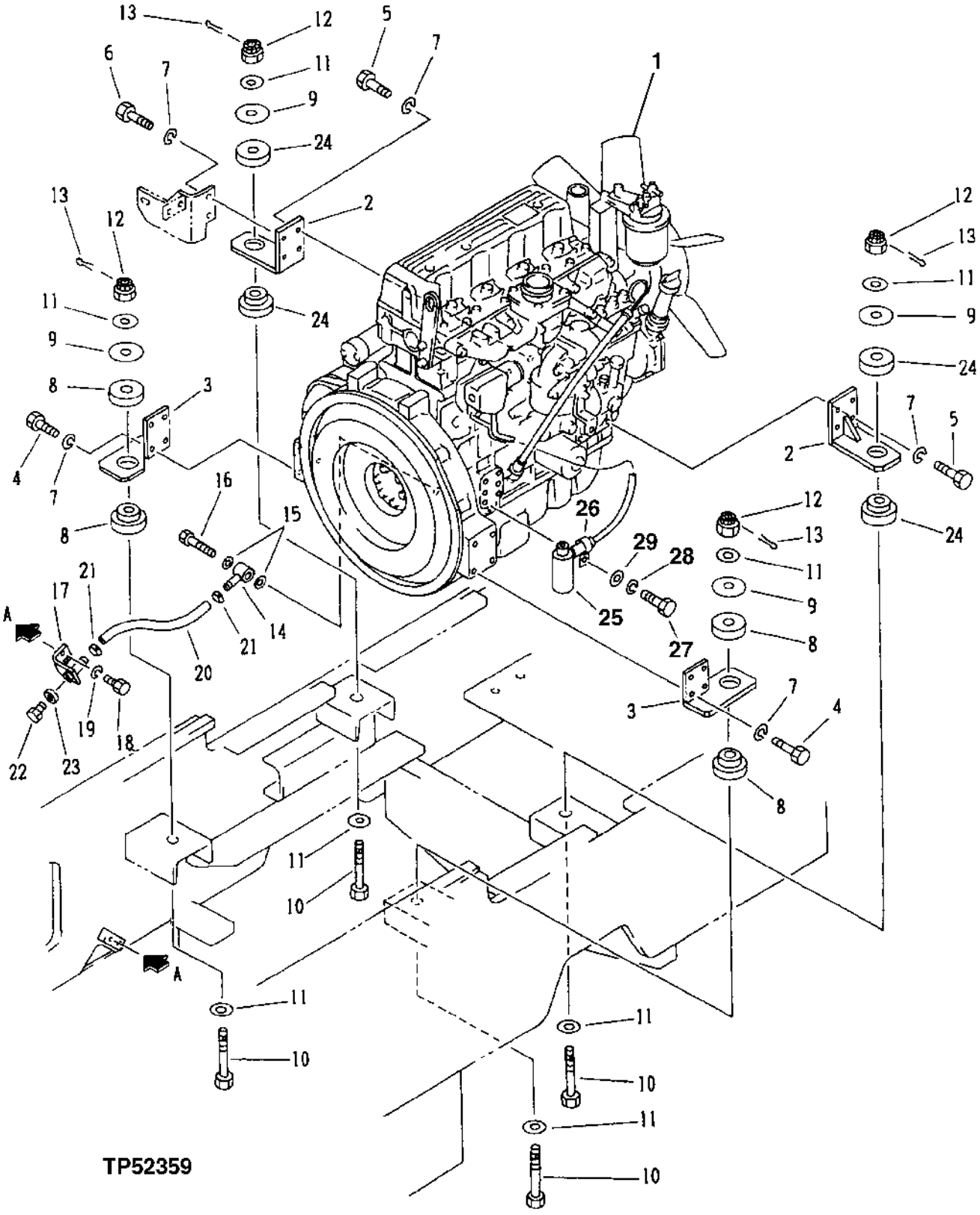

ENGINE MOUNTING

KEY	PART NO.	PART NAME	QTY	SERIAL NO.	REMARKS
1	AT179548	ENGINE	1		(CONVENIENCE ASSEMBLY) (COMPLETE ENGINE)
2	AT215288	BRACKET	2		
3	AT215289	BRACKET	2		
4	19M7402	CAP SCREW	8		M10 X 25
5	AT152394	BOLT	6		
6	19M7550	CAP SCREW	2		M10 X 35
7	12M6791	LOCK WASHER	16		10.200 MM
8	AT152631	ISOLATOR	4		
9	T101172	WASHER	4		
10	AT152633	BOLT	4		
11	24M7338	WASHER	8		17 X 30 X 3 MM
12	AT152634	NUT	4		
13	11M7024	COTTER PIN	4		4 X 36 MM
14	AT215281	YOKE	1		
15	AT152580	SEALING WASHER	2		
16	AT152579	BOLT	1		
17	AT215282	ANGLE	1		
18	19M7166	CAP SCREW	2		M10 X 20
19	12M6791	LOCK WASHER	2		10.200 MM
20	AT215154	HYDRAULIC HOSE	1		
21	.....	CLAMP	2		
22	AT215438	FITTING PLUG	1		
23	AT215439	PACKING	1		
24	AT215192	RUBBER MOUNT	4		
25	AT211832	BREATHER	1		
26	T14787	CLAMP	1		
27	19M8324	CAP SCREW	1		M10 X 16
28	12M6791	LOCK WASHER	1		10.200 MM
29	24M7028	WASHER	1		10.500 X 20 X 2 MM

FUEL TANK

TP52366 -UN-11OCT96

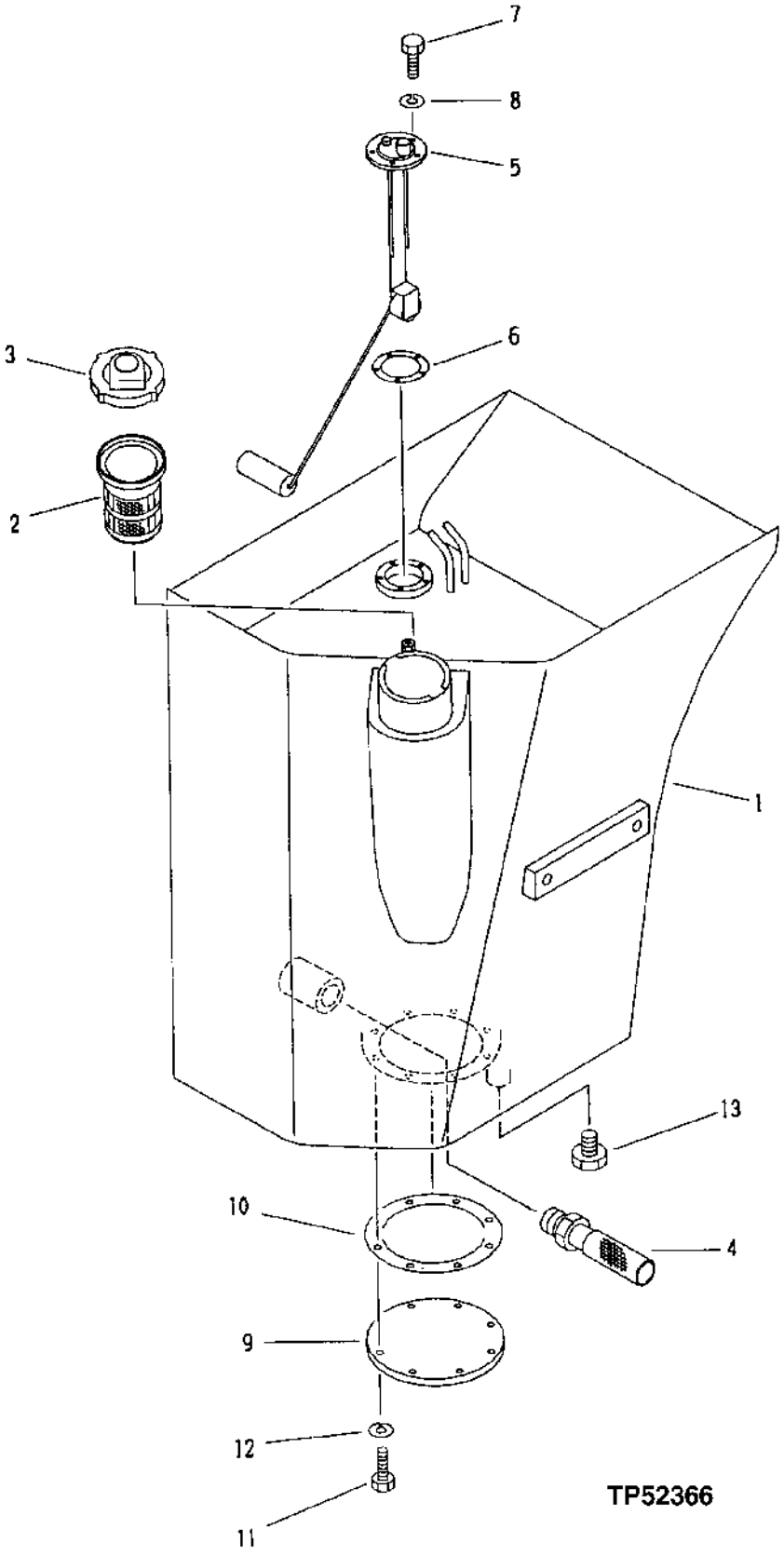

FUEL TANK

KEY	PART NO.	PART NAME	QTY	SERIAL NO.	REMARKS
1	AT215301	FUEL TANK	1		
2	T116247	STRAINER	1		
3	AT215260	CAP	1		
4	AT152492	STRAINER	1		
5	AT215451	SENDER	1		
6	U42323	GASKET	1		
7	AT215125	CAP SCREW	5		
8	12M7063	LOCK WASHER	5		4 MM
9	AT152493	COVER	1		
10	T115418	GASKET	1		
11	19M7932	CAP SCREW	8		M8 X 16
12	12M7065	LOCK WASHER	8		8 MM
13	T115332	FITTING PLUG	1		

FUEL LINES

TP52367 -UN-07OCT96

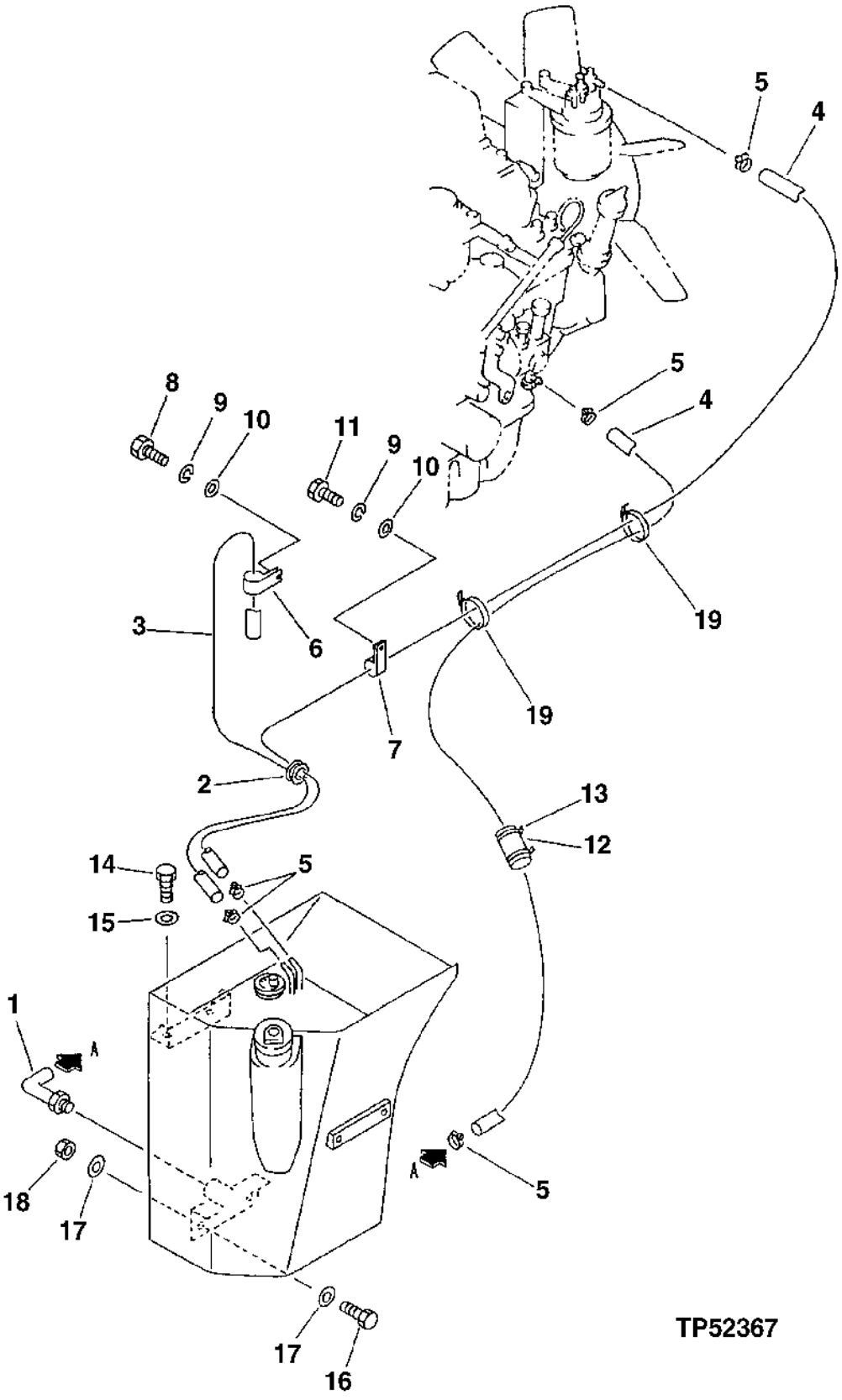

FUEL LINES

KEY	PART NO.	PART NAME	QTY	SERIAL NO.	REMARKS
1	AT215584	COVER	1		
2	T115386	GROMMET	1		
3	AT152494	HOSE	1		(51 INCHES LONG-CUT TO LENGTH)
4	AT152494	HOSE	2		(51 INCHES LONG-CUT TO LENGTH)
5	TY22462	CLAMP	5		(SUB FOR AR48236)
6	H75541	CLAMP	1		
7	M45242	CLIP	1		
8	19M8324	CAP SCREW	1		M10 X 16
9	12M6791	LOCK WASHER	2		10.200 MM
10	24M7028	WASHER	2		10.500 X 20 X 2 MM
11	19M7938	CAP SCREW	1		M10 X 20
14	19M8029	CAP SCREW	2		M16 X 30
15	T116256	WASHER	2		
16	19M7488	CAP SCREW	2		M16 X 40
17	T116256	WASHER	4		
18	14M7276	NUT	2		M16
19	H77698	TIE BAND	2		

ENGINE SHUTOFF

TP52443 -UN-20SEP96

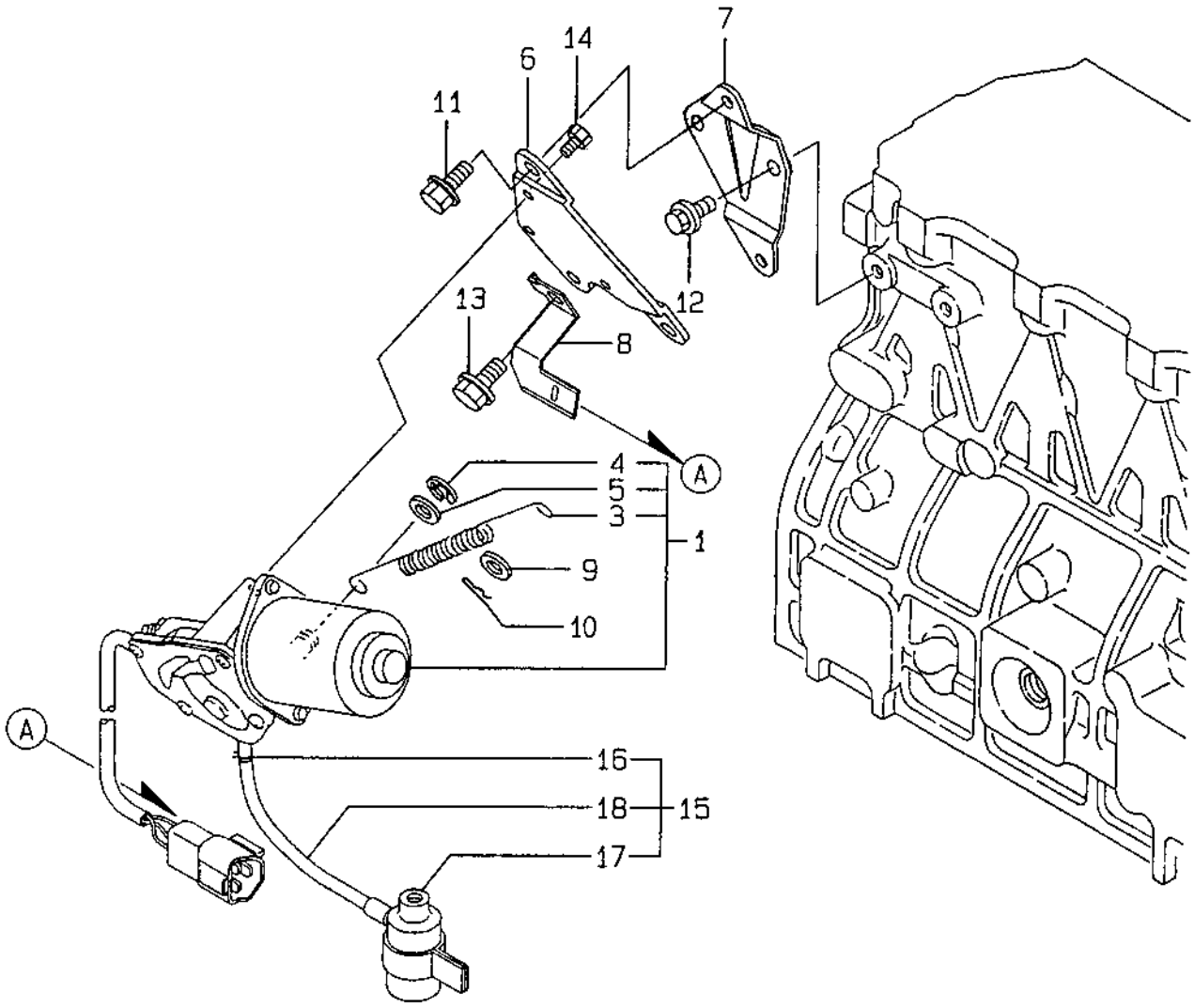

TP52443

ENGINE SHUTOFF

KEY	PART NO.	PART NAME	QTY	ENGINE SERIAL NO.	REMARKS
1	AT211808	ELECTRIC MOTOR	1		
3	AT211810	SPRING	1		
4	AT211811	SNAP RING	1		
5	AT211812	WASHER	1		
6	AT211813	BRACKET	1		
7	AT211814	BRACKET	1		
8	AT211815	SUPPORT	1		
9	24M7095	WASHER	1		
10	CH11524	PIN	1		
11	CH19137	BOLT	2		
12	CH19137	BOLT	2		
13	CH19137	BOLT	1		
14	M89164	BOLT	3		
15	AT211832	BREATHER	1		
16	CH10426	RETAINER	1		
17	M805048	BREATHER	1		
18	AT211833	LINE	1		

STEERING WHEEL

TP40021 -UN-01JAN94

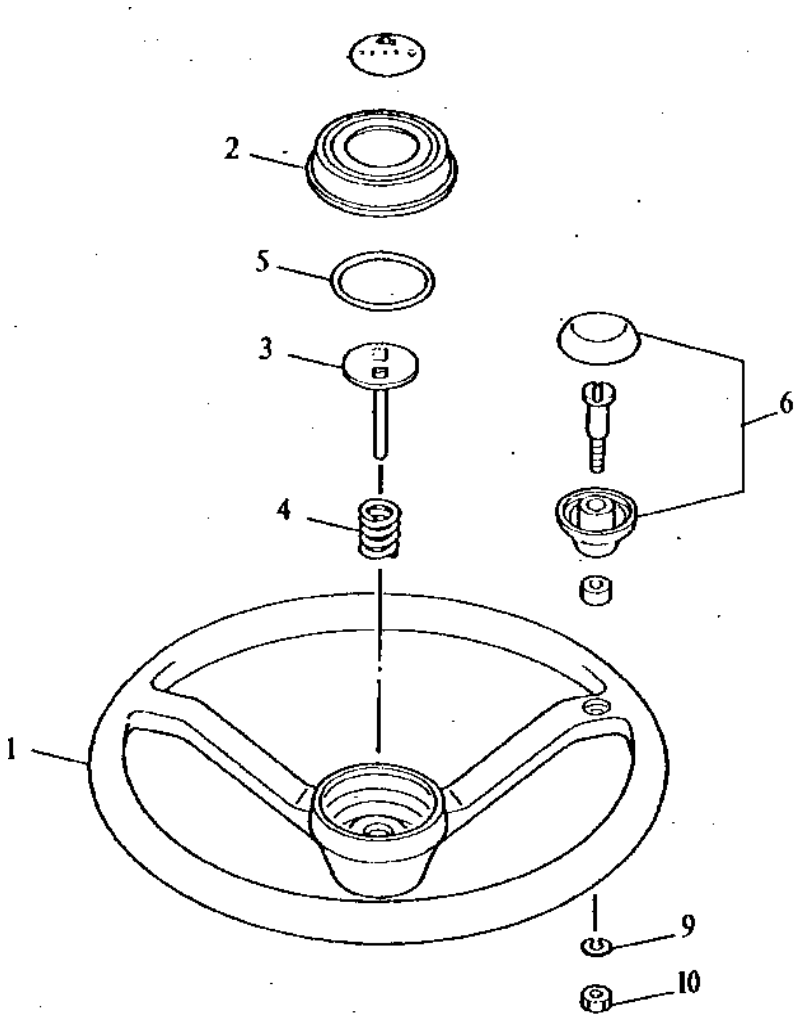

TP40021

STEERING WHEEL

KEY	PART NO.	PART NAME	QTY	SERIAL NO.	REMARKS
1	AT121288	STEERING WHEEL	1		
2	AT136596	CAP	1		
3	AT136597	NEEDLE	1		
4	AT136598	SPRING	1		
5	AT136599	SPRING	1		
6	AT129528	KNOB	1		
9	12M7065	LOCK WASHER	1		
10	14M7273	NUT	1		

STEERING COLUMN

TP52392 -UN-14OCT96

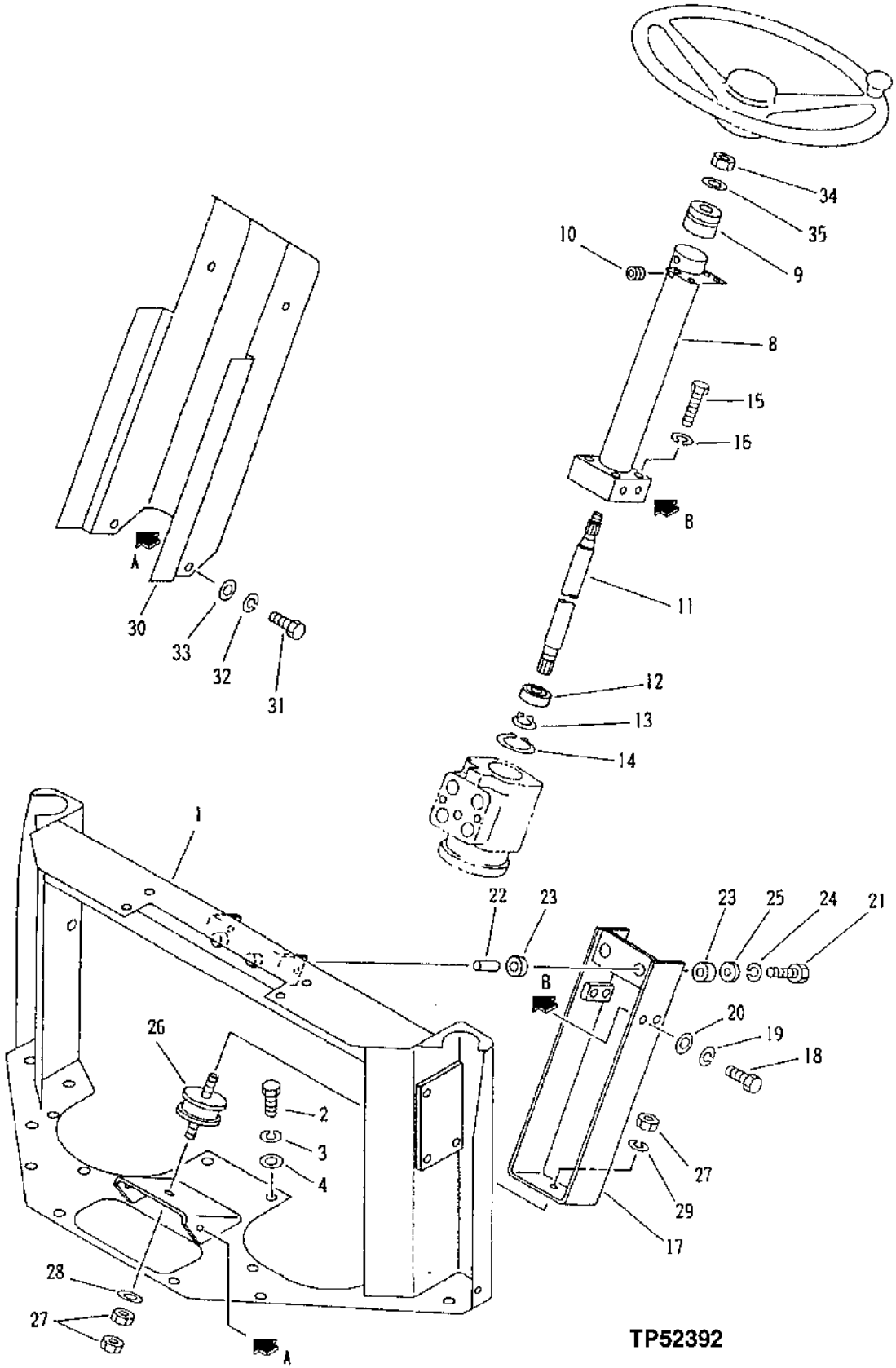

STEERING COLUMN

KEY	PART NO.	PART NAME	QTY	SERIAL NO.	REMARKS
1	.....	SUPPORT	1		
2	19M7938	CAP SCREW	8		M10 X 20
3	12M6791	LOCK WASHER	8		10.200 MM
4	24M7028	WASHER	8		10.500 X 20 X 2 MM
8	.....	STEERING COLUMN	1		
9	T115370	HORN SWITCH	1		
10	T116648	GROMMET	1		
11	AT179656	SHAFT	1		
12	T116640	BEARING	1		
13	40M7080	SNAP RING	1		
14	40M7225	SNAP RING	1		
15	19M7179	CAP SCREW	4		M10 X 50
16	12M7135	LOCK WASHER	4		10 MM
17	.....	BRACKET	1		
18	19M7168	CAP SCREW	4		M10 X 30
19	12M7135	LOCK WASHER	4		10 MM
20	24M7028	WASHER	4		10.500 X 20 X 2 MM
21	19M7179	CAP SCREW	2		M10 X 50
22	AT137522	SPACER	2		
23	AT179657	ISOLATOR	4		
24	12M7135	LOCK WASHER	2		10 MM
25	T82425	WASHER	2		
26	AT179659	ISOLATOR	1		
27	14M7275	NUT	3		M12
28	24M7047	WASHER	1		13 X 24 X 2.500 MM
29	12M7014	LOCK WASHER	1		12 MM
30	AT179660	COVER	1		
31	19M7092	CAP SCREW	4		M8 X 16
32	12M7065	LOCK WASHER	4		8 MM
33	24M7055	WASHER	4		8.400 X 16 X 1.600 MM
34	14M7150	NUT	1		M14
35	24M7085	WASHER	1		15 X 28 X 2.500 MM

STEERING VALVE

T141883 -UN-02MAY01

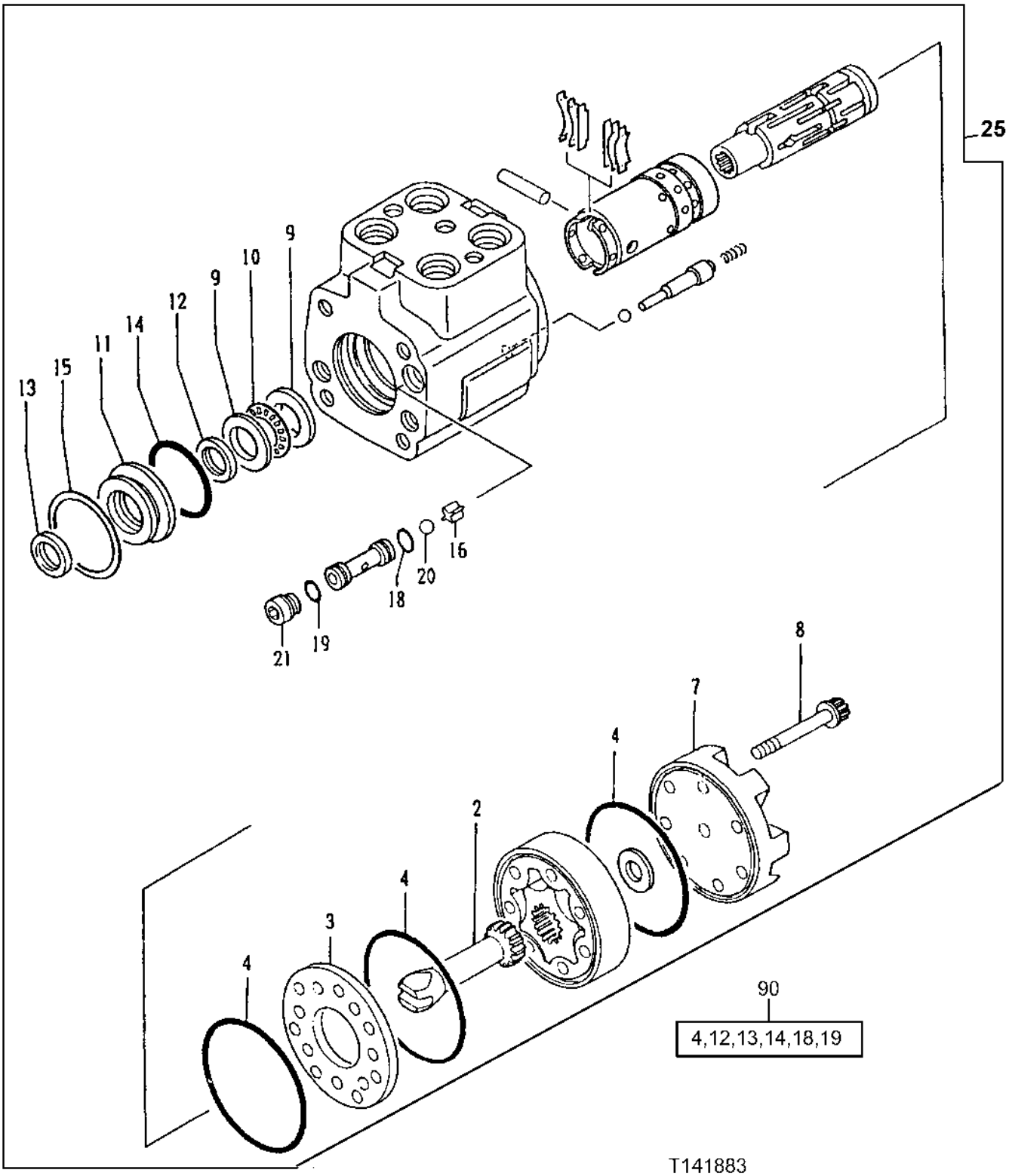

STEERING VALVE

KEY	PART NO.	PART NAME	QTY	SERIAL NO.	REMARKS
2	T37253	DRIVE	1		
3	T64310	WASHER	1		
4	T70321	WASHER	3		(K)
7	T115740	CAP	1		
8	AT215267	SCREW	7		
9	T41836	BEARING RACE	2		
10	JD8856	NEEDLE BEARING	1		
11	T77346	BUSHING	1		
12	AT215455	SEAL	1		(K)
13	C15104	SEAL	1		(K)
14	B3690R	O-RING	1		(K)
15	T54324	SNAP RING	1		
16	T64311	RETAINER	1		
18	R10093	O-RING	1		(K) 7.645 X 1.778 MM (0.301" X 0.070")
19	A3917R	O-RING	1		(K)
20	R26552	BALL	1		
21	T64313	SET SCREW	1		
25	AT215382	VALVE	1		
90	AT179650	SEAL KIT	1		INCLUDES ALL (K) PARTS

STEERING PRIORITY VALVE

TP29940 -UN-01JAN94

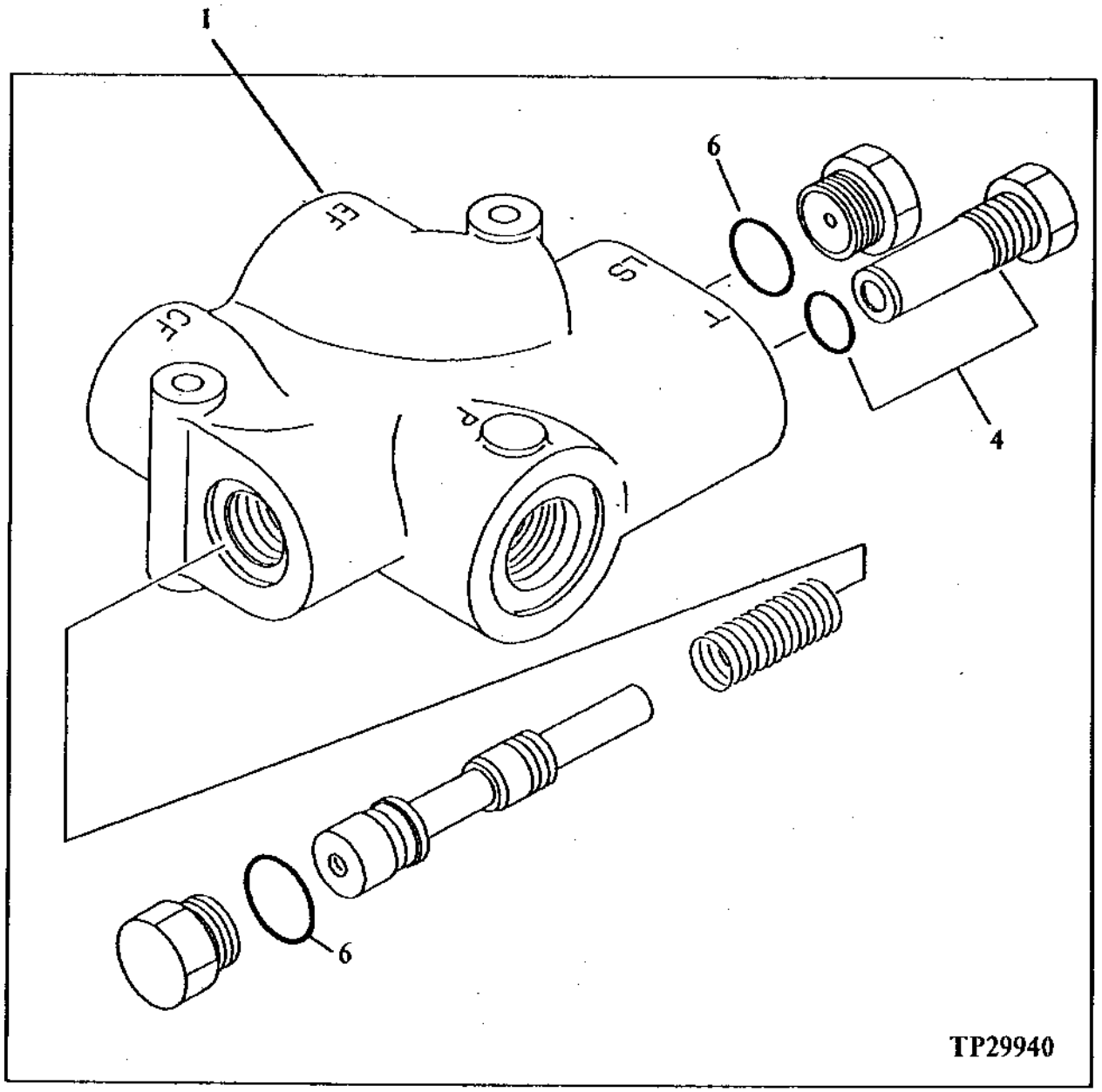

STEERING PRIORITY VALVE

KEY	PART NO.	PART NAME	QTY	SERIAL NO.	REMARKS
1	AT215384	VALVE	1		
4	AT69937	RELIEF VALVE	1		
6	R26906	O-RING	2		

STEERING PLUMBING

TP52394 -UN-12OCT96

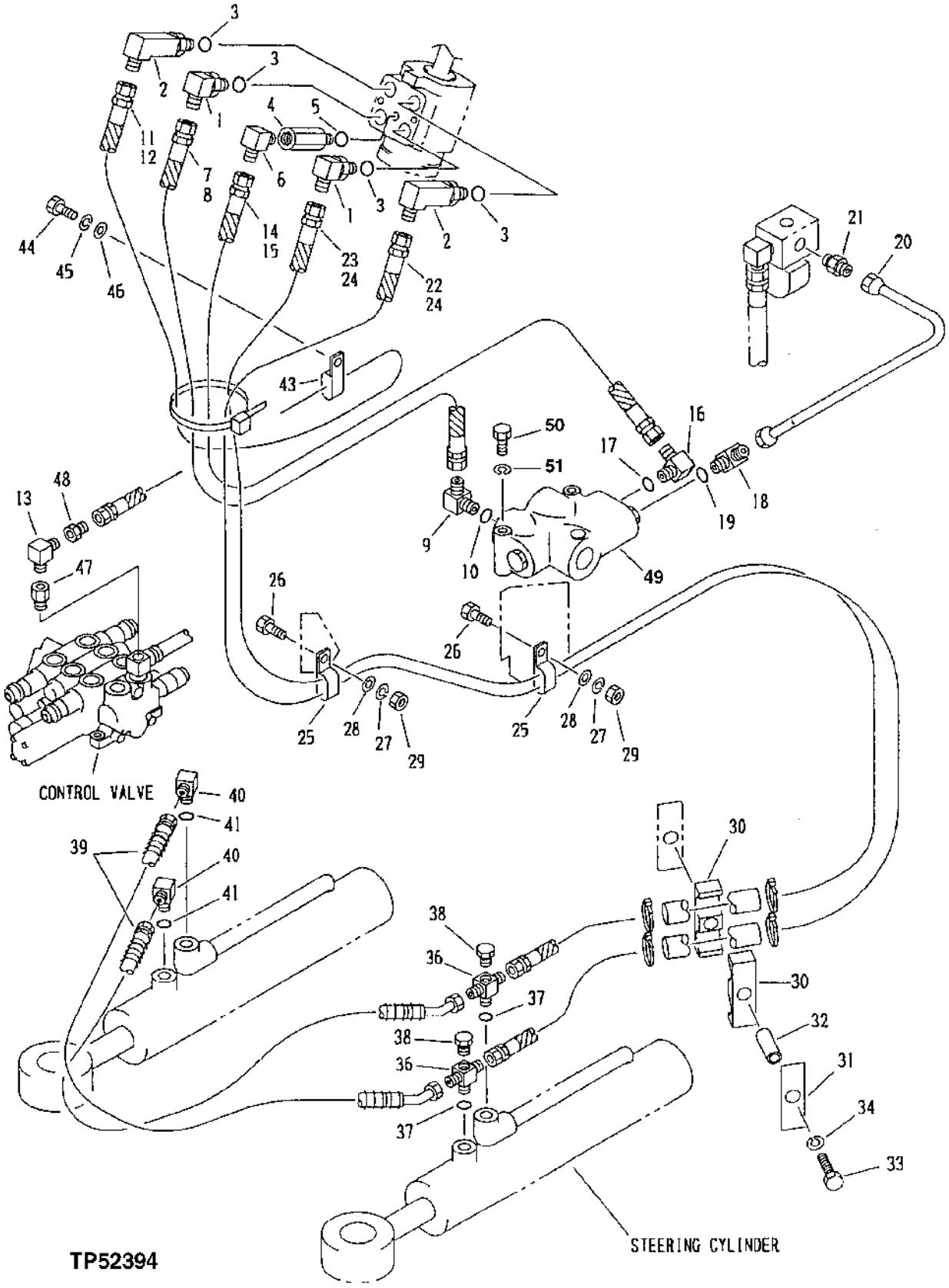

STEERING PLUMBING

KEY	PART NO.	PART NAME	QTY	SERIAL NO.	REMARKS
1	AT35123	ELBOW FITTING	2		
2	AT152989	ELBOW FITTING	2		
3	R26375	O-RING	4		16.358 X 2.210 MM (0.644" X 0.087")
4	AT215383	BUSHING	1		
5	R76729	O-RING	1		8.890 X 1.778 MM (0.350" X 0.070")
6	AT215373	ELBOW FITTING	1		
7	AT215385	HYDRAULIC HOSE	1		
8	AT215158	HOSE GUARD	1		
9	AT35123	ELBOW FITTING	1		
10	R26375	O-RING	1		16.358 X 2.210 MM (0.644" X 0.087")
11	AT215386	HYDRAULIC HOSE	1		
12	AT215160	HOSE GUARD	1		
13	T115621	PIPE ELBOW	1		
14	AT215387	HYDRAULIC HOSE	1		
15	AT215157	HOSE GUARD	1		
16	AH63565	ELBOW FITTING	1		
17	R76729	O-RING	1		8.890 X 1.778 MM (0.350" X 0.070")
18	AT152986	ELBOW FITTING	1		
19	R76729	O-RING	1		8.890 X 1.778 MM (0.350" X 0.070")
20	AT152987	OIL LINE	1		
21	AT152425	FITTING	1		
22	AT215388	HYDRAULIC HOSE	1		
23	AT215389	HYDRAULIC HOSE	1		
24	AT215159	HOSE GUARD	2		
25	AH77884	CLIP	2		
26	19M7402	CAP SCREW	2		M10 X 25
27	12M6791	LOCK WASHER	2		10.200 MM
28	24M7028	WASHER	2		10.500 X 20 X 2 MM
29	14M7274	NUT	2		M10
30	AT152624	ISOLATOR	2		
31	AT152625	PLATE	1		
32	AT152626	PIPE	1		
33	19M7935	CAP SCREW	1		M10 X 55
34	12M6791	LOCK WASHER	1		10.200 MM
36	AT152995	TEE FITTING	2		
37	U46489	O-RING	2		
38	AT153307	PLUG	2		
39	AT152996	HOSE	2		
40	AT152997	ELBOW FITTING	2		
41	U46489	O-RING	2		
43	T14787	CLAMP	1		
44	19M7938	CAP SCREW	1		M10 X 20
45	12M6791	LOCK WASHER	1		10.200 MM
46	24M7028	WASHER	1		10.500 X 20 X 2 MM
47	AT215184	SOCKET	1		
48	T115864	ADAPTER	1		
49	AT215384	VALVE	1		(PRIORITY VALVE)
50	19M7324	CAP SCREW	2		M8 X 75
51	12M7065	LOCK WASHER	2		8 MM

STEERING CYLINDER

T141884 -UN-02MAY01

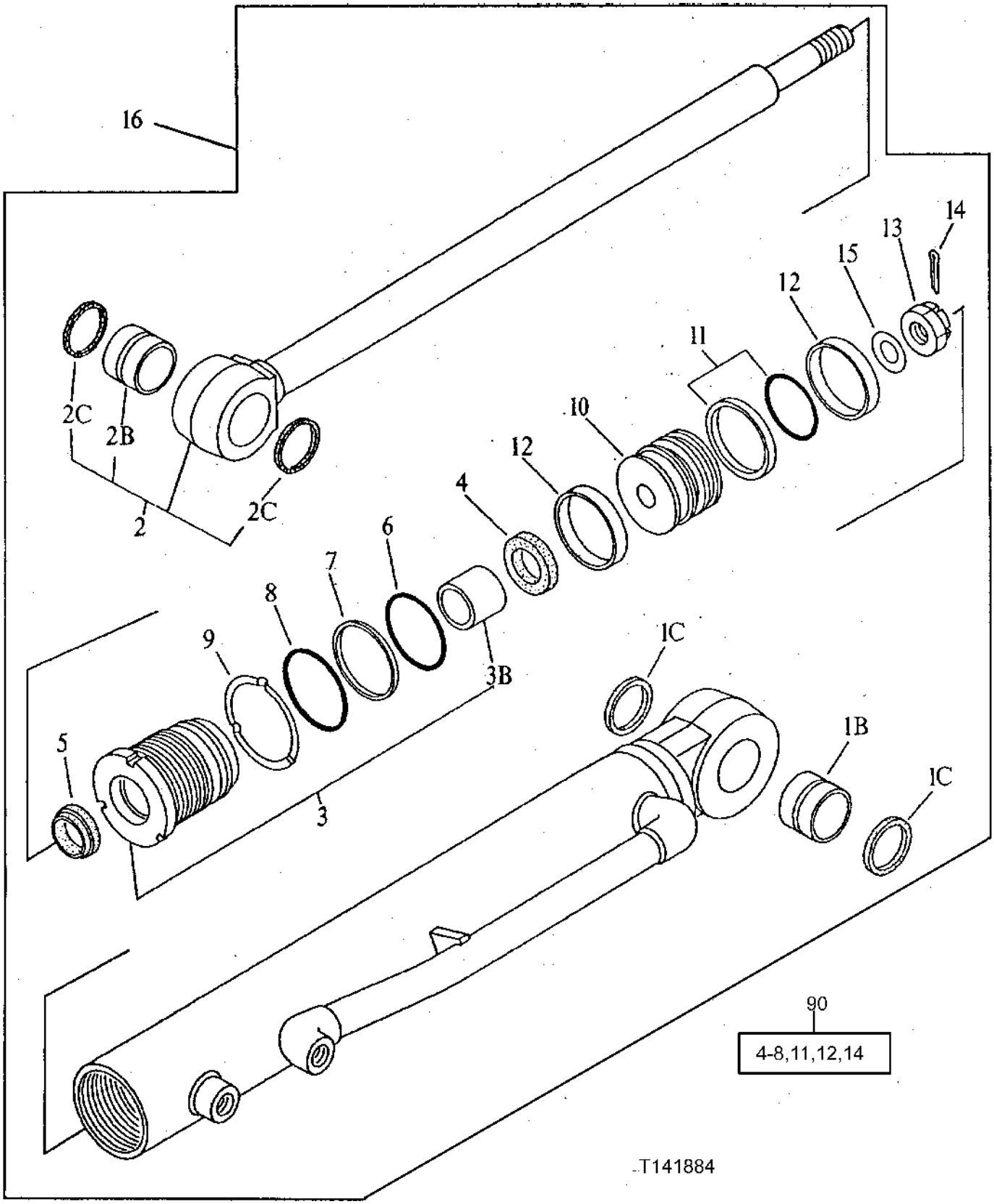

STEERING CYLINDER

KEY	PART NO.	PART NAME	QTY	SERIAL NO.	REMARKS
1B	AT153007	BUSHING	1		
1C	AT152450	SEAL	2		
2	AT153008	ROD	1		
2B	AT153007	BUSHING	1		
2C	AT152450	SEAL	2		
3	AT153010	HYDRAULIC CYLINDER CAP	1		
3B	AT153012	BUSHING	1		
4	.....	PACKING	1		(K)
5	.....	RING	1		(K)
6	.....	O-RING	1		(K)
7	.....	BACK-UP RING	1		(K)
8	.....	O-RING	1		(K)
9	AT153016	LOCK WASHER	1		
10	AT153017	PISTON	1		
11	.....	SEAL	1		(K)
12	.....	O-RING	2		(K)
13	AT153020	NUT	1		
14	.....	COTTER PIN	1		(K)
15	AT153022	SHIM	1		
16	AT153004	HYDRAULIC CYLINDER	2		
90	AT153023	HYDRAULIC CYLINDER KIT	1		INCLUDES ALL (K) PARTS

STEERING CYLINDER SUPPORT

TP52396 -UN-12OCT96

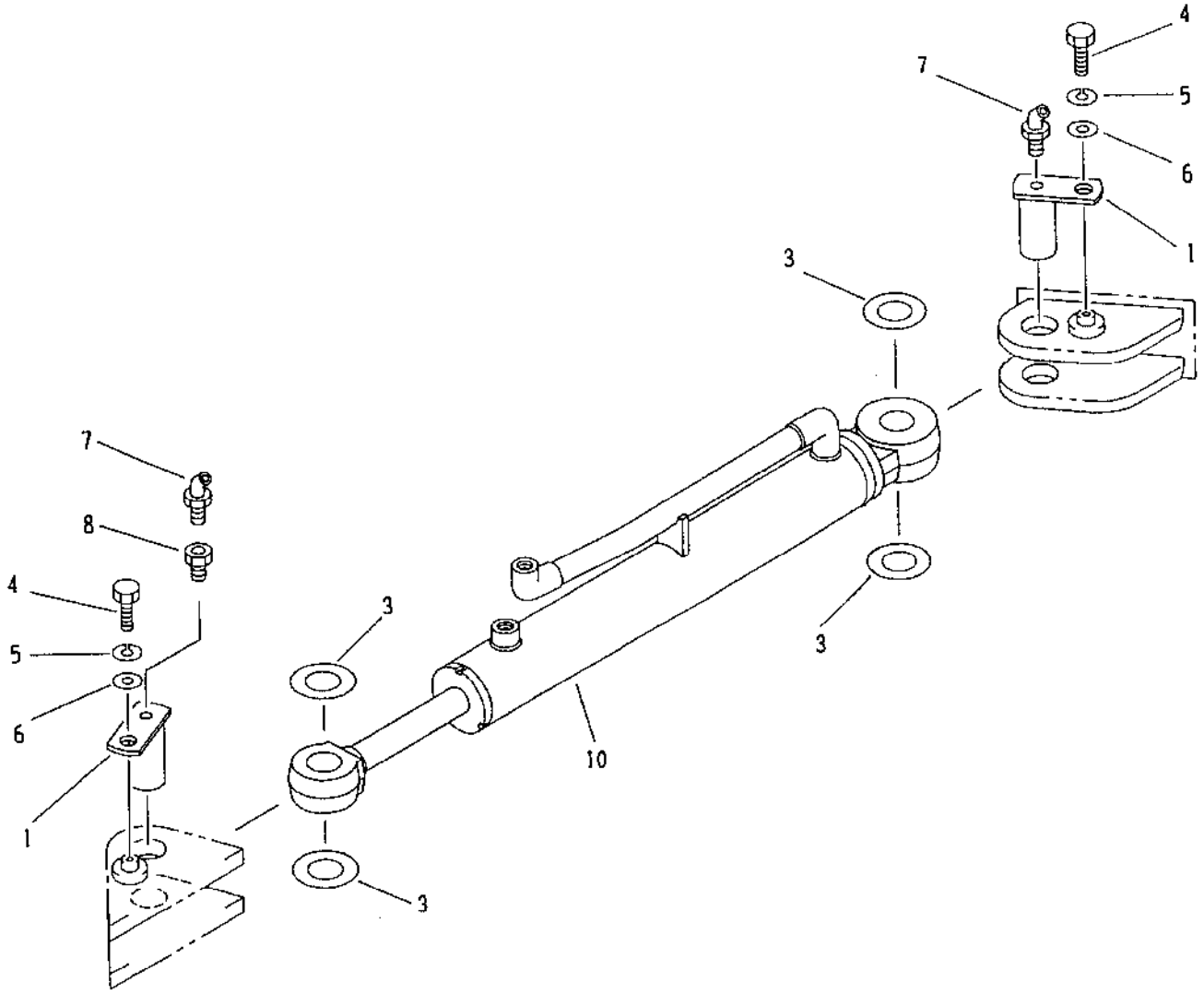

TP52396

STEERING CYLINDER SUPPORT

KEY	PART NO.	PART NAME	QTY	SERIAL NO.	REMARKS
1	AT152999	PIN	4		
3	AT153001	WASHER	4		
4	19M8017	CAP SCREW	4		M12 X 20
5	12M7067	LOCK WASHER	4		12 MM
6	T115340	WASHER	4		
7	CH18478	FITTING	4		
8	AT215177	THREADED NIPPLE	2		
10	AT153004	HYDRAULIC CYLINDER	1		

SERVICE BRAKES

TP52390 -UN-11OCT96

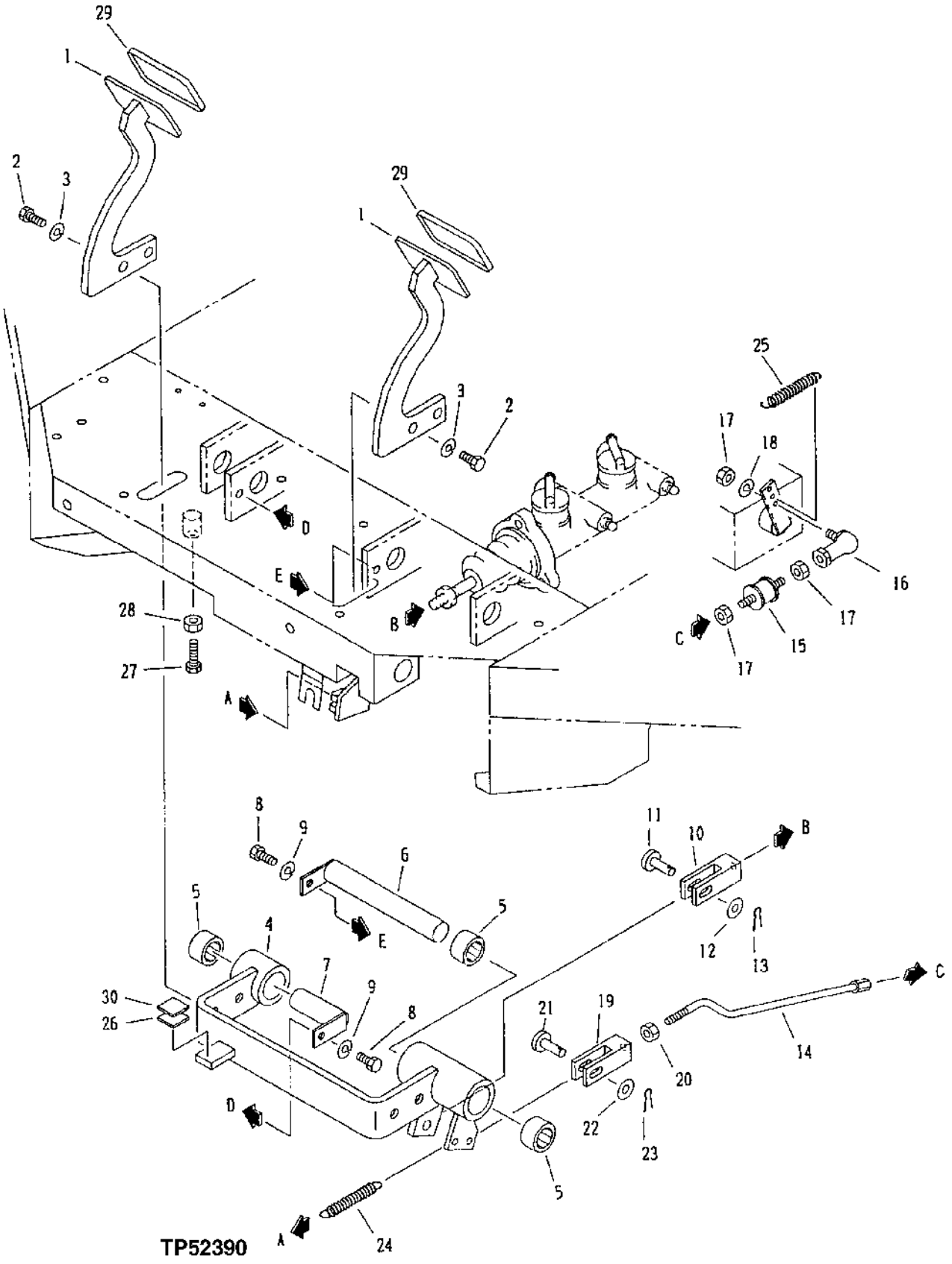

SERVICE BRAKES

KEY	PART NO.	PART NAME	QTY	SERIAL NO.	REMARKS
1	AT215615	PEDAL	1		
2	19M8011	CAP SCREW	4		M12 X 30
3	12M7067	LOCK WASHER	4		12 MM
4	AT215616	LINK	1		
5	AT215214	NEEDLE BEARING	3		
6	AT215191	SHAFT	1		
7	AT215215	SHAFT	1		
8	19M8324	CAP SCREW	2		M10 X 16
9	12M6791	LOCK WASHER	2		10.200 MM
10	AT152607	YOKE	1		
11	AT152608	PIN	1		
12	24M7047	WASHER	1		13 X 24 X 2.500 MM
13	AT215140	COTTER PIN	1		
14	AT215375	ROD	1		
15	AT215374	RUBBER MOUNT	1		
16	T115312	END	1		
17	14M7272	NUT	3		M6
18	12M7006	LOCK WASHER	1		6 MM
19	AT152974	YOKE	1		
20	14M7273	NUT	1		M8
21	AT153328	PIN	1		
22	24M7055	WASHER	1		8.400 X 16 X 1.600 MM
23	11M7009	COTTER PIN	1		2 X 16 MM
24	AT136506	SPRING	1		
25	AT215216	SPRING	1		
26	.....	ISOLATOR	1		
27	19M7168	CAP SCREW	1		M10 X 30
28	14M7274	NUT	1		M10
29	T115874	COVER	1		
30	.....	PLATE	1		

BRAKE PLUMBIMG

TP52388 -UN-14OCT96

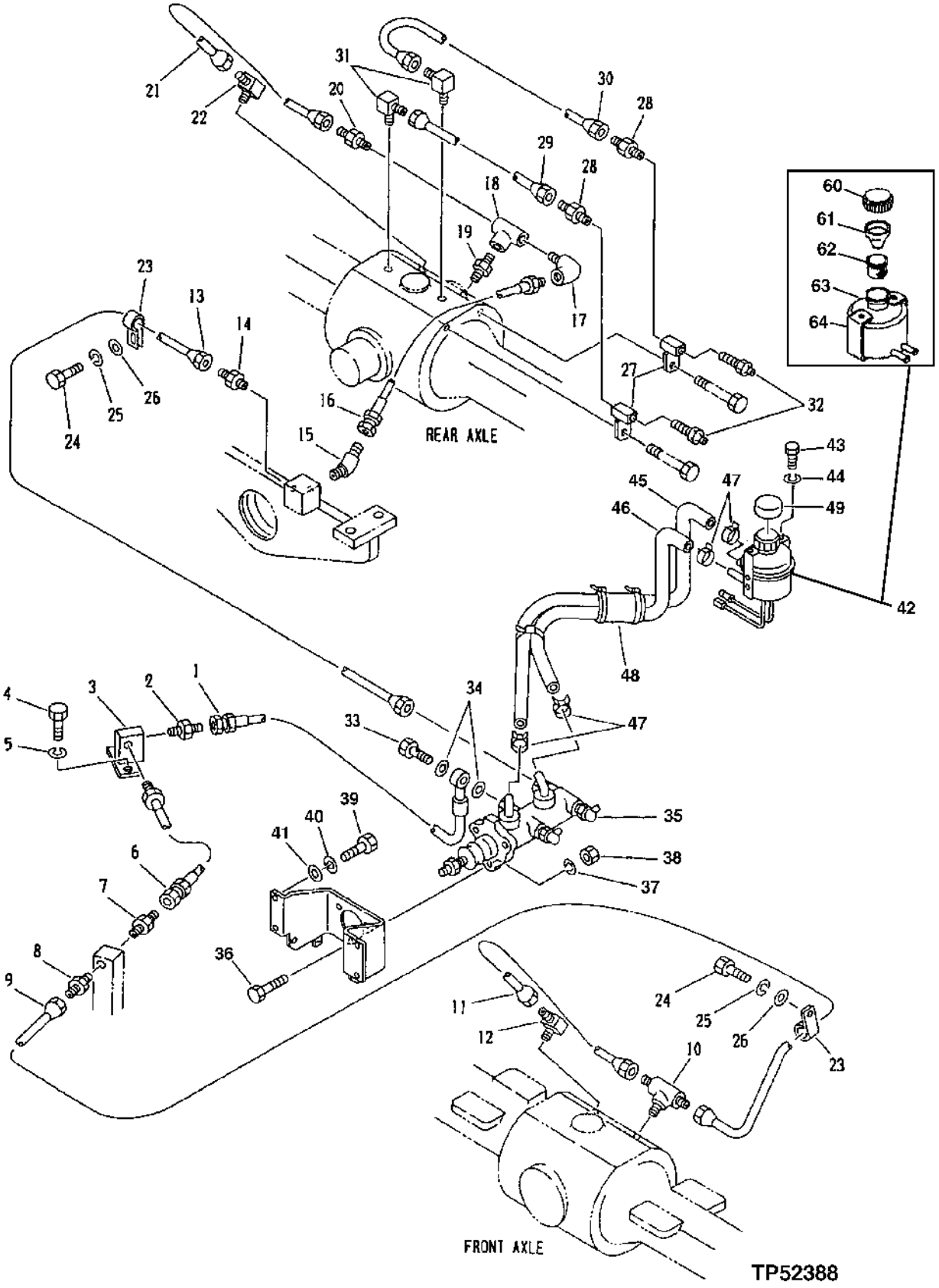

BRAKE PLUMBIMG

KEY	PART NO.	PART NAME	QTY	SERIAL NO.	REMARKS
1	AT215372	HYDRAULIC HOSE	1		
2	TH100953	CHECK VALVE	1		
3	AT215361	ELBOW FITTING	1		
4	19M7872	CAP SCREW	2		M12 X 25
5	12M7067	LOCK WASHER	2		12 MM
6	AT152968	HYDRAULIC HOSE - FABRICATE	1		
7	X0103-4-4	ADAPTER	1		(SUB FOR T115783 OR TH100963)
8	T116633	CONNECTOR	1		
9	AT215362	OIL LINE	1		
10	T116637	TEE FITTING	1		
11	T115866	TUBE	1		
12	T116636	PIPE ELBOW	1		
13	AT215371	OIL LINE	1		
14	T116633	CONNECTOR	1		
15	AT152969	ELBOW FITTING	1		
16	AT152968	HYDRAULIC HOSE - FABRICATE	1		
17	AT215373	ELBOW FITTING	1		
18	T116055	TEE FITTING	1		
19	T116057	FITTING	1		
20	T116633	CONNECTOR	1		
21	T115867	TUBE	1		
22	T116363	HOSE	1		
23	E15360	CLAMP	5		
24	19M8324	CAP SCREW	5		M10 X 16
25	12M6791	LOCK WASHER	5		10.200 MM
26	24M7028	WASHER	5		10.500 X 20 X 2 MM
27	AT215363	CONNECTOR	2		
28	T116632	CONNECTOR	2		
29	AT215364	OIL LINE	1		
30	AT215365	OIL LINE	1		
31	AT215161	ELBOW FITTING	2		
32	T116183	BREATHER	2		
33	AT215366	BOLT	1		
34	AT215367	PACKING	2		
35	AT215368	CYLINDER	1		
36	19M7550	CAP SCREW	3		M10 X 35
37	12M6791	LOCK WASHER	3		10.200 MM
38	14M7274	NUT	3		M10
39	19M7838	SCREW	6		M12 X 130
40	12M6791	LOCK WASHER	6		10.200 MM
41	24M7028	WASHER	6		10.500 X 20 X 2 MM
42	AT215243	RESERVOIR	1		
43	19M8425	CAP SCREW	2		M6 X 16
44	12M7006	LOCK WASHER	2		6 MM
45	TY22325	BULK HOSE	1		(CUT TO LENGTH)
46	TY22325	BULK HOSE	1		(CUT TO LENGTH)
47	AR21836	CLAMP	4		
48	T116365	HOSE	2		
49	AT215359	CAP	1		(RUBBER)
60	AT215245	CAP	1		(SCREW CAP)
61	AT215246	CAP	1		(INNER CAP)
62	AT215247	STRAINER	1		
63	.....	TANK	1		
64	AT215248	BRACKET	1		

MASTER BRAKE CYLINDER

T141885 -UN-02MAY01

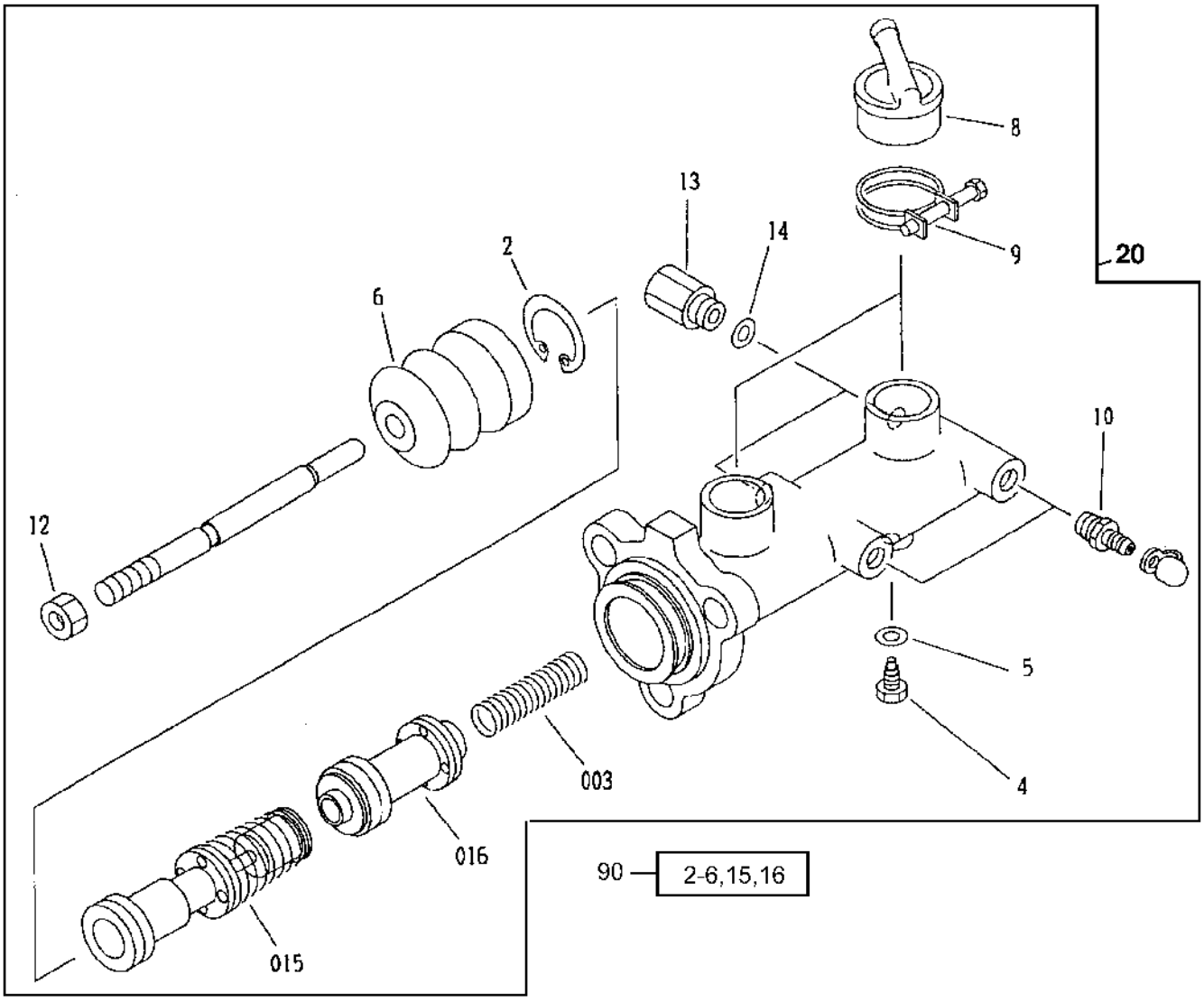

T141885

MASTER BRAKE CYLINDER

KEY	PART NO.	PART NAME	QTY	SERIAL NO.	REMARKS
2	.....	SNAP RING	1		(K)
3	.....	SPRING	1		(K)
4	.....	PIN	1		(K)
5	.....	GASKET	1		(K)
6	AT179648	BOOT	1		(K)
8	AT215449	CONNECTOR	2		
9	AT215450	CLAMP	2		
10	AT215369	BLEED VALVE	2		
12	.....	NUT	1		
13	AT215370	UNION FITTING	1		
14	AT215239	GASKET	1		
15	.....	PISTON	1		(K)
16	.....	PISTON	1		(K)
20	AT215368	CYLINDER	1		
90	AT179649	KIT	1		INCLUDES ALL (K) PARTS (REPAIR)

PARK BRAKE

TP40797 -UN-01JAN94

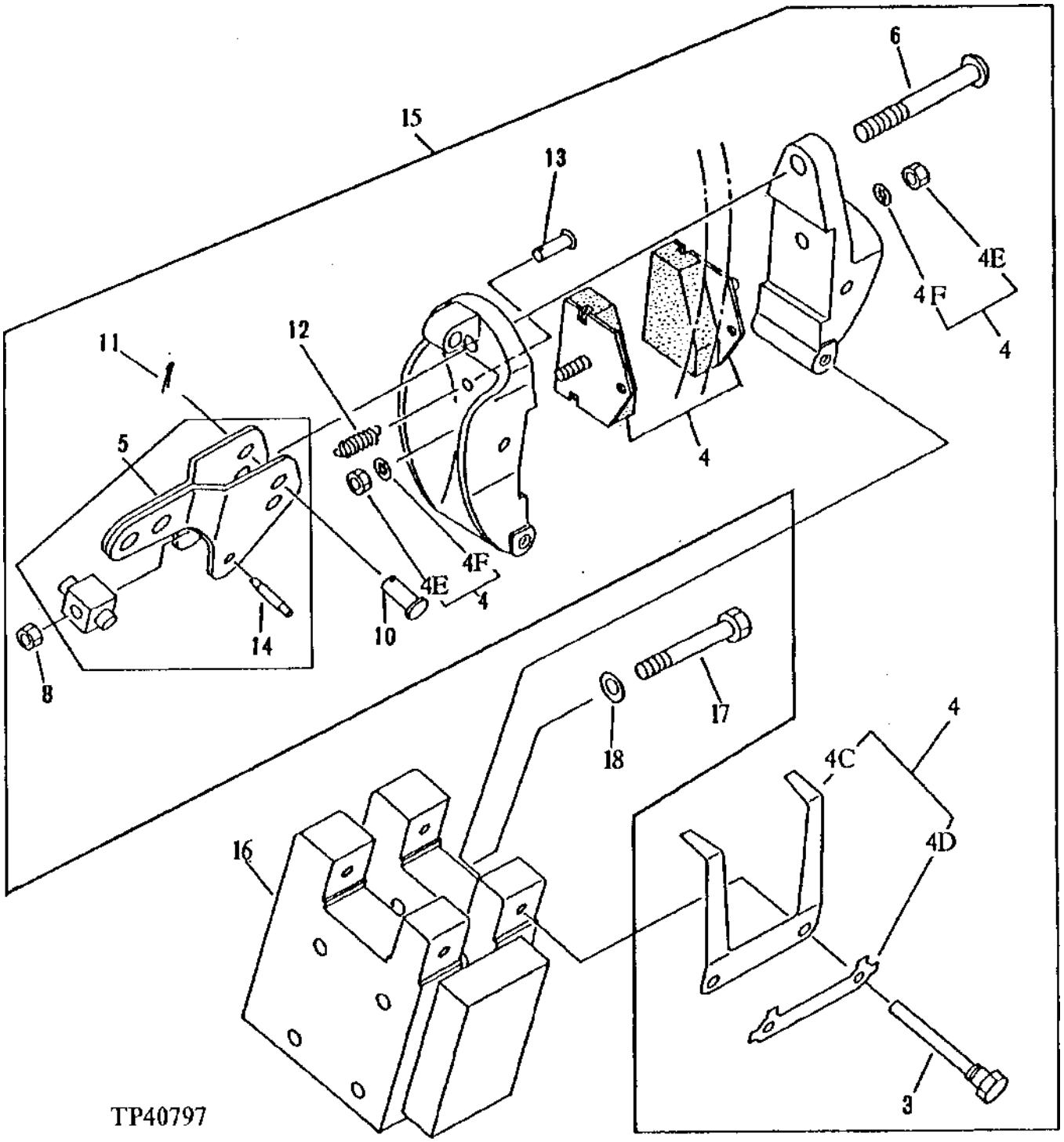

PARK BRAKE

KEY	PART NO.	PART NAME	QTY	SERIAL NO.	REMARKS
3	AT152610	BOLT	2		
4	AT215266	PAD	1		
4C	T115317	PLATE	1		
4D	T115318	LOCK PLATE	1		
4E	14M7297	NUT	2		M5
4F	.....	WASHER	2		
5	AT152611	LEVER	1		
6	T115349	BOLT	1		
8	14M7166	LOCK NUT	1		
10	T115350	PIN	1		
11	11M7005	COTTER PIN	1		1.600 X 10 MM
12	AT152612	EXTENSION SPRING	1		
13	T115320	ANCHOR	1		
14	.....	SPRING PIN	1		(AT152462 NO LONGER AVAILABLE)
15	AT152609	BRAKE	1		
16	AT152978	BRACKET	1		
17	19M7403	CAP SCREW	4		M12 X 35
18	T116266	WASHER	4		

PARK BRAKE LINKAGE

TP56628 -UN-17DEC98

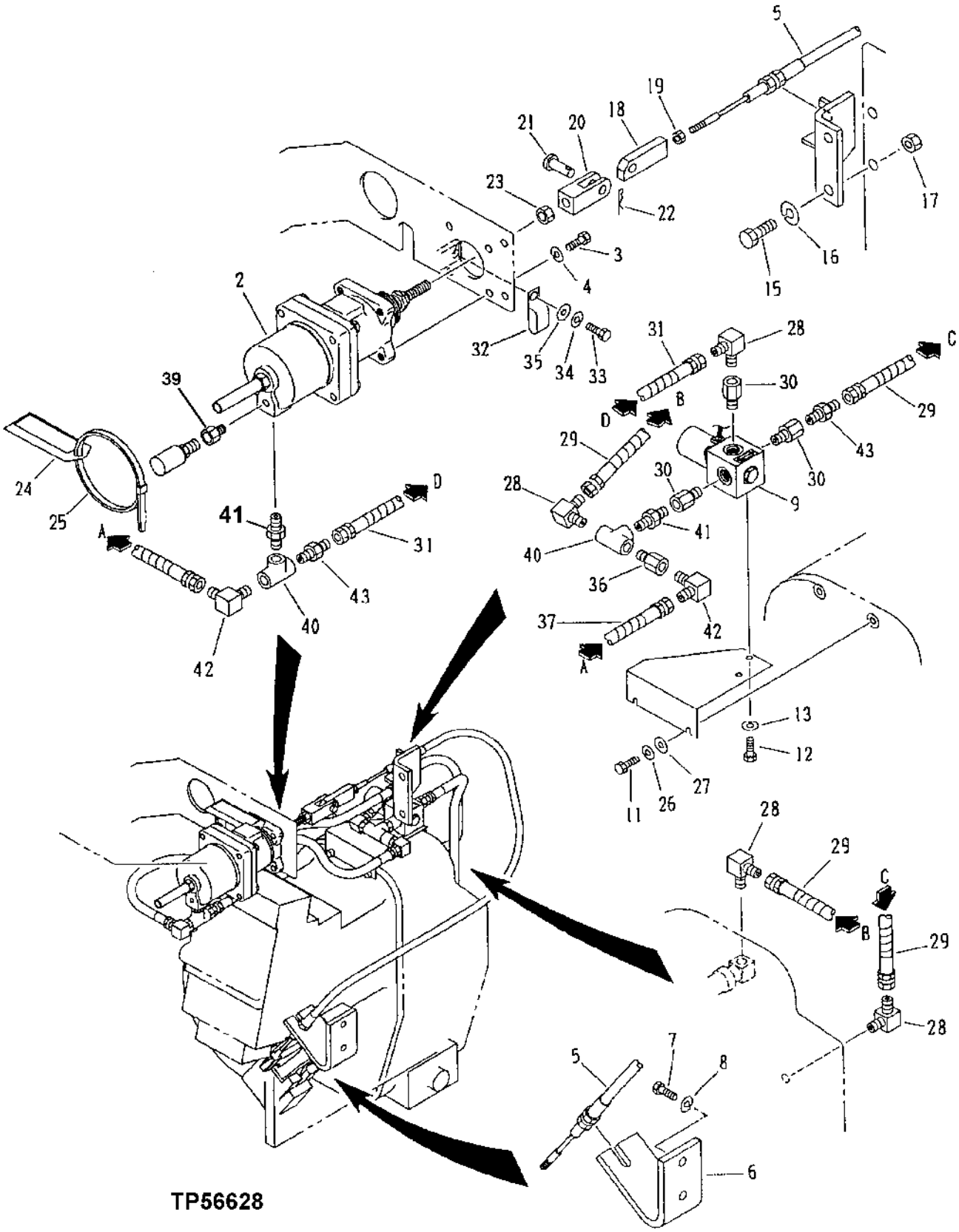

PARK BRAKE LINKAGE

KEY	PART NO.	PART NAME	QTY	SERIAL NO.	REMARKS
2	AT215626	CYLINDER	1		
3	19M7402	CAP SCREW	4		M10 X 25
4	12M6791	LOCK WASHER	4		10.200 MM
5	AT179778	PUSH PULL CABLE	1		
6	AT158768	BRACKET	1		
7	19M7872	CAP SCREW	2		M12 X 25
8	12M7067	LOCK WASHER	2		12 MM
9	AT215380	SOLENOID	1		
11	AT215131	BOLT	2		
12	AT215127	CAP SCREW	2		
13	12M7006	LOCK WASHER	2		6 MM, (SUB FOR AT152404)
15	19M7403	CAP SCREW	2		M12 X 35
16	12M7067	LOCK WASHER	2		12 MM
17	14M7275	NUT	2		M12
18	AT215241	END	1		
19	14M7273	NUT	1		M8
20	AT215141	YOKE	1		
21	T116341	PIN	1		
22	11M7021	COTTER PIN	1		4 X 25 MM
23	14M7510	NUT	1		M12, (SUB FOR AT215440)
24	AT215376	DECAL	1		(WARNING-PARK BRAKE BOOSTER CYLINDER)
25	AT215155	CLAMP	1		
26	12M6791	LOCK WASHER	2		10.200 MM
27	24M7038	WASHER	2		13.500 X 24 X 2.500 MM
28	AT215377	ELBOW FITTING	4		
29	AT215378	HYDRAULIC HOSE	2		
30	AT215453	ADAPTER	3		
31	AT215379	HYDRAULIC HOSE	1		
32	M45242	CLIP	1		
33	19M7938	CAP SCREW	1		M10 X 20
34	12M6791	LOCK WASHER	1		10.200 MM
35	24M7028	WASHER	1		10.500 X 20 X 2 MM
36	AT179786	ADAPTER	1		
37	AT179787	HYDRAULIC HOSE	1		
39	AT215443	BUSHING	1		
40	T116055	TEE FITTING	1		
41	T116057	FITTING	1		
42	AT215373	ELBOW FITTING	1		
43	T115864	ADAPTER	2		

SPRING CYLINDER

TP52452 -UN-12OCT96

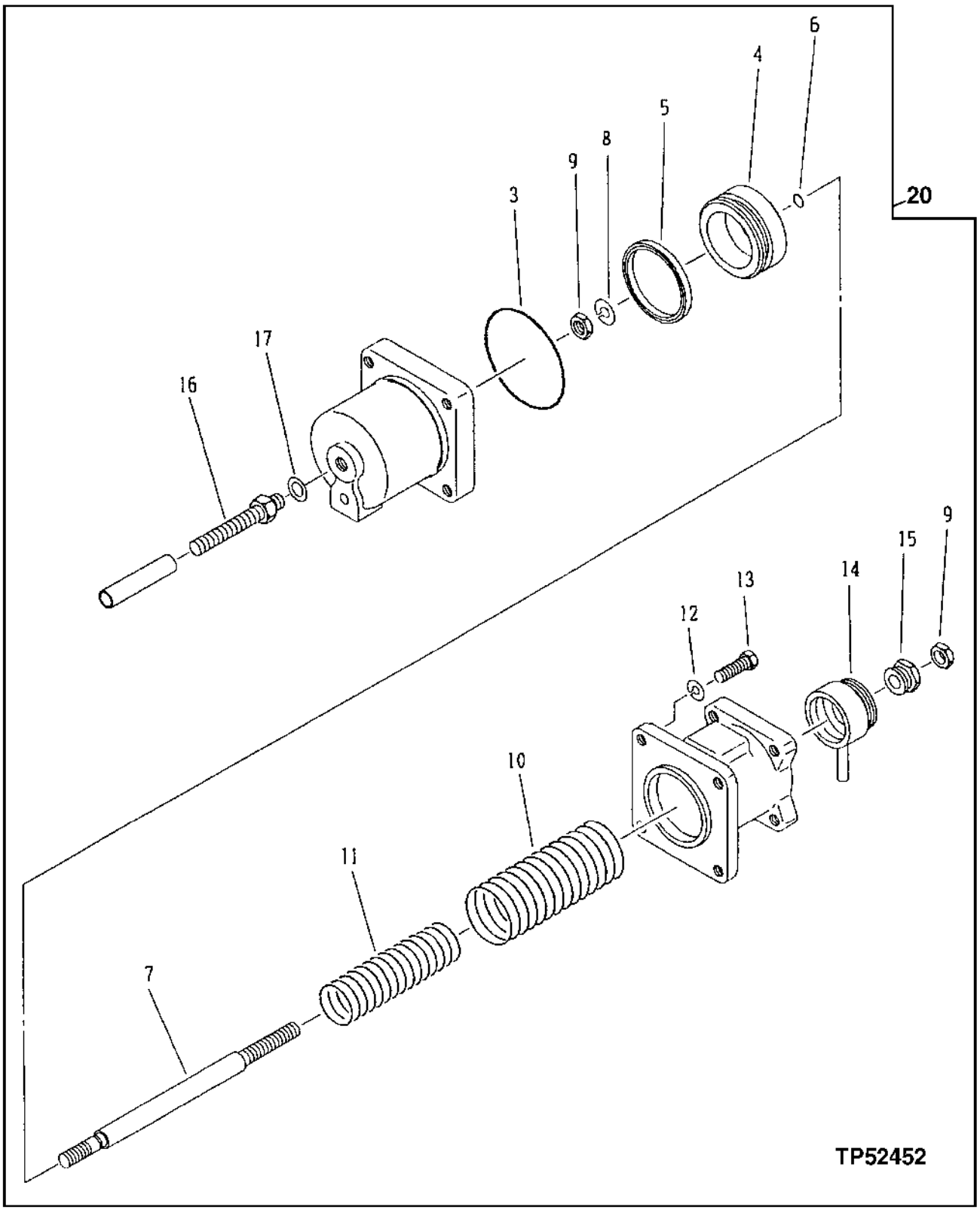

SPRING CYLINDER

KEY	PART NO.	PART NAME	QTY	SERIAL NO.	REMARKS
3	U46456	O-RING	1		
4	AT215617	PISTON	1		
5	AT215618	SEAL	1		
6	CH11560	PACKING	1		
7	AT215619	ROD	1		
8	12M7067	LOCK WASHER	1		12 MM
9	AT215620	NUT	1		
10	AT215621	SPRING	1		
11	AT215622	SPRING	1		
12	12M6791	LOCK WASHER	4		10.200 MM
13	T116333	BOLT	4		
14	AT215623	COVER	1		
15	AT215624	ADJUSTER	1		
16	AT215625	BOLT	1		
17	AT215367	PACKING	1		
20	AT215626	CYLINDER	1		(SPRING)

SOLENOID VALVE

TP52453 -UN-12OCT96

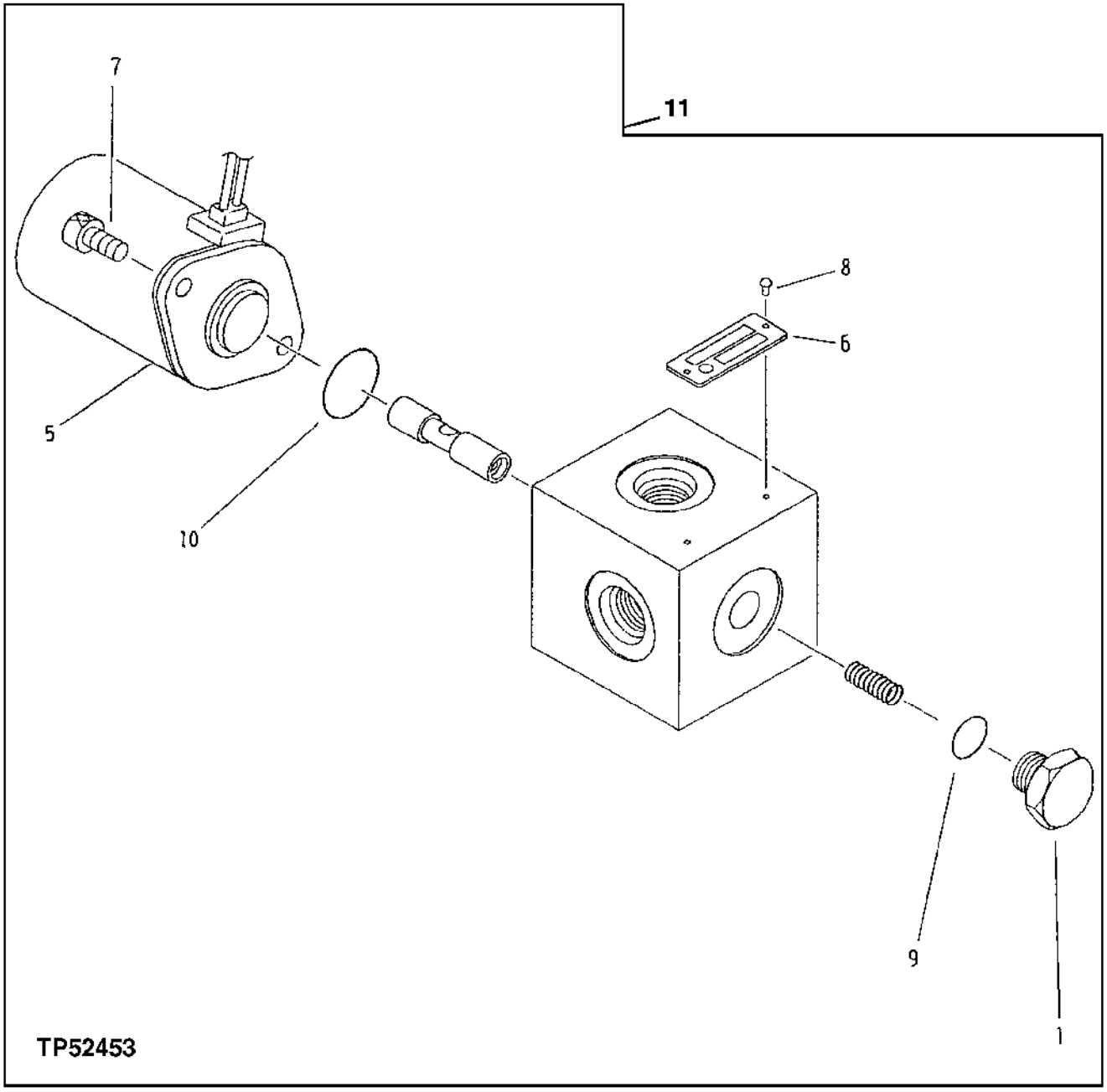

SOLENOID VALVE

KEY	PART NO.	PART NAME	QTY	SERIAL NO.	REMARKS
1	AT215628	FITTING PLUG	1		
5	AT215629	SOLENOID	1		
6	AT215381	DECAL	1		
7	AT215132	CAP SCREW	2		
8	37H131	SCREW	2		0.140" X 3/8"
9	CH15146	PACKING	1		
10	CH10570	PACKING	1		
11	AT215380	SOLENOID	1		

DECALS (CAB)

TP52414 -UN-15OCT96

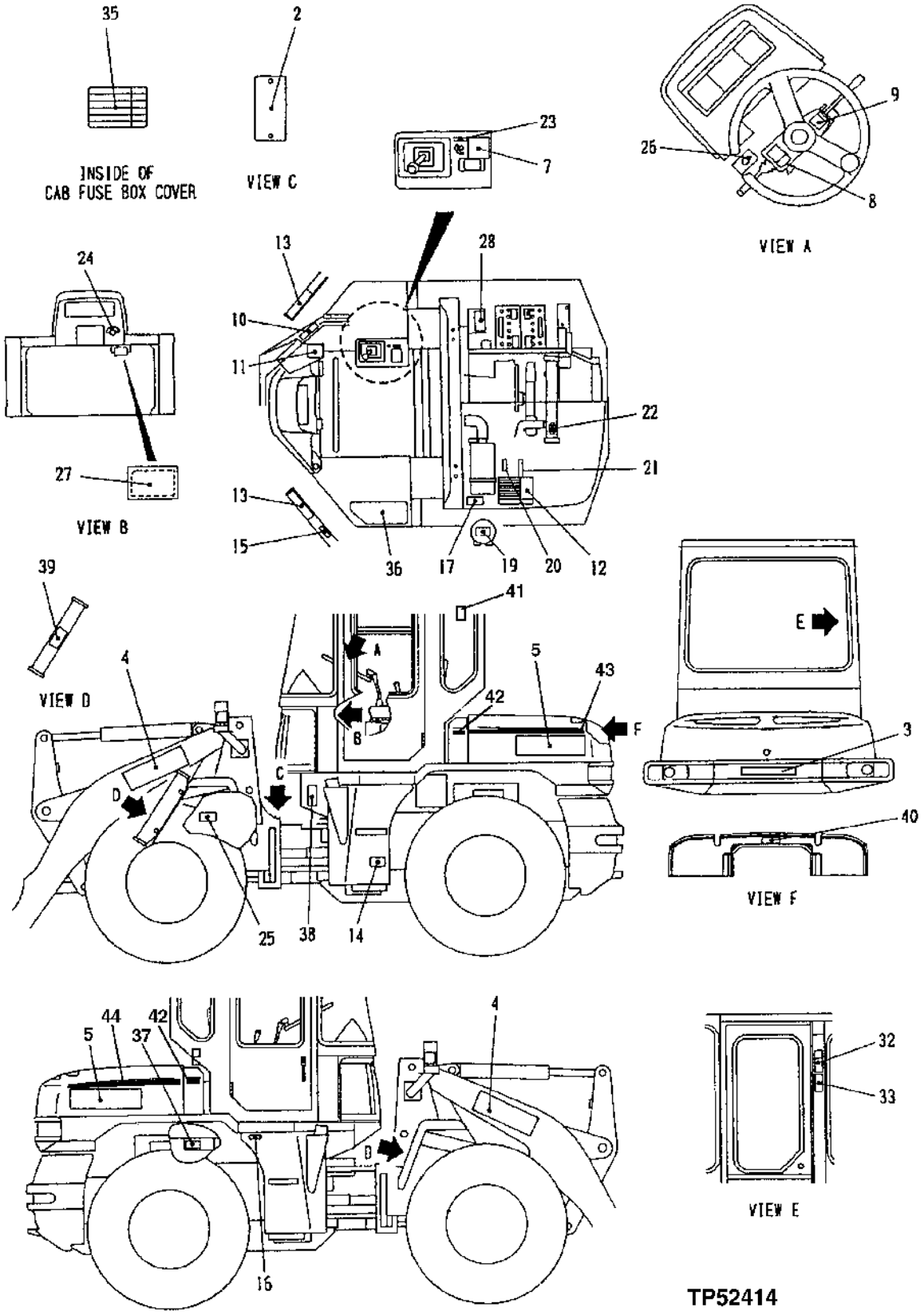

DECALS (CAB)

KEY	PART NO.	PART NAME	QTY	SERIAL NO.	REMARKS
2	37H131	SCREW	6		
3	T161179	DECAL	2		DEERE
4	T160818	DECAL	2		SERIES DESIGNATION
5	T160817	DECAL	2		DEERE
7	T120548	LABEL	1		CONTROL LEVER
8	AT215632	DECAL	1		SHIFT INDICATOR
9	AT215633	DECAL	1		SWITCH
10	T104363	SAFETY SIGN	1		ENGINE START AND STOP
11	AT215634	DECAL	1		ENGINE SHUT DOWN
12	AT215635	DECAL	1		LUBRICATION
13	T146436	SAFETY SIGN	2		WARNING
14	AT215636	DECAL	1		TRANSMISSION OIL LEVEL
15	AT215637	DECAL	1		FUEL
16	T101942	LABEL	1		HYDRAULIC OIL
17	AT215638	DECAL	1		BRAKE OIL
19	R56902	LABEL	1		AIR CLEANER
20	AT153366	DECAL	1		ENGINE OIL FILLER
21	AT153365	DECAL	1		TRANSMISSION OIL FILLER
22	AT139619	LABEL	1		RADIATOR CAP
23	AT215639	DECAL	1		NEUTRAL LOCK
24	AT215640	DECAL	1		STARTER SWITCH
25	T102998	SAFETY SIGN	1		DANGER
26	AT215641	DECAL	1		CAUTION
27	AT215642	DECAL	1		FUSE
28	AT215643	DECAL	1		RELAY
32	AT215434	DECAL	1		ROPS
33	T84314	SAFETY SIGN	1		SEAT BELT
34	T117019	DECAL	1		CAUTION
35	AT215433	DECAL	1		FUSE BLOCK
36	AT137845	DECAL	1		ANTI-SKID
37	T146102	LABEL	1		BYPASS START
38	T159028	LABEL	1		(SUB FOR T146435) PARK BRAKE
39	T146174	SAFETY SIGN	1		WARNING-BOOM LOCK
40	M118611	LABEL	1		HOT SURFACE
41	T160822	DECAL	2		LEAPING DEER
42	T161017	DECAL	2		STRIPE
43	T161015	DECAL	1		STRIPE (LEFT)
44	T161014	DECAL	1		STRIPE (RIGHT)

MEMORANDA

MEMORANDA

FLUID ANALYSIS PRODUCTS (OILSCAN PLUS TEST KIT)

T135474 -UN-15NOV00



T135474

FLUID ANALYSIS PRODUCTS (OILSCAN PLUS TEST KIT)

KEY	PART NO.	PART NAME	QTY	SERIAL NO.	REMARKS
1	AT178840	KIT	1		STANDARD ENGINE, SELF EXTRACTION (12 PER PACKAGE)(INCLUDES SPECTROCHEMICAL ANALYSIS, VISCOSITY, ° WATER, FUEL DILUTION, GLYCOL, FUEL SOOT) (SUB FOR AT178843)
	AT180333	KIT	1		STANDARD ENGINE, 4 OZ BOTTLE (10 PER PACKAGE) (SAME AS AT178840) (SUB FOR AT180335)
	AT178842	KIT	1		COMPREHENSIVE ENGINE W/TBN (EXTENDED DRAIN) (12 PER PACKAGE)(SAME AS AT178840 PLUS TBN)
	AT180334	KIT	1		COMPREHENSIVE ENGINE W/TBN (EXTENDED DRAIN) 4 OZ BOTTLE (10 PRT PACKAGE) (SAME AS AT178842)
	.....	KIT	1		TRANSMISSION, GEARBOXES & BASIC HYDRAULIC SYSTEM (12 PER PACKAGE)(INCLUDES SPECTRO-CHEMICAL ANALYSIS, VISCOSITY, ° WATER) (AT178843 NO LONGER USED) (SUB AT178840)
	.....	KIT	1		TRANSMISSION,GEARBOXES & BASIC HYDRAULICS, 4 OZ BOTTLE (10 PER PACKAGE) (AT180335 NO LONGER AVAILABLE) (SUB AT180333)
	AT178844	KIT	1		COMPREHENSIVE HYDRAULIC & HYDROSTATIC SYSTEMS, 4 OZ BOTTLE (10 PER PACKAGE) (REQUIRES USE OF A SAMPLING VALVE FOR ACCURATE RESULTS)
	AT182602	ASSEMBLY LINE PARTS	1		VALVE, SAMPLING, 1000 PSI RATING, (5 PER PACKAGE)(PUSH BUTTON, 1/8" NPT MALE)
	AT182603	KIT	1		FITTING, PRESSURE REDUCING (5 PER PACKAGE) (REQUIRED FOR CIRCUIT PRESSURE OVER 100 PSI) (USED WITH AT182602) (7/16" O-RING MALE X 1/8" NPT FEMALE WITH 0.025" ORIFACE)
	AT185503	KIT	1		FITTING, PRESSURE REDUCING (5 PER PACKAGE) (1/8" NPT MALE X 1/8 NPT FEMALE) (NOT ILLUSTRATED)
	AT183524	FITTING	1		PRESSURE REDUCING (5 PER PACKAGE)(REQUIRED FOR PRESSURE OVER 100 PSI)(USED WITH AT182602. 9/16" O-RING MALE X 1/8" NPT FEMALE WITH 0.025" ORIFICE)
	ISPKIT3	PUMP	1		OIL EXTRACTION (1 PER PACKAGE)(CAN BE USED WITH AT180333, AT180334, AND AT180335 KITS TO EXTRACT OIL SAMPLE)
	DSO345	TUBE	1		500'ROLL (USED WITH IPSKIT3 PUMP TO EXTRACT SAMPLE)
	DSO346	TUBE	1		100' ROLL (USED WITH IPSKIT3 PUMP TO EXTRACT SAMPLE)

FLUID ANALYSIS PRODUCTS (COOLSCAN PLUS TEST KIT)

T135475 -UN-15NOV00

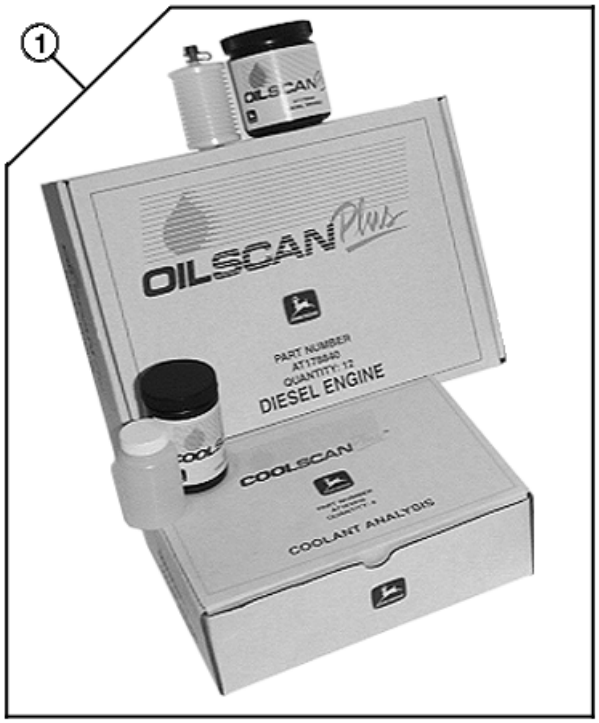

T135475

KEY	PART NO.	PART NAME	QTY	SERIAL NO.	REMARKS
1	AT183016	KIT	1		COOLANT ANALYSIS (6 PER PACKAGE)(TESTS FREEZE POINT, ° ANTIFREEZE, PH, RESERVE ALKALINITY, NITRITE, MOLYBDATE, SILICATE, VISUAL ASSESSMENT & CORROSION METALS (IRON, COPPER, ALUMINUM & LEAD))

FLUID ANALYSIS PRODUCTS (DIESELSCAN TEST KIT)

T135476 -UN-15NOV00



T135476

KEY	PART NO.	PART NAME	QTY	SERIAL NO.	REMARKS
1	AT180344	KIT	1		DIESEL ANALYSIS (6 PER PACKAGE)(USED TO VERIFY TYPE, SUITABILITY FOR COLD TEMPERATURE OPERATIONS, CLEANLINESS, WATER CONTENT AND IF FUEL IS WITHIN ASTM SPECIFICATIONS. CHECKS API GRAVITY, VISCOSITY AT 40C, SULFUR, CETANE INDEX, DISTILLATION, CLOUD POINT, POUR POINT AND COLD FILTER PLUGGING POINT.

FLUID ANALYSIS PRODUCTS (CUSTOMER CONVENIENCE PACKS)

TP49951 -UN-17FEB98



KEY	PART NO.	PART NAME	QTY	SERIAL NO.	REMARKS
1	AT182016	KIT	1		(INCLUDES (4) AT178840 KITS)
	AT182017	KIT	1		(INCLUDES (6) AT178840 & (2) AT178844 KITS)

MEMORANDA

BATTERY

TP52371 -UN-10OCT96

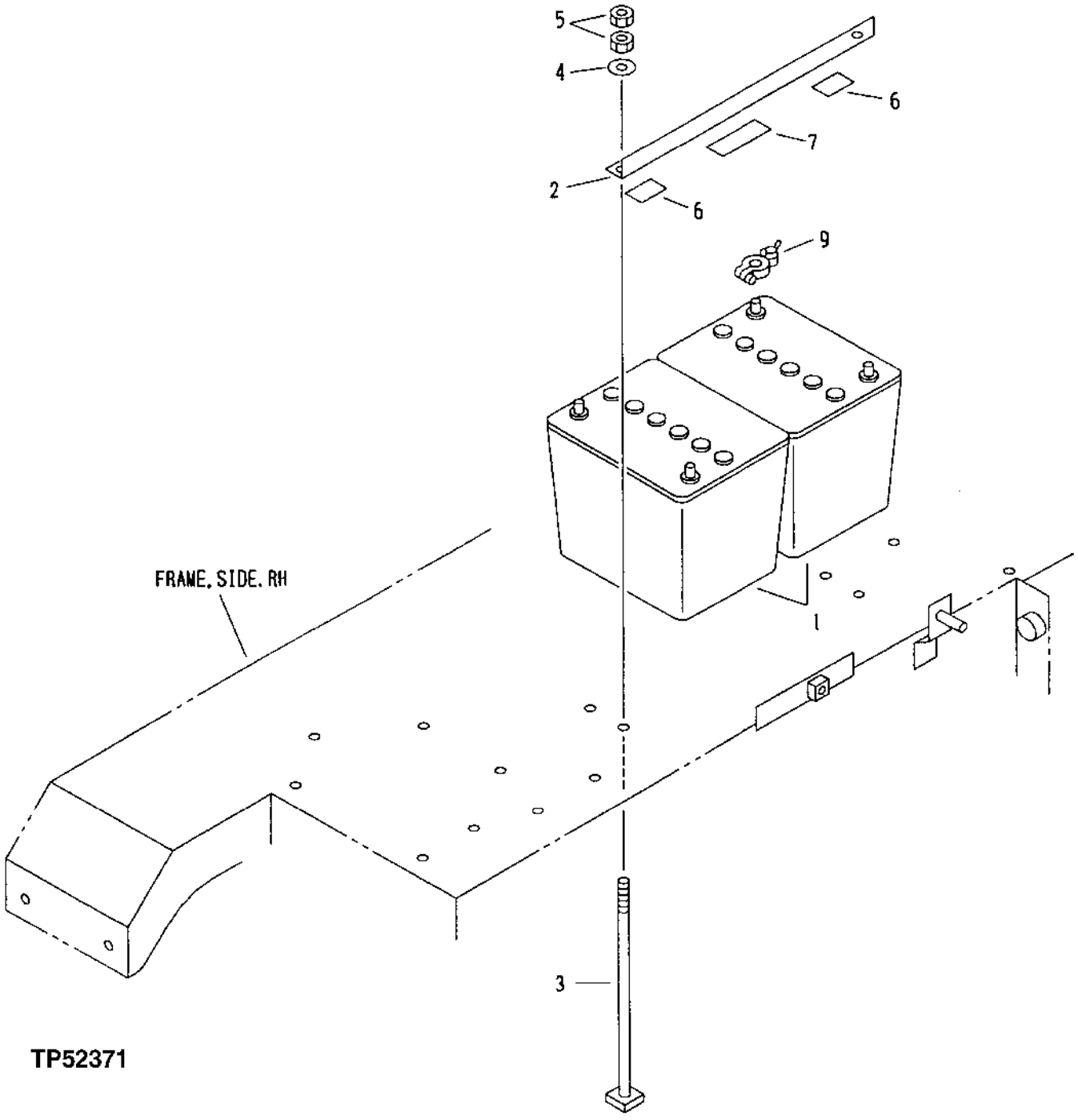

BATTERY

KEY	PART NO.	PART NAME	QTY	SERIAL NO.	REMARKS
1	TY21705	DRY CHARGED BATTERY	2		
2	AT108997	ANGLE	1		
3	AT153306	ROD	2		
4	24M7055	WASHER	2		8.400 X 16 X 1.600 MM
5	14M7273	NUT	4		M8
6	.....	ISOLATOR	1		
7	.....	ISOLATOR	1		

FRONT AND REAR LIGHTS

TP52375 -UN-07OCT96

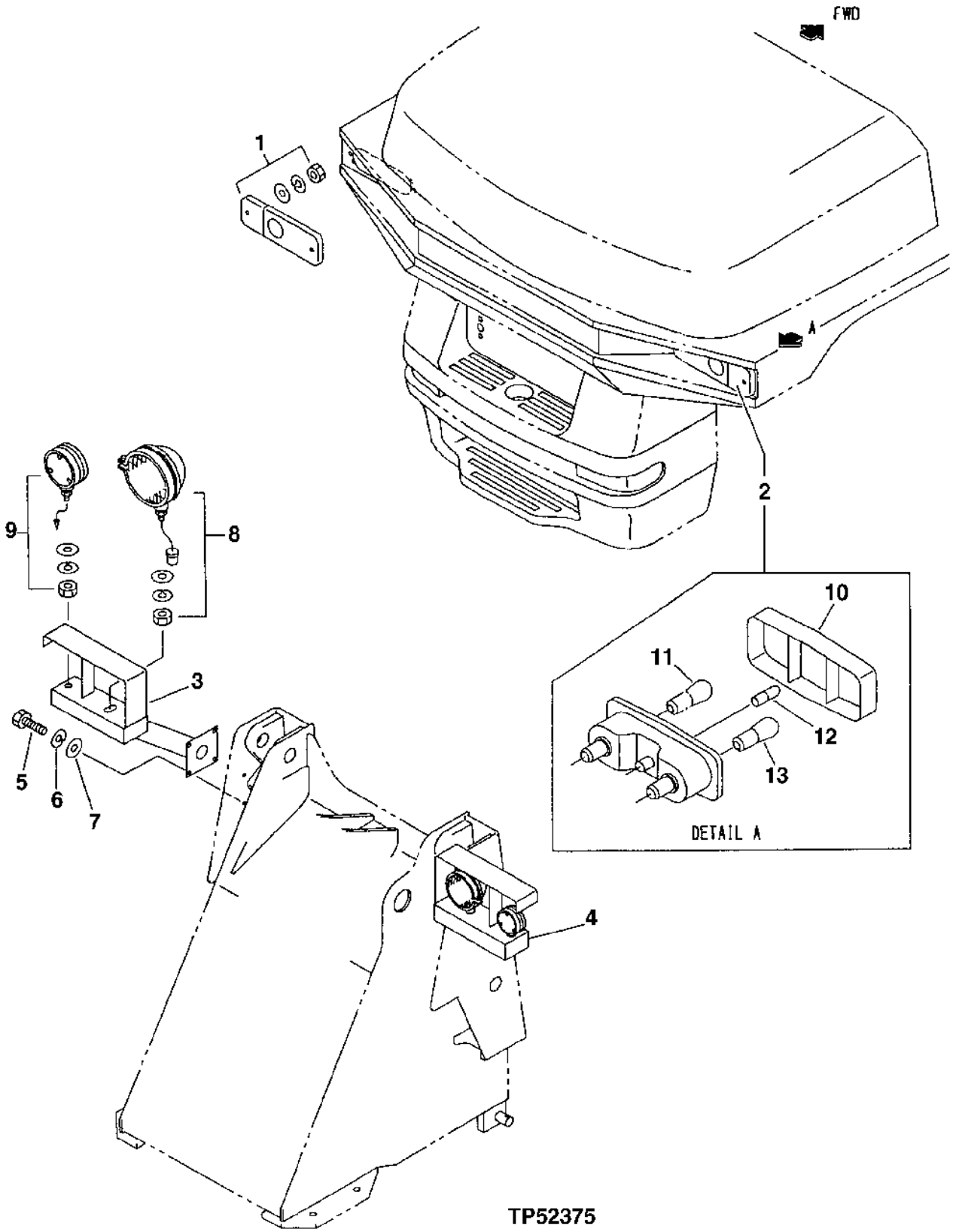

FRONT AND REAR LIGHTS

KEY	PART NO.	PART NAME	QTY	SERIAL NO.	REMARKS
1	AT108145	TAIL LAMP	1		
2	AT108146	LAMP	1		
3	AT152714	BRACKET	1		
4	AT152715	BRACKET	1		
5	19M7938	CAP SCREW	8		M10 X 20
6	12M6791	LOCK WASHER	8		10.200 MM
7	24M7028	WASHER	8		10.500 X 20 X 2 MM
8	AT165110	LAMP	2		(SUB FOR AT108299)
	AT165110	LAMP	1		(SUB FOR T116689)
9	AT108300	TURN SIGNAL LAMP	2		(TURN SIGNAL)
	57M7022	BULB	1		
	T116274	LENS	1		
	T116275	LENS	1		
10	T116688	LENS	1		
11	57M7022	BULB	1		
12	57M7169	BULB	1		
13	T116278	BULB	1		

FRONT AND REAR LIGHTS

TP52376 -UN-07OCT96

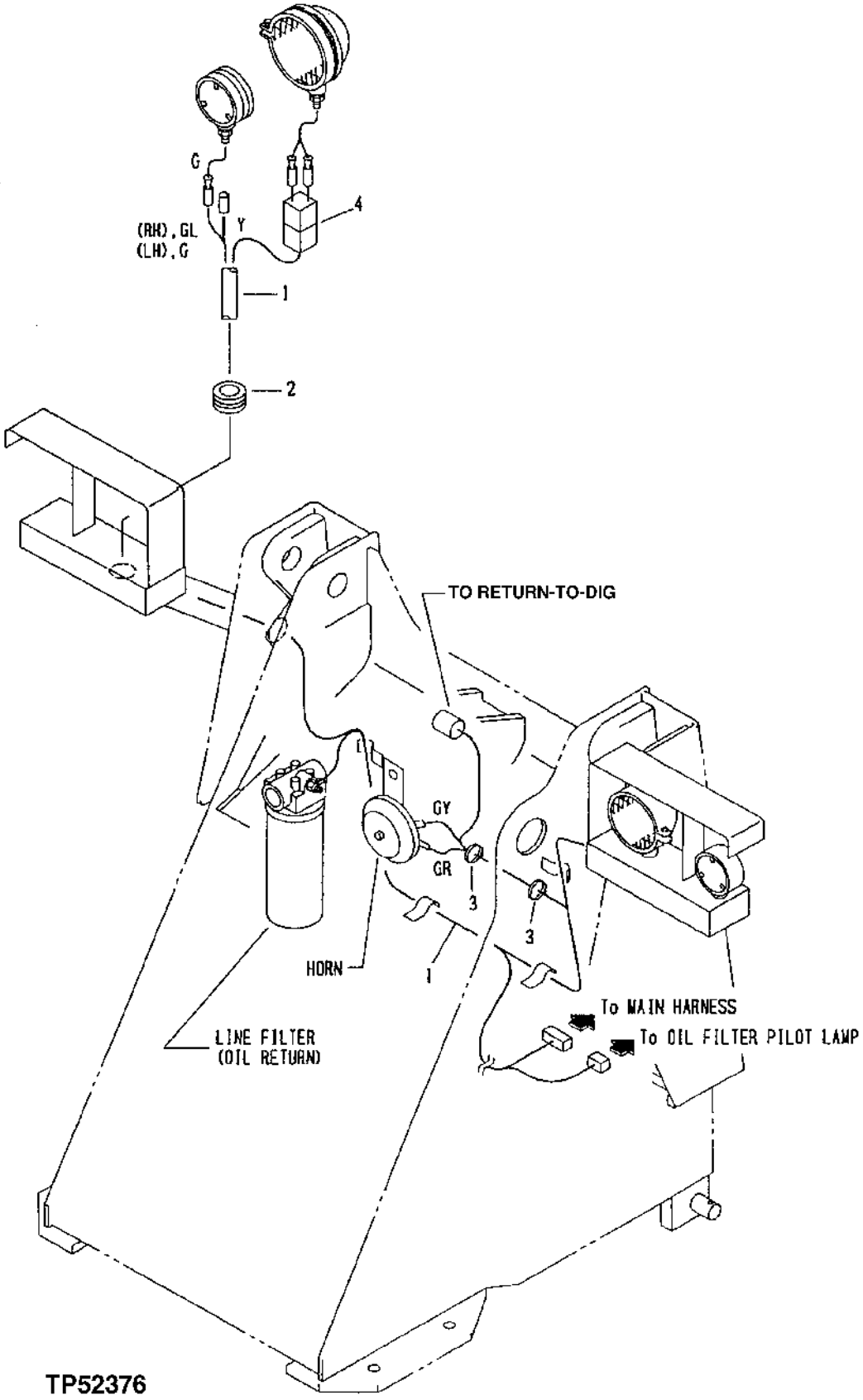

FRONT AND REAR LIGHTS

KEY	PART NO.	PART NAME	QTY	SERIAL NO.	REMARKS
1	AT215313	WIRING HARNESS	1		
2	T115386	GROMMET	2		
3	.....	CLAMP	3		
4	AT152713	WIRING HARNESS	2		

WORK LIGHT

T141886 -UN-02MAY01

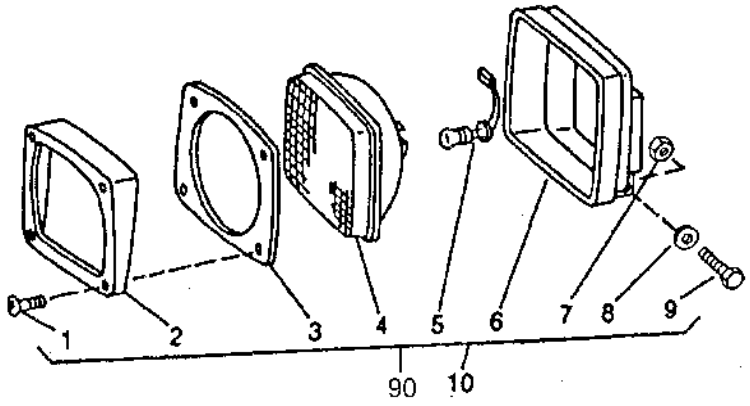

T141886

KEY	PART NO.	PART NAME	QTY	SERIAL NO.	REMARKS
1	T80394	SCREW	4		
2	.....	BEZEL	1		
3	T80393	GASKET	1		
4	.....	LENS	1		
5	AT135758	BULB	1		
6	.....	HOUSING	1		
7	14M7166	LOCK NUT	1		M8
8	12M7032	LOCK WASHER	1		8.400 MM
9	19M7269	CAP SCREW	1		M8 X 50
10	AT142126	FLOODLAMP	1		
90	AT179430	MOUNTING PARTS	1		(WORK LIGHT KIT) INCLUDES 3 LIGHTS AND MOUNTING HARDWARE

MEMORANDA

MAIN WIRING HARNESSES

TP52372 -UN-17OCT96

CRITERION COLOR

COLOR	BLACK	WHITE	RED	GREEN	BLUE	YELLOW	BROWN	ORANGE
COLOR CORD	B	W	R	G	L	Y	Br	O

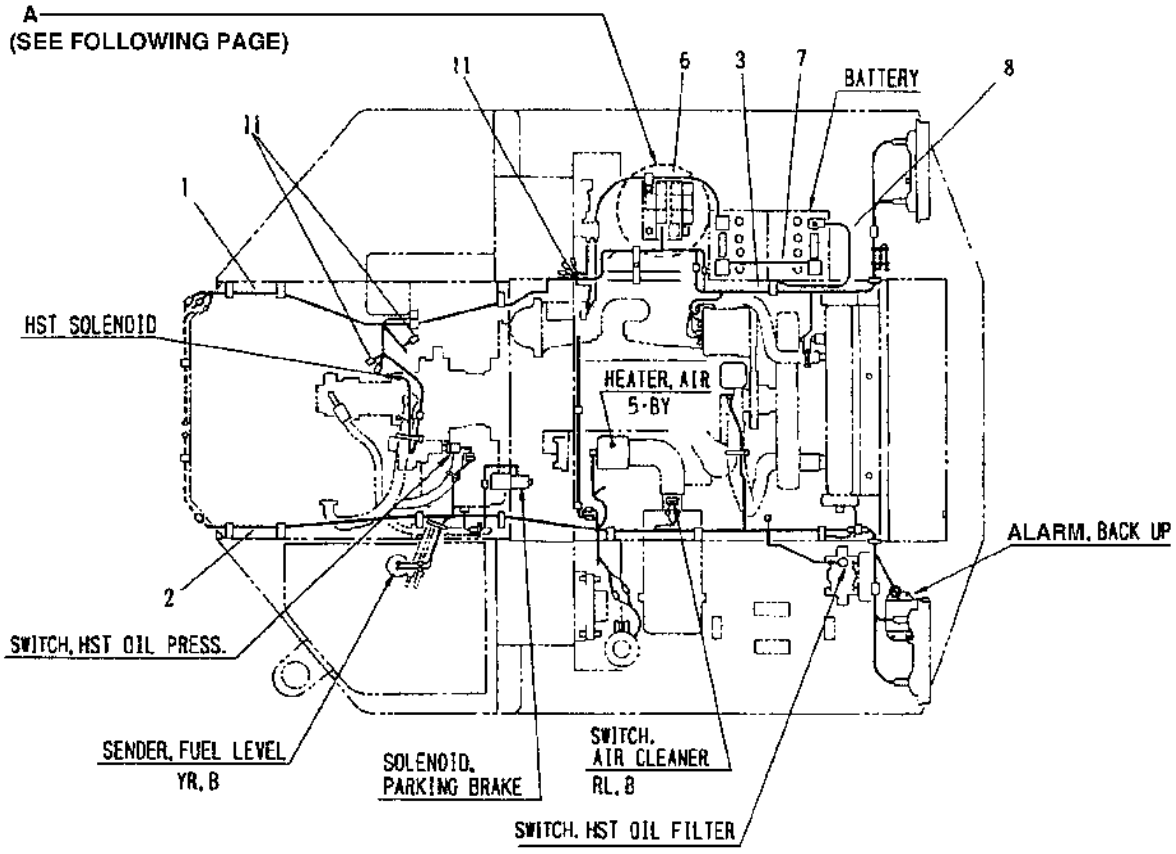

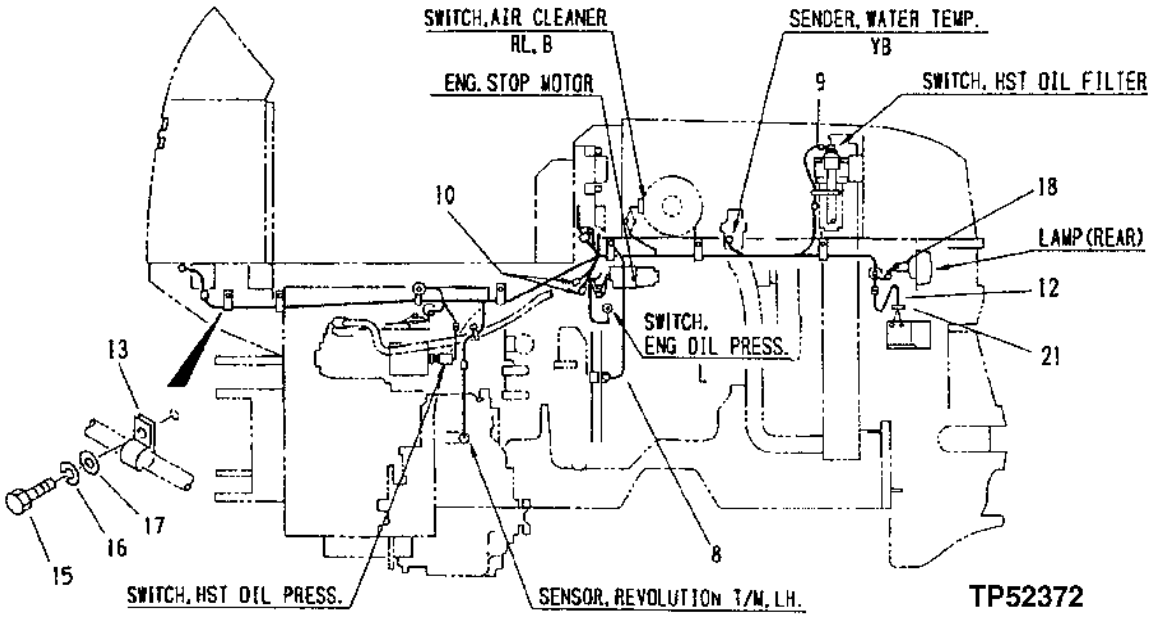

MAIN WIRING HARNESSES

KEY	PART NO.	PART NAME	QTY	SERIAL NO.	REMARKS
1	AT215310	WIRING HARNESS	1		(MAIN)
2	AT215311	WIRING HARNESS	1		
3	AT215308	WIRING HARNESS	1		
6	AT152706	CONDUCTOR	1		
7	AT108999	BATTERY CABLE	1		
8	AT215193	CABLE	2		
9	AT215305	WIRING HARNESS	1		
10	T114319	DIODE	2		
11	AT152473	DIODE	7		
12	AT215312	WIRING HARNESS	1		
13	T115715	CLAMP	7		
15	19M8324	CAP SCREW	13		M10 X 16
16	12M6791	LOCK WASHER	13		10.200 MM
17	24M7028	WASHER	13		10.500 X 20 X 2 MM
18	AT152456	GROMMET	1		
21	T115904	GROMMET	1		

MAIN WIRING HARNESSES

TP52373 -UN-15OCT96

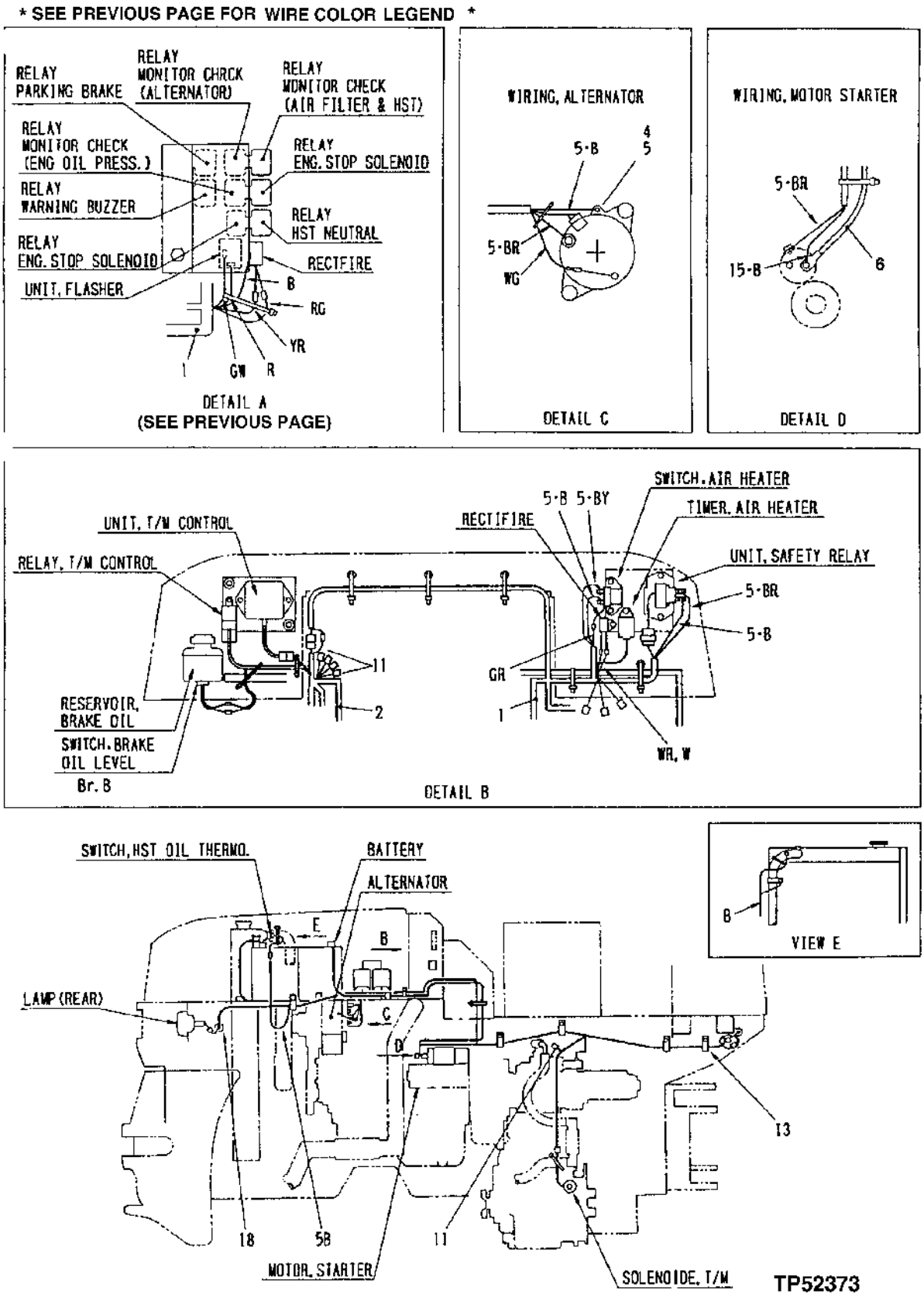

MAIN WIRING HARNESSES

KEY	PART NO.	PART NAME	QTY	SERIAL NO.	REMARKS
1	AT215310	WIRING HARNESS	1		(MAIN)
2	AT215311	WIRING HARNESS	1		
4	AT215126	CAP SCREW	1		
5	12M7064	LOCK WASHER	1		5 MM
6	AT152706	CONDUCTOR	1		
11	AT152473	DIODE	7		
13	T115715	CLAMP	7		
18	AT152456	GROMMET	1		

MAIN FRAME WIRING

TP52374 -UN-08OCT96

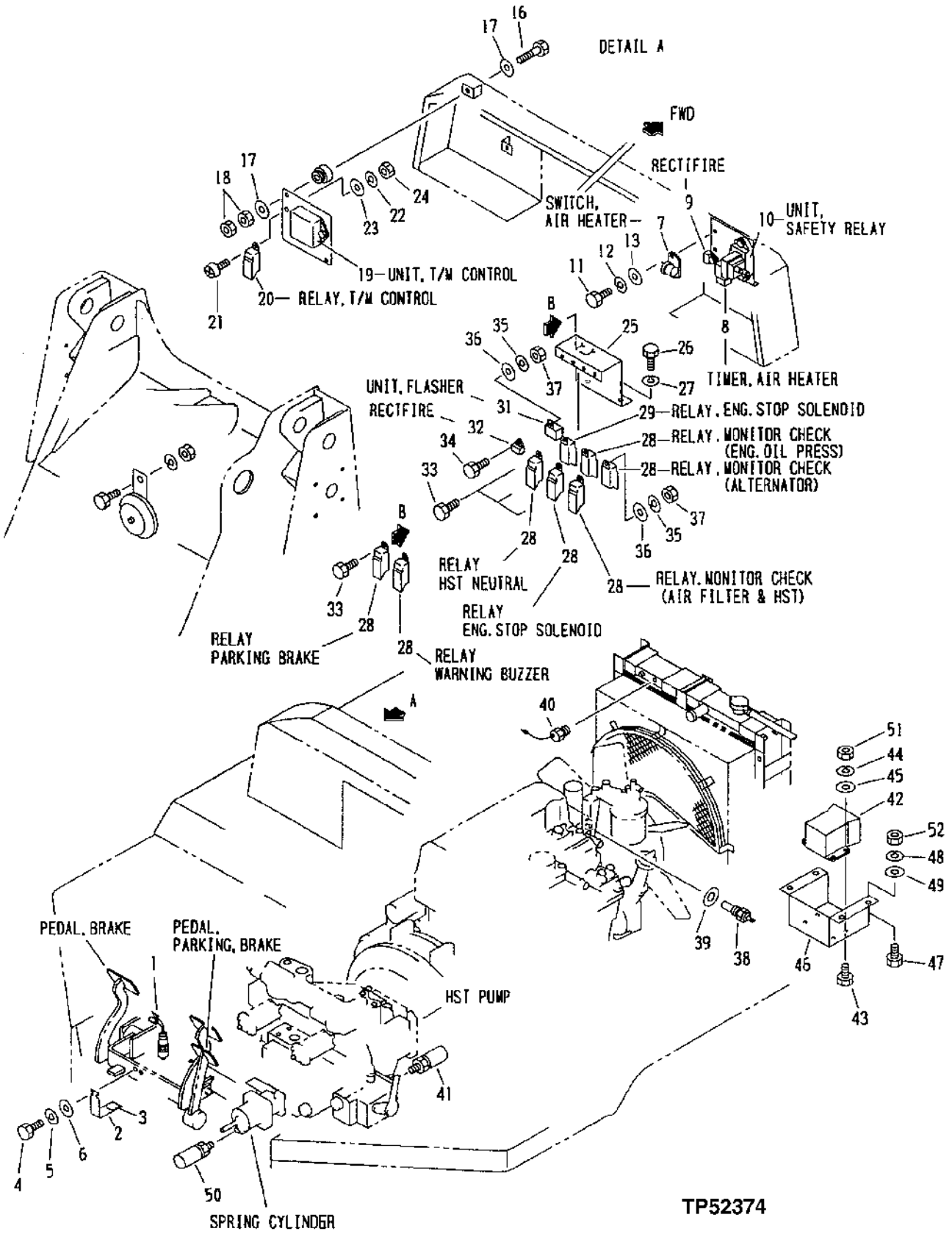

MAIN FRAME WIRING

KEY	PART NO.	PART NAME	QTY	SERIAL NO.	REMARKS
1	AT183822	SWITCH	1		(BRAKE) (SUB FOR AT215454)
2	AT215194	ANGLE	1		
3	.....	LABEL	1		(TH101411 NO LONGER AVAILABLE)
4	19M7932	CAP SCREW	2		M8 X 16
5	12M7065	LOCK WASHER	2		8 MM
6	24M7055	WASHER	2		8.400 X 16 X 1.600 MM
7	T113924	RELAY	1		(AIR HEATER)
8	T113925	TIMER	1		(AIR HEATER)
9	T114321	RECTIFIER	1		
10	AT211834	RELAY	1		(SAFETY RELAY)
11	19M7077	CAP SCREW	6		M6 X 20
12	12M7006	LOCK WASHER	6		6 MM
13	24M7054	WASHER	6		6.400 X 12 X 1.600 MM
16	19M8008	CAP SCREW	2		M8 X 35
17	24M7024	WASHER	2		9 X 28 X 3 MM
18	14M7273	NUT	4		M8
19	AT215307	TRANSMISSION CONTROLLER	1		
20	AT215306	RELAY	1		
21	21M7246	SCREW	3		M6 X 16
22	12M7006	LOCK WASHER	3		6 MM
23	24M7054	WASHER	3		6.400 X 12 X 1.600 MM
24	14M7272	NUT	3		M6
26	19M7938	CAP SCREW	2		M10 X 20
27	12M6791	LOCK WASHER	2		10.200 MM
28	AT215306	RELAY	7		
29	AT152594	RELAY	1		
31	AT179780	FLASHER	1		
32	AT152503	RECTIFIER	1		
33	19M8425	CAP SCREW	5		M6 X 16
34	19M7077	CAP SCREW	1		M6 X 20
35	12M7066	LOCK WASHER	6		10 MM
36	M65893	WASHER	6		6.200 X 13 X 2 MM (0.244" X 0.512" X 0.079")
37	14M7272	NUT	6		M6
38	T116145	SENDER	1		(WATER TEMPERATURE)
39	T110737	GASKET	1		
40	AT152505	SWITCH	1		(HST OIL TEMPERATURE)
41	AT152707	PRESSURE SWITCH	1		(HST OIL PRESSURE)
42	AT179781	TRAVEL WARNING ALARM	1		
43	19M7077	CAP SCREW	4		M6 X 20
44	12M7006	LOCK WASHER	4		6 MM
45	M65893	WASHER	4		6.200 X 13 X 2 MM (0.244" X 0.512" X 0.079")
46	AT179782	BRACKET	1		
47	19M7938	CAP SCREW	4		M10 X 20
48	12M6791	LOCK WASHER	4		10.200 MM
49	24M7028	WASHER	4		10.500 X 20 X 2 MM
50	AT179783	SWITCH	1		(PARK BRAKE OIL PRESSURE)
51	14M7272	NUT	4		M6
52	14M7274	NUT	4		M10
53	AT215461	HORN	1		
54	19M7139	CAP SCREW	1		M8 X 20
55	12M7065	LOCK WASHER	1		8 MM
56	14M7273	NUT	1		M8

DASH INSTRUMENT PANEL

TP52368 -UN-07OCT96

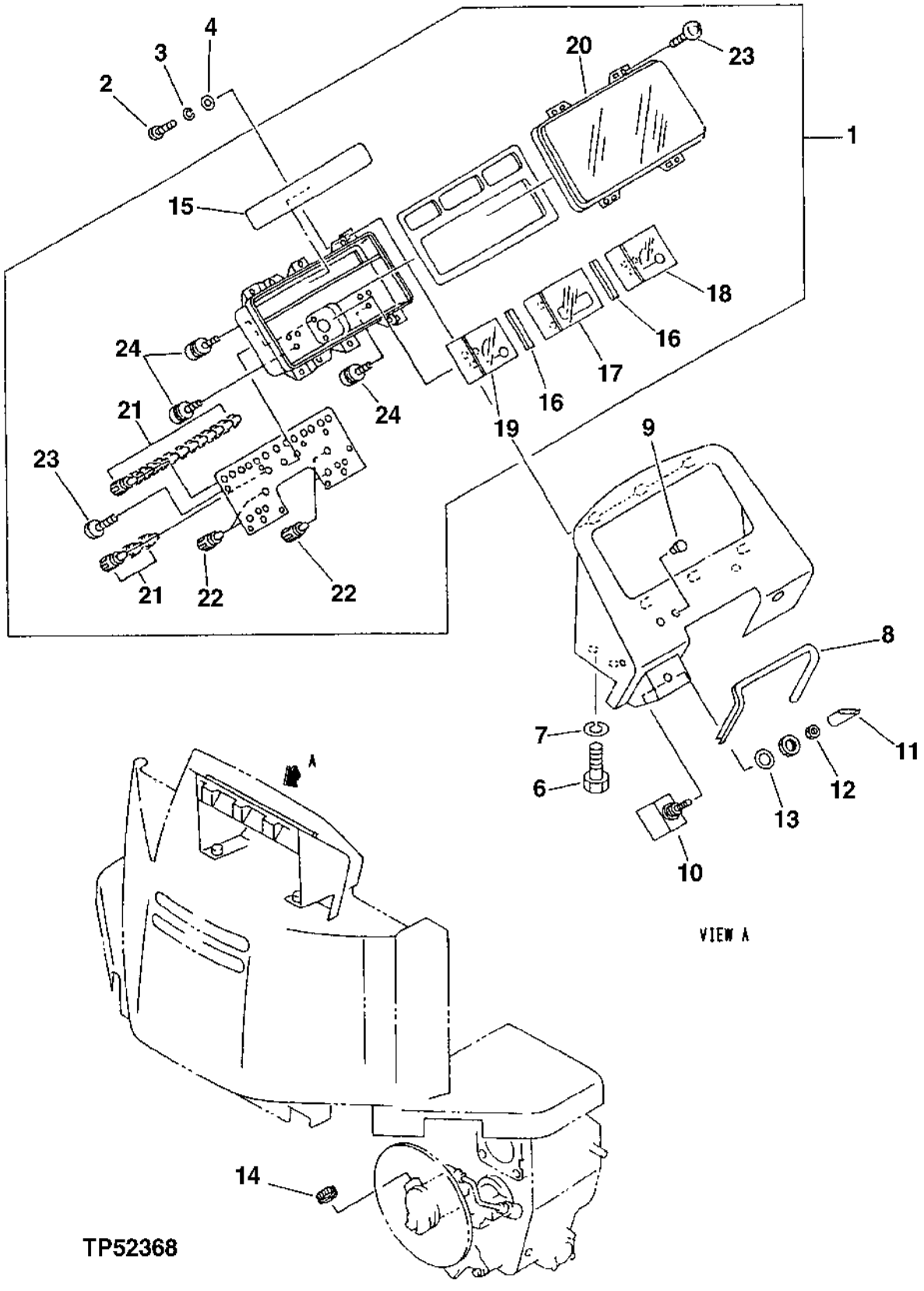

DASH INSTRUMENT PANEL

KEY	PART NO.	PART NAME	QTY	SERIAL NO.	REMARKS
1	AT215302	INSTRUMENT PANEL	1		
2	21M7246	SCREW	6		M6 X 16
3	12M7006	LOCK WASHER	6		6 MM
4	24M7054	WASHER	6		6.400 X 12 X 1.600 MM
6	19M7938	CAP SCREW	4		M10 X 20
7	12M6791	LOCK WASHER	4		10.200 MM
8	AT215162	SEAL	1		
9	AT215220	PLUG	2		
10	AT215452	SWITCH	1		(PARK BRAKE)
11	AT164014	CAP	1		
12	AT164013	NUT	1		
13	AT164012	WASHER	1		
14	T116126	CAP	1		
15	AT215646	LENS	1		
16	AT215647	SPACER	2		
17	AT179773	GAUGE	1		(HOUR METER)
18	AT179774	GAUGE	1		(TEMPERATURE GAUGE)
19	AT179775	GAUGE	1		(FUEL)
20	AT215651	COVER	1		
21	AT179776	BULB	16		
22	AT179777	BULB	4		
23	AT215654	SCREW	12		
24	AT215655	CAP SCREW	8		

DASH INSTRUMENT WIRING

TP52369 -UN-08OCT96

CRITERION COLOR

COLOR	BLACK	WHITE	RED	GREEN	BLUE	YELLOW	BROWN	ORANGE
COLOR CORD	B	W	R	G	L	Y	Br	O

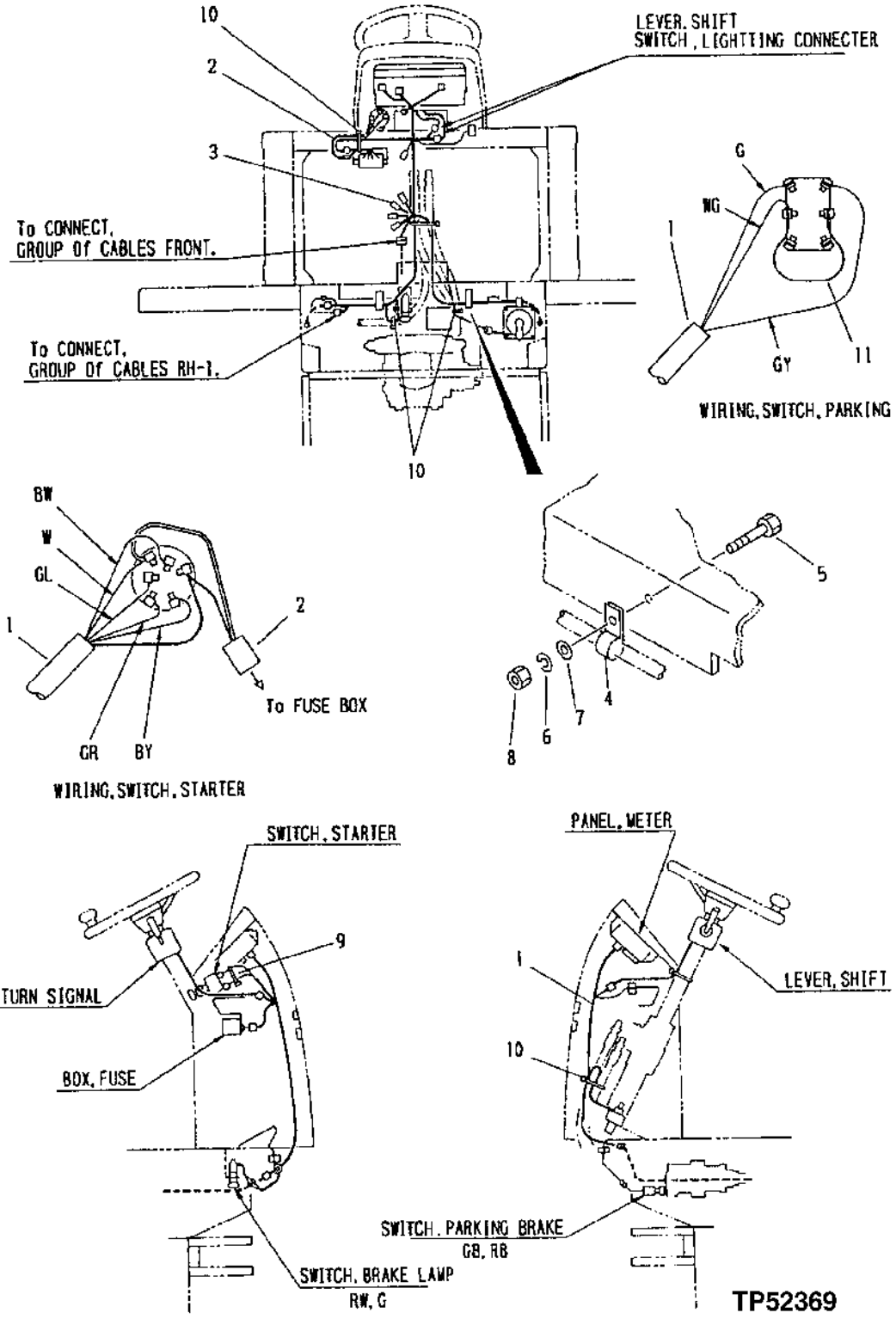

DASH INSTRUMENT WIRING

KEY	PART NO.	PART NAME	QTY	SERIAL NO.	REMARKS
1	AT215303	WIRING HARNESS	1		(FRONT CONSOLE-DASH)
2	AT152680	WIRING HARNESS	1		(FUSE BOX)
3	AT152473	DIODE	5		
4	T115715	CLAMP	2		
5	19M7402	CAP SCREW	2		M10 X 25
6	12M6791	LOCK WASHER	2		10.200 MM
7	24M7028	WASHER	2		10.500 X 20 X 2 MM
8	14M7274	NUT	2		M10
10	AT215155	CLAMP	1		
11	AT215446	WIRING HARNESS	1		

DASH INSTRUMENT CONTROLS

TP52370 -UN-08OCT96

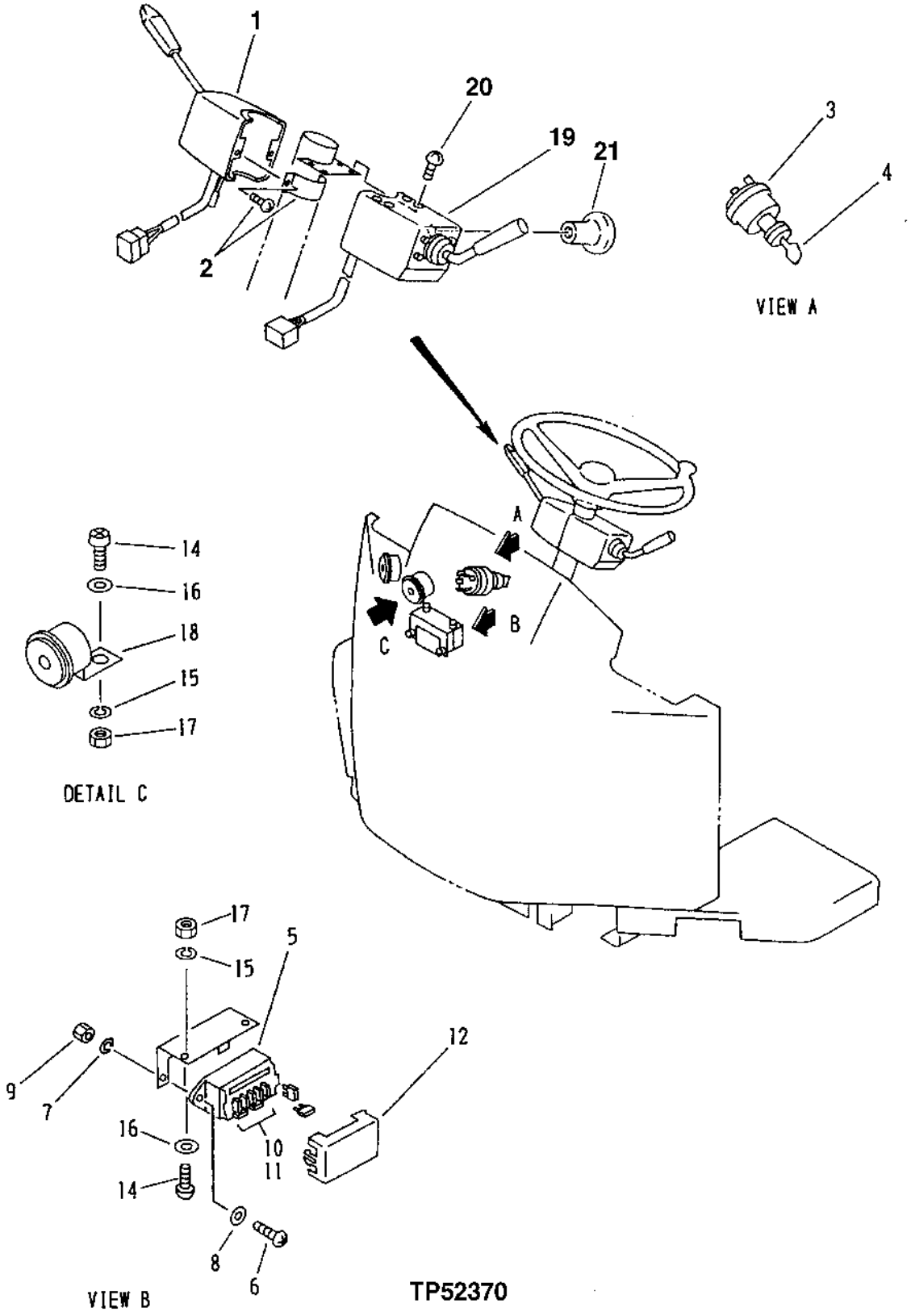

TP52370

DASH INSTRUMENT CONTROLS

KEY	PART NO.	PART NAME	QTY	SERIAL NO.	REMARKS
1	AT215179	SWITCH	1		(TURN SIGNAL)
2	AT215180	CLAMP	1		
3	AT215462	SWITCH	1		(STARTER)
4	AT194969	KEY	2		(SUB FOR AT215304 AND AT147803)
5	AT152585	FUSE BOX	1		
6	21M7267	SCREW	2		M6 X 20
7	12M7006	LOCK WASHER	2		6 MM
8	24M7054	WASHER	2		6.400 X 12 X 1.600 MM
9	14M7272	NUT	2		M6
10	57M7121	FUSE	7		(10 AMP)
11	57M7120	FUSE	2		(20 AMP)
12	AT215178	COVER	1		
13	AT215212	CONTROL LEVER	1		
14	21M7267	SCREW	4		M6 X 20
15	12M7006	LOCK WASHER	4		6 MM
16	24M7054	WASHER	4		6.400 X 12 X 1.600 MM
17	14M7272	NUT	4		M6
18	AT152590	AUDIBLE WARNING ALARM	2		(MONITOR)
19	AT215212	CONTROL LEVER	1		(SHIFT LEVER)
20	21M7246	SCREW	4		M6 X 16
	24M7105	WASHER	4		6 X 12 X 1.600 MM
	12M7006	LOCK WASHER	4		6 MM
21	AT215213	KNOB	1		

MAIN FRAME

TP52397 -UN-14OCT96

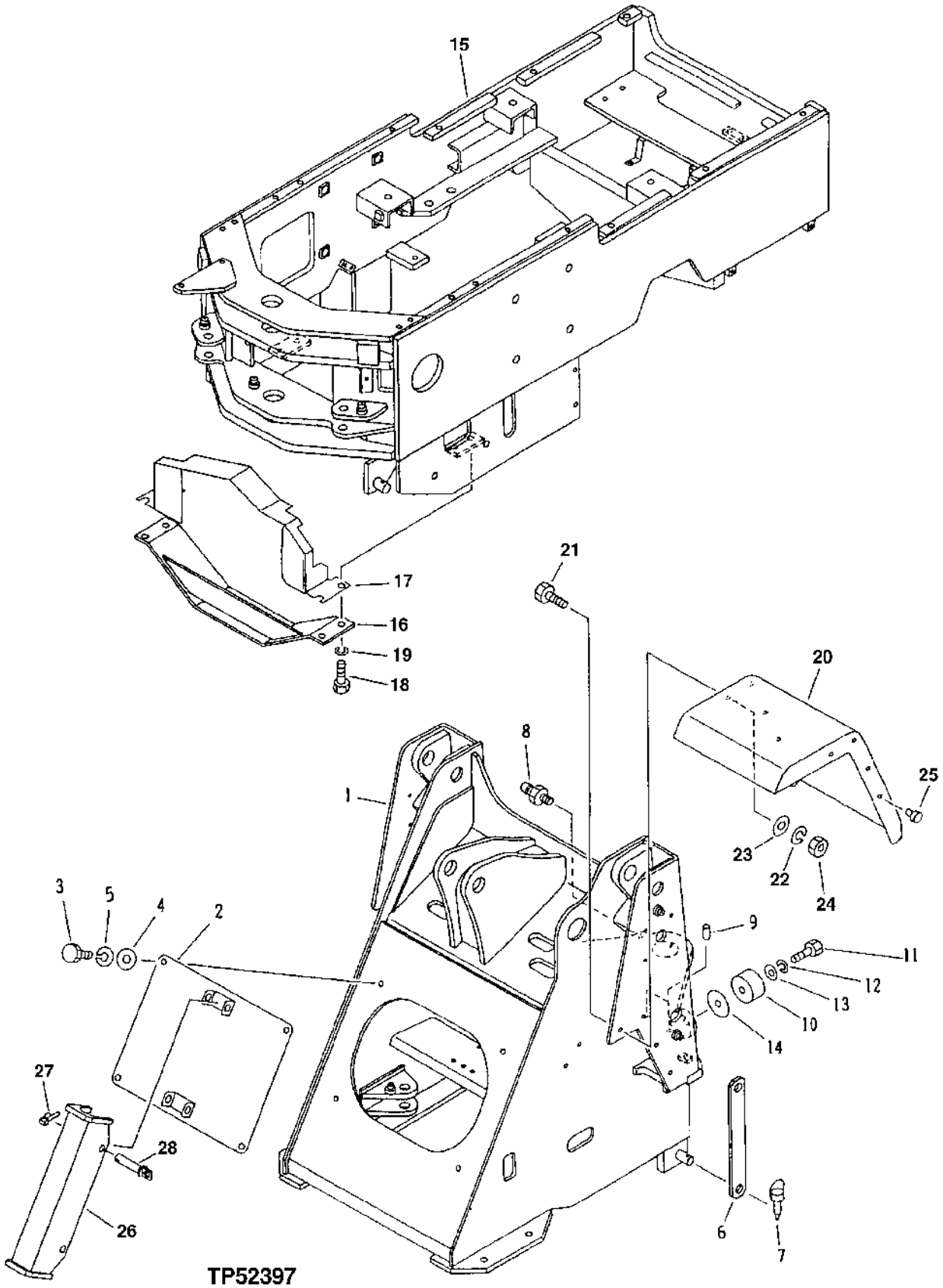

MAIN FRAME

KEY	PART NO.	PART NAME	QTY	SERIAL NO.	REMARKS
1	AT215391	FRAME	1		(CONVENIENCE ASSEMBLY)
2	AT179716	COVER	1		
3	19M7402	CAP SCREW	4		M10 X 25
4	T82425	WASHER	4		10.668 X 25.400 X 3.048 MM (0.420" X 1" X 0.120")
5	12M6791	LOCK WASHER	4		10.200 MM
6	AT215268	STRAP	1		
7	T115753	PIN	2		
8	TH100074	LUBRICATION FITTING	2		
9	37H131	SCREW	2		0.140" X 3/8"
10	AT215182	RUBBER MOUNT	2		
11	19M8011	CAP SCREW	2		M12 X 30
12	12M7067	LOCK WASHER	2		12 MM
13	24M7047	WASHER	2		13 X 24 X 2.500 MM
14	AT215183	WASHER	2		
15	AT215393	FRAME	1		(CONVENIENCE ASSEMBLY)
16	AT153427	COVER	1		
17	AT153426	COVER	1		
18	19M8011	CAP SCREW	4		M12 X 30
19	12M7067	LOCK WASHER	4		12 MM
20	AT215402	FENDER	1		
21	19M7168	CAP SCREW	8		M10 X 30
22	12M6791	LOCK WASHER	8		10.200 MM
23	24M7028	WASHER	8		10.500 X 20 X 2 MM
24	14M7274	NUT	8		M10
25	AT215220	PLUG	8		
26	AT215436	SUPPORT	1		
27	T115753	PIN	2		
28	AT179715	PIN	2		

MAIN FRAME DRIVELINE SUSPENSION

TP52400 -UN-14OCT96

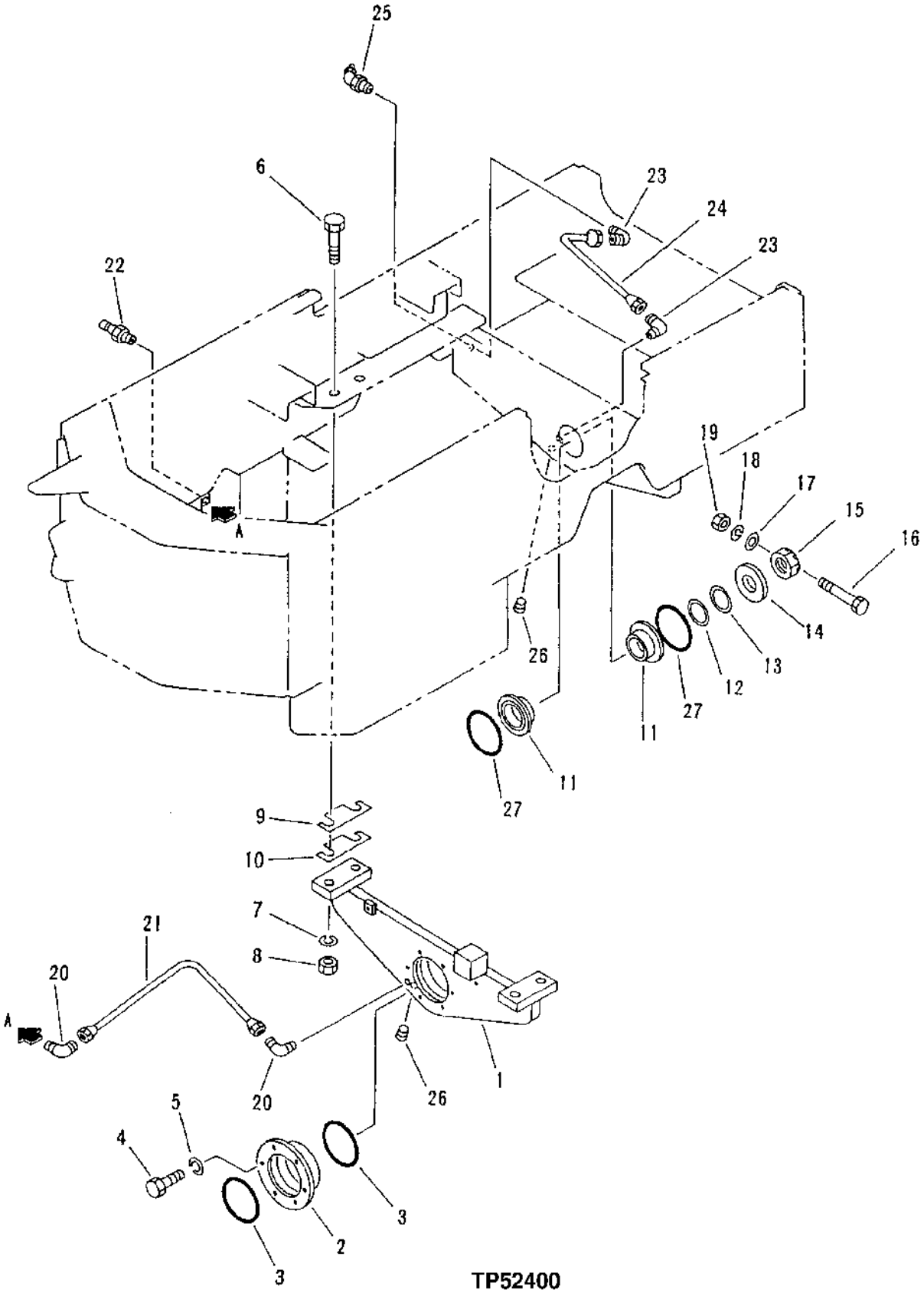

TP52400

MAIN FRAME DRIVELINE SUSPENSION

KEY	PART NO.	PART NAME	QTY	SERIAL NO.	REMARKS
1	AT153423	BRACKET	1		(SUB FOR AT153046)
2	AT153047	BUSHING	1		
3	U46158	O-RING	2		
4	19M7402	CAP SCREW	6		M10 X 25
5	12M6791	LOCK WASHER	6		10.200 MM
6	AT215129	CAP SCREW	4		
7	12M7103	LOCK WASHER	4		20.200 MM
8	14M7277	NUT	4		M20
9	T115648	SHIM	8		(1.0 THICK)
10	T115649	SHIM	6		(.5 THICK)
11	AT153048	BUSHING	2		
12	T115655	SHIM	4		(.5 THICK)
13	T115650	WASHER	2		(2.0 THICK)
14	AT153049	BUSHING	1		
15	T116207	NUT	1		
16	19M7663	CAP SCREW	1		M8 X 70
17	24M7055	WASHER	1		8.400 X 16 X 1.600 MM
18	12M7065	LOCK WASHER	1		8 MM
19	14M7273	NUT	1		M8
20	T116635	PIPE ELBOW	2		
21	AT153050	OIL LINE	1		
22	TH100074	LUBRICATION FITTING	1		
23	T116635	PIPE ELBOW	2		
24	AT153051	TUBE	1		
25	T116334	LUBRICATION FITTING	1		
26	TH100689	FITTING PLUG	2		(SUB FOR T115329)
27	T110437	O-RING	2		(SUB FOR AT152408)

FRAME ARTICULATION

TP40027 -UN-01JAN94

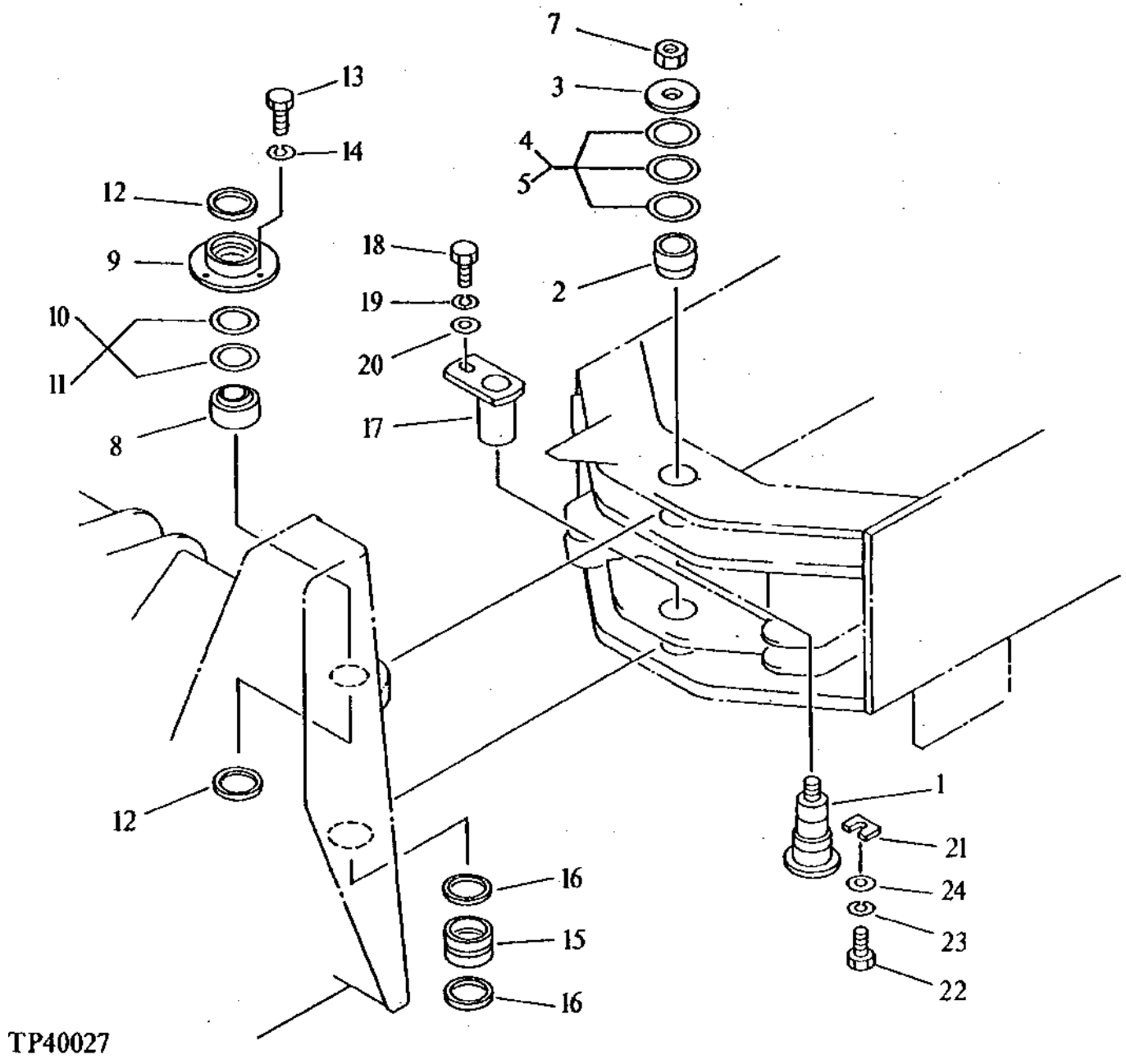

FRAME ARTICULATION

KEY	PART NO.	PART NAME	QTY	SERIAL NO.	REMARKS
1	AT153036	PIN	1		
2	AT153037	LOCKING COLLAR	1		
3	AT137137	WASHER	1		
4	AT153038	SHIM	2		
5	.....	SHIM	1		(AT153039 NO LONGER AVAILABLE)
7	14M7278	NUT	1		M24
8	AT153041	BUSHING	1		
9	AT153042	RETAINER	1		
10	AT153038	SHIM	1		
12	AT153441	SEAL	2		(SUB FOR AT152452)
13	19M7268	CAP SCREW	4		M12 X 25
14	12M6268	LOCK WASHER	4		12.200 MM
15	AT153043	BUSHING	1		
16	AT153441	SEAL	2		(SUB FOR AT152452)
17	AT153044	PIN	1		
18	19M7386	CAP SCREW	1		M12 X 20
19	12M6268	LOCK WASHER	1		12.200 MM
20	T115340	WASHER	1		
21	AT153045	PLATE	2		
22	19M7285	CAP SCREW	1		M12 X 30
23	12M6268	LOCK WASHER	1		12.200 MM
24	24M7047	WASHER	1		13 X 24 X 2.500 MM

COUNTERWEIGHT

TP52407 -UN-14OCT96

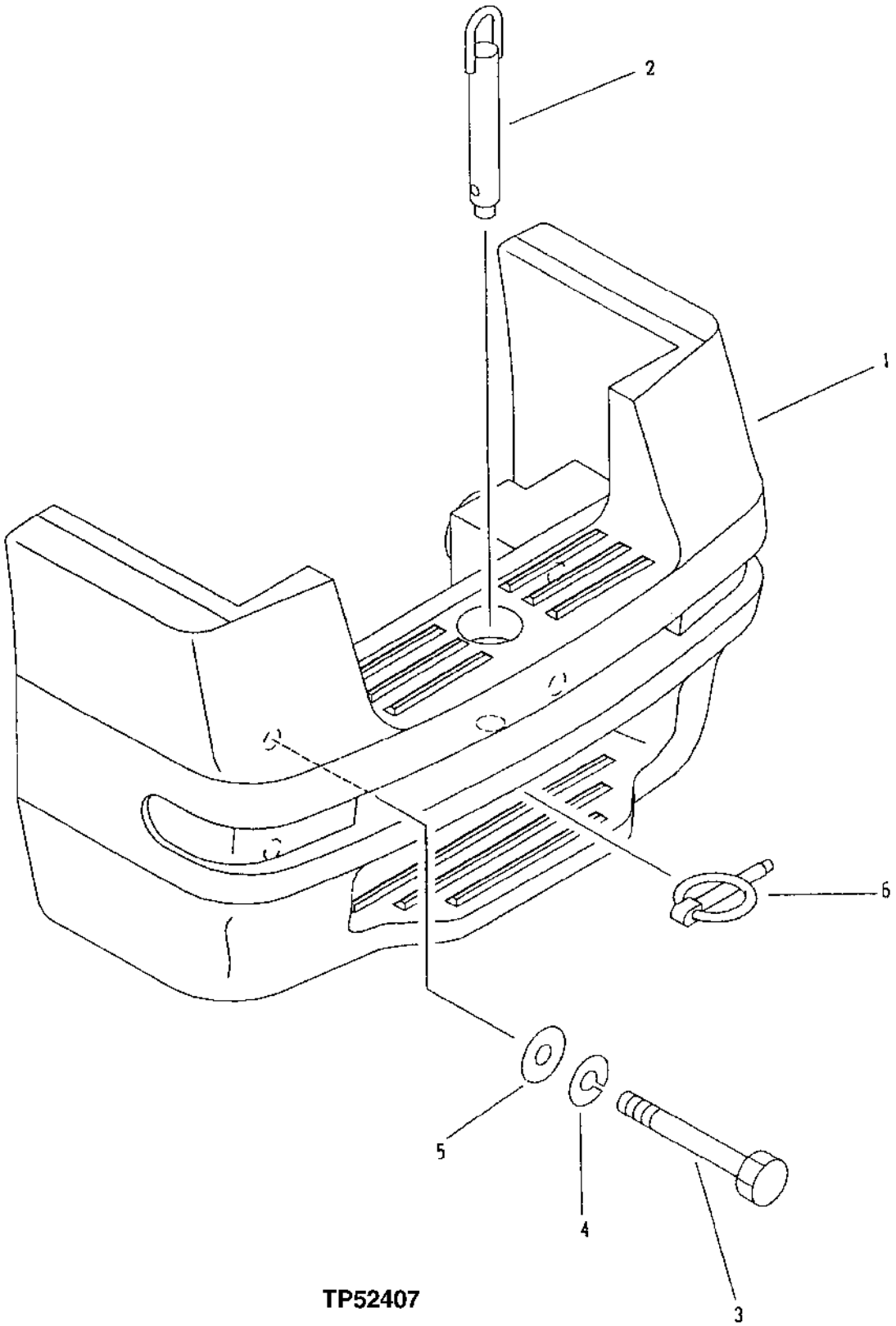

TP52407

COUNTERWEIGHT

KEY	PART NO.	PART NAME	QTY	SERIAL NO.	REMARKS
1	AT215410	WEIGHT	1		(CONVENIENCE ASSEMBLY)
2	T115752	PIN	1		
3	AT215130	CAP SCREW	4		
4	12M7071	LOCK WASHER	4		24.500 MM
5	24M7242	WASHER	4		
6	T115753	PIN	1		

CAB

TP52461 -UN-08OCT96

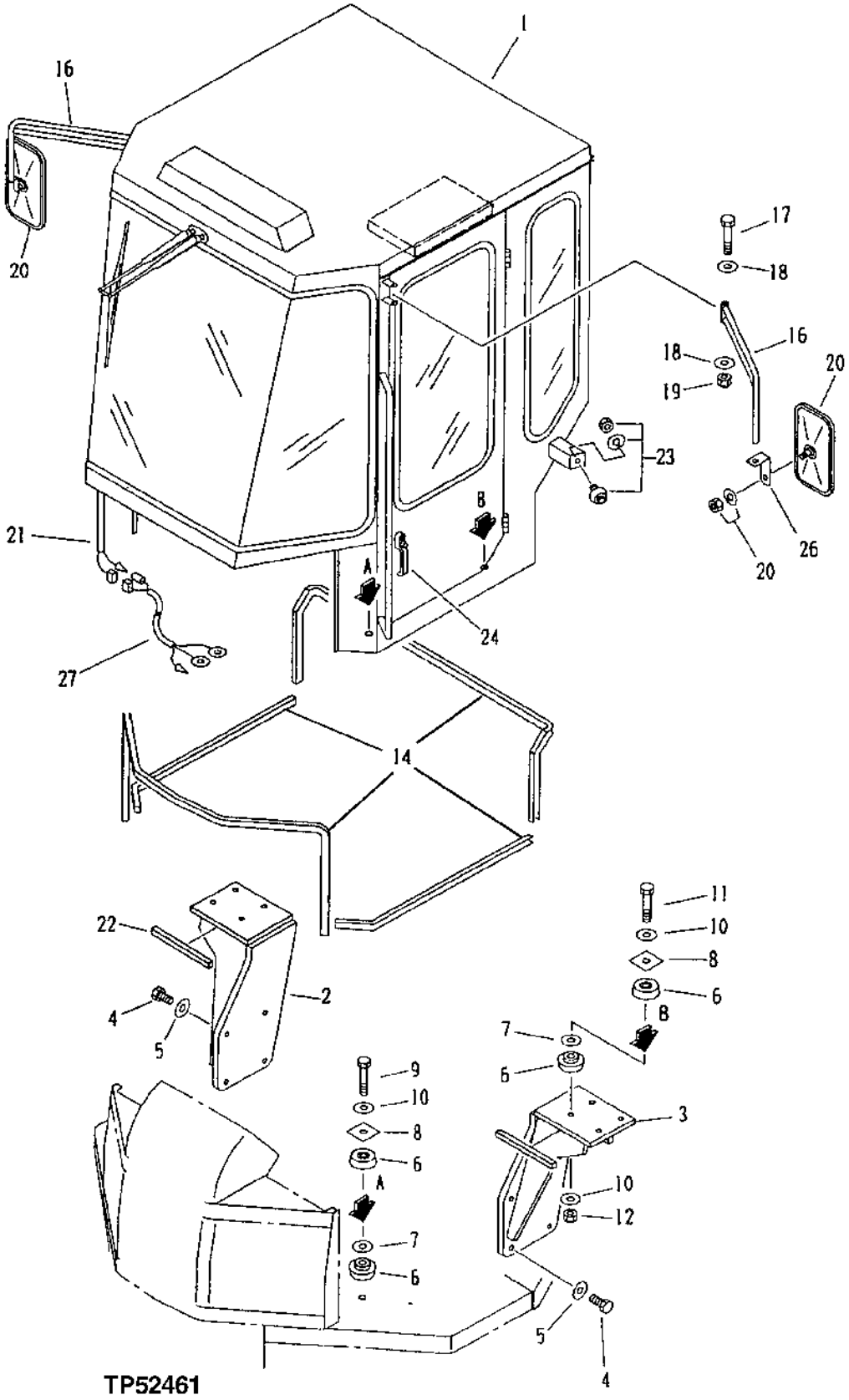

CAB

KEY	PART NO.	PART NAME	QTY	SERIAL NO.	REMARKS
1	AT179446	CAB	1		
2	AT179789	BRACKET	1		(CONVENIENCE ASSEMBLY) (RIGHT)
3	AT179790	BRACKET	1		(CONVENIENCE ASSEMBLY) (LEFT)
4	19M8287	CAP SCREW	8		(SUB FOR AT152392)
5	24M7243	WASHER	8		25.400 X 50 X 6 MM
6	AT153218	ISOLATOR	8		
7	AT153219	DISK SPRING	4		
8	AT202514	PLATE	4		
9	19M7609	CAP SCREW	2		(SUB FOR AT152388, THIS APPLICATION)
10	T116256	WASHER	6		
11	19M7495	CAP SCREW	2		(SUB FOR AT152389)
12	14M7276	NUT	2		M16
14	AT202569	SEAL	2		(REQUIRES (2) FOR ENTIRE LENGTH)
16	T116123	BRACKET	2		
17	19M7949	CAP SCREW	2		M12 X 100
18	24M7047	WASHER	4		13 X 24 X 2.500 MM
19	AT152529	NUT	2		
20	AT202533	REAR VIEW MIRROR	2		
21	AT179443	WIRING HARNESS	1		
23	.....	CATCH	1		
24	AT108122	HANDLE	2		
26	AT202496	BRACKET	2		
27	AT179791	WIRING HARNESS	1		

CAB BODY

TP52462 -UN-10OCT96

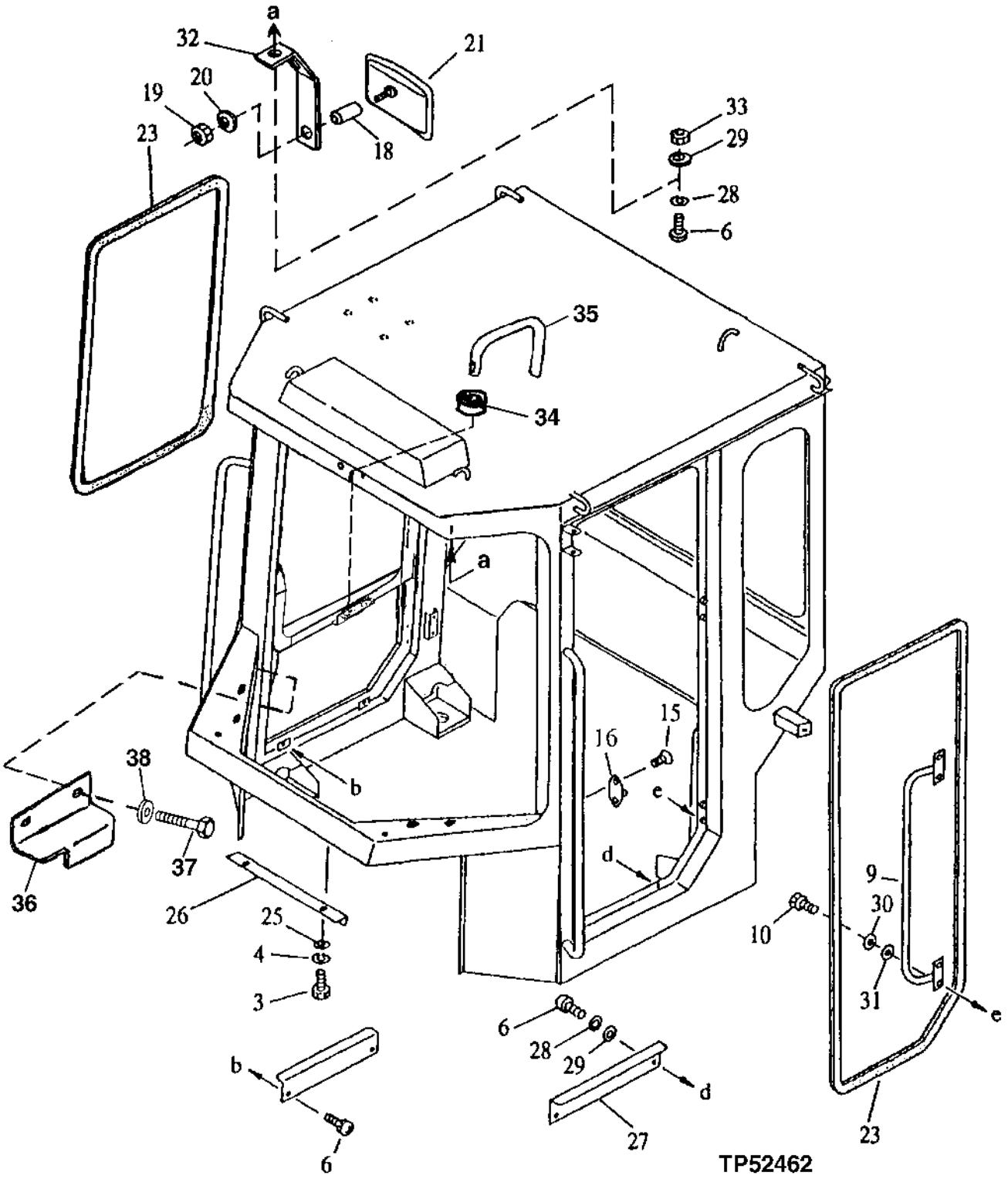

CAB BODY

KEY	PART NO.	PART NAME	QTY	SERIAL NO.	REMARKS
3	AT202556	CAP SCREW	2		
4	24H1136	WASHER	2		11/32" X 11/16" X 0.065"
6	21H1302	SCREW	6		1/4" X 5/8"
9	AT153229	HANDLE	1		
10	19H1900	CAP SCREW	4		5/16" X 3/4"
15	AR91896	STRIKER	2		
16	AT202500	PLATE	2		(STRIKER)
18	R92351	SPACER	1		
19	14H785	NUT	1		5/16"
20	24H1136	WASHER	1		11/32" X 11/16" X 0.065"
21	AT186760	REAR VIEW MIRROR	1		(SUB FOR RE52660)
23	AT202569	SEAL	1		
24	AT202569	SEAL	1		(CUT TO LENGTH)
25	12M7065	LOCK WASHER	2		8 MM
26	AT202510	ANGLE	1		
27	AT202511	ANGLE	1		
28	12H302	LOCK WASHER	4		1/4"
29	24H1753	WASHER	4		1/4" X 9/16" X 0.049"
30	24H1136	WASHER	4		11/32" X 11/16" X 0.065"
31	12M7065	LOCK WASHER	4		8 MM
32	AT202495	BRACKET	1		
33	14H850	NUT	2		1/4"
34	AT179435	GROMMET	2		
35	AT179438	ROD	1		(WINDOW SUPPORT)
36	AT179444	BRACKET	1		(WIRE HARNESS COVER)
37	19H1227	CAP SCREW	2		1/4" X 1/2"
38	24H1287	WASHER	2		9/32" X 5/8" X 0.065"

CAB DOOR AND WINDOW

TP56793 -UN-21JUN99

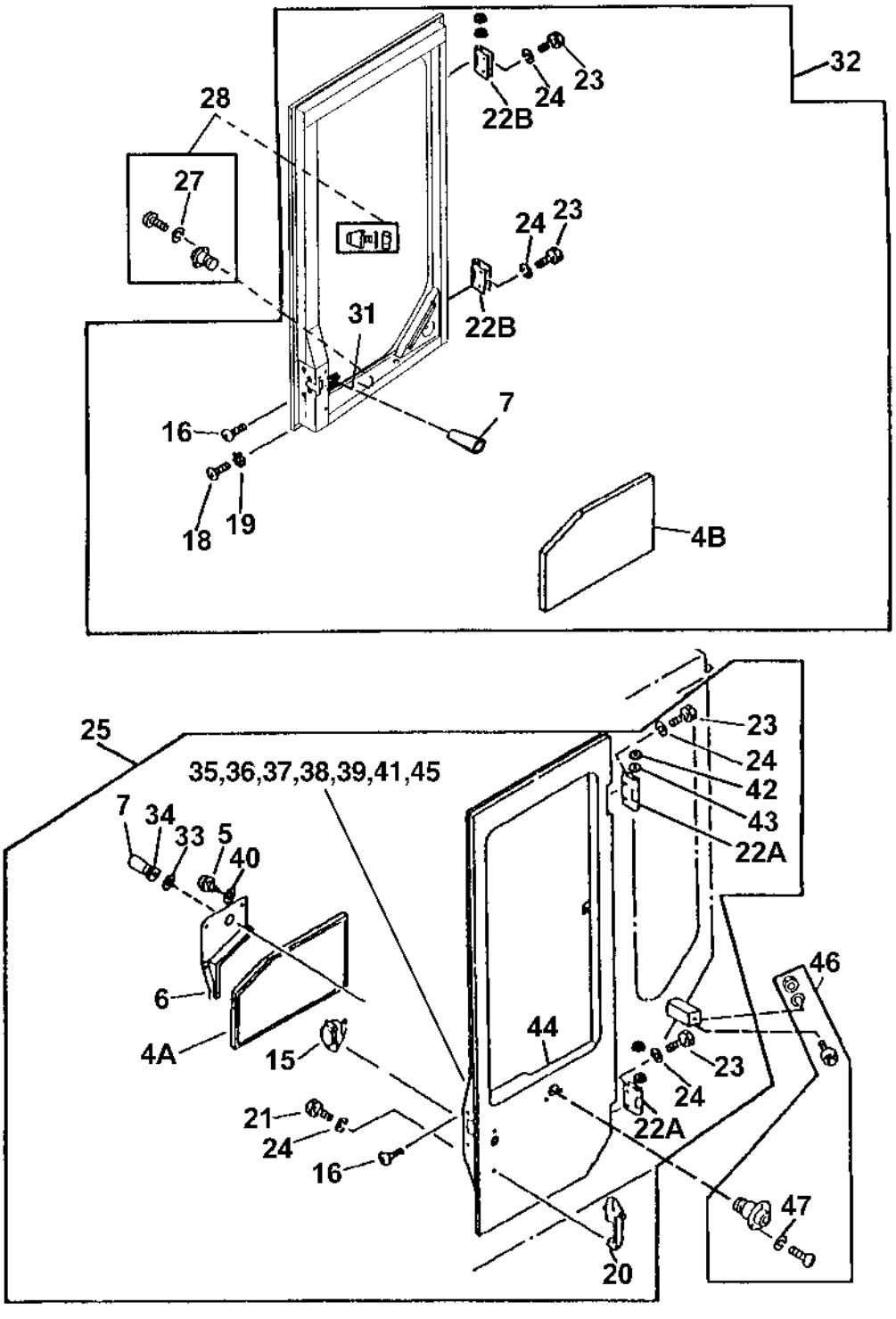

TP56793

CAB DOOR AND WINDOW

KEY	PART NO.	PART NAME	QTY	SERIAL NO.	REMARKS
4A	AT202520	PANEL	1		
4B	AT179440	PANEL	1		
5	21H1295	SCREW	5		0.190" X 5/8"
6	AT202512	COVER	1		
7	AT202505	KNOB	2		
15	AT202560	LATCH	1		
16	21H1303	SCREW	4		1/4" X 3/4"
20	AT108122	HANDLE	1		
21	19M7964	CAP SCREW	2		M8 X 12
22A	AT202501	HINGE	2		(LEFT)
22B	AT202502	HINGE	2		(RIGHT)
23	AT202557	BOLT	4		
24	AT202559	WASHER	2		
25	AT202523	DOOR	1		(LH)
27	AT202549	LOCK WASHER	3		
28	AT153240	STOP	1		
31	AT179432	LATCH	1		
32	AT179445	WINDOW	1		(RH)
33	AT202563	WASHER	2		(SUB FOR AT202562) (NYLON)
34	AT202552	NUT	1		
35	14H786	NUT	2		1/4", (LEFT AND RIGHT)
36	19H1227	CAP SCREW	2		1/4" X 1/2", (LEFT AND RIGHT)
37	AT202503	LINKAGE	2		(LEFT AND RIGHT)
38	AT202551	WASHER	2		(LEFT AND RIGHT)
39	24H1136	WASHER	2		11/32" X 11/16" X 0.065", (LEFT AND RIGHT)
40	M68340	WASHER	5		4.940 X 11.913 X 1.219 MM (0.195" X 15/32" X 0.048")
41	24M7055	WASHER	4		8.400 X 16 X 1.600 MM, (LEFT AND RIGHT)
42	12H304	LOCK WASHER	4		3/8"
43	24M7096	WASHER	4		10.500 X 18 X 1.600 MM
44	AT202504	GROMMET	1		
45	12H246	LOCK WASHER	6		0.190", (LEFT AND RIGHT)
46	AT153240	STOP	2		
47	12M7064	LOCK WASHER	3		5 MM

CAB BODY PANELS

TP45677 -UN-01JAN94

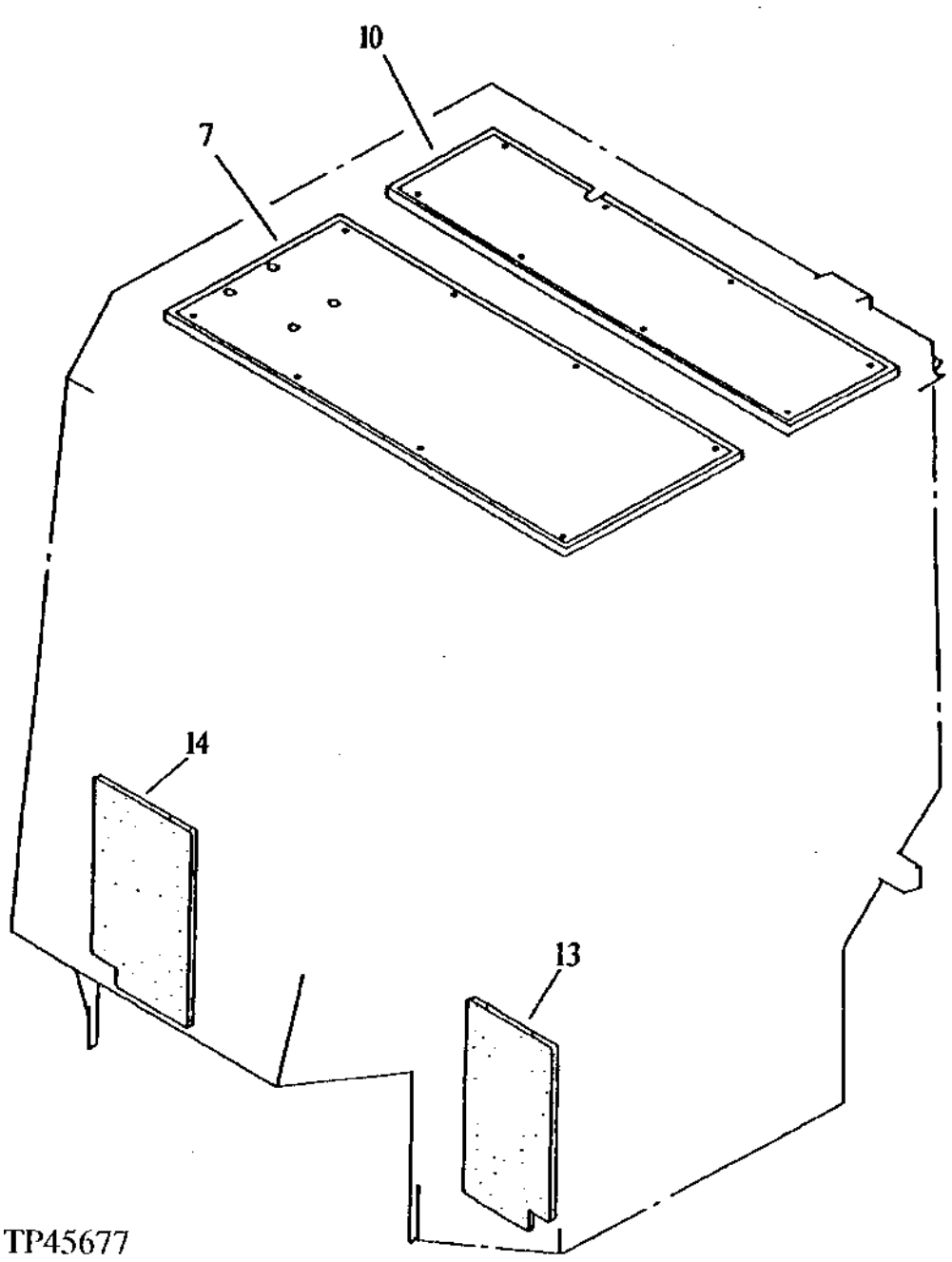

CAB BODY PANELS

KEY	PART NO.	PART NAME	QTY	SERIAL NO.	REMARKS
7	AT202525	PANEL	1		
10	AT202517	PANEL	1		
13	AT179441	PANEL	1		LEFT
14	AT179442	PANEL	1		RIGHT

CAB GLASS

TP52464 -UN-08OCT96

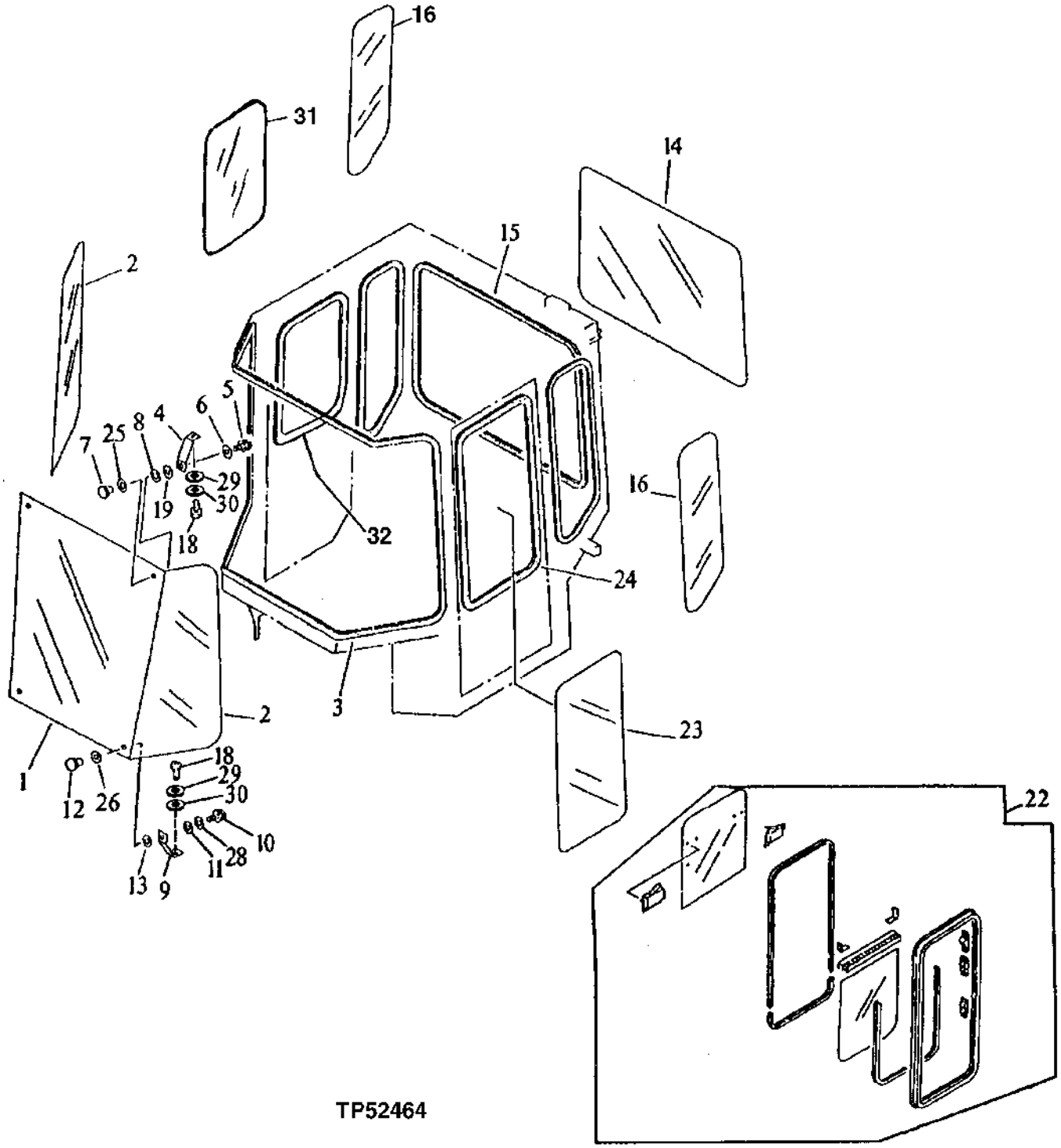

TP52464

CAB GLASS

KEY	PART NO.	PART NAME	QTY	SERIAL NO.	REMARKS
1	AT202526	WINDOWPANE	1		
2	AT202527	WINDOWPANE	2		
3	AT202571	SEAL	1		
4	AT202494	BRACKET	2		
5	M68689	NUT	2		4.826 MM (0.190")
6	AT202550	WASHER	6		
7	AT202547	SCREW	2		
8	AT202563	WASHER	2		
9	AT202499	BRACKET	2		
10	M68689	NUT	2		4.826 MM (0.190")
11	AT202550	WASHER	6		
12	AT202547	SCREW	2		
13	AT202563	WASHER	2		
14	AT202529	WINDOWPANE	1		
15	AT202571	SEAL	1		
16	AT202530	WINDOWPANE	2		
18	AT202553	SCREW	4		
22	AT202508	WINDOW	1		
23	AT202528	WINDOWPANE	1		
24	AT202571	SEAL	1		
25	AT202535	WASHER	2		
26	AT202535	WASHER	2		
28	12H246	LOCK WASHER	2		0.190"
29	12H302	LOCK WASHER	4		1/4"
30	24H1287	WASHER	4		9/32" X 5/8" X 0.065"
31	AT179439	WINDOWPANE	1		
32	AT202571	SEAL	1		(CUT TO LENGTH)

OPERATOR PLATFORM AND FLOORMAT

TP56351 -UN-10JAN98

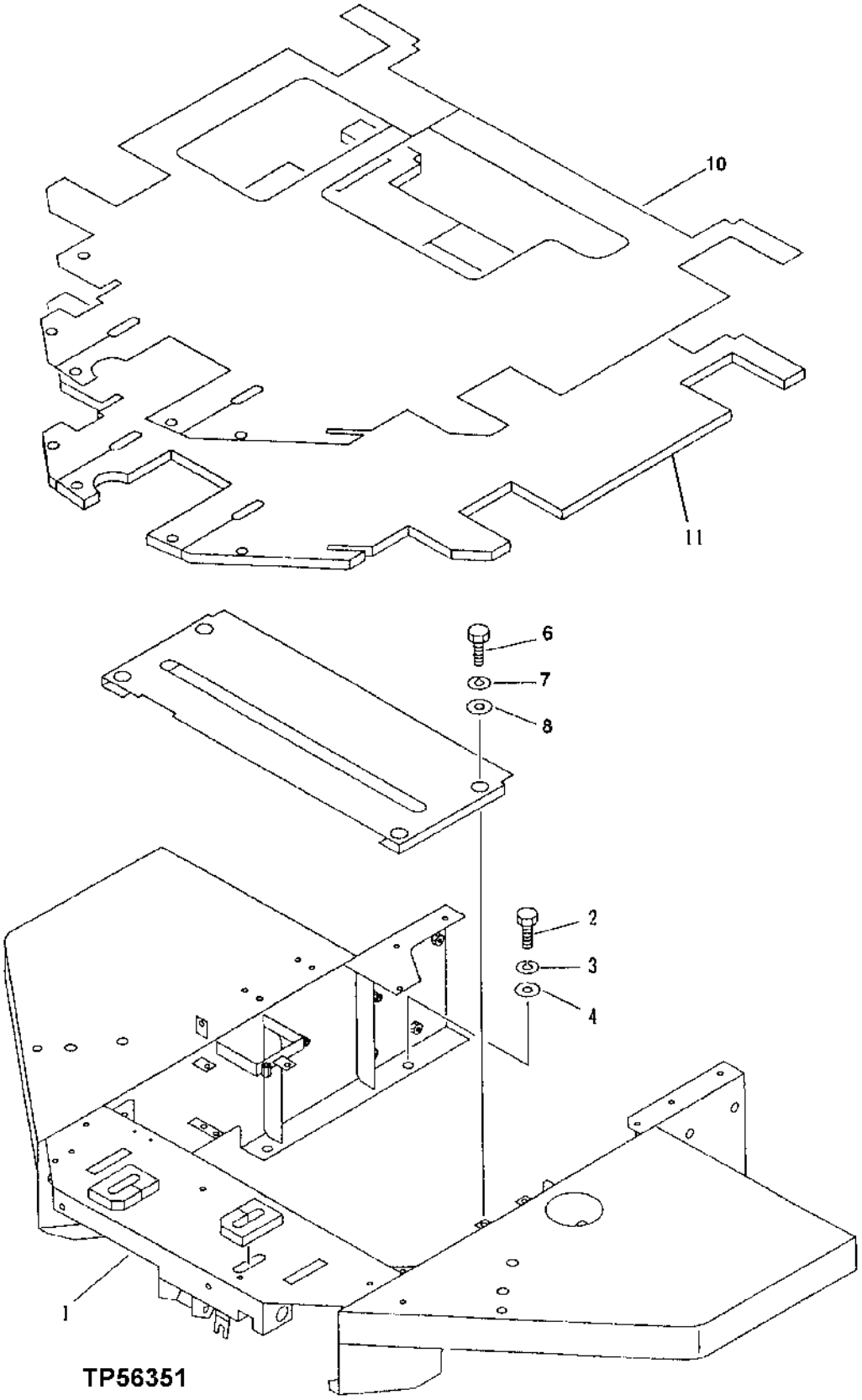

OPERATOR PLATFORM AND FLOORMAT

KEY	PART NO.	PART NAME	QTY	SERIAL NO.	REMARKS
1	AT215394	FRAME	1		CONVENIENCE ASSEMBLY
2	19M8029	CAP SCREW	6		M16 X 30
3	12M7069	LOCK WASHER	6		16 MM
4	T116256	WASHER	6		
6	19M7402	CAP SCREW	4		M10 X 25
7	12M6791	LOCK WASHER	4		10.200 MM
8	24M7028	WASHER	4		10.500 X 20 X 2 MM
10	AT179653	MAT	1		FLOOR
11	AT181982	MAT	1		SPONGE

WINDSHIELD WIPER

TP52465 -UN-07OCT96

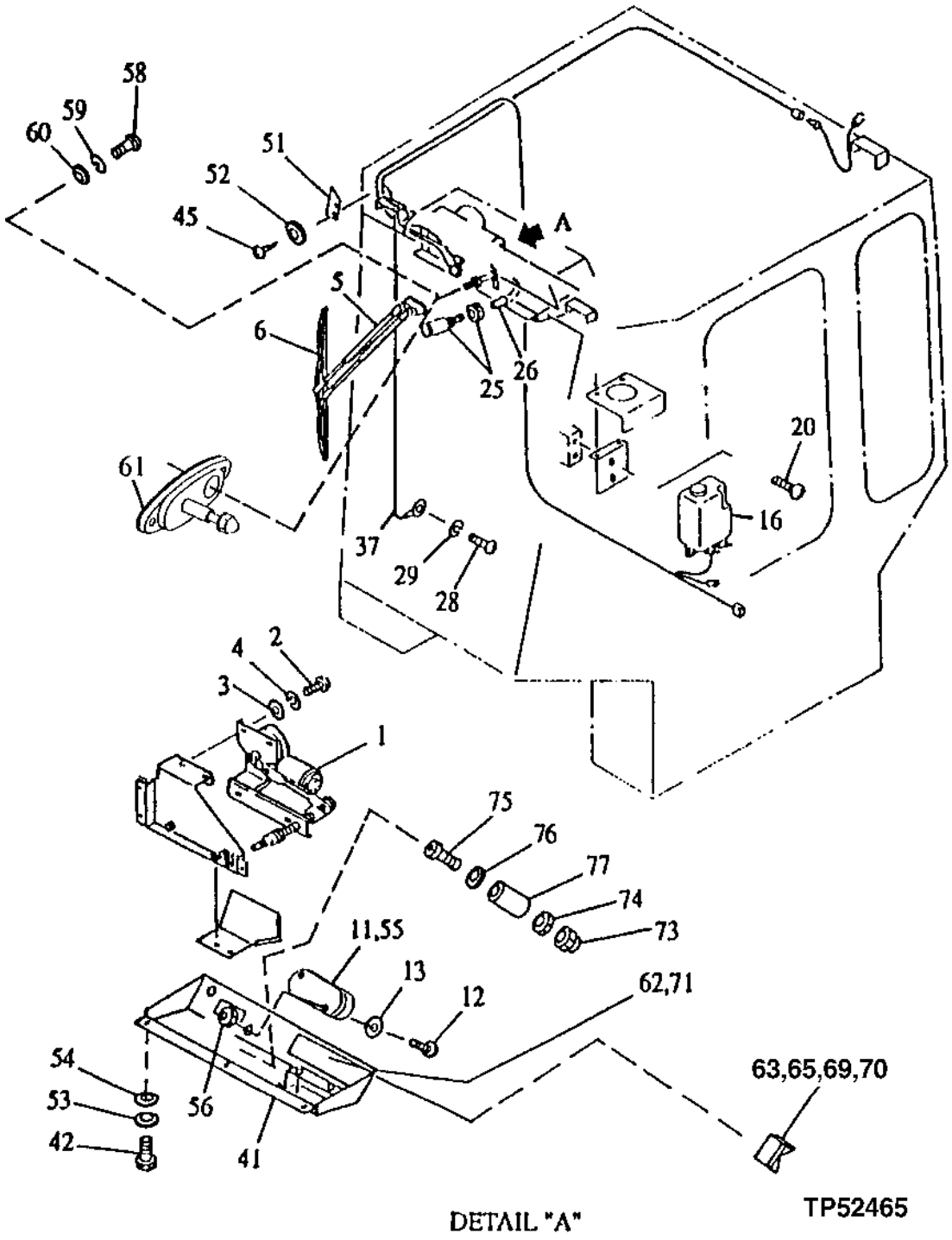

WINDSHIELD WIPER

KEY	PART NO.	PART NAME	QTY	SERIAL NO.	REMARKS
1	AT202568	MOTOR	1		
2	19H1227	CAP SCREW	2		1/4" X 1/2"
3	24H1287	WASHER	2		9/32" X 5/8" X 0.065"
4	12H302	LOCK WASHER	2		1/4"
5	AT202567	WIPER ARM	1		
6	AT202566	WIPER BLADE	1		
11	AT202544	LAMP	1		
12	AT202543	SCREW	4		
13	AT202548	WASHER	4		
16	AT202509	TANK	1		
20	AT202545	SCREW	2		
25	AT151008	KIT	1		(NOZZLE)
26	AT202570	HOSE	1		
28	19H1648	CAP SCREW	1		3/8" X 3/4"
29	AT202558	WASHER	1		
37	AT202531	WIRING HARNESS	1		
41	.....	PANEL	1		
42	21H1302	SCREW	8		1/4" X 5/8"
45	21H1295	SCREW	2		0.190" X 5/8"
51	AT202497	PLATE	2		
52	M68340	WASHER	2		4.940 X 11.913 X 1.219 MM (0.195" X 15/32" X 0.048")
53	12H302	LOCK WASHER	8		1/4"
54	24H1287	WASHER	8		9/32" X 5/8" X 0.065"
55	AT202532	BULB	8		
56	14H605	NUT	4		0.164"
58	AT202554	BOLT	4		
59	AT202555	WASHER	4		
60	24H1287	WASHER	4		9/32" X 5/8" X 0.065"
61	RE36215	PLATE	1		(SUB FOR AT115596)
62	Z45961	FRAME	1		
63	AT202506	ROCKER SWITCH	2		(DOME LIGHT)
65	AT202507	ROCKER SWITCH	2		(FRONT WIPER)
69	AT202565	ROCKER SWITCH	1		(WINDSHIELD WASHER PUMP)
70	AT179433	ROCKER SWITCH	1		(WORK LIGHT)
	AT179434	LENS	1		(GREEN WHEN "ON") (NOT ILLUSTRATED)
71	Z45833	COVER	1		
73	M68689	NUT	2		4.826 MM (0.190")
74	AT202564	NUT	2		
75	19H2335	CAP SCREW	2		1/4" X 2-3/4"
76	M68340	WASHER	6		4.940 X 11.913 X 1.219 MM (0.195" X 15/32" X 0.048")
77	AT202498	SPACER	2		

OPERATOR SEAT

TP52406 -UN-14OCT96

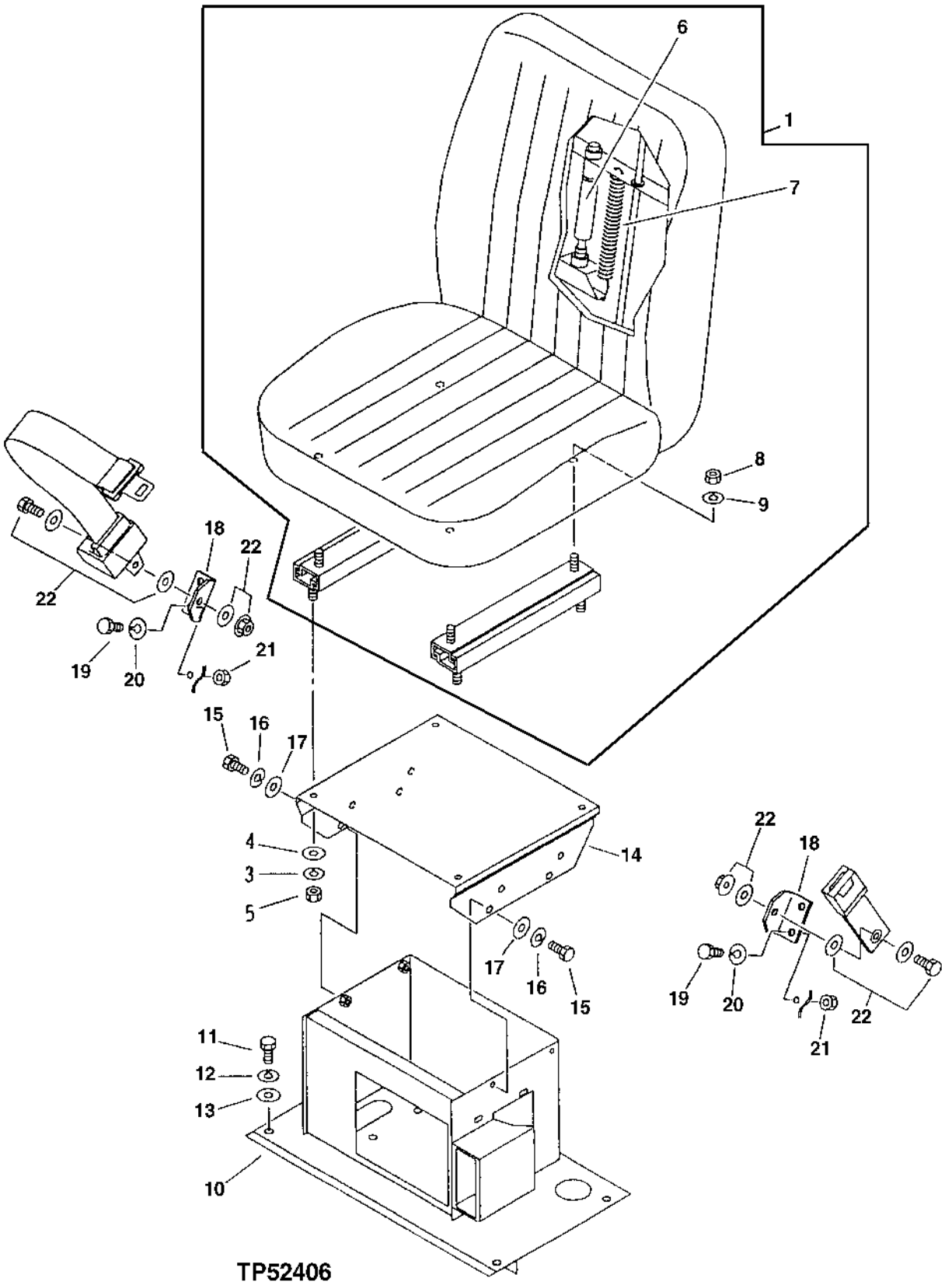

OPERATOR SEAT

KEY	PART NO.	PART NAME	QTY	SERIAL NO.	REMARKS
1	AT152469	SEAT	1		
3	12M6791	LOCK WASHER	4		10.200 MM
4	24M7028	WASHER	4		10.500 X 20 X 2 MM
5	14M7444	NUT	4		M10
6	AT152470	TORTIONAL DAMPENER	1		
7	AT152471	SPRING	2		
8	14M7273	NUT	10		M8
9	12M7065	LOCK WASHER	10		8 MM
10	AT215320	SUPPORT	1		
11	19M7402	CAP SCREW	4		M10 X 25
12	12M6791	LOCK WASHER	4		10.200 MM
13	24M7028	WASHER	4		10.500 X 20 X 2 MM
14	AT215409	SUPPORT	1		
15	19M7402	CAP SCREW	4		M10 X 25
16	12M6791	LOCK WASHER	4		10.200 MM
17	24M7028	WASHER	4		10.500 X 20 X 2 MM
18	AT152555	BRACKET	2		
19	19M7872	CAP SCREW	4		M12 X 25
20	12M7067	LOCK WASHER	4		12 MM
21	14M7275	NUT	4		M12
22	AT157415	SEAT BELT	1		

FRAME STEPS

TP52403 -UN-14OCT96

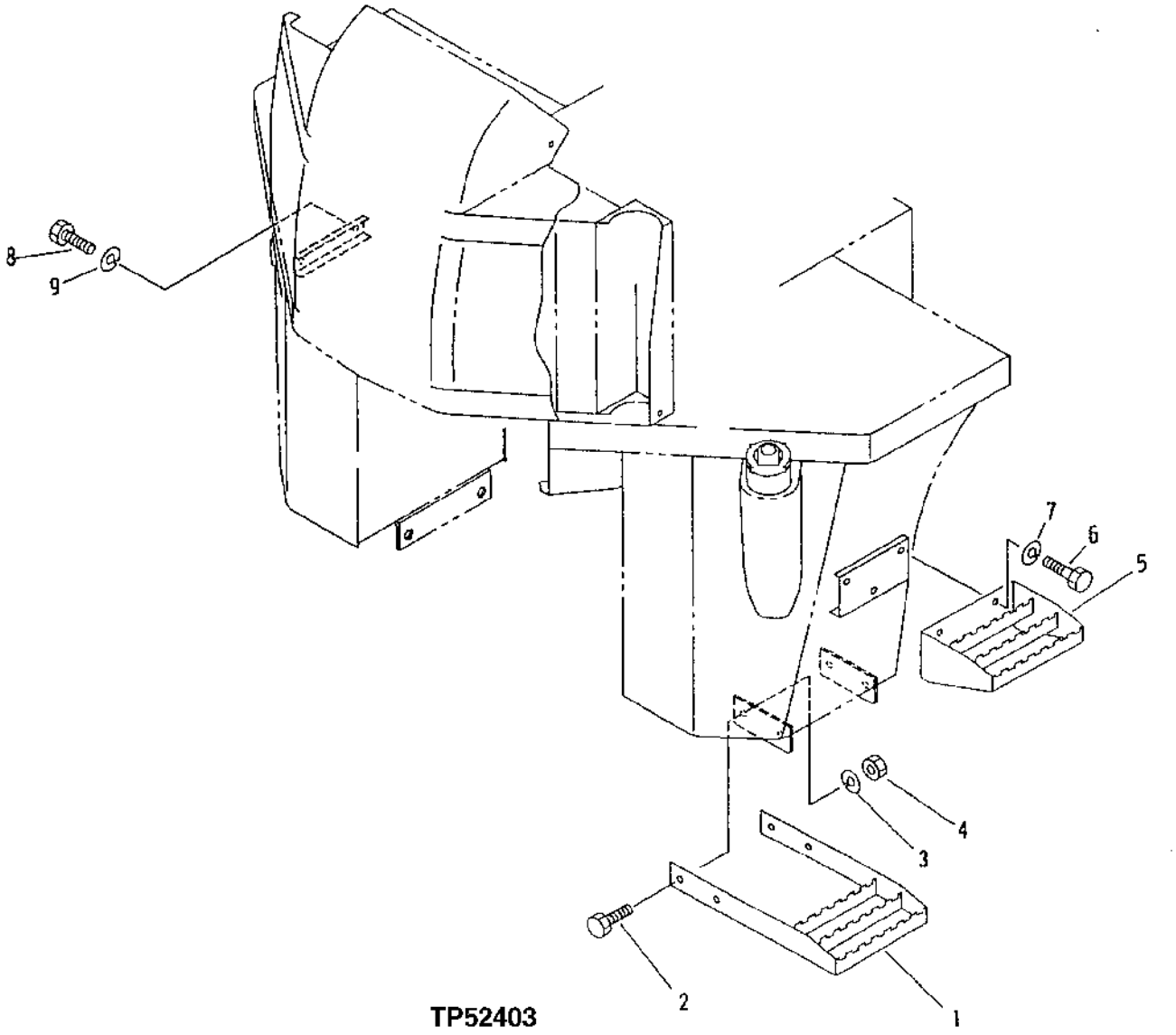

TP52403

FRAME STEPS

KEY	PART NO.	PART NAME	QTY	SERIAL NO.	REMARKS
1	AT179654	STEP	1		
2	19M8011	CAP SCREW	4		M12 X 30
3	12M7067	LOCK WASHER	4		12 MM
4	14M7275	NUT	4		M12
5	AT215408	STEP	1		
6	19M7872	CAP SCREW	3		M12 X 25
7	12M7067	LOCK WASHER	3		12 MM
8	AT215128	CAP SCREW	2		
9	12M7067	LOCK WASHER	2		12 MM

HEATER

TP52466 -UN-08OCT96

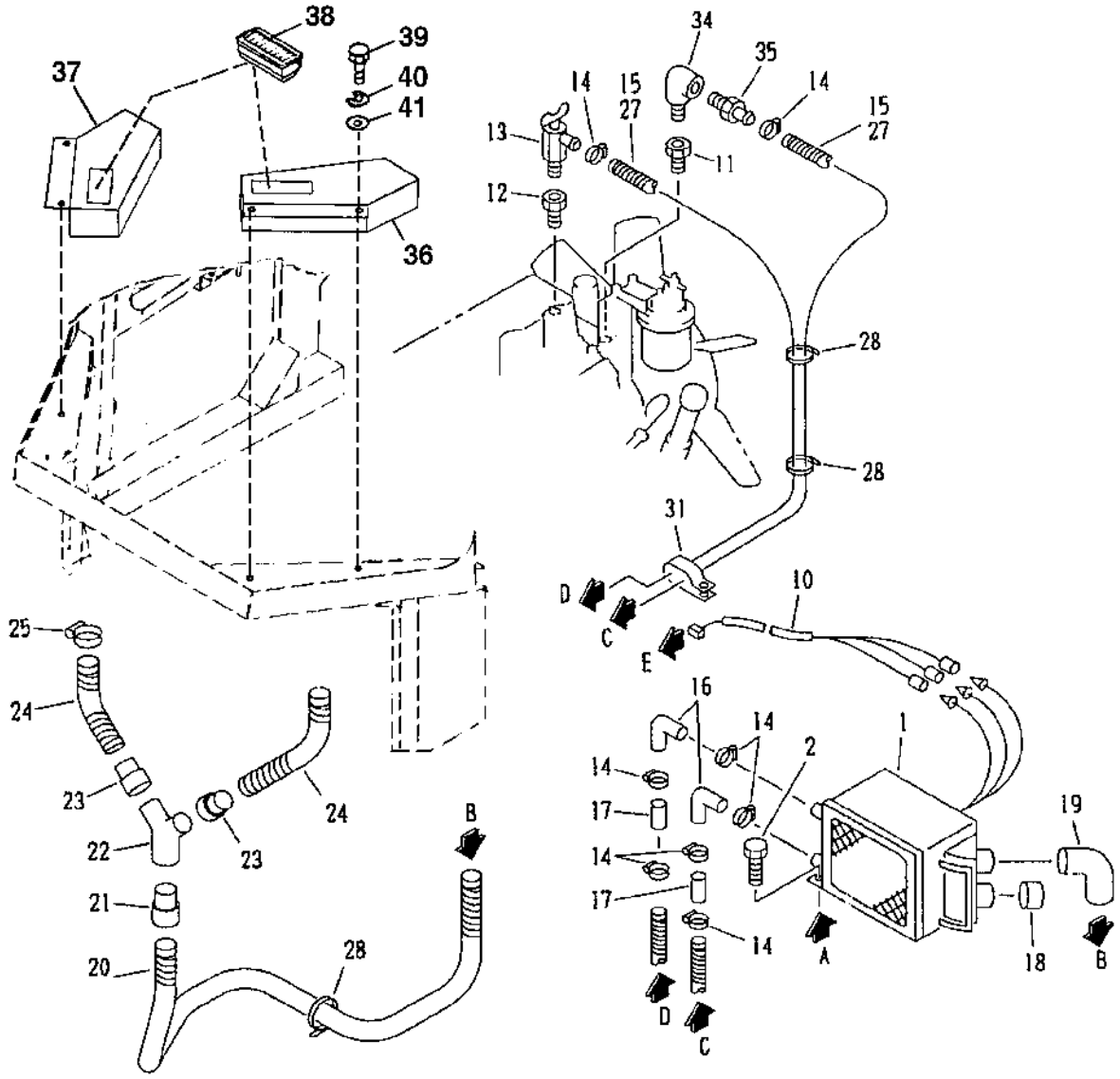

INSTRUMENT PANEL

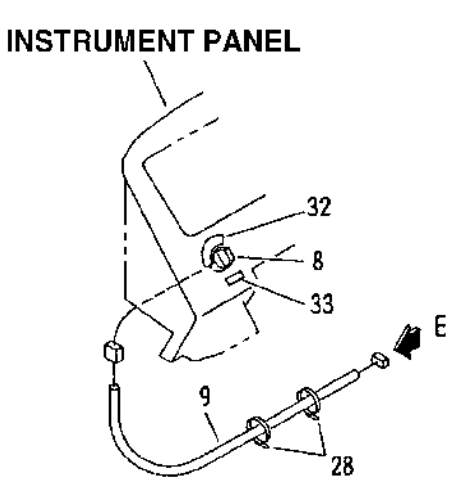

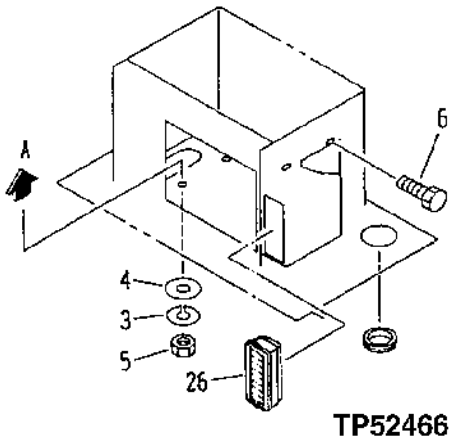

TP52466

HEATER

KEY	PART NO.	PART NAME	QTY	SERIAL NO.	REMARKS
1	T116229	HEATER	1		
2	19M8324	CAP SCREW	2		M10 X 16
3	12M6791	LOCK WASHER	2		10.200 MM
4	24M7028	WASHER	2		10.500 X 20 X 2 MM
5	14M7274	NUT	2		
6	T116744	BOLT	2		
8	AT215315	SWITCH	1		(HEATER FAN)
9	AT215316	WIRING HARNESS	1		
10	AT152716	WIRING HARNESS	1		
11	T115808	ADAPTER	1		
12	T115444	ADAPTER	1		
13	T116073	VALVE	1		
14	AA34965	HOSE CLAMP	8		
15	.....	HOSE	2		(FURNISH T60811 CUT TO LENGTH)
16	T116075	PIPE ELBOW	2		
17	T116074	CONNECTOR	2		
18	T115445	CAP	1		
19	AT215445	CONNECTOR	1		
20	AT215317	HOSE	1		
21	AT215444	CONNECTOR	1		
22	AT215447	BALL JOINT	1		
23	AT152545	BUSHING	1		
24	AT215318	HOSE	2		
25	AT152433	CLAMP	2		
26	AT136847	GRILLE	1		
27	AT138220	GUARD	2		
28	H77698	TIE BAND	16		
31	AT153311	CLAMP	1		
32	AT215319	DECAL	1		
33	T116019	PLATE	1		
34	AT136693	ELBOW FITTING	1		
35	AT215314	ADAPTER	1		
36	AT179436	DEFROSTER	1		(LH)
37	AT179437	DEFROSTER	1		(RH)
38	RE64911	LOUVER	2		
39	19H1948	CAP SCREW	4		1/4" X 3/4"
40	24H1287	WASHER	4		9/32" X 5/8" X 0.065"
41	12H302	LOCK WASHER	4		1/4"

HEATER

TP52467 -UN-07OCT96

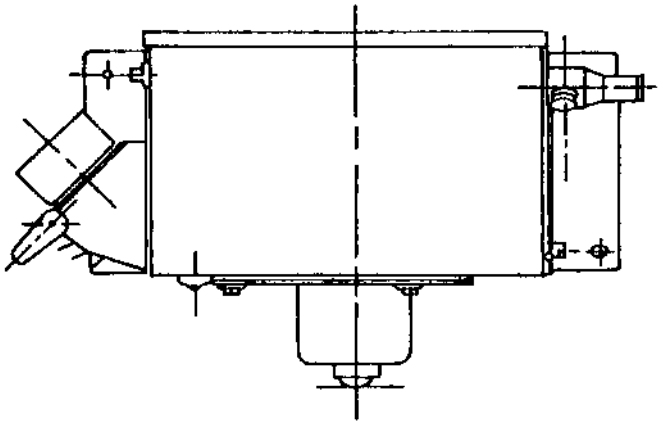

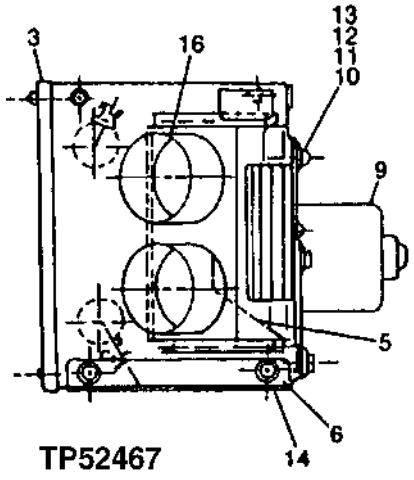

TP52467

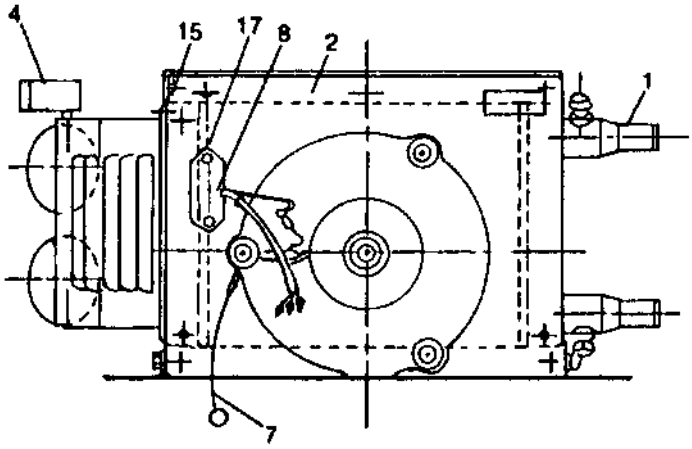

HEATER

KEY	PART NO.	PART NAME	QTY	SERIAL NO.	REMARKS
1	T116757	RADIATOR	1		
2	T116756	CASE	1		
3	T116755	COVER	1		
4	T116754	AIR DUCT	1		
5	T116753	FAN	1		
6	T116752	BRACKET	2		
7	T116751	WIRING HARNESS	1		
8	T116750	RESISTOR	1		
9	T116749	ELECTRIC MOTOR	1		
10	T116748	BOLT	3		
11	T116747	INSERT	3		
12	T116746	BUSHING	3		
13	T116745	PACKING	1		
14	T116744	BOLT	6		
15	T116743	SCREW	4		
16	T116742	SCREW	4		
17	T116741	SCREW	2		

REAR FRAME COVER

TP52401 -UN-14OCT96

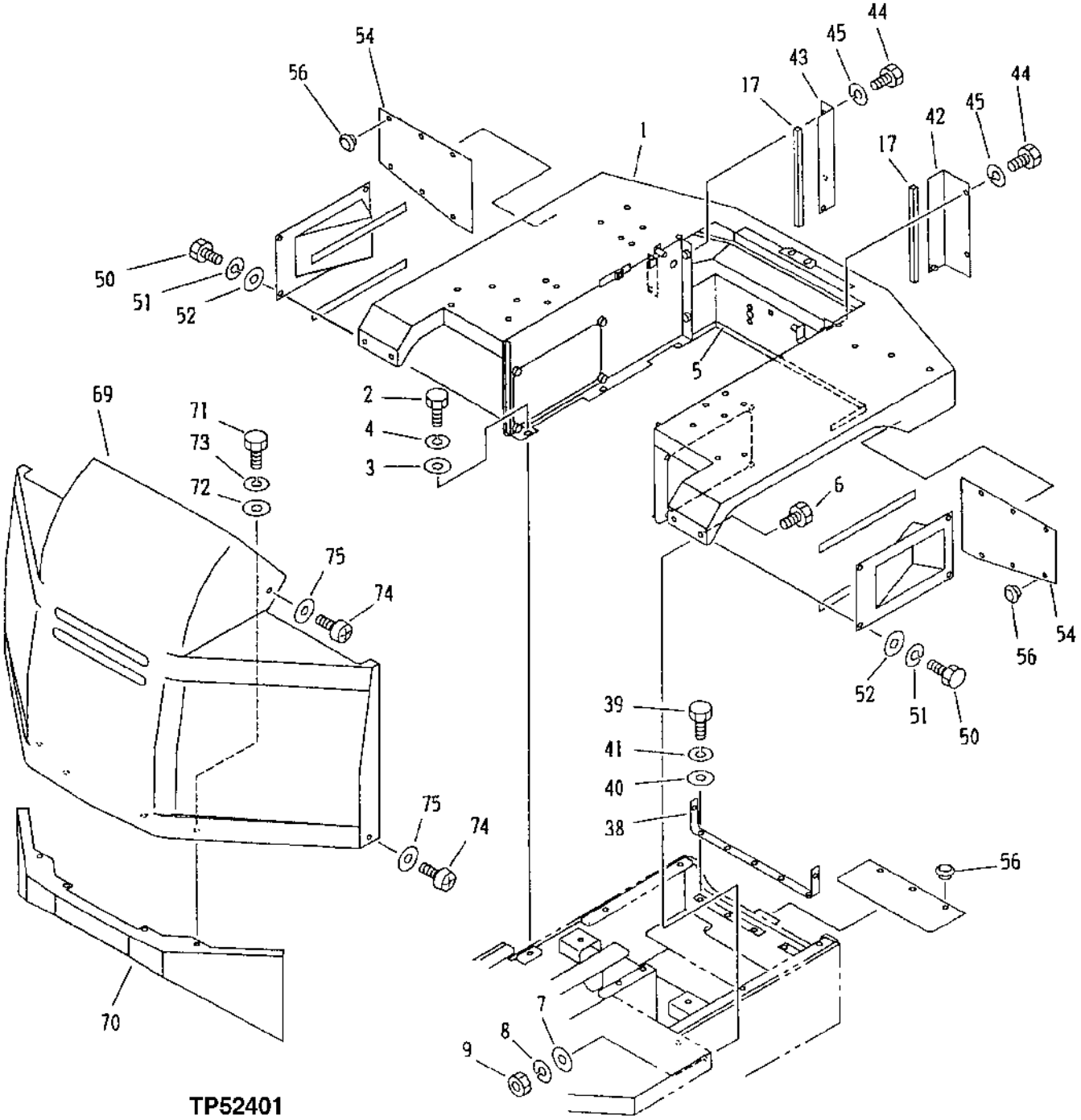

REAR FRAME COVER

KEY	PART NO.	PART NAME	QTY	SERIAL NO.	REMARKS
1	AT215403	WING FRAME	1		
2	19M8011	CAP SCREW	6		M12 X 30
3	E42967	WASHER	6		13.106 X 28.575 X 6.350 MM
4	12M7067	LOCK WASHER	6		12 MM
5	AT215168	SEAL	1		
6	19M7168	CAP SCREW	4		M10 X 30
7	T82425	WASHER	4		
8	12M6791	LOCK WASHER	4		10.200 MM
9	14M7274	NUT	4		M10
17	AT215167	SEAL	2		
38	AT159162	ISOLATOR	1		
39	19M7881	SCREW	6		M8 X 20
40	24M7024	WASHER	6		9 X 28 X 3 MM
41	12M7065	LOCK WASHER	6		8 MM
42	AT159163	PLATE	1		
43	AT159164	PLATE	1		
44	19M7402	CAP SCREW	4		M10 X 25
45	12M6791	LOCK WASHER	4		10.200 MM
50	19M7938	CAP SCREW	8		M10 X 20
51	12M6791	LOCK WASHER	8		10.200 MM
52	24M7028	WASHER	8		10.500 X 20 X 2 MM
54	AT215406	PLATE	2		
56	AT215407	PLUG	15		
69	AT215218	COVER	1		
70	AT215219	COVER	1		
71	19M7168	CAP SCREW	4		M10 X 30
72	T82425	WASHER	4		10.668 X 25.400 X 3.048 MM (0.420" X 1" X 0.120")
73	12M6791	LOCK WASHER	4		10.200 MM
74	T116095	SCREW	4		M8 X 20
75	24M7055	WASHER	4		8.400 X 16 X 1.600 MM

ENGINE HOOD

TP52402 -UN-14OCT96

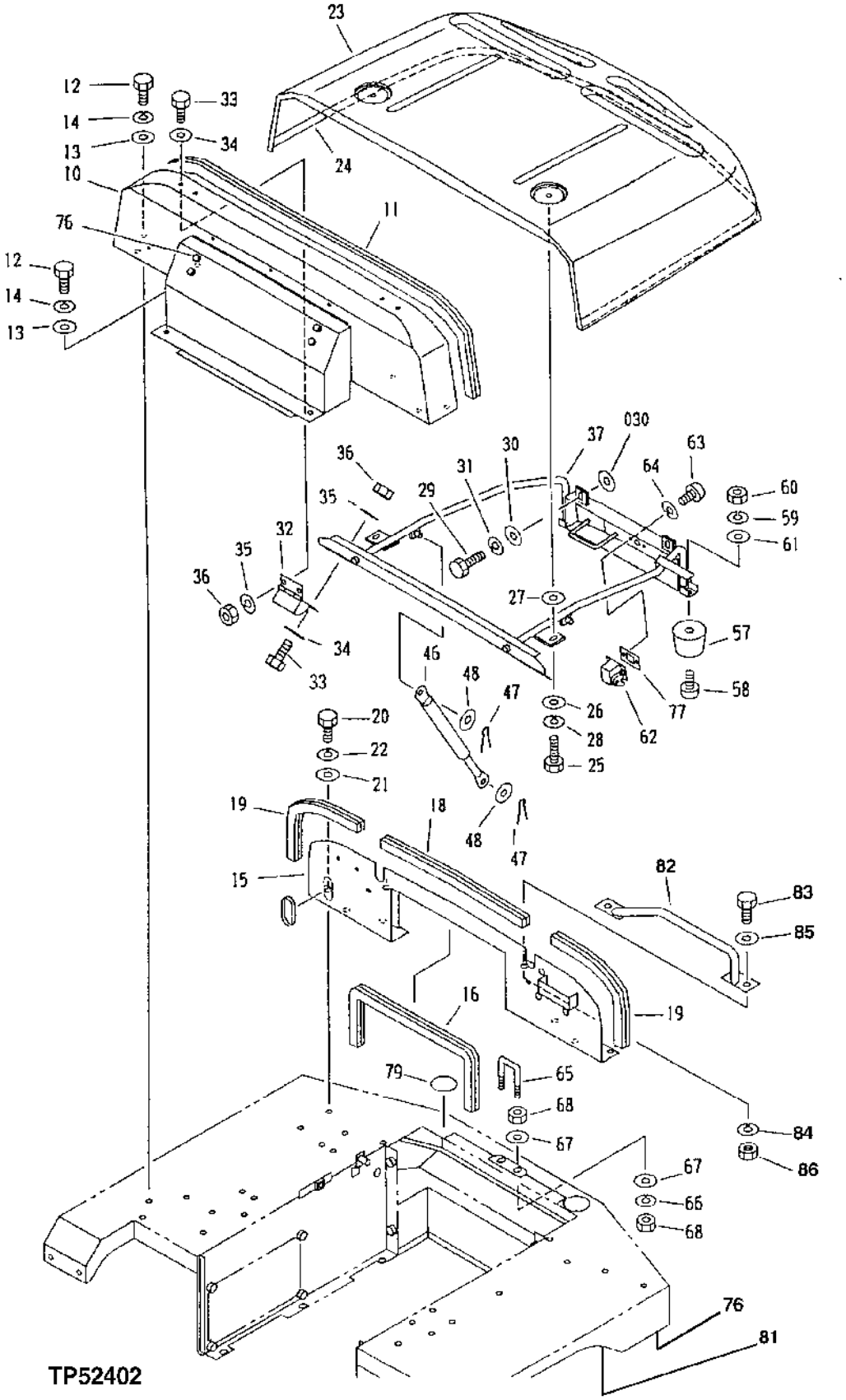

ENGINE HOOD

KEY	PART NO.	PART NAME	QTY	SERIAL NO.	REMARKS
10	AT215404	SUPPORT	1		
11	AT159175	SEAL	1		(CUT TO LENGTH)
12	19M7402	CAP SCREW	8		M10 X 25
13	T82425	WASHER	8		10.668 X 25.400 X 3.048 MM (0.420" X 1" X 0.120")
14	12M6791	LOCK WASHER	8		10.200 MM
15	AT215405	SUPPORT	1		
16	AT215166	SEAL	1		
18	AT215165	SEAL	1		
19	AT215164	SEAL	2		
20	19M7402	CAP SCREW	6		M10 X 25
21	T82425	WASHER	6		10.668 X 25.400 X 3.048 MM
22	12M6791	LOCK WASHER	6		10.200 MM
23	AT215395	HOOD	1		(DOES NOT INCLUDE SOUND PACKAGE)
24	AT159175	SEAL	1		(CUT TO LENGTH)
25	19M7403	CAP SCREW	2		M12 X 35
26	R100105	WASHER	2		13.500 X 30 X 3 MM (0.531" X 1.181" X 0.118")
27	R100105	WASHER	2		13.500 X 30 X 3 MM (0.531" X 1.181" X 0.118")
28	12M7067	LOCK WASHER	2		12 MM
29	19M8071	SCREW	2		M6 X 65
30	R100105	WASHER	4		13.500 X 30 X 3 MM (0.531" X 1.181" X 0.118")
31	12M7067	LOCK WASHER	2		12 MM
32	AT215396	HINGE	2		
33	19M7402	CAP SCREW	8		M10 X 25
34	24M7028	WASHER	8		10.500 X 20 X 2 MM
35	12M6791	LOCK WASHER	8		10.200 MM
36	14M7274	NUT	8		M10
37	AT215397	SUPPORT	1		
46	AT215398	CYLINDER	2		
47	11M7081	COTTER PIN	4		2.500 X 20 MM
48	24M7055	WASHER	4		8.400 X 16 X 1.600 MM
57	AT215463	RUBBER MOUNT	2		
58	21M7267	SCREW	2		
59	12M7006	LOCK WASHER	2		
60	14M7027	NUT	2		M6
61	24M7054	WASHER	2		6.400 X 12 X 1.600 MM
62	AT215399	LOCK	1		
63	AT215137	SCREW	2		
64	12M7065	LOCK WASHER	2		8 MM
65	AT215401	U-BOLT	1		
66	12M7065	LOCK WASHER	2		
67	24M7055	WASHER	4		8.400 X 16 X 1.600 MM
68	14M7273	NUT	4		M8
76	AT215220	PLUG	8		
77	AT215400	PLATE	1		
79	.....	LABEL	2		(TH101411 NO LONGER AVAILABLE)
81	AT215170	GROMMET	1		(NOT SHOWN)
82	AT179655	HANDLE	1		
83	19M7168	CAP SCREW	2		M10 X 30
84	12M6791	LOCK WASHER	2		10.200 MM
85	24M7028	WASHER	2		10.500 X 20 X 2 MM
86	14M7274	NUT	2		M10

MEMORANDA

SLOW MOVING VEHICLE EMBLEM

TP24155 -UN-01JAN94

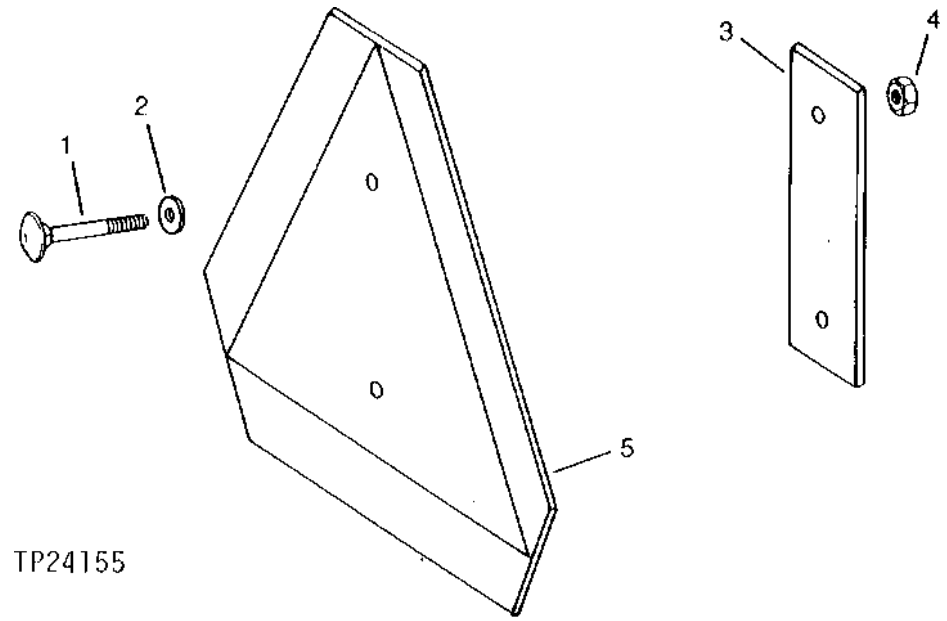

KEY	PART NO.	PART NAME	QTY	SERIAL NO.	REMARKS
1	19H3491	CAP SCREW	2		1/4" X 1-7/8"
2	24H1287	WASHER	2		9/32" X 5/8" X 0.065"
3	H26743	STRAP	1		
4	14H786	NUT	2		1/4"
5	JD5929	SMV EMBLEM	1		(SUB FOR TY2615)

MAIN HYDRAULIC PUMP

T141887 -UN-02MAY01

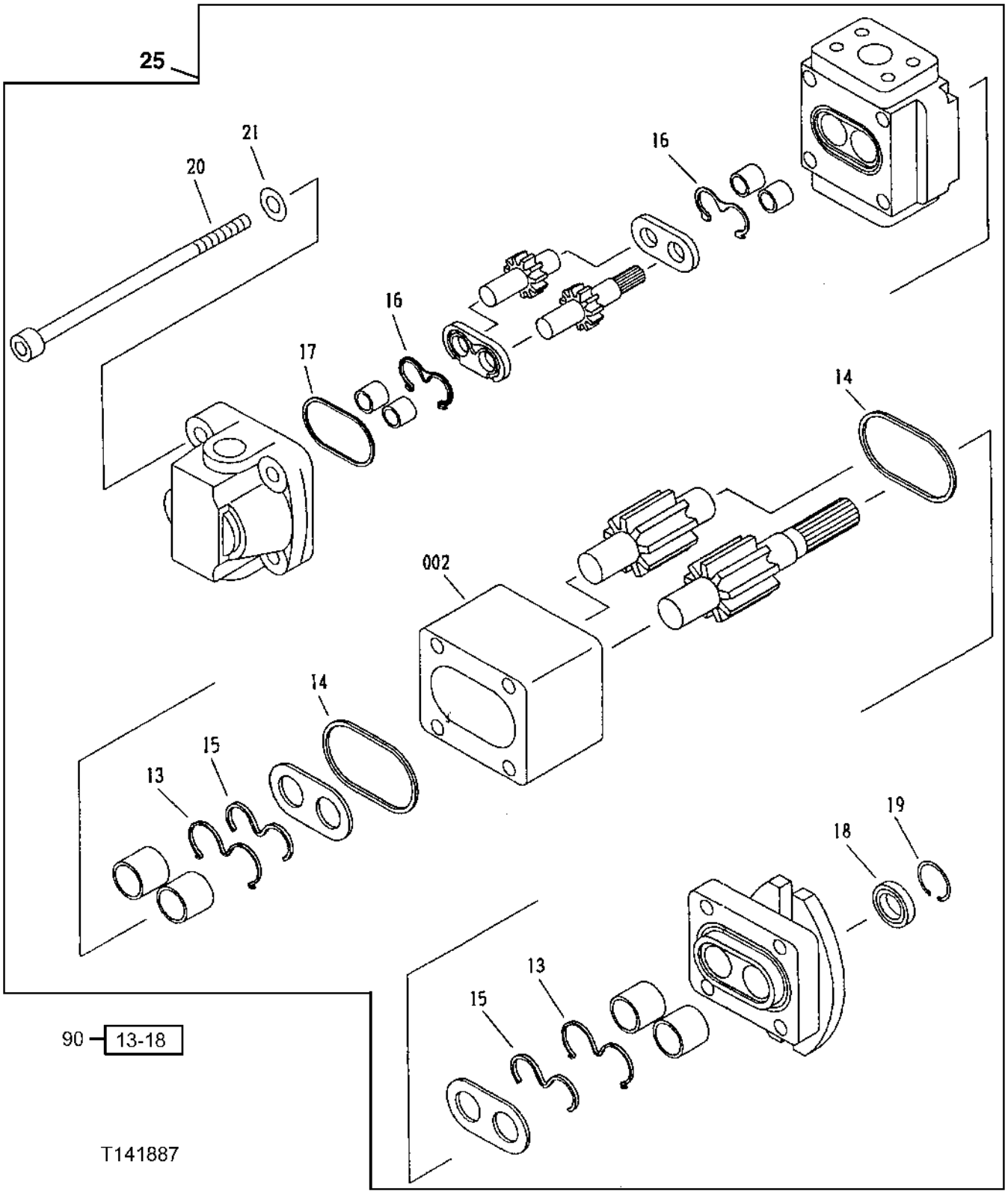

MAIN HYDRAULIC PUMP

KEY	PART NO.	PART NAME	QTY	SERIAL NO.	REMARKS
13	.....	GASKET	1		(K)
14	.....	GASKET	1		(K)
15	.....	GASKET	1		(K)
16	.....	GASKET	1		(K)
17	.....	GASKET	1		(K)
18	.....	SEAL	1		(K)
19	AT215143	SNAP RING	1		
20	AT215135	SCREW	4		
21	AT215335	WASHER	4		
25	AT215338	PUMP	1		
90	AT179652	KIT	1		INCLUDES ALL (K) PARTS (REPAIR)

THREE-SPOOL CONTROL VALVE

TP52408 -UN-15OCT96

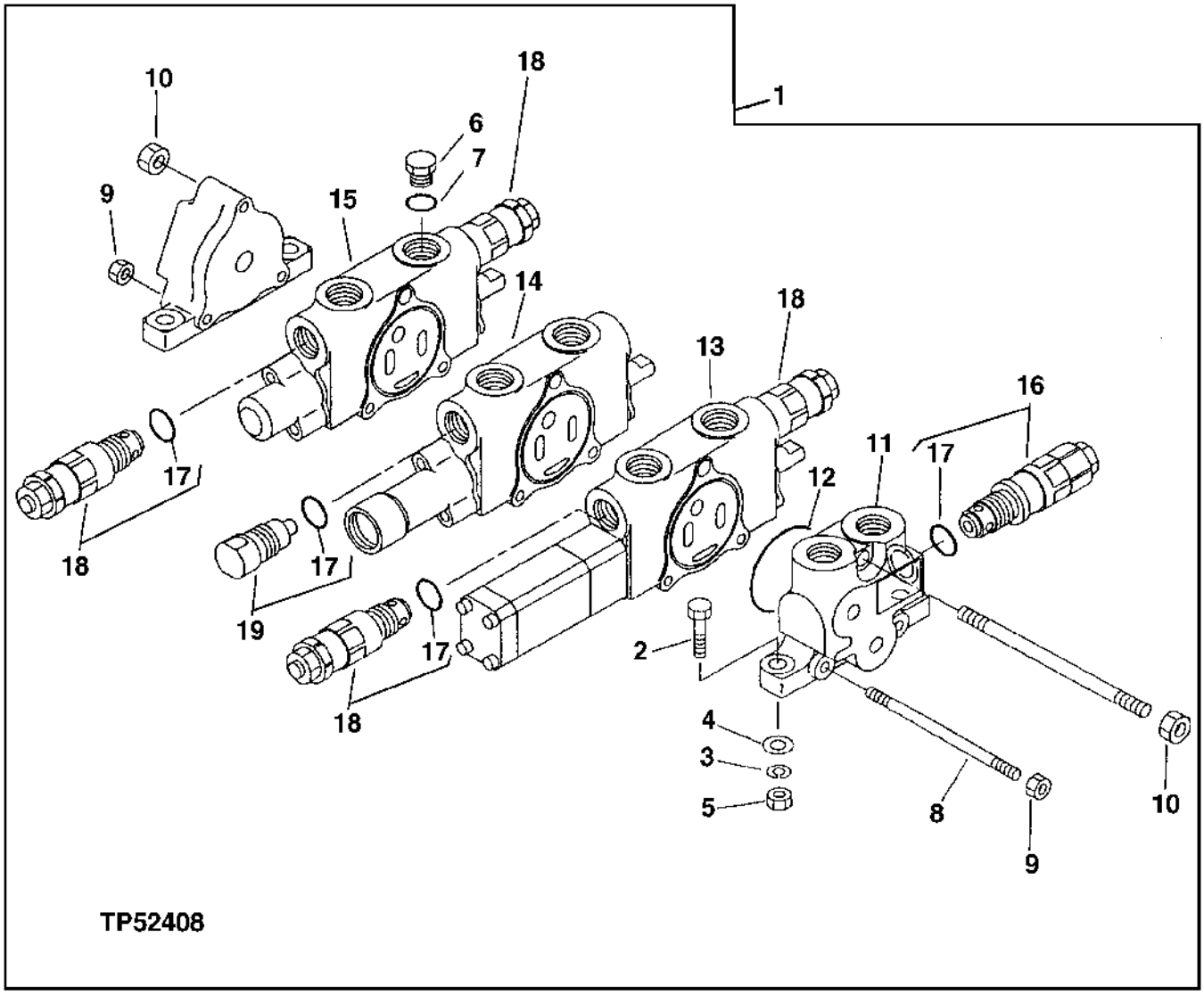

THREE-SPOOL CONTROL VALVE

KEY	PART NO.	PART NAME	QTY	SERIAL NO.	REMARKS
1	AT215274	CONTROL VALVE	1		
2	19M7358	CAP SCREW	3		M10 X 40
3	12M6791	LOCK WASHER	3		10.200 MM
4	T82425	WASHER	3		10.668 X 25.400 X 3.048 MM
5	14M7274	NUT	3		M10
6	AT215171	FITTING PLUG	2		
7	R26375	O-RING	2		
8	AT215458	ROD	2		
9	14M7273	NUT	4		
10	14M7474	FLANGE NUT	2		M20
11	AT108294	VALVE	1		
12	U46457	O-RING	1		56.744 X 3.531 MM (2-15/64" X 0.139")
13	AT215271	PLUNGER	1		
14	AT153110	VALVE	1		
15	AT108988	VALVE	1		
16	AT153114	RELIEF VALVE	1		
17	R26906	O-RING	3		19.177 X 2.464 MM (0.755" X 0.097")
18	AT153115	RELIEF VALVE	1		
19	AT152556	VALVE	1		

CONTROL VALVE - BUCKET SECTION

TP52409 -UN-14OCT96

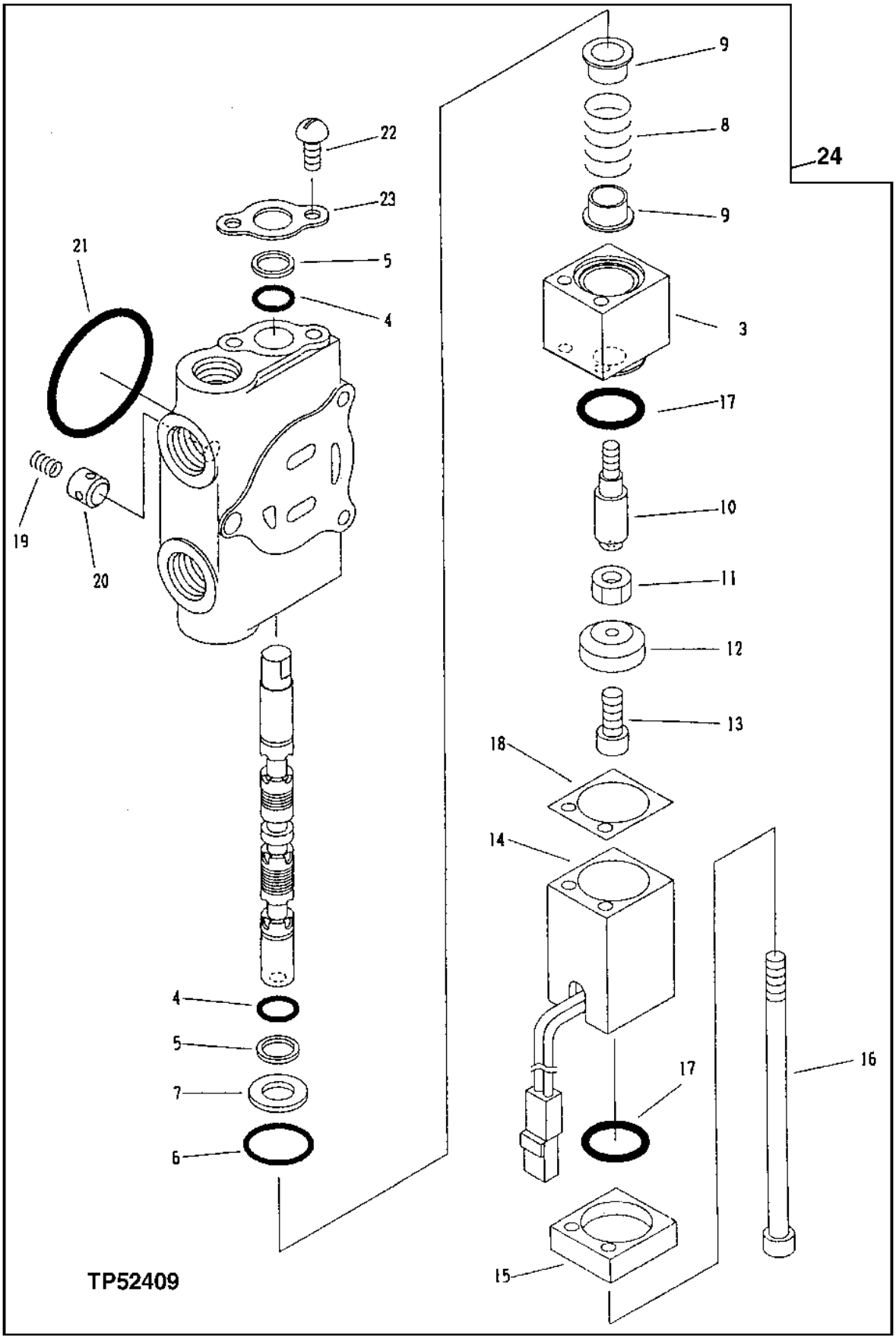

CONTROL VALVE - BUCKET SECTION

KEY	PART NO.	PART NAME	QTY	SERIAL NO.	REMARKS
3	AT215221	SLEEVE	1		
4	32246	O-RING	2		
5	T115392	SEAL	2		
6	AT215222	O-RING	1		
7	AT215223	PLATE	1		
8	AT153352	SPRING	1		
9	T115394	PLUG	2		
10	AT215224	SCREW	1		
11	AT215225	NUT	1		
12	AT215226	PLATE	1		
13	AT215227	SCREW	1		
14	AT215272	SOLENOID	1		
15	AT215228	CAP	1		
16	AT215229	BOLT	2		
17	AT215230	O-RING	2		
18	AT215231	SHIM	1		
19	T116213	SPRING	1		
20	T115397	POPPET	1		
21	U46457	O-RING	1		
22	21M7400	SCREW	2		M6 X 10
23	T115390	PLATE	1		
24	AT215271	PLUNGER	1		

CONTROL VALVE - BOOM SECTION

TP40039 -UN-01JAN94

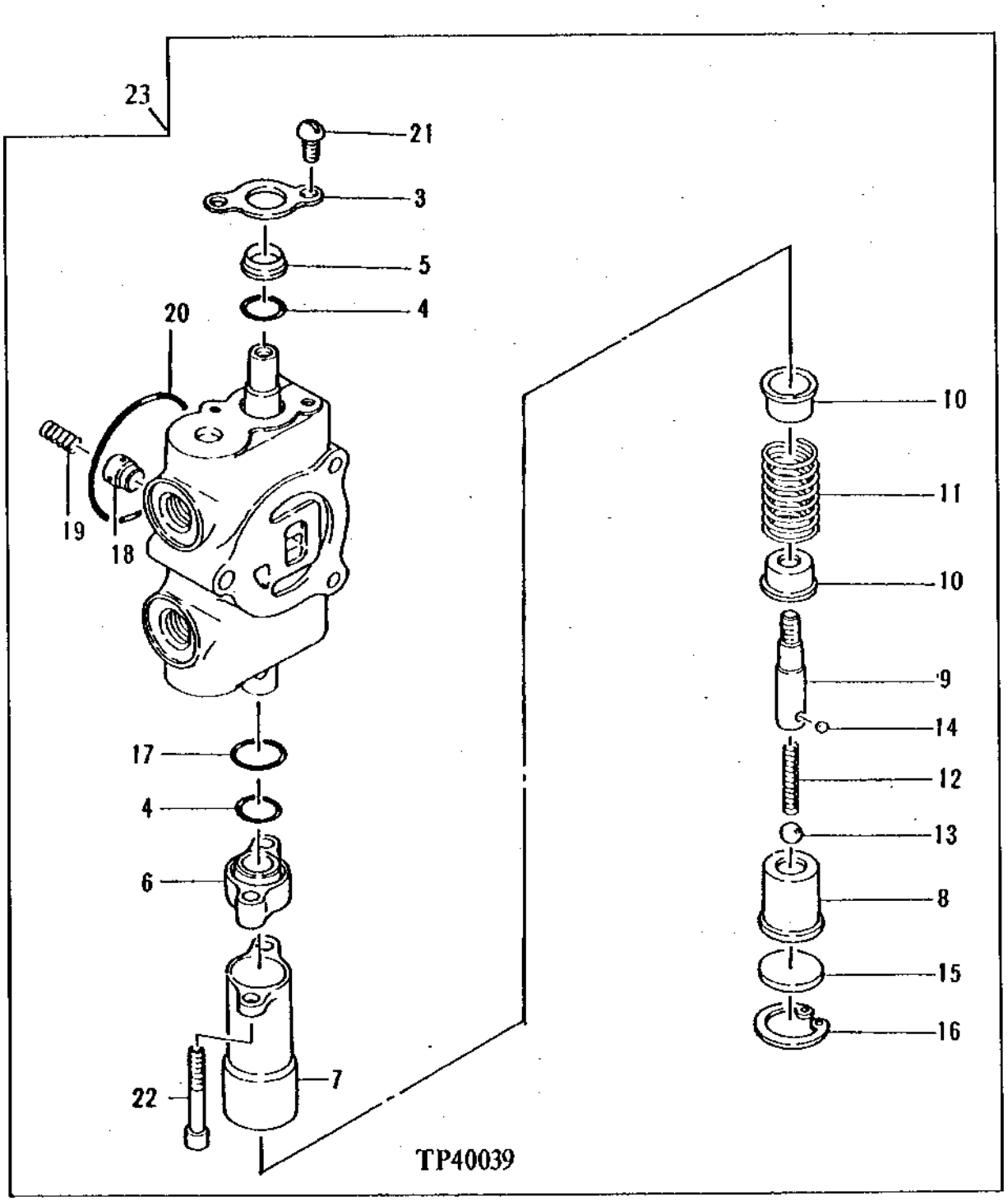

CONTROL VALVE - BOOM SECTION

KEY	PART NO.	PART NAME	QTY	SERIAL NO.	REMARKS
3	T115390	PLATE	1		
4	32246	O-RING	2		(SUB FOR T115391)
5	T115392	SEAL	1		
6	T115399	SPACER	1		
7	T115400	CAP	1		
8	AT153112	SLEEVE	1		
9	T115402	PIN	1		
10	T115394	PLUG	2		
11	AT153113	SPRING	1		
12	T115403	SPRING	1		
13	R26552	BALL	1		
14	R63075	BALL	4		(SUB FOR T115405)
15	T115406	DISK	1		
16	T115407	SNAP RING	1		
17	T13119	O-RING	1		(SUB FOR T115408)
18	T115397	POPPET	1		
19	T116213	SPRING	1		
20	U46457	O-RING	1		(SUB FOR T115388)
21	21M7400	SCREW	2		(SUB FOR AT153331)
22	T115409	BOLT	2		(SUB FOR TH110336 OR AT152463)
23	AT153110	VALVE	1		

CONTROL VALVE - AUXILLARY SECTION

TP52454 -UN-17OCT96

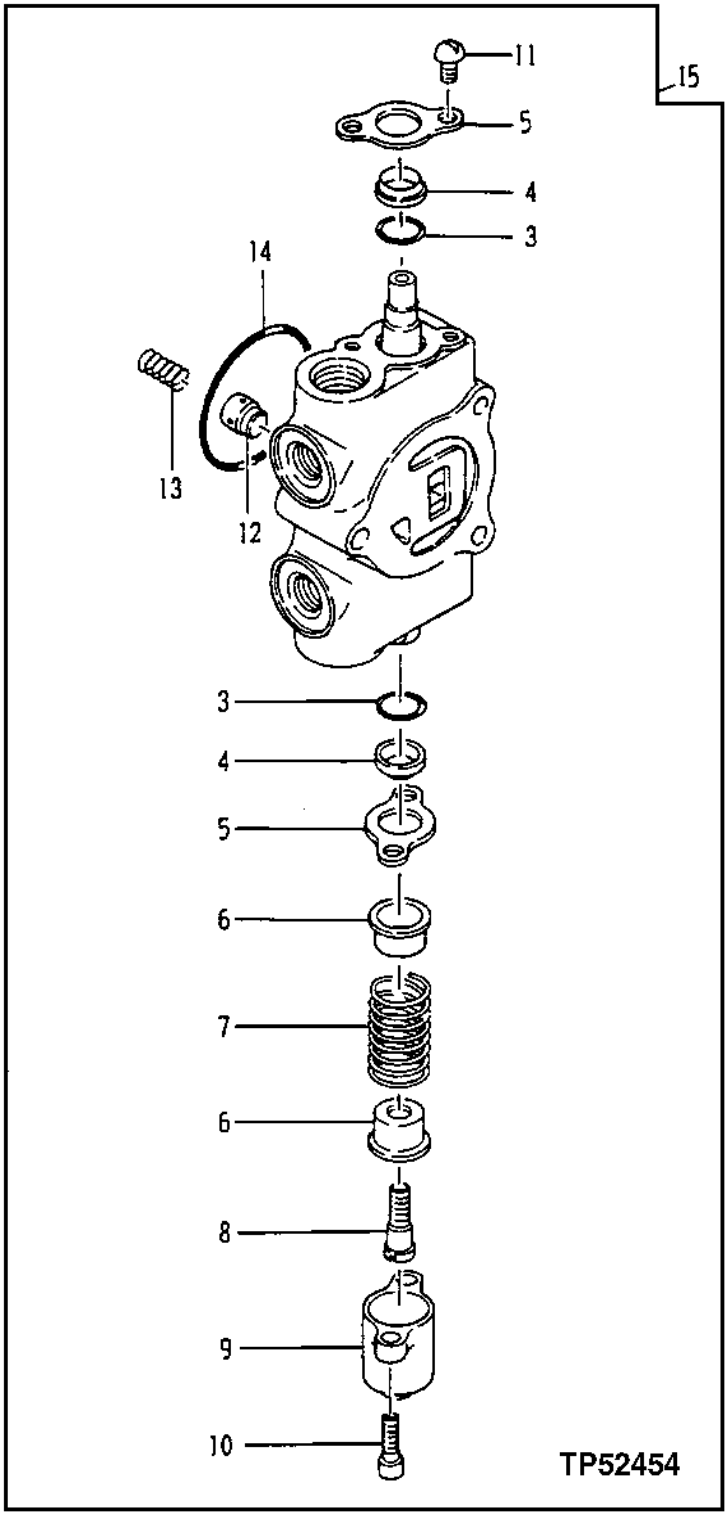

CONTROL VALVE - AUXILLIARY SECTION

KEY	PART NO.	PART NAME	QTY	SERIAL NO.	REMARKS
3	32246	O-RING	2		
4	T115392	SEAL	2		
5	T115390	PLATE	2		
6	T115394	PLUG	2		
7	AT153352	SPRING	1		
8	T115395	SCREW	1		
9	T115393	CAP	1		
10	AT215273	CAP SCREW	2		
11	21M7400	SCREW	2		M6 X 10
12	T115397	POPPET	1		
13	T116213	SPRING	1		
14	U46457	O-RING	1		56.744 X 3.531 MM (2-15/64" X 0.139")
15	AT108988	VALVE	1		

THIRD FUNCTION PLUMBING

TP68657 -UN-09DEC99

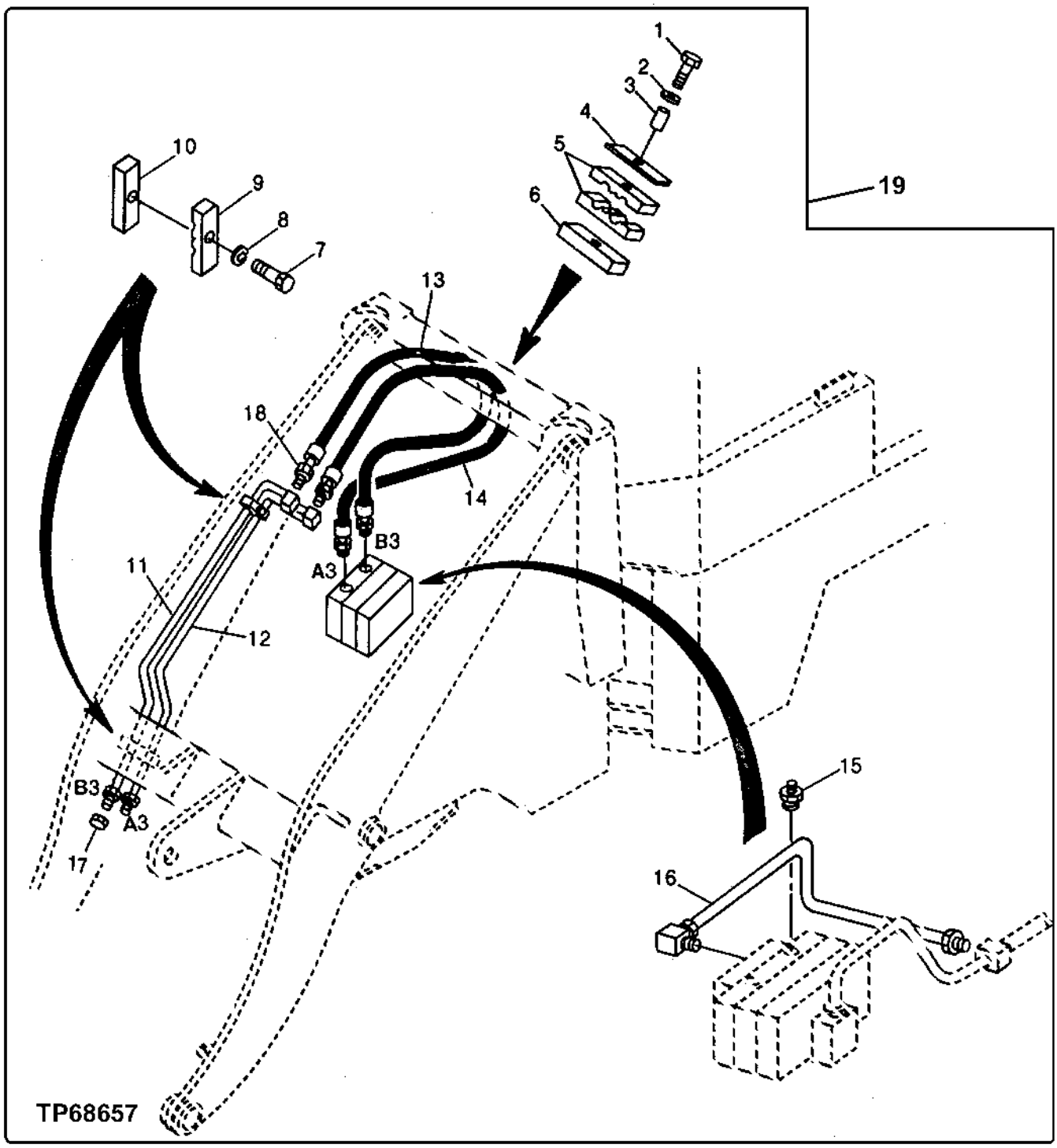

THIRD FUNCTION PLUMBING

KEY	PART NO.	PART NAME	QTY	SERIAL NO.	REMARKS
1	19M7179	CAP SCREW	1		M10 X 50
2	12M6791	LOCK WASHER	1		10.200 MM
3	AT153164	BUSHING	1		
4	AT152625	PLATE	1		
5	AT152627	ISOLATOR	2		
6	AT108977	PLATE	2		
7	19M8261	CAP SCREW	2		M8 X 40
8	12M7065	LOCK WASHER	2		8 MM
9	AT108978	CLAMP	2		
10	T115701	HALF CLAMP	2		
11	AT108980	OIL TUBE	1		
12	AT108981	OIL TUBE	1		
13	AT108979	HYDRAULIC HOSE	1		
14	AT108979	HYDRAULIC HOSE	1		
15	R36426	FITTING	2		(SUB FOR AT153171) (ALSO ORDER R26375)
16	AT108987	OIL TUBE	1		
17	T115332	FITTING PLUG	2		
18	T115957	ADAPTER	2		
19	AT177183	KIT	1		

HYDRAULIC PLUMBING

TP52455 -UN-15OCT96

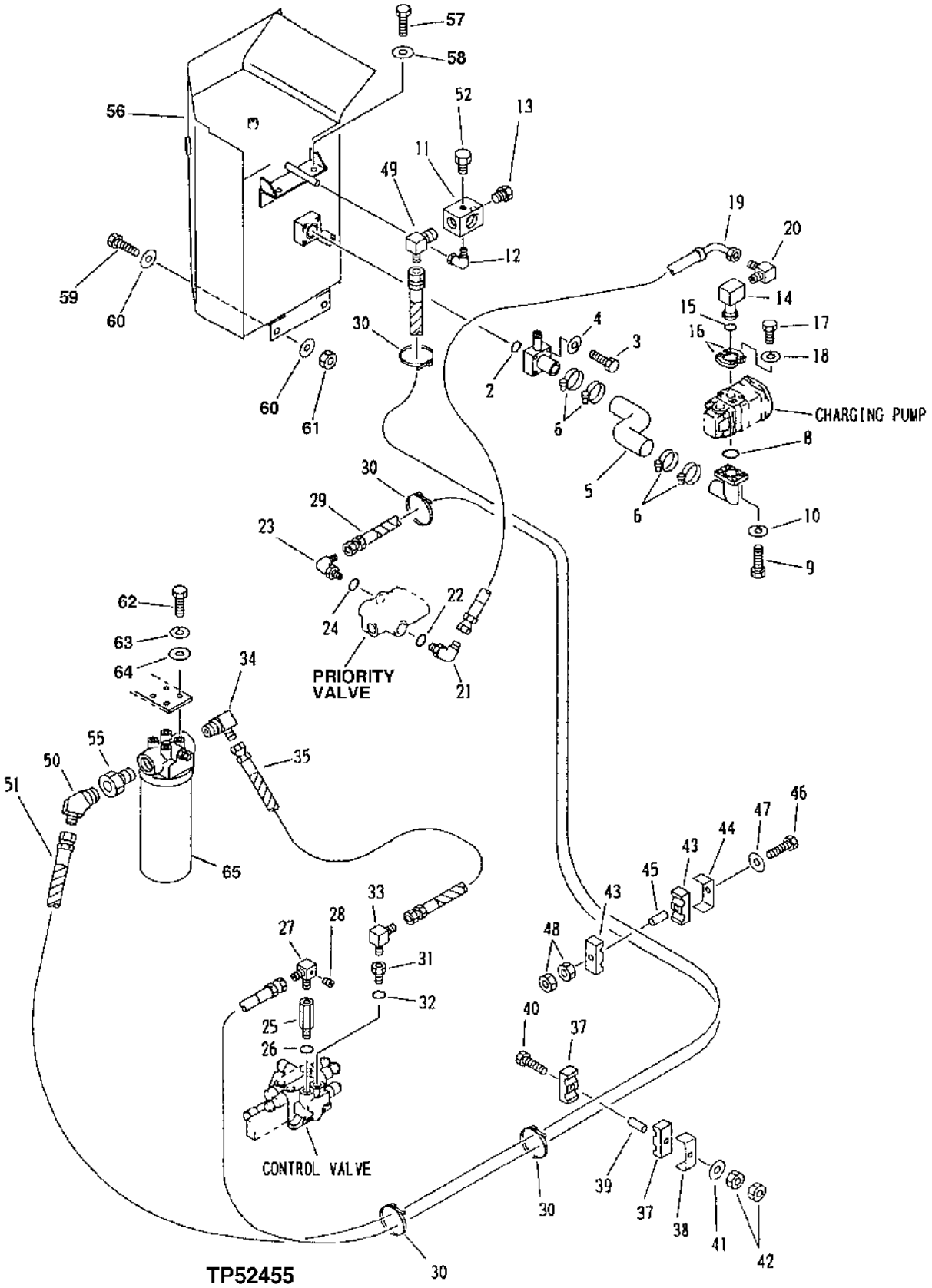

HYDRAULIC PLUMBING

KEY	PART NO.	PART NAME	QTY	SERIAL NO.	REMARKS
2	AT122625	O-RING	1		43.700 X 3.500 MM (1.720" X 0.138")
3	19M7935	CAP SCREW	4		M10 X 55
4	12M6791	LOCK WASHER	4		10.200 MM
5	AT215411	HYDRAULIC HOSE	1		
6	R110531	CLAMP	4		
8	T116619	O-RING	1		
9	19M7168	CAP SCREW	4		M10 X 30
10	12M6791	LOCK WASHER	4		10.200 MM
11	AT215415	JUNCTION BLOCK	1		
12	AT179788	ELBOW FITTING	1		
13	AT153341	PLUG	1		
14	AT215412	TUBE	1		
15	T78313	O-RING	1		32.918 X 3.531 MM (1.296" X 0.139")
16	H61354	FLANGE FITTING	2		
17	19M7550	CAP SCREW	4		M10 X 35
18	12M6791	LOCK WASHER	4		10.200 MM
19	AT215417	HYDRAULIC HOSE	1		
20	T115821	ELBOW FITTING	1		
21	AT215420	ELBOW FITTING	1		
22	U12547	O-RING	1		23.470 X 2.946 MM (0.924" X 0.116")
23	AH76990	ELBOW FITTING	1		
24	U12547	O-RING	1		23.470 X 2.946 MM (0.924" X 0.116")
25	AT215275	CONNECTOR	1		
26	R26906	O-RING	1		19.177 X 2.464 MM (0.755" X 0.097")
27	AT215276	ELBOW FITTING	1		
28	T116250	FITTING PLUG	1		
29	AT215277	HYDRAULIC HOSE - FABRICATE	1		
30	H77698	TIE BAND	4		
31	AT215441	CONNECTOR	1		
32	R26906	O-RING	1		19.177 X 2.464 MM (0.755" X 0.097")
33	AT215419	ELBOW FITTING	1		
34	T115821	ELBOW FITTING	1		
35	AT153141	HYDRAULIC HOSE - FABRICATE	1		
37	AT153128	CLAMP	2		
38	AT158769	CLAMP	1		
39	AT152626	PIPE	1		
40	19M7385	CAP SCREW	1		M10 X 70
41	24M7028	WASHER	1		10.500 X 20 X 2 MM
42	14M7274	NUT	2		M10
43	AT153128	CLAMP	2		
44	AT158769	CLAMP	1		
45	AT152626	PIPE	1		
46	19M7385	CAP SCREW	1		M10 X 70
47	24M7028	WASHER	1		10.500 X 20 X 2 MM
48	14M7274	NUT	2		M10
49	AT153142	ELBOW FITTING	1		
50	T115824	ELBOW FITTING	1		
51	AT215418	HYDRAULIC HOSE - FABRICATE	1		
52	TH100653	FITTING PLUG	1		
55	T116165	BUSHING	1		
56	AT215416	HYDRAULIC RESERVOIR	1		
57	19M8029	CAP SCREW	2		M16 X 30
58	T116256	WASHER	2		
59	19M7488	CAP SCREW	2		M16 X 40
60	T116256	WASHER	4		
61	14M7276	NUT	2		M16
62	19M7402	CAP SCREW	4		M10 X 25
63	12M6791	LOCK WASHER	4		10.200 MM
64	24M7028	WASHER	4		10.500 X 20 X 2 MM
65	AT179431	FILTER	1		

HYDRAULIC OIL RESERVOIR

TP52410 -UN-15OCT96

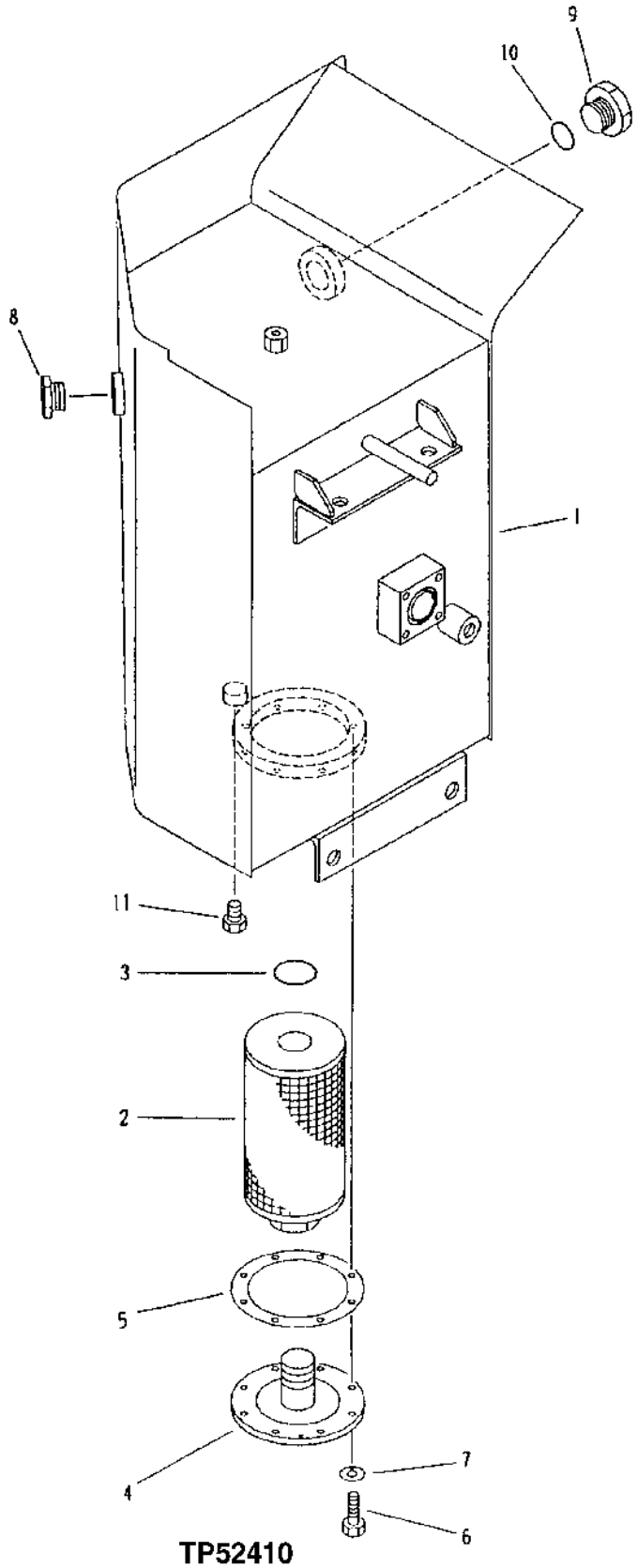

HYDRAULIC OIL RESERVOIR

KEY	PART NO.	PART NAME	QTY	SERIAL NO.	REMARKS
1	AT215416	HYDRAULIC RESERVOIR	1		
2	T115967	STRAINER	1		
3	CH13519	PACKING	1		
4	T115417	COVER	1		
5	T115418	GASKET	1		
6	19M7881	SCREW	8		M8 X 20
7	12M7065	LOCK WASHER	8		8 MM
8	AT215232	GAUGE	1		
9	AT137683	PIPE PLUG	1		
10	T110922	O-RING	1		37.700 X 3.500 MM (1.484" X 0.138")
11	T115332	FITTING PLUG	1		

MAIN HYDRAULIC LINE FILTER

TP52411 -UN-15OCT96

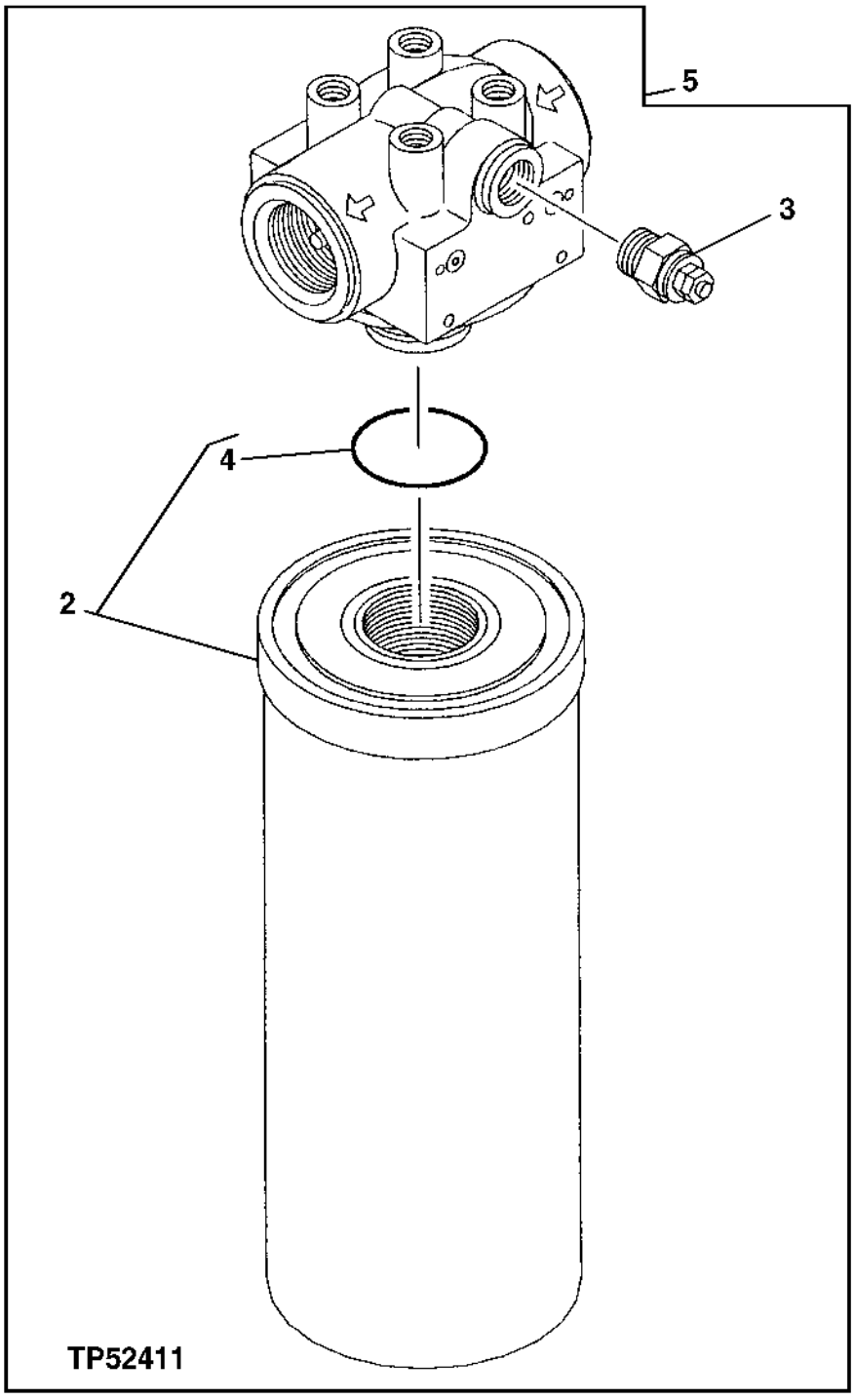

MAIN HYDRAULIC LINE FILTER

KEY	PART NO.	PART NAME	QTY	SERIAL NO.	REMARKS
2	AT215172	HYDRAULIC FILTER	1		
3	AT129776	KIT	1		(SWITCH)
4	AT215176	O-RING	1		
5	AT179431	FILTER	1		

BUCKET WITH CUTTING EDGE

T141888 -UN-02MAY01

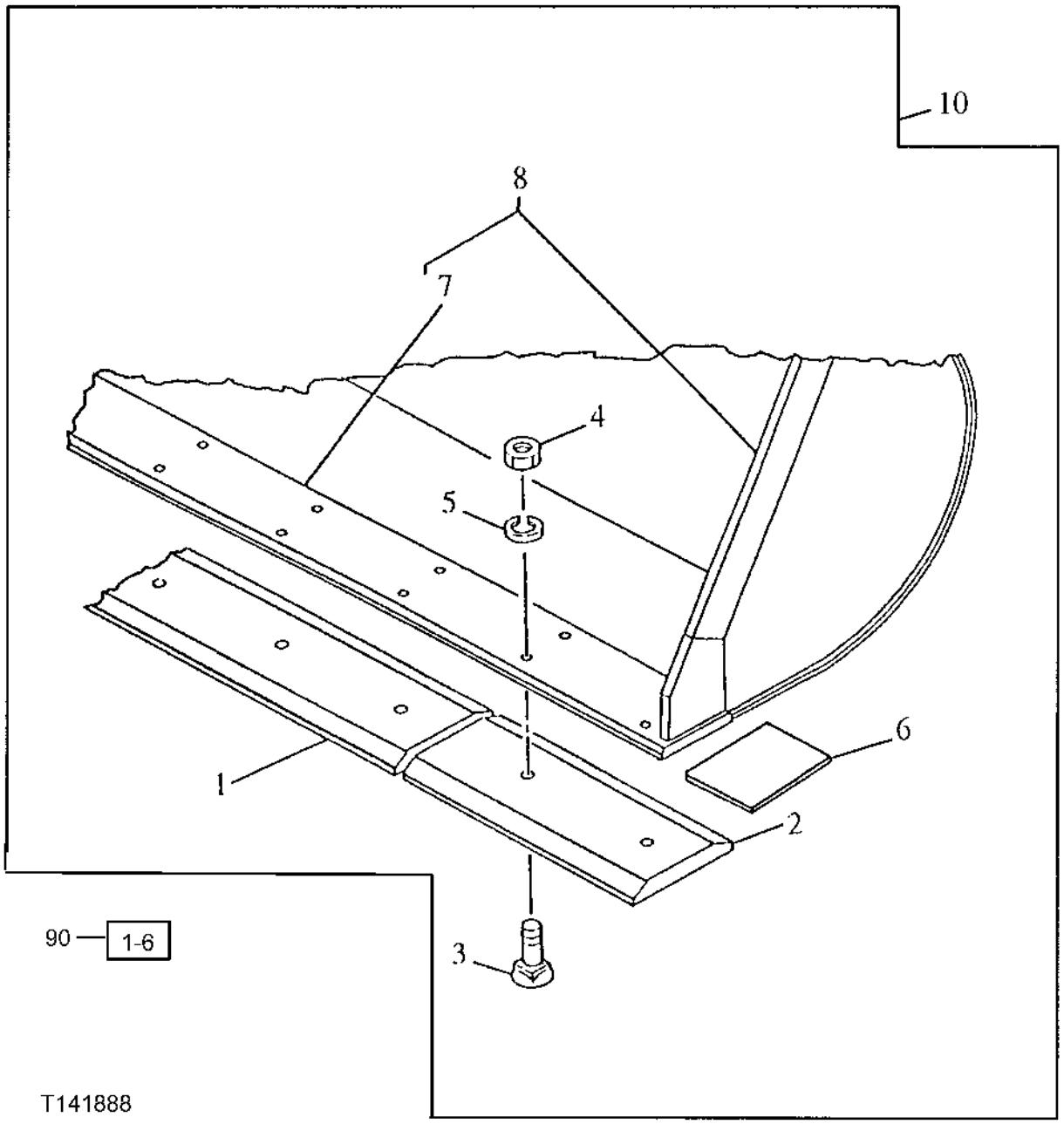

BUCKET WITH CUTTING EDGE

KEY	PART NO.	PART NAME	QTY	SERIAL NO.	REMARKS
1	T152344	CUTTING EDGE	1		(K) (FOR UNIVERSAL CUTTING EDGE, USE T144328)
2	T152342	CUTTING EDGE	2		(K) (FOR UNIVERSAL CUTTING EDGE, USE T144328)
3	A44246	BOLT	8		(K)
4	14M7276	NUT	8		(K) M16
5	T116256	WASHER	8		(K)
6	T152703	SHOE	2		(K) (FOR UNIVERSAL CUTTING EDGE, USE T144328)
7	T152355	CUTTING EDGE	1		(WELD-ON) (SUB FOR T152499)
8	AT168683	LOADER BUCKET	1		(1.3 CU. YD. BUCKET) (WHOLEGOODS)
	AT169151	LOADER BUCKET	1		(1.0 CU. YD. BUCKET) (WHOLEGOODS)
10	AT168775	LOADER BUCKET	1		INCLUDES ALL (K) (PARTS AUXILLIARY BOLT ON CUTTING EDGES) (1.3 CU. YD. BUCKET) (WHOLEGOODS)
	AT169155	LOADER BUCKET	1		(1.0 CU. YD. BUCKET) (WHOLEGOODS)
90	AT178458	KIT	1		(AUXILIARY BOLT ON CUTTING EDGES) INCLUDES ALL (K) PARTS

LOADER BUCKET TEETH

TP45944 -UN-01SEP94

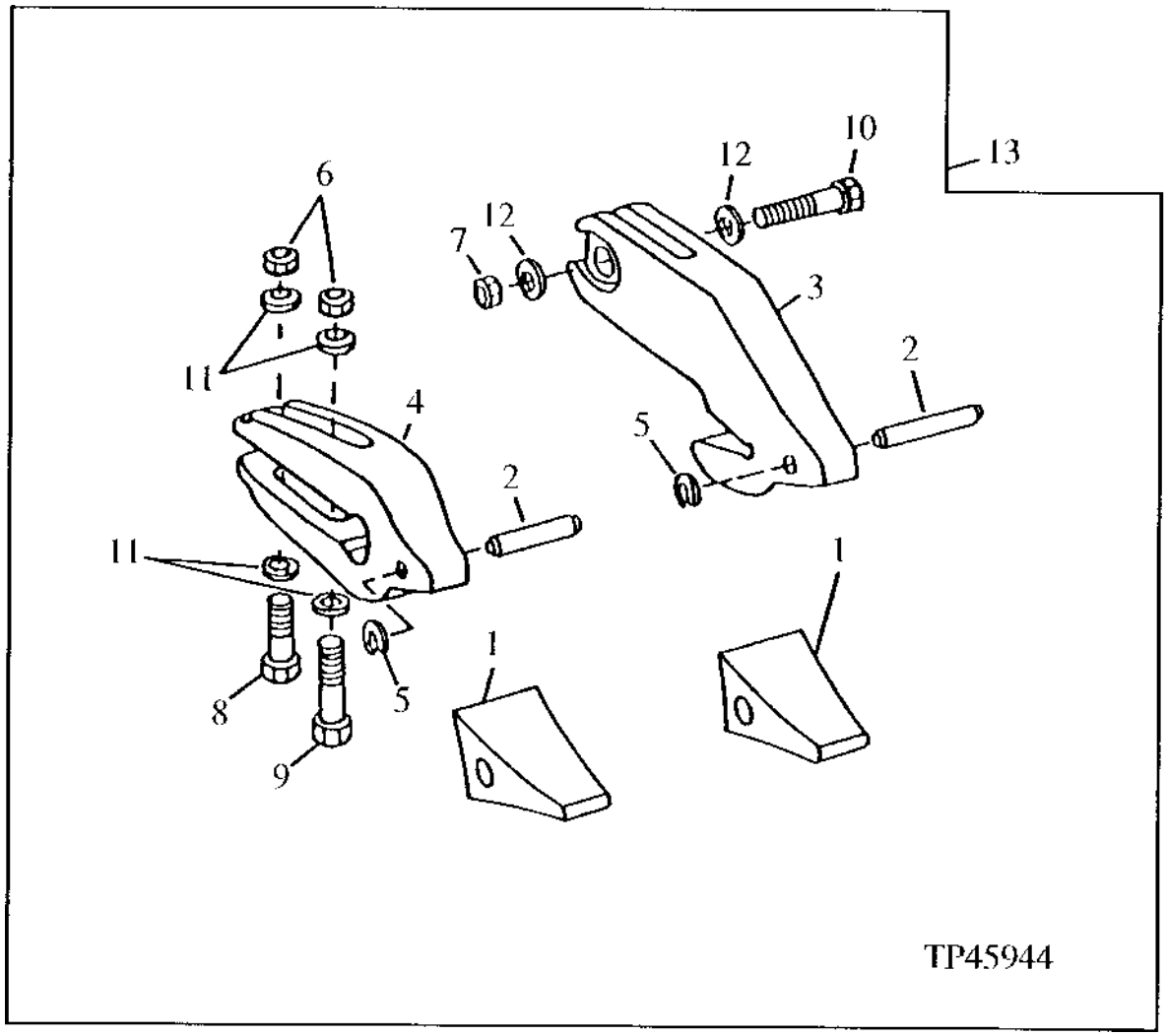

LOADER BUCKET TEETH

KEY	PART NO.	PART NAME	QTY	SERIAL NO.	REMARKS
1	TF10L	TOOTH	8		
2	TF10P	PIN	8		
3	T112163	BUCKET TOOTH ADAPTER	2		(CORNER)
4	T112164	BUCKET TOOTH ADAPTER	6		(CENTER)
5	T112196	RETAINING WASHER	8		
6	14M7276	NUT	12		M16
7	14M7278	NUT	2		M24
8	19M7417	CAP SCREW	6		M16 X 65
9	19M7720	CAP SCREW	6		M16 X 80
10	19M8288	CAP SCREW	2		M24 X 90
11	24M7241	WASHER	24		17 X 34 X 4 MM
12	24M7243	WASHER	4		25.400 X 50 X 6 MM
13	AT178459	TOOTH	1		BUCKET

244H BUCKET DATA

TP52459 -UN-15OCT96

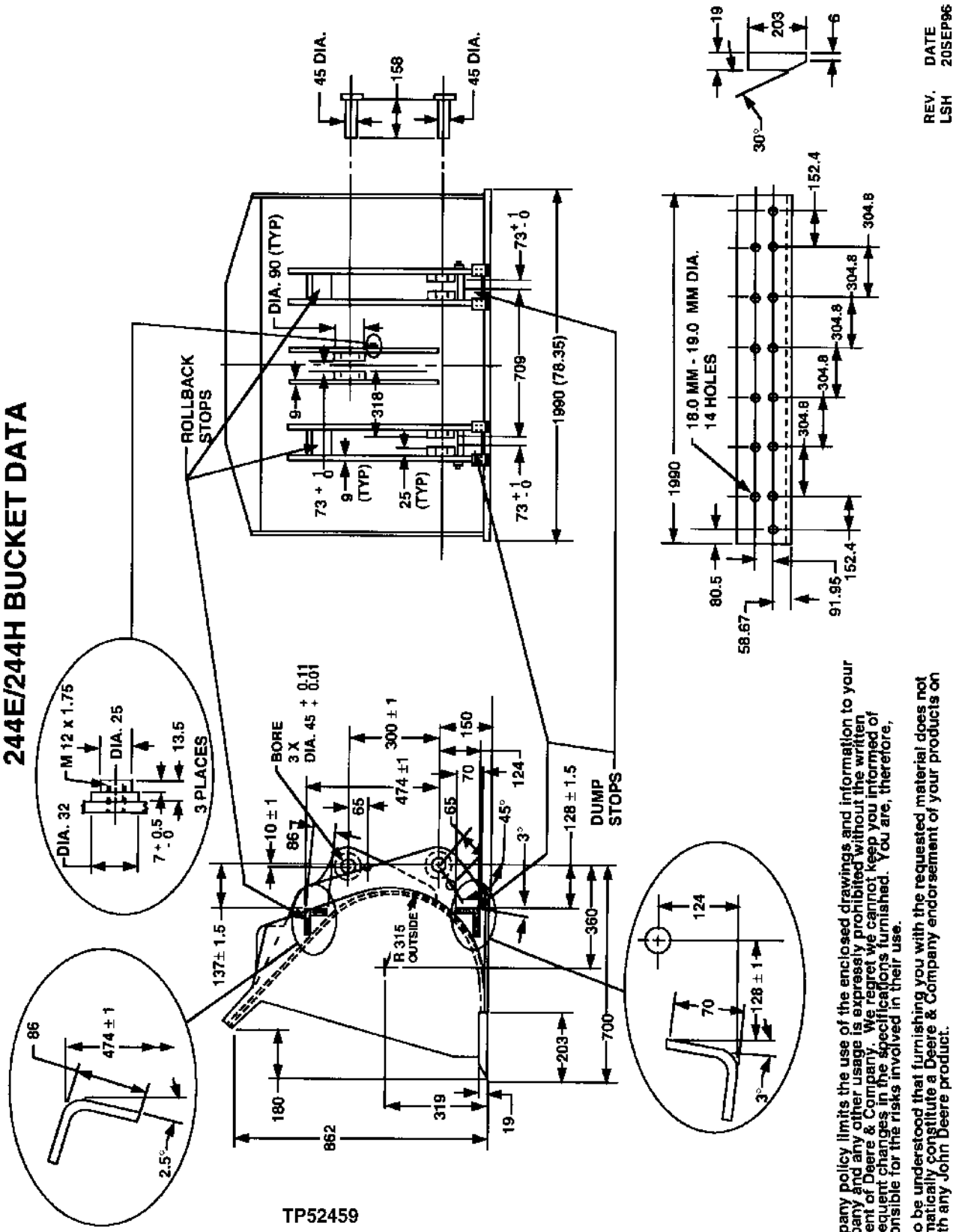

TP52459

Company policy limits the use of the enclosed drawings and information to your company and any other usage is expressly prohibited without the written consent of Deere & Company. We regret we cannot keep you informed of subsequent changes in the specifications furnished. You are, therefore, responsible for the risks involved in their use.

It is to be understood that furnishing you with the requested material does not automatically constitute a Deere & Company endorsement of your products or with any John Deere product.

LOG LOAD GUARD

TP40611 -UN-01JAN94

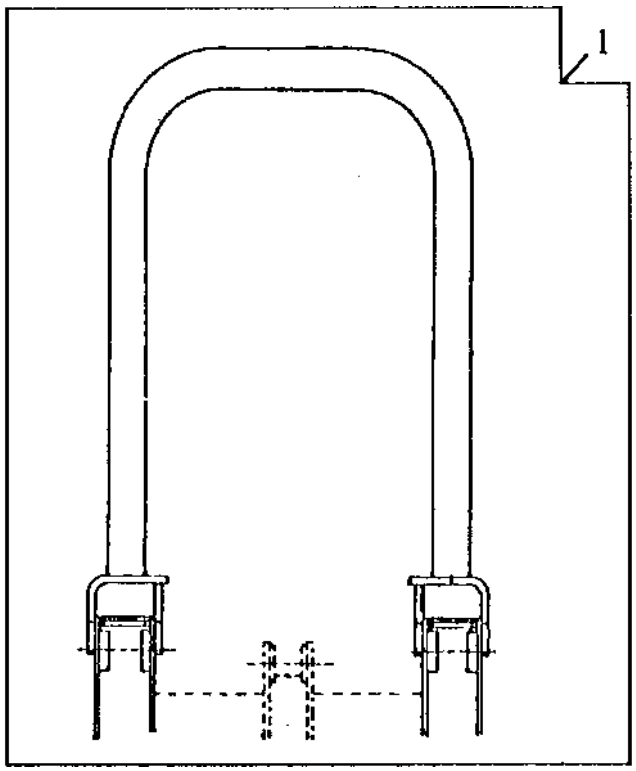

KEY	PART NO.	PART NAME	QTY	SERIAL NO.	REMARKS
1	AT178115	GUARD	1		

LOADER CONTROL

TP52412 -UN-15OCT96

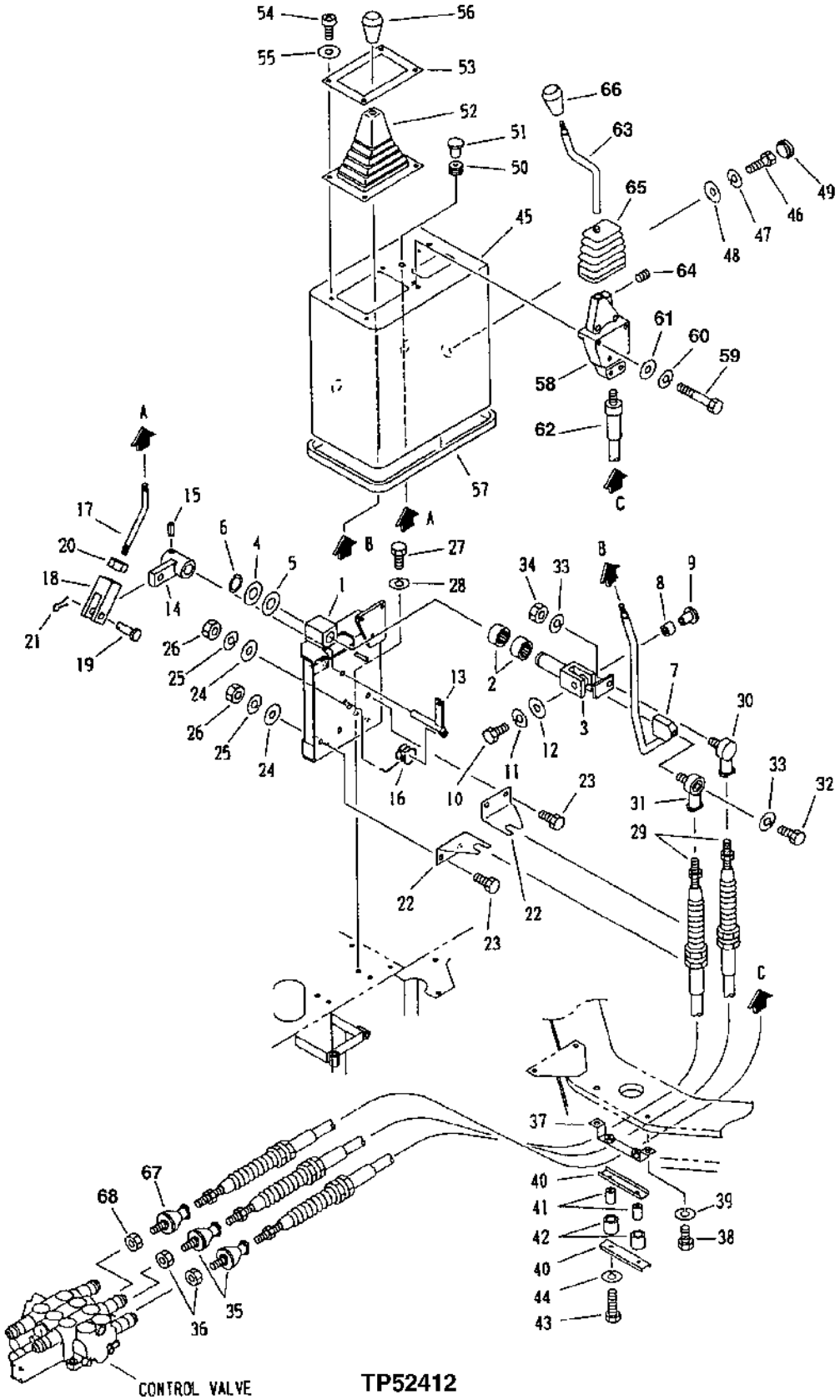

LOADER CONTROL

KEY	PART NO.	PART NAME	QTY	SERIAL NO.	REMARKS
1	.....	BRACKET	1		
2	AT215466	NEEDLE BEARING	2		
3	AT215233	PIN	1		
4	24M7051	WASHER	2		21 X 37 X 3 MM
5	AT215442	SHIM	1		
6	40M7080	SNAP RING	1		
7	AT215423	LEVER	1		
8	AT215466	NEEDLE BEARING	1		
9	AT215464	PIN	1		
10	19M7932	CAP SCREW	1		M8 X 16
11	12M7065	LOCK WASHER	1		8 MM
12	24M7055	WASHER	1		8.400 X 16 X 1.600 MM
13	AT215234	LEVER	1		
14	.....	LINK	1		
15	34M7010	SPRING PIN	1		3 X 20 MM
16	AT215467	SPRING	1		
17	AT215631	ROD	1		
18	AT136462	YOKE	1		
19	45M7009	PIN	1		6 X 16 MM
20	.....	NUT	1		
21	11M7099	COTTER PIN	1		2 X 12 MM
22	AT215424	BRACKET	2		
23	19M7168	CAP SCREW	4		
24	24M7028	WASHER	4		10.500 X 20 X 2 MM
25	12M6791	LOCK WASHER	4		10.200 MM
26	14M7274	NUT	4		M10
27	19M7938	CAP SCREW	4		M10 X 20
28	12M6791	LOCK WASHER	4		10.200 MM
29	AT153203	PUSH PULL CABLE	2		
30	AT215217	TIE ROD END	1		
31	AT215448	TIE ROD END	1		
32	19M7407	CAP SCREW	1		M8 X 25
33	12M7065	LOCK WASHER	2		8 MM
34	14M7273	NUT	1		M8
35	AT137836	END	2		
36	14M7273	NUT	2		M8
37	AT153206	SUPPORT	1		
38	19M7285	CAP SCREW	2		M12 X 30
39	12M6268	LOCK WASHER	2		12.200 MM
40	AT153308	CHANNEL	2		
41	AT153309	LOCKING COLLAR	2		
42	AT153310	LOCKING COLLAR	2		
43	19M8359	CAP SCREW	2		M8 X 45
44	12M7065	LOCK WASHER	2		8 MM
45	AT215430	CONSOLE	1		
46	19M7938	CAP SCREW	3		M10 X 20
47	12M6791	LOCK WASHER	3		10.200 MM
48	24M7028	WASHER	3		10.500 X 20 X 2 MM
49	AT215170	GROMMET	3		
50	AT215169	GROMMET	1		
51	AT215213	KNOB	1		
52	AT152534	BOOT	1		
53	AT153205	PLATE	1		
54	T116095	SCREW	4		
55	24M7055	WASHER	4		8.400 X 16 X 1.600 MM
56	AT215465	KNOB	1		
57	AT215163	RUBBER MOUNT	1		
58	AT215235	LEVER	1		
59	19M7165	CAP SCREW	3		M8 X 55
60	12M7065	LOCK WASHER	3		8 MM
61	24M7055	WASHER	6		8.400 X 16 X 1.600 MM
62	AT215425	PUSH PULL CABLE	2		
63	AT215426	LEVER	1		
64	AT215138	SCREW	1		
65	AT215236	BOOT	1		
66	AT215460	KNOB	1		
67	AT137836	END	1		
68	14M7273	NUT	1		M8

LOADER LINKAGE

TP52350 -UN-11JUN96

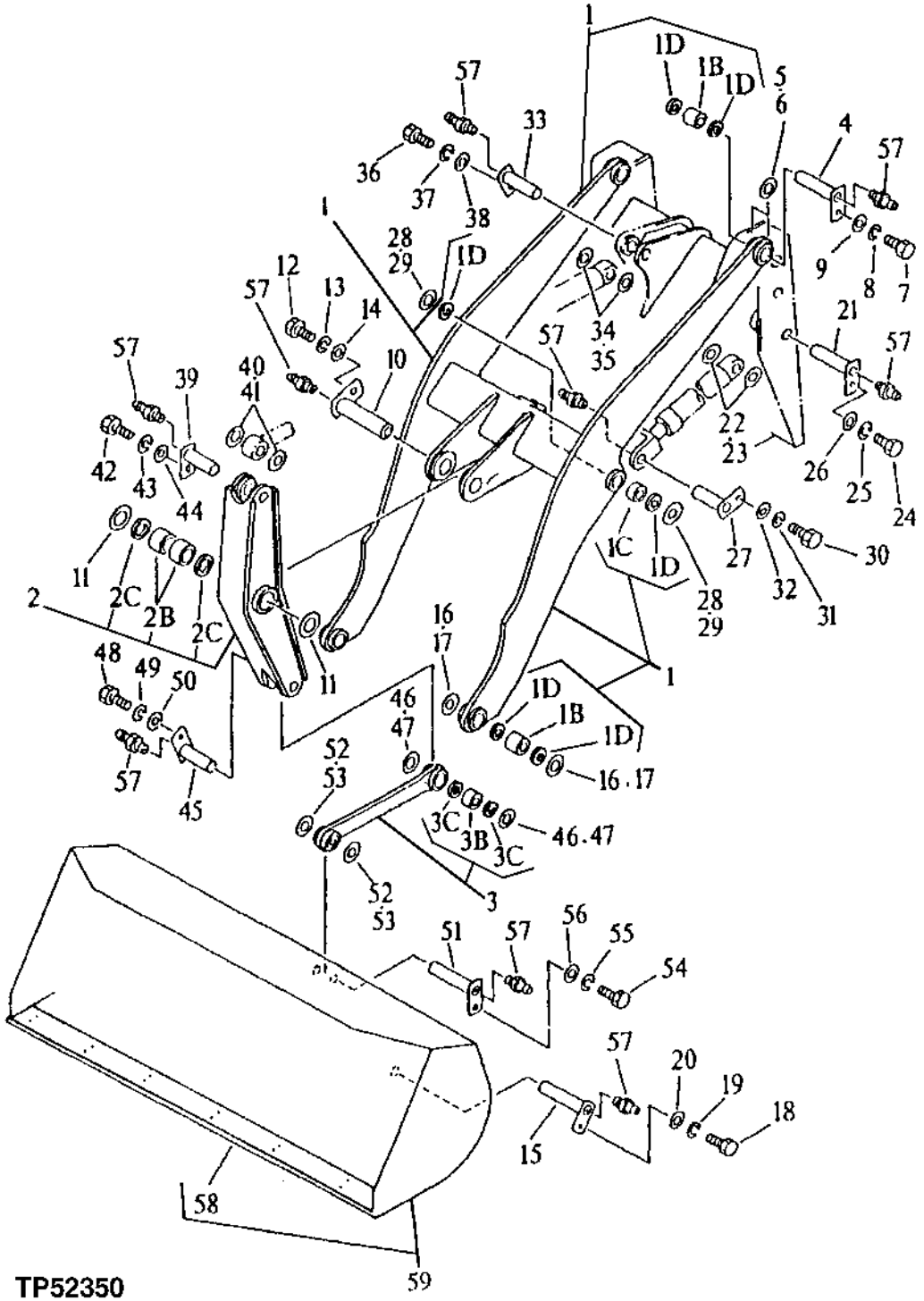

LOADER LINKAGE

KEY	PART NO.	PART NAME	QTY	SERIAL NO.	REMARKS
1	AT153147	LIFT ARM	1		
1B	AT153149	BUSHING	4		
1C	AT153150	BUSHING	2		
1D	AT153445	SEAL	12		(SUB FOR T116642)
2	AT153151	BELLCRANK	1		
2B	AT153153	BUSHING	2		
2C	AT153446	SEAL	2		(SUB FOR AT152451)
3	AT153154	LINK	1		
3B	AT153149	BUSHING	2		
3C	AT153445	SEAL	4		(SUB FOR T116642)
4	AT153156	PIN	2		
5	T116059	WASHER	4		
6	T115679	WASHER	2		
7	19M7386	CAP SCREW	2		M12 X 20
8	12M6268	LOCK WASHER	2		12.200 MM
9	T115340	WASHER	2		
10	AT153157	PIN	1		
11	AT153158	WASHER	1		
12	19M7386	CAP SCREW	1		M12 X 20
13	12M6268	LOCK WASHER	1		12.200 MM
14	T115340	WASHER	1		
15	AT153156	PIN	2		
16	T116059	WASHER	2		
17	T115679	WASHER	2		
18	19M7386	CAP SCREW	2		M12 X 20
19	12M6268	LOCK WASHER	2		12.200 MM
20	T115340	WASHER	2		
21	AT153156	PIN	2		
22	AT152560	WASHER	4		
23	AT152559	WASHER	2		
24	19M7386	CAP SCREW	2		M12 X 20
25	12M6268	LOCK WASHER	2		12.200 MM
26	T115340	WASHER	2		
27	AT153159	PIN	2		
28	T116059	WASHER	4		
29	T115679	WASHER	1		
30	19M7386	CAP SCREW	2		
31	12M6268	LOCK WASHER	2		12.200 MM
32	T115340	WASHER	2		
33	AT153160	PIN	1		
34	AT152560	WASHER	4		
35	AT152559	WASHER	1		
36	19M7386	CAP SCREW	1		M12 X 20
37	12M6268	LOCK WASHER	1		12.200 MM
38	T115340	WASHER	1		
39	AT153160	PIN	1		
40	AT152560	WASHER	4		
41	AT152559	WASHER	1		
42	19M7386	CAP SCREW	1		M12 X 20
43	12M6268	LOCK WASHER	1		12.200 MM
44	T115340	WASHER	1		
45	AT153160	PIN	1		
46	AT153161	WASHER	4		
47	.....	SHIM	1		(AT153162 NEVER USED)
48	19M7386	CAP SCREW	1		
49	12M6268	LOCK WASHER	1		12.200 MM
50	T115340	WASHER	1		
51	AT153156	PIN	1		
52	AT153161	WASHER	2		
53	.....	SHIM	1		(AT153162 NEVER USED)
54	19M7386	CAP SCREW	1		M12 X 20
55	12M6268	LOCK WASHER	1		12.200 MM
56	T115340	WASHER	1		
57	TH100074	LUBRICATION FITTING	13		
58	T152658	CUTTING EDGE	1		WELD ON CUTTING EDGE
59	AT153163	LOADER BUCKET	1		CONVENIENCE ASSEMBLY

LOADER BOOM HYDRAULIC LINES

TP52458 -UN-15OCT96

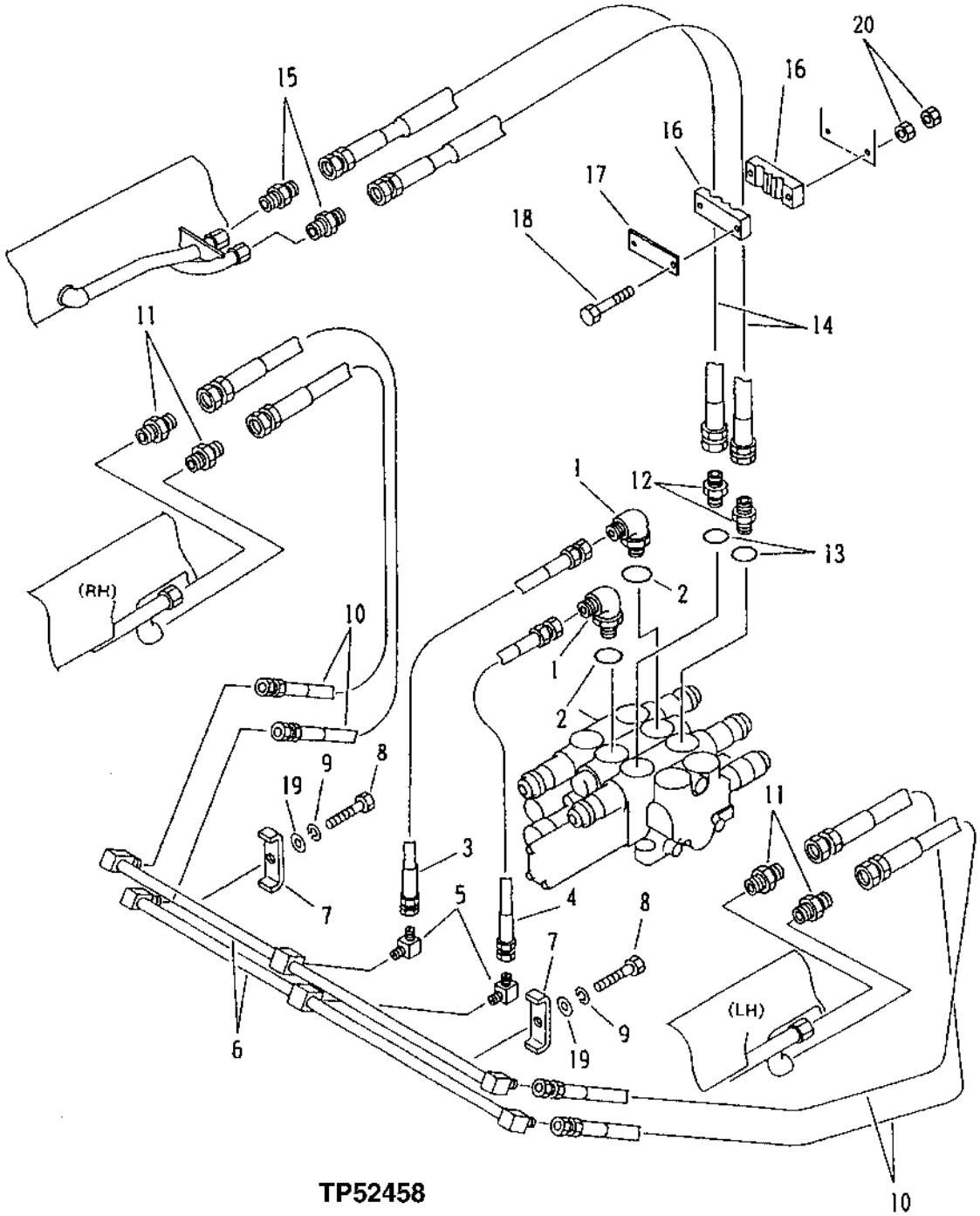

TP52458

LOADER BOOM HYDRAULIC LINES

KEY	PART NO.	PART NAME	QTY	SERIAL NO.	REMARKS
1	AT32332	ELBOW FITTING	2		(SUB FOR AT153165) (ALSO ORDER R26375, AR26763)
2	R26375	O-RING	2		
3	AT153166	HYDRAULIC HOSE - FABRICATE	1		
4	AT153167	HYDRAULIC HOSE - FABRICATE	1		
5	AT152919	ELBOW FITTING	2		
6	AT174470	TUBE	2		(SUB FOR AT153168)
7	AT153354	HOLDER	2		
8	19M7935	CAP SCREW	2		
9	12M6791	LOCK WASHER	2		10.200 MM
10	AT153169	HYDRAULIC HOSE - FABRICATE	4		
11	AT153170	ADAPTER	4		
12	AT153171	ADAPTER	2		
13	R26375	O-RING	2		16.358 X 2.210 MM (0.644" X 0.087")
14	AT153172	HYDRAULIC HOSE - FABRICATE	2		
15	T115957	ADAPTER	2		
16	T116705	CLAMP	2		
17	T116218	PLATE	2		
18	19M8499	CAP SCREW	2		M10 X 60
19	24M7028	WASHER	2		10.500 X 20 X 2 MM
20	14M7274	NUT	2		M10

TILT CYLINDER

T141889 -UN-02MAY01

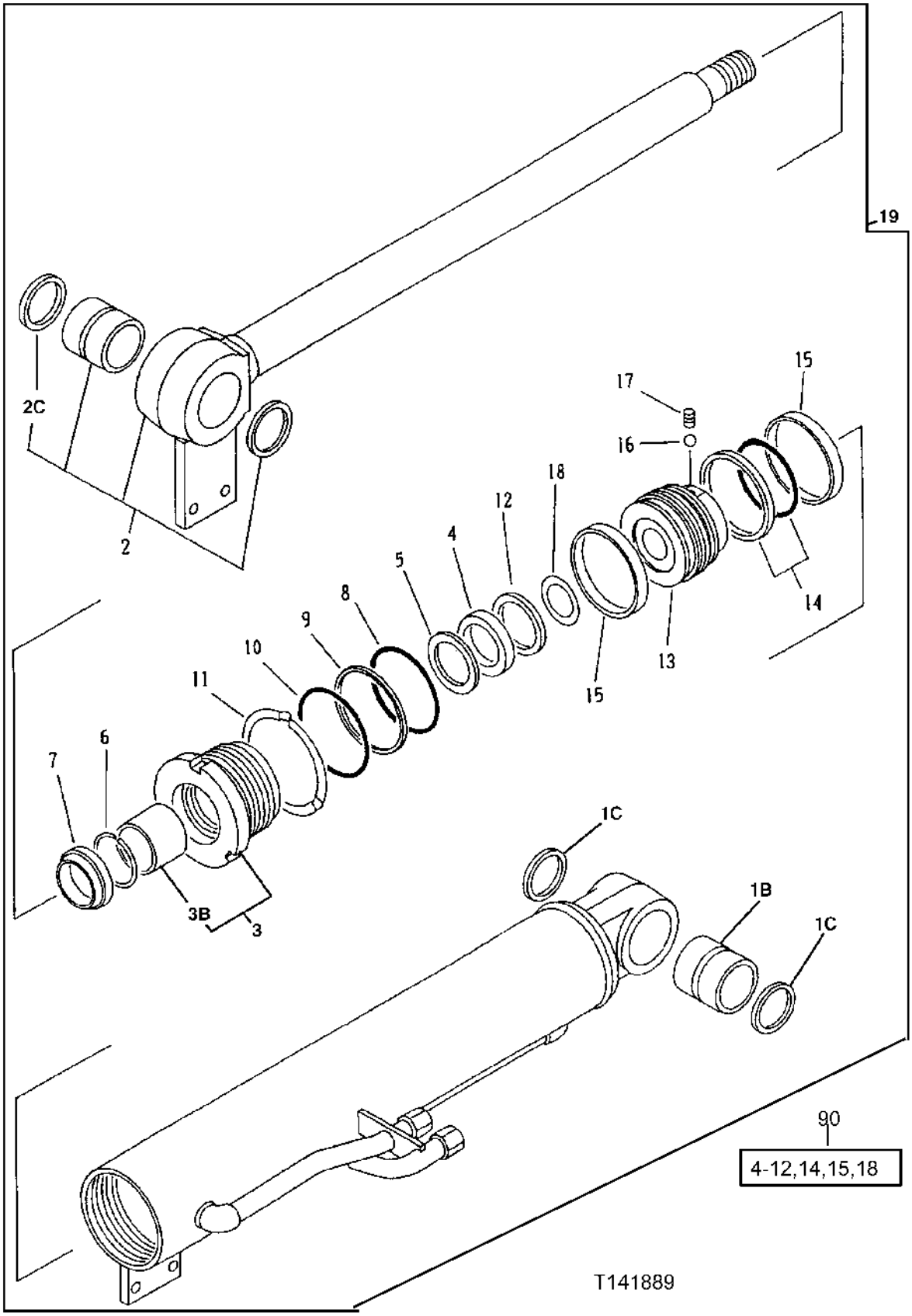

TILT CYLINDER

KEY	PART NO.	PART NAME	QTY	SERIAL NO.	REMARKS
1B	AT153176	BUSHING	1		
1C	AT153445	SEAL	2		(SUB FOR T116642)
2	AT180154	ROD	1		
2C	AT153445	SEAL	2		(SUB FOR T116642)
3	AT153179	HYDRAULIC CYLINDER CAP	1		
3B	AT153181	BUSHING	1		
4	.....	PACKING	1		(K)
5	.....	BACK-UP RING	1		(K)
6	.....	SNAP RING	1		(K)
7	.....	SEAL	1		(K)
8	.....	O-RING	1		(K)
9	.....	BACK-UP RING	1		(K)
10	.....	O-RING	1		(K)
11	.....	LOCK WASHER	1		(K)
12	.....	O-RING	1		(K)
13	AT153188	PISTON	1		
14	.....	SEAL	1		(K)
15	.....	O-RING	2		(K)
16	AT153191	BALL BEARING	1		
17	AT153192	SET SCREW	1		
18	.....	SHIM	1		(K)
19	AT215422	CYLINDER	1		
90	AT153198	HYDRAULIC CYLINDER KIT	1		INCLUDES ALL (K) PARTS

LIFT CYLINDER

T141890 -UN-02MAY01

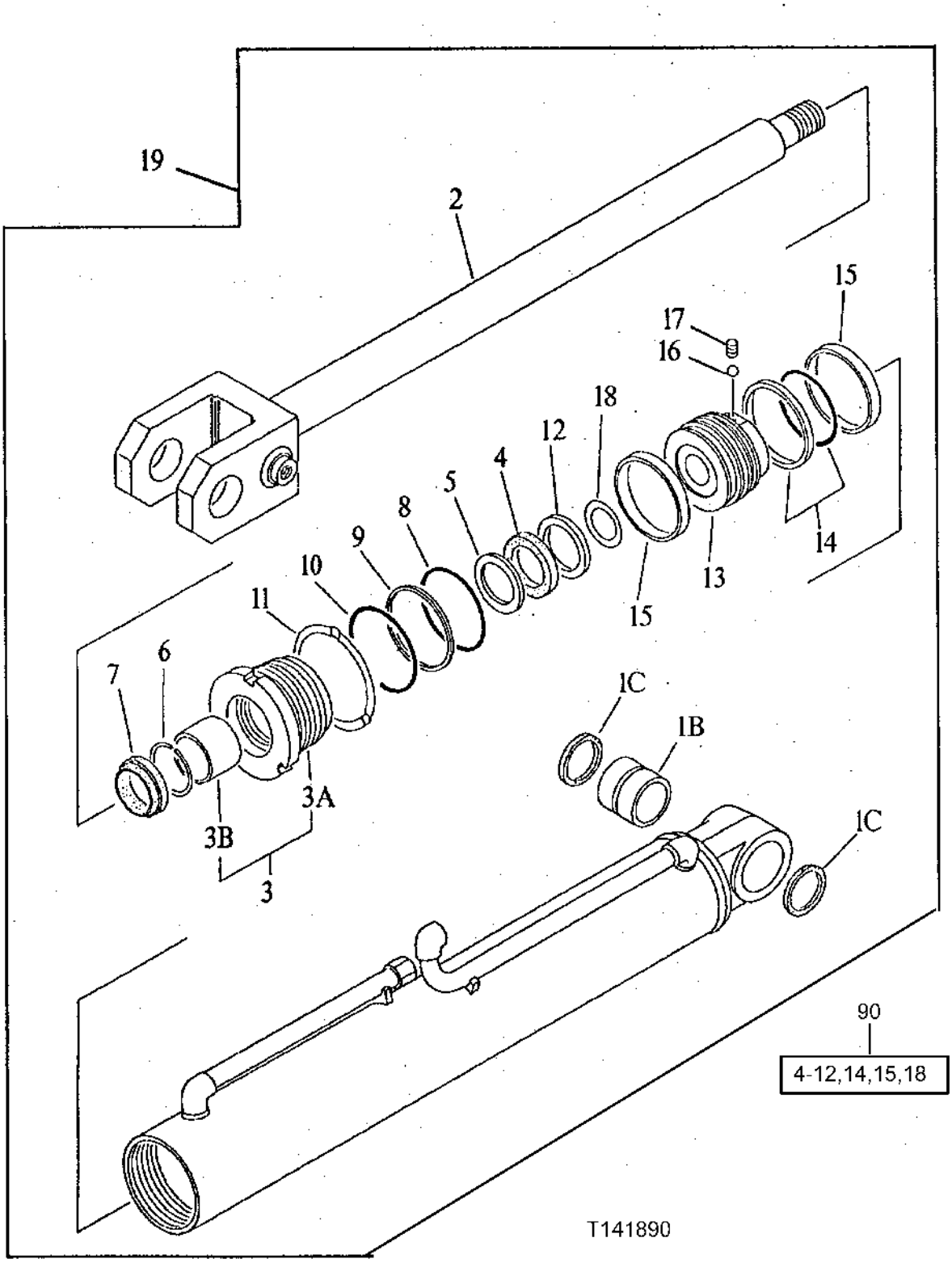

LIFT CYLINDER

KEY	PART NO.	PART NAME	QTY	SERIAL NO.	REMARKS
1B	AT153176	BUSHING	1		
1C	AT153445	SEAL	2		(SUB FOR T116642)
2	AT153197	ROD	1		
3	AT153179	HYDRAULIC CYLINDER CAP	1		
3B	AT153181	BUSHING	1		
4	.....	PACKING	1		(K)
5	.....	BACK-UP RING	1		(K)
6	.....	SNAP RING	1		(K)
7	.....	SEAL	1		(K)
8	.....	O-RING	1		(K)
9	.....	BACK-UP RING	1		(K)
10	.....	O-RING	1		(K)
11	.....	LOCK WASHER	1		(K)
12	.....	O-RING	1		(K)
13	AT153188	PISTON	1		
14	.....	SEAL	1		(K)
15	.....	O-RING	2		(K)
16	AT153191	BALL BEARING	1		
17	AT153192	SET SCREW	1		
18	.....	SHIM	1		(K)
19	AT153194	HYDRAULIC CYLINDER	1		
90	AT153198	HYDRAULIC CYLINDER KIT	1		INCLUDES ALL (K) PARTS

RETURN-TO-DIG

TP52413 -UN-15OCT96

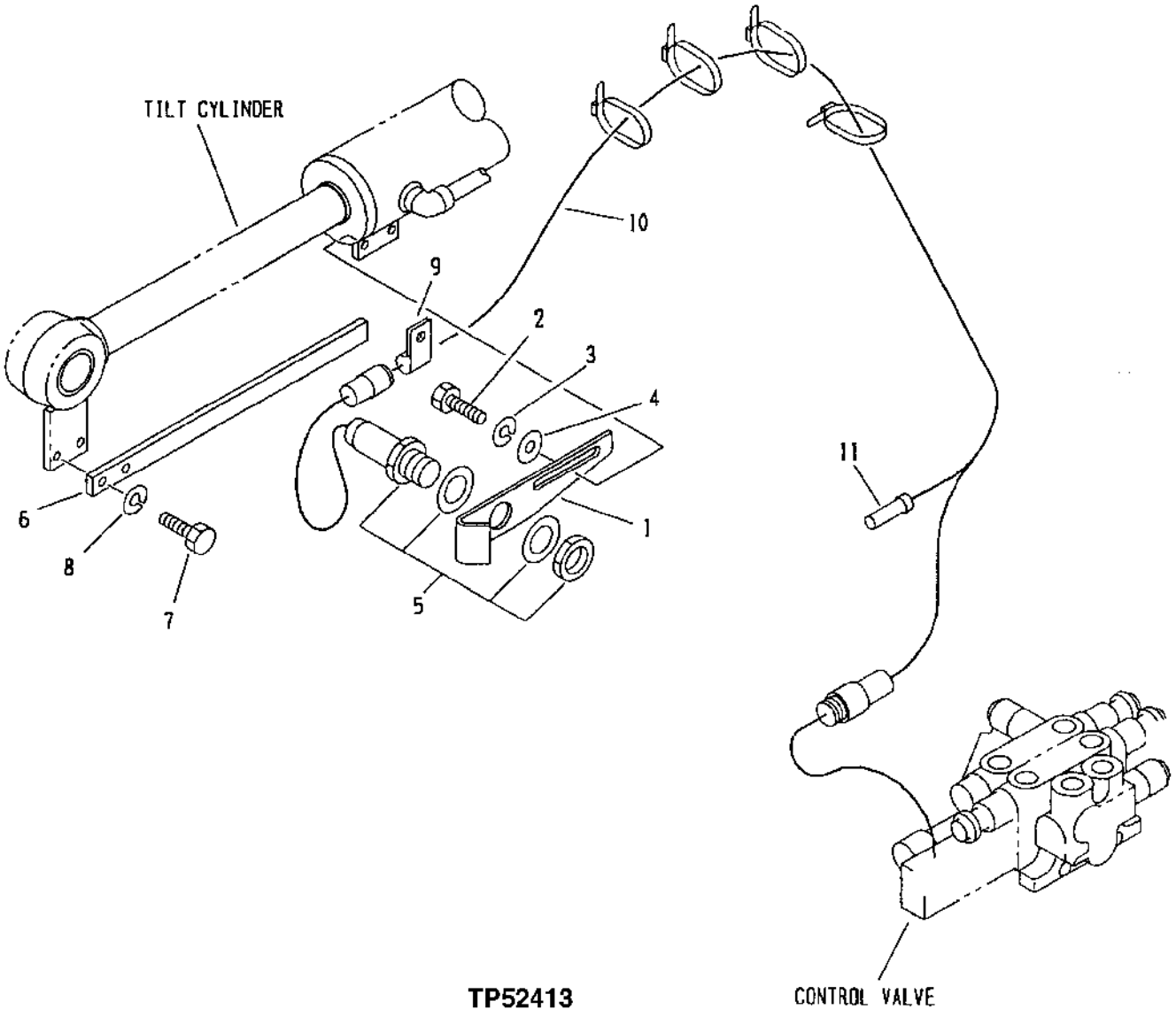

TP52413

RETURN-TO-DIG

KEY	PART NO.	PART NAME	QTY	SERIAL NO.	REMARKS
1	AT215237	SUPPORT	1		
2	19M7938	CAP SCREW	2		M10 X 20
3	12M6791	LOCK WASHER	2		10.200 MM
4	24M7028	WASHER	2		10.500 X 20 X 2 MM
5	AT176748	SWITCH	1		
6	AT215431	STRAP	1		
7	19M7938	CAP SCREW	2		M10 X 20
8	12M6791	LOCK WASHER	2		10.200 MM
9	T74416	CLAMP	1		
10	AT215238	WIRING HARNESS	1		
11	AT152473	DIODE	1		

MEMORANDA

NUMERICAL INDEX

PART NO.	GRID	KEY	PAGE
AA34965	I22	14	1831 - 3
AH20849	E12	4	0521 - 3
AH20851	E12	6	0521 - 3
AH20854	E12	7	0521 - 3
AH20857	E12	5	0521 - 3
AH63565	F11	16	0963 - 3
AH76990	J22	23	2163 - 3
AH77884	F11	25	0963 - 3
AM100756	D16	9	0413 - 9
AM100800	D18	30	0417 - 3
AM100856	D2	16	0407 - 5
AM875069	D14	16	0413 - 7
AM875330	D14	9	0413 - 7
AM875413	D14	27	0413 - 7
AN153119	E12	2	0521 - 3
AR21836	E6	10	0511 - 3
AR21836	F20	47	1063 - 3
AR26763	K15	1	3163 - 3
AR48236	D16	7	0413 - 9
AR48236	D16	21	0413 - 9
AR48236	E22	5	0560 - 5
AR65293	E8	3	0511 - 5
AR87167	E4	3	0505 - 1
AR87168	E4	2	0505 - 1
AR91896	I6	15	1810 - 5
AT108037	E16	1	0530 - 3
AT108072	A18	12	0210 - 3
AT108122	I4	24	1810 - 3
AT108122	I8	20	1810 - 7
AT108145	G23	1	1673 - 3
AT108146	G23	2	1673 - 3
AT108294	J12	11	2162 - 3
AT108299	G23	8	1673 - 3
AT108300	G23	9	1673 - 3
AT108896	C4	14	0367 - 5
AT108917	C6	4	0367 - 7
AT108920	C6	9	0367 - 7
AT108943	C4	49	0367 - 5
AT108943	C8	21	0367 - 9
AT108944	C8	23	0367 - 9
AT108948	C8	25	0367 - 9
AT108949	C8	27	0367 - 9
AT108950	C8	28	0367 - 9
AT108951	C4	46	0367 - 5
AT108951	C8	17	0367 - 9
AT108953	C8	32	0367 - 9
AT108954	C8	34	0367 - 9
AT108955	C8	33	0367 - 9
AT108968	C10	5	0367 - 11
AT108977	J20	6	2162 - 11
AT108978	J20	9	2162 - 11
AT108979	J20	13	2162 - 11
AT108979	J20	14	2162 - 11
AT108980	J20	11	2162 - 11
AT108981	J20	12	2162 - 11
AT108987	J20	16	2162 - 11
AT108988	J12	15	2162 - 3
AT108988	J18	15	2162 - 9
AT108997	G21	2	1671 - 3
AT108999	H3	7	1674 - 3
AT110820	D20	3	0422 - 3
AT115596	I16	61	1814 - 3
AT121288	F3	1	0920 - 3
AT122625	J22	2	2163 - 3
AT129528	F3	6	0920 - 3
AT129776	K2	3	2164 - 5
AT135758	H1	5	1673 - 6
AT136458	C8	35	0367 - 9
AT136462	E10	24	0515 - 3
AT136462	K11	18	3115 - 3
AT136469	E8	21	0511 - 5
AT136498	E8	19	0511 - 5
AT136506	F18	24	1062 - 3
AT136523	E12	9	0521 - 3
AT136596	F3	2	0920 - 3
AT136597	F3	3	0920 - 3
AT136598	F3	4	0920 - 3
AT136599	F3	5	0920 - 3
AT136693	I22	34	1831 - 3
AT136847	I22	26	1831 - 3
AT137137	H20	3	1743 - 3
AT137522	F5	22	0920 - 5
AT137683	J24	9	2164 - 3
AT137836	K11	35	3115 - 3
AT137836	K11	67	3115 - 3
AT137845	G12	36	1322 - 3
AT138220	I22	27	1831 - 3
AT139619	G12	22	1322 - 3
AT142126	H1	10	1673 - 6
AT145649	E6	10	0511 - 3
AT145650	B16	5	0363 - 3
AT145650	B20	3	0363 - 7
AT145650	B20	27	0363 - 7
AT147803	H13	4	1676 - 7
AT147821	B22	1	0364 - 3
AT147821	B24	1	0364 - 5
AT151008	I16	25	1814 - 3
AT152312	B14	20	0362 - 3
AT152389	I4	11	1810 - 3
AT152390	A16	2	0201 - 3
AT152392	I4	4	1810 - 3
AT152393	A22	2	0225 - 3
AT152393	A22	5	0225 - 3
AT152393	A22	8	0225 - 3
AT152394	E18	5	0540 - 3
AT152395	B16	18	0363 - 3
AT152396	B4	36	0341 - 3
AT152397	B4	4	0341 - 3
AT152399	B6	13	0342 - 3
AT152399	C2	21	0367 - 3
AT152403	B4	19	0341 - 3
AT152404	G5	13	1115 - 3
AT152405	A24	13	0225 - 5
AT152407	B10	24	0352 - 3
AT152408	H18	27	1741 - 5
AT152424	B4	20	0341 - 3
AT152425	F11	21	0963 - 3
AT152427	B4	21	0341 - 3
AT152428	B20	24	0363 - 7
AT152429	B16	45	0363 - 3
AT152430	E8	22	0511 - 5
AT152432	E8	20	0511 - 5
AT152433	E8	3	0511 - 5
AT152433	I22	25	1831 - 3
AT152435	E14	10	0521 - 5
AT152439	B20	3	0363 - 7
AT152444	B8	8	0350 - 3
AT152445	B10	23	0352 - 3
AT152446	B8	4	0350 - 3
AT152447	B8	19	0350 - 3
AT152448	B10	19	0352 - 3
AT152449	B4	13	0341 - 3
AT152450	F13	1C	0965 - 3
AT152450	F13	2C	0965 - 3
AT152451	K13	2C	3115 - 5
AT152452	H20	12	1743 - 3
AT152452	H20	16	1743 - 3
AT152456	H3	18	1674 - 3
AT152456	H5	18	1674 - 5
AT152462	G3	14	1111 - 3
AT152463	J16	22	2162 - 7
AT152469	I18	1	1821 - 3
AT152470	I18	6	1821 - 3
AT152471	I18	7	1821 - 3
AT152472	B16	61	0363 - 3
AT152473	H3	11	1674 - 3
AT152473	H5	11	1674 - 5
AT152473	H11	3	1676 - 5
AT152473	K21	11	3166 - 3
AT152477	A20	27	0210 - 5
AT152478	A13	2	0110 - 3
AT152485	B12	14	0361 - 3
AT152487	B6	15	0342 - 3
AT152488	E6	8	0511 - 3
AT152490	E8	4	0511 - 5
AT152490	E8	13	0511 - 5
AT152492	E20	4	0560 - 3
AT152493	E20	9	0560 - 3
AT152494	E22	3	0560 - 5
AT152494	E22	4	0560 - 5
AT152503	H7	32	1674 - 7
AT152505	H7	40	1674 - 7
AT152506	C12	25	0367 - 13
AT152507	C12	24	0367 - 13
AT152516	B16	40	0363 - 3
AT152517	B18	80	0363 - 5
AT152517	B20	40	0363 - 7
AT152517	B22	8	0364 - 3
AT152521	B22	6	0364 - 3
AT152522	B22	7	0364 - 3
AT152529	I4	19	1810 - 3
AT152534	K11	52	3115 - 3
AT152540	B16	7	0363 - 3
AT152540	B16	17	0363 - 3
AT152540	B16	28	0363 - 3
AT152545	I22	23	1831 - 3
AT152555	I18	18	1821 - 3
AT152556	J12	19	2162 - 3
AT152557	B20	2	0363 - 7
AT152559	K13	23	3115 - 5
AT152559	K13	35	3115 - 5
AT152559	K13	41	3115 - 5
AT152560	K13	22	3115 - 5
AT152560	K13	34	3115 - 5
AT152560	K13	40	3115 - 5
AT152562	E16	23	0530 - 3
AT152563	E16	24	0530 - 3
AT152579	E18	16	0540 - 3
AT152580	E18	15	0540 - 3
AT152582	E6	6	0511 - 3
AT152585	H13	5	1676 - 7
AT152590	H13	18	1676 - 7
AT152594	H7	29	1674 - 7
AT152600	C6	12	0367 - 7
AT152602	B16	8	0363 - 3
AT152603	B16	13	0363 - 3
AT152603	B16	33	0363 - 3
AT152604	B16	42	0363 - 3
AT152604	B16	47	0363 - 3
AT152606	A24	1	0225 - 5
AT152607	F18	10	1062 - 3

NUMERICAL INDEX - CONTINUED

PART NO.	GRID	KEY	PAGE
AT152608	F18	11	1062 - 3
AT152609	G3	15	1111 - 3
AT152610	G3	3	1111 - 3
AT152611	G3	5	1111 - 3
AT152612	G3	12	1111 - 3
AT152624	F11	30	0963 - 3
AT152625	F11	31	0963 - 3
AT152625	J20	4	2162 - 11
AT152626	F11	32	0963 - 3
AT152626	J22	39	2163 - 3
AT152626	J22	45	2163 - 3
AT152627	J20	5	2162 - 11
AT152631	E18	8	0540 - 3
AT152633	E18	10	0540 - 3
AT152634	E18	12	0540 - 3
AT152638	E14	7	0521 - 5
AT152639	E12	10	0521 - 3
AT152646	E16	14	0530 - 3
AT152648	E16	2	0530 - 3
AT152653	E6	2	0511 - 3
AT152656	E6	5	0511 - 3
AT152660	E8	9	0511 - 5
AT152661	E8	17	0511 - 5
AT152680	H11	2	1676 - 5
AT152706	H3	6	1674 - 3
AT152706	H5	6	1674 - 5
AT152707	H7	41	1674 - 7
AT152713	G25	4	1673 - 5
AT152714	G23	3	1673 - 3
AT152715	G23	4	1673 - 3
AT152716	I22	10	1831 - 3
AT152727	B4	2	0341 - 3
AT152729	B4	6	0341 - 3
AT152732	B4	12	0341 - 3
AT152733	B4	14	0341 - 3
AT152734	B4	22	0341 - 3
AT152735	B4	23	0341 - 3
AT152736	B4	24	0341 - 3
AT152738	B4	26	0341 - 3
AT152740	B4	29	0341 - 3
AT152741	B4	31	0341 - 3
AT152742	B4	34	0341 - 3
AT152743	B4	35	0341 - 3
AT152744	B4	39	0341 - 3
AT152745	B4	40	0341 - 3
AT152746	B4	44	0341 - 3
AT152747	B4	45	0341 - 3
AT152748	B4	47	0341 - 3
AT152749	B4	49	0341 - 3
AT152750	B4	33	0341 - 3
AT152751	B4	52	0341 - 3
AT152753	B10	2	0352 - 3
AT152756	B10	5	0352 - 3
AT152757	B10	6	0352 - 3
AT152758	B10	7	0352 - 3
AT152759	B10	8	0352 - 3
AT152760	B10	9	0352 - 3
AT152761	B10	9A	0352 - 3
AT152762	B10	9B	0352 - 3
AT152763	B10	9C	0352 - 3
AT152764	B10	9D	0352 - 3
AT152765	B10	9E	0352 - 3
AT152766	B10	9F	0352 - 3
AT152767	B10	9G	0352 - 3
AT152768	B10	10	0352 - 3
AT152769	B10	11	0352 - 3
AT152771	B10	14	0352 - 3
AT152772	B10	15	0352 - 3
AT152774	B10	17	0352 - 3
AT152775	B10	18	0352 - 3
AT152778	B10	25	0352 - 3
AT152779	B10	26	0352 - 3
AT152781	B10	28	0352 - 3
AT152782	B8	20	0350 - 3
AT152783	B8	1	0350 - 3
AT152784	B8	2	0350 - 3
AT152785	B8	5	0350 - 3
AT152786	B8	7	0350 - 3
AT152787	B8	9	0350 - 3
AT152789	B8	15	0350 - 3
AT152790	B8	16	0350 - 3
AT152792	B8	18	0350 - 3
AT152796	B14	3	0362 - 3
AT152798	B14	5	0362 - 3
AT152801	B14	11	0362 - 3
AT152802	B14	15	0362 - 3
AT152803	B14	16	0362 - 3
AT152805	B4	55	0341 - 3
AT152805	B8	90	0350 - 3
AT152805	B10	90	0352 - 3
AT152805	B14	90	0362 - 3
AT152817	C12	2	0367 - 13
AT152819	C12	5	0367 - 13
AT152820	C12	6	0367 - 13
AT152821	C12	7	0367 - 13
AT152822	C12	8	0367 - 13
AT152823	C12	9	0367 - 13
AT152824	C12	10	0367 - 13
AT152825	C12	11	0367 - 13
AT152826	C12	12	0367 - 13
AT152827	C12	13	0367 - 13
AT152828	C12	14	0367 - 13
AT152835	C12	16	0367 - 13
AT152836	C12	17	0367 - 13
AT152837	C12	18	0367 - 13
AT152838	C12	19	0367 - 13
AT152840	C12	21	0367 - 13
AT152843	C12	22	0367 - 13
AT152846	C12	23	0367 - 13
AT152847	C12	28	0367 - 13
AT152848	C12	29	0367 - 13
AT152850	C12	32	0367 - 13
AT152851	C12	34	0367 - 13
AT152854	C12	36	0367 - 13
AT152855	C12	37	0367 - 13
AT152856	C12	38	0367 - 13
AT152858	C12	40	0367 - 13
AT152859	C12	41	0367 - 13
AT152860	C12	42	0367 - 13
AT152861	C12	43	0367 - 13
AT152862	C12	44	0367 - 13
AT152863	C12	46	0367 - 13
AT152864	C12	47	0367 - 13
AT152865	C12	48	0367 - 13
AT152866	C12	51	0367 - 13
AT152867	C12	33	0367 - 13
AT152867	C12	52	0367 - 13
AT152869	C12	55	0367 - 13
AT152876	C12	58	0367 - 13
AT152884	C12	90	0367 - 13
AT152889	B16	22	0363 - 3
AT152892	B16	46	0363 - 3
AT152893	B16	50	0363 - 3
AT152894	B16	52	0363 - 3
AT152898	B20	1	0363 - 7
AT152900	B20	25	0363 - 7
AT152901	B20	28	0363 - 7
AT152902	B20	31	0363 - 7
AT152904	B24	5	0364 - 5
AT152911	B18	38	0363 - 5
AT152911	B20	11	0363 - 7
AT152911	B20	13	0363 - 7
AT152919	K15	5	3163 - 3
AT152925	A22	10	0225 - 3
AT152926	A22	1	0225 - 3
AT152926	A24	10	0225 - 5
AT152927	A24	2	0225 - 5
AT152927	A24	11	0225 - 5
AT152929	A24	4	0225 - 5
AT152930	A24	5	0225 - 5
AT152933	A22	7C	0225 - 3
AT152933	A24	9	0225 - 5
AT152934	A22	4	0225 - 3
AT152934	A24	16	0225 - 5
AT152936	A24	14	0225 - 5
AT152937	A22	7	0225 - 3
AT152941	A18	4	0210 - 3
AT152943	A20	5	0210 - 5
AT152944	A20	11	0210 - 5
AT152945	A20	14	0210 - 5
AT152946	A20	15	0210 - 5
AT152947	A20	16	0210 - 5
AT152948	A20	18	0210 - 5
AT152949	A20	19	0210 - 5
AT152950	A20	20	0210 - 5
AT152951	A20	21	0210 - 5
AT152952	A20	26	0210 - 5
AT152953	A20	31	0210 - 5
AT152954	A20	32	0210 - 5
AT152955	A20	33	0210 - 5
AT152957	A20	34	0210 - 5
AT152959	A13	1	0110 - 3
AT152968	F20	6	1063 - 3
AT152968	F20	16	1063 - 3
AT152969	F20	15	1063 - 3
AT152974	F18	19	1062 - 3
AT152978	G3	16	1111 - 3
AT152986	F11	18	0963 - 3
AT152987	F11	20	0963 - 3
AT152989	F11	2	0963 - 3
AT152995	F11	36	0963 - 3
AT152996	F11	39	0963 - 3
AT152997	F11	40	0963 - 3
AT152999	F15	1	0965 - 5
AT153001	F15	3	0965 - 5
AT153004	F13	16	0965 - 3
AT153004	F15	10	0965 - 5
AT153007	F13	1B	0965 - 3
AT153007	F13	2B	0965 - 3
AT153008	F13	2	0965 - 3
AT153010	F13	3	0965 - 3
AT153012	F13	3B	0965 - 3
AT153016	F13	9	0965 - 3
AT153017	F13	10	0965 - 3
AT153020	F13	13	0965 - 3
AT153022	F13	15	0965 - 3
AT153023	F13	90	0965 - 3
AT153036	H20	1	1743 - 3
AT153037	H20	2	1743 - 3
AT153038	H20	4	1743 - 3
AT153038	H20	10	1743 - 3

NUMERICAL INDEX - CONTINUED

PART NO.	GRID	KEY	PAGE
AT153039	H20	5	1743 - 3
AT153041	H20	8	1743 - 3
AT153042	H20	9	1743 - 3
AT153043	H20	15	1743 - 3
AT153044	H20	17	1743 - 3
AT153045	H20	21	1743 - 3
AT153046	H18	1	1741 - 5
AT153047	H18	2	1741 - 5
AT153048	H18	11	1741 - 5
AT153049	H18	14	1741 - 5
AT153050	H18	21	1741 - 5
AT153051	H18	24	1741 - 5
AT153110	J12	14	2162 - 3
AT153110	J16	23	2162 - 7
AT153112	J16	8	2162 - 7
AT153113	J16	11	2162 - 7
AT153114	J12	16	2162 - 3
AT153115	J12	18	2162 - 3
AT153128	J22	37	2163 - 3
AT153128	J22	43	2163 - 3
AT153141	J22	35	2163 - 3
AT153142	J22	49	2163 - 3
AT153147	K13	1	3115 - 5
AT153149	K13	1B	3115 - 5
AT153149	K13	3B	3115 - 5
AT153150	K13	1C	3115 - 5
AT153151	K13	2	3115 - 5
AT153153	K13	2B	3115 - 5
AT153154	K13	3	3115 - 5
AT153156	K13	4	3115 - 5
AT153156	K13	15	3115 - 5
AT153156	K13	21	3115 - 5
AT153156	K13	51	3115 - 5
AT153157	K13	10	3115 - 5
AT153158	K13	11	3115 - 5
AT153159	K13	27	3115 - 5
AT153160	K13	33	3115 - 5
AT153160	K13	39	3115 - 5
AT153160	K13	45	3115 - 5
AT153161	K13	46	3115 - 5
AT153161	K13	52	3115 - 5
AT153162	K13	47	3115 - 5
AT153162	K13	53	3115 - 5
AT153163	K13	59	3115 - 5
AT153164	J20	3	2162 - 11
AT153165	K15	1	3163 - 3
AT153166	K15	3	3163 - 3
AT153167	K15	4	3163 - 3
AT153168	K15	6	3163 - 3
AT153169	K15	10	3163 - 3
AT153170	B18	20	0363 - 5
AT153170	K15	11	3163 - 3
AT153171	J20	15	2162 - 11
AT153171	K15	12	3163 - 3
AT153172	K15	14	3163 - 3
AT153176	K17	1B	3165 - 3
AT153176	K19	1B	3165 - 5
AT153179	K17	3	3165 - 3
AT153179	K19	3	3165 - 5
AT153181	K17	3B	3165 - 3
AT153181	K19	3B	3165 - 5
AT153188	K17	13	3165 - 3
AT153188	K19	13	3165 - 5
AT153191	K17	16	3165 - 3
AT153191	K19	16	3165 - 5
AT153192	K17	17	3165 - 3
AT153192	K19	17	3165 - 5
AT153194	K19	19	3165 - 5
AT153197	K19	2	3165 - 5
AT153198	K17	90	3165 - 3
AT153198	K19	90	3165 - 5
AT153203	K11	29	3115 - 3
AT153205	K11	53	3115 - 3
AT153206	K11	37	3115 - 3
AT153218	I4	6	1810 - 3
AT153219	I4	7	1810 - 3
AT153229	I6	9	1810 - 5
AT153240	I8	28	1810 - 7
AT153240	I8	46	1810 - 7
AT153306	G21	3	1671 - 3
AT153307	F11	38	0963 - 3
AT153308	K11	40	3115 - 3
AT153309	K11	41	3115 - 3
AT153310	K11	42	3115 - 3
AT153311	B18	66	0363 - 5
AT153311	B20	18	0363 - 7
AT153311	I22	31	1831 - 3
AT153328	F18	21	1062 - 3
AT153331	J16	21	2162 - 7
AT153341	J22	13	2163 - 3
AT153342	B4	28	0341 - 3
AT153348	B12	8	0361 - 3
AT153352	J14	8	2162 - 5
AT153352	J18	7	2162 - 9
AT153354	K15	7	3163 - 3
AT153365	G12	21	1322 - 3
AT153366	G12	20	1322 - 3
AT153371	A18	26	0210 - 3
AT153372	A18	17	0210 - 3
AT153373	A18	45	0210 - 3
AT153374	A18	46	0210 - 3
AT153381	C4	12	0367 - 5
AT153391	C6	41	0367 - 7
AT153392	C6	42	0367 - 7
AT153394	C4	32	0367 - 5
AT153394	C6	24	0367 - 7
AT153394	C6	43	0367 - 7
AT153399	C8	22	0367 - 9
AT153408	C12	59	0367 - 13
AT153410	C12	64	0367 - 13
AT153412	C12	62	0367 - 13
AT153414	C12	60	0367 - 13
AT153415	C12	65	0367 - 13
AT153416	C2	17	0367 - 3
AT153417	C12	67	0367 - 13
AT153423	H18	1	1741 - 5
AT153426	H16	17	1741 - 3
AT153427	H16	16	1741 - 3
AT153441	H20	12	1743 - 3
AT153441	H20	16	1743 - 3
AT153445	K13	1D	3115 - 5
AT153445	K13	3C	3115 - 5
AT153445	K17	1C	3165 - 3
AT153445	K17	2C	3165 - 3
AT153445	K19	1C	3165 - 5
AT153446	K13	2C	3115 - 5
AT157415	I18	22	1821 - 3
AT158768	G5	6	1115 - 3
AT158769	J22	38	2163 - 3
AT158769	J22	44	2163 - 3
AT159019	B20	36	0363 - 7
AT159020	B20	35	0363 - 7
AT159021	B20	34	0363 - 7
AT159038	B10	22	0352 - 3
AT159039	B10	16	0352 - 3
AT159041	B10	1	0352 - 3
AT159071	E8	18	0511 - 5
AT159162	J3	38	1911 - 3
AT159163	J3	42	1911 - 3
AT159164	J3	43	1911 - 3
AT159175	J5	11	1911 - 5
AT159175	J5	24	1911 - 5
AT159194	E10	9	0515 - 3
AT159734	C8	27	0367 - 9
AT159734	C8	28	0367 - 9
AT159735	C8	27	0367 - 9
AT161631	E6	8	0511 - 3
AT164012	H9	13	1676 - 3
AT164013	H9	12	1676 - 3
AT164014	H9	11	1676 - 3
AT165110	G23	8	1673 - 3
AT168683	K5	8	3101 - 3
AT168775	K5	10	3101 - 3
AT169151	K5	8	3101 - 3
AT169155	K5	10	3101 - 3
AT170432	B4	29	0341 - 3
AT173525	E16	23	0530 - 3
AT174470	K15	6	3163 - 3
AT176748	K21	5	3166 - 3
AT176752	B10	14	0352 - 3
AT176753	B10	15	0352 - 3
AT177183	J20	19	2162 - 11
AT178115	K9	1	3103 - 1
AT178458	K5	90	3101 - 3
AT178459	K7	13	3102 - 3
AT178840	G14	1	1369 - 3
AT178840	G17	1	1369 - 6
AT178842	G14	1	1369 - 3
AT178843	G14	1	1369 - 3
AT178844	G14	1	1369 - 3
AT178844	G17	1	1369 - 6
AT179430	H1	90	1673 - 6
AT179431	J22	65	2163 - 3
AT179431	K2	5	2164 - 5
AT179432	I8	31	1810 - 7
AT179433	I16	70	1814 - 3
AT179434	I16	70	1814 - 3
AT179435	I6	34	1810 - 5
AT179436	I22	36	1831 - 3
AT179437	I22	37	1831 - 3
AT179438	I6	35	1810 - 5
AT179439	I12	31	1810 - 11
AT179440	I8	4B	1810 - 7
AT179441	I10	13	1810 - 9
AT179442	I10	14	1810 - 9
AT179443	I4	21	1810 - 3
AT179444	I6	36	1810 - 5
AT179445	I8	32	1810 - 7
AT179446	I4	1	1810 - 3
AT179548	C15	1	0400 - 2
AT179548	E18	1	0540 - 3
AT179648	F22	6	1064 - 3
AT179649	F22	90	1064 - 3
AT179650	F7	90	0962 - 3
AT179651	C4	90	0367 - 5
AT179651	C6	90	0367 - 7
AT179651	C8	90	0367 - 9
AT179652	J10	90	2161 - 3
AT179653	I14	10	1812 - 3
AT179654	I20	1	1822 - 3
AT179655	J5	82	1911 - 5

NUMERICAL INDEX - CONTINUED

PART NO.	GRID	KEY	PAGE
AT179656	F5	11	0920 - 5
AT179657	F5	23	0920 - 5
AT179659	F5	26	0920 - 5
AT179660	F5	30	0920 - 5
AT179715	H16	28	1741 - 3
AT179716	H16	2	1741 - 3
AT179773	H9	17	1676 - 3
AT179774	H9	18	1676 - 3
AT179775	H9	19	1676 - 3
AT179776	H9	21	1676 - 3
AT179777	H9	22	1676 - 3
AT179778	G5	5	1115 - 3
AT179779	B14	4	0362 - 3
AT179780	H7	31	1674 - 7
AT179781	H7	42	1674 - 7
AT179782	H7	46	1674 - 7
AT179783	H7	50	1674 - 7
AT179784	B8	17	0350 - 3
AT179785	C8	7	0367 - 9
AT179786	G5	36	1115 - 3
AT179787	G5	37	1115 - 3
AT179788	J22	12	2163 - 3
AT179789	I4	2	1810 - 3
AT179790	I4	3	1810 - 3
AT179791	I4	27	1810 - 3
AT180154	K17	2	3165 - 3
AT180287	C8	37	0367 - 9
AT180333	G14	1	1369 - 3
AT180334	G14	1	1369 - 3
AT180335	G14	1	1369 - 3
AT180344	G16	1	1369 - 5
AT180654	C4	54	0367 - 5
AT180655	C4	55	0367 - 5
AT181982	I14	11	1812 - 3
AT182016	G17	1	1369 - 6
AT182017	G17	1	1369 - 6
AT182602	G14	1	1369 - 3
AT182603	G14	1	1369 - 3
AT183016	G15	1	1369 - 4
AT183061	D18	1	0417 - 3
AT183524	G14	1	1369 - 3
AT183822	H7	1	1674 - 7
AT185503	G14	1	1369 - 3
AT186554	B22	1	0364 - 3
AT186554	B24	1	0364 - 5
AT186760	I6	21	1810 - 5
AT188818	B14	4	0362 - 3
AT191316	D16	1	0413 - 9
AT194969	H13	4	1676 - 7
AT202454	C12	63	0367 - 13
AT202494	I12	4	1810 - 11
AT202495	I6	32	1810 - 5
AT202496	I4	26	1810 - 3
AT202497	I16	51	1814 - 3
AT202498	I16	77	1814 - 3
AT202499	I12	9	1810 - 11
AT202500	I6	16	1810 - 5
AT202501	I8	22A	1810 - 7
AT202502	I8	22B	1810 - 7
AT202503	I8	37	1810 - 7
AT202504	I8	44	1810 - 7
AT202505	I8	7	1810 - 7
AT202506	I16	63	1814 - 3
AT202507	I16	65	1814 - 3
AT202508	I12	22	1810 - 11
AT202509	I16	16	1814 - 3
AT202510	I6	26	1810 - 5
AT202511	I6	27	1810 - 5
AT202512	I8	6	1810 - 7
AT202514	I4	8	1810 - 3
AT202517	I10	10	1810 - 9
AT202520	I8	4A	1810 - 7
AT202523	I8	25	1810 - 7
AT202525	I10	7	1810 - 9
AT202526	I12	1	1810 - 11
AT202527	I12	2	1810 - 11
AT202528	I12	23	1810 - 11
AT202529	I12	14	1810 - 11
AT202530	I12	16	1810 - 11
AT202531	I16	37	1814 - 3
AT202532	I16	55	1814 - 3
AT202533	I4	20	1810 - 3
AT202535	I12	25	1810 - 11
AT202535	I12	26	1810 - 11
AT202543	I16	12	1814 - 3
AT202544	I16	11	1814 - 3
AT202545	I16	20	1814 - 3
AT202547	I12	7	1810 - 11
AT202547	I12	12	1810 - 11
AT202548	I16	13	1814 - 3
AT202549	I8	27	1810 - 7
AT202550	I12	6	1810 - 11
AT202550	I12	11	1810 - 11
AT202551	I8	38	1810 - 7
AT202552	I8	34	1810 - 7
AT202553	I12	18	1810 - 11
AT202554	I16	58	1814 - 3
AT202555	I16	59	1814 - 3
AT202556	I6	3	1810 - 5
AT202557	I8	23	1810 - 7
AT202558	I16	29	1814 - 3
AT202559	I8	24	1810 - 7
AT202560	I8	15	1810 - 7
AT202562	I8	33	1810 - 7
AT202563	I8	33	1810 - 7
AT202563	I12	8	1810 - 11
AT202563	I12	13	1810 - 11
AT202564	I16	74	1814 - 3
AT202565	I16	69	1814 - 3
AT202566	I16	6	1814 - 3
AT202567	I16	5	1814 - 3
AT202568	I16	1	1814 - 3
AT202569	I4	14	1810 - 3
AT202569	I6	23	1810 - 5
AT202569	I6	24	1810 - 5
AT202570	I16	26	1814 - 3
AT202571	I12	3	1810 - 11
AT202571	I12	15	1810 - 11
AT202571	I12	24	1810 - 11
AT202571	I12	32	1810 - 11
AT20728	E12	3	0521 - 3
AT211653	C23	7	0404 - 3
AT211656	C23	10	0404 - 3
AT211657	C23	12	0404 - 3
AT211658	C23	21	0404 - 3
AT211659	C23	22	0404 - 3
AT211659	E2	2	0452 - 5
AT211662	C19	4	0402 - 3
AT211663	C19	3	0402 - 3
AT211663	D24	2	0452 - 3
AT211664	C19	5	0402 - 3
AT211667	C19	8	0402 - 3
AT211667	C19	17	0402 - 3
AT211668	C19	7	0402 - 3
AT211670	C19	14	0402 - 3
AT211670	D2	8	0407 - 5
AT211670	D24	10	0452 - 3
AT211670	D24	19	0452 - 3
AT211671	C19	15	0402 - 3
AT211671	D24	20	0452 - 3
AT211672	C25	2	0407 - 3
AT211675	C25	5	0407 - 3
AT211676	C25	7	0407 - 3
AT211677	C25	8	0407 - 3
AT211680	C19	29	0402 - 3
AT211681	C19	30	0402 - 3
AT211682	C23	15	0404 - 3
AT211691	C23	18	0404 - 3
AT211695	D4	4	0409 - 3
AT211699	D4	11	0409 - 3
AT211700	D4	13	0409 - 3
AT211701	D4	14	0409 - 3
AT211702	D4	15	0409 - 3
AT211703	D4	26	0409 - 3
AT211704	D4	27	0409 - 3
AT211706	D4	30	0409 - 3
AT211707	D4	31	0409 - 3
AT211708	D4	32	0409 - 3
AT211709	D4	33	0409 - 3
AT211711	D4	37	0409 - 3
AT211713	D4	42	0409 - 3
AT211714	D4	43	0409 - 3
AT211715	D4	46	0409 - 3
AT211718	D4	47	0409 - 3
AT211718	E2	5	0452 - 5
AT211719	D4	50	0409 - 3
AT211720	D6	1	0409 - 5
AT211720	E2	7	0452 - 5
AT211721	D6	2	0409 - 5
AT211723	D8	1	0410 - 3
AT211725	D8	3	0410 - 3
AT211725	E2	8	0452 - 5
AT211726	C21	2	0402 - 5
AT211727	C21	3	0402 - 5
AT211730	C21	7	0402 - 5
AT211731	C17	1	0401 - 3
AT211734	C17	3	0401 - 3
AT211735	C17	8	0401 - 3
AT211736	C17	7	0401 - 3
AT211737	C17	11	0401 - 3
AT211740	C17	14	0401 - 3
AT211742	C17	16	0401 - 3
AT211746	C17	20	0401 - 3
AT211747	C17	22	0401 - 3
AT211751	C17	26	0401 - 3
AT211752	C17	27	0401 - 3
AT211754	C21	10	0402 - 5
AT211755	C21	11	0402 - 5
AT211757	C21	8	0402 - 5
AT211758	C21	16	0402 - 5
AT211760	D2	1	0407 - 5
AT211761	D2	3	0407 - 5
AT211762	D2	9	0407 - 5
AT211767	D2	20	0407 - 5
AT211768	D2	21	0407 - 5
AT211769	D2	17	0407 - 5
AT211770	D18	1	0417 - 3
AT211775	D18	9	0417 - 3
AT211775	D24	23	0452 - 3
AT211776	D18	14	0417 - 3
AT211777	D18	15	0417 - 3

NUMERICAL INDEX - CONTINUED

PART NO.	GRID	KEY	PAGE
AT211781	D18	24	0417 - 3
AT211784	D10	1	0413 - 3
AT211786	D10	3	0413 - 3
AT211786	D12	1	0413 - 5
AT211788	D14	1	0413 - 7
AT211789	D14	5	0413 - 7
AT211791	D16	1	0413 - 9
AT211793	D14	32	0413 - 7
AT211795	D14	36	0413 - 7
AT211797	D14	40	0413 - 7
AT211799	D14	44	0413 - 7
AT211801	D16	14	0413 - 9
AT211803	D16	29	0413 - 9
AT211807	D16	35	0413 - 9
AT211807	D16	36	0413 - 9
AT211807	D24	16	0452 - 3
AT211807	D24	17	0452 - 3
AT211808	E24	1	0570 - 3
AT211810	E24	3	0570 - 3
AT211811	E24	4	0570 - 3
AT211812	E24	5	0570 - 3
AT211813	E24	6	0570 - 3
AT211814	E24	7	0570 - 3
AT211815	E24	8	0570 - 3
AT211816	D20	1	0422 - 3
AT211817	D22	1	0423 - 3
AT211818	D22	2	0423 - 3
AT211819	D22	3	0423 - 3
AT211820	D22	11	0423 - 3
AT211821	D22	12	0423 - 3
AT211822	D22	4	0423 - 3
AT211823	D22	5	0423 - 3
AT211824	D22	6	0423 - 3
AT211825	D22	8	0423 - 3
AT211826	D22	7	0423 - 3
AT211827	D22	9	0423 - 3
AT211828	D22	10	0423 - 3
AT211829	D22	18	0423 - 3
AT211830	D22	15	0423 - 3
AT211832	E18	25	0540 - 3
AT211832	E24	15	0570 - 3
AT211833	E24	18	0570 - 3
AT211834	H7	10	1674 - 7
AT211835	C23	1	0404 - 3
AT211836	C23	23	0404 - 3
AT211837	C23	26	0404 - 3
AT211838	C19	1	0402 - 3
AT211839	D4	5	0409 - 3
AT211840	C17	25	0401 - 3
AT211841	C17	29	0401 - 3
AT211842	C17	31	0401 - 3
AT211843	C17	33	0401 - 3
AT211844	D24	1	0452 - 3
AT211845	E2	1	0452 - 5
AT211846	D20	37	0422 - 3
AT211847	D10	5	0413 - 3
AT211848	D10	6	0413 - 3
AT211850	D18	20	0417 - 3
AT211852	D18	28	0417 - 3
AT211852	E2	11	0452 - 5
AT211889	D2	3	0407 - 5
AT211907	D14	4	0413 - 7
AT212048	D16	1	0413 - 9
AT215125	E20	7	0560 - 3
AT215126	H5	4	1674 - 5
AT215127	G5	12	1115 - 3
AT215128	I20	8	1822 - 3
AT215129	H18	6	1741 - 5
AT215130	H22	3	1749 - 3
AT215131	G5	11	1115 - 3
AT215132	G9	7	1115 - 7
AT215133	C4	1	0367 - 5
AT215134	C6	39	0367 - 7
AT215135	J10	20	2161 - 3
AT215136	C2	9	0367 - 3
AT215137	J5	63	1911 - 5
AT215138	K11	64	3115 - 3
AT215140	F18	13	1062 - 3
AT215141	G5	20	1115 - 3
AT215142	E10	42	0515 - 3
AT215143	J10	19	2161 - 3
AT215144	C2	13	0367 - 3
AT215154	E18	20	0540 - 3
AT215155	G5	25	1115 - 3
AT215155	H11	10	1676 - 5
AT215157	F11	15	0963 - 3
AT215158	F11	8	0963 - 3
AT215159	F11	24	0963 - 3
AT215160	F11	12	0963 - 3
AT215161	F20	31	1063 - 3
AT215162	H9	8	1676 - 3
AT215163	K11	57	3115 - 3
AT215164	J5	19	1911 - 5
AT215165	J5	18	1911 - 5
AT215166	J5	16	1911 - 5
AT215167	J3	17	1911 - 3
AT215168	J3	5	1911 - 3
AT215169	K11	50	3115 - 3
AT215170	J5	81	1911 - 5
AT215170	K11	49	3115 - 3
AT215171	J12	6	2162 - 3
AT215172	K2	2	2164 - 5
AT215176	K2	4	2164 - 5
AT215177	F15	8	0965 - 5
AT215178	H13	12	1676 - 7
AT215179	H13	1	1676 - 7
AT215180	H13	2	1676 - 7
AT215182	H16	10	1741 - 3
AT215183	H16	14	1741 - 3
AT215184	F11	47	0963 - 3
AT215185	C6	8	0367 - 7
AT215186	C8	16	0367 - 9
AT215187	C8	14	0367 - 9
AT215188	C6	37	0367 - 7
AT215189	C8	30	0367 - 9
AT215190	C10	1	0367 - 11
AT215191	F18	6	1062 - 3
AT215192	E18	24	0540 - 3
AT215193	H3	8	1674 - 3
AT215194	H7	2	1674 - 7
AT215195	C4	3	0367 - 5
AT215196	C6	3	0367 - 7
AT215197	C6	6	0367 - 7
AT215197	C6	22	0367 - 7
AT215198	C6	25	0367 - 7
AT215199	C6	29	0367 - 7
AT215200	C8	1	0367 - 9
AT215201	C8	2	0367 - 9
AT215202	C8	3	0367 - 9
AT215204	C8	6	0367 - 9
AT215208	C8	12	0367 - 9
AT215209	C8	24	0367 - 9
AT215209	C12	32	0367 - 13
AT215210	C10	6	0367 - 11
AT215211	B16	3	0363 - 3
AT215212	H13	13	1676 - 7
AT215212	H13	19	1676 - 7
AT215213	H13	21	1676 - 7
AT215213	K11	51	3115 - 3
AT215214	F18	5	1062 - 3
AT215215	F18	7	1062 - 3
AT215216	F18	25	1062 - 3
AT215217	K11	30	3115 - 3
AT215218	J3	69	1911 - 3
AT215219	J3	70	1911 - 3
AT215220	H9	9	1676 - 3
AT215220	H16	25	1741 - 3
AT215220	J5	76	1911 - 5
AT215221	J14	3	2162 - 5
AT215222	J14	6	2162 - 5
AT215223	J14	7	2162 - 5
AT215224	J14	10	2162 - 5
AT215225	J14	11	2162 - 5
AT215226	J14	12	2162 - 5
AT215227	J14	13	2162 - 5
AT215228	J14	15	2162 - 5
AT215229	J14	16	2162 - 5
AT215230	J14	17	2162 - 5
AT215231	J14	18	2162 - 5
AT215232	J24	8	2164 - 3
AT215233	K11	3	3115 - 3
AT215234	K11	13	3115 - 3
AT215235	K11	58	3115 - 3
AT215236	K11	65	3115 - 3
AT215237	K21	1	3166 - 3
AT215238	K21	10	3166 - 3
AT215239	F22	14	1064 - 3
AT215241	G5	18	1115 - 3
AT215243	F20	42	1063 - 3
AT215245	F20	60	1063 - 3
AT215246	F20	61	1063 - 3
AT215247	F20	62	1063 - 3
AT215248	F20	64	1063 - 3
AT215258	C4	45	0367 - 5
AT215259	B16	1	0363 - 3
AT215260	E20	3	0560 - 3
AT215261	B4	1	0341 - 3
AT215262	B4	10	0341 - 3
AT215264	C2	19	0367 - 3
AT215265	C2	12	0367 - 3
AT215265	C12	70	0367 - 13
AT215266	G3	4	1111 - 3
AT215267	F7	8	0962 - 3
AT215268	H16	6	1741 - 3
AT215271	J12	13	2162 - 3
AT215271	J14	24	2162 - 5
AT215272	J14	14	2162 - 5
AT215273	J18	10	2162 - 9
AT215274	J12	1	2162 - 3
AT215275	J22	25	2163 - 3
AT215276	J22	27	2163 - 3
AT215277	J22	29	2163 - 3
AT215281	E18	14	0540 - 3
AT215282	E18	17	0540 - 3
AT215284	C4	16	0367 - 5
AT215286	C4	44	0367 - 5
AT215287	C6	1	0367 - 7
AT215288	E18	2	0540 - 3
AT215289	E18	3	0540 - 3
AT215290	E14	5	0521 - 5
AT215291	E14	9	0521 - 5

NUMERICAL INDEX - CONTINUED

PART NO.	GRID	KEY	PAGE
AT215292	E16	4	0530 - 3
AT215293	E16	9	0530 - 3
AT215294	E16	19	0530 - 3
AT215295	E16	25	0530 - 3
AT215296	E6	3	0511 - 3
AT215297	E6	4	0511 - 3
AT215298	E8	1	0511 - 5
AT215299	E8	2	0511 - 5
AT215300	E10	23	0515 - 3
AT215301	E20	1	0560 - 3
AT215302	H9	1	1676 - 3
AT215303	H11	1	1676 - 5
AT215304	H13	4	1676 - 7
AT215305	H3	9	1674 - 3
AT215306	H7	20	1674 - 7
AT215306	H7	28	1674 - 7
AT215307	H7	19	1674 - 7
AT215308	H3	3	1674 - 3
AT215310	H3	1	1674 - 3
AT215310	H5	1	1674 - 5
AT215311	H3	2	1674 - 3
AT215311	H5	2	1674 - 5
AT215312	H3	12	1674 - 3
AT215313	G25	1	1673 - 5
AT215314	I22	35	1831 - 3
AT215315	I22	8	1831 - 3
AT215316	I22	9	1831 - 3
AT215317	I22	20	1831 - 3
AT215318	I22	24	1831 - 3
AT215319	I22	32	1831 - 3
AT215320	I18	10	1821 - 3
AT215321	B6	1	0342 - 3
AT215322	B6	2	0342 - 3
AT215323	B6	5	0342 - 3
AT215324	B6	16	0342 - 3
AT215325	B4	27	0341 - 3
AT215327	B6	11	0342 - 3
AT215327	B12	16	0361 - 3
AT215328	B12	9	0361 - 3
AT215329	B12	12	0361 - 3
AT215330	C2	1	0367 - 3
AT215331	C2	5	0367 - 3
AT215332	C2	8	0367 - 3
AT215333	C2	10	0367 - 3
AT215334	C4	17	0367 - 5
AT215335	J10	21	2161 - 3
AT215336	C6	10	0367 - 7
AT215337	C6	11	0367 - 7
AT215338	C6	13	0367 - 7
AT215338	J10	25	2161 - 3
AT215339	C6	26	0367 - 7
AT215340	C6	31	0367 - 7
AT215341	C8	36	0367 - 9
AT215342	C10	3	0367 - 11
AT215343	C10	4	0367 - 11
AT215344	B16	4	0363 - 3
AT215345	B16	16	0363 - 3
AT215346	B16	6	0363 - 3
AT215347	B16	27	0363 - 3
AT215348	B20	4	0363 - 7
AT215349	B18	36	0363 - 5
AT215350	B18	37	0363 - 5
AT215351	B18	74	0363 - 5
AT215352	B20	10	0363 - 7
AT215353	B20	15	0363 - 7
AT215354	B20	9	0363 - 7
AT215355	B20	23	0363 - 7
AT215359	F20	49	1063 - 3
AT215361	F20	3	1063 - 3
AT215362	F20	9	1063 - 3
AT215363	F20	27	1063 - 3
AT215364	F20	29	1063 - 3
AT215365	F20	30	1063 - 3
AT215366	F20	33	1063 - 3
AT215367	F20	34	1063 - 3
AT215367	G7	17	1115 - 5
AT215368	F20	35	1063 - 3
AT215368	F22	20	1064 - 3
AT215369	F22	10	1064 - 3
AT215370	F22	13	1064 - 3
AT215371	F20	13	1063 - 3
AT215372	F20	1	1063 - 3
AT215373	F11	6	0963 - 3
AT215373	F20	17	1063 - 3
AT215373	G5	42	1115 - 3
AT215374	F18	15	1062 - 3
AT215375	F18	14	1062 - 3
AT215376	G5	24	1115 - 3
AT215377	G5	28	1115 - 3
AT215378	G5	29	1115 - 3
AT215379	G5	31	1115 - 3
AT215380	G5	9	1115 - 3
AT215380	G9	11	1115 - 7
AT215381	G9	6	1115 - 7
AT215382	F7	25	0962 - 3
AT215383	F11	4	0963 - 3
AT215384	F9	1	0962 - 5
AT215384	F11	49	0963 - 3
AT215385	F11	7	0963 - 3
AT215386	F11	11	0963 - 3
AT215387	F11	14	0963 - 3
AT215388	F11	22	0963 - 3
AT215389	F11	23	0963 - 3
AT215391	H16	1	1741 - 3
AT215393	H16	15	1741 - 3
AT215394	I14	1	1812 - 3
AT215395	J5	23	1911 - 5
AT215396	J5	32	1911 - 5
AT215397	J5	37	1911 - 5
AT215398	J5	46	1911 - 5
AT215399	J5	62	1911 - 5
AT215400	J5	77	1911 - 5
AT215401	J5	65	1911 - 5
AT215402	H16	20	1741 - 3
AT215403	J3	1	1911 - 3
AT215404	J5	10	1911 - 5
AT215405	J5	15	1911 - 5
AT215406	J3	54	1911 - 3
AT215407	J3	56	1911 - 3
AT215408	I20	5	1822 - 3
AT215409	I18	14	1821 - 3
AT215410	H22	1	1749 - 3
AT215411	J22	5	2163 - 3
AT215412	J22	14	2163 - 3
AT215415	J22	11	2163 - 3
AT215416	J22	56	2163 - 3
AT215416	J24	1	2164 - 3
AT215417	J22	19	2163 - 3
AT215418	J22	51	2163 - 3
AT215419	J22	33	2163 - 3
AT215420	J22	21	2163 - 3
AT215422	K17	19	3165 - 3
AT215423	K11	7	3115 - 3
AT215424	K11	22	3115 - 3
AT215425	K11	62	3115 - 3
AT215426	K11	63	3115 - 3
AT215430	K11	45	3115 - 3
AT215431	K21	6	3166 - 3
AT215433	G12	35	1322 - 3
AT215434	G12	32	1322 - 3
AT215436	H16	26	1741 - 3
AT215437	E10	36	0515 - 3
AT215438	E18	22	0540 - 3
AT215439	E18	23	0540 - 3
AT215440	G5	23	1115 - 3
AT215441	J22	31	2163 - 3
AT215442	K11	5	3115 - 3
AT215443	B16	73	0363 - 3
AT215443	G5	39	1115 - 3
AT215444	I22	21	1831 - 3
AT215445	I22	19	1831 - 3
AT215446	H11	11	1676 - 5
AT215447	I22	22	1831 - 3
AT215448	K11	31	3115 - 3
AT215449	F22	8	1064 - 3
AT215450	F22	9	1064 - 3
AT215451	E20	5	0560 - 3
AT215452	H9	10	1676 - 3
AT215453	G5	30	1115 - 3
AT215454	H7	1	1674 - 7
AT215455	F7	12	0962 - 3
AT215456	B20	5	0363 - 7
AT215458	J12	8	2162 - 3
AT215459	E14	1	0521 - 5
AT215460	K11	66	3115 - 3
AT215461	H7	53	1674 - 7
AT215462	H13	3	1676 - 7
AT215463	J5	57	1911 - 5
AT215464	K11	9	3115 - 3
AT215465	K11	56	3115 - 3
AT215466	K11	2	3115 - 3
AT215466	K11	8	3115 - 3
AT215467	K11	16	3115 - 3
AT215584	E22	1	0560 - 5
AT215615	F18	1	1062 - 3
AT215616	F18	4	1062 - 3
AT215617	G7	4	1115 - 5
AT215618	G7	5	1115 - 5
AT215619	G7	7	1115 - 5
AT215620	G7	9	1115 - 5
AT215621	G7	10	1115 - 5
AT215622	G7	11	1115 - 5
AT215623	G7	14	1115 - 5
AT215624	G7	15	1115 - 5
AT215625	G7	16	1115 - 5
AT215626	G5	2	1115 - 3
AT215626	G7	20	1115 - 5
AT215628	G9	1	1115 - 7
AT215629	G9	5	1115 - 7
AT215631	K11	17	3115 - 3
AT215632	G12	8	1322 - 3
AT215633	G12	9	1322 - 3
AT215634	G12	11	1322 - 3
AT215635	G12	12	1322 - 3
AT215636	G12	14	1322 - 3
AT215637	G12	15	1322 - 3
AT215638	G12	17	1322 - 3
AT215639	G12	23	1322 - 3
AT215640	G12	24	1322 - 3
AT215641	G12	26	1322 - 3
AT215642	G12	27	1322 - 3

NUMERICAL INDEX - CONTINUED

PART NO.	GRID	KEY	PAGE
AT215643	G12	28	1322 - 3
AT215646	H9	15	1676 - 3
AT215647	H9	16	1676 - 3
AT215651	H9	20	1676 - 3
AT215654	H9	23	1676 - 3
AT215655	H9	24	1676 - 3
AT216327	E6	1	0511 - 3
AT32332	K15	1	3163 - 3
AT35123	F11	1	0963 - 3
AT35123	F11	9	0963 - 3
AT39141	E14	6	0521 - 5
AT39141	E14	8	0521 - 5
AT69937	F9	4	0962 - 5
A3917R	F7	19	0962 - 3
A44246	K5	3	3101 - 3
B3690R	F7	14	0962 - 3
CH10067	D4	12	0409 - 3
CH10273	D16	15	0413 - 9
CH10285	D16	26	0413 - 9
CH10319	D16	11	0413 - 9
CH10323	D16	22	0413 - 9
CH10348	D4	45	0409 - 3
CH10426	E24	16	0570 - 3
CH10450	D4	18	0409 - 3
CH10554	D2	19	0407 - 5
CH10554	D2	22	0407 - 5
CH10554	D16	37	0413 - 9
CH10554	D24	11	0452 - 3
CH10554	D24	12	0452 - 3
CH10554	D24	18	0452 - 3
CH10555	D16	34	0413 - 9
CH10555	D24	15	0452 - 3
CH10567	C19	22	0402 - 3
CH10567	D24	21	0452 - 3
CH10568	D4	53	0409 - 3
CH10568	E2	6	0452 - 5
CH10570	G9	10	1115 - 7
CH10571	D2	4	0407 - 5
CH10571	D24	9	0452 - 3
CH10572	D24	7	0452 - 3
CH10614	D8	5	0410 - 3
CH11524	E24	10	0570 - 3
CH11560	G7	6	1115 - 5
CH11566	C19	36	0402 - 3
CH11566	D24	5	0452 - 3
CH11570	C12	49	0367 - 13
CH13519	J24	3	2164 - 3
CH13526	C19	11	0402 - 3
CH13526	D24	8	0452 - 3
CH13814	D18	10	0417 - 3
CH13814	D18	34	0417 - 3
CH13814	E2	12	0452 - 5
CH14432	C17	21	0401 - 3
CH15002	C23	4	0404 - 3
CH15002	C23	5	0404 - 3
CH15146	G9	9	1115 - 7
CH16109	A18	23	0210 - 3
CH16730	C17	5	0401 - 3
CH16751	D4	8	0409 - 3
CH16780	D6	7	0409 - 5
CH16791	C17	10	0401 - 3
CH16793	C17	4	0401 - 3
CH16798	C17	9	0401 - 3
CH16843	D2	23	0407 - 5
CH16876	D18	22	0417 - 3
CH16877	D18	23	0417 - 3
CH16877	E2	9	0452 - 5
CH16878	D18	21	0417 - 3
CH16878	E2	10	0452 - 5
CH16902	D16	19	0413 - 9
CH17154	B22	1A	0364 - 3
CH17447	A18	55	0210 - 3
CH17858	D24	22	0452 - 3
CH17954	D16	10	0413 - 9
CH17960	D16	6	0413 - 9
CH18079	C23	11	0404 - 3
CH18443	D20	33	0422 - 3
CH18478	F15	7	0965 - 5
CH19101	C19	24	0402 - 3
CH19101	D6	4	0409 - 5
CH19101	D8	4	0410 - 3
CH19137	D2	14	0407 - 5
CH19137	D4	3	0409 - 3
CH19137	E24	11	0570 - 3
CH19137	E24	12	0570 - 3
CH19137	E24	13	0570 - 3
CH19141	D18	12	0417 - 3
CH20044	D16	38	0413 - 9
CH20252	D6	6	0409 - 5
CH20252	E2	14	0452 - 5
C15104	F7	13	0962 - 3
DSO345	G14	1	1369 - 3
DSO346	G14	1	1369 - 3
ET14631	D20	32	0422 - 3
E15360	F20	23	1063 - 3
E42967	C2	4	0367 - 3
E42967	J3	3	1911 - 3
H26743	J7	3	2008 - 1
H61354	J22	16	2163 - 3
H75541	E8	23	0511 - 5
H75541	E22	6	0560 - 5
H77698	E22	19	0560 - 5
H77698	I22	28	1831 - 3
H77698	J22	30	2163 - 3
H871R	B4	50	0341 - 3
H871R	B8	14	0350 - 3
IPSKIT3	G14	1	1369 - 3
ISPKIT3	G14	1	1369 - 3
JD10063	A18	39	0210 - 3
JD10428	A20	4	0210 - 5
JD10455	A18	17	0210 - 3
JD5929	J7	5	2008 - 1
JD7125	B8	4	0350 - 3
JD8520	B8	8	0350 - 3
JD8856	F7	10	0962 - 3
M118611	G12	40	1322 - 3
M45242	E22	7	0560 - 5
M45242	G5	32	1115 - 3
M64850	C19	40	0402 - 3
M64850	C25	14	0407 - 3
M64850	D4	54	0409 - 3
M64850	D24	25	0452 - 3
M65893	H7	36	1674 - 7
M65893	H7	45	1674 - 7
M68340	I8	40	1810 - 7
M68340	I16	52	1814 - 3
M68340	I16	76	1814 - 3
M68689	I12	5	1810 - 11
M68689	I12	10	1810 - 11
M68689	I16	73	1814 - 3
M800002	D4	29	0409 - 3
M800056	C19	9	0402 - 3
M800212	D14	13	0413 - 7
M800312	D18	33	0417 - 3
M800312	D18	35	0417 - 3
M801017	D4	21	0409 - 3
M801017	E2	4	0452 - 5
M801018	D4	22	0409 - 3
M801027	D4	34	0409 - 3
M801027	D4	38	0409 - 3
M801028	D4	36	0409 - 3
M801028	D4	40	0409 - 3
M801038	D4	2	0409 - 3
M801045	C17	6	0401 - 3
M801045	C21	6	0402 - 5
M801046	C21	1	0402 - 5
M801050	C21	14	0402 - 5
M801093	D14	8	0413 - 7
M801096	D14	12	0413 - 7
M801097	D14	14	0413 - 7
M801098	D14	15	0413 - 7
M801110	D16	27	0413 - 9
M801111	D16	28	0413 - 9
M801209	D2	6	0407 - 5
M801219	D4	23	0409 - 3
M801223	D4	16	0409 - 3
M801224	D4	19	0409 - 3
M801228	D4	9	0409 - 3
M802008	C19	33	0402 - 3
M802009	C19	35	0402 - 3
M802255	C19	16	0402 - 3
M802255	C25	1	0407 - 3
M802506	D20	5	0422 - 3
M803762	D22	17	0423 - 3
M803787	D14	2	0413 - 7
M805048	E24	17	0570 - 3
M805710	C19	32	0402 - 3
M805711	C19	37	0402 - 3
M805711	D24	6	0452 - 3
M805838	D8	6	0410 - 3
M805838	E2	15	0452 - 5
M806431	D16	12	0413 - 9
M806431	D24	13	0452 - 3
M806438	D16	18	0413 - 9
M806438	D24	14	0452 - 3
M806544	C25	9	0407 - 3
M806545	C25	11	0407 - 3
M806732	D4	20	0409 - 3
M806732	E2	3	0452 - 5
M806745	D14	26	0413 - 7
M806745	D14	30	0413 - 7
M809503	C19	34	0402 - 3
M87828	D4	24	0409 - 3
M87874	C19	10	0402 - 3
M88031	C19	28	0402 - 3
M88031	D4	44	0409 - 3
M88031	D22	20	0423 - 3
M88046	D16	35	0413 - 9
M88046	D16	36	0413 - 9
M88046	D24	16	0452 - 3
M88046	D24	17	0452 - 3
M88666	D4	25	0409 - 3
M88753	D16	13	0413 - 9
M88753	D16	24	0413 - 9
M89128	C19	21	0402 - 3
M89128	C19	23	0402 - 3
M89143	D2	2	0407 - 5
M89164	E24	14	0570 - 3
RE36215	I16	61	1814 - 3
RE52660	I6	21	1810 - 5
RE64911	I22	38	1831 - 3

NUMERICAL INDEX - CONTINUED

PART NO.	GRID	KEY	PAGE
RG60641	D14	23	0413 - 7
R100105	J5	26	1911 - 5
R100105	J5	27	1911 - 5
R100105	J5	30	1911 - 5
R10093	F7	18	0962 - 3
R110531	J22	6	2163 - 3
R26375	D12	2	0413 - 5
R26375	F11	3	0963 - 3
R26375	F11	10	0963 - 3
R26375	J12	7	2162 - 3
R26375	J20	15	2162 - 11
R26375	K15	1	3163 - 3
R26375	K15	2	3163 - 3
R26375	K15	13	3163 - 3
R26552	F7	20	0962 - 3
R26552	J16	13	2162 - 7
R26906	F9	6	0962 - 5
R26906	J12	17	2162 - 3
R26906	J22	26	2163 - 3
R26906	J22	32	2163 - 3
R36426	J20	15	2162 - 11
R44302	D16	8	0413 - 9
R56902	G12	19	1322 - 3
R63075	C12	48	0367 - 13
R63075	J16	14	2162 - 7
R76729	F11	5	0963 - 3
R76729	F11	17	0963 - 3
R76729	F11	19	0963 - 3
R92351	I6	18	1810 - 5
TF10L	K7	1	3102 - 3
TF10P	K7	2	3102 - 3
TH100044	C12	56	0367 - 13
TH100044	C19	38	0402 - 3
TH100055	B16	2	0363 - 3
TH100074	H16	8	1741 - 3
TH100074	H18	22	1741 - 5
TH100074	K13	57	3115 - 5
TH100434	A18	15	0210 - 3
TH100434	B14	19	0362 - 3
TH100434	C12	69	0367 - 13
TH100648	B4	43	0341 - 3
TH100653	A20	28	0210 - 5
TH100653	J22	52	2163 - 3
TH100689	C10	2	0367 - 11
TH100689	H18	26	1741 - 5
TH100953	F20	2	1063 - 3
TH100963	F20	7	1063 - 3
TH101411	H7	3	1674 - 7
TH101411	J5	79	1911 - 5
TH101490	C12	54	0367 - 13
TH101811	B20	22	0363 - 7
TH102492	B4	20	0341 - 3
TH102535	C4	13	0367 - 5
TH102535	C4	51	0367 - 5
TH104056	D18	27	0417 - 3
TH105038	C12	61	0367 - 13
TH105075	A20	27	0210 - 5
TH105075	A20	31	0210 - 5
TH110336	J16	22	2162 - 7
TH110522	B18	58	0363 - 5
TH110522	B20	16	0363 - 7
TY21705	G21	1	1671 - 3
TY22325	F20	45	1063 - 3
TY22325	F20	46	1063 - 3
TY22462	D16	7	0413 - 9
TY22462	D16	21	0413 - 9
TY22462	E22	5	0560 - 5
TY2615	J7	5	2008 - 1
T101172	E18	9	0540 - 3
T101942	G12	16	1322 - 3
T102998	G12	25	1322 - 3
T104363	G12	10	1322 - 3
T107446	B16	9	0363 - 3
T107446	B16	29	0363 - 3
T110437	H18	27	1741 - 5
T110452	D4	51	0409 - 3
T110650	D4	17	0409 - 3
T110718	D2	18	0407 - 5
T110737	E2	16	0452 - 5
T110737	H7	39	1674 - 7
T110922	J24	10	2164 - 3
T111563	D16	5	0413 - 9
T111592	D20	7	0422 - 3
T112163	K7	3	3102 - 3
T112164	K7	4	3102 - 3
T112196	K7	5	3102 - 3
T113827	C25	4	0407 - 3
T113853	D2	7	0407 - 5
T113865	D16	2	0413 - 9
T113872	D4	1	0409 - 3
T113892	D18	16	0417 - 3
T113893	D18	17	0417 - 3
T113894	D6	5	0409 - 5
T113894	E2	13	0452 - 5
T113905	D6	8	0409 - 5
T113924	H7	7	1674 - 7
T113925	H7	8	1674 - 7
T113934	C25	6	0407 - 3
T113934	D24	3	0452 - 3
T113940	D16	3	0413 - 9
T113941	D16	25	0413 - 9
T113942	D16	23	0413 - 9
T114106	D4	41	0409 - 3
T114269	A22	15	0225 - 3
T114301	C19	34	0402 - 3
T114313	D16	16	0413 - 9
T114313	D16	17	0413 - 9
T114313	D16	20	0413 - 9
T114319	H3	10	1674 - 3
T114321	H7	9	1674 - 7
T115312	E10	33	0515 - 3
T115312	F18	16	1062 - 3
T115317	G3	4C	1111 - 3
T115318	G3	4D	1111 - 3
T115320	G3	13	1111 - 3
T115329	H18	26	1741 - 5
T115332	E20	13	0560 - 3
T115332	J20	17	2162 - 11
T115332	J24	11	2164 - 3
T115340	F15	6	0965 - 5
T115340	H20	20	1743 - 3
T115340	K13	9	3115 - 5
T115340	K13	14	3115 - 5
T115340	K13	20	3115 - 5
T115340	K13	26	3115 - 5
T115340	K13	32	3115 - 5
T115340	K13	38	3115 - 5
T115340	K13	44	3115 - 5
T115340	K13	50	3115 - 5
T115340	K13	56	3115 - 5
T115349	G3	6	1111 - 3
T115350	G3	10	1111 - 3
T115351	E8	5	0511 - 5
T115361	A18	5	0210 - 3
T115362	A18	8	0210 - 3
T115370	F5	9	0920 - 5
T115386	E22	2	0560 - 5
T115386	G25	2	1673 - 5
T115388	J16	20	2162 - 7
T115390	J14	23	2162 - 5
T115390	J16	3	2162 - 7
T115390	J18	5	2162 - 9
T115391	J16	4	2162 - 7
T115392	J14	5	2162 - 5
T115392	J16	5	2162 - 7
T115392	J18	4	2162 - 9
T115393	J18	9	2162 - 9
T115394	J14	9	2162 - 5
T115394	J16	10	2162 - 7
T115394	J18	6	2162 - 9
T115395	J18	8	2162 - 9
T115397	J14	20	2162 - 5
T115397	J16	18	2162 - 7
T115397	J18	12	2162 - 9
T115399	J16	6	2162 - 7
T115400	J16	7	2162 - 7
T115402	J16	9	2162 - 7
T115403	J16	12	2162 - 7
T115405	J16	14	2162 - 7
T115406	J16	15	2162 - 7
T115407	J16	16	2162 - 7
T115408	J16	17	2162 - 7
T115409	J16	22	2162 - 7
T115417	J24	4	2164 - 3
T115418	E20	10	0560 - 3
T115418	J24	5	2164 - 3
T115444	I22	12	1831 - 3
T115445	I22	18	1831 - 3
T115464	B4	37	0341 - 3
T115492	B4	32	0341 - 3
T115550	B8	12	0350 - 3
T115553	B4	50	0341 - 3
T115553	B8	14	0350 - 3
T115566	B14	9	0362 - 3
T115567	B14	13	0362 - 3
T115575	B14	17	0362 - 3
T115576	B14	14	0362 - 3
T115604	A24	8	0225 - 5
T115604	A24	15	0225 - 5
T115611	A18	30	0210 - 3
T115612	A18	29	0210 - 3
T115613	A18	28	0210 - 3
T115614	A18	31	0210 - 3
T115615	A18	53	0210 - 3
T115616	A18	51	0210 - 3
T115618	A18	33	0210 - 3
T115619	A20	23	0210 - 5
T115619	A22	12	0225 - 3
T115621	F11	13	0963 - 3
T115648	H18	9	1741 - 5
T115649	H18	10	1741 - 5
T115650	H18	13	1741 - 5
T115655	H18	12	1741 - 5
T115679	K13	6	3115 - 5
T115679	K13	17	3115 - 5
T115679	K13	29	3115 - 5
T115701	J20	10	2162 - 11
T115715	E10	37	0515 - 3
T115715	H3	13	1674 - 3
T115715	H5	13	1674 - 5
T115715	H11	4	1676 - 5

NUMERICAL INDEX - CONTINUED

PART NO.	GRID	KEY	PAGE
T115716	A18	3	0210 - 3
T115716	A20	29	0210 - 5
T115717	A18	36	0210 - 3
T115718	A18	47	0210 - 3
T115719	A18	43	0210 - 3
T115720	A18	44	0210 - 3
T115721	A18	42	0210 - 3
T115722	A20	3	0210 - 5
T115725	A20	6	0210 - 5
T115726	A20	8	0210 - 5
T115727	A20	9	0210 - 5
T115728	A20	10	0210 - 5
T115729	A20	12	0210 - 5
T115730	A20	13	0210 - 5
T115736	A18	56	0210 - 3
T115740	F7	7	0962 - 3
T115752	H22	2	1749 - 3
T115753	H16	7	1741 - 3
T115753	H16	27	1741 - 3
T115753	H22	6	1749 - 3
T115761	E16	20	0530 - 3
T115762	E16	5	0530 - 3
T115762	E16	10	0530 - 3
T115763	E16	15	0530 - 3
T115783	F20	7	1063 - 3
T115808	I22	11	1831 - 3
T115821	J22	20	2163 - 3
T115821	J22	34	2163 - 3
T115824	J22	50	2163 - 3
T115836	A18	1	0210 - 3
T115838	A18	6	0210 - 3
T115839	A18	9	0210 - 3
T115840	A18	10	0210 - 3
T115841	A18	11	0210 - 3
T115842	A18	16	0210 - 3
T115843	A18	19	0210 - 3
T115844	A18	20	0210 - 3
T115845	A18	21	0210 - 3
T115846	A18	22	0210 - 3
T115849	A18	40	0210 - 3
T115850	A18	41	0210 - 3
T115853	A18	48	0210 - 3
T115855	A20	2	0210 - 5
T115864	F11	48	0963 - 3
T115864	G5	43	1115 - 3
T115866	F20	11	1063 - 3
T115867	F20	21	1063 - 3
T115874	F18	29	1062 - 3
T115904	H3	21	1674 - 3
T115957	J20	18	2162 - 11
T115957	K15	15	3163 - 3
T115967	J24	2	2164 - 3
T116019	I22	33	1831 - 3
T116054	A18	2	0210 - 3
T116054	A20	30	0210 - 5
T116055	F20	18	1063 - 3
T116055	G5	40	1115 - 3
T116056	A18	15	0210 - 3
T116056	B14	19	0362 - 3
T116057	F20	19	1063 - 3
T116057	G5	41	1115 - 3
T116059	K13	5	3115 - 5
T116059	K13	16	3115 - 5
T116059	K13	28	3115 - 5
T116073	I22	13	1831 - 3
T116074	I22	17	1831 - 3
T116075	I22	16	1831 - 3
T116095	J3	74	1911 - 3
T116095	K11	54	3115 - 3
T116118	B20	17	0363 - 7
T116123	I4	16	1810 - 3
T116126	H9	14	1676 - 3
T116144	E8	4	0511 - 5
T116144	E8	13	0511 - 5
T116145	H7	38	1674 - 7
T116148	B4	46	0341 - 3
T116160	B4	41	0341 - 3
T116165	J22	55	2163 - 3
T116179	E10	6	0515 - 3
T116183	A18	54	0210 - 3
T116183	F20	32	1063 - 3
T116185	A20	24	0210 - 5
T116186	A20	25	0210 - 5
T116207	H18	15	1741 - 5
T116213	J14	19	2162 - 5
T116213	J16	19	2162 - 7
T116213	J18	13	2162 - 9
T116214	A20	28	0210 - 5
T116218	K15	17	3163 - 3
T116229	I22	1	1831 - 3
T116247	E20	2	0560 - 3
T116250	J22	28	2163 - 3
T116256	E22	15	0560 - 5
T116256	E22	17	0560 - 5
T116256	I4	10	1810 - 3
T116256	I14	4	1812 - 3
T116256	J22	58	2163 - 3
T116256	J22	60	2163 - 3
T116256	K5	5	3101 - 3
T116266	G3	18	1111 - 3
T116274	G23	9	1673 - 3
T116275	G23	9	1673 - 3
T116278	G23	13	1673 - 3
T116284	B8	10	0350 - 3
T116296	A18	52	0210 - 3
T116331	E16	3	0530 - 3
T116332	A20	7	0210 - 5
T116333	G7	13	1115 - 5
T116334	H18	25	1741 - 5
T116335	A18	27	0210 - 3
T116341	G5	21	1115 - 3
T116363	F20	22	1063 - 3
T116365	F20	48	1063 - 3
T116619	J22	8	2163 - 3
T116625	E14	6	0521 - 5
T116625	E14	8	0521 - 5
T116632	F20	28	1063 - 3
T116633	F20	8	1063 - 3
T116633	F20	14	1063 - 3
T116633	F20	20	1063 - 3
T116635	H18	20	1741 - 5
T116635	H18	23	1741 - 5
T116636	F20	12	1063 - 3
T116637	F20	10	1063 - 3
T116640	F5	12	0920 - 5
T116641	A18	18	0210 - 3
T116642	K13	1D	3115 - 5
T116642	K13	3C	3115 - 5
T116642	K17	1C	3165 - 3
T116642	K17	2C	3165 - 3
T116642	K19	1C	3165 - 5
T116648	F5	10	0920 - 5
T116688	G23	10	1673 - 3
T116689	G23	8	1673 - 3
T116705	K15	16	3163 - 3
T116741	I24	17	1831 - 5
T116742	I24	16	1831 - 5
T116743	I24	15	1831 - 5
T116744	I22	6	1831 - 3
T116744	I24	14	1831 - 5
T116745	I24	13	1831 - 5
T116746	I24	12	1831 - 5
T116747	I24	11	1831 - 5
T116748	I24	10	1831 - 5
T116749	I24	9	1831 - 5
T116750	I24	8	1831 - 5
T116751	I24	7	1831 - 5
T116752	I24	6	1831 - 5
T116753	I24	5	1831 - 5
T116754	I24	4	1831 - 5
T116755	I24	3	1831 - 5
T116756	I24	2	1831 - 5
T116757	I24	1	1831 - 5
T117019	G12	34	1322 - 3
T120548	G12	7	1322 - 3
T13119	J16	17	2162 - 7
T144298	B8	21	0350 - 3
T144299	B10	21	0352 - 3
T144300	B10	13	0352 - 3
T144328	K5	1	3101 - 3
T144328	K5	2	3101 - 3
T144328	K5	6	3101 - 3
T144392	E10	28	0515 - 3
T144393	E10	10	0515 - 3
T145310	B4	34	0341 - 3
T146102	G12	37	1322 - 3
T146174	G12	39	1322 - 3
T146435	G12	38	1322 - 3
T146436	G12	13	1322 - 3
T14787	E18	26	0540 - 3
T14787	F11	43	0963 - 3
T152342	K5	2	3101 - 3
T152344	K5	1	3101 - 3
T152355	K5	7	3101 - 3
T152499	K5	7	3101 - 3
T152658	K13	58	3115 - 5
T152703	K5	6	3101 - 3
T159028	G12	38	1322 - 3
T160817	G12	5	1322 - 3
T160818	G12	4	1322 - 3
T160822	G12	41	1322 - 3
T161014	G12	44	1322 - 3
T161015	G12	43	1322 - 3
T161017	G12	42	1322 - 3
T161179	G12	3	1322 - 3
T165227	A13	1	0110 - 3
T26257	C4	53	0367 - 5
T37253	F7	2	0962 - 3
T39414	A18	44	0210 - 3
T41836	F7	9	0962 - 3
T54324	F7	15	0962 - 3
T60811	I22	15	1831 - 3
T64310	F7	3	0962 - 3
T64311	F7	16	0962 - 3
T64313	F7	21	0962 - 3
T70321	F7	4	0962 - 3
T74416	K21	9	3166 - 3
T75984	B16	7	0363 - 3
T75984	B16	17	0363 - 3
T75984	B16	28	0363 - 3
T77346	F7	11	0962 - 3

NUMERICAL INDEX - CONTINUED

PART NO.	GRID	KEY	PAGE
T78313	B16	12	0363 - 3
T78313	B16	32	0363 - 3
T78313	J22	15	2163 - 3
T78497	B16	43	0363 - 3
T78497	B16	48	0363 - 3
T78497	B18	53	0363 - 5
T80393	H1	3	1673 - 6
T80394	H1	1	1673 - 6
T82425	F5	25	0920 - 5
T82425	H16	4	1741 - 3
T82425	J3	7	1911 - 3
T82425	J3	72	1911 - 3
T82425	J5	13	1911 - 5
T82425	J5	21	1911 - 5
T82425	J12	4	2162 - 3
T84314	G12	33	1322 - 3
UN4671	B20	26	0363 - 7
U12547	B16	7	0363 - 3
U12547	B16	17	0363 - 3
U12547	B16	28	0363 - 3
U12547	J22	22	2163 - 3
U12547	J22	24	2163 - 3
U42323	E20	6	0560 - 3
U46158	H18	3	1741 - 5
U46456	B6	12	0342 - 3
U46456	C19	13	0402 - 3
U46456	G7	3	1115 - 5
U46457	J12	12	2162 - 3
U46457	J14	21	2162 - 5
U46457	J16	20	2162 - 7
U46457	J18	14	2162 - 9
U46489	B16	41	0363 - 3
U46489	B16	62	0363 - 3
U46489	B18	21	0363 - 5
U46489	B18	39	0363 - 5
U46489	B20	12	0363 - 7
U46489	B20	14	0363 - 7
U46489	C12	27	0367 - 13
U46489	C12	66	0367 - 13
U46489	F11	37	0963 - 3
U46489	F11	41	0963 - 3
X0103-4-4	F20	7	1063 - 3
Z40879	B20	6	0363 - 7
Z45833	I16	71	1814 - 3
Z45961	I16	62	1814 - 3
32246	J14	4	2162 - 5
32246	J16	4	2162 - 7
32246	J18	3	2162 - 9

PART NO.	GRID	KEY	PAGE

PART NO.	GRID	KEY	PAGE