CATERPILLAR®

SEBP4570-08
July 2009

RUTHZIL TRATOR COMERCIAL DE PEÇAS LTDA 11 97083-6812 ROLANDO

Parts Manual

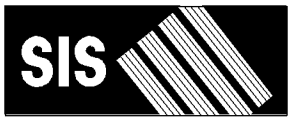

See "General Information" for New Parts Manual Features.

246C Skid Steer Loader

JAY1-Up (Machine)
CJS1-70000 (Engine)
CYM1-Up (Engine)

Powered By 3044C Engine
This Parts Manual is also available on Compact Disc (CD-ROM) - Caterpillar Form No. SERP4570.

Product and Dealer Information

Note: For product identification plate locations, see the section “Product Identification Information” in the Operation and Maintenance Manual.

Delivery Date: _____

Product Information

Model: _____

Product Identification Number: _____

Engine Serial Number: _____

Transmission Serial Number: _____

Generator Serial Number: _____

Attachment Serial Numbers: _____

Attachment Information: _____

Customer Equipment Number: _____

Dealer Equipment Number: _____

Dealer Information

Name: _____ Branch: _____

Address: _____

_____

_____

	Dealer Contact	Phone Number	Hours
Sales:	_____	_____	_____
Parts:	_____	_____	_____
Service:	_____	_____	_____

MEMORANDA

TABLE OF CONTENTS

Name	Page
GENERAL INFORMATION	A4
REPAIR ALTERNATIVES	A7
SUPPLEMENTAL COOLANT ADDITIVES	A8
MAINTENANCE PARTS	A9
INDEX	A12
MACHINE ARRANGEMENT	1
CHASSIS AR	1
COMMON AR	1
CONTROL AR-MACHINE	2
CONVERSION AR-MACHINE	3
MACHINE AR-SPECIAL	4
ENGINE ARRANGEMENT	7
ENGINE AR	7
ENGINE AR-PRIMARY	8
INSTALLATION AR-ENGINE	12
BASIC ENGINE	14
BEARING GP-MAIN	14
CAMSHAFT GP	15
CONNECTING ROD GP	17
COVER GP-VALVE MECHANISM	18
CRANKSHAFT GP	20
CYLINDER BLOCK GP	22
CYLINDER HEAD GP	30
DRAIN GP-ENGINE OIL	32
FLYWHEEL GP	33
GEAR GP-FRONT	35
GUARD GP-BELT	37
HOUSING GP-FLYWHEEL	38
HOUSING GP-FRONT	40
LIFTING GP-ENGINE	46
MOUNTING GP-ENGINE	48
PAN GP-OIL	49
PISTON GP	56
PLUG GP-ENGINE	58
PULLEY GP-CRANKSHAFT	60
PULLEY GP-WATER PUMP	62
V-BELT GP	63
VALVE MECHANISM GP	64
LUBRICATION SYSTEM	65
BREATHER GP	65
FILTER GP-ENGINE OIL	69
LINES GP-ENGINE OIL	72
PUMP GP-ENGINE OIL	73
VALVE GP-ENGINE OIL RELIEF	74
COOLING SYSTEM	75
COOLER GP-ENGINE OIL	75
DRAIN GP-COOLANT	78
HOUSING & REGULATOR GP	79
LINES GP-WATER	80
MOUNTING GP-RAD & OIL COOLER	82
PUMP GP-WATER	86
RADIATOR & HYD OIL COOLER GP	88
AIR INLET AND EXHAUST SYSTEM	90
AIR CLEANER GP	90
GUARD GP-DEBRIS	93
KIT-DEBRIS GUARD	94
LINES GP-AIR	96
MANIFOLD GP-EXHAUST	100
MANIFOLD GP-INLET	101
MUFFLER & MOUNTING GP	102
MUFFLER GP	103
TURBOCHARGER GP	104
FUEL SYSTEM	108
CONTROL GP-GOVERNOR	108
LINES GP-FUEL	111
LINES GP-FUEL INJECTION	113
LINES GP-FUEL PRM & FILTER	119
PUMP GP-FUEL INJECTION	121
TANK & MTG GP-FUEL	128
TANK GP-FUEL	130
ELECTRICAL AND STARTING SYSTEM	131
ALTERNATOR GP-CHARGING	131
BATTERY & WIRING GP	137
CONTROL GP-MACHINE	139
COVER GP-FUSE PANEL	140
GLOW PLUG GP	141
HEATER GP-JACKET WATER	142
KIT-CONTROL MOUNTING	144
KIT-SECURITY	145
KIT-WORK TOOL WIRING	149
LAMP GP-FLOOD	150
LAMP GP-HEAD & SIGNAL	151
LAMP GP-WARNING BEACON	153
LIGHTING GP-FLOOD	154
LIGHTING GP-ROADING	155
LIGHTING GP-STOP & TAIL	159
LIGHTING GP-WARNING BEACON	160
MAST GP	161
RELAY GP	162
SENSOR GP-POSITION	163
SENSOR GP-SPEED	165
SENSOR GP-TEMP & PRESS	166
SERVICE GP-MACHINE	167
STARTING MOTOR GP-ELECTRIC	168
SWITCH GP-PRESSURE	171
WIRING GP-AIR CONDITIONER	172
WIRING GP-CAB	174
WIRING GP-ENGINE	178

TABLE OF CONTENTS

Name	Page
WIRING GP-GRADE CONTROL	186
WIRING GP-MACHINE	187
WIRING GP-QUICK COUPLER	190
WIRING GP-WORK TOOL	191
POWER TRAIN	193
AXLE GP	193
DRIVE GP-TANDEM	195
FILTER & LINES GP-HYDRAULIC	198
FILTER GP-OIL	200
LINES GP-HYDROSTATIC	201
LINES GP-PARKING BRAKE	205
MANIFOLD & LINES GP-CONTROL	206
MANIFOLD GP-RETURN	210
MOTOR & MTG GP-HYDROSTATIC	214
MOTOR GP-PISTON	217
MOUNTING GP-PUMP	225
POWER TRAIN AR	226
PUMP & MTG GP-HYDROSTATIC	227
PUMP GP-PISTON	229
TIRE & RIM GP	234
WHEEL & TIRE AR	240
WHEEL & TIRE GP	243
FRAME AND BODY	245
CONVERSION AR-ROADING	245
CONVERSION GP-ROADING	246
COUNTERWEIGHT GP	248
DOOR AS-ACCESS	249
ENCLOSURE GP-ENGINE	250
FRAME & MTG GP-MACHINE	251
FRAME GP-MACHINE	253
GUIDE GP-LINES	254
KIT-COUNTERWEIGHT	255
KIT-ENGINE ENCLOSURE	257
KIT-MACHINE ENCLOSURE SEAL	258
KIT-ROADING CONVERSION	260
LIFTING GP-MACHINE	268
MIRROR & MTG GP-REAR VIEW	271
MOUNTING GP-REGISTRATION	272
MOUNTING GP-ROADING LIGHTS	274
SUPPRESSION GP-SOUND	276
HYDRAULIC SYSTEM	280
ACCUMULATOR GP-HYDRAULIC	280
ACCUMULATOR GP-RIDE CONTROL	281
CYLINDER & MTG GP-ANGLE BLADE	283
CYLINDER GP-BUCKET	285
CYLINDER GP-GRAPPLE	287
CYLINDER GP-HYDRAULIC	290
CYLINDER GP-LIFT ARM	295
FITTING GP-HYDRAULIC	296
HYDRAULIC AR	300
KIT-QUICK COUPLER CONVERSION	303
KIT-RIDE CONTROL	307
KIT-WORK TOOL POSITIONER	310
LINES GP-BUCKET	312
LINES GP-CONNECTING	334
LINES GP-COUPLER	338
LINES GP-GRAPPLE	344
LINES GP-HYDRAULIC	350
LINES GP-HYDRAULIC FAN	356
LINES GP-HYDRAULIC OIL COOLER	364
LINES GP-LIFT CYLINDER	366
LINES GP-LOWERING CONTROL	367
LINES GP-PUMP	369
LINES GP-TILT CYLINDER	394
LINES GP-WORK TOOL	396
MANF & SOLENOID MTG GP-ACCUM	402
MANIFOLD & LINES GP-ACCUM	404
MANIFOLD & MTG GP-CONTROL	406
MANIFOLD & SOLENOID GP-CONTROL	409
MANIFOLD GP-CONTROL	410
MANIFOLD GP-RIDE CONTROL	415
MOTOR & MTG GP-HYDRAULIC FAN	417
MOUNTING GP-CYLINDER	418
PUMP & MTG GP-GEAR	422
PUMP & MTG GP-WORK TOOL	423
PUMP GP-PISTON	425
PUMP GP-PISTON & GEAR	427
TANK & MTG GP-HYDRAULIC	428
TANK GP-HYDRAULIC	429
VALVE & MTG GP-CONTROL	431
VALVE GP-CHECK	433
VALVE GP-CONTROL	434
VALVE GP-MANUAL	438
VALVE GP-RELIEF	439
VALVE GP-SHUTTLE	440
VALVE GP-SOLENOID	441
IMPLEMENTS	443
ARM AS-LIFT	443
PIN GP-LIFT ARM	444
WORK TOOLS	446
ARM GP-MATERIAL HANDLING	446
BLADE AR	447
BLADE GP-ANGLING	452
BLADE GP-MULTIPURPOSE BUCKET	456
BUCKET AR-DIRT	476
BUCKET AR-GENERAL PURPOSE	477
BUCKET AR-GRAPPLE	479
BUCKET AR-LIGHT MATERIAL	486
BUCKET AR-MULTIPURPOSE	487
BUCKET AR-UTILITY	496
BUCKET AS-DIRT	497
BUCKET AS-GENERAL PURPOSE	510
BUCKET AS-GRAPPLE	520
BUCKET AS-LIGHT MATERIAL	528

TABLE OF CONTENTS

Name	Page
BUCKET AS-UTILITY	536
BUCKET GP-DIRT	541
BUCKET GP-GENERAL PURPOSE	545
BUCKET GP-GRAPPLE	546
BUCKET GP-MULTIPURPOSE	553
BUCKET GP-UTILITY	565
CARRIAGE & FORK AR	568
CARRIAGE GP-FORK	569
CLAM AS-MULTIPURPOSE BUCKET	571
CONVERSION GP-WORK TOOL	576
COUPLER AR-QUICK	577
COUPLER GP-QUICK	578
COVER GP-LINES	580
CYLINDER & LINK GP-COUPLER	581
EDGE GP-BIT & CUTTING	583
EDGE GP-CUTTING	583
FORK AR-GRAPPLE	591
FORK GP-GRAPPLE	592
FORK GP-PALLET	595
FORK GP-UTILITY	597
FRAME GP-BLADE	603
FRAME GP-FORK	604
GRAPPLE & CYLINDER GP-UTILITY	606
GRAPPLE GP-UTILITY	608
HANDLE & PIN GP-COUPLER	609
KIT-ROADING PLATE & MOUNTING	611
KIT-WATER TANK & MOUNTING	613
LINK GP-COUPLER	615
LOCK GP-QUICK COUPLER	617
PLATE GP-ROADING	620
SPRING GP-BLADE	622
STEP GP-MATERIAL HANDLING ARM	623
STOP GP-BUCKET	624
STRAINER GP-WATER	625
TANK GP-WATER	626
TOOTH GP-UNI	627
OPERATOR STATION	628
ACCESSORY GP-CAB	628
ACCUMULATOR GP-REFRIGERANT	629
AIR CONDITIONER & MOUNTING GP	631
AIR CONDITIONER AR	632
AIR CONDITIONER GP	633
ARMREST & MOUNTING GP	637
BASE AS-JOYSTICK	638
CAB AR-ENCLOSED ROPS	640
CABLE GP-CONTROL	641
COMPRESSOR & MTG GP-REFRIG	643
CONDENSER & MTG GP-REFRIGERANT	644
CONTROL & WIRING GP-AIR & TEMP	646
CONTROL GP-AIR & TEMPERATURE	648
CONTROL GP-ELECTROHYDRAULIC	649
CONTROL GP-HANDLE	654
CONTROL GP-JOYSTICK	655
COVER GP-CAB	660
COVER GP-CONSOLE	661
COVER GP-INSTRUMENT PANEL	662
DOOR & MTG GP-CAB	663
DOOR GP-CAB	671
DUCT & FILTER GP-CAB AIR	691
GUARD GP-ROPS/FOPS	693
HANDLE GP	694
HEATER & MTG GP-CAB	695
HEATER AR-CAB	696
HEATER GP-CAB	697
INSTALLATION GP-RADIO	701
KIT-AIR COND & HEATER INSTL	703
KIT-AIR CONDITIONER INSTL	705
KIT-CAB DOOR & MOUNTING	707
KIT-CAB HEATER & MOUNTING	716
KIT-CAB WINDOW	717
KIT-CONTROL PATTERN CHANGE	718
KIT-INSTRUMENT PANEL	720
LEVER GP-GOVERNOR	721
LINER GP-CAB	722
LINES GP-AIR CONDITIONER	726
LINES GP-HEATER	728
LITERATURE GP	729
MIRROR GP-REAR VIEW	730
MOTOR GP-WINDOW WIPER	732
MOUNTING GP-ARMREST	733
MOUNTING GP-ROPS	735
OPTION AR-CAB	738
PANEL GP-INSTRUMENT	739
PEDAL GP-GOVERNOR	744
RADIO GP	747
SEAT & ARMREST GP	758
SEAT & MOUNTING GP	761
SEAT AR	764
SEAT AR-SUSPENSION	764
SEAT BELT GP	765
SEAT GP	767
SEAT GP-SUSPENSION	770
SPRING GP-GAS	773
SUSPENSION GP-SEAT	775
VISOR GP-CAB	779
WINDOW GP-CAB	781
SERVICE EQUIPMENT AND SUPPLIES	785
BRACKET GP-MOUNTING	785
FILM GP	786
PLATE & FILM GP	792
PART NUMBER INDEX	B1

GENERAL INFORMATION

1. MACHINE IDENTIFICATION

Caterpillar machines are identified by Product Identification Numbers (PIN). Some components included in a machine may be identified by Serial Numbers (S/N). Typical components that will be serialized include engines, transmissions, bulldozers, and rippers. The machine and engine are further identified by arrangement numbers and in some cases modification numbers. These numbers are shown on the product identification plate(s) and on the master plate in the operator's compartment.

Caterpillar dealers need all of these numbers to determine accurate parts identification.

SIS *New Feature*

Effective First Quarter 2001 the Caterpillar Product Identification Number (PIN) changed from 8 to 17 characters. In an effort to provide uniform equipment identification, Caterpillar and other construction equipment manufacturers are moving to comply with the latest version of the product identification numbering standard. Non-road machine PINs are defined by ISO 10261. The new PIN format will apply to all Caterpillar machines and generator sets. The PIN plates and frame marking will display the 17 character PIN. The new format will look like the following:

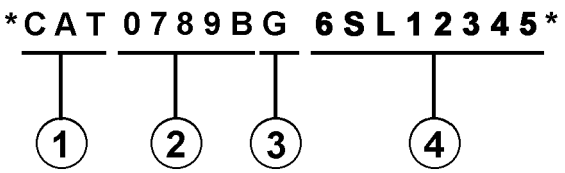

Where:

1. Caterpillar's World Manufacturing Code (characters 1-3)

2. Machine Descriptor (characters 4-8)

3. Check Character (character 9)

4. Machine Indicator Section (MIS) or Product Sequence Number (characters 10-17). These were previously referred to as the Serial Number.

Machines and generator sets produced before First Quarter 2001 will maintain their 8 character PIN format.

Components such as engines, transmissions, axles, etc. and work tools will continue to use an 8 character Serial Number (S/N).

2. ORDERING PARTS

⚠ WARNING

When replacement parts are required for this product Caterpillar recommends using Caterpillar replacement parts or parts with equivalent specifications including, but not limited to, physical dimensions, type, strength and material.

Failure to heed this warning can lead to premature failures, product damage, personal injury or death.

Quality Caterpillar replacement parts are available from Caterpillar dealers throughout the world. Their parts inventories are up to date and include all parts normally required to protect your investment in Caterpillar machines. Dealers may offer repair kits or remanufactured parts to allow selection of the most effective repair alternative for a particular situation. When ordering parts, your order should specify the quantity, part number, part name, and the serial number/product identification number of the machine for which the parts are needed.

3. PARTS MANUAL ORGANIZATION

Product information in this manual is presented as "information elements" that represent all of the components for the specific model. Engine Arrangement and Seat Group are examples of information elements. The information elements are organized alphabetically by part name and secondarily by part number within each major section of the manual.

4. TABLE OF CONTENTS

A table of contents (TOC) is found at the beginning of the manual. The TOC lists each section of the manual with a complete list of all information elements organized as they appear in the manual. Page numbers are provided for quick reference to detailed parts identification illustrations and serviceable consist lists.

5. MAINTENANCE PARTS INDEX

The Maintenance Parts Index, located near the beginning of the manual, references most frequently used maintenance part numbers, providing description, quantity, usage and page number. This information is organized alphabetically by part description.

6. INDEX

The index located near the front of the manual is an alphabetical listing of all information elements included in the manual. Page numbers are provided for quick reference to detailed parts identification illustrations and serviceable consist lists.

7. PART NUMBER INDEX

A numerical index listing all part numbers and the corresponding page number(s) appears at the back of the manual.

8. CAPTIONS

Captions located at the beginning of each information element identify the part number and part name along with additional descriptive information. PIN and S/N information found in each caption should be used to select correct information for a specific machine. Field replacement options, identification of optional attachment components, and where used ("part of") information is also provided.

The first line of a caption is shown in larger type font to indicate the beginning of an information element. Captions for additional pages that may be required to illustrate an information element will be shown in standard type font and will include the term *(contd.)* .

9. NON-SERVICED PARTS

In some instances it is necessary to display non-serviced parts that are a link to a lower level serviceable consist lists. These non-serviced part numbers are shown in *italic* type indicating that they are not available.

10. PARTS LIST REFERENCE NUMBERS

Numbers shown in the Ref No column correspond to numbers used in the associated graphic(s). An alphabetic suffix may be added to a reference number to identify lower level consist items. Numbers shown in the Graphic Ref column refer to the graphic number identifier displayed in the lower left corner of each illustration. The Graphic Ref number may be used in combination with the item Ref No to determine the correct part number. There may be intentional omission of a Ref No in a consist list as information is updated to reflect the latest serviceable part numbers.

11. INDENTED PART NAMES

When a part name is indented in a parts list, it is part of (included in) the group or assembly under which it is indented.

12. ILLUSTRATION REFERENCE LETTERS

When necessary, illustrations contain reference letters (A, B, C etc.) that are intended to track lines and harnesses from one point to another. They are also used to show where to reconnect illustrations that have been separated.

13. ABBREVIATIONS AND SYMBOLS

O.D. – Outside Diameter
I.D. – Inside Diameter
A – Not Part Of This Group
B – Use As Required
C – Change From Previous Type
D – Order By The Meter
E – Order By The Centimeter
F – Not Shown
G – Order By The Inch
I – Refer To Hydraulic Information System
M – Metric Part
R – Remfg Part May Be Available
Y – Separate Illustration
Z – Not Serviced Separately

SIS *New Feature*

14. DESCRIPTION OF TYPE CHANGES

Type - A type is defined as any configuration change that requires an additional Information Element for an Arrangement, Group, or Assembly. If serial number breaks for types are not available, a type # (Type 1, Type 2, etc.) will be displayed in the caption. These "type" changes are identified with a "C" note (change from previous type) in the Parts List. Only the "types" that apply to this Parts Manual will be included. Additional types may exist causing "C" notes to appear on an Information Element when no other types are shown.

15.<END>

This symbol indicates the end of an information element.

NOTE:

Continuing improvement and advancement of product design may cause changes to your machine which may not be included in this publication. Whenever a question arises regarding your caterpillar product or this publication, please consult your caterpillar dealer for the latest available information.

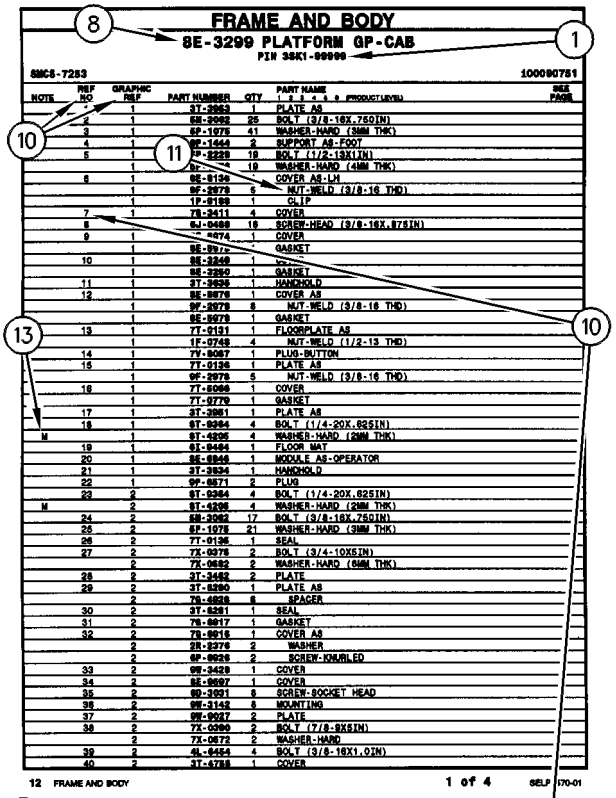
FRAME AND BODY
8E-3299 PLATFORM GP-CAB
PIN 3SK1-99999
SMCS-7283
100090751
1 of 4
SELP4570-01

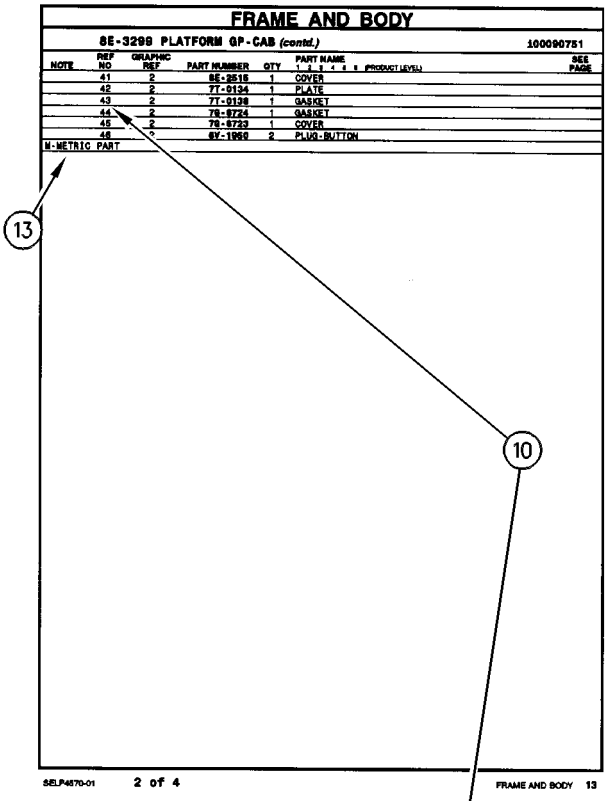
FRAME AND BODY
8E-3299 PLATFORM GP-CAB (contd.)
100090751
M-METRIC PART
2 of 4
SELP4570-01

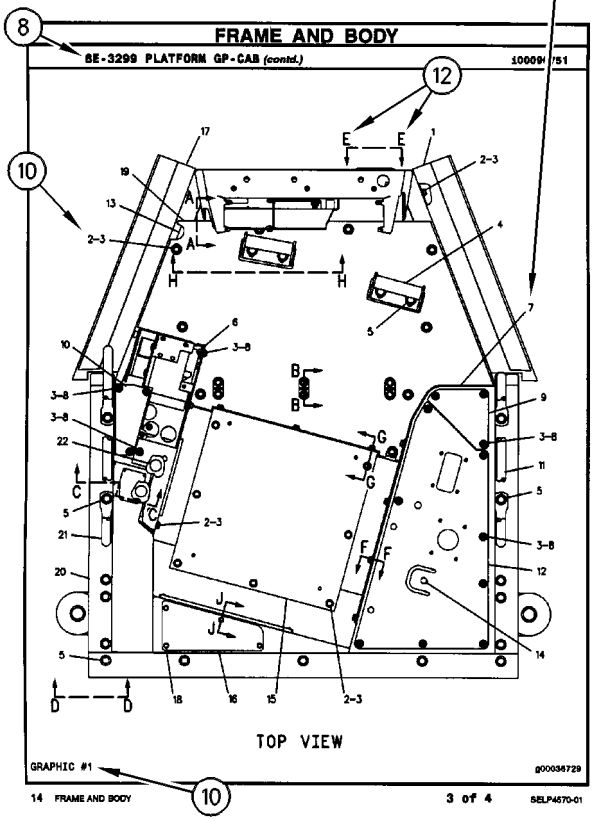
FRAME AND BODY
8E-3299 PLATFORM GP-CAB (contd.)
TOP VIEW
GRAPHIC #1
g00036729
3 of 4
SELP4570-01

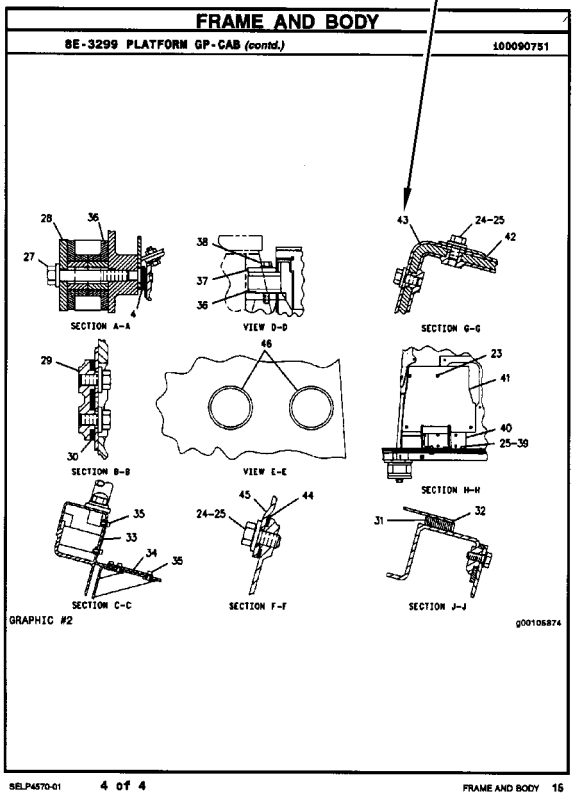
FRAME AND BODY
8E-3299 PLATFORM GP-CAB (contd.)
100090751
SECTION A-A
VIEW D-D
SECTION G-G
SECTION B-B
VIEW E-E
SECTION H-H
SECTION C-C
SECTION F-F
SECTION J-J
GRAPHIC #2
g00105874
4 of 4
SELP4570-01

REPAIR ALTERNATIVES

REMANUFACTURED COMPONENTS

As an option when making repairs consider Caterpillar Remanufactured Components. Components that are available through the Caterpillar Remanufactured Program are identified three ways in the parts book:

- with the letter R in the note field of the parts list
- with an R* at the beginning of the first line of the caption
- with an *R at the end of the first line of the caption

Typical components included in the Remanufacturing Program include:

ALTERNATORS
CONNECTING RODS
CRANKSHAFTS - UNDERSIZE
CRANKSHAFTS - UPGRADE TO NEW
CYLINDER HEADS
ELECTRONIC CONTROL MODULES (ECM)
ELECTRONIC SENSORS
FUEL INJECTORS
FUEL NOZZLES
FUEL PUMPS
GOVERNORS
OIL PUMPS
PISTONS
SHORT BLOCKS
STARTERS
TURBOCHARGERS - COMPLETE
TURBOCHARGER CARTRIDGES
WATER PUMPS

Caterpillar Remanufactured engines for many engine arrangements are also available.

SUPPLEMENTAL COOLANT ADDITIVES

CUSTOMER BENEFITS:

Protects against cavitation, foam, erosion, corrosion, and scale buildup in cooling systems.

- Provides measured coolant conditioner.

DESCRIPTION:

Additives deplete from the coolant with normal operation. For this reason, Supplemental Coolant Additives (SCA) must be added to all heavy duty coolants at regular intervals. In addition, when not using a fully formulated, pre-charged antifreeze, like Caterpillar's DEAC, an initial charge of SCA must be added to the cooling system. The amount of SCA added to the system is dependent on the capacity of the system.

The SCA for initial fill is provided as a liquid. SCA's for maintenance intervals are available in liquid form and as a spin-on element. (No Spin-on available for 3600 Family of Engines)

NOTE:

The amount of SCA added at initial fill is not the same as the amount added at maintenance intervals.

The coolant additive elements can be used with any ethylene or propylene glycol type antifreeze which meets ASTM D4985 or ASTM D5345 Specifications.

NOTE:

For use with standard heavy duty coolant only, not for use with Extended Life Coolant.

PARTS NEEDED:

Cooling System Capacity		Liquid SCA at Initial Fill	Liquid SCA at Maintenance*	Spin-on SCA Maintenance Element*
Liters	Gallons			
22-30	(6-8)	3P-2044 (1)	6V-3542 (1)	111-2370 (1)
30-38	(8-10)	3P-2044 (1) 6V-3542 (1)	111-2372 (1)	111-2369 (1)
38-49	(10-13)	3P-2044 (1) 8T-1589 (1)	111-2372 (1)	111-2369 (1)
49-64	(13-17)	3P-2044 (2)	8T-1589 (1)	9N-3368 (1)
64-83	(17-22)	3P-2044 (2) 8T-1589 (1)	111-2372 (1) 6V-3542 (1)	111-2371 (1)
83-114	(22-30)	3P-2044 (3) 8T-1589 (1)	3P-2044 (1)	9N-3718 (1)
114-163	(30-43)	3P-2044 (5)	3P-2044 (1) 6V-3542 (1)	111-2371 (2)
163-242	(43-64)	3P-2044 (8)	3P-2044 (2)	9N-3718 (2)

** Normal maintenance period is 250 hrs. See your Operation and Maintenance Manual for complete coolant maintenance instructions.*

( ) Indicates quantity required.

MAINTENANCE PARTS

DESCRIPTION	PART NUMBER	QTY	WHERE USED	PAGE
BASIC ENGINE				
CAP-FILLER (ENGINE OIL)	233-5498	1	HOUSING GP-FRONT	40
CAP-OIL FILLER (ENGINE)	310-8798	1	COVER GP-VALVE MECHANISM	18
		1	COVER GP-VALVE MECHANISM	19
GASKET (VALVE COVER)	233-5483	1	COVER GP-VALVE MECHANISM	18
GASKET (VALVE MECHANISM)	233-5483	1	COVER GP-VALVE MECHANISM	19
PLUG (DRAIN, ENGINE OIL)	135-8432	1	PAN GP-OIL	51
		1	PAN GP-OIL	53
		1	PAN GP-OIL	55
PLUG-DRAIN (ENGINE OIL PAN)	5I-7833	1	PAN GP-OIL	49
V-BELT (WATER PUMP)	235-4972	1	V-BELT GP	63
COOLING SYSTEM				
CAP AS-RADIATOR	036-1865	1	RADIATOR & HYD OIL COOLER GP	88
CAP-VENTED (COOLANT RECOVERY)	169-6715	1	LINES GP-WATER	81
GASKET (WATER TEMPERATURE REGULATOR)	235-4959	1	HOUSING & REGULATOR GP	79
		1	LINES GP-WATER	80
REGULATOR AS-WATER TEMPERATURE (THERMOSTAT)	235-4960	1	HOUSING & REGULATOR GP	79
		1	LINES GP-WATER	80

MAINTENANCE PARTS

DESCRIPTION	PART NUMBER	QTY	WHERE USED	PAGE
ELECTRICAL AND STARTING SYSTEM				
BATTERY (12-VOLT, MAINTENANCE FREE)	230-6368	1	BATTERY & WIRING GP	137
BELT-DRIVE	9X-8139	1	LAMP GP-WARNING BEACON	153
FLASHER AS (12-VOLT) (STOP LIGHT)	242-9000	1	LIGHTING GP-ROADING	155
		1	LIGHTING GP-ROADING	157
FUSE (10-AMPERE)	113-8490	7	WIRING GP-CAB	174
FUSE (100-AMPERE)	235-1845	1	BATTERY & WIRING GP	137
FUSE (15-AMPERE)	113-8491	10	WIRING GP-CAB	174
FUSE (20-AMPERE)	113-8492	3	WIRING GP-CAB	174
	267-2680	2	COVER GP-FUSE PANEL	140
		1	RELAY GP	162
		2	WIRING GP-CAB	175
FUSE (60-AMPERE)	267-2701	1	RELAY GP	162
FUSE AS (MAIN POWER)	258-4136	1	WIRING GP-CAB	175
FUSE AS (ROADING)	258-4134	1	LIGHTING GP-ROADING	155
		1	LIGHTING GP-ROADING	157
GLOW PLUG	107-3659	4	GLOW PLUG GP	141
KEY AS-ELECTRONIC (SECURITY)	206-5162	2	KIT-SECURITY	145
LAMP (12-VOLT)	9W-2471	1	LIGHTING GP-STOP & TAIL	159
LAMP (12-VOLT, 21-WATT) (AMBER)	226-4560	1	LAMP GP-HEAD & SIGNAL	151
		1	LAMP GP-HEAD & SIGNAL	152
LAMP (12-VOLT, 21-WATT) (ROADING LIGHTS)	9W-3326	1	LIGHTING GP-ROADING	155
		1	LIGHTING GP-ROADING	157
LAMP (12-VOLT, 5-WATT) (CLEAR)	226-4561	1	LAMP GP-HEAD & SIGNAL	151
		1	LAMP GP-HEAD & SIGNAL	152
LAMP (12-VOLT, 5-WATT) (MINIATURE)	084-4348	1	LIGHTING GP-ROADING	155
		1	LIGHTING GP-ROADING	157
LAMP (12-VOLT, 55-WATT) (FLOODLIGHT)	9W-0607	1	LAMP GP-FLOOD	150
		1	WIRING GP-MACHINE	188
LAMP (12-VOLT, 55-WATT) (WARNING BEACON)	9X-8118	1	LAMP GP-WARNING BEACON	153
LAMP-HEAD (12-VOLT, 60/55-WATT) (12-VOLT, 60/55-WATT)	9W-3324	1	LAMP GP-HEAD & SIGNAL	151
		1	LAMP GP-HEAD & SIGNAL	152
FRAME AND BODY				
FLASHER AS (12-VOLT) (STOP LIGHT)	242-9000	1	KIT-ROADING CONVERSION	260
FUSE AS (ROADING)	258-4134	1	KIT-ROADING CONVERSION	260
LAMP (12-VOLT, 10-WATT)	195-9712	1	KIT-ROADING CONVERSION	260
		1	KIT-ROADING CONVERSION	263
		1	KIT-ROADING CONVERSION	265
		1	MOUNTING GP-REGISTRATION	272
LAMP (12-VOLT, 21-WATT)	9W-3326	1	KIT-ROADING CONVERSION	260
LAMP (12-VOLT, 5-WATT)	084-4348	1	KIT-ROADING CONVERSION	260
PLUG-MAGNETIC (FRAME)	3S-9182	4	FRAME & MTG GP-MACHINE	251
FUEL SYSTEM				
CAP-FUEL	304-3885	1	TANK GP-FUEL	130
FILTER AS-WATER SEP & FUEL	233-9856	1	LINES GP-FUEL	111
		1	LINES GP-FUEL PRM & FILTER	119

MAINTENANCE PARTS

DESCRIPTION	PART NUMBER	QTY	WHERE USED	PAGE
HYDRAULIC SYSTEM				
BREATHER (HYDRAULIC TANK)	258-2829	1	TANK GP-HYDRAULIC	429
CAP AS	6V-9828	1	KIT-RIDE CONTROL	307
CAP AS-FILLER (HYDRAULIC TANK)	142-8937	1	TANK GP-HYDRAULIC	429
SCREEN (HYDRAULIC)	195-6768	1	MANIFOLD & LINES GP-ACCUM	404
STRAINER AS (HYDRAULIC TANK)	258-2804	1	TANK GP-HYDRAULIC	430
LUBRICATION SYSTEM				
BREATHER (CRANKCASE)	287-6020	1	BREATHER GP	65
FILTER-ENGINE OIL	1R-0734	1	FILTER GP-ENGINE OIL	69
		1	FILTER GP-ENGINE OIL	70
FILTER-ENGINE OIL (ENGINE)	1R-0734	1	FILTER GP-ENGINE OIL	71
OPERATOR STATION				
BLADE AS-WIPER (400-MM) (CAB DOOR)	322-9633	1	DOOR GP-CAB	674
		1	DOOR GP-CAB	681
		1	DOOR GP-CAB	688
	8Y-4615	1	DOOR GP-CAB	671
		1	DOOR GP-CAB	677
		1	DOOR GP-CAB	685
CAP-VENTED (WASHER)	258-3296	1	DOOR & MTG GP-CAB	663
		1	DOOR & MTG GP-CAB	666
		1	DOOR & MTG GP-CAB	668
		1	KIT-CAB DOOR & MOUNTING	707
		1	KIT-CAB DOOR & MOUNTING	710
		1	KIT-CAB DOOR & MOUNTING	713
FILTER ELEMENT-CAB AIR (FRESH)	265-6619	1	DUCT & FILTER GP-CAB AIR	691
		1	KIT-AIR COND & HEATER INSTL	704
		1	KIT-CAB HEATER & MOUNTING	716
FILTER ELEMENT-CAB AIR (RECIRCULATION)	265-6618	1	DUCT & FILTER GP-CAB AIR	691
		1	KIT-AIR COND & HEATER INSTL	704
		1	KIT-CAB HEATER & MOUNTING	716
LAMP (12-VOLT) (MINIATURE)	210-8754	1	PANEL GP-INSTRUMENT	739
V-BELT (REFRIGERANT)	258-3539	1	COMPRESSOR & MTG GP-REFRIG	643
		1	KIT-AIR COND & HEATER INSTL	705
		1	KIT-AIR CONDITIONER INSTL	706
POWER TRAIN				
FILTER-OIL (ADVANCED EFFICIENCY) (HYDRAULIC)	1G-8878	1	FILTER GP-OIL	200
WORK TOOLS				
CAP AS (WATER TANK)	192-2606	1	TANK GP-WATER	626
FUSE (10-AMPERE)	3K-8782	1	CONVERSION GP-WORK TOOL	576
SCREEN (WATER TANK)	119-1414	1	STRAINER GP-WATER	625
STRAINER (WATER TANK FILL)	7R-0476	1	KIT-WATER TANK & MOUNTING	613

INDEX

Name	Page
A	
ACCESSORY GP-CAB	628
ACCUMULATOR GP-HYDRAULIC–CHARGED	280
ACCUMULATOR GP-HYDRAULIC–UNCHARGED	280
ACCUMULATOR GP-REFRIGERANT–WITH DESICCANT	629 630
ACCUMULATOR GP-RIDE CONTROL–CHARGED	281
ACCUMULATOR GP-RIDE CONTROL–UNCHARGED	282
AIR CLEANER GP	90 91 92
AIR CONDITIONER & MOUNTING GP	631
AIR CONDITIONER AR	632
AIR CONDITIONER GP	633 635
ALTERNATOR GP-CHARGING	131 133 134 135 136
ARM AS-LIFT	443
ARM GP-MATERIAL HANDLING	446
ARM GP-WINDOW WIPER (CAB DOOR)	672 674 678 682
ARM GP-WINDOW WIPER (WET)	685 688
ARMREST & MOUNTING GP	637
AXLE GP–STANDARD	193 194
B	
BASE AS-JOYSTICK–LH	639
BASE AS-JOYSTICK–RH	638
BATTERY & WIRING GP	137
BATTERY (12-VOLT, MAINTENANCE FREE)	137
BEARING GP-MAIN	14
BELT-DRIVE	153
BLADE AR–ANGLING	447 448 450
BLADE AS-WIPER (400-MM) (CAB DOOR)	671 674 677 681 685 688
BLADE GP-ANGLING	452 453 454 455
BLADE GP-MULTIPURPOSE BUCKET	456 457 458 459 460 461 462 463 464 465 466 467 468 469 470 471 472 473 474 475
BRACKET GP-MOUNTING–BELT GUARD	785
BREATHER (CRANKCASE)	65
BREATHER (HYDRAULIC TANK)	429
BREATHER GP	65 67
BUCKET AR-DIRT	476 477
BUCKET AR-GENERAL PURPOSE	477 478 479
BUCKET AR-GRAPPLE	479 480 481 482 483 484 485
BUCKET AR-GRAPPLE–INDUSTRIAL	480
BUCKET AR-LIGHT MATERIAL	486
BUCKET AR-MULTIPURPOSE	487 488 489 490 491 492 493 494 495 496
BUCKET AR-UTILITY	496
BUCKET AS-DIRT	497

INDEX

Name	Page
	498
	499
	500
	501
	502
	503
	504
	505
	506
	507
	508
	509
BUCKET AS-GENERAL PURPOSE	510
	511
	512
	513
	514
	515
	516
	517
	519
BUCKET AS-GENERAL PURPOSE–HIGH CAPACITY	518
BUCKET AS-GRAPPLE	520
	521
	522
	523
	524
	525
	526
	527
BUCKET AS-LIGHT MATERIAL	528
	529
	530
	531
	532
	533
	534
	535
BUCKET AS-UTILITY	536
	537
	538
	539
	540
BUCKET GP-DIRT	541
	542
	543
	544
BUCKET GP-GENERAL PURPOSE	545
BUCKET GP-GRAPPLE	546
	547
	548
	549
	551
	552
BUCKET GP-GRAPPLE–INDUSTRIAL	550
BUCKET GP-MULTIPURPOSE	553
	554
	555
	556
	557
	558
	559
	560
	561
	562
	563
	564
BUCKET GP-UTILITY	565
	566
	567

C

CAB AR-ENCLOSED ROPS	640
CABLE GP-CONTROL	641
CABLE GP-CONTROL–MANUAL LOWERING	642
CAMSHAFT GP	15
	16
CANOPY GP-OPEN ROPS	3
	4
	245
CAP AS	307
CAP AS (WATER TANK)	626
CAP AS-FILLER (HYDRAULIC TANK)	429
CAP AS-RADIATOR	88
CAP-FILLER (ENGINE OIL)	40
CAP-FUEL	130
CAP-OIL FILLER (ENGINE)	18
	19
CAP-VENTED (COOLANT RECOVERY)	81
CAP-VENTED (WASHER)	663
	666
	668
	707
	710
	713
CARRIAGE & FORK AR	568
CARRIAGE GP-FORK	569
	570
CHASSIS AR	1
CLAM AS-MULTIPURPOSE BUCKET	571
	572
	573
	574
	575
COMMON AR	1
	2
COMPRESSOR & MTG GP-REFRIG	643
COMPRESSOR GP-REFRIGERANT	643

INDEX

Name	Page
	703
	705
CONDENSER & MTG GP-REFRIGERANT	644
	645
CONNECTING ROD GP	17
CONTROL & WIRING GP-AIR & TEMP	646
CONTROL AR-MACHINE– AUX PROPORTIONAL FLOW	2
CONTROL AR-MACHINE– ON, OFF AUXILIARY CONTROL	2
CONTROL GP-AIR & TEMPERATURE	648
CONTROL GP-AIR CONDITIONER	703
	726
CONTROL GP-AIR CONDITIONER (COMPRESSOR)	705
CONTROL GP-ELECTROHYDRAULIC–LH	649
CONTROL GP-ELECTROHYDRAULIC– LH, HIGH FLOW	650
CONTROL GP-ELECTROHYDRAULIC–RH	651
	652
CONTROL GP-ELECTROHYDRAULIC– RH, HIGH FLOW	653
CONTROL GP-GOVERNOR	108
	110
CONTROL GP-HANDLE	657
	659
CONTROL GP-HANDLE (RH)	655
	656
CONTROL GP-HANDLE–LH	654
CONTROL GP-JOYSTICK–LH	659
CONTROL GP-JOYSTICK–LH, HIGH FLOW	658
CONTROL GP-JOYSTICK–RH	655
	657
CONTROL GP-JOYSTICK–RH, HIGH FLOW	656
CONTROL GP-MACHINE	139
	147
CONTROL GP-UNPROGRAMMED (MACHINE)	167
CONVERSION AR-MACHINE	4
CONVERSION AR-MACHINE–GERMANY	3
CONVERSION AR-MACHINE–ITALY	3
CONVERSION AR-ROADING– EUROPEAN MARKET	245
CONVERSION AR-ROADING–NACD	245
CONVERSION GP-ROADING–GERMANY	246
CONVERSION GP-ROADING–ITALY	247
CONVERSION GP-WORK TOOL– KIT, HIGH FLOW	576
COOLER GP-ENGINE OIL	75
	76
	77
COUNTERWEIGHT GP	248
COUPLER AR-QUICK	577
COUPLER GP-QUICK	578
	579
COVER GP-CAB	660
COVER GP-CONSOLE–RH, LH	661
COVER GP-FUSE PANEL	140
COVER GP-INSTRUMENT PANEL	662
COVER GP-LINES	580
COVER GP-VALVE MECHANISM	18
	19
CRANKSHAFT GP	20
	21
CYLINDER & LINK GP-COUPLER–LH	581
CYLINDER & LINK GP-COUPLER–RH	582
CYLINDER & MTG GP-ANGLE BLADE	283
	284
CYLINDER BLOCK GP	22
	24
	26
	28
CYLINDER GP-BUCKET	285
	286
CYLINDER GP-GRAPPLE	287
	288
CYLINDER GP-GRAPPLE–INDUSTRIAL	289
CYLINDER GP-HYDRAULIC	294
CYLINDER GP-HYDRAULIC–ANGLE BLADE	291
	292
	293
CYLINDER GP-HYDRAULIC–COUPLER	290
CYLINDER GP-LIFT ARM–RADIAL LIFT	295
CYLINDER GP-TILT (LH)	295
CYLINDER GP-TILT (RH)	295
CYLINDER HEAD GP	30
	31

D

DOOR & MTG GP-CAB– WITH CAB TILT GAS SPRING	663
	666
	668
DOOR AS-ACCESS–VENTED	249
DOOR GP-CAB	685
	688
DOOR GP-CAB–GLASS	671
	674
DOOR GP-CAB–POLYCARBONATE	677
	681
DRAIN GP-COOLANT	78
DRAIN GP-ENGINE OIL	32
DRIVE GP-TANDEM	195
	196
	197
DUCT & FILTER GP-CAB AIR	691

INDEX

Name	Page
E	
EDGE GP-BIT & CUTTING	583
EDGE GP-CUTTING	486
	583
	584
	585
	586
	587
	588
	589
	590
ENCLOSURE GP-ENGINE	250
ENGINE AR	7
ENGINE AR-PRIMARY	8
	10
	11
F	
FAN GP-BLOWER	88
FASTENER GP-FRONT COVER	42
	44
FILM (POWER DISTRIBUTION)	175
FILM (REFLECTIVE)	612
	620
	621
FILM GP	788
FILM GP–2-SPEED	791
FILM GP–HIGH FLOW XPS	790
FILM GP–UN	786
FILM-CERTIFICATION (OPS, READ OMM)	693
FILM-FUSE PANEL	140
FILM-IDENTIFICATION (HIGH FLOW XPS)	790
FILM-IDENTIFICATION (IGNITION SWITCH)	145
	147
FILM-IDENTIFICATION (POWER RECEPTACLE, 12-VOLT)	794
	798
	802
	805
FILM-IDENTIFICATION (TWO SPEED)	791
FILM-INFORMATION (READ OMM)	794
	798
	802
	805
FILM-INFORMATION (TIE-DOWN LOCATION)	446
FILM-INSTRUCTION (ALTERNATE EXIT)	783
FILM-INSTRUCTION (CONTROL PATTERN, LH)	718
	719
FILM-INSTRUCTION (CONTROL PATTERN, RH)	718
	719
FILM-INSTRUCTION (DO NOT SPRAY, READ OMM)	633
	635
	697
	699
FILM-INSTRUCTION (EGRESS SYSTEM, READ OMM)	672
	675
	678
	682
	686
	689
FILM-INSTRUCTION (KEY START SWITCH)	739
FILM-INSTRUCTION (MACHINE SECURITY, CONSOLE)	145
	147
FILM-INSTRUCTION (MACHINE SECURITY, READ OMM)	147
FILM-INSTRUCTION (NO STEP)	303
	338
	341
	792
FILM-INSTRUCTION (OPERATOR CONSOLE)	794
	798
	802
	805
FILM-INSTRUCTION (OPERATOR CONTROL)	794
	798
	802
	805
FILM-INSTRUCTION (SERVICE CHART, READ OMM)	257
FILM-NOTICE	263
FILM-NOTICE (ALTERNATE EXIT, READ OMM)	663
	666
	668
	707
	710
	713
FILM-NOTICE (STEERING)	246
	264
FILM-PANEL (BLOWER, TEMPERATURE CONTROL)	648
FILM-SPEED (THROTTLE)	794
	798
	802
	805
FILM-STRIPE (REFLECTIVE, RED, WHITE)	612
	620
	621
FILM-WARNING (CRUSH HAZARD, FASTEN SEAT BELT)	794

INDEX

Name	Page
	798
FILM-WARNING (CRUSH HAZARD, READ OMM)	802
FILM-WARNING (CRUSH HAZARD, STAY BACK)	419
	554
	564
	571
	572
	573
	574
	792
FILM-WARNING (CRUSH HAZARD, STAY BACK, U.S.)	792
FILM-WARNING (GROUND)	794
	798
	802
	805
FILM-WARNING (HIGH PRESSURE, READ OMM)	281
	282
FILM-WARNING (HIGH PRESSURE, READ OMM, INTL)	802
	805
FILM-WARNING (HIGH PRESSURE, READ OMM, U.S.)	794
	798
FILM-WARNING (IMPALED POINT)	550
	593
	594
	598
	599
	602
FILM-WARNING (JUMP START, READ OMM)	802
	805
FILM-WARNING (JUMP START, READ OMM) (JUMP START)	794
	798
FILM-WARNING (NO ACCESS)	802
FILM-WARNING (NO CLEARANCE, STAY BACK)	452
	453
FILM-WARNING (ROPS, FOPS, READ OMM)	794
	798
	802
	805
FILTER & LINES GP-HYDRAULIC	198
FILTER AS-WATER SEP & FUEL	111
	119
FILTER ELEMENT AS-AIR (PRIMARY)	90
FILTER ELEMENT AS-AIR (SECONDARY)	90
FILTER ELEMENT-CAB AIR (FRESH)	691
	704
	716
FILTER ELEMENT-CAB AIR (RECIRCULATION)	691
	704
	716
FILTER GP-ENGINE OIL	69
	70
	71
FILTER GP-OIL–HYDRAULIC	200
FILTER-ENGINE OIL	69
	70
FILTER-ENGINE OIL (ENGINE)	71
FILTER-OIL (ADVANCED EFFICIENCY) (HYDRAULIC)	200
FITTING GP	385
FITTING GP (PUMP CASE DRAIN)	212
	371
	382
FITTING GP (RETURN MANIFOLD)	369
	371
	373
	376
	379
	382
	388
	391
FITTING GP-HYDRAULIC	369
	371
	373
	376
	379
	382
	385
	388
	391
FITTING GP-HYDRAULIC (MANUAL)	577
FITTING GP-HYDRAULIC–1-SPEED	299
FITTING GP-HYDRAULIC–MANUAL	298
FITTING GP-HYDRAULIC–QUICK DISCONNECT, FEMALE, HIGH FLOW	297
FITTING GP-HYDRAULIC–QUICK DISCONNECT, MALE, HIGH FLOW	296
FLASHER AS (12-VOLT) (STOP LIGHT)	155
	157
	260
FLOOR MAT	722
FLYWHEEL GP	33
	34
FORK AR-GRAPPLE	591
FORK GP-GRAPPLE	593
	594
FORK GP-GRAPPLE–INDUSTRIAL	592
FORK GP-PALLET	595
FORK GP-PALLET–KIT	595
	596
FORK GP-UTILITY	597

INDEX

Name	Page
	598
	599
	600
	601
	602
FRAME & MTG GP-MACHINE	251
FRAME GP-BLADE	603
FRAME GP-FORK–INDUSTRIAL	604
	605
FRAME GP-MACHINE	253
FUSE (10-AMPERE)	174
	576
FUSE (100-AMPERE)	137
FUSE (15-AMPERE)	174
FUSE (20-AMPERE)	140
	162
	174
	175
FUSE (60-AMPERE)	162
FUSE AS (MAIN POWER)	175
FUSE AS (ROADING)	155
	157
	260

G

GASKET (VALVE COVER)	18
GASKET (VALVE MECHANISM)	19
GASKET (WATER TEMPERATURE REGULATOR)	79
	80
GAUGE GP-OIL LEVEL (DIPSTICK) (ENGINE)	51
	53
	55
GAUGE GP-SIGHT (HYDRAULIC TANK)	430
GAUGE-OIL (DIPSTICK, ENGINE)	49
GAUGE-SIGHT (COOLANT LEVEL)	88
GEAR GP-FRONT	35
	36
GLOW PLUG	141
GLOW PLUG GP	141
GRAPPLE & CYLINDER GP-UTILITY	606
	607
GRAPPLE GP-UTILITY	608
GUARD GP-BELT	37
GUARD GP-DEBRIS (TURBOCHARGER, EXHAUST MANIFOLD)	301
	302
GUARD GP-DEBRIS–TURBOCHARGER, EXHAUST MANIFOLD	93
GUARD GP-ROPS/FOPS–KIT	693
GUIDE GP-LINES	254

H

HANDLE & PIN GP-COUPLER–LH	610
HANDLE & PIN GP-COUPLER–RH	609
HANDLE GP	642
	694
HARNESS AS-CAB	174
	663
	666
	668
	707
	710
	713
HARNESS AS-CAB (DOOR, FRONT)	671
	674
	677
	681
	685
	688
HARNESS AS-CHASSIS	187
HARNESS AS-CONTROL	646
HARNESS AS-CONTROL (ACCUGRADE)	186
HARNESS AS-CONTROL (SECURITY)	145
	147
HARNESS AS-ENGINE	178
	181
HARNESS AS-HEATER	697
HARNESS AS-HEATER & AIR COND	172
	633
	703
	716
HARNESS AS-LIGHTING (FRONT, REAR)	155
	260
	266
HARNESS AS-MOTOR	635
	699
HARNESS AS-OPERATOR CONTROLS	175
HARNESS AS-PANEL	739
HARNESS AS-RADIO	701
	748
	750
	754
	755
HARNESS AS-REAR (DOOR)	187
HARNESS AS-REAR LIGHTING	274
HARNESS AS-REAR LIGHTING (STOP, TAIL, TURN)	261
	263
	265
	272
HARNESS AS-RIDE CONTROL	307
	353
HARNESS AS-SWITCH	767
	770
HARNESS AS-VALVE	396

INDEX

Name	Page
HARNESS AS-WIRING	775
HARNESS AS-WORK TOOL	149
	190
	191
	303
	576
	613
HARNESS AS-WORK TOOL (CONNECTING)	448
	450
HEATER & MTG GP-CAB	695
HEATER AR-CAB	696
HEATER GP-CAB	697
	699
HEATER GP-JACKET WATER	142
	143
HOUSING & REGULATOR GP	79
HOUSING GP-FLYWHEEL	38
	39
HOUSING GP-FRONT	40
	42
	44
HYDRAULIC AR	300
	301
	302
HYDRAULIC AR–HIGH FLOW	301
	302
HYDRAULIC AR–WORK TOOL POSITIONER	300

I

Name	Page
INDICATOR	91
INSTALLATION AR-ENGINE	12
	13
INSTALLATION GP-RADIO	701

K

Name	Page
KEY AS-ELECTRONIC (SECURITY)	145
	147
KIT-AIR COND & HEATER INSTL	703
KIT-AIR CONDITIONER INSTL–CONVERSION	705
KIT-CAB DOOR & MOUNTING	710
KIT-CAB DOOR & MOUNTING–GLASS	707
KIT-CAB DOOR & MOUNTING–POLYCARBONATE	713
KIT-CAB HEATER & MOUNTING	716
KIT-CAB WINDOW–SIDE	717
KIT-CONTROL MOUNTING–PRODUCT LINK	144
KIT-CONTROL PATTERN CHANGE–DEDICATED	719
KIT-CONTROL PATTERN CHANGE–SELECTABLE	718
KIT-COUNTERWEIGHT	255
	256
KIT-DEBRIS GUARD–TURBOCHARGER, EXHAUST MANIFOLD	94
	95
KIT-ENGINE ENCLOSURE–VENTED	257
KIT-INSTRUMENT PANEL–INCLUDES CREEPER CONTROL, RH	720
KIT-MACHINE ENCLOSURE SEAL–DEBRIS BARRIER	258
KIT-QUICK COUPLER CONVERSION–HYDRAULIC	303
KIT-RIDE CONTROL	307
KIT-ROADING CONVERSION–FRONT	266
KIT-ROADING CONVERSION–GERMANY	263
	264
KIT-ROADING CONVERSION–ITALY	263
	265
KIT-ROADING CONVERSION–LIGHTS, MIRRORS	260
KIT-ROADING PLATE & MOUNTING–BUCKET	611
	612
KIT-SECURITY	145
	147
KIT-WATER TANK & MOUNTING	613
KIT-WORK TOOL POSITIONER–SELF-LEVELING HYDRAULICS	310
KIT-WORK TOOL WIRING	149

L

Name	Page
LAMP (12-VOLT)	159
LAMP (12-VOLT) (MINIATURE)	739
LAMP (12-VOLT, 10-WATT)	260
	263
	265
	272
LAMP (12-VOLT, 21-WATT)	260
LAMP (12-VOLT, 21-WATT) (AMBER)	151
	152
LAMP (12-VOLT, 21-WATT) (ROADING LIGHTS)	155
	157
LAMP (12-VOLT, 5-WATT)	260
LAMP (12-VOLT, 5-WATT) (CLEAR)	151
	152
LAMP (12-VOLT, 5-WATT) (MINIATURE)	155
	157
LAMP (12-VOLT, 55-WATT) (FLOODLIGHT)	150
	188
LAMP (12-VOLT, 55-WATT) (WARNING BEACON)	153
LAMP GP-DOME (12-VOLT)	739
LAMP GP-FLOOD	150
LAMP GP-FLOOD (12-VOLT)	188

INDEX

Name	Page
LAMP GP-HEAD & SIGNAL–LH–HIGH, LOW BEAM	152
LAMP GP-HEAD & SIGNAL–RH–HIGH, LOW BEAM	151
LAMP GP-REGISTRATION PLATE	260 263 265 272
LAMP GP-SIGNAL (STOP, TAIL, TURN)	155 157 260
LAMP GP-STOP & TAIL	159
LAMP GP-WARNING BEACON–AMBER, MAGNETIC MOUNT, ROTATING	153
LAMP-HEAD (12-VOLT, 60/55-WATT) (12-VOLT, 60/55-WATT)	151 152
LEVER GP-GOVERNOR	721
LIFTING GP-ENGINE	46 47
LIFTING GP-MACHINE–FOUR POINT	268
LIFTING GP-MACHINE–KIT, FOUR POINT	270
LIFTING GP-MACHINE–KIT, SINGLE POINT	269
LIGHTING GP-FLOOD–WORK LIGHTS, FRONT	154
LIGHTING GP-ROADING–HEAD, SIGNAL, STOP, TAIL	155
LIGHTING GP-ROADING–REAR	157
LIGHTING GP-STOP & TAIL	159
LIGHTING GP-WARNING BEACON–AMBER, MAGNETIC MOUNT, ROTATING	160
LINER GP-CAB	722 725
LINES GP-AIR	96 97 98 99
LINES GP-AIR CONDITIONER	726
LINES GP-BUCKET	312 314 316
LINES GP-BUCKET–INDUSTRIAL	318
LINES GP-BUCKET–MULTIPURPOSE	320 322 324 326 332
LINES GP-BUCKET–UTILITY	328 330
LINES GP-CONNECTING	334 336
LINES GP-COUPLER	338 341
LINES GP-ENGINE OIL	72
LINES GP-FUEL	111
LINES GP-FUEL INJECTION	113 115 117
LINES GP-FUEL PRM & FILTER	119
LINES GP-GRAPPLE	344 346 348
LINES GP-HEATER	728
LINES GP-HYDRAULIC	350
LINES GP-HYDRAULIC FAN	360 362
LINES GP-HYDRAULIC FAN–RADIATOR	356 358
LINES GP-HYDRAULIC OIL COOLER	364
LINES GP-HYDRAULIC–RIDE CONTROL, WORK TOOL POSITIONER	353
LINES GP-HYDRAULIC–WORK TOOL POSITIONER	351
LINES GP-HYDROSTATIC	201 203
LINES GP-LIFT CYLINDER	366
LINES GP-LOWERING CONTROL–MANUAL	367
LINES GP-PARKING BRAKE	205
LINES GP-PUMP	369 371 385 388 391
LINES GP-PUMP–HIGH FLOW	373 376 379 382
LINES GP-TILT CYLINDER	394
LINES GP-WATER	80
LINES GP-WATER–RADIATOR	81
LINES GP-WORK TOOL	400
LINES GP-WORK TOOL–HIGH FLOW	396
LINK GP-COUPLER	615 616
LITERATURE GP	1 2 729
LOCK GP (ENGINE COVER)	250
LOCK GP-QUICK COUPLER–LH	619
LOCK GP-QUICK COUPLER–MECHANICAL	617
LOCK GP-QUICK COUPLER–RH	618

M

MACHINE AR-SPECIAL	5 6
MACHINE AR-SPECIAL–EXTREME SERVICE POWER TRAIN	5 6

INDEX

Name	Page
MACHINE AR-SPECIAL–RIDE CONTROL, WORK TOOL POSITIONER, 2-SPEED	5
MACHINE AR-SPECIAL–WORK TOOL POSITIONER	5
MACHINE AR-SPECIAL–WORK TOOL POSITIONER, 2-SPEED	4
MANF & SOLENOID MTG GP-ACCUM	403
MANF & SOLENOID MTG GP-ACCUM–PILOT SHUTOFF	402
MANIFOLD & LINES GP-ACCUM	404
MANIFOLD & LINES GP-CONTROL–MOTOR, 2-SPEED	206 208
MANIFOLD & MTG GP-CONTROL–ANGLING BLADE	406
MANIFOLD & MTG GP-CONTROL–MOTOR, 2-SPEED	407
MANIFOLD & MTG GP-CONTROL–WORK TOOL POSITIONER	408
MANIFOLD & SOLENOID GP-CONTROL–WORK TOOL POSITIONER	409
MANIFOLD GP-CONTROL–ANGLING BLADE	410
MANIFOLD GP-CONTROL–MOTOR, 2-SPEED	413
MANIFOLD GP-CONTROL–PILOT SHUTOFF	412
MANIFOLD GP-CONTROL–QUICK COUPLER	414
MANIFOLD GP-EXHAUST	100
MANIFOLD GP-INLET	101
MANIFOLD GP-RETURN	210 212
MANIFOLD GP-RIDE CONTROL	415
MANIFOLD GP-RIDE CONTROL–ACCUMULATOR	416
MAST GP–ACCUGRADE LASER	161
MIRROR & MTG GP-REAR VIEW–WITH ROADING LIGHT MOUNT	271
MIRROR GP-REAR VIEW	260 266 271 730 731
MODULE GP-DISPLAY	720 743
MODULE GP-DISPLAY (PARKING BRAKE)	740
MODULE GP-INTERFACE (KEY)	139 145
MOTOR & MTG GP-HYDRAULIC FAN	417
MOTOR & MTG GP-HYDROSTATIC	214 215 216
MOTOR GP-GEAR (FAN, DEMAND)	417
MOTOR GP-PISTON	217 223
MOTOR GP-PISTON–2-SPEED, LH	219
MOTOR GP-PISTON–2-SPEED, RH	221
MOTOR GP-WINDOW WIPER	732
MOTOR GP-WINDOW WIPER (CAB DOOR)	671 677 685
MOUNTING GP-ARMREST–LH	733
MOUNTING GP-ARMREST–RH	734
MOUNTING GP-CYLINDER	418
MOUNTING GP-CYLINDER–GRAPPLE BUCKET	421
MOUNTING GP-CYLINDER–INDUSTRIAL	419
MOUNTING GP-CYLINDER–UTILITY	420
MOUNTING GP-ENGINE	48
MOUNTING GP-PUMP	225
MOUNTING GP-RAD & OIL COOLER	82 84
MOUNTING GP-REGISTRATION	272
MOUNTING GP-ROADING LIGHTS–KIT, GERMANY, ITALY	274
MOUNTING GP-ROPS–INCLUDES STEP	735
MUFFLER & MOUNTING GP	102
MUFFLER GP	103

O

OPTION AR-CAB	738
ORIFICE AS-AIR CONDITIONER	633 635

P

PAN GP-OIL	49 51 53 55
PANEL GP-INSTRUMENT	739
PANEL GP-INSTRUMENT–RH	743
PEDAL GP-GOVERNOR	744 745 746
PIN GP-LIFT ARM–WITH SUPPORT	444
PISTON GP	56 57
PLATE & FILM GP	792 794 798 802 805 808 810
PLATE GP-ROADING–LH	620
PLATE GP-ROADING–RH	621
PLATE-IDENTIFICATION (ENGLISH, GERMAN, SPANISH)	246
PLUG (DRAIN, ENGINE OIL)	51

INDEX

Name	Page
	53
	55
PLUG GP-ENGINE	58
	59
PLUG-DRAIN (ENGINE OIL PAN)	49
PLUG-MAGNETIC (FRAME)	251
POSITIONER GP-FORK	595
POWER TRAIN AR	226
PULLEY GP-CRANKSHAFT	60
	61
PULLEY GP-WATER PUMP	62
PUMP & MTG GP-GEAR	422
PUMP & MTG GP-HYDROSTATIC	227
	228
PUMP & MTG GP-WORK TOOL	423
PUMP & MTG GP-WORK TOOL–HIGH FLOW	424
PUMP GP-DIAPHRAGM	613
PUMP GP-ENGINE OIL	73
PUMP GP-FUEL INJECTION	121
	123
	125
	127
PUMP GP-FUEL PRM & PRIM FILTER (WATER SEPARATOR)	111
	119
PUMP GP-GEAR	422
	423
	427
PUMP GP-GEAR (WORK TOOL HYDRAULIC)	424
PUMP GP-PISTON & GEAR	427
PUMP GP-PISTON–HIGH FLOW	425
PUMP GP-PISTON–HYDROSTATIC	229
	232
PUMP GP-WATER	86
	87

R

Name	Page
RADIATOR & HYD OIL COOLER GP	88
RADIO GP–AM, FM	757
RADIO GP–AM/FM CASSETTE	750
RADIO GP–AM/FM/WB	747
	748
RADIO GP–AM/FM/WB/CD PLAYER	749
	751
	754
	755
	756
RADIO GP–AM/FM/WB/SIRIUS/ CD PLAYER	753
RADIO GP–AM/FM/WB/XM/ CD PLAYER	752
RECEIVER GP-LASER (LR410)	161
RECOVERY GP-COOLANT	81
REGULATOR AS-ALTERNATOR	131
REGULATOR AS-WATER TEMPERATURE (THERMOSTAT)	79
	80
RELAY AS (12-VOLT)	174
	191
	307
	351
	353
	644
RELAY AS (12-VOLT) (AIR CONDITIONER)	704
	705
RELAY AS (12-VOLT) (COLD START)	178
	181
RELAY AS (12-VOLT) (RIDE CONTROL)	310
RELAY AS (12-VOLT) (STOP LIGHT)	155
	157
	260
RELAY AS (12-VOLT) (WORK TOOL)	149
RELAY GP–MAIN POWER	162
ROCKER ARM GP	64

S

Name	Page
SCREEN (HYDRAULIC)	404
SCREEN (WATER TANK)	625
SEAT & ARMREST GP	758
SEAT & ARMREST GP–STATIC	760
SEAT & ARMREST GP–SUSPENSION	759
SEAT & MOUNTING GP	763
SEAT & MOUNTING GP–STATIC	761
SEAT & MOUNTING GP–SUSPENSION	762
SEAT AR–STATIC	764
SEAT AR-SUSPENSION–AIR	764
SEAT AR-SUSPENSION–MECHANICAL	764
SEAT BELT GP–RETRACTABLE	765
	766
SEAT GP	767
SEAT GP–CLOTH, SUSPENSION	768
SEAT GP–VINYL	769
SEAT GP-SUSPENSION–AIR	772
SEAT GP-SUSPENSION–MECHANICAL	770
SENDER AS-FUEL LEVEL	128
SENSOR GP-POSITION	163
SENSOR GP-POSITION (ROTARY)	745
SENSOR GP-POSITION–ROTARY	164
SENSOR GP-SPEED (ENGINE)	178
	181
SENSOR GP-SPEED (MOTOR)	214
	215
	216
SENSOR GP-SPEED–MOTOR	165
SENSOR GP-TEMP & PRESS–ENGINE	166
SENSOR GP-TEMPERATURE (ENGINE COOLANT)	178
	181
SENSOR GP-TEMPERATURE (HYDRAULIC OIL)	429

INDEX

Name	Page
SERVICE GP-MACHINE	167
SOFTWARE GP-MACHINE	167
SOLENOID (FUEL PUMP)	123, 125
SOLENOID AS	410
SOLENOID AS (FUEL SHUTOFF)	127
SPRING AS-GAS (RH)	82, 84
SPRING GP-BLADE	622
SPRING GP-GAS–INCLUDES LIFT HANDLE	773
SPRING-GAS	663, 668, 710
SPRING-GAS (CAB)	666, 707, 713
SPRING-GAS (DOOR)	666, 707, 710, 713
SPRING-GAS (LH)	82, 84
SPRING-GAS (LOCKING)	773
SPRING-GAS (NON-LOCKING)	773
STARTING MOTOR GP-ELECTRIC	168, 170
STEP GP-MATERIAL HANDLING ARM	623
STOP GP-BUCKET	606, 607
STOP GP-BUCKET–UTILITY	624
STRAINER (WATER TANK FILL)	613
STRAINER AS (HYDRAULIC TANK)	430
STRAINER GP-WATER	625
SUN VISOR	779, 780
SUPPRESSION GP-SOUND–ENGINE	278
SUPPRESSION GP-SOUND–MACHINE	276, 279
SUSPENSION GP-SEAT–AIR	775
SUSPENSION GP-SEAT–MECHANICAL	777
SWITCH AS (BLOWER FAN SPEED)	648
SWITCH AS (SEAT)	767, 769
SWITCH AS (SEAT) (OPERATOR SWITCHES)	768
SWITCH AS (STARTING MOTOR)(12-VOLT)	168
SWITCH AS (TEMPERATURE CONTROL)	648
SWITCH AS-LIMIT (IMPLEMENT LOCKOUT)	637, 677
SWITCH AS-LIMIT (IMPLEMENT LOCKOUT) (DOOR)	671, 674, 681
SWITCH AS-LIMIT (IMPLEMENT LOCKOUT) (WIPER)	685, 688
SWITCH AS-PRESSURE (HYDRAULIC OIL)	200
SWITCH AS-PRESSURE (REFRIGERANT COMPR, HIGH SIDE)	704, 705, 726
SWITCH AS-PRESSURE (REFRIGERANT COMPR, LOW SIDE)	726
SWITCH AS-PRESSURE (REFRIGERANT, LOW SIDE)	704, 705
SWITCH AS-ROCKER (AIR CONDITIONER)	631, 704, 705
SWITCH AS-ROCKER (CONTROL PATTERN CHANGE)	718
SWITCH AS-ROCKER (CREEPER CONTROL)	720, 743
SWITCH AS-ROCKER (DIVERTER VALVE, 4TH FUNCTION)	740
SWITCH AS-ROCKER (FRONT WIPER, WASHER)	675
SWITCH AS-ROCKER (FRONT WIPER/WASHER)	678, 682
SWITCH AS-ROCKER (HAZARD WARNING LIGHTS)	155, 157, 261
SWITCH AS-ROCKER (HYD LOCKOUT, INTERLOCK OVRD)	740
SWITCH AS-ROCKER (HYDRAULIC QUICK COUPLER)	190, 303
SWITCH AS-ROCKER (MOTOR, 2-SPEED, AUXILIARY)	206, 208
SWITCH AS-ROCKER (PARKING BRAKE)	739
SWITCH AS-ROCKER (RIDE CONTROL)	307, 353
SWITCH AS-ROCKER (ROADING LIGHTS)	155, 260, 266
SWITCH AS-ROCKER (TURN SIGNAL)	155, 157, 261
SWITCH AS-ROCKER (WARNING BEACON)	160, 247
SWITCH AS-ROCKER (WIPER)	672, 686, 689
SWITCH AS-ROCKER (WORK LIGHTS, FRONT)	740
SWITCH AS-ROCKER (WORK LIGHTS, REAR)	740

INDEX

Name	Page
SWITCH AS-ROCKER (WORK TOOL POSITIONER)	310, 351, 353
SWITCH AS-ROCKER (WORK TOOL)	149, 191
SWITCH AS-START (KEY) (IGNITION)	739
SWITCH AS-TOGGLE (IDLE SPEED)	576
SWITCH GP-PRESSURE	171
SWITCH-OIL PRESS (ENGINE)	166, 171
SWITCH-TEMPERATURE (AIR CONDITIONER)	633, 635
SWITCH-TEMPERATURE (ENGINE COOLANT)	166

T

TANK & MTG GP-FUEL	128
TANK & MTG GP-HYDRAULIC	428
TANK GP-FUEL	130
TANK GP-HYDRAULIC	429, 430
TANK GP-WATER	626
TINE GP	552
TIRE & RIM GP–HEAVY-DUTY, LH	234
TIRE & RIM GP–HEAVY-DUTY, RH	234, 235
TIRE & RIM GP–LH	235, 236, 237, 238, 239, 240
TIRE & RIM GP–RH	235, 236, 237, 238, 239, 240
TOOTH GP-UNI	627
TURBOCHARGER GP	104, 106

V

V-BELT (REFRIGERANT)	643, 705, 706
V-BELT (WATER PUMP)	63
V-BELT GP	63
VALVE & MTG GP-CONTROL	431
VALVE & MTG GP-CONTROL–HIGH FLOW	432
VALVE AS-RELIEF (REFRIGERANT COMPRESSOR)	643, 703, 705
VALVE GP-CHECK	353, 410
VALVE GP-CHECK (PILOT)	412
VALVE GP-CHECK (RIDE CONTROL)	307
VALVE GP-CHECK–PILOT OIL	433
VALVE GP-CONTROL	434
VALVE GP-CONTROL (QUICK COUPLER)	415
VALVE GP-CONTROL–HIGH FLOW	436
VALVE GP-ENGINE OIL RELIEF	74
VALVE GP-FLUSHING	217, 219, 221, 223
VALVE GP-MANUAL–LOWERING CONTROL	438
VALVE GP-PUMP CONTROL	229, 232, 425
VALVE GP-RELIEF	410
VALVE GP-RELIEF (AUXILIARY)	436
VALVE GP-RELIEF (CHARGE)	229, 232
VALVE GP-RELIEF (CROSSOVER)	229, 232
VALVE GP-RELIEF (LIFT)	434
VALVE GP-RELIEF (LIFT, TILT)	436
VALVE GP-RELIEF (TILT)	434
VALVE GP-RELIEF (TILT, AUXILIARY)	436
VALVE GP-RELIEF–MAIN	439
VALVE GP-SHUTTLE–HIGH FLOW	440
VALVE GP-SOLENOID	410
VALVE GP-SOLENOID (12-VOLT)	434, 436
VALVE GP-SOLENOID (FAN)	417
VALVE GP-SOLENOID (MAIN)	436
VALVE GP-SOLENOID (MOTOR, 2-SPEED)	413
VALVE GP-SOLENOID (PILOT SHUTOFF)	412
VALVE GP-SOLENOID (QUICK COUPLER)	414
VALVE GP-SOLENOID–12-VOLT	441, 442
VALVE GP-SPEED CONTROL (2-SPEED)	219, 221
VALVE MECHANISM GP	64
VISOR GP-CAB	779
VISOR GP-CAB–LH	780

W

WHEEL & TIRE AR	242, 243
WHEEL & TIRE AR–HEAVY DUTY	240, 241

INDEX

Name	Page	Name	Page
	242		
WHEEL & TIRE AR–LOW SIDE WALL	241		
WHEEL & TIRE AR–SOLID	240		
	243		
WHEEL & TIRE GP	243		
	244		
WINDOW GP-CAB	783		
WINDOW GP-CAB–SIDE	784		
WINDOW GP-CAB–SIDE, LH	781		
WINDOW GP-CAB–SIDE, RH	782		
WIRING GP-AIR CONDITIONER	172		
	696		
WIRING GP-CAB	174		
WIRING GP-ENGINE	178		
	181		
WIRING GP-ENGINE–BATTERY	184		
WIRING GP-GRADE CONTROL	186		
WIRING GP-MACHINE	187		
WIRING GP-QUICK COUPLER	190		
WIRING GP-WORK TOOL	191		

MACHINE ARRANGEMENT

258-2410 CHASSIS AR

S/N: JAY1-2059

PART OF 258-3236 COMMON AR

SMCS-7000 **i02721369**

NOTE	PART NUMBER	QTY	PART NAME 1 2 3 4 5 6 (PRODUCT LEVEL)	SEE PAGE
Y	*258-3736*	1	AXLE GP	194
Y	*258-4121*	1	BATTERY & WIRING GP	137
Y	*280-6340*	1	CONTROL GP-GOVERNOR	108
Y	*258-2558*	1	CYLINDER GP-LIFT ARM	295
Y	*258-2594*	1	ENCLOSURE GP-ENGINE	250
Y	*258-2675*	1	FRAME & MTG GP-MACHINE	251
Y	*150-8621*	1	GUIDE GP-LINES	254
Y	*258-2444*	1	LINES GP-FUEL PRM & FILTER	119
Y	*258-2699*	1	PIN GP-LIFT ARM (WITH SUPPORT)	444
Y	*258-2439*	1	TANK & MTG GP-FUEL	128
Y	*258-4107*	1	WIRING GP-MACHINE	187

Y-SEPARATE ILLUSTRATION

<END>

295-7291 CHASSIS AR

S/N: JAY2060-UP

PART OF 295-7246 COMMON AR

SMCS-7000 **i02908893**

NOTE	PART NUMBER	QTY	PART NAME 1 2 3 4 5 6 (PRODUCT LEVEL)	SEE PAGE
Y	*258-3736*	1	AXLE GP	194
Y	*258-4121*	1	BATTERY & WIRING GP	137
Y	*295-7463*	1	CONTROL GP-GOVERNOR	110
Y	*258-2558*	1	CYLINDER GP-LIFT ARM	295
Y	*258-2594*	1	ENCLOSURE GP-ENGINE	250
Y	*258-2675*	1	FRAME & MTG GP-MACHINE	251
Y	*150-8621*	1	GUIDE GP-LINES	254
Y	*295-7029*	1	LINES GP-FUEL	111
Y	*258-2699*	1	PIN GP-LIFT ARM (WITH SUPPORT)	444
Y	*258-2439*	1	TANK & MTG GP-FUEL	128
Y	*258-4107*	1	WIRING GP-MACHINE	187

Y-SEPARATE ILLUSTRATION

<END>

258-3236 COMMON AR

S/N: JAY1-2059

SMCS-7000 **i02627471**

NOTE	PART NUMBER	QTY	PART NAME 1 2 3 4 5 6 (PRODUCT LEVEL)	SEE PAGE
Y	*258-4000*	1	CAB AR-ENCLOSED ROPS	640
Y	*258-2410*	1	CHASSIS AR	1
Y	*258-3190*	1	FILM GP (246C)	788
Y	*258-2600*	1	HYDRAULIC AR	300
Y	*258-2445*	1	INSTALLATION AR-ENGINE	12
Y	*6V-1970*	1	LITERATURE GP	729

Y-SEPARATE ILLUSTRATION

<END>

MACHINE ARRANGEMENT

295-7246 COMMON AR

S/N: JAY2060-UP

SMCS-7000 **i02837845**

NOTE	PART NUMBER	QTY	PART NAME 1 2 3 4 5 6 (PRODUCT LEVEL)	SEE PAGE
Y	*258-4000*	1	CAB AR-ENCLOSED ROPS	640
Y	*295-7291*	1	CHASSIS AR	1
Y	*258-3190*	1	FILM GP (246C)	788
Y	*258-2600*	1	HYDRAULIC AR	300
Y	*295-7118*	1	INSTALLATION AR-ENGINE	13
Y	*6V-1970*	1	LITERATURE GP	729

Y-SEPARATE ILLUSTRATION

<END>

342-5009 CONTROL AR-MACHINE–ON, OFF AUXILIARY CONTROL

S/N: JAY1-UP

AN ATTACHMENT

SMCS-4062, 4284, 4351, 5059, 5705 **i03633336**

NOTE	PART NUMBER	QTY	PART NAME 1 2 3 4 5 6 (PRODUCT LEVEL)	SEE PAGE
Y	*258-3403*	1	CONTROL GP-ELECTROHYDRAULIC (LH)	649
Y	*258-3405*	1	CONTROL GP-ELECTROHYDRAULIC (RH)	651

Y-SEPARATE ILLUSTRATION

<END>

342-5010 CONTROL AR-MACHINE–AUX PROPORTIONAL FLOW

S/N: JAY1-UP

AN ATTACHMENT

SMCS-4062, 4284, 4351, 5059, 5705 **i03633340**

NOTE	PART NUMBER	QTY	PART NAME 1 2 3 4 5 6 (PRODUCT LEVEL)	SEE PAGE
Y	*258-3403*	1	CONTROL GP-ELECTROHYDRAULIC (LH)	649
Y	*258-3406*	1	CONTROL GP-ELECTROHYDRAULIC (RH)	652

Y-SEPARATE ILLUSTRATION

<END>

342-5011 CONTROL AR-MACHINE–AUX PROPORTIONAL FLOW

S/N: JAY1-UP

AN ATTACHMENT

SMCS-4062, 4284, 4351, 5059, 5705 **i03633343**

NOTE	PART NUMBER	QTY	PART NAME 1 2 3 4 5 6 (PRODUCT LEVEL)	SEE PAGE
Y	*258-3404*	1	CONTROL GP-ELECTROHYDRAULIC (LH)	650
Y	*258-3406*	1	CONTROL GP-ELECTROHYDRAULIC (RH)	652
Y	*258-4125*	1	WIRING GP-WORK TOOL	191

Y-SEPARATE ILLUSTRATION

<END>

MACHINE ARRANGEMENT

258-3818 CONVERSION AR-MACHINE—GERMANY

S/N: JAY1-UP
AN ATTACHMENT

SMCS-7000 **i03342407**

NOTE	PART NUMBER	QTY	PART NAME 1 2 3 4 5 6 (PRODUCT LEVEL)	SEE PAGE
Y	*258-3840*	1	CONVERSION GP-ROADING (GERMANY)	246
Y	**177-9152**	1	KIT-ROADING PLATE & MOUNTING (BUCKET)	611
			—OR—	
Y	**319-9480**	1	KIT-ROADING PLATE & MOUNTING (BUCKET)	612
Y	*258-4385*	1	LIFTING GP-MACHINE (FOUR POINT)	268
Y	*258-4130*	1	LIGHTING GP-ROADING (HEAD, SIGNAL, STOP, TAIL)	155
Y	*175-4238*	1	LOCK GP-QUICK COUPLER (MECHANICAL)	617
Y	*258-3872*	1	MIRROR & MTG GP-REAR VIEW (WITH ROADING LIGHT MOUNT)	271
Y	*305-8034*	1	MIRROR GP-REAR VIEW	731
Y	*258-2579*	1	MOTOR & MTG GP-HYDRAULIC FAN	417
Y	*280-8347*	1	MUFFLER GP	103
Y	*258-3496*	1	SUPPRESSION GP-SOUND (MACHINE)	276
Y	*294-4560*	1	SUPPRESSION GP-SOUND (MACHINE)	279
Y	*280-8330*	1	SUPPRESSION GP-SOUND (ENGINE)	278
			S/N: JAY1-2059	
Y	*258-3497*	1	VISOR GP-CAB	779
	258-4222	1	CANOPY GP-OPEN ROPS	

Y-SEPARATE ILLUSTRATION

<END>

258-3819 CONVERSION AR-MACHINE—ITALY

S/N: JAY1-UP
AN ATTACHMENT

SMCS-7000 **i03342425**

NOTE	PART NUMBER	QTY	PART NAME 1 2 3 4 5 6 (PRODUCT LEVEL)	SEE PAGE
Y	*258-3841*	1	CONVERSION GP-ROADING (ITALY)	247
Y	**177-9152**	1	KIT-ROADING PLATE & MOUNTING (BUCKET)	611
			—OR—	
Y	**319-9480**	1	KIT-ROADING PLATE & MOUNTING (BUCKET)	612
Y	*258-4385*	1	LIFTING GP-MACHINE (FOUR POINT)	268
Y	*258-4130*	1	LIGHTING GP-ROADING (HEAD, SIGNAL, STOP, TAIL)	155
Y	*175-4238*	1	LOCK GP-QUICK COUPLER (MECHANICAL)	617
Y	*258-3872*	1	MIRROR & MTG GP-REAR VIEW (WITH ROADING LIGHT MOUNT)	271
Y	*305-8034*	1	MIRROR GP-REAR VIEW	731
Y	*258-2579*	1	MOTOR & MTG GP-HYDRAULIC FAN	417
Y	*258-3848*	1	MOUNTING GP-REGISTRATION (ITALIAN)	272
Y	*280-8347*	1	MUFFLER GP	103
Y	*258-3496*	1	SUPPRESSION GP-SOUND (MACHINE)	276
Y	*280-8330*	1	SUPPRESSION GP-SOUND (ENGINE)	278
			S/N: JAY1-2059	
Y	*294-4560*	1	SUPPRESSION GP-SOUND (MACHINE)	279
	258-4222	1	CANOPY GP-OPEN ROPS	

Y-SEPARATE ILLUSTRATION

<END>

MACHINE ARRANGEMENT

315-6353 CONVERSION AR-MACHINE

S/N: JAY1-UP

AN ATTACHMENT

SMCS-7000 **i03550764**

NOTE	PART NUMBER	QTY	PART NAME 1 2 3 4 5 6 (PRODUCT LEVEL)	SEE PAGE
Y	**177-9152**	1	KIT-ROADING PLATE & MOUNTING (BUCKET)	611
			—OR—	
Y	**319-9480**	1	KIT-ROADING PLATE & MOUNTING (BUCKET)	612
Y	*258-4385*	1	LIFTING GP-MACHINE (FOUR POINT)	268
Y	*258-4130*	1	LIGHTING GP-ROADING (HEAD, SIGNAL, STOP, TAIL)	155
			S/N: JAY1-3185	
Y	*333-4957*	1	LIGHTING GP-ROADING	157
			S/N: JAY3186-UP	
Y	*175-4238*	1	LOCK GP-QUICK COUPLER (MECHANICAL)	617
			S/N: JAY1-3185	
Y	*305-8034*	1	MIRROR GP-REAR VIEW	731
Y	*258-3872*	1	MIRROR & MTG GP-REAR VIEW (WITH ROADING LIGHT MOUNT)	271
			S/N: JAY1-3185	
Y	*258-2579*	1	MOTOR & MTG GP-HYDRAULIC FAN	417
Y	*280-8347*	1	MUFFLER GP	103
Y	*280-8330*	1	SUPPRESSION GP-SOUND (ENGINE)	278
			S/N: JAY1-2059	
Y	*258-3496*	1	SUPPRESSION GP-SOUND (MACHINE)	276
Y	*294-4560*	1	SUPPRESSION GP-SOUND (MACHINE)	279
	258-4222	1	CANOPY GP-OPEN ROPS	
	289-0849	1	BLOCK AS	
			S/N: JAY1-3185	
	258-3849	1	PLATE-IDENTIFICATION (ENGLISH, GERMAN, SPANISH)	
			S/N: JAY1-3185	

Y-SEPARATE ILLUSTRATION

<END>

258-3682 MACHINE AR-SPECIAL—

WORK TOOL POSITIONER, 2-SPEED

S/N: JAY1-UP

AN ATTACHMENT

SMCS-7000 **i02650311**

NOTE	PART NUMBER	QTY	PART NAME 1 2 3 4 5 6 (PRODUCT LEVEL)	SEE PAGE
Y	*258-4009*	1	COVER GP-INSTRUMENT PANEL	662
Y	*258-2428*	1	HYDRAULIC AR	300
Y	*258-3400*	1	POWER TRAIN AR	226
Y	*258-2406*	1	PUMP & MTG GP-HYDROSTATIC	227

Y-SEPARATE ILLUSTRATION

<END>

MACHINE ARRANGEMENT

258-3748 MACHINE AR-SPECIAL

S/N: JAY1-UP

AN ATTACHMENT

SMCS-7000 **i02650313**

NOTE	PART NUMBER	QTY	PART NAME 1 2 3 4 5 6 (PRODUCT LEVEL)	SEE PAGE
Y	*258-4009*	1	COVER GP-INSTRUMENT PANEL	662
Y	*258-2426*	1	HYDRAULIC AR	300
Y	*258-3200*	1	POWER TRAIN AR	226
Y	*258-2406*	1	PUMP & MTG GP-HYDROSTATIC	227

Y-SEPARATE ILLUSTRATION

<END>

258-3750 MACHINE AR-SPECIAL—WORK TOOL POSITIONER

S/N: JAY1-UP

AN ATTACHMENT

SMCS-7000 **i02650314**

NOTE	PART NUMBER	QTY	PART NAME 1 2 3 4 5 6 (PRODUCT LEVEL)	SEE PAGE
Y	*258-4009*	1	COVER GP-INSTRUMENT PANEL	662
Y	*258-2428*	1	HYDRAULIC AR	300
Y	*258-3200*	1	POWER TRAIN AR	226
Y	*258-2406*	1	PUMP & MTG GP-HYDROSTATIC	227

Y-SEPARATE ILLUSTRATION

<END>

258-3753 MACHINE AR-SPECIAL—
RIDE CONTROL, WORK TOOL POSITIONER, 2-SPEED

S/N: JAY1-UP

AN ATTACHMENT

SMCS-7000 **i02693288**

NOTE	PART NUMBER	QTY	PART NAME 1 2 3 4 5 6 (PRODUCT LEVEL)	SEE PAGE
Y	*258-2428*	1	HYDRAULIC AR	300
Y	*258-4163*	1	PANEL GP-INSTRUMENT (RH)	743
Y	*258-3400*	1	POWER TRAIN AR	226
Y	*258-2406*	1	PUMP & MTG GP-HYDROSTATIC	227

Y-SEPARATE ILLUSTRATION

<END>

300-7629 MACHINE AR-SPECIAL—
EXTREME SERVICE POWER TRAIN

S/N: JAY1-UP

AN ATTACHMENT

SMCS-7000 **i02782132**

NOTE	PART NUMBER	QTY	PART NAME 1 2 3 4 5 6 (PRODUCT LEVEL)	SEE PAGE
Y	*258-4009*	1	COVER GP-INSTRUMENT PANEL	662
Y	*258-2426*	1	HYDRAULIC AR	300
Y	*300-7637*	1	POWER TRAIN AR	226
Y	*300-7640*	1	PUMP & MTG GP-HYDROSTATIC	228

Y-SEPARATE ILLUSTRATION

<END>

MACHINE ARRANGEMENT

300-7634 MACHINE AR-SPECIAL–
EXTREME SERVICE POWER TRAIN
S/N: JAY1-UP
AN ATTACHMENT

SMCS-7000 **i02782151**

NOTE	PART NUMBER	QTY	PART NAME 1 2 3 4 5 6 (PRODUCT LEVEL)	SEE PAGE
Y	*258-2428*	1	HYDRAULIC AR (WORK TOOL POSITIONER)	300
Y	*258-4163*	1	PANEL GP-INSTRUMENT (RH)	743
Y	*300-7637*	1	POWER TRAIN AR	226
Y	*300-7640*	1	PUMP & MTG GP-HYDROSTATIC	228

Y-SEPARATE ILLUSTRATION

<END>

304-6740 MACHINE AR-SPECIAL
S/N: JAY1-UP
AN ATTACHMENT

SMCS-7000 **i02836924**

NOTE	PART NUMBER	QTY	PART NAME 1 2 3 4 5 6 (PRODUCT LEVEL)	SEE PAGE
Y	*304-6743*	1	HYDRAULIC AR	302
Y	*258-4163*	1	PANEL GP-INSTRUMENT (RH)	743
Y	*258-3400*	1	POWER TRAIN AR	226
Y	*258-2406*	1	PUMP & MTG GP-HYDROSTATIC	227

Y-SEPARATE ILLUSTRATION

<END>

ENGINE ARRANGEMENT

258-2517 ENGINE AR

S/N: JAY1-UP

AN ATTACHMENT

SMCS-1000 **i02645015**

NOTE	PART NUMBER	QTY	PART NAME 1 2 3 4 5 6 (PRODUCT LEVEL)	SEE PAGE
Y	**262-7288**	1	ENGINE AR-PRIMARY	8

Y-SEPARATE ILLUSTRATION

ENGINE ARRANGEMENT

262-7288 ENGINE AR-PRIMARY

S/N: CJS1-70000
55 BRAKE KW (74 BHP) AT 2500 RPM
PART OF 258-2517 ENGINE AR
AN ATTACHMENT

SMCS-1000 **i03462922**

NOTE	PART NUMBER	QTY	PART NAME 1 2 3 4 5 6 (PRODUCT LEVEL)	SEE PAGE
Y	*287-6361*	1	ALTERNATOR GP-CHARGING	133
			S/N: CJS1-60343	
Y	*315-8353*	1	ALTERNATOR GP-CHARGING	135
			S/N: CJS60344-70000	
Y	*287-6138*	1	V-BELT GP (WATER PUMP)	63
Y	*287-6016*	1	BREATHER GP	65
			S/N: CJS1-60343	
Y	*317-5070*	1	LINES GP-AIR (CRANKCASE BREATHER)	99
			S/N: CJS60344-70000	
Y	*233-5473*	1	CAMSHAFT GP	15
Y	*287-4033*	1	CONNECTING ROD GP	17
Y	*235-5896*	1	COOLER GP-ENGINE OIL	75
			S/N: CJS1-60343	
Y	*314-9900*	1	COOLER GP-ENGINE OIL	76
			S/N: CJS60344-70000	
Y	*233-5480*	1	COVER GP-VALVE MECHANISM	18
			S/N: CJS1-60343	
Y	*315-7762*	1	COVER GP-VALVE MECHANISM	19
			S/N: CJS60344-70000	
Y	*287-4649*	1	CRANKSHAFT GP	20
Y	*287-2416*	1	CYLINDER BLOCK GP	22
			S/N: CJS1-60343	
Y	*317-5094*	1	CYLINDER BLOCK GP	24
			S/N: CJS60344-70000	
Y	*233-5500*	1	CYLINDER HEAD GP	30
Y	*292-4040*	1	DRAIN GP-COOLANT	78
Y	*235-5897*	1	FILTER GP-ENGINE OIL	69
			S/N: CJS1-60343	
Y	*317-5076*	1	FILTER GP-ENGINE OIL	71
			S/N: CJS60344-70000	
Y	*287-5377*	1	LINES GP-ENGINE OIL	72
Y	*235-5890*	1	FLYWHEEL GP	33
Y	*287-4830*	1	GEAR GP-FRONT	35
Y	*235-5904*	1	GLOW PLUG GP	141
Y	*287-3357*	1	HOUSING GP-FLYWHEEL	38
			S/N: CJS1-60343	
Y	*315-7764*	1	HOUSING GP-FLYWHEEL	39
			S/N: CJS60344-70000	
Y	*287-1844*	1	LIFTING GP-ENGINE	46
			S/N: CJS1-60343	
Y	*315-7761*	1	LIFTING GP-ENGINE	47
			S/N: CJS60344-70000	
Y	*247-6317*	1	LINES GP-AIR	96
Y	*235-5901*	1	LINES GP-FUEL INJECTION	113
			S/N: CJS1-60343	
Y	*317-5057*	1	LINES GP-FUEL INJECTION	117
			S/N: CJS60344-70000	
Y	*235-5900*	1	LINES GP-WATER (TEMPERATURE REGULATOR)	80
			S/N: CJS1-60343	
Y	*315-8355*	1	HOUSING & REGULATOR GP	79
			S/N: CJS60344-70000	
Y	*287-3074*	1	HOUSING GP-FRONT	40
			S/N: CJS1-60343	

ENGINE ARRANGEMENT

262-7288 ENGINE AR-PRIMARY *(contd.)* i03462922

NOTE	PART NUMBER	QTY	PART NAME 1 2 3 4 5 6 (PRODUCT LEVEL)	SEE PAGE
Y	*316-9040*	1	HOUSING GP-FRONT	44
			S/N: CJS60344-70000	
Y	*287-5323*	1	MANIFOLD GP-EXHAUST	100
Y	*287-4832*	1	MANIFOLD GP-INLET	101
Y	*287-3921*	1	PAN GP-OIL (ENGINE)	49
			S/N: CJS1-60343	
Y	*317-5082*	1	PAN GP-OIL	55
			S/N: CJS60344-70000	
Y	*235-5889*	1	PISTON GP	56
Y	*287-2983*	1	PLUG GP-ENGINE	59
Y	*287-2922*	1	PLUG GP-ENGINE	58
Y	*287-4749*	1	PULLEY GP-CRANKSHAFT	60
			S/N: CJS1-60343	
Y	*301-3396*	1	PULLEY GP-CRANKSHAFT	61
			S/N: CJS60344-70000	
Y	*287-6114*	1	PULLEY GP-WATER PUMP	62
Y	*235-5895*	1	PUMP GP-ENGINE OIL	73
Y	*249-7347*	1	PUMP GP-FUEL INJECTION	121
			S/N: CJS1-60343	
Y	*317-5047*	1	PUMP GP-FUEL INJECTION	127
			S/N: CJS60344-70000	
Y	*287-6056*	1	PUMP GP-WATER	86
Y	*238-8277*	1	SENSOR GP-TEMP & PRESS (ENGINE COOLANT, ENGINE OIL)	166
			S/N: CJS1-60343	
Y	*300-1071*	1	SWITCH GP-PRESSURE (ENGINE OIL)	171
			S/N: CJS60344-70000	
Y	*287-6181*	1	STARTING MOTOR GP-ELECTRIC	170
Y	*235-5894*	1	TURBOCHARGER GP	104
Y	*287-5665*	1	VALVE GP-ENGINE OIL RELIEF	74
Y	*235-5880*	1	VALVE MECHANISM GP	64
			AVAILABLE GASKET KIT(S):	
	341-3561	1	KIT-GASKET	

Y-SEPARATE ILLUSTRATION

ENGINE ARRANGEMENT

287-8073 ENGINE AR-PRIMARY

S/N: CYM1-UP
55 BRAKE KW (74 BHP) AT 2500 RPM
PART OF 295-7113 ENGINE AR-PRIMARY
AN ATTACHMENT

SMCS-1000 **i03398105**

NOTE	PART NUMBER	QTY	PART NAME 1 2 3 4 5 6 (PRODUCT LEVEL)	SEE PAGE
Y	*315-8353*	1	ALTERNATOR GP-CHARGING	135
Y	*292-4041*	1	BEARING GP-MAIN	14
Y	*315-7769*	1	LINES GP-AIR	98
Y	*315-8329*	1	CAMSHAFT GP	16
Y	*287-4033*	1	CONNECTING ROD GP	17
Y	*314-9900*	1	COOLER GP-ENGINE OIL	76
Y	*315-7762*	1	COVER GP-VALVE MECHANISM	19
Y	*314-9860*	1	CRANKSHAFT GP	21
Y	*330-7633*	1	CYLINDER BLOCK GP	28
Y	*233-5500*	1	CYLINDER HEAD GP	30
Y	*292-4040*	1	DRAIN GP-COOLANT	78
Y	*314-9901*	1	FILTER GP-ENGINE OIL	70
Y	*314-9861*	1	FLYWHEEL GP	34
Y	*315-7766*	1	GEAR GP-FRONT	36
Y	*235-5904*	1	GLOW PLUG GP	141
Y	*315-8355*	1	HOUSING & REGULATOR GP	79
Y	*315-7764*	1	HOUSING GP-FLYWHEEL	39
Y	*315-8336*	1	HOUSING GP-FRONT	42
Y	*315-7761*	1	LIFTING GP-ENGINE	47
Y	*247-6317*	1	LINES GP-AIR	96
Y	*287-5377*	1	LINES GP-ENGINE OIL	72
Y	*315-8350*	1	LINES GP-FUEL INJECTION	115
Y	*287-5323*	1	MANIFOLD GP-EXHAUST	100
Y	*287-4832*	1	MANIFOLD GP-INLET	101
Y	*315-7765*	1	PAN GP-OIL	51
Y	*315-8348*	1	PISTON GP	57
Y	*287-2922*	1	PLUG GP-ENGINE	58
Y	*287-2983*	1	PLUG GP-ENGINE	59
Y	*301-3396*	1	PULLEY GP-CRANKSHAFT	61
Y	*287-6114*	1	PULLEY GP-WATER PUMP	62
Y	*235-5895*	1	PUMP GP-ENGINE OIL	73
Y	*315-8352*	1	PUMP GP-FUEL INJECTION	123
Y	*287-6056*	1	PUMP GP-WATER	86
Y	*287-6181*	1	STARTING MOTOR GP-ELECTRIC	170
Y	*300-1071*	1	SWITCH GP-PRESSURE (ENGINE OIL)	171
Y	*315-7768*	1	TURBOCHARGER GP	106
Y	*287-6138*	1	V-BELT GP (WATER PUMP)	63
Y	*287-5665*	1	VALVE GP-ENGINE OIL RELIEF	74
Y	*235-5880*	1	VALVE MECHANISM GP	64
			AVAILABLE GASKET KIT(S):	
	341-3561	1	KIT-GASKET	

Y-SEPARATE ILLUSTRATION

ENGINE ARRANGEMENT

295-7113 ENGINE AR-PRIMARY

S/N: JAY1750-UP
AN ATTACHMENT

SMCS-1000 **i02836332**

NOTE	PART NUMBER	QTY	PART NAME 1 2 3 4 5 6 (PRODUCT LEVEL)	SEE PAGE
Y	**287-8073**	1	ENGINE AR-PRIMARY	10

Y-SEPARATE ILLUSTRATION

ENGINE ARRANGEMENT

258-2445 INSTALLATION AR-ENGINE

S/N: JAY1-2059

PART OF 258-3236 COMMON AR

SMCS-1000 **i02663657**

NOTE	PART NUMBER	QTY	PART NAME 1 2 3 4 5 6 (PRODUCT LEVEL)	SEE PAGE
Y	*280-8294*	1	AIR CLEANER GP	92
Y	*258-2452*	1	DRAIN GP-ENGINE OIL	32
Y	*258-2469*	1	GUARD GP-BELT	37
Y	*258-2465*	1	LINES GP-AIR	97
Y	*258-3552*	1	LINES GP-WATER (RADIATOR)	81
Y	*258-2447*	1	MOUNTING GP-ENGINE	48
Y	*258-3318*	1	MOUNTING GP-PUMP	225
Y	*258-3542*	1	MOUNTING GP-RAD & OIL COOLER	82
Y	*258-3459*	1	RADIATOR & HYD OIL COOLER GP	88
Y	*258-4115*	1	WIRING GP-ENGINE	178
Y	*258-4192*	1	WIRING GP-ENGINE (BATTERY)	184

Y-SEPARATE ILLUSTRATION

ENGINE ARRANGEMENT

295-7118 INSTALLATION AR-ENGINE

S/N: JAY2060-UP

PART OF 295-7246 COMMON AR

SMCS-1000 **i02835478**

NOTE	PART NUMBER	QTY	PART NAME 1 2 3 4 5 6 (PRODUCT LEVEL)	SEE PAGE
Y	*280-8294*	1	AIR CLEANER GP	92
Y	*258-2452*	1	DRAIN GP-ENGINE OIL	32
Y	*258-2469*	1	GUARD GP-BELT	37
Y	*258-2465*	1	LINES GP-AIR	97
Y	*258-3552*	1	LINES GP-WATER (RADIATOR)	81
Y	*258-2447*	1	MOUNTING GP-ENGINE	48
Y	*258-3318*	1	MOUNTING GP-PUMP	225
Y	*258-3542*	1	MOUNTING GP-RAD & OIL COOLER	82
Y	*258-3459*	1	RADIATOR & HYD OIL COOLER GP	88
Y	*258-4115*	1	WIRING GP-ENGINE	178
Y	*258-4192*	1	WIRING GP-ENGINE (BATTERY)	184

Y-SEPARATE ILLUSTRATION

BASIC ENGINE

292-4041 BEARING GP-MAIN

S/N: CYM1-UP
PART OF 287-8073 ENGINE AR-PRIMARY
AN ATTACHMENT

SMCS-1203 **i03552784**

NOTE	REF NO	GRAPHIC REF	PART NUMBER	QTY	PART NAME 1 2 3 4 5 6 (PRODUCT LEVEL)	SEE PAGE
	1	1	**103-9288**	1	PLATE-THRUST (STANDARD)	
AB		1	**103-9289**	1	PLATE-THRUST (0.15-MM OS)	
AB		1	**103-9290**	1	PLATE-THRUST (0.35-MM OS)	
	2	1	**233-5486**	1	BEARING-MAIN (STANDARD)	
AB		1	**294-4890**	1	KIT-BEARING (0.25-MM US)	
AB		1	**294-4891**	1	KIT-BEARING (0.50-MM US)	
AB		1	**294-4892**	1	KIT-BEARING (0.75-MM US)	

A-NOT PART OF THIS GROUP
B-USE AS REQUIRED

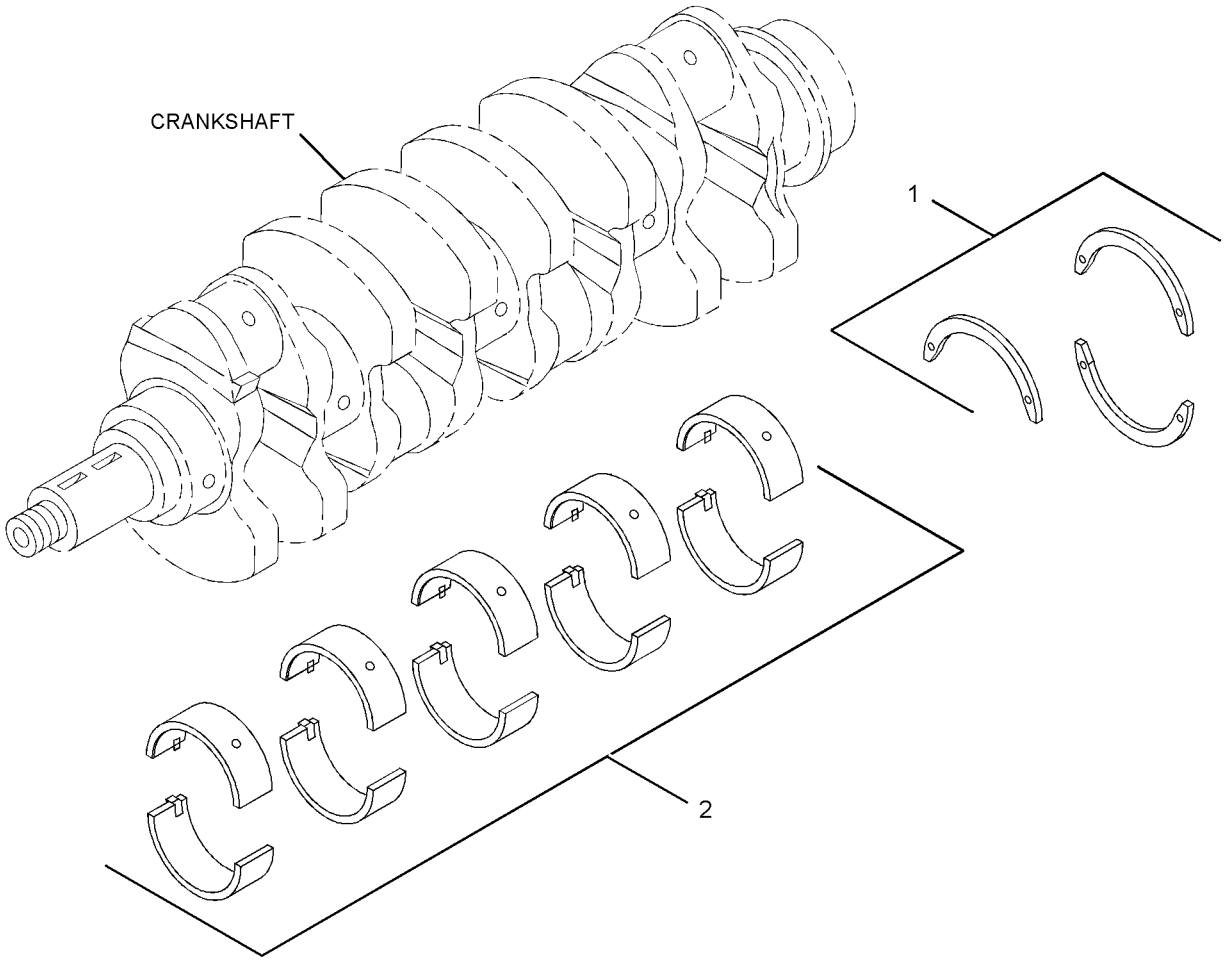

GRAPHIC #1 **<END>** g01379195

BASIC ENGINE

233-5473 CAMSHAFT GP

S/N: CJS1-70000
PART OF 262-7288 ENGINE AR-PRIMARY
AN ATTACHMENT

SMCS-1210, 1211, 1212 **i03199957**

NOTE	REF NO	GRAPHIC REF	PART NUMBER	QTY	PART NAME 1 2 3 4 5 6 (PRODUCT LEVEL)	SEE PAGE
M	1	1	**6V-5215**	2	BOLT (M8X1.25X16-MM)	
	2	1	**9M-1974**	2	WASHER-HARD (8.8X16X2-MM THK)	
	3	1	**094-4628**	1	KEY	
	4	1	**103-9272**	8	TAPPET	
	5	1	**233-5479**	1	CAMSHAFT	
	6	1	**233-5485**	1	PLATE-THRUST	
	7	1	**103-9273**	8	PUSHROD	

M-METRIC PART

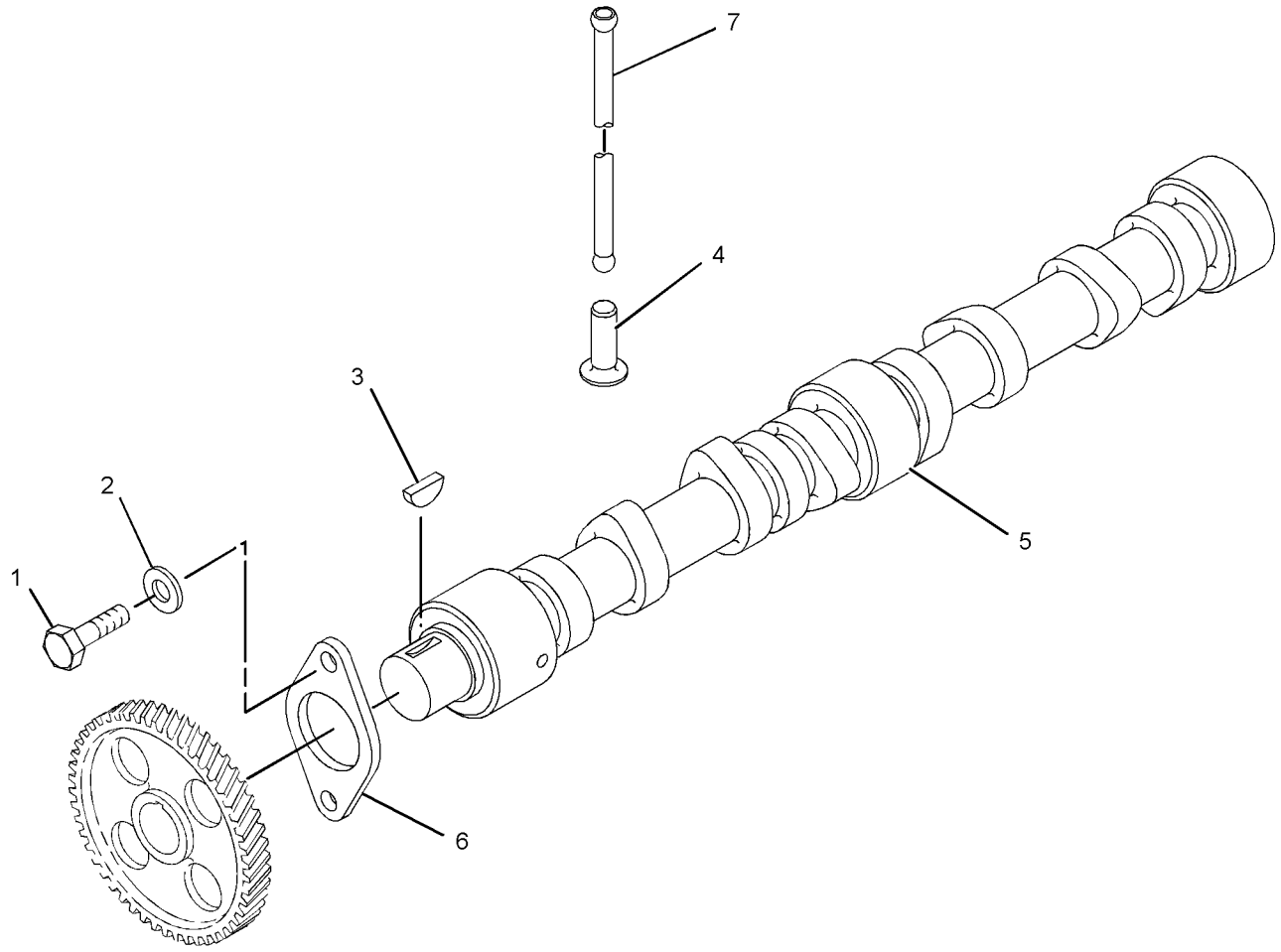

GRAPHIC #1 **<END>** g01654693

BASIC ENGINE

315-8329 CAMSHAFT GP

S/N: CYM1-UP

PART OF 287-8073 ENGINE AR-PRIMARY

AN ATTACHMENT

SMCS-1210, 1211, 1212 **i03606061**

NOTE	REF NO	GRAPHIC REF	PART NUMBER	QTY	PART NAME 1 2 3 4 5 6 (PRODUCT LEVEL)	SEE PAGE
	1	1	**3B-4505**	2	LOCKWASHER	
M	2	1	**8T-4200**	2	BOLT (M8X1.25X16-MM)	
	3	1	**094-4628**	1	KEY	
	4	1	**233-5485**	1	PLATE-THRUST	
	5	1	**103-9273**	8	PUSHROD	
	6	1	**103-9272**	8	TAPPET	
	7	1	**315-4664**	1	CAMSHAFT	

M-METRIC PART

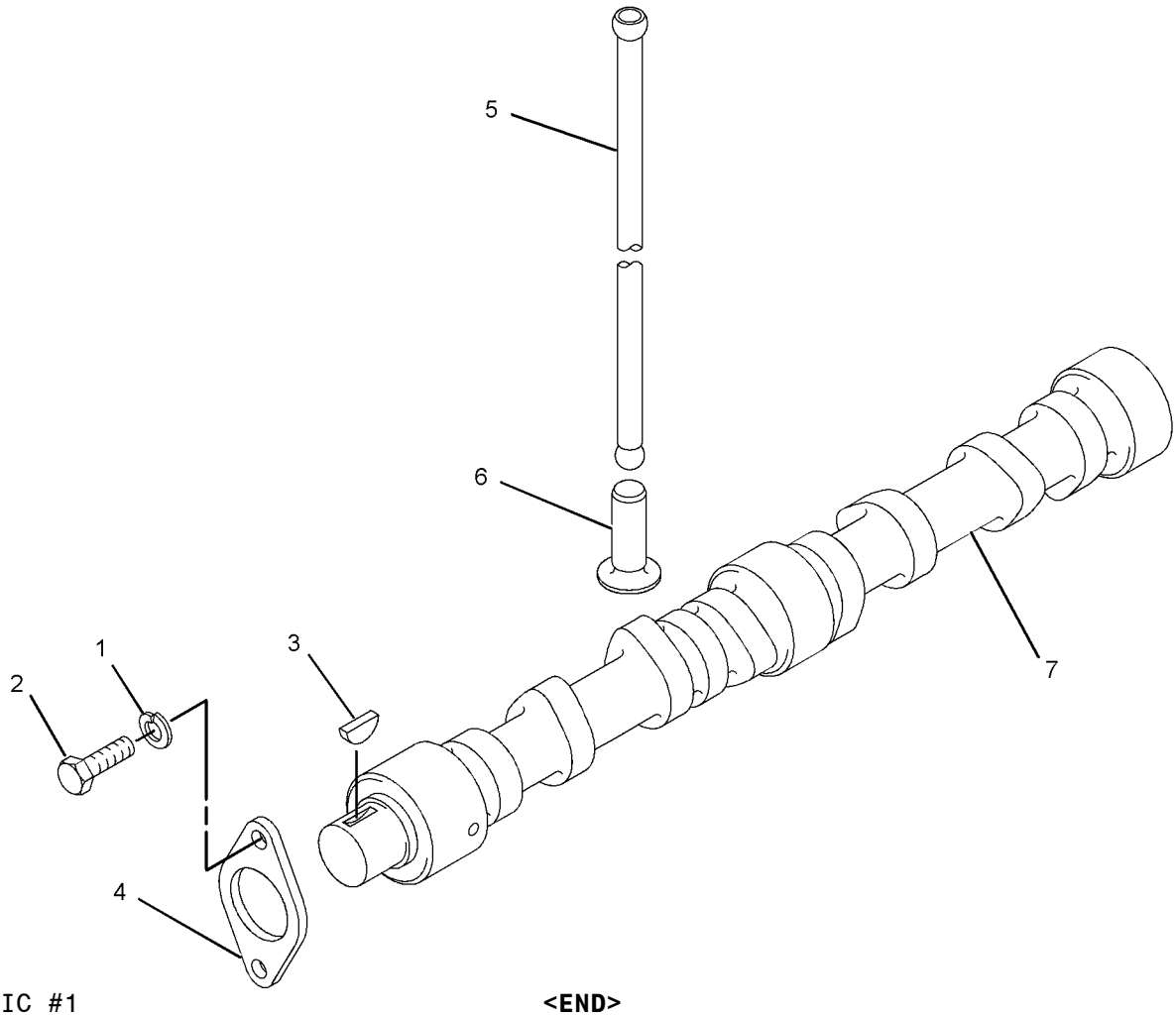

GRAPHIC #1 **<END>** g01448098

287-4033 CONNECTING ROD GP

S/N: CYM1-UP; CJS1-70000
PART OF 262-7288, 287-8073 ENGINE AR-PRIMARY
AN ATTACHMENT

SMCS-1218 **i02735544**

NOTE	REF NO	GRAPHIC REF	PART NUMBER	QTY	PART NAME 1 2 3 4 5 6 (PRODUCT LEVEL)	SEE PAGE
	1	1	**103-9680**	4	ROD AS-CONNECTING	
					(EACH INCLUDES)	
	1A	1	**128-2955**	2	BOLT-CONNECTING ROD	
	1B	1	**128-2956**	2	NUT	
	1C	1	**128-2958**	1	BUSHING	
	2	1	**238-8282**	1	BEARING (STANDARD)	
AB		1	**238-8283**		BEARING (0.25-MM US)	
AB		1	**238-8284**		BEARING (0.5-MM US)	
AB		1	**238-8285**		BEARING (0.75-MM US)	

A-NOT PART OF THIS GROUP
B-USE AS REQUIRED

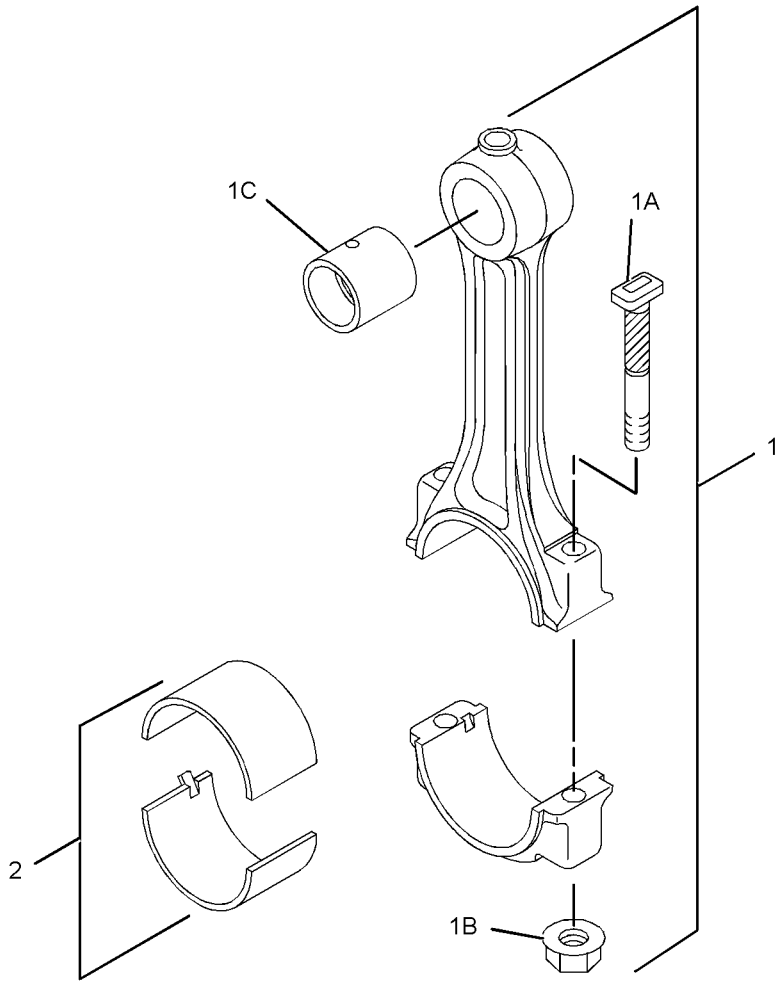

GRAPHIC #1 **<END>** g01380324

BASIC ENGINE

233-5480 COVER GP-VALVE MECHANISM

S/N: CJS1-60343

PART OF 262-7288 ENGINE AR-PRIMARY

AN ATTACHMENT

SMCS-1107 **i03480226**

NOTE	REF NO	GRAPHIC REF	PART NUMBER	QTY	PART NAME 1 2 3 4 5 6 (PRODUCT LEVEL)	SEE PAGE
M	1	1	**8T-4197**	5	BOLT (M8X1.25X40-MM)	
	2	1	**9M-1974**	5	WASHER-HARD (8.8X16X2-MM THK)	
	3	1	**310-8798**	1	CAP-OIL FILLER (ENGINE)	
	4	1	**233-5483**	1	GASKET (VALVE COVER)	
	5	1	**234-4790**	1	COVER AS	

M-METRIC PART

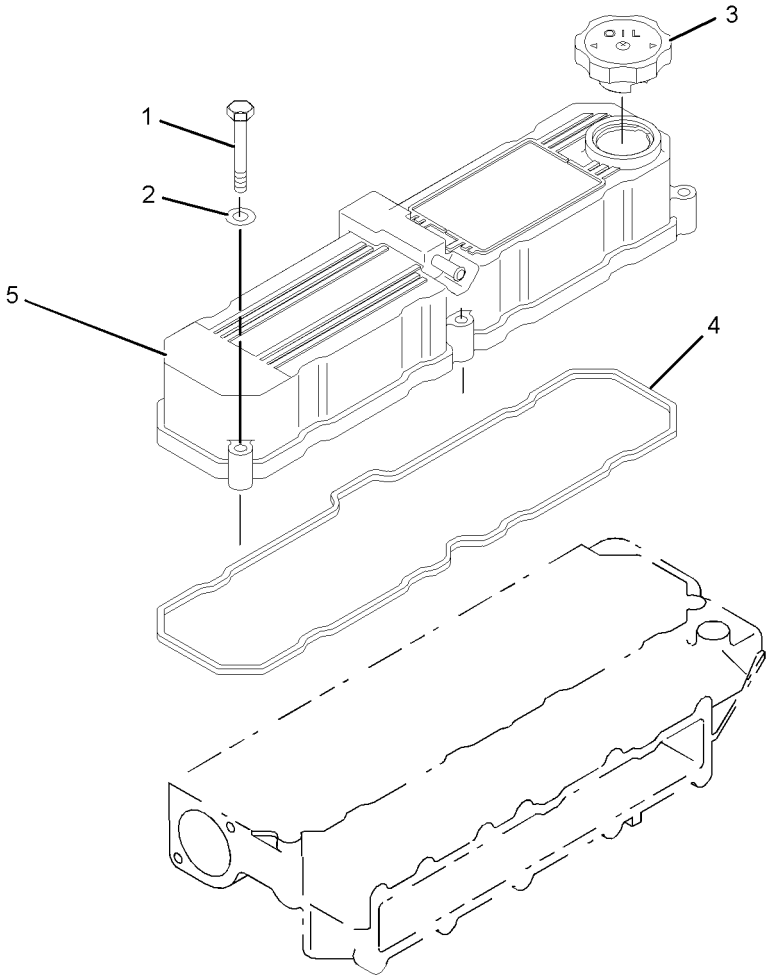

GRAPHIC #1 **<END>** g01011546

315-7762 COVER GP-VALVE MECHANISM

S/N: CYM1-UP; CJS60344-70000
PART OF 262-7288, 287-8073 ENGINE AR-PRIMARY
AN ATTACHMENT

SMCS-1107 **i03637508**

NOTE	REF NO	GRAPHIC REF	PART NUMBER	QTY	PART NAME 1 2 3 4 5 6 (PRODUCT LEVEL)	SEE PAGE
	1	1	**3B-4505**	5	LOCKWASHER	
M	2	1	**099-3649**	5	BOLT (M8X1.25X40-MM)	
	3	1	**233-5483**	1	GASKET (VALVE MECHANISM)	
	4	1	**294-7917**	1	COVER-VALVE MECHANISM	
	5	1	**310-8798**	1	CAP-OIL FILLER (ENGINE)	

M-METRIC PART

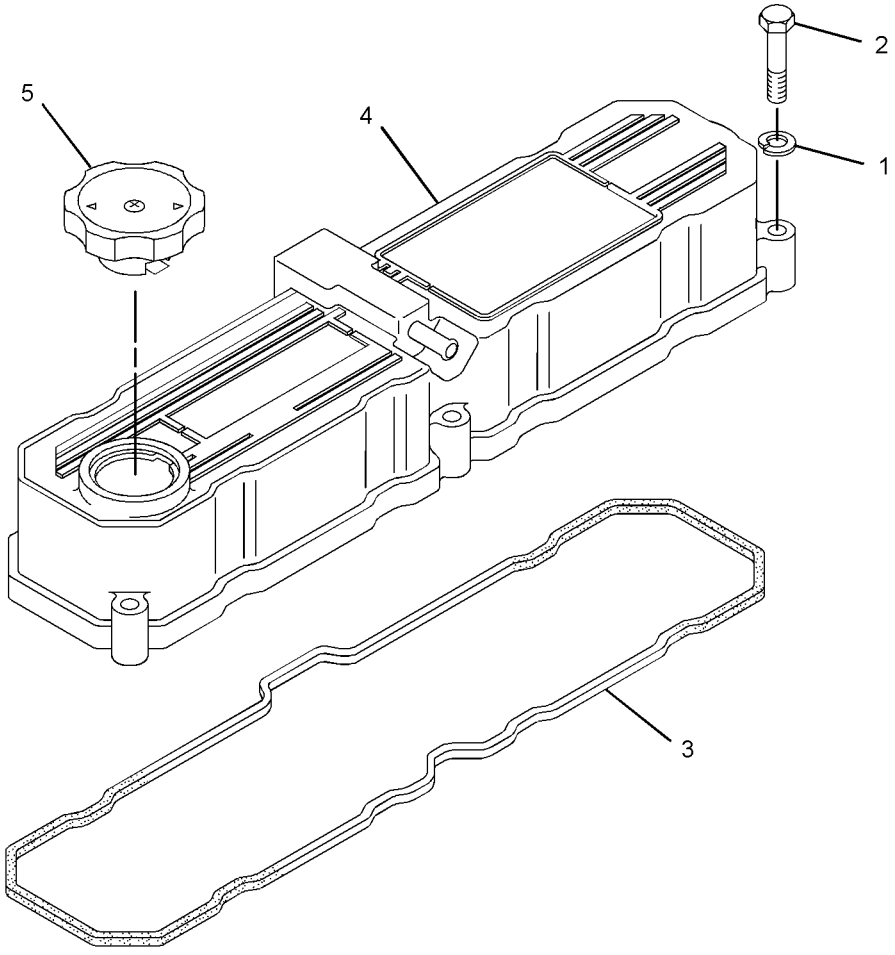

GRAPHIC #1 **<END>** g01400933

BASIC ENGINE

287-4649 CRANKSHAFT GP

S/N: CJS1-70000
PART OF 262-7288 ENGINE AR-PRIMARY
AN ATTACHMENT

SMCS-1202 **i02735545**

NOTE	REF NO	GRAPHIC REF	PART NUMBER	QTY	PART NAME 1 2 3 4 5 6 (PRODUCT LEVEL)	SEE PAGE
	1	1	**234-4794**	1	CRANKSHAFT AS	
	1A	1	**085-9513**	2	PIN	
	1B	1	**094-4628**	2	KEY	
	1C	1	**130-7596**	1	NUT	

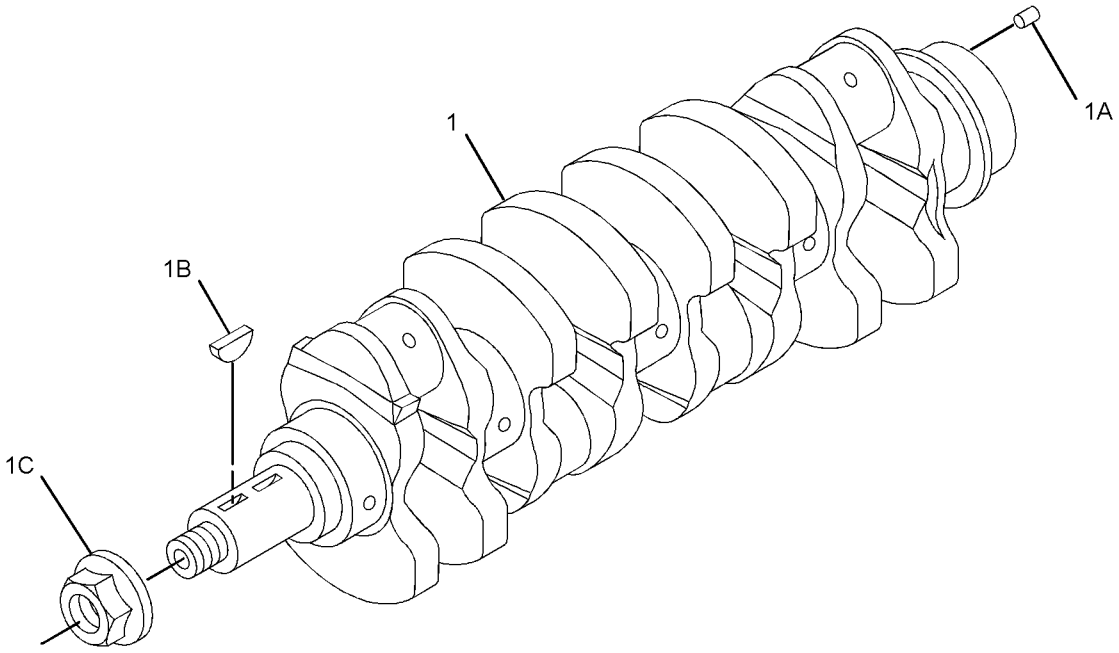

GRAPHIC #1 **<END>** g01380298

BASIC ENGINE

314-9860 CRANKSHAFT GP

S/N: CYM1-UP
PART OF 287-8073 ENGINE AR-PRIMARY
AN ATTACHMENT

SMCS-1202 **i02822912**

NOTE	REF NO	GRAPHIC REF	PART NUMBER	QTY	PART NAME 1 2 3 4 5 6 (PRODUCT LEVEL)	SEE PAGE
	1	1	**085-9513**	2	PIN	
	2	1	**094-4628**	2	KEY	
	3	1	**130-7596**	1	NUT	
	4	1	**294-7922**	1	CRANKSHAFT	

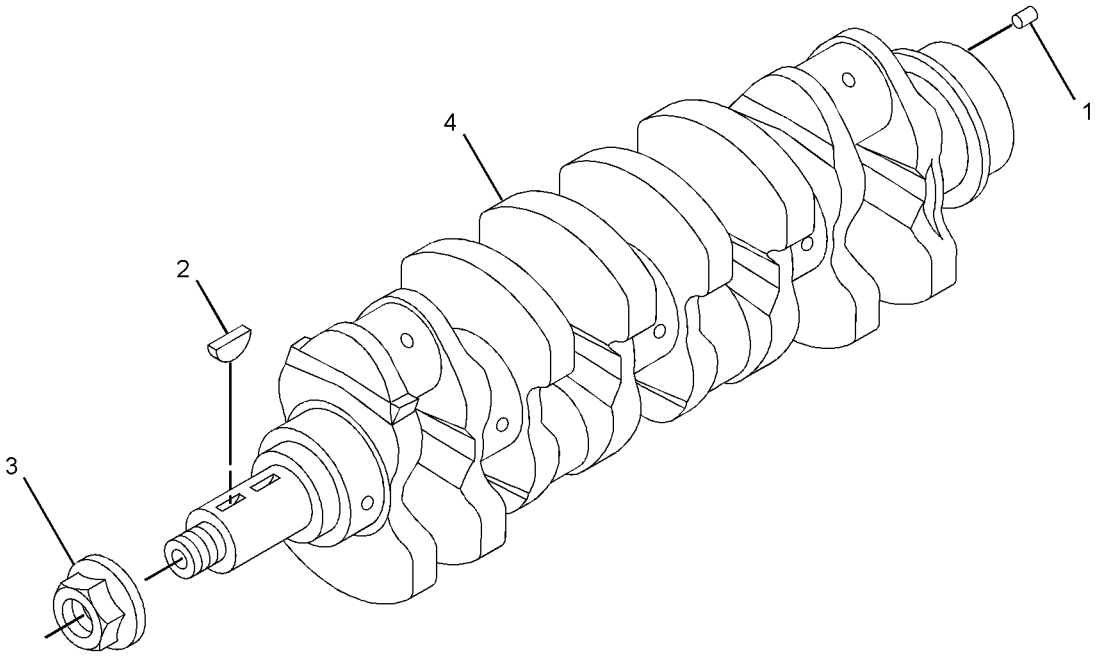

GRAPHIC #1 **<END>** g01392963

BASIC ENGINE

287-2416 CYLINDER BLOCK GP

S/N: CJS1-60343

PART OF 262-7288 ENGINE AR-PRIMARY

AN ATTACHMENT

SMCS-1201 **i02854033**

NOTE	REF NO	GRAPHIC REF	PART NUMBER	QTY	PART NAME 1 2 3 4 5 6 (PRODUCT LEVEL)	SEE PAGE
	1	1	**5I-7525**	1	PLUG	
	2	1	**096-3741**	4	CAP	
	3	1	**099-4420**	2	PIN	
	4	1	**103-9062**	1	BUSHING	
	5	1	**103-9275**	2	DOWEL	
	6	1	**103-9703**	1	SHAFT-IDLER	
	7	1	**183-5916**	6	PIN-SPRING	
	8	1	**104-1218**	2	DOWEL	
	9	1	**233-5457**	4	ORIFICE-JET (OIL PISTON COOLING)	
	10	1	**239-8504**	1	CYLINDER BLOCK GP	
	10A	1	**3P-1896**	10	PLUG-CUP	
	10B	1	**103-9276**	10	BOLT	
	11	1	**310-2682**	2	PLUG	
	12	1	**103-9279**	2	SEAL-SIDE	

287-2416 **CYLINDER BLOCK GP** *(contd.)* **i02854033**

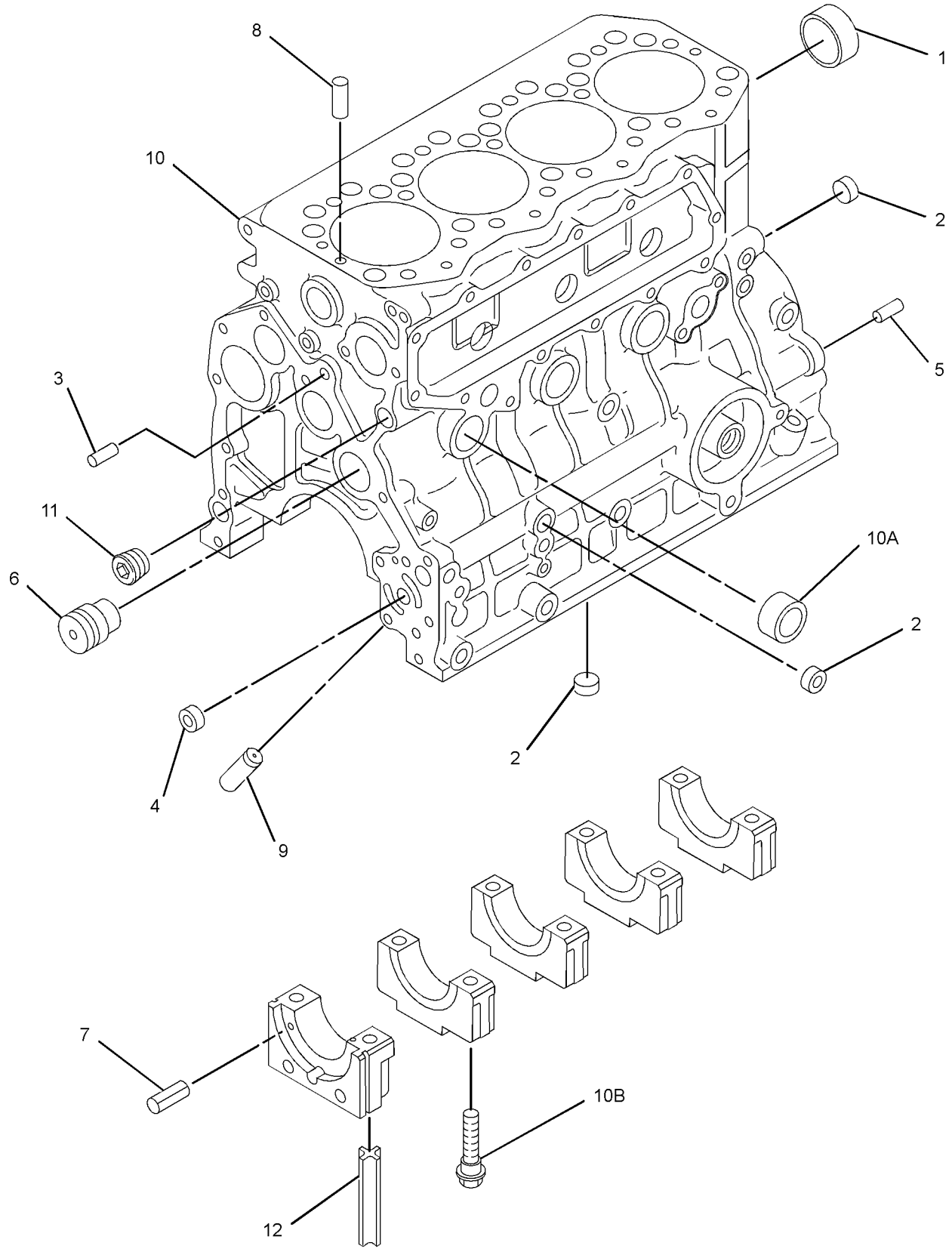

GRAPHIC #1 **<END>** g01443371

BASIC ENGINE

317-5094 CYLINDER BLOCK GP

S/N: CJS60344-61783
PART OF 262-7288 ENGINE AR-PRIMARY
AN ATTACHMENT

SMCS-1201 **i02864977**

NOTE	REF NO	GRAPHIC REF	PART NUMBER	QTY	PART NAME 1 2 3 4 5 6 (PRODUCT LEVEL)	SEE PAGE
	1	1	**5I-7525**	1	PLUG	
	2	1	**099-4420**	2	PIN	
	3	1	**103-9062**	1	BUSHING	
	4	1	**103-9279**	2	SEAL-SIDE	
	5	1	**103-9703**	1	SHAFT-IDLER	
	6	1	**183-5916**	6	PIN-SPRING	
	7	1	**104-1218**	2	DOWEL	
	8	1	**233-5457**	4	ORIFICE-JET (OIL PISTON COOLING)	
	9	1	**233-5488**	2	PIN	
	10	1	**289-8271**	4	CAP	
	11	1	**310-2682**	2	PLUG	
	12	1	**317-5010**	1	CYLINDER BLOCK GP	
	12A	1	**3P-1896**	5	PLUG-CUP	
	12B	1	**103-9276**	10	BOLT	

317-5094 **CYLINDER BLOCK GP** *(contd.)* **i02864977**

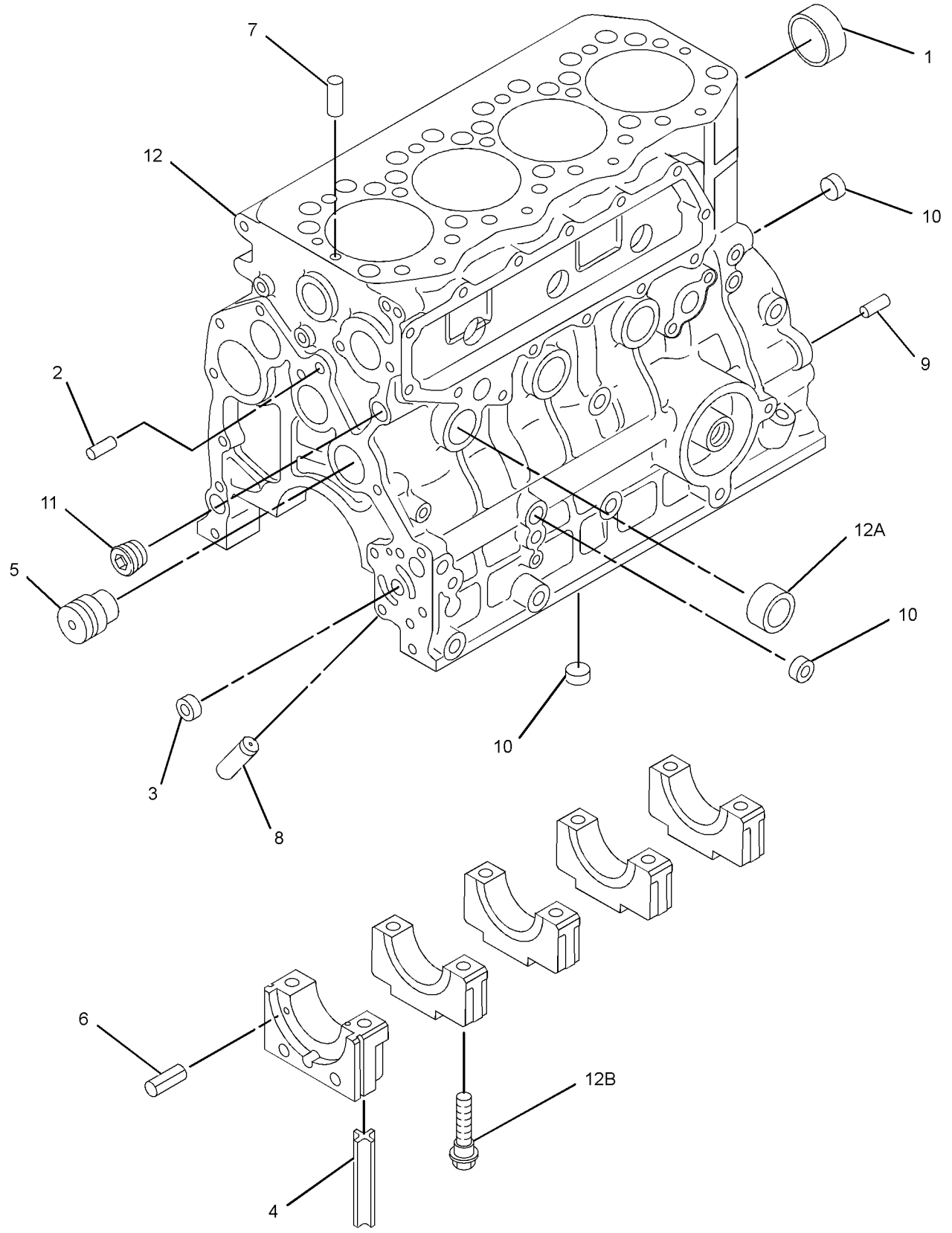

GRAPHIC #1 **<END>** g01407228

BASIC ENGINE

317-5094 CYLINDER BLOCK GP

S/N: CJS61784-70000
PART OF 262-7288 ENGINE AR-PRIMARY
AN ATTACHMENT

SMCS-1201 **i03465055**

NOTE	REF NO	GRAPHIC REF	PART NUMBER	QTY	PART NAME 1 2 3 4 5 6 (PRODUCT LEVEL)	SEE PAGE
	1	1	**5I-7525**	1	PLUG	
	2	1	**099-4420**	2	PIN	
	3	1	**103-9062**	1	BUSHING	
	4	1	**103-9279**	2	SEAL-SIDE	
	5	1	**103-9703**	1	SHAFT-IDLER	
	6	1	**183-5916**	6	PIN-SPRING	
	7	1	**104-1218**	2	DOWEL	
	8	1	**233-5457**	4	ORIFICE-JET (OIL PISTON COOLING)	
	9	1	**233-5488**	2	PIN	
	10	1	**289-8271**	4	CAP	
	11	1	**310-2682**	2	PLUG	
C	12	1	**327-7701**	1	CRANKCASE AS	

C-CHANGE FROM PREVIOUS TYPE

317-5094 **CYLINDER BLOCK GP** *(contd.)* **i03465055**

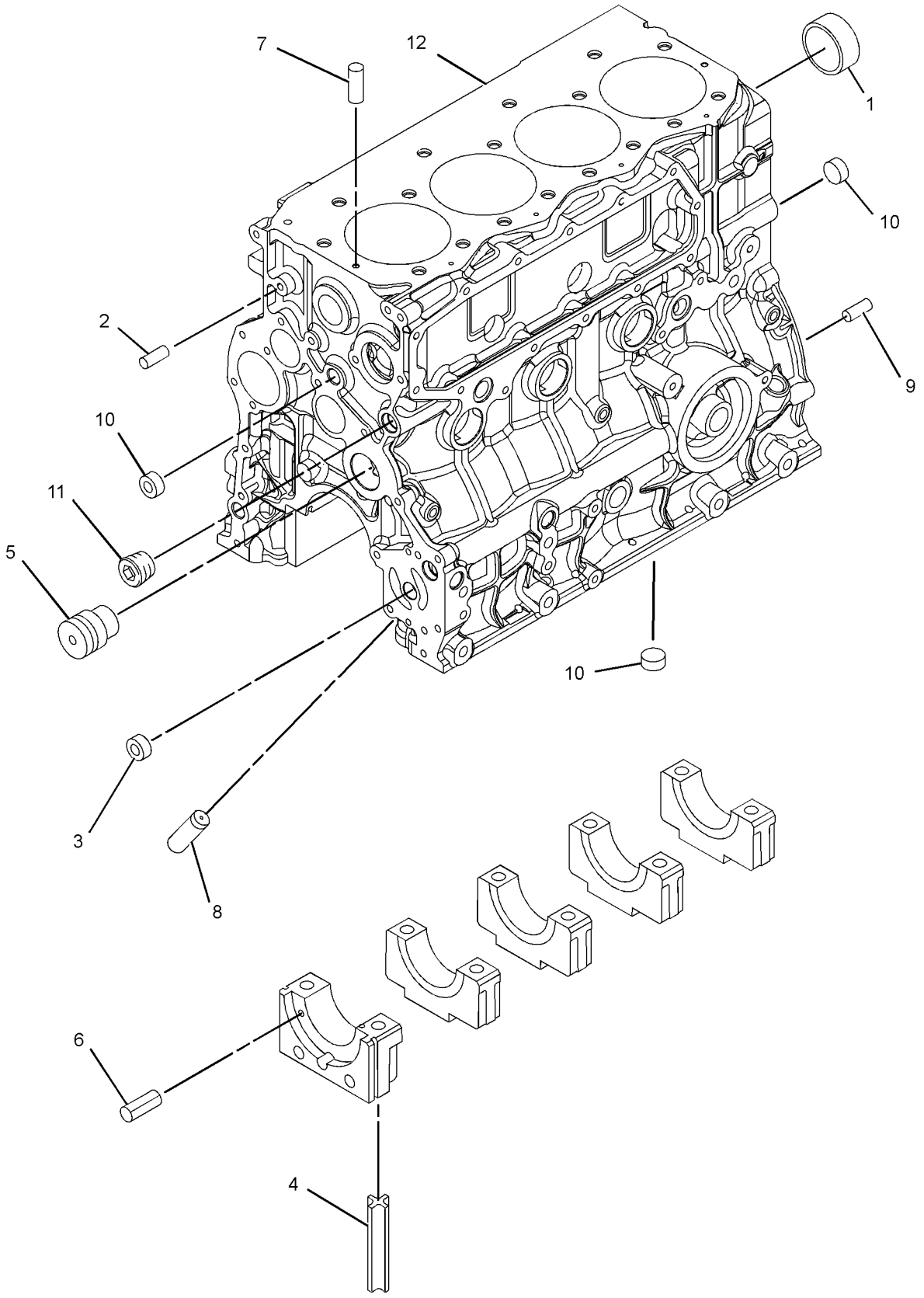

GRAPHIC #1 **<END>** g01857736

BASIC ENGINE

330-7633 CYLINDER BLOCK GP

S/N: CYM1-UP
PART OF 287-8073 ENGINE AR-PRIMARY
AN ATTACHMENT

SMCS-1201 **i03098184**

NOTE	REF NO	GRAPHIC REF	PART NUMBER	QTY	PART NAME 1 2 3 4 5 6 (PRODUCT LEVEL)	SEE PAGE
	1	1	**5I-7525**	1	PLUG	
	2	1	**096-3741**	5	CAP	
	3	1	**099-4420**	2	PIN	
	4	1	**103-9279**	2	SEAL-SIDE	
	5	1	**103-9703**	1	SHAFT-IDLER	
	6	1	**183-5916**	6	PIN-SPRING	
	7	1	**104-1218**	2	DOWEL	
	8	1	**233-5457**	4	ORIFICE-JET (OIL PISTON COOLING)	
	9	1	**233-5488**	2	PIN	
	10	1	**310-2682**	2	PLUG	
	11	1	**314-9938**	1	BUSHING	
	12	1	**330-7634**	1	CYLINDER BLOCK GP	
	12A	1	**3P-1896**	10	PLUG-CUP	
	12B	1	**096-3741**	5	CAP	
	12C	1	**103-9276**	10	BOLT	

330-7633 **CYLINDER BLOCK GP** *(contd.)* **i03098184**

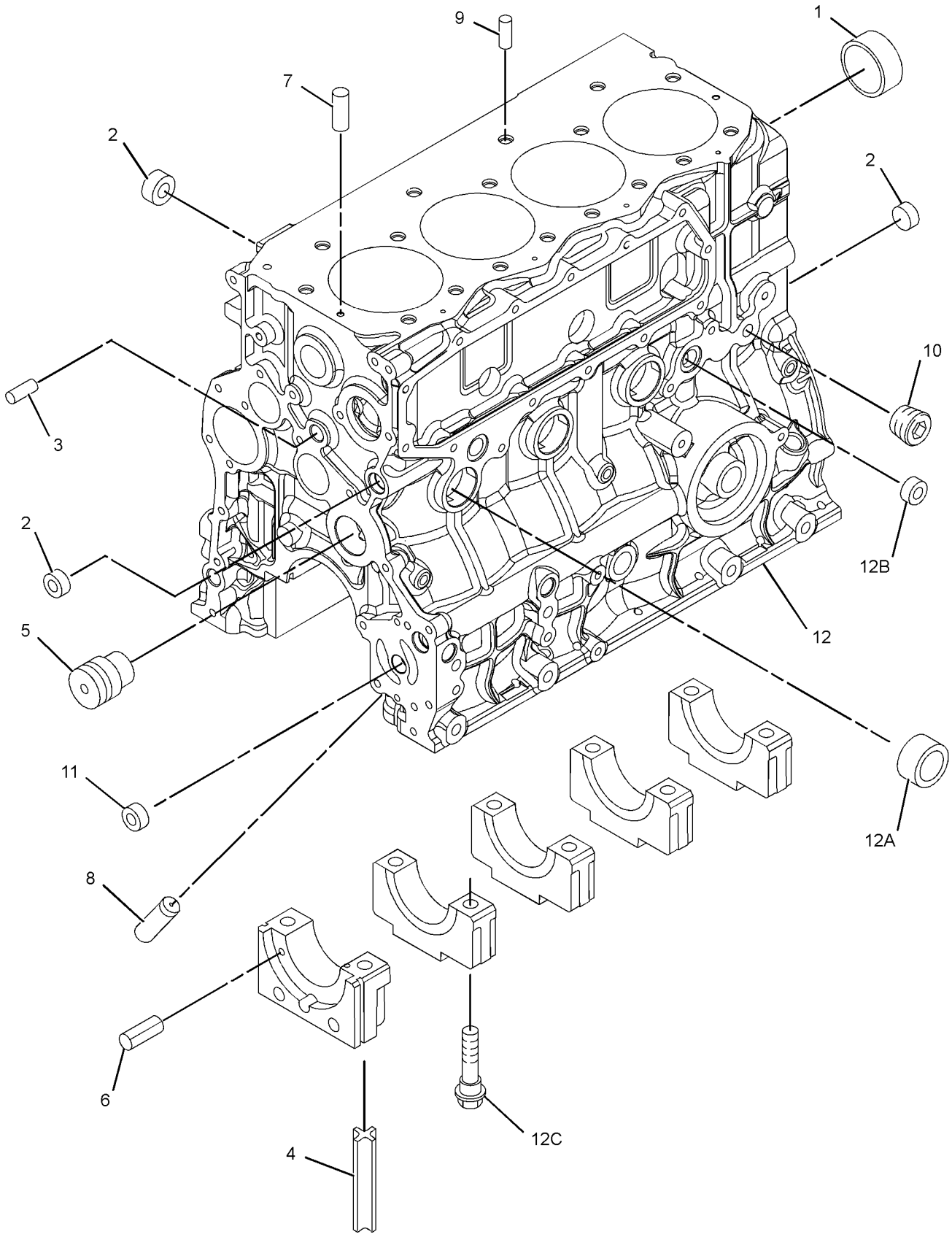

GRAPHIC #1 **<END>** g01562194

233-5500 CYLINDER HEAD GP

S/N: CJS1-16657
PART OF 262-7288 ENGINE AR-PRIMARY
AN ATTACHMENT

SMCS-1100, 1101, 1103, 1104, 1105, 1108, 1109, 1115, 1117, 1121, 1124, 1125

i02843018

NOTE	REF NO	GRAPHIC REF	PART NUMBER	QTY	PART NAME 1 2 3 4 5 6 (PRODUCT LEVEL)	SEE PAGE
	1	1	**233-5454**	17	BOLT (M12X1.75X115-MM)	
	2	1	**299-4645**	1	GASKET-HEAD	
	3	1	**233-5465**	1	HEAD AS	
	3A	1	**212-8475**	7	CAP	
	3B	1	**257-8736**	12	CAP-SEALING	
	3C	1	**233-5453**	1	CYLINDER HEAD	
	3D	1	**233-5462**	4	INSERT-INLET	
	3E	1	**233-5463**	4	INSERT-EXHAUST	
	3F	1	**233-5464**	8	GUIDE	

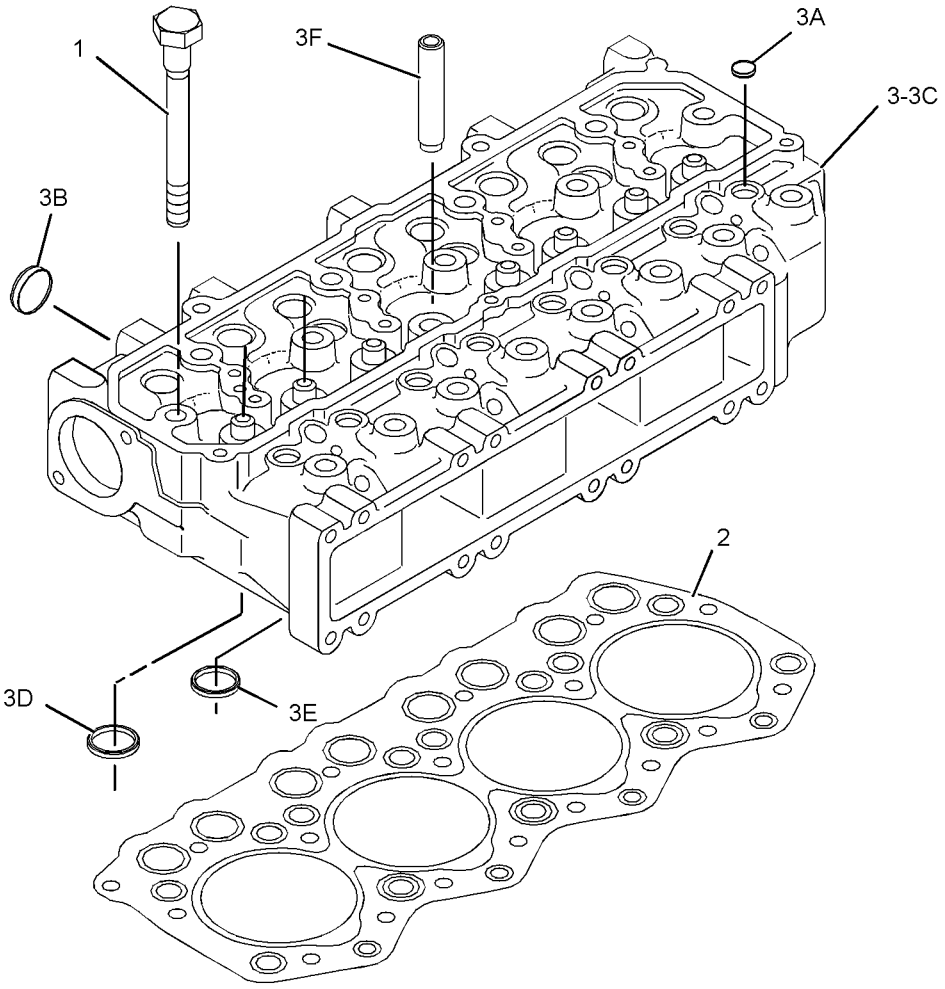

GRAPHIC #1

<END>

g01330815

233-5500 CYLINDER HEAD GP

S/N: CYM1-UP; CJS16658-70000
PART OF 262-7288, 287-8073 ENGINE AR-PRIMARY
AN ATTACHMENT

SMCS-1100, 1101, 1103, 1104, 1105, 1108, 1109, 1115, 1117, 1121, 1124, 1125

i03536270

NOTE	REF NO	GRAPHIC REF	PART NUMBER	QTY	PART NAME 1 2 3 4 5 6 (PRODUCT LEVEL)	SEE PAGE
	1	1	**103-9246**	17	BOLT-CYLINDER HEAD	
	2	1	**299-4645**	1	GASKET-HEAD	
C	3	1	**319-7263**	1	CYLINDER HEAD AS	
	4	1	**319-7262**	1	STUD	
	5	1	**103-9252**	4	SEAT-VALVE (INLET)	
	6	1	**103-9253**	4	SEAT-VALVE (EXHAUST)	
	7	1	**103-9247**	8	GUIDE-VALVE	

C-CHANGE FROM PREVIOUS TYPE

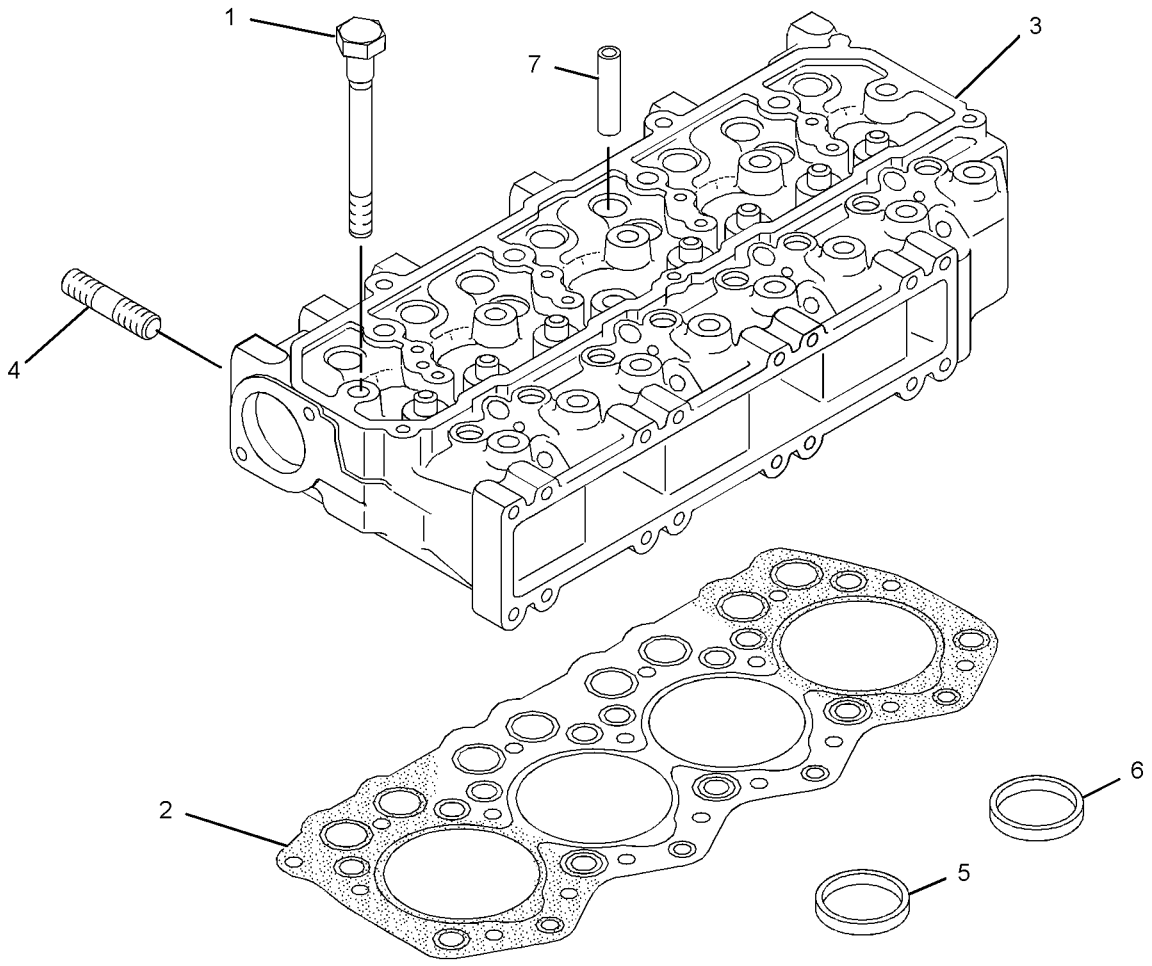

GRAPHIC #1

<END>

g01869753

258-2452 DRAIN GP-ENGINE OIL

S/N: JAY1-UP

PART OF 258-2445, 295-7118 INSTALLATION AR-ENGINE

SMCS-1302 **i03552826**

NOTE	REF NO	GRAPHIC REF	PART NUMBER	QTY	PART NAME 1 2 3 4 5 6 (PRODUCT LEVEL)	SEE PAGE
	1	1	**1P-4278**	1	CLAMP-HOSE	
	2	1	**8C-3445**	1	CAP-DUST	
	3	1	**8C-3446**	1	VALVE-FLUID SAMPLING (ENGINE OIL)	
	4	1	**110-2570**	1	CAP (ENGINE OIL)	
	5	1	**218-0919**	1	ADAPTER	
	6	1	**8L-2779**	1	SEAL-O-RING	
E	7	1	**5P-1442**		HOSE (68-CM)	

E-ORDER BY THE CENTIMETER

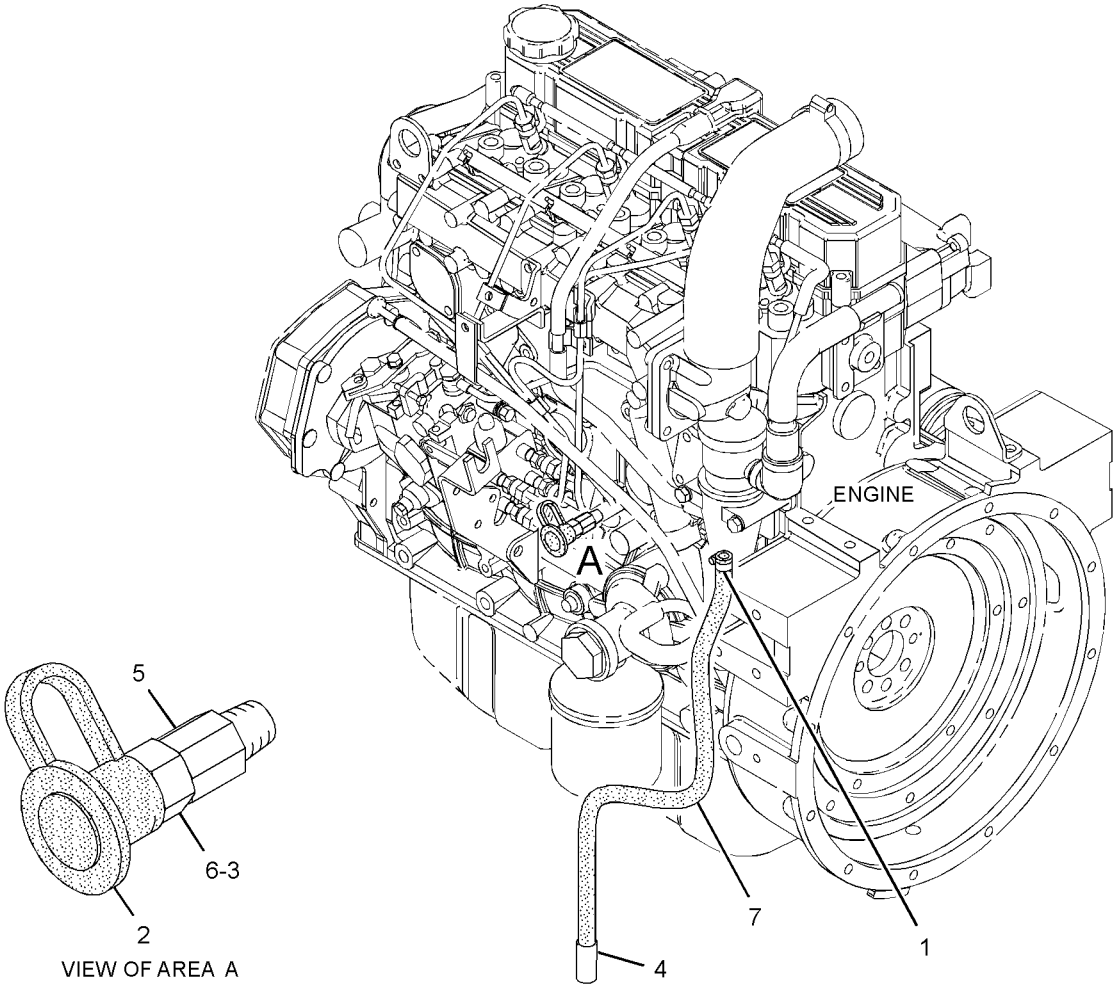

GRAPHIC #1 **<END>** g01319979

BASIC ENGINE

235-5890 FLYWHEEL GP

S/N: CJS1-70000
PART OF 262-7288 ENGINE AR-PRIMARY
AN ATTACHMENT

SMCS-1156, 1158 **i02613784**

NOTE	REF NO	GRAPHIC REF	PART NUMBER	QTY	PART NAME 1 2 3 4 5 6 (PRODUCT LEVEL)	SEE PAGE
	1	1	**234-4791**	1	FLYWHEEL AS	
M	1A	1	**226-3693**	4	BOLT (M12X1.25X30-MM)	
	1B	1	**032-8139**	1	GEAR-STARTER (112-TEETH)	

M-METRIC PART

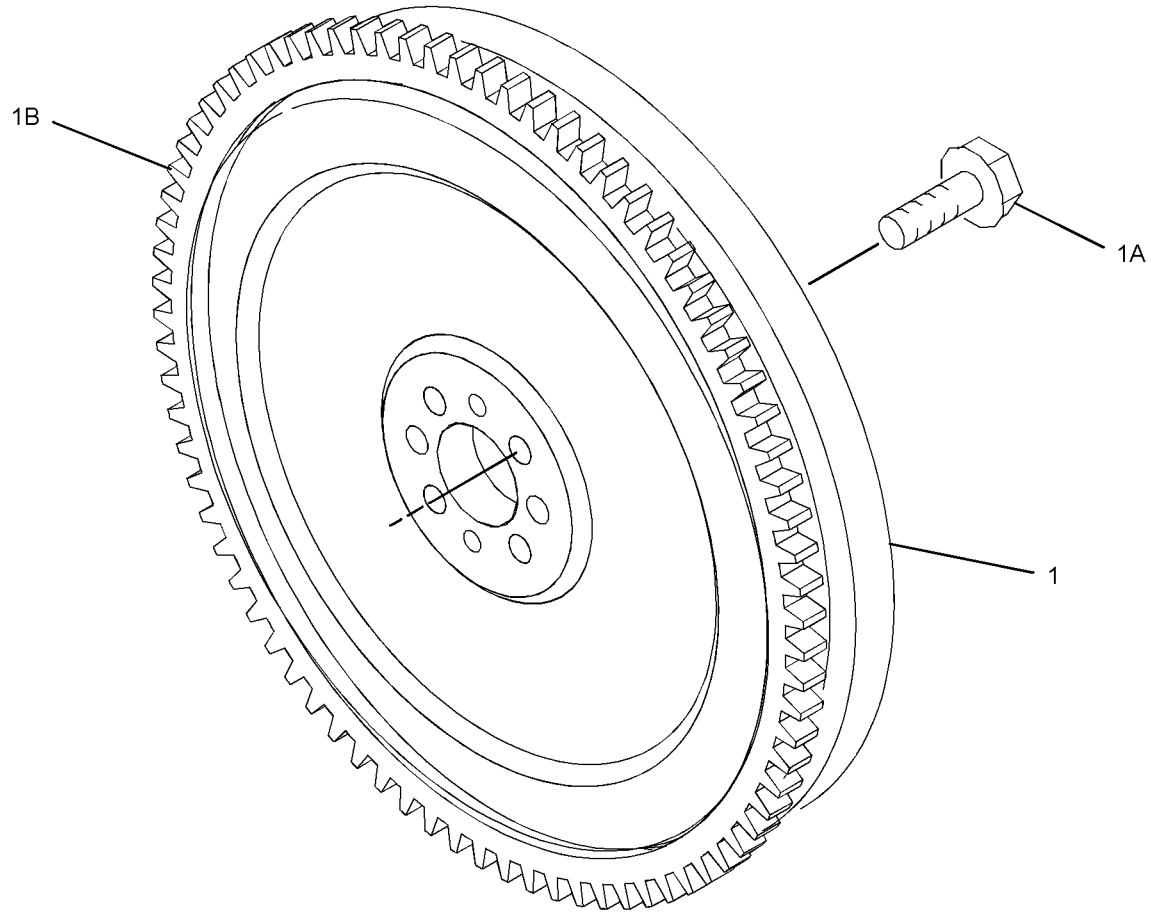

GRAPHIC #1 **<END>** g01310290

314-9861 FLYWHEEL GP

S/N: CYM1-UP
PART OF 287-8073 ENGINE AR-PRIMARY
AN ATTACHMENT

SMCS-1156, 1158 **i02824838**

NOTE	REF NO	GRAPHIC REF	PART NUMBER	QTY	PART NAME 1 2 3 4 5 6 (PRODUCT LEVEL)	SEE PAGE
M	1	1	**226-3693**	6	BOLT (M12X1.25X30-MM)	
	2	1	**234-4791**	1	FLYWHEEL AS	
	2A	1	**032-8139**	1	GEAR-STARTER (112-TEETH)	

M-METRIC PART

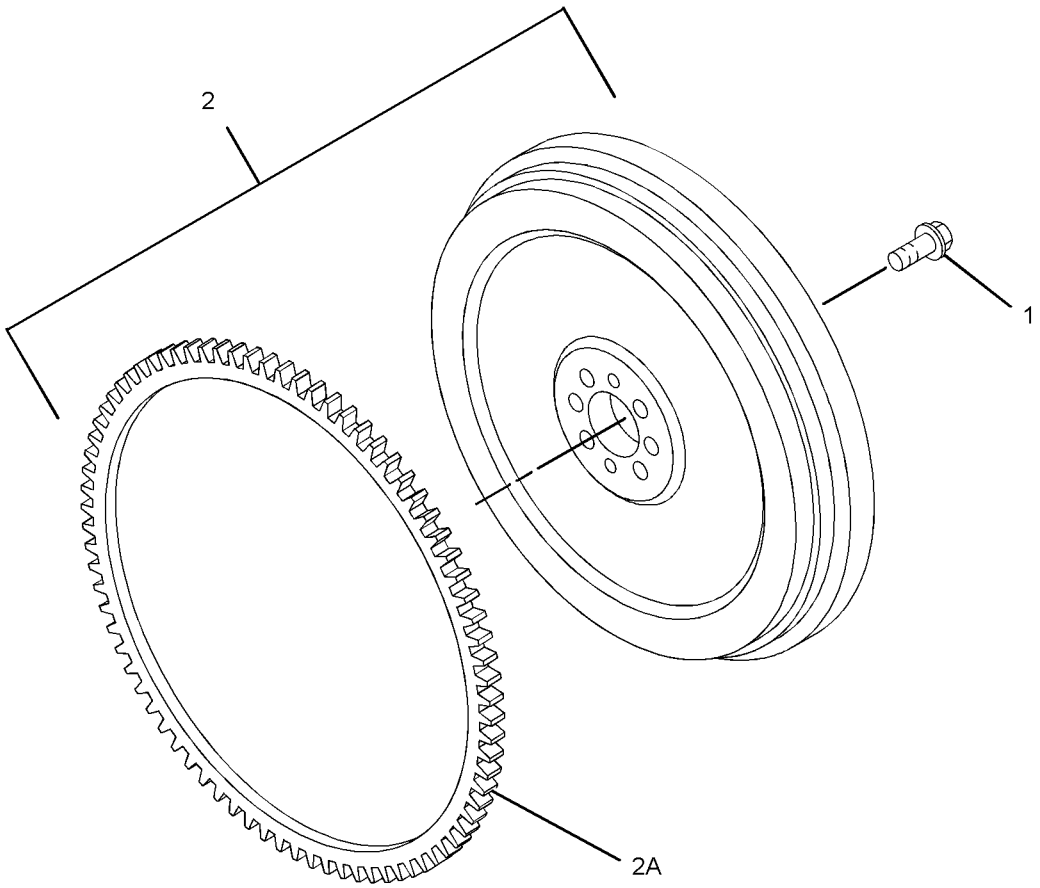

GRAPHIC #1 **<END>** g01394554

287-4830 GEAR GP-FRONT

S/N: CJS1-70000
PART OF 262-7288 ENGINE AR-PRIMARY
AN ATTACHMENT

SMCS-1206, 1212, 1234, 1288, 1313 **i02568578**

NOTE	REF NO	GRAPHIC REF	PART NUMBER	QTY	PART NAME 1 2 3 4 5 6 (PRODUCT LEVEL)	SEE PAGE
M	1	1	**5I-4936**	1	BOLT (M10X1.25X20-MM)	
	2	1	**222-8202**	1	PLATE	
	3	1	**8T-4121**	1	WASHER-HARD (11X21X2.5-MM THK)	
	4	1	**117-2827**	1	GEAR (46-TEETH)	
	5	1	**117-2829**	1	GEAR (23-TEETH)	
	6	1	**117-3283**	1	GEAR AS-IDLER (49-TEETH)	
	7	1	**117-3285**	1	GEAR-PUMP (OIL, 31-TEETH)	
	8	1	**239-4292**	1	GEAR	

M-METRIC PART

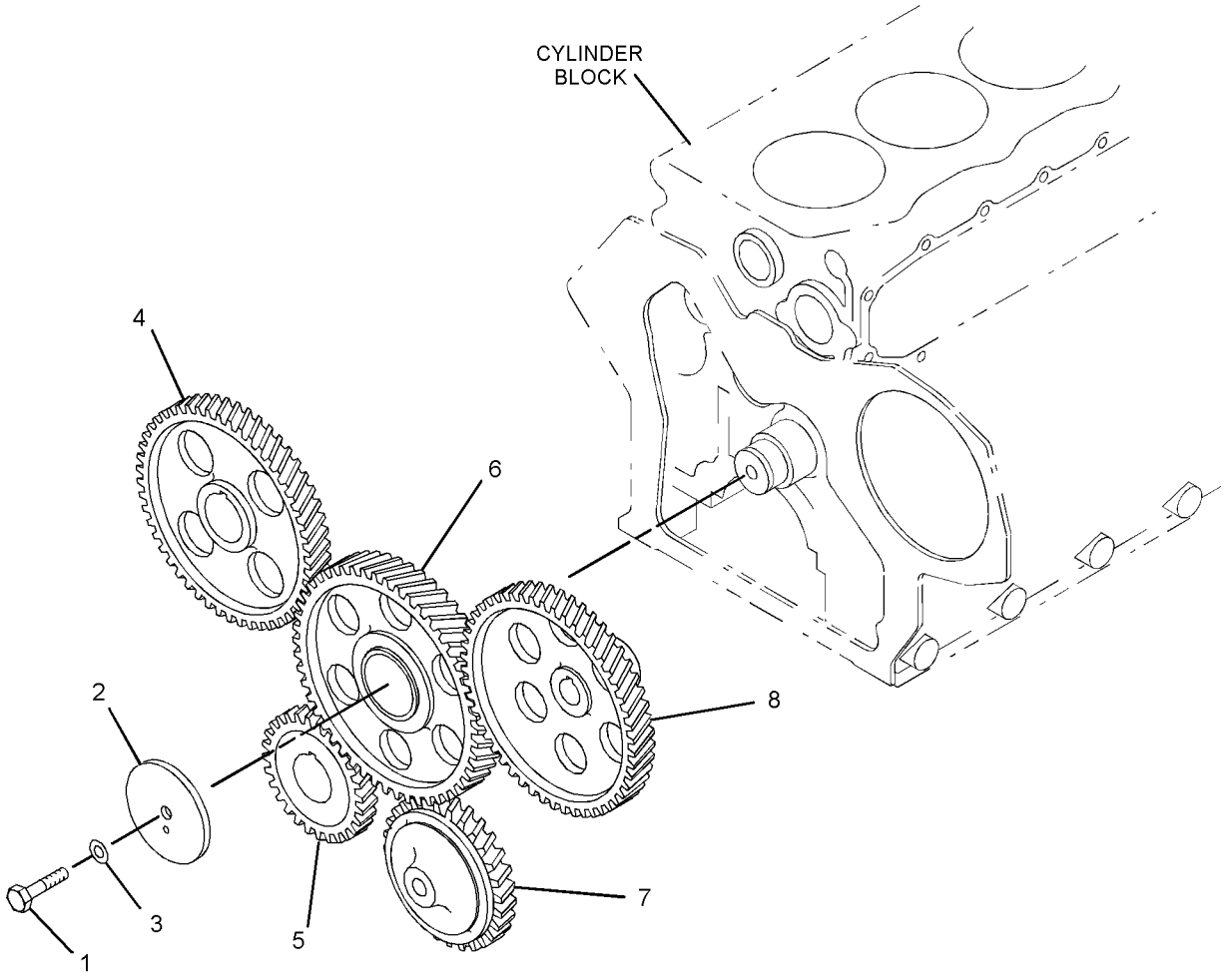

GRAPHIC #1 **<END>** g01322038

BASIC ENGINE

315-7766 GEAR GP-FRONT

S/N: CYM1-UP

PART OF 287-8073 ENGINE AR-PRIMARY

AN ATTACHMENT

SMCS-1206, 1212, 1234, 1288, 1313 **i03469908**

NOTE	REF NO	GRAPHIC REF	PART NUMBER	QTY	PART NAME 1 2 3 4 5 6 (PRODUCT LEVEL)	SEE PAGE
M	1	1	**5I-4936**	1	BOLT (M10X1.25X20-MM)	
	2	1	**5I-7543**	1	PLATE	
	3	1	**8T-4121**	1	WASHER-HARD (11X21X2.5-MM THK)	
	4	1	**117-2827**	1	GEAR (46-TEETH)	
	5	1	**117-2829**	1	GEAR (23-TEETH)	
	6	1	**117-3285**	1	GEAR-PUMP (OIL, 31-TEETH)	
	7	1	**239-4292**	1	GEAR	
	8	1	**322-3150**	1	GEAR-IDLER	

M-METRIC PART

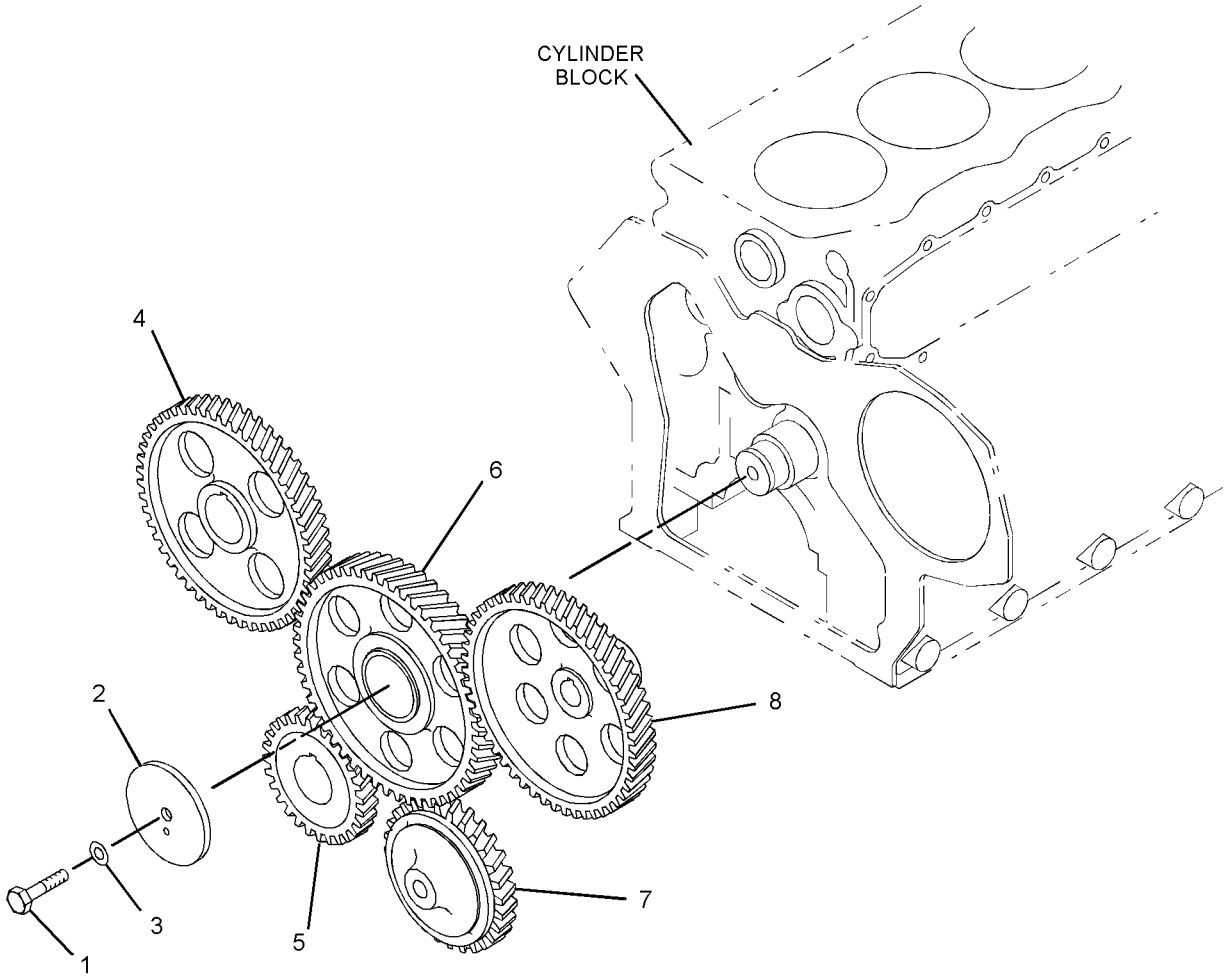

GRAPHIC #1 **<END>** g01322038

258-2469 GUARD GP-BELT

S/N: JAY1-UP

PART OF 258-2445, 295-7118 INSTALLATION AR-ENGINE

SMCS-7174 **i03552842**

NOTE	REF NO	GRAPHIC REF	PART NUMBER	QTY	PART NAME 1 2 3 4 5 6 (PRODUCT LEVEL)	SEE PAGE
	1	1	**258-2443**	1	GUARD-BELT	
	2	1	**258-2590**	1	BRACKET AS	
M		1	**8T-3612**	4	NUT-WELD (M8X1.25-THD)	
	3	1	**280-8307**	1	BRACKET AS	
M		1	**6V-9632**	1	NUT-WELD (M6X1-THD)	
	4	1	**280-8314**	1	BRACKET AS	
M		1	**6V-9632**	3	NUT-WELD (M6X1-THD)	
	5	1	**280-8335**	2	SPACER (6.5X12X4.5-MM THK)	
	6	1	**280-8361**	1	PLATE	
	7	1	**101-2867**	4	WASHER-HARD (7.2X25X2-MM THK)	
M	8	1	**134-7722**	2	BOLT-LOCKING (M8X1.25X16-MM)	
	9	1	**270-9442**	4	SCREW-TRUSS HEAD (M6X1X20-MM)	
	10	1	**5P-4116**	6	WASHER-HARD (8.8X20.5X2-MM THK)	
M	11	1	**6V-7357**	2	BOLT (M6X1X25-MM)	
M	12	1	**8T-5093**	4	BOLT-LOCKING (M8X1.25X25-MM)	

M-METRIC PART

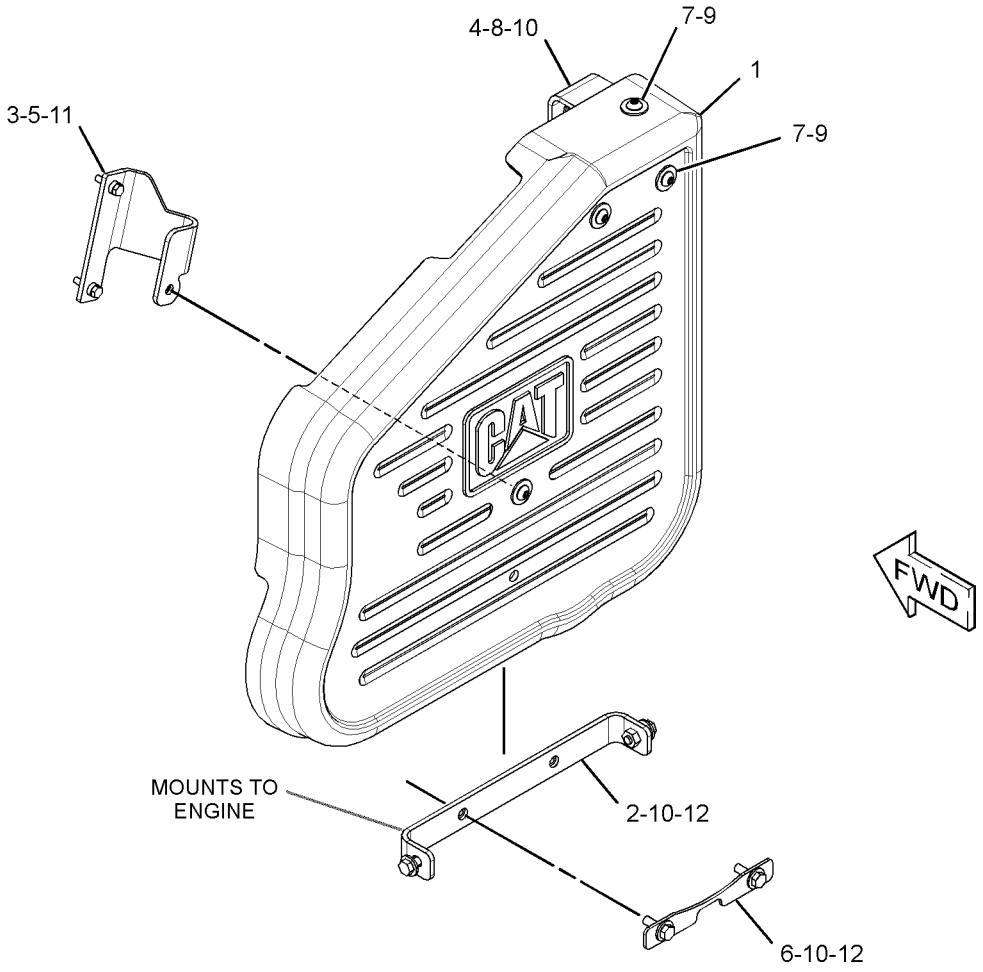

GRAPHIC #1 **<END>** g01457077

BASIC ENGINE

287-3357 HOUSING GP-FLYWHEEL

S/N: CJS1-60343
PART OF 262-7288 ENGINE AR-PRIMARY
AN ATTACHMENT

SMCS-1157 **i02877118**

NOTE	REF NO	GRAPHIC REF	PART NUMBER	QTY	PART NAME 1 2 3 4 5 6 (PRODUCT LEVEL)	SEE PAGE
	1	1	**096-4415**	2	LOCKWASHER	
	2	1	**103-9280**	1	GASKET-REAR	
	3	1	**117-5015**	1	SEAL AS-OIL	
M	4	1	**185-8182**	2	BOLT (M10X1.5X20-MM)	
	5	1	**199-2354**	10	BOLT (M10X1.25X25-MM)	
	6	1	**212-8499**	3	STUD	
M	7	1	**212-8510**	3	NUT (M10X1.25 THD)	
M	8	1	**9X-8912**	2	BOLT (M10X1.25X30-MM)	
	9	1	**233-5482**	1	EYE	
	10	1	**315-7703**	1	HOUSING-FLYWHEEL	
	11	1	**5I-7628**	1	GASKET	
	12	1	**5I-8056**	1	PLUG	

M-METRIC PART

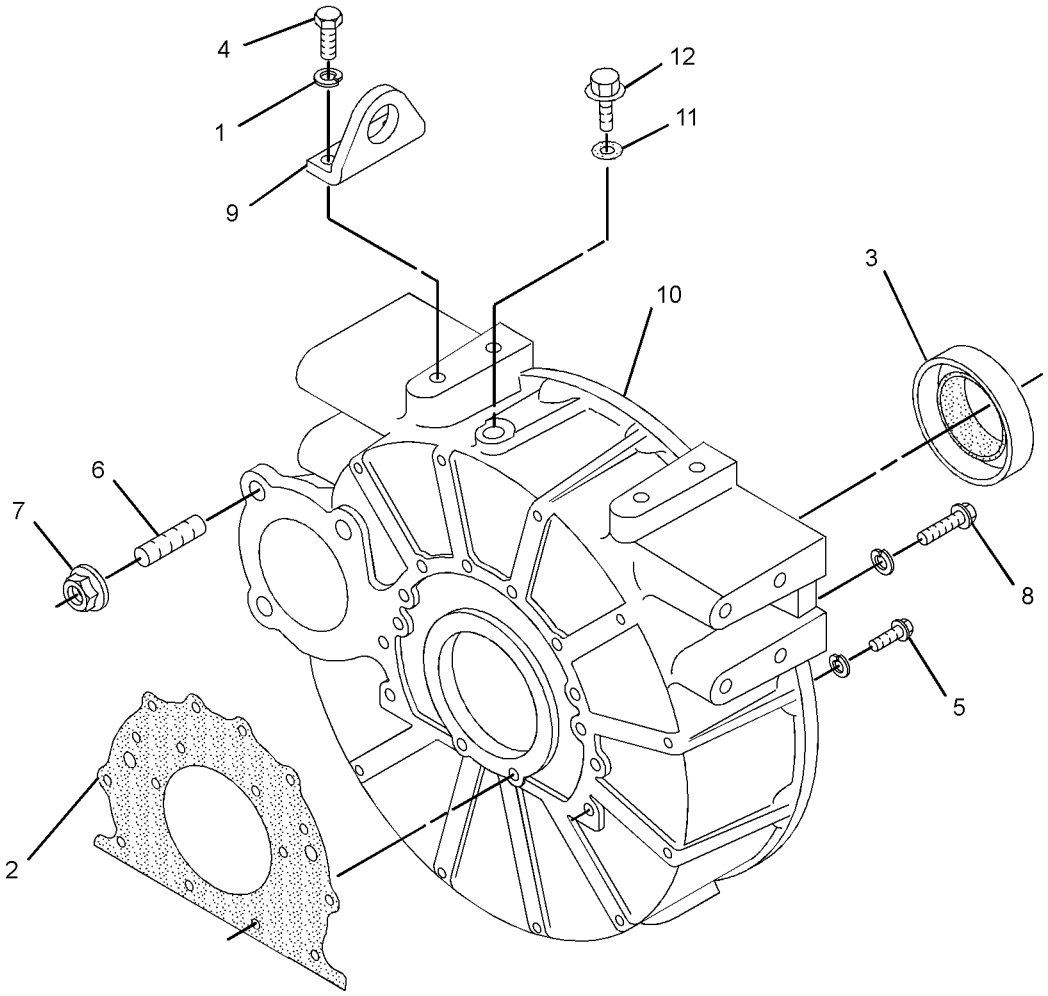

GRAPHIC #1 **<END>** g01442694

315-7764 HOUSING GP-FLYWHEEL

S/N: CYM1-UP; CJS60344-70000
PART OF 262-7288, 287-8073 ENGINE AR-PRIMARY
AN ATTACHMENT

SMCS-1157 **i02825004**

NOTE	REF NO	GRAPHIC REF	PART NUMBER	QTY	PART NAME 1 2 3 4 5 6 (PRODUCT LEVEL)	SEE PAGE
	1	1	**5I-7628**	1	GASKET	
	2	1	**5I-8056**	1	PLUG	
M	3	1	**8T-4137**	2	BOLT (M10X1.5X20-MM)	
M	4	1	**8T-4195**	2	BOLT (M10X1.5X30-MM)	
	5	1	**8T-4896**	14	WASHER-HARD (10.2X18.5X2.5-MM THK)	
	6	1	**103-9280**	1	GASKET-REAR	
	7	1	**117-5015**	1	SEAL AS-OIL	
M	8	1	**140-5217**	10	BOLT (M10X1.25X25-MM)	
	9	1	**212-8499**	3	STUD	
M	10	1	**212-8510**	3	NUT (M10X1.25 THD)	
	11	1	**233-5482**	1	EYE	
	12	1	**315-7703**	1	HOUSING-FLYWHEEL	

M-METRIC PART

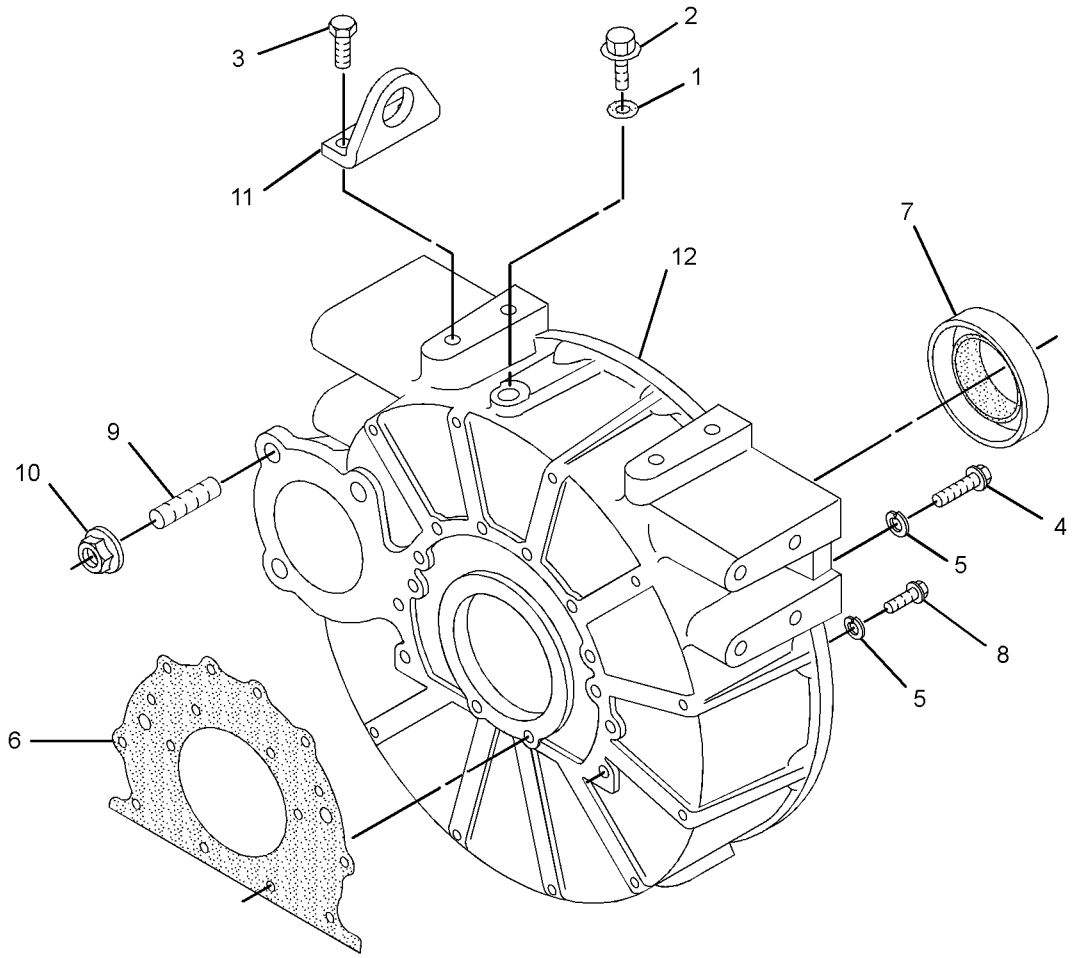

GRAPHIC #1 **<END>** g01433304

BASIC ENGINE

287-3074 HOUSING GP-FRONT

S/N: CJS1-60343

PART OF 262-7288 ENGINE AR-PRIMARY

AN ATTACHMENT

SMCS-1151, 1160, 1162, 1166, 3108 **i02674007**

NOTE	REF NO	GRAPHIC REF	PART NUMBER	QTY	PART NAME 1 2 3 4 5 6 (PRODUCT LEVEL)	SEE PAGE
	1	1	**9M-1974**	23	WASHER-HARD (8.8X16X2-MM THK)	
M	2	1	**8T-7329**	13	BOLT (M8X1.25X55-MM)	
	3	1	**096-9529**	1	SEAL-O-RING	
	4	1	**103-9277**	1	GASKET-FRONT PLATE	
	5	1	**117-3447**	1	GASKET	
	6	1	**117-3448**	1	PLATE	
M	7	1	**6V-5215**	5	BOLT (M8X1.25X16-MM)	
	10	1	**233-5497**	1	COVER-GEAR	
	11	1	**233-5498**	1	CAP-FILLER (ENGINE OIL)	
	13	1	**238-8279**	1	HOUSING-FRONT	
	14	1	**239-8429**	1	SEAL-CRANKSHAFT	
	15	1	**285-9066**	5	BOLT (M8X1.25X65-MM)	

M-METRIC PART

287-3074 **HOUSING GP-FRONT** *(contd.)* **i02674007**

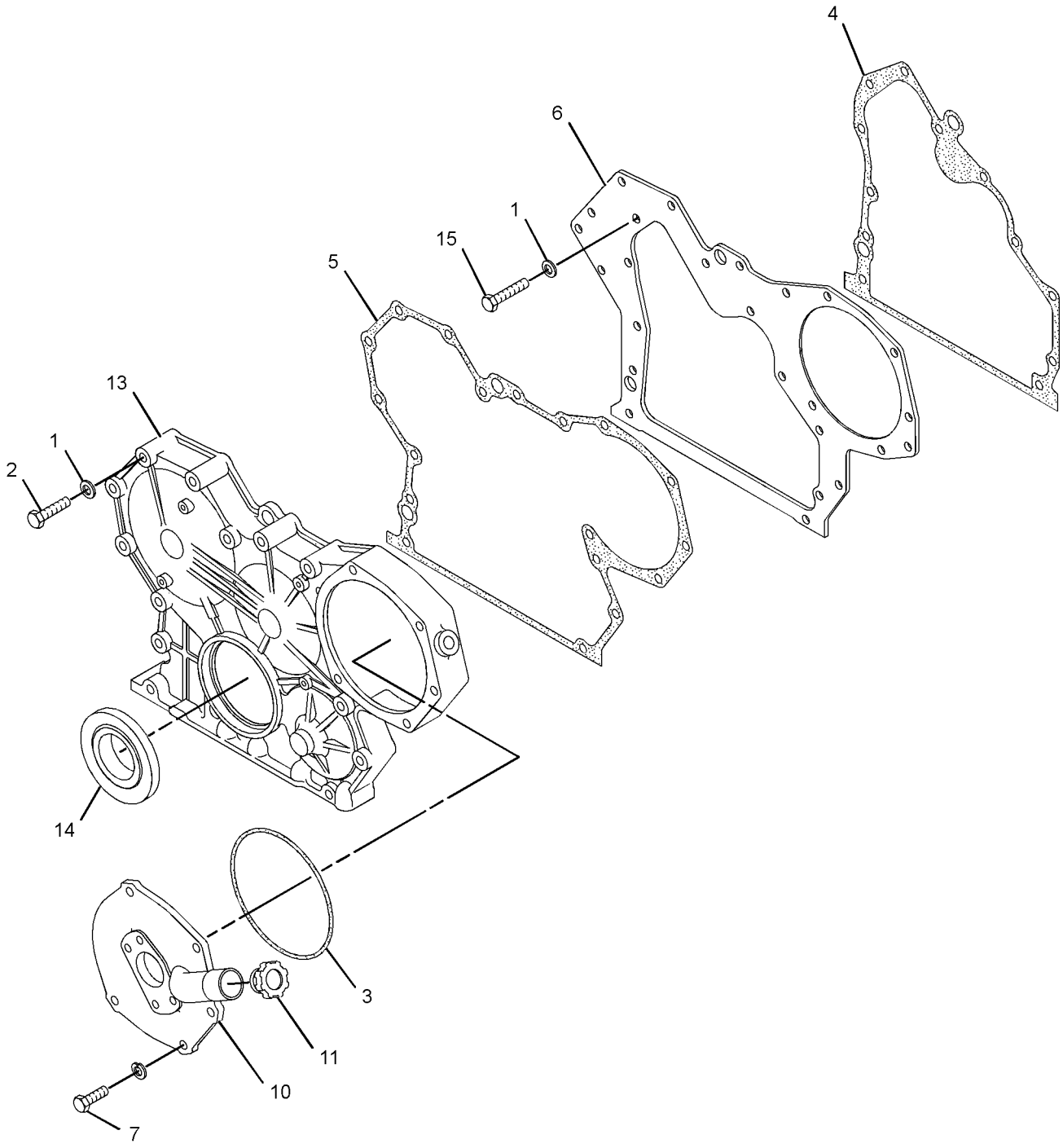

GRAPHIC #1 **<END>** g01351136

BASIC ENGINE

315-8336 HOUSING GP-FRONT

S/N: CYM1-UP

PART OF 287-8073 ENGINE AR-PRIMARY

AN ATTACHMENT

SMCS-1151, 1160, 1162, 1166, 3108 **i03245870**

NOTE	REF NO	GRAPHIC REF	PART NUMBER	QTY	PART NAME 1 2 3 4 5 6 (PRODUCT LEVEL)	SEE PAGE
	1	1	**3B-4505**	5	LOCKWASHER	
M	2	1	**6V-7357**	2	BOLT (M6X1X25-MM)	
M	3	1	**8T-4200**	5	BOLT (M8X1.25X16-MM)	
	4	1	**8T-4224**	15	WASHER-HARD (8.8X16X2-MM THK)	
M	5	1	**8T-7329**	11	BOLT (M8X1.25X55-MM)	
	6	1	**9X-8256**	6	WASHER (6.6X12X2-MM THK)	
	7	1	**096-2500**	2	LOCKWASHER	
	8	1	**096-9529**	1	SEAL-O-RING	
	9	1	**199-2212**	4	BOLT (M6X1X18-MM)	
	11	1	**246-1259**	1	COVER-INSULATION	
	12	1	**246-1260**	1	COVER-INSULATION	
	13	1	**285-9066**	4	BOLT (M8X1.25X65-MM)	
	14	1	**314-9947**	1	GASKET	
	15	1	**314-9948**	1	FASTENER GP-FRONT COVER	
	17	1	**315-4667**	1	GASKET	
	18	1	**315-4668**	1	PLATE	
	19	1	**315-4686**	1	HOUSING-FRONT	
	20	1	**315-4687**	1	COVER	
	21	1	**239-8429**	1	SEAL-CRANKSHAFT	

M-METRIC PART

315-8336 **HOUSING GP-FRONT** *(contd.)* **i03245870**

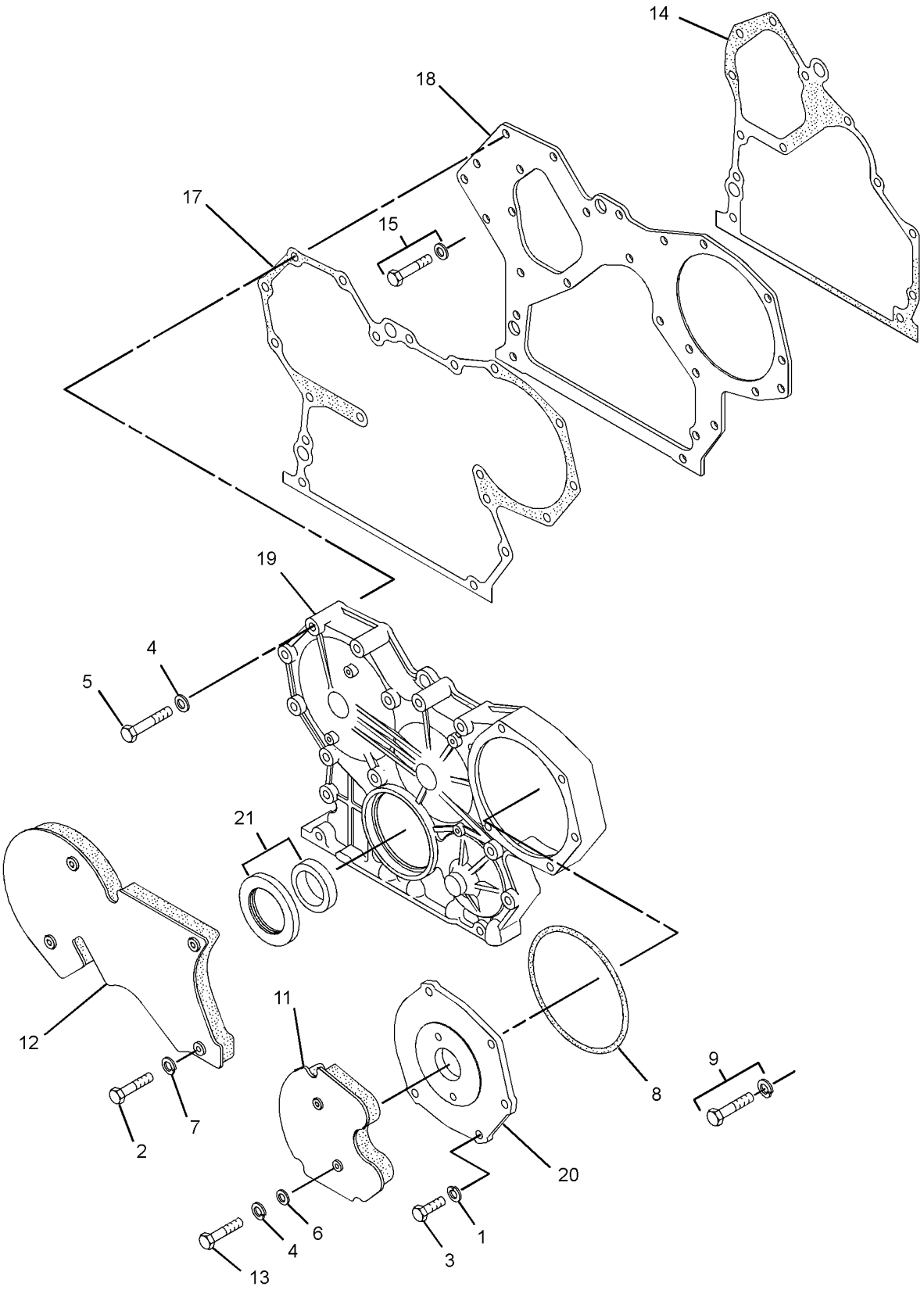

GRAPHIC #1 **<END>** g01658277

BASIC ENGINE

316-9040 HOUSING GP-FRONT

S/N: CJS60344-70000
PART OF 262-7288 ENGINE AR-PRIMARY
AN ATTACHMENT

SMCS-1151, 1160, 1162, 1166, 3108 **i02902182**

NOTE	REF NO	GRAPHIC REF	PART NUMBER	QTY	PART NAME 1 2 3 4 5 6 (PRODUCT LEVEL)	SEE PAGE
	1	1	**3B-4505**	5	LOCKWASHER	
M	2	1	**8T-4200**	5	BOLT (M8X1.25X16-MM)	
	3	1	**8T-4224**	13	WASHER-HARD (8.8X16X2-MM THK)	
M	4	1	**8T-7329**	13	BOLT (M8X1.25X55-MM)	
	5	1	**096-9529**	1	SEAL-O-RING	
	6	1	**103-9277**	1	GASKET-FRONT PLATE	
	7	1	**117-3447**	1	GASKET	
	8	1	**117-3448**	1	PLATE	
	9	1	**238-8279**	1	HOUSING-FRONT	
	10	1	**239-8429**	2	SEAL-CRANKSHAFT	
	11	1	**246-1258**	1	COVER-GEAR	
	12	1	**314-9948**	5	FASTENER GP-FRONT COVER	

M-METRIC PART

316-9040 **HOUSING GP-FRONT** *(contd.)* **i02902182**

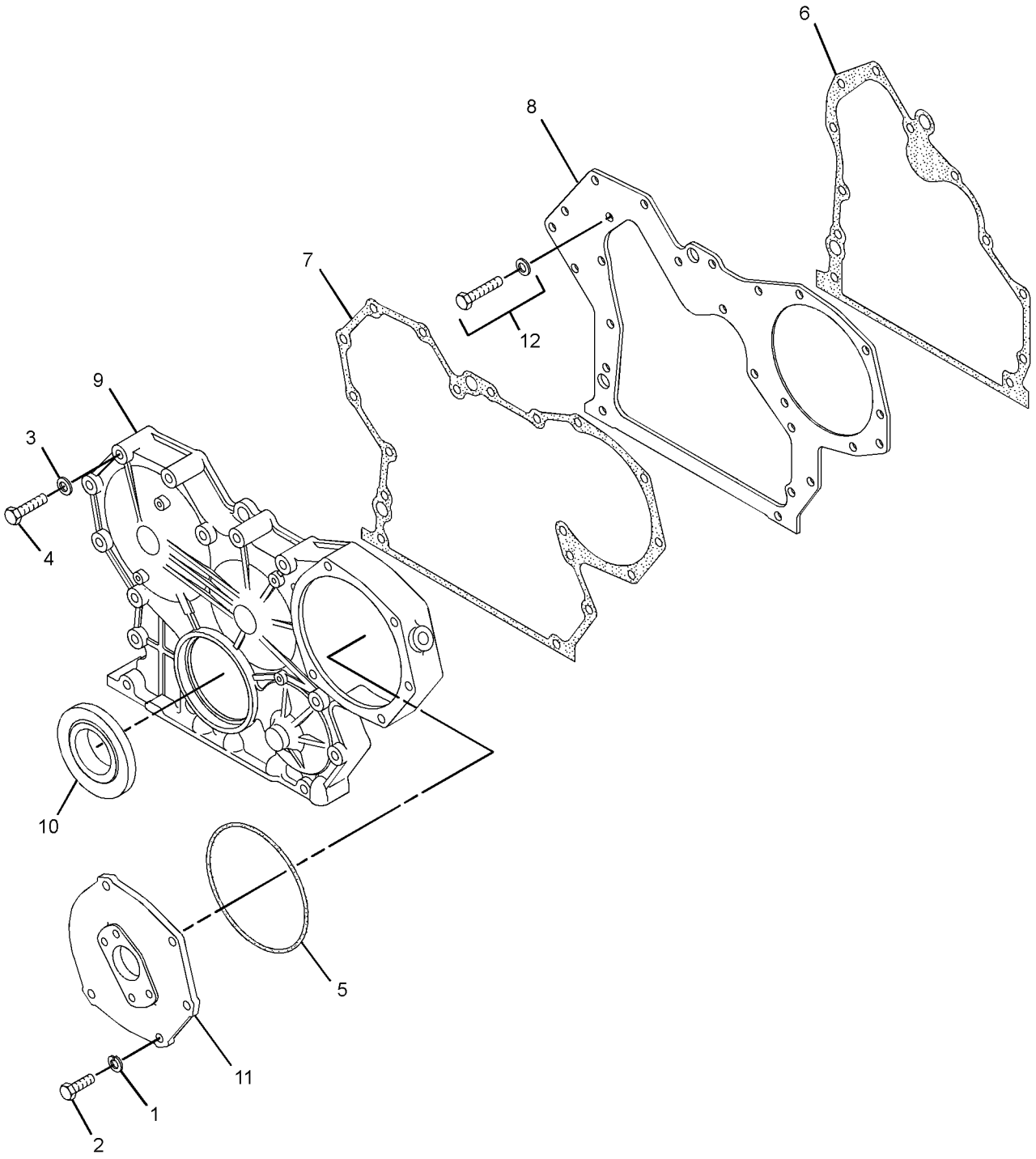

GRAPHIC #1 **<END>** g01401110

287-1844 LIFTING GP-ENGINE

S/N: CJS1-60343
PART OF 262-7288 ENGINE AR-PRIMARY
AN ATTACHMENT

SMCS-1122 **i02816278**

NOTE	REF NO	GRAPHIC REF	PART NUMBER	QTY	PART NAME 1 2 3 4 5 6 (PRODUCT LEVEL)	SEE PAGE
	1	1	**233-5466**	1	EYE	
	2	1	**233-5468**	1	GASKET	
	3	1	**234-4810**	1	COVER-CYLINDER HEAD	
M	4	1	**199-2205**	4	BOLT AS	
	5	1	**3B-4505**	4	LOCKWASHER	

M-METRIC PART

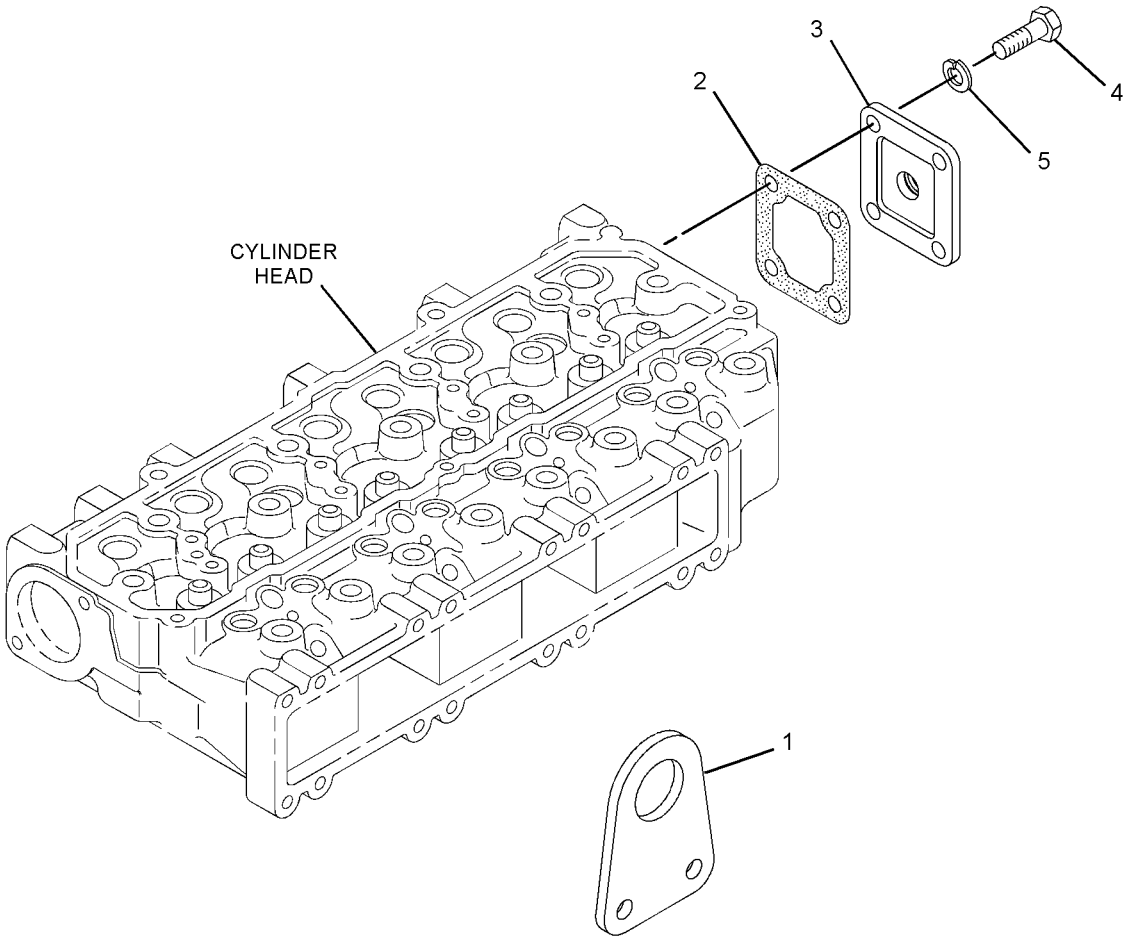

GRAPHIC #1 **<END>** g01352020

315-7761 LIFTING GP-ENGINE

S/N: CYM1-UP; CJS60344-70000
PART OF 262-7288, 287-8073 ENGINE AR-PRIMARY
AN ATTACHMENT

SMCS-1122 **i02864974**

NOTE	REF NO	GRAPHIC REF	PART NUMBER	QTY	PART NAME 1 2 3 4 5 6 (PRODUCT LEVEL)	SEE PAGE
	1	1	**3B-4505**	4	LOCKWASHER	
M	2	1	**8T-4200**	4	BOLT (M8X1.25X16-MM)	
	3	1	**233-5466**	1	EYE	
	4	1	**233-5468**	1	GASKET	
	5	1	**315-7704**	1	COVER	

M-METRIC PART

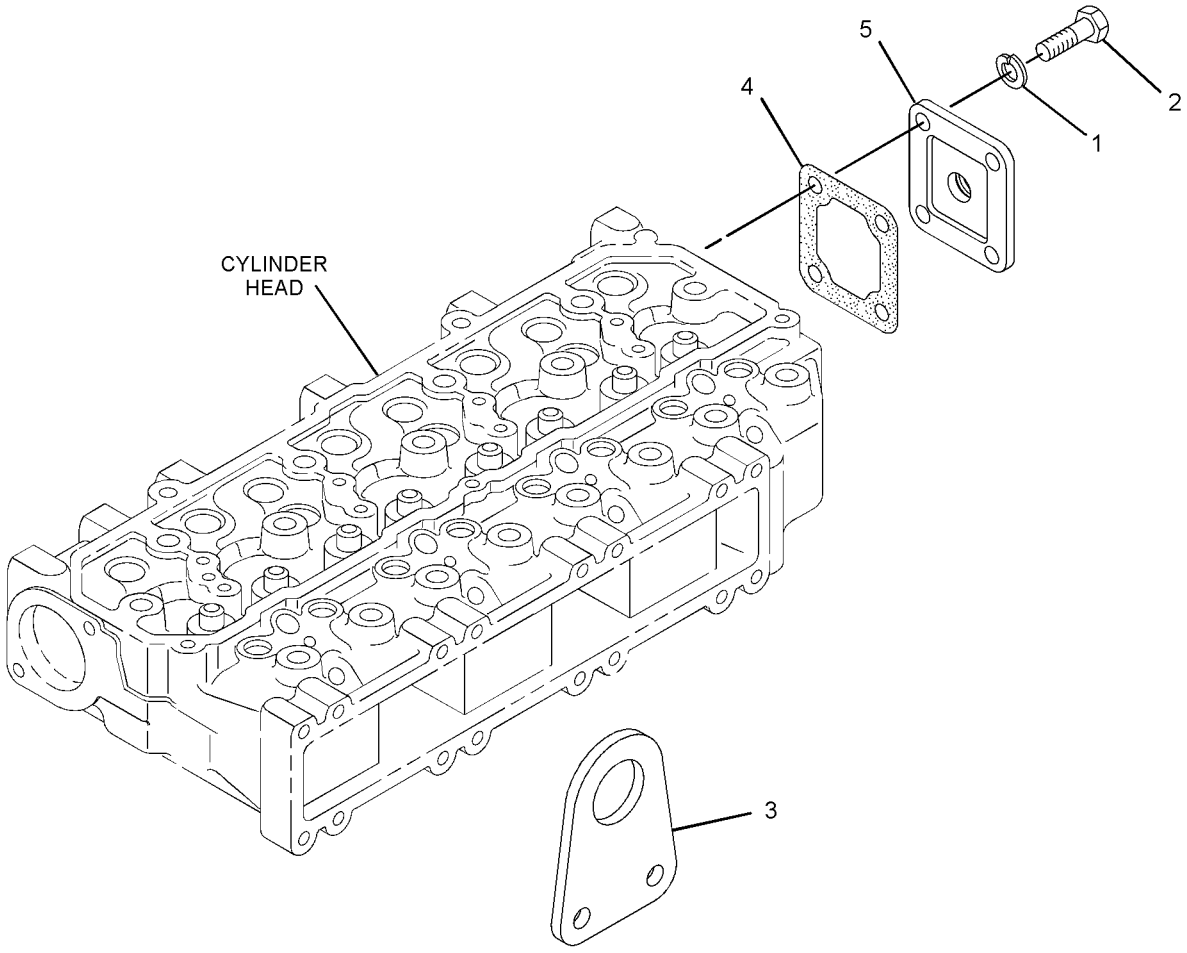

GRAPHIC #1 **<END>** g01430113

BASIC ENGINE

258-2447 MOUNTING GP-ENGINE

S/N: JAY1-UP

PART OF 258-2445, 295-7118 INSTALLATION AR-ENGINE

SMCS-1152, 1153, 1154 **i03635708**

NOTE	REF NO	GRAPHIC REF	PART NUMBER	QTY	PART NAME 1 2 3 4 5 6 (PRODUCT LEVEL)	SEE PAGE
	1	1	**280-8308**	4	WASHER	
	2	1	**118-2990**	2	MOUNT AS	
	3	1	**230-3621**	1	MOUNT AS	
		1	**149-3488**	2	MOUNT-ENGINE	
		1	**241-6397**	1	SLEEVE	
	4	1	**258-2448**	1	BRACKET AS	
	5	1	**258-2449**	2	BRACKET AS	
	6	1	**258-3447**	2	BOLT AS	
M	7	1	**129-3180**	1	LOCKNUT (M12X1.75-THD)	
	8	1	**165-7095**	4	WASHER (16.5X71.5X3-MM THK)	
	9	1	**5P-1076**	2	WASHER-HARD (13.5X30X4-MM THK)	
	10	1	**8T-4122**	2	WASHER-HARD (17X32X3.5-MM THK)	
M	11	1	**8T-4132**	2	NUT (M16X2-THD)	
M	12	1	**8T-4176**	1	BOLT (M12X1.75X90-MM)	
M	13	1	**8T-4192**	16	BOLT (M12X1.75X25-MM)	
	14	1	**8T-4223**	16	WASHER-HARD (13.5X25.5X3-MM THK)	
	15	1	**280-8299**	2	ROD	

M-METRIC PART

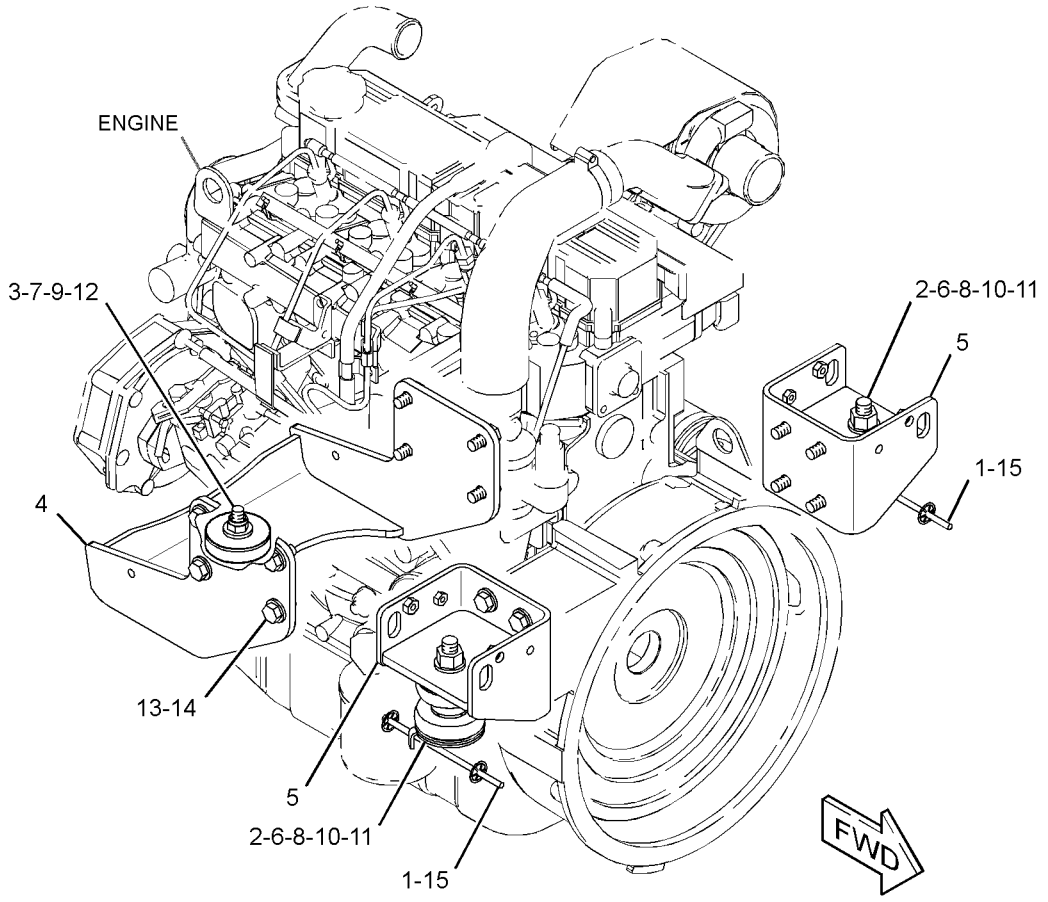

GRAPHIC #1 **<END>** g01341126

287-3921 PAN GP-OIL

S/N: CJS1-60343
PART OF 262-7288 ENGINE AR-PRIMARY
AN ATTACHMENT

SMCS-1302 **i03463441**

NOTE	REF NO	GRAPHIC REF	PART NUMBER	QTY	PART NAME 1 2 3 4 5 6 (PRODUCT LEVEL)	SEE PAGE
	1	1	**5I-4993**	2	SEAL	
M	2	1	**195-8403**	1	BOLT AS	
	3	1	**3B-4505**	25	LOCKWASHER	
	4	1	**234-4812**	1	GUIDE	
	5	1	**234-4813**	1	STAY	
	6	1	**323-6266**	1	GAUGE-OIL (DIPSTICK, ENGINE)	
	7	1	**235-4957**	1	GUIDE	
	8	1	**287-3922**	1	PAN AS-OIL	
	8A	1	**5I-7833**	1	PLUG-DRAIN (ENGINE OIL PAN)	
	8B	1	**234-4811**	1	WASHER	
M	9	1	**8T-4200**	25	BOLT (M8X1.25X16-MM)	
BF			**165-2601**		SEALANT-SILICONE	

B-USE AS REQUIRED
F-NOT SHOWN
M-METRIC PART

287-3921 **PAN GP-OIL** *(contd.)* **i03463441**

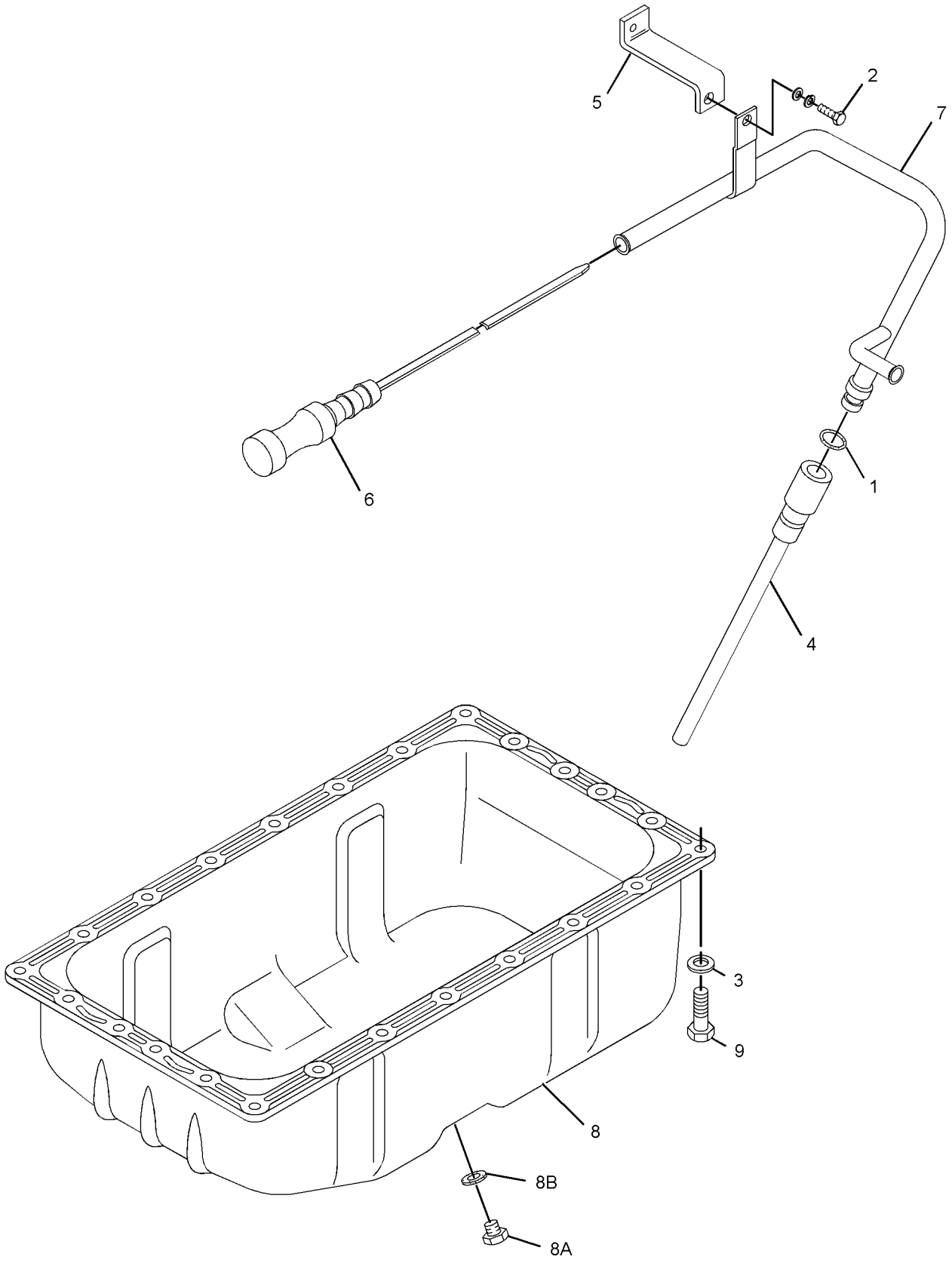

GRAPHIC #1 **<END>** g01377905

315-7765 PAN GP-OIL

S/N: CYM1-UP
PART OF 287-8073 ENGINE AR-PRIMARY
AN ATTACHMENT
TYPE 1

SMCS-1302 **i02939180**

NOTE	REF NO	GRAPHIC REF	PART NUMBER	QTY	PART NAME 1 2 3 4 5 6 (PRODUCT LEVEL)	SEE PAGE
	1	1	**3B-4505**	25	LOCKWASHER	
	2	1	**5I-4993**	2	SEAL	
M	3	1	**8T-4200**	25	BOLT (M8X1.25X16-MM)	
	4	1	**165-2601**	1	SEALANT-SILICONE	
M	5	1	**195-8403**	1	BOLT AS	
	6	1	**234-4812**	1	GUIDE	
	7	1	**300-9449**	1	PAN AS-OIL	
	7A	1	**096-8482**	1	GASKET	
	7B	1	**135-8432**	1	PLUG (DRAIN, ENGINE OIL)	
	8	1	**309-8909**	1	GAUGE GP-OIL LEVEL (DIPSTICK) (ENGINE)	
	9	1	**315-2354**	1	STAY	
	10	1	**315-2356**	1	GUIDE	

M-METRIC PART

315-7765 **PAN GP-OIL** *(contd.)* **i02939180**

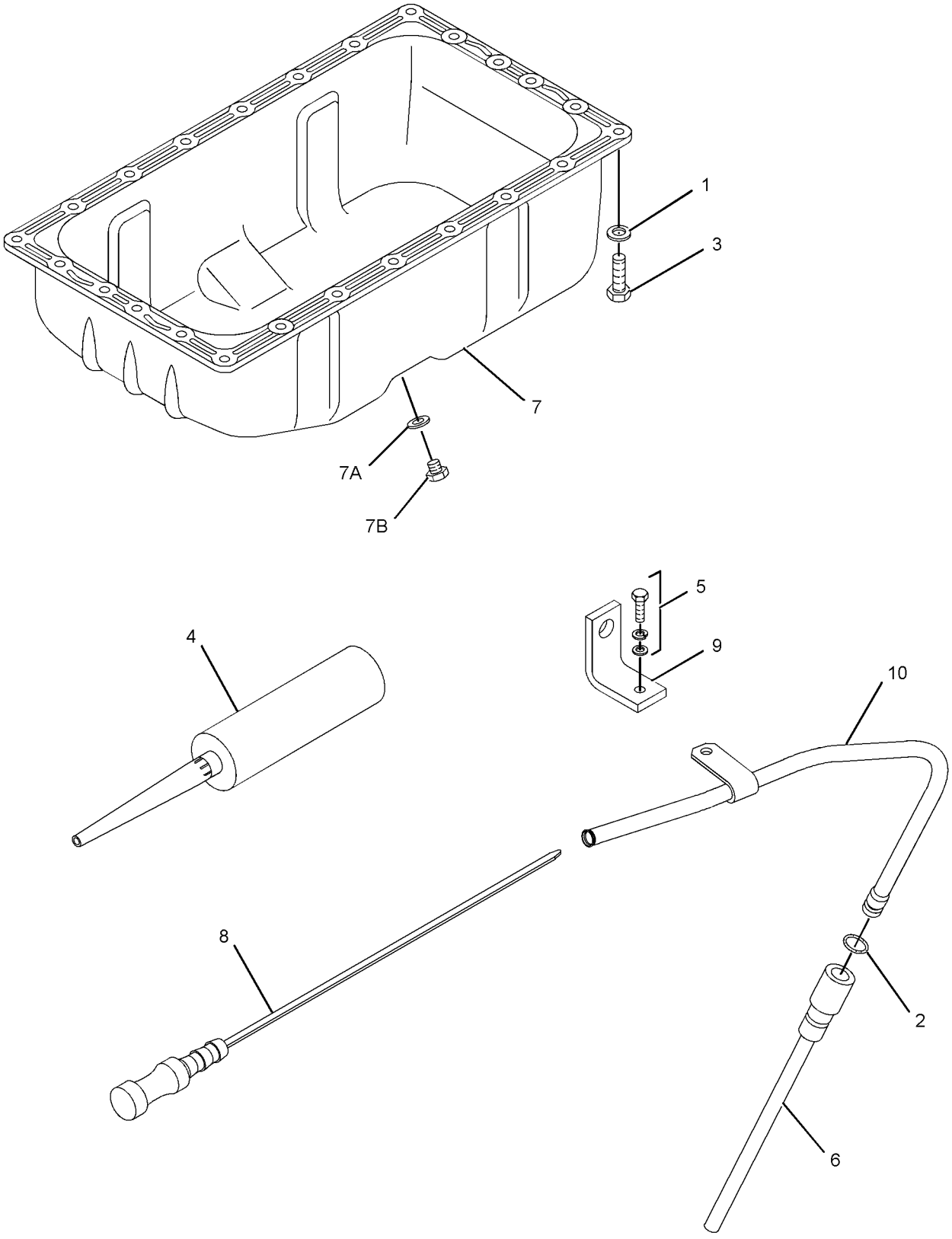

GRAPHIC #1 **<END>** g01446213

315-7765 PAN GP-OIL

S/N: CYM1-UP
PART OF 287-8073 ENGINE AR-PRIMARY
AN ATTACHMENT
TYPE 2

SMCS-1302 **i03198483**

NOTE	REF NO	GRAPHIC REF	PART NUMBER	QTY	PART NAME 1 2 3 4 5 6 (PRODUCT LEVEL)	SEE PAGE
	1	1	**3B-4505**	25	LOCKWASHER	
	2	1	**5I-4993**	2	SEAL	
M	3	1	**8T-4200**	25	BOLT (M8X1.25X16-MM)	
	4	1	**165-2601**	1	SEALANT-SILICONE	
M	5	1	**195-8403**	1	BOLT AS	
	6	1	**234-4812**	1	GUIDE	
	7	1	**300-9449**	1	PAN AS-OIL	
	7A	1	**096-8482**	1	GASKET	
	7B	1	**135-8432**	1	PLUG (DRAIN, ENGINE OIL)	
	8	1	**309-8909**	1	GAUGE GP-OIL LEVEL (DIPSTICK) (ENGINE)	
C	9	1	**325-5905**	1	BRACKET	
	10	1	**315-2356**	1	GUIDE	

C-CHANGE FROM PREVIOUS TYPE
M-METRIC PART

315-7765 **PAN GP-OIL** *(contd.)* **i03198483**

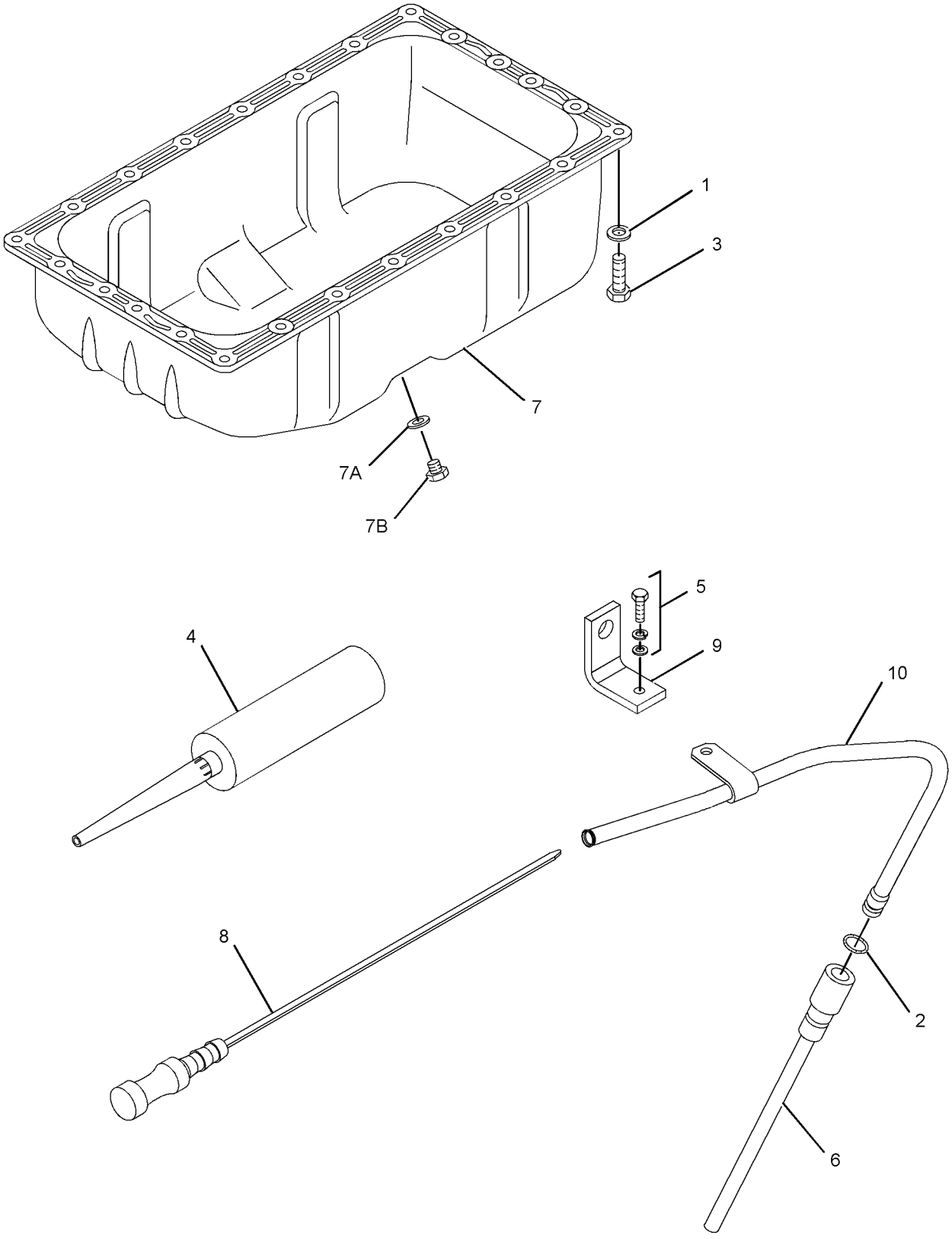

GRAPHIC #1 **<END>** g01852093

317-5082 PAN GP-OIL

S/N: CJS60344-70000
PART OF 262-7288 ENGINE AR-PRIMARY
AN ATTACHMENT

SMCS-1302 **i03296280**

NOTE	PART NUMBER	QTY	PART NAME 1 2 3 4 5 6 (PRODUCT LEVEL)	SEE PAGE
M	**8T-4200**	25	BOLT (M8X1.25X16-MM)	
M	**195-8403**	1	BOLT AS	
	309-8909	1	GAUGE GP-OIL LEVEL (DIPSTICK) (ENGINE)	
	3B-4505	25	LOCKWASHER	
	300-9449	1	PAN AS-OIL	
	096-8482	1	GASKET	
	135-8432	1	PLUG (DRAIN, ENGINE OIL)	
	5I-4993	2	SEAL	
B	**165-2601**	1	SEALANT-SILICONE	
	234-4813	1	STAY	
	309-8907	1	TUBE	
	309-8908	1	TUBE AS-OIL LEVEL	

B-USE AS REQUIRED
M-METRIC PART

<END>

235-5889 PISTON GP

S/N: CJS1-70000
PART OF 262-7288 ENGINE AR-PRIMARY
AN ATTACHMENT

SMCS-1214, 1215 **i02887927**

NOTE	REF NO	GRAPHIC REF	PART NUMBER	QTY	PART NAME 1 2 3 4 5 6 (PRODUCT LEVEL)	SEE PAGE
	1	1	**257-8738**	8	RING-SNAP	
	2	1	**234-4815**	4	PIN-PISTON	
R	3	1	**234-4814**	4	PISTON (STANDARD)	
ABR		1	**234-4816**		PISTON (0.50-MM OS)	
ABR		1	**234-4817**		PISTON (0.25-MM OS)	
	4	1	**226-8204**	4	SET-PISTON RING (STANDARD)	
AB		1	**238-8280**		RING GP-PISTON (0.25MM OS)	
AB		1	**238-8281**		RING GP-PISTON (0.50MM OS)	

A-NOT PART OF THIS GROUP
B-USE AS REQUIRED
R-REMFG PART MAY BE AVAILABLE

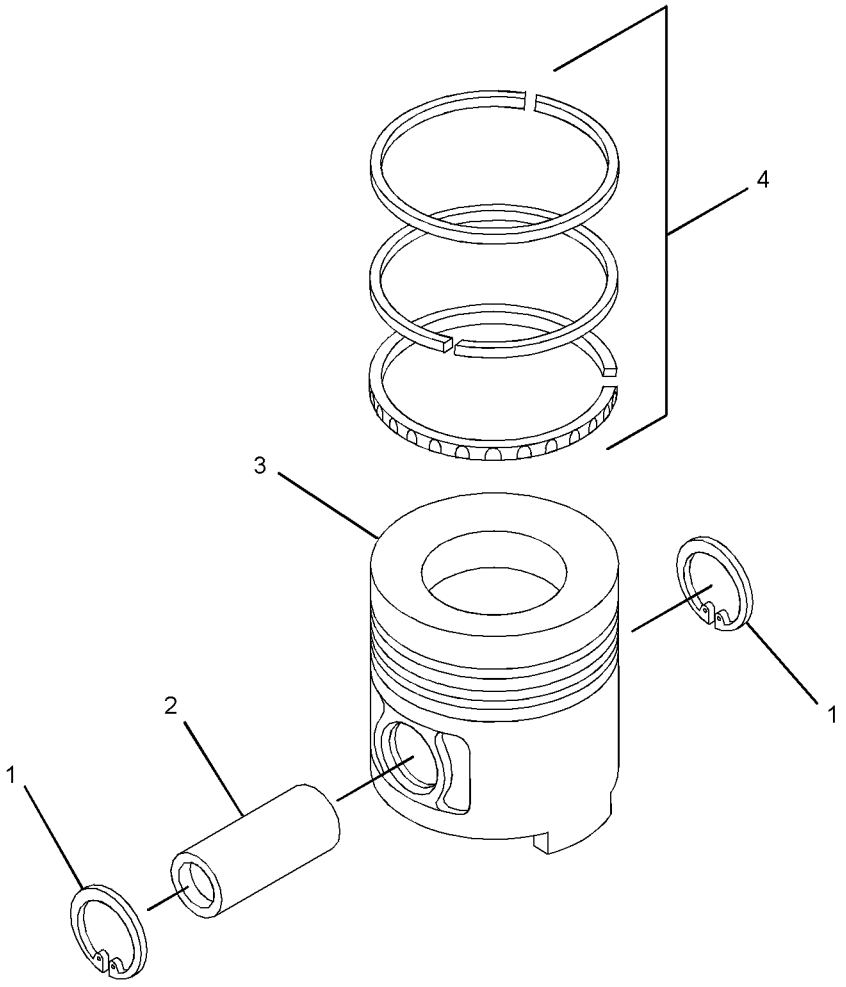

GRAPHIC #1 **<END>** g01348295

315-8348 PISTON GP

S/N: CYM1-UP
PART OF 287-8073 ENGINE AR-PRIMARY
AN ATTACHMENT

SMCS-1214, 1215 **i02883796**

NOTE	REF NO	GRAPHIC REF	PART NUMBER	QTY	PART NAME 1 2 3 4 5 6 (PRODUCT LEVEL)	SEE PAGE
	1	1	**212-8597**	8	RING	
	2	1	**234-4815**	4	PIN-PISTON	
	3	1	**314-9962**	4	RING-PISTON (STANDARD)	
AB		1	**314-9964**	1	RING-PISTON (0.25-MM OS)	
AB		1	**314-9963**	1	RING-PISTON (0.5-MM OS)	
	4	1	**315-4669**	4	PISTON (STANDARD)	
AB		1	**315-4670**	1	PISTON (0.25-MM OS)	
AB		1	**315-4671**	1	PISTON (0.50-MM OS)	

A-NOT PART OF THIS GROUP
B-USE AS REQUIRED

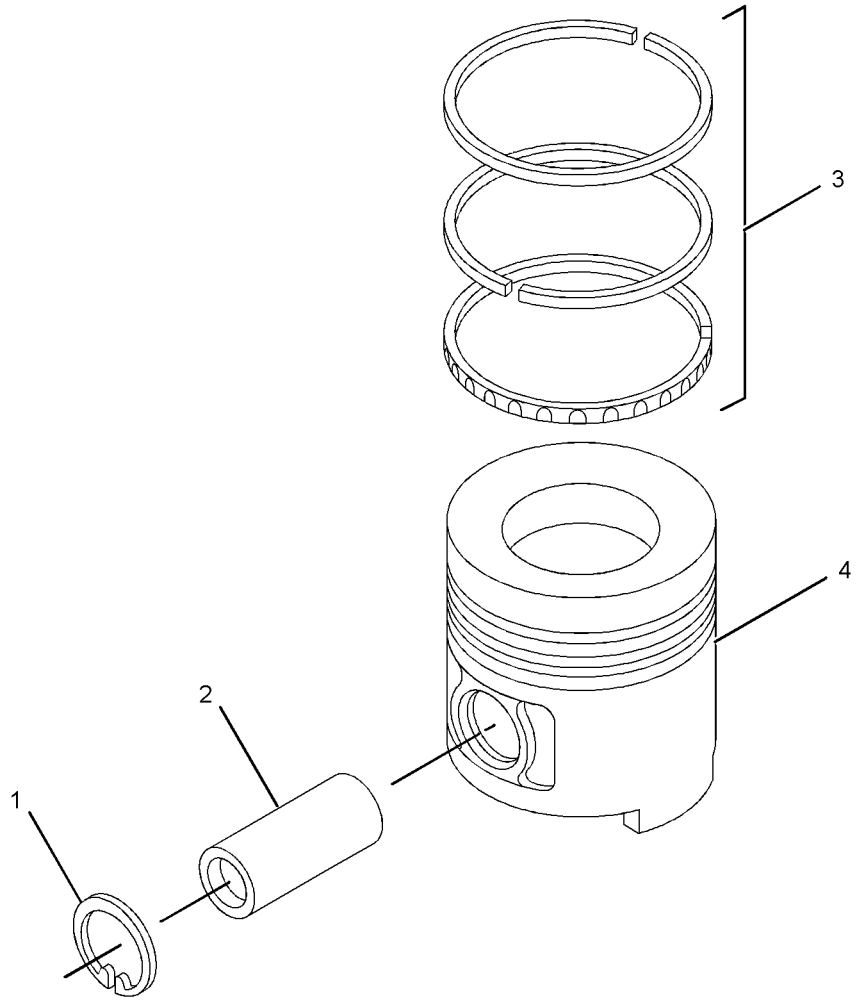

GRAPHIC #1 **<END>** g01445478

287-2922 PLUG GP-ENGINE

S/N: CYM1-UP; CJS1-70000
PART OF 262-7288, 287-8073 ENGINE AR-PRIMARY
AN ATTACHMENT

SMCS-1000 **i02568378**

NOTE	REF NO	GRAPHIC REF	PART NUMBER	QTY	PART NAME 1 2 3 4 5 6 (PRODUCT LEVEL)	SEE PAGE
	1	1	**5I-7505**	6	PLUG	

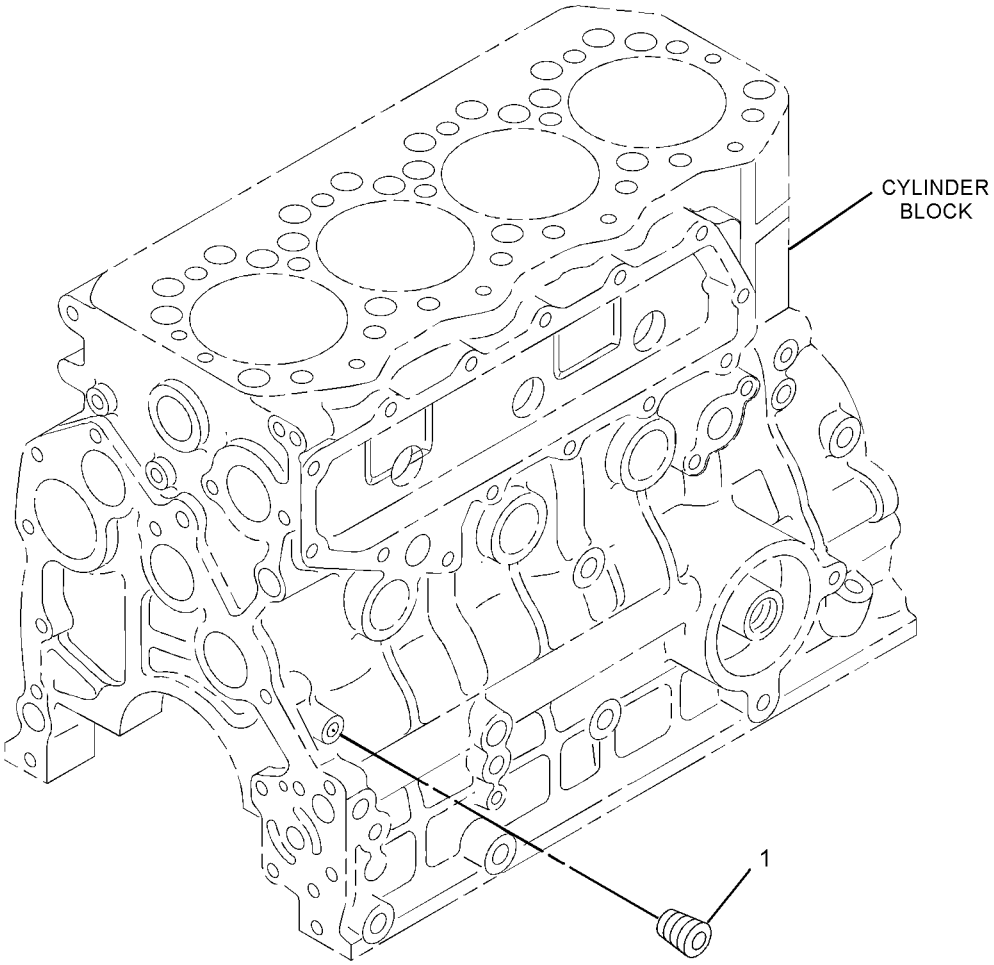

GRAPHIC #1 **<END>** g01325237

287-2983 PLUG GP-ENGINE

S/N: CYM1-UP; CJS1-70000
PART OF 262-7288, 287-8073 ENGINE AR-PRIMARY
AN ATTACHMENT

SMCS-1000 **i02616574**

NOTE	REF NO	GRAPHIC REF	PART NUMBER	QTY	PART NAME 1 2 3 4 5 6 (PRODUCT LEVEL)	SEE PAGE
	1	1	**195-8211**	1	PLUG	

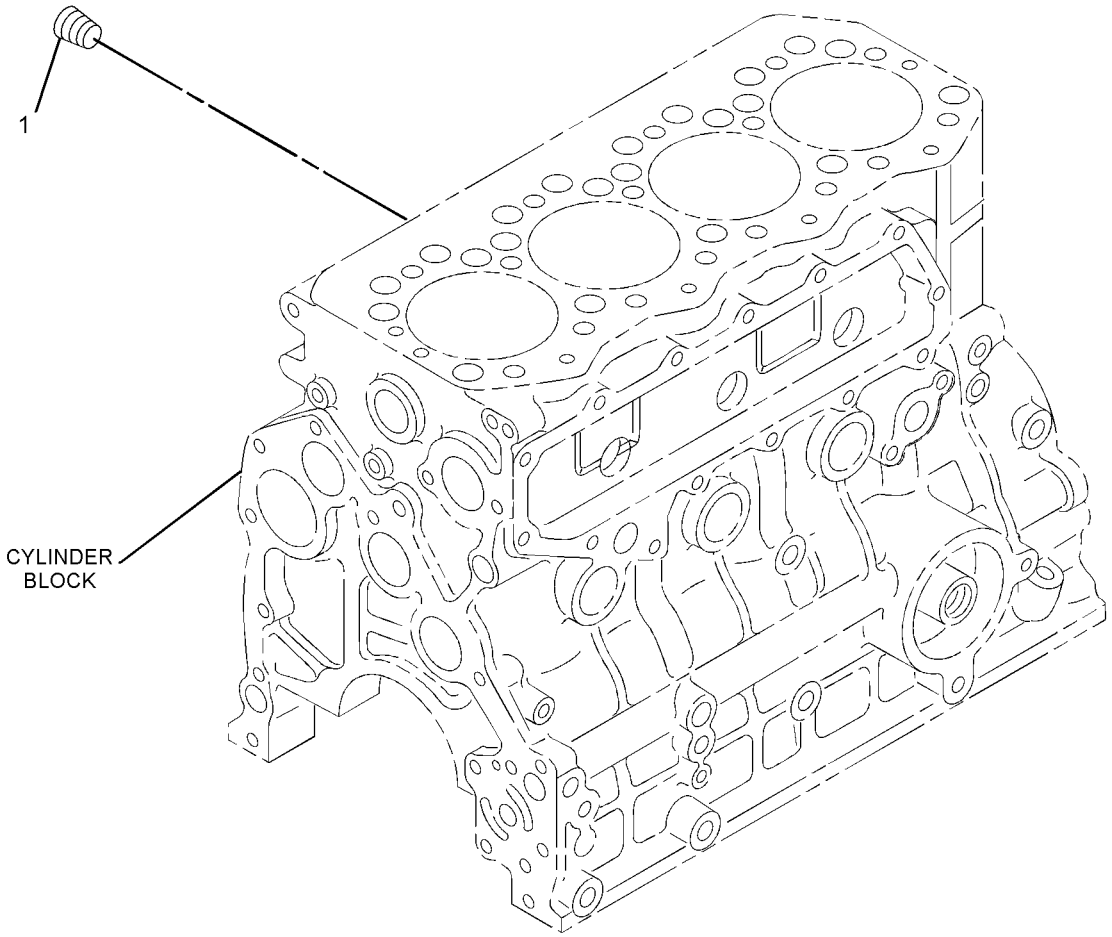

GRAPHIC #1 **<END>** g01325240

287-4749 PULLEY GP-CRANKSHAFT

S/N: CJS1-60343
PART OF 262-7288 ENGINE AR-PRIMARY
AN ATTACHMENT

SMCS-1205 **i02568579**

NOTE	REF NO	GRAPHIC REF	PART NUMBER	QTY	PART NAME 1 2 3 4 5 6 (PRODUCT LEVEL)	SEE PAGE
	1	1	**287-4748**	1	PULLEY-CRANKSHAFT	

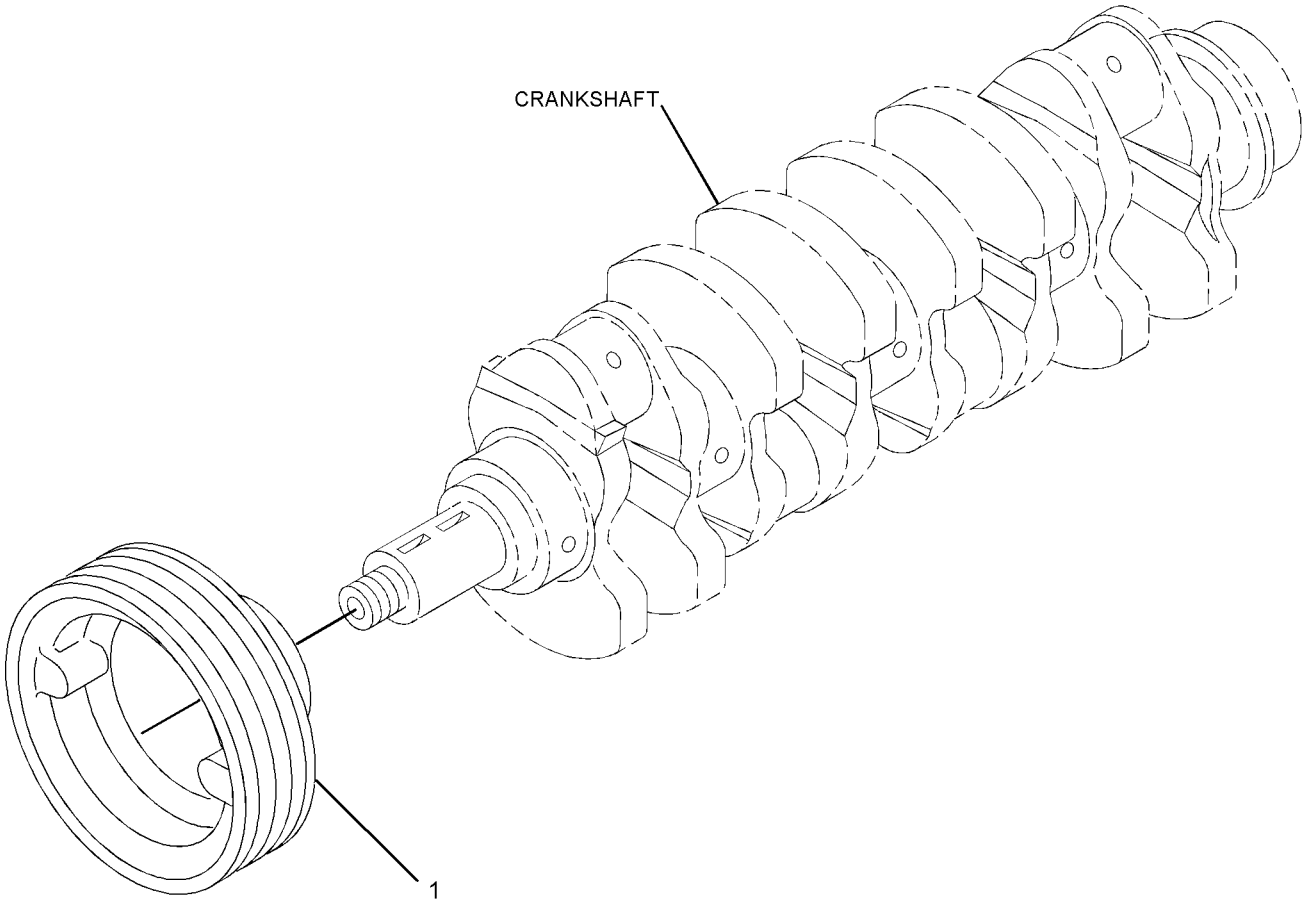

GRAPHIC #1 **<END>** g01321554

BASIC ENGINE

301-3396 PULLEY GP-CRANKSHAFT

S/N: CYM1-UP; CJS60344-70000
PART OF 262-7288, 287-8073 ENGINE AR-PRIMARY
AN ATTACHMENT

SMCS-1205 **i02864961**

NOTE	REF NO	GRAPHIC REF	PART NUMBER	QTY	PART NAME 1 2 3 4 5 6 (PRODUCT LEVEL)	SEE PAGE
	1	1	**301-3397**	1	PULLEY-CRANKSHAFT (2-GROOVE)	

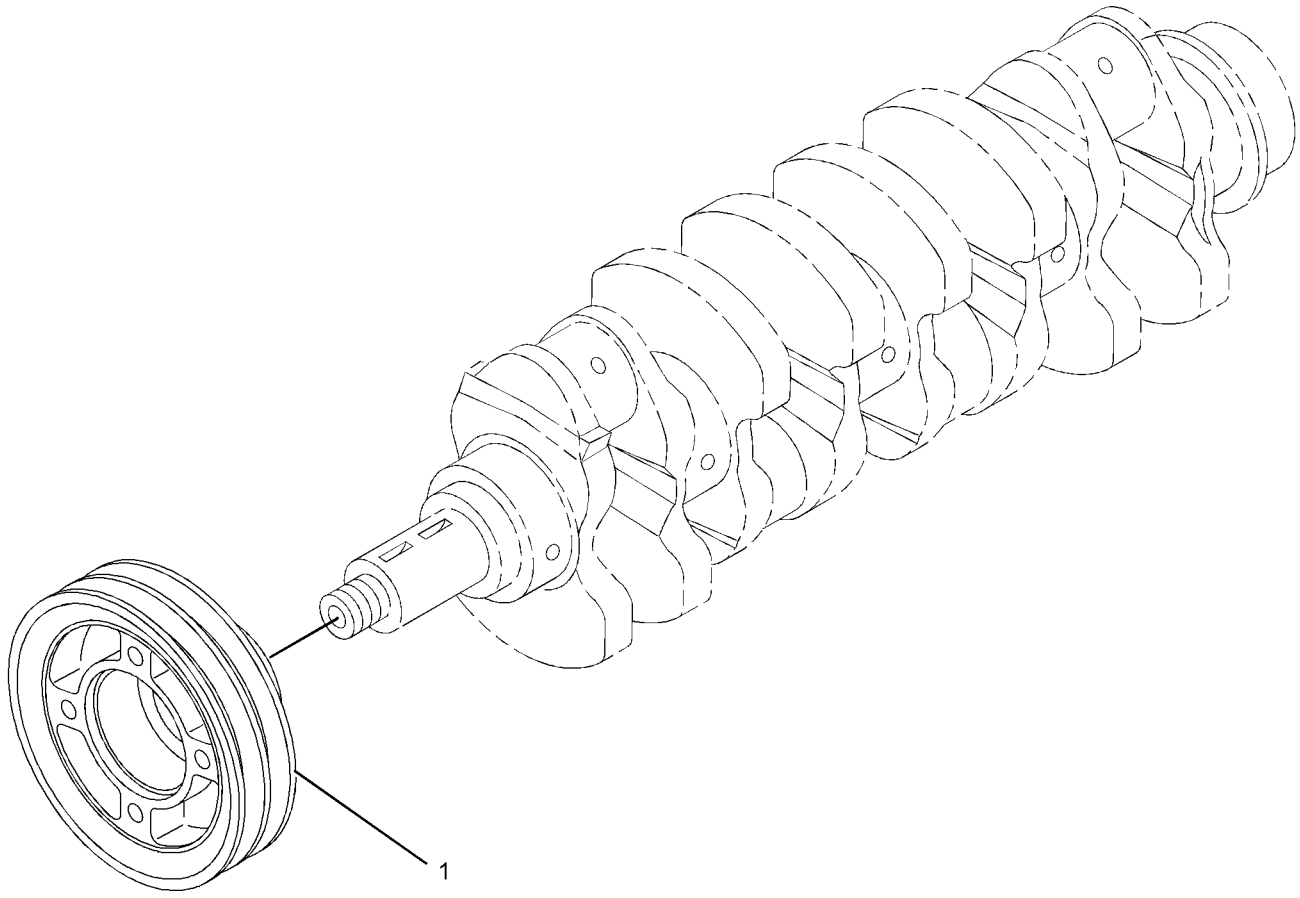

GRAPHIC #1 **<END>** g01351097

287-6114 PULLEY GP-WATER PUMP

S/N: CYM1-UP; CJS1-70000
PART OF 262-7288, 287-8073 ENGINE AR-PRIMARY
AN ATTACHMENT

SMCS-1384 **i03552847**

NOTE	REF NO	GRAPHIC REF	PART NUMBER	QTY	PART NAME 1 2 3 4 5 6 (PRODUCT LEVEL)	SEE PAGE
M	1	1	**8T-0642**	4	BOLT (M8X1.25X14-MM)	
	2	1	**9M-1974**	4	WASHER-HARD (8.8X16X2-MM THK)	
	3	1	**234-4807**	1	PULLEY (1-GROOVE)	

M-METRIC PART

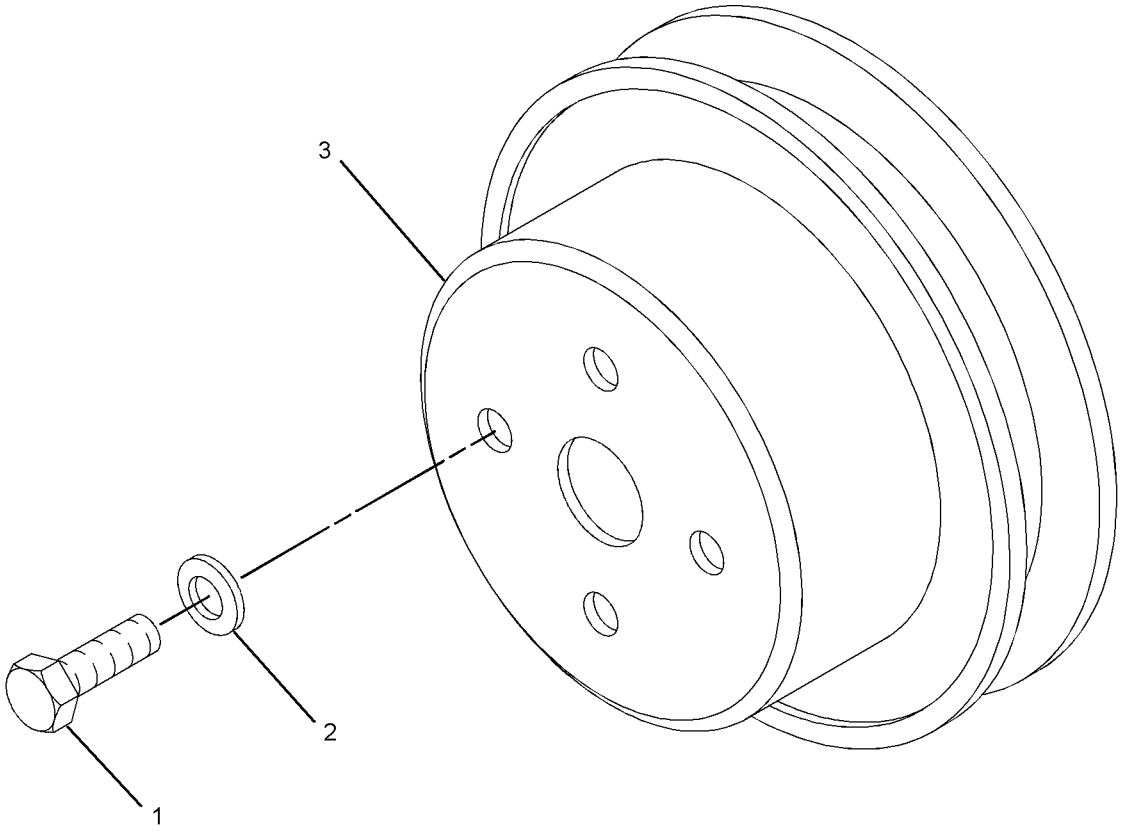

GRAPHIC #1 **<END>** g01326766

BASIC ENGINE

287-6138 V-BELT GP

S/N: CYM1-UP; CJS1-70000
WATER PUMP
PART OF 262-7288, 287-8073 ENGINE AR-PRIMARY
AN ATTACHMENT

SMCS-1357 **i02760620**

NOTE	REF NO	GRAPHIC REF	PART NUMBER	QTY	PART NAME 1 2 3 4 5 6 (PRODUCT LEVEL)	SEE PAGE
	1	1	**235-4972**	1	V-BELT (WATER PUMP)	

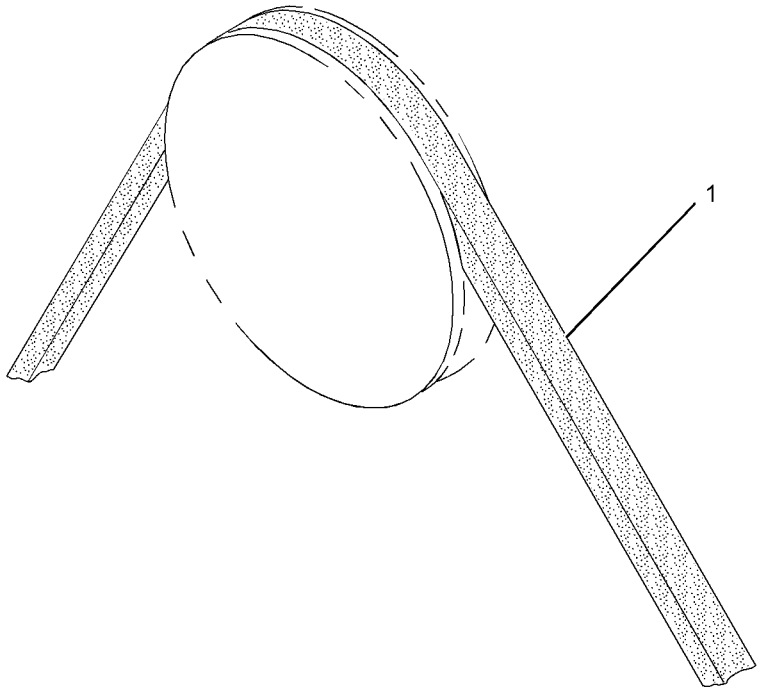

GRAPHIC #1 **<END>** g01321905

BASIC ENGINE

235-5880 VALVE MECHANISM GP

S/N: CYM1-UP; CJS1-70000
PART OF 262-7288, 287-8073 ENGINE AR-PRIMARY
AN ATTACHMENT

SMCS-1102, 1112, 1121, 1123, 1208, 1209 **i02628721**

NOTE	REF NO	GRAPHIC REF	PART NUMBER	QTY	PART NAME 1 2 3 4 5 6 (PRODUCT LEVEL)	SEE PAGE
	1	1	**5I-7625**	8	RETAINER	
	2	1	**5I-7630**	8	CAP	
	3	1	**5I-7719**	16	RETAINER	
M	4	1	**6V-3940**	4	BOLT (M8X1.25X25-MM)	
	5	1	**9M-1974**	4	WASHER-HARD (8.8X16X2-MM THK)	
	6	1	**233-5469**	4	VALVE-INLET	
	7	1	**233-5470**	4	VALVE-EXHAUST	
	8	1	**233-5471**	8	SPRING-VALVE	
	10	1	**233-5501**	1	ROCKER ARM GP	
		1	**233-5476**	1	SHAFT AS	
	10A	1	**095-2005**	1	CAP	
	10B	1	**195-8324**	2	RING-SNAP	
	10C	1	**221-5245**	8	ROCKER AS	
	10D	1	**221-5250**	3	SPRING	
	10E	1	**233-5477**	4	BRACKET	
	10F	1	**233-5478**	4	BOLT	

M-METRIC PART

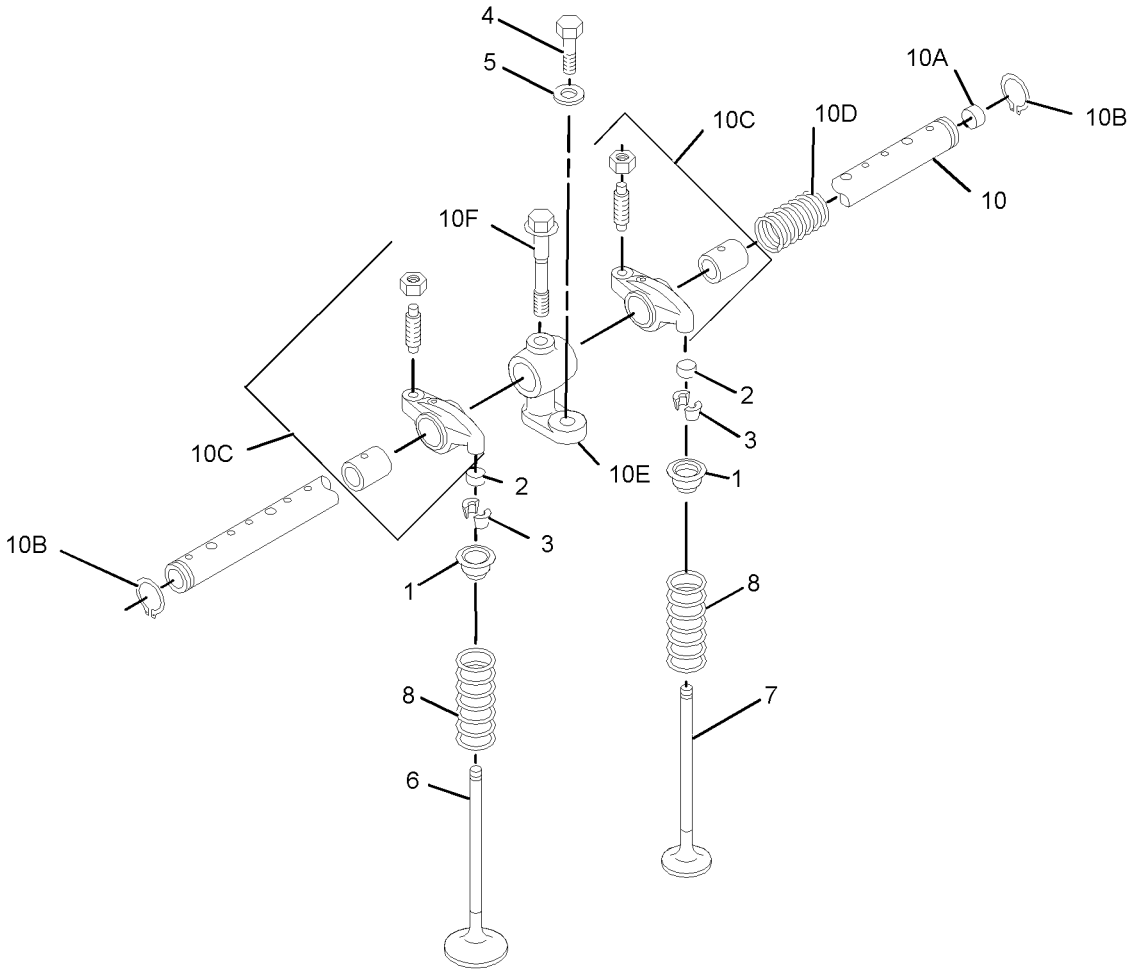

GRAPHIC #1 **<END>** g01348046

287-6016 BREATHER GP

S/N: CJS1-70000
CRANKCASE
PART OF 262-7288 ENGINE AR-PRIMARY
AN ATTACHMENT

SMCS-1317 **i03637507**

NOTE	REF NO	GRAPHIC REF	PART NUMBER	QTY	PART NAME 1 2 3 4 5 6 (PRODUCT LEVEL)	SEE PAGE
	1	1	**5I-8063**	1	CLIP	
	2	1	**115-0468**	2	CLIP	
	3	1	**151-5328**	1	CLAMP	
M	4	1	**195-8222**	2	BOLT AS	
	5	1	**195-8356**	2	BOLT AS	
M	6	1	**195-8449**	2	BOLT AS	
M	6A	1	**8T-3647**	1	BOLT (M8X1.25X80-MM)	
	6B	1	**3B-4505**	1	LOCKWASHER	
	6C	1	**8T-4224**	1	WASHER-HARD (8.8X16X2-MM THK)	
M	7	1	**199-2205**	1	BOLT AS (M8X1.25X16-MM)	
M	7A	1	**8T-4200**	1	BOLT (M8X1.25X16-MM)	
	7B	1	**3B-4505**	1	LOCKWASHER	
	8	1	**234-4837**	1	CLIP-HOSE	
	9	1	**234-4838**	1	CLIP	
	10	1	**234-4839**	1	PIPE	
	11	1	**235-4931**	1	HOSE	
	12	1	**235-4937**	1	HOSE	
	13	1	**235-4942**	1	PLATE	
	14	1	**235-4951**	1	ADAPTER	
	15	1	**257-8389**	2	CLIP	
	16	1	**257-8739**	1	CLAMP-HOSE	
	17	1	**287-6015**	1	HOSE	
	18	1	**287-6017**	1	CLAMP-HOSE	
	19	1	**287-6020**	1	BREATHER (CRANKCASE)	
	20	1	**287-6021**	1	HOSE	
	21	1	**287-6022**	1	TUBE-BREATHER	

M-METRIC PART

287-6016 **BREATHER GP** *(contd.)* **i03637507**

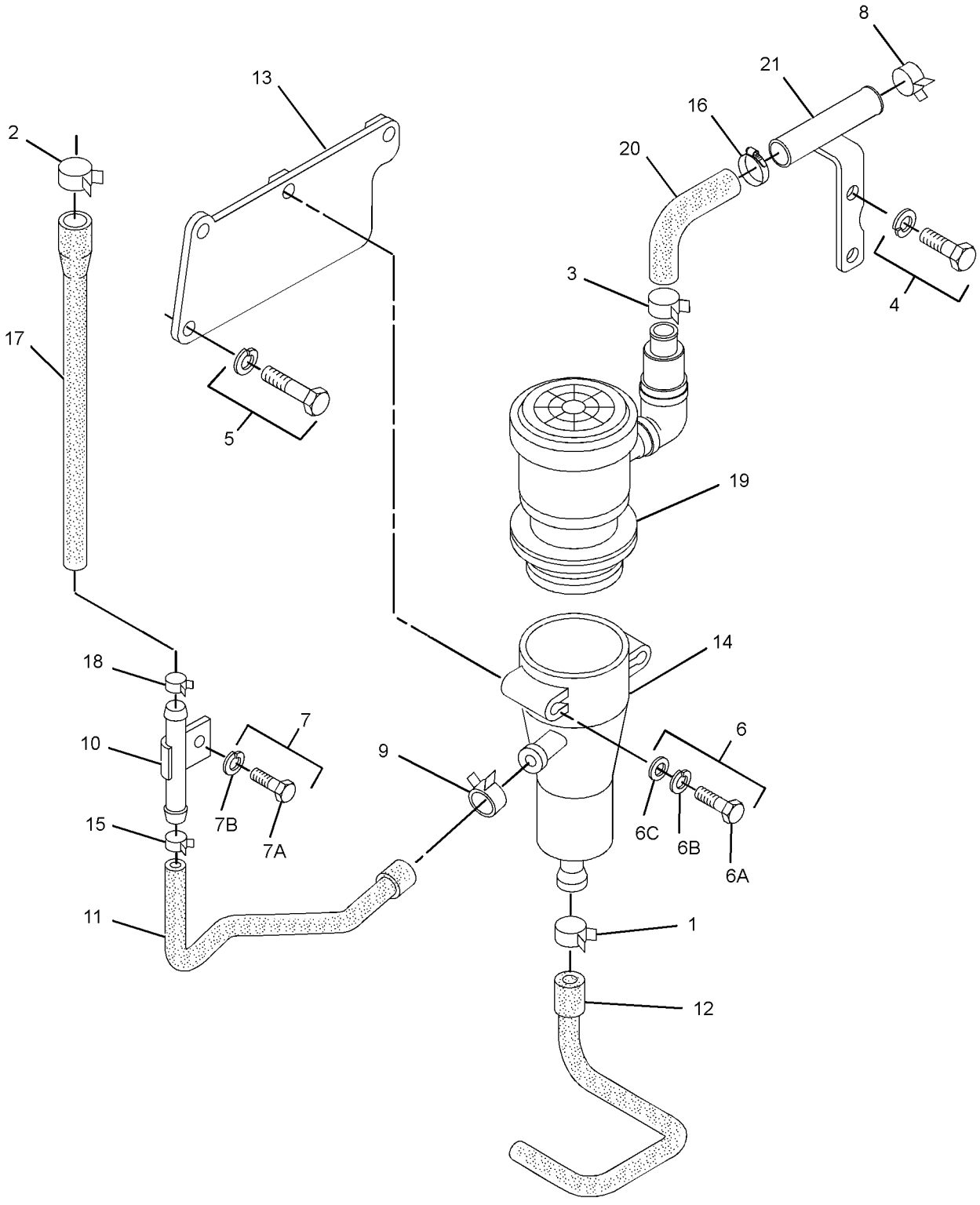

GRAPHIC #1 **<END>** g01355209

287-6016 BREATHER GP

S/N: CJS1-60343
CRANKCASE
PART OF 262-7288 ENGINE AR-PRIMARY
AN ATTACHMENT

SMCS-1317 **i03546181**

NOTE	REF NO	GRAPHIC REF	PART NUMBER	QTY	PART NAME 1 2 3 4 5 6 (PRODUCT LEVEL)	SEE PAGE
	1	1	**151-5328**	2	CLAMP	
	8	1	**234-4837**	1	CLIP-HOSE	
	9	1	**234-4838**	3	CLIP	
	10	1	**234-4839**	1	PIPE	
	11	1	**235-4931**	1	HOSE	
	12	1	**235-4937**	1	HOSE	
	13	1	**235-4942**	1	PLATE	
	14	1	**235-4951**	1	ADAPTER	
	15	1	**257-8389**	1	CLIP	
	17	1	**287-6015**	1	HOSE	
	20	1	**287-6021**	1	HOSE	
	22	1	**3B-4505**	3	LOCKWASHER	
M	23	1	**6V-2317**	2	BOLT (M8X1.25X30-MM)	
M	24	1	**6V-5221**	2	BOLT (M8X1.25X80-MM)	
M	25	1	**8T-4200**	2	BOLT (M8X1.25X16-MM)	
	26	1	**9M-1974**	2	WASHER-HARD (8.8X16X2-MM THK)	
	27	1	**318-8033**	1	TUBE-BREATHER	
	28	1	**263-3452**	1	ELBOW	
	29	1	**239-4261**	1	HOSE-BREATHER	

M-METRIC PART

287-6016 **BREATHER GP** *(contd.)* **i03546181**

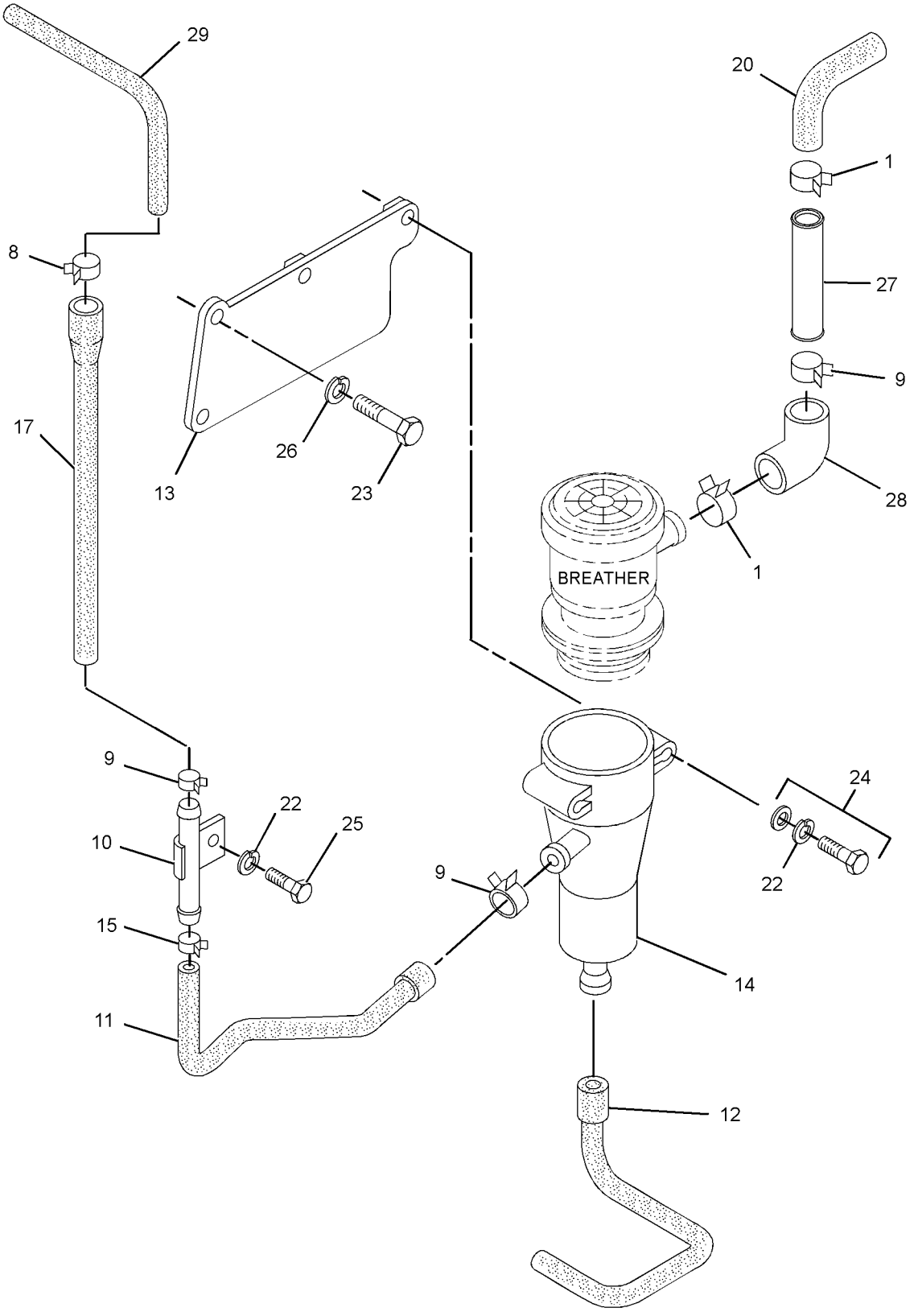

GRAPHIC #1 **<END>** g01942994

235-5897 FILTER GP-ENGINE OIL

S/N: CJS1-60343
PART OF 262-7288 ENGINE AR-PRIMARY
AN ATTACHMENT

SMCS-1308 **i02524392**

NOTE	REF NO	GRAPHIC REF	PART NUMBER	QTY	PART NAME 1 2 3 4 5 6 (PRODUCT LEVEL)	SEE PAGE
	1	1	**1R-0734**	1	FILTER-ENGINE OIL	
M	2	1	**6V-3940**	1	BOLT (M8X1.25X25-MM)	
	3	1	**9M-1974**	1	WASHER-HARD (8.8X16X2-MM THK)	
	4	1	**095-1537**	1	SEAL-O-RING	
	5	1	**095-1671**	1	SEAL-O-RING	
	6	1	**234-4827**	1	BOLT	
	7	1	**235-4955**	1	BRACKET AS	
	7A	1	**234-4826**	1	UNION	

M-METRIC PART

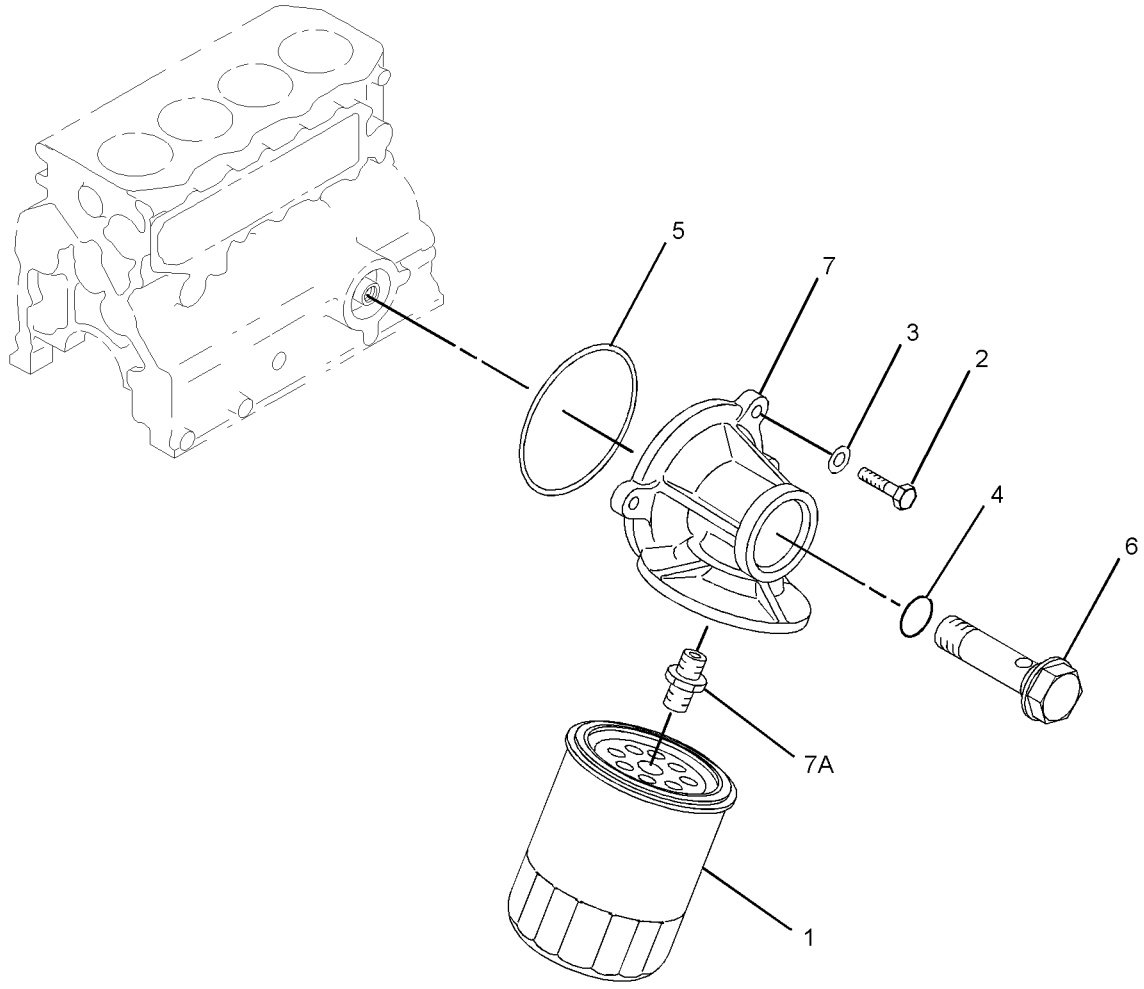

GRAPHIC #1 **<END>** g01347957

314-9901 FILTER GP-ENGINE OIL

S/N: CYM1-UP
PART OF 287-8073 ENGINE AR-PRIMARY
AN ATTACHMENT

SMCS-1308 **i02895566**

NOTE	REF NO	GRAPHIC REF	PART NUMBER	QTY	PART NAME 1 2 3 4 5 6 (PRODUCT LEVEL)	SEE PAGE
M	1	1	**6V-3940**	1	BOLT (M8X1.25X25-MM)	
	2	1	**9M-1974**	1	WASHER-HARD (8.8X16X2-MM THK)	
	3	1	**095-1537**	1	SEAL-O-RING	
	4	1	**095-1671**	1	SEAL-O-RING	
	5	1	**234-4827**	1	BOLT	
	6	1	**235-4955**	1	BRACKET AS	
	6A	1	**234-4826**	1	UNION	
	7	1	**253-0244**	1	BUSHING-THREADED	
	8	1	**1R-0734**	1	FILTER-ENGINE OIL	

M-METRIC PART

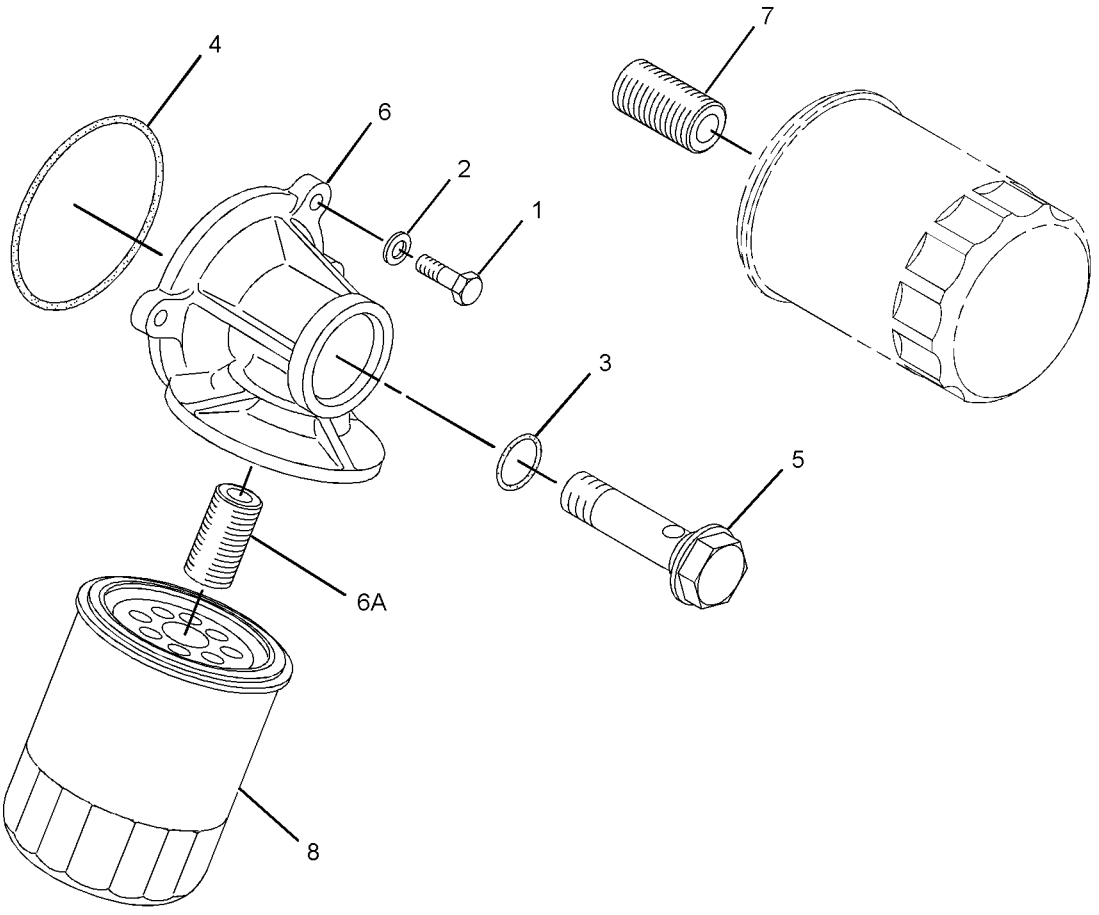

GRAPHIC #1 **<END>** g01392106

317-5076 FILTER GP-ENGINE OIL

S/N: CJS60344-70000
PART OF 262-7288 ENGINE AR-PRIMARY
AN ATTACHMENT

SMCS-1308 **i03464000**

NOTE	REF NO	GRAPHIC REF	PART NUMBER	QTY	PART NAME 1 2 3 4 5 6 (PRODUCT LEVEL)	SEE PAGE
M	1	1	**6V-3940**	1	BOLT (M8X1.25X25-MM)	
	2	1	**9M-1974**	1	WASHER-HARD (8.8X16X2-MM THK)	
	3	1	**095-1537**	1	SEAL-O-RING	
	4	1	**095-1671**	1	SEAL-O-RING	
	5	1	**234-4827**	1	BOLT	
	6	1	**235-4955**	1	BRACKET AS	
	6A	1	**234-4826**	1	UNION	
	7	1	**1R-0734**	1	FILTER-ENGINE OIL (ENGINE)	

M-METRIC PART

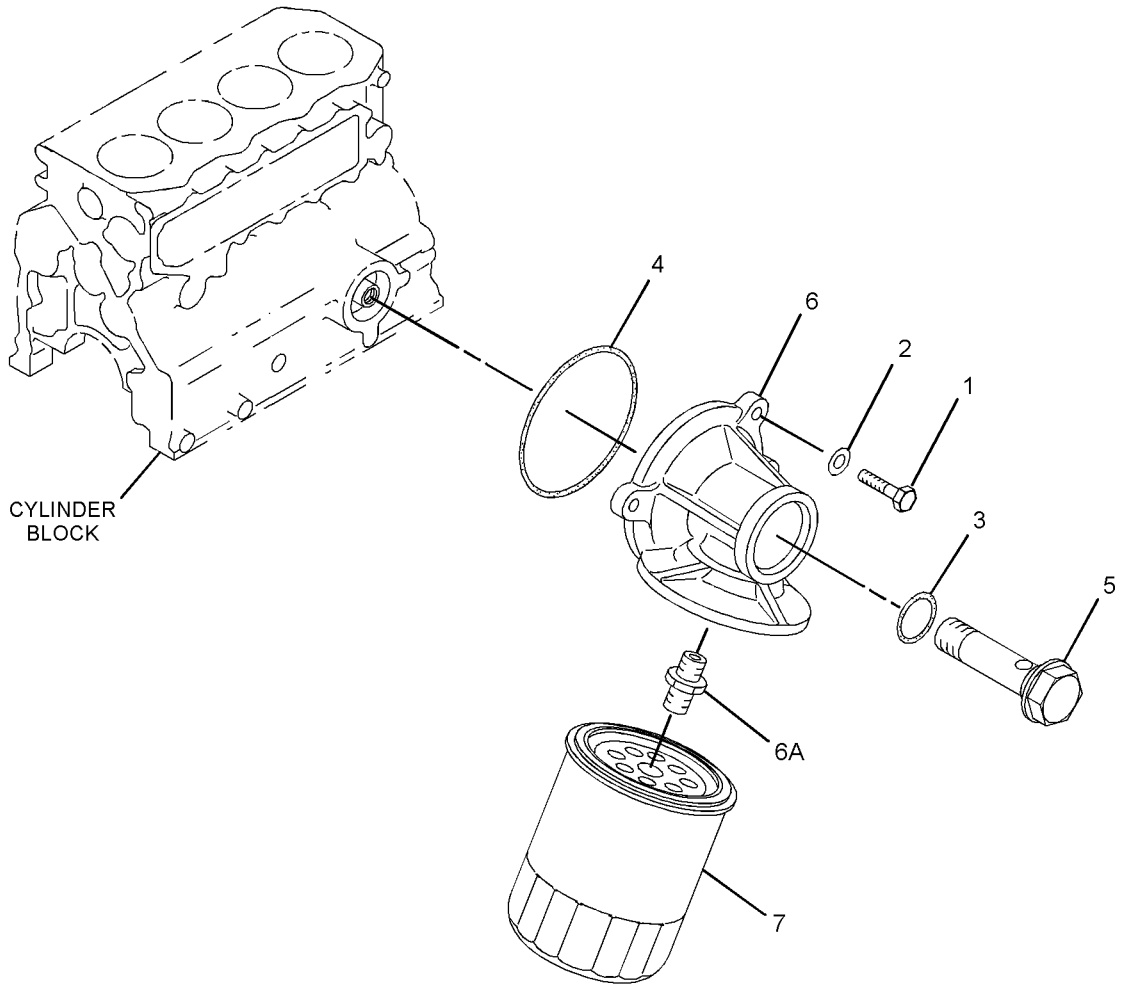

GRAPHIC #1 **<END>** g01429454

LUBRICATION SYSTEM

287-5377 LINES GP-ENGINE OIL

S/N: CYM1-UP; CJS1-70000
PART OF 262-7288, 287-8073 ENGINE AR-PRIMARY
AN ATTACHMENT

SMCS-1307 **i02555558**

NOTE	REF NO	GRAPHIC REF	PART NUMBER	QTY	PART NAME 1 2 3 4 5 6 (PRODUCT LEVEL)	SEE PAGE
M	1	1	**6V-5215**	3	BOLT (M8X1.25X16-MM)	
	2	1	**9M-1974**	3	WASHER-HARD (8.8X16X2-MM THK)	
	3	1	**233-5494**	1	STRAINER AS-OIL (ENGINE)	
	4	1	**239-8513**	1	SEAL-O-RING	

M-METRIC PART

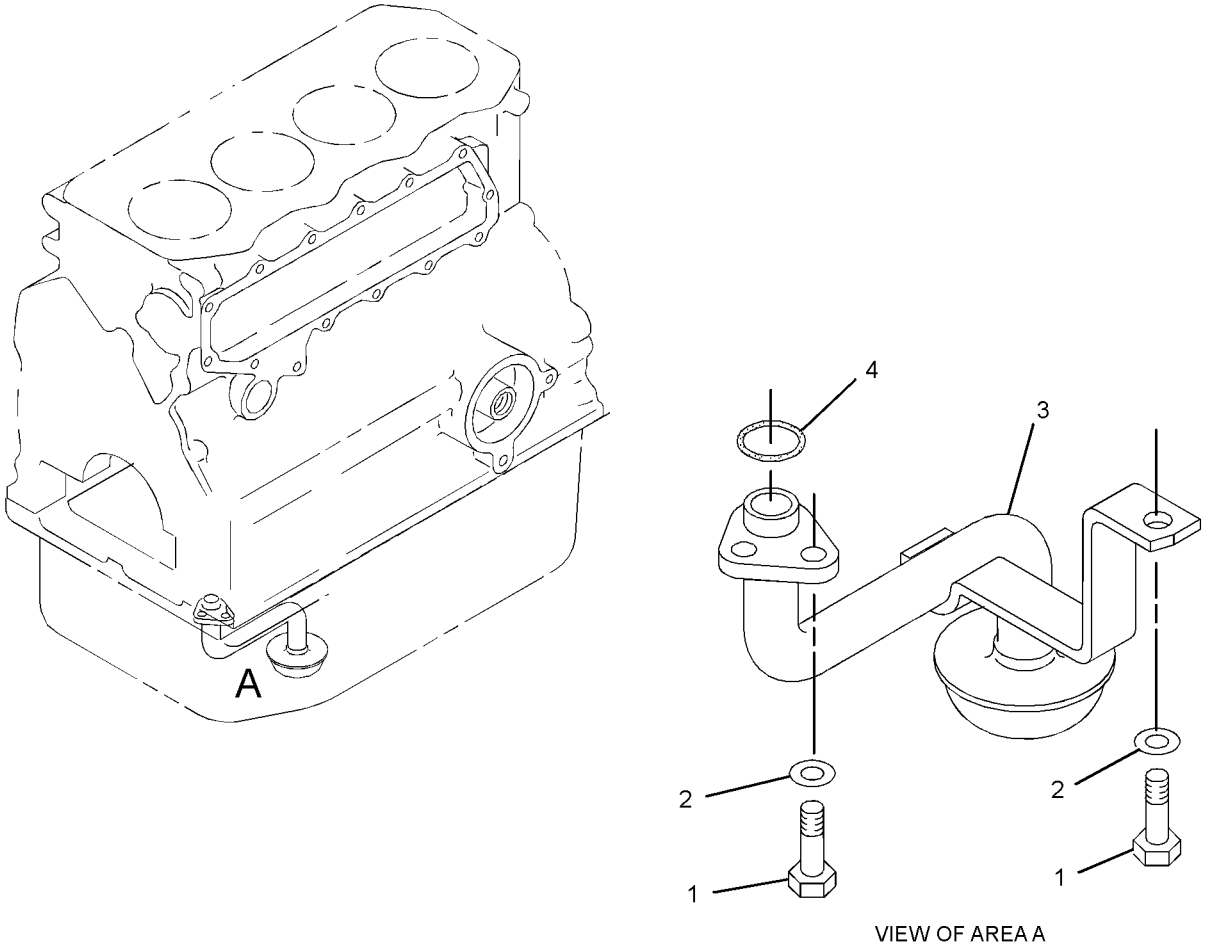

VIEW OF AREA A

GRAPHIC #1 **<END>** g01342337

235-5895 PUMP GP-ENGINE OIL

S/N: CYM1-UP; CJS1-70000
PART OF 262-7288, 287-8073 ENGINE AR-PRIMARY
AN ATTACHMENT

SMCS-1304, 1315 **i02524390**

NOTE	REF NO	GRAPHIC REF	PART NUMBER	QTY	PART NAME 1 2 3 4 5 6 (PRODUCT LEVEL)	SEE PAGE
M	1	1	**6V-5217**	4	BOLT (M8X1.25X20-MM)	
	2	1	**9M-1974**	4	WASHER-HARD (8.8X16X2-MM THK)	
	3	1	**113-1141**	1	PUMP AS-OIL	
	4	1	**101-6544**	1	NUT	
	5	1	**6V-5839**	1	WASHER (11X21X2.5-MM THK)	
	6	1	**103-9083**	1	SEAL-O-RING	

M-METRIC PART

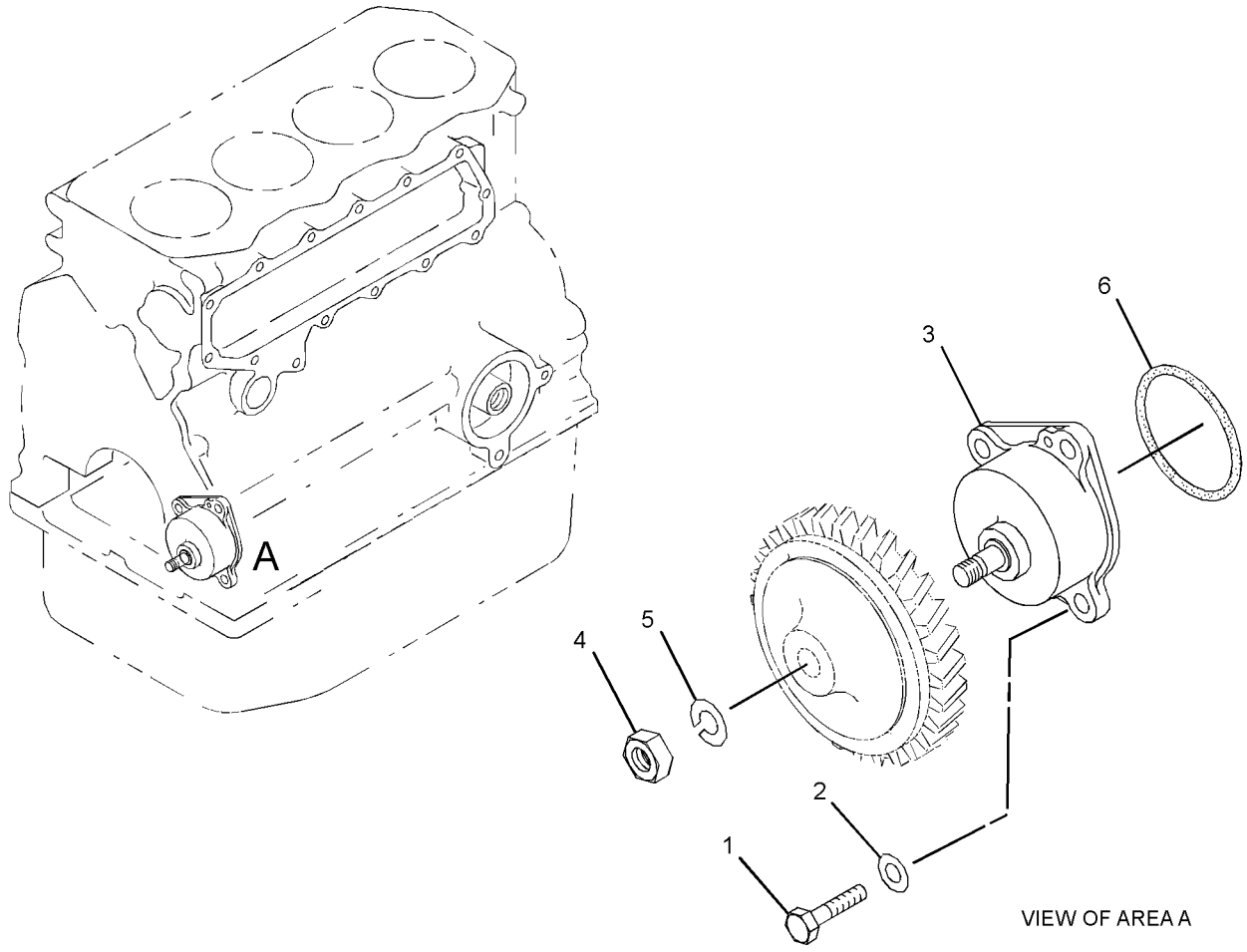

GRAPHIC #1 **<END>** g01348493

287-5665 VALVE GP-ENGINE OIL RELIEF

S/N: CYM1-UP; CJS1-70000
PART OF 262-7288, 287-8073 ENGINE AR-PRIMARY
AN ATTACHMENT

SMCS-1315 **i02961094**

NOTE	REF NO	GRAPHIC REF	PART NUMBER	QTY	PART NAME 1 2 3 4 5 6 (PRODUCT LEVEL)	SEE PAGE
	1	1	**294-1767**	1	VALVE (ENGINE OIL PRESSURE)	
	2	1	**103-9725**	1	VALVE AS (OIL BYPASS) (ENGINE)	
	3	1	**233-5496**	1	GASKET	
	4	1	**234-4796**	1	GASKET	

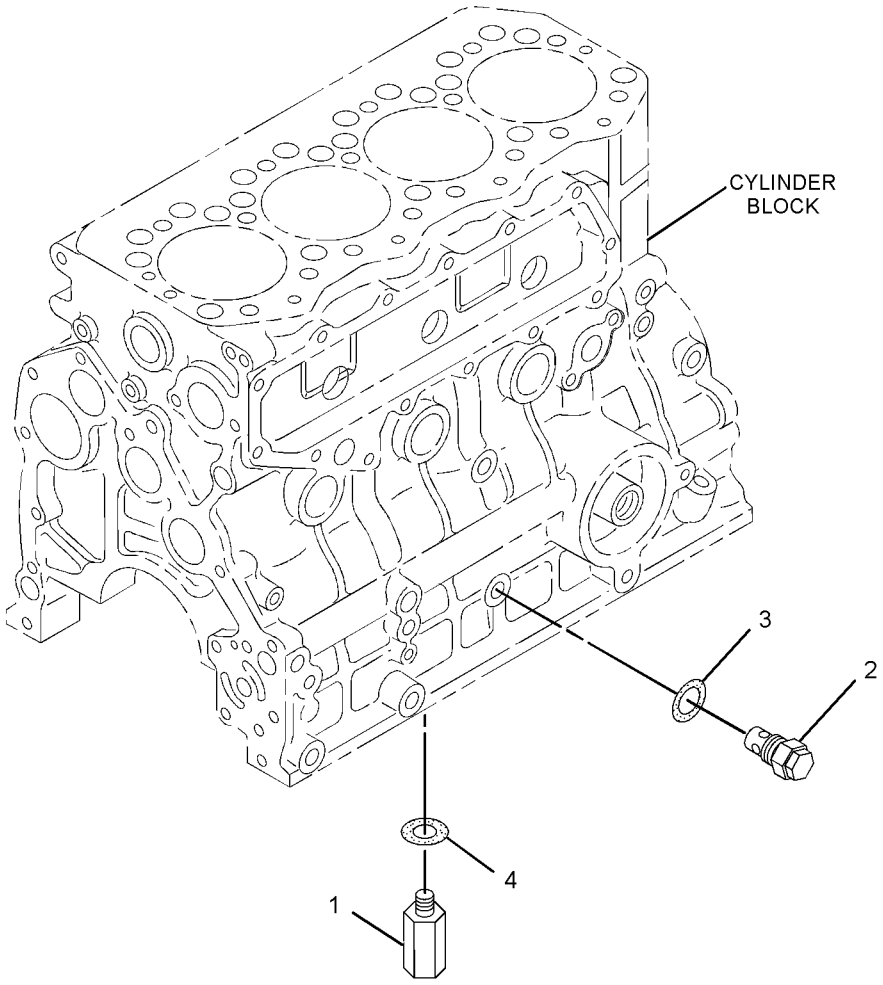

GRAPHIC #1 **<END>** g01323255

235-5896 COOLER GP-ENGINE OIL

S/N: CJS1-60343
PART OF 262-7288 ENGINE AR-PRIMARY
AN ATTACHMENT

SMCS-1378 **i02656178**

NOTE	REF NO	GRAPHIC REF	PART NUMBER	QTY	PART NAME 1 2 3 4 5 6 (PRODUCT LEVEL)	SEE PAGE
	1	1	**4I-9404**	2	SEAL-O-RING	
M	2	1	**6V-2317**	1	BOLT (M8X1.25X30-MM)	
M	3	1	**195-8222**	11	BOLT AS	
	4	1	**9M-1974**	12	WASHER-HARD (8.8X16X2-MM THK)	
	5	1	**095-1513**	4	SEAL-O-RING	
	6	1	**234-4800**	1	GASKET	
	7	1	**234-4798**	1	STUD	
	8	1	**244-7127**	5	NUT-FLANGE (M8X1.25-THD)	
	9	1	**234-4797**	1	GASKET	
	10	1	**234-4801**	1	COVER	
	11	1	**234-4802**	1	COVER AS	
	11A	1	**096-3321**	2	PLUG	
	12	1	**234-4803**	1	COOLER AS	
	13	1	**239-8513**	2	SEAL-O-RING	
F			**3B-4505**	11	LOCKWASHER	
F			**301-3274**	1	HOUSING-OIL COOLER	

F-NOT SHOWN
M-METRIC PART

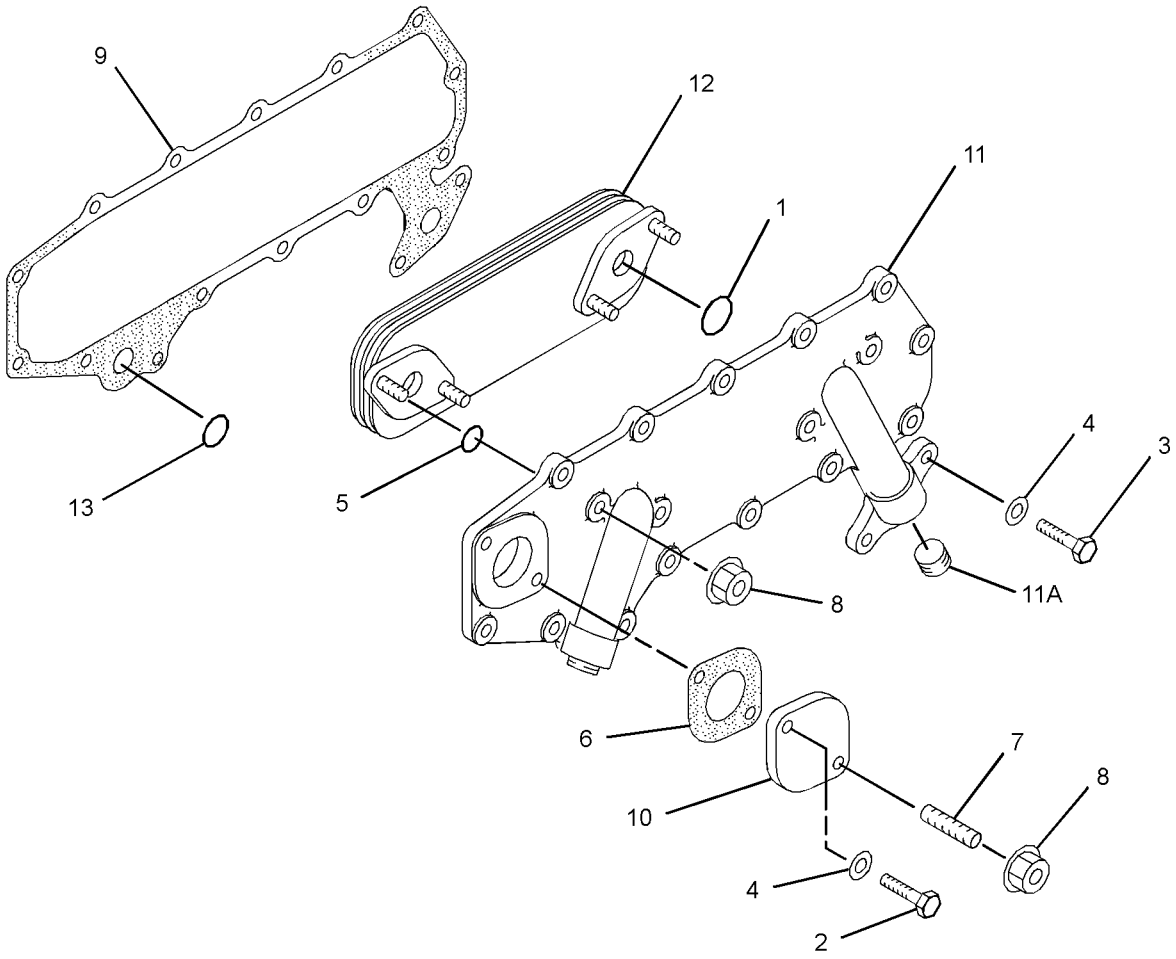

GRAPHIC #1 **<END>** g01354876

314-9900 COOLER GP-ENGINE OIL

S/N: CYM1-4609; CJS60344-70000
PART OF 262-7288, 287-8073 ENGINE AR-PRIMARY
AN ATTACHMENT

SMCS-1378 **i02801846**

NOTE	REF NO	GRAPHIC REF	PART NUMBER	QTY	PART NAME 1 2 3 4 5 6 (PRODUCT LEVEL)	SEE PAGE
	1	1	**3B-4505**	13	LOCKWASHER	
	2	1	**4I-9404**	2	SEAL-O-RING	
M	3	1	**6V-2317**	1	BOLT (M8X1.25X30-MM)	
	4	1	**9M-1974**	1	WASHER-HARD (8.8X16X2-MM THK)	
	5	1	**095-1513**	4	SEAL-O-RING	
	6	1	**199-2235**	13	BOLT (M8X1.25X22-MM)	
	7	1	**234-4797**	1	GASKET	
	8	1	**234-4798**	1	STUD	
	9	1	**234-4800**	1	GASKET	
	10	1	**234-4801**	1	COVER	
	11	1	**234-4802**	1	COVER AS	
	11A	1	**096-3321**	2	PLUG	
	12	1	**234-4803**	1	COOLER AS	
	13	1	**244-7127**	5	NUT-FLANGE (M8X1.25-THD)	

M-METRIC PART

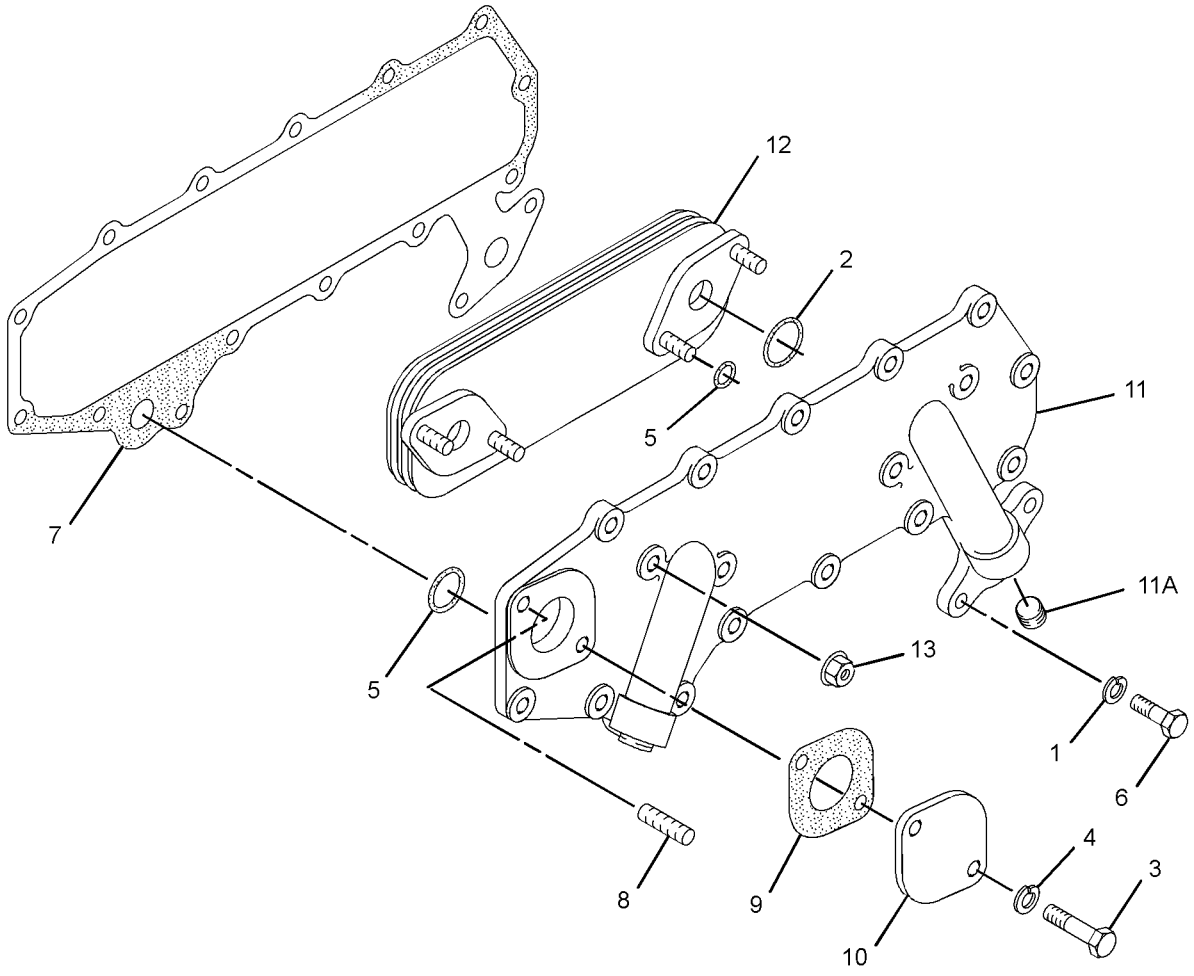

GRAPHIC #1 **<END>** g01392888

314-9900 COOLER GP-ENGINE OIL

S/N: CYM4610-UP; CJS60344-70000
PART OF 262-7288, 287-8073 ENGINE AR-PRIMARY
AN ATTACHMENT

SMCS-1378 **i03470024**

NOTE	REF NO	GRAPHIC REF	PART NUMBER	QTY	PART NAME 1 2 3 4 5 6 (PRODUCT LEVEL)	SEE PAGE
	1	1	**3B-4505**	13	LOCKWASHER	
	2	1	**4I-9404**	2	SEAL-O-RING	
M	3	1	**6V-2317**	1	BOLT (M8X1.25X30-MM)	
	4	1	**9M-1974**	1	WASHER-HARD (8.8X16X2-MM THK)	
	5	1	**095-1513**	4	SEAL-O-RING	
C	6	1	**336-9857**	13	BOLT	
C	7	1	**336-9856**	1	GASKET	
	8	1	**234-4798**	1	STUD	
	9	1	**234-4800**	1	GASKET	
	10	1	**234-4801**	1	COVER	
	11	1	**234-4802**	1	COVER AS	
	11A	1	**096-3321**	2	PLUG	
	12	1	**234-4803**	1	COOLER AS	
	13	1	**244-7127**	5	NUT-FLANGE (M8X1.25-THD)	

C-CHANGE FROM PREVIOUS TYPE
M-METRIC PART

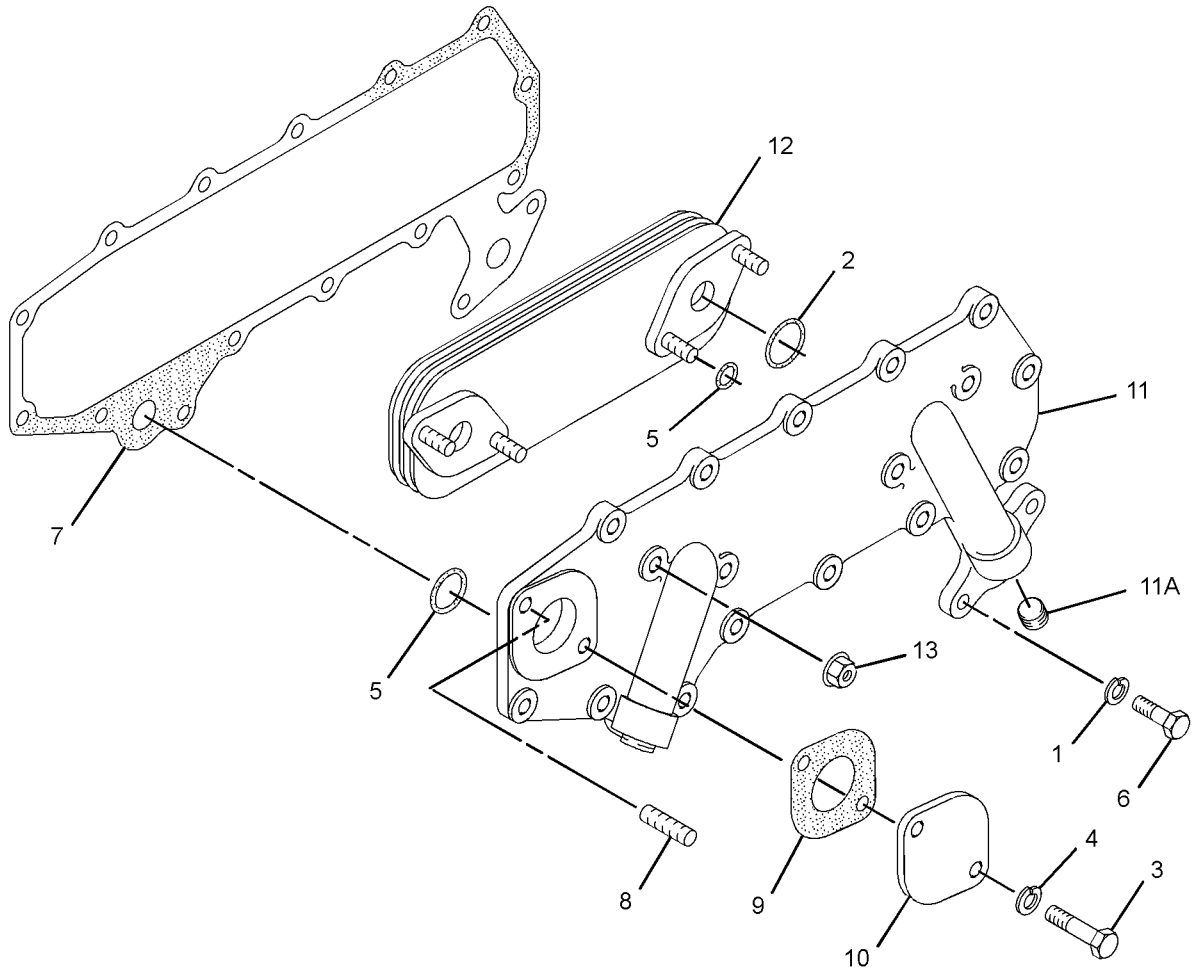

GRAPHIC #1 **<END>** g01392888

COOLING SYSTEM

292-4040 DRAIN GP-COOLANT

S/N: CYM1-UP; CJS1-70000
PART OF 262-7288, 287-8073 ENGINE AR-PRIMARY
AN ATTACHMENT

SMCS-1380, 1395 **i03552850**

NOTE	REF NO	GRAPHIC REF	PART NUMBER	QTY	PART NAME 1 2 3 4 5 6 (PRODUCT LEVEL)	SEE PAGE
	1	1	**238-8278**	1	VALVE AS-DRAIN (WATER)	

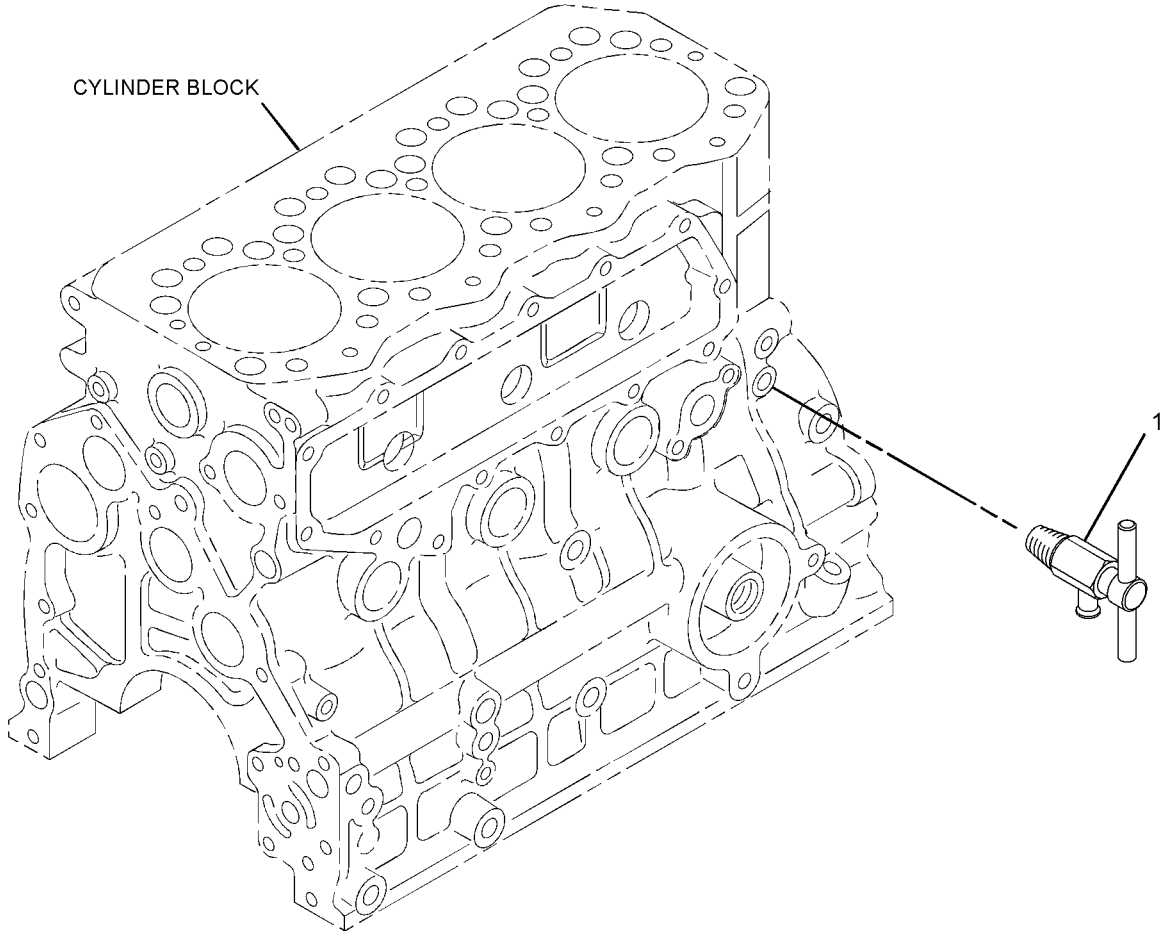

GRAPHIC #1 **<END>** g01354785

315-8355 HOUSING & REGULATOR GP

S/N: CYM1-UP; CJS60344-70000
PART OF 262-7288, 287-8073 ENGINE AR-PRIMARY
AN ATTACHMENT

SMCS-1355, 1393 **i03601610**

NOTE	REF NO	GRAPHIC REF	PART NUMBER	QTY	PART NAME 1 2 3 4 5 6 (PRODUCT LEVEL)	SEE PAGE
	1	1	**294-7915**	1	HOUSING AS	
	2	1	**235-4960**	1	REGULATOR AS-WATER TEMPERATURE (THERMOSTAT)	
	3	1	**235-4959**	1	GASKET (WATER TEMPERATURE REGULATOR)	
	4	1	**234-4831**	1	COVER	
	5	1	**096-8475**	2	BOLT (25-MM LG)	
	6	1	**303-6257**	1	GASKET	
	7	1	**257-8739**	2	CLAMP-HOSE	
	8	1	**246-8315**	1	HOSE-BYPASS	
M	9	1	**6V-5221**	1	BOLT (M8X1.25X80-MM)	
M	10	1	**8T-0276**	1	BOLT (M8X1.25X45-MM)	
	11	1	**5I-8056**	1	PLUG	
	12	1	**5I-7628**	2	GASKET	
	13	1	**234-4809**	1	WASHER-SPECIAL	
	14	1	**315-7700**	1	PLUG	
	15	1	**9M-1974**	2	WASHER-HARD (8.8X16X2-MM THK)	

M-METRIC PART

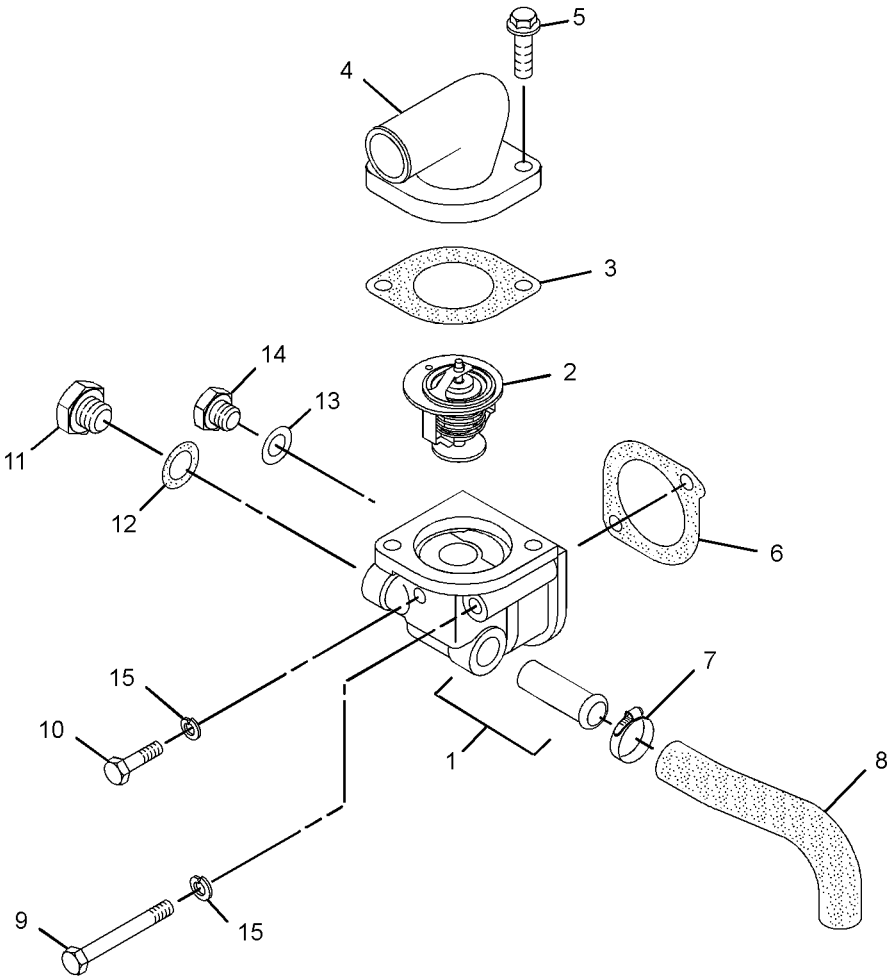

GRAPHIC #1 **<END>** g01943155

COOLING SYSTEM

235-5900 LINES GP-WATER

S/N: CJS1-60343
PART OF 262-7288 ENGINE AR-PRIMARY
AN ATTACHMENT

SMCS-1355, 1380, 1393 **i02643608**

NOTE	REF NO	GRAPHIC REF	PART NUMBER	QTY	PART NAME 1 2 3 4 5 6 (PRODUCT LEVEL)	SEE PAGE
	1	1	**5I-7628**	2	GASKET	
	2	1	**5I-8056**	2	PLUG (DRAIN)	
	3	1	**096-8475**	2	BOLT (25-MM LG)	
M	4	1	**6V-5221**	1	BOLT (M8X1.25X80-MM)	
M	5	1	**8T-0276**	1	BOLT (M8X1.25X45-MM)	
	6	1	**9M-1974**	4	WASHER-HARD (8.8X16X2-MM THK)	
	7	1	**5I-7728**	1	GASKET	
	8	1	**246-8315**	1	HOSE-BYPASS	
	9	1	**257-8739**	2	CLAMP-HOSE (HOSE)	
	10	1	**234-4831**	1	COVER	
	11	1	**235-4959**	1	GASKET (WATER TEMPERATURE REGULATOR)	
	12	1	**235-4960**	1	REGULATOR AS-WATER TEMPERATURE (THERMOSTAT)	
	13	1	**246-8314**	1	HOUSING	

M-METRIC PART

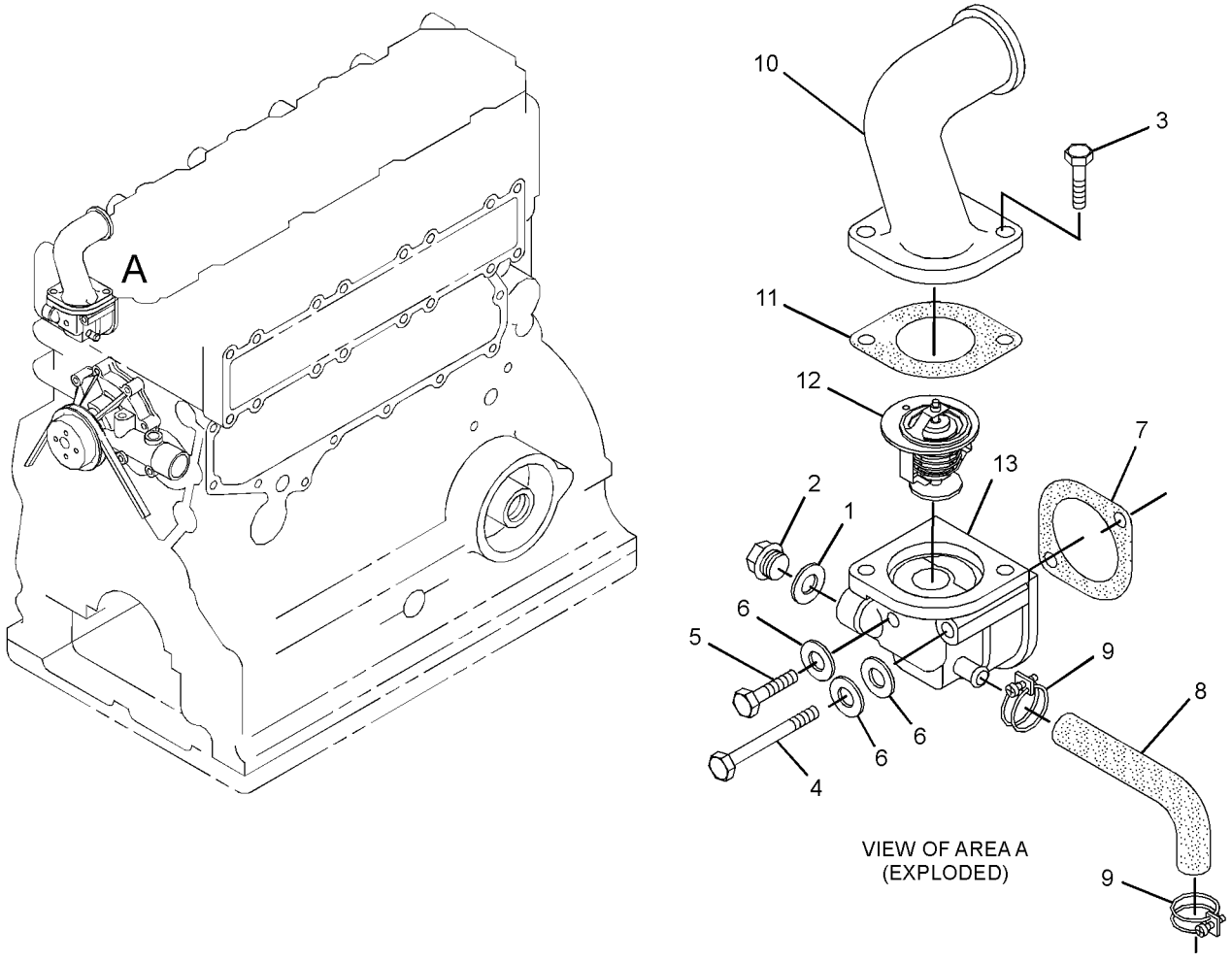

GRAPHIC #1 **<END>** g01345074

258-3552 LINES GP-WATER—RADIATOR

S/N: JAY1-UP

PART OF 258-2445, 295-7118 INSTALLATION AR-ENGINE

SMCS-1355, 1380, 1393 **i02752365**

NOTE	REF NO	GRAPHIC REF	PART NUMBER	QTY	PART NAME 1 2 3 4 5 6 (PRODUCT LEVEL)	SEE PAGE
	1	1	**1P-4278**	2	CLAMP-HOSE	
	2	1	**7K-1181**	2	STRAP-CABLE	
	3	1	**222-1178**	4	CLAMP	
	4	1	**258-2547**	1	HOSE	
	5	1	**258-3546**	1	HOSE	
	6	1	**258-3549**	1	BRACKET AS	
	7	1	**285-5794**	1	RECOVERY GP-COOLANT	
		1	**169-6715**	1	CAP-VENTED (COOLANT RECOVERY)	
	8	1	**266-3316**	3	BOLT-FLANGE HEAD (M10X1.5X25-MM)	
	9	1	**4K-8864**	3	CLIP	
	10	1	**5P-7470**	2	CLIP (SLOT)	
	11	1	**5P-7471**	2	CLIP (TAB)	
	12	1	**5P-7703**	2	GROMMET	
	13	1	**8T-4121**	1	WASHER-HARD (11X21X2.5-MM THK)	
M	14	1	**8T-4196**	1	BOLT (M10X1.5X35-MM)	
	15	1	**8T-4224**	4	WASHER-HARD (8.8X16X2-MM THK)	
M	16	1	**8T-5091**	4	BOLT (M8X1.25X20-MM)	
E	17	1	**5P-1420**		HOSE (222-CM)	
	18	1	**7X-1443**	4	PROTECTOR	

E-ORDER BY THE CENTIMETER
M-METRIC PART

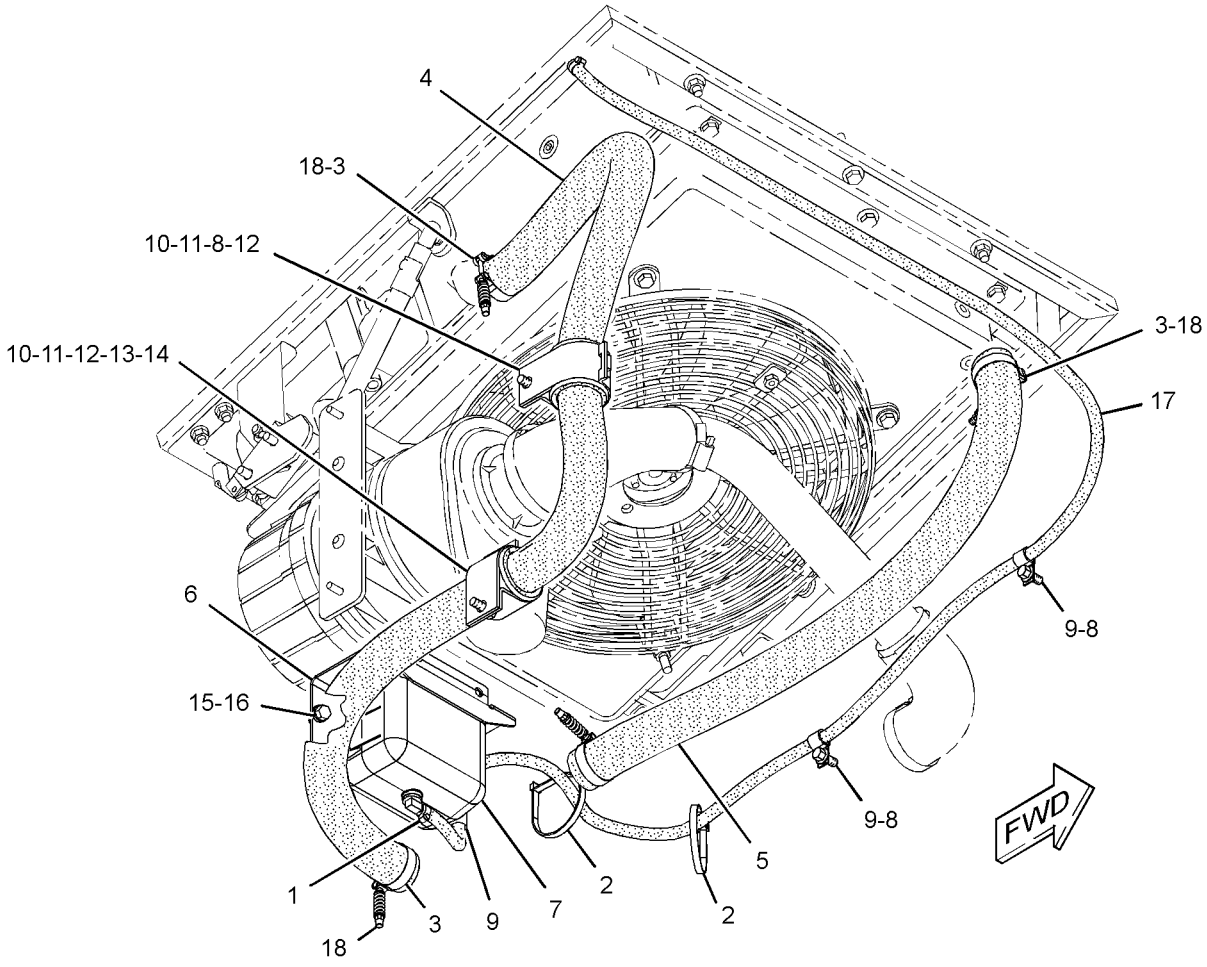

GRAPHIC #1 **<END>** g01387418

258-3542 MOUNTING GP-RAD & OIL COOLER

S/N: JAY1-UP

PART OF 258-2445, 295-7118 INSTALLATION AR-ENGINE

SMCS-1353, 1374 **i03636348**

NOTE	REF NO	GRAPHIC REF	PART NUMBER	QTY	PART NAME 1 2 3 4 5 6 (PRODUCT LEVEL)	SEE PAGE
	1	1	**258-3543**	1	SUPPORT AS (BOTTOM)	
	2	1	**258-3544**	1	SUPPORT AS (TOP)	
	3	1	**258-3545**	1	GRILL AS-RADIATOR	
	4	1	**258-3551**	1	BRACKET AS	
	5	1	**258-3555**	1	SPRING AS-GAS (RH)	
	6	1	**258-3562**	1	SPRING-GAS (LH)	
	7	1	**142-8832**	1	PIN AS	
	8	1	**178-2255**	2	PIN	
	9	1	**208-6176**	4	STUD-BALL	
	10	1	**223-4275**	1	LATCH AS	
	11	1	**266-3316**	2	BOLT-FLANGE HEAD (M10X1.5X25-MM)	
	12	1	**2K-4973**	1	LOCKNUT (3/8-16-THD)	
M	13	1	**5C-7261**	1	NUT (M8X1.25-THD)	
	14	1	**5P-0372**	2	LOCK PIN	
	15	1	**5V-8309**	1	STRIKER AS	
	16	1	**7X-7729**	1	WASHER (11X25X3-MM THK)	
	17	1	**8T-0318**	1	SHIM (0.8-MM THK)	
	18	1	**8T-4121**	8	WASHER-HARD (11X21X2.5-MM THK)	
M	19	1	**8T-4133**	4	NUT (M10X1.5-THD)	
	20	1	**8T-4159**	1	BUMPER	
M	21	1	**8T-4181**	3	BOLT (M6X1X20-MM)	
	22	1	**8T-4205**	3	WASHER-HARD (7.2X14.5X2-MM THK)	
M	23	1	**8T-6466**	4	BOLT (M10X1.5X60-MM)	
D	24	1	**5P-8309**		SEAL (0.15-M)	
D	24A	1	**5P-8309**		SEAL (0.34-M)	
D	24B	1	**5P-8309**		SEAL (0.68-M EACH)	
D	24C	1	**5P-8309**		SEAL (0.56-M)	

D-ORDER BY THE METER
M-METRIC PART

258-3542 **MOUNTING GP-RAD & OIL COOLER** *(contd.)* **i03636348**

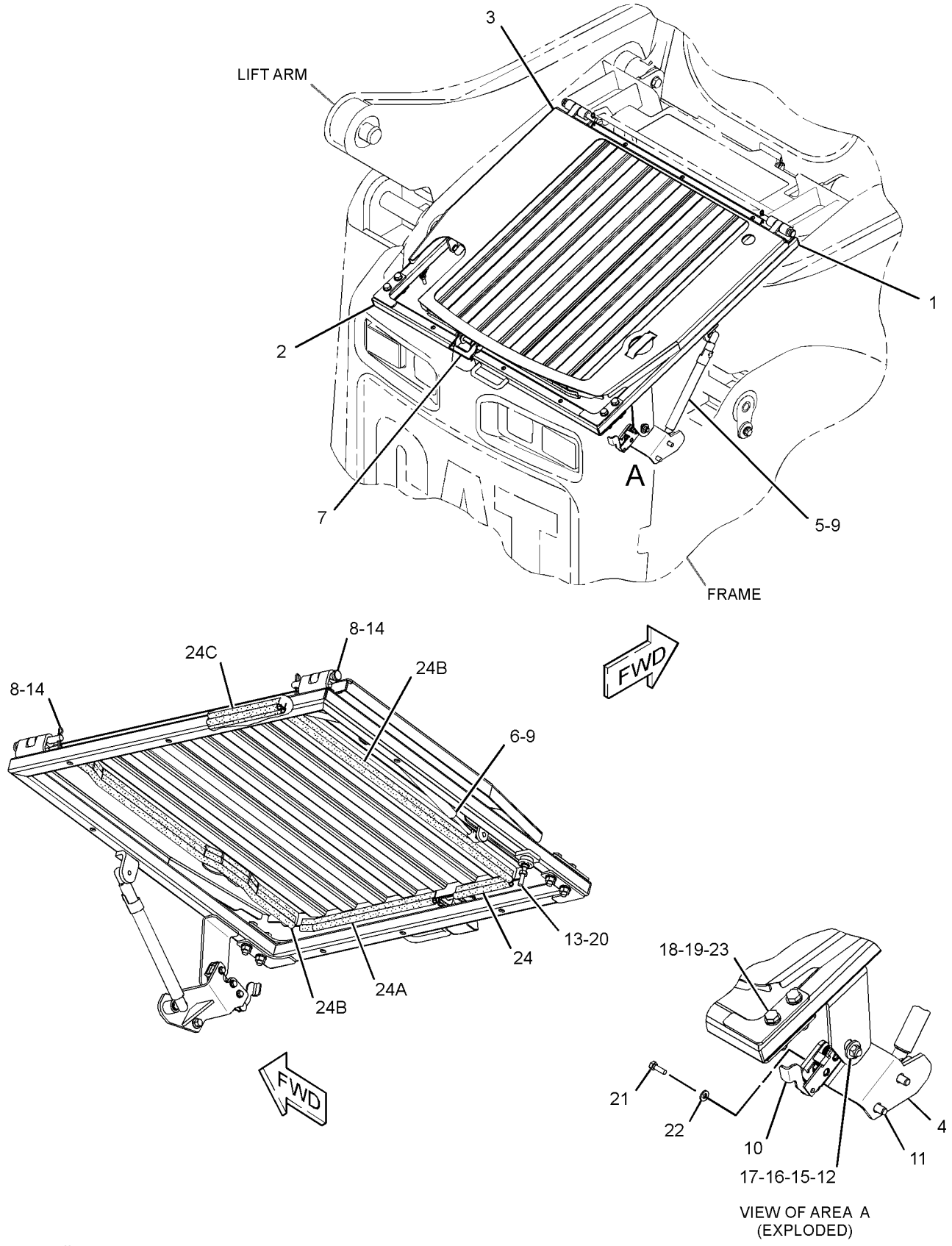

GRAPHIC #1 **<END>** g01951577

COOLING SYSTEM

258-3542 MOUNTING GP-RAD & OIL COOLER

S/N: JAY2060-UP

PART OF 295-7118 INSTALLATION AR-ENGINE

SMCS-1353, 1374 **i03636349**

NOTE	REF NO	GRAPHIC REF	PART NUMBER	QTY	PART NAME 1 2 3 4 5 6 (PRODUCT LEVEL)	SEE PAGE
	1	1	**258-3543**	1	SUPPORT AS (BOTTOM)	
	2	1	**258-3544**	1	SUPPORT AS (TOP)	
	3	1	**258-3545**	1	GRILL AS-RADIATOR	
	4	1	**258-3551**	1	BRACKET AS	
	5	1	**258-3555**	1	SPRING AS-GAS (RH)	
	6	1	**258-3562**	1	SPRING-GAS (LH)	
	7	1	**142-8832**	1	PIN AS	
	8	1	**178-2255**	2	PIN	
	9	1	**208-6176**	4	STUD-BALL	
	10	1	**223-4275**	1	LATCH AS	
	11	1	**266-3316**	2	BOLT-FLANGE HEAD (M10X1.5X25-MM)	
	12	1	**2K-4973**	1	LOCKNUT (3/8-16-THD)	
M	13	1	**5C-7261**	1	NUT (M8X1.25-THD)	
	14	1	**5P-0372**	2	LOCK PIN	
C	15	1	**280-8328**	1	STRIKER AS	
	16	1	**7X-7729**	1	WASHER (11X25X3-MM THK)	
	18	1	**8T-4121**	8	WASHER-HARD (11X21X2.5-MM THK)	
M	19	1	**8T-4133**	4	NUT (M10X1.5-THD)	
	20	1	**8T-4159**	1	BUMPER	
M	21	1	**8T-4181**	3	BOLT (M6X1X20-MM)	
	22	1	**8T-4205**	3	WASHER-HARD (7.2X14.5X2-MM THK)	
M	23	1	**8T-6466**	4	BOLT (M10X1.5X60-MM)	
D	24	1	**5P-8309**		SEAL (0.15-M)	
D	24A	1	**5P-8309**		SEAL (0.34-M)	
D	24B	1	**5P-8309**		SEAL (0.68-M EACH)	
D	24C	1	**5P-8309**		SEAL (0.56-M)	

C-CHANGE FROM PREVIOUS TYPE
D-ORDER BY THE METER
M-METRIC PART

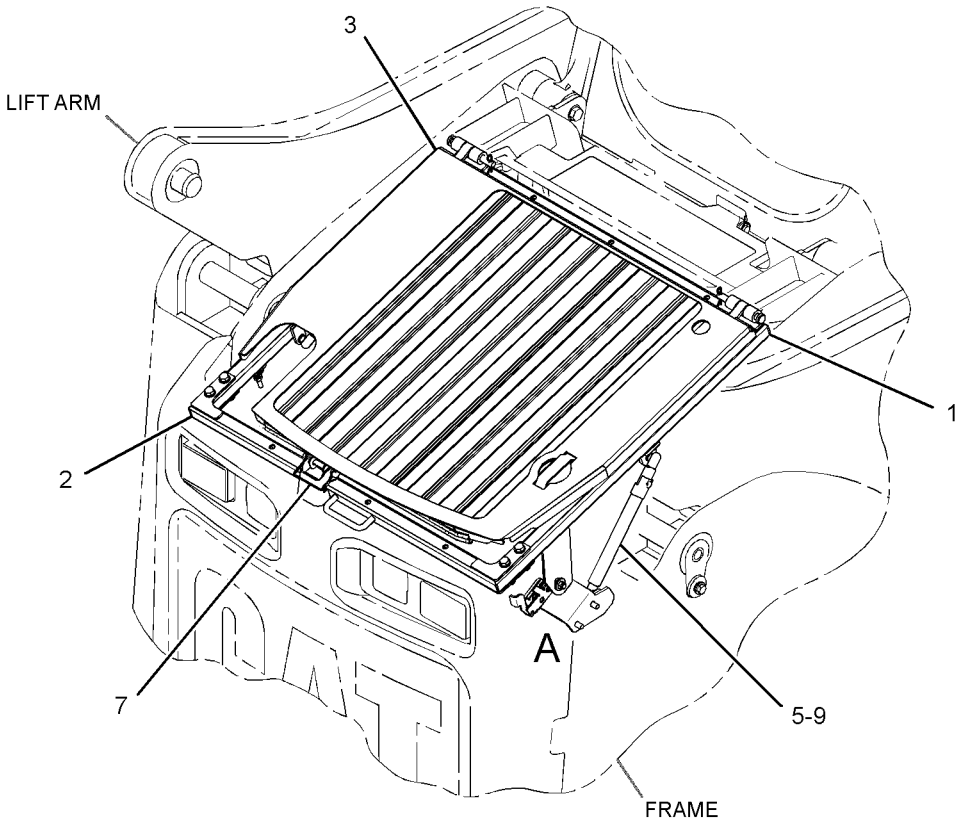

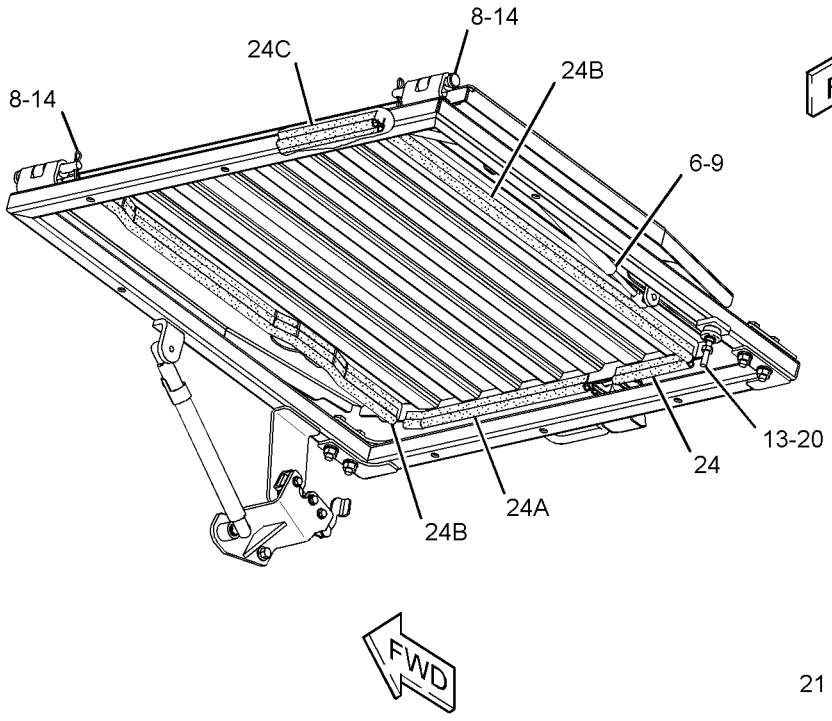

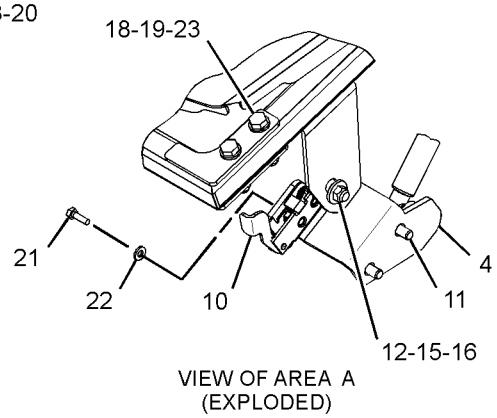

VIEW OF AREA A
(EXPLODED)

GRAPHIC #1 **<END>** g01951582

COOLING SYSTEM

287-6056 PUMP GP-WATER

S/N: CYM1-UP; CJS1-70000
PART OF 262-7288, 287-8073 ENGINE AR-PRIMARY
AN ATTACHMENT

SMCS-1355, 1361 **i03355624**

NOTE	REF NO	GRAPHIC REF	PART NUMBER	QTY	PART NAME 1 2 3 4 5 6 (PRODUCT LEVEL)	SEE PAGE
	1	1	**8T-4224**	5	WASHER-HARD (8.8X16X2-MM THK)	
	2	1	**285-9066**	1	BOLT (M8X1.25X65-MM)	
Y	3	1	**335-9117**	1	PUMP GP-WATER	87
	4	1	**335-9125**	1	GASKET	
M	5	1	**7X-0818**	4	BOLT (M8X1.25X45-MM)	

M-METRIC PART
Y-SEPARATE ILLUSTRATION

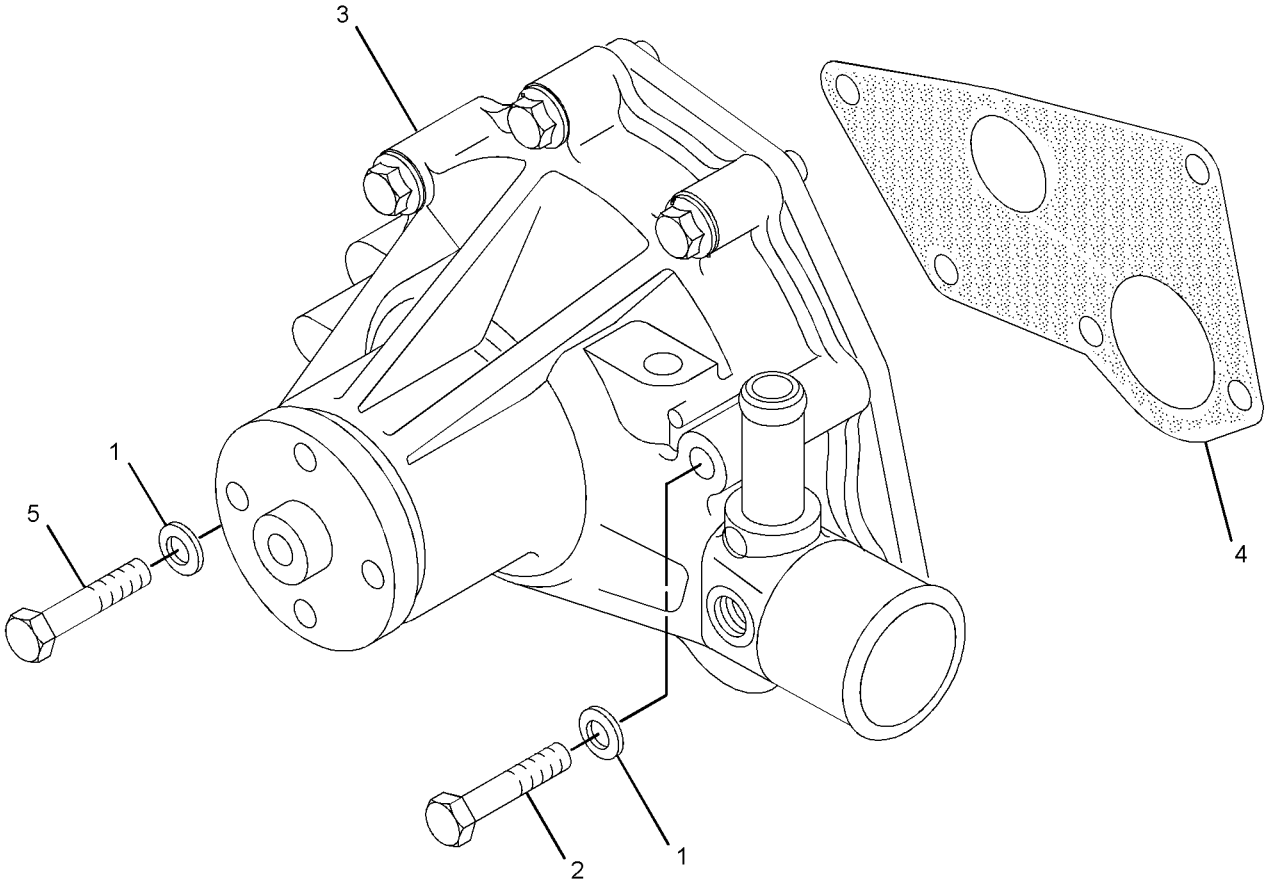

GRAPHIC #1 **<END>** g01757413

335-9117 PUMP GP-WATER

S/N: CYM1-UP; CJS1-70000
PART OF 287-6056 PUMP GP-WATER
AN ATTACHMENT

SMCS-1355, 1361 **i03562121**

NOTE	REF NO	GRAPHIC REF	PART NUMBER	QTY	PART NAME 1 2 3 4 5 6 (PRODUCT LEVEL)	SEE PAGE
M	1	1	**6V-3940**	2	BOLT (M8X1.25X25-MM)	
M	2	1	**7X-2537**	1	BOLT (M8X1.25X35-MM)	
	3	1	**9M-1974**	2	WASHER-HARD (8.8X16X2-MM THK)	
	4	1	**103-9747**	1	COVER-PUMP	
	5	1	**195-8460**	1	PLUG	
	6	1	**335-9124**	1	GASKET	

M-METRIC PART

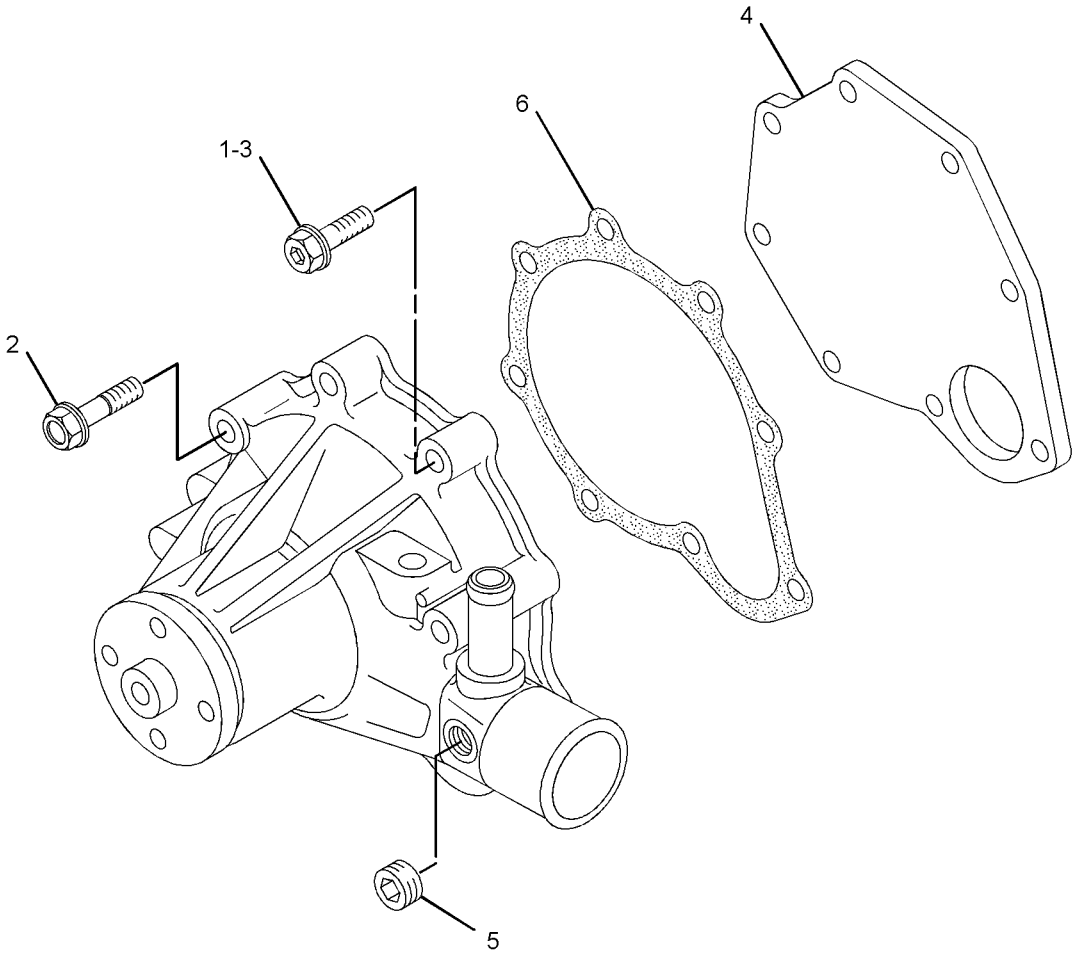

GRAPHIC #1 **<END>** g01757556

COOLING SYSTEM

258-3459 RADIATOR & HYD OIL COOLER GP

S/N: JAY1-UP

PART OF 258-2445, 295-7118 INSTALLATION AR-ENGINE

SMCS-1351, 1356, 1386 **i03477120**

NOTE	REF NO	GRAPHIC REF	PART NUMBER	QTY	PART NAME 1 2 3 4 5 6 (PRODUCT LEVEL)	SEE PAGE
	1	1	**036-1865**	1	CAP AS-RADIATOR	
	2	1	**069-4080**	1	FITTING	
	3	1	**122-7052**	1	SPACER (10.5X20X28-MM THK)	
	4	1	**207-6154**	1	GAUGE-SIGHT (COOLANT LEVEL)	
	5	1	*217-3572*	1	FAN GP-BLOWER	
		1	**8T-4224**	4	WASHER-HARD (8.8X16X2-MM THK)	
M		1	**8T-4908**	4	BOLT (M8X1.25X25-MM)	
		1	**203-4827**	1	FAN AS	
		1	**229-8796**	1	ADAPTER	
	6	1	**258-3457**	1	RADIATOR & HYD OIL COOLER AS	
	7	1	**258-3458**	1	SHROUD AS	
	8	1	**258-3537**	1	GUARD AS-FAN	
	9	1	**258-3548**	1	CAP AS	
	10	1	**234-9525**	1	STUD (M10X1.5-THD)	
	11	1	**4K-8864**	2	CLIP	
	12	1	**7M-7410**	1	PLUG-PIPE	
	13	1	**7X-7729**	25	WASHER (11X25X3-MM THK)	
	14	1	**8T-4121**	2	WASHER-HARD (11X21X2.5-MM THK)	
M	15	1	**8T-4133**	12	NUT (M10X1.5-THD)	
M	16	1	**8T-4196**	9	BOLT (M10X1.5X35-MM)	
M	17	1	**8T-5005**	1	BOLT (M10X1.5X70-MM)	
M	18	1	**8T-6466**	5	BOLT (M10X1.5X60-MM)	

M-METRIC PART

258-3459 **RADIATOR & HYD OIL COOLER GP** *(contd.)* **i03477120**

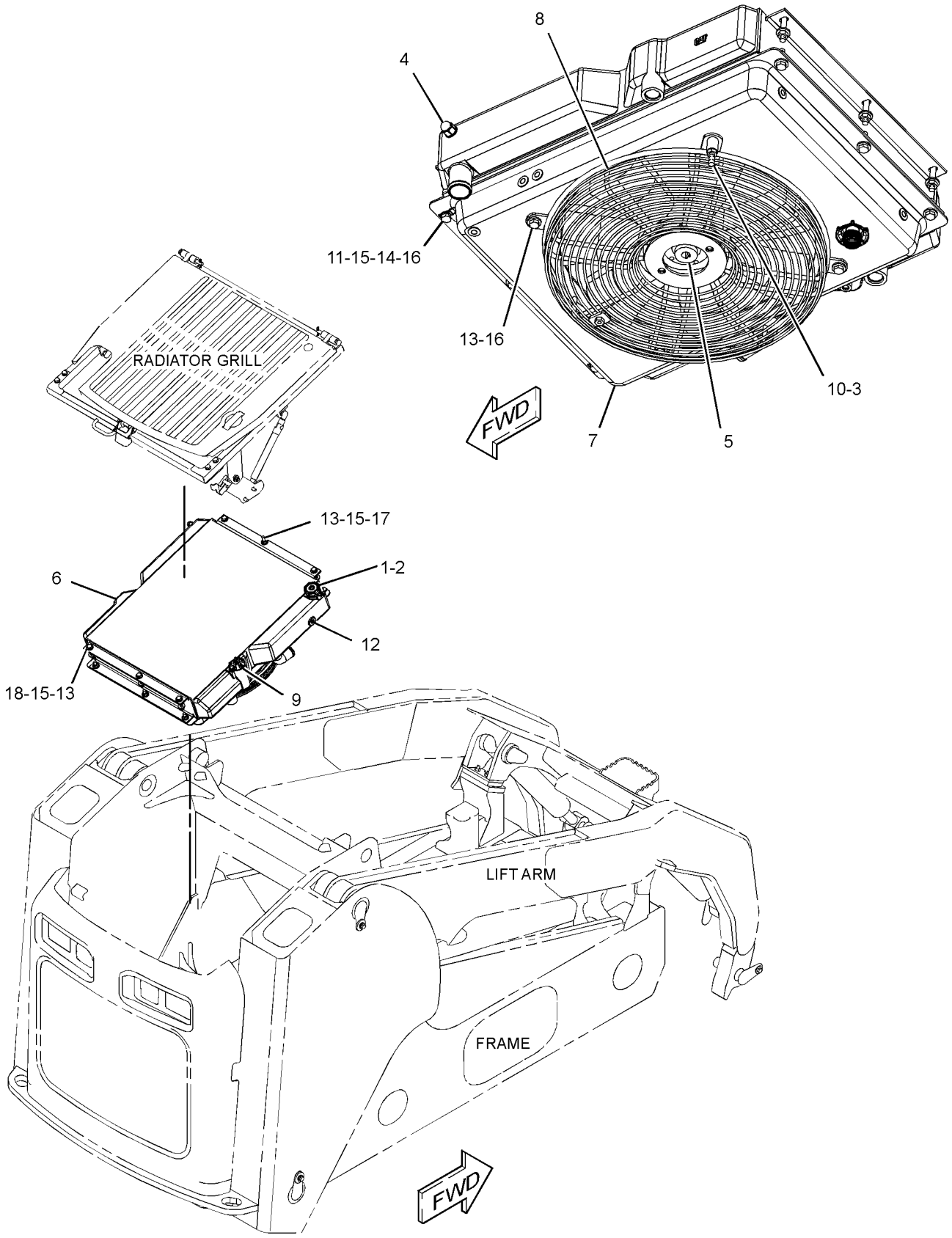

GRAPHIC #1

<END>

g01891273

AIR INLET AND EXHAUST SYSTEM

258-3320 AIR CLEANER GP

S/N: JAY1-UP

PART OF 258-3453 AIR CLEANER GP

SMCS-1051, 1054 **i03552762**

NOTE	REF NO	GRAPHIC REF	PART NUMBER	QTY	PART NAME 1 2 3 4 5 6 (PRODUCT LEVEL)	SEE PAGE
	1	1	**112-9717**	1	VALVE-DUST (AIR CLEANER)	
	2	1	**280-8298**	1	CLAMP	
	3	1	**280-8302**	1	COVER AS	
F			**110-6326**	1	FILTER ELEMENT AS-AIR (PRIMARY)	
F			**110-6331**	1	FILTER ELEMENT AS-AIR (SECONDARY)	

F-NOT SHOWN

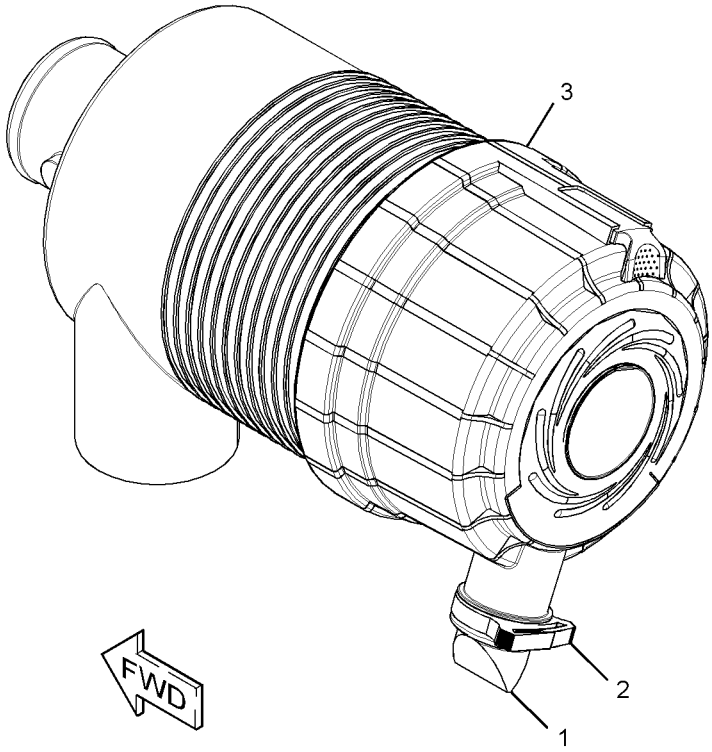

GRAPHIC #1 **<END>** g01352945

AIR INLET AND EXHAUST SYSTEM

258-3453 AIR CLEANER GP

S/N: JAY1-UP

PART OF 280-8294 AIR CLEANER GP

SMCS-1051, 1054 **i02807696**

NOTE	REF NO	GRAPHIC REF	PART NUMBER	QTY	PART NAME 1 2 3 4 5 6 (PRODUCT LEVEL)	SEE PAGE
	1	1	**152-4898**	1	BAND-MOUNTING	
	2	1	**237-7325**	1	INDICATOR	
Y	3	1	**258-3320**	1	AIR CLEANER GP	90

Y-SEPARATE ILLUSTRATION

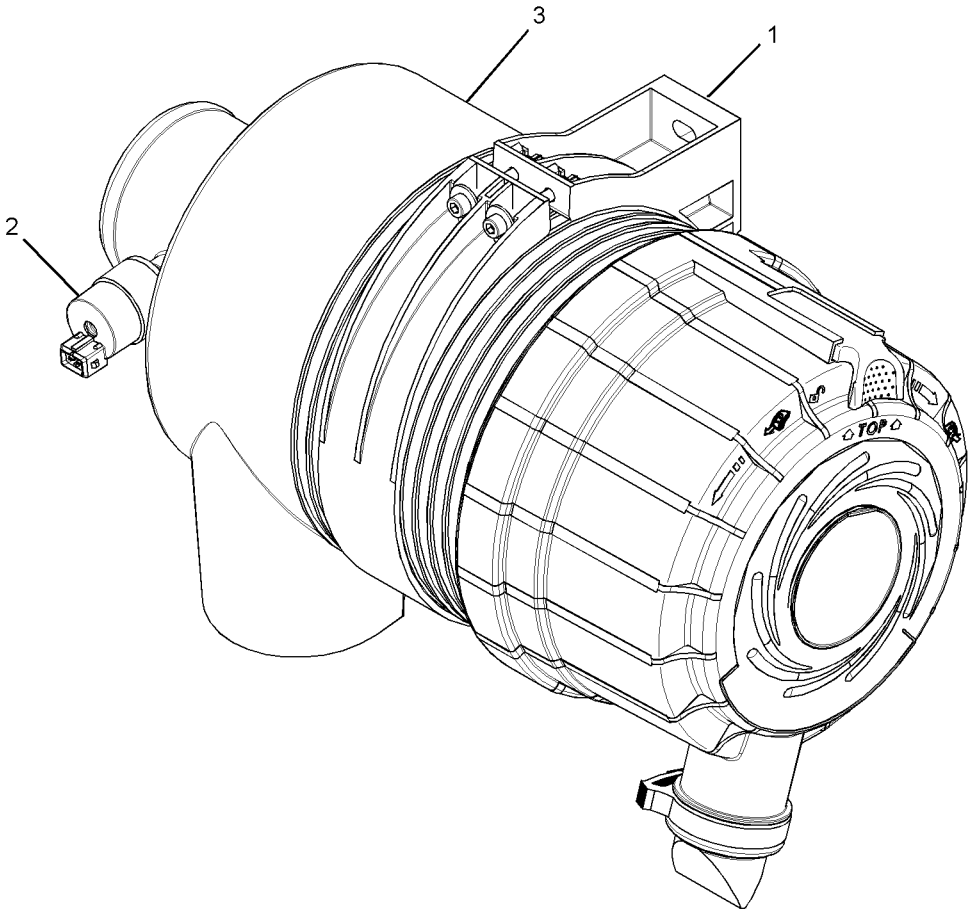

GRAPHIC #1 **<END>** g01413091

AIR INLET AND EXHAUST SYSTEM

280-8294 AIR CLEANER GP

S/N: JAY1-UP

PART OF 258-2445, 295-7118 INSTALLATION AR-ENGINE

SMCS-1051, 1054 **i02663655**

NOTE	REF NO	GRAPHIC REF	PART NUMBER	QTY	PART NAME 1 2 3 4 5 6 (PRODUCT LEVEL)	SEE PAGE
	1	1	**131-6143**	1	CLAMP-HOSE	
	2	1	**258-2511**	1	PLATE	
Y	3	1	*258-3453*	1	AIR CLEANER GP	91
	4	1	**280-8286**	1	COVER	
	5	1	**280-8293**	1	DUCT	
M	6	1	**127-2170**	2	SCREW-TRUSS HEAD (M8X1.25X20-MM)	
M	7	1	**266-3315**	2	BOLT-FLANGE HEAD (M8X1.25X25.5-MM)	
	8	1	**8T-4224**	2	WASHER-HARD (8.8X16X2-MM THK)	
	9	1	**9R-9901**	4	FASTENER (CLIP)	

M-METRIC PART
Y-SEPARATE ILLUSTRATION

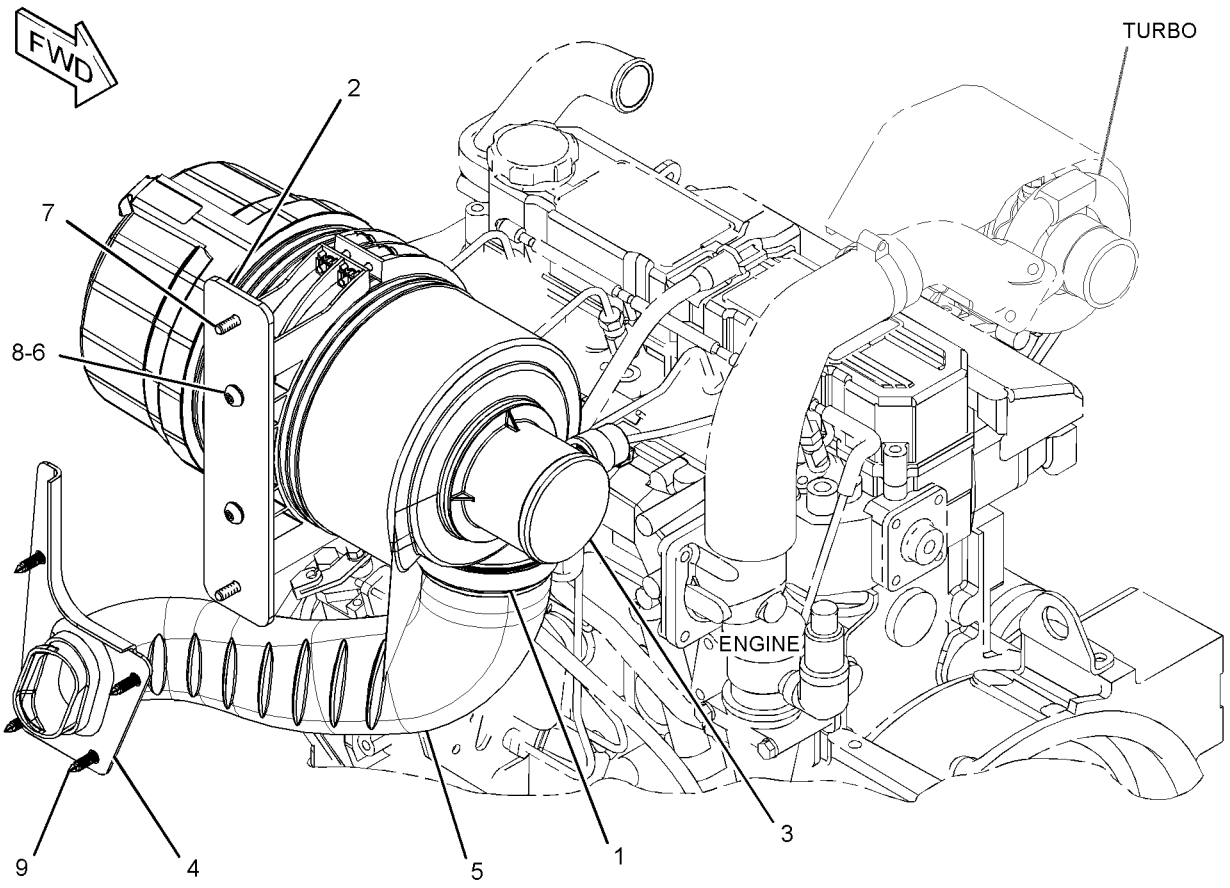

GRAPHIC #1 **<END>** g01340060

280-8393 GUARD GP-DEBRIS—TURBOCHARGER, EXHAUST MANIFOLD

S/N: JAY1-UP

PART OF 258-3182, 258-3733, 261-6264 HYDRAULIC AR AN ATTACHMENT

SMCS-1052, 1059 **i03019204**

NOTE	REF NO	GRAPHIC REF	PART NUMBER	QTY	PART NAME 1 2 3 4 5 6 (PRODUCT LEVEL)	SEE PAGE
	1	1	**280-8355**	1	GUARD AS-EXHAUST (TURBOCHARGER)	
	2	1	**280-8391**	1	GUARD-EXHAUST (MANIFOLD)	
M	3	1	**8T-4189**	2	BOLT (M8X1.25X20-MM)	
	4	1	**8T-4224**	4	WASHER-HARD (8.8X16X2-MM THK)	

M-METRIC PART

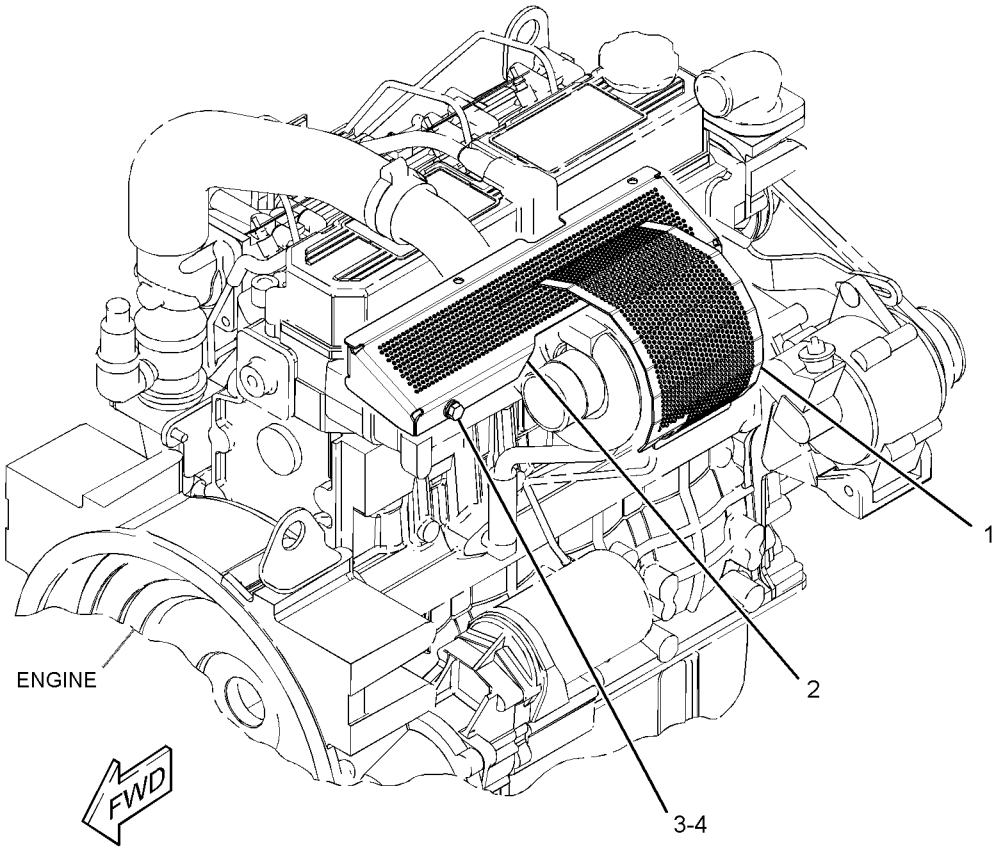

GRAPHIC #1 **<END>** g01528728

AIR INLET AND EXHAUST SYSTEM

272-3062 KIT-DEBRIS GUARD–
TURBOCHARGER, EXHAUST MANIFOLD
S/N: JAY1-UP
AN ATTACHMENT

SMCS-1052, 1059 **i02921012**

NOTE	REF NO	GRAPHIC REF	PART NUMBER	QTY	PART NAME 1 2 3 4 5 6 (PRODUCT LEVEL)	SEE PAGE
	1	1	**272-3052**	1	GUARD-EXHAUST (MANIFOLD)	
	2	1	**280-8355**	1	GUARD AS-EXHAUST (TURBOCHARGER)	

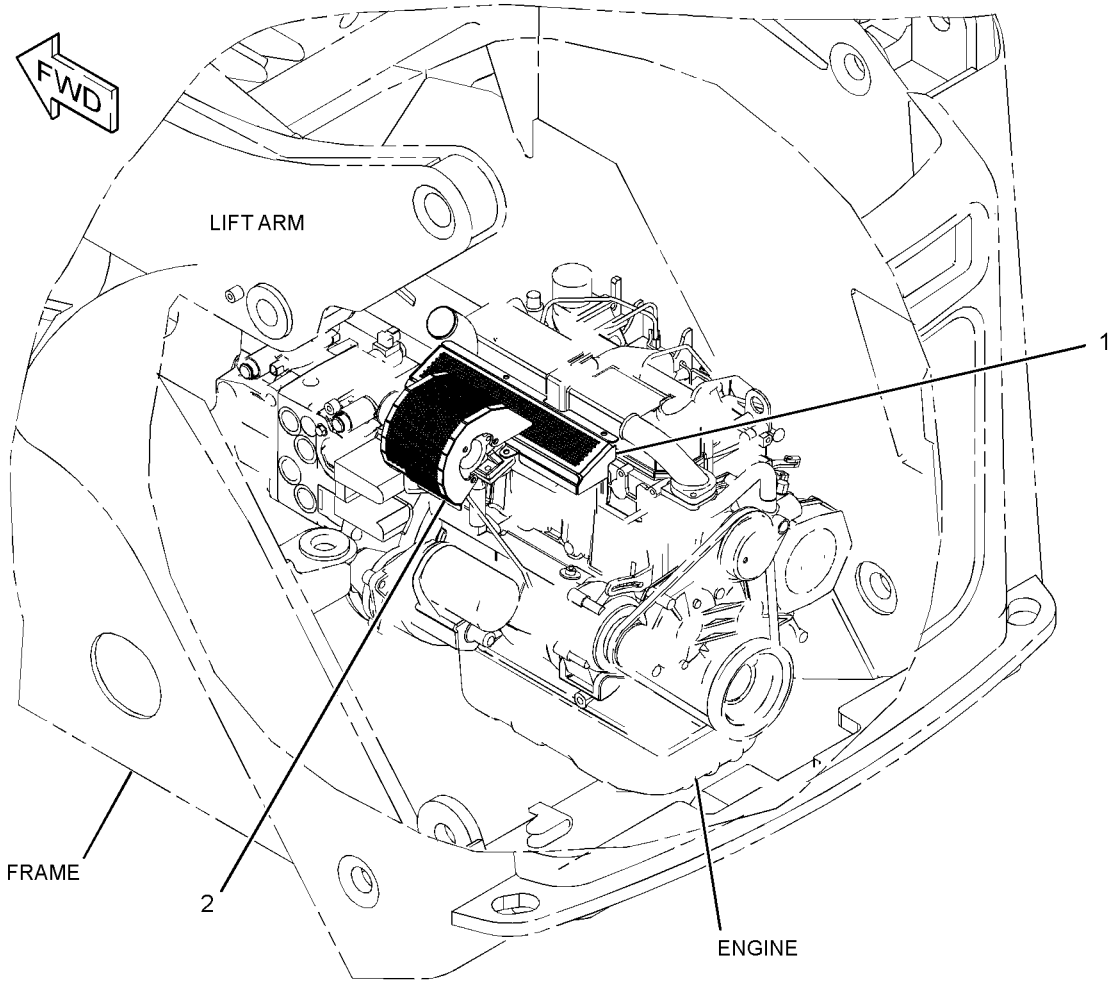

GRAPHIC #1 **<END>** g01452325

280-8392 KIT-DEBRIS GUARD–
TURBOCHARGER, EXHAUST MANIFOLD
S/N: JAY1-UP
AN ATTACHMENT

SMCS-1052, 1059 **i03079704**

NOTE	REF NO	GRAPHIC REF	PART NUMBER	QTY	PART NAME 1 2 3 4 5 6 (PRODUCT LEVEL)	SEE PAGE
	1	1	**280-8355**	1	GUARD AS-EXHAUST (TURBOCHARGER)	
	2	1	**280-8391**	1	GUARD-EXHAUST (MANIFOLD)	
M	3	1	**8T-4189**	2	BOLT (M8X1.25X20-MM)	
	4	1	**8T-4224**	4	WASHER-HARD (8.8X16X2-MM THK)	

M-METRIC PART

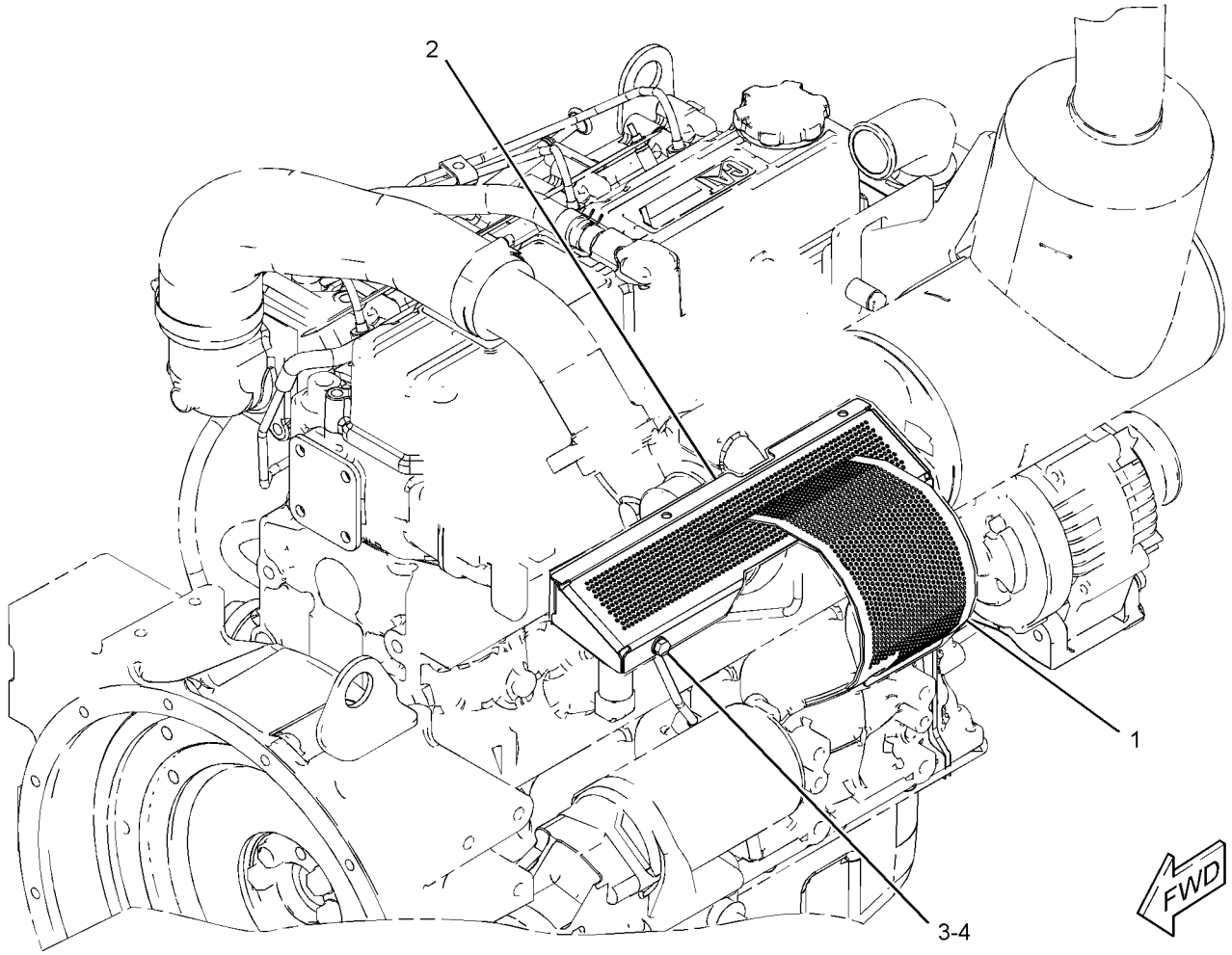

GRAPHIC #1 **<END>** g01863814

AIR INLET AND EXHAUST SYSTEM

247-6317 LINES GP-AIR

S/N: CYM1-UP; CJS1-70000
PART OF 262-7288, 287-8073 ENGINE AR-PRIMARY
AN ATTACHMENT

SMCS-1071 **i02712952**

NOTE	REF NO	GRAPHIC REF	PART NUMBER	QTY	PART NAME 1 2 3 4 5 6 (PRODUCT LEVEL)	SEE PAGE
M	1	1	**6V-3940**	4	BOLT (M8X1.25X25-MM)	
	2	1	**9M-1974**	4	WASHER-HARD (8.8X16X2-MM THK)	
	3	1	**5I-7678**	1	GASKET	
	4	1	**5I-8021**	1	ELBOW AS	
		1	**5I-8023**	1	PLUG	

M-METRIC PART

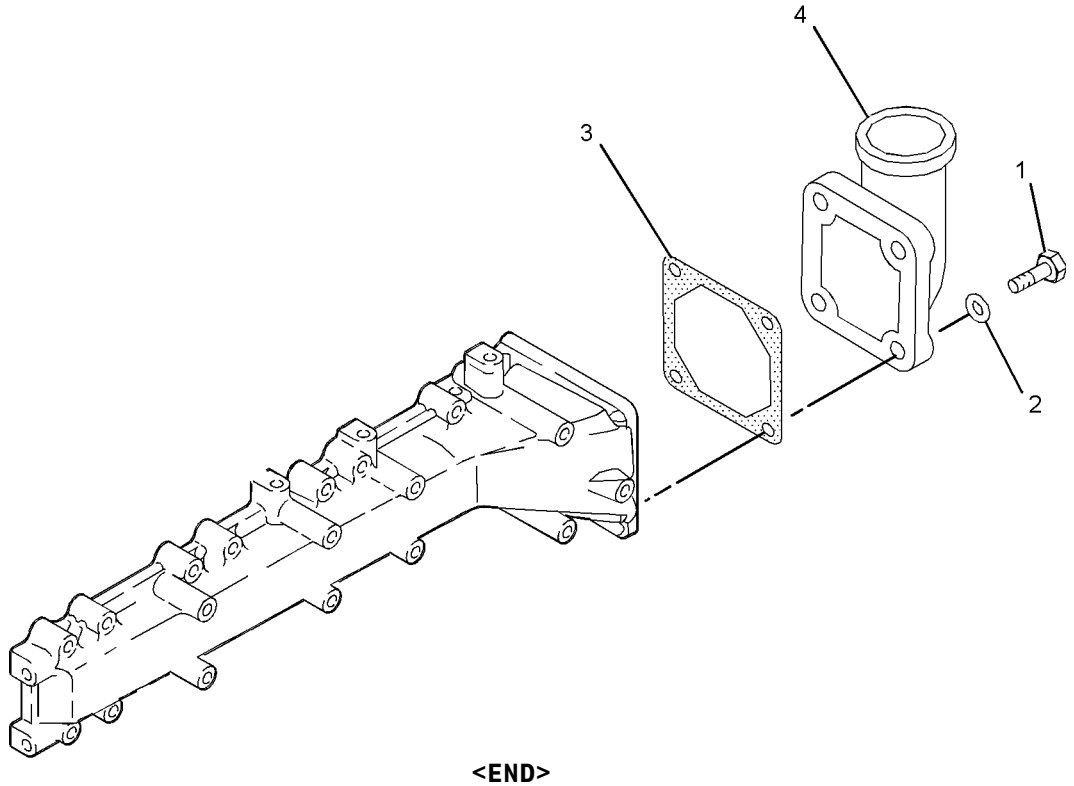

GRAPHIC #1 **<END>** g01048173

AIR INLET AND EXHAUST SYSTEM

258-2465 LINES GP-AIR

S/N: JAY1-UP

PART OF 258-2445, 295-7118 INSTALLATION AR-ENGINE

SMCS-1071 **i02627291**

NOTE	REF NO	GRAPHIC REF	PART NUMBER	QTY	PART NAME 1 2 3 4 5 6 (PRODUCT LEVEL)	SEE PAGE
	1	1	**5P-4868**	1	CLAMP - HOSE	
	2	1	**258-2464**	1	HOSE AS	
	3	1	**8T-6726**	1	CLAMP - HOSE	

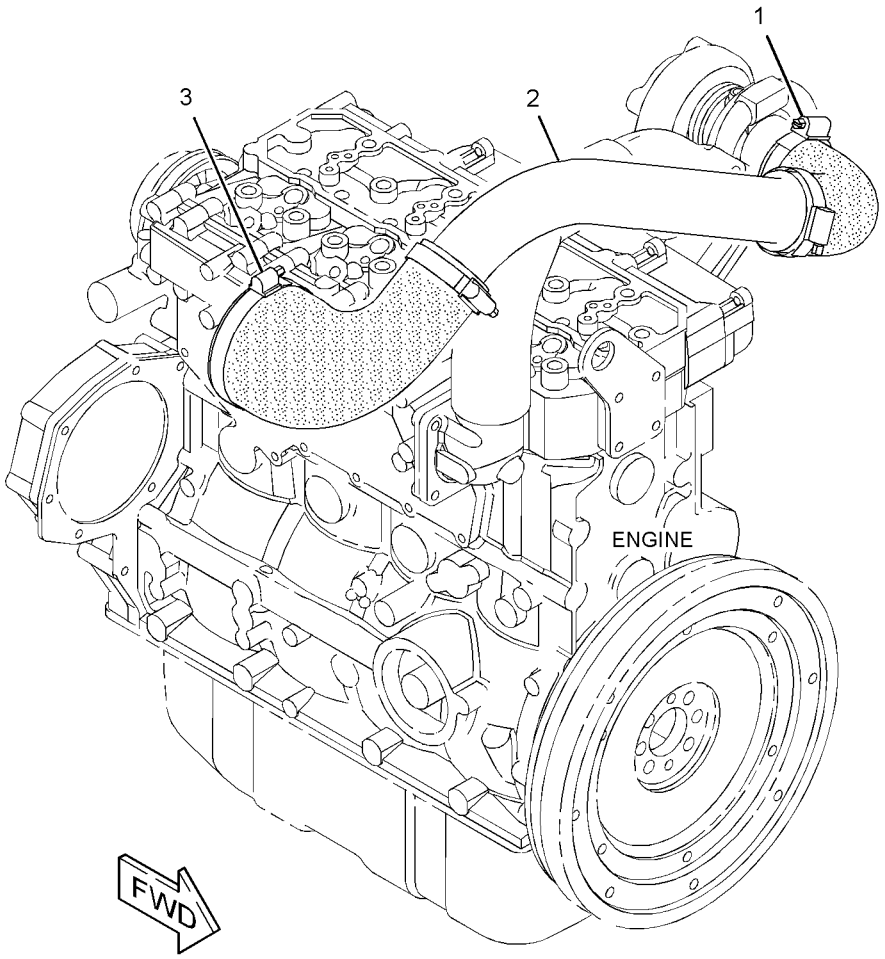

GRAPHIC #1 **<END>** g01321081

AIR INLET AND EXHAUST SYSTEM

315-7769 LINES GP-AIR

S/N: CYM1-UP
PART OF 287-8073 ENGINE AR-PRIMARY
AN ATTACHMENT

SMCS-1071 **i03529260**

NOTE	REF NO	GRAPHIC REF	PART NUMBER	QTY	PART NAME 1 2 3 4 5 6 (PRODUCT LEVEL)	SEE PAGE
	1	1	**330-7621**	1	HOSE-BREATHER	
	2	1	**330-7622**	2	CLIP	
M	3	1	**5C-9553**	2	BOLT (M6X1X16-MM)	
	4	1	**9X-8256**	2	WASHER (6.6X12X2-MM THK)	
	5	1	**315-8697**	1	CLIP HOSE	
	6	1	**253-5512**	1	CLIP	
	7	1	**315-7701**	2	SCREW	
	8	1	**315-8698**	2	RETAINER-WASHER	
	9	1	**315-7702**	1	CLIP HOSE	
	10	1	**330-7620**	1	BRACKET-SUPPORT	
	11	1	**096-2500**	2	LOCKWASHER	

M-METRIC PART

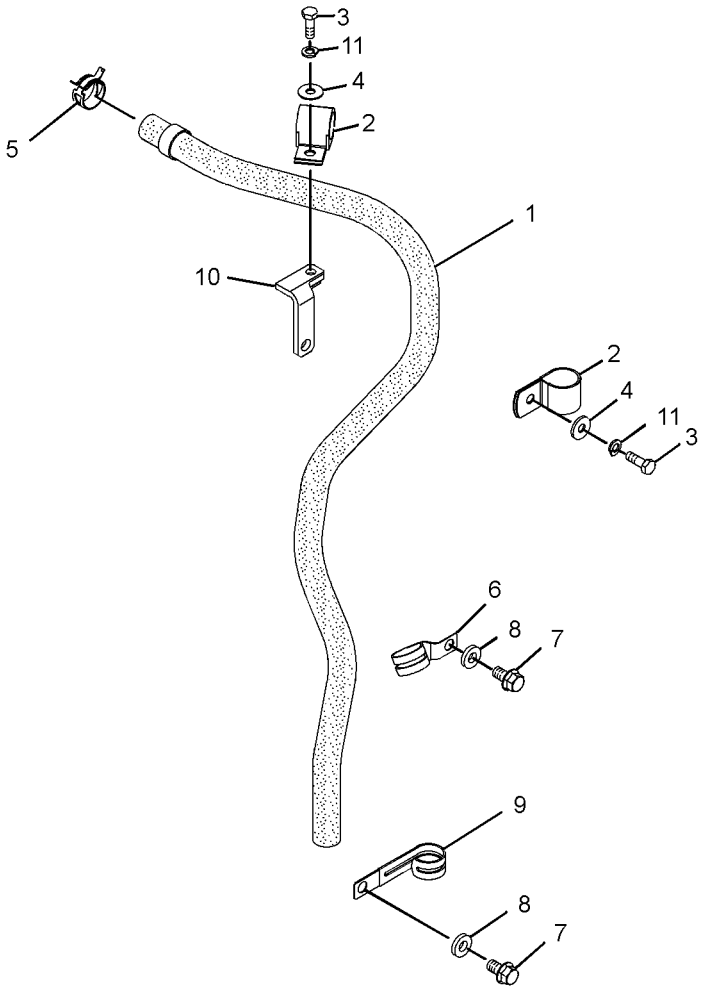

GRAPHIC #1 **<END>** g01802753

AIR INLET AND EXHAUST SYSTEM

317-5070 LINES GP-AIR

S/N: CJS60344-70000
PART OF 262-7288 ENGINE AR-PRIMARY
AN ATTACHMENT

SMCS-1071 **i02864898**

NOTE	REF NO	GRAPHIC REF	PART NUMBER	QTY	PART NAME 1 2 3 4 5 6 (PRODUCT LEVEL)	SEE PAGE
	1	1	**234-4837**	1	CLIP-HOSE	
	2	1	**253-5512**	1	CLIP	
	3	1	**315-7701**	3	SCREW	
	4	1	**315-7702**	1	CLIP HOSE	
	5	1	**315-8698**	3	RETAINER-WASHER	
	6	1	**317-5007**	1	HOSE	
	7	1	**317-5008**	1	CLIP	

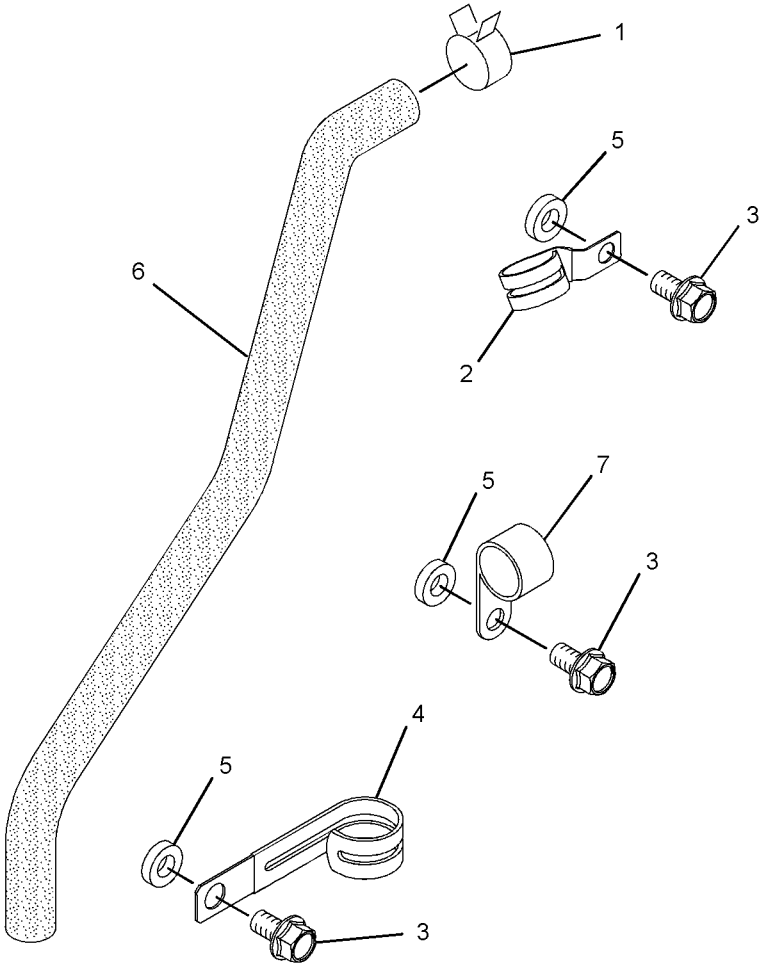

GRAPHIC #1 **<END>** g01429572

AIR INLET AND EXHAUST SYSTEM

287-5323 MANIFOLD GP-EXHAUST

S/N: CYM1-UP; CJS1-70000
PART OF 262-7288, 287-8073 ENGINE AR-PRIMARY
AN ATTACHMENT

SMCS-1059 **i03041710**

NOTE	REF NO	GRAPHIC REF	PART NUMBER	QTY	PART NAME 1 2 3 4 5 6 (PRODUCT LEVEL)	SEE PAGE
	1	1	**5I-7931**	4	STUD	
	2	1	**195-8260**	8	NUT (M8X1.25-THD)	
	3	1	**233-5460**	8	BOLT	
	4	1	**328-5192**	1	MANIFOLD-EXHAUST	
	5	1	**234-4824**	1	GASKET-MANIFOLD	

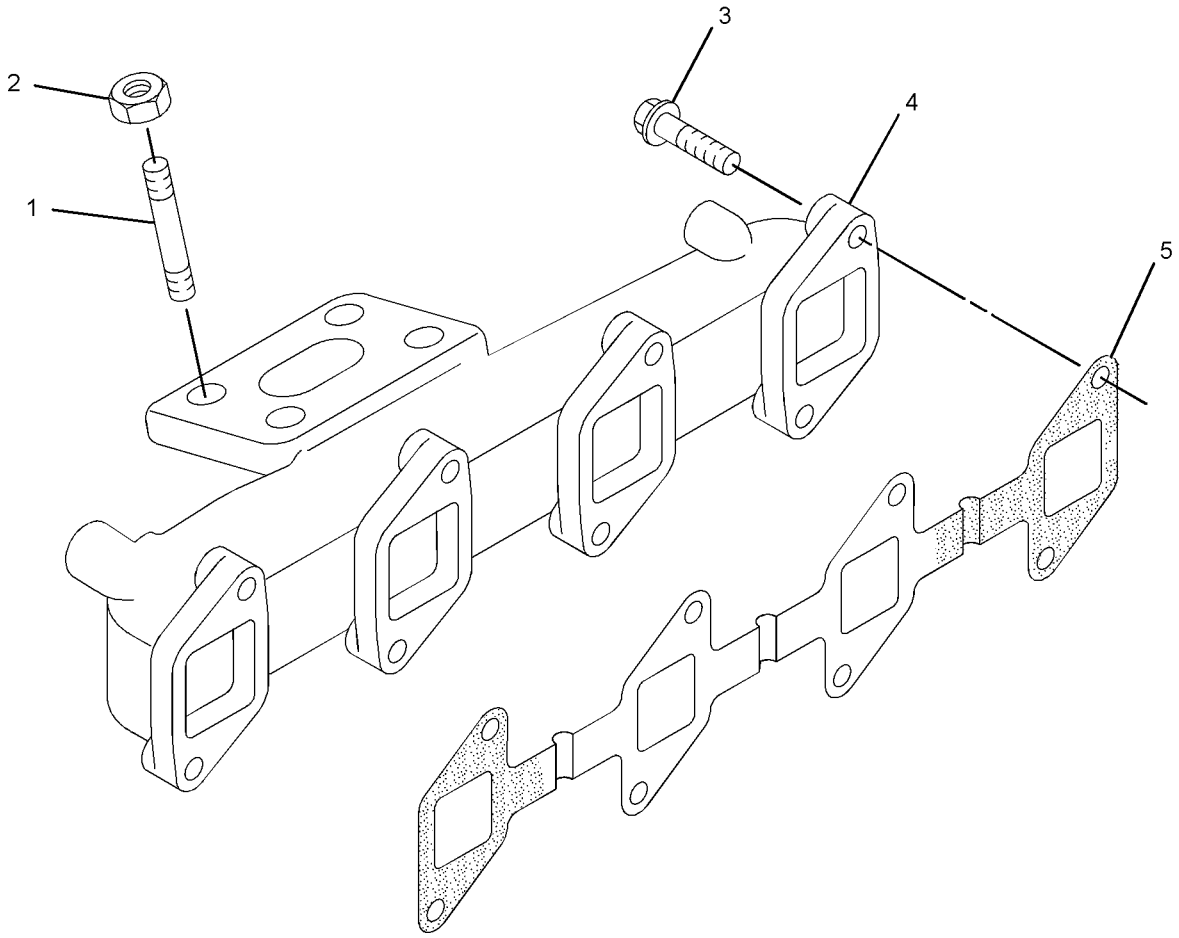

GRAPHIC #1 **<END>** g01327717

AIR INLET AND EXHAUST SYSTEM

287-4832 MANIFOLD GP-INLET

S/N: CYM1-UP; CJS1-70000
PART OF 262-7288, 287-8073 ENGINE AR-PRIMARY
AN ATTACHMENT

SMCS-1058 **i02568577**

NOTE	REF NO	GRAPHIC REF	PART NUMBER	QTY	PART NAME 1 2 3 4 5 6 (PRODUCT LEVEL)	SEE PAGE
	1	1	**234-4805**	1	MANIFOLD-INLET	
	2	1	**234-4806**	1	GASKET (INLET MANIFOLD)	
M	3	1	**099-3649**	12	BOLT (M8X1.25X40-MM)	
M	4	1	**8T-4177**	2	BOLT (M8X1.25X90-MM)	
	5	1	**3B-4505**	14	LOCKWASHER	
M	6	1	**7X-0818**	2	BOLT (M8X1.25X45-MM)	
	7	1	**8T-4224**	2	WASHER-HARD (8.8X16X2-MM THK)	

M-METRIC PART

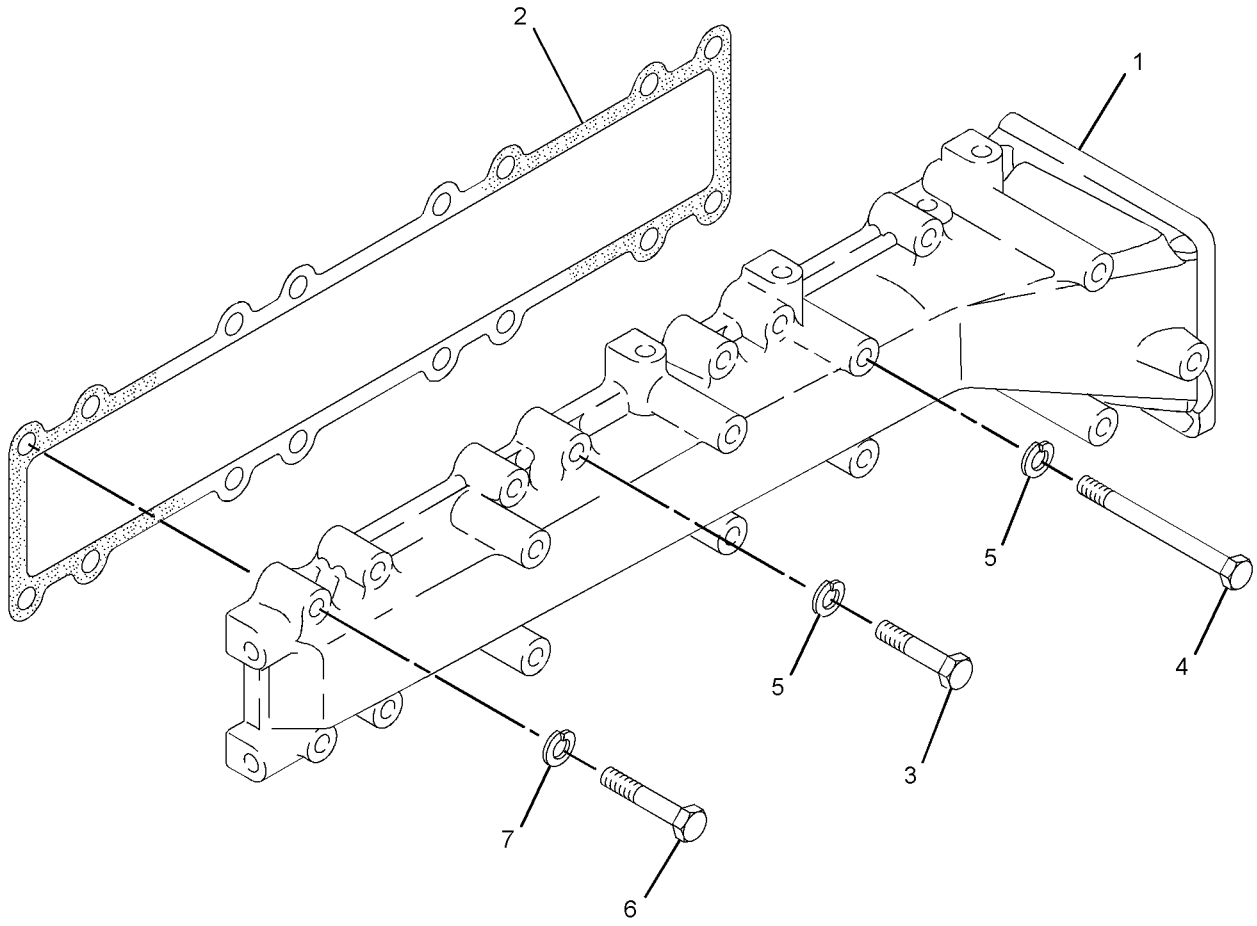

GRAPHIC #1 **<END>** g01327572

AIR INLET AND EXHAUST SYSTEM

258-2462 MUFFLER & MOUNTING GP

S/N: JAY1-UP
PART OF 258-3800 CONVERSION AR-ROADING
AN ATTACHMENT

SMCS-1062 **i02930638**

NOTE	REF NO	GRAPHIC REF	PART NUMBER	QTY	PART NAME 1 2 3 4 5 6 (PRODUCT LEVEL)	SEE PAGE
	1	1	**5I-8111**	1	GASKET	
	2	1	**198-4776**	3	WASHER-HARD (8.8X20X8-MM THK)	
	3	1	**258-2419**	1	MUFFLER AS	
	4	1	**280-8240**	1	PLATE	
	5	1	**232-3121**	1	NUT (M10X1.25-THD)	
	6	1	**280-8341**	2	SPACER (8.7X15.8X21.1-MM THK)	
M	7	1	**8T-7547**	3	BOLT (M8X1.25X30-MM)	
	8	1	**280-8377**	1	SPACER (11.1X19.1X25-MM THK)	
M	9	1	**305-5385**	2	BOLT (M8X1.25X50-MM)	

M-METRIC PART

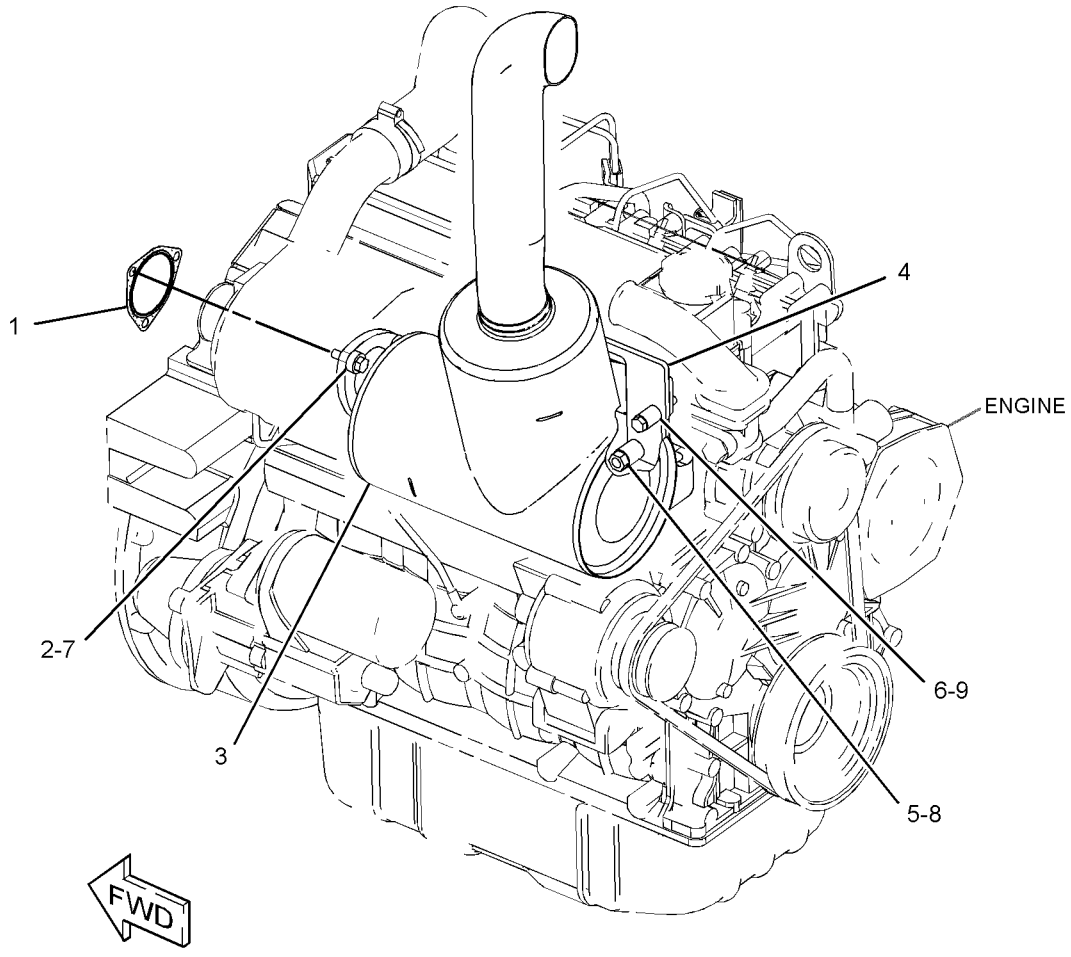

GRAPHIC #1 **<END>** g01457027

280-8347 MUFFLER GP

S/N: JAY1-UP
PART OF 258-3818, 258-3819, 315-6353 CONVERSION AR-MACHINE, 258-3801 CONVERSION AR-ROADING
AN ATTACHMENT

SMCS-1062 **i02948043**

NOTE	REF NO	GRAPHIC REF	PART NUMBER	QTY	PART NAME 1 2 3 4 5 6 (PRODUCT LEVEL)	SEE PAGE
	1	1	**5I-8111**	1	GASKET	
	2	1	**198-4776**	3	WASHER-HARD (8.8X20X8-MM THK)	
	3	1	**272-3050**	1	MUFFLER AS	
	4	1	**280-8240**	1	PLATE	
	5	1	**280-8341**	2	SPACER (8.7X15.8X21.1-MM THK)	
	6	1	**280-8377**	1	SPACER (11.1X19.1X25-MM THK)	
	7	1	**232-3121**	1	NUT (M10X1.25-THD)	
M	8	1	**305-5385**	2	BOLT (M8X1.25X50-MM)	
M	9	1	**8T-7547**	3	BOLT (M8X1.25X30-MM)	

M-METRIC PART

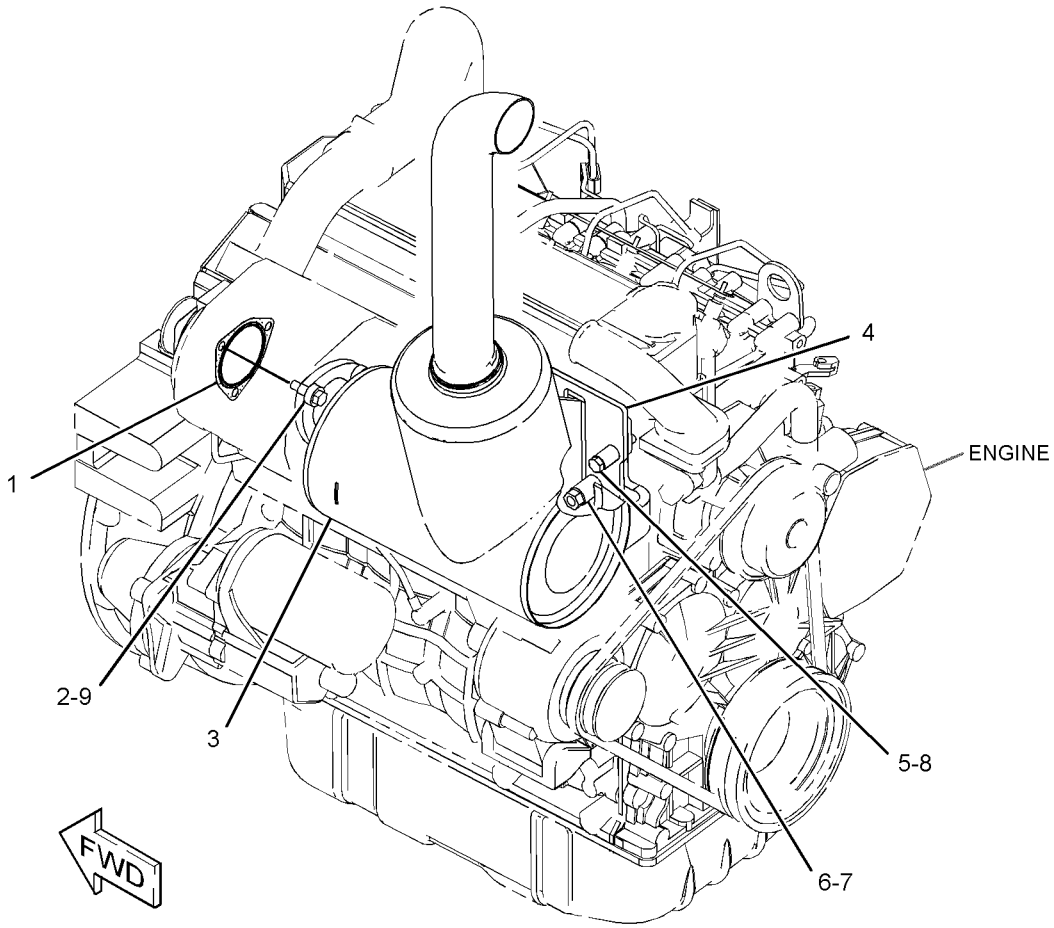

GRAPHIC #1 **<END>** g01556973

AIR INLET AND EXHAUST SYSTEM

235-5894 TURBOCHARGER GP

S/N: CJS1-70000

PART OF 262-7288 ENGINE AR-PRIMARY

AN ATTACHMENT

SMCS-1052, 1053 **i02524388**

NOTE	REF NO	GRAPHIC REF	PART NUMBER	QTY	PART NAME 1 2 3 4 5 6 (PRODUCT LEVEL)	SEE PAGE
	1	1	**5I-7933**	1	GASKET	
	2	1	**5I-5077**	2	CLAMP	
	3	1	**5I-7623**	1	BOLT	
	4	1	**235-4964**	1	TURBOCHARGER GP	
	5	1	**5I-7689**	1	GASKET	
	6	1	**5I-8109**	1	HOSE	
	7	1	**5I-8110**	1	ELBOW	
M	8	1	**6V-7357**	1	BOLT (M6X1X25-MM)	
	9	1	**096-2500**	3	LOCKWASHER	
	10	1	**191-3206**	4	GASKET	
M	11	1	**6V-2317**	2	BOLT (M8X1.25X30-MM)	
	12	1	**9M-1974**	2	WASHER-HARD (8.8X16X2-MM THK)	
	13	1	**5P-0597**	1	CLAMP-HOSE	
	14	1	**5P-4868**	1	CLAMP-HOSE	
	15	1	**234-4818**	1	GASKET	
	16	1	**234-4819**	1	HOSE	
	17	1	**234-4820**	1	PIPE	
	18	1	**234-4821**	1	PIPE	
	19	1	**234-4822**	2	CLAMP	
	20	1	**235-4966**	1	BOLT	
	21	1	**235-4967**	1	CONNECTOR	
	22	1	**235-4968**	1	PIPE	
M	23	1	**5C-2890**	1	NUT (M6X1-THD)	
M	24	1	**5C-9553**	2	BOLT (M6X1X16-MM)	

M-METRIC PART

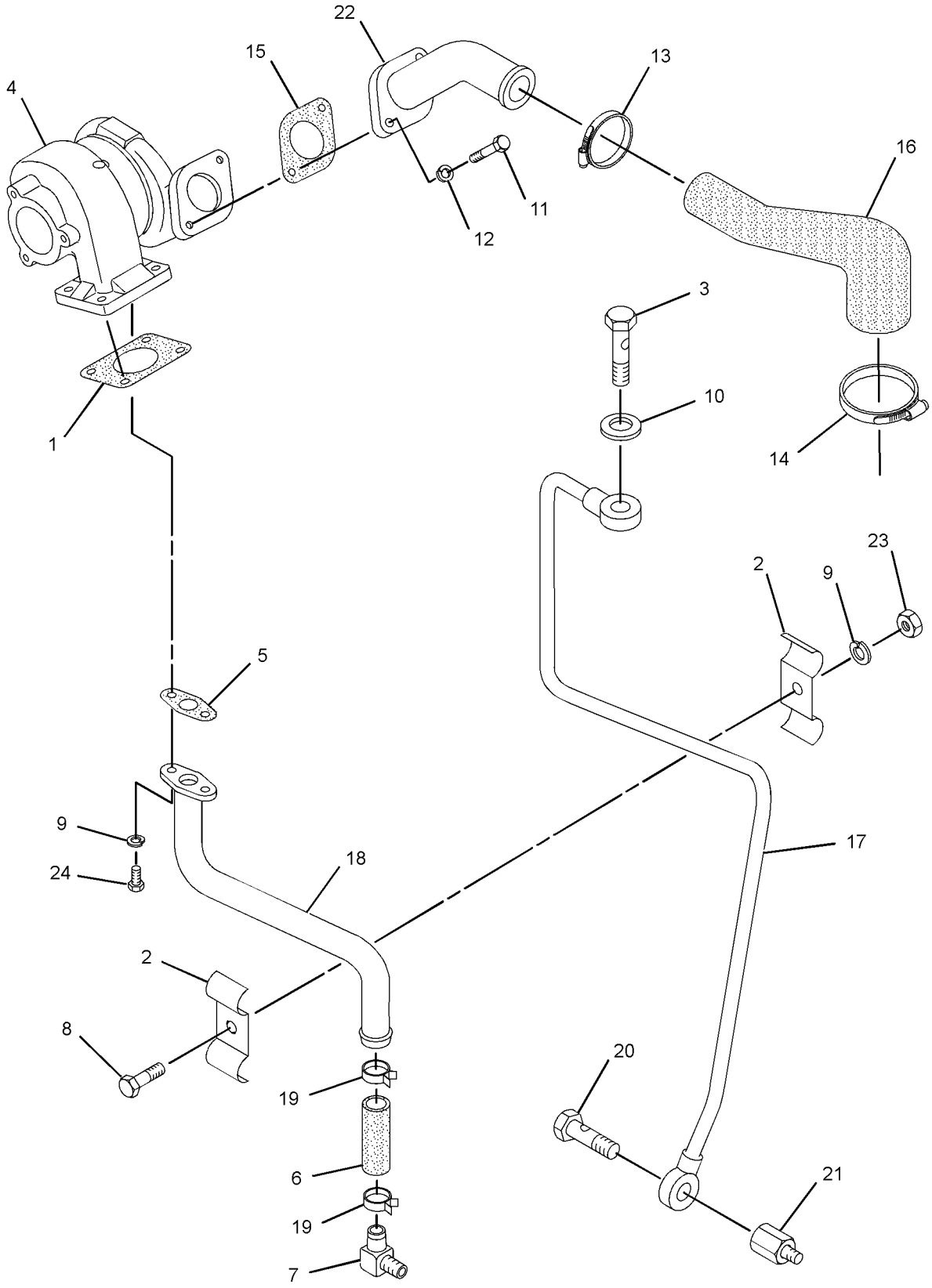

GRAPHIC #1 **<END>** g01345914

AIR INLET AND EXHAUST SYSTEM

315-7768 TURBOCHARGER GP

S/N: CYM1-UP
PART OF 287-8073 ENGINE AR-PRIMARY
AN ATTACHMENT

SMCS-1052, 1053 **i02883798**

NOTE	REF NO	GRAPHIC REF	PART NUMBER	QTY	PART NAME 1 2 3 4 5 6 (PRODUCT LEVEL)	SEE PAGE
M	1	1	**5C-2890**	1	NUT (M6X1-THD)	
M	2	1	**5C-9553**	2	BOLT (M6X1X16-MM)	
	3	1	**5I-5077**	2	CLAMP	
	4	1	**5I-7623**	1	BOLT (M10X1.25X20-MM)	
	5	1	**5I-7689**	1	GASKET	
	6	1	**5I-7933**	1	GASKET	
	7	1	**5I-8109**	1	HOSE	
	8	1	**5I-8110**	1	ELBOW	
M	9	1	**6V-2317**	2	BOLT (M8X1.25X30-MM)	
M	10	1	**6V-7357**	1	BOLT (M6X1X25-MM)	
	11	1	**9M-1974**	2	WASHER-HARD (8.8X16X2-MM THK)	
	12	1	**096-2500**	3	LOCKWASHER	
	13	1	**191-3206**	4	GASKET	
	14	1	**5P-0597**	1	CLAMP-HOSE	
	15	1	**5P-4868**	1	CLAMP-HOSE	
	16	1	**234-4818**	1	GASKET	
	17	1	**234-4820**	1	PIPE	
	18	1	**234-4821**	1	PIPE	
	19	1	**234-4822**	2	CLAMP	
	20	1	**235-4966**	1	BOLT	
	21	1	**235-4967**	1	CONNECTOR	
	22	1	**235-4968**	1	PIPE	
	23	1	**314-9972**	1	TURBOCHARGER AS	
	24	1	**314-9974**	1	HOSE-AIR	

M-METRIC PART

315-7768 **TURBOCHARGER GP** *(contd.)* **i02883798**

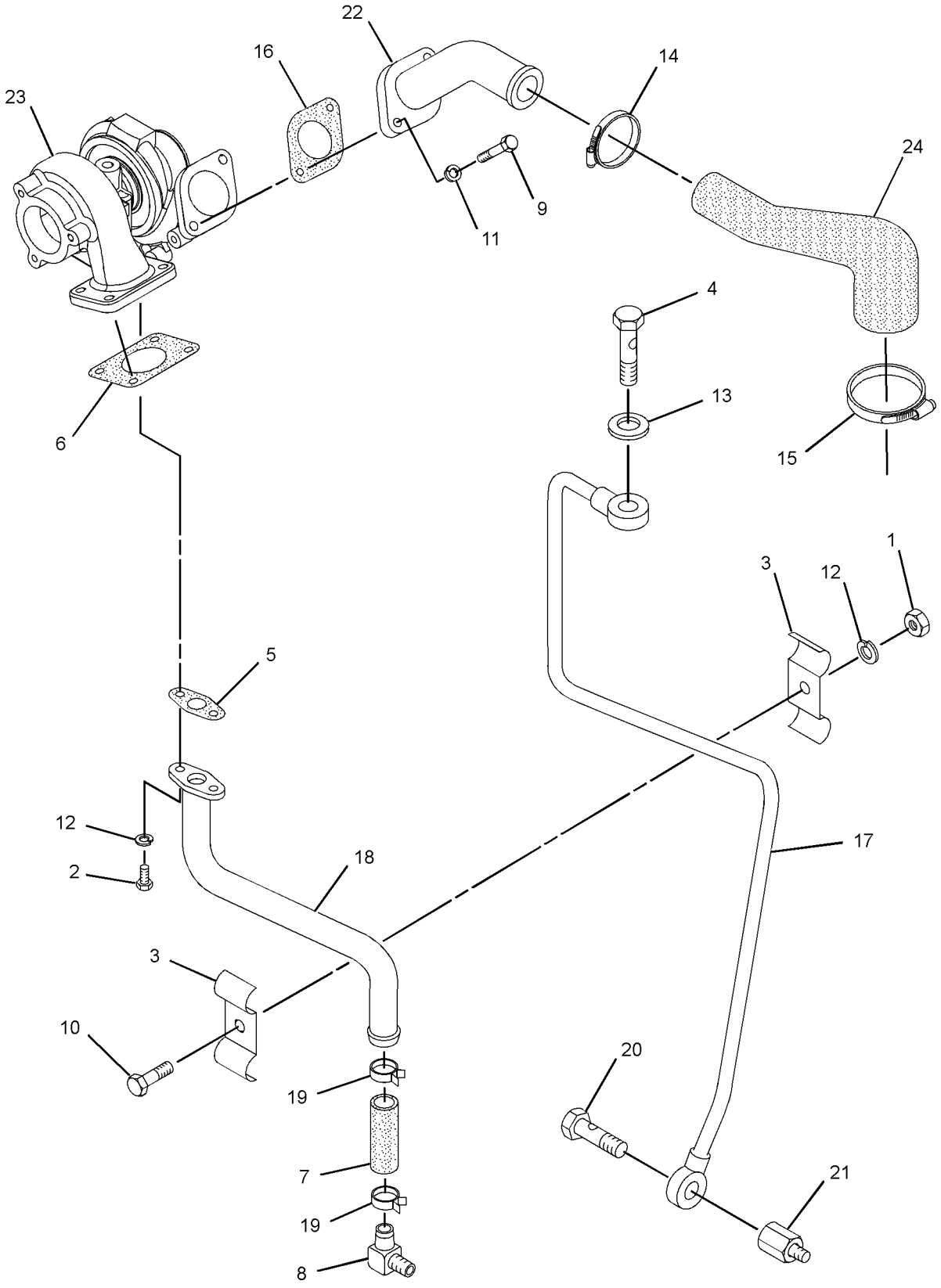

GRAPHIC #1 **<END>** g01445155

FUEL SYSTEM

280-6340 CONTROL GP-GOVERNOR

S/N: JAY1-2059

PART OF 258-2410 CHASSIS AR

SMCS-1265, 1276 **i02792818**

NOTE	REF NO	GRAPHIC REF	PART NUMBER	QTY	PART NAME 1 2 3 4 5 6 (PRODUCT LEVEL)	SEE PAGE
	1	1	**3S-2093**	2	STRAP-CABLE	
	2	1	**4P-7581**	1	CLIP	
	3	1	**8T-3984**	1	KNOB	
	4	1	**258-3727**	1	SCREW-TRUSS HEAD (NO 12X17.46-MM)	
	5	1	**258-4041**	1	BRACKET AS	
Y	6	1	**258-4045**	1	LEVER GP-GOVERNOR	721
	7	1	**258-4048**	1	BRACKET-STOP	
	8	1	**258-4372**	1	CLIP	
Y	9	1	*280-6342*	1	PEDAL GP-GOVERNOR	746
	10	1	**134-3987**	1	CLIP	
	11	1	**237-7296**	4	SCREW-FLAT HEAD (M6X1X35-MM)	
	12	1	**195-0936**	3	INSERT-THREADED (M6X1-THD)	
	13	1	**8T-4205**	3	WASHER-HARD (7.2X14.5X2-MM THK)	
	14	1	**5P-4116**	2	WASHER-HARD (8.8X20.5X2-MM THK)	
M	15	1	**8T-4138**	3	BOLT (M6X1X20-MM)	
M	16	1	**3E-8020**	2	SCREW-TRUSS HEAD (M6X1X25-MM)	
	17	1	**9X-2038**	2	WASHER (7X19X2-MM THK)	
	18	1	**258-4242**	1	PIN-CLEVIS	
	19	1	**258-4243**	1	LINK	
	20	1	**258-4244**	1	CLIP-SPRING	

M-METRIC PART
Y-SEPARATE ILLUSTRATION

280-6340 **CONTROL GP-GOVERNOR** *(contd.)* **i02792818**

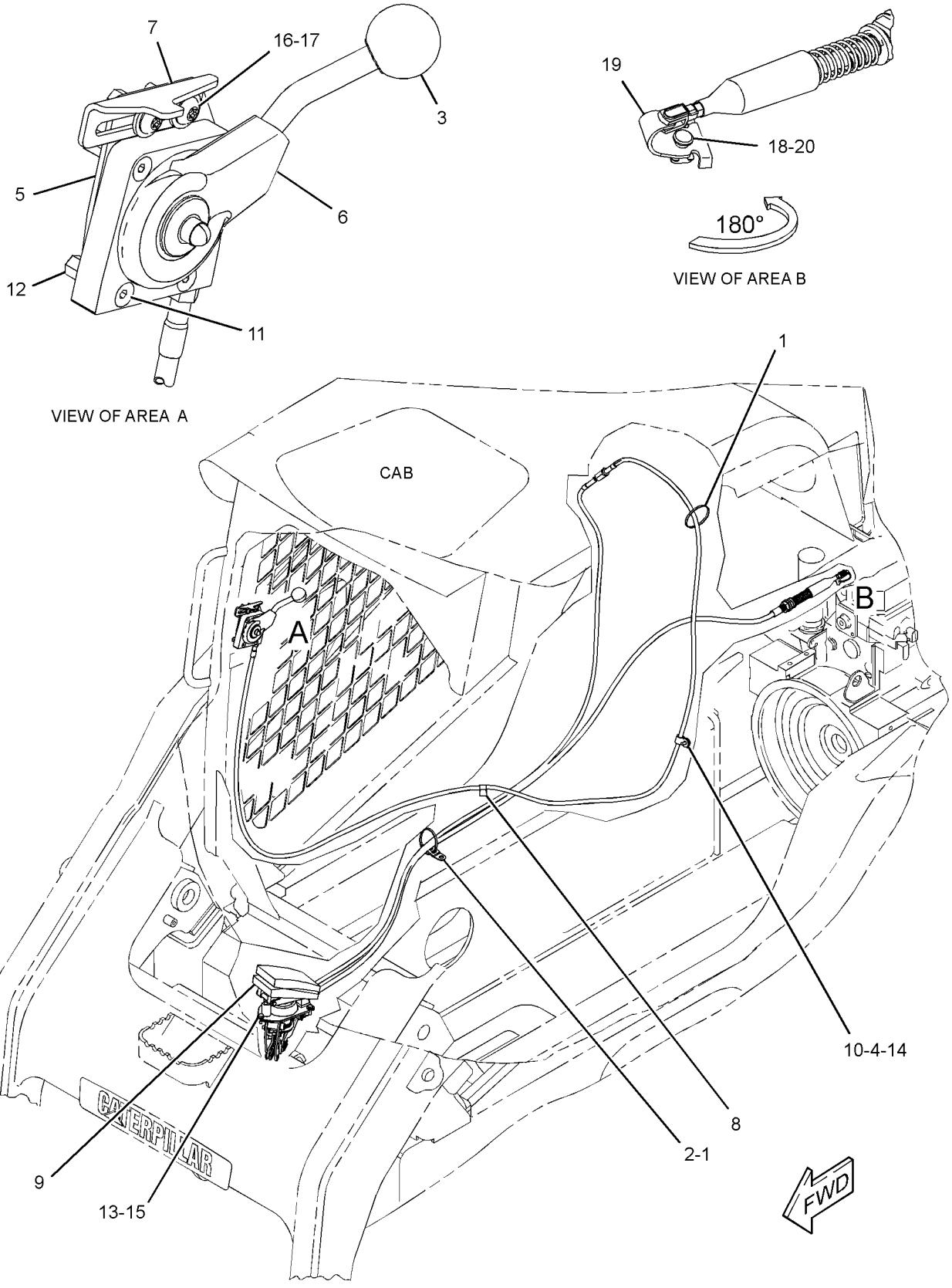

GRAPHIC #1 **<END>** g01413055

FUEL SYSTEM

295-7463 CONTROL GP-GOVERNOR

S/N: JAY2060-UP

PART OF 295-7291 CHASSIS AR

SMCS-1265, 1276 **i02908850**

NOTE	REF NO	GRAPHIC REF	PART NUMBER	QTY	PART NAME 1 2 3 4 5 6 (PRODUCT LEVEL)	SEE PAGE
	1	1	**4P-7581**	1	CLIP (LADDER)	
	2	1	**8T-3984**	1	KNOB	
	3	1	**9X-2038**	2	WASHER (7X19X2-MM THK)	
	4	1	**237-7296**	4	SCREW-FLAT HEAD (M6X1X35-MM)	
	5	1	**258-3727**	1	SCREW-TRUSS HEAD (NO 12X17.46-MM)	
	6	1	**258-4041**	1	BRACKET AS	
Y	7	1	**258-4045**	1	LEVER GP-GOVERNOR	721
	8	1	**258-4048**	1	BRACKET-STOP	
	9	1	**258-4372**	1	CLIP	
Y	10	1	*280-6342*	1	PEDAL GP-GOVERNOR	746
	11	1	**134-3987**	1	CLIP (LOOP)	
	12	1	**195-0936**	3	INSERT-THREADED (M6X1-THD)	
M	13	1	**3E-8020**	2	SCREW-TRUSS HEAD (M6X1X25-MM)	
	14	1	**3S-2093**	2	STRAP-CABLE	
	15	1	**5P-4116**	2	WASHER-HARD (8.8X20.5X2-MM THK)	
M	16	1	**8T-4138**	3	BOLT (M6X1X20-MM)	
	17	1	**8T-4205**	3	WASHER-HARD (7.2X14.5X2-MM THK)	

M-METRIC PART
Y-SEPARATE ILLUSTRATION

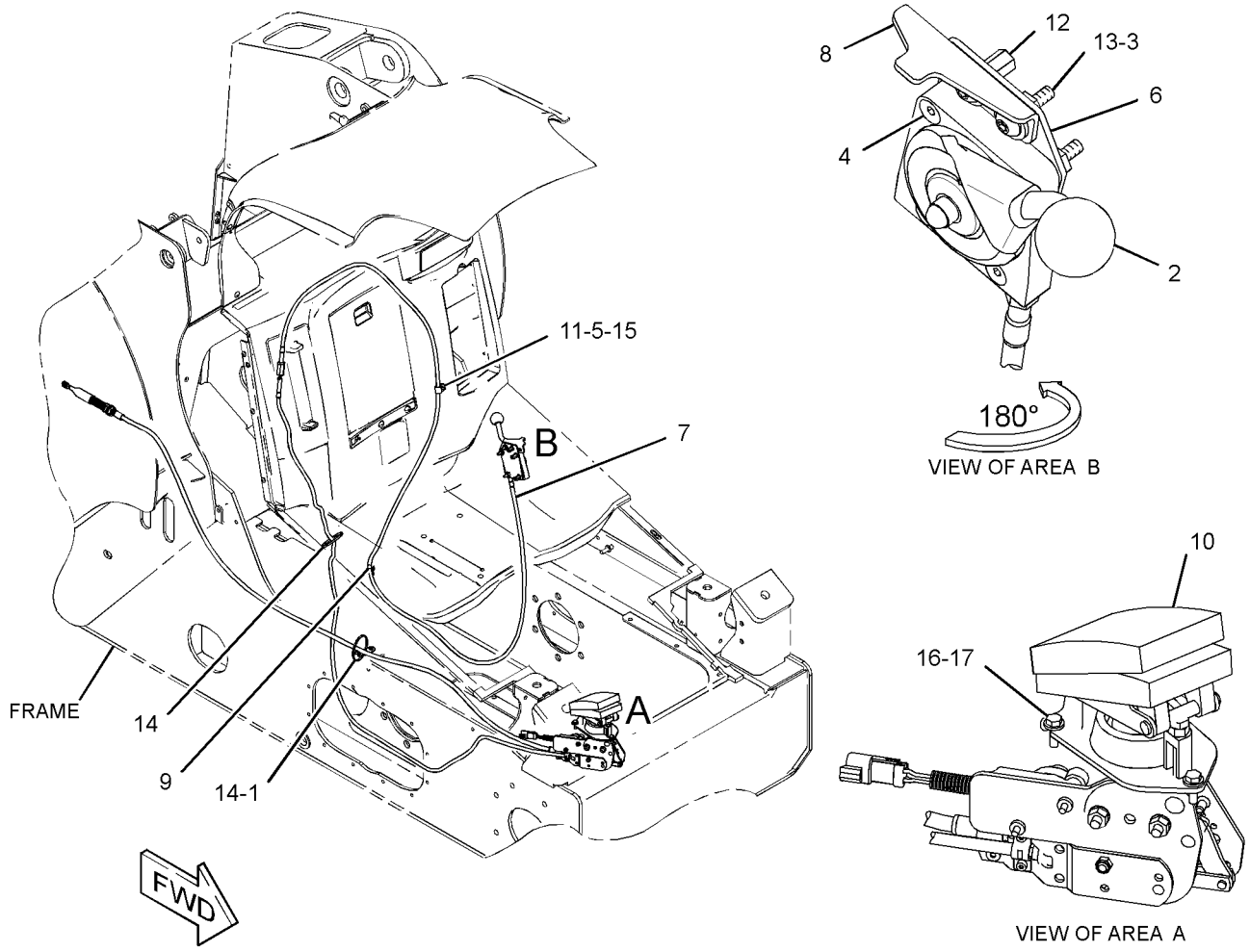

GRAPHIC #1 **<END>** g01454060

FUEL SYSTEM

295-7029 LINES GP-FUEL

S/N: JAY2060-UP

PART OF 295-7291 CHASSIS AR

SMCS-1274 **i03468620**

NOTE	REF NO	GRAPHIC REF	PART NUMBER	QTY	PART NAME 1 2 3 4 5 6 (PRODUCT LEVEL)	SEE PAGE
	1	1	**1P-4278**	8	CLAMP-HOSE	
	2	1	**3S-2093**	4	STRAP-CABLE	
	3	1	**5P-4961**	2	CLAMP-HOSE	
	4	1	**069-4080**	1	FITTING	
	5	1	**206-2423**	2	SADDLE	
	6	1	**246-2622**	2	ELBOW	
	7	1	**258-3442**	1	PUMP GP-FUEL PRM & PRIM FILTER (WATER SEPARATOR)	
J		1	**112-9401**	1	BOWL AS-WATER COLLECTION	
		1	**118-8118**	1	RING-RETAINING	
		1	**228-9132**	1	FITTING	
		1	**233-9856**	1	FILTER AS-WATER SEP & FUEL	
	8	1	**258-3530**	1	TUBE AS	
	9	1	**258-3532**	1	BRACKET AS	
E	10	1	**295-7072**		HOSE (203-CM)	
E	11	1	**295-7125**		HOSE (122-CM)	
	12	1	**195-8372**	1	CLIP	
M	13	1	**266-3315**	3	BOLT-FLANGE HEAD (M8X1.25X25.5-MM)	
	14	1	**4D-6466**	5	CLIP	
	15	1	**4K-8864**	2	CLIP	
M	16	1	**5C-9553**	3	BOLT (M6X1X16-MM)	
	17	1	**5K-8451**	1	CLIP	
	18	1	**7H-7055**	2	CLIP	
	19	1	**8T-4121**	4	WASHER-HARD (11X21X2.5-MM THK)	
M	20	1	**8T-4136**	2	BOLT (M10X1.5X25-MM)	
M	21	1	**8T-4196**	2	BOLT (M10X1.5X35-MM)	
	22	1	**8T-4205**	3	WASHER-HARD (7.2X14.5X2-MM THK)	
	23	1	**8T-4224**	4	WASHER-HARD (8.8X16X2-MM THK)	
M	24	1	**8T-4908**	4	BOLT (M8X1.25X25-MM)	
	25	1	**9M-8406**	4	CLIP	
E	26	1	**5P-1420**		HOSE (62-CM)	
E	26A	1	**5P-1420**		HOSE (32-CM)	
E	27	1	**5P-1442**		HOSE (145-CM)	
E	28	1	**8C-3681**		HOSE (28-CM)	
					AVAILABLE REPAIR KIT(S):	
J			**128-8614**	1	KIT-SEAL (WATER SEPARATOR)	
					(INCLUDES SEALS)	

E-ORDER BY THE CENTIMETER
J-KIT MARKED J SERVICES PART MARKED J
M-METRIC PART

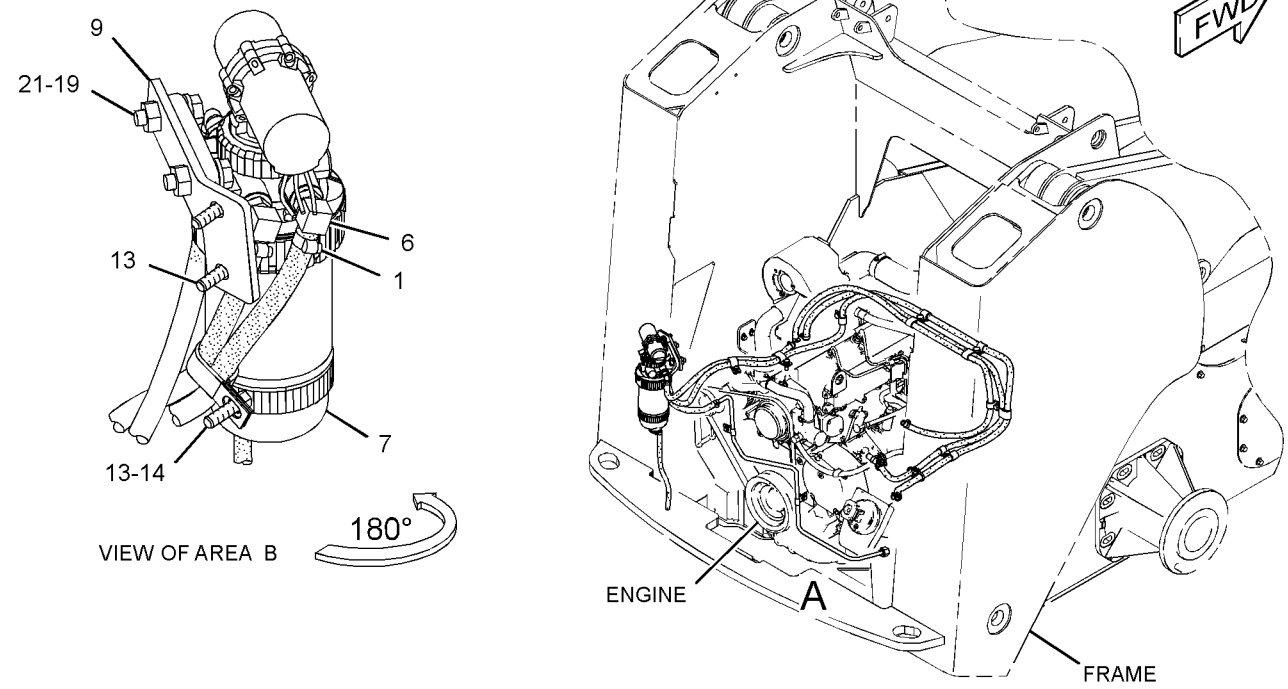

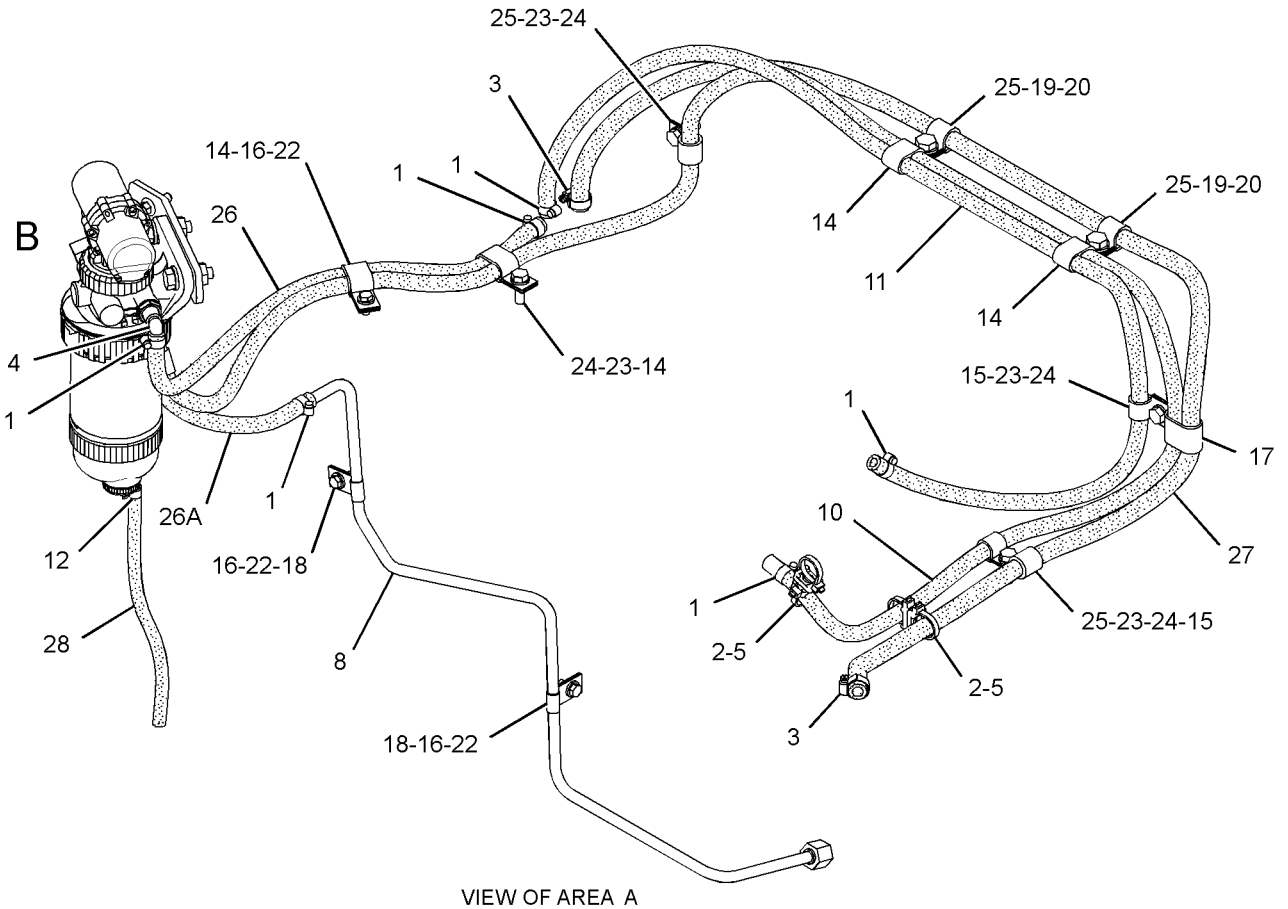

GRAPHIC #1 **<END>** g01825683

235-5901 LINES GP-FUEL INJECTION

S/N: CJS1-60343
PART OF 262-7288 ENGINE AR-PRIMARY
AN ATTACHMENT

SMCS-1252, 1254 **i02942222**

NOTE	REF NO	GRAPHIC REF	PART NUMBER	QTY	PART NAME 1 2 3 4 5 6 (PRODUCT LEVEL)	SEE PAGE
	1	1	**113-0363**	4	SUPPORT	
	2	1	**5P-0537**	5	WASHER-HARD (7.2X14.5X2-MM THK)	
M	3	1	**6V-2317**	4	BOLT (M8X1.25X30-MM)	
M	4	1	**8T-4908**	2	BOLT (M8X1.25X25-MM)	
M	5	1	**6V-5215**	3	BOLT (M8X1.25X16-MM)	
	7	1	**9M-1974**	9	WASHER-HARD (8.8X16X2-MM THK)	
	8	1	**113-0364**	4	HOSE	
	9	1	**122-8948**	7	CLAMP	
	10	1	**122-8949**	3	CLAMP	
	11	1	**195-8355**	4	GASKET	
	13	1	**094-7235**	1	CAP	
	14	1	**234-4809**	2	WASHER-SPECIAL	
	15	1	**239-0687**	1	TUBE	
	16	1	**239-0719**	1	TUBE AS-FUEL INJECTION (CYL. NO. 1)	
	17	1	**239-0720**	1	TUBE AS-FUEL INJECTION (CYL. NO. 2)	
	18	1	**239-0721**	1	TUBE AS-FUEL INJECTION (CYL. NO.3)	
	19	1	**239-0722**	1	TUBE AS-FUEL INJECTION (CYL. NO.4)	
	20	1	**239-0728**	1	STAY	
	21	1	**239-0729**	1	SUPPORT	
	22	1	*239-0734*	4	NOZZLE AS	
					(EACH INCLUDES)	
		1	**300-2952**	1	NOZZLE	
B		1	**096-8994**		SHIM (0.7-MM THK)	
B		1	**099-7519**		SHIM (0.75-MM THK)	
B		1	**099-7520**		SHIM (0.8-MM THK)	
B		1	**099-7521**		SHIM (0.85-MM THK)	
B		1	**096-8995**		SHIM (0.9-MM THK)	
B		1	**096-8996**		SHIM (0.98-MM THK)	
B		1	**099-7522**		SHIM (1.03-MM THK)	
B		1	**099-7523**		SHIM (1.08-MM THK)	
B		1	**099-7524**		SHIM (1.13-MM THK)	
B		1	**102-7341**		SHIM (1.15-MM THK)	
B		1	**099-7525**		SHIM (1.18-MM THK)	
B		1	**102-7342**		SHIM (1.20-MM THK)	
B		1	**096-8997**		SHIM (1.23-MM THK)	
B		1	**104-8039**		SHIM (1.25-MM THK)	
B		1	**102-7343**		SHIM (1.30-MM THK)	
B		1	**102-7344**		SHIM (1.35-MM THK)	
B		1	**102-7345**		SHIM (1.40-MM THK)	
B		1	**102-7346**		SHIM (1.45-MM THK)	
B		1	**102-7347**		SHIM (1.50-MM THK)	
B		1	**102-7348**		SHIM (1.55-MM THK)	
B		1	**102-7349**		SHIM (1.60-MM THK)	
B		1	**102-7350**		SHIM (1.65-MM THK)	
B		1	**102-7351**		SHIM (1.70-MM THK)	
B		1	**096-8990**		SHIM (1.80-MM THK)	
	23	1	**294-5520**	1	STAY	
M	24	1	**195-8364**	5	BOLT AS	
	25	1	**196-8356**	8	CLIP	

B-USE AS REQUIRED
M-METRIC PART

235-5901 **LINES GP-FUEL INJECTION** *(contd.)* **i02942222**

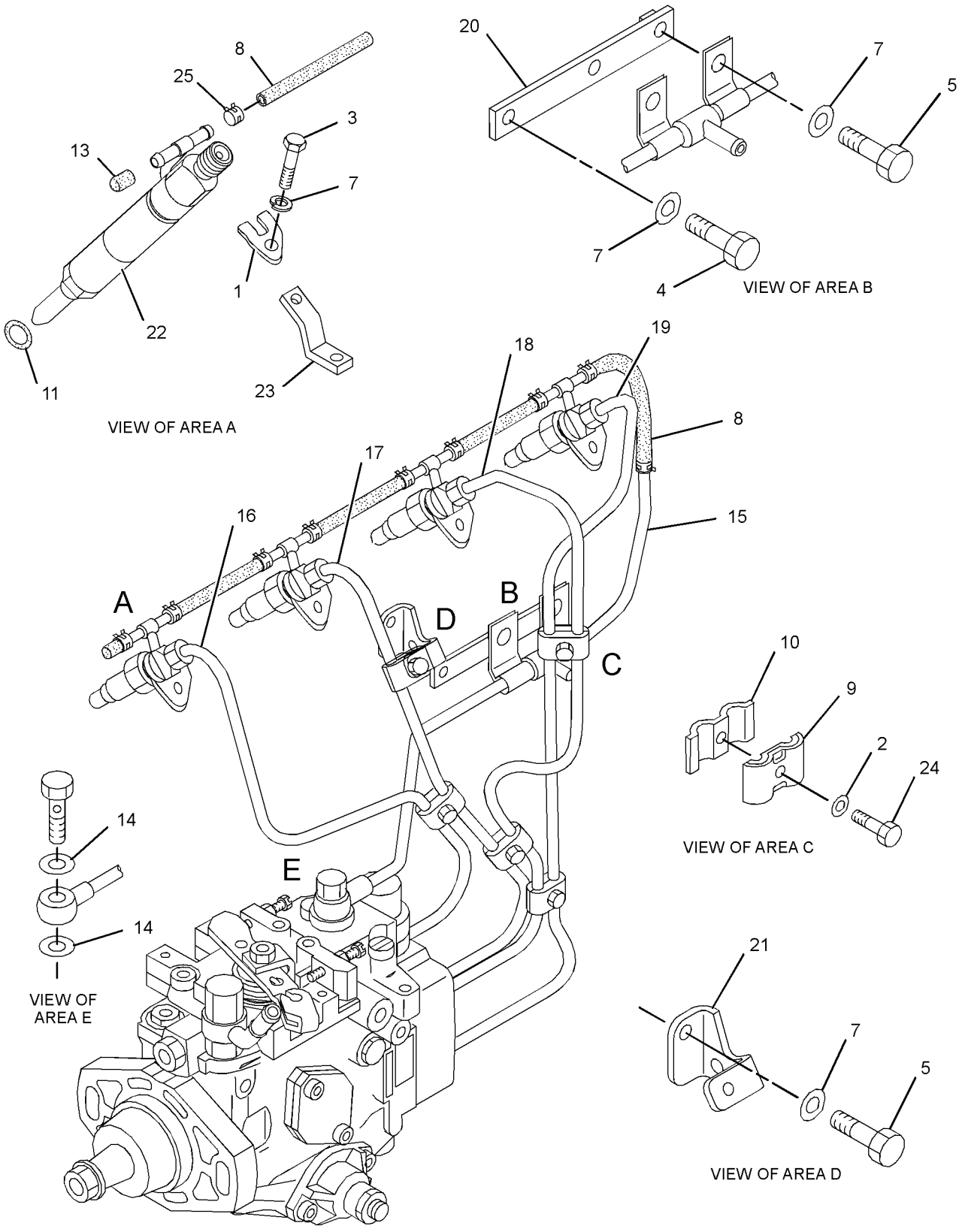

GRAPHIC #1 **<END>** g01461768

315-8350 LINES GP-FUEL INJECTION

S/N: CYM1-UP

PART OF 287-8073 ENGINE AR-PRIMARY

AN ATTACHMENT

SMCS-1252, 1254 **i02883793**

NOTE	REF NO	GRAPHIC REF	PART NUMBER	QTY	PART NAME 1 2 3 4 5 6 (PRODUCT LEVEL)	SEE PAGE
	1	1	**3B-4505**	2	LOCKWASHER	
M	2	1	**6V-2317**	4	BOLT (M8X1.25X30-MM)	
M	3	1	**8T-4200**	2	BOLT (M8X1.25X16-MM)	
	4	1	**9M-1974**	4	WASHER-HARD (8.8X16X2-MM THK)	
	5	1	**094-7235**	1	CAP	
	6	1	**113-0363**	4	SUPPORT	
	7	1	**113-0364**	4	HOSE	
	8	1	**122-8948**	6	CLAMP	
	9	1	**122-8949**	2	CLAMP	
M	10	1	**195-8364**	4	BOLT AS	
	11	1	**196-8356**	8	CLIP	
	12	1	**314-9980**	1	TUBE (CYL NO. 1)	
	13	1	**314-9981**	1	TUBE (CYL NO. 2)	
	14	1	**314-9982**	1	TUBE (CYL NO. 3)	
	15	1	**314-9983**	1	TUBE (CYL NO. 4)	
	16	1	**314-9984**	4	WASHER	
	17	1	**314-9985**	4	INJECTOR AS	
					(EACH INCLUDES)	
		1	**314-9986**	1	NOZZLE AS-FUEL INJECTION	
	18	1	**314-9987**	1	TUBE	
	19	1	**314-9988**	1	BRACKET	
	20	1	**314-9989**	1	HOSE	

M-METRIC PART

315-8350 **LINES GP-FUEL INJECTION** *(contd.)* **i02883793**

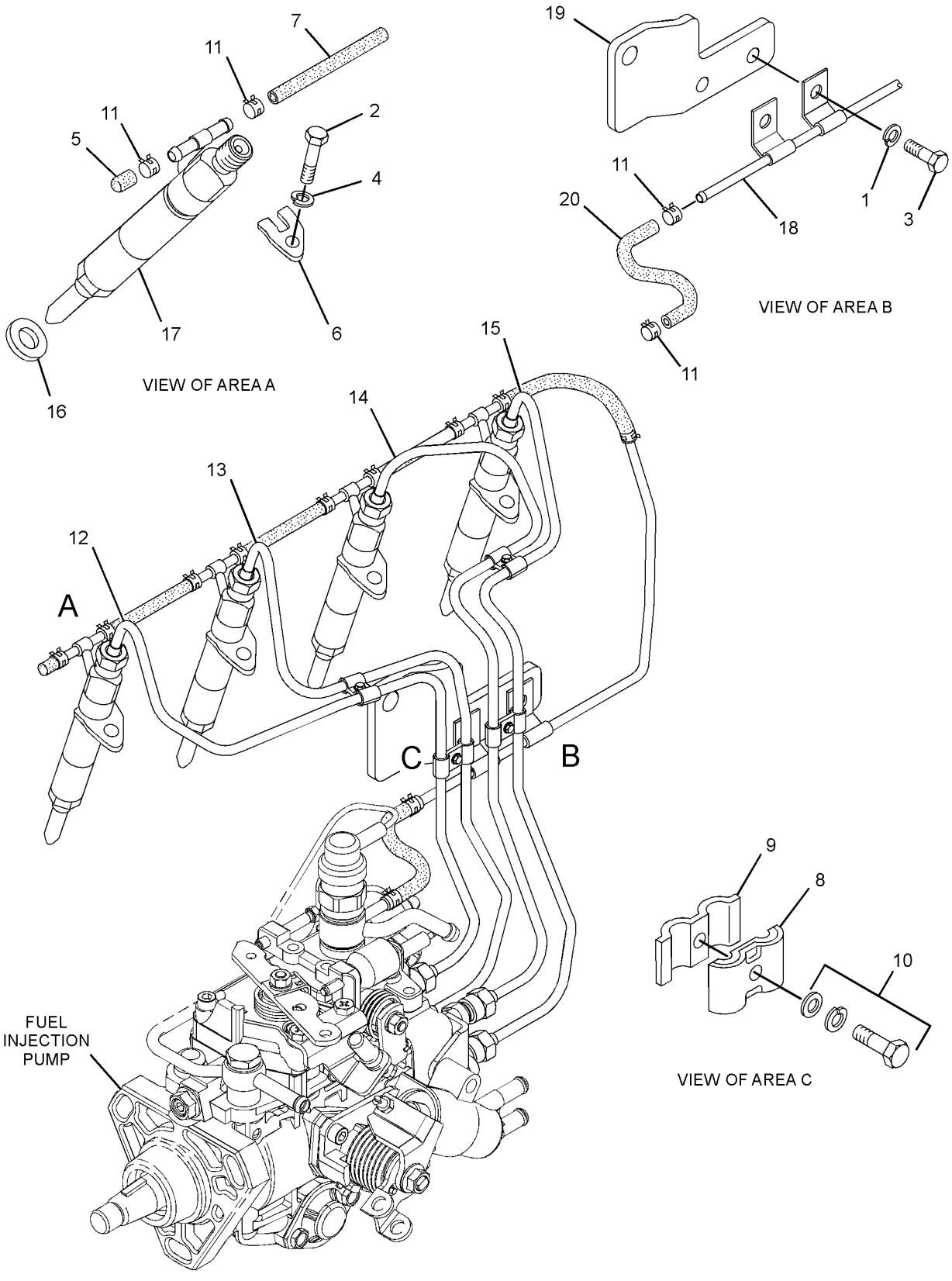

GRAPHIC #1 **<END>** g01395214

317-5057 LINES GP-FUEL INJECTION

S/N: CJS60344-70000

PART OF 262-7288 ENGINE AR-PRIMARY

AN ATTACHMENT

SMCS-1252, 1254 **i03464001**

NOTE	REF NO	GRAPHIC REF	PART NUMBER	QTY	PART NAME 1 2 3 4 5 6 (PRODUCT LEVEL)	SEE PAGE
	1	1	**3B-4505**	3	LOCKWASHER	
M	2	1	**6V-2317**	4	BOLT (M8X1.25X30-MM)	
M	3	1	**8T-4200**	3	BOLT (M8X1.25X16-MM)	
M	4	1	**8T-4908**	2	BOLT (M8X1.25X25-MM)	
	5	1	**9M-1974**	6	WASHER-HARD (8.8X16X2-MM THK)	
	6	1	**094-7235**	1	CAP	
	7	1	**113-0363**	4	SUPPORT	
	8	1	**113-0364**	4	HOSE	
	9	1	**122-8948**	7	CLAMP	
	10	1	**122-8949**	3	CLAMP	
	11	1	**195-8355**	4	GASKET	
M	12	1	**195-8364**	5	BOLT AS	
	13	1	**196-8356**	8	CLIP	
	14	1	**227-1028**	4	NOZZLE AS	
	15	1	**234-4809**	2	WASHER-SPECIAL	
	16	1	**239-0687**	1	TUBE	
	17	1	**239-0719**	1	TUBE AS-FUEL INJECTION (NO. 1)	
	18	1	**239-0720**	1	TUBE AS-FUEL INJECTION (NO. 2)	
	19	1	**239-0721**	1	TUBE AS-FUEL INJECTION (NO. 3)	
	20	1	**239-0722**	1	TUBE AS-FUEL INJECTION (NO. 4)	
	21	1	**239-0728**	1	STAY	
	22	1	**239-0729**	1	SUPPORT	
	23	1	**294-5520**	1	STAY	

M-METRIC PART

317-5057 **LINES GP-FUEL INJECTION** *(contd.)* **i03464001**

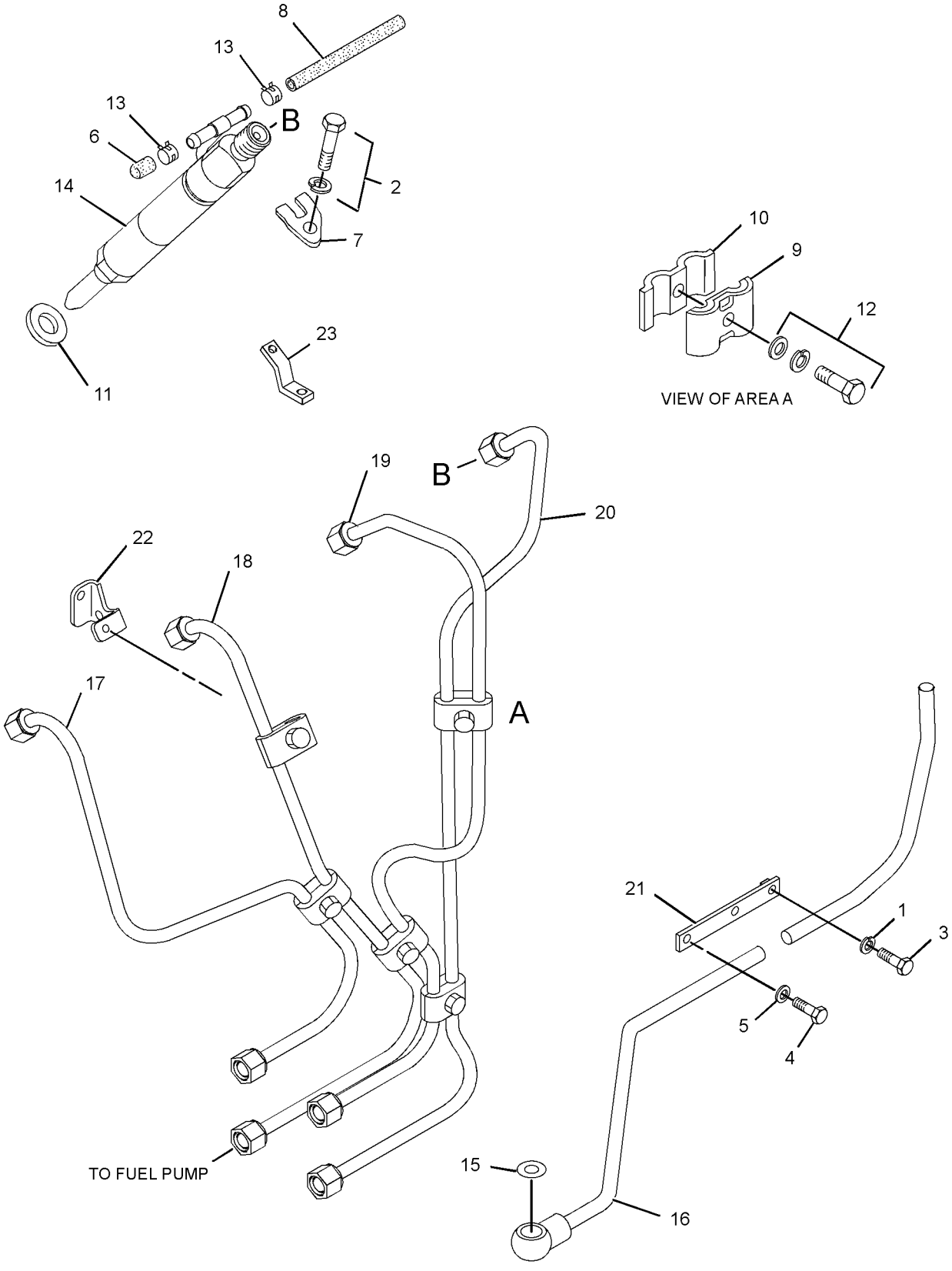

GRAPHIC #1 **<END>** g01874282

FUEL SYSTEM

258-2444 LINES GP-FUEL PRM & FILTER

S/N: JAY1-1749

PART OF 258-2410 CHASSIS AR

SMCS-1258, 1263, 1274 **i02760084**

NOTE	REF NO	GRAPHIC REF	PART NUMBER	QTY	PART NAME 1 2 3 4 5 6 (PRODUCT LEVEL)	SEE PAGE
	1	1	**1P-4278**	8	CLAMP-HOSE	
	2	1	**5P-4961**	2	CLAMP-HOSE	
	3	1	**069-4080**	1	FITTING	
	4	1	**246-2622**	2	ELBOW	
	5	1	**258-3442**	1	PUMP GP-FUEL PRM & PRIM FILTER (WATER SEPARATOR)	
J		1	**112-9401**	1	BOWL AS-WATER COLLECTION	
		1	**118-8118**	1	RING-RETAINING	
		1	**228-9132**	1	FITTING	
		1	**233-9856**	1	FILTER AS-WATER SEP & FUEL	
	6	1	**258-3530**	1	TUBE AS	
	7	1	**258-3532**	1	BRACKET AS	
	8	1	**258-3662**	1	HOSE	
	9	1	**195-8372**	1	CLIP	
M	10	1	**266-3315**	3	BOLT-FLANGE HEAD (M8X1.25X25.5-MM)	
	11	1	**4D-6466**	5	CLIP	
	12	1	**4K-8864**	2	CLIP	
M	13	1	**5C-9553**	3	BOLT (M6X1X16-MM)	
	14	1	**7H-7055**	2	CLIP	
	15	1	**8T-4121**	4	WASHER-HARD (11X21X2.5-MM THK)	
M	16	1	**8T-4136**	2	BOLT (M10X1.5X25-MM)	
M	17	1	**8T-4196**	2	BOLT (M10X1.5X35-MM)	
	18	1	**8T-4205**	3	WASHER-HARD (7.2X14.5X2-MM THK)	
	19	1	**8T-4224**	4	WASHER-HARD (8.8X16X2-MM THK)	
M	20	1	**8T-4908**	4	BOLT (M8X1.25X25-MM)	
	21	1	**9M-8406**	5	CLIP	
E	23	1	**5P-1442**		HOSE (144-CM)	
E	24	1	**8C-3681**		HOSE (28-CM)	
					AVAILABLE REPAIR KIT(S):	
J			**128-8614**	1	KIT-SEAL (WATER SEPARATOR)	
					(INCLUDES SEALS)	

E-ORDER BY THE CENTIMETER
J-KIT MARKED J AVAILABLE FOR PART MARKED J
M-METRIC PART

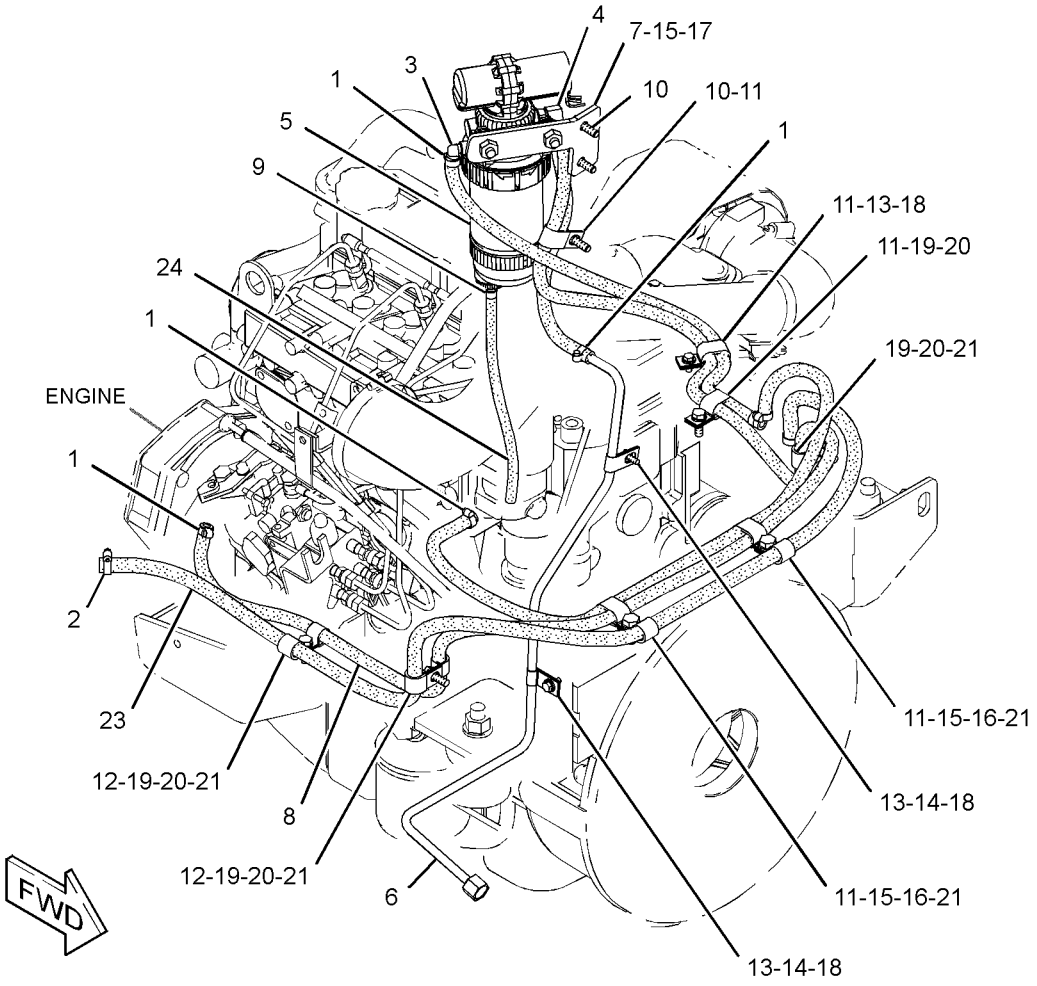

GRAPHIC #1 **<END>** g01345122

249-7347 PUMP GP-FUEL INJECTION

S/N: CJS1-60343
PART OF 262-7288 ENGINE AR-PRIMARY
AN ATTACHMENT

SMCS-1251, 1290, 5479 **i03518402**

NOTE	REF NO	GRAPHIC REF	PART NUMBER	QTY	PART NAME 1 2 3 4 5 6 (PRODUCT LEVEL)	SEE PAGE
	1	1	**5J-3886**	1	SEAL-O-RING	
M	2	1	**5P-7970**	1	NUT (M8X1.25-THD)	
M	3	1	**6V-5217**	3	BOLT (M8X1.25X20-MM)	
	4	1	**9M-1974**	4	WASHER-HARD (8.8X16X2-MM THK)	
	5	1	**8T-4121**	1	WASHER-HARD (11X21X2.5-MM THK)	
M	6	1	**8T-4136**	1	BOLT (M10X1.5X25-MM)	
M	7	1	**212-8510**	1	NUT (M10X1.25 THD)	
	8	1	**8C-3080**	1	SEAL-O-RING	
	9	1	**306-2165**	1	FLANGE-PUMP	
	10	1	**234-4836**	1	BRACKET	
	11	1	**234-4835**	1	STUD	
C	12	1	**235-4969**	1	BRACKET	
	13	1	**235-4970**	1	BOLT	
	14	1	**249-7346**	1	PUMP AS	

C-CHANGE FROM PREVIOUS TYPE
M-METRIC PART

249-7347 **PUMP GP-FUEL INJECTION** *(contd.)* **i03518402**

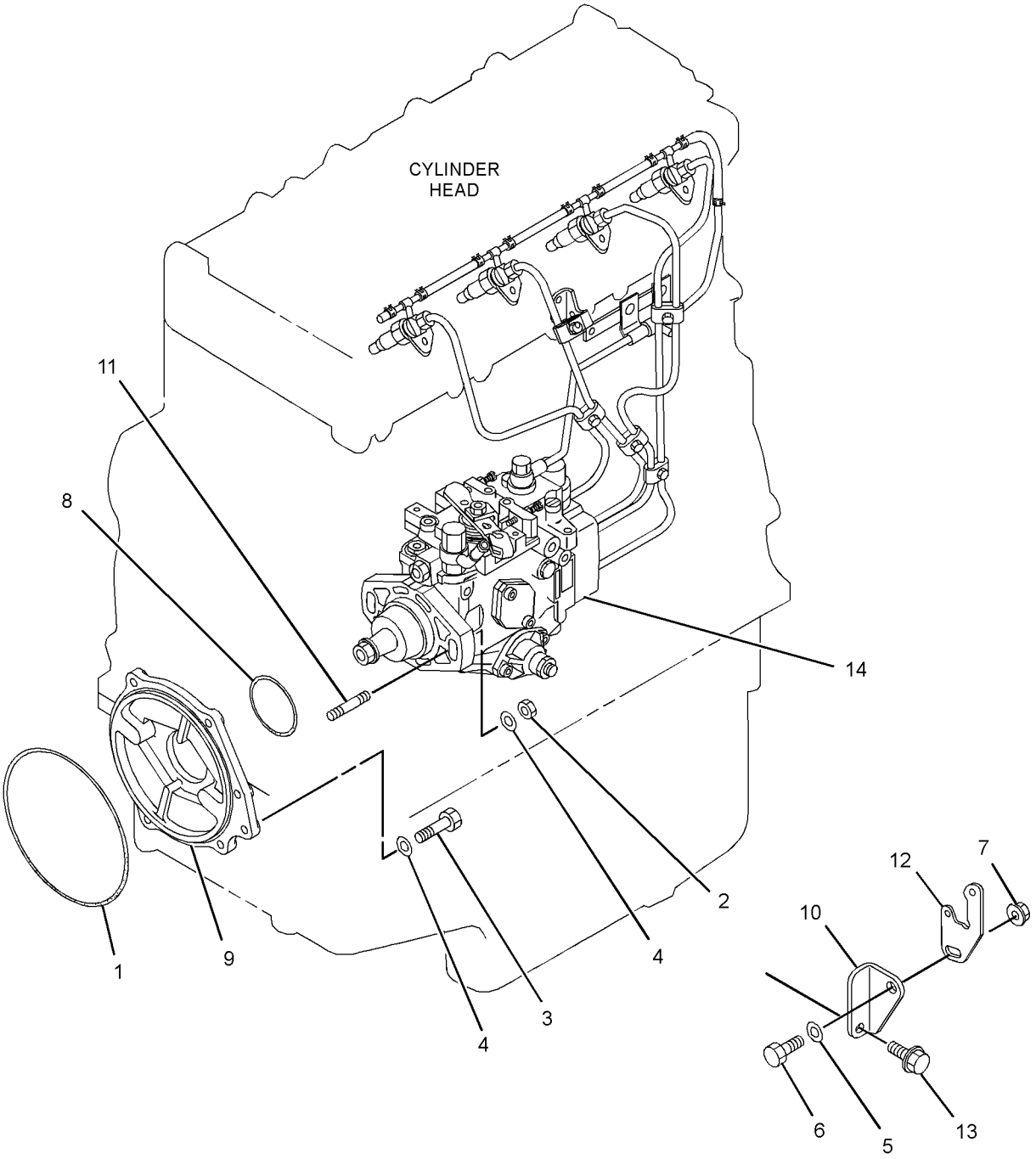

GRAPHIC #1 **<END>** g01354102

315-8352 PUMP GP-FUEL INJECTION

S/N: CYM1-435

PART OF 287-8073 ENGINE AR-PRIMARY

AN ATTACHMENT

SMCS-1251, 1290, 5479 **i03633187**

NOTE	REF NO	GRAPHIC REF	PART NUMBER	QTY	PART NAME 1 2 3 4 5 6 (PRODUCT LEVEL)	SEE PAGE
M	1	1	**6V-5217**	1	BOLT (M8X1.25X20-MM)	
	2	1	**7X-0796**	1	LOCKWASHER	
	3	1	**8T-4121**	2	WASHER-HARD (11X21X2.5-MM THK)	
M	4	1	**8T-4137**	1	BOLT (M10X1.5X20-MM)	
	5	1	**8T-4896**	1	WASHER-HARD (10.2X18.5X2.5-MM THK)	
	6	1	**9M-1974**	1	WASHER-HARD (8.8X16X2-MM THK)	
M	7	1	**140-5217**	1	BOLT (M10X1.25X25-MM)	
M	9	1	**212-8510**	1	NUT (M10X1.25-THD)	
	10	1	**225-5249**	1	RETAINER	
	11	1	**234-4835**	3	STUD	
	12	1	**241-6010**	1	BOLT	
	13	1	**244-7127**	3	NUT-FLANGE (M8X1.25-THD)	
	14	1	**294-5060**	1	SEAL-O-RING	
	15	1	**300-3988**	1	SEAL-O-RING	
	16	1	**300-3867**	1	WASHER	
	17	1	**314-9991**	1	FLANGE	
	18	1	**314-9992**	1	BRACKET	
	20	1	**315-4677**	1	PUMP GP-FUEL INJECTION	
	20A	1	**300-3573**	1	SOLENOID (FUEL PUMP)	
	21	1	**315-8326**	1	BRACKET	

M-METRIC PART

315-8352 **PUMP GP-FUEL INJECTION** *(contd.)* **i03633187**

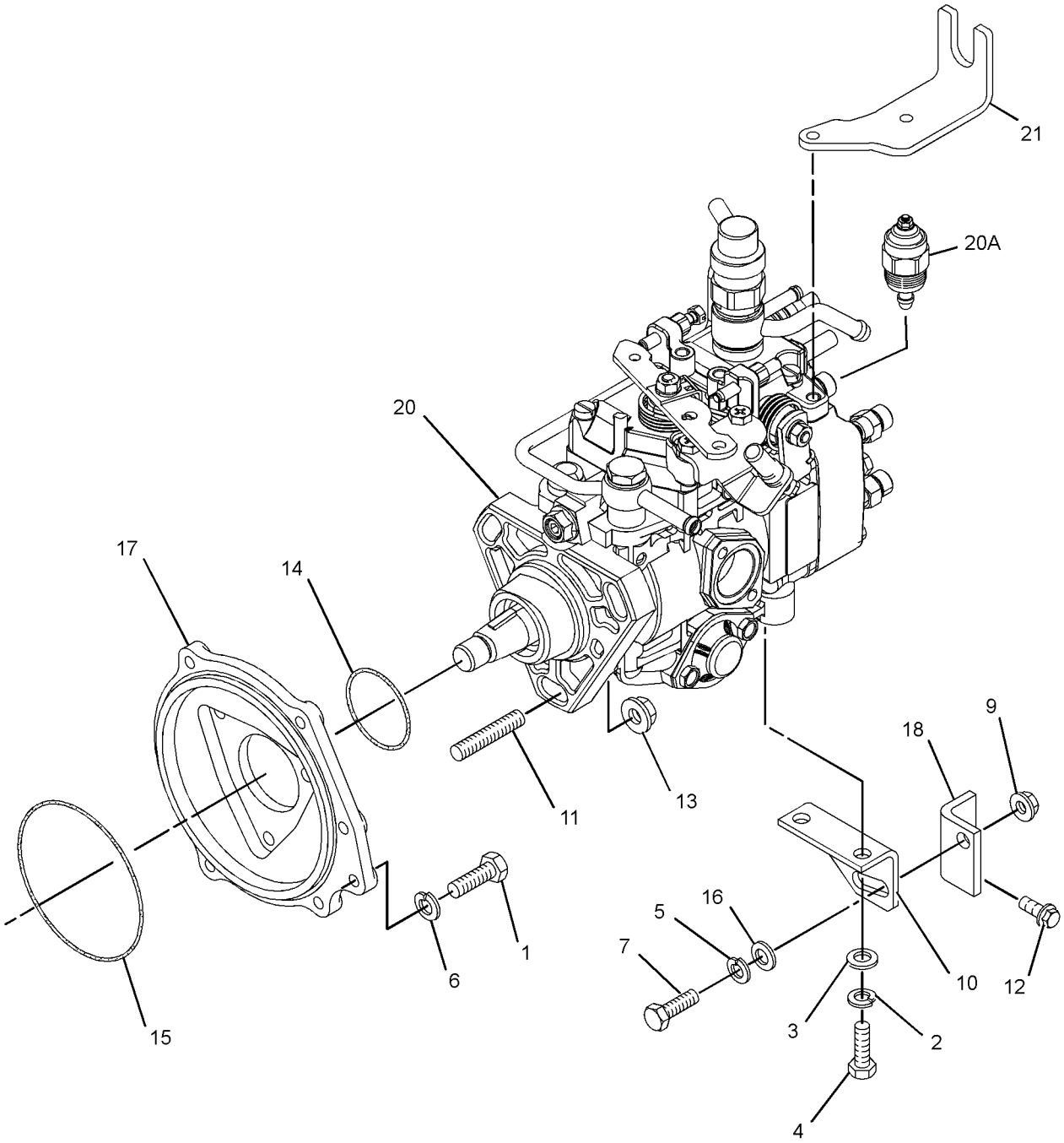

GRAPHIC #1 **<END>** g01950672

315-8352 PUMP GP-FUEL INJECTION

S/N: CYM436-UP
PART OF 287-8073 ENGINE AR-PRIMARY
AN ATTACHMENT

SMCS-1251, 1290, 5479 **i03633186**

NOTE	REF NO	GRAPHIC REF	PART NUMBER	QTY	PART NAME 1 2 3 4 5 6 (PRODUCT LEVEL)	SEE PAGE
M	1	1	**6V-5217**	1	BOLT (M8X1.25X20-MM)	
	2	1	**7X-0796**	1	LOCKWASHER	
	3	1	**8T-4121**	2	WASHER-HARD (11X21X2.5-MM THK)	
M	4	1	**8T-4137**	1	BOLT (M10X1.5X20-MM)	
	5	1	**8T-4896**	1	WASHER-HARD (10.2X18.5X2.5-MM THK)	
	6	1	**9M-1974**	1	WASHER-HARD (8.8X16X2-MM THK)	
M	7	1	**140-5217**	1	BOLT (M10X1.25X25-MM)	
M	9	1	**212-8510**	1	NUT (M10X1.25-THD)	
	10	1	**225-5249**	1	RETAINER	
	11	1	**234-4835**	3	STUD	
	12	1	**241-6010**	1	BOLT	
	13	1	**244-7127**	3	NUT-FLANGE (M8X1.25-THD)	
	14	1	**294-5060**	1	SEAL-O-RING	
	15	1	**300-3988**	1	SEAL-O-RING	
	16	1	**300-3867**	1	WASHER	
	17	1	**314-9991**	1	FLANGE	
	18	1	**314-9992**	1	BRACKET	
C	20	1	**336-9190**	1	PUMP GP-FUEL INJECTION	
	20A	1	**300-3573**	1	SOLENOID (FUEL PUMP)	
	21	1	**315-8326**	1	BRACKET	
	22	1	**314-9999**	1	NUT	
	23	1	**199-2333**	2	BOLT	

C-CHANGE FROM PREVIOUS TYPE
M-METRIC PART

315-8352 **PUMP GP-FUEL INJECTION** *(contd.)* **i03633186**

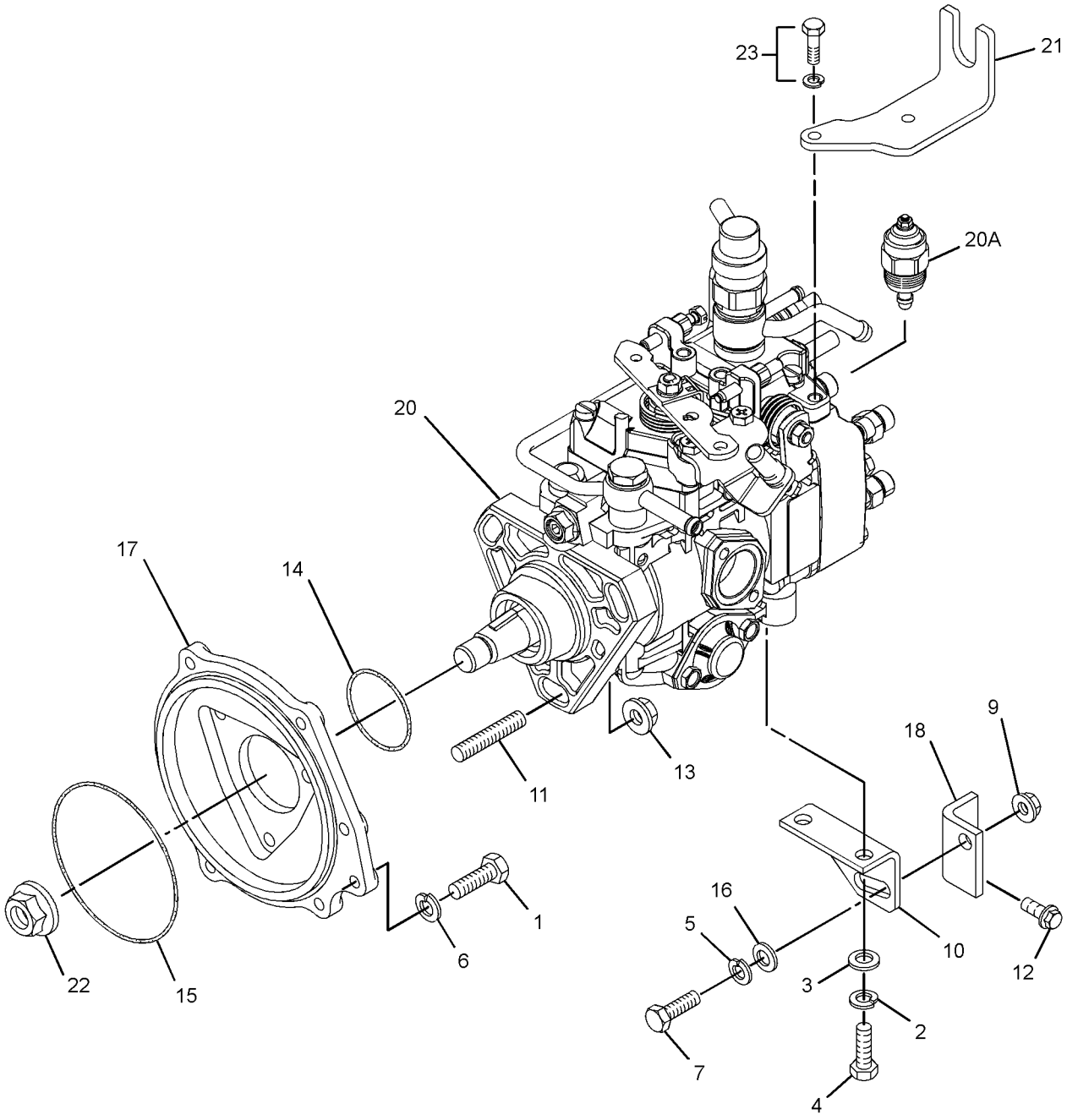

GRAPHIC #1 **<END>** g01950674

317-5047 PUMP GP-FUEL INJECTION

S/N: CJS60344-70000
PART OF 262-7288 ENGINE AR-PRIMARY
AN ATTACHMENT

SMCS-1251, 1290, 5479 **i03463767**

NOTE	REF NO	GRAPHIC REF	PART NUMBER	QTY	PART NAME 1 2 3 4 5 6 (PRODUCT LEVEL)	SEE PAGE
M	1	1	**6V-5217**	3	BOLT (M8X1.25X20-MM)	
	2	1	**8T-4896**	1	WASHER-HARD (10.2X18.5X2.5-MM THK)	
	3	1	**9M-1974**	3	WASHER-HARD (8.8X16X2-MM THK)	
M	4	1	**140-5217**	1	BOLT (M10X1.25X25-MM)	
M	5	1	**212-8510**	1	NUT (M10X1.25-THD)	
	6	1	**306-2165**	1	FLANGE-PUMP	
	7	1	**234-4835**	1	STUD	
	8	1	**234-4836**	1	BRACKET	
	9	1	**235-4969**	1	BRACKET	
	10	1	**235-4970**	1	BOLT	
	11	1	**244-7127**	1	NUT-FLANGE (M8X1.25-THD)	
	12	1	**294-5060**	1	SEAL-O-RING	
	13	1	**300-3867**	1	WASHER	
	14	1	**300-3988**	1	SEAL-O-RING	
	15	1	**317-4998**	1	PUMP-FUEL INJECTION	
	15A	1	**237-5396**	1	SOLENOID AS (FUEL SHUTOFF)	

M-METRIC PART

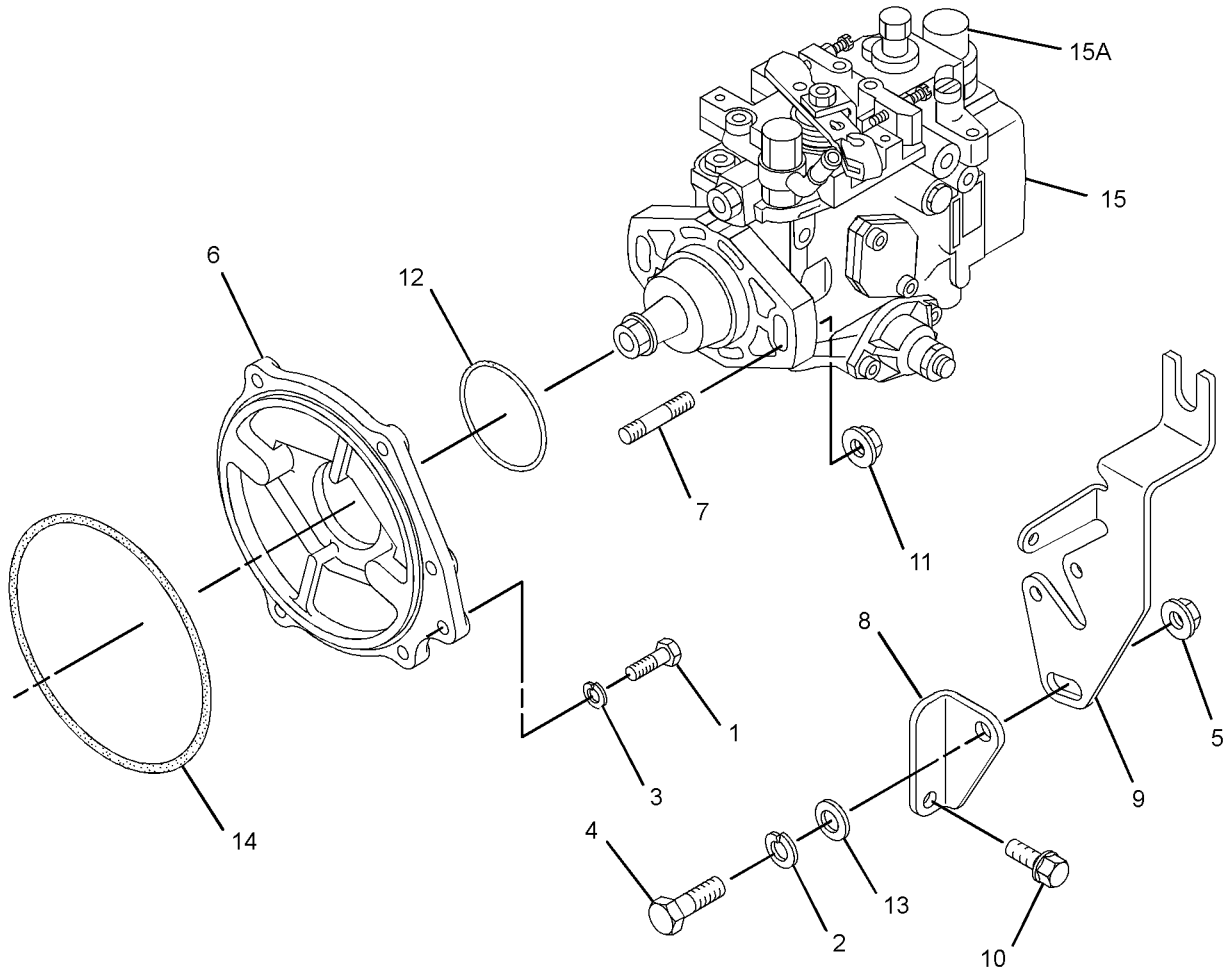

GRAPHIC #1 **<END>** g01429183

FUEL SYSTEM

258-2439 TANK & MTG GP-FUEL

S/N: JAY1-UP

PART OF 258-2410, 295-7291 CHASSIS AR

SMCS-1273 **i03571121**

NOTE	REF NO	GRAPHIC REF	PART NUMBER	QTY	PART NAME 1 2 3 4 5 6 (PRODUCT LEVEL)	SEE PAGE
	1	1	**9R-7240**	1	GASKET (FUEL TANK)	
Y	2	1	*258-2440*	1	TANK GP-FUEL	130
	3	1	**258-2948**	2	BRACKET AS	
	4	1	**258-2995**	1	INSULATION (BOTTOM)	
M	5	1	**266-3315**	4	BOLT-FLANGE HEAD (M8X1.25X25.5-MM)	
	6	1	**304-8351**	2	INSULATION	
	7	1	**304-8352**	2	INSULATION	
	8	1	**271-2912**	1	SENDER AS-FUEL LEVEL	
		1	**102-8802**	1	KIT-RECEPTACLE (2-PIN)	
					(INCLUDES RECEPTACLE AS & WEDGE)	
		1	**186-3735**	2	PIN-CONNECTOR (16-GA TO 18-GA)	
M	9	1	**7X-7920**	5	BOLT (M5X0.8X14-MM)	
	10	1	**6V-7699**	5	WASHER-HARD (5.5X13X1.6-MM THK)	

M-METRIC PART
Y-SEPARATE ILLUSTRATION

258-2439 **TANK & MTG GP-FUEL** *(contd.)* **i03571121**

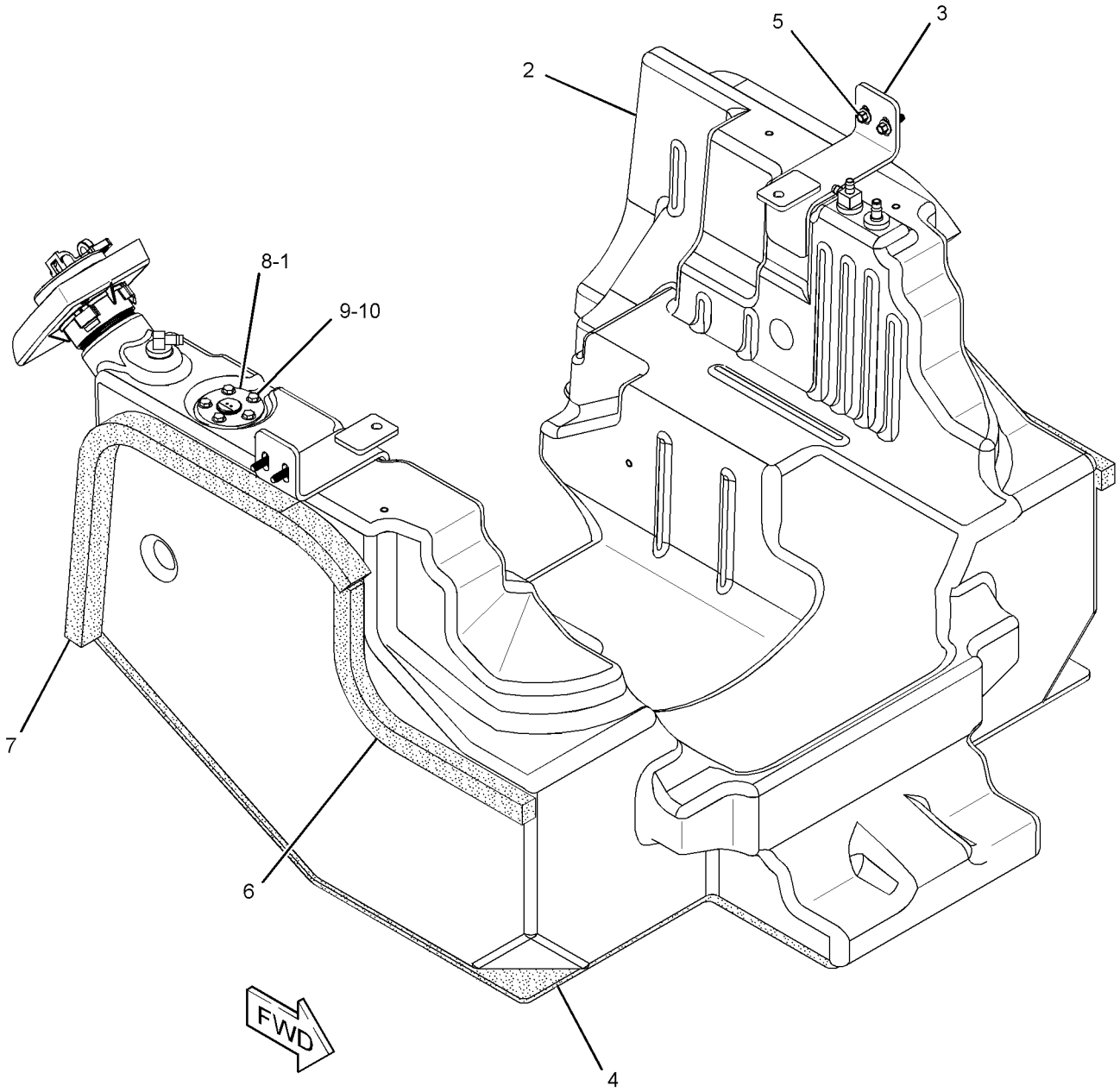

GRAPHIC #1 **<END>** g01344088

FUEL SYSTEM

258-2440 TANK GP-FUEL

S/N: JAY1-UP
110-L
PART OF 258-2439 TANK & MTG GP-FUEL

SMCS-1273 **i03024180**

NOTE	REF NO	GRAPHIC REF	PART NUMBER	QTY	PART NAME 1 2 3 4 5 6 (PRODUCT LEVEL)	SEE PAGE
	1	1	**6W-5698**	3	GROMMET	
	2	1	**304-3885**	1	CAP-FUEL	
	3	1	**142-8928**	1	ELBOW	
	4	1	**230-3737**	1	FITTING	
	5	1	**322-0352**	1	TANK AS-FUEL	
	6	1	**258-2732**	1	GUARD AS	
		1	**7F-8268**	1	SEAL-O-RING	
		1	**004-1964**	1	SEAL-O-RING	
	7	1	**258-2983**	1	TUBE AS	
	8	1	**258-2988**	1	TUBE AS	
	9	1	**3K-0360**	1	SEAL-O-RING	
	10	1	**9S-4185**	1	PLUG-O-RING	

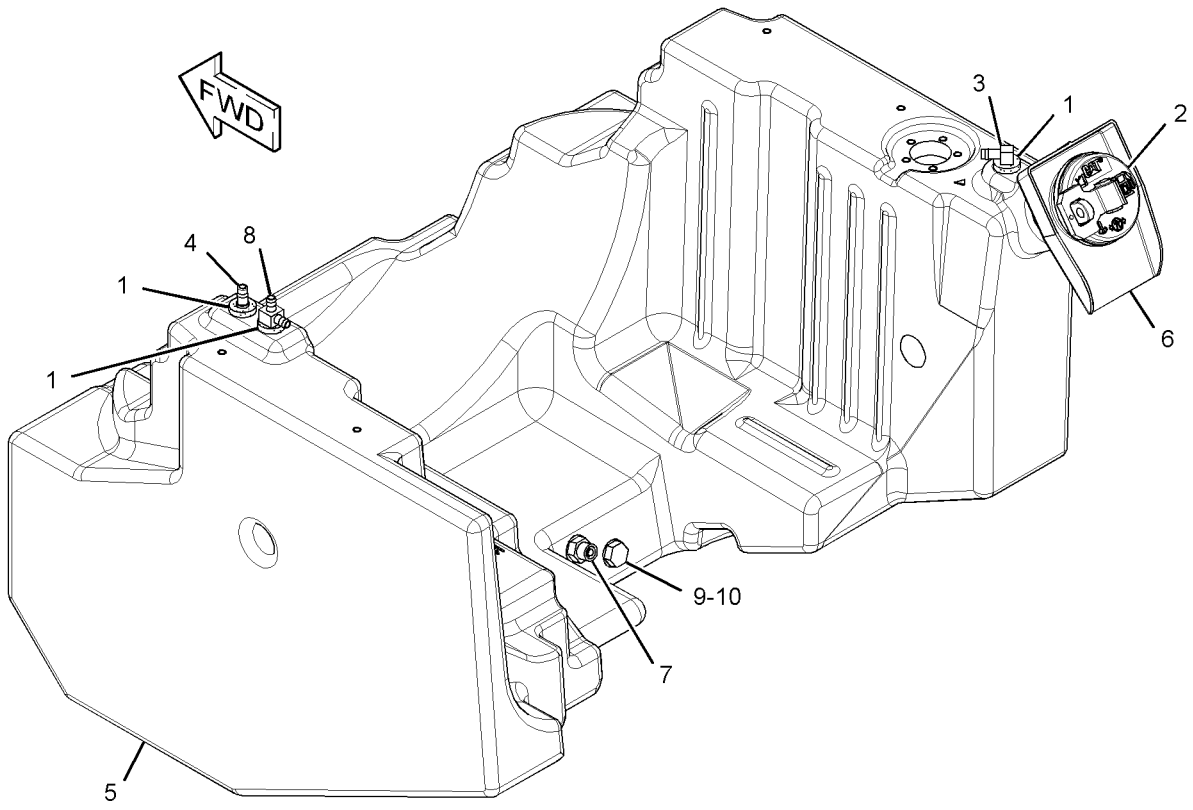

GRAPHIC #1 **<END>** g01329630

105-2814 ALTERNATOR GP-CHARGING*R

S/N: CYM1-UP; CJS1-70000
12 VOLT, 90 AMPERE
PART OF 287-6361, 315-8353 ALTERNATOR GP-CHARGING
AN ATTACHMENT

SMCS-1405 **i03552882**

NOTE	REF NO	GRAPHIC REF	PART NUMBER	QTY	PART NAME 1 2 3 4 5 6 (PRODUCT LEVEL)	SEE PAGE
	1	1	**113-4458**	1	PULLEY-ALTERNATOR (2-GROOVE)	
	2	1	**113-4459**	1	FRAME AS-ALTERNATOR	
	3	1	**113-4460**	1	ROTOR AS-ALTERNATOR	
	4	1	**113-4461**	1	FRAME AS-ALTERNATOR	
	5	1	**113-4462**	1	REGULATOR AS-ALTERNATOR	
	6	1	**113-4463**	1	RECTIFIER AS-ALTERNATOR	
	7	1	**113-4464**	1	COVER-ALTERNATOR	
	8	1	**113-4469**	4	BUSHING-ALTERNATOR	
	9	1	**113-4470**	1	BUSHING-ALTERNATOR	
M	10	1	**5C-2890**	1	NUT (M6X1-THD)	
	11	1	**8T-4205**	1	WASHER-HARD (7.2X14.5X2-MM THK)	
	12	1	**1H-3244**	1	LOCKWASHER	
					AVAILABLE REPAIR KIT(S):	
			113-4465	1	KIT-ALTERNATOR BEARING	
					(INCLUDES COVERS, BEARINGS & WASHERS)	
			113-4466	1	KIT-REPAIR (ALTERNATOR BRUSHES)	
					(INCLUDES HOLDER ASSEMBLY & SEALS)	
			113-4467	1	KIT-ALTERNATOR TERMINAL	
					(INCLUDES SCREWS, PLATE & NUTS)	
			113-4468	1	KIT-ALTERNATOR HARDWARE	
					(INCLUDES SCREWS)	

M-METRIC PART

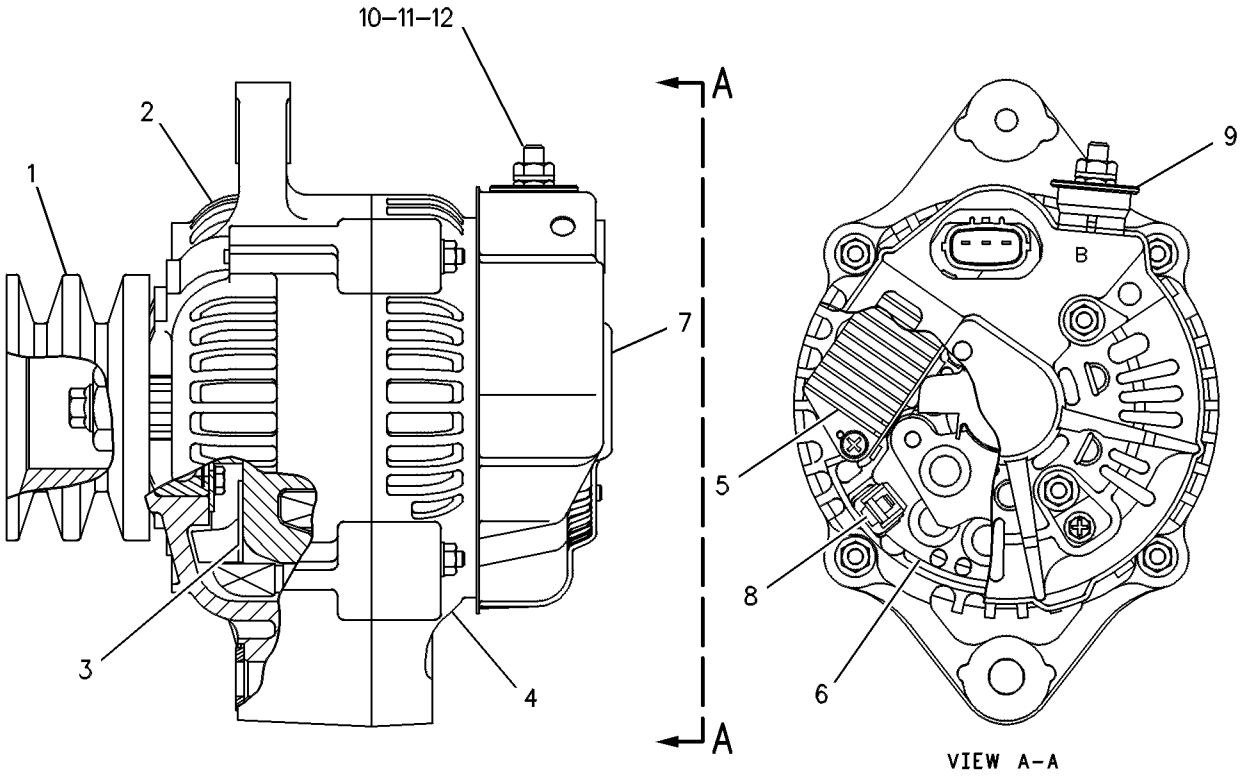

GRAPHIC #1 **<END>** g00128916

287-6361 ALTERNATOR GP-CHARGING

S/N: CJS1-31382
PART OF 262-7288 ENGINE AR-PRIMARY
AN ATTACHMENT

SMCS-1405 **i02735547**

NOTE	REF NO	GRAPHIC REF	PART NUMBER	QTY	PART NAME 1 2 3 4 5 6 (PRODUCT LEVEL)	SEE PAGE
M	1	1	**6V-5217**	1	BOLT (M8X1.25X20-MM)	
	2	1	**8T-4896**	1	WASHER-HARD (10.2X18.5X2.5-MM THK)	
	3	1	**9M-1974**	1	WASHER-HARD (8.8X16X2-MM THK)	
	4	1	**235-4962**	1	PLATE	
	5	1	**235-4973**	1	BOLT (M10X1.5X90-MM)	
	6	1	**239-0771**	1	BRACKET	
YR	7	1	**105-2814**	1	ALTERNATOR GP-CHARGING	131
M	8	1	**8T-4189**	2	BOLT (M8X1.25X20-MM)	
	9	1	**3B-4505**	2	LOCKWASHER	

M-METRIC PART
R-REMFG PART MAY BE AVAILABLE
Y-SEPARATE ILLUSTRATION

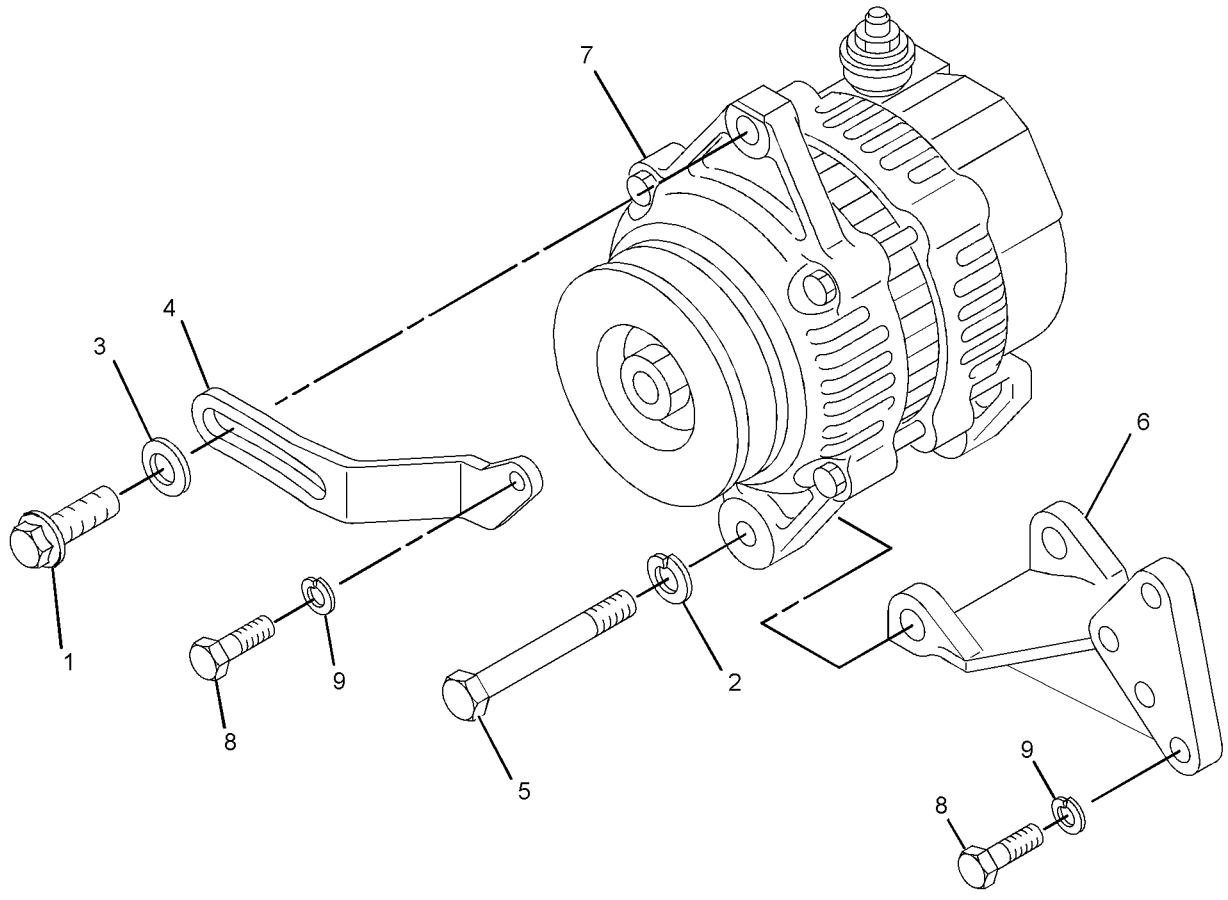

GRAPHIC #1 **<END>** g01377214

287-6361 ALTERNATOR GP-CHARGING

S/N: CJS31383-60343
PART OF 262-7288 ENGINE AR-PRIMARY
AN ATTACHMENT

SMCS-1405 **i02814901**

NOTE	REF NO	GRAPHIC REF	PART NUMBER	QTY	PART NAME 1 2 3 4 5 6 (PRODUCT LEVEL)	SEE PAGE
M	1	1	**6V-5217**	1	BOLT (M8X1.25X20-MM)	
	2	1	**8T-4896**	1	WASHER-HARD (10.2X18.5X2.5-MM THK)	
	3	1	**9M-1974**	1	WASHER-HARD (8.8X16X2-MM THK)	
	4	1	**235-4962**	1	PLATE	
	5	1	**235-4973**	1	BOLT (M10X1.5X90-MM)	
C	6	1	**294-7916**	1	BRACKET	
YR	7	1	**105-2814**	1	ALTERNATOR GP-CHARGING	131
M	8	1	**8T-4189**	2	BOLT (M8X1.25X20-MM)	
	9	1	**3B-4505**	2	LOCKWASHER	

C-CHANGE FROM PREVIOUS TYPE
M-METRIC PART
R-REMFG PART MAY BE AVAILABLE
Y-SEPARATE ILLUSTRATION

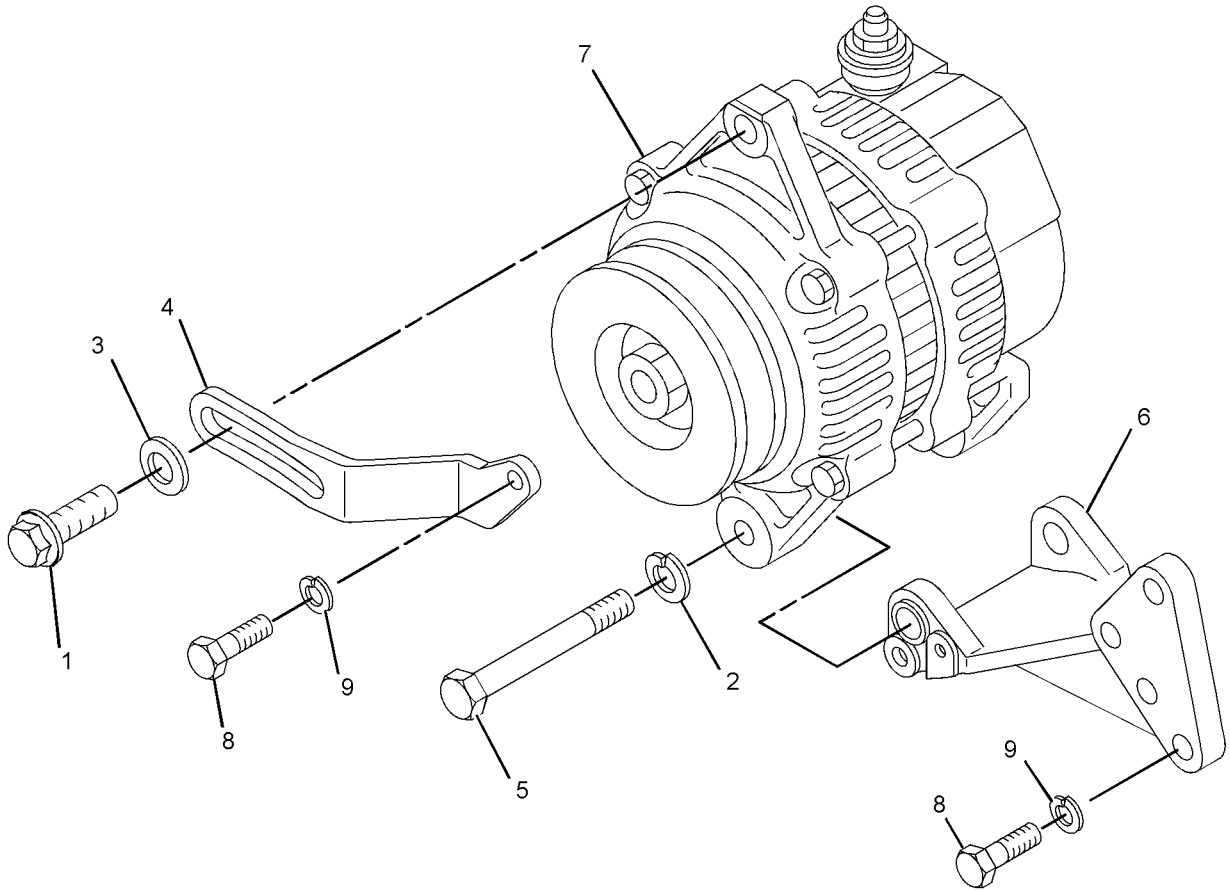

GRAPHIC #1 **<END>** g01414335

315-8353 ALTERNATOR GP-CHARGING

S/N: CYM1-UP; CJS60344-63198
PART OF 262-7288, 287-8073 ENGINE AR-PRIMARY
AN ATTACHMENT

SMCS-1405 **i02822892**

NOTE	REF NO	GRAPHIC REF	PART NUMBER	QTY	PART NAME 1 2 3 4 5 6 (PRODUCT LEVEL)	SEE PAGE
	1	1	**3B-4505**	2	LOCKWASHER	
M	2	1	**6V-5217**	1	BOLT (M8X1.25X20-MM)	
M	3	1	**8T-4189**	2	BOLT (M8X1.25X20-MM)	
	4	1	**8T-4896**	1	WASHER-HARD (10.2X18.5X2.5-MM THK)	
	5	1	**9M-1974**	1	WASHER-HARD (8.8X16X2-MM THK)	
	6	1	**235-4962**	1	PLATE	
	7	1	**235-4973**	1	BOLT (M10X1.5X90-MM)	
	8	1	*239-0772*	1	ALTERNATOR GP-CHARGING	
	9	1	**294-7916**	1	BRACKET	

M-METRIC PART

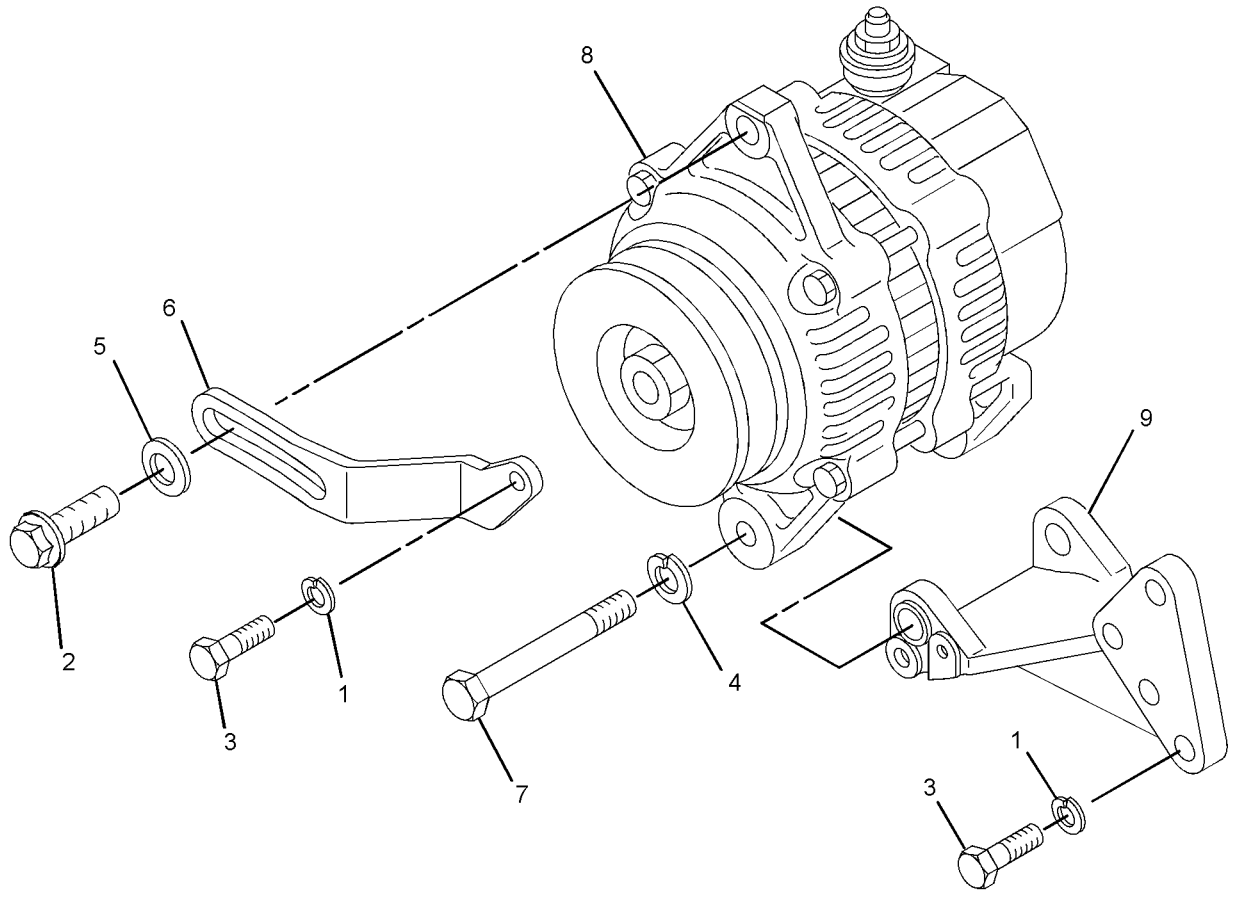

GRAPHIC #1 **<END>** g01433294

315-8353 ALTERNATOR GP-CHARGING

S/N: CYM1-UP; CJS63199-70000
PART OF 262-7288, 287-8073 ENGINE AR-PRIMARY
AN ATTACHMENT

SMCS-1405 **i03077440**

NOTE	REF NO	GRAPHIC REF	PART NUMBER	QTY	PART NAME 1 2 3 4 5 6 (PRODUCT LEVEL)	SEE PAGE
	1	1	**294-7916**	1	BRACKET	
M	2	1	**6V-5217**	1	BOLT (M8X1.25X20-MM)	
C	3	1	**241-6010**	3	BOLT	
	4	1	**8T-4896**	1	WASHER-HARD (10.2X18.5X2.5-MM THK)	
	5	1	**9M-1974**	1	WASHER-HARD (8.8X16X2-MM THK)	
	6	1	**235-4962**	1	PLATE	
	7	1	**235-4973**	1	BOLT (M10X1.5X90-MM)	
YR	8	1	**105-2814**	1	ALTERNATOR GP-CHARGING	131

C-CHANGE FROM PREVIOUS TYPE
M-METRIC PART
R-REMFG PART MAY BE AVAILABLE
Y-SEPARATE ILLUSTRATION

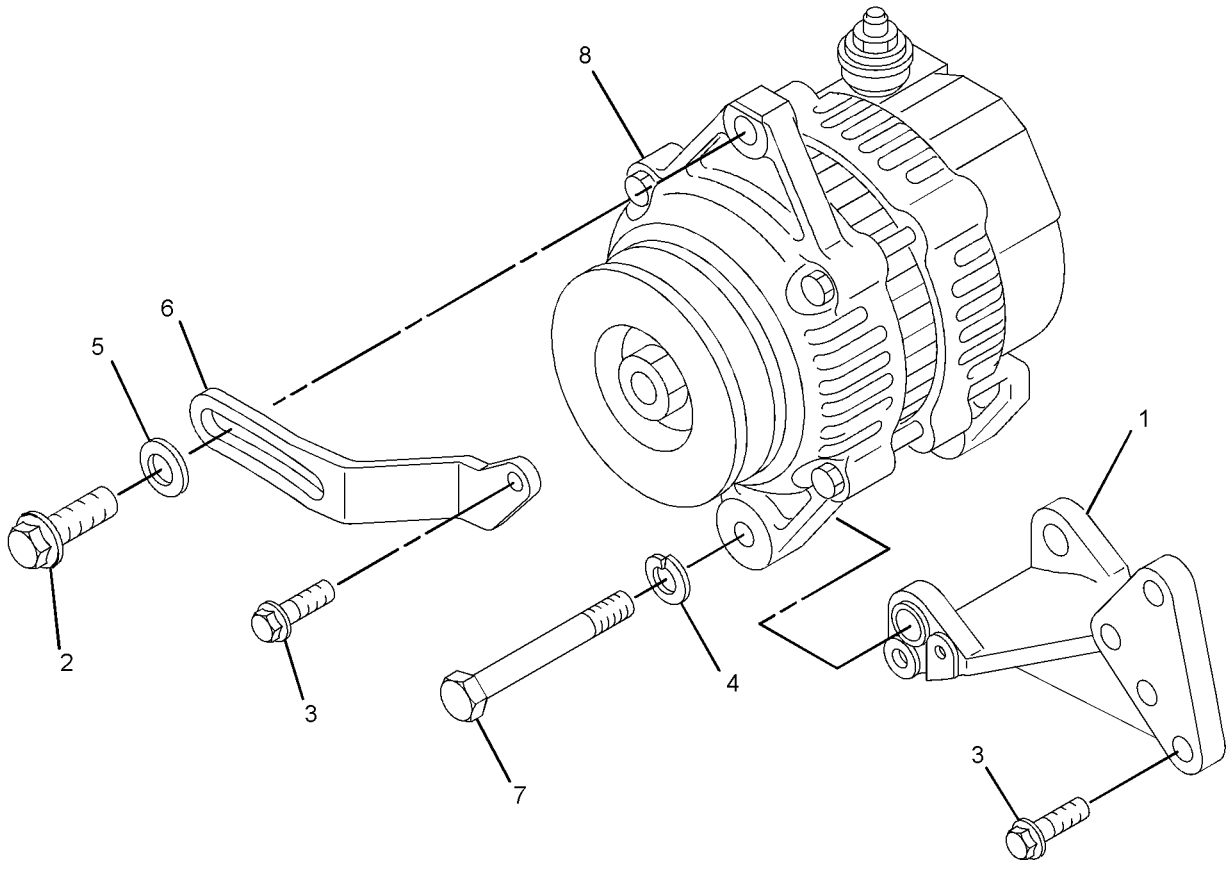

GRAPHIC #1 **<END>** g01567413

258-4121 BATTERY & WIRING GP

S/N: JAY1-UP

PART OF 258-2410, 295-7291 CHASSIS AR

SMCS-1401, 1402 **i03179041**

NOTE	REF NO	GRAPHIC REF	PART NUMBER	QTY	PART NAME 1 2 3 4 5 6 (PRODUCT LEVEL)	SEE PAGE
	1	1	**114-4516**	1	BLOCK	
	2	1	**230-6368**	1	BATTERY (12-VOLT, MAINTENANCE FREE)	
	3	1	**235-1845**	1	FUSE (100-AMPERE)	
	4	1	**247-6440**	1	HOLD-DOWN AS	
	5	1	**258-2849**	1	PLATE AS	
	6	1	**258-4118**	1	CABLE AS-BATTERY (POSITIVE)	
E		1	**8Y-8081**		TUBE-CONVOLUTED (132-CM)	
E		1	**210-8958**		TUBE-HEAT SHRINK (24-MM DIA) (10-CM)	
B		1	**1P-0810**		TAPE-ELECTRICAL	
		1	**1S-7252**	1	TERMINAL-CABLE (00-GA, 3/8-IN BOLT)	
E		1	**5P-0761**		CABLE (00-GA, RED) (132-CM)	
		1	**8N-0869**	2	COVER-TERMINAL (RED)	
		1	**030-1705**	1	RING-TERMINAL (FOR 5/16-IN BOLT)	
	7	1	**258-4120**	1	WIRE AS	
	8	1	**258-4123**	1	PLATE AS	
	9	1	**267-2744**	1	HOLDER AS-FUSE	
		1	**267-2746**	1	COVER AS	
M		1	**5C-7261**	2	NUT (M8X1.25-THD)	
		1	**7X-0608**	2	WASHER-HARD (10.2X16X2-MM THK)	
		1	**9F-5644**	2	LOCKWASHER	
	10	1	**266-3314**	3	BOLT-FLANGE HEAD (M6X1X20.5-MM)	
M	11	1	**266-3315**	2	BOLT-FLANGE HEAD (M8X1.25X25.5-MM)	
M	12	1	**5C-2890**	2	NUT (M6X1-THD)	
M	13	1	**5C-7261**	1	NUT (M8X1.25-THD)	
M	14	1	**6V-5698**	2	SCREW-BUTTON HEAD (M4X0.7X10-MM)	
M	15	1	**6V-7357**	2	BOLT (M6X1X25-MM)	
	16	1	**7X-0608**	1	WASHER-HARD (10.2X16X2-MM THK)	
	17	1	**6V-8801**	2	NUT (3/8-16-THD)	
	18	1	**8T-4205**	5	WASHER-HARD (7.2X14.5X2-MM THK)	
	19	1	**8T-4224**	2	WASHER-HARD (8.8X16X2-MM THK)	
M	20	1	**8T-4908**	1	BOLT (M8X1.25X25-MM)	
	21	1	**9F-5644**	1	LOCKWASHER	
	22	1	**3S-8665**	2	CLIP	
M	23	1	**8T-4138**	2	BOLT (M6X1X20-MM)	

B-USE AS REQUIRED
E-ORDER BY THE CENTIMETER
M-METRIC PART

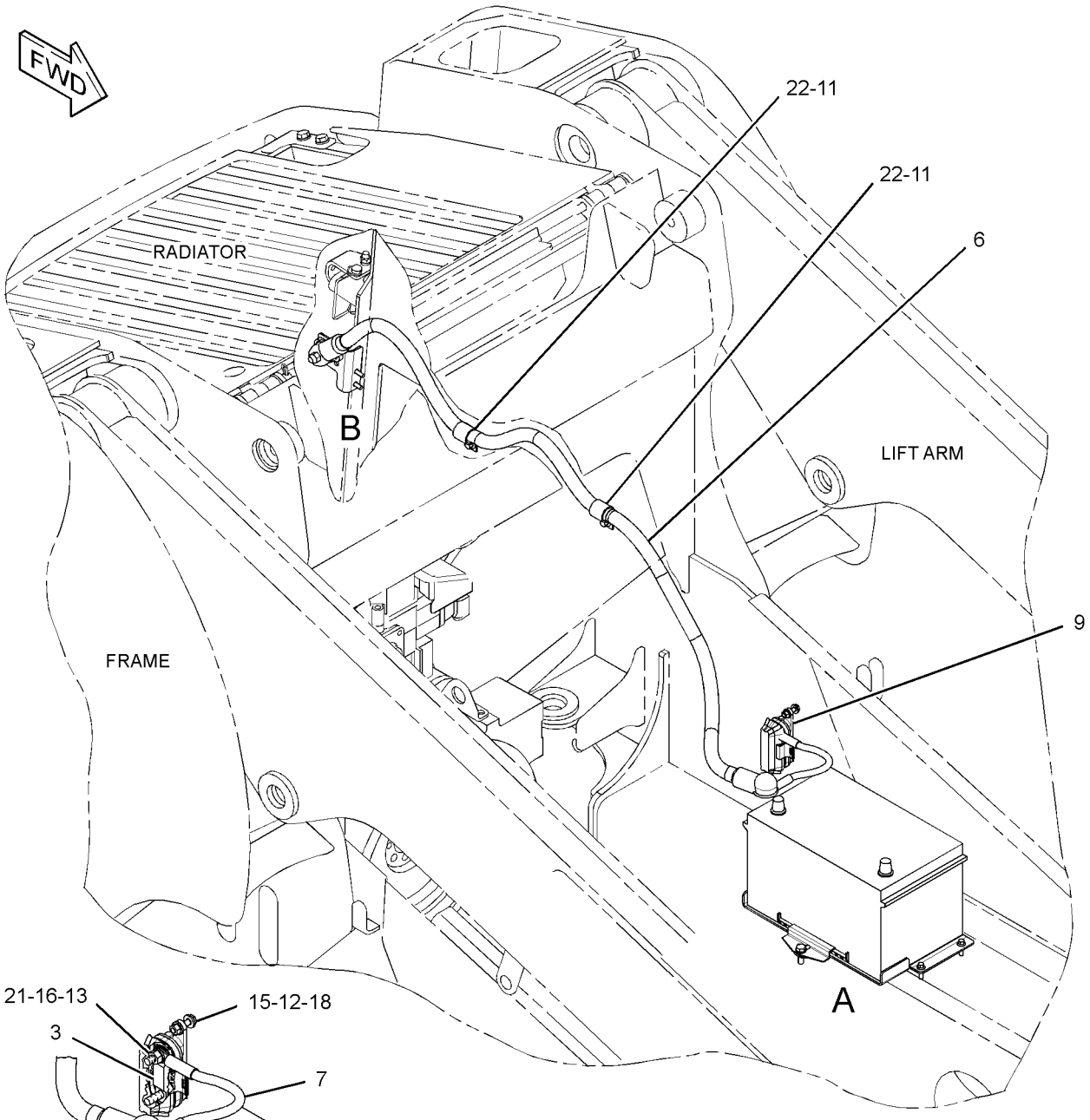

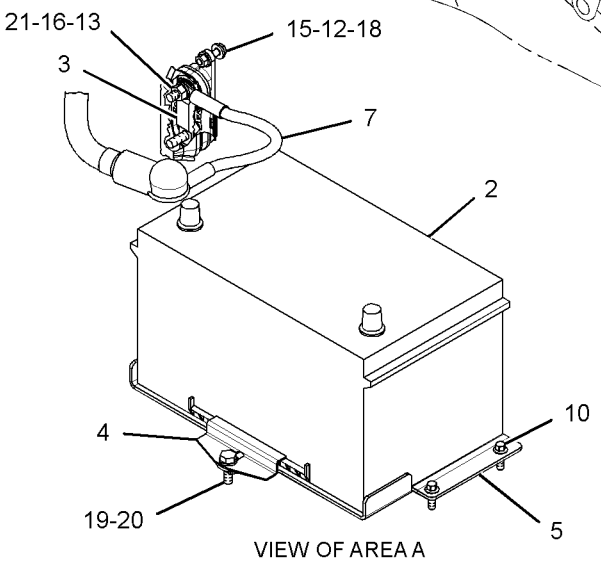

VIEW OF AREA A

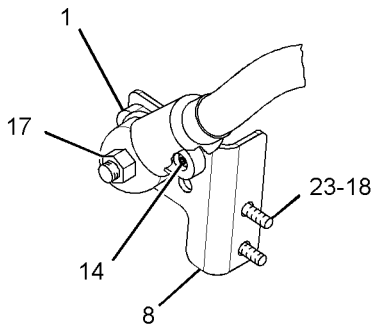

VIEW OF AREA B

GRAPHIC #1 **<END>** g01669835

310-5289 CONTROL GP-MACHINE

S/N: JAY1-UP
PART OF 258-4185 KIT-SECURITY
AN ATTACHMENT

SMCS-7600, 7610 **i03546822**

NOTE	PART NUMBER	QTY	PART NAME 1 2 3 4 5 6 (PRODUCT LEVEL)	SEE PAGE
	310-4772	1	MODULE GP-INTERFACE (KEY)	
	6V-6715	1	SCREW-PAN HEAD (4-20X0.25-IN)	
	8C-3095	1	SEAL-O-RING	

<END>

258-4144 COVER GP-FUSE PANEL

S/N: JAY1-UP

PART OF 258-4000 CAB AR-ENCLOSED ROPS

SMCS-1417 **i02712956**

NOTE	REF NO	GRAPHIC REF	PART NUMBER	QTY	PART NAME 1 2 3 4 5 6 (PRODUCT LEVEL)	SEE PAGE
	1	1	**8R-9654**	1	LANYARD	
	2	1	**116-7471**	1	PULLER-MINIFUSE	
	3	1	**258-3727**	2	SCREW-TRUSS HEAD (NO 12X17.46-MM)	
	4	1	**258-4137**	1	FILM-FUSE PANEL	
	5	1	**267-2680**	2	FUSE (20-AMPERE)	
	6	1	**8T-4205**	3	WASHER-HARD (7.2X14.5X2-MM THK)	

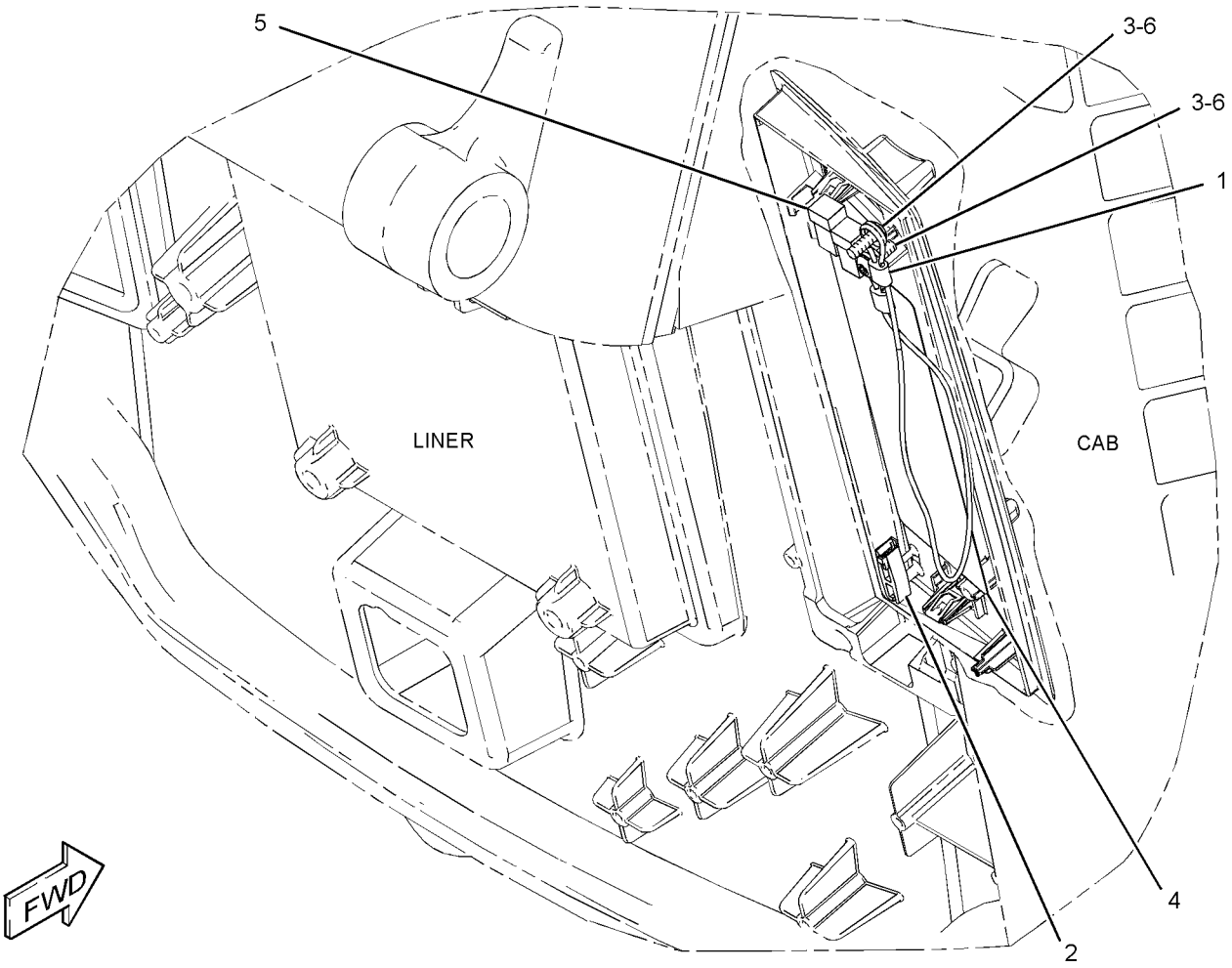

GRAPHIC #1 **<END>** g01339564

235-5904 GLOW PLUG GP

S/N: CYM1-UP; CJS1-70000
PART OF 262-7288, 287-8073 ENGINE AR-PRIMARY
AN ATTACHMENT

SMCS-1412 **i02162785**

NOTE	REF NO	GRAPHIC REF	PART NUMBER	QTY	PART NAME 1 2 3 4 5 6 (PRODUCT LEVEL)	SEE PAGE
	1	1	**107-3659**	4	GLOW PLUG	
	2	1	**257-8390**	1	PLATE-CONNECTION	

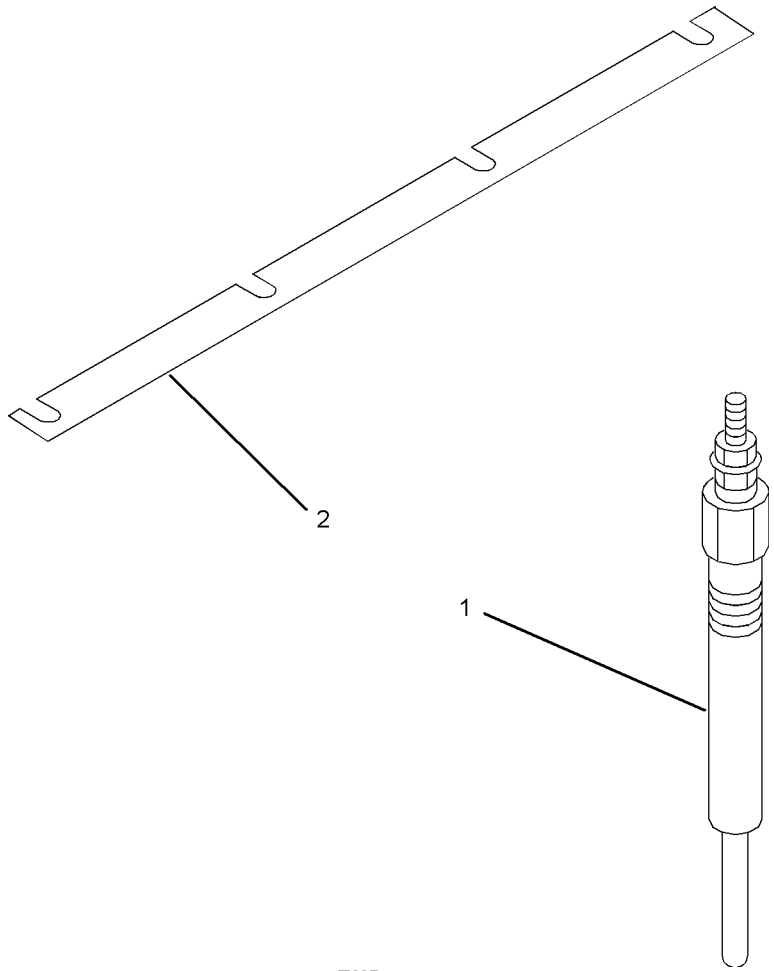

GRAPHIC #1 **<END>** g01011629

218-0942 HEATER GP-JACKET WATER

S/N: JAY1-UP
120-VOLT, 530-WATT
AN ATTACHMENT

SMCS-1383 **i02762194**

NOTE	REF NO	GRAPHIC REF	PART NUMBER	QTY	PART NAME 1 2 3 4 5 6 (PRODUCT LEVEL)	SEE PAGE
	1	1	**9X-6772**	2	STRAP-CABLE	
	2	1	*225-5642*	1	HEATER GP-JACKET WATER	
	2A	1	**7X-6312**	1	CORD AS-HEATER ELEMENT (120-VOLT, 15-AMPERE)	
	2B	1	**225-5541**	1	ELEMENT AS-JACKET WATER HEATER (120-VOLT, 530-WATT)	
	2C	1	**232-4703**	1	GASKET	

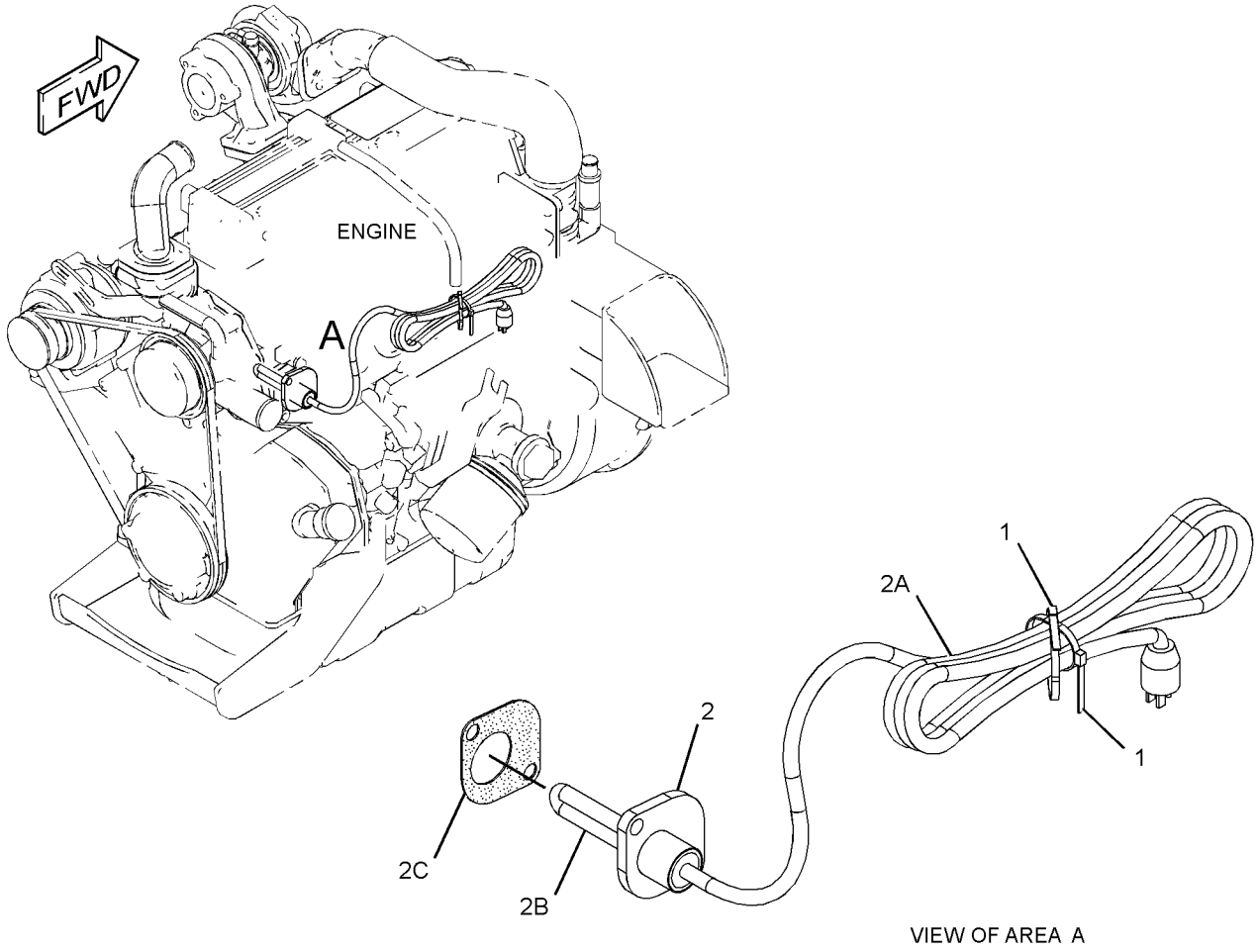

VIEW OF AREA A

GRAPHIC #1 **<END>** g01335541

218-0943 HEATER GP-JACKET WATER

S/N: JAY1-UP
240-VOLT, 530-WATT
AN ATTACHMENT

SMCS-1383 **i02762195**

NOTE	REF NO	GRAPHIC REF	PART NUMBER	QTY	PART NAME 1 2 3 4 5 6 (PRODUCT LEVEL)	SEE PAGE
	1	1	**9X-6772**	2	STRAP-CABLE	
	2	1	*225-5644*	1	HEATER GP-JACKET WATER	
	2A	1	**217-5912**	1	CORD AS	
	2B	1	**225-5535**	1	ELEMENT AS-JACKET WATER HEATER (240-VOLT, 530-WATT)	
	2C	1	**232-4703**	1	GASKET	

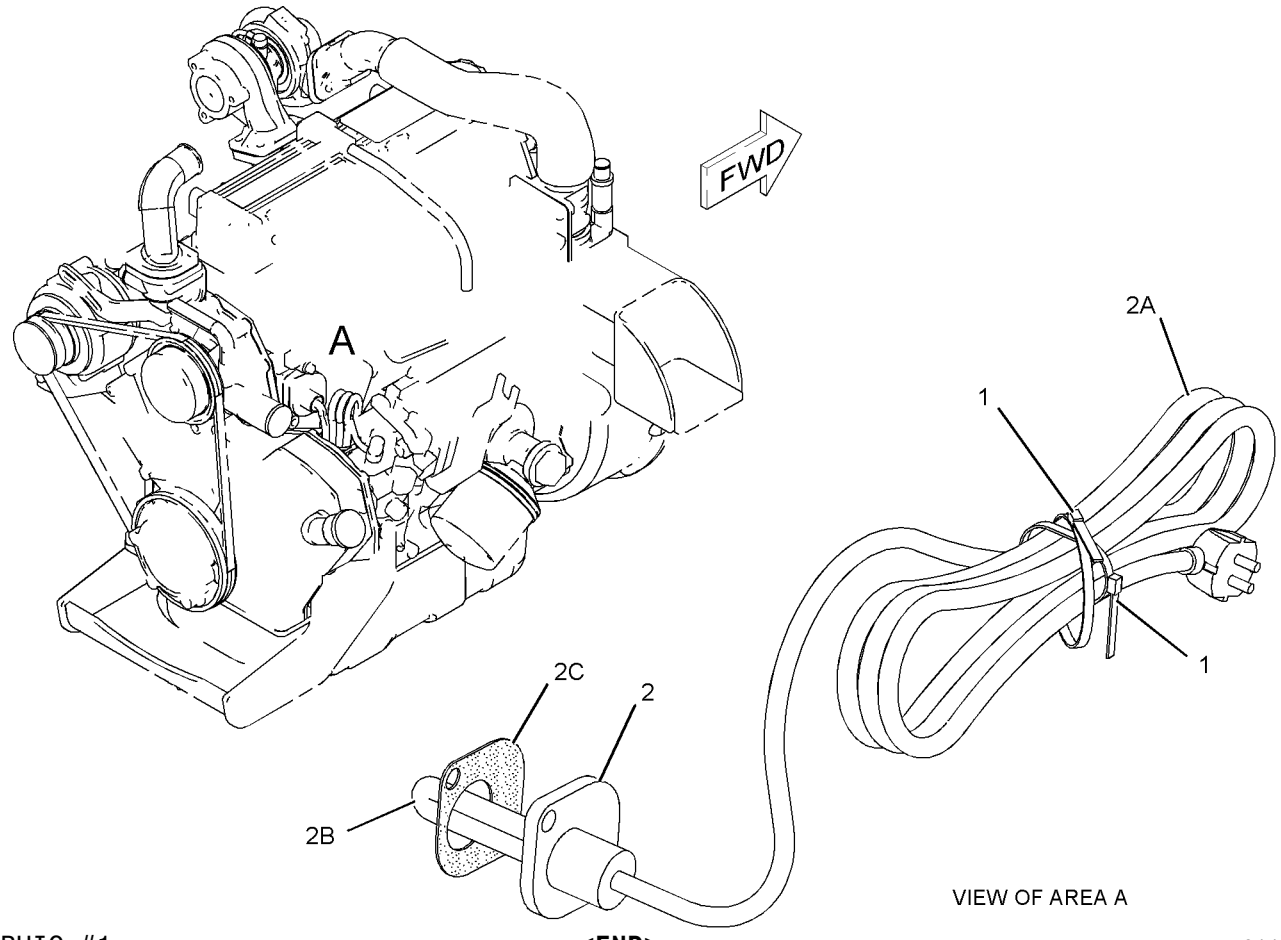

GRAPHIC #1 **<END>** g01108040

258-4145 KIT-CONTROL MOUNTING–PRODUCT LINK

S/N: JAY1-UP

AN ATTACHMENT

SMCS-7606 **i02637900**

NOTE	REF NO	GRAPHIC REF	PART NUMBER	QTY	PART NAME 1 2 3 4 5 6 (PRODUCT LEVEL)	SEE PAGE
	1	1	**157-2528**	4	SPACER (7X16X20-MM THK)	
	2	1	**258-3727**	9	SCREW-TRUSS HEAD (NO 12X17.46-MM)	
	3	1	**258-4148**	1	PLATE AS	
	4	1	**258-4149**	1	PLATE AS	
M	5	1	**8C-8451**	4	BOLT (M6X1X40-MM)	

M-METRIC PART

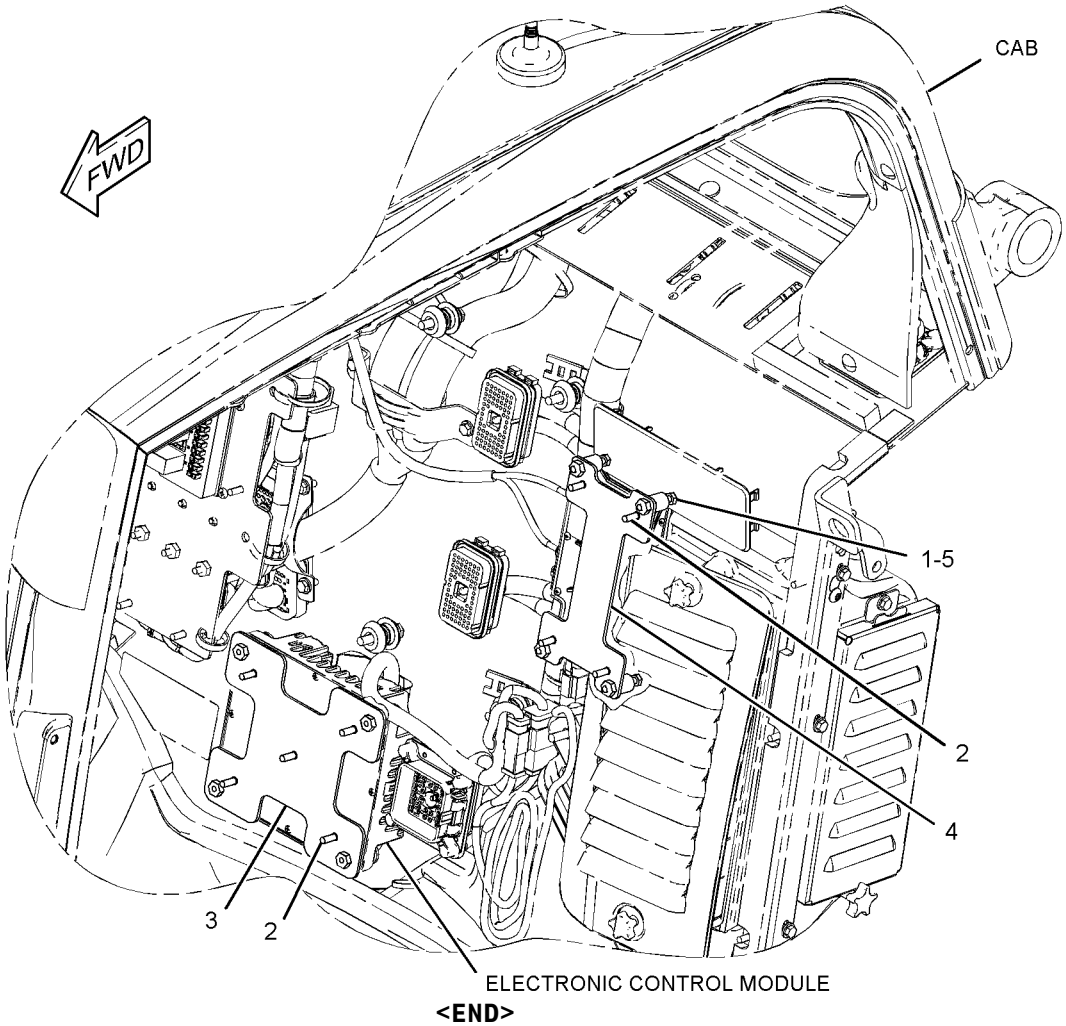

GRAPHIC #1 **<END>** g01328380

258-4185 KIT-SECURITY

S/N: JAY1-UP
AN ATTACHMENT
TYPE 1

SMCS-7631 **i03635698**

NOTE	REF NO	GRAPHIC REF	PART NUMBER	QTY	PART NAME 1 2 3 4 5 6 (PRODUCT LEVEL)	SEE PAGE
	1	1	**102-8802**	1	KIT-RECEPTACLE (2-PIN)	
					(INCLUDES RECEPTACLE AS & WEDGE)	
B	2	1	**107-2417**		TAPE (FOAM)	
	3	1	**205-0826**	1	FILM-INSTRUCTION (MACHINE SECURITY, CONSOLE)	
	4	1	**206-5162**	2	KEY AS-ELECTRONIC (SECURITY)	
	5	1	*206-5206*	1	COIL AS	
		1	**198-5389**	1	FILM-IDENTIFICATION (IGNITION SWITCH)	
		1	**205-8257**	1	COIL AS (EXCITER)	
	6	1	**213-6065**	1	HARNESS AS-CONTROL (SECURITY)	
		1	**9X-3401**	4	PIN-CONNECTOR (16-GA TO 18-GA)	
					—OR—	
		1	**126-1767**	4	PIN-CONNECTOR (14-GA)	
		1	**8T-8737**	2	PLUG-SEAL	
		1	**180-9340**	8	SOCKET-CONNECTOR (14-GA TO 18-GA)	
		1	**102-8804**	1	KIT-RECEPTACLE (4-PIN)	
					(INCLUDES RECEPTACLE AS & WEDGE)	
		1	**8L-8413**	10	STRAP-CABLE	
		1	**155-2265**	1	KIT-CONNECTING PLUG (8-PIN)	
		1	**155-2270**	1	KIT-CONNECTING PLUG (2-PIN)	
					(EACH PLUG KIT INCLUDES PLUG AS, WEDGE & INTERFACE SEAL)	
	7	1	**218-0404**	1	MODULE GP-INTERFACE (KEY)	
		1	*216-2517*	1	MODULE GP-INTERFACE (KEY)	
		1	**6V-6715**	1	SCREW-PAN HEAD (4-20X0.25-IN)	
		1	**8C-3095**	1	SEAL-O-RING	
	8	1	**219-6314**	2	KEY RING (IDENTIFICATION)	
	9	1	**8Y-5947**	3	FASTENER	

B-USE AS REQUIRED

258-4185 KIT-SECURITY *(contd.)* **i03635698**

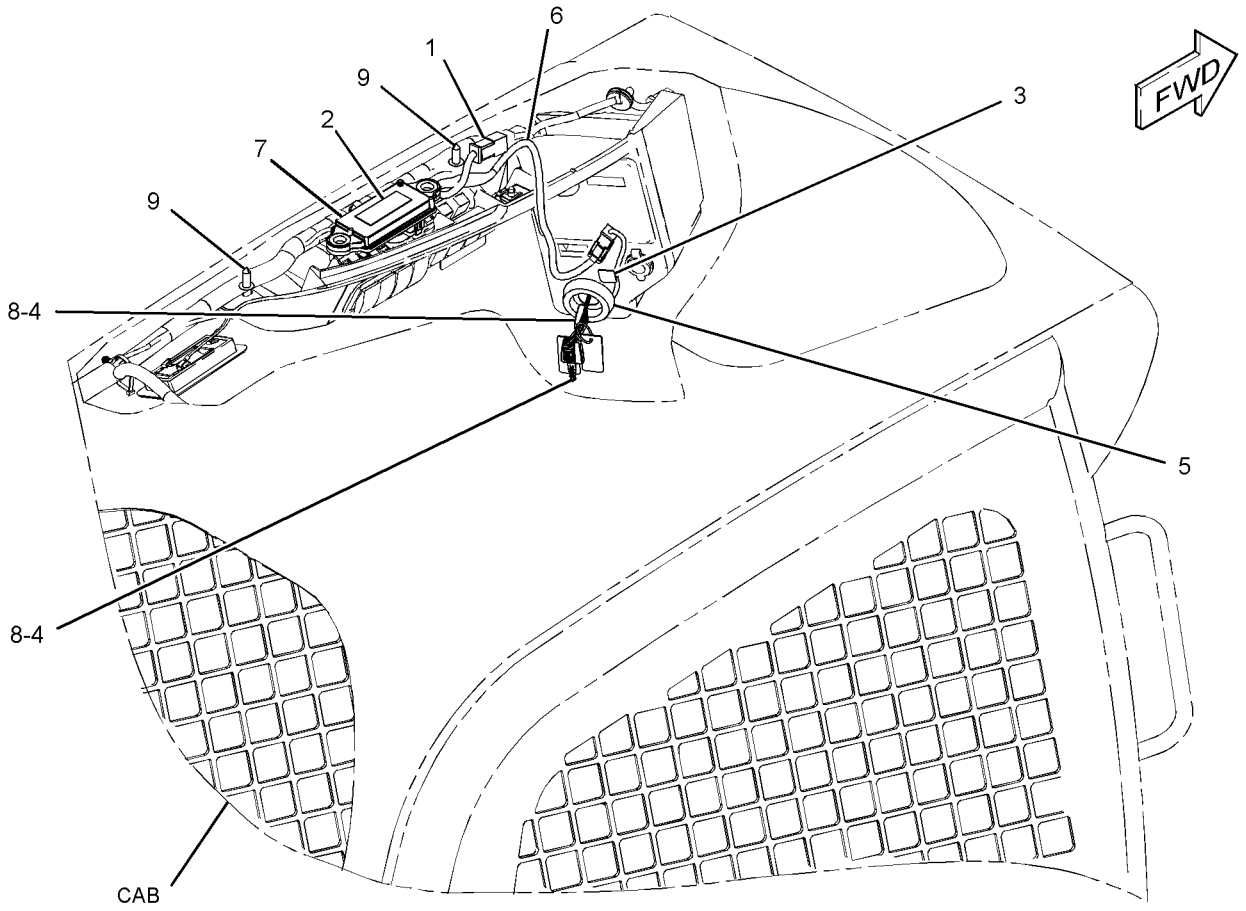

GRAPHIC #1 **<END>** g01328327

258-4185 KIT-SECURITY

S/N: JAY1-UP
AN ATTACHMENT
TYPE 2

SMCS-7631 **i03571122**

NOTE	REF NO	GRAPHIC REF	PART NUMBER	QTY	PART NAME 1 2 3 4 5 6 (PRODUCT LEVEL)	SEE PAGE
	1	1	**102-8802**	1	KIT-RECEPTACLE (2-PIN)	
					(INCLUDES RECEPTACLE AS & WEDGE)	
E	2	1	**107-2417**		TAPE (FOAM) (5-CM)	
	3	1	**205-0826**	1	FILM-INSTRUCTION (MACHINE SECURITY, CONSOLE)	
	4	1	**206-5162**	2	KEY AS-ELECTRONIC (SECURITY)	
C	5	1	**205-8257**	1	COIL AS (EXCITER)	
D		1	**5P-5677**		WIRE (18-GA, BLACK) (0.4-M)	
		1	**186-3735**	2	PIN-CONNECTOR (16-GA TO 18-GA)	
		1	**207-5271**	1	WASHER (27X60.5X0.36-MM THK)	
	6	1	**213-6065**	1	HARNESS AS-CONTROL (SECURITY)	
		1	**180-9339**	4	PIN-CONNECTOR (14-GA TO 18-GA)	
		1	**180-9340**	8	SOCKET-CONNECTOR (14-GA TO 18-GA)	
		1	**102-8804**	1	KIT-RECEPTACLE (4-PIN)	
					(INCLUDES RECEPTACLE AS & WEDGE)	
		1	**8L-8413**	10	STRAP-CABLE	
		1	**8T-8737**	2	PLUG-SEAL	
		1	**155-2270**	1	KIT-CONNECTING PLUG (2-PIN)	
		1	**155-2265**	1	KIT-CONNECTING PLUG (8-PIN)	
					(EACH PLUG KIT INCLUDES PLUG AS, WEDGE & INTERFACE SEAL)	
Y	7	1	**310-5289**	1	CONTROL GP-MACHINE	139
	8	1	**219-6314**	2	KEY RING (IDENTIFICATION)	
	9	1	**8Y-5947**	3	FASTENER	
C	10	1	**198-5389**	1	FILM-IDENTIFICATION (IGNITION SWITCH)	
	11	1	**225-5927**	1	FILM-INSTRUCTION (MACHINE SECURITY, READ OMM)	
					(ON LH SIDE OF FOPS ON DOOR FRAME 100-MM BELOW LH PANEL)	

C-CHANGE FROM PREVIOUS TYPE
D-ORDER BY THE METER
E-ORDER BY THE CENTIMETER
Y-SEPARATE ILLUSTRATION

258-4185 KIT-SECURITY *(contd.)* **i03571122**

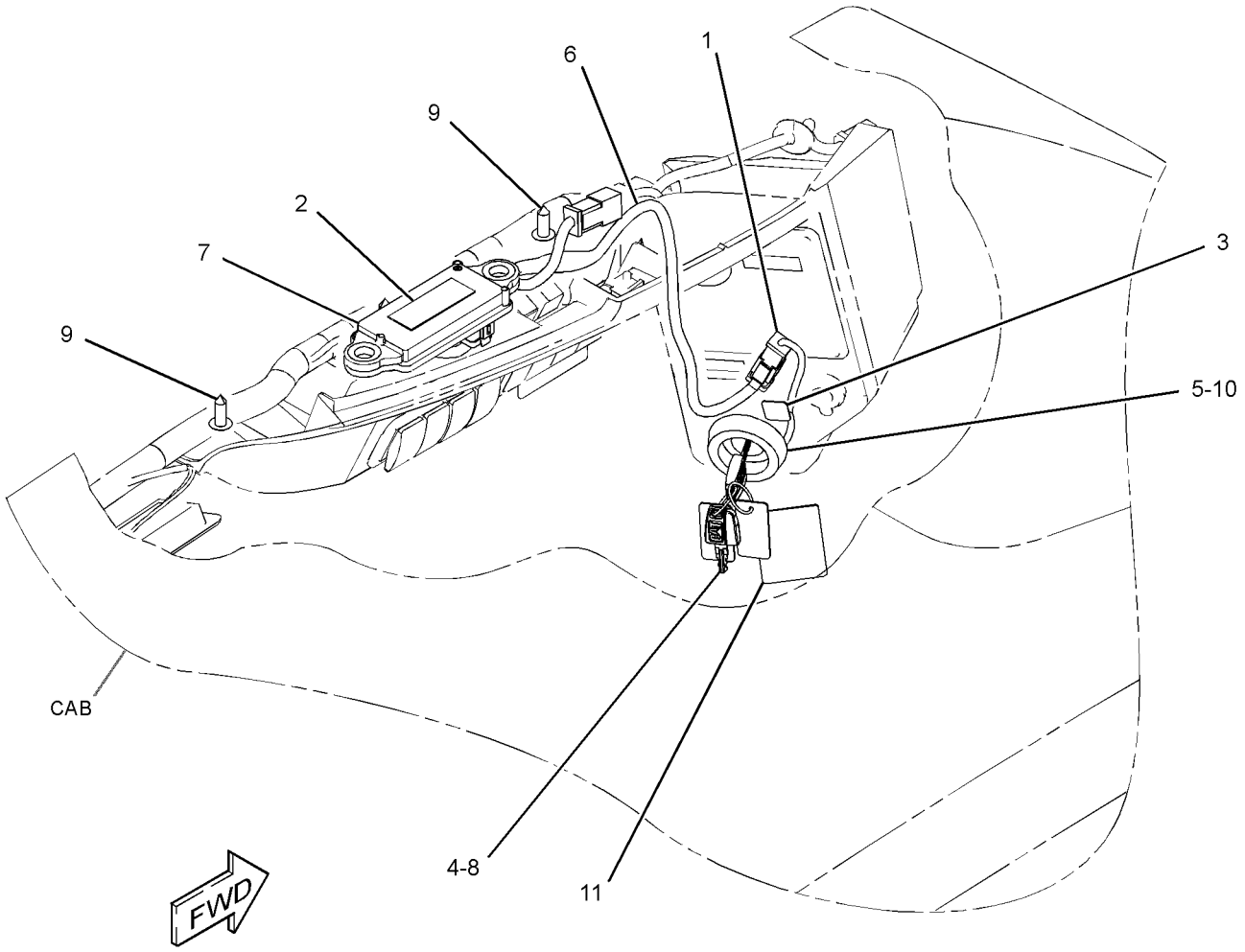

GRAPHIC #1 **<END>** g01787034

258-4127 KIT-WORK TOOL WIRING

S/N: JAY1-UP
CANNOT BE USED WITH FACTORY EQUIPPED HIGH FLOW MACHINES
AN ATTACHMENT

SMCS-1408 **i03637885**

NOTE	REF NO	GRAPHIC REF	PART NUMBER	QTY	PART NAME 1 2 3 4 5 6 (PRODUCT LEVEL)	SEE PAGE
	1	1	**7K-1181**	3	STRAP-CABLE	
	2	1	**146-9439**	3	RELAY AS (12-VOLT) (WORK TOOL)	
	3	1	**159-9495**	1	NUT (1-1/2-18-THD)	
	4	1	**159-9496**	1	LOCKWASHER	
	5	1	**178-3620**	5	STRAP-DUAL CLAMP	
	6	1	**258-4126**	1	HARNESS AS-WORK TOOL	
E		1	**307-2338**		SLEEVE (12-CM)	
		1	**9W-0852**	8	PIN-CONNECTOR (14-GA)	
		1	**102-8806**	1	KIT-RECEPTACLE (8-PIN)	
					(INCLUDES RECEPTACLE AS & WEDGE)	
		1	**8L-8413**	1	STRAP-CABLE	
		1	**156-1458**	1	COVER	
		1	**156-1460**	1	RECEPTACLE (8-PIN)	
	7	1	**263-5418**	1	SWITCH AS-ROCKER (WORK TOOL)	
		1	**111-7899**	1	GASKET	
Y	8	1	**272-1790**	1	CONTROL GP-HANDLE (LH)	654
	9	1	**3S-2093**	8	STRAP-CABLE	
	10	1	**1S-9593**	2	STRAP-CABLE	

E-ORDER BY THE CENTIMETER
Y-SEPARATE ILLUSTRATION

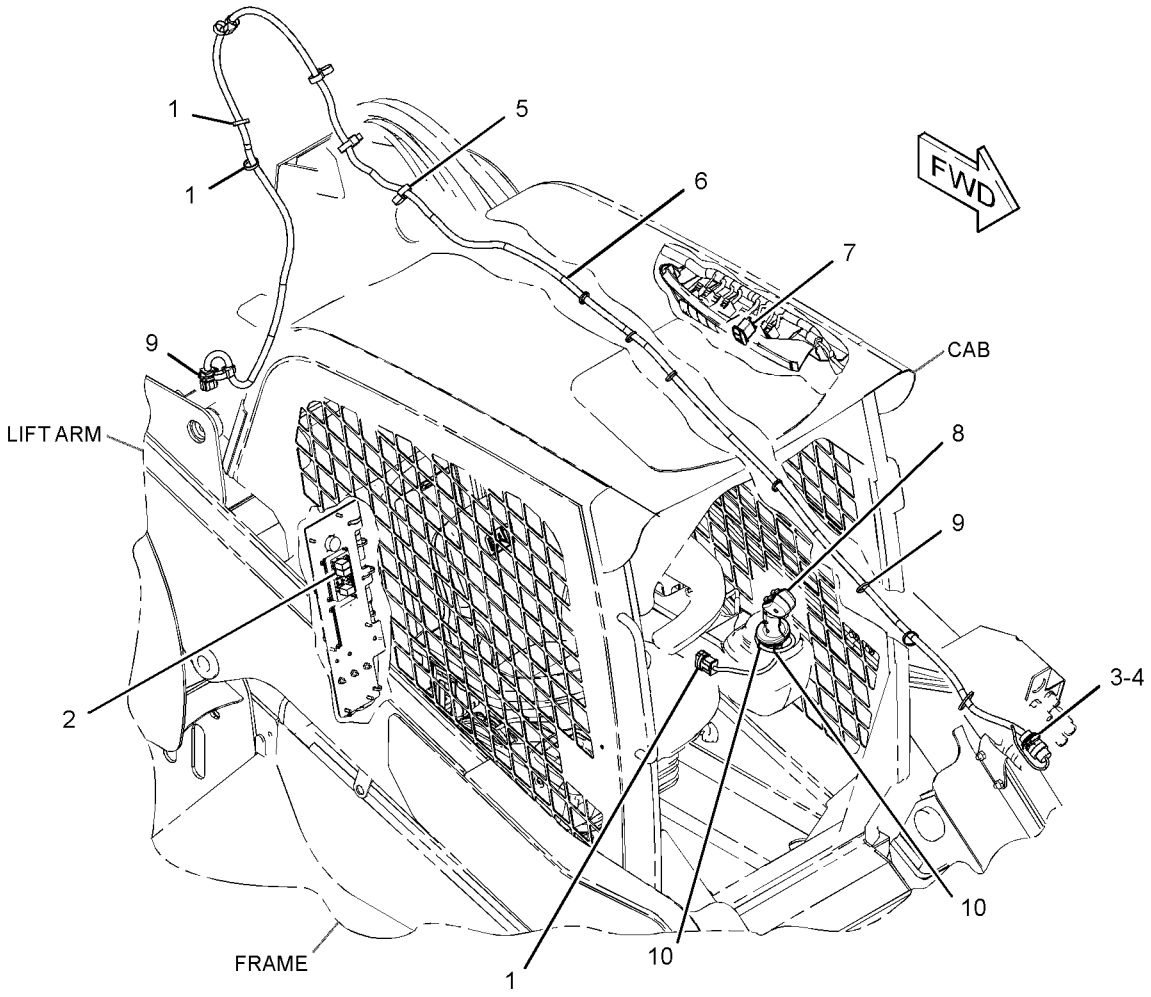

GRAPHIC #1 **<END>** g01359399

234-4328 LAMP GP-FLOOD

S/N: JAY1-UP
12-VOLT
PART OF 258-4164 LIGHTING GP-FLOOD

SMCS-1434 **i03505280**

NOTE	REF NO	GRAPHIC REF	PART NUMBER	QTY	PART NAME 1 2 3 4 5 6 (PRODUCT LEVEL)	SEE PAGE
	1	1	**9W-0607**	1	LAMP (12-VOLT, 55-WATT) (FLOODLIGHT)	
M	2	1	**8T-0389**	1	LOCKNUT (M10X1.5-THD)	
	3	1	**9X-4244**	2	SCREW-SPECIAL (M4X1.79X25-MM)	
	4	1	**202-6614**	1	LENS AS	
	5	1	**234-7730**	1	BODY AS	
	6	1	**164-7556**	1	BRACKET (LAMP RETAINING)	
	7	1	**234-7731**	1	BRACKET AS	
	8	1	**8T-4121**	1	WASHER-HARD (11X21X2.5-MM THK)	

M-METRIC PART

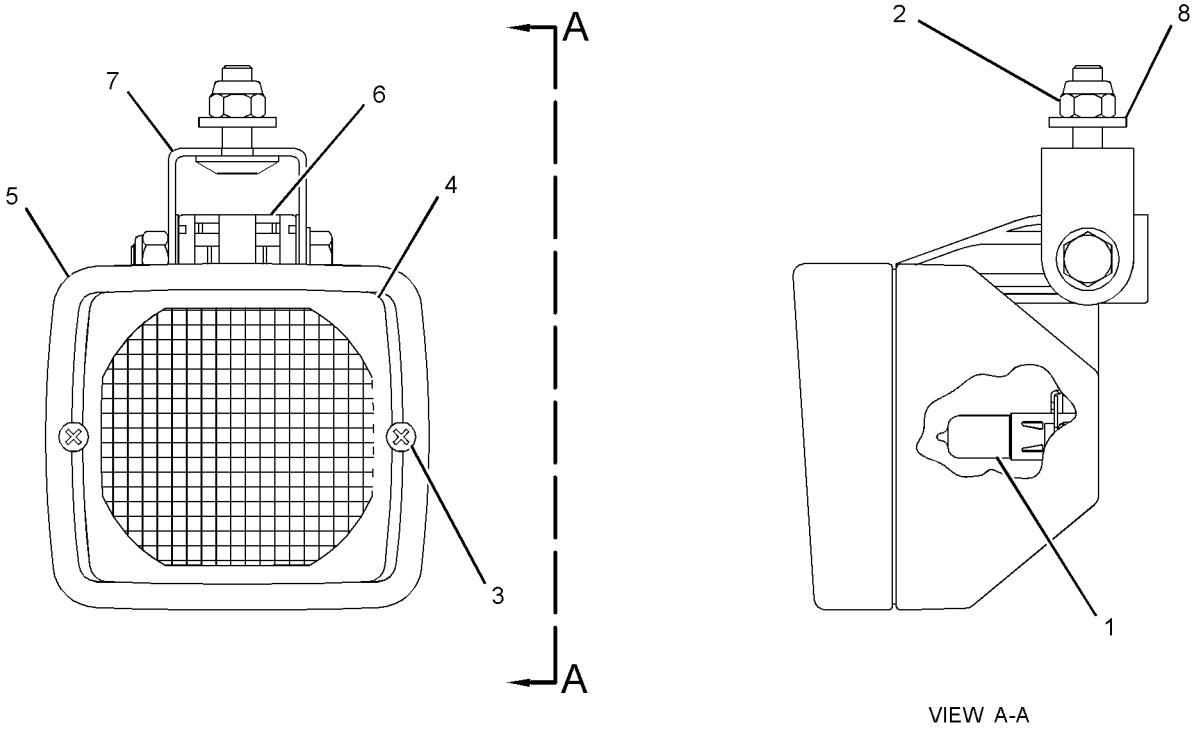

GRAPHIC #1 **<END>** g01283627

195-0189 LAMP GP-HEAD & SIGNAL–RH–HIGH, LOW BEAM

S/N: JAY1-UP
12-VOLT
PART OF 258-3884, 333-7436 KIT-ROADING CONVERSION, 258-4130 LIGHTING GP-ROADING
AN ATTACHMENT

SMCS-1429, 1430 **i02712950**

NOTE	REF NO	GRAPHIC REF	PART NUMBER	QTY	PART NAME 1 2 3 4 5 6 (PRODUCT LEVEL)	SEE PAGE
	1	1	**228-6053**	1	BODY AS	
	2	1	**228-6054**	1	BEZEL	
	3	1	**228-6051**	1	LENS AS (HEADLIGHT)	
	4	1	**228-6052**	1	LENS AS (TURN SIGNAL)	
	5	1	**228-6056**	6	SCREW (4-32X1.26-IN)	
	6	1	**9W-3324**	1	LAMP-HEAD (12-VOLT, 60/55-WATT) (12-VOLT, 60/55-WATT)	
	7	1	**226-4560**	1	LAMP (12-VOLT, 21-WATT) (AMBER)	
	8	1	**226-4561**	1	LAMP (12-VOLT, 5-WATT) (CLEAR)	
M	9	1	**8T-0389**	1	LOCKNUT (M10X1.5-THD)	
	10	1	**100-3253**	1	SPACER	
	11	1	**100-3254**	1	SPACER	
	12	1	**100-3255**	1	WASHER (SPHERICAL)	
	13	1	**102-8805**	1	KIT-RECEPTACLE (6-PIN)	
					(INCLUDES RECEPTACLE AS & WEDGE)	
	14	1	**186-3735**	5	PIN-CONNECTOR (16-GA TO 18-GA)	
	15	1	**8T-8737**	1	PLUG-SEAL	

M-METRIC PART

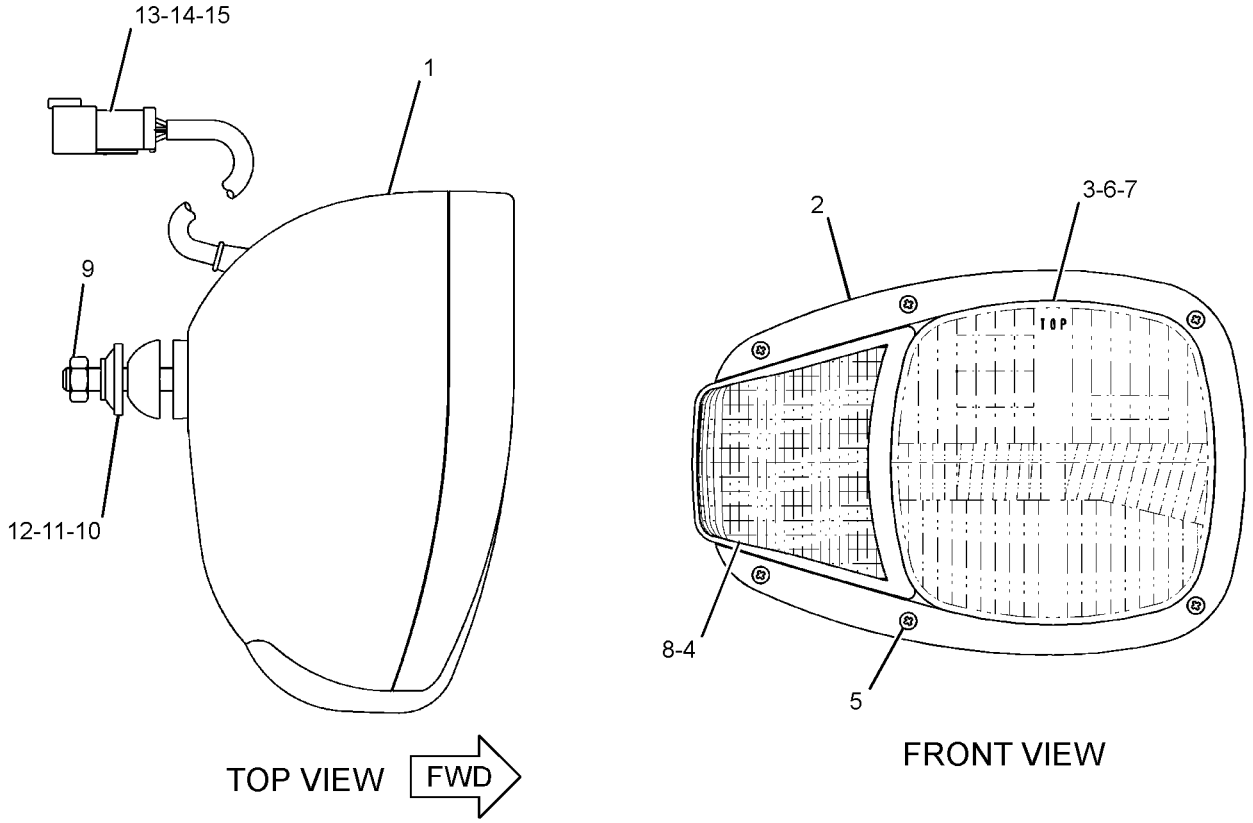

GRAPHIC #1 **<END>** g01313421

195-0190 LAMP GP-HEAD & SIGNAL–LH–HIGH, LOW BEAM

S/N: JAY1-UP
12-VOLT
PART OF 258-3884, 333-7436 KIT-ROADING CONVERSION, 258-4130 LIGHTING GP-ROADING
AN ATTACHMENT

SMCS-1429, 1430 **i02712951**

NOTE	REF NO	GRAPHIC REF	PART NUMBER	QTY	PART NAME 1 2 3 4 5 6 (PRODUCT LEVEL)	SEE PAGE
	1	1	**228-6053**	1	BODY AS	
	2	1	**228-6054**	1	BEZEL	
	3	1	**228-6051**	1	LENS AS (HEADLIGHT)	
	4	1	**228-6052**	1	LENS AS (TURN SIGNAL)	
	5	1	**228-6056**	6	SCREW (4-32X1.26-IN)	
	6	1	**9W-3324**	1	LAMP-HEAD (12-VOLT, 60/55-WATT) (12-VOLT, 60/55-WATT)	
	7	1	**226-4560**	1	LAMP (12-VOLT, 21-WATT) (AMBER)	
	8	1	**226-4561**	1	LAMP (12-VOLT, 5-WATT) (CLEAR)	
M	9	1	**8T-0389**	1	LOCKNUT (M10X1.5-THD)	
	10	1	**100-3253**	1	SPACER	
	11	1	**100-3254**	1	SPACER	
	12	1	**100-3255**	1	WASHER (SPHERICAL)	
	13	1	**102-8805**	1	KIT-RECEPTACLE (6-PIN)	
					(INCLUDES RECEPTACLE AS & WEDGE)	
	14	1	**186-3735**	5	PIN-CONNECTOR (16-GA TO 18-GA)	
	15	1	**8T-8737**	1	PLUG-SEAL	

M-METRIC PART

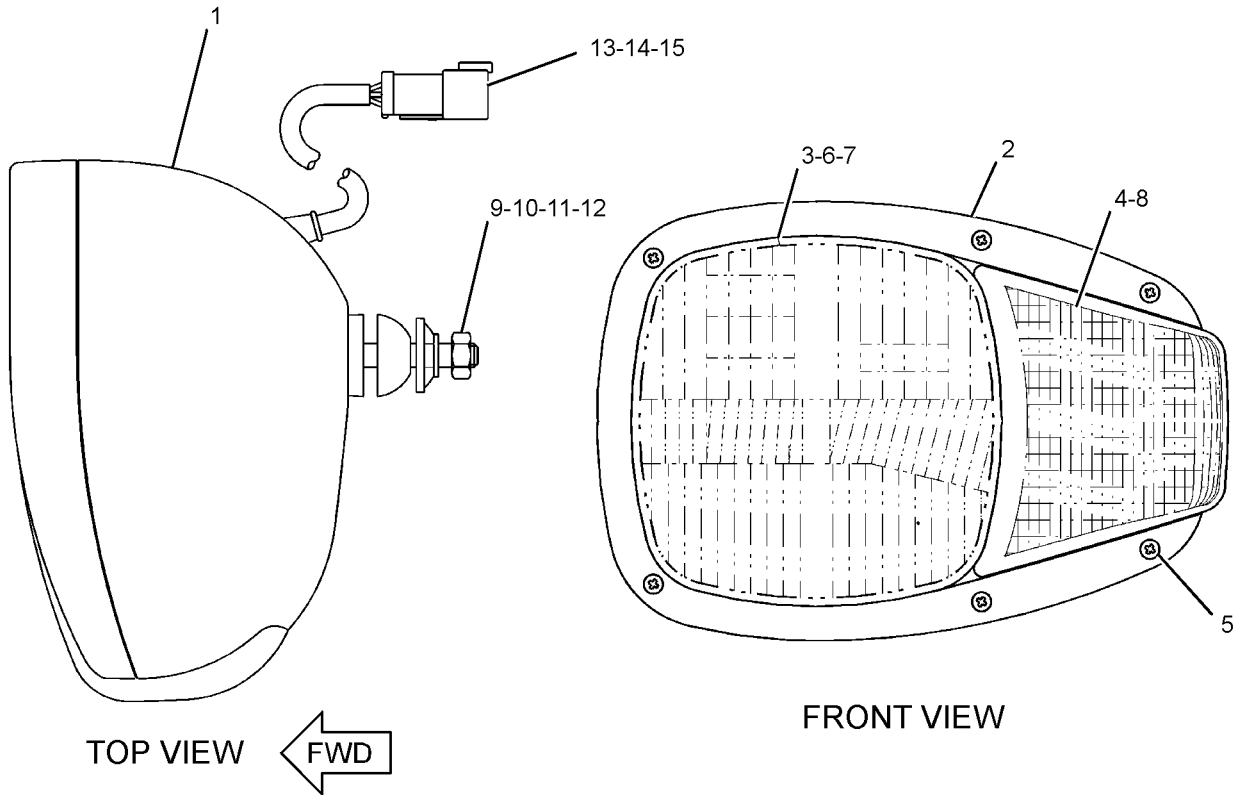

GRAPHIC #1 **<END>** g01313362

128-6985 LAMP GP-WARNING BEACON–

AMBER, MAGNETIC MOUNT, ROTATING
S/N: JAY1-UP
12-VOLT
PART OF 258-3841 CONVERSION GP-ROADING, 315-7816, 333-7435 KIT-ROADING CONVERSION, 258-4184 LIGHTING GP-WARNING BEACON
AN ATTACHMENT

SMCS-1431 **i03543747**

NOTE	REF NO	GRAPHIC REF	PART NUMBER	QTY	PART NAME 1 2 3 4 5 6 (PRODUCT LEVEL)	SEE PAGE
	1	1	**9X-8121**	1	LENS (AMBER, WARNING BEACON)	
	2	1	**9X-8118**	1	LAMP (12-VOLT, 55-WATT) (WARNING BEACON)	
	3	1	**9X-8139**	1	BELT-DRIVE	
	4	1	**9R-7958**	1	CORD AS	
		1	**9R-7942**	1	PLUG AS	
					–OR–	
		1	**179-5434**	1	PLUG AS	

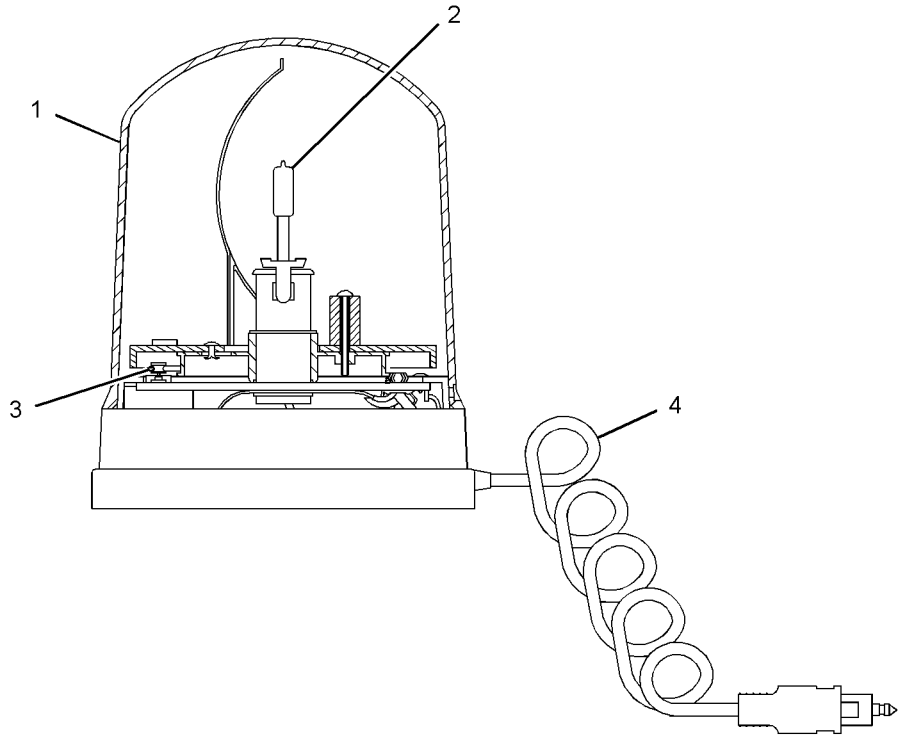

GRAPHIC #1 **<END>** g01567653

258-4164 LIGHTING GP-FLOOD—WORK LIGHTS, FRONT

S/N: JAY1-UP
12-VOLT
PART OF 258-4000 CAB AR-ENCLOSED ROPS

SMCS-1434 **i02760100**

NOTE	REF NO	GRAPHIC REF	PART NUMBER	QTY	PART NAME 1 2 3 4 5 6 (PRODUCT LEVEL)	SEE PAGE
Y	1	1	**234-4328**	2	LAMP GP-FLOOD (12-VOLT) (FRONT)	150
	2	1	**8T-4121**	4	WASHER-HARD (11X21X2.5-MM THK)	

Y-SEPARATE ILLUSTRATION

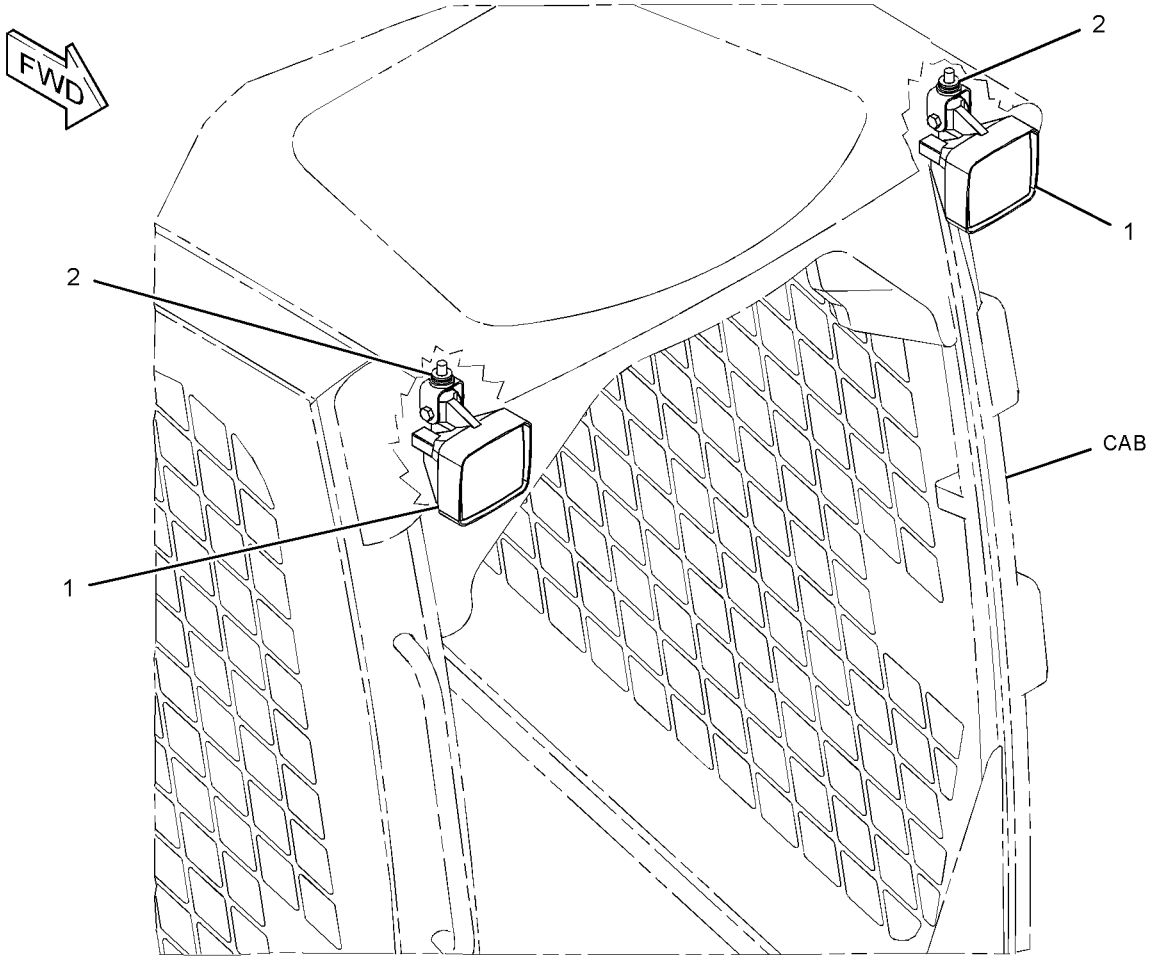

GRAPHIC #1 **<END>** g01316670

258-4130 LIGHTING GP-ROADING—HEAD, SIGNAL, STOP, TAIL

S/N: JAY1-UP

PART OF 258-3818, 258-3819, 315-6353 CONVERSION AR-MACHINE

AN ATTACHMENT

SMCS-1429 **i03643540**

NOTE	REF NO	GRAPHIC REF	PART NUMBER	QTY	PART NAME 1 2 3 4 5 6 (PRODUCT LEVEL)	SEE PAGE
	1	1	**7K-1181**	5	STRAP-CABLE	
	2	1	**9R-1499**	2	REFLECTOR	
	3	1	**146-9439**	1	RELAY AS (12-VOLT) (STOP LIGHT)	
	4	1	**178-3620**	6	STRAP-DUAL CLAMP	
Y	5	1	**195-0189**	1	LAMP GP-HEAD & SIGNAL (RH) (HIGH, LOW BEAM)	151
Y	6	1	**195-0190**	1	LAMP GP-HEAD & SIGNAL (LH) (HIGH, LOW BEAM)	152
	7	1	**242-9000**	1	FLASHER AS (12-VOLT) (STOP LIGHT)	
	8	1	**258-4131**	1	HARNESS AS-LIGHTING (FRONT, REAR)	
E		1	**125-7875**		TUBE-HEAT SHRINK (7.44-MM DIA) (15-CM)	
		1	**155-2255**	1	KIT-CONNECTING PLUG (12-PIN)	
		1	**155-2271**	2	KIT-CONNECTING PLUG (4-PIN)	
		1	**155-2274**	2	KIT-CONNECTING PLUG (6-PIN)	
					(EACH PLUG KIT INCLUDES PLUG AS, WEDGE & INTERFACE SEAL)	
		1	**180-9339**	1	PIN-CONNECTOR (14-GA TO 18-GA)	
		1	**180-9340**	1	SOCKET-CONNECTOR (14-GA TO 18-GA)	
		1	**102-8804**	2	KIT-RECEPTACLE (4-PIN)	
		1	**102-8801**	1	KIT-RECEPTACLE (12-PIN)	
					(EACH RECEPTACLE KIT INCLUDES RECEPTACLE AS & WEDGE)	
		1	**3S-2093**	3	STRAP-CABLE	
		1	**8T-8737**	17	PLUG-SEAL	
		1	**186-3735**	2	PIN-CONNECTOR (16-GA TO 18-GA)	
		1	**186-3736**	18	SOCKET-CONNECTOR (16-GA TO 18-GA)	
		1	**9W-0852**	7	PIN-CONNECTOR (14-GA)	
		1	**9W-0844**	6	SOCKET-CONNECTOR (14-GA)	
E		1	**119-3662**		TUBE-HEAT SHRINK (10.85-MM DIA) (7-CM)	
E		1	**125-7874**		TUBE-HEAT SHRINK (5.72-MM DIA) (15-CM)	
	9	1	**258-4134**	1	FUSE AS (ROADING)	
	10	1	**263-5421**	1	SWITCH AS-ROCKER (ROADING LIGHTS)	
		1	**111-7899**	1	GASKET	
	11	1	**263-5422**	1	SWITCH AS-ROCKER (TURN SIGNAL)	
		1	**111-7899**	1	GASKET	
	12	1	**265-9543**	1	SWITCH AS-ROCKER (HAZARD WARNING LIGHTS)	
		1	**111-7899**	1	GASKET	
	13	1	**172-6490**	2	LAMP GP-SIGNAL (STOP, TAIL, TURN)	
					(EACH INCLUDES)	
		1	**9W-3326**	1	LAMP (12-VOLT, 21-WATT) (ROADING LIGHTS)	
		1	**084-4348**	1	LAMP (12-VOLT, 5-WATT) (MINIATURE)	
		1	**267-2809**	1	LENS (STOP, TAIL, TURN)	
		1	**186-3735**	4	PIN-CONNECTOR (16-GA TO 18-GA)	
		1	**102-8804**	1	KIT-RECEPTACLE (4-PIN)	
					(INCLUDES RECEPTACLE AS & WEDGE)	
	14	1	**3S-2093**	21	STRAP-CABLE	

E-ORDER BY THE CENTIMETER
Y-SEPARATE ILLUSTRATION

258-4130 **LIGHTING GP-ROADING** *(contd.)* **i03643540**

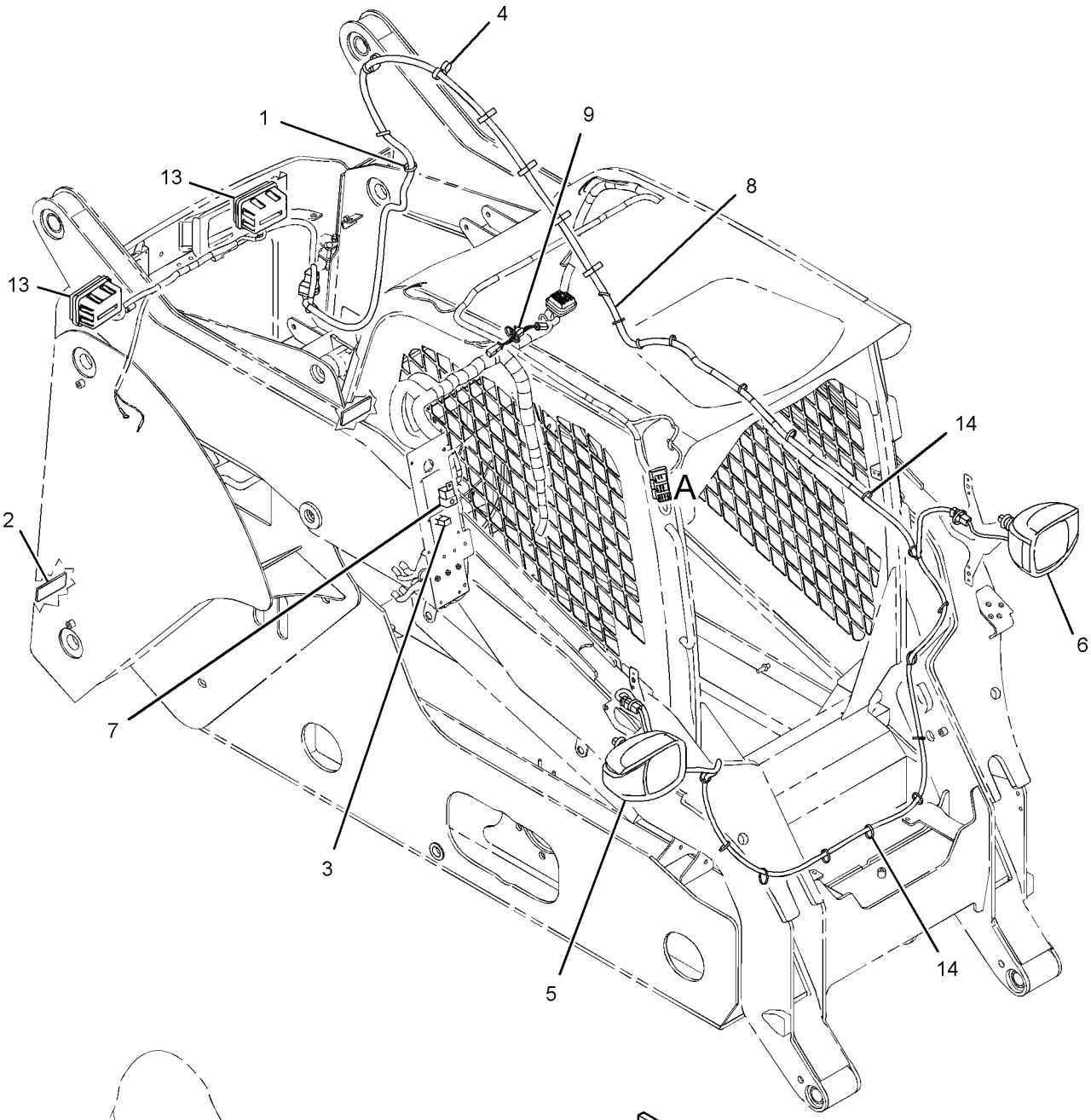

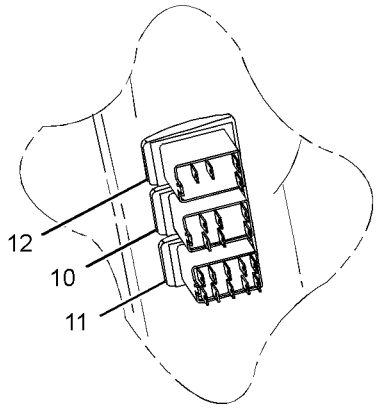

VIEW OF AREA A

GRAPHIC #1 **<END>** g01310738

333-4957 LIGHTING GP-ROADING–REAR

S/N: JAY3186-UP
PART OF 315-6353 CONVERSION AR-MACHINE
AN ATTACHMENT

SMCS-1429 **i03505284**

NOTE	REF NO	GRAPHIC REF	PART NUMBER	QTY	PART NAME 1 2 3 4 5 6 (PRODUCT LEVEL)	SEE PAGE
	1	1	**9R-1499**	2	REFLECTOR	
	2	1	**146-9439**	1	RELAY AS (12-VOLT) (STOP LIGHT)	
	3	1	**172-6490**	2	LAMP GP-SIGNAL (STOP, TAIL, TURN)	
					(EACH INCLUDES)	
		1	**9W-3326**	1	LAMP (12-VOLT, 21-WATT) (ROADING LIGHTS)	
		1	**084-4348**	1	LAMP (12-VOLT, 5-WATT) (MINIATURE)	
		1	**102-8804**	1	KIT-RECEPTACLE (4-PIN)	
					(INCLUDES RECEPTACLE AS & WEDGE)	
		1	**186-3735**	4	PIN-CONNECTOR (16-GA TO 18-GA)	
		1	**267-2809**	1	LENS (STOP, TAIL, TURN)	
	4	1	**242-9000**	1	FLASHER AS (12-VOLT) (STOP LIGHT)	
	5	1	**258-4134**	1	FUSE AS (ROADING)	
	6	1	**263-5422**	1	SWITCH AS-ROCKER (TURN SIGNAL)	
		1	**111-7899**	1	GASKET	
	7	1	**265-9543**	1	SWITCH AS-ROCKER (HAZARD WARNING LIGHTS)	
		1	**111-7899**	1	GASKET	
	8	1	**3S-2093**	1	STRAP-CABLE	

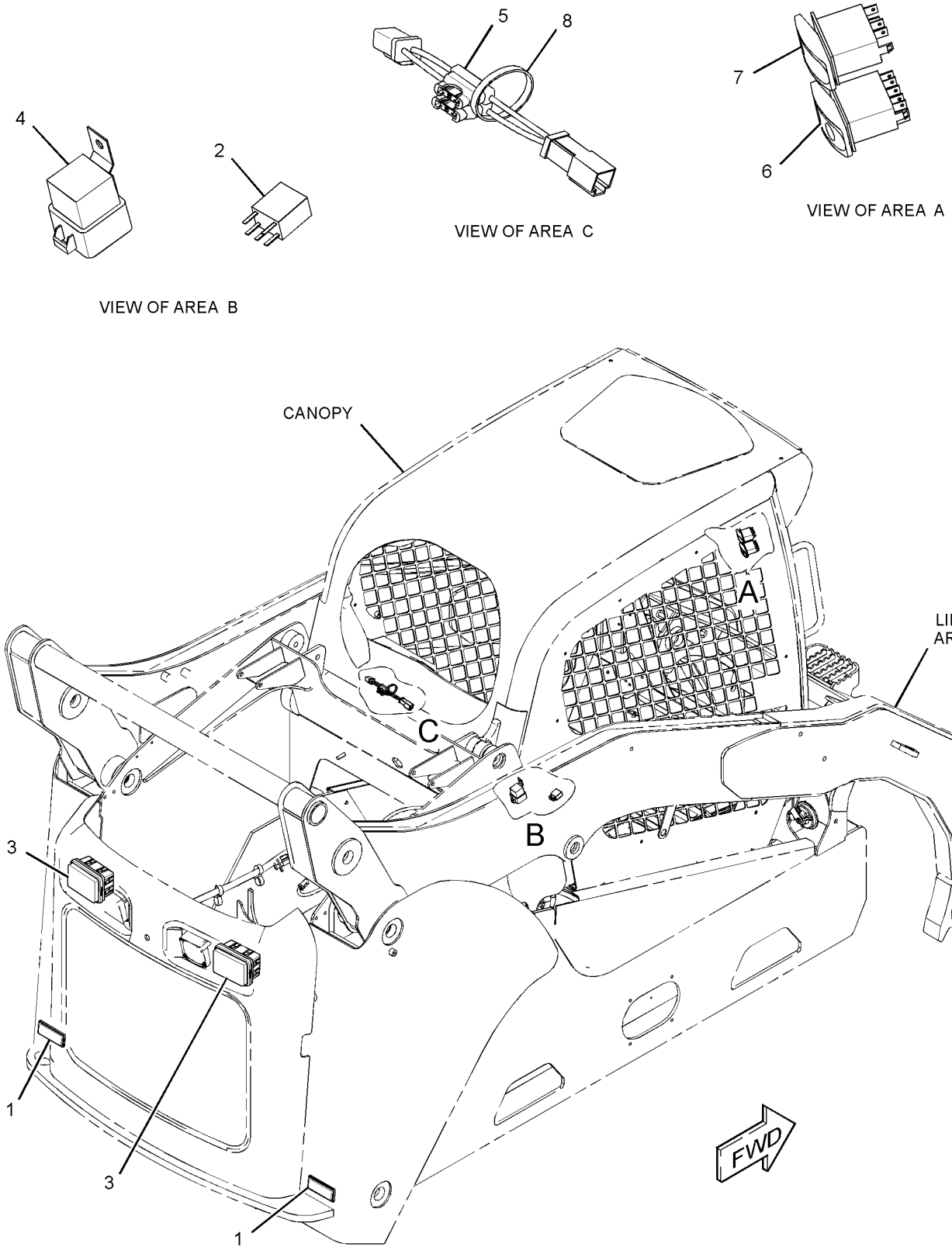

GRAPHIC #1 **<END>** g01824820

258-4169 LIGHTING GP-STOP & TAIL

S/N: JAY1-UP
PART OF 258-3800, 258-3801 CONVERSION AR-ROADING AN ATTACHMENT

SMCS-1432 **i03507880**

NOTE	REF NO	GRAPHIC REF	PART NUMBER	QTY	PART NAME 1 2 3 4 5 6 (PRODUCT LEVEL)	SEE PAGE
	1	1	**9R-1499**	2	REFLECTOR	
	2	1	**258-0930**	2	LAMP GP-STOP & TAIL	
		1	**8T-8737**	2	PLUG-SEAL	
		1	**9W-2471**	1	LAMP (12-VOLT)	
		1	**102-8804**	1	KIT-RECEPTACLE (4-PIN)	
					(INCLUDES RECEPTACLE AS & WEDGE)	
		1	**165-4895**	1	LENS	
		1	**186-3735**	2	PIN-CONNECTOR (16-GA TO 18-GA)	

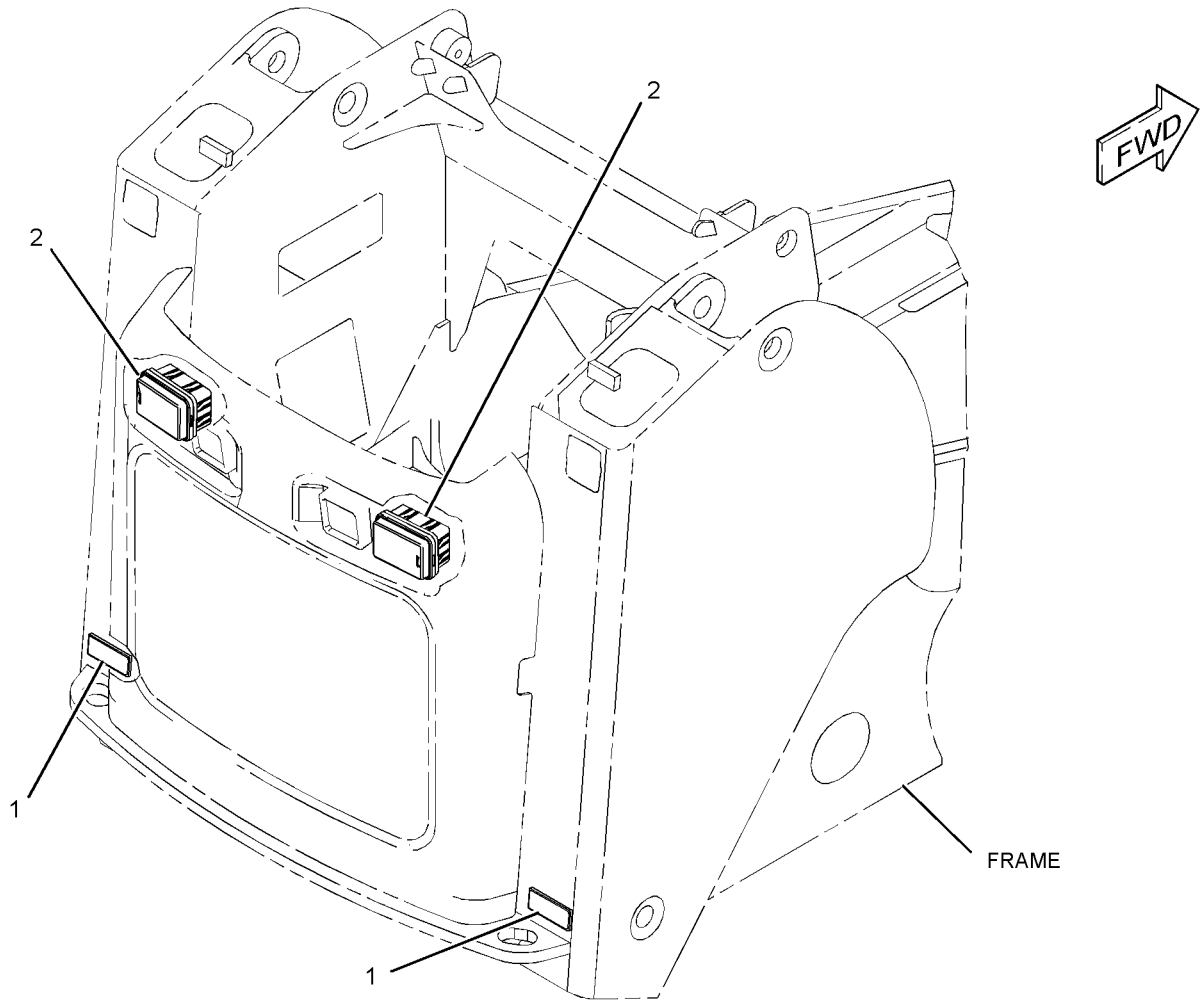

GRAPHIC #1 **<END>** g01325047

258-4184 LIGHTING GP-WARNING BEACON–
AMBER, MAGNETIC MOUNT, ROTATING
S/N: JAY1-UP
AN ATTACHMENT

SMCS-1431 **i03505260**

NOTE	REF NO	GRAPHIC REF	PART NUMBER	QTY	PART NAME 1 2 3 4 5 6 (PRODUCT LEVEL)	SEE PAGE
Y	1	1	**128-6985**	1	LAMP GP-WARNING BEACON (12-VOLT, AMBER)	153
	2	1	**263-5423**	1	SWITCH AS-ROCKER (WARNING BEACON)	
		1	**111-7899**	1	GASKET	

Y-SEPARATE ILLUSTRATION

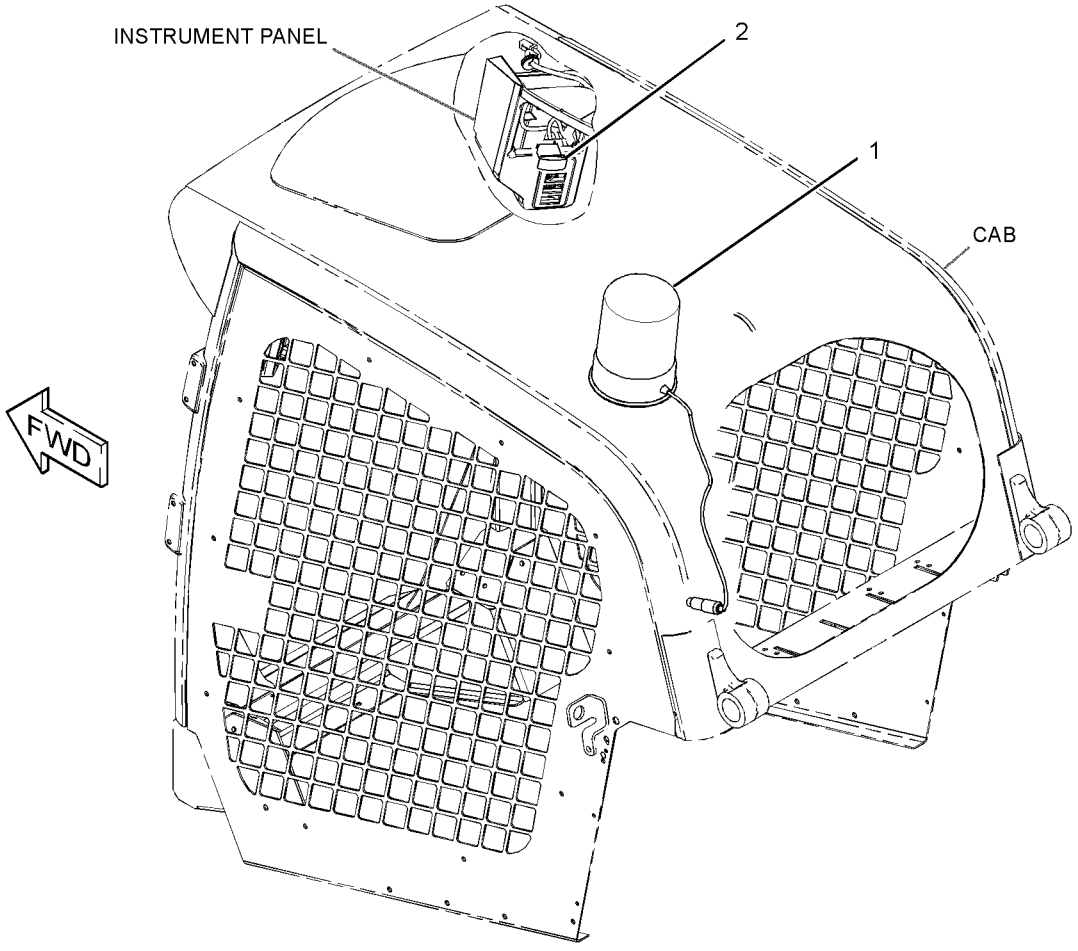

GRAPHIC #1 **<END>** g01311626

292-1271 MAST GP–ACCUGRADE LASER

S/N: JAY1-UP

FOR USE WITH BOX BLADE, 258-4111–PAGE 720, 264-8861 MODULE GP-DISPLAY, 328-2367 HARNESS AS-CONTROL, 258-4111–PAGE 720

FIELD INSTALLATION

SMCS-7220, 79NS **i03503861**

NOTE	PART NUMBER	QTY	PART NAME 1 2 3 4 5 6 (PRODUCT LEVEL)	SEE PAGE
Y	**336-0913**	1	WIRING GP-GRADE CONTROL	186
	336-0914	1	RECEIVER GP-LASER (LR410)	
	248-1497	1	CABLE-COILED	
	253-8329	1	RECEIVER GP-LASER (LR410)	
	257-1729	1	CASE-CARRYING	
Y-SEPARATE ILLUSTRATION				

<END>

258-4135 RELAY GP—MAIN POWER

S/N: JAY1-UP

PART OF 258-4100 WIRING GP-CAB

SMCS-1422, 4493 **i02645967**

NOTE	REF NO	GRAPHIC REF	PART NUMBER	QTY	PART NAME 1 2 3 4 5 6 (PRODUCT LEVEL)	SEE PAGE
M	1	1	**5C-2890**	2	NUT (M6X1-THD)	
	2	1	**8T-4205**	2	WASHER-HARD (7.2X14.5X2-MM THK)	
	3	1	**1H-3244**	2	LOCKWASHER	
M	4	1	**5C-7261**	1	NUT (M8X1.25-THD)	
	5	1	**8T-4224**	1	WASHER-HARD (8.8X16X2-MM THK)	
	6	1	**267-5213**	1	COVER	
	7	1	**267-5211**	1	SEAL	
	8	1	**267-2680**	1	FUSE (20-AMPERE)	
	9	1	**267-2701**	1	FUSE (60-AMPERE)	

M-METRIC PART

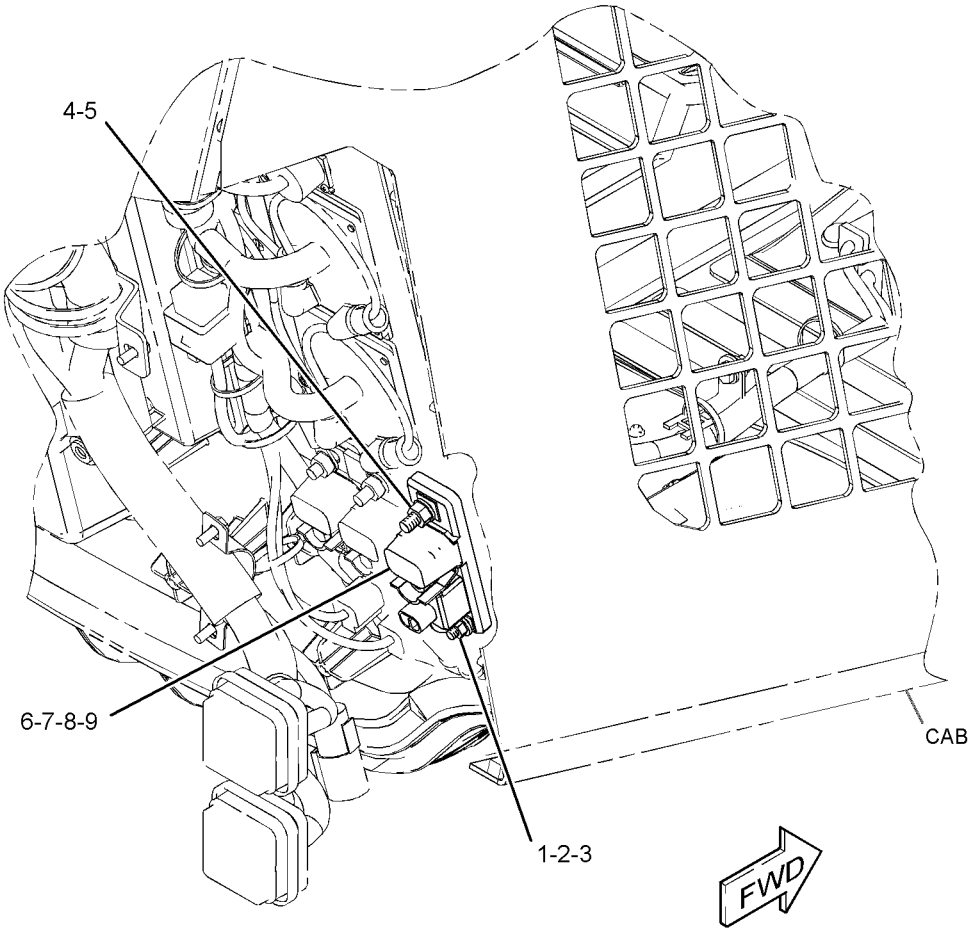

GRAPHIC #1 **<END>** g01328212

160-2443 SENSOR GP-POSITION

S/N: JAY1-UP
PART OF 258-4043 PEDAL GP-GOVERNOR
FIELD REPLACEMENT ORDER 266-1467—PAGE 164

SMCS-1913 **i03543383**

NOTE	REF NO	GRAPHIC REF	PART NUMBER	QTY	PART NAME 1 2 3 4 5 6 (PRODUCT LEVEL)	SEE PAGE
	1	1	**102-8803**	1	KIT-RECEPTACLE (3-PIN)	
					(INCLUDES RECEPTACLE AS & WEDGE)	
	2	1	**186-3735**	3	PIN-CONNECTOR (16-GA TO 18-GA)	

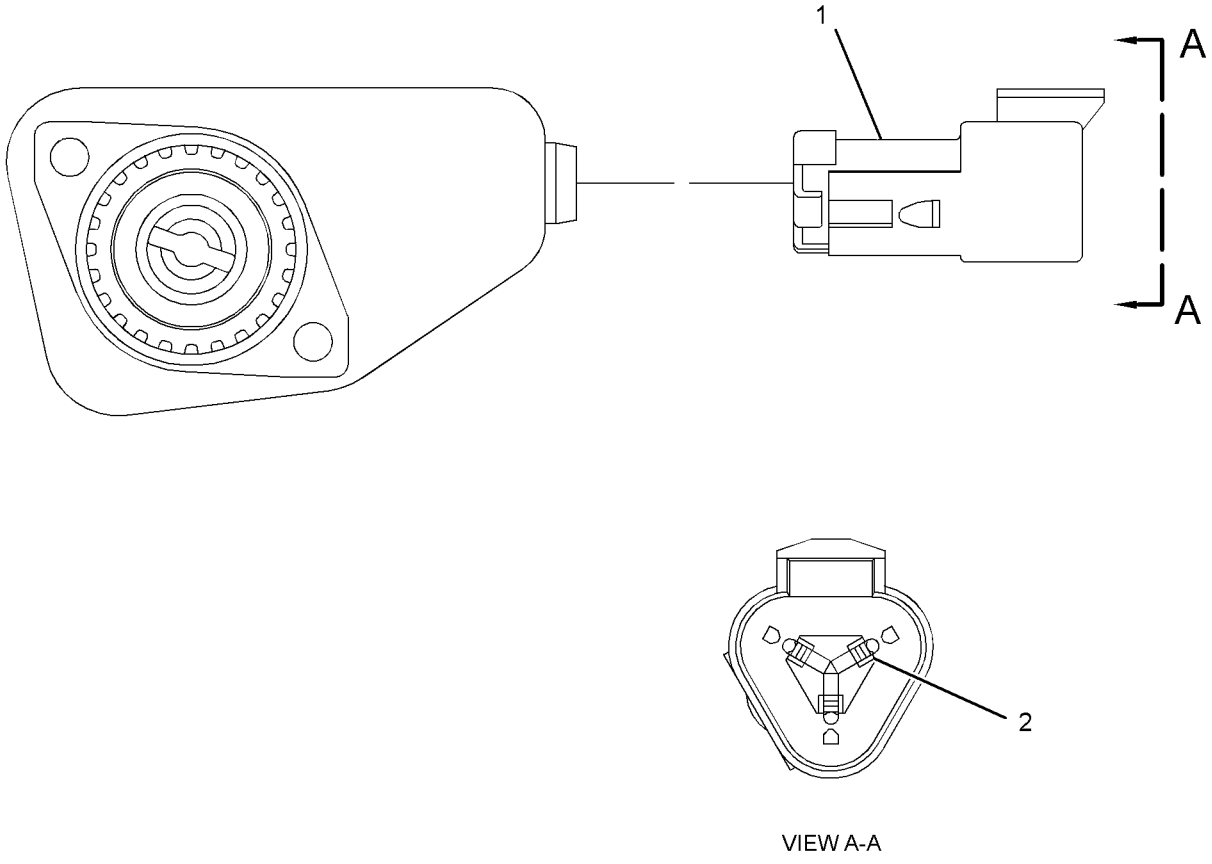

VIEW A-A

GRAPHIC #1 **<END>** g01871473

266-1467 SENSOR GP-POSITION–ROTARY

S/N: JAY1-UP

PART OF 258-4043 PEDAL GP-GOVERNOR

FIELD REPLACEMENT FOR 160-2443–PAGE 163

SMCS-1913 **i03371123**

NOTE	REF NO	GRAPHIC REF	PART NUMBER	QTY	PART NAME 1 2 3 4 5 6 (PRODUCT LEVEL)	SEE PAGE
	1	1	**9X-3401**	3	PIN-CONNECTOR (16-GA TO 18-GA)	
					–OR–	
		1	**126-1767**	3	PIN-CONNECTOR (14-GA)	
	2	1	**102-8803**	1	KIT-RECEPTACLE (3-PIN)	
					(INCLUDES RECEPTACLE AS & WEDGE)	

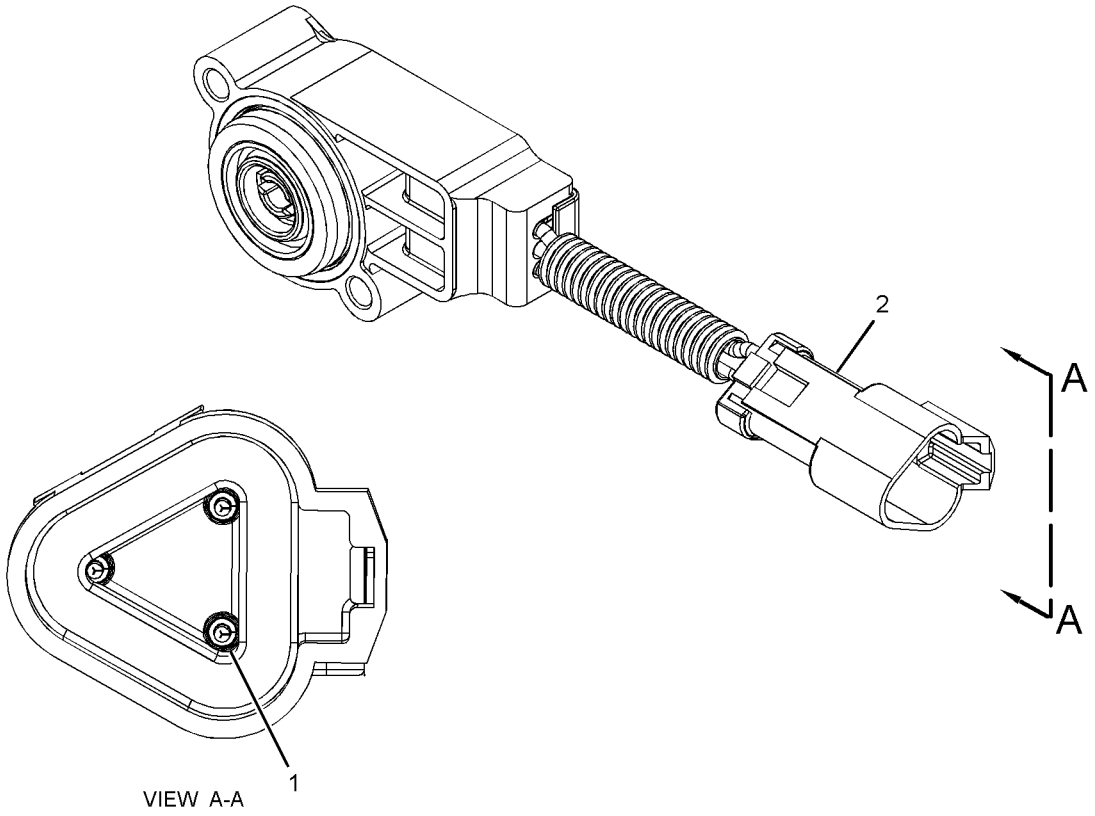

GRAPHIC #1 **<END>** g01740694

262-3764 SENSOR GP-SPEED–MOTOR

S/N: JAY1-UP

PART OF 258-2408, 258-2409, 258-2416 MOTOR & MTG GP-HYDROSTATIC

AN ATTACHMENT

SMCS-4803 **i02635720**

NOTE	REF NO	GRAPHIC REF	PART NUMBER	QTY	PART NAME 1 2 3 4 5 6 (PRODUCT LEVEL)	SEE PAGE
	1	1	**102-8804**	1	KIT-RECEPTACLE (4-PIN)	
					(INCLUDES RECEPTACLE AS & WEDGE)	
	2	1	**9X-3401**	4	PIN-CONNECTOR (16-GA TO 18-GA)	
E	3	1	**9X-1813**		SLEEVE (28-CM)	
	4	1	**9X-7408**	1	SEAL-O-RING	
B	5	1	**171-5349**	1	STRAP-MARKER	

B-USE AS REQUIRED
E-ORDER BY THE CENTIMETER

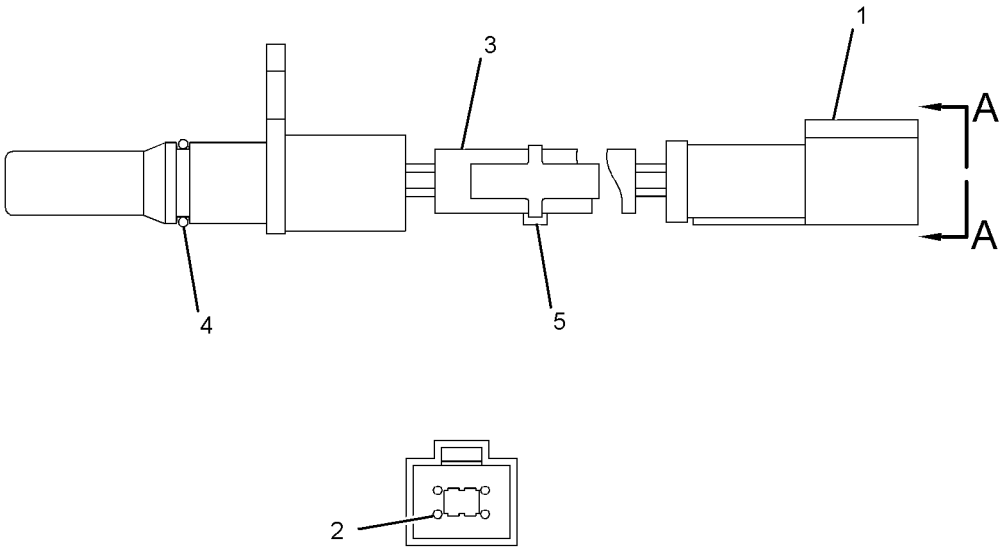

VIEW A-A

GRAPHIC #1 **<END>** g01326248

238-8277 SENSOR GP-TEMP & PRESS–ENGINE

S/N: CJS1-60343
PART OF 262-7288 ENGINE AR-PRIMARY
AN ATTACHMENT

SMCS-1906, 1924 **i03637586**

NOTE	REF NO	GRAPHIC REF	PART NUMBER	QTY	PART NAME 1 2 3 4 5 6 (PRODUCT LEVEL)	SEE PAGE
	1	1	**327-0752**	1	SWITCH-OIL PRESS (ENGINE)	
	2	1	**238-8274**	1	SWITCH-TEMPERATURE (ENGINE COOLANT)	

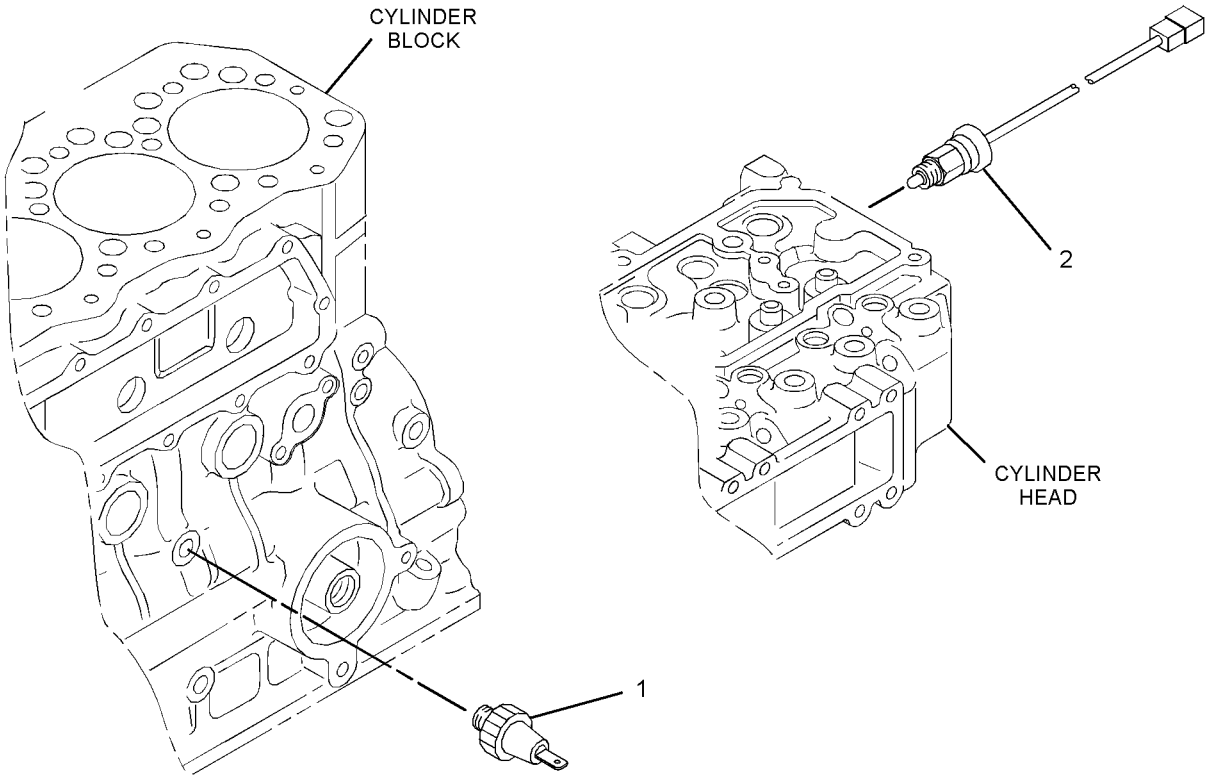

GRAPHIC #1 **<END>** g01341914

258-4103 SERVICE GP-MACHINE

S/N: JAY1-UP

PART OF 258-4100 WIRING GP-CAB

SMCS-7610, 7631 **i03580901**

NOTE	PART NUMBER	QTY	PART NAME 1 2 3 4 5 6 (PRODUCT LEVEL)	SEE PAGE
	346-1575	1	SOFTWARE GP-MACHINE	
			-OR-	
R	**304-5687**	1	CONTROL GP-UNPROGRAMMED (MACHINE)	
			-OR-	
	346-1576	1	SERVICE GP-MACHINE	
			(OPTIONAL SERVICE REPLACEMENT)(INCLUDES CONTROL GP & SOFTWARE)	

R-REMFG PART MAY BE AVAILABLE

<END>

ELECTRICAL AND STARTING SYSTEM

143-0539 STARTING MOTOR GP-ELECTRIC*R

S/N: CYM1-UP; CJS1-70000
12-VOLT
PART OF 287-6181 STARTING MOTOR GP-ELECTRIC
AN ATTACHMENT

SMCS-1453 **i02712964**

NOTE	REF NO	GRAPHIC REF	PART NUMBER	QTY	PART NAME 1 2 3 4 5 6 (PRODUCT LEVEL)	SEE PAGE
	1	1	**8C-9778**	1	PLUNGER AS	
	2	1	**8C-9783**	1	GASKET	
	3	1	**2P-8104**	1	BEARING	
	4	1	**7T-6092**	1	HOLDER AS-BRUSH	
M	5	1	**8T-4133**	2	NUT (M10X1.5-THD)	
	6	1	**7T-6088**	1	BEARING AS	
	7	1	**7T-6087**	1	WASHER (15.2X40X0.5-MM THK)	
	8	1	**7T-6093**	1	CLUTCH AS	
	9	1	**8J-4455**	1	BALL	
	10	1	**7T-6090**	1	SPRING	
	11	1	**8T-4121**	2	WASHER-HARD (11X21X2.5-MM THK)	
	12	1	**3E-5153**	1	COVER-STARTING MOTOR	
M	13	1	**9X-2036**	1	SCREW-PAN HEAD	
	14	1	**8F-1434**	1	LOCKWASHER	
	15	1	**100-4113**	1	SWITCH AS (STARTING MOTOR)(12-VOLT)	
	16	1	**100-4119**	1	ARMATURE AS	
	17	1	**100-4118**	1	CASE AS-STARTING MOTOR	
	18	1	**100-4115**	1	HOUSING-STARTING MOTOR	
	19	1	**143-1344**	1	FRAME-STARTER	
	20	1	**100-3685**	1	CAP	
	21	1	**3E-5154**	1	BUSHING-STARTING MOTOR	
					AVAILABLE REPAIR KIT(S):	
			7T-6099	1	KIT-GEAR (STARTING MOTOR)	
					(INCLUDES RETAINER, PINION & ROLLERS)	
			146-6729	1	KIT-HARDWARE (STARTING MOTOR)	
					(INCLUDES BOLTS, SCREWS, SCREW ASSEMBLIES & PLATE)	
			100-4112	1	KIT-CONTACT (STARTING MOTOR)	
					(INCLUDES NUT, WASHERS, SEAL, BUSHINGS, PLATE & BOLT)	

M-METRIC PART

143-0539 **STARTING MOTOR GP-ELECTRIC** *(contd.)* **i02712964**

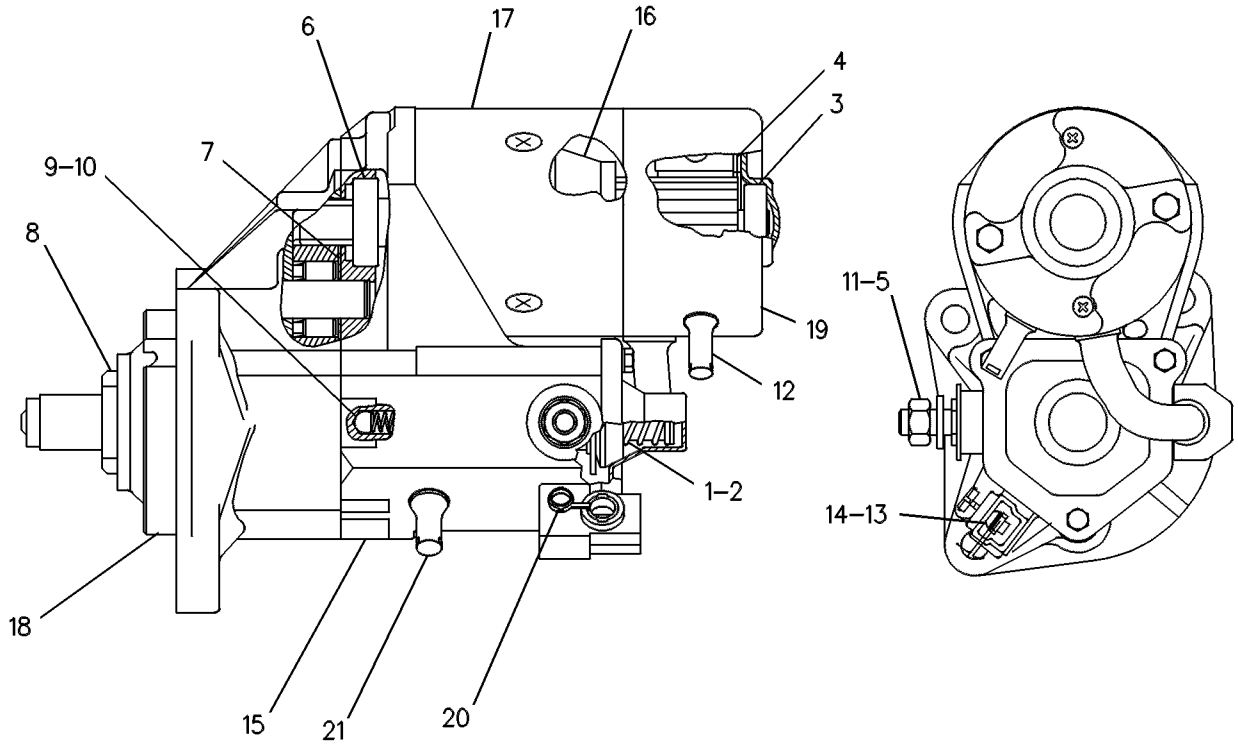

GRAPHIC #1 **<END>** g00131126

ELECTRICAL AND STARTING SYSTEM

287-6181 STARTING MOTOR GP-ELECTRIC

S/N: CYM1-UP; CJS1-70000
12-VOLT
PART OF 262-7288, 287-8073 ENGINE AR-PRIMARY
AN ATTACHMENT

SMCS-1453 **i02568571**

NOTE	REF NO	GRAPHIC REF	PART NUMBER	QTY	PART NAME 1 2 3 4 5 6 (PRODUCT LEVEL)	SEE PAGE
YR	1	1	**143-0539**	1	STARTING MOTOR GP-ELECTRIC	168

R-REMFG PART MAY BE AVAILABLE
Y-SEPARATE ILLUSTRATION

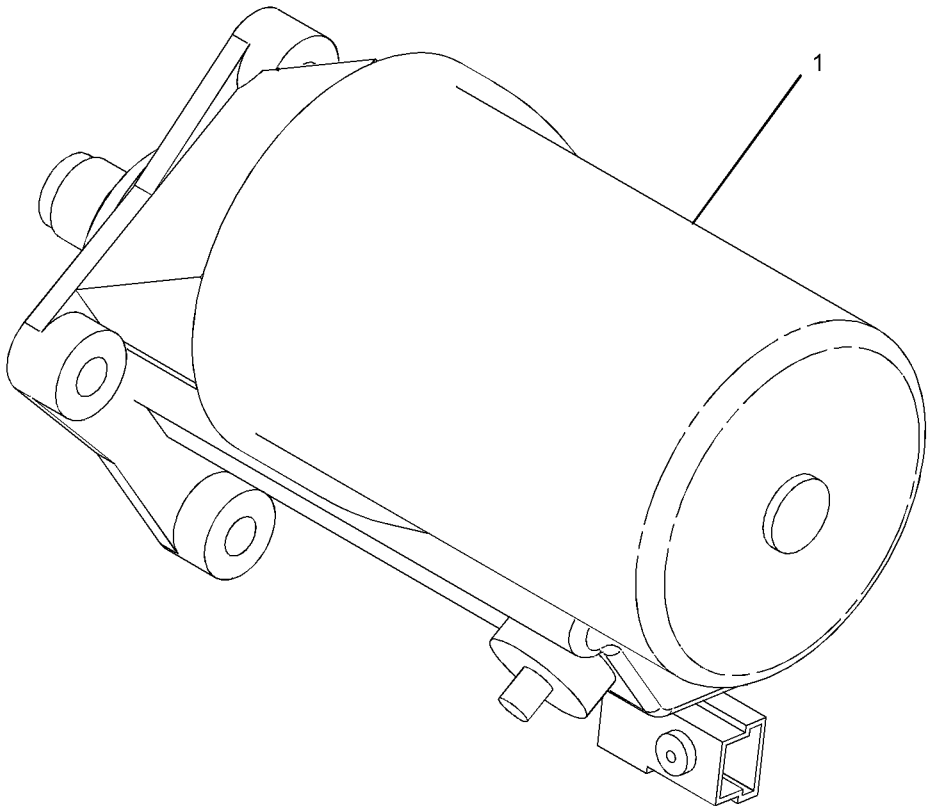

GRAPHIC #1 **<END>** g01345353

300-1071 SWITCH GP-PRESSURE

S/N: CYM1-UP; CJS60344-70000
PART OF 262-7288, 287-8073 ENGINE AR-PRIMARY
AN ATTACHMENT

SMCS-1435, 7400 **i02974920**

NOTE	REF NO	GRAPHIC REF	PART NUMBER	QTY	PART NAME 1 2 3 4 5 6 (PRODUCT LEVEL)	SEE PAGE
	1	1	**327-0752**	1	SWITCH-OIL PRESS (ENGINE)	

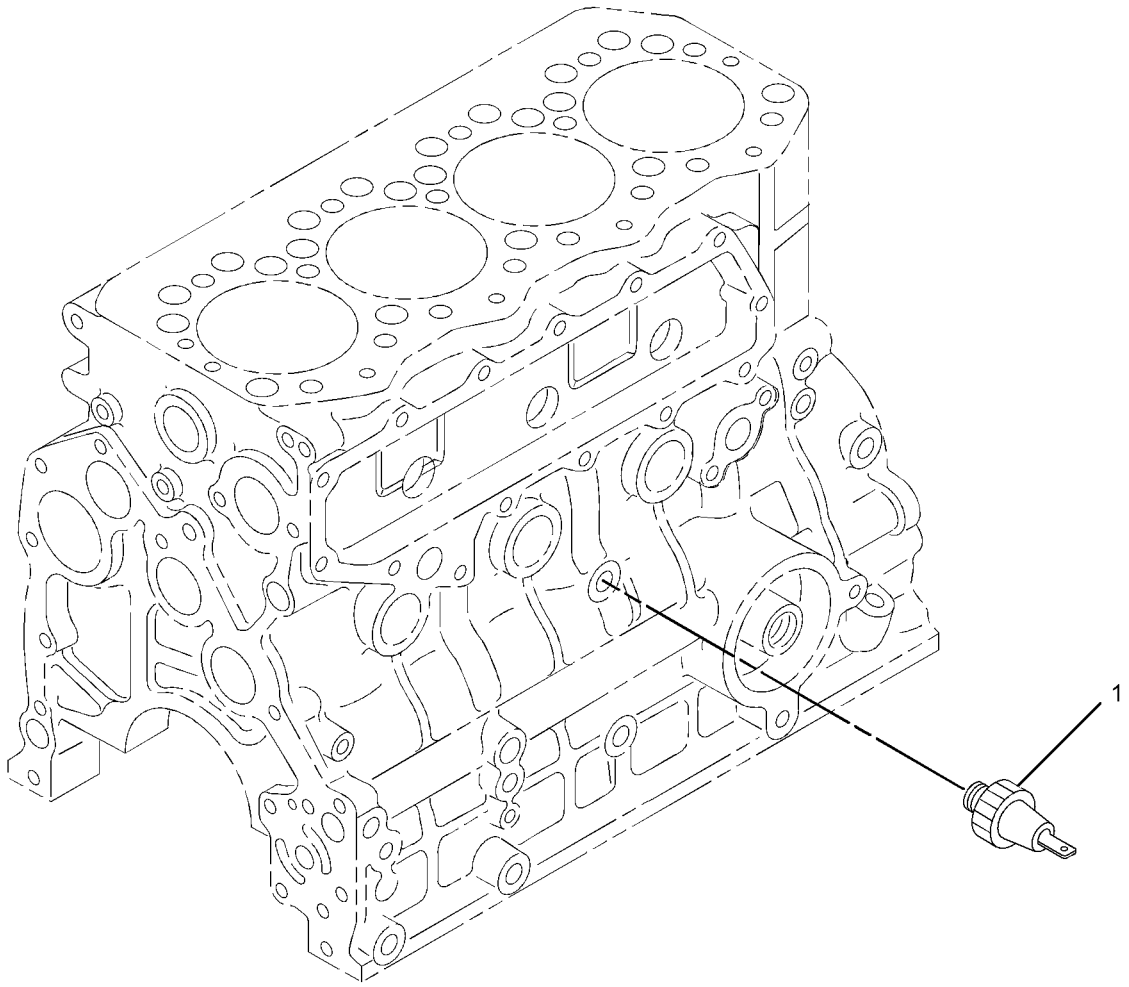

GRAPHIC #1 **<END>** g01345516

258-4146 WIRING GP-AIR CONDITIONER

S/N: JAY1-UP

PART OF 258-4260 AIR CONDITIONER AR, 258-4250 HEATER AR-CAB AN ATTACHMENT

SMCS-1408, 7320 **i03571139**

NOTE	REF NO	GRAPHIC REF	PART NUMBER	QTY	PART NAME 1 2 3 4 5 6 (PRODUCT LEVEL)	SEE PAGE
	1	1	**206-2423**	3	SADDLE	
	2	1	**258-4147**	1	HARNESS AS-HEATER & AIR COND	
E		1	**119-3662**		TUBE-HEAT SHRINK (10.85-MM DIA) (7-CM)	
E		1	**125-7874**		TUBE-HEAT SHRINK (5.72-MM DIA) (20-CM)	
		1	**155-2255**	1	KIT-CONNECTING PLUG (12-PIN)	
		1	**155-2270**	3	KIT-CONNECTING PLUG (2-PIN)	
		1	**155-2265**	1	KIT-CONNECTING PLUG (8-PIN)	
					(EACH PLUG KIT INCLUDES PLUG AS, WEDGE & INTERFACE SEAL)	
		1	**102-8804**	1	KIT-RECEPTACLE (4-PIN)	
		1	**102-8805**	1	KIT-RECEPTACLE (6-PIN) (1)	
					(EACH RECEPTACLE KIT INCLUDES RECEPTACLE AS & WEDGE)	
		1	**8L-8413**	5	STRAP-CABLE	
		1	**8T-8737**	6	PLUG-SEAL	
		1	**9X-1054**	1	PLUG AS-CONNECTOR (4-PIN)	
		1	**100-6674**	2	SEAL-CONNECTOR	
		1	**186-3735**	5	PIN-CONNECTOR (16-GA TO 18-GA)	
		1	**186-3736**	5	SOCKET-CONNECTOR (16-GA TO 18-GA)	
		1	**9W-0852**	4	PIN-CONNECTOR (14-GA)	
		1	**9W-0844**	16	SOCKET-CONNECTOR (14-GA)	
	3	1	**3S-2093**	18	STRAP-CABLE	

E-ORDER BY THE CENTIMETER

258-4146 **WIRING GP-AIR CONDITIONER** *(contd.)* **i03571139**

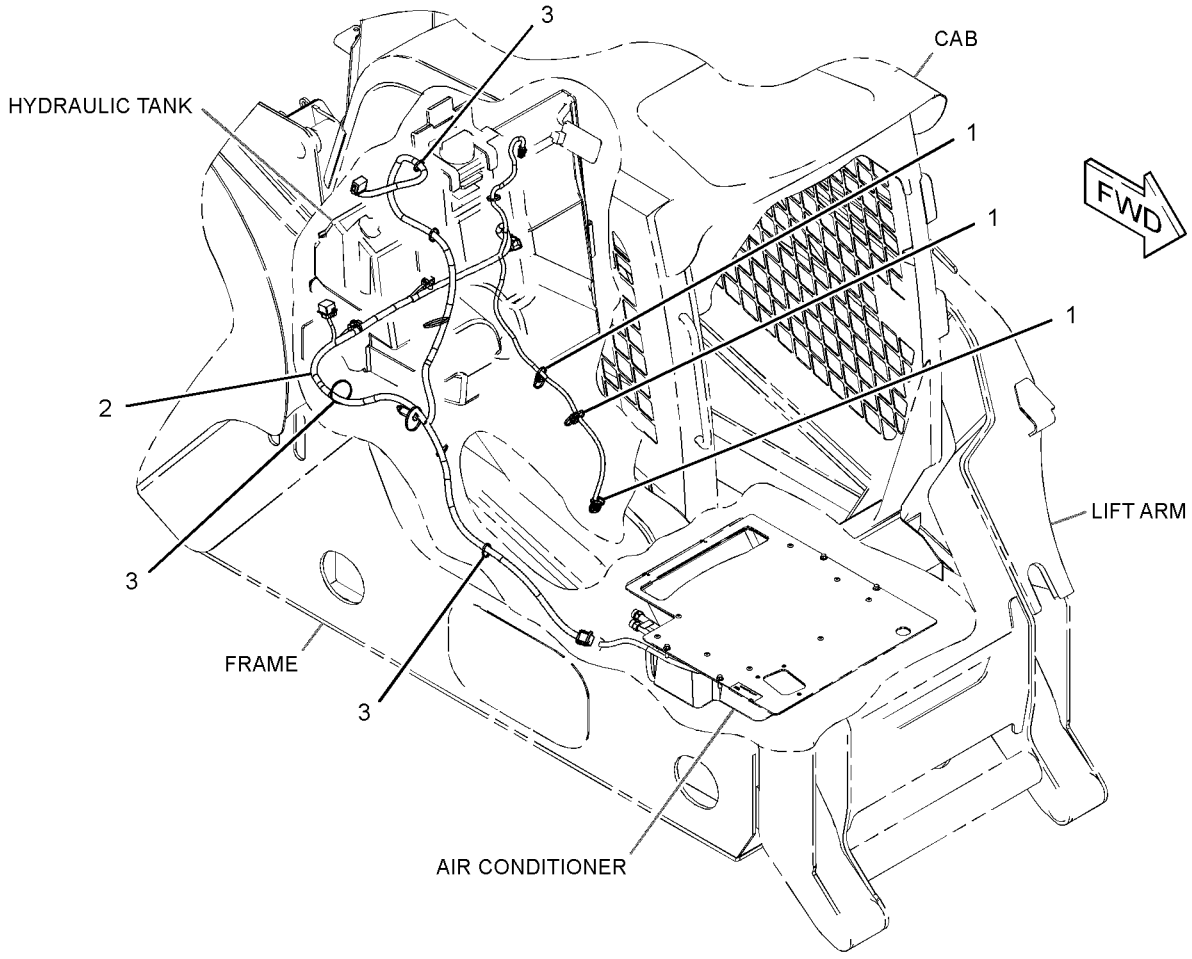

GRAPHIC #1 **<END>** g01320889

ELECTRICAL AND STARTING SYSTEM

258-4100 WIRING GP-CAB

S/N: JAY1-UP

PART OF 258-4000 CAB AR-ENCLOSED ROPS

SMCS-1408, 7301 **i03624509**

NOTE	REF NO	GRAPHIC REF	PART NUMBER	QTY	PART NAME 1 2 3 4 5 6 (PRODUCT LEVEL)	SEE PAGE
	1	1	**6I-1418**	4	SPACER (8.2X12.7X28.7-MM THK)	
	2	1	**7G-1060**	1	STRAP AS-GROUND	
	3	1	**7K-1181**	14	STRAP-CABLE	
	4	1	**8T-9655**	8	MOUNT-ISOLATION	
	5	1	**100-5805**	1	CAP-RECEPTACLE (3-PIN)	
	6	1	**126-1774**	2	COVER-CONNECTOR (ENDBALL-CONNECTOR)	
	7	1	**146-9439**	3	RELAY AS (12-VOLT)	
	8	1	**246-9371**	1	COVER-RELAY	
	9	1	**258-3727**	8	SCREW-TRUSS HEAD (NO 12X17.46-MM)	
	10	1	**258-4102**	1	HARNESS AS-CAB	
		1	**2L-8069**	2	TERMINAL (2-GA TO 10-GA)	
		1	**2L-8078**	1	TERMINAL-RING (14-GA TO 16-GA, 5/16-IN SCREW)	
		1	**5P-3454**	1	TERMINAL (4-GA)	
		1	**2L-8067**	7	TERMINAL-RING (10-GA TO 12-GA, 1/4-IN SCREW)	
		1	**2L-8077**	1	TERMINAL (14-GA TO 16-GA)	
D		1	**141-8061**		TAPE (2-M)	
		1	**147-1445**	1	PLUG AS-CONNECTOR (70-PIN)	
		1	**147-1446**	1	PLUG AS-CONNECTOR (70-PIN)	
					(EACH PLUG AS INCLUDES)	
		1	**159-9322**	1	SEAL-O-RING	
		1	**169-0705**	21	SEAL	
		1	**126-1766**	89	SOCKET-CONNECTOR (14-GA TO 18-GA)	
		1	**127-5484**	1	RECEPTACLE AS-CONNECTOR (1-PIN)	
		1	**128-4123**	19	SEAL	
		1	**128-5016**	25	SEAL-CABLE	
		1	**134-2540**	1	RESISTOR AS-CONNECTION (3-PIN)	
		1	**9W-0844**	19	SOCKET-CONNECTOR (14-GA)	
		1	**186-3736**	28	SOCKET-CONNECTOR (16-GA TO 18-GA)	
E		1	**119-3662**		TUBE-HEAT SHRINK (10.85-MM DIA) (33-CM)	
E		1	**125-7874**		TUBE-HEAT SHRINK (5.72-MM DIA) (50-CM)	
E		1	**125-7875**		TUBE-HEAT SHRINK (7.44-MM DIA) (30-CM)	
E		1	**125-7876**		TUBE-HEAT SHRINK (17.78-MM) (6-CM)	
		1	**8T-8732**	1	RECEPTACLE (3-PIN)	
		1	**8T-8737**	88	PLUG-SEAL	
		1	**8T-8799**	6	BOOT	
		1	**9W-1951**	1	RECEPTACLE-CONNECTOR (9-PIN)	
		1	**113-8490**	7	FUSE (10-AMPERE)	
		1	**113-8491**	10	FUSE (15-AMPERE)	
		1	**113-8492**	3	FUSE (20-AMPERE)	
		1	**102-8802**	1	KIT-RECEPTACLE (2-PIN)	
					(INCLUDES RECEPTACLE AS & WEDGE)	
		1	**155-2255**	1	KIT-CONNECTING PLUG (12-PIN)	
		1	**155-2270**	1	KIT-CONNECTING PLUG (2-PIN)	
		1	**155-2265**	1	KIT-CONNECTING PLUG (8-PIN)	
		1	**174-0503**	1	KIT-CONNECTING PLUG (3-PIN)	
		1	**155-2260**	1	KIT-CONNECTING PLUG (3-PIN)	
					(EACH PLUG KIT INCLUDES PLUG AS, WEDGE & INTERFACE SEAL)	
		1	**7R-2750**	7	SEAL-CONNECTOR	
		1	**7R-2751**	25	PLUG-CONNECTOR	
		1	**8L-8413**	47	STRAP-CABLE	
		1	**8N-1548**	1	PIN-CONNECTOR (4-GA)	
		1	**9W-0852**	2	PIN-CONNECTOR (14-GA)	
		1	**186-3735**	2	PIN-CONNECTOR (16-GA TO 18-GA)	

258-4100 **WIRING GP-CAB** ***(contd.)*** **i03624509**

NOTE	REF NO	GRAPHIC REF	PART NUMBER	QTY	PART NAME 1 2 3 4 5 6 (PRODUCT LEVEL)	SEE PAGE
Y	11	1	*258-4103*	1	SERVICE GP-MACHINE	167
Y	12	1	**258-4135**	2	RELAY GP (MAIN POWER)	162
	13	1	**258-4136**	1	FUSE AS (MAIN POWER)	
		1	**267-2680**	2	FUSE (20-AMPERE)	
		1	**267-5211**	1	SEAL (DUAL FUSE HOLDER)	
		1	**267-5213**	1	COVER	
	14	1	**258-4138**	1	FILM (POWER DISTRIBUTION)	
	15	1	**258-4143**	1	BAR-BUS	
	16	1	**258-4150**	1	PLATE AS	
	17	1	**258-4154**	1	BRACKET	
	18	1	**258-4155**	1	BRACKET	
	19	1	**258-4160**	1	HARNESS AS-OPERATOR CONTROLS	
		1	**186-3735**	2	PIN-CONNECTOR (16-GA TO 18-GA)	
		1	**9X-3401**	4	PIN-CONNECTOR (16-GA TO 18-GA)	
					—OR—	
		1	**126-1767**	4	PIN-CONNECTOR (14-GA)	
		1	**275-0600**	18	PIN-CONNECTOR	
		1	**9W-0852**	4	PIN-CONNECTOR (14-GA)	
		1	**9W-0844**	10	SOCKET-CONNECTOR (14-GA)	
		1	**180-9340**	19	SOCKET-CONNECTOR (14-GA TO 18-GA)	
		1	**186-3736**	11	SOCKET-CONNECTOR (16-GA TO 18-GA)	
E		1	**119-3662**		TUBE-HEAT SHRINK (10.85-MM DIA) (7-CM)	
E		1	**125-7874**		TUBE-HEAT SHRINK (5.72-MM DIA) (10-CM)	
E		1	**135-5009**		TUBE-HEAT SHRINK (32-MM DIA) (10-CM)	
		1	**169-0705**	6	SEAL	
E		1	**201-3304**		CONDUIT (131-CM)	
E		1	**211-5358**		CONDUIT-FLEXIBLE (19-CM)	
		1	**271-5604**	18	PIN	
		1	**102-8805**	1	KIT-RECEPTACLE (6-PIN)	
					(INCLUDES RECEPTACLE AS & WEDGE)	
		1	**155-2255**	2	KIT-CONNECTING PLUG (12-PIN)	
		1	**155-2271**	1	KIT-CONNECTING PLUG (4-PIN)	
		1	**155-2274**	3	KIT-CONNECTING PLUG (6-PIN)	
		1	**155-2260**	1	KIT-CONNECTING PLUG (3-PIN)	
					(EACH PLUG KIT INCLUDES PLUG AS, WEDGE & INTERFACE SEAL)	
		1	**8L-8413**	14	STRAP-CABLE	
		1	**8T-8737**	26	PLUG-SEAL	
	20	1	**258-4178**	1	FLANGE-MOUNTING	
	21	1	**258-4196**	2	WIRE AS	
	22	1	**156-6175**	2	CLIP	
	23	1	**102-8806**	1	KIT-RECEPTACLE (8-PIN)	
	24	1	**102-8801**	1	KIT-RECEPTACLE (12-PIN)	
					(EACH RECEPTACLE KIT INCLUDES RECEPTACLE AS & WEDGE)	
	25	1	**3S-2093**	29	STRAP-CABLE	
	26	1	**4P-7581**	2	CLIP	
	27	1	**4P-8134**	2	CLIP	
M	28	1	**5C-2890**	12	NUT (M6X1-THD)	
M	29	1	**5C-7261**	4	NUT (M8X1.25-THD)	
M	30	1	**5C-9553**	4	BOLT (M6X1X16-MM)	
	31	1	**5P-4115**	2	WASHER-HARD (7.2X19X2-MM THK)	
	32	1	**5P-7162**	8	SCREW-MACHINE (10-32X0.5-IN)	
	33	1	**6V-5834**	4	SCREW-HEAD (10-14X0.75-IN)	
M	34	1	**7X-0818**	4	BOLT (M8X1.25X45-MM)	
M	35	1	**7X-2534**	3	BOLT (M6X1X50-MM)	
	36	1	**8C-8558**	2	SCREW-LOCK (4-40X0.25-IN)	
	37	1	**8T-0328**	4	WASHER-HARD (5.5X10X1-MM THK)	
	38	1	**8T-4205**	18	WASHER-HARD (7.2X14.5X2-MM THK)	
	39	1	**8T-4224**	6	WASHER-HARD (8.8X16X2-MM THK)	

258-4100 **WIRING GP-CAB** *(contd.)* **i03624509**

NOTE	REF NO	GRAPHIC REF	PART NUMBER	QTY	PART NAME 1 2 3 4 5 6 (PRODUCT LEVEL)	SEE PAGE
	40	1	**8T-8737**	20	PLUG-SEAL	
M	41	1	**8T-4970**	2	BOLT (M6X1X14-MM)	
D	42	1	**5P-9909**		SEAL (0.2-M)	

D-ORDER BY THE METER
E-ORDER BY THE CENTIMETER
M-METRIC PART
Y-SEPARATE ILLUSTRATION

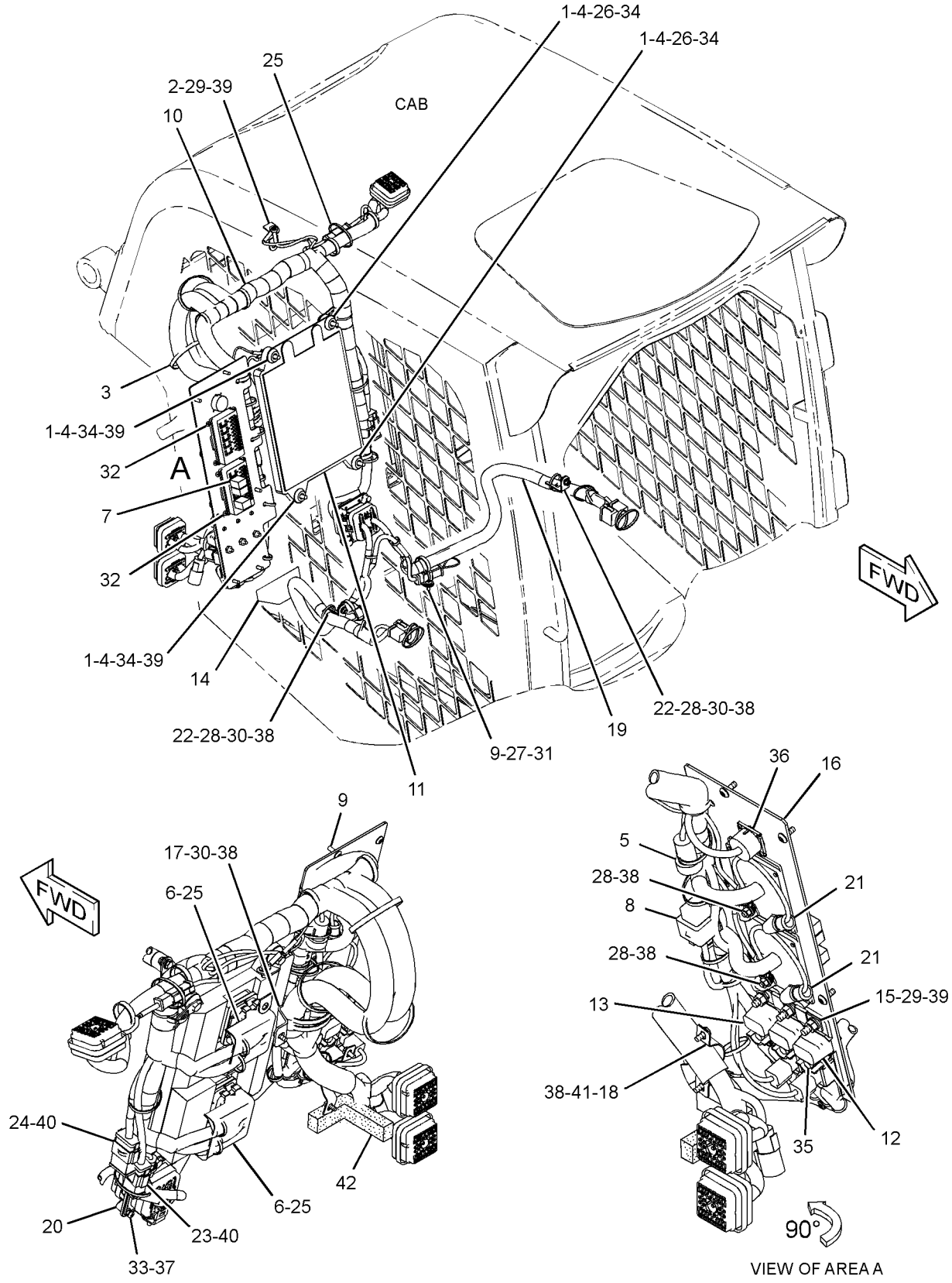

GRAPHIC #1 **<END>** g01413112

ELECTRICAL AND STARTING SYSTEM

258-4115 WIRING GP-ENGINE

S/N: JAY1-3085

PART OF 258-2445, 295-7118 INSTALLATION AR-ENGINE

SMCS-1000, 1408, 1420 **i03624510**

NOTE	REF NO	GRAPHIC REF	PART NUMBER	QTY	PART NAME 1 2 3 4 5 6 (PRODUCT LEVEL)	SEE PAGE
	1	1	**191-8303**	1	SENSOR GP-SPEED (ENGINE)	
		1	**137-6645**	1	PAD	
	2	1	**238-0112**	1	SENSOR GP-TEMPERATURE (ENGINE COOLANT)	
	3	1	**258-4116**	1	HARNESS AS-ENGINE	
		1	**230-4011**	1	PLUG AS-CONNECTOR (2-PIN)	
		1	**264-7029**	1	SEAL-CONNECTOR	
		1	**271-5604**	17	PIN	
		1	**126-1766**	2	SOCKET-CONNECTOR (14-GA TO 18-GA)	
		1	**155-2270**	8	KIT-CONNECTING PLUG (2-PIN)	
		1	**155-2271**	2	KIT-CONNECTING PLUG (4-PIN)	
					(EACH PLUG KIT INCLUDES PLUG AS, WEDGE & INTERFACE SEAL)	
D		1	**1P-0810**		TAPE-ELECTRICAL (1-M)	
		1	**169-0705**	7	SEAL	
		1	**176-1477**	1	PLUG AS (2-PIN)	
		1	**176-1522**	2	SEAL	
		1	**180-9339**	7	PIN-CONNECTOR (14-GA TO 18-GA)	
		1	**180-9340**	10	SOCKET-CONNECTOR (14-GA TO 18-GA)	
E		1	**211-5358**		CONDUIT-FLEXIBLE (161-CM)	
		1	**8T-8737**	12	PLUG-SEAL	
		1	**8T-8799**	1	BOOT	
		1	**9X-1054**	2	PLUG AS-CONNECTOR (4-PIN)	
		1	**107-3136**	4	PLUG-SEAL	
		1	**186-3735**	4	PIN-CONNECTOR (16-GA TO 18-GA)	
		1	**186-3736**	14	SOCKET-CONNECTOR (16-GA TO 18-GA)	
		1	**9W-0852**	1	PIN-CONNECTOR (14-GA)	
		1	**2L-8069**	1	TERMINAL (2-GA TO 10-GA)	
		1	**107-3135**	2	TERMINAL	
		1	**9X-1055**	4	TERMINAL-RECEPTACLE	
		1	**9X-1056**	1	TERMINAL-RECEPTACLE (14-GA TO 16-GA)	
		1	**100-5041**	3	TERMINAL-RECEPTACLE (18-GA TO 20-GA)	
		1	**030-1712**	1	TERMINAL-RING (2-GA, 1/4-IN SCREW)	
		1	**9G-4336**	1	TERMINAL-RING (4-GA)	
		1	**2L-8065**	1	TERMINAL (10-GA TO 12-GA)	
		1	**5P-4571**	1	TERMINAL-BLADE (14-GA TO 16-GA)	
		1	**5P-1478**	1	TERMINAL-FORK (10-GA TO 12-GA, NO. 10 SCREW)	
E		1	**119-3662**		TUBE-HEAT SHRINK (10.85-MM DIA) (13-CM)	
E		1	**125-7874**		TUBE-HEAT SHRINK (5.72-MM DIA) (10-CM)	
E		1	**125-7875**		TUBE-HEAT SHRINK (7.44-MM DIA) (5-CM)	
	4	1	**115-1615**	2	RELAY AS (12-VOLT) (COLD START)	
	5	1	**117-1385**	1	SEAL-O-RING	
	6	1	**132-5789**	1	CLIP	
B	7	1	**102-8802**	2	KIT-RECEPTACLE (2-PIN)	
					(EACH RECEPTACLE KIT INCLUDES RECEPTACLE AS & WEDGE)	
	8	1	**3S-2093**	9	STRAP-CABLE	
	9	1	**4P-7428**	1	CLIP	
	10	1	**4P-7429**	1	CLIP	
	11	1	**4P-7581**	3	CLIP	
	12	1	**4P-8134**	3	CLIP	
M	13	1	**6V-7357**	2	BOLT (M6X1X25-MM)	
	14	1	**6V-9028**	1	SEAL-O-RING	
M	15	1	**7X-2548**	1	BOLT (M12X1.75X16-MM)	
M	16	1	**8T-4200**	2	BOLT (M8X1.25X16-MM)	
	17	1	**8T-4205**	1	WASHER-HARD (7.2X14.5X2-MM THK)	

258-4115 **WIRING GP-ENGINE** *(contd.)* **i03624510**

NOTE	REF NO	GRAPHIC REF	PART NUMBER	QTY	PART NAME 1 2 3 4 5 6 (PRODUCT LEVEL)	SEE PAGE
	18	1	**8T-4224**	1	WASHER-HARD (8.8X16X2-MM THK)	
B	19	1	**8T-8737**	4	PLUG-SEAL	
	20	1	**7K-1181**	3	STRAP-CABLE	
	21	1	**5P-4116**	1	WASHER-HARD (8.8X20.5X2-MM THK)	
	24	1	**206-1345**	1	STRAP-CABLE	

B-USE AS REQUIRED
D-ORDER BY THE METER
E-ORDER BY THE CENTIMETER
M-METRIC PART

258-4115 **WIRING GP-ENGINE** *(contd.)* **i03624510**

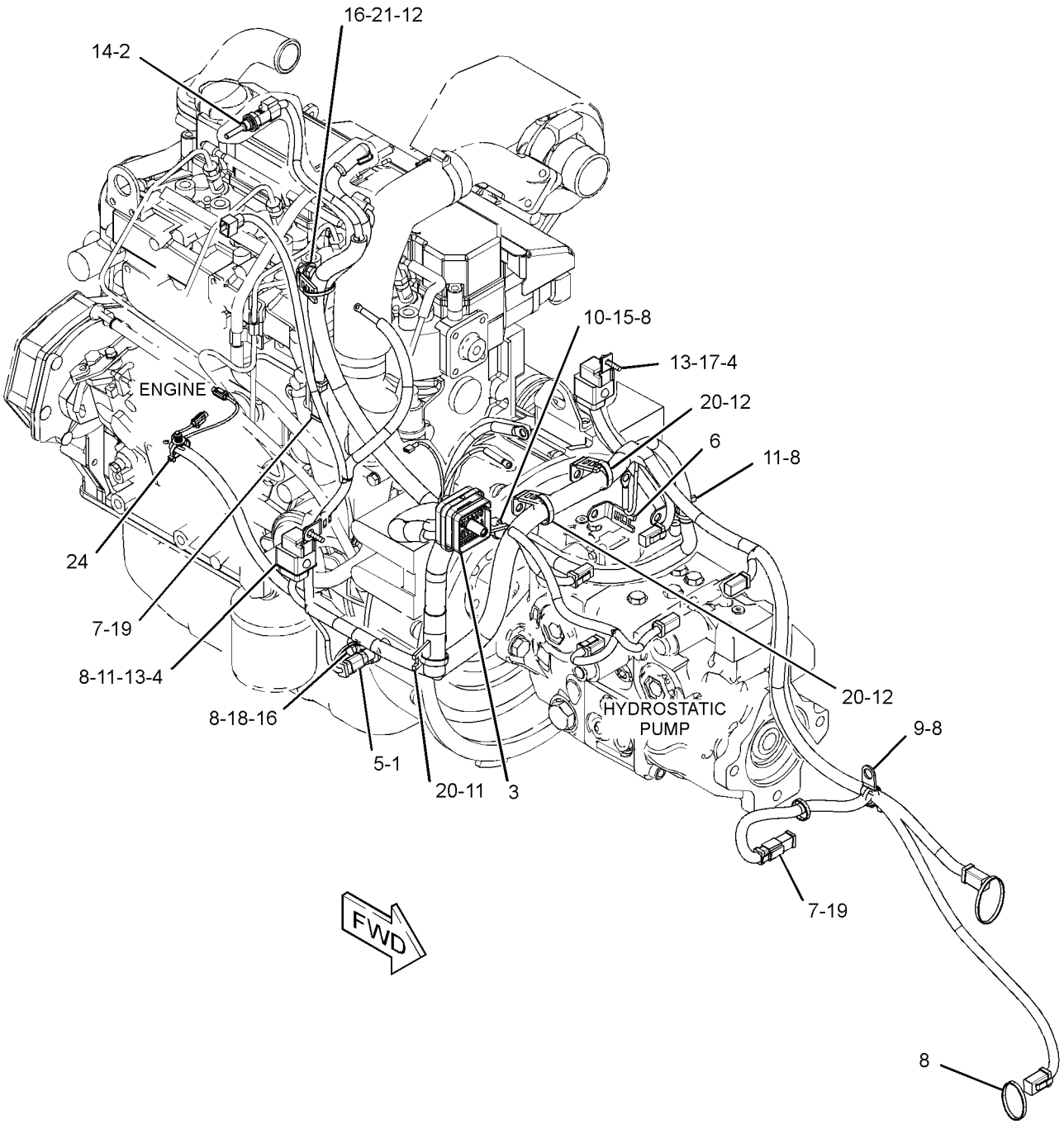

GRAPHIC #1 **<END>** g01519087

258-4115 WIRING GP-ENGINE

S/N: JAY3086-UP

PART OF 295-7118 INSTALLATION AR-ENGINE

SMCS-1000, 1408, 1420 **i03624511**

NOTE	REF NO	GRAPHIC REF	PART NUMBER	QTY	PART NAME 1 2 3 4 5 6 (PRODUCT LEVEL)	SEE PAGE
	1	1	**191-8303**	1	SENSOR GP-SPEED (ENGINE)	
		1	**137-6645**	1	PAD	
	2	1	**238-0112**	1	SENSOR GP-TEMPERATURE (ENGINE COOLANT)	
	3	1	**258-4116**	1	HARNESS AS-ENGINE	
		1	**230-4011**	1	PLUG AS-CONNECTOR (2-PIN)	
		1	**264-7029**	1	SEAL-CONNECTOR	
		1	**271-5604**	17	PIN	
		1	**126-1766**	2	SOCKET-CONNECTOR (14-GA TO 18-GA)	
		1	**155-2270**	8	KIT-CONNECTING PLUG (2-PIN)	
		1	**155-2271**	2	KIT-CONNECTING PLUG (4-PIN)	
					(EACH PLUG KIT INCLUDES PLUG AS, WEDGE & INTERFACE SEAL)	
D		1	**1P-0810**		TAPE-ELECTRICAL (1-M)	
		1	**169-0705**	7	SEAL	
		1	**176-1477**	1	PLUG AS (2-PIN)	
		1	**176-1522**	2	SEAL	
		1	**180-9339**	7	PIN-CONNECTOR (14-GA TO 18-GA)	
		1	**180-9340**	10	SOCKET-CONNECTOR (14-GA TO 18-GA)	
E		1	**211-5358**		CONDUIT-FLEXIBLE (161-CM)	
		1	**8T-8737**	12	PLUG-SEAL	
		1	**8T-8799**	1	BOOT	
		1	**9X-1054**	2	PLUG AS-CONNECTOR (4-PIN)	
		1	**107-3136**	4	PLUG-SEAL	
		1	**186-3735**	4	PIN-CONNECTOR (16-GA TO 18-GA)	
		1	**186-3736**	14	SOCKET-CONNECTOR (16-GA TO 18-GA)	
		1	**9W-0852**	1	PIN-CONNECTOR (14-GA)	
		1	**2L-8069**	1	TERMINAL (2-GA TO 10-GA)	
		1	**107-3135**	2	TERMINAL	
		1	**9X-1055**	4	TERMINAL-RECEPTACLE	
		1	**9X-1056**	1	TERMINAL-RECEPTACLE (14-GA TO 16-GA)	
		1	**100-5041**	3	TERMINAL-RECEPTACLE (18-GA TO 20-GA)	
		1	**030-1712**	1	TERMINAL-RING (2-GA, 1/4-IN SCREW)	
		1	**9G-4336**	1	TERMINAL-RING (4-GA)	
		1	**2L-8065**	1	TERMINAL (10-GA TO 12-GA)	
		1	**5P-4571**	1	TERMINAL-BLADE (14-GA TO 16-GA)	
		1	**5P-1478**	1	TERMINAL-FORK (10-GA TO 12-GA, NO. 10 SCREW)	
E		1	**119-3662**		TUBE-HEAT SHRINK (10.85-MM DIA) (13-CM)	
E		1	**125-7874**		TUBE-HEAT SHRINK (5.72-MM DIA) (10-CM)	
E		1	**125-7875**		TUBE-HEAT SHRINK (7.44-MM DIA) (5-CM)	
	4	1	**115-1615**	2	RELAY AS (12-VOLT) (COLD START)	
	5	1	**117-1385**	1	SEAL-O-RING	
C	6	1	**132-5789**	4	CLIP	
B	7	1	**102-8802**	2	KIT-RECEPTACLE (2-PIN)	
					(EACH INCLUDES RECEPTACLE AS & WEDGE)	
	8	1	**3S-2093**	9	STRAP-CABLE	
	9	1	**4P-7428**	1	CLIP	
	10	1	**4P-7429**	1	CLIP	
C	11	1	**4P-7581**	2	CLIP	
M	13	1	**6V-7357**	2	BOLT (M6X1X25-MM)	
	14	1	**6V-9028**	1	SEAL-O-RING	
M	15	1	**7X-2548**	1	BOLT (M12X1.75X16-MM)	
M	16	1	**8T-4200**	2	BOLT (M8X1.25X16-MM)	
	17	1	**8T-4205**	1	WASHER-HARD (7.2X14.5X2-MM THK)	
	18	1	**8T-4224**	1	WASHER-HARD (8.8X16X2-MM THK)	
B	19	1	**8T-8737**	4	PLUG-SEAL	

258-4115 **WIRING GP-ENGINE** *(contd.)* **i03624511**

NOTE	REF NO	GRAPHIC REF	PART NUMBER	QTY	PART NAME 1 2 3 4 5 6 (PRODUCT LEVEL)	SEE PAGE
C	20	1	**7K-1181**	2	STRAP-CABLE	
	21	1	**5P-4116**	1	WASHER-HARD (8.8X20.5X2-MM THK)	
	24	1	**206-1345**	1	STRAP-CABLE	

B-USE AS REQUIRED
C-CHANGE FROM PREVIOUS TYPE
D-ORDER BY THE METER
E-ORDER BY THE CENTIMETER
M-METRIC PART

258-4115 **WIRING GP-ENGINE** *(contd.)* **i03624511**

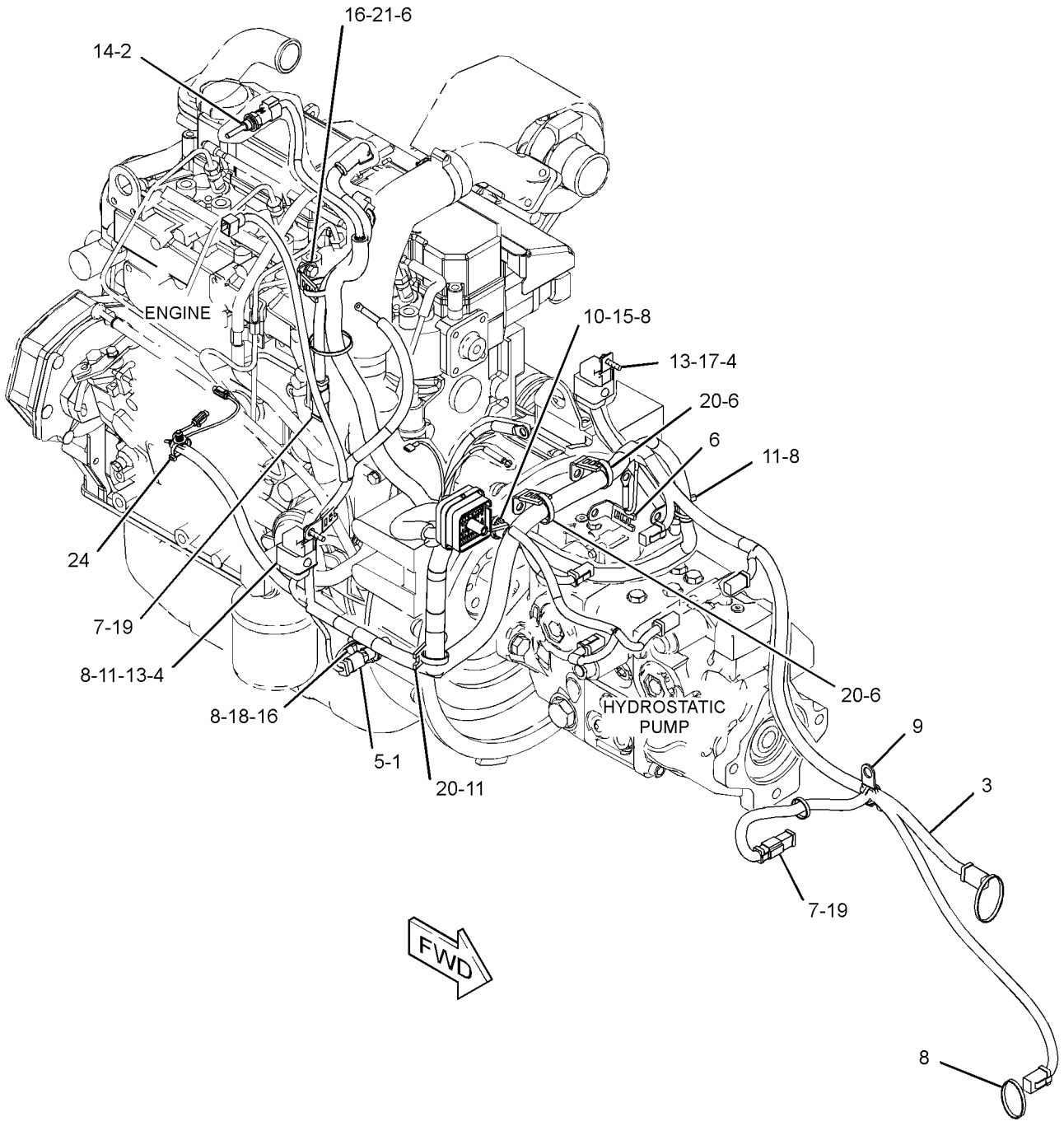

GRAPHIC #1 **<END>** g01840433

258-4192 WIRING GP-ENGINE–BATTERY

S/N: JAY1-UP

PART OF 258-2445, 295-7118 INSTALLATION AR-ENGINE

SMCS-1000, 1408, 1420 **i03624512**

NOTE	REF NO	GRAPHIC REF	PART NUMBER	QTY	PART NAME 1 2 3 4 5 6 (PRODUCT LEVEL)	SEE PAGE
	1	1	**7K-1181**	5	STRAP-CABLE	
	2	1	**178-3620**	5	STRAP-DUAL CLAMP	
	3	1	**200-6345**	2	MOUNT (DUAL SWIVEL)	
	4	1	**258-4188**	1	CABLE AS-BATTERY (NEGATIVE)	
		1	**3S-2093**	1	STRAP-CABLE	
B		1	**1P-0810**		TAPE-ELECTRICAL	
		1	**9X-3410**	1	COVER-TERMINAL	
		1	**9X-6763**	1	TERMINAL AS (NEGATIVE)	
E		1	**159-8050**		CABLE (00-GA, BLACK) (141-CM)	
	5	1	**258-4189**	1	CABLE AS-BATTERY (POSITIVE)	
		1	*247-1337*	1	TERMINAL AS-BATTERY	
		1	**1M-6119**	1	BOLT (5/16-18X1.375-IN)	
		1	**1M-6120**	2	NUT (5/16-18-THD)	
		1	**283-3436**	1	COVER-TERMINAL	
B		1	**1P-0810**		TAPE-ELECTRICAL	
		1	**1S-7252**	1	TERMINAL-CABLE (00-GA, 3/8-IN BOLT)	
		1	**8N-0869**	1	COVER-TERMINAL (RED)	
E		1	**159-8049**		CABLE (00-GA, RED) (87-CM)	
	6	1	**8X-5489**	1	SLEEVE	
	7	1	**8T-4121**	1	WASHER-HARD (11X21X2.5-MM THK)	
M	8	1	**8T-4133**	1	NUT (M10X1.5-THD)	

B-USE AS REQUIRED
E-ORDER BY THE CENTIMETER
M-METRIC PART

258-4192 **WIRING GP-ENGINE** *(contd.)* **i03624512**

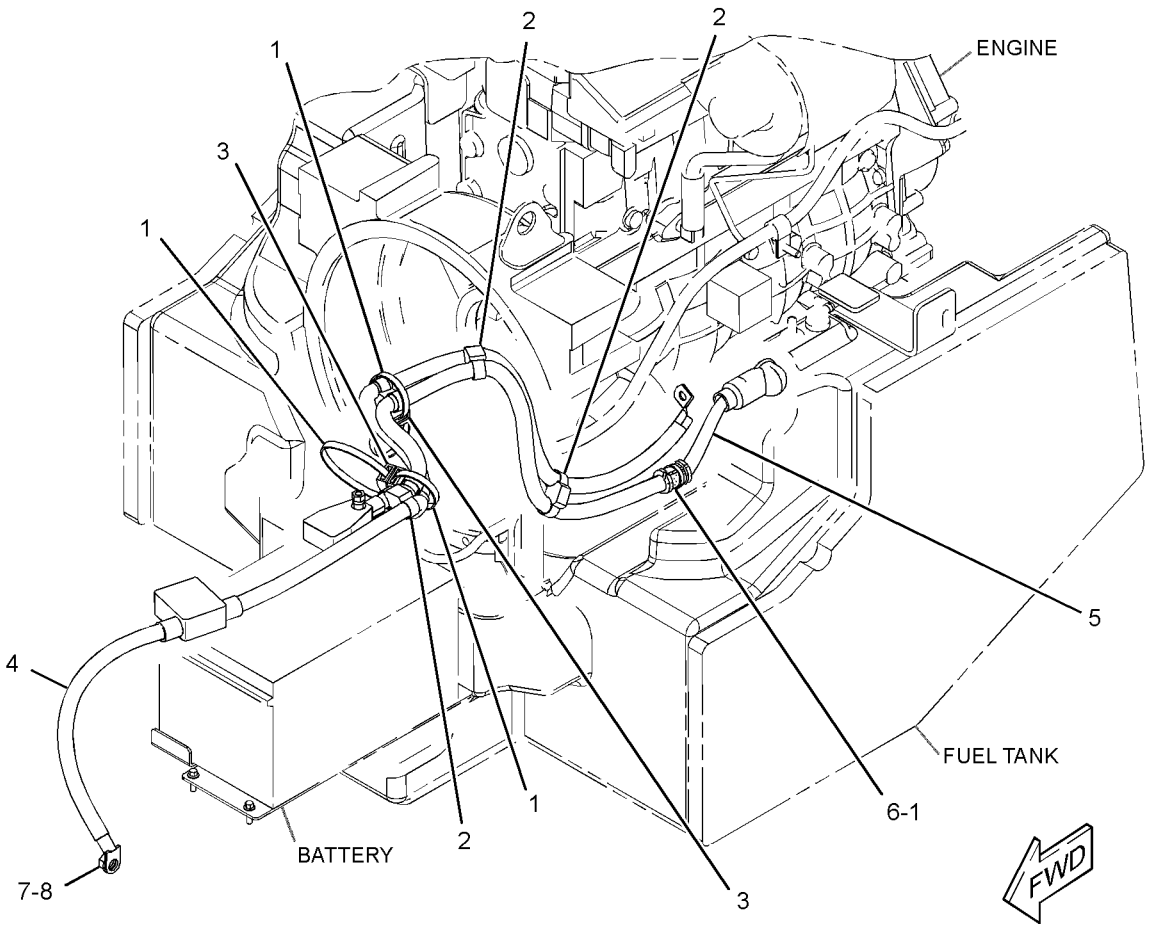

GRAPHIC #1 **<END>** g01624778

336-0913 WIRING GP-GRADE CONTROL

S/N: JAY1-UP
PART OF 292-1271 MAST GP

SMCS-1408, 7220 **i03624513**

NOTE	PART NUMBER	QTY	PART NAME 1 2 3 4 5 6 (PRODUCT LEVEL)	SEE PAGE
	292-4554	1	HARNESS AS-CONTROL (ACCUGRADE)	
	155-2260	1	KIT-CONNECTING PLUG (3-PIN)	
			(INCLUDES PLUG AS, WEDGE & INTERFACE SEAL)	
	228-3323	1	CLIP-SPRING	
	102-8804	1	KIT-RECEPTACLE (4-PIN)	
			(INCLUDES RECPTACLE AS & WEDGE)	
	8T-8737	1	PLUG-SEAL	
E	**125-7874**		TUBE-HEAT SHRINK (5.72-MM DIA) (10-CM)	
	126-1766	2	SOCKET-CONNECTOR (14-GA TO 18-GA)	
	9X-3401	4	PIN-CONNECTOR (16-GA TO 18-GA)	
			—OR—	
	126-1767	4	PIN-CONNECTOR (14-GA)	
M	**8T-4908**	2	BOLT (M8X1.25X25-MM)	
	7R-3029	1	CAP-DUST	
	4P-7581	4	CLIP	
	130-5300	1	CLIP	
	134-2540	1	RESISTOR AS-CONNECTION (3-PIN)	
M	**5C-7261**	2	NUT (M8X1.25-THD)	
	132-8487	1	NUT-RING	
	292-4553	1	PLATE	
	6D-3033	4	SCREW-SOCKET HEAD (4-40X0.5-IN)	
	7K-1181	11	STRAP-CABLE	
	177-2215	15	STRAP-DUAL CLAMP	
	8T-4224	4	WASHER-HARD (8.8X16X2-MM THK)	

E-ORDER BY THE CENTIMETER
M-METRIC PART

<END>

258-4107 WIRING GP-MACHINE

S/N: JAY1-UP

PART OF 258-2410, 295-7291 CHASSIS AR

SMCS-1408 **i03624541**

NOTE	REF NO	GRAPHIC REF	PART NUMBER	QTY	PART NAME 1 2 3 4 5 6 (PRODUCT LEVEL)	SEE PAGE
	1	1	**7K-1181**	2	STRAP-CABLE	
	2	1	**106-8704**	1	SUPPRESSOR AS-ARC	
	3	1	**300-9546**	1	ALARM AS (BACKUP)	
B	4	1	**161-3357**	1	SPACER (12X20X10-MM THK)	
	5	1	**164-9425**	1	HORN AS (24-VOLT, LOW TONE)	
	6	1	**178-3620**	12	STRAP-DUAL CLAMP	
	7	1	**206-1345**	1	STRAP-CABLE	
	8	1	**258-4106**	1	HARNESS AS-REAR (DOOR)	
		1	**2L-8069**	1	TERMINAL (2-GA TO 10-GA)	
		1	**2L-8076**	1	TERMINAL-RING (14-GA TO 16-GA, NO. 10 SCREW)	
		1	**186-3735**	2	PIN-CONNECTOR (16-GA TO 18-GA)	
		1	**9W-0852**	6	PIN-CONNECTOR (14-GA)	
		1	**180-9339**	1	PIN-CONNECTOR (14-GA TO 18-GA)	
		1	**155-2270**	3	KIT-CONNECTING PLUG (2-PIN)	
					(INCLUDES PLUG AS, WEDGE & INTERFACE SEAL)	
		1	**155-2271**	2	KIT-CONNECTING PLUG (4-PIN)	
					(INCLUDES PLUG AS, WEDGE & INTERFACE SEAL)	
		1	**8T-8737**	3	PLUG-SEAL	
		1	**102-8801**	1	KIT-RECEPTACLE (12-PIN)	
					(INCLUDES RECEPTACLE AS & WEDGE)	
		1	**186-3736**	8	SOCKET-CONNECTOR (16-GA TO 18-GA)	
		1	**9W-0844**	6	SOCKET-CONNECTOR (14-GA)	
		1	**8L-8413**	4	STRAP-CABLE	
E		1	**119-3662**		TUBE-HEAT SHRINK (10.85-MM DIA) (7-CM)	
E		1	**125-7874**		TUBE-HEAT SHRINK (5.72-MM DIA) (5-CM)	
E		1	**125-7875**		TUBE-HEAT SHRINK (7.44-MM DIA) (5-CM)	
	9	1	**258-4108**	1	HARNESS AS-CHASSIS	
		1	**8N-1549**	1	SOCKET-CONNECTOR (4-GA)	
		1	**186-3736**	40	SOCKET-CONNECTOR (16-GA TO 18-GA)	
		1	**9W-0844**	21	SOCKET-CONNECTOR (14-GA)	
		1	**180-9340**	1	SOCKET-CONNECTOR (14-GA TO 18-GA)	
		1	**9G-4336**	1	TERMINAL-RING	
		1	**2L-8079**	2	TERMINAL (14-GA TO 16-GA)	
E		1	**211-5358**		CONDUIT-FLEXIBLE (202-CM)	
E		1	**283-4198**		CONDUIT (65-CM)	
		1	**186-3735**	8	PIN-CONNECTOR (16-GA TO 18-GA)	
		1	**9W-0852**	4	PIN-CONNECTOR (14-GA)	
		1	**271-5604**	19	PIN	
		1	**127-5483**	1	PLUG AS-CONNECTOR (1-PIN)	
		1	**155-2255**	1	KIT-CONNECTING PLUG (12-PIN)	
		1	**155-2265**	1	KIT-CONNECTING PLUG (8-PIN)	
		1	**155-2260**	2	KIT-CONNECTING PLUG (3-PIN)	
		1	**155-2270**	14	KIT-CONNECTING PLUG (2-PIN)	
		1	**155-2271**	1	KIT-CONNECTING PLUG (4-PIN)	
		1	**155-2274**	2	KIT-CONNECTING PLUG (6-PIN)	
					(EACH PLUG KIT INCLUDES PLUG AS, WEDGE & INTERFACE SEAL)	
		1	**8T-8737**	6	PLUG-SEAL	
		1	**169-0705**	5	SEAL	
E		1	**119-3662**		TUBE-HEAT SHRINK (10.85-MM DIA) (13-CM)	
E		1	**125-7874**		TUBE-HEAT SHRINK (5.72-MM DIA) (20-CM)	
E		1	**125-7875**		TUBE-HEAT SHRINK (7.44-MM DIA) (5-CM)	
	10	1	**258-4179**	1	RAIL-MOUNTING	

258-4107 **WIRING GP-MACHINE** ***(contd.)*** **i03624541**

NOTE	REF NO	GRAPHIC REF	PART NUMBER	QTY	PART NAME 1 2 3 4 5 6 (PRODUCT LEVEL)	SEE PAGE
	11	1	**268-4071**	2	LAMP GP-FLOOD (12-VOLT)	
					(EACH INCLUDES)	
		1	**9W-0607**	1	LAMP (12-VOLT, 55-WATT) (FLOODLIGHT)	
		1	**102-8802**	1	KIT-RECEPTACLE (2-PIN)	
					(INCLUDES RECEPTACLE AS & WEDGE)	
		1	**186-3735**	2	PIN-CONNECTOR (16-GA TO 18-GA)	
	12	1	**132-5789**	1	CLIP	
	13	1	**156-6175**	1	CLIP	
	14	1	**266-3314**	1	BOLT-FLANGE HEAD (M6X1X20.5-MM)	
B	15	1	**102-8802**	1	KIT-RECEPTACLE (2-PIN)	
B	16	1	**102-8803**	1	KIT-RECEPTACLE (3-PIN)	
B	17	1	**102-8804**	1	KIT-RECEPTACLE (4-PIN)	
B	18	1	**102-8805**	2	KIT-RECEPTACLE (6-PIN)	
B	19	1	**102-8806**	1	KIT-RECEPTACLE (8-PIN)	
					(EACH RECEPTACLE KIT INCLUDES RECEPTACLE AS & WEDGE)	
	20	1	**3S-2093**	24	STRAP-CABLE	
	21	1	**4P-7581**	3	CLIP	
	22	1	**4P-8134**	1	CLIP	
M	23	1	**5C-7261**	1	NUT (M8X1.25-THD)	
M	24	1	**8T-4138**	2	BOLT (M6X1X20-MM)	
M	25	1	**7X-2533**	2	BOLT (M6X1X35-MM)	
	26	1	**8T-4121**	2	WASHER-HARD (11X21X2.5-MM THK)	
M	27	1	**8T-4133**	2	NUT (M10X1.5-THD)	
M	28	1	**8T-4137**	2	BOLT (M10X1.5X20-MM)	
M	29	1	**8T-4196**	1	BOLT (M10X1.5X35-MM)	
	30	1	**8T-4205**	2	WASHER-HARD (7.2X14.5X2-MM THK)	
	31	1	**8T-4224**	1	WASHER-HARD (8.8X16X2-MM THK)	
B	32	1	**8T-8737**	29	PLUG-SEAL	
	33	1	**310-0657**	1	PLATE	
	34	1	**5P-4115**	2	WASHER-HARD (7.2X19X2-MM THK)	

B-USE AS REQUIRED
E-ORDER BY THE CENTIMETER
M-METRIC PART

258-4107 **WIRING GP-MACHINE** *(contd.)* **i03624541**

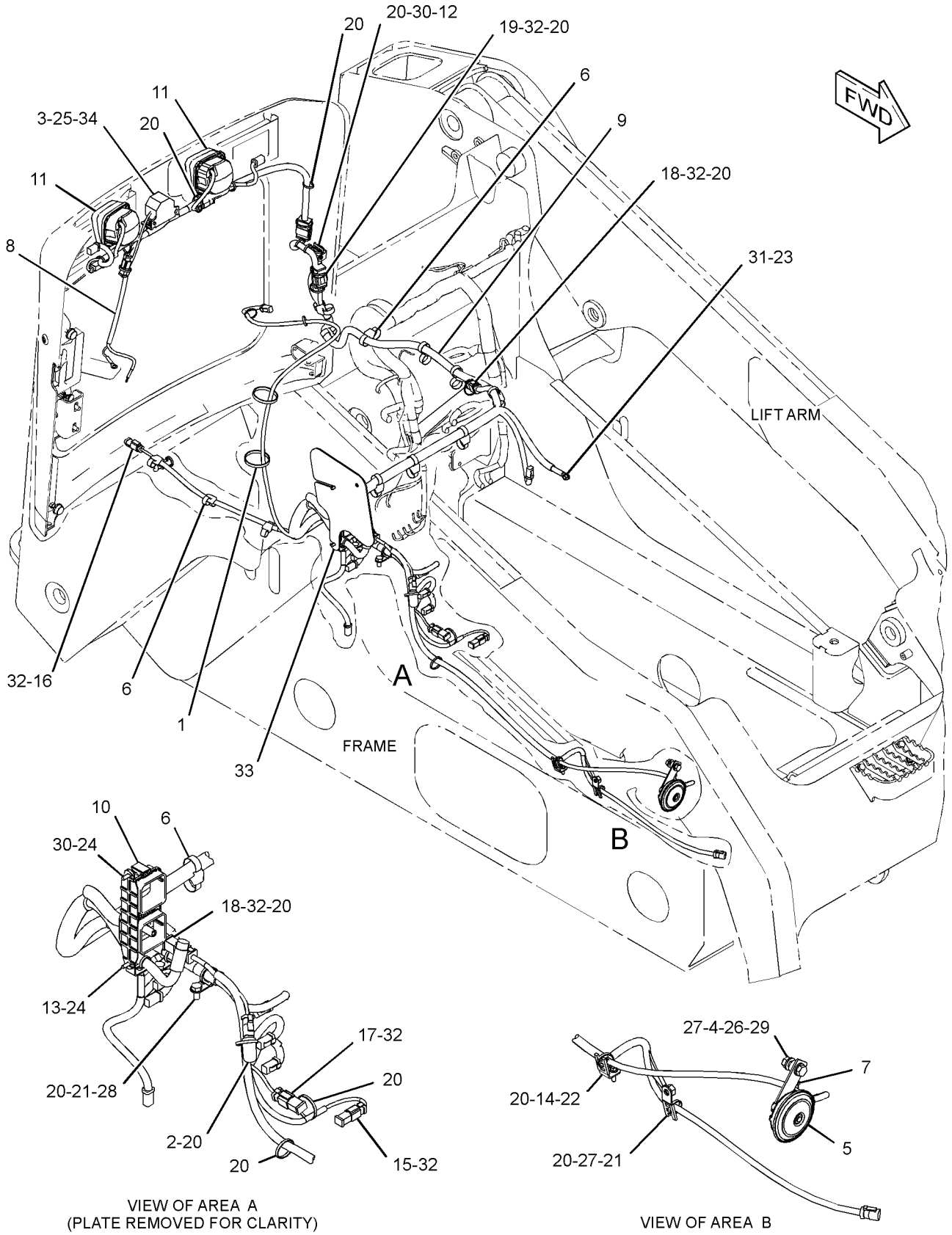

VIEW OF AREA A
(PLATE REMOVED FOR CLARITY)

VIEW OF AREA B

GRAPHIC #1 **<END>** g01454591

258-4190 WIRING GP-QUICK COUPLER

S/N: JAY1-UP
PART OF 258-2791 COUPLER AR-QUICK
AN ATTACHMENT

SMCS-1408, 6129 **i03571155**

NOTE	REF NO	GRAPHIC REF	PART NUMBER	QTY	PART NAME 1 2 3 4 5 6 (PRODUCT LEVEL)	SEE PAGE
B	1	1	**7K-1181**	1	STRAP-CABLE	
	2	1	**178-3620**	6	STRAP-DUAL CLAMP	
	3	1	**258-4191**	1	HARNESS AS-WORK TOOL	
		1	**155-2270**	2	KIT-CONNECTING PLUG (2-PIN)	
					(EACH PLUG KIT INCLUDES PLUG AS, WEDGE & INTERFACE SEAL)	
		1	**102-8803**	1	KIT-RECEPTACLE (3-PIN)	
					(INCLUDES RECEPTACLE AS & WEDGE)	
		1	**8L-8413**	3	STRAP-CABLE	
		1	**186-3735**	3	PIN-CONNECTOR (16-GA TO 18-GA)	
		1	**186-3736**	4	SOCKET-CONNECTOR (16-GA TO 18-GA)	
E		1	**125-7874**		TUBE-HEAT SHRINK (5.72-MM DIA) (5-CM)	
	4	1	**265-9513**	1	SWITCH AS-ROCKER (HYDRAULIC QUICK COUPLER)	
		1	**111-7899**	1	GASKET	
B	5	1	**3S-2093**	13	STRAP-CABLE	

B-USE AS REQUIRED
E-ORDER BY THE CENTIMETER

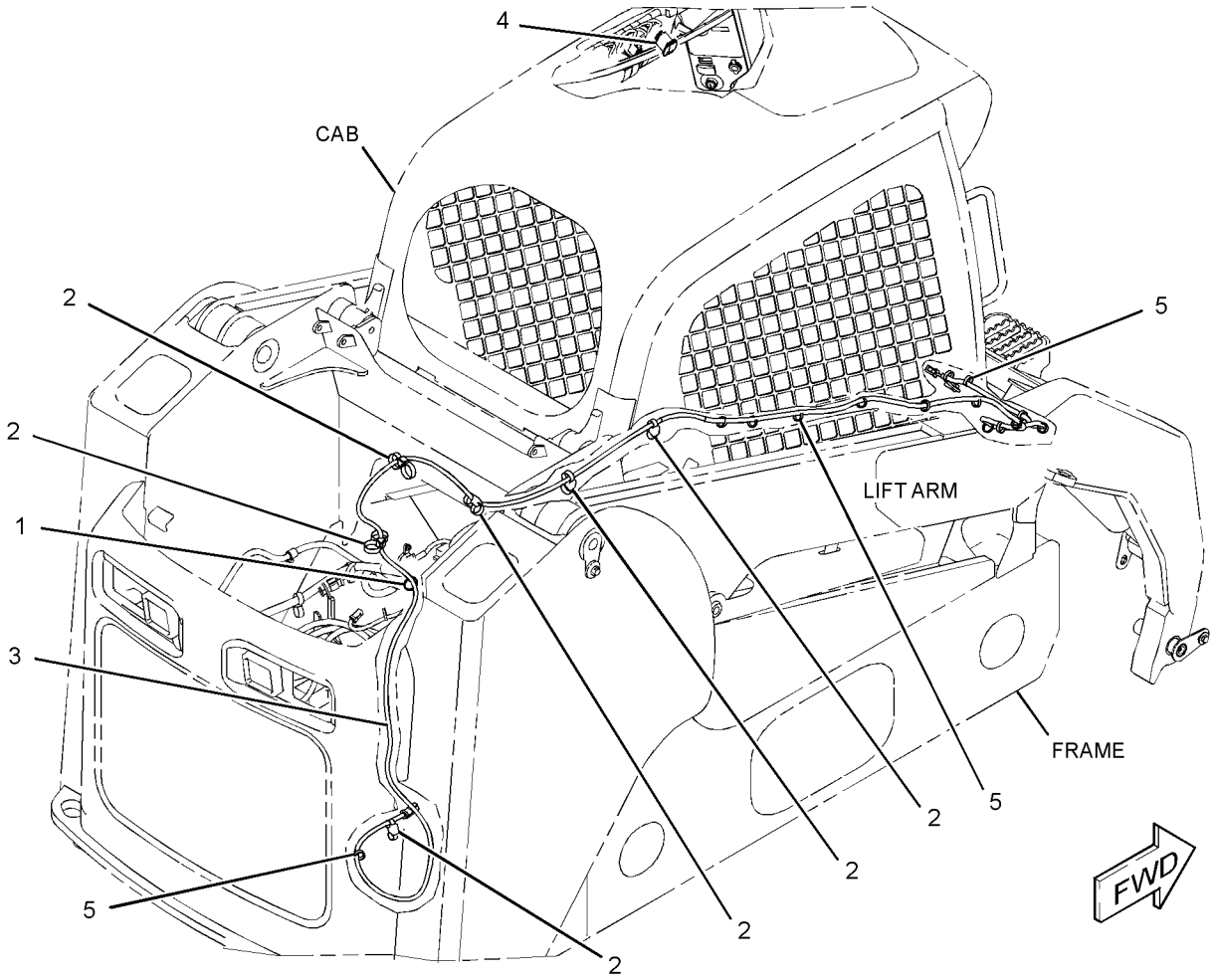

GRAPHIC #1 **<END>** g01329239

258-4125 WIRING GP-WORK TOOL

S/N: JAY1-UP

PART OF 342-5011 CONTROL AR-MACHINE, 258-3182, 258-3733, 261-6264 HYDRAULIC AR

AN ATTACHMENT

SMCS-1408 **i03571158**

NOTE	REF NO	GRAPHIC REF	PART NUMBER	QTY	PART NAME 1 2 3 4 5 6 (PRODUCT LEVEL)	SEE PAGE
	1	1	**7K-1181**	2	STRAP-CABLE	
	2	1	**146-9439**	5	RELAY AS (12-VOLT)	
	3	1	**159-9495**	1	NUT (1-1/2-18-THD)	
	4	1	**159-9496**	1	LOCKWASHER	
	5	1	**178-3620**	6	STRAP-DUAL CLAMP	
	6	1	**258-4126**	1	HARNESS AS-WORK TOOL	
		1	**156-1458**	1	COVER	
		1	**9W-0852**	1	PIN-CONNECTOR (14-GA)	
		1	**102-8806**	1	KIT-RECEPTACLE (8-PIN)	
					(INCLUDES RECEPTACLE AS & WEDGE)	
		1	**156-1460**	1	RECEPTACLE (8-PIN)	
E		1	**307-2338**		SLEEVE (12-CM)	
		1	**8L-8413**	1	STRAP-CABLE	
	7	1	**263-5418**	1	SWITCH AS-ROCKER (WORK TOOL)	
		1	**111-7899**	1	GASKET	
	8	1	**3S-2093**	8	STRAP-CABLE	

E-ORDER BY THE CENTIMETER

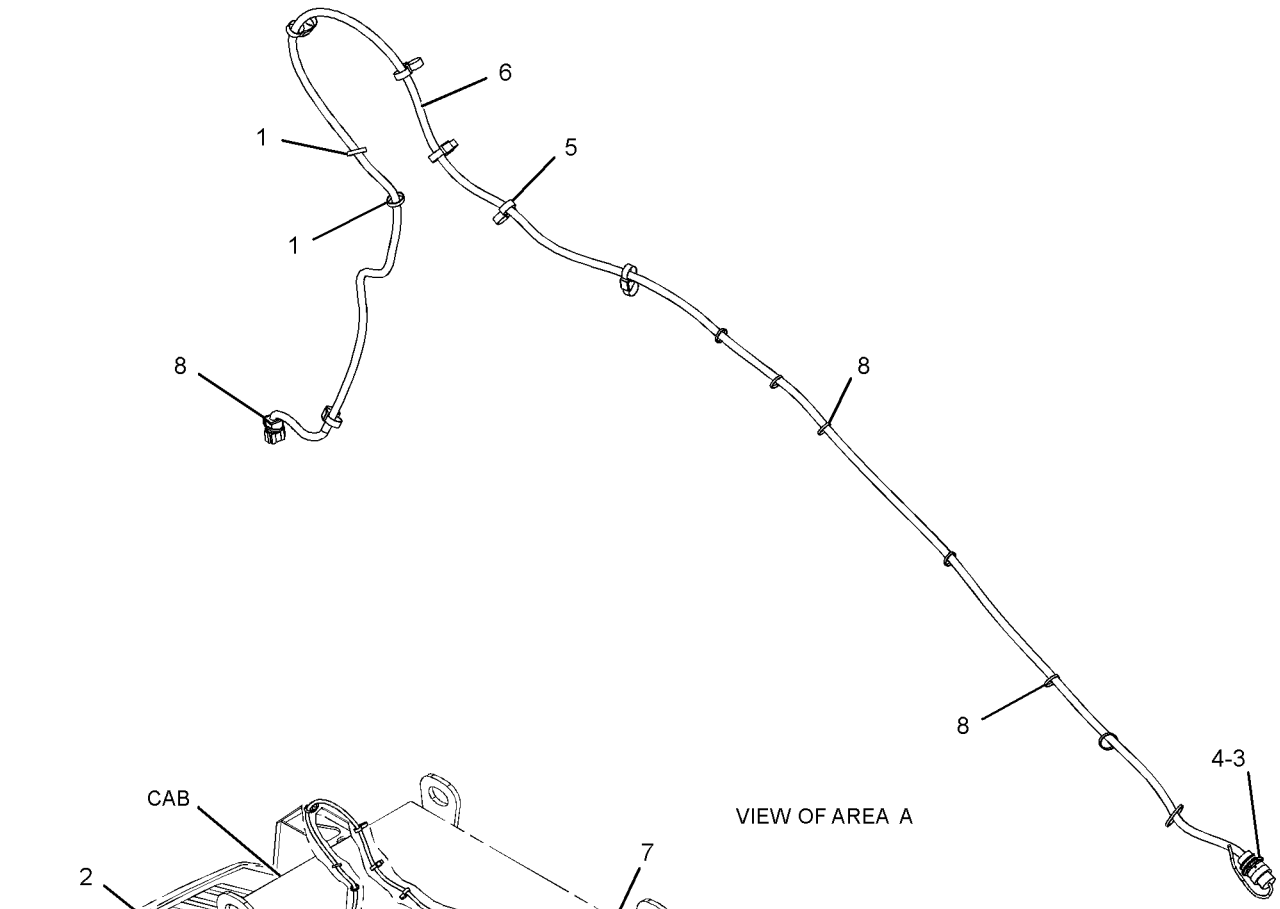

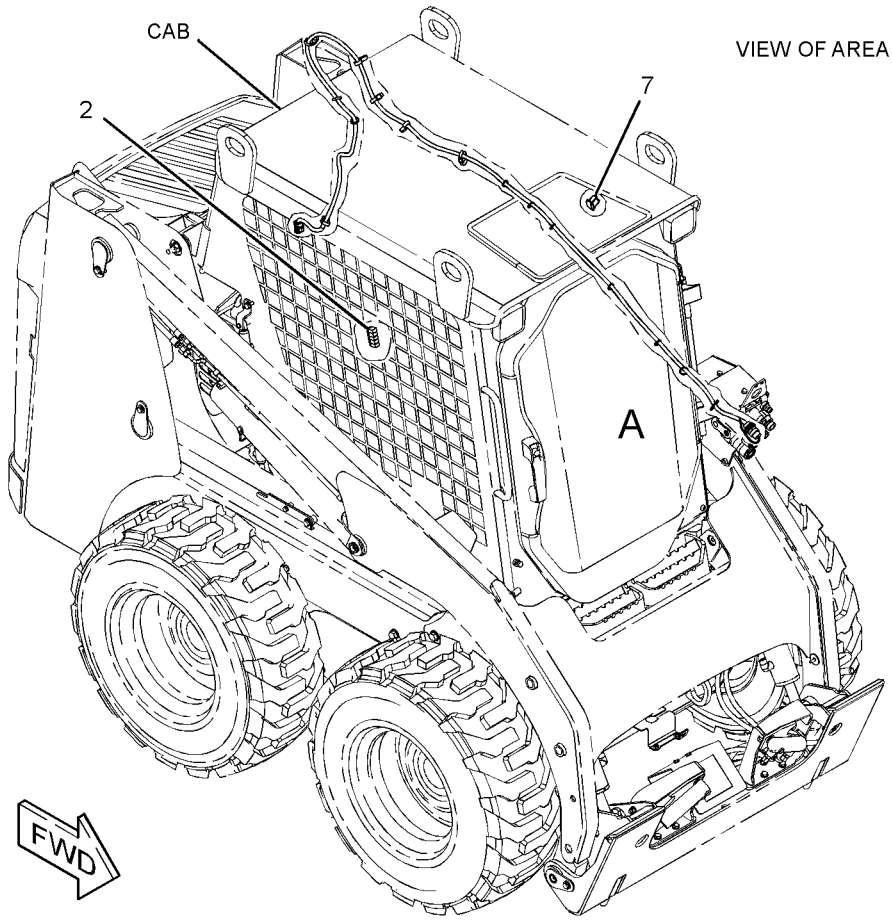

GRAPHIC #1 **<END>** g01310145

258-2857 AXLE GP–STANDARD

S/N: JAY1-UP

PART OF 258-3736 AXLE GP

SMCS-3278 **i02628507**

NOTE	REF NO	GRAPHIC REF	PART NUMBER	QTY	PART NAME 1 2 3 4 5 6 (PRODUCT LEVEL)	SEE PAGE
	1	1	**142-9023**	1	HOUSING-AXLE	
	2	1	**142-9029**	1	SPACER (57.16X69.85X27.54-MM THK)	
	3	1	**155-5652**	1	SEAL-LIP TYPE	
	4	1	**155-9010**	1	CONE-BEARING	
	5	1	**155-9432**	1	CONE-BEARING	
	6	1	**155-9433**	2	CUP-BEARING	
	7	1	**159-5772**	8	STUD	
	8	1	**169-1679**	1	SEAL-LIP TYPE	
	9	1	**258-2954**	1	SPINDLE (WHEEL)	

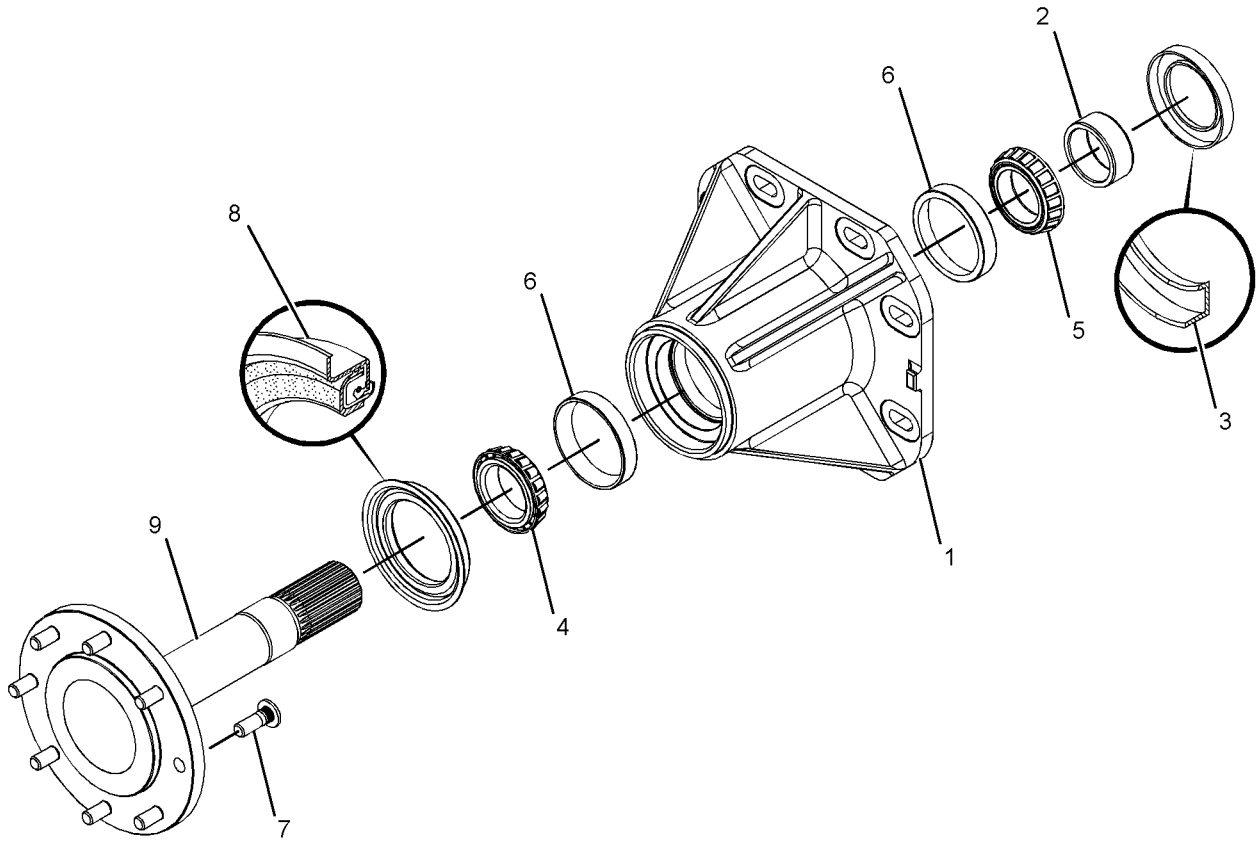

GRAPHIC #1 **<END>** g01321899

258-3736 AXLE GP–STANDARD

S/N: JAY1-UP

PART OF 258-2410, 295-7291 CHASSIS AR

SMCS-3278 **i02628508**

NOTE	REF NO	GRAPHIC REF	PART NUMBER	QTY	PART NAME 1 2 3 4 5 6 (PRODUCT LEVEL)	SEE PAGE
Y	1	1	*258-2857*	4	AXLE GP	193

Y-SEPARATE ILLUSTRATION

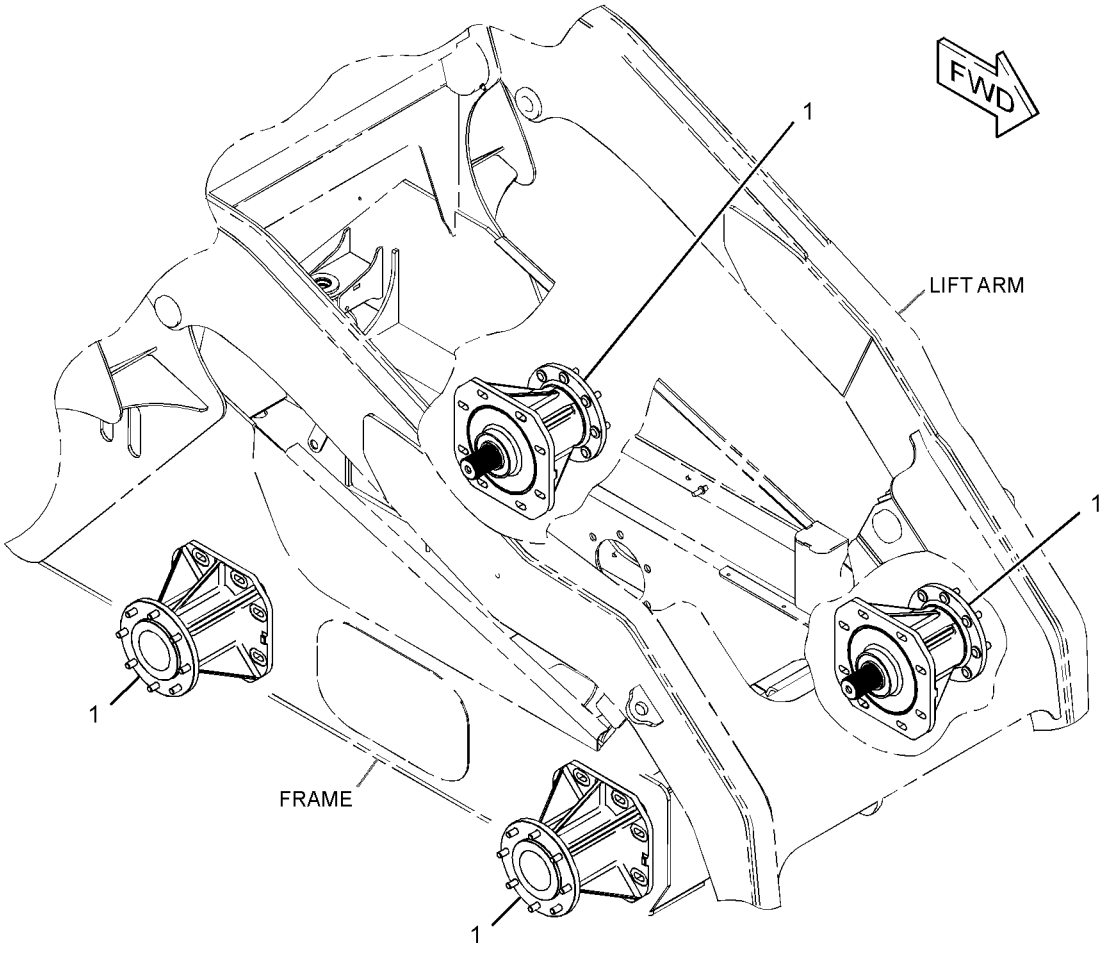

GRAPHIC #1 **<END>** g01321923

258-2860 DRIVE GP-TANDEM

S/N: JAY1-UP
PART OF 258-3200 POWER TRAIN AR
AN ATTACHMENT

SMCS-4062 **i02659358**

NOTE	REF NO	GRAPHIC REF	PART NUMBER	QTY	PART NAME 1 2 3 4 5 6 (PRODUCT LEVEL)	SEE PAGE
	1	1	**5P-3092**	4	SEAL-O-RING	
	2	1	**142-9033**	2	RETAINER	
	3	1	**152-1157**	32	WASHER (15.5X32X8-MM THK)	
	4	1	**191-9762**	4	CHAIN AS	
	5	1	**200-0999**	32	STUD (9/16-18-THD)	
	6	1	**258-2855**	4	SPROCKET	
	7	1	**258-2858**	2	SPACER (63.9X75X13.13-MM THK)	
	8	1	**258-2864**	2	SPROCKET-MOTOR	
M	9	1	**100-3866**	4	BOLT-SELF-LOCKING (M16X2X40-MM)	
	10	1	**142-9036**	32	NUT (9/16-18-THD)	
	11	1	**7X-0610**	4	WASHER-HARD (20X75X6-MM THK)	
M	12	1	**8C-8992**	2	BOLT-LOCKING (M12X1.75X30-MM)	
	13	1	**8T-4122**	4	WASHER-HARD (17X32X3.5-MM THK)	

M-METRIC PART

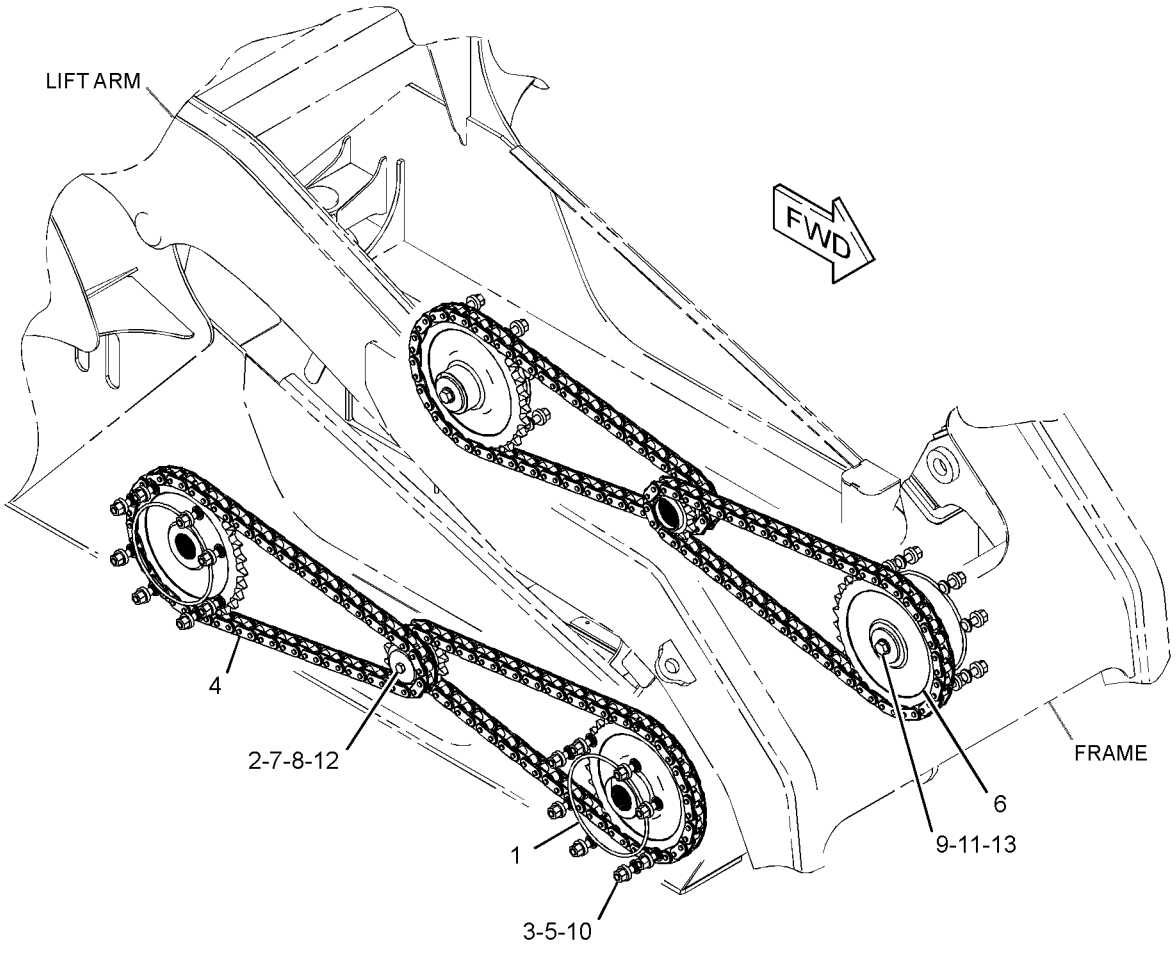

GRAPHIC #1 **<END>** g01325924

258-2862 DRIVE GP-TANDEM

S/N: JAY1-UP
PART OF 258-3400 POWER TRAIN AR
AN ATTACHMENT

SMCS-4062 **i02636748**

NOTE	REF NO	GRAPHIC REF	PART NUMBER	QTY	PART NAME 1 2 3 4 5 6 (PRODUCT LEVEL)	SEE PAGE
	1	1	**5P-3092**	4	SEAL-O-RING	
	2	1	**142-9033**	2	RETAINER	
	3	1	**152-1157**	32	WASHER (15.5X32X8-MM THK)	
	4	1	**191-9762**	4	CHAIN AS	
	5	1	**200-0999**	32	STUD	
	6	1	**258-2854**	4	SPROCKET (AXLE)	
	7	1	**258-2858**	2	SPACER (63.9X75X13.13-MM THK)	
	8	1	**258-2865**	4	SPROCKET-MOTOR	
M	9	1	**100-3866**	4	BOLT-SELF-LOCKING (M16X2X40-MM)	
	10	1	**142-9036**	32	NUT (9/16-18-THD)	
	11	1	**7X-0610**	4	WASHER-HARD (20X75X6-MM THK)	
M	12	1	**8C-8992**	2	BOLT-LOCKING (M12X1.75X30-MM)	
	13	1	**8T-4122**	4	WASHER-HARD (17X32X3.5-MM THK)	

M-METRIC PART

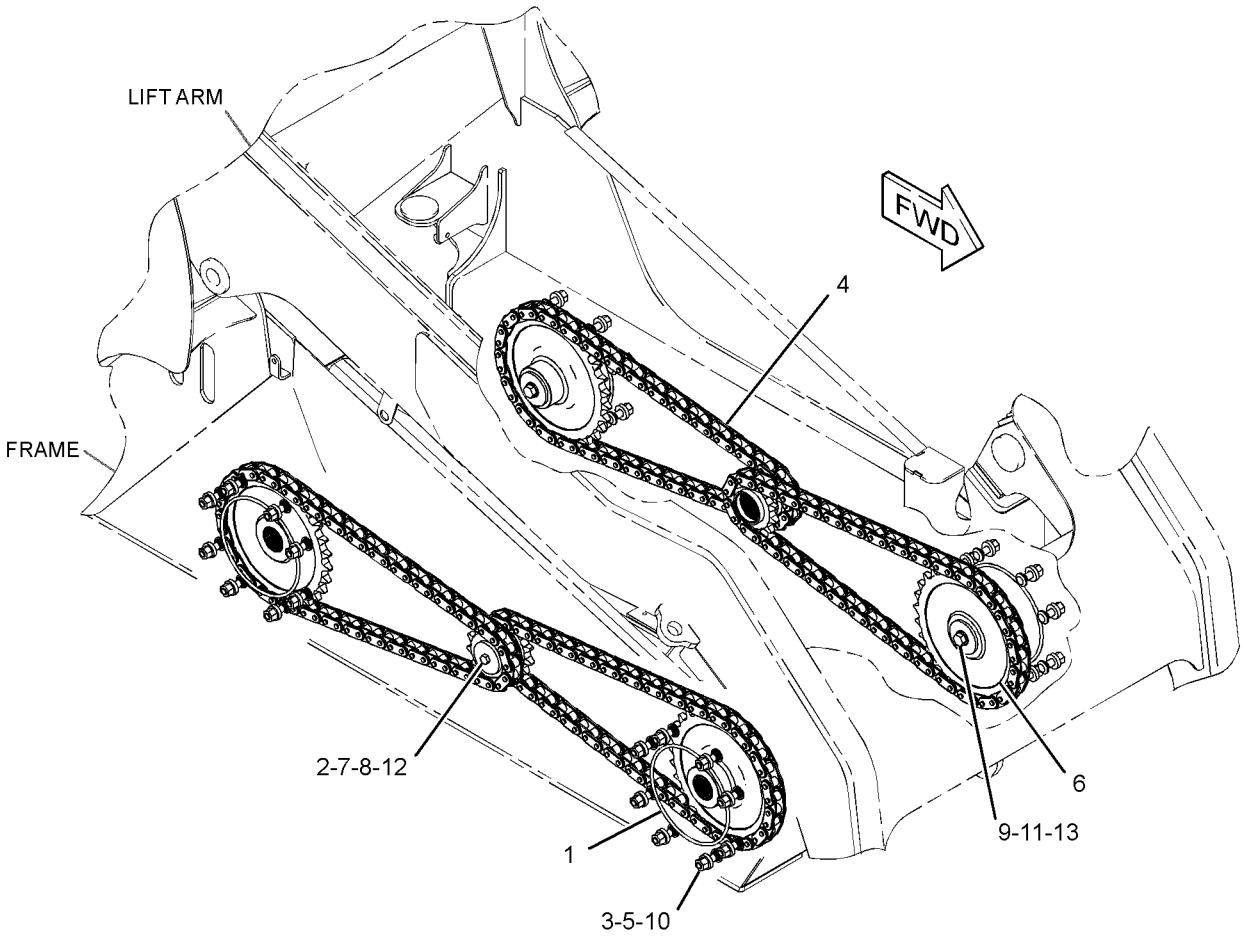

GRAPHIC #1 **<END>** g01326192

300-7627 DRIVE GP-TANDEM

S/N: JAY1-UP
PART OF 300-7637 POWER TRAIN AR
AN ATTACHMENT

SMCS-4062 **i02782171**

NOTE	REF NO	GRAPHIC REF	PART NUMBER	QTY	PART NAME 1 2 3 4 5 6 (PRODUCT LEVEL)	SEE PAGE
	1	1	**5P-3092**	4	SEAL-O-RING	
	2	1	**152-1157**	32	WASHER (15.5X32X8-MM THK)	
	3	1	**200-0999**	32	STUD	
	4	1	**258-2852**	4	SPROCKET-AXLE DRIVE (23-TEETH)	
	5	1	**258-2856**	4	CHAIN AS	
	6	1	**258-2952**	4	SPROCKET-DRIVE (11-TEETH)	
	7	1	**258-2955**	2	RETAINER	
	8	1	**258-2958**	2	SPACER (69X90X13.13-MM THK)	
M	9	1	**100-3866**	4	BOLT-SELF-LOCKING (M16X2X40-MM)	
	10	1	**142-9036**	32	NUT (9/16-18-THD)	
	11	1	**7X-0610**	4	WASHER-HARD (20X75X6-MM THK)	
M	12	1	**8C-8992**	2	BOLT-LOCKING (M12X1.75X30-MM)	
	13	1	**8T-4122**	4	WASHER-HARD (17X32X3.5-MM THK)	

M-METRIC PART

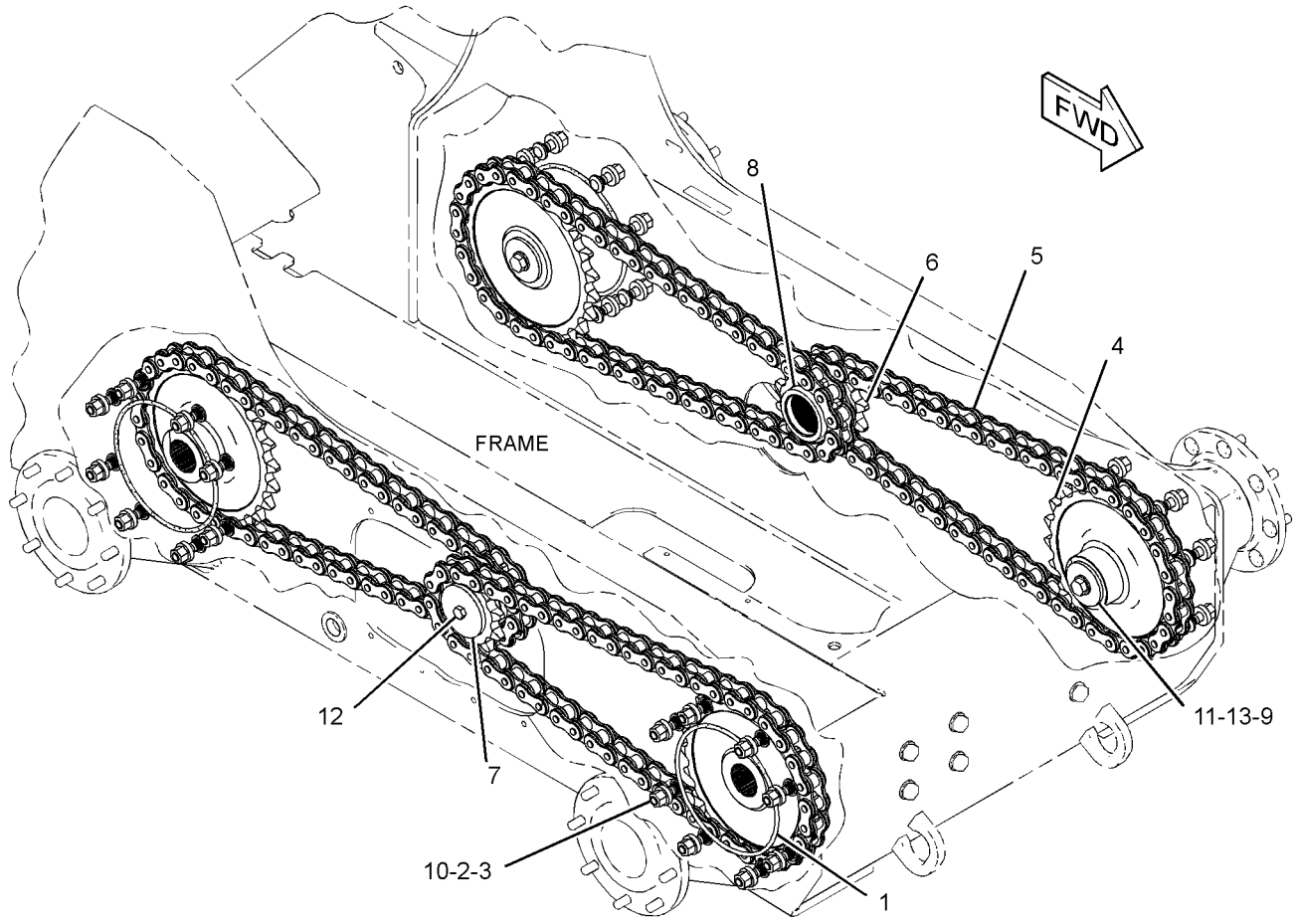

GRAPHIC #1 **<END>** g01416117

258-2581 FILTER & LINES GP-HYDRAULIC

S/N: JAY1-UP

PART OF 258-2600 HYDRAULIC AR

SMCS-5057, 5068 **i03508080**

NOTE	REF NO	GRAPHIC REF	PART NUMBER	QTY	PART NAME 1 2 3 4 5 6 (PRODUCT LEVEL)	SEE PAGE
	1	1	*197-8940*	1	CONNECTOR AS	
		1	**2M-9780**	1	SEAL-O-RING	
		1	**7J-9108**	1	SEAL-O-RING	
		1	**8T-1576**	1	CONNECTOR (FACE SEAL)	
Y	2	1	**223-9974**	1	FILTER GP-OIL (HYDRAULIC)	200
	3	1	**258-3979**	1	HOSE AS	
	4	1	*148-8382*	2	ELBOW AS	
					(EACH INCLUDES)	
		1	**3D-2824**	1	SEAL-O-RING	
		1	**7J-9108**	1	SEAL-O-RING	
		1	**8T-0404**	1	ELBOW	
	5	1	**266-3316**	1	BOLT-FLANGE HEAD (M10X1.5X25-MM)	
	6	1	**2M-6102**	1	PIPE	
	7	1	**3E-4321**	7	CLIP	
	8	1	**6V-1889**	1	CLIP	
	9	1	**8T-4121**	7	WASHER-HARD (11X21X2.5-MM THK)	
M	10	1	**8T-4137**	4	BOLT (M10X1.5X20-MM)	
M	11	1	**8T-4185**	1	BOLT (M10X1.5X50-MM)	
M	12	1	**8T-4189**	2	BOLT (M8X1.25X20-MM)	
	13	1	**8T-4224**	2	WASHER-HARD (8.8X16X2-MM THK)	
M	14	1	**8T-4196**	2	BOLT (M10X1.5X35-MM)	
	15	1	**178-3620**	1	STRAP-DUAL CLAMP	

M-METRIC PART
Y-SEPARATE ILLUSTRATION

258-2581 **FILTER & LINES GP-HYDRAULIC** *(contd.)* **i03508080**

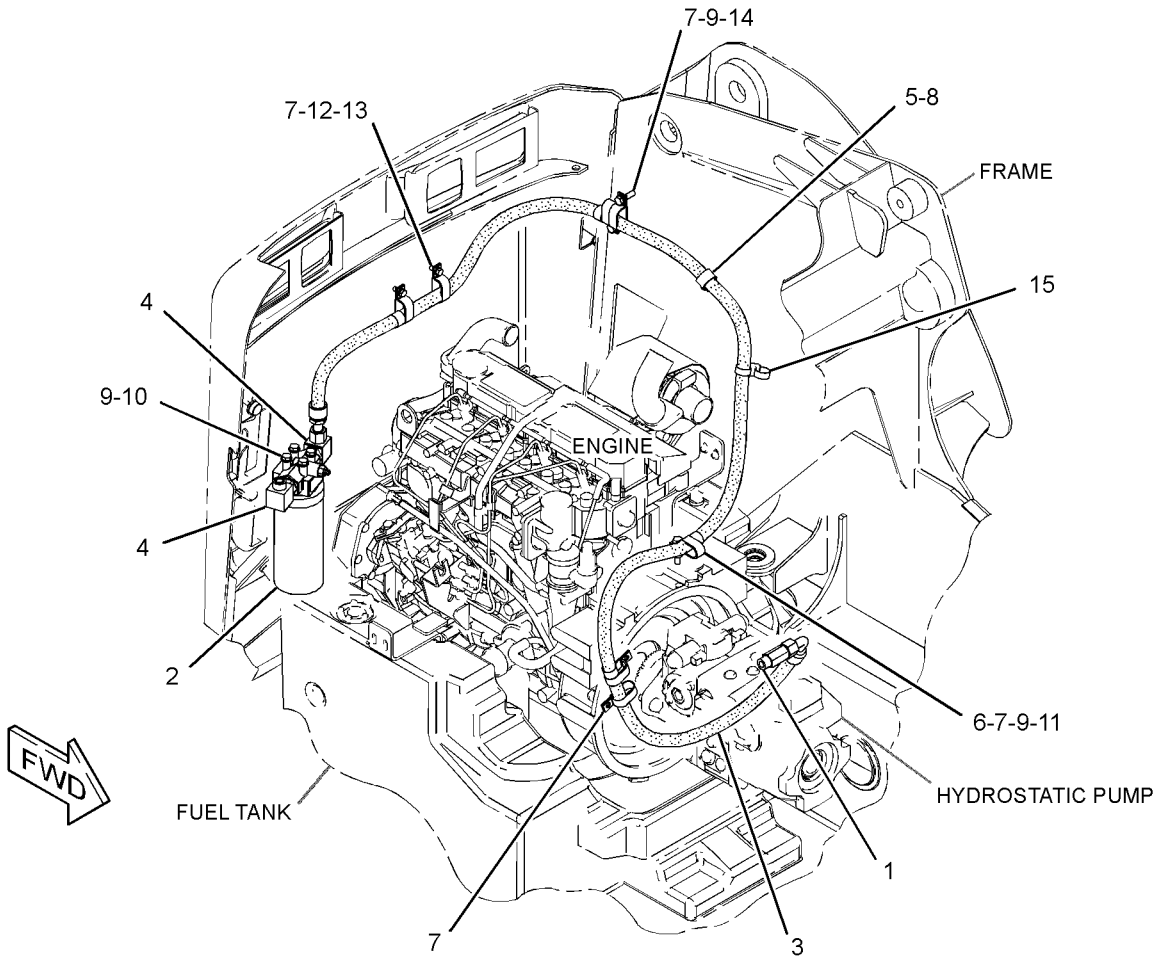

GRAPHIC #1 **<END>** g01337656

223-9974 FILTER GP-OIL–HYDRAULIC

S/N: JAY1-UP

PART OF 258-2581 FILTER & LINES GP-HYDRAULIC

SMCS-5068 **i02469830**

NOTE	REF NO	GRAPHIC REF	PART NUMBER	QTY	PART NAME 1 2 3 4 5 6 (PRODUCT LEVEL)	SEE PAGE
	1	1	**3J-1907**	1	SEAL-O-RING	
	2	1	**134-0404**	1	SWITCH AS-PRESSURE (HYDRAULIC OIL)	
	3	1	**1G-8878**	1	FILTER-OIL (ADVANCED EFFICIENCY) (HYDRAULIC)	

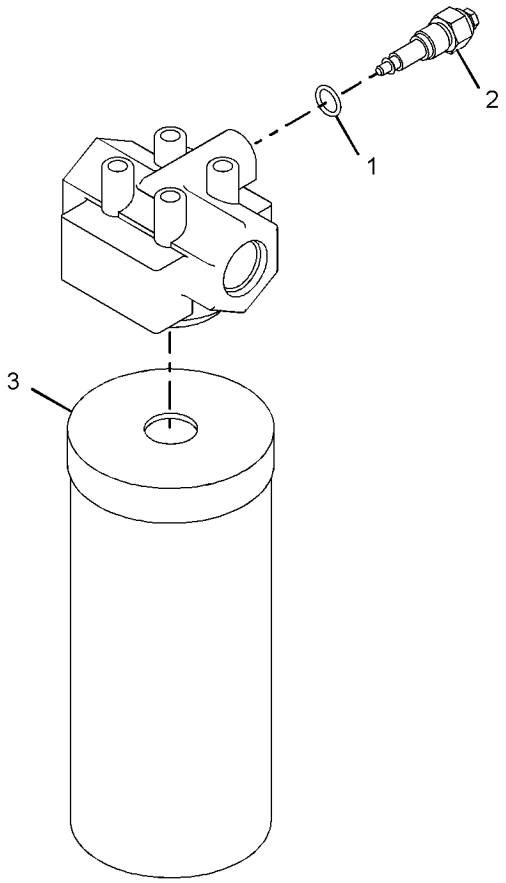

GRAPHIC #1 **<END>** g01035150

258-2430 LINES GP-HYDROSTATIC

S/N: JAY1-UP
PART OF 258-3200, 300-7637 POWER TRAIN AR
AN ATTACHMENT

SMCS-3154 **i03595543**

NOTE	REF NO	GRAPHIC REF	PART NUMBER	QTY	PART NAME 1 2 3 4 5 6 (PRODUCT LEVEL)	SEE PAGE
	1	1	**6V-0852**	2	CAP-DUST	
	2	1	*153-6237*	2	ELBOW AS	
					(EACH INCLUDES)	
		1	**3D-2824**	1	SEAL-O-RING	
		1	**6V-9004**	1	ELBOW	
		1	**6V-9746**	1	SEAL-O-RING	
	3	1	*164-5567*	2	COUPLER AS-QUICK DISCONNECT	
					(EACH INCLUDES)	
		1	**214-7568**	1	SEAL-O-RING	
		1	**6V-3965**	1	FITTING (QUICK DISCONNECT)	
I	4	1	**258-3250**	2	HOSE AS	
I	5	1	**258-3252**	2	HOSE AS	
I	6	1	**258-3254**	1	HOSE AS	
I	7	1	**258-3257**	1	HOSE AS	
	8	1	*296-5750*	1	CONNECTOR AS	
		1	**6V-9746**	1	SEAL-O-RING	
		1	**7M-8485**	1	SEAL-O-RING	
		1	**109-5821**	1	CONNECTOR	
	9	1	*148-8339*	3	CONNECTOR AS	
					(EACH INCLUDES)	
		1	**6V-8716**	1	CONNECTOR	
		1	**6V-9746**	1	SEAL-O-RING	
		1	**7M-8485**	1	SEAL-O-RING	
	10	1	*148-8358*	1	ELBOW AS	
		1	**2M-9780**	1	SEAL-O-RING	
		1	**6V-8398**	1	SEAL-O-RING	
		1	**6V-8624**	1	ELBOW	
	11	1	*164-5557*	1	CONNECTOR AS	
		1	**2M-9780**	1	SEAL-O-RING	
		1	**5I-4370**	1	CONNECTOR	
		1	**6V-8398**	1	SEAL-O-RING	
	12	1	*164-5606*	2	CONNECTOR AS	
					(EACH INCLUDES)	
		1	**3D-2824**	1	SEAL-O-RING	
		1	**6V-9746**	1	SEAL-O-RING	
		1	**8T-0078**	1	CONNECTOR	
M	13	1	**266-3315**	1	BOLT-FLANGE HEAD (M8X1.25X25.5-MM)	
	14	1	**3S-8665**	1	CLIP	
M	15	1	**5C-7261**	1	NUT (M8X1.25-THD)	
	16	1	**5P-4116**	1	WASHER-HARD (8.8X20.5X2-MM THK)	

I-REFER TO HYDRAULIC INFORMATION SYSTEM
M-METRIC PART

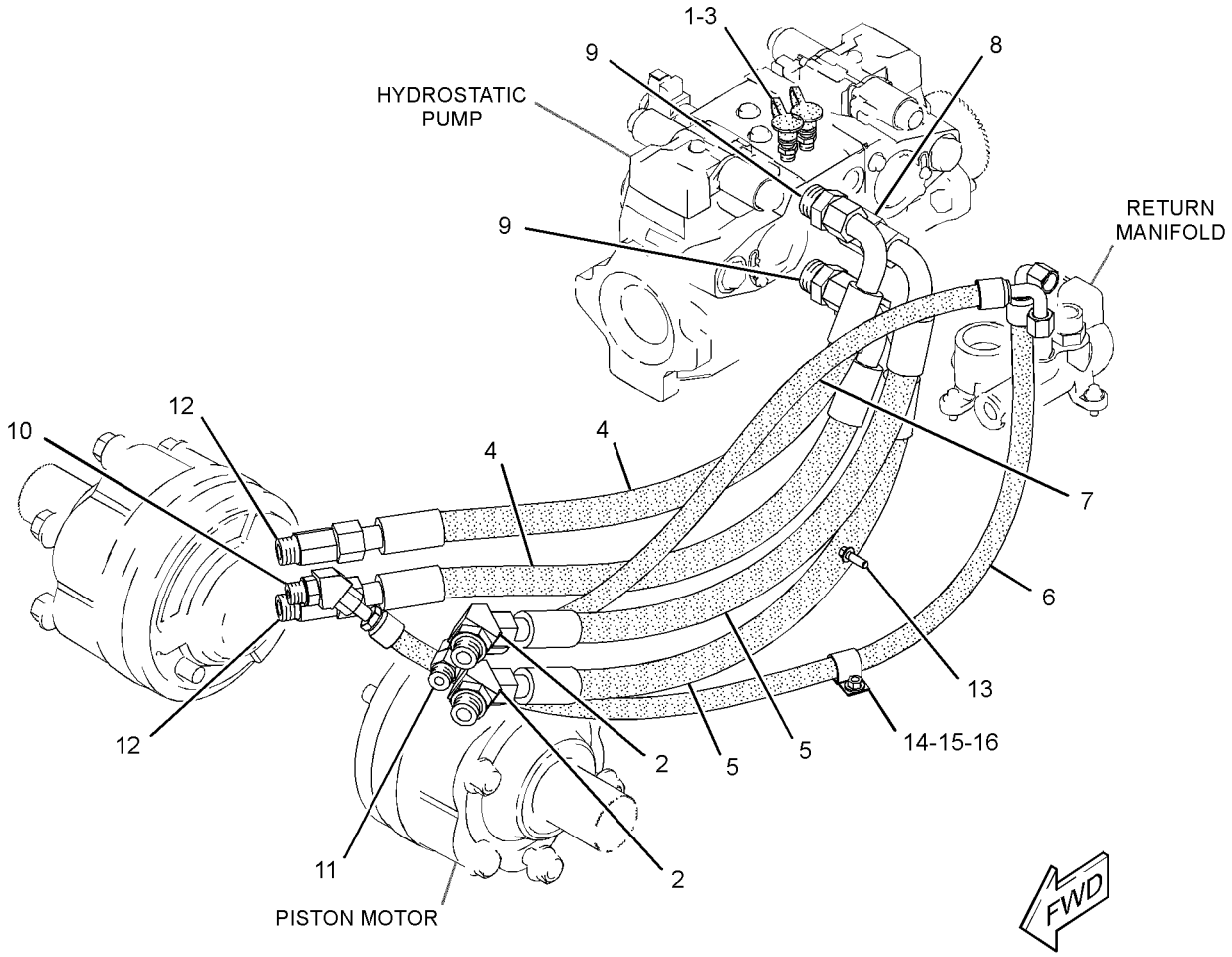

GRAPHIC #1 **<END>** g01932053

258-2431 LINES GP-HYDROSTATIC

S/N: JAY1-UP
PART OF 258-3400 POWER TRAIN AR
AN ATTACHMENT

SMCS-3154 **i02693331**

NOTE	REF NO	GRAPHIC REF	PART NUMBER	QTY	PART NAME 1 2 3 4 5 6 (PRODUCT LEVEL)	SEE PAGE
	1	1	**6V-0852**	4	CAP-DUST	
	2	1	*164-5567*	4	COUPLER AS-QUICK DISCONNECT	
					(EACH INCLUDES)	
		1	**3J-1907**	1	SEAL-O-RING	
		1	**6V-3965**	1	FITTING (QUICK DISCONNECT)	
I	3	1	**258-3251**	1	HOSE AS	
I	4	1	**258-3255**	1	HOSE AS	
I	5	1	**258-3258**	1	HOSE AS	
I	6	1	**258-3259**	1	HOSE AS	
I	7	1	**258-3972**	1	HOSE AS	
	8	1	*296-5750*	1	CONNECTOR AS	
		1	**6V-9746**	1	SEAL-O-RING	
		1	**7M-8485**	1	SEAL-O-RING	
		1	**109-5821**	1	CONNECTOR	
	9	1	*148-8327*	3	CONNECTOR AS	
					(EACH INCLUDES)	
		1	**3D-2824**	1	SEAL-O-RING	
		1	**6V-8637**	1	CONNECTOR	
		1	**6V-9746**	1	SEAL-O-RING	
	10	1	*148-8339*	3	CONNECTOR AS	
					(EACH INCLUDES)	
		1	**6V-8716**	1	CONNECTOR	
		1	**6V-9746**	1	SEAL-O-RING	
		1	**7M-8485**	1	SEAL-O-RING	
	11	1	*148-8345*	2	CONNECTOR AS	
					(EACH INCLUDES)	
		1	**2M-9780**	1	SEAL-O-RING	
		1	**6V-8398**	1	SEAL-O-RING	
		1	**6V-8638**	1	CONNECTOR	
M	12	1	**266-3315**	1	BOLT-FLANGE HEAD (M8X1.25X25.5-MM)	
	13	1	**3S-8665**	3	CLIP	
M	14	1	**5C-7261**	2	NUT (M8X1.25-THD)	
	15	1	**5P-4116**	2	WASHER-HARD (8.8X20.5X2-MM THK)	
I	16	1	**305-0201**	1	HOSE AS	
	17	1	*164-5606*	1	CONNECTOR AS	
		1	**3D-2824**	1	SEAL-O-RING	
		1	**6V-9746**	1	SEAL-O-RING	
		1	**8T-0078**	1	CONNECTOR	
	18	1	**8T-4121**	1	WASHER-HARD (11X21X2.5-MM THK)	

I-REFER TO HYDRAULIC INFORMATION SYSTEM
M-METRIC PART

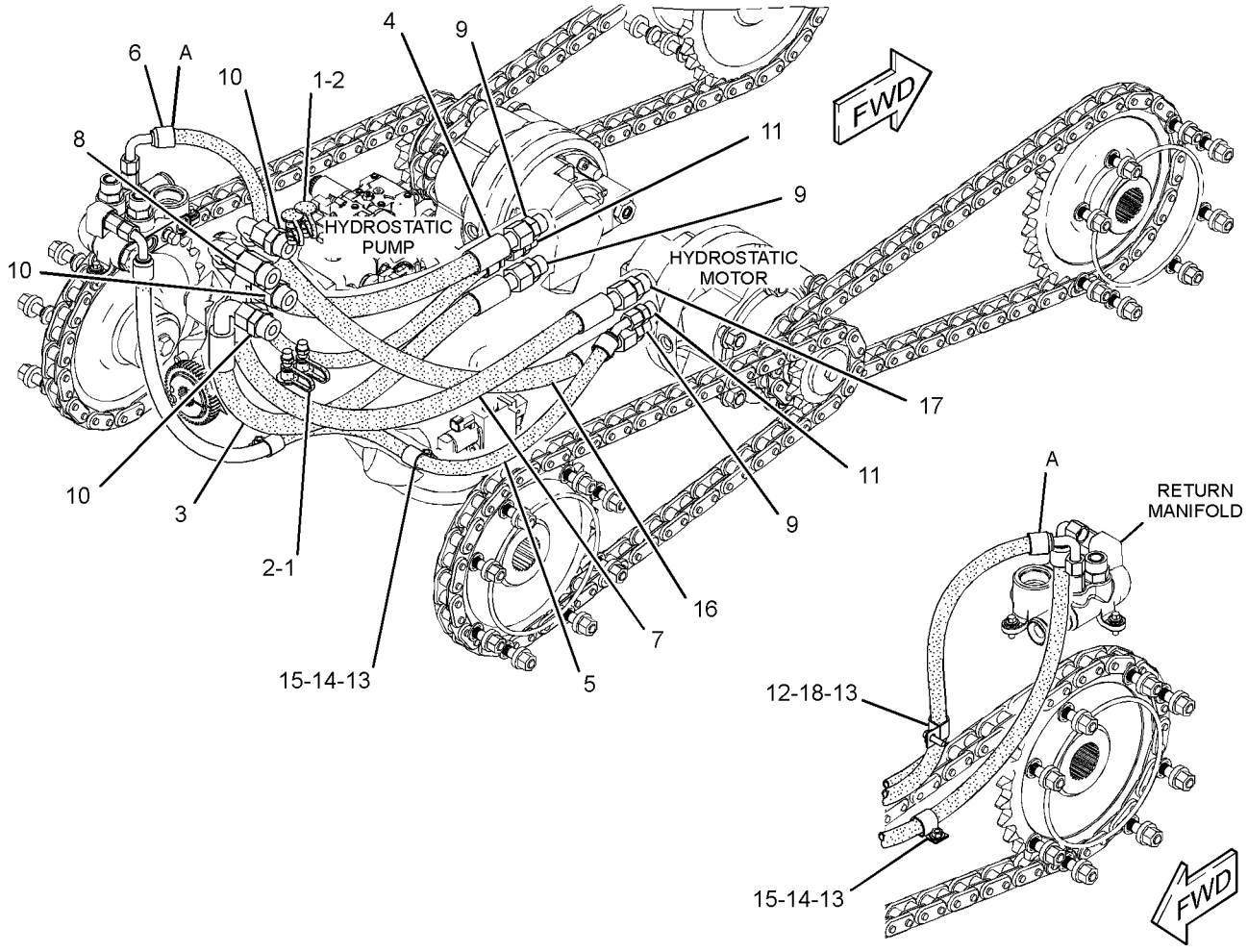

GRAPHIC #1 **<END>** g01351477

258-2607 LINES GP-PARKING BRAKE

S/N: JAY1-UP

PART OF 258-2600 HYDRAULIC AR

SMCS-4284 **i02674948**

NOTE	REF NO	GRAPHIC REF	PART NUMBER	QTY	PART NAME 1 2 3 4 5 6 (PRODUCT LEVEL)	SEE PAGE
	1	1	**097-0832**	2	SPACER (13.5X22X14-MM THK)	
I	2	1	**258-2608**	1	HOSE AS	
I	3	1	**258-2609**	2	HOSE AS	
	4	1	**258-3931**	1	TUBE AS	
	5	1	*148-8340*	2	CONNECTOR AS	
					(EACH INCLUDES)	
		1	**3K-0360**	1	SEAL-O-RING	
		1	**6V-8398**	1	SEAL-O-RING	
		1	**6V-8639**	1	CONNECTOR	
	6	1	*172-9287*	1	CONNECTOR AS	
		1	**3J-1907**	1	SEAL-O-RING	
		1	**6V-8397**	1	SEAL-O-RING	
		1	**7E-9898**	1	CONNECTOR	
	7	1	**1F-7567**	2	CLIP (LOOP)	
M	8	1	**5C-7261**	2	NUT (M8X1.25-THD)	
	9	1	**5P-4116**	2	WASHER-HARD (8.8X20.5X2-MM THK)	
	10	1	**6V-8397**	3	SEAL-O-RING	
	11	1	**204-2281**	2	STRAP-TIE	
	12	1	**200-6345**	1	MOUNT (DUAL SWIVEL)	

I-REFER TO HYDRAULIC INFORMATION SYSTEM
M-METRIC PART

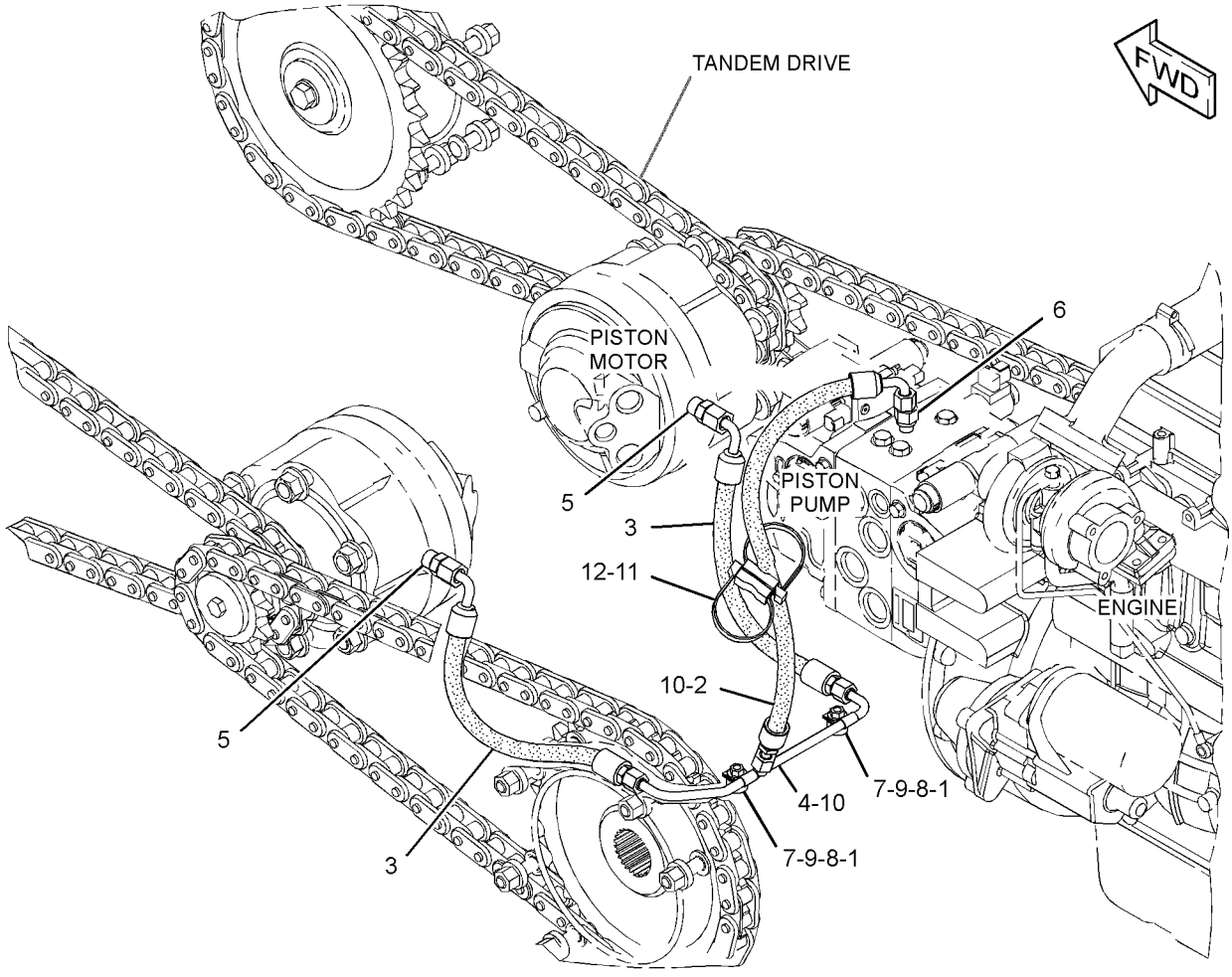

GRAPHIC #1 **<END>** g01344996

258-3151 MANIFOLD & LINES GP-CONTROL—MOTOR, 2-SPEED

S/N: JAY1-UP
PART OF 258-3400 POWER TRAIN AR
AN ATTACHMENT
TYPE 1

SMCS-5057, 5264, 5479 **i03635735**

NOTE	REF NO	GRAPHIC REF	PART NUMBER	QTY	PART NAME 1 2 3 4 5 6 (PRODUCT LEVEL)	SEE PAGE
I	1	1	**234-9661**	1	HOSE AS	
	2	1	**258-3157**	1	TUBE AS	
Y	3	1	*258-3463*	1	MANIFOLD & MTG GP-CONTROL (MOTOR, 2-SPEED)	407
	4	1	**263-5419**	1	SWITCH AS-ROCKER (MOTOR, 2-SPEED, AUXILIARY)	
		1	**111-7899**	1	GASKET	
	5	1	*148-8336*	1	CONNECTOR AS	
		1	**3J-1907**	1	SEAL-O-RING	
		1	**6V-8397**	1	SEAL-O-RING	
		1	**6V-8636**	1	CONNECTOR	
	6	1	*148-8378*	2	ELBOW AS	
					(EACH INCLUDES)	
		1	**3J-1907**	1	SEAL-O-RING	
		1	**6V-8397**	1	SEAL-O-RING	
		1	**6V-8724**	1	ELBOW	
	7	1	*148-8433*	1	TEE AS	
		1	**6V-8397**	2	SEAL-O-RING	
		1	**6V-9836**	1	TEE-SWIVEL	
	8	1	*148-8439*	1	TEE AS	
		1	**3J-1907**	1	SEAL-O-RING	
		1	**6V-8397**	2	SEAL-O-RING	
		1	**6V-8774**	1	TEE	
I	9	1	**196-3940**	1	HOSE AS	
I	10	1	**7I-5418**	1	HOSE AS	
	11	1	*148-8318*	2	CONNECTOR AS	
					(EACH INCLUDES)	
		1	**3K-0360**	1	SEAL-O-RING	
		1	**6V-8397**	1	SEAL-O-RING	
		1	**6V-8634**	1	CONNECTOR	

I-REFER TO HYDRAULIC INFORMATION SYSTEM
Y-SEPARATE ILLUSTRATION

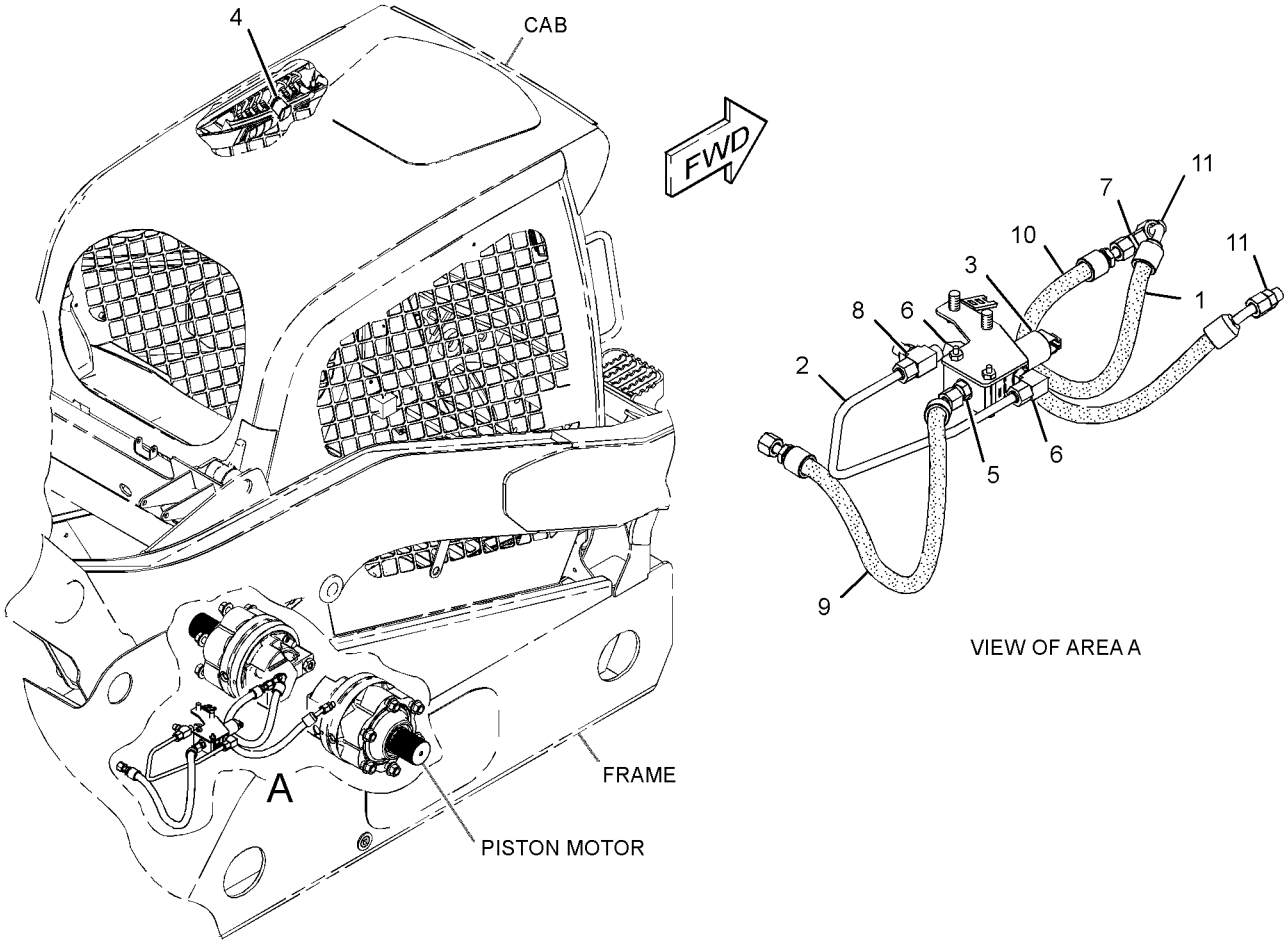

GRAPHIC #1 **<END>** g01340854

258-3151 MANIFOLD & LINES GP-CONTROL—MOTOR, 2-SPEED

S/N: JAY1-UP
PART OF 258-3400 POWER TRAIN AR
AN ATTACHMENT
TYPE 2

SMCS-5057, 5264, 5479 **i03632767**

NOTE	REF NO	GRAPHIC REF	PART NUMBER	QTY	PART NAME 1 2 3 4 5 6 (PRODUCT LEVEL)	SEE PAGE
CI	1	1	**328-8818**	1	HOSE AS	
	2	1	**258-3157**	1	TUBE AS	
Y	3	1	*258-3463*	1	MANIFOLD & MTG GP-CONTROL (MOTOR, 2-SPEED)	407
	4	1	**263-5419**	1	SWITCH AS-ROCKER (MOTOR, 2-SPEED, AUXILIARY)	
		1	**111-7899**	1	GASKET	
	5	1	*148-8336*	1	CONNECTOR AS	
		1	**3J-1907**	1	SEAL-O-RING	
		1	**6V-8397**	1	SEAL-O-RING	
		1	**6V-8636**	1	CONNECTOR	
C	6	1	*148-8378*	1	ELBOW AS	
		1	**3J-1907**	1	SEAL-O-RING	
		1	**6V-8397**	1	SEAL-O-RING	
		1	**6V-8724**	1	ELBOW	
C	7	1	*148-8435*	1	TEE AS	
		1	**3J-1907**	1	SEAL-O-RING	
		1	**6V-8397**	2	SEAL-O-RING	
		1	**6V-8781**	1	TEE-FACE SEAL	
	8	1	*148-8439*	1	TEE AS	
		1	**3J-1907**	1	SEAL-O-RING	
		1	**6V-8397**	2	SEAL-O-RING	
		1	**6V-8774**	1	TEE	
I	9	1	**196-3940**	1	HOSE AS	
C	10	1	**328-8817**	1	HOSE AS	
	11	1	*148-8318*	2	CONNECTOR AS	
					(EACH INCLUDES)	
		1	**3K-0360**	1	SEAL-O-RING	
		1	**6V-8397**	1	SEAL-O-RING	
		1	**6V-8634**	1	CONNECTOR	

C-CHANGE FROM PREVIOUS TYPE
I-REFER TO HYDRAULIC INFORMATION SYSTEM
Y-SEPARATE ILLUSTRATION

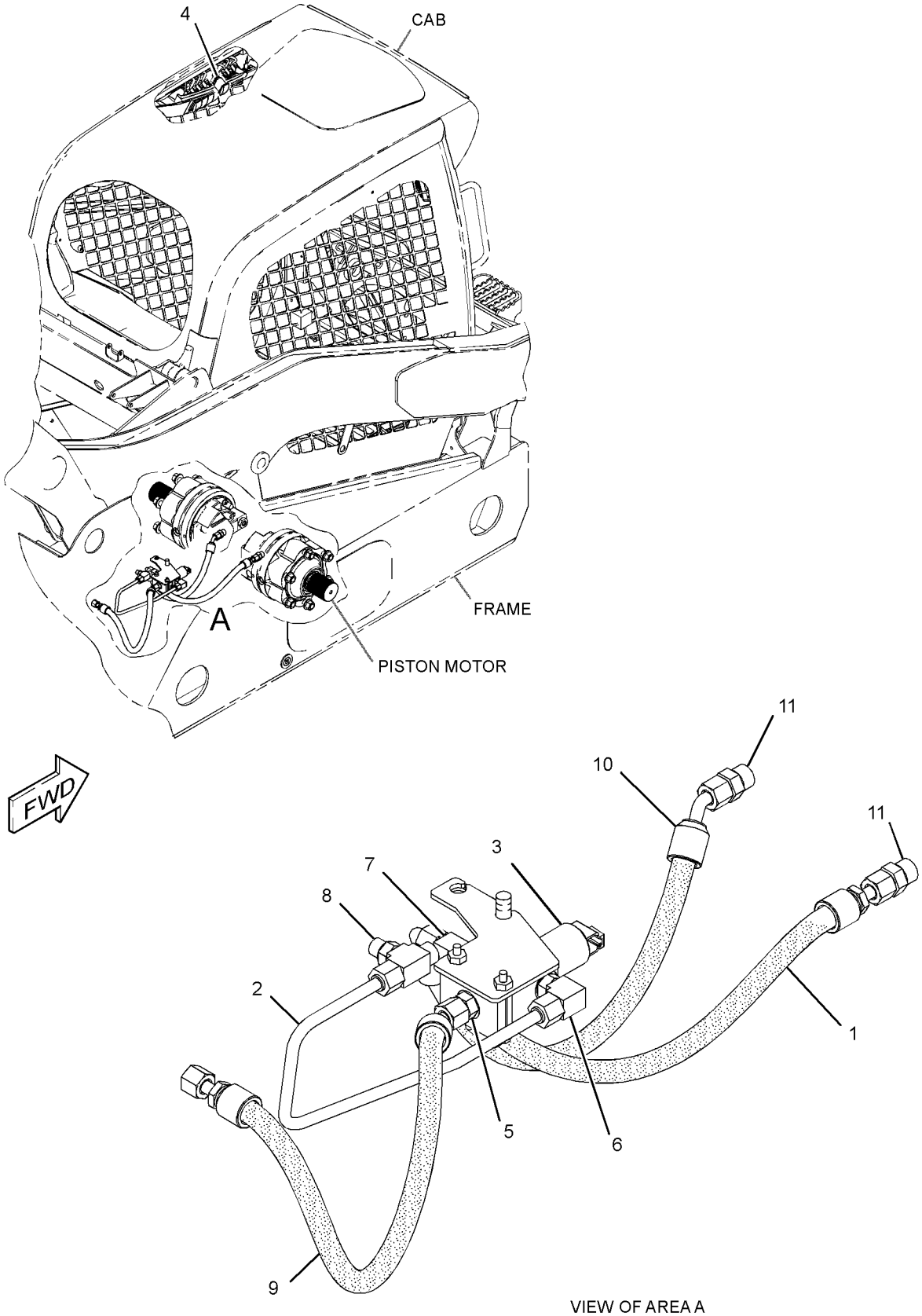

GRAPHIC #1 **<END>** g01954112

258-2589 MANIFOLD GP-RETURN

S/N: JAY1-UP
PART OF 258-2600 HYDRAULIC AR
TYPE 1

SMCS-5264 **i03624540**

NOTE	REF NO	GRAPHIC REF	PART NUMBER	QTY	PART NAME 1 2 3 4 5 6 (PRODUCT LEVEL)	SEE PAGE
	1	1	**105-4593**	1	POPPET	
	2	1	*148-8407*	1	PLUG AS	
		1	**3J-1907**	1	SEAL-O-RING	
		1	**9S-4191**	1	PLUG-O-RING	
	3	1	**212-6603**	1	PLUG AS	
		1	**6V-8978**	1	SEAL-O-RING	
	4	1	**212-6604**	1	SPRING	
	5	1	**305-4185**	1	BLOCK	
I	6	1	**258-3660**	1	HOSE AS	
	7	1	*148-8327*	2	CONNECTOR AS	
					(EACH INCLUDES)	
		1	**3D-2824**	1	SEAL-O-RING	
		1	**6V-8637**	1	CONNECTOR	
		1	**6V-9746**	1	SEAL-O-RING	
	8	1	*150-3072*	1	PLUG AS	
		1	**6V-8398**	1	SEAL-O-RING	
		1	**6V-9509**	1	PLUG (13/16-16-THD)	
	9	1	*164-5608*	2	CONNECTOR AS	
					(EACH INCLUDES)	
		1	**3K-0360**	1	SEAL-O-RING	
		1	**6V-8398**	1	SEAL-O-RING	
		1	**8T-1687**	1	CONNECTOR	
M	10	1	**266-3315**	3	BOLT-FLANGE HEAD (M8X1.25X25.5-MM)	
M	11	1	**5C-7261**	1	NUT (M8X1.25-THD)	
	12	1	**5P-4116**	4	WASHER-HARD (8.8X20.5X2-MM THK)	
	13	1	**6D-4246**	1	CLIP	
	14	1	*148-8362*	1	ELBOW AS	
		1	**3D-2824**	1	SEAL-O-RING	
		1	**5K-9090**	1	SEAL-O-RING	
		1	**8T-6684**	1	ELBOW	

I-REFER TO HYDRAULIC INFORMATION SYSTEM
M-METRIC PART

258-2589 **MANIFOLD GP-RETURN** *(contd.)* **i03624540**

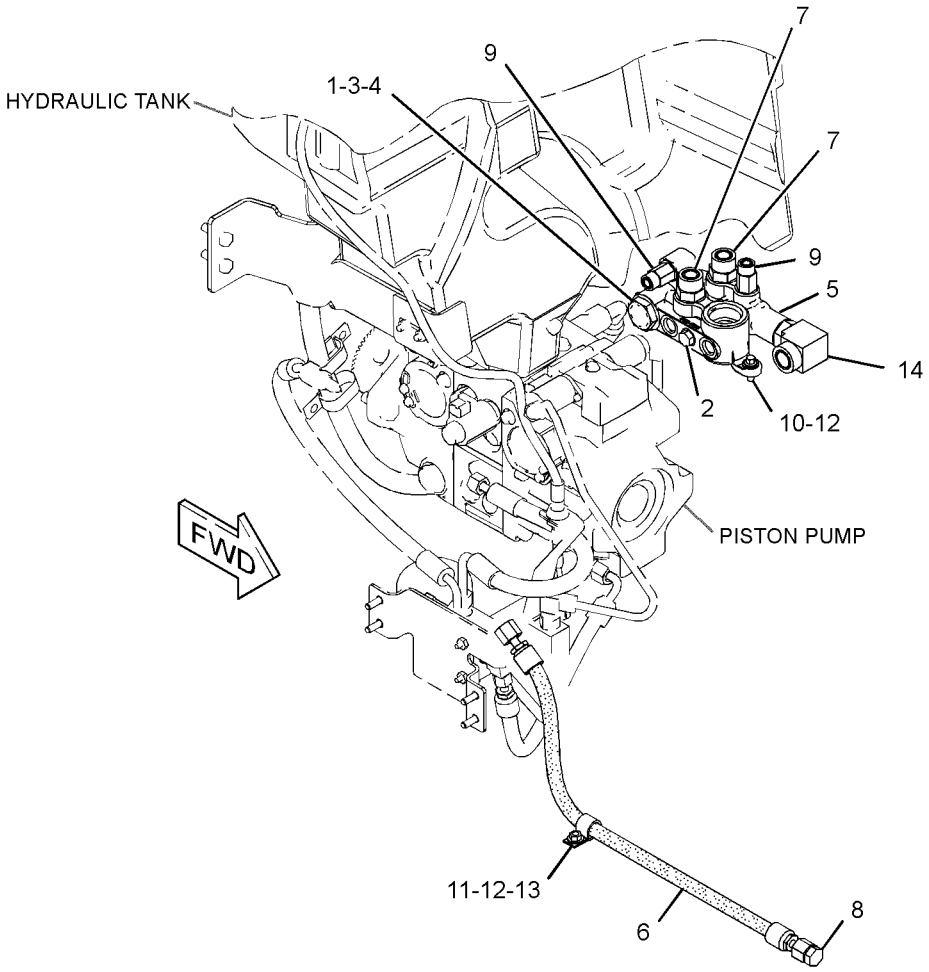

GRAPHIC #1 **<END>** g01352597

258-2589 MANIFOLD GP-RETURN

S/N: JAY1-UP
PART OF 258-2600 HYDRAULIC AR
TYPE 2

SMCS-5264 **i03632803**

NOTE	REF NO	GRAPHIC REF	PART NUMBER	QTY	PART NAME 1 2 3 4 5 6 (PRODUCT LEVEL)	SEE PAGE
	1	1	**105-4593**	1	POPPET	
	2	1	*148-8407*	1	PLUG AS	
		1	**3J-1907**	1	SEAL-O-RING	
		1	**9S-4191**	1	PLUG-O-RING	
	3	1	**212-6603**	1	PLUG AS	
		1	**6V-8978**	1	SEAL-O-RING	
	4	1	**212-6604**	1	SPRING	
	5	1	**305-4185**	1	BLOCK	
I	6	1	**258-3660**	1	HOSE AS	
	7	1	*148-8327*	2	CONNECTOR AS	
					(EACH INCLUDES)	
		1	**3D-2824**	1	SEAL-O-RING	
		1	**6V-8637**	1	CONNECTOR	
		1	**6V-9746**	1	SEAL-O-RING	
	8	1	*150-3072*	1	PLUG AS	
		1	**6V-8398**	1	SEAL-O-RING	
		1	**6V-9509**	1	PLUG (13/16-16-THD)	
	9	1	*164-5608*	2	CONNECTOR AS	
					(EACH INCLUDES)	
		1	**3K-0360**	1	SEAL-O-RING	
		1	**6V-8398**	1	SEAL-O-RING	
		1	**8T-1687**	1	CONNECTOR	
M	10	1	**266-3315**	3	BOLT-FLANGE HEAD (M8X1.25X25.5-MM)	
M	11	1	**5C-7261**	1	NUT (M8X1.25-THD)	
	12	1	**5P-4116**	4	WASHER-HARD (8.8X20.5X2-MM THK)	
	13	1	**6D-4246**	1	CLIP	
C	14	1	**9U-6998**	1	FITTING GP (PUMP CASE DRAIN)	
		1	**3D-2824**	1	SEAL-O-RING	

C-CHANGE FROM PREVIOUS TYPE
I-REFER TO HYDRAULIC INFORMATION SYSTEM
M-METRIC PART

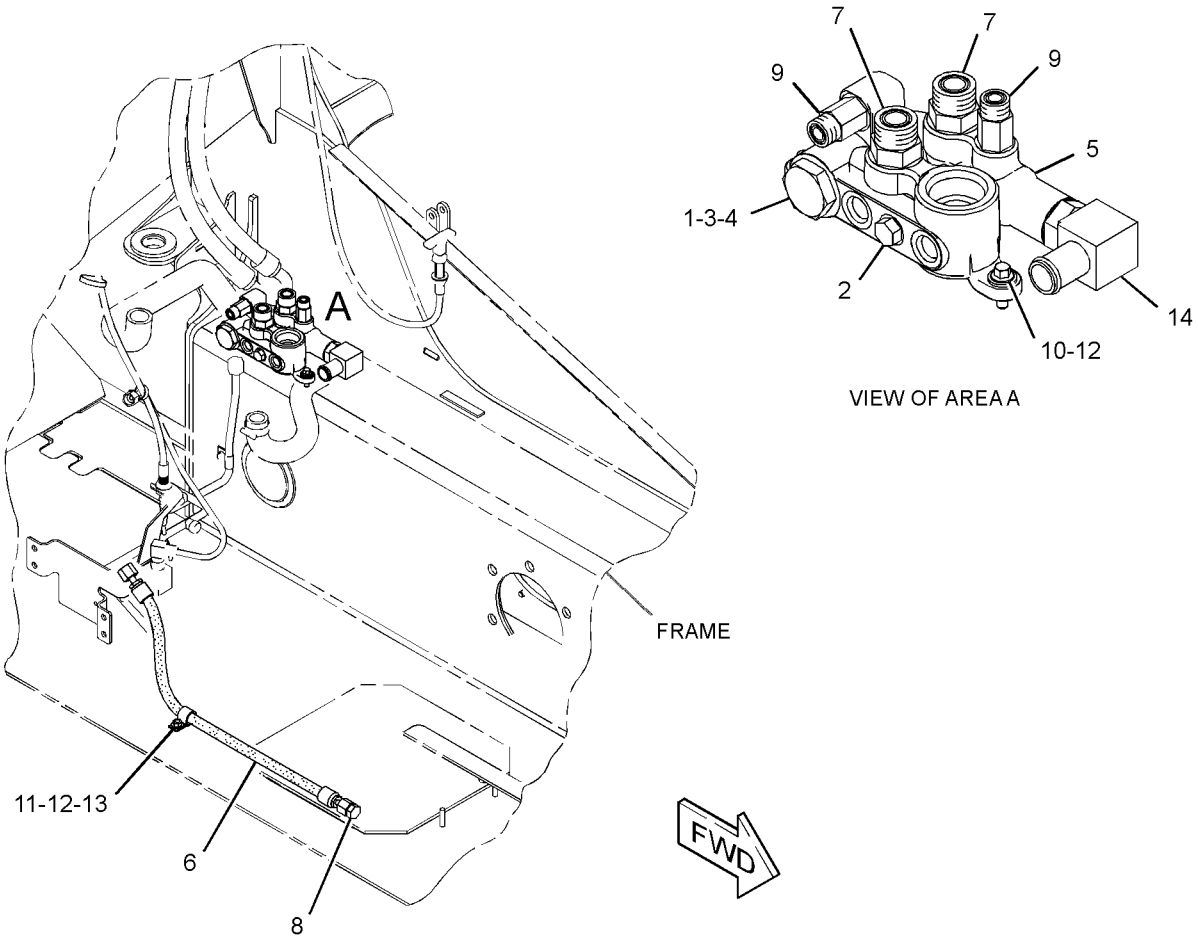

GRAPHIC #1 **<END>** g01950941

258-2408 MOTOR & MTG GP-HYDROSTATIC

S/N: JAY1-UP
PART OF 258-3200 POWER TRAIN AR
AN ATTACHMENT

SMCS-5058 **i02715578**

NOTE	REF NO	GRAPHIC REF	PART NUMBER	QTY	PART NAME 1 2 3 4 5 6 (PRODUCT LEVEL)	SEE PAGE
Y	1	1	**258-2442**	2	MOTOR GP-PISTON	217
Y	2	1	*262-3764*	2	SENSOR GP-SPEED (MOTOR)	165
M	3	1	**282-2613**	12	NUT-FLANGE (M18X1.5-THD)	
M	4	1	**170-6705**	2	BOLT-SOCKET HEAD (M8X1.25X12-MM)	
	5	1	**6F-4718**	2	SEAL-O-RING	

M-METRIC PART
Y-SEPARATE ILLUSTRATION

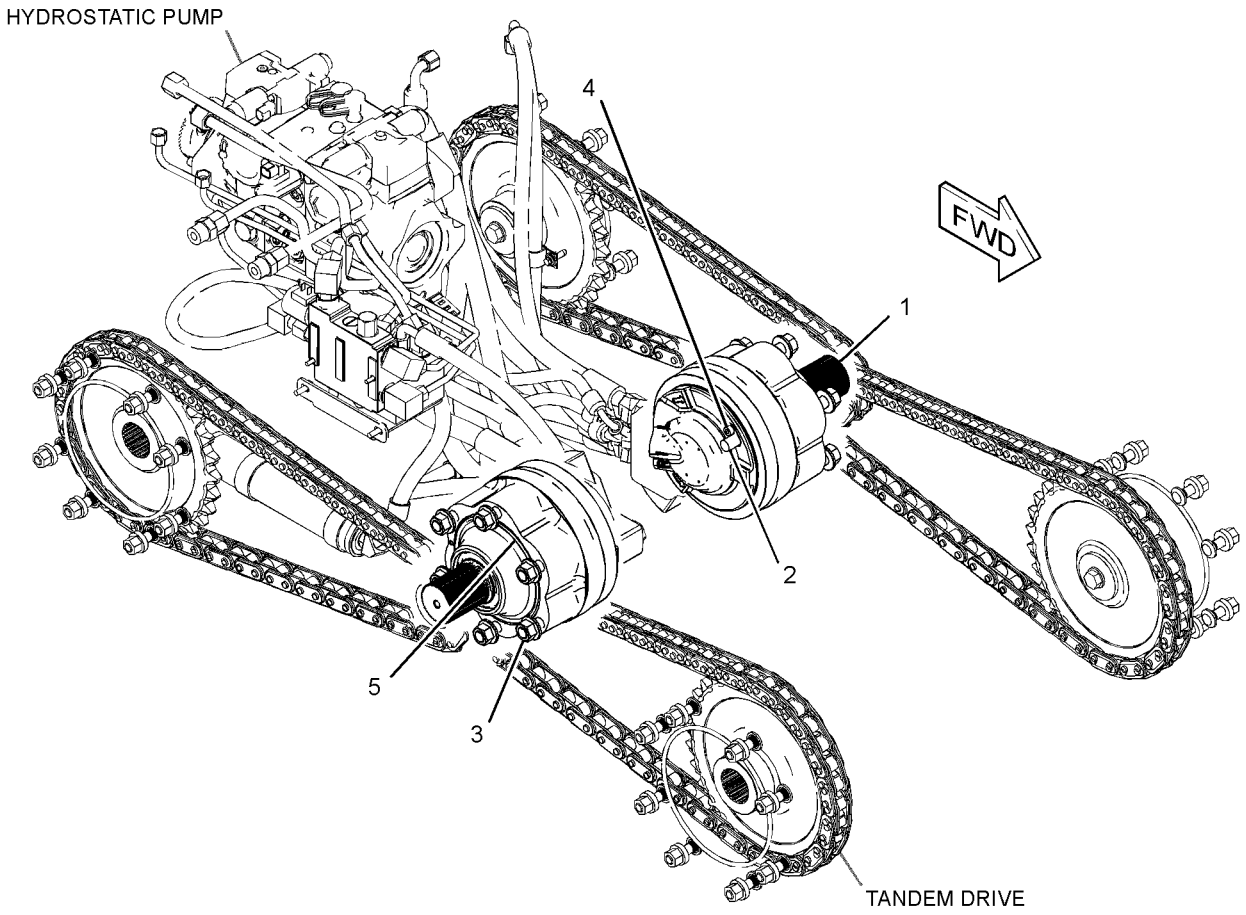

GRAPHIC #1 **<END>** g01326148

258-2409 MOTOR & MTG GP-HYDROSTATIC

S/N: JAY1-UP
PART OF 258-3400 POWER TRAIN AR
AN ATTACHMENT

SMCS-5058 **i03635701**

NOTE	REF NO	GRAPHIC REF	PART NUMBER	QTY	PART NAME 1 2 3 4 5 6 (PRODUCT LEVEL)	SEE PAGE
Y	1	1	**258-2520**	1	MOTOR GP-PISTON (2-SPEED, LH)	219
Y	2	1	**258-2521**	1	MOTOR GP-PISTON (2-SPEED, RH)	221
Y	3	1	*262-3764*	2	SENSOR GP-SPEED (MOTOR)	165
M	4	1	**282-2613**	12	NUT-FLANGE (M18X1.5-THD)	
M	5	1	**170-6705**	2	BOLT-SOCKET HEAD (M8X1.25X12-MM)	
	6	1	**6F-4718**	2	SEAL-O-RING	

M-METRIC PART
Y-SEPARATE ILLUSTRATION

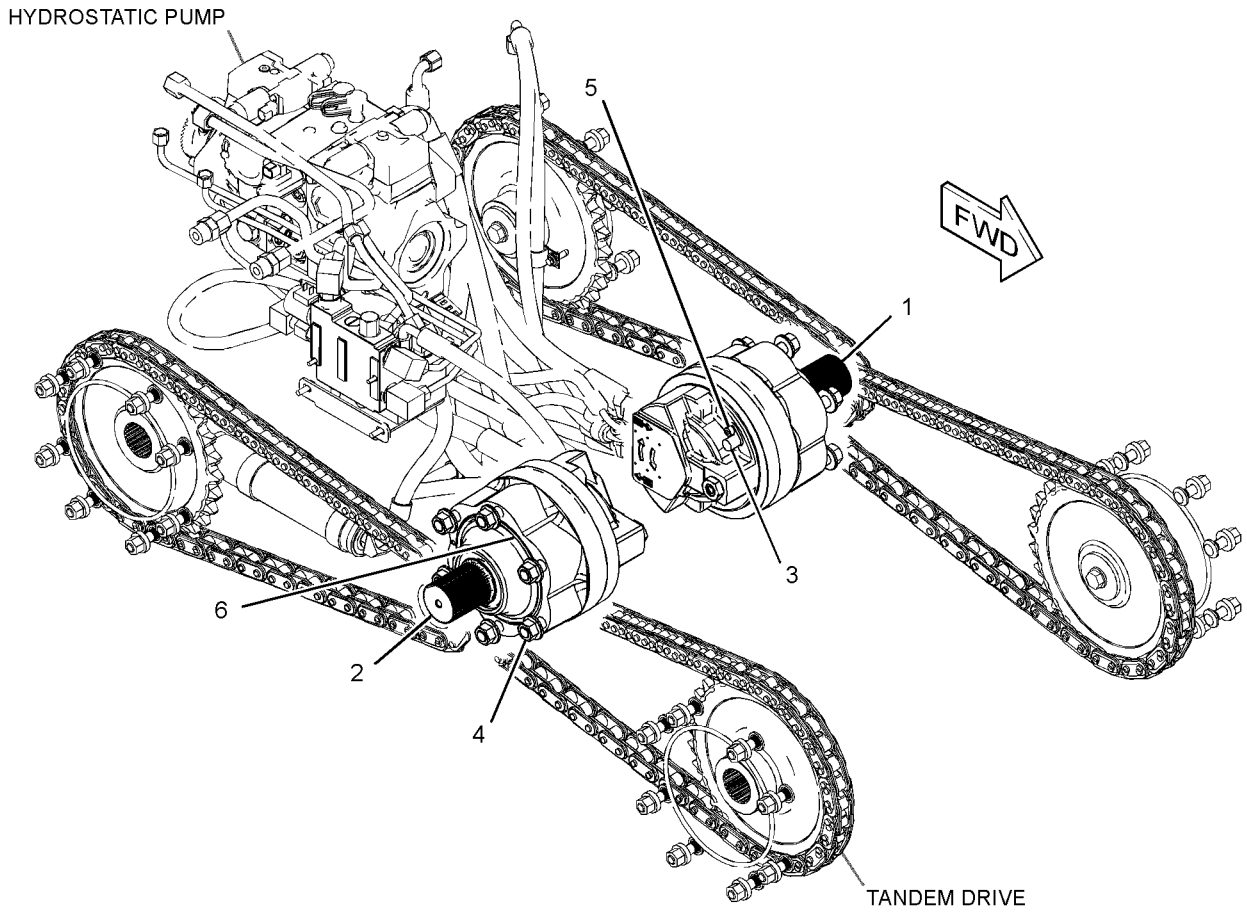

GRAPHIC #1 **<END>** g01326160

258-2416 MOTOR & MTG GP-HYDROSTATIC

S/N: JAY1-UP
PART OF 300-7637 POWER TRAIN AR
AN ATTACHMENT

SMCS-5058 **i03635704**

NOTE	REF NO	GRAPHIC REF	PART NUMBER	QTY	PART NAME 1 2 3 4 5 6 (PRODUCT LEVEL)	SEE PAGE
Y	1	1	**258-2605**	2	MOTOR GP-PISTON	223
Y	2	1	*262-3764*	2	SENSOR GP-SPEED (MOTOR)	165
M	3	1	**282-2613**	12	NUT-FLANGE (M18X1.5-THD)	
M	4	1	**170-6705**	2	BOLT-SOCKET HEAD (M8X1.25X12-MM)	
	5	1	**6F-4718**	2	SEAL-O-RING	

M-METRIC PART
Y-SEPARATE ILLUSTRATION

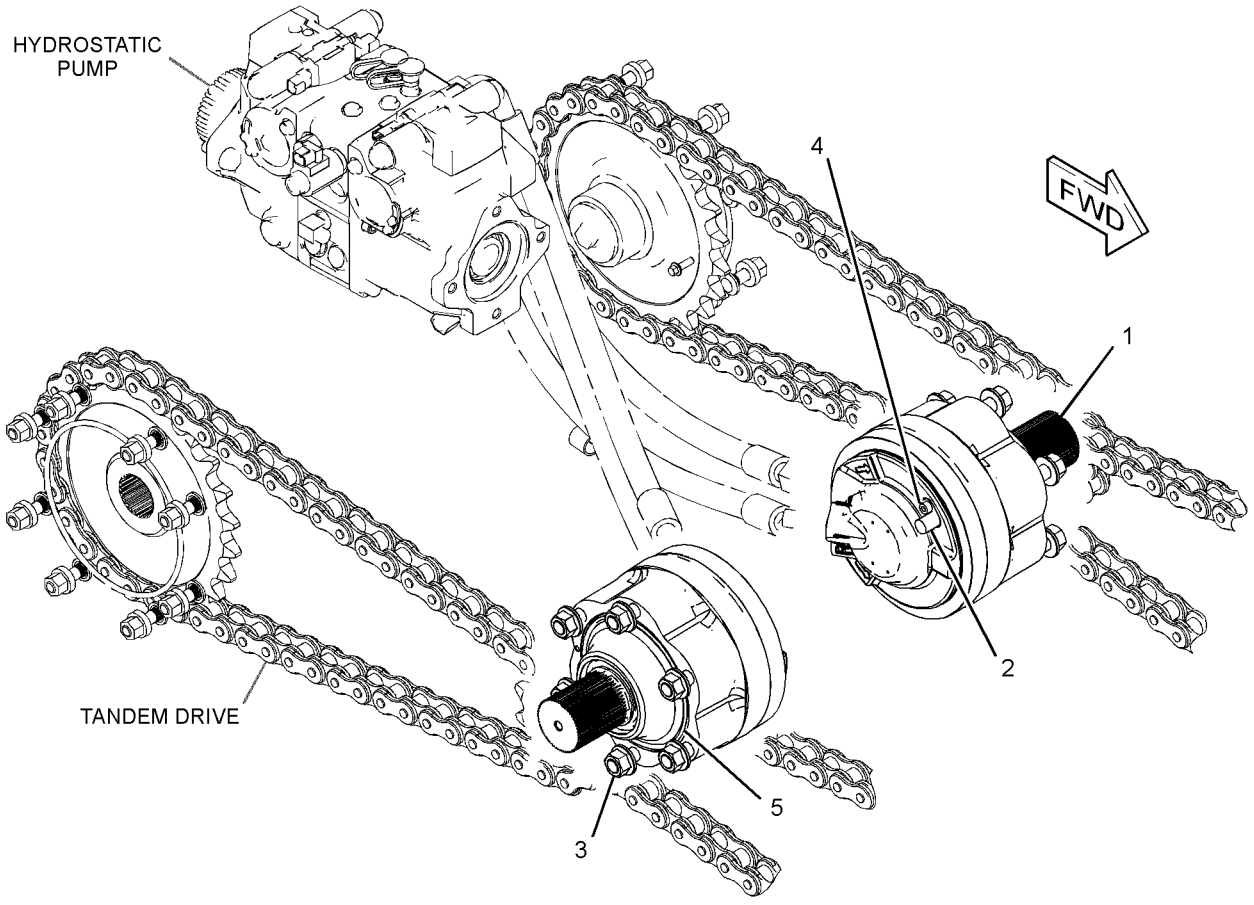

GRAPHIC #1 **<END>** g01327510

258-2442 MOTOR GP-PISTON

S/N: JAY1-UP

PART OF 258-2408 MOTOR & MTG GP-HYDROSTATIC

AN ATTACHMENT

SMCS-4351, 5058 **i03539007**

NOTE	REF NO	GRAPHIC REF	PART NUMBER	QTY	PART NAME 1 2 3 4 5 6 (PRODUCT LEVEL)	SEE PAGE
	1	1	**280-7843**	1	VALVE GP-FLUSHING	
	2	1	**280-7837**	1	KIT-VALVE	
					(INCLUDES DISTRIBUTION VALVE BODY, PIN, RINGS & SPRINGS)	
	3	1	**280-7838**	1	KIT-BEARING	
					(INCLUDES SEALS, TAPERED ROLLER BEARINGS, WASHERS & RINGS)	
	4	1	**280-7839**	6	STUD	
	5	1	**280-7840**	1	KIT-BRAKE	
					(INCLUDES STEEL BRAKE PISTON, SEALS & SPRINGS)	
	6	1	**280-7841**	1	SHAFT-DRIVE	
					PARTS SHOWN IN GRAPHIC(S) WITHOUT A REFERENCE NUMBER ARE NOT SERVICED SEPARATELY	

258-2442 MOTOR GP-PISTON *(contd.)* **i03539007**

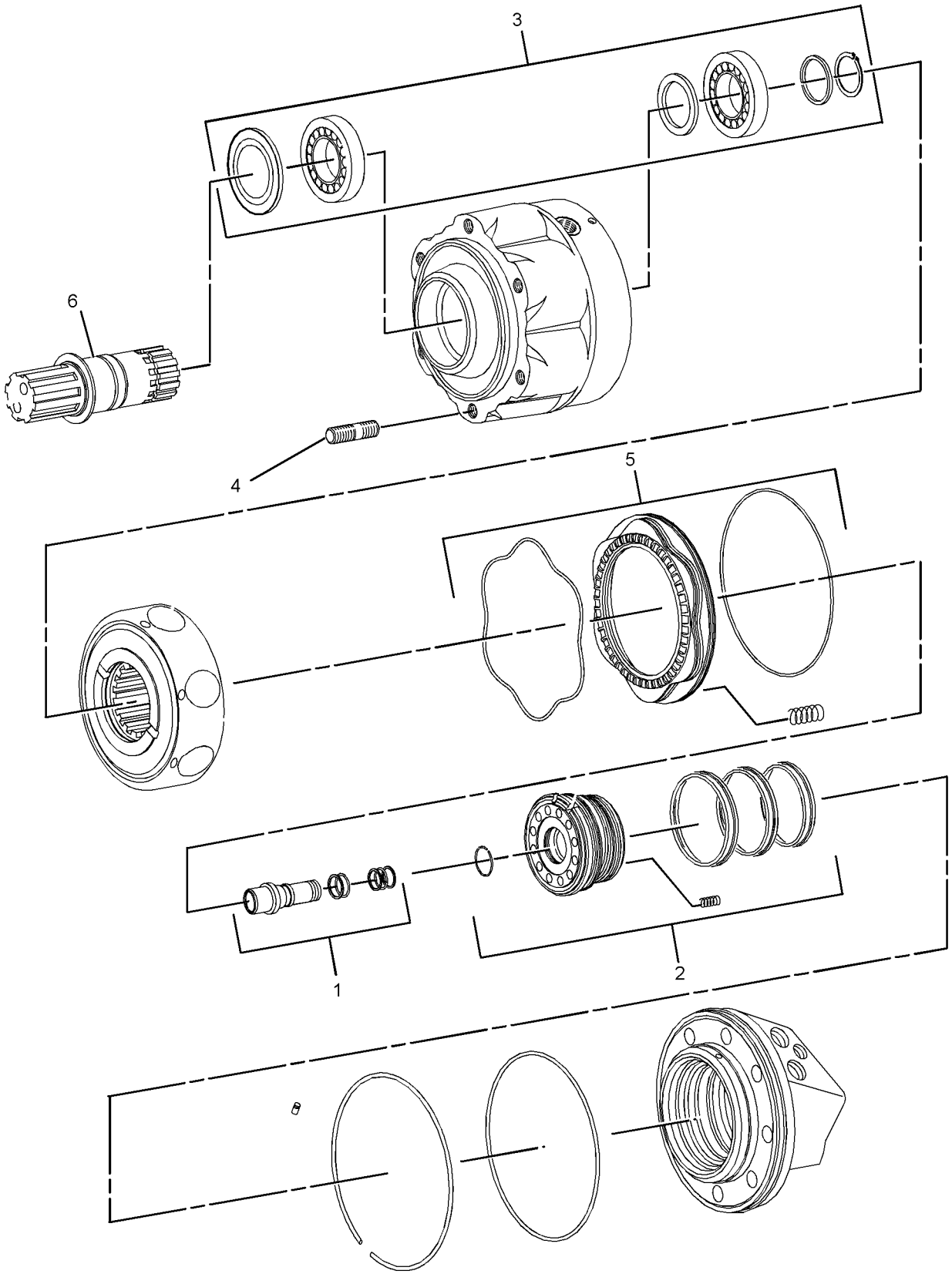

GRAPHIC #1 **<END>** g01327439

258-2520 MOTOR GP-PISTON—2-SPEED, LH

S/N: JAY1-UP

PART OF 258-2409 MOTOR & MTG GP-HYDROSTATIC

AN ATTACHMENT

SMCS-4351, 5058 **i02636745**

NOTE	REF NO	GRAPHIC REF	PART NUMBER	QTY	PART NAME 1 2 3 4 5 6 (PRODUCT LEVEL)	SEE PAGE
	1	1	**280-7846**	1	VALVE GP-SPEED CONTROL (2-SPEED)	
	2	1	**280-7850**	1	KIT-VALVE (DISTRIBUTION)	
					(INCLUDES DISTRIBUTION VALVE BODY, PIN, RINGS, SPRINGS & SEAL)	
	3	1	**280-7838**	1	KIT-BEARING (PISTON MOTOR)	
					(INCLUDES SEALS, TAPERED ROLLER BEARINGS, WASHER & RING)	
	4	1	**280-7839**	6	STUD	
	5	1	**280-7840**	1	KIT-BRAKE (PISTON MOTOR)	
					(INCLUDES STEEL BRAKE PISTON, SEALS & SPRINGS)	
	6	1	**280-7841**	1	SHAFT-DRIVE	
	7	1	**280-7848**	1	VALVE GP-FLUSHING	
					PARTS SHOWN IN GRAPHIC(S) WITHOUT A REFERENCE NUMBER ARE NOT SERVICED SEPARATELY	
					AVAILABLE REPAIR KIT(S):	
			280-7849	1	KIT-VALVE (PISTON MOTOR)	
					(INCLUDES RINGS, SEALS & PINS)	

258-2520 MOTOR GP-PISTON *(contd.)* **i02636745**

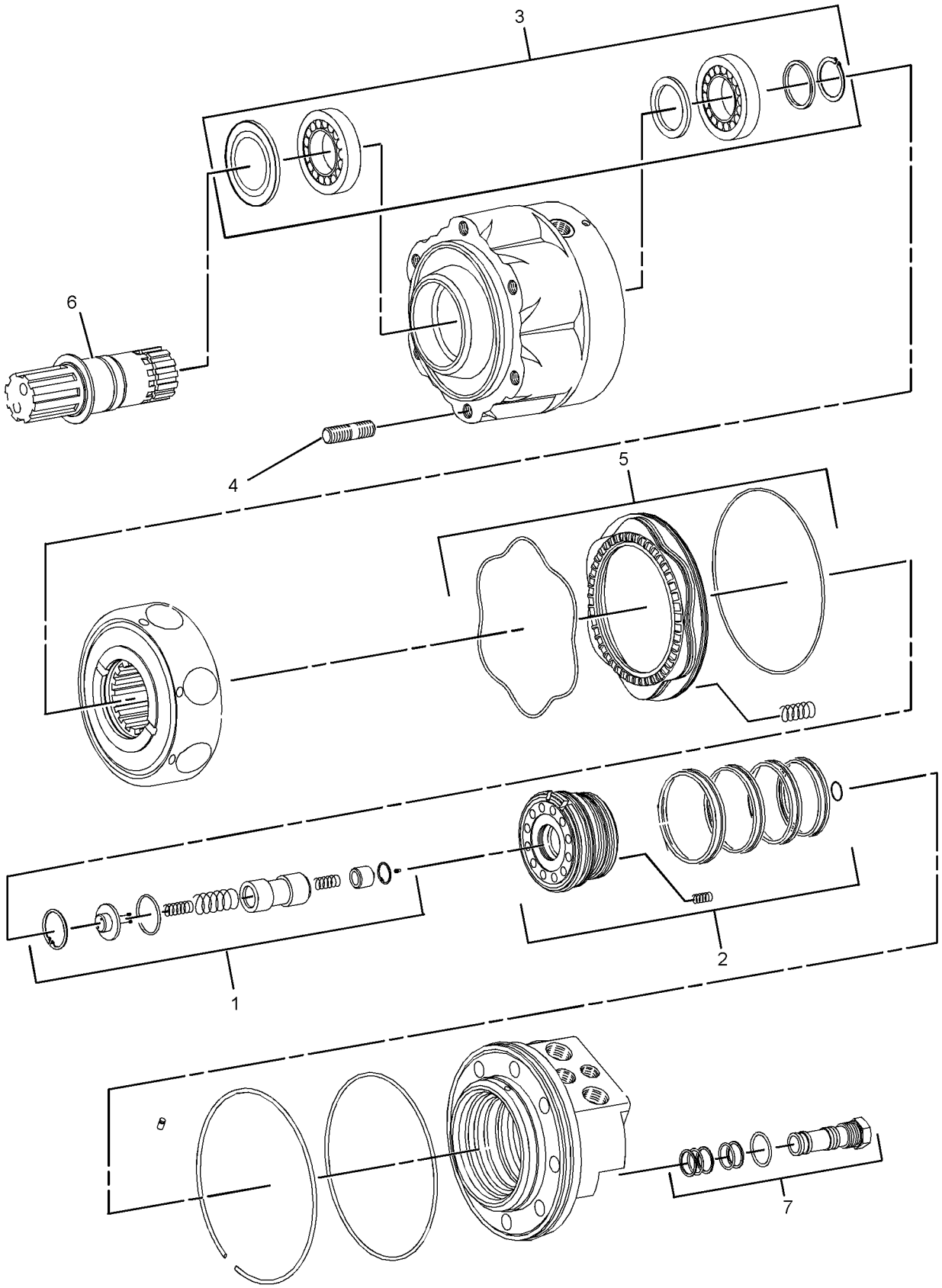

GRAPHIC #1 **<END>** g01327254

258-2521 MOTOR GP-PISTON—2-SPEED, RH

S/N: JAY1-UP

PART OF 258-2409 MOTOR & MTG GP-HYDROSTATIC

AN ATTACHMENT

SMCS-4351, 5058 **i02636746**

NOTE	REF NO	GRAPHIC REF	PART NUMBER	QTY	PART NAME 1 2 3 4 5 6 (PRODUCT LEVEL)	SEE PAGE
	1	1	**280-7846**	1	VALVE GP-SPEED CONTROL (2-SPEED)	
	2	1	**280-7850**	1	KIT-VALVE	
					(INCLUDES DISTRIBUTION VALVE BODY, PIN, RINGS, SPRINGS & SEAL)	
	3	1	**280-7838**	1	KIT-BEARING	
					(INCLUDES SEALS, TAPERED ROLLER BEARINGS, WASHER & RING)	
	4	1	**280-7839**	6	STUD	
	5	1	**280-7840**	1	KIT-BRAKE	
					(INCLUDES STEEL BRAKE PISTON, SEALS & SPRINGS)	
	6	1	**280-7841**	1	SHAFT-DRIVE	
	7	1	**280-7848**	1	VALVE GP-FLUSHING	
					PARTS SHOWN IN GRAPHIC(S) WITHOUT A REFERENCE NUMBER ARE NOT SERVICED SEPARATELY	
					AVAILABLE REPAIR KIT(S):	
			280-7849	1	KIT-VALVE	
					(INCLUDES RINGS, SEALS & PINS)	

258-2521 MOTOR GP-PISTON *(contd.)* **i02636746**

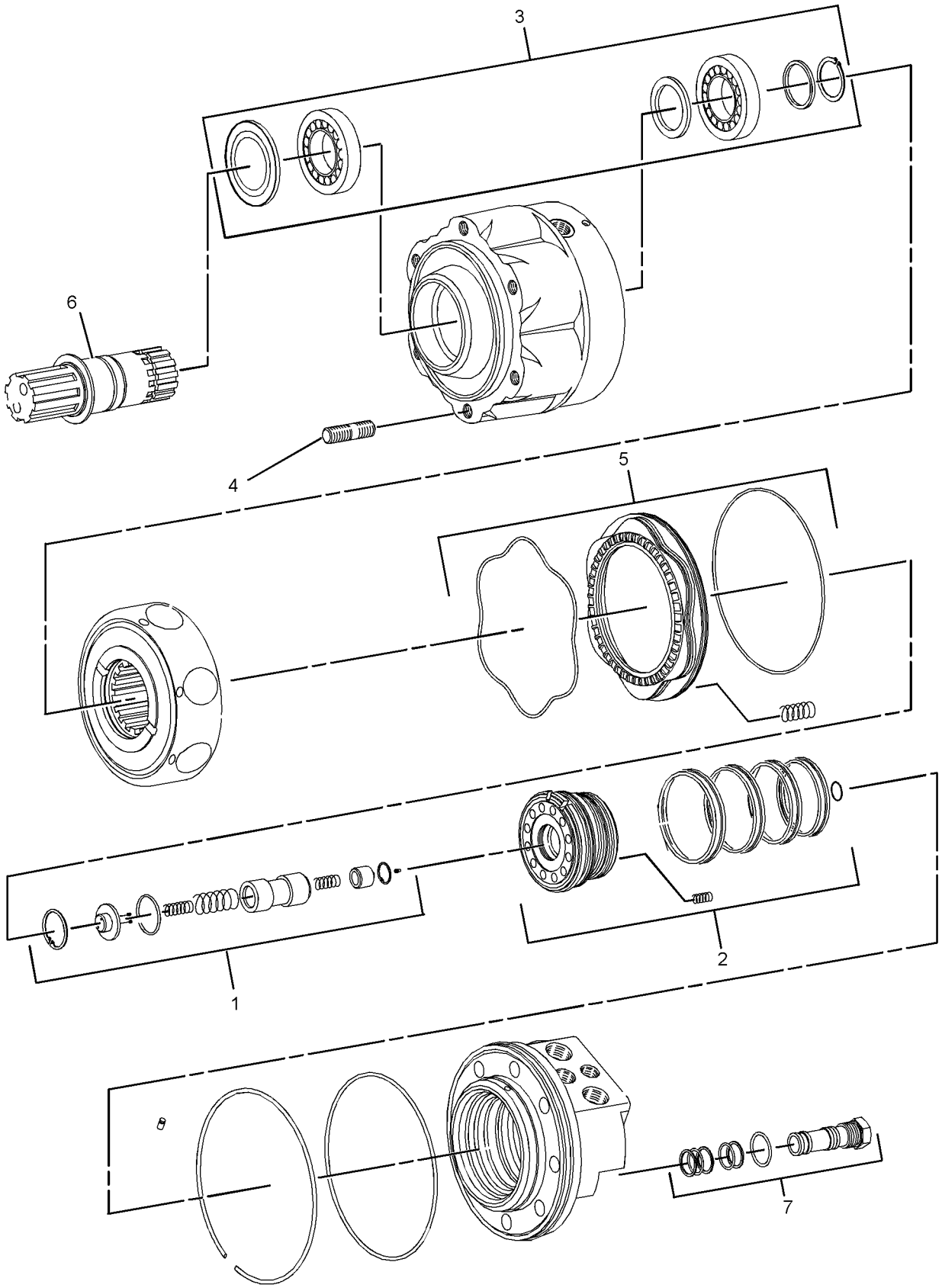

GRAPHIC #1 **<END>** g01327254

258-2605 MOTOR GP-PISTON

S/N: JAY1-UP

PART OF 258-2416 MOTOR & MTG GP-HYDROSTATIC

AN ATTACHMENT

SMCS-4351, 5058 **i03525742**

NOTE	REF NO	GRAPHIC REF	PART NUMBER	QTY	PART NAME 1 2 3 4 5 6 (PRODUCT LEVEL)	SEE PAGE
	1	1	**280-7843**	1	VALVE GP-FLUSHING	
	2	1	**280-7837**	1	KIT-VALVE (DISTRIBUTION)	
					(INCLUDES DISTRIBUTION VALVE BODY, PIN, RINGS & SPRINGS)	
	3	1	**280-7838**	1	KIT-BEARING	
					(INCLUDES SEALS, TAPERED ROLLER BEARINGS, WASHER & RING)	
	4	1	**280-7839**	6	STUD	
	5	1	**280-7840**	1	KIT-BRAKE	
					(INCLUDES STEEL BRAKE PISTON, SEALS & SPRINGS)	
	6	1	**280-7844**	1	SHAFT-DRIVE	
					PARTS SHOWN IN GRAPHIC(S) WITHOUT A REFERENCE NUMBER ARE NOT SERVICED SEPARATELY	

258-2605 MOTOR GP-PISTON *(contd.)* **i03525742**

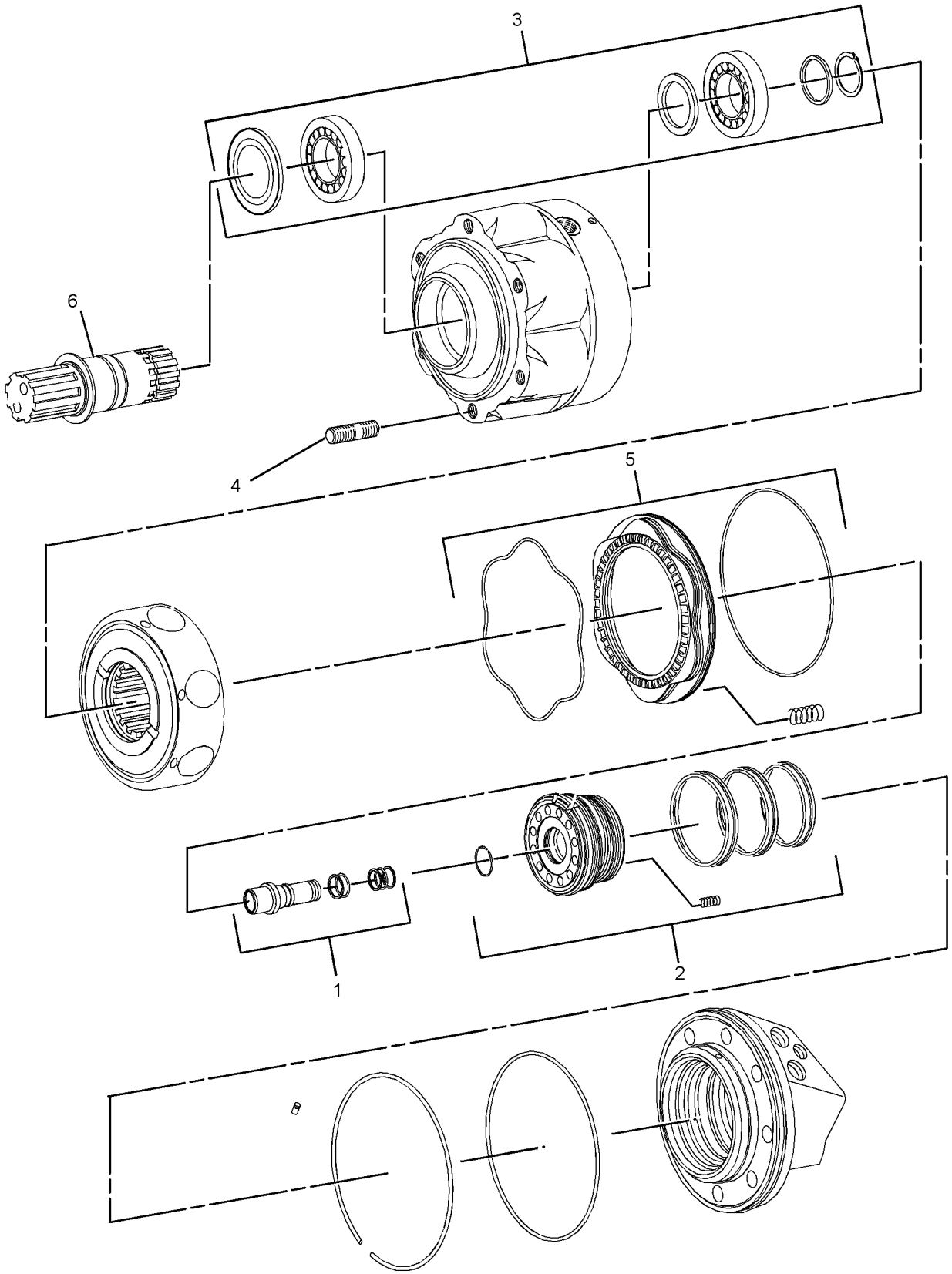

GRAPHIC #1 **<END>** g01327439

258-3318 MOUNTING GP-PUMP

S/N: JAY1-UP

PART OF 258-2445, 295-7118 INSTALLATION AR-ENGINE

SMCS-3203, 5062, 5070 **i02606322**

NOTE	REF NO	GRAPHIC REF	PART NUMBER	QTY	PART NAME 1 2 3 4 5 6 (PRODUCT LEVEL)	SEE PAGE
	1	1	**226-7635**	1	FLANGE	
	2	1	**258-3319**	1	PLATE-ADAPTER	
	3	1	**8T-4121**	12	WASHER-HARD (11X21X2.5-MM THK)	
M	4	1	**8T-4195**	8	BOLT (M10X1.5X30-MM)	
M	5	1	**8T-4196**	12	BOLT (M10X1.5X35-MM)	

M-METRIC PART

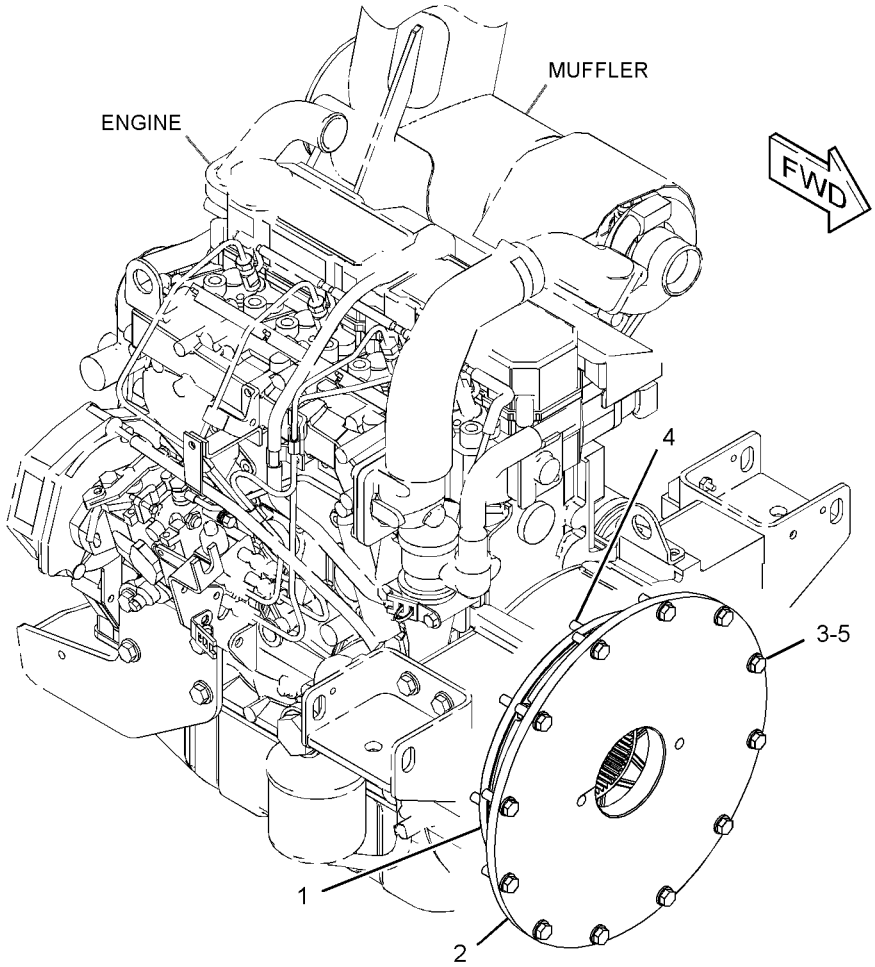

GRAPHIC #1 **<END>** g01320472

POWER TRAIN

258-3200 POWER TRAIN AR

S/N: JAY1-UP
PART OF 258-3748, 258-3750 MACHINE AR-SPECIAL
AN ATTACHMENT

SMCS-3203, 4062, 5058, 5070 **i03635739**

NOTE	PART NUMBER	QTY	PART NAME 1 2 3 4 5 6 (PRODUCT LEVEL)	SEE PAGE
Y	*258-2860*	1	DRIVE GP-TANDEM	195
Y	*292-2439*	1	FITTING GP-HYDRAULIC (1-SPEED)	299
Y	*258-2430*	1	LINES GP-HYDROSTATIC	201
Y	*258-2408*	1	MOTOR & MTG GP-HYDROSTATIC	214

Y-SEPARATE ILLUSTRATION

<END>

258-3400 POWER TRAIN AR

S/N: JAY1-UP
PART OF 258-3682, 258-3753, 304-6740 MACHINE AR-SPECIAL
AN ATTACHMENT

SMCS-3203, 4062, 5058, 5070 **i02636753**

NOTE	PART NUMBER	QTY	PART NAME 1 2 3 4 5 6 (PRODUCT LEVEL)	SEE PAGE
Y	*258-2862*	1	DRIVE GP-TANDEM	196
Y	*289-0848*	1	FILM GP (2-SPEED)	791
Y	*258-2431*	1	LINES GP-HYDROSTATIC	203
Y	*258-3151*	1	MANIFOLD & LINES GP-CONTROL (MOTOR, 2-SPEED)	206
Y	*258-2409*	1	MOTOR & MTG GP-HYDROSTATIC	215

Y-SEPARATE ILLUSTRATION

<END>

300-7637 POWER TRAIN AR

S/N: JAY1-UP
PART OF 300-7629, 300-7634 MACHINE AR-SPECIAL
AN ATTACHMENT

SMCS-3203, 4062, 5058, 5070 **i02782155**

NOTE	PART NUMBER	QTY	PART NAME 1 2 3 4 5 6 (PRODUCT LEVEL)	SEE PAGE
Y	*300-7627*	1	DRIVE GP-TANDEM	197
Y	*292-2439*	1	FITTING GP-HYDRAULIC (1-SPEED)	299
Y	*258-2430*	1	LINES GP-HYDROSTATIC	201
Y	*258-2416*	1	MOTOR & MTG GP-HYDROSTATIC	216

Y-SEPARATE ILLUSTRATION

<END>

258-2406 PUMP & MTG GP-HYDROSTATIC

S/N: JAY1-UP

PART OF 258-3682, 258-3748, 258-3750, 258-3753, 304-6740 MACHINE AR-SPECIAL AN ATTACHMENT

SMCS-3203, 5070 **i02715577**

NOTE	REF NO	GRAPHIC REF	PART NUMBER	QTY	PART NAME 1 2 3 4 5 6 (PRODUCT LEVEL)	SEE PAGE
	1	1	**165-0142**	2	WASHER-HARD (14.8X27X3-MM THK)	
M	2	1	**167-4339**	2	BOLT (M14X2X40-MM)	
	3	1	**252-9197**	1	BOLT-SOCKET HEAD (M12X1.75X35-MM)	
Y	4	1	**258-2404**	1	PUMP GP-PISTON (HYDROSTATIC)	229
	5	1	**263-4996**	1	HUB AS-COUPLING	
		1	**096-0194**	1	RING-RETAINING	

M-METRIC PART
Y-SEPARATE ILLUSTRATION

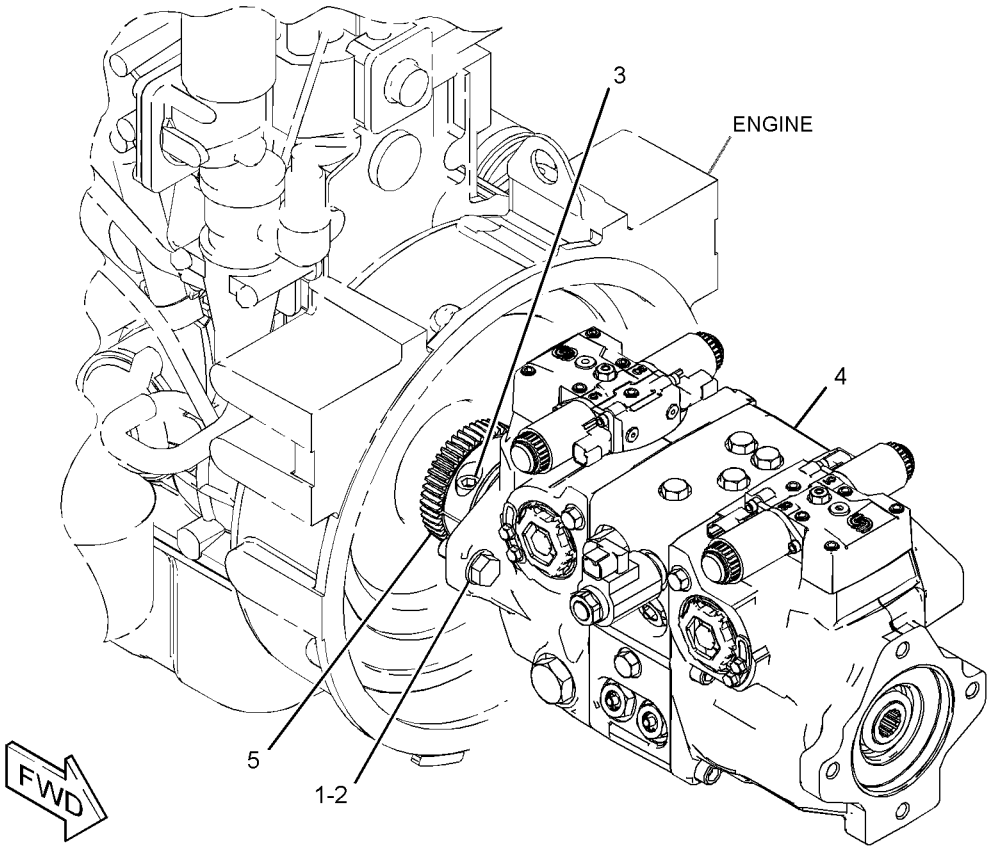

GRAPHIC #1 **<END>** g01333116

300-7640 PUMP & MTG GP-HYDROSTATIC

S/N: JAY1-UP
PART OF 300-7629, 300-7634 MACHINE AR-SPECIAL
AN ATTACHMENT

SMCS-3203, 5070 **i02782157**

NOTE	REF NO	GRAPHIC REF	PART NUMBER	QTY	PART NAME 1 2 3 4 5 6 (PRODUCT LEVEL)	SEE PAGE
	1	1	**165-0142**	2	WASHER-HARD (14.8X27X3-MM THK)	
M	2	1	**167-4339**	2	BOLT (M14X2X40-MM)	
	3	1	**252-9197**	1	BOLT-SOCKET HEAD (M12X1.75X35-MM)	
	4	1	**263-4996**	1	HUB AS-COUPLING	
		1	**096-0194**	1	RING-RETAINING	
Y	5	1	**289-6362**	1	PUMP GP-PISTON (HYDROSTATIC)	232

M-METRIC PART
Y-SEPARATE ILLUSTRATION

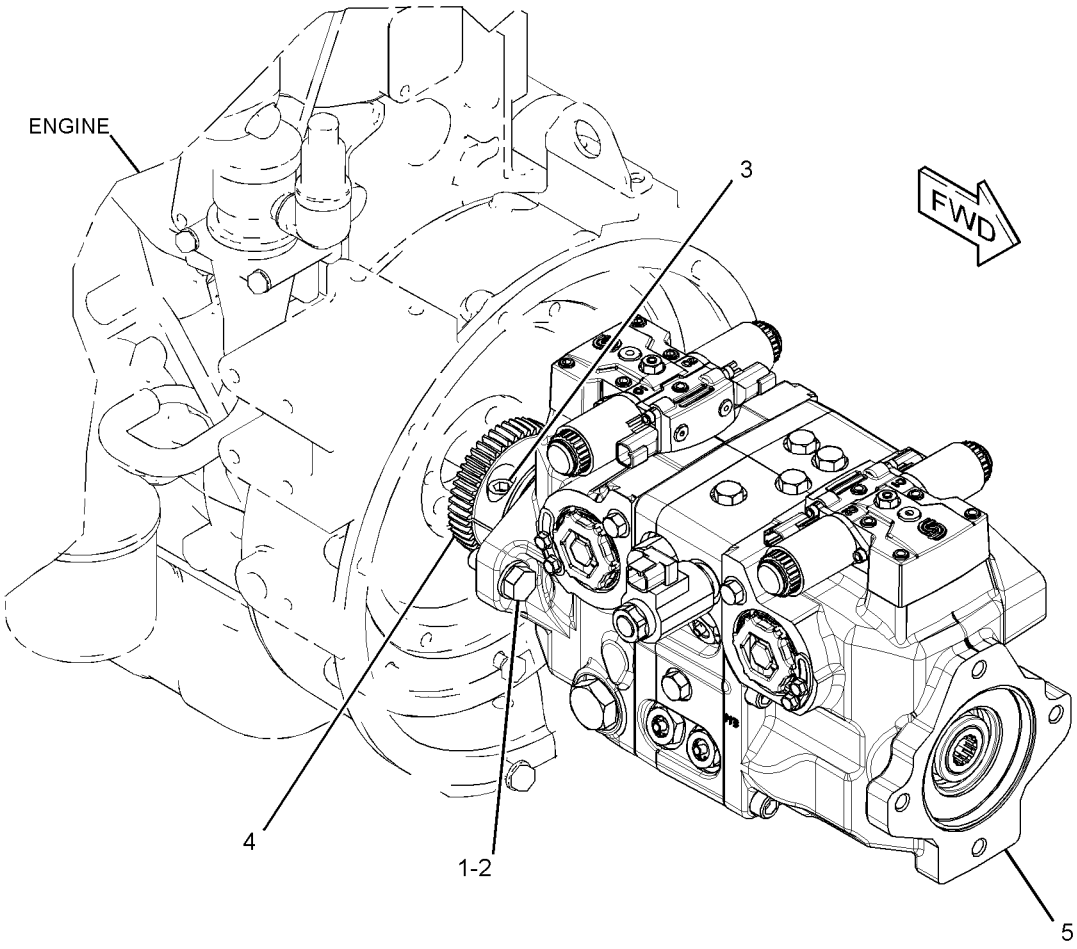

GRAPHIC #1 **<END>** g01417799

258-2404 PUMP GP-PISTON–HYDROSTATIC*R

S/N: JAY1-UP

PART OF 258-2406 PUMP & MTG GP-HYDROSTATIC

AN ATTACHMENT

SMCS-3203, 5070, 5117, 5455, 5479 **i03635696**

NOTE	REF NO	GRAPHIC REF	PART NUMBER	QTY	PART NAME 1 2 3 4 5 6 (PRODUCT LEVEL)	SEE PAGE
	1	1,2	**278-8737**	2	VALVE GP-PUMP CONTROL	
	2	1,2	**278-8740**	2	SWASHPLATE	
	3	1	**278-8748**	1	SHAFT-DRIVE (INPUT)	
L	4	1,2	**280-7860**	2	BLOCK-SLIDER	
L	5	1,2	**278-8751**	4	SPRING	
	6	1	**278-8746**	1	VALVE GP-RELIEF (CHARGE)	
	7	1	**278-8743**	1	VALVE GP-SOLENOID (PARKING BRAKE)	
	8	1	**278-8745**	4	VALVE GP-RELIEF (CROSSOVER)	
	9	1	**278-8750**	1	PLATE (CCW)	
	10	1	**278-8749**	1	PLATE (CW)	
	11	2	**278-8747**	1	SHAFT-DRIVE	
	12	1,2	**9S-8002**	4	PLUG-O-RING	
	13	1	**9S-8004**	1	PLUG-O-RING	
	14	2	**9S-8008**	2	PLUG-O-RING	
	15	1,2	**278-8741**	2	KIT-BEARING (PISTON PUMP)	
					(EACH INCLUDES SWASHPLATES)	
	16	1,2	**278-8735**	2	KIT-CYLINDER BLOCK	
M	17	1	**8C-3413**	6	BOLT-SOCKET HEAD (M12X1.75X120-MM)	
					PARTS SHOWN IN GRAPHIC(S) WITHOUT A REFERENCE NUMBER ARE NOT SERVICED SEPARATELY	
					AVAILABLE REPAIR KIT(S):	
			278-8736	1	KIT-SEAL (PISTON PUMP)	
					(INCLUDES O-RINGS,RING-PISTON SEAL,RING BACKUPS,RING-RETAINING,PIN-DOWEL,PIN-SLOTTED,GASKET-CONTROLLER,	
					GASKET-BODY/HEAD,SHAFT SEAL & RETAINER)	
L			**278-8738**	2	KIT-PISTON	
			278-8742	1	KIT-BEARING (PISTON PUMP)	
					(INCLUDES COUPLING,SLEEVE BEARING,RETAINING RING & SHAFT BEARING)	
			278-8744	4	KIT-SOLENOID	

L-KIT MARKED L SERVICES PARTS MARKED L
M-METRIC PART

258-2404 PUMP GP-PISTON *(contd.)* i03635696

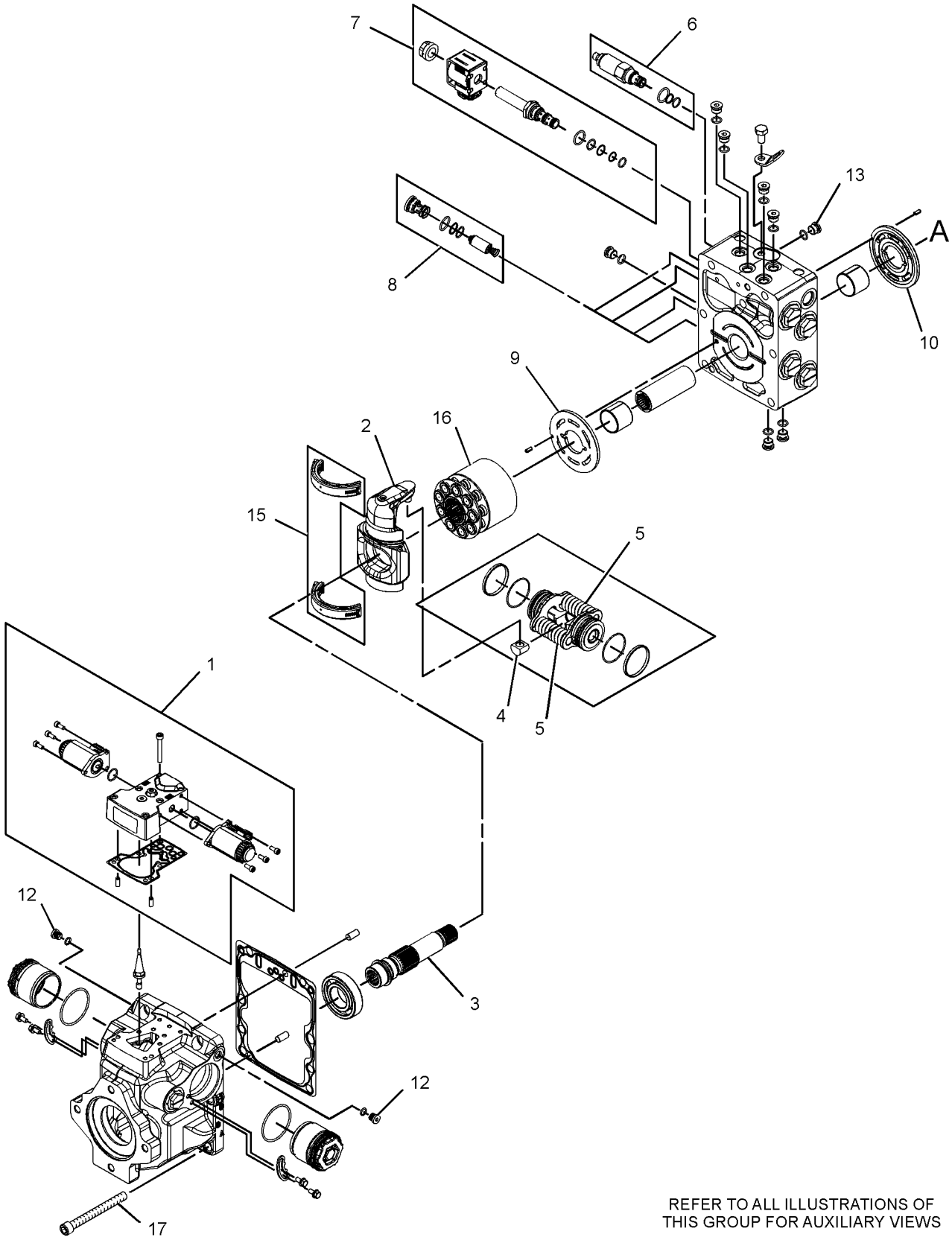

REFER TO ALL ILLUSTRATIONS OF
THIS GROUP FOR AUXILIARY VIEWS

GRAPHIC #1

g01332812

258-2404 PUMP GP-PISTON *(contd.)* **i03635696**

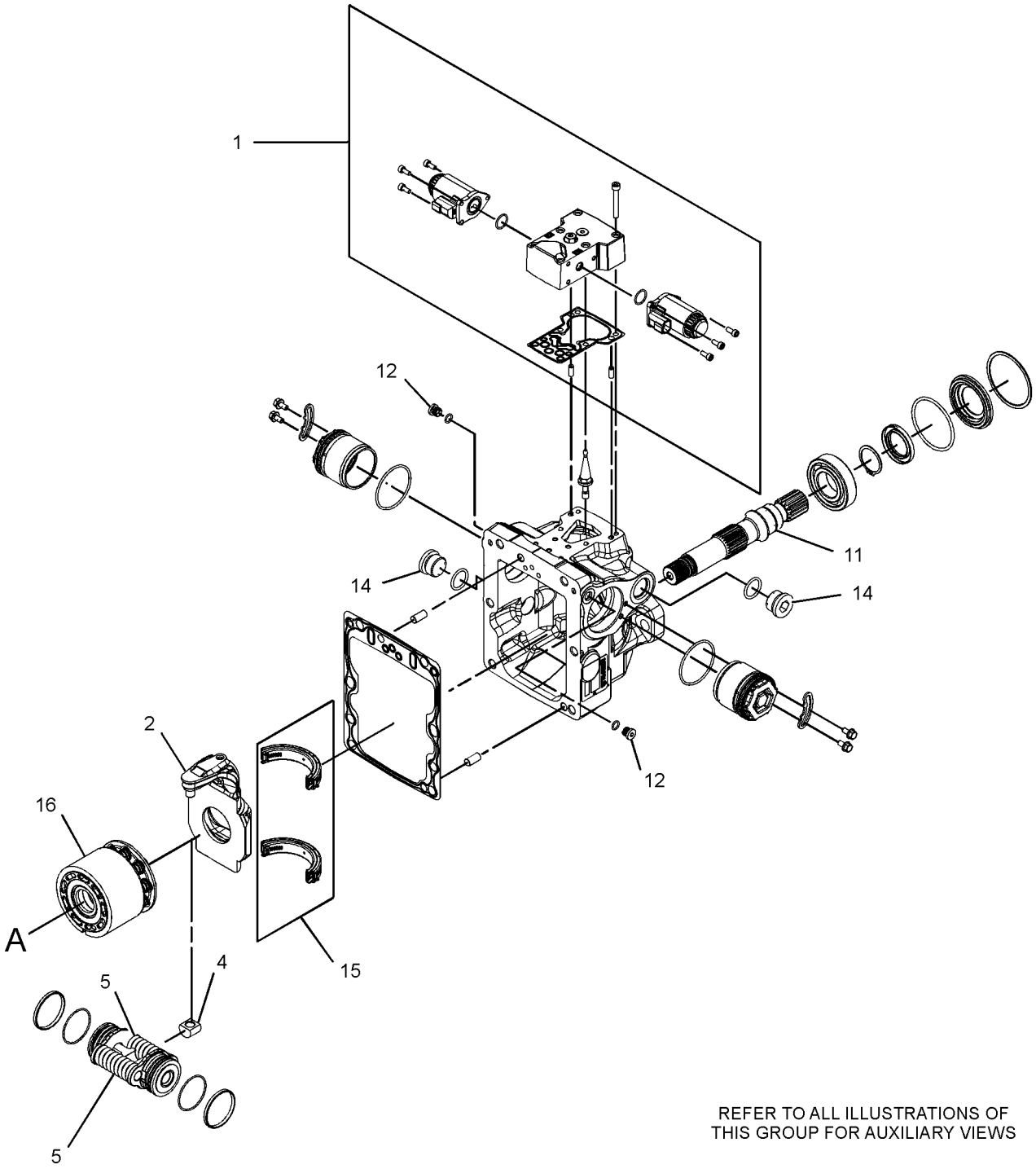

REFER TO ALL ILLUSTRATIONS OF
THIS GROUP FOR AUXILIARY VIEWS

GRAPHIC #2 **<END>** g01332841

289-6362 PUMP GP-PISTON—HYDROSTATIC

S/N: JAY1-UP

PART OF 300-7640 PUMP & MTG GP-HYDROSTATIC

AN ATTACHMENT

SMCS-3203, 5070, 5117, 5455, 5479 **i02782160**

NOTE	REF NO	GRAPHIC REF	PART NUMBER	QTY	PART NAME 1 2 3 4 5 6 (PRODUCT LEVEL)	SEE PAGE
	1	1	**278-8737**	2	VALVE GP-PUMP CONTROL	
	2	1	**278-8740**	2	SWASHPLATE	
	3	1	**278-8748**	1	SHAFT-DRIVE	
J	4	1	**280-7860**	2	BLOCK-SLIDER	
J	5	1	**278-8751**	4	SPRING	
	6	1	**278-8746**	1	VALVE GP-RELIEF (CHARGE)	
	7	1	**278-8743**	1	VALVE GP-SOLENOID (PARKING BRAKE)	
	8	1	**289-6377**	4	VALVE GP-RELIEF (CROSSOVER)	
	9	1	**278-8750**	1	PLATE	
	10	1	**278-8749**	1	PLATE	
	11	1	**278-8747**	1	SHAFT-DRIVE (INPUT)	
	12	1	**9S-8002**	4	PLUG-O-RING	
	13	1	**9S-8004**	1	PLUG-O-RING	
	14	1	**9S-8008**	2	PLUG-O-RING	
	15	1	**278-8741**	2	KIT-BEARING	
					(EACH INCLUDES SWASHPLATES)	
	16	1	**278-8739**	2	ROTATING GP-PUMP	
M	17	1	**8C-3413**	6	BOLT-SOCKET HEAD (M12X1.75X120-MM)	
					PARTS SHOWN IN GRAPHIC(S) WITHOUT A REFERENCE NUMBER ARE NOT SERVICED SEPARATELY	
					AVAILABLE REPAIR KIT(S):	
J			**278-8738**	2	KIT-PISTON	
			278-8736	1	KIT-SEAL	
					(INCLUDES O-RINGS,RING-PISTON SEAL,RING BACKUPS,RING-RETAINING,PIN-DOWEL,PIN-SLOTTED,GASKET-CONTROLLER,	
					GASKET-BODY/HEAD,SHAFT SEAL & RETAINER)	
			278-8742	1	KIT-BEARING	
					(INCLUDES COUPLING,SLEEVE BEARING,RETAINING RING & SHAFT BEARING)	
			278-8744	2	KIT-SOLENOID	

J-KIT MARKED J SERVICES PARTS MARKED J
M-METRIC PART

289-6362 PUMP GP-PISTON *(contd.)* **i02782160**

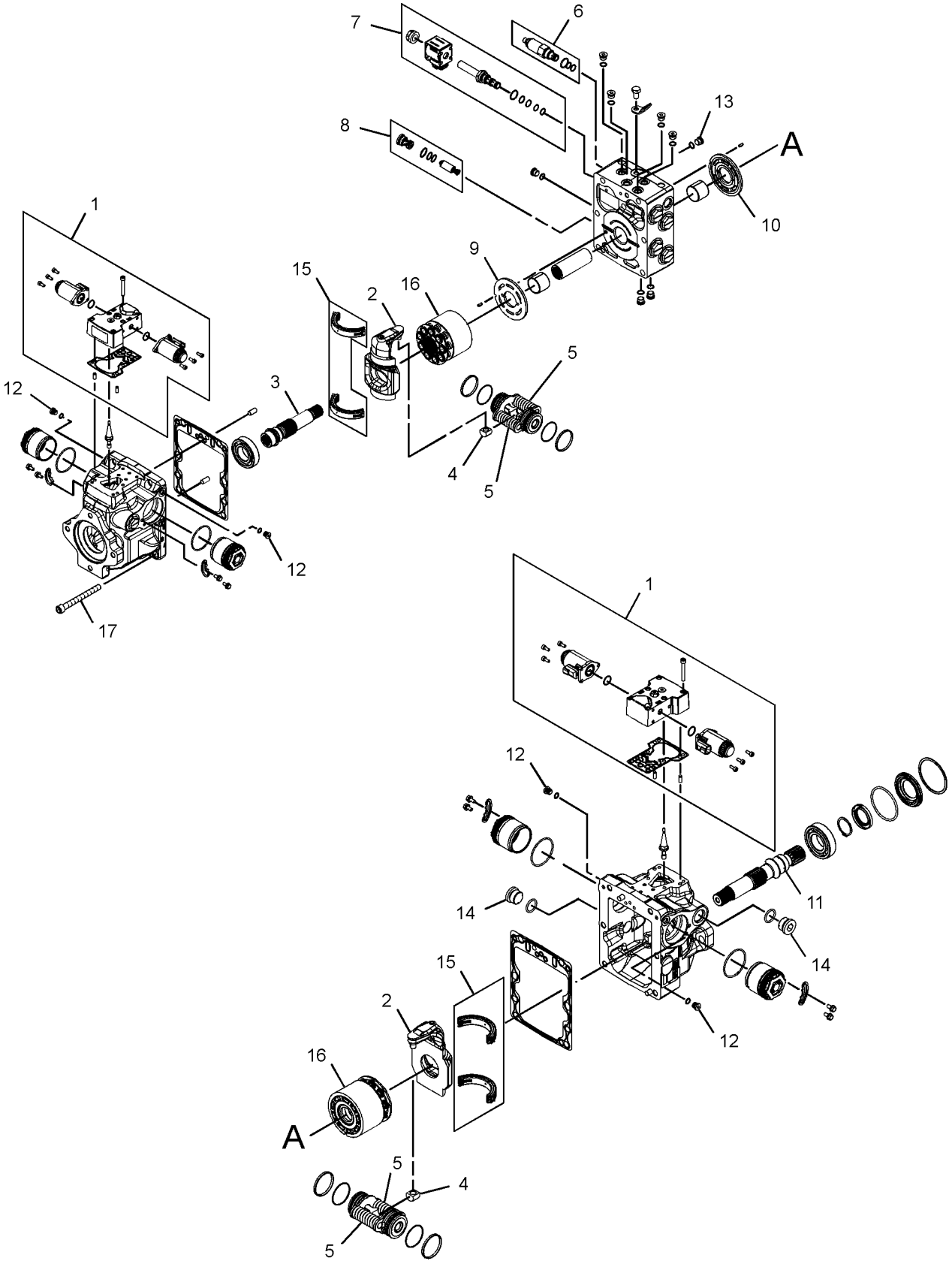

GRAPHIC #1 **<END>** g01442516

165-4901 TIRE & RIM GP—HEAVY-DUTY, LH

S/N: JAY1-UP
(12X16.5). DIRECTIONAL TIRE
PART OF 165-4898 WHEEL & TIRE AR
AN ATTACHMENT

SMCS-4202 **i02474449**

NOTE	PART NUMBER	QTY	PART NAME 1 2 3 4 5 6 (PRODUCT LEVEL)	SEE PAGE
	150-8599	1	VALVE AS-TIRE	
	142-8731	1	WHEEL AS	
	165-4909	1	TIRE (12-16.5)	

<END>

165-4902 TIRE & RIM GP—HEAVY-DUTY, RH

S/N: JAY1-UP
(12X16.5). DIRECTIONAL TIRE
PART OF 165-4898 WHEEL & TIRE AR
AN ATTACHMENT

SMCS-4202 **i02474458**

NOTE	PART NUMBER	QTY	PART NAME 1 2 3 4 5 6 (PRODUCT LEVEL)	SEE PAGE
	150-8599	1	VALVE AS-TIRE	
	142-8731	1	WHEEL AS	
	165-4909	1	TIRE (12-16.5)	

<END>

165-4906 TIRE & RIM GP—HEAVY-DUTY, LH

S/N: JAY1-UP
(12X16.5). DIRECTIONAL TIRE
PART OF 165-4903 WHEEL & TIRE AR
AN ATTACHMENT

SMCS-4202 **i02571051**

NOTE	PART NUMBER	QTY	PART NAME 1 2 3 4 5 6 (PRODUCT LEVEL)	SEE PAGE
	150-8599	1	VALVE AS-TIRE	
	142-8759	1	WHEEL AS	
	165-4909	1	TIRE (12-16.5)	

<END>

165-4907 TIRE & RIM GP—HEAVY-DUTY, RH

S/N: JAY1-UP
(12X16.5). DIRECTIONAL TIRE
PART OF 165-4903 WHEEL & TIRE AR
AN ATTACHMENT

SMCS-4202 **i02571052**

NOTE	PART NUMBER	QTY	PART NAME 1 2 3 4 5 6 (PRODUCT LEVEL)	SEE PAGE
	150-8599	1	VALVE AS-TIRE	
	142-8759	1	WHEEL AS	
	165-4909	1	TIRE (12-16.5)	

<END>

185-8674 TIRE & RIM GP—LH

S/N: JAY1-UP
(305X546). DIRECTIONAL TIRE
PART OF 185-8662 WHEEL & TIRE AR
AN ATTACHMENT

SMCS-4202 **i02571069**

NOTE	PART NUMBER	QTY	PART NAME 1 2 3 4 5 6 (PRODUCT LEVEL)	SEE PAGE
	150-8599	1	VALVE AS-TIRE	
	185-9936	1	WHEEL AS	
	185-9935	1	TIRE (305-546)	

<END>

185-8675 TIRE & RIM GP—RH

S/N: JAY1-UP
(305X546). DIRECTIONAL TIRE
PART OF 185-8662 WHEEL & TIRE AR
AN ATTACHMENT

SMCS-4202 **i02571070**

NOTE	PART NUMBER	QTY	PART NAME 1 2 3 4 5 6 (PRODUCT LEVEL)	SEE PAGE
	150-8599	1	VALVE AS-TIRE	
	185-9936	1	WHEEL AS	
	185-9935	1	TIRE (305-546)	

<END>

185-8676 TIRE & RIM GP–LH

S/N: JAY1-UP
(305X546). DIRECTIONAL TIRE
PART OF 185-8663 WHEEL & TIRE AR
AN ATTACHMENT

SMCS-4202 **i02474467**

NOTE	PART NUMBER	QTY	PART NAME 1 2 3 4 5 6 (PRODUCT LEVEL)	SEE PAGE
	150-8599	1	VALVE AS-TIRE	
	185-9937	1	WHEEL AS	
	185-9935	1	TIRE (305-546)	

<END>

185-8677 TIRE & RIM GP–RH

S/N: JAY1-UP
(305X546). DIRECTIONAL TIRE
PART OF 185-8663 WHEEL & TIRE AR
AN ATTACHMENT

SMCS-4202 **i02474504**

NOTE	PART NUMBER	QTY	PART NAME 1 2 3 4 5 6 (PRODUCT LEVEL)	SEE PAGE
	150-8599	1	VALVE AS-TIRE	
	185-9937	1	WHEEL AS	
	185-9935	1	TIRE (305-546)	

<END>

185-9928 TIRE & RIM GP–LH

S/N: JAY1-UP
(12X16.5). DIRECTIONAL TIRE
PART OF 185-8666 WHEEL & TIRE AR
AN ATTACHMENT

SMCS-4202 **i02571082**

NOTE	PART NUMBER	QTY	PART NAME 1 2 3 4 5 6 (PRODUCT LEVEL)	SEE PAGE
	150-8599	1	VALVE AS-TIRE	
	142-8759	1	WHEEL AS	
	185-9933	1	TIRE (12-16.5)	

<END>

185-9929 TIRE & RIM GP–RH

S/N: JAY1-UP
(12X16.5). DIRECTIONAL TIRE
PART OF 185-8666 WHEEL & TIRE AR
AN ATTACHMENT

SMCS-4202 **i02571083**

NOTE	PART NUMBER	QTY	PART NAME 1 2 3 4 5 6 (PRODUCT LEVEL)	SEE PAGE
	150-8599	1	VALVE AS-TIRE	
	142-8759	1	WHEEL AS	
	185-9933	1	TIRE (12-16.5)	

<END>

185-9930 TIRE & RIM GP–LH

S/N: JAY1-UP
(12X16.5). DIRECTIONAL TIRE
PART OF 185-8667 WHEEL & TIRE AR
AN ATTACHMENT

SMCS-4202 **i02362232**

NOTE	PART NUMBER	QTY	PART NAME 1 2 3 4 5 6 (PRODUCT LEVEL)	SEE PAGE
	150-8599	1	VALVE AS-TIRE	
	142-8731	1	WHEEL AS	
	185-9933	1	TIRE (12-16.5)	

<END>

185-9931 TIRE & RIM GP–RH

S/N: JAY1-UP
(12X16.5). DIRECTIONAL TIRE
PART OF 185-8667 WHEEL & TIRE AR
AN ATTACHMENT

SMCS-4202 **i02362236**

NOTE	PART NUMBER	QTY	PART NAME 1 2 3 4 5 6 (PRODUCT LEVEL)	SEE PAGE
	150-8599	1	VALVE AS-TIRE	
	142-8731	1	WHEEL AS	
	185-9933	1	TIRE (12-16.5)	

<END>

188-0124 TIRE & RIM GP–LH

S/N: JAY1-UP
(12X16.5). DIRECTIONAL TIRE
PART OF 187-3239 WHEEL & TIRE AR
AN ATTACHMENT

SMCS-4202 **i02474523**

NOTE	PART NUMBER	QTY	PART NAME 1 2 3 4 5 6 (PRODUCT LEVEL)	SEE PAGE
	142-8731	1	WHEEL AS	
	150-8599	1	VALVE AS-TIRE	
	185-9933	1	TIRE (12-16.5)	

<END>

188-0125 TIRE & RIM GP–RH

S/N: JAY1-UP
(12X16.5). DIRECTIONAL TIRE
PART OF 187-3239 WHEEL & TIRE AR
AN ATTACHMENT

SMCS-4202 **i02474537**

NOTE	PART NUMBER	QTY	PART NAME 1 2 3 4 5 6 (PRODUCT LEVEL)	SEE PAGE
	142-8731	1	WHEEL AS	
	150-8599	1	VALVE AS-TIRE	
	185-9933	1	TIRE (12-16.5)	

<END>

199-5438 TIRE & RIM GP–LH

S/N: JAY1-UP
(12X16.5). DIRECTIONAL TIRE
PART OF 178-2256 WHEEL & TIRE AR
AN ATTACHMENT

SMCS-4202 **i02362244**

NOTE	PART NUMBER	QTY	PART NAME 1 2 3 4 5 6 (PRODUCT LEVEL)	SEE PAGE
	150-8599	1	VALVE AS-TIRE	
	178-2270	1	WHEEL AS	
	199-5440	1	TIRE (33/15.5-16.5)	

<END>

199-5439 TIRE & RIM GP–RH

S/N: JAY1-UP
(12X16.5). DIRECTIONAL TIRE
PART OF 178-2256 WHEEL & TIRE AR
AN ATTACHMENT

SMCS-4202 **i02362243**

NOTE	PART NUMBER	QTY	PART NAME 1 2 3 4 5 6 (PRODUCT LEVEL)	SEE PAGE
	150-8599	1	VALVE AS-TIRE	
	178-2270	1	WHEEL AS	
	199-5440	1	TIRE (33/15.5-16.5)	

<END>

265-2898 TIRE & RIM GP–LH

S/N: JAY1-UP
(12X16.5)
PART OF 252-0346 WHEEL & TIRE AR
AN ATTACHMENT

SMCS-4202 **i02361217**

NOTE	PART NUMBER	QTY	PART NAME 1 2 3 4 5 6 (PRODUCT LEVEL)	SEE PAGE
	150-8599	1	VALVE AS-TIRE	
	142-8731	1	WHEEL AS	
	222-3963	1	TIRE (12-16.5)	

<END>

265-2899 TIRE & RIM GP–RH

S/N: JAY1-UP
(12X16.5)
PART OF 252-0346 WHEEL & TIRE AR
AN ATTACHMENT

SMCS-4202 **i02361220**

NOTE	PART NUMBER	QTY	PART NAME 1 2 3 4 5 6 (PRODUCT LEVEL)	SEE PAGE
	150-8599	1	VALVE AS-TIRE	
	142-8731	1	WHEEL AS	
	222-3963	1	TIRE (12-16.5)	

<END>

265-2900 TIRE & RIM GP–LH

S/N: JAY1-UP
(12X16.5)
PART OF 252-0347 WHEEL & TIRE AR
AN ATTACHMENT

SMCS-4202 **i02279760**

NOTE	PART NUMBER	QTY	PART NAME 1 2 3 4 5 6 (PRODUCT LEVEL)	SEE PAGE
	150-8599	1	VALVE AS-TIRE	
	142-8759	1	WHEEL AS	
	222-3963	1	TIRE (12-16.5)	

<END>

265-2901 TIRE & RIM GP–RH

S/N: JAY1-UP
(12X16.5)
PART OF 252-0347 WHEEL & TIRE AR
AN ATTACHMENT

SMCS-4202 **i02279766**

NOTE	PART NUMBER	QTY	PART NAME 1 2 3 4 5 6 (PRODUCT LEVEL)	SEE PAGE
	150-8599	1	VALVE AS-TIRE	
	142-8759	1	WHEEL AS	
	222-3963	1	TIRE (12-16.5)	

<END>

159-5761 WHEEL & TIRE AR–SOLID

S/N: JAY1-UP
AN ATTACHMENT

SMCS-4200, 4201, 4203 **i02361156**

NOTE	PART NUMBER	QTY	PART NAME 1 2 3 4 5 6 (PRODUCT LEVEL)	SEE PAGE
	142-7493	32	NUT-LUG (9/16-18-THD)	
	187-3230	4	TIRE-SOLID (33X6X8)	

<END>

165-4898 WHEEL & TIRE AR–HEAVY DUTY

S/N: JAY1-UP
AN ATTACHMENT

SMCS-4200, 4201, 4203 **i02361187**

NOTE	PART NUMBER	QTY	PART NAME 1 2 3 4 5 6 (PRODUCT LEVEL)	SEE PAGE
Y	*165-4901*	2	TIRE & RIM GP (LH)	234
Y	*165-4902*	2	TIRE & RIM GP (RH)	234
	142-7493	32	NUT-LUG (9/16-18-2B THD)	

Y-SEPARATE ILLUSTRATION

<END>

165-4903 WHEEL & TIRE AR—HEAVY DUTY

S/N: JAY1-UP
AN ATTACHMENT

SMCS-4200, 4201, 4203 **i02571050**

NOTE	PART NUMBER	QTY	PART NAME 1 2 3 4 5 6 (PRODUCT LEVEL)	SEE PAGE
Y	*165-4906*	2	TIRE & RIM GP (LH)	234
Y	*165-4907*	2	TIRE & RIM GP (RH)	235
	142-7493	32	NUT-LUG (9/16-18-2B-THD)	

Y-SEPARATE ILLUSTRATION

<END>

178-2256 WHEEL & TIRE AR—HEAVY DUTY

S/N: JAY1-UP
AN ATTACHMENT

SMCS-4200, 4201, 4203 **i02361189**

NOTE	PART NUMBER	QTY	PART NAME 1 2 3 4 5 6 (PRODUCT LEVEL)	SEE PAGE
Y	*199-5438*	2	TIRE & RIM GP (LH)	238
Y	*199-5439*	2	TIRE & RIM GP (RH)	239
	142-7493	32	NUT-LUG (9/16-18-2B THD)	

Y-SEPARATE ILLUSTRATION

<END>

185-8662 WHEEL & TIRE AR—LOW SIDE WALL

S/N: JAY1-UP
AN ATTACHMENT

SMCS-4200, 4201, 4203 **i02571068**

NOTE	PART NUMBER	QTY	PART NAME 1 2 3 4 5 6 (PRODUCT LEVEL)	SEE PAGE
Y	*185-8674*	2	TIRE & RIM GP (LH)	235
Y	*185-8675*	2	TIRE & RIM GP (RH)	235
	142-7493	32	NUT-LUG (9/16-18-2B-THD)	

Y-SEPARATE ILLUSTRATION

<END>

185-8663 WHEEL & TIRE AR—LOW SIDE WALL

S/N: JAY1-UP
AN ATTACHMENT

SMCS-4200, 4201, 4203 **i02361197**

NOTE	PART NUMBER	QTY	PART NAME 1 2 3 4 5 6 (PRODUCT LEVEL)	SEE PAGE
Y	*185-8676*	2	TIRE & RIM GP (LH)	236
Y	*185-8677*	2	TIRE & RIM GP (RH)	236
	142-7493	32	NUT-LUG (9/16-18-2B THD)	

Y-SEPARATE ILLUSTRATION

<END>

185-8666 WHEEL & TIRE AR—HEAVY DUTY

S/N: JAY1-UP
AN ATTACHMENT

SMCS-4200, 4201, 4203 **i02571081**

NOTE	PART NUMBER	QTY	PART NAME 1 2 3 4 5 6 (PRODUCT LEVEL)	SEE PAGE
Y	*185-9928*	2	TIRE & RIM GP (LH)	236
Y	*185-9929*	2	TIRE & RIM GP (RH)	237
	142-7493	32	NUT-LUG (9/16-18-2B-THD)	

Y-SEPARATE ILLUSTRATION

<END>

185-8667 WHEEL & TIRE AR—HEAVY DUTY

S/N: JAY1-UP
AN ATTACHMENT

SMCS-4200, 4201, 4203 **i02361203**

NOTE	PART NUMBER	QTY	PART NAME 1 2 3 4 5 6 (PRODUCT LEVEL)	SEE PAGE
Y	*185-9930*	2	TIRE & RIM GP (LH)	237
Y	*185-9931*	2	TIRE & RIM GP (RH)	237
	142-7493	32	NUT-LUG (9/16-18-2B THD)	

Y-SEPARATE ILLUSTRATION

<END>

187-3239 WHEEL & TIRE AR

S/N: JAY1-UP
AN ATTACHMENT

SMCS-4200, 4201, 4203 **i02361206**

NOTE	PART NUMBER	QTY	PART NAME 1 2 3 4 5 6 (PRODUCT LEVEL)	SEE PAGE
Y	*188-0124*	2	TIRE & RIM GP (LH)	238
Y	*188-0125*	2	TIRE & RIM GP (RH)	238
	142-7493	32	NUT-LUG (9/16-18-2B THD)	

Y-SEPARATE ILLUSTRATION

<END>

252-0346 WHEEL & TIRE AR

S/N: JAY1-UP
AN ATTACHMENT

SMCS-4200, 4201, 4203 **i02279611**

NOTE	PART NUMBER	QTY	PART NAME 1 2 3 4 5 6 (PRODUCT LEVEL)	SEE PAGE
Y	**265-2899**	2	TIRE & RIM GP (RH)	239
Y	**265-2898**	2	TIRE & RIM GP (LH)	239
	142-7493	32	NUT-LUG (9/16-18-2B THD)	

Y-SEPARATE ILLUSTRATION

<END>

252-0347 WHEEL & TIRE AR

S/N: JAY1-UP
AN ATTACHMENT

SMCS-4200, 4201, 4203 **i02279615**

NOTE	PART NUMBER	QTY	PART NAME 1 2 3 4 5 6 (PRODUCT LEVEL)	SEE PAGE
Y	**265-2900**	2	TIRE & RIM GP (LH)	240
Y	**265-2901**	2	TIRE & RIM GP (RH)	240
	142-7493	32	NUT-LUG (9/16-18-2B THD)	

Y-SEPARATE ILLUSTRATION

<END>

252-0366 WHEEL & TIRE AR—SOLID

S/N: JAY1-UP
33X6X11
AN ATTACHMENT

SMCS-4200, 4201, 4203 **i02233317**

NOTE	PART NUMBER	QTY	PART NAME 1 2 3 4 5 6 (PRODUCT LEVEL)	SEE PAGE
	142-7493	32	NUT-LUG (9/16-18-2B THD)	
	226-3734	2	TIRE-SOLID (33X6X11) (LH)	
	226-3735	2	TIRE-SOLID (33X6X11) (RH)	

<END>

252-0377 WHEEL & TIRE AR—SOLID

S/N: JAY1-UP
33X6X11
AN ATTACHMENT

SMCS-4200, 4201, 4203 **i02233313**

NOTE	PART NUMBER	QTY	PART NAME 1 2 3 4 5 6 (PRODUCT LEVEL)	SEE PAGE
	142-7493	32	NUT-LUG (9/16-18-2B THD)	
	226-3734	2	TIRE-SOLID (33X6X11) (RH)	
	226-3735	2	TIRE-SOLID (33X6X11) (LH)	

<END>

259-9892 WHEEL & TIRE GP

S/N: JAY1-UP
AN ATTACHMENT

SMCS-4200, 4201, 4202, 4203, 4208, 4209 **i02797678**

NOTE	PART NUMBER	QTY	PART NAME 1 2 3 4 5 6 (PRODUCT LEVEL)	SEE PAGE
	226-3734	2	TIRE-SOLID (33X6X11)	
	226-3735	2	TIRE-SOLID (33X6X11)	

<END>

317-0691 WHEEL & TIRE GP

S/N: JAY1-UP

FIELD INSTALLATION

SMCS-4200, 4201, 4202, 4203, 4208, 4209 **i02839893**

NOTE	REF NO	GRAPHIC REF	PART NUMBER	QTY	PART NAME 1 2 3 4 5 6 (PRODUCT LEVEL)	SEE PAGE
	1	1	**311-4928**	4	TIRE (33X6X10)	

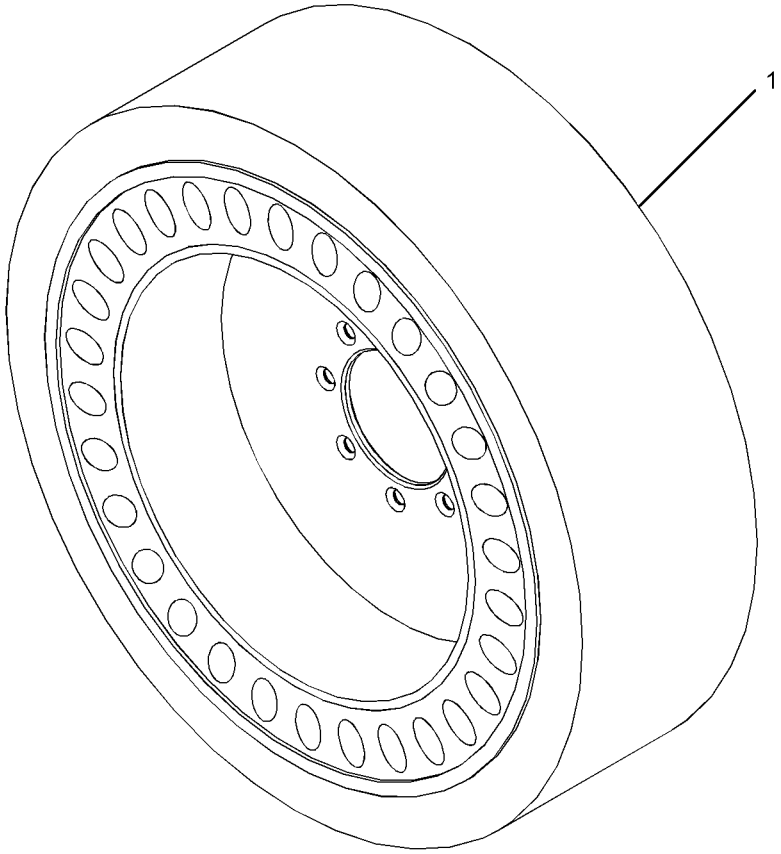

GRAPHIC #1 **<END>** g01417448

258-3800 CONVERSION AR-ROADING—NACD

S/N: JAY1-UP
AN ATTACHMENT

SMCS-7000 **i03343862**

NOTE	PART NUMBER	QTY	PART NAME 1 2 3 4 5 6 (PRODUCT LEVEL)	SEE PAGE
Y	*280-8329*	1	BRACKET GP-MOUNTING (BELT GUARD)	785
			S/N: JAY1-2059	
Y	*258-4169*	1	LIGHTING GP-STOP & TAIL	159
Y	*258-4230*	1	MIRROR GP-REAR VIEW	730
Y	*258-2579*	1	MOTOR & MTG GP-HYDRAULIC FAN	417
Y	*258-2462*	1	MUFFLER & MOUNTING GP	102
	258-4200	1	CANOPY AS	
	258-4012	1	WINDOW-PLASTIC (TOP)	

Y-SEPARATE ILLUSTRATION

<END>

258-3801 CONVERSION AR-ROADING—EUROPEAN MARKET

S/N: JAY1-UP
AN ATTACHMENT

SMCS-7000 **i03344081**

NOTE	PART NUMBER	QTY	PART NAME 1 2 3 4 5 6 (PRODUCT LEVEL)	SEE PAGE
Y	*258-4385*	1	LIFTING GP-MACHINE (FOUR POINT)	268
Y	*258-4169*	1	LIGHTING GP-STOP & TAIL	159
Y	*305-8034*	1	MIRROR GP-REAR VIEW	731
Y	*258-2579*	1	MOTOR & MTG GP-HYDRAULIC FAN	417
Y	*280-8347*	1	MUFFLER GP	103
Y	*258-3496*	1	SUPPRESSION GP-SOUND (MACHINE)	276
Y	*294-4560*	1	SUPPRESSION GP-SOUND (MACHINE)	279
Y	*280-8330*	1	SUPPRESSION GP-SOUND (ENGINE)	278
	258-4222	1	CANOPY GP-OPEN ROPS	
	258-4012	1	WINDOW-PLASTIC (TOP)	

Y-SEPARATE ILLUSTRATION

<END>

258-3840 CONVERSION GP-ROADING–GERMANY

S/N: JAY1-UP
PART OF 258-3818 CONVERSION AR-MACHINE
AN ATTACHMENT

SMCS-7000 **i02948040**

NOTE	REF NO	GRAPHIC REF	PART NUMBER	QTY	PART NAME 1 2 3 4 5 6 (PRODUCT LEVEL)	SEE PAGE
	1	1	**258-3833**	1	FILM-NOTICE (STEERING)	
	2	1	**173-3016**	1	CHOCK	
	3	1	**258-3844**	1	BRACKET AS (REGISTRATION PLATE)	
	4	1	**258-3849**	1	PLATE-IDENTIFICATION (ENGLISH, GERMAN, SPANISH)	
	5	1	**289-0849**	1	BLOCK AS	
M	6	1	**8T-4138**	1	BOLT (M6X1X20-MM)	
	7	1	**8T-4205**	1	WASHER-HARD (7.2X14.5X2-MM THK)	

M-METRIC PART

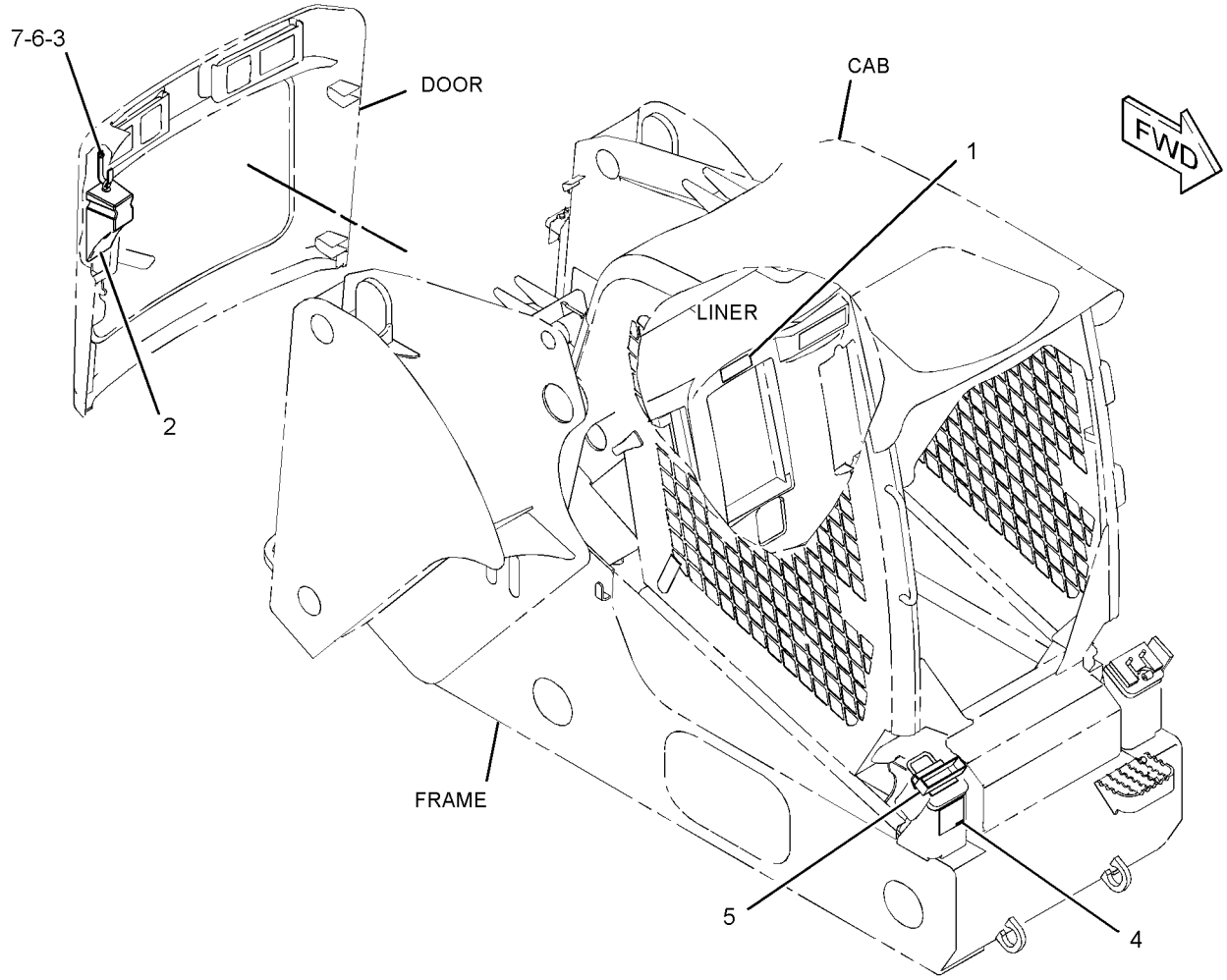

GRAPHIC #1 **<END>** g01559633

258-3841 CONVERSION GP-ROADING–ITALY

S/N: JAY1-UP
PART OF 258-3819 CONVERSION AR-MACHINE
AN ATTACHMENT

SMCS-7000 **i03571174**

NOTE	REF NO	GRAPHIC REF	PART NUMBER	QTY	PART NAME 1 2 3 4 5 6 (PRODUCT LEVEL)	SEE PAGE
Y	1	1	**128-6985**	1	LAMP GP-WARNING BEACON (12-VOLT, AMBER)	153
	2	1	**186-2360**	4	COVER AS	
					(EACH INCLUDES)	
		1	**129-1854**	10	FASTENER-LOOP	
		1	**129-1855**	10	FASTENER-HOOK	
	3	1	**258-3849**	1	PLATE-IDENTIFICATION (ENGLISH, GERMAN, SPANISH)	
	4	1	**289-0849**	1	BLOCK AS	
	5	1	**263-5423**	1	SWITCH AS-ROCKER (WARNING BEACON)	
		1	**111-7899**	1	GASKET	

Y-SEPARATE ILLUSTRATION

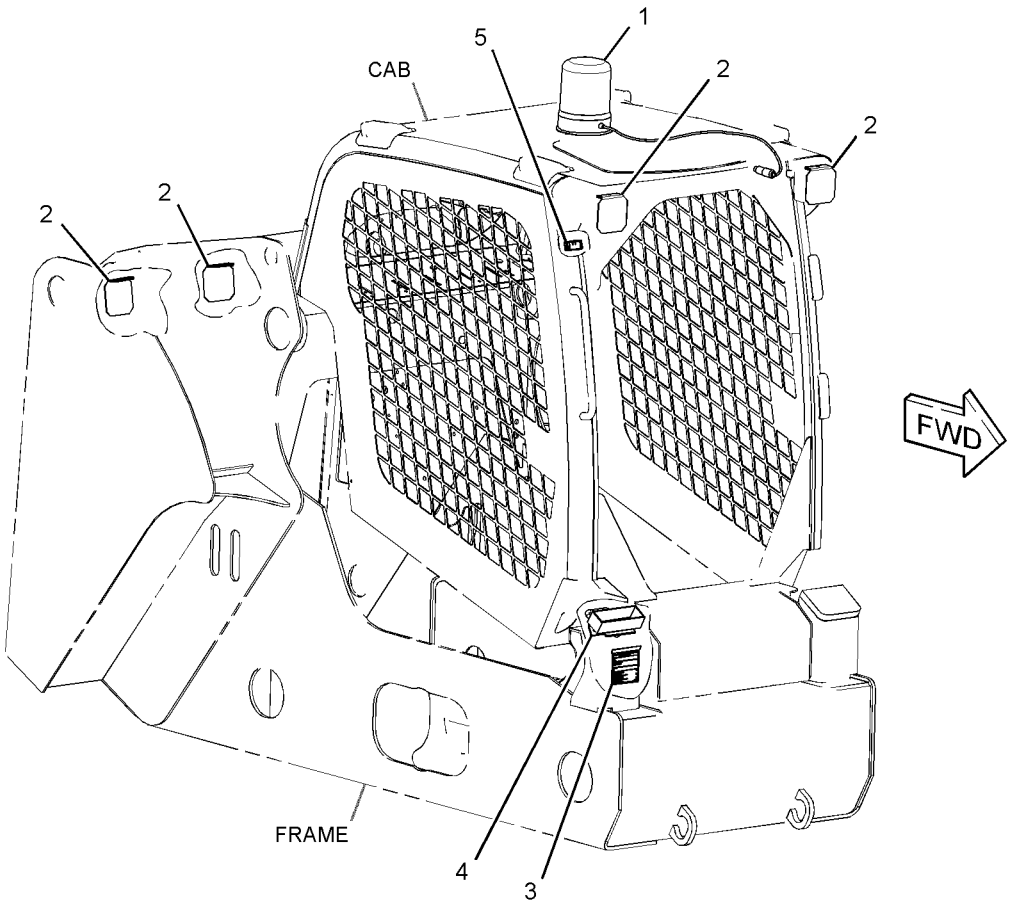

GRAPHIC #1 **<END>** g01727793

FRAME AND BODY

258-2591 COUNTERWEIGHT GP

S/N: JAY1-UP

AN ATTACHMENT

SMCS-7056 **i02894421**

NOTE	REF NO	GRAPHIC REF	PART NUMBER	QTY	PART NAME 1 2 3 4 5 6 (PRODUCT LEVEL)	SEE PAGE
	1	1	**313-9141**	4	COUNTERWEIGHT	
	2	1	**8T-4223**	4	WASHER-HARD (13.5X25.5X3-MM THK)	
M	3	1	**7X-2549**	4	BOLT (M12X1.75X100-MM)	

M-METRIC PART

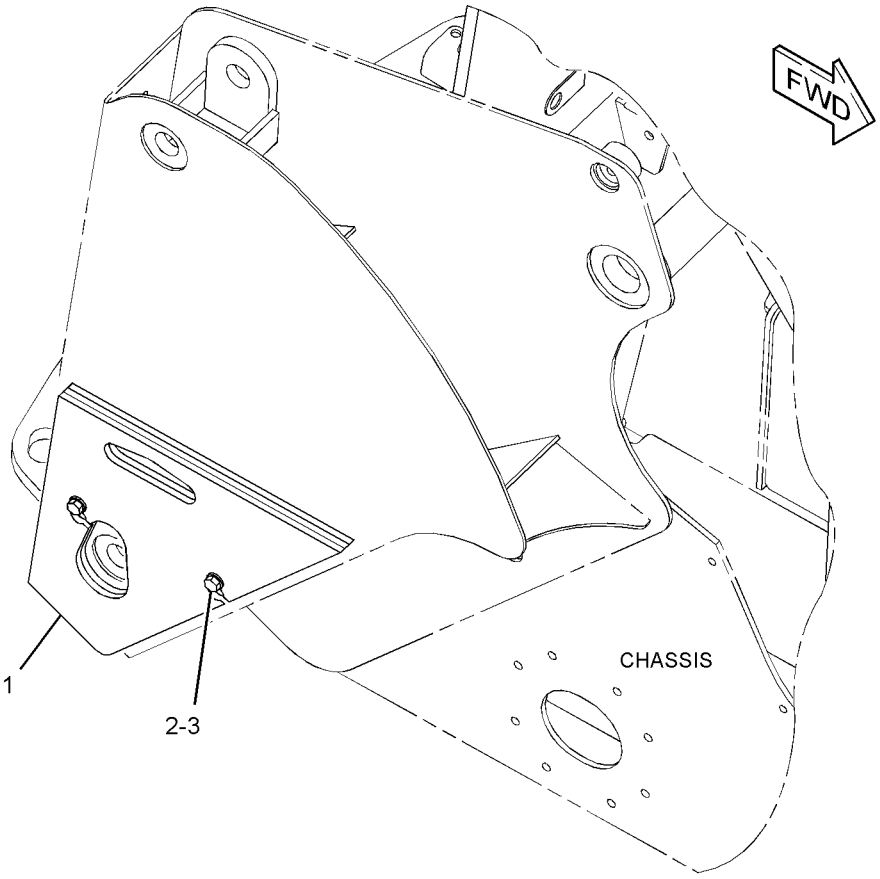

GRAPHIC #1 **<END>** g01330983

322-1644 DOOR AS-ACCESS–VENTED

S/N: JAY2060-UP

PART OF 312-1024 KIT-ENGINE ENCLOSURE

AN ATTACHMENT

SMCS-7263, 7273 **i02920859**

NOTE	REF NO	GRAPHIC REF	PART NUMBER	QTY	PART NAME 1 2 3 4 5 6 (PRODUCT LEVEL)	SEE PAGE
	1	1	**7T-1099**	1	LINK	
	2	1	**317-6894**	1	GRILL	
					PARTS SHOWN IN GRAPHIC(S) WITHOUT A REFERENCE NUMBER ARE NOT SERVICED SEPARATELY	

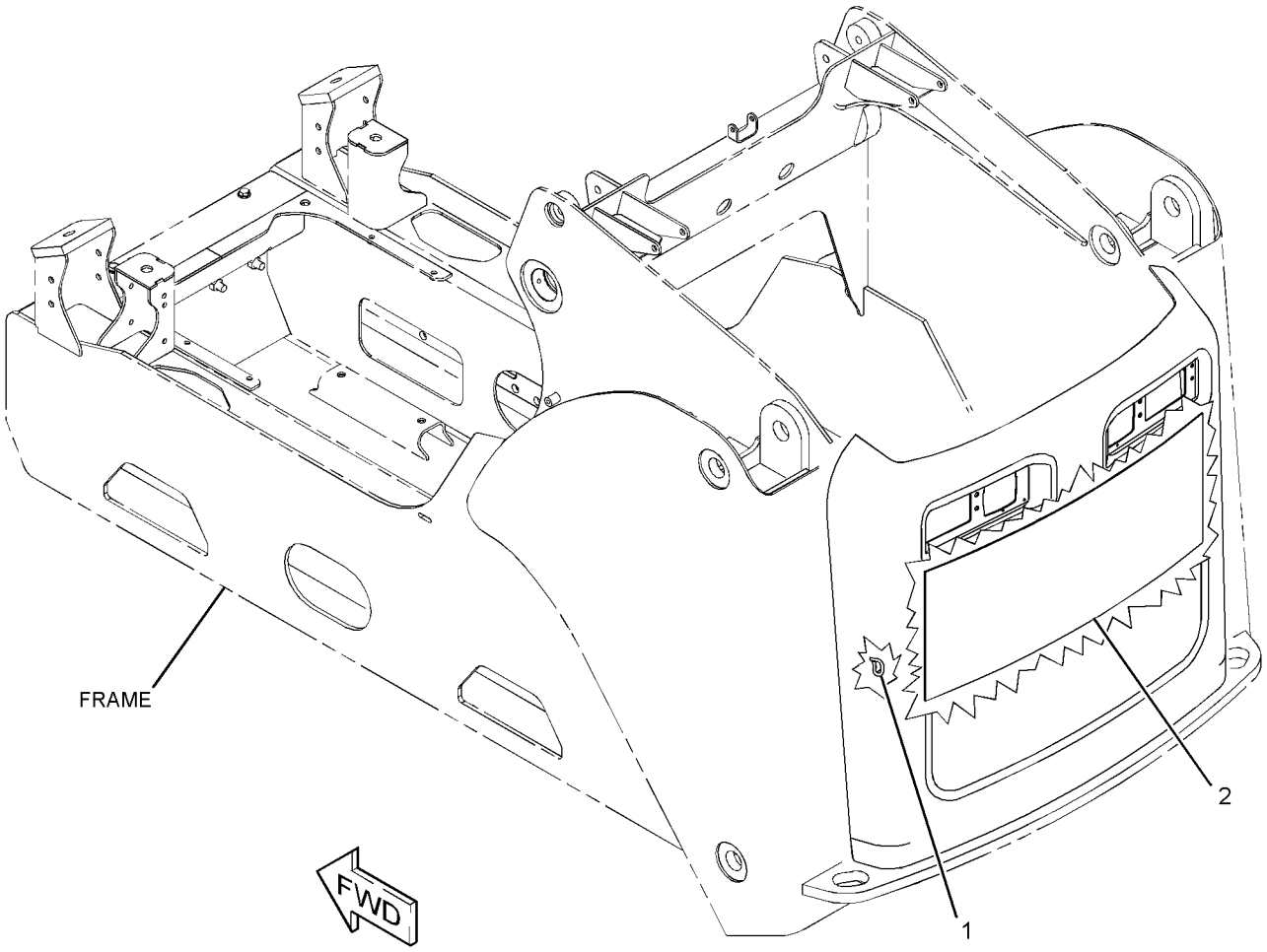

GRAPHIC #1 **<END>** g01454524

FRAME AND BODY

258-2594 ENCLOSURE GP-ENGINE

S/N: JAY1-UP

PART OF 258-2410, 295-7291 CHASSIS AR

SMCS-7263, 7273 **i02928684**

NOTE	REF NO	GRAPHIC REF	PART NUMBER	QTY	PART NAME 1 2 3 4 5 6 (PRODUCT LEVEL)	SEE PAGE
	1	1	**309-4920**	1	STRIKER AS	
	2	1	**159-8405**	2	BOLT-SHOULDER	
	3	1	**223-4240**	1	LATCH AS	
	4	1	*224-3875*	1	LOCK GP (ENGINE COVER)	
		1	**226-0291**	1	LOCK AS	
		1	**233-4872**	1	CAM	
	5	1	**258-2606**	1	DOOR AS-ACCESS	
	6	1	**142-8832**	1	PIN AS	
	7	1	**2K-4973**	2	LOCKNUT (3/8-16-THD)	
M	8	1	**5C-7261**	2	NUT (M8X1.25-THD)	
	9	1	**7X-7729**	2	WASHER (11X25X3-MM THK)	
M	10	1	**8T-4137**	2	BOLT (M10X1.5X20-MM)	
	11	1	**308-6767**	2	BUMPER AS	
M	12	1	**8T-4181**	4	BOLT (M6X1X20-MM)	
	13	1	**8T-4205**	4	WASHER-HARD (7.2X14.5X2-MM THK)	

M-METRIC PART

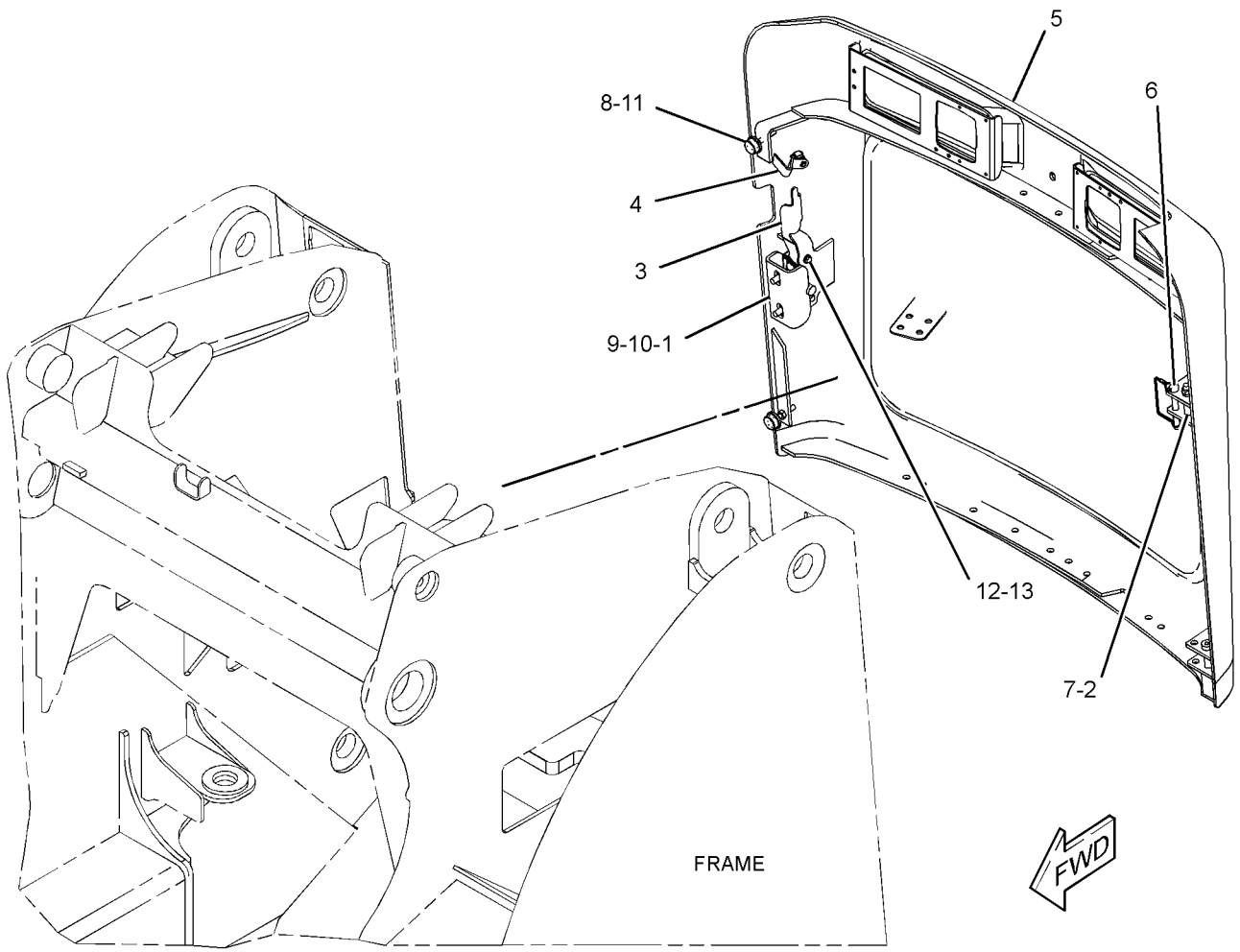

GRAPHIC #1 **<END>** g01317331

258-2675 FRAME & MTG GP-MACHINE

S/N: JAY1-UP

PART OF 258-2410, 295-7291 CHASSIS AR

SMCS-6119, 7050, 7481 **i02712974**

NOTE	REF NO	GRAPHIC REF	PART NUMBER	QTY	PART NAME 1 2 3 4 5 6 (PRODUCT LEVEL)	SEE PAGE
	1	1	**3S-9182**	4	PLUG-MAGNETIC (FRAME)	
Y	2	1	*258-2674*	1	FRAME GP-MACHINE	253
	3	1	**258-2978**	1	PLATE AS	
	4	1	**258-3184**	2	COVER	
	5	1	**258-3186**	1	PLATE AS	
	6	1	**258-3312**	1	PLATE	
	7	1	**258-3399**	1	PLATE	
	8	1	**261-6101**	4	COVER	
	9	1	**287-4218**	2	PLATE	
	10	1	**287-4219**	1	STEP AS	
	11	1	**266-3316**	31	BOLT-FLANGE HEAD (M10X1.5X25-MM)	
	12	1	**7X-7729**	4	WASHER (11X25X3-MM THK)	
	13	1	**8T-4121**	4	WASHER-HARD (11X21X2.5-MM THK)	
M	14	1	**8T-4196**	8	BOLT (M10X1.5X35-MM)	
	15	1	**8T-4224**	6	WASHER-HARD (8.8X16X2-MM THK)	
M	16	1	**8T-4908**	6	BOLT (M8X1.25X25-MM)	
	17	1	**287-4287**	2	PLATE	
B	18	1	**287-4220**	6	SHIM	

B-USE AS REQUIRED
M-METRIC PART
Y-SEPARATE ILLUSTRATION

258-2675 **FRAME & MTG GP-MACHINE** *(contd.)* **i02712974**

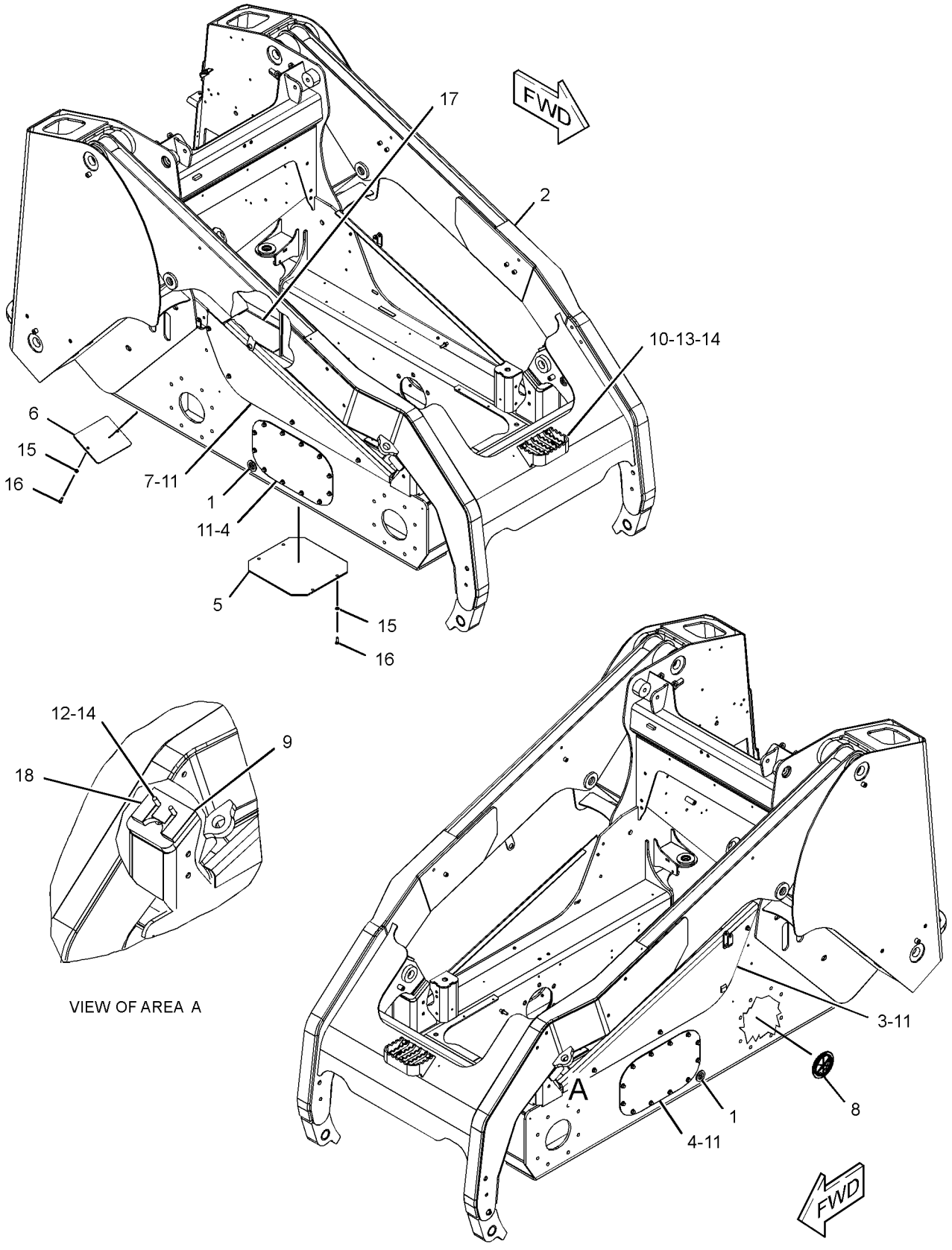

GRAPHIC #1 **<END>** g01344432

FRAME AND BODY

258-2674 FRAME GP-MACHINE

S/N: JAY1-UP

PART OF 258-2675 FRAME & MTG GP-MACHINE

SMCS-6119, 7050 **i03638352**

NOTE	PART NUMBER	QTY	PART NAME 1 2 3 4 5 6 (PRODUCT LEVEL)	SEE PAGE
Y	**287-4198**	1	ARM AS-LIFT	443
	258-2673	1	FRAME AS	

Y-SEPARATE ILLUSTRATION

<END>

FRAME AND BODY

150-8621 GUIDE GP-LINES

S/N: JAY1-UP

PART OF 258-2410, 295-7291 CHASSIS AR

SMCS-5057 **i02059885**

NOTE	REF NO	GRAPHIC REF	PART NUMBER	QTY	PART NAME 1 2 3 4 5 6 (PRODUCT LEVEL)	SEE PAGE
	1	1	**227-4315**	1	PLATE AS	
	2	1	**247-4877**	1	BOLT (M8X1.25X12-MM)	
M	3	1	**6V-9189**	1	LOCKNUT (M8X1.25-THD)	
	4	1	**7X-0603**	2	WASHER-HARD (9.9X35X2.5-MM THK)	
M	5	1	**7X-2539**	1	BOLT (M8X1.25X110-MM)	
	6	1	**8T-4224**	1	WASHER-HARD (8.8X16X2-MM THK)	

M-METRIC PART

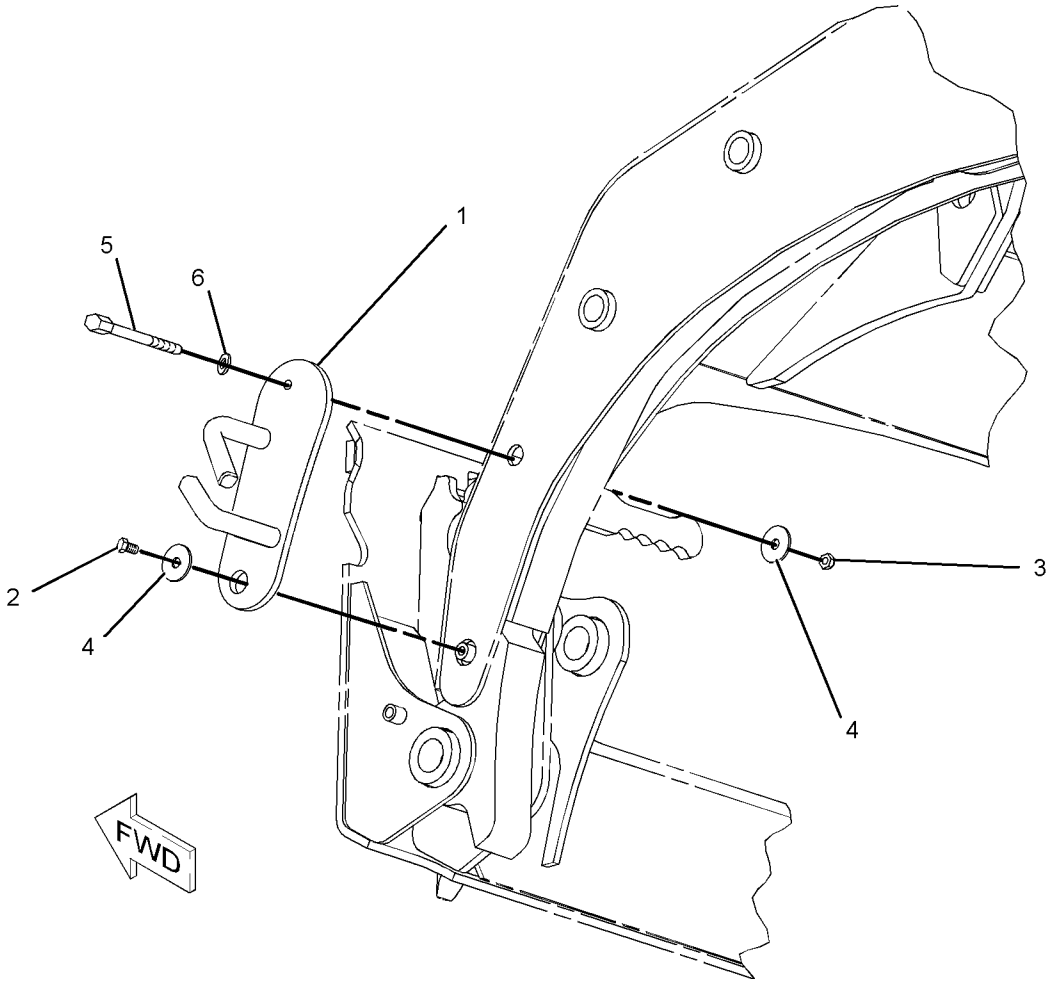

GRAPHIC #1 **<END>** g01056803

287-4160 KIT-COUNTERWEIGHT

S/N: JAY1-UP
AN ATTACHMENT

SMCS-7056 **i02867022**

NOTE	REF NO	GRAPHIC REF	PART NUMBER	QTY	PART NAME 1 2 3 4 5 6 (PRODUCT LEVEL)	SEE PAGE
	1	1	**313-9141**	2	COUNTERWEIGHT	
	2	1	**8T-4223**	4	WASHER-HARD (13.5X25.5X3-MM THK)	
M	3	1	**8T-4910**	4	BOLT (M12X1.75X60-MM)	
M	4	1	**7X-2549**	4	BOLT (M12X1.75X100-MM)	

M-METRIC PART

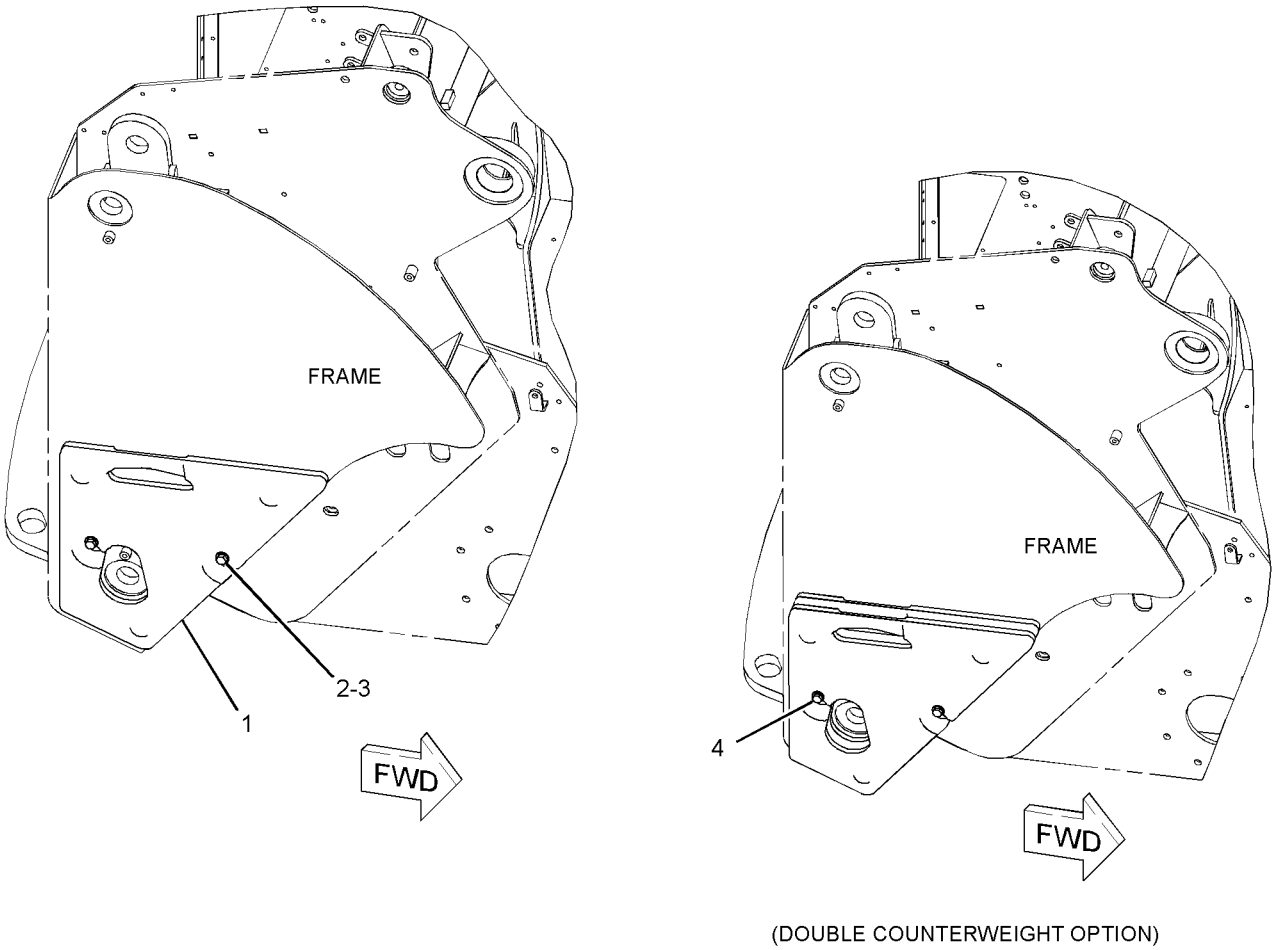

(DOUBLE COUNTERWEIGHT OPTION)

GRAPHIC #1 **<END>** g01453942

FRAME AND BODY

287-4161 KIT-COUNTERWEIGHT

S/N: JAY1-UP

AN ATTACHMENT

SMCS-7056 **i02675253**

NOTE	REF NO	GRAPHIC REF	PART NUMBER	QTY	PART NAME 1 2 3 4 5 6 (PRODUCT LEVEL)	SEE PAGE
	1	1	**258-2592**	8	PLATE	
	2	1	**8T-4223**	4	WASHER-HARD (13.5X25.5X3-MM THK)	
M	3	1	**8T-6868**	4	BOLT (M12X1.75X80-MM)	

M-METRIC PART

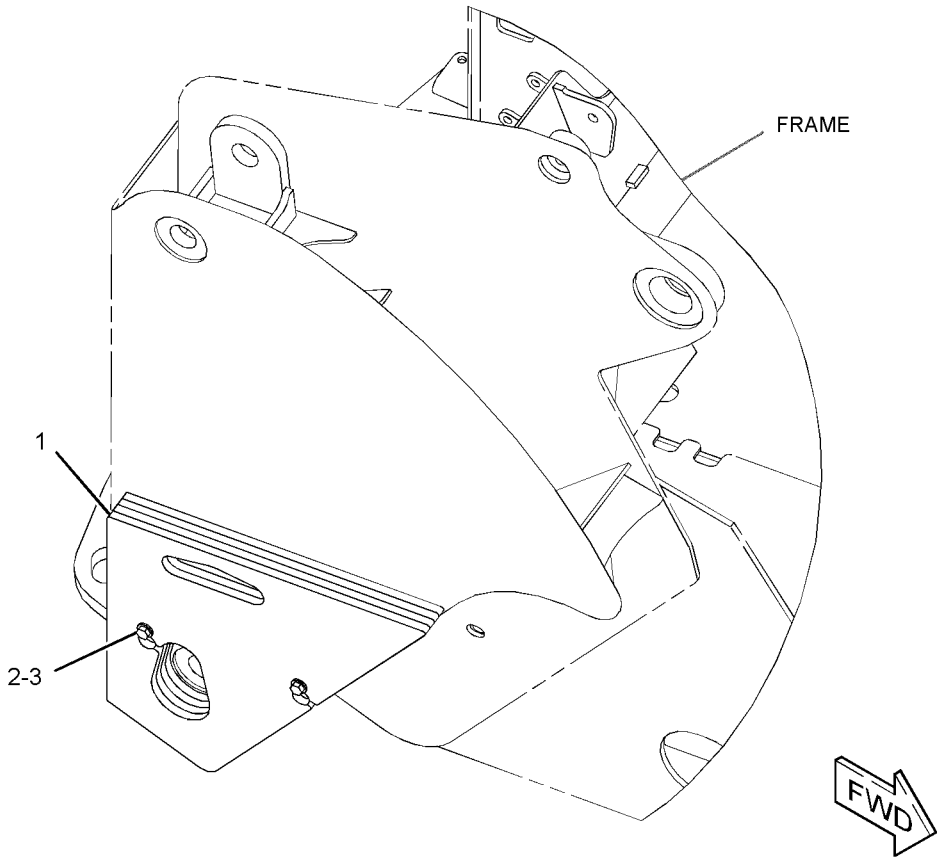

GRAPHIC #1 **<END>** g01344895

312-1024 KIT-ENGINE ENCLOSURE–VENTED

S/N: JAY2060-UP
AN ATTACHMENT

SMCS-7263 **i03333560**

NOTE	REF NO	GRAPHIC REF	PART NUMBER	QTY	PART NAME 1 2 3 4 5 6 (PRODUCT LEVEL)	SEE PAGE
	1	1	**285-2167**	1	FILM-INSTRUCTION (SERVICE CHART, READ OMM)	
					-OR-	
		1	**285-2168**	1	FILM-INSTRUCTION (SERVICE CHART, READ OMM)	
					-OR-	
		1	**285-2169**	1	FILM-INSTRUCTION (SERVICE CHART, READ OMM)	
					-OR-	
		1	**285-2170**	1	FILM-INSTRUCTION (SERVICE CHART, READ OMM)	
Y	2	1	*322-1644*	1	DOOR AS-ACCESS (VENTED)	249
	3	1	**2K-4973**	2	LOCKNUT (3/8-16-THD)	
	4	1	**330-4060**	1	STRIKER AS	

Y-SEPARATE ILLUSTRATION

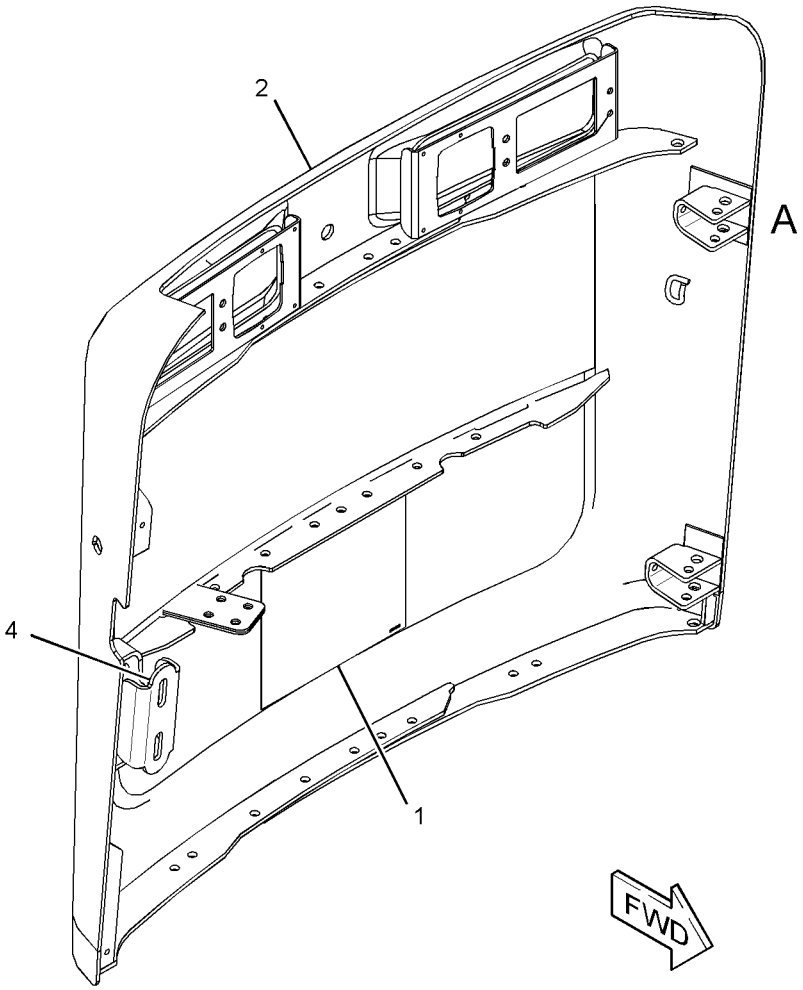

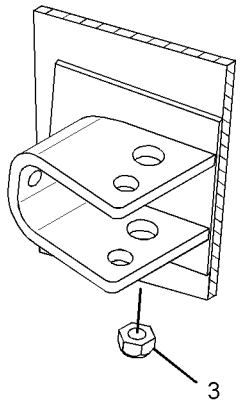

VIEW OF AREA A

GRAPHIC #1 **<END>** g01869522

311-8704 KIT-MACHINE ENCLOSURE SEAL—DEBRIS BARRIER

S/N: JAY1-UP

AN ATTACHMENT

SMCS-7276 **i02872187**

NOTE	REF NO	GRAPHIC REF	PART NUMBER	QTY	PART NAME 1 2 3 4 5 6 (PRODUCT LEVEL)	SEE PAGE
	1	1	**176-4079**	1	INSULATION	
	2	1	**261-6379**	1	INSULATION	
	3	1	**294-0082**	1	INSULATION	
	4	1	**294-0083**	1	INSULATION	
	5	1	**294-0084**	1	INSULATION	
	6	1	**308-7534**	1	COVER AS	
	7	1	**308-7535**	1	COVER AS	
	8	1	**308-7536**	1	COVER AS	
	9	1	**308-7537**	2	COVER AS	
	10	1	**308-7538**	1	COVER AS	
	11	1	**308-7540**	1	BRACKET AS	
	12	1	**309-0052**	1	COVER AS	
	13	1	**309-1926**	1	BRACKET AS	
M		1	**3E-6908**	2	STUD-WELD (M8X1.25X20-MM)	
		1	**196-0271**	2	SPACER (8.5X14.3X8-MM THK)	
	14	1	**309-1927**	1	BRACKET AS	
M		1	**3E-6908**	2	STUD-WELD (M8X1.25X20-MM)	
		1	**196-0271**	2	SPACER (8.5X14.3X8-MM THK)	
	15	1	**309-1936**	4	GUARD AS-BRUSH	
	16	1	**309-2477**	1	HOOD AS	
	17	1	**312-8308**	1	COVER AS	
	18	1	**5P-4116**	8	WASHER-HARD (8.8X20.5X2-MM THK)	
M	19	1	**6V-7357**	4	BOLT (M6X1X25-MM)	
M	20	1	**6V-7743**	4	LOCKNUT (M6X1-THD)	
M	21	1	**6V-9189**	4	LOCKNUT (M8X1.25-THD)	
	22	1	**8T-4205**	8	WASHER-HARD (7.2X14.5X2-MM THK)	
M	23	1	**8T-7547**	4	BOLT (M8X1.25X30-MM)	
E	24	1	**134-2827**		SEAL (81-CM EACH)	
E	25	1	**125-3518**		SEAL (25-CM EACH)	
D	26	1	**5P-7483**		SEAL (0.7-M)	
D	26A	1	**5P-7483**		SEAL (0.9-M EACH)	
E	27	1	**310-9334**		SEAL (54-CM EACH)	
E	28	1	**310-9335**		SEAL (84-CM EACH)	
E	29	1	**310-9332**		SEAL (93-CM EACH)	

D-ORDER BY THE METER
E-ORDER BY THE CENTIMETER
M-METRIC PART

311-8704 KIT-MACHINE ENCLOSURE SEAL *(contd.)* i02872187

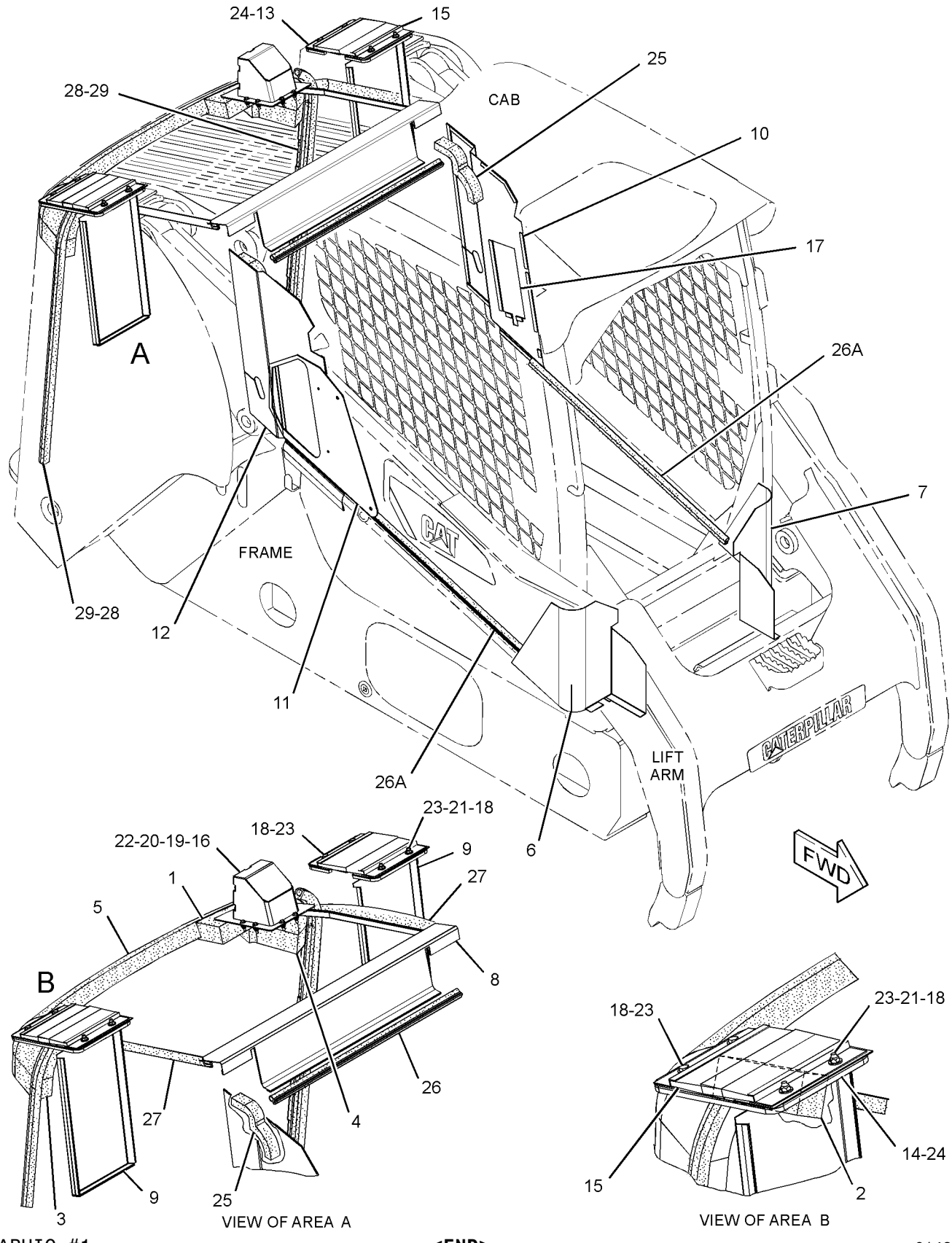

GRAPHIC #1 **<END>** g01430597

FRAME AND BODY

258-3884 KIT-ROADING CONVERSION—LIGHTS, MIRRORS

S/N: JAY2060-UP

AN ATTACHMENT

SMCS-1408, 1429, 1430, 1432, 7000, 7319 **i03635692**

NOTE	REF NO	GRAPHIC REF	PART NUMBER	QTY	PART NAME 1 2 3 4 5 6 (PRODUCT LEVEL)	SEE PAGE
	1	1	**7K-1181**	5	STRAP-CABLE	
	2	1	**7X-0579**	1	WASHER-HARD (8.8X25.5X2-MM THK)	
	3	1	**9R-1499**	2	REFLECTOR	
	4	1	**132-5166**	2	MIRROR GP-REAR VIEW	
					(EACH INCLUDES)	
		1	**148-2371**	1	CLAMP (TOP)	
		1	**148-2372**	1	CLAMP (BOTTOM)	
	5	1	**146-9439**	1	RELAY AS (12-VOLT) (STOP LIGHT)	
	6	1	**172-6490**	2	LAMP GP-SIGNAL (STOP, TAIL, TURN)	
					(EACH INCLUDES)	
		1	**9W-3326**	1	LAMP (12-VOLT, 21-WATT)	
		1	**084-4348**	1	LAMP (12-VOLT, 5-WATT)	
		1	**102-8804**	1	KIT-RECEPTACLE (4-PIN)	
					(INCLUDES RECEPTACLE AS & WEDGE)	
		1	**186-3735**	4	PIN-CONNECTOR (16-GA TO 18-GA)	
		1	**267-2809**	1	LENS	
	7	1	**175-4236**	1	PLATE	
	8	1	**175-4239**	2	BRACKET AS	
	9	1	**178-3620**	6	STRAP-DUAL CLAMP	
	10	1	**190-8962**	1	LAMP GP-REGISTRATION PLATE	
		1	**195-9712**	1	LAMP (12-VOLT, 10-WATT)	
Y	11	1	**195-0189**	1	LAMP GP-HEAD & SIGNAL (RH) (HIGH, LOW BEAM)	151
Y	12	1	**195-0190**	1	LAMP GP-HEAD & SIGNAL (LH) (HIGH, LOW BEAM)	152
	13	1	**242-9000**	1	FLASHER AS (12-VOLT) (STOP LIGHT)	
	14	1	**252-0413**	1	BRACKET AS (REGISTRATION PLATE)	
	15	1	**258-3873**	2	BRACKET	
	16	1	**258-4131**	1	HARNESS AS-LIGHTING (FRONT, REAR)	
		1	**186-3735**	2	PIN-CONNECTOR (16-GA TO 18-GA)	
		1	**9W-0852**	7	PIN-CONNECTOR (14-GA)	
		1	**155-2255**	1	KIT-CONNECTING PLUG (12-PIN)	
		1	**155-2271**	2	KIT-CONNECTING PLUG (4-PIN)	
		1	**155-2274**	2	KIT-CONNECTING PLUG (6-PIN)	
					(EACH PLUG KIT INCLUDES PLUG AS, WEDGE & INTERFACE SEAL)	
		1	**8T-8737**	17	PLUG-SEAL	
		1	**102-8804**	2	KIT-RECEPTACLE (4-PIN)	
		1	**102-8801**	1	KIT-RECEPTACLE (12-PIN)	
					(EACH RECEPTACLE KIT INCLUDES RECEPTACLE AS & WEDGE)	
		1	**3S-2093**	3	STRAP-CABLE	
		1	**186-3736**	18	SOCKET-CONNECTOR (16-GA TO 18-GA)	
		1	**9W-0844**	6	SOCKET-CONNECTOR (14-GA)	
E		1	**119-3662**		TUBE-HEAT SHRINK (10.85-MM DIA) (7-CM)	
E		1	**125-7874**		TUBE-HEAT SHRINK (5.72-MM DIA) (15-CM)	
E		1	**125-7875**		TUBE-HEAT SHRINK (7.44-MM DIA) (15-CM)	
		1	**180-9339**	1	PIN-CONNECTOR (14-GA TO 18-GA)	
		1	**180-9340**	1	SOCKET-CONNECTOR (14-GA TO 18-GA)	
	17	1	**258-4134**	1	FUSE AS (ROADING)	
		1	**102-8802**	1	KIT-RECEPTACLE (2-PIN)	
					(INCLUDES RECEPTACLE AS & WEDGE)	
		1	**9W-0852**	2	PIN-CONNECTOR (14-GA)	
		1	**9W-0844**	2	SOCKET-CONNECTOR (14-GA)	
		1	**155-2270**	1	KIT-CONNECTING PLUG (2-PIN)	
					(INCLUDES PLUG AS, WEDGE & INTERFACE SEAL)	
	18	1	**263-5421**	1	SWITCH AS-ROCKER (ROADING LIGHTS)	

258-3884 KIT-ROADING CONVERSION *(contd.)* i03635692

NOTE	REF NO	GRAPHIC REF	PART NUMBER	QTY	PART NAME 1 2 3 4 5 6 (PRODUCT LEVEL)	SEE PAGE
	19	1	**263-5422**	1	SWITCH AS-ROCKER (TURN SIGNAL)	
	20	1	**265-9543**	1	SWITCH AS-ROCKER (HAZARD WARNING LIGHTS)	
					(EACH SWITCH AS INCLUDES)	
		1	**111-7899**	1	GASKET	
	21	1	**293-9044**	1	HARNESS AS-REAR LIGHTING (STOP, TAIL, TURN)	
		1	**102-8804**	1	KIT-RECEPTACLE (4-PIN)	
					(INCLUDES RECEPTACLE AS & WEDGE)	
		1	**186-3735**	4	PIN-CONNECTOR (16-GA TO 18-GA)	
		1	**186-3736**	4	SOCKET-CONNECTOR (16-GA TO 18-GA)	
E		1	**125-7874**		TUBE-HEAT SHRINK (5.72-MM DIA) (10-CM)	
		1	**5P-4571**	2	TERMINAL-BLADE (14-GA TO 16-GA)	
		1	**155-2271**	1	KIT-CONNECTING PLUG (4-PIN)	
					(INCLUDES PLUG AS, WEDGE & INTERFACE SEAL)	
	22	1	**3S-2093**	21	STRAP-CABLE	
	23	1	**4B-4863**	2	WASHER (4.7X11X1.2-MM THK)	
M	24	1	**5C-8312**	2	NUT (M4X0.7-THD)	
M	25	1	**5C-9553**	4	BOLT (M6X1X16-MM)	
M	26	1	**6V-9672**	2	SCREW-MACHINE (M4X0.7X16-MM)	
	27	1	**8T-4121**	4	WASHER-HARD (11X21X2.5-MM THK)	
M	28	1	**8T-4138**	2	BOLT (M6X1X20-MM)	
M	29	1	**8T-4189**	1	BOLT (M8X1.25X20-MM)	
M	30	1	**8T-4196**	4	BOLT (M10X1.5X35-MM)	
	31	1	**8T-4205**	6	WASHER-HARD (7.2X14.5X2-MM THK)	

E-ORDER BY THE CENTIMETER
M-METRIC PART
Y-SEPARATE ILLUSTRATION

258-3884 KIT-ROADING CONVERSION *(contd.)* i03635692

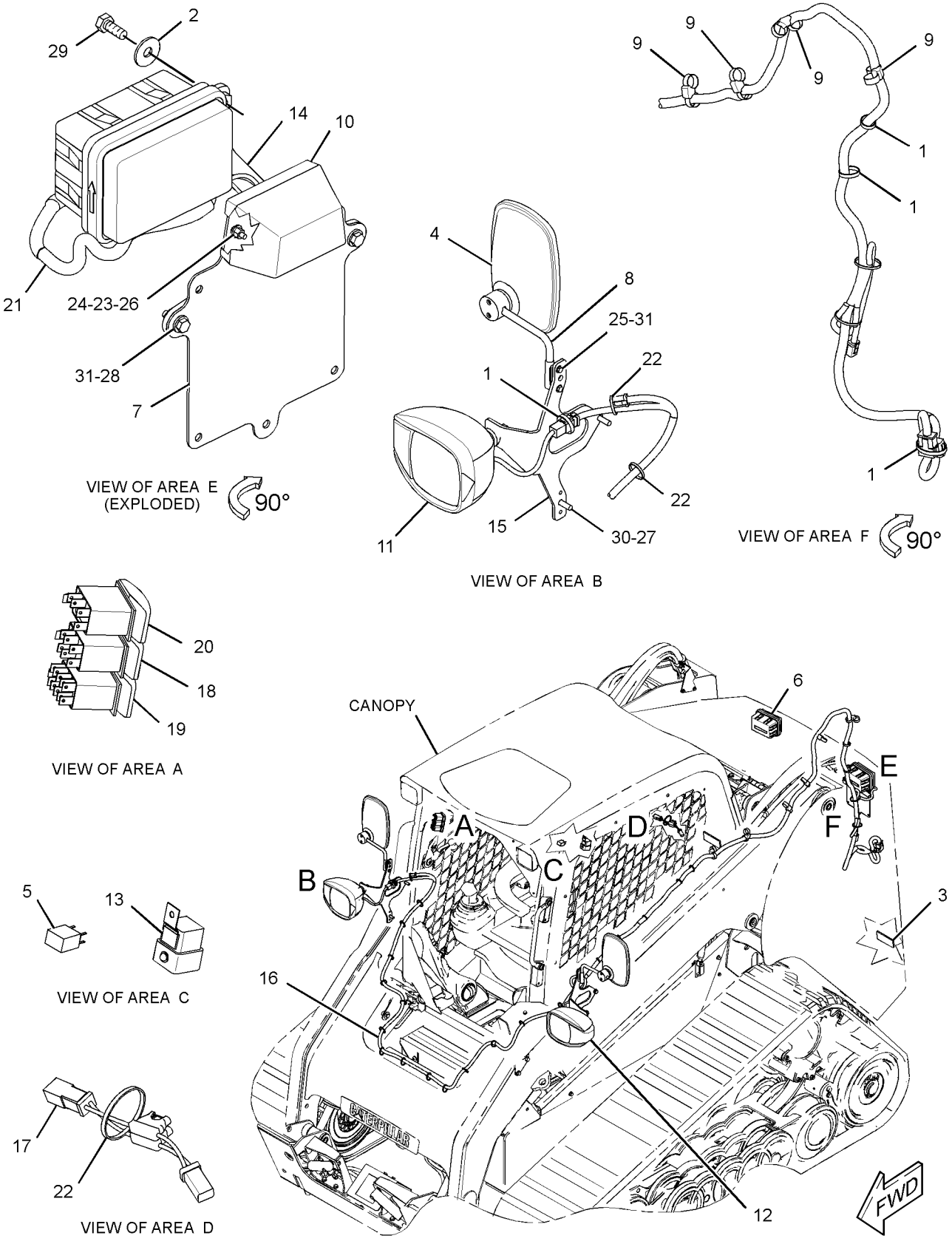

GRAPHIC #1

<END>

g01444576

315-7815 KIT-ROADING CONVERSION—GERMANY

S/N: JAY1-UP
AN ATTACHMENT

SMCS-1408, 1429, 1430, 1432, 7000, 7319 **i02942930**

NOTE	PART NUMBER	QTY	PART NAME 1 2 3 4 5 6 (PRODUCT LEVEL)	SEE PAGE
Y	**258-4233**	1	VISOR GP-CAB (LH)	780
M	**8T-4138**	1	BOLT (M6X1X20-MM)	
	258-3844	1	BRACKET AS (REGISTRATION PLATE)	
	173-3016	1	CHOCK	
	258-3833	1	FILM-NOTICE	
	172-8591	4	NUT-SPRING	
	270-9442	4	SCREW-TRUSS HEAD (M6X1X20-MM)	
	8T-4205	1	WASHER-HARD (7.2X14.5X2-MM THK)	

M-METRIC PART
Y-SEPARATE ILLUSTRATION

<END>

315-7816 KIT-ROADING CONVERSION—ITALY

S/N: JAY1-UP
AN ATTACHMENT

SMCS-1408, 1429, 1430, 1432, 7000, 7319 **i03638354**

NOTE	PART NUMBER	QTY	PART NAME 1 2 3 4 5 6 (PRODUCT LEVEL)	SEE PAGE
Y	*128-6985*	1	LAMP GP-WARNING BEACON (12-VOLT, AMBER)	153
	190-8962	1	LAMP GP-REGISTRATION PLATE	
	195-9712	1	LAMP (12-VOLT, 10-WATT)	
	252-0413	1	BRACKET AS (REGISTRATION PLATE)	
	186-2360	4	COVER AS	
			(EACH INCLUDES)	
E	**129-1854**		FASTENER-LOOP (10-CM)	
E	**129-1855**		FASTENER-HOOK (10-CME)	
	293-9044	1	HARNESS AS-REAR LIGHTING (STOP, TAIL, TURN)	
	186-3735	4	PIN-CONNECTOR (16-GA TO 18-GA)	
	155-2271	1	KIT-CONNECTING PLUG (4-PIN)	
			(INCLUDES PLUG AS, WEDGE & INTERFACE SEAL)	
	102-8804	1	KIT-RECEPTACLE (4-PIN)	
			(INCLUDES RECEPTACLE AS & WEDGE)	
	186-3736	4	SOCKET-CONNECTOR (16-GA TO 18-GA)	
	5P-4571	2	TERMINAL-BLADE (14-GA TO 16-GA)	
E	**125-7874**		TUBE-HEAT SHRINK (5.72-MM DIA) (10-CM)	
M	**8T-4138**	2	BOLT (M6X1X20-MM)	
M	**8T-4189**	1	BOLT (M8X1.25X20-MM)	
M	**5C-8312**	2	NUT (M4X0.7-THD)	
	175-4236	1	PLATE	
M	**6V-9672**	2	SCREW-MACHINE (M4X0.7X16-MM)	
	4B-4863	2	WASHER (4.7X11X1.2-MM THK)	
	7X-0579	1	WASHER-HARD (8.8X25.5X2-MM THK)	
	8T-4205	1	WASHER-HARD (7.2X14.5X2-MM THK)	

E-ORDER BY THE CENTIMETER
M-METRIC PART
Y-SEPARATE ILLUSTRATION

<END>

FRAME AND BODY

333-7434 KIT-ROADING CONVERSION—GERMANY

S/N: JAY1-UP

AN ATTACHMENT

SMCS-1408, 1429, 1430, 1432, 7000, 7319 **i03381062**

NOTE	PART NUMBER	QTY	PART NAME 1 2 3 4 5 6 (PRODUCT LEVEL)	SEE PAGE
Y	**258-4233**	1	VISOR GP-CAB (LH)	780
	289-0849	1	BLOCK AS	
	258-3844	1	BRACKET AS (REGISTRATION PLATE)	
M	**8T-4138**	1	BOLT (M6X1X20-MM)	
	173-3016	1	CHOCK	
	258-3833	1	FILM-NOTICE (STEERING)	
	172-8591	4	NUT-SPRING	
	178-2247	1	PIN	
	9R-5301	1	PIN-COTTER	
	270-9442	4	SCREW-TRUSS HEAD (M6X1X20-MM)	
	9X-8257	1	WASHER (17.5X30X3.5-MM THK)	
	8T-4205	1	WASHER-HARD (7.2X14.5X2-MM THK)	

M-METRIC PART
Y-SEPARATE ILLUSTRATION

<END>

FRAME AND BODY

333-7435 KIT-ROADING CONVERSION–ITALY

S/N: JAY1-UP
AN ATTACHMENT

SMCS-1408, 1429, 1430, 1432, 7000, 7319 **i03624552**

NOTE	PART NUMBER	QTY	PART NAME 1 2 3 4 5 6 (PRODUCT LEVEL)	SEE PAGE
Y	*128-6985*	1	LAMP GP-WARNING BEACON (12-VOLT, AMBER)	153
	190-8962	1	LAMP GP-REGISTRATION PLATE	
	195-9712	1	LAMP (12-VOLT, 10-WATT)	
	289-0849	1	BLOCK AS	
	252-0413	1	BRACKET AS (REGISTRATION PLATE)	
	186-2360	4	COVER AS	
			(EACH INCLUDES)	
E	**129-1854**		FASTENER-LOOP (10-CM)	
E	**129-1855**		FASTENER-HOOK (10-CM)	
	293-9044	1	HARNESS AS-REAR LIGHTING (STOP, TAIL, TURN)	
	102-8804	1	KIT-RECEPTACLE (4-PIN)	
			(INCLUDES RECEPTACLE AS & WEDGE)	
	186-3735	4	PIN-CONNECTOR (16-GA TO 18-GA)	
	186-3736	4	SOCKET-CONNECTOR (16-GA TO 18-GA)	
E	**125-7874**		TUBE-HEAT SHRINK (5.72-MM DIA) (10-CM)	
	5P-4571	2	TERMINAL-BLADE (14-GA TO 16-GA)	
	155-2271	1	KIT-CONNECTING PLUG (4-PIN)	
			(INCLUDES PLUG AS, WEDGE & INTERFACE SEAL)	
M	**8T-4138**	2	BOLT (M6X1X20-MM)	
M	**8T-4189**	1	BOLT (M8X1.25X20-MM)	
M	**5C-8312**	2	NUT (M4X0.7-THD)	
	178-2247	1	PIN	
	9R-5301	1	PIN-COTTER	
	175-4236	1	PLATE	
M	**6V-9672**	2	SCREW-MACHINE (M4X0.7X16-MM)	
	4B-4863	2	WASHER (4.7X11X1.2-MM THK)	
	9X-8257	1	WASHER (17.5X30X3.5-MM THK)	
	7X-0579	1	WASHER-HARD (8.8X25.5X2-MM THK)	
	8T-4205	2	WASHER-HARD (7.2X14.5X2-MM THK)	

E-ORDER BY THE CENTIMETER
M-METRIC PART
Y-SEPARATE ILLUSTRATION

<END>

333-7436 KIT-ROADING CONVERSION—FRONT

S/N: JAY1-UP

AN ATTACHMENT

SMCS-1408, 1429, 1430, 1432, 7000, 7319 **i03643541**

NOTE	REF NO	GRAPHIC REF	PART NUMBER	QTY	PART NAME 1 2 3 4 5 6 (PRODUCT LEVEL)	SEE PAGE
	1	1	**7K-1181**	5	STRAP-CABLE	
	2	1	**132-5166**	2	MIRROR GP-REAR VIEW	
		1	**148-2371**	1	CLAMP (TOP)	
		1	**148-2372**	1	CLAMP (BOTTOM)	
	3	1	**175-4239**	2	BRACKET AS	
	4	1	**178-3620**	6	STRAP-DUAL CLAMP	
Y	5	1	**195-0189**	1	LAMP GP-HEAD & SIGNAL (RH) (HIGH, LOW BEAM)	151
Y	6	1	**195-0190**	1	LAMP GP-HEAD & SIGNAL (LH) (HIGH, LOW BEAM)	152
	7	1	**258-3873**	2	BRACKET	
	8	1	**258-4131**	1	HARNESS AS-LIGHTING (FRONT, REAR)	
E		1	**125-7875**		TUBE-HEAT SHRINK (7.44-MM DIA) (15-CM)	
		1	**155-2255**	1	KIT-CONNECTING PLUG (12-PIN)	
		1	**155-2271**	2	KIT-CONNECTING PLUG (4-PIN)	
		1	**155-2274**	2	KIT-CONNECTING PLUG (6-PIN)	
					(EACH PLUG KIT INCLUDES PLUG AS, WEDGE & INTERFACE SEAL)	
		1	**180-9339**	1	PIN-CONNECTOR (14-GA TO 18-GA)	
		1	**180-9340**	1	SOCKET-CONNECTOR (14-GA TO 18-GA)	
		1	**102-8804**	2	KIT-RECEPTACLE (4-PIN)	
		1	**102-8801**	1	KIT-RECEPTACLE (12-PIN)	
					(EACH RECEPTACLE KIT INCLUDES RECEPTACLE AS & WEDGE)	
		1	**3S-2093**	3	STRAP-CABLE	
		1	**8T-8737**	17	PLUG-SEAL	
		1	**186-3735**	2	PIN-CONNECTOR (16-GA TO 18-GA)	
		1	**186-3736**	18	SOCKET-CONNECTOR (16-GA TO 18-GA)	
		1	**9W-0852**	7	PIN-CONNECTOR (14-GA)	
		1	**9W-0844**	6	SOCKET-CONNECTOR (14-GA)	
E		1	**119-3662**		TUBE-HEAT SHRINK (10.85-MM DIA) (7-CM)	
E		1	**125-7874**		TUBE-HEAT SHRINK (5.72-MM DIA) (15-CM)	
	9	1	**263-5421**	1	SWITCH AS-ROCKER (ROADING LIGHTS)	
		1	**111-7899**	1	GASKET	
	10	1	**3S-2093**	20	STRAP-CABLE	
M	11	1	**5C-9553**	4	BOLT (M6X1X16-MM)	
	12	1	**8T-4121**	4	WASHER-HARD (11X21X2.5-MM THK)	
M	13	1	**8T-4196**	4	BOLT (M10X1.5X35-MM)	
	14	1	**8T-4205**	4	WASHER-HARD (7.2X14.5X2-MM THK)	

E-ORDER BY THE CENTIMETER
M-METRIC PART
Y-SEPARATE ILLUSTRATION

333-7436 KIT-ROADING CONVERSION *(contd.)* **i03643541**

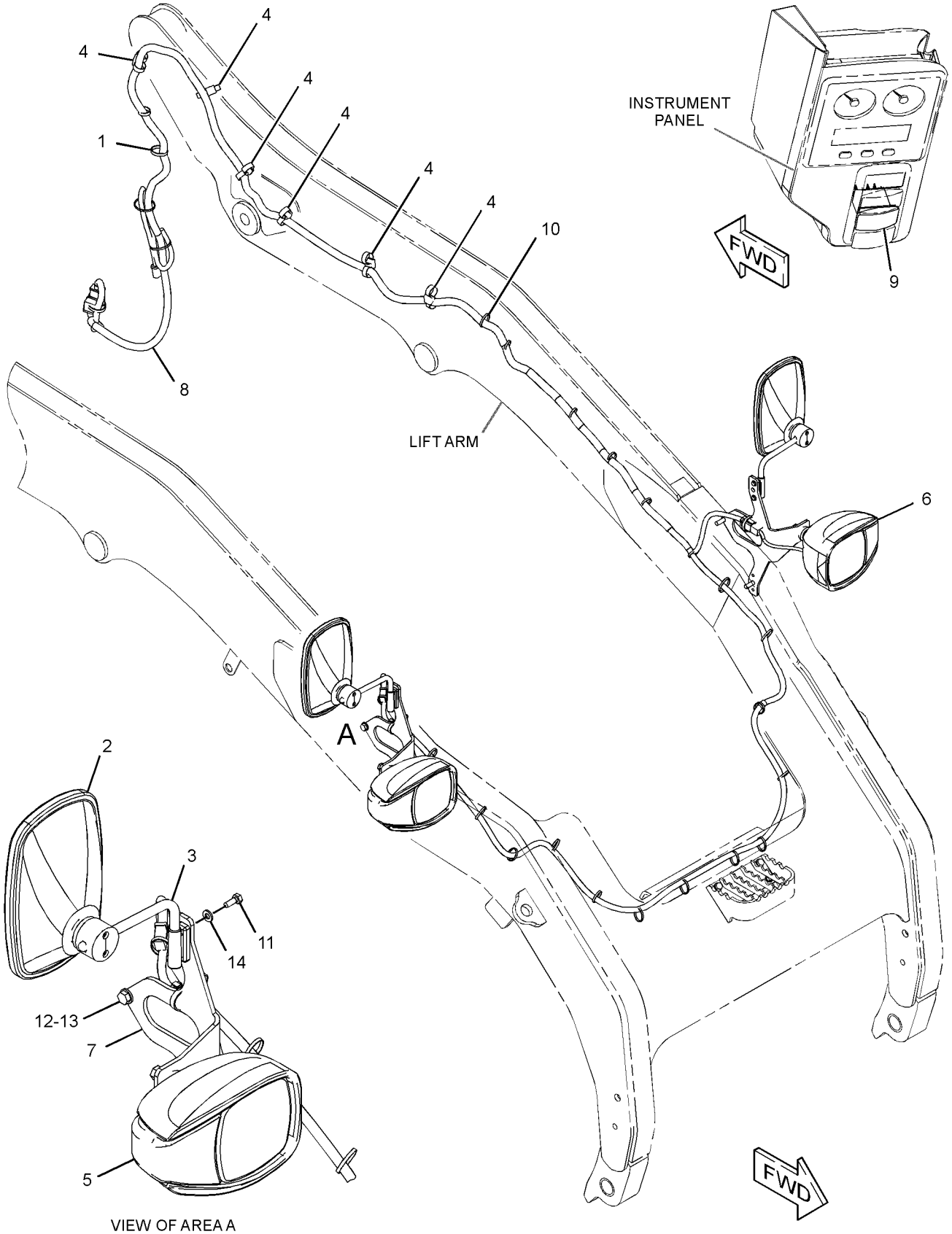

GRAPHIC #1 **<END>** g01818361

258-4385 LIFTING GP-MACHINE—FOUR POINT

S/N: JAY1-UP

PART OF 258-3818, 258-3819, 315-6353 CONVERSION AR-MACHINE, 258-3801 CONVERSION AR-ROADING

CANNOT BE USED WITH 258-4390—PAGE 269

AN ATTACHMENT

SMCS-1122, 6459, 7000 **i02664269**

NOTE	REF NO	GRAPHIC REF	PART NUMBER	QTY	PART NAME 1 2 3 4 5 6 (PRODUCT LEVEL)	SEE PAGE
	1	1	**7E-2700**	4	FILM-SYMBOL (LIFT EYE LOCATION)	
	2	1	**258-4391**	4	PLATE-LIFT	
M	3	1	**7X-2562**	8	BOLT (M20X2.5X45-MM)	
	4	1	**154-1580**	8	WASHER-HARD (22X38X6-MM THK)	

M-METRIC PART

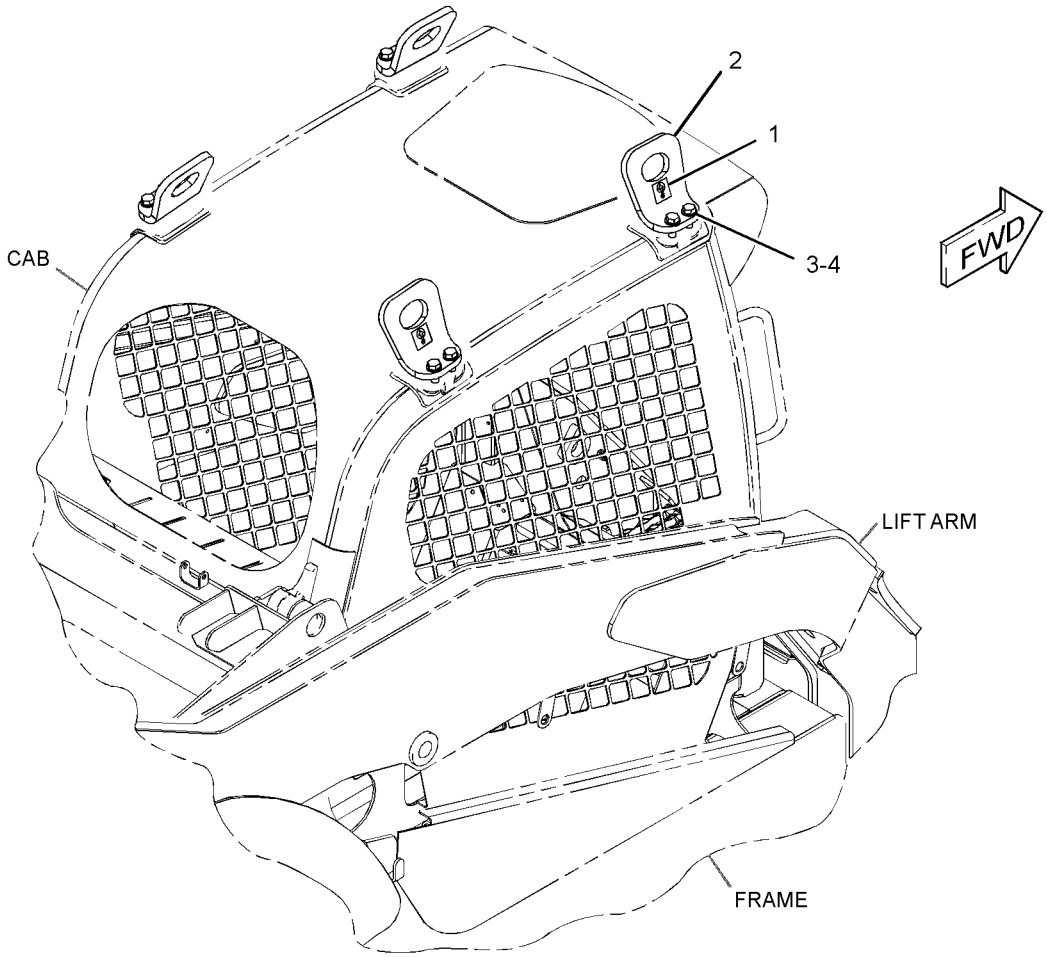

GRAPHIC #1 **<END>** g01322822

258-4390 LIFTING GP-MACHINE–KIT, SINGLE POINT

S/N: JAY1-UP

CANNOT BE USED WITH 258-4410–PAGE 270

AN ATTACHMENT

SMCS-1122, 6459, 7000 **i02939460**

NOTE	REF NO	GRAPHIC REF	PART NUMBER	QTY	PART NAME 1 2 3 4 5 6 (PRODUCT LEVEL)	SEE PAGE
	1	1	**7E-2700**	2	FILM-SYMBOL (LIFT EYE LOCATION)	
	2	1	**258-4389**	4	MOUNT	
	3	1	**258-4392**	1	BRACKET AS-LIFT	
	4	1	**154-1580**	8	WASHER-HARD (22X38X6-MM THK)	
M	5	1	**7X-2562**	8	BOLT (M20X2.5X45-MM)	

M-METRIC PART

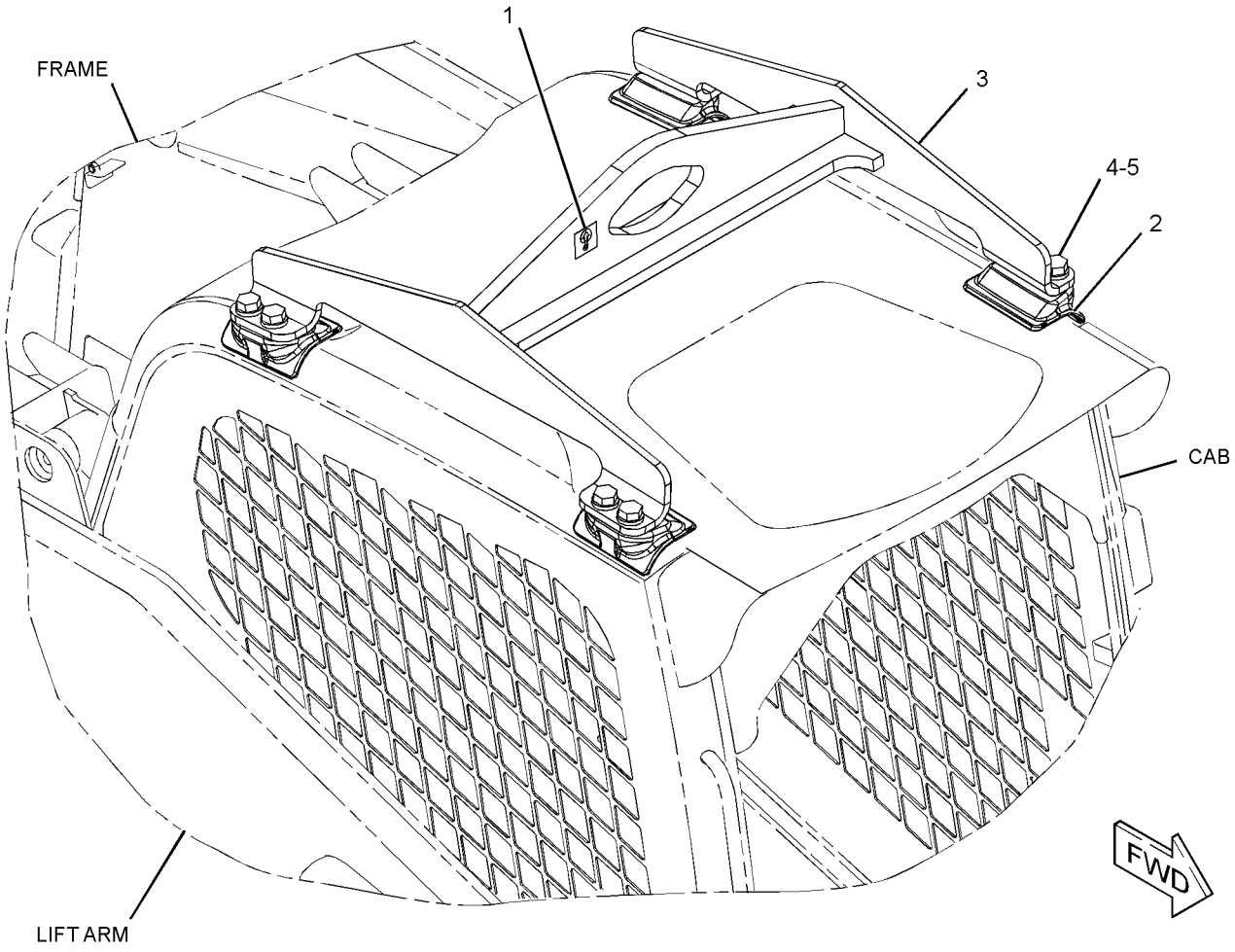

GRAPHIC #1 **<END>** g01339251

258-4410 LIFTING GP-MACHINE–KIT, FOUR POINT

S/N: JAY1-UP

CANNOT BE USED WITH 258-4390–PAGE 269, 258-4400–PAGE 693

AN ATTACHMENT

SMCS-1122, 6459, 7000 **i02939461**

NOTE	REF NO	GRAPHIC REF	PART NUMBER	QTY	PART NAME 1 2 3 4 5 6 (PRODUCT LEVEL)	SEE PAGE
	1	1	**7E-2700**	4	FILM-SYMBOL (LIFT EYE LOCATION)	
	2	1	**258-4389**	4	MOUNT	
	3	1	**258-4391**	4	PLATE-LIFT	
	4	1	**154-1580**	8	WASHER-HARD (22X38X6-MM THK)	
M	5	1	**7X-2562**	8	BOLT (M20X2.5X45-MM)	

M-METRIC PART

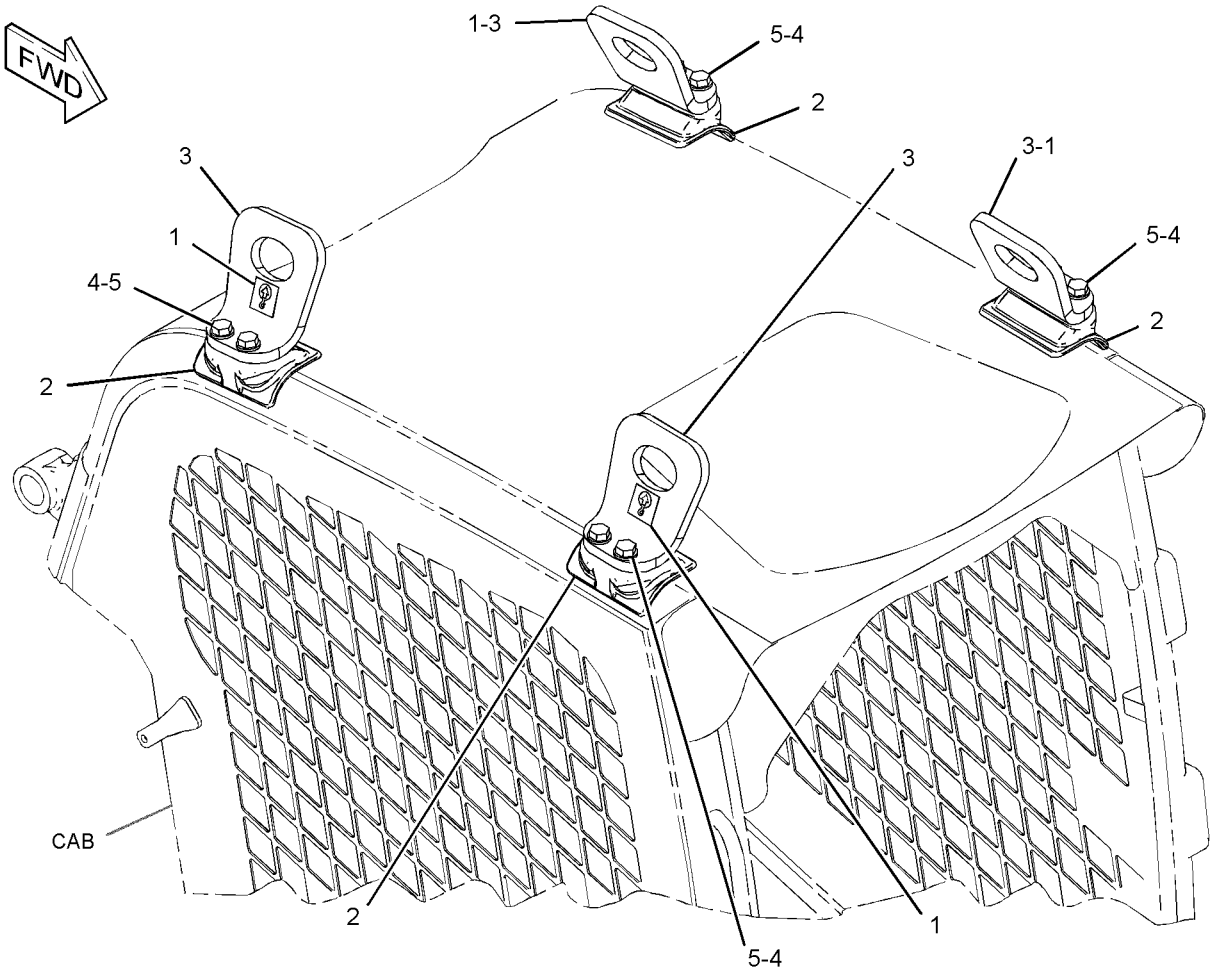

GRAPHIC #1 **<END>** g01344723

258-3872 MIRROR & MTG GP-REAR VIEW–
WITH ROADING LIGHT MOUNT
S/N: JAY1-UP
PART OF 258-3818, 258-3819, 315-6353 CONVERSION AR-MACHINE
AN ATTACHMENT

SMCS-7319 **i03505322**

NOTE	REF NO	GRAPHIC REF	PART NUMBER	QTY	PART NAME 1 2 3 4 5 6 (PRODUCT LEVEL)	SEE PAGE
	1	1	**132-5166**	2	MIRROR GP-REAR VIEW	
					(EACH INCLUDES)	
		1	**148-2371**	1	CLAMP (TOP)	
		1	**148-2372**	1	CLAMP (BOTTOM)	
	2	1	**175-4239**	2	BRACKET AS	
	3	1	**258-3873**	2	BRACKET	
M	4	1	**5C-9553**	4	BOLT (M6X1X16-MM)	
	5	1	**8T-4121**	4	WASHER-HARD (11X21X2.5-MM THK)	
M	6	1	**8T-4196**	4	BOLT (M10X1.5X35-MM)	
	7	1	**8T-4205**	4	WASHER-HARD (7.2X14.5X2-MM THK)	

M-METRIC PART

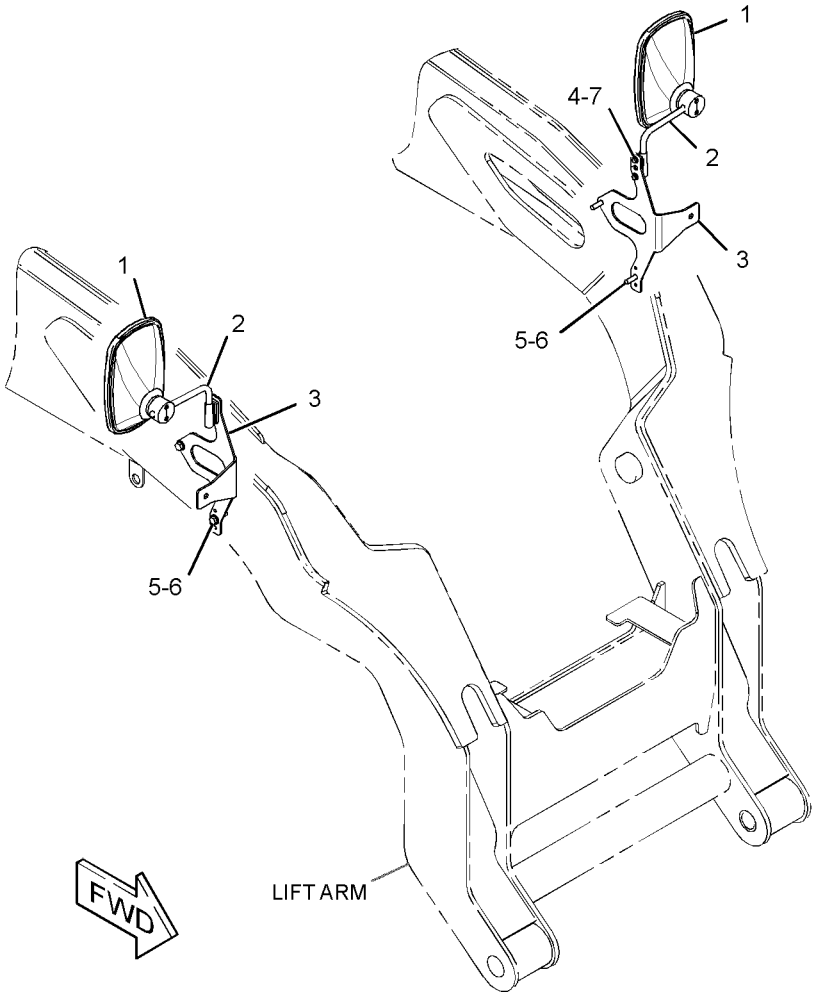

GRAPHIC #1 **<END>** g01313245

258-3848 MOUNTING GP-REGISTRATION

S/N: JAY1-UP
PART OF 258-3819 CONVERSION AR-MACHINE
AN ATTACHMENT

SMCS-1408, 1429, 7050 **i03624553**

NOTE	REF NO	GRAPHIC REF	PART NUMBER	QTY	PART NAME 1 2 3 4 5 6 (PRODUCT LEVEL)	SEE PAGE
	1	1	**175-4236**	1	PLATE	
	2	1	**190-8962**	1	LAMP GP-REGISTRATION PLATE	
		1	**195-9712**	1	LAMP (12-VOLT, 10-WATT)	
	3	1	**252-0413**	1	BRACKET AS (REGISTRATION PLATE)	
	4	1	**4B-4863**	2	WASHER (4.7X11X1.2-MM THK)	
M	5	1	**5C-8312**	2	NUT (M4X0.7-THD)	
	6	1	**7X-0579**	1	WASHER-HARD (8.8X25.5X2-MM THK)	
M	7	1	**6V-9672**	2	SCREW-MACHINE (M4X0.7X16-MM)	
M	8	1	**8T-4138**	2	BOLT (M6X1X20-MM)	
M	9	1	**8T-4189**	1	BOLT (M8X1.25X20-MM)	
	10	1	**8T-4205**	2	WASHER-HARD (7.2X14.5X2-MM THK)	
	11	1	**293-9044**	1	HARNESS AS-REAR LIGHTING (STOP, TAIL, TURN)	
		1	**102-8804**	1	KIT-RECEPTACLE (4-PIN)	
					(INCLUDES RECEPTACLE AS & WEDGE)	
		1	**186-3735**	4	PIN-CONNECTOR (16-GA TO 18-GA)	
		1	**186-3736**	4	SOCKET-CONNECTOR (16-GA TO 18-GA)	
E		1	**125-7874**		TUBE-HEAT SHRINK (5.72-MM DIA) (10-CM)	
		1	**5P-4571**	2	TERMINAL-BLADE (14-GA TO 16-GA)	
		1	**155-2271**	1	KIT-CONNECTING PLUG (4-PIN)	
					(INCLUDES PLUG AS, WEDGE & INTERFACE SEAL)	

E-ORDER BY THE CENTIMETER
M-METRIC PART

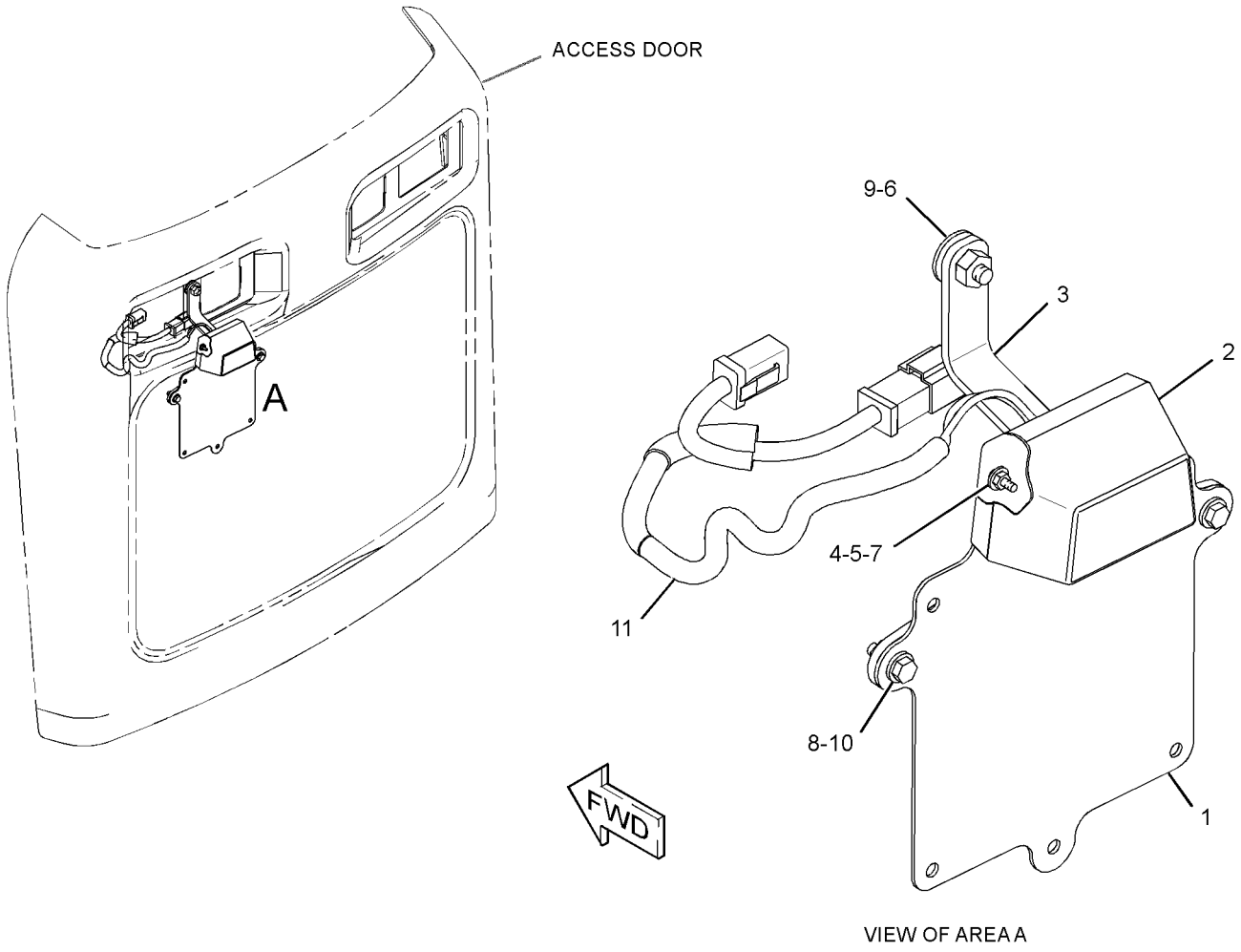

GRAPHIC #1 **<END>** g01557353

307-6237 MOUNTING GP-ROADING LIGHTS–
KIT, GERMANY, ITALY
S/N: JAY2060-UP
AN ATTACHMENT

SMCS-1429 **i03571193**

NOTE	REF NO	GRAPHIC REF	PART NUMBER	QTY	PART NAME 1 2 3 4 5 6 (PRODUCT LEVEL)	SEE PAGE
	1	1	**9R-1499**	2	REFLECTOR	
	2	1	**178-3620**	5	STRAP-DUAL CLAMP	
	3	1	**310-3990**	2	PLATE AS	
M		1	**8T-3597**	2	NUT-WELD (M12X1.75-THD)	
	4	1	**310-4062**	2	BRACKET AS	
	5	1	**312-8932**	2	PLATE	
	6	1	**315-9794**	1	HARNESS AS-REAR LIGHTING	
		1	**186-3735**	4	PIN-CONNECTOR (16-GA TO 18-GA)	
		1	**155-2271**	1	KIT-CONNECTING PLUG (4-PIN)	
					(INCLUDES PLUG AS, WEDGE & TNERFACE SEAL)	
		1	**102-8804**	1	KIT-RECEPTACLE (4-PIN)	
					(INCLUDES RECEPTACLE AS & WEDGE)	
		1	**186-3736**	4	SOCKET-CONNECTOR (16-GA TO 18-GA)	
	7	1	**3S-2093**	3	STRAP-CABLE	
M	8	1	**5C-7261**	2	NUT (M8X1.25-THD)	
	9	1	**5P-1076**	4	WASHER-HARD (13.5X30X4-MM THK)	
M	10	1	**8T-4183**	4	BOLT (M12X1.75X40-MM)	
M	11	1	**8T-4189**	2	BOLT (M8X1.25X20-MM)	
	12	1	**8T-4224**	4	WASHER-HARD (8.8X16X2-MM THK)	
	13	1	**9G-4191**	2	GROMMET	

M-METRIC PART

307-6237 MOUNTING GP-ROADING LIGHTS *(contd.)* i03571193

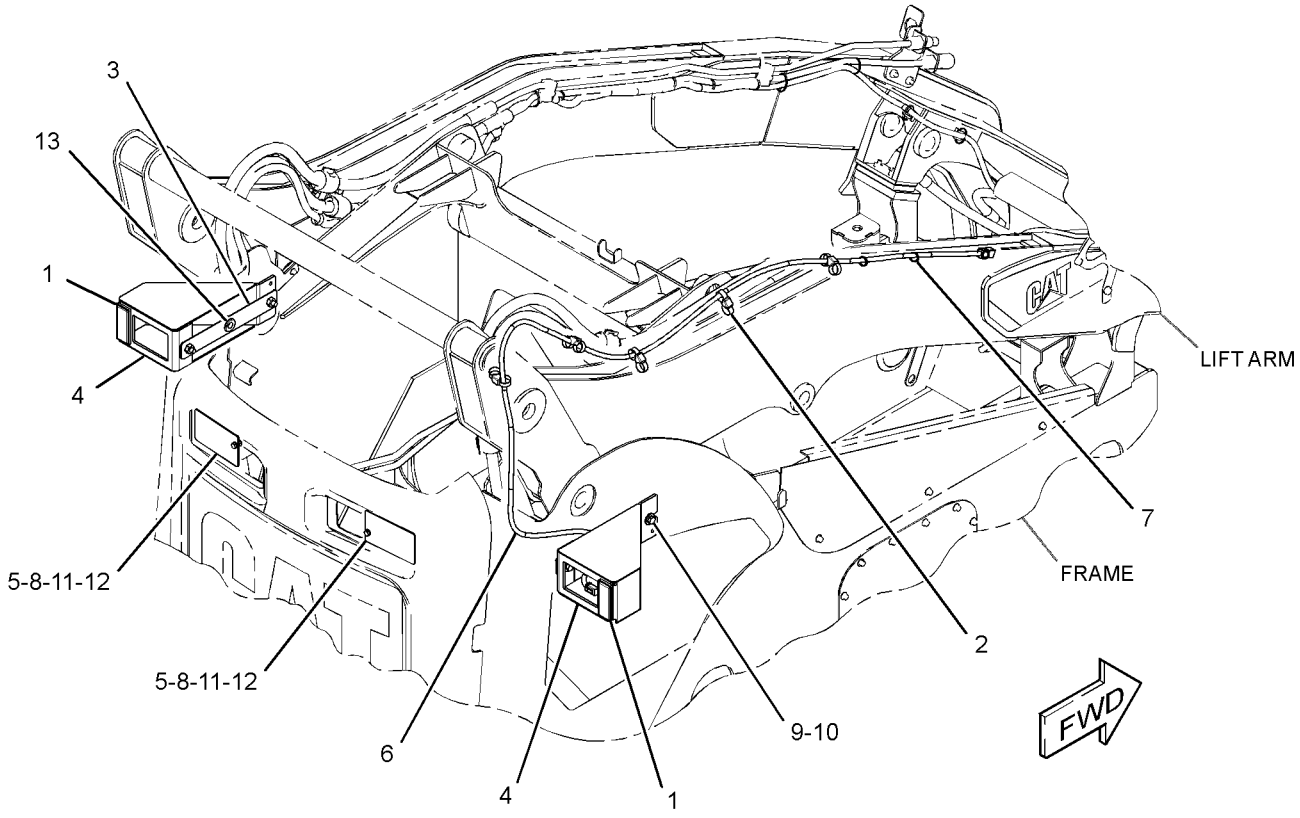

GRAPHIC #1 **<END>** g01444372

FRAME AND BODY

258-3496 SUPPRESSION GP-SOUND—MACHINE

S/N: JAY1-UP

PART OF 258-3818, 258-3819, 315-6353 CONVERSION AR-MACHINE, 258-3801 CONVERSION AR-ROADING

AN ATTACHMENT

SMCS-1801, 7076 **i02645971**

NOTE	REF NO	GRAPHIC REF	PART NUMBER	QTY	PART NAME 1 2 3 4 5 6 (PRODUCT LEVEL)	SEE PAGE
	1	1	**176-4079**	1	INSULATION	
	3	1	**261-6378**	1	INSULATION	
	4	1	**261-6379**	1	INSULATION	
	5	1	**294-0075**	1	INSULATION	
	6	1	**294-0076**	1	INSULATION	
	7	1	**294-0077**	1	INSULATION	
	8	1	**294-0078**	1	INSULATION	
	9	1	**294-0079**	1	INSULATION	
	10	1	**294-0081**	1	INSULATION	
	11	1	**294-0082**	1	INSULATION	
	12	1	**294-0083**	1	INSULATION	
	13	1	**294-0084**	1	INSULATION	
	14	1	**294-0085**	1	INSULATION	
	15	1	**294-0086**	1	INSULATION	
	18	1	**294-0090**	1	INSULATION	
	19	1	**294-4558**	1	INSULATION	
	20	1	**294-4559**	1	INSULATION	
	21	1	**295-0035**	1	INSULATION	

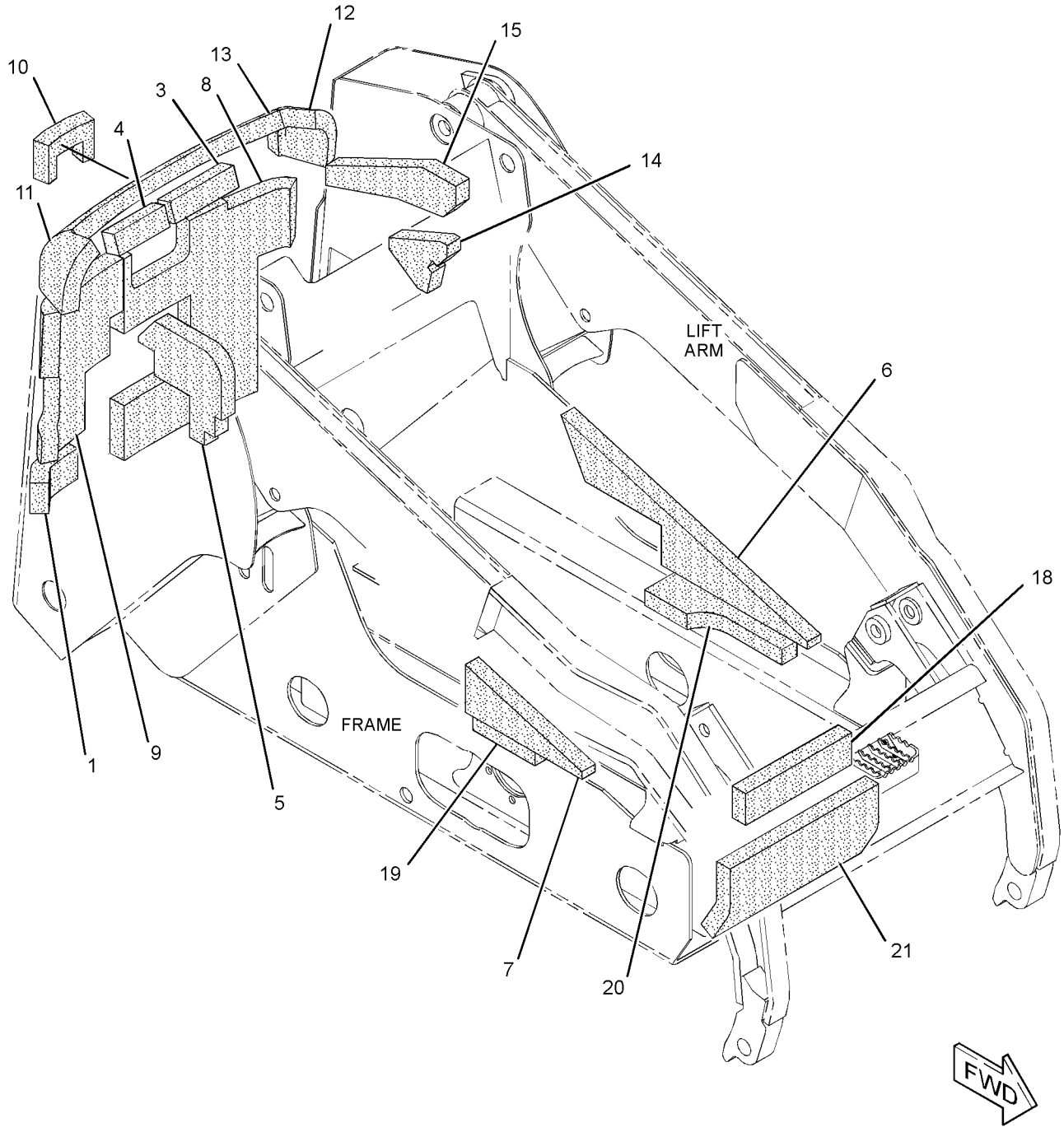

GRAPHIC #1 **<END>** g01329402

280-8330 SUPPRESSION GP-SOUND–ENGINE

S/N: JAY1-UP
PART OF 258-3818, 258-3819, 315-6353 CONVERSION AR-MACHINE, 258-3801 CONVERSION AR-ROADING
AN ATTACHMENT

SMCS-1801, 7076 **i02885847**

NOTE	REF NO	GRAPHIC REF	PART NUMBER	QTY	PART NAME 1 2 3 4 5 6 (PRODUCT LEVEL)	SEE PAGE
	1	1	**246-1259**	1	COVER-INSULATION (LH)	
	2	1	**246-1260**	1	COVER-INSULATION (RH)	
	3	1	**280-8307**	1	BRACKET AS	
B	4	1	**280-8335**	4	SPACER	
	5	1	**101-2867**	1	WASHER-HARD (7.2X25X2-MM THK)	
	6	1	**270-9442**	1	SCREW-TRUSS HEAD (M6X1X20-MM)	
M	7	1	**6V-7357**	4	BOLT (M6X1X25-MM)	
M	8	1	**5C-9553**	2	BOLT (M6X1X16-MM)	
	9	1	**9X-2026**	2	WASHER (6.5X17X1-MM THK)	

B-USE AS REQUIRED
M-METRIC PART

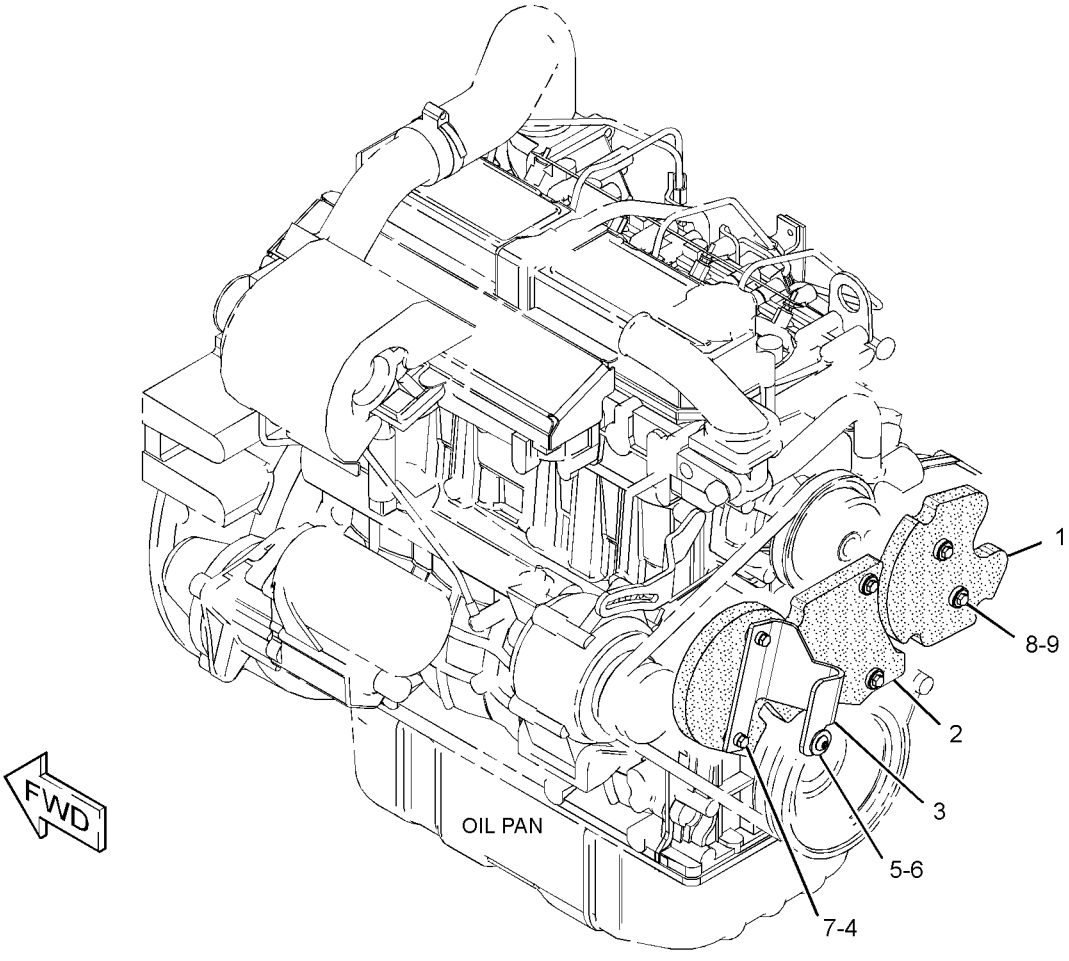

GRAPHIC #1 **<END>** g01372934

294-4560 SUPPRESSION GP-SOUND–MACHINE

S/N: JAY1-UP
PART OF 258-3818, 258-3819, 315-6353 CONVERSION AR-MACHINE, 258-3801 CONVERSION AR-ROADING
AN ATTACHMENT

SMCS-1801, 7076 **i02645129**

NOTE	REF NO	GRAPHIC REF	PART NUMBER	QTY	PART NAME 1 2 3 4 5 6 (PRODUCT LEVEL)	SEE PAGE
	1	1	**176-4079**	2	INSULATION	
	2	1	**294-4555**	1	INSULATION	
	3	1	**294-4556**	1	INSULATION	

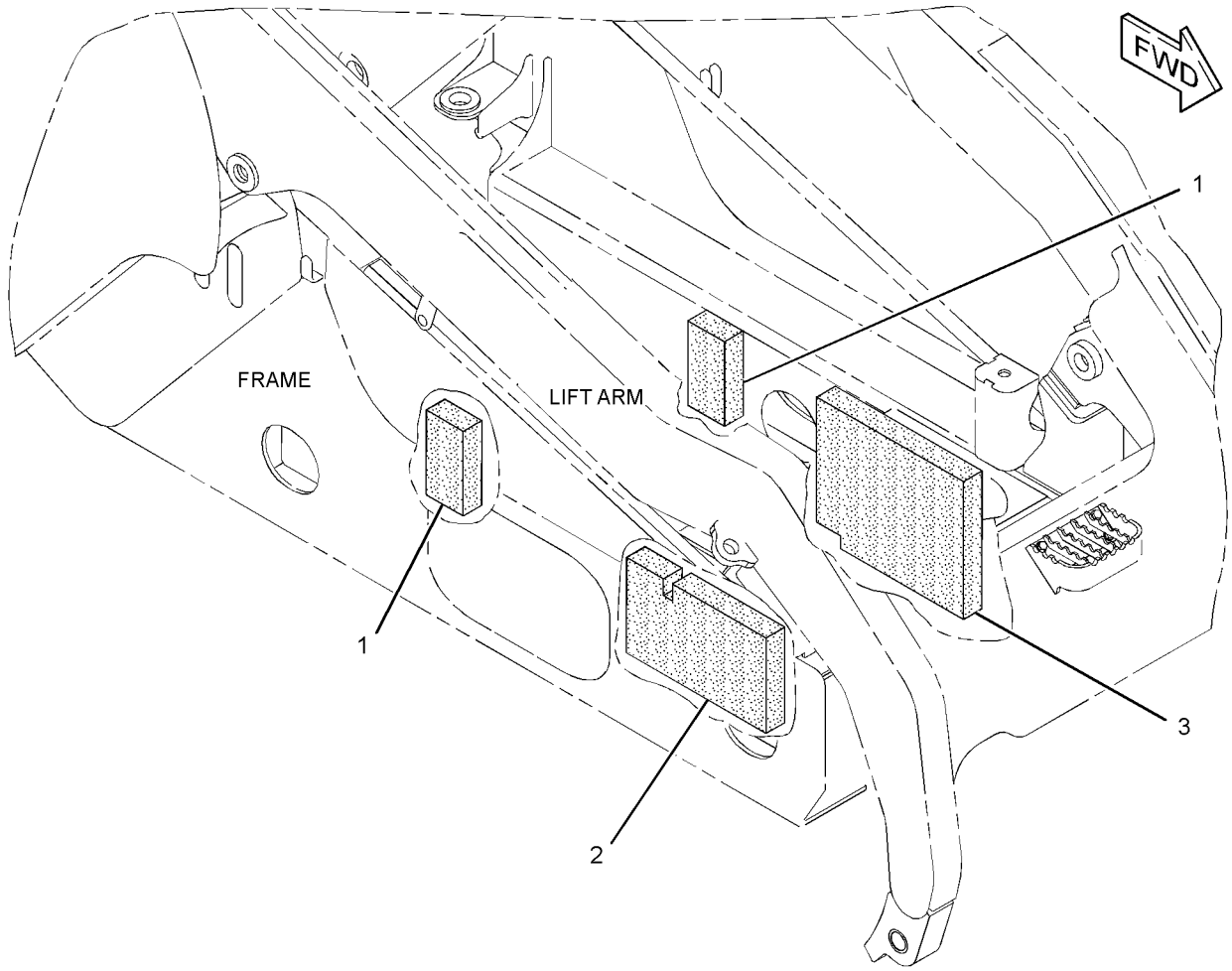

GRAPHIC #1 **<END>** g01332926

HYDRAULIC SYSTEM

149-0686 ACCUMULATOR GP-HYDRAULIC—CHARGED

S/N: JAY1-UP

PART OF 258-3462 MANF & SOLENOID MTG GP-ACCUM

FIELD REPLACEMENT ORDER 227-8807—PAGE 280

SMCS-5077 **i02036049**

NOTE	PART NUMBER	QTY	PART NAME 1 2 3 4 5 6 (PRODUCT LEVEL)	SEE PAGE
			(NO SERVICED PARTS)	

<END>

227-8807 ACCUMULATOR GP-HYDRAULIC—UNCHARGED

S/N: JAY1-UP

FIELD REPLACEMENT FOR 149-0686—PAGE 280

SMCS-5077 **i02036588**

NOTE	PART NUMBER	QTY	PART NAME 1 2 3 4 5 6 (PRODUCT LEVEL)	SEE PAGE
			(NO SERVICED PARTS)	

<END>

310-8460 ACCUMULATOR GP-RIDE CONTROL–CHARGED

S/N: JAY1-UP
PART OF 304-6754 KIT-RIDE CONTROL
FIELD REPLACEMENT ORDER 310-8461–PAGE 282
AN ATTACHMENT

SMCS-5077 **i02840193**

NOTE	REF NO	GRAPHIC REF	PART NUMBER	QTY	PART NAME 1 2 3 4 5 6 (PRODUCT LEVEL)	SEE PAGE
	1	1	**224-5132**	1	CAP (GAS VALVE)	
	2	1	**224-5152**	1	VALVE-GAS	
	3	1	**3J-7354**	1	SEAL-O-RING	
	4	1	**1J-9671**	1	SEAL-O-RING	
	5	1	**241-0037**	1	FILM-WARNING (HIGH PRESSURE, READ OMM)	
	6	1	**312-4965**	1	LABEL	

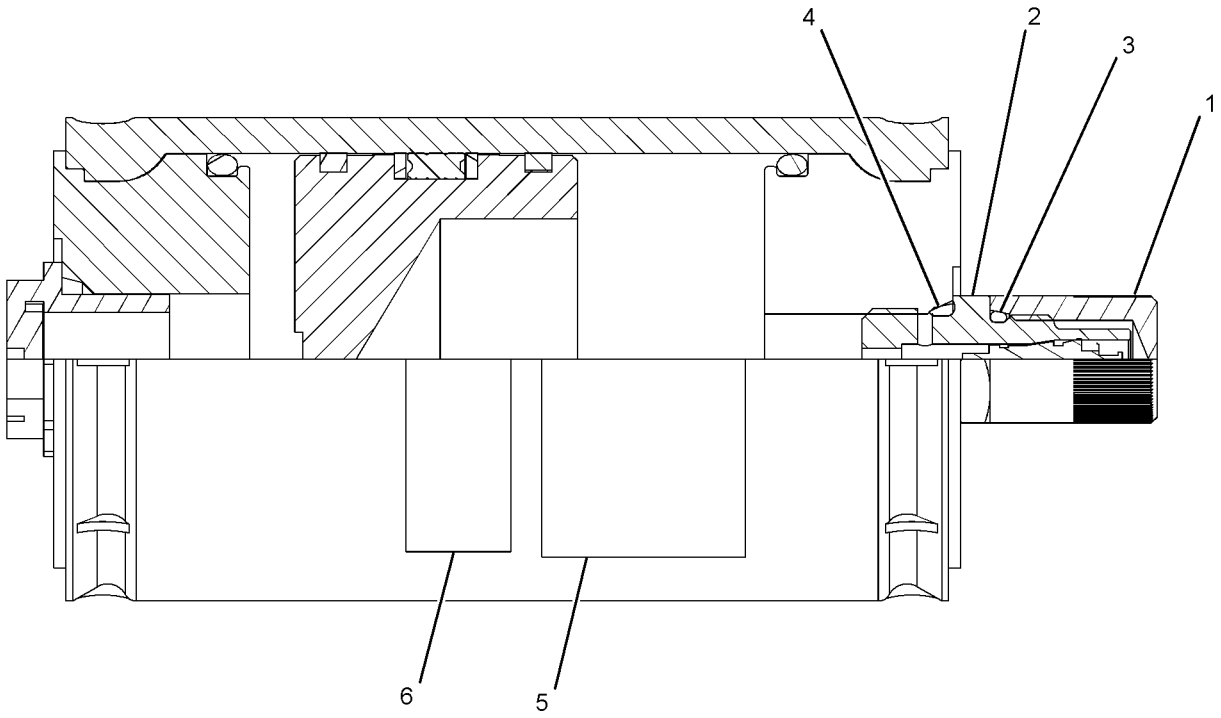

GRAPHIC #1 **<END>** g01417908

310-8461 ACCUMULATOR GP-RIDE CONTROL—UNCHARGED

S/N: JAY1-UP
PART OF 304-6755 MANF & SOLENOID MTG GP-ACCUM
FIELD REPLACEMENT FOR 310-8460—PAGE 281
AN ATTACHMENT

SMCS-5077 **i02840194**

NOTE	REF NO	GRAPHIC REF	PART NUMBER	QTY	PART NAME 1 2 3 4 5 6 (PRODUCT LEVEL)	SEE PAGE
	1	1	**224-5132**	1	CAP (GAS VALVE)	
	2	1	**224-5152**	1	VALVE-GAS	
	3	1	**3J-7354**	1	SEAL-O-RING	
	4	1	**1J-9671**	1	SEAL-O-RING	
	5	1	**241-0037**	1	FILM-WARNING (HIGH PRESSURE, READ OMM)	

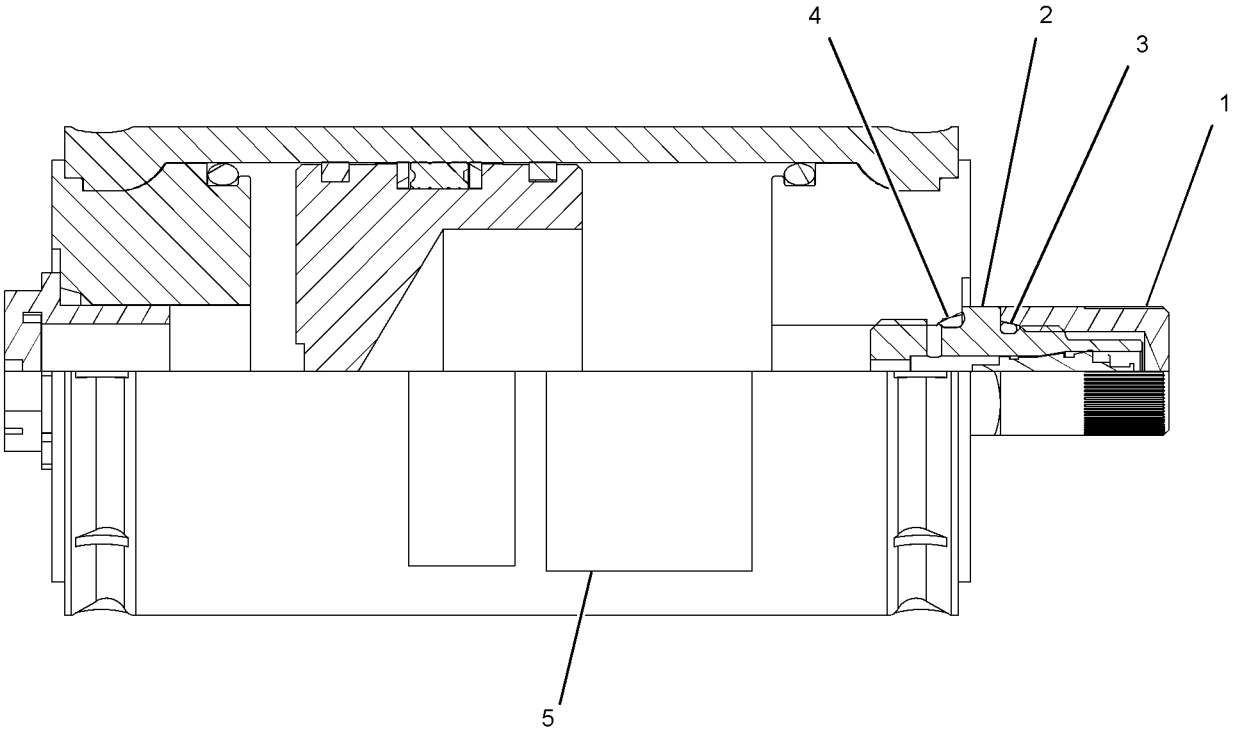

GRAPHIC #1 **<END>** g01417987

230-5406 CYLINDER & MTG GP-ANGLE BLADE

S/N: JAY1-UP
PART OF 177-1989, 177-1990 BLADE AR
AN ATTACHMENT

SMCS-6701 **i01860855**

NOTE	REF NO	GRAPHIC REF	PART NUMBER	QTY	PART NAME 1 2 3 4 5 6 (PRODUCT LEVEL)	SEE PAGE
	1	1	**064-3843**	1	RING-SNAP	
	2	1	**210-0855**	1	PIN AS	
	3	1	**213-3943**	1	BUSHING	
Y	4	1	**225-9521**	1	CYLINDER GP-HYDRAULIC (ANGLE BLADE)	291
	5	1	**3B-8489**	1	FITTING-GREASE	
	6	1	**7X-7729**	1	WASHER (11X25X3-MM THK)	
M	7	1	**8T-4137**	1	BOLT (M10X1.5X20-MM)	

M-METRIC PART
Y-SEPARATE ILLUSTRATION

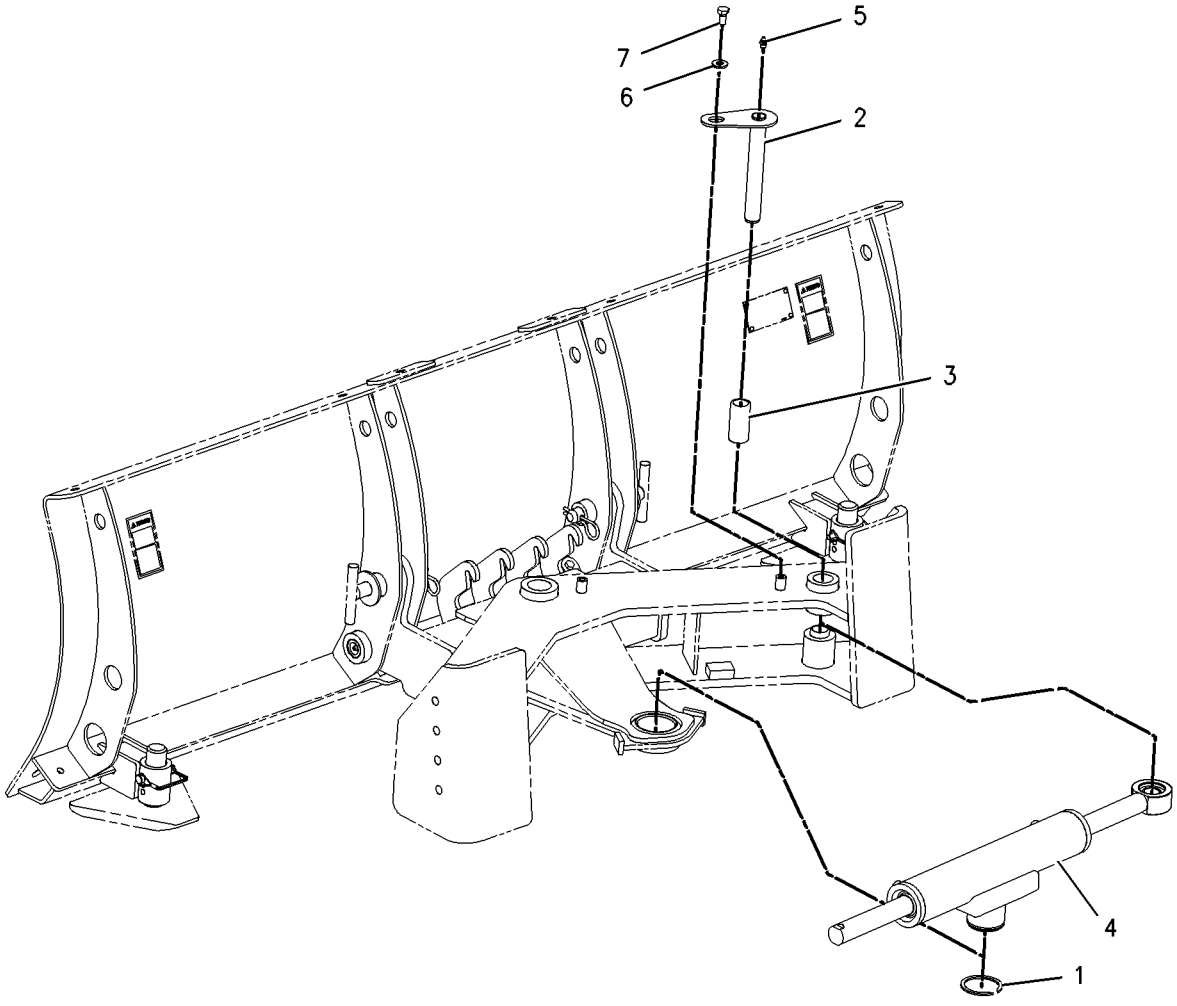

GRAPHIC #1 **<END>** g00978845

HYDRAULIC SYSTEM

231-5274 CYLINDER & MTG GP-ANGLE BLADE

S/N: JAY1-UP
PART OF 231-5275, 231-5277 BLADE AR
AN ATTACHMENT

SMCS-6701 **i03590820**

NOTE	REF NO	GRAPHIC REF	PART NUMBER	QTY	PART NAME 1 2 3 4 5 6 (PRODUCT LEVEL)	SEE PAGE
CY	1	1	**274-9930**	2	CYLINDER GP-HYDRAULIC (LOWER RADIATOR)	292
CY	2	1	**274-9931**	1	CYLINDER GP-HYDRAULIC (UPPER)	293
	3	1	**231-5266**	6	PIN AS	
	4	1	**238-0999**	12	SPACER (25.4X28.4X13-MM THK)	
M	5	1	**8T-4200**	6	BOLT (M8X1.25X16-MM)	
	6	1	**6V-8397**	6	SEAL-O-RING	
	7	1	**8T-4224**	6	WASHER-HARD (8.8X16X2-MM THK)	
	8	1	**244-1370**	6	SPACER (8.2X13X6-MM THK)	

C-CHANGE FROM PREVIOUS TYPE
M-METRIC PART
Y-SEPARATE ILLUSTRATION

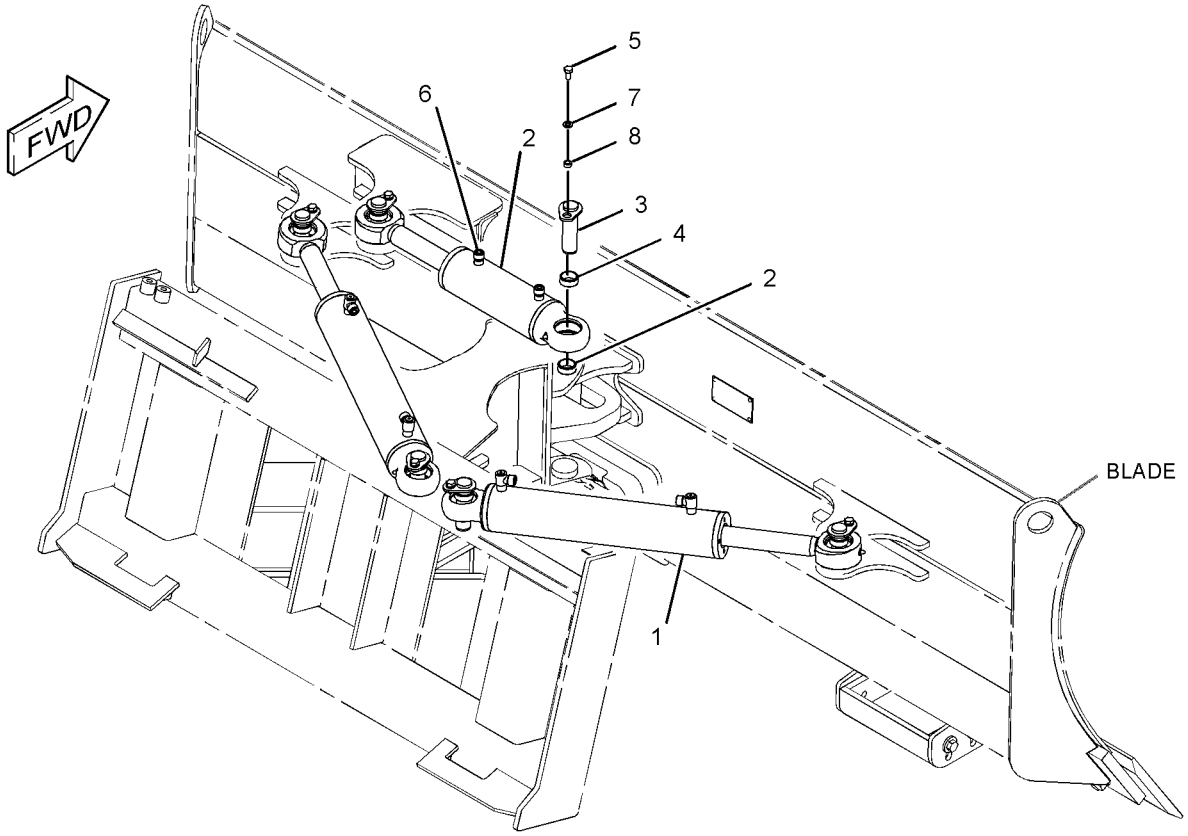

GRAPHIC #1 **<END>** g01270108

154-5018 CYLINDER GP-BUCKET

S/N: JAY1-UP
60-MM (2.4-IN) BORE X 200-MM (7.9-IN) STROKE
PART OF 279-5382, 279-5390, 279-5398, 279-5403, 293-0139 BUCKET
AR-MULTIPURPOSE
AN ATTACHMENT

SMCS-5498 **i03624556**

NOTE	REF NO	GRAPHIC REF	PART NUMBER	QTY	PART NAME 1 2 3 4 5 6 (PRODUCT LEVEL)	SEE PAGE
	1	1	**3B-8489**	1	FITTING-GREASE	
					AVAILABLE REPAIR KIT(S):	
			164-3213	1	KIT-SEAL	
					(INCLUDES O-RINGS, SEALS, BACK RINGS, PISTON GUIDE RING, SET SCREW & WIPER RING)	

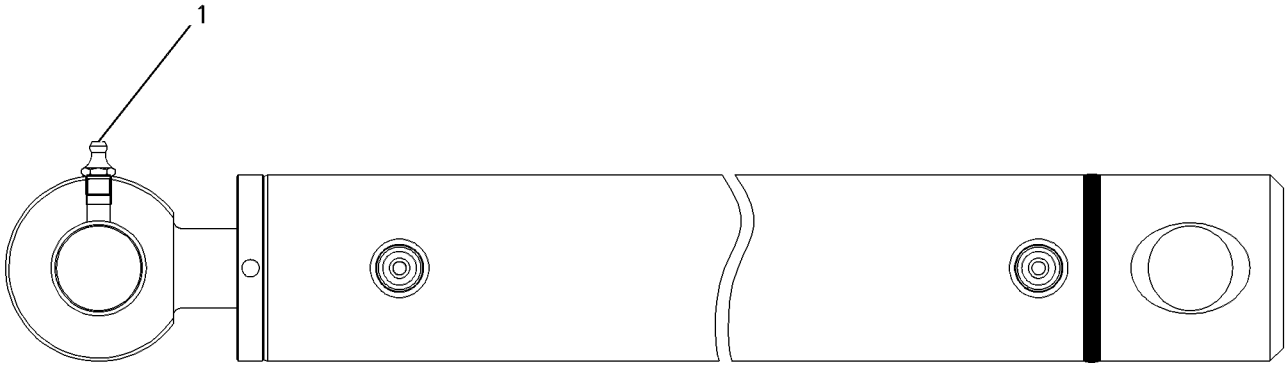

GRAPHIC #1 **<END>** g00564347

HYDRAULIC SYSTEM

293-6264 CYLINDER GP-BUCKET

S/N: JAY1-UP
50-MM (2-IN) BORE X 225-MM (8.9-IN) STROKE
PART OF 286-9300, 286-9301 BUCKET AR-GRAPPLE
AN ATTACHMENT

SMCS-5498 **i03590825**

NOTE	REF NO	GRAPHIC REF	PART NUMBER	QTY	PART NAME 1 2 3 4 5 6 (PRODUCT LEVEL)	SEE PAGE
	1	1	**6B-6682**	1	NUT-FULL (3/4-16-THD)	
	2	1	**3B-8489**	1	FITTING-GREASE	
	3	1	**7J-0204**	2	SEAL-O-RING	
	4	1	**9S-8007**	2	PLUG	
					AVAILABLE REPAIR KIT(S):	
			262-0941	1	KIT-SEAL (BUCKET CYLINDER)	
					(INCLUDES PISTON SEAL, PISTON WEAR RING, ROD-O-RING, GLAND-O-RING, GLAND BACKUP RING, GLAND DUST RING, WIPER SEAL & ROD SEAL)	

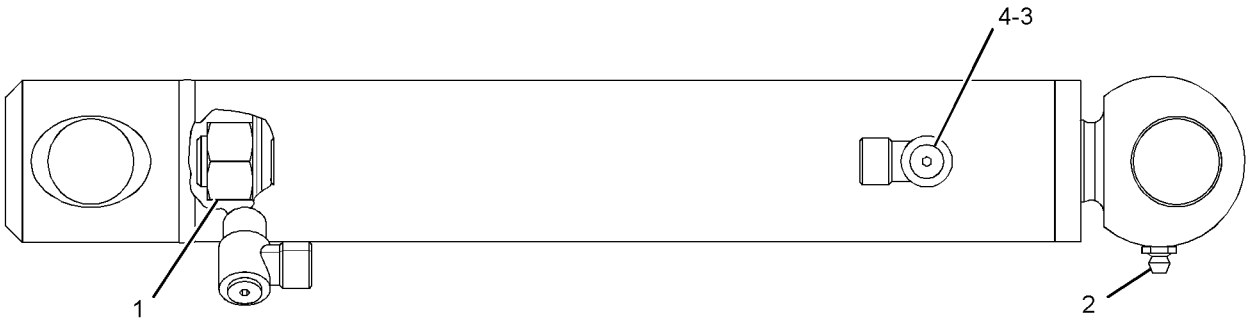

GRAPHIC #1 **<END>** g01373044

164-9295 CYLINDER GP-GRAPPLE

S/N: JAY1-UP
40-MM (1.6-IN) BORE X 200-MM (7.9-IN) STROKE
PART OF 285-6116 GRAPPLE & CYLINDER GP-UTILITY
AN ATTACHMENT

SMCS-5457 **i03347409**

NOTE	REF NO	GRAPHIC REF	PART NUMBER	QTY	PART NAME 1 2 3 4 5 6 (PRODUCT LEVEL)	SEE PAGE
	1	1	**3B-8489**	1	FITTING-GREASE	
					AVAILABLE REPAIR KIT(S):	
			172-5285	1	KIT-SEAL	
					(INCLUDES WIPER RING, PISTON GUIDE RING, PISTON SEAL & O-RINGS)	

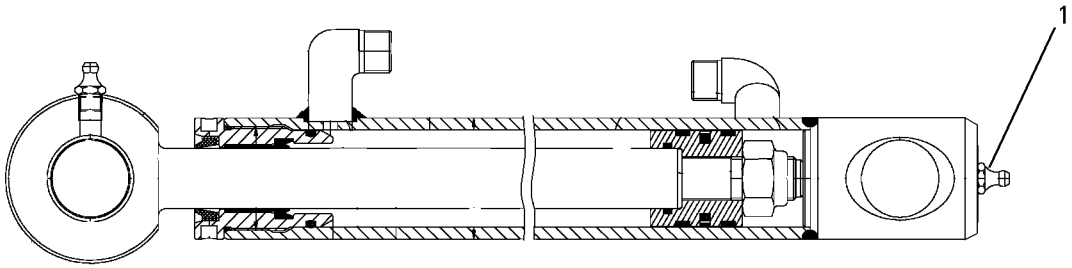

GRAPHIC #1 **<END>** g00604934

HYDRAULIC SYSTEM

255-0943 CYLINDER GP-GRAPPLE

S/N: JAY1-UP
40-MM (1.6-IN) BORE X 200-MM (7.9-IN) STROKE
PART OF 285-6116 GRAPPLE & CYLINDER GP-UTILITY
AN ATTACHMENT

SMCS-5457 **i02888528**

NOTE	REF NO	GRAPHIC REF	PART NUMBER	QTY	PART NAME 1 2 3 4 5 6 (PRODUCT LEVEL)	SEE PAGE
	1	1	**254-9097**	1	BEARING-SLEEVE	
	2	1	**3B-8489**	2	FITTING-GREASE	
	3	1	**7J-0204**	2	SEAL-O-RING	
	4	1	**9S-8007**	2	PLUG	
	5	1	**2K-4821**	1	LOCKNUT (5/8-18-THD)	
					AVAILABLE REPAIR KIT(S):	
			286-3591	1	KIT-SEAL	
					(INCLUDES SEALS, SEAL-O-RINGS & RING BACK-UPS)	

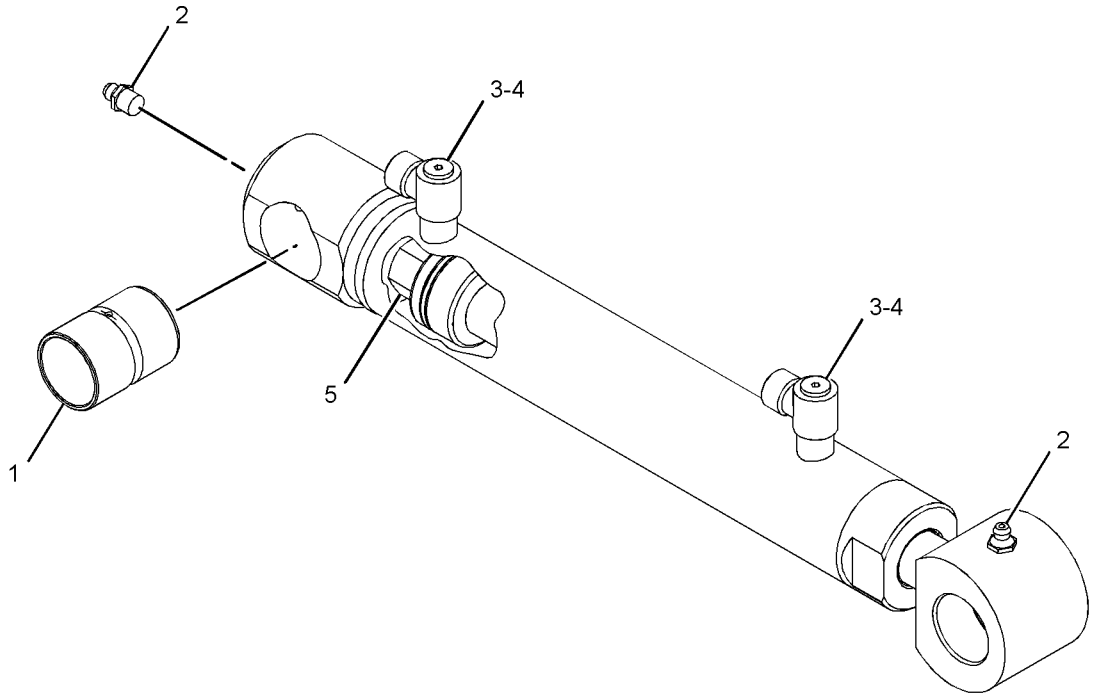

GRAPHIC #1 **<END>** g01439380

278-1975 CYLINDER GP-GRAPPLE–INDUSTRIAL

S/N: JAY1-UP
60-MM (2.4-IN) BORE X 200-MM (7.9-IN) STROKE
PART OF 157-7223, 157-7224, 157-7225, 217-6229 BUCKET AR-GRAPPLE, 279-5350, 279-5360 FORK AR-GRAPPLE
AN ATTACHMENT

SMCS-5457 **i03590846**

NOTE	REF NO	GRAPHIC REF	PART NUMBER	QTY	PART NAME 1 2 3 4 5 6 (PRODUCT LEVEL)	SEE PAGE
	1	1	**7D-8508**	1	NUT-FULL (7/8-14-THD)	
	2	1	**254-9097**	1	BEARING-SLEEVE	
	3	1	**255-0942**	1	BEARING-SLEEVE	
	4	1	**3B-8489**	1	FITTING-GREASE	
	5	1	**7J-0204**	2	SEAL-O-RING	
	6	1	**9S-8007**	2	PLUG	
					AVAILABLE REPAIR KIT(S):	
			278-1970	1	KIT-SEAL (HYDRAULIC CYLINDER)	
					(INCLUDES SEAL-O-RINGS, WEAR RINGS, BACKUP RING, SEAL-U CUP & SEAL)	

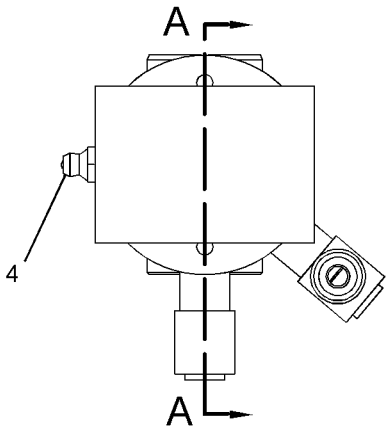

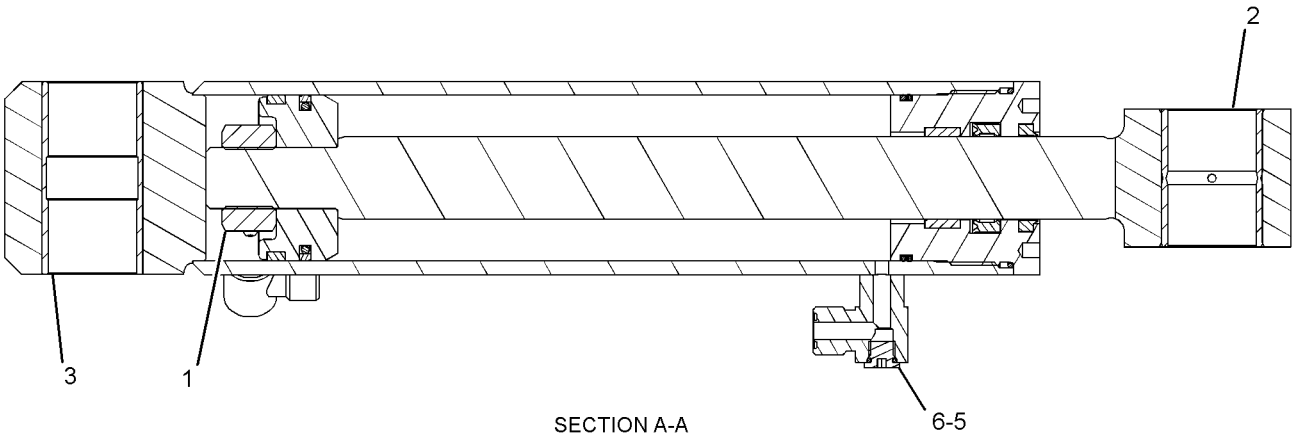

SECTION A-A

GRAPHIC #1 **<END>** g01280909

HYDRAULIC SYSTEM

192-2640 CYLINDER GP-HYDRAULIC–COUPLER

S/N: JAY1-UP
35-MM (1.4-IN) BORE X 103.5-MM (4.1-IN) STROKE
PART OF 215-3962, 215-3963 CYLINDER & LINK GP-COUPLER, 258-3910 KIT-QUICK COUPLER CONVERSION
AN ATTACHMENT

SMCS-5362, 7562 **i03435422**

NOTE	REF NO	GRAPHIC REF	PART NUMBER	QTY	PART NAME 1 2 3 4 5 6 (PRODUCT LEVEL)	SEE PAGE
					(NO SERVICED PARTS)	

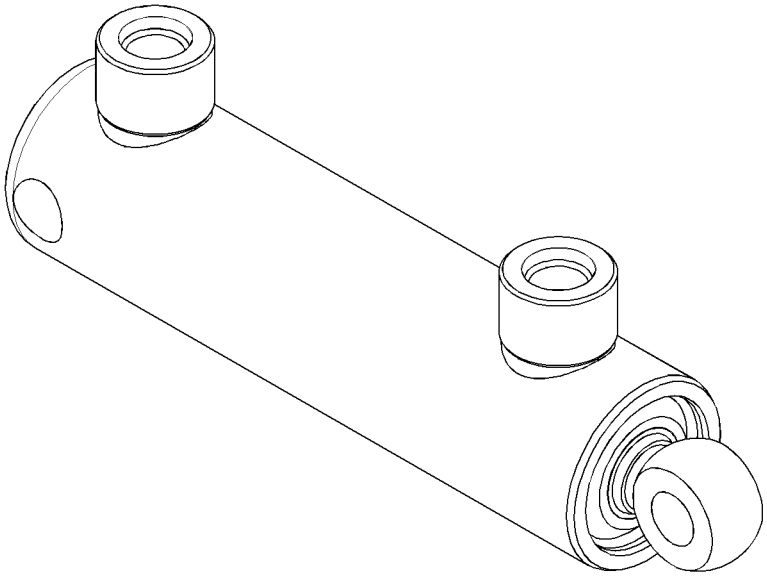

GRAPHIC #1 **<END>** g01787137

225-9521 CYLINDER GP-HYDRAULIC–ANGLE BLADE

S/N: JAY1-UP
63-MM (2.5-IN) BORE X 300-MM (11.8-IN) STROKE
PART OF 230-5406 CYLINDER & MTG GP-ANGLE BLADE
AN ATTACHMENT

SMCS-5362, 7562 **i03590837**

NOTE	REF NO	GRAPHIC REF	PART NUMBER	QTY	PART NAME 1 2 3 4 5 6 (PRODUCT LEVEL)	SEE PAGE
	1	1	**214-5555**	1	ROD END AS	
					AVAILABLE REPAIR KIT(S):	
			177-1958	1	KIT-SEAL	
					(INCLUDES O-RINGS, SEALS, BACK RINGS, PISTON GUIDE RING, ROD GUIDE RING & WIPER RINGS)	

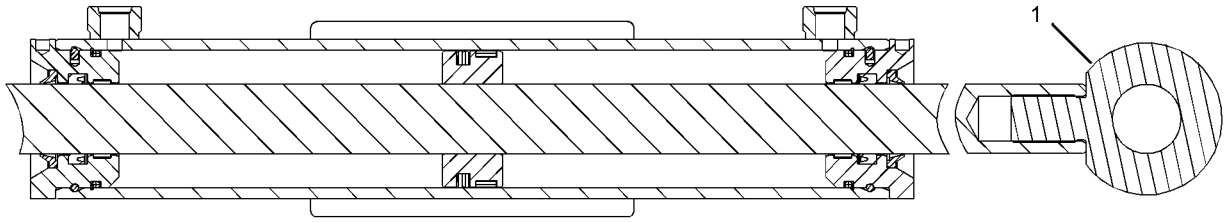

GRAPHIC #1 **<END>** g01282929

274-9930 CYLINDER GP-HYDRAULIC—ANGLE BLADE

S/N: JAY1-UP
70-MM (2.8-IN) BORE X 314-MM (12.4-IN) STROKE
PART OF 231-5274 CYLINDER & MTG GP-ANGLE BLADE
AN ATTACHMENT

SMCS-5362, 7562 **i03590840**

NOTE	REF NO	GRAPHIC REF	PART NUMBER	QTY	PART NAME 1 2 3 4 5 6 (PRODUCT LEVEL)	SEE PAGE
	1	1	**7D-8508**	1	NUT-FULL (7/8-14-THD)	
	2	1	**8Q-6027**	2	BEARING-SPHERICAL	
	3	1	**027-1287**	2	FITTING-GREASE	
	4	1	**278-4524**	1	ROD AS	
	5	1	**278-4875**	2	RING-RETAINING	
	6	1	**7J-0204**	2	SEAL-O-RING	
	7	1	**9S-8007**	2	PLUG	
					AVAILABLE REPAIR KIT(S):	
			266-6140	1	KIT-SEAL (SWING CYLINDER)	
					(INCLUDES SEAL-O-RINGS, WEAR RINGS, BACKUP RING, SEAL-U CUP, SEAL & SETSCREW)	

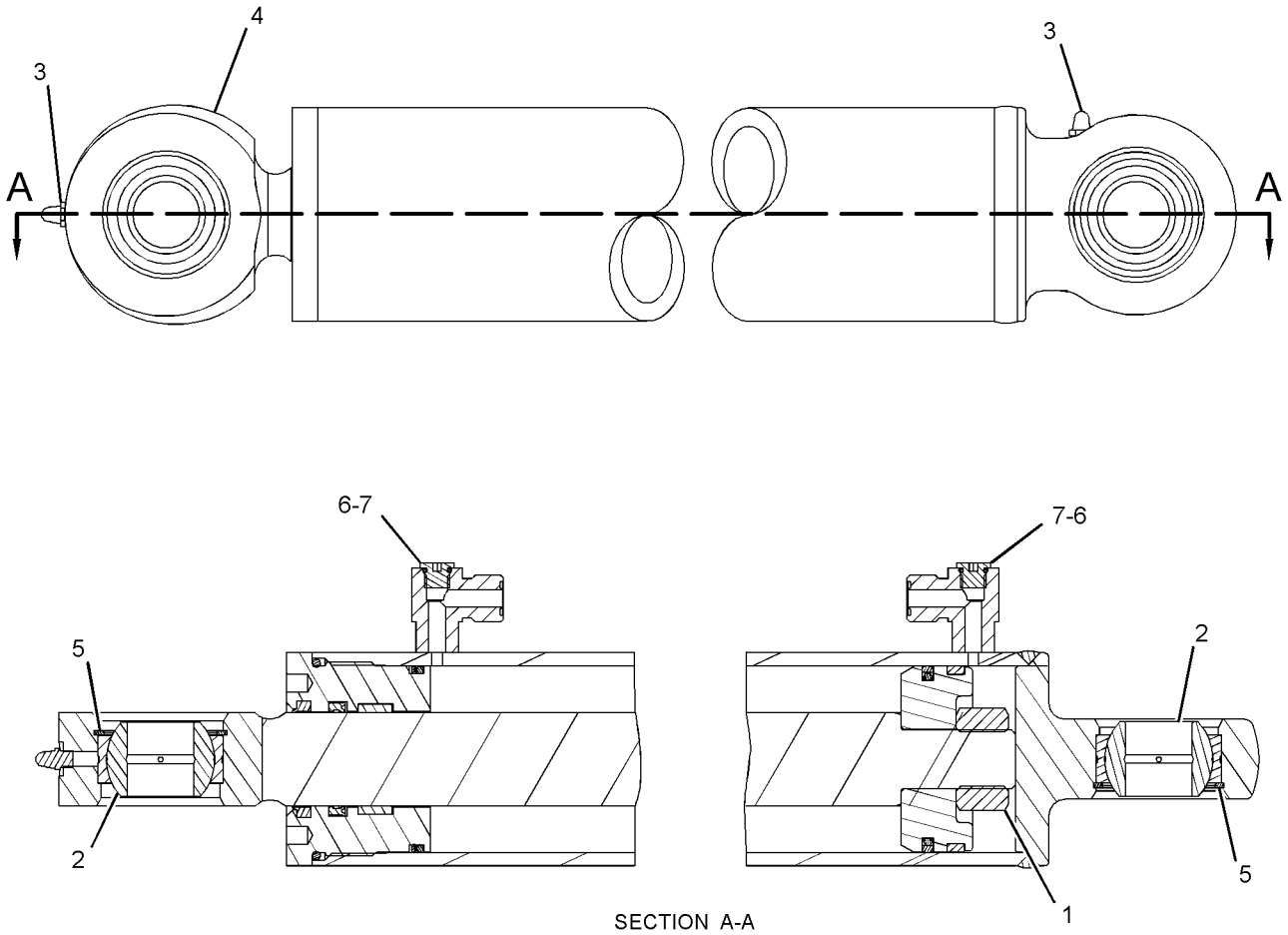

SECTION A-A

GRAPHIC #1 **<END>** g01305293

274-9931 CYLINDER GP-HYDRAULIC–ANGLE BLADE

S/N: JAY1-UP
70-MM (2.8-IN) BORE X 120-MM (4.7-IN) STROKE
PART OF 231-5274 CYLINDER & MTG GP-ANGLE BLADE
AN ATTACHMENT

SMCS-5362, 7562 **i03590844**

NOTE	REF NO	GRAPHIC REF	PART NUMBER	QTY	PART NAME 1 2 3 4 5 6 (PRODUCT LEVEL)	SEE PAGE
	1	1	**7D-8508**	1	NUT-FULL (7/8-14-THD)	
	2	1	**8Q-6027**	2	BEARING-SPHERICAL	
	3	1	**027-1287**	2	FITTING-GREASE	
	4	1	**278-4525**	1	ROD AS	
	5	1	**278-4875**	2	RING-RETAINING	
					AVAILABLE REPAIR KIT(S):	
			266-6140	1	KIT-SEAL	
					(INCLUDES SEAL-O-RINGS, WEAR RINGS, BACKUP RING, SEAL-U CUP, SEAL & SETSCREW)	

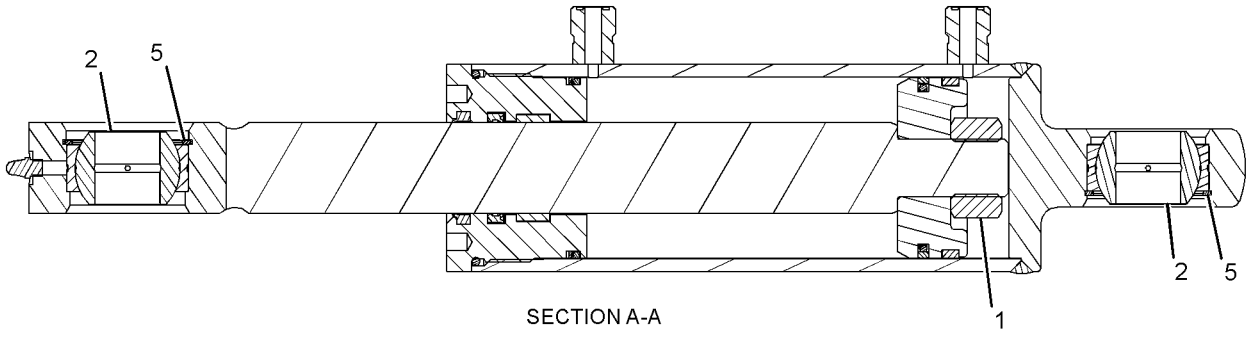

SECTION A-A

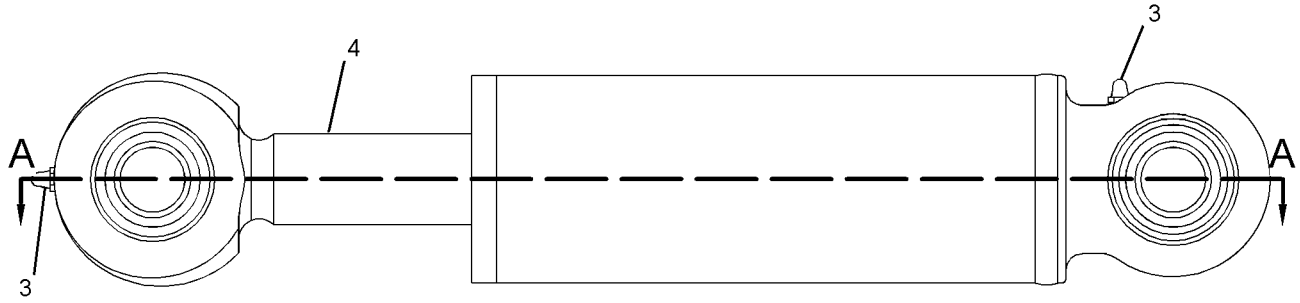

GRAPHIC #1 **<END>** g01270194

278-1969 CYLINDER GP-HYDRAULIC

S/N: JAY1-UP
60-MM (2.4-IN) BORE X 200-MM (7.9-IN) STROKE
PART OF 154-5004, 154-5010, 279-5382, 279-5390, 279-5398, 279-5403, 293-0139, 325-7036, 325-7046, 325-7056, 325-7066, 325-7076 BUCKET
AR-MULTIPURPOSE
AN ATTACHMENT

SMCS-5362, 7562 **i03590845**

NOTE	REF NO	GRAPHIC REF	PART NUMBER	QTY	PART NAME 1 2 3 4 5 6 (PRODUCT LEVEL)	SEE PAGE
	1	1	**7D-8508**	1	NUT-FULL (7/8-14-THD)	
	2	1	**254-9097**	1	BEARING-SLEEVE	
	3	1	**3B-8489**	1	FITTING-GREASE	
					AVAILABLE REPAIR KIT(S):	
			278-1970	1	KIT-SEAL (HYDRAULIC CYLINDER)	
					(INCLUDES SEAL-O-RINGS, WEAR RINGS, BACKUP RING, SEAL-U CUP & SEAL)	

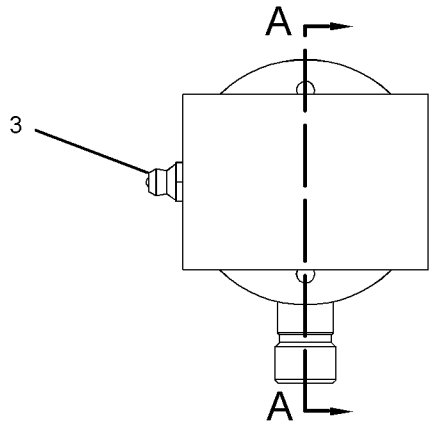

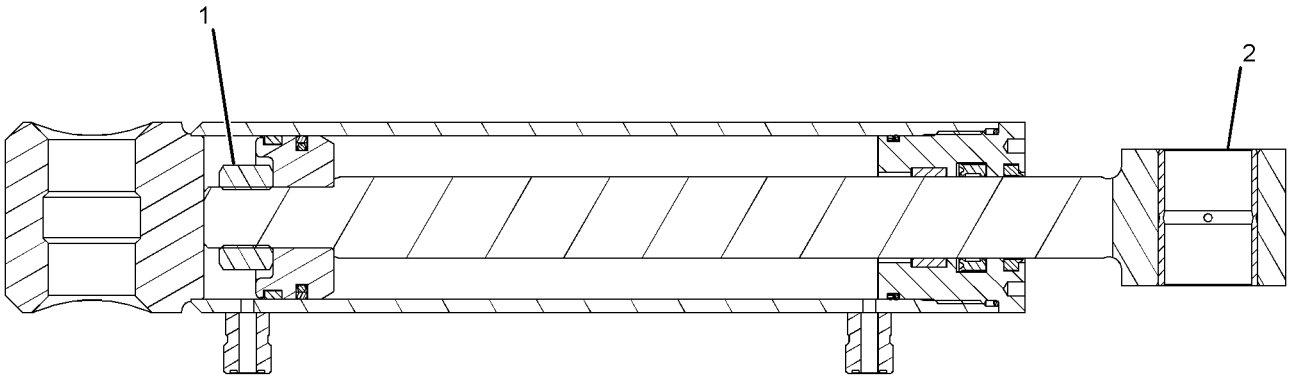

SECTION A-A

GRAPHIC #1 **<END>** g01281180

258-2558 CYLINDER GP-LIFT ARM–RADIAL LIFT

S/N: JAY1-UP

PART OF 258-2410, 295-7291 CHASSIS AR

SMCS-5102, 5104 **i02712989**

NOTE	REF NO	GRAPHIC REF	PART NUMBER	QTY	PART NAME 1 2 3 4 5 6 (PRODUCT LEVEL)	SEE PAGE
J	1	1	**258-2512**	2	CYLINDER GP-LIFT	
H	2	1	**258-2514**	1	CYLINDER GP-TILT (RH)	
H	3	1	**258-2515**	1	CYLINDER GP-TILT (LH)	
					AVAILABLE REPAIR KIT(S):	
J			**218-6824**	2	KIT-SEAL (LIFT)	
					(INCLUDES PISTON SEAL, PISTON WEAR BAND, WIPER SEAL, ROD SEAL & RINGS)	
H			**258-3621**	2	KIT-SEAL (TILT)	
					(INCLUDES SETSCREW, SEALS & RINGS)	

H-KITS MARKED H AVAILABLE FOR PARTS MARKED H
J-KIT MARKED J AVAILABLE FOR PART MARKED J

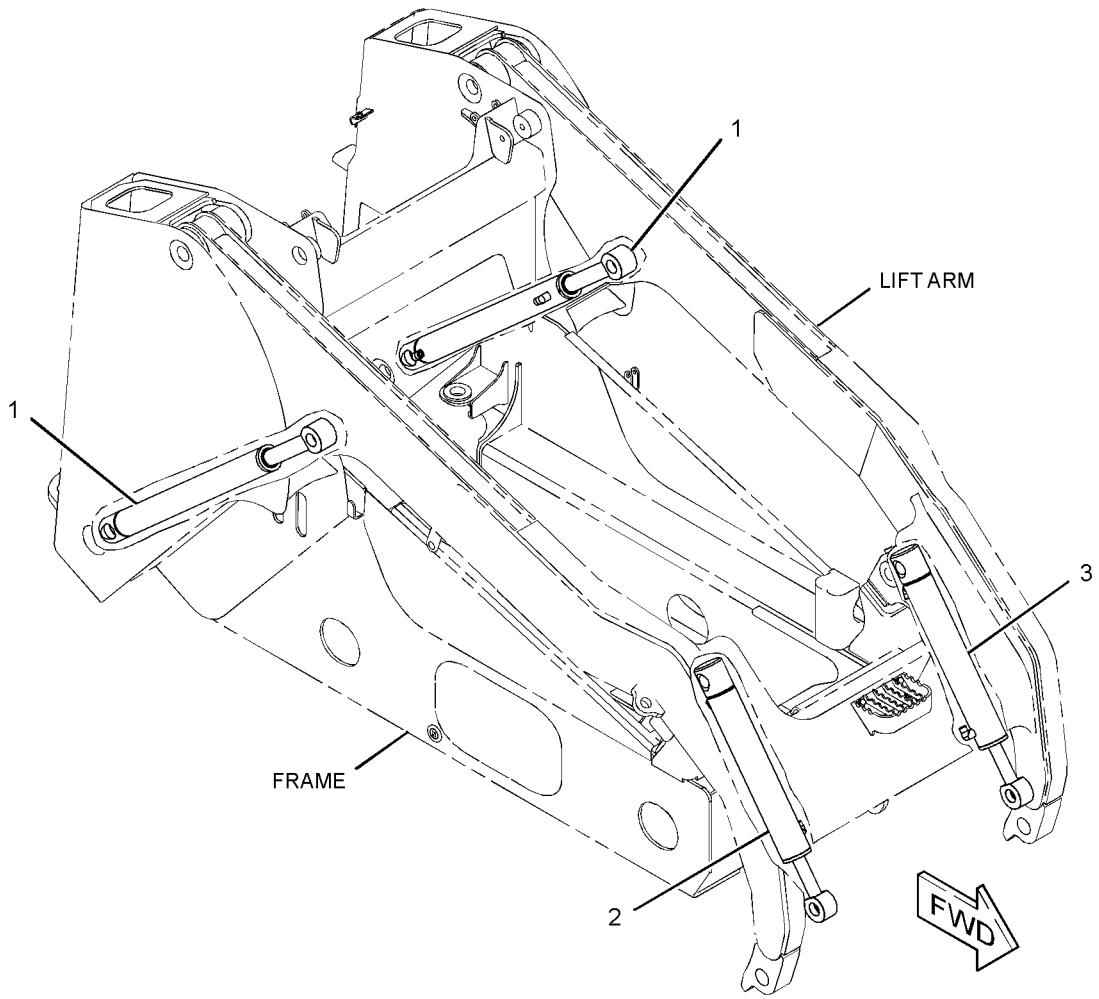

GRAPHIC #1 **<END>** g01317320

218-5840 FITTING GP-HYDRAULIC–
QUICK DISCONNECT, MALE, HIGH FLOW
S/N: JAY1-UP
PART OF 258-2421 LINES GP-WORK TOOL
AN ATTACHMENT

SMCS-5057 **i03587746**

NOTE	REF NO	GRAPHIC REF	PART NUMBER	QTY	PART NAME 1 2 3 4 5 6 (PRODUCT LEVEL)	SEE PAGE
	1	1	**218-5843**	1	FITTING AS (QUICK DISCONNECT, MALE)	
		1	**3K-0360**	1	SEAL-O-RING	
	2	1	**218-5844**	1	FITTING AS (QUICK DISCONNECT, MALE)	
		1	**2M-9780**	1	SEAL-O-RING	
	3	1	**2M-9780**	1	SEAL-O-RING	
	4	1	**6V-8640**	1	CONNECTOR	
	5	1	**6V-9746**	1	SEAL-O-RING	

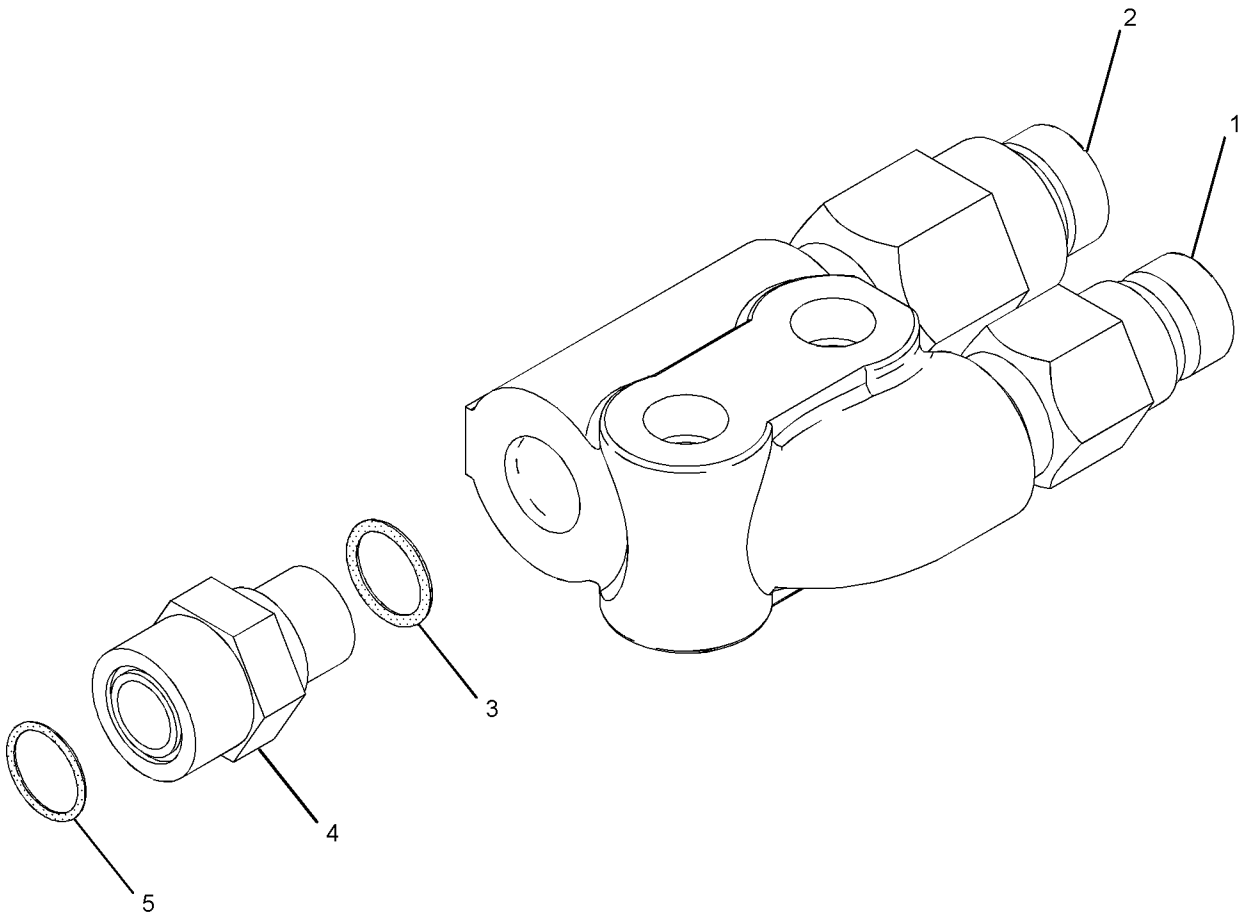

GRAPHIC #1 **<END>** g01026062

218-5841 FITTING GP-HYDRAULIC–
QUICK DISCONNECT, FEMALE, HIGH FLOW
S/N: JAY1-UP
PART OF 258-2421 LINES GP-WORK TOOL
AN ATTACHMENT

SMCS-5057 **i03587747**

NOTE	REF NO	GRAPHIC REF	PART NUMBER	QTY	PART NAME 1 2 3 4 5 6 (PRODUCT LEVEL)	SEE PAGE
	1	1	**218-5845**	1	FITTING AS (QUICK DISCONNECT, FEMALE)	
		1	**3K-0360**	1	SEAL-O-RING	
	2	1	**218-5846**	1	FITTING AS (QUICK DISCONNECT, FEMALE)	
		1	**2M-9780**	1	SEAL-O-RING	
	3	1	**2M-9780**	1	SEAL-O-RING	
	4	1	**6V-8640**	1	CONNECTOR	
	5	1	**6V-9746**	1	SEAL-O-RING	

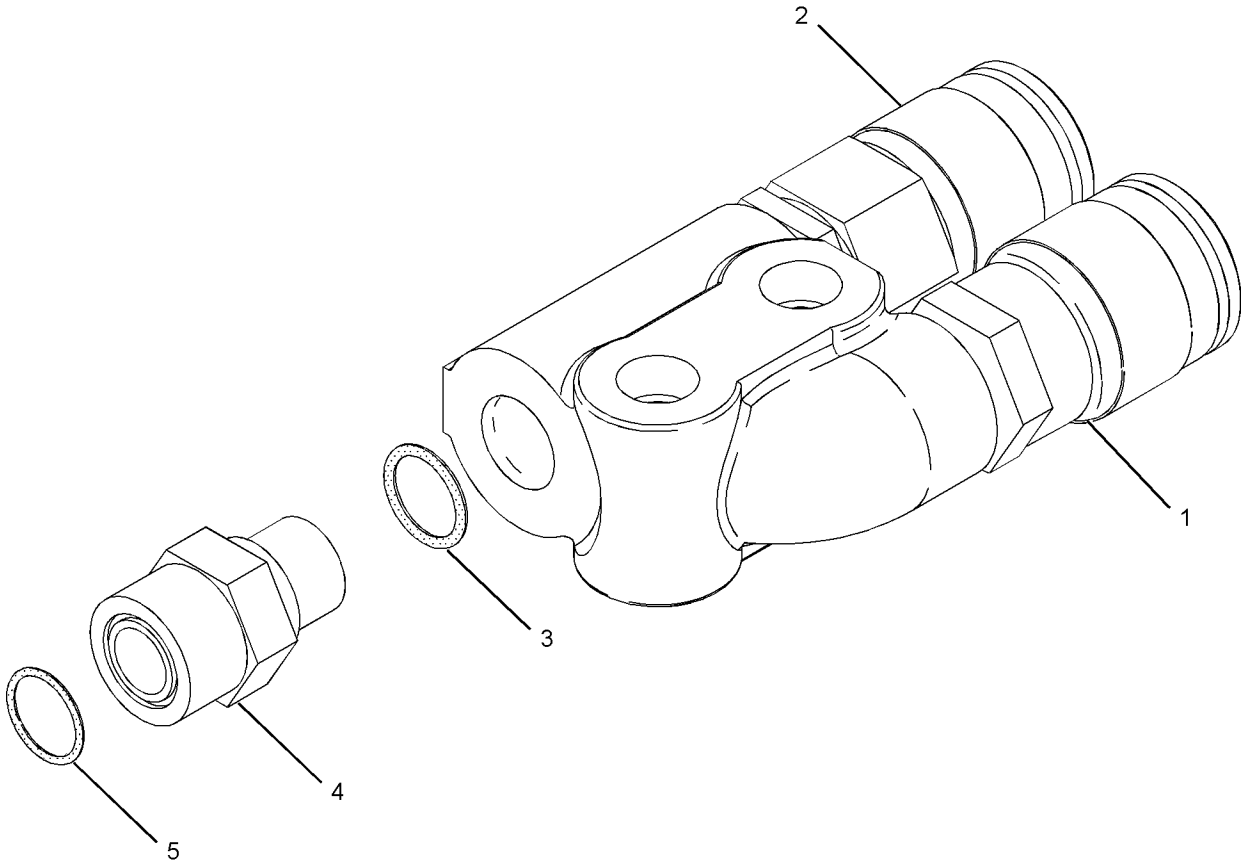

GRAPHIC #1 **<END>** g01084158

285-2190 FITTING GP-HYDRAULIC–MANUAL

S/N: JAY1-UP
PART OF 258-2790 COUPLER AR-QUICK
AN ATTACHMENT

SMCS-5057 **i02859004**

NOTE	REF NO	GRAPHIC REF	PART NUMBER	QTY	PART NAME 1 2 3 4 5 6 (PRODUCT LEVEL)	SEE PAGE
	1	1	**304-6752**	1	TEE	
	2	1	**2M-9780**	1	SEAL-O-RING	
	3	1	**4J-5477**	1	SEAL-O-RING	
	4	1	**6V-8397**	1	SEAL-O-RING	
	5	1	**6V-9828**	1	CAP AS	
	6	1	**6V-9829**	1	CAP AS	
	7	1	**7J-9108**	1	SEAL-O-RING	

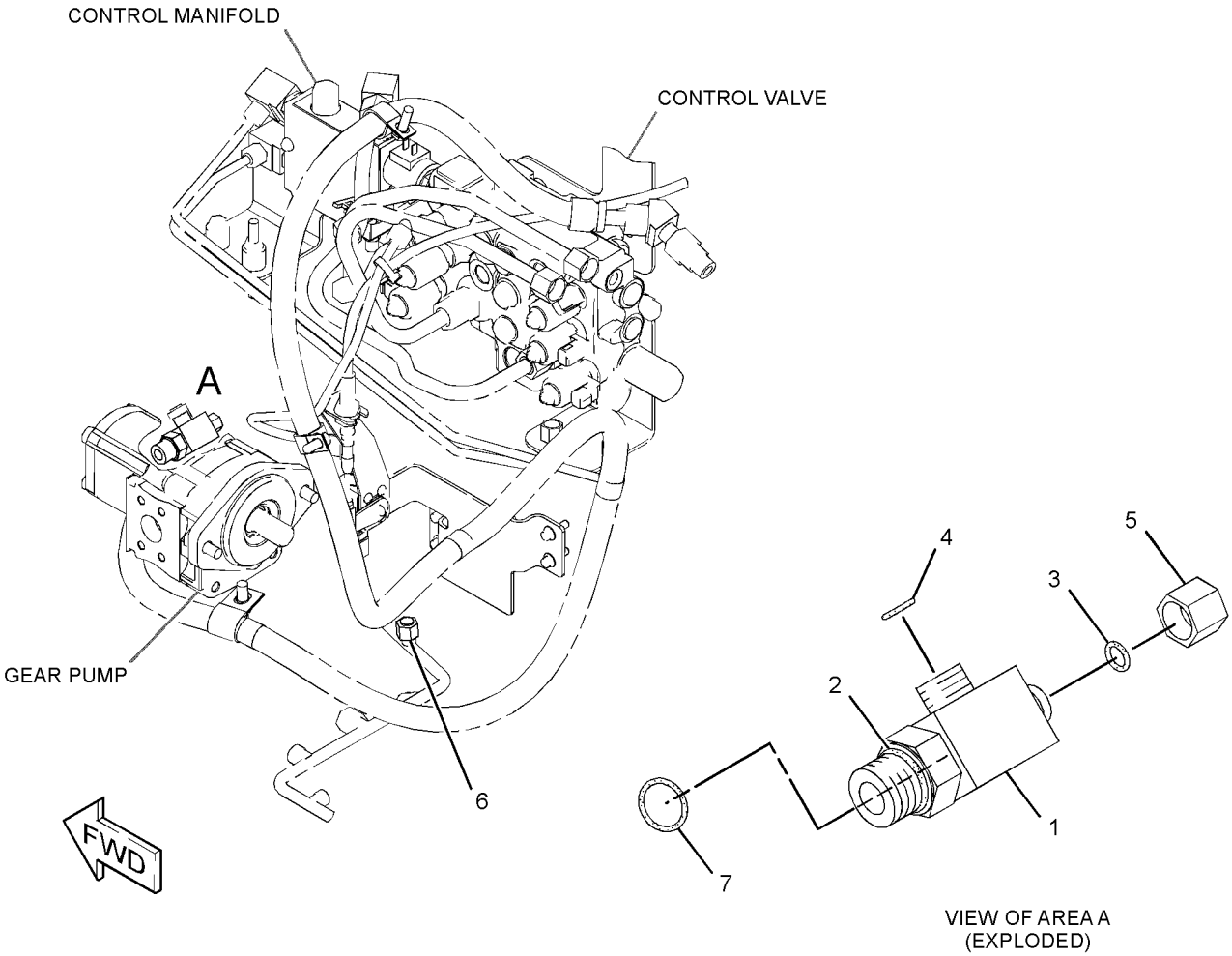

VIEW OF AREA A
(EXPLODED)

GRAPHIC #1 **<END>** g01433212

292-2439 FITTING GP-HYDRAULIC–1-SPEED

S/N: JAY1-UP
PART OF 258-3200, 300-7637 POWER TRAIN AR
AN ATTACHMENT

SMCS-5057 **i03018455**

NOTE	REF NO	GRAPHIC REF	PART NUMBER	QTY	PART NAME 1 2 3 4 5 6 (PRODUCT LEVEL)	SEE PAGE
	1	1	*148-8378*	1	ELBOW AS	
		1	**3J-1907**	1	SEAL-O-RING	
		1	**6V-8397**	1	SEAL-O-RING	
		1	**6V-8724**	1	ELBOW	
	2	1	**6V-9829**	1	CAP AS (AUX HYD FUNCTION)	
	3	1	**227-7474**	1	SPACER (13X20X7-MM THK)	

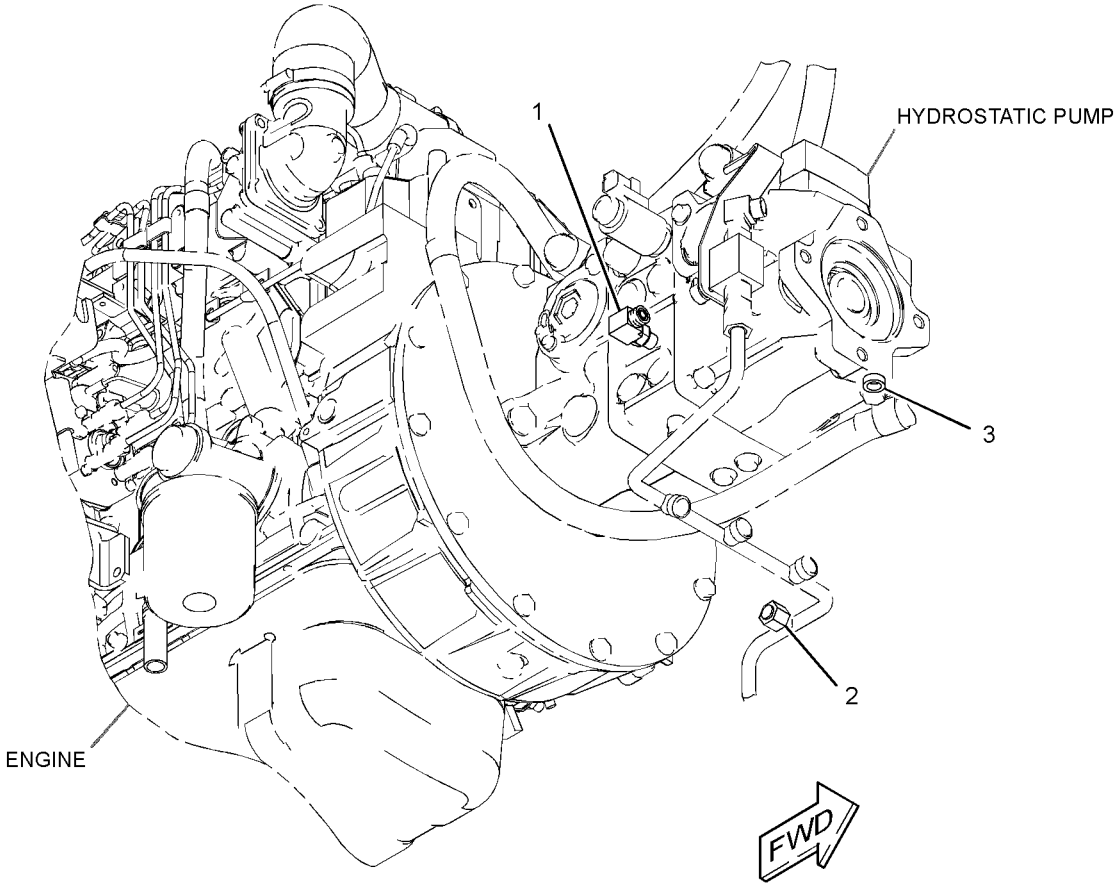

GRAPHIC #1 **<END>** g01533254

HYDRAULIC SYSTEM

258-2426 HYDRAULIC AR

S/N: JAY1-UP
PART OF 258-3748, 300-7629 MACHINE AR-SPECIAL
AN ATTACHMENT

SMCS-5050 **i02636295**

NOTE	PART NUMBER	QTY	PART NAME 1 2 3 4 5 6 (PRODUCT LEVEL)	SEE PAGE
Y	*258-2876*	1	LINES GP-HYDRAULIC	350

Y-SEPARATE ILLUSTRATION

<END>

258-2428 HYDRAULIC AR—WORK TOOL POSITIONER

S/N: JAY1-UP
PART OF 258-3682, 258-3750, 258-3753, 300-7634 MACHINE AR-SPECIAL
AN ATTACHMENT

SMCS-5050 **i02764091**

NOTE	PART NUMBER	QTY	PART NAME 1 2 3 4 5 6 (PRODUCT LEVEL)	SEE PAGE
Y	*258-2878*	1	LINES GP-HYDRAULIC (WORK TOOL POSITIONER)	351
Y	*258-3468*	1	MANIFOLD & MTG GP-CONTROL (WORK TOOL POSITIONER)	408

Y-SEPARATE ILLUSTRATION

<END>

258-2600 HYDRAULIC AR

S/N: JAY1-UP
PART OF 258-3236, 295-7246 COMMON AR

SMCS-5050 **i02706199**

NOTE	PART NUMBER	QTY	PART NAME 1 2 3 4 5 6 (PRODUCT LEVEL)	SEE PAGE
Y	*258-2581*	1	FILTER & LINES GP-HYDRAULIC	198
Y	*258-2780*	1	LINES GP-HYDRAULIC OIL COOLER	364
Y	*258-2411*	1	LINES GP-LIFT CYLINDER	366
Y	*258-3393*	1	LINES GP-LOWERING CONTROL (MANUAL)	367
Y	*258-2607*	1	LINES GP-PARKING BRAKE	205
Y	*258-2412*	1	LINES GP-TILT CYLINDER	394
Y	*258-3394*	1	MANIFOLD & LINES GP-ACCUM	404
Y	*258-2589*	1	MANIFOLD GP-RETURN	210
Y	*258-2434*	1	TANK & MTG GP-HYDRAULIC	428

Y-SEPARATE ILLUSTRATION

<END>

HYDRAULIC SYSTEM

258-3180 HYDRAULIC AR

S/N: JAY1-UP
AN ATTACHMENT

SMCS-5050 **i03632772**

NOTE	PART NUMBER	QTY	PART NAME 1 2 3 4 5 6 (PRODUCT LEVEL)	SEE PAGE
Y	*258-2582*	1	LINES GP-HYDRAULIC FAN (RADIATOR)	356
Y	*258-3237*	1	LINES GP-PUMP	369
Y	*258-2422*	1	LINES GP-WORK TOOL	400
Y	*258-2556*	1	PUMP & MTG GP-WORK TOOL	423
Y	*258-2502*	1	VALVE & MTG GP-CONTROL	431

Y-SEPARATE ILLUSTRATION

<END>

258-3182 HYDRAULIC AR—HIGH FLOW

S/N: JAY1-UP
AN ATTACHMENT

SMCS-5050 **i03635736**

NOTE	PART NUMBER	QTY	PART NAME 1 2 3 4 5 6 (PRODUCT LEVEL)	SEE PAGE
Y	*258-3404*	1	CONTROL GP-ELECTROHYDRAULIC (LH) (HIGH FLOW)	650
Y	*258-3407*	1	CONTROL GP-ELECTROHYDRAULIC (RH) (HIGH FLOW)	653
Y	*258-3230*	1	FILM GP (HIGH FLOW XPS)	790
Y	*280-8393*	1	GUARD GP-DEBRIS (TURBOCHARGER, EXHAUST MANIFOLD)	93
Y	*258-2786*	1	LINES GP-HYDRAULIC FAN (HIGH FLOW)	360
Y	*258-3238*	1	LINES GP-PUMP (HIGH FLOW)	373
Y	*258-2421*	1	LINES GP-WORK TOOL (HIGH FLOW)	396
Y	*258-2557*	1	PUMP & MTG GP-WORK TOOL (HIGH FLOW)	424
Y	*258-2503*	1	VALVE & MTG GP-CONTROL (HIGH FLOW)	432
Y	*258-4125*	1	WIRING GP-WORK TOOL	191

Y-SEPARATE ILLUSTRATION

<END>

258-3730 HYDRAULIC AR

S/N: JAY1-UP
AN ATTACHMENT

SMCS-5050 **i03632775**

NOTE	PART NUMBER	QTY	PART NAME 1 2 3 4 5 6 (PRODUCT LEVEL)	SEE PAGE
Y	*258-2582*	1	LINES GP-HYDRAULIC FAN (RADIATOR)	356
Y	*258-3237*	1	LINES GP-PUMP	369
Y	*258-2422*	1	LINES GP-WORK TOOL	400
Y	*258-3402*	1	PUMP & MTG GP-GEAR	422
Y	*258-2502*	1	VALVE & MTG GP-CONTROL	431

Y-SEPARATE ILLUSTRATION

<END>

HYDRAULIC SYSTEM

258-3733 HYDRAULIC AR

S/N: JAY1-UP
AN ATTACHMENT

SMCS-5050 **i03635685**

NOTE	PART NUMBER	QTY	PART NAME 1 2 3 4 5 6 (PRODUCT LEVEL)	SEE PAGE
Y	*258-3404*	1	CONTROL GP-ELECTROHYDRAULIC (LH) (HIGH FLOW)	650
Y	*258-3407*	1	CONTROL GP-ELECTROHYDRAULIC (RH) (HIGH FLOW)	653
Y	*258-3230*	1	FILM GP (HIGH FLOW XPS)	790
Y	*280-8393*	1	GUARD GP-DEBRIS (TURBOCHARGER, EXHAUST MANIFOLD)	93
Y	*258-2786*	1	LINES GP-HYDRAULIC FAN (HIGH FLOW)	360
Y	*258-3238*	1	LINES GP-PUMP (HIGH FLOW)	373
Y	*258-2421*	1	LINES GP-WORK TOOL (HIGH FLOW)	396
Y	*258-3401*	1	PUMP GP-PISTON & GEAR	427
Y	*258-2503*	1	VALVE & MTG GP-CONTROL (HIGH FLOW)	432
Y	*258-4125*	1	WIRING GP-WORK TOOL	191

Y-SEPARATE ILLUSTRATION

<END>

261-6264 HYDRAULIC AR—HIGH FLOW

S/N: JAY1-UP
AN ATTACHMENT

SMCS-5050 **i03635686**

NOTE	PART NUMBER	QTY	PART NAME 1 2 3 4 5 6 (PRODUCT LEVEL)	SEE PAGE
Y	*258-3404*	1	CONTROL GP-ELECTROHYDRAULIC (LH) (HIGH FLOW)	650
Y	*258-3407*	1	CONTROL GP-ELECTROHYDRAULIC (RH) (HIGH FLOW)	653
Y	*258-3230*	1	FILM GP (HIGH FLOW XPS)	790
Y	*280-8393*	1	GUARD GP-DEBRIS (TURBOCHARGER, EXHAUST MANIFOLD)	93
Y	*258-2786*	1	LINES GP-HYDRAULIC FAN (HIGH FLOW)	360
Y	*261-6239*	1	LINES GP-PUMP	385
Y	*258-2421*	1	LINES GP-WORK TOOL (HIGH FLOW)	396
Y	*258-3401*	1	PUMP GP-PISTON & GEAR	427
Y	*258-2503*	1	VALVE & MTG GP-CONTROL (HIGH FLOW)	432
Y	*258-4125*	1	WIRING GP-WORK TOOL	191

Y-SEPARATE ILLUSTRATION

<END>

304-6743 HYDRAULIC AR

S/N: JAY1-UP
PART OF 304-6740 MACHINE AR-SPECIAL
AN ATTACHMENT

SMCS-5050 **i02879329**

NOTE	PART NUMBER	QTY	PART NAME 1 2 3 4 5 6 (PRODUCT LEVEL)	SEE PAGE
Y	*304-6745*	1	LINES GP-HYDRAULIC	353
Y	*304-6755*	1	MANF & SOLENOID MTG GP-ACCUM	403
Y	*258-3468*	1	MANIFOLD & MTG GP-CONTROL (WORK TOOL POSITIONER)	408

Y-SEPARATE ILLUSTRATION

<END>

258-3910 KIT-QUICK COUPLER CONVERSION—HYDRAULIC

S/N: JAY1-UP
AN ATTACHMENT

SMCS-5057, 5133, 5479, 6129 **i03624557**

NOTE	REF NO	GRAPHIC REF	PART NUMBER	QTY	PART NAME 1 2 3 4 5 6 (PRODUCT LEVEL)	SEE PAGE
	1	1	**7K-1181**	15	STRAP-CABLE	
	2	2	**124-2456**	1	FILM-INSTRUCTION (NO STEP)	
	3	2	**310-6660**	2	PIN-SPRING	
	4	1	**178-3620**	6	STRAP-DUAL CLAMP	
	5	2	**311-9240**	2	PLATE	
	6	2	**319-2137**	2	BRACKET	
Y	7	2	**192-2640**	2	CYLINDER GP-HYDRAULIC (COUPLER)	290
	8	2	**303-8768**	4	PIN-SPRING	
	9	2	**207-9737**	1	BRACKET AS	
	10	2	**207-9785**	2	PIN	
	11	2	**212-6690**	1	GUARD	
	12	2	**218-6332**	1	BRACKET AS	
	13	2	**218-6333**	1	BRACKET AS	
	14	2	**192-2645**	2	SPRING	
	15	1	**258-3368**	1	TUBE AS	
	16	1	**258-3369**	1	TUBE AS	
	17	1	**258-4191**	1	HARNESS AS-WORK TOOL	
		1	**102-8803**	1	KIT-RECEPTACLE (3-PIN)	
					(INCLUDES RECEPTACLE AS & WEDGE)	
		1	**8L-8413**	3	STRAP-CABLE	
		1	**186-3735**	3	PIN-CONNECTOR (16-GA TO 18-GA)	
		1	**186-3736**	4	SOCKET-CONNECTOR (16-GA TO 18-GA)	
E		1	**125-7874**		TUBE-HEAT SHRINK (5.72-MM DIA) (5-CM)	
		1	**155-2270**	2	KIT-CONNECTING PLUG (2-PIN)	
					(EACH PLUG KIT INCLUDES PLUG AS, WEDGE & INTERFACE SEAL)	
	18	1	**265-9513**	1	SWITCH AS-ROCKER (HYDRAULIC QUICK COUPLER)	
		1	**111-7899**	1	GASKET	
Y	19	1	**291-0010**	1	MANIFOLD GP-CONTROL (QUICK COUPLER)	414
	20	2	**303-8767**	2	PIN-SPRING	
	24	1	**132-7551**	1	SPACER (11X19X6-MM THK)	
	25	2	*148-8325*	4	CONNECTOR AS	
					(EACH INCLUDES)	
		2	**3J-1907**	1	SEAL-O-RING	
		2	**4J-5477**	1	SEAL-O-RING	
		2	**6V-8641**	1	CONNECTOR	
	26	1	*148-8336*	2	CONNECTOR AS	
					(EACH INCLUDES)	
		1	**3J-1907**	1	SEAL-O-RING	
		1	**6V-8397**	1	SEAL-O-RING	
		1	**6V-8636**	1	CONNECTOR	
	27	1	*148-8378*	2	ELBOW AS	
					(EACH INCLUDES)	
		1	**3J-1907**	1	SEAL-O-RING	
		1	**6V-8397**	1	SEAL-O-RING	
		1	**6V-8724**	1	ELBOW	
	28	2	*150-4034*	2	TEE AS	
					(EACH INCLUDES)	
		2	**6V-8397**	3	SEAL-O-RING	
		2	**8T-0379**	1	TEE-BULKHEAD	
	29	1	*212-1336*	1	TEE AS	
		1	**2M-9780**	1	SEAL-O-RING	
		1	**6V-8783**	1	TEE-FACE SEAL	
		1	**7J-9108**	2	SEAL-O-RING	
	30	1	*215-3191*	1	REDUCER AS	
		1	**4J-5477**	1	SEAL-O-RING	

258-3910 KIT-QUICK COUPLER CONVERSION *(contd.)* i03624557

NOTE	REF NO	GRAPHIC REF	PART NUMBER	QTY	PART NAME 1 2 3 4 5 6 (PRODUCT LEVEL)	SEE PAGE
		1	**6V-8937**	1	REDUCER-O-RING	
M	32	1	**266-3315**	2	BOLT-FLANGE HEAD (M8X1.25X25.5-MM)	
	33	2	**3B-4628**	2	PIN-COTTER	
	34	1,2	**3S-2093**	2	STRAP-CABLE	
	35	1	**4D-6466**	3	CLIP	
	36	2	**5P-0372**	2	LOCK PIN	
	37	1	**5P-4116**	2	WASHER-HARD (8.8X20.5X2-MM THK)	
	38	1	**6V-8397**	2	SEAL-O-RING	
	39	2	**6V-9168**	2	NUT (11/16-16-THD)	
	40	1	**7B-1597**	2	CLIP	
	41	2	**7G-2950**	1	CLIP (SLOT)	
	42	2	**7G-2951**	1	CLIP (TAB)	
	43	1	**7H-7055**	2	CLIP	
	44	2	**7X-7729**	3	WASHER (11X25X3-MM THK)	
	45	2	**8L-5188**	2	PIN	
	46	1,2	**8T-4121**	13	WASHER-HARD (11X21X2.5-MM THK)	
M	47	2	**315-5493**	4	WASHER-HARD (22.5X35X4.5-MM THK)	
M	48	1,2	**8T-4133**	5	NUT (M10X1.5-THD)	
M	49	1,2	**8T-4136**	4	BOLT (M10X1.5X25-MM)	
M	50	1	**8T-4137**	2	BOLT (M10X1.5X20-MM)	
M	51	2	**8T-4189**	2	BOLT (M8X1.25X20-MM)	
M	52	1	**8T-4191**	1	BOLT (M10X1.5X16-MM)	
M	53	2	**8T-4196**	4	BOLT (M10X1.5X35-MM)	
M	54	1	**8T-4200**	2	BOLT (M8X1.25X16-MM)	
	55	1,2	**8T-4224**	4	WASHER-HARD (8.8X16X2-MM THK)	
M	56	1	**8T-6870**	2	BOLT (M8X1.25X70-MM)	
	57	1	**9M-8406**	2	CLIP	
	58	1	**9S-1350**	2	CLIP	
	59	2	**9T-7303**	4	SPACER (16X28X1.5-MM THK)	
	60	1	**9X-6581**	1	NUT-O-RING SEAL (1-14-THD)	
I	61	2	**207-9756**	4	HOSE AS	
I	62	1	**258-2841**	2	HOSE AS	
I	63	1	**258-3367**	1	HOSE AS	
I	64	1	**258-3366**	1	HOSE AS	
	65	1	**302-0389**	1	BRACKET AS	

E-ORDER BY THE CENTIMETER
I-REFER TO HYDRAULIC INFORMATION SYSTEM
M-METRIC PART
Y-SEPARATE ILLUSTRATION

258-3910 KIT-QUICK COUPLER CONVERSION *(contd.)* i03624557

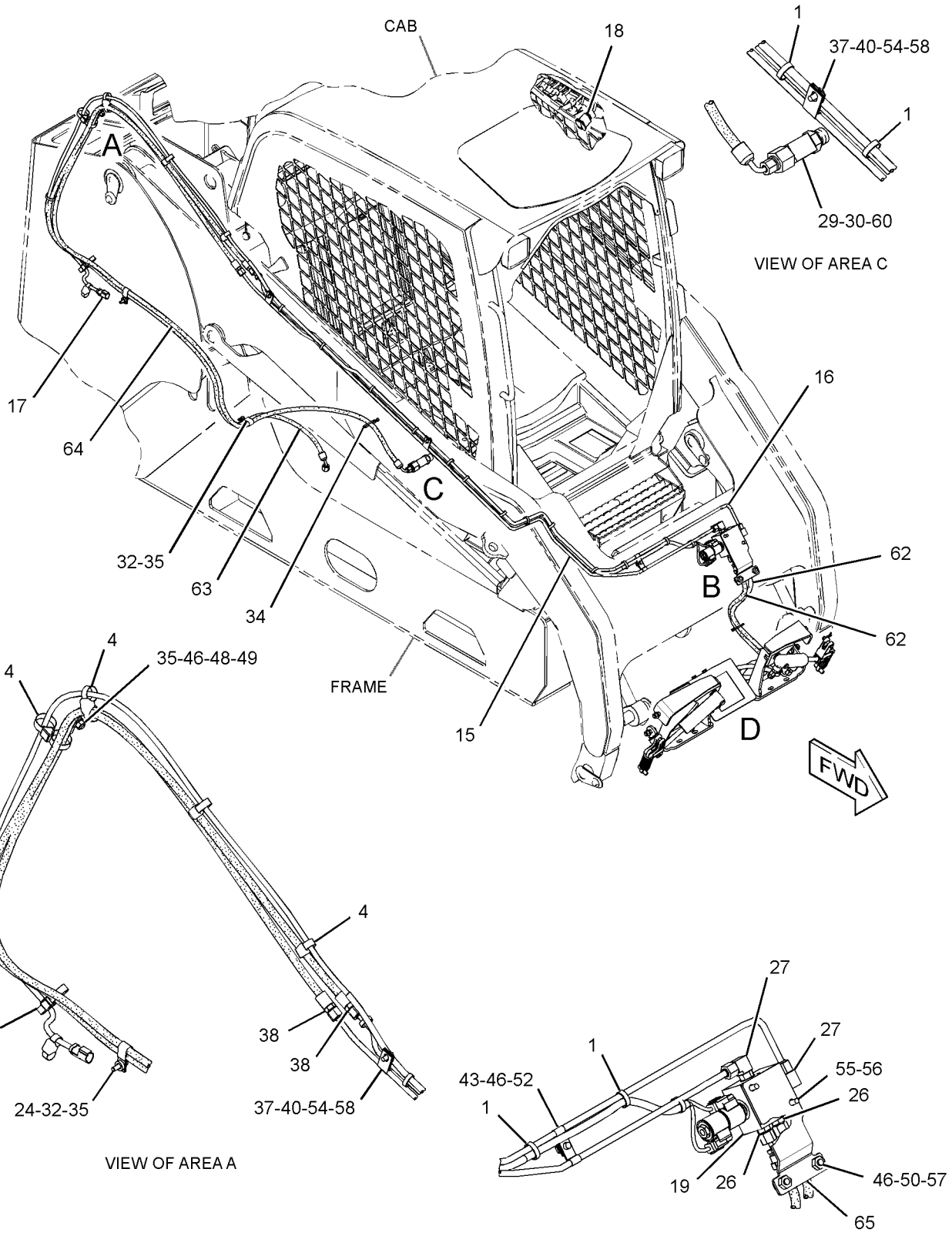

REFER TO ALL ILLUSTRATIONS OF THIS GROUP FOR AUXILIARY VIEWS

GRAPHIC #1

g01483314

258-3910 KIT-QUICK COUPLER CONVERSION *(contd.)* i03624557

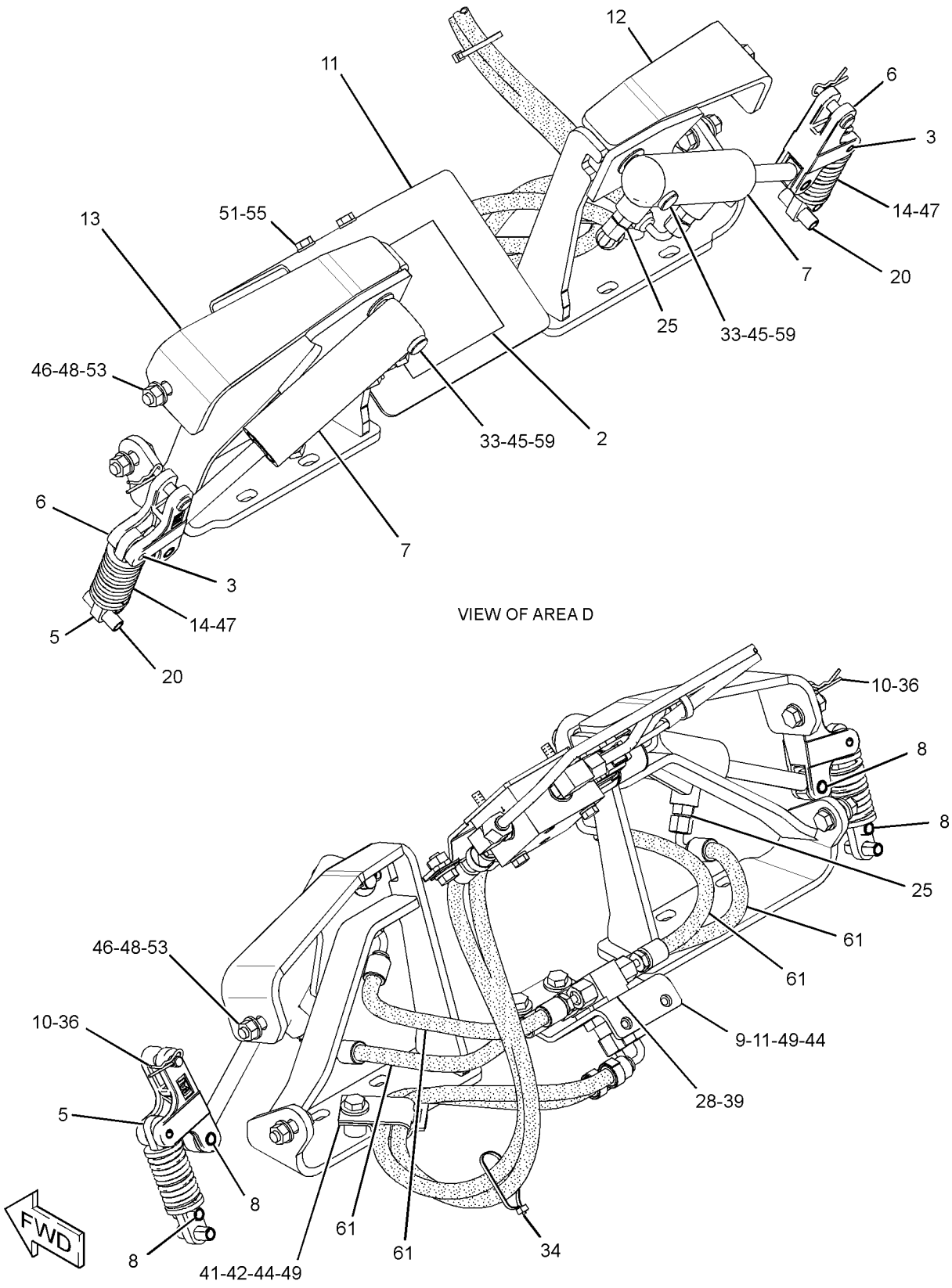

GRAPHIC #2 **<END>** g01483353

HYDRAULIC SYSTEM

304-6754 KIT-RIDE CONTROL

S/N: JAY1-UP

AN ATTACHMENT

SMCS-5004 **i03635723**

NOTE	REF NO	GRAPHIC REF	PART NUMBER	QTY	PART NAME 1 2 3 4 5 6 (PRODUCT LEVEL)	SEE PAGE
	1	1	**9W-4216**	2	SPACER (9X18X7-MM THK)	
	2	1	**146-9439**	1	RELAY AS (12-VOLT)	
	3	1	**178-3620**	3	STRAP-DUAL CLAMP	
	4	1	**258-2886**	1	TUBE AS	
	5	1	**258-2887**	1	TUBE AS	
	6	1	**258-2888**	1	TUBE AS	
	7	1	**258-2890**	1	BRACKET AS	
I	8	1	**258-2891**	1	HOSE AS	
	9	1	**265-9526**	1	SWITCH AS-ROCKER (RIDE CONTROL)	
		1	**111-7899**	1	GASKET	
	10	1	**304-6748**	1	PLATE AS	
	11	1	**304-6749**	1	TEE	
I	12	1	**304-6751**	1	HOSE AS	
	13	1	**304-6752**	1	TEE	
I	14	1	**304-6753**	1	HOSE AS	
	15	1	**304-6756**	1	VALVE GP-CHECK (RIDE CONTROL)	
		1	**3K-0360**	1	SEAL-O-RING	
		1	**6V-8398**	1	SEAL-O-RING	
Y	16	1	**307-2275**	1	MANIFOLD GP-RIDE CONTROL	415
Y	17	1	**307-2276**	1	MANIFOLD GP-RIDE CONTROL (ACCUMULATOR)	416
	18	1	**308-6423**	1	HARNESS AS-RIDE CONTROL	
		1	**186-3735**	2	PIN-CONNECTOR (16-GA TO 18-GA)	
		1	**155-2270**	3	KIT-CONNECTING PLUG (2-PIN)	
					(EACH INCLUDES PLUG AS, WEDGE & INTERFACE SEAL)	
		1	**102-8802**	1	KIT-RECEPTACLE (2-PIN)	
					(INCLUDES RECEPTACLE AS & WEDGE)	
		1	**186-3736**	6	SOCKET-CONNECTOR (16-GA TO 18-GA)	
E		1	**125-7874**		TUBE-HEAT SHRINK (5.72-MM DIA) (10-CM)	
Y	19	1	**310-8460**	1	ACCUMULATOR GP-RIDE CONTROL (CHARGED)	281
	20	1	**104-3173**	2	CLIP	
	21	1	*148-8318*	1	CONNECTOR AS	
		1	**3K-0360**	1	SEAL-O-RING	
		1	**6V-8397**	1	SEAL-O-RING	
		1	**6V-8634**	1	CONNECTOR	
	22	1	*148-8354*	1	ELBOW AS	
		1	**3K-0360**	1	SEAL-O-RING	
		1	**6V-8398**	1	SEAL-O-RING	
		1	**6V-9002**	1	ELBOW	
	23	1	*148-8364*	2	ELBOW AS	
					(EACH INCLUDES)	
		1	**3K-0360**	1	SEAL-O-RING	
		1	**6V-8398**	1	SEAL-O-RING	
		1	**6V-8625**	1	ELBOW	
	24	1	**2M-9780**	1	SEAL-O-RING	
	25	1	**3K-0360**	2	SEAL-O-RING	
	26	1	**4J-5477**	1	SEAL-O-RING	
	27	1	**4P-7581**	1	CLIP	
M	28	1	**5C-7261**	3	NUT (M8X1.25-THD)	
	29	1	**5P-4116**	3	WASHER-HARD (8.8X20.5X2-MM THK)	
	30	1	**6V-8397**	1	SEAL-O-RING	
	31	1	**6V-8398**	1	SEAL-O-RING	
	32	1	**6V-9828**	1	CAP AS	
	33	1	**7J-9108**	1	SEAL-O-RING	
M	34	1	**7X-2534**	2	BOLT (M6X1X50-MM)	
M	35	1	**7X-7888**	2	BOLT (M6X1X90-MM)	

304-6754 KIT-RIDE CONTROL *(contd.)* i03635723

NOTE	REF NO	GRAPHIC REF	PART NUMBER	QTY	PART NAME 1 2 3 4 5 6 (PRODUCT LEVEL)	SEE PAGE
	36	1	**8T-4205**	4	WASHER-HARD (7.2X14.5X2-MM THK)	
	37	1	**8T-4224**	2	WASHER-HARD (8.8X16X2-MM THK)	
M	38	1	**8T-4908**	2	BOLT (M8X1.25X25-MM)	

E-ORDER BY THE CENTIMETER
I-REFER TO HYDRAULIC INFORMATION SYSTEM
M-METRIC PART
Y-SEPARATE ILLUSTRATION

304-6754 KIT-RIDE CONTROL *(contd.)* **i03635723**

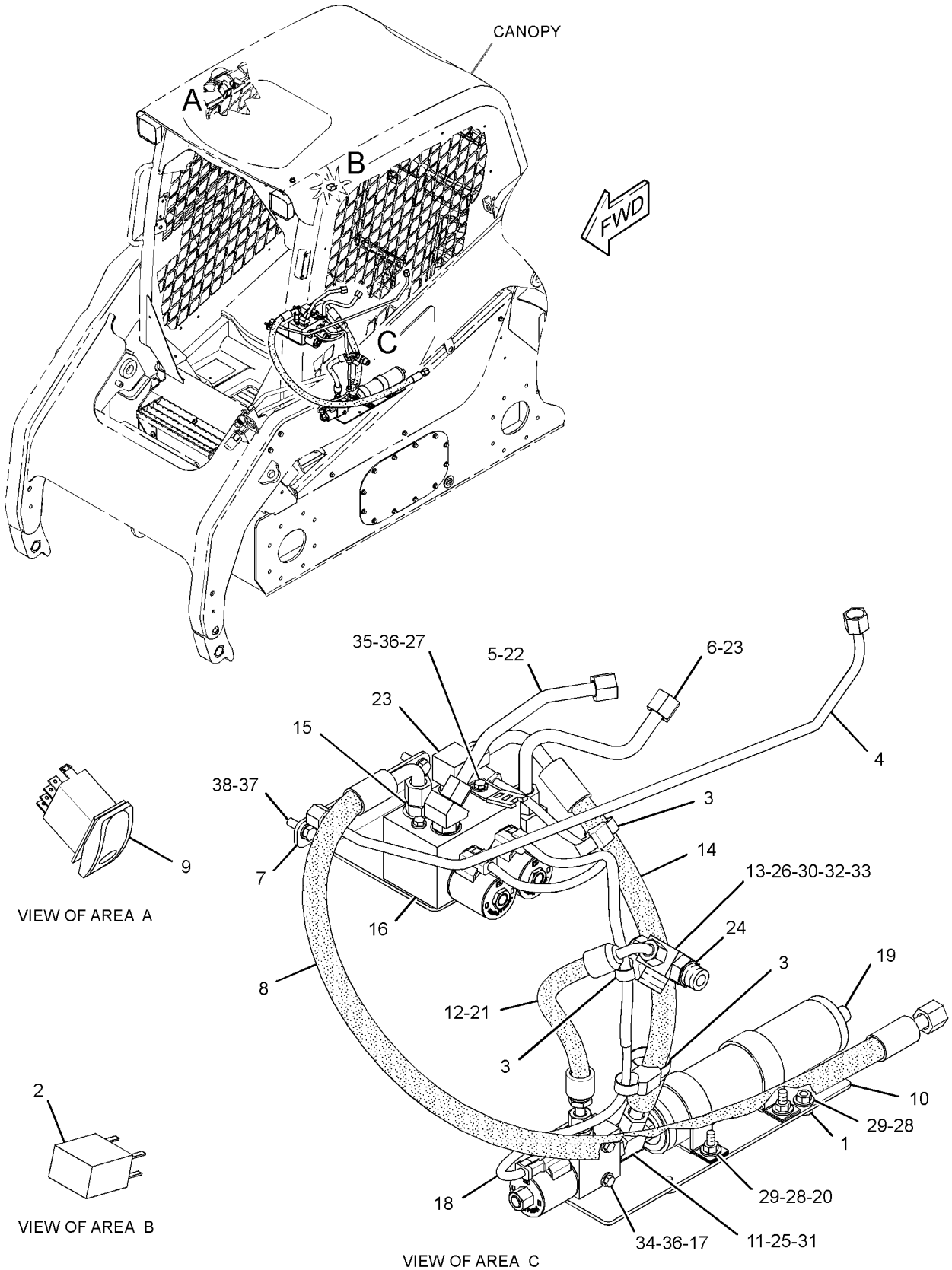

GRAPHIC #1

<END>

g01430775

HYDRAULIC SYSTEM

258-3915 KIT-WORK TOOL POSITIONER–
SELF-LEVELING HYDRAULICS
S/N: JAY1-UP
AN ATTACHMENT

SMCS-5112, 5264, 5479 **i03624559**

NOTE	REF NO	GRAPHIC REF	PART NUMBER	QTY	PART NAME 1 2 3 4 5 6 (PRODUCT LEVEL)	SEE PAGE
	1	1	**146-9439**	1	RELAY AS (12-VOLT) (RIDE CONTROL)	
Y	2	1	**258-2801**	1	MANIFOLD & SOLENOID GP-CONTROL (WORK TOOL POSITIONER)	409
	3	1	**318-0008**	1	TUBE AS	
	4	1	**258-2884**	1	TUBE AS	
	5	1	**258-2885**	1	TUBE AS	
	6	1	**258-2886**	1	TUBE AS	
	7	1	**263-5417**	1	SWITCH AS-ROCKER (WORK TOOL POSITIONER)	
		1	**111-7899**	1	GASKET	
	8	1	*148-8315*	1	CONNECTOR AS	
		1	**2M-9780**	1	SEAL-O-RING	
		1	**6V-8642**	1	CONNECTOR	
		1	**7J-9108**	1	SEAL-O-RING	
	9	1	*148-8388*	1	ELBOW AS	
		1	**2M-9780**	1	SEAL-O-RING	
		1	**6V-8629**	1	ELBOW	
		1	**6V-9746**	1	SEAL-O-RING	
	10	1	*148-8393*	1	ELBOW AS	
		1	**6V-9852**	1	ELBOW	
		1	**7J-9108**	1	SEAL-O-RING	
	11	1	*205-3692*	2	ELBOW AS (EACH INCLUDES)	
		1	**2M-9780**	1	SEAL-O-RING	
		1	**6V-8397**	1	SEAL-O-RING	
		1	**9X-2134**	1	ELBOW	
	12	1	**4P-8134**	1	CLIP	
	13	1	**6V-8398**	1	SEAL-O-RING	
	14	1	**6V-9830**	1	CAP AS	
M	15	1	**7X-2535**	2	BOLT (M6X1X60-MM)	
	16	1	**8T-4205**	1	WASHER-HARD (7.2X14.5X2-MM THK)	
	17	1	**7K-1181**	1	STRAP-CABLE	
	18	1	*148-8327*	1	CONNECTOR AS	
		1	**3D-2824**	1	SEAL-O-RING	
		1	**6V-8637**	1	CONNECTOR	
		1	**6V-9746**	1	SEAL-O-RING	

M-METRIC PART
Y-SEPARATE ILLUSTRATION

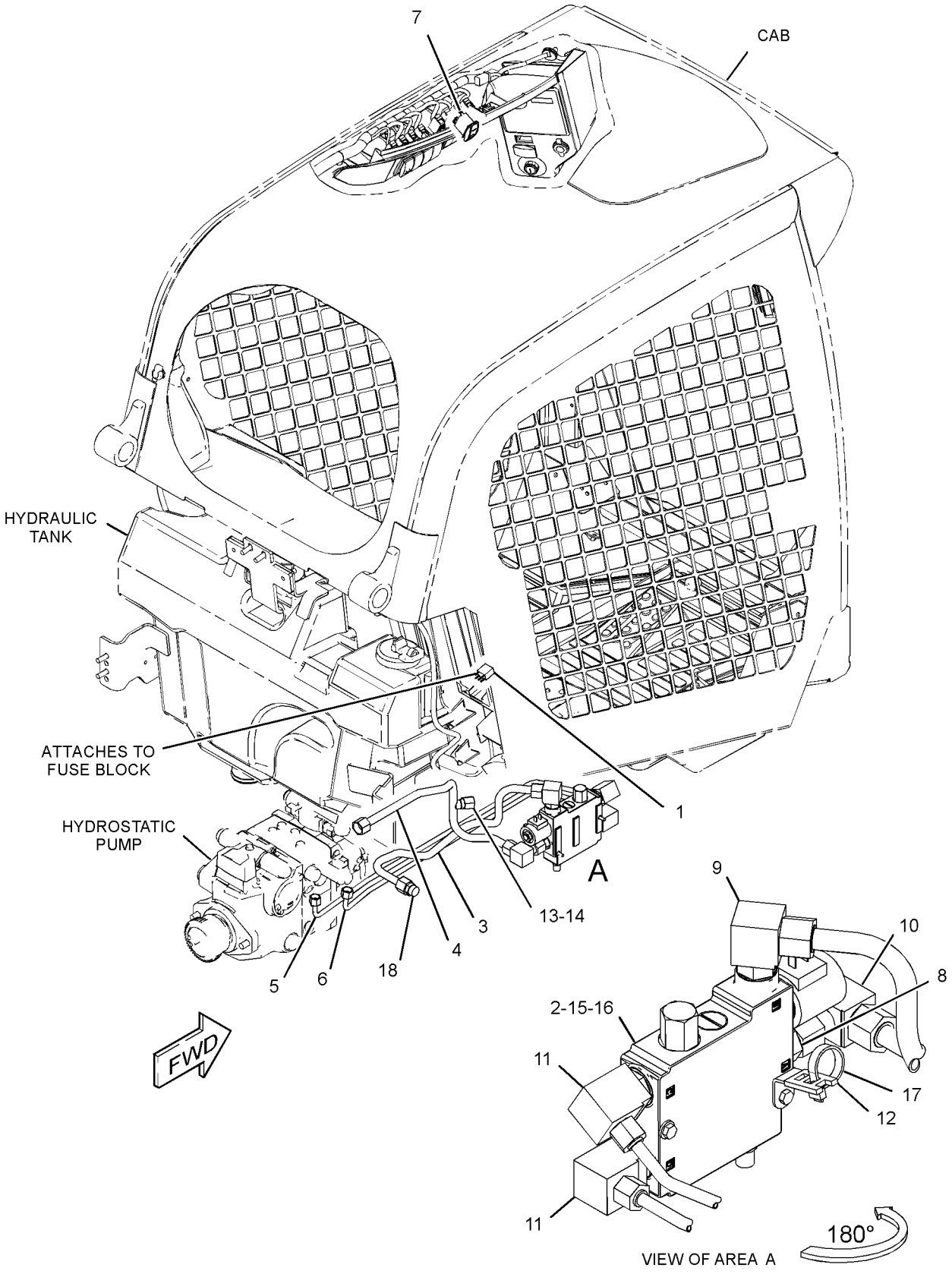

GRAPHIC #1 **<END>** g01440438

HYDRAULIC SYSTEM

154-5019 LINES GP-BUCKET

S/N: JAY1-UP
PART OF 154-5004 BUCKET AR-MULTIPURPOSE
AN ATTACHMENT
TYPE 1

SMCS-5057 **i03635688**

NOTE	REF NO	GRAPHIC REF	PART NUMBER	QTY	PART NAME 1 2 3 4 5 6 (PRODUCT LEVEL)	SEE PAGE
	1	1	**153-2994**	1	COUPLER AS-QUICK DISCONNECT (FEMALE)	
I	2	1	**154-5020**	2	HOSE AS	
I	3	1	**154-5021**	1	HOSE AS	
I	4	1	**154-5022**	1	HOSE AS	
I	5	1	**154-5024**	1	HOSE AS	
I	6	1	**154-5025**	1	HOSE AS	
	7	1	**163-1386**	1	TEE-UNION	
	8	1	**185-7887**	1	COUPLER AS-QUICK DISCONNECT (MALE)	
	9	1	*148-8319*	2	CONNECTOR AS	
					(EACH INCLUDES)	
		1	**2M-9780**	1	SEAL-O-RING	
		1	**6V-8397**	1	SEAL-O-RING	
		1	**6V-8715**	1	CONNECTOR	
	10	1	*150-3056*	1	TEE AS	
		1	**6V-8397**	3	SEAL-O-RING	
		1	**6V-8788**	1	TEE	
	11	1	**1S-0994**	1	CLIP	
	12	1	**6D-4247**	3	CLIP	
	13	1	**6V-8397**	7	SEAL-O-RING	
CM	14	1	**8T-4189**	4	BOLT (M8X1.25X20-MM)	
C	15	1	**8T-4224**	4	WASHER-HARD (8.8X16X2-MM THK)	
B	16	1	**9X-6273**	2	WASHER (32.5X50X0.8-MM THK)	
B	17	1	**9X-6274**	2	WASHER (32.5X50X1.6-MM THK)	

B-USE AS REQUIRED
C-CHANGE FROM PREVIOUS TYPE
I-REFER TO HYDRAULIC INFORMATION SYSTEM
M-METRIC PART

154-5019 **LINES GP-BUCKET** *(contd.)* **i03635688**

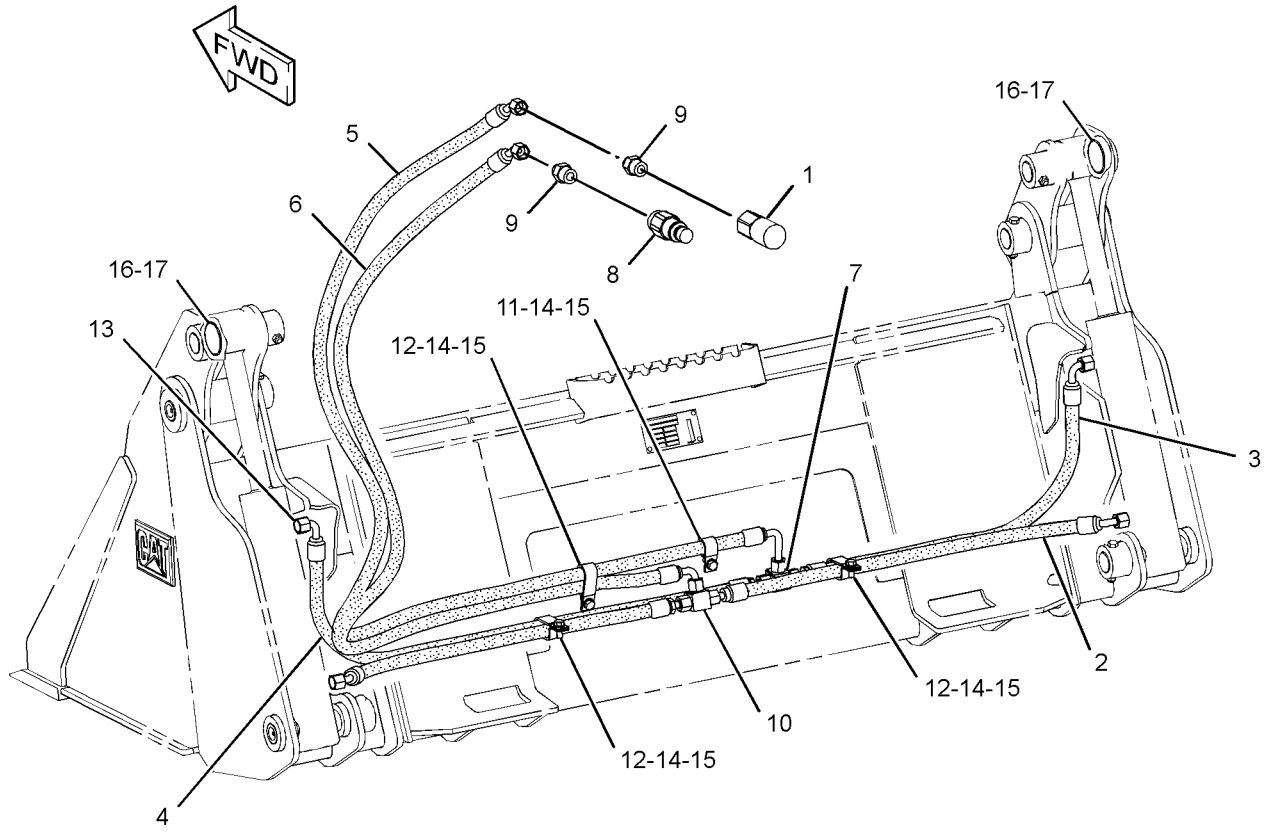

GRAPHIC #1 **<END>** g01283080

HYDRAULIC SYSTEM

154-5019 LINES GP-BUCKET

S/N: JAY1-UP
PART OF 154-5004 BUCKET AR-MULTIPURPOSE
AN ATTACHMENT
TYPE 2

SMCS-5057 **i03635690**

NOTE	REF NO	GRAPHIC REF	PART NUMBER	QTY	PART NAME 1 2 3 4 5 6 (PRODUCT LEVEL)	SEE PAGE
	1	1	**153-2994**	1	COUPLER AS-QUICK DISCONNECT (FEMALE)	
	2	1	**185-7887**	1	COUPLER AS-QUICK DISCONNECT (MALE)	
I	3	1	**154-5020**	2	HOSE AS	
I	4	1	**154-5021**	1	HOSE AS	
I	5	1	**154-5022**	1	HOSE AS	
I	6	1	**154-5024**	1	HOSE AS	
I	7	1	**154-5025**	1	HOSE AS	
	8	1	**163-1386**	1	TEE-UNION	
	9	1	*148-8319*	2	CONNECTOR AS	
					(EACH INCLUDES)	
		1	**2M-9780**	1	SEAL-O-RING	
		1	**6V-8397**	1	SEAL-O-RING	
		1	**6V-8715**	1	CONNECTOR	
	10	1	*150-3056*	1	TEE AS	
		1	**6V-8397**	3	SEAL-O-RING	
		1	**6V-8788**	1	TEE	
	11	1	**1S-0994**	1	CLIP	
M	12	1	**5C-7261**	4	NUT (M8X1.25-THD)	
	13	1	**6D-4247**	3	CLIP	
	14	1	**6V-8397**	7	SEAL-O-RING	
	15	1	**9X-6273**	2	WASHER (32.5X50X0.8-MM THK)	
	16	1	**9X-6274**	2	WASHER (32.5X50X1.6-MM THK)	

I-REFER TO HYDRAULIC INFORMATION SYSTEM
M-METRIC PART

154-5019 **LINES GP-BUCKET** *(contd.)* **i03635690**

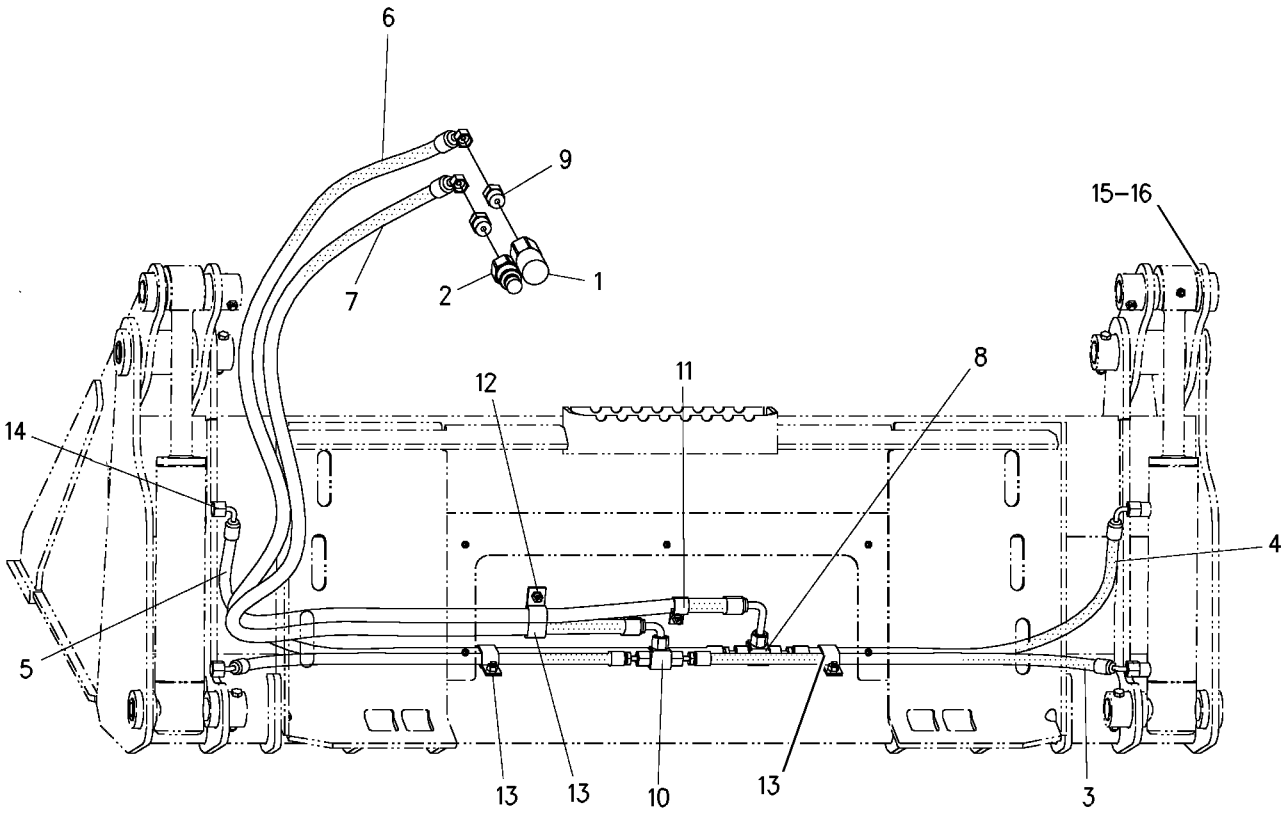

GRAPHIC #1 **<END>** g00922568

HYDRAULIC SYSTEM

154-5052 LINES GP-BUCKET

S/N: JAY1-UP

PART OF 154-5010 BUCKET AR-MULTIPURPOSE

AN ATTACHMENT

SMCS-5057 **i03635695**

NOTE	REF NO	GRAPHIC REF	PART NUMBER	QTY	PART NAME 1 2 3 4 5 6 (PRODUCT LEVEL)	SEE PAGE
	1	1	**153-2994**	1	COUPLER AS-QUICK DISCONNECT (FEMALE)	
I	2	1	**154-5024**	1	HOSE AS	
I	3	1	**154-5025**	1	HOSE AS	
I	4	1	**159-4535**	1	HOSE AS	
I	5	1	**159-4536**	2	HOSE AS	
I	6	1	**159-4537**	1	HOSE AS	
	7	1	**163-1386**	1	TEE-UNION	
	8	1	**185-7887**	1	COUPLER AS-QUICK DISCONNECT (MALE)	
	9	1	*148-8319*	2	CONNECTOR AS	
					(EACH INCLUDES)	
		1	**2M-9780**	1	SEAL-O-RING	
		1	**6V-8397**	1	SEAL-O-RING	
		1	**6V-8715**	1	CONNECTOR	
	10	1	*150-3056*	1	TEE AS	
		1	**6V-8397**	3	SEAL-O-RING	
		1	**6V-8788**	1	TEE	
	11	1	**1S-0994**	1	CLIP	
	12	1	**6D-4247**	3	CLIP	
	13	1	**6V-8397**	7	SEAL-O-RING	
CM	14	1	**8T-4189**	4	BOLT (M8X1.25X20-MM)	
C	15	1	**8T-4224**	4	WASHER-HARD (8.8X16X2-MM THK)	
B	16	1	**9X-6273**	2	WASHER (32.5X50X0.8-MM THK)	
B	17	1	**9X-6274**	2	WASHER (32.5X50X1.6-MM THK)	

B-USE AS REQUIRED
C-CHANGE FROM PREVIOUS TYPE
I-REFER TO HYDRAULIC INFORMATION SYSTEM
M-METRIC PART

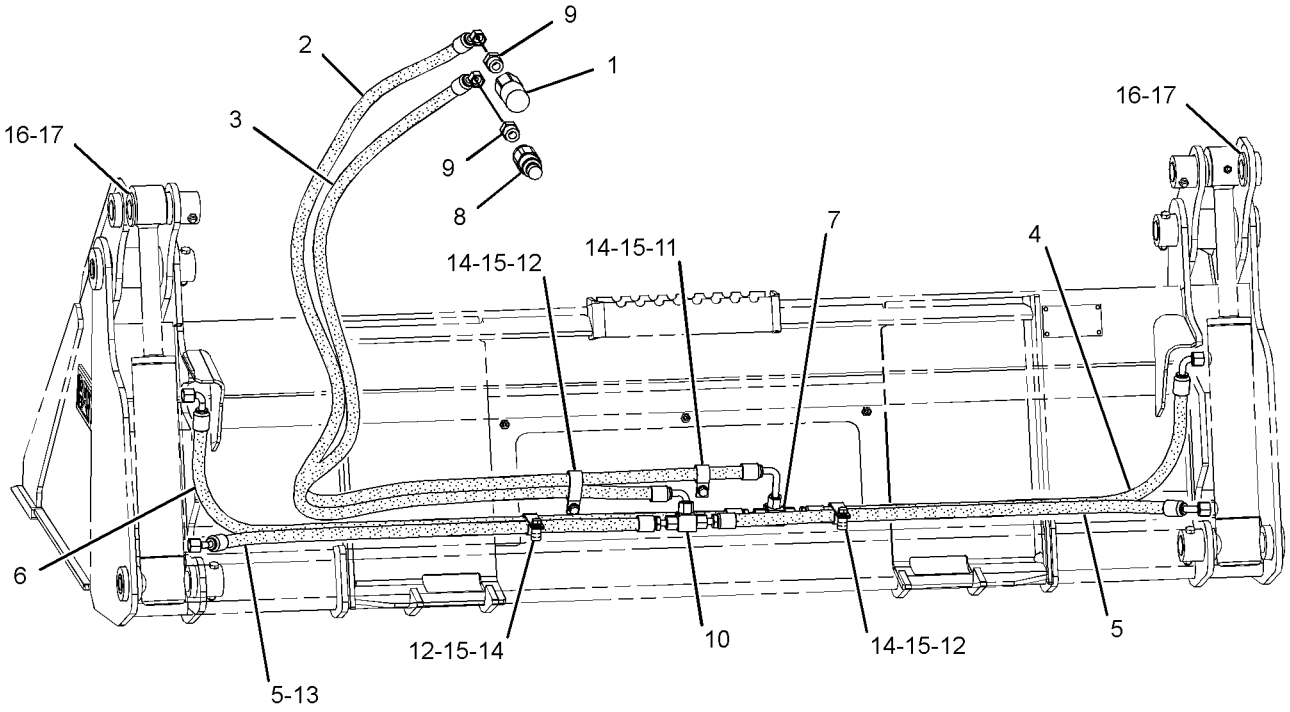

REAR VIEW
(UPPER LEFT)

GRAPHIC #1 **<END>** g01283201

HYDRAULIC SYSTEM

279-5412 LINES GP-BUCKET—INDUSTRIAL

S/N: JAY1-UP

PART OF 279-5350, 279-5360 FORK AR-GRAPPLE

AN ATTACHMENT

SMCS-5057 **i02616554**

NOTE	REF NO	GRAPHIC REF	PART NUMBER	QTY	PART NAME 1 2 3 4 5 6 (PRODUCT LEVEL)	SEE PAGE
	1	1	**3E-7404**	2	CLAMP-HOSE	
I	2	1	**294-5503**	1	HOSE AS	
	3	1	**153-2994**	1	COUPLER AS-QUICK DISCONNECT (FEMALE)	
	4	1	**153-2995**	1	FITTING AS (QUICK DISCONNECT, MALE)	
	5	1	**161-0185**	1	TUBE AS	
	6	1	**161-0186**	1	TUBE AS	
	7	1	**161-0188**	2	TUBE AS	
I	8	1	**161-0189**	2	HOSE AS	
I	9	1	**161-0190**	2	HOSE AS	
	10	1	**163-1385**	1	ELBOW	
I	11	1	**294-5502**	1	HOSE AS	
	12	1	*148-8319*	2	CONNECTOR AS	
					(EACH INCLUDES)	
		1	**2M-9780**	1	SEAL-O-RING	
		1	**6V-8397**	1	SEAL-O-RING	
		1	**6V-8715**	1	CONNECTOR	
	13	1	**2V-3216**	6	CLIP	
	14	1	**6V-8397**	13	SEAL-O-RING	
	15	1	**7S-3916**	2	CLIP (TAB)	
	16	1	**7S-3919**	2	CLIP (SLOT)	
	17	1	**8T-4121**	2	WASHER-HARD (11X21X2.5-MM THK)	
M	18	1	**8T-4136**	2	BOLT (M10X1.5X25-MM)	
M	19	1	**8T-4171**	4	BOLT (M6X1X12-MM)	
	20	1	**9R-2004**	2	BLOCK	

I-REFER TO HYDRAULIC INFORMATION SYSTEM
M-METRIC PART

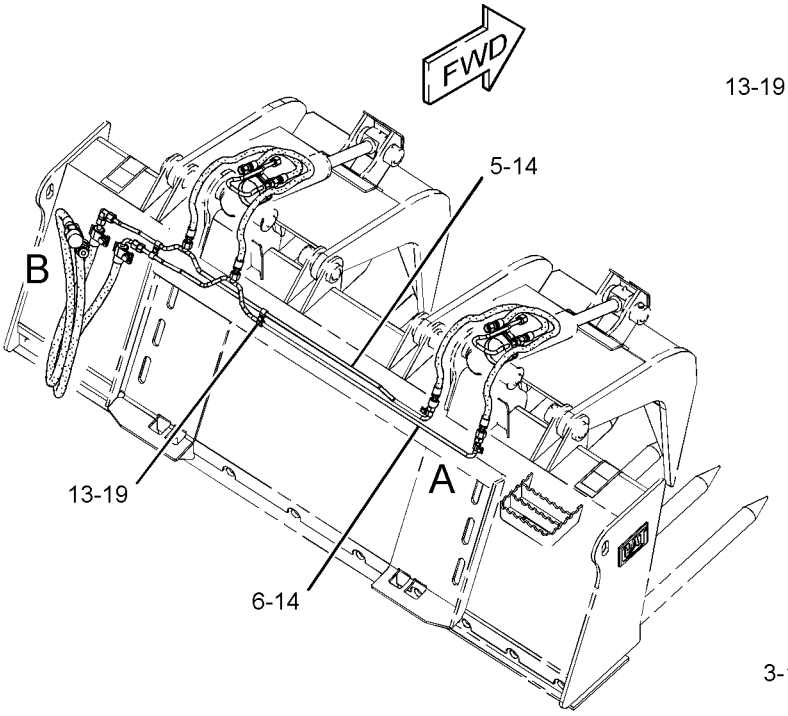

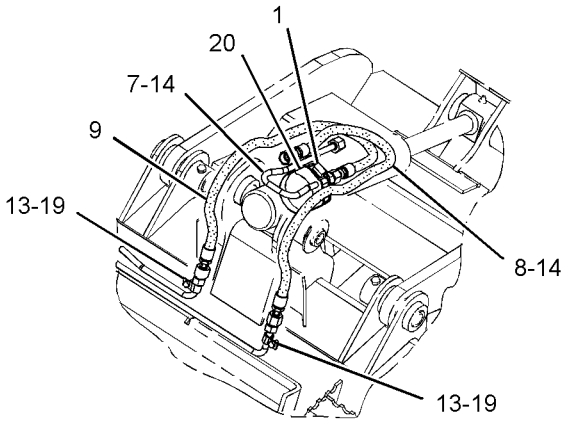

VIEW OF AREA A

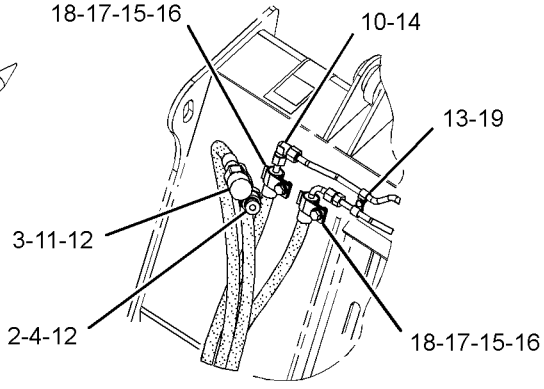

VIEW OF AREA B

GRAPHIC #1 **<END>** g01280859

HYDRAULIC SYSTEM

279-5413 LINES GP-BUCKET—MULTIPURPOSE

S/N: JAY1-UP
PART OF 279-5382, 325-7036 BUCKET AR-MULTIPURPOSE
AN ATTACHMENT

SMCS-5057 **i03641721**

NOTE	REF NO	GRAPHIC REF	PART NUMBER	QTY	PART NAME 1 2 3 4 5 6 (PRODUCT LEVEL)	SEE PAGE
	1	1	**153-2994**	1	COUPLER AS-QUICK DISCONNECT (FEMALE)	
I	2	1	**154-5020**	2	HOSE AS	
I	3	1	**154-5021**	1	HOSE AS	
I	4	1	**154-5022**	1	HOSE AS	
	5	1	**163-1386**	1	TEE-UNION	
	6	1	**185-7887**	1	COUPLER AS-QUICK DISCONNECT (MALE)	
I	7	1	**279-5417**	1	HOSE AS	
I	8	1	**279-5418**	1	HOSE AS	
	9	1	*148-8319*	2	CONNECTOR AS	
					(EACH INCLUDES)	
		1	**2M-9780**	1	SEAL-O-RING	
		1	**6V-8397**	1	SEAL-O-RING	
		1	**6V-8715**	1	CONNECTOR	
	10	1	*150-3056*	1	TEE AS	
		1	**6V-8397**	3	SEAL-O-RING	
		1	**6V-8788**	1	TEE	
	11	1	**1S-0994**	1	CLIP	
	12	1	**6D-4247**	3	CLIP	
	13	1	**6V-8397**	7	SEAL-O-RING	
M	14	1	**8T-4189**	4	BOLT (M8X1.25X20-MM)	
	15	1	**8T-4224**	4	WASHER-HARD (8.8X16X2-MM THK)	
B	16	1	**9X-6273**	2	WASHER (32.5X50X0.8-MM THK)	
B	17	1	**9X-6274**	2	WASHER (32.5X50X1.6-MM THK)	

B-USE AS REQUIRED
I-REFER TO HYDRAULIC INFORMATION SYSTEM
M-METRIC PART

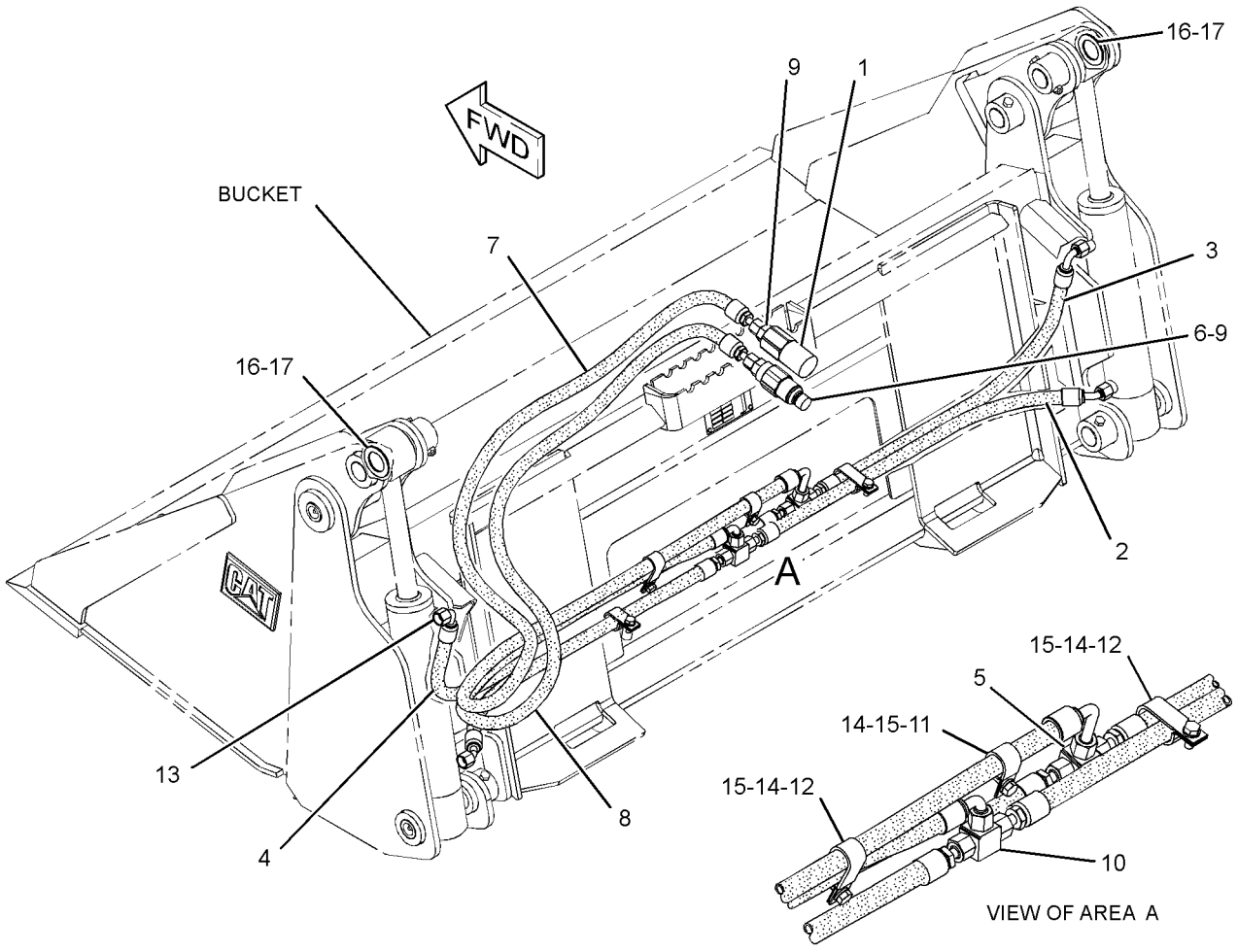

GRAPHIC #1 **<END>** g01278435

HYDRAULIC SYSTEM

279-5414 LINES GP-BUCKET—MULTIPURPOSE

S/N: JAY1-UP
PART OF 279-5390, 325-7046 BUCKET AR-MULTIPURPOSE
AN ATTACHMENT

SMCS-5057 **i02664837**

NOTE	REF NO	GRAPHIC REF	PART NUMBER	QTY	PART NAME 1 2 3 4 5 6 (PRODUCT LEVEL)	SEE PAGE
	1	1	**153-2994**	1	COUPLER AS-QUICK DISCONNECT (FEMALE)	
I	2	1	**156-5508**	1	HOSE AS	
I	3	1	**156-5509**	2	HOSE AS	
I	4	1	**156-5510**	1	HOSE AS	
	5	1	**163-1386**	1	TEE-UNION	
	6	1	**185-7887**	1	COUPLER AS-QUICK DISCONNECT (MALE)	
I	7	1	**279-5417**	1	HOSE AS	
I	8	1	**279-5418**	1	HOSE AS	
	9	1	*148-8319*	2	CONNECTOR AS	
					(EACH INCLUDES)	
		1	**2M-9780**	1	SEAL-O-RING	
		1	**6V-8397**	1	SEAL-O-RING	
		1	**6V-8715**	1	CONNECTOR	
	10	1	*150-3056*	1	TEE AS	
		1	**6V-8397**	3	SEAL-O-RING	
		1	**6V-8788**	1	TEE	
	11	1	**1S-0994**	1	CLIP	
	12	1	**6D-4247**	3	CLIP	
	13	1	**6V-8397**	7	SEAL-O-RING	
M	14	1	**8T-4189**	4	BOLT (M8X1.25X20-MM)	
	15	1	**8T-4224**	4	WASHER-HARD (8.8X16X2-MM THK)	
B	16	1	**9X-6273**	2	WASHER (32.5X50X0.8-MM THK)	
B	17	1	**9X-6274**	2	WASHER (32.5X50X1.6-MM THK)	

B-USE AS REQUIRED
I-REFER TO HYDRAULIC INFORMATION SYSTEM
M-METRIC PART

279-5414 **LINES GP-BUCKET** *(contd.)* **i02664837**

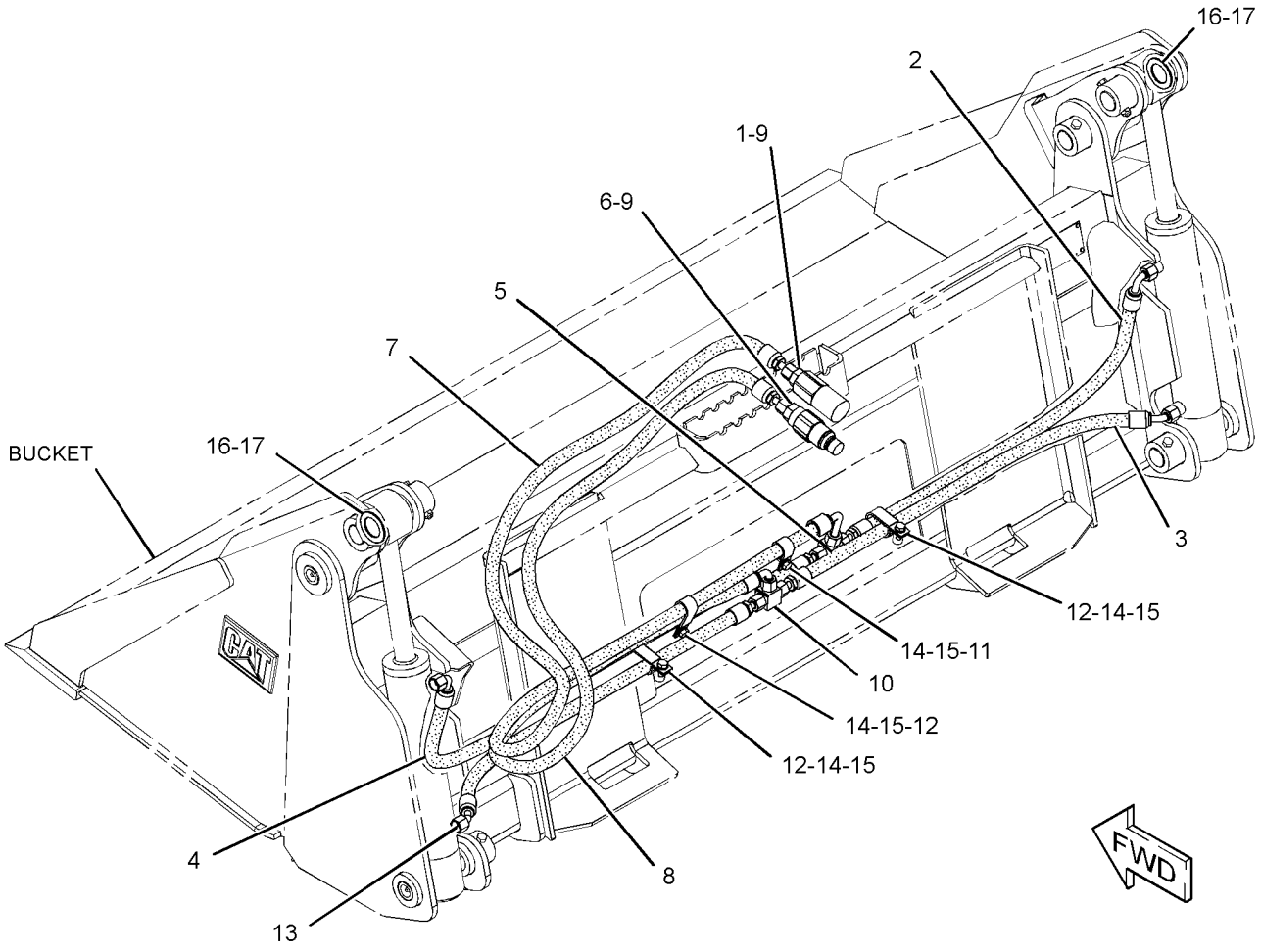

GRAPHIC #1 **<END>** g01339126

HYDRAULIC SYSTEM

279-5415 LINES GP-BUCKET—MULTIPURPOSE

S/N: JAY1-UP

PART OF 279-5398, 325-7056 BUCKET AR-MULTIPURPOSE

AN ATTACHMENT

SMCS-5057 **i02552160**

NOTE	REF NO	GRAPHIC REF	PART NUMBER	QTY	PART NAME 1 2 3 4 5 6 (PRODUCT LEVEL)	SEE PAGE
	1	1	**153-2994**	1	COUPLER AS-QUICK DISCONNECT (FEMALE)	
I	2	1	**159-4535**	1	HOSE AS	
I	3	1	**159-4536**	2	HOSE AS	
I	4	1	**159-4537**	1	HOSE AS	
	5	1	**163-1386**	1	TEE-UNION	
	6	1	**185-7887**	1	COUPLER AS-QUICK DISCONNECT (MALE)	
I	7	1	**279-5417**	1	HOSE AS	
I	8	1	**279-5418**	1	HOSE AS	
	9	1	*148-8319*	2	CONNECTOR AS	
					(EACH INCLUDES)	
		1	**2M-9780**	1	SEAL-O-RING	
		1	**6V-8397**	1	SEAL-O-RING	
		1	**6V-8715**	1	CONNECTOR	
	10	1	*150-3056*	1	TEE AS	
		1	**6V-8397**	3	SEAL-O-RING	
		1	**6V-8788**	1	TEE	
	11	1	**1S-0994**	1	CLIP	
	12	1	**6D-4247**	3	CLIP	
	13	1	**6V-8397**	7	SEAL-O-RING	
M	14	1	**8T-4189**	4	BOLT (M8X1.25X20-MM)	
	15	1	**8T-4224**	4	WASHER-HARD (8.8X16X2-MM THK)	
B	16	1	**9X-6273**	2	WASHER (32.5X50X0.8-MM THK)	
B	17	1	**9X-6274**	2	WASHER (32.5X50X1.6-MM THK)	

B-USE AS REQUIRED
I-REFER TO HYDRAULIC INFORMATION SYSTEM
M-METRIC PART

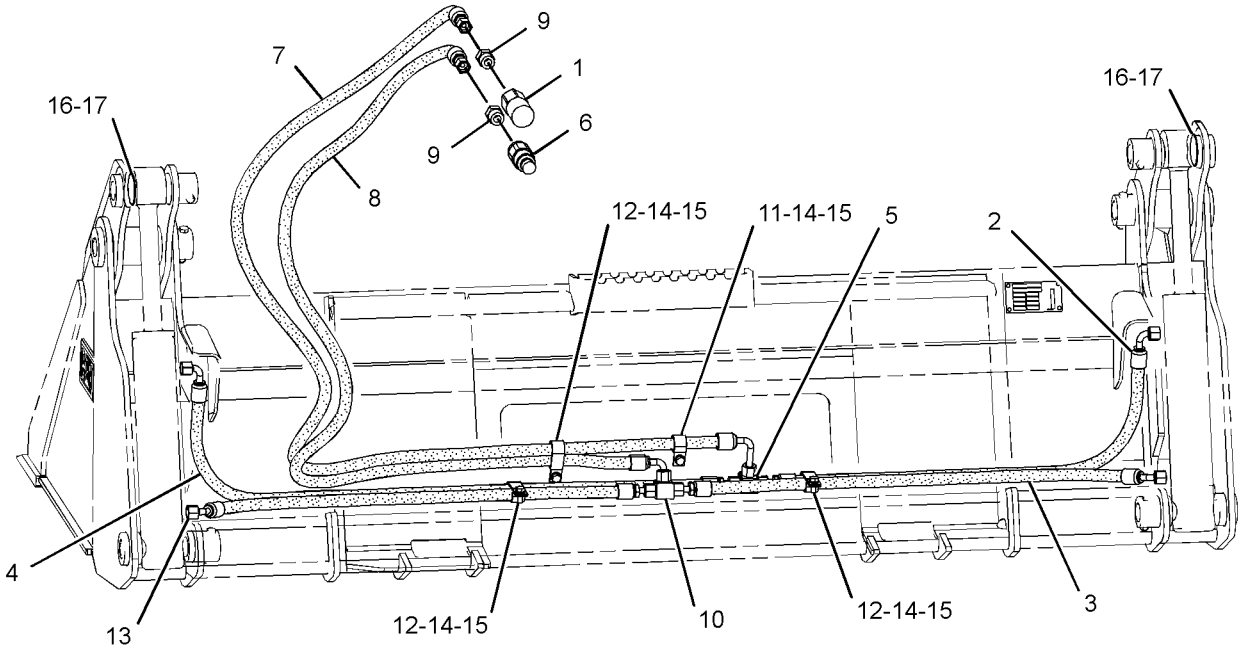

REAR VIEW
(UPPER LEFT)

GRAPHIC #1 **<END>** g01280163

HYDRAULIC SYSTEM

279-5416 LINES GP-BUCKET—MULTIPURPOSE

S/N: JAY1-UP
PART OF 279-5403, 325-7066 BUCKET AR-MULTIPURPOSE
AN ATTACHMENT

SMCS-5057 **i02552257**

NOTE	REF NO	GRAPHIC REF	PART NUMBER	QTY	PART NAME 1 2 3 4 5 6 (PRODUCT LEVEL)	SEE PAGE
	1	1	**153-2994**	1	COUPLER AS-QUICK DISCONNECT (FEMALE)	
	2	1	**163-1386**	1	TEE-UNION	
	3	1	**185-7887**	1	COUPLER AS-QUICK DISCONNECT (MALE)	
I	4	1	**199-8309**	1	HOSE AS	
I	5	1	**199-8310**	2	HOSE AS	
I	6	1	**199-8311**	1	HOSE AS	
I	7	1	**279-5417**	1	HOSE AS	
I	8	1	**279-5418**	1	HOSE AS	
	9	1	*148-8319*	2	CONNECTOR AS	
					(EACH INCLUDES)	
		1	**2M-9780**	1	SEAL-O-RING	
		1	**6V-8397**	1	SEAL-O-RING	
		1	**6V-8715**	1	CONNECTOR	
	10	1	*150-3056*	1	TEE AS	
		1	**6V-8397**	3	SEAL-O-RING	
		1	**6V-8788**	1	TEE	
	11	1	**1S-0994**	1	CLIP	
	12	1	**6D-4247**	3	CLIP	
	13	1	**6V-8397**	7	SEAL-O-RING	
M	14	1	**8T-4189**	4	BOLT (M8X1.25X20-MM)	
	15	1	**8T-4224**	4	WASHER-HARD (8.8X16X2-MM THK)	
B	16	1	**9X-6273**	2	WASHER (32.5X50X0.8-MM THK)	
B	17	1	**9X-6274**	2	WASHER (32.5X50X1.6-MM THK)	

B-USE AS REQUIRED
I-REFER TO HYDRAULIC INFORMATION SYSTEM
M-METRIC PART

279-5416 **LINES GP-BUCKET** *(contd.)* **i02552257**

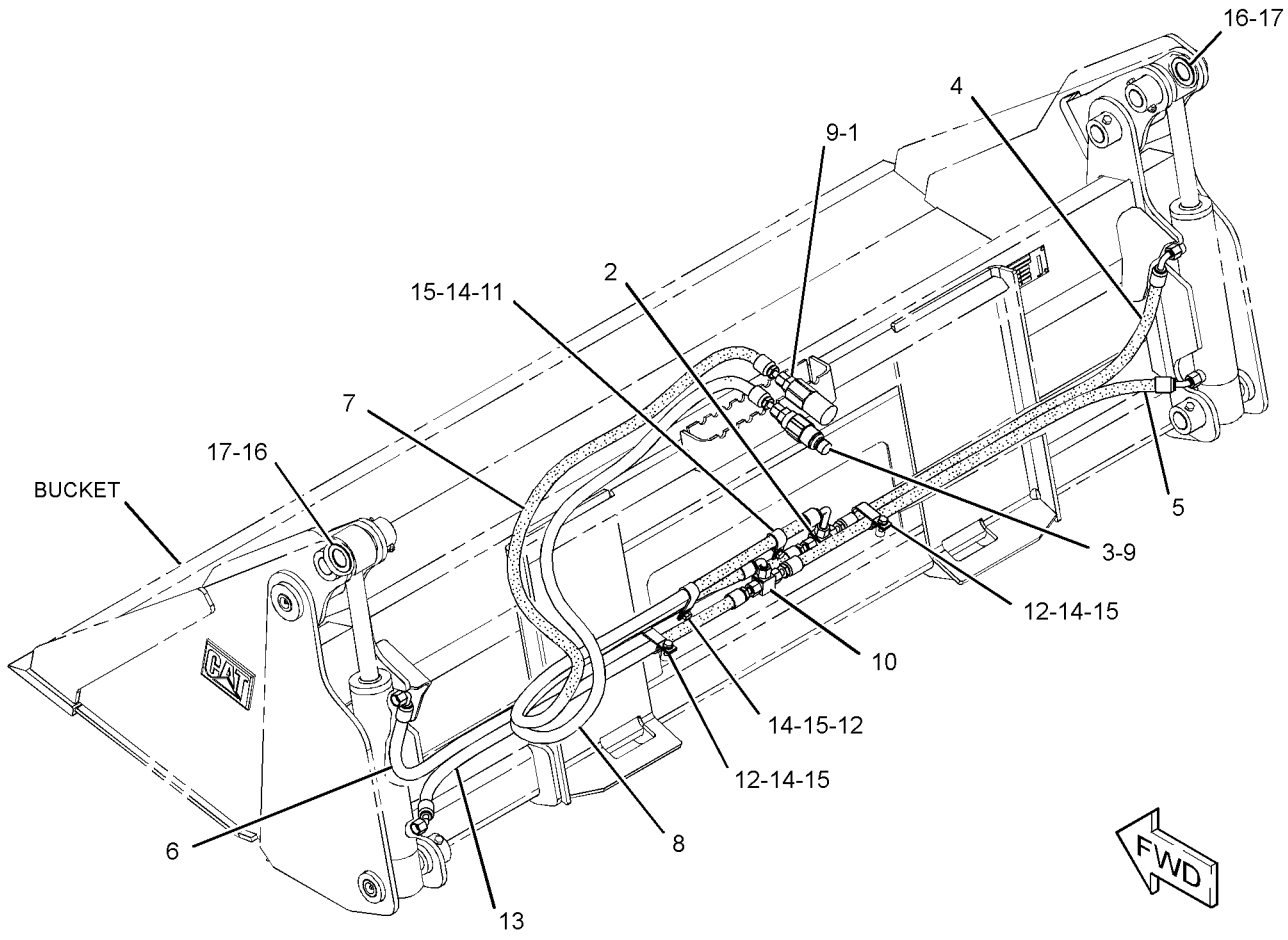

GRAPHIC #1 **<END>** g01278627

HYDRAULIC SYSTEM

285-6113 LINES GP-BUCKET—UTILITY

S/N: JAY1-UP
PART OF 285-6116 GRAPPLE & CYLINDER GP-UTILITY
AN ATTACHMENT
TYPE 1

SMCS-5057 **i02645962**

NOTE	REF NO	GRAPHIC REF	PART NUMBER	QTY	PART NAME 1 2 3 4 5 6 (PRODUCT LEVEL)	SEE PAGE
	1	1	**2J-6540**	1	CLAMP-HOSE	
	2	1	**153-2994**	1	COUPLER AS-QUICK DISCONNECT (FEMALE)	
	3	1	**153-2995**	1	FITTING AS (QUICK DISCONNECT, MALE)	
	4	1	**174-2388**	1	TUBE AS	
	5	1	**174-2389**	1	TUBE AS	
I	6	1	**174-2393**	2	HOSE AS	
	7	1	**174-3097**	1	TUBE AS	
	8	1	*183-4085*	1	ELBOW AS	
		1	**6V-8397**	2	SEAL-O-RING	
		1	**183-4084**	1	ELBOW	
I	9	1	**294-5504**	1	HOSE AS	
I	10	1	**294-5505**	1	HOSE AS	
	11	1	*148-8319*	2	CONNECTOR AS	
					(EACH INCLUDES)	
		1	**2M-9780**	1	SEAL-O-RING	
		1	**6V-8397**	1	SEAL-O-RING	
		1	**6V-8715**	1	CONNECTOR	
	12	1	**6V-8397**	6	SEAL-O-RING	
	13	1	**7S-3912**	2	CLIP (TAB)	
	14	1	**7S-3913**	2	CLIP (SLOT)	
	15	1	**8T-1893**	2	CLIP (SLOT)	
	16	1	**8T-1894**	2	CLIP (TAB)	
	17	1	**8T-4121**	6	WASHER-HARD (11X21X2.5-MM THK)	
M	18	1	**8T-4137**	4	BOLT (M10X1.5X20-MM)	
	19	1	**9R-2004**	1	BLOCK	

I-REFER TO HYDRAULIC INFORMATION SYSTEM
M-METRIC PART

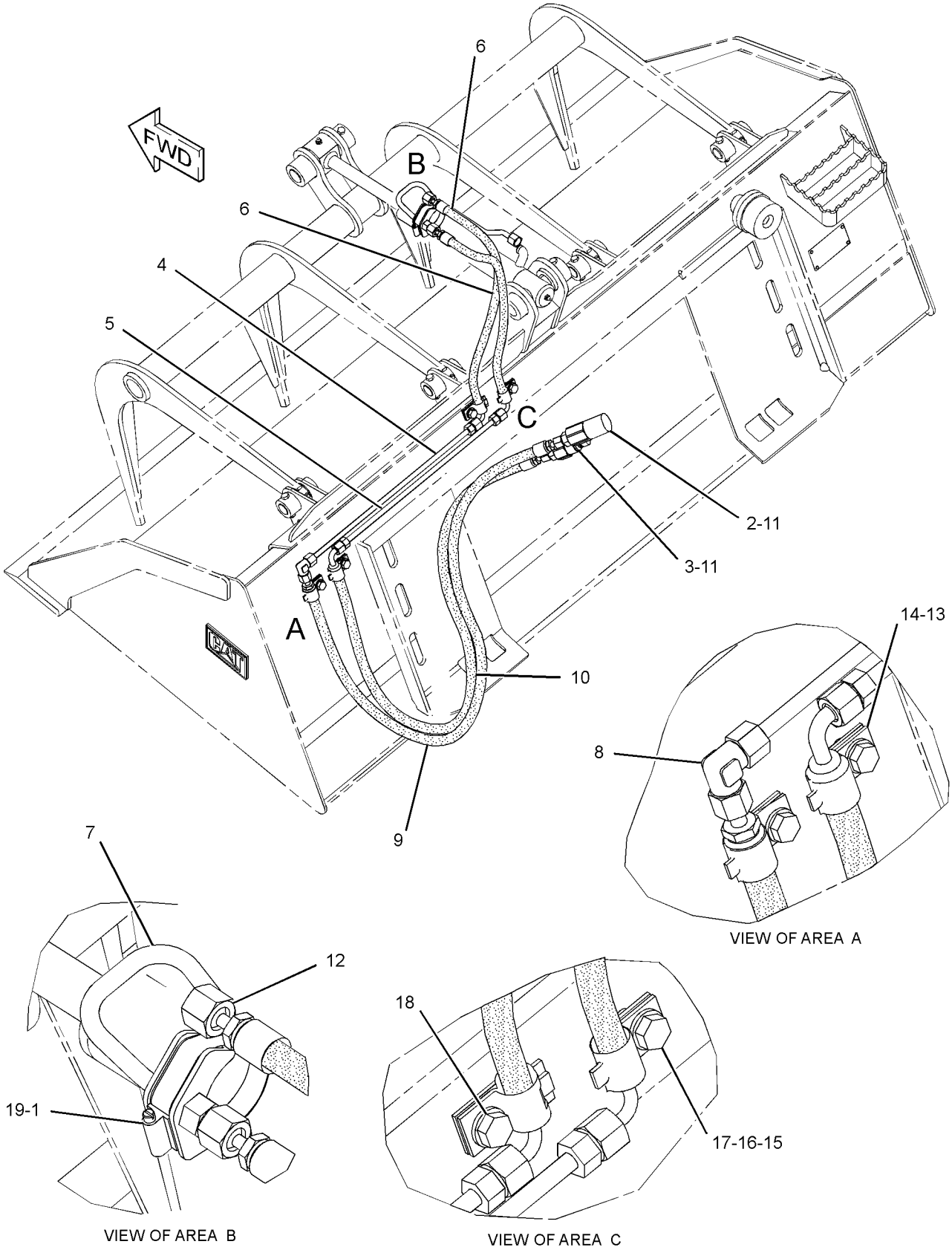

GRAPHIC #1 **<END>** g01279537

HYDRAULIC SYSTEM

285-6113 LINES GP-BUCKET—UTILITY

S/N: JAY1-UP
PART OF 285-6116 GRAPPLE & CYLINDER GP-UTILITY
AN ATTACHMENT
TYPE 2

SMCS-5057 **i02890974**

NOTE	REF NO	GRAPHIC REF	PART NUMBER	QTY	PART NAME 1 2 3 4 5 6 (PRODUCT LEVEL)	SEE PAGE
	1	1	**153-2994**	1	COUPLER AS-QUICK DISCONNECT (FEMALE)	
	2	1	**153-2995**	1	FITTING AS (QUICK DISCONNECT, MALE)	
	3	1	**174-2388**	1	TUBE AS	
	4	1	**174-2389**	1	TUBE AS	
CI	5	1	**174-2393**	1	HOSE AS	
	6	1	*183-4085*	1	ELBOW AS	
		1	**6V-8397**	2	SEAL-O-RING	
		1	**183-4084**	1	ELBOW	
I	7	1	**294-5504**	1	HOSE AS	
I	8	1	**294-5505**	1	HOSE AS	
CI	9	1	**307-3808**	1	HOSE AS	
	10	1	*148-8319*	2	CONNECTOR AS	
					(EACH INCLUDES)	
		1	**2M-9780**	1	SEAL-O-RING	
		1	**6V-8397**	1	SEAL-O-RING	
		1	**6V-8715**	1	CONNECTOR	
C	11	1	**6V-8397**	5	SEAL-O-RING	
	12	1	**7S-3912**	2	CLIP (TAB)	
	13	1	**7S-3913**	2	CLIP (SLOT)	
	14	1	**8T-1893**	2	CLIP (SLOT)	
	15	1	**8T-1894**	2	CLIP (TAB)	
	16	1	**8T-4121**	6	WASHER-HARD (11X21X2.5-MM THK)	
M	17	1	**8T-4137**	4	BOLT (M10X1.5X20-MM)	

C-CHANGE FROM PREVIOUS TYPE
I-REFER TO HYDRAULIC INFORMATION SYSTEM
M-METRIC PART

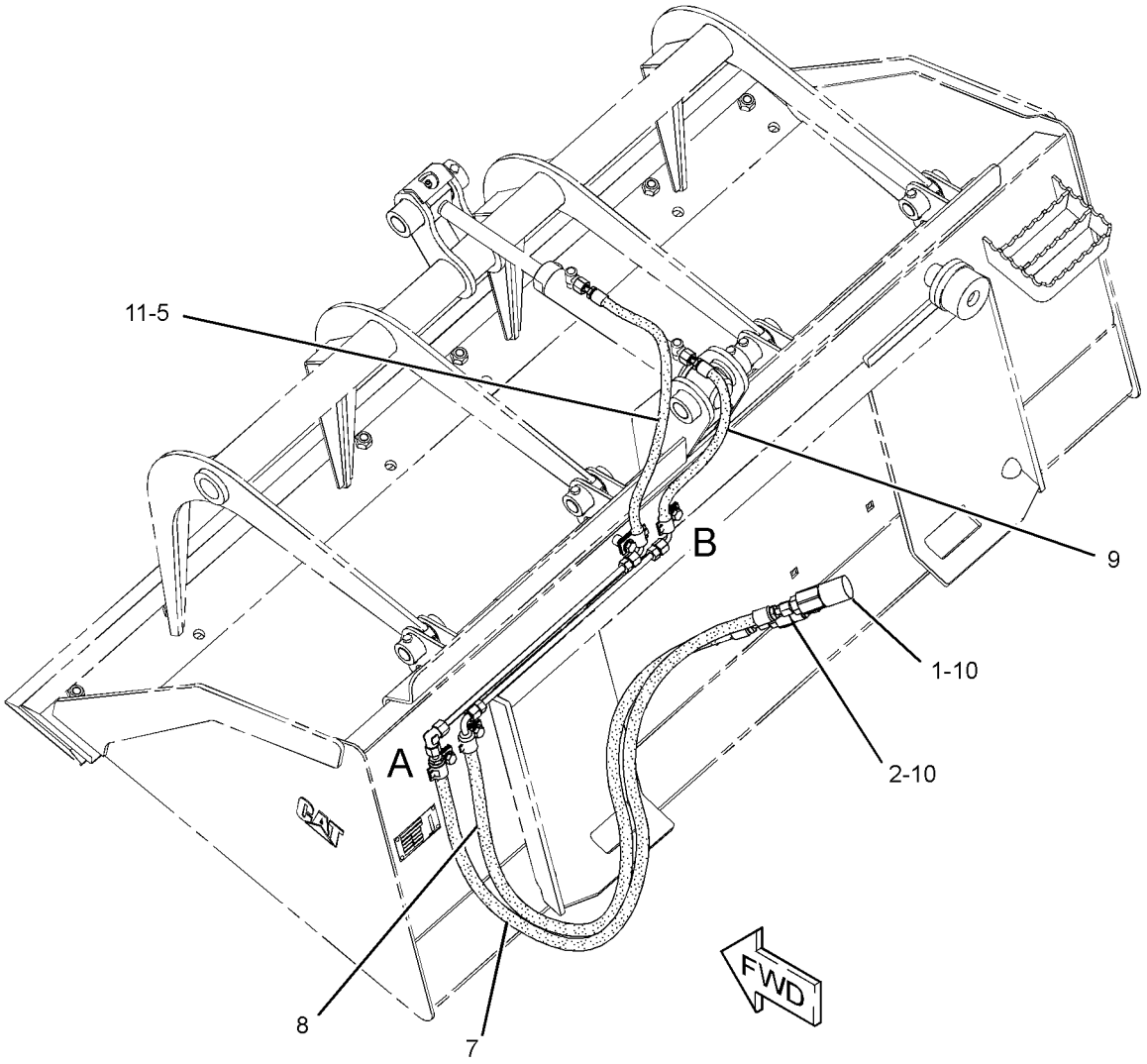

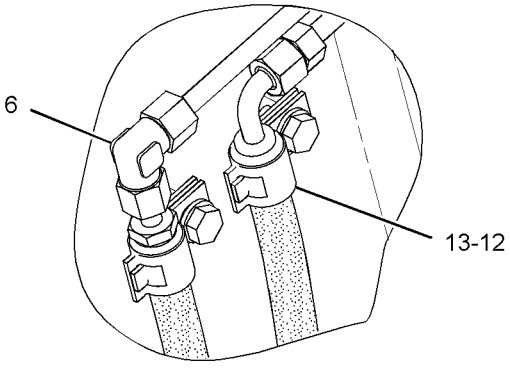

VIEW OF AREA A

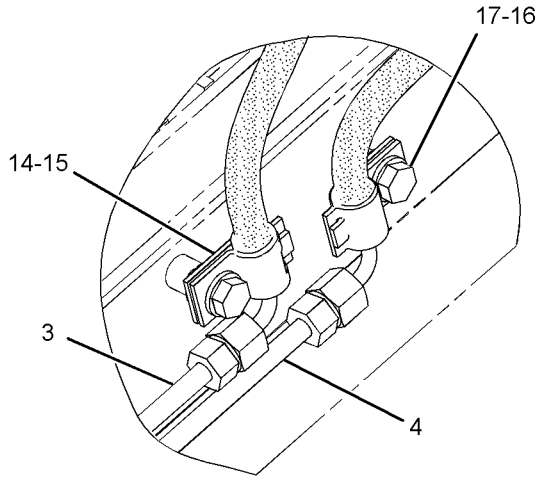

VIEW OF AREA B

GRAPHIC #1 **<END>** g01439824

HYDRAULIC SYSTEM

293-0140 LINES GP-BUCKET—MULTIPURPOSE

S/N: JAY1-UP
PART OF 293-0139, 325-7076 BUCKET AR-MULTIPURPOSE
AN ATTACHMENT

SMCS-5057 **i02636472**

NOTE	REF NO	GRAPHIC REF	PART NUMBER	QTY	PART NAME 1 2 3 4 5 6 (PRODUCT LEVEL)	SEE PAGE
	1	1	**153-2994**	1	COUPLER AS-QUICK DISCONNECT (FEMALE)	
	2	1	**163-1386**	1	TEE-UNION	
	3	1	**185-7887**	1	COUPLER AS-QUICK DISCONNECT (MALE)	
I	4	1	**199-8309**	1	HOSE AS	
I	5	1	**199-8311**	1	HOSE AS	
I	6	1	**279-5417**	1	HOSE AS	
I	7	1	**279-5418**	1	HOSE AS	
I	8	1	**293-0152**	2	HOSE AS	
	9	1	*148-8319*	2	CONNECTOR AS	
					(EACH INCLUDES)	
		1	**2M-9780**	1	SEAL-O-RING	
		1	**6V-8397**	1	SEAL-O-RING	
		1	**6V-8715**	1	CONNECTOR	
	10	1	*150-3056*	1	TEE AS	
		1	**6V-8397**	3	SEAL-O-RING	
		1	**6V-8788**	1	TEE	
	11	1	**1S-0994**	1	CLIP	
	12	1	**6D-4247**	3	CLIP	
	13	1	**6V-8397**	7	SEAL-O-RING	
M	14	1	**8T-4189**	4	BOLT (M8X1.25X20-MM)	
	15	1	**8T-4224**	4	WASHER-HARD (8.8X16X2-MM THK)	
B	16	1	**9X-6273**	2	WASHER (32.5X50X0.8-MM THK)	
B	17	1	**9X-6274**	2	WASHER (32.5X50X1.6-MM THK)	

B-USE AS REQUIRED
I-REFER TO HYDRAULIC INFORMATION SYSTEM
M-METRIC PART

293-0140 **LINES GP-BUCKET** *(contd.)* **i02636472**

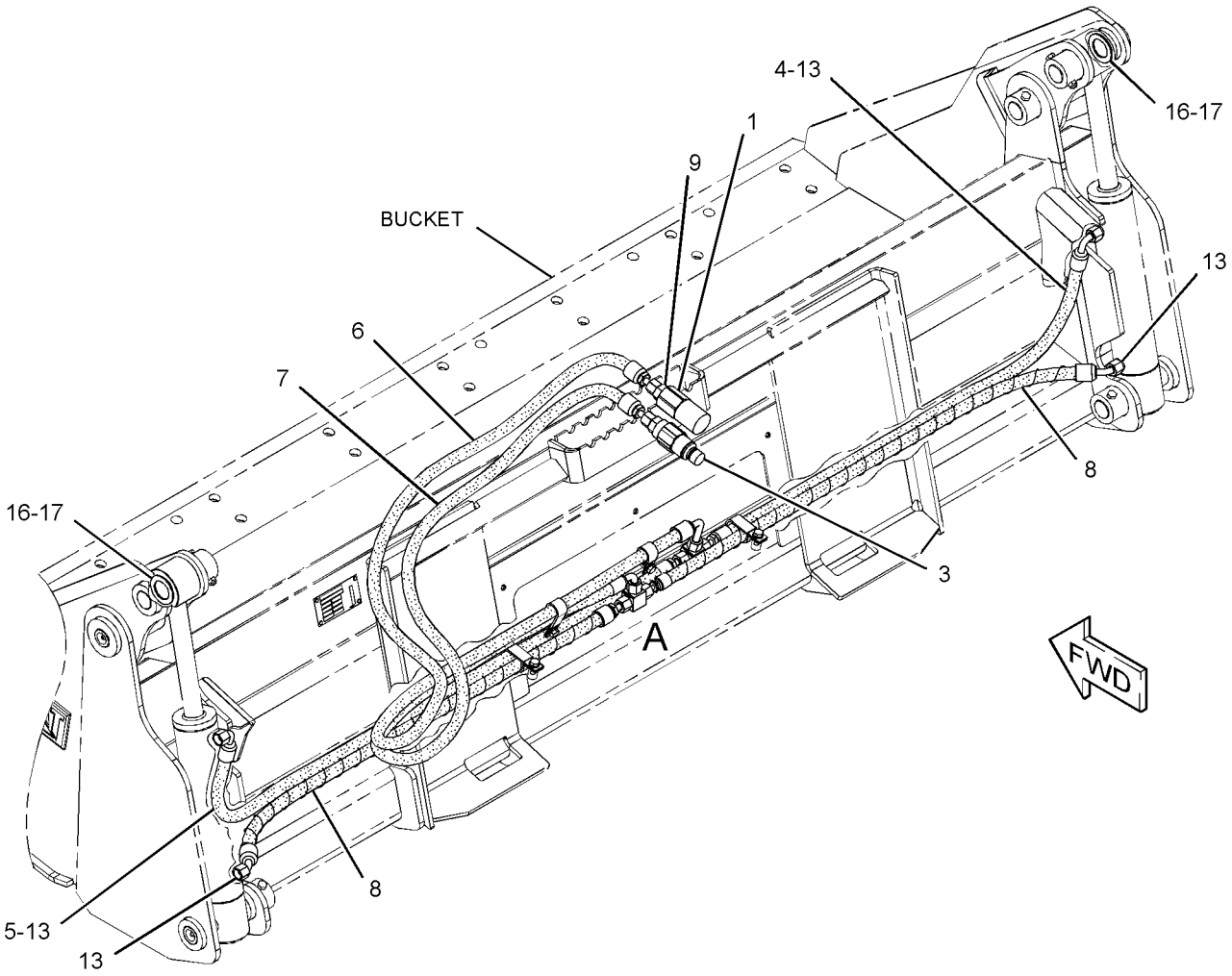

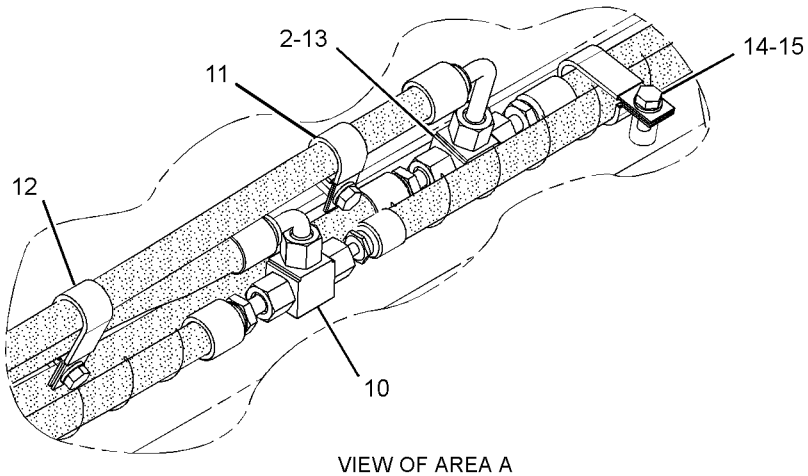

VIEW OF AREA A

GRAPHIC #1 **<END>** g01327736

HYDRAULIC SYSTEM

177-1986 LINES GP-CONNECTING

S/N: JAY1-UP

PART OF 177-1989, 177-1990 BLADE AR

AN ATTACHMENT

SMCS-5057 **i01928980**

NOTE	REF NO	GRAPHIC REF	PART NUMBER	QTY	PART NAME 1 2 3 4 5 6 (PRODUCT LEVEL)	SEE PAGE
	1	1	**153-2994**	1	COUPLER AS-QUICK DISCONNECT (FEMALE)	
	2	1	**153-2995**	1	FITTING AS (QUICK DISCONNECT, MALE)	
	3	1	**163-1385**	2	ELBOW	
I	4	1	**177-1910**	2	HOSE AS	
I	5	1	**177-1911**	1	HOSE AS	
I	6	1	**177-1912**	1	HOSE AS	
	7	1	*148-8319*	2	CONNECTOR AS	
					(EACH INCLUDES)	
		1	**2M-9780**	1	SEAL-O-RING	
		1	**6V-8397**	1	SEAL-O-RING	
		1	**6V-8715**	1	CONNECTOR	
	8	1	**148-8378**	2	ELBOW AS	
					(EACH INCLUDES)	
		1	**3J-1907**	1	SEAL-O-RING	
		1	**6V-8397**	1	SEAL-O-RING	
		1	**6V-8724**	1	ELBOW	
	9	1	**6V-8397**	4	SEAL-O-RING	
	10	1	**8T-4121**	4	WASHER-HARD (11X21X2.5-MM THK)	
M	11	1	**8T-4133**	2	NUT (M10X1.5-THD)	
M	12	1	**8T-4185**	1	BOLT (M10X1.5X50-MM)	
M	13	1	**8T-4195**	1	BOLT (M10X1.5X30-MM)	
	14	1	**8T-8192**	2	CLIP (SLOT)	
	15	1	**8T-8193**	2	CLIP (TAB)	

I-REFER TO HYDRAULIC INFORMATION SYSTEM
M-METRIC PART

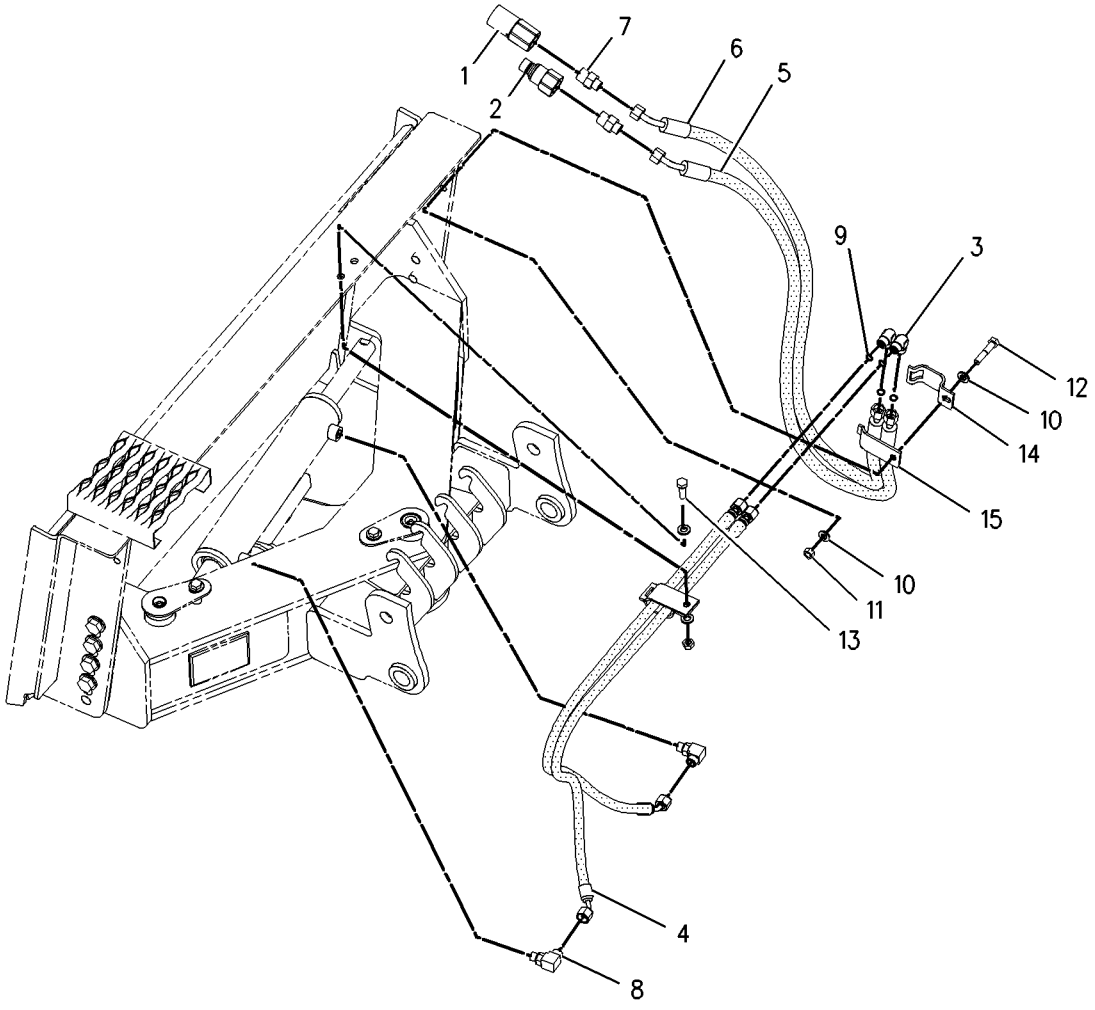

GRAPHIC #1 **<END>** g00978933

HYDRAULIC SYSTEM

231-5273 LINES GP-CONNECTING

S/N: JAY1-UP
PART OF 231-5275, 231-5277 BLADE AR
AN ATTACHMENT

SMCS-5057 **i01964116**

NOTE	REF NO	GRAPHIC REF	PART NUMBER	QTY	PART NAME 1 2 3 4 5 6 (PRODUCT LEVEL)	SEE PAGE
	1	1	**153-2994**	1	COUPLER AS-QUICK DISCONNECT (FEMALE)	
	2	1	**153-2995**	1	FITTING AS (QUICK DISCONNECT, MALE)	
I	3	1	**231-0124**	2	HOSE AS	
I	4	1	**231-0125**	1	HOSE AS	
I	5	1	**231-0126**	2	HOSE AS	
I	6	1	**231-0127**	2	HOSE AS	
I	7	1	**238-1003**	1	HOSE AS	
	8	1	*148-8315*	2	CONNECTOR AS	
					(EACH INCLUDES)	
		1	**2M-9780**	1	SEAL-O-RING	
		1	**6V-8642**	1	CONNECTOR	
		1	**7J-9108**	1	SEAL-O-RING	
	9	1	*148-8336*	6	CONNECTOR AS	
					(EACH INCLUDES)	
		1	**3J-1907**	1	SEAL-O-RING	
		1	**6V-8397**	1	SEAL-O-RING	
		1	**6V-8636**	1	CONNECTOR	
	10	1	*148-8342*	2	CONNECTOR AS	
					(EACH INCLUDES)	
		1	**3K-0360**	1	SEAL-O-RING	
		1	**6V-8632**	1	CONNECTOR	
		1	**7J-9108**	1	SEAL-O-RING	
	11	1	**5P-1076**	2	WASHER-HARD (13.5X30X4-MM THK)	
	12	1	**7G-5984**	1	CLIP (TAB)	
	13	1	**7G-5985**	1	CLIP (SLOT)	
	14	1	**7G-5986**	1	GROMMET	
M	15	1	**8T-4139**	2	BOLT (M12X1.75X30-MM)	

I-REFER TO HYDRAULIC INFORMATION SYSTEM
M-METRIC PART

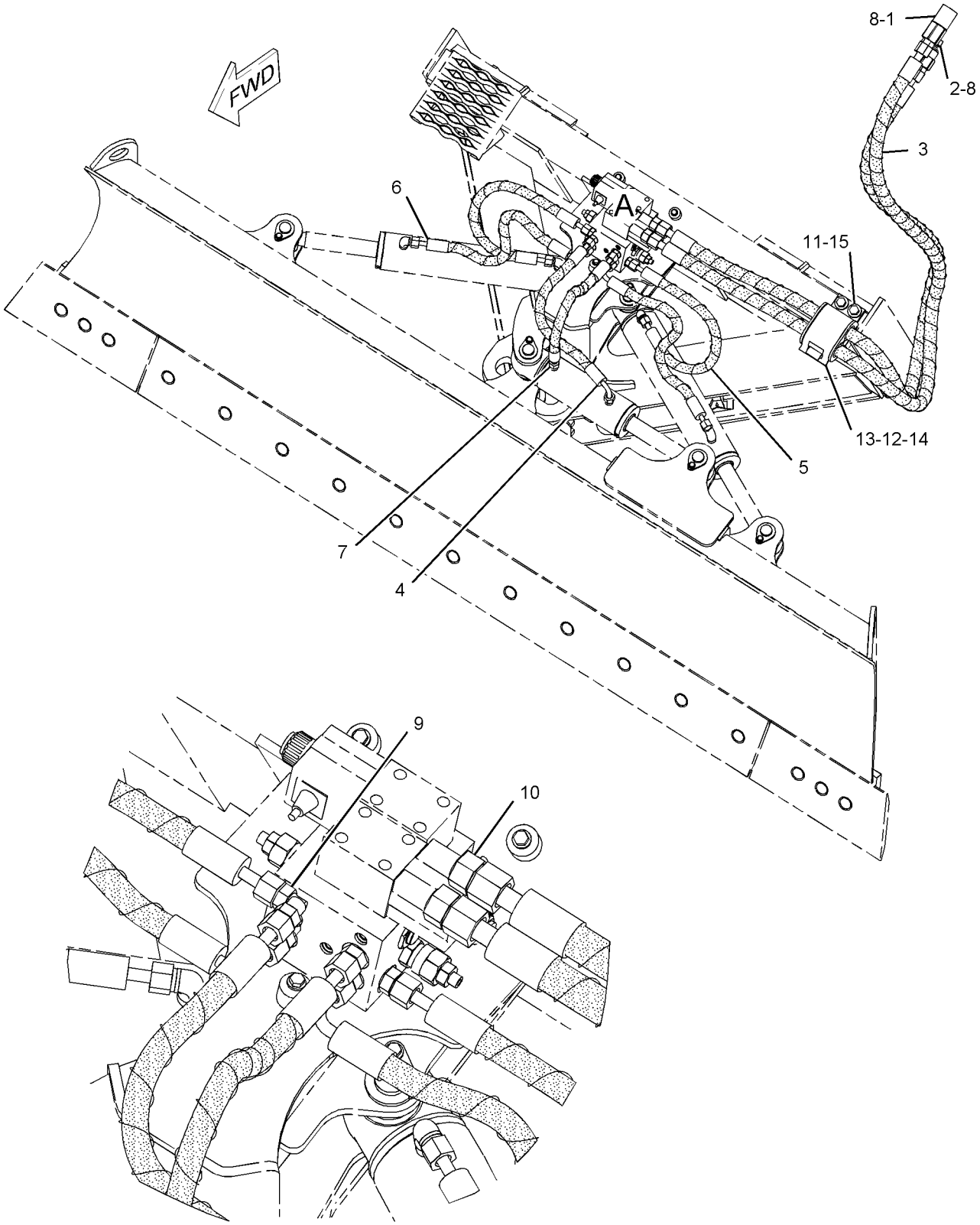

VIEW OF AREA A

GRAPHIC #1 **<END>** g01041993

HYDRAULIC SYSTEM

258-2424 LINES GP-COUPLER

S/N: JAY1-UP
PART OF 258-2791 COUPLER AR-QUICK
AN ATTACHMENT
TYPE 1

SMCS-5057, 6129 **i02667714**

NOTE	REF NO	GRAPHIC REF	PART NUMBER	QTY	PART NAME 1 2 3 4 5 6 (PRODUCT LEVEL)	SEE PAGE
	1	1	**124-2456**	1	FILM-INSTRUCTION (NO STEP)	
	2	1	**207-9737**	1	BRACKET AS	
I	3	1	**207-9756**	4	HOSE AS	
	4	1	**212-6690**	1	GUARD	
I	5	1	**258-2841**	2	HOSE AS	
I	6	1	**258-3366**	1	HOSE AS	
I	7	1	**258-3367**	1	HOSE AS	
	8	1	**258-3368**	1	TUBE AS	
	9	1	**258-3369**	1	TUBE AS	
Y	10	1	**291-0010**	1	MANIFOLD GP-CONTROL (QUICK COUPLER)	414
	11	1	**302-0389**	1	BRACKET AS	
	12	1	**132-7551**	1	SPACER (11X19X6-MM THK)	
	13	1	*148-8325*	4	CONNECTOR AS	
					(EACH INCLUDES)	
		1	**3J-1907**	1	SEAL-O-RING	
		1	**4J-5477**	1	SEAL-O-RING	
		1	**6V-8641**	1	CONNECTOR	
	14	1	*148-8336*	2	CONNECTOR AS	
					(EACH INCLUDES)	
		1	**3J-1907**	1	SEAL-O-RING	
		1	**6V-8397**	1	SEAL-O-RING	
		1	**6V-8636**	1	CONNECTOR	
	15	1	*148-8378*	2	ELBOW AS	
					(EACH INCLUDES)	
		1	**3J-1907**	1	SEAL-O-RING	
		1	**6V-8397**	1	SEAL-O-RING	
		1	**6V-8724**	1	ELBOW	
	16	1	*150-4034*	2	TEE AS	
					(EACH INCLUDES)	
		1	**6V-8397**	3	SEAL-O-RING	
		1	**8T-0379**	1	TEE-BULKHEAD	
	17	1	*212-1336*	1	TEE AS	
		1	**2M-9780**	1	SEAL-O-RING	
		1	**6V-8783**	1	TEE-FACE SEAL	
		1	**7J-9108**	2	SEAL-O-RING	
	18	1	*215-3191*	1	REDUCER AS	
		1	**4J-5477**	1	SEAL-O-RING	
		1	**6V-8937**	1	REDUCER-O-RING	
M	19	1	**266-3315**	2	BOLT-FLANGE HEAD (M8X1.25X25.5-MM)	
	20	1	**3S-2093**	2	STRAP-CABLE	
	21	1	**4D-6466**	3	CLIP	
	22	1	**5P-4116**	2	WASHER-HARD (8.8X20.5X2-MM THK)	
	23	1	**6V-8397**	2	SEAL-O-RING	
	24	1	**6V-9168**	2	NUT (11/16-16-THD)	
	25	1	**7B-1597**	2	CLIP (LOOP)	
	26	1	**7G-2950**	1	CLIP (SLOT)	
	27	1	**7G-2951**	1	CLIP (TAB)	
	28	1	**7H-7055**	2	CLIP	
	29	1	**7X-7729**	3	WASHER (11X25X3-MM THK)	
	30	1	**8T-4121**	5	WASHER-HARD (11X21X2.5-MM THK)	
M	31	1	**8T-4133**	1	NUT (M10X1.5-THD)	
M	32	1	**8T-4136**	4	BOLT (M10X1.5X25-MM)	
M	33	1	**8T-4137**	3	BOLT (M10X1.5X20-MM)	
M	34	1	**8T-4189**	2	BOLT (M8X1.25X20-MM)	

258-2424 **LINES GP-COUPLER** *(contd.)* **i02667714**

NOTE	REF NO	GRAPHIC REF	PART NUMBER	QTY	PART NAME 1 2 3 4 5 6 (PRODUCT LEVEL)	SEE PAGE
M	35	1	**8T-4200**	2	BOLT (M8X1.25X16-MM)	
	36	1	**8T-4224**	4	WASHER-HARD (8.8X16X2-MM THK)	
M	37	1	**8T-6870**	2	BOLT (M8X1.25X70-MM)	
	38	1	**9M-8406**	2	CLIP	
	39	1	**9S-1350**	2	CLIP	
	40	1	**9X-6581**	1	NUT-O-RING SEAL (1-14-THD)	

I-REFER TO HYDRAULIC INFORMATION SYSTEM
M-METRIC PART
Y-SEPARATE ILLUSTRATION

258-2424 **LINES GP-COUPLER** *(contd.)* **i02667714**

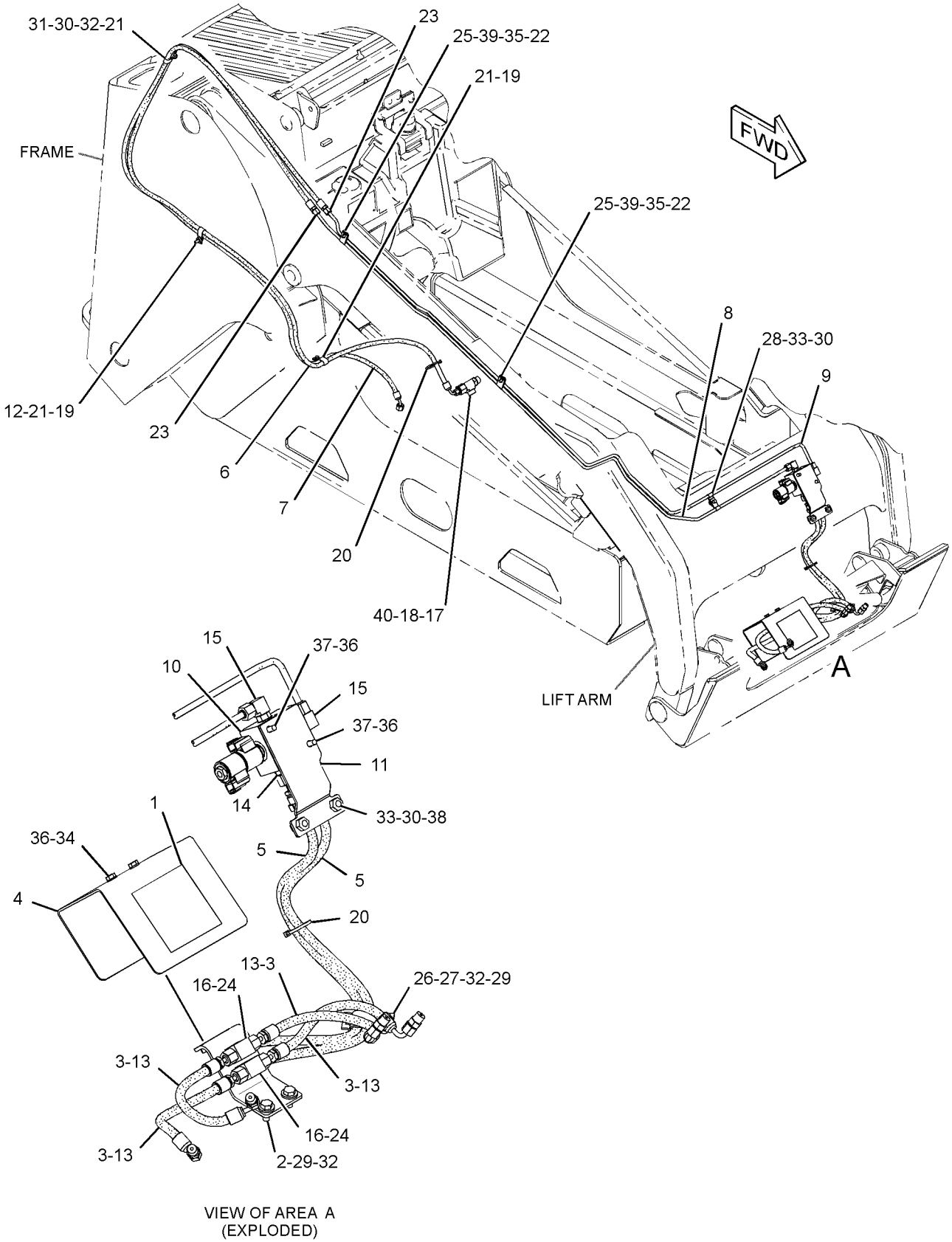

VIEW OF AREA A
(EXPLODED)

GRAPHIC #1 **<END>** g01341345

HYDRAULIC SYSTEM

258-2424 LINES GP-COUPLER

S/N: JAY1-UP
PART OF 258-2791 COUPLER AR-QUICK
AN ATTACHMENT
TYPE 2

SMCS-5057, 6129 **i02877724**

NOTE	REF NO	GRAPHIC REF	PART NUMBER	QTY	PART NAME 1 2 3 4 5 6 (PRODUCT LEVEL)	SEE PAGE
	1	1	**124-2456**	1	FILM-INSTRUCTION (NO STEP)	
	2	1	**207-9737**	1	BRACKET AS	
I	3	1	**207-9756**	4	HOSE AS	
	4	1	**212-6690**	1	GUARD	
I	5	1	**258-2841**	2	HOSE AS	
I	6	1	**258-3366**	1	HOSE AS	
I	7	1	**258-3367**	1	HOSE AS	
	8	1	**258-3368**	1	TUBE AS	
	9	1	**258-3369**	1	TUBE AS	
Y	10	1	**291-0010**	1	MANIFOLD GP-CONTROL (QUICK COUPLER)	414
	11	1	**302-0389**	1	BRACKET AS	
	12	1	**132-7551**	1	SPACER (11X19X6-MM THK)	
	13	1	*148-8325*	4	CONNECTOR AS	
					(EACH INCLUDES)	
		1	**3J-1907**	1	SEAL-O-RING	
		1	**4J-5477**	1	SEAL-O-RING	
		1	**6V-8641**	1	CONNECTOR	
	14	1	*148-8336*	2	CONNECTOR AS	
					(EACH INCLUDES)	
		1	**3J-1907**	1	SEAL-O-RING	
		1	**6V-8397**	1	SEAL-O-RING	
		1	**6V-8636**	1	CONNECTOR	
	15	1	*148-8378*	2	ELBOW AS	
					(EACH INCLUDES)	
		1	**3J-1907**	1	SEAL-O-RING	
		1	**6V-8397**	1	SEAL-O-RING	
		1	**6V-8724**	1	ELBOW	
	16	1	*150-4034*	2	TEE AS	
					(EACH INCLUDES)	
		1	**6V-8397**	3	SEAL-O-RING	
		1	**8T-0379**	1	TEE-BULKHEAD	
C	17	1	**304-6752**	1	TEE	
C	18	1	**2M-9780**	1	SEAL-O-RING	
M	19	1	**266-3315**	2	BOLT-FLANGE HEAD (M8X1.25X25.5-MM)	
	20	1	**3S-2093**	2	STRAP-CABLE	
	21	1	**4D-6466**	3	CLIP	
	22	1	**5P-4116**	2	WASHER-HARD (8.8X20.5X2-MM THK)	
C	23	1	**6V-8397**	3	SEAL-O-RING	
	24	1	**6V-9168**	2	NUT (11/16-16-THD)	
	25	1	**7B-1597**	2	CLIP (LOOP)	
	26	1	**7G-2950**	1	CLIP (SLOT)	
	27	1	**7G-2951**	1	CLIP (TAB)	
	28	1	**7H-7055**	2	CLIP	
	29	1	**7X-7729**	3	WASHER (11X25X3-MM THK)	
	30	1	**8T-4121**	5	WASHER-HARD (11X21X2.5-MM THK)	
M	31	1	**8T-4133**	1	NUT (M10X1.5-THD)	
M	32	1	**8T-4136**	4	BOLT (M10X1.5X25-MM)	
M	33	1	**8T-4137**	3	BOLT (M10X1.5X20-MM)	
M	34	1	**8T-4189**	2	BOLT (M8X1.25X20-MM)	
M	35	1	**8T-4200**	2	BOLT (M8X1.25X16-MM)	
	36	1	**8T-4224**	4	WASHER-HARD (8.8X16X2-MM THK)	
M	37	1	**8T-6870**	2	BOLT (M8X1.25X70-MM)	
	38	1	**9M-8406**	2	CLIP	
	39	1	**9S-1350**	2	CLIP	

258-2424 **LINES GP-COUPLER** *(contd.)* **i02877724**

NOTE	REF NO	GRAPHIC REF	PART NUMBER	QTY	PART NAME 1 2 3 4 5 6 (PRODUCT LEVEL)	SEE PAGE
C	40	1	**4J-5477**	1	SEAL-O-RING	
C	41	1	**7J-9108**	1	SEAL-O-RING	

C-CHANGE FROM PREVIOUS TYPE
I-REFER TO HYDRAULIC INFORMATION SYSTEM
M-METRIC PART
Y-SEPARATE ILLUSTRATION

258-2424 **LINES GP-COUPLER** *(contd.)* **i02877724**

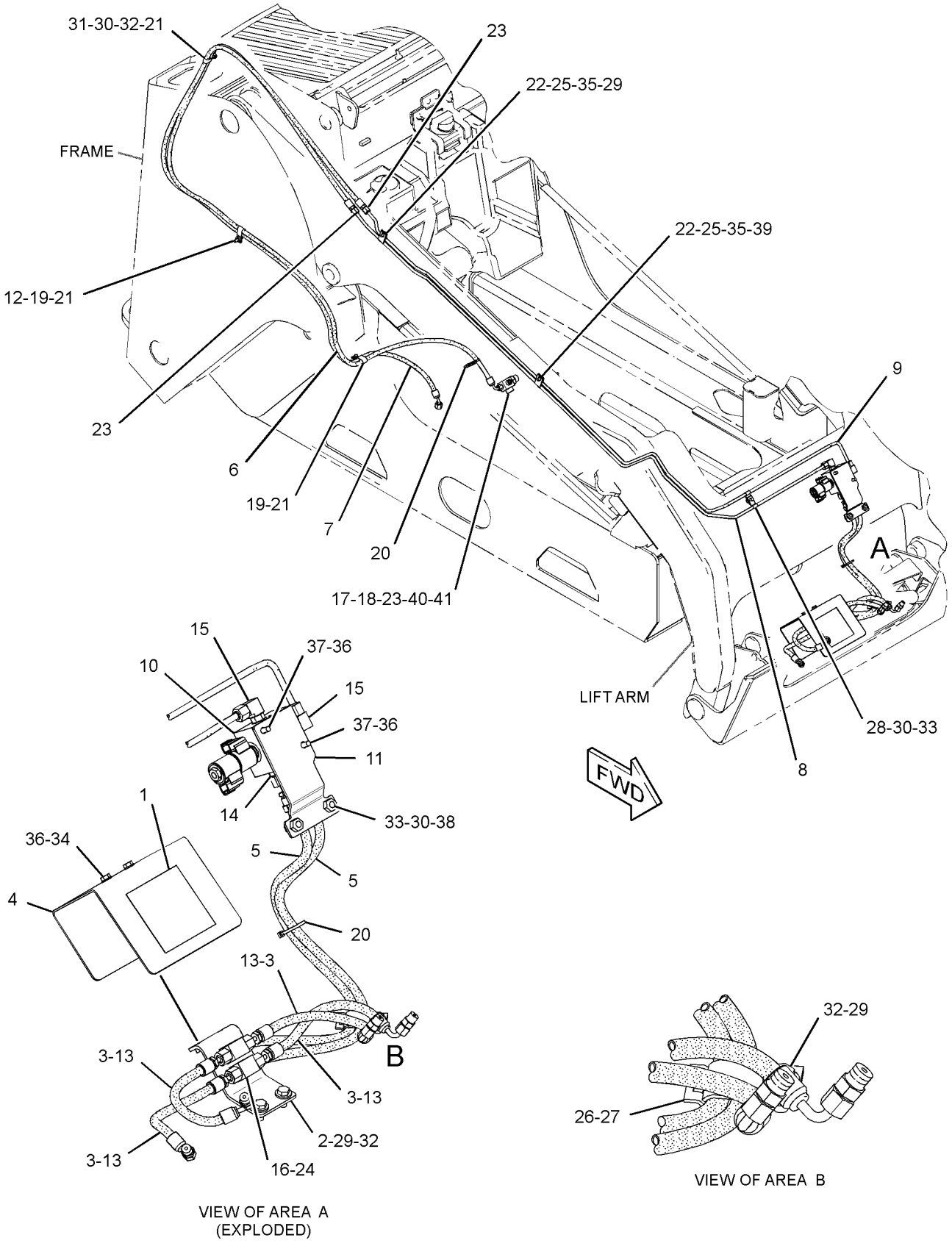

GRAPHIC #1 **<END>** g01453677

HYDRAULIC SYSTEM

161-0187 LINES GP-GRAPPLE

S/N: JAY1-UP

PART OF 157-7223, 157-7224, 157-7225, 217-6229 BUCKET AR-GRAPPLE

AN ATTACHMENT

SMCS-5057, 5555 **i01928983**

NOTE	REF NO	GRAPHIC REF	PART NUMBER	QTY	PART NAME 1 2 3 4 5 6 (PRODUCT LEVEL)	SEE PAGE
	1	1	**3E-7404**	2	CLAMP-HOSE	
	2	1	**153-2994**	1	COUPLER AS-QUICK DISCONNECT (FEMALE)	
	3	1	**153-2995**	1	FITTING AS (QUICK DISCONNECT, MALE)	
	4	1	**161-0185**	1	TUBE AS	
	5	1	**161-0186**	1	TUBE AS	
	6	1	**161-0188**	2	TUBE AS	
I	7	1	**161-0189**	2	HOSE AS	
I	8	1	**161-0190**	2	HOSE AS	
	9	1	**163-1385**	1	ELBOW	
I	10	1	**163-9320**	1	HOSE AS	
I	11	1	**166-9312**	1	HOSE AS	
	12	1	*148-8319*	2	CONNECTOR AS	
					(EACH INCLUDES)	
		1	**2M-9780**	1	SEAL-O-RING	
		1	**6V-8397**	1	SEAL-O-RING	
		1	**6V-8715**	1	CONNECTOR	
	13	1	**2V-3216**	6	CLIP	
	14	1	**6V-8397**	13	SEAL-O-RING	
	15	1	**7S-3916**	2	CLIP (TAB)	
	16	1	**7S-3919**	2	CLIP (SLOT)	
	17	1	**8T-4121**	2	WASHER-HARD (11X21X2.5-MM THK)	
M	18	1	**8T-4136**	2	BOLT (M10X1.5X25-MM)	
M	19	1	**8T-4171**	4	BOLT (M6X1X12-MM)	
	20	1	**9R-2004**	2	BLOCK	

I-REFER TO HYDRAULIC INFORMATION SYSTEM
M-METRIC PART

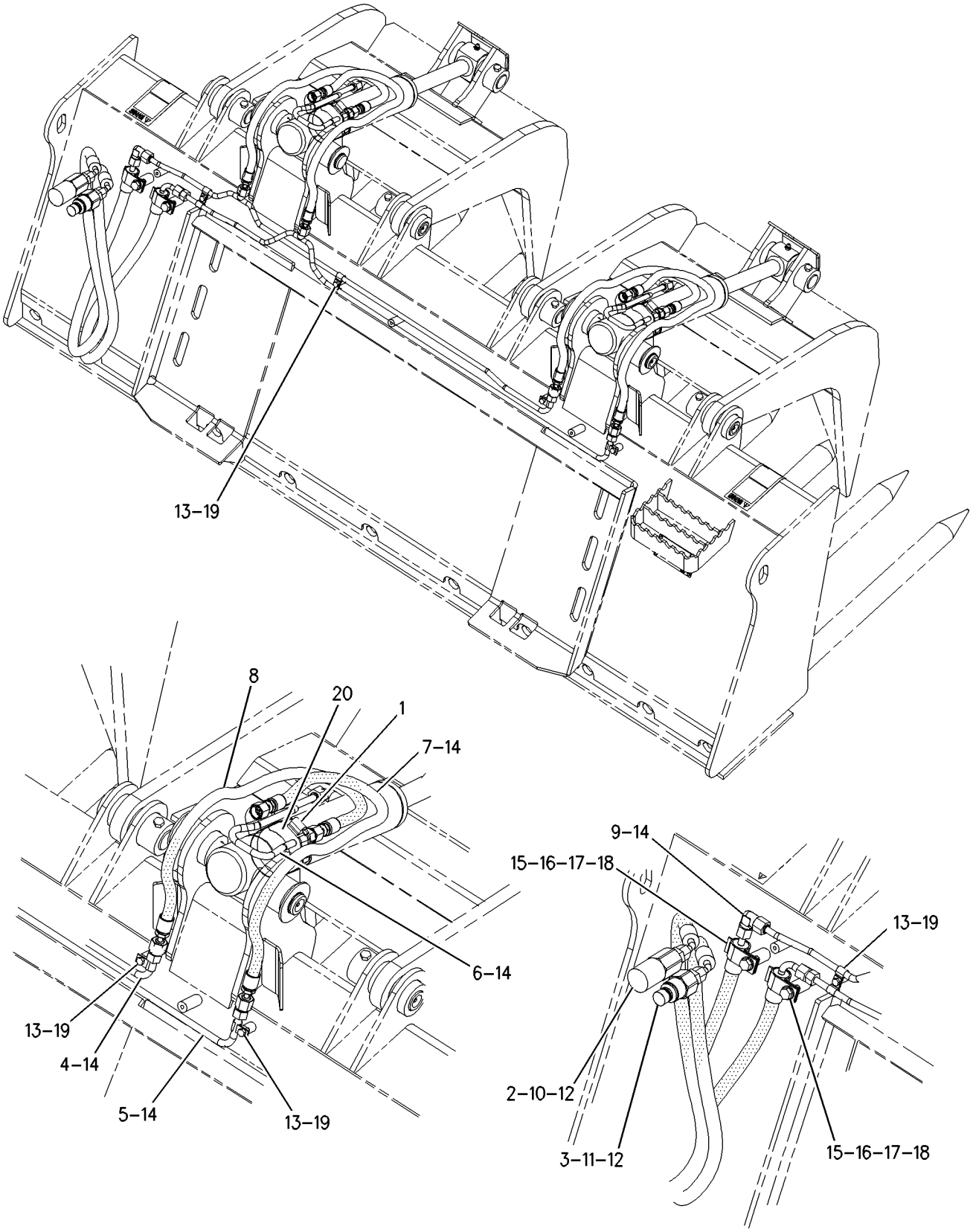

GRAPHIC #1 **<END>** g00733464

HYDRAULIC SYSTEM

286-9250 LINES GP-GRAPPLE

S/N: JAY1-UP
2134-MM (84-IN)
PART OF 286-9301 BUCKET AR-GRAPPLE
AN ATTACHMENT

SMCS-5057, 5555 **i02941543**

NOTE	REF NO	GRAPHIC REF	PART NUMBER	QTY	PART NAME 1 2 3 4 5 6 (PRODUCT LEVEL)	SEE PAGE
	1	1	**2H-7829**	10	CLIP	
	2	1	**9S-4200**	2	CLIP	
	3	1	**153-2994**	1	COUPLER AS-QUICK DISCONNECT (FEMALE)	
I	4	1	**161-0189**	2	HOSE AS	
	5	1	**163-1385**	1	ELBOW	
I	6	1	**177-1911**	2	HOSE AS	
	7	1	**185-7887**	1	COUPLER AS-QUICK DISCONNECT (MALE)	
I	8	1	**286-9263**	2	HOSE AS	
	9	1	**286-9265**	1	TUBE AS	
	10	1	**286-9266**	1	TUBE AS	
	11	1	**286-9267**	1	TUBE AS	
	12	1	**286-9268**	1	TUBE AS	
	13	1	**286-9271**	1	GUARD	
	14	1	*148-8319*	2	CONNECTOR AS	
					(EACH INCLUDES)	
		1	**2M-9780**	1	SEAL-O-RING	
		1	**6V-8397**	1	SEAL-O-RING	
		1	**6V-8715**	1	CONNECTOR	
	15	1	**8T-4224**	6	WASHER-HARD (8.8X16X2-MM THK)	
	16	1	**6V-8397**	13	SEAL-O-RING	
	17	1	**7S-3916**	2	CLIP (TAB)	
	18	1	**7S-3919**	2	CLIP (SLOT)	
	19	1	**7X-7729**	5	WASHER (11X25X3-MM THK)	
M	20	1	**8T-4195**	5	BOLT (M10X1.5X30-MM)	
M	21	1	**8T-4200**	6	BOLT (M8X1.25X16-MM)	
	22	1	**5P-5148**	2	STRAP-TIE	

I-REFER TO HYDRAULIC INFORMATION SYSTEM
M-METRIC PART

286-9250 **LINES GP-GRAPPLE** *(contd.)* **i02941543**

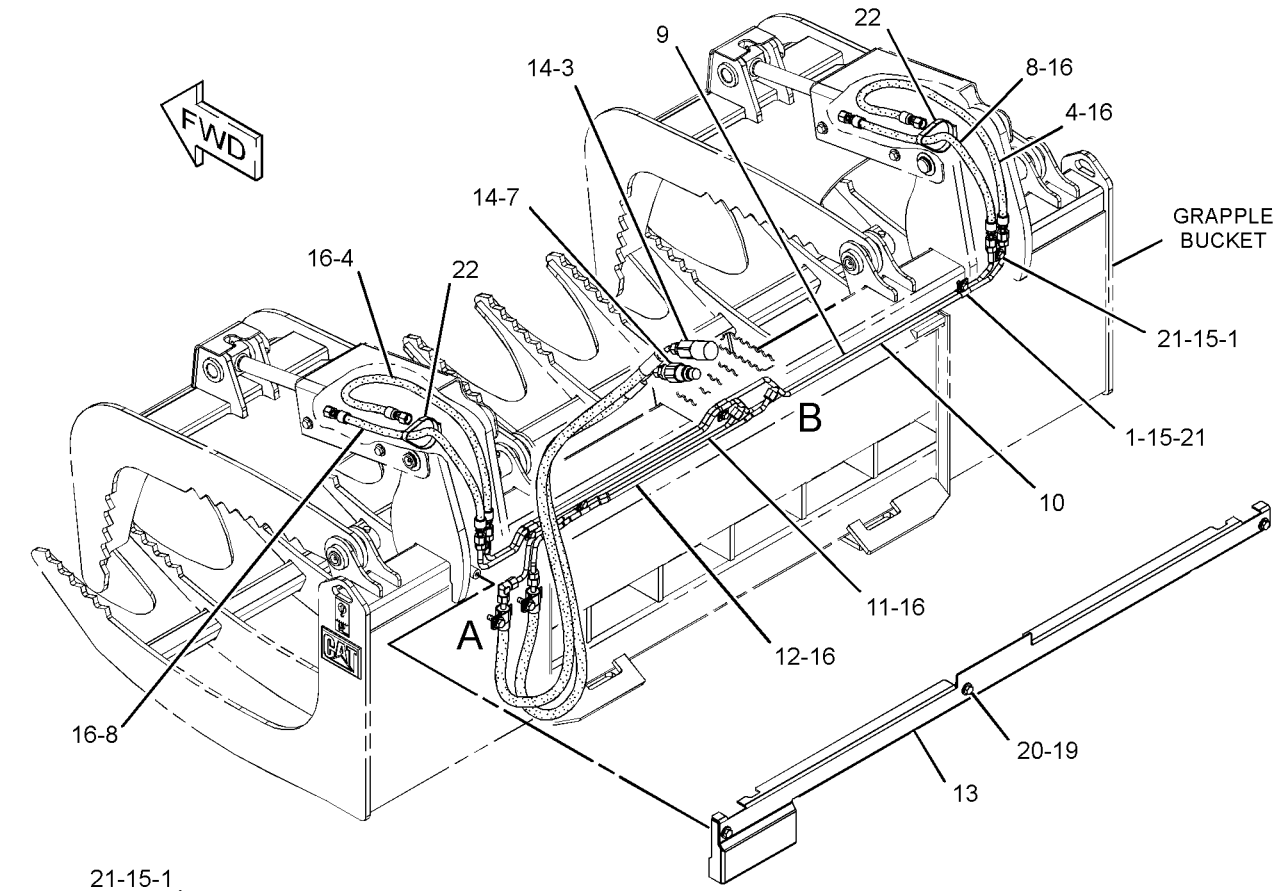

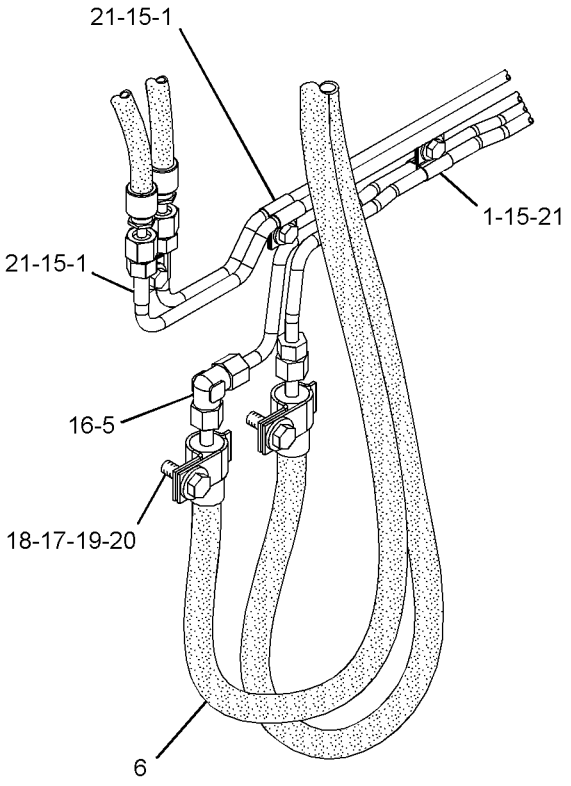

VIEW OF AREA A

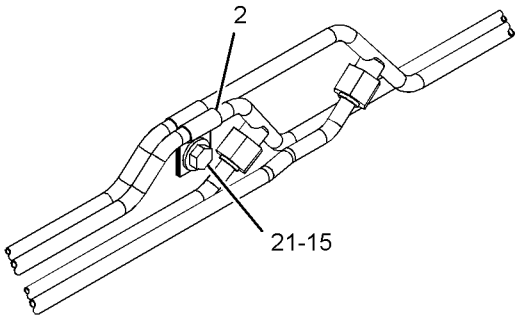

VIEW OF AREA B

GRAPHIC #1 **<END>** g01514424

HYDRAULIC SYSTEM

286-9279 LINES GP-GRAPPLE

S/N: JAY1-UP
1829-MM (72-IN)
PART OF 286-9300 BUCKET AR-GRAPPLE
AN ATTACHMENT

SMCS-5057, 5555 **i02914649**

NOTE	REF NO	GRAPHIC REF	PART NUMBER	QTY	PART NAME 1 2 3 4 5 6 (PRODUCT LEVEL)	SEE PAGE
	1	1	**2H-7829**	10	CLIP	
	2	1	**9S-4200**	2	CLIP	
	3	1	**153-2994**	1	COUPLER AS-QUICK DISCONNECT (FEMALE)	
I	4	1	**161-0189**	2	HOSE AS	
	5	1	**163-1385**	1	ELBOW	
I	6	1	**177-1911**	2	HOSE AS	
	7	1	**185-7887**	1	COUPLER AS-QUICK DISCONNECT (MALE)	
	8	1	**286-9249**	1	GUARD	
I	9	1	**286-9263**	2	HOSE AS	
	10	1	**286-9267**	1	TUBE AS	
	11	1	**286-9268**	1	TUBE AS	
	12	1	**286-9280**	1	TUBE AS	
	13	1	**286-9281**	1	TUBE AS	
	14	1	*148-8319*	2	CONNECTOR AS	
					(EACH INCLUDES)	
		1	**2M-9780**	1	SEAL-O-RING	
		1	**6V-8397**	1	SEAL-O-RING	
		1	**6V-8715**	1	CONNECTOR	
	15	1	**8T-4224**	6	WASHER-HARD (8.8X16X2-MM THK)	
	16	1	**6V-8397**	13	SEAL-O-RING	
	17	1	**7S-3916**	2	CLIP (TAB)	
	18	1	**7S-3919**	2	CLIP (SLOT)	
	19	1	**7X-7729**	5	WASHER (11X25X3-MM THK)	
M	20	1	**8T-4195**	5	BOLT (M10X1.5X30-MM)	
M	21	1	**8T-4200**	6	BOLT (M8X1.25X16-MM)	
	22	1	**5P-5148**	2	STRAP-TIE	

I-REFER TO HYDRAULIC INFORMATION SYSTEM
M-METRIC PART

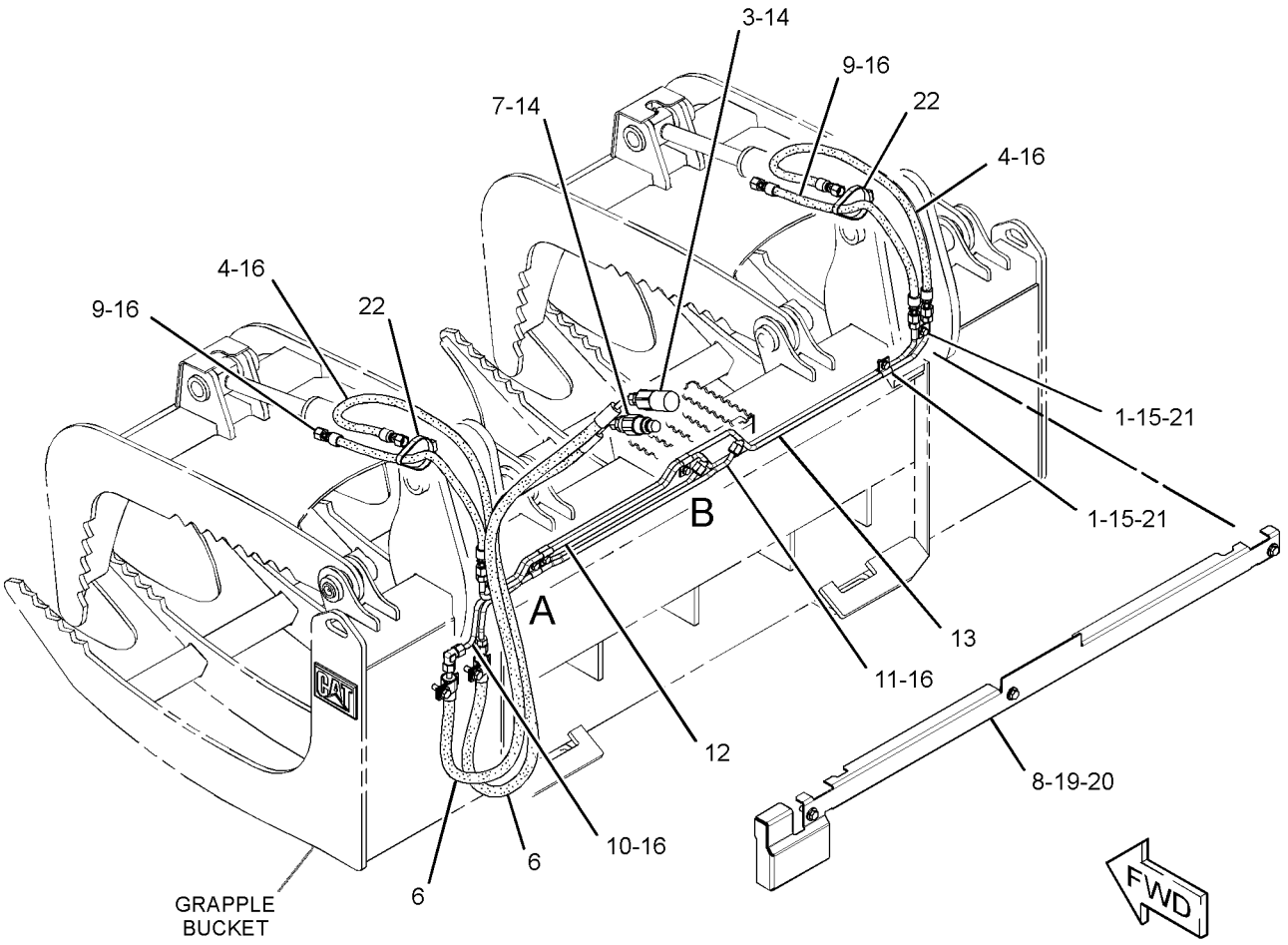

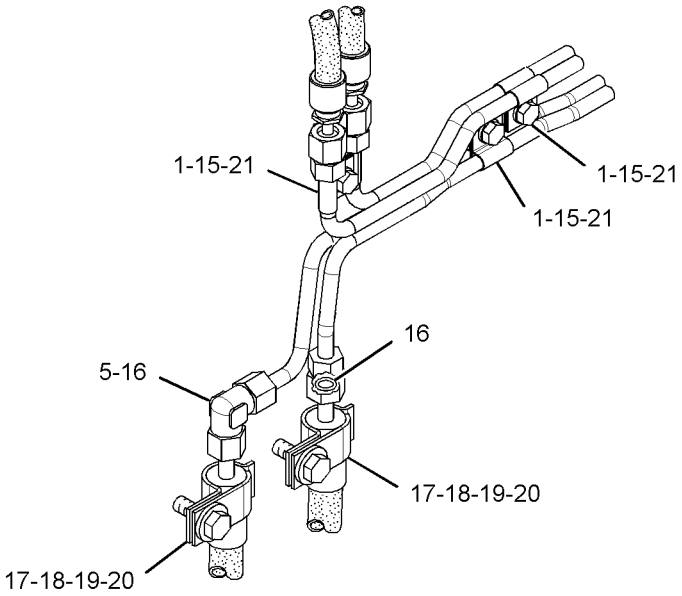

VIEW OF AREA A
(HOSES REMOVED FOR CLARITY)

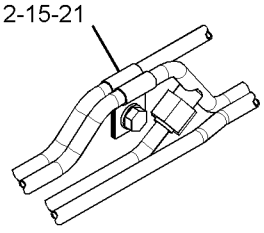

VIEW OF AREA B

GRAPHIC #1 **<END>** g01453768

HYDRAULIC SYSTEM

258-2876 LINES GP-HYDRAULIC

S/N: JAY1-UP
PART OF 258-2426 HYDRAULIC AR
AN ATTACHMENT

SMCS-5057 **i02793528**

NOTE	REF NO	GRAPHIC REF	PART NUMBER	QTY	PART NAME 1 2 3 4 5 6 (PRODUCT LEVEL)	SEE PAGE
	1	1	**258-2880**	1	TUBE AS	
	2	1	**258-2881**	1	TUBE AS	
	3	1	*148-8341*	2	CONNECTOR AS	
					(EACH INCLUDES)	
		1	**3D-2824**	1	SEAL-O-RING	
		1	**6V-8713**	1	CONNECTOR	
		1	**7J-9108**	1	SEAL-O-RING	
	4	1	**6V-8397**	1	SEAL-O-RING	
	5	1	**6V-8398**	2	SEAL-O-RING	
	6	1	**6V-9829**	3	CAP AS	
	7	1	**6V-9830**	3	CAP AS	

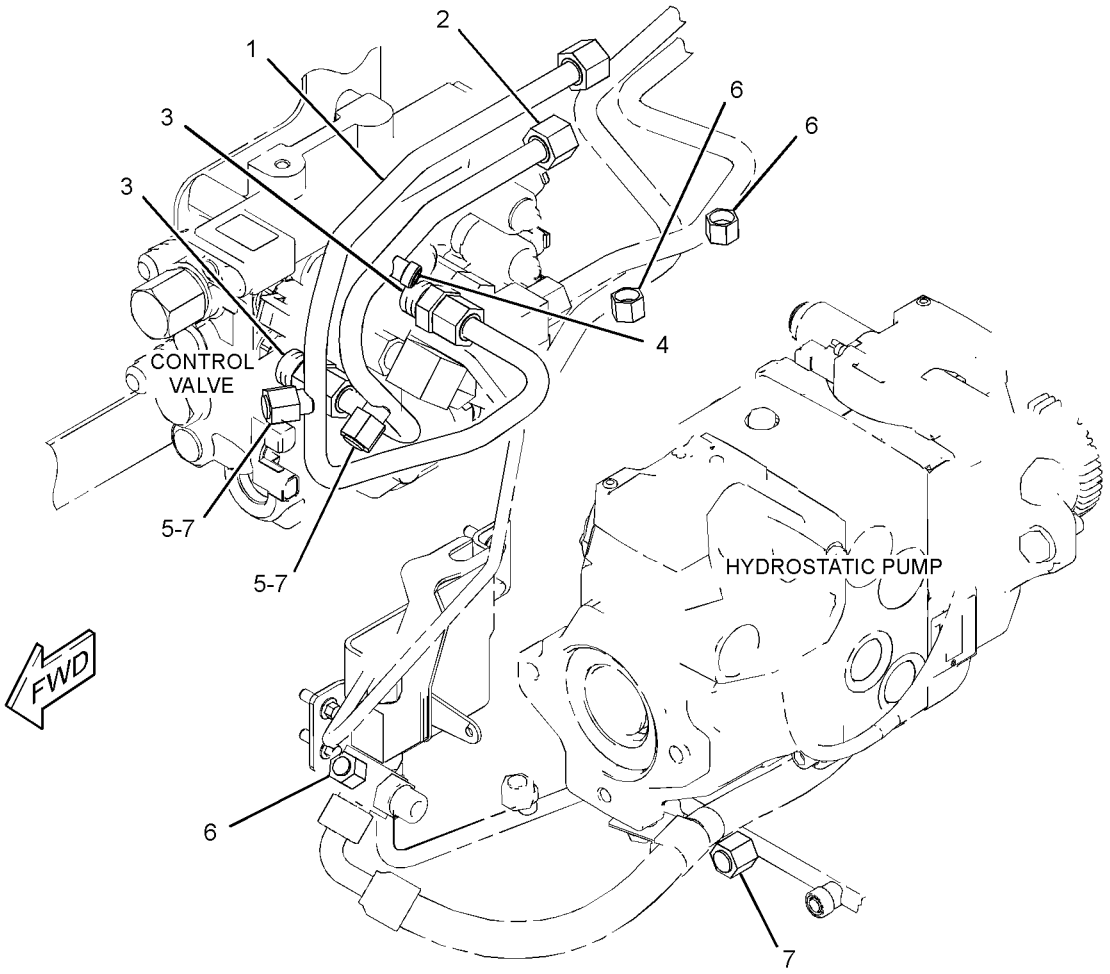

GRAPHIC #1 **<END>** g01417465

258-2878 LINES GP-HYDRAULIC—WORK TOOL POSITIONER

S/N: JAY1-UP

PART OF 258-2428 HYDRAULIC AR

AN ATTACHMENT

SMCS-5057 **i03571200**

NOTE	REF NO	GRAPHIC REF	PART NUMBER	QTY	PART NAME 1 2 3 4 5 6 (PRODUCT LEVEL)	SEE PAGE
	1	1	**146-9439**	1	RELAY AS (12-VOLT)	
	2	1	**258-2881**	1	TUBE AS	
	3	1	**318-0008**	1	TUBE AS	
	4	1	**258-2884**	1	TUBE AS	
	5	1	**258-2885**	1	TUBE AS	
	6	1	**258-2886**	1	TUBE AS	
	7	1	**263-5417**	1	SWITCH AS-ROCKER (WORK TOOL POSITIONER)	
		1	**111-7899**	1	GASKET	
	8	1	*148-8315*	1	CONNECTOR AS	
		1	**2M-9780**	1	SEAL-O-RING	
		1	**6V-8642**	1	CONNECTOR	
		1	**7J-9108**	1	SEAL-O-RING	
	9	1	*148-8341*	1	CONNECTOR AS	
		1	**3D-2824**	1	SEAL-O-RING	
		1	**6V-8713**	1	CONNECTOR	
		1	**7J-9108**	1	SEAL-O-RING	
	10	1	*148-8388*	1	ELBOW AS	
		1	**2M-9780**	1	SEAL-O-RING	
		1	**6V-8629**	1	ELBOW	
		1	**6V-9746**	1	SEAL-O-RING	
	11	1	*148-8393*	1	ELBOW AS	
		1	**6V-9852**	1	ELBOW	
		1	**7J-9108**	1	SEAL-O-RING	
	12	1	*205-3692*	2	ELBOW AS	
					(EACH INCLUDES)	
		1	**2M-9780**	1	SEAL-O-RING	
		1	**6V-8397**	1	SEAL-O-RING	
		1	**9X-2134**	1	ELBOW	
	13	1	**6V-8397**	1	SEAL-O-RING	
	14	1	**6V-8398**	2	SEAL-O-RING	
	15	1	**6V-9830**	3	CAP AS	
	16	1	**6V-9829**	1	CAP AS	
	17	1	*148-8327*	1	CONNECTOR AS	
		1	**3D-2824**	1	SEAL-O-RING	
		1	**6V-8637**	1	CONNECTOR	
		1	**6V-9746**	1	SEAL-O-RING	

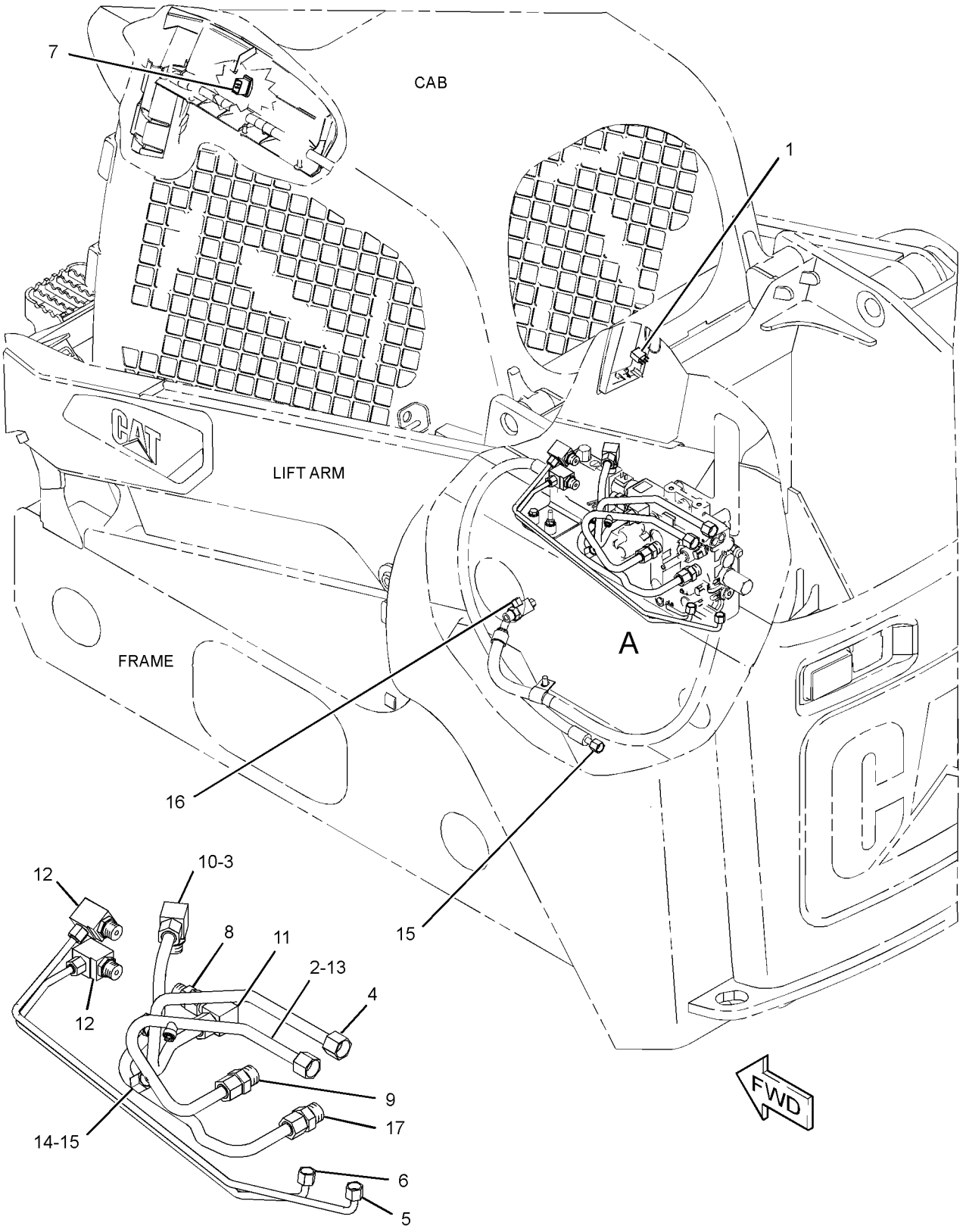

VIEW OF AREA A

GRAPHIC #1 **<END>** g01440645

HYDRAULIC SYSTEM

304-6745 LINES GP-HYDRAULIC–
RIDE CONTROL, WORK TOOL POSITIONER
S/N: JAY1-UP
PART OF 304-6743 HYDRAULIC AR
AN ATTACHMENT

SMCS-5057 **i03624562**

NOTE	REF NO	GRAPHIC REF	PART NUMBER	QTY	PART NAME 1 2 3 4 5 6 (PRODUCT LEVEL)	SEE PAGE
	1	1	**146-9439**	1	RELAY AS (12-VOLT)	
	2	1	**178-3620**	3	STRAP-DUAL CLAMP	
	3	1	**258-2881**	1	TUBE AS	
	4	1	**318-0008**	1	TUBE AS	
	5	1	**258-2884**	1	TUBE AS	
	6	1	**258-2885**	1	TUBE AS	
	7	1	**258-2886**	1	TUBE AS	
	8	1	**258-2887**	1	TUBE AS	
	9	1	**258-2888**	1	TUBE AS	
I	10	1	**258-2891**	1	HOSE AS	
	11	1	**263-5417**	1	SWITCH AS-ROCKER (WORK TOOL POSITIONER)	
		1	**111-7899**	1	GASKET	
	12	1	**265-9526**	1	SWITCH AS-ROCKER (RIDE CONTROL)	
		1	**111-7899**	1	GASKET	
I	13	1	**304-6751**	1	HOSE AS	
I	14	1	**304-6753**	1	HOSE AS	
	15	1	**304-6756**	1	VALVE GP-CHECK	
		1	**3K-0360**	1	SEAL-O-RING	
		1	**6V-8398**	1	SEAL-O-RING	
	16	1	**308-6423**	1	HARNESS AS-RIDE CONTROL	
		1	**102-8802**	1	KIT-RECEPTACLE (2-PIN)	
					(INCLUDES RECEPTACLE AS & WEDGE)	
		1	**186-3735**	2	PIN-CONNECTOR (16-GA TO 18-GA)	
		1	**186-3736**	6	SOCKET-CONNECTOR (16-GA TO 18-GA)	
E		1	**125-7874**		TUBE-HEAT SHRINK (5.72-MM DIA) (10-CM)	
		1	**155-2270**	3	KIT-CONNECTING PLUG (2-PIN)	
					(EACH PLUG KIT INCLUDES PLUG AS, WEDGE & INTERFACE SEAL)	
	17	1	*148-8315*	1	CONNECTOR AS	
		1	**2M-9780**	1	SEAL-O-RING	
		1	**6V-8642**	1	CONNECTOR	
		1	**7J-9108**	1	SEAL-O-RING	
	18	1	*148-8318*	1	CONNECTOR AS	
		1	**3K-0360**	1	SEAL-O-RING	
		1	**6V-8397**	1	SEAL-O-RING	
		1	**6V-8634**	1	CONNECTOR	
	19	1	*148-8341*	1	CONNECTOR AS	
		1	**3D-2824**	1	SEAL-O-RING	
		1	**6V-8713**	1	CONNECTOR	
		1	**7J-9108**	1	SEAL-O-RING	
	20	1	*148-8354*	1	ELBOW AS	
		1	**3K-0360**	1	SEAL-O-RING	
		1	**6V-8398**	1	SEAL-O-RING	
		1	**6V-9002**	1	ELBOW	
	21	1	*148-8364*	2	ELBOW AS	
					(EACH INCLUDES)	
		1	**3K-0360**	1	SEAL-O-RING	
		1	**6V-8398**	1	SEAL-O-RING	
		1	**6V-8625**	1	ELBOW	
	22	1	*148-8388*	1	ELBOW AS	
		1	**2M-9780**	1	SEAL-O-RING	
		1	**6V-8629**	1	ELBOW	
		1	**6V-9746**	1	SEAL-O-RING	
	23	1	*148-8393*	1	ELBOW AS	

304-6745 **LINES GP-HYDRAULIC** *(contd.)* **i03624562**

NOTE	REF NO	GRAPHIC REF	PART NUMBER	QTY	PART NAME 1 2 3 4 5 6 (PRODUCT LEVEL)	SEE PAGE
		1	**6V-9852**	1	ELBOW	
		1	**7J-9108**	1	SEAL-O-RING	
	24	1	*205-3692*	2	ELBOW AS	
					(EACH INCLUDES)	
		1	**2M-9780**	1	SEAL-O-RING	
		1	**6V-8397**	1	SEAL-O-RING	
		1	**9X-2134**	1	ELBOW	
	25	1	**4P-7581**	1	CLIP	
	26	1	**6V-8397**	1	SEAL-O-RING	
	27	1	**6V-8398**	2	SEAL-O-RING	
	28	1	**148-8327**	1	CONNECTOR AS	
		1	**3D-2824**	1	SEAL-O-RING	
		1	**6V-8637**	1	CONNECTOR	
		1	**6V-9746**	1	SEAL-O-RING	
	29	1	**7K-1181**	1	STRAP-CABLE	
	30	1	*148-8336*	1	CONNECTOR AS	
		1	**3J-1907**	1	SEAL-O-RING	
		1	**6V-8397**	1	SEAL-O-RING	
		1	**6V-8636**	1	CONNECTOR	
	31	1	*153-6248*	1	ADAPTER AS	
		1	**6V-8397**	1	SEAL-O-RING	
		1	**8T-6663**	1	ADAPTER-PORT	
I	32	1	**321-5709**	1	HOSE AS	

E-ORDER BY THE CENTIMETER
I-REFER TO HYDRAULIC INFORMATION SYSTEM

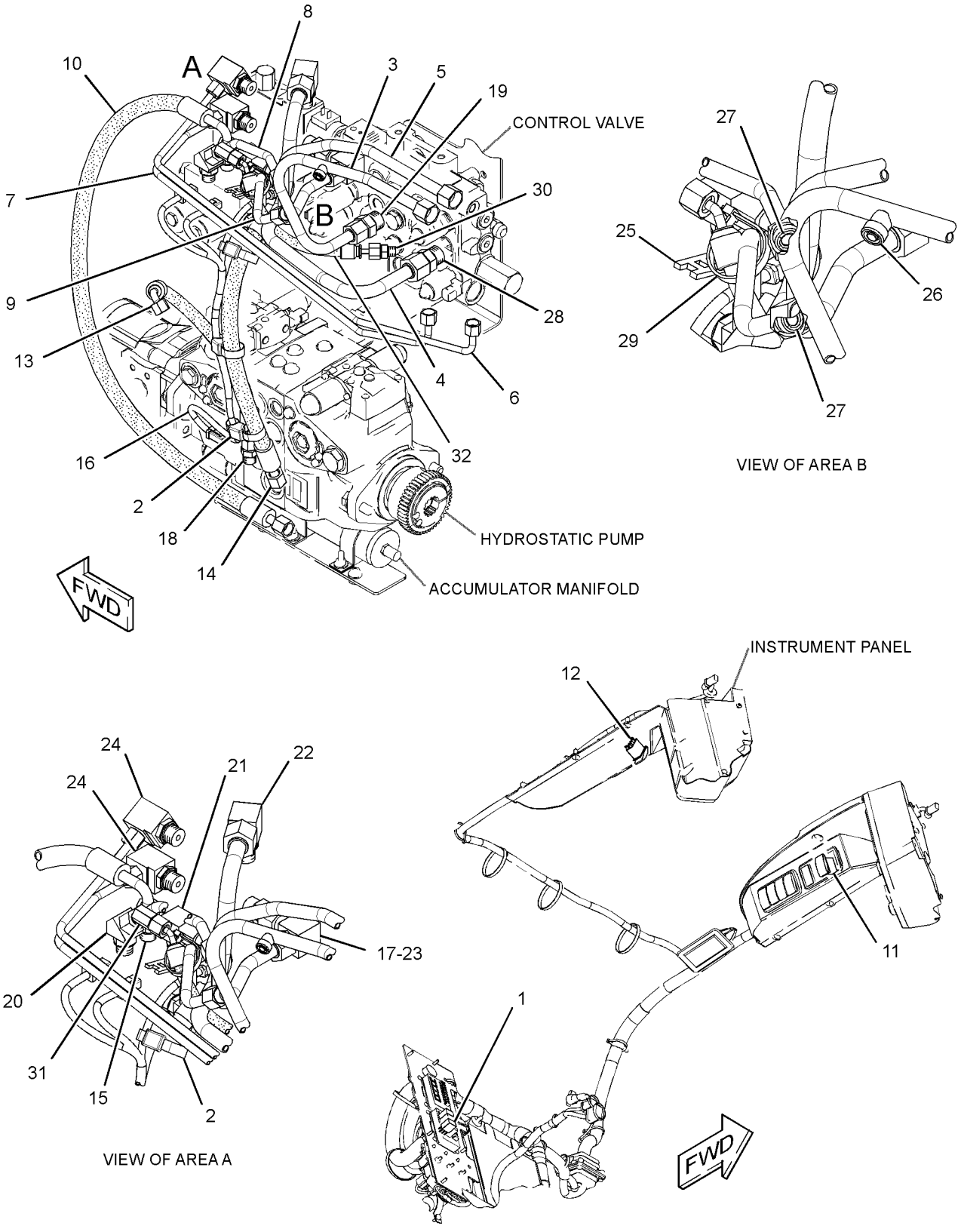

GRAPHIC #1 **<END>** g01771173

HYDRAULIC SYSTEM

258-2582 LINES GP-HYDRAULIC FAN—RADIATOR

S/N: JAY1-2405

PART OF 258-3180, 258-3730 HYDRAULIC AR

AN ATTACHMENT

SMCS-5057 **i02659388**

NOTE	REF NO	GRAPHIC REF	PART NUMBER	QTY	PART NAME 1 2 3 4 5 6 (PRODUCT LEVEL)	SEE PAGE
I	1	1	**115-8161**	1	HOSE AS	
	2	1	**229-5466**	1	FITTING AS	
		1	**3J-7354**	1	SEAL-O-RING	
		1	**229-5465**	1	FITTING	
	3	1	**258-2585**	1	HOSE AS	
I	4	1	**258-2784**	1	HOSE AS	
	5	1	*148-8315*	2	CONNECTOR AS	
					(EACH INCLUDES)	
		1	**2M-9780**	1	SEAL-O-RING	
		1	**6V-8642**	1	CONNECTOR	
		1	**7J-9108**	1	SEAL-O-RING	
	6	1	*148-8316*	2	CONNECTOR AS	
					(EACH INCLUDES)	
		1	**3J-7354**	1	SEAL-O-RING	
		1	**4J-5477**	1	SEAL-O-RING	
		1	**6V-8647**	1	CONNECTOR	
	7	1	*153-6256*	1	ELBOW AS	
		1	**8C-7563**	1	ELBOW	
		1	**7J-9108**	1	SEAL-O-RING	
	8	1	**266-3316**	2	BOLT-FLANGE HEAD (M10X1.5X25-MM)	
	9	1	**3S-8665**	1	CLIP	
	10	1	**4K-8864**	2	CLIP	
	11	1	**5P-4116**	1	WASHER-HARD (8.8X20.5X2-MM THK)	
	12	1	**6V-1889**	4	CLIP	
	13	1	**8C-3451**	1	CAP-DUST	
	14	1	**8J-8197**	1	CLIP	
	15	1	**8T-4121**	3	WASHER-HARD (11X21X2.5-MM THK)	
M	16	1	**8T-4133**	1	NUT (M10X1.5-THD)	
M	17	1	**8T-4196**	2	BOLT (M10X1.5X35-MM)	
M	18	1	**8T-4189**	1	BOLT (M8X1.25X20-MM)	
M	19	1	**8T-4192**	1	BOLT (M12X1.75X25-MM)	
	20	1	**8T-4223**	1	WASHER-HARD (13.5X25.5X3-MM THK)	

I-REFER TO HYDRAULIC INFORMATION SYSTEM
M-METRIC PART

258-2582 **LINES GP-HYDRAULIC FAN** *(contd.)* **i02659388**

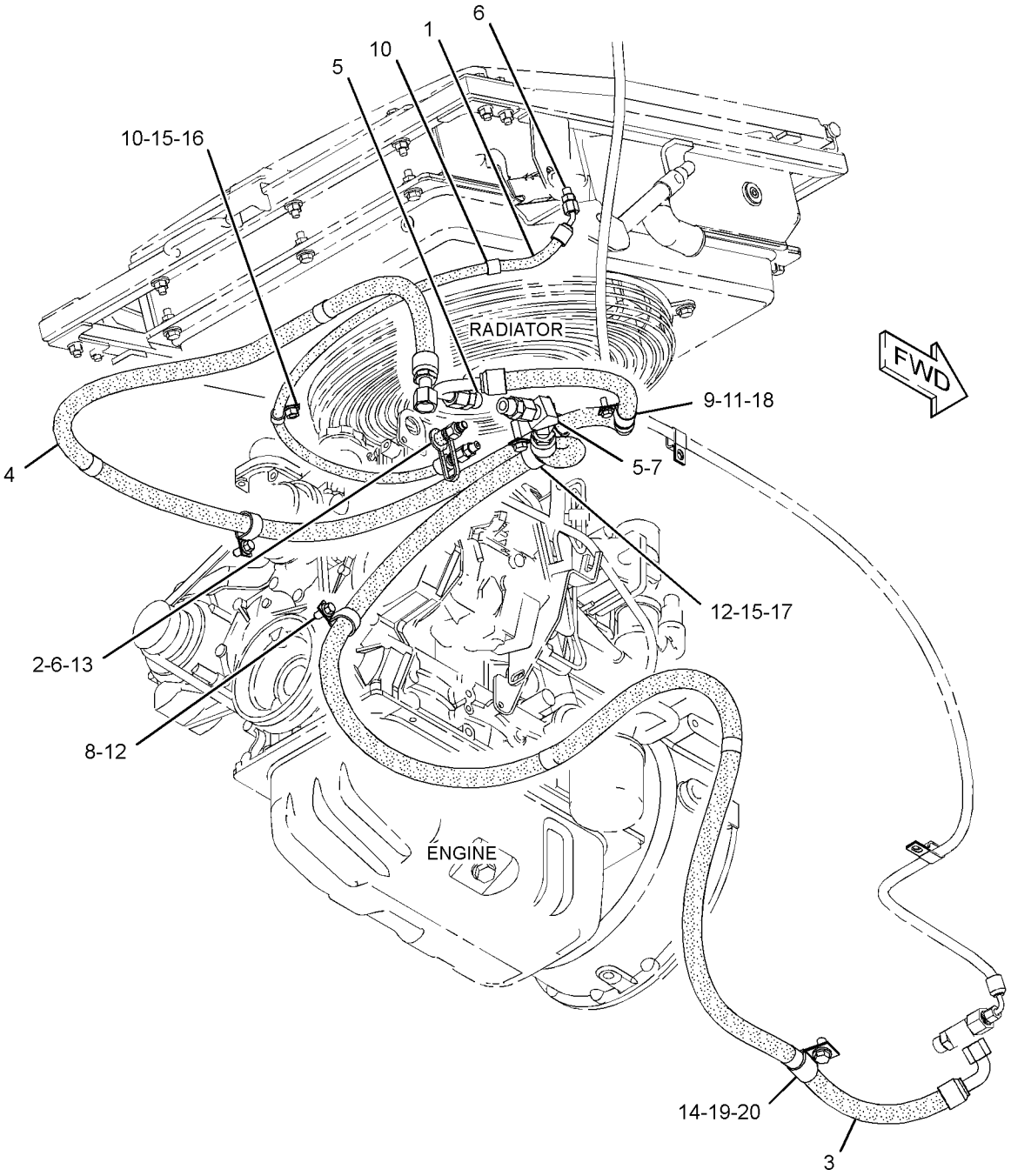

GRAPHIC #1 **<END>** g01337527

HYDRAULIC SYSTEM

258-2582 LINES GP-HYDRAULIC FAN–RADIATOR

S/N: JAY2406-UP
PART OF 258-3180, 258-3730 HYDRAULIC AR
AN ATTACHMENT

SMCS-5057 **i03630975**

NOTE	REF NO	GRAPHIC REF	PART NUMBER	QTY	PART NAME 1 2 3 4 5 6 (PRODUCT LEVEL)	SEE PAGE
I	1	1	**115-8161**	1	HOSE AS	
	2	1	*164-5590*	1	VALVE AS-FLUID SAMPLING	
		1	**3J-7354**	1	SEAL-O-RING	
		1	**8C-3446**	1	VALVE-FLUID SAMPLING	
	3	1	**258-2585**	1	HOSE AS	
I	4	1	**258-2784**	1	HOSE AS	
	5	1	*148-8315*	2	CONNECTOR AS	
					(EACH INCLUDES)	
		1	**2M-9780**	1	SEAL-O-RING	
		1	**6V-8642**	1	CONNECTOR	
		1	**7J-9108**	1	SEAL-O-RING	
	6	1	*148-8316*	2	CONNECTOR AS	
					(EACH INCLUDES)	
		1	**3J-7354**	1	SEAL-O-RING	
		1	**4J-5477**	1	SEAL-O-RING	
		1	**6V-8647**	1	CONNECTOR	
	7	1	*153-6256*	1	ELBOW AS	
		1	**8C-7563**	1	ELBOW	
		1	**7J-9108**	1	SEAL-O-RING	
	8	1	**266-3316**	2	BOLT-FLANGE HEAD (M10X1.5X25-MM)	
	9	1	**3S-8665**	1	CLIP	
	10	1	**4K-8864**	2	CLIP	
	11	1	**5P-4116**	1	WASHER-HARD (8.8X20.5X2-MM THK)	
	12	1	**6V-1889**	4	CLIP	
	13	1	**8C-3451**	1	CAP-DUST (HYDRAULIC OIL)	
C	14	1	**6D-4636**	1	CLIP	
	15	1	**8T-4121**	3	WASHER-HARD (11X21X2.5-MM THK)	
M	16	1	**8T-4133**	1	NUT (M10X1.5-THD)	
M	17	1	**8T-4196**	2	BOLT (M10X1.5X35-MM)	
M	18	1	**8T-4189**	1	BOLT (M8X1.25X20-MM)	
CM	19	1	**8T-4139**	1	BOLT (M12X1.75X30-MM)	
	20	1	**8T-4223**	1	WASHER-HARD (13.5X25.5X3-MM THK)	

C-CHANGE FROM PREVIOUS TYPE
I-REFER TO HYDRAULIC INFORMATION SYSTEM
M-METRIC PART

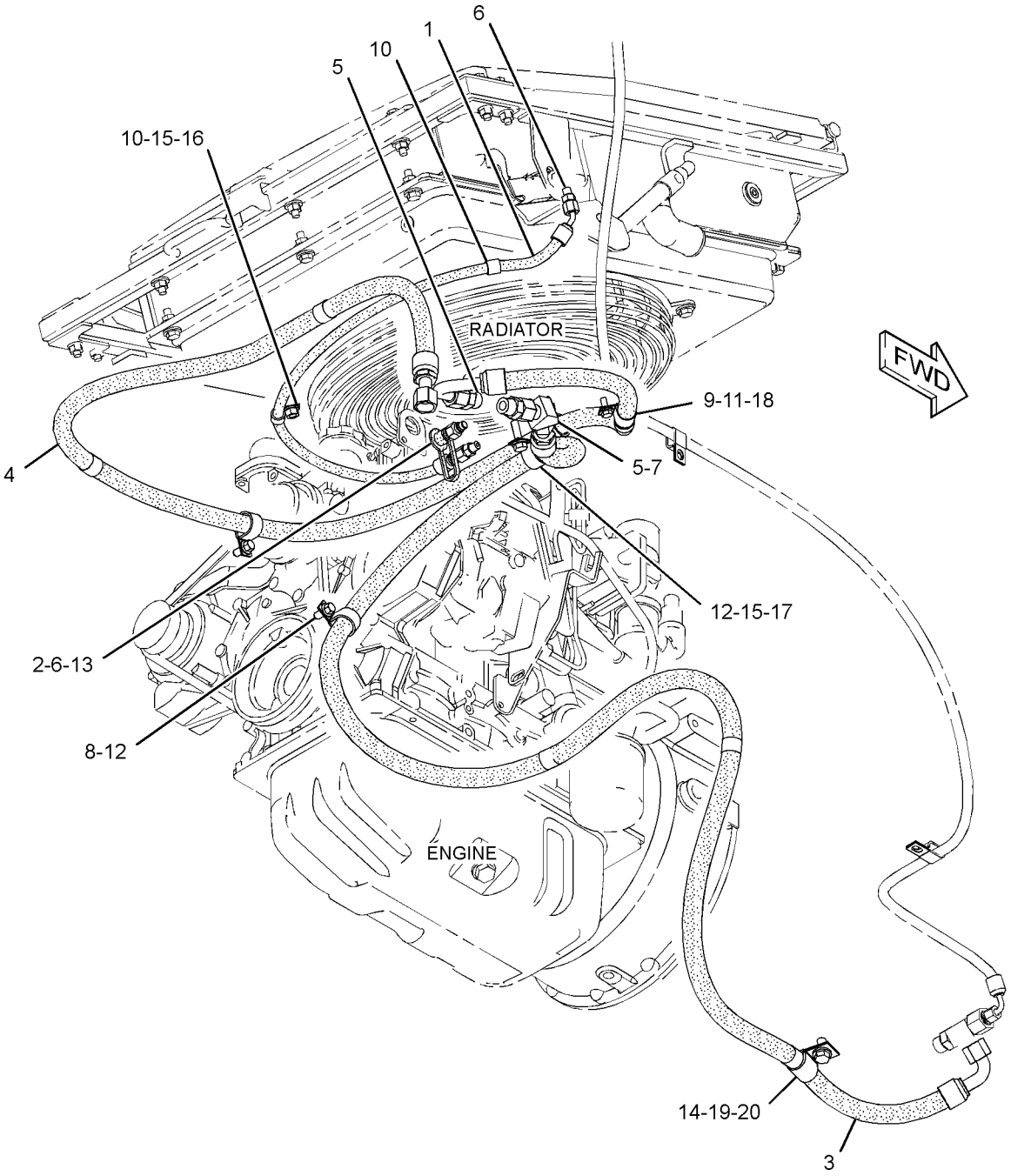

GRAPHIC #1 **<END>** g01337527

HYDRAULIC SYSTEM

258-2786 LINES GP-HYDRAULIC FAN

S/N: JAY1-2405

PART OF 258-3182, 258-3733, 261-6264 HYDRAULIC AR

AN ATTACHMENT

SMCS-5057 **i02659369**

NOTE	REF NO	GRAPHIC REF	PART NUMBER	QTY	PART NAME 1 2 3 4 5 6 (PRODUCT LEVEL)	SEE PAGE
I	1	1	**115-8161**	1	HOSE AS	
	2	1	**229-5466**	1	FITTING AS	
		1	**3J-7354**	2	SEAL-O-RING	
		1	**229-5465**	2	FITTING	
I	3	1	**258-2689**	1	HOSE AS	
I	4	1	**258-2784**	1	HOSE AS	
	5	1	*148-8315*	2	CONNECTOR AS	
					(EACH INCLUDES)	
		1	**2M-9780**	1	SEAL-O-RING	
		1	**6V-8642**	1	CONNECTOR	
		1	**7J-9108**	1	SEAL-O-RING	
	6	1	*148-8316*	2	CONNECTOR AS	
					(EACH INCLUDES)	
		1	**3J-7354**	1	SEAL-O-RING	
		1	**4J-5477**	1	SEAL-O-RING	
		1	**6V-8647**	1	CONNECTOR	
	7	1	*153-6256*	1	ELBOW AS	
		1	**7J-9108**	1	SEAL-O-RING	
		1	**8C-7563**	1	ELBOW	
	8	1	**266-3316**	2	BOLT-FLANGE HEAD (M10X1.5X25-MM)	
	9	1	**3S-8665**	1	CLIP	
	10	1	**4K-8864**	2	CLIP	
	11	1	**5P-4116**	1	WASHER-HARD (8.8X20.5X2-MM THK)	
	12	1	**6V-1889**	4	CLIP	
	13	1	**8C-3451**	1	CAP-DUST	
	14	1	**8J-8197**	1	CLIP	
	15	1	**8T-4121**	3	WASHER-HARD (11X21X2.5-MM THK)	
M	16	1	**8T-4133**	1	NUT (M10X1.5-THD)	
M	17	1	**8T-4196**	2	BOLT (M10X1.5X35-MM)	
M	18	1	**8T-4189**	1	BOLT (M8X1.25X20-MM)	
M	19	1	**8T-4192**	1	BOLT (M12X1.75X25-MM)	
	20	1	**8T-4223**	1	WASHER-HARD (13.5X25.5X3-MM THK)	

I-REFER TO HYDRAULIC INFORMATION SYSTEM
M-METRIC PART

258-2786 **LINES GP-HYDRAULIC FAN** *(contd.)* **i02659369**

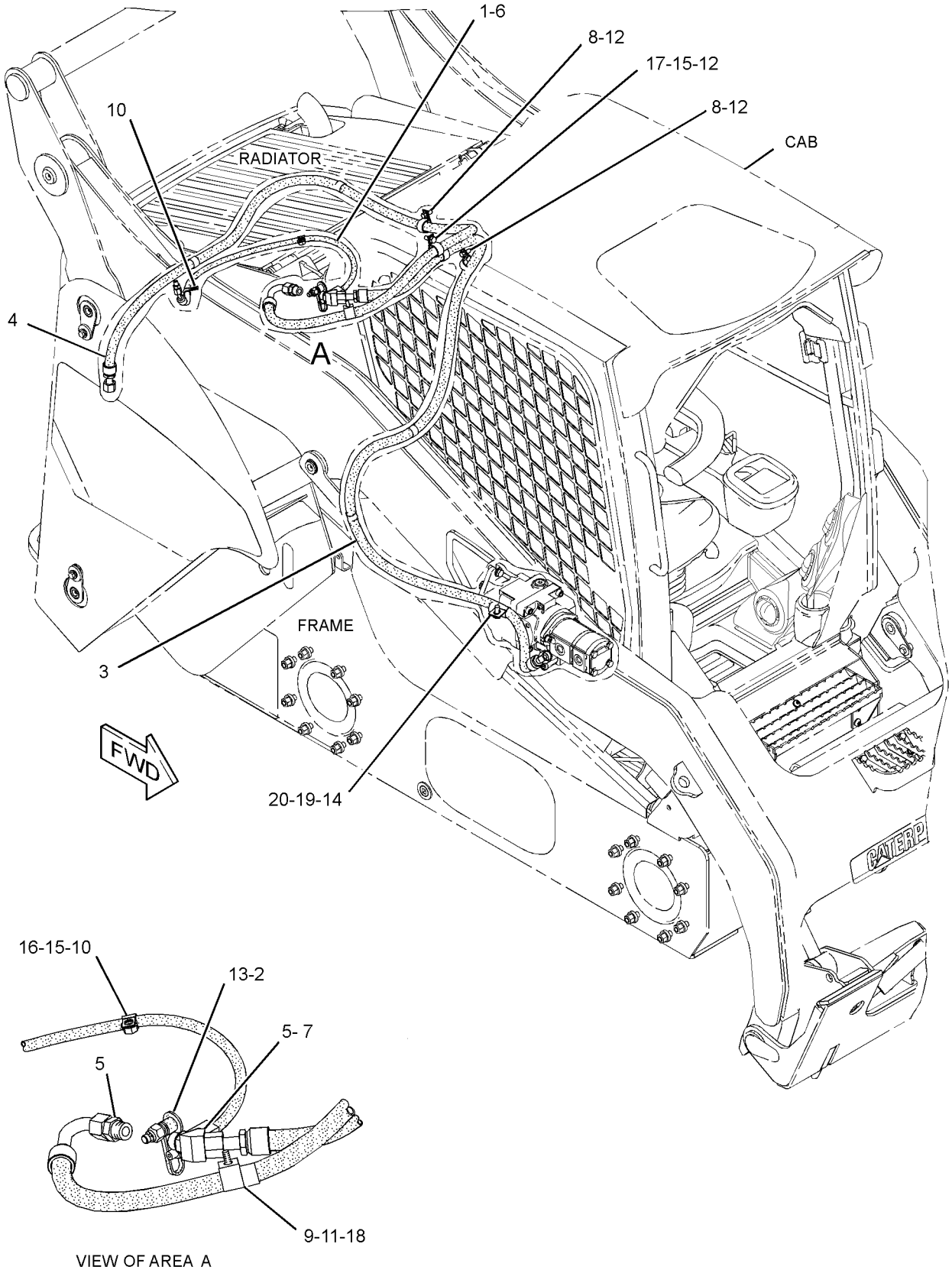

GRAPHIC #1 **<END>** g01336901

HYDRAULIC SYSTEM

258-2786 LINES GP-HYDRAULIC FAN

S/N: JAY2406-UP

PART OF 258-3182, 258-3733, 261-6264 HYDRAULIC AR

AN ATTACHMENT

SMCS-5057 **i03630974**

NOTE	REF NO	GRAPHIC REF	PART NUMBER	QTY	PART NAME 1 2 3 4 5 6 (PRODUCT LEVEL)	SEE PAGE
I	1	1	**115-8161**	1	HOSE AS	
	2	1	*164-5590*	1	VALVE AS-FLUID SAMPLING	
		1	**3J-7354**	1	SEAL-O-RING	
		1	**8C-3446**	1	VALVE-FLUID SAMPLING	
I	3	1	**258-2689**	1	HOSE AS	
I	4	1	**258-2784**	1	HOSE AS	
	5	1	*148-8315*	2	CONNECTOR AS	
					(EACH INCLUDES)	
		1	**2M-9780**	1	SEAL-O-RING	
		1	**6V-8642**	1	CONNECTOR	
		1	**7J-9108**	1	SEAL-O-RING	
	6	1	*148-8316*	2	CONNECTOR AS	
					(EACH INCLUDES)	
		1	**3J-7354**	1	SEAL-O-RING	
		1	**4J-5477**	1	SEAL-O-RING	
		1	**6V-8647**	1	CONNECTOR	
	7	1	*153-6256*	1	ELBOW AS	
		1	**7J-9108**	1	SEAL-O-RING	
		1	**8C-7563**	1	ELBOW	
	8	1	**266-3316**	2	BOLT-FLANGE HEAD (M10X1.5X25-MM)	
	9	1	**3S-8665**	1	CLIP	
	10	1	**4K-8864**	2	CLIP	
	11	1	**5P-4116**	1	WASHER-HARD (8.8X20.5X2-MM THK)	
	12	1	**6V-1889**	4	CLIP	
	13	1	**8C-3451**	1	CAP-DUST (HYDRAULIC OIL)	
C	14	1	**6D-4636**	1	CLIP	
	15	1	**8T-4121**	3	WASHER-HARD (11X21X2.5-MM THK)	
M	16	1	**8T-4133**	1	NUT (M10X1.5-THD)	
M	17	1	**8T-4196**	2	BOLT (M10X1.5X35-MM)	
M	18	1	**8T-4189**	1	BOLT (M8X1.25X20-MM)	
CM	19	1	**8T-4139**	1	BOLT (M12X1.75X30-MM)	
	20	1	**8T-4223**	1	WASHER-HARD (13.5X25.5X3-MM THK)	

C-CHANGE FROM PREVIOUS TYPE
I-REFER TO HYDRAULIC INFORMATION SYSTEM
M-METRIC PART

258-2786 **LINES GP-HYDRAULIC FAN** *(contd.)* **i03630974**

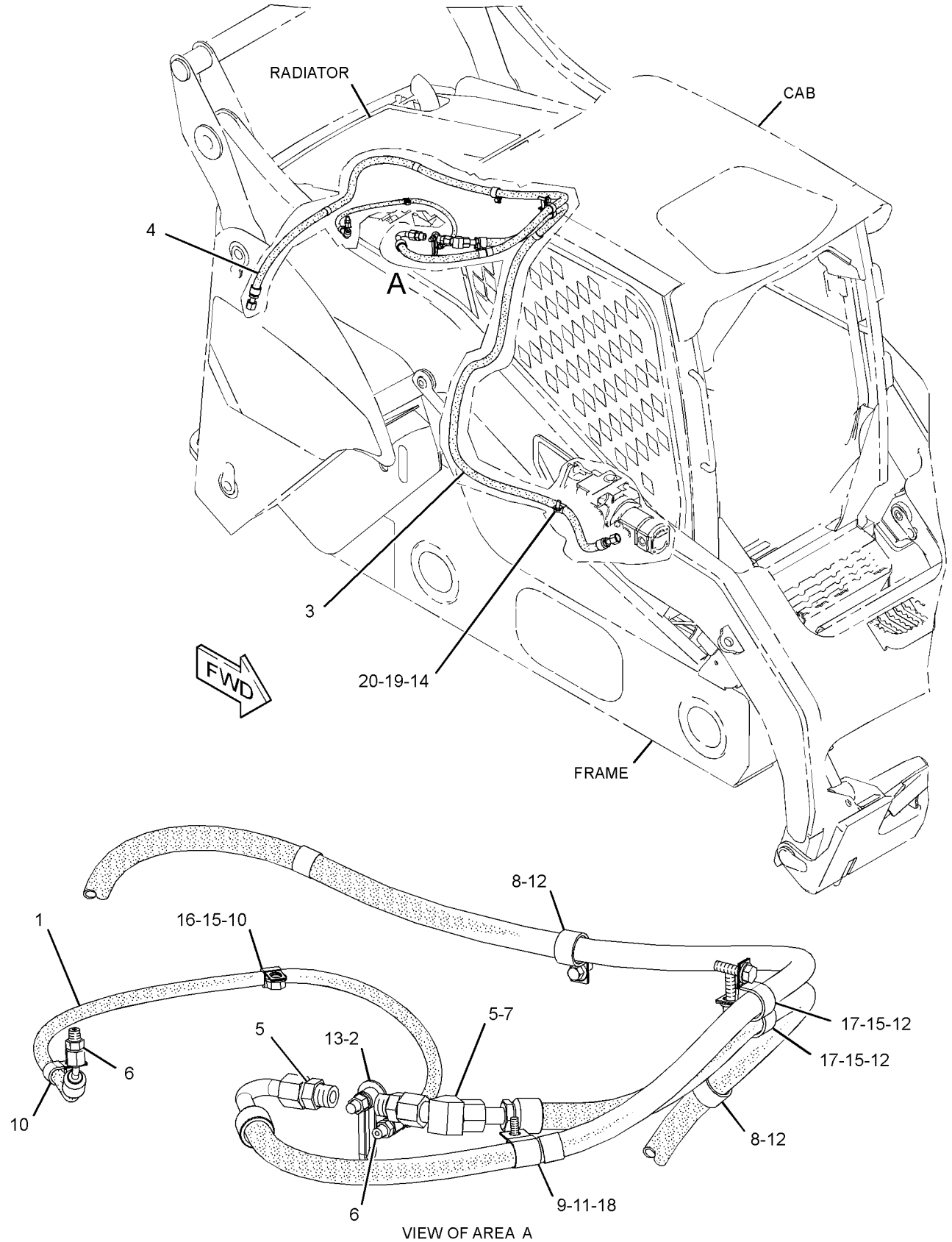

GRAPHIC #1

<END>

g01948500

HYDRAULIC SYSTEM

258-2780 LINES GP-HYDRAULIC OIL COOLER

S/N: JAY1-UP

PART OF 258-2600 HYDRAULIC AR

SMCS-5057 **i02659364**

NOTE	REF NO	GRAPHIC REF	PART NUMBER	QTY	PART NAME 1 2 3 4 5 6 (PRODUCT LEVEL)	SEE PAGE
	1	1	**6R-3320**	2	COVER	
	2	1	**258-2781**	1	TUBE AS	
I	3	1	**258-2782**	2	HOSE AS	
	4	1	**258-3620**	1	BRACKET AS	
	5	1	**258-3845**	1	BRACKET AS	
	6	1	**258-3850**	4	CLAMP-HALF	
	7	1	*148-8347*	1	ELBOW AS	
		1	**3D-2824**	1	SEAL-O-RING	
		1	**6V-9007**	1	ELBOW	
		1	**6V-9746**	1	SEAL-O-RING	
	8	1	*148-8411*	1	PLUG AS	
		1	**3K-0360**	1	SEAL-O-RING	
		1	**9S-4185**	1	PLUG-O-RING	
	9	1	*171-6725*	1	ELBOW AS	
		1	**3D-2824**	1	SEAL-O-RING	
		1	**8T-6451**	1	ELBOW	
	10	1	**266-3316**	2	BOLT-FLANGE HEAD (M10X1.5X25-MM)	
	11	1	**5K-9660**	2	CLIP (LOOP)	
	12	1	**6V-9746**	2	SEAL-O-RING	
	13	1	**8T-4121**	5	WASHER-HARD (11X21X2.5-MM THK)	
M	14	1	**8T-4136**	4	BOLT (M10X1.5X25-MM)	
M	15	1	**8T-6466**	1	BOLT (M10X1.5X60-MM)	
M	16	1	**303-8205**	2	BOLT (M8X1.25X60-MM)	

I-REFER TO HYDRAULIC INFORMATION SYSTEM
M-METRIC PART

258-2780 **LINES GP-HYDRAULIC OIL COOLER** *(contd.)* **i02659364**

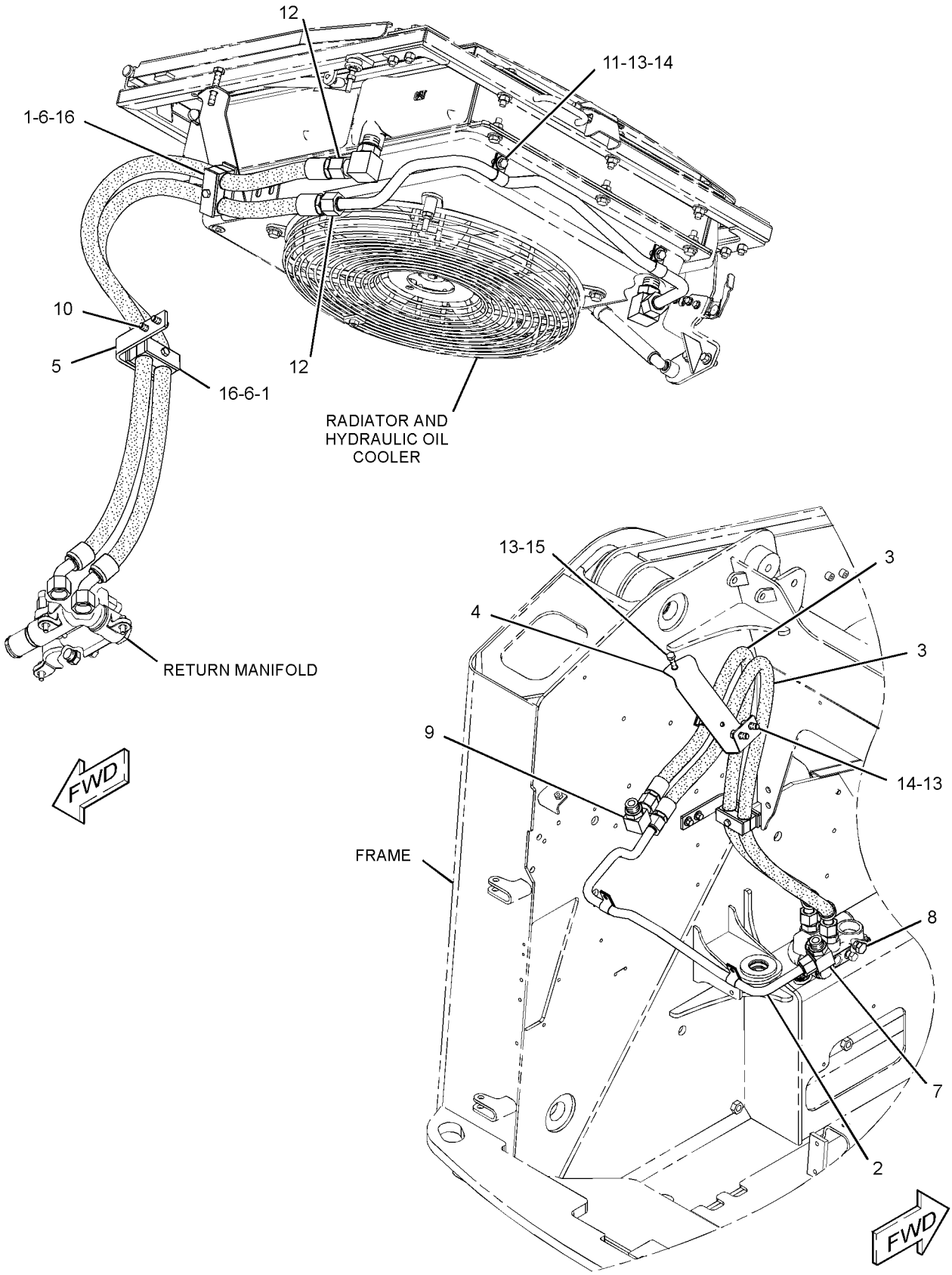

GRAPHIC #1

<END>

g01329836

HYDRAULIC SYSTEM

258-2411 LINES GP-LIFT CYLINDER

S/N: JAY1-UP

PART OF 258-2600 HYDRAULIC AR

SMCS-5057, 5102 **i02659356**

NOTE	REF NO	GRAPHIC REF	PART NUMBER	QTY	PART NAME 1 2 3 4 5 6 (PRODUCT LEVEL)	SEE PAGE
	1	1	**6V-3582**	2	CLAMP-HOSE	
	2	1	**9R-1005**	2	CLIP (SLOT)	
	3	1	**9R-7802**	2	CLIP (SLOT)	
	4	1	**9R-7803**	2	CLIP (TAB)	
	5	1	**142-8997**	2	BLOCK	
I	6	1	**258-2939**	4	HOSE AS	
	7	1	**258-2964**	1	TUBE AS	
	8	1	**258-2965**	1	TUBE AS	
	9	1	**258-2966**	1	TUBE AS	
	10	1	**258-2967**	1	TUBE AS	
	11	1	**6V-8398**	6	SEAL-O-RING	
	12	1	**7J-9108**	6	SEAL-O-RING	
	13	1	**8T-4121**	2	WASHER-HARD (11X21X2.5-MM THK)	
M	14	1	**8T-4136**	2	BOLT (M10X1.5X25-MM)	
	15	1	**7K-1181**	1	STRAP-CABLE	

I-REFER TO HYDRAULIC INFORMATION SYSTEM
M-METRIC PART

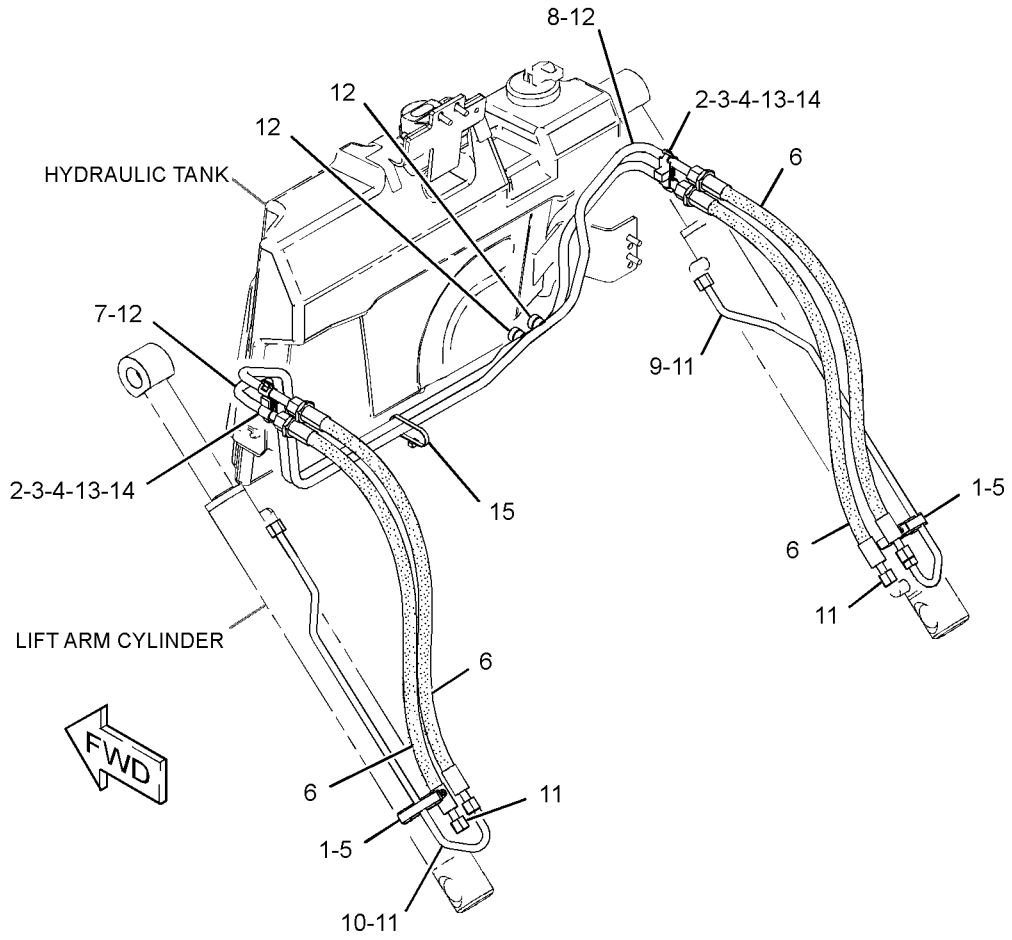

GRAPHIC #1 **<END>** g01337933

258-3393 LINES GP-LOWERING CONTROL–MANUAL

S/N: JAY1-UP

PART OF 258-2600 HYDRAULIC AR

SMCS-5057, 5147, 5154 **i02879514**

NOTE	REF NO	GRAPHIC REF	PART NUMBER	QTY	PART NAME 1 2 3 4 5 6 (PRODUCT LEVEL)	SEE PAGE
	1	1	**7K-1181**	2	STRAP-CABLE (LOWERING CONTROL)	
Y	2	1	**112-1817**	1	VALVE GP-MANUAL (LOWERING CONTROL)	438
	3	1	**178-3620**	1	STRAP-DUAL CLAMP	
	5	1	**258-3501**	1	BRACKET AS	
	6	1	**258-3507**	1	TUBE AS	
	8	1	**269-9404**	1	BRACKET	
	9	1	**270-0216**	1	BRACKET	
	10	1	**289-0843**	1	TUBE AS	
	11	1	*148-8378*	1	ELBOW AS	
		1	**3J-1907**	1	SEAL-O-RING	
		1	**6V-8397**	1	SEAL-O-RING	
		1	**6V-8724**	1	ELBOW	
	12	1	*150-4043*	1	CONNECTOR AS	
		1	**3J-1907**	1	SEAL-O-RING	
		1	**6V-8398**	1	SEAL-O-RING	
		1	**6V-9873**	1	CONNECTOR	
M	13	1	**266-3315**	5	BOLT-FLANGE HEAD (M8X1.25X25.5-MM)	
	14	1	**4B-0418**	1	CLIP	
	15	1	**4B-4274**	1	WASHER (5.5X13X1.2-MM THK)	
	17	1	**6V-8397**	2	SEAL-O-RING	
	18	1	**6V-8398**	3	SEAL-O-RING	
M	19	1	**6V-9673**	1	SCREW-MACHINE (M5X0.8X12-MM)	
	20	1	**8M-4791**	2	WASHER-HARD (13.5X27X3-MM THK)	
M	21	1	**8T-0337**	4	SCREW-MACHINE (M4X0.7X12-MM)	
	22	1	**9X-1481**	1	WASHER (13X25.4X1.6-MM THK)	
Y	23	1	**298-7198**	1	CABLE GP-CONTROL (MANUAL LOWERING)	642

M-METRIC PART
Y-SEPARATE ILLUSTRATION

258-3393 **LINES GP-LOWERING CONTROL** *(contd.)* **i02879514**

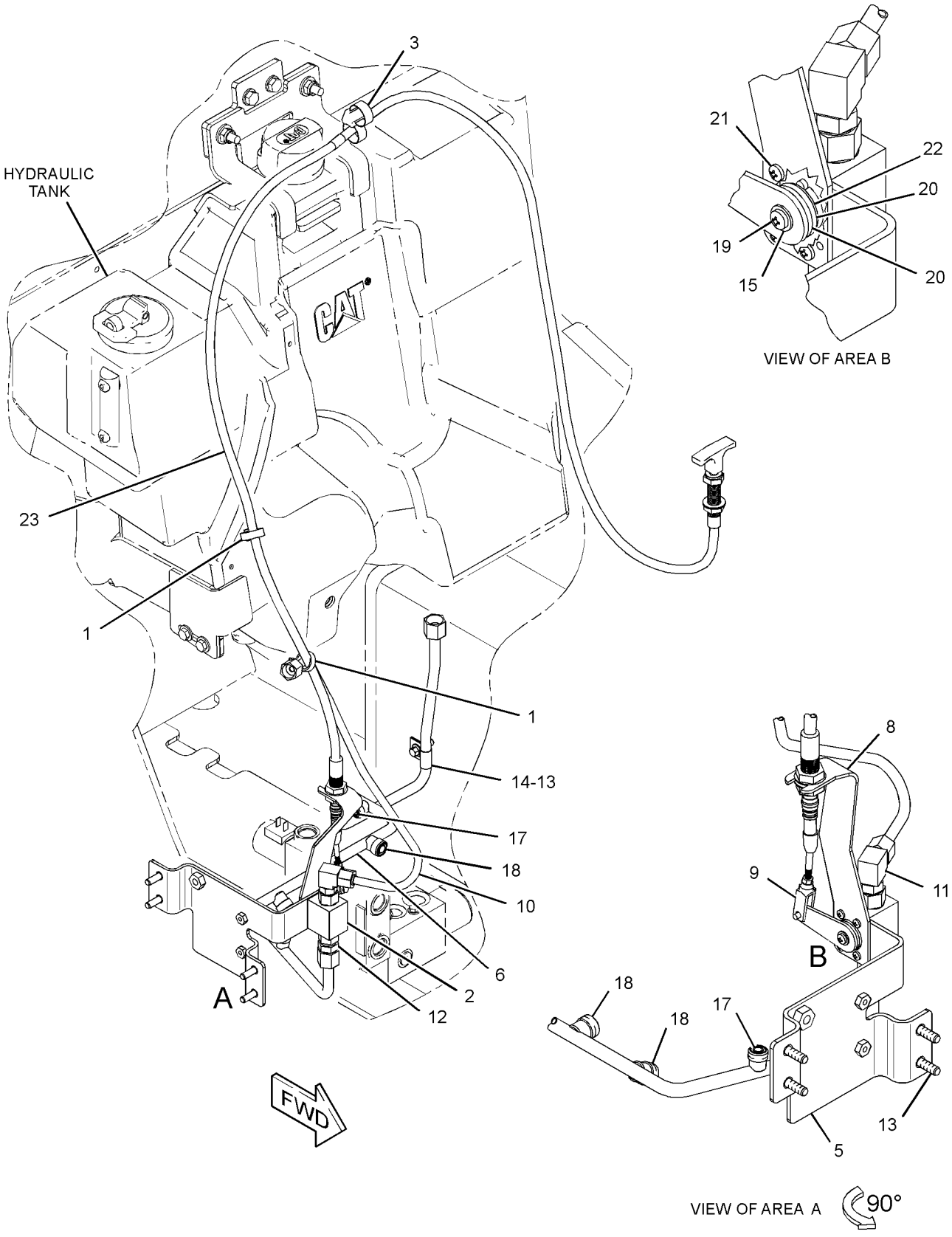

GRAPHIC #1 **<END>** g01454033

HYDRAULIC SYSTEM

258-3237 LINES GP-PUMP

S/N: JAY1-UP
PART OF 258-3180, 258-3730 HYDRAULIC AR
AN ATTACHMENT
TYPE 1

SMCS-5057 **i03635745**

NOTE	REF NO	GRAPHIC REF	PART NUMBER	QTY	PART NAME 1 2 3 4 5 6 (PRODUCT LEVEL)	SEE PAGE
	1	1	**2S-3440**	1	CLAMP-HOSE	
	2	1	**3J-1907**	1	SEAL-O-RING	
	3	1	**5P-2230**	4	CLAMP-HOSE	
	4	1	**5P-4868**	1	CLAMP-HOSE	
	5	1	**6V-0852**	3	CAP-DUST (FUEL QUICK DISCONNECT)	
	6	1	**9U-6994**	1	FITTING GP (RETURN MANIFOLD)	
		1	**5P-4362**	1	CONNECTOR	
		1	**7M-8485**	1	SEAL-O-RING	
	7	1	*148-8362*	1	ELBOW AS	
		1	**3D-2824**	1	SEAL-O-RING	
		1	**5K-9090**	1	SEAL-O-RING	
		1	**8T-6684**	1	ELBOW	
	8	1	**9U-7000**	1	FITTING GP-HYDRAULIC	
		1	**2S-4078**	1	SEAL-O-RING	
		1	**5P-7506**	1	ELBOW	
	9	1	**9S-4191**	1	PLUG-O-RING	
	10	1	*241-6215*	1	ELBOW AS	
		1	**3J-1907**	1	SEAL-O-RING	
		1	**6V-8076**	1	ELBOW	
	11	1	**193-8308**	1	ADAPTER	
	12	1	**258-3870**	1	HOSE	
I	13	1	**258-3871**	1	HOSE AS	
	14	1	**258-3874**	1	HOSE	
	15	1	**258-3882**	1	HOSE	
	16	1	**305-2893**	1	HOSE AS	
	17	1	**292-2440**	1	FITTING GP-HYDRAULIC	
		1	**6V-9746**	1	SEAL-O-RING	
	18	1	*150-4049*	1	ELBOW AS	
		1	**6V-9746**	1	SEAL-O-RING	
		1	**7M-8485**	1	SEAL-O-RING	
		1	**8T-4149**	1	ELBOW	
	19	1	*164-5567*	2	COUPLER AS-QUICK DISCONNECT (EACH INCLUDES)	
		1	**214-7568**	1	SEAL-O-RING	
		1	**6V-3965**	1	FITTING (QUICK DISCONNECT)	
	20	1	**1P-4578**	2	FLANGE-HALF	
	21	1	**4J-0522**	1	SEAL-O-RING	
	22	1	**4J-5267**	1	SEAL-O-RING	
	23	1	**8C-3205**	2	FLANGE-HALF	
	24	1	**8T-4121**	8	WASHER-HARD (11X21X2.5-MM THK)	
M	25	1	**8T-4196**	8	BOLT (M10X1.5X35-MM)	
	26	1	**110-6349**	1	FITTING AS (QUICK DISCONNECT)	
	27	1	*297-7942*	1	ELBOW AS	
		1	**3J-7354**	1	SEAL-O-RING	
		1	**297-7941**	1	ELBOW	

I-REFER TO HYDRAULIC INFORMATION SYSTEM
M-METRIC PART

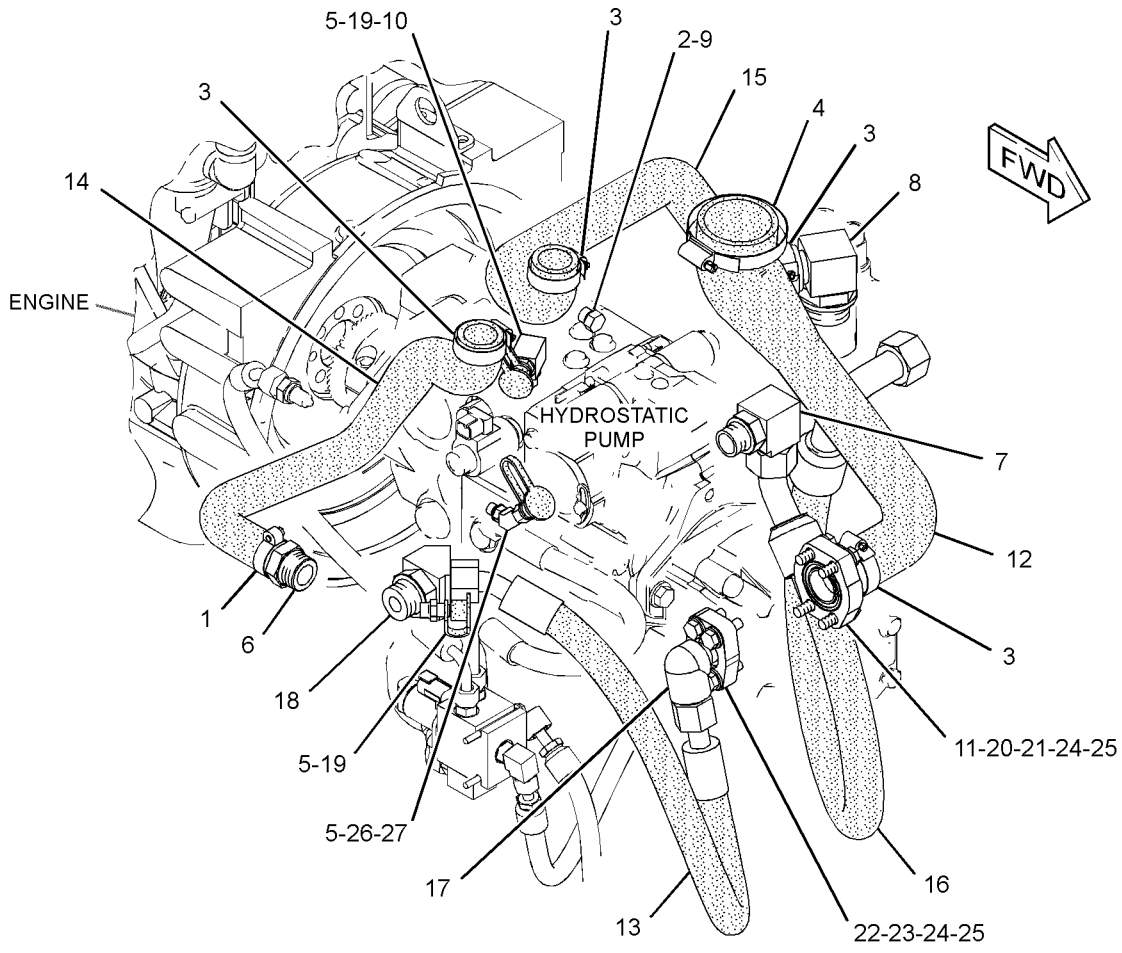

GRAPHIC #1 **<END>** g01454520

HYDRAULIC SYSTEM

258-3237 LINES GP-PUMP

S/N: JAY1-UP
PART OF 258-3180, 258-3730 HYDRAULIC AR
AN ATTACHMENT
TYPE 2

SMCS-5057 **i03632781**

NOTE	REF NO	GRAPHIC REF	PART NUMBER	QTY	PART NAME 1 2 3 4 5 6 (PRODUCT LEVEL)	SEE PAGE
	1	1	**2S-3440**	1	CLAMP-HOSE	
	2	1	**3J-1907**	1	SEAL-O-RING	
	3	1	**5P-2230**	4	CLAMP-HOSE	
	4	1	**5P-4868**	1	CLAMP-HOSE	
	5	1	**6V-0852**	3	CAP-DUST	
	6	1	**9U-6994**	1	FITTING GP (RETURN MANIFOLD)	
		1	**5P-4362**	1	CONNECTOR	
		1	**7M-8485**	1	SEAL-O-RING	
C	7	1	**9U-6998**	1	FITTING GP (PUMP CASE DRAIN)	
		1	**3D-2824**	1	SEAL-O-RING	
	8	1	**9U-7000**	1	FITTING GP-HYDRAULIC	
		1	**2S-4078**	1	SEAL-O-RING	
		1	**5P-7506**	1	ELBOW	
	9	1	**9S-4191**	1	PLUG-O-RING	
	10	1	*241-6215*	1	ELBOW AS	
		1	**3J-1907**	1	SEAL-O-RING	
		1	**6V-8076**	1	ELBOW	
	11	1	**193-8308**	1	ADAPTER	
	12	1	**258-3870**	1	HOSE	
I	13	1	**258-3871**	1	HOSE AS	
	14	1	**258-3874**	1	HOSE	
	15	1	**258-3882**	1	HOSE	
C	16	1	**328-2044**	1	HOSE	
	17	1	**292-2440**	1	FITTING GP-HYDRAULIC	
		1	**6V-9746**	1	SEAL-O-RING	
	18	1	*150-4049*	1	ELBOW AS	
		1	**6V-9746**	1	SEAL-O-RING	
		1	**7M-8485**	1	SEAL-O-RING	
		1	**8T-4149**	1	ELBOW	
	19	1	*164-5567*	2	COUPLER AS-QUICK DISCONNECT (EACH INCLUDES)	
		1	**214-7568**	1	SEAL-O-RING	
		1	**6V-3965**	1	FITTING (QUICK DISCONNECT)	
	20	1	**1P-4578**	2	FLANGE-HALF	
	21	1	**4J-0522**	1	SEAL-O-RING	
	22	1	**4J-5267**	1	SEAL-O-RING	
	23	1	**8C-3205**	2	FLANGE-HALF	
	24	1	**8T-4121**	8	WASHER-HARD (11X21X2.5-MM THK)	
M	25	1	**8T-4196**	8	BOLT (M10X1.5X35-MM)	
	26	1	**110-6349**	1	FITTING AS (QUICK DISCONNECT)	
	27	1	*297-7942*	1	ELBOW AS	
		1	**3J-7354**	1	SEAL-O-RING	
		1	**297-7941**	1	ELBOW	
C	28	1	**280-8911**	2	CLAMP-BAND	

C-CHANGE FROM PREVIOUS TYPE
I-REFER TO HYDRAULIC INFORMATION SYSTEM
M-METRIC PART

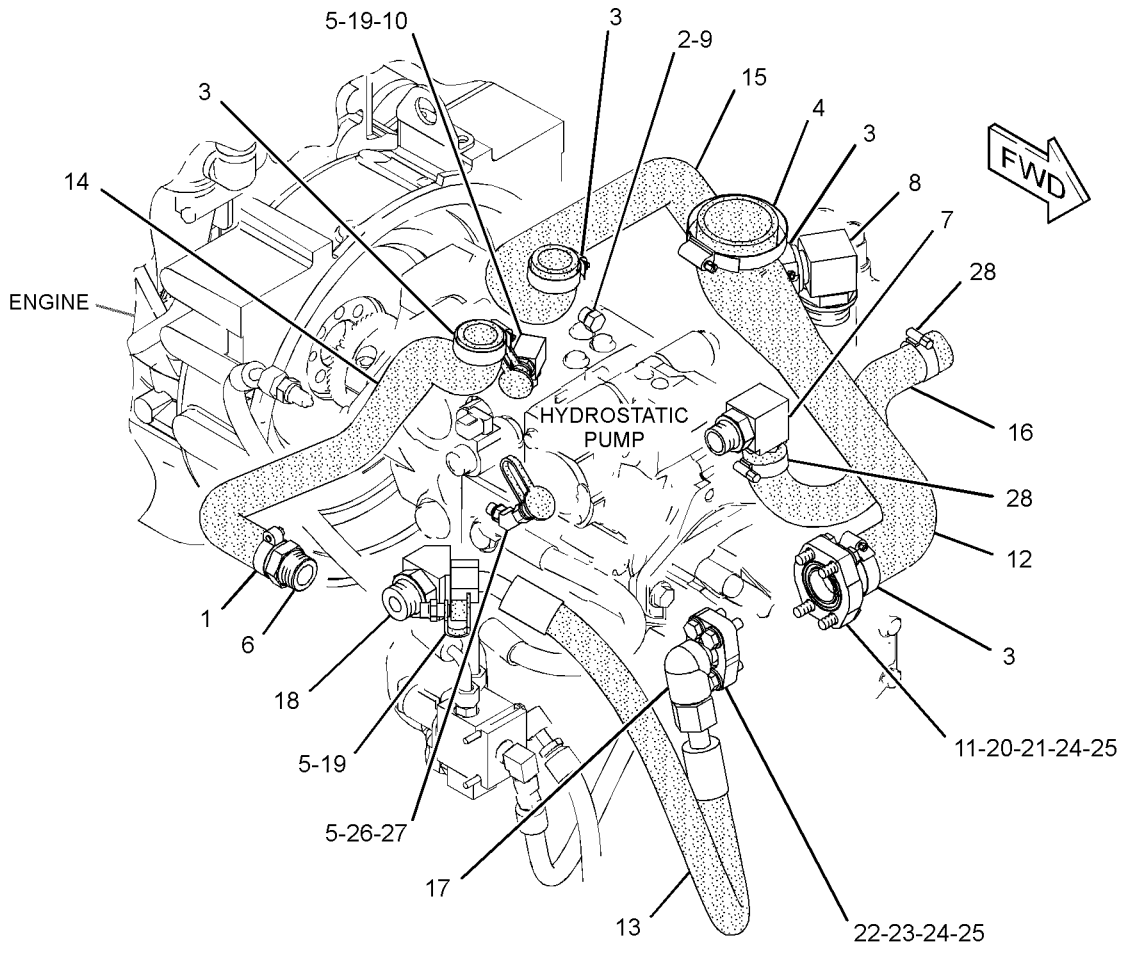

GRAPHIC #1 **<END>** g01955440

HYDRAULIC SYSTEM

258-3238 LINES GP-PUMP—HIGH FLOW

S/N: JAY1-199
PART OF 258-3182, 258-3733 HYDRAULIC AR
AN ATTACHMENT

SMCS-5057 **i03635795**

NOTE	REF NO	GRAPHIC REF	PART NUMBER	QTY	PART NAME 1 2 3 4 5 6 (PRODUCT LEVEL)	SEE PAGE
	1	1	**2S-3440**	1	CLAMP-HOSE	
	2	1	**5P-0597**	1	CLAMP-HOSE	
	3	1	**5P-2230**	3	CLAMP-HOSE	
	4	1	**5P-4868**	1	CLAMP-HOSE	
	5	1	**6V-0852**	4	CAP-DUST	
	6	1	**9U-6994**	1	FITTING GP (RETURN MANIFOLD)	
		1	**5P-4362**	1	CONNECTOR	
		1	**7M-8485**	1	SEAL-O-RING	
	7	1	*148-8362*	1	ELBOW AS	
		1	**3D-2824**	1	SEAL-O-RING	
		1	**5K-9090**	1	SEAL-O-RING	
		1	**8T-6684**	1	ELBOW	
	8	1	**9U-7000**	1	FITTING GP-HYDRAULIC	
		1	**2S-4078**	1	SEAL-O-RING	
		1	**5P-7506**	1	ELBOW	
	9	1	**161-3357**	2	SPACER (12X20X10-MM THK)	
	10	1	**110-6349**	2	FITTING AS (QUICK DISCONNECT) (MALE)	
	11	1	**204-2281**	1	STRAP-TIE	
Y	12	1	**211-3014**	1	VALVE GP-SHUTTLE	440
	13	1	**258-3880**	1	HOSE	
I	14	1	**258-3881**	1	HOSE AS	
	15	1	**258-3882**	1	HOSE	
I	16	1	**258-3883**	1	HOSE AS	
	17	1	**258-3889**	1	HOSE	
	18	1	**304-5080**	1	TUBE AS	
	19	1	**258-3899**	1	ADAPTER AS	
	20	1	**258-3967**	1	HOSE AS	
	21	1	**305-2893**	1	HOSE AS	
	22	1	*148-8361*	1	ELBOW AS	
		1	**3J-7354**	1	SEAL-O-RING	
		1	**6V-8397**	1	SEAL-O-RING	
		1	**6V-9200**	1	ELBOW	
	23	1	*297-7942*	1	ELBOW AS	
		1	**3J-7354**	1	SEAL-O-RING	
		1	**297-7941**	1	ELBOW	
	24	1	**303-5020**	1	ELBOW	
	25	1	*148-8368*	2	ELBOW AS	
					(EACH INCLUDES)	
		1	**3J-1907**	1	SEAL-O-RING	
		1	**4J-5477**	1	SEAL-O-RING	
		1	**6V-8627**	1	ELBOW	
	26	1	*164-5567*	2	COUPLER AS-QUICK DISCONNECT	
					(EACH INCLUDES)	
		1	**214-7568**	1	SEAL-O-RING	
		1	**6V-3965**	1	FITTING (QUICK DISCONNECT)	
	27	1	**286-4867**	1	HOSE AS	
	28	1	**1P-3703**	1	SEAL-RECTANGULAR	
	29	1	**1P-4582**	2	FLANGE-HALF	
	30	1	**4J-0527**	1	SEAL-O-RING	
M	31	1	**5C-7261**	2	NUT (M8X1.25-THD)	
	32	1	**5K-9090**	3	SEAL-O-RING	
	33	1	**5P-4116**	2	WASHER-HARD (8.8X20.5X2-MM THK)	
	34	1	**6V-0400**	2	FLANGE-HALF	
	35	1	**6V-7359**	3	GROMMET	
	36	1	**7M-8485**	1	SEAL-O-RING	

258-3238 **LINES GP-PUMP** *(contd.)* **i03635795**

NOTE	REF NO	GRAPHIC REF	PART NUMBER	QTY	PART NAME 1 2 3 4 5 6 (PRODUCT LEVEL)	SEE PAGE
	37	1	**5P-7464**	2	CLIP (SLOT)	
	38	1	**5P-7465**	2	CLIP (TAB)	
M	39	1	**8T-4184**	8	BOLT (M12X1.75X45-MM)	
	40	1	**8T-4223**	8	WASHER-HARD (13.5X25.5X3-MM THK)	
	41	1	*241-6215*	1	ELBOW AS	
		1	**3J-1907**	1	SEAL-O-RING	
		1	**6V-8076**	1	ELBOW	

I-REFER TO HYDRAULIC INFORMATION SYSTEM
M-METRIC PART
Y-SEPARATE ILLUSTRATION

258-3238 **LINES GP-PUMP** *(contd.)* **i03635795**

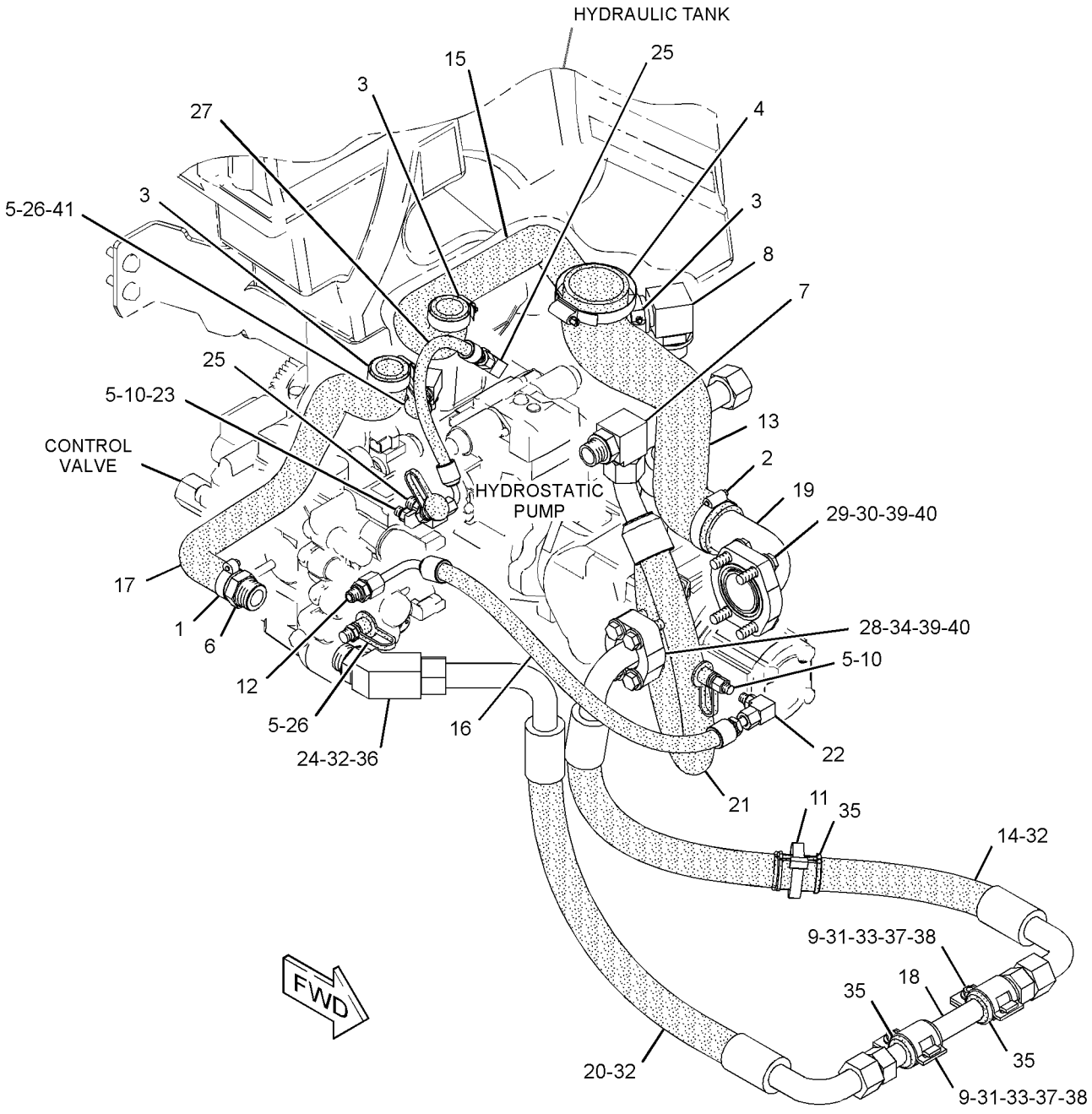

GRAPHIC #1 **<END>** g01352748

HYDRAULIC SYSTEM

258-3238 LINES GP-PUMP—HIGH FLOW

S/N: JAY200-UP
PART OF 258-3182, 258-3733 HYDRAULIC AR
AN ATTACHMENT
TYPE 1

SMCS-5057 **i03636346**

NOTE	REF NO	GRAPHIC REF	PART NUMBER	QTY	PART NAME 1 2 3 4 5 6 (PRODUCT LEVEL)	SEE PAGE
	1	1	**2S-3440**	1	CLAMP-HOSE	
	2	1	**5P-0597**	1	CLAMP-HOSE	
	3	1	**5P-2230**	3	CLAMP-HOSE	
	4	1	**5P-4868**	1	CLAMP-HOSE	
	5	1	**6V-0852**	4	CAP-DUST	
	6	1	**9U-6994**	1	FITTING GP (RETURN MANIFOLD)	
		1	**5P-4362**	1	CONNECTOR	
		1	**7M-8485**	1	SEAL-O-RING	
	7	1	*148-8362*	1	ELBOW AS	
		1	**3D-2824**	1	SEAL-O-RING	
		1	**5K-9090**	1	SEAL-O-RING	
		1	**8T-6684**	1	ELBOW	
	8	1	**9U-7000**	1	FITTING GP-HYDRAULIC	
		1	**2S-4078**	1	SEAL-O-RING	
		1	**5P-7506**	1	ELBOW	
	9	1	**161-3357**	2	SPACER (12X20X10-MM THK)	
	10	1	**110-6349**	2	FITTING AS (QUICK DISCONNECT) (MALE)	
	11	1	**204-2281**	1	STRAP-TIE	
Y	12	1	**211-3014**	1	VALVE GP-SHUTTLE	440
	13	1	**258-3880**	1	HOSE	
I	14	1	**258-3881**	1	HOSE AS	
	15	1	**258-3882**	1	HOSE	
I	16	1	**258-3883**	1	HOSE AS	
	17	1	**258-3889**	1	HOSE	
	18	1	**304-5080**	1	TUBE AS	
	19	1	**258-3899**	1	ADAPTER AS	
	20	1	**258-3967**	1	HOSE AS	
	21	1	**305-2893**	1	HOSE AS	
	22	1	*148-8361*	1	ELBOW AS	
		1	**3J-7354**	1	SEAL-O-RING	
		1	**6V-8397**	1	SEAL-O-RING	
		1	**6V-9200**	1	ELBOW	
	23	1	*297-7942*	1	ELBOW AS	
		1	**3J-7354**	1	SEAL-O-RING	
		1	**297-7941**	1	ELBOW	
	24	1	**303-5020**	1	ELBOW	
C	25	1	*148-8368*	1	ELBOW AS	
		1	**3J-1907**	1	SEAL-O-RING	
		1	**4J-5477**	1	SEAL-O-RING	
		1	**6V-8627**	1	ELBOW	
	26	1	*164-5567*	2	COUPLER AS-QUICK DISCONNECT	
					(EACH INCLUDES)	
		1	**214-7568**	1	SEAL-O-RING	
		1	**6V-3965**	1	FITTING (QUICK DISCONNECT)	
	27	1	**286-4867**	1	HOSE AS	
	28	1	**1P-3703**	1	SEAL-RECTANGULAR	
	29	1	**1P-4582**	2	FLANGE-HALF	
	30	1	**4J-0527**	1	SEAL-O-RING	
M	31	1	**5C-7261**	2	NUT (M8X1.25-THD)	
	32	1	**5K-9090**	3	SEAL-O-RING	
	33	1	**5P-4116**	2	WASHER-HARD (8.8X20.5X2-MM THK)	
	34	1	**6V-0400**	2	FLANGE-HALF	
	35	1	**6V-7359**	3	GROMMET	
	36	1	**7M-8485**	1	SEAL-O-RING	

258-3238 **LINES GP-PUMP** ***(contd.)*** **i03636346**

NOTE	REF NO	GRAPHIC REF	PART NUMBER	QTY	PART NAME 1 2 3 4 5 6 (PRODUCT LEVEL)	SEE PAGE
	37	1	**5P-7464**	2	CLIP (SLOT)	
	38	1	**5P-7465**	2	CLIP (TAB)	
M	39	1	**8T-4184**	8	BOLT (M12X1.75X45-MM)	
	40	1	**8T-4223**	8	WASHER-HARD (13.5X25.5X3-MM THK)	
	41	1	*241-6215*	1	ELBOW AS	
		1	**3J-1907**	1	SEAL-O-RING	
		1	**6V-8076**	1	ELBOW	
C	42	1	**314-2403**	1	VALVE-CHECK	
		1	**3J-1907**	1	SEAL-O-RING	
		1	**6V-8397**	1	SEAL-O-RING	

C-CHANGE FROM PREVIOUS TYPE
I-REFER TO HYDRAULIC INFORMATION SYSTEM
M-METRIC PART
Y-SEPARATE ILLUSTRATION

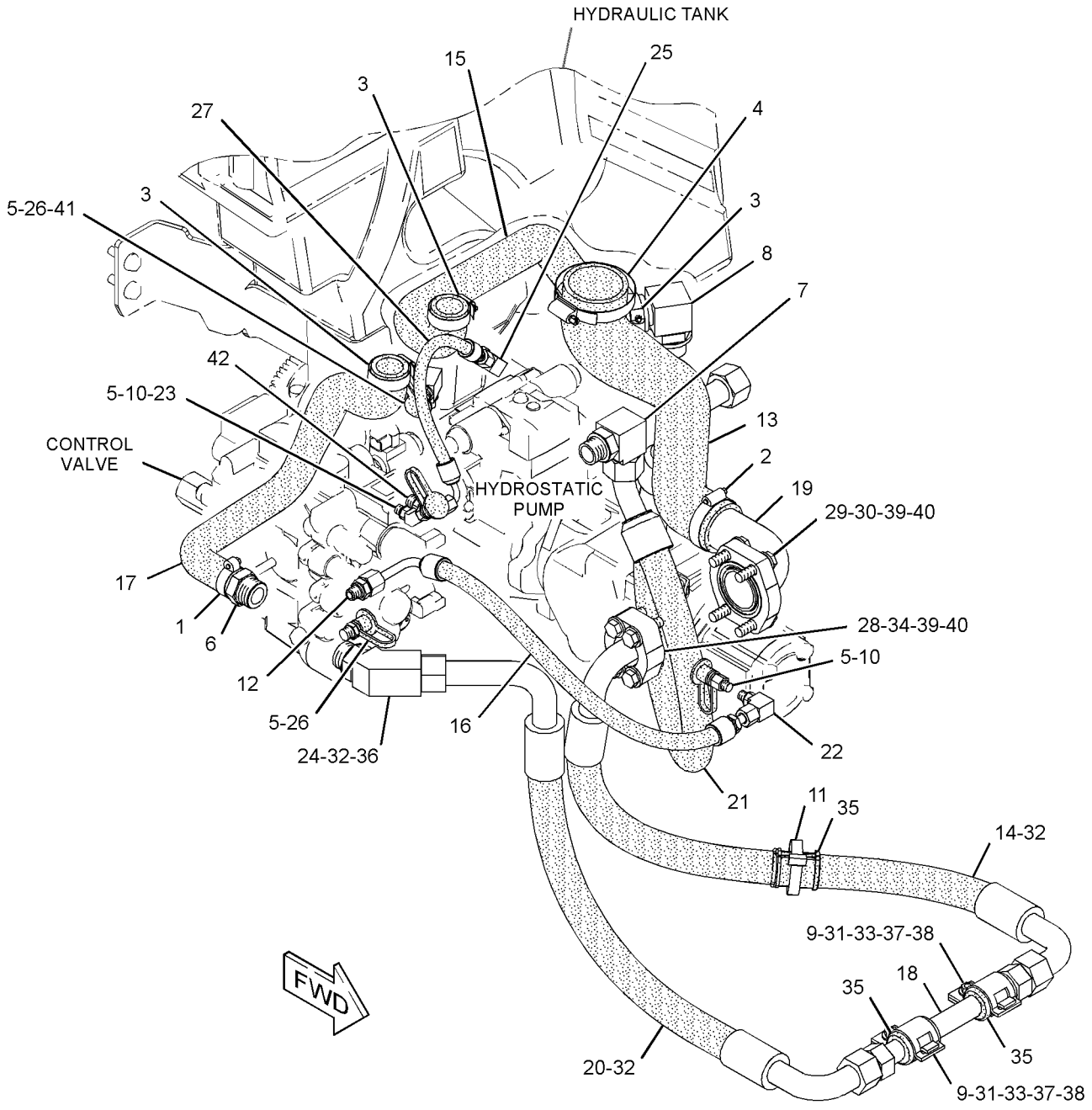

GRAPHIC #1 **<END>** g01453974

HYDRAULIC SYSTEM

258-3238 LINES GP-PUMP—HIGH FLOW

S/N: JAY200-UP
PART OF 258-3182, 258-3733 HYDRAULIC AR
AN ATTACHMENT
TYPE 2

SMCS-5057 **i03636347**

NOTE	REF NO	GRAPHIC REF	PART NUMBER	QTY	PART NAME 1 2 3 4 5 6 (PRODUCT LEVEL)	SEE PAGE
	1	1	**2S-3440**	1	CLAMP-HOSE	
	2	1	**5P-0597**	1	CLAMP-HOSE	
	3	1	**5P-2230**	3	CLAMP-HOSE	
	4	1	**5P-4868**	1	CLAMP-HOSE	
	5	1	**6V-0852**	4	CAP-DUST	
	6	1	**9U-6994**	1	FITTING GP (RETURN MANIFOLD)	
		1	**5P-4362**	1	CONNECTOR	
		1	**7M-8485**	1	SEAL-O-RING	
	7	1	*148-8362*	1	ELBOW AS	
		1	**3D-2824**	1	SEAL-O-RING	
		1	**5K-9090**	1	SEAL-O-RING	
		1	**8T-6684**	1	ELBOW	
	8	1	**9U-7000**	1	FITTING GP-HYDRAULIC	
		1	**2S-4078**	1	SEAL-O-RING	
		1	**5P-7506**	1	ELBOW	
	9	1	**161-3357**	2	SPACER (12X20X10-MM THK)	
	10	1	**110-6349**	2	FITTING AS (QUICK DISCONNECT) (MALE)	
	11	1	**204-2281**	1	STRAP-TIE	
Y	12	1	**211-3014**	1	VALVE GP-SHUTTLE	440
	13	1	**258-3880**	1	HOSE	
CI	14	1	**261-6168**	1	HOSE AS	
	15	1	**258-3882**	1	HOSE	
CI	16	1	**319-5901**	1	HOSE AS	
	17	1	**258-3889**	1	HOSE	
	18	1	**304-5080**	1	TUBE AS	
	19	1	**258-3899**	1	ADAPTER AS	
	20	1	**258-3967**	1	HOSE AS	
	21	1	**305-2893**	1	HOSE AS	
	22	1	*148-8361*	1	ELBOW AS	
		1	**3J-7354**	1	SEAL-O-RING	
		1	**6V-8397**	1	SEAL-O-RING	
		1	**6V-9200**	1	ELBOW	
	23	1	*297-7942*	1	ELBOW AS	
		1	**3J-7354**	1	SEAL-O-RING	
		1	**297-7941**	1	ELBOW	
	24	1	**303-5020**	1	ELBOW	
	25	1	*148-8368*	1	ELBOW AS	
		1	**3J-1907**	1	SEAL-O-RING	
		1	**4J-5477**	1	SEAL-O-RING	
		1	**6V-8627**	1	ELBOW	
	26	1	*164-5567*	2	COUPLER AS-QUICK DISCONNECT	
					(EACH INCLUDES)	
		1	**214-7568**	1	SEAL-O-RING	
		1	**6V-3965**	1	FITTING (QUICK DISCONNECT)	
	27	1	**286-4867**	1	HOSE AS	
	28	1	**1P-3703**	1	SEAL-RECTANGULAR	
	29	1	**1P-4582**	2	FLANGE-HALF	
	30	1	**4J-0527**	1	SEAL-O-RING	
M	31	1	**5C-7261**	2	NUT (M8X1.25-THD)	
	32	1	**5K-9090**	3	SEAL-O-RING	
	33	1	**5P-4116**	2	WASHER-HARD (8.8X20.5X2-MM THK)	
	34	1	**6V-0400**	2	FLANGE-HALF	
	35	1	**6V-7359**	3	GROMMET	
	36	1	**7M-8485**	1	SEAL-O-RING	

258-3238 **LINES GP-PUMP** *(contd.)* **i03636347**

NOTE	REF NO	GRAPHIC REF	PART NUMBER	QTY	PART NAME 1 2 3 4 5 6 (PRODUCT LEVEL)	SEE PAGE
	37	1	**5P-7464**	2	CLIP (SLOT)	
	38	1	**5P-7465**	2	CLIP (TAB)	
M	39	1	**8T-4184**	8	BOLT (M12X1.75X45-MM)	
	40	1	**8T-4223**	8	WASHER-HARD (13.5X25.5X3-MM THK)	
	41	1	*241-6215*	1	ELBOW AS	
		1	**3J-1907**	1	SEAL-O-RING	
		1	**6V-8076**	1	ELBOW	
	42	1	**314-2403**	1	VALVE-CHECK	
		1	**3J-1907**	1	SEAL-O-RING	
		1	**6V-8397**	1	SEAL-O-RING	
C	43	1	*148-8352*	1	ELBOW AS	
		1	**5K-9090**	1	SEAL-O-RING	
		1	**6V-9854**	1	ELBOW	
C	44	1	*165-4931*	1	ELBOW AS	
		1	**3J-1907**	1	SEAL-O-RING	
		1	**6V-8077**	1	ELBOW	

C-CHANGE FROM PREVIOUS TYPE
I-REFER TO HYDRAULIC INFORMATION SYSTEM
M-METRIC PART
Y-SEPARATE ILLUSTRATION

258-3238 **LINES GP-PUMP** *(contd.)* **i03636347**

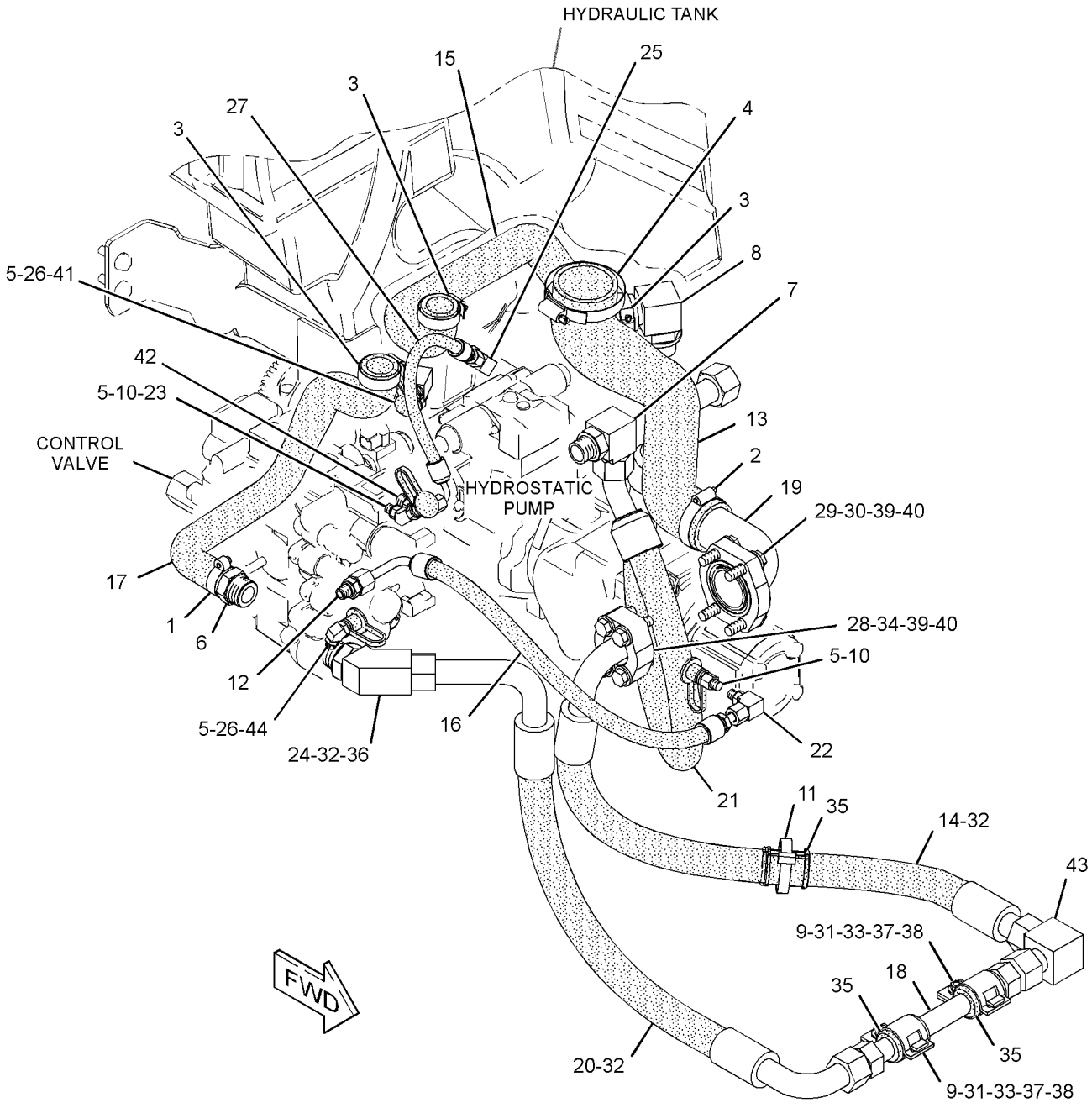

GRAPHIC #1 **<END>** g01453975

HYDRAULIC SYSTEM

258-3238 LINES GP-PUMP—HIGH FLOW

S/N: JAY200-UP
PART OF 258-3182, 258-3733 HYDRAULIC AR
AN ATTACHMENT
TYPE 3

SMCS-5057 **i03632784**

NOTE	REF NO	GRAPHIC REF	PART NUMBER	QTY	PART NAME 1 2 3 4 5 6 (PRODUCT LEVEL)	SEE PAGE
	1	1	**2S-3440**	1	CLAMP-HOSE	
	2	1	**5P-0597**	1	CLAMP-HOSE	
	3	1	**5P-2230**	3	CLAMP-HOSE	
	4	1	**5P-4868**	1	CLAMP-HOSE	
	5	1	**6V-0852**	4	CAP-DUST	
	6	1	**9U-6994**	1	FITTING GP (RETURN MANIFOLD)	
		1	**5P-4362**	1	CONNECTOR	
		1	**7M-8485**	1	SEAL-O-RING	
C	7	1	**9U-6998**	1	FITTING GP (PUMP CASE DRAIN)	
		1	**3D-2824**	1	SEAL-O-RING	
	8	1	**9U-7000**	1	FITTING GP-HYDRAULIC	
		1	**2S-4078**	1	SEAL-O-RING	
		1	**5P-7506**	1	ELBOW	
	9	1	**161-3357**	2	SPACER (12X20X10-MM THK)	
	10	1	**110-6349**	2	FITTING AS (QUICK DISCONNECT) (MALE)	
	11	1	**204-2281**	1	STRAP-TIE	
Y	12	1	**211-3014**	1	VALVE GP-SHUTTLE (HIGH FLOW)	440
	13	1	**258-3880**	1	HOSE	
I	14	1	**261-6168**	1	HOSE AS	
	15	1	**258-3882**	1	HOSE	
I	16	1	**319-5901**	1	HOSE AS	
	17	1	**258-3889**	1	HOSE	
	18	1	**304-5080**	1	TUBE AS	
	19	1	**258-3899**	1	ADAPTER AS	
	20	1	**258-3967**	1	HOSE AS	
C	21	1	**328-2044**	1	HOSE	
	22	1	*148-8361*	1	ELBOW AS	
		1	**3J-7354**	1	SEAL-O-RING	
		1	**6V-8397**	1	SEAL-O-RING	
		1	**6V-9200**	1	ELBOW	
	23	1	*297-7942*	1	ELBOW AS	
		1	**3J-7354**	1	SEAL-O-RING	
		1	**297-7941**	1	ELBOW	
	24	1	**303-5020**	1	ELBOW	
	25	1	*148-8368*	1	ELBOW AS	
		1	**3J-1907**	1	SEAL-O-RING	
		1	**4J-5477**	1	SEAL-O-RING	
		1	**6V-8627**	1	ELBOW	
	26	1	*164-5567*	2	COUPLER AS-QUICK DISCONNECT (EACH INCLUDES)	
		1	**214-7568**	1	SEAL-O-RING	
		1	**6V-3965**	1	FITTING (QUICK DISCONNECT)	
	27	1	**286-4867**	1	HOSE AS	
	28	1	**1P-3703**	1	SEAL-RECTANGULAR	
	29	1	**1P-4582**	2	FLANGE-HALF	
	30	1	**4J-0527**	1	SEAL-O-RING	
M	31	1	**5C-7261**	2	NUT (M8X1.25-THD)	
	32	1	**5K-9090**	3	SEAL-O-RING	
	33	1	**5P-4116**	2	WASHER-HARD (8.8X20.5X2-MM THK)	
	34	1	**6V-0400**	2	FLANGE-HALF	
	35	1	**6V-7359**	3	GROMMET	
	36	1	**7M-8485**	1	SEAL-O-RING	
	37	1	**5P-7464**	2	CLIP (SLOT)	
	38	1	**5P-7465**	2	CLIP (TAB)	

258-3238 **LINES GP-PUMP** *(contd.)* **i03632784**

NOTE	REF NO	GRAPHIC REF	PART NUMBER	QTY	PART NAME 1 2 3 4 5 6 (PRODUCT LEVEL)	SEE PAGE
M	39	1	**8T-4184**	8	BOLT (M12X1.75X45-MM)	
	40	1	**8T-4223**	8	WASHER-HARD (13.5X25.5X3-MM THK)	
	41	1	*241-6215*	1	ELBOW AS	
		1	**3J-1907**	1	SEAL-O-RING	
		1	**6V-8076**	1	ELBOW	
	42	1	**314-2403**	1	VALVE-CHECK	
		1	**3J-1907**	1	SEAL-O-RING	
		1	**6V-8397**	1	SEAL-O-RING	
	43	1	*148-8352*	1	ELBOW AS	
		1	**5K-9090**	1	SEAL-O-RING	
		1	**6V-9854**	1	ELBOW	
	44	1	*165-4931*	1	ELBOW AS	
		1	**3J-1907**	1	SEAL-O-RING	
		1	**6V-8077**	1	ELBOW	
C	45	1	**280-8911**	2	CLAMP-BAND	

C-CHANGE FROM PREVIOUS TYPE
I-REFER TO HYDRAULIC INFORMATION SYSTEM
M-METRIC PART
Y-SEPARATE ILLUSTRATION

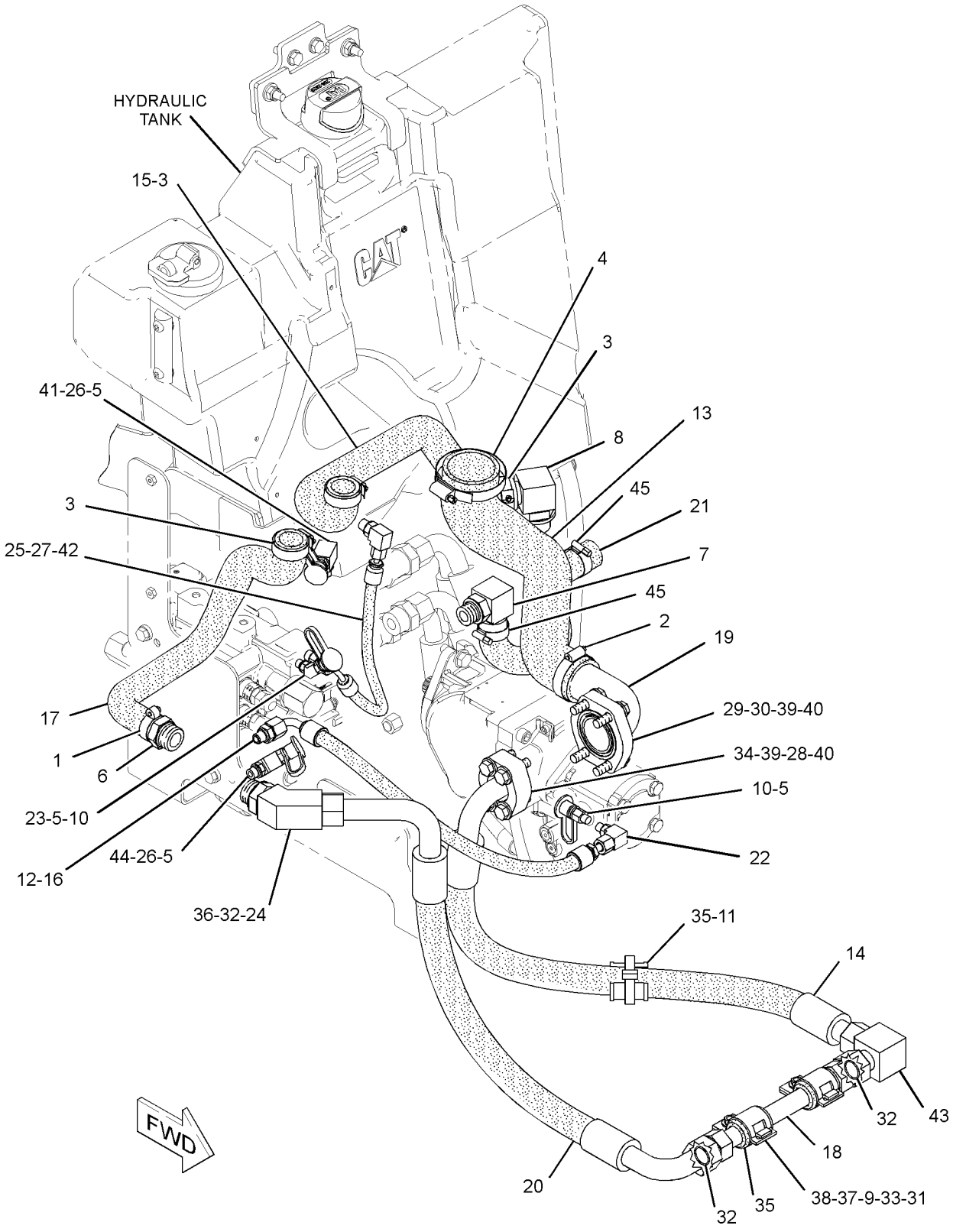

GRAPHIC #1 **<END>** g01949818

HYDRAULIC SYSTEM

261-6239 LINES GP-PUMP

S/N: JAY1-199
PART OF 261-6264 HYDRAULIC AR
AN ATTACHMENT

SMCS-5057 **i02693439**

NOTE	REF NO	GRAPHIC REF	PART NUMBER	QTY	PART NAME 1 2 3 4 5 6 (PRODUCT LEVEL)	SEE PAGE
	1	1	**2S-3440**	1	CLAMP-HOSE	
	2	1	**5P-2230**	3	CLAMP-HOSE	
	3	1	**5P-4868**	1	CLAMP-HOSE	
	4	1	**6V-0852**	4	CAP-DUST	
	5	1	**9U-6994**	1	FITTING GP	
	6	1	**9U-7000**	1	FITTING GP-HYDRAULIC	
	7	1	**110-6349**	2	FITTING AS (QUICK DISCONNECT)	
Y	8	1	**211-3014**	1	VALVE GP-SHUTTLE	440
	9	1	**258-3880**	1	HOSE	
	10	1	**258-3882**	1	HOSE	
I	11	1	**258-3883**	1	HOSE AS	
	12	1	**258-3889**	1	HOSE	
	13	1	**258-3899**	1	ADAPTER AS	
	14	1	**258-3967**	1	HOSE AS	
I	15	1	**261-6167**	1	HOSE AS	
I	16	1	**261-6168**	1	HOSE AS	
	17	1	*297-7942*	1	ELBOW AS	
		1	**3J-7354**	1	SEAL-O-RING	
		1	**297-7941**	1	ELBOW	
	18	1	**303-5020**	1	ELBOW	
	19	1	**304-5080**	1	TUBE AS	
	20	1	**305-2893**	1	HOSE AS	
	21	1	*148-8361*	1	ELBOW AS	
		1	**3J-7354**	1	SEAL-O-RING	
		1	**6V-8397**	1	SEAL-O-RING	
		1	**6V-9200**	1	ELBOW	
	22	1	*148-8362*	1	ELBOW AS	
		1	**3D-2824**	1	SEAL-O-RING	
		1	**5K-9090**	1	SEAL-O-RING	
		1	**8T-6684**	1	ELBOW	
	23	1	*148-8368*	2	ELBOW AS	
					(EACH INCLUDES)	
		1	**3J-1907**	1	SEAL-O-RING	
		1	**4J-5477**	1	SEAL-O-RING	
		1	**6V-8627**	1	ELBOW	
	24	1	*148-8445*	1	TEE AS	
		1	**5K-9090**	2	SEAL-O-RING	
		1	**6V-9847**	1	TEE-SWIVEL	
	25	1	*150-3073*	1	PLUG AS	
		1	**5K-9090**	1	SEAL-O-RING	
		1	**6V-9512**	1	PLUG (1-7/16-12-THD)	
	26	1	**161-3357**	2	SPACER (12X20X10-MM THK)	
	27	1	*164-5567*	2	COUPLER AS-QUICK DISCONNECT	
					(EACH INCLUDES)	
		1	**3J-1907**	1	SEAL-O-RING	
		1	**6V-3965**	1	FITTING (QUICK DISCONNECT)	
	28	1	*241-6215*	1	ELBOW AS	
		1	**3J-1907**	2	SEAL-O-RING	
		1	**6V-8076**	2	ELBOW	
	29	1	**286-4867**	1	HOSE AS	
	30	1	**1P-3703**	1	SEAL-RECTANGULAR	
	31	1	**1P-4582**	2	FLANGE-HALF	
	32	1	**4J-0527**	1	SEAL-O-RING	
M	33	1	**5C-7261**	2	NUT (M8X1.25-THD)	
	34	1	**5K-9090**	3	SEAL-O-RING	

261-6239 **LINES GP-PUMP** *(contd.)* **i02693439**

NOTE	REF NO	GRAPHIC REF	PART NUMBER	QTY	PART NAME 1 2 3 4 5 6 (PRODUCT LEVEL)	SEE PAGE
	35	1	**5P-0597**	1	CLAMP-HOSE	
	36	1	**5P-4116**	2	WASHER-HARD (8.8X20.5X2-MM THK)	
	37	1	**5P-7464**	2	CLIP (SLOT)	
	38	1	**5P-7465**	2	CLIP (TAB)	
	39	1	**6V-0400**	2	FLANGE-HALF	
	40	1	**6V-7359**	2	GROMMET	
	41	1	**7M-8485**	1	SEAL-O-RING	
M	42	1	**8T-4184**	8	BOLT (M12X1.75X45-MM)	
	43	1	**8T-4223**	8	WASHER-HARD (13.5X25.5X3-MM THK)	

I-REFER TO HYDRAULIC INFORMATION SYSTEM
M-METRIC PART
Y-SEPARATE ILLUSTRATION

261-6239 **LINES GP-PUMP** *(contd.)* **i02693439**

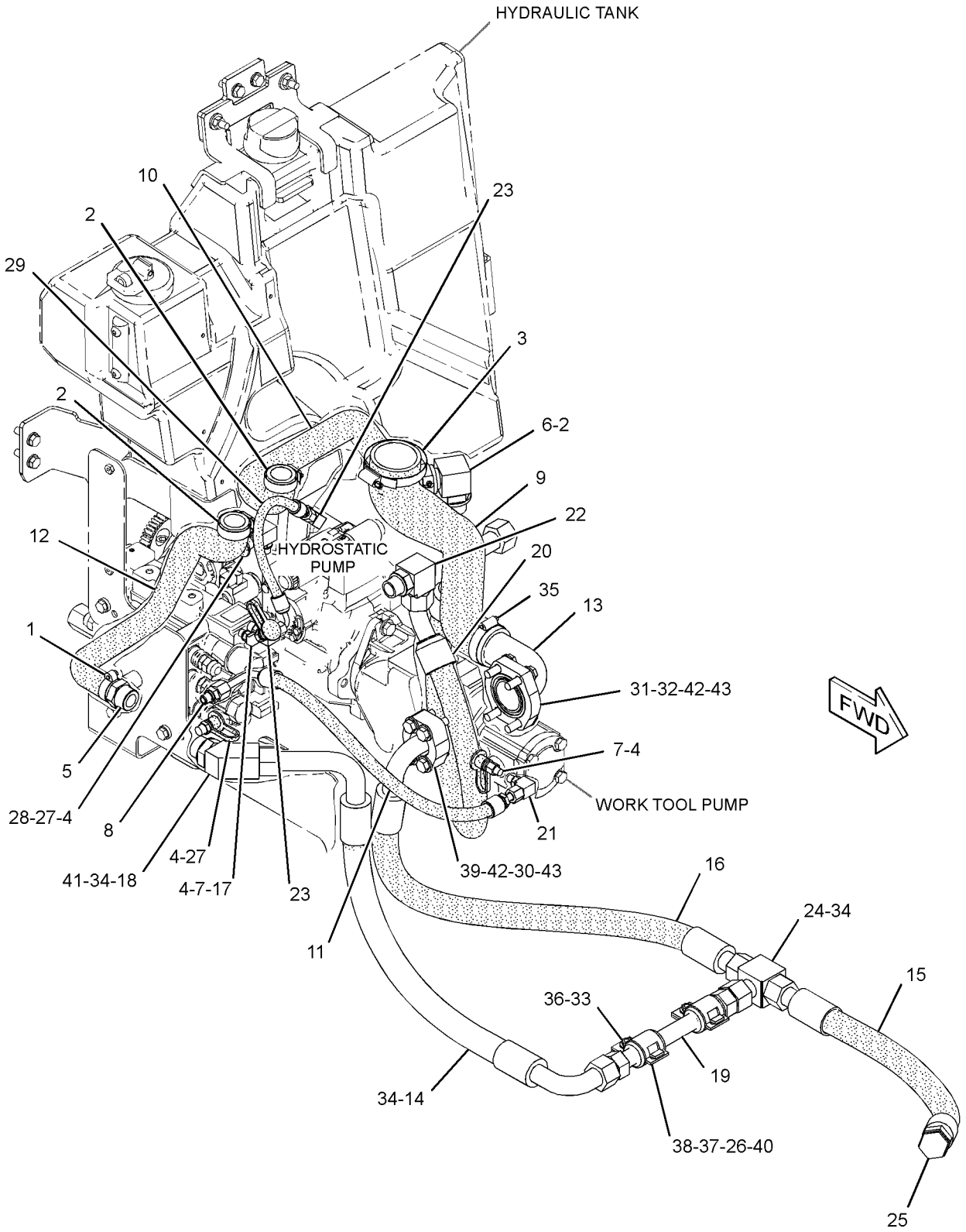

GRAPHIC #1 **<END>** g01352758

HYDRAULIC SYSTEM

261-6239 LINES GP-PUMP

S/N: JAY200-1593
PART OF 261-6264 HYDRAULIC AR
AN ATTACHMENT

SMCS-5057 **i02799226**

NOTE	REF NO	GRAPHIC REF	PART NUMBER	QTY	PART NAME 1 2 3 4 5 6 (PRODUCT LEVEL)	SEE PAGE
	1	1	**2S-3440**	1	CLAMP-HOSE	
	2	1	**5P-2230**	3	CLAMP-HOSE	
	3	1	**5P-4868**	1	CLAMP-HOSE	
	4	1	**6V-0852**	4	CAP-DUST	
	5	1	**9U-6994**	1	FITTING GP (RETURN MANIFOLD)	
	6	1	**9U-7000**	1	FITTING GP-HYDRAULIC	
	7	1	**110-6349**	2	FITTING AS (QUICK DISCONNECT)	
Y	8	1	**211-3014**	1	VALVE GP-SHUTTLE	440
	9	1	**258-3880**	1	HOSE	
	10	1	**258-3882**	1	HOSE	
I	11	1	**258-3883**	1	HOSE AS	
	12	1	**258-3889**	1	HOSE	
	13	1	**258-3899**	1	ADAPTER AS	
	14	1	**258-3967**	1	HOSE AS	
I	15	1	**261-6167**	1	HOSE AS	
I	16	1	**261-6168**	1	HOSE AS	
	17	1	*297-7942*	1	ELBOW AS	
		1	**3J-7354**	1	SEAL-O-RING	
		1	**297-7941**	1	ELBOW	
	18	1	**303-5020**	1	ELBOW	
	19	1	**304-5080**	1	TUBE AS	
	20	1	**305-2893**	1	HOSE AS	
	21	1	*148-8361*	1	ELBOW AS	
		1	**3J-7354**	1	SEAL-O-RING	
		1	**6V-8397**	1	SEAL-O-RING	
		1	**6V-9200**	1	ELBOW	
	22	1	*148-8362*	1	ELBOW AS	
		1	**3D-2824**	1	SEAL-O-RING	
		1	**5K-9090**	1	SEAL-O-RING	
		1	**8T-6684**	1	ELBOW	
C	23	1	*148-8368*	1	ELBOW AS	
		1	**3J-1907**	1	SEAL-O-RING	
		1	**4J-5477**	1	SEAL-O-RING	
		1	**6V-8627**	1	ELBOW	
	24	1	*148-8445*	1	TEE AS	
		1	**5K-9090**	2	SEAL-O-RING	
		1	**6V-9847**	1	TEE-SWIVEL	
	25	1	*150-3073*	1	PLUG AS	
		1	**5K-9090**	1	SEAL-O-RING	
		1	**6V-9512**	1	PLUG (1-7/16-12-THD)	
	26	1	**161-3357**	2	SPACER (12X20X10-MM THK)	
	27	1	*164-5567*	2	COUPLER AS-QUICK DISCONNECT	
					(EACH INCLUDES)	
		1	**3J-1907**	1	SEAL-O-RING	
		1	**6V-3965**	1	FITTING (QUICK DISCONNECT) (TEST)	
	28	1	*241-6215*	1	ELBOW AS	
		1	**3J-1907**	2	SEAL-O-RING	
		1	**6V-8076**	2	ELBOW	
	29	1	**286-4867**	1	HOSE AS	
	30	1	**1P-3703**	1	SEAL-RECTANGULAR	
	31	1	**1P-4582**	2	FLANGE-HALF	
	32	1	**4J-0527**	1	SEAL-O-RING	
M	33	1	**5C-7261**	2	NUT (M8X1.25-THD)	
	34	1	**5K-9090**	3	SEAL-O-RING	
	35	1	**5P-0597**	1	CLAMP-HOSE	

261-6239 **LINES GP-PUMP** ***(contd.)*** **i02799226**

NOTE	REF NO	GRAPHIC REF	PART NUMBER	QTY	PART NAME 1 2 3 4 5 6 (PRODUCT LEVEL)	SEE PAGE
	36	1	**5P-4116**	2	WASHER-HARD (8.8X20.5X2-MM THK)	
	37	1	**5P-7464**	2	CLIP (SLOT)	
	38	1	**5P-7465**	2	CLIP (TAB)	
	39	1	**6V-0400**	2	FLANGE-HALF	
	40	1	**6V-7359**	2	GROMMET	
	41	1	**7M-8485**	1	SEAL-O-RING	
M	42	1	**8T-4184**	8	BOLT (M12X1.75X45-MM)	
	43	1	**8T-4223**	8	WASHER-HARD (13.5X25.5X3-MM THK)	
C	44	1	**314-2403**	1	VALVE-CHECK	
		1	**3J-1907**	1	SEAL-O-RING	
		1	**6V-8397**	1	SEAL-O-RING	

C-CHANGE FROM PREVIOUS TYPE
I-REFER TO HYDRAULIC INFORMATION SYSTEM
M-METRIC PART
Y-SEPARATE ILLUSTRATION

261-6239 **LINES GP-PUMP** *(contd.)* **i02799226**

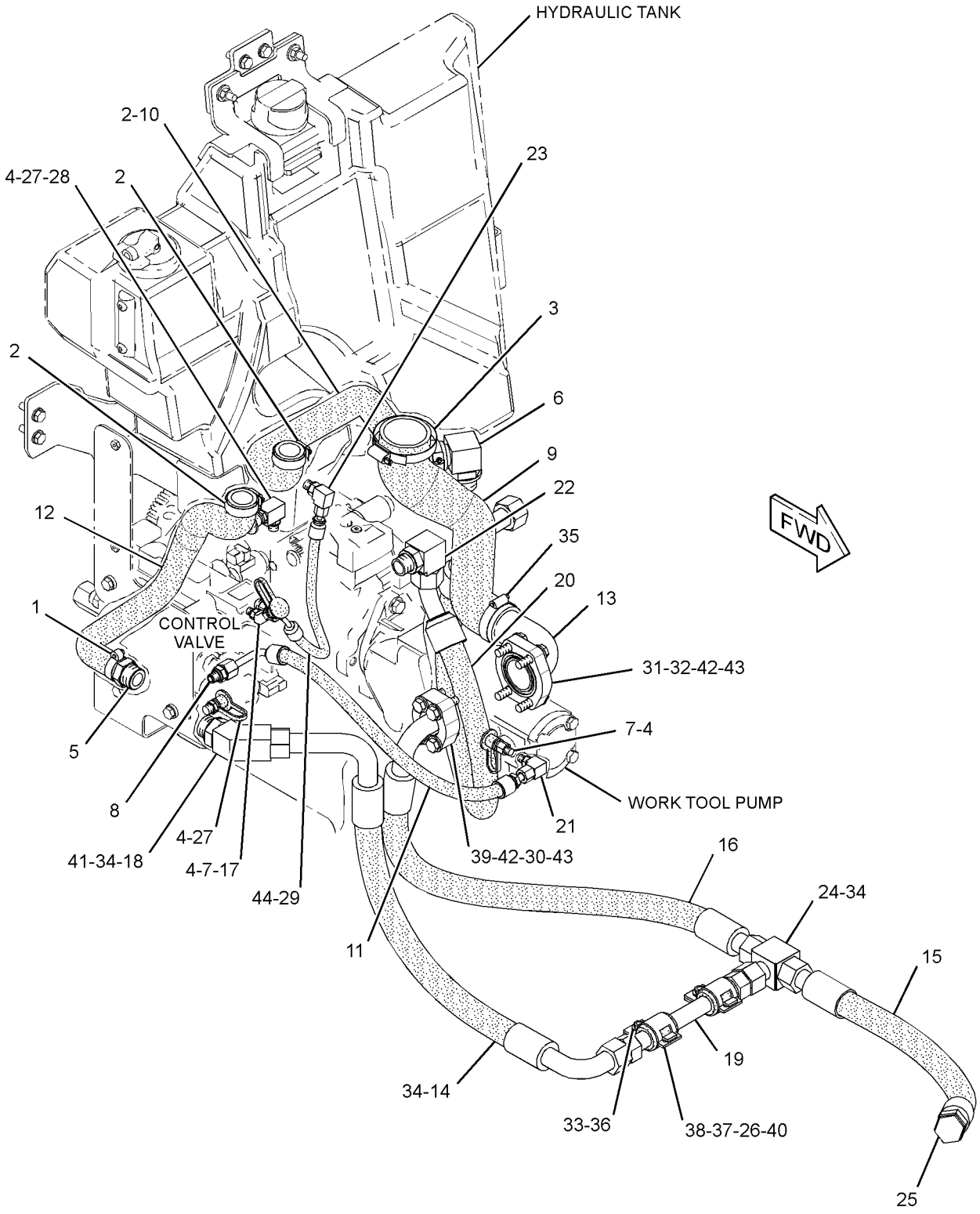

GRAPHIC #1 **<END>** g01424665

HYDRAULIC SYSTEM

261-6239 LINES GP-PUMP

S/N: JAY1594-UP
PART OF 261-6264 HYDRAULIC AR
AN ATTACHMENT

SMCS-5057 **i02916369**

NOTE	REF NO	GRAPHIC REF	PART NUMBER	QTY	PART NAME 1 2 3 4 5 6 (PRODUCT LEVEL)	SEE PAGE
	1	1	**2S-3440**	1	CLAMP-HOSE	
	2	1	**5P-2230**	3	CLAMP-HOSE	
	3	1	**5P-4868**	1	CLAMP-HOSE	
	4	1	**6V-0852**	4	CAP-DUST	
	5	1	**9U-6994**	1	FITTING GP (RETURN MANIFOLD)	
	6	1	**9U-7000**	1	FITTING GP-HYDRAULIC	
	7	1	**110-6349**	2	FITTING AS (QUICK DISCONNECT)	
C	8	1	**204-2281**	1	STRAP-TIE	
Y	9	1	**211-3014**	1	VALVE GP-SHUTTLE	440
	10	1	**258-3880**	1	HOSE	
	11	1	**258-3882**	1	HOSE	
	12	1	**258-3889**	1	HOSE	
	13	1	**258-3899**	1	ADAPTER AS	
	14	1	**258-3967**	1	HOSE AS	
I	15	1	**261-6167**	1	HOSE AS	
I	16	1	**261-6168**	1	HOSE AS	
	17	1	**286-4867**	1	HOSE AS	
	18	1	*297-7942*	1	ELBOW AS	
		1	**3J-7354**	1	SEAL-O-RING	
		1	**297-7941**	1	ELBOW	
	19	1	**303-5020**	1	ELBOW	
	20	1	**304-5080**	1	TUBE AS	
	21	1	**305-2893**	1	HOSE AS	
	22	1	**314-2403**	1	VALVE-CHECK	
		1	**3J-1907**	1	SEAL-O-RING	
		1	**6V-8397**	1	SEAL-O-RING	
CI	23	1	*319-5901*	1	HOSE AS	
	24	1	*148-8361*	1	ELBOW AS	
		1	**3J-7354**	1	SEAL-O-RING	
		1	**6V-8397**	1	SEAL-O-RING	
		1	**6V-9200**	1	ELBOW	
	25	1	*148-8362*	1	ELBOW AS	
		1	**3D-2824**	1	SEAL-O-RING	
		1	**5K-9090**	1	SEAL-O-RING	
		1	**8T-6684**	1	ELBOW	
	26	1	*148-8368*	1	ELBOW AS	
		1	**3J-1907**	1	SEAL-O-RING	
		1	**4J-5477**	1	SEAL-O-RING	
		1	**6V-8627**	1	ELBOW	
	27	1	*148-8445*	1	TEE AS	
		1	**5K-9090**	2	SEAL-O-RING	
		1	**6V-9847**	1	TEE-SWIVEL	
	28	1	*150-3073*	1	PLUG AS	
		1	**5K-9090**	1	SEAL-O-RING	
		1	**6V-9512**	1	PLUG (1-7/16-12-THD)	
	29	1	**161-3357**	2	SPACER (12X20X10-MM THK)	
	30	1	*164-5567*	2	COUPLER AS-QUICK DISCONNECT	
					(EACH INCLUDES)	
		1	**3J-1907**	1	SEAL-O-RING	
		1	**6V-3965**	1	FITTING (QUICK DISCONNECT) (TEST)	
C	31	1	*165-4931*	1	ELBOW AS	
			3J-1907	1	SEAL-O-RING	
			6V-8077	1	ELBOW	
	32	1	*241-6215*	1	ELBOW AS	
		1	**3J-1907**	2	SEAL-O-RING	

261-6239 **LINES GP-PUMP** *(contd.)* **i02916369**

NOTE	REF NO	GRAPHIC REF	PART NUMBER	QTY	PART NAME 1 2 3 4 5 6 (PRODUCT LEVEL)	SEE PAGE
		1	**6V-8076**	2	ELBOW	
	33	1	**1P-3703**	1	SEAL-RECTANGULAR	
	34	1	**1P-4582**	2	FLANGE-HALF	
	35	1	**4J-0527**	1	SEAL-O-RING	
M	36	1	**5C-7261**	2	NUT (M8X1.25-THD)	
	37	1	**5K-9090**	3	SEAL-O-RING	
	38	1	**5P-0597**	1	CLAMP-HOSE	
	39	1	**5P-4116**	2	WASHER-HARD (8.8X20.5X2-MM THK)	
	40	1	**5P-7464**	2	CLIP (SLOT)	
	41	1	**5P-7465**	2	CLIP (TAB)	
	42	1	**6V-0400**	2	FLANGE-HALF	
C	43	1	**6V-7359**	3	GROMMET	
	44	1	**7M-8485**	1	SEAL-O-RING	
M	45	1	**8T-4184**	8	BOLT (M12X1.75X45-MM)	
	46	1	**8T-4223**	8	WASHER-HARD (13.5X25.5X3-MM THK)	

C-CHANGE FROM PREVIOUS TYPE
I-REFER TO HYDRAULIC INFORMATION SYSTEM
M-METRIC PART
Y-SEPARATE ILLUSTRATION

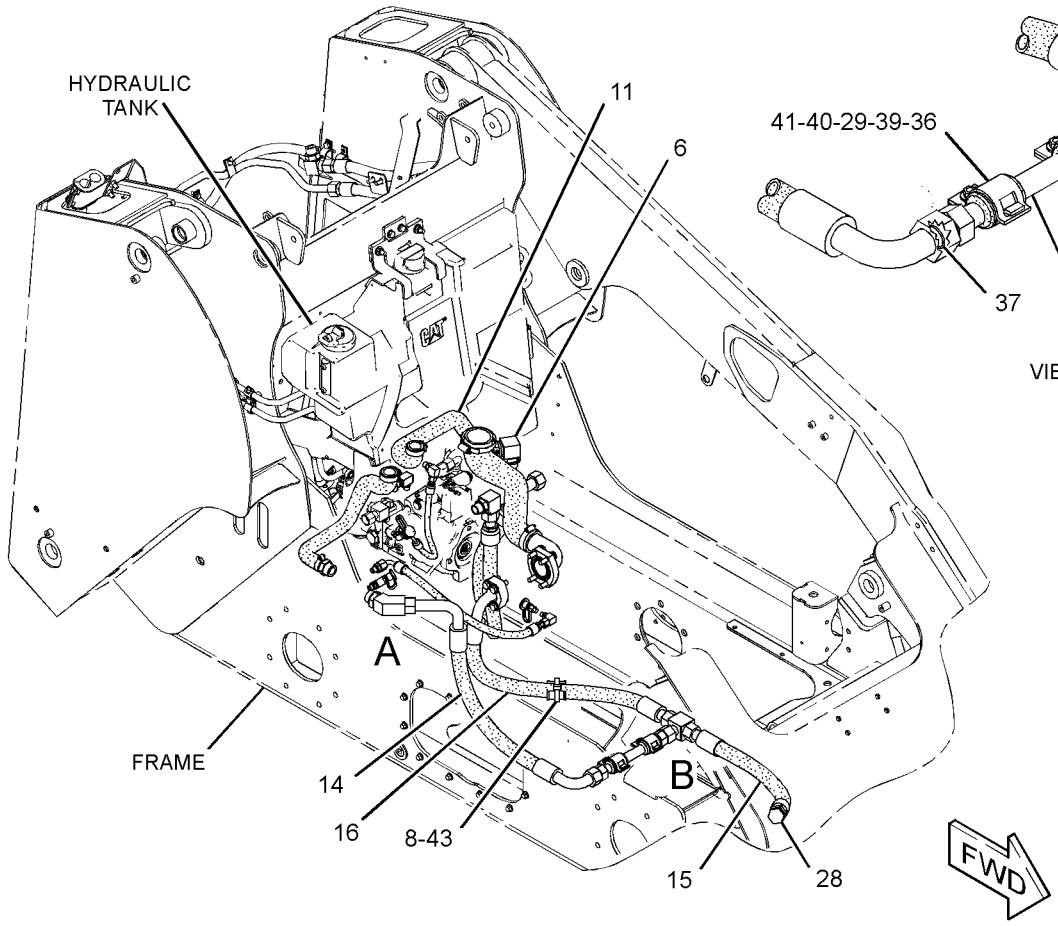

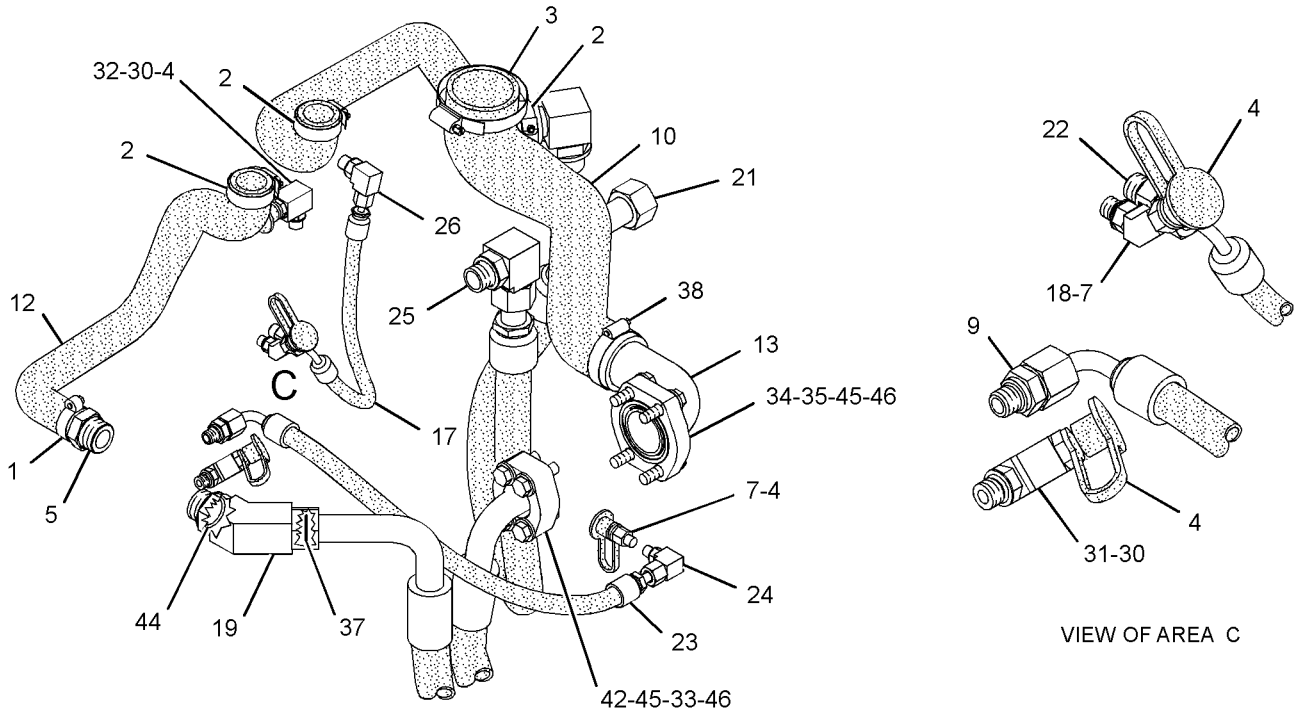

GRAPHIC #1 **<END>** g01454361

HYDRAULIC SYSTEM

258-2412 LINES GP-TILT CYLINDER

S/N: JAY1-UP

PART OF 258-2600 HYDRAULIC AR

SMCS-5057, 5104 **i02741361**

NOTE	REF NO	GRAPHIC REF	PART NUMBER	QTY	PART NAME 1 2 3 4 5 6 (PRODUCT LEVEL)	SEE PAGE
	1	1	**102-8703**	3	PLATE-COVER	
	2	1	**195-6750**	6	CLAMP-DOUBLE	
	3	1	*197-8940*	2	CONNECTOR AS	
					(EACH INCLUDES)	
		1	**2M-9780**	1	SEAL-O-RING	
		1	**7J-9108**	1	SEAL-O-RING	
		1	**8T-1576**	1	CONNECTOR (FACE SEAL)	
I	4	1	**258-2931**	2	HOSE AS	
	5	1	**258-2932**	1	TUBE AS	
	6	1	**258-2933**	1	TUBE AS	
	7	1	**258-3958**	4	HOSE AS	
	8	1	**292-2433**	1	BRACKET AS	
	9	1	**292-2434**	1	TUBE AS	
	10	1	**292-2435**	1	TUBE AS	
M	11	1	**303-8205**	3	BOLT (M8X1.25X60-MM)	
	12	1	**309-8968**	2	PLATE	
	13	1	**068-8358**	2	CLAMP	
	14	1	*148-8393*	2	ELBOW AS	
					(EACH INCLUDES)	
		1	**6V-9852**	1	ELBOW	
		1	**7J-9108**	1	SEAL-O-RING	
M	15	1	**266-3315**	2	BOLT-FLANGE HEAD (M8X1.25X25.5-MM)	
	16	1	**6B-2882**	2	SPACER (0.406X0.75X0.312-IN THK)	
	17	1	**6V-8397**	2	SEAL-O-RING	
	18	1	**6V-8398**	8	SEAL-O-RING	
	19	1	**7G-3832**	1	GROMMET	
	20	1	**7G-3833**	1	CLIP (TAB)	
	21	1	**7G-3834**	1	CLIP (SLOT)	
	22	1	**7J-9108**	4	SEAL-O-RING	
	23	1	**8T-4121**	2	WASHER-HARD (11X21X2.5-MM THK)	
M	24	1	**8T-4186**	2	BOLT (M10X1.5X40-MM)	
M	25	1	**8T-4196**	2	BOLT (M10X1.5X35-MM)	

I-REFER TO HYDRAULIC INFORMATION SYSTEM
M-METRIC PART

258-2412 **LINES GP-TILT CYLINDER** *(contd.)* **i02741361**

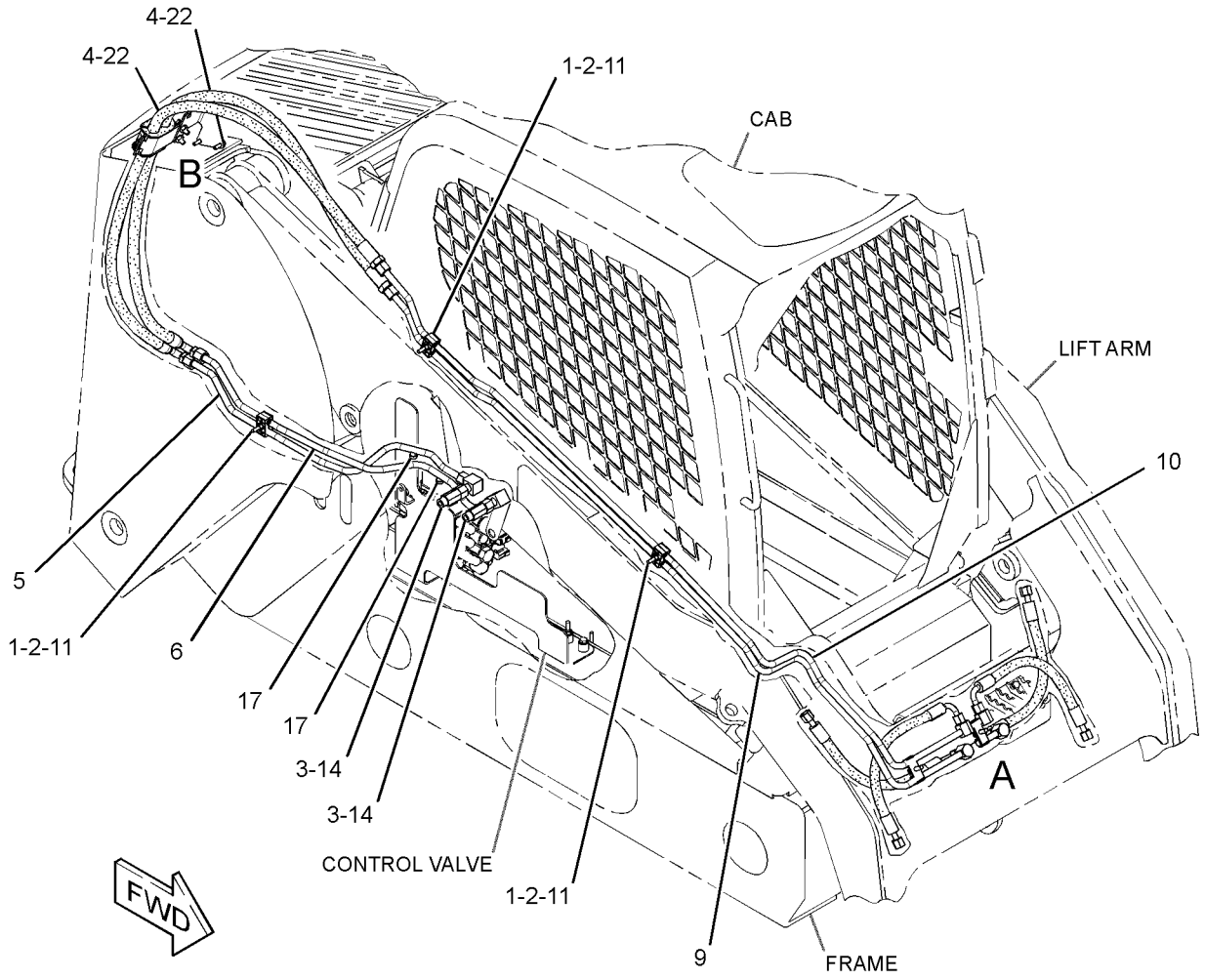

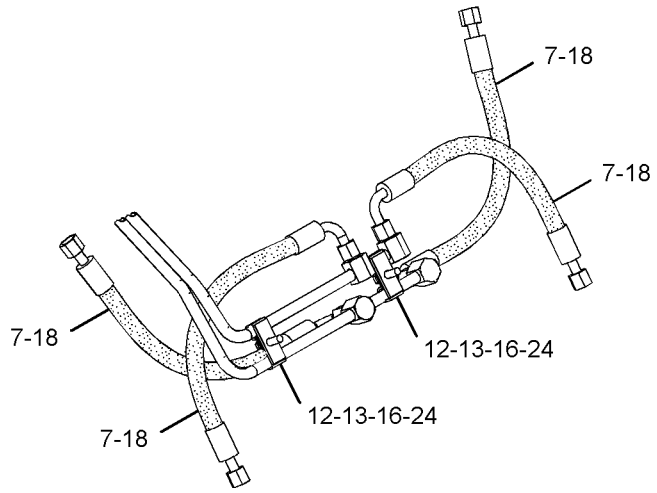

VIEW OF AREA A

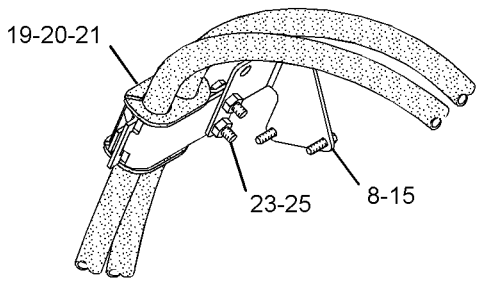

VIEW OF AREA B

GRAPHIC #1 **<END>** g01374426

HYDRAULIC SYSTEM

258-2421 LINES GP-WORK TOOL—HIGH FLOW

S/N: JAY1-UP

PART OF 258-3182, 258-3733, 261-6264 HYDRAULIC AR

AN ATTACHMENT

SMCS-5057 **i03636362**

NOTE	REF NO	GRAPHIC REF	PART NUMBER	QTY	PART NAME 1 2 3 4 5 6 (PRODUCT LEVEL)	SEE PAGE
	1	1,2	**4V-0611**	6	CLAMP	
	2	1,2	**4V-0612**	3	PLATE	
Y	3	1	**218-5840**	1	FITTING GP-HYDRAULIC (QUICK DISCONNECT, MALE)	296
Y	4	1	**218-5841**	1	FITTING GP-HYDRAULIC (QUICK DISCONNECT, FEMALE)	297
	5	1	**229-5468**	1	FITTING AS (QUICK DISCONNECT, MALE)	
	6	1	**229-5471**	1	FITTING AS (QUICK DISCONNECT, FEMALE)	
	7	1	**229-5473**	1	FITTING AS (QUICK DISCONNECT, MALE)	
	8	1	**258-2498**	1	TUBE AS	
	9	1	**258-2499**	1	TUBE AS	
	10	1	**258-2574**	1	BRACKET AS	
	11	2	**258-3162**	2	BLOCK	
	12	2	**258-3164**	2	PLATE	
	13	1	**258-3330**	1	TUBE AS	
	14	1	**258-3331**	1	TUBE AS	
	15	2	**258-3332**	1	TUBE AS	
I	16	1	**258-3333**	2	HOSE AS	
I	17	1	**258-3334**	1	HOSE AS	
	18	1	**258-3335**	1	TUBE AS	
	19	1	**258-3336**	1	TUBE AS	
	20	1	**258-3337**	1	TUBE AS	
	21	1	**258-3344**	1	COVER	
	22	1	**258-3351**	1	TUBE AS	
	23	1	**258-3352**	1	TUBE AS	
	24	1	**331-7171**	1	HARNESS AS-VALVE	
		1	**9X-3401**	5	PIN-CONNECTOR (16-GA TO 18-GA)	
					-OR-	
		1	**126-1767**	5	PIN-CONNECTOR (14-GA)	
		1	**155-2270**	3	KIT-CONNECTING PLUG (2-PIN)	
					(EACH PLUG KIT INCLUDES PLUG AS, WEDGE & INTERFACE SEAL)	
		1	**8T-8737**	1	PLUG-SEAL	
		1	**102-8805**	1	KIT-RECEPTACLE (6-PIN)	
					(INCLUDES RECEPTACLE AS & WEDGE)	
		1	**180-9340**	6	SOCKET-CONNECTOR (14-GA TO 18-GA)	
		1	**8L-8413**	1	STRAP-CABLE	
E		1	**125-7874**		TUBE-HEAT SHRINK (5.72-MM DIA) (5-CM)	
I	25	1	**285-2188**	2	HOSE AS	
	26	1	**286-4863**	1	BRACKET AS	
M	27	1,2	**303-8205**	3	BOLT (M8X1.25X60-MM)	
	28	2	**132-7551**	1	SPACER (11X19X6-MM THK)	
	29	1	*148-8344*	2	CONNECTOR AS	
					(EACH INCLUDES)	
		1	**3D-2824**	1	SEAL-O-RING	
		1	**6V-9162**	1	CONNECTOR	
		1	**6V-9746**	1	SEAL-O-RING	
	30	1	*148-8392*	2	ELBOW AS	
					(EACH INCLUDES)	
		1	**6V-9746**	1	SEAL-O-RING	
		1	**6V-9853**	1	ELBOW	
	31	2	*148-8436*	1	TEE AS	
		2	**3K-0360**	1	SEAL-O-RING	
		2	**6V-8398**	2	SEAL-O-RING	
		2	**6V-8775**	1	TEE-FACE SEAL	

258-2421 **LINES GP-WORK TOOL** *(contd.)* **i03636362**

NOTE	REF NO	GRAPHIC REF	PART NUMBER	QTY	PART NAME 1 2 3 4 5 6 (PRODUCT LEVEL)	SEE PAGE
	32	1	*164-5605*	2	CONNECTOR AS	
					(EACH INCLUDES)	
		1	**3K-0360**	1	SEAL-O-RING	
		1	**6V-8397**	1	SEAL-O-RING	
		1	**8T-0076**	1	CONNECTOR	
M	33	1,2	**266-3315**	4	BOLT-FLANGE HEAD (M8X1.25X25.5-MM)	
	34	1,2	**1B-3057**	2	CLIP	
	35	1	**5K-8451**	1	CLIP	
	36	1,2	**5P-4116**	7	WASHER-HARD (8.8X20.5X2-MM THK)	
	37	1,2	**6V-8397**	4	SEAL-O-RING	
	38	1,2	**6V-8398**	2	SEAL-O-RING	
	39	1,2	**6V-9746**	4	SEAL-O-RING	
	40	1,2	**7B-1597**	2	CLIP	
	41	1	**7G-3832**	1	GROMMET	
	42	1	**7G-3833**	1	CLIP (TAB)	
	43	1	**7G-3834**	1	CLIP (SLOT)	
M	44	1	**7X-2543**	2	BOLT (M10X1.5X120-MM)	
	45	1	**7X-7729**	4	WASHER (11X25X3-MM THK)	
	46	1	**8D-9671**	1	CLIP	
M	47	1	**8T-0341**	4	BOLT-SOCKET HEAD (M10X1.5X60-MM)	
	48	1	**8T-4121**	5	WASHER-HARD (11X21X2.5-MM THK)	
M	49	1	**8T-4133**	3	NUT (M10X1.5-THD)	
M	50	1	**8T-4137**	1	BOLT (M10X1.5X20-MM)	
M	51	1	**8T-4189**	1	BOLT (M8X1.25X20-MM)	
M	52	1	**8T-4196**	3	BOLT (M10X1.5X35-MM)	
M	53	1,2	**8T-4200**	4	BOLT (M8X1.25X16-MM)	
	55	1,2	**9S-1350**	2	CLIP	

E-ORDER BY THE CENTIMETER
I-REFER TO HYDRAULIC INFORMATION SYSTEM
M-METRIC PART
Y-SEPARATE ILLUSTRATION

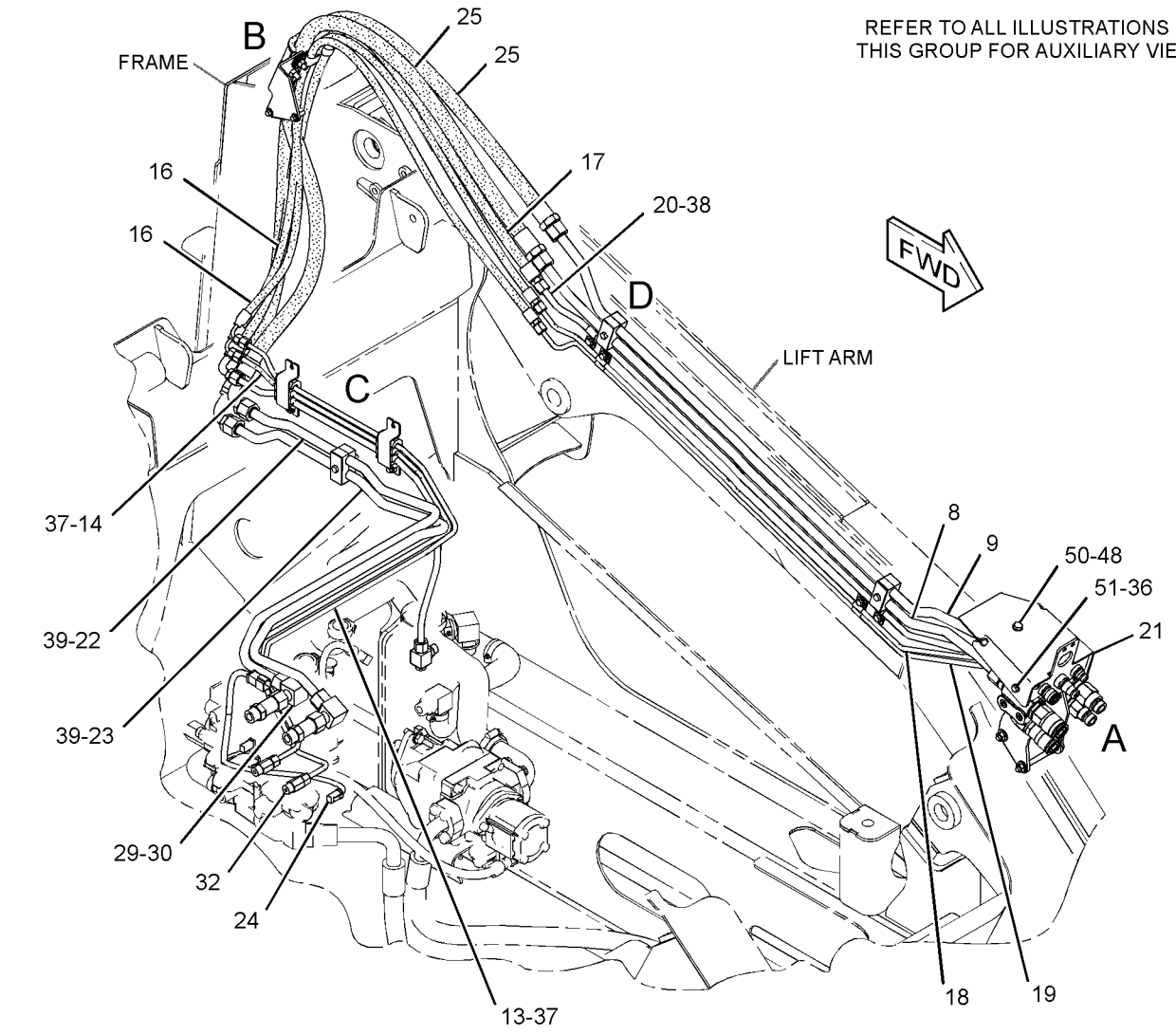

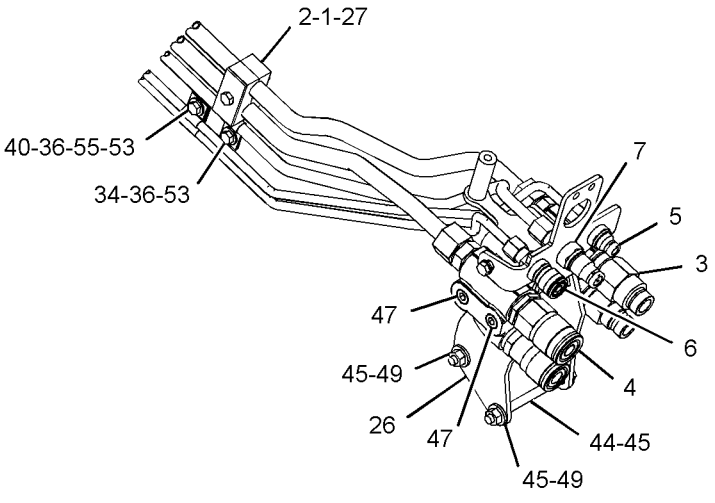

VIEW OF AREA A
(COVER REMOVED FOR CLARITY)

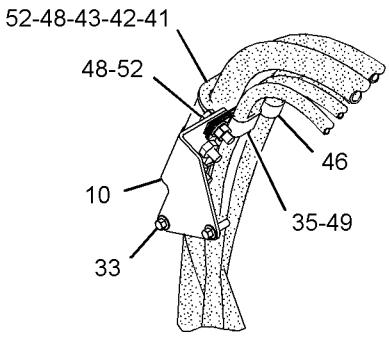

VIEW OF AREA B

GRAPHIC #1

g01454040

258-2421 **LINES GP-WORK TOOL** *(contd.)* **i03636362**

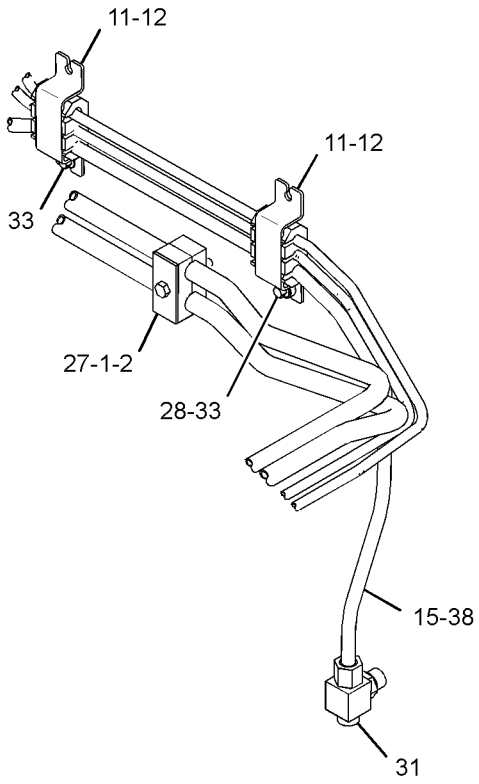

VIEW OF AREA C

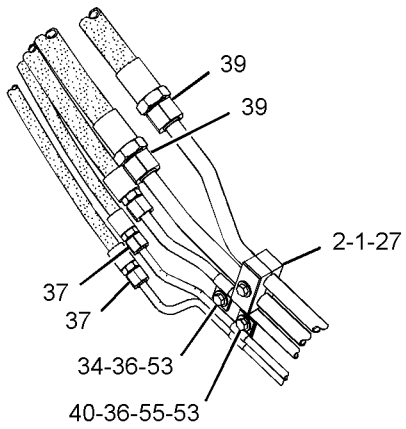

VIEW OF AREA D

GRAPHIC #2 **<END>** g01341436

HYDRAULIC SYSTEM

258-2422 LINES GP-WORK TOOL

S/N: JAY1-UP
PART OF 258-3180, 258-3730 HYDRAULIC AR
AN ATTACHMENT

SMCS-5057 **i02637849**

NOTE	REF NO	GRAPHIC REF	PART NUMBER	QTY	PART NAME 1 2 3 4 5 6 (PRODUCT LEVEL)	SEE PAGE
	1	1	**102-8703**	3	PLATE-COVER	
	2	1	**193-8334**	1	FITTING AS (QUICK DISCONNECT, MALE)	
	3	1	**193-8335**	1	FITTING AS (QUICK DISCONNECT, FEMALE)	
	4	1	**195-6750**	6	CLAMP-DOUBLE	
	5	1	**258-2574**	1	BRACKET AS	
	6	1	**258-2927**	1	TUBE AS	
	7	1	**258-2928**	1	TUBE AS	
I	8	1	**258-2931**	2	HOSE AS	
	9	1	**258-3247**	1	BRACKET AS	
	10	1	*260-9214*	2	CONNECTOR AS	
					(EACH INCLUDES)	
		1	**3D-2824**	1	SEAL-O-RING	
		1	**7J-9108**	1	SEAL-O-RING	
		1	**260-9213**	1	CONNECTOR	
	11	1	**286-4868**	1	TUBE AS	
	12	1	**286-4869**	1	TUBE AS	
M	13	1	**303-8205**	3	BOLT (M8X1.25X60-MM)	
	14	1	*148-8364*	1	ELBOW AS	
		1	**3K-0360**	1	SEAL-O-RING	
		1	**6V-8398**	1	SEAL-O-RING	
		1	**6V-8625**	1	ELBOW	
	15	1	*148-8393*	2	ELBOW AS	
					(EACH INCLUDES)	
		1	**6V-9852**	1	ELBOW	
		1	**7J-9108**	1	SEAL-O-RING	
M	16	1	**266-3315**	2	BOLT-FLANGE HEAD (M8X1.25X25.5-MM)	
	17	1	**6V-9170**	2	NUT-BULKHEAD (1-14-THD)	
	18	1	**7G-3832**	1	GROMMET	
	19	1	**7G-3833**	1	CLIP (TAB)	
	20	1	**7G-3834**	1	CLIP (SLOT)	
	21	1	**7J-9108**	6	SEAL-O-RING	
	22	1	**8T-4121**	4	WASHER-HARD (11X21X2.5-MM THK)	
M	23	1	**8T-4196**	2	BOLT (M10X1.5X35-MM)	
M	24	1	**8T-6685**	2	BOLT (M10X1.5X110-MM)	

I-REFER TO HYDRAULIC INFORMATION SYSTEM
M-METRIC PART

258-2422 **LINES GP-WORK TOOL** *(contd.)* **i02637849**

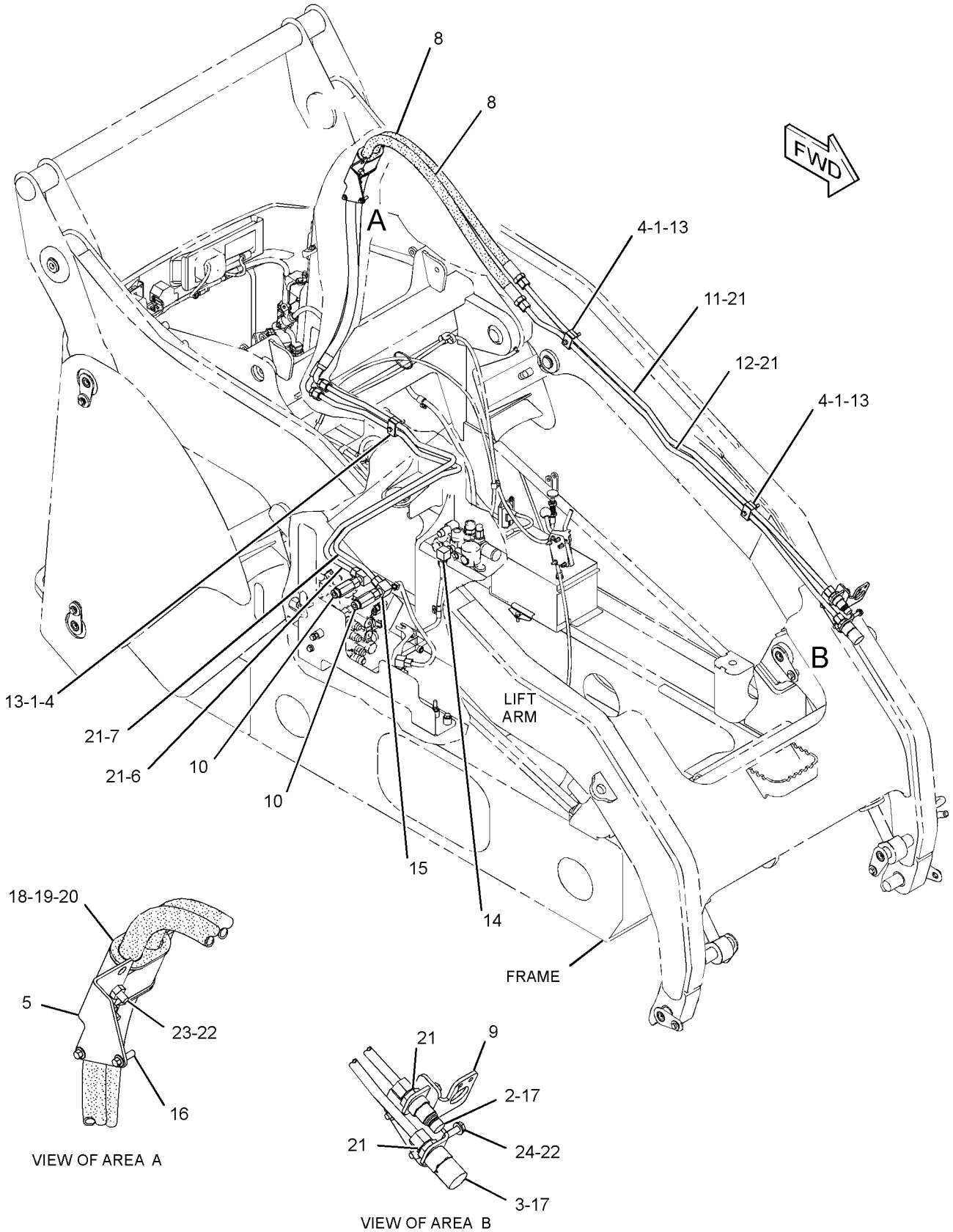

GRAPHIC #1

<END>

g01328658

258-3462 MANF & SOLENOID MTG GP-ACCUM–PILOT SHUTOFF

S/N: JAY1-UP

PART OF 258-3394 MANIFOLD & LINES GP-ACCUM

SMCS-5077, 5264, 5479 **i03571201**

NOTE	REF NO	GRAPHIC REF	PART NUMBER	QTY	PART NAME 1 2 3 4 5 6 (PRODUCT LEVEL)	SEE PAGE
Y	1	1	*149-0686*	1	ACCUMULATOR GP-HYDRAULIC (CHARGED)	280
	2	1	*194-7632*	1	ELBOW AS	
		1	**3K-0360**	1	SEAL-O-RING	
		1	**194-7631**	1	ELBOW	
Y	3	1	**274-8563**	1	MANIFOLD GP-CONTROL (PILOT SHUTOFF)	412
	4	1	*194-2903*	1	ELBOW AS	
		1	**3K-0360**	1	SEAL-O-RING	
		1	**8T-0119**	1	ELBOW	
	5	1	**3K-0360**	1	SEAL-O-RING	
M	6	1	**8T-3844**	2	BOLT (M6X1X70-MM)	
	7	1	**8T-4205**	2	WASHER-HARD (7.2X14.5X2-MM THK)	

M-METRIC PART
Y-SEPARATE ILLUSTRATION

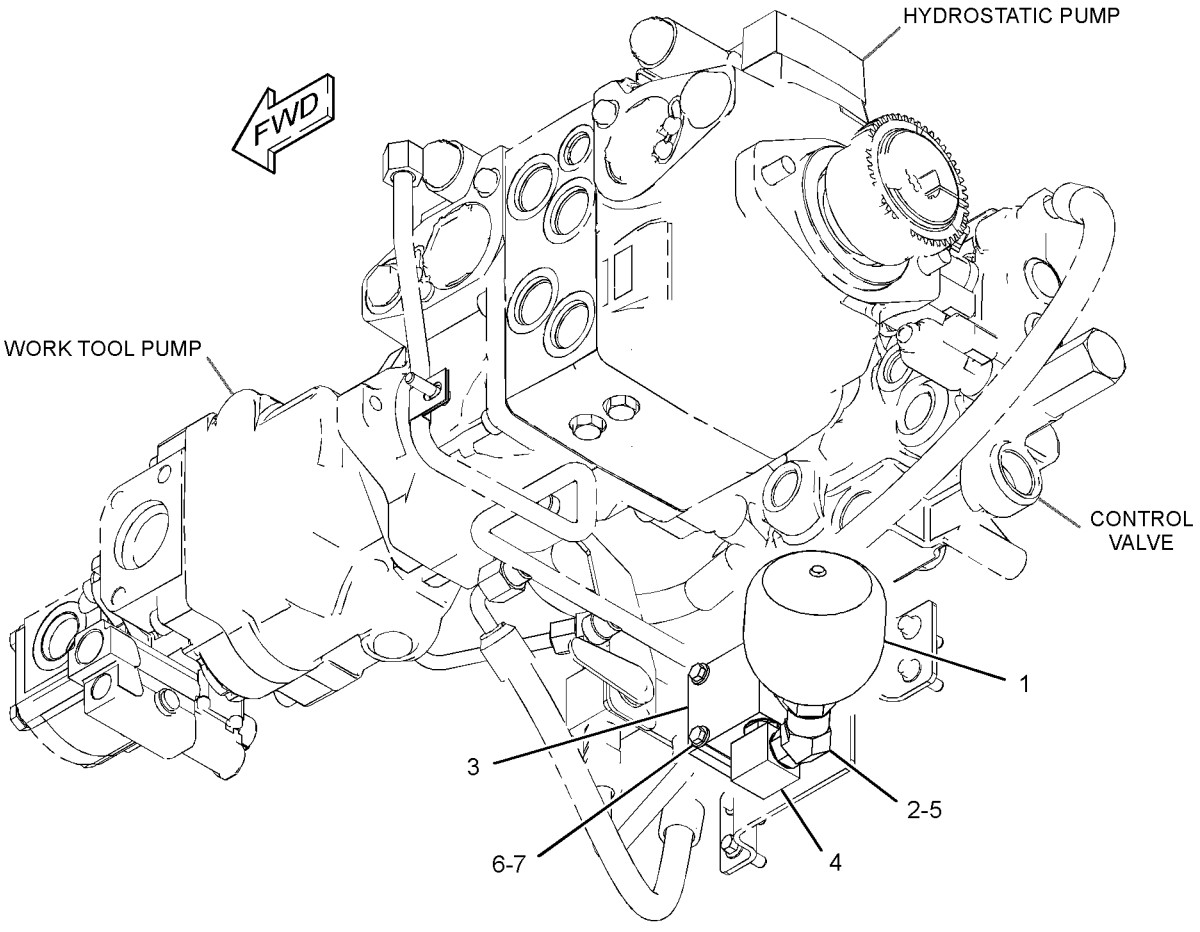

GRAPHIC #1 **<END>** g01329523

304-6755 MANF & SOLENOID MTG GP-ACCUM

S/N: JAY1-UP
PART OF 304-6743 HYDRAULIC AR
AN ATTACHMENT

SMCS-5077, 5264, 5479 **i02859592**

NOTE	REF NO	GRAPHIC REF	PART NUMBER	QTY	PART NAME 1 2 3 4 5 6 (PRODUCT LEVEL)	SEE PAGE
B	1	1	**9W-4216**	2	SPACER (9X18X7-MM THK)	
	2	1	**258-2890**	1	BRACKET AS	
	3	1	**304-6748**	1	PLATE AS	
	4	1	**304-6749**	1	TEE	
Y	5	1	**307-2275**	1	MANIFOLD GP-RIDE CONTROL	415
Y	6	1	**307-2276**	1	MANIFOLD GP-RIDE CONTROL (ACCUMULATOR)	416
Y	7	1	**310-8461**	1	ACCUMULATOR GP-RIDE CONTROL (UNCHARGED)	282
	8	1	**104-3173**	2	CLIP	
	9	1	**3K-0360**	2	SEAL-O-RING	
M	10	1	**5C-7261**	3	NUT (M8X1.25-THD)	
	11	1	**5P-4116**	3	WASHER-HARD (8.8X20.5X2-MM THK)	
	12	1	**6V-8398**	1	SEAL-O-RING	
M	13	1	**7X-2534**	2	BOLT (M6X1X50-MM)	
M	14	1	**7X-7888**	2	BOLT (M6X1X90-MM)	
	15	1	**8T-4205**	4	WASHER-HARD (7.2X14.5X2-MM THK)	
	16	1	**8T-4224**	2	WASHER-HARD (8.8X16X2-MM THK)	
M	17	1	**8T-4908**	2	BOLT (M8X1.25X25-MM)	

B-USE AS REQUIRED
M-METRIC PART
Y-SEPARATE ILLUSTRATION

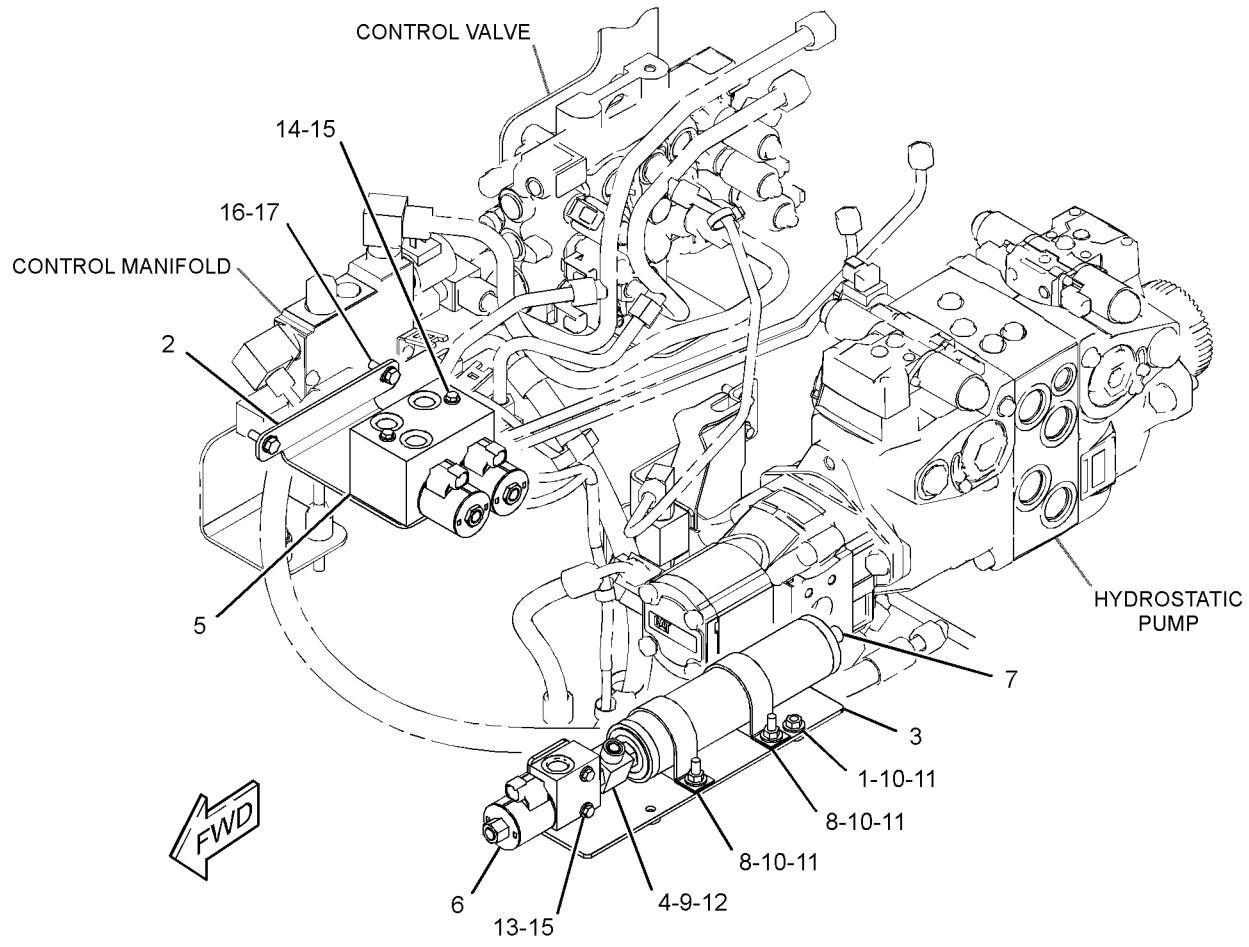

GRAPHIC #1 **<END>** g01454849

HYDRAULIC SYSTEM

258-3394 MANIFOLD & LINES GP-ACCUM

S/N: JAY1-UP

PART OF 258-2600 HYDRAULIC AR

SMCS-5057, 5077, 5264 **i02721372**

NOTE	REF NO	GRAPHIC REF	PART NUMBER	QTY	PART NAME 1 2 3 4 5 6 (PRODUCT LEVEL)	SEE PAGE
	1	1	**7K-1181**	2	STRAP-CABLE	
	2	1	**195-6768**	1	SCREEN (HYDRAULIC)	
	3	1	**195-6769**	1	WASHER (6.99X12.7X5.46-MM THK)	
	4	1	**200-6345**	1	MOUNT (DUAL SWIVEL)	
I	5	1	**258-3279**	1	HOSE AS	
I	6	1	**258-3292**	1	HOSE AS	
Y	7	1	*258-3462*	1	MANF & SOLENOID MTG GP-ACCUM (PILOT SHUTOFF)	402
I	8	1	**289-0841**	1	HOSE AS	
	9	1	*148-8336*	1	CONNECTOR AS	
		1	**3J-1907**	1	SEAL-O-RING	
		1	**6V-8397**	1	SEAL-O-RING	
		1	**6V-8636**	1	CONNECTOR	
	10	1	*148-8378*	1	ELBOW AS	
		1	**3J-1907**	1	SEAL-O-RING	
		1	**6V-8397**	1	SEAL-O-RING	
		1	**6V-8724**	1	ELBOW	
	11	1	*150-4043*	1	CONNECTOR AS	
		1	**3J-1907**	1	SEAL-O-RING	
		1	**6V-8398**	1	SEAL-O-RING	
		1	**6V-9873**	1	CONNECTOR	

I-REFER TO HYDRAULIC INFORMATION SYSTEM
Y-SEPARATE ILLUSTRATION

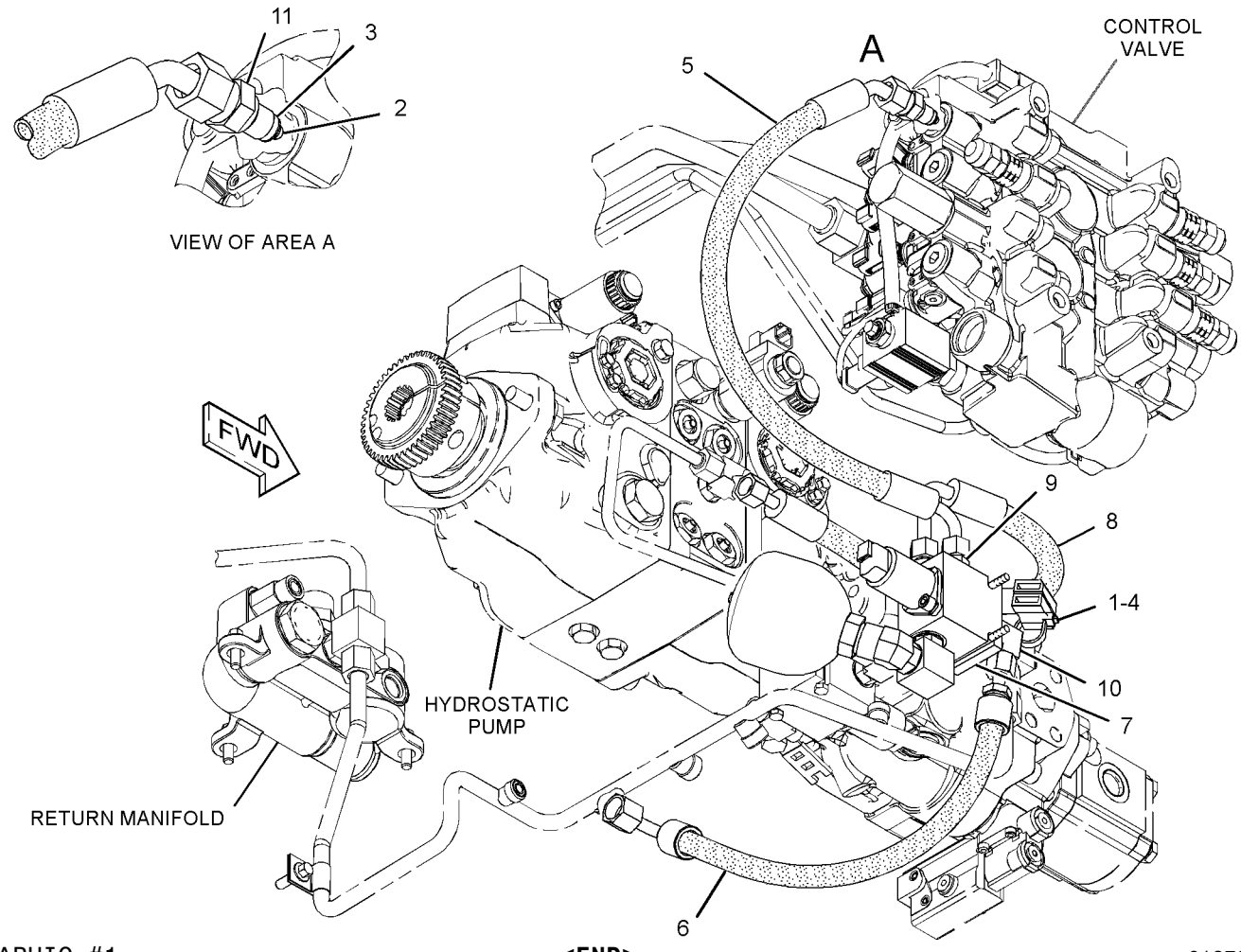

GRAPHIC #1 **<END>** g01373077

231-5278 MANIFOLD & MTG GP-CONTROL—ANGLING BLADE

S/N: JAY1-UP
PART OF 231-5275, 231-5277 BLADE AR
AN ATTACHMENT

SMCS-5264 **i02337085**

NOTE	REF NO	GRAPHIC REF	PART NUMBER	QTY	PART NAME 1 2 3 4 5 6 (PRODUCT LEVEL)	SEE PAGE
Y	1	1	**258-9011**	1	MANIFOLD GP-CONTROL (ANGLING BLADE)	410
	2	1	**231-5279**	1	COVER	
	3	1	**5P-4116**	3	WASHER-HARD (8.8X20.5X2-MM THK)	
M	4	1	**8T-4189**	2	BOLT (M8X1.25X20-MM)	
M	5	1	**8T-4200**	3	BOLT (M8X1.25X16-MM)	
	6	1	**8T-4224**	2	WASHER-HARD (8.8X16X2-MM THK)	

M-METRIC PART
Y-SEPARATE ILLUSTRATION

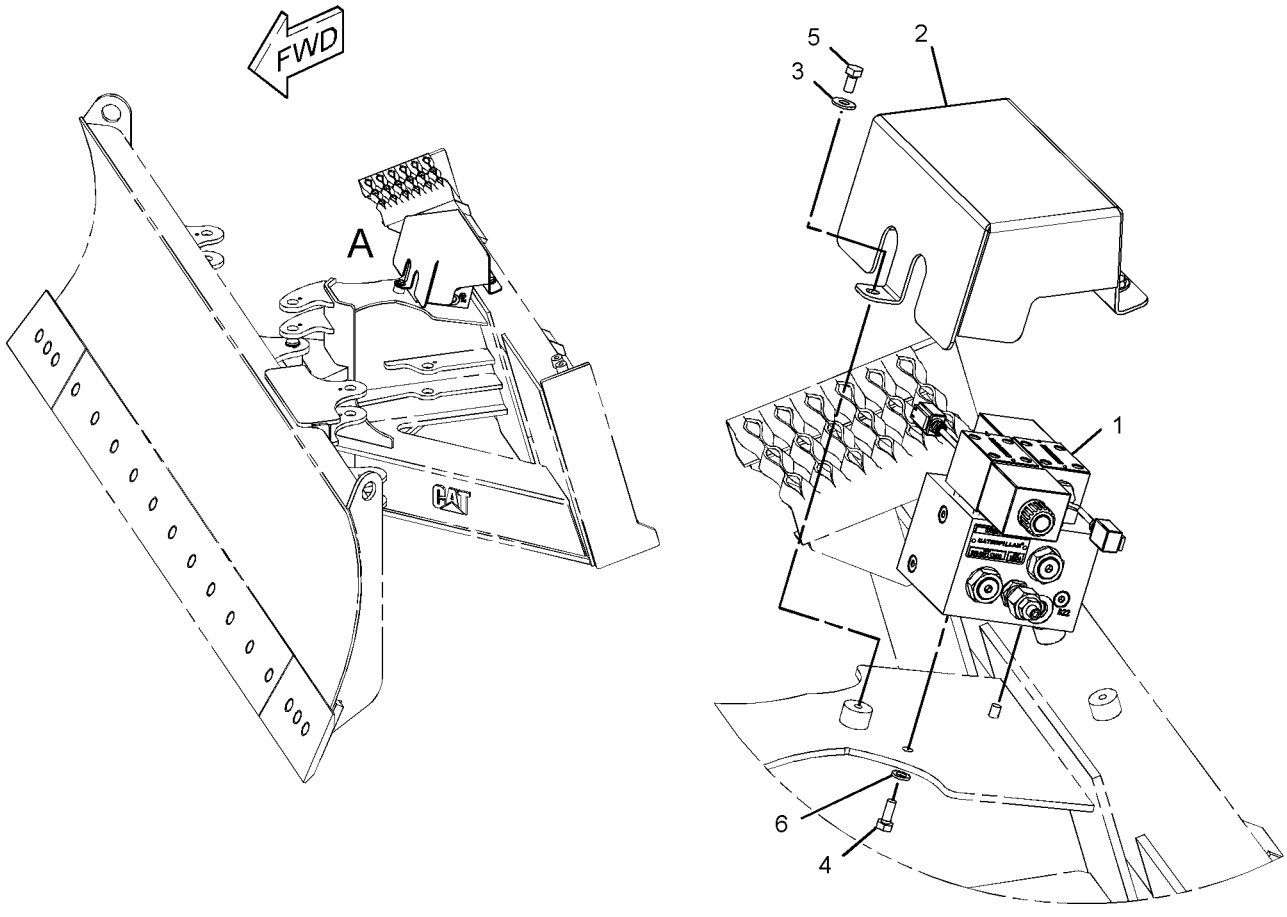

VIEW OF AREA A

GRAPHIC #1 **<END>** g01167422

258-3463 MANIFOLD & MTG GP-CONTROL—MOTOR, 2-SPEED

S/N: JAY1-UP

PART OF 258-3151 MANIFOLD & LINES GP-CONTROL

AN ATTACHMENT

SMCS-5264 **i03018453**

NOTE	REF NO	GRAPHIC REF	PART NUMBER	QTY	PART NAME 1 2 3 4 5 6 (PRODUCT LEVEL)	SEE PAGE
	1	1	**258-3160**	1	BRACKET AS	
Y	2	1	**274-8564**	1	MANIFOLD GP-CONTROL (MOTOR, 2-SPEED)	413
	3	1	**4P-7429**	1	CLIP (LADDER)	
M	4	1	**7X-2535**	2	BOLT (M6X1X60-MM)	
	5	1	**8T-4223**	2	WASHER-HARD (13.5X25.5X3-MM THK)	
M	6	1	**8T-4192**	1	BOLT (M12X1.75X25-MM)	
	7	1	**8T-4205**	2	WASHER-HARD (7.2X14.5X2-MM THK)	

M-METRIC PART
Y-SEPARATE ILLUSTRATION

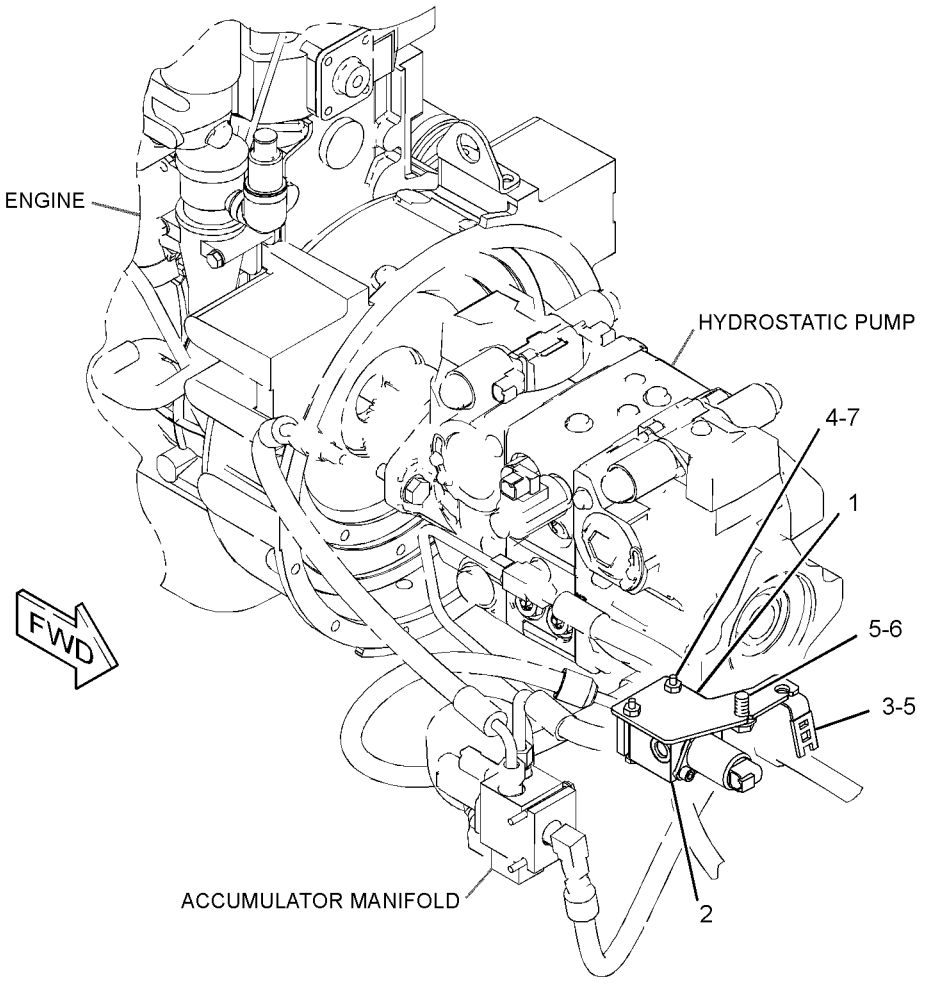

GRAPHIC #1 **<END>** g01526673

258-3468 MANIFOLD & MTG GP-CONTROL–
WORK TOOL POSITIONER
S/N: JAY1-UP
PART OF 258-2428, 304-6743 HYDRAULIC AR
AN ATTACHMENT

SMCS-5264 **i02764093**

NOTE	REF NO	GRAPHIC REF	PART NUMBER	QTY	PART NAME 1 2 3 4 5 6 (PRODUCT LEVEL)	SEE PAGE
Y	1	1	**258-2801**	1	MANIFOLD & SOLENOID GP-CONTROL (WORK TOOL POSITIONER)	409
	2	1	**4P-8134**	1	CLIP	
M	3	1	**7X-2535**	2	BOLT (M6X1X60-MM)	
	4	1	**8T-4205**	1	WASHER-HARD (7.2X14.5X2-MM THK)	

M-METRIC PART
Y-SEPARATE ILLUSTRATION

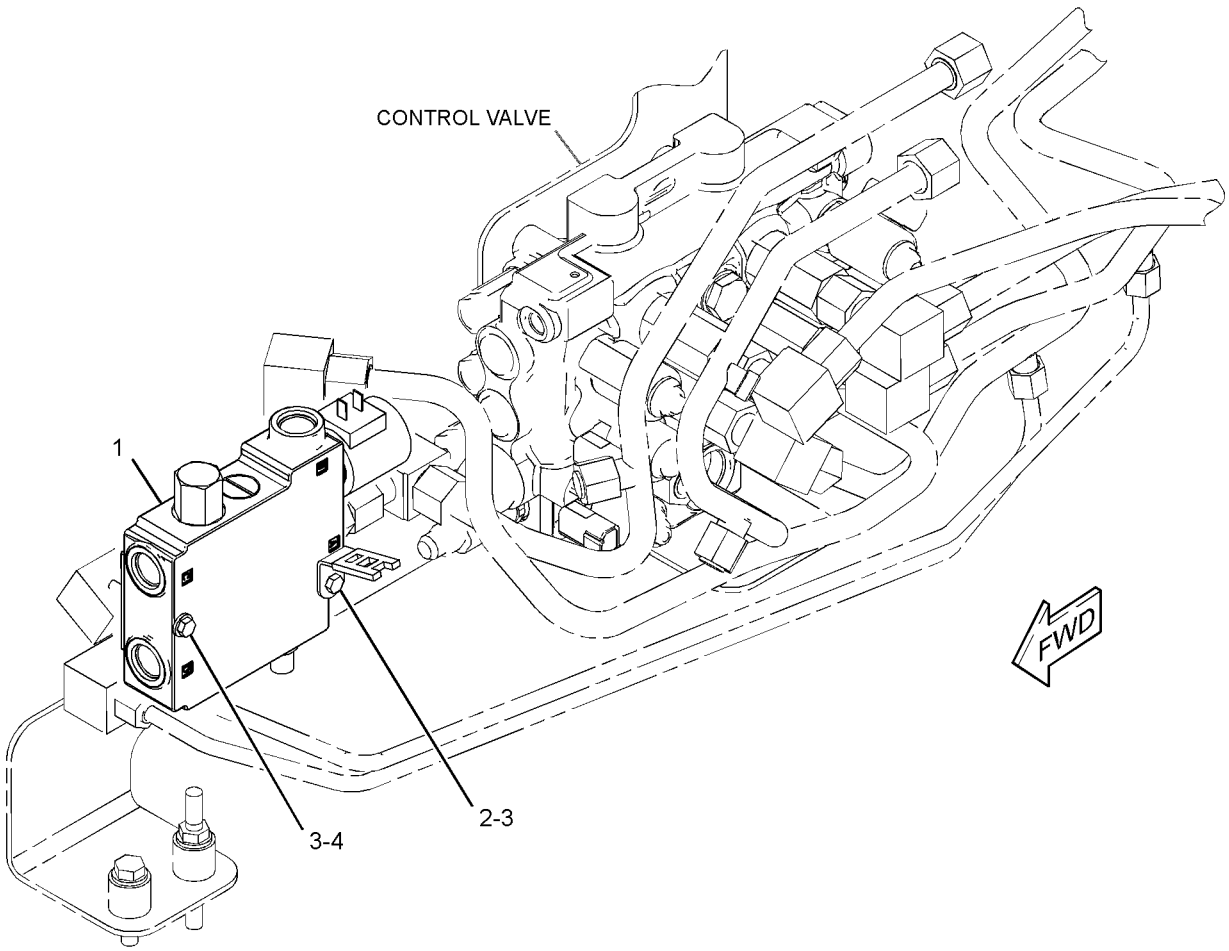

GRAPHIC #1 **<END>** g01328256

258-2801 MANIFOLD & SOLENOID GP-CONTROL–

WORK TOOL POSITIONER

S/N: JAY1-UP

PART OF 258-3915 KIT-WORK TOOL POSITIONER, 258-3468 MANIFOLD & MTG GP-CONTROL

AN ATTACHMENT

SMCS-5264, 5479 **i02667626**

NOTE	REF NO	GRAPHIC REF	PART NUMBER	QTY	PART NAME 1 2 3 4 5 6 (PRODUCT LEVEL)	SEE PAGE
	1	1	**102-8804**	1	KIT-RECEPTACLE (4-PIN)	
					(INCLUDES RECEPTACLE AS & WEDGE)	
	2	1	**3E-3377**	1	WEDGE-RECEPTACLE LOCK (4-PIN)	
	3	1	**186-3735**	2	PIN-CONNECTOR (16-GA TO 18-GA)	
	4	1	**9G-3695**	2	PLUG	
	5	1	**218-6858**	1	CARTRIDGE AS-VALVE	
	6	1	**218-6857**	1	COIL AS	
					AVAILABLE REPAIR KIT(S):	
			218-6856	1	KIT-SEAL (DIVERTER VALVE)	
					(INCLUDES O-RINGS, COVER & BACK-UP WASHER)	
			155-1279	1	KIT-SEAL (DIVERTER VALVE)	
					(INCLUDES SEAL-O-RINGS & RING-BACKUP)	

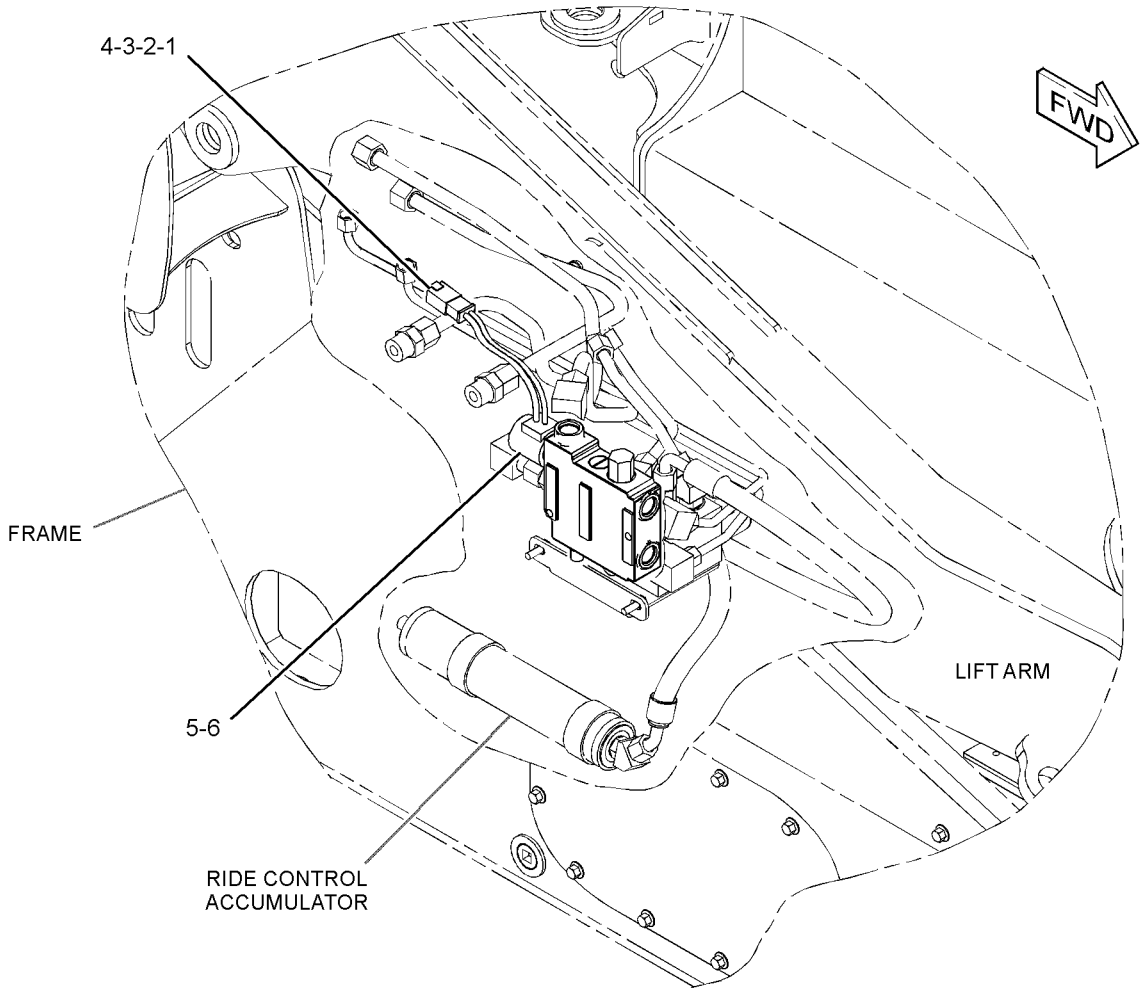

GRAPHIC #1 **<END>** g01341164

HYDRAULIC SYSTEM

258-9011 MANIFOLD GP-CONTROL—ANGLING BLADE

S/N: JAY1-UP

PART OF 231-5278 MANIFOLD & MTG GP-CONTROL

AN ATTACHMENT

SMCS-5117, 5264, 5479 **i03610941**

NOTE	REF NO	GRAPHIC REF	PART NUMBER	QTY	PART NAME 1 2 3 4 5 6 (PRODUCT LEVEL)	SEE PAGE
M	1	1	**9X-6615**	8	BOLT (M5X0.8X30-MM)	
	2	1	**243-5601**	7	PLUG	
	3	1	**244-1363**	1	VALVE GP-SOLENOID	
		1	**215-3273**	1	CARTRIDGE AS-VALVE	
		1	**6V-8399**	1	SEAL-O-RING	
		1	**215-3274**	1	SEAL & RETAINER AS	
		1	**217-3875**	1	SEAL-O-RING	
		1	**212-4114**	1	SEAL-O-RING	
		1	**215-3275**	1	KIT-SEAL	
		1	**227-7025**	1	SOLENOID AS	
	4	1	**244-1364**	1	VALVE GP-SOLENOID	
		1	**215-3273**	1	CARTRIDGE AS-VALVE	
		1	**6V-8399**	1	SEAL-O-RING	
		1	**215-3274**	1	SEAL & RETAINER AS	
		1	**217-3875**	1	SEAL-O-RING	
		1	**212-4114**	1	SEAL-O-RING	
		1	**215-3275**	1	KIT-SEAL	
		1	**227-7025**	1	SOLENOID AS	
	5	1	**244-1365**	2	VALVE GP-RELIEF	
					(EACH INCLUDES)	
		1	**192-7508**	1	SEAL-O-RING	
	6	1	**266-8903**	4	VALVE GP-CHECK	
					(EACH INCLUDES)	
		1	**2M-9780**	1	SEAL-O-RING	
		1	**7J-9108**	1	SEAL-O-RING	
	7	1	**180-7451**	8	WASHER-HARD (5.3X8.8X2-MM THK)	

M-METRIC PART

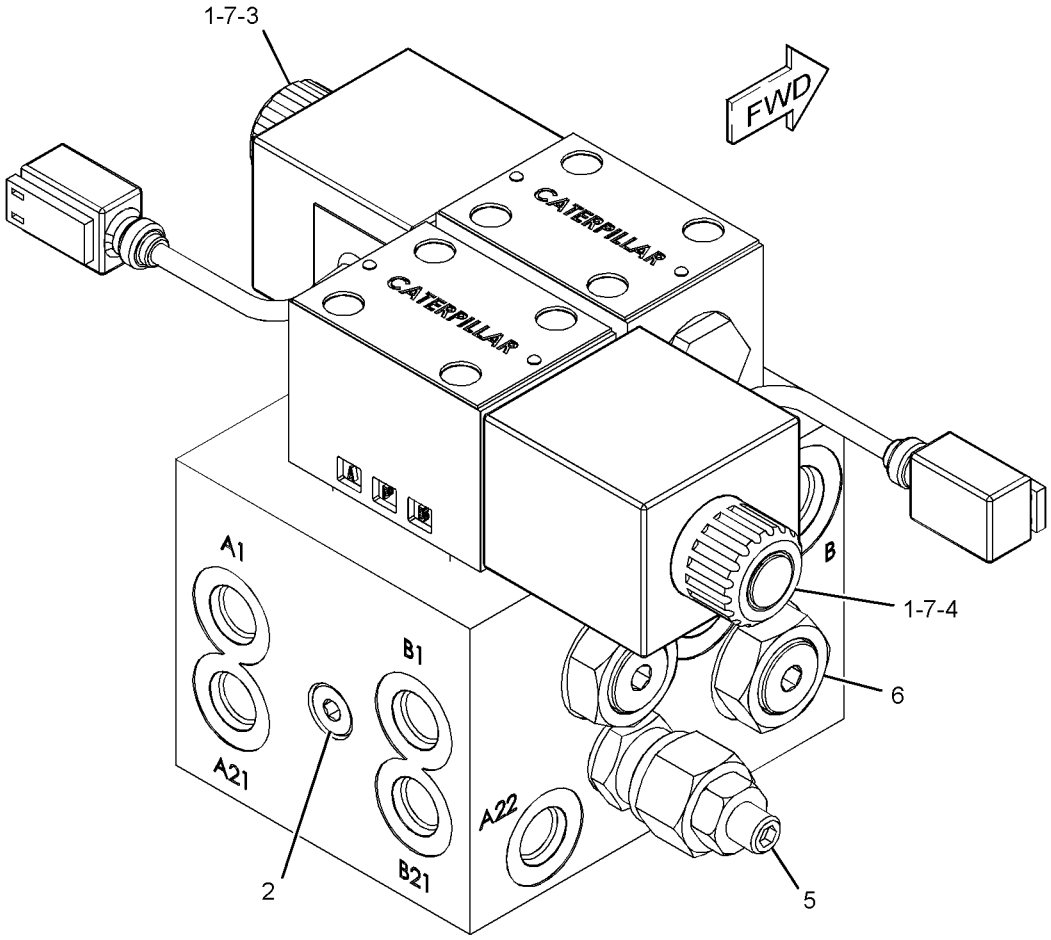

GRAPHIC #1 **<END>** g01178679

274-8563 MANIFOLD GP-CONTROL–PILOT SHUTOFF

S/N: JAY1-UP

PART OF 258-3462 MANF & SOLENOID MTG GP-ACCUM

SMCS-5117, 5264, 5479 **i03635716**

NOTE	REF NO	GRAPHIC REF	PART NUMBER	QTY	PART NAME 1 2 3 4 5 6 (PRODUCT LEVEL)	SEE PAGE
	1	1	**245-1181**	1	FLANGE	
J	2	1	**252-4734**	1	VALVE GP-SOLENOID (PILOT SHUTOFF)	
		1	**245-1181**	1	FLANGE	
Y	3	1	**6E-4701**	1	VALVE GP-CHECK (PILOT)	433
M	4	1	**8T-1158**	1	BOLT-SOCKET HEAD (M8X1.25X20-MM)	
					AVAILABLE REPAIR KIT(S):	
J			**245-1912**	1	KIT-SEAL (SOLENOID VALVE)	
					(INCLUDES SEAL-O-RINGS)	

J-(KIT MARKED J SERVICES PARTS MARKED J)
M-METRIC PART
Y-SEPARATE ILLUSTRATION

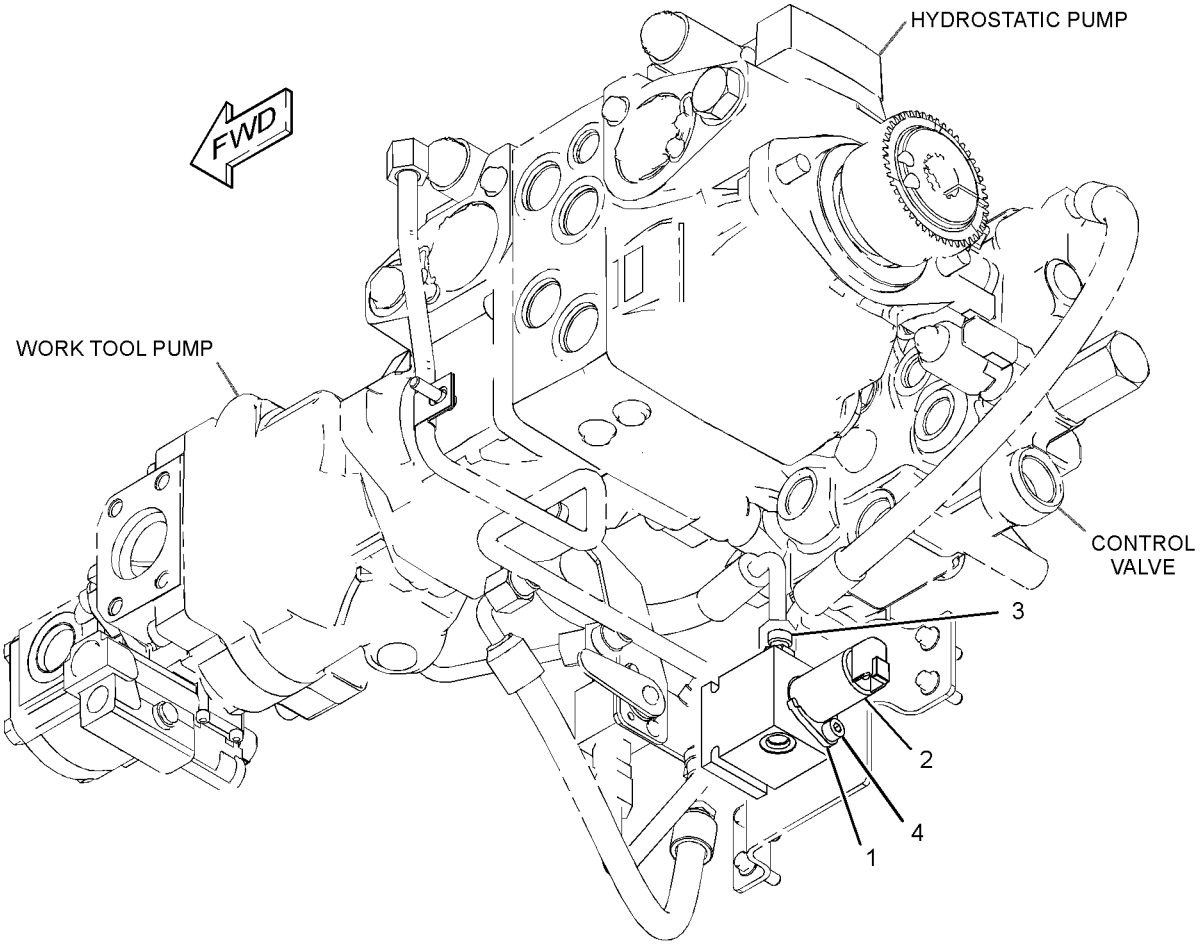

GRAPHIC #1 **<END>** g01341170

HYDRAULIC SYSTEM

274-8564 MANIFOLD GP-CONTROL–MOTOR, 2-SPEED

S/N: JAY1-UP

PART OF 258-3463 MANIFOLD & MTG GP-CONTROL

AN ATTACHMENT

SMCS-5117, 5264, 5479 **i03635743**

NOTE	REF NO	GRAPHIC REF	PART NUMBER	QTY	PART NAME 1 2 3 4 5 6 (PRODUCT LEVEL)	SEE PAGE
	1	1	**245-1181**	1	FLANGE	
J	2	1	**252-4734**	1	VALVE GP-SOLENOID (MOTOR, 2-SPEED)	
		1	**245-1181**	1	FLANGE	
M	3	1	**8T-1158**	1	BOLT-SOCKET HEAD (M8X1.25X20-MM)	
					AVAILABLE REPAIR KIT(S):	
J			**245-1912**	1	KIT-SEAL (SOLENOID VALVE)	
					(INCLUDES SEAL-O-RINGS)	

J-KIT MARKED J SERVICES PARTS MARKED J
M-METRIC PART

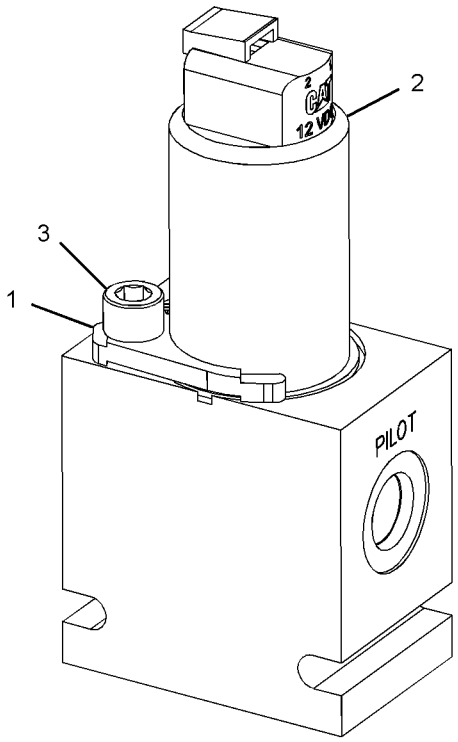

GRAPHIC #1 **<END>** g01322427

291-0010 MANIFOLD GP-CONTROL–QUICK COUPLER

S/N: JAY1-UP

PART OF 258-3910 KIT-QUICK COUPLER CONVERSION, 258-2424 LINES GP-COUPLER AN ATTACHMENT

SMCS-5117, 5264, 5479 **i02939462**

NOTE	REF NO	GRAPHIC REF	PART NUMBER	QTY	PART NAME 1 2 3 4 5 6 (PRODUCT LEVEL)	SEE PAGE
J	1	1	**274-8044**	1	VALVE GP-SOLENOID (QUICK COUPLER)	
		1	**274-8034**	2	COIL AS (12-VOLT)	
					AVAILABLE REPAIR KIT(S):	
J			**106-3108**	1	KIT-SEAL (QUICK COUPLER VALVE)	

J-KIT MARKED J SERVICES PART MARKED J

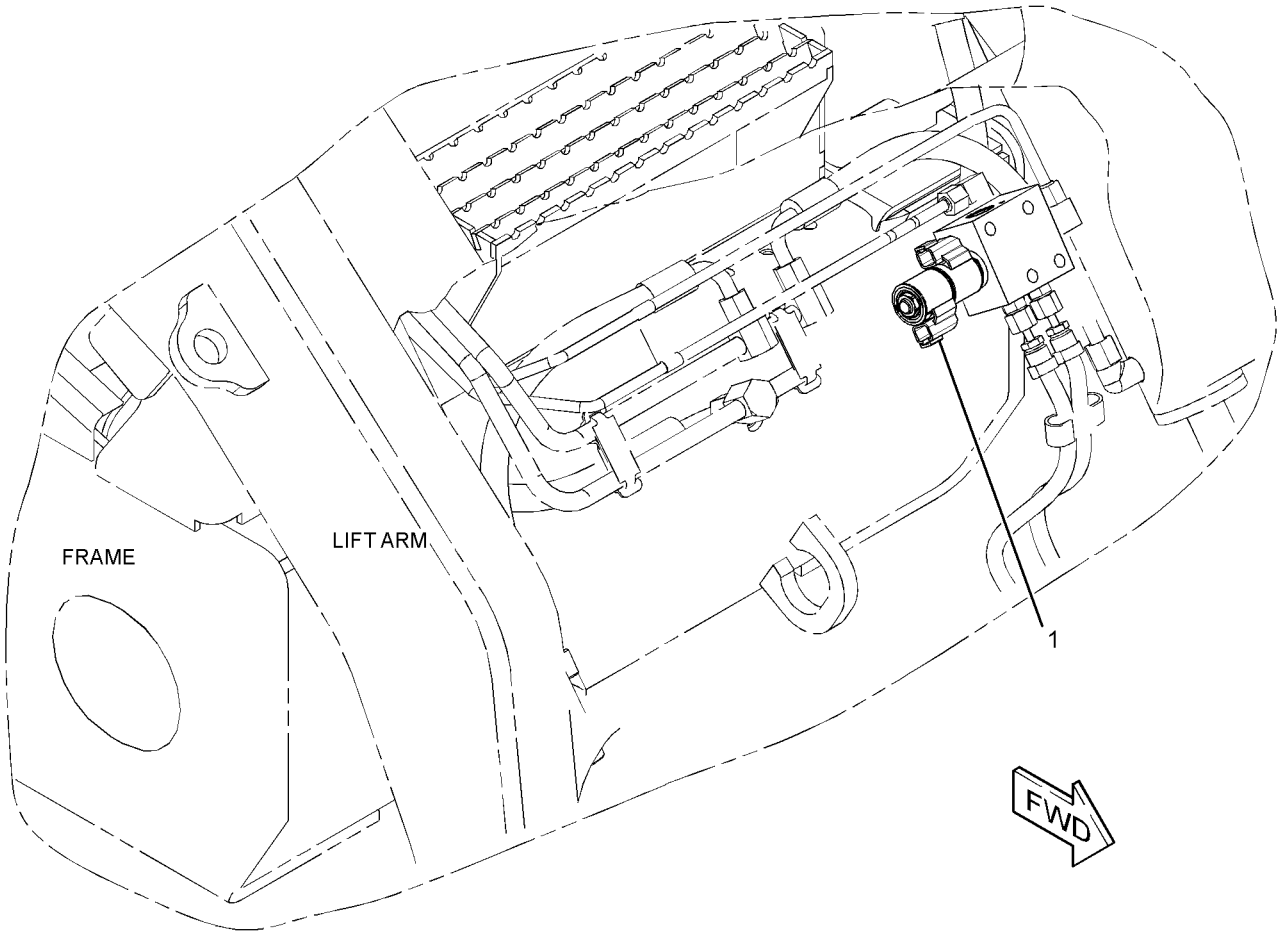

GRAPHIC #1 **<END>** g01372907

307-2275 MANIFOLD GP-RIDE CONTROL

S/N: JAY1-UP

PART OF 304-6754 KIT-RIDE CONTROL, 304-6755 MANF & SOLENOID MTG GP-ACCUM

AN ATTACHMENT

SMCS-5264 **i02836992**

NOTE	REF NO	GRAPHIC REF	PART NUMBER	QTY	PART NAME 1 2 3 4 5 6 (PRODUCT LEVEL)	SEE PAGE
	1	1	**274-8035**	2	COIL AS	
	2	1	**303-2206**	2	VALVE GP-CONTROL (QUICK COUPLER)	
	3	1	**141-0888**	2	KIT-SEAL	
					(EACH INCLUDES SEAL-O-RINGS & BACK-UP RING)	

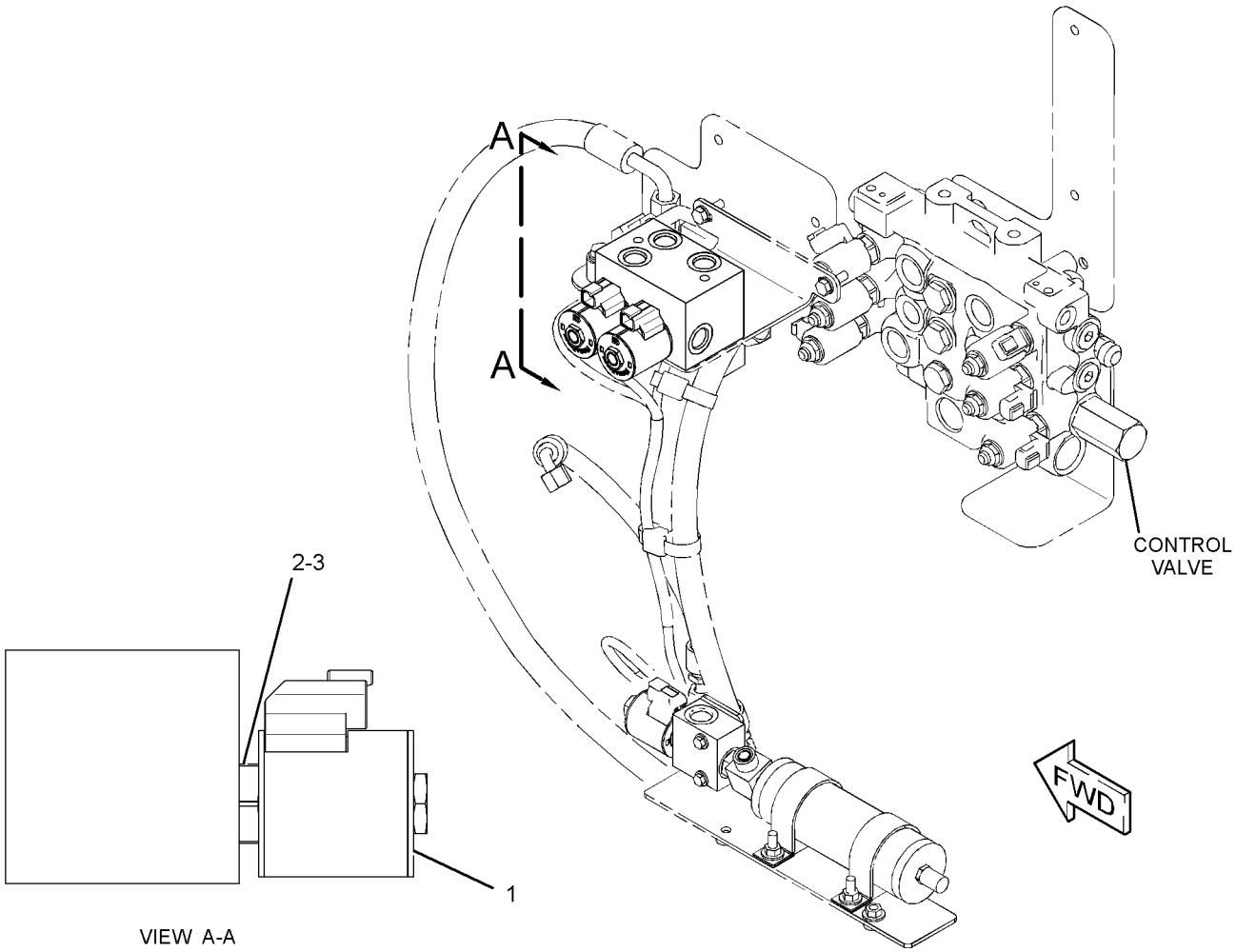

GRAPHIC #1 **<END>** g01420203

307-2276 MANIFOLD GP-RIDE CONTROL–ACCUMULATOR

S/N: JAY1-UP

PART OF 304-6754 KIT-RIDE CONTROL, 304-6755 MANF & SOLENOID MTG GP-ACCUM

AN ATTACHMENT

SMCS-5264 **i02837001**

NOTE	REF NO	GRAPHIC REF	PART NUMBER	QTY	PART NAME 1 2 3 4 5 6 (PRODUCT LEVEL)	SEE PAGE
	1	1	**274-8035**	1	COIL AS	
	2	1	**307-2277**	1	VALVE GP-CONTROL	
	3	1	**141-0888**	1	KIT-SEAL	
					(INCLUDES SEAL-O-RINGS & A BACK-UP SEAL)	

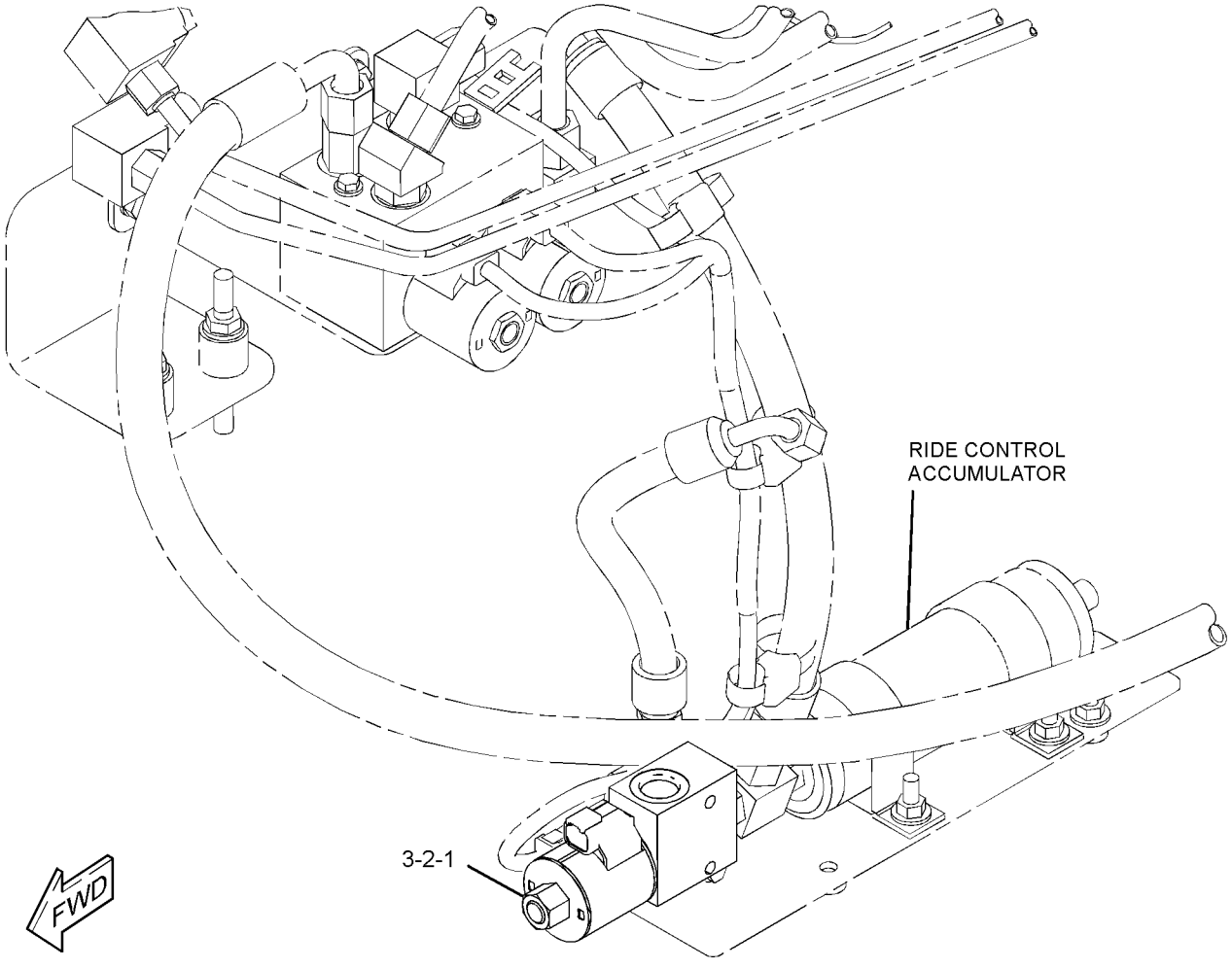

GRAPHIC #1 **<END>** g01420190

258-2579 MOTOR & MTG GP-HYDRAULIC FAN

S/N: JAY1-UP

PART OF 258-3818, 258-3819, 315-6353 CONVERSION AR-MACHINE, 258-3800, 258-3801 CONVERSION AR-ROADING

AN ATTACHMENT

SMCS-1386 **i03635732**

NOTE	REF NO	GRAPHIC REF	PART NUMBER	QTY	PART NAME 1 2 3 4 5 6 (PRODUCT LEVEL)	SEE PAGE
J	1	1	**258-2577**	1	MOTOR GP-GEAR (FAN, DEMAND)	
M		1	**8T-0271**	2	BOLT-SOCKET HEAD (M10X1.5X35-MM)	
M		1	**9T-4884**	2	BOLT (M10X1.5X30-MM)	
	2	1	**277-8862**	1	VALVE GP-SOLENOID (FAN)	
		1	**238-4628**	1	COIL AS (12-VOLT)	
	3	1	**8T-4121**	2	WASHER-HARD (11X21X2.5-MM THK)	
	4	1	**8T-4224**	1	WASHER-HARD (8.8X16X2-MM THK)	
M	5	1	**8T-7547**	1	BOLT (M8X1.25X30-MM)	
M	6	1	**9X-6032**	2	BOLT-SOCKET HEAD (M10X1.5X30-MM)	
					AVAILABLE REPAIR KIT(S):	
J			**278-8716**	1	KIT-SEAL	
					(INCLUDES E-SEALS, SEAL-O-RINGS, SHAFT SEAL, SNAP RING & BACK UP SEALS)	

J-KIT MARKED J SERVICES PARTS MARKED J
M-METRIC PART

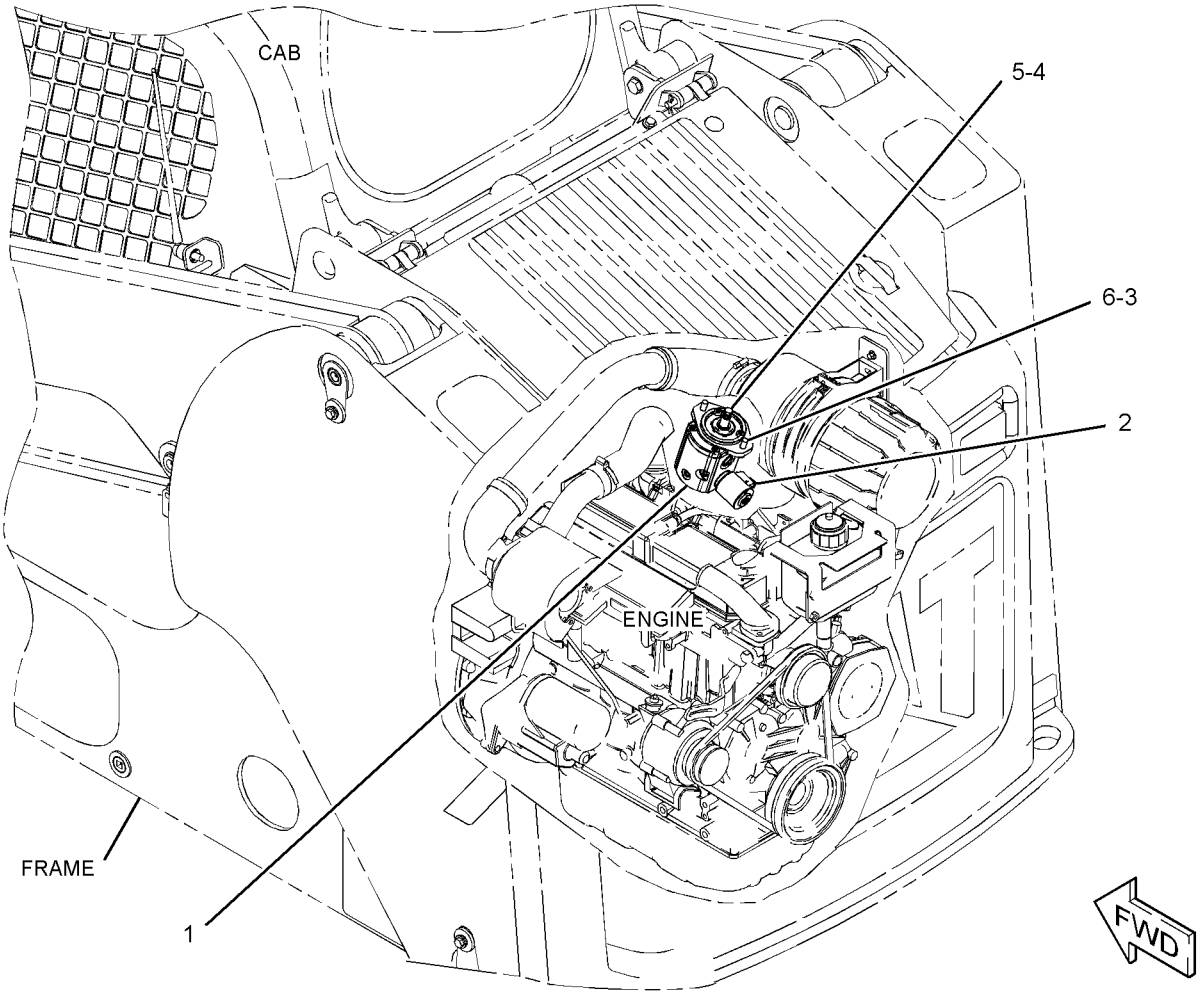

GRAPHIC #1 **<END>** g01315096

HYDRAULIC SYSTEM

154-5011 MOUNTING GP-CYLINDER

S/N: JAY1-UP
PART OF 154-5004, 154-5010, 279-5382, 279-5390, 279-5398, 279-5403, 293-0139, 325-7036, 325-7046, 325-7056, 325-7066, 325-7076 BUCKET
AR-MULTIPURPOSE
AN ATTACHMENT

SMCS-5498 **i01066088**

NOTE	REF NO	GRAPHIC REF	PART NUMBER	QTY	PART NAME 1 2 3 4 5 6 (PRODUCT LEVEL)	SEE PAGE
	1	1	**154-5012**	2	PIN	
	2	1	**154-5013**	2	PIN	
	3	1	**3B-8489**	2	FITTING-GREASE	
M	4	1	**6V-9189**	4	LOCKNUT (M8X1.25-THD)	
M	5	1	**8T-6869**	4	BOLT (M8X1.25X60-MM)	

M-METRIC PART

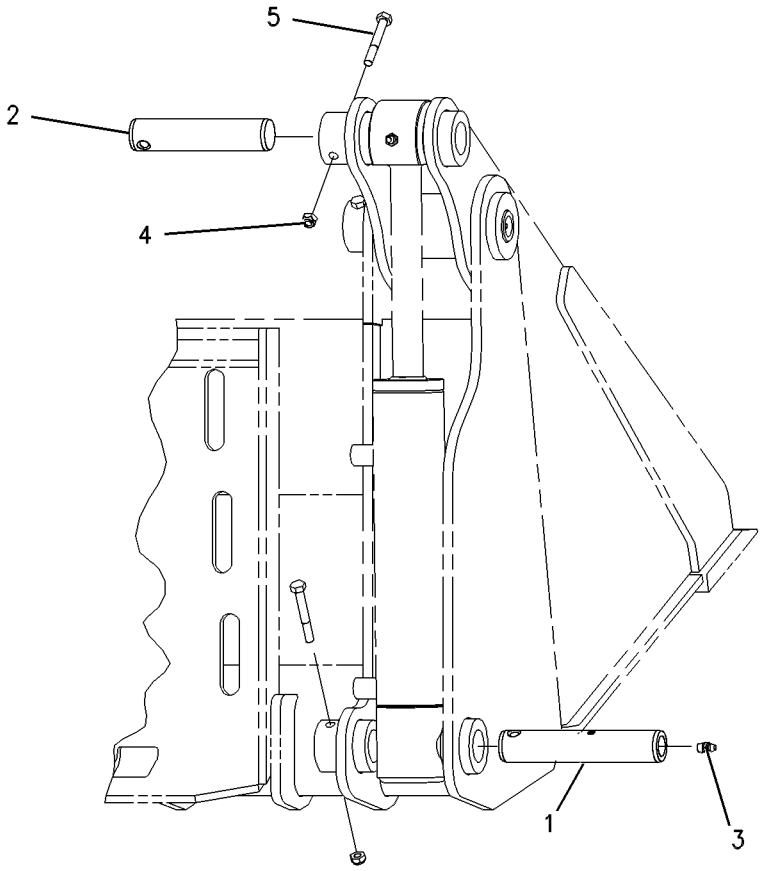

GRAPHIC #1 **<END>** g00560356

156-0891 MOUNTING GP-CYLINDER—INDUSTRIAL

S/N: JAY1-UP

PART OF 157-7223, 157-7224, 157-7225, 217-6229 BUCKET AR-GRAPPLE, 279-5350, 279-5360 FORK AR-GRAPPLE

AN ATTACHMENT

SMCS-5498 **i02578037**

NOTE	REF NO	GRAPHIC REF	PART NUMBER	QTY	PART NAME 1 2 3 4 5 6 (PRODUCT LEVEL)	SEE PAGE
	1	1	**255-8058**	2	PLATE	
	2	1	**156-0913**	1	PLATE	
	3	1	**157-0941**	2	PIN	
	4	1	**157-0942**	2	PIN	
	5	1	**159-8035**	2	FILM-WARNING (CRUSH HAZARD, STAY BACK)	
	6	1	**3B-8489**	2	FITTING-GREASE	
	7	1	**4M-5285**	4	RING-RETAINING (EXTERNAL)	
M	8	1	**6V-9189**	2	LOCKNUT (M8X1.25-THD)	
M	9	1	**8T-4138**	3	BOLT (M6X1X20-MM)	
M	10	1	**8T-6869**	2	BOLT (M8X1.25X60-MM)	
	11	1	**9X-2026**	3	WASHER (6.5X17X1-MM THK)	
	12	1	**9X-6274**	4	WASHER (32.5X50X1.6-MM THK)	

M-METRIC PART

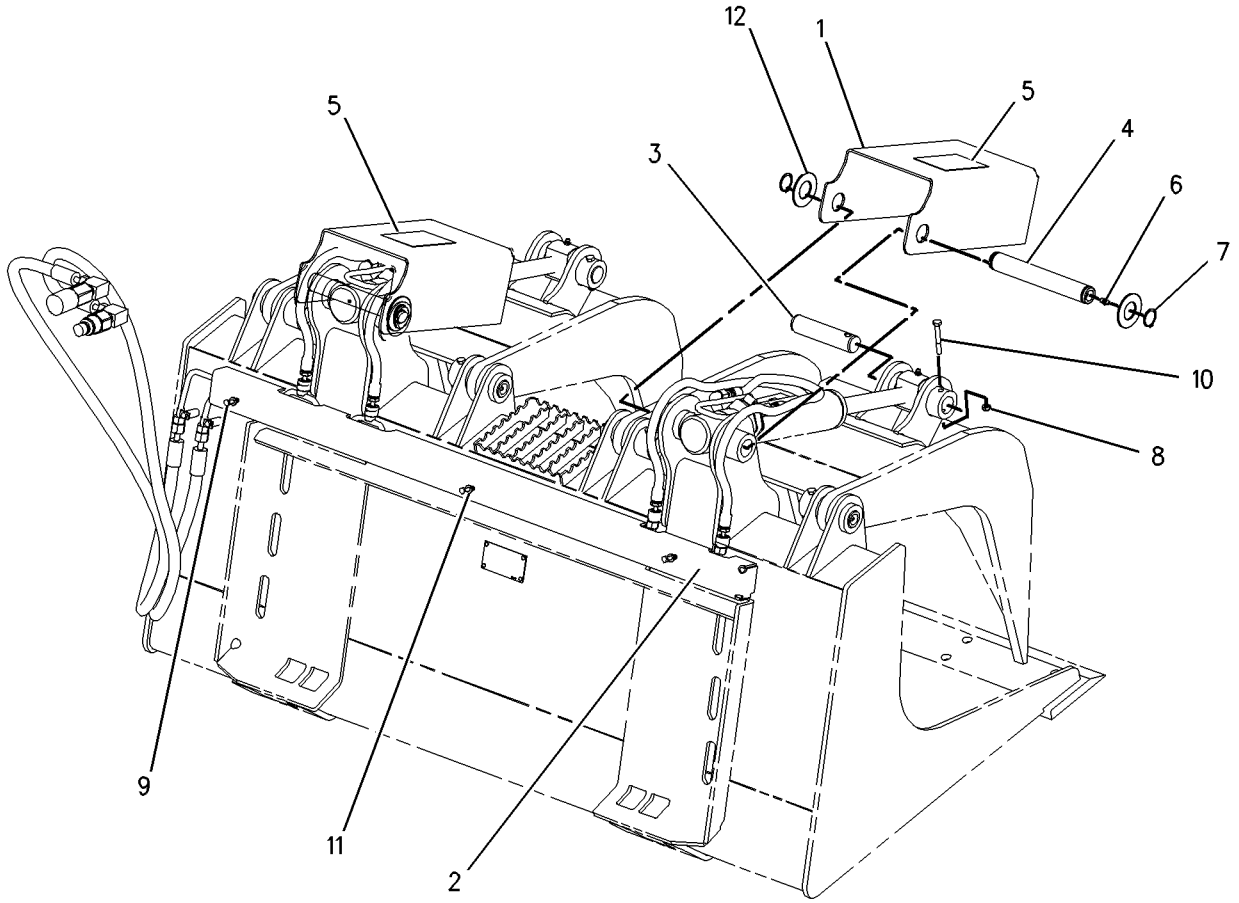

GRAPHIC #1 **<END>** g00777681

HYDRAULIC SYSTEM

165-8731 MOUNTING GP-CYLINDER–UTILITY

S/N: JAY1-UP
PART OF 285-6116 GRAPPLE & CYLINDER GP-UTILITY
AN ATTACHMENT

SMCS-5498 **i02017132**

NOTE	REF NO	GRAPHIC REF	PART NUMBER	QTY	PART NAME 1 2 3 4 5 6 (PRODUCT LEVEL)	SEE PAGE
	1	1	**154-5013**	2	PIN	
M	2	1	**6V-9189**	2	LOCKNUT (M8X1.25-THD)	
M	3	1	**8T-6869**	2	BOLT (M8X1.25X60-MM)	

M-METRIC PART

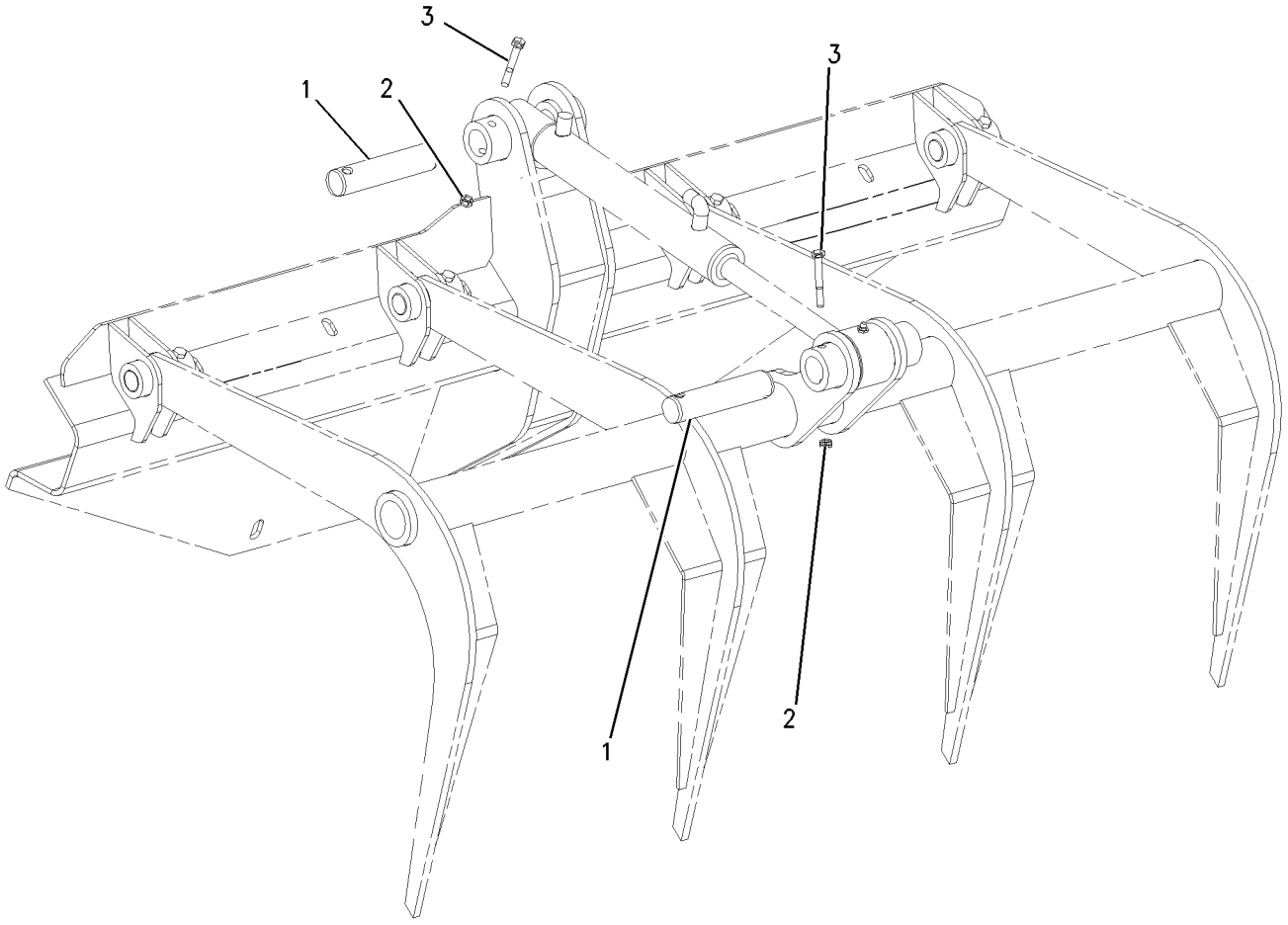

GRAPHIC #1 **<END>** g00652937

HYDRAULIC SYSTEM

286-9248 MOUNTING GP-CYLINDER—GRAPPLE BUCKET

S/N: JAY1-UP

PART OF 286-9300, 286-9301 BUCKET AR-GRAPPLE

AN ATTACHMENT

SMCS-5498 **i02723716**

NOTE	REF NO	GRAPHIC REF	PART NUMBER	QTY	PART NAME 1 2 3 4 5 6 (PRODUCT LEVEL)	SEE PAGE
	1	1	**157-0941**	2	PIN	
	2	1	**157-0942**	2	PIN	
	3	1	**286-9273**	2	PLATE	
	4	1	**286-9289**	2	PLATE AS	
	5	1	**3B-8489**	2	FITTING-GREASE	
	6	1	**4M-5285**	4	RING-RETAINING (EXTERNAL)	
M	7	1	**6V-9189**	2	LOCKNUT (M8X1.25-THD)	
	8	1	**7X-7729**	8	WASHER (11X25X3-MM THK)	
M	9	1	**8T-4195**	8	BOLT (M10X1.5X30-MM)	
M	10	1	**8T-6869**	2	BOLT (M8X1.25X60-MM)	
	11	1	**9X-6274**	4	WASHER (32.5X50X1.6-MM THK)	

M-METRIC PART

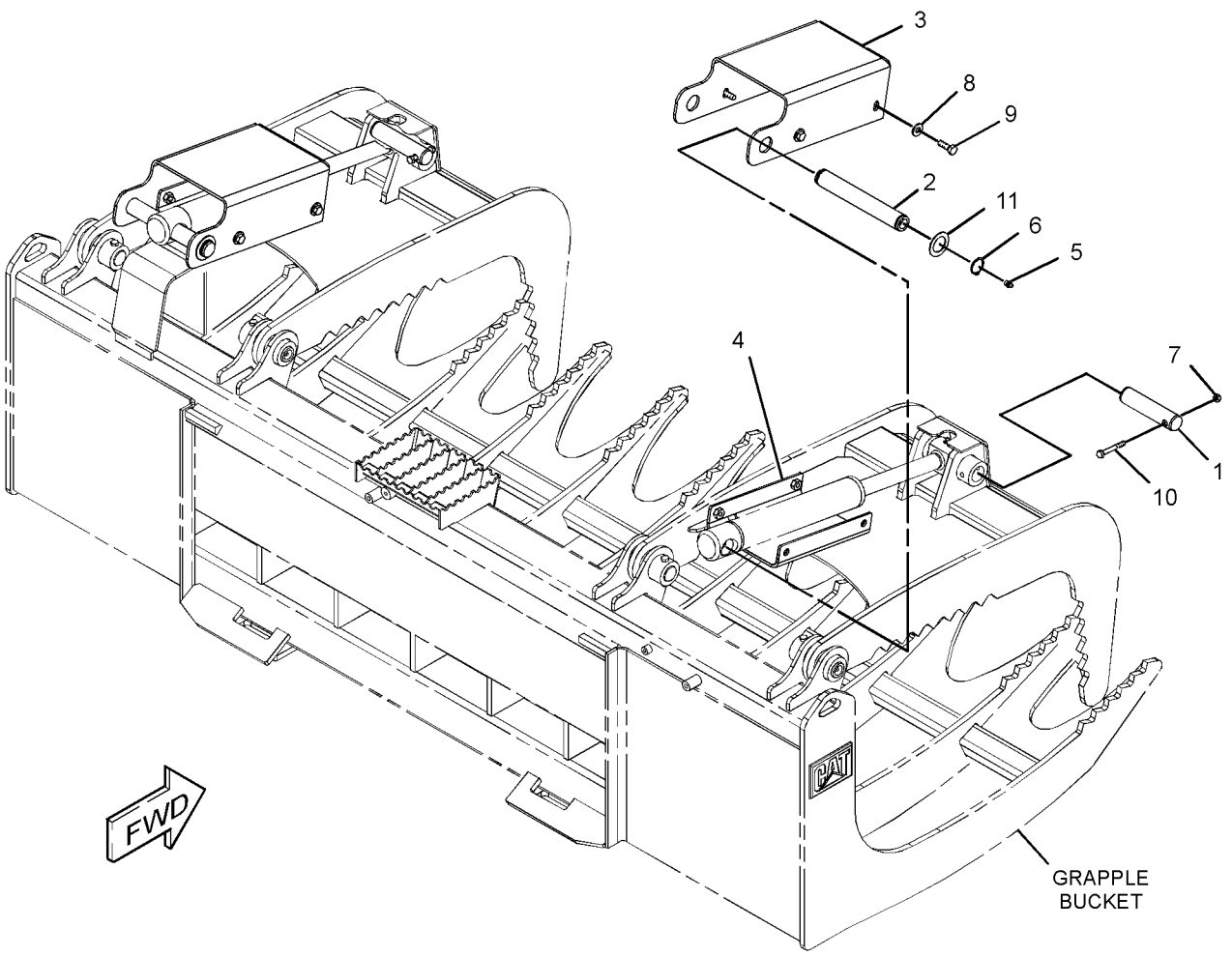

GRAPHIC #1 **<END>** g01372951

HYDRAULIC SYSTEM

258-3402 PUMP & MTG GP-GEAR

S/N: JAY1-UP
PART OF 258-3730 HYDRAULIC AR
AN ATTACHMENT

SMCS-5073 **i03507900**

NOTE	REF NO	GRAPHIC REF	PART NUMBER	QTY	PART NAME 1 2 3 4 5 6 (PRODUCT LEVEL)	SEE PAGE
J	1	1	**258-3260**	1	PUMP GP-GEAR	
		1	**313-5646**	4	BOLT	
		1	**271-2360**	4	WASHER-HARD (15X22X2.5-MM THK)	
M		1	**297-8107**	4	BOLT (M10X1.5X105-MM)	
		1	**8T-5095**	4	WASHER-PLATED (11X16X2-MM THK)	
	2	1	**8T-4223**	2	WASHER-HARD (13.5X25.5X3-MM THK)	
M	3	1	**8T-4956**	2	BOLT (M12X1.75X35-MM)	
	4	1	**8T-5049**	1	SEAL-O-RING	
					AVAILABLE REPAIR KIT(S):	
J			**278-8714**	1	KIT-SEAL (GEAR PUMP)	
					(INCLUDES SNAP RING & SEALS)	

J-KITS MARKED J AVAILABLE FOR PART MARKED J
M-METRIC PART

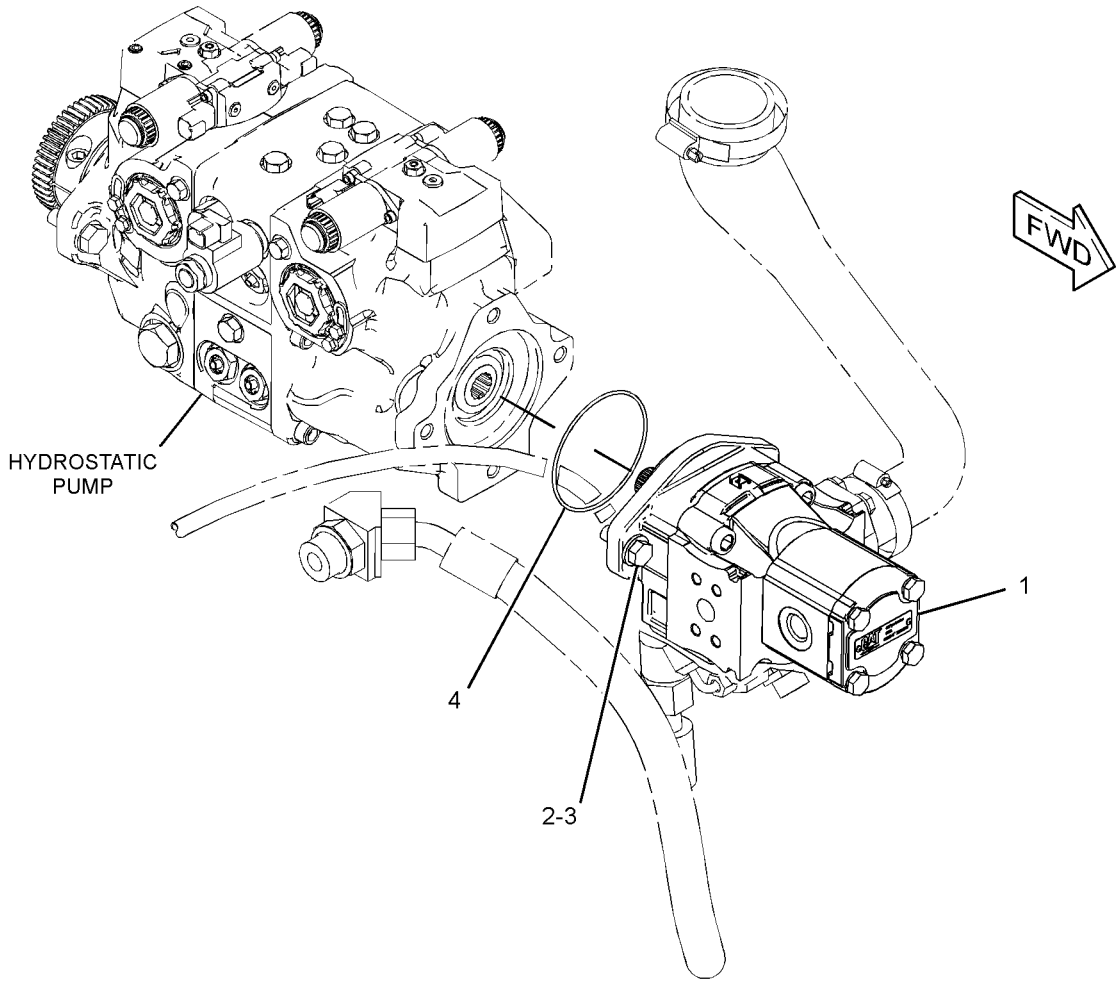

GRAPHIC #1 **<END>** g01326166

258-2556 PUMP & MTG GP-WORK TOOL

S/N: JAY1-UP
PART OF 258-3180 HYDRAULIC AR
AN ATTACHMENT

SMCS-6700 **i03635718**

NOTE	REF NO	GRAPHIC REF	PART NUMBER	QTY	PART NAME 1 2 3 4 5 6 (PRODUCT LEVEL)	SEE PAGE
J	1	1	**258-2553**	1	PUMP GP-GEAR	
		1	**313-5646**	4	BOLT	
M		1	**297-8107**	4	BOLT (M10X1.5X105-MM)	
		1	**271-2360**	4	WASHER-HARD (15X22X2.5-MM THK)	
		1	**8T-5095**	4	WASHER-PLATED (11X16X2-MM THK)	
	2	1	**8T-4223**	2	WASHER-HARD (13.5X25.5X3-MM THK)	
M	3	1	**8T-4956**	2	BOLT (M12X1.75X35-MM)	
	4	1	**8T-5049**	1	SEAL-O-RING	
					AVAILABLE REPAIR KIT(S):	
J			**278-8714**	1	KIT-SEAL (GEAR PUMP)	
					(INCLUDES E-SEALS, SEAL-O-RINGS, SHAFT SEAL, SNAP RING & BACK UP SEALS)	

J-KIT MARKED J SERVICES PART MARKED J
M-METRIC PART

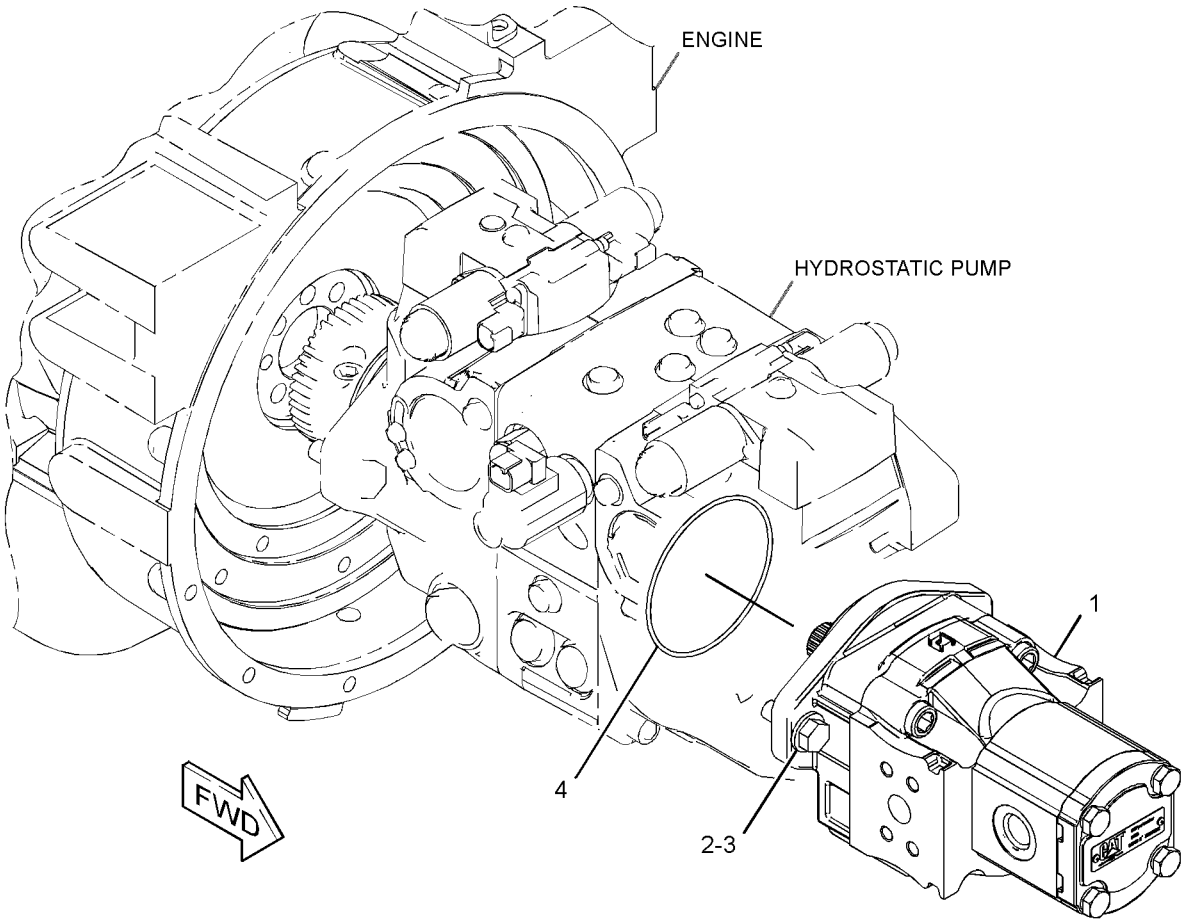

GRAPHIC #1 **<END>** g01328229

HYDRAULIC SYSTEM

258-2557 PUMP & MTG GP-WORK TOOL—HIGH FLOW

S/N: JAY1-UP
PART OF 258-3182 HYDRAULIC AR
AN ATTACHMENT

SMCS-6700 **i03635727**

NOTE	REF NO	GRAPHIC REF	PART NUMBER	QTY	PART NAME 1 2 3 4 5 6 (PRODUCT LEVEL)	SEE PAGE
YR	1	1	**258-2554**	1	PUMP GP-PISTON (HIGH FLOW)	425
	2	1	**258-2555**	1	PUMP GP-GEAR (WORK TOOL HYDRAULIC)	
		1	**8T-5095**	4	WASHER-PLATED (11X16X2-MM THK)	
M		1	**8T-6685**	4	BOLT (M10X1.5X110-MM)	
M	3	1	**101-7404**	2	BOLT-SOCKET HEAD (M10X1.5X30-MM)	
	4	1	**5P-3863**	1	SEAL-O-RING	
	5	1	**8T-4121**	2	WASHER-HARD (11X21X2.5-MM THK)	
	6	1	**8T-4223**	2	WASHER-HARD (13.5X25.5X3-MM THK)	
M	7	1	**8T-4956**	2	BOLT (M12X1.75X35-MM)	
	8	1	**8T-5049**	1	SEAL-O-RING	
					AVAILABLE REPAIR KIT(S):	
				1	KIT-SEAL (GEAR PUMP)	
					(INCLUDES SEALS & BACK UP RINGS)	

M-METRIC PART
R-REMFG PART MAY BE AVAILABLE
Y-SEPARATE ILLUSTRATION

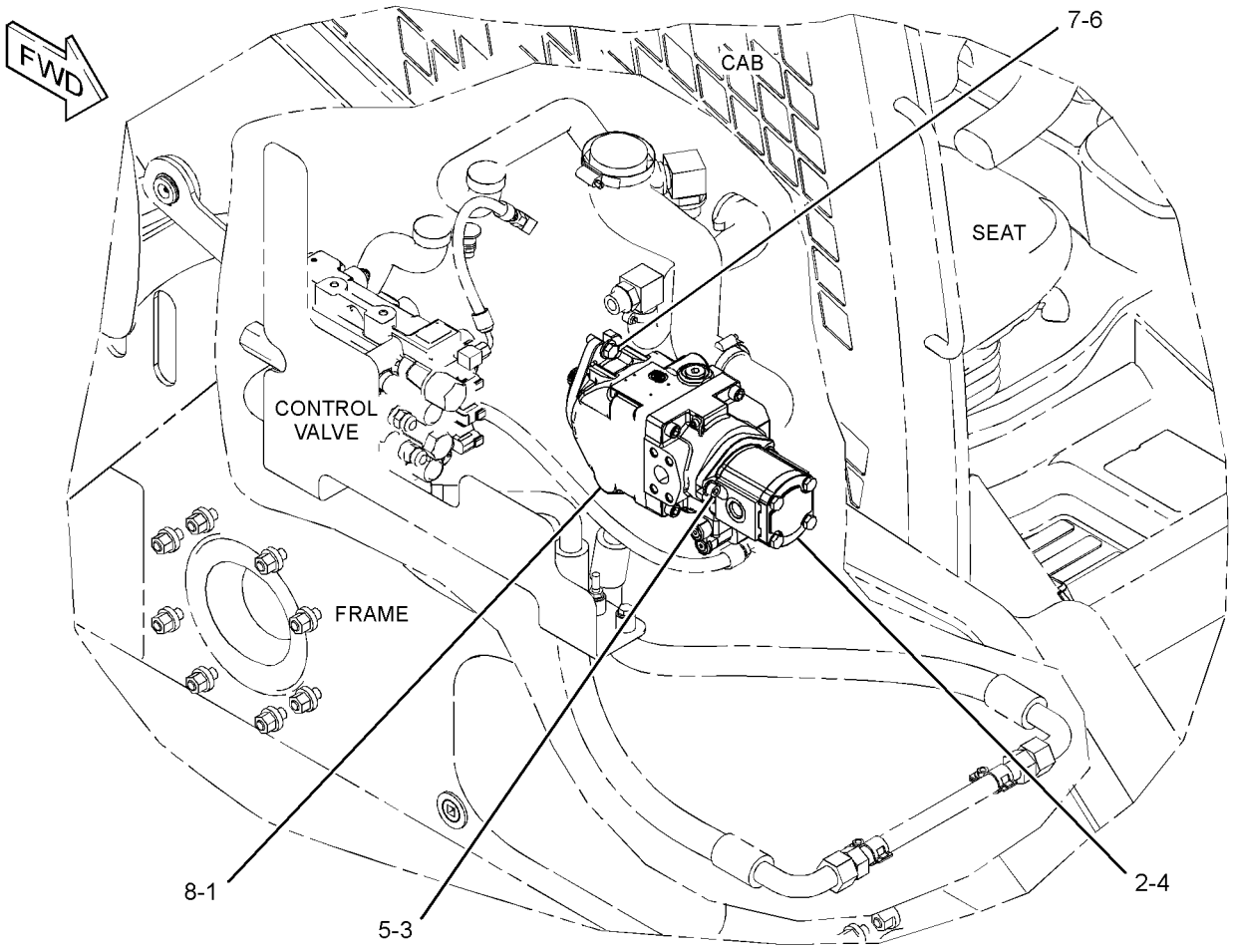

GRAPHIC #1 **<END>** g01314720

258-2554 PUMP GP-PISTON—HIGH FLOW

S/N: JAY1-UP

PART OF 258-2557 PUMP & MTG GP-WORK TOOL, 258-3401 PUMP GP-PISTON & GEAR AN ATTACHMENT

SMCS-5070 **i02943060**

NOTE	REF NO	GRAPHIC REF	PART NUMBER	QTY	PART NAME 1 2 3 4 5 6 (PRODUCT LEVEL)	SEE PAGE
	1	1	**232-3587**	1	KIT-BEARING (PISTON PUMP)	
	2	1	**232-3586**	1	KIT-BEARING (PISTON PUMP)	
					(EACH BEARING KIT INCLUDES TAPERED ROLLER BEARING)	
	3	1	**260-3146**	1	SWASHPLATE	
	4	1	**260-3149**	1	KIT-CYLINDER (PISTON PUMP)	
					(INCLUDES PISTON AS, SLIPPER RETAINER, GUIDE, PINS, CYLINDER BLOCK, SPRING SEATS, SPRING & RING)	
	5	1	**260-3147**	1	PLATE	
	6	1	**260-3145**	1	KIT-SWASHPLATE (PISTON PUMP)	
					(KIT INCLUDES PINS & BEARINGS)	
	7	1	**278-8718**	1	VALVE GP-PUMP CONTROL	
		1	**3J-7354**	4	SEAL-O-RING	
		1	**6J-2245**	1	SEAL-O-RING	
		1	**234-4173**	4	SEAL-O-RING	
		1	**307-3049**	1	PLUG-ADJUSTMENT	
	8	1	**278-8719**	1	SHAFT-DRIVE	
	9	1	**6J-7855**	1	RING-LOCK	
	10	1	**9S-8006**	2	PLUG-O-RING	
M	11	1	**113-2004**	4	BOLT-SOCKET HEAD (M12X1.75X45-MM)	
	12	1	**278-8722**	1	ADAPTER	
J	13	1	**307-3049**	1	PLUG-ADJUSTMENT	
J	14	1	**2M-9780**	2	SEAL-O-RING	
					AVAILABLE REPAIR KIT(S):	
J			**307-3043**	1	KIT-SEAL (PISTON PUMP)	
					(KIT INCLUDES O-RINGS SEALS, LIP SEAL, SEAL RINGS, PLUG-SPECIAL & PISTON RINGS)	

J-KIT MARKED J SERVICES PARTS MARKED J
M-METRIC PART

258-2554 PUMP GP-PISTON *(contd.)* **i02943060**

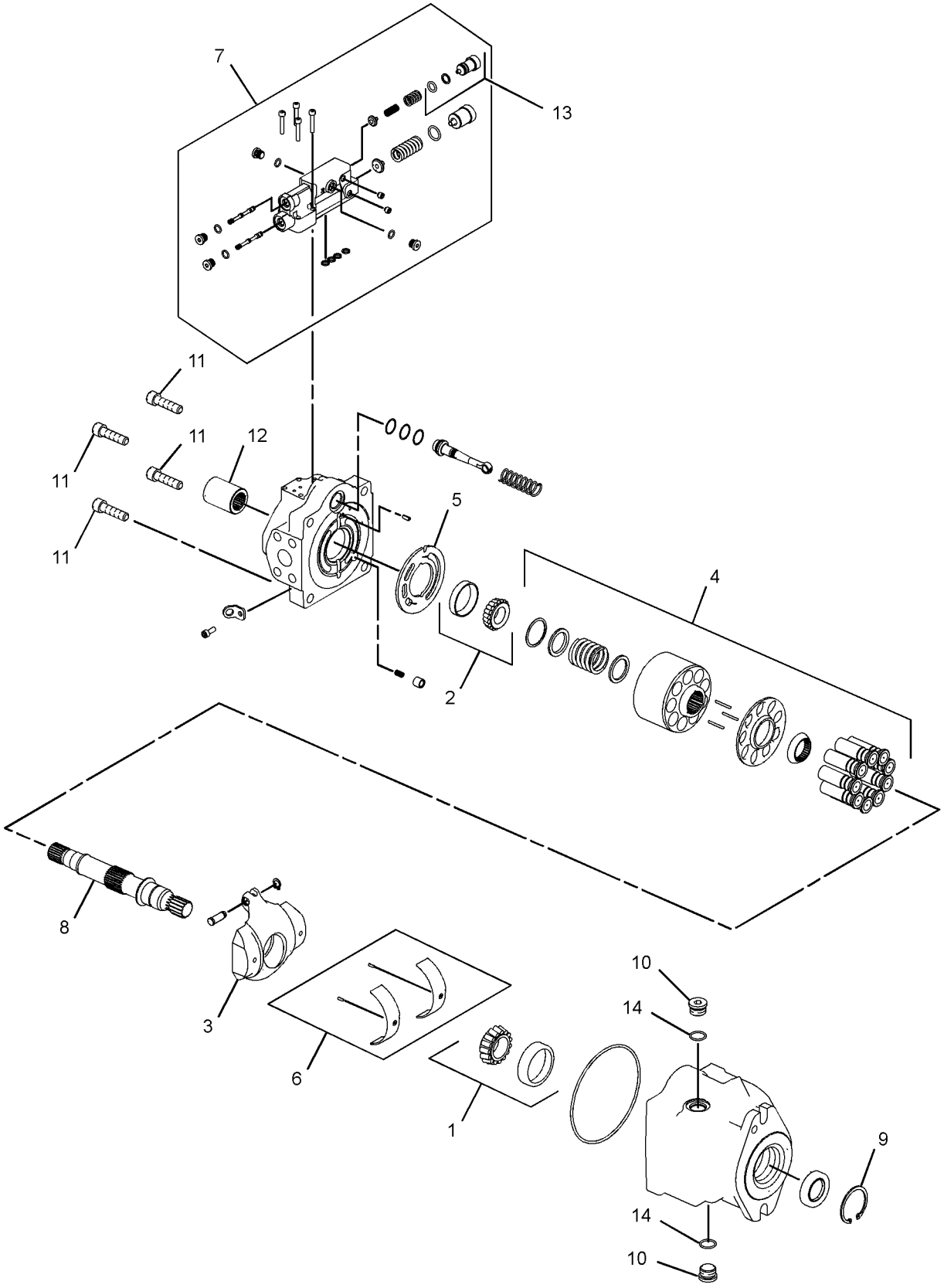

GRAPHIC #1 **<END>** g01459550

258-3401 PUMP GP-PISTON & GEAR

S/N: JAY1-UP
PART OF 258-3733, 261-6264 HYDRAULIC AR
AN ATTACHMENT

SMCS-3203, 5070, 5073 **i03635741**

NOTE	REF NO	GRAPHIC REF	PART NUMBER	QTY	PART NAME 1 2 3 4 5 6 (PRODUCT LEVEL)	SEE PAGE
YR	1	1	**258-2554**	1	PUMP GP-PISTON (HIGH FLOW)	425
J	2	1	**258-3261**	1	PUMP GP-GEAR	
		1	**8T-5095**	4	WASHER-PLATED (11X16X2-MM THK)	
M		1	**8T-6685**	4	BOLT (M10X1.5X110-MM)	
M	3	1	**101-7404**	2	BOLT-SOCKET HEAD (M10X1.5X30-MM)	
	4	1	**5P-3863**	1	SEAL-O-RING	
	5	1	**8T-4121**	2	WASHER-HARD (11X21X2.5-MM THK)	
	6	1	**8T-4223**	2	WASHER-HARD (13.5X25.5X3-MM THK)	
M	7	1	**8T-4956**	2	BOLT (M12X1.75X35-MM)	
	8	1	**8T-5049**	1	SEAL-O-RING	
					AVAILABLE REPAIR KIT(S):	
J			**278-8715**	1	KIT-SEAL (GEAR PUMP)	
					(INCLUDES SEALS & RINGS)	

J-KIT MARKED J SERVICES PARTS MARKED J
M-METRIC PART
R-REMFG PART MAY BE AVAILABLE
Y-SEPARATE ILLUSTRATION

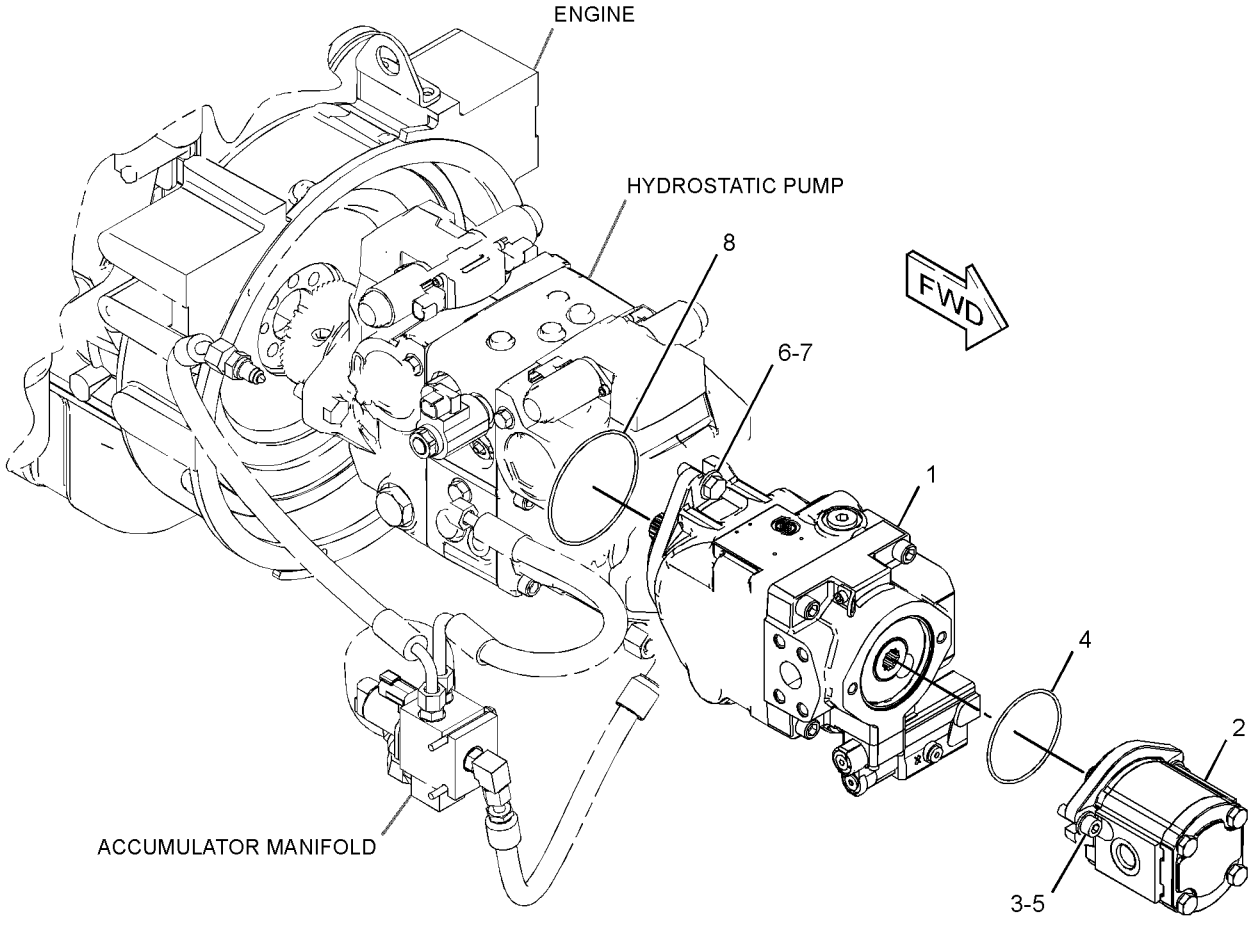

GRAPHIC #1 **<END>** g01327061

258-2434 TANK & MTG GP-HYDRAULIC

S/N: JAY1-UP

PART OF 258-2600 HYDRAULIC AR

SMCS-5056 **i02723735**

NOTE	REF NO	GRAPHIC REF	PART NUMBER	QTY	PART NAME 1 2 3 4 5 6 (PRODUCT LEVEL)	SEE PAGE
Y	1	1	*258-2435*	1	TANK GP-HYDRAULIC	429
	2	1	**258-2947**	1	BRACKET	
	3	1	**258-2949**	1	BRACKET AS	
	4	1	**258-2981**	1	BRACKET AS	
	5	1	**258-2982**	1	BRACKET	
	6	1	**258-2991**	1	BRACKET AS	
	7	1	**258-2992**	1	BRACKET	
	8	1	**5P-4116**	4	WASHER-HARD (8.8X20.5X2-MM THK)	
	9	1	**7X-7729**	2	WASHER (11X25X3-MM THK)	
	10	1	**8T-4121**	6	WASHER-HARD (11X21X2.5-MM THK)	
M	11	1	**8T-0389**	2	LOCKNUT (M10X1.15-THD)	
M	12	1	**8T-4196**	6	BOLT (M10X1.5X35-MM)	
M	13	1	**8T-4908**	4	BOLT (M8X1.25X25-MM)	

M-METRIC PART
Y-SEPARATE ILLUSTRATION

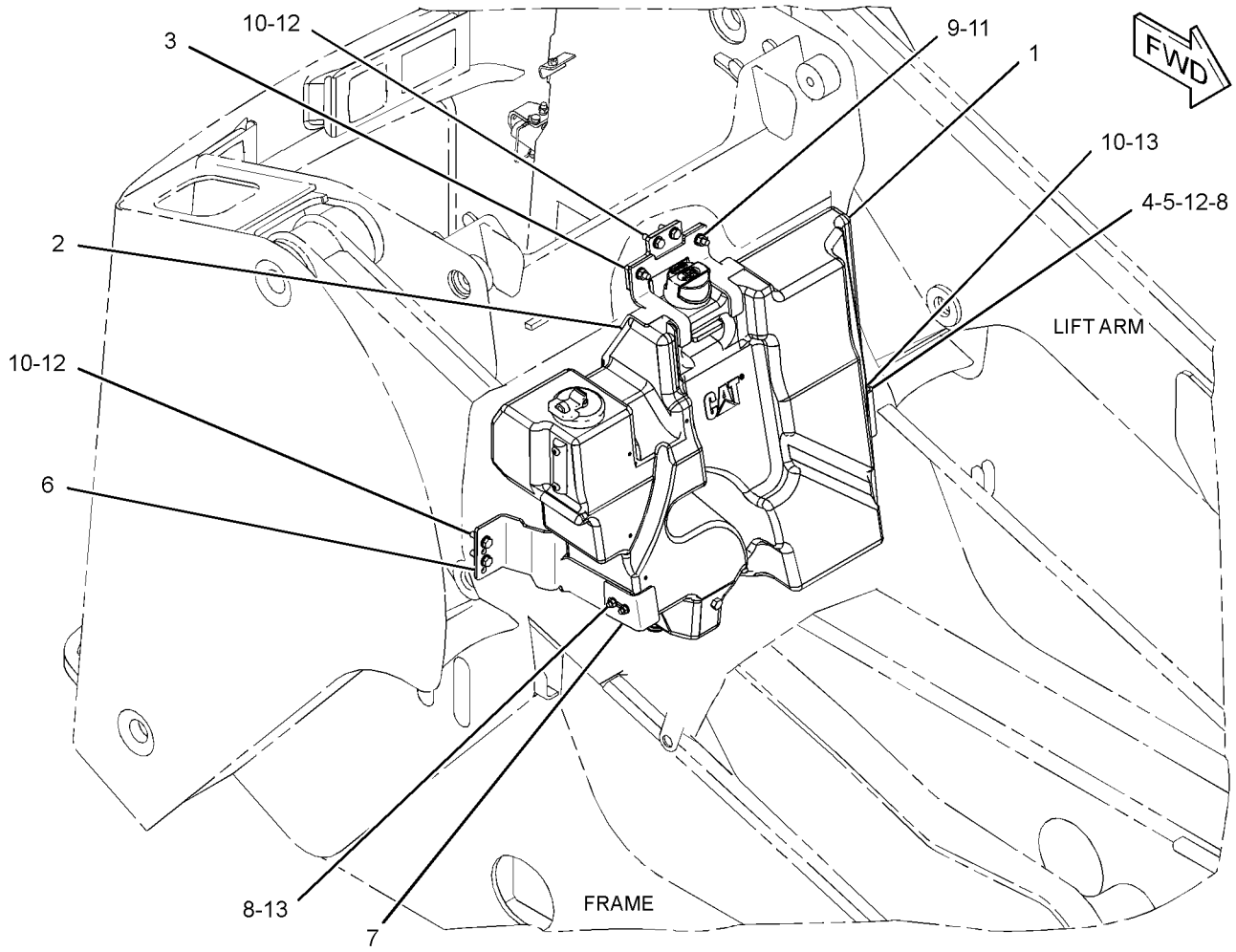

GRAPHIC #1 **<END>** g01340814

258-2435 TANK GP-HYDRAULIC

S/N: JAY1-UP

PART OF 258-2434 TANK & MTG GP-HYDRAULIC

SMCS-5056 **i02655613**

NOTE	REF NO	GRAPHIC REF	PART NUMBER	QTY	PART NAME 1 2 3 4 5 6 (PRODUCT LEVEL)	SEE PAGE
	1	1	**142-8937**	1	CAP AS-FILLER (HYDRAULIC TANK)	
Y	2	1	**258-2806**	1	TANK GP-HYDRAULIC	430
	3	1	**258-2829**	1	BREATHER (HYDRAULIC TANK)	
	4	1	**264-4297**	1	SENSOR GP-TEMPERATURE (HYDRAULIC OIL)	
		1	**137-6645**	1	PAD	
	5	1	**3K-0360**	1	SEAL-O-RING	

Y-SEPARATE ILLUSTRATION

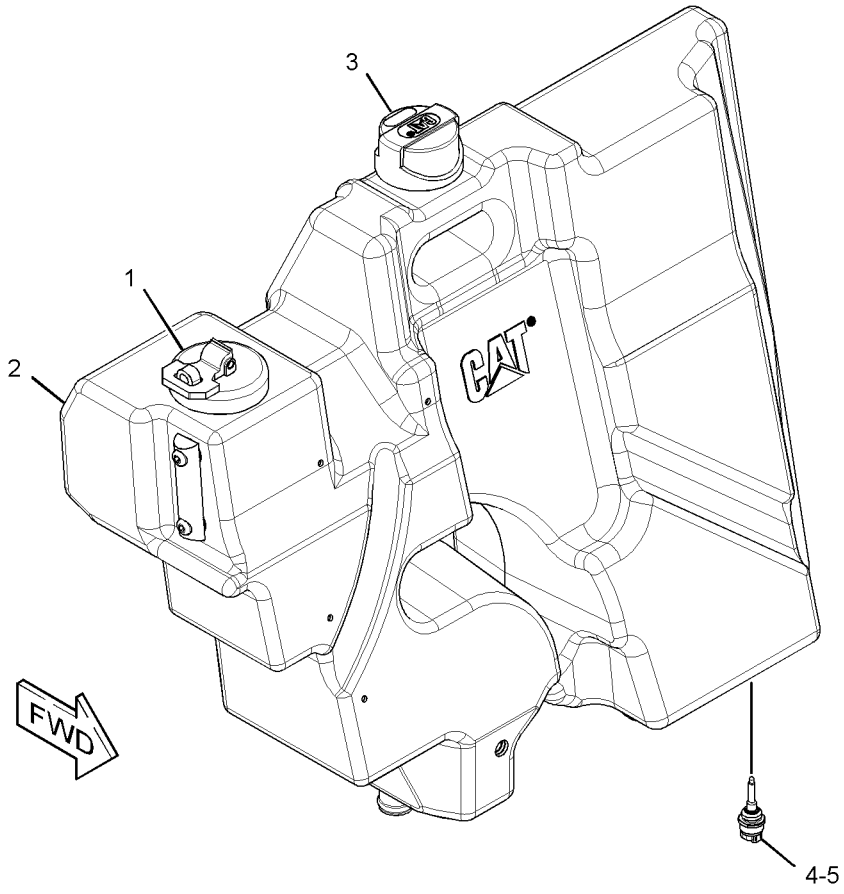

GRAPHIC #1 **<END>** g01335539

HYDRAULIC SYSTEM

258-2806 TANK GP-HYDRAULIC

S/N: JAY1-UP

PART OF 258-2435 TANK GP-HYDRAULIC

SMCS-5056 **i02712995**

NOTE	REF NO	GRAPHIC REF	PART NUMBER	QTY	PART NAME 1 2 3 4 5 6 (PRODUCT LEVEL)	SEE PAGE
	1	1	**258-2804**	1	STRAINER AS (HYDRAULIC TANK)	
	2	1	**267-8390**	1	GAUGE GP-SIGHT (HYDRAULIC TANK)	
		1	**7W-3983**	2	RING-RETAINING	
		1	**8F-3469**	2	SEAL-O-RING	
					PARTS SHOWN IN GRAPHIC(S) WITHOUT A REFERENCE NUMBER ARE NOT SERVICED SEPARATELY	

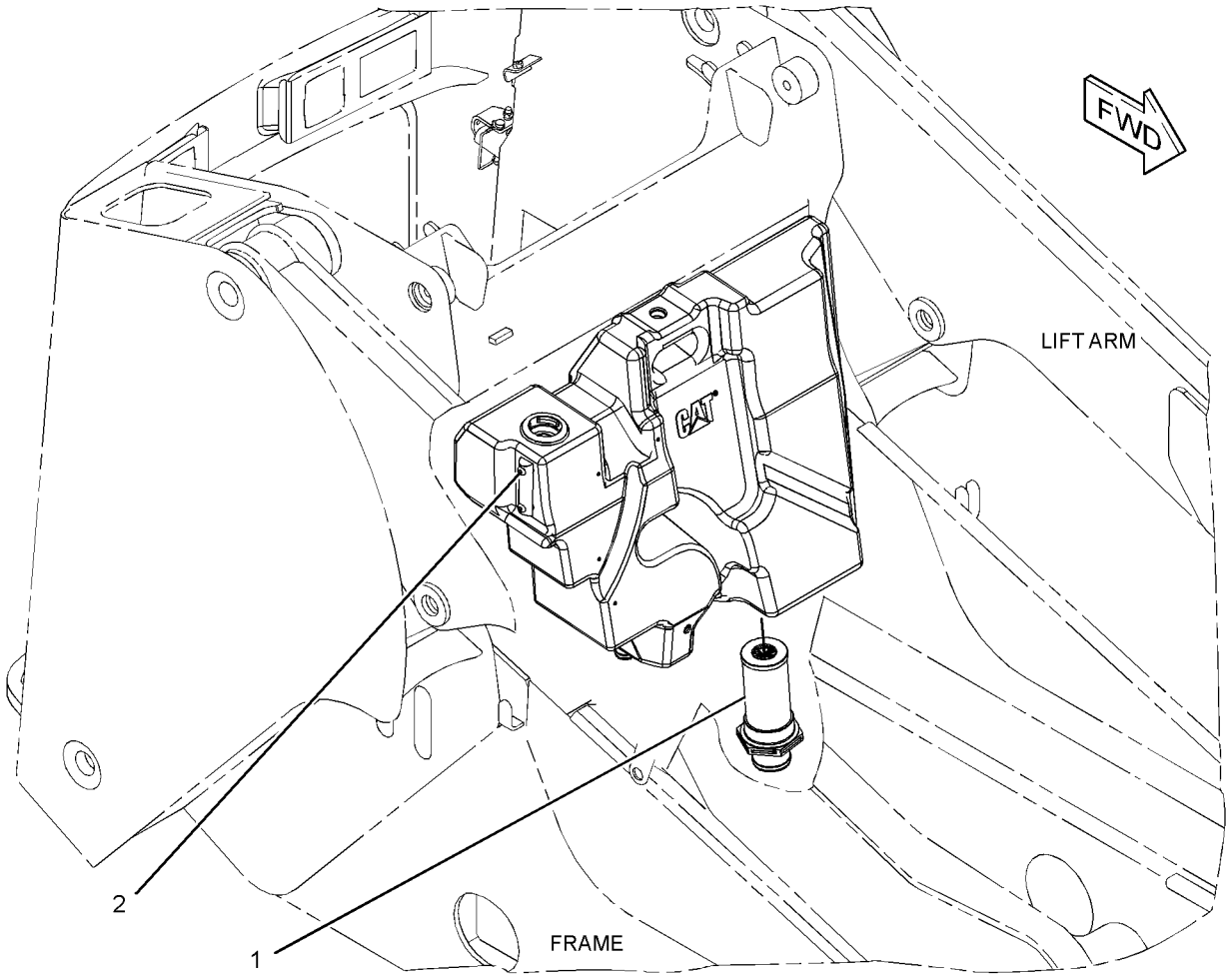

GRAPHIC #1 **<END>** g01330021

258-2502 VALVE & MTG GP-CONTROL

S/N: JAY1-UP
PART OF 258-3180, 258-3730 HYDRAULIC AR
AN ATTACHMENT

SMCS-5051 **i03635715**

NOTE	REF NO	GRAPHIC REF	PART NUMBER	QTY	PART NAME 1 2 3 4 5 6 (PRODUCT LEVEL)	SEE PAGE
Y	1	1	**258-2506**	1	VALVE GP-CONTROL	434
	2	1	**258-2569**	1	BRACKET AS	
	3	1	**8T-4121**	3	WASHER-HARD (11X21X2.5-MM THK)	
M	4	1	**8T-4136**	3	BOLT (M10X1.5X25-MM)	
M	5	1	**8T-4185**	2	BOLT (M10X1.5X50-MM)	
	6	1	**234-9525**	1	STUD (M10X1.5-THD)	
	7	1	**112-9252**	2	SPACER (13X25X22.14-MM THK)	
	8	1	**8T-7934**	3	WASHER-HARD (11X21X5-MM THK)	

M-METRIC PART
Y-SEPARATE ILLUSTRATION

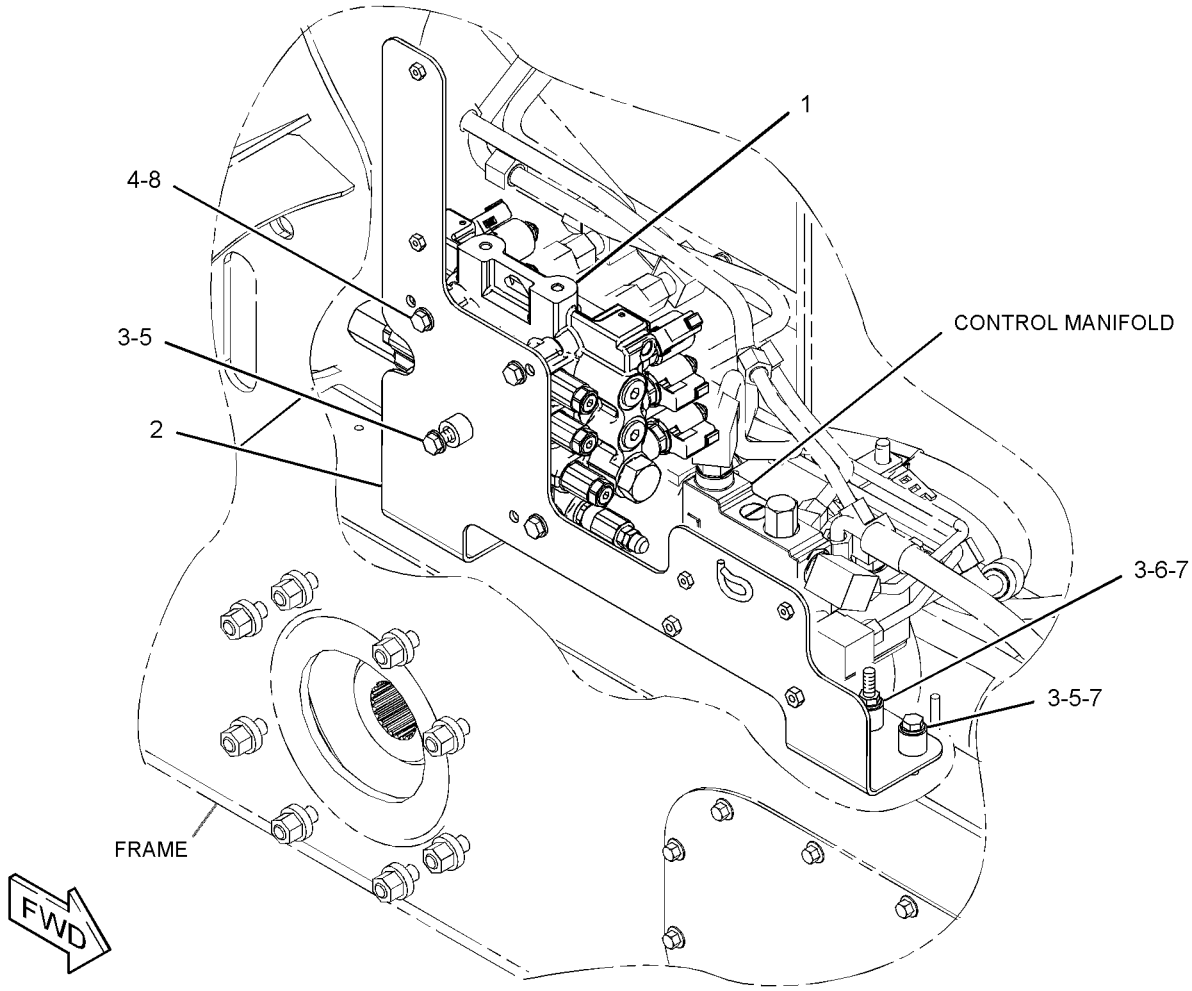

GRAPHIC #1 **<END>** g01336995

258-2503 VALVE & MTG GP-CONTROL–HIGH FLOW

S/N: JAY1-UP
PART OF 258-3182, 258-3733, 261-6264 HYDRAULIC AR
AN ATTACHMENT

SMCS-5051 **i02659368**

NOTE	REF NO	GRAPHIC REF	PART NUMBER	QTY	PART NAME 1 2 3 4 5 6 (PRODUCT LEVEL)	SEE PAGE
	1	1	**112-9252**	2	SPACER (13X25X22.14-MM THK)	
Y	2	1	**258-2507**	1	VALVE GP-CONTROL (HIGH FLOW)	436
	3	1	**258-2569**	1	BRACKET AS	
	4	1	**234-9525**	1	STUD (BOLT)	
	5	1	**8T-4121**	3	WASHER-HARD (11X21X2.5-MM THK)	
M	6	1	**8T-4136**	3	BOLT (M10X1.5X25-MM)	
M	7	1	**8T-4185**	2	BOLT (M10X1.5X50-MM)	
	8	1	**8T-7934**	3	WASHER-HARD (11X21X5-MM THK)	

M-METRIC PART
Y-SEPARATE ILLUSTRATION

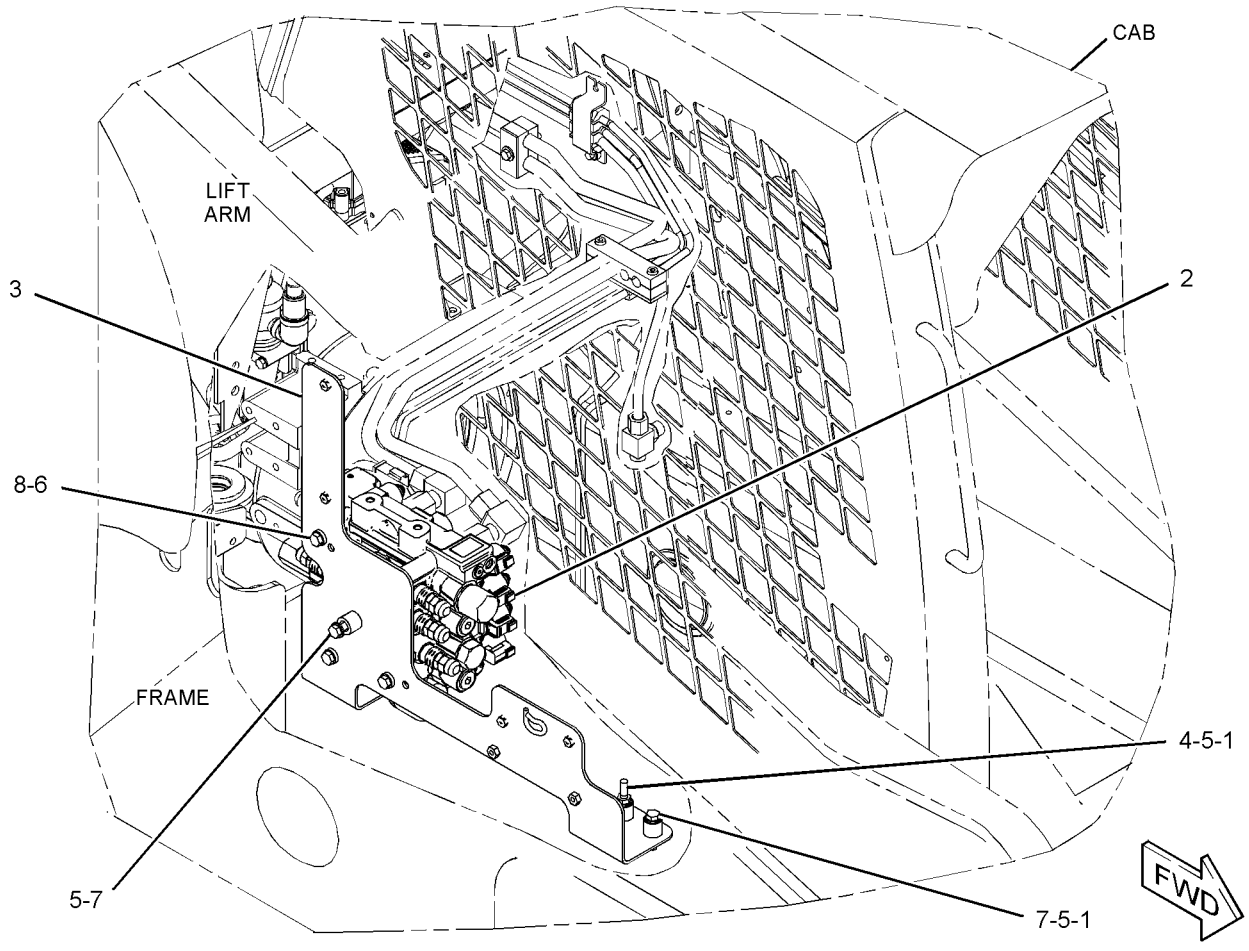

GRAPHIC #1 **<END>** g01337533

6E-4701 VALVE GP-CHECK–PILOT OIL

S/N: JAY1-UP

PART OF 274-8563 MANIFOLD GP-CONTROL

SMCS-5067 **i03619401**

NOTE	REF NO	GRAPHIC REF	PART NUMBER	QTY	PART NAME 1 2 3 4 5 6 (PRODUCT LEVEL)	SEE PAGE
	1	1	**3J-1907**	1	SEAL-O-RING	
	2	1	**6V-8397**	1	SEAL-O-RING	

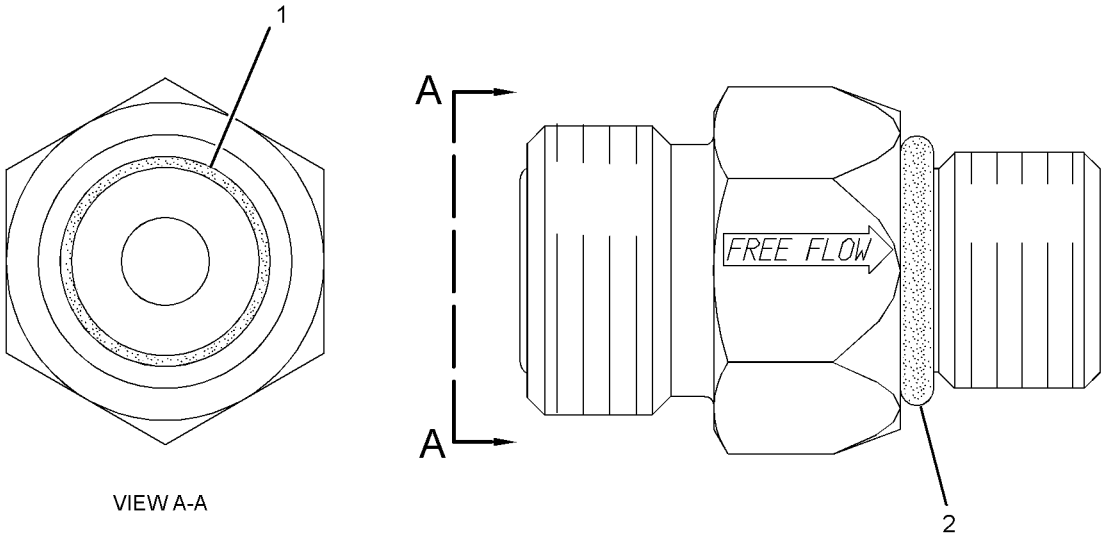

VIEW A-A

GRAPHIC #1 **<END>** g01944653

HYDRAULIC SYSTEM

258-2506 VALVE GP-CONTROL

S/N: JAY1-UP

PART OF 258-2502 VALVE & MTG GP-CONTROL

AN ATTACHMENT

SMCS-5051 **i03508207**

NOTE	REF NO	GRAPHIC REF	PART NUMBER	QTY	PART NAME 1 2 3 4 5 6 (PRODUCT LEVEL)	SEE PAGE
Y	1	1	**295-1799**	1	VALVE GP-RELIEF (MAIN)	439
	2	1	**216-6160**	3	VALVE GP-RELIEF (TILT)	
	3	1	**216-6161**	1	VALVE GP-RELIEF (LIFT)	
Y	4	1	**185-4254**	6	VALVE GP-SOLENOID (12-VOLT)	441
	5	1	**4J-7533**	1	SEAL-O-RING	
	6	1	**204-1485**	6	WASHER (0.47X0.75X0.02-MM THK)	
	7	1	**204-1482**	1	SPRING	
	8	1	**204-1488**	1	SPRING	
	9	1	**204-1489**	4	SPRING	
	10	1	**204-1486**	1	WASHER (0.32X0.74X0.02-MM THK)	
	11	1	**127-6316**	1	BOLT-SHOULDER	
	12	1	**204-1476**	4	PLUG	
	13	1	**4K-1388**	2	SEAL-O-RING	
	14	1	**204-1471**	1	CAP	
	15	1	**204-1481**	1	CAP	
	16	1	**144-4531**	3	VALVE-CHECK	
	17	1	**003-3082**	3	SPRING	
	18	1	**2M-9780**	7	SEAL-O-RING	
	19	1	**144-4532**	3	PLUG	
	20	1	**216-6156**	1	VALVE-CHECK	
	21	1	**216-6157**	1	SPRING	
	22	1	**3J-1907**	1	SEAL-O-RING	
	23	1	**216-6159**	1	PLUG	
	24	1	**9S-8002**	1	PLUG-O-RING	
	25	1	**3J-7354**	1	SEAL-O-RING	

Y-SEPARATE ILLUSTRATION

258-2506 VALVE GP-CONTROL *(contd.)* **i03508207**

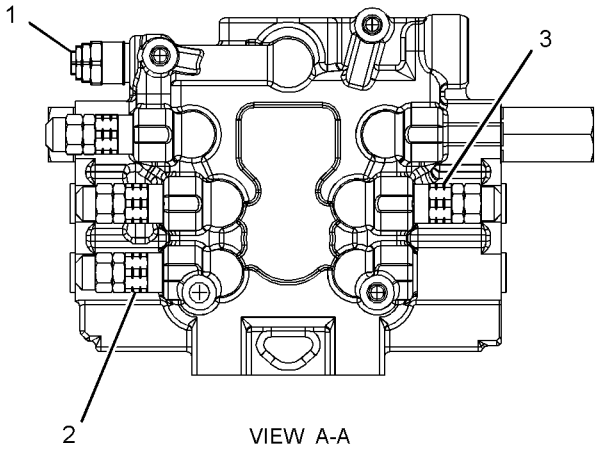

VIEW A-A

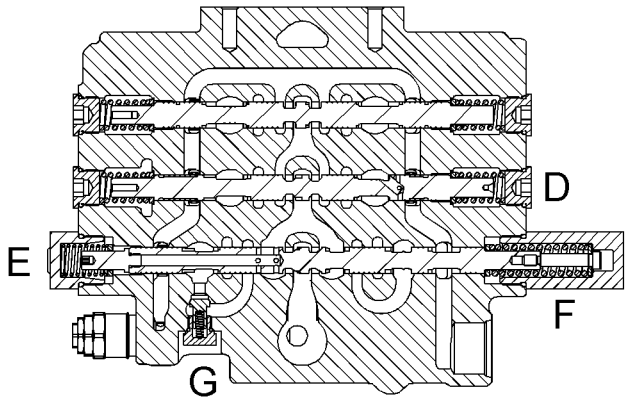

SECTION B-B

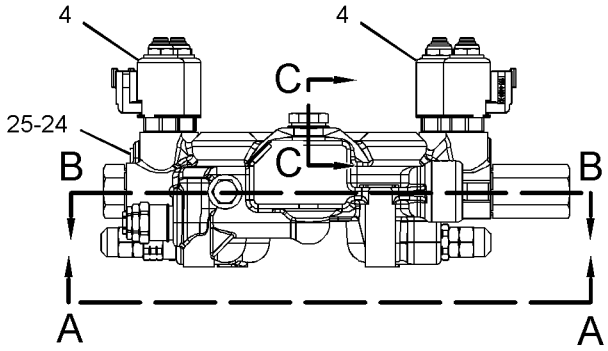

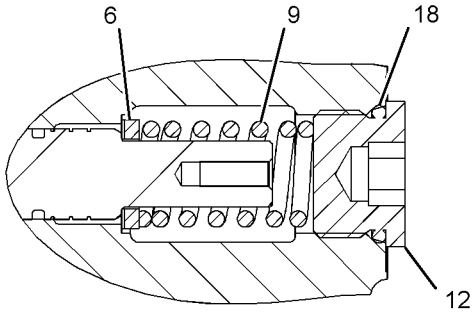

VIEW OF AREA D

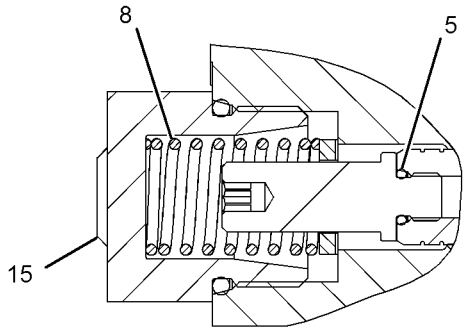

VIEW OF AREA E

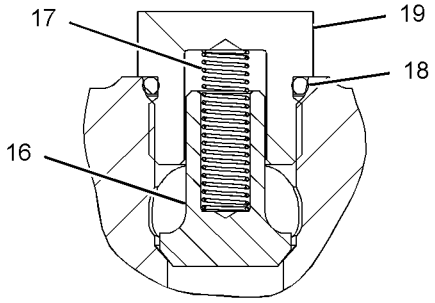

SECTION C-C

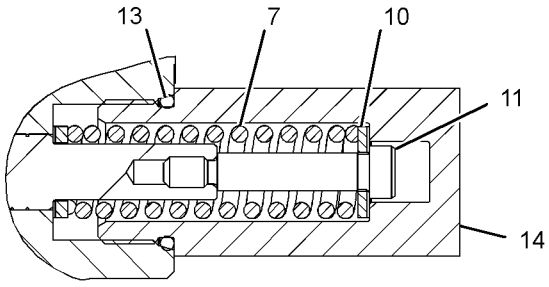

VIEW OF AREA F

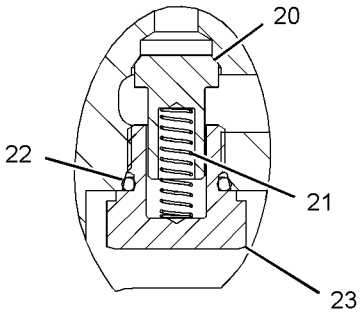

VIEW OF AREA G

GRAPHIC #1 **<END>** g01327679

HYDRAULIC SYSTEM

258-2507 VALVE GP-CONTROL—HIGH FLOW

S/N: JAY1-UP
PART OF 258-2503 VALVE & MTG GP-CONTROL
AN ATTACHMENT

SMCS-5051 **i03508208**

NOTE	REF NO	GRAPHIC REF	PART NUMBER	QTY	PART NAME 1 2 3 4 5 6 (PRODUCT LEVEL)	SEE PAGE
Y	1	1	**185-4254**	6	VALVE GP-SOLENOID (12-VOLT)	441
Y	2	1	**195-9700**	2	VALVE GP-SOLENOID (12-VOLT)	442
	3	1	**204-1471**	1	CAP	
	4	1	**204-1476**	9	PLUG	
	5	1	**204-1481**	1	CAP	
	6	1	**216-6160**	2	VALVE GP-RELIEF (TILT, AUXILIARY)	
	7	1	**216-6161**	1	VALVE GP-RELIEF (LIFT, TILT)	
	8	1	**289-0850**	1	VALVE GP-RELIEF (AUXILIARY)	
	9	1	**295-0046**	1	VALVE GP-SOLENOID (MAIN)	
		1	**287-8753**	1	SCREEN	
		1	**301-4213**	1	SPACER	
	10	1	**231-7156**	1	CAP-VALVE	
	11	1	**9S-8002**	4	PLUG-O-RING	
	12	1	**231-7165**	1	PLUG-VALVE	
	13	1	**231-7297**	7	SPRING	
	14	1	**280-5164**	3	SPOOL (ISOLATOR)	
	15	1	**231-7299**	3	SPOOL (COMP)	
	16	1	**287-8752**	1	SPOOL (COMP)	
	17	1	**287-8753**	1	SCREEN	
M	18	1	**8T-1158**	2	BOLT-SOCKET HEAD (M8X1.25X20-MM)	
	19	1	**3J-7354**	4	SEAL-O-RING	
	20	1	**204-1472**	2	SEAL-O-RING	
	21	1	**9X-7744**	1	SEAL-O-RING	

M-METRIC PART
Y-SEPARATE ILLUSTRATION

258-2507 VALVE GP-CONTROL *(contd.)* **i03508208**

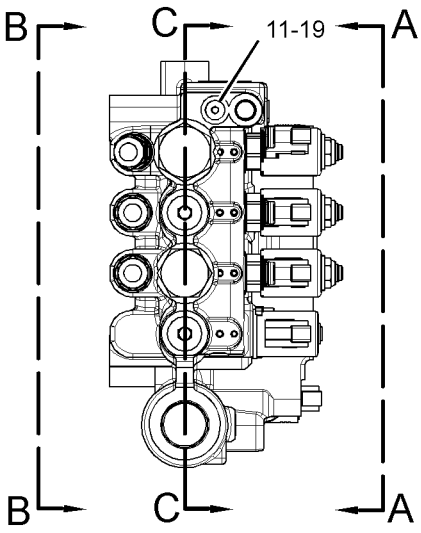

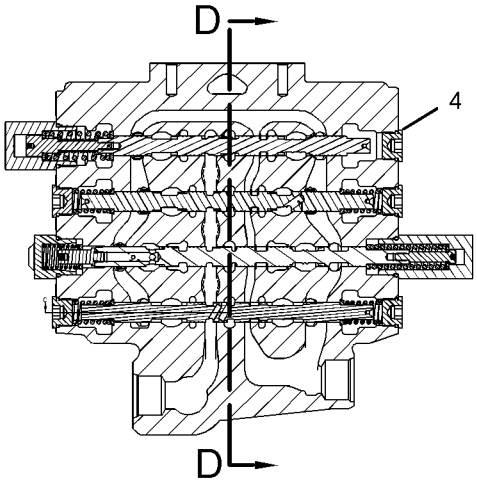

SECTION C-C

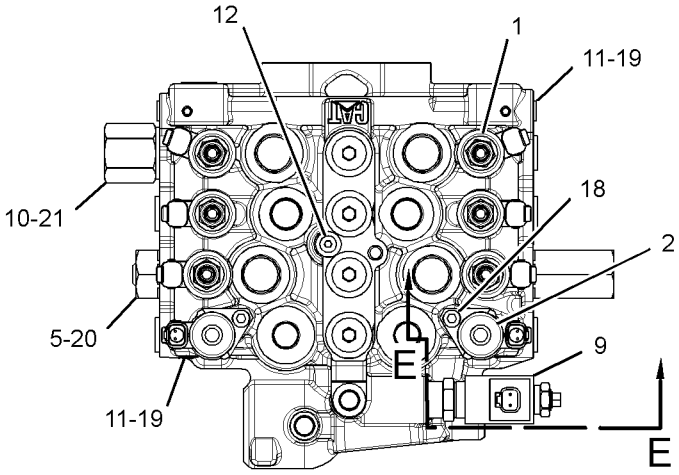

VIEW A-A

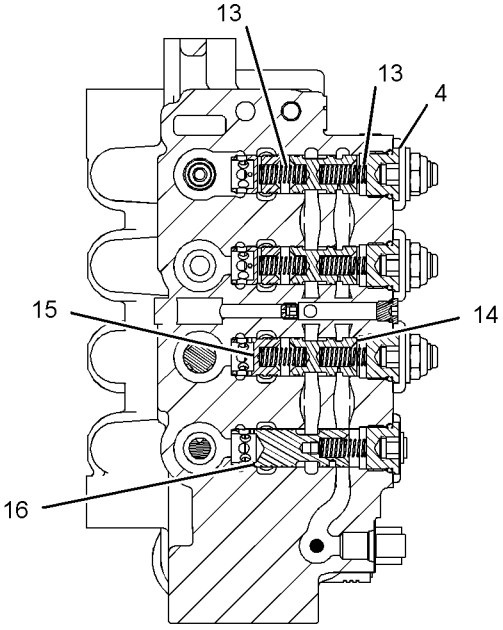

SECTION D-D

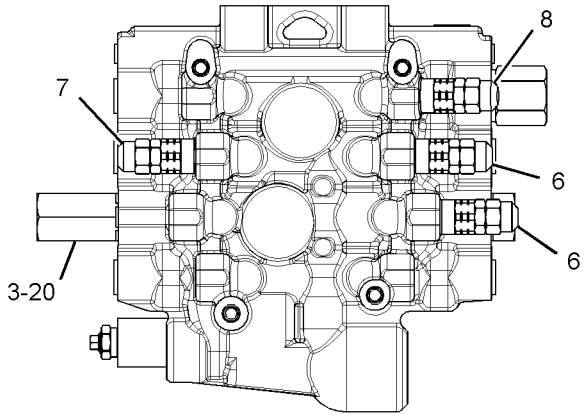

VIEW B-B

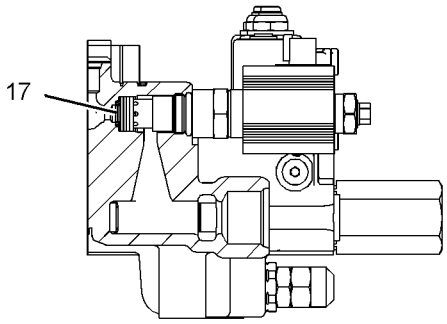

SECTION E-E

GRAPHIC #1 **<END>** g01328897

112-1817 VALVE GP-MANUAL—LOWERING CONTROL

S/N: JAY1-UP

PART OF 258-3393 LINES GP-LOWERING CONTROL

SMCS-5147 **i02903081**

NOTE	PART NUMBER	QTY	PART NAME 1 2 3 4 5 6 (PRODUCT LEVEL)	SEE PAGE
J	*202-0671*	1	VALVE GP-MANUAL (COUPLER PIN, LIFT ARM LWR CONT)	
			—OR—	
J	*202-0673*	1	VALVE GP-MANUAL (COUPLER PIN, LIFT ARM LWR CONT)	
			—OR—	
J	*202-0674*	1	VALVE GP-MANUAL (COUPLER PIN, LIFT ARM LWR CONT)	
			AVAILABLE REPAIR KIT(S):	
J	**112-9861**	1	KIT-SEAL (DEAD ENGINE LOWERING)	
			(INCLUDES SEALS, CONNECTORS & THRUST RING)	

J-KIT MARKED J SERVICES PARTS MARKED J

<END>

295-1799 VALVE GP-RELIEF–MAIN

S/N: JAY1-UP
PART OF 258-2506 VALVE GP-CONTROL
AN ATTACHMENT

SMCS-5069, 5117 **i02605603**

NOTE	REF NO	GRAPHIC REF	PART NUMBER	QTY	PART NAME 1 2 3 4 5 6 (PRODUCT LEVEL)	SEE PAGE
	1	1	**130-1676**	1	SEAL-O-RING	

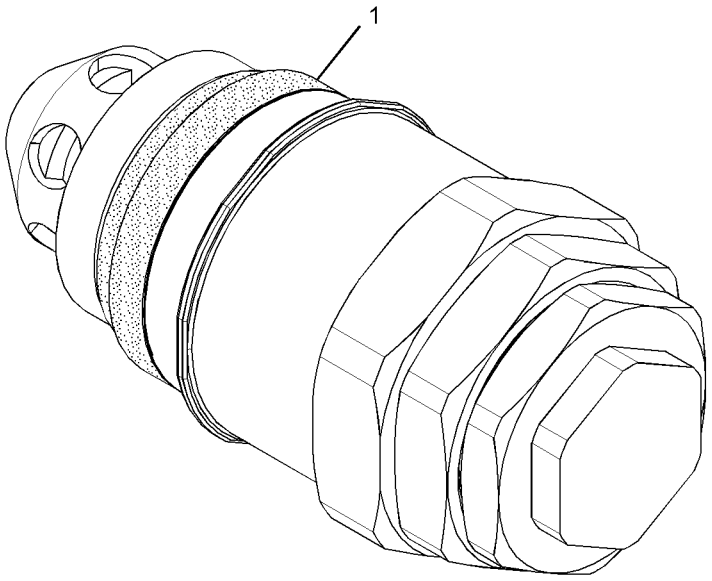

GRAPHIC #1 **<END>** g01304645

HYDRAULIC SYSTEM

211-3014 VALVE GP-SHUTTLE—HIGH FLOW

S/N: JAY1-UP
PART OF 258-3238, 261-6239 LINES GP-PUMP
AN ATTACHMENT

SMCS-5079 **i02772037**

NOTE	REF NO	GRAPHIC REF	PART NUMBER	QTY	PART NAME 1 2 3 4 5 6 (PRODUCT LEVEL)	SEE PAGE
	1	1	**123-5798**	1	SEAT	
	2	1	**123-5799**	1	SEAT	
	3	1	**131-0749**	1	CONNECTOR	
	4	1	**211-3646**	1	VALVE-SHUTTLE	
	5	1	**3J-1907**	1	SEAL-O-RING	
	6	1	**6V-8398**	1	SEAL-O-RING	

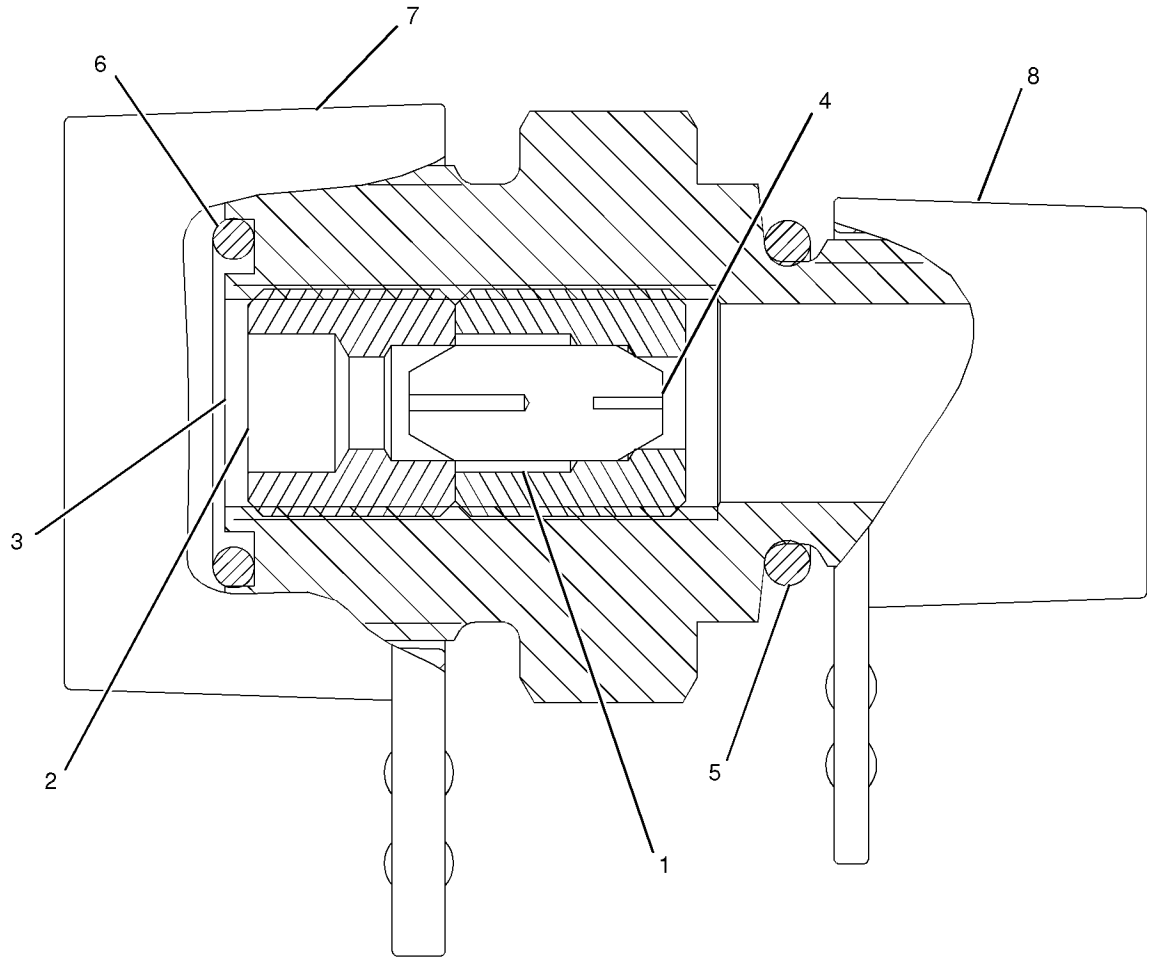

GRAPHIC #1 **<END>** g01041755

185-4254 VALVE GP-SOLENOID–12-VOLT

S/N: JAY1-UP
PART OF 258-2506, 258-2507 VALVE GP-CONTROL
AN ATTACHMENT

SMCS-5479 **i03437588**

NOTE	REF NO	GRAPHIC REF	PART NUMBER	QTY	PART NAME 1 2 3 4 5 6 (PRODUCT LEVEL)	SEE PAGE
	1	1	**226-9629**	1	COIL AS-SOLENOID (12-VOLT)	
	2	1	**164-2108**	1	WASHER (13.03X25.4X2.38-MM THK)	
	3	1	**218-2373**	1	NUT (1/2-28-THD)	

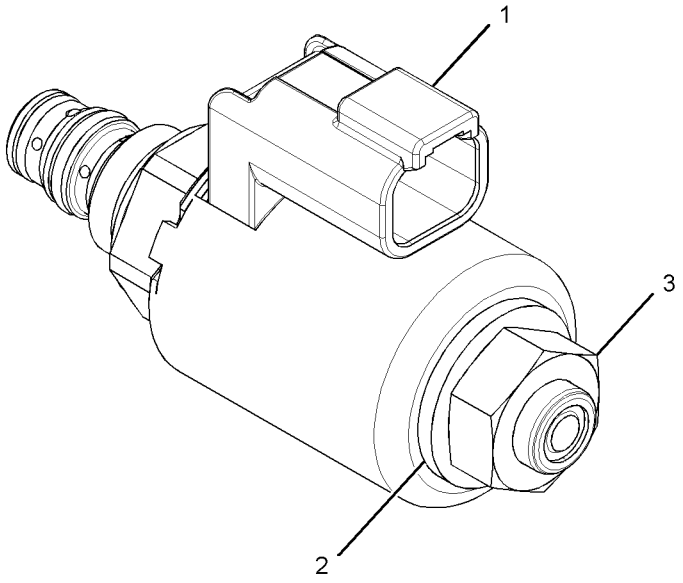

GRAPHIC #1 **<END>** g01794642

HYDRAULIC SYSTEM

195-9700 VALVE GP-SOLENOID–12-VOLT

S/N: JAY1-UP
PART OF 258-2507 VALVE GP-CONTROL
AN ATTACHMENT

SMCS-5479 **i02712998**

NOTE	REF NO	GRAPHIC REF	PART NUMBER	QTY	PART NAME 1 2 3 4 5 6 (PRODUCT LEVEL)	SEE PAGE
	1	1	**212-0061**	1	FLANGE	
					AVAILABLE REPAIR KIT(S):	
			200-2371	1	KIT-SEAL	
					(INCLUDES 3 SEALS)	

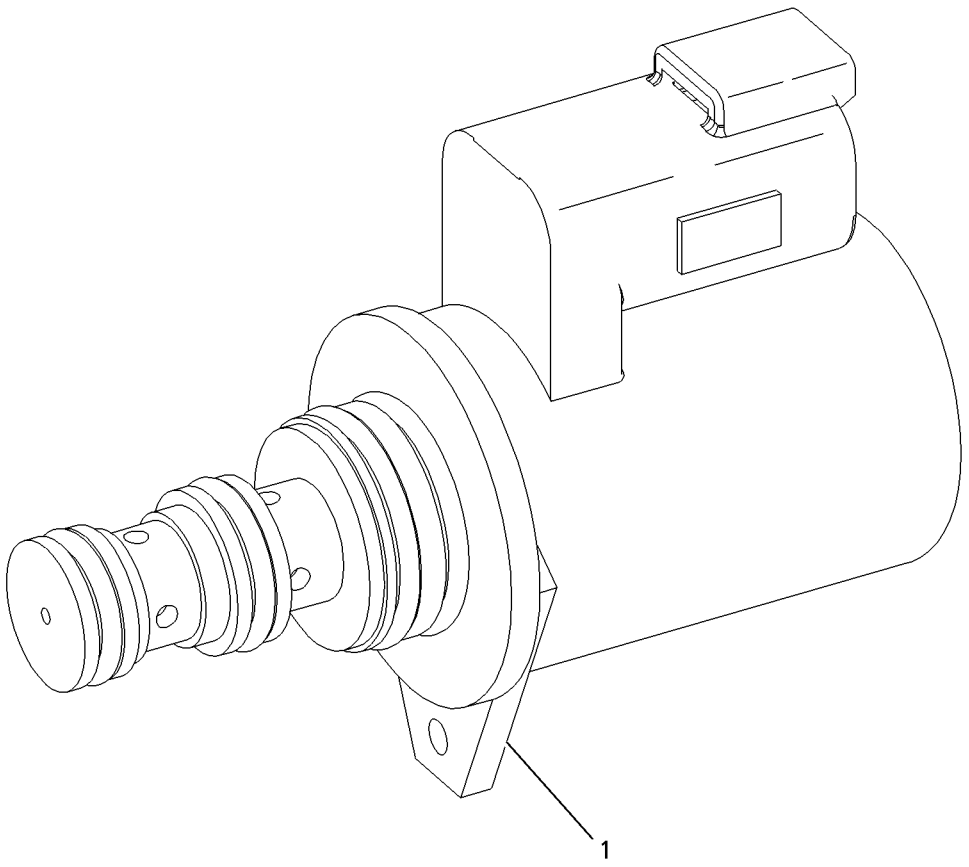

GRAPHIC #1 **<END>** g00947284

287-4198 ARM AS-LIFT

S/N: JAY1-UP

PART OF 258-2674 FRAME GP-MACHINE

SMCS-6119 **i03200140**

NOTE	REF NO	GRAPHIC REF	PART NUMBER	QTY	PART NAME 1 2 3 4 5 6 (PRODUCT LEVEL)	SEE PAGE
	1	1	**4K-4709**	4	BEARING-SLEEVE	
	2	1	**6K-4148**	4	BEARING-SLEEVE	
	3	1	**8R-3857**	6	BOSS (M8X1.2X12-MM)	
M	4	1	**9R-2613**	2	BOSS-WELD (M10X1.5X25-MM)	
					PARTS SHOWN IN GRAPHIC(S) WITHOUT A REFERENCE NUMBER ARE NOT SERVICED SEPARATELY	

M-METRIC PART

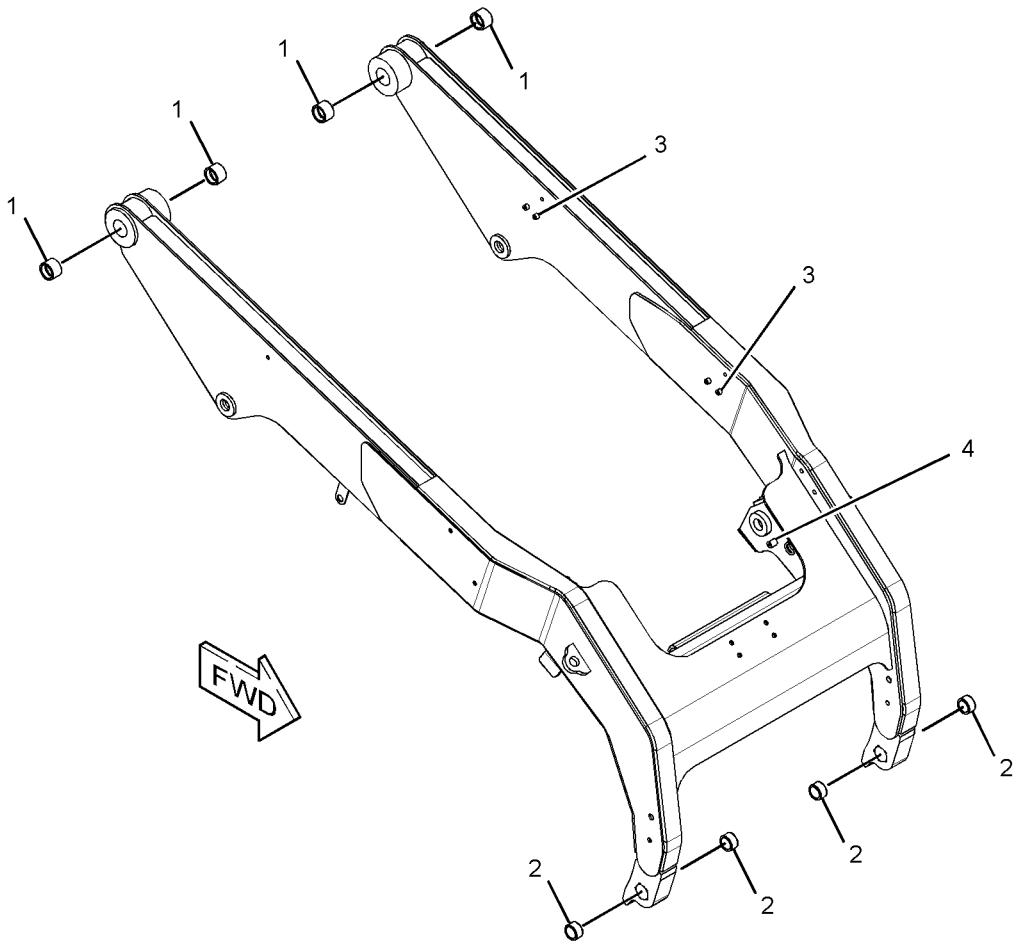

GRAPHIC #1 **<END>** g01637309

258-2699 PIN GP-LIFT ARM—WITH SUPPORT

S/N: JAY1-UP

PART OF 258-2410, 295-7291 CHASSIS AR

SMCS-6119, 7507 **i02943374**

NOTE	REF NO	GRAPHIC REF	PART NUMBER	QTY	PART NAME 1 2 3 4 5 6 (PRODUCT LEVEL)	SEE PAGE
	1	1	**142-9091**	2	PIN AS	
	2	1	**142-9094**	1	PIN	
	3	1	**258-2679**	2	PIN AS	
	4	1	**258-2920**	4	PIN AS	
	5	1	**258-2922**	2	PIN AS	
	6	1	**258-3451**	1	PIN	
	7	1	**258-3452**	1	SUPPORT (LIFT ARM BRACE)	
	8	1	**285-2185**	1	PIN AS	
	9	1	**1H-8134**	4	RING-RETAINING (EXTERNAL)	
	10	1	**3B-8489**	8	FITTING-GREASE	
	11	1	**5B-0651**	4	FITTING-STRAIGHT	
	12	1	**5H-9743**	1	GROMMET	
	13	1	**6N-8863**	6	WASHER (10.2X32X2.5-MM THK)	
	14	1	**7X-7729**	4	WASHER (11X25X3-MM THK)	
M	15	1	**8T-4191**	10	BOLT (M10X1.5X16-MM)	
	16	1	**8T-5439**	4	WASHER-HARD (21.5X45X6-MM THK)	
	17	1	**308-6542**	2	SPACER	

M-METRIC PART

258-2699 **PIN GP-LIFT ARM** *(contd.)* **i02943374**

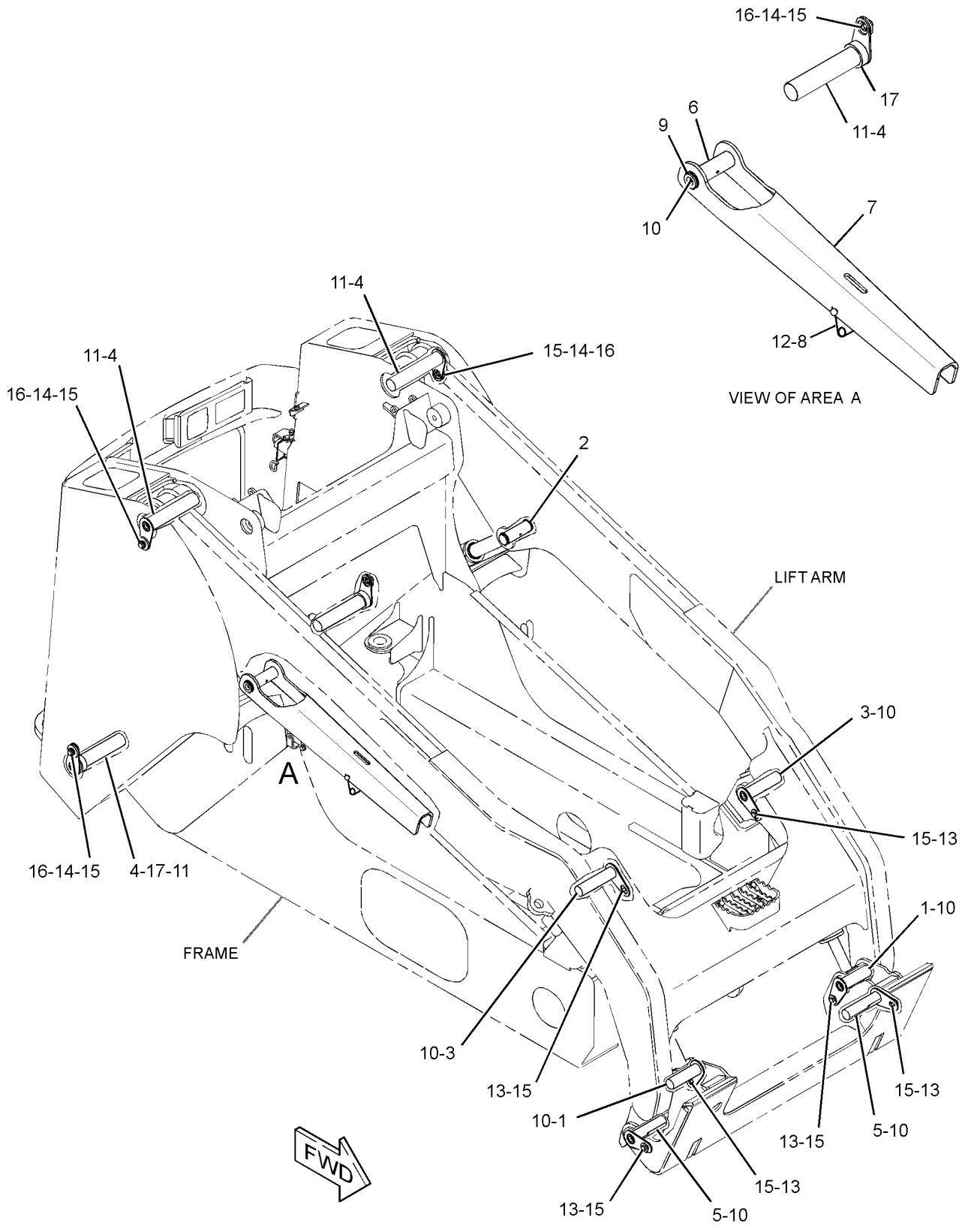

GRAPHIC #1 **<END>** g01466487

WORK TOOLS

216-8756 ARM GP-MATERIAL HANDLING

S/N: JAY1-UP

AN ATTACHMENT

SMCS-6542 **i02342557**

NOTE	REF NO	GRAPHIC REF	PART NUMBER	QTY	PART NAME 1 2 3 4 5 6 (PRODUCT LEVEL)	SEE PAGE
	1	1	**9V-2714**	1	HOOK	
	2	1	**9V-2715**	1	SHACKLE AS	
	3	1	**156-5762**	2	FILM-INFORMATION (TIE-DOWN LOCATION)	
Y	4	1	*188-7733*	1	STEP GP-MATERIAL HANDLING ARM	623
	5	1	**216-8850**	1	ARM AS	
M	6	1	**7X-2475**	1	BOLT (M16X2X130-MM)	
	7	1	**8T-4122**	1	WASHER-HARD (17X32X3.5-MM THK)	
M	8	1	**8T-1757**	1	NUT (M16X2-THD)	

M-METRIC PART
Y-SEPARATE ILLUSTRATION

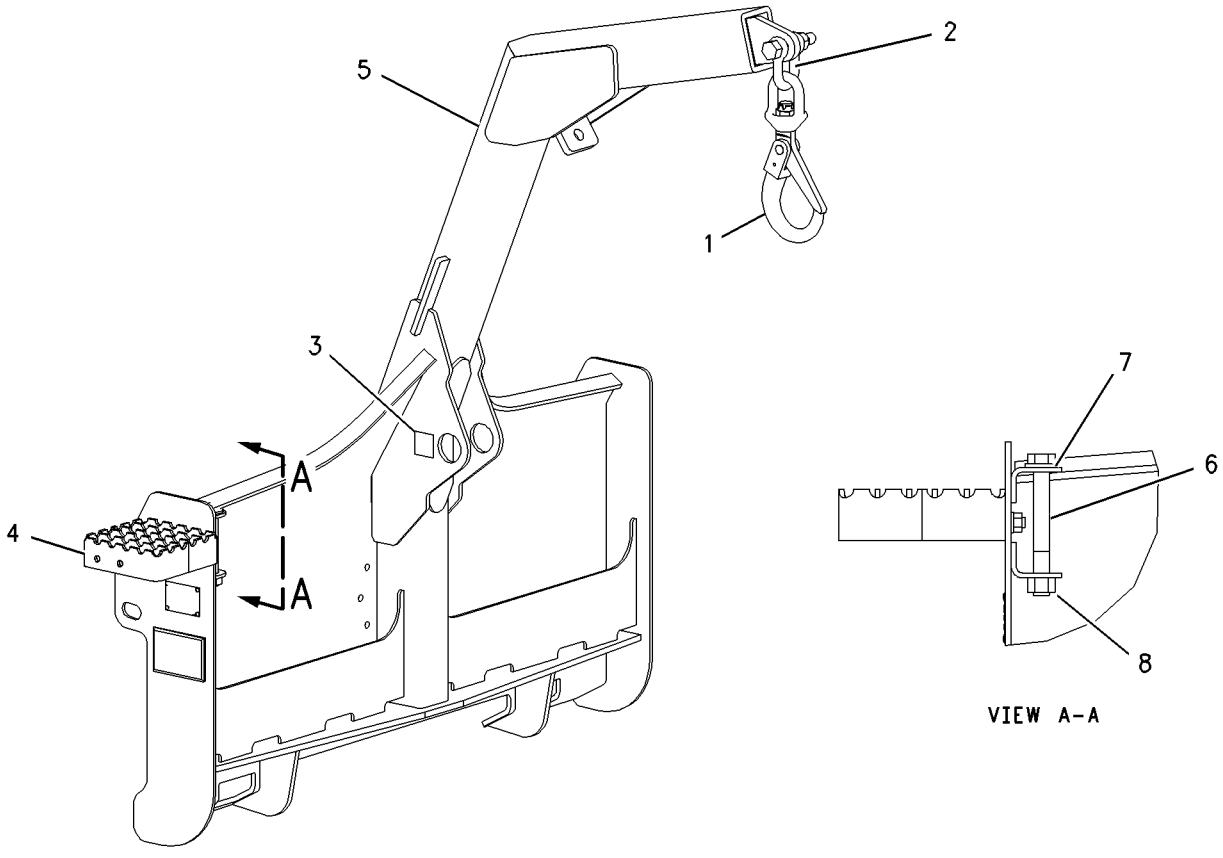

GRAPHIC #1 **<END>** g00934159

177-1989 BLADE AR–ANGLING

S/N: JAY1-UP
1829-MM (72-IN)
AN ATTACHMENT

SMCS-6060, 6701 **i01860746**

NOTE	PART NUMBER	QTY	PART NAME 1 2 3 4 5 6 (PRODUCT LEVEL)	SEE PAGE
Y	*177-1981*	1	BLADE GP-ANGLING	452
Y	*230-5406*	1	CYLINDER & MTG GP-ANGLE BLADE	283
Y	*135-9386*	1	EDGE GP-CUTTING	586
Y	*230-5670*	1	FRAME GP-BLADE	603
Y	*177-1986*	1	LINES GP-CONNECTING	334
Y	*177-1983*	1	SPRING GP-BLADE	622

Y-SEPARATE ILLUSTRATION

<END>

177-1990 BLADE AR–ANGLING

S/N: JAY1-UP
2134-MM (84-IN)
AN ATTACHMENT

SMCS-6060, 6701 **i01861063**

NOTE	PART NUMBER	QTY	PART NAME 1 2 3 4 5 6 (PRODUCT LEVEL)	SEE PAGE
Y	*177-1982*	1	BLADE GP-ANGLING	453
Y	*230-5406*	1	CYLINDER & MTG GP-ANGLE BLADE	283
Y	*149-5741*	1	EDGE GP-CUTTING	588
Y	*230-5670*	1	FRAME GP-BLADE	603
Y	*177-1986*	1	LINES GP-CONNECTING	334
Y	*177-1983*	1	SPRING GP-BLADE	622

Y-SEPARATE ILLUSTRATION

<END>

WORK TOOLS

231-5275 BLADE AR—ANGLING

S/N: JAY1-UP
2337-MM (92-IN)
AN ATTACHMENT

SMCS-6060, 6701 **i03571232**

NOTE	REF NO	GRAPHIC REF	PART NUMBER	QTY	PART NAME 1 2 3 4 5 6 (PRODUCT LEVEL)	SEE PAGE
	1	1	**7K-1181**	3	STRAP-CABLE	
Y	2	1	*222-7724*	1	BLADE GP-ANGLING	454
	3	1	**225-8015**	1	HARNESS AS-WORK TOOL (CONNECTING)	
		1	**213-0139**	6	PIN	
		1	**172-3998**	1	PLUG AS	
		1	**155-2270**	8	KIT-CONNECTING PLUG (2-PIN) (INCLUDES PLUG AS, WEDGE & INTERFACE SEAL)	
		1	**9W-0844**	9	SOCKET-CONNECTOR (14-GA)	
		1	**180-9340**	7	SOCKET-CONNECTOR (14-GA TO 18-GA)	
		1	**8L-8413**	10	STRAP-CABLE	
		1	**189-3158**	2	SUPPRESSOR-ARC	
E		1	**119-3662**		TUBE-HEAT SHRINK (10.85-MM DIA) (13-CM)	
E		1	**125-7874**		TUBE-HEAT SHRINK (5.72-MM DIA) (5-CM)	
E		1	**125-7875**		TUBE-HEAT SHRINK (7.44-MM DIA) (10-CM)	
Y	4	1	*231-5273*	1	LINES GP-CONNECTING	336
Y	5	1	*231-5274*	1	CYLINDER & MTG GP-ANGLE BLADE	284
Y	6	1	*231-5278*	1	MANIFOLD & MTG GP-CONTROL (ANGLING BLADE)	406
Y	7	1	*247-0678*	1	PLATE & FILM GP	792

E-ORDER BY THE CENTIMETER
Y-SEPARATE ILLUSTRATION

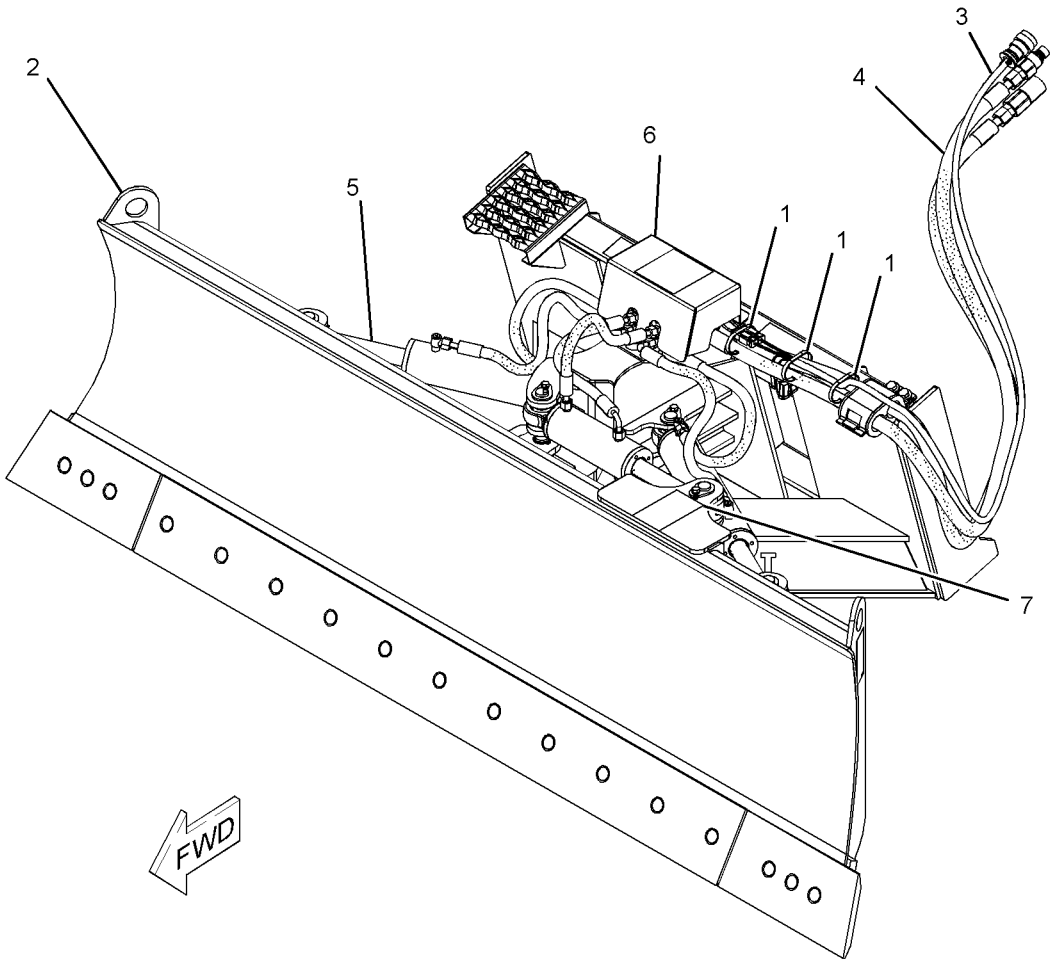

GRAPHIC #1 **<END>** g01381201

WORK TOOLS

231-5277 BLADE AR—ANGLING

S/N: JAY1-UP
2007-MM (79-IN)
AN ATTACHMENT

SMCS-6060, 6701 **i03571243**

NOTE	REF NO	GRAPHIC REF	PART NUMBER	QTY	PART NAME 1 2 3 4 5 6 (PRODUCT LEVEL)	SEE PAGE
	1	1	**7K-1181**	3	STRAP-CABLE	
	2	1	**225-8015**	1	HARNESS AS-WORK TOOL (CONNECTING)	
		1	**213-0139**	6	PIN	
		1	**172-3998**	1	PLUG AS	
		1	**155-2270**	8	KIT-CONNECTING PLUG (2-PIN)	
					(EACH INCLUDES PLUG AS, WEDGE & INTERFACE SEAL)	
		1	**9W-0844**	9	SOCKET-CONNECTOR (14-GA)	
		1	**180-9340**	7	SOCKET-CONNECTOR (14-GA TO 18-GA)	
		1	**8L-8413**	10	STRAP-CABLE	
		1	**189-3158**	2	SUPPRESSOR-ARC	
E		1	**119-3662**		TUBE-HEAT SHRINK (10.85-MM DIA) (13-CM)	
E		1	**125-7874**		TUBE-HEAT SHRINK (5.72-MM DIA) (5-CM)	
E		1	**125-7875**		TUBE-HEAT SHRINK (7.44-MM DIA) (15-CM)	
Y	3	1	*231-5273*	1	LINES GP-CONNECTING	336
Y	4	1	*231-5274*	1	CYLINDER & MTG GP-ANGLE BLADE	284
Y	5	1	*231-5276*	1	BLADE GP-ANGLING	455
Y	6	1	*231-5278*	1	MANIFOLD & MTG GP-CONTROL (ANGLING BLADE)	406
Y	7	1	*247-0678*	1	PLATE & FILM GP	792

E-ORDER BY THE CENTIMETER
Y-SEPARATE ILLUSTRATION

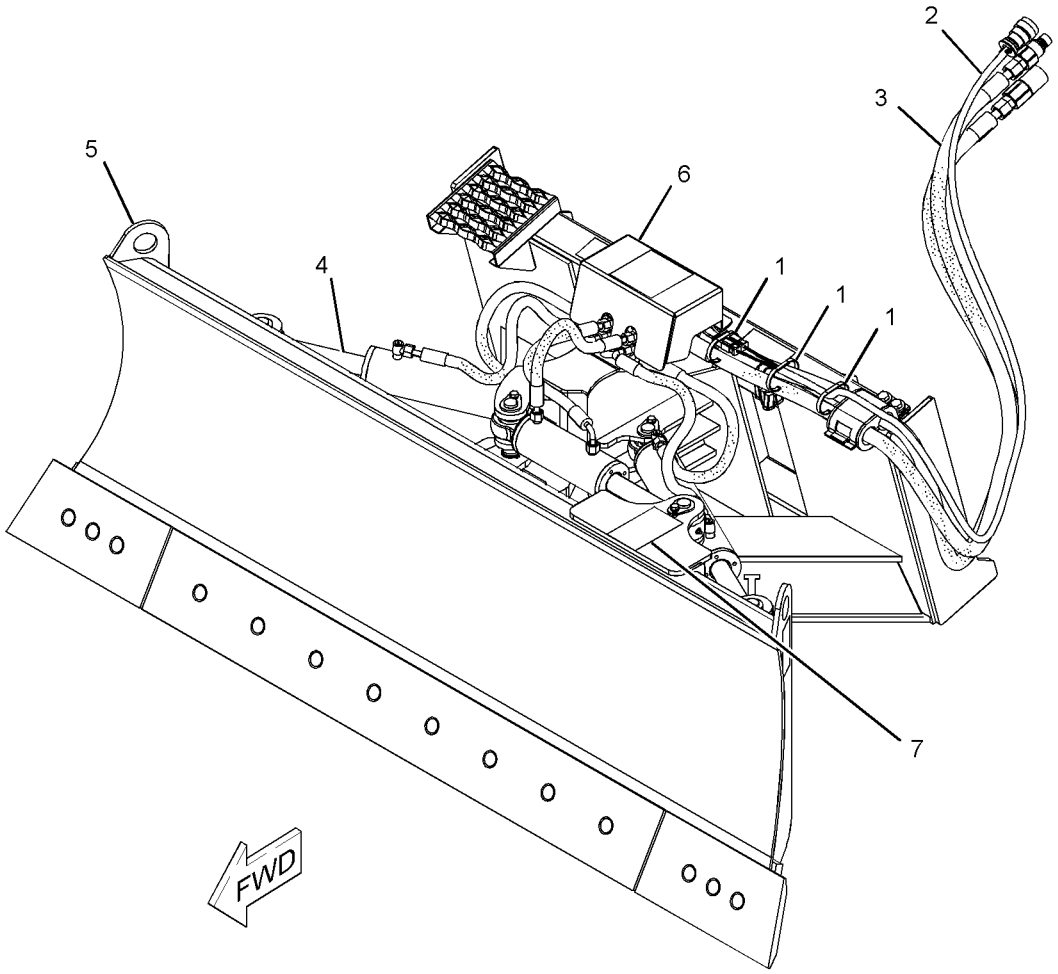

GRAPHIC #1 **<END>** g01381202

WORK TOOLS

177-1981 BLADE GP-ANGLING

S/N: JAY1-UP
1829-MM (72-IN)
PART OF 177-1989 BLADE AR
AN ATTACHMENT

SMCS-6060, 6701 **i01905763**

NOTE	REF NO	GRAPHIC REF	PART NUMBER	QTY	PART NAME 1 2 3 4 5 6 (PRODUCT LEVEL)	SEE PAGE
	1	1	**157-0940**	2	PIN	
	2	1	**166-0319**	2	PIN AS	
	3	1	**169-4868**	2	FILM-WARNING (NO CLEARANCE, STAY BACK)	
	4	1	**177-1921**	2	PIN AS	
	5	1	**177-1972**	2	SKID AS	
	6	1	**177-1987**	1	BLADE AS	
	7	1	**3B-8489**	2	FITTING-GREASE	
M	8	1	**6V-9189**	2	LOCKNUT (M8X1.25-THD)	
M	9	1	**8T-6869**	2	BOLT (M8X1.25X60-MM)	
	10	1	**9R-2959**	2	CLIP	

M-METRIC PART

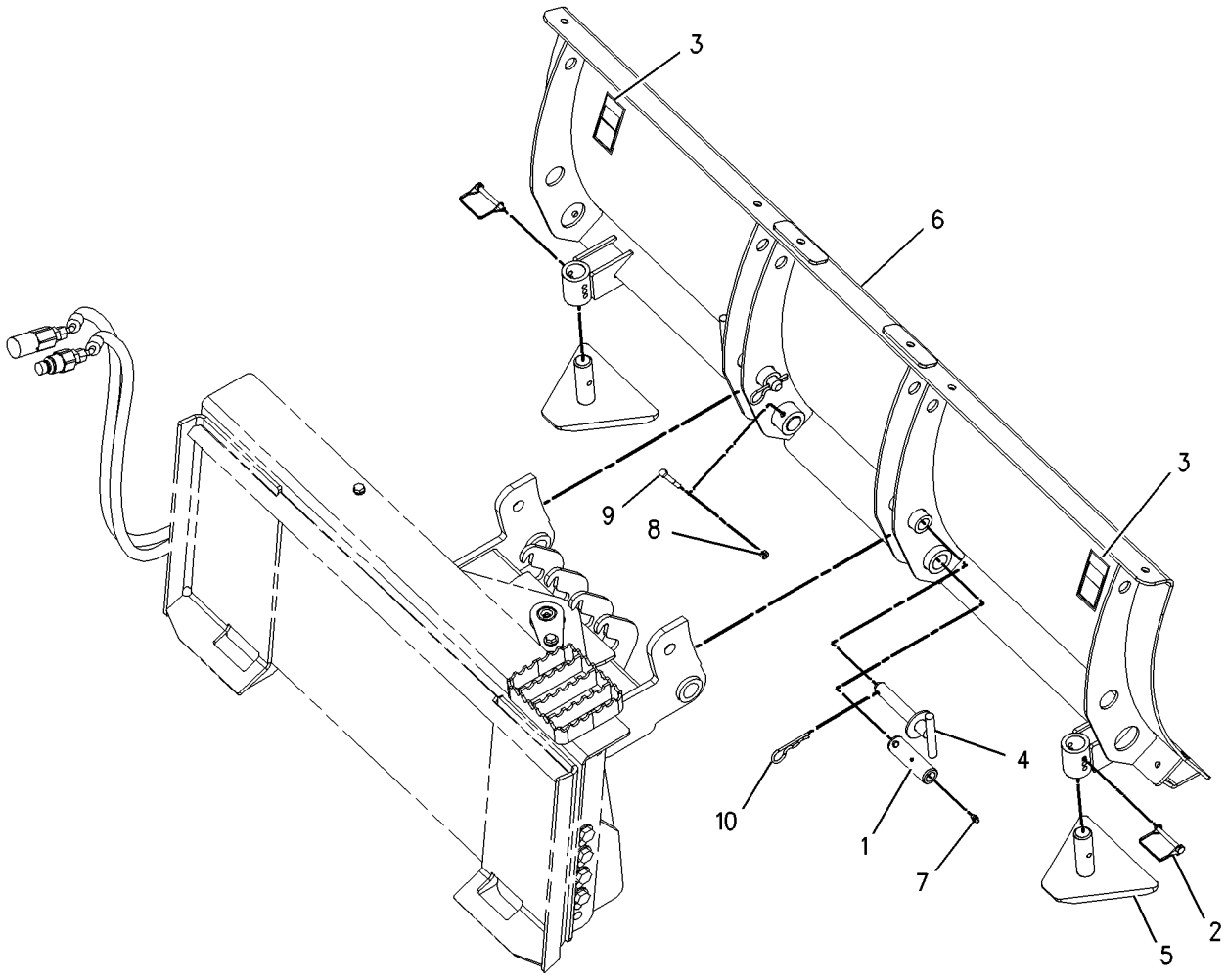

GRAPHIC #1 **<END>** g00777694

177-1982 BLADE GP-ANGLING

S/N: JAY1-UP
2134-MM (84-IN)
PART OF 177-1990 BLADE AR
AN ATTACHMENT

SMCS-6060, 6701 **i01911992**

NOTE	REF NO	GRAPHIC REF	PART NUMBER	QTY	PART NAME 1 2 3 4 5 6 (PRODUCT LEVEL)	SEE PAGE
	1	1	**157-0940**	2	PIN	
	2	1	**166-0319**	2	PIN AS	
	3	1	**169-4868**	2	FILM-WARNING (NO CLEARANCE, STAY BACK)	
	4	1	**177-1921**	2	PIN AS	
	5	1	**177-1972**	2	SKID AS	
	6	1	**177-1988**	1	BLADE AS	
	7	1	**3B-8489**	2	FITTING-GREASE	
M	8	1	**6V-9189**	2	LOCKNUT (M8X1.25-THD)	
M	9	1	**8T-6869**	2	BOLT (M8X1.25X60-MM)	
	10	1	**9R-2959**	2	CLIP	

M-METRIC PART

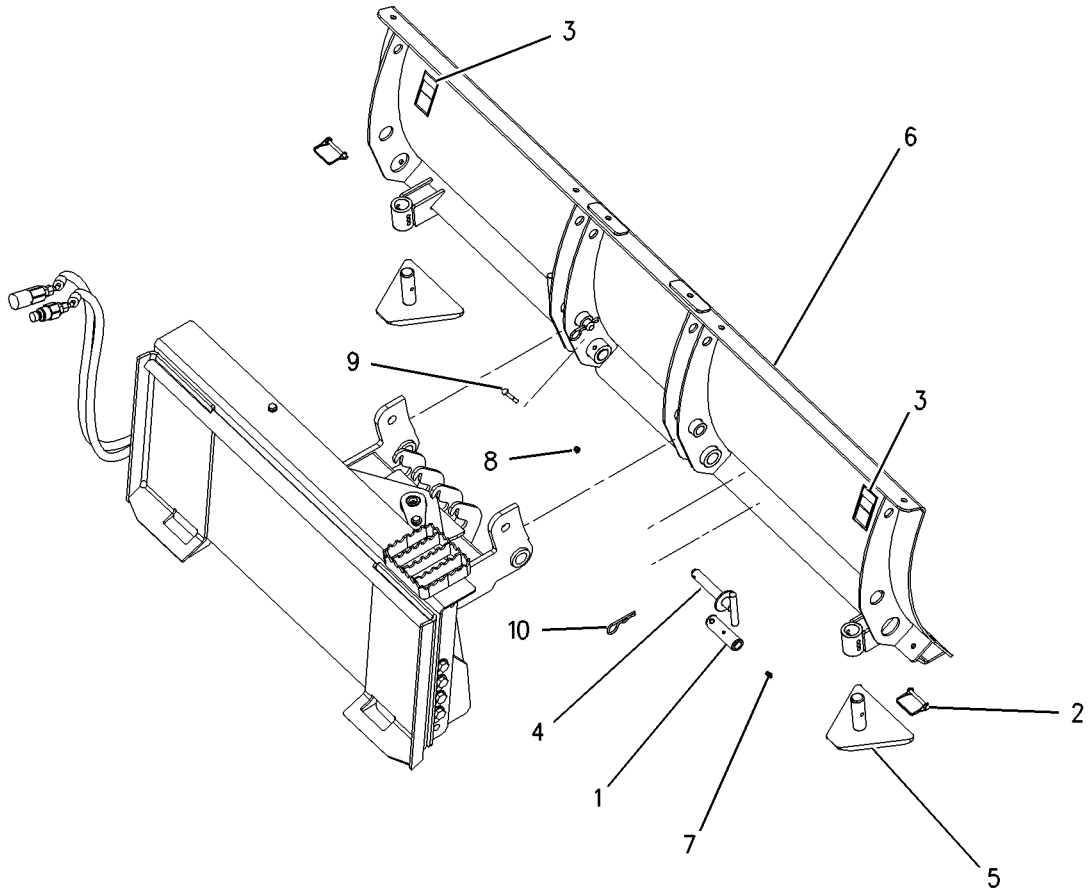

GRAPHIC #1 **<END>** g00710327

WORK TOOLS

222-7724 BLADE GP-ANGLING

S/N: JAY1-UP
2134-MM (84-IN)
PART OF 231-5275 BLADE AR
AN ATTACHMENT

SMCS-6060, 6701 **i02280909**

NOTE	REF NO	GRAPHIC REF	PART NUMBER	QTY	PART NAME 1 2 3 4 5 6 (PRODUCT LEVEL)	SEE PAGE
B	1	1	**8E-5702**	22	SHIM (0.8-MM THK)	
	2	1	**255-6540**	1	PLATE-INSTRUCTION (BUCKET SPECIFICATIONS)	
	3	1	**168-8389**	4	TACK-FASTENER	
	4	1	**222-7412**	1	BLADE AS-ANGLING	
	5	1	**222-7725**	1	FRAME GP-BLADE	
	6	1	**231-5271**	1	PIN	
	7	1	**238-1004**	2	MOUNT AS	
	8	1	**238-1005**	2	SKID AS	
	9	1	**244-1367**	1	BUSHING	
Y	10	1	*222-7546*	1	EDGE GP-BIT & CUTTING	583
	11	1	**5P-1076**	8	WASHER-HARD (13.5X30X4-MM THK)	
	12	1	**6V-7644**	2	RING-RETAINING	
M	13	1	**8C-8478**	4	BOLT (M20X2.5X140-MM)	
	14	1	**8J-2880**	1	CAP-BEARING	
	15	1	**8T-4123**	4	WASHER (22X35X3.5-MM THK)	
M	16	1	**8T-4139**	8	BOLT (M12X1.75X30-MM)	

B-USE AS REQUIRED
M-METRIC PART
Y-SEPARATE ILLUSTRATION

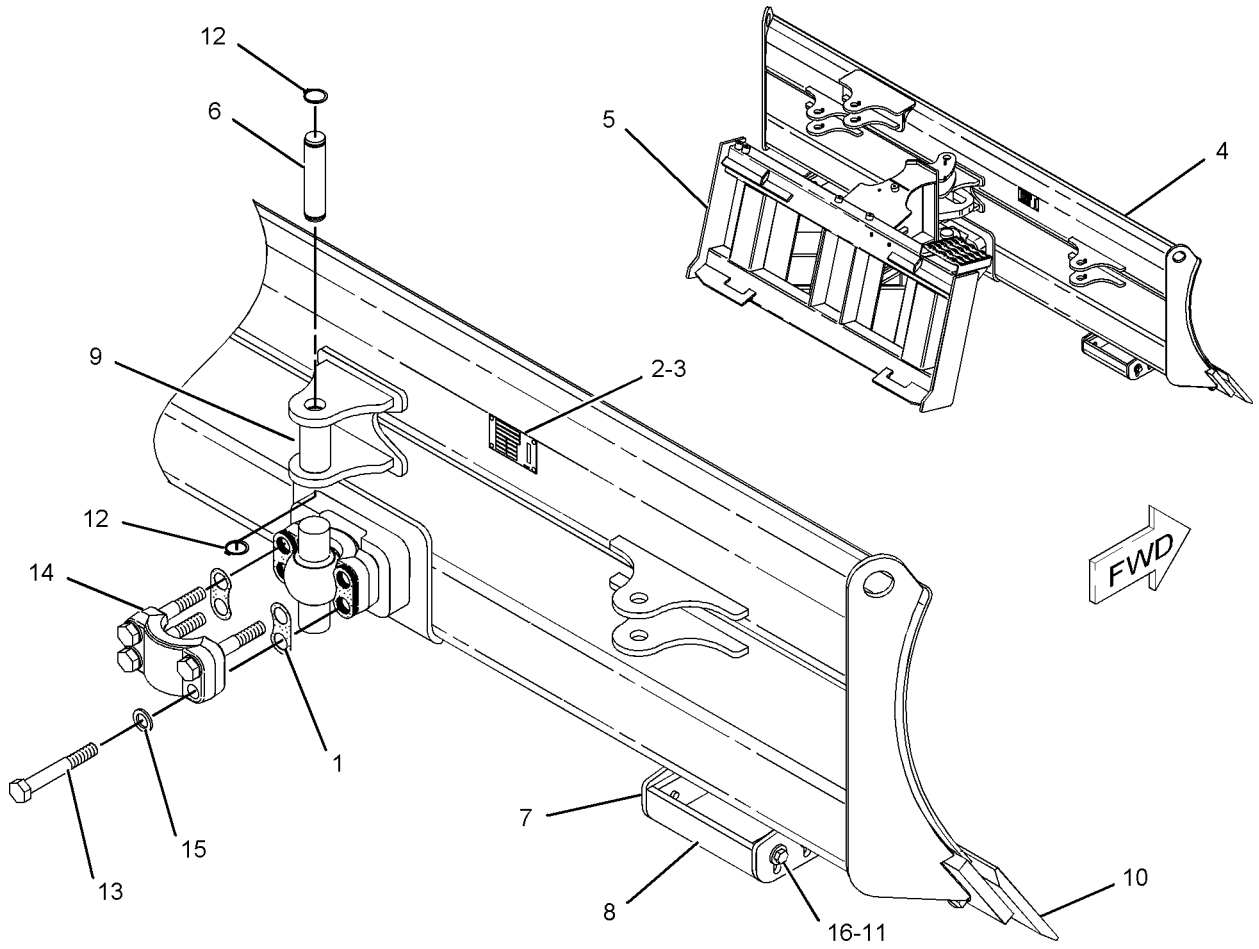

GRAPHIC #1 **<END>** g01021080

231-5276 BLADE GP-ANGLING

S/N: JAY1-UP
1829-MM (72-IN)
PART OF 231-5277 BLADE AR
AN ATTACHMENT

SMCS-6060, 6701 **i02280916**

NOTE	REF NO	GRAPHIC REF	PART NUMBER	QTY	PART NAME 1 2 3 4 5 6 (PRODUCT LEVEL)	SEE PAGE
B	1	1	**8E-5702**	22	SHIM (0.8-MM THK)	
	2	1	**255-6540**	1	PLATE-INSTRUCTION (BUCKET SPECIFICATIONS)	
	3	1	**168-8389**	4	TACK-FASTENER	
	4	1	**222-7725**	1	FRAME GP-BLADE	
	5	1	**230-4596**	1	BLADE AS-ANGLING	
	6	1	**231-5271**	1	PIN	
	7	1	**238-1004**	2	MOUNT AS	
	8	1	**238-1005**	2	SKID AS	
	9	1	**244-1367**	1	BUSHING	
Y	10	1	*222-7545*	1	EDGE GP-BIT & CUTTING	583
	11	1	**5P-1076**	8	WASHER-HARD (13.5X30X4-MM THK)	
	12	1	**6V-7644**	2	RING-RETAINING	
M	13	1	**8C-8478**	4	BOLT (M20X2.5X140-MM)	
	14	1	**8J-2880**	1	CAP-BEARING	
	15	1	**8T-4123**	4	WASHER (22X35X3.5-MM THK)	
M	16	1	**8T-4139**	8	BOLT (M12X1.75X30-MM)	

B-USE AS REQUIRED
M-METRIC PART
Y-SEPARATE ILLUSTRATION

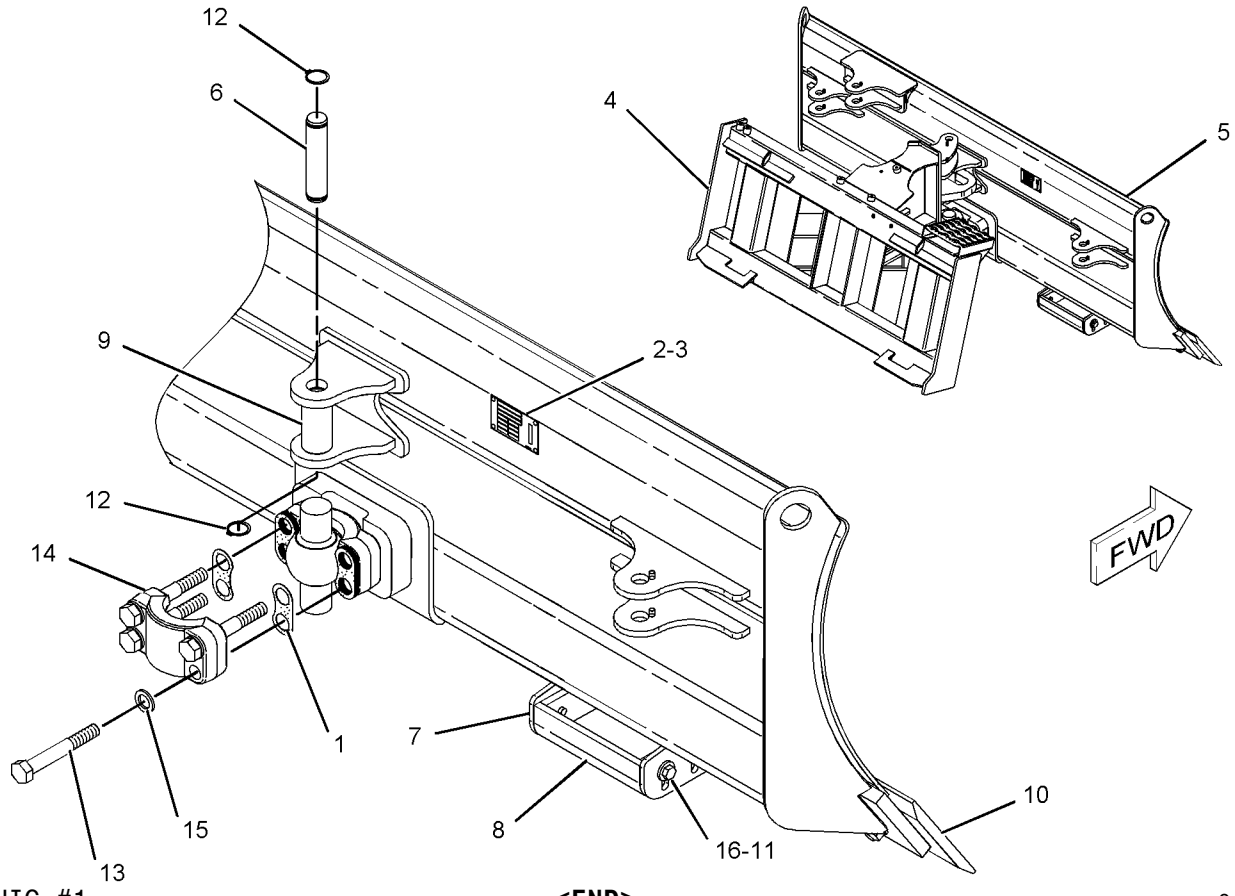

GRAPHIC #1 **<END>** g01020723

154-5080 BLADE GP-MULTIPURPOSE BUCKET

S/N: JAY1-UP
1829-MM (72-IN)
PART OF 159-5347 BLADE GP-MULTIPURPOSE BUCKET
AN ATTACHMENT

SMCS-6060, 6104 **i03641795**

NOTE	REF NO	GRAPHIC REF	PART NUMBER	QTY	PART NAME 1 2 3 4 5 6 (PRODUCT LEVEL)	SEE PAGE
	1	1	**154-5077**	1	EDGE	

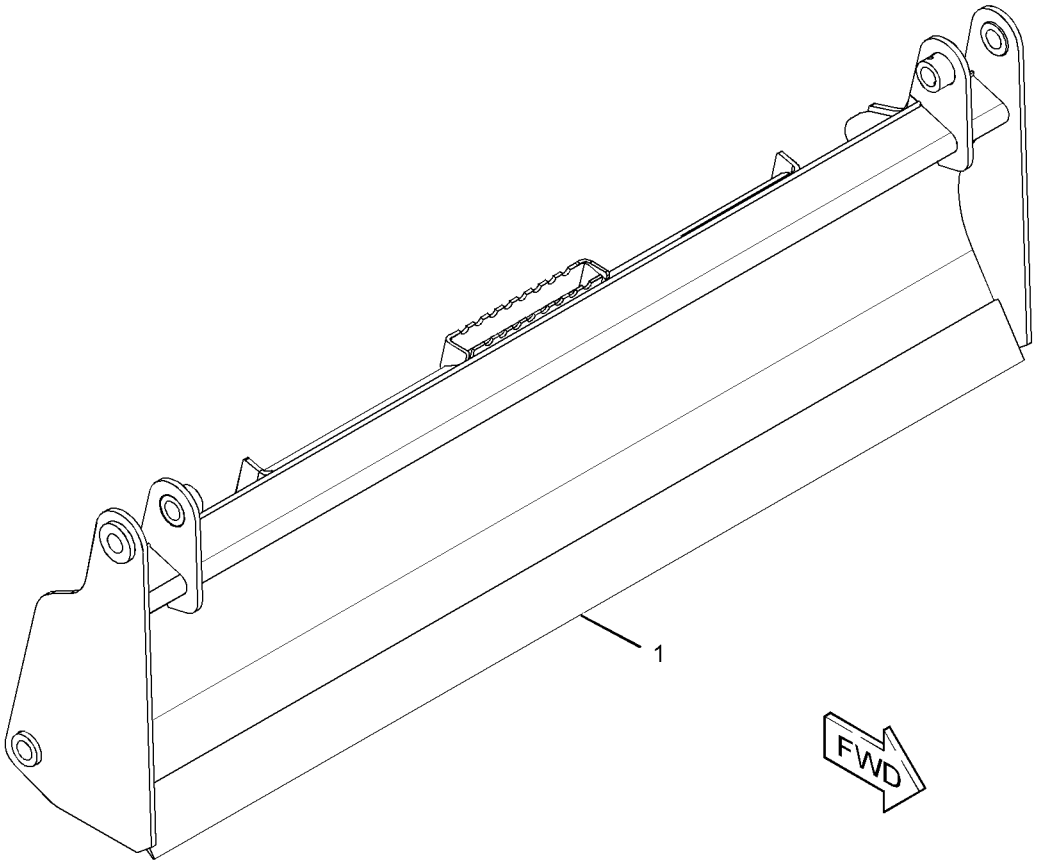

GRAPHIC #1 **<END>** g01953741

159-5345 BLADE GP-MULTIPURPOSE BUCKET

S/N: JAY1-UP
1524-MM (60-IN)
PART OF 154-5005 BUCKET GP-MULTIPURPOSE
AN ATTACHMENT

SMCS-6060, 6104 **i03641755**

NOTE	REF NO	GRAPHIC REF	PART NUMBER	QTY	PART NAME 1 2 3 4 5 6 (PRODUCT LEVEL)	SEE PAGE
Y	1	1	**279-5385**	1	BLADE GP-MULTIPURPOSE BUCKET (60-IN)	460
	2	1	**154-2704**	1	PLATE-INSTRUCTION (BUCKET SPECIFICATIONS)	
	3	1	**168-8389**	4	TACK-FASTENER	

Y-SEPARATE ILLUSTRATION

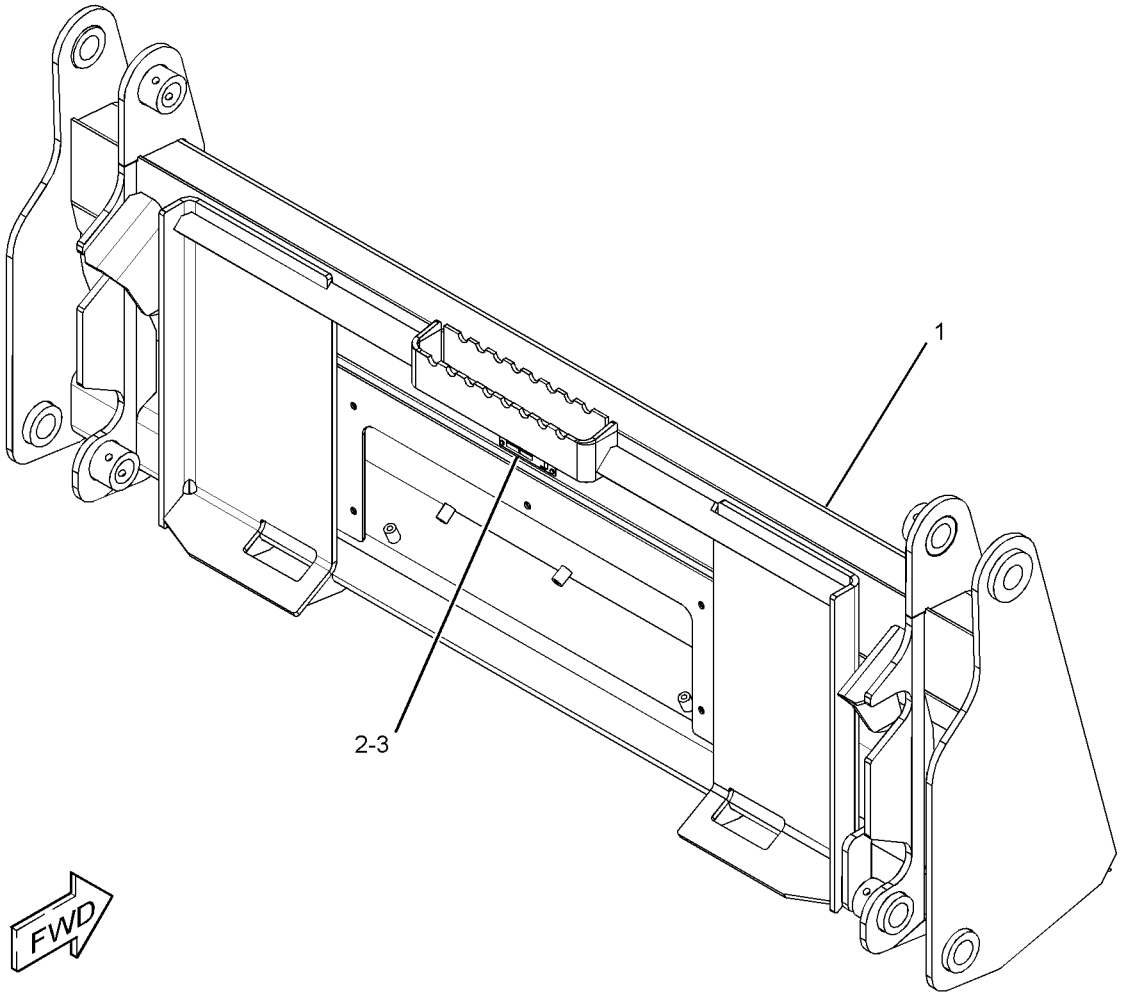

GRAPHIC #1 **<END>** g01945292

159-5347 BLADE GP-MULTIPURPOSE BUCKET

S/N: JAY1-UP
1829-MM (72-IN)
PART OF 154-5009 BUCKET GP-MULTIPURPOSE
AN ATTACHMENT

SMCS-6060, 6104 **i03641796**

NOTE	REF NO	GRAPHIC REF	PART NUMBER	QTY	PART NAME 1 2 3 4 5 6 (PRODUCT LEVEL)	SEE PAGE
	1	1	**154-2704**	1	PLATE-INSTRUCTION (BUCKET SPECIFICATIONS)	
Y	2	1	*154-5080*	1	BLADE GP-MULTIPURPOSE BUCKET (72-IN)	456
	3	1	**168-8389**	4	TACK-FASTENER	

Y-SEPARATE ILLUSTRATION

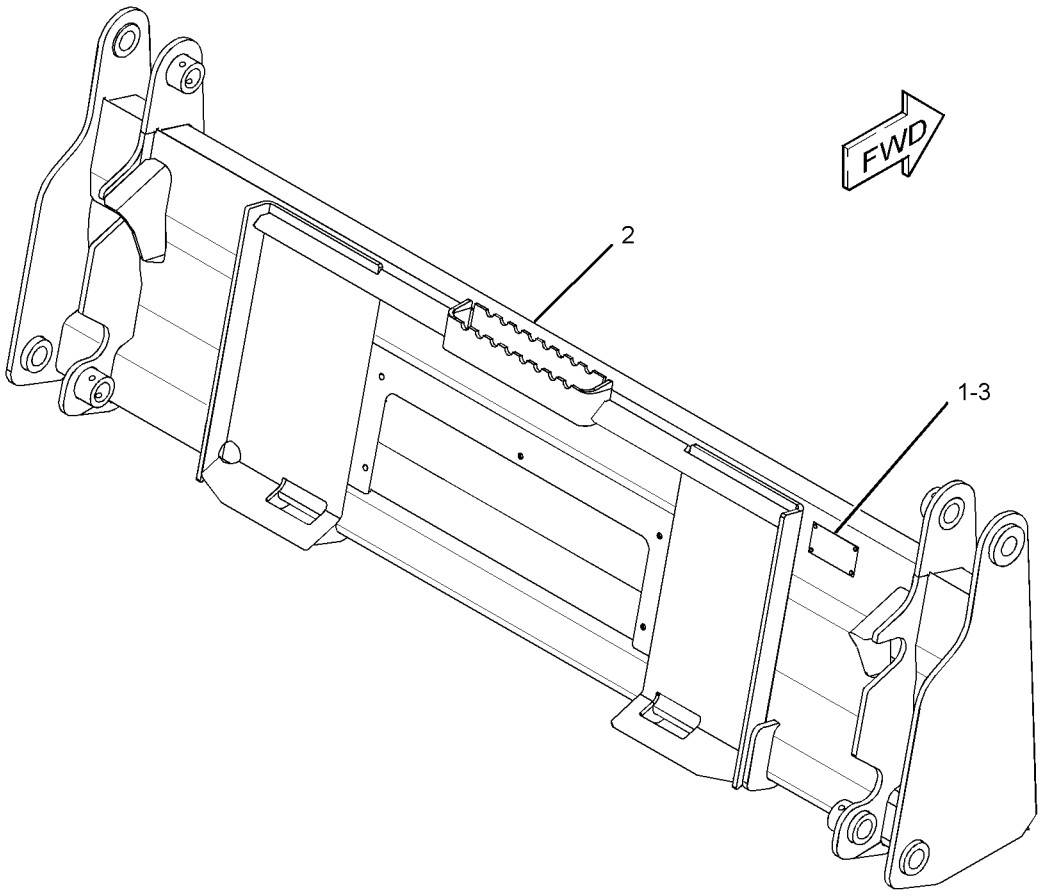

GRAPHIC #1 **<END>** g01953756

279-5384 BLADE GP-MULTIPURPOSE BUCKET

S/N: JAY1-UP
1524-MM (60-IN)
PART OF 279-5383 BUCKET GP-MULTIPURPOSE
AN ATTACHMENT

SMCS-6060, 6104 **i03641756**

NOTE	REF NO	GRAPHIC REF	PART NUMBER	QTY	PART NAME 1 2 3 4 5 6 (PRODUCT LEVEL)	SEE PAGE
	1	1	**154-2704**	1	PLATE-INSTRUCTION (BUCKET SPECIFICATIONS)	
	2	1	**168-8389**	4	TACK-FASTENER	
Y	3	1	**279-5385**	1	BLADE GP-MULTIPURPOSE BUCKET (60-IN)	460

Y-SEPARATE ILLUSTRATION

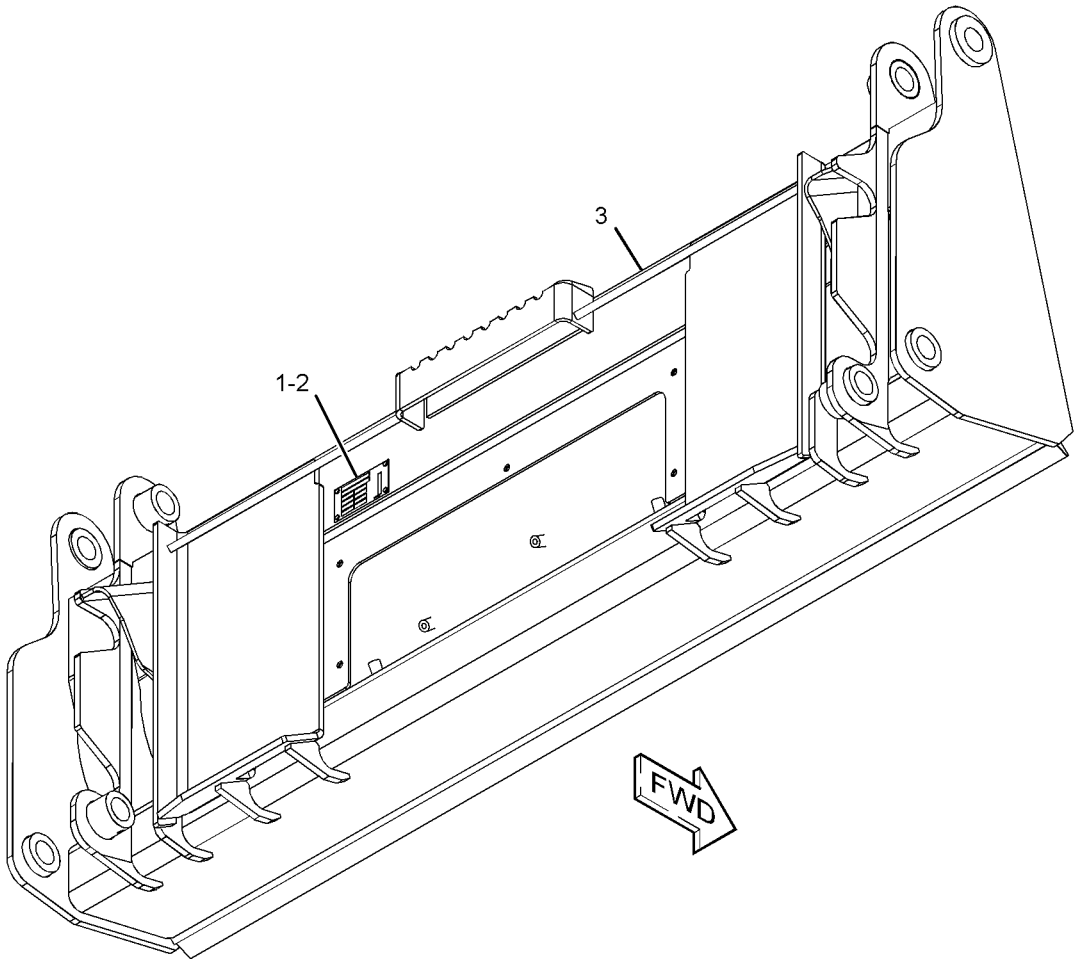

GRAPHIC #1 **<END>** g01278496

279-5385 BLADE GP-MULTIPURPOSE BUCKET

S/N: JAY1-UP
1524-MM (60-IN)
PART OF 159-5345, 279-5384 BLADE GP-MULTIPURPOSE BUCKET
AN ATTACHMENT

SMCS-6060, 6104 **i03638431**

NOTE	REF NO	GRAPHIC REF	PART NUMBER	QTY	PART NAME 1 2 3 4 5 6 (PRODUCT LEVEL)	SEE PAGE
	1	1	**154-5037**	1	EDGE	

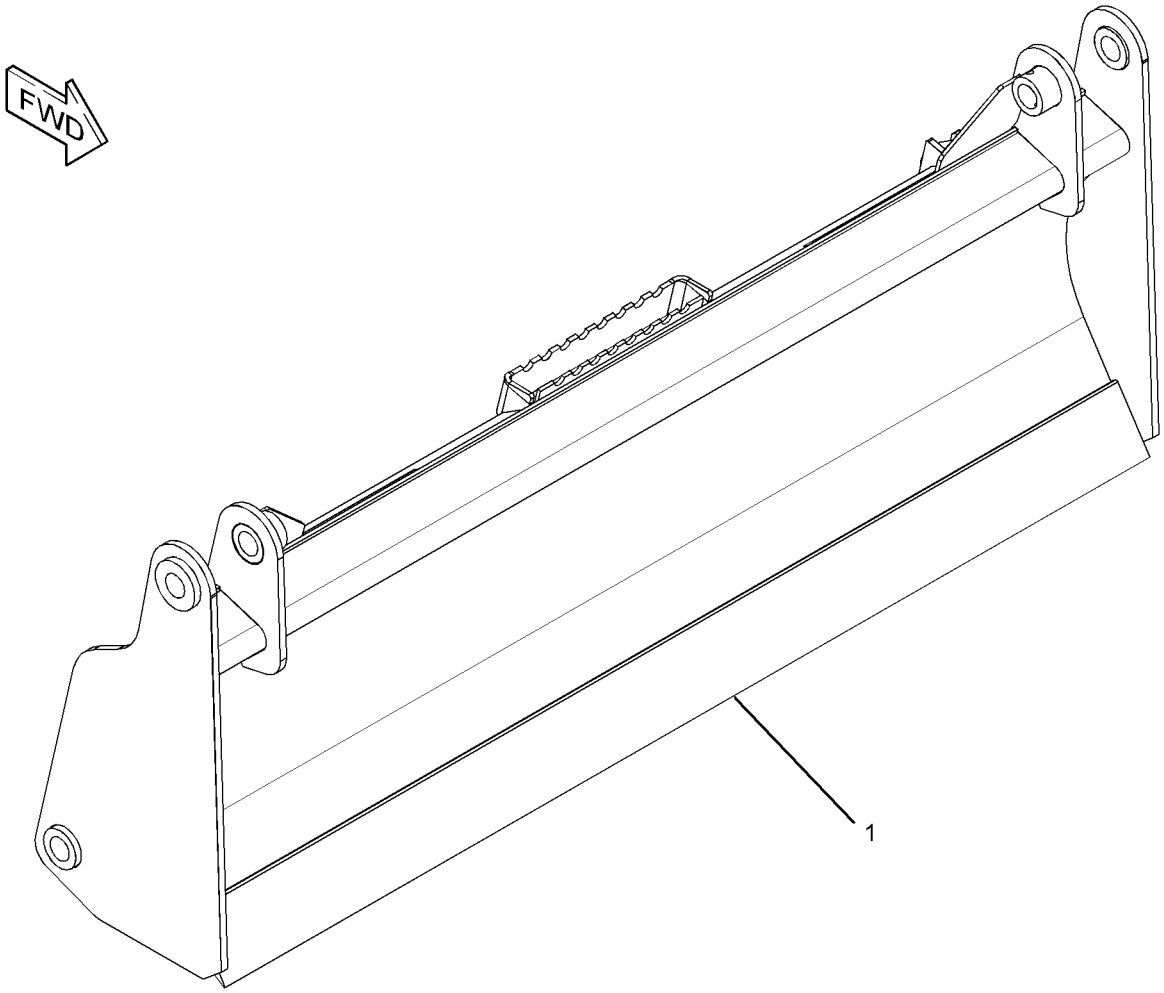

GRAPHIC #1 **<END>** g01953861

279-5388 BLADE GP-MULTIPURPOSE BUCKET

S/N: JAY1-UP
1676-MM (66-IN)
PART OF 279-5389 BUCKET GP-MULTIPURPOSE
AN ATTACHMENT

SMCS-6060, 6104 **i02552100**

NOTE	REF NO	GRAPHIC REF	PART NUMBER	QTY	PART NAME 1 2 3 4 5 6 (PRODUCT LEVEL)	SEE PAGE
	1	1	**154-2704**	1	PLATE-INSTRUCTION (BUCKET SPECIFICATIONS)	
	2	1	**168-8389**	4	TACK-FASTENER	
	3	1	**279-5387**	1	BLADE AS	

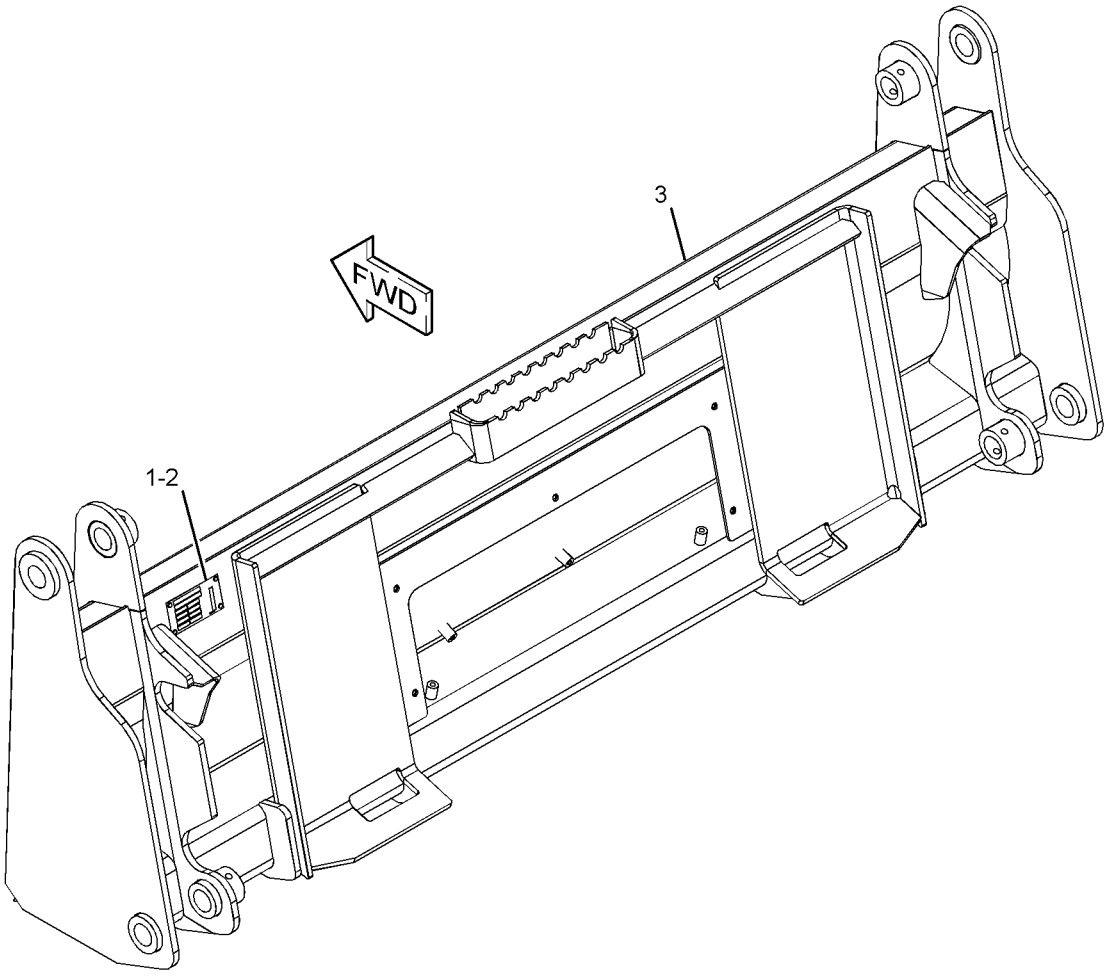

GRAPHIC #1 **<END>** g01279242

279-5396 BLADE GP-MULTIPURPOSE BUCKET

S/N: JAY1-UP
1829-MM (72-IN)
PART OF 279-5397 BUCKET GP-MULTIPURPOSE
AN ATTACHMENT

SMCS-6060, 6104 **i02552170**

NOTE	REF NO	GRAPHIC REF	PART NUMBER	QTY	PART NAME 1 2 3 4 5 6 (PRODUCT LEVEL)	SEE PAGE
	1	1	**154-2704**	1	PLATE-INSTRUCTION (BUCKET SPECIFICATIONS)	
	2	1	**168-8389**	4	TACK-FASTENER	
	3	1	**279-5395**	1	BLADE AS	

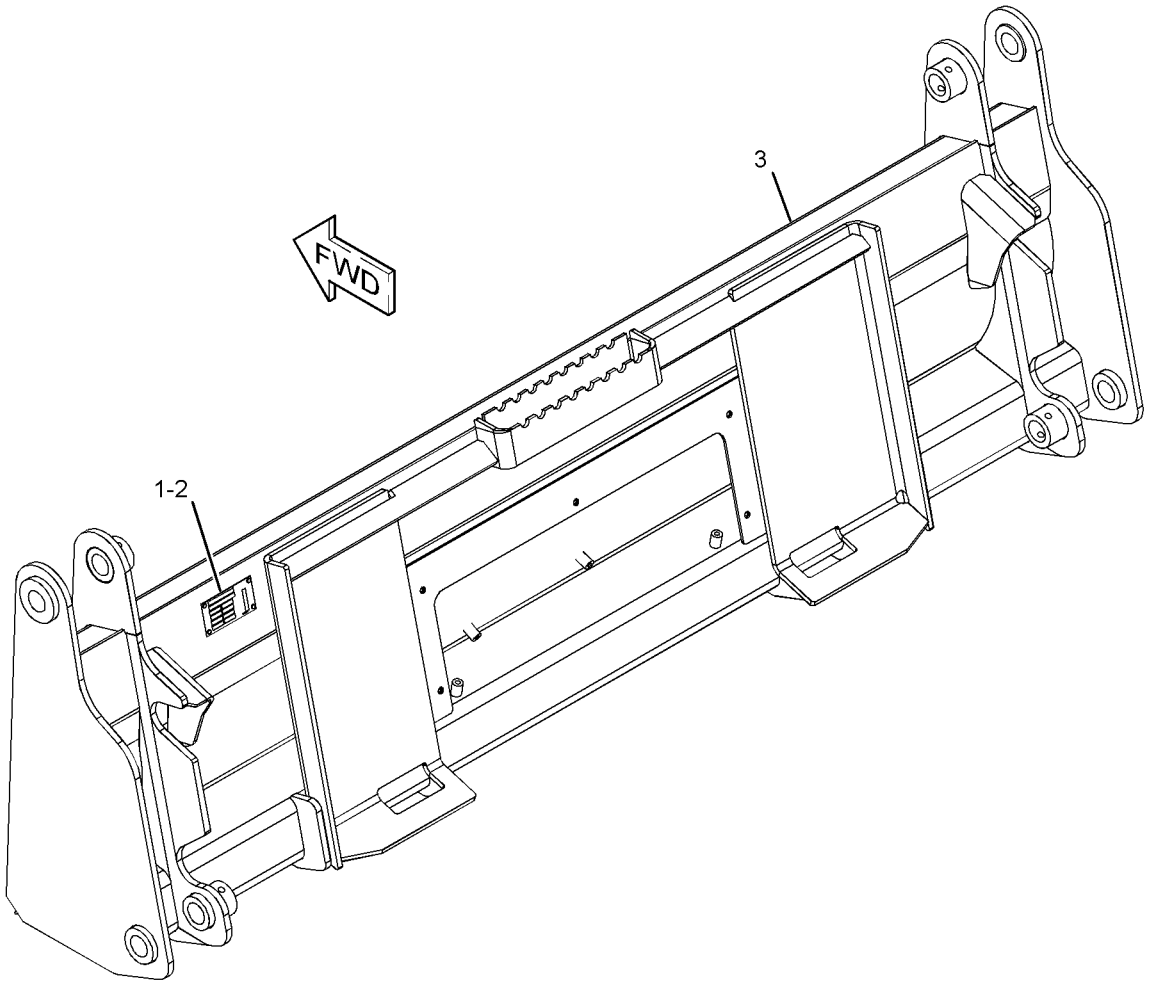

GRAPHIC #1 **<END>** g01279973

279-5405 BLADE GP-MULTIPURPOSE BUCKET

S/N: JAY1-UP
1981-MM (78-IN)
PART OF 279-5404 BUCKET GP-MULTIPURPOSE
AN ATTACHMENT

SMCS-6060, 6104 **i03641757**

NOTE	REF NO	GRAPHIC REF	PART NUMBER	QTY	PART NAME 1 2 3 4 5 6 (PRODUCT LEVEL)	SEE PAGE
	1	1	**154-2704**	1	PLATE-INSTRUCTION (BUCKET SPECIFICATIONS)	
	2	1	**168-8389**	4	TACK-FASTENER	
Y	3	1	**279-5406**	1	BLADE GP-MULTIPURPOSE BUCKET (78-IN)	464

Y-SEPARATE ILLUSTRATION

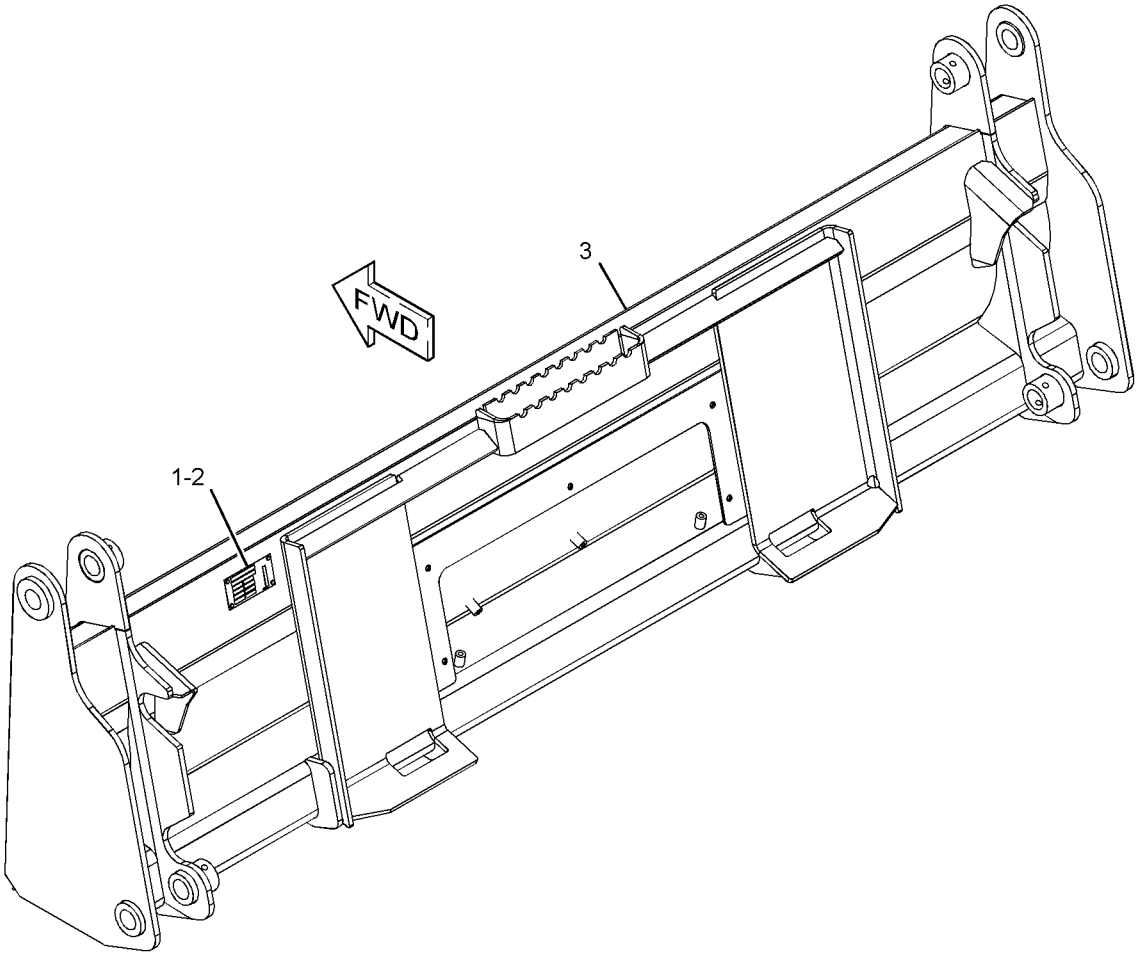

GRAPHIC #1 **<END>** g01278518

279-5406 BLADE GP-MULTIPURPOSE BUCKET

S/N: JAY1-UP
1981-MM (78-IN)
PART OF 279-5405 BLADE GP-MULTIPURPOSE BUCKET
AN ATTACHMENT

SMCS-6060, 6104 **i03638465**

NOTE	REF NO	GRAPHIC REF	PART NUMBER	QTY	PART NAME 1 2 3 4 5 6 (PRODUCT LEVEL)	SEE PAGE
	1	1	**199-8316**	1	EDGE	

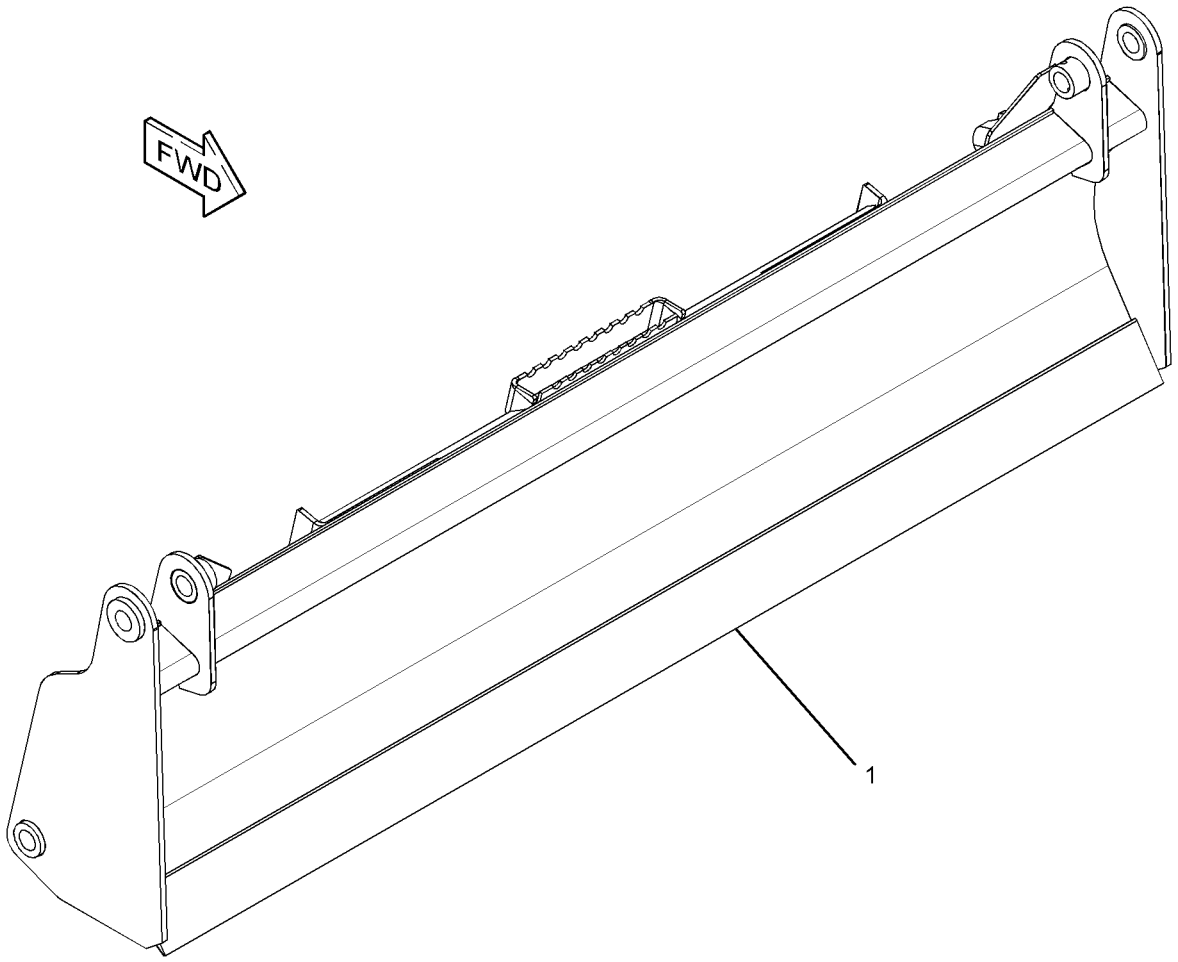

GRAPHIC #1 **<END>** g01954566

293-0142 BLADE GP-MULTIPURPOSE BUCKET

S/N: JAY1-UP
2134-MM (84-IN)
PART OF 293-0141 BUCKET GP-MULTIPURPOSE
AN ATTACHMENT

SMCS-6060, 6104 **i02636486**

NOTE	REF NO	GRAPHIC REF	PART NUMBER	QTY	PART NAME 1 2 3 4 5 6 (PRODUCT LEVEL)	SEE PAGE
	1	1	**154-2704**	1	PLATE-INSTRUCTION (BUCKET SPECIFICATIONS)	
	2	1	**168-8389**	4	TACK-FASTENER	
	3	1	**293-0143**	1	BLADE AS	

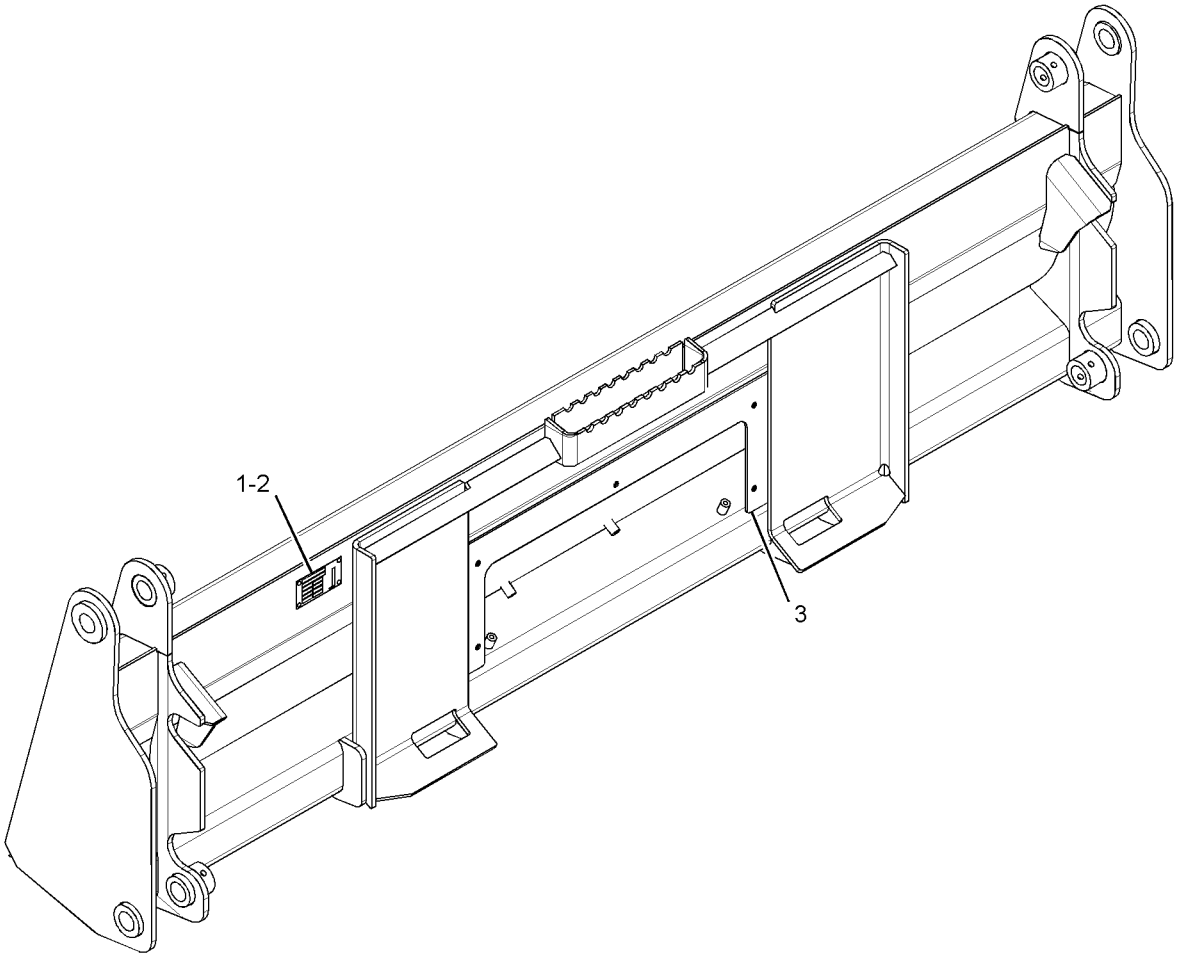

GRAPHIC #1 **<END>** g01327412

325-7038 BLADE GP-MULTIPURPOSE BUCKET

S/N: JAY1-UP
PART OF 325-7037 BUCKET GP-MULTIPURPOSE
AN ATTACHMENT

SMCS-6060, 6104 **i03641711**

NOTE	REF NO	GRAPHIC REF	PART NUMBER	QTY	PART NAME 1 2 3 4 5 6 (PRODUCT LEVEL)	SEE PAGE
	1	1	**154-2704**	1	PLATE-INSTRUCTION (BUCKET SPECIFICATIONS)	
	2	1	**168-8389**	4	TACK-FASTENER	
Y	3	1	**325-7039**	1	BLADE GP-MULTIPURPOSE BUCKET (60-IN)	467

Y-SEPARATE ILLUSTRATION

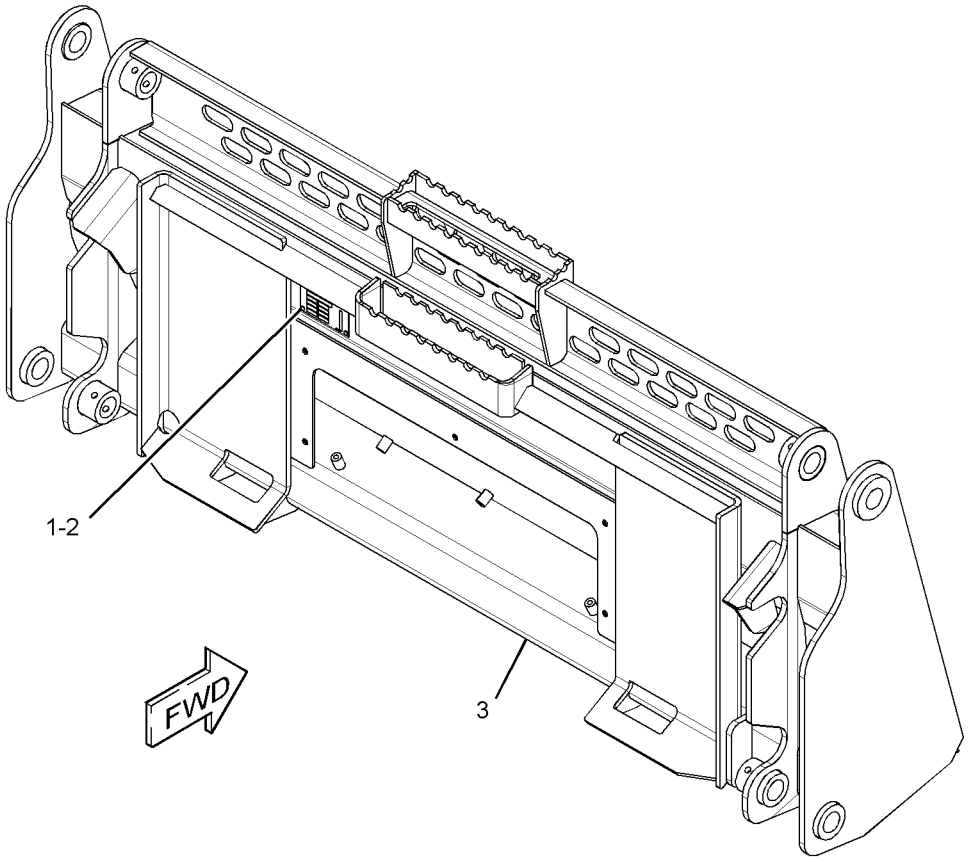

GRAPHIC #1 **<END>** g01529146

325-7039 BLADE GP-MULTIPURPOSE BUCKET

S/N: JAY1-UP
1524-MM (60-IN)
PART OF 325-7038 BLADE GP-MULTIPURPOSE BUCKET
AN ATTACHMENT

SMCS-6060, 6104 **i03635069**

NOTE	REF NO	GRAPHIC REF	PART NUMBER	QTY	PART NAME 1 2 3 4 5 6 (PRODUCT LEVEL)	SEE PAGE
	1	1	**154-5037**	1	EDGE	
	2	1	**325-7034**	1	GUARD AS (60-IN)	

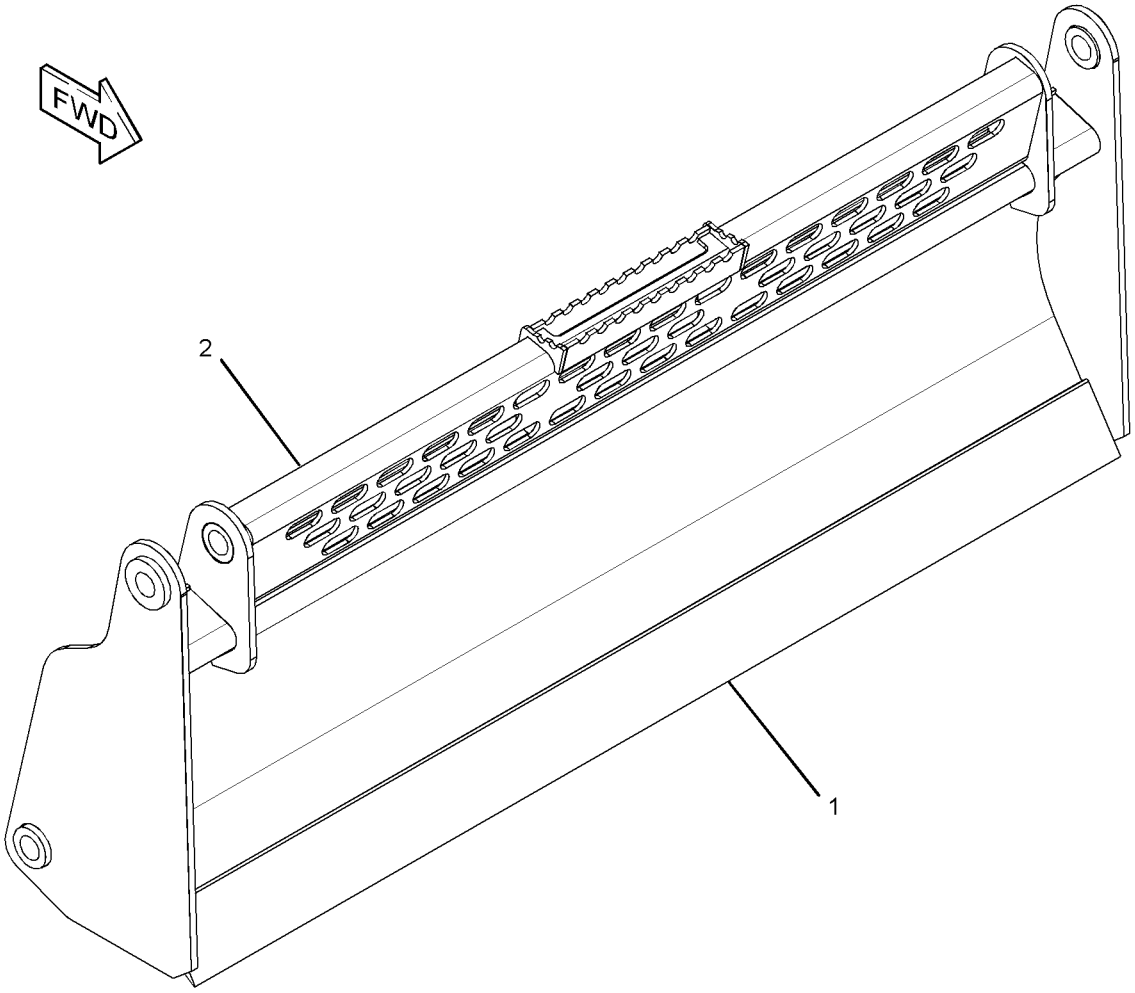

GRAPHIC #1 **<END>** g01953488

325-7048 BLADE GP-MULTIPURPOSE BUCKET

S/N: JAY1-UP
PART OF 325-7047 BUCKET GP-MULTIPURPOSE
AN ATTACHMENT

SMCS-6060, 6104 **i03641712**

NOTE	REF NO	GRAPHIC REF	PART NUMBER	QTY	PART NAME 1 2 3 4 5 6 (PRODUCT LEVEL)	SEE PAGE
	1	1	**154-2704**	1	PLATE-INSTRUCTION (BUCKET SPECIFICATIONS)	
	2	1	**168-8389**	4	TACK-FASTENER	
Y	3	1	**325-7049**	1	BLADE GP-MULTIPURPOSE BUCKET (66-IN)	469

Y-SEPARATE ILLUSTRATION

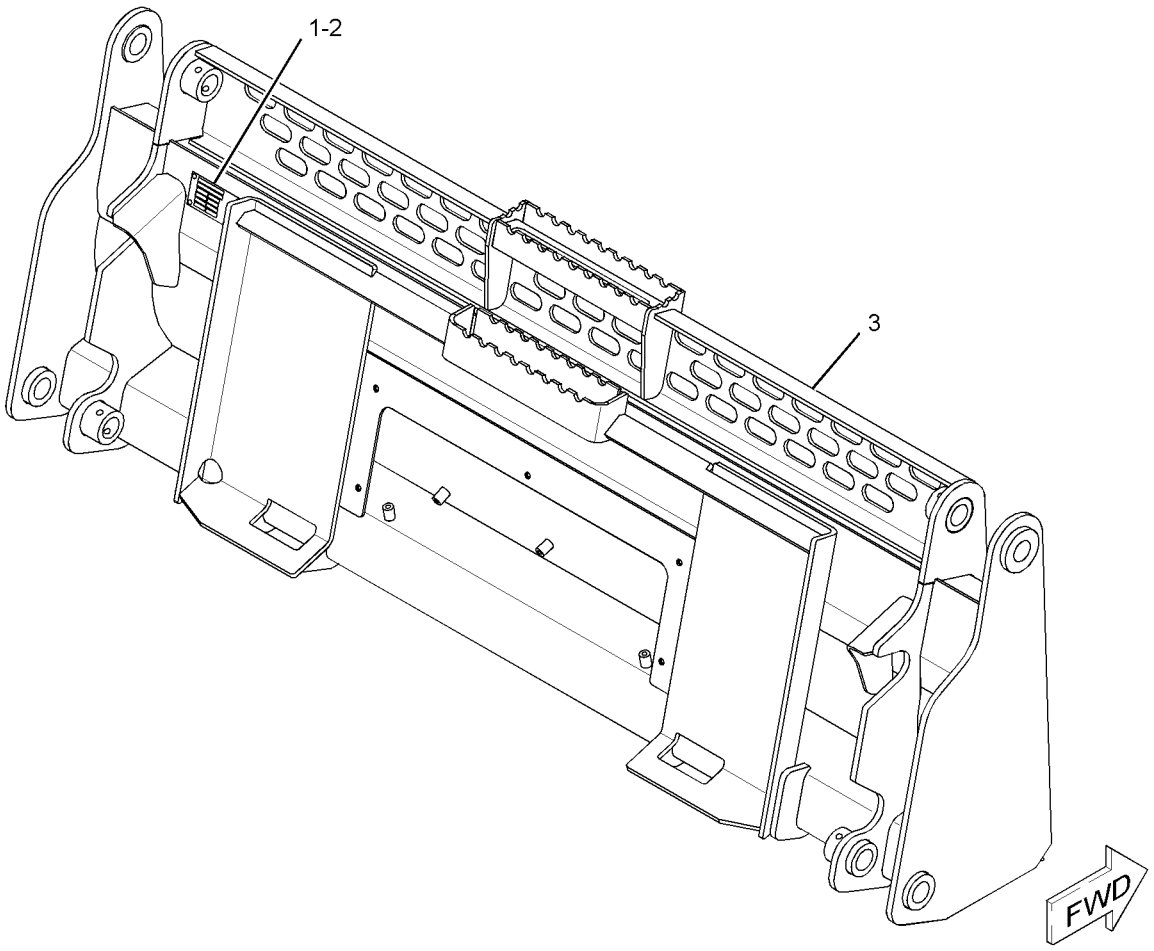

GRAPHIC #1 **<END>** g01943656

325-7049 BLADE GP-MULTIPURPOSE BUCKET

S/N: JAY1-UP
1676-MM (66-IN)
PART OF 325-7048 BLADE GP-MULTIPURPOSE BUCKET
AN ATTACHMENT

SMCS-6060, 6104 **i03635073**

NOTE	REF NO	GRAPHIC REF	PART NUMBER	QTY	PART NAME 1 2 3 4 5 6 (PRODUCT LEVEL)	SEE PAGE
	1	1	**154-5059**	1	EDGE	
	2	1	**325-7044**	1	GUARD AS (66-IN)	

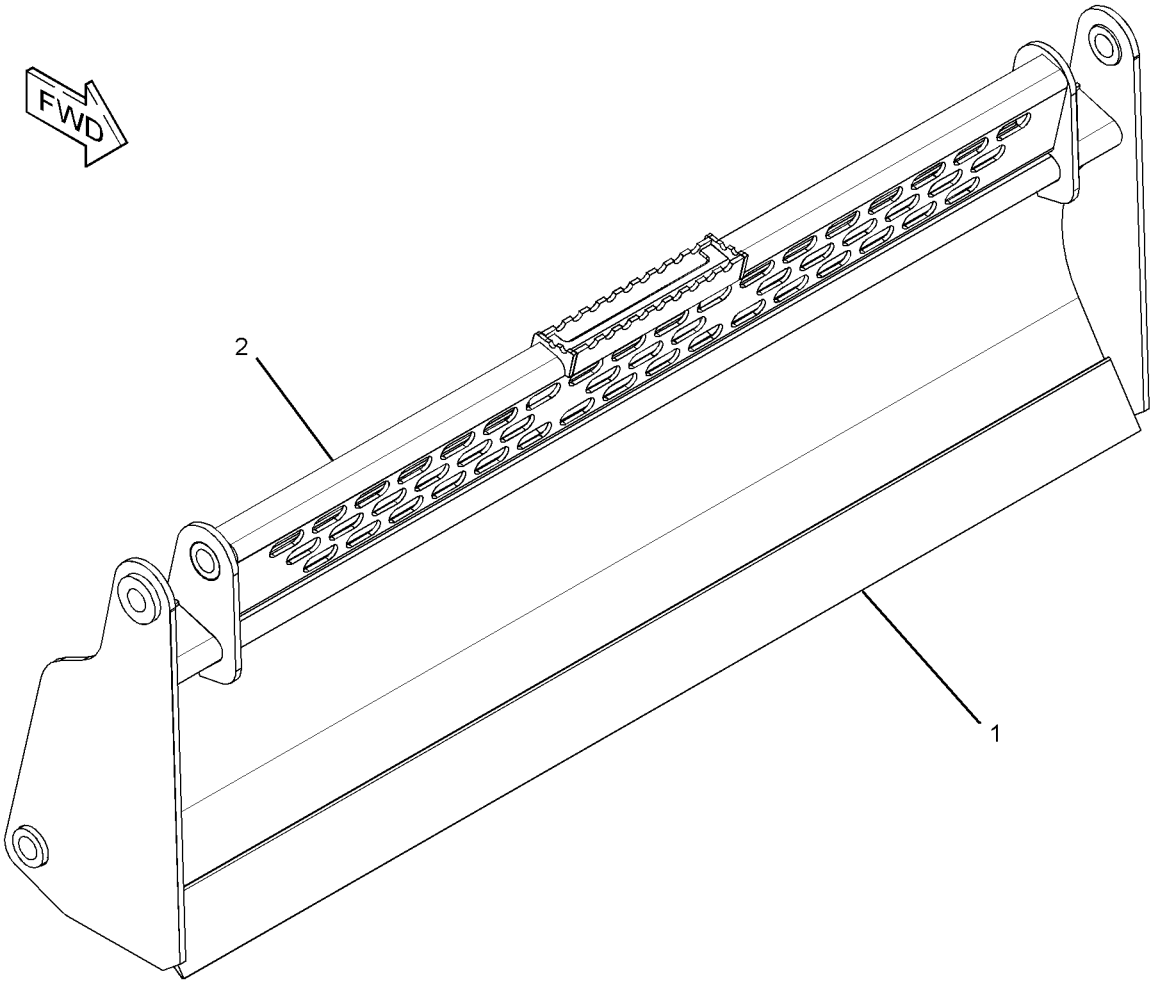

GRAPHIC #1 **<END>** g01953513

325-7058 BLADE GP-MULTIPURPOSE BUCKET

S/N: JAY1-UP
PART OF 325-7057 BUCKET GP-MULTIPURPOSE
AN ATTACHMENT

SMCS-6060, 6104 **i03641713**

NOTE	REF NO	GRAPHIC REF	PART NUMBER	QTY	PART NAME 1 2 3 4 5 6 (PRODUCT LEVEL)	SEE PAGE
	1	1	**154-2704**	1	PLATE-INSTRUCTION (BUCKET SPECIFICATIONS)	
	2	1	**168-8389**	4	TACK-FASTENER	
Y	3	1	**325-7059**	1	BLADE GP-MULTIPURPOSE BUCKET (72-IN)	471

Y-SEPARATE ILLUSTRATION

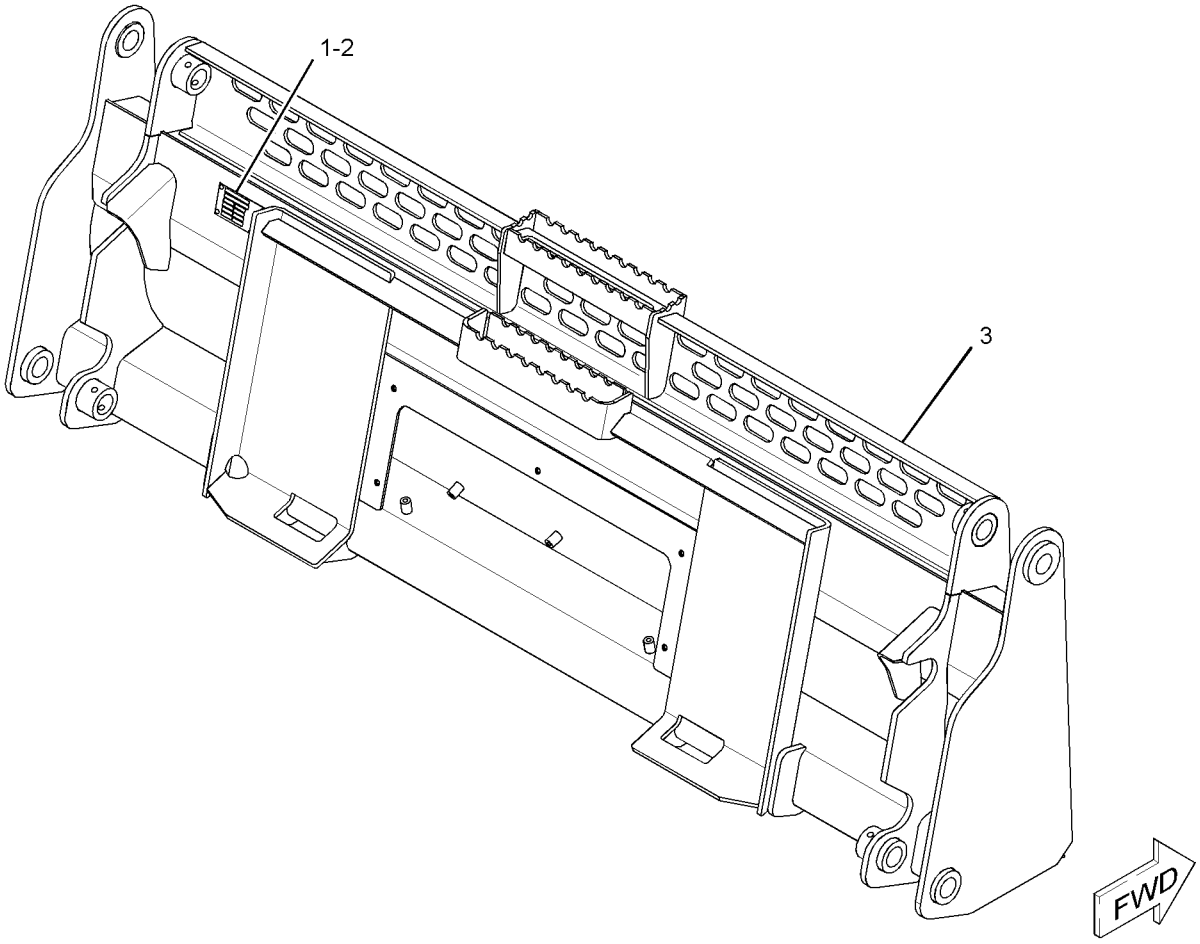

GRAPHIC #1 **<END>** g01943659

325-7059 BLADE GP-MULTIPURPOSE BUCKET

S/N: JAY1-UP
1829-MM (72-IN)
PART OF 325-7058 BLADE GP-MULTIPURPOSE BUCKET
AN ATTACHMENT

SMCS-6060, 6104 **i03635074**

NOTE	REF NO	GRAPHIC REF	PART NUMBER	QTY	PART NAME 1 2 3 4 5 6 (PRODUCT LEVEL)	SEE PAGE
	1	1	**154-5077**	1	EDGE	
	2	1	**325-7054**	1	GUARD AS (72-IN)	

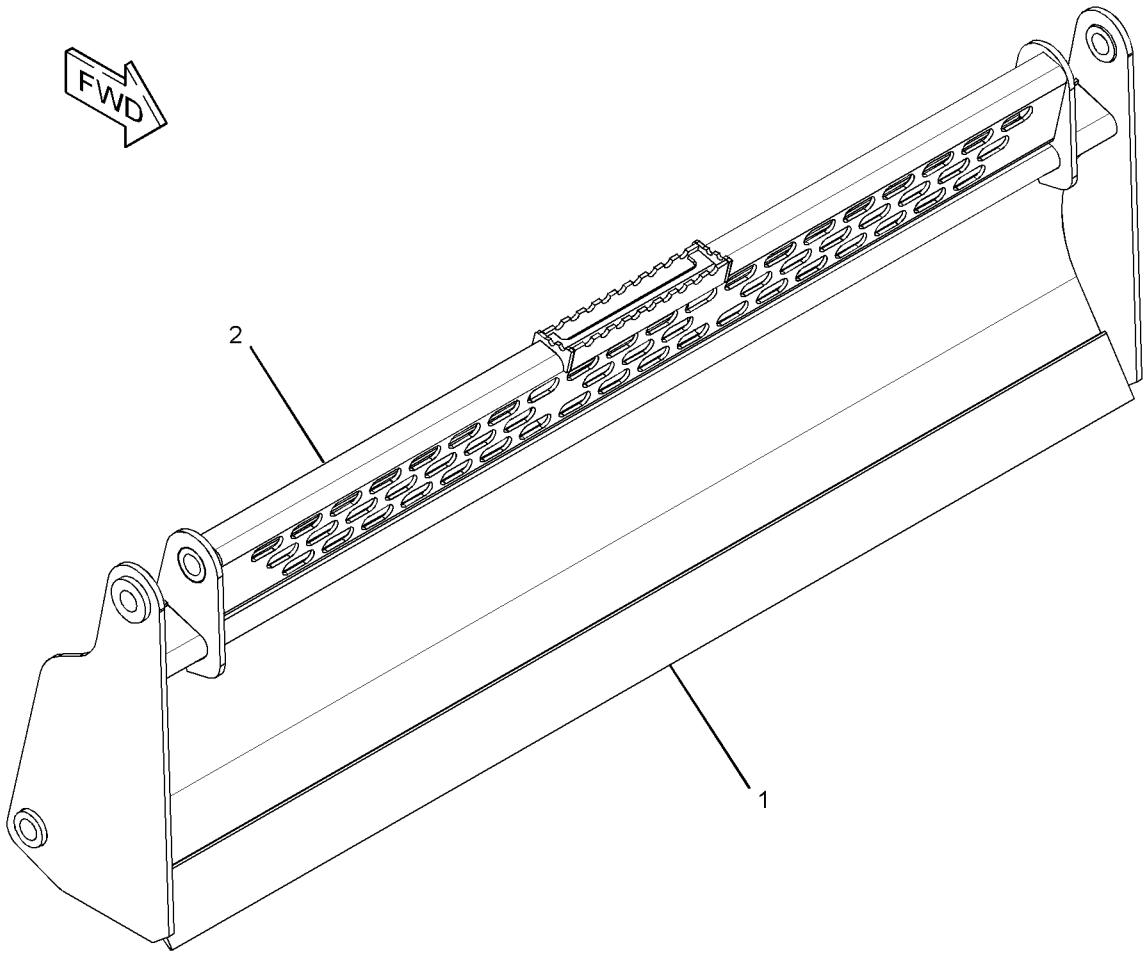

GRAPHIC #1 **<END>** g01953461

325-7068 BLADE GP-MULTIPURPOSE BUCKET

S/N: JAY1-UP
PART OF 325-7067 BUCKET GP-MULTIPURPOSE
AN ATTACHMENT

SMCS-6060, 6104 **i03641709**

NOTE	REF NO	GRAPHIC REF	PART NUMBER	QTY	PART NAME 1 2 3 4 5 6 (PRODUCT LEVEL)	SEE PAGE
	1	1	**154-2704**	1	PLATE-INSTRUCTION (BUCKET SPECIFICATIONS)	
	2	1	**168-8389**	4	TACK-FASTENER	
Y	3	1	**325-7069**	1	BLADE GP-MULTIPURPOSE BUCKET (78-IN)	473

Y-SEPARATE ILLUSTRATION

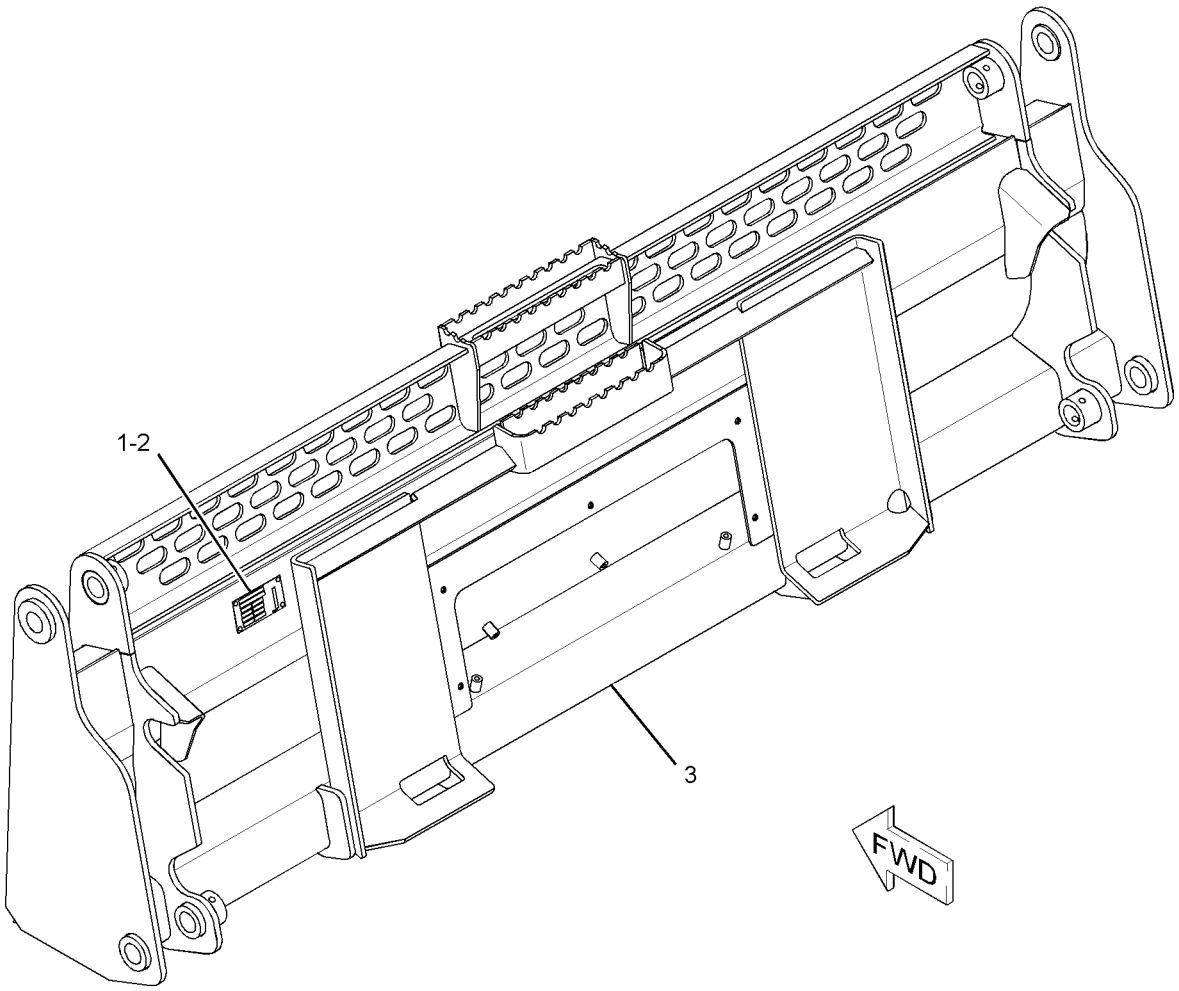

GRAPHIC #1 **<END>** g01943849

WORK TOOLS

325-7069 BLADE GP-MULTIPURPOSE BUCKET

S/N: JAY1-UP
1981-MM (78-IN)
PART OF 325-7068 BLADE GP-MULTIPURPOSE BUCKET
AN ATTACHMENT

SMCS-6060, 6104 **i03635083**

NOTE	REF NO	GRAPHIC REF	PART NUMBER	QTY	PART NAME 1 2 3 4 5 6 (PRODUCT LEVEL)	SEE PAGE
	1	1	**199-8316**	1	EDGE	
	2	1	**325-7064**	1	GUARD AS (78-IN)	

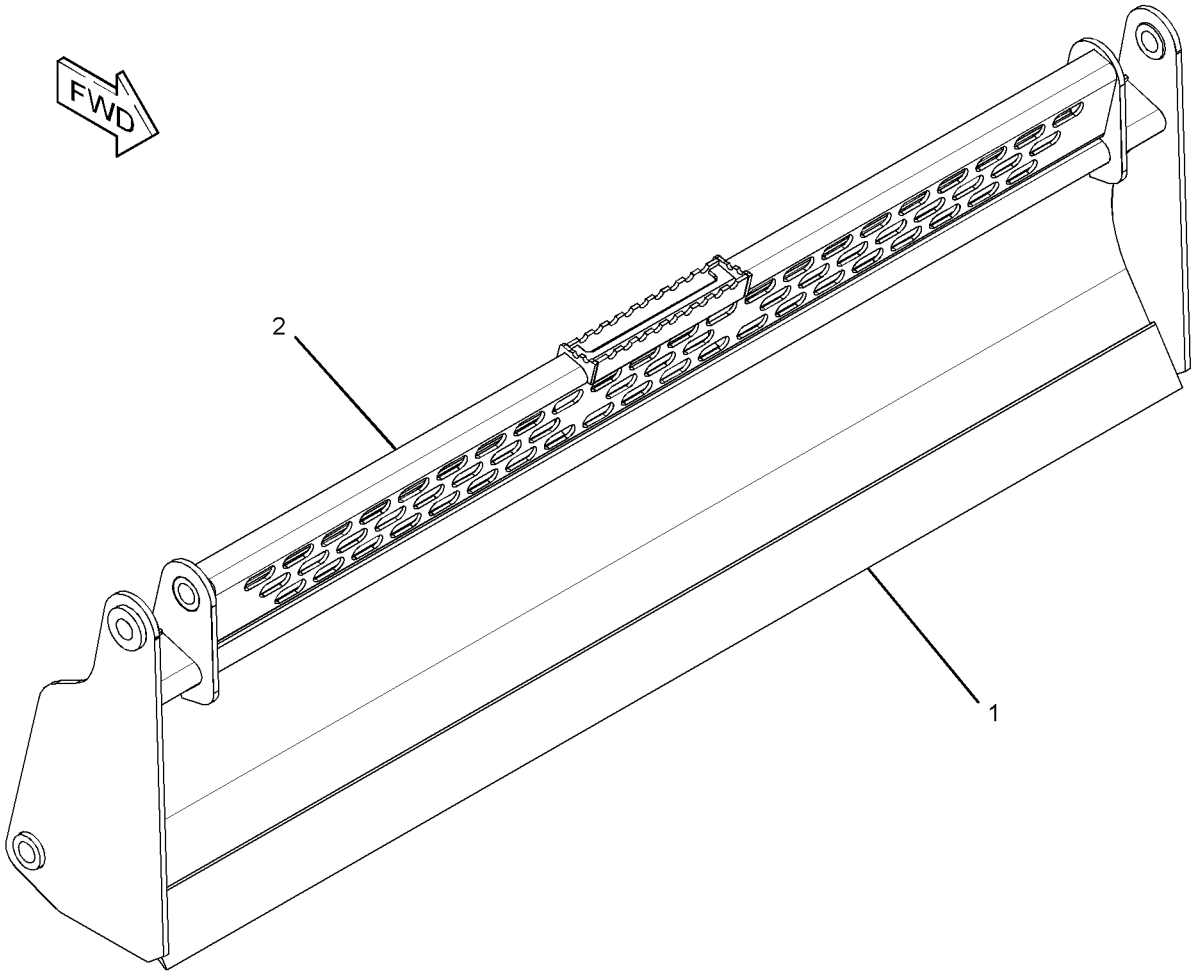

GRAPHIC #1 **<END>** g01953472

325-7078 BLADE GP-MULTIPURPOSE BUCKET

S/N: JAY1-UP
PART OF 325-7077 BUCKET GP-MULTIPURPOSE
AN ATTACHMENT

SMCS-6060, 6104 **i03641714**

NOTE	REF NO	GRAPHIC REF	PART NUMBER	QTY	PART NAME 1 2 3 4 5 6 (PRODUCT LEVEL)	SEE PAGE
	1	1	**154-2704**	1	PLATE-INSTRUCTION (BUCKET SPECIFICATIONS)	
	2	1	**168-8389**	4	TACK-FASTENER	
Y	3	1	**325-7079**	1	BLADE GP-MULTIPURPOSE BUCKET (84-IN)	475

Y-SEPARATE ILLUSTRATION

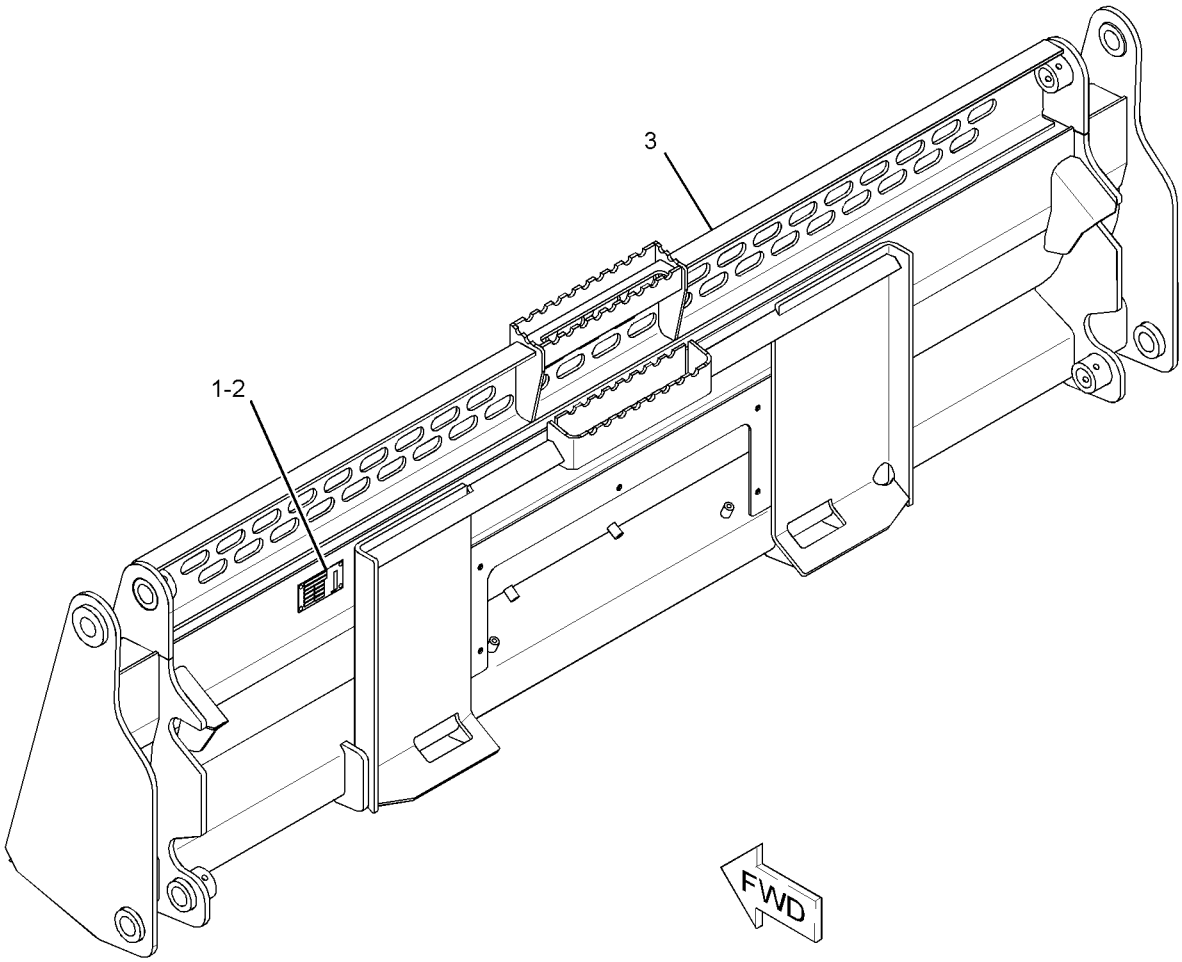

GRAPHIC #1 **<END>** g01943897

WORK TOOLS

325-7079 BLADE GP-MULTIPURPOSE BUCKET

S/N: JAY1-UP
2134-MM (84-IN)
PART OF 325-7078 BLADE GP-MULTIPURPOSE BUCKET
AN ATTACHMENT

SMCS-6060, 6104 **i03638915**

NOTE	REF NO	GRAPHIC REF	PART NUMBER	QTY	PART NAME 1 2 3 4 5 6 (PRODUCT LEVEL)	SEE PAGE
	1	1	**293-0144**	1	EDGE	
	2	1	**325-7074**	1	GUARD AS (84-IN)	

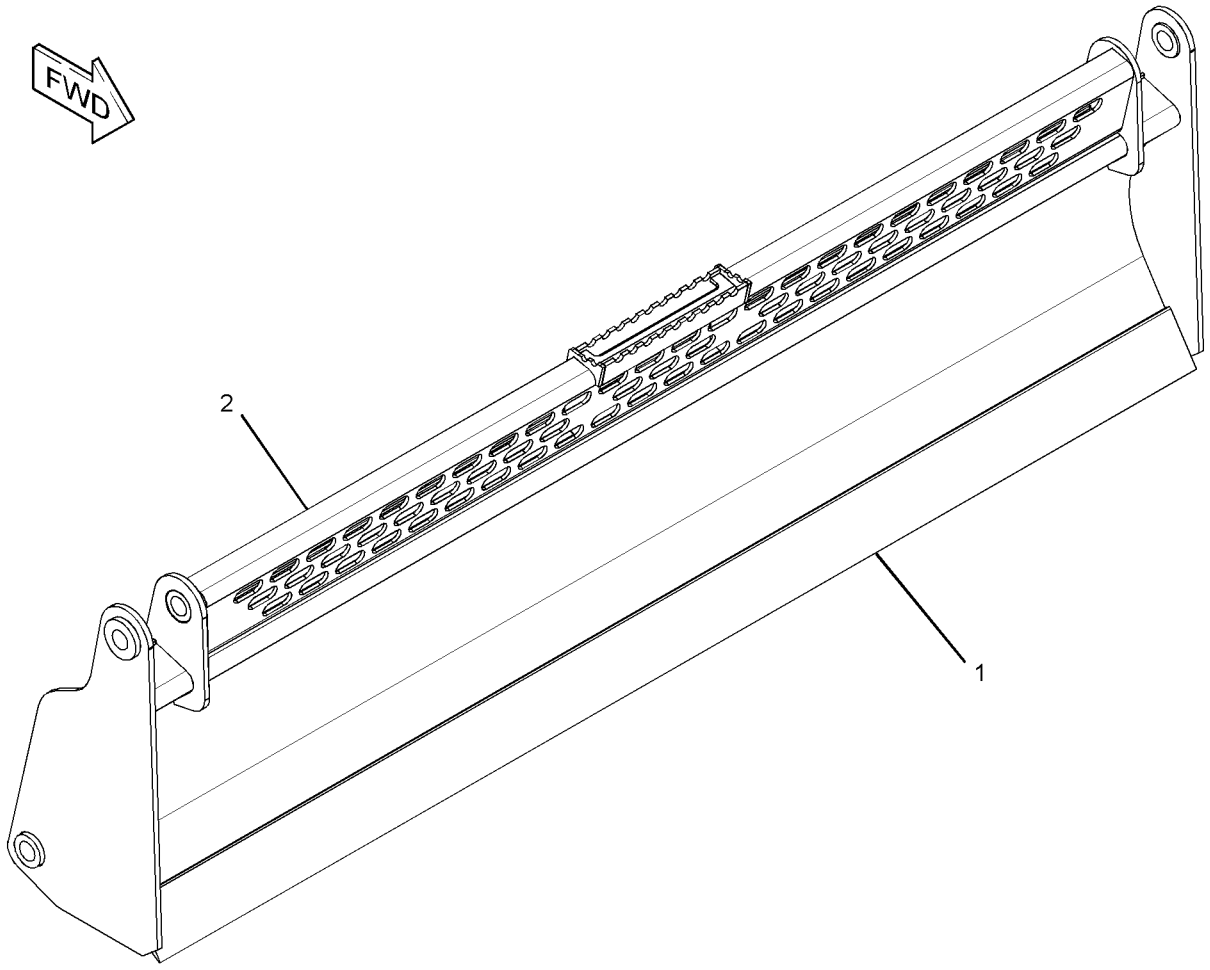

GRAPHIC #1 **<END>** g01954100

WORK TOOLS

268-4083 BUCKET AR-DIRT

S/N: JAY1-UP
FIELD REPLACEMENT FOR 268-4084—PAGE 544
AN ATTACHMENT

SMCS-6001 **i02539980**

NOTE	PART NUMBER	QTY	PART NAME 1 2 3 4 5 6 (PRODUCT LEVEL)	SEE PAGE
Y	**268-4084**	1	BUCKET GP-DIRT	544
Y	*135-9387*	1	EDGE GP-CUTTING	587
Y-SEPARATE ILLUSTRATION				

<END>

279-5435 BUCKET AR-DIRT

S/N: JAY1-UP
AN ATTACHMENT

SMCS-6001 **i02552331**

NOTE	PART NUMBER	QTY	PART NAME 1 2 3 4 5 6 (PRODUCT LEVEL)	SEE PAGE
Y	**279-5434**	1	BUCKET AS-DIRT	503
Y	*135-9383*	1	EDGE GP-CUTTING	583
Y-SEPARATE ILLUSTRATION				

<END>

279-5438 BUCKET AR-DIRT

S/N: JAY1-UP
AN ATTACHMENT

SMCS-6001 **i02571312**

NOTE	PART NUMBER	QTY	PART NAME 1 2 3 4 5 6 (PRODUCT LEVEL)	SEE PAGE
Y	**279-5437**	1	BUCKET AS-DIRT	505
Y	*135-9384*	1	EDGE GP-CUTTING	584
Y-SEPARATE ILLUSTRATION				

<END>

279-5441 BUCKET AR-DIRT

S/N: JAY1-UP
AN ATTACHMENT

SMCS-6001 **i02571314**

NOTE	PART NUMBER	QTY	PART NAME 1 2 3 4 5 6 (PRODUCT LEVEL)	SEE PAGE
Y	**279-5440**	1	BUCKET AS-DIRT	507
Y	*135-9385*	1	EDGE GP-CUTTING	585
Y-SEPARATE ILLUSTRATION				

<END>

WORK TOOLS

285-6090 BUCKET AR-DIRT

S/N: JAY1-UP
AN ATTACHMENT

SMCS-6001 **i02552446**

NOTE	PART NUMBER	QTY	PART NAME 1 2 3 4 5 6 (PRODUCT LEVEL)	SEE PAGE
Y	**285-6089**	1	BUCKET AS-DIRT	509
Y	*135-9386*	1	EDGE GP-CUTTING (DIRT)	586

Y-SEPARATE ILLUSTRATION

<END>

279-5365 BUCKET AR-GENERAL PURPOSE

S/N: JAY1-UP
AN ATTACHMENT

SMCS-6101 **i02550406**

NOTE	PART NUMBER	QTY	PART NAME 1 2 3 4 5 6 (PRODUCT LEVEL)	SEE PAGE
Y	**279-5364**	1	BUCKET AS-GENERAL PURPOSE	511
Y	*135-9384*	1	EDGE GP-CUTTING	584

Y-SEPARATE ILLUSTRATION

<END>

279-5366 BUCKET AR-GENERAL PURPOSE

S/N: JAY1-UP
AN ATTACHMENT

SMCS-6101 **i02550436**

NOTE	PART NUMBER	QTY	PART NAME 1 2 3 4 5 6 (PRODUCT LEVEL)	SEE PAGE
Y	**279-5364**	1	BUCKET AS-GENERAL PURPOSE	511
Y	*141-4999*	8	TOOTH GP-UNI	627

Y-SEPARATE ILLUSTRATION

<END>

279-5369 BUCKET AR-GENERAL PURPOSE

S/N: JAY1-UP
AN ATTACHMENT

SMCS-6101 **i02551081**

NOTE	PART NUMBER	QTY	PART NAME 1 2 3 4 5 6 (PRODUCT LEVEL)	SEE PAGE
Y	**279-5368**	1	BUCKET AS-GENERAL PURPOSE	513
Y	*135-9385*	1	EDGE GP-CUTTING	585

Y-SEPARATE ILLUSTRATION

<END>

WORK TOOLS

279-5370 BUCKET AR-GENERAL PURPOSE

S/N: JAY1-UP

AN ATTACHMENT

SMCS-6101 **i02551084**

NOTE	PART NUMBER	QTY	PART NAME 1 2 3 4 5 6 (PRODUCT LEVEL)	SEE PAGE
Y	**279-5368**	1	BUCKET AS-GENERAL PURPOSE	513
Y	*141-4999*	8	TOOTH GP-UNI	627

Y-SEPARATE ILLUSTRATION

<END>

279-5373 BUCKET AR-GENERAL PURPOSE

S/N: JAY1-UP

AN ATTACHMENT

SMCS-6101 **i02552012**

NOTE	PART NUMBER	QTY	PART NAME 1 2 3 4 5 6 (PRODUCT LEVEL)	SEE PAGE
Y	**279-5372**	1	BUCKET AS-GENERAL PURPOSE	515
Y	*135-9386*	1	EDGE GP-CUTTING	586

Y-SEPARATE ILLUSTRATION

<END>

279-5374 BUCKET AR-GENERAL PURPOSE

S/N: JAY1-UP

AN ATTACHMENT

SMCS-6101 **i02552011**

NOTE	PART NUMBER	QTY	PART NAME 1 2 3 4 5 6 (PRODUCT LEVEL)	SEE PAGE
Y	**279-5372**	1	BUCKET AS-GENERAL PURPOSE	515
Y	*141-4999*	8	TOOTH GP-UNI	627

Y-SEPARATE ILLUSTRATION

<END>

279-5377 BUCKET AR-GENERAL PURPOSE

S/N: JAY1-UP

AN ATTACHMENT

SMCS-6101 **i02552020**

NOTE	PART NUMBER	QTY	PART NAME 1 2 3 4 5 6 (PRODUCT LEVEL)	SEE PAGE
Y	**279-5376**	1	BUCKET AS-GENERAL PURPOSE	517
Y	*135-9387*	1	EDGE GP-CUTTING	587

Y-SEPARATE ILLUSTRATION

<END>

WORK TOOLS

279-5378 BUCKET AR-GENERAL PURPOSE

S/N: JAY1-UP

AN ATTACHMENT

SMCS-6101 **i02552018**

NOTE	PART NUMBER	QTY	PART NAME 1 2 3 4 5 6 (PRODUCT LEVEL)	SEE PAGE
Y	**279-5376**	1	BUCKET AS-GENERAL PURPOSE	517
Y	*141-4999*	9	TOOTH GP-UNI	627
Y-SEPARATE ILLUSTRATION				

<END>

296-8192 BUCKET AR-GENERAL PURPOSE

S/N: JAY1-UP

AN ATTACHMENT

SMCS-6101 **i02636478**

NOTE	PART NUMBER	QTY	PART NAME 1 2 3 4 5 6 (PRODUCT LEVEL)	SEE PAGE
Y	**292-9270**	1	BUCKET AS-GENERAL PURPOSE	518
Y	*195-7124*	1	EDGE GP-CUTTING	589
Y-SEPARATE ILLUSTRATION				

<END>

157-7223 BUCKET AR-GRAPPLE

S/N: JAY1-UP

PART OF 157-7226 BUCKET AR-GRAPPLE

AN ATTACHMENT

SMCS-6704 **i03636369**

NOTE	PART NUMBER	QTY	PART NAME 1 2 3 4 5 6 (PRODUCT LEVEL)	SEE PAGE
Y	*156-0884*	1	BUCKET GP-GRAPPLE (INDUSTRIAL)	546
Y	**278-1975**	2	CYLINDER GP-GRAPPLE (INDUSTRIAL)	289
Y	*161-0187*	1	LINES GP-GRAPPLE (INDUSTRIAL)	344
Y	*156-0891*	1	MOUNTING GP-CYLINDER (INDUSTRIAL)	419
Y-SEPARATE ILLUSTRATION				

<END>

157-7224 BUCKET AR-GRAPPLE

S/N: JAY1-UP

PART OF 157-7227 BUCKET AR-GRAPPLE

AN ATTACHMENT

SMCS-6704 **i03636379**

NOTE	PART NUMBER	QTY	PART NAME 1 2 3 4 5 6 (PRODUCT LEVEL)	SEE PAGE
Y	*156-0885*	1	BUCKET GP-GRAPPLE (INDUSTRIAL)	547
Y	*156-0891*	1	MOUNTING GP-CYLINDER (INDUSTRIAL)	419
Y	**278-1975**	2	CYLINDER GP-GRAPPLE (INDUSTRIAL)	289
Y	*161-0187*	1	LINES GP-GRAPPLE (INDUSTRIAL)	344
Y-SEPARATE ILLUSTRATION				

<END>

WORK TOOLS

157-7225 BUCKET AR-GRAPPLE—INDUSTRIAL

S/N: JAY1-UP
PART OF 158-6095 BUCKET AR-GRAPPLE
AN ATTACHMENT

SMCS-6704 **i03636381**

NOTE	PART NUMBER	QTY	PART NAME 1 2 3 4 5 6 (PRODUCT LEVEL)	SEE PAGE
Y	*156-0886*	1	BUCKET GP-GRAPPLE (INDUSTRIAL)	548
Y	**278-1975**	2	CYLINDER GP-GRAPPLE (INDUSTRIAL)	289
Y	*161-0187*	1	LINES GP-GRAPPLE (INDUSTRIAL)	344
Y	*156-0891*	1	MOUNTING GP-CYLINDER (INDUSTRIAL)	419

Y-SEPARATE ILLUSTRATION

<END>

157-7226 BUCKET AR-GRAPPLE

S/N: JAY1-UP
AN ATTACHMENT

SMCS-6704 **i01788957**

NOTE	PART NUMBER	QTY	PART NAME 1 2 3 4 5 6 (PRODUCT LEVEL)	SEE PAGE
Y	**157-7223**	1	BUCKET AR-GRAPPLE	479
Y	*135-9384*	1	EDGE GP-CUTTING	584

Y-SEPARATE ILLUSTRATION

<END>

157-7227 BUCKET AR-GRAPPLE

S/N: JAY1-UP
AN ATTACHMENT

SMCS-6704 **i01788965**

NOTE	PART NUMBER	QTY	PART NAME 1 2 3 4 5 6 (PRODUCT LEVEL)	SEE PAGE
Y	**157-7224**	1	BUCKET AR-GRAPPLE	479
Y	*135-9385*	1	EDGE GP-CUTTING	585

Y-SEPARATE ILLUSTRATION

<END>

158-6095 BUCKET AR-GRAPPLE

S/N: JAY1-UP
AN ATTACHMENT

SMCS-6704 **i01060288**

NOTE	PART NUMBER	QTY	PART NAME 1 2 3 4 5 6 (PRODUCT LEVEL)	SEE PAGE
Y	**157-7225**	1	BUCKET AR-GRAPPLE	480
Y	*135-9386*	1	EDGE GP-CUTTING	586

Y-SEPARATE ILLUSTRATION

<END>

WORK TOOLS

217-6229 BUCKET AR-GRAPPLE

S/N: JAY1-UP
PART OF 217-6230 BUCKET AR-GRAPPLE
AN ATTACHMENT

SMCS-6704 **i03636392**

NOTE	REF NO	GRAPHIC REF	PART NUMBER	QTY	PART NAME 1 2 3 4 5 6 (PRODUCT LEVEL)	SEE PAGE
Y	1	1	*156-0891*	1	MOUNTING GP-CYLINDER (INDUSTRIAL)	419
Y	2	1	*161-0187*	1	LINES GP-GRAPPLE (INDUSTRIAL)	344
Y	3	1	*217-6228*	1	BUCKET GP-GRAPPLE (INDUSTRIAL)	549
CY	4	1	**278-1975**	2	CYLINDER GP-GRAPPLE (INDUSTRIAL)	289

C-CHANGE FROM PREVIOUS TYPE
Y-SEPARATE ILLUSTRATION

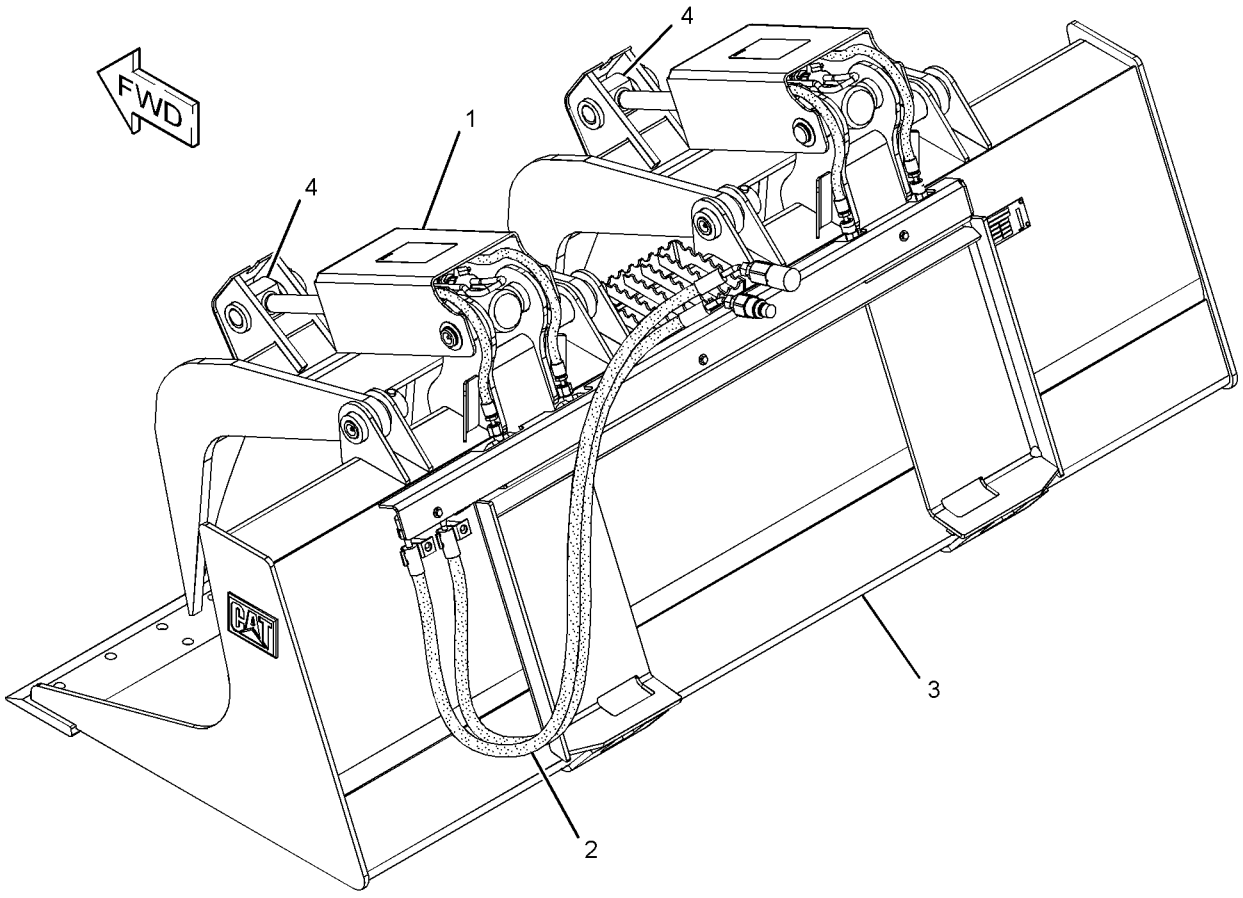

GRAPHIC #1 **<END>** g01281607

217-6230 BUCKET AR-GRAPPLE

S/N: JAY1-UP
AN ATTACHMENT

SMCS-6704 **i01877714**

NOTE	PART NUMBER	QTY	PART NAME 1 2 3 4 5 6 (PRODUCT LEVEL)	SEE PAGE
Y	**217-6229**	1	BUCKET AR-GRAPPLE (INDUSTRIAL)	481
Y	*135-9387*	1	EDGE GP-CUTTING	587

Y-SEPARATE ILLUSTRATION

<END>

285-6093 BUCKET AR-GRAPPLE

S/N: JAY1-UP
AN ATTACHMENT

SMCS-6704 **i02552451**

NOTE	PART NUMBER	QTY	PART NAME 1 2 3 4 5 6 (PRODUCT LEVEL)	SEE PAGE
Y	**285-6099**	1	BUCKET GP-UTILITY (66-IN)	566
Y	*285-6116*	1	GRAPPLE & CYLINDER GP-UTILITY	606

Y-SEPARATE ILLUSTRATION

<END>

285-6104 BUCKET AR-GRAPPLE

S/N: JAY1-UP
AN ATTACHMENT

SMCS-6704 **i02552487**

NOTE	PART NUMBER	QTY	PART NAME 1 2 3 4 5 6 (PRODUCT LEVEL)	SEE PAGE
Y	**285-6102**	1	BUCKET GP-UTILITY (72-IN)	567
Y	*285-6116*	1	GRAPPLE & CYLINDER GP-UTILITY	606

Y-SEPARATE ILLUSTRATION

<END>

285-6111 BUCKET AR-GRAPPLE

S/N: JAY1-UP
AN ATTACHMENT

SMCS-6704 **i02552741**

NOTE	PART NUMBER	QTY	PART NAME 1 2 3 4 5 6 (PRODUCT LEVEL)	SEE PAGE
Y	**285-6100**	1	BUCKET AR-UTILITY	496
Y	*285-6116*	1	GRAPPLE & CYLINDER GP-UTILITY	606

Y-SEPARATE ILLUSTRATION

<END>

WORK TOOLS

285-6112 BUCKET AR-GRAPPLE

S/N: JAY1-UP

AN ATTACHMENT

SMCS-6704 **i02552759**

NOTE	PART NUMBER	QTY	PART NAME 1 2 3 4 5 6 (PRODUCT LEVEL)	SEE PAGE
Y	**285-6101**	1	BUCKET AR-UTILITY	496
Y	*285-6116*	1	GRAPPLE & CYLINDER GP-UTILITY	606

Y-SEPARATE ILLUSTRATION

<END>

WORK TOOLS

286-9300 BUCKET AR-GRAPPLE

S/N: JAY1-UP

AN ATTACHMENT

SMCS-6704 **i02723699**

NOTE	REF NO	GRAPHIC REF	PART NUMBER	QTY	PART NAME 1 2 3 4 5 6 (PRODUCT LEVEL)	SEE PAGE
Y	1	1	*286-9248*	1	MOUNTING GP-CYLINDER (GRAPPLE BUCKET)	421
Y	2	1	*286-9251*	1	PLATE & FILM GP	808
Y	3	1	*286-9278*	1	BUCKET GP-GRAPPLE (1829-MM (72-IN) WIDE)	552
Y	4	1	*286-9279*	1	LINES GP-GRAPPLE	348
Y	5	1	*293-6264*	2	CYLINDER GP-BUCKET	286

Y-SEPARATE ILLUSTRATION

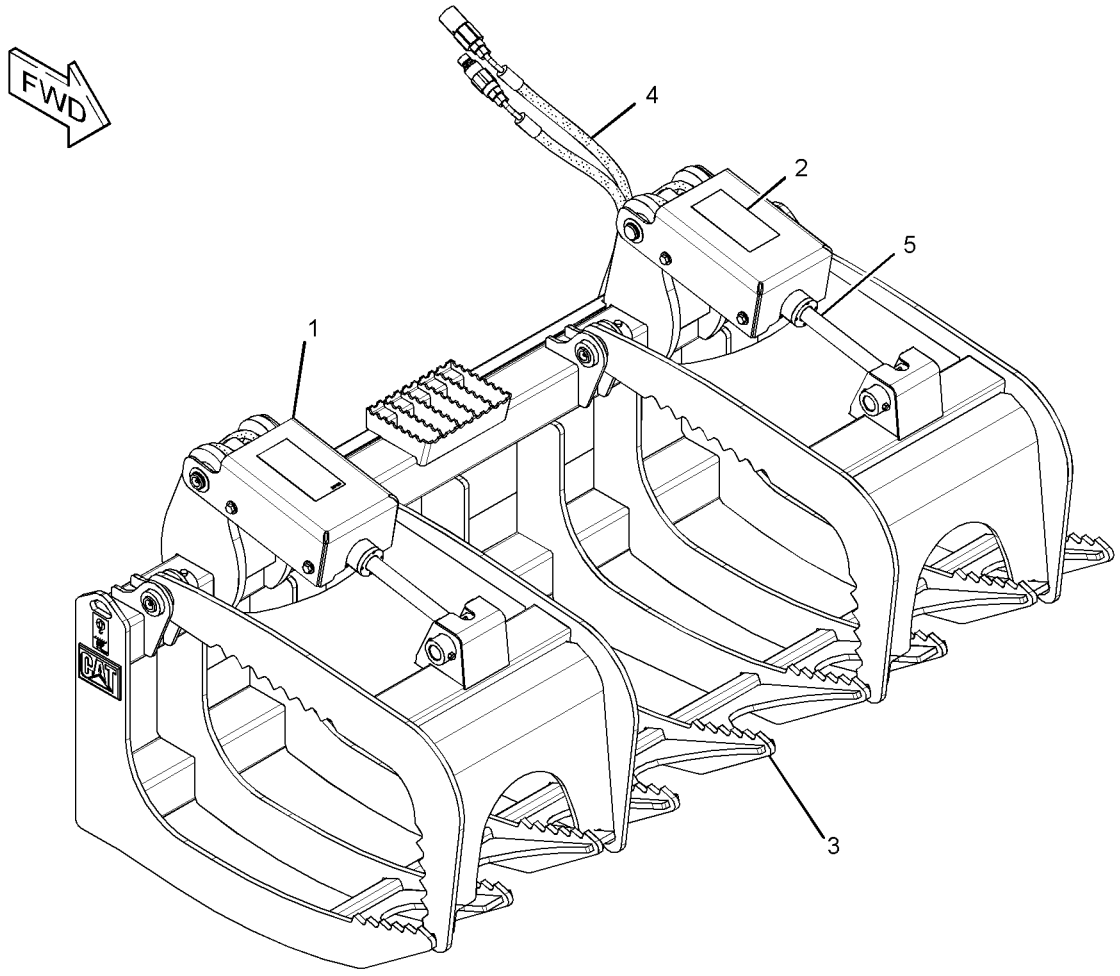

GRAPHIC #1 **<END>** g01372572

WORK TOOLS

286-9301 BUCKET AR-GRAPPLE

S/N: JAY1-UP

AN ATTACHMENT

SMCS-6704 **i02723700**

NOTE	REF NO	GRAPHIC REF	PART NUMBER	QTY	PART NAME 1 2 3 4 5 6 (PRODUCT LEVEL)	SEE PAGE
Y	1	1	*286-9244*	1	BUCKET GP-GRAPPLE	551
Y	2	1	*286-9248*	1	MOUNTING GP-CYLINDER (GRAPPLE BUCKET)	421
Y	3	1	*286-9250*	1	LINES GP-GRAPPLE	346
Y	4	1	*286-9251*	1	PLATE & FILM GP	808
Y	5	1	**293-6264**	2	CYLINDER GP-BUCKET	286

Y-SEPARATE ILLUSTRATION

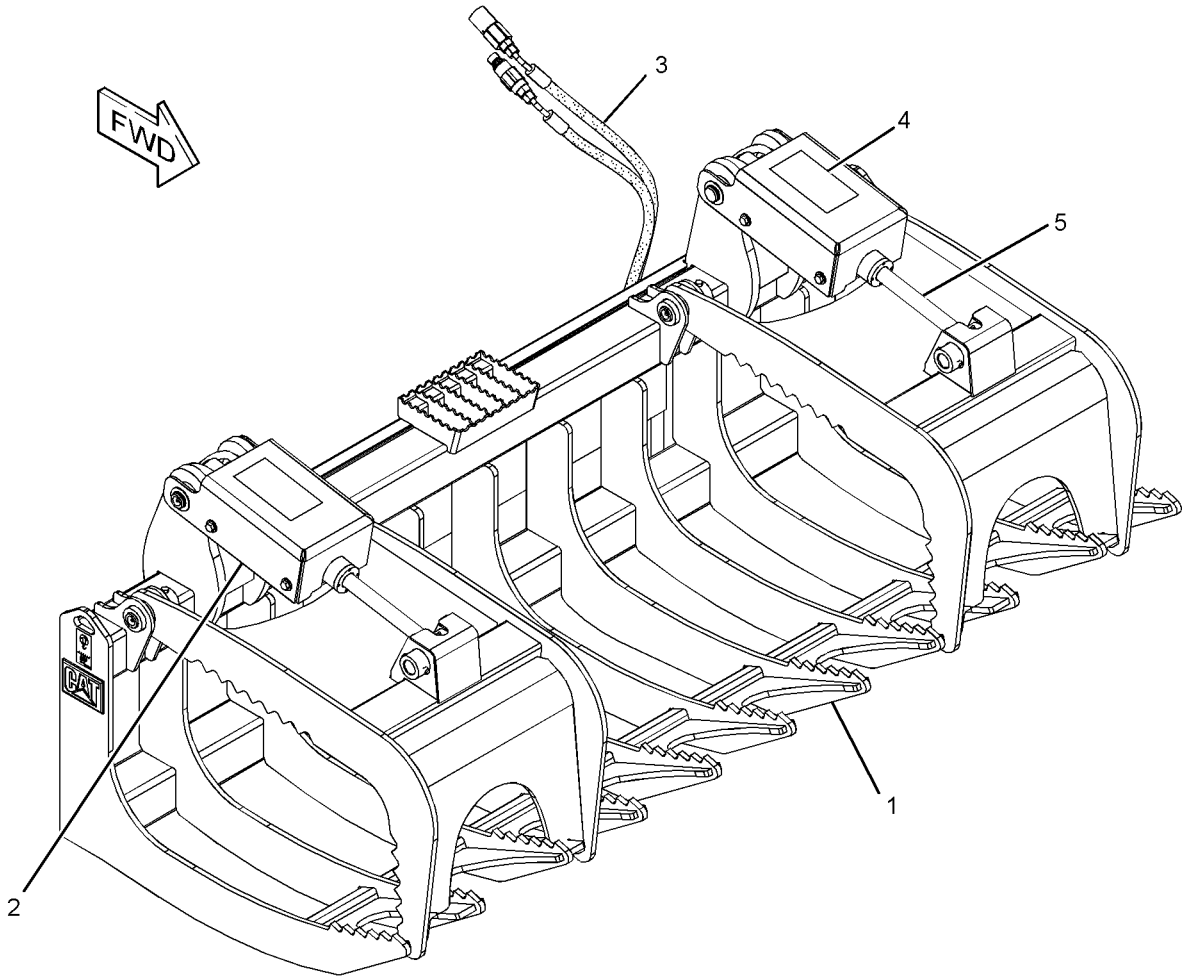

GRAPHIC #1 **<END>** g01372972

WORK TOOLS

279-5420 BUCKET AR-LIGHT MATERIAL

S/N: JAY1-UP
AN ATTACHMENT

SMCS-6103 **i02552302**

NOTE	PART NUMBER	QTY	PART NAME 1 2 3 4 5 6 (PRODUCT LEVEL)	SEE PAGE
Y	**279-5421**	1	BUCKET AS-LIGHT MATERIAL	528
Y	*135-9386*	1	EDGE GP-CUTTING	586
Y-SEPARATE ILLUSTRATION				

<END>

279-5425 BUCKET AR-LIGHT MATERIAL

S/N: JAY1-UP
AN ATTACHMENT

SMCS-6103 **i02552308**

NOTE	PART NUMBER	QTY	PART NAME 1 2 3 4 5 6 (PRODUCT LEVEL)	SEE PAGE
Y	**279-5424**	1	BUCKET AS-LIGHT MATERIAL	531
Y	*135-9387*	1	EDGE GP-CUTTING	587
Y-SEPARATE ILLUSTRATION				

<END>

279-5430 BUCKET AR-LIGHT MATERIAL

S/N: JAY1-UP
AN ATTACHMENT

SMCS-6103 **i02552313**

NOTE	PART NUMBER	QTY	PART NAME 1 2 3 4 5 6 (PRODUCT LEVEL)	SEE PAGE
Y	**279-5429**	1	BUCKET AS-LIGHT MATERIAL	533
Y	*195-7124*	1	EDGE GP-CUTTING	589
Y-SEPARATE ILLUSTRATION				

<END>

296-7597 BUCKET AR-LIGHT MATERIAL

S/N: JAY1-UP
AN ATTACHMENT

SMCS-6103 **i03624568**

NOTE	PART NUMBER	QTY	PART NAME 1 2 3 4 5 6 (PRODUCT LEVEL)	SEE PAGE
Y	*292-9223*	1	BUCKET AS-LIGHT MATERIAL	534
Y	*296-7680*	1	EDGE GP-CUTTING	590
Y-SEPARATE ILLUSTRATION				

<END>

WORK TOOLS

154-5004 BUCKET AR-MULTIPURPOSE

S/N: JAY1-UP
PART OF 154-5046 BUCKET AR-MULTIPURPOSE
AN ATTACHMENT

SMCS-6104 **i02501151**

NOTE	PART NUMBER	QTY	PART NAME 1 2 3 4 5 6 (PRODUCT LEVEL)	SEE PAGE
Y	**154-5005**	1	BUCKET GP-MULTIPURPOSE	553
Y	*162-5236*	1	COVER GP-LINES	580
Y	**154-5018**	2	CYLINDER GP-BUCKET	285
			—OR—	
Y	**278-1969**	2	CYLINDER GP-HYDRAULIC	294
Y	*154-5019*	1	LINES GP-BUCKET	312
Y	*154-5011*	1	MOUNTING GP-CYLINDER	418

Y-SEPARATE ILLUSTRATION

<END>

154-5010 BUCKET AR-MULTIPURPOSE

S/N: JAY1-UP
AN ATTACHMENT

SMCS-6104 **i02501162**

NOTE	PART NUMBER	QTY	PART NAME 1 2 3 4 5 6 (PRODUCT LEVEL)	SEE PAGE
Y	**154-5009**	1	BUCKET GP-MULTIPURPOSE	554
Y	*162-5236*	1	COVER GP-LINES	580
Y	**154-5018**	2	CYLINDER GP-BUCKET	285
			—OR—	
Y	**278-1969**	2	CYLINDER GP-HYDRAULIC	294
Y	*154-5052*	1	LINES GP-BUCKET	316
Y	*154-5011*	1	MOUNTING GP-CYLINDER	418

Y-SEPARATE ILLUSTRATION

<END>

154-5046 BUCKET AR-MULTIPURPOSE

S/N: JAY1-UP
AN ATTACHMENT

SMCS-6104 **i01218112**

NOTE	PART NUMBER	QTY	PART NAME 1 2 3 4 5 6 (PRODUCT LEVEL)	SEE PAGE
Y	**154-5004**	1	BUCKET AR-MULTIPURPOSE	487
Y	*141-4999*	8	TOOTH GP-UNI	627

Y-SEPARATE ILLUSTRATION

<END>

WORK TOOLS

279-5380 BUCKET AR-MULTIPURPOSE

S/N: JAY1-UP

AN ATTACHMENT

SMCS-6104 **i02552027**

NOTE	PART NUMBER	QTY	PART NAME 1 2 3 4 5 6 (PRODUCT LEVEL)	SEE PAGE
Y	**279-5382**	1	BUCKET AR-MULTIPURPOSE	488
Y	*141-4999*	8	TOOTH GP-UNI	627
Y-SEPARATE ILLUSTRATION				

<END>

279-5381 BUCKET AR-MULTIPURPOSE

S/N: JAY1-UP

AN ATTACHMENT

SMCS-6104 **i02552030**

NOTE	PART NUMBER	QTY	PART NAME 1 2 3 4 5 6 (PRODUCT LEVEL)	SEE PAGE
Y	**279-5382**	1	BUCKET AR-MULTIPURPOSE	488
Y	*135-9384*	1	EDGE GP-CUTTING	584
Y-SEPARATE ILLUSTRATION				

<END>

279-5382 BUCKET AR-MULTIPURPOSE

S/N: JAY1-UP

PART OF 279-5380, 279-5381 BUCKET AR-MULTIPURPOSE

AN ATTACHMENT

SMCS-6104 **i02770080**

NOTE	PART NUMBER	QTY	PART NAME 1 2 3 4 5 6 (PRODUCT LEVEL)	SEE PAGE
Y	*279-5383*	1	BUCKET GP-MULTIPURPOSE (60-IN)	555
Y	*162-5236*	1	COVER GP-LINES	580
Y	**154-5018**	2	CYLINDER GP-BUCKET	285
			—OR—	
Y	*278-1969*	2	CYLINDER GP-HYDRAULIC	294
Y	*279-5413*	1	LINES GP-BUCKET	320
Y	*154-5011*	1	MOUNTING GP-CYLINDER	418
Y-SEPARATE ILLUSTRATION				

<END>

279-5390 BUCKET AR-MULTIPURPOSE

S/N: JAY1-UP
PART OF 279-5391, 279-5392 BUCKET AR-MULTIPURPOSE
AN ATTACHMENT

SMCS-6104 **i02770129**

NOTE	PART NUMBER	QTY	PART NAME 1 2 3 4 5 6 (PRODUCT LEVEL)	SEE PAGE
Y	*279-5389*	1	BUCKET GP-MULTIPURPOSE	556
Y	*162-5236*	1	COVER GP-LINES	580
Y	**154-5018**	2	CYLINDER GP-BUCKET	285
			—OR—	
Y	*278-1969*	2	CYLINDER GP-HYDRAULIC	294
Y	*279-5414*	1	LINES GP-BUCKET	322
Y	*154-5011*	1	MOUNTING GP-CYLINDER	418
Y-SEPARATE ILLUSTRATION				

<END>

279-5391 BUCKET AR-MULTIPURPOSE

S/N: JAY1-UP
AN ATTACHMENT

SMCS-6104 **i02552078**

NOTE	PART NUMBER	QTY	PART NAME 1 2 3 4 5 6 (PRODUCT LEVEL)	SEE PAGE
Y	**279-5390**	1	BUCKET AR-MULTIPURPOSE	489
Y	*135-9385*	1	EDGE GP-CUTTING	585
Y-SEPARATE ILLUSTRATION				

<END>

279-5392 BUCKET AR-MULTIPURPOSE

S/N: JAY1-UP
AN ATTACHMENT

SMCS-6104 **i02552071**

NOTE	PART NUMBER	QTY	PART NAME 1 2 3 4 5 6 (PRODUCT LEVEL)	SEE PAGE
Y	**279-5390**	1	BUCKET AR-MULTIPURPOSE	489
Y	*141-4999*	8	TOOTH GP-UNI	627
Y-SEPARATE ILLUSTRATION				

<END>

WORK TOOLS

279-5398 BUCKET AR-MULTIPURPOSE

S/N: JAY1-UP
PART OF 279-5399, 279-5400 BUCKET AR-MULTIPURPOSE
AN ATTACHMENT

SMCS-6104 **i02770203**

NOTE	PART NUMBER	QTY	PART NAME 1 2 3 4 5 6 (PRODUCT LEVEL)	SEE PAGE
Y	*279-5397*	1	BUCKET GP-MULTIPURPOSE	557
Y	*162-5236*	1	COVER GP-LINES	580
Y	**154-5018**	2	CYLINDER GP-BUCKET	285
			—OR—	
Y	*278-1969*	2	CYLINDER GP-HYDRAULIC	294
Y	*279-5415*	1	LINES GP-BUCKET	324
Y	*154-5011*	1	MOUNTING GP-CYLINDER	418

Y-SEPARATE ILLUSTRATION

<END>

279-5399 BUCKET AR-MULTIPURPOSE

S/N: JAY1-UP
AN ATTACHMENT

SMCS-6104 **i02552131**

NOTE	PART NUMBER	QTY	PART NAME 1 2 3 4 5 6 (PRODUCT LEVEL)	SEE PAGE
Y	**279-5398**	1	BUCKET AR-MULTIPURPOSE	490
Y	*135-9386*	1	EDGE GP-CUTTING	586

Y-SEPARATE ILLUSTRATION

<END>

279-5400 BUCKET AR-MULTIPURPOSE

S/N: JAY1-UP
AN ATTACHMENT

SMCS-6104 **i02552121**

NOTE	PART NUMBER	QTY	PART NAME 1 2 3 4 5 6 (PRODUCT LEVEL)	SEE PAGE
Y	**279-5398**	1	BUCKET AR-MULTIPURPOSE	490
Y	*141-4999*	8	TOOTH GP-UNI	627

Y-SEPARATE ILLUSTRATION

<END>

279-5401 BUCKET AR-MULTIPURPOSE

S/N: JAY1-UP
AN ATTACHMENT

SMCS-6104 **i02552198**

NOTE	PART NUMBER	QTY	PART NAME 1 2 3 4 5 6 (PRODUCT LEVEL)	SEE PAGE
Y	**279-5403**	1	BUCKET AR-MULTIPURPOSE	491
Y	*141-4999*	9	TOOTH GP-UNI	627

Y-SEPARATE ILLUSTRATION

<END>

WORK TOOLS

279-5402 BUCKET AR-MULTIPURPOSE

S/N: JAY1-UP
AN ATTACHMENT

SMCS-6104 **i02552200**

NOTE	PART NUMBER	QTY	PART NAME 1 2 3 4 5 6 (PRODUCT LEVEL)	SEE PAGE
Y	**279-5403**	1	BUCKET AR-MULTIPURPOSE	491
Y	*135-9387*	1	EDGE GP-CUTTING	587
Y-SEPARATE ILLUSTRATION				

<END>

279-5403 BUCKET AR-MULTIPURPOSE

S/N: JAY1-UP
PART OF 279-5401, 279-5402 BUCKET AR-MULTIPURPOSE
AN ATTACHMENT

SMCS-6104 **i02770224**

NOTE	PART NUMBER	QTY	PART NAME 1 2 3 4 5 6 (PRODUCT LEVEL)	SEE PAGE
Y	*279-5404*	1	BUCKET GP-MULTIPURPOSE (78-IN)	558
Y	*162-5236*	1	COVER GP-LINES	580
Y	**154-5018**	2	CYLINDER GP-BUCKET	285
			—OR—	
Y	*278-1969*	2	CYLINDER GP-HYDRAULIC	294
Y	*279-5416*	1	LINES GP-BUCKET	326
Y	*154-5011*	1	MOUNTING GP-CYLINDER	418
Y-SEPARATE ILLUSTRATION				

<END>

293-0139 BUCKET AR-MULTIPURPOSE

S/N: JAY1-UP
PART OF 296-8055, 296-8057 BUCKET AR-MULTIPURPOSE
AN ATTACHMENT

SMCS-6104 **i02796780**

NOTE	PART NUMBER	QTY	PART NAME 1 2 3 4 5 6 (PRODUCT LEVEL)	SEE PAGE
Y	*293-0141*	1	BUCKET GP-MULTIPURPOSE	559
Y	*162-5236*	1	COVER GP-LINES	580
Y	*154-5018*	2	CYLINDER GP-BUCKET	285
			—OR—	
Y	**278-1969**	2	CYLINDER GP-HYDRAULIC	294
Y	*293-0140*	1	LINES GP-BUCKET	332
Y	*154-5011*	1	MOUNTING GP-CYLINDER	418
Y-SEPARATE ILLUSTRATION				

<END>

WORK TOOLS

296-8055 BUCKET AR-MULTIPURPOSE

S/N: JAY1-UP
AN ATTACHMENT

SMCS-6104 **i02636475**

NOTE	PART NUMBER	QTY	PART NAME 1 2 3 4 5 6 (PRODUCT LEVEL)	SEE PAGE
Y	*293-0139*	1	BUCKET AR-MULTIPURPOSE	491
Y	*141-4999*	9	TOOTH GP-UNI	627
Y-SEPARATE ILLUSTRATION				

<END>

296-8057 BUCKET AR-MULTIPURPOSE

S/N: JAY1-UP
AN ATTACHMENT

SMCS-6104 **i02636476**

NOTE	PART NUMBER	QTY	PART NAME 1 2 3 4 5 6 (PRODUCT LEVEL)	SEE PAGE
Y	*293-0139*	1	BUCKET AR-MULTIPURPOSE	491
Y	*195-7124*	1	EDGE GP-CUTTING	589
Y-SEPARATE ILLUSTRATION				

<END>

325-7035 BUCKET AR-MULTIPURPOSE

S/N: JAY1-UP
AN ATTACHMENT

SMCS-6104 **i03021270**

NOTE	PART NUMBER	QTY	PART NAME 1 2 3 4 5 6 (PRODUCT LEVEL)	SEE PAGE
Y	*325-7036*	1	BUCKET AR-MULTIPURPOSE	492
Y	*141-4999*	8	TOOTH GP-UNI	627
Y-SEPARATE ILLUSTRATION				

<END>

325-7036 BUCKET AR-MULTIPURPOSE

S/N: JAY1-UP
PART OF 325-7035, 325-7040 BUCKET AR-MULTIPURPOSE
AN ATTACHMENT

SMCS-6104 **i03021273**

NOTE	PART NUMBER	QTY	PART NAME 1 2 3 4 5 6 (PRODUCT LEVEL)	SEE PAGE
Y	*325-7037*	1	BUCKET GP-MULTIPURPOSE	560
Y	*162-5236*	1	COVER GP-LINES	580
Y	**278-1969**	2	CYLINDER GP-HYDRAULIC	294
Y	*279-5413*	1	LINES GP-BUCKET	320
Y	*154-5011*	1	MOUNTING GP-CYLINDER	418
Y-SEPARATE ILLUSTRATION				

<END>

WORK TOOLS

325-7040 BUCKET AR-MULTIPURPOSE

S/N: JAY1-UP
AN ATTACHMENT

SMCS-6104 **i03021373**

NOTE	PART NUMBER	QTY	PART NAME 1 2 3 4 5 6 (PRODUCT LEVEL)	SEE PAGE
Y	*325-7036*	1	BUCKET AR-MULTIPURPOSE	492
Y	*135-9384*	1	EDGE GP-CUTTING	584

Y-SEPARATE ILLUSTRATION

<END>

325-7045 BUCKET AR-MULTIPURPOSE

S/N: JAY1-UP
AN ATTACHMENT

SMCS-6104 **i03021504**

NOTE	PART NUMBER	QTY	PART NAME 1 2 3 4 5 6 (PRODUCT LEVEL)	SEE PAGE
Y	*325-7046*	1	BUCKET AR-MULTIPURPOSE	493
Y	*141-4999*	8	TOOTH GP-UNI	627

Y-SEPARATE ILLUSTRATION

<END>

325-7046 BUCKET AR-MULTIPURPOSE

S/N: JAY1-UP
PART OF 325-7045, 325-7050 BUCKET AR-MULTIPURPOSE
AN ATTACHMENT

SMCS-6104 **i03021636**

NOTE	PART NUMBER	QTY	PART NAME 1 2 3 4 5 6 (PRODUCT LEVEL)	SEE PAGE
Y	*325-7047*	1	BUCKET GP-MULTIPURPOSE	561
Y	*162-5236*	1	COVER GP-LINES	580
Y	**278-1969**	2	CYLINDER GP-HYDRAULIC	294
Y	*279-5414*	1	LINES GP-BUCKET	322
Y	*154-5011*	1	MOUNTING GP-CYLINDER	418

Y-SEPARATE ILLUSTRATION

<END>

325-7050 BUCKET AR-MULTIPURPOSE

S/N: JAY1-UP
AN ATTACHMENT

SMCS-6104 **i03022239**

NOTE	PART NUMBER	QTY	PART NAME 1 2 3 4 5 6 (PRODUCT LEVEL)	SEE PAGE
Y	*325-7046*	1	BUCKET AR-MULTIPURPOSE	493
Y	*135-9385*	1	EDGE GP-CUTTING	585

Y-SEPARATE ILLUSTRATION

<END>

WORK TOOLS

325-7055 BUCKET AR-MULTIPURPOSE

S/N: JAY1-UP
AN ATTACHMENT

SMCS-6104 **i03022391**

NOTE	PART NUMBER	QTY	PART NAME 1 2 3 4 5 6 (PRODUCT LEVEL)	SEE PAGE
Y	*325-7056*	1	BUCKET AR-MULTIPURPOSE	494
Y	*141-4999*	8	TOOTH GP-UNI	627
Y-SEPARATE ILLUSTRATION				

<END>

325-7056 BUCKET AR-MULTIPURPOSE

S/N: JAY1-UP
PART OF 325-7055, 325-7060 BUCKET AR-MULTIPURPOSE
AN ATTACHMENT

SMCS-6104 **i03022408**

NOTE	PART NUMBER	QTY	PART NAME 1 2 3 4 5 6 (PRODUCT LEVEL)	SEE PAGE
Y	*325-7057*	1	BUCKET GP-MULTIPURPOSE	562
Y	*162-5236*	1	COVER GP-LINES	580
Y	**278-1969**	2	CYLINDER GP-HYDRAULIC	294
Y	*279-5415*	1	LINES GP-BUCKET	324
Y	*154-5011*	1	MOUNTING GP-CYLINDER	418
Y-SEPARATE ILLUSTRATION				

<END>

325-7060 BUCKET AR-MULTIPURPOSE

S/N: JAY1-UP
AN ATTACHMENT

SMCS-6104 **i03022550**

NOTE	PART NUMBER	QTY	PART NAME 1 2 3 4 5 6 (PRODUCT LEVEL)	SEE PAGE
Y	*325-7056*	1	BUCKET AR-MULTIPURPOSE	494
Y	*135-9386*	1	EDGE GP-CUTTING	586
Y-SEPARATE ILLUSTRATION				

<END>

325-7065 BUCKET AR-MULTIPURPOSE

S/N: JAY1-UP
AN ATTACHMENT

SMCS-6104 **i03022572**

NOTE	PART NUMBER	QTY	PART NAME 1 2 3 4 5 6 (PRODUCT LEVEL)	SEE PAGE
Y	*325-7066*	1	BUCKET AR-MULTIPURPOSE	495
Y	*141-4999*	9	TOOTH GP-UNI	627
Y-SEPARATE ILLUSTRATION				

<END>

325-7066 BUCKET AR-MULTIPURPOSE

S/N: JAY1-UP
PART OF 325-7065, 325-7070 BUCKET AR-MULTIPURPOSE
AN ATTACHMENT

SMCS-6104 **i03022580**

NOTE	PART NUMBER	QTY	PART NAME 1 2 3 4 5 6 (PRODUCT LEVEL)	SEE PAGE
Y	*325-7067*	1	BUCKET GP-MULTIPURPOSE	563
Y	*162-5236*	1	COVER GP-LINES	580
Y	**278-1969**	2	CYLINDER GP-HYDRAULIC	294
Y	*279-5416*	1	LINES GP-BUCKET	326
Y	*154-5011*	1	MOUNTING GP-CYLINDER	418
Y-SEPARATE ILLUSTRATION				

<END>

325-7070 BUCKET AR-MULTIPURPOSE

S/N: JAY1-UP
AN ATTACHMENT

SMCS-6104 **i03022802**

NOTE	PART NUMBER	QTY	PART NAME 1 2 3 4 5 6 (PRODUCT LEVEL)	SEE PAGE
Y	*325-7066*	1	BUCKET AR-MULTIPURPOSE	495
Y	*135-9387*	1	EDGE GP-CUTTING	587
Y-SEPARATE ILLUSTRATION				

<END>

325-7075 BUCKET AR-MULTIPURPOSE

S/N: JAY1-UP
AN ATTACHMENT

SMCS-6104 **i03012162**

NOTE	PART NUMBER	QTY	PART NAME 1 2 3 4 5 6 (PRODUCT LEVEL)	SEE PAGE
Y	*325-7076*	1	BUCKET AR-MULTIPURPOSE	495
Y	*141-4999*	9	TOOTH GP-UNI	627
Y-SEPARATE ILLUSTRATION				

<END>

325-7076 BUCKET AR-MULTIPURPOSE

S/N: JAY1-UP
PART OF 325-7075, 325-7080 BUCKET AR-MULTIPURPOSE
AN ATTACHMENT

SMCS-6104 **i03012205**

NOTE	PART NUMBER	QTY	PART NAME 1 2 3 4 5 6 (PRODUCT LEVEL)	SEE PAGE
Y	*325-7077*	1	BUCKET GP-MULTIPURPOSE	564
Y	*162-5236*	1	COVER GP-LINES	580
Y	**278-1969**	2	CYLINDER GP-HYDRAULIC	294
Y	*293-0140*	1	LINES GP-BUCKET	332
Y	*154-5011*	1	MOUNTING GP-CYLINDER	418
Y-SEPARATE ILLUSTRATION				

<END>

WORK TOOLS

325-7080 BUCKET AR-MULTIPURPOSE

S/N: JAY1-UP
AN ATTACHMENT

SMCS-6104 **i03013192**

NOTE	PART NUMBER	QTY	PART NAME 1 2 3 4 5 6 (PRODUCT LEVEL)	SEE PAGE
Y	*325-7076*	1	BUCKET AR-MULTIPURPOSE	495
Y	*195-7124*	1	EDGE GP-CUTTING	589
Y-SEPARATE ILLUSTRATION				

<END>

285-6095 BUCKET AR-UTILITY

S/N: JAY1-UP
AN ATTACHMENT

i02552467

NOTE	PART NUMBER	QTY	PART NAME 1 2 3 4 5 6 (PRODUCT LEVEL)	SEE PAGE
Y	**285-6096**	1	BUCKET GP-UTILITY (60-IN)	565
Y	*135-9384*	1	EDGE GP-CUTTING	584
Y-SEPARATE ILLUSTRATION				

<END>

285-6100 BUCKET AR-UTILITY

S/N: JAY1-UP
PART OF 285-6111 BUCKET AR-GRAPPLE
AN ATTACHMENT

i02552478

NOTE	PART NUMBER	QTY	PART NAME 1 2 3 4 5 6 (PRODUCT LEVEL)	SEE PAGE
Y	**285-6099**	1	BUCKET GP-UTILITY (66-IN)	566
Y	*135-9385*	1	EDGE GP-CUTTING	585
Y-SEPARATE ILLUSTRATION				

<END>

285-6101 BUCKET AR-UTILITY

S/N: JAY1-UP
PART OF 285-6112 BUCKET AR-GRAPPLE
AN ATTACHMENT

i02552482

NOTE	PART NUMBER	QTY	PART NAME 1 2 3 4 5 6 (PRODUCT LEVEL)	SEE PAGE
Y	**285-6102**	1	BUCKET GP-UTILITY (72-IN)	567
Y	*135-9386*	1	EDGE GP-CUTTING	586
Y-SEPARATE ILLUSTRATION				

<END>

WORK TOOLS

141-6704 BUCKET AS-DIRT

S/N: JAY1-UP
1676-MM (66-IN)
PART OF 165-6157 BUCKET AS-DIRT
AN ATTACHMENT

SMCS-6001 **i03638866**

NOTE	REF NO	GRAPHIC REF	PART NUMBER	QTY	PART NAME 1 2 3 4 5 6 (PRODUCT LEVEL)	SEE PAGE
	1	1	**149-5436**	1	EDGE	

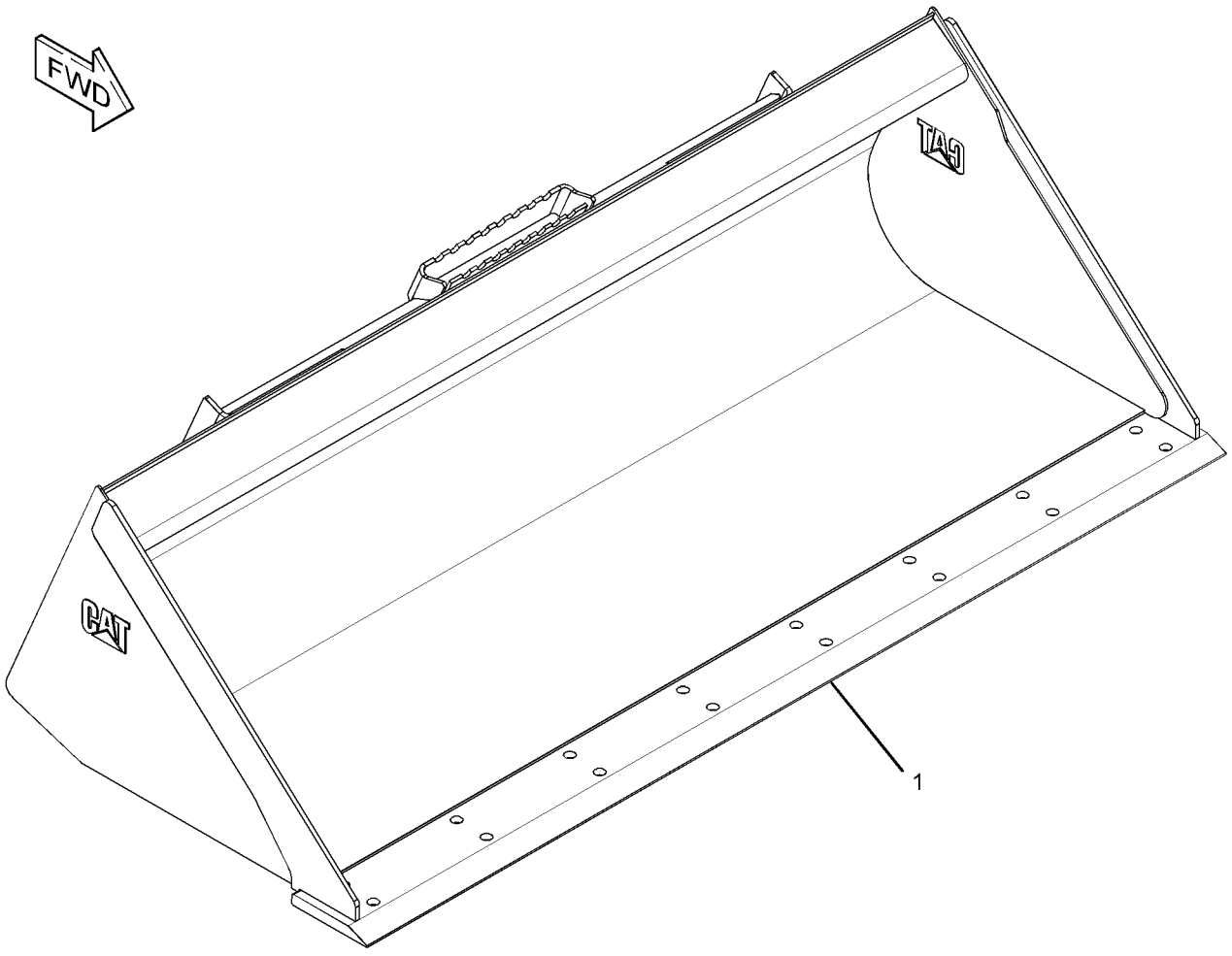

GRAPHIC #1 **<END>** g01953854

WORK TOOLS

152-0227 BUCKET AS-DIRT

S/N: JAY1-UP
1524-MM (60-IN)
PART OF 165-6156 BUCKET AS-DIRT
AN ATTACHMENT

SMCS-6001 **i03638850**

NOTE	REF NO	GRAPHIC REF	PART NUMBER	QTY	PART NAME 1 2 3 4 5 6 (PRODUCT LEVEL)	SEE PAGE
	1	1	**149-5435**	1	EDGE	

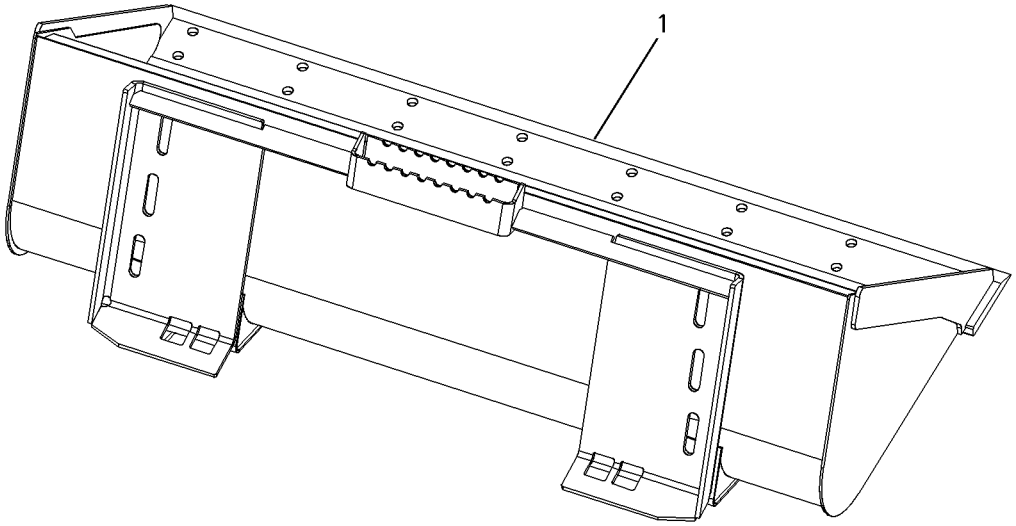

GRAPHIC #1 **<END>** g00651083

165-6156 BUCKET AS-DIRT

S/N: JAY1-UP
1524-MM (60-IN), 0.34CU M (0.44 CU YD)
PART OF 152-0231 BUCKET GP-DIRT
AN ATTACHMENT

SMCS-6001 **i03638322**

NOTE	REF NO	GRAPHIC REF	PART NUMBER	QTY	PART NAME 1 2 3 4 5 6 (PRODUCT LEVEL)	SEE PAGE
Y	1	1	*152-0227*	1	BUCKET AS-DIRT (60-IN)	498
	2	1	**154-2704**	1	PLATE-INSTRUCTION (BUCKET SPECIFICATIONS)	
	3	1	**168-8389**	4	TACK-FASTENER	

Y-SEPARATE ILLUSTRATION

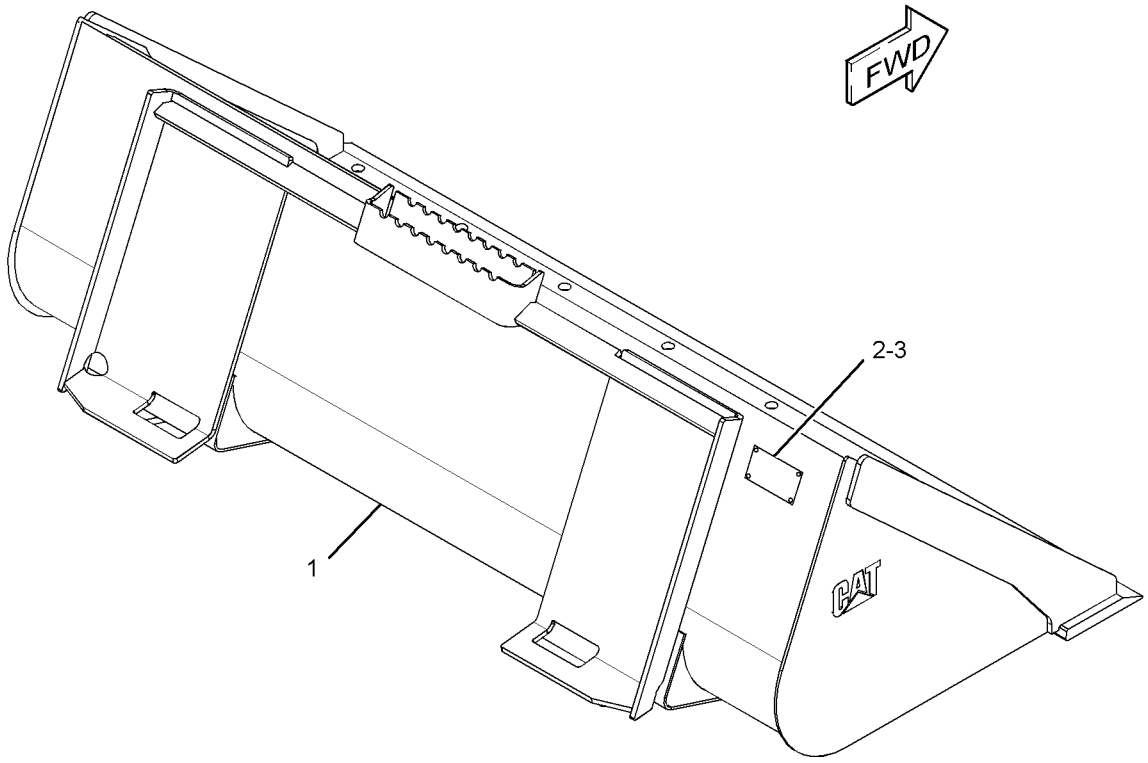

GRAPHIC #1 **<END>** g01954030

WORK TOOLS

165-6157 BUCKET AS-DIRT

S/N: JAY1-UP
0.37CU M (0.48 CU YD), 1677-MM (66-IN)
PART OF 152-0232 BUCKET GP-DIRT
AN ATTACHMENT

SMCS-6001 **i03638323**

NOTE	REF NO	GRAPHIC REF	PART NUMBER	QTY	PART NAME 1 2 3 4 5 6 (PRODUCT LEVEL)	SEE PAGE
Y	1	1	*141-6704*	1	BUCKET AS-DIRT	497
	2	1	**154-2704**	1	PLATE-INSTRUCTION (BUCKET SPECIFICATIONS)	
	3	1	**168-8389**	4	TACK-FASTENER	

Y-SEPARATE ILLUSTRATION

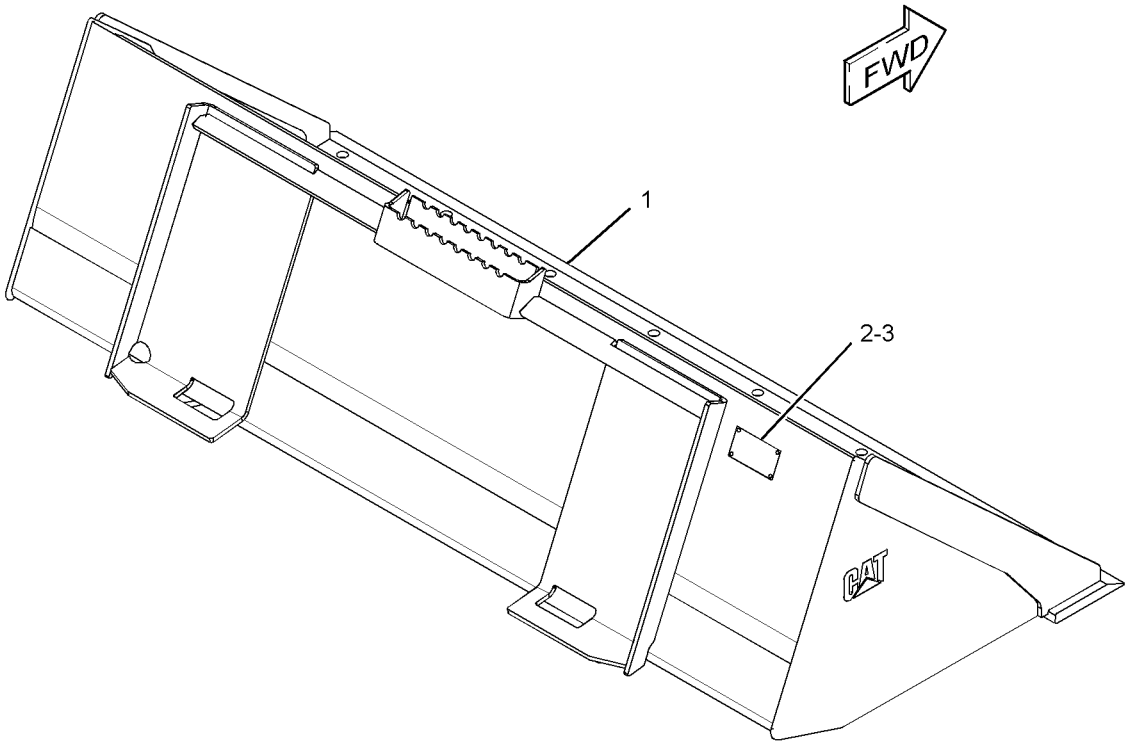

GRAPHIC #1 **<END>** g01953993

188-3526 BUCKET AS-DIRT

S/N: JAY1-UP
1829-MM (72-IN), 0.41CU M (0.53CU YD)
PART OF 188-2719 BUCKET GP-DIRT
AN ATTACHMENT

SMCS-6001 **i03638327**

NOTE	REF NO	GRAPHIC REF	PART NUMBER	QTY	PART NAME 1 2 3 4 5 6 (PRODUCT LEVEL)	SEE PAGE
	1	1	**154-2704**	1	PLATE-INSTRUCTION (BUCKET SPECIFICATIONS)	
	2	1	**168-8389**	4	TACK-FASTENER	
	3	1	*188-2716*	1	BUCKET AS-DIRT	

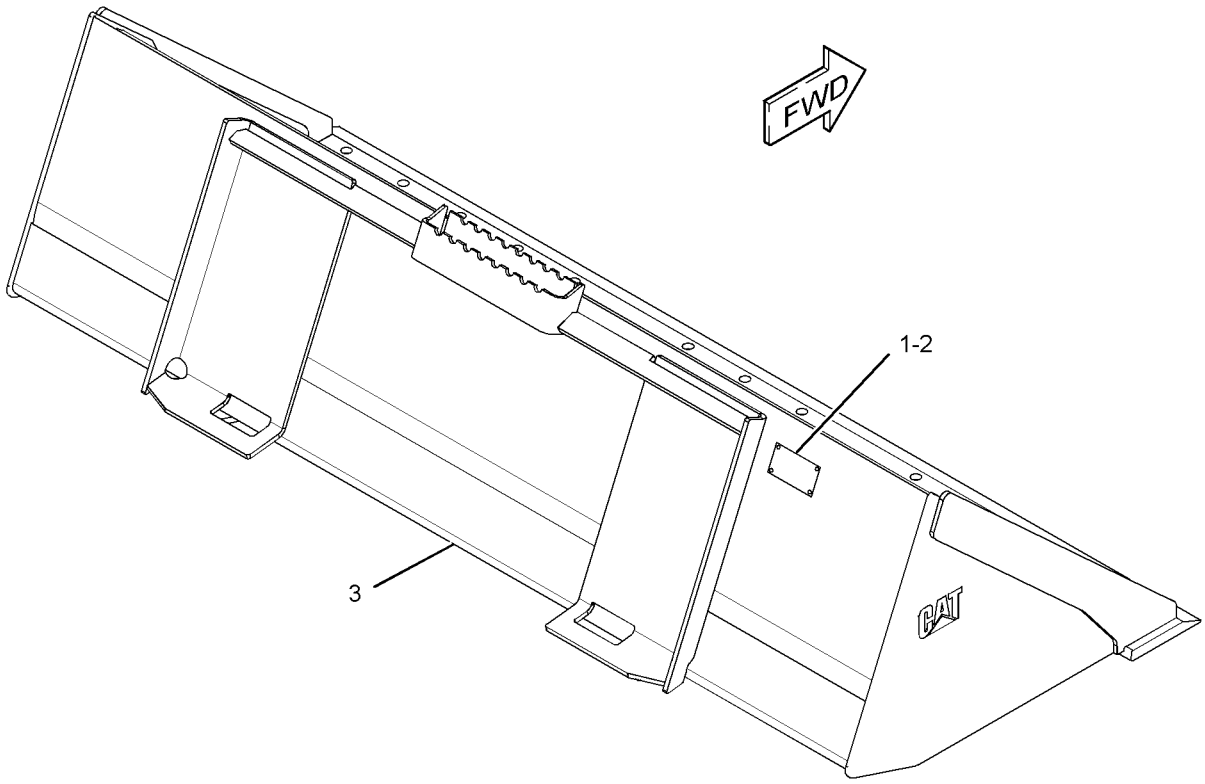

GRAPHIC #1 **<END>** g01954110

WORK TOOLS

279-5433 BUCKET AS-DIRT

S/N: JAY1-UP
1372-MM (54-IN)
PART OF 279-5434 BUCKET AS-DIRT
AN ATTACHMENT

SMCS-6001 **i03635729**

NOTE	REF NO	GRAPHIC REF	PART NUMBER	QTY	PART NAME 1 2 3 4 5 6 (PRODUCT LEVEL)	SEE PAGE
	1	1	**149-5434**	1	EDGE	

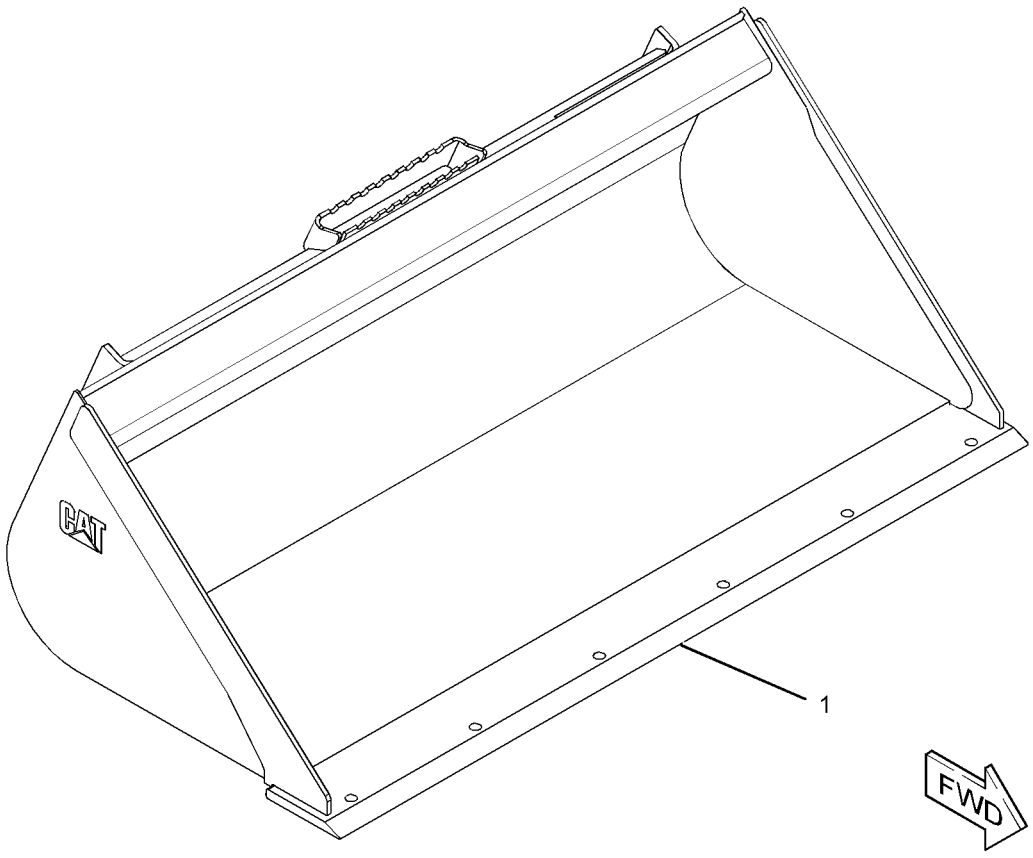

GRAPHIC #1 **<END>** g01953755

279-5434 BUCKET AS-DIRT

S/N: JAY1-UP
PART OF 279-5435 BUCKET AR-DIRT
AN ATTACHMENT

SMCS-6001 **i03636082**

NOTE	REF NO	GRAPHIC REF	PART NUMBER	QTY	PART NAME 1 2 3 4 5 6 (PRODUCT LEVEL)	SEE PAGE
	1	1	**154-2704**	1	PLATE-INSTRUCTION (BUCKET SPECIFICATIONS)	
	2	1	**168-8389**	4	TACK-FASTENER	
Y	3	1	*279-5433*	1	BUCKET AS-DIRT	502

Y-SEPARATE ILLUSTRATION

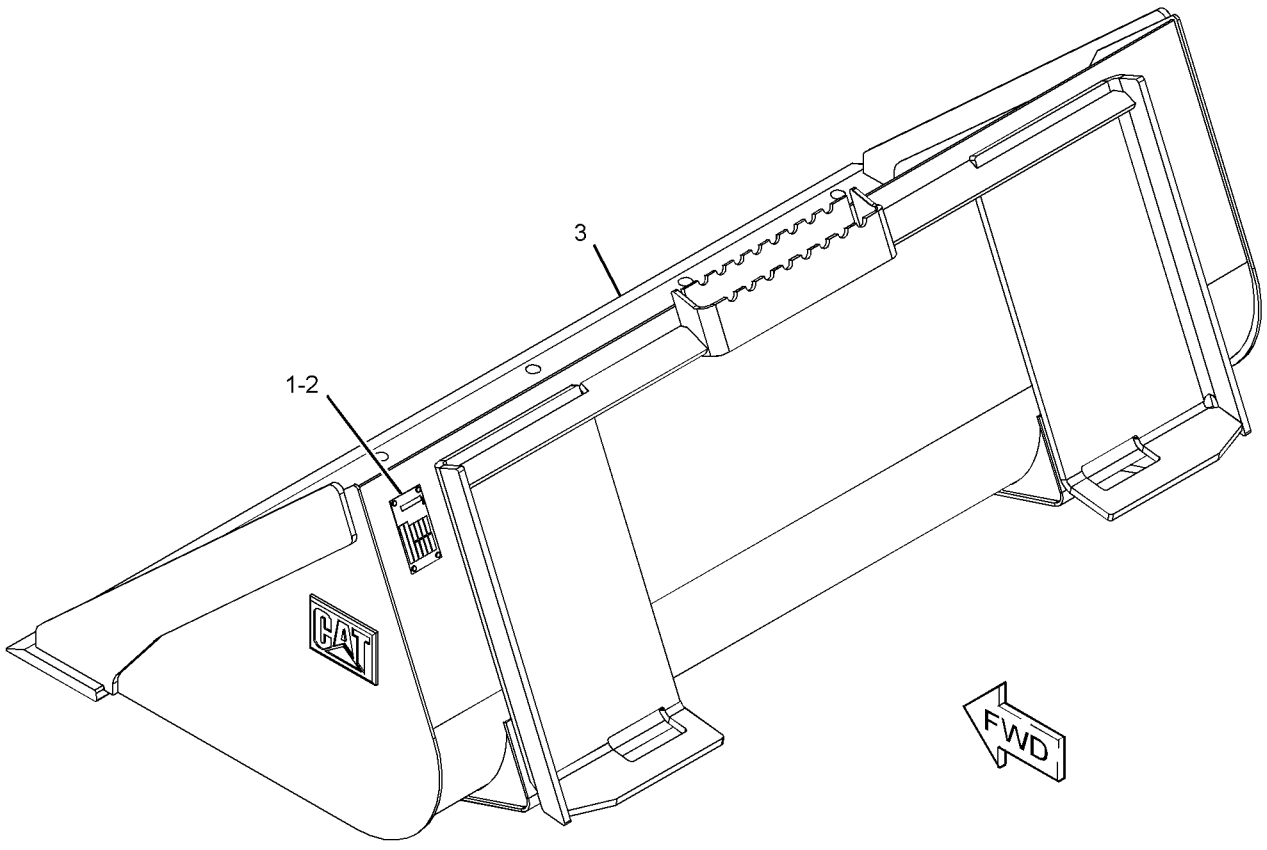

GRAPHIC #1 **<END>** g01951568

WORK TOOLS

279-5436 BUCKET AS-DIRT

S/N: JAY1-UP
1524-MM (60-IN)
PART OF 279-5437 BUCKET AS-DIRT
AN ATTACHMENT

SMCS-6001 **i03635731**

NOTE	REF NO	GRAPHIC REF	PART NUMBER	QTY	PART NAME 1 2 3 4 5 6 (PRODUCT LEVEL)	SEE PAGE
	1	1	**149-5435**	1	EDGE	

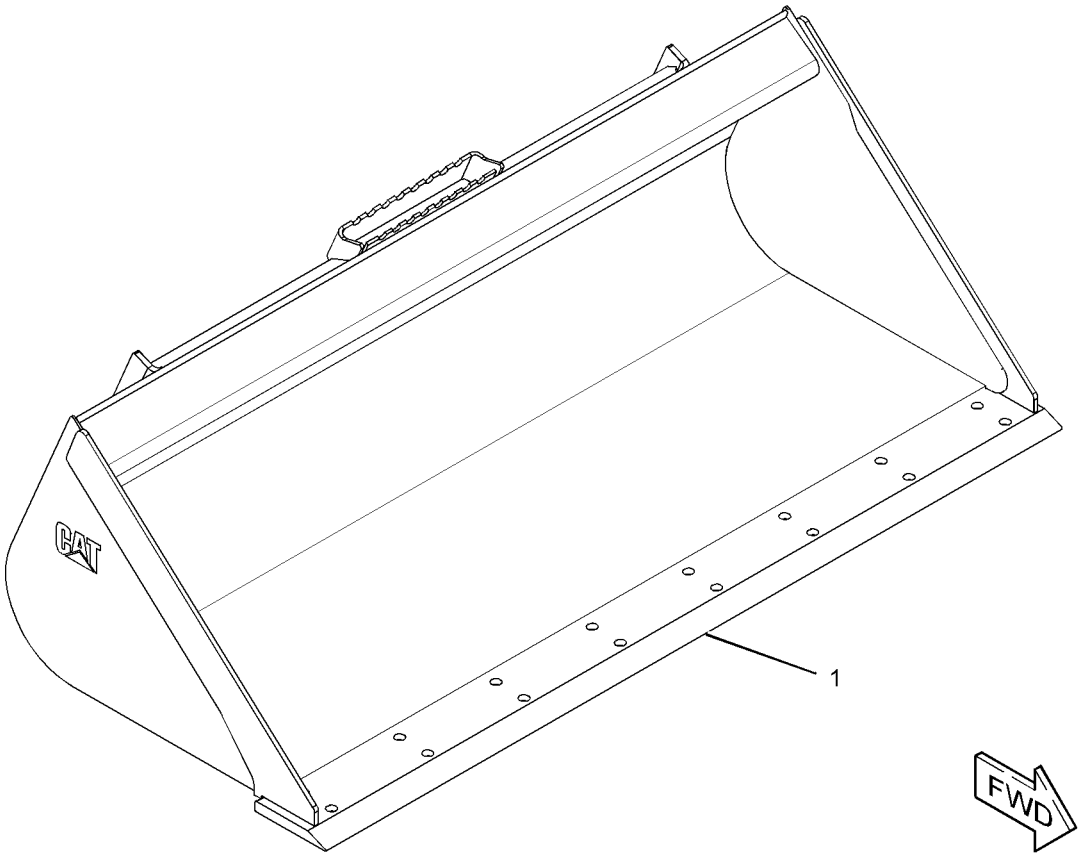

GRAPHIC #1 **<END>** g01953749

WORK TOOLS

279-5437 BUCKET AS-DIRT

S/N: JAY1-UP
PART OF 279-5438 BUCKET AR-DIRT
AN ATTACHMENT

SMCS-6001 **i03642570**

NOTE	REF NO	GRAPHIC REF	PART NUMBER	QTY	PART NAME 1 2 3 4 5 6 (PRODUCT LEVEL)	SEE PAGE
	1	1	**154-2704**	1	PLATE-INSTRUCTION (BUCKET SPECIFICATIONS)	
	2	1	**168-8389**	4	TACK-FASTENER	
Y	3	1	*279-5436*	1	BUCKET AS-DIRT	504

Y-SEPARATE ILLUSTRATION

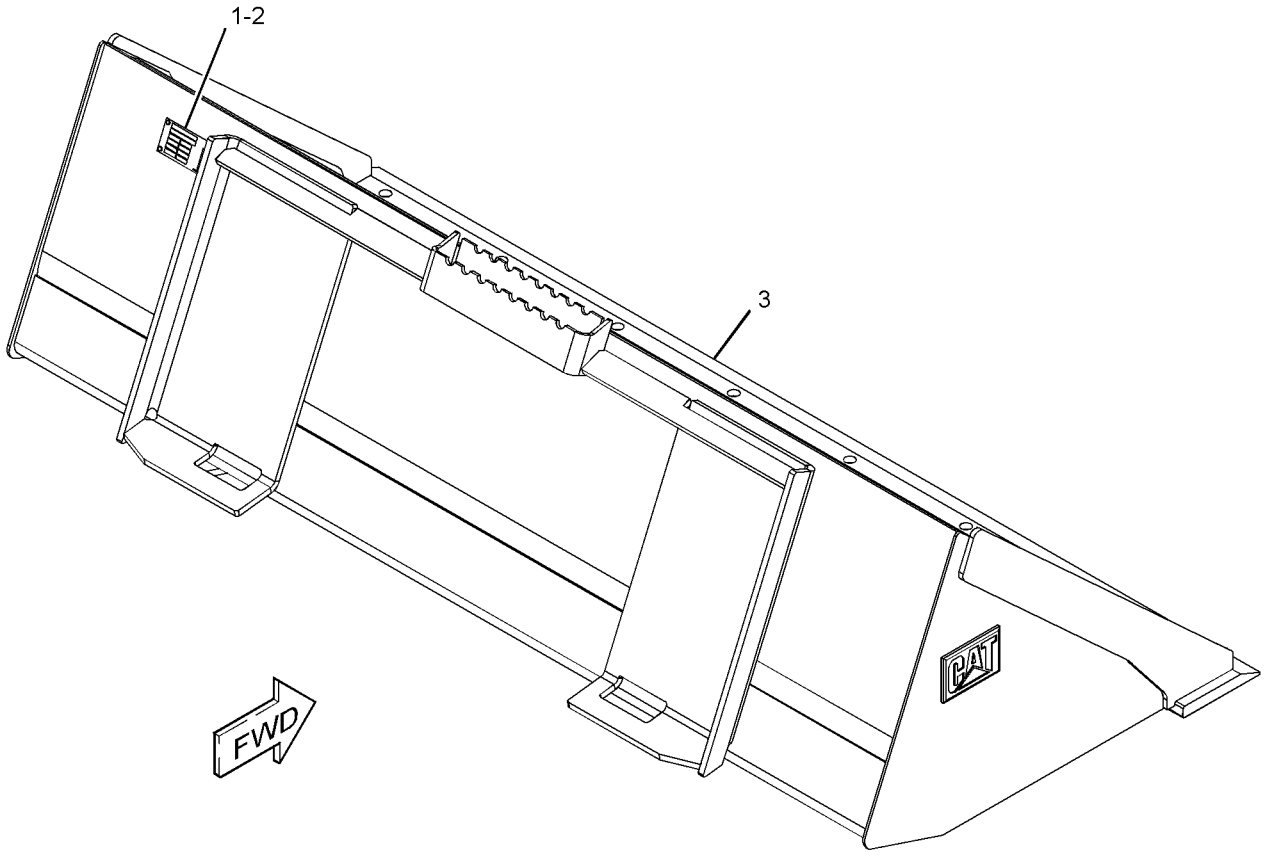

GRAPHIC #1 **<END>** g01951590

WORK TOOLS

279-5439 BUCKET AS-DIRT

S/N: JAY1-UP
1676-MM (66-IN)
PART OF 279-5440 BUCKET AS-DIRT
AN ATTACHMENT

SMCS-6001 **i03635763**

NOTE	REF NO	GRAPHIC REF	PART NUMBER	QTY	PART NAME 1 2 3 4 5 6 (PRODUCT LEVEL)	SEE PAGE
	1	1	**149-5436**	1	EDGE	

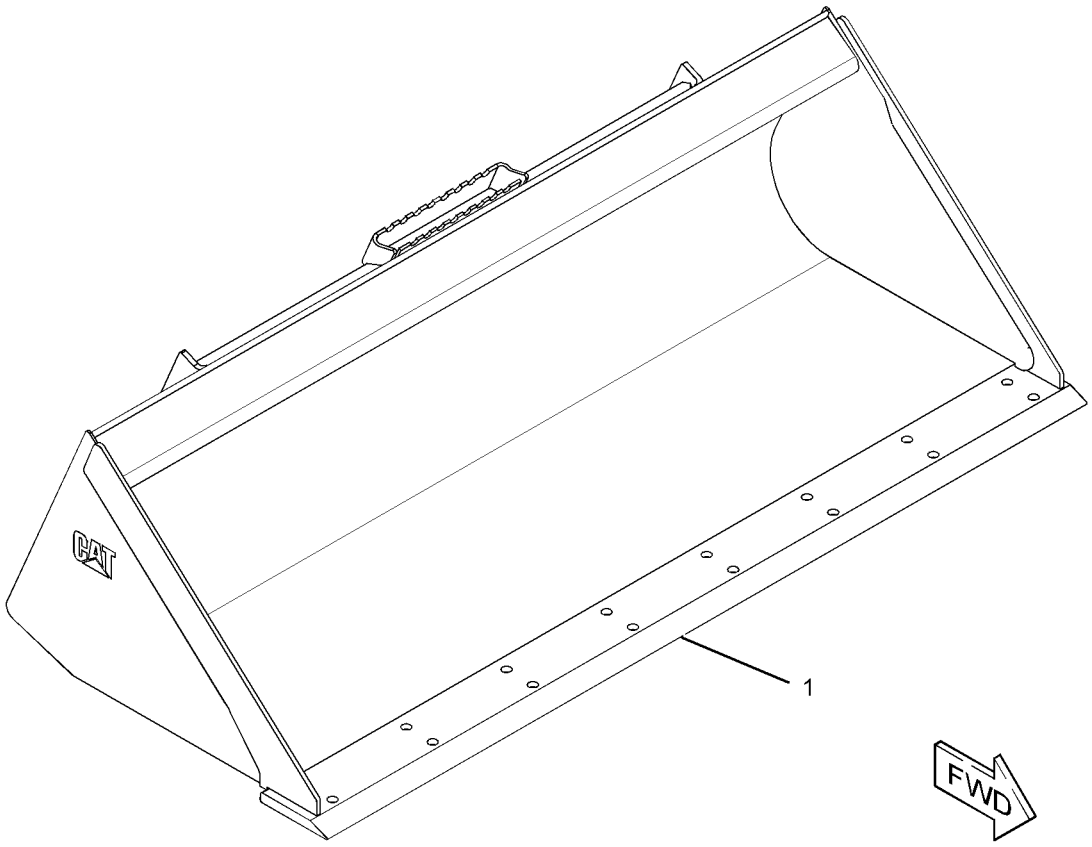

GRAPHIC #1 **<END>** g01953842

WORK TOOLS

279-5440 BUCKET AS-DIRT

S/N: JAY1-UP
PART OF 279-5441 BUCKET AR-DIRT
AN ATTACHMENT

SMCS-6001 **i03636105**

NOTE	REF NO	GRAPHIC REF	PART NUMBER	QTY	PART NAME 1 2 3 4 5 6 (PRODUCT LEVEL)	SEE PAGE
	1	1	**154-2704**	1	PLATE-INSTRUCTION (BUCKET SPECIFICATIONS)	
	2	1	**168-8389**	4	TACK-FASTENER	
Y	3	1	*279-5439*	1	BUCKET AS-DIRT	506

Y-SEPARATE ILLUSTRATION

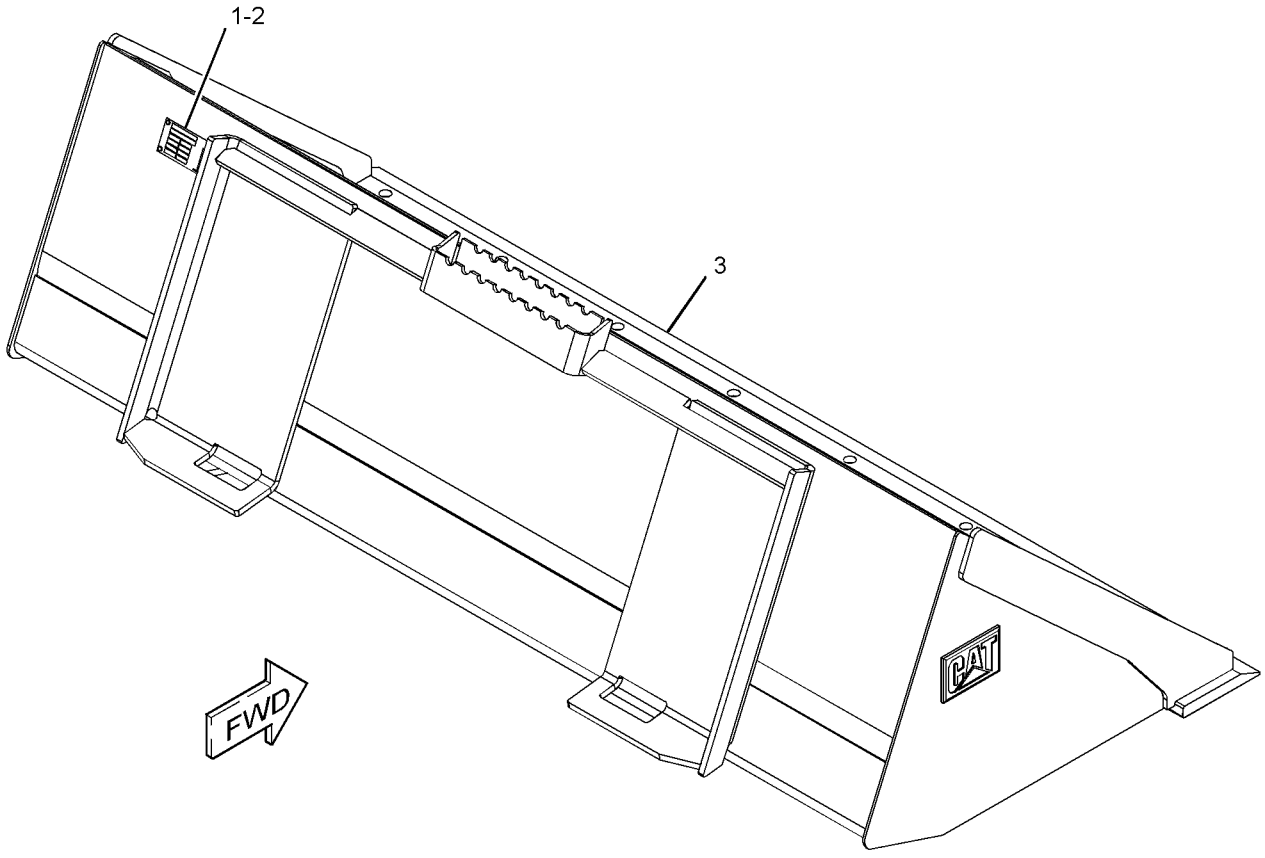

GRAPHIC #1 **<END>** g01951588

WORK TOOLS

285-6088 BUCKET AS-DIRT

S/N: JAY1-UP
1829-MM (72-IN)
PART OF 285-6089 BUCKET AS-DIRT
AN ATTACHMENT

SMCS-6001 **i03635778**

NOTE	REF NO	GRAPHIC REF	PART NUMBER	QTY	PART NAME 1 2 3 4 5 6 (PRODUCT LEVEL)	SEE PAGE
	1	1	**149-5437**	1	EDGE	

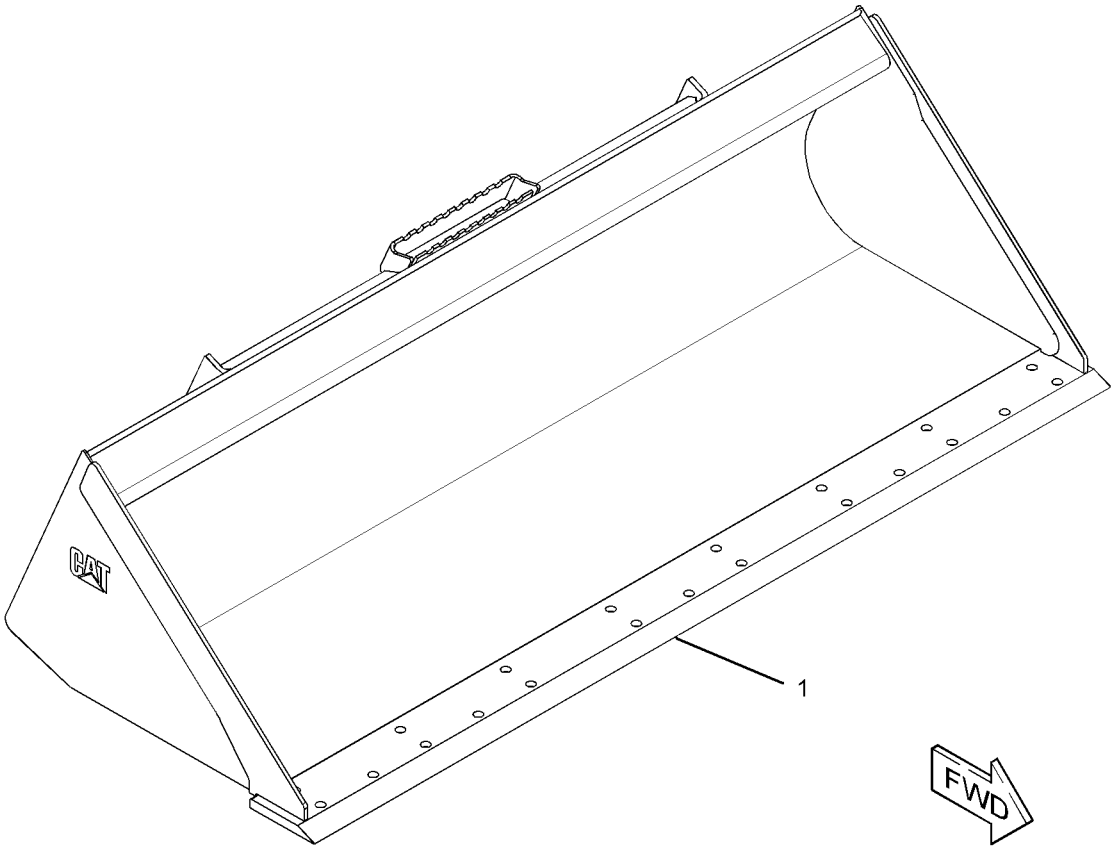

GRAPHIC #1 **<END>** g01953863

WORK TOOLS

285-6089 BUCKET AS-DIRT

S/N: JAY1-UP
PART OF 285-6090 BUCKET AR-DIRT
AN ATTACHMENT

SMCS-6001 **i03636401**

NOTE	REF NO	GRAPHIC REF	PART NUMBER	QTY	PART NAME 1 2 3 4 5 6 (PRODUCT LEVEL)	SEE PAGE
	1	1	**154-2704**	1	PLATE-INSTRUCTION (BUCKET SPECIFICATIONS)	
	2	1	**168-8389**	4	TACK-FASTENER	
Y	3	1	*285-6088*	1	BUCKET AS-DIRT	508

Y-SEPARATE ILLUSTRATION

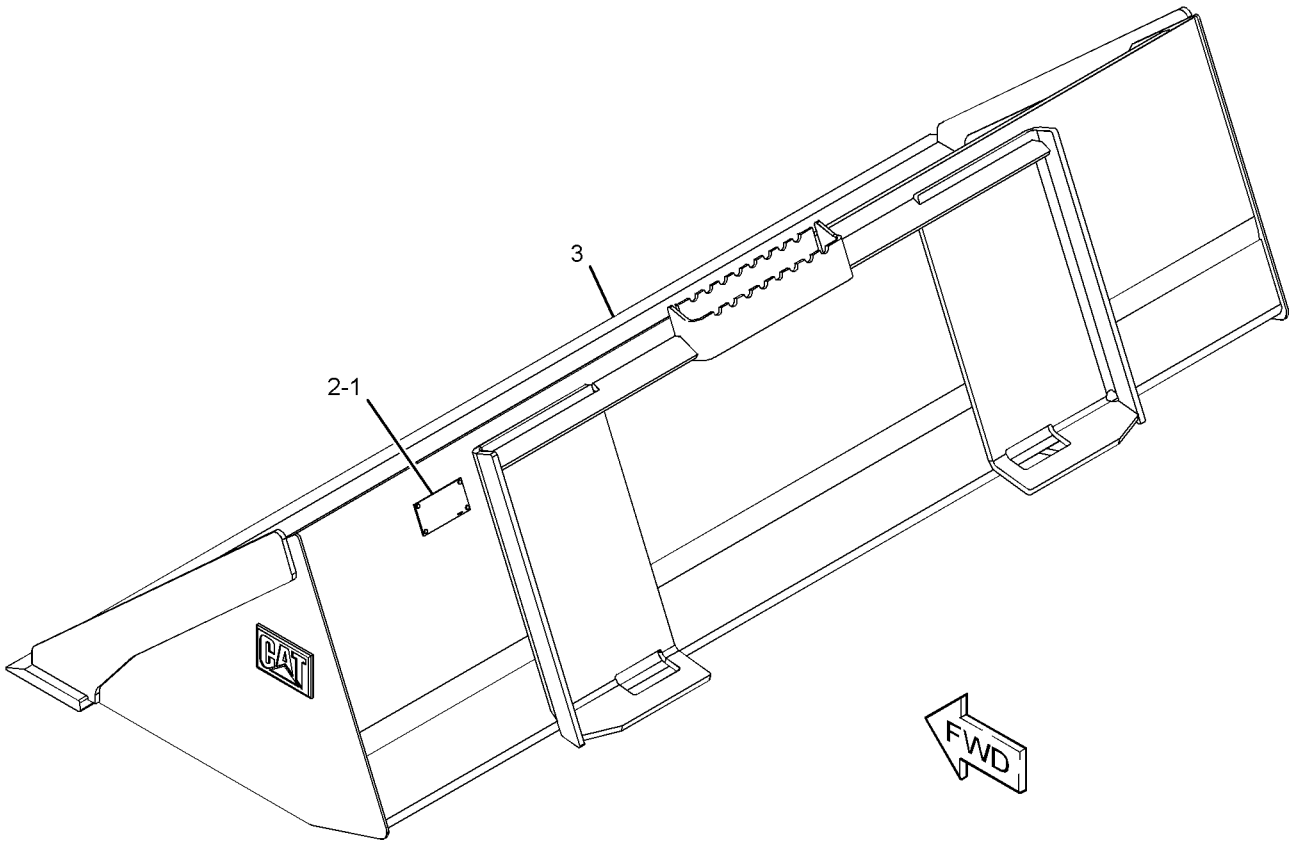

GRAPHIC #1 **<END>** g01951563

279-5363 BUCKET AS-GENERAL PURPOSE

S/N: JAY1-UP
1524-MM (60-IN)
PART OF 279-5364 BUCKET AS-GENERAL PURPOSE
AN ATTACHMENT

SMCS-6101 **i03635782**

NOTE	REF NO	GRAPHIC REF	PART NUMBER	QTY	PART NAME 1 2 3 4 5 6 (PRODUCT LEVEL)	SEE PAGE
	1	1	**149-5435**	1	EDGE	

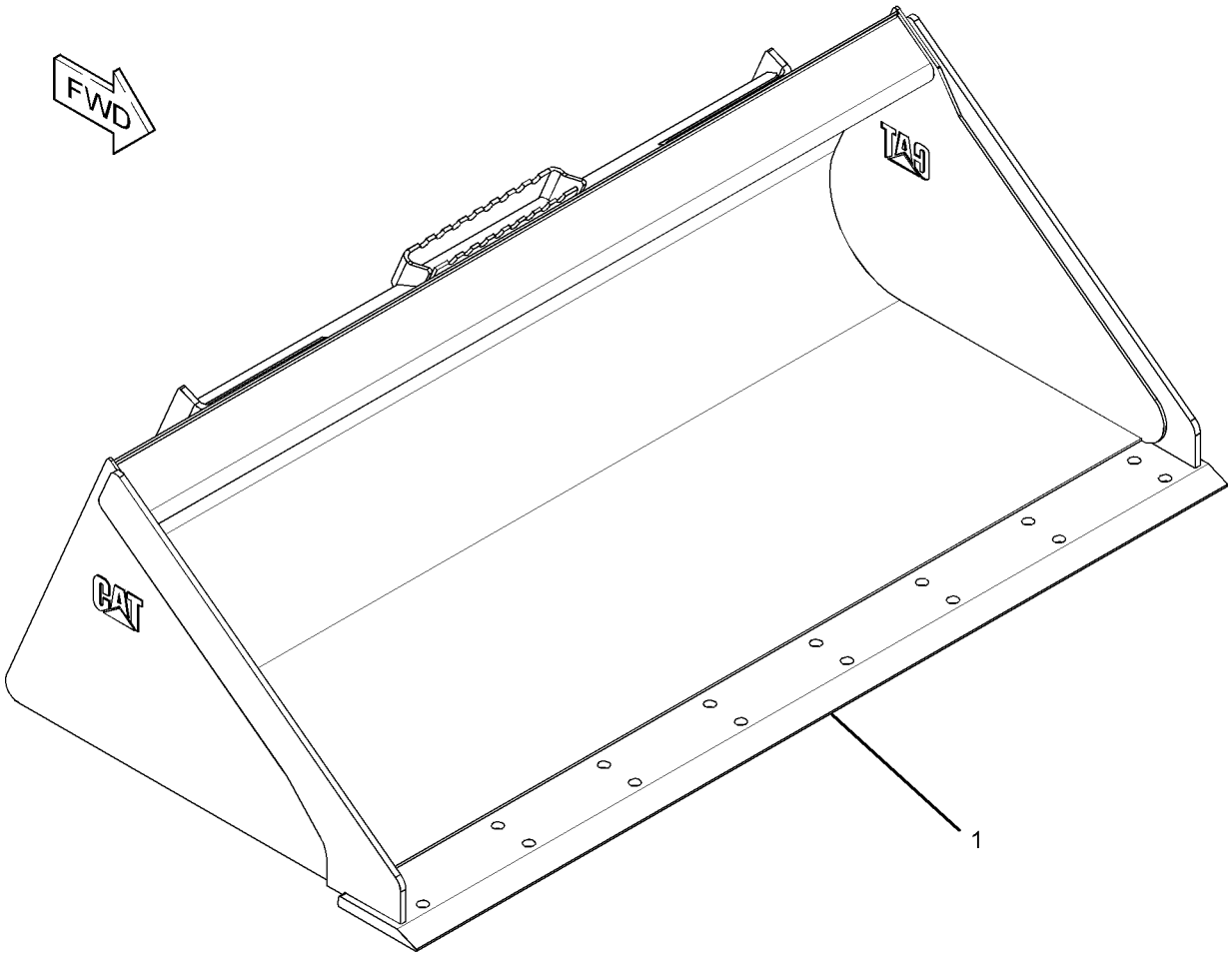

GRAPHIC #1 **<END>** g01951959

WORK TOOLS

279-5364 BUCKET AS-GENERAL PURPOSE

S/N: JAY1-UP

PART OF 279-5365, 279-5366 BUCKET AR-GENERAL PURPOSE

AN ATTACHMENT

SMCS-6101 **i03636015**

NOTE	REF NO	GRAPHIC REF	PART NUMBER	QTY	PART NAME 1 2 3 4 5 6 (PRODUCT LEVEL)	SEE PAGE
	1	1	**154-2704**	1	PLATE-INSTRUCTION (BUCKET SPECIFICATIONS)	
	2	1	**168-8389**	4	TACK-FASTENER	
Y	3	1	*279-5363*	1	BUCKET AS-GENERAL PURPOSE	510

Y-SEPARATE ILLUSTRATION

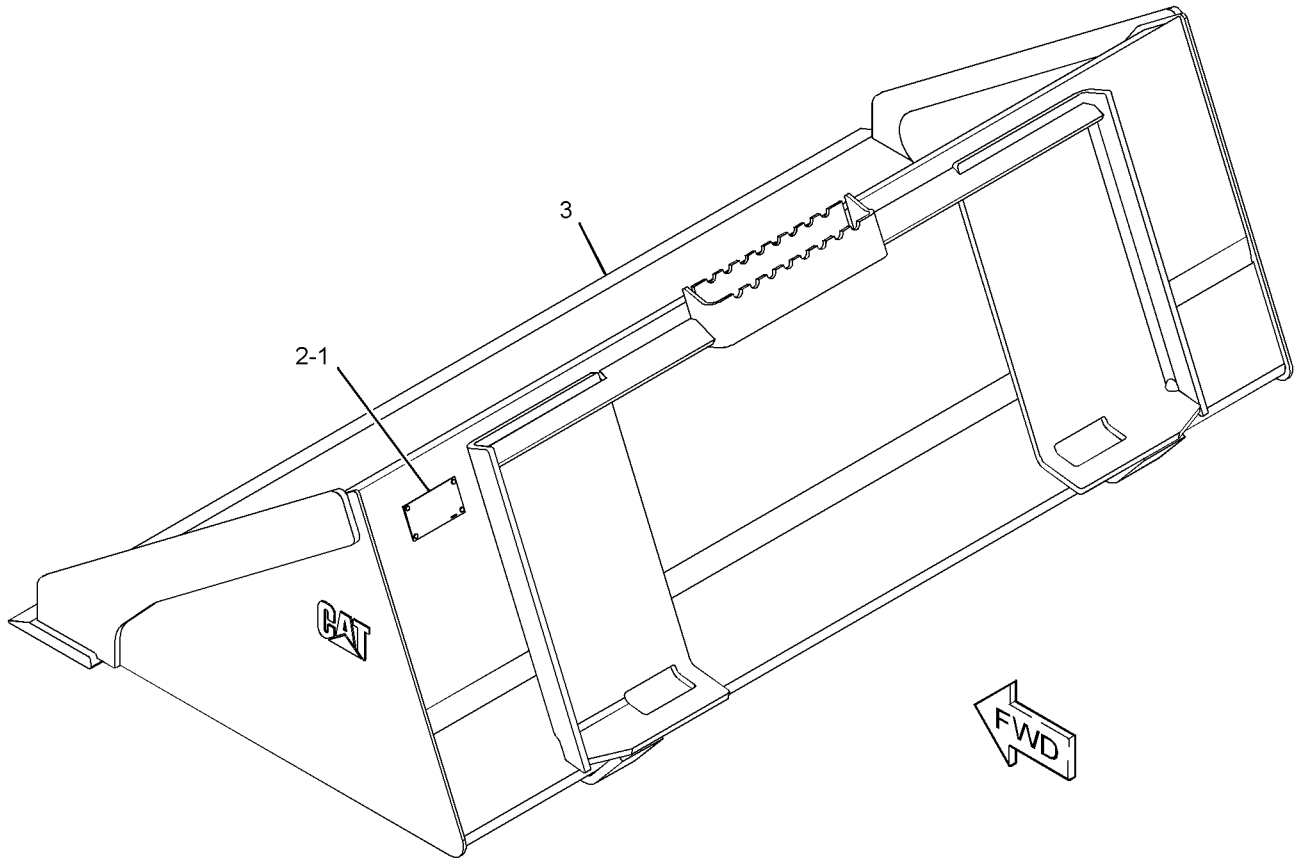

GRAPHIC #1 **<END>** g01951595

279-5367 BUCKET AS-GENERAL PURPOSE

S/N: JAY1-UP
1676-MM (66-IN)
PART OF 279-5368 BUCKET AS-GENERAL PURPOSE
AN ATTACHMENT

SMCS-6101 **i03635793**

NOTE	REF NO	GRAPHIC REF	PART NUMBER	QTY	PART NAME 1 2 3 4 5 6 (PRODUCT LEVEL)	SEE PAGE
	1	1	**149-5436**	1	EDGE	

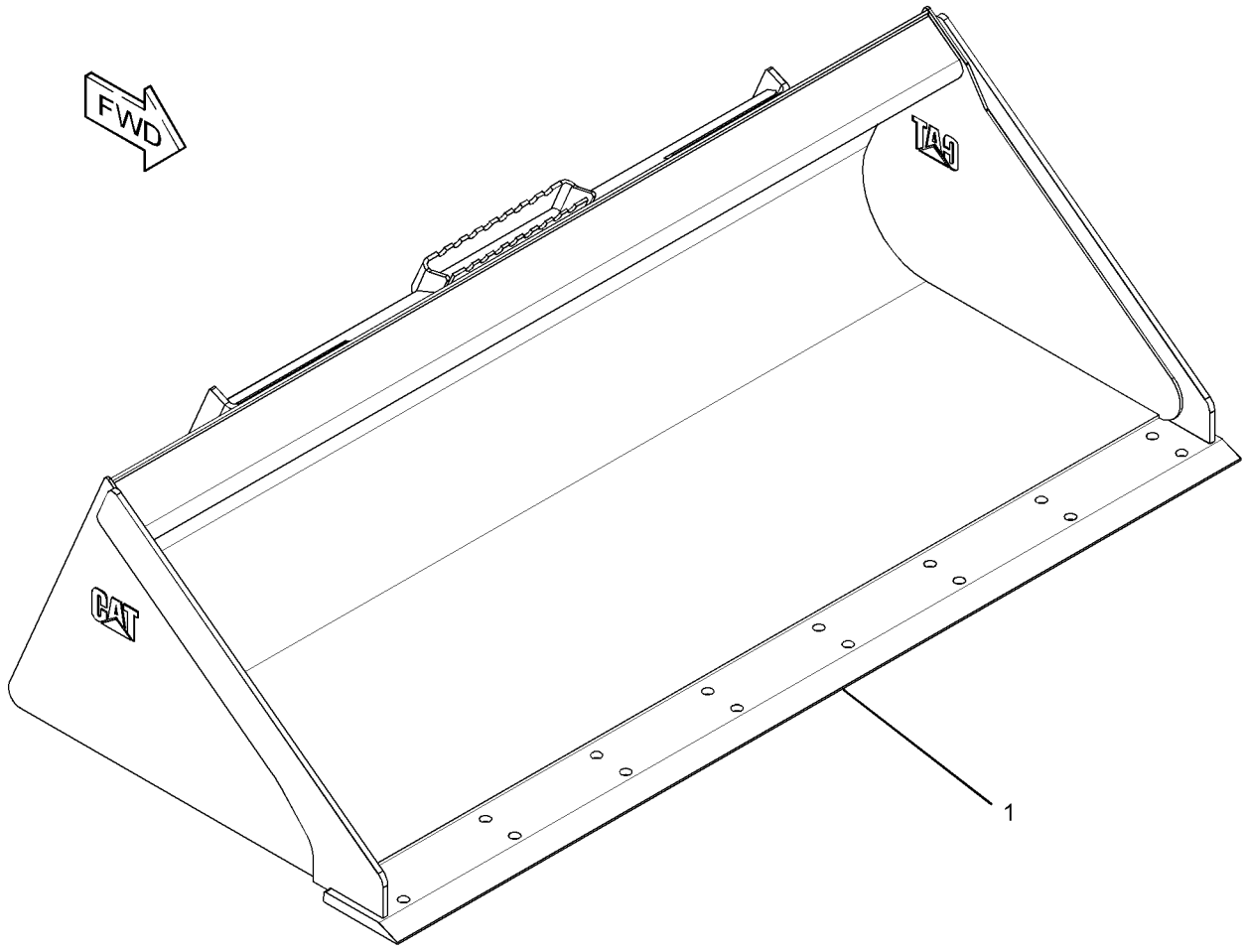

GRAPHIC #1 **<END>** g01951953

WORK TOOLS

279-5368 BUCKET AS-GENERAL PURPOSE

S/N: JAY1-UP

PART OF 279-5369, 279-5370 BUCKET AR-GENERAL PURPOSE AN ATTACHMENT

SMCS-6101 **i03636033**

NOTE	REF NO	GRAPHIC REF	PART NUMBER	QTY	PART NAME 1 2 3 4 5 6 (PRODUCT LEVEL)	SEE PAGE
	1	1	**154-2704**	1	PLATE-INSTRUCTION (BUCKET SPECIFICATIONS)	
	2	1	**168-8389**	4	TACK-FASTENER	
Y	3	1	*279-5367*	1	BUCKET AS-GENERAL PURPOSE	512

Y-SEPARATE ILLUSTRATION

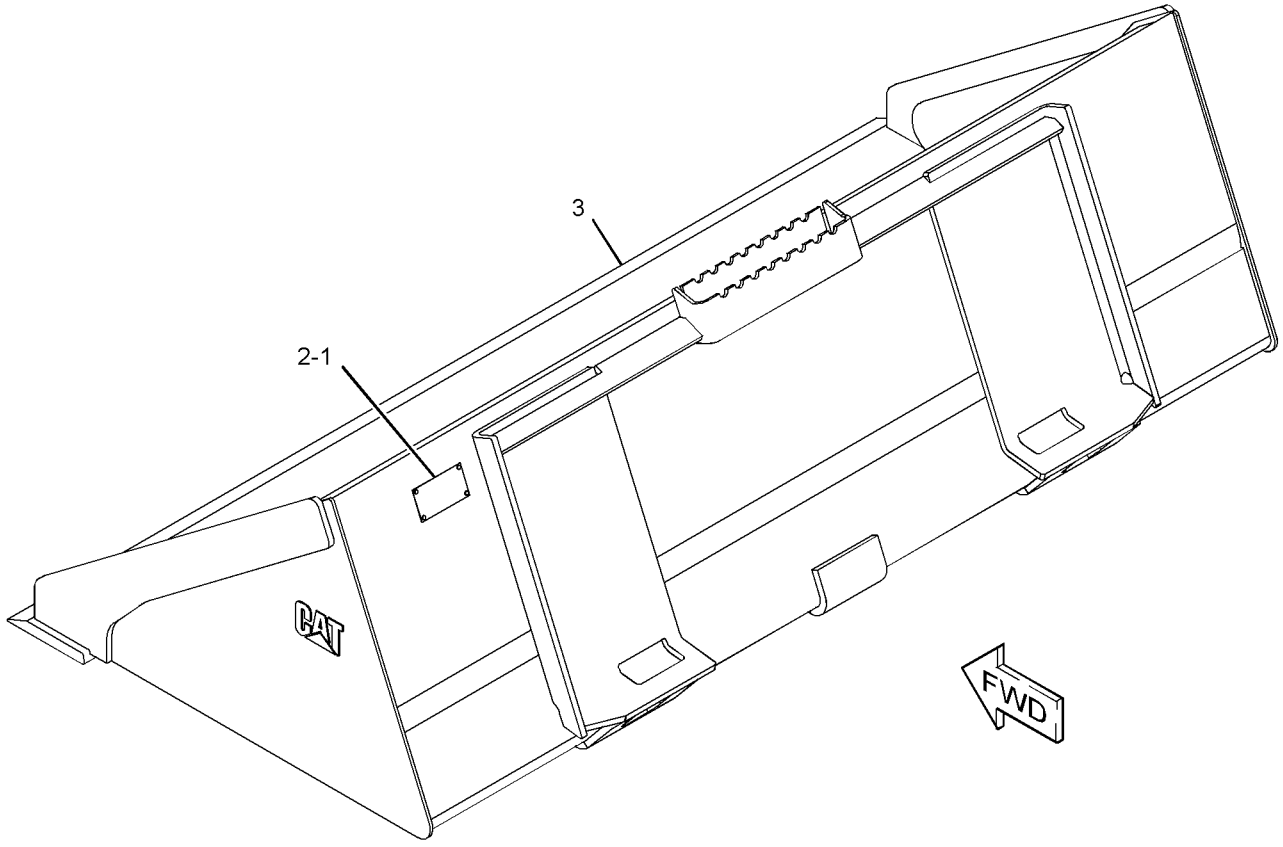

GRAPHIC #1 **<END>** g01951562

279-5371 BUCKET AS-GENERAL PURPOSE

S/N: JAY1-UP
1829-MM (72-IN)
PART OF 279-5372 BUCKET AS-GENERAL PURPOSE
AN ATTACHMENT

SMCS-6101 **i03635988**

NOTE	REF NO	GRAPHIC REF	PART NUMBER	QTY	PART NAME 1 2 3 4 5 6 (PRODUCT LEVEL)	SEE PAGE
	1	1	**149-5437**	1	EDGE	

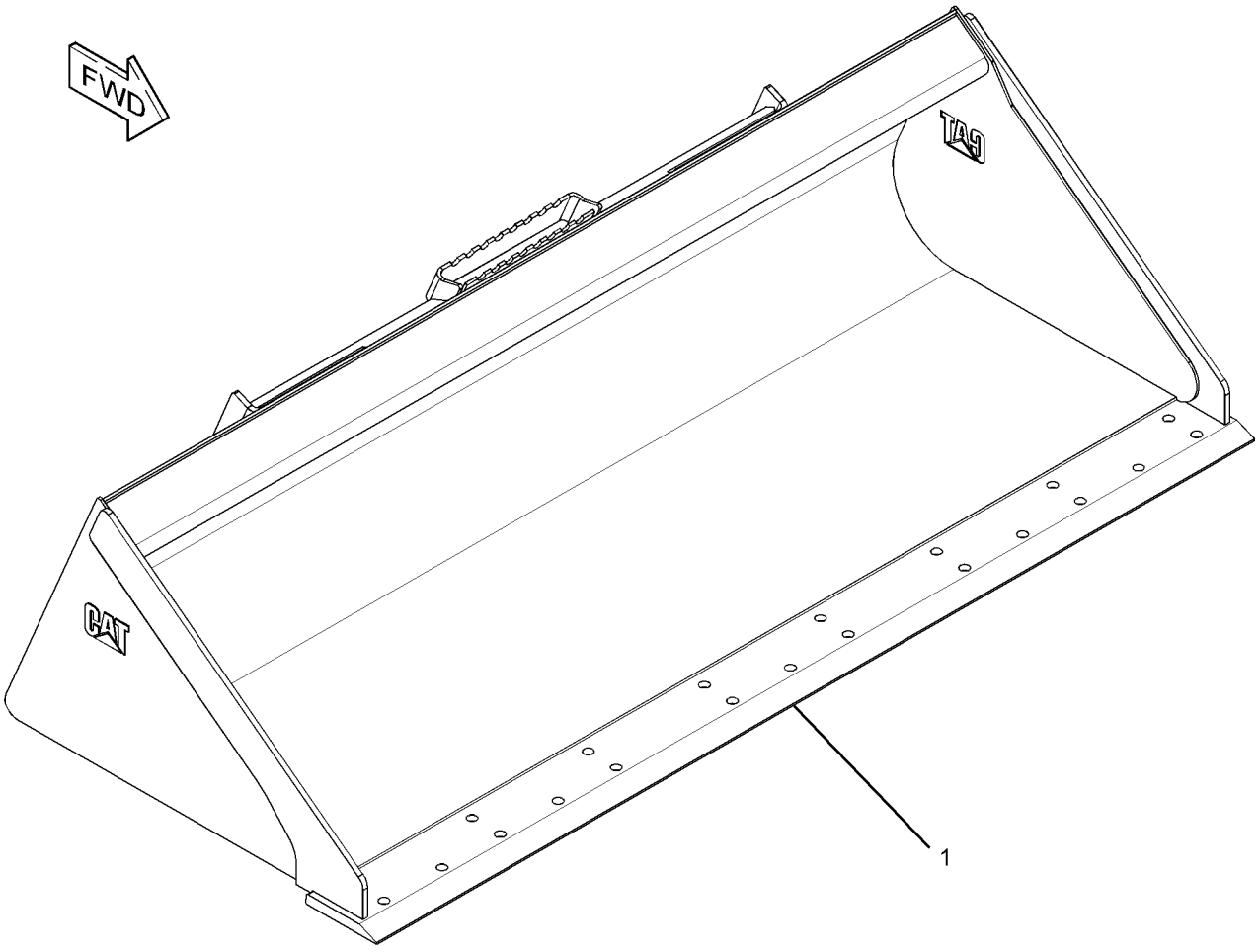

GRAPHIC #1 **<END>** g01952024

279-5372 BUCKET AS-GENERAL PURPOSE

S/N: JAY1-UP

PART OF 279-5373, 279-5374 BUCKET AR-GENERAL PURPOSE AN ATTACHMENT

SMCS-6101 **i03636030**

NOTE	REF NO	GRAPHIC REF	PART NUMBER	QTY	PART NAME 1 2 3 4 5 6 (PRODUCT LEVEL)	SEE PAGE
	1	1	**154-2704**	1	PLATE-INSTRUCTION (BUCKET SPECIFICATIONS)	
	2	1	**168-8389**	4	TACK-FASTENER	
Y	3	1	*279-5371*	1	BUCKET AS-GENERAL PURPOSE	514

Y-SEPARATE ILLUSTRATION

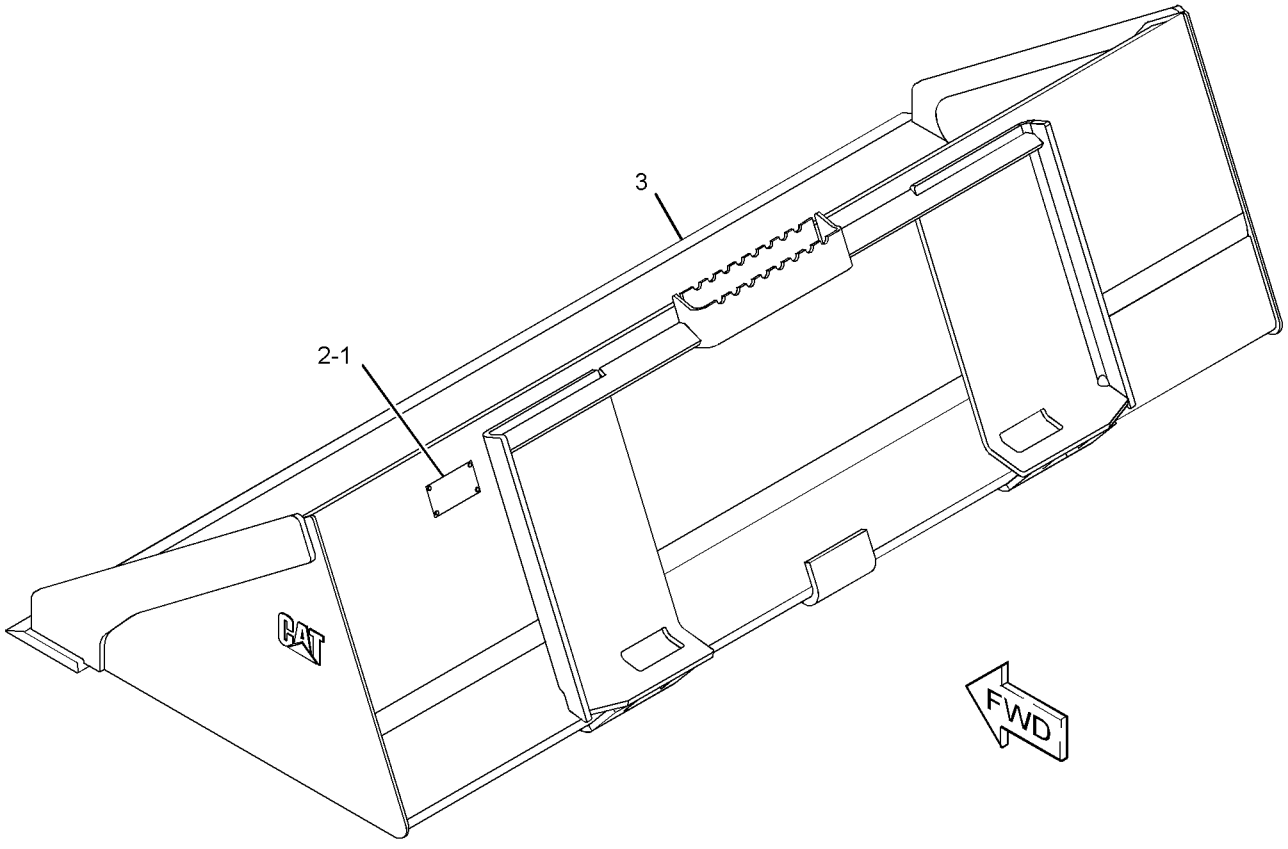

GRAPHIC #1 **<END>** g01951593

279-5375 BUCKET AS-GENERAL PURPOSE

S/N: JAY1-UP
1981-MM (78-IN)
PART OF 279-5376 BUCKET AS-GENERAL PURPOSE
AN ATTACHMENT

SMCS-6101 **i03636000**

NOTE	REF NO	GRAPHIC REF	PART NUMBER	QTY	PART NAME 1 2 3 4 5 6 (PRODUCT LEVEL)	SEE PAGE
	1	1	**199-7722**	1	EDGE	

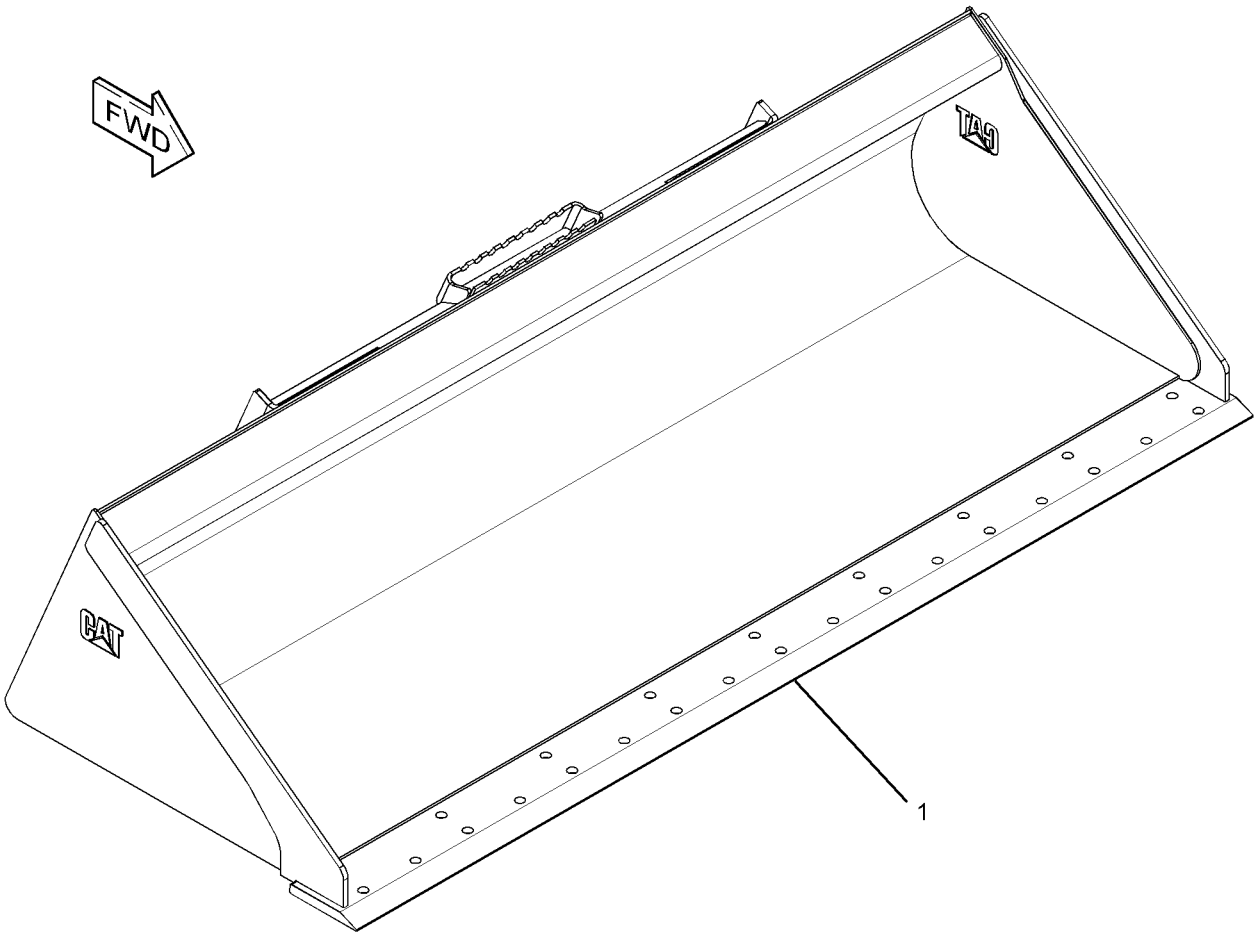

GRAPHIC #1 **<END>** g01952022

279-5376 BUCKET AS-GENERAL PURPOSE

S/N: JAY1-UP

PART OF 279-5377, 279-5378 BUCKET AR-GENERAL PURPOSE

AN ATTACHMENT

SMCS-6101 **i03636035**

NOTE	REF NO	GRAPHIC REF	PART NUMBER	QTY	PART NAME 1 2 3 4 5 6 (PRODUCT LEVEL)	SEE PAGE
	1	1	**154-2704**	1	PLATE-INSTRUCTION (BUCKET SPECIFICATIONS)	
	2	1	**168-8389**	4	TACK-FASTENER	
Y	3	1	*279-5375*	1	BUCKET AS-GENERAL PURPOSE	516

Y-SEPARATE ILLUSTRATION

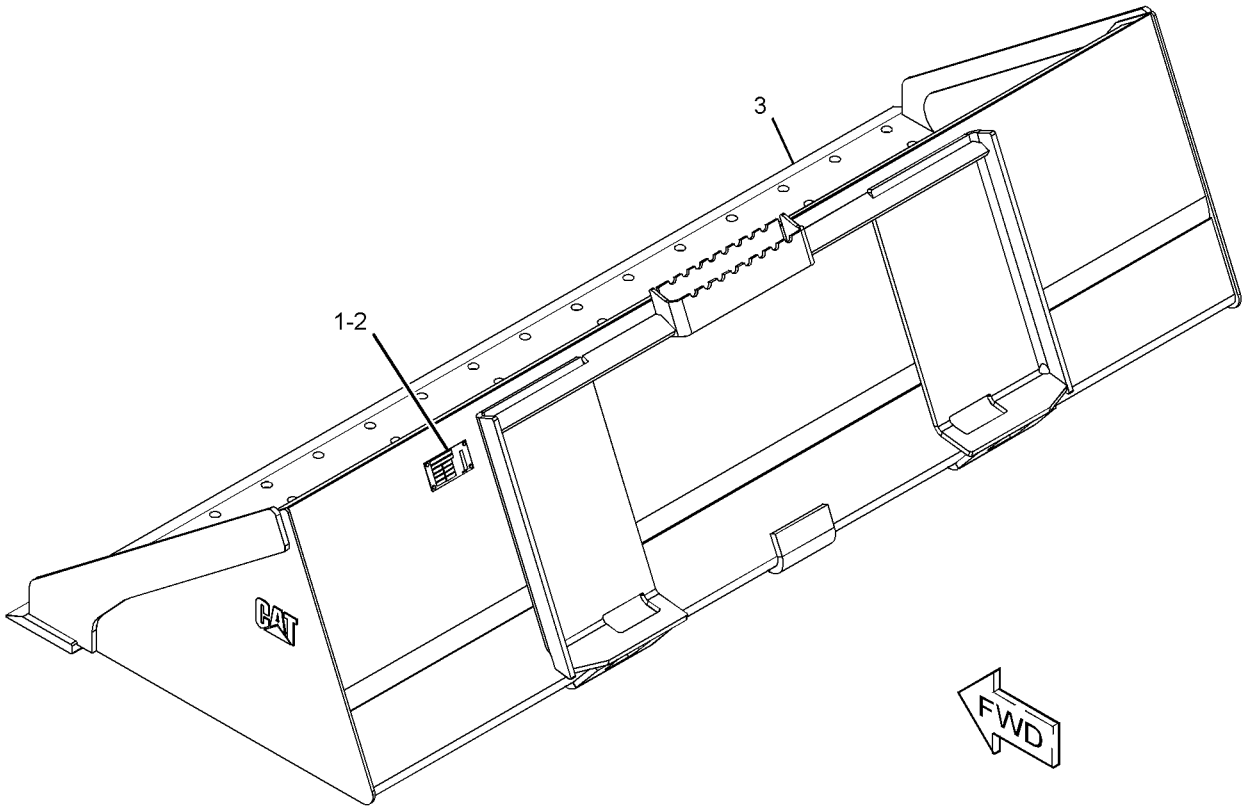

GRAPHIC #1 **<END>** g01951591

292-9270 BUCKET AS-GENERAL PURPOSE–HIGH CAPACITY

S/N: JAY1-UP

PART OF 296-8192 BUCKET AR-GENERAL PURPOSE, 296-8191 BUCKET GP-GENERAL PURPOSE

AN ATTACHMENT

SMCS-6101 **i03636406**

NOTE	REF NO	GRAPHIC REF	PART NUMBER	QTY	PART NAME 1 2 3 4 5 6 (PRODUCT LEVEL)	SEE PAGE
	1	1	**154-2704**	1	PLATE-INSTRUCTION (BUCKET SPECIFICATIONS)	
	2	1	**168-8389**	4	TACK-FASTENER	
Y	3	1	*292-9271*	1	BUCKET AS-GENERAL PURPOSE	519

Y-SEPARATE ILLUSTRATION

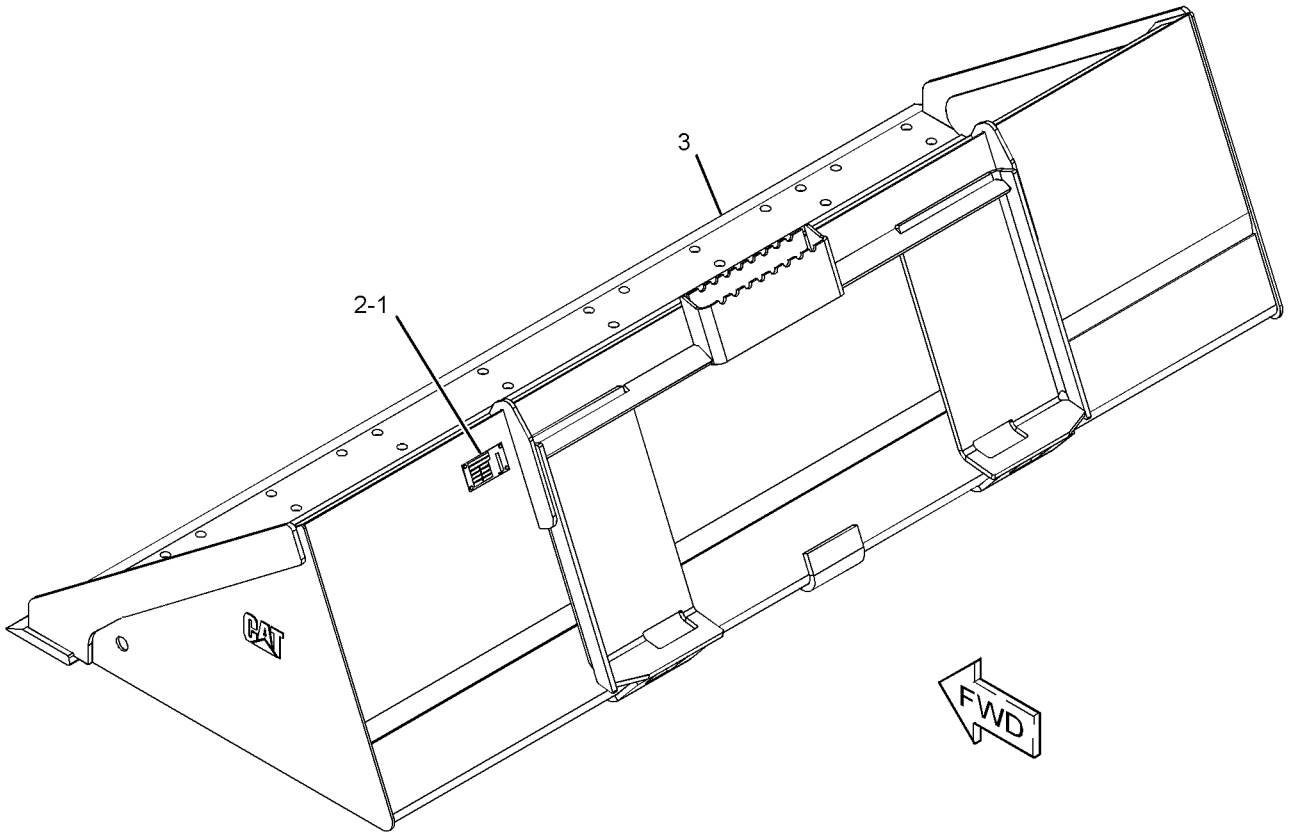

GRAPHIC #1 **<END>** g01951560

292-9271 BUCKET AS-GENERAL PURPOSE

S/N: JAY1-UP
2134-MM (84-IN)
PART OF 292-9270 BUCKET AS-GENERAL PURPOSE
AN ATTACHMENT

SMCS-6101 **i03636009**

NOTE	REF NO	GRAPHIC REF	PART NUMBER	QTY	PART NAME 1 2 3 4 5 6 (PRODUCT LEVEL)	SEE PAGE
	1	1	**229-3432**	1	EDGE	

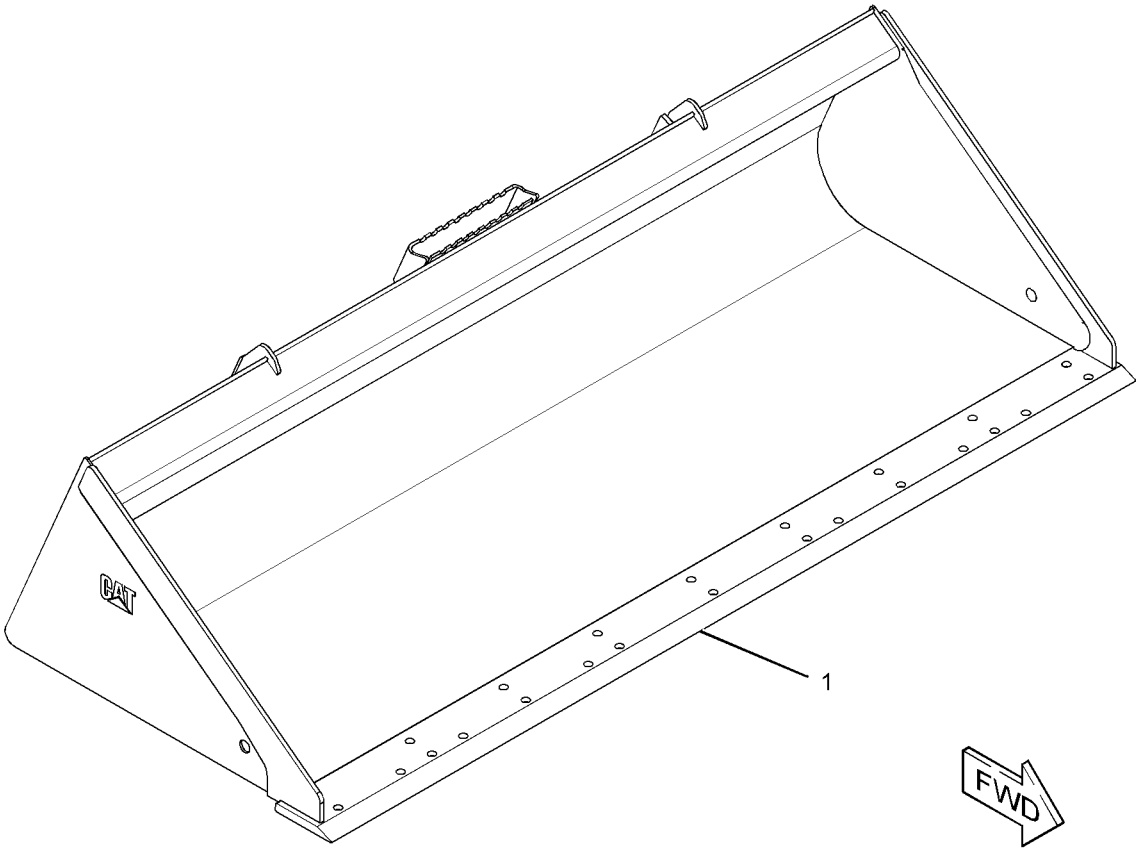

GRAPHIC #1 **<END>** g01953877

WORK TOOLS

156-0887 BUCKET AS-GRAPPLE

S/N: JAY1-UP
1524-MM (60-IN)
PART OF 169-8941 BUCKET AS-GRAPPLE
AN ATTACHMENT

SMCS-6704 **i03613140**

NOTE	REF NO	GRAPHIC REF	PART NUMBER	QTY	PART NAME 1 2 3 4 5 6 (PRODUCT LEVEL)	SEE PAGE
	1	1	**149-5435**	1	EDGE	
	2	1	**161-4130**	2	PLATE-IDENTIFICATION (CAT)	
M	3	1	**8Y-4489**	2	BOSS (M10X1.5-THD)	

M-METRIC PART

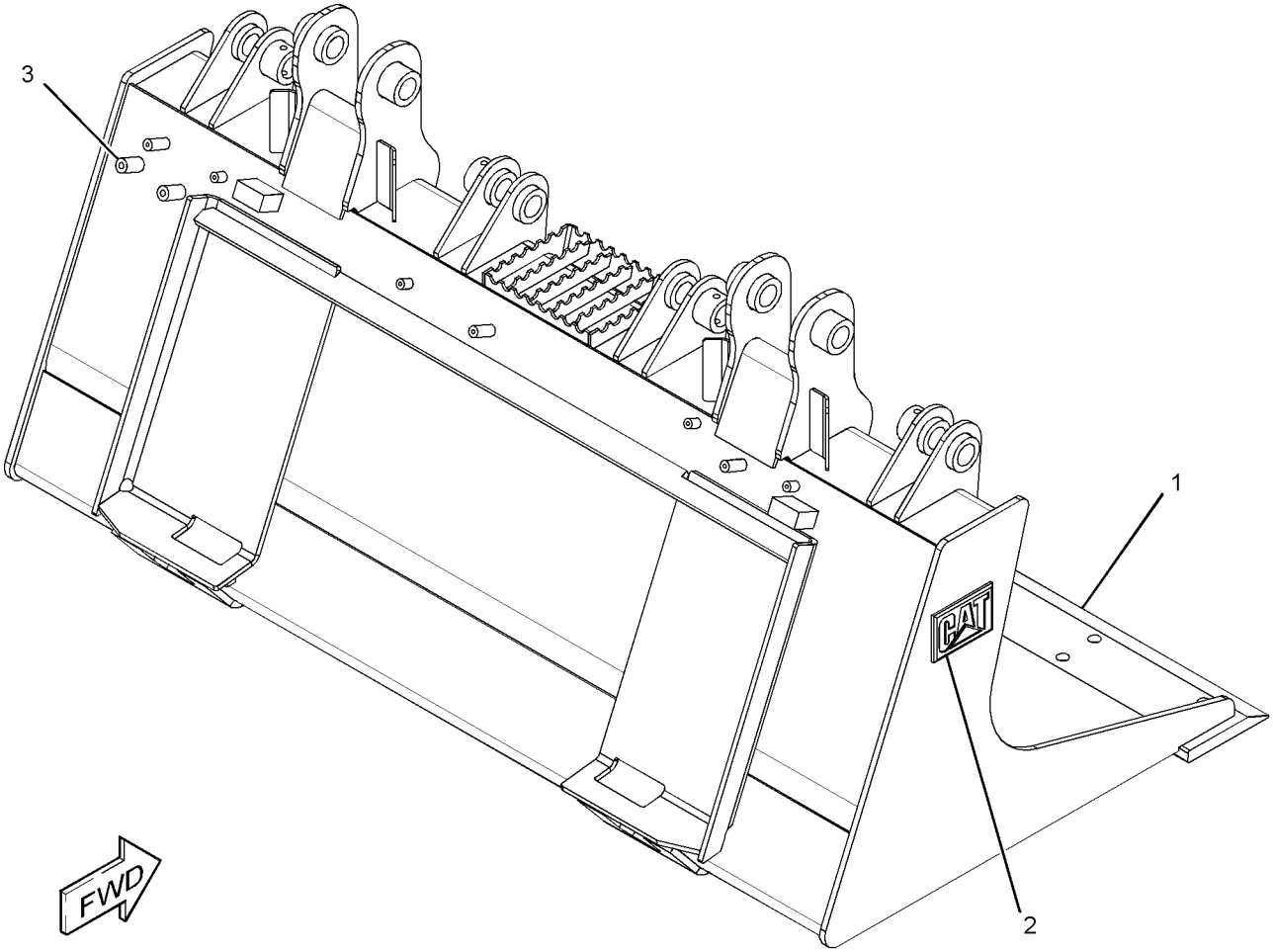

GRAPHIC #1 **<END>** g01944452

WORK TOOLS

156-0888 BUCKET AS-GRAPPLE

S/N: JAY1-UP
1676-MM (66-IN)
PART OF 169-8942 BUCKET AS-GRAPPLE
AN ATTACHMENT

SMCS-6704 **i03613141**

NOTE	REF NO	GRAPHIC REF	PART NUMBER	QTY	PART NAME 1 2 3 4 5 6 (PRODUCT LEVEL)	SEE PAGE
	1	1	**149-5436**	1	EDGE	
	2	1	**161-4130**	2	PLATE-IDENTIFICATION (CAT)	
M	3	1	**8Y-4489**	2	BOSS (M10X1.5-THD)	

M-METRIC PART

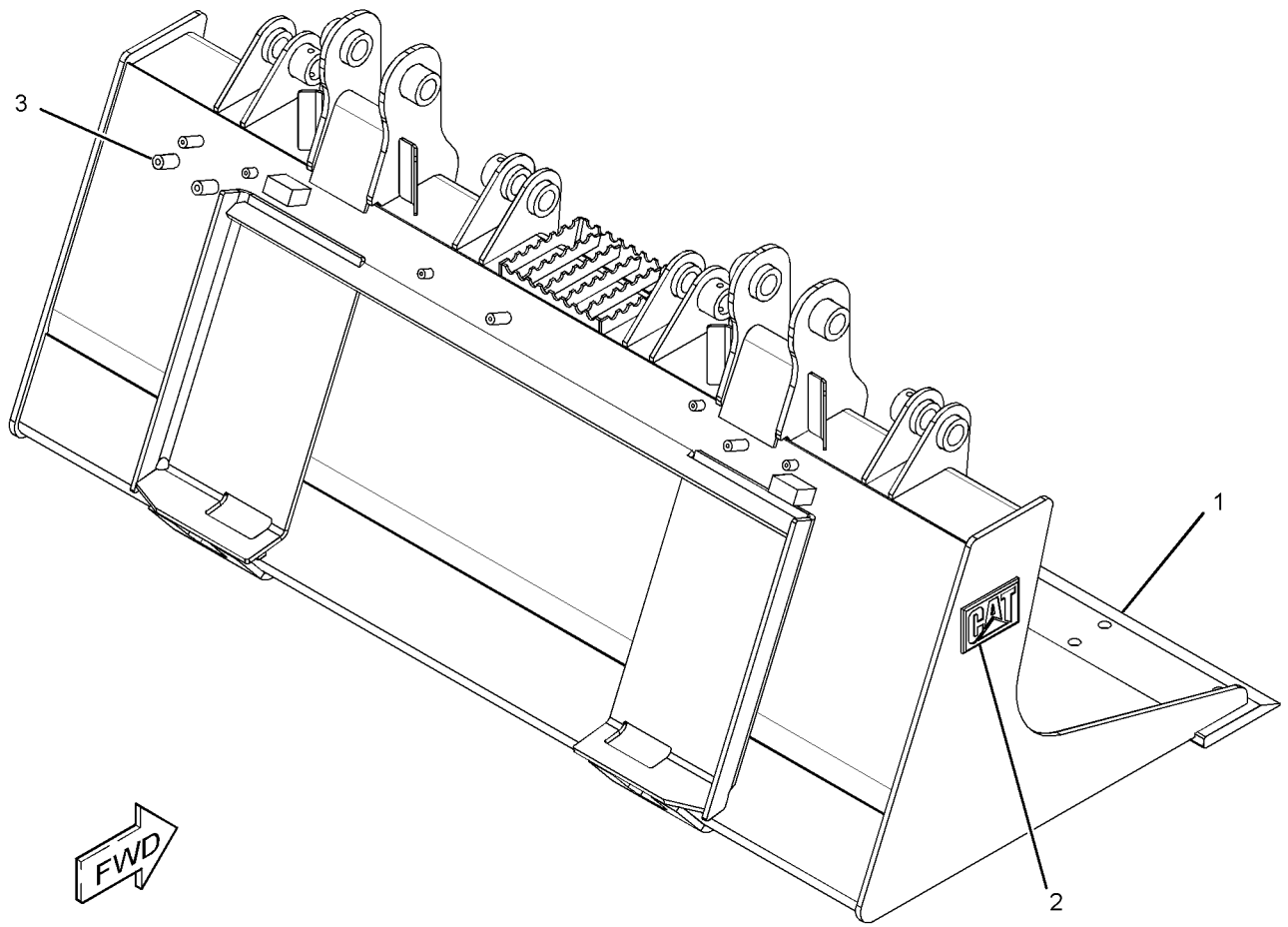

GRAPHIC #1 **<END>** g01944438

WORK TOOLS

156-0889 BUCKET AS-GRAPPLE

S/N: JAY1-UP
1829-MM (72-IN)
PART OF 169-8943 BUCKET AS-GRAPPLE
AN ATTACHMENT

SMCS-6704 **i03613143**

NOTE	REF NO	GRAPHIC REF	PART NUMBER	QTY	PART NAME 1 2 3 4 5 6 (PRODUCT LEVEL)	SEE PAGE
	1	1	**149-5437**	1	EDGE	
	2	1	**161-4130**	2	PLATE-IDENTIFICATION (CAT)	
M	3	1	**8Y-4489**	2	BOSS (M10X1.5-THD)	

M-METRIC PART

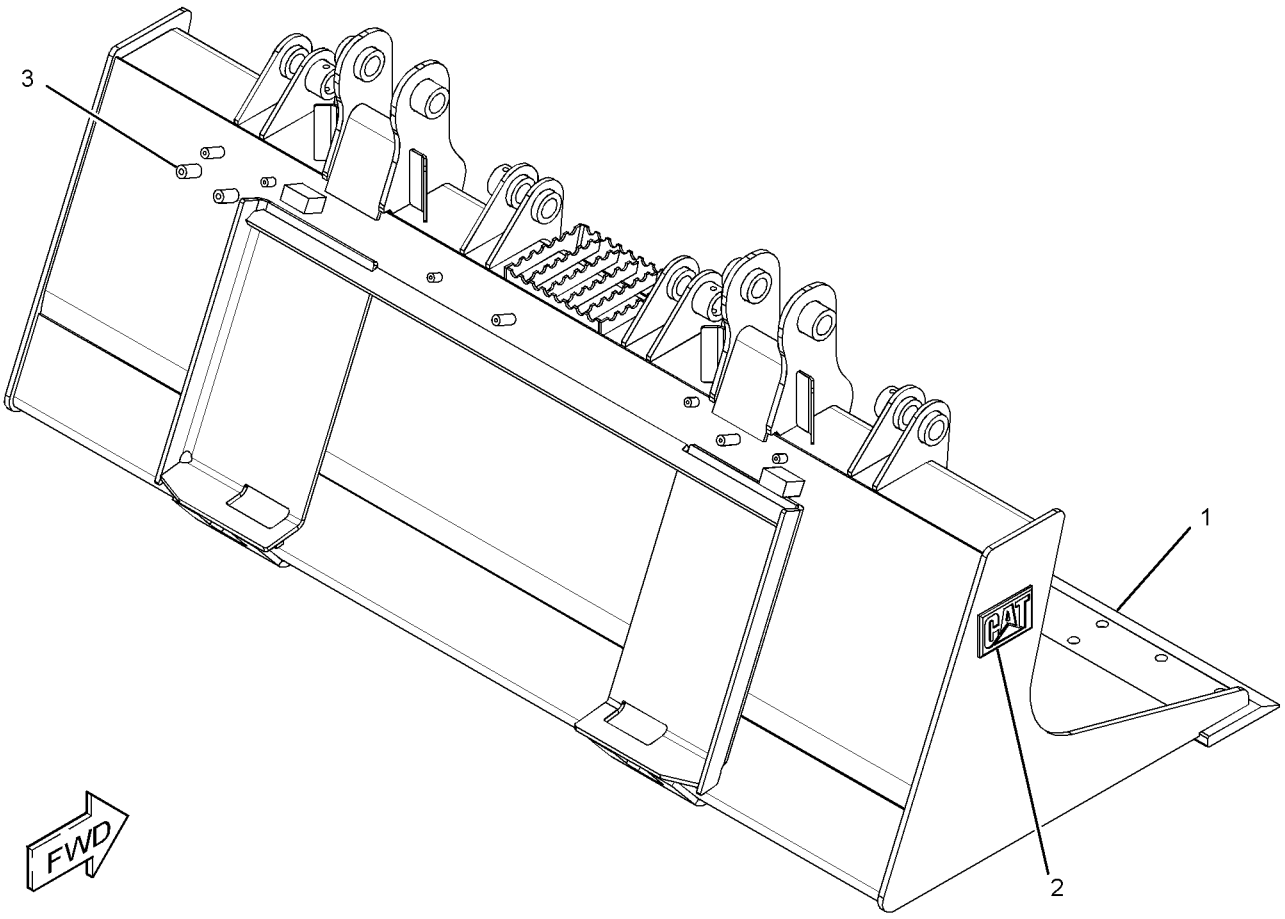

GRAPHIC #1 **<END>** g01944443

169-8941 BUCKET AS-GRAPPLE

S/N: JAY1-UP

PART OF 156-0884 BUCKET GP-GRAPPLE

AN ATTACHMENT

SMCS-6704 **i03611461**

NOTE	REF NO	GRAPHIC REF	PART NUMBER	QTY	PART NAME 1 2 3 4 5 6 (PRODUCT LEVEL)	SEE PAGE
	1	1	**154-2704**	1	PLATE-INSTRUCTION (BUCKET SPECIFICATIONS)	
Y	2	1	**156-0887**	1	BUCKET AS-GRAPPLE (INDUSTRIAL)	520
	3	1	**168-8389**	4	TACK-FASTENER	

Y-SEPARATE ILLUSTRATION

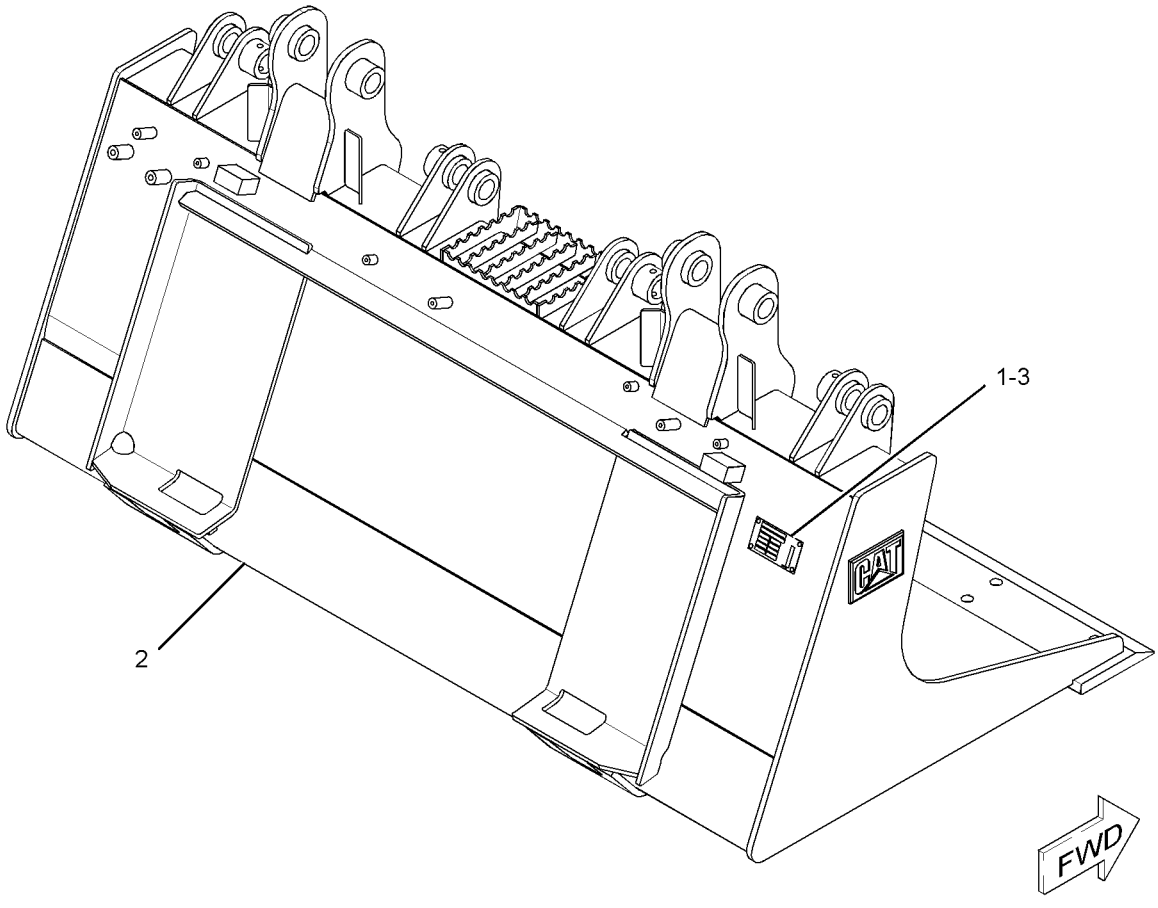

GRAPHIC #1 **<END>** g01941813

WORK TOOLS

169-8942 BUCKET AS-GRAPPLE

S/N: JAY1-UP
PART OF 156-0885 BUCKET GP-GRAPPLE
AN ATTACHMENT

SMCS-6704 **i03611483**

NOTE	REF NO	GRAPHIC REF	PART NUMBER	QTY	PART NAME 1 2 3 4 5 6 (PRODUCT LEVEL)	SEE PAGE
	1	1	**154-2704**	1	PLATE-INSTRUCTION (BUCKET SPECIFICATIONS)	
Y	2	1	**156-0888**	1	BUCKET AS-GRAPPLE (INDUSTRIAL)	521
	3	1	**168-8389**	4	TACK-FASTENER	

Y-SEPARATE ILLUSTRATION

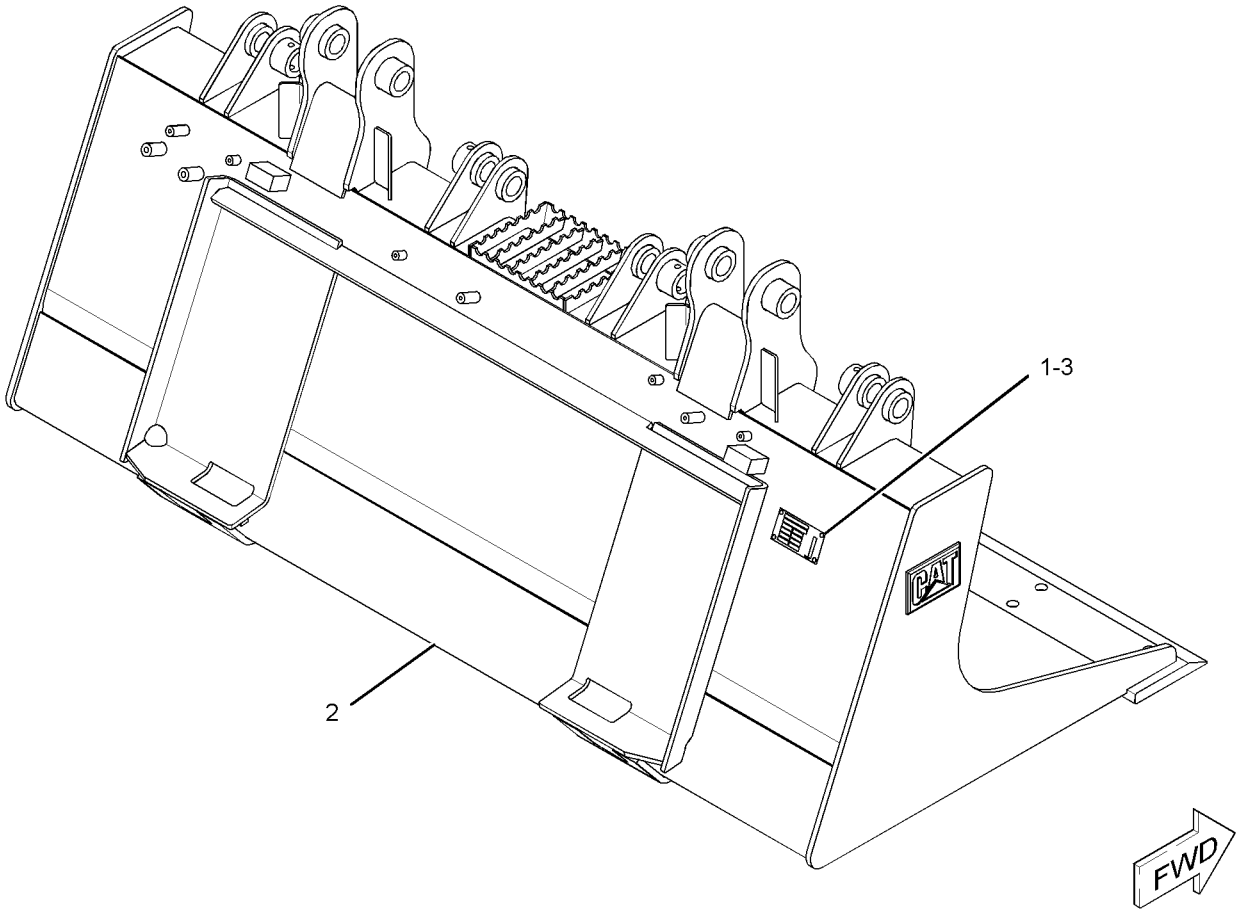

GRAPHIC #1 **<END>** g01941854

WORK TOOLS

169-8943 BUCKET AS-GRAPPLE

S/N: JAY1-UP
PART OF 156-0886 BUCKET GP-GRAPPLE
AN ATTACHMENT

SMCS-6704 **i03611485**

NOTE	REF NO	GRAPHIC REF	PART NUMBER	QTY	PART NAME 1 2 3 4 5 6 (PRODUCT LEVEL)	SEE PAGE
	1	1	**154-2704**	1	PLATE-INSTRUCTION (BUCKET SPECIFICATIONS)	
Y	2	1	**156-0889**	1	BUCKET AS-GRAPPLE (INDUSTRIAL)	522
	3	1	**168-8389**	4	TACK-FASTENER	

Y-SEPARATE ILLUSTRATION

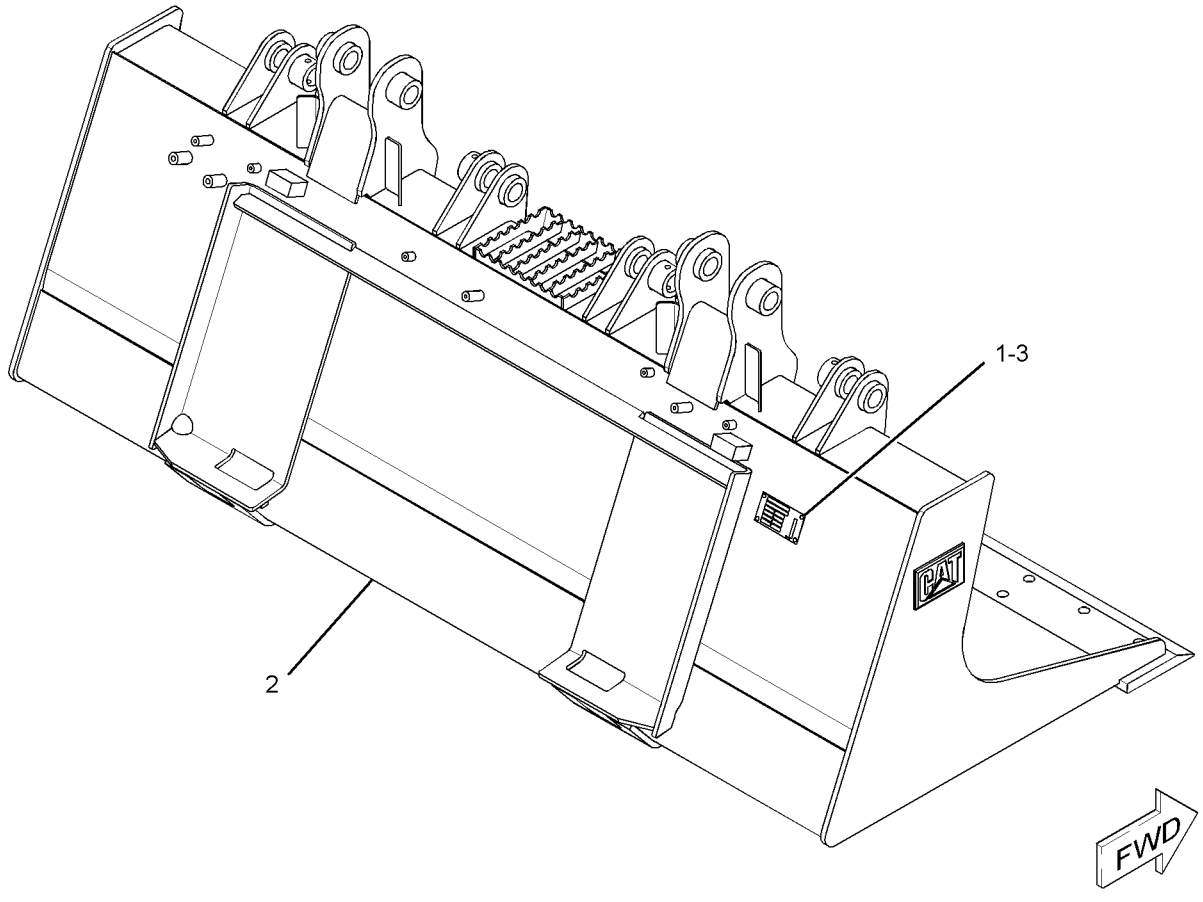

GRAPHIC #1 **<END>** g01941893

WORK TOOLS

217-6226 BUCKET AS-GRAPPLE

S/N: JAY1-UP
1981-MM (78-IN)
PART OF 217-6227 BUCKET AS-GRAPPLE
AN ATTACHMENT

SMCS-6704 **i03638332**

NOTE	REF NO	GRAPHIC REF	PART NUMBER	QTY	PART NAME 1 2 3 4 5 6 (PRODUCT LEVEL)	SEE PAGE
	1	1	**199-7722**	1	EDGE	
	2	1	**161-4130**	2	PLATE-IDENTIFICATION (CAT)	

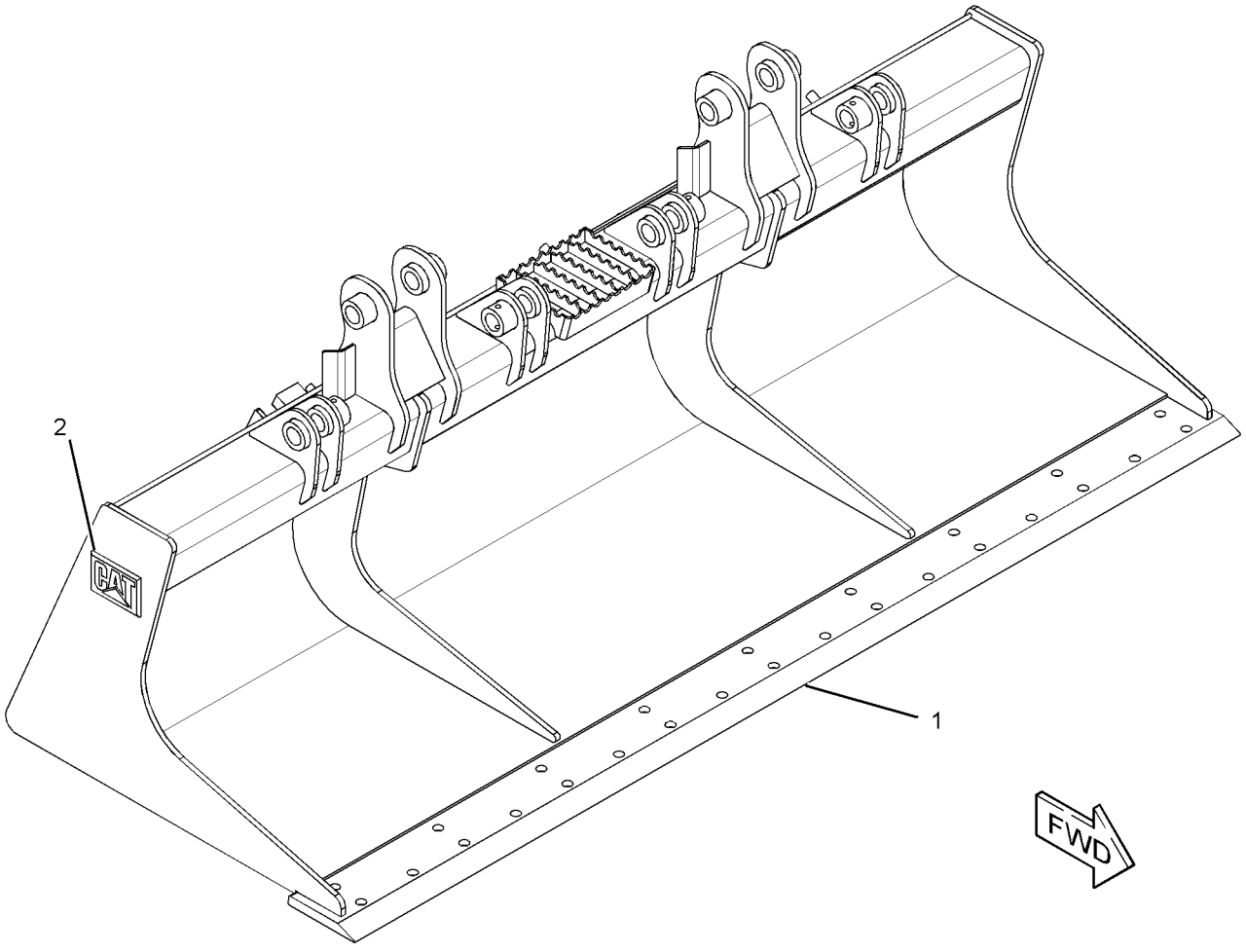

GRAPHIC #1 **<END>** g01953746

217-6227 BUCKET AS-GRAPPLE

S/N: JAY1-UP
PART OF 217-6228 BUCKET GP-GRAPPLE
AN ATTACHMENT

SMCS-6704 **i03624582**

NOTE	REF NO	GRAPHIC REF	PART NUMBER	QTY	PART NAME 1 2 3 4 5 6 (PRODUCT LEVEL)	SEE PAGE
	1	1	**154-2704**	1	PLATE-INSTRUCTION (BUCKET SPECIFICATIONS)	
	2	1	**168-8389**	4	TACK-FASTENER	
Y	3	1	*217-6226*	1	BUCKET AS-GRAPPLE (INDUSTRIAL)	526

Y-SEPARATE ILLUSTRATION

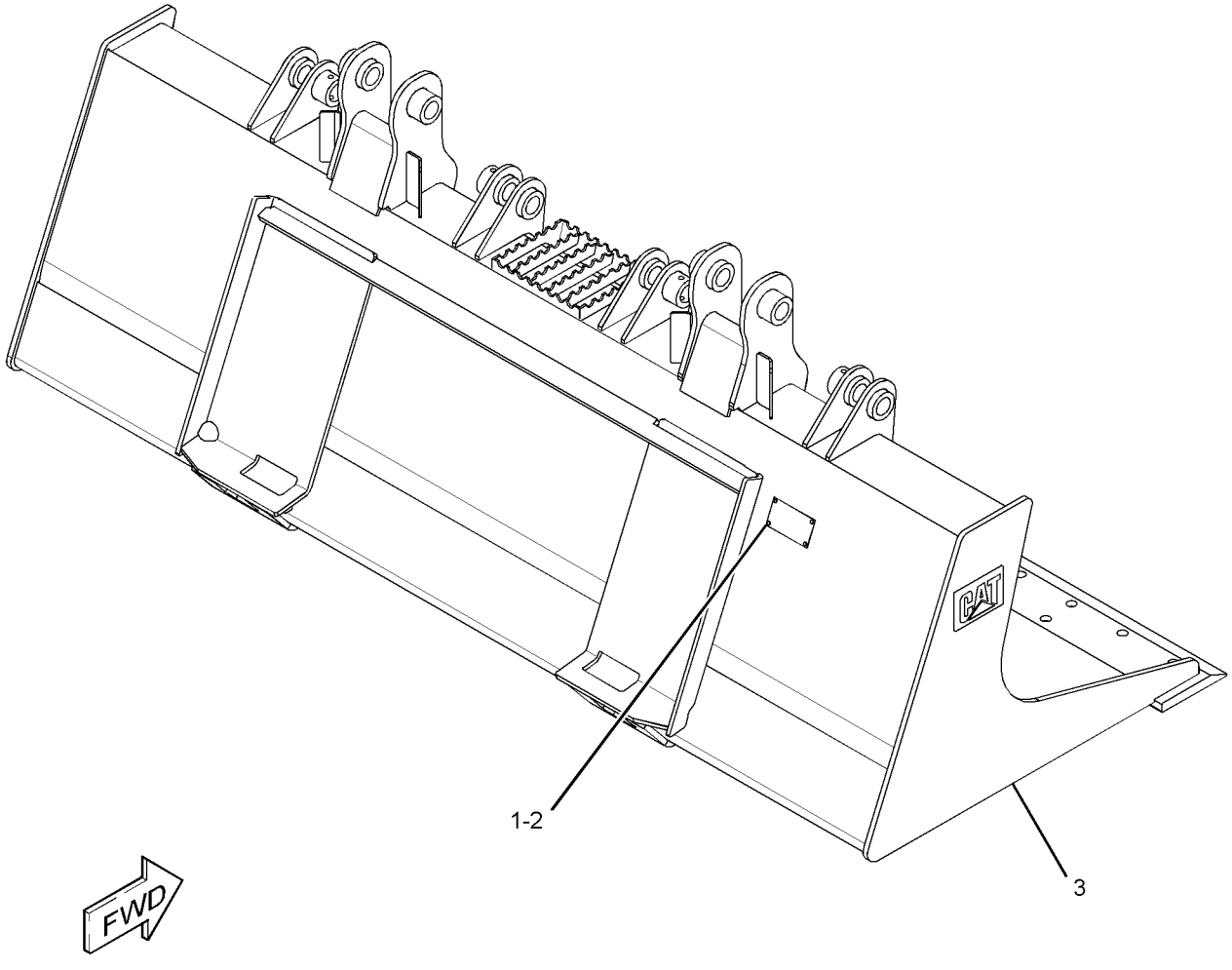

GRAPHIC #1 **<END>** g01945431

279-5421 BUCKET AS-LIGHT MATERIAL

S/N: JAY1-UP
1829-MM (72-IN)
PART OF 279-5420 BUCKET AR-LIGHT MATERIAL
AN ATTACHMENT

SMCS-6103 **i03636045**

NOTE	REF NO	GRAPHIC REF	PART NUMBER	QTY	PART NAME 1 2 3 4 5 6 (PRODUCT LEVEL)	SEE PAGE
	1	1	**154-2704**	1	PLATE-INSTRUCTION (BUCKET SPECIFICATIONS)	
	2	1	**168-8389**	4	TACK-FASTENER	
Y	3	1	*279-5422*	1	BUCKET AS-LIGHT MATERIAL (72-IN)	529

Y-SEPARATE ILLUSTRATION

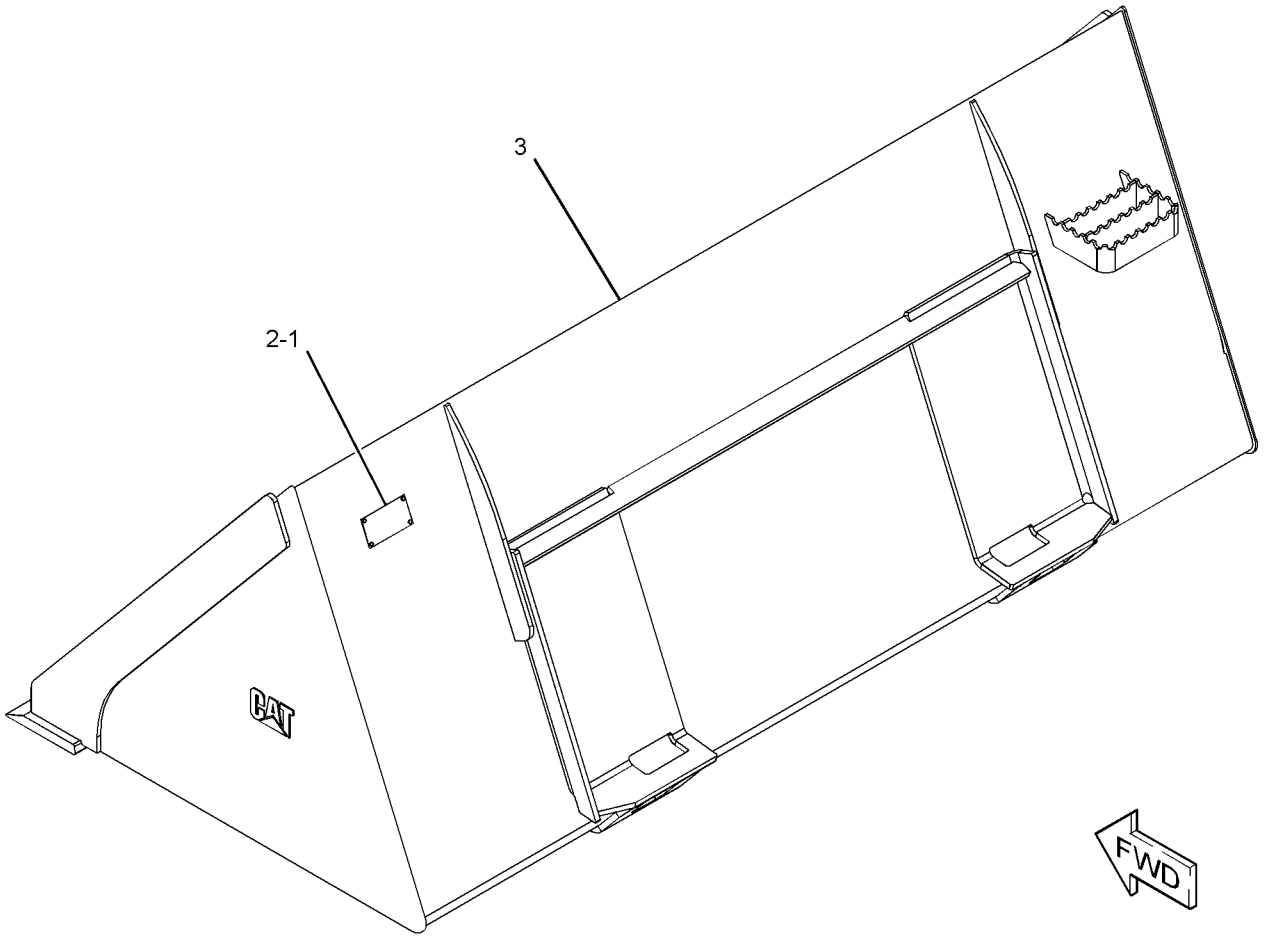

GRAPHIC #1 **<END>** g01951970

WORK TOOLS

279-5422 BUCKET AS-LIGHT MATERIAL

S/N: JAY1-UP
1829-MM (72-IN)
PART OF 279-5421 BUCKET AS-LIGHT MATERIAL
AN ATTACHMENT

SMCS-6103 **i03636387**

NOTE	REF NO	GRAPHIC REF	PART NUMBER	QTY	PART NAME 1 2 3 4 5 6 (PRODUCT LEVEL)	SEE PAGE
	1	1	**149-5437**	1	EDGE	

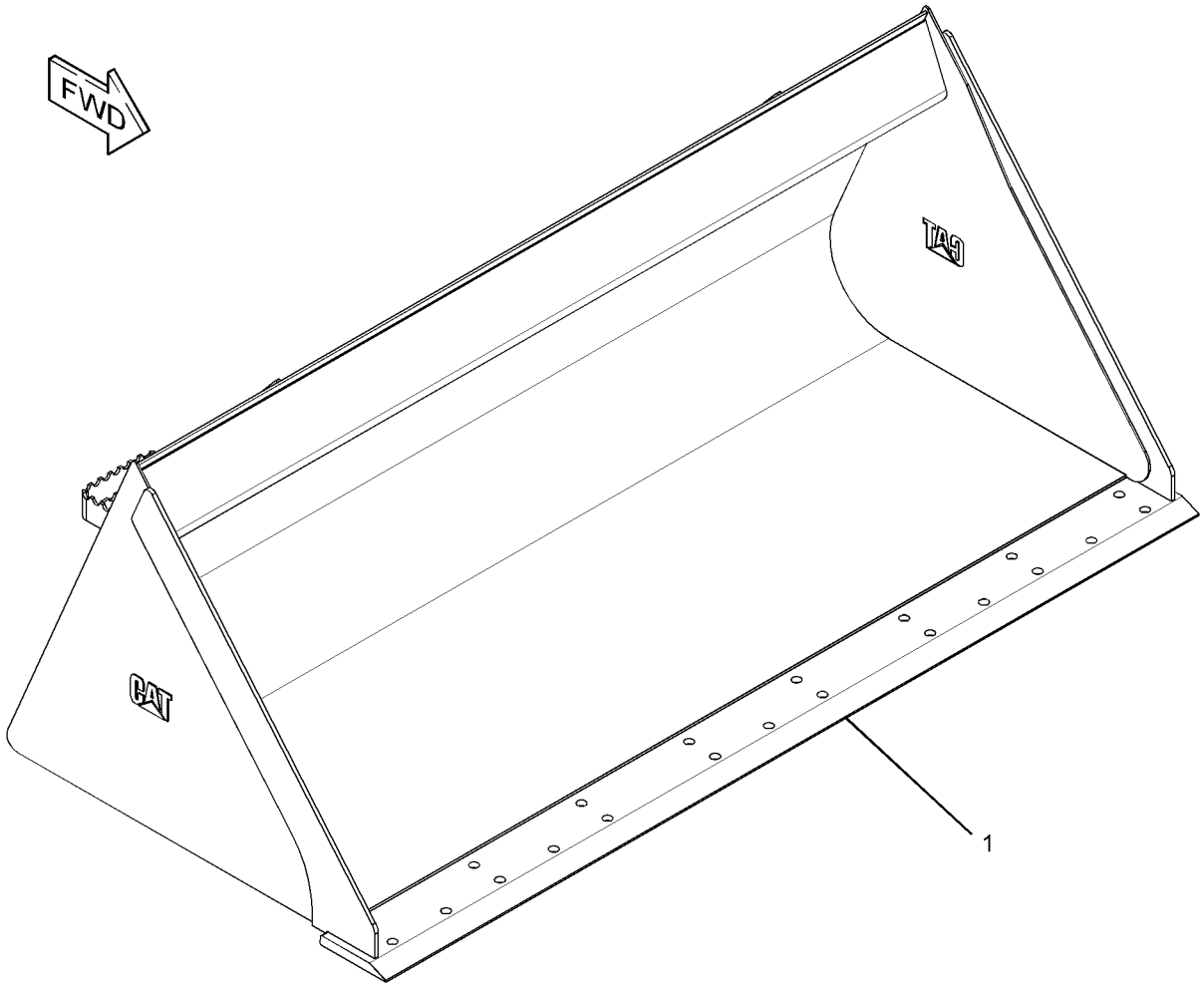

GRAPHIC #1 **<END>** g01952030

279-5423 BUCKET AS-LIGHT MATERIAL

S/N: JAY1-UP
1981-MM (78-IN)
PART OF 279-5424 BUCKET AS-LIGHT MATERIAL
AN ATTACHMENT

SMCS-6103 **i03636382**

NOTE	REF NO	GRAPHIC REF	PART NUMBER	QTY	PART NAME 1 2 3 4 5 6 (PRODUCT LEVEL)	SEE PAGE
	1	1	**199-7722**	1	EDGE	

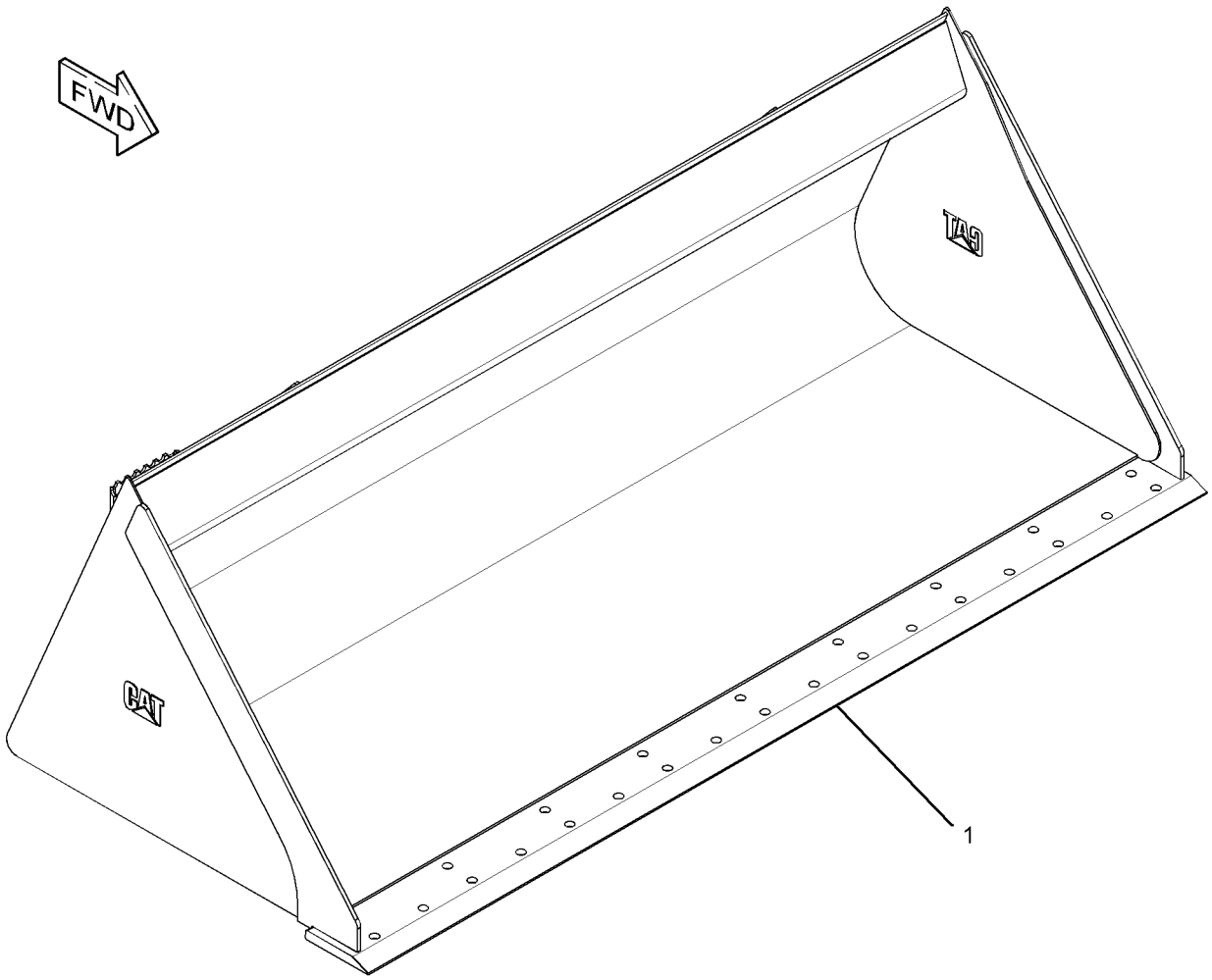

GRAPHIC #1 **<END>** g01952052

279-5424 BUCKET AS-LIGHT MATERIAL

S/N: JAY1-UP
1981-MM (78-IN)
PART OF 279-5425 BUCKET AR-LIGHT MATERIAL
AN ATTACHMENT

SMCS-6103 **i03636062**

NOTE	REF NO	GRAPHIC REF	PART NUMBER	QTY	PART NAME 1 2 3 4 5 6 (PRODUCT LEVEL)	SEE PAGE
	1	1	**154-2704**	1	PLATE-INSTRUCTION (BUCKET SPECIFICATIONS)	
	2	1	**168-8389**	4	TACK-FASTENER	
Y	3	1	*279-5423*	1	BUCKET AS-LIGHT MATERIAL	530

Y-SEPARATE ILLUSTRATION

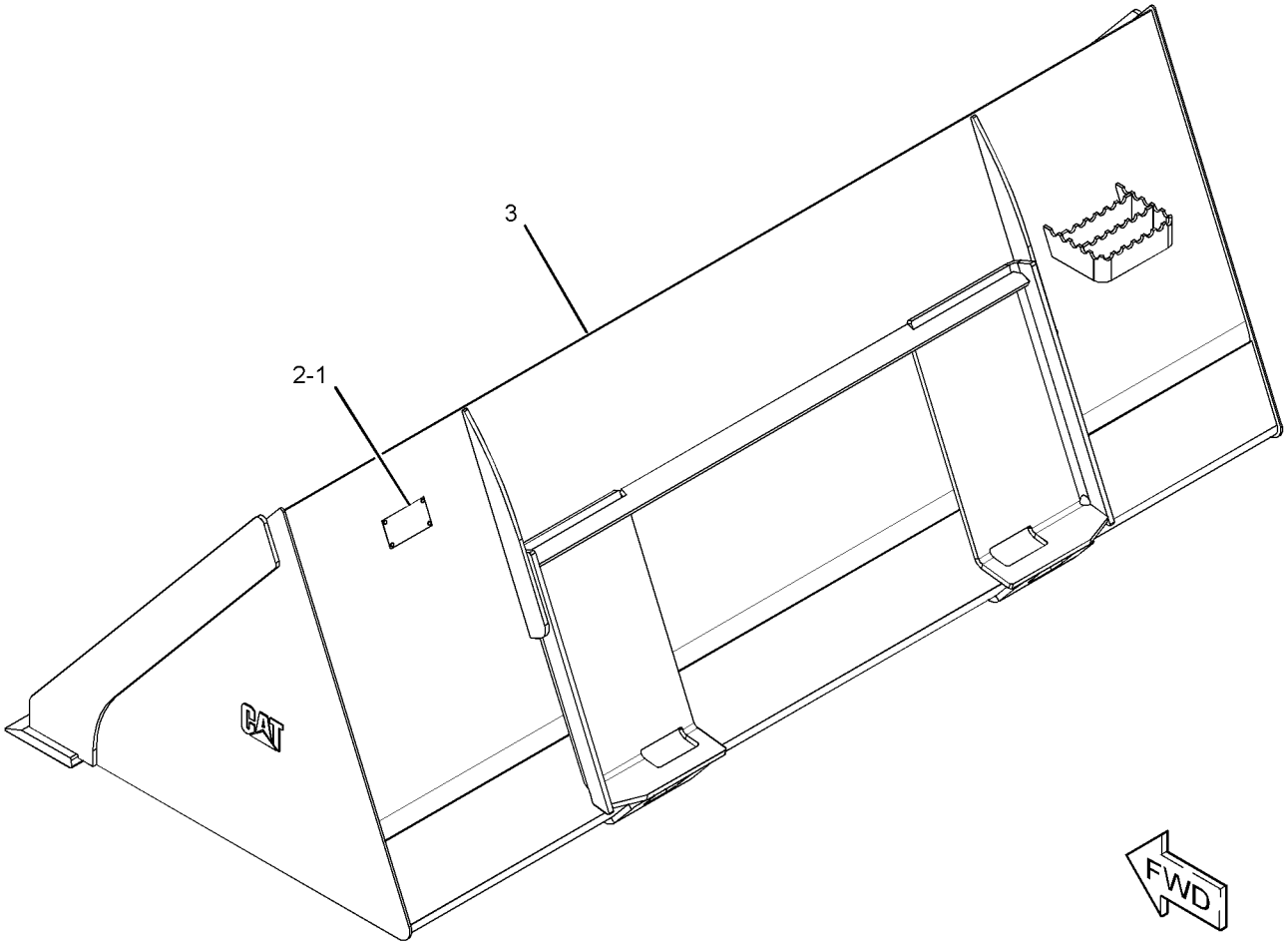

GRAPHIC #1 **<END>** g01951977

WORK TOOLS

279-5428 BUCKET AS-LIGHT MATERIAL

S/N: JAY1-UP
2134-MM (84-IN)
PART OF 279-5429 BUCKET AS-LIGHT MATERIAL
AN ATTACHMENT

SMCS-6103 **i03636386**

NOTE	REF NO	GRAPHIC REF	PART NUMBER	QTY	PART NAME 1 2 3 4 5 6 (PRODUCT LEVEL)	SEE PAGE
	1	1	**220-4982**	1	EDGE	

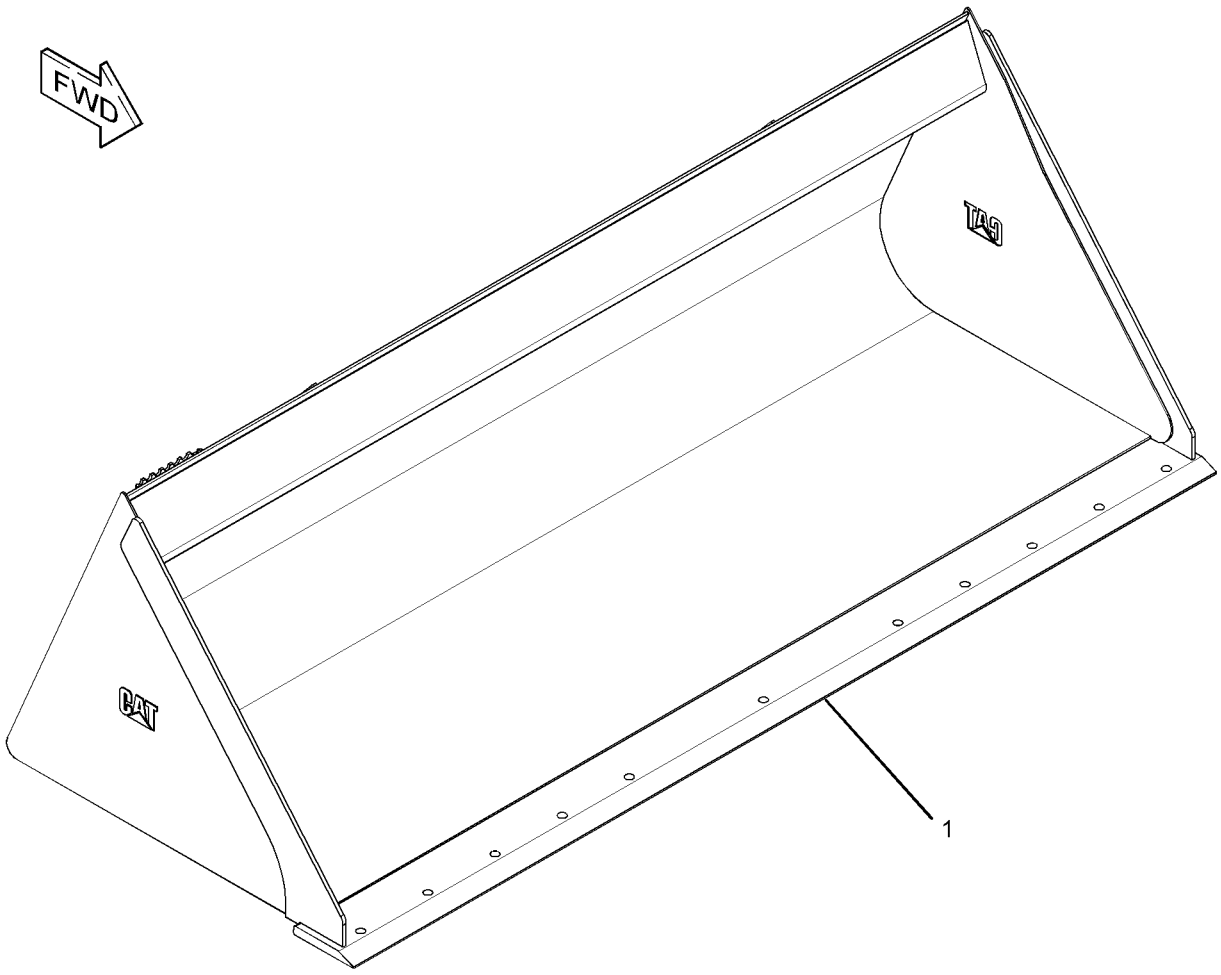

GRAPHIC #1 **<END>** g01952037

279-5429 BUCKET AS-LIGHT MATERIAL

S/N: JAY1-UP
2134-MM (84-IN)
PART OF 279-5430 BUCKET AR-LIGHT MATERIAL
AN ATTACHMENT

SMCS-6103 **i03636071**

NOTE	REF NO	GRAPHIC REF	PART NUMBER	QTY	PART NAME 1 2 3 4 5 6 (PRODUCT LEVEL)	SEE PAGE
	1	1	**154-2704**	1	PLATE-INSTRUCTION (BUCKET SPECIFICATIONS)	
	2	1	**168-8389**	4	TACK-FASTENER	
Y	3	1	*279-5428*	1	BUCKET AS-LIGHT MATERIAL	532

Y-SEPARATE ILLUSTRATION

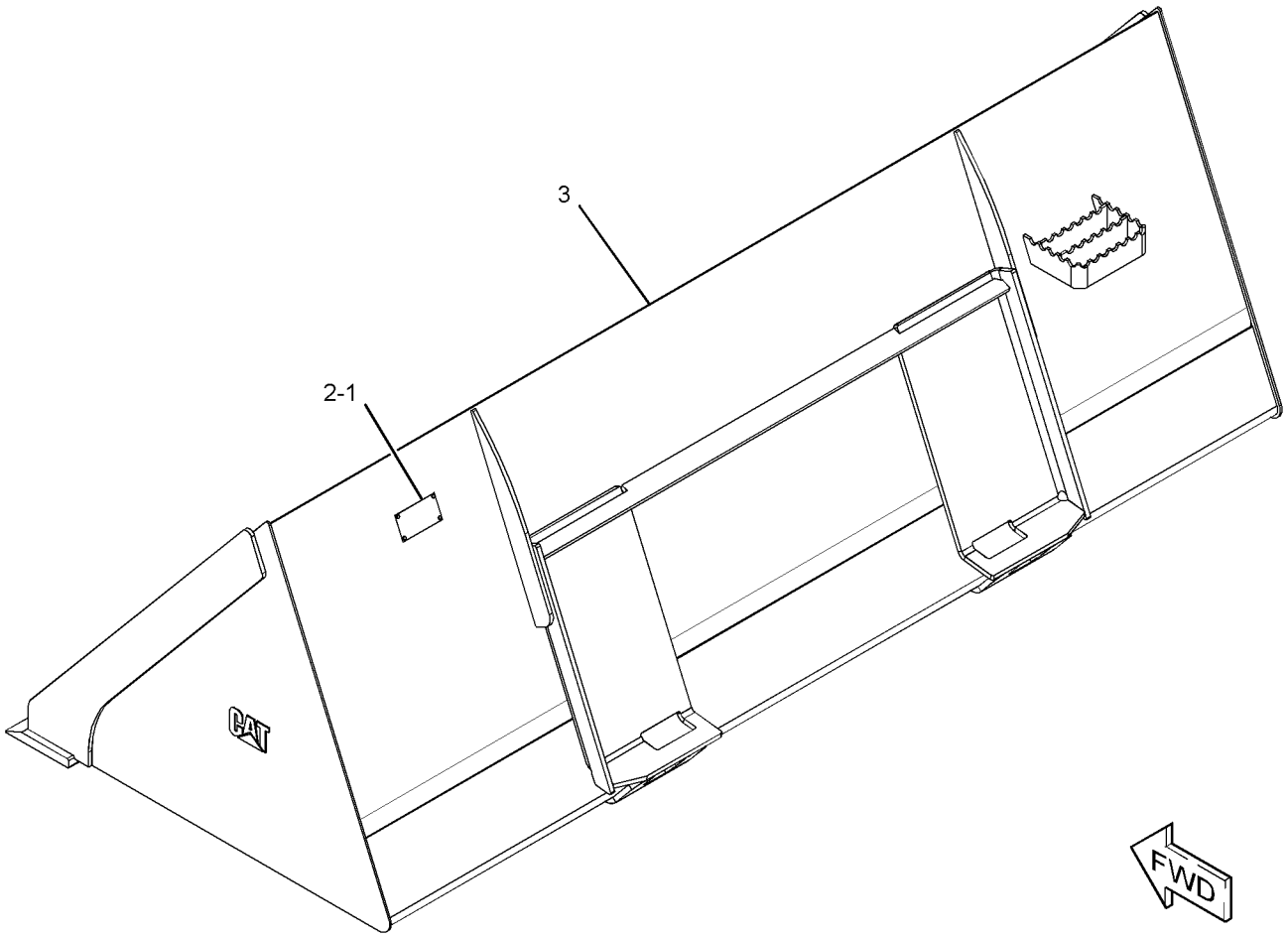

GRAPHIC #1 **<END>** g01951973

292-9223 BUCKET AS-LIGHT MATERIAL

S/N: JAY1-UP
PART OF 296-7597 BUCKET AR-LIGHT MATERIAL
AN ATTACHMENT

SMCS-6103 **i03611901**

NOTE	REF NO	GRAPHIC REF	PART NUMBER	QTY	PART NAME 1 2 3 4 5 6 (PRODUCT LEVEL)	SEE PAGE
	1	1	**154-2704**	1	PLATE-INSTRUCTION (BUCKET SPECIFICATIONS)	
	2	1	**168-8389**	4	TACK-FASTENER	
Y	3	1	*292-9224*	1	BUCKET AS-LIGHT MATERIAL	535

Y-SEPARATE ILLUSTRATION

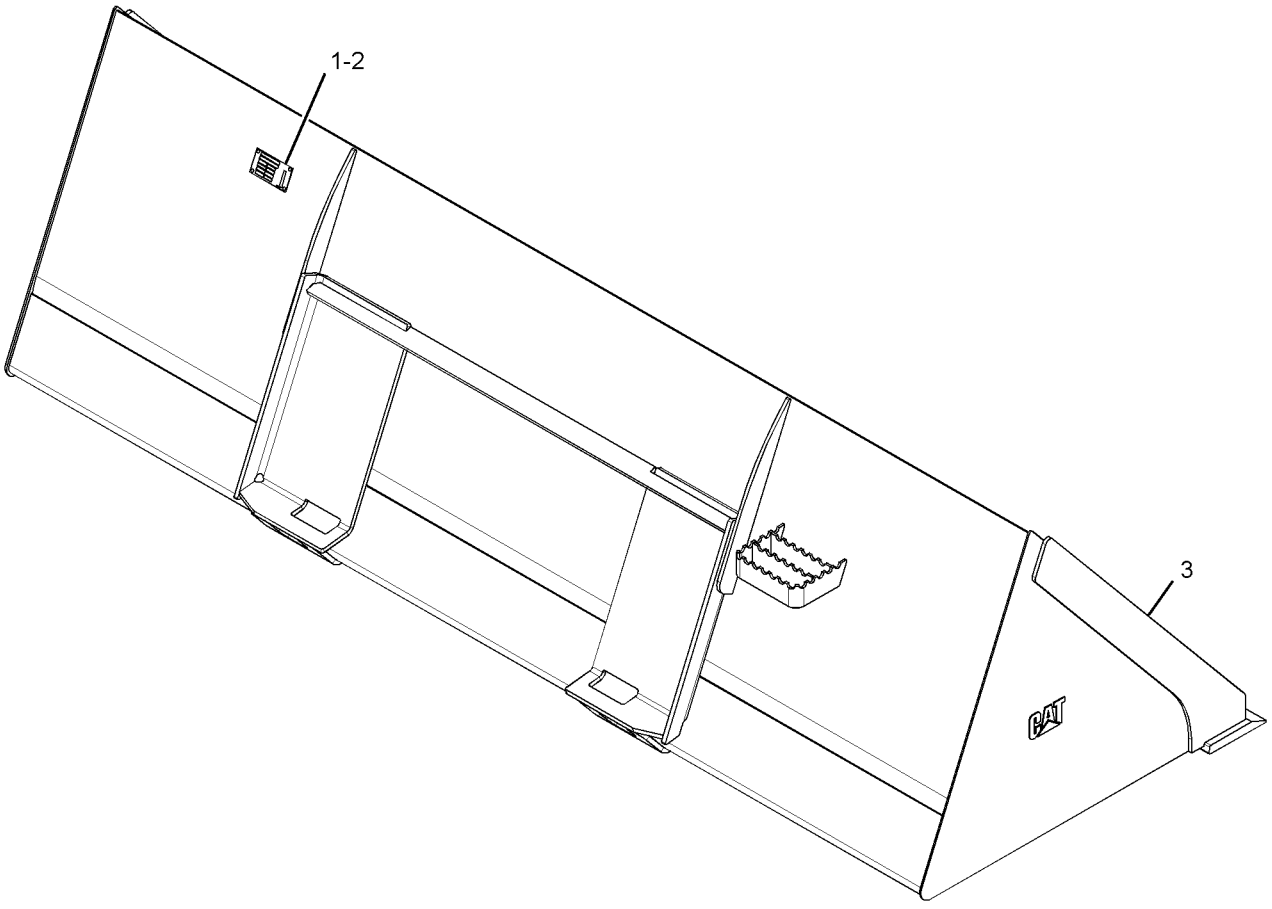

GRAPHIC #1 **<END>** g01322797

292-9224 BUCKET AS-LIGHT MATERIAL

S/N: JAY1-UP
2438-MM (96-IN)
PART OF 292-9223 BUCKET AS-LIGHT MATERIAL
AN ATTACHMENT

SMCS-6103 **i03611760**

NOTE	REF NO	GRAPHIC REF	PART NUMBER	QTY	PART NAME 1 2 3 4 5 6 (PRODUCT LEVEL)	SEE PAGE
	1	1	**292-9257**	1	EDGE	

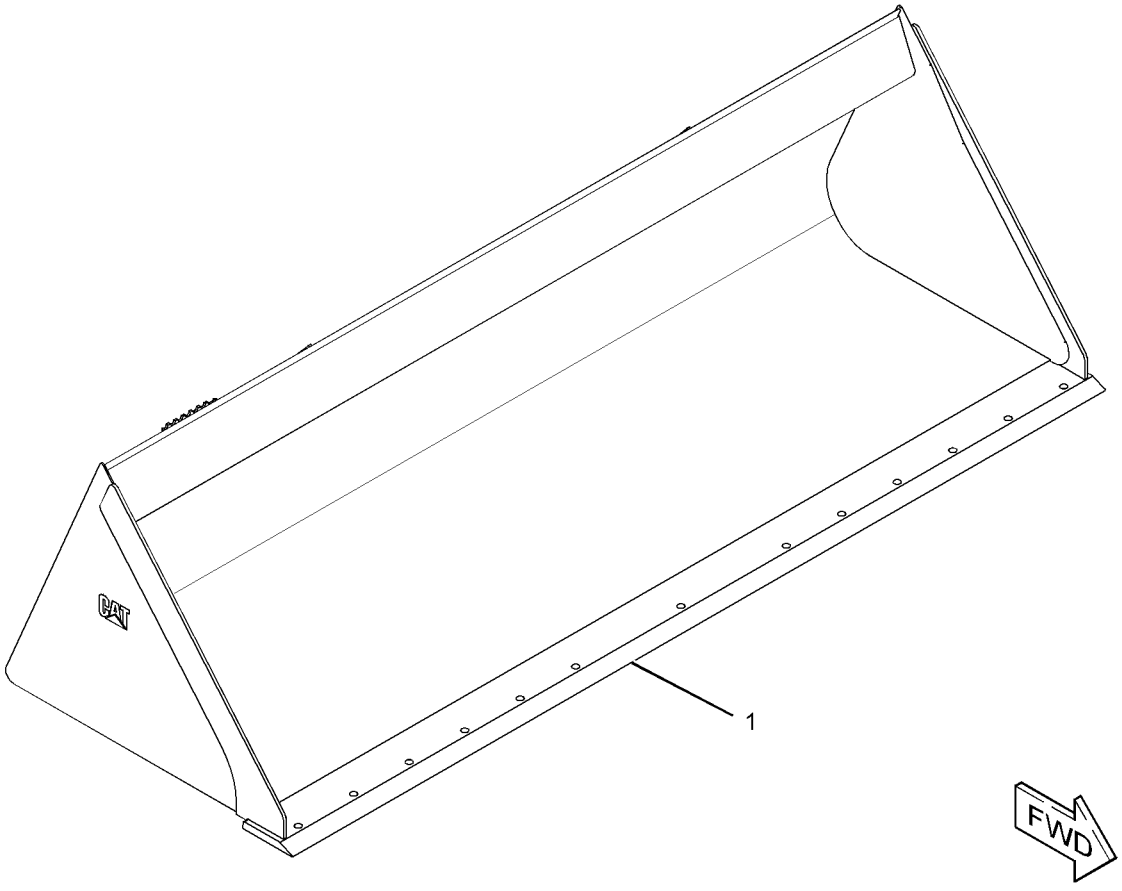

GRAPHIC #1 **<END>** g01938633

WORK TOOLS

165-8746 BUCKET AS-UTILITY

S/N: JAY1-UP
167.64-CM (66-IN) WIDE X 0.47-CU M (0.61-CU YD)
AN ATTACHMENT

SMCS-6101 **i03638324**

NOTE	REF NO	GRAPHIC REF	PART NUMBER	QTY	PART NAME 1 2 3 4 5 6 (PRODUCT LEVEL)	SEE PAGE
	1	1	**154-2704**	1	PLATE-INSTRUCTION (BUCKET SPECIFICATIONS)	
	2	1	*165-8832*	1	BUCKET AS-UTILITY	
	2A	1	**149-5436**	1	EDGE	
M	2B	1	**111-0483**	4	BOSS (M10X1.5-THD)	
	3	1	**168-8389**	4	TACK-FASTENER	

M-METRIC PART

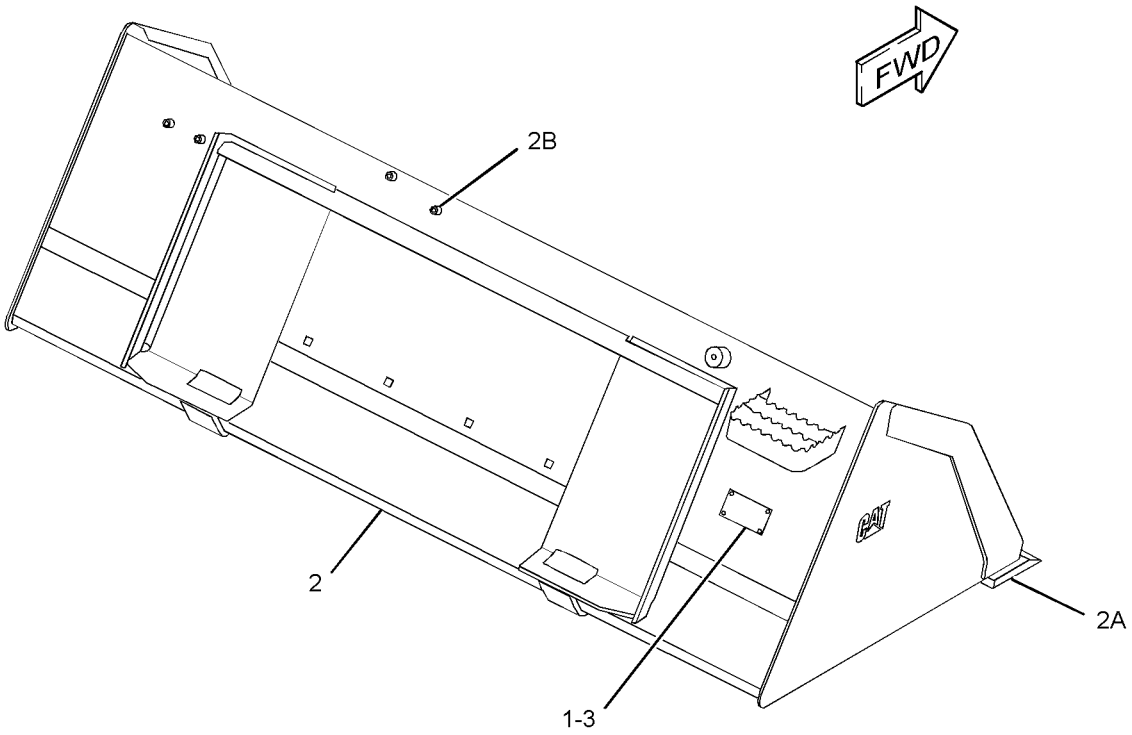

GRAPHIC #1 **<END>** g01953973

WORK TOOLS

165-8835 BUCKET AS-UTILITY

S/N: JAY1-UP
1524-MM (60-IN) WIDE X 0.42-CU M (0.55-CU YD)
AN ATTACHMENT

SMCS-6101 **i03638325**

NOTE	REF NO	GRAPHIC REF	PART NUMBER	QTY	PART NAME 1 2 3 4 5 6 (PRODUCT LEVEL)	SEE PAGE
	1	1	**154-2704**	1	PLATE-INSTRUCTION (BUCKET SPECIFICATIONS)	
Y	2	1	*165-8837*	1	BUCKET AS-UTILITY	538
	3	1	**168-8389**	4	TACK-FASTENER	

Y-SEPARATE ILLUSTRATION

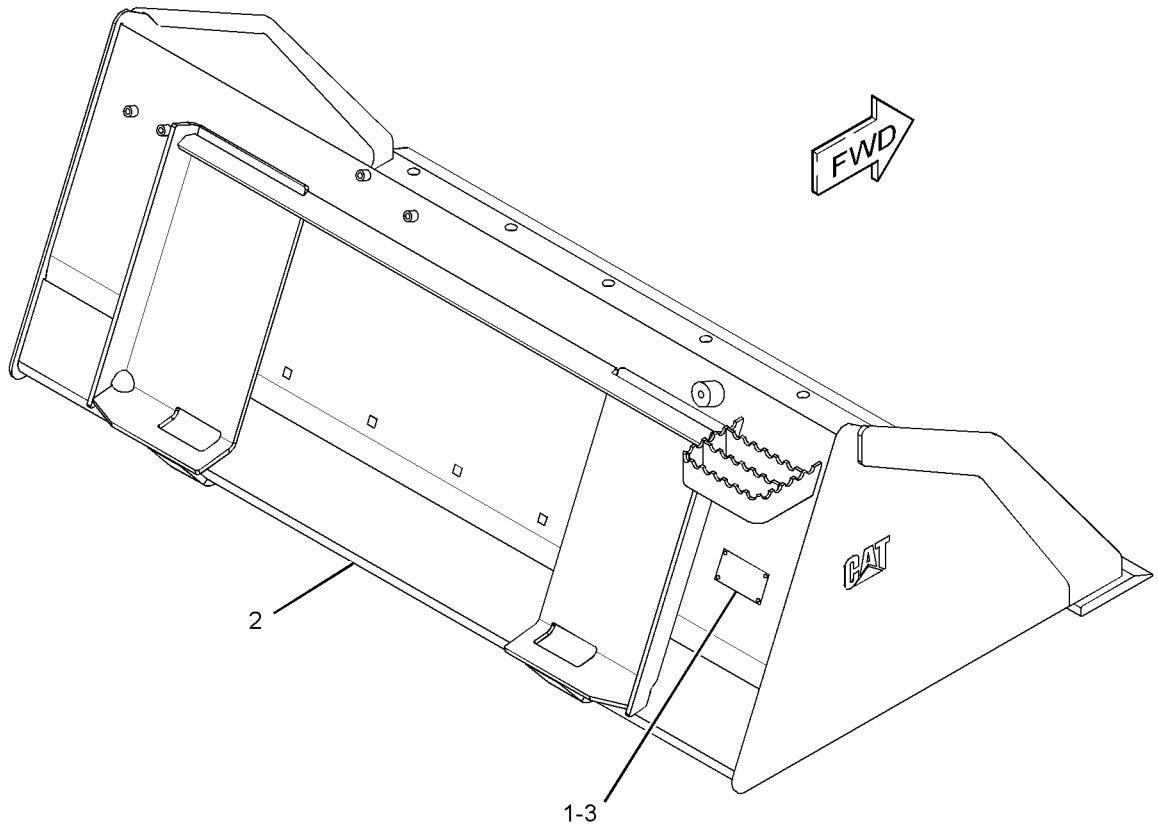

GRAPHIC #1 **<END>** g01954101

165-8837 BUCKET AS-UTILITY

S/N: JAY1-UP
1524-MM (60-IN)
PART OF 165-8835 BUCKET AS-UTILITY
AN ATTACHMENT

SMCS-6101 **i03638851**

NOTE	REF NO	GRAPHIC REF	PART NUMBER	QTY	PART NAME 1 2 3 4 5 6 (PRODUCT LEVEL)	SEE PAGE
	1	1	**149-5435**	1	EDGE	

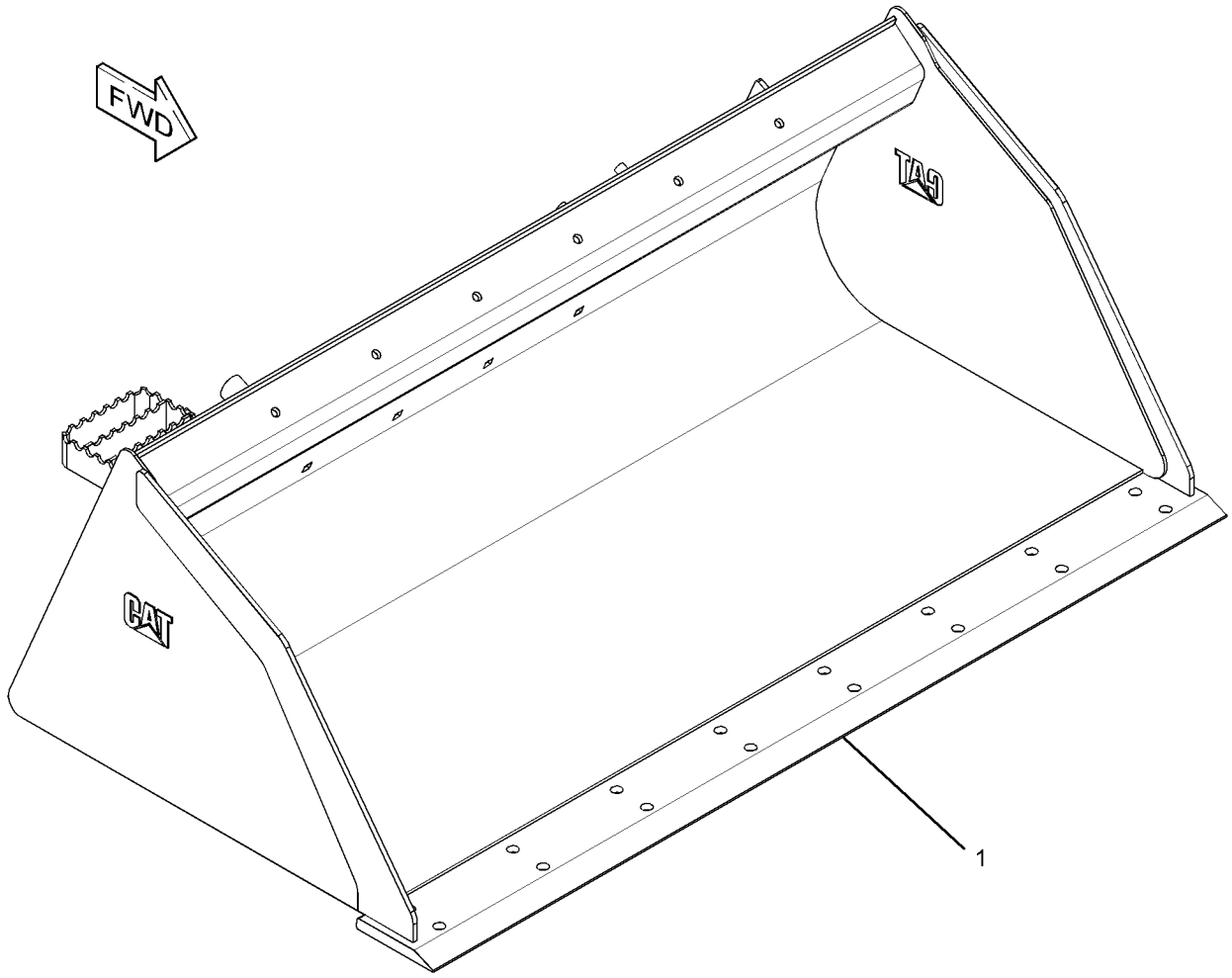

GRAPHIC #1 **<END>** g01953674

WORK TOOLS

285-6098 BUCKET AS-UTILITY

S/N: JAY1-UP
1676-MM (66-IN)
PART OF 285-6099 BUCKET GP-UTILITY
AN ATTACHMENT

SMCS-6101 **i03638906**

NOTE	REF NO	GRAPHIC REF	PART NUMBER	QTY	PART NAME 1 2 3 4 5 6 (PRODUCT LEVEL)	SEE PAGE
	1	1	**149-5436**	1	EDGE	

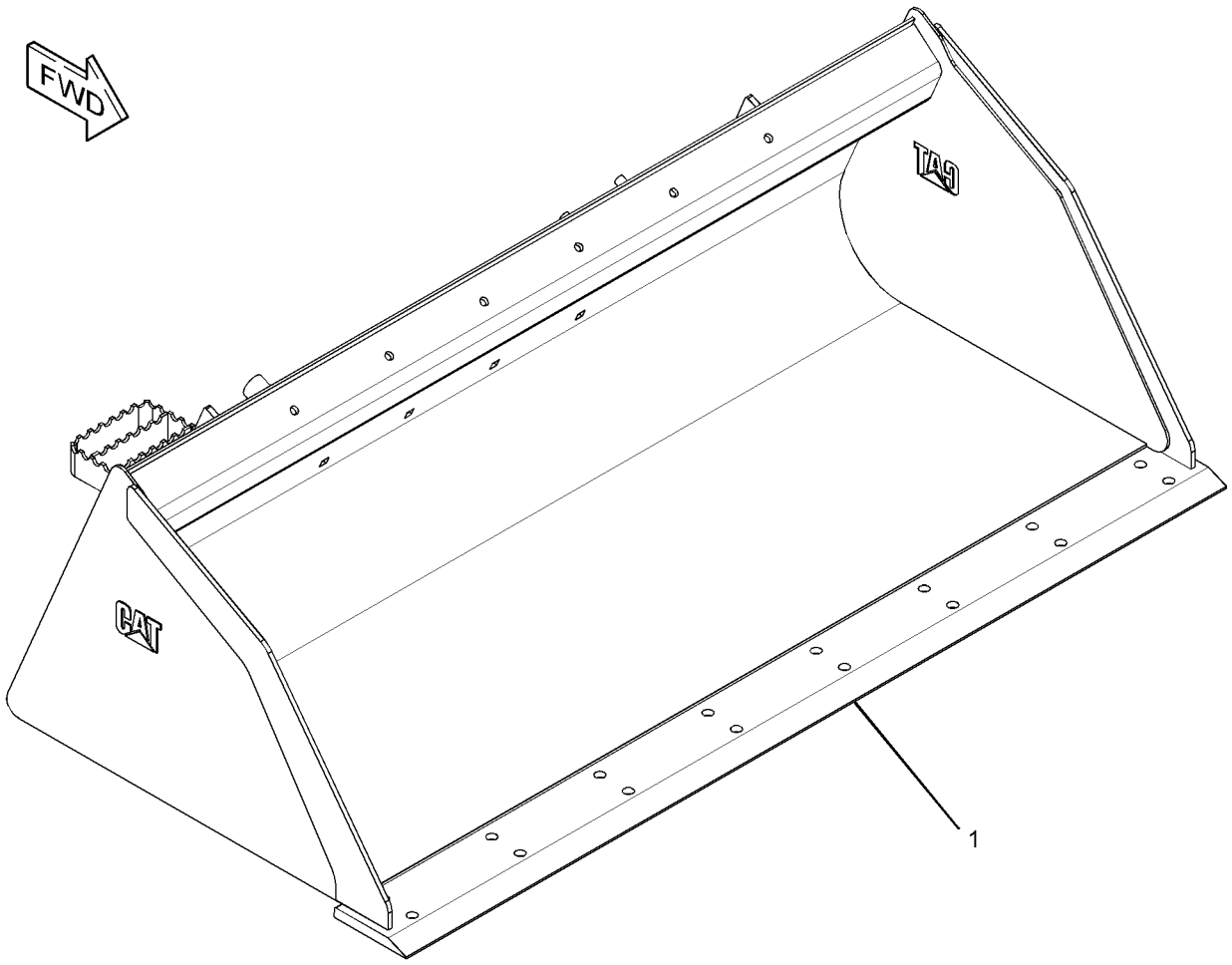

GRAPHIC #1 **<END>** g01953732

WORK TOOLS

285-6103 BUCKET AS-UTILITY

S/N: JAY1-UP
1829-MM (72-IN)
PART OF 285-6102 BUCKET GP-UTILITY
AN ATTACHMENT

SMCS-6101 **i03638909**

NOTE	REF NO	GRAPHIC REF	PART NUMBER	QTY	PART NAME 1 2 3 4 5 6 (PRODUCT LEVEL)	SEE PAGE
	1	1	**149-5437**	1	EDGE	

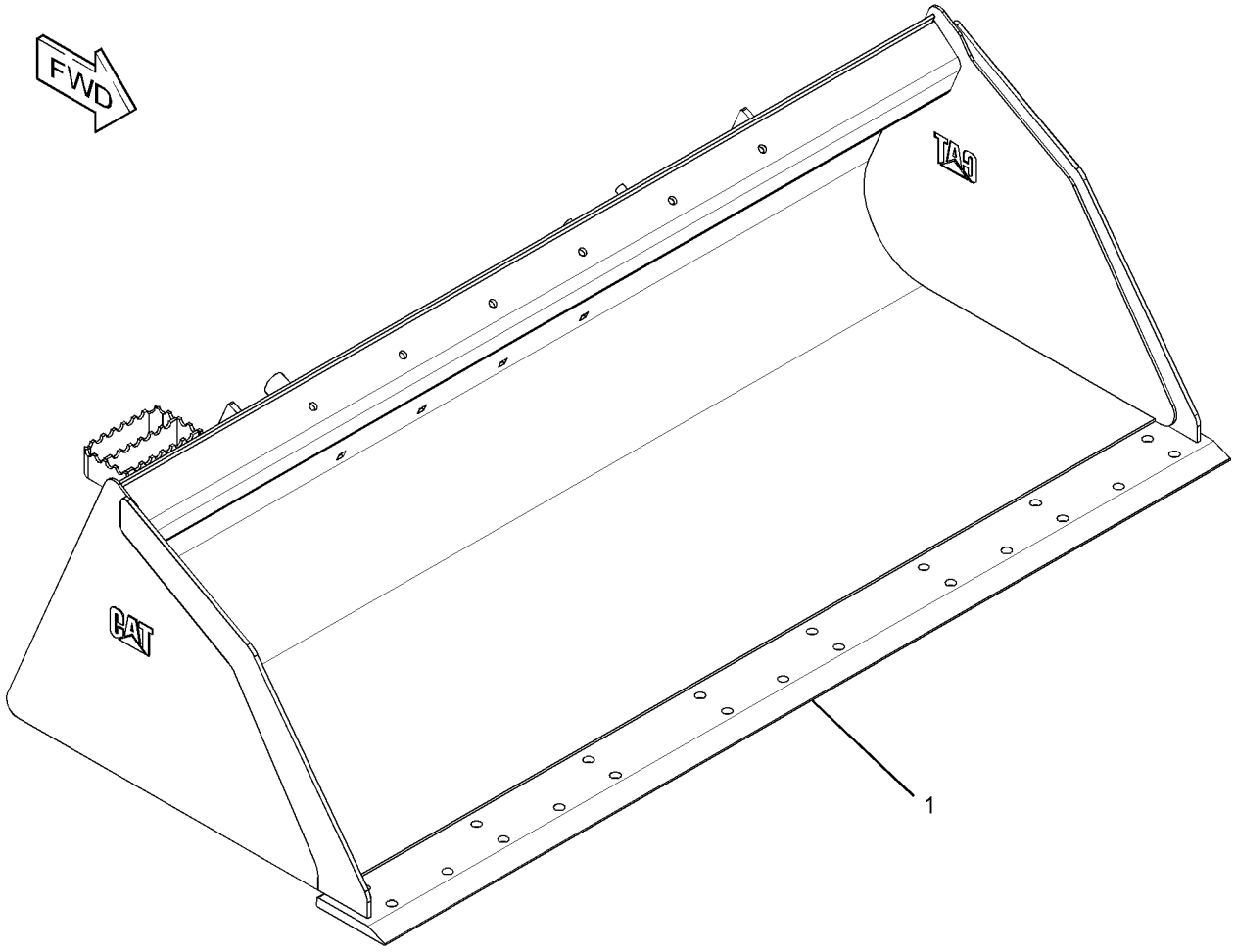

GRAPHIC #1 **<END>** g01953843

WORK TOOLS

152-0231 BUCKET GP-DIRT

S/N: JAY1-UP

FIELD REPLACEMENT FOR 165-6156 BUCKET AS-DIRT

AN ATTACHMENT

SMCS-6001 **i02962462**

NOTE	REF NO	GRAPHIC REF	PART NUMBER	QTY	PART NAME 1 2 3 4 5 6 (PRODUCT LEVEL)	SEE PAGE
Y	1	1	**165-6156**	1	BUCKET AS-DIRT	499
Y	2	1	*135-9384*	1	EDGE GP-CUTTING	584

Y-SEPARATE ILLUSTRATION

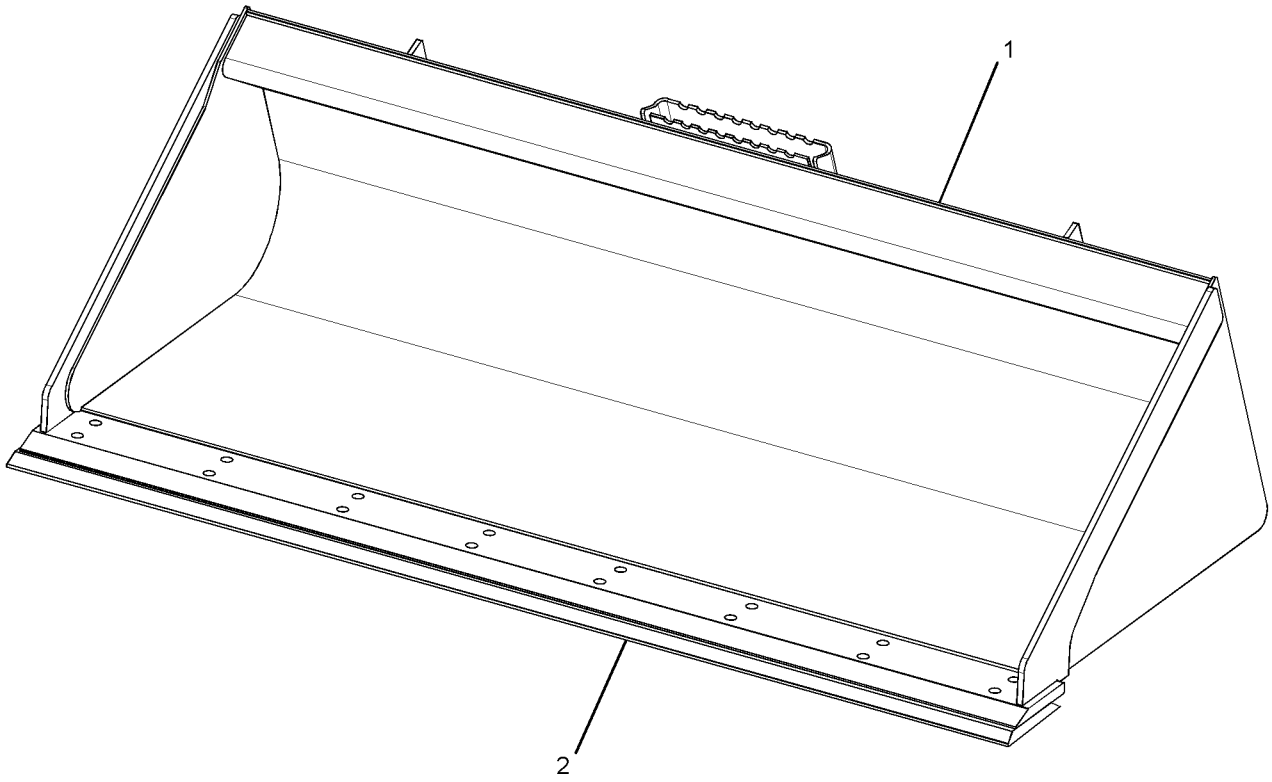

GRAPHIC #1 **<END>** g01481192

WORK TOOLS

152-0232 BUCKET GP-DIRT

S/N: JAY1-UP
FIELD REPLACEMENT FOR 165-6157 BUCKET AS-DIRT
AN ATTACHMENT

SMCS-6001 **i02961159**

NOTE	REF NO	GRAPHIC REF	PART NUMBER	QTY	PART NAME 1 2 3 4 5 6 (PRODUCT LEVEL)	SEE PAGE
Y	1	1	**165-6157**	1	BUCKET AS-DIRT	500
Y	2	1	*135-9385*	1	EDGE GP-CUTTING	585

Y-SEPARATE ILLUSTRATION

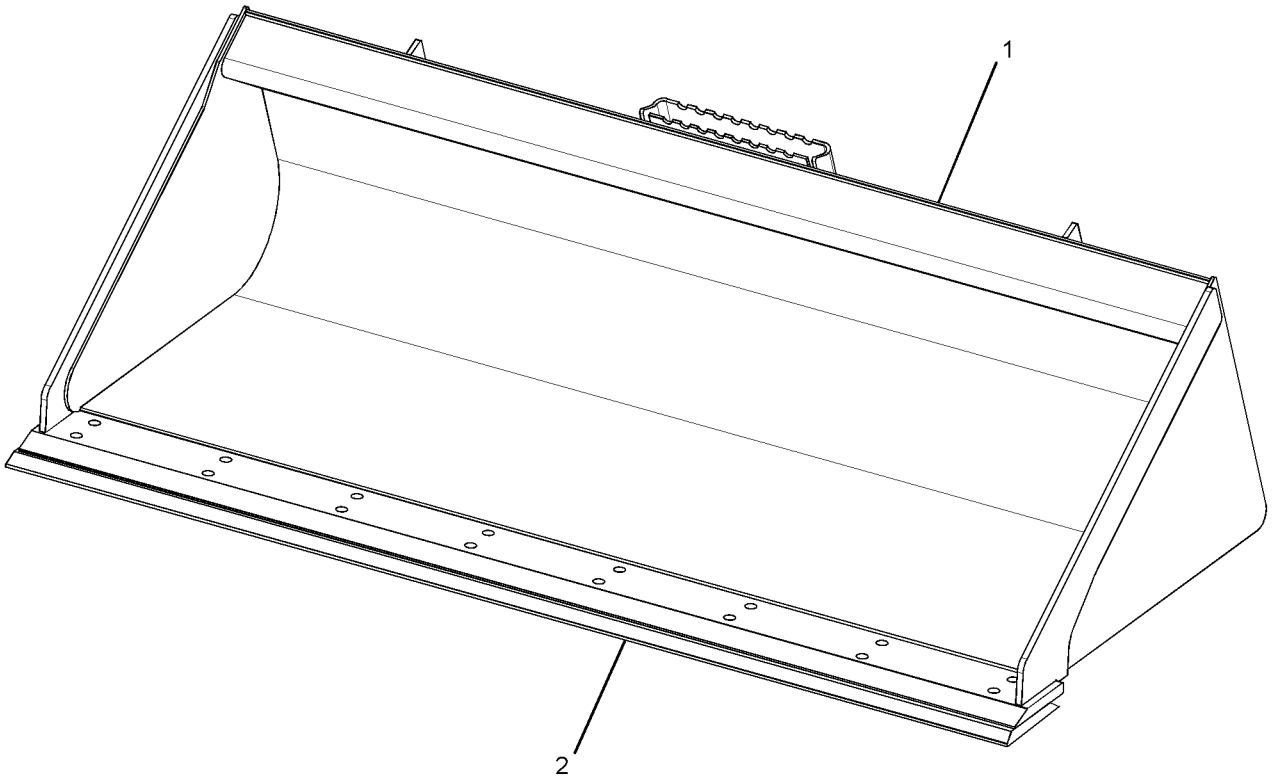

GRAPHIC #1 **<END>** g01481192

WORK TOOLS

188-2719 BUCKET GP-DIRT

S/N: JAY1-UP

FIELD REPLACEMENT FOR 188-3526 BUCKET AS-DIRT

AN ATTACHMENT

SMCS-6001 **i02757699**

NOTE	PART NUMBER	QTY	PART NAME 1 2 3 4 5 6 (PRODUCT LEVEL)	SEE PAGE
Y	*188-3526*	1	BUCKET AS-DIRT	501
Y	*135-9386*	1	EDGE GP-CUTTING	586

Y-SEPARATE ILLUSTRATION

<END>

268-4084 BUCKET GP-DIRT

S/N: JAY1-UP
1981-MM (78-IN)
PART OF 268-4083 BUCKET AR-DIRT
FIELD REPLACEMENT ORDER 268-4083—PAGE 476
AN ATTACHMENT

SMCS-6001 **i02540002**

NOTE	REF NO	GRAPHIC REF	PART NUMBER	QTY	PART NAME 1 2 3 4 5 6 (PRODUCT LEVEL)	SEE PAGE
	1	1	**154-2704**	1	PLATE-INSTRUCTION (BUCKET SPECIFICATIONS)	
	2	1	**168-8389**	4	TACK-FASTENER	
					PARTS SHOWN IN GRAPHIC(S) WITHOUT A REFERENCE NUMBER ARE NOT SERVICED SEPARATELY	

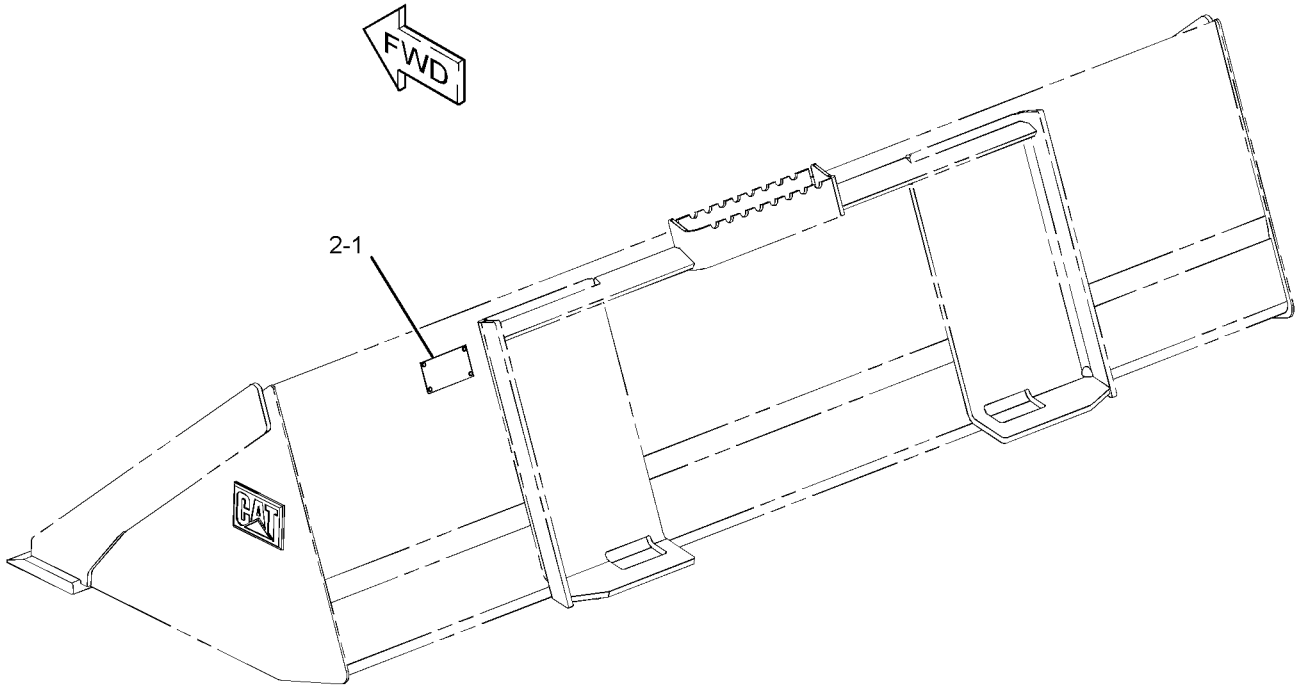

GRAPHIC #1 **<END>** g01279383

WORK TOOLS

296-8191 BUCKET GP-GENERAL PURPOSE

S/N: JAY1-UP

AN ATTACHMENT

SMCS-6101 **i02636477**

NOTE	PART NUMBER	QTY	PART NAME 1 2 3 4 5 6 (PRODUCT LEVEL)	SEE PAGE
Y	**292-9270**	1	BUCKET AS-GENERAL PURPOSE	518
Y	*141-4999*	9	TOOTH GP-UNI	627

Y-SEPARATE ILLUSTRATION

<END>

WORK TOOLS

156-0884 BUCKET GP-GRAPPLE

S/N: JAY1-UP
PART OF 157-7223 BUCKET AR-GRAPPLE
AN ATTACHMENT

SMCS-6704 **i03611520**

NOTE	REF NO	GRAPHIC REF	PART NUMBER	QTY	PART NAME 1 2 3 4 5 6 (PRODUCT LEVEL)	SEE PAGE
	1	1	**157-0940**	4	PIN	
Y	2	1	**169-8941**	1	BUCKET AS-GRAPPLE	523
	3	1	**222-7467**	2	FORK AS	
					(EACH INCLUDES)	
		1	**158-5648**	2	BEARING-SLEEVE	
	4	1	**3B-8489**	4	FITTING-GREASE	
M	5	1	**6V-9189**	4	LOCKNUT (M8X1.25-THD)	
M	6	1	**8T-6869**	4	BOLT (M8X1.25X60-MM)	

M-METRIC PART
Y-SEPARATE ILLUSTRATION

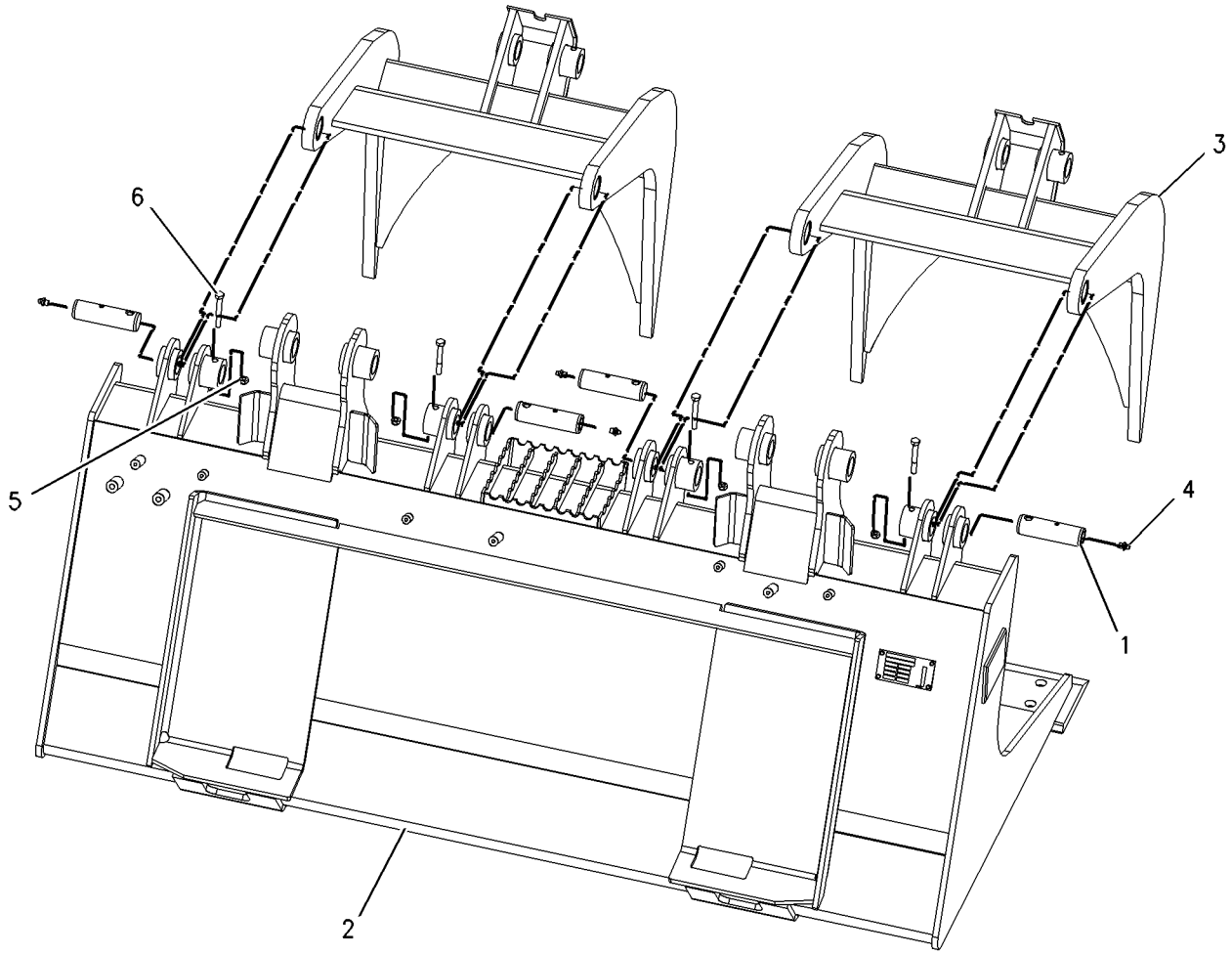

GRAPHIC #1 **<END>** g00978796

WORK TOOLS

156-0885 BUCKET GP-GRAPPLE

S/N: JAY1-UP
PART OF 157-7224 BUCKET AR-GRAPPLE
AN ATTACHMENT

SMCS-6704 **i03611521**

NOTE	REF NO	GRAPHIC REF	PART NUMBER	QTY	PART NAME 1 2 3 4 5 6 (PRODUCT LEVEL)	SEE PAGE
	1	1	**157-0940**	4	PIN	
Y	2	1	**169-8942**	1	BUCKET AS-GRAPPLE	524
	3	1	**222-7467**	2	FORK AS	
					(EACH INCLUDES)	
		1	**158-5648**	2	BEARING-SLEEVE	
	4	1	**3B-8489**	4	FITTING-GREASE	
M	5	1	**6V-9189**	4	LOCKNUT (M8X1.25-THD)	
M	6	1	**8T-6869**	4	BOLT (M8X1.25X60-MM)	

M-METRIC PART
Y-SEPARATE ILLUSTRATION

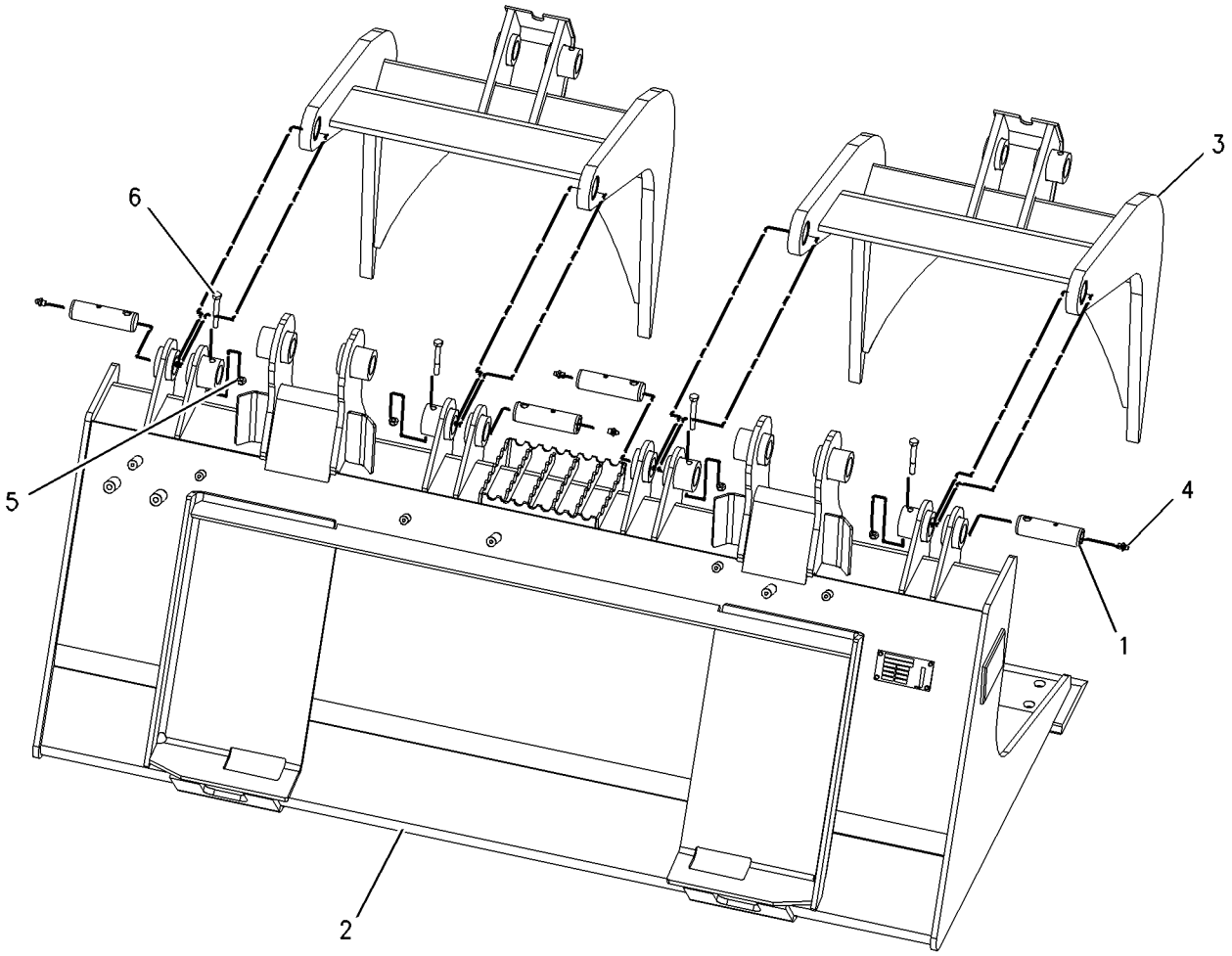

GRAPHIC #1 **<END>** g00978796

WORK TOOLS

156-0886 BUCKET GP-GRAPPLE

S/N: JAY1-UP
PART OF 157-7225 BUCKET AR-GRAPPLE
AN ATTACHMENT

SMCS-6704 **i03611522**

NOTE	REF NO	GRAPHIC REF	PART NUMBER	QTY	PART NAME 1 2 3 4 5 6 (PRODUCT LEVEL)	SEE PAGE
	1	1	**157-0940**	4	PIN	
Y	2	1	**169-8943**	1	BUCKET AS-GRAPPLE (INDUSTRIAL)	525
	3	1	**222-7467**	2	FORK AS	
					(EACH INCLUDES)	
		1	**158-5648**	2	BEARING-SLEEVE	
	4	1	**3B-8489**	4	FITTING-GREASE	
M	5	1	**6V-9189**	4	LOCKNUT (M8X1.25-THD)	
M	6	1	**8T-6869**	4	BOLT (M8X1.25X60-MM)	

M-METRIC PART
Y-SEPARATE ILLUSTRATION

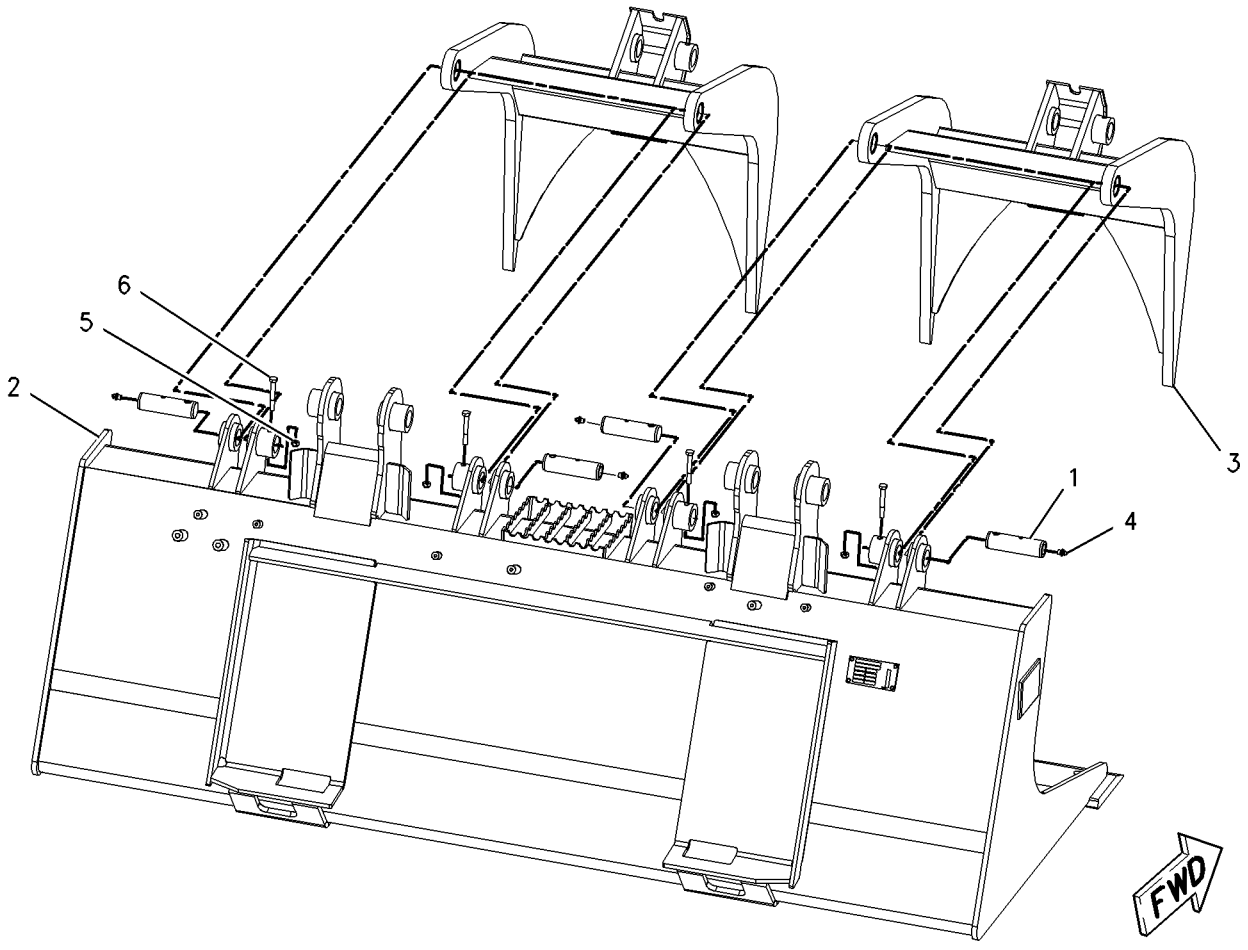

GRAPHIC #1 **<END>** g00993692

WORK TOOLS

217-6228 BUCKET GP-GRAPPLE

S/N: JAY1-UP
PART OF 217-6229 BUCKET AR-GRAPPLE
AN ATTACHMENT

SMCS-6704 **i03624595**

NOTE	REF NO	GRAPHIC REF	PART NUMBER	QTY	PART NAME 1 2 3 4 5 6 (PRODUCT LEVEL)	SEE PAGE
	1	1	**157-0940**	4	PIN	
Y	2	1	**217-6227**	1	BUCKET AS-GRAPPLE (INDUSTRIAL)	527
	3	1	**222-7467**	2	FORK AS	
					(EACH INCLUDES)	
		1	**158-5648**	2	BEARING-SLEEVE	
	4	1	**3B-8489**	4	FITTING-GREASE	
M	5	1	**6V-9189**	4	LOCKNUT (M8X1.25-THD)	
M	6	1	**8T-6869**	4	BOLT (M8X1.25X60-MM)	

M-METRIC PART
Y-SEPARATE ILLUSTRATION

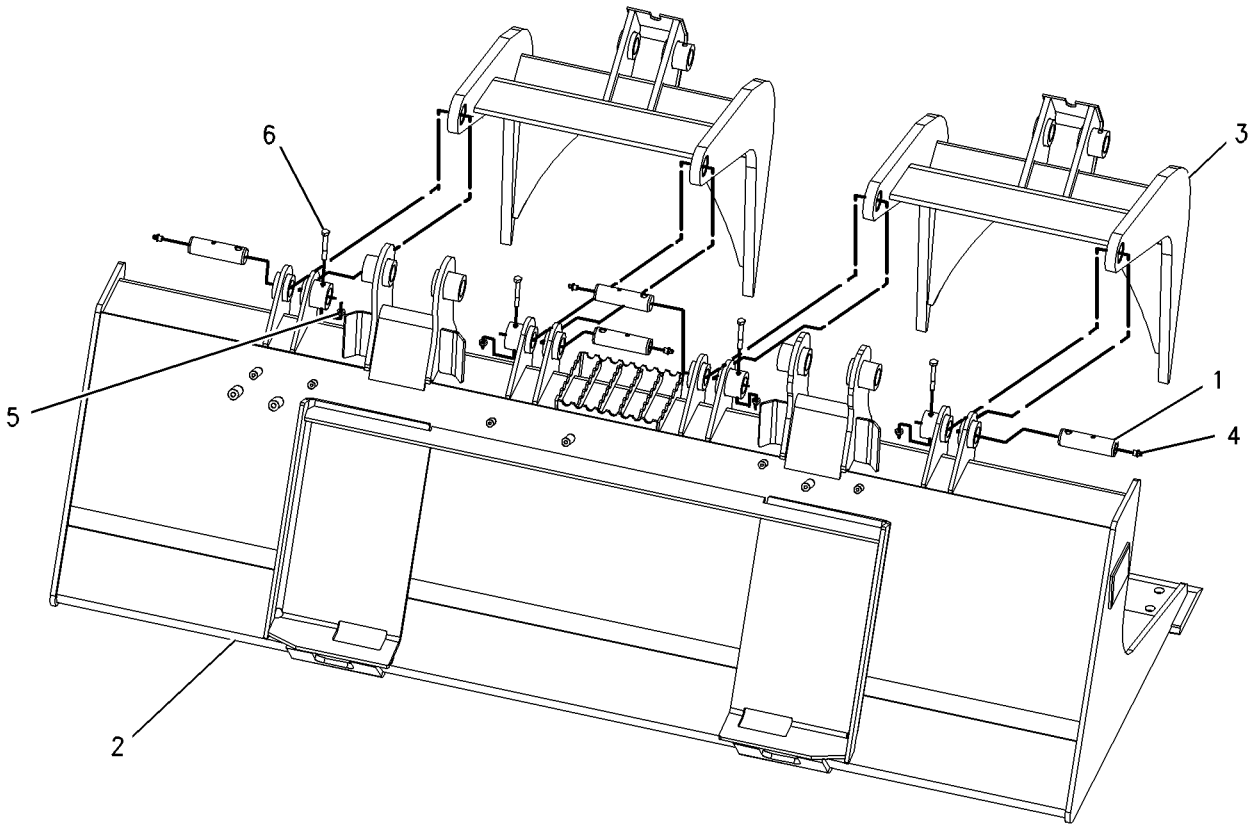

GRAPHIC #1 **<END>** g00992181

279-5359 BUCKET GP-GRAPPLE—INDUSTRIAL

S/N: JAY1-UP
1829-MM (72-IN)
PART OF 279-5360 FORK AR-GRAPPLE
AN ATTACHMENT

SMCS-6704 **i03439501**

NOTE	REF NO	GRAPHIC REF	PART NUMBER	QTY	PART NAME 1 2 3 4 5 6 (PRODUCT LEVEL)	SEE PAGE
	1	1	**157-0940**	4	PIN	
	2	1	**164-9989**	2	FILM-WARNING (IMPALED POINT)	
	3	1	**222-7467**	2	FORK AS	
		1	**158-5648**	2	BEARING-SLEEVE	
Y	4	1	*279-5358*	1	FRAME GP-FORK (72-IN, INDUSTRIAL)	605
	5	1	**3B-8489**	4	FITTING-GREASE	
M	6	1	**6V-9189**	4	LOCKNUT (M8X1.25-THD)	
M	7	1	**8T-6869**	4	BOLT (M8X1.25X60-MM)	

M-METRIC PART
Y-SEPARATE ILLUSTRATION

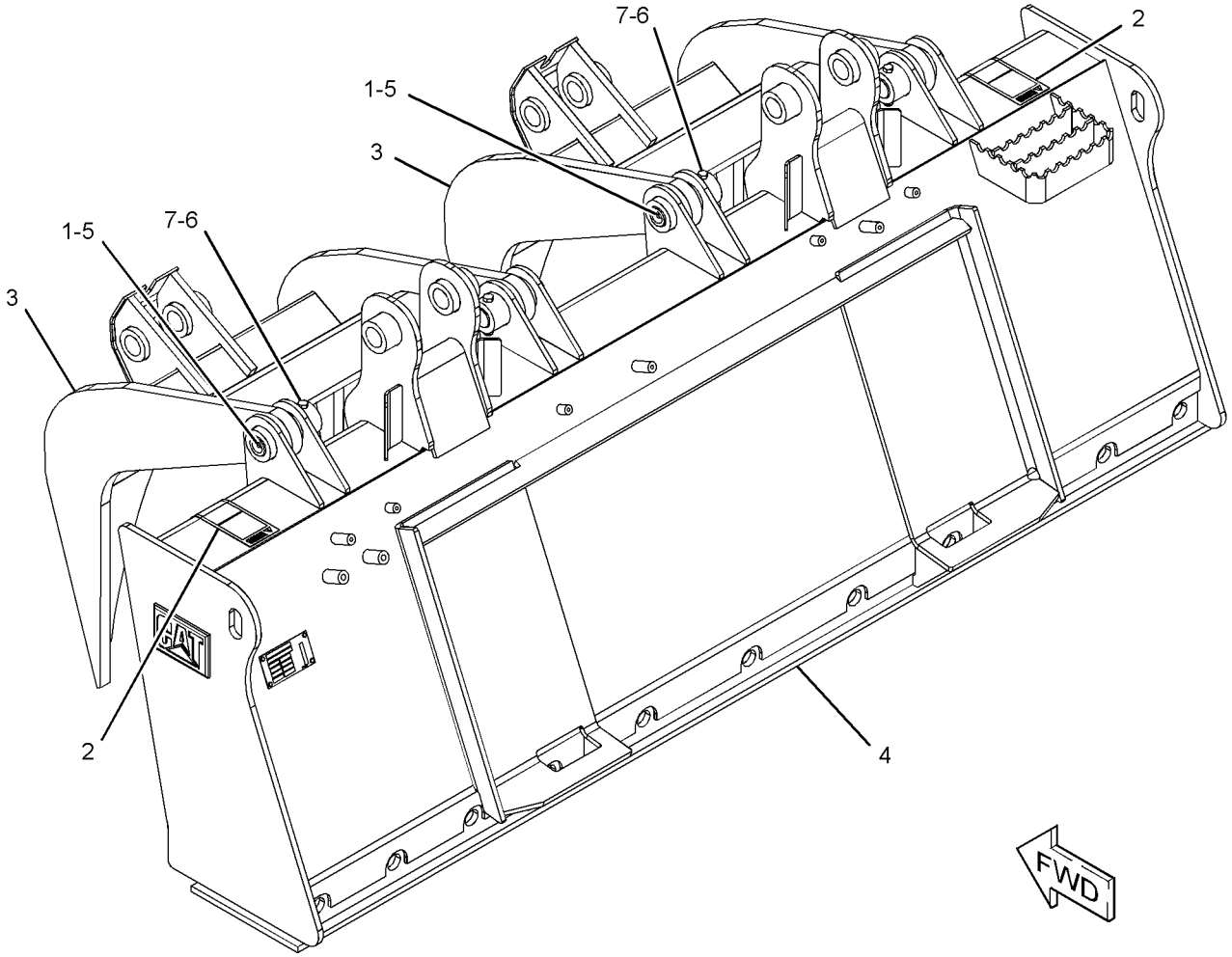

GRAPHIC #1 **<END>** g01280924

WORK TOOLS

286-9244 BUCKET GP-GRAPPLE

S/N: JAY1-UP
PART OF 286-9301 BUCKET AR-GRAPPLE
AN ATTACHMENT

SMCS-6704 **i02723701**

NOTE	REF NO	GRAPHIC REF	PART NUMBER	QTY	PART NAME 1 2 3 4 5 6 (PRODUCT LEVEL)	SEE PAGE
	1	1	**157-0940**	4	PIN	
	2	1	**286-9229**	1	TINE GP	
	3	1	**286-9243**	2	FORK AS	
					(EACH INCLUDES)	
		1	**158-5648**	2	BEARING-SLEEVE	
	4	1	**3B-8489**	4	FITTING-GREASE	
M	5	1	**6V-9189**	4	LOCKNUT (M8X1.25-THD)	
M	6	1	**8T-6869**	4	BOLT (M8X1.25X60-MM)	

M-METRIC PART

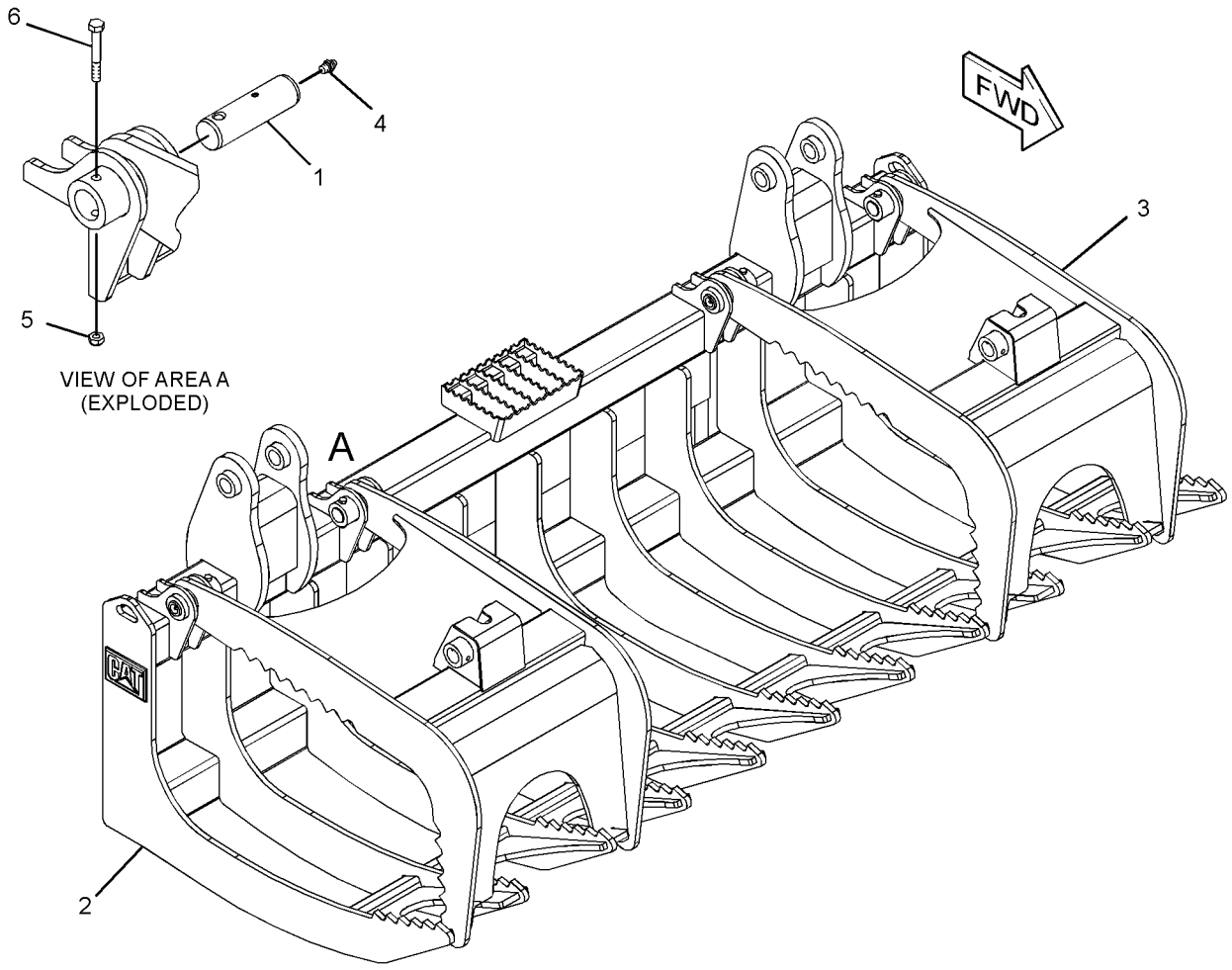

GRAPHIC #1 **<END>** g01372924

286-9278 BUCKET GP-GRAPPLE

S/N: JAY1-UP
1829-MM (72-IN)
PART OF 286-9300 BUCKET AR-GRAPPLE
AN ATTACHMENT

SMCS-6704 **i03635722**

NOTE	REF NO	GRAPHIC REF	PART NUMBER	QTY	PART NAME 1 2 3 4 5 6 (PRODUCT LEVEL)	SEE PAGE
	1	1	**157-0940**	4	PIN	
	2	1	**286-9243**	2	FORK AS	
					(EACH INCLUDES)	
		1	**158-5648**	2	BEARING-SLEEVE	
	3	1	**286-9274**	1	TINE GP	
	4	1	**3B-8489**	4	FITTING-GREASE	
M	5	1	**6V-9189**	4	LOCKNUT (M8X1.25-THD)	
M	6	1	**8T-6869**	4	BOLT (M8X1.25X60-MM)	

M-METRIC PART

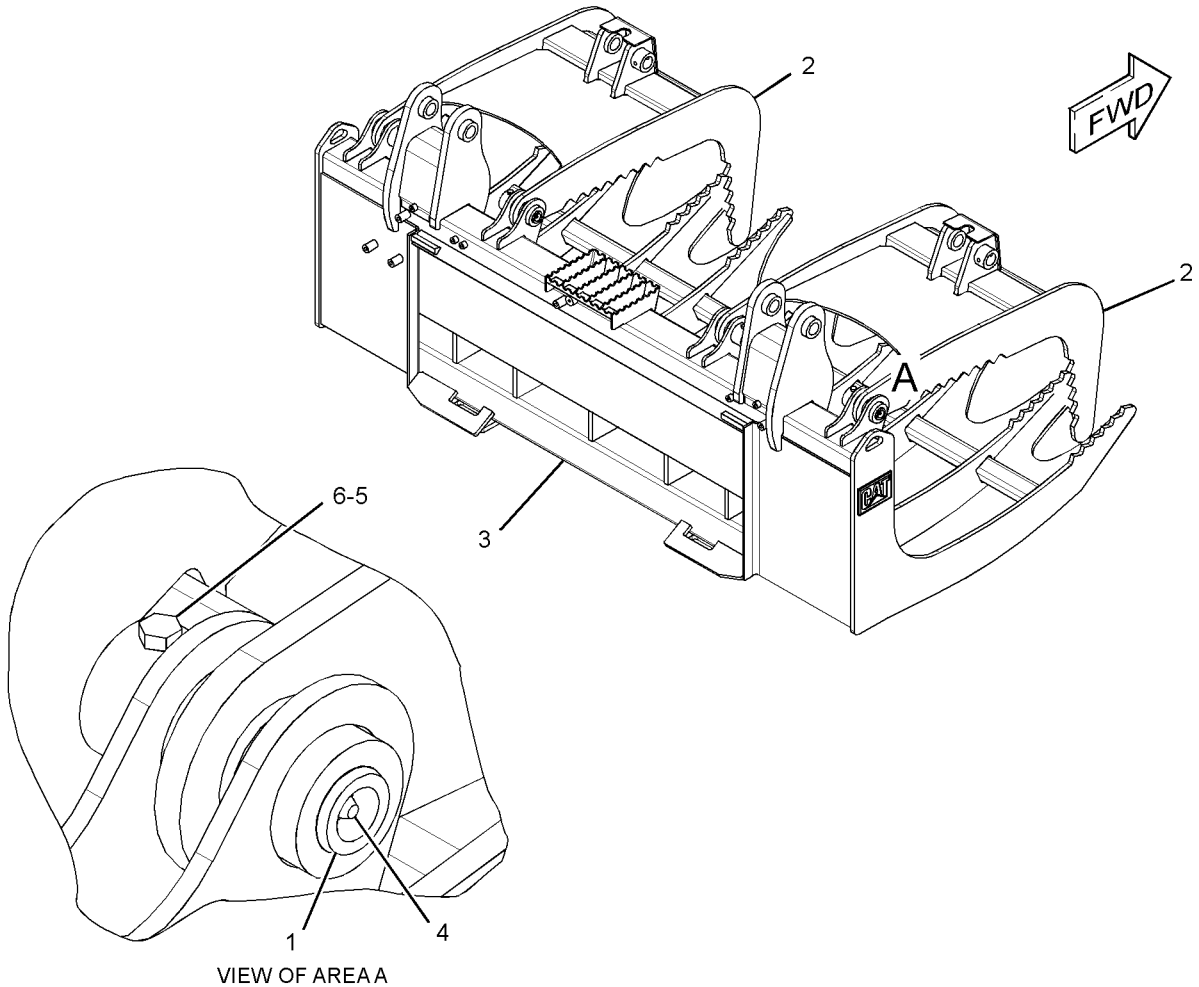

VIEW OF AREA A

GRAPHIC #1 **<END>** g01372568

154-5005 BUCKET GP-MULTIPURPOSE

S/N: JAY1-UP
152.40-CM (60-IN) WIDE X 0.30-CU M (0.39-CU YD)
PART OF 154-5004 BUCKET AR-MULTIPURPOSE
AN ATTACHMENT

SMCS-6104 **i03622340**

NOTE	REF NO	GRAPHIC REF	PART NUMBER	QTY	PART NAME 1 2 3 4 5 6 (PRODUCT LEVEL)	SEE PAGE
Y	1	1	**149-4232**	1	CLAM AS-MULTIPURPOSE BUCKET	571
	2	1	**154-5012**	2	PIN	
Y	3	1	**159-5345**	1	BLADE GP-MULTIPURPOSE BUCKET	457
M	4	1	**8T-6869**	2	BOLT (M8X1.25X60-MM)	
	5	1	**3B-8489**	2	FITTING-GREASE	
M	6	1	**6V-9189**	2	LOCKNUT (M8X1.25-THD)	

M-METRIC PART
Y-SEPARATE ILLUSTRATION

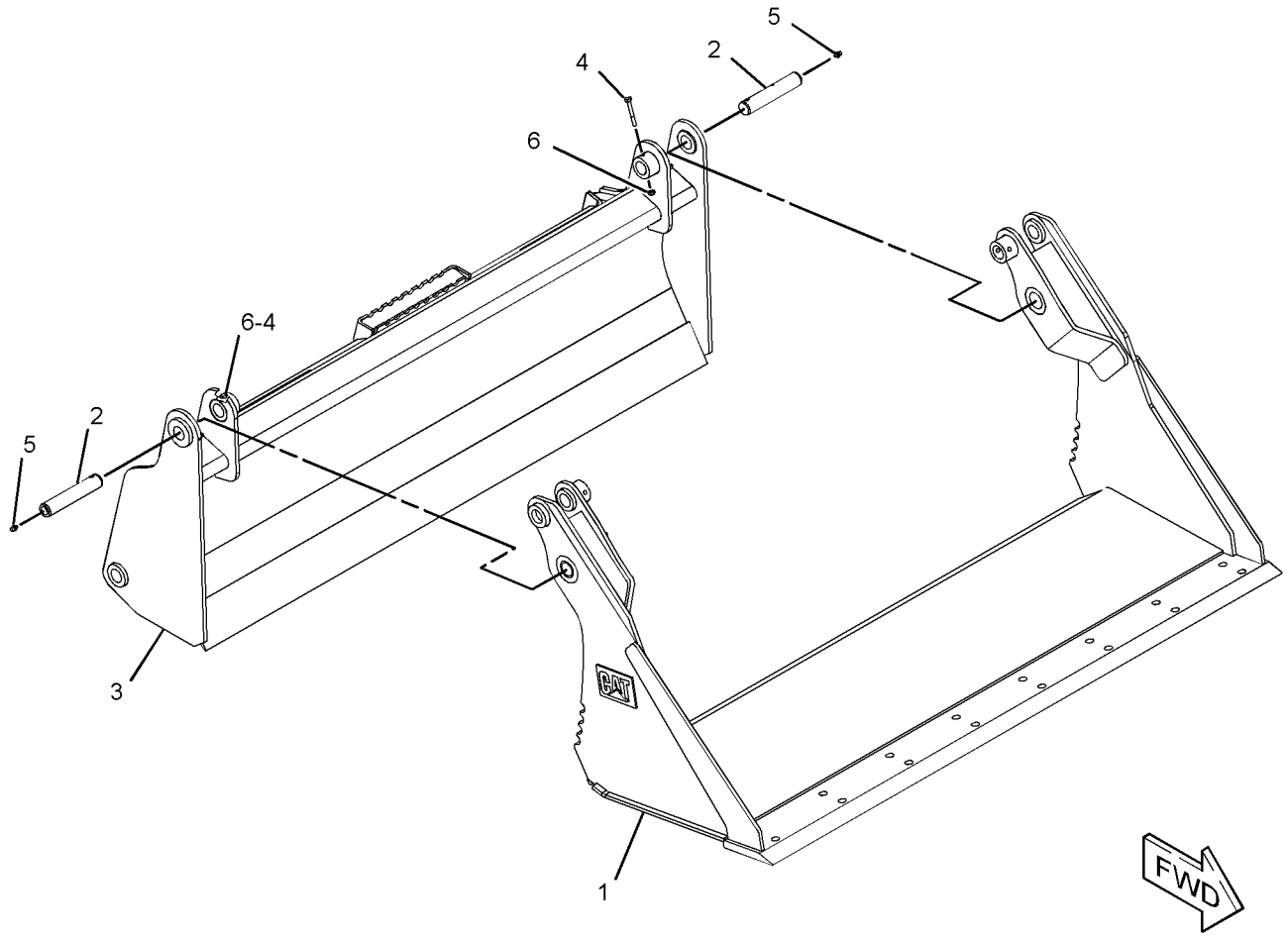

GRAPHIC #1 **<END>** g01945754

WORK TOOLS

154-5009 BUCKET GP-MULTIPURPOSE

S/N: JAY1-UP
1829-MM (72-IN)
PART OF 154-5010 BUCKET AR-MULTIPURPOSE
AN ATTACHMENT

SMCS-6104 **i03637863**

NOTE	REF NO	GRAPHIC REF	PART NUMBER	QTY	PART NAME 1 2 3 4 5 6 (PRODUCT LEVEL)	SEE PAGE
	1	1	**154-5012**	2	PIN	
Y	2	1	**154-5070**	1	CLAM AS-MULTIPURPOSE BUCKET	573
Y	3	1	**159-5347**	1	BLADE GP-MULTIPURPOSE BUCKET (72-IN) (72-IN)	458
M	4	1	**8T-6869**	2	BOLT (M8X1.25X60-MM)	
	5	1	**3B-8489**	2	FITTING-GREASE	
M	6	1	**6V-9189**	2	LOCKNUT (M8X1.25-THD)	
	7	1	**159-8038**	2	FILM-WARNING (CRUSH HAZARD, STAY BACK)	

M-METRIC PART
Y-SEPARATE ILLUSTRATION

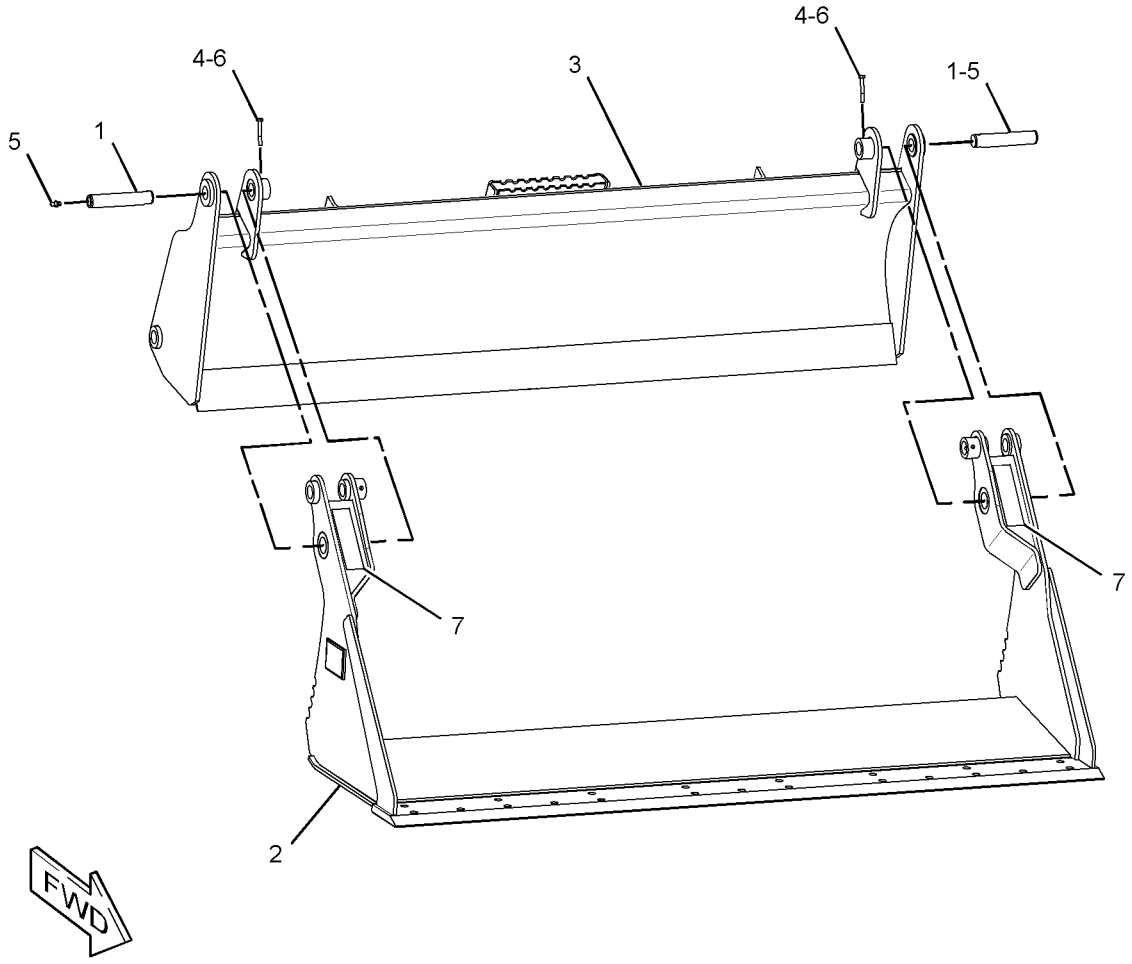

GRAPHIC #1 **<END>** g01953374

279-5383 BUCKET GP-MULTIPURPOSE

S/N: JAY1-UP
1524-MM (60-IN)
PART OF 279-5382 BUCKET AR-MULTIPURPOSE
AN ATTACHMENT

SMCS-6104 **i03622341**

NOTE	REF NO	GRAPHIC REF	PART NUMBER	QTY	PART NAME 1 2 3 4 5 6 (PRODUCT LEVEL)	SEE PAGE
Y	1	1	**149-4232**	1	CLAM AS-MULTIPURPOSE BUCKET	571
	2	1	**154-5012**	2	PIN	
M	3	1	**8T-6869**	2	BOLT (M8X1.25X60-MM)	
Y	4	1	*279-5384*	1	BLADE GP-MULTIPURPOSE BUCKET (60-IN)	459
	5	1	**3B-8489**	2	FITTING-GREASE	
M	6	1	**6V-9189**	2	LOCKNUT (M8X1.25-THD)	

M-METRIC PART
Y-SEPARATE ILLUSTRATION

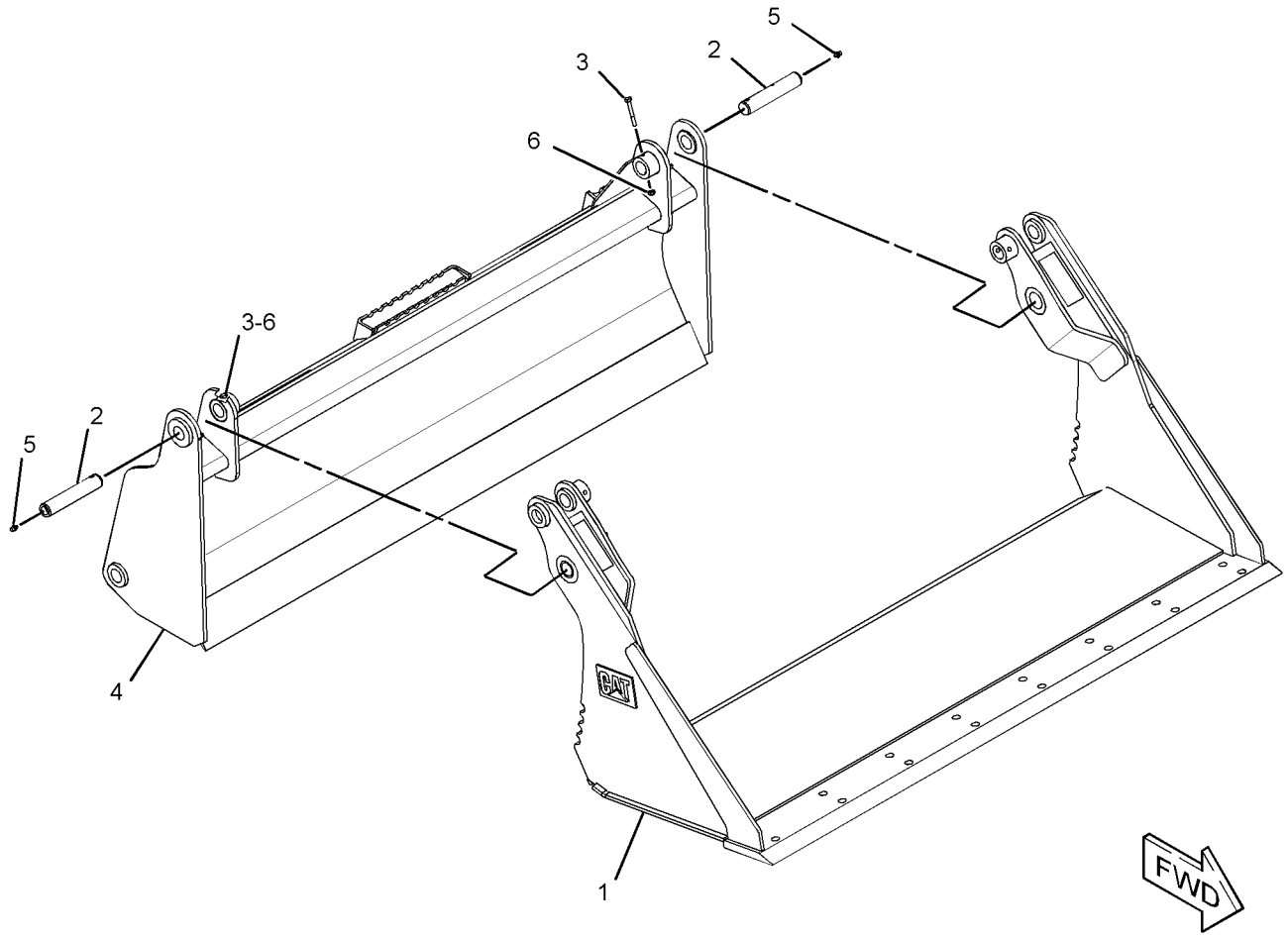

GRAPHIC #1 **<END>** g01945368

279-5389 BUCKET GP-MULTIPURPOSE

S/N: JAY1-UP
1676-MM (66-IN)
PART OF 279-5390 BUCKET AR-MULTIPURPOSE
AN ATTACHMENT

SMCS-6104 **i03635045**

NOTE	REF NO	GRAPHIC REF	PART NUMBER	QTY	PART NAME 1 2 3 4 5 6 (PRODUCT LEVEL)	SEE PAGE
	1	1	**154-5012**	2	PIN	
Y	2	1	**154-5053**	1	CLAM AS-MULTIPURPOSE BUCKET	572
Y	3	1	*279-5388*	1	BLADE GP-MULTIPURPOSE BUCKET (66-IN)	461
	4	1	**3B-8489**	2	FITTING-GREASE	
M	5	1	**6V-9189**	2	LOCKNUT (M8X1.25-THD)	
M	6	1	**8T-6869**	2	BOLT (M8X1.25X60-MM)	

M-METRIC PART
Y-SEPARATE ILLUSTRATION

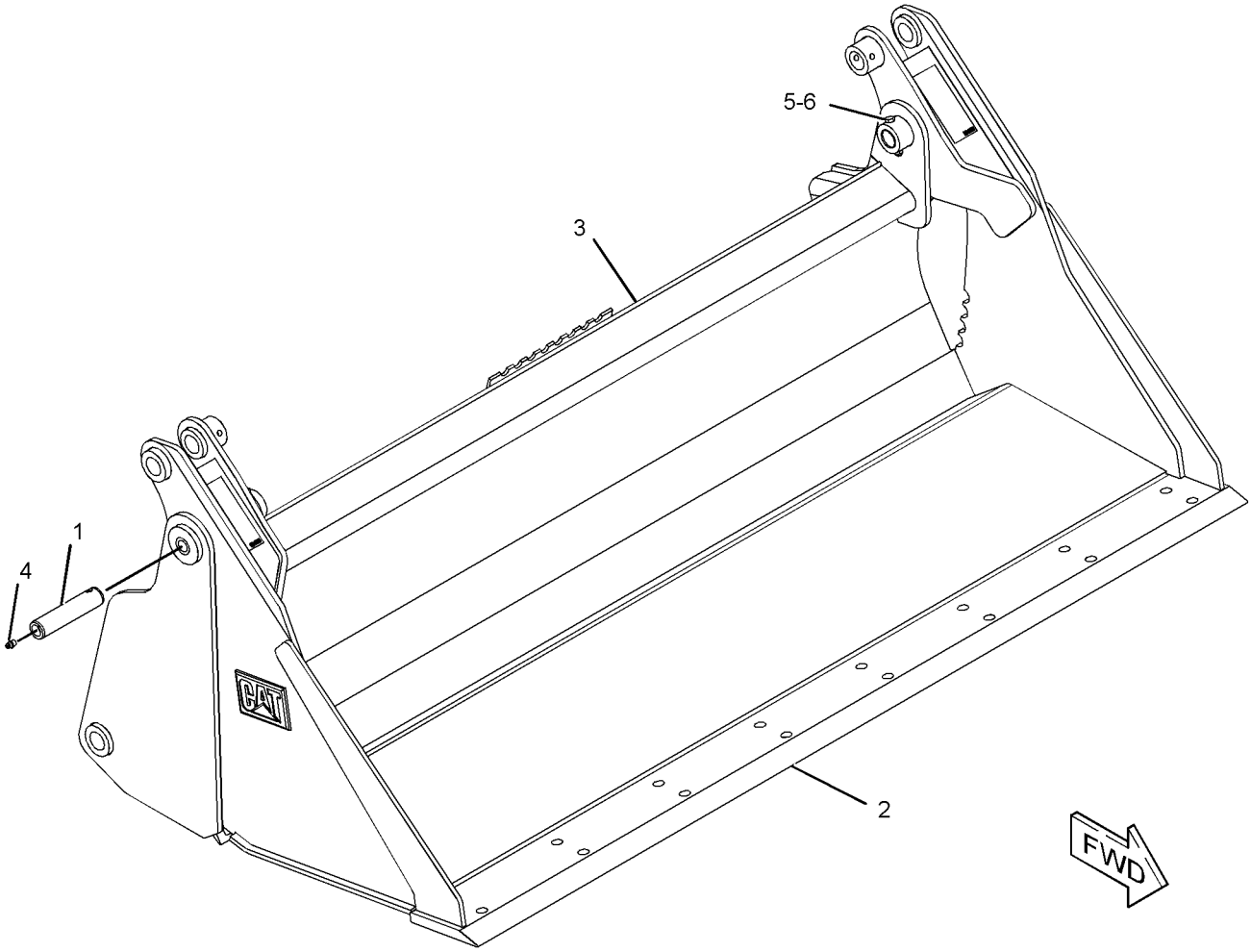

GRAPHIC #1 **<END>** g01952471

279-5397 BUCKET GP-MULTIPURPOSE

S/N: JAY1-UP
1829-MM (72-IN)
PART OF 279-5398 BUCKET AR-MULTIPURPOSE
AN ATTACHMENT

SMCS-6104 **i03635046**

NOTE	REF NO	GRAPHIC REF	PART NUMBER	QTY	PART NAME 1 2 3 4 5 6 (PRODUCT LEVEL)	SEE PAGE
	1	1	**154-5012**	2	PIN	
Y	2	1	**154-5070**	1	CLAM AS-MULTIPURPOSE BUCKET	573
M	3	1	**8T-6869**	2	BOLT (M8X1.25X60-MM)	
Y	4	1	*279-5396*	1	BLADE GP-MULTIPURPOSE BUCKET (72-IN)	462
	5	1	**3B-8489**	2	FITTING-GREASE	
M	6	1	**6V-9189**	2	LOCKNUT (M8X1.25-THD)	

M-METRIC PART
Y-SEPARATE ILLUSTRATION

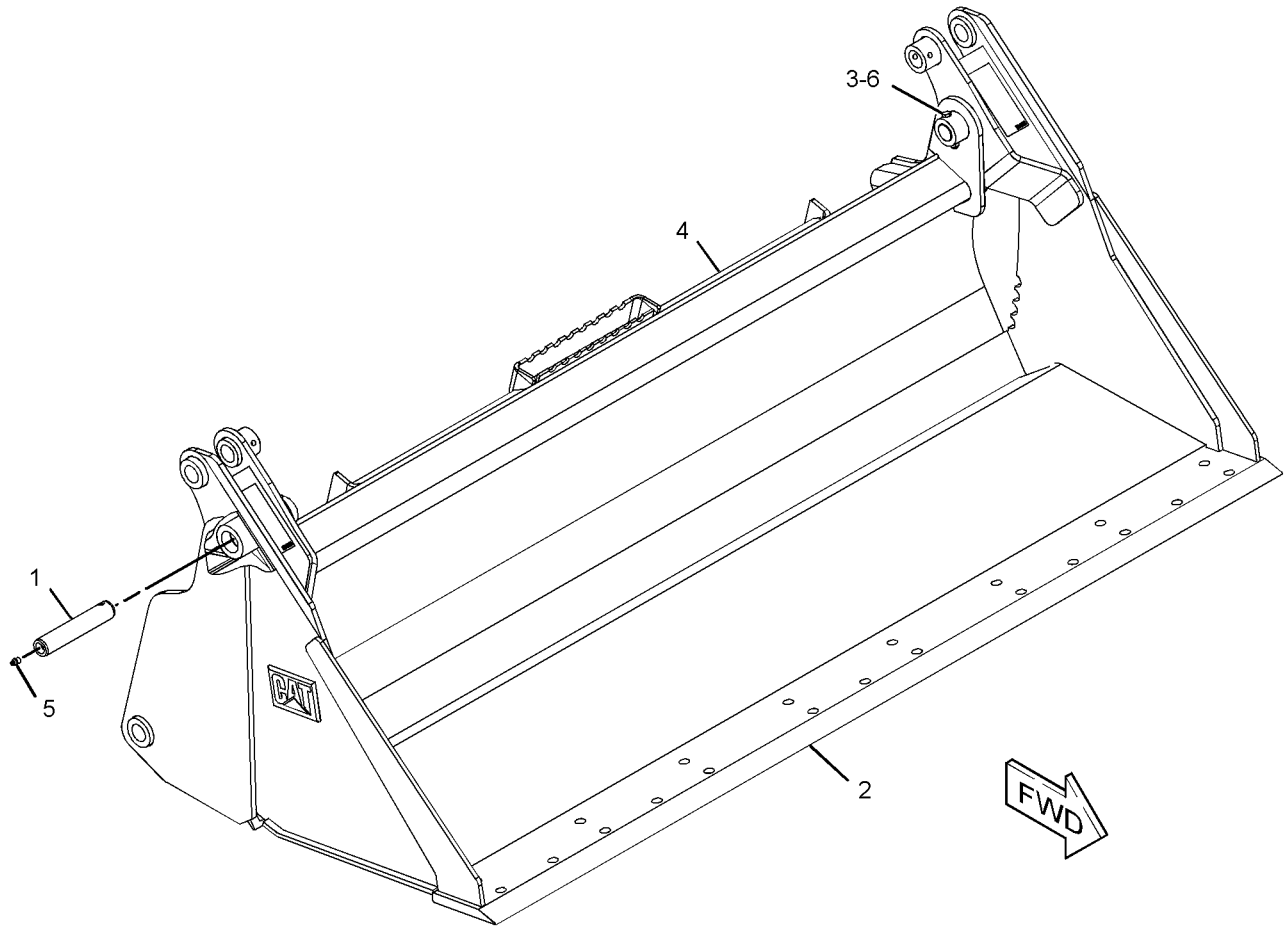

GRAPHIC #1 **<END>** g01952445

WORK TOOLS

279-5404 BUCKET GP-MULTIPURPOSE

S/N: JAY1-UP
1981-MM (78-IN)
PART OF 279-5403 BUCKET AR-MULTIPURPOSE
AN ATTACHMENT

SMCS-6104 **i03635047**

NOTE	REF NO	GRAPHIC REF	PART NUMBER	QTY	PART NAME 1 2 3 4 5 6 (PRODUCT LEVEL)	SEE PAGE
	1	1	**154-5012**	2	PIN	
M	2	1	**8T-6869**	2	BOLT (M8X1.25X60-MM)	
Y	3	1	**199-8308**	1	CLAM AS-MULTIPURPOSE BUCKET	574
Y	4	1	*279-5405*	1	BLADE GP-MULTIPURPOSE BUCKET (78-IN)	463
	5	1	**3B-8489**	2	FITTING-GREASE	
M	6	1	**6V-9189**	2	LOCKNUT (M8X1.25-THD)	

M-METRIC PART
Y-SEPARATE ILLUSTRATION

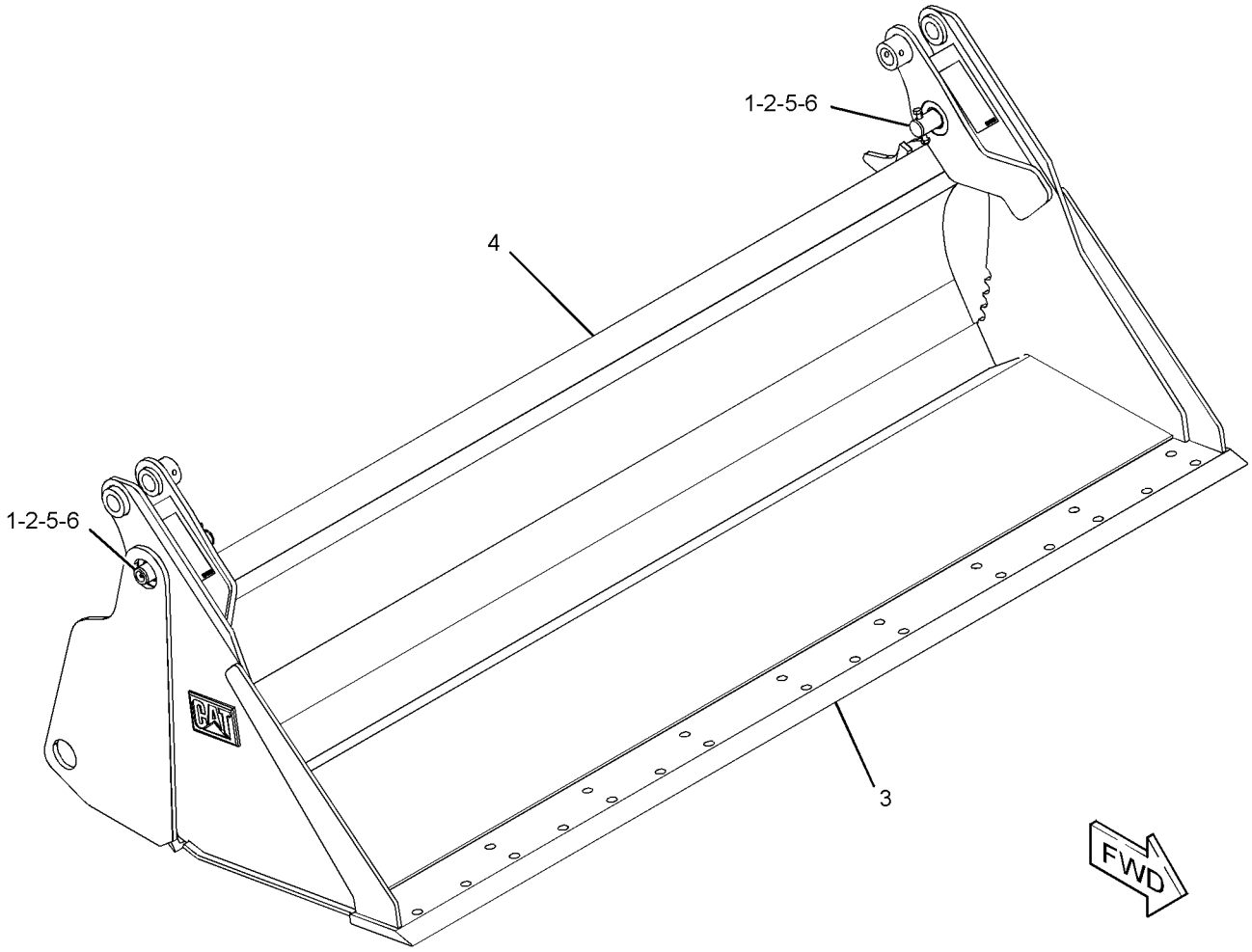

GRAPHIC #1 **<END>** g01920456

293-0141 BUCKET GP-MULTIPURPOSE

S/N: JAY1-UP
PART OF 293-0139 BUCKET AR-MULTIPURPOSE
AN ATTACHMENT

SMCS-6104 **i03635048**

NOTE	REF NO	GRAPHIC REF	PART NUMBER	QTY	PART NAME 1 2 3 4 5 6 (PRODUCT LEVEL)	SEE PAGE
	1	1	**154-5012**	2	PIN	
Y	2	1	*293-0142*	1	BLADE GP-MULTIPURPOSE BUCKET	465
Y	3	1	**293-0148**	1	CLAM AS-MULTIPURPOSE BUCKET	575
	4	1	**3B-8489**	2	FITTING-GREASE	
M	5	1	**6V-9189**	2	LOCKNUT (M8X1.25-THD)	
M	6	1	**8T-6869**	2	BOLT (M8X1.25X60-MM)	

M-METRIC PART
Y-SEPARATE ILLUSTRATION

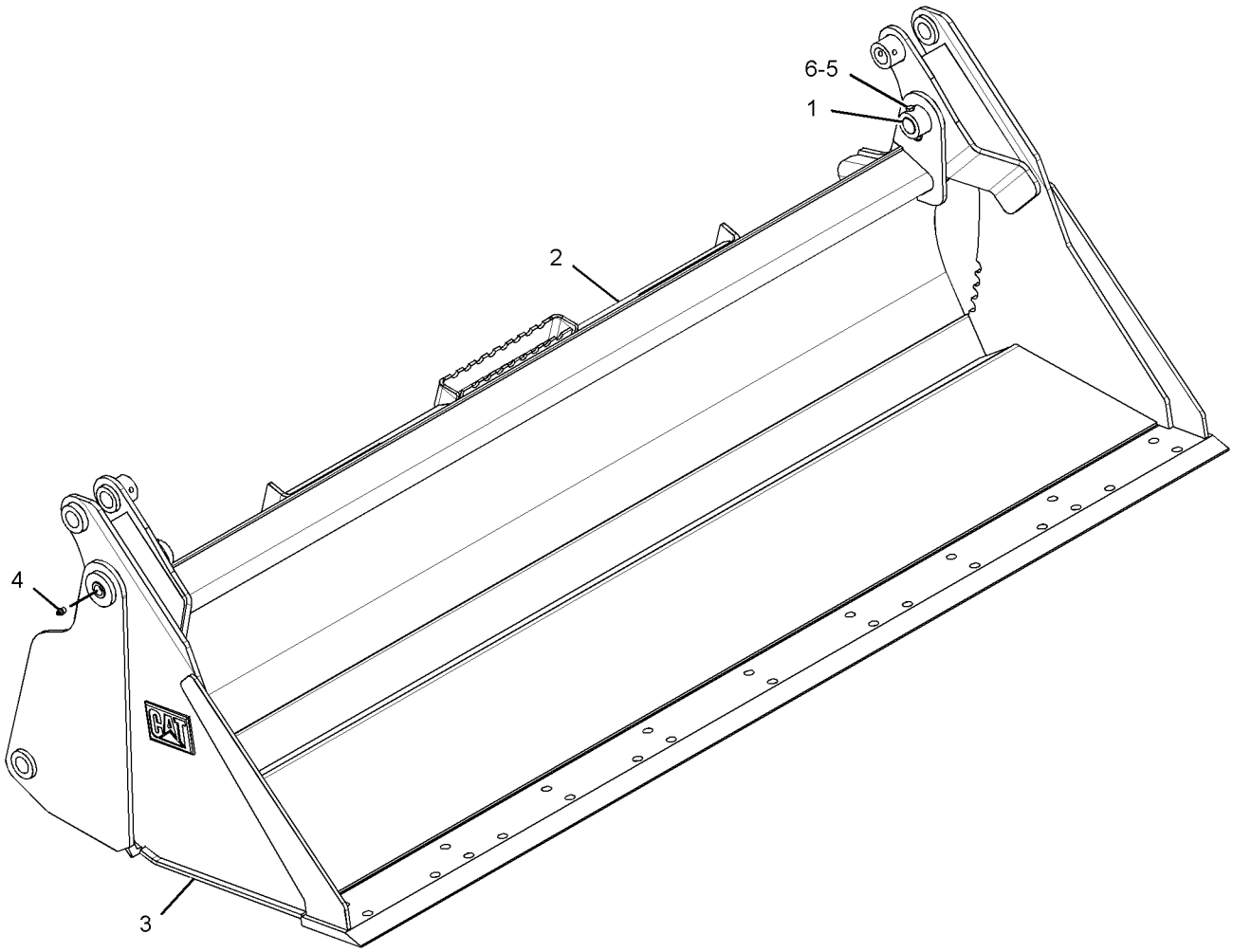

GRAPHIC #1 **<END>** g01327400

WORK TOOLS

325-7037 BUCKET GP-MULTIPURPOSE

S/N: JAY1-UP
PART OF 325-7036 BUCKET AR-MULTIPURPOSE
AN ATTACHMENT

SMCS-6104 **i03622342**

NOTE	REF NO	GRAPHIC REF	PART NUMBER	QTY	PART NAME 1 2 3 4 5 6 (PRODUCT LEVEL)	SEE PAGE
Y	1	1	**149-4232**	1	CLAM AS-MULTIPURPOSE BUCKET	571
	2	1	**154-5012**	2	PIN	
M	3	1	**8T-6869**	2	BOLT (M8X1.25X60-MM)	
Y	4	1	*325-7038*	1	BLADE GP-MULTIPURPOSE BUCKET (1552-MM)	466
	5	1	**3B-8489**	2	FITTING-GREASE	
M	6	1	**6V-9189**	2	LOCKNUT (M8X1.25-THD)	

M-METRIC PART
Y-SEPARATE ILLUSTRATION

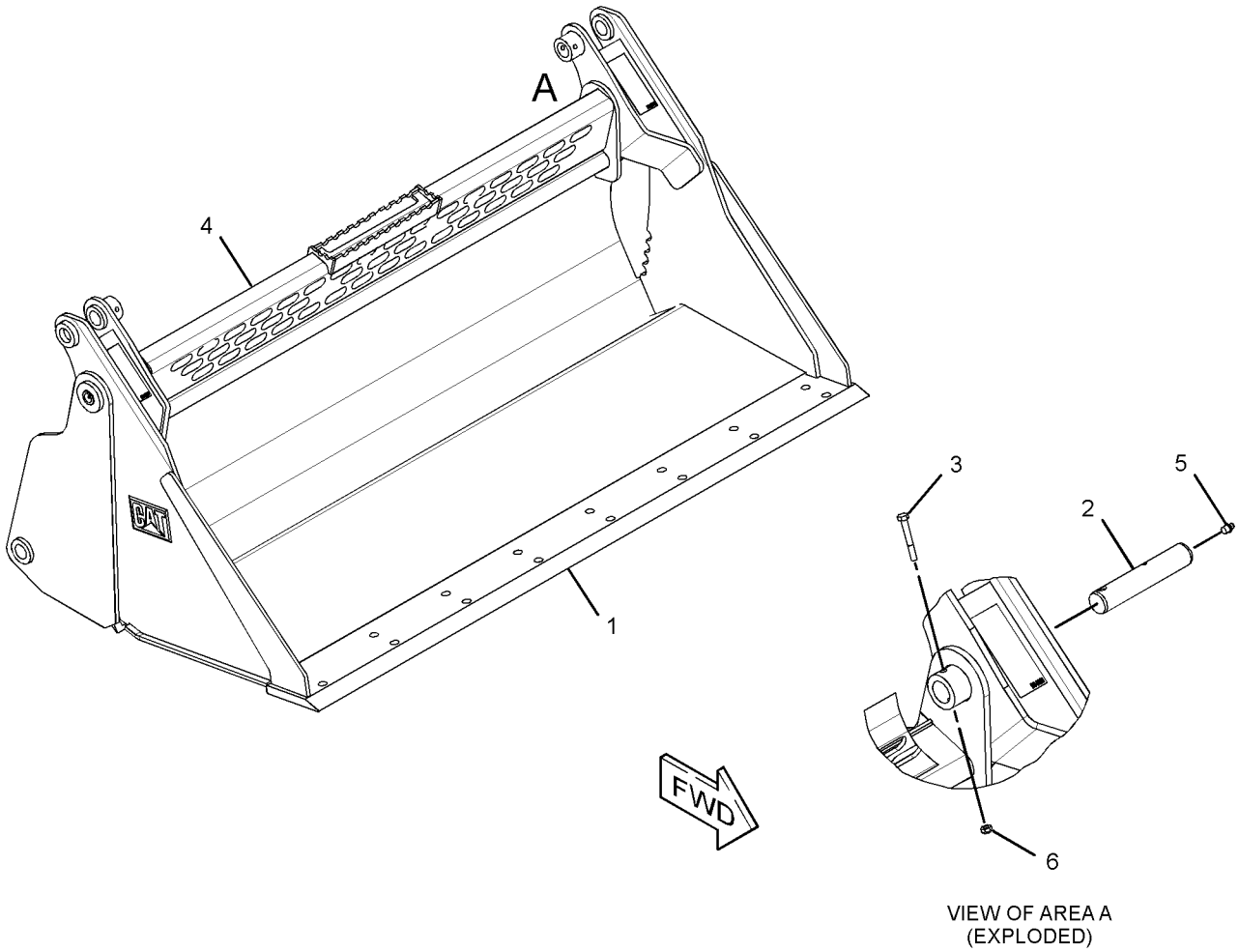

VIEW OF AREA A
(EXPLODED)

GRAPHIC #1 **<END>** g01920493

325-7047 BUCKET GP-MULTIPURPOSE

S/N: JAY1-UP

PART OF 325-7046 BUCKET AR-MULTIPURPOSE

AN ATTACHMENT

SMCS-6104 **i03619681**

NOTE	REF NO	GRAPHIC REF	PART NUMBER	QTY	PART NAME 1 2 3 4 5 6 (PRODUCT LEVEL)	SEE PAGE
	1	1	**154-5012**	2	PIN	
Y	2	1	**154-5053**	1	CLAM AS-MULTIPURPOSE BUCKET	572
Y	3	1	*325-7048*	1	BLADE GP-MULTIPURPOSE BUCKET	468
	4	1	**3B-8489**	2	FITTING-GREASE	
M	5	1	**6V-9189**	2	LOCKNUT (M8X1.25-THD)	
M	6	1	**8T-6869**	2	BOLT (M8X1.25X60-MM)	

M-METRIC PART
Y-SEPARATE ILLUSTRATION

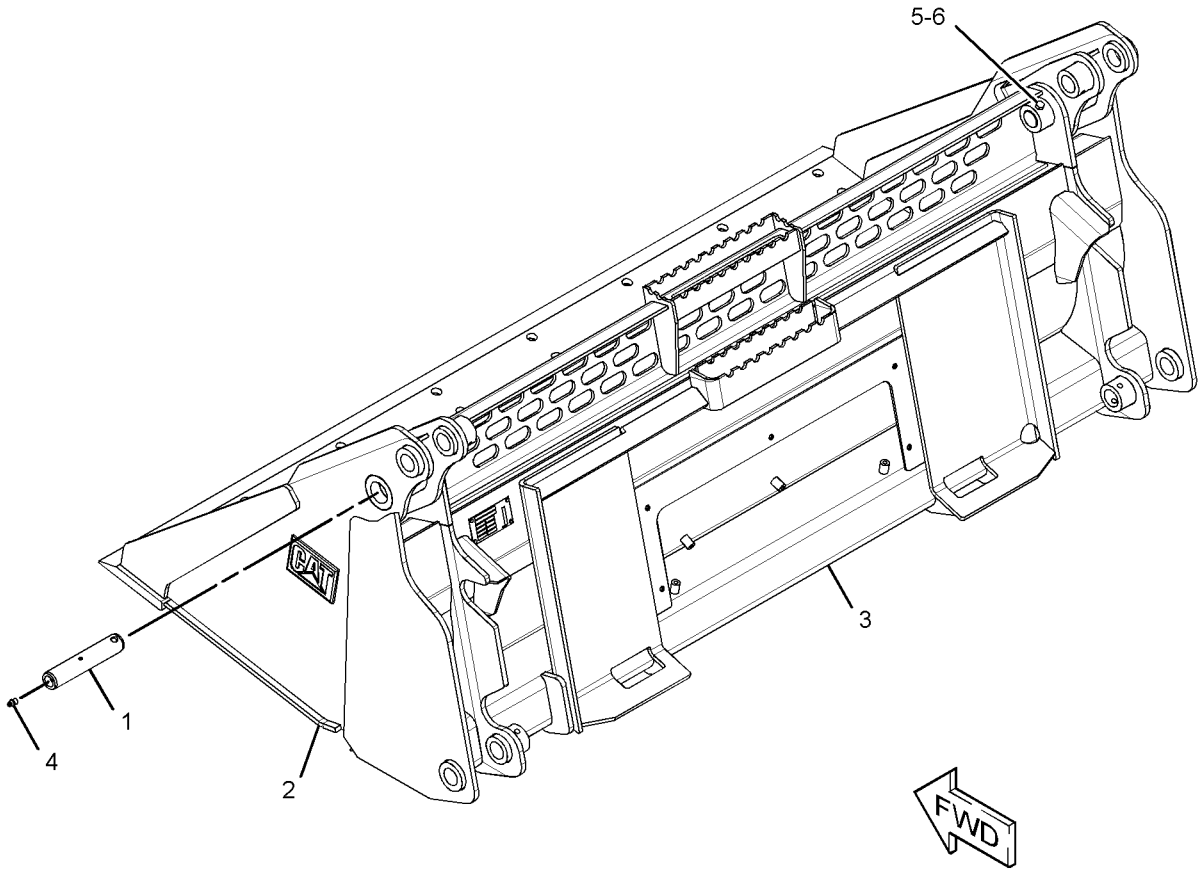

GRAPHIC #1 **<END>** g01943396

WORK TOOLS

325-7057 BUCKET GP-MULTIPURPOSE

S/N: JAY1-UP
PART OF 325-7056 BUCKET AR-MULTIPURPOSE
AN ATTACHMENT

SMCS-6104 **i03619682**

NOTE	REF NO	GRAPHIC REF	PART NUMBER	QTY	PART NAME 1 2 3 4 5 6 (PRODUCT LEVEL)	SEE PAGE
	1	1	**154-5012**	2	PIN	
Y	2	1	**154-5070**	1	CLAM AS-MULTIPURPOSE BUCKET	573
Y	3	1	*325-7058*	1	BLADE GP-MULTIPURPOSE BUCKET	470
	4	1	**3B-8489**	2	FITTING-GREASE	
M	5	1	**6V-9189**	2	LOCKNUT (M8X1.25-THD)	
M	6	1	**8T-6869**	2	BOLT (M8X1.25X60-MM)	

M-METRIC PART
Y-SEPARATE ILLUSTRATION

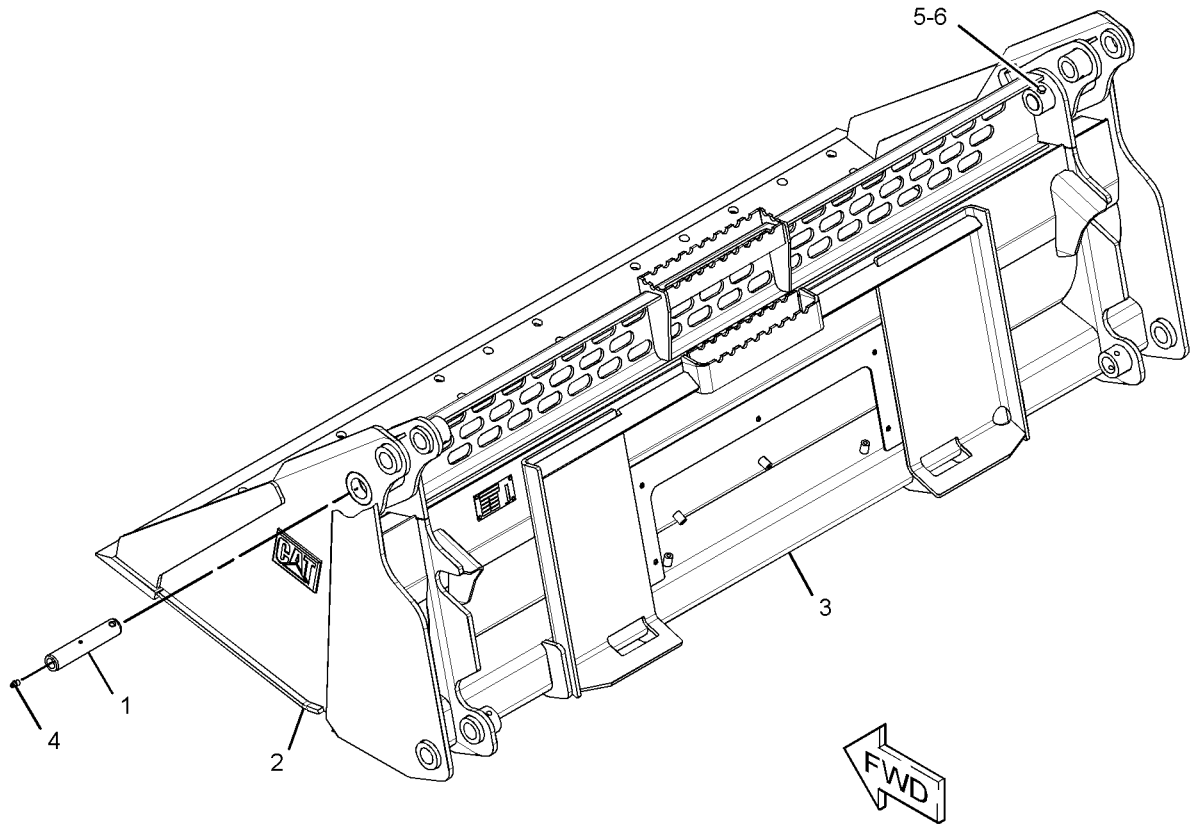

GRAPHIC #1 **<END>** g01943398

WORK TOOLS

325-7067 BUCKET GP-MULTIPURPOSE

S/N: JAY1-UP
PART OF 325-7066 BUCKET AR-MULTIPURPOSE
AN ATTACHMENT

SMCS-6104 **i03619683**

NOTE	REF NO	GRAPHIC REF	PART NUMBER	QTY	PART NAME 1 2 3 4 5 6 (PRODUCT LEVEL)	SEE PAGE
	1	1	**154-5012**	2	PIN	
M	2	1	**8T-6869**	2	BOLT (M8X1.25X60-MM)	
Y	3	1	**199-8308**	1	CLAM AS-MULTIPURPOSE BUCKET	574
Y	4	1	*325-7068*	1	BLADE GP-MULTIPURPOSE BUCKET	472
	5	1	**3B-8489**	2	FITTING-GREASE	
M	6	1	**6V-9189**	2	LOCKNUT (M8X1.25-THD)	

M-METRIC PART
Y-SEPARATE ILLUSTRATION

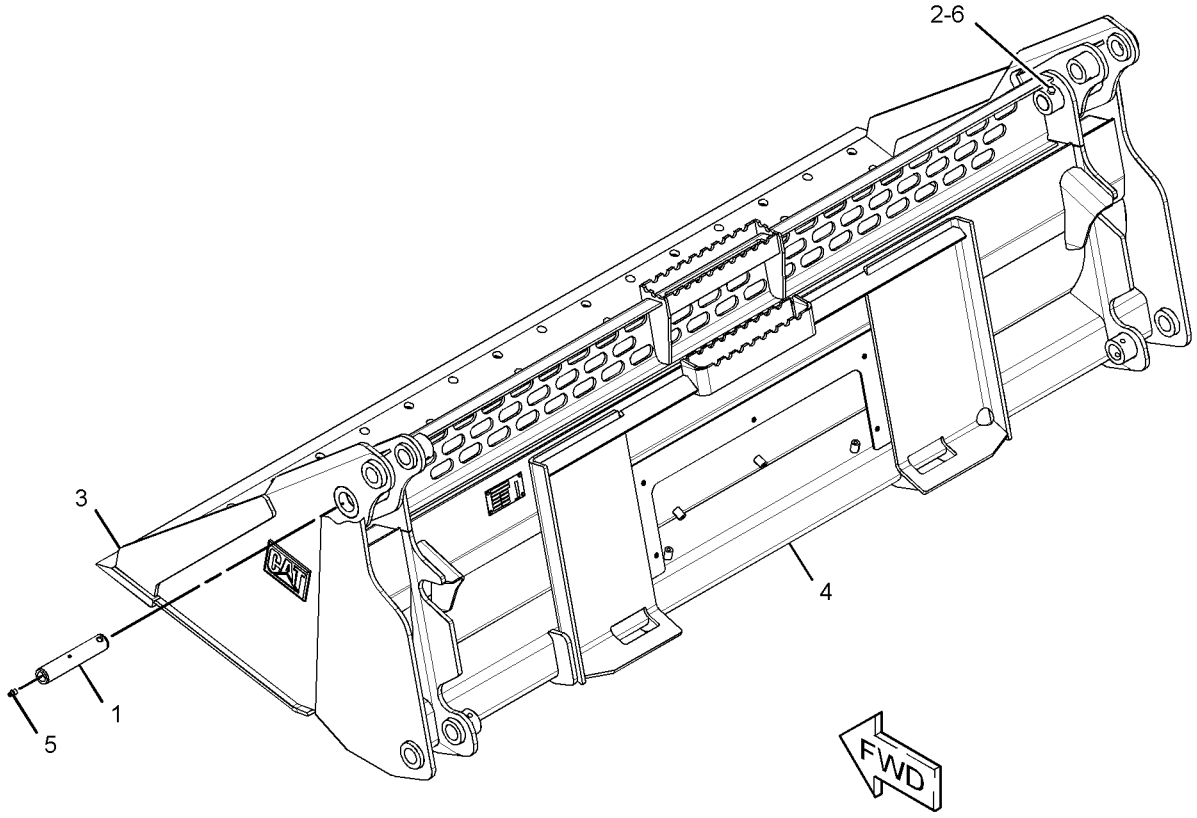

GRAPHIC #1 **<END>** g01943400

WORK TOOLS

325-7077 BUCKET GP-MULTIPURPOSE

S/N: JAY1-UP
PART OF 325-7076 BUCKET AR-MULTIPURPOSE
AN ATTACHMENT

SMCS-6104 **i03619701**

NOTE	REF NO	GRAPHIC REF	PART NUMBER	QTY	PART NAME 1 2 3 4 5 6 (PRODUCT LEVEL)	SEE PAGE
	1	1	**154-5012**	2	PIN	
	2	1	**159-8038**	2	FILM-WARNING (CRUSH HAZARD, STAY BACK)	
Y	3	1	**293-0148**	1	CLAM AS-MULTIPURPOSE BUCKET	575
Y	4	1	*325-7078*	1	BLADE GP-MULTIPURPOSE BUCKET	474
	5	1	**3B-8489**	2	FITTING-GREASE	
M	6	1	**6V-9189**	2	LOCKNUT (M8X1.25-THD)	
M	7	1	**8T-6869**	2	BOLT (M8X1.25X60-MM)	

M-METRIC PART
Y-SEPARATE ILLUSTRATION

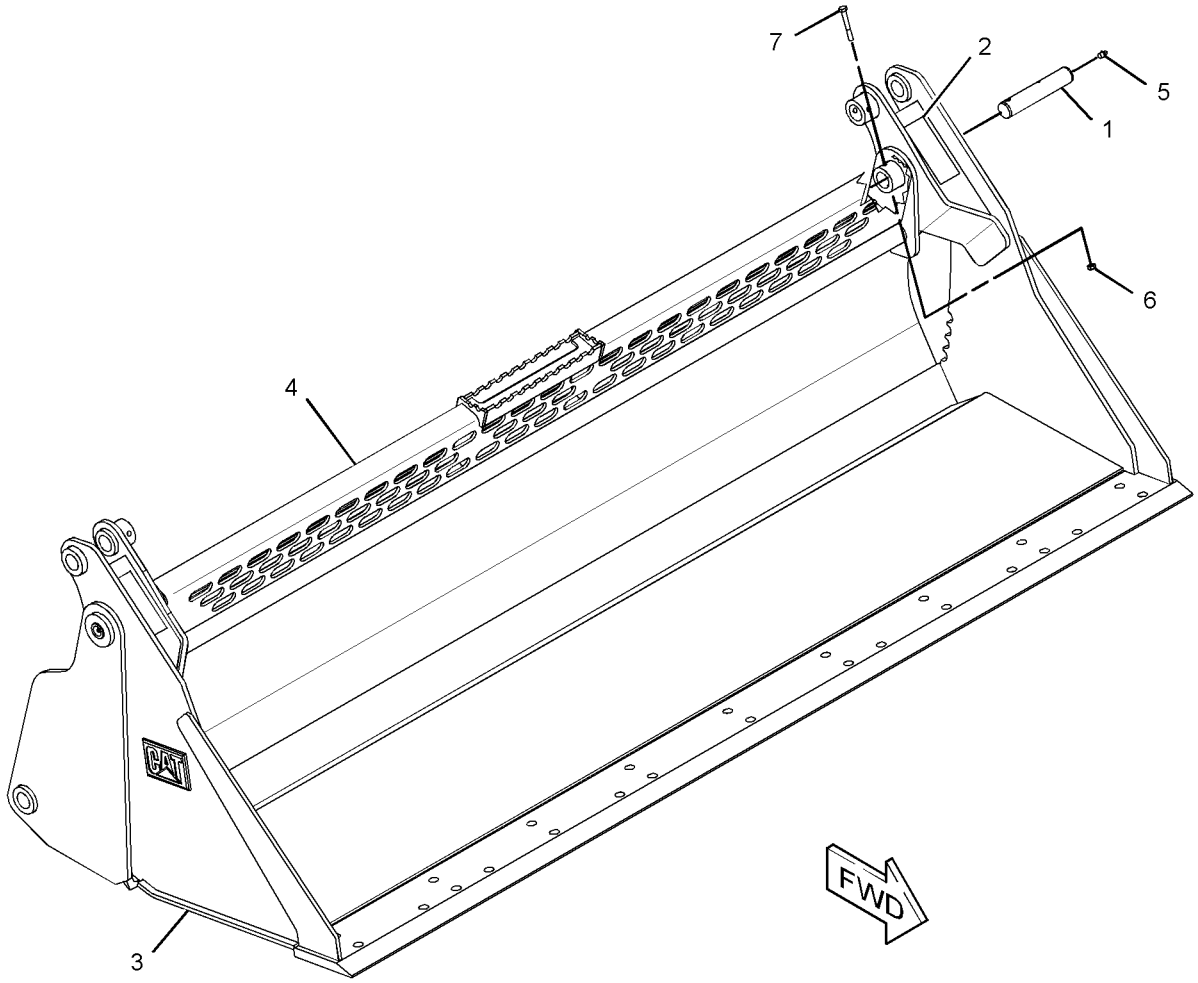

GRAPHIC #1 **<END>** g01532821

285-6096 BUCKET GP-UTILITY

S/N: JAY1-UP
1524-MM (60-IN)
PART OF 285-6095 BUCKET AR-UTILITY
AN ATTACHMENT

SMCS-6101 **i02764095**

NOTE	REF NO	GRAPHIC REF	PART NUMBER	QTY	PART NAME 1 2 3 4 5 6 (PRODUCT LEVEL)	SEE PAGE
	1	1	**154-2704**	1	PLATE-INSTRUCTION (BUCKET SPECIFICATIONS)	
	2	1	**168-8389**	4	TACK-FASTENER	
					PARTS SHOWN IN GRAPHIC(S) WITHOUT A REFERENCE NUMBER ARE NOT SERVICED SEPARATELY	

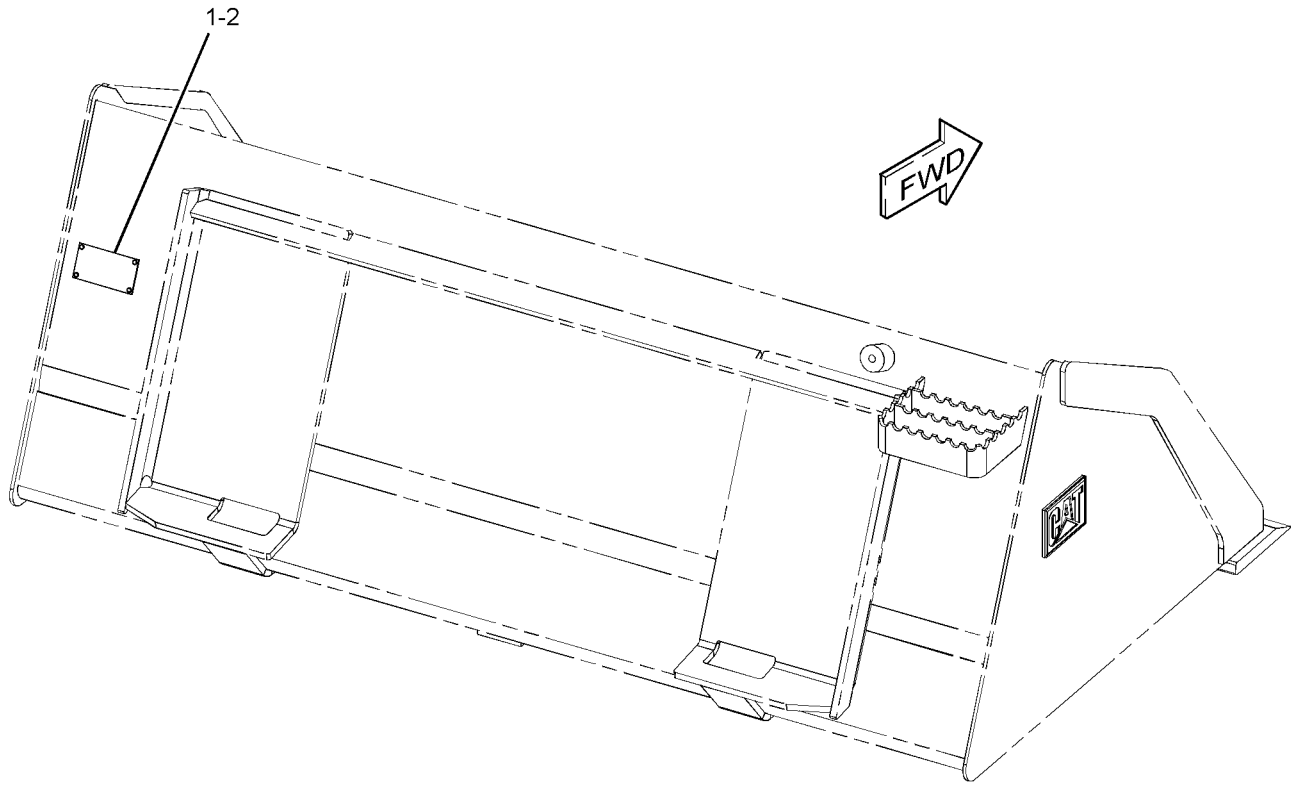

GRAPHIC #1 **<END>** g01278644

285-6099 BUCKET GP-UTILITY

S/N: JAY1-UP
1676-MM (66-IN)
PART OF 285-6093 BUCKET AR-GRAPPLE, 285-6100 BUCKET AR-UTILITY
AN ATTACHMENT

SMCS-6101 **i03638340**

NOTE	REF NO	GRAPHIC REF	PART NUMBER	QTY	PART NAME 1 2 3 4 5 6 (PRODUCT LEVEL)	SEE PAGE
	1	1	**154-2704**	1	PLATE-INSTRUCTION (BUCKET SPECIFICATIONS)	
	2	1	**168-8389**	4	TACK-FASTENER	
Y	3	1	*285-6098*	1	BUCKET AS-UTILITY	539

Y-SEPARATE ILLUSTRATION

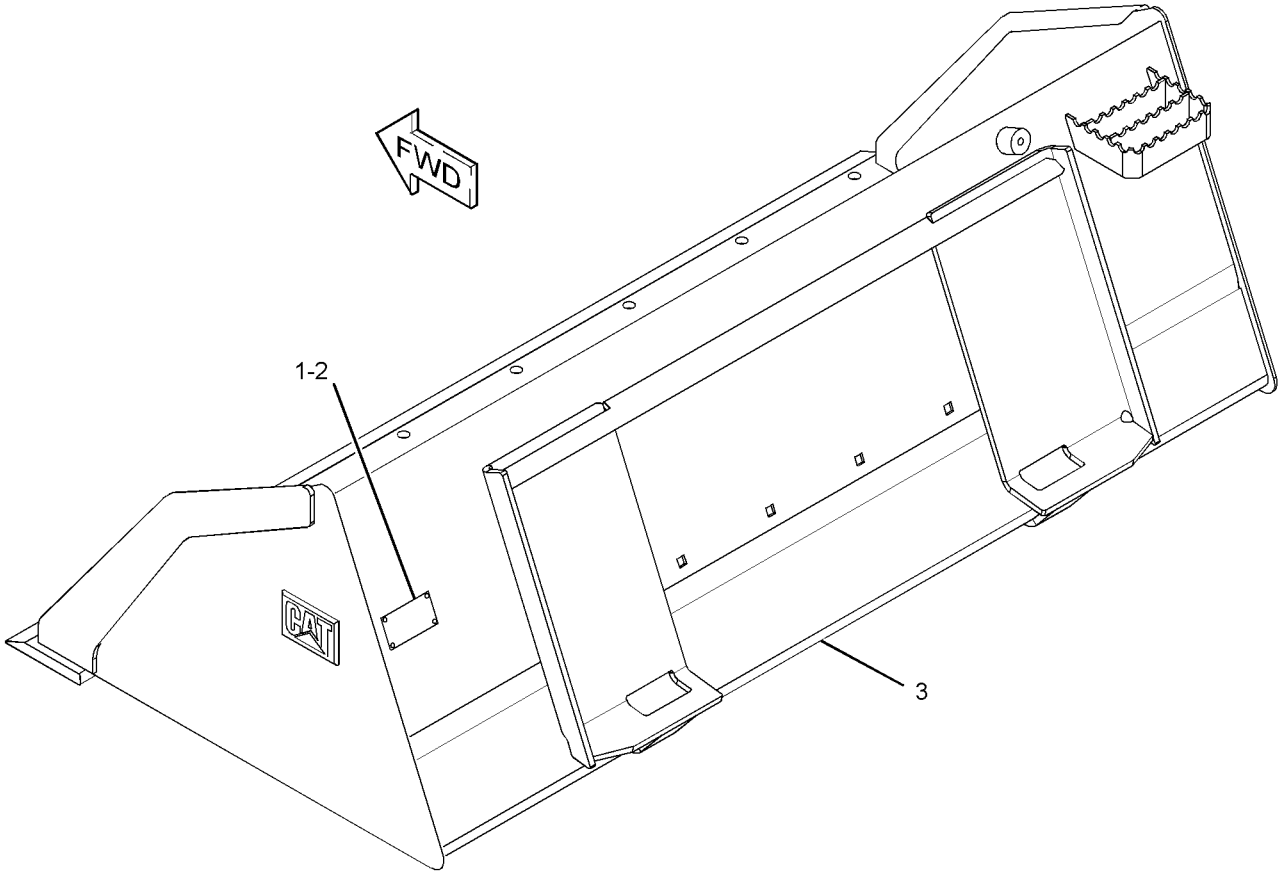

GRAPHIC #1 **<END>** g01954053

WORK TOOLS

285-6102 BUCKET GP-UTILITY

S/N: JAY1-UP
1829-MM (72-IN)
PART OF 285-6104 BUCKET AR-GRAPPLE, 285-6101 BUCKET AR-UTILITY
AN ATTACHMENT

SMCS-6101 **i03638341**

NOTE	REF NO	GRAPHIC REF	PART NUMBER	QTY	PART NAME 1 2 3 4 5 6 (PRODUCT LEVEL)	SEE PAGE
	1	1	**154-2704**	1	PLATE-INSTRUCTION (BUCKET SPECIFICATIONS)	
	2	1	**168-8389**	4	TACK-FASTENER	
Y	3	1	*285-6103*	1	BUCKET AS-UTILITY	540

Y-SEPARATE ILLUSTRATION

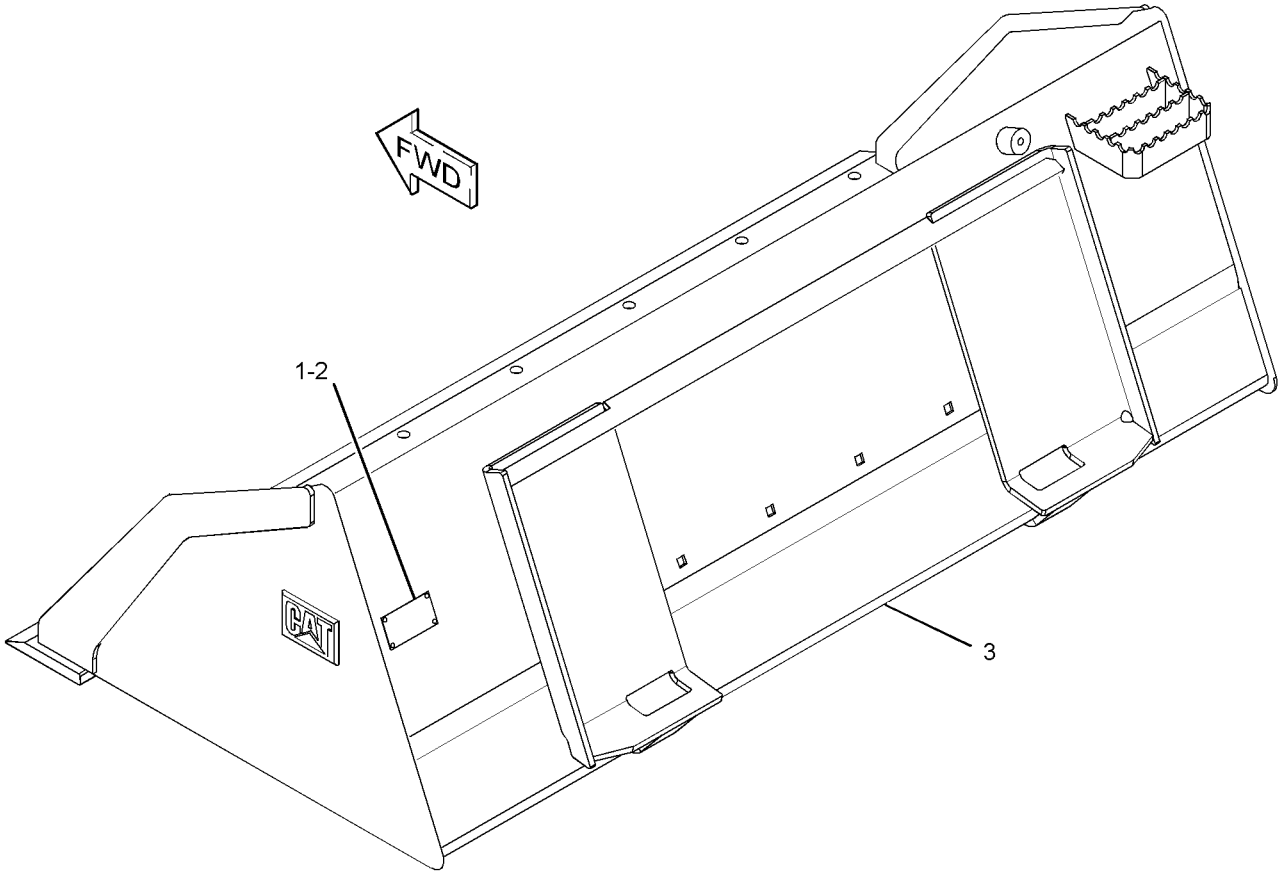

GRAPHIC #1 **<END>** g01954037

WORK TOOLS

293-9427 CARRIAGE & FORK AR

S/N: JAY1-UP

AN ATTACHMENT

SMCS-6136, 6402 **i02628876**

NOTE	PART NUMBER	QTY	PART NAME 1 2 3 4 5 6 (PRODUCT LEVEL)	SEE PAGE
Y	**261-6681**	1	CARRIAGE GP-FORK	569
Y	**195-6943**	2	FORK GP-PALLET (36-IN)	595

Y-SEPARATE ILLUSTRATION

<END>

293-9428 CARRIAGE & FORK AR

S/N: JAY1-UP

AN ATTACHMENT

SMCS-6136, 6402 **i02628877**

NOTE	PART NUMBER	QTY	PART NAME 1 2 3 4 5 6 (PRODUCT LEVEL)	SEE PAGE
Y	**261-6681**	1	CARRIAGE GP-FORK	569
Y	**195-6942**	2	FORK GP-PALLET (42-IN)	595

Y-SEPARATE ILLUSTRATION

<END>

293-9429 CARRIAGE & FORK AR

S/N: JAY1-UP

AN ATTACHMENT

SMCS-6136, 6402 **i02628878**

NOTE	PART NUMBER	QTY	PART NAME 1 2 3 4 5 6 (PRODUCT LEVEL)	SEE PAGE
Y	**261-6681**	1	CARRIAGE GP-FORK	569
Y	**195-8545**	2	FORK GP-PALLET (48-IN)	595

Y-SEPARATE ILLUSTRATION

<END>

WORK TOOLS

261-6681 CARRIAGE GP-FORK

S/N: JAY1-UP

PART OF 293-9427, 293-9428, 293-9429 CARRIAGE & FORK AR, 293-9426 CARRIAGE GP-FORK

AN ATTACHMENT

SMCS-6402 **i02539756**

NOTE	REF NO	GRAPHIC REF	PART NUMBER	QTY	PART NAME 1 2 3 4 5 6 (PRODUCT LEVEL)	SEE PAGE
	1	1	**157-4835**	1	PLATE-INSTRUCTION	
	2	1	**168-8389**	4	TACK-FASTENER	
	3	1	**252-8595**	1	STEP AS	
	4	1	**8T-4121**	2	WASHER-HARD (11X21X2.5-MM THK)	
M	5	1	**8T-4133**	2	NUT (M10X1.5-THD)	
M	6	1	**8T-4136**	2	BOLT (M10X1.5X25-MM)	
					PARTS SHOWN IN GRAPHIC(S) WITHOUT A REFERENCE NUMBER ARE NOT SERVICED SEPARATELY	

M-METRIC PART

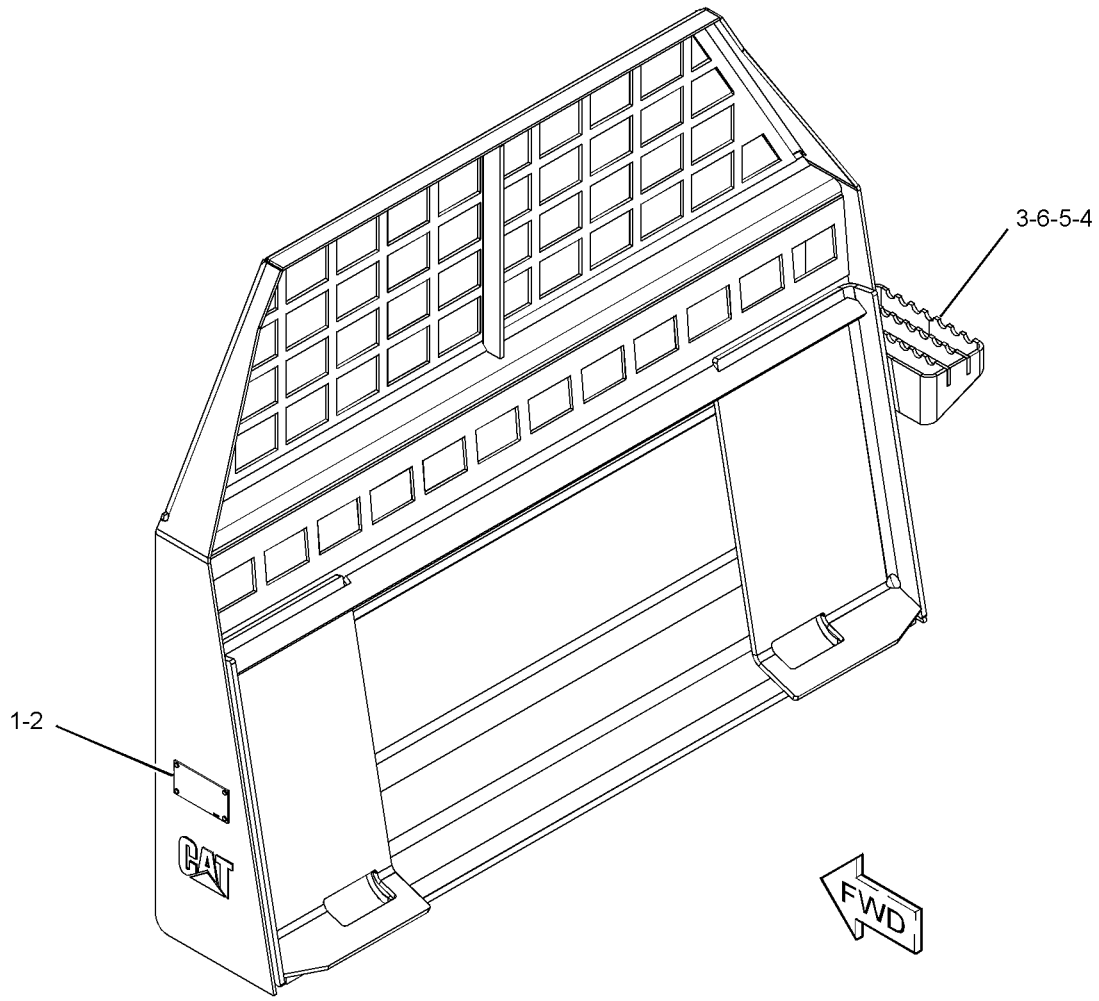

GRAPHIC #1 **<END>** g01282475

WORK TOOLS

293-9426 CARRIAGE GP-FORK

S/N: JAY1-UP

AN ATTACHMENT

SMCS-6402 **i02628875**

NOTE	PART NUMBER	QTY	PART NAME 1 2 3 4 5 6 (PRODUCT LEVEL)	SEE PAGE
Y	**261-6681**	6	CARRIAGE GP-FORK	569

Y-SEPARATE ILLUSTRATION

<END>

149-4232 CLAM AS-MULTIPURPOSE BUCKET

S/N: JAY1-UP
1524-MM (60-IN)
PART OF 154-5005, 279-5383, 325-7037 BUCKET GP-MULTIPURPOSE
AN ATTACHMENT

SMCS-6104 **i03622320**

NOTE	REF NO	GRAPHIC REF	PART NUMBER	QTY	PART NAME 1 2 3 4 5 6 (PRODUCT LEVEL)	SEE PAGE
	1	1	**142-8805**	4	BEARING-SLEEVE	
	2	1	**161-4130**	2	PLATE-IDENTIFICATION (CAT)	
	3	1	**149-5435**	1	EDGE	
	4	1	**159-8038**	2	FILM-WARNING (CRUSH HAZARD, STAY BACK)	

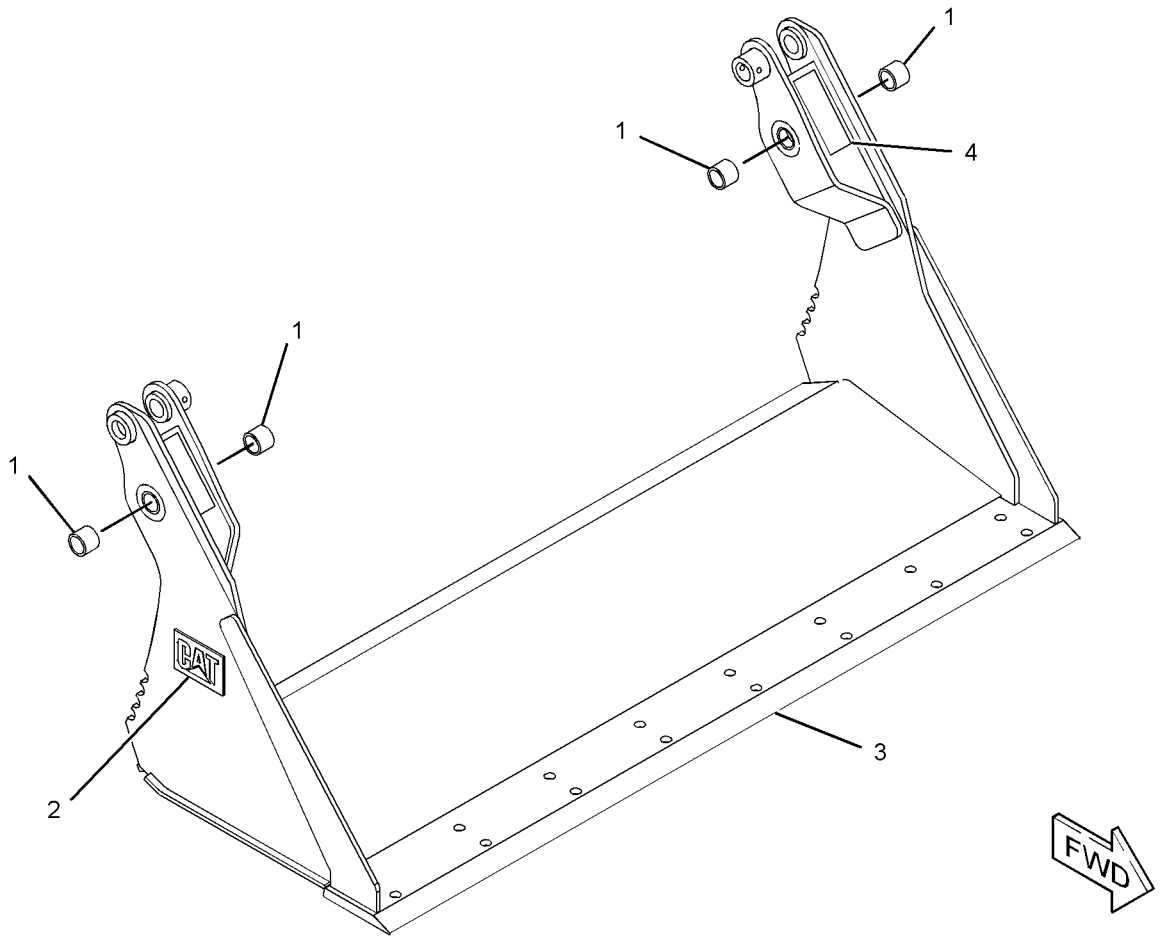

GRAPHIC #1 **<END>** g01945759

WORK TOOLS

154-5053 CLAM AS-MULTIPURPOSE BUCKET

S/N: JAY1-UP
1676-MM (66-IN)
PART OF 279-5389, 325-7047 BUCKET GP-MULTIPURPOSE
AN ATTACHMENT

SMCS-6104 **i03621236**

NOTE	REF NO	GRAPHIC REF	PART NUMBER	QTY	PART NAME 1 2 3 4 5 6 (PRODUCT LEVEL)	SEE PAGE
	1	1	**142-8805**	4	BEARING-SLEEVE	
	2	1	**161-4130**	2	PLATE-IDENTIFICATION (CAT)	
	3	1	**149-5436**	1	EDGE	
	4	1	**159-8038**	2	FILM-WARNING (CRUSH HAZARD, STAY BACK)	

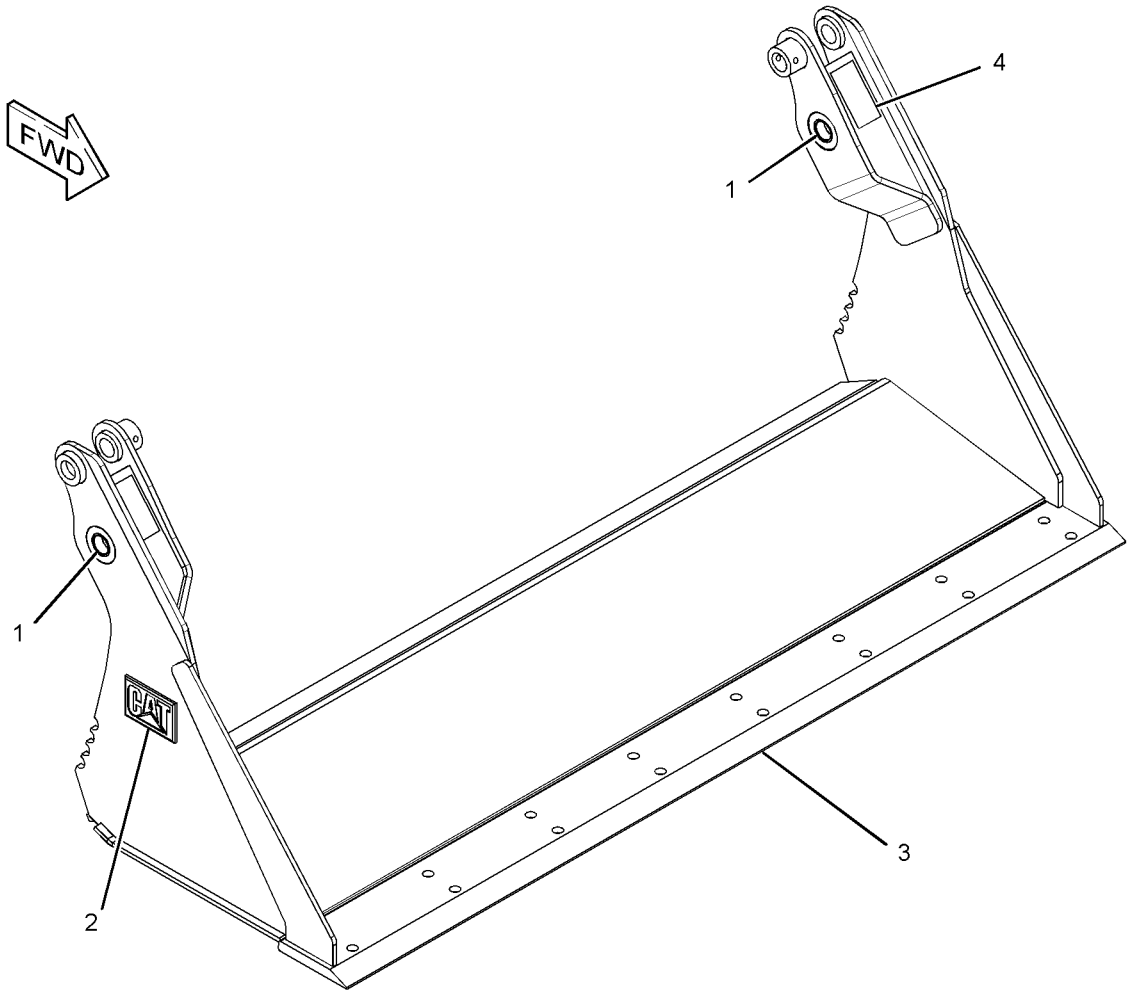

GRAPHIC #1 **<END>** g01945550

154-5070 CLAM AS-MULTIPURPOSE BUCKET

S/N: JAY1-UP
1829-MM (72-IN)
PART OF 154-5009, 279-5397, 325-7057 BUCKET GP-MULTIPURPOSE
AN ATTACHMENT

SMCS-6104 **i03621205**

NOTE	REF NO	GRAPHIC REF	PART NUMBER	QTY	PART NAME 1 2 3 4 5 6 (PRODUCT LEVEL)	SEE PAGE
	1	1	**142-8805**	4	BEARING-SLEEVE	
	2	1	**161-4130**	2	PLATE-IDENTIFICATION (CAT)	
	3	1	**149-5437**	1	EDGE	
	4	1	**159-8038**	2	FILM-WARNING (CRUSH HAZARD, STAY BACK)	

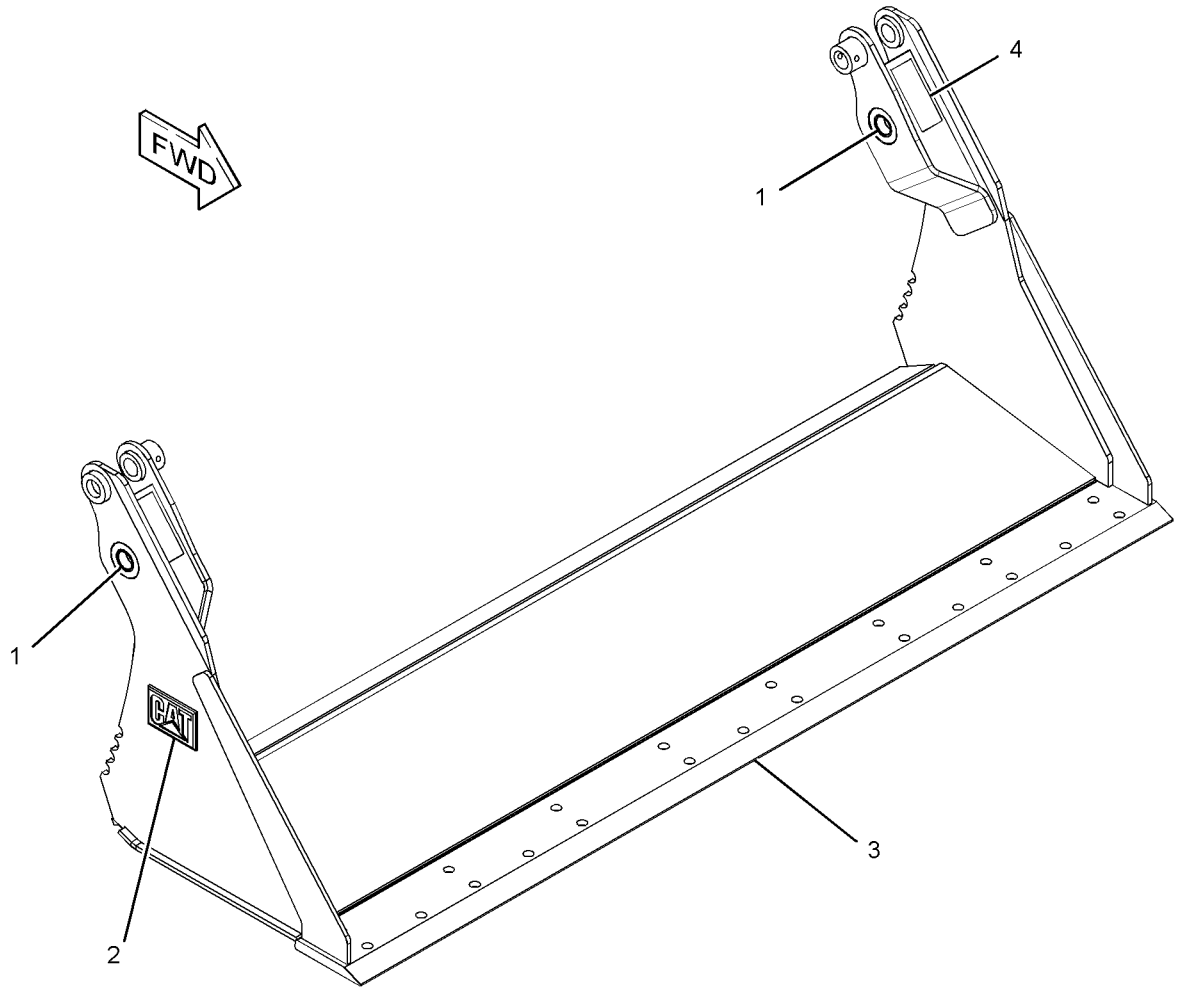

GRAPHIC #1 **<END>** g01945555

199-8308 CLAM AS-MULTIPURPOSE BUCKET

S/N: JAY1-UP
1981-MM (78-IN)
PART OF 279-5404, 325-7067 BUCKET GP-MULTIPURPOSE
AN ATTACHMENT

SMCS-6104 **i03621225**

NOTE	REF NO	GRAPHIC REF	PART NUMBER	QTY	PART NAME 1 2 3 4 5 6 (PRODUCT LEVEL)	SEE PAGE
	1	1	**142-8805**	4	BEARING-SLEEVE	
	2	1	**161-4130**	2	PLATE-IDENTIFICATION (CAT)	
	3	1	**199-7722**	1	EDGE	
	4	1	**199-8317**	1	EDGE	
	5	1	**159-8038**	2	FILM-WARNING (CRUSH HAZARD, STAY BACK)	

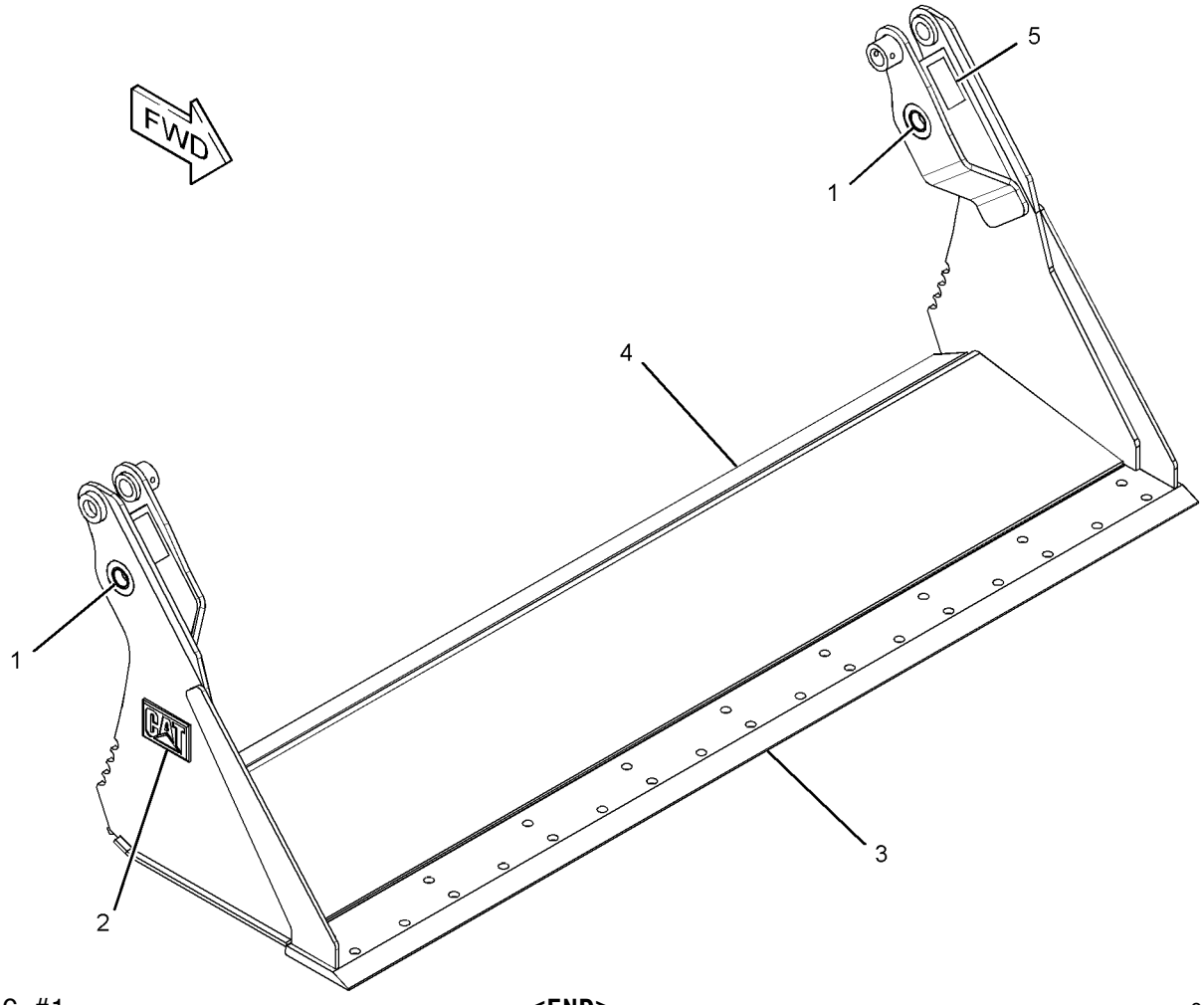

GRAPHIC #1 **<END>** g01945620

293-0148 CLAM AS-MULTIPURPOSE BUCKET

S/N: JAY1-UP
2134-MM (84-IN)
PART OF 293-0141, 325-7077 BUCKET GP-MULTIPURPOSE
AN ATTACHMENT

SMCS-6104 **i03621201**

NOTE	REF NO	GRAPHIC REF	PART NUMBER	QTY	PART NAME 1 2 3 4 5 6 (PRODUCT LEVEL)	SEE PAGE
	1	1	**142-8805**	4	BEARING-SLEEVE	
	2	1	**161-4130**	2	PLATE-IDENTIFICATION (CAT)	
	3	1	**229-3432**	1	EDGE	

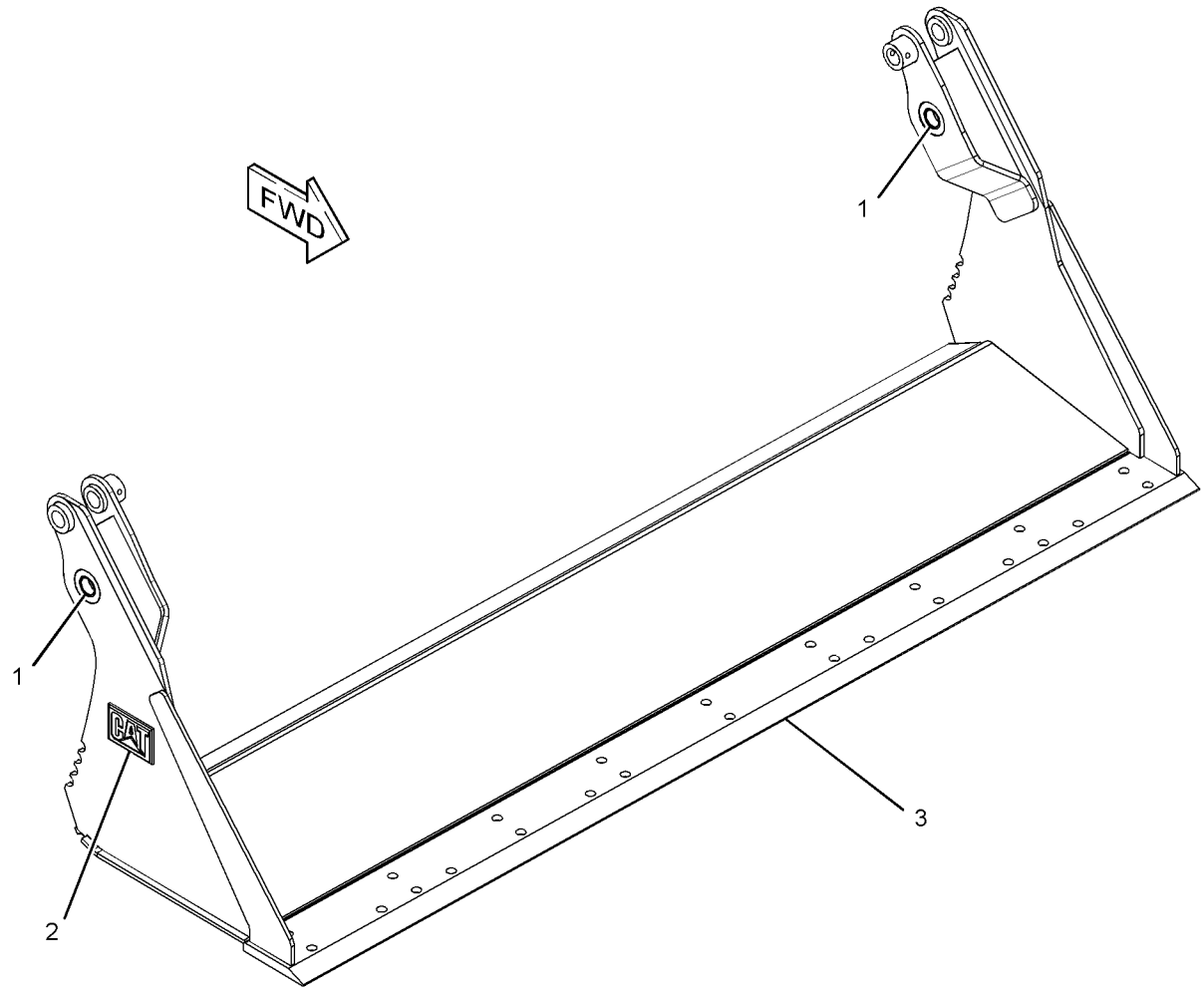

GRAPHIC #1 **<END>** g01945653

296-0582 CONVERSION GP-WORK TOOL—KIT, HIGH FLOW

S/N: JAY1-UP

AN ATTACHMENT

SMCS-1408, 4283, 5057, 7553 **i03568248**

NOTE	REF NO	GRAPHIC REF	PART NUMBER	QTY	PART NAME 1 2 3 4 5 6 (PRODUCT LEVEL)	SEE PAGE
	1	1	**258-4198**	1	HARNESS AS-WORK TOOL	
		1	**8T-8737**	5	PLUG-SEAL	
		1	**9W-0844**	2	SOCKET-CONNECTOR (14-GA)	
		1	**155-2260**	1	KIT-CONNECTING PLUG (3-PIN)	
					(INCLUDES PLUG AS, WEDGE & INTERFACE SEAL)	
		1	**156-1460**	1	RECEPTACLE (8-PIN)	
		1	**179-5434**	1	PLUG AS	
		1	**3K-8782**	1	FUSE (10-AMPERE)	
		1	**180-9340**	1	SOCKET-CONNECTOR (14-GA TO 18-GA)	
	2	1	**259-1107**	1	SWITCH AS-TOGGLE (IDLE SPEED)	
		1	**102-8803**	1	KIT-RECEPTACLE (3-PIN)	
					(INCLUDES RECEPTACLE AS & WEDGE)	
		1	**186-3735**	3	PIN-CONNECTOR (16-GA TO 18-GA)	
	3	1	**296-0583**	1	BRACKET	
	4	1	**296-0584**	1	MAGNET	
	5	1	**096-6166**	4	WASHER-HARD (4.5X9X1-MM THK)	
M	6	1	**6V-9671**	2	SCREW-MACHINE (M3X0.5X12-MM)	
M	7	1	**8T-2658**	2	LOCKNUT (M3X0.5-THD)	

M-METRIC PART

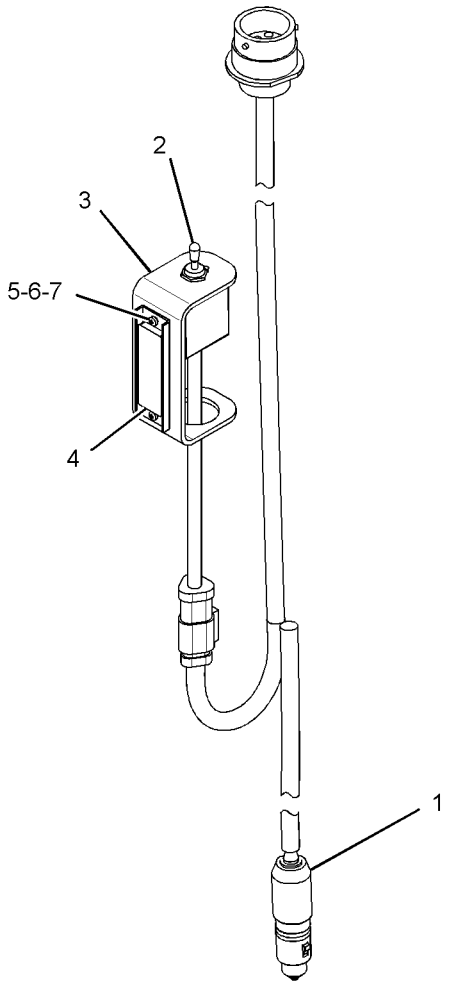

GRAPHIC #1 **<END>** g01894540

258-2790 COUPLER AR-QUICK

S/N: JAY1-UP

AN ATTACHMENT

SMCS-6129 **i02860885**

NOTE	PART NUMBER	QTY	PART NAME 1 2 3 4 5 6 (PRODUCT LEVEL)	SEE PAGE
Y	*258-2500*	1	COUPLER GP-QUICK	578
Y	*285-2190*	1	FITTING GP-HYDRAULIC (MANUAL)	298

Y-SEPARATE ILLUSTRATION

<END>

258-2791 COUPLER AR-QUICK

S/N: JAY1-UP

AN ATTACHMENT

SMCS-6129 **i02629811**

NOTE	PART NUMBER	QTY	PART NAME 1 2 3 4 5 6 (PRODUCT LEVEL)	SEE PAGE
Y	*258-2501*	1	COUPLER GP-QUICK (HYDRAULIC)	579
Y	*258-2424*	1	LINES GP-COUPLER	338
Y	*258-4190*	1	WIRING GP-QUICK COUPLER	190

Y-SEPARATE ILLUSTRATION

<END>

WORK TOOLS

258-2500 COUPLER GP-QUICK

S/N: JAY1-UP
PART OF 258-2790 COUPLER AR-QUICK
AN ATTACHMENT

SMCS-6129 **i02711953**

NOTE	REF NO	GRAPHIC REF	PART NUMBER	QTY	PART NAME 1 2 3 4 5 6 (PRODUCT LEVEL)	SEE PAGE
	1	1	**159-5797**	2	SPRING	
Y	2	1	*258-2537*	1	LOCK GP-QUICK COUPLER (LH)	619
Y	3	1	*258-2535*	1	LOCK GP-QUICK COUPLER (RH)	618
	4	1	**287-4300**	1	COUPLER AS	
	5	1	**131-5879**	2	WASHER (11X32X3-MM THK)	
	6	1	**132-7551**	2	SPACER (11X19X6-MM THK)	
	7	1	**5B-0651**	2	FITTING-STRAIGHT	
M	8	1	**6V-7744**	2	LOCKNUT (M10X1.5-THD)	
M	9	1	**7X-2621**	2	BOLT (M10X1.5X12-MM)	
	10	1	**7X-7729**	4	WASHER (11X25X3-MM THK)	
	11	1	**8T-4121**	6	WASHER-HARD (11X21X2.5-MM THK)	
M	12	1	**8T-4172**	2	BOLT (M10X1.5X80-MM)	
M	13	1	**8T-4196**	4	BOLT (M10X1.5X35-MM)	

M-METRIC PART
Y-SEPARATE ILLUSTRATION

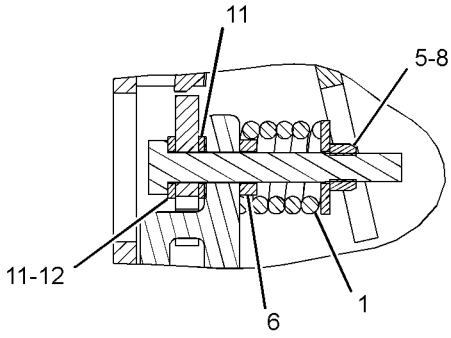

SECTION A-A

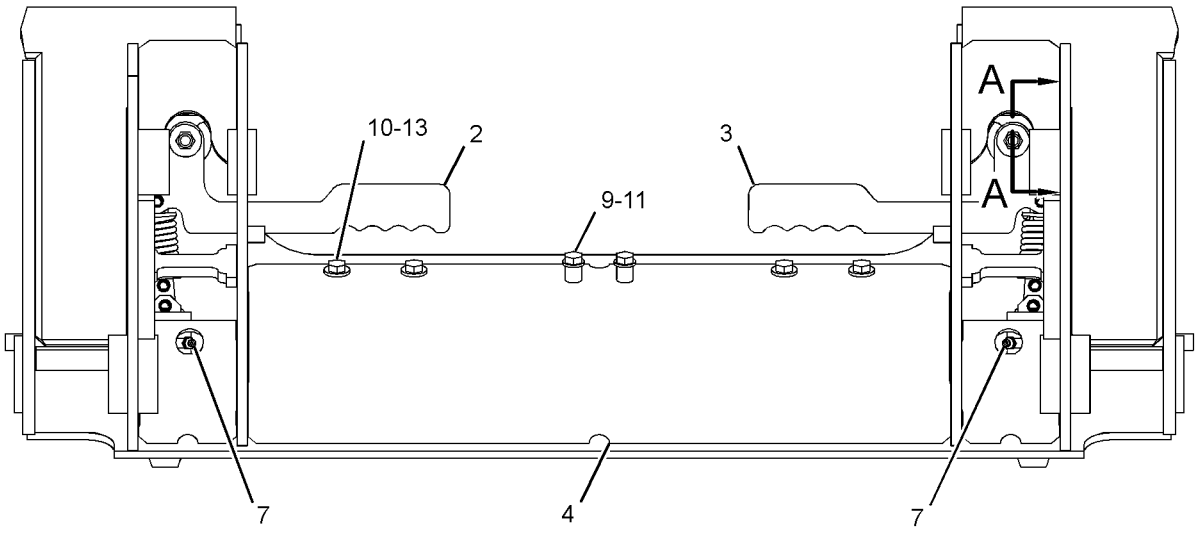

FRONT VIEW

GRAPHIC #1 **<END>** g01320262

WORK TOOLS

258-2501 COUPLER GP-QUICK

S/N: JAY1-UP
PART OF 258-2791 COUPLER AR-QUICK
AN ATTACHMENT

SMCS-6129 **i02625579**

NOTE	REF NO	GRAPHIC REF	PART NUMBER	QTY	PART NAME 1 2 3 4 5 6 (PRODUCT LEVEL)	SEE PAGE
	1	1	**207-9785**	2	PIN	
Y	2	1	*215-3962*	1	CYLINDER & LINK GP-COUPLER (LH)	581
Y	3	1	*215-3963*	1	CYLINDER & LINK GP-COUPLER (RH)	582
	4	1	**218-6332**	1	BRACKET AS	
	5	1	**218-6333**	1	BRACKET AS	
	6	1	**287-4300**	1	COUPLER AS	
	7	1	**3B-4628**	2	PIN-COTTER	
	8	1	**5B-0651**	2	FITTING-STRAIGHT	
	9	1	**5P-0372**	2	LOCK PIN	
	10	1	**8L-5188**	2	PIN	
	11	1	**8T-4121**	12	WASHER-HARD (11X21X2.5-MM THK)	
M	12	1	**8T-4133**	4	NUT (M10X1.5-THD)	
M	13	1	**8T-4196**	8	BOLT (M10X1.5X35-MM)	
	14	1	**9T-7303**	4	SPACER (16X28X1.5-MM THK)	

M-METRIC PART
Y-SEPARATE ILLUSTRATION

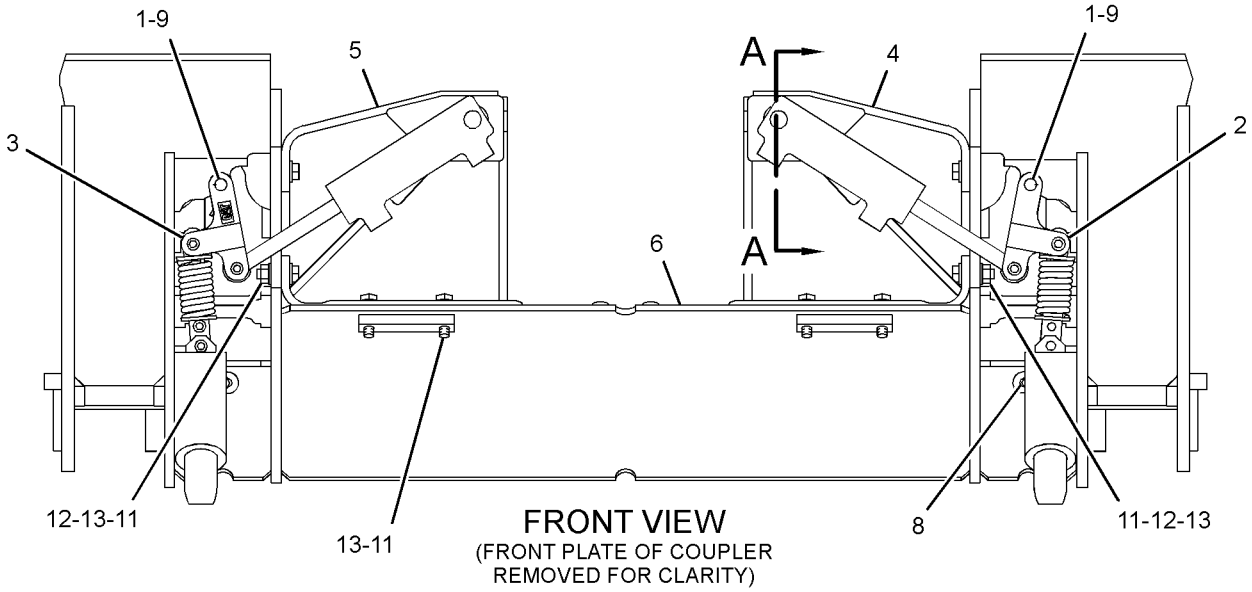

FRONT VIEW
(FRONT PLATE OF COUPLER REMOVED FOR CLARITY)

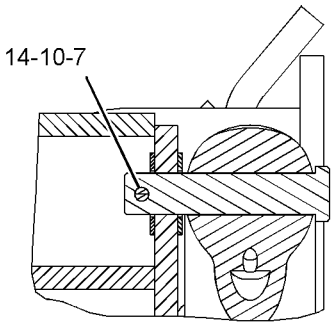

SECTION A-A

GRAPHIC #1

<END>

g01322741

WORK TOOLS

162-5236 COVER GP-LINES

S/N: JAY1-UP
PART OF 154-5004, 154-5010, 279-5382, 279-5390, 279-5398, 279-5403, 293-0139, 325-7036, 325-7046, 325-7056, 325-7066, 325-7076 BUCKET
AR-MULTIPURPOSE
AN ATTACHMENT

i01227894

NOTE	REF NO	GRAPHIC REF	PART NUMBER	QTY	PART NAME 1 2 3 4 5 6 (PRODUCT LEVEL)	SEE PAGE
	1	1	**161-4128**	1	PLATE	
M	2	1	**5C-9553**	5	BOLT (M6X1.0X16MM)	
	3	1	**9X-2026**	5	WASHER (1MM THK)	

M-METRIC PART

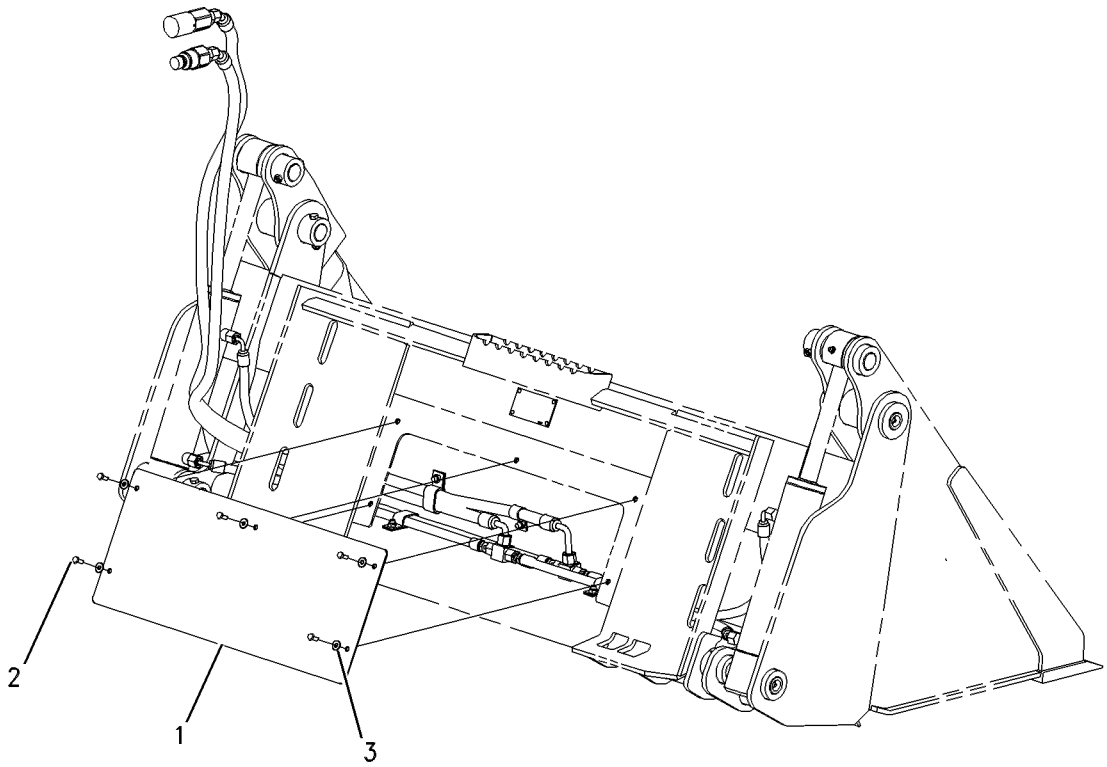

GRAPHIC #1 **<END>** g00560360

WORK TOOLS

215-3962 CYLINDER & LINK GP-COUPLER—LH

S/N: JAY1-UP
PART OF 258-2501 COUPLER GP-QUICK
AN ATTACHMENT

SMCS-5133, 6129 **i02960140**

NOTE	REF NO	GRAPHIC REF	PART NUMBER	QTY	PART NAME 1 2 3 4 5 6 (PRODUCT LEVEL)	SEE PAGE
	1	1	**303-8767**	1	PIN-SPRING	
Y	2	1	**192-2640**	1	CYLINDER GP-HYDRAULIC (COUPLER)	290
	3	1	**192-2642**	1	PIN	
	4	1	**303-8768**	1	PIN-SPRING	
Y	5	1	*215-3957*	1	LINK GP-COUPLER	615

Y-SEPARATE ILLUSTRATION

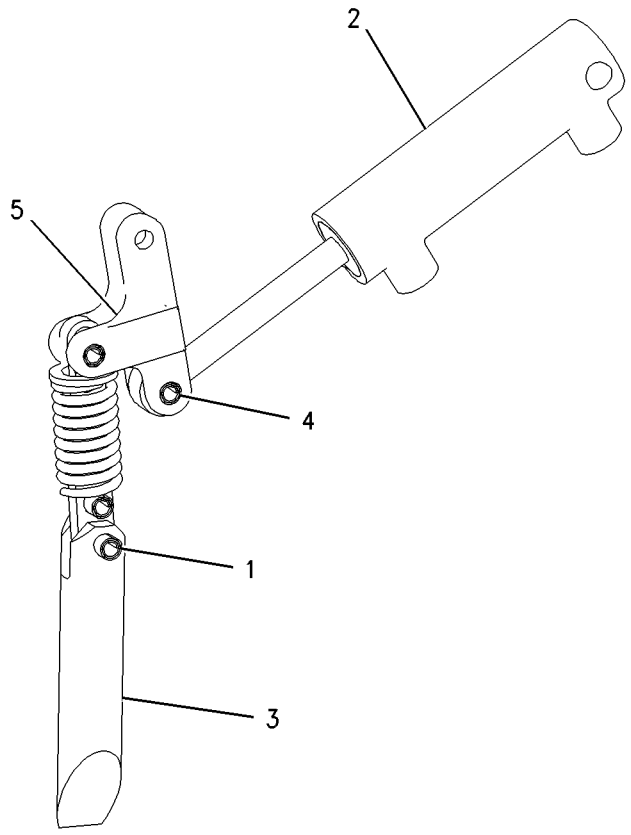

GRAPHIC #1 **<END>** g00871294

215-3963 CYLINDER & LINK GP-COUPLER–RH

S/N: JAY1-UP
PART OF 258-2501 COUPLER GP-QUICK
AN ATTACHMENT

SMCS-5133, 6129 **i02960142**

NOTE	REF NO	GRAPHIC REF	PART NUMBER	QTY	PART NAME 1 2 3 4 5 6 (PRODUCT LEVEL)	SEE PAGE
	1	1	**303-8767**	1	PIN-SPRING	
Y	2	1	**192-2640**	1	CYLINDER GP-HYDRAULIC (COUPLER)	290
	3	1	**192-2642**	1	PIN	
	4	1	**303-8768**	1	PIN-SPRING	
Y	5	1	*215-3957*	1	LINK GP-COUPLER	615

Y-SEPARATE ILLUSTRATION

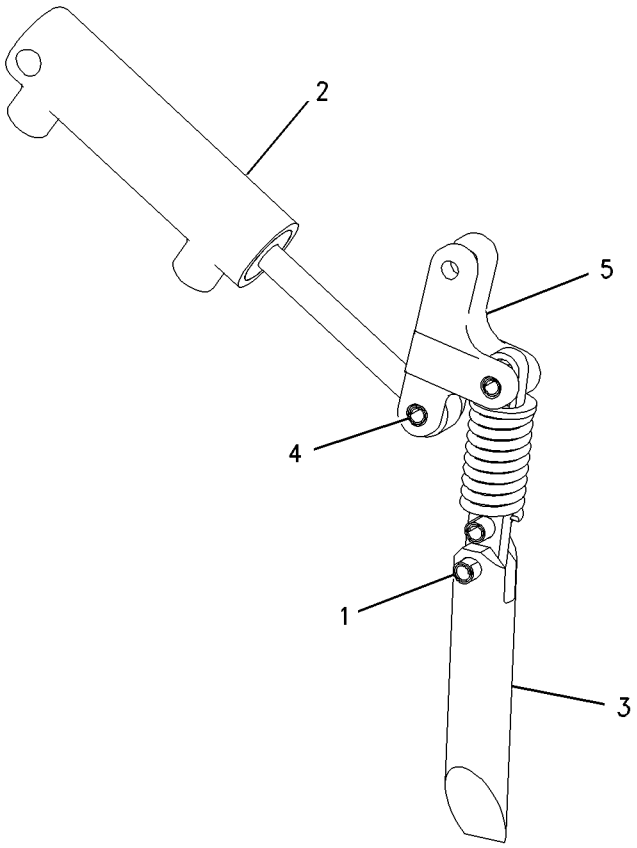

GRAPHIC #1 **<END>** g00871299

WORK TOOLS

222-7545 EDGE GP-BIT & CUTTING

S/N: JAY1-UP
PART OF 231-5276 BLADE GP-ANGLING
AN ATTACHMENT

SMCS-6801, 6804 **i02103534**

NOTE	PART NUMBER	QTY	PART NAME 1 2 3 4 5 6 (PRODUCT LEVEL)	SEE PAGE
	6Y-5839	1	BIT-END	
	6Y-5840	1	BIT-END	
	3F-5108	10	BOLT-PLOW (5/8-11X2.25-IN)	
	4F-3658	4	BOLT-PLOW (5/8-11X3-IN)	
	142-4914	1	EDGE-CUTTING	
	4K-0367	14	NUT-FULL (5/8-11-THD)	
	5P-8247	14	WASHER-HARD (17X32X3.5-MM THK)	

<END>

222-7546 EDGE GP-BIT & CUTTING

S/N: JAY1-UP
PART OF 222-7724 BLADE GP-ANGLING
AN ATTACHMENT

SMCS-6801, 6804 **i02571926**

NOTE	PART NUMBER	QTY	PART NAME 1 2 3 4 5 6 (PRODUCT LEVEL)	SEE PAGE
	6Y-5839	1	BIT-END	
	6Y-5840	1	BIT-END	
	3F-5108	13	BOLT-PLOW (5/8-11X2.25-IN)	
	4F-3658	4	BOLT-PLOW (5/8-11X3-IN)	
	143-3088	1	EDGE-CUTTING	
	4K-0367	17	NUT-FULL (5/8-11-THD)	
	5P-8247	17	WASHER-HARD (17X32X3.5-MM THK)	

<END>

135-9383 EDGE GP-CUTTING

S/N: JAY1-UP
PART OF 279-5435 BUCKET AR-DIRT
FOR USE WITH 137.20-CM (54-IN) BUCKET
AN ATTACHMENT

SMCS-6801 **i02571125**

NOTE	PART NUMBER	QTY	PART NAME 1 2 3 4 5 6 (PRODUCT LEVEL)	SEE PAGE
	135-9393	1	EDGE-CUTTING	
M	**8T-4778**	6	LOCKNUT (M16X2-THD)	
M	**159-2953**	6	SCREW-FLAT HEAD (M16X2-THD)	

M-METRIC PART

<END>

135-9384 EDGE GP-CUTTING

S/N: JAY1-UP
PART OF 279-5438 BUCKET AR-DIRT, 279-5365 BUCKET AR-GENERAL PURPOSE, 157-7226 BUCKET AR-GRAPPLE, 279-5381, 325-7040 BUCKET AR-MULTIPURPOSE, 285-6095 BUCKET AR-UTILITY, 152-0231 BUCKET GP-DIRT
FOR USE WITH 152.40-CM (60-IN) BUCKET
AN ATTACHMENT

SMCS-6801 **i01372033**

NOTE	REF NO	GRAPHIC REF	PART NUMBER	QTY	PART NAME 1 2 3 4 5 6 (PRODUCT LEVEL)	SEE PAGE
	1	1	**135-9394**	1	EDGE-CUTTING	
M	2	1	**8T-4778**	8	LOCKNUT (M16X2.00 THD)	
M	3	1	**159-2953**	8	SCREW-FLAT HEAD (M16X2.00 THD)	

M-METRIC PART

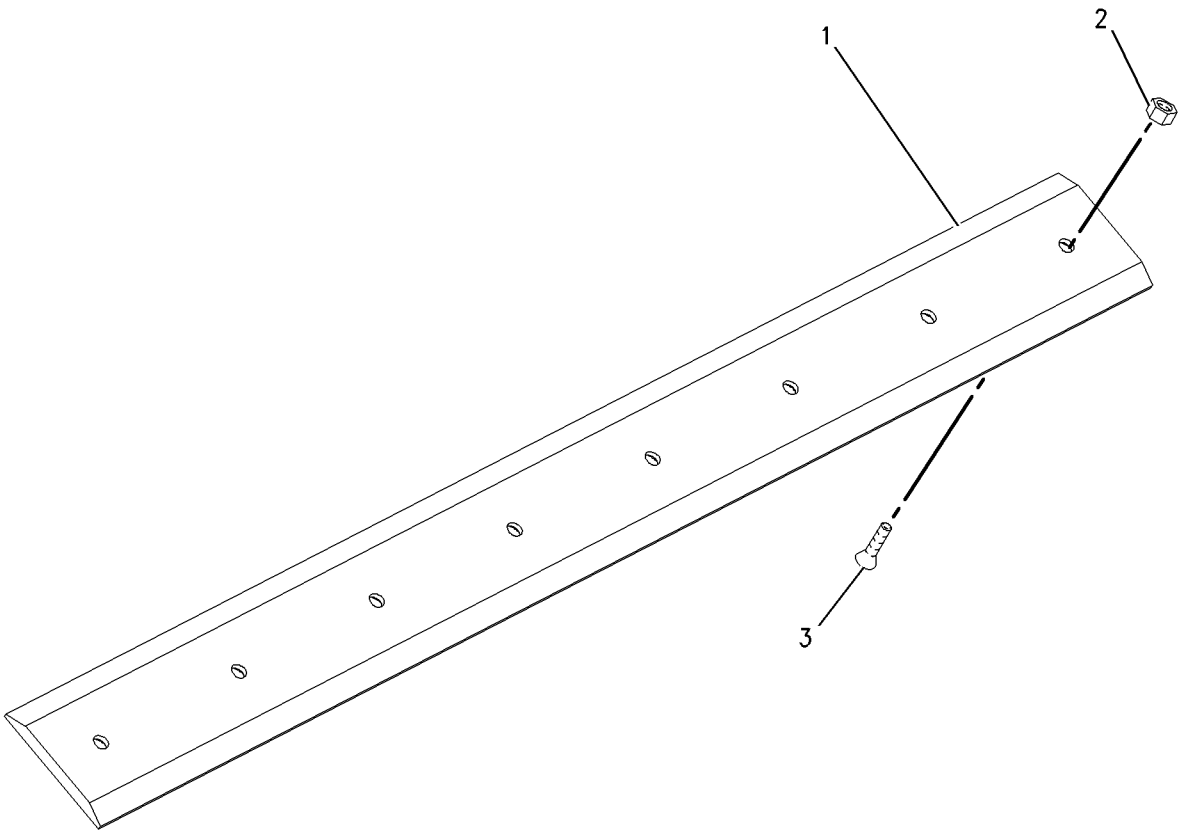

GRAPHIC #1 **<END>** g00724087

WORK TOOLS

135-9385 EDGE GP-CUTTING

S/N: JAY1-UP
PART OF 279-5441 BUCKET AR-DIRT, 279-5369 BUCKET AR-GENERAL PURPOSE, 157-7227 BUCKET AR-GRAPPLE, 279-5391, 325-7050 BUCKET AR-MULTIPURPOSE, 285-6100 BUCKET AR-UTILITY, 152-0232 BUCKET GP-DIRT
FOR USE WITH 167.64-CM (66-IN) BUCKET
AN ATTACHMENT

SMCS-6801 **i01228508**

NOTE	REF NO	GRAPHIC REF	PART NUMBER	QTY	PART NAME 1 2 3 4 5 6 (PRODUCT LEVEL)	SEE PAGE
	1	1	**135-9395**	1	EDGE-CUTTING	
M	2	1	**8T-4778**	8	LOCKNUT (M16X2.00 THD)	
M	3	1	**159-2953**	8	SCREW-FLAT HEAD (M16X2.00 THD)	

M-METRIC PART

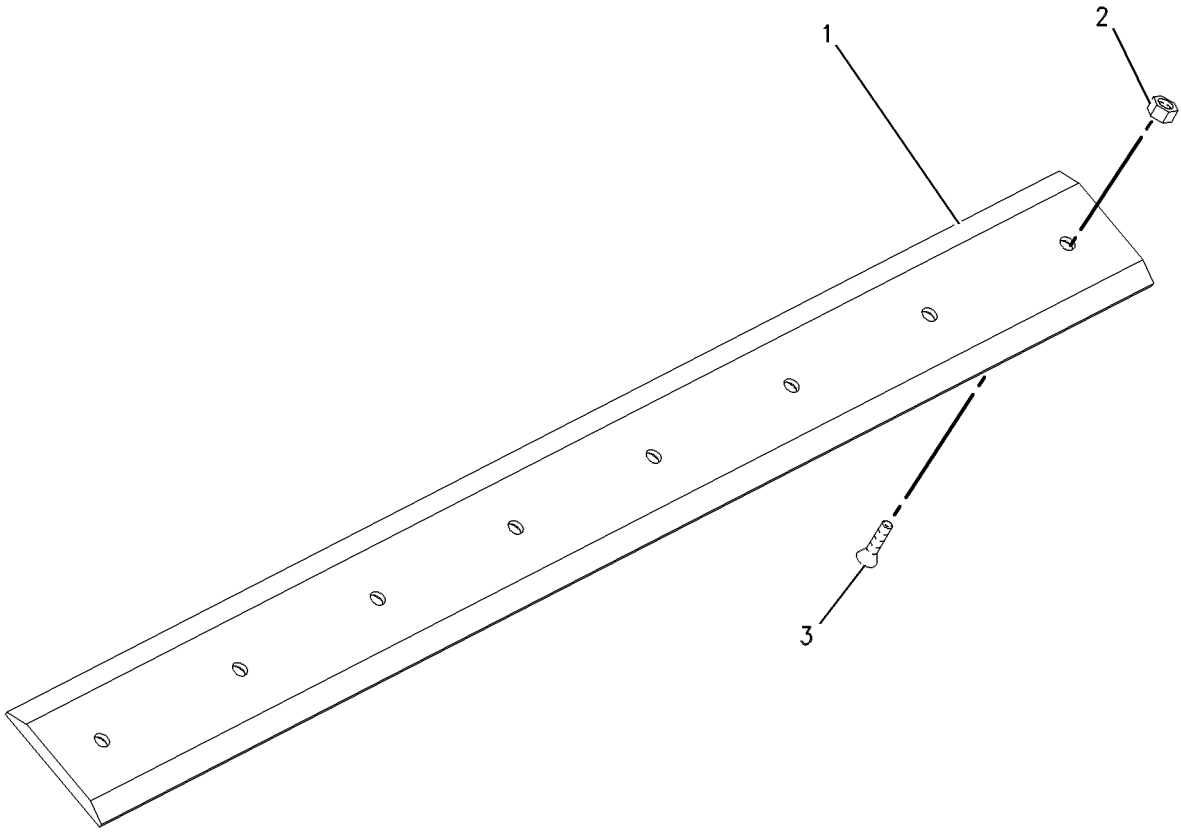

GRAPHIC #1 **<END>** g00657004

135-9386 EDGE GP-CUTTING

S/N: JAY1-UP

PART OF 177-1989 BLADE AR, 285-6090 BUCKET AR-DIRT, 279-5373 BUCKET AR-GENERAL PURPOSE, 158-6095 BUCKET AR-GRAPPLE, 279-5420 BUCKET AR-LIGHT MATERIAL, 279-5399, 325-7060 BUCKET AR-MULTIPURPOSE, 285-6101 BUCKET AR-UTILITY, 188-2719 BUCKET GP-DIRT

FOR USE WITH 182.88-CM (72-IN) BUCKET

AN ATTACHMENT

SMCS-6801 **i01372498**

NOTE	REF NO	GRAPHIC REF	PART NUMBER	QTY	PART NAME 1 2 3 4 5 6 (PRODUCT LEVEL)	SEE PAGE
	1	1	**135-9396**	1	EDGE-CUTTING	
M	2	1	**8T-4778**	11	LOCKNUT (M16X2.00 THD)	
M	3	1	**159-2953**	11	SCREW-FLAT HEAD (M16X2.00 THD)	

M-METRIC PART

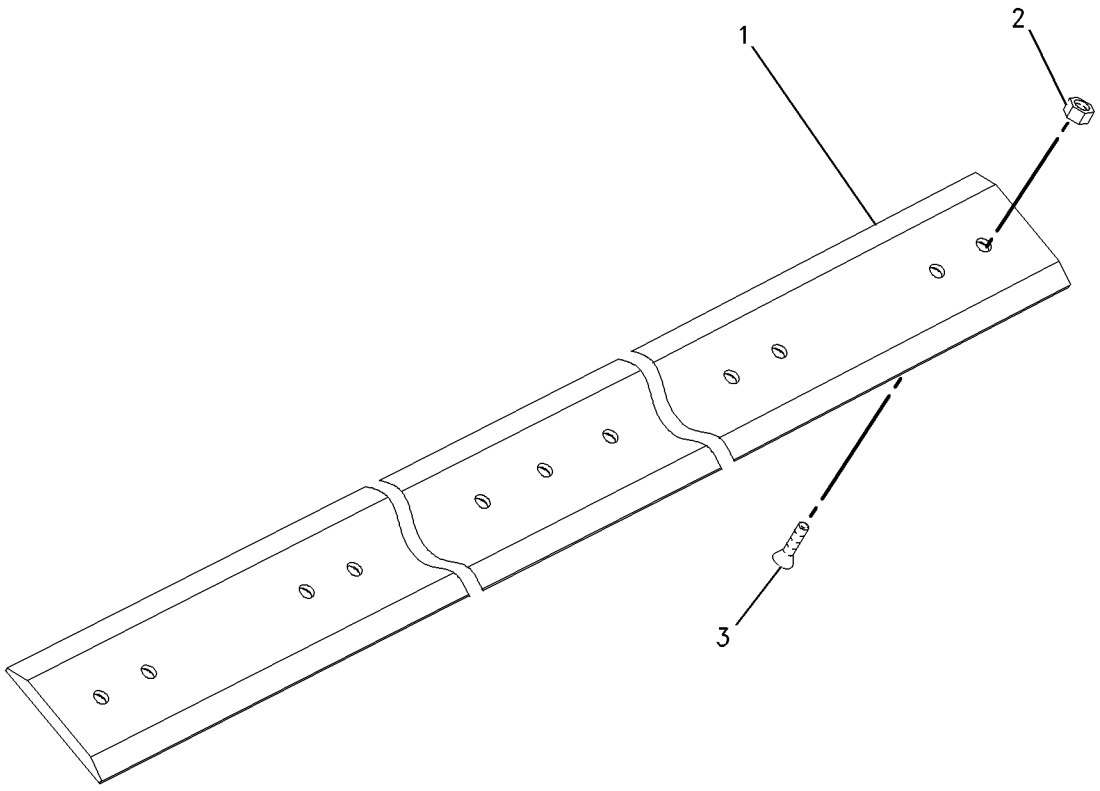

GRAPHIC #1 **<END>** g00724435

135-9387 EDGE GP-CUTTING

S/N: JAY1-UP

PART OF 268-4083 BUCKET AR-DIRT, 279-5377 BUCKET AR-GENERAL PURPOSE, 217-6230 BUCKET AR-GRAPPLE, 279-5425 BUCKET AR-LIGHT MATERIAL, 279-5402, 325-7070 BUCKET AR-MULTIPURPOSE

FOR USE WITH 198.12-CM (78-IN) BUCKET

AN ATTACHMENT

SMCS-6801 **i01755490**

NOTE	REF NO	GRAPHIC REF	PART NUMBER	QTY	PART NAME 1 2 3 4 5 6 (PRODUCT LEVEL)	SEE PAGE
	1	1	**135-9397**	1	EDGE-CUTTING	
M	2	1	**8T-4778**	11	LOCKNUT (M16X2 THD)	
M	3	1	**159-2953**	11	SCREW-FLAT HEAD (M16X2.00 THD)	

M-METRIC PART

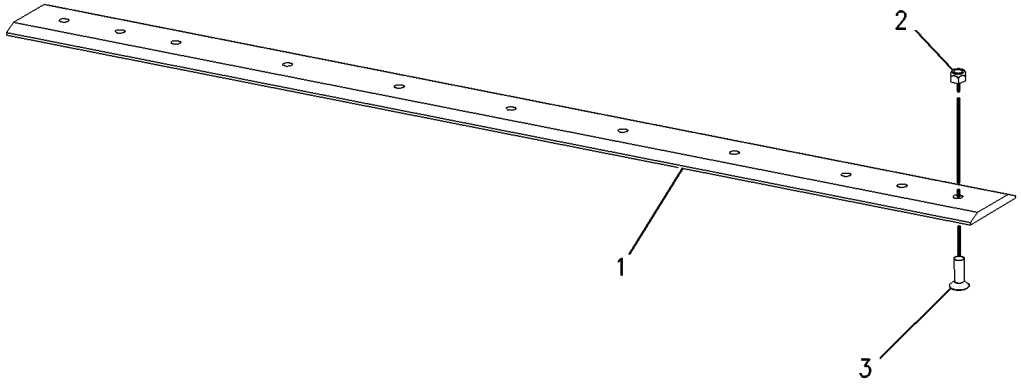

GRAPHIC #1 **<END>** g00898154

WORK TOOLS

149-5741 EDGE GP-CUTTING

S/N: JAY1-UP
PART OF 177-1990 BLADE AR
FOR USE WITH 218.9-CM (85-IN) BUCKET
AN ATTACHMENT

SMCS-6801 **i01832720**

NOTE	REF NO	GRAPHIC REF	PART NUMBER	QTY	PART NAME 1 2 3 4 5 6 (PRODUCT LEVEL)	SEE PAGE
	1	1	**195-5124**	1	EDGE-CUTTING	
M	2	1	**8T-4778**	7	LOCKNUT (M16X2 THD)	
M	3	1	**159-2953**	7	SCREW-FLAT HEAD (M16X2.00 THD)	

M-METRIC PART

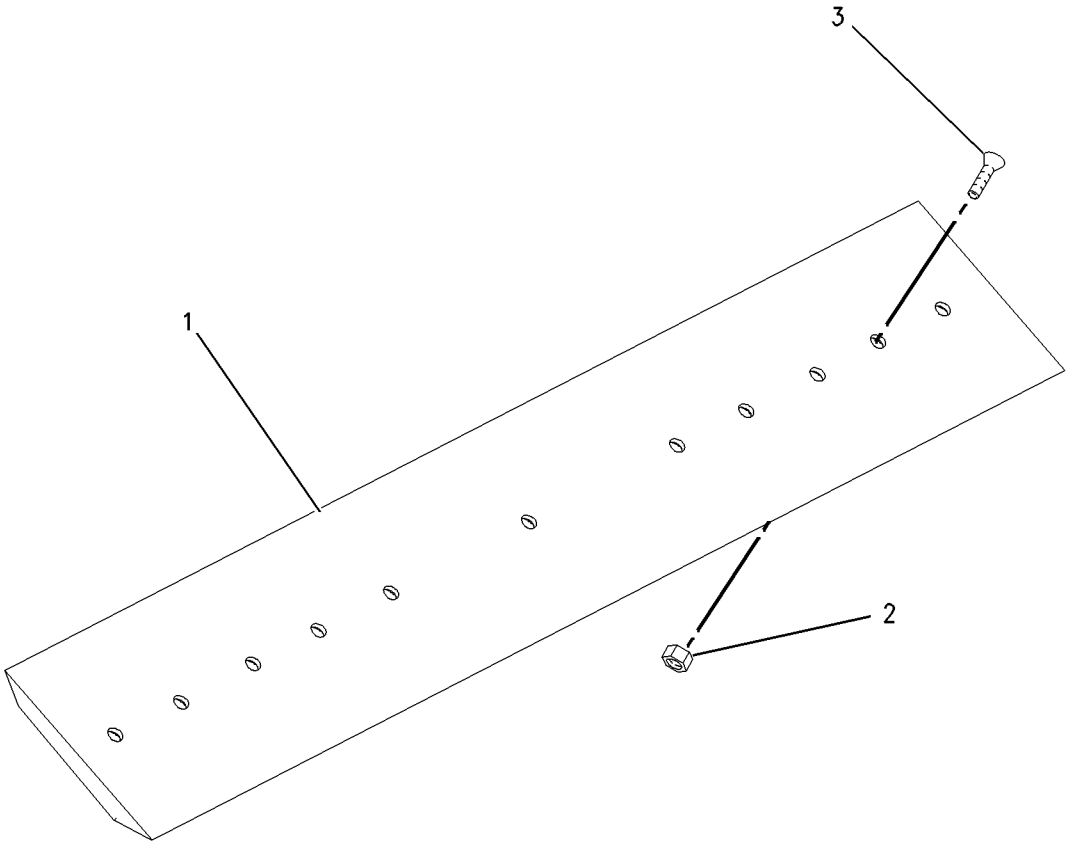

GRAPHIC #1 **<END>** g00936281

WORK TOOLS

195-7124 EDGE GP-CUTTING

S/N: JAY1-UP
PART OF 296-8192 BUCKET AR-GENERAL PURPOSE, 279-5430 BUCKET AR-LIGHT MATERIAL, 296-8057, 325-7080 BUCKET AR-MULTIPURPOSE
FOR USE WITH 213.36CM (84 IN) BUCKET
AN ATTACHMENT

SMCS-6801 **i01859534**

NOTE	PART NUMBER	QTY	PART NAME 1 2 3 4 5 6 (PRODUCT LEVEL)	SEE PAGE
	195-5124	1	EDGE-CUTTING	
M	**8T-4778**	11	LOCKNUT (M16X2 THD)	
M	**159-2953**	11	SCREW-FLAT HEAD (M16X2.00 THD)	

M-METRIC PART

<END>

WORK TOOLS

296-7680 EDGE GP-CUTTING

S/N: JAY1-UP
PART OF 296-7597 BUCKET AR-LIGHT MATERIAL
AN ATTACHMENT

SMCS-6801 **i03508403**

NOTE	REF NO	GRAPHIC REF	PART NUMBER	QTY	PART NAME 1 2 3 4 5 6 (PRODUCT LEVEL)	SEE PAGE
	1	1	**296-7602**	1	EDGE-CUTTING	
M	2	1	**159-2953**	13	SCREW-FLAT HEAD (M16X2-THD)	
M	3	1	**8T-4778**	13	LOCKNUT (M16X2-THD)	

M-METRIC PART

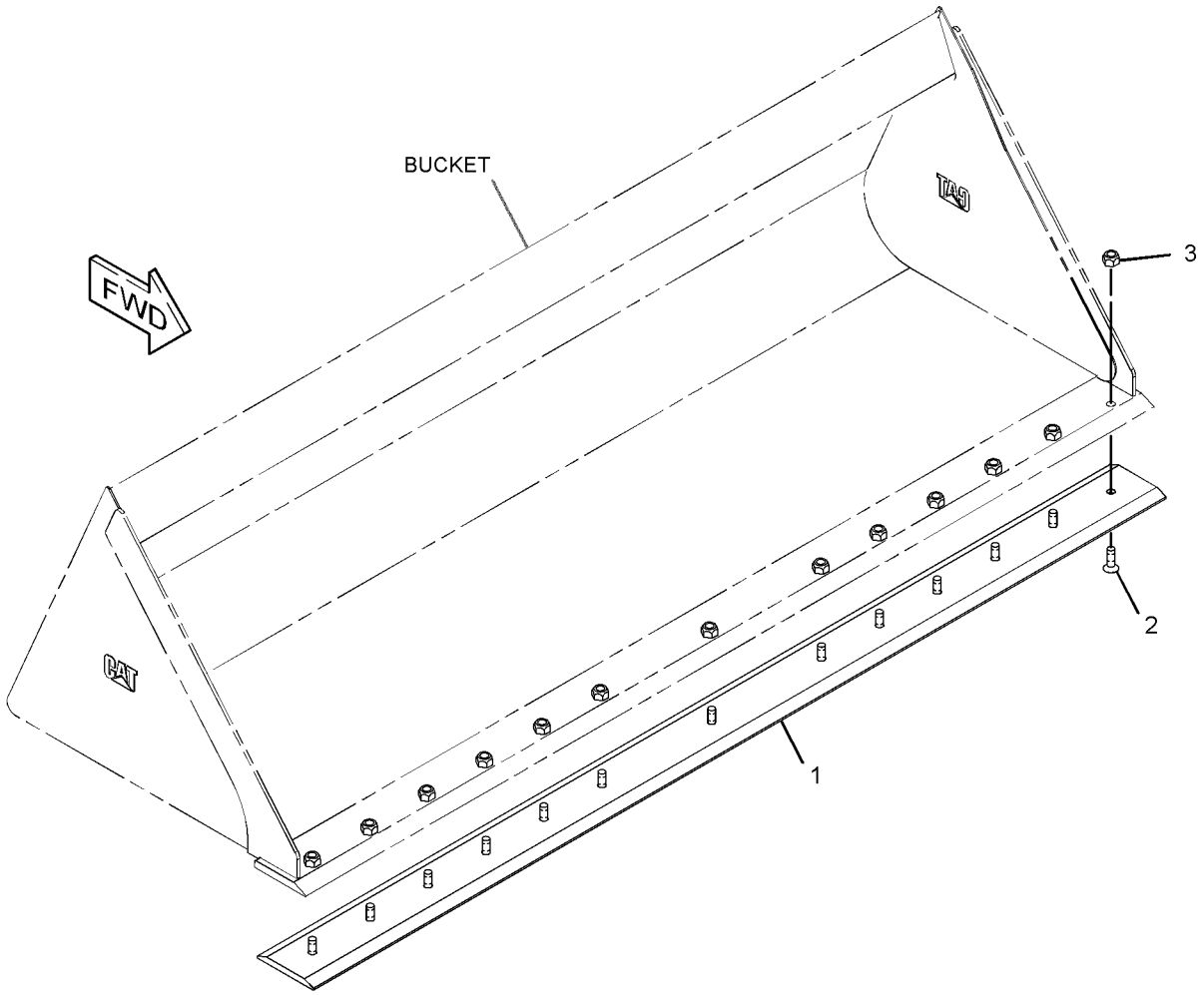

GRAPHIC #1 **<END>** g01845076

279-5350 FORK AR-GRAPPLE

S/N: JAY1-UP
1676-MM (66-IN)
AN ATTACHMENT

SMCS-6705 **i02715580**

NOTE	PART NUMBER	QTY	PART NAME 1 2 3 4 5 6 (PRODUCT LEVEL)	SEE PAGE
Y	**278-1975**	2	CYLINDER GP-GRAPPLE (INDUSTRIAL)	289
Y	*164-9614*	9	FORK GP-GRAPPLE (INDUSTRIAL)	592
Y	*279-5351*	1	FORK GP-GRAPPLE (66-IN, INDUSTRIAL)	593
Y	*279-5412*	1	LINES GP-BUCKET (INDUSTRIAL)	318
Y	*156-0891*	1	MOUNTING GP-CYLINDER (INDUSTRIAL)	419
Y-SEPARATE ILLUSTRATION				

<END>

279-5360 FORK AR-GRAPPLE

S/N: JAY1-UP
1829-MM (72-IN)
AN ATTACHMENT

SMCS-6705 **i02715593**

NOTE	PART NUMBER	QTY	PART NAME 1 2 3 4 5 6 (PRODUCT LEVEL)	SEE PAGE
Y	**278-1975**	2	CYLINDER GP-GRAPPLE (INDUSTRIAL)	289
Y	*164-9614*	2	FORK GP-GRAPPLE (INDUSTRIAL)	592
Y	*279-5359*	1	BUCKET GP-GRAPPLE (72-IN, INDUSTRIAL)	550
Y	*279-5412*	1	LINES GP-BUCKET (INDUSTRIAL)	318
Y	*156-0891*	1	MOUNTING GP-CYLINDER (INDUSTRIAL)	419
Y-SEPARATE ILLUSTRATION				

<END>

285-6114 FORK AR-GRAPPLE

S/N: JAY1-UP
1676-MM (66-IN)
AN ATTACHMENT

SMCS-6705 **i02552497**

NOTE	PART NUMBER	QTY	PART NAME 1 2 3 4 5 6 (PRODUCT LEVEL)	SEE PAGE
Y	**285-6105**	1	FORK GP-UTILITY (66-IN)	602
Y	*285-6116*	1	GRAPPLE & CYLINDER GP-UTILITY	606
Y-SEPARATE ILLUSTRATION				

<END>

285-6115 FORK AR-GRAPPLE

S/N: JAY1-UP
1829-MM(72-IN)
AN ATTACHMENT

SMCS-6705 **i02552699**

NOTE	PART NUMBER	QTY	PART NAME 1 2 3 4 5 6 (PRODUCT LEVEL)	SEE PAGE
Y	**285-6110**	1	FORK GP-GRAPPLE	594
Y	*285-6116*	1	GRAPPLE & CYLINDER GP-UTILITY	606
Y-SEPARATE ILLUSTRATION				

<END>

WORK TOOLS

164-9614 FORK GP-GRAPPLE–INDUSTRIAL

S/N: JAY1-UP

PART OF 279-5350, 279-5360 FORK AR-GRAPPLE

AN ATTACHMENT

SMCS-6705 **i01075196**

NOTE	REF NO	GRAPHIC REF	PART NUMBER	QTY	PART NAME 1 2 3 4 5 6 (PRODUCT LEVEL)	SEE PAGE
	1	1	**3E-4370**	1	PIN-SPRING	
	2	1	**162-8154**	1	TINE	

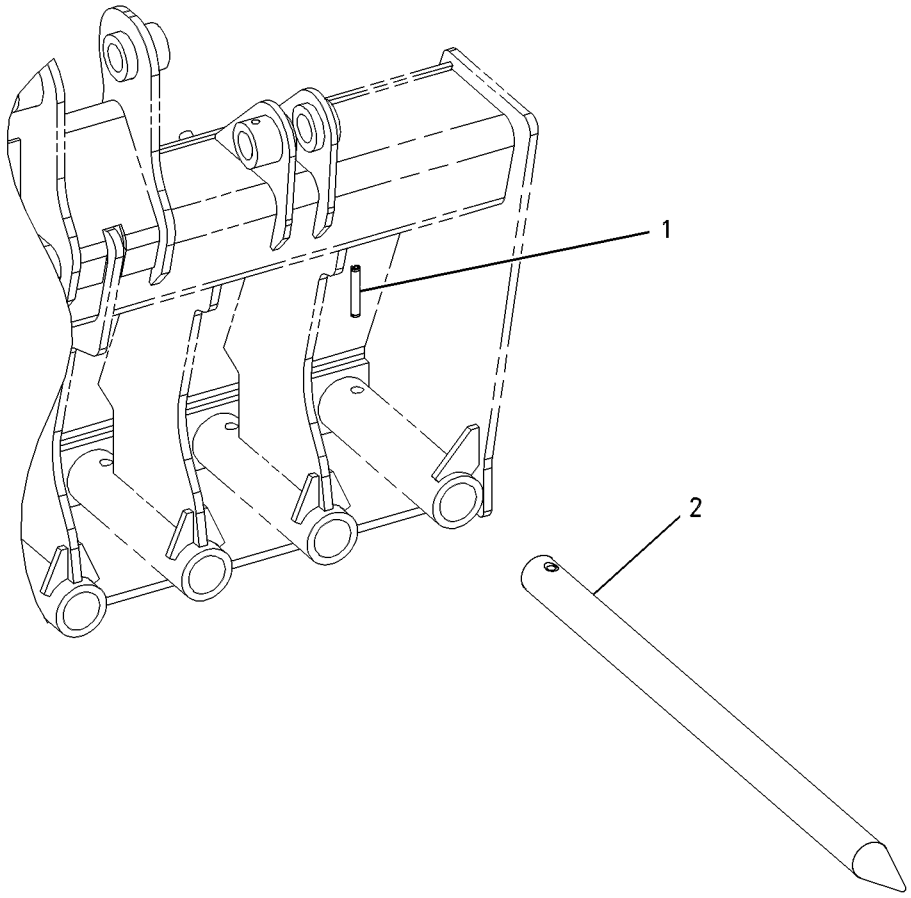

GRAPHIC #1 **<END>** g00559648

279-5351 FORK GP-GRAPPLE

S/N: JAY1-UP
1676-MM (66-IN)
PART OF 279-5350 FORK AR-GRAPPLE
AN ATTACHMENT

SMCS-6705 **i02571199**

NOTE	REF NO	GRAPHIC REF	PART NUMBER	QTY	PART NAME 1 2 3 4 5 6 (PRODUCT LEVEL)	SEE PAGE
	1	1	**157-0940**	4	PIN	
	2	1	**164-9989**	2	FILM-WARNING (IMPALED POINT)	
	3	1	**222-7467**	2	FORK AS	
Y	4	1	*279-5352*	1	FRAME GP-FORK (66-IN, INDUSTRIAL)	604
	5	1	**3B-8489**	4	FITTING-GREASE	
M	6	1	**6V-9189**	4	LOCKNUT (M8X1.25-THD)	
M	7	1	**8T-6869**	4	BOLT (M8X1.25X60-MM)	

M-METRIC PART
Y-SEPARATE ILLUSTRATION

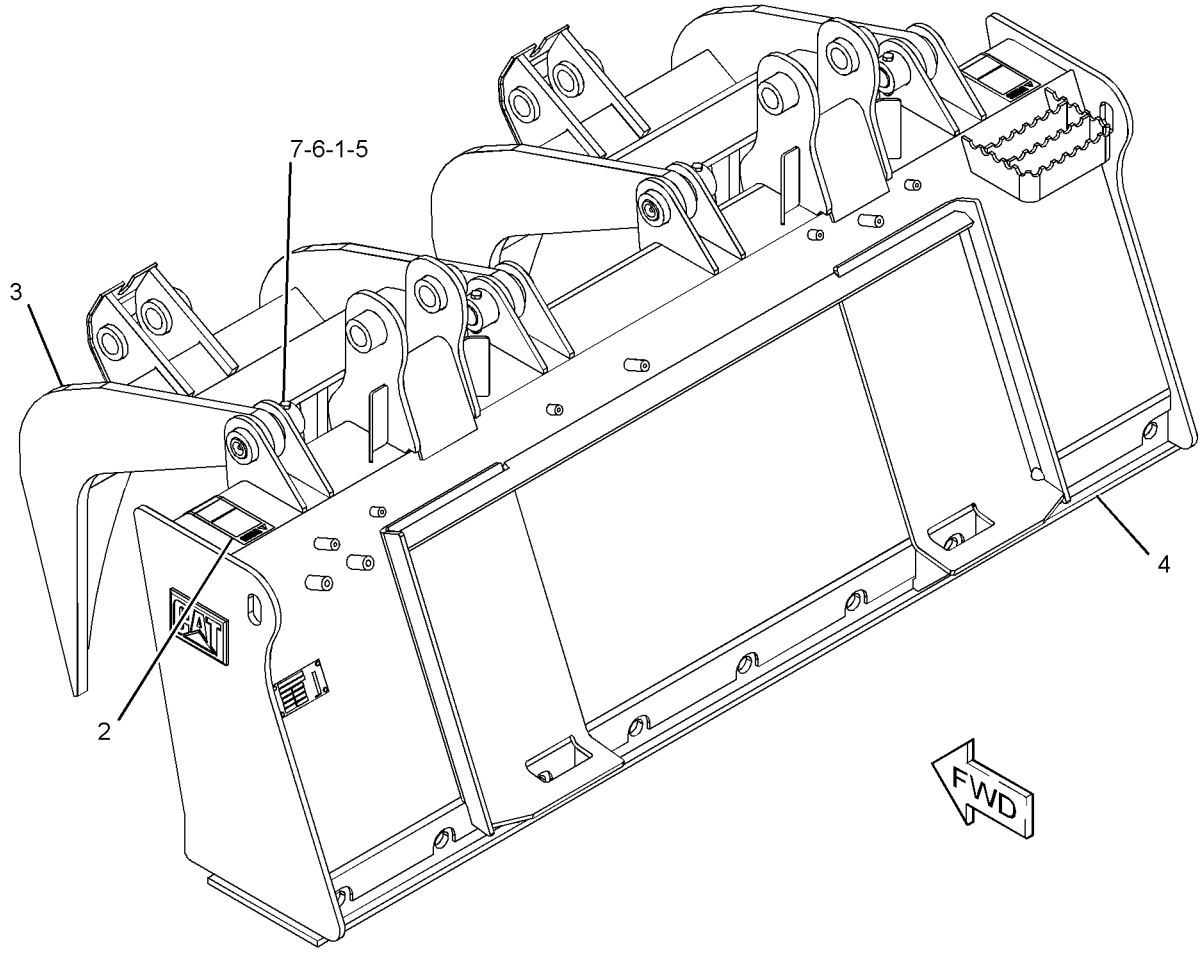

GRAPHIC #1 **<END>** g01279797

WORK TOOLS

285-6110 FORK GP-GRAPPLE

S/N: JAY1-UP
1829-MM (72-IN)
PART OF 285-6115 FORK AR-GRAPPLE
AN ATTACHMENT

SMCS-6705 **i02760170**

NOTE	REF NO	GRAPHIC REF	PART NUMBER	QTY	PART NAME 1 2 3 4 5 6 (PRODUCT LEVEL)	SEE PAGE
	1	1	**164-9989**	2	FILM-WARNING (IMPALED POINT)	
Y	2	1	*165-8732*	9	FORK GP-UTILITY (1676-MM (66-IN) WIDE)	597
					PARTS SHOWN IN GRAPHIC(S) WITHOUT A REFERENCE NUMBER ARE NOT SERVICED SEPARATELY	

Y-SEPARATE ILLUSTRATION

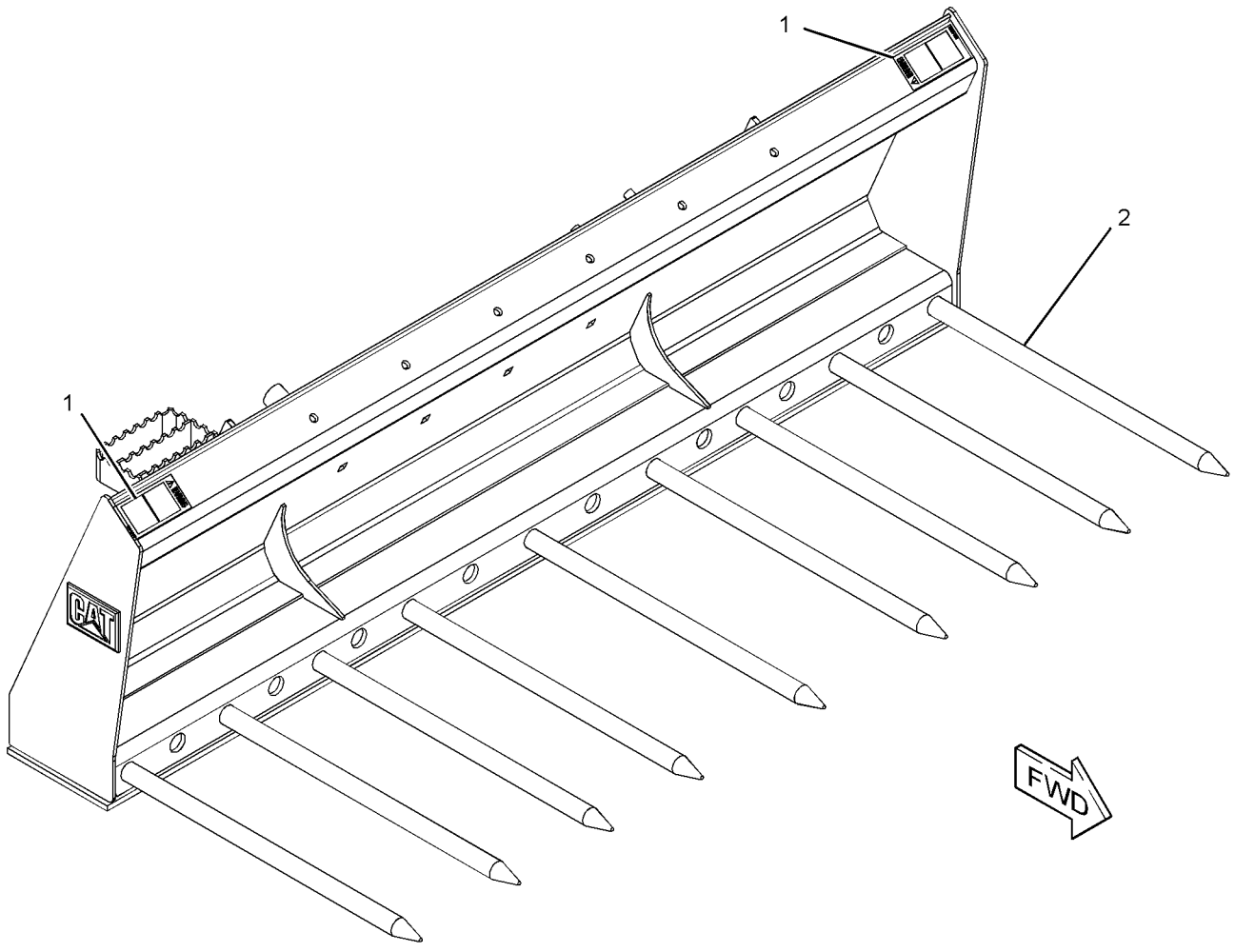

GRAPHIC #1 **<END>** g01381750

WORK TOOLS

195-6942 FORK GP-PALLET

S/N: JAY1-UP
1067-MM (42-IN)
PART OF 293-9428 CARRIAGE & FORK AR
AN ATTACHMENT

SMCS-6136 **i02569271**

NOTE	PART NUMBER	QTY	PART NAME 1 2 3 4 5 6 (PRODUCT LEVEL)	SEE PAGE
	221-3429	1	POSITIONER GP-FORK	

<END>

195-6943 FORK GP-PALLET

S/N: JAY1-UP
914-MM (36-IN)
PART OF 293-9427 CARRIAGE & FORK AR
AN ATTACHMENT

SMCS-6136 **i02569272**

NOTE	PART NUMBER	QTY	PART NAME 1 2 3 4 5 6 (PRODUCT LEVEL)	SEE PAGE
	221-3429	1	POSITIONER GP-FORK	

<END>

195-8545 FORK GP-PALLET

S/N: JAY1-UP
1219-MM (48-IN)
PART OF 293-9429 CARRIAGE & FORK AR
AN ATTACHMENT

SMCS-6136 **i02569274**

NOTE	PART NUMBER	QTY	PART NAME 1 2 3 4 5 6 (PRODUCT LEVEL)	SEE PAGE
	221-3429	1	POSITIONER GP-FORK	

<END>

243-0001 FORK GP-PALLET–KIT

S/N: JAY1-UP
914-MM (36-IN)
AN ATTACHMENT

SMCS-6136 **i01964024**

NOTE	PART NUMBER	QTY	PART NAME 1 2 3 4 5 6 (PRODUCT LEVEL)	SEE PAGE
	195-6943	12	FORK GP-PALLET (36-IN)	
			(EACH INCLUDES)	
	221-3429	1	POSITIONER GP-FORK	

<END>

WORK TOOLS

243-0002 FORK GP-PALLET–KIT

S/N: JAY1-UP
1067-MM (42-IN)
AN ATTACHMENT

SMCS-6136 **i01964030**

NOTE	PART NUMBER	QTY	PART NAME 1 2 3 4 5 6 (PRODUCT LEVEL)	SEE PAGE
	195-6942	12	FORK GP-PALLET (42 IN)	
			(EACH INCLUDES)	
	221-3429	1	POSITIONER GP-FORK	

<END>

243-0003 FORK GP-PALLET–KIT

S/N: JAY1-UP
1219-MM (48-IN)
AN ATTACHMENT

SMCS-6136 **i01964031**

NOTE	PART NUMBER	QTY	PART NAME 1 2 3 4 5 6 (PRODUCT LEVEL)	SEE PAGE
	195-8545	12	FORK GP-PALLET (48 IN)	
			(EACH INCLUDES)	
	221-3429	1	POSITIONER GP-FORK	

<END>

165-8732 FORK GP-UTILITY

S/N: JAY1-UP
1676-MM (66-IN)
PART OF 285-6110 FORK GP-GRAPPLE, 165-8736, 165-8737, 285-6105 FORK GP-UTILITY
AN ATTACHMENT

SMCS-6458 **i01204324**

NOTE	REF NO	GRAPHIC REF	PART NUMBER	QTY	PART NAME 1 2 3 4 5 6 (PRODUCT LEVEL)	SEE PAGE
	1	1	**9R-2959**	1	CLIP	
	2	1	**166-4041**	1	TINE	

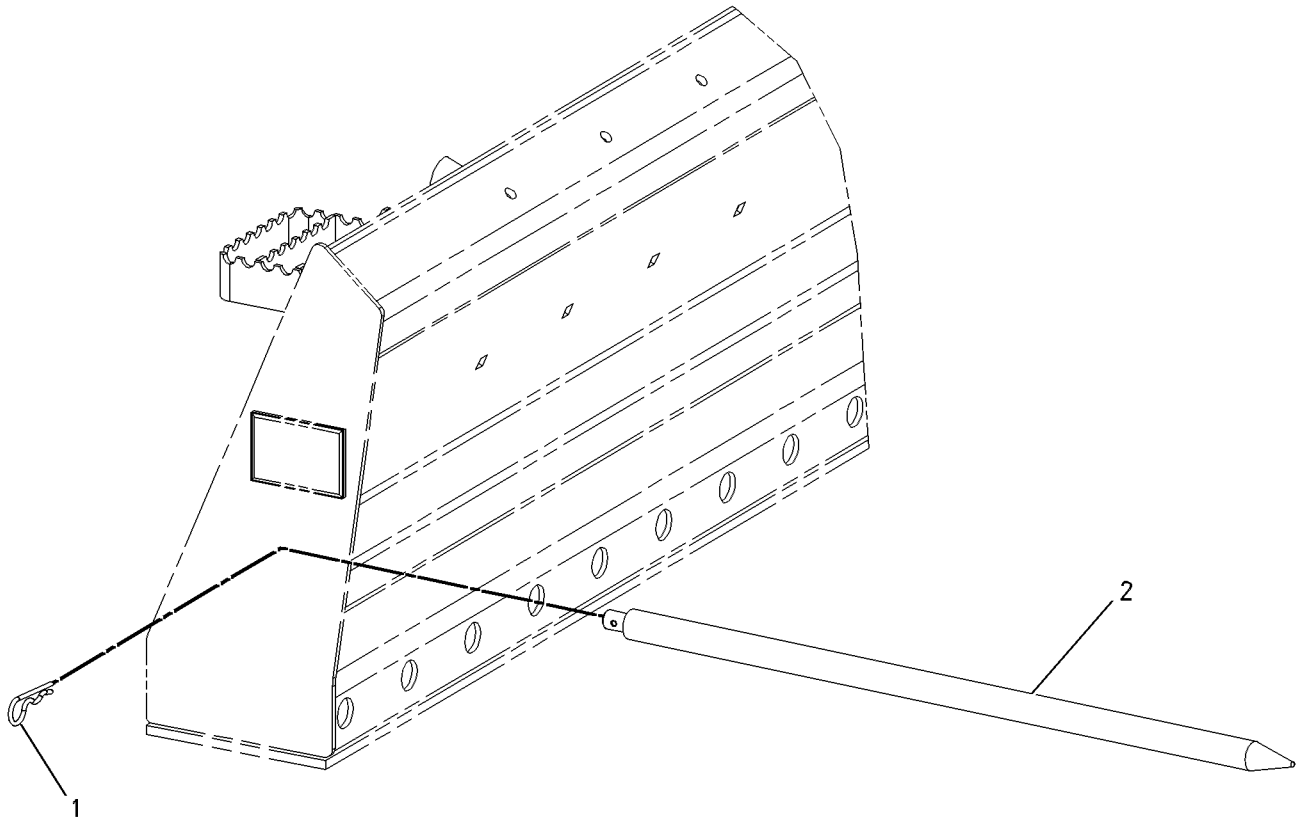

GRAPHIC #1 **<END>** g00639778

WORK TOOLS

165-8736 FORK GP-UTILITY

S/N: JAY1-UP

AN ATTACHMENT

SMCS-6458 **i03019728**

NOTE	REF NO	GRAPHIC REF	PART NUMBER	QTY	PART NAME 1 2 3 4 5 6 (PRODUCT LEVEL)	SEE PAGE
	1	1	**164-9989**	2	FILM-WARNING (IMPALED POINT)	
Y	2	1	*165-8732*	7	FORK GP-UTILITY (1676-MM (66-IN) WIDE)	597
Y	3	1	*165-8738*	1	FORK GP-UTILITY	600

Y-SEPARATE ILLUSTRATION

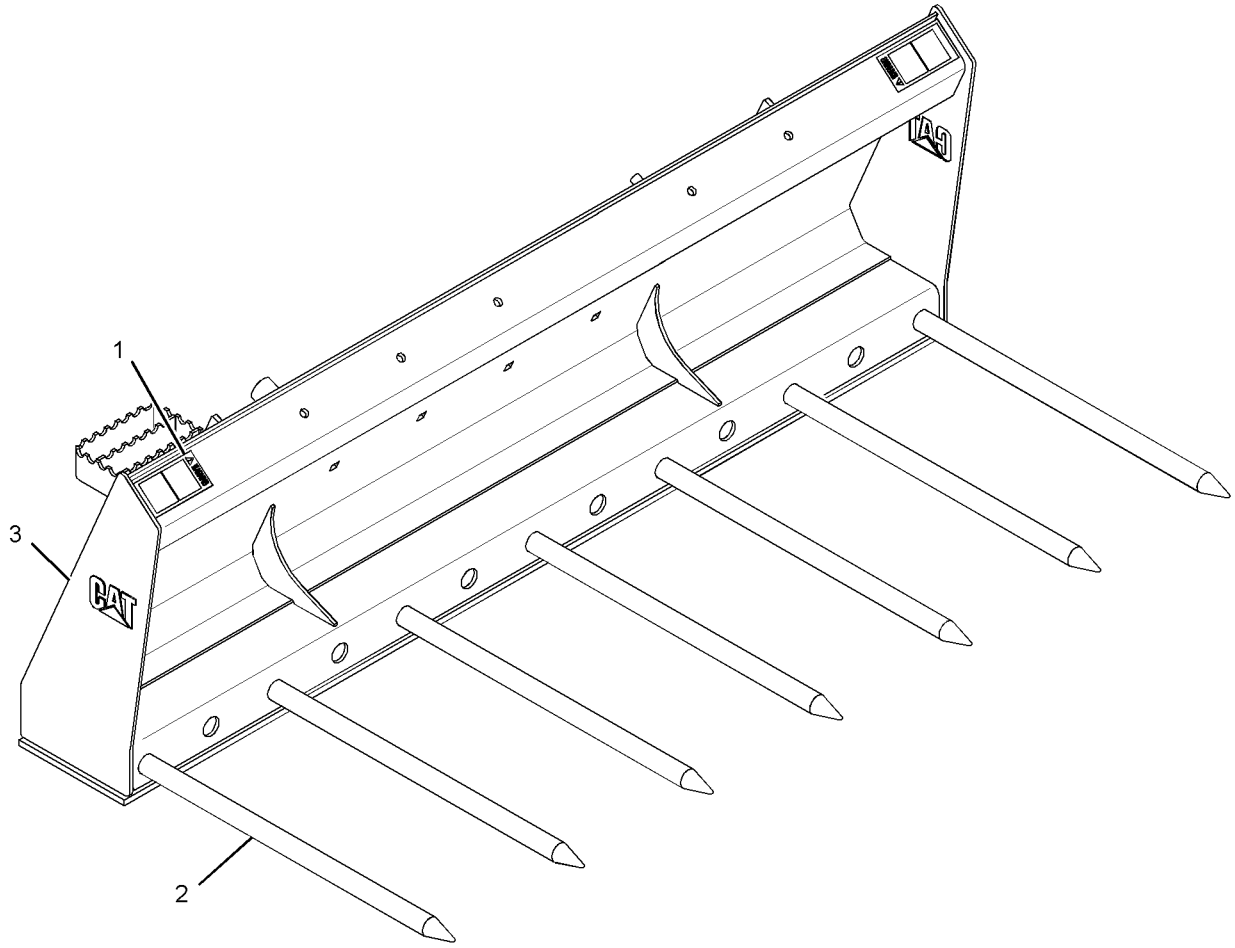

GRAPHIC #1 **<END>** g01527067

WORK TOOLS

165-8737 FORK GP-UTILITY

S/N: JAY1-UP
AN ATTACHMENT

SMCS-6458 **i03019730**

NOTE	REF NO	GRAPHIC REF	PART NUMBER	QTY	PART NAME 1 2 3 4 5 6 (PRODUCT LEVEL)	SEE PAGE
	1	1	**164-9989**	2	FILM-WARNING (IMPALED POINT)	
Y	2	1	*165-8732*	9	FORK GP-UTILITY (1676-MM (66-IN) WIDE)	597
Y	3	1	*165-8739*	1	FORK GP-UTILITY	601

Y-SEPARATE ILLUSTRATION

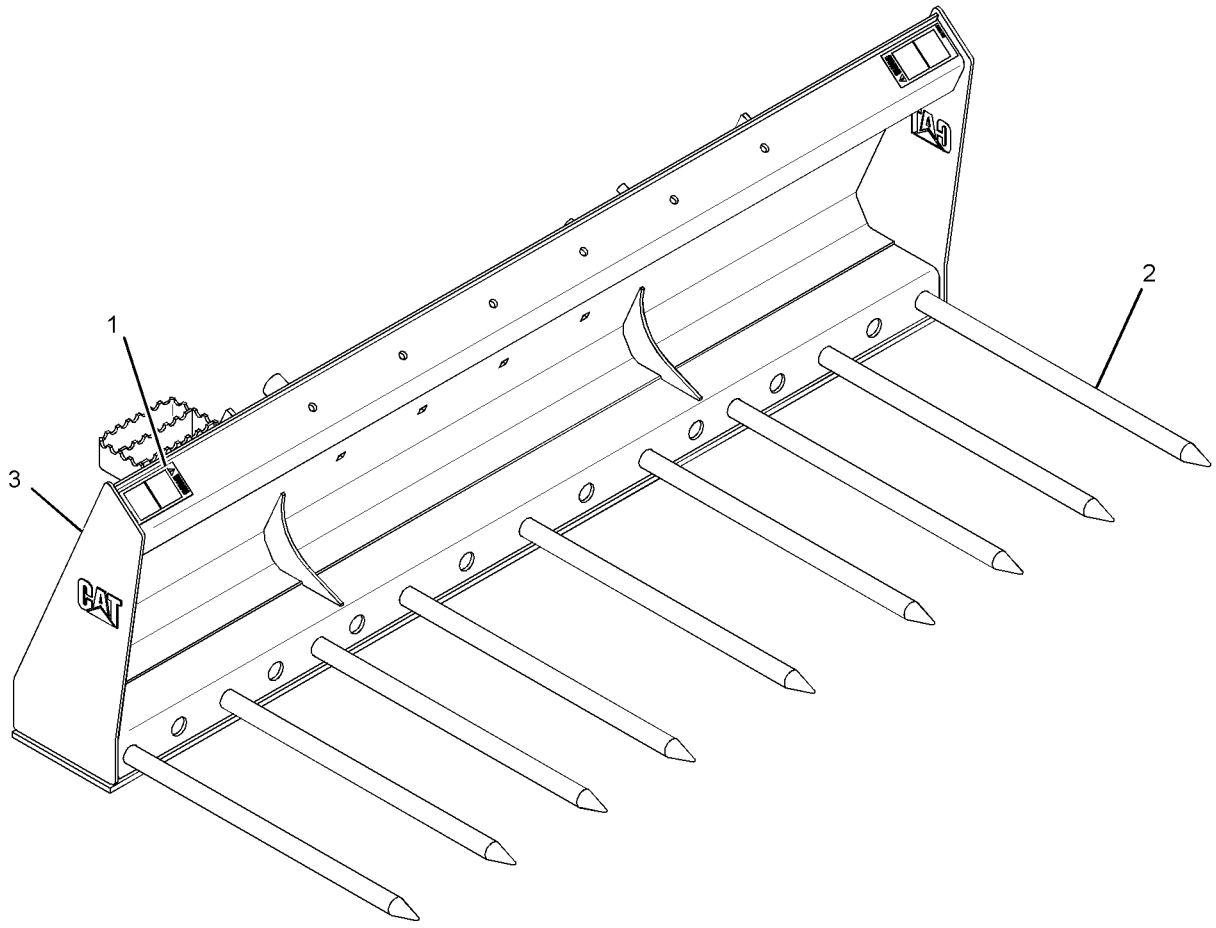

GRAPHIC #1 **<END>** g01527025

WORK TOOLS

165-8738 FORK GP-UTILITY

S/N: JAY1-UP
167.64CM (66 IN)
PART OF 165-8736 FORK GP-UTILITY
AN ATTACHMENT

SMCS-6458 **i01227091**

NOTE	REF NO	GRAPHIC REF	PART NUMBER	QTY	PART NAME 1 2 3 4 5 6 (PRODUCT LEVEL)	SEE PAGE
	1	1	**165-8744**	1	FORK AS (UTILITY)	
M		1	**111-0483**	4	BOSS (M10X1.5-MM THD)	

M-METRIC PART

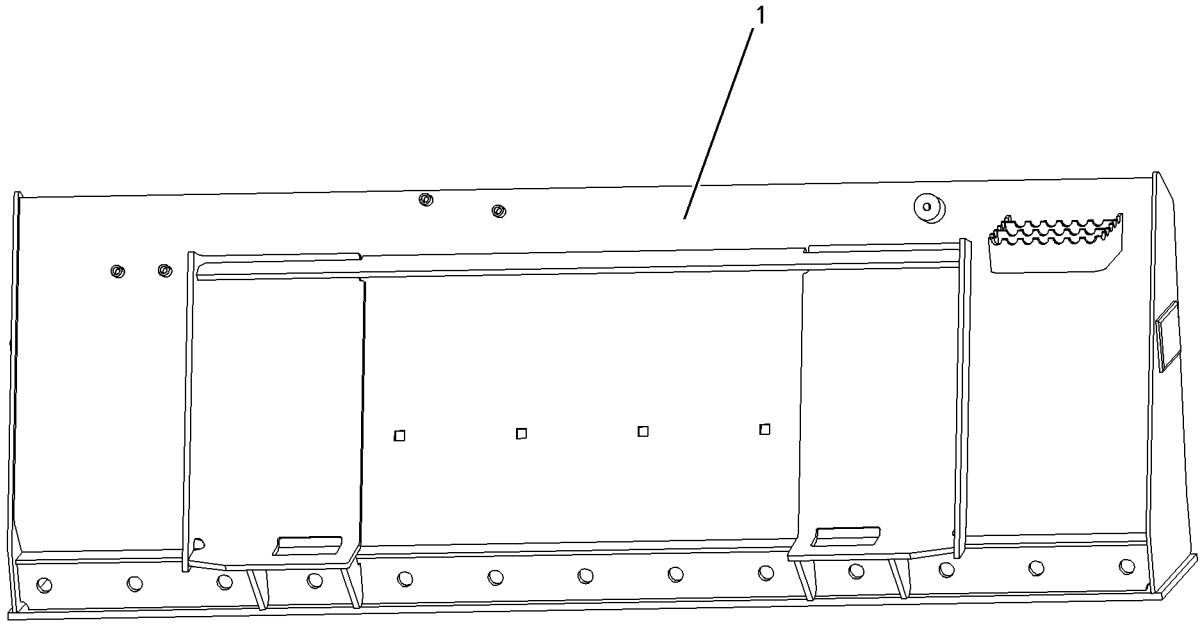

GRAPHIC #1 **<END>** g00651438

WORK TOOLS

165-8739 FORK GP-UTILITY

S/N: JAY1-UP
182.88CM (72 IN)
PART OF 165-8737 FORK GP-UTILITY
AN ATTACHMENT

SMCS-6458 **i01226855**

NOTE	REF NO	GRAPHIC REF	PART NUMBER	QTY	PART NAME 1 2 3 4 5 6 (PRODUCT LEVEL)	SEE PAGE
	1	1	**165-8745**	1	FORK AS (UTILITY)	
M		1	**111-0483**	4	BOSS (M10X1.5-MM THD)	

M-METRIC PART

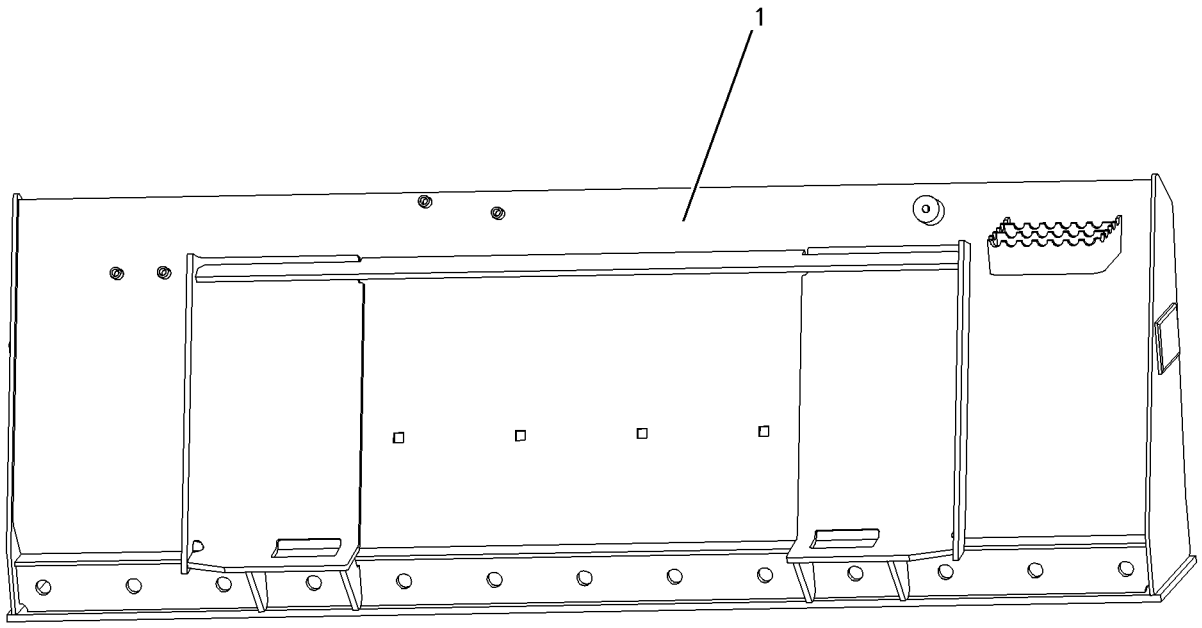

GRAPHIC #1 **<END>** g00651441

WORK TOOLS

285-6105 FORK GP-UTILITY

S/N: JAY1-UP
1676-MM (66-IN)
PART OF 285-6114 FORK AR-GRAPPLE
AN ATTACHMENT

SMCS-6458 **i02552504**

NOTE	REF NO	GRAPHIC REF	PART NUMBER	QTY	PART NAME 1 2 3 4 5 6 (PRODUCT LEVEL)	SEE PAGE
	1	1	**164-9989**	2	FILM-WARNING (IMPALED POINT)	
Y	2	1	*165-8732*	7	FORK GP-UTILITY (1676-MM (66-IN) WIDE)	597
					PARTS SHOWN IN GRAPHIC(S) WITHOUT A REFERENCE NUMBER ARE NOT SERVICED SEPARATELY	

Y-SEPARATE ILLUSTRATION

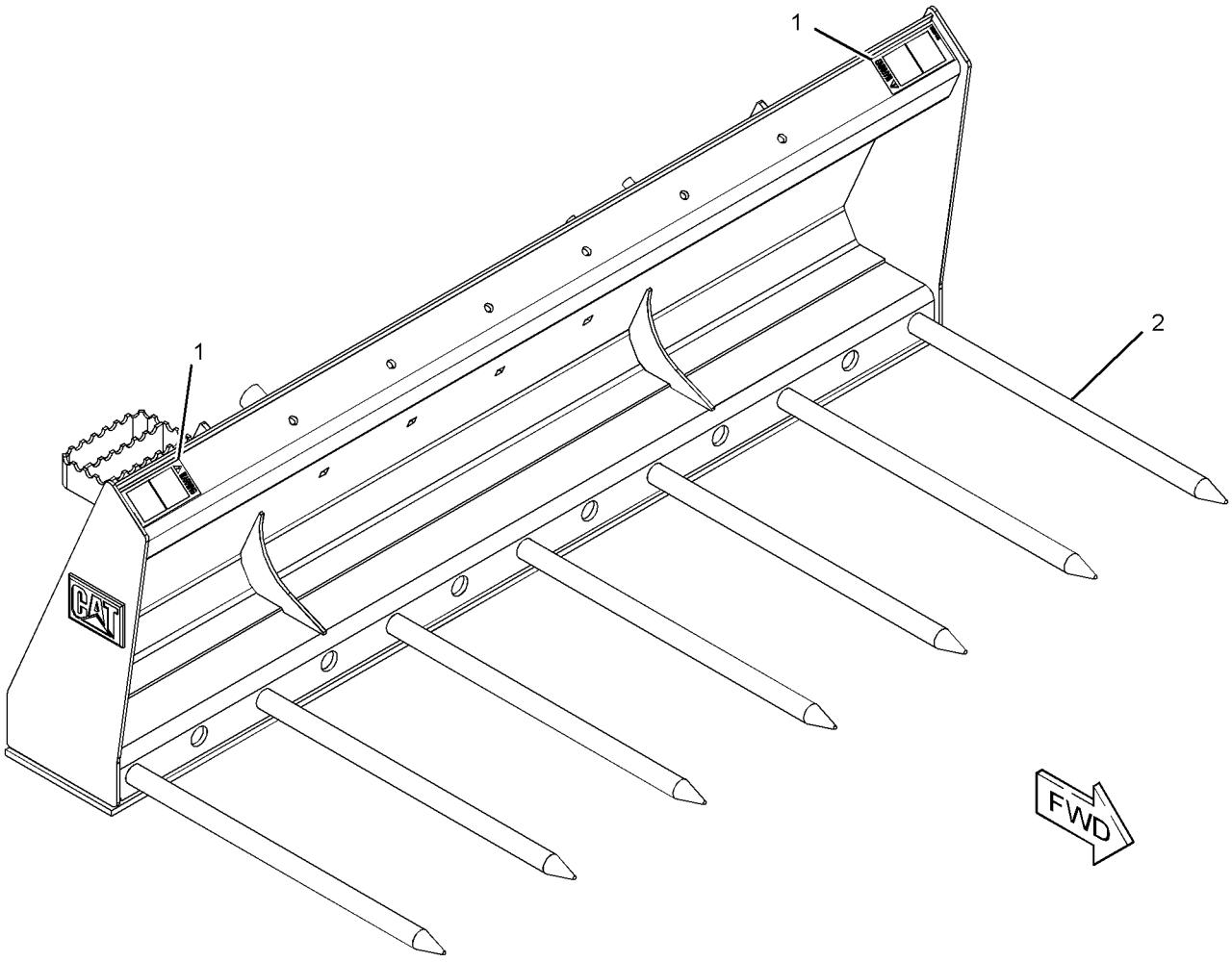

GRAPHIC #1 **<END>** g01280417

WORK TOOLS

230-5670 FRAME GP-BLADE

S/N: JAY1-UP
PART OF 177-1989, 177-1990 BLADE AR
AN ATTACHMENT

SMCS-6060 **i03637977**

NOTE	REF NO	GRAPHIC REF	PART NUMBER	QTY	PART NAME 1 2 3 4 5 6 (PRODUCT LEVEL)	SEE PAGE
	1	1	**177-1914**	1	PIN AS	
B	2	1	**177-1955**	1	SHIM (1-MM THK)	
B	3	1	**177-1956**	1	SHIM (2-MM THK)	
B	4	1	**177-1957**	1	SHIM (3-MM THK)	
	5	1	**177-1971**	1	FRAME AS	
	6	1	**177-1975**	1	FRAME AS	
	7	1	**230-5407**	1	FRAME AS	
	8	1	**3B-8489**	1	FITTING-GREASE	
	9	1	**5B-0935**	1	FITTING-GREASE	
M	10	1	**7X-2553**	8	BOLT (M16X2X40-MM)	
	11	1	**7X-7729**	1	WASHER (11X25X3-MM THK)	
	12	1	**8T-4122**	8	WASHER-HARD (17X32X3.5-MM THK)	
M	13	1	**8T-4137**	1	BOLT (M10X1.5X20-MM)	

B-USE AS REQUIRED
M-METRIC PART

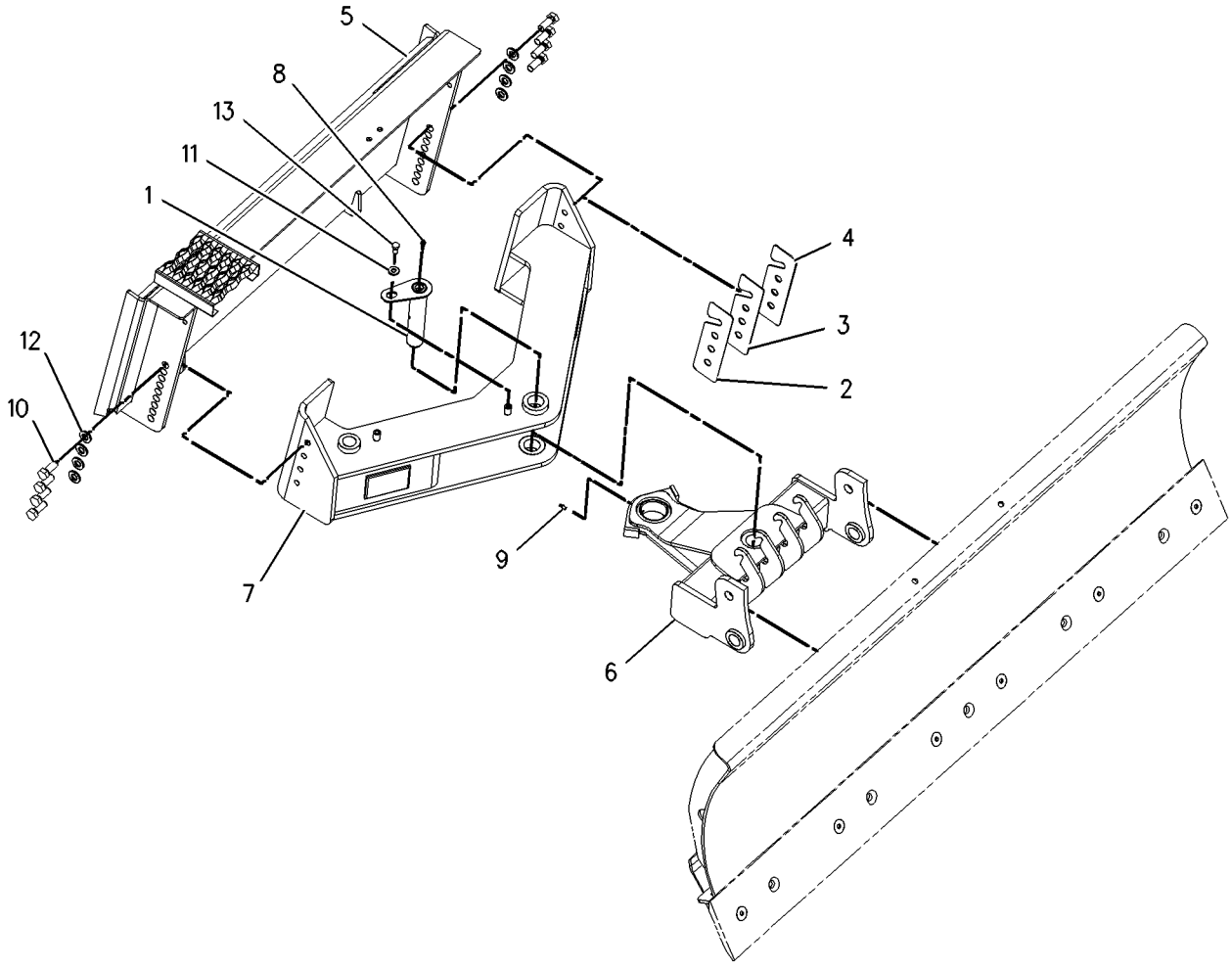

GRAPHIC #1 **<END>** g00978893

279-5352 FRAME GP-FORK–INDUSTRIAL

S/N: JAY1-UP
1676-MM (66-IN)
PART OF 279-5351 FORK GP-GRAPPLE
AN ATTACHMENT

SMCS-6705 **i02550300**

NOTE	REF NO	GRAPHIC REF	PART NUMBER	QTY	PART NAME 1 2 3 4 5 6 (PRODUCT LEVEL)	SEE PAGE
	1	1	**154-2704**	1	PLATE-INSTRUCTION (BUCKET SPECIFICATIONS)	
	2	1	**168-8389**	4	TACK-FASTENER	
	3	1	**279-5353**	1	FORK AS	

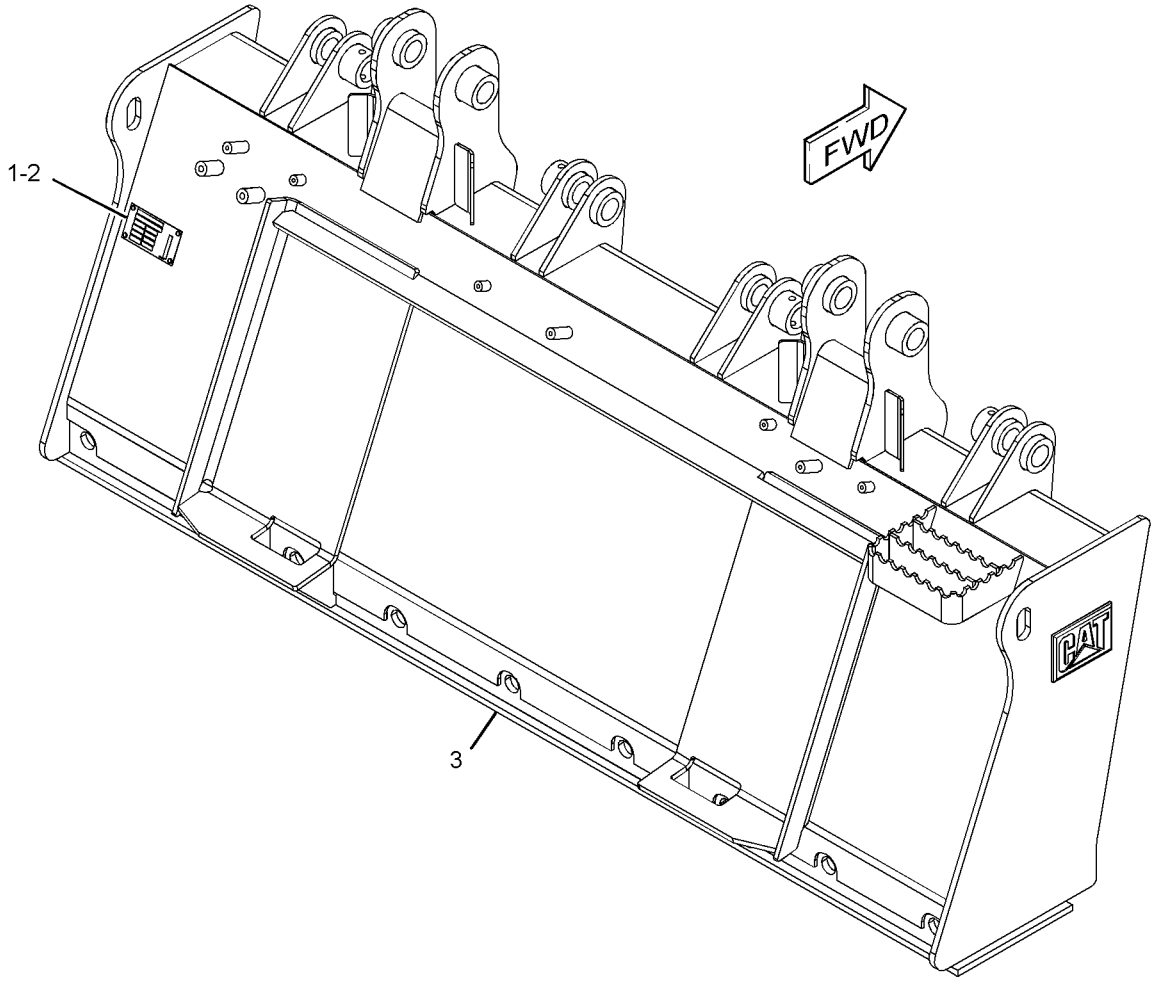

GRAPHIC #1 **<END>** g01280687

279-5358 FRAME GP-FORK–INDUSTRIAL

S/N: JAY1-UP
1829-MM (72-IN)
PART OF 279-5359 BUCKET GP-GRAPPLE
AN ATTACHMENT

SMCS-6705 **i02550334**

NOTE	REF NO	GRAPHIC REF	PART NUMBER	QTY	PART NAME 1 2 3 4 5 6 (PRODUCT LEVEL)	SEE PAGE
	1	1	**154-2704**	1	PLATE-INSTRUCTION (BUCKET SPECIFICATIONS)	
	2	1	**168-8389**	4	TACK-FASTENER	
	3	1	**279-5357**	1	FORK AS	

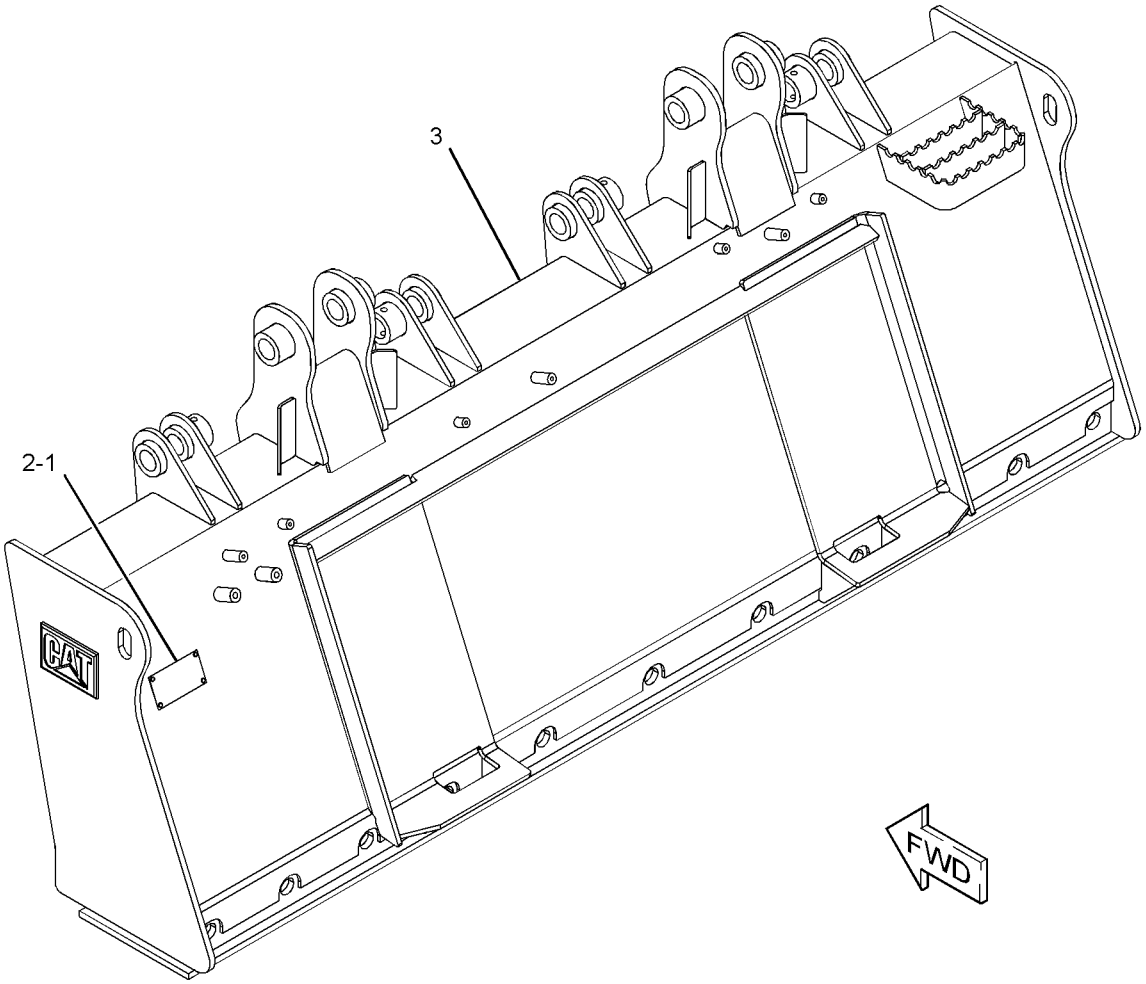

GRAPHIC #1 **<END>** g01279388

WORK TOOLS

285-6116 GRAPPLE & CYLINDER GP-UTILITY

S/N: JAY1-UP
PART OF 285-6093, 285-6104, 285-6111, 285-6112 BUCKET AR-GRAPPLE, 285-6114, 285-6115 FORK AR-GRAPPLE
AN ATTACHMENT
TYPE 1

SMCS-5057, 5555, 6307 **i02711972**

NOTE	REF NO	GRAPHIC REF	PART NUMBER	QTY	PART NAME 1 2 3 4 5 6 (PRODUCT LEVEL)	SEE PAGE
Y	1	1	**164-9295**	1	CYLINDER GP-GRAPPLE	287
Y	2	1	*165-8731*	1	MOUNTING GP-CYLINDER (UTILITY)	420
Y	3	1	*165-8740*	1	GRAPPLE GP-UTILITY	608
M	4	1	**170-5836**	4	BOLT (M12X1.75X35-MM)	
Y	5	1	*173-7407*	1	STOP GP-BUCKET	624
	6	1	**239-5029**	1	GUARD	
Y	7	1	*285-6113*	1	LINES GP-BUCKET	328
	8	1	**5P-1076**	4	WASHER-HARD (13.5X30X4-MM THK)	
M	9	1	**8T-4139**	6	BOLT (M12X1.75X30-MM)	
	10	1	**8T-4223**	6	WASHER-HARD (13.5X25.5X3-MM THK)	
M	11	1	**8T-4244**	10	NUT (M12X1.75-THD)	

M-METRIC PART
Y-SEPARATE ILLUSTRATION

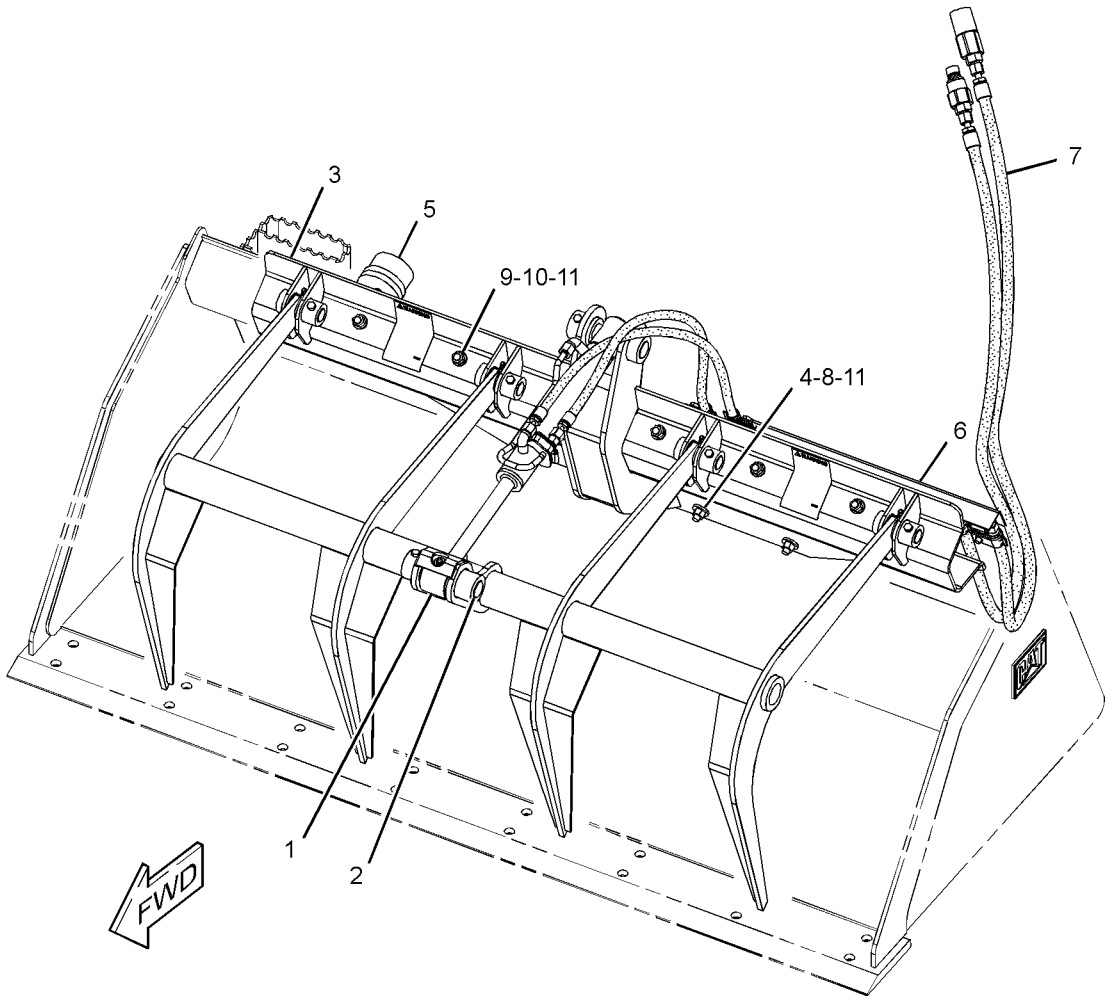

GRAPHIC #1 **<END>** g01278678

285-6116 GRAPPLE & CYLINDER GP-UTILITY

S/N: JAY1-UP

PART OF 285-6093, 285-6104, 285-6111, 285-6112 BUCKET AR-GRAPPLE, 285-6114, 285-6115 FORK AR-GRAPPLE

AN ATTACHMENT

TYPE 2

SMCS-5057, 5555, 6307 **i02941009**

NOTE	REF NO	GRAPHIC REF	PART NUMBER	QTY	PART NAME 1 2 3 4 5 6 (PRODUCT LEVEL)	SEE PAGE
CY	1	1	**255-0943**	1	CYLINDER GP-GRAPPLE	288
Y	2	1	*165-8731*	1	MOUNTING GP-CYLINDER (UTILITY)	420
Y	3	1	*165-8740*	1	GRAPPLE GP-UTILITY	608
M	4	1	**170-5836**	4	BOLT (M12X1.75X35-MM)	
Y	5	1	*173-7407*	1	STOP GP-BUCKET	624
	6	1	**239-5029**	1	GUARD	
Y	7	1	*285-6113*	1	LINES GP-BUCKET	328
	8	1	**5P-1076**	4	WASHER-HARD (13.5X30X4-MM THK)	
M	9	1	**8T-4139**	6	BOLT (M12X1.75X30-MM)	
	10	1	**8T-4223**	6	WASHER-HARD (13.5X25.5X3-MM THK)	
M	11	1	**8T-4244**	10	NUT (M12X1.75-THD)	

C-CHANGE FROM PREVIOUS TYPE
M-METRIC PART
Y-SEPARATE ILLUSTRATION

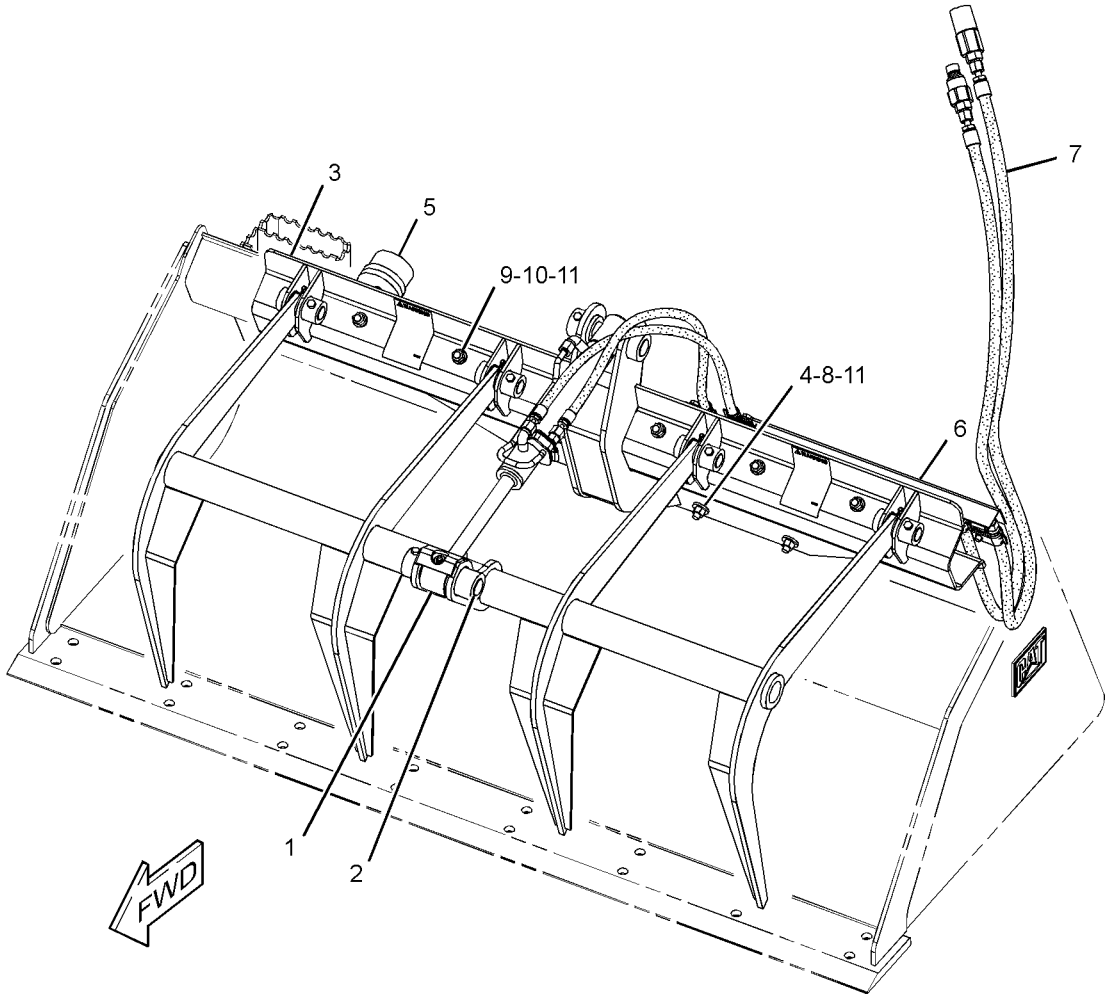

GRAPHIC #1 **<END>** g01278678

WORK TOOLS

165-8740 GRAPPLE GP-UTILITY

S/N: JAY1-UP
PART OF 285-6116 GRAPPLE & CYLINDER GP-UTILITY
AN ATTACHMENT

SMCS-6307 **i02772047**

NOTE	REF NO	GRAPHIC REF	PART NUMBER	QTY	PART NAME 1 2 3 4 5 6 (PRODUCT LEVEL)	SEE PAGE
	1	1	**3B-8488**	4	FITTING-GREASE	
	2	1	**159-5411**	4	PIN	
	3	1	**165-8743**	1	ARM AS	
	4	1	**169-3569**	1	BRACKET AS	
		1	**159-8035**	2	FILM-WARNING (CRUSH HAZARD, STAY BACK)	
M	5	1	**6V-9189**	4	LOCKNUT (M8X1.25-THD)	
M	6	1	**8T-6912**	4	BOLT (M8X1.25X50-MM)	

M-METRIC PART

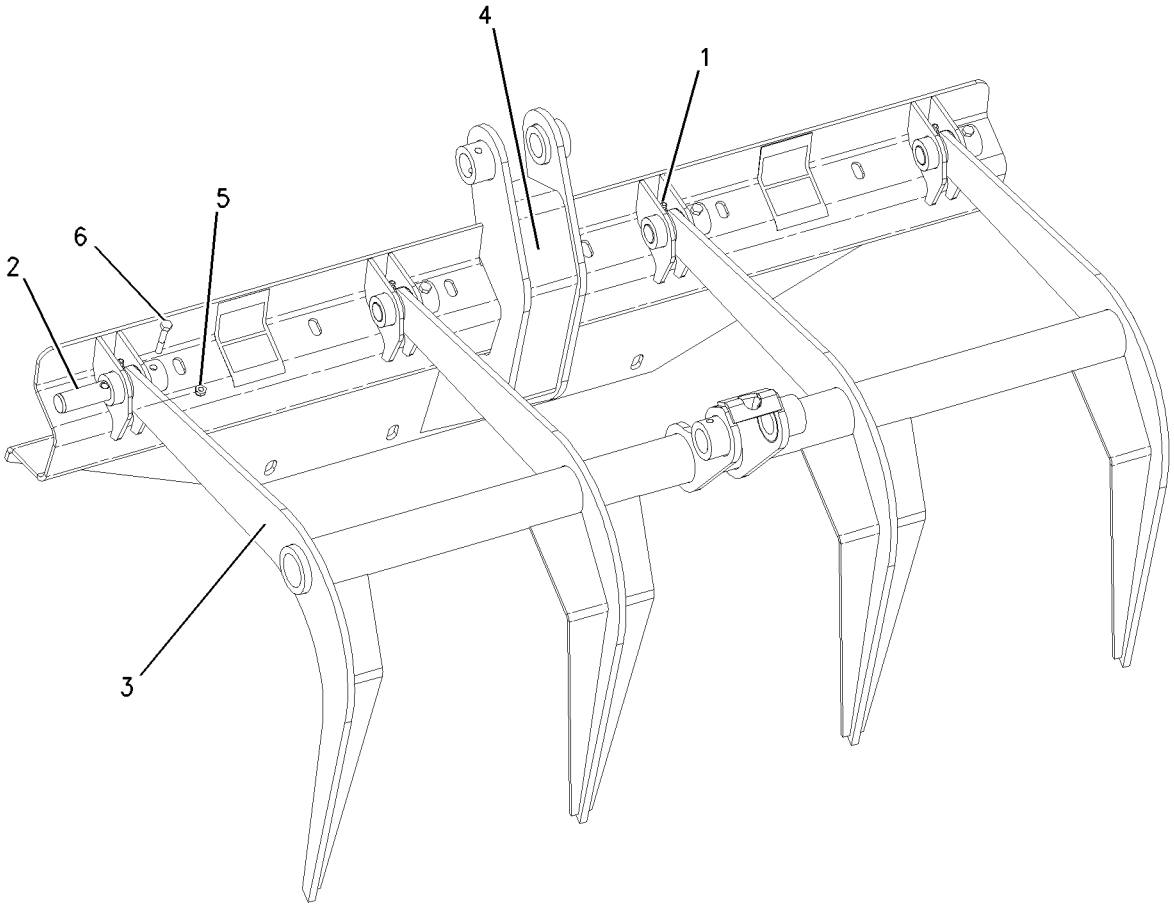

GRAPHIC #1 **<END>** g00777325

258-2536 HANDLE & PIN GP-COUPLER–RH

S/N: JAY1-UP
PART OF 258-2535 LOCK GP-QUICK COUPLER
AN ATTACHMENT

SMCS-6129 **i02960198**

NOTE	REF NO	GRAPHIC REF	PART NUMBER	QTY	PART NAME 1 2 3 4 5 6 (PRODUCT LEVEL)	SEE PAGE
	1	1	**192-2637**	1	PLATE	
	2	1	**195-6754**	2	PIN-SPRING	
	3	1	**192-2645**	1	SPRING	
	4	1	**258-2534**	1	HANDLE-RH	
M	5	1	**315-5493**	2	WASHER-HARD (22.5X35X4.5-MM THK)	

M-METRIC PART

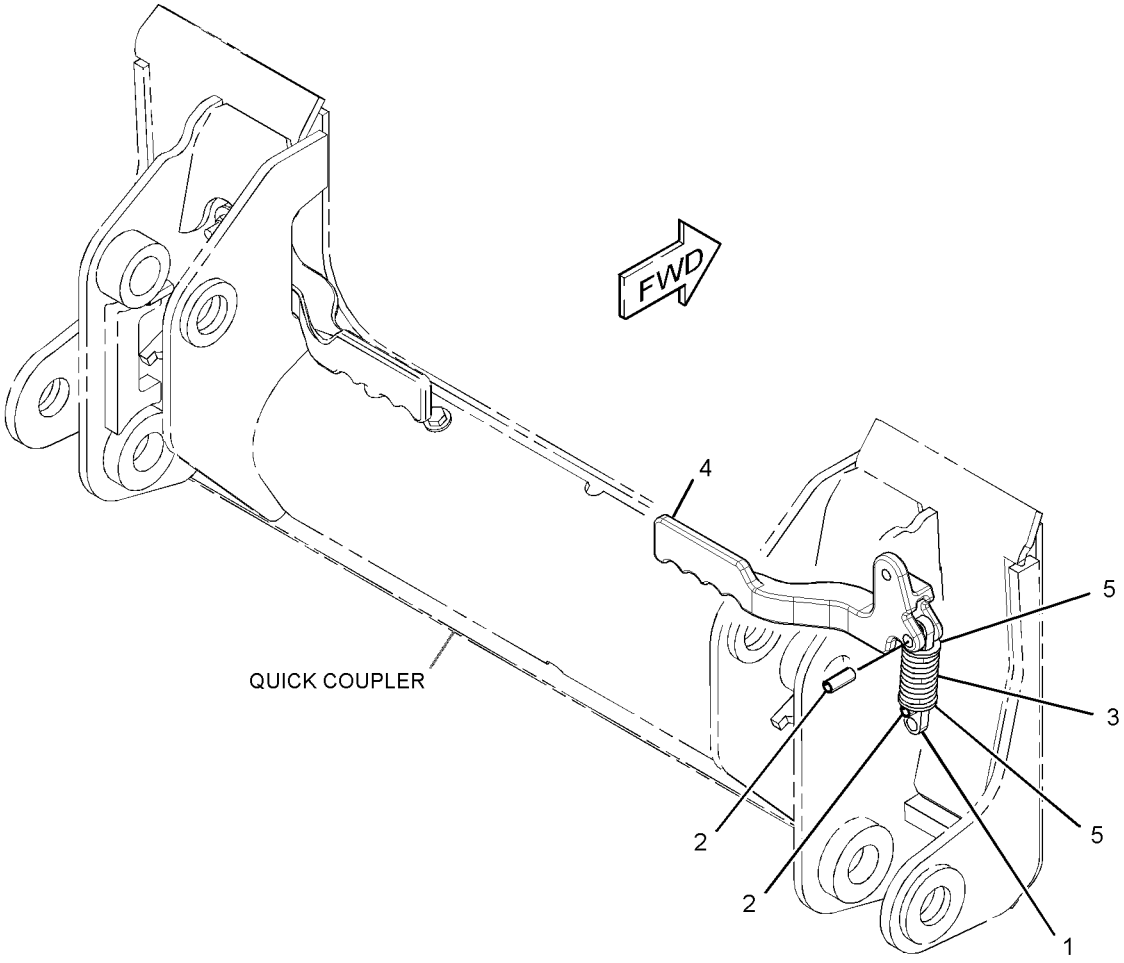

GRAPHIC #1 **<END>** g01335572

WORK TOOLS

258-2538 HANDLE & PIN GP-COUPLER—LH

S/N: JAY1-UP
PART OF 258-2537 LOCK GP-QUICK COUPLER
AN ATTACHMENT

SMCS-6129 **i02960209**

NOTE	REF NO	GRAPHIC REF	PART NUMBER	QTY	PART NAME 1 2 3 4 5 6 (PRODUCT LEVEL)	SEE PAGE
	1	1	**192-2637**	1	PLATE	
	2	1	**195-6754**	2	PIN-SPRING	
	3	1	**192-2645**	1	SPRING	
	4	1	**258-2533**	1	HANDLE-LH	
M	5	1	**315-5493**	2	WASHER-HARD (22.5X35X4.5-MM THK)	

M-METRIC PART

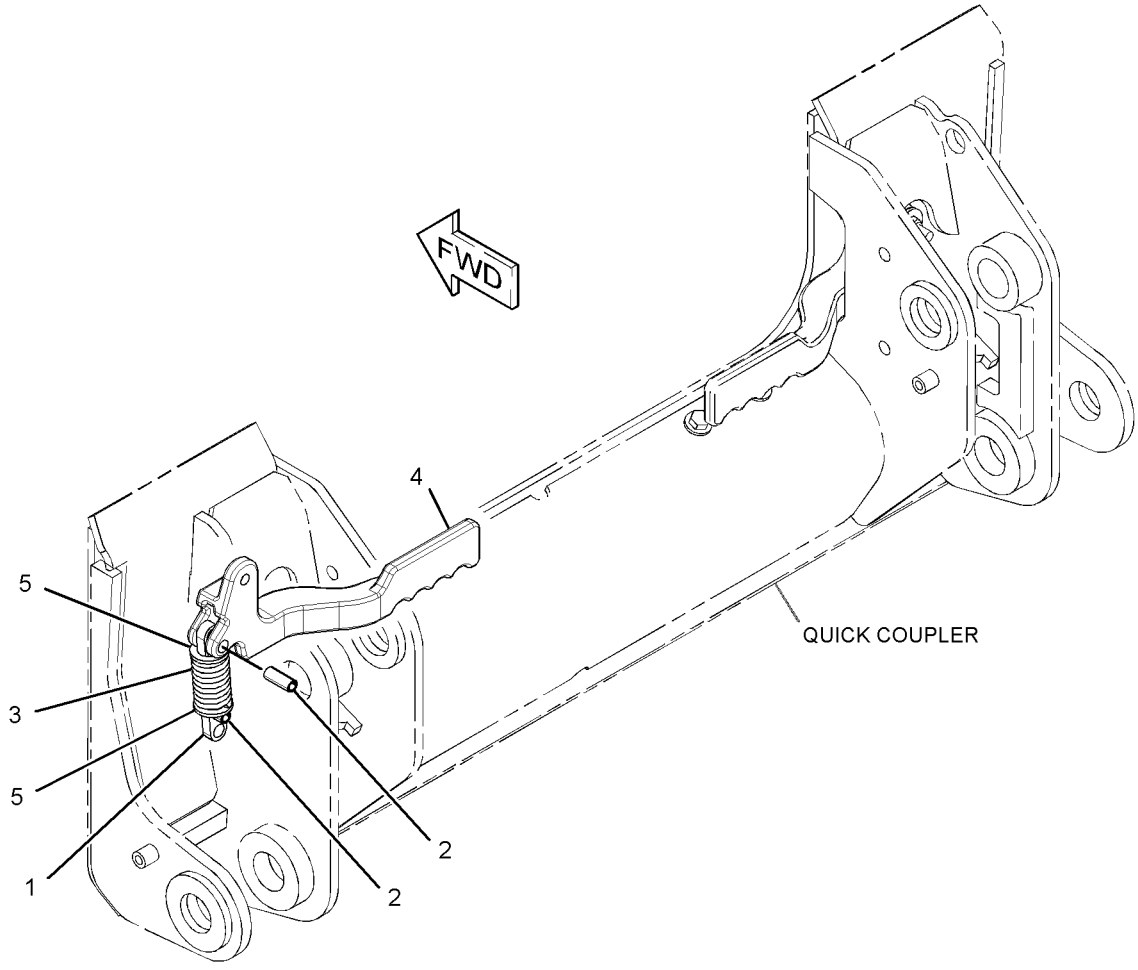

GRAPHIC #1 **<END>** g01335567

WORK TOOLS

177-9152 KIT-ROADING PLATE & MOUNTING—BUCKET

S/N: JAY1-UP

PART OF 258-3818, 258-3819, 315-6353 CONVERSION AR-MACHINE

AN ATTACHMENT

SMCS-7405, 7557 **i01905397**

NOTE	REF NO	GRAPHIC REF	PART NUMBER	QTY	PART NAME 1 2 3 4 5 6 (PRODUCT LEVEL)	SEE PAGE
	1	1	**177-9153**	2	PLATE	
Y	2	1	*184-6097*	1	PLATE GP-ROADING (LH)	620
Y	3	1	*184-6098*	1	PLATE GP-ROADING (RH)	621
	4	1	**039-8557**	2	WASHER (13X26X6-MM THK)	
M	5	1	**6V-8949**	4	NUT (M10X1.5-6H THD)	
	6	1	**8T-4121**	8	WASHER-HARD (11X21X2.5-MM THK)	
M	7	1	**8T-4137**	2	BOLT (M10X1.5X20-MM)	
M	8	1	**8T-4186**	2	BOLT (M10X1.5X40-MM)	

M-METRIC PART
Y-SEPARATE ILLUSTRATION

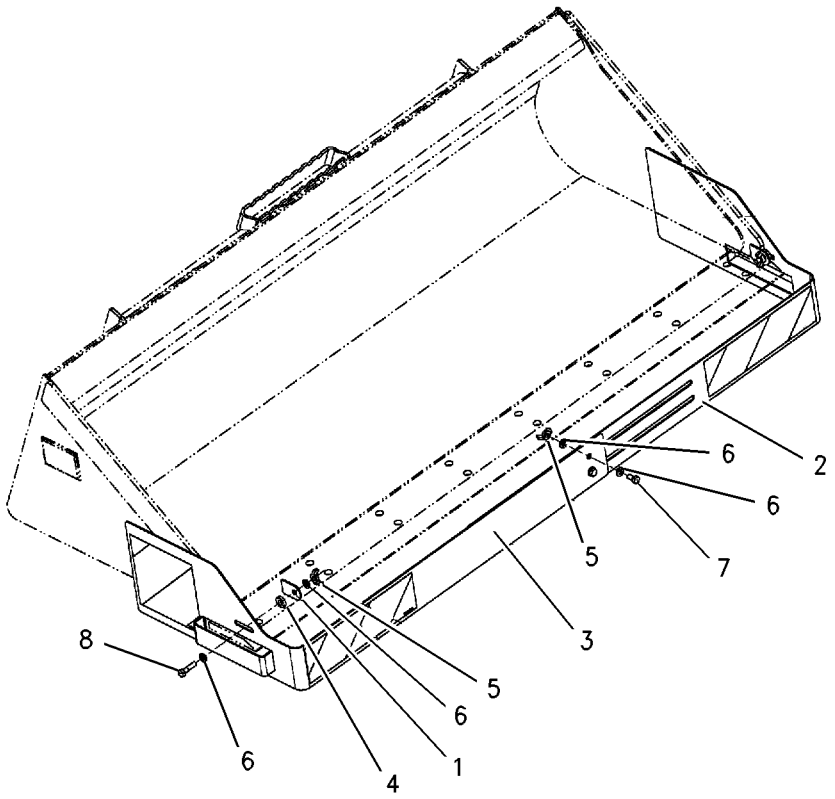

GRAPHIC #1 **<END>** g00778934

319-9480 KIT-ROADING PLATE & MOUNTING—BUCKET

S/N: JAY1-UP

PART OF 258-3818, 258-3819, 315-6353 CONVERSION AR-MACHINE

AN ATTACHMENT

SMCS-7405, 7557 **i03342321**

NOTE	PART NUMBER	QTY	PART NAME 1 2 3 4 5 6 (PRODUCT LEVEL)	SEE PAGE
M	**8T-4136**	8	BOLT (M10X1.5X25-MM)	
M	**8T-4186**	2	BOLT (M10X1.5X40-MM)	
M	**6V-8949**	8	NUT (M10X1.5-THD)	
	319-9489	2	PLATE	
	319-9481	1	PLATE AS (LH)	
	177-7414	1	FILM-STRIPE (REFLECTIVE, RED, WHITE)	
	177-7415	1	FILM (REFLECTIVE)	
	319-9483	1	PLATE AS	
	319-9482	1	PLATE AS (RH)	
	177-7414	1	FILM-STRIPE (REFLECTIVE, RED, WHITE)	
	177-7415	1	FILM (REFLECTIVE)	
	319-9484	1	PLATE AS	
	319-9490	2	STRAP AS	
	039-8557	4	WASHER (13X26X6-MM THK)	
	8T-4121	16	WASHER-HARD (11X21X2.5-MM THK)	

M-METRIC PART

<END>

WORK TOOLS

258-3645 KIT-WATER TANK & MOUNTING

S/N: JAY1-UP

AN ATTACHMENT

SMCS-5613 **i03636358**

NOTE	REF NO	GRAPHIC REF	PART NUMBER	QTY	PART NAME 1 2 3 4 5 6 (PRODUCT LEVEL)	SEE PAGE
	1	1	**3B-7255**	1	BUSHING-REDUCING	
	2	1	**3S-2093**	4	STRAP-CABLE	
	3	1	**7X-0495**	1	ADAPTER	
	4	1	**8T-0737**	1	VALVE-SHUTOFF	
Y	5	1	**116-2001**	1	STRAINER GP-WATER	625
	6	1	**124-1916**	1	COUPLING-PERMANENT	
	7	1	**124-1917**	1	COUPLING-PERMANENT	
	8	1	**165-4894**	1	HARNESS AS-WORK TOOL	
		1	**126-1767**	8	PIN-CONNECTOR (14-GA)	
		1	**9X-3402**	10	SOCKET-CONNECTOR (16-GA TO 18-GA)	
		1	**102-8806**	1	KIT-RECEPTACLE (8-PIN)	
					(INCLUDES RECEPTACLE AS & WEDGE)	
E		1	**119-3662**		TUBE-HEAT SHRINK (10.85-MM DIA) (13-CM)	
		1	**155-2265**	1	KIT-CONNECTING PLUG (8-PIN)	
		1	**155-2270**	1	KIT-CONNECTING PLUG (2-PIN)	
					(EACH PLUG KIT INCLUDES PLUG AS, WEDGE & INTERFACE SEAL)	
Y	9	1	**166-2551**	1	TANK GP-WATER	626
I	10	1	**166-2552**	1	HOSE AS	
	11	1	**166-2557**	1	PLATE	
	12	1	**166-2558**	1	COUPLING	
	13	1	**166-2559**	2	BRACKET	
	14	1	**218-5847**	1	PLATE	
	15	1	**233-5719**	1	PUMP GP-DIAPHRAGM	
	16	1	**258-3644**	1	BRACKET AS	
	17	1	**7R-0476**	1	STRAINER (WATER TANK FILL)	
B	18	1	**292-5476**	1	BRACKET	
	19	1	**003-2143**	1	ELBOW	
	20	1	**067-2551**	4	CLIP	
B	21	1	**101-9759**	1	SPACER (9X20X39.2-MM THK)	
M	22	1	**111-4627**	4	SCREW-MACHINE (M6X1X30-MM)	
	23	1	**119-3859**	6	SCREW-PAN HEAD (10-16X0.75-IN)	
M	24	1	**129-3178**	4	LOCKNUT (M6X1-THD)	
	25	1	**1L-2279**	1	ELBOW	
BM	26	1	**5C-7261**	5	NUT (M8X1.25-THD)	
B	27	1	**5P-4116**	6	WASHER-HARD (8.8X20.5X2-MM THK)	
	28	1	**5P-8246**	2	WASHER-HARD (15.5X29X3-MM THK)	
	29	1	**8T-4122**	4	WASHER-HARD (17X32X3.5-MM THK)	
	30	1	**154-1580**	1	WASHER-HARD (22X38X6-MM THK)	
	31	1	**8T-4205**	4	WASHER-HARD (7.2X14.5X2-MM THK)	
	32	1	**8T-4224**	4	WASHER-HARD (8.8X16X2-MM THK)	
M	33	1	**8T-4779**	4	BOLT (M16X2X35-MM)	
M	34	1	**8T-4908**	4	BOLT (M8X1.25X25-MM)	
BM	35	1	**8T-6870**	1	BOLT (M8X1.25X70-MM)	
M	36	1	**7X-2561**	8	BOLT (M20X2.5X35-MM)	
E	37	1	**167-0608**		SEAL (86-CM)	
BE	38	1	**122-6869**		HOSE-HYDRAULIC (410-CM)	
BE	38A	1	**122-6869**		HOSE-HYDRAULIC (383-CM)	
BE	38B	1	**122-6869**		HOSE-HYDRAULIC (369-CM)	
	39	1	**258-4389**	4	MOUNT	
	40	1	**178-3620**	2	STRAP-DUAL CLAMP	

B-USE AS REQUIRED
E-ORDER BY THE CENTIMETER
I-REFER TO HYDRAULIC INFORMATION SYSTEM
M-METRIC PART
Y-SEPARATE ILLUSTRATION

258-3645 KIT-WATER TANK & MOUNTING *(contd.)* i03636358

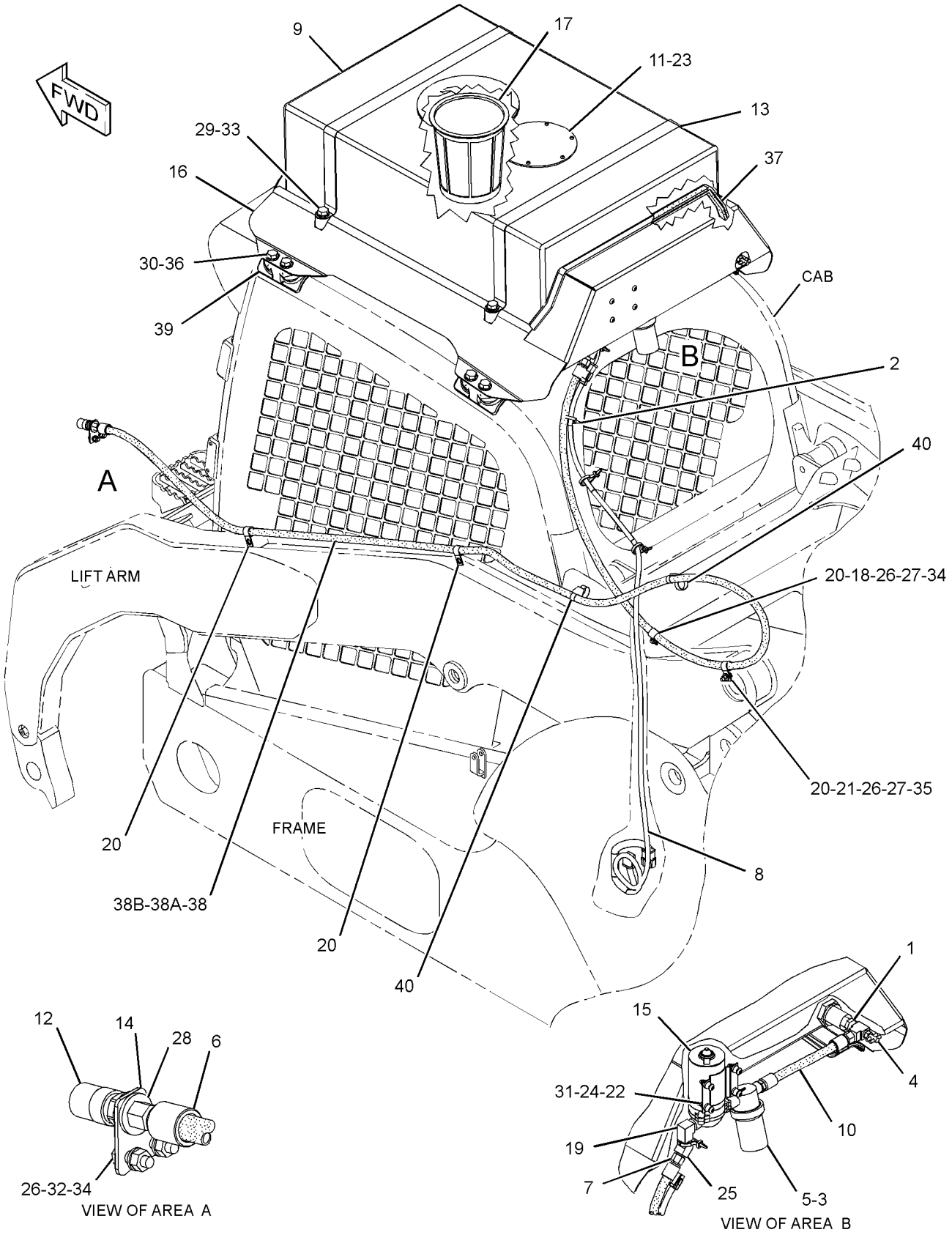

GRAPHIC #1 **<END>** g01359396

215-3957 LINK GP-COUPLER

S/N: JAY1-2159

PART OF 215-3962, 215-3963 CYLINDER & LINK GP-COUPLER

AN ATTACHMENT

SMCS-6129 **i02232650**

NOTE	REF NO	GRAPHIC REF	PART NUMBER	QTY	PART NAME 1 2 3 4 5 6 (PRODUCT LEVEL)	SEE PAGE
	1	1	**192-2637**	1	PLATE	
	2	1	**192-2638**	1	BRACKET	
C	3	1	**238-7693**	1	SPRING	
	4	1	**195-6754**	2	PIN-SPRING	
C	5	1	**8T-4123**	2	WASHER (22X35X3.5-MM THK)	

C-CHANGE FROM PREVIOUS TYPE

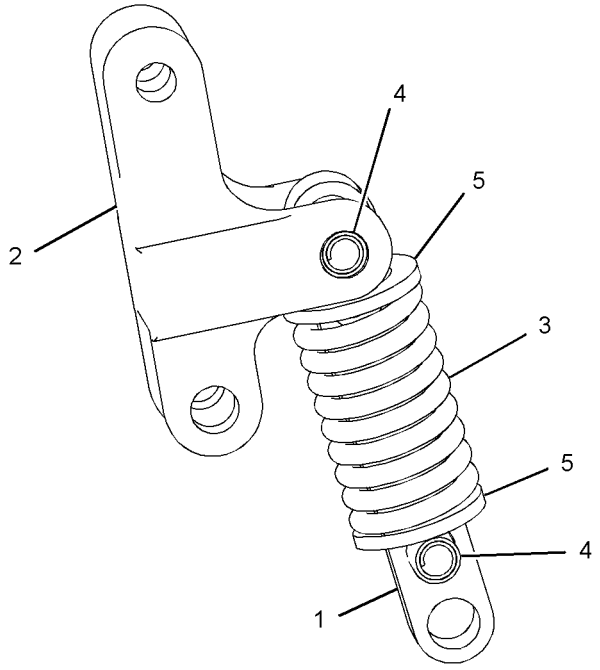

GRAPHIC #1 **<END>** g01130555

WORK TOOLS

215-3957 LINK GP-COUPLER

S/N: JAY2160-UP

PART OF 215-3962, 215-3963 CYLINDER & LINK GP-COUPLER

AN ATTACHMENT

SMCS-6129 **i02999956**

NOTE	REF NO	GRAPHIC REF	PART NUMBER	QTY	PART NAME 1 2 3 4 5 6 (PRODUCT LEVEL)	SEE PAGE
C	1	1	**192-2645**	1	SPRING	
C	2	1	**303-8768**	1	PIN-SPRING	
C	3	1	**310-6660**	1	PIN-SPRING	
C	4	1	**311-9240**	1	PLATE	
CM	5	1	**315-5493**	2	WASHER-HARD (22.5X35X4.5-MM THK)	
C	6	1	**319-2137**	1	BRACKET	

C-CHANGE FROM PREVIOUS TYPE
M-METRIC PART

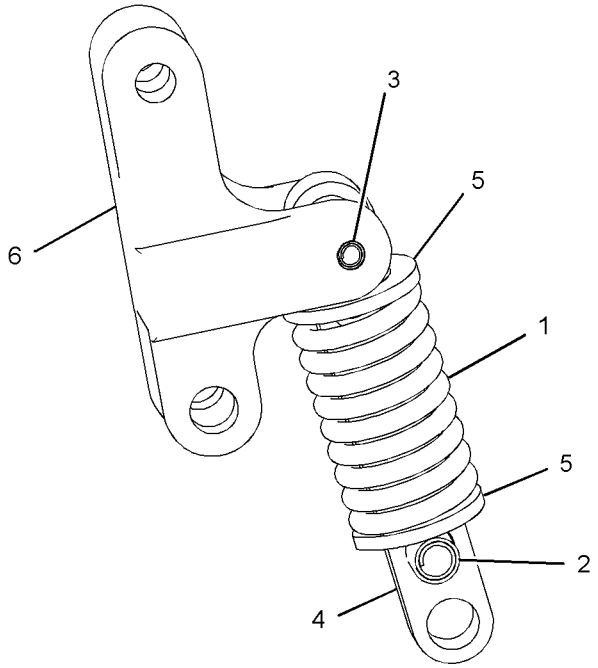

GRAPHIC #1 **<END>** g01523779

175-4238 LOCK GP-QUICK COUPLER—MECHANICAL

S/N: JAY1-UP

PART OF 258-3818, 258-3819, 315-6353 CONVERSION AR-MACHINE

AN ATTACHMENT

SMCS-6129 **i01408856**

NOTE	REF NO	GRAPHIC REF	PART NUMBER	QTY	PART NAME 1 2 3 4 5 6 (PRODUCT LEVEL)	SEE PAGE
	1	1	**9R-5301**	1	PIN-COTTER	
	2	1	**178-2247**	1	PIN	
	3	1	**9X-8257**	1	WASHER (17.5X30X3.5-MM THK)	

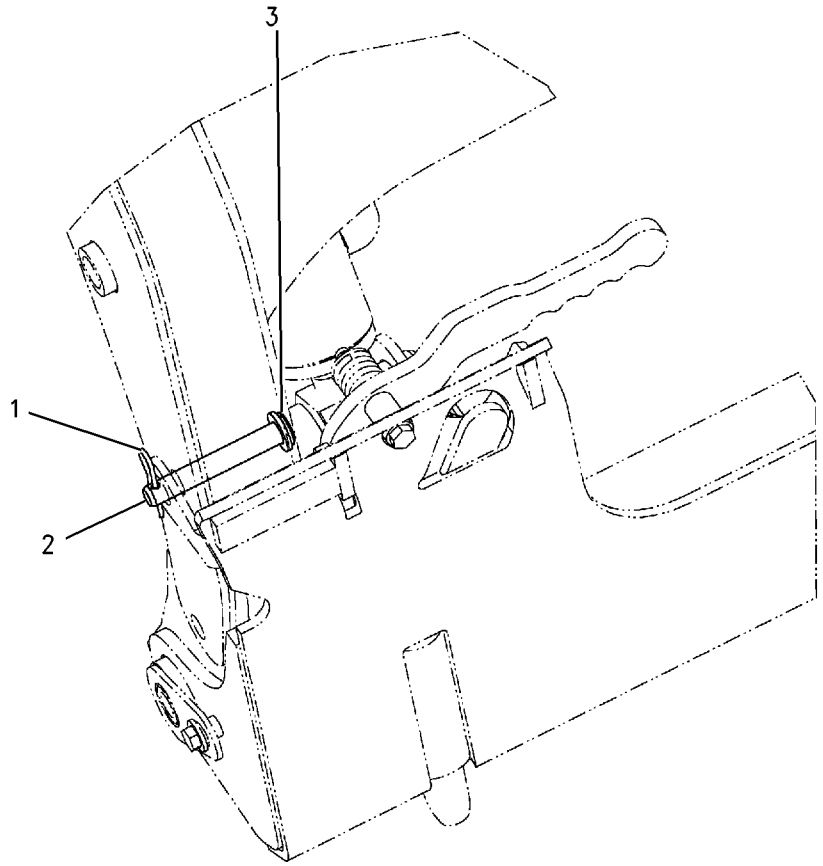

GRAPHIC #1 **<END>** g00741828

258-2535 LOCK GP-QUICK COUPLER–RH

S/N: JAY1-UP
PART OF 258-2500 COUPLER GP-QUICK
AN ATTACHMENT

SMCS-6129 **i02655596**

NOTE	REF NO	GRAPHIC REF	PART NUMBER	QTY	PART NAME 1 2 3 4 5 6 (PRODUCT LEVEL)	SEE PAGE
	1	1	**166-2560**	1	PIN-SPRING	
	2	1	**192-2642**	1	PIN	
Y	3	1	*258-2536*	1	HANDLE & PIN GP-COUPLER (RH)	609

Y-SEPARATE ILLUSTRATION

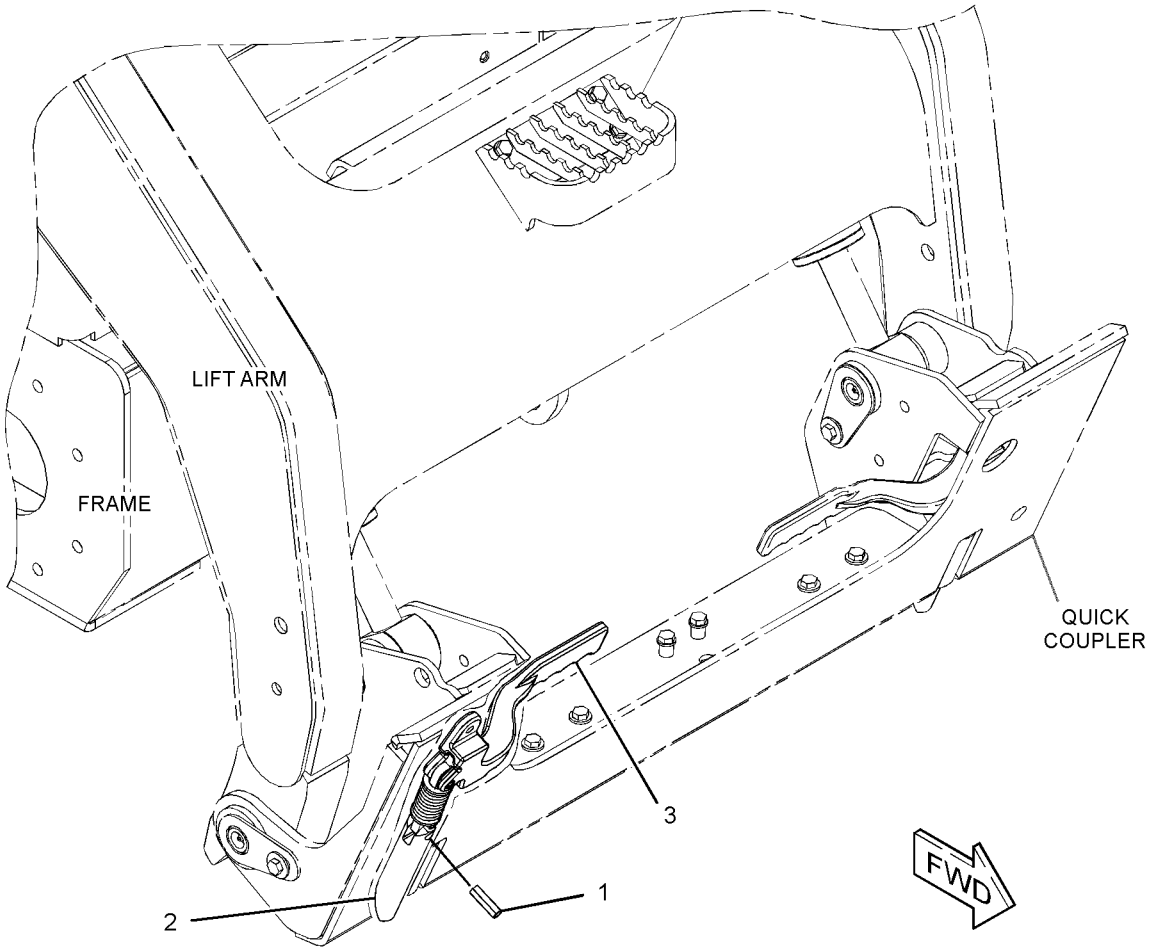

GRAPHIC #1 **<END>** g01335585

258-2537 LOCK GP-QUICK COUPLER–LH

S/N: JAY1-UP
PART OF 258-2500 COUPLER GP-QUICK
AN ATTACHMENT

SMCS-6129 **i02655597**

NOTE	REF NO	GRAPHIC REF	PART NUMBER	QTY	PART NAME 1 2 3 4 5 6 (PRODUCT LEVEL)	SEE PAGE
	1	1	**166-2560**	1	PIN-SPRING	
	2	1	**192-2642**	1	PIN	
Y	3	1	*258-2538*	1	HANDLE & PIN GP-COUPLER (LH)	610

Y-SEPARATE ILLUSTRATION

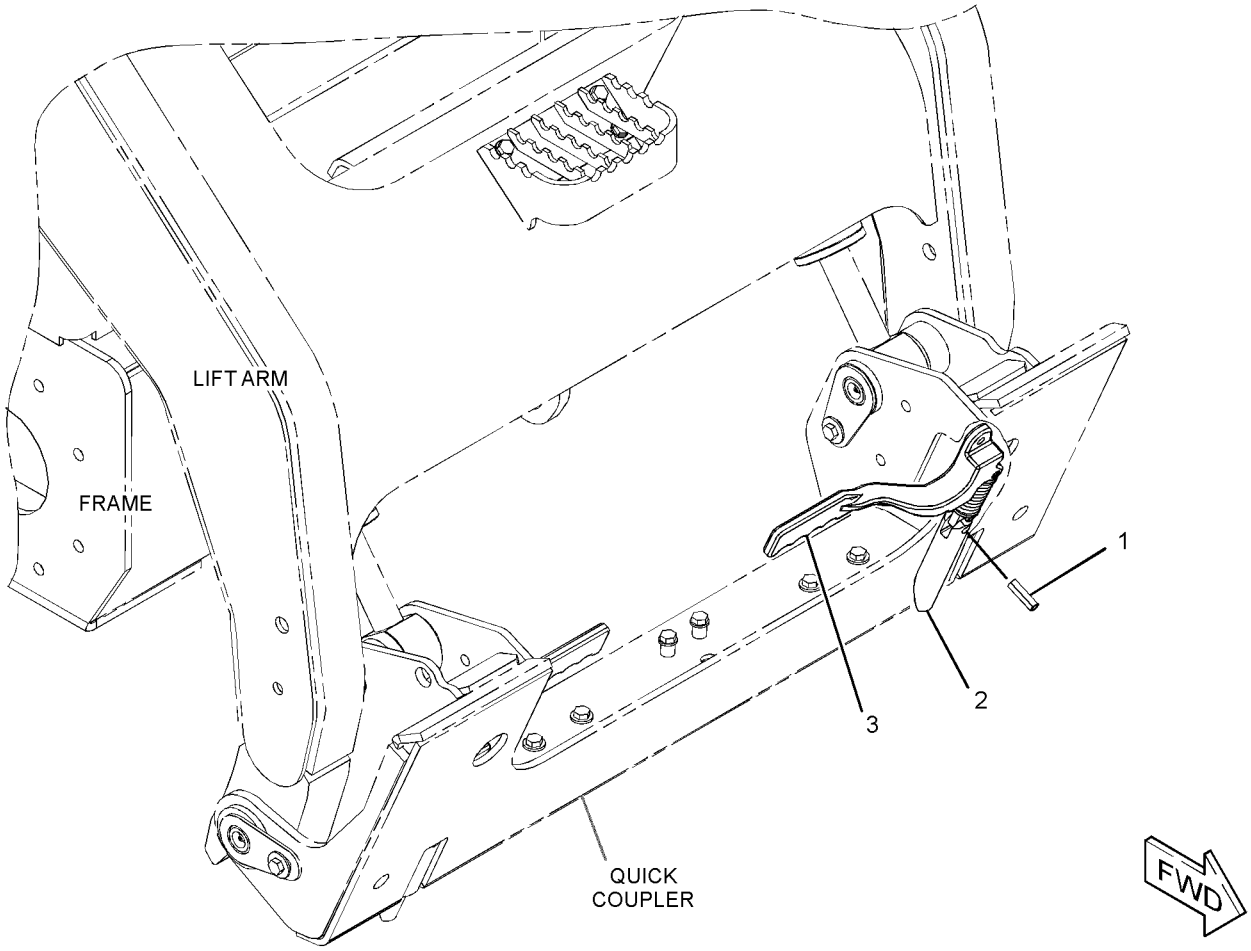

GRAPHIC #1 **<END>** g01335566

WORK TOOLS

184-6097 PLATE GP-ROADING—LH

S/N: JAY1-UP
PART OF 177-9152 KIT-ROADING PLATE & MOUNTING
AN ATTACHMENT

SMCS-7405, 7557 **i02939455**

NOTE	REF NO	GRAPHIC REF	PART NUMBER	QTY	PART NAME 1 2 3 4 5 6 (PRODUCT LEVEL)	SEE PAGE
	1	1	**177-7414**	1	FILM-STRIPE (REFLECTIVE, RED, WHITE)	
	2	1	**177-7415**	1	FILM (REFLECTIVE)	
	3	1	**177-9150**	1	PLATE AS (LH)	

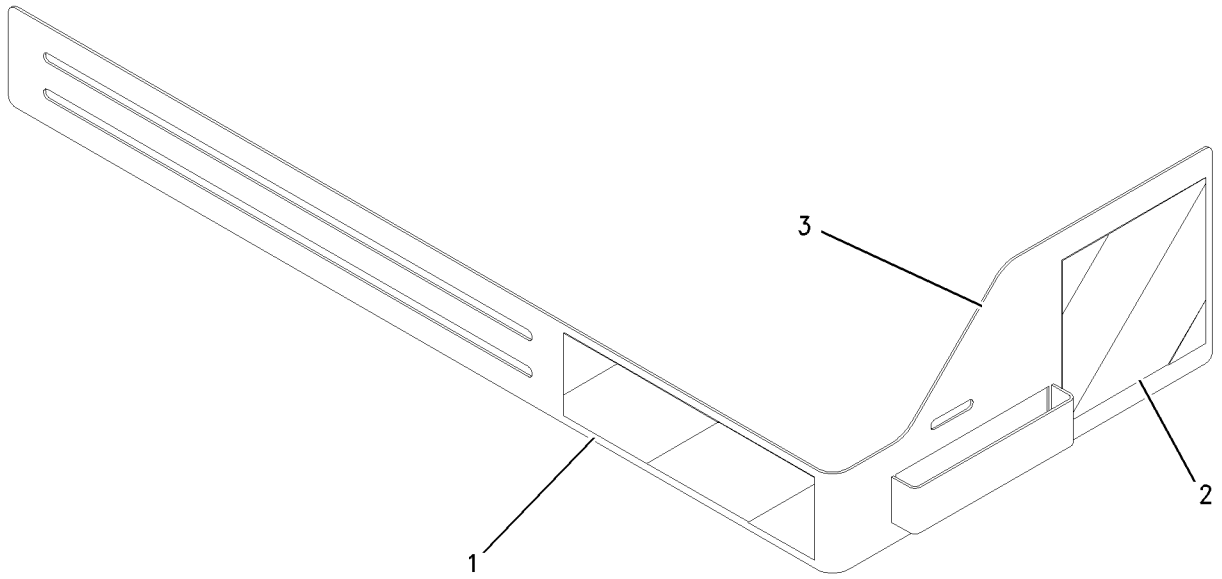

GRAPHIC #1 **<END>** g00995785

184-6098 PLATE GP-ROADING–RH

S/N: JAY1-UP
PART OF 177-9152 KIT-ROADING PLATE & MOUNTING
AN ATTACHMENT

SMCS-7405, 7557 **i02939456**

NOTE	REF NO	GRAPHIC REF	PART NUMBER	QTY	PART NAME 1 2 3 4 5 6 (PRODUCT LEVEL)	SEE PAGE
	1	1	**177-7414**	1	FILM-STRIPE (REFLECTIVE, RED, WHITE)	
	2	1	**177-7415**	1	FILM (REFLECTIVE)	
	3	1	**177-9151**	1	PLATE AS (RH)	

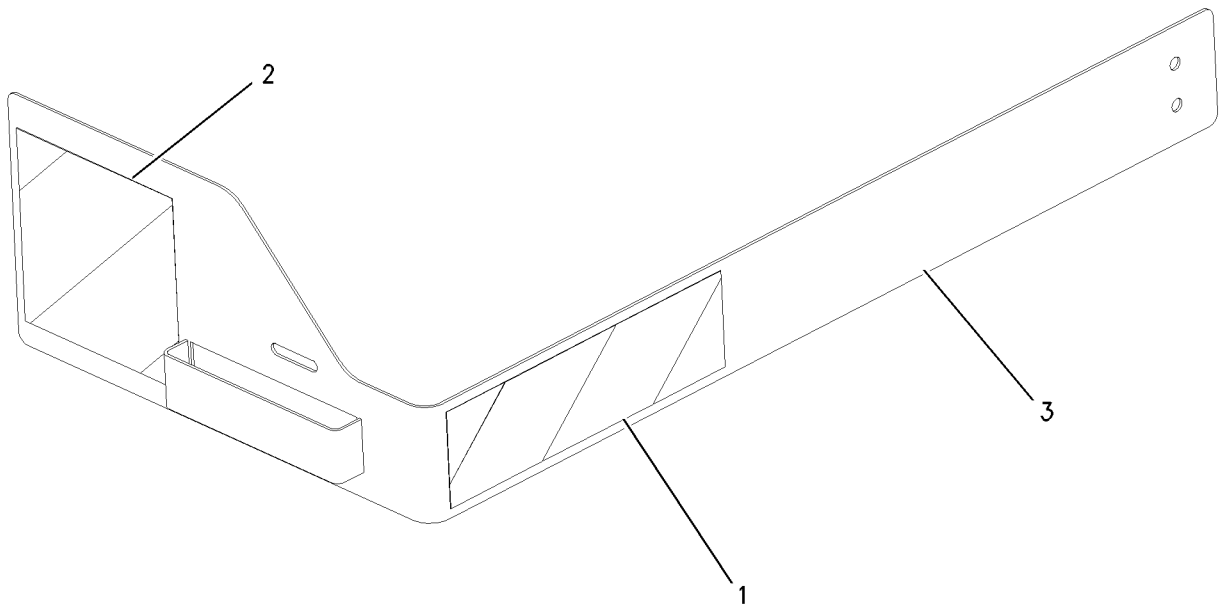

GRAPHIC #1 **<END>** g00995786

WORK TOOLS

177-1983 SPRING GP-BLADE

S/N: JAY1-UP
PART OF 177-1989, 177-1990 BLADE AR
AN ATTACHMENT

SMCS-6060 **i01497986**

NOTE	REF NO	GRAPHIC REF	PART NUMBER	QTY	PART NAME 1 2 3 4 5 6 (PRODUCT LEVEL)	SEE PAGE
	1	1	**177-1941**	4	SPRING	
	2	1	**177-1973**	1	PLATE AS	
M	3	1	**8T-4194**	2	BOLT (M12X1.75X50-MM)	
	4	1	**8T-4223**	4	WASHER-HARD (13.5X25.5X3-MM THK)	
M	5	1	**8T-4244**	2	NUT (M12X1.75-THD)	

M-METRIC PART

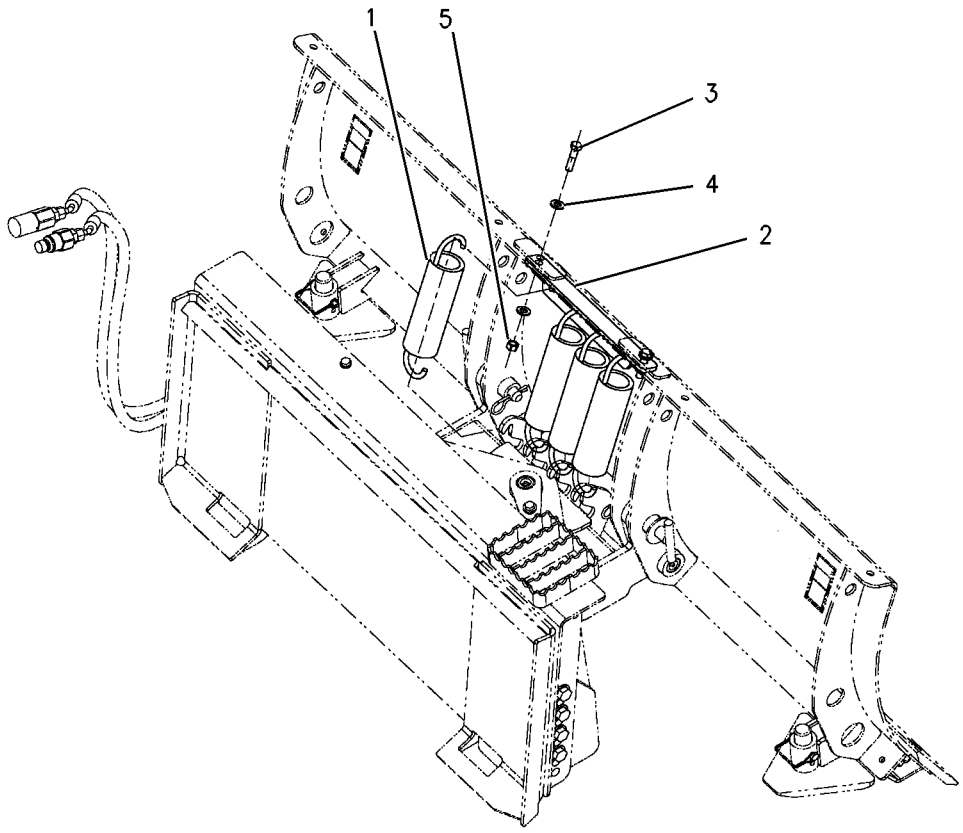

GRAPHIC #1 **<END>** g00777337

WORK TOOLS

188-7733 STEP GP-MATERIAL HANDLING ARM

S/N: JAY1-UP

PART OF 216-8756 ARM GP-MATERIAL HANDLING

AN ATTACHMENT

SMCS-6542 **i01498007**

NOTE	REF NO	GRAPHIC REF	PART NUMBER	QTY	PART NAME 1 2 3 4 5 6 (PRODUCT LEVEL)	SEE PAGE
	1	1	**186-5186**	1	STEP AS	
	2	1	**8T-4121**	2	WASHER-HARD (11X21X2.5-MM THK)	
M	3	1	**8T-4133**	2	NUT (M10X1.5-THD)	
M	4	1	**8T-4136**	2	BOLT (M10X1.5X25-MM)	

M-METRIC PART

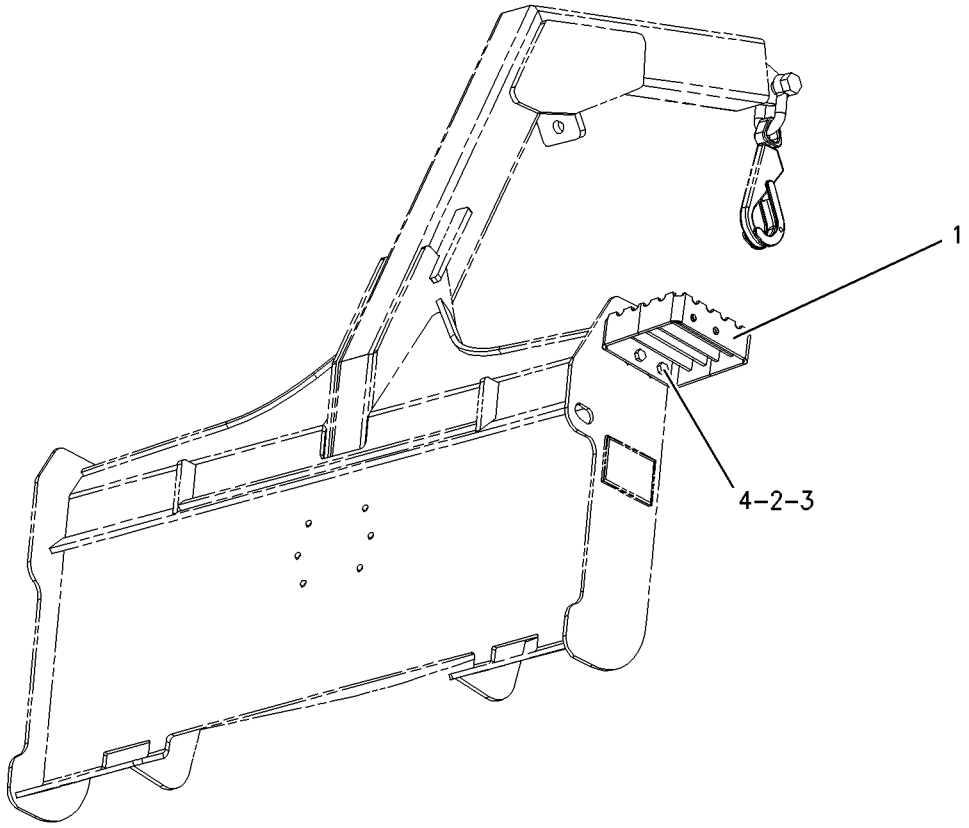

GRAPHIC #1 **<END>** g00777345

WORK TOOLS

173-7407 STOP GP-BUCKET—UTILITY

S/N: JAY1-UP
PART OF 285-6116 GRAPPLE & CYLINDER GP-UTILITY
AN ATTACHMENT

SMCS-6001, 6307 **i01218895**

NOTE	REF NO	GRAPHIC REF	PART NUMBER	QTY	PART NAME 1 2 3 4 5 6 (PRODUCT LEVEL)	SEE PAGE
	1	1	**8Y-7386**	1	SPACER (12.5X17.1X16.5-MM THK)	
	2	1	**2S-6408**	2	WASHER-RETAINING (0.531X3.25X0.438-IN THK)	
	3	1	**8T-4223**	1	WASHER-HARD (13.5X25.5X3-MM THK)	
M	4	1	**8T-4910**	1	BOLT (M12X1.75X60-MM)	
	5	1	**8Y-7385**	1	STOP	

M-METRIC PART

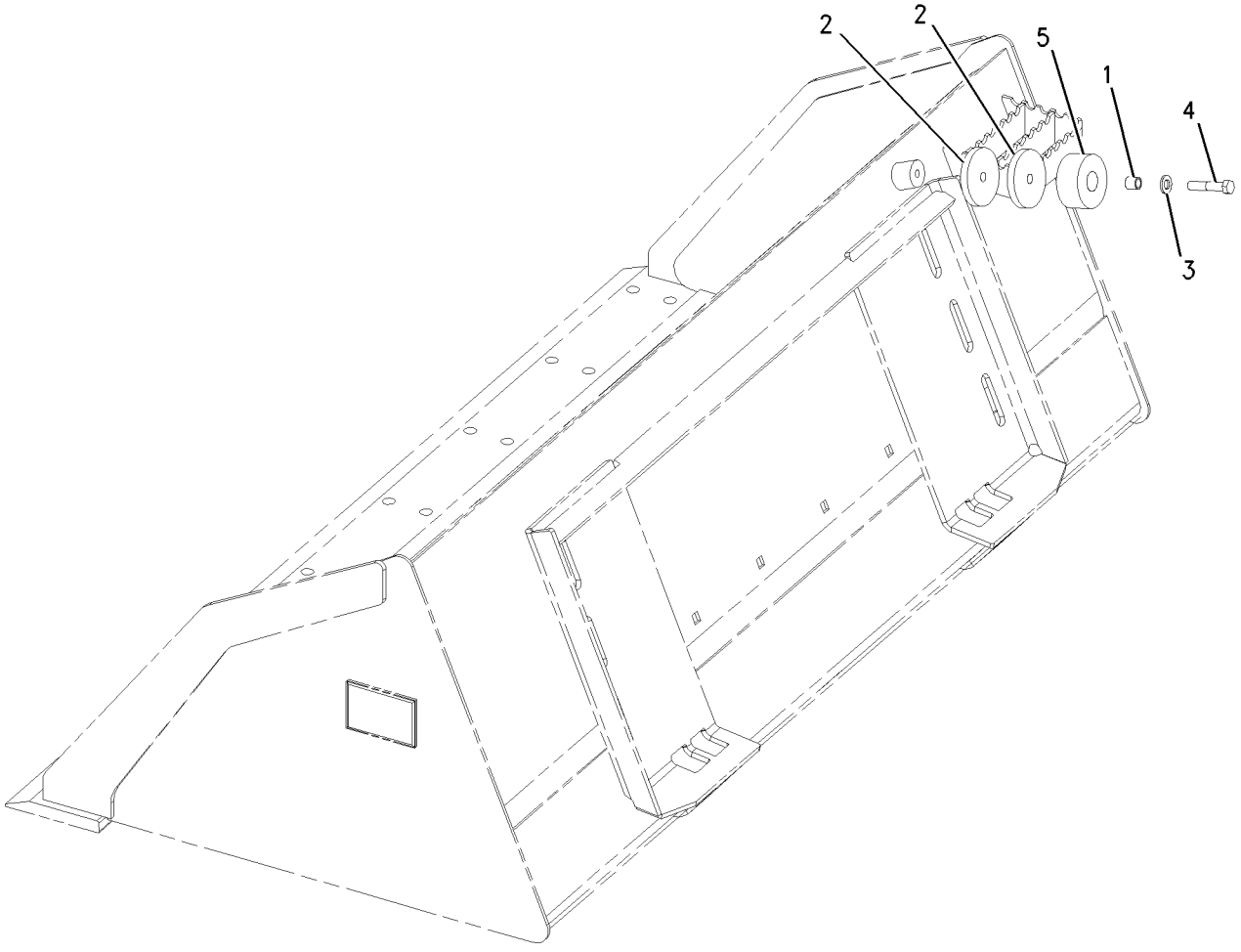

GRAPHIC #1 **<END>** g00651574

116-2001 STRAINER GP-WATER

S/N: JAY1-UP

PART OF 258-3645 KIT-WATER TANK & MOUNTING

AN ATTACHMENT

SMCS-5612 **i02571404**

NOTE	REF NO	GRAPHIC REF	PART NUMBER	QTY	PART NAME 1 2 3 4 5 6 (PRODUCT LEVEL)	SEE PAGE
	1	1	**119-1415**	1	GASKET	
	2	1	**119-1414**	1	SCREEN (WATER TANK)	

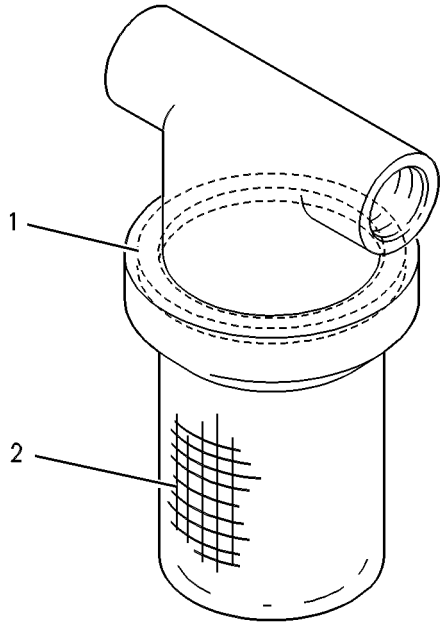

GRAPHIC #1 **<END>** g00293866

WORK TOOLS

166-2551 TANK GP-WATER

S/N: JAY1-UP
PART OF 258-3645 KIT-WATER TANK & MOUNTING
AN ATTACHMENT

SMCS-5613 **i02571400**

NOTE	REF NO	GRAPHIC REF	PART NUMBER	QTY	PART NAME 1 2 3 4 5 6 (PRODUCT LEVEL)	SEE PAGE
	1	1	**192-2606**	1	CAP AS (WATER TANK)	
	2	1	**192-2607**	1	FITTING-DRAIN	

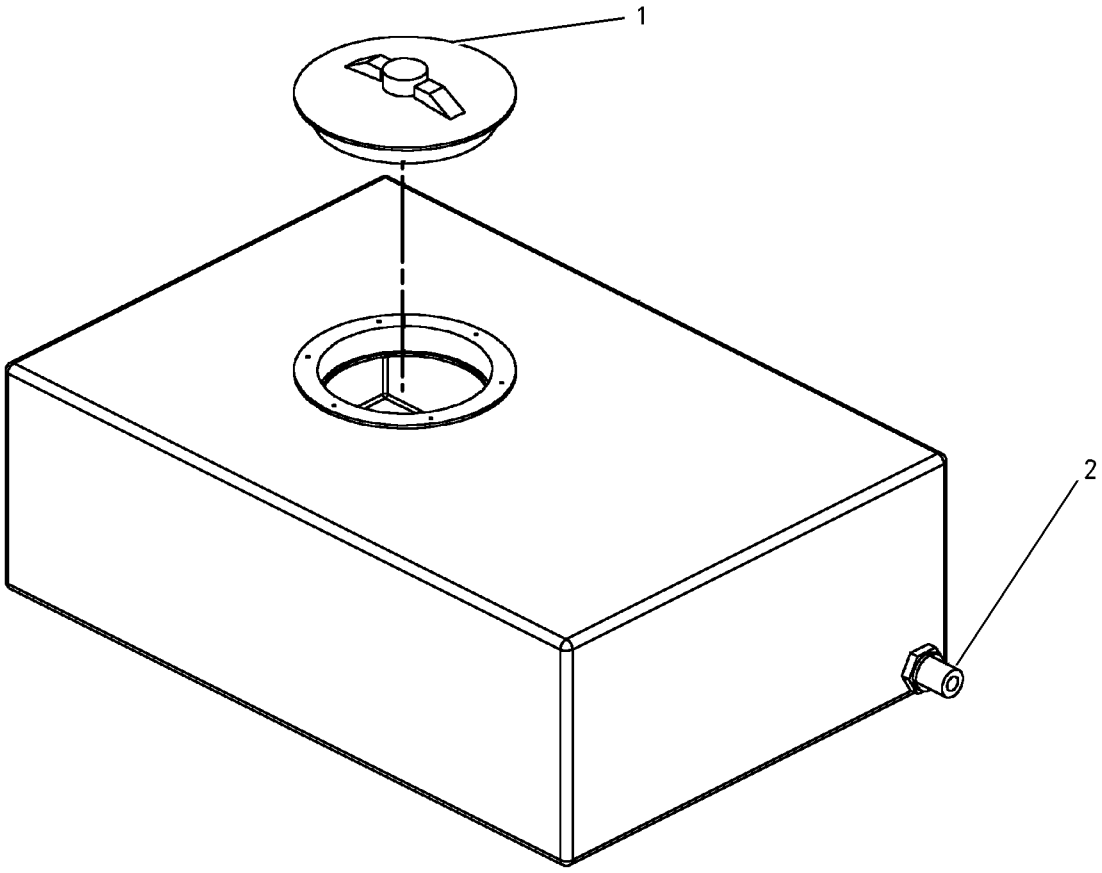

GRAPHIC #1 **<END>** g00742953

WORK TOOLS

141-4999 TOOTH GP-UNI

S/N: JAY1-UP

PART OF 279-5366, 279-5370, 279-5374, 279-5378 BUCKET AR-GENERAL PURPOSE, 154-5046, 279-5380, 279-5392, 279-5400, 279-5401, 296-8055, 325-7035, 325-7045, 325-7055, 325-7065, 325-7075 BUCKET AR-MULTIPURPOSE, 296-8191 BUCKET GP-GENERAL PURPOSE

AN ATTACHMENT

SMCS-6822 **i02163942**

NOTE	REF NO	GRAPHIC REF	PART NUMBER	QTY	PART NAME 1 2 3 4 5 6 (PRODUCT LEVEL)	SEE PAGE
	1	1	**132-4720**	1	TOOTH-UNI-SINGLE STRAP	
	2	1	**246-4349**	2	SCREW-FLAT HEAD (M16X2-THD)	
M	3	1	**8T-4778**	2	LOCKNUT (M16X2-THD)	

M-METRIC PART

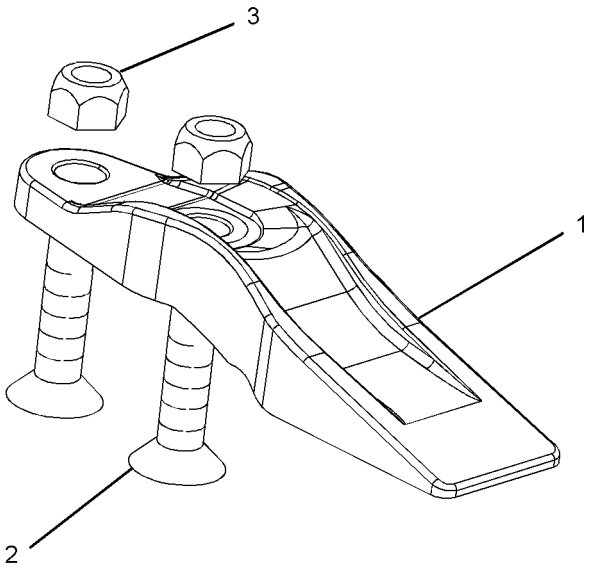

GRAPHIC #1 **<END>** g01097424

OPERATOR STATION

258-4229 ACCESSORY GP-CAB

S/N: JAY1-UP

PART OF 258-3680, 258-3742 CAB AR-ENCLOSED ROPS, 258-3740 OPTION AR-CAB

AN ATTACHMENT

SMCS-7301, 731C **i02629783**

NOTE	REF NO	GRAPHIC REF	PART NUMBER	QTY	PART NAME 1 2 3 4 5 6 (PRODUCT LEVEL)	SEE PAGE
	1	1	**258-3727**	4	SCREW-TRUSS HEAD (NO 12X17.46-MM)	
	2	1	**258-4098**	1	HOLDER-CUP	
	3	1	**258-4099**	1	TRAY (CHANGE)	

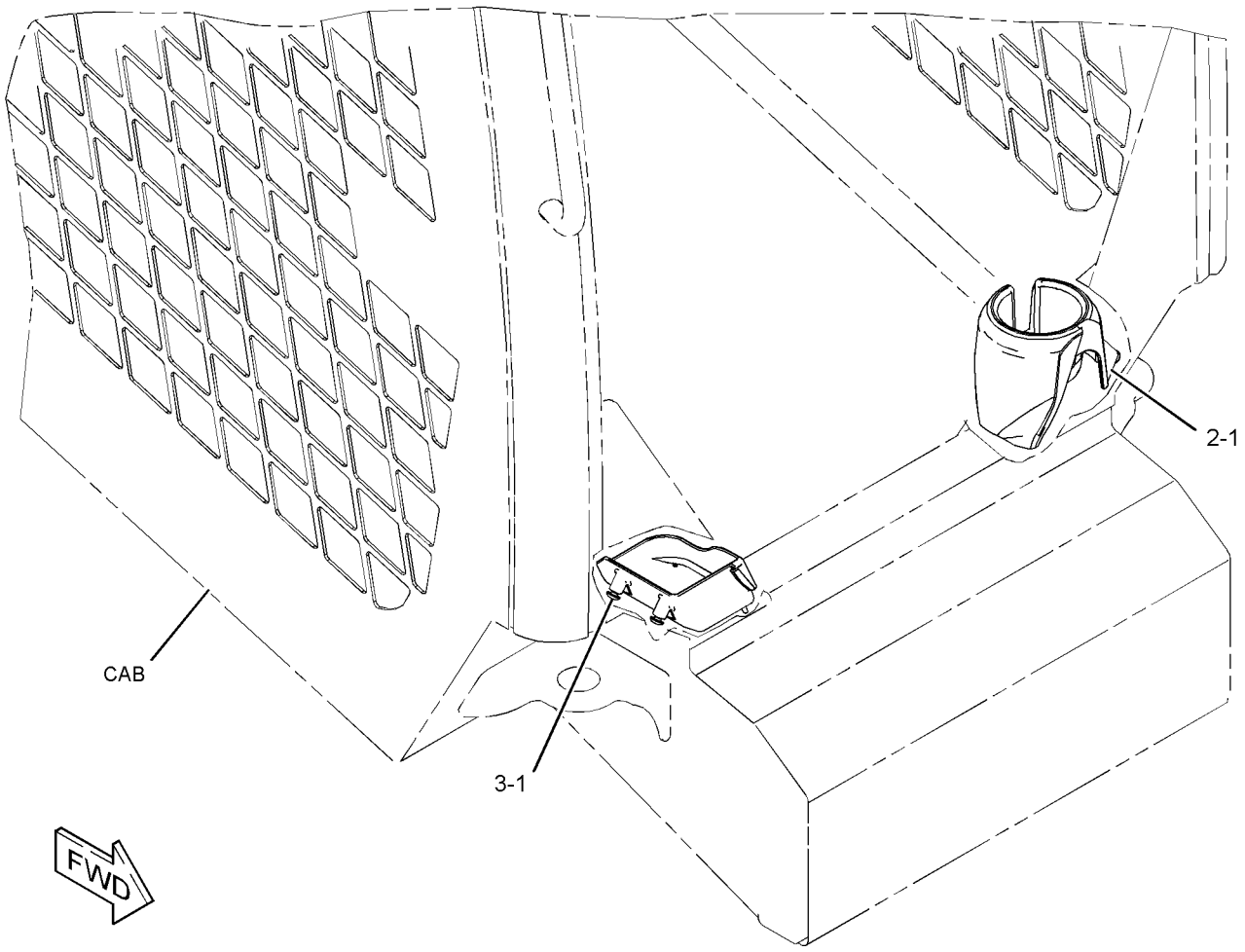

GRAPHIC #1 **<END>** g01322422

OPERATOR STATION

176-3900 ACCUMULATOR GP-REFRIGERANT—WITH DESICCANT

S/N: JAY1-UP

FIELD REPLACEMENT FOR 186-6190—PAGE 630

SMCS-7320 **i02195254**

NOTE	REF NO	GRAPHIC REF	PART NUMBER	QTY	PART NAME 1 2 3 4 5 6 (PRODUCT LEVEL)	SEE PAGE
					(NO SERVICED PARTS)	

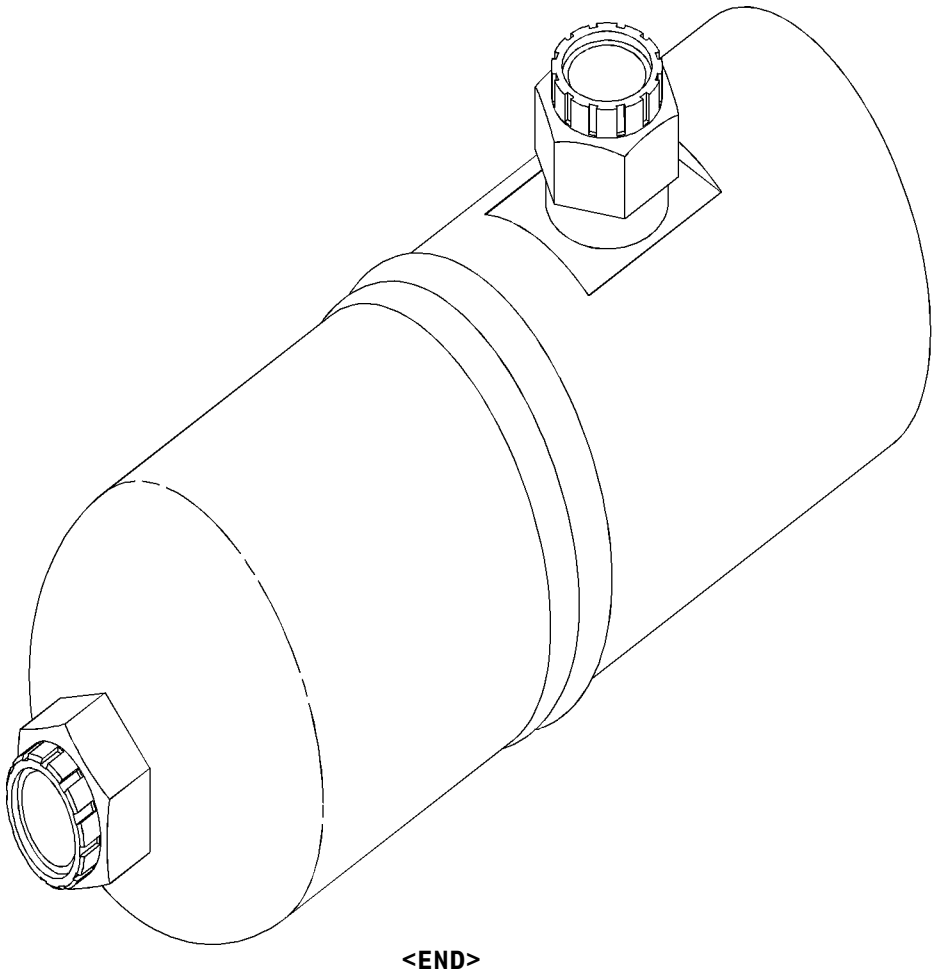

GRAPHIC #1 **<END>** g01035076

OPERATOR STATION

186-6190 ACCUMULATOR GP-REFRIGERANT—WITH DESICCANT

S/N: JAY1-UP
PART OF 258-2474 KIT-AIR COND & HEATER INSTL, 258-2475 KIT-AIR CONDITIONER INSTL, 258-4265 LINES GP-AIR CONDITIONER
FIELD REPLACEMENT ORDER 176-3900—PAGE 629
AN ATTACHMENT

SMCS-7320 **i02306357**

NOTE	REF NO	GRAPHIC REF	PART NUMBER	QTY	PART NAME 1 2 3 4 5 6 (PRODUCT LEVEL)	SEE PAGE
					(NO SERVICED PARTS)	

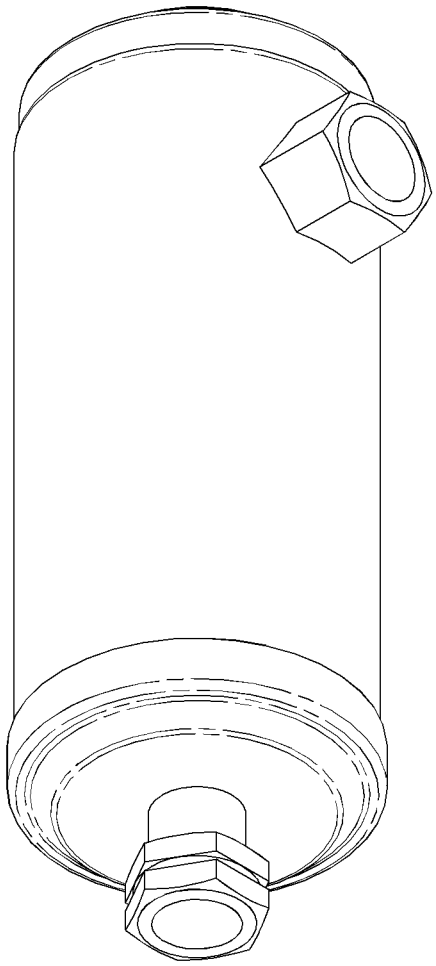

GRAPHIC #1 **<END>** g01155244

OPERATOR STATION

258-4261 AIR CONDITIONER & MOUNTING GP

S/N: JAY1-UP
PART OF 258-4260 AIR CONDITIONER AR
AN ATTACHMENT

SMCS-7320 **i03624612**

NOTE	REF NO	GRAPHIC REF	PART NUMBER	QTY	PART NAME 1 2 3 4 5 6 (PRODUCT LEVEL)	SEE PAGE
	1	1	**206-1345**	2	STRAP-CABLE	
	2	1	**258-3792**	1	SEAL	
	3	1	**258-3794**	1	INSULATION	
Y	4	1	*258-4290*	1	AIR CONDITIONER GP	633
	5	1	**258-4408**	1	INSULATION	
	6	1	**266-0299**	1	SWITCH AS-ROCKER (AIR CONDITIONER)	
		1	**111-7899**	1	GASKET	
Y	7	1	*266-2430*	1	CONTROL & WIRING GP-AIR & TEMP	646
M	8	1	**266-3315**	4	BOLT-FLANGE HEAD (M8X1.25X25.5-MM)	
	9	1	**266-3314**	2	BOLT-FLANGE HEAD (M6X1X20.5-MM)	

M-METRIC PART
Y-SEPARATE ILLUSTRATION

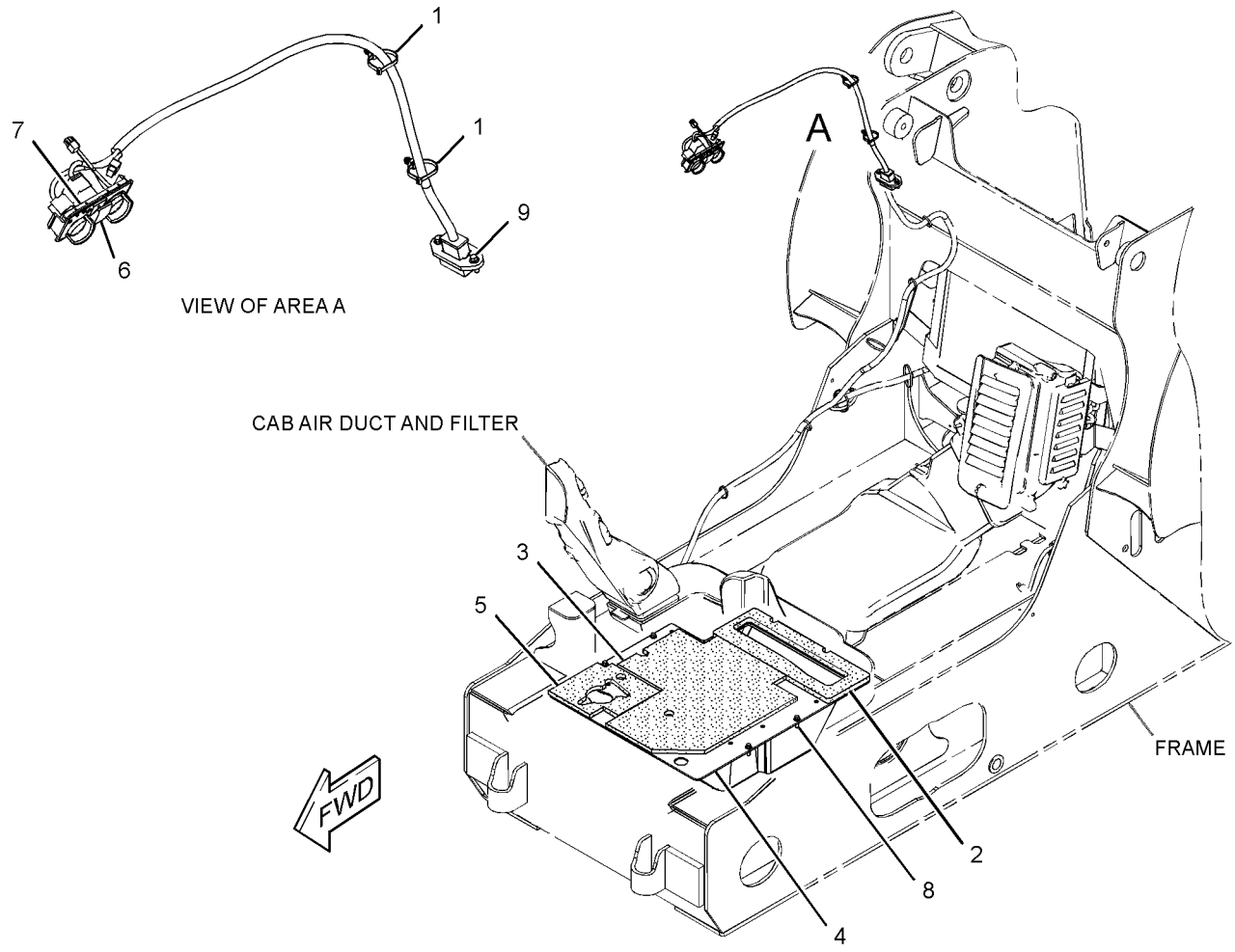

GRAPHIC #1 **<END>** g01311283

OPERATOR STATION

258-4260 AIR CONDITIONER AR

S/N: JAY1-UP

PART OF 258-3680 CAB AR-ENCLOSED ROPS

AN ATTACHMENT

SMCS-7320 **i03505640**

NOTE	PART NUMBER	QTY	PART NAME 1 2 3 4 5 6 (PRODUCT LEVEL)	SEE PAGE
Y	*258-4261*	1	AIR CONDITIONER & MOUNTING GP	631
Y	*258-2468*	1	COMPRESSOR & MTG GP-REFRIG	643
Y	*258-4280*	1	CONDENSER & MTG GP-REFRIGERANT	644
Y	*258-4252*	1	DUCT & FILTER GP-CAB AIR	691
Y	*258-4265*	1	LINES GP-AIR CONDITIONER	726
Y	*258-4255*	1	LINES GP-HEATER	728
Y	*258-4146*	1	WIRING GP-AIR CONDITIONER	172

Y-SEPARATE ILLUSTRATION

<END>

OPERATOR STATION

258-4290 AIR CONDITIONER GP

S/N: JAY1-3455

PART OF 258-4261 AIR CONDITIONER & MOUNTING GP, 258-2474 KIT-AIR COND & HEATER INSTL, 258-2475 KIT-AIR CONDITIONER INSTL AN ATTACHMENT

SMCS-7320, 7342 **i03635697**

NOTE	REF NO	GRAPHIC REF	PART NUMBER	QTY	PART NAME 1 2 3 4 5 6 (PRODUCT LEVEL)	SEE PAGE
	1	1	**119-9631**	1	SWITCH-TEMPERATURE (AIR CONDITIONER)	
	2	1	**295-5440**	1	MOTOR (BLOWER)	
	3	1	**232-1384**	1	ORIFICE AS-AIR CONDITIONER	
	4	1	**258-4273**	1	CASE AS	
	5	1	**258-4274**	1	GASKET	
	6	1	**258-4286**	1	TUBE	
	7	1	**258-4298**	1	PLATE AS	
	8	1	**266-2432**	1	VALVE AS-WATER	
	9	1	**266-2433**	1	COIL AS-EVAPORATOR	
	10	1	**266-2434**	1	COIL AS-HEATER	
	11	1	**266-2435**	1	HARNESS AS-HEATER & AIR COND	
		1	**7T-6739**	1	HOUSING-PLUG	
		1	**8T-8729**	3	PIN-CONNECTOR (16-GA TO 18-GA)	
		1	**9W-0852**	5	PIN-CONNECTOR (14-GA)	
		1	**102-8806**	1	KIT-RECEPTACLE (8-PIN) (INCLUDES RECEPTACLE AS & WEDGE)	
		1	**100-6674**	3	SEAL-CONNECTOR	
		1	**9G-9314**	3	TERMINAL (14-GA TO 16-GA)	
		1	**5P-4571**	1	TERMINAL-BLADE (14-GA TO 16-GA)	
		1	**6S-4350**	2	TERMINAL-BLADE (14-GA TO 16-GA)	
E		1	**8Y-8081**		TUBE-CONVOLUTED (50-CM)	
E		1	**119-3662**		TUBE-HEAT SHRINK (10.85-MM DIA) (7-CM)	
	12	1	**283-2458**	2	NUT-SPEED	
	13	1	**6V-6717**	4	SCREW-WASHER HEAD (8-32X9.52-MM)	
M	14	1	**9X-2045**	9	SCREW-TRUSS HEAD (M6X1X20-MM)	
D	15	1	**5P-5637**		SEAL (0.17-M EACH)	
	16	1	**294-0091**	1	FILM-INSTRUCTION (DO NOT SPRAY, READ OMM)	

D-ORDER BY THE METER
E-ORDER BY THE CENTIMETER
M-METRIC PART

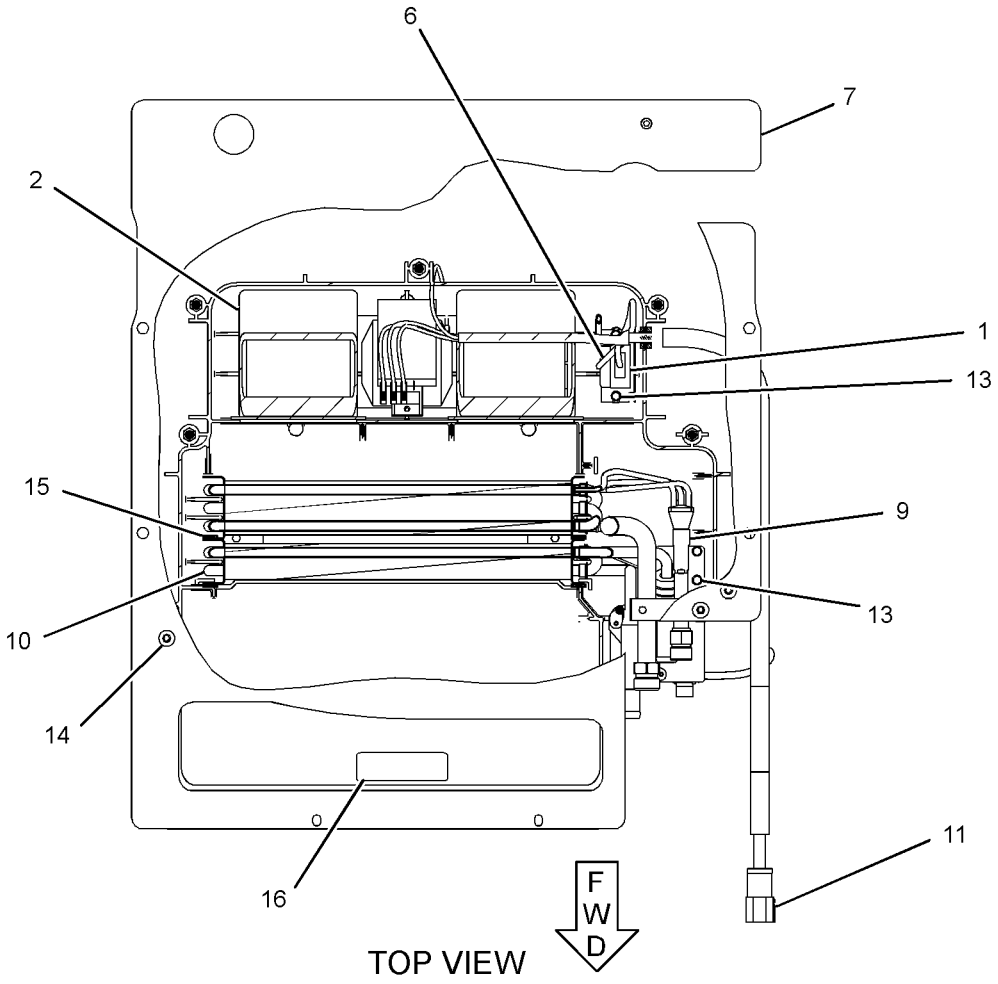

TOP VIEW

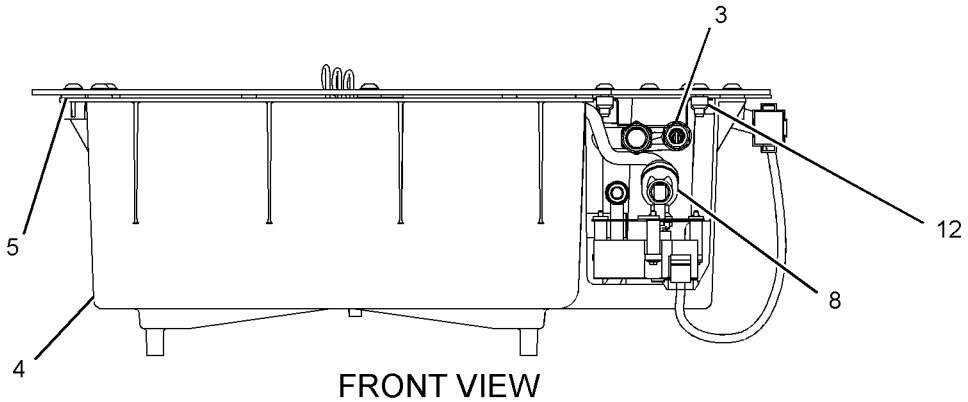

FRONT VIEW

GRAPHIC #1

<END>

g01339586

OPERATOR STATION

258-4290 AIR CONDITIONER GP

S/N: JAY3456-UP

PART OF 258-4261 AIR CONDITIONER & MOUNTING GP, 258-2474 KIT-AIR COND & HEATER INSTL, 258-2475 KIT-AIR CONDITIONER INSTL

AN ATTACHMENT

SMCS-7320, 7342 **i03615660**

NOTE	REF NO	GRAPHIC REF	PART NUMBER	QTY	PART NAME 1 2 3 4 5 6 (PRODUCT LEVEL)	SEE PAGE
	1	1	**119-9631**	1	SWITCH-TEMPERATURE (AIR CONDITIONER)	
	2	1	**295-5440**	1	MOTOR (BLOWER)	
	3	1	**232-1384**	1	ORIFICE AS-AIR CONDITIONER	
	4	1	**258-4273**	1	CASE AS	
	5	1	**258-4274**	1	GASKET	
	6	1	**258-4286**	1	TUBE	
	7	1	**258-4298**	1	PLATE AS	
C	8	1	**328-3317**	1	VALVE AS-WATER	
	9	1	**266-2433**	1	COIL AS-EVAPORATOR	
	10	1	**266-2434**	1	COIL AS-HEATER	
C	11	1	**328-2369**	1	HARNESS AS-MOTOR	
		1	**7T-6739**	1	HOUSING-PLUG	
		1	**186-3735**	3	PIN-CONNECTOR (16-GA TO 18-GA)	
		1	**9W-0852**	5	PIN-CONNECTOR (14-GA)	
		1	**155-2271**	1	KIT-CONNECTING PLUG (4-PIN)	
					(INCLUDES PLUG AS, WEDGE & INTERFACE SEAL)	
		1	**8T-8737**	1	PLUG-SEAL	
		1	**102-8806**	1	KIT-RECEPTACLE (8-PIN)	
					(INCLUDES RECEPTACLE AS & WEDGE)	
		1	**186-3736**	1	SOCKET-CONNECTOR (16-GA TO 18-GA)	
		1	**9W-0844**	2	SOCKET-CONNECTOR (14-GA)	
		1	**3S-2093**	8	STRAP-CABLE	
		1	**9G-9314**	3	TERMINAL (14-GA TO 16-GA)	
		1	**5P-4571**	1	TERMINAL-BLADE (14-GA TO 16-GA)	
		1	**6S-4350**	2	TERMINAL-BLADE (14-GA TO 16-GA)	
E		1	**8Y-8081**		TUBE-CONVOLUTED (50-CM)	
E		1	**125-7874**		TUBE-HEAT SHRINK (5.72-MM DIA) (5-CM)	
	12	1	**283-2458**	2	NUT-SPEED	
	13	1	**6V-6717**	4	SCREW-WASHER HEAD (8-32X9.52-MM)	
M	14	1	**9X-2045**	9	SCREW-TRUSS HEAD (M6X1X20-MM)	
D	15	1	**5P-5637**		SEAL (0.2-M EACH)	
	16	1	**294-0091**	1	FILM-INSTRUCTION (DO NOT SPRAY, READ OMM)	

C-CHANGE FROM PREVIOUS TYPE
D-ORDER BY THE METER
E-ORDER BY THE CENTIMETER
M-METRIC PART

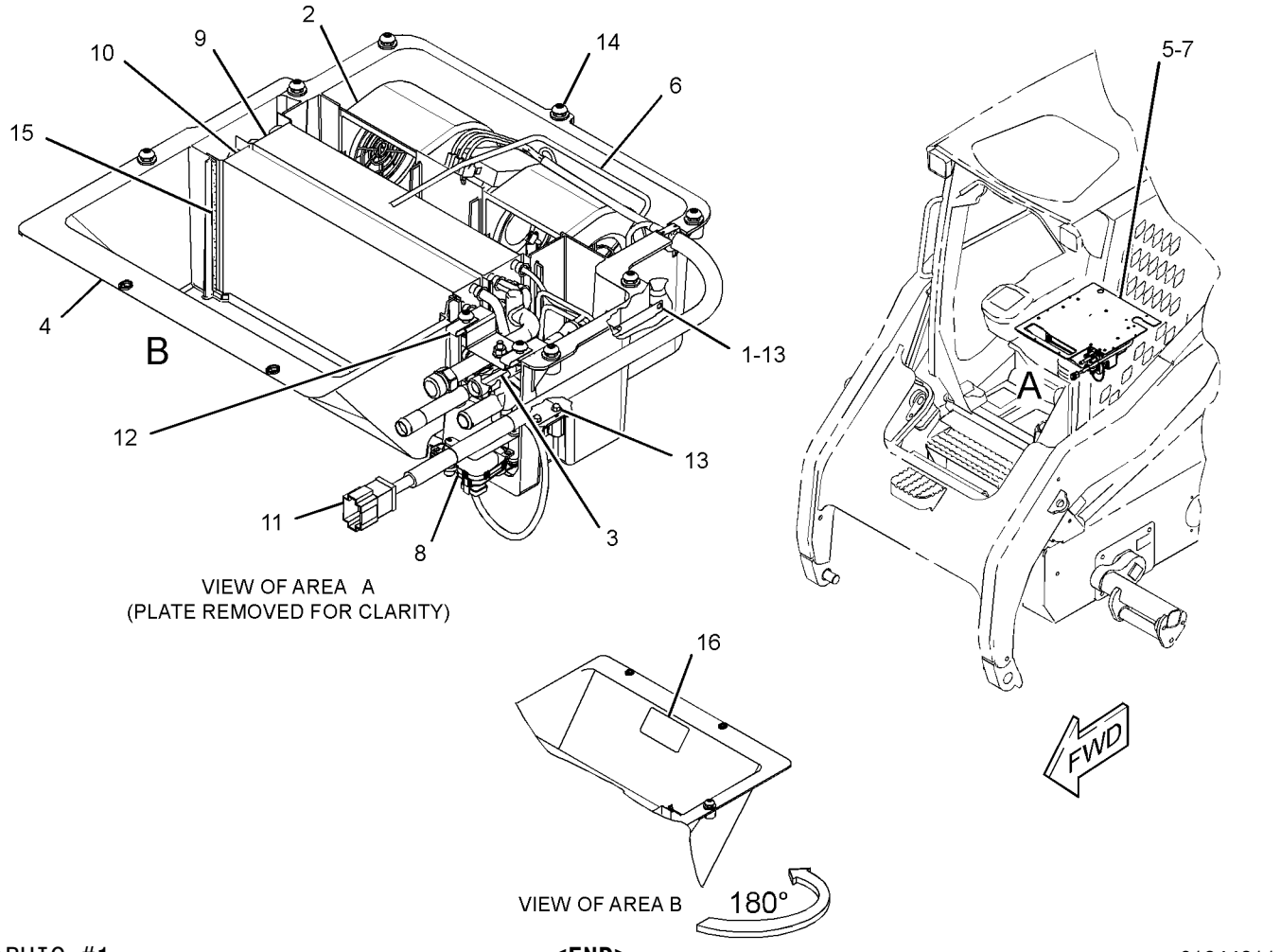

GRAPHIC #1

<END>

g01944811

258-4311 ARMREST & MOUNTING GP

S/N: JAY1-UP

PART OF 258-4401, 258-4402, 258-4403 SEAT & ARMREST GP

AN ATTACHMENT

SMCS-7307 **i03505662**

NOTE	REF NO	GRAPHIC REF	PART NUMBER	QTY	PART NAME 1 2 3 4 5 6 (PRODUCT LEVEL)	SEE PAGE
	1	1	**229-8757**	1	SWITCH AS-LIMIT (IMPLEMENT LOCKOUT)	
		1	**102-8803**	1	KIT-RECEPTACLE (3-PIN)	
					(INCLUDES RECEPTACLE AS & WEDGE)	
		1	**186-3735**	3	PIN-CONNECTOR (16-GA TO 18-GA)	
	2	1	**258-4318**	1	ARMREST AS (LH)	
	3	1	**258-4319**	1	ARMREST AS (RH)	
	4	1	**7X-7729**	6	WASHER (11X25X3-MM THK)	
	5	1	**258-4422**	2	WASHER-SPRING	
Y	6	1	*295-3171*	1	MOUNTING GP-ARMREST (LH)	733
Y	7	1	*295-3172*	1	MOUNTING GP-ARMREST (RH)	734
	8	1	**3S-2093**	1	STRAP-CABLE	
M	9	1	**8T-6685**	2	BOLT (M10X1.5X110-MM)	

M-METRIC PART
Y-SEPARATE ILLUSTRATION

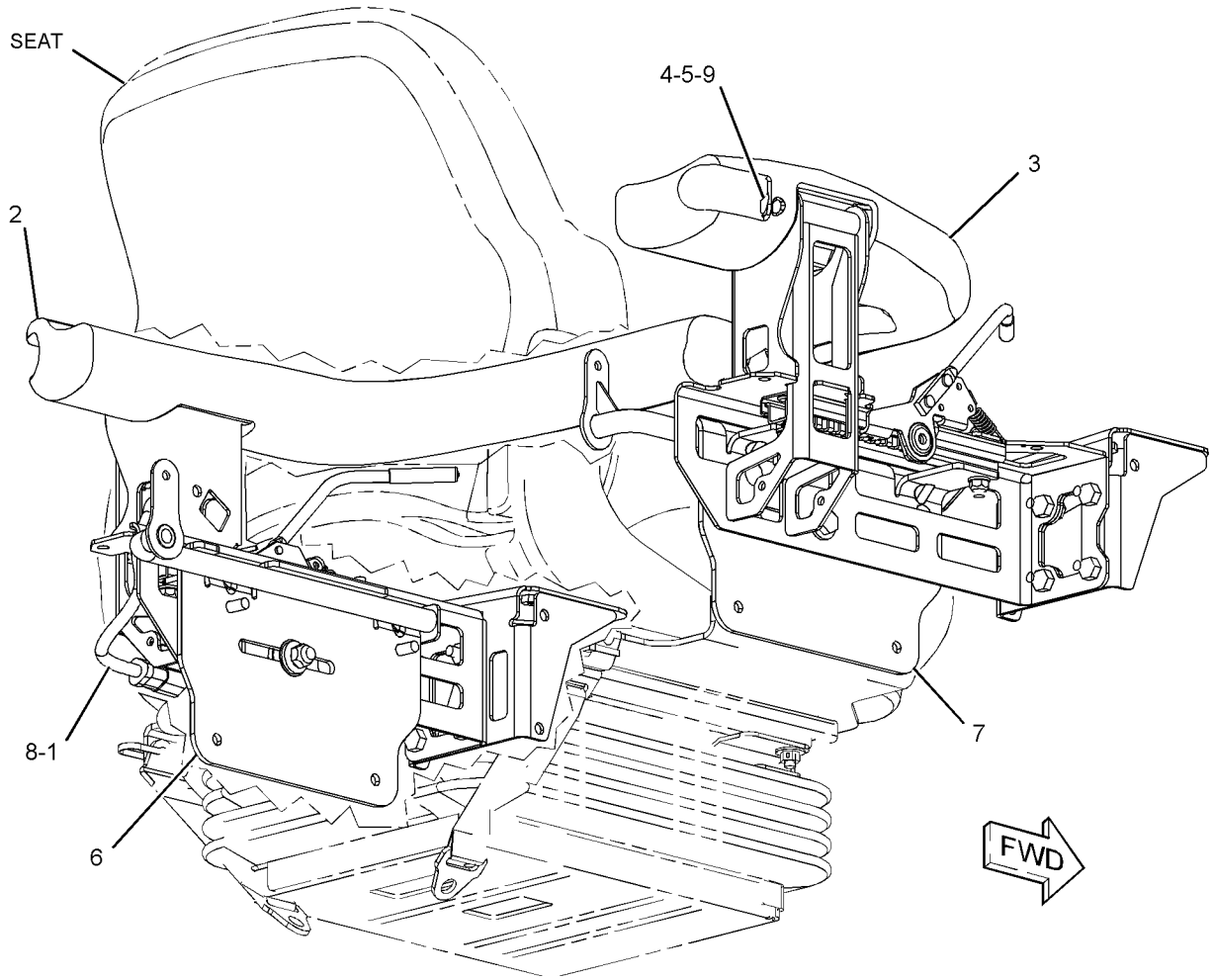

GRAPHIC #1 **<END>** g01312099

OPERATOR STATION

269-0257 BASE AS-JOYSTICK–RH

S/N: JAY1-UP
PART OF 269-0262, 269-0263 CONTROL GP-JOYSTICK
AN ATTACHMENT

SMCS-5705 **i02645126**

NOTE	REF NO	GRAPHIC REF	PART NUMBER	QTY	PART NAME 1 2 3 4 5 6 (PRODUCT LEVEL)	SEE PAGE
	1	1	**102-8805**	1	KIT-RECEPTACLE (6-PIN)	
					(INCLUDES RECEPTACLE AS & WEDGE)	
	2	1	**186-3735**	6	PIN-CONNECTOR (16-GA TO 18-GA)	

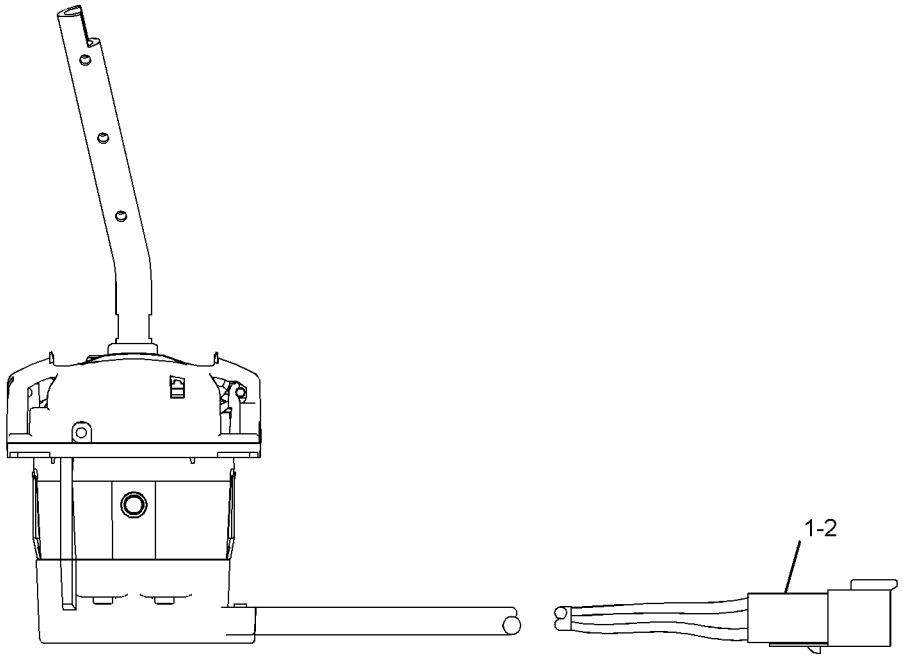

LEFT SIDE VIEW

GRAPHIC #1 **<END>** g01330001

OPERATOR STATION

269-0258 BASE AS-JOYSTICK–LH

S/N: JAY1-UP

PART OF 269-0265, 269-0266 CONTROL GP-JOYSTICK

AN ATTACHMENT

SMCS-5705 **i02645128**

NOTE	REF NO	GRAPHIC REF	PART NUMBER	QTY	PART NAME 1 2 3 4 5 6 (PRODUCT LEVEL)	SEE PAGE
	1	1	**102-8805**	1	KIT-RECEPTACLE (6-PIN)	
					(INCLUDES RECEPTACLE AS & WEDGE)	
	2	1	**186-3735**	6	PIN-CONNECTOR (16-GA TO 18-GA)	

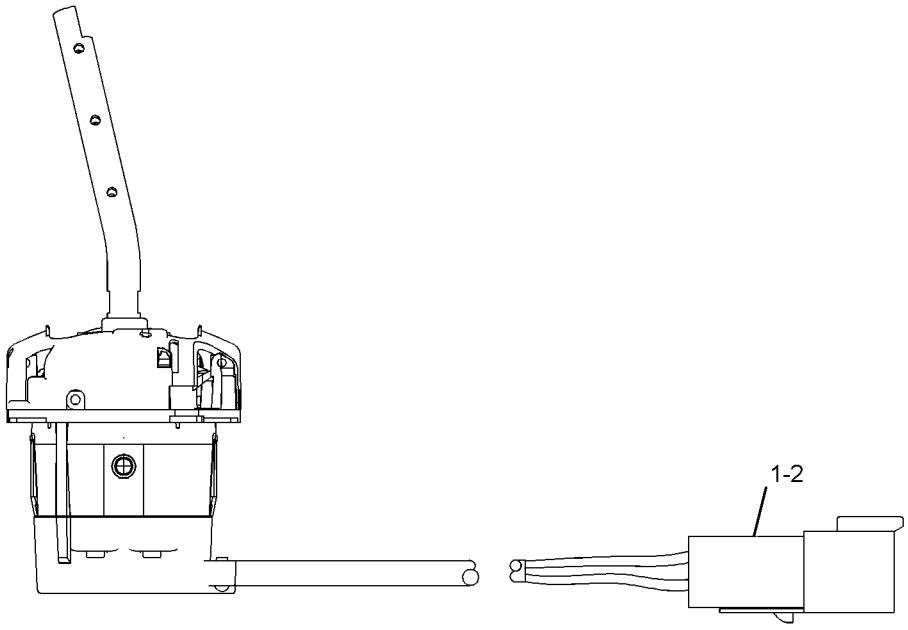

LEFT SIDE VIEW

GRAPHIC #1 **<END>** g01330013

OPERATOR STATION

258-3680 CAB AR-ENCLOSED ROPS

S/N: JAY1-UP

AN ATTACHMENT

SMCS-7301 **i02664231**

NOTE	PART NUMBER	QTY	PART NAME 1 2 3 4 5 6 (PRODUCT LEVEL)	SEE PAGE
Y	*258-4229*	1	ACCESSORY GP-CAB	628
Y	*258-4260*	1	AIR CONDITIONER AR	632
Y	*258-4066*	1	INSTALLATION GP-RADIO	701
Y	*258-4090*	1	WINDOW GP-CAB (SIDE)	784

Y-SEPARATE ILLUSTRATION

<END>

258-3742 CAB AR-ENCLOSED ROPS

S/N: JAY1-UP

AN ATTACHMENT

SMCS-7301 **i02664492**

NOTE	PART NUMBER	QTY	PART NAME 1 2 3 4 5 6 (PRODUCT LEVEL)	SEE PAGE
Y	*258-4229*	1	ACCESSORY GP-CAB	628
Y	*258-4250*	1	HEATER AR-CAB	696
Y	*258-4066*	1	INSTALLATION GP-RADIO	701
Y	*258-4090*	1	WINDOW GP-CAB (SIDE)	784

Y-SEPARATE ILLUSTRATION

<END>

258-4000 CAB AR-ENCLOSED ROPS

S/N: JAY1-UP

PART OF 258-3236, 295-7246 COMMON AR

SMCS-7301 **i03343843**

NOTE	PART NUMBER	QTY	PART NAME 1 2 3 4 5 6 (PRODUCT LEVEL)	SEE PAGE
Y	*258-4144*	1	COVER GP-FUSE PANEL	140
Y	*258-4164*	1	LIGHTING GP-FLOOD (WORK LIGHTS, FRONT)	154
Y	*258-4020*	1	LINER GP-CAB	722
Y	*258-4220*	1	MOUNTING GP-ROPS (INCLUDES STEP)	735
Y	*258-4162*	1	PANEL GP-INSTRUMENT	739
Y	*258-4010*	1	WINDOW GP-CAB	783
Y	*258-4100*	1	WIRING GP-CAB	174

Y-SEPARATE ILLUSTRATION

<END>

OPERATOR STATION

276-0074 CABLE GP-CONTROL

S/N: JAY1-UP

PART OF 298-7198 CABLE GP-CONTROL

SMCS-5154 **i03620341**

NOTE	REF NO	GRAPHIC REF	PART NUMBER	QTY	PART NAME 1 2 3 4 5 6 (PRODUCT LEVEL)	SEE PAGE
	1	1	**8T-4744**	1	PIN AS-SPRING	
	2	1	**8T-4742**	1	END-YOKE ROD	

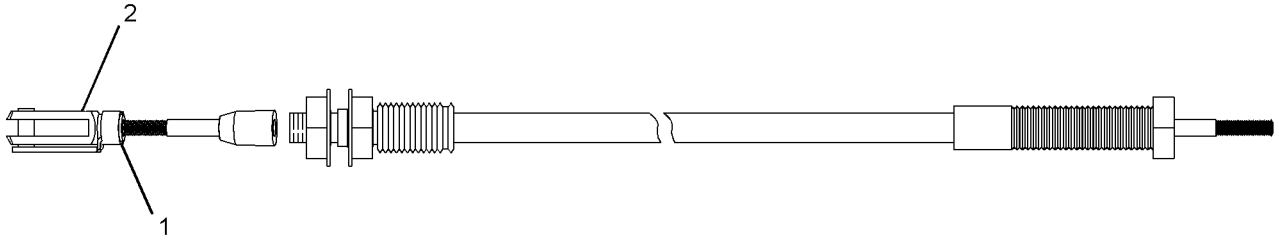

GRAPHIC #1 **<END>** g01943691

OPERATOR STATION

298-7198 CABLE GP-CONTROL—MANUAL LOWERING

S/N: JAY1-UP

PART OF 258-3393 LINES GP-LOWERING CONTROL

SMCS-5154 **i03620642**

NOTE	PART NUMBER	QTY	PART NAME 1 2 3 4 5 6 (PRODUCT LEVEL)	SEE PAGE
Y	**276-0074**	1	CABLE GP-CONTROL	641
Y	**298-7197**	1	HANDLE GP	694

Y-SEPARATE ILLUSTRATION

<END>

258-2468 COMPRESSOR & MTG GP-REFRIG

S/N: JAY1-UP
PART OF 258-4260 AIR CONDITIONER AR
AN ATTACHMENT

SMCS-1802 **i03215465**

NOTE	REF NO	GRAPHIC REF	PART NUMBER	QTY	PART NAME 1 2 3 4 5 6 (PRODUCT LEVEL)	SEE PAGE
	1	1	**258-2466**	1	BRACKET	
	2	1	**258-2467**	1	BRACKET AS	
	3	1	**258-3539**	1	V-BELT (REFRIGERANT)	
	4	1	**276-9875**	1	COMPRESSOR GP-REFRIGERANT	
		1	**102-8802**	1	KIT-RECEPTACLE (2-PIN)	
					(INCLUDES RECEPTACLE AS & WEDGE)	
		1	**229-4896**	2	SEAL-O-RING	
		1	**229-7356**	1	VALVE AS-RELIEF (REFRIGERANT COMPRESSOR)	
	5	1	**113-0693**	1	LOCKWASHER	
	6	1	**8T-4121**	8	WASHER-HARD (11X21X2.5-MM THK)	
M	7	1	**8T-4133**	3	NUT (M10X1.5-THD)	
M	8	1	**8T-4196**	3	BOLT (M10X1.5X35-MM)	
	9	1	**8T-4223**	3	WASHER-HARD (13.5X25.5X3-MM THK)	
M	10	1	**8T-4183**	3	BOLT (M12X1.75X40-MM)	
M	11	1	**8T-6685**	1	BOLT (M10X1.5X110-MM)	
	12	1	**4P-7429**	1	CLIP	
	13	1	**7K-1181**	1	STRAP-CABLE	

M-METRIC PART

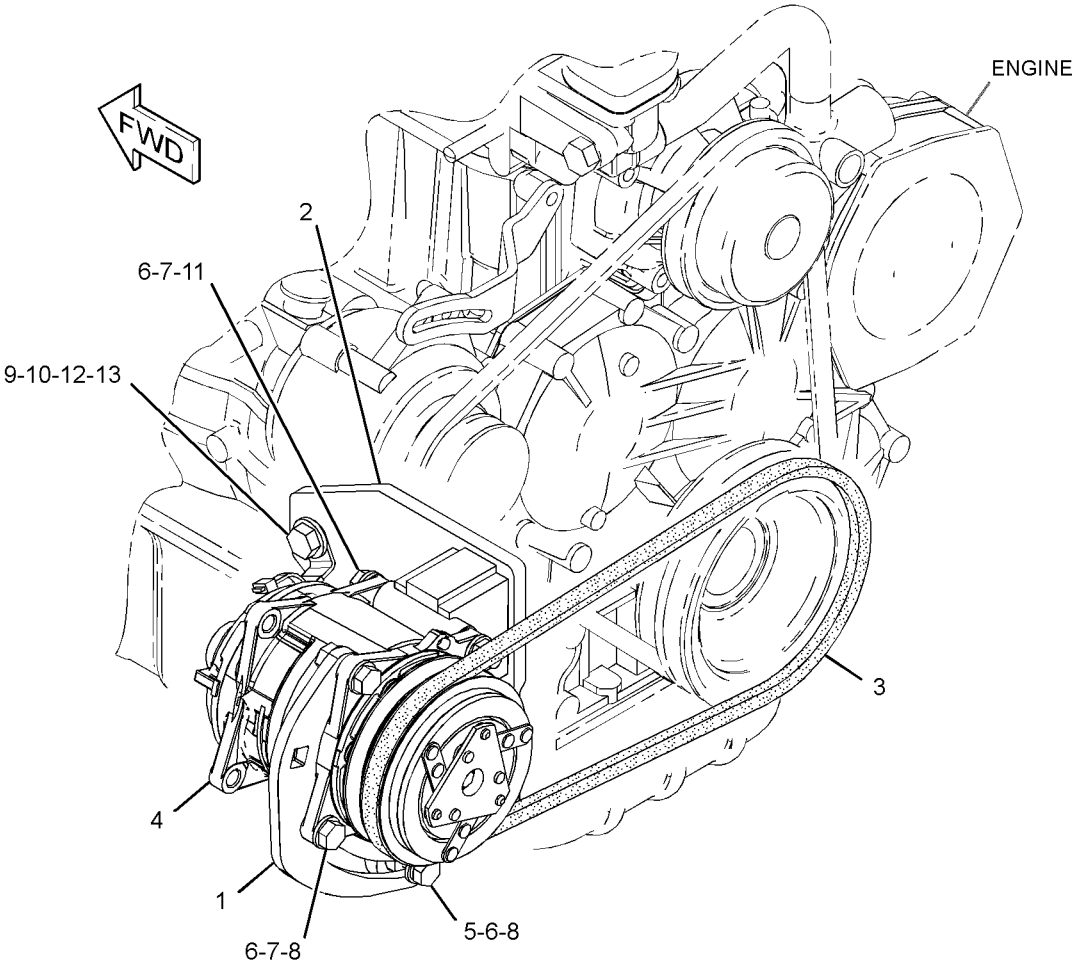

GRAPHIC #1 **<END>** g01672193

OPERATOR STATION

258-4280 CONDENSER & MTG GP-REFRIGERANT

S/N: JAY1-UP
PART OF 258-4260 AIR CONDITIONER AR
AN ATTACHMENT

SMCS-1805 **i02664464**

NOTE	REF NO	GRAPHIC REF	PART NUMBER	QTY	PART NAME 1 2 3 4 5 6 (PRODUCT LEVEL)	SEE PAGE
	1	1	**115-1615**	1	RELAY AS (12-VOLT)	
	2	1	**258-4284**	1	BRACKET AS (UPPER LH)	
	3	1	**258-4380**	1	BRACKET AS (LOWER LEFT)	
	4	1	**258-4386**	1	BRACKET AS (RIGHT)	
Y	6	1	*266-2425*	1	CONDENSER & MTG GP-REFRIGERANT	645
	7	1	**4K-8864**	2	CLIP	
M	8	1	**5C-9553**	10	BOLT (M6X1X16-MM)	
	9	1	**6D-4246**	1	CLIP	
	10	1	**8T-4121**	2	WASHER-HARD (11X21X2.5-MM THK)	
M	11	1	**8T-4136**	2	BOLT (M10X1.5X25-MM)	
	12	1	**8T-4205**	10	WASHER-HARD (7.2X14.5X2-MM THK)	

M-METRIC PART
Y-SEPARATE ILLUSTRATION

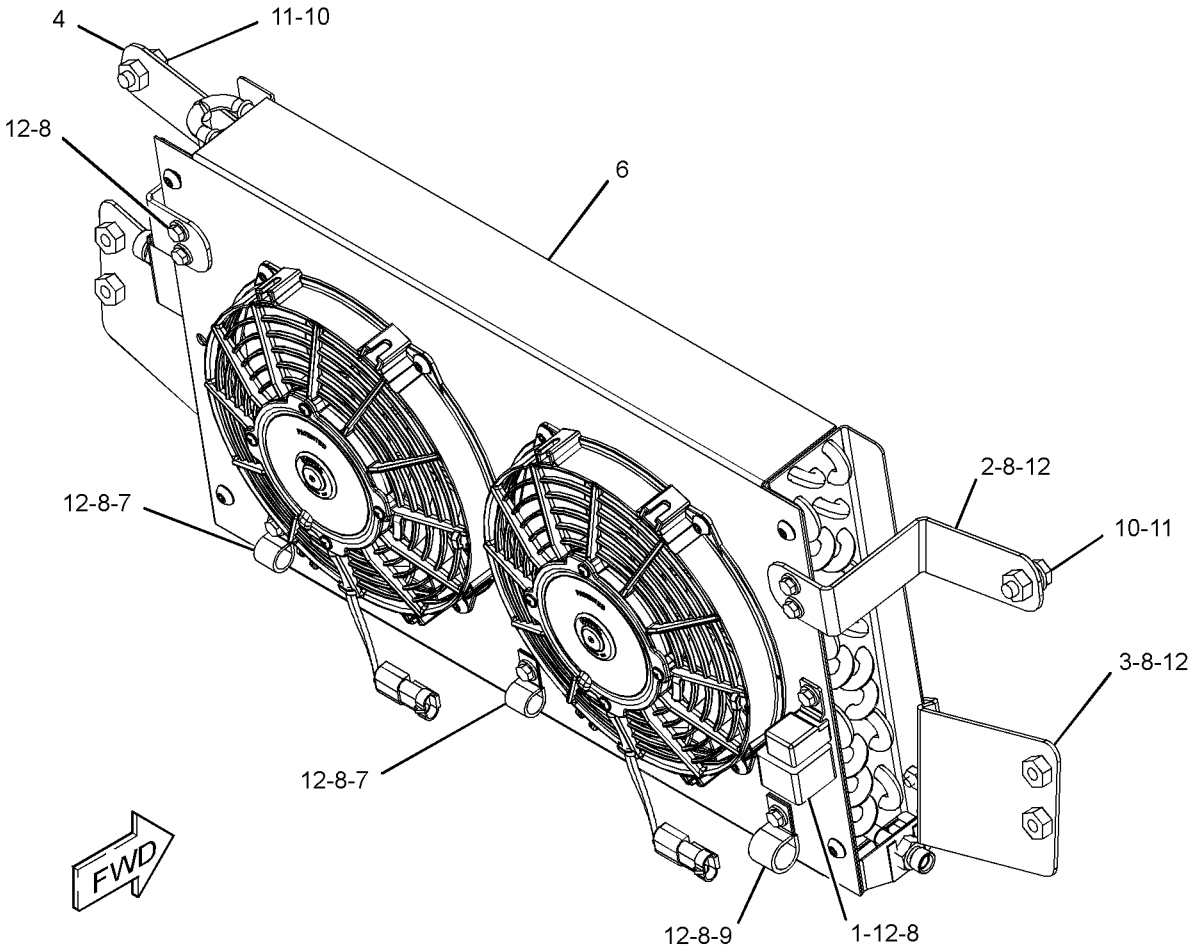

GRAPHIC #1 **<END>** g01339547

OPERATOR STATION

266-2425 CONDENSER & MTG GP-REFRIGERANT

S/N: JAY1-UP

PART OF 258-4280 CONDENSER & MTG GP-REFRIGERANT, 258-2474 KIT-AIR COND & HEATER INSTL, 258-2475 KIT-AIR CONDITIONER INSTL

AN ATTACHMENT

SMCS-1805 **i02614216**

NOTE	REF NO	GRAPHIC REF	PART NUMBER	QTY	PART NAME 1 2 3 4 5 6 (PRODUCT LEVEL)	SEE PAGE
	1	1	**266-2429**	1	SHROUD AS	
	2	1	**284-6041**	1	COIL AS	
	3	1	**287-7062**	2	FAN AS (REFRIGERANT)	
M	4	1	**5C-9553**	4	BOLT (M6X1X16-MM)	
M	5	1	**8T-4181**	8	BOLT (M6X1X20-MM)	
	6	1	**9X-8256**	12	WASHER (6.6X12X2-MM THK)	

M-METRIC PART

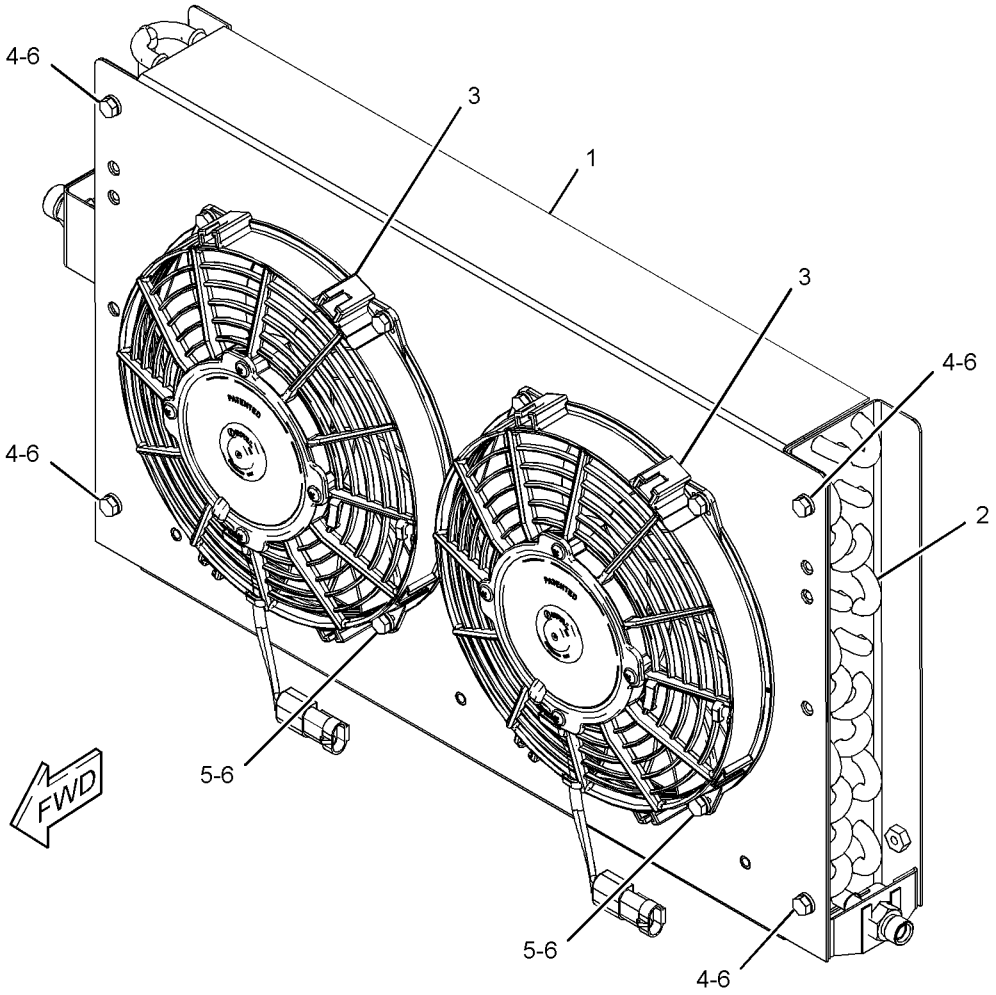

GRAPHIC #1 **<END>** g01311051

OPERATOR STATION

266-2430 CONTROL & WIRING GP-AIR & TEMP

S/N: JAY1-UP

PART OF 258-4261 AIR CONDITIONER & MOUNTING GP, 258-4251 HEATER & MTG GP-CAB, 258-2474 KIT-AIR COND & HEATER INSTL, 280-6077 KIT-CAB HEATER & MOUNTING

AN ATTACHMENT

SMCS-1408, 7451 **i03624800**

NOTE	REF NO	GRAPHIC REF	PART NUMBER	QTY	PART NAME 1 2 3 4 5 6 (PRODUCT LEVEL)	SEE PAGE
	1	1	**289-8537**	1	HARNESS AS-CONTROL	
		1	**128-7721**	1	CONNECTOR	
		1	**142-9117**	1	CONNECTOR	
		1	**186-3735**	2	PIN-CONNECTOR (16-GA TO 18-GA)	
		1	**9W-0852**	5	PIN-CONNECTOR (14-GA)	
		1	**155-2270**	1	KIT-CONNECTING PLUG (2-PIN)	
					(INCLUDES PLUG AS, WEDGE & INTERFACE SEAL)	
		1	**8T-8737**	5	PLUG-SEAL	
		1	**103-8133**	1	KIT-RECEPTACLE (12-PIN)	
					(INCLUDES RECEPTACLE AS & WEDGE)	
		1	**9W-0844**	2	SOCKET-CONNECTOR (14-GA)	
		1	**8L-8413**	17	STRAP-CABLE	
		1	**128-2016**	1	TERMINAL	
		1	**128-7714**	5	TERMINAL	
E		1	**125-7874**		TUBE-HEAT SHRINK (5.72-MM DIA) (10-CM)	
Y	2	1	**258-4299**	1	CONTROL GP-AIR & TEMPERATURE	648
	3	1	**239-9368**	1	RESISTOR AS	
	4	1	**3S-2093**	1	STRAP-CABLE	

E-ORDER BY THE CENTIMETER
Y-SEPARATE ILLUSTRATION

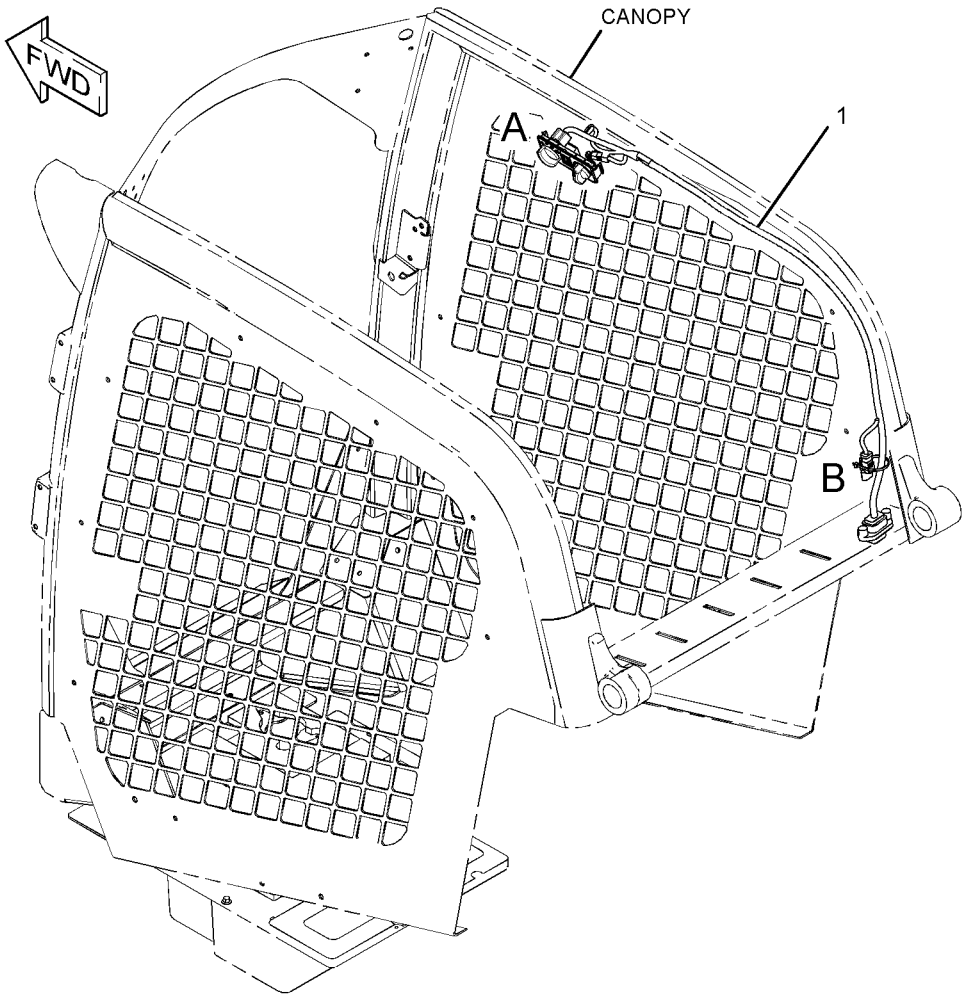

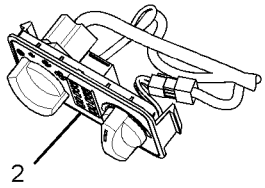

VIEW OF AREA A

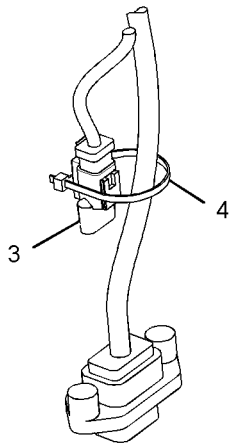

VIEW OF AREA B

GRAPHIC #1 **<END>** g01413078

OPERATOR STATION

258-4299 CONTROL GP-AIR & TEMPERATURE

S/N: JAY1-UP
PART OF 266-2430 CONTROL & WIRING GP-AIR & TEMP
AN ATTACHMENT

SMCS-7451 **i03604422**

NOTE	REF NO	GRAPHIC REF	PART NUMBER	QTY	PART NAME 1 2 3 4 5 6 (PRODUCT LEVEL)	SEE PAGE
	1	1	**6V-8369**	1	NUT (7/16-28-THD)	
	2	1	**340-8931**	2	KNOB AS	
	3	1	**258-4271**	1	SWITCH AS (TEMPERATURE CONTROL)	
	4	1	**258-4272**	1	SWITCH AS (BLOWER FAN SPEED)	
	5	1	**258-4288**	1	KNOB	
	6	1	**258-4289**	1	STOP	
	7	1	**258-4292**	1	FILM-PANEL (BLOWER, TEMPERATURE CONTROL)	
	8	1	**266-2431**	1	PANEL	
	9	1	**7X-0848**	1	NUT-BULKHEAD (3/8-32-THD)	
	10	1	**9F-5644**	1	LOCKWASHER	

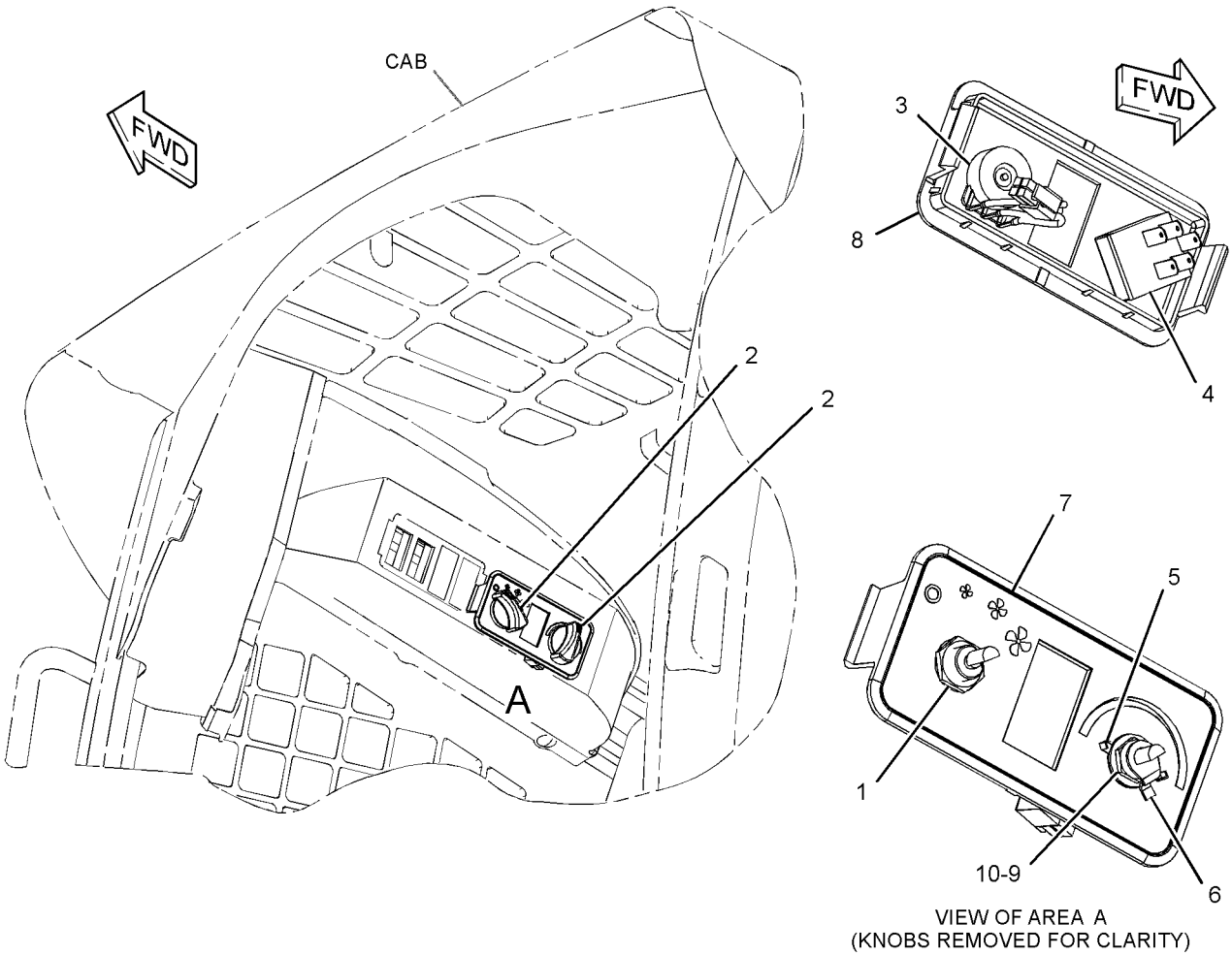

VIEW OF AREA A
(KNOBS REMOVED FOR CLARITY)

GRAPHIC #1 **<END>** g01339840

258-3403 CONTROL GP-ELECTROHYDRAULIC—LH

S/N: JAY1-UP

PART OF 342-5009, 342-5010 CONTROL AR-MACHINE

AN ATTACHMENT

SMCS-5702, 5705 **i02711960**

NOTE	REF NO	GRAPHIC REF	PART NUMBER	QTY	PART NAME 1 2 3 4 5 6 (PRODUCT LEVEL)	SEE PAGE
M	1	1	**9X-2546**	4	BOLT (M6X1X20-MM)	
Y	2	1	**269-0266**	1	CONTROL GP-JOYSTICK (LH)	659
	3	1	**3S-2093**	2	STRAP-CABLE	

M-METRIC PART
Y-SEPARATE ILLUSTRATION

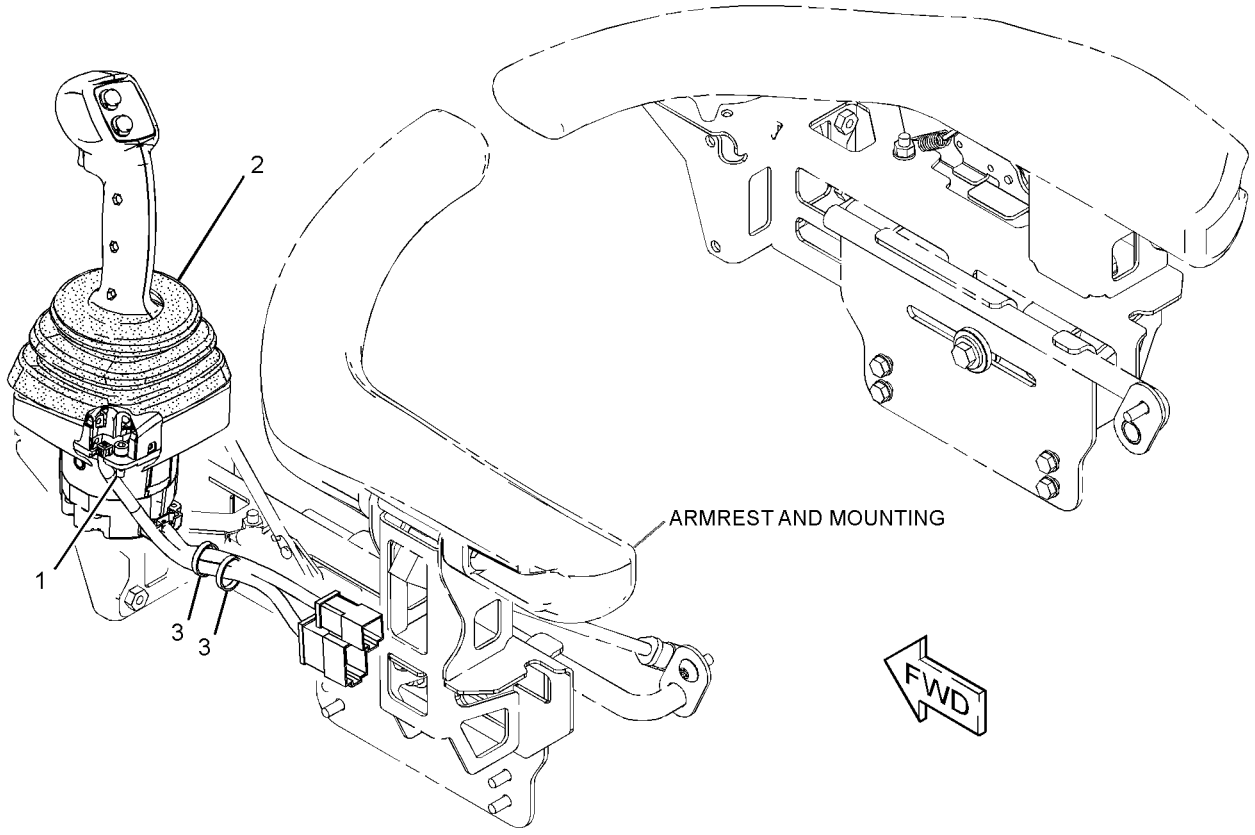

GRAPHIC #1 **<END>** g01337550

OPERATOR STATION

258-3404 CONTROL GP-ELECTROHYDRAULIC—LH, HIGH FLOW

S/N: JAY1-UP

PART OF 342-5011 CONTROL AR-MACHINE, 258-3182, 258-3733, 261-6264 HYDRAULIC AR

AN ATTACHMENT

SMCS-5702, 5705 **i02711961**

NOTE	REF NO	GRAPHIC REF	PART NUMBER	QTY	PART NAME 1 2 3 4 5 6 (PRODUCT LEVEL)	SEE PAGE
M	1	1	**9X-2546**	4	BOLT (M6X1X20-MM)	
Y	2	1	**269-0265**	1	CONTROL GP-JOYSTICK (LH, HIGH FLOW)	658
	3	1	**3S-2093**	2	STRAP-CABLE	

M-METRIC PART
Y-SEPARATE ILLUSTRATION

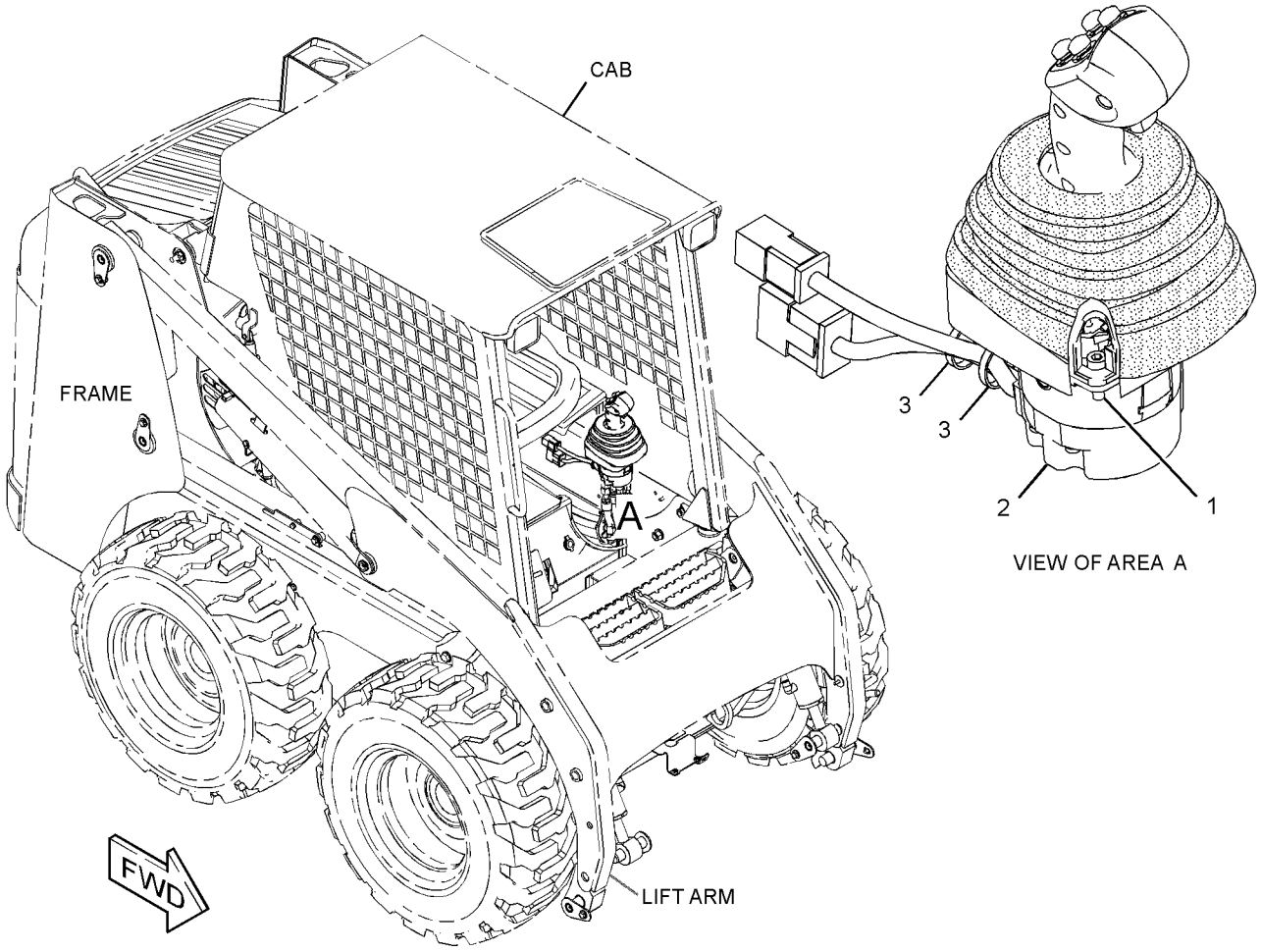

GRAPHIC #1 **<END>** g01336967

258-3405 CONTROL GP-ELECTROHYDRAULIC—RH

S/N: JAY1-UP

PART OF 342-5009 CONTROL AR-MACHINE

FOR USE WITH 258-3180—PAGE 301, 258-3730—PAGE 301. CANNOT BE USED WITH 258-3406—PAGE 652, 258-3182—PAGE 301, 258-3733—PAGE 302 AN ATTACHMENT

SMCS-5702, 5705 **i02659395**

NOTE	REF NO	GRAPHIC REF	PART NUMBER	QTY	PART NAME 1 2 3 4 5 6 (PRODUCT LEVEL)	SEE PAGE
M	1	1	**9X-2546**	4	BOLT (M6X1X20-MM)	
Y	2	1	**269-0264**	1	CONTROL GP-JOYSTICK (RH)	657
	3	1	**3S-2093**	2	STRAP-CABLE	

M-METRIC PART
Y-SEPARATE ILLUSTRATION

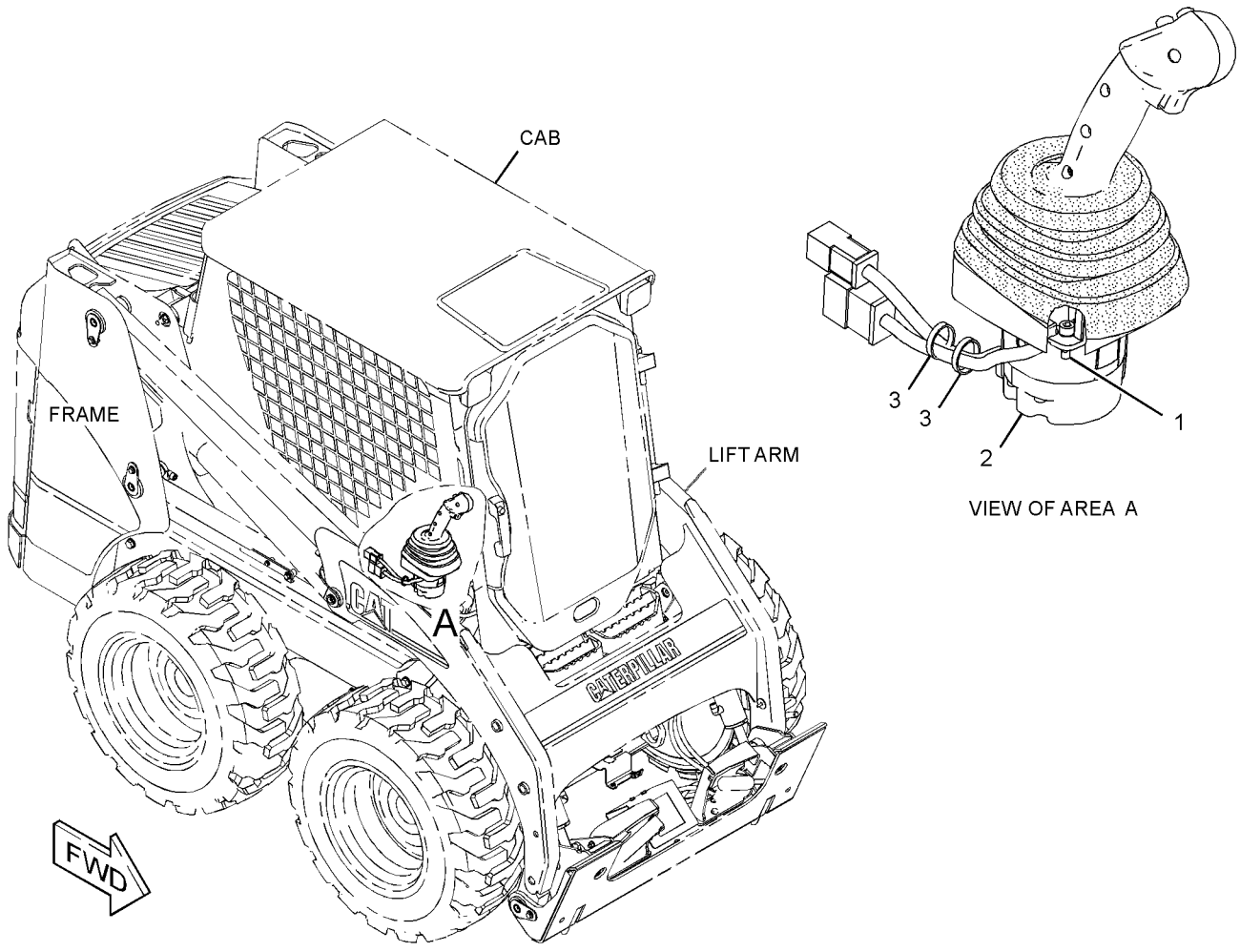

GRAPHIC #1 **<END>** g01337551

OPERATOR STATION

258-3406 CONTROL GP-ELECTROHYDRAULIC–RH

S/N: JAY1-UP

PART OF 342-5010, 342-5011 CONTROL AR-MACHINE

FOR USE WITH 258-3180–PAGE 301, 258-3730–PAGE 301. CANNOT BE USED WITH 258-3405–PAGE 651, 258-3182–PAGE 301, 258-3733–PAGE 302

AN ATTACHMENT

SMCS-5702, 5705 **i02659382**

NOTE	REF NO	GRAPHIC REF	PART NUMBER	QTY	PART NAME 1 2 3 4 5 6 (PRODUCT LEVEL)	SEE PAGE
M	1	1	**9X-2546**	4	BOLT (M6X1X20-MM)	
Y	2	1	**269-0262**	1	CONTROL GP-JOYSTICK (RH)	655
	3	1	**3S-2093**	2	STRAP-CABLE	

M-METRIC PART
Y-SEPARATE ILLUSTRATION

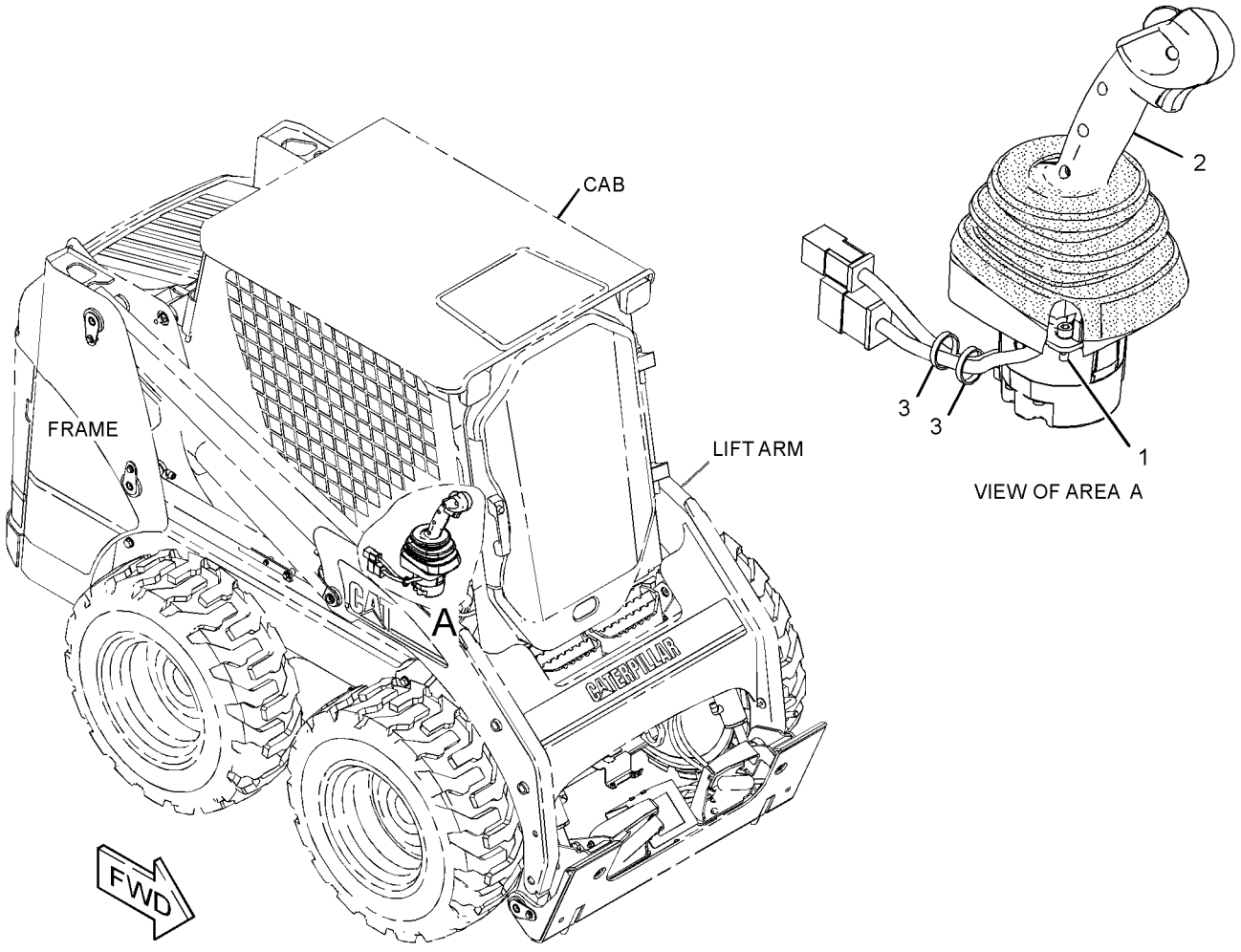

GRAPHIC #1 **<END>** g01337510

258-3407 CONTROL GP-ELECTROHYDRAULIC–RH, HIGH FLOW

S/N: JAY1-UP

PART OF 258-3182, 258-3733, 261-6264 HYDRAULIC AR

AN ATTACHMENT

SMCS-5702, 5705 **i02659383**

NOTE	REF NO	GRAPHIC REF	PART NUMBER	QTY	PART NAME 1 2 3 4 5 6 (PRODUCT LEVEL)	SEE PAGE
M	1	1	**9X-2546**	4	BOLT (M6X1X20-MM)	
Y	2	1	**269-0263**	1	CONTROL GP-JOYSTICK (RH, HIGH FLOW)	656
	3	1	**3S-2093**	2	STRAP-CABLE	

M-METRIC PART
Y-SEPARATE ILLUSTRATION

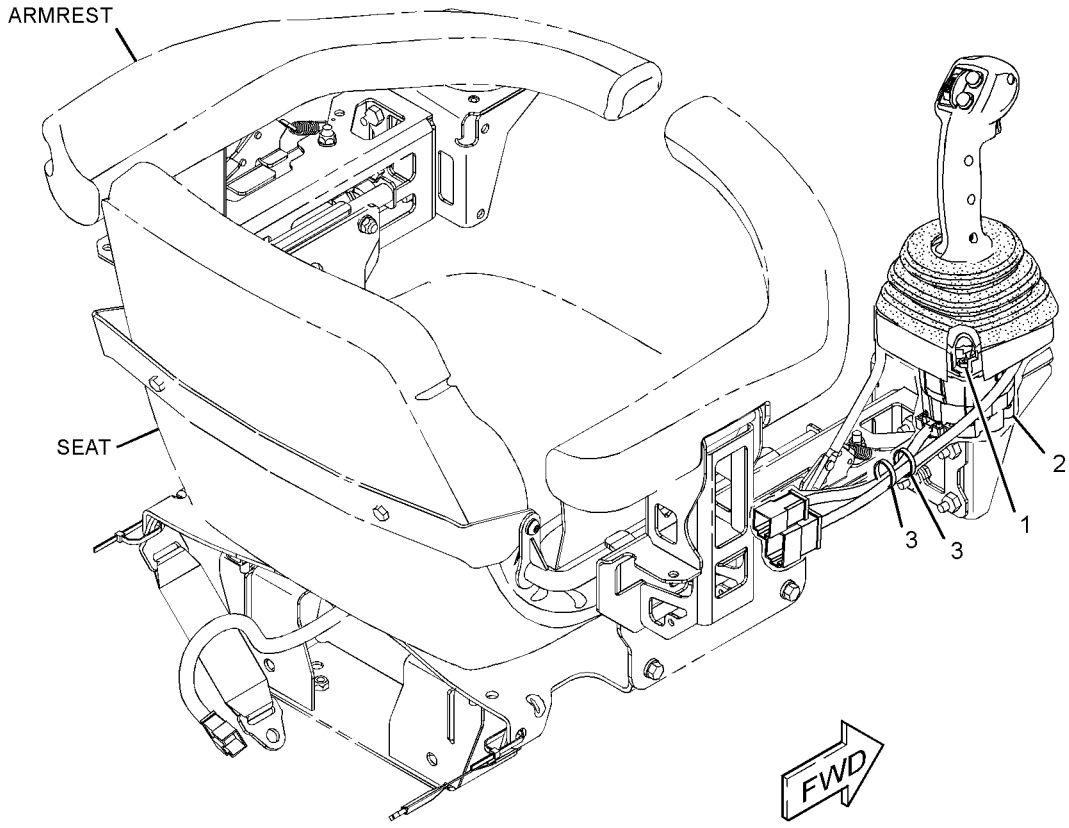

GRAPHIC #1 **<END>** g01336965

OPERATOR STATION

272-1790 CONTROL GP-HANDLE–LH

S/N: JAY1-UP

PART OF 269-0265 CONTROL GP-JOYSTICK, 258-4127 KIT-WORK TOOL WIRING AN ATTACHMENT

SMCS-5705 **i02629793**

NOTE	REF NO	GRAPHIC REF	PART NUMBER	QTY	PART NAME 1 2 3 4 5 6 (PRODUCT LEVEL)	SEE PAGE
	1	1	**174-3091**	1	KIT-RECEPTACLE (12-PIN)	
					(INCLUDES RECEPTACLE AS & WEDGE)	
	2	1	**186-3735**	9	PIN-CONNECTOR (16-GA TO 18-GA)	
	3	1	**8T-8737**	3	PLUG-SEAL	
	4	1	**276-4878**	1	GROMMET	

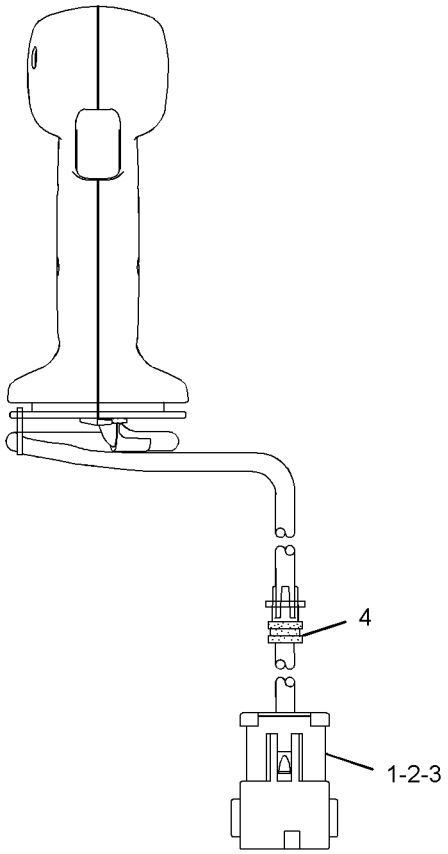

FRONT VIEW

GRAPHIC #1 **<END>** g01322784

269-0262 CONTROL GP-JOYSTICK–RH

S/N: JAY1-UP
PART OF 258-3406 CONTROL GP-ELECTROHYDRAULIC
AN ATTACHMENT

SMCS-5705 **i03296096**

NOTE	REF NO	GRAPHIC REF	PART NUMBER	QTY	PART NAME 1 2 3 4 5 6 (PRODUCT LEVEL)	SEE PAGE
	1	1	**254-3437**	1	BOOT	
Y	2	1	**269-0257**	1	BASE AS-JOYSTICK (RH)	638
	3	1	**273-9103**	1	CONTROL GP-HANDLE (RH)	
	3A	1	**8T-8737**	5	PLUG-SEAL	
	3B	1	**174-3091**	1	KIT-RECEPTACLE (12-PIN)	
					(INCLUDES RECEPTACLE AS & WEDGE)	
	3C	1	**186-3735**	7	PIN-CONNECTOR (16-GA TO 18-GA)	
		1	**276-4878**	1	GROMMET	
M	4	1	**213-7489**	3	SCREW (M4X25-MM)	
M	5	1	**178-9983**	3	LOCKNUT (M4X0.7-THD)	

M-METRIC PART
Y-SEPARATE ILLUSTRATION

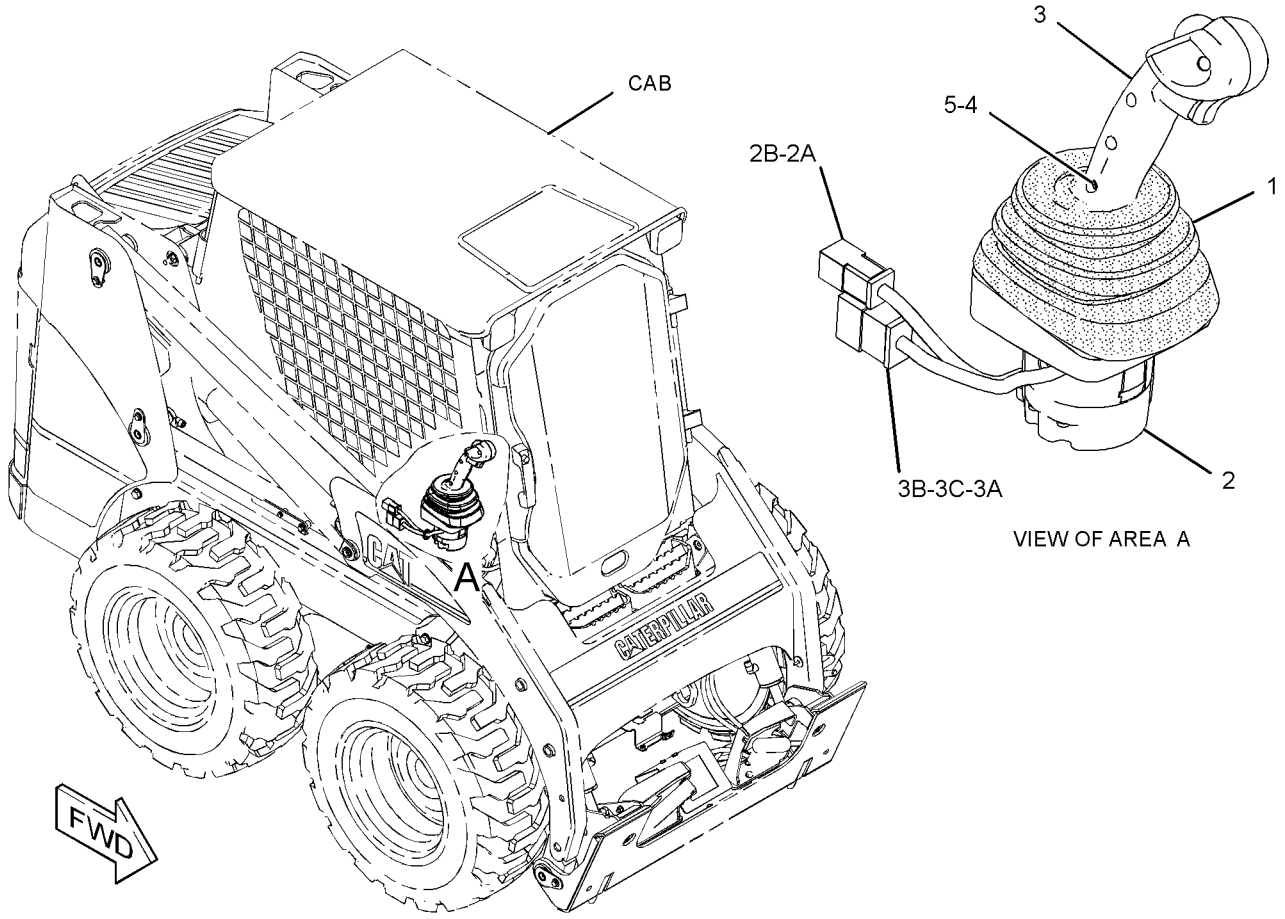

GRAPHIC #1 **<END>** g01309748

OPERATOR STATION

269-0263 CONTROL GP-JOYSTICK–RH, HIGH FLOW

S/N: JAY1-UP
PART OF 258-3407 CONTROL GP-ELECTROHYDRAULIC
AN ATTACHMENT

SMCS-5705 **i03638372**

NOTE	REF NO	GRAPHIC REF	PART NUMBER	QTY	PART NAME 1 2 3 4 5 6 (PRODUCT LEVEL)	SEE PAGE
	1	1	**254-3437**	1	BOOT	
Y	2	1	**269-0257**	1	BASE AS-JOYSTICK (RH)	638
	3	1	**273-9104**	1	CONTROL GP-HANDLE (RH)	
		1	**8T-8737**	1	PLUG-SEAL	
		1	**174-3091**	1	KIT-RECEPTACLE (12-PIN)	
					(INCLUDES RECEPTACLE AS & WEDGE)	
		1	**186-3735**	11	PIN-CONNECTOR (16-GA TO 18-GA)	
		1	**276-4878**	1	GROMMET	
M	4	1	**213-7489**	3	SCREW (M4X0.7X25-MM)	
M	5	1	**178-9983**	3	LOCKNUT (M4X0.7-THD)	
	6	1	**174-3091**	1	KIT-RECEPTACLE (12-PIN)	
	7	1	**102-8805**	1	KIT-RECEPTACLE (6-PIN)	
					(EACH RECEPTACLE KIT INCLUDES RECEPTACLE AS & WEDGE)	
	8	1	**186-3735**	17	PIN-CONNECTOR (16-GA TO 18-GA)	
	9	1	**8T-8737**	1	PLUG-SEAL	

M-METRIC PART
Y-SEPARATE ILLUSTRATION

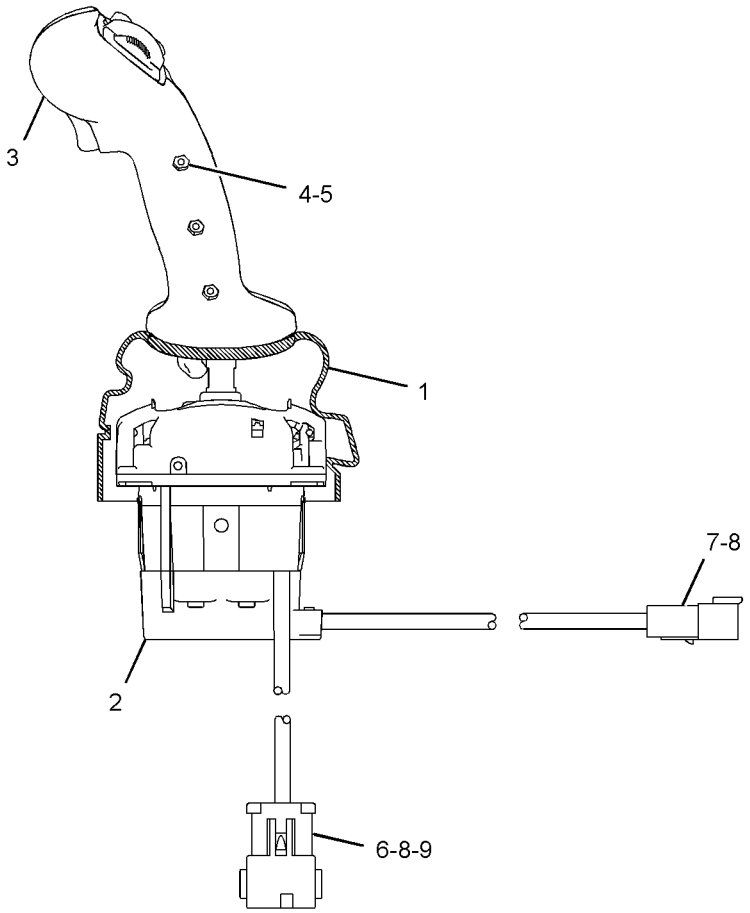

LEFT SIDE VIEW

GRAPHIC #1 **<END>** g01317881

OPERATOR STATION

269-0264 CONTROL GP-JOYSTICK–RH

S/N: JAY1-UP

PART OF 258-3405 CONTROL GP-ELECTROHYDRAULIC

AN ATTACHMENT

SMCS-5705 **i02611117**

NOTE	REF NO	GRAPHIC REF	PART NUMBER	QTY	PART NAME 1 2 3 4 5 6 (PRODUCT LEVEL)	SEE PAGE
	1	1	**254-3437**	1	BOOT	
	2	1	**269-0257**	1	BASE AS-JOYSTICK (RH)	
	2A	1	**186-3735**	6	PIN-CONNECTOR (16-GA TO 18-GA)	
	2B	1	**102-8805**	1	KIT-RECEPTACLE (6-PIN)	
					(INCLUDES RECEPTACLE AS & WEDGE)	
	3	1	**269-0259**	1	CONTROL GP-HANDLE	
	3A	1	**8T-8737**	6	PLUG-SEAL	
	3B	1	**186-3735**	6	PIN-CONNECTOR (16-GA TO 18-GA)	
	3C	1	**174-3091**	1	KIT-RECEPTACLE (12-PIN)	
					(INCLUDES RECEPTACLE AS & WEDGE)	
		1	**276-4878**	1	GROMMET	
M	4	1	**213-7489**	3	SCREW (M4X25-MM)	
M	5	1	**178-9983**	3	LOCKNUT (M4X0.7-THD)	

M-METRIC PART

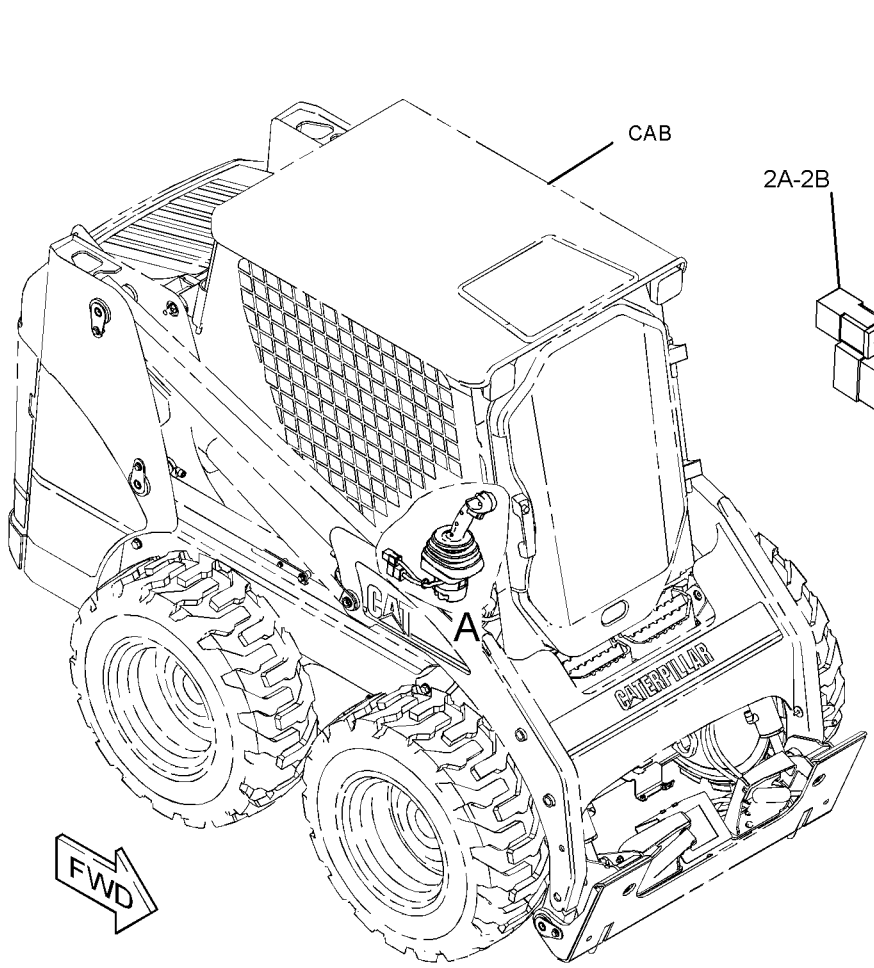

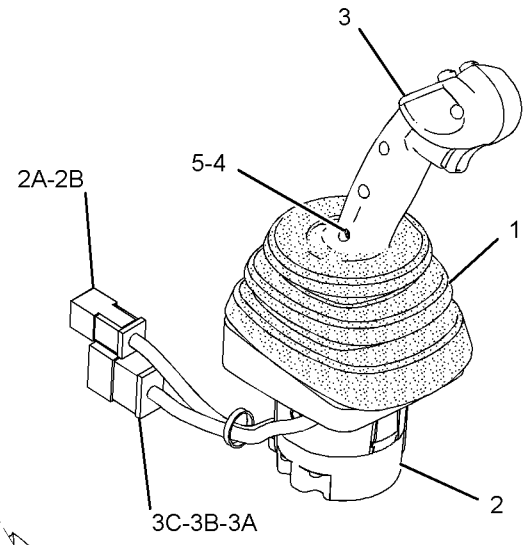

VIEW OF AREA A

GRAPHIC #1 **<END>** g01309693

OPERATOR STATION

269-0265 CONTROL GP-JOYSTICK–LH, HIGH FLOW

S/N: JAY1-UP

PART OF 258-3404 CONTROL GP-ELECTROHYDRAULIC

AN ATTACHMENT

SMCS-5705 **i03638925**

NOTE	REF NO	GRAPHIC REF	PART NUMBER	QTY	PART NAME 1 2 3 4 5 6 (PRODUCT LEVEL)	SEE PAGE
	1	1	**254-3437**	1	BOOT	
Y	2	1	**269-0258**	1	BASE AS-JOYSTICK (LH)	639
Y	3	1	**272-1790**	1	CONTROL GP-HANDLE (LH)	654
M	4	1	**213-7489**	3	SCREW (M4X0.7X25-MM)	
M	5	1	**178-9983**	3	LOCKNUT (M4X0.7-THD)	

M-METRIC PART
Y-SEPARATE ILLUSTRATION

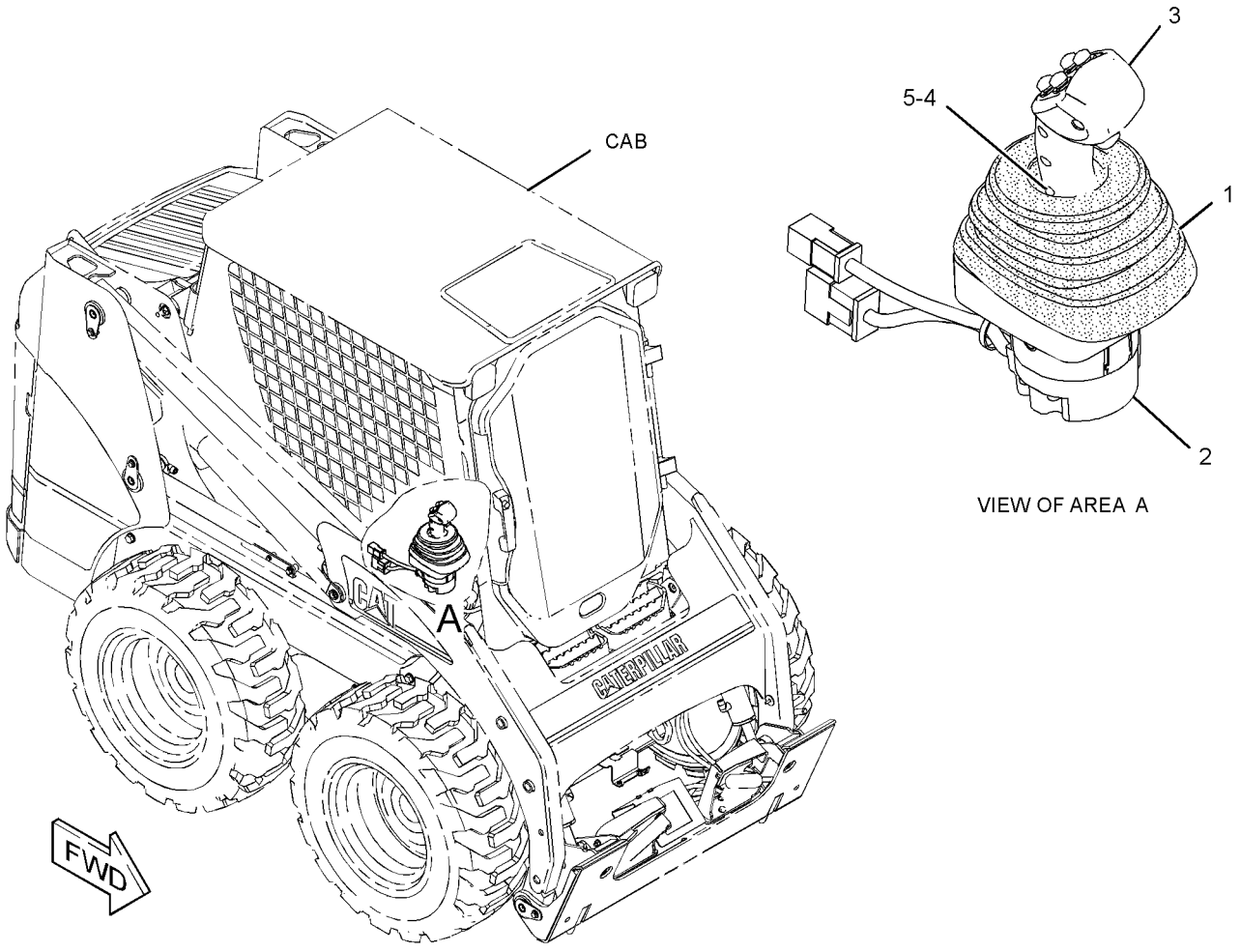

GRAPHIC #1 **<END>** g01954298

OPERATOR STATION

269-0266 CONTROL GP-JOYSTICK–LH

S/N: JAY1-UP

PART OF 258-3403 CONTROL GP-ELECTROHYDRAULIC

AN ATTACHMENT

SMCS-5705 **i03638926**

NOTE	REF NO	GRAPHIC REF	PART NUMBER	QTY	PART NAME 1 2 3 4 5 6 (PRODUCT LEVEL)	SEE PAGE
Y	1	1	**269-0258**	1	BASE AS-JOYSTICK (LH)	639
	2	1	**269-0259**	1	CONTROL GP-HANDLE	
	2A	1	**8T-8737**	6	PLUG-SEAL	
	2B	1	**174-3091**	1	KIT-RECEPTACLE (12-PIN)	
					(INCLUDES RECEPTACLE AS & WEDGE)	
	2C	1	**186-3735**	6	PIN-CONNECTOR (16-GA TO 18-GA)	
		1	**276-4878**	1	GROMMET	
	3	1	**254-3437**	1	BOOT	
M	4	1	**213-7489**	3	SCREW (M4X0.7X25-MM)	
M	5	1	**178-9983**	3	LOCKNUT (M4X0.7-THD)	

M-METRIC PART
Y-SEPARATE ILLUSTRATION

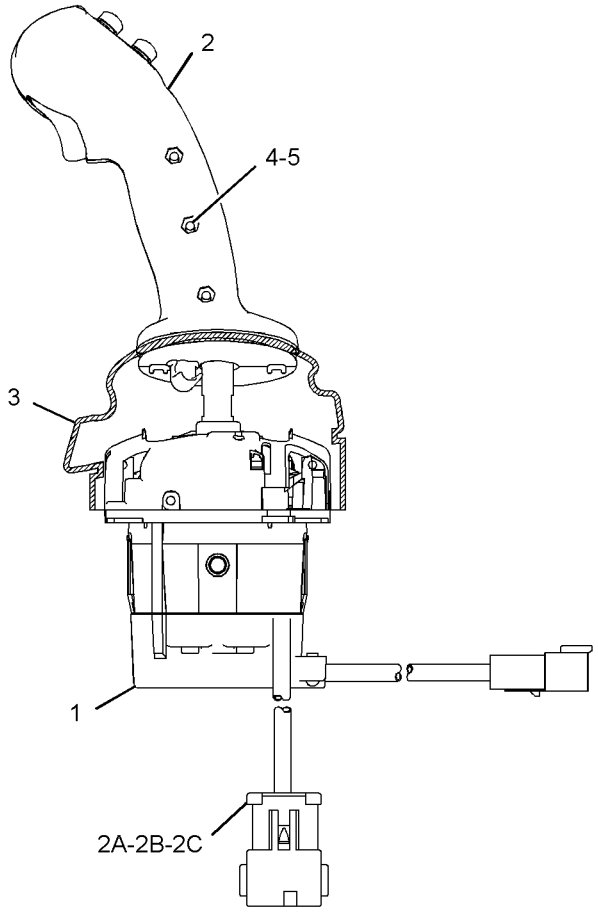

LEFT SIDE VIEW

GRAPHIC #1

<END>

g01955073

OPERATOR STATION

258-4245 COVER GP-CAB

S/N: JAY1-UP
PART OF 258-3738, 258-3740 OPTION AR-CAB
AN ATTACHMENT

SMCS-7301 **i02613965**

NOTE	REF NO	GRAPHIC REF	PART NUMBER	QTY	PART NAME 1 2 3 4 5 6 (PRODUCT LEVEL)	SEE PAGE
	1	1	**258-3727**	2	SCREW-TRUSS HEAD (NO 12X17.46-MM)	
	2	1	**258-3728**	1	PLATE	
	3	1	**258-3794**	1	INSULATION	
	4	1	**258-4027**	1	COVER	
	5	1	**258-4028**	2	COVER-DUCT	
	6	1	**258-4034**	1	COVER-SWITCH	
	7	1	**258-4225**	1	FLOORPLATE AS	
	8	1	**258-4408**	1	INSULATION	
	9	1	**266-3314**	2	BOLT-FLANGE HEAD (M6X1X20.5-MM)	
M	10	1	**266-3315**	8	BOLT-FLANGE HEAD (M8X1.25X25.5-MM)	
	11	1	**5P-4116**	2	WASHER-HARD (8.8X20.5X2-MM THK)	
	12	1	**8T-4121**	4	WASHER-HARD (11X21X2.5-MM THK)	
M	13	1	**8T-4133**	4	NUT (M10X1.5-THD)	

M-METRIC PART

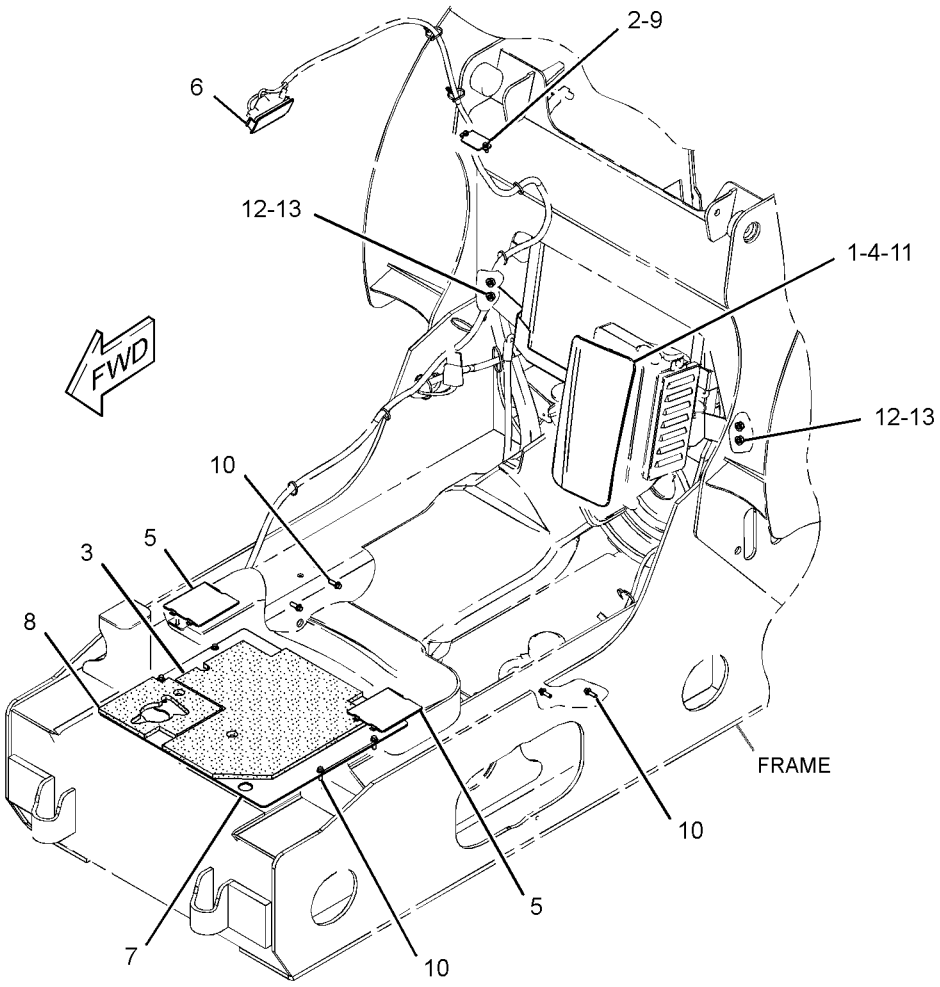

GRAPHIC #1 **<END>** g01313308

OPERATOR STATION

258-4314 COVER GP-CONSOLE–RH, LH

S/N: JAY1-UP

PART OF 258-4310 SEAT AR, 258-4320, 258-4330 SEAT AR-SUSPENSION AN ATTACHMENT

SMCS-5258 **i02711965**

NOTE	REF NO	GRAPHIC REF	PART NUMBER	QTY	PART NAME 1 2 3 4 5 6 (PRODUCT LEVEL)	SEE PAGE
	1	1	**139-6039**	10	NUT (U-TYPE RETAINER)	
	2	1	**258-3727**	6	SCREW-TRUSS HEAD (NO 12X17.46-MM)	
	3	1	**258-4312**	1	COVER (INNER, LH)	
	4	1	**258-4313**	1	COVER (OUTER, LH)	
	5	1	**258-4315**	1	COVER (INNER, RH)	
	6	1	**258-4316**	1	COVER (OUTER, RH)	
M	7	1	**215-6406**	10	SCREW-TRUSS HEAD (M6X1X16-MM)	

M-METRIC PART

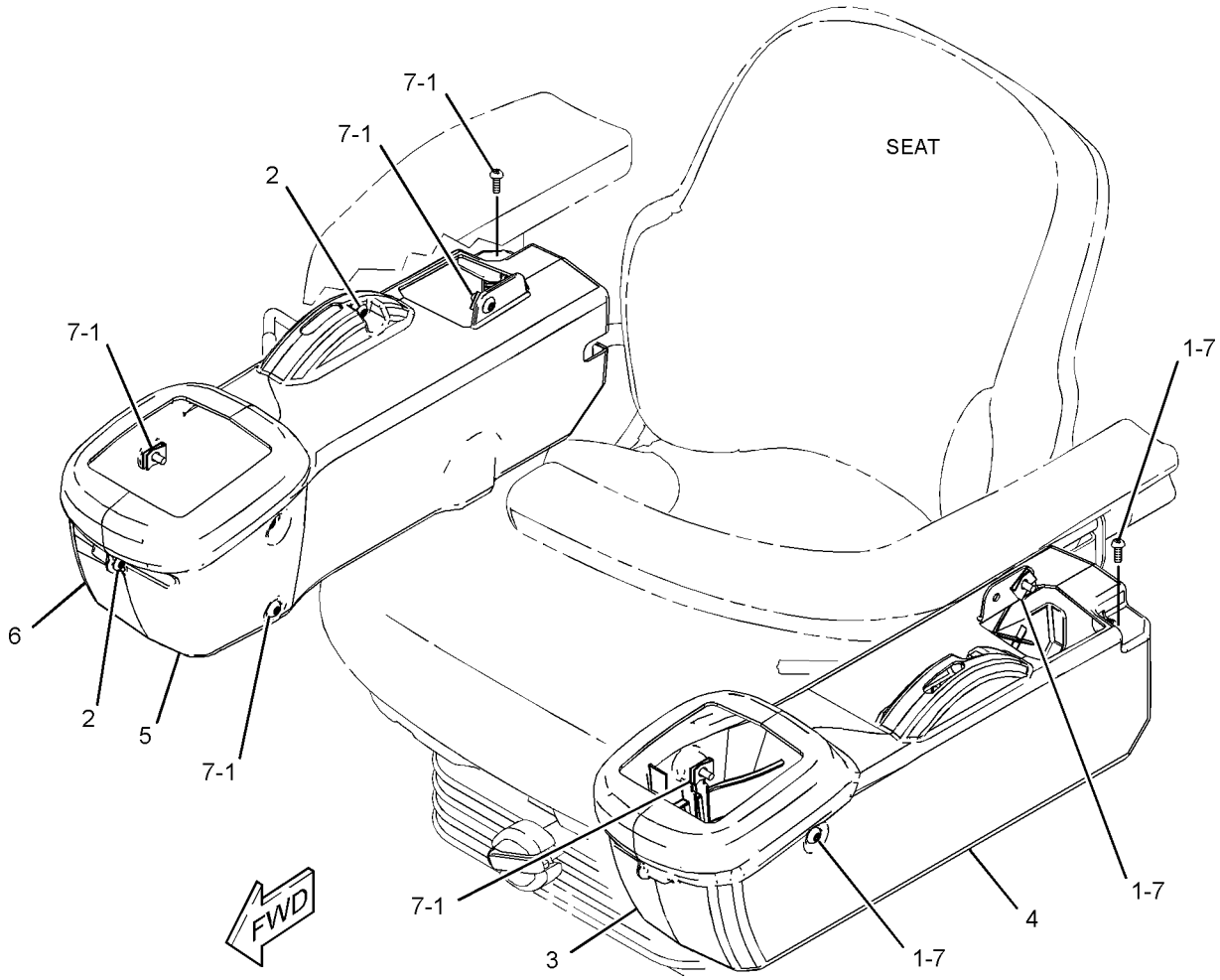

GRAPHIC #1 **<END>** g01312002

OPERATOR STATION

258-4009 COVER GP-INSTRUMENT PANEL

S/N: JAY1-UP

PART OF 258-3682, 258-3748, 258-3750, 300-7629 MACHINE AR-SPECIAL

AN ATTACHMENT

SMCS-1408, 7451, 7478 **i02630066**

NOTE	REF NO	GRAPHIC REF	PART NUMBER	QTY	PART NAME 1 2 3 4 5 6 (PRODUCT LEVEL)	SEE PAGE
	1	1	**109-2356**	6	PLUG	
	2	1	**258-4033**	1	COVER (CLUSTER)	

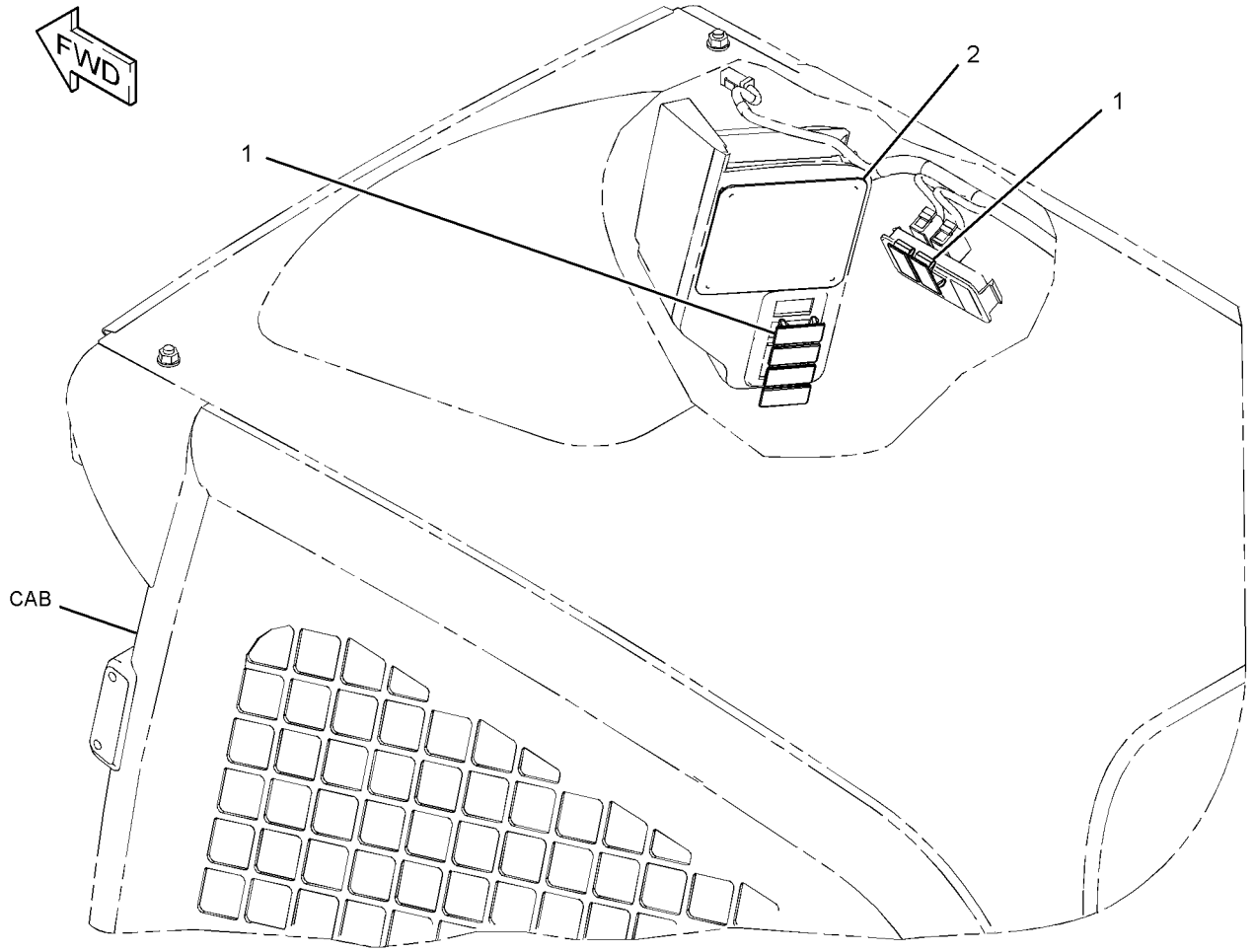

GRAPHIC #1 **<END>** g01321985

OPERATOR STATION

258-4070 DOOR & MTG GP-CAB—WITH CAB TILT GAS SPRING

S/N: JAY1-UP

CANNOT BE USED WITH 258-4080—PAGE 666, 258-3738—PAGE 738, 258-3740—PAGE 738 AN ATTACHMENT

SMCS-7308 **i03635694**

NOTE	REF NO	GRAPHIC REF	PART NUMBER	QTY	PART NAME 1 2 3 4 5 6 (PRODUCT LEVEL)	SEE PAGE
M	1	1	**5C-2890**	1	NUT (M6X1-THD)	
M	2	1	**215-6406**	1	SCREW-TRUSS HEAD (M6X1X16-MM)	
	3	1	**5T-9400**	1	SPACER (12X25X8.5-MM THK)	
	4	1	**7C-8246**	2	SPACER (10.5X20X24-MM THK)	
	5	1	**8T-2444**	2	STUD-BALL	
	6	1	**095-1325**	1	PIN-CLEVIS	
	7	1	**139-6039**	1	NUT (U-TYPE RETAINER)	
	8	1	**153-2682**	2	SPRING-GAS	
	9	1	**198-1725**	4	WASHER-HARD (8.8X25.5X2-M THK)	
	10	1	**206-1345**	4	STRAP-CABLE	
	11	1	**258-3281**	1	BRACKET AS	
	12	1	**258-3725**	1	HINGE	
	13	1	**258-3726**	2	PIN	
	14	1	**258-3761**	1	SPRING-GAS	
	15	1	**258-3764**	1	STRIKER AS	
	16	1	**258-4078**	1	TANK AS-WINDOW WASHER	
		1	**6T-1375**	1	PUMP AS-WASHER	
		1	**8E-8293**	1	GROMMET	
		1	**258-3296**	1	CAP-VENTED (WASHER)	
Y	17	1	*258-4086*	1	DOOR GP-CAB (GLASS)	671
	18	1	**258-4141**	2	CLIP	
	19	1	**258-4157**	1	HARNESS AS-CAB	
		1	**091-2436**	2	TERMINAL-BLADE (18-GA TO 22-GA)	
		1	**123-7615**	1	CONNECTOR	
		1	**9X-3401**	2	PIN-CONNECTOR (16-GA TO 18-GA)	
					—OR—	
		1	**126-1767**	2	PIN-CONNECTOR (14-GA)	
		1	**186-3735**	1	PIN-CONNECTOR (16-GA TO 18-GA)	
		1	**9W-0852**	2	PIN-CONNECTOR (14-GA)	
		1	**155-2274**	1	KIT-CONNECTING PLUG (6-PIN)	
					(INCLUDES PLUG AS, WEDGE & INTERFACE SEAL)	
		1	**8T-8737**	1	PLUG-SEAL	
		1	**102-8805**	1	KIT-RECEPTACLE (6-PIN)	
					(INCLUDES RECPTACLE AS & WEDGE)	
		1	**180-9340**	2	SOCKET-CONNECTOR (14-GA TO 18-GA)	
E		1	**211-5358**		CONDUIT-FLEXIBLE (63-CM)	
		1	**186-3736**	2	SOCKET-CONNECTOR (16-GA TO 18-GA)	
		1	**9W-0844**	2	SOCKET-CONNECTOR (14-GA)	
E		1	**125-7874**		TUBE-HEAT SHRINK (5.72-MM DIA) (5-CM)	
	20	1	**258-4356**	1	BRACKET AS	
	21	1	**284-7932**	1	FILM-NOTICE (ALTERNATE EXIT, READ OMM)	
M	22	1	**127-2170**	4	SCREW-TRUSS HEAD (M8X1.25X20-MM)	
	23	1	**5P-0372**	4	LOCK PIN	
	24	1	**6L-3966**	3	PIN (0.374-IN OD)	
	25	1	**8S-7803**	2	RING-RETAINING	
	26	1	**8T-4223**	1	WASHER-HARD (13.5X25.5X3-MM THK)	
	27	1	**8T-4224**	2	WASHER-HARD (8.8X16X2-MM THK)	
M	28	1	**8T-4244**	1	NUT (M12X1.75-THD)	
M	29	1	**9X-2044**	3	SCREW-TRUSS HEAD (M6X1X16-MM)	
E	30	1	**144-0195**		HOSE (90-CM)	
B	31	1	**198-1725**	2	WASHER-HARD (8.8X25.5X2-M THK)	
D	32	1	**8T-6936**		SEAL (0.05-M EACH)	

B-USE AS REQUIRED
D-ORDER BY THE METER
E-ORDER BY THE CENTIMETER
M-METRIC PART
Y-SEPARATE ILLUSTRATION

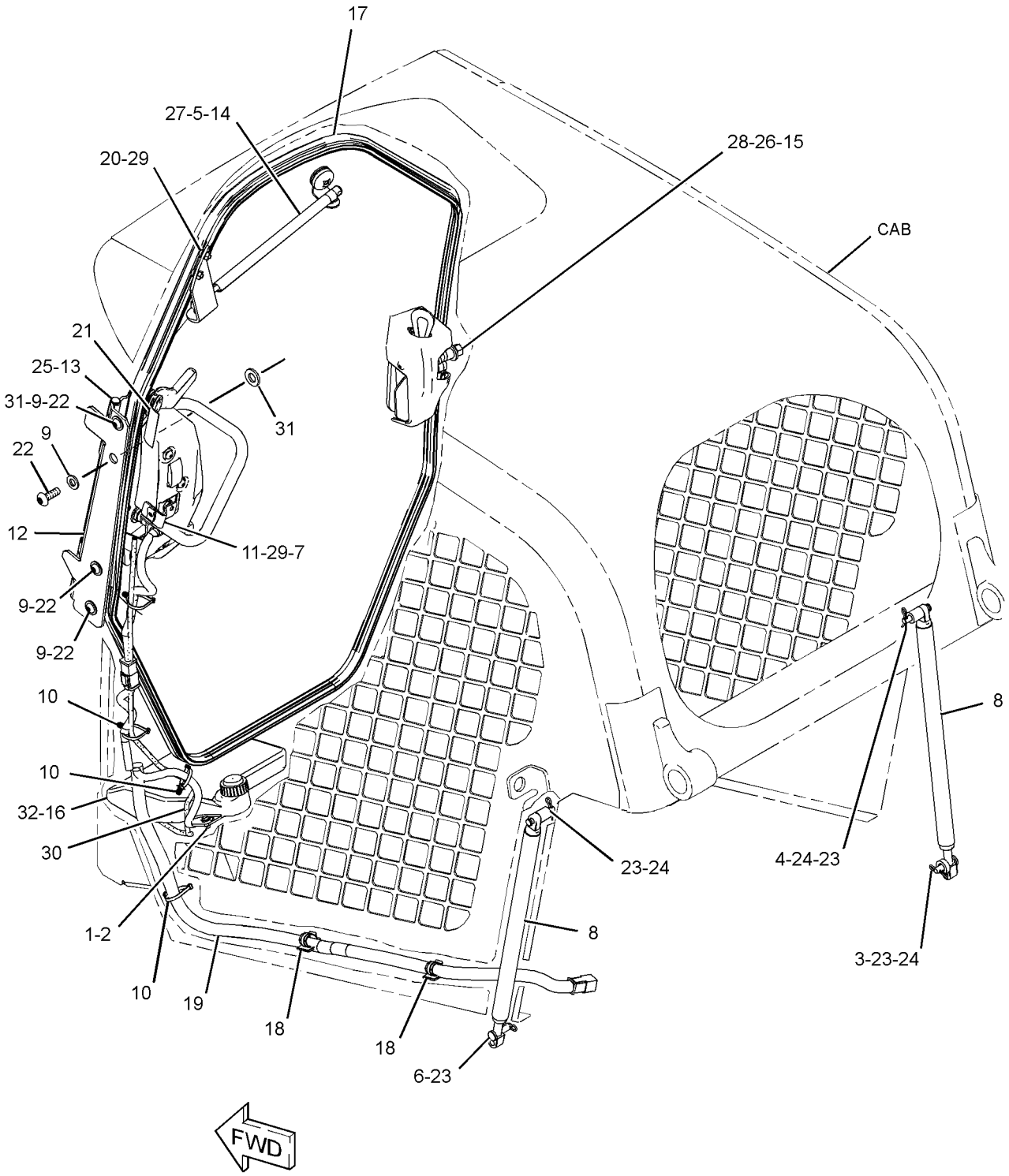

GRAPHIC #1 **<END>** g01441682

OPERATOR STATION

258-4080 DOOR & MTG GP-CAB—WITH CAB TILT GAS SPRING

S/N: JAY1-UP

CANNOT BE USED WITH 258-4070—PAGE 663, 258-3738—PAGE 738, 258-3740—PAGE 738 AN ATTACHMENT

SMCS-7308 **i03624790**

NOTE	REF NO	GRAPHIC REF	PART NUMBER	QTY	PART NAME 1 2 3 4 5 6 (PRODUCT LEVEL)	SEE PAGE
M	1	1	**5C-2890**	1	NUT (M6X1-THD)	
	2	1	**5T-9400**	1	SPACER (12X25X8.5-MM THK)	
	3	1	**7C-8246**	2	SPACER (10.5X20X24-MM THK)	
	4	1	**8T-2444**	2	STUD-BALL	
	5	1	**095-1325**	1	PIN-CLEVIS	
	6	1	**139-6039**	1	NUT (U-TYPE RETAINER)	
	7	1	**153-2682**	2	SPRING-GAS (CAB)	
	8	1	**198-1725**	4	WASHER-HARD (8.8X25.5X2-M THK)	
	9	1	**206-1345**	4	STRAP-CABLE	
	10	1	**258-3281**	1	BRACKET AS	
	11	1	**258-3725**	1	HINGE	
	12	1	**258-3726**	2	PIN	
	13	1	**258-3761**	1	SPRING-GAS (DOOR)	
	14	1	**258-3764**	1	STRIKER AS	
	15	1	**258-4078**	1	TANK AS-WINDOW WASHER	
		1	**6T-1375**	1	PUMP AS-WASHER	
		1	**8E-8293**	1	GROMMET	
		1	**258-3296**	1	CAP-VENTED (WASHER)	
Y	16	1	*258-4087*	1	DOOR GP-CAB (POLYCARBONATE)	677
	17	1	**258-4141**	2	CLIP	
	18	1	**258-4157**	1	HARNESS AS-CAB	
		1	**102-8805**	1	KIT-RECEPTACLE (6-PIN)	
					(INCLUDES RECEPTACLE AS & WEDGE)	
		1	**8T-8737**	1	PLUG-SEAL	
		1	**091-2436**	2	TERMINAL-BLADE	
		1	**186-3735**	1	PIN-CONNECTOR (16-GA TO 18-GA)	
		1	**186-3736**	2	SOCKET-CONNECTOR (16-GA TO 18-GA)	
		1	**9W-0852**	2	PIN-CONNECTOR (14-GA)	
		1	**9W-0844**	2	SOCKET-CONNECTOR (14-GA)	
		1	**123-7615**	1	CONNECTOR	
E		1	**125-7874**		TUBE-HEAT SHRINK (5.72-MM DIA) (5-CM)	
		1	**155-2274**	1	KIT-CONNECTING PLUG (6-PIN)	
					(INCLUDES PLUG AS, WEDGE & INTERFACE SEAL)	
		1	**180-9339**	2	PIN-CONNECTOR (14-GA TO 18-GA)	
		1	**180-9340**	2	SOCKET-CONNECTOR (14-GA TO 18-GA)	
E		1	**211-5358**		CONDUIT-FLEXIBLE (63-CM)	
	19	1	**258-4356**	1	BRACKET AS	
	20	1	**284-7932**	1	FILM-NOTICE (ALTERNATE EXIT, READ OMM)	
M	21	1	**127-2170**	4	SCREW-TRUSS HEAD (M8X1.25X20-MM)	
M	22	1	**215-6406**	1	SCREW-TRUSS HEAD (M6X1X16-MM)	
	23	1	**5P-0372**	4	LOCK PIN	
	24	1	**6L-3966**	3	PIN (0.374-IN OD)	
	25	1	**8S-7803**	2	RING-RETAINING	
	26	1	**8T-4224**	2	WASHER-HARD (8.8X16X2-MM THK)	
M	27	1	**8T-4244**	1	NUT (M12X1.75-THD)	
M	28	1	**9X-2044**	3	SCREW-TRUSS HEAD (M6X1X16-MM)	
E	29	1	**144-0195**		HOSE (90-CM)	
B	30	1	**198-1725**	2	WASHER-HARD (8.8X25.5X2-M THK)	
	31	1	**8T-4223**	1	WASHER-HARD (13.5X25.5X3-MM THK)	
D	32	1	**8T-6936**		SEAL (0.1-M)	

B-USE AS REQUIRED
D-ORDER BY THE METER
E-ORDER BY THE CENTIMETER
M-METRIC PART
Y-SEPARATE ILLUSTRATION

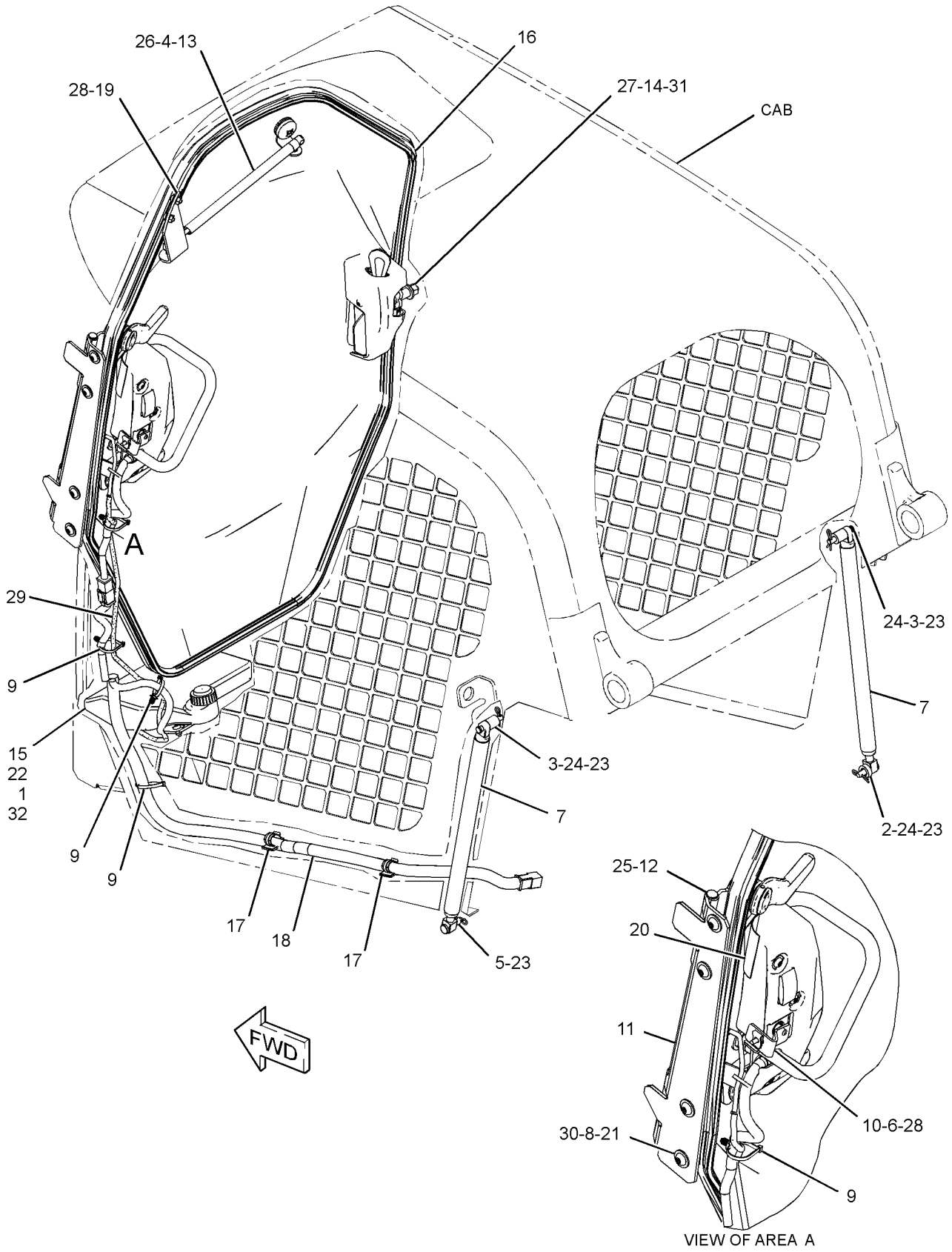

GRAPHIC #1 **<END>** g01440596

OPERATOR STATION

258-4440 DOOR & MTG GP-CAB—WITH CAB TILT GAS SPRING

S/N: JAY2060-UP

CANNOT BE USED WITH 258-4070—PAGE 663, 258-4080—PAGE 666, 258-3738—PAGE 738, 258-3740—PAGE 738

AN ATTACHMENT

SMCS-7308 **i03635713**

NOTE	REF NO	GRAPHIC REF	PART NUMBER	QTY	PART NAME 1 2 3 4 5 6 (PRODUCT LEVEL)	SEE PAGE
	1	1	**5T-9400**	1	SPACER (12X25X8.5-MM THK)	
	2	1	**7C-8246**	2	SPACER (10.5X20X24-MM THK)	
	3	1	**8T-2444**	2	STUD-BALL	
	4	1	**139-6039**	1	NUT (U-TYPE RETAINER)	
	5	1	**153-2682**	2	SPRING-GAS	
	6	1	**206-1345**	4	STRAP-CABLE	
	7	1	**258-3281**	1	BRACKET AS	
	8	1	**258-3725**	1	HINGE	
	9	1	**258-3726**	2	PIN	
	10	1	**258-3761**	1	SPRING-GAS	
	11	1	**258-3764**	1	STRIKER AS	
	12	1	**258-4078**	1	TANK AS-WINDOW WASHER	
		1	**6T-1375**	1	PUMP AS-WASHER	
		1	**8E-8293**	1	GROMMET	
		1	**258-3296**	1	CAP-VENTED (WASHER)	
	13	1	**258-4141**	2	CLIP	
	14	1	**258-4157**	1	HARNESS AS-CAB	
		1	**091-2436**	2	TERMINAL-BLADE (18-GA TO 22-GA)	
		1	**123-7615**	1	CONNECTOR	
		1	**9X-3401**	2	PIN-CONNECTOR (16-GA TO 18-GA)	
					—OR—	
		1	**126-1767**	2	PIN-CONNECTOR (14-GA)	
		1	**186-3735**	1	PIN-CONNECTOR (16-GA TO 18-GA)	
		1	**9W-0852**	2	PIN-CONNECTOR (14-GA)	
		1	**155-2274**	1	KIT-CONNECTING PLUG (6-PIN)	
					(INCLUDES PLUG AS, WEDGE & INTERFACE SEAL)	
		1	**8T-8737**	1	PLUG-SEAL	
		1	**102-8805**	1	KIT-RECEPTACLE (6-PIN)	
					(INCLUDES RECPTACLE AS & WEDGE)	
		1	**180-9340**	2	SOCKET-CONNECTOR (14-GA TO 18-GA)	
E		1	**211-5358**		CONDUIT-FLEXIBLE (63-CM)	
		1	**186-3736**	2	SOCKET-CONNECTOR (16-GA TO 18-GA)	
		1	**9W-0844**	2	SOCKET-CONNECTOR (14-GA)	
E		1	**125-7874**		TUBE-HEAT SHRINK (5.72-MM DIA) (5-CM)	
	15	1	**258-4356**	1	BRACKET AS	
Y	16	1	*258-4442*	1	DOOR GP-CAB	685
	17	1	**284-7932**	1	FILM-NOTICE (ALTERNATE EXIT, READ OMM)	
	18	1	**095-1325**	1	PIN-CLEVIS	
M	19	1	**127-2170**	4	SCREW-TRUSS HEAD (M8X1.25X20-MM)	
	20	1	**198-1725**	4	WASHER-HARD (8.8X25.5X2-M THK)	
M	21	1	**215-6406**	1	SCREW-TRUSS HEAD (M6X1X16-MM)	
M	22	1	**5C-2890**	1	NUT (M6X1-THD)	
	23	1	**5P-0372**	4	LOCK PIN	
	24	1	**6L-3966**	3	PIN (0.374-IN OD)	
	25	1	**8S-7803**	2	RING-RETAINING	
	26	1	**8T-4223**	1	WASHER-HARD (13.5X25.5X3-MM THK)	
M	27	1	**8T-4244**	1	NUT (M12X1.75-THD)	
	28	1	**8T-4224**	2	WASHER-HARD (8.8X16X2-MM THK)	
M	29	1	**9X-2044**	3	SCREW-TRUSS HEAD (M6X1X16-MM)	
B	30	1	**198-1725**	2	WASHER-HARD (8.8X25.5X2-M THK)	
E	31	1	**144-0195**		HOSE (90-CM)	

B-USE AS REQUIRED
E-ORDER BY THE CENTIMETER
M-METRIC PART
Y-SEPARATE ILLUSTRATION

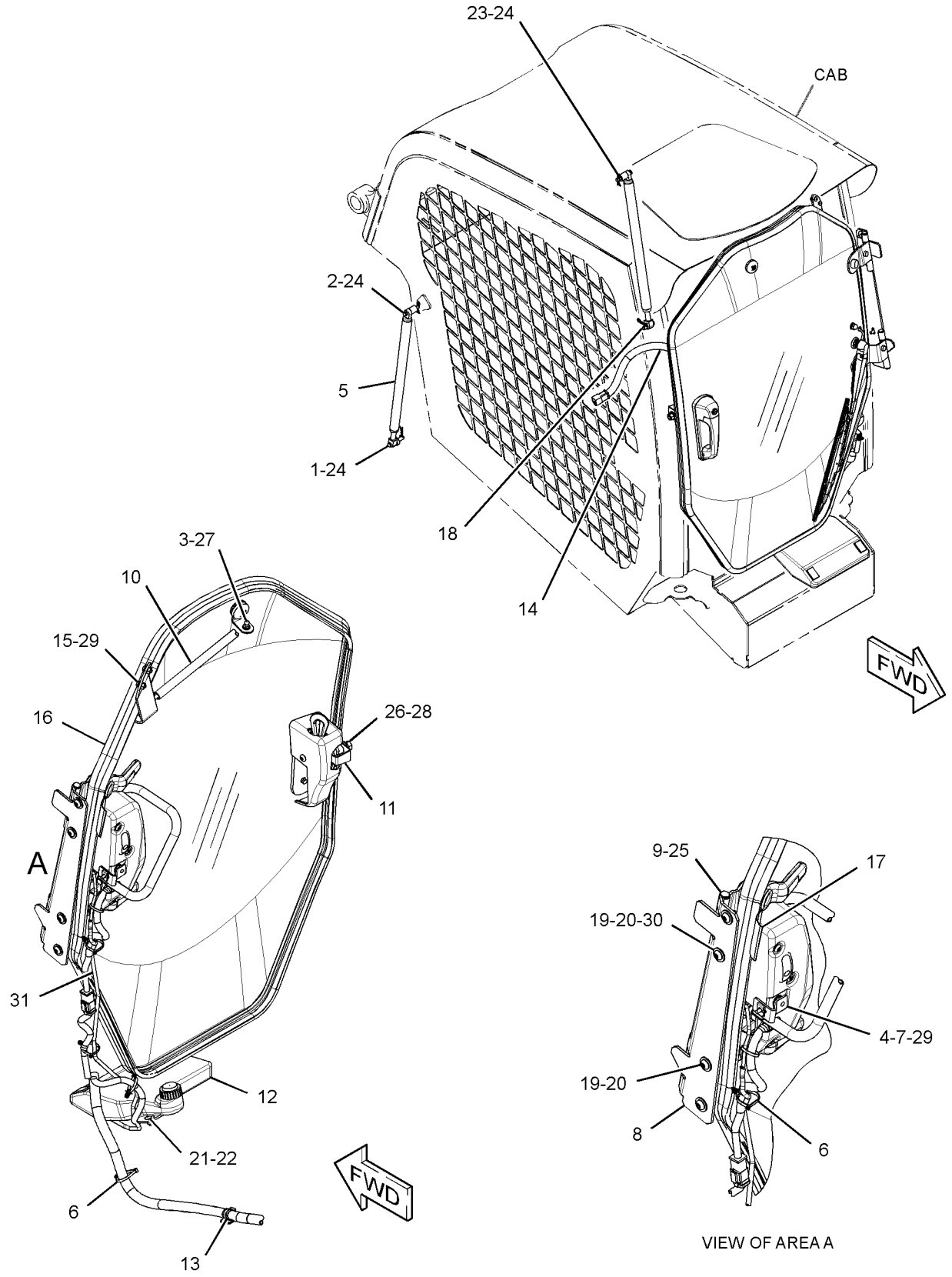

GRAPHIC #1 **<END>** g01455108

OPERATOR STATION

258-4086 DOOR GP-CAB—GLASS

S/N: JAY1-3274

PART OF 258-4070 DOOR & MTG GP-CAB, 258-2473 KIT-CAB DOOR & MOUNTING

AN ATTACHMENT

SMCS-7308 **i03624791**

NOTE	REF NO	GRAPHIC REF	PART NUMBER	QTY	PART NAME 1 2 3 4 5 6 (PRODUCT LEVEL)	SEE PAGE
M	1	1	**5C-2890**	2	NUT (M6X1-THD)	
	2	1	**8G-1151**	1	CONNECTOR	
	3	1	**8Y-4615**	1	BLADE AS-WIPER (400-MM) (CAB DOOR)	
	4	1	**129-8542**	2	RETAINER	
	5	1	**129-8545**	2	WASHER (13X40X3-MM THK)	
M	6	1	**136-4192**	1	BOLT (M6X1X35-MM)	
B	7	1	**154-5423**	1	SPACER (6.6X12.7X17-MM THK)	
	8	1	**206-1345**	2	STRAP-CABLE	
M	9	1	**215-6406**	6	SCREW-TRUSS HEAD (M6X1X16-MM)	
	10	1	**229-8757**	1	SWITCH AS-LIMIT (IMPLEMENT LOCKOUT) (DOOR)	
		1	**102-8803**	1	KIT-RECEPTACLE (3-PIN)	
					(INCLUDES RECEPTACLE AS & WEDGE)	
		1	**186-3735**	3	PIN-CONNECTOR (16-GA TO 18-GA)	
J	11	1	**252-1862**	1	HANDLE AS (PULL)	
B	12	1	**253-1817**	1	SPACER (6.5X14.5X12-MM THK)	
	13	1	**258-3280**	1	LATCH AS (INNER)	
	14	1	**258-3288**	1	HANDLE AS (LOWER)	
	15	1	**258-3289**	2	LATCH AS (OUTER)	
	16	1	**258-3290**	1	GASKET	
	17	1	**258-3294**	1	HANDLE AS (UPPER)	
	18	1	**258-3298**	1	GROMMET	
	19	1	**258-3697**	1	WASHER-NYLON (7X20X2-MM THK)	
	20	1	**258-3762**	2	GROMMET	
	21	1	**258-4013**	1	BRACKET AS	
	22	1	**258-4014**	1	HINGE	
	23	1	**258-4016**	1	COVER (WIPER)	
	24	1	**258-4071**	1	GLASS (DOOR)	
	25	1	**258-4073**	1	HINGE	
	26	1	**258-4075**	4	GASKET	
	27	1	**258-4076**	1	HANDLE AS	
	28	1	**258-4082**	1	GASKET	
	29	1	**258-4083**	1	COVER-LATCH	
	30	1	**258-4084**	1	BRACKET	
	31	1	**258-4085**	2	BUSHING	
	32	1	**258-4156**	1	HARNESS AS-CAB (DOOR, FRONT)	
		1	**102-8805**	1	KIT-RECEPTACLE (6-PIN)	
					(INCLUDES RECEPTACLE AS & WEDGE)	
		1	**8L-8413**	5	STRAP-CABLE	
		1	**091-2436**	4	TERMINAL-BLADE	
		1	**104-1995**	3	TERMINAL-BLADE	
		1	**186-3735**	2	PIN-CONNECTOR (16-GA TO 18-GA)	
		1	**9W-0852**	2	PIN-CONNECTOR (14-GA)	
		1	**9W-0844**	4	SOCKET-CONNECTOR (14-GA)	
E		1	**125-7874**		TUBE-HEAT SHRINK (5.72-MM DIA) (10-CM)	
		1	**155-2260**	1	KIT-CONNECTING PLUG (3-PIN)	
		1	**155-2271**	1	KIT-CONNECTING PLUG (4-PIN)	
		1	**155-2260**	1	KIT-CONNECTING PLUG (3-PIN)	
					(EACH PLUG KIT INCLUDES PLUG AS, WEDGE & INTERFACE SEAL)	
		1	**180-9339**	2	PIN-CONNECTOR (14-GA TO 18-GA)	
		1	**180-9340**	3	SOCKET-CONNECTOR (14-GA TO 18-GA)	
		1	**228-5856**	1	CONNECTOR	
	33	1	**264-4407**	1	MOTOR GP-WINDOW WIPER (CAB DOOR)	
		1	**102-8804**	1	KIT-RECEPTACLE (4-PIN)	
					(INCLUDES RECEPTACLE AS & WEDGE)	

258-4086 **DOOR GP-CAB** *(contd.)* **i03624791**

NOTE	REF NO	GRAPHIC REF	PART NUMBER	QTY	PART NAME 1 2 3 4 5 6 (PRODUCT LEVEL)	SEE PAGE
		1	**3F-9556**	1	LOCKWASHER	
M		1	**5C-7261**	1	NUT (M8X1.25-THD)	
		1	**186-3735**	4	PIN-CONNECTOR (16-GA TO 18-GA)	
		1	**263-3823**	1	CAP-WIPER	
	34	1	**264-4408**	1	ARM GP-WINDOW WIPER (CAB DOOR)	
		1	**305-9194**	1	NOZZLE AS-WASHER	
E		1	**194-5171**		HOSE (50-CM)	
	35	1	**281-6390**	1	SWITCH AS-ROCKER (WIPER)	
		1	**111-7899**	1	GASKET	
	36	1	**292-6936**	1	BOLT (M6X1X70-MM)	
	37	1	**115-3069**	1	CLIP AS-CONNECTOR (3-PIN)	
	38	1	**3S-2093**	2	STRAP-CABLE	
M	39	1	**6V-7357**	4	BOLT (M6X1X25-MM)	
M	40	1	**8C-3798**	3	BOLT-LOCKING (M6X1X30-MM)	
	41	1	**8T-4205**	1	WASHER-HARD (7.2X14.5X2-MM THK)	
M	42	1	**9X-2044**	1	SCREW-TRUSS HEAD (M6X1X16-MM)	
E	43	1	**258-4430**		SEAL (329-CM)	
M	44	1	**129-3178**	1	LOCKNUT (M6X1-THD)	
	45	1	**319-0710**	2	FILM-INSTRUCTION (EGRESS SYSTEM, READ OMM)	

B-USE AS REQUIRED
E-ORDER BY THE CENTIMETER
J-REQUIRES CORPORATE KEY
M-METRIC PART

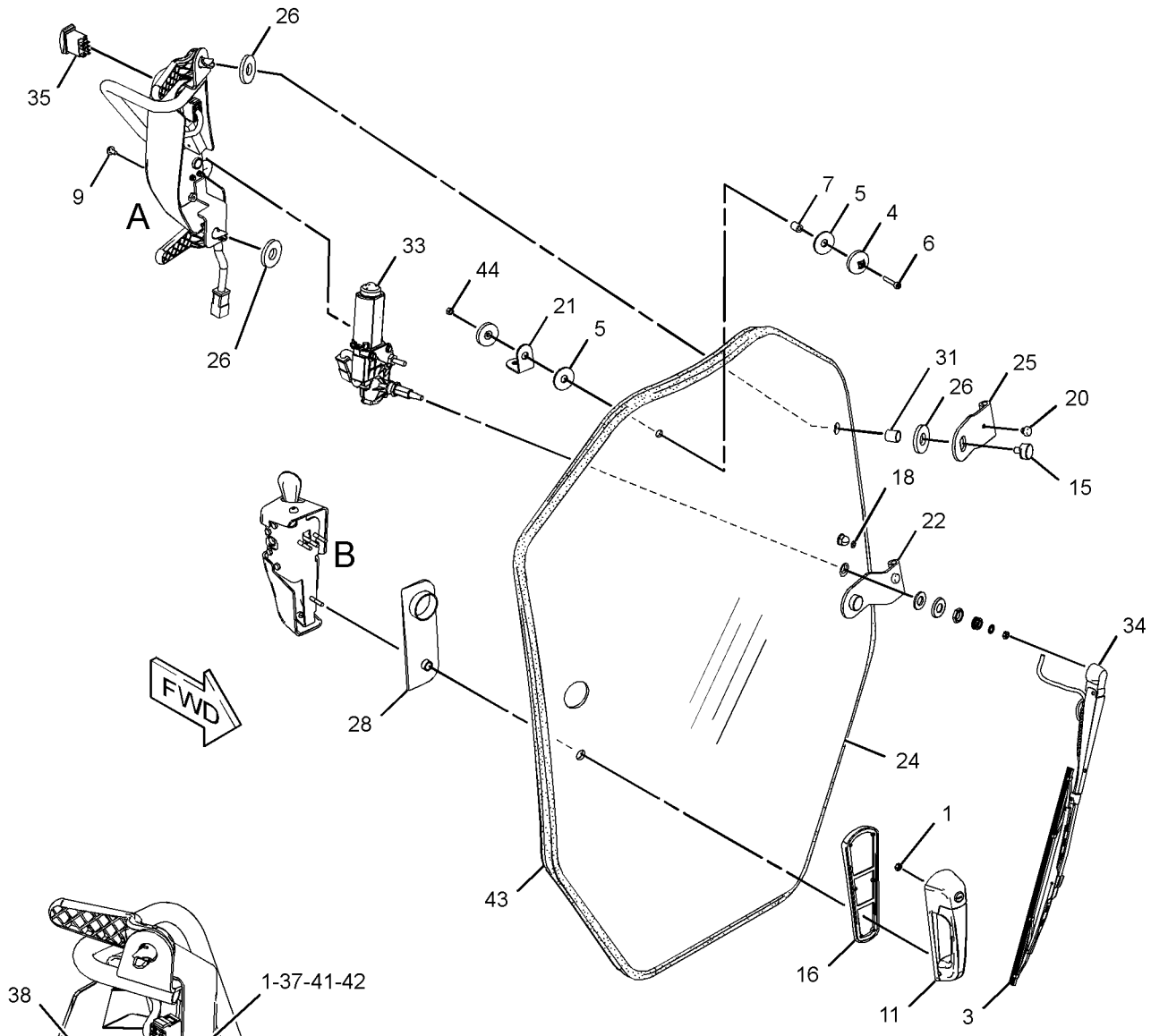

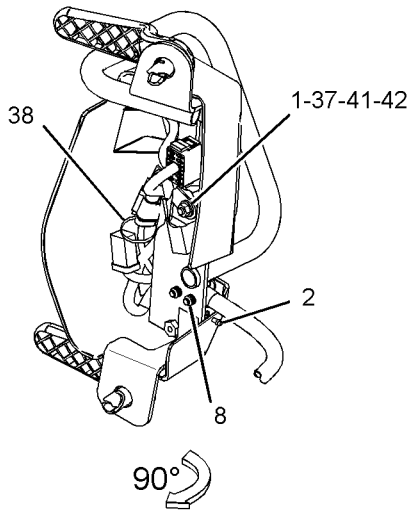

VIEW OF AREA A

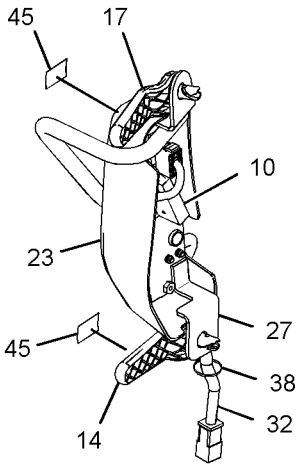

VIEW OF AREA A

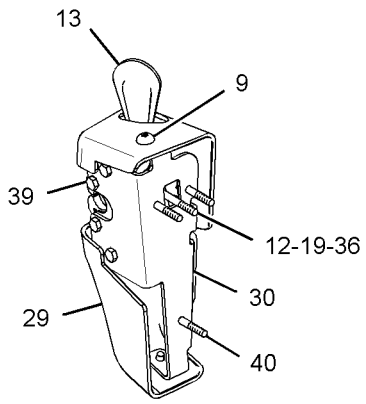

VIEW OF AREA B

GRAPHIC #1

<END>

g01457058

OPERATOR STATION

258-4086 DOOR GP-CAB—GLASS

S/N: JAY3275-UP

PART OF 258-4070 DOOR & MTG GP-CAB, 258-2473 KIT-CAB DOOR & MOUNTING

AN ATTACHMENT

SMCS-7308 **i03585729**

NOTE	REF NO	GRAPHIC REF	PART NUMBER	QTY	PART NAME 1 2 3 4 5 6 (PRODUCT LEVEL)	SEE PAGE
M	1	1	**5C-2890**	2	NUT (M6X1-THD)	
	2	1	**8G-1151**	1	CONNECTOR	
C	3	1	**322-9633**	1	BLADE AS-WIPER (400-MM) (CAB DOOR)	
	4	1	**129-8542**	2	RETAINER	
	5	1	**129-8545**	2	WASHER (13X40X3-MM THK)	
M	6	1	**136-4192**	1	BOLT (M6X1X35-MM)	
	7	1	**154-5423**	1	SPACER (6.6X12.7X17-MM THK)	
	8	1	**206-1345**	2	STRAP-CABLE	
M	9	1	**215-6406**	6	SCREW-TRUSS HEAD (M6X1X16-MM)	
	10	1	**229-8757**	1	SWITCH AS-LIMIT (IMPLEMENT LOCKOUT) (DOOR)	
		1	**102-8803**	1	KIT-RECEPTACLE (3-PIN)	
					(INCLUDES RECEPTACLE AS & WEDGE)	
		1	**186-3735**	3	PIN-CONNECTOR (16-GA TO 18-GA)	
J	11	1	**252-1862**	1	HANDLE AS (PULL)	
	12	1	**253-1817**	1	SPACER (6.5X14.5X12-MM THK)	
	13	1	**258-3280**	1	LATCH AS (INNER)	
	14	1	**258-3288**	1	HANDLE AS (LOWER)	
	15	1	**258-3289**	2	LATCH AS (OUTER)	
	16	1	**258-3290**	1	GASKET	
	17	1	**258-3294**	1	HANDLE AS (UPPER)	
	18	1	**258-3298**	1	GROMMET	
	19	1	**258-3697**	1	WASHER-NYLON (7X20X2-MM THK)	
	20	1	**331-8050**	2	BUMPER	
	21	1	**258-4013**	1	BRACKET AS	
	22	1	**258-4014**	1	HINGE (LOWER)	
	23	1	**258-4016**	1	COVER (WIPER)	
	24	1	**258-4071**	1	GLASS (DOOR)	
	25	1	**258-4073**	1	HINGE (UPPER)	
	26	1	**258-4075**	4	GASKET	
	27	1	**258-4076**	1	HANDLE AS	
	28	1	**258-4082**	1	GASKET	
	29	1	**258-4083**	1	COVER-LATCH	
	30	1	**258-4084**	1	BRACKET	
	31	1	**258-4085**	2	BUSHING	
	32	1	**258-4156**	1	HARNESS AS-CAB (DOOR, FRONT)	
		1	**228-5856**	1	CONNECTOR	
		1	**186-3735**	2	PIN-CONNECTOR (16-GA TO 18-GA)	
		1	**9W-0852**	2	PIN-CONNECTOR (14-GA)	
		1	**9X-3401**	2	PIN-CONNECTOR (16-GA TO 18-GA)	
					-OR-	
		1	**126-1767**	2	PIN-CONNECTOR (14-GA)	
		1	**155-2271**	1	KIT-CONNECTING PLUG (4-PIN)	
		1	**155-2260**	1	KIT-CONNECTING PLUG (3-PIN)	
					(EACH PLUG KIT INCLUDES PLUG AS, WEDGE & INTERFACE SEAL)	
		1	**102-8805**	1	KIT-RECEPTACLE (6-PIN)	
					(INCLUDES RECEPTACLE AS & WEDGE)	
		1	**180-9340**	3	SOCKET-CONNECTOR (14-GA TO 18-GA)	
		1	**9W-0844**	4	SOCKET-CONNECTOR (14-GA)	
		1	**8L-8413**	5	STRAP-CABLE	
		1	**091-2436**	4	TERMINAL-BLADE (18-GA TO 22-GA)	
		1	**104-1995**	3	TERMINAL-BLADE (14-GA TO 18-GA)	
E		1	**125-7875**		TUBE-HEAT SHRINK (7.44-MM DIA) (10-CM)	
CY	33	1	**330-5011**	1	MOTOR GP-WINDOW WIPER (CAB DOOR)	732
	34	1	**264-4408**	1	ARM GP-WINDOW WIPER (CAB DOOR)	

258-4086 **DOOR GP-CAB** *(contd.)* **i03585729**

NOTE	REF NO	GRAPHIC REF	PART NUMBER	QTY	PART NAME 1 2 3 4 5 6 (PRODUCT LEVEL)	SEE PAGE
		1	**305-9194**	1	NOZZLE AS-WASHER	
E		1	**194-5171**		HOSE (50-CM)	
	35	1	**281-6390**	1	SWITCH AS-ROCKER (FRONT WIPER, WASHER)	
		1	**111-7899**	1	GASKET	
	36	1	**292-6936**	1	BOLT (M6X1X70-MM)	
	37	1	**115-3069**	1	CLIP AS-CONNECTOR (3-PIN)	
	38	1	**3S-2093**	2	STRAP-CABLE	
M	39	1	**6V-7357**	4	BOLT (M6X1X25-MM)	
M	40	1	**8C-3798**	3	BOLT-LOCKING (M6X1X30-MM)	
	41	1	**8T-4205**	1	WASHER-HARD (7.2X14.5X2-MM THK)	
M	42	1	**9X-2044**	1	SCREW-TRUSS HEAD (M6X1X16-MM)	
E	43	1	**258-4430**		SEAL (329-CM)	
M	44	1	**129-3178**	1	LOCKNUT (M6X1-THD)	
	45	1	**319-0710**	2	FILM-INSTRUCTION (EGRESS SYSTEM, READ OMM)	
	46	1	**8S-3193**	2	NUT-PUSH ON	

C-CHANGE FROM PREVIOUS TYPE
E-ORDER BY THE CENTIMETER
J-REQUIRES CORPORATE KEY
M-METRIC PART
Y-SEPARATE ILLUSTRATION

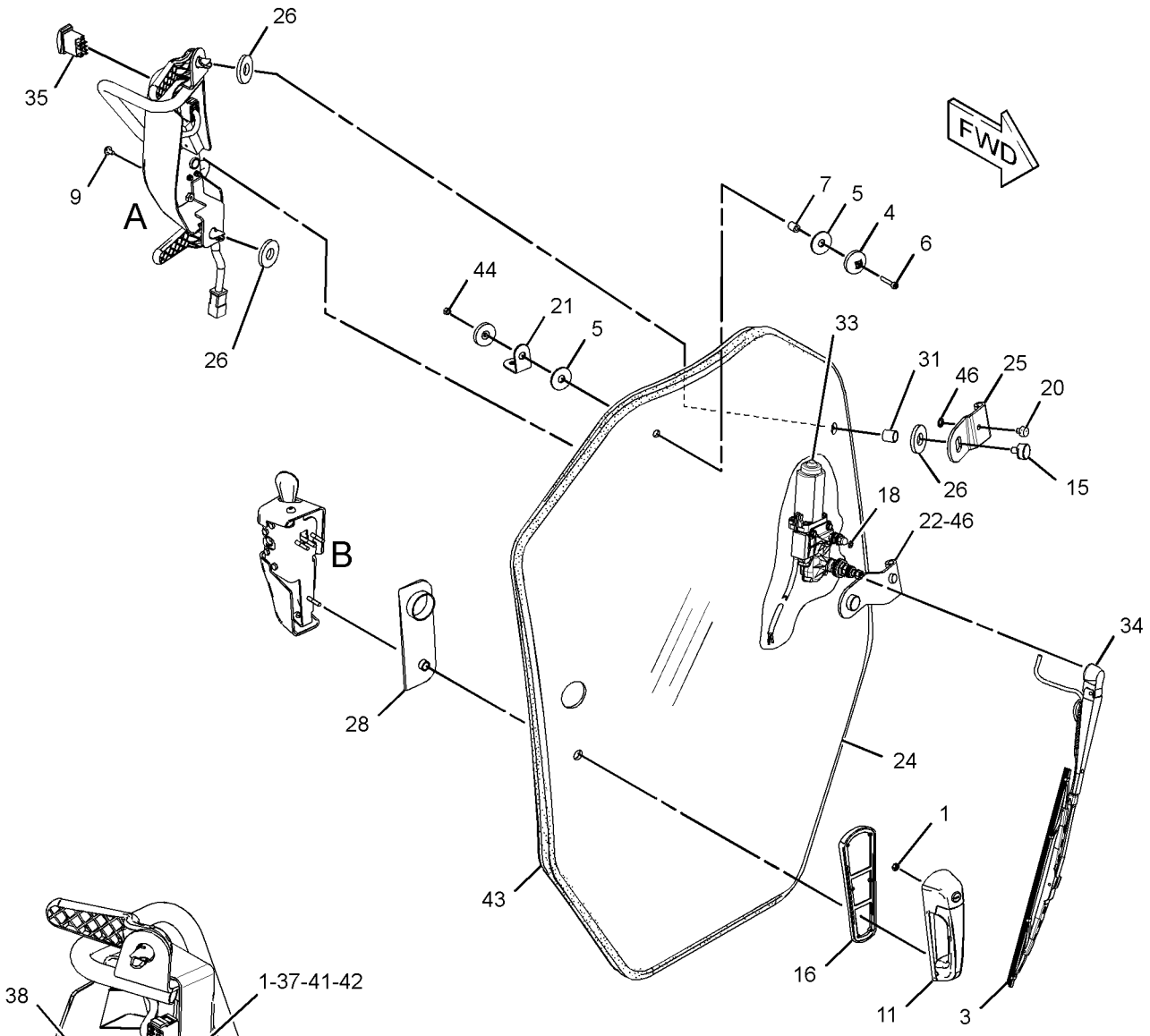

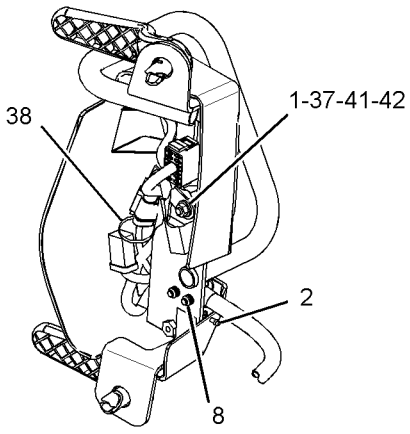

VIEW OF AREA A 90°

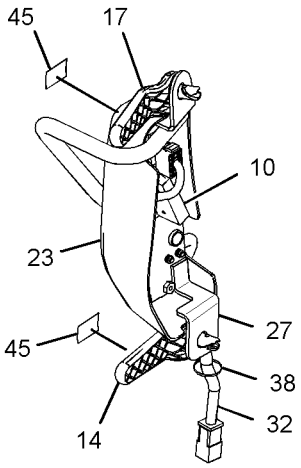

VIEW OF AREA A

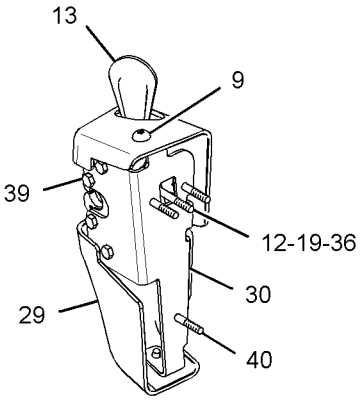

VIEW OF AREA B

GRAPHIC #1

<END>

g01942813

OPERATOR STATION

258-4087 DOOR GP-CAB—POLYCARBONATE

S/N: JAY1-UP

PART OF 258-4080 DOOR & MTG GP-CAB, 280-6084 KIT-CAB DOOR & MOUNTING

AN ATTACHMENT

TYPE 1

SMCS-7308 **i03624792**

NOTE	REF NO	GRAPHIC REF	PART NUMBER	QTY	PART NAME 1 2 3 4 5 6 (PRODUCT LEVEL)	SEE PAGE
M	1	1,2	**5C-2890**	2	NUT (M6X1-THD)	
	2	2	**8G-1151**	1	CONNECTOR	
	3	2	**8Y-4615**	1	BLADE AS-WIPER (400-MM) (CAB DOOR)	
	4	1	**129-8542**	2	RETAINER	
	5	1	**129-8545**	2	WASHER (13X40X3-MM THK)	
M	6	1	**136-4192**	1	BOLT (M6X1X35-MM)	
B	7	1	**154-5423**	1	SPACER (6.6X12.7X17-MM THK)	
	8	2	**206-1345**	2	STRAP-CABLE	
M	9	1,2	**215-6406**	6	SCREW-TRUSS HEAD (M6X1X16-MM)	
	10	2	**229-8757**	1	SWITCH AS-LIMIT (IMPLEMENT LOCKOUT)	
		2	**186-3735**	3	PIN-CONNECTOR (16-GA TO 18-GA)	
		2	**102-8803**	1	KIT-RECEPTACLE (3-PIN)	
					(INCLUDES RECEPTACLE AS & WEDGE)	
J	11	1	**252-1862**	1	HANDLE AS (PULL)	
B	12	1	**253-1817**	1	SPACER (6.5X14.5X12-MM THK)	
	13	1	**258-3280**	1	LATCH AS (INNER)	
	14	2	**258-3288**	1	HANDLE AS (LOWER)	
	15	2	**258-3289**	2	LATCH AS (OUTER)	
	16	1	**258-3290**	1	GASKET	
	17	2	**258-3294**	1	HANDLE AS (UPPER)	
	18	2	**258-3298**	1	GROMMET	
	19	1	**258-3697**	1	WASHER-NYLON (7X20X2-MM THK)	
	20	2	**258-3762**	2	GROMMET	
	21	1	**258-4013**	1	BRACKET AS	
	22	2	**258-4014**	1	HINGE (LOWER)	
	23	2	**258-4016**	1	COVER (WIPER)	
	24	2	**258-4073**	1	HINGE (UPPER)	
	25	2	**258-4075**	4	GASKET	
	26	2	**258-4076**	1	HANDLE AS	
	27	1	**258-4081**	1	WINDOW	
	28	1	**258-4082**	1	GASKET	
	29	1	**258-4083**	1	COVER-LATCH	
	30	1	**258-4084**	1	BRACKET	
	31	2	**258-4085**	2	BUSHING	
	32	2	**258-4156**	1	HARNESS AS-CAB (DOOR, FRONT)	
		1	**102-8805**	1	KIT-RECEPTACLE (6-PIN)	
					(INCLUDES RECEPTACLE AS & WEDGE)	
		1	**8L-8413**	5	STRAP-CABLE	
		1	**091-2436**	4	TERMINAL-BLADE	
		1	**104-1995**	3	TERMINAL-BLADE	
		1	**186-3735**	2	PIN-CONNECTOR (16-GA TO 18-GA)	
		1	**9W-0852**	2	PIN-CONNECTOR (14-GA)	
		1	**9W-0844**	4	SOCKET-CONNECTOR (14-GA)	
E		1	**125-7875**		TUBE-HEAT SHRINK (7.44-MM DIA) (10-CM)	
		1	**155-2260**	1	KIT-CONNECTING PLUG (3-PIN)	
		1	**155-2271**	1	KIT-CONNECTING PLUG (4-PIN)	
		1	**155-2260**	1	KIT-CONNECTING PLUG (3-PIN)	
					(EACH PLUG KIT INCLUDES PLUG AS , WEDGE & INTERFACE SEAL)	
		1	**180-9339**	2	PIN-CONNECTOR (14-GA TO 18-GA)	
		1	**180-9340**	3	SOCKET-CONNECTOR (14-GA TO 18-GA)	
		1	**228-5856**	1	CONNECTOR	
	33	2	**264-4407**	1	MOTOR GP-WINDOW WIPER (CAB DOOR)	
		2	**3F-9556**	1	LOCKWASHER	

OPERATOR STATION

258-4087 **DOOR GP-CAB** *(contd.)* **i03624792**

NOTE	REF NO	GRAPHIC REF	PART NUMBER	QTY	PART NAME 1 2 3 4 5 6 (PRODUCT LEVEL)	SEE PAGE
M		2	**5C-7261**	1	NUT (M8X1.25-THD)	
		2	**102-8804**	1	KIT-RECEPTACLE (4-PIN)	
					(INCLUDES RECEPTACLE AS & WEDGE)	
		2	**186-3735**	4	PIN-CONNECTOR (16-GA TO 18-GA)	
		2	**263-3823**	1	CAP-WIPER	
	34	2	**264-4408**	1	ARM GP-WINDOW WIPER (CAB DOOR)	
		2	**305-9194**	1	NOZZLE AS-WASHER	
E		2	**194-5171**		HOSE (50-CM)	
	35	2	**281-6390**	1	SWITCH AS-ROCKER (FRONT WIPER/WASHER)	
		2	**111-7899**	1	GASKET	
	36	1	**292-6936**	1	BOLT (M6X1X70-MM)	
	37	2	**115-3069**	1	CLIP AS-CONNECTOR (3-PIN)	
	38	2	**3S-2093**	2	STRAP-CABLE	
M	39	1	**6V-7357**	4	BOLT (M6X1X25-MM)	
M	40	1	**8C-3798**	3	BOLT-LOCKING (M6X1X30-MM)	
	41	2	**8T-4205**	1	WASHER-HARD (7.2X14.5X2-MM THK)	
M	42	2	**9X-2044**	1	SCREW-TRUSS HEAD (M6X1X16-MM)	
E	43	1	**258-4430**		SEAL (331-CM)	
M	44	1	**129-3178**	1	LOCKNUT (M6X1-THD)	
	45	2	**319-0710**	2	FILM-INSTRUCTION (EGRESS SYSTEM, READ OMM)	

B-USE AS REQUIRED
E-ORDER BY THE CENTIMETER
J-REQUIRES CORPORATE KEY
M-METRIC PART

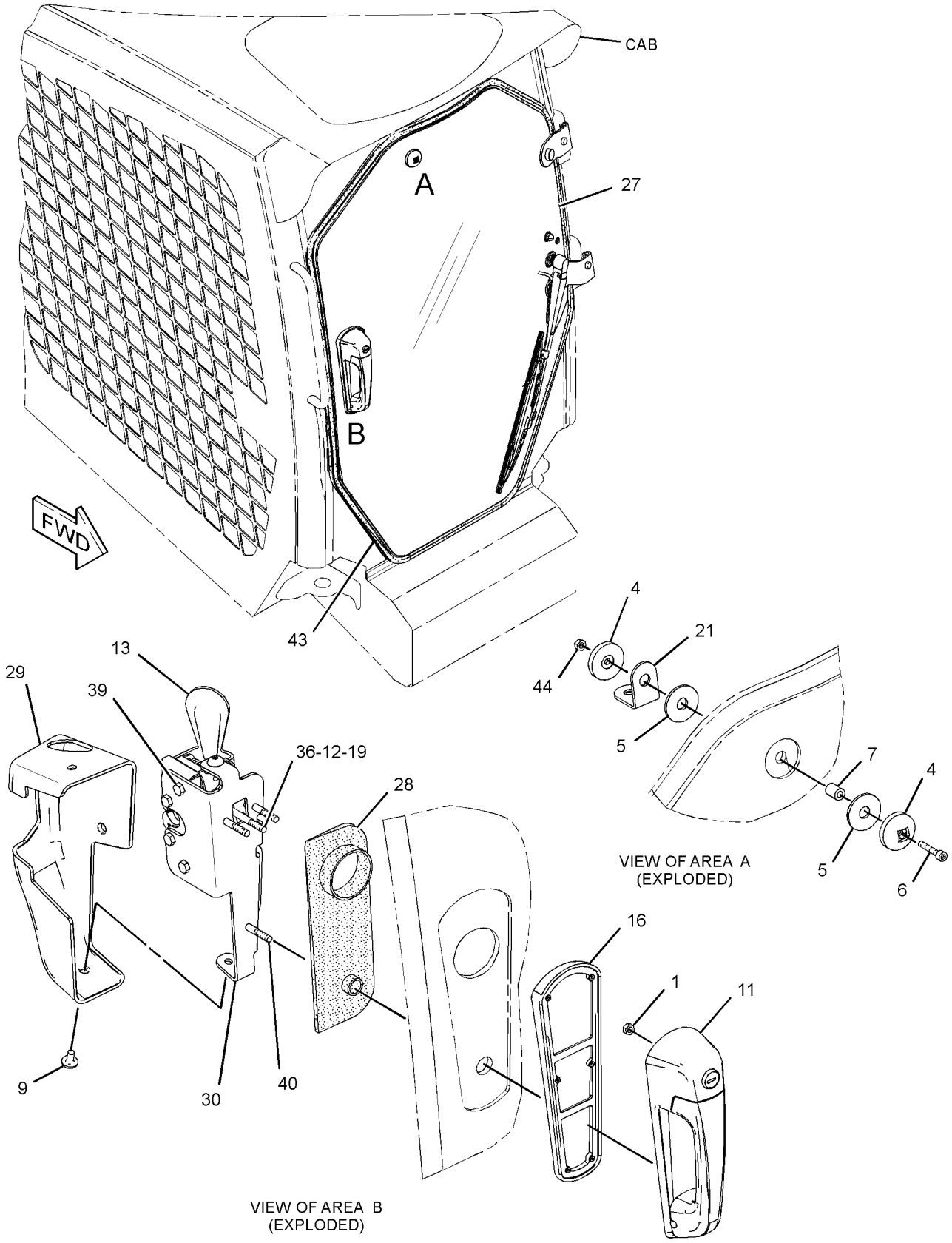

GRAPHIC #1

g01457062

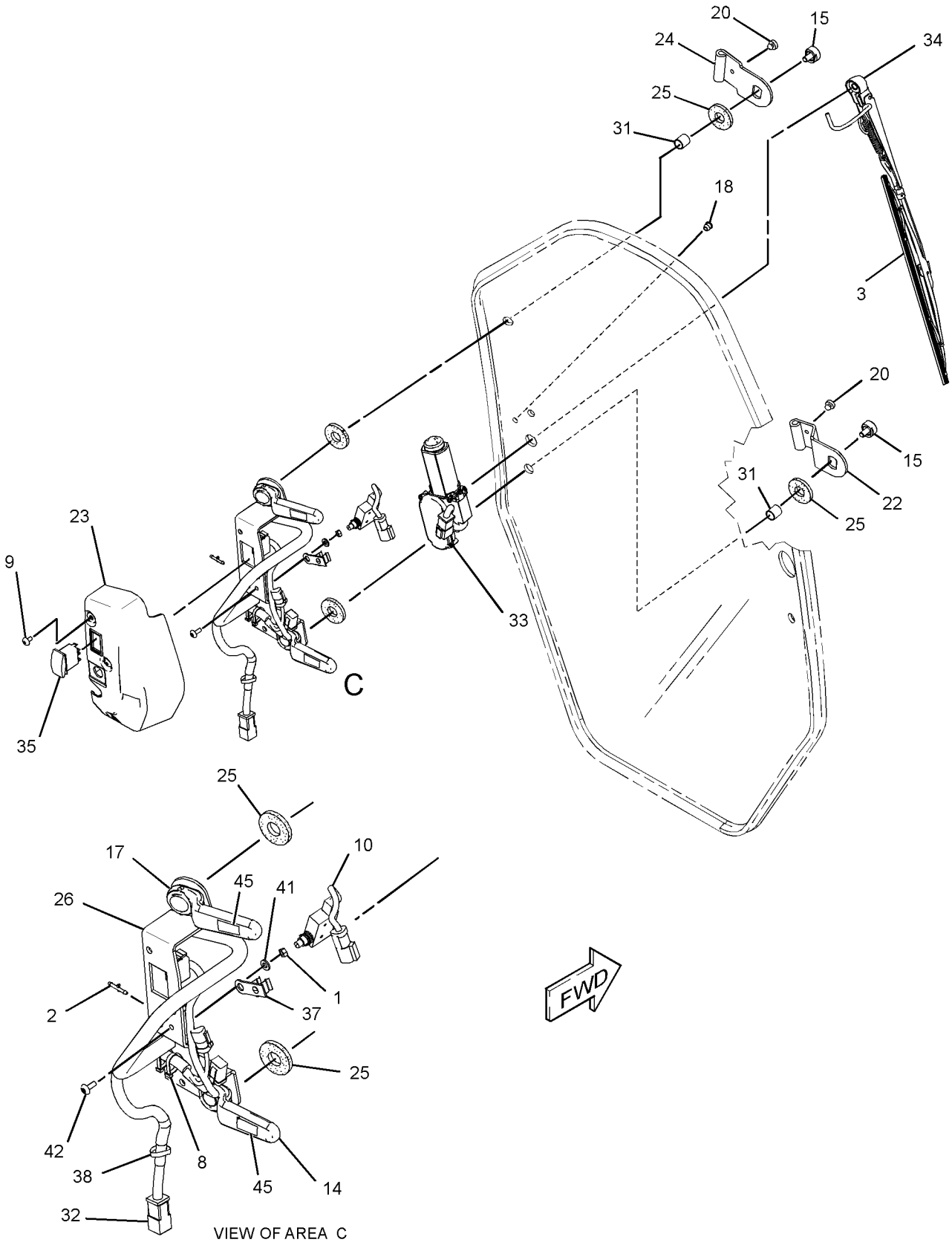

GRAPHIC #2 **<END>** g01441397

OPERATOR STATION

258-4087 DOOR GP-CAB—POLYCARBONATE

S/N: JAY1-UP

PART OF 258-4080 DOOR & MTG GP-CAB, 280-6084 KIT-CAB DOOR & MOUNTING

AN ATTACHMENT

TYPE 2

SMCS-7308 **i03585732**

NOTE	REF NO	GRAPHIC REF	PART NUMBER	QTY	PART NAME 1 2 3 4 5 6 (PRODUCT LEVEL)	SEE PAGE
M	1	1,2	**5C-2890**	2	NUT (M6X1-THD)	
	2	2	**8G-1151**	1	CONNECTOR	
C	3	2	**322-9633**	1	BLADE AS-WIPER (400-MM) (CAB DOOR)	
	4	1	**129-8542**	2	RETAINER	
	5	1	**129-8545**	2	WASHER (13X40X3-MM THK)	
M	6	1	**136-4192**	1	BOLT (M6X1X35-MM)	
	7	1	**154-5423**	1	SPACER (6.6X12.7X17-MM THK)	
	8	2	**206-1345**	2	STRAP-CABLE	
M	9	1,2	**215-6406**	6	SCREW-TRUSS HEAD (M6X1X16-MM)	
	10	2	**229-8757**	1	SWITCH AS-LIMIT (IMPLEMENT LOCKOUT) (DOOR)	
		2	**186-3735**	3	PIN-CONNECTOR (16-GA TO 18-GA)	
		2	**102-8803**	1	KIT-RECEPTACLE (3-PIN)	
					(INCLUDES RECEPTACLE AS & WEDGE)	
J	11	1	**252-1862**	1	HANDLE AS (PULL)	
	12	1	**253-1817**	1	SPACER (6.5X14.5X12-MM THK)	
	13	1	**258-3280**	1	LATCH AS (INNER)	
	14	2	**258-3288**	1	HANDLE AS (LOWER)	
	15	2	**258-3289**	2	LATCH AS (OUTER)	
	16	1	**258-3290**	1	GASKET	
	17	2	**258-3294**	1	HANDLE AS (UPPER)	
	18	2	**258-3298**	1	GROMMET	
	19	1	**258-3697**	1	WASHER-NYLON (7X20X2-MM THK)	
	20	2	**331-8050**	2	BUMPER	
	21	1	**258-4013**	1	BRACKET AS	
	22	2	**258-4014**	1	HINGE (LOWER)	
	23	2	**258-4016**	1	COVER (WIPER)	
	24	2	**258-4073**	1	HINGE (UPPER)	
	25	2	**258-4075**	4	GASKET	
	26	2	**258-4076**	1	HANDLE AS	
	27	1	**258-4081**	1	WINDOW	
	28	1	**258-4082**	1	GASKET	
	29	1	**258-4083**	1	COVER-LATCH	
	30	1	**258-4084**	1	BRACKET	
	31	2	**258-4085**	2	BUSHING	
	32	2	**258-4156**	1	HARNESS AS-CAB (DOOR, FRONT)	
		2	**228-5856**	1	CONNECTOR	
		2	**186-3735**	2	PIN-CONNECTOR (16-GA TO 18-GA)	
		2	**9W-0852**	2	PIN-CONNECTOR (14-GA)	
		2	**9X-3401**	2	PIN-CONNECTOR (16-GA TO 18-GA)	
					-OR-	
		2	**126-1767**	2	PIN-CONNECTOR (14-GA)	
		2	**155-2271**	1	KIT-CONNECTING PLUG (4-PIN)	
		2	**155-2260**	1	KIT-CONNECTING PLUG (3-PIN)	
					(EACH PLUG KIT INCLUDES PLUG AS, WEDGE & INTERFACE SEAL)	
		2	**102-8805**	1	KIT-RECEPTACLE (6-PIN)	
					(INCLUDES RECEPTACLE AS & WEDGE)	
		2	**180-9340**	3	SOCKET-CONNECTOR (14-GA TO 18-GA)	
		2	**9W-0844**	4	SOCKET-CONNECTOR (14-GA)	
		2	**8L-8413**	5	STRAP-CABLE	
		2	**091-2436**	4	TERMINAL-BLADE (18-GA TO 22-GA)	
		2	**104-1995**	3	TERMINAL-BLADE (14-GA TO 18-GA)	
E		2	**125-7875**		TUBE-HEAT SHRINK (7.44-MM DIA) (10-CM)	
CY	33	2	**330-5011**	1	MOTOR GP-WINDOW WIPER (CAB DOOR)	732

258-4087 **DOOR GP-CAB** *(contd.)* **i03585732**

NOTE	REF NO	GRAPHIC REF	PART NUMBER	QTY	PART NAME 1 2 3 4 5 6 (PRODUCT LEVEL)	SEE PAGE
	34	2	**264-4408**	1	ARM GP-WINDOW WIPER (CAB DOOR)	
		2	**305-9194**	1	NOZZLE AS-WASHER	
E		2	**194-5171**		HOSE (50-CM)	
	35	2	**281-6390**	1	SWITCH AS-ROCKER (FRONT WIPER/WASHER)	
		2	**111-7899**	1	GASKET	
	36	1	**292-6936**	1	BOLT (M6X1X70-MM)	
	37	2	**115-3069**	1	CLIP AS-CONNECTOR (3-PIN)	
	38	2	**3S-2093**	2	STRAP-CABLE	
M	39	1	**6V-7357**	4	BOLT (M6X1X25-MM)	
M	40	1	**8C-3798**	3	BOLT-LOCKING (M6X1X30-MM)	
	41	2	**8T-4205**	1	WASHER-HARD (7.2X14.5X2-MM THK)	
M	42	2	**9X-2044**	1	SCREW-TRUSS HEAD (M6X1X16-MM)	
E	43	1	**258-4430**		SEAL (331-CM)	
M	44	1	**129-3178**	1	LOCKNUT (M6X1-THD)	
	45	2	**319-0710**	2	FILM-INSTRUCTION (EGRESS SYSTEM, READ OMM)	
	46	2	**8S-3193**	2	NUT-PUSH ON	

C-CHANGE FROM PREVIOUS TYPE
E-ORDER BY THE CENTIMETER
J-REQUIRES CORPORATE KEY
M-METRIC PART
Y-SEPARATE ILLUSTRATION

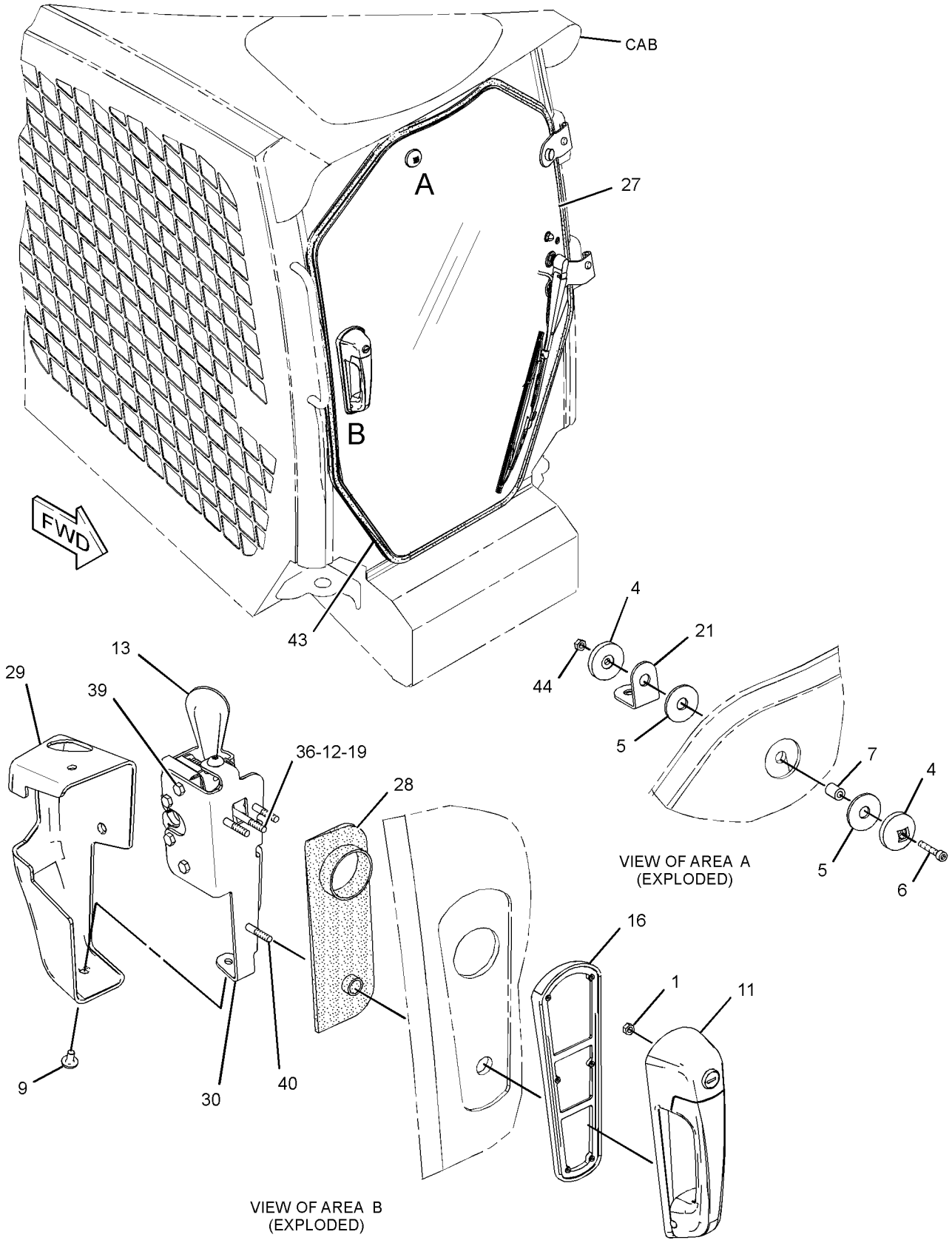

GRAPHIC #1

g01457062

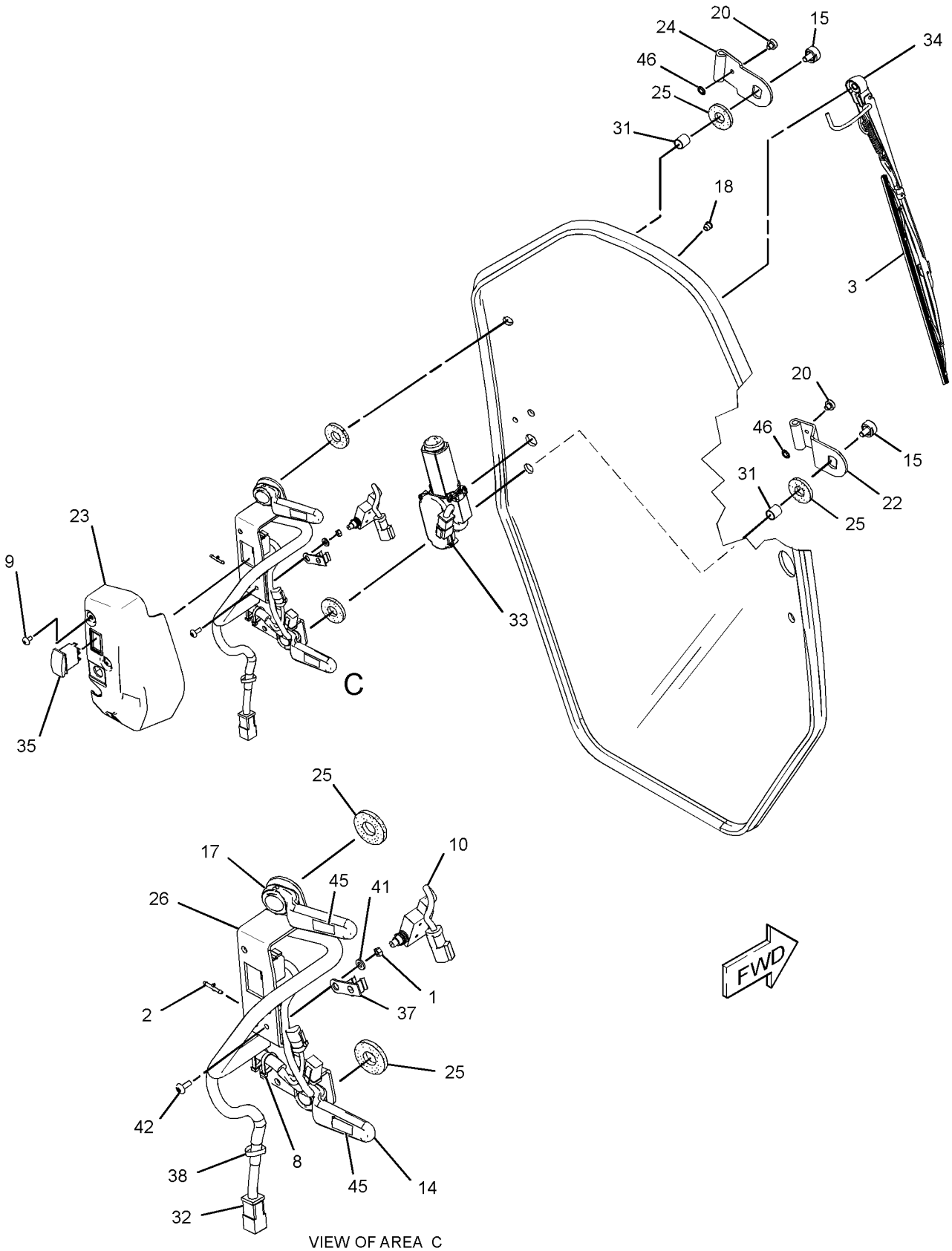

VIEW OF AREA C

GRAPHIC #2 **<END>** g01942834

OPERATOR STATION

258-4442 DOOR GP-CAB

S/N: JAY1-UP

PART OF 258-4440 DOOR & MTG GP-CAB, 258-4443 KIT-CAB DOOR & MOUNTING AN ATTACHMENT

SMCS-7308 **i03543583**

NOTE	REF NO	GRAPHIC REF	PART NUMBER	QTY	PART NAME 1 2 3 4 5 6 (PRODUCT LEVEL)	SEE PAGE
	1	1	**8G-1151**	1	CONNECTOR	
	2	1	**8Y-4615**	1	BLADE AS-WIPER (400-MM) (CAB DOOR)	
	3	1	**129-8542**	2	RETAINER (GLASS MOUNT)	
	4	1	**129-8545**	2	WASHER (13X40X3-MM THK)	
M	5	1	**136-4192**	1	BOLT (M6X1X35-MM)	
	6	1	**154-5423**	1	SPACER (6.6X12.7X17-MM THK)	
	7	1	**206-1345**	2	STRAP-CABLE	
	8	1	**229-8757**	1	SWITCH AS-LIMIT (IMPLEMENT LOCKOUT) (WIPER)	
		1	**102-8803**	1	KIT-RECEPTACLE (3-PIN)	
					(INCLUDES RECEPTACLE AS & WEDGE)	
		1	**186-3735**	3	PIN-CONNECTOR (16-GA TO 18-GA)	
J	9	1	**252-1862**	1	HANDLE AS (PULL)	
	10	1	**253-1817**	1	SPACER (6.5X14.5X12-MM THK)	
	11	1	**258-3280**	1	LATCH AS (INNER)	
	12	1	**258-3288**	1	HANDLE AS (LOWER)	
	13	1	**258-3289**	2	LATCH AS (OUTER)	
	14	1	**258-3290**	1	GASKET	
	15	1	**258-3294**	1	HANDLE AS (UPPER)	
	16	1	**258-3298**	1	GROMMET	
	17	1	**258-3697**	1	WASHER-NYLON (7X20X2-MM THK)	
	18	1	**258-3762**	2	GROMMET	
	19	1	**258-4013**	1	BRACKET AS	
	20	1	**258-4014**	1	HINGE	
	21	1	**258-4016**	1	COVER (WIPER)	
	22	1	**258-4073**	1	HINGE (UPPER)	
	23	1	**258-4075**	4	GASKET	
	24	1	**258-4076**	1	HANDLE AS	
	25	1	**258-4082**	1	GASKET	
	26	1	**258-4083**	1	COVER-LATCH	
	27	1	**258-4084**	1	BRACKET	
	28	1	**258-4085**	2	BUSHING	
	29	1	**258-4156**	1	HARNESS AS-CAB (DOOR, FRONT)	
		1	**228-5856**	1	CONNECTOR	
E		1	**125-7875**		TUBE-HEAT SHRINK (7.44-MM DIA) (10-CM)	
		1	**9W-0852**	2	PIN-CONNECTOR (14-GA)	
		1	**9W-0844**	4	SOCKET-CONNECTOR (14-GA)	
		1	**180-9339**	2	PIN-CONNECTOR (14-GA TO 18-GA)	
		1	**8L-8413**	5	STRAP-CABLE	
		1	**186-3735**	2	PIN-CONNECTOR (16-GA TO 18-GA)	
		1	**155-2271**	1	KIT-CONNECTING PLUG (4-PIN)	
		1	**155-2260**	1	KIT-CONNECTING PLUG (3-PIN)	
					(EACH PLUG KIT INCLUDES PLUG AS, WEDGE & INTERFACE SEAL)	
		1	**180-9340**	3	SOCKET-CONNECTOR (14-GA TO 18-GA)	
		1	**102-8805**	1	KIT-RECEPTACLE (6-PIN)	
					(INCLUDES RECEPTACLE AS & WEDGE)	
	30	1	**258-4441**	1	GLASS (CLEAR)	
	31	1	**264-4407**	1	MOTOR GP-WINDOW WIPER (CAB DOOR)	
		1	**3F-9556**	1	LOCKWASHER	
M		1	**5C-7261**	1	NUT (M8X1.25-THD)	
		1	**102-8804**	1	KIT-RECEPTACLE (4-PIN)	
					(INCLUDES RECEPTACLE AS & WEDGE)	
		1	**186-3735**	4	PIN-CONNECTOR (16-GA TO 18-GA)	
		1	**263-3823**	1	CAP-WIPER	
	32	1	**264-4408**	1	ARM GP-WINDOW WIPER (WET)	

258-4442 **DOOR GP-CAB** *(contd.)* **i03543583**

NOTE	REF NO	GRAPHIC REF	PART NUMBER	QTY	PART NAME 1 2 3 4 5 6 (PRODUCT LEVEL)	SEE PAGE
		1	**305-9194**	1	NOZZLE AS-WASHER	
E		1	**194-5171**		HOSE (50-CM)	
	33	1	**281-6390**	1	SWITCH AS-ROCKER (WIPER)	
		1	**111-7899**	1	GASKET	
	34	1	**292-6936**	1	BOLT (M6X1X70-MM)	
	35	1	**319-0710**	2	FILM-INSTRUCTION (EGRESS SYSTEM, READ OMM)	
	36	1	**115-3069**	1	CLIP AS-CONNECTOR (3-PIN)	
		1	**8C-3334**	1	RIVET-TUBULAR	
M	37	1	**129-3178**	1	LOCKNUT (M6X1-THD)	
M	38	1	**215-6406**	6	SCREW-TRUSS HEAD (M6X1X16-MM)	
	39	1	**3S-2093**	2	STRAP-CABLE	
M	40	1	**5C-2890**	2	NUT (M6X1-THD)	
M	41	1	**6V-7357**	4	BOLT (M6X1X25-MM)	
M	42	1	**8C-3798**	3	BOLT-LOCKING (M6X1X30-MM)	
	43	1	**8T-4205**	1	WASHER-HARD (7.2X14.5X2-MM THK)	
M	44	1	**9X-2044**	1	SCREW-TRUSS HEAD (M6X1X16-MM)	
E	45	1	**258-4430**		SEAL (329-CM)	

E-ORDER BY THE CENTIMETER
J-REQUIRES CORPORATE KEY
M-METRIC PART

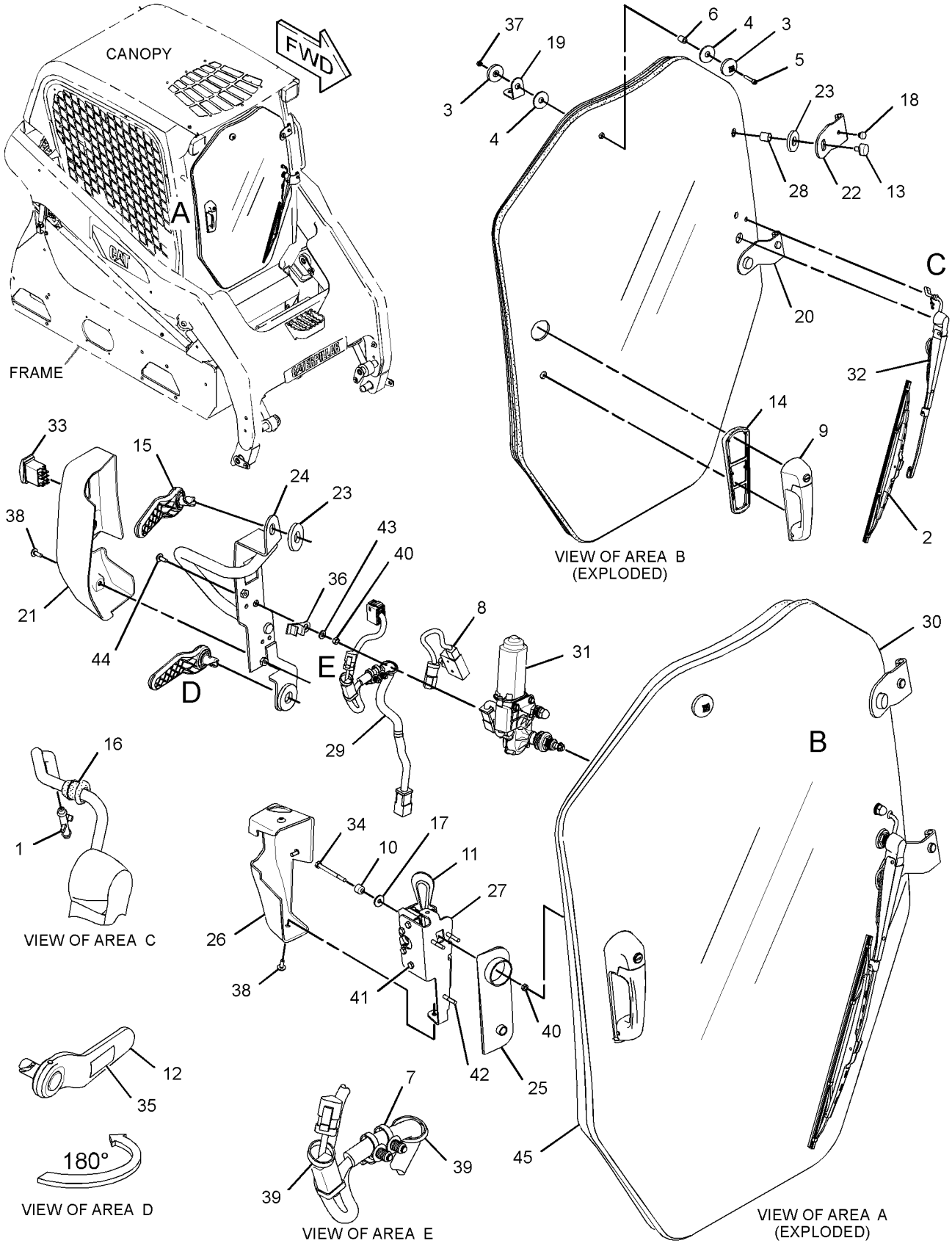

GRAPHIC #1 **<END>** g01456748

OPERATOR STATION

258-4442 DOOR GP-CAB

S/N: JAY2060-UP
PART OF 258-4440 DOOR & MTG GP-CAB
AN ATTACHMENT

SMCS-7308 **i03585760**

NOTE	REF NO	GRAPHIC REF	PART NUMBER	QTY	PART NAME 1 2 3 4 5 6 (PRODUCT LEVEL)	SEE PAGE
	1	1	**8G-1151**	1	CONNECTOR	
C	2	1	**322-9633**	1	BLADE AS-WIPER (400-MM) (CAB DOOR)	
	3	1	**129-8542**	2	RETAINER (MOUNT)	
	4	1	**129-8545**	2	WASHER (13X40X3-MM THK)	
M	5	1	**136-4192**	1	BOLT (M6X1X35-MM)	
	6	1	**154-5423**	1	SPACER (6.6X12.7X17-MM THK)	
	7	1	**206-1345**	2	STRAP-CABLE	
	8	1	**229-8757**	1	SWITCH AS-LIMIT (IMPLEMENT LOCKOUT) (WIPER)	
		1	**102-8803**	1	KIT-RECEPTACLE (3-PIN)	
					(INCLUDES RECEPTACLE AS & WEDGE)	
		1	**186-3735**	3	PIN-CONNECTOR (16-GA TO 18-GA)	
J	9	1	**252-1862**	1	HANDLE AS (PULL)	
	10	1	**253-1817**	1	SPACER (6.5X14.5X12-MM THK)	
	11	1	**258-3280**	1	LATCH AS (INNER)	
	12	1	**258-3288**	1	HANDLE AS (LOWER)	
	13	1	**258-3289**	2	LATCH AS (OUTER)	
	14	1	**258-3290**	1	GASKET	
	15	1	**258-3294**	1	HANDLE AS (UPPER)	
	16	1	**258-3298**	1	GROMMET	
	17	1	**258-3697**	1	WASHER-NYLON (7X20X2-MM THK)	
	18	1	**331-8050**	2	BUMPER	
	19	1	**258-4013**	1	BRACKET AS	
	20	1	**258-4014**	1	HINGE	
	21	1	**258-4016**	1	COVER (WIPER)	
	22	1	**258-4073**	1	HINGE (UPPER)	
	23	1	**258-4075**	4	GASKET	
	24	1	**258-4076**	1	HANDLE AS	
	25	1	**258-4082**	1	GASKET	
	26	1	**258-4083**	1	COVER-LATCH	
	27	1	**258-4084**	1	BRACKET	
	28	1	**258-4085**	2	BUSHING	
	29	1	**258-4156**	1	HARNESS AS-CAB (DOOR, FRONT)	
		1	**228-5856**	1	CONNECTOR	
		1	**186-3735**	2	PIN-CONNECTOR (16-GA TO 18-GA)	
		1	**9W-0852**	2	PIN-CONNECTOR (14-GA)	
		1	**9X-3401**	2	PIN-CONNECTOR (16-GA TO 18-GA)	
					-OR-	
		1	**126-1767**	2	PIN-CONNECTOR (14-GA)	
		1	**155-2271**	1	KIT-CONNECTING PLUG (4-PIN)	
		1	**155-2260**	1	KIT-CONNECTING PLUG (3-PIN)	
					(EACH PLUG KIT INCLUDES PLUG AS, WEDGE & INTERFACE SEAL)	
		1	**102-8805**	1	KIT-RECEPTACLE (6-PIN)	
					(INCLUDES RECEPTACLE AS & WEDGE)	
		1	**180-9340**	3	SOCKET-CONNECTOR (14-GA TO 18-GA)	
		1	**9W-0844**	4	SOCKET-CONNECTOR (14-GA)	
		1	**8L-8413**	5	STRAP-CABLE	
		1	**091-2436**	4	TERMINAL-BLADE (18-GA TO 22-GA)	
		1	**104-1995**	3	TERMINAL-BLADE (14-GA TO 18-GA)	
E		1	**125-7875**		TUBE-HEAT SHRINK (7.44-MM DIA) (10-CM)	
	30	1	**258-4441**	1	GLASS (CLEAR)	
CY	31	1	**330-5011**	1	MOTOR GP-WINDOW WIPER (CAB DOOR)	732
	32	1	**264-4408**	1	ARM GP-WINDOW WIPER (WET)	
		1	**305-9194**	1	NOZZLE AS-WASHER	
E		1	**194-5171**		HOSE (50-CM)	

258-4442 **DOOR GP-CAB** *(contd.)* **i03585760**

NOTE	REF NO	GRAPHIC REF	PART NUMBER	QTY	PART NAME 1 2 3 4 5 6 (PRODUCT LEVEL)	SEE PAGE
	33	1	**281-6390**	1	SWITCH AS-ROCKER (WIPER)	
		1	**111-7899**	1	GASKET	
	34	1	**292-6936**	1	BOLT (M6X1X70-MM)	
	35	1	**319-0710**	2	FILM-INSTRUCTION (EGRESS SYSTEM, READ OMM)	
	36	1	**115-3069**	1	CLIP AS-CONNECTOR (3-PIN)	
		1	**8C-3334**	1	RIVET-TUBULAR	
M	37	1	**129-3178**	1	LOCKNUT (M6X1-THD)	
M	38	1	**215-6406**	6	SCREW-TRUSS HEAD (M6X1X16-MM)	
	39	1	**3S-2093**	2	STRAP-CABLE	
M	40	1	**5C-2890**	2	NUT (M6X1-THD)	
M	41	1	**6V-7357**	4	BOLT (M6X1X25-MM)	
M	42	1	**8C-3798**	3	BOLT-LOCKING (M6X1X30-MM)	
	43	1	**8T-4205**	1	WASHER-HARD (7.2X14.5X2-MM THK)	
M	44	1	**9X-2044**	1	SCREW-TRUSS HEAD (M6X1X16-MM)	
E	45	1	**258-4430**		SEAL (329-CM)	
	46	1	**8S-3193**	2	NUT-PUSH ON	

C-CHANGE FROM PREVIOUS TYPE
E-ORDER BY THE CENTIMETER
J-REQUIRES CORPORATE KEY
M-METRIC PART
Y-SEPARATE ILLUSTRATION

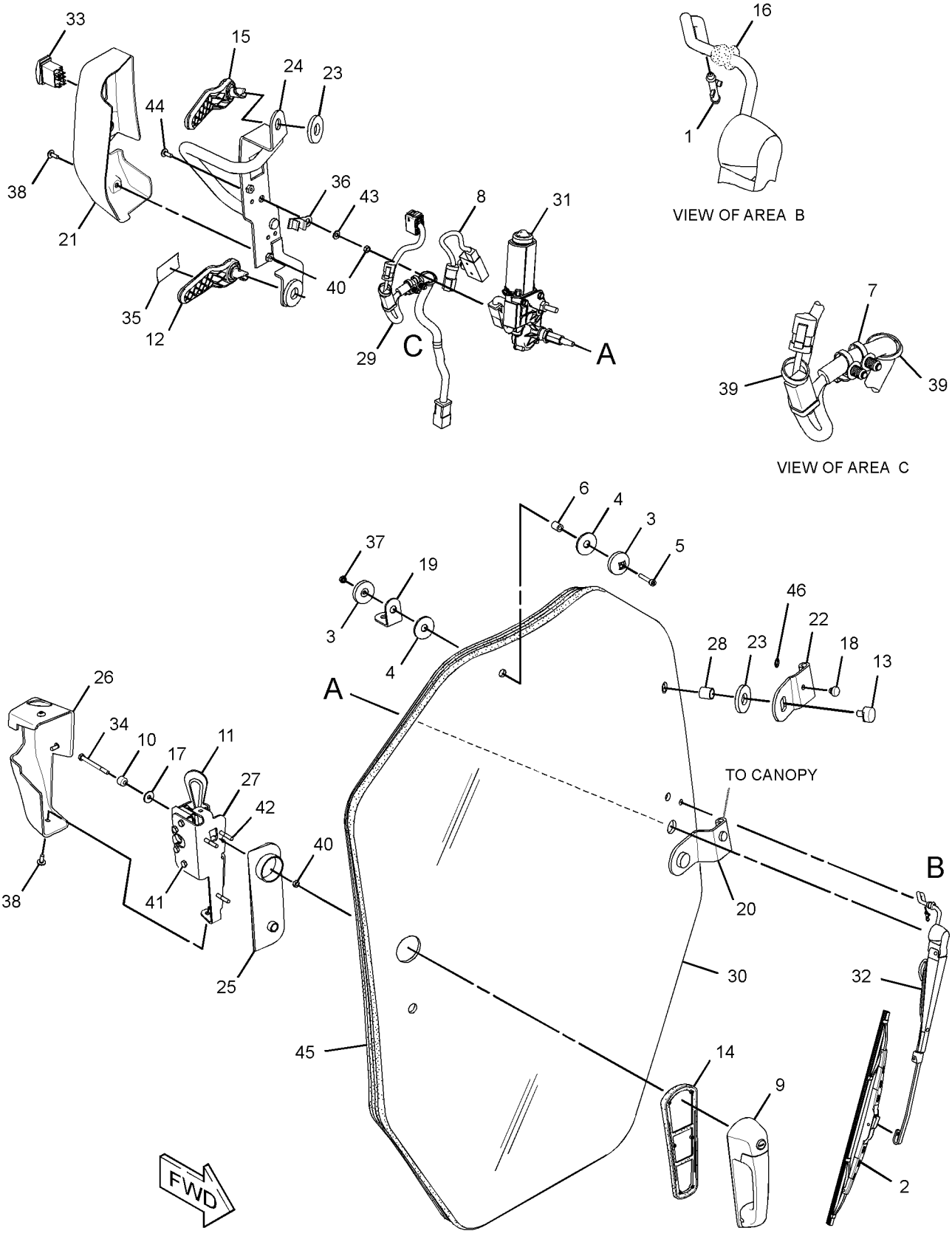

GRAPHIC #1 **<END>** g01941294

OPERATOR STATION

258-4252 DUCT & FILTER GP-CAB AIR

S/N: JAY1-UP

PART OF 258-4260 AIR CONDITIONER AR, 258-4250 HEATER AR-CAB

AN ATTACHMENT

SMCS-7342, 734D **i03543625**

NOTE	REF NO	GRAPHIC REF	PART NUMBER	QTY	PART NAME 1 2 3 4 5 6 (PRODUCT LEVEL)	SEE PAGE
	1	1	**8Y-5947**	2	FASTENER	
	2	1	**146-6371**	6	LOUVER AS	
	3	1	**206-9185**	1	BOLT (M8X1.25X35-MM)	
	4	1	**258-3727**	7	SCREW-TRUSS HEAD (NO 12X17.46-MM)	
	5	1	**258-3793**	1	SEAL	
	6	1	**258-3795**	4	SEAL	
	7	1	**258-3796**	1	SEAL	
	8	1	**258-4248**	1	COVER-LOUVER	
	9	1	**258-4249**	1	DUCT-INLET	
	10	1	**258-4253**	1	DUCT AS (INTERIOR)	
	11	1	**258-4257**	1	DUCT AS (INLET)	
	12	1	**258-4258**	1	DUCT AS (PLENUM)	
	13	1	**258-4263**	1	PLATE	
	14	1	**258-4264**	1	COVER-FILTER	
	15	1	**258-4378**	2	KNOB AS	
	16	1	**258-4379**	1	KNOB AS	
	17	1	**258-4384**	1	SCREEN	
	18	1	**265-6618**	1	FILTER ELEMENT-CAB AIR (RECIRCULATION)	
	19	1	**265-6619**	1	FILTER ELEMENT-CAB AIR (FRESH)	
M	20	1	**163-3955**	2	BOLT (M6X1X35-MM)	
M	21	1	**215-6406**	3	SCREW-TRUSS HEAD (M6X1X16-MM)	
	22	1	**258-4254**	1	DUCT AS (INTERIOR)	
	23	1	**258-4259**	1	DUCT AS-OUTLET	
	24	1	**5P-4116**	1	WASHER-HARD (8.8X20.5X2-MM THK)	
	25	1	**6V-6689**	2	SCREW-SELF-TAPPING (10-16X.625-IN)	
M	26	1	**6V-7357**	4	BOLT (M6X1X25-MM)	
	27	1	**7X-2031**	3	RETAINER	
	28	1	**8T-4205**	8	WASHER-HARD (7.2X14.5X2-MM THK)	
D	29	1	**6V-9335**		SEAL (0.33-M EACH)	
D	29A	1	**6V-9335**		SEAL (0.14-M EACH)	
	30	1	**312-0131**	4	SCREW-MACHINE (M6X1X30-MM)	

D-ORDER BY THE METER
M-METRIC PART

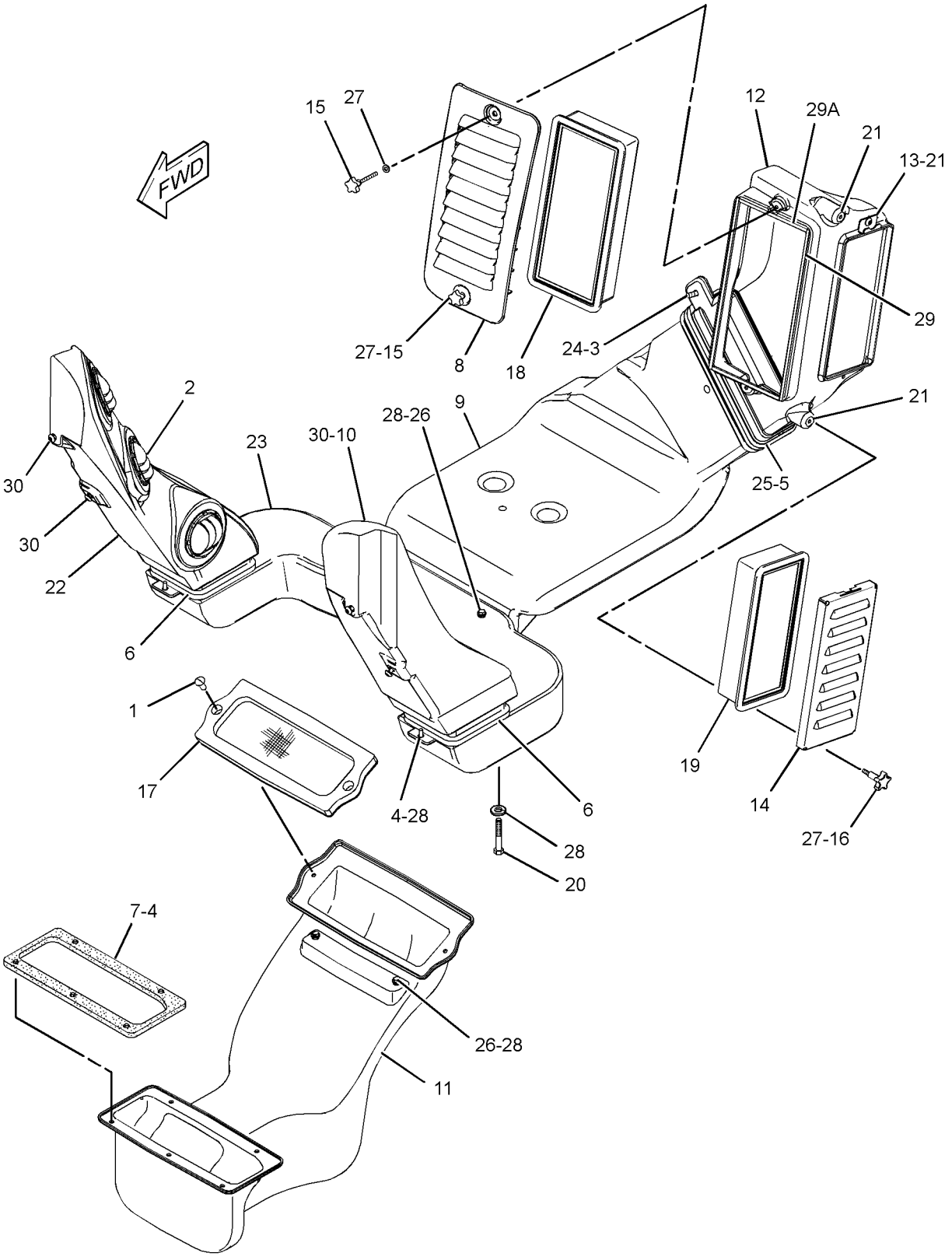

GRAPHIC #1 **<END>** g01413021

OPERATOR STATION

258-4400 GUARD GP-ROPS/FOPS—KIT

S/N: JAY1-UP

CANNOT BE USED WITH 258-4410—PAGE 270

AN ATTACHMENT

SMCS-7323 **i02939444**

NOTE	REF NO	GRAPHIC REF	PART NUMBER	QTY	PART NAME 1 2 3 4 5 6 (PRODUCT LEVEL)	SEE PAGE
	1	1	**258-4389**	4	MOUNT	
	2	1	**258-4398**	1	FILM-CERTIFICATION (OPS, READ OMM)	
	3	1	**258-4405**	1	PLATE AS	
	4	1	**154-1580**	8	WASHER-HARD (22X38X6-MM THK)	
M	5	1	**8T-5460**	8	BOLT (M20X2.5X40-MM)	

M-METRIC PART

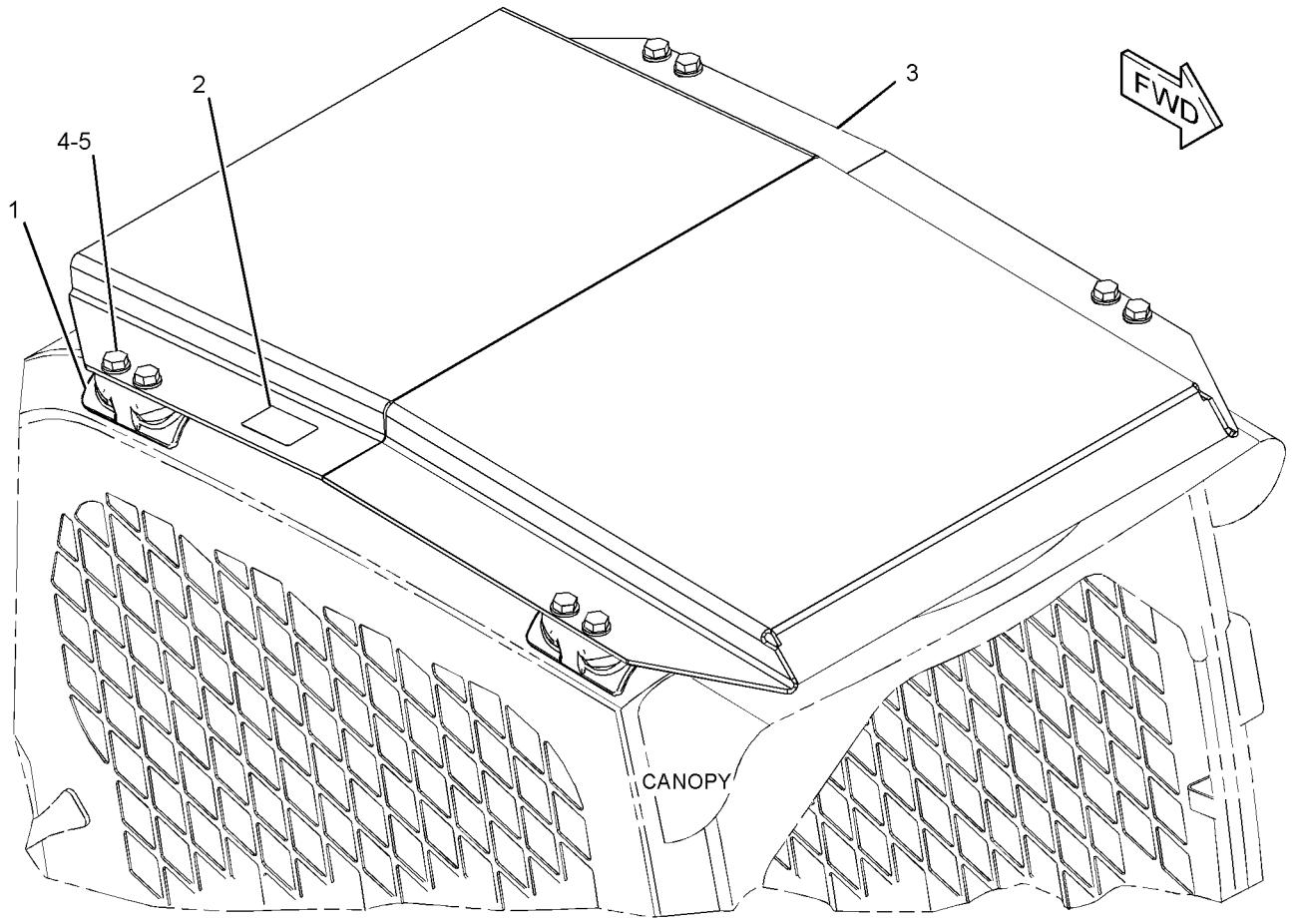

GRAPHIC #1 **<END>** g01339107

OPERATOR STATION

298-7197 HANDLE GP

S/N: JAY1-UP

PART OF 298-7198 CABLE GP-CONTROL

SMCS-5800 **i03619742**

NOTE	REF NO	GRAPHIC REF	PART NUMBER	QTY	PART NAME 1 2 3 4 5 6 (PRODUCT LEVEL)	SEE PAGE
	1	1	**284-3914**	1	HANDLE	
	2	1	**292-2437**	1	NUT	
	3	1	**292-2438**	1	SEAL	
					PARTS SHOWN IN GRAPHIC(S) WITHOUT A REFERENCE NUMBER ARE NOT SERVICED SEPARATELY	

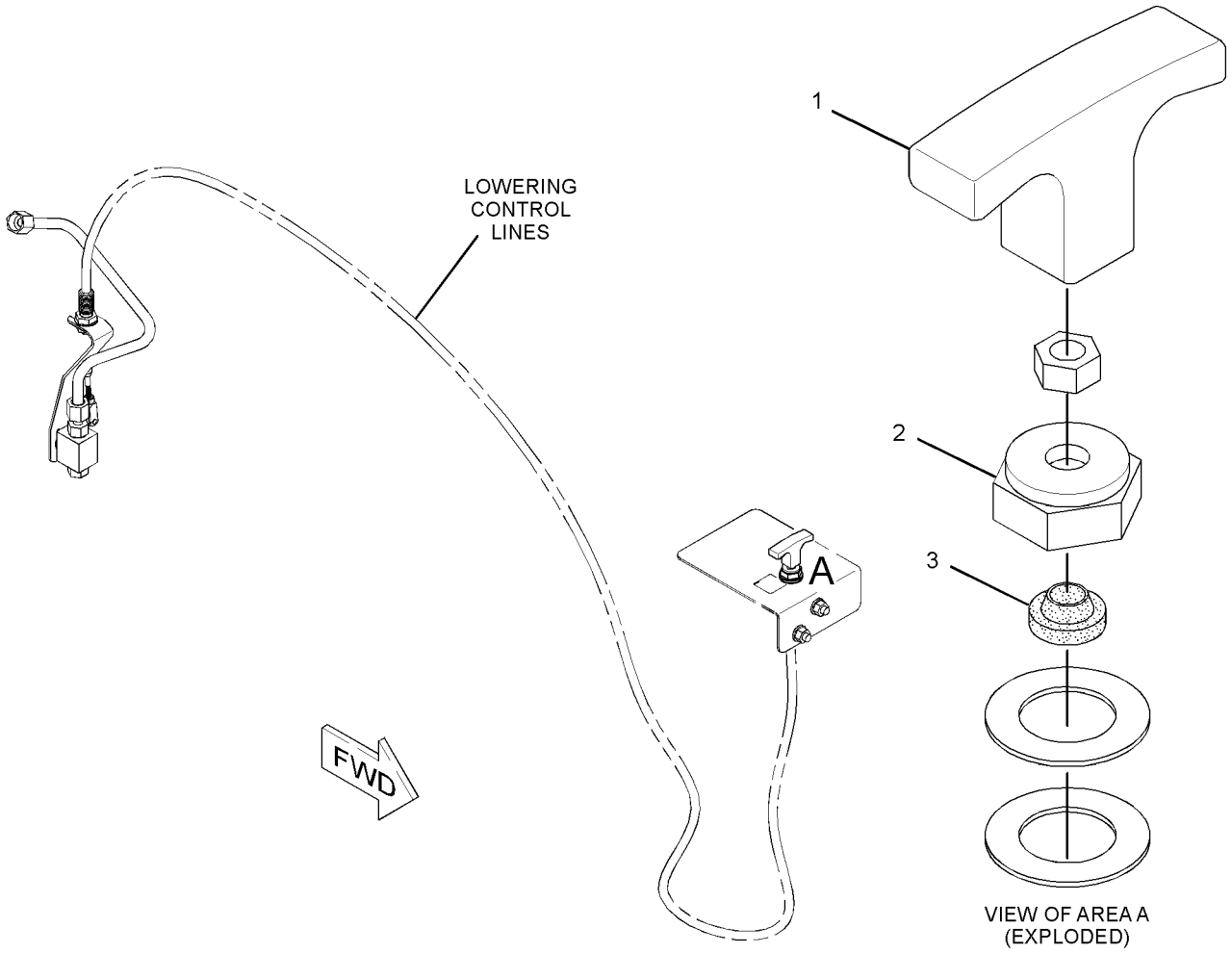

GRAPHIC #1 **<END>** g01943789

OPERATOR STATION

258-4251 HEATER & MTG GP-CAB

S/N: JAY1-UP
PART OF 258-4250 HEATER AR-CAB
AN ATTACHMENT

SMCS-7304 **i02628667**

NOTE	REF NO	GRAPHIC REF	PART NUMBER	QTY	PART NAME 1 2 3 4 5 6 (PRODUCT LEVEL)	SEE PAGE
	1	1	**8T-8737**	10	PLUG-SEAL	
	2	1	**109-2356**	1	PLUG	
	3	1	**206-1345**	2	STRAP-CABLE	
	4	1	**246-9371**	1	COVER-RELAY	
	5	1	**258-3792**	1	SEAL	
	6	1	**258-3794**	1	INSULATION	
Y	7	1	*258-4270*	1	HEATER GP-CAB	697
	8	1	**258-4408**	1	INSULATION	
Y	9	1	*266-2430*	1	CONTROL & WIRING GP-AIR & TEMP	646
	10	1	**155-2271**	1	KIT-CONNECTING PLUG (4-PIN)	
					(INCLUDES PLUG AS, WEDGE & INTERFACE SEAL)	
	11	1	**266-3314**	2	BOLT-FLANGE HEAD (M6X1X20.5-MM)	
M	12	1	**266-3315**	7	BOLT-FLANGE HEAD (M8X1.25X25.5-MM)	
	13	1	**102-8802**	3	KIT-RECEPTACLE (2-PIN)	
					(EACH INCLUDES RECEPTACLE AS & WEDGE)	

M-METRIC PART
Y-SEPARATE ILLUSTRATION

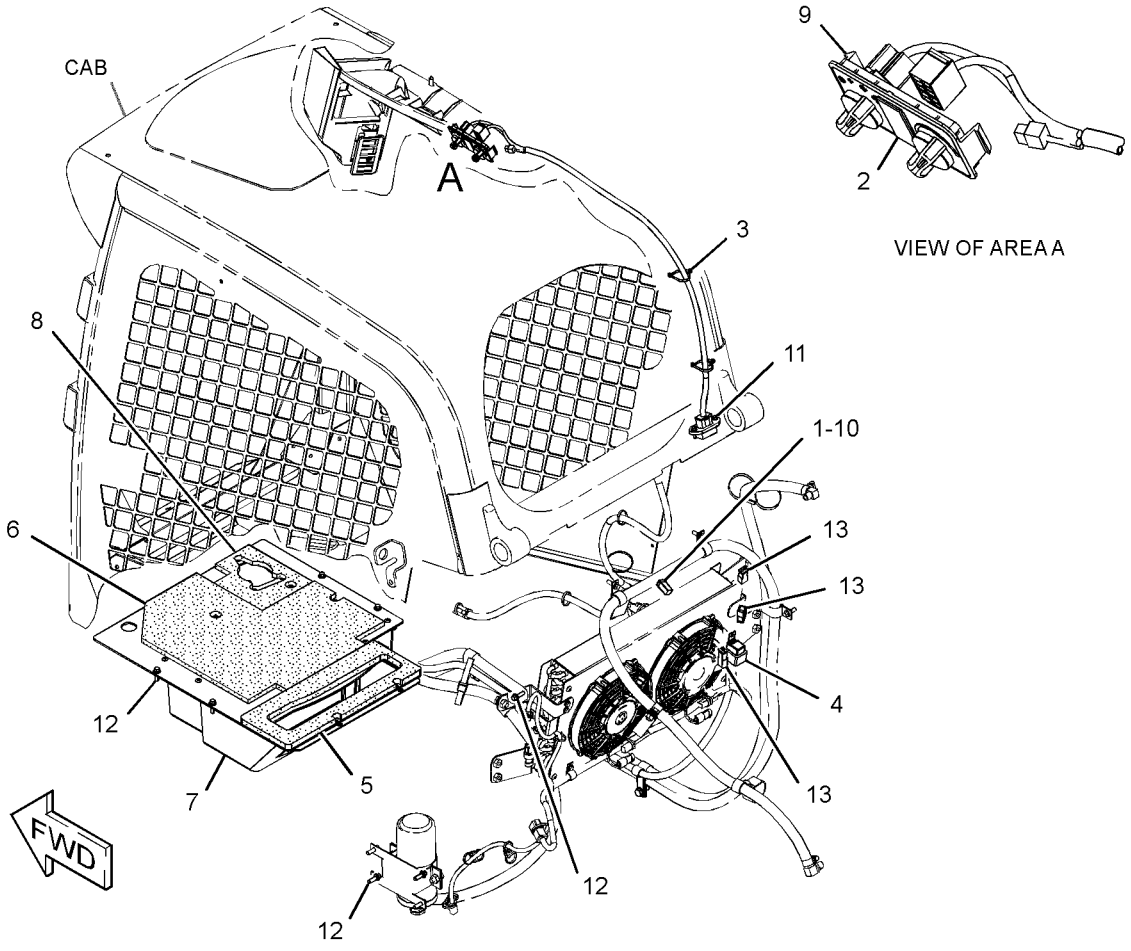

GRAPHIC #1 **<END>** g01325906

OPERATOR STATION

258-4250 HEATER AR-CAB

S/N: JAY1-UP
PART OF 258-3742 CAB AR-ENCLOSED ROPS
AN ATTACHMENT

SMCS-7304 **i02629844**

NOTE	REF NO	GRAPHIC REF	PART NUMBER	QTY	PART NAME 1 2 3 4 5 6 (PRODUCT LEVEL)	SEE PAGE
Y	1	1	*258-4146*	1	WIRING GP-AIR CONDITIONER	172
Y	2	1	*258-4251*	1	HEATER & MTG GP-CAB	695
Y	3	1	*258-4252*	1	DUCT & FILTER GP-CAB AIR	691
Y	4	1	*258-4255*	1	LINES GP-HEATER	728
	5	1	**8T-4121**	4	WASHER-HARD (11X21X2.5-MM THK)	
M	6	1	**8T-4133**	4	NUT (M10X1.5-THD)	

M-METRIC PART
Y-SEPARATE ILLUSTRATION

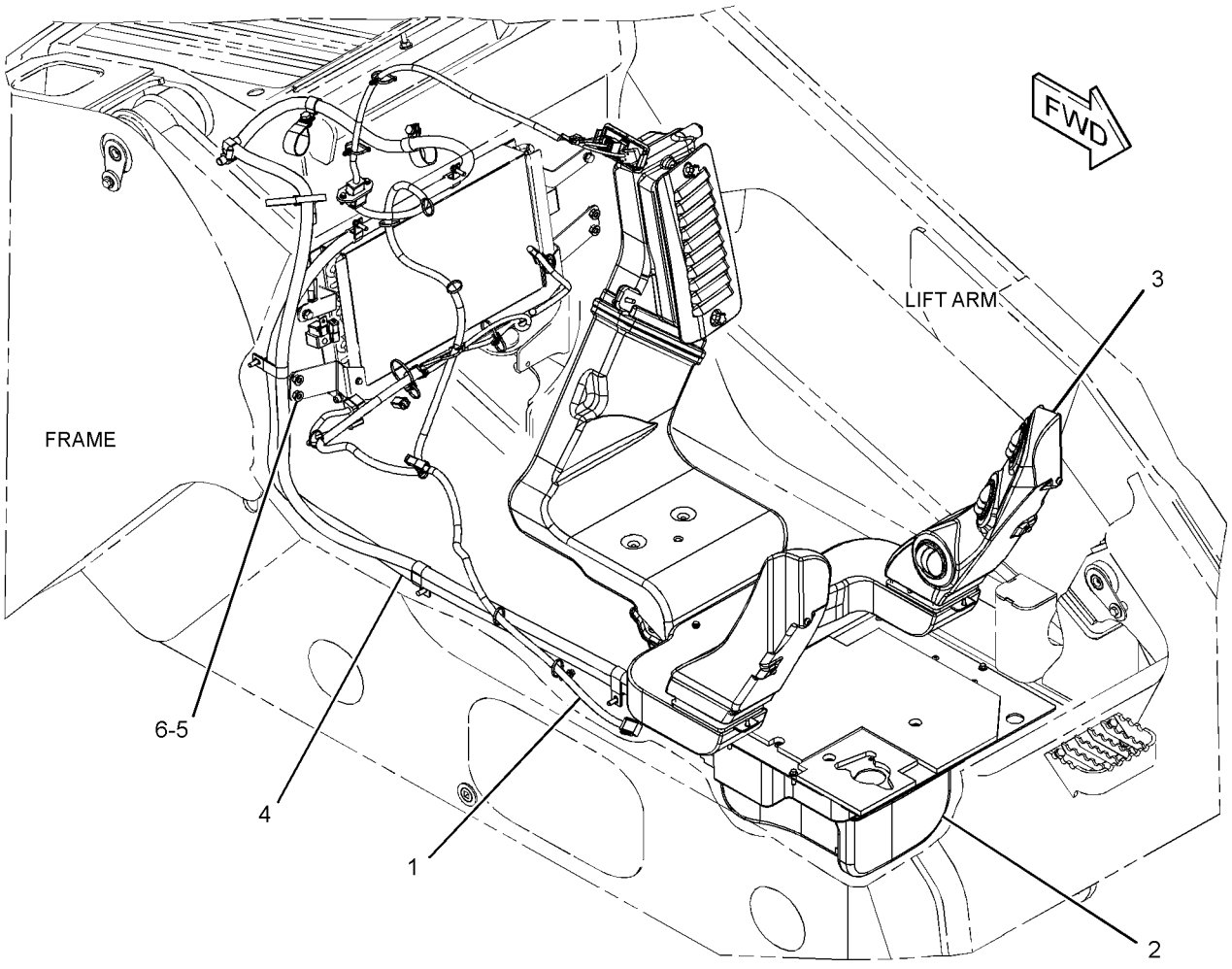

GRAPHIC #1 **<END>** g01323037

OPERATOR STATION

258-4270 HEATER GP-CAB

S/N: JAY1-3472

PART OF 258-4251 HEATER & MTG GP-CAB, 280-6077 KIT-CAB HEATER & MOUNTING AN ATTACHMENT

SMCS-7304, 7342 **i03624801**

NOTE	REF NO	GRAPHIC REF	PART NUMBER	QTY	PART NAME 1 2 3 4 5 6 (PRODUCT LEVEL)	SEE PAGE
	1	1	**295-5440**	1	MOTOR (BLOWER)	
	2	1	**258-4273**	1	CASE AS	
	3	1	**258-4274**	1	GASKET	
	4	1	**258-4287**	1	BAFFLE	
	5	1	**258-4295**	1	CLIP	
	6	1	**258-4298**	1	PLATE AS	
	7	1	**266-2432**	1	VALVE AS-WATER	
	8	1	**266-2434**	1	COIL AS-HEATER	
	9	1	**266-2436**	1	HARNESS AS-HEATER	
		1	**9G-9314**	3	TERMINAL (14-GA TO 16-GA)	
		1	**5P-4571**	1	TERMINAL-BLADE (14-GA TO 16-GA)	
		1	**100-6674**	3	SEAL-CONNECTOR	
E		1	**119-3662**		TUBE-HEAT SHRINK (10.85-MM DIA) (7-CM)	
		1	**102-8806**	1	KIT-RECEPTACLE (8-PIN)	
					(INCLUDES RECEPTACLE AS & WEDGE)	
		1	**186-3735**	1	PIN-CONNECTOR (16-GA TO 18-GA)	
		1	**8T-8737**	2	PLUG-SEAL	
E		1	**8Y-8081**		TUBE-CONVOLUTED (50-CM)	
		1	**9W-0852**	5	PIN-CONNECTOR (14-GA)	
	10	1	**6V-6717**	2	SCREW-WASHER HEAD (8-32X9.52-MM)	
M	11	1	**9X-2045**	7	SCREW-TRUSS HEAD (M6X1X20-MM)	
D	12	1	**5P-5637**		SEAL (0.17-M EACH)	
	13	1	**294-0091**	1	FILM-INSTRUCTION (DO NOT SPRAY, READ OMM)	

D-ORDER BY THE METER
E-ORDER BY THE CENTIMETER
M-METRIC PART

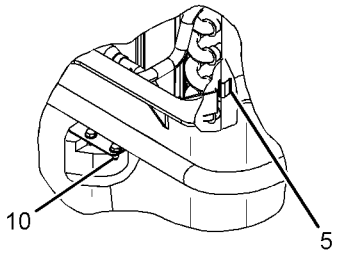

VIEW OF AREA B

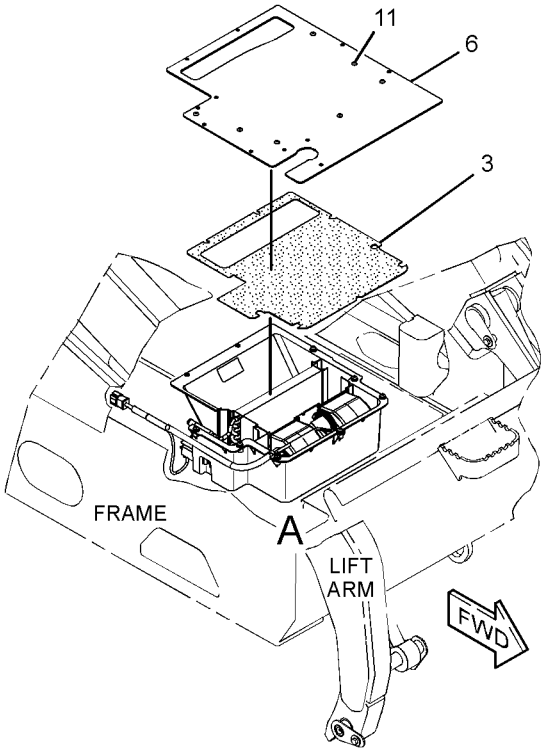

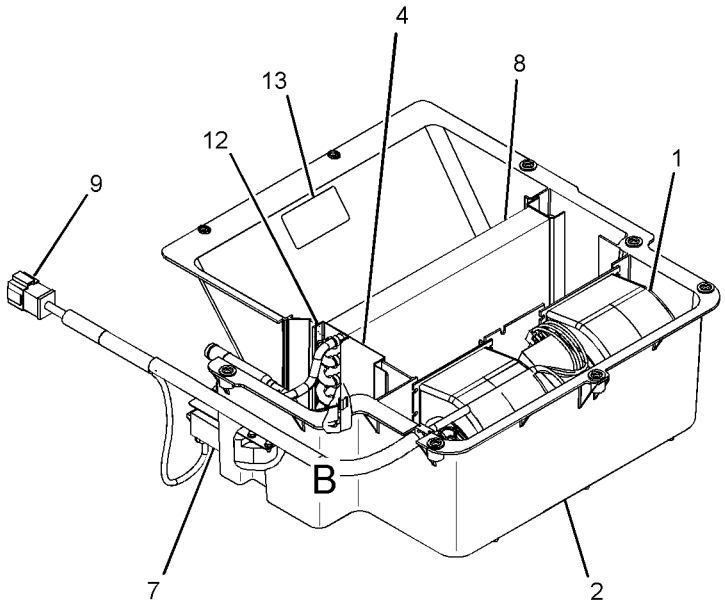

VIEW OF AREA A

GRAPHIC #1 **<END>** g01339603

OPERATOR STATION

258-4270 HEATER GP-CAB

S/N: JAY3473-UP

PART OF 258-4251 HEATER & MTG GP-CAB, 280-6077 KIT-CAB HEATER & MOUNTING AN ATTACHMENT

SMCS-7304, 7342 **i03599059**

NOTE	REF NO	GRAPHIC REF	PART NUMBER	QTY	PART NAME 1 2 3 4 5 6 (PRODUCT LEVEL)	SEE PAGE
	1	1	**295-5440**	1	MOTOR (BLOWER)	
	2	1	**258-4273**	1	CASE AS	
	3	1	**258-4274**	1	GASKET	
	4	1	**258-4287**	1	BAFFLE	
	5	1	**258-4295**	1	CLIP	
	6	1	**258-4298**	1	PLATE AS	
C	7	1	**328-3317**	1	VALVE AS-WATER	
	8	1	**266-2434**	1	COIL AS-HEATER	
C	9	1	**328-2370**	1	HARNESS AS-MOTOR	
		1	**186-3735**	1	PIN-CONNECTOR (16-GA TO 18-GA)	
		1	**9W-0852**	5	PIN-CONNECTOR (14-GA)	
		1	**155-2271**	1	KIT-CONNECTING PLUG (4-PIN)	
					(INCLUDES PLUG AS, WEDGE & INTERFACE SEAL)	
		1	**8T-8737**	3	PLUG-SEAL	
		1	**102-8806**	1	KIT-RECEPTACLE (8-PIN)	
					(INCLUDES RECEPTACLE S & WEDGE)	
		1	**186-3736**	1	SOCKET-CONNECTOR (16-GA TO 18-GA)	
		1	**9W-0844**	2	SOCKET-CONNECTOR (14-GA)	
		1	**3S-2093**	6	STRAP-CABLE	
		1	**9G-9314**	3	TERMINAL (14-GA TO 16-GA)	
		1	**5P-4571**	1	TERMINAL-BLADE (14-GA TO 16-GA)	
E		1	**8Y-8081**		TUBE-CONVOLUTED (50-CM)	
E		1	**125-7874**		TUBE-HEAT SHRINK (5.72-MM DIA) (5-CM)	
	10	1	**6V-6717**	2	SCREW-WASHER HEAD (8-32X9.52-MM)	
M	11	1	**9X-2045**	7	SCREW-TRUSS HEAD (M6X1X20-MM)	
D	12	1	**5P-5637**		SEAL (0.17-M EACH)	
	13	1	**294-0091**	1	FILM-INSTRUCTION (DO NOT SPRAY, READ OMM)	

C-CHANGE FROM PREVIOUS TYPE
D-ORDER BY THE METER
E-ORDER BY THE CENTIMETER
M-METRIC PART

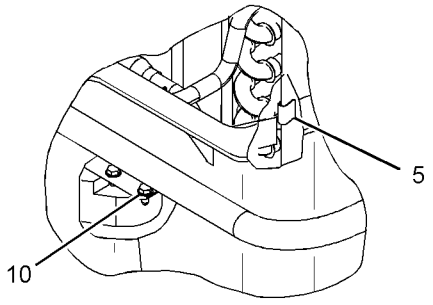

VIEW OF AREA B

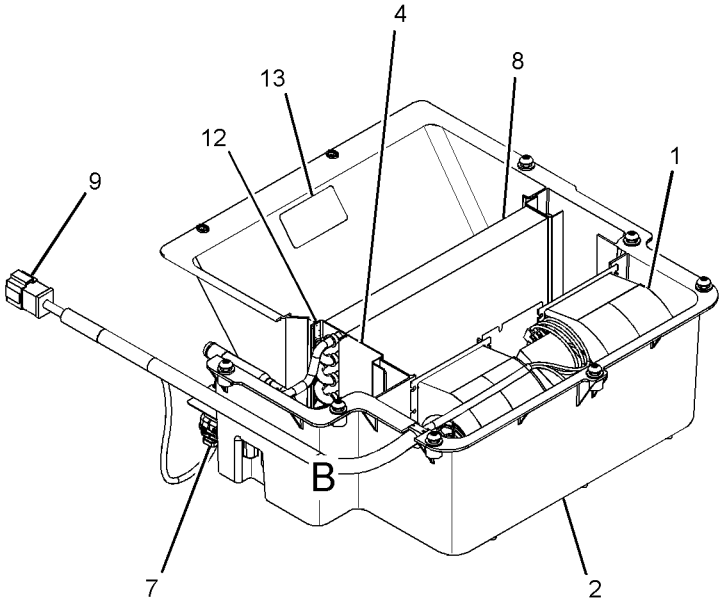

VIEW OF AREA A

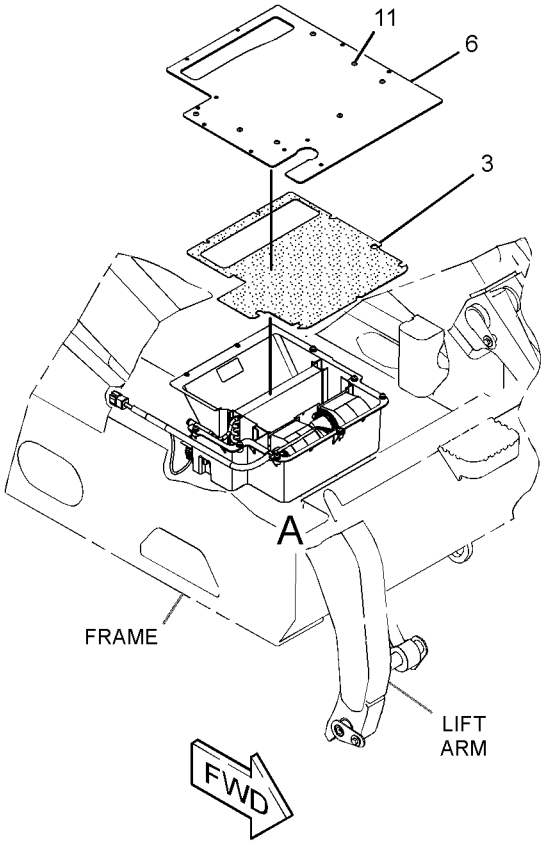

GRAPHIC #1 **<END>** g01937214

OPERATOR STATION

258-4066 INSTALLATION GP-RADIO

S/N: JAY1-UP

PART OF 258-3680, 258-3742 CAB AR-ENCLOSED ROPS, 258-3740 OPTION AR-CAB

AN ATTACHMENT

SMCS-1408, 7338 **i03572293**

NOTE	REF NO	GRAPHIC REF	PART NUMBER	QTY	PART NAME 1 2 3 4 5 6 (PRODUCT LEVEL)	SEE PAGE
	1	1	**8E-1118**	1	ANTENNA AS	
	2	1	**8Y-5947**	1	FASTENER	
	3	1	**9U-8746**	1	CABLE AS-COAXIAL	
	4	1	**168-8772**	2	SPEAKER AS-RADIO	
	5	1	**200-5728**	1	HARNESS AS-RADIO	
		1	**160-3518**	1	KIT-RECEPTACLE (8-PIN)	
					(INCLUDES RECEPTACLE AS & WEDGE)	
		1	**8T-8737**	1	PLUG-SEAL	
		1	**172-8037**	1	CONNECTOR (RADIO)	
		1	**186-3735**	7	PIN-CONNECTOR (16-GA TO 18-GA)	
	6	1	**8T-4224**	4	WASHER-HARD (8.8X16X2-MM THK)	
	7	1	**258-4039**	1	SPACER	
M	8	1	**5C-7261**	1	NUT (M8X1.25-THD)	
	9	1	**258-4067**	1	COVER (RADIO)	
	10	1	**258-4074**	1	BRACKET	
	11	1	**258-4367**	2	BRACKET	
	12	1	**5P-4116**	1	WASHER-HARD (8.8X20.5X2-MM THK)	
	13	1	**195-0936**	4	INSERT-THREADED (M6X1-THD)	
M	14	1	**6V-7357**	4	BOLT (M6X1X25-MM)	
M	15	1	**8T-4142**	8	BOLT-FLANGE HEAD (M5X0.8X12-MM)	

M-METRIC PART

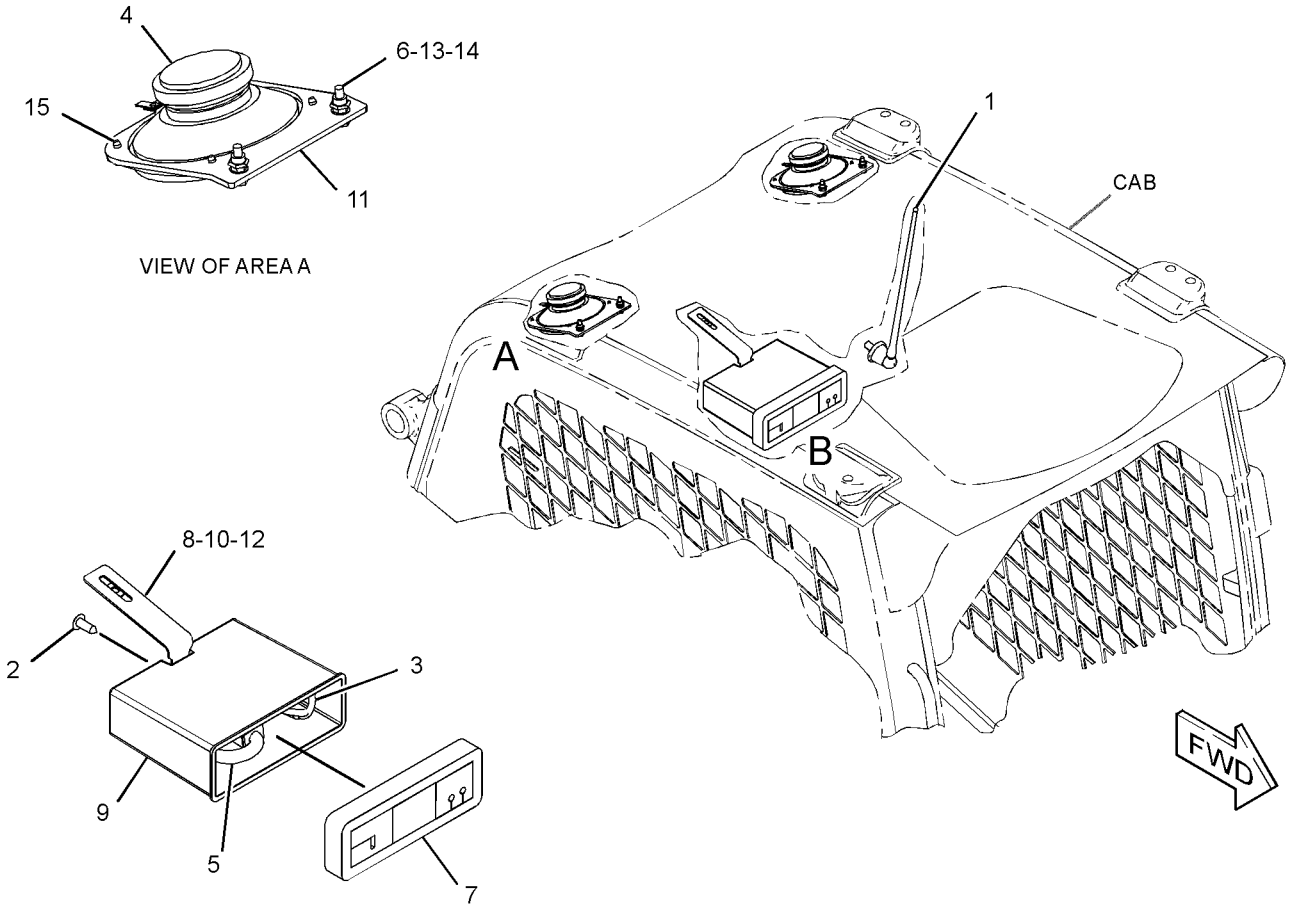

GRAPHIC #1 **<END>** g01459585

OPERATOR STATION

258-2474 KIT-AIR COND & HEATER INSTL

S/N: JAY1-UP

AN ATTACHMENT

SMCS-1405, 1802, 1805, 1808, 7174, 7304, 7320, 734D **i03636350**

NOTE	PART NUMBER	QTY	PART NAME 1 2 3 4 5 6 (PRODUCT LEVEL)	SEE PAGE
Y	*186-6190*	1	ACCUMULATOR GP-REFRIGERANT (WITH DESICCANT)	630
Y	*258-4290*	1	AIR CONDITIONER GP	633
Y	*266-2425*	1	CONDENSER & MTG GP-REFRIGERANT	645
Y	*266-2430*	1	CONTROL & WIRING GP-AIR & TEMP	646
	276-9875	1	COMPRESSOR GP-REFRIGERANT	
	102-8802	1	KIT-RECEPTACLE (2-PIN)	
			(INCLUDES RECEPTACLE AS & WEDGE)	
	229-4896	2	SEAL-O-RING	
	229-7356	1	VALVE AS-RELIEF (REFRIGERANT COMPRESSOR)	
	212-2204	1	CONTROL GP-AIR CONDITIONER	
	155-2271	1	KIT-CONNECTING PLUG (4-PIN)	
			(INCLUDES PLUG AS, WEDGE & INTERFACE SEAL)	
	186-3736	4	SOCKET-CONNECTOR (16-GA TO 18-GA)	
	258-2467	1	BRACKET AS	
	258-4284	1	BRACKET AS	
	258-4380	1	BRACKET AS	
	258-4386	1	BRACKET AS	
	258-4388	1	BRACKET AS	
	258-4253	1	DUCT AS (INTERIOR)	
	258-4254	1	DUCT AS (INTERIOR)	
	258-4257	1	DUCT AS (INLET)	
	258-4258	1	DUCT AS (PLENUM)	
	258-4259	1	DUCT AS-OUTLET	
	258-4147	1	HARNESS AS-HEATER & AIR COND	
	186-3735	5	PIN-CONNECTOR (16-GA TO 18-GA)	
	9W-0852	4	PIN-CONNECTOR (14-GA)	
	155-2255	1	KIT-CONNECTING PLUG (12-PIN)	
	155-2270	3	KIT-CONNECTING PLUG (2-PIN)	
	155-2265	1	KIT-CONNECTING PLUG (8-PIN)	
			(EACH PLUG KIT INCLUDES PLUG AS, WEDGE & INTERFACE SEAL)	
	9X-1054	1	PLUG AS-CONNECTOR (4-PIN)	
	8T-8737	6	PLUG-SEAL	
	102-8804	1	KIT-RECEPTACLE (4-PIN)	
	102-8805	1	KIT-RECEPTACLE (6-PIN)	
			(EACH RECEPTACLE KIT INCLUDES RECEPTACLE AS & WEDGE)	
	100-6674	2	SEAL-CONNECTOR	
	186-3736	5	SOCKET-CONNECTOR (16-GA TO 18-GA)	
	9W-0844	16	SOCKET-CONNECTOR (14-GA)	
	124-5640	2	TERMINAL-SOCKET	
	8L-8413	5	STRAP-CABLE	
	9X-1056	2	TERMINAL-RECEPTACLE (14-GA TO 16-GA)	
	100-5041	2	TERMINAL-RECEPTACLE (18-GA TO 20-GA)	
E	**119-3662**		TUBE-HEAT SHRINK (10.85-MM DIA) (7-CM)	
E	**125-7874**		TUBE-HEAT SHRINK (5.72-MM DIA) (20-CM)	
	258-4262	1	HOSE AS	
	258-4304	1	HOSE AS	
I	**258-4308**	1	HOSE AS	
I	**258-4309**	1	HOSE AS	
	258-4378	2	KNOB AS	
	258-4379	1	KNOB AS	
	146-6371	6	LOUVER AS	

258-2474 KIT-AIR COND & HEATER INSTL *(contd.)* i03636350

NOTE	PART NUMBER	QTY	PART NAME 1 2 3 4 5 6 (PRODUCT LEVEL)	SEE PAGE
	149-6371	1	SWITCH AS-PRESSURE (REFRIGERANT, LOW SIDE)	
	102-8802	1	KIT-RECEPTACLE (2-PIN)	
			(INCLUDES RECEPTACLE AS & WEDGE)	
	186-3735	2	PIN-CONNECTOR (16-GA TO 18-GA)	
	236-6923	1	SWITCH AS-PRESSURE (REFRIGERANT COMPR, HIGH SIDE)	
	266-0299	1	SWITCH AS-ROCKER (AIR CONDITIONER)	
	111-7899	1	GASKET	
M	**5C-9553**	10	BOLT (M6X1X16-MM)	
M	**6V-7357**	4	BOLT (M6X1X25-MM)	
M	**8T-4136**	6	BOLT (M10X1.5X25-MM)	
M	**8T-4196**	3	BOLT (M10X1.5X35-MM)	
M	**8T-6685**	1	BOLT (M10X1.5X110-MM)	
	206-9185	1	BOLT (M8X1.25X35-MM)	
M	**163-3955**	2	BOLT (M6X1X35-MM)	
M	**8T-4183**	3	BOLT (M12X1.75X40-MM)	
M	**266-3315**	6	BOLT-FLANGE HEAD (M8X1.25X25.5-MM)	
	266-3314	2	BOLT-FLANGE HEAD (M6X1X20.5-MM)	
	258-2466	1	BRACKET	
	8T-0154	4	CLAMP-HOSE	
	4K-8864	2	CLIP (SLOT)	
	6D-1641	3	CLIP	
	6D-4246	1	CLIP (SLOT)	
	9X-8250	2	CLIP	
	4P-7429	1	CLIP	
	101-8296	2	CLIP (SLOT)	
	258-4264	1	COVER-FILTER	
	258-4248	1	COVER-LOUVER	
	258-4249	1	DUCT-INLET	
	004-6810	1	ELBOW	
	218-6645	1	ELBOW	
	8Y-5947	2	FASTENER	
	265-6618	1	FILTER ELEMENT-CAB AIR (RECIRCULATION)	
	265-6619	1	FILTER ELEMENT-CAB AIR (FRESH)	
E	**136-1953**		HOSE (530-CM)	
	258-3794	1	INSULATION	
	258-4408	1	INSULATION	
	113-0693	1	LOCKWASHER	
	204-8000	1	MOUNT (TIE WRAP)	
M	**8T-4133**	3	NUT (M10X1.5-THD)	
	258-4263	1	PLATE	
	315-5381	1	PLATE-INSTRUCTION (AIR CONDITIONER, READ OMM)	
	115-1615	1	RELAY AS (12-VOLT) (AIR CONDITIONER)	
	7X-2031	3	RETAINER	
	206-2423	3	SADDLE	
	258-4384	1	SCREEN	
	312-0131	4	SCREW-MACHINE (M6X1X30-MM)	
	6V-6689	2	SCREW-SELF-TAPPING (10-16X.625-IN)	
M	**215-6406**	3	SCREW-TRUSS HEAD (M6X1X16-MM)	
	258-3727	7	SCREW-TRUSS HEAD (NO 12X17.46-MM)	
D	**5P-5924**		SEAL (0.3-M)	
D	**6V-9335**		SEAL (1-M)	
	258-3792	1	SEAL	
	258-3793	1	SEAL	
	258-3795	4	SEAL	
	258-3796	1	SEAL	
	9X-7378	2	SEAL-O-RING	
	9X-7380	1	SEAL-O-RING	
	9X-7381	2	SEAL-O-RING	

258-2474 KIT-AIR COND & HEATER INSTL *(contd.)* i03636350

NOTE	PART NUMBER	QTY	PART NAME 1 2 3 4 5 6 (PRODUCT LEVEL)	SEE PAGE
	9X-7382	1	SEAL-O-RING	
	9X-7383	2	SEAL-O-RING	
	3S-2093	20	STRAP-CABLE	
	206-1345	2	STRAP-CABLE	
	7K-1181	1	STRAP-CABLE	
	178-3620	7	STRAP-DUAL CLAMP	
	105-9411	1	SUPPORT	
	258-3539	1	V-BELT (REFRIGERANT)	
	5P-4116	1	WASHER-HARD (8.8X20.5X2-MM THK)	
	8T-4121	14	WASHER-HARD (11X21X2.5-MM THK)	
	8T-4205	18	WASHER-HARD (7.2X14.5X2-MM THK)	
	8T-4223	3	WASHER-HARD (13.5X25.5X3-MM THK)	

D-ORDER BY THE METER
E-ORDER BY THE CENTIMETER
I-REFER TO HYDRAULIC INFORMATION SYSTEM
M-METRIC PART
Y-SEPARATE ILLUSTRATION

<END>

258-2475 KIT-AIR CONDITIONER INSTL–CONVERSION

S/N: JAY1-UP
AN ATTACHMENT

SMCS-1405, 1802, 1805, 1808, 7174, 7320, 734D **i03636351**

NOTE	PART NUMBER	QTY	PART NAME 1 2 3 4 5 6 (PRODUCT LEVEL)	SEE PAGE
Y	*186-6190*	1	ACCUMULATOR GP-REFRIGERANT (WITH DESICCANT)	630
Y	*258-4290*	1	AIR CONDITIONER GP	633
Y	*266-2425*	1	CONDENSER & MTG GP-REFRIGERANT	645
	276-9875	1	COMPRESSOR GP-REFRIGERANT	
	102-8802	1	KIT-RECEPTACLE (2-PIN)	
			(INCLUDES RECEPTACLE AS & WEDGE)	
	229-4896	2	SEAL-O-RING	
	229-7356	1	VALVE AS-RELIEF (REFRIGERANT COMPRESSOR)	
	212-2204	1	CONTROL GP-AIR CONDITIONER (COMPRESSOR)	
	155-2271	1	KIT-CONNECTING PLUG (4-PIN)	
			(INCLUDES PLUG AS, WEDGE & INTERFACE SEAL)	
	186-3736	4	SOCKET-CONNECTOR (16-GA TO 18-GA)	
	258-2467	1	BRACKET AS	
	258-4284	1	BRACKET AS	
	258-4380	1	BRACKET AS	
	258-4386	1	BRACKET AS	
	258-4388	1	BRACKET AS	
	258-4262	1	HOSE AS	
	258-4304	1	HOSE AS	
I	**258-4308**	1	HOSE AS	
I	**258-4309**	1	HOSE AS	
	115-1615	1	RELAY AS (12-VOLT) (AIR CONDITIONER)	
	149-6371	1	SWITCH AS-PRESSURE (REFRIGERANT, LOW SIDE)	
	102-8802	1	KIT-RECEPTACLE (2-PIN)	
			(INCLUDES RECEPTACLE AS & WEDGE)	
	8T-8729	2	PIN-CONNECTOR (16-GA TO 18-GA)	
	236-6923	1	SWITCH AS-PRESSURE (REFRIGERANT COMPR, HIGH SIDE)	
	266-0299	1	SWITCH AS-ROCKER (AIR CONDITIONER)	
	111-7899	1	GASKET	

258-2475 KIT-AIR CONDITIONER INSTL *(contd.)* i03636351

NOTE	PART NUMBER	QTY	PART NAME 1 2 3 4 5 6 (PRODUCT LEVEL)	SEE PAGE
M	**5C-9553**	10	BOLT (M6X1X16-MM)	
M	**8T-4136**	5	BOLT (M10X1.5X25-MM)	
M	**8T-4196**	3	BOLT (M10X1.5X35-MM)	
M	**8T-4183**	3	BOLT (M12X1.75X40-MM)	
M	**8T-6685**	1	BOLT (M10X1.5X110-MM)	
M	**266-3315**	3	BOLT-FLANGE HEAD (M8X1.25X25.5-MM)	
	258-2466	1	BRACKET	
	4K-8864	2	CLIP	
	6D-4246	1	CLIP	
	101-8296	2	CLIP	
	4P-7429	1	CLIP	
	258-3794	1	INSULATION	
	258-4408	1	INSULATION	
	113-0693	1	LOCKWASHER	
	204-8000	1	MOUNT (TIE WRAP)	
M	**8T-4133**	3	NUT (M10X1.5-THD)	
	315-5381	1	PLATE-INSTRUCTION (AIR CONDITIONER, READ OMM)	
D	**5P-5924**		SEAL (0.3-M)	
	258-3792	1	SEAL	
	9X-7378	2	SEAL-O-RING	
	9X-7380	1	SEAL-O-RING	
	9X-7381	2	SEAL-O-RING	
	9X-7382	1	SEAL-O-RING	
	9X-7383	2	SEAL-O-RING	
	7K-1181	1	STRAP-CABLE	
	3S-2093	2	STRAP-CABLE	
	178-3620	4	STRAP-DUAL CLAMP	
	105-9411	1	SUPPORT	
	258-3539	1	V-BELT (REFRIGERANT)	
	8T-4121	13	WASHER-HARD (11X21X2.5-MM THK)	
	8T-4205	10	WASHER-HARD (7.2X14.5X2-MM THK)	
	8T-4223	3	WASHER-HARD (13.5X25.5X3-MM THK)	

D-ORDER BY THE METER
I-REFER TO HYDRAULIC INFORMATION SYSTEM
M-METRIC PART
Y-SEPARATE ILLUSTRATION

<END>

OPERATOR STATION

258-2473 KIT-CAB DOOR & MOUNTING—GLASS

S/N: JAY1-UP
AN ATTACHMENT

SMCS-7308 **i03572301**

NOTE	REF NO	GRAPHIC REF	PART NUMBER	QTY	PART NAME 1 2 3 4 5 6 (PRODUCT LEVEL)	SEE PAGE
	1	1	**7C-8246**	1	SPACER (10.5X20X24-MM THK)	
	2	2	**8T-2444**	2	STUD-BALL	
	3	2	**139-6039**	1	NUT (U-TYPE RETAINER)	
	4	1	**153-2682**	1	SPRING-GAS (CAB)	
	5	2	**206-1345**	4	STRAP-CABLE	
	6	2	**258-3281**	1	BRACKET AS	
	7	2	**258-3725**	1	HINGE	
	8	2	**258-3726**	2	PIN	
	9	2	**258-3761**	1	SPRING-GAS (DOOR)	
	10	1	**258-3764**	1	STRIKER AS	
	11	1	**258-4078**	1	TANK AS-WINDOW WASHER	
		1	**6T-1375**	1	PUMP AS-WASHER	
		1	**8E-8293**	1	GROMMET	
		1	**258-3296**	1	CAP-VENTED (WASHER)	
Y	12	2	*258-4086*	1	DOOR GP-CAB (GLASS)	671
	13	2	**258-4141**	2	CLIP	
	14	2	**258-4157**	1	HARNESS AS-CAB	
		1	**180-9340**	2	SOCKET-CONNECTOR (14-GA TO 18-GA)	
		1	**102-8805**	1	KIT-RECEPTACLE (6-PIN)	
					(INCLUDES RECEPTACLE AS & WEDGE)	
		1	**8T-8737**	1	PLUG-SEAL	
		1	**186-3735**	1	PIN-CONNECTOR (16-GA TO 18-GA)	
		1	**186-3736**	2	SOCKET-CONNECTOR (16-GA TO 18-GA)	
		1	**9W-0852**	2	PIN-CONNECTOR (14-GA)	
		1	**9W-0844**	2	SOCKET-CONNECTOR (14-GA)	
		1	**123-7615**	1	CONNECTOR	
E		1	**125-7874**		TUBE-HEAT SHRINK (5.72-MM DIA) (5-CM)	
		1	**155-2274**	1	KIT-CONNECTING PLUG (6-PIN)	
					(INCLUDES PLUG AS, WEDGE & INTERFACE SEAL)	
		1	**180-9339**	2	PIN-CONNECTOR (14-GA TO 18-GA)	
	15	2	**258-4356**	1	BRACKET AS	
	16	2	**284-7932**	1	FILM-NOTICE (ALTERNATE EXIT, READ OMM)	
	17	1	**095-1325**	1	PIN-CLEVIS	
M	18	2	**127-2170**	4	SCREW-TRUSS HEAD (M8X1.25X20-MM)	
	19	2	**198-1725**	4	WASHER-HARD (8.8X25.5X2-M THK)	
M	20	1	**215-6406**	1	SCREW-TRUSS HEAD (M6X1X16-MM)	
M	21	1	**5C-2890**	1	NUT (M6X1-THD)	
	22	1	**5P-0372**	2	LOCK PIN	
	23	1	**6L-3966**	1	PIN (0.374-IN OD)	
	24	2	**8S-7803**	2	RING-RETAINING	
	25	1	**8T-4223**	1	WASHER-HARD (13.5X25.5X3-MM THK)	
	26	2	**8T-4224**	2	WASHER-HARD (8.8X16X2-MM THK)	
M	27	1	**8T-4244**	1	NUT (M12X1.75-THD)	
M	28	2	**9X-2044**	3	SCREW-TRUSS HEAD (M6X1X16-MM)	
B	29	2	**198-1725**	2	WASHER-HARD (8.8X25.5X2-M THK)	
E	30	2	**144-0195**		HOSE (90-CM)	
D	31	1	**8T-6936**		SEAL (0.1-M)	

B-USE AS REQUIRED
D-ORDER BY THE METER
E-ORDER BY THE CENTIMETER
M-METRIC PART
Y-SEPARATE ILLUSTRATION

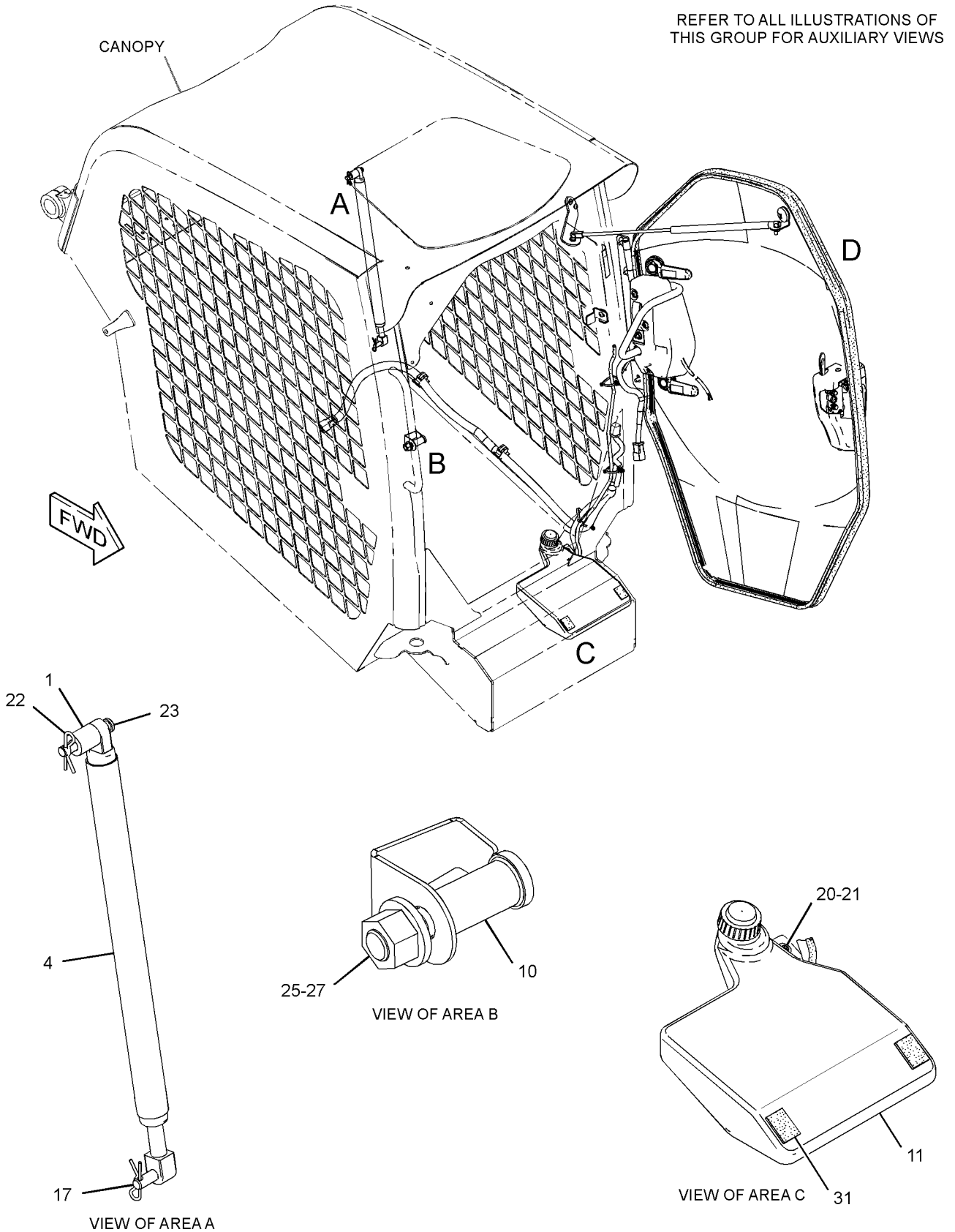

GRAPHIC #1

g01831455

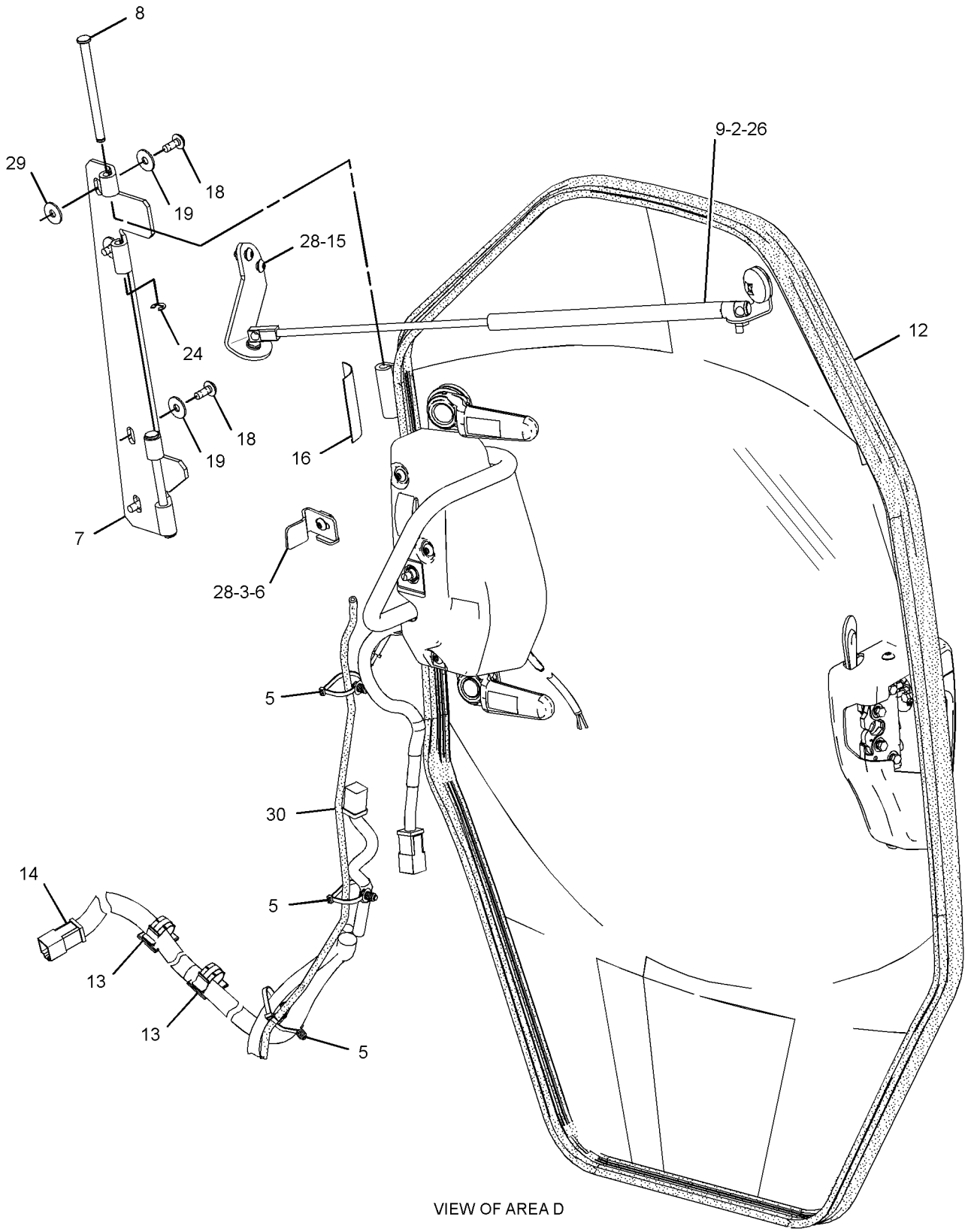

VIEW OF AREA D

GRAPHIC #2 **<END>** g01831459

OPERATOR STATION

258-4443 KIT-CAB DOOR & MOUNTING

S/N: JAY1-UP

CANNOT BE USED WITH 258-2473—PAGE 707, 280-6084—PAGE 713, 258-3738—PAGE 738, 258-3740—PAGE 738

AN ATTACHMENT

SMCS-7308 **i03572315**

NOTE	REF NO	GRAPHIC REF	PART NUMBER	QTY	PART NAME 1 2 3 4 5 6 (PRODUCT LEVEL)	SEE PAGE
M	1	2	**5C-2890**	1	NUT (M6X1-THD)	
B	2	1	**7C-8246**	1	SPACER (10.5X20X24-MM THK)	
	3	1	**8T-2444**	2	STUD-BALL	
	4	1	**095-1325**	1	PIN-CLEVIS	
	5	2	**139-6039**	1	NUT (U-TYPE RETAINER)	
	6	1	**153-2682**	1	SPRING-GAS	
	7	1,2	**206-1345**	4	STRAP-CABLE	
	8	2	**258-3281**	1	BRACKET AS	
	9	2	**258-3725**	1	HINGE	
	10	2	**258-3726**	2	PIN	
	11	1	**258-3761**	1	SPRING-GAS (DOOR)	
	12	1	**258-3764**	1	STRIKER AS	
	13	2	**258-4078**	1	TANK AS-WINDOW WASHER	
		2	**6T-1375**	1	PUMP AS-WASHER	
		2	**8E-8293**	1	GROMMET	
		2	**258-3296**	1	CAP-VENTED (WASHER)	
	14	1	**258-4141**	2	CLIP	
	15	1	**258-4157**	1	HARNESS AS-CAB	
		1	**180-9340**	2	SOCKET-CONNECTOR (14-GA TO 18-GA)	
E		1	**211-5358**		CONDUIT-FLEXIBLE (63-CM)	
		1	**102-8805**	1	KIT-RECEPTACLE (6-PIN) (INCLUDES RECPTACLE AS & WEDGE)	
		1	**8T-8737**	1	PLUG-SEAL	
		1	**186-3735**	1	PIN-CONNECTOR (16-GA TO 18-GA)	
		1	**186-3736**	2	SOCKET-CONNECTOR (16-GA TO 18-GA)	
		1	**9W-0852**	2	PIN-CONNECTOR (14-GA)	
		1	**9W-0844**	2	SOCKET-CONNECTOR (14-GA)	
		1	**123-7615**	1	CONNECTOR	
E		1	**125-7874**		TUBE-HEAT SHRINK (5.72-MM DIA) (5-CM)	
		1	**155-2274**	1	KIT-CONNECTING PLUG (6-PIN) (INCLUDES PLUG AS, WEDGE & INTERFACE SEAL)	
		1	**180-9339**	2	PIN-CONNECTOR (14-GA TO 18-GA)	
	16	1	**258-4356**	1	BRACKET AS	
Y	17	1	*258-4442*	1	DOOR GP-CAB	685
	18	2	**284-7932**	1	FILM-NOTICE (ALTERNATE EXIT, READ OMM)	
M	19	2	**127-2170**	4	SCREW-TRUSS HEAD (M8X1.25X20-MM)	
B	20	2	**198-1725**	6	WASHER-HARD (8.8X25.5X2-M THK)	
M	21	2	**215-6406**	1	SCREW-TRUSS HEAD (M6X1X16-MM)	
	22	1	**5P-0372**	2	LOCK PIN	
	23	1	**6L-3966**	1	PIN (0.374-IN OD) (LOCK)	
	24	2	**8S-7803**	2	RING-RETAINING	
	25	1	**8T-4223**	1	WASHER-HARD (13.5X25.5X3-MM THK)	
	26	1	**8T-4224**	2	WASHER-HARD (8.8X16X2-MM THK)	
M	27	1	**8T-4244**	1	NUT (M12X1.75-THD)	
M	28	1,2	**9X-2044**	3	SCREW-TRUSS HEAD (M6X1X16-MM)	
E	30	1	**144-0195**		HOSE (90-CM)	
D	31	2	**8T-6936**		SEAL (1-M EACH)	

B-USE AS REQUIRED
D-ORDER BY THE METER
E-ORDER BY THE CENTIMETER
M-METRIC PART
Y-SEPARATE ILLUSTRATION

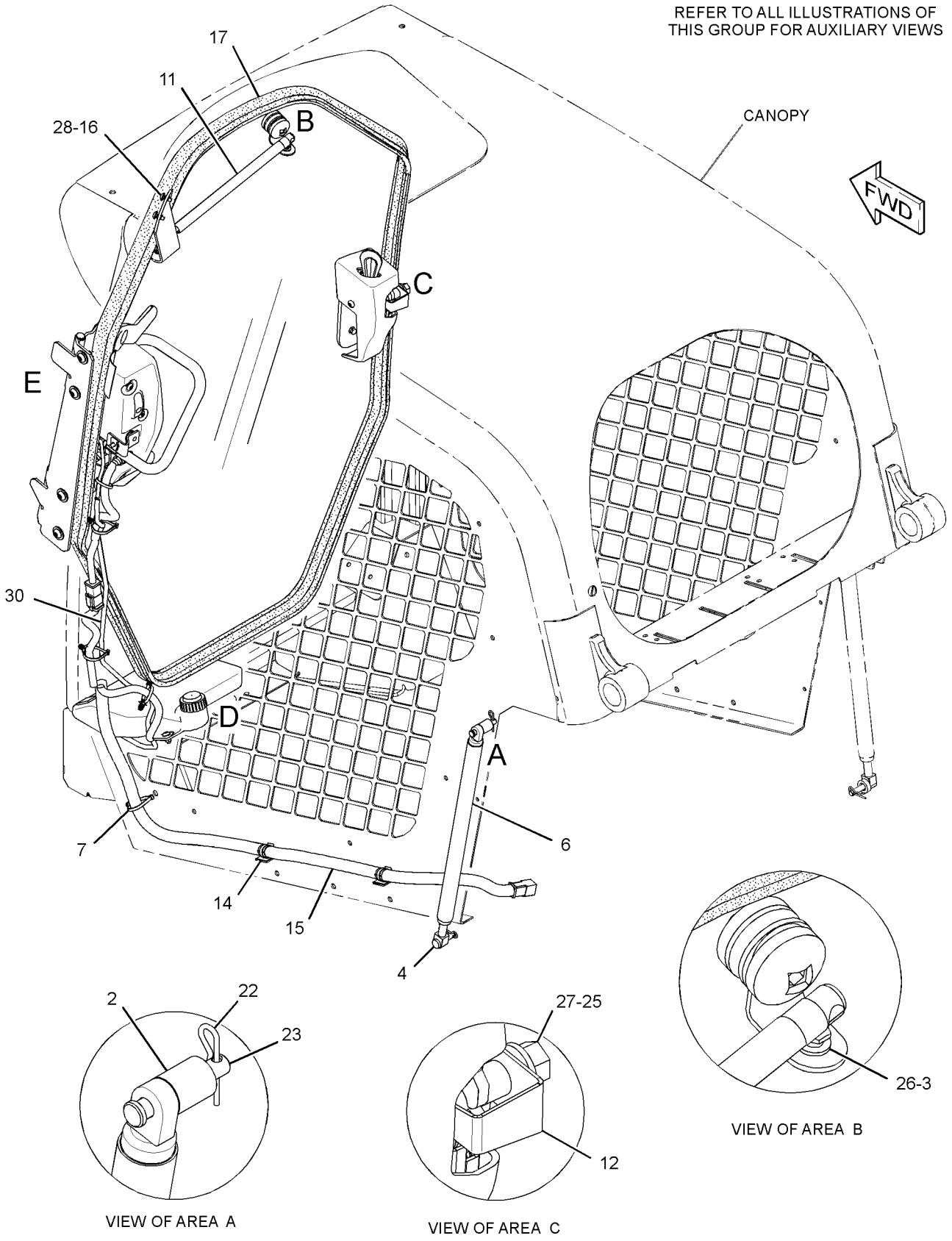

GRAPHIC #1

g01436984

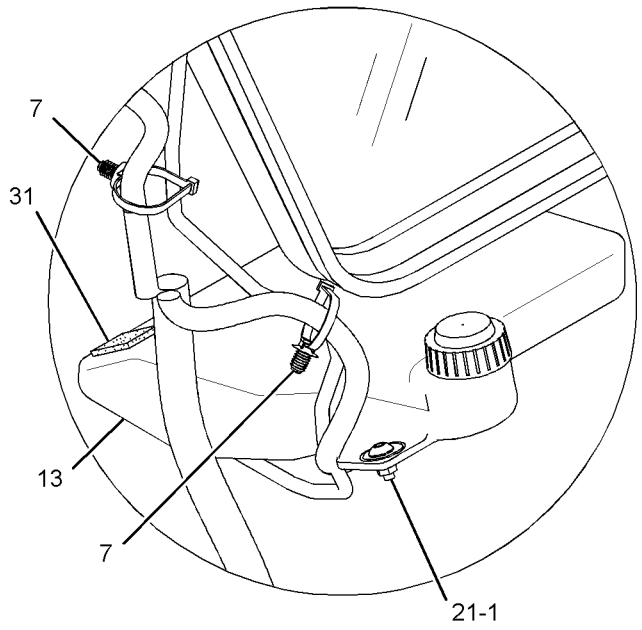

VIEW OF AREA D

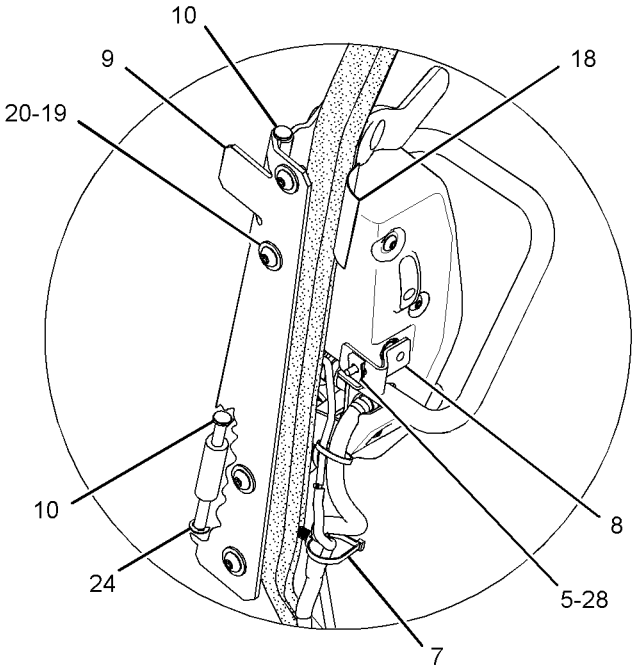

VIEW OF AREA E

GRAPHIC #2 **<END>** g01436985

OPERATOR STATION

280-6084 KIT-CAB DOOR & MOUNTING—POLYCARBONATE

S/N: JAY1-UP

AN ATTACHMENT

SMCS-7308 **i03572319**

NOTE	REF NO	GRAPHIC REF	PART NUMBER	QTY	PART NAME 1 2 3 4 5 6 (PRODUCT LEVEL)	SEE PAGE
	1	1	**7C-8246**	1	SPACER (10.5X20X24-MM THK)	
	2	2	**8T-2444**	2	STUD-BALL	
	3	2	**139-6039**	1	NUT (U-TYPE RETAINER)	
	4	1	**153-2682**	1	SPRING-GAS (CAB)	
	5	2	**206-1345**	4	STRAP-CABLE	
	6	2	**258-3281**	1	BRACKET AS	
	7	2	**258-3725**	1	HINGE	
	8	2	**258-3726**	2	PIN	
	9	2	**258-3761**	1	SPRING-GAS (DOOR)	
	10	1	**258-3764**	1	STRIKER AS	
	11	1	**258-4078**	1	TANK AS-WINDOW WASHER	
		1	**6T-1375**	1	PUMP AS-WASHER	
		1	**8E-8293**	1	GROMMET	
		1	**258-3296**	1	CAP-VENTED (WASHER)	
Y	12	2	*258-4087*	1	DOOR GP-CAB (POLYCARBONATE)	677
	13	2	**258-4141**	2	CLIP	
	14	2	**258-4157**	1	HARNESS AS-CAB	
		1	**180-9340**	2	SOCKET-CONNECTOR (14-GA TO 18-GA)	
E		1	**211-5358**		CONDUIT-FLEXIBLE (63-CM)	
		1	**102-8805**	1	KIT-RECEPTACLE (6-PIN)	
					(INCLUDES RECEPTACLE AS & WEDGE)	
		1	**8T-8737**	1	PLUG-SEAL	
		1	**186-3735**	1	PIN-CONNECTOR (16-GA TO 18-GA)	
		1	**186-3736**	2	SOCKET-CONNECTOR (16-GA TO 18-GA)	
		1	**9W-0852**	2	PIN-CONNECTOR (14-GA)	
		1	**9W-0844**	2	SOCKET-CONNECTOR (14-GA)	
		1	**123-7615**	1	CONNECTOR	
E		1	**125-7874**		TUBE-HEAT SHRINK (5.72-MM DIA) (5-CM)	
		1	**155-2274**	1	KIT-CONNECTING PLUG (6-PIN)	
					(INCLUDES PLUG AS, WEDGE & INTERFACE SEAL)	
		1	**180-9339**	2	PIN-CONNECTOR (14-GA TO 18-GA)	
	15	2	**258-4356**	1	BRACKET AS	
	16	2	**284-7932**	1	FILM-NOTICE (ALTERNATE EXIT, READ OMM)	
	17	1	**095-1325**	1	PIN-CLEVIS	
M	18	2	**127-2170**	4	SCREW-TRUSS HEAD (M8X1.25X20-MM)	
	19	2	**198-1725**	4	WASHER-HARD (8.8X25.5X2-M THK)	
M	20	1	**215-6406**	1	SCREW-TRUSS HEAD (M6X1X16-MM)	
M	21	1	**5C-2890**	1	NUT (M6X1-THD)	
	22	1	**5P-0372**	2	LOCK PIN	
	23	1	**6L-3966**	1	PIN (0.374-IN OD)	
	24	2	**8S-7803**	2	RING-RETAINING	
	25	1	**8T-4223**	1	WASHER-HARD (13.5X25.5X3-MM THK)	
	26	2	**8T-4224**	2	WASHER-HARD (8.8X16X2-MM THK)	
M	27	1	**8T-4244**	1	NUT (M12X1.75-THD)	
M	28	2	**9X-2044**	3	SCREW-TRUSS HEAD (M6X1X16-MM)	
B	29	2	**198-1725**	2	WASHER-HARD (8.8X25.5X2-M THK)	
E	30	2	**144-0195**		HOSE (90-CM)	
D	31	1	**8T-6936**		SEAL (0.1-M)	

B-USE AS REQUIRED
D-ORDER BY THE METER
E-ORDER BY THE CENTIMETER
M-METRIC PART
Y-SEPARATE ILLUSTRATION

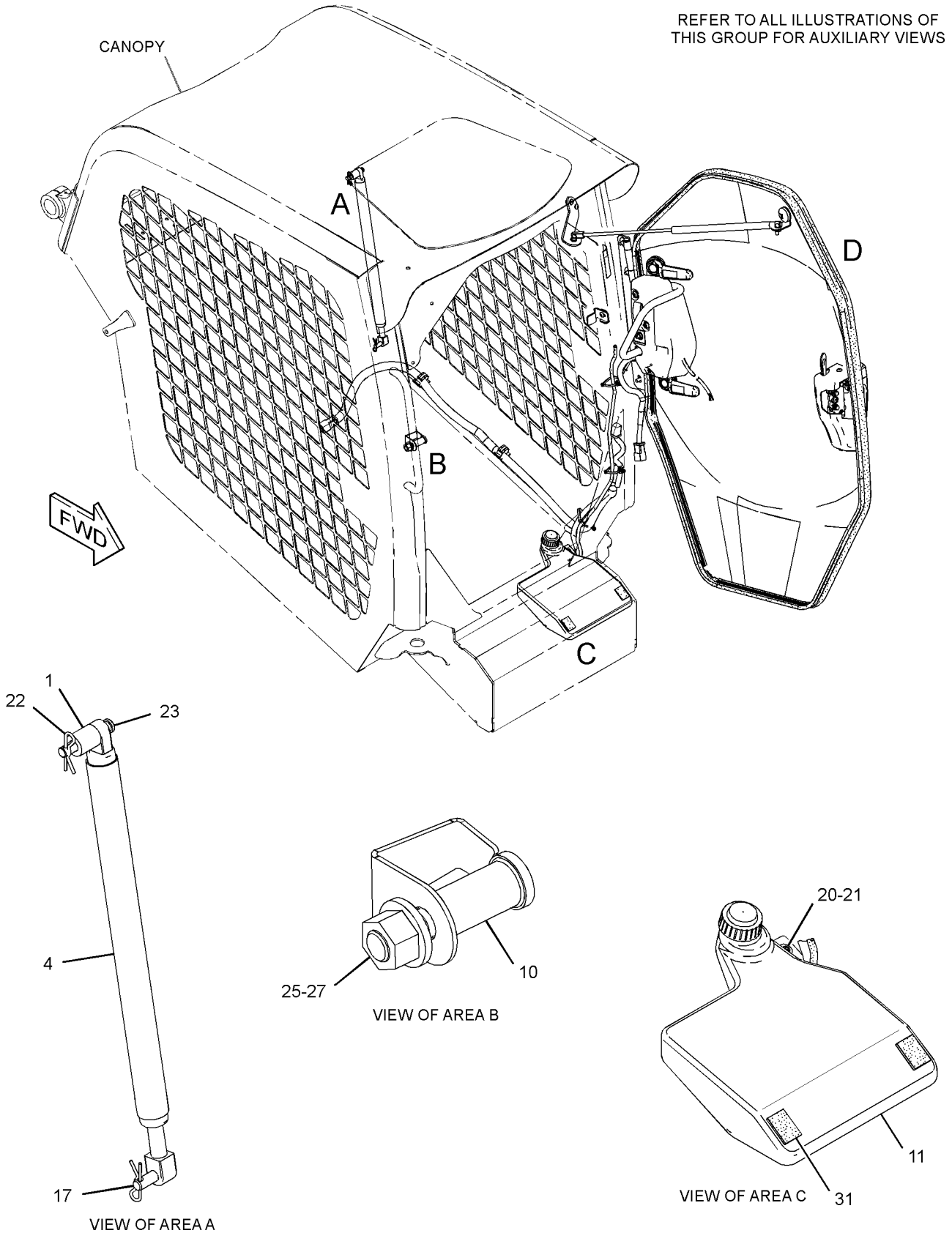

GRAPHIC #1

g01831455

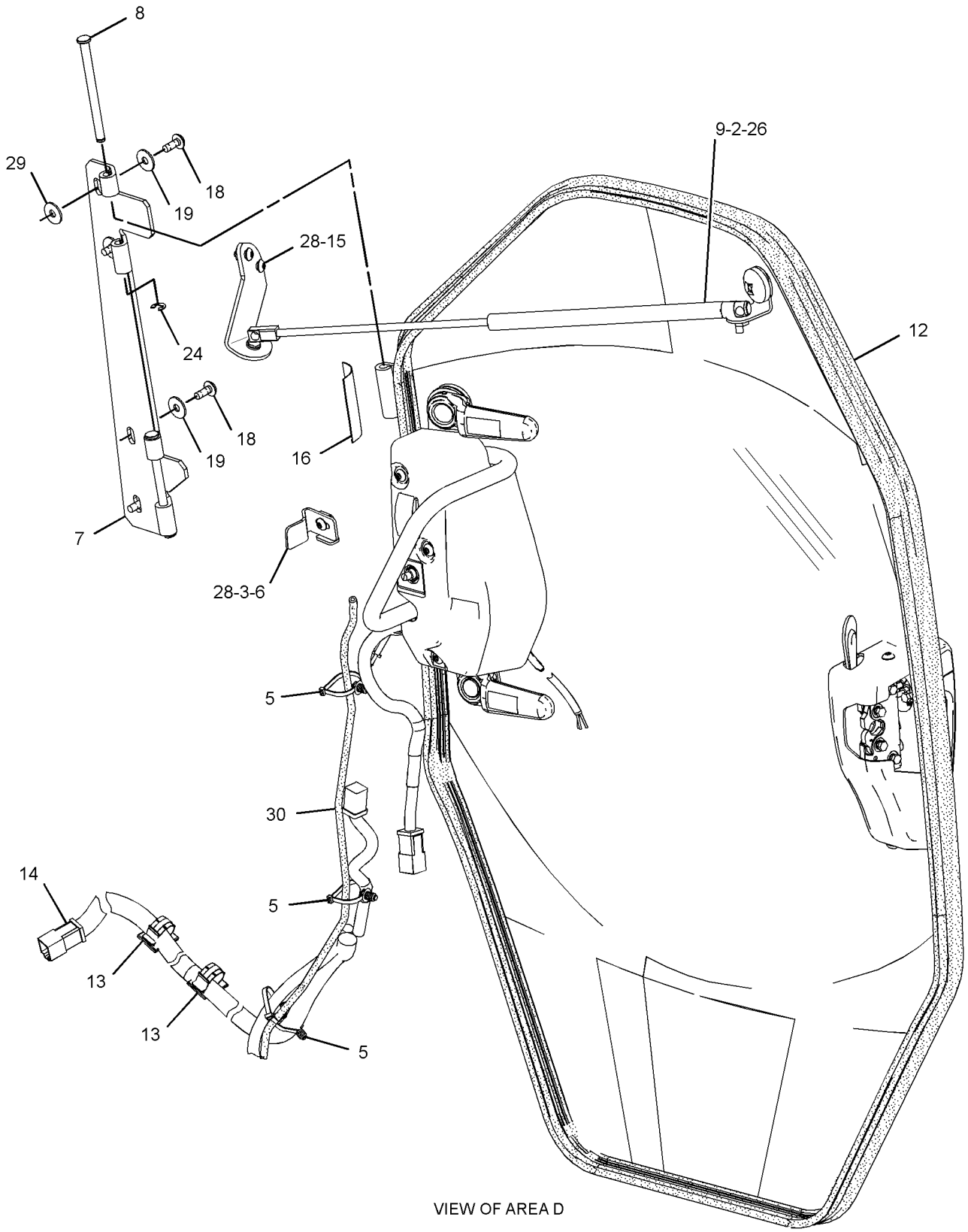

VIEW OF AREA D

GRAPHIC #2 **<END>** g01831459

OPERATOR STATION

280-6077 KIT-CAB HEATER & MOUNTING

S/N: JAY1-UP

AN ATTACHMENT

SMCS-7304 **i03624798**

NOTE	PART NUMBER	QTY	PART NAME 1 2 3 4 5 6 (PRODUCT LEVEL)	SEE PAGE
Y	*266-2430*	1	CONTROL & WIRING GP-AIR & TEMP	646
Y	*258-4270*	1	HEATER GP-CAB	697
	258-4253	1	DUCT AS (INTERIOR)	
	258-4254	1	DUCT AS (INTERIOR)	
	258-4257	1	DUCT AS (INLET)	
	258-4258	1	DUCT AS (PLENUM)	
	258-4259	1	DUCT AS-OUTLET	
	258-4147	1	HARNESS AS-HEATER & AIR COND	
	186-3735	5	PIN-CONNECTOR (16-GA TO 18-GA)	
	9W-0852	4	PIN-CONNECTOR (14-GA)	
	9X-1054	1	PLUG AS-CONNECTOR (4-PIN)	
	155-2255	1	KIT-CONNECTING PLUG (12-PIN)	
	155-2265	1	KIT-CONNECTING PLUG (8-PIN)	
	155-2270	3	KIT-CONNECTING PLUG (2-PIN)	
			(EACH PLUG KIT INCLUDES PLUG AS, WEDGE & INTERFACE SEAL)	
	8T-8737	6	PLUG-SEAL	
	102-8804	1	KIT-RECEPTACLE (4-PIN)	
	102-8805	1	KIT-RECEPTACLE (6-PIN)	
			(EACH RECEPTACLE KIT INCLUDES RECEPTACLE AS & WEDGE)	
	100-6674	2	SEAL-CONNECTOR	
	186-3736	5	SOCKET-CONNECTOR (16-GA TO 18-GA)	
	9W-0844	16	SOCKET-CONNECTOR (14-GA)	
	124-5640	2	TERMINAL-SOCKET	
	8L-8413	5	STRAP-CABLE	
	9X-1056	2	TERMINAL-RECEPTACLE (14-GA TO 16-GA)	
	100-5041	2	TERMINAL-RECEPTACLE (18-GA TO 20-GA)	
E	**119-3662**		TUBE-HEAT SHRINK (10.85-MM DIA) (7-CM)	
E	**125-7874**		TUBE-HEAT SHRINK (5.72-MM DIA) (20-CM)	
	258-4378	2	KNOB AS	
	258-4379	1	KNOB AS	
	146-6371	6	LOUVER AS	
M	**6V-7357**	4	BOLT (M6X1X25-MM)	
M	**8T-4136**	1	BOLT (M10X1.5X25-MM)	
M	**163-3955**	2	BOLT (M6X1X35-MM)	
	206-9185	1	BOLT (M8X1.25X35-MM)	
	266-3314	2	BOLT-FLANGE HEAD (M6X1X20.5-MM)	
M	**266-3315**	11	BOLT-FLANGE HEAD (M8X1.25X25.5-MM)	
	8T-0154	4	CLAMP-HOSE	
	6D-1641	3	CLIP (LOOP)	
	9X-8250	4	CLIP	
	258-4264	1	COVER-FILTER	
	258-4248	1	COVER-LOUVER	
	246-9371	1	COVER-RELAY	
	258-4249	1	DUCT-INLET	
	004-6810	1	ELBOW	
	218-6645	1	ELBOW	
	8Y-5947	2	FASTENER	
	265-6618	1	FILTER ELEMENT-CAB AIR (RECIRCULATION)	
	265-6619	1	FILTER ELEMENT-CAB AIR (FRESH)	
E	**136-1953**		HOSE (530-CM)	
	258-3794	1	INSULATION	
	258-4408	1	INSULATION	

280-6077 KIT-CAB HEATER & MOUNTING *(contd.)* i03624798

NOTE	PART NUMBER	QTY	PART NAME 1 2 3 4 5 6 (PRODUCT LEVEL)	SEE PAGE
	155-2271	1	KIT-CONNECTING PLUG (4-PIN)	
			(INCLUDES PLUG AS, WEDGE & INTERFACE SEAL)	
	102-8802	3	KIT-RECEPTACLE (2-PIN)	
			(EACH INCLUDES RECEPTACLE AS & WEDGE)	
	258-4263	1	PLATE	
	109-2356	1	PLUG	
	8T-8737	10	PLUG-SEAL	
	7X-2031	3	RETAINER	
	206-2423	3	SADDLE	
	258-4384	1	SCREEN	
	6V-6689	2	SCREW-SELF-TAPPING (10-16X.625-IN)	
M	**215-6406**	3	SCREW-TRUSS HEAD (M6X1X16-MM)	
	258-3727	7	SCREW-TRUSS HEAD (NO 12X17.46-MM)	
	312-0131	4	SCREW-MACHINE (M6X1X30-MM)	
D	**6V-9335**		SEAL (1-M)	
	258-3792	1	SEAL	
	258-3793	1	SEAL	
	258-3795	2	SEAL	
	258-3796	1	SEAL	
	178-3620	3	STRAP-DUAL CLAMP	
	3S-2093	18	STRAP-CABLE	
	206-1345	2	STRAP-CABLE	
	5P-4116	1	WASHER-HARD (8.8X20.5X2-MM THK)	
	8T-4121	1	WASHER-HARD (11X21X2.5-MM THK)	
	8T-4205	8	WASHER-HARD (7.2X14.5X2-MM THK)	

D-ORDER BY THE METER
E-ORDER BY THE CENTIMETER
M-METRIC PART
Y-SEPARATE ILLUSTRATION

<END>

258-2472 KIT-CAB WINDOW—SIDE

S/N: JAY1-UP
AN ATTACHMENT

SMCS-7310 i02645952

NOTE	PART NUMBER	QTY	PART NAME 1 2 3 4 5 6 (PRODUCT LEVEL)	SEE PAGE
Y	*258-3285*	1	WINDOW GP-CAB (SIDE, LH)	781
Y	*258-3286*	1	WINDOW GP-CAB (SIDE, RH)	782
	270-9442	18	SCREW-TRUSS HEAD (M6X1X20-MM)	

Y-SEPARATE ILLUSTRATION

<END>

258-4110 KIT-CONTROL PATTERN CHANGE–SELECTABLE

S/N: JAY1-UP

FIELD INSTALLATION

SMCS-5705, 7557, 7620 **i03572324**

NOTE	REF NO	GRAPHIC REF	PART NUMBER	QTY	PART NAME 1 2 3 4 5 6 (PRODUCT LEVEL)	SEE PAGE
	1	1	**265-8033**	1	SWITCH AS-ROCKER (CONTROL PATTERN CHANGE)	
		1	**111-7899**	1	GASKET	
	2	1	**285-2181**	1	FILM-INSTRUCTION (CONTROL PATTERN, RH)	
	3	1	**285-2182**	1	FILM-INSTRUCTION (CONTROL PATTERN, LH)	

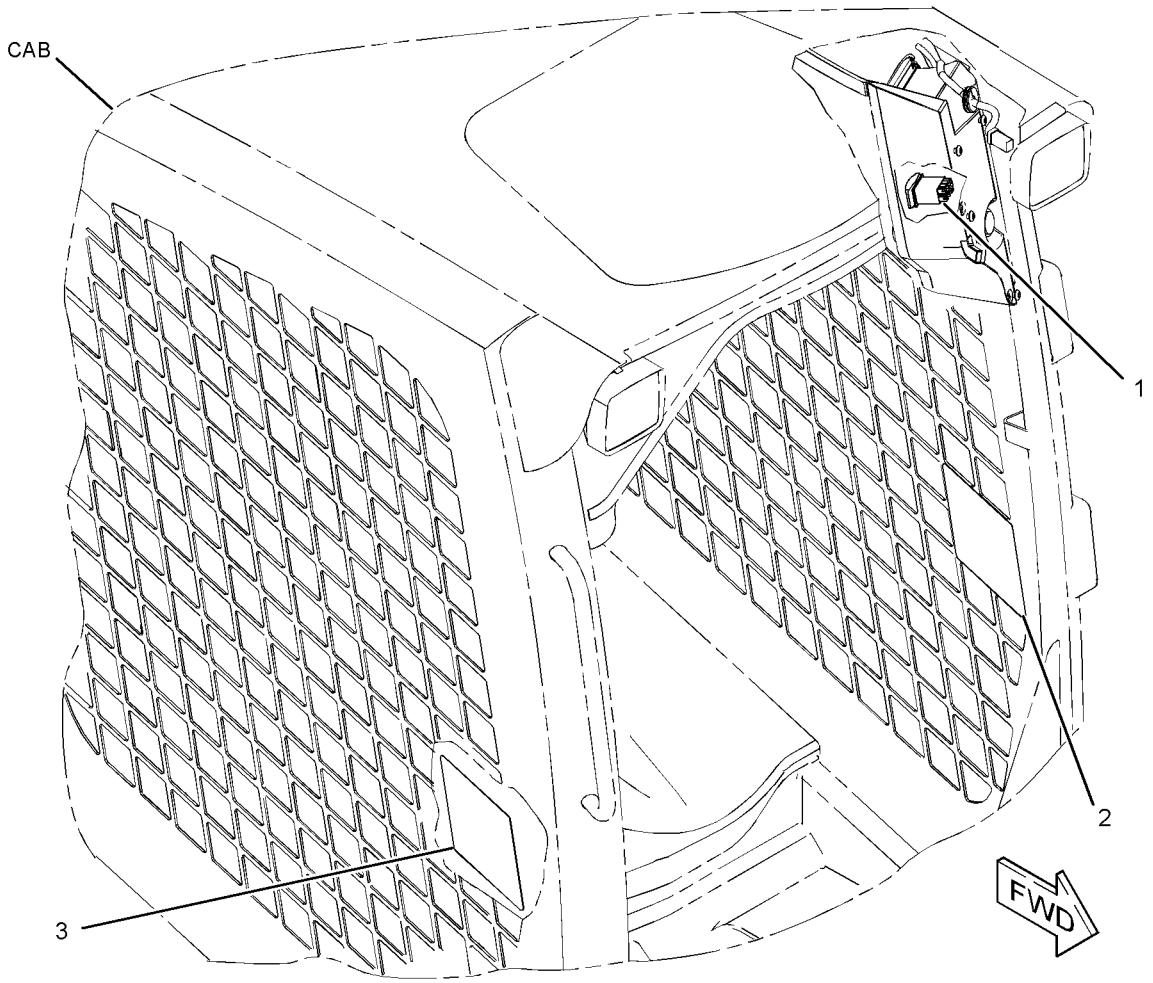

GRAPHIC #1 **<END>** g01328348

OPERATOR STATION

292-7927 KIT-CONTROL PATTERN CHANGE–DEDICATED

S/N: JAY1-UP

AN ATTACHMENT

SMCS-5705, 7557, 7620 **i02910287**

NOTE	REF NO	GRAPHIC REF	PART NUMBER	QTY	PART NAME 1 2 3 4 5 6 (PRODUCT LEVEL)	SEE PAGE
	1	1	**285-2181**	1	FILM-INSTRUCTION (CONTROL PATTERN, RH)	
	2	1	**285-2182**	1	FILM-INSTRUCTION (CONTROL PATTERN, LH)	

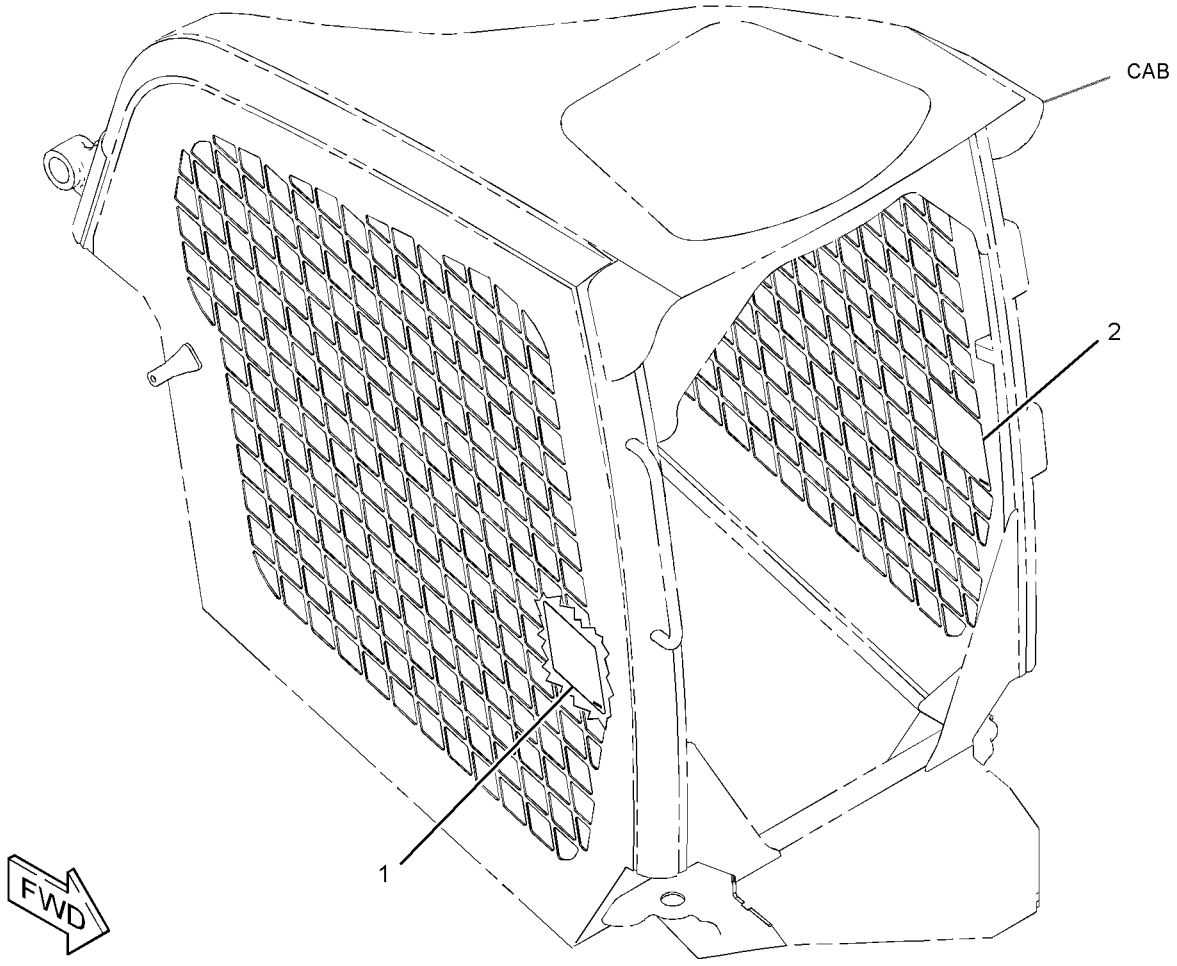

GRAPHIC #1 **<END>** g01349478

OPERATOR STATION

258-4111 KIT-INSTRUMENT PANEL–
INCLUDES CREEPER CONTROL, RH
S/N: JAY1-UP
CANNOT BE USED WITH MACHINE EQUIPPED WITH THE RH INSTRUMENT CLUSTER AN ATTACHMENT

SMCS-1435, 7450, 7490 **i03572329**

NOTE	REF NO	GRAPHIC REF	PART NUMBER	QTY	PART NAME 1 2 3 4 5 6 (PRODUCT LEVEL)	SEE PAGE
	1	1	**263-5420**	1	SWITCH AS-ROCKER (CREEPER CONTROL)	
		1	**111-7899**	1	GASKET	
	2	1	**264-8861**	1	MODULE GP-DISPLAY	
M	3	1	**135-7242**	4	SCREW-SELF-TAPPING (M5X2.3X18.8-MM)	
	4	1	**9X-8256**	4	WASHER (6.6X12X2-MM THK)	

M-METRIC PART

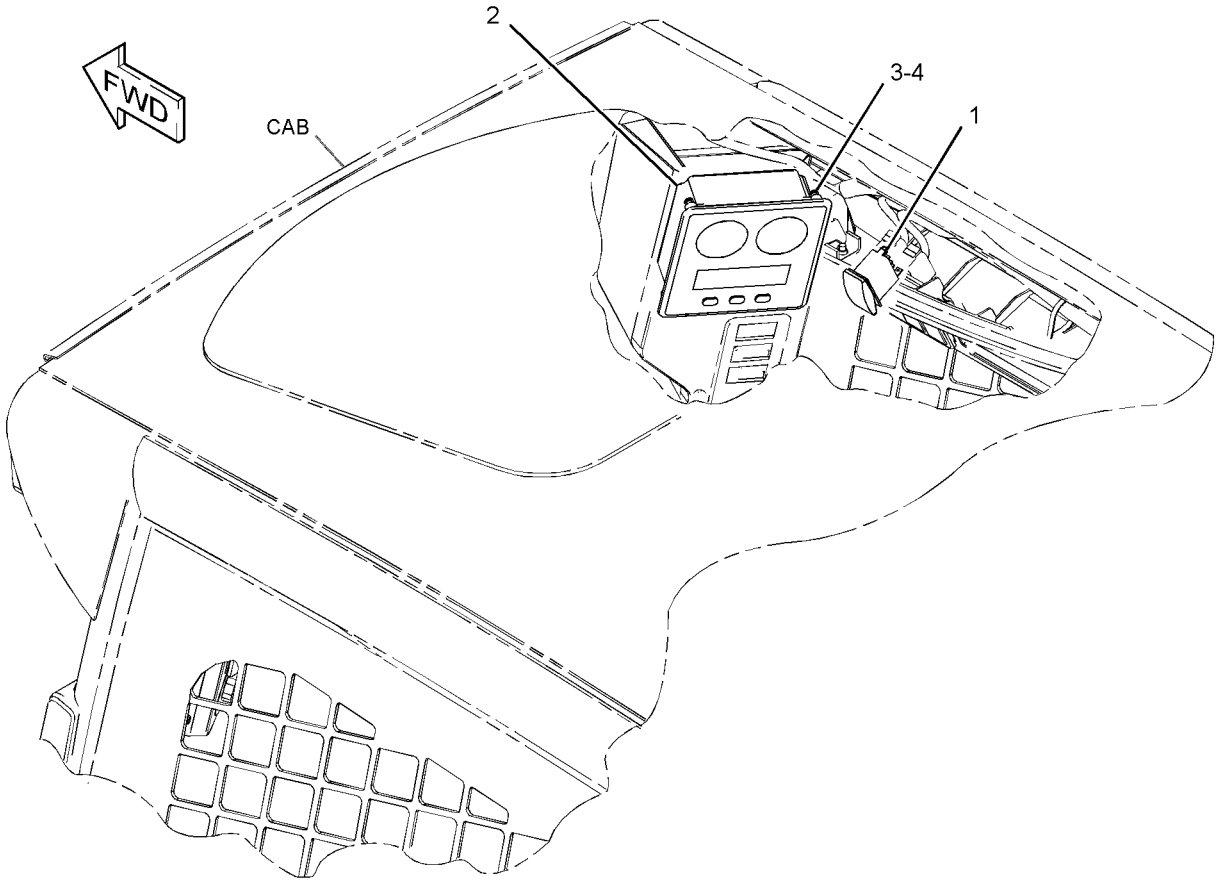

GRAPHIC #1 **<END>** g01328352

OPERATOR STATION

258-4045 LEVER GP-GOVERNOR

S/N: JAY1-UP

PART OF 280-6340, 295-7463 CONTROL GP-GOVERNOR

SMCS-1265, 1276 **i02625324**

NOTE	REF NO	GRAPHIC REF	PART NUMBER	QTY	PART NAME 1 2 3 4 5 6 (PRODUCT LEVEL)	SEE PAGE
	1	1	**258-4046**	1	LEVER GP-GOVERNOR	
M		1	**8T-4971**	1	BOLT (M6X1X30-MM)	
M		1	**129-3178**	1	LOCKNUT (M6X1-THD)	
	2	1	**258-4047**	1	CABLE AS	
M		1	**8T-4133**	1	NUT (M10X1.5-THD)	
		1	**280-6341**	1	NUT (M10X1.5-MM THD)	

M-METRIC PART

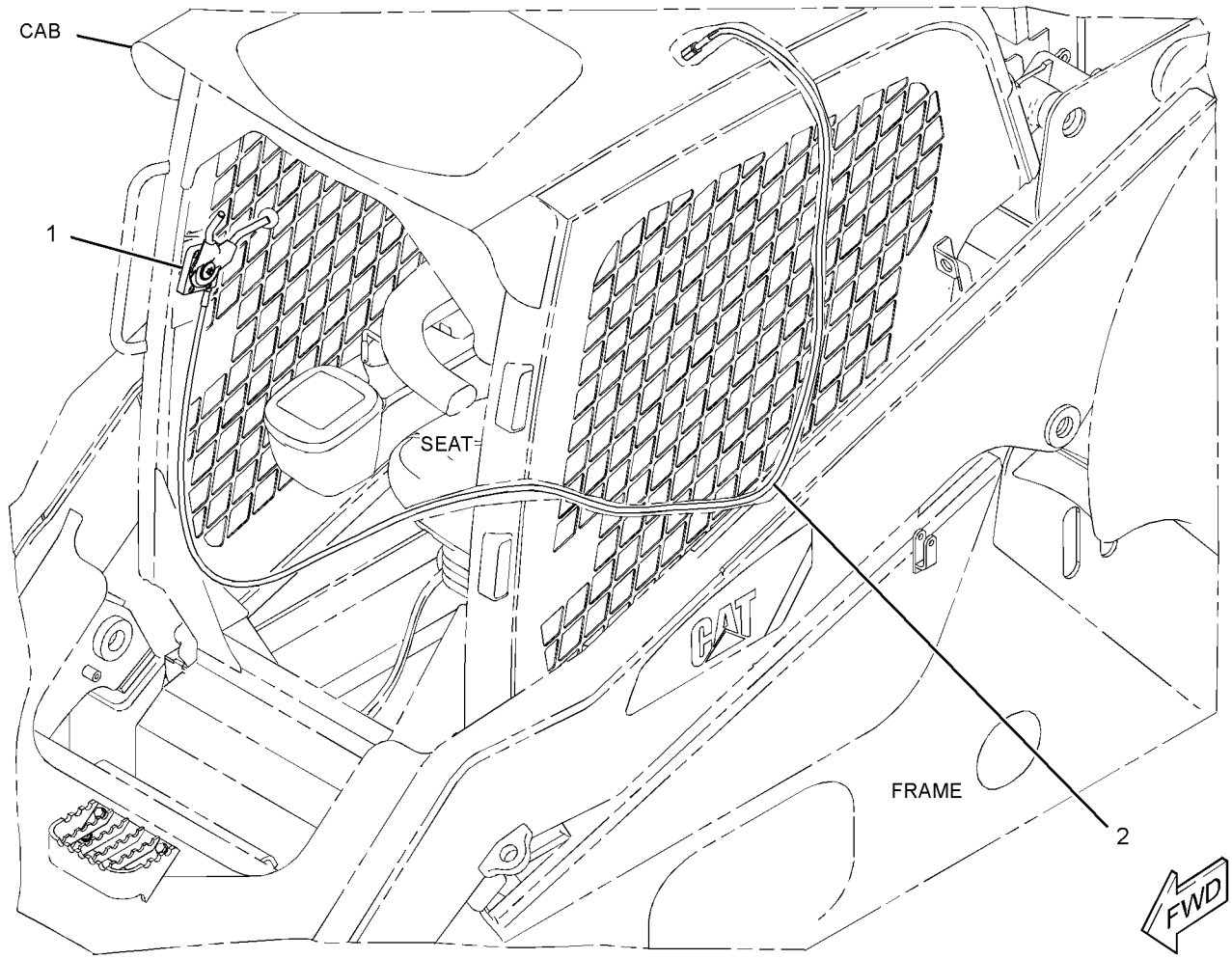

GRAPHIC #1 **<END>** g01316881

OPERATOR STATION

258-4020 LINER GP-CAB

S/N: JAY1-UP

PART OF 258-4000 CAB AR-ENCLOSED ROPS

SMCS-7268, 7329 **i03636002**

NOTE	REF NO	GRAPHIC REF	PART NUMBER	QTY	PART NAME 1 2 3 4 5 6 (PRODUCT LEVEL)	SEE PAGE
	1	2	**8Y-5947**	7	FASTENER	
	2	1	**258-3727**	5	SCREW-TRUSS HEAD (NO 12X17.46-MM)	
	3	1	**258-3785**	2	SEAL	
	4	1	**258-3786**	1	SEAL	
	5	1	**258-3787**	1	SEAL	
	6	1	**258-3788**	1	SEAL	
	7	1	**258-3790**	1	SEAL	
	8	2	**258-4021**	1	HEADLINER	
	9	2	**258-4024**	1	LINER (FLOOR)	
Y	10	2	*258-4433*	1	LINER GP-CAB	725
	11	2	**258-4029**	1	SUPPORT AS-SEAT	
	12	2	**258-4065**	1	FLOOR MAT	
	13	1	**5P-7957**	1	LANYARD	
	16	1	**280-6068**	1	COVER (LH)	
	17	2	**280-6069**	1	COVER (RH)	
	18	1	**280-6071**	5	CLIP	
	19	2	**274-7409**	6	SCREW-TRUSS HEAD (M8X1.25X45-MM)	
M	20	2	**5C-2890**	6	NUT (M6X1-THD)	
	21	2	**5P-4116**	2	WASHER-HARD (8.8X20.5X2-MM THK)	
M	22	2	**6V-9189**	6	LOCKNUT (M8X1.25-THD)	
	23	2	**8T-4205**	6	WASHER-HARD (7.2X14.5X2-MM THK)	
	24	2	**8T-4224**	6	WASHER-HARD (8.8X16X2-MM THK)	
M	25	2	**9X-2045**	6	SCREW-TRUSS HEAD (M6X1X20-MM)	
M	26	2	**111-4627**	2	SCREW-MACHINE (M6X1X30-MM)	
E	27	1	**134-2827**		SEAL (89-CM)	
	28	1	**5P-7958**	1	SLEEVE-CABLE SPLICE	
E	29	1	**177-4122**		SEAL (48-CM)	
D	30	1	**5P-5927**		SEAL (0.86-M EACH)	
D	31	1	**5P-5755**		SEAL (0.13-M EACH)	
D	32	1	**5P-7483**		SEAL (0.53-M)	
D	34	1	**8T-6936**		SEAL (0.04-M EACH)	
D	35	2	**8T-5372**		SEAL (0.33-M EACH)	
D	35A	2	**8T-5372**		SEAL (0.09-M EACH)	
D	35B	1	**8T-5372**		SEAL (0.36-M EACH)	
D	35C	1	**8T-5372**		SEAL (0.1-M EACH)	
E	41	1	**9X-2092**		TRIM-EDGE (70-CM EACH)	

D-ORDER BY THE METER
E-ORDER BY THE CENTIMETER
M-METRIC PART
Y-SEPARATE ILLUSTRATION

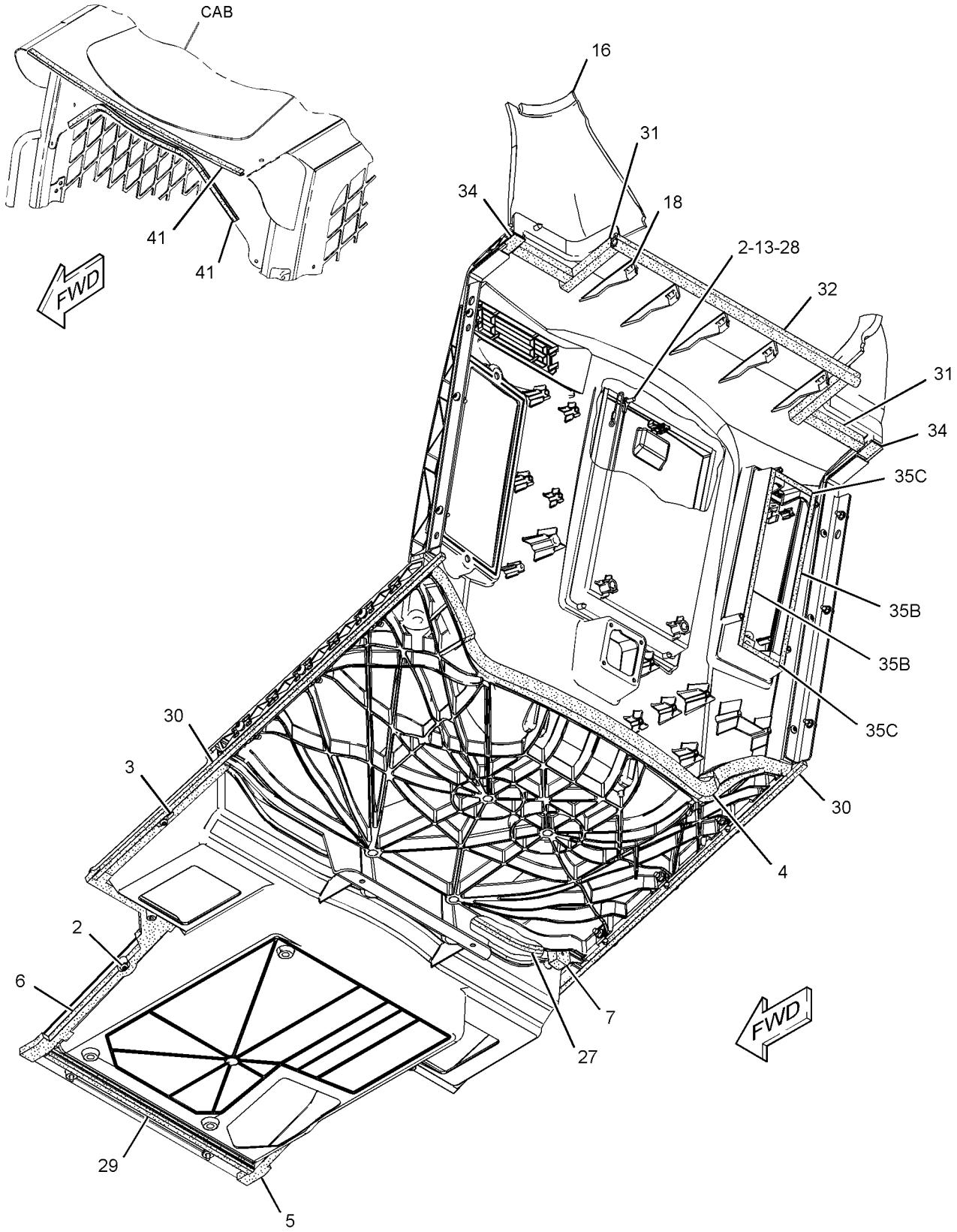

GRAPHIC #1

g01951541

258-4020 **LINER GP-CAB** *(contd.)* **i03636002**

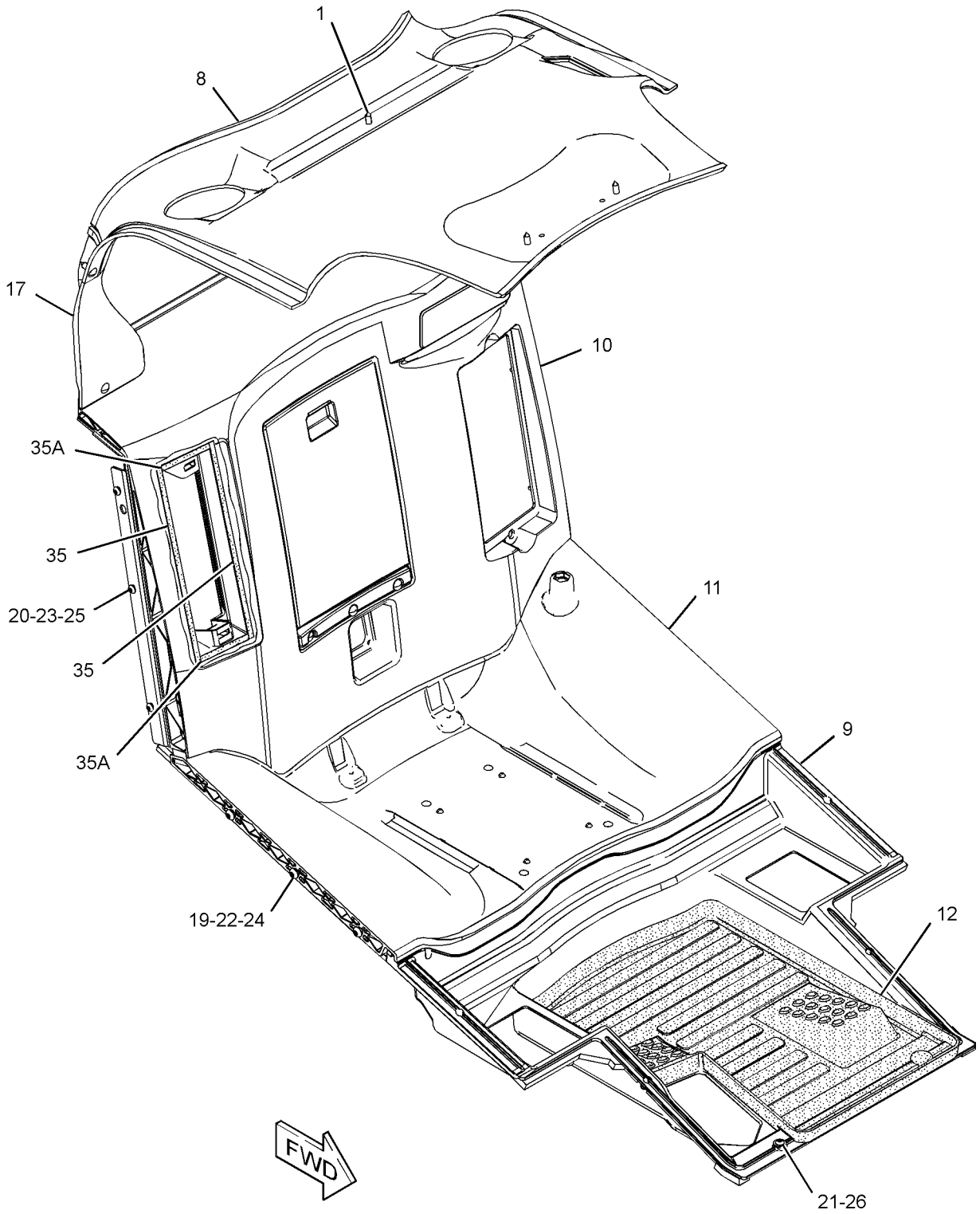

GRAPHIC #2 **<END>** g01951542

OPERATOR STATION

258-4433 LINER GP-CAB

S/N: JAY1-UP

PART OF 258-4020 LINER GP-CAB

SMCS-7268, 7329 **i03635702**

NOTE	REF NO	GRAPHIC REF	PART NUMBER	QTY	PART NAME 1 2 3 4 5 6 (PRODUCT LEVEL)	SEE PAGE
	1	1	**8Y-5947**	3	FASTENER	
	2	1	**258-3727**	6	SCREW-TRUSS HEAD (NO 12X17.46-MM)	
	3	1	**258-4025**	1	LINER AS	
	4	1	**258-4026**	1	COVER AS	
	5	1	**258-4068**	1	COVER	
	6	1	**258-4236**	1	COVER AS	
		1	**206-1667**	1	CLIP	
	7	1	**258-4358**	1	PLATE	
	8	1	**258-4359**	1	PLATE	
E	9	1	**8C-7524**		SEAL (60.5-CM EACH)	
D	10	1	**8T-5372**		SEAL (0.25-M)	
D	10A	1	**8T-5372**		SEAL (0.4-M EACH)	

D-ORDER BY THE METER
E-ORDER BY THE CENTIMETER

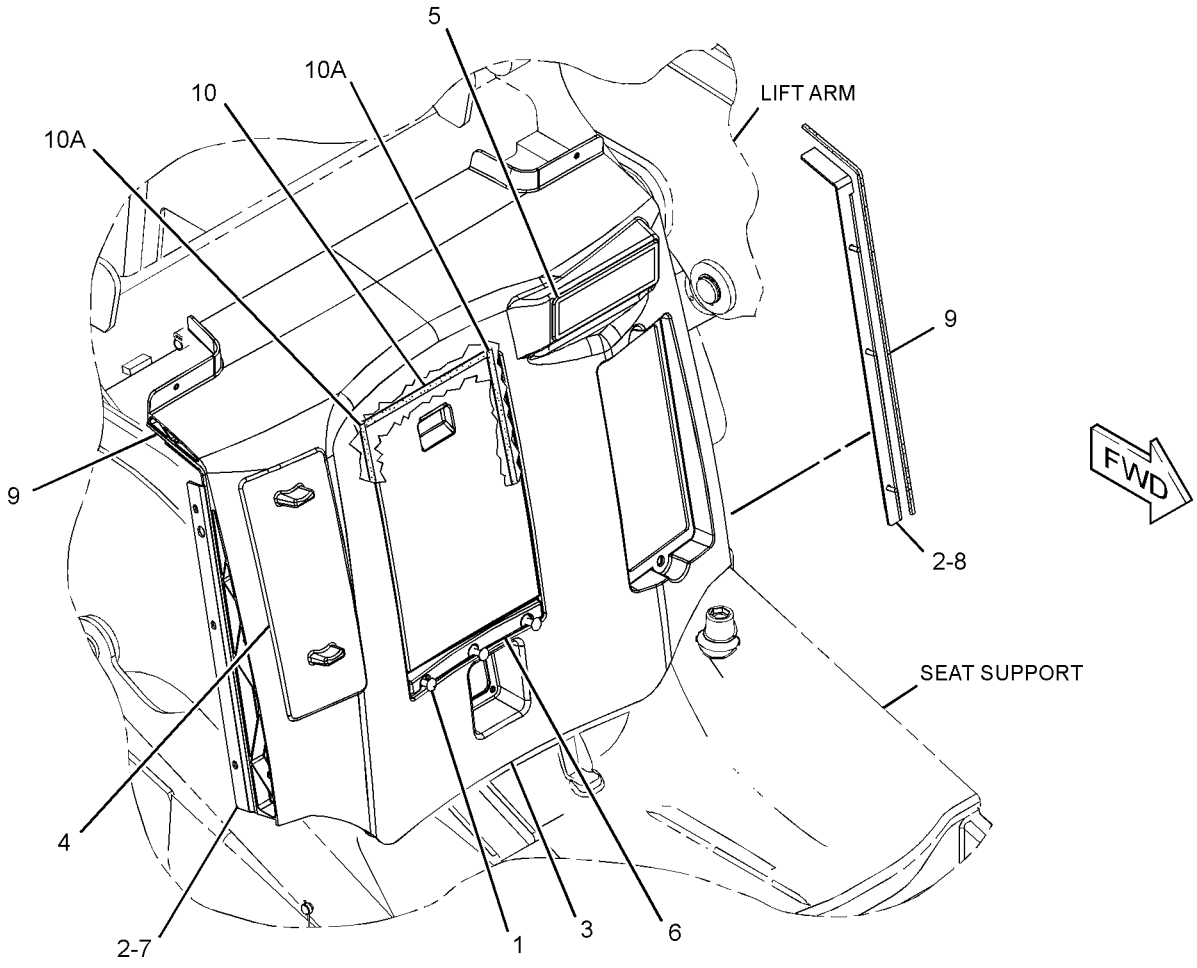

GRAPHIC #1 **<END>** g01951619

OPERATOR STATION

258-4265 LINES GP-AIR CONDITIONER

S/N: JAY1-UP
PART OF 258-4260 AIR CONDITIONER AR
AN ATTACHMENT

SMCS-1808, 7320 **i03159000**

NOTE	REF NO	GRAPHIC REF	PART NUMBER	QTY	PART NAME 1 2 3 4 5 6 (PRODUCT LEVEL)	SEE PAGE
	1	1	**3S-2093**	2	STRAP-CABLE	
	2	1	**9X-7378**	2	SEAL-O-RING	
	3	1	**101-8296**	2	CLIP	
	4	1	**105-9411**	1	SUPPORT	
	5	1	**149-6371**	1	SWITCH AS-PRESSURE (REFRIGERANT COMPR, LOW SIDE)	
		1	**102-8802**	1	KIT-RECEPTACLE (2-PIN)	
					(INCLUDES RECEPTACLE AS & WEDGE)	
		1	**186-3735**	2	PIN-CONNECTOR (16-GA TO 18-GA)	
	6	1	**178-3620**	4	STRAP-DUAL CLAMP	
	7	1	**212-2204**	1	CONTROL GP-AIR CONDITIONER	
		1	**155-2271**	1	KIT-CONNECTING PLUG (4-PIN)	
					(INCLUDES PLUG AS, WEDGE & INTERFACE SEAL)	
		1	**186-3736**	4	SOCKET-CONNECTOR (16-GA TO 18-GA)	
	8	1	**236-6923**	1	SWITCH AS-PRESSURE (REFRIGERANT COMPR, HIGH SIDE)	
	9	1	**258-4262**	1	HOSE AS	
	10	1	**258-4304**	1	HOSE AS	
I	11	1	**258-4308**	1	HOSE AS	
I	12	1	**258-4309**	1	HOSE AS	
	13	1	**258-4388**	1	BRACKET AS	
Y	14	1	*186-6190*	1	ACCUMULATOR GP-REFRIGERANT (WITH DESICCANT)	630
	15	1	**315-5381**	1	PLATE-INSTRUCTION (AIR CONDITIONER, READ OMM)	
M	16	1	**266-3315**	3	BOLT-FLANGE HEAD (M8X1.25X25.5-MM)	
	18	1	**8T-4121**	3	WASHER-HARD (11X21X2.5-MM THK)	
M	19	1	**8T-4136**	3	BOLT (M10X1.5X25-MM)	
	21	1	**9X-7380**	1	SEAL-O-RING	
	22	1	**9X-7381**	2	SEAL-O-RING	
	23	1	**9X-7382**	1	SEAL-O-RING	
	24	1	**9X-7383**	2	SEAL-O-RING	
	25	1	**132-5789**	1	CLIP (LOOP)	
D	26	1	**5P-5924**		SEAL (0.15-M EACH)	
	27	1	**7K-1181**	1	STRAP-CABLE	

D-ORDER BY THE METER
I-REFER TO HYDRAULIC INFORMATION SYSTEM
M-METRIC PART
Y-SEPARATE ILLUSTRATION

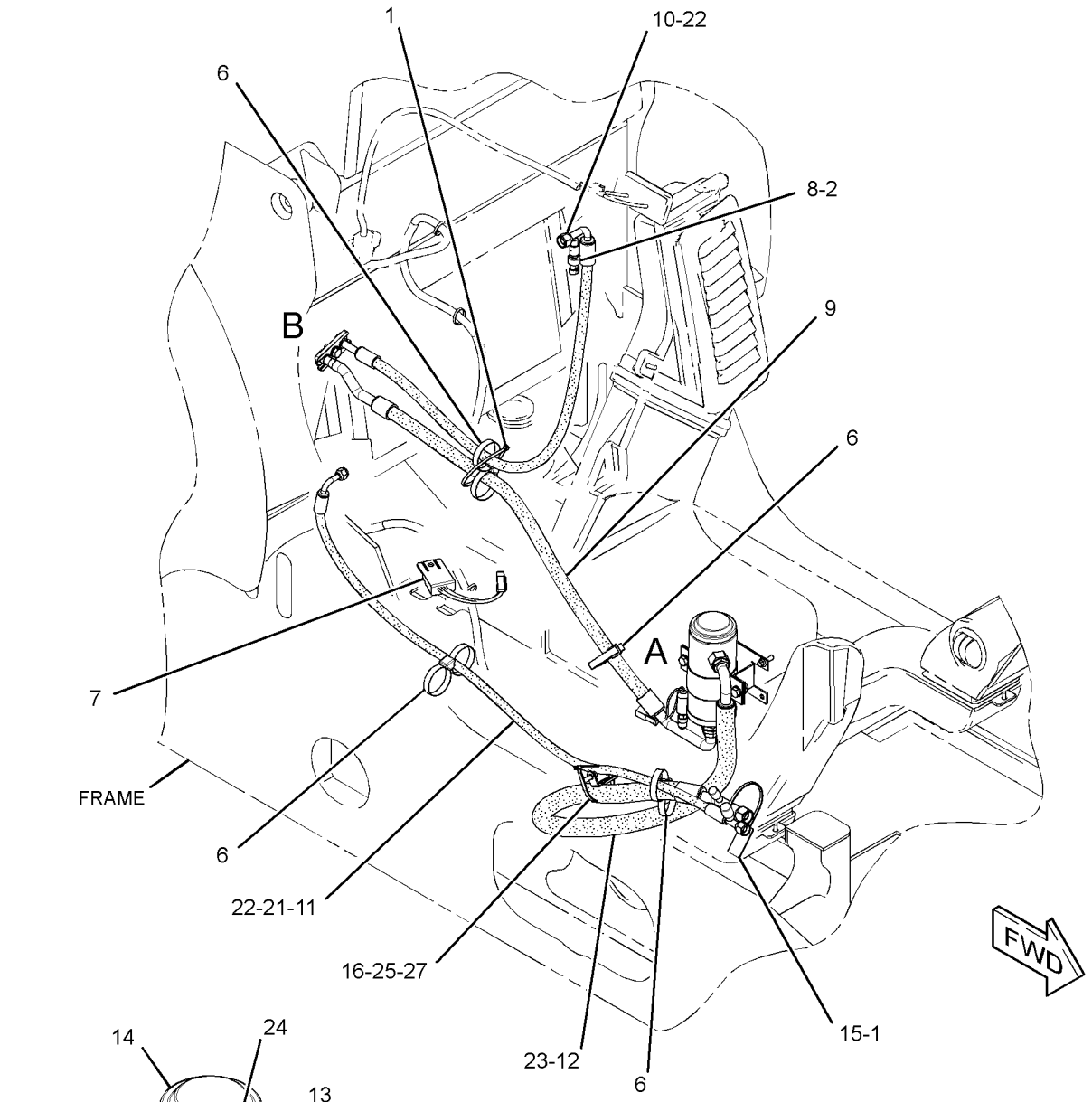

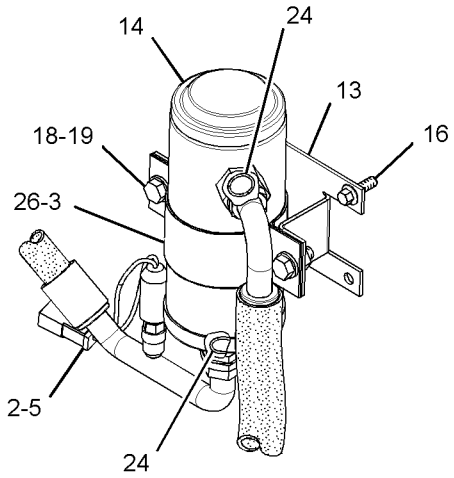

VIEW OF AREA A

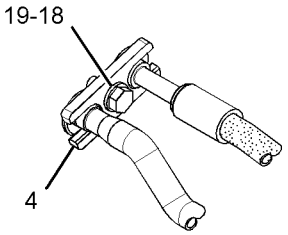

VIEW OF AREA B

GRAPHIC #1 **<END>** g01669953

OPERATOR STATION

258-4255 LINES GP-HEATER

S/N: JAY1-UP

PART OF 258-4260 AIR CONDITIONER AR, 258-4250 HEATER AR-CAB

AN ATTACHMENT

SMCS-1812, 7304 **i02894615**

NOTE	REF NO	GRAPHIC REF	PART NUMBER	QTY	PART NAME 1 2 3 4 5 6 (PRODUCT LEVEL)	SEE PAGE
	1	1	**8T-0154**	4	CLAMP-HOSE	
	2	1	**004-6810**	1	ELBOW	
	3	1	**178-3620**	3	STRAP-DUAL CLAMP	
	4	1	**218-6645**	1	ELBOW	
M	5	1	**266-3315**	4	BOLT-FLANGE HEAD (M8X1.25X25.5-MM)	
	6	1	**6D-1641**	3	CLIP (LOOP)	
	7	1	**8T-4121**	1	WASHER-HARD (11X21X2.5-MM THK)	
M	8	1	**8T-4136**	1	BOLT (M10X1.5X25-MM)	
	9	1	**9X-8250**	2	CLIP	
E	10	1	**136-1953**		HOSE (315-CM)	
E	10A	1	**136-1953**		HOSE (215-CM)	

E-ORDER BY THE CENTIMETER
M-METRIC PART

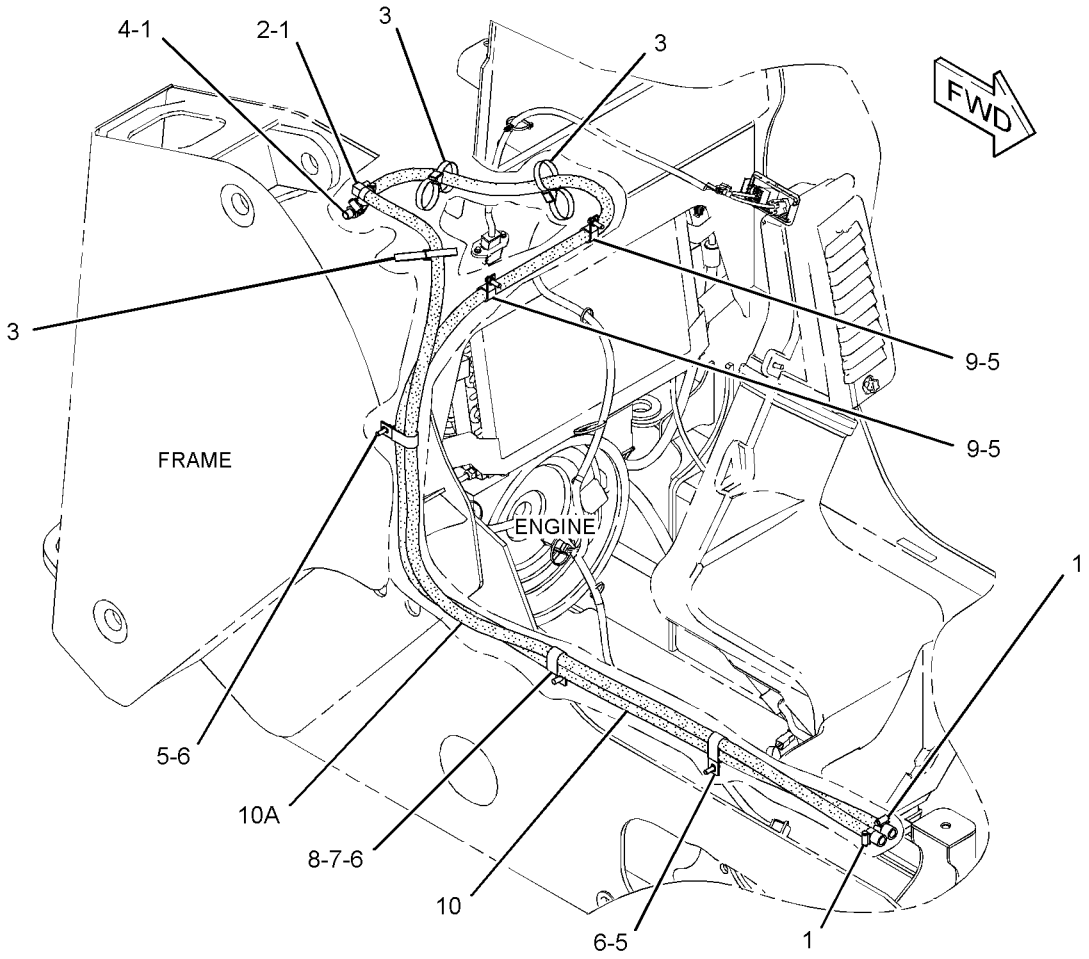

GRAPHIC #1 **<END>** g01442537

OPERATOR STATION

6V-1970 LITERATURE GP

S/N: JAY1-UP

PART OF 258-3236, 295-7246 COMMON AR

SMCS-0374, 0375, 7300 **i02831417**

NOTE	PART NUMBER	QTY	PART NAME 1 2 3 4 5 6 (PRODUCT LEVEL)	SEE PAGE
	5P-8500	2	KEY (LITERATURE COMPARTMENT)	
	5P-7958	1	SLEEVE-CABLE SPLICE	

<END>

OPERATOR STATION

258-4230 MIRROR GP-REAR VIEW

S/N: JAY2060-UP
PART OF 258-3800 CONVERSION AR-ROADING
AN ATTACHMENT

SMCS-7319 **i03505726**

NOTE	REF NO	GRAPHIC REF	PART NUMBER	QTY	PART NAME 1 2 3 4 5 6 (PRODUCT LEVEL)	SEE PAGE
	1	1	**280-6070**	1	MIRROR AS (REAR VIEW)	
	2	1	**3B-4505**	1	LOCKWASHER	
M	3	1	**5C-7261**	1	NUT (M8X1.25-THD)	
	4	1	**8T-4224**	1	WASHER-HARD (8.8X16X2-MM THK)	

M-METRIC PART

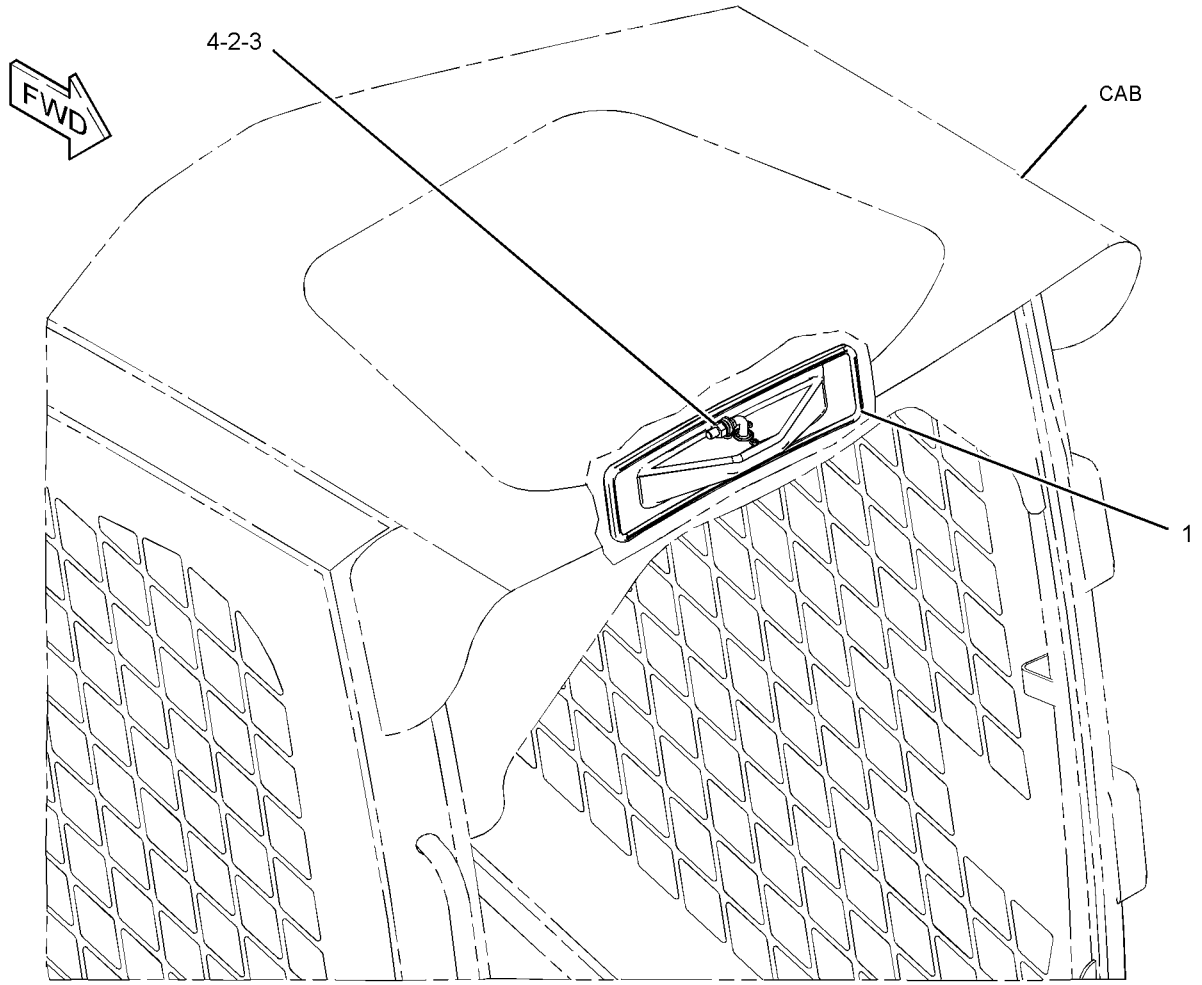

GRAPHIC #1 **<END>** g01316638

305-8034 MIRROR GP-REAR VIEW

S/N: JAY1-UP
PART OF 258-3818, 258-3819, 315-6353 CONVERSION AR-MACHINE, 258-3801 CONVERSION AR-ROADING
AN ATTACHMENT

SMCS-7319 **i03344042**

NOTE	REF NO	GRAPHIC REF	PART NUMBER	QTY	PART NAME 1 2 3 4 5 6 (PRODUCT LEVEL)	SEE PAGE
	1	1	**218-6384**	1	MIRROR AS	
	2	1	**3B-4505**	1	LOCKWASHER	
M	3	1	**5C-7261**	2	NUT (M8X1.25-THD)	
	4	1	**8T-4224**	2	WASHER-HARD (8.8X16X2-MM THK)	

M-METRIC PART

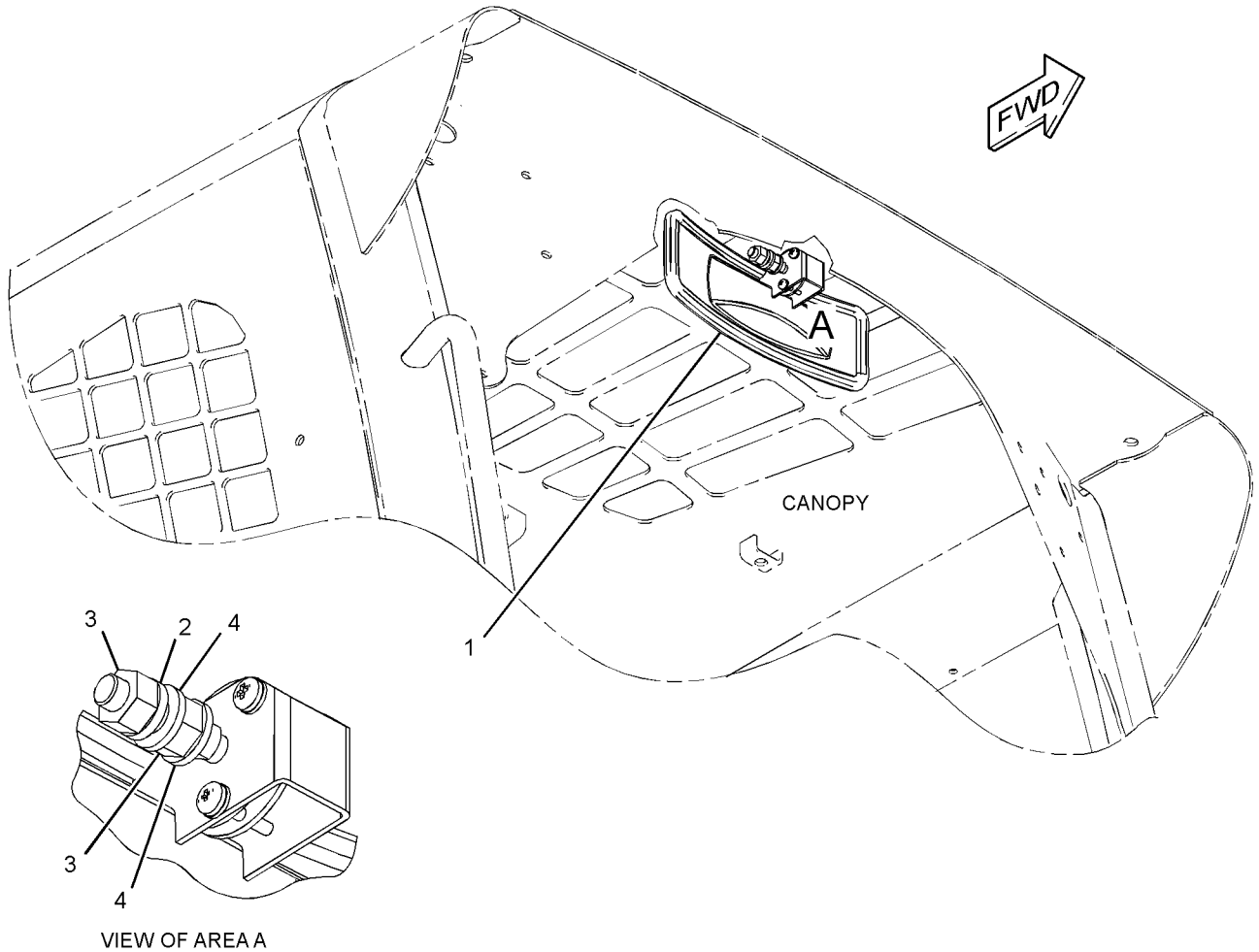

VIEW OF AREA A

GRAPHIC #1 **<END>** g01839142

OPERATOR STATION

330-5011 MOTOR GP-WINDOW WIPER

S/N: JAY1-UP

PART OF 258-4086, 258-4087, 258-4442 DOOR GP-CAB

AN ATTACHMENT

SMCS-7305 **i03261560**

NOTE	REF NO	GRAPHIC REF	PART NUMBER	QTY	PART NAME 1 2 3 4 5 6 (PRODUCT LEVEL)	SEE PAGE
	1	1	**102-8804**	1	KIT-RECEPTACLE (4-PIN)	
					(INCLUDES RECEPTACLE AS & WEDGE)	
	2	1	**263-3823**	1	CAP-WIPER	
	3	1	**3F-9556**	1	LOCKWASHER	
M	4	1	**5C-7261**	1	NUT (M8X1.25-THD)	
	5	1	**186-3735**	4	PIN-CONNECTOR (16-GA TO 18-GA)	

M-METRIC PART

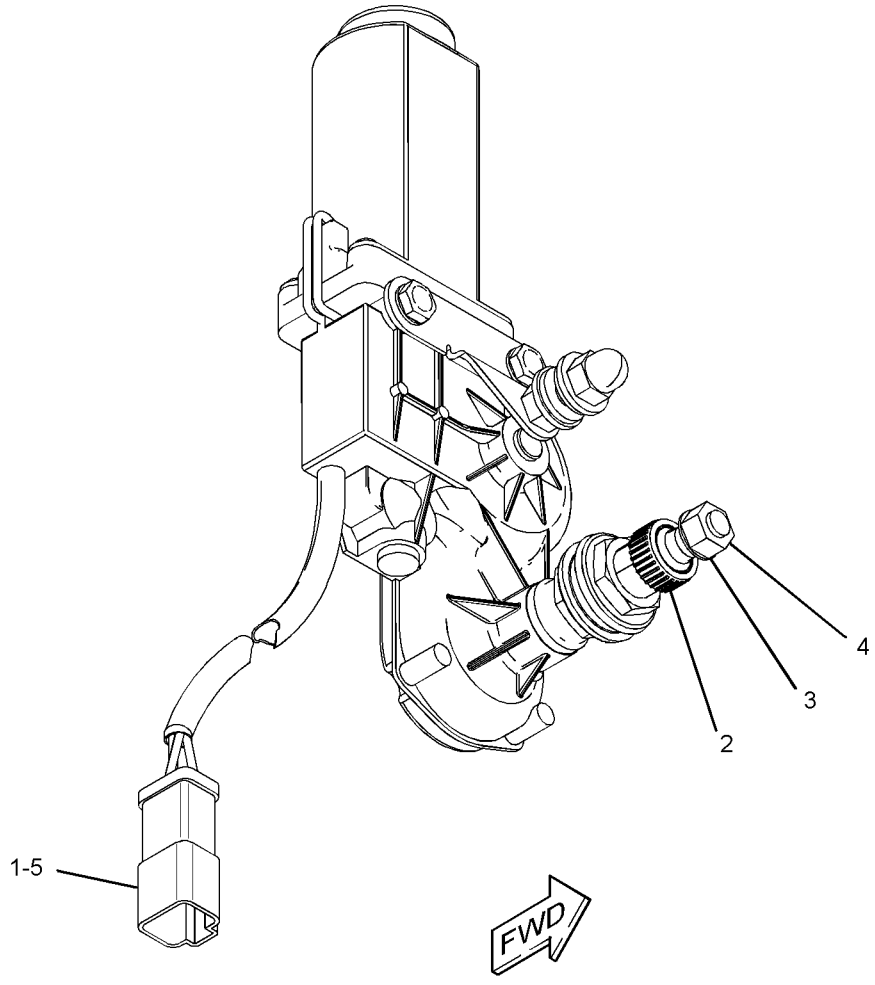

GRAPHIC #1 **<END>** g01668495

OPERATOR STATION

295-3171 MOUNTING GP-ARMREST–LH

S/N: JAY1-UP

PART OF 258-4311 ARMREST & MOUNTING GP

AN ATTACHMENT

SMCS-7307 **i02755507**

NOTE	REF NO	GRAPHIC REF	PART NUMBER	QTY	PART NAME 1 2 3 4 5 6 (PRODUCT LEVEL)	SEE PAGE
	1	1	**258-4321**	1	BRACKET AS-MOUNTING (FRONT)	
	2	1	**258-4323**	1	BRACKET AS-MOUNTING (REAR)	
	3	1	**258-4325**	1	SLIDE AS (LH)	
	4	1	**258-4328**	1	SUPPORT AS	
	5	1	**258-4431**	2	BLOCK	
	6	1	**216-7352**	2	SCREW-TRUSS HEAD (M8X1.25X30-MM)	
M	7	1	**6V-9189**	4	LOCKNUT (M8X1.25-THD)	
	8	1	**7X-0613**	2	WASHER-HARD (8.8X25.5X5-MM THK)	
	9	1	**8T-4224**	8	WASHER-HARD (8.8X16X2-MM THK)	
M	10	1	**8T-4908**	4	BOLT (M8X1.25X25-MM)	
M	11	1	**131-3540**	2	LOCKNUT (M8X1.25-THD)	

M-METRIC PART

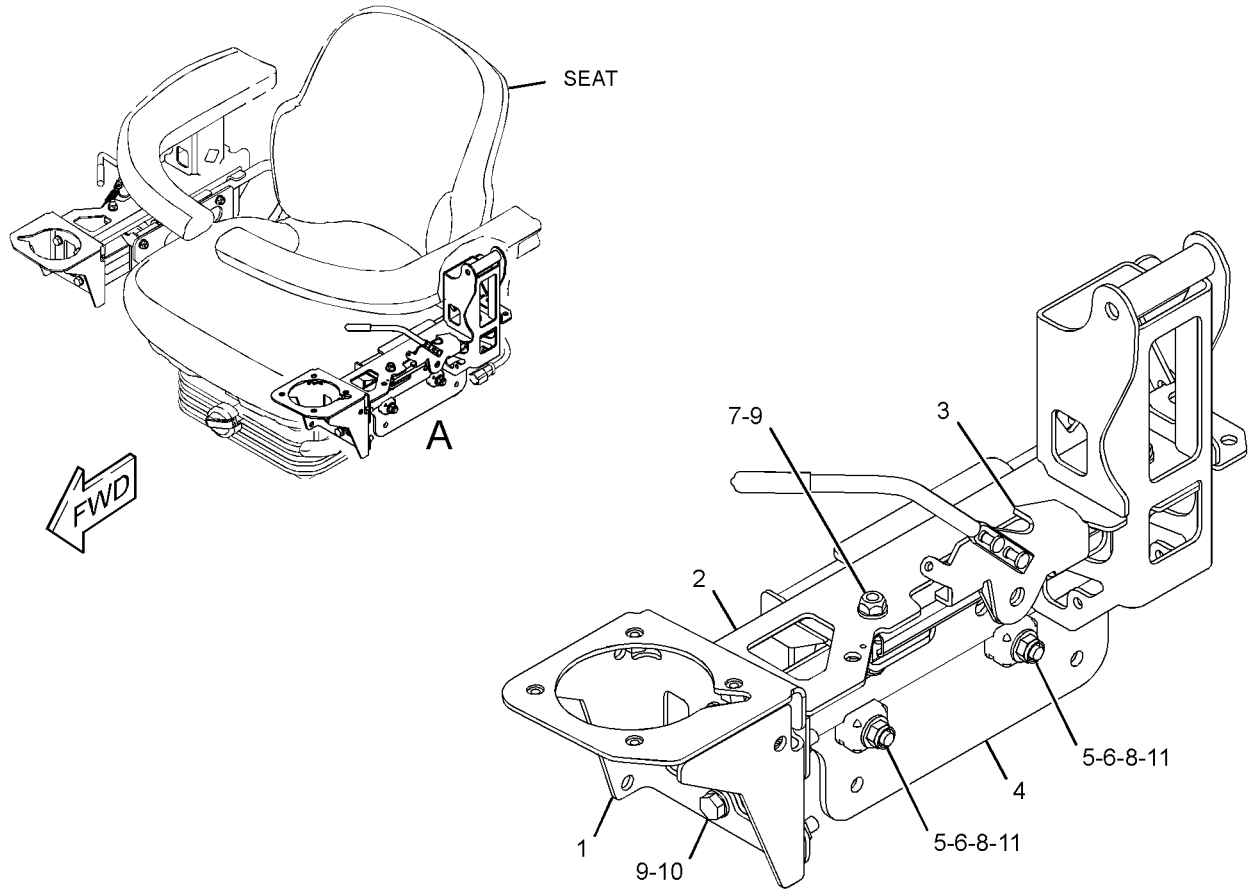

VIEW OF AREA A

GRAPHIC #1 **<END>** g01345430

OPERATOR STATION

295-3172 MOUNTING GP-ARMREST–RH

S/N: JAY1-UP
PART OF 258-4311 ARMREST & MOUNTING GP
AN ATTACHMENT

SMCS-7307 **i02755508**

NOTE	REF NO	GRAPHIC REF	PART NUMBER	QTY	PART NAME 1 2 3 4 5 6 (PRODUCT LEVEL)	SEE PAGE
	1	1	**258-4322**	1	BRACKET AS-MOUNTING (FRONT)	
	2	1	**258-4324**	1	BRACKET AS-MOUNTING (REAR)	
	3	1	**258-4326**	1	SLIDE AS (LH)	
	4	1	**258-4329**	1	SUPPORT AS	
	5	1	**258-4431**	2	BLOCK	
M	6	1	**131-3540**	2	LOCKNUT (M8X1.25-THD)	
	7	1	**216-7352**	2	SCREW-TRUSS HEAD (M8X1.25X30-MM)	
M	8	1	**6V-9189**	4	LOCKNUT (M8X1.25-THD)	
	9	1	**7X-0613**	2	WASHER-HARD (8.8X25.5X5-MM THK)	
	10	1	**8T-4224**	8	WASHER-HARD (8.8X16X2-MM THK)	
M	11	1	**8T-4908**	4	BOLT (M8X1.25X25-MM)	

M-METRIC PART

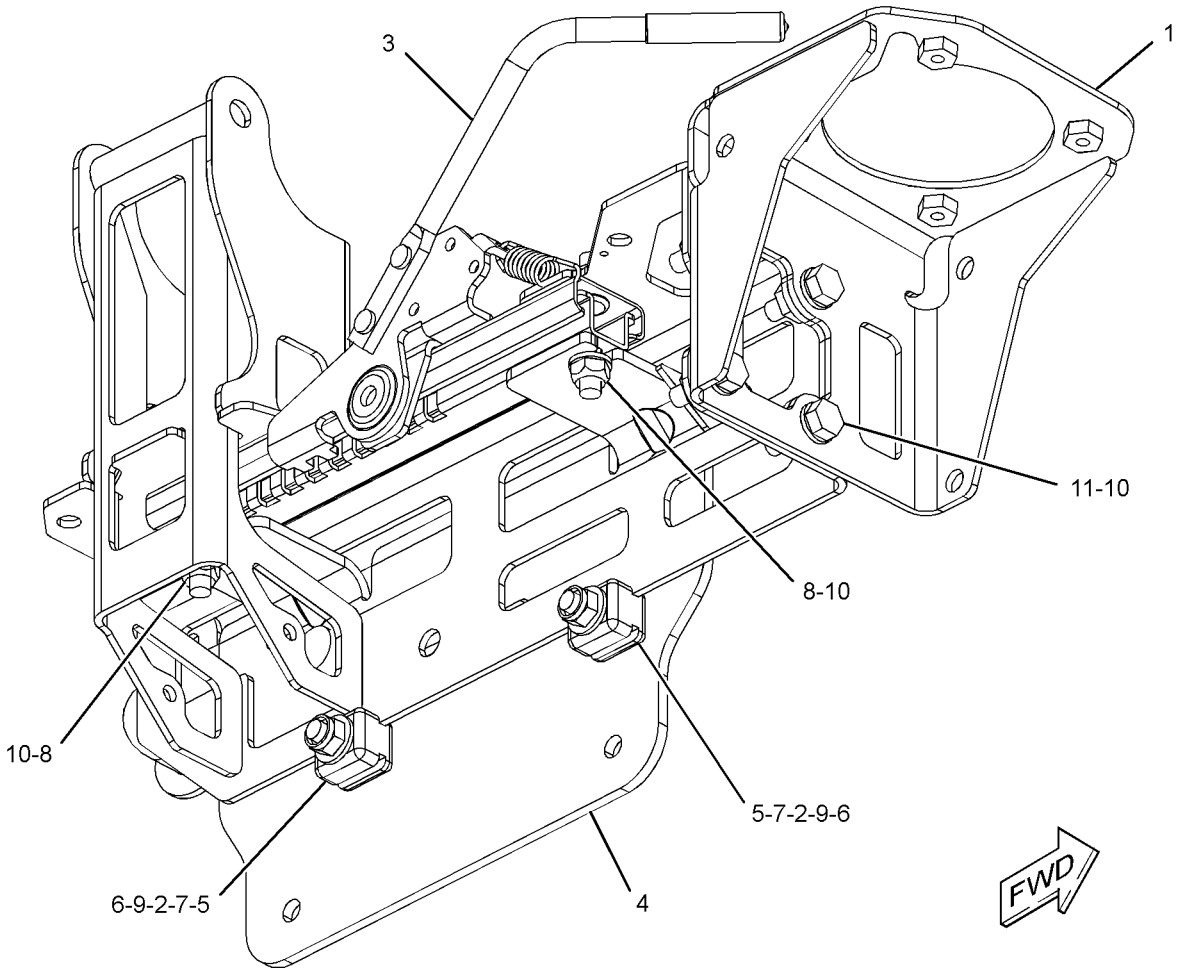

GRAPHIC #1 **<END>** g01346210

OPERATOR STATION

258-4220 MOUNTING GP-ROPS—INCLUDES STEP

S/N: JAY1-UP

PART OF 258-4000 CAB AR-ENCLOSED ROPS

SMCS-7266, 7325 **i02752473**

NOTE	REF NO	GRAPHIC REF	PART NUMBER	QTY	PART NAME 1 2 3 4 5 6 (PRODUCT LEVEL)	SEE PAGE
	1	1	**5P-7958**	2	SLEEVE-CABLE SPLICE	
	2	1	**5T-9400**	1	SPACER (12X25X8.5-MM THK)	
	4	2	**305-4339**	2	MOUNT AS	
	5	1	**305-4335**	2	MOUNT	
	6	2	**258-4221**	2	SPACER	
	7	1	**258-4224**	1	SPRING	
	8	1	**258-4227**	1	BRACKET AS	
	9	1	**258-4387**	1	KNOB	
	10	1	**258-4396**	1	PIN	
	11	1	**258-4397**	1	LANYARD	
	12	2	**258-4416**	1	STEP AS	
	13	2	**090-8865**	2	SPACER (17X40X3-MM THK)	
	14	2	**165-7095**	4	WASHER (16.5X71.5X3-MM THK)	
M	15	2	**195-0937**	1	INSERT-THREADED (M8X1.25-THD)	
	16	2	**3E-4352**	1	WASHER-HARD (8.8X20.5X2.5-MM THK)	
	17	1	**5P-0372**	1	LOCK PIN	
	18	2	**6V-5839**	4	WASHER (11X21X2.5-MM THK)	
M	19	1	**7X-2557**	2	BOLT (M16X2X140-MM)	
M	20	2	**7X-2556**	2	BOLT (M16X2X100-MM)	
M	21	2	**7Y-9099**	1	SCREW-TRUSS HEAD (M8X1.25X25-MM)	
	22	1	**8T-4122**	4	WASHER-HARD (17X32X3.5-MM THK)	
M	23	1,2	**8T-4778**	4	LOCKNUT (M16X2-THD)	
M	24	2	**9X-2040**	4	SCREW-TRUSS HEAD (M10X1.5X25-MM)	
	26	1	**305-4337**	4	PAD	

PARTS SHOWN IN GRAPHIC(S) WITHOUT A REFERENCE NUMBER ARE NOT SERVICED SEPARATELY

M-METRIC PART

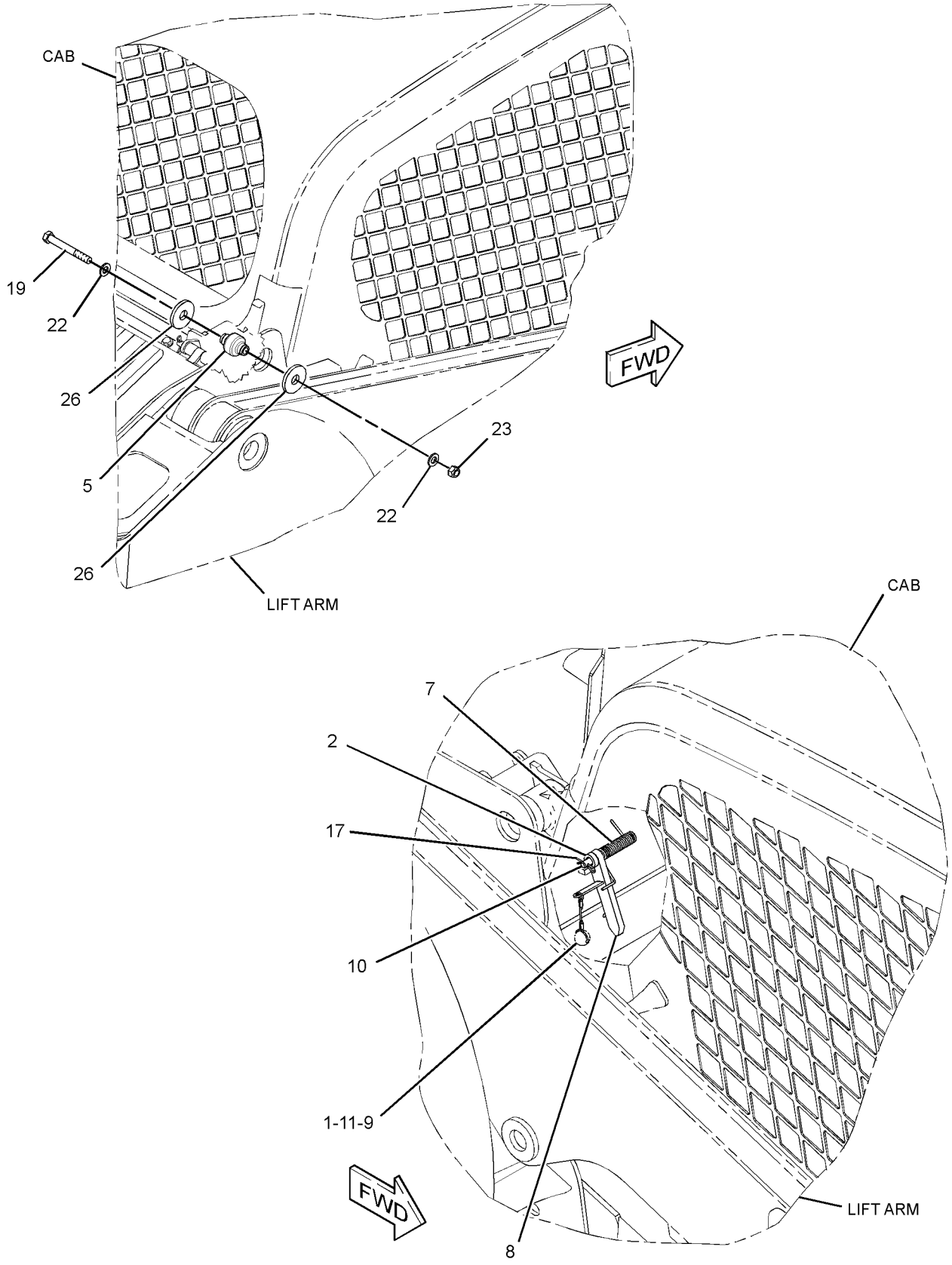

GRAPHIC #1

g01384955

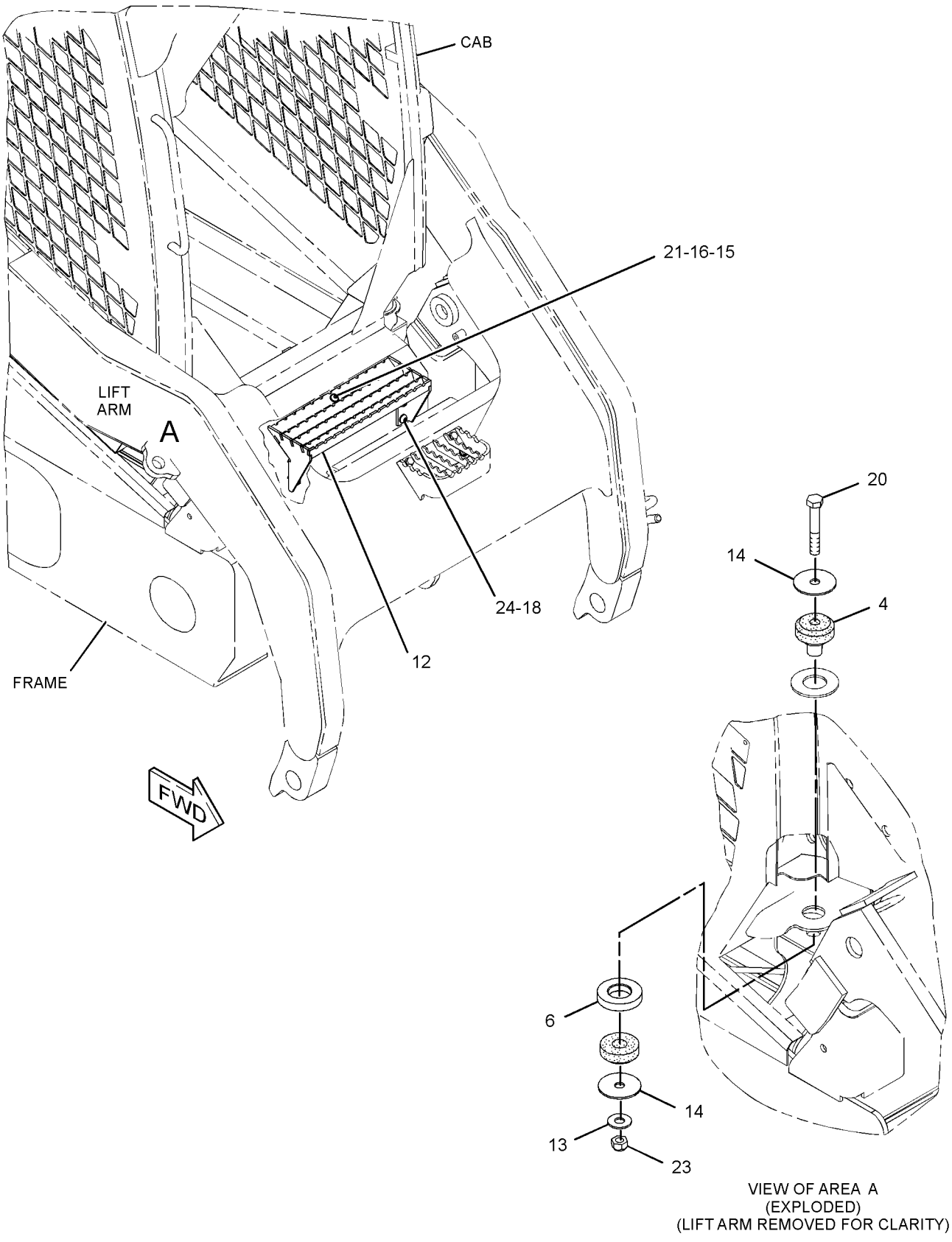

VIEW OF AREA A
(EXPLODED)
(LIFT ARM REMOVED FOR CLARITY)

GRAPHIC #2 **<END>** g01345079

OPERATOR STATION

258-3738 OPTION AR-CAB

S/N: JAY1-UP

AN ATTACHMENT

SMCS-7301 **i02613958**

NOTE	PART NUMBER	QTY	PART NAME 1 2 3 4 5 6 (PRODUCT LEVEL)	SEE PAGE
Y	*258-4245*	1	COVER GP-CAB	660
Y	*258-4310*	1	SEAT AR (STATIC)	764
Y	*258-4017*	1	SPRING GP-GAS (INCLUDES LIFT HANDLE)	773

Y-SEPARATE ILLUSTRATION

<END>

258-3740 OPTION AR-CAB

S/N: JAY1-UP

AN ATTACHMENT

SMCS-7301 **i02629830**

NOTE	PART NUMBER	QTY	PART NAME 1 2 3 4 5 6 (PRODUCT LEVEL)	SEE PAGE
Y	*258-4229*	1	ACCESSORY GP-CAB	628
Y	*258-4245*	1	COVER GP-CAB	660
Y	*258-4066*	1	INSTALLATION GP-RADIO	701
Y	*258-4320*	1	SEAT AR-SUSPENSION (MECHANICAL)	764
Y	*258-4017*	1	SPRING GP-GAS (INCLUDES LIFT HANDLE)	773

Y-SEPARATE ILLUSTRATION

<END>

OPERATOR STATION

258-4162 PANEL GP-INSTRUMENT

S/N: JAY1-UP

PART OF 258-4000 CAB AR-ENCLOSED ROPS

SMCS-7451 **i03624793**

NOTE	REF NO	GRAPHIC REF	PART NUMBER	QTY	PART NAME 1 2 3 4 5 6 (PRODUCT LEVEL)	SEE PAGE
	1	1	**7K-1181**	3	STRAP-CABLE	
	2	1	**8Y-5947**	6	FASTENER	
	3	1	**9R-7941**	1	SOCKET AS	
		1	**9R-7980**	1	COVER	
	4	1	**084-4277**	1	LAMP GP-DOME (12-VOLT)	
		1	**210-8754**	1	LAMP (12-VOLT) (MINIATURE)	
B	5	1,2	**109-2356**	6	PLUG	
	6	1	**139-6039**	2	NUT (U-TYPE RETAINER)	
	7	2	**110-7887**	1	SWITCH AS-START (KEY) (IGNITION)	
		2	**7T-6799**	1	NUT-MOUNTING (1-32-THD)	
		2	**186-3735**	4	PIN-CONNECTOR (16-GA TO 18-GA)	
		2	**102-8804**	1	KIT-RECEPTACLE (4-PIN)	
					(INCLUDES RECEPTACLE AS & WEDGE)	
	8	1,2	**165-0312**	2	WIRE AS	
	9	2	**178-7539**	1	RECEPTACLE AS (POWER SUPPLY)	
	10	1	**206-1345**	6	STRAP-CABLE	
	11	2	**218-0651**	1	FILM-INSTRUCTION (KEY START SWITCH)	
	12	1	**232-1792**	1	HORN	
	13	1	**258-3727**	8	SCREW-TRUSS HEAD (NO 12X17.46-MM)	
	14	2	**258-4001**	1	PANEL (LH)	
	15	2	**258-4002**	1	COVER (FRONT, LH)	
	16	1	**258-4003**	1	COVER (REAR, LH)	
	17	2	**258-4004**	1	PANEL (RH)	
	18	2	**258-4005**	1	COVER (FRONT, RH)	
	19	1	**258-4006**	1	COVER (REAR, RH)	
	20	1,2	**258-4007**	4	COVER-SWITCH	
	21	1	**258-4101**	1	HARNESS AS-PANEL	
		1	**8L-8413**	84	STRAP-CABLE	
		1	**8T-8737**	12	PLUG-SEAL	
		1	**091-2436**	74	TERMINAL-BLADE (18-GA TO 22-GA)	
		1	**104-1995**	19	TERMINAL-BLADE (14-GA TO 18-GA)	
		1	**186-3736**	4	SOCKET-CONNECTOR (16-GA TO 18-GA)	
		1	**9W-0852**	5	PIN-CONNECTOR (14-GA)	
		1	**9W-0844**	2	SOCKET-CONNECTOR (14-GA)	
E		1	**119-3662**		TUBE-HEAT SHRINK (10.85-MM DIA) (26-CM)	
		1	**123-7615**	1	CONNECTOR	
E		1	**125-7874**		TUBE-HEAT SHRINK (5.72-MM DIA) (60-CM)	
E		1	**125-7875**		TUBE-HEAT SHRINK (7.44-MM DIA) (25-CM)	
		1	**9X-3402**	13	SOCKET-CONNECTOR (16-GA TO 18-GA)	
		1	**5P-4571**	4	TERMINAL-BLADE (14-GA TO 16-GA)	
		1	**097-7234**	4	TERMINAL	
		1	**7N-7221**	2	TERMINAL-BLADE (18-GA TO 22-GA)	
		1	**155-2270**	2	KIT-CONNECTING PLUG (2-PIN)	
		1	**155-2271**	2	KIT-CONNECTING PLUG (4-PIN)	
					(EACH PLUG KIT INCLUDES PLUG AS, WEDGE & INTERFACE SEAL)	
		1	**169-0705**	3	SEAL	
		1	**180-9339**	7	PIN-CONNECTOR (14-GA TO 18-GA)	
		1	**180-9340**	5	SOCKET-CONNECTOR (14-GA TO 18-GA)	
		1	**228-5856**	8	CONNECTOR	
		1	**230-4009**	2	PLUG AS-CONNECTOR (12-PIN)	
					(EACH INCLUDES)	
		1	**264-7034**	1	SEAL-CONNECTOR	
	22	1	**258-4178**	1	FLANGE-MOUNTING	
	23	2	**263-5414**	1	SWITCH AS-ROCKER (PARKING BRAKE)	

258-4162 **PANEL GP-INSTRUMENT** *(contd.)* **i03624793**

NOTE	REF NO	GRAPHIC REF	PART NUMBER	QTY	PART NAME 1 2 3 4 5 6 (PRODUCT LEVEL)	SEE PAGE
	24	1	**263-5415**	1	SWITCH AS-ROCKER (HYD LOCKOUT, INTERLOCK OVRD)	
	25	1	**263-5416**	1	SWITCH AS-ROCKER (DIVERTER VALVE, 4TH FUNCTION)	
					(EACH SWITCH AS-ROCKER INCLUDES)	
		1	**111-7899**	1	GASKET	
	26	2	**264-8860**	1	MODULE GP-DISPLAY (PARKING BRAKE)	
	27	1	**265-9424**	1	SWITCH AS-ROCKER (WORK LIGHTS, FRONT)	
	28	1	**265-9425**	1	SWITCH AS-ROCKER (WORK LIGHTS, REAR)	
					(EACH SWITCH AS-ROCKER INCLUDES)	
		1	**111-7899**	1	GASKET	
	29	1	**103-2006**	12	SCREW-PAN HEAD (6-19X0.37-IN)	
M	30	1	**135-7242**	4	SCREW-SELF-TAPPING (M5X2.3X18.8-MM)	
	31	1	**2V-8260**	2	GROMMET	
	32	1	**6V-5834**	4	SCREW-HEAD (10-14X0.75-IN)	
M	33	1	**9X-2044**	2	SCREW-TRUSS HEAD (M6X1X16-MM)	
	34	1	**9X-8256**	8	WASHER (6.6X12X2-MM THK)	
B	35	2	**258-4141**	1	CLIP	

B-USE AS REQUIRED
E-ORDER BY THE CENTIMETER
M-METRIC PART

258-4162 **PANEL GP-INSTRUMENT** *(contd.)* **i03624793**

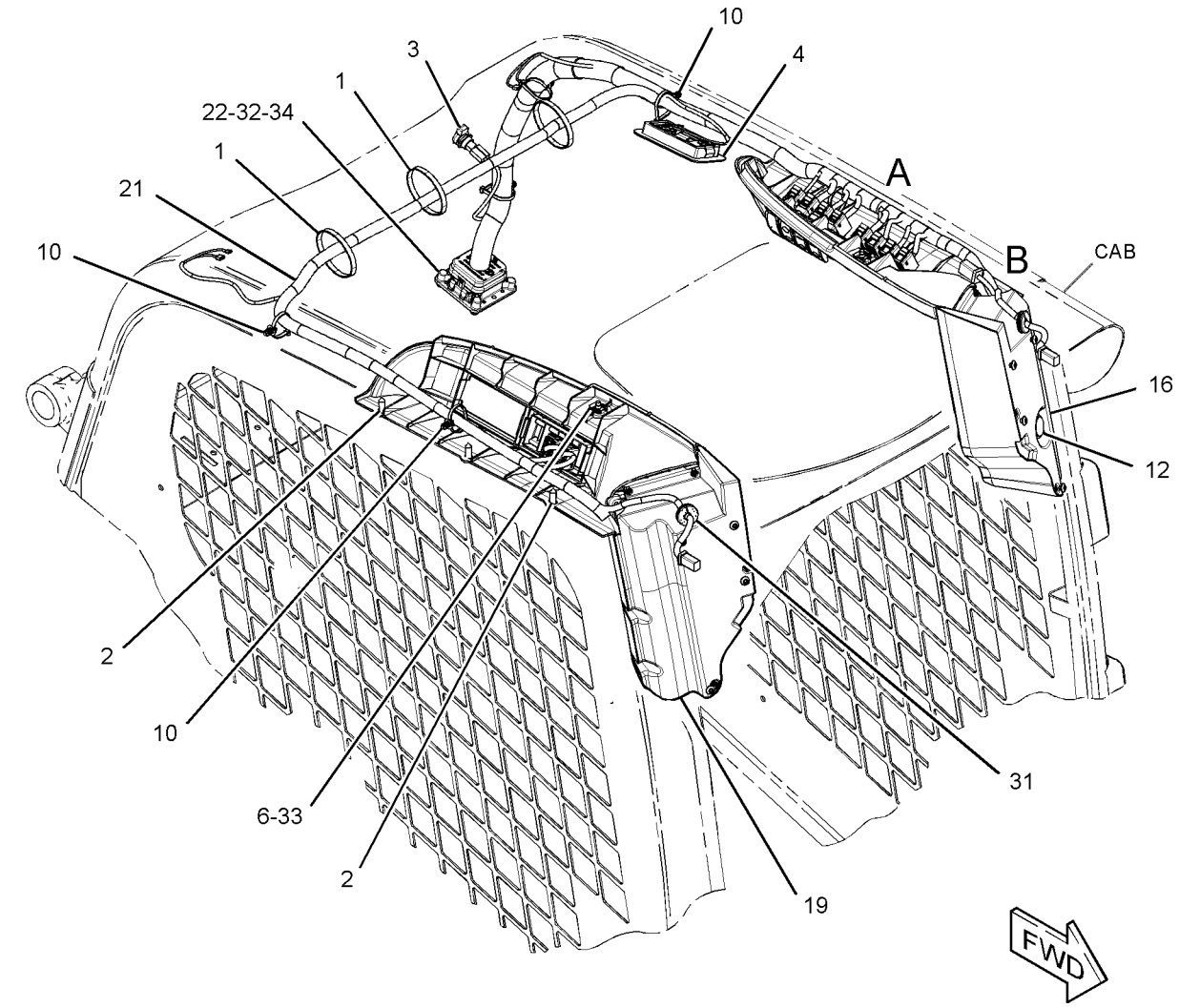

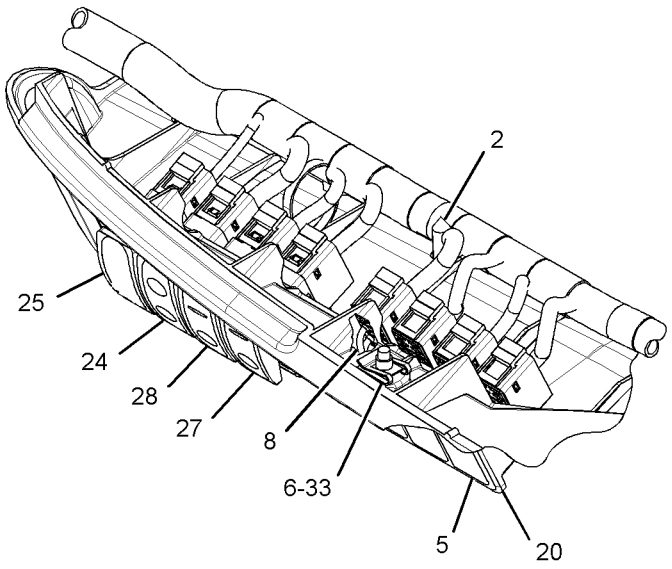

VIEW OF AREA A

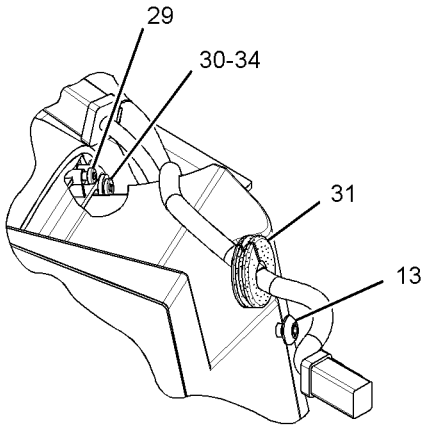

VIEW OF AREA B

GRAPHIC #1 g01453999

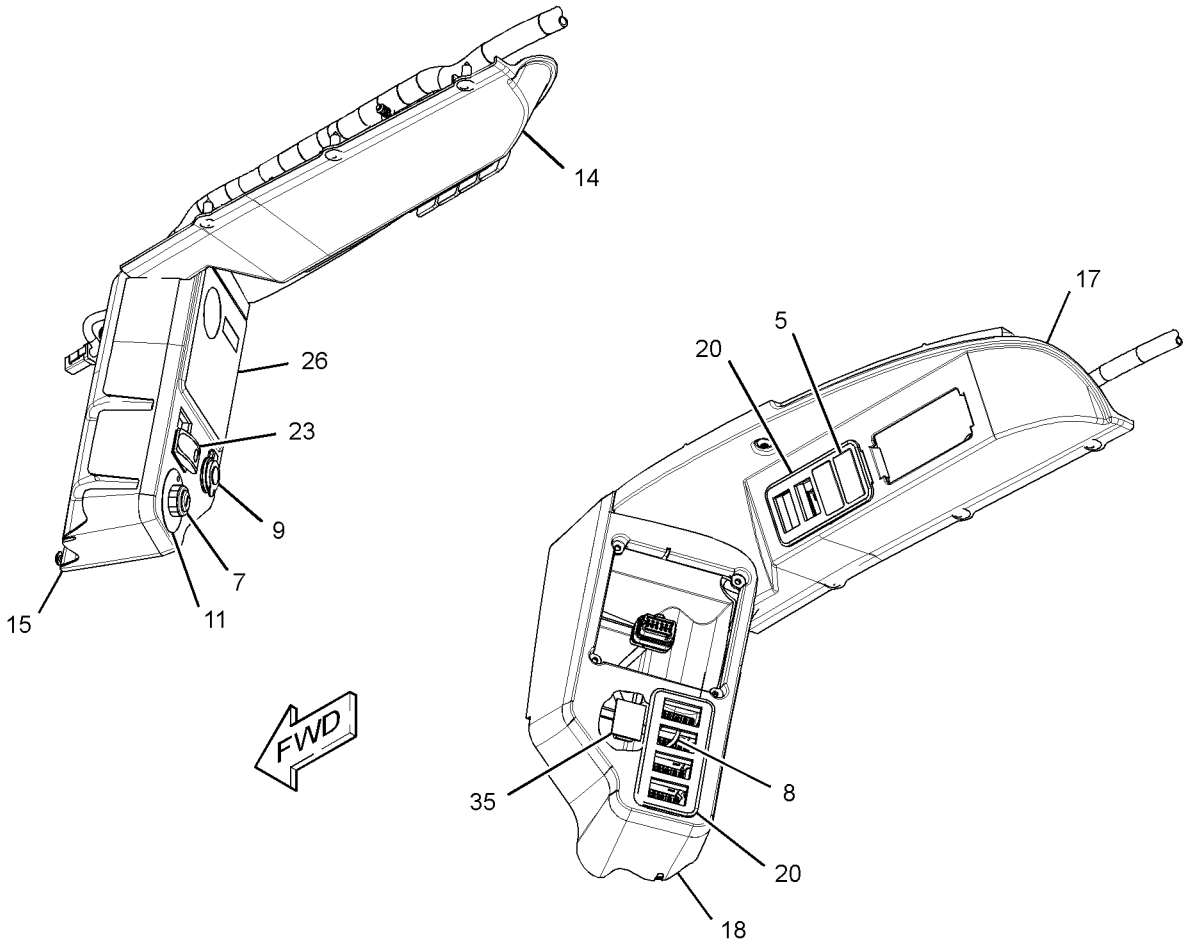

GRAPHIC #2 **<END>** g01454007

OPERATOR STATION

258-4163 PANEL GP-INSTRUMENT–RH

S/N: JAY1-UP

PART OF 258-3753, 300-7634, 304-6740 MACHINE AR-SPECIAL

AN ATTACHMENT

SMCS-7451 **i03572356**

NOTE	REF NO	GRAPHIC REF	PART NUMBER	QTY	PART NAME 1 2 3 4 5 6 (PRODUCT LEVEL)	SEE PAGE
	1	1	**263-5420**	1	SWITCH AS-ROCKER (CREEPER CONTROL)	
		1	**111-7899**	1	GASKET	
	2	1	**264-8861**	1	MODULE GP-DISPLAY	
M	3	1	**135-7242**	4	SCREW-SELF-TAPPING (M5X2.3X18.8-MM)	
	4	1	**9X-8256**	4	WASHER (6.6X12X2-MM THK)	

M-METRIC PART

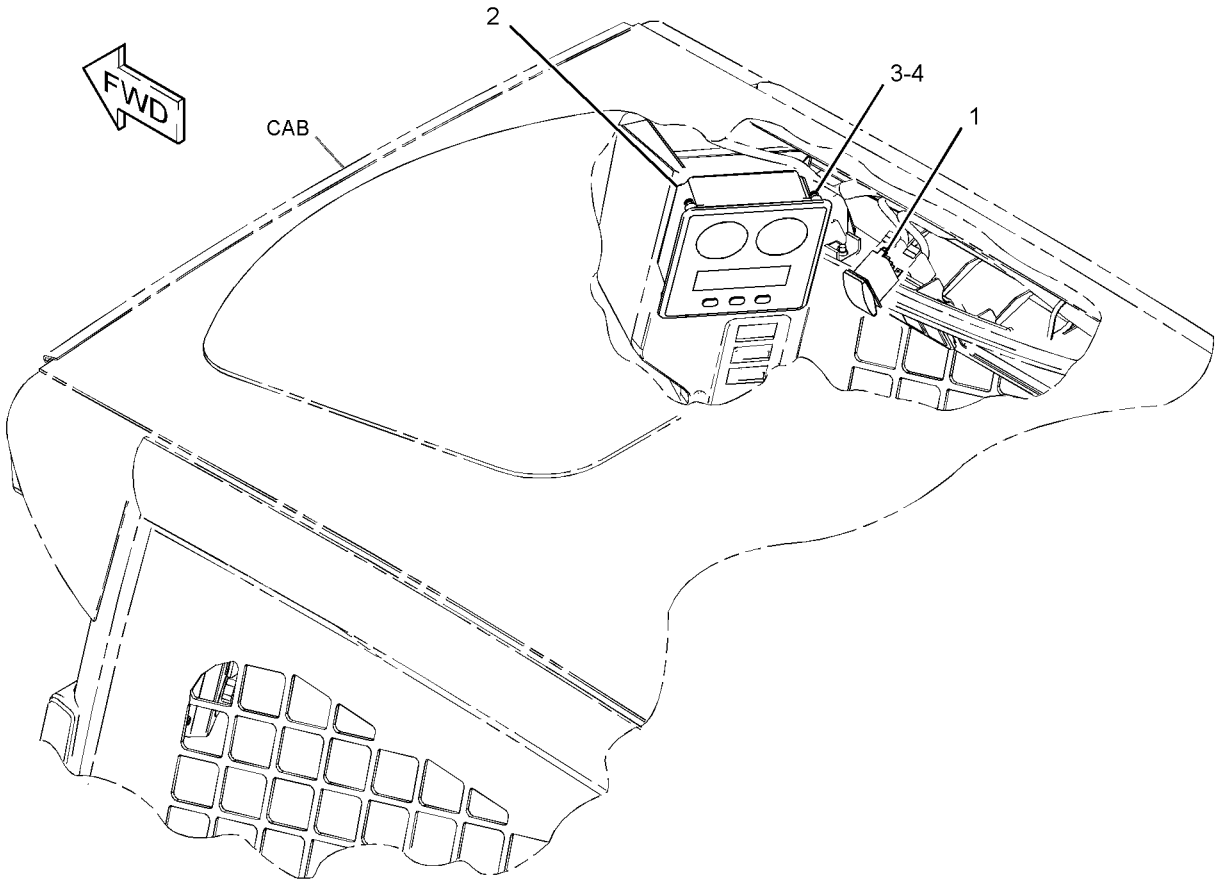

GRAPHIC #1 **<END>** g01327575

OPERATOR STATION

258-4043 PEDAL GP-GOVERNOR

S/N: JAY1-UP

PART OF 280-6342 PEDAL GP-GOVERNOR

TYPE 1

SMCS-1265, 1276 **i02664234**

NOTE	REF NO	GRAPHIC REF	PART NUMBER	QTY	PART NAME 1 2 3 4 5 6 (PRODUCT LEVEL)	SEE PAGE
	1	1	**8T-0328**	2	WASHER-HARD (5.5X10X1-MM THK)	
M	2	1	**8T-0352**	2	BOLT (M5X0.8X45-MM)	
	3	1	**8T-6904**	2	PIN-CLEVIS	
M	4	1	**095-0641**	4	BOLT-SOCKET HEAD (M4X0.7X10-MM)	
Y	5	1	**160-2443**	1	SENSOR GP-POSITION (ROTARY)	163
M	6	1	**129-3178**	1	LOCKNUT (M6X1-THD)	
	7	1	**3F-9556**	2	LOCKWASHER	
M	8	1	**5C-7261**	1	NUT (M8X1.25-THD)	
M	9	1	**5C-9553**	1	BOLT (M6X1X16-MM)	
	10	1	**6V-8186**	2	NUT-FULL (5/16-24-THD)	
M	11	1	**8T-4197**	1	BOLT (M8X1.25X40-MM)	
	12	1	**8T-4205**	1	WASHER-HARD (7.2X14.5X2-MM THK)	
	13	1	**8T-6902**	3	CLIP	
					AVAILABLE REPAIR KIT(S):	
			164-1154	1	KIT-SERVICE (PEDAL)	
					(INCLUDES CABLE CLAMPS & SCREWS)	

M-METRIC PART
Y-SEPARATE ILLUSTRATION

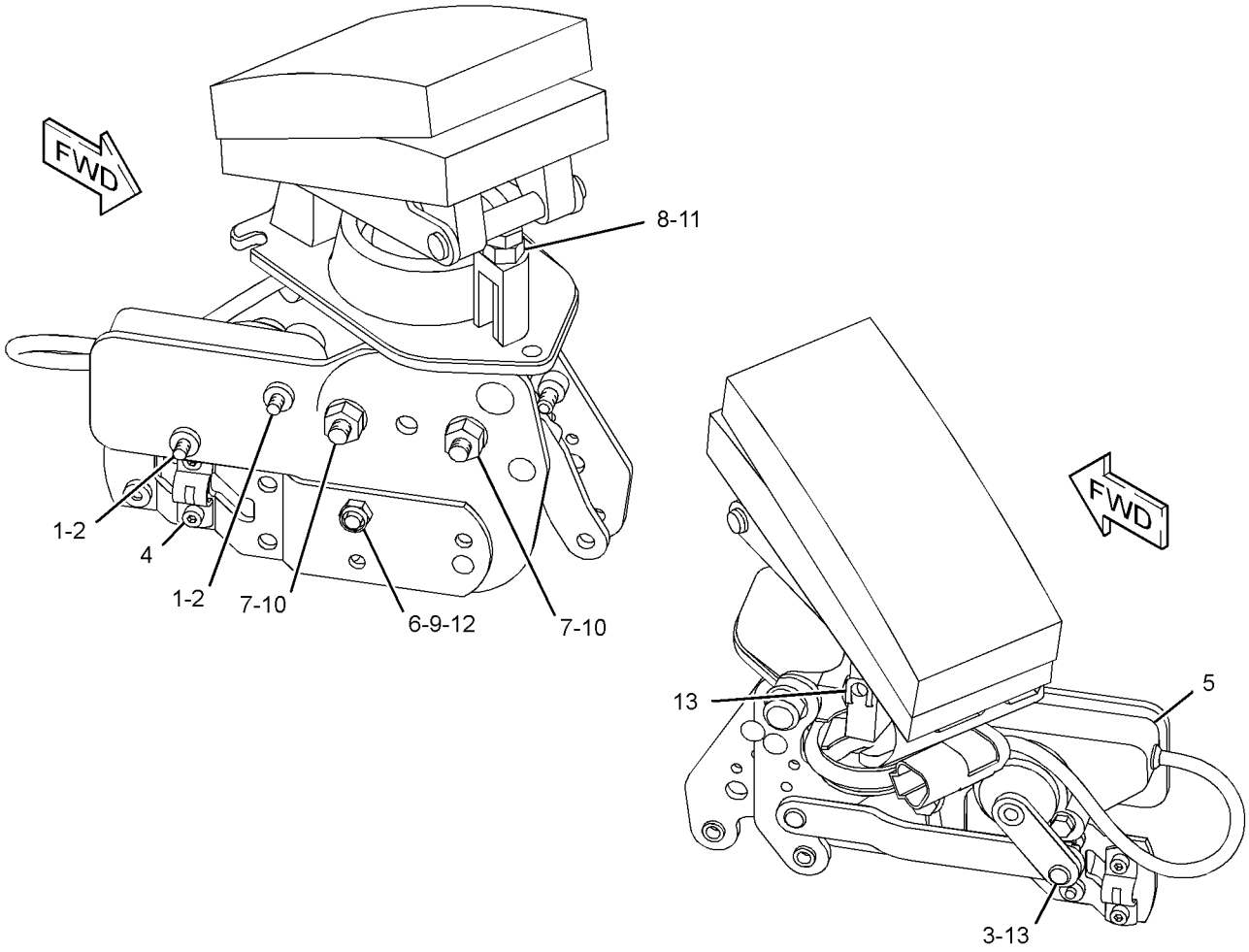

GRAPHIC #1 **<END>** g01339285

OPERATOR STATION

258-4043 PEDAL GP-GOVERNOR

S/N: JAY1-UP

PART OF 280-6342 PEDAL GP-GOVERNOR

TYPE 2

SMCS-1265, 1276 **i03001258**

NOTE	REF NO	GRAPHIC REF	PART NUMBER	QTY	PART NAME 1 2 3 4 5 6 (PRODUCT LEVEL)	SEE PAGE
	1	1	**8T-0328**	2	WASHER-HARD (5.5X10X1-MM THK)	
M	2	1	**8T-0352**	2	BOLT (M5X0.8X45-MM)	
	3	1	**8T-6904**	2	PIN-CLEVIS	
M	4	1	**095-0641**	4	BOLT-SOCKET HEAD (M4X0.7X10-MM)	
CY	5	1	**266-1467**	1	SENSOR GP-POSITION (ROTARY)	164
M	6	1	**129-3178**	1	LOCKNUT (M6X1-THD)	
	7	1	**3F-9556**	2	LOCKWASHER	
M	8	1	**5C-7261**	1	NUT (M8X1.25-THD)	
M	9	1	**5C-9553**	1	BOLT (M6X1X16-MM)	
	10	1	**6V-8186**	2	NUT-FULL (5/16-24-THD)	
M	11	1	**8T-4197**	1	BOLT (M8X1.25X40-MM)	
	12	1	**8T-4205**	1	WASHER-HARD (7.2X14.5X2-MM THK)	
	13	1	**8T-6902**	3	CLIP	
					AVAILABLE REPAIR KIT(S):	
			164-1154	1	KIT-SERVICE (PEDAL)	
					(INCLUDES CABLE CLAMPS & SCREWS)	

C-CHANGE FROM PREVIOUS TYPE
M-METRIC PART
Y-SEPARATE ILLUSTRATION

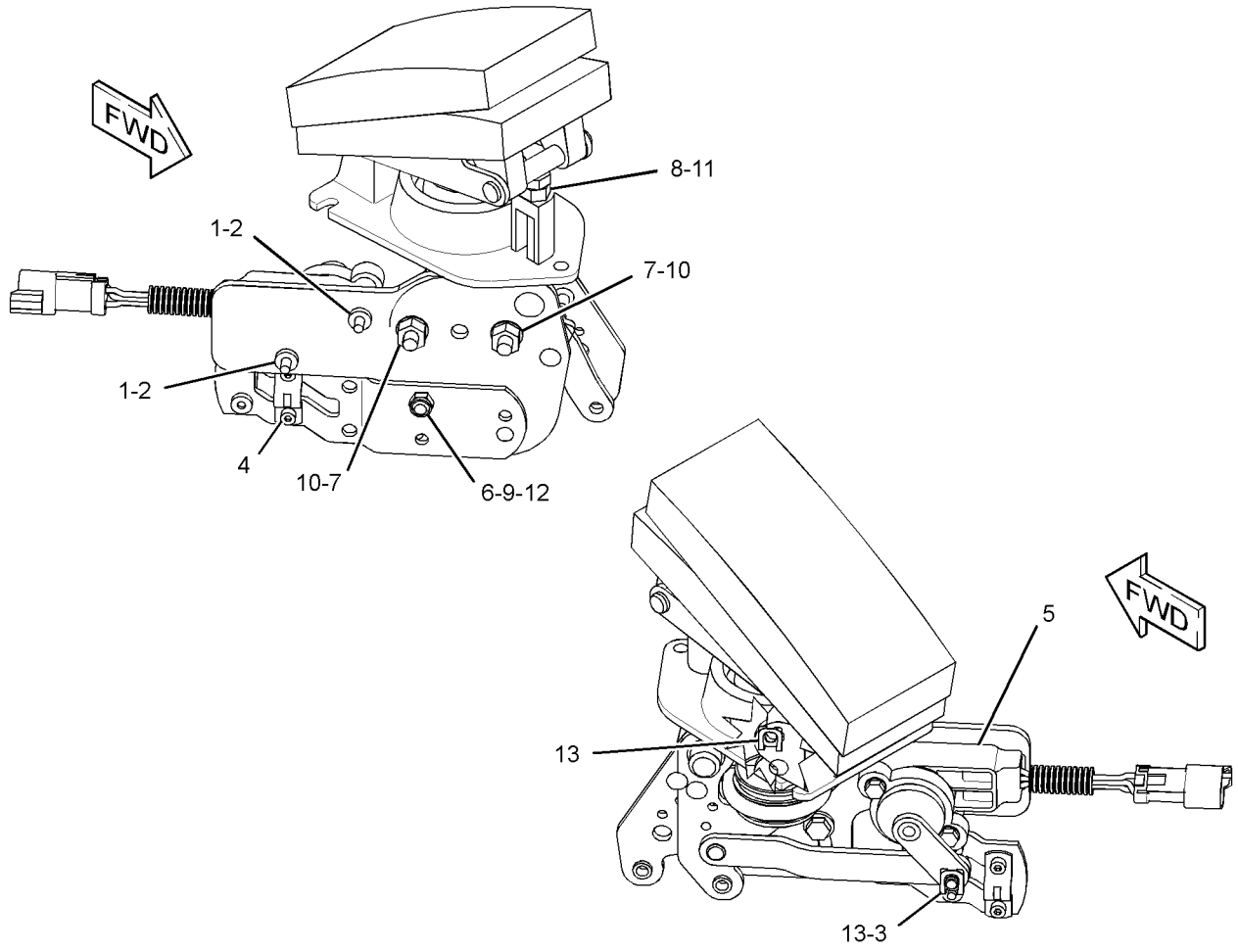

GRAPHIC #1 **<END>** g01567793

OPERATOR STATION

280-6342 PEDAL GP-GOVERNOR

S/N: JAY1-UP

PART OF 280-6340, 295-7463 CONTROL GP-GOVERNOR

SMCS-1265, 1276 **i02625322**

NOTE	REF NO	GRAPHIC REF	PART NUMBER	QTY	PART NAME 1 2 3 4 5 6 (PRODUCT LEVEL)	SEE PAGE
Y	1	1	**258-4043**	1	PEDAL GP-GOVERNOR	744
	2	1	**258-4373**	1	CABLE AS (HAND CONTROL)	
M		1	**5C-2890**	1	NUT (M6X1-THD)	
		1	**8T-4742**	1	END-YOKE ROD	
		1	**8T-4744**	1	PIN AS-SPRING	
	3	1	**280-6344**	1	CABLE AS (LOW IDLE)	
M		1	**5C-2890**	1	NUT (M6X1-THD)	
		1	**8T-4742**	1	END-YOKE ROD	
		1	**8T-4744**	1	PIN AS-SPRING	
		1	**8T-6902**	1	CLIP	
		1	**8T-6904**	1	PIN-CLEVIS	

M-METRIC PART
Y-SEPARATE ILLUSTRATION

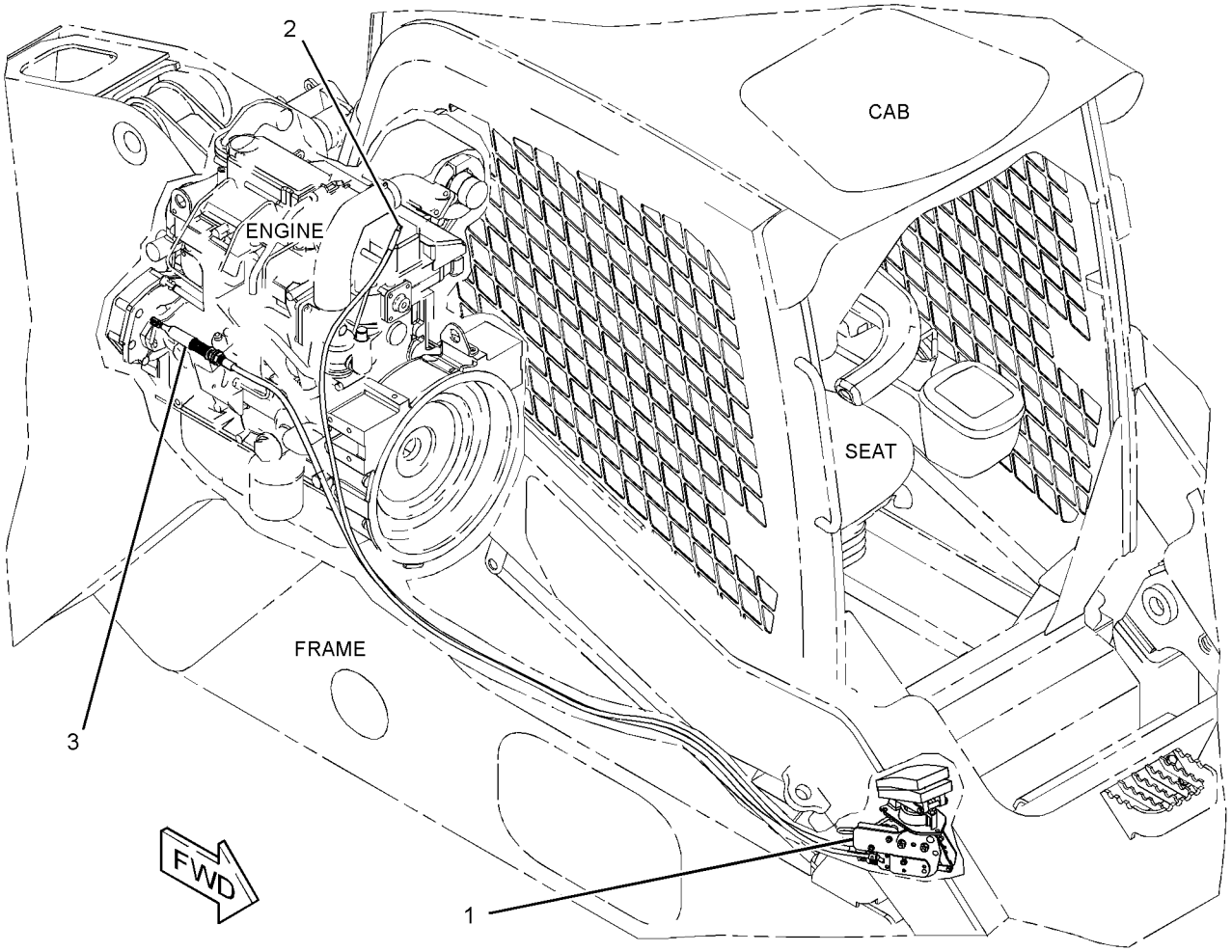

GRAPHIC #1 **<END>** g01316917

OPERATOR STATION

200-5729 RADIO GP–AM/FM/WB

S/N: JAY1-UP

FIELD REPLACEMENT ORDER 331-5292–PAGE 757

AN ATTACHMENT

SMCS-7338, 733C **i03503821**

NOTE	REF NO	GRAPHIC REF	PART NUMBER	QTY	PART NAME 1 2 3 4 5 6 (PRODUCT LEVEL)	SEE PAGE
	1	1	**192-7054**	1	SLEEVE	

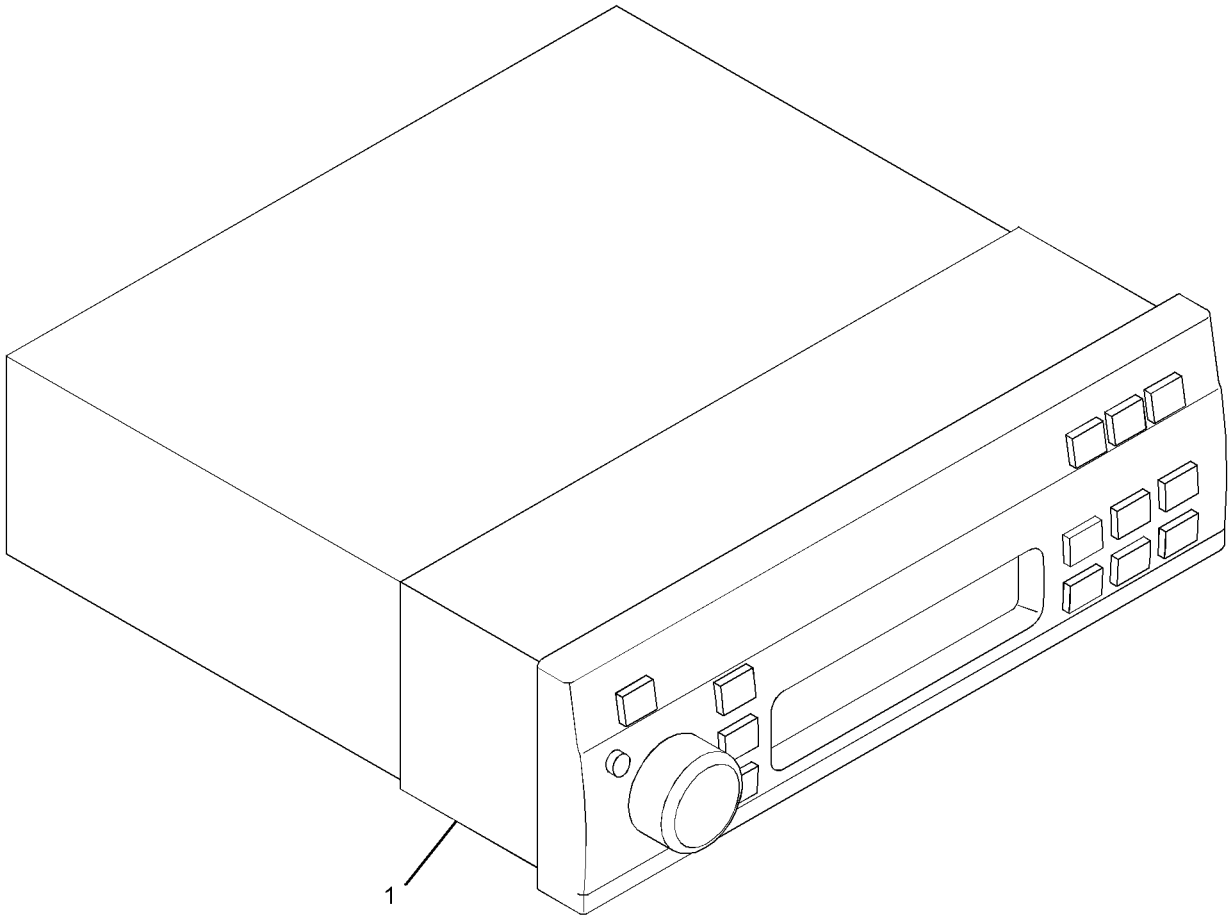

GRAPHIC #1 **<END>** g01846295

OPERATOR STATION

233-3123 RADIO GP–AM/FM/WB

S/N: JAY1-UP

AN ATTACHMENT

SMCS-7338, 733C **i03572366**

NOTE	REF NO	GRAPHIC REF	PART NUMBER	QTY	PART NAME 1 2 3 4 5 6 (PRODUCT LEVEL)	SEE PAGE
	1	1	**136-5490**	1	BUSHING (RADIO MOUNT)	
	2	1	**200-5728**	1	HARNESS AS-RADIO	
		1	**172-8037**	1	CONNECTOR (RADIO)	
		1	**186-3735**	7	PIN-CONNECTOR (16-GA TO 18-GA)	
		1	**8T-8737**	1	PLUG-SEAL	
		1	**160-3518**	1	KIT-RECEPTACLE (8-PIN)	
					(INCLUDES RECEPTACLE AS & WEDGE)	
Y	3	1	**331-5292**	1	RADIO GP (AM, FM)	757

Y-SEPARATE ILLUSTRATION

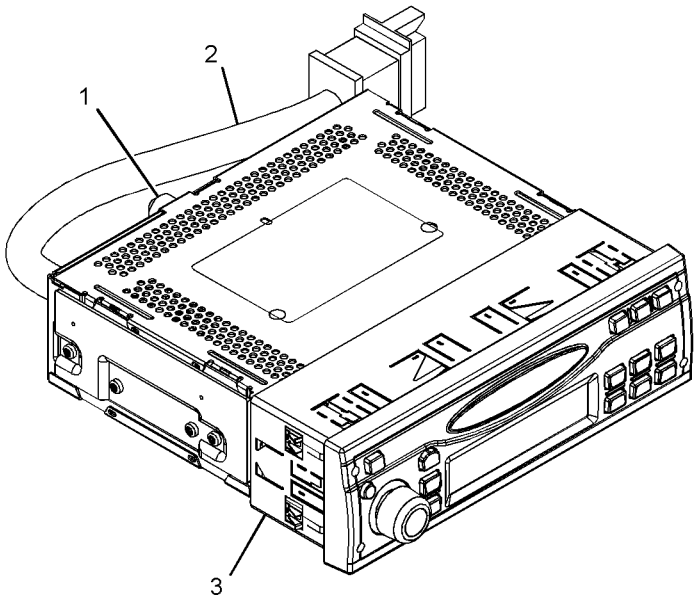

GRAPHIC #1 **<END>** g01813816

OPERATOR STATION

241-4936 RADIO GP–AM/FM/WB/CD PLAYER

S/N: JAY1-UP

PART OF 288-1744 RADIO GP

AN ATTACHMENT

SMCS-7338, 733C **i03466483**

NOTE	REF NO	GRAPHIC REF	PART NUMBER	QTY	PART NAME 1 2 3 4 5 6 (PRODUCT LEVEL)	SEE PAGE
	1	1	**192-7054**	1	SLEEVE	

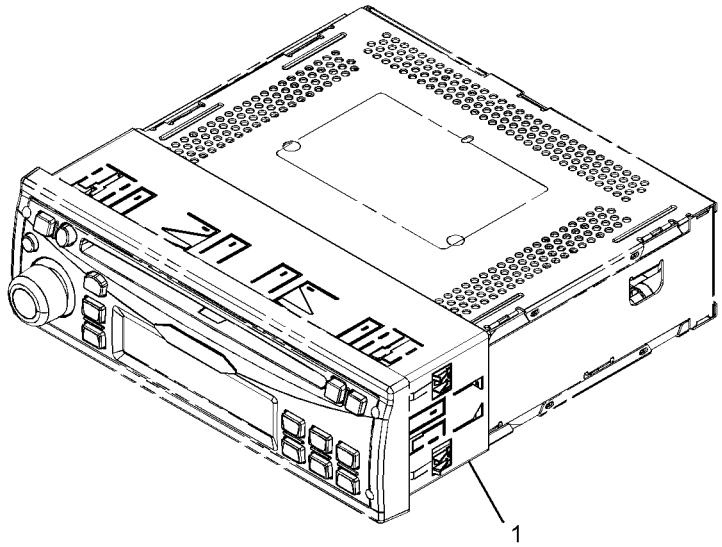

GRAPHIC #1 **<END>** g01813873

OPERATOR STATION

262-9163 RADIO GP—AM/FM CASSETTE

S/N: JAY1-UP
12-VOLT
AN ATTACHMENT

SMCS-7338, 733C **i03572365**

NOTE	PART NUMBER	QTY	PART NAME 1 2 3 4 5 6 (PRODUCT LEVEL)	SEE PAGE
Y	**331-5291**	1	RADIO GP (AM/FM/WB/CD PLAYER)	756
	200-5728	1	HARNESS AS-RADIO	
	172-8037	1	CONNECTOR (RADIO)	
	186-3735	7	PIN-CONNECTOR (16-GA TO 18-GA)	
	8T-8737	1	PLUG-SEAL	
	160-3518	1	KIT-RECEPTACLE (8-PIN)	
			(INCLUDES RECEPTACLE AS & WEDGE)	
	137-8166	1	LEAD-ANTENNA	
	170-1817	1	SUPPORT-RADIO	

Y-SEPARATE ILLUSTRATION

<END>

OPERATOR STATION

284-8953 RADIO GP–AM/FM/WB/CD PLAYER

S/N: JAY1-UP

AN ATTACHMENT

SMCS-7338, 733C **i03426820**

NOTE	REF NO	GRAPHIC REF	PART NUMBER	QTY	PART NAME 1 2 3 4 5 6 (PRODUCT LEVEL)	SEE PAGE
	1	1	**192-7054**	1	SLEEVE	

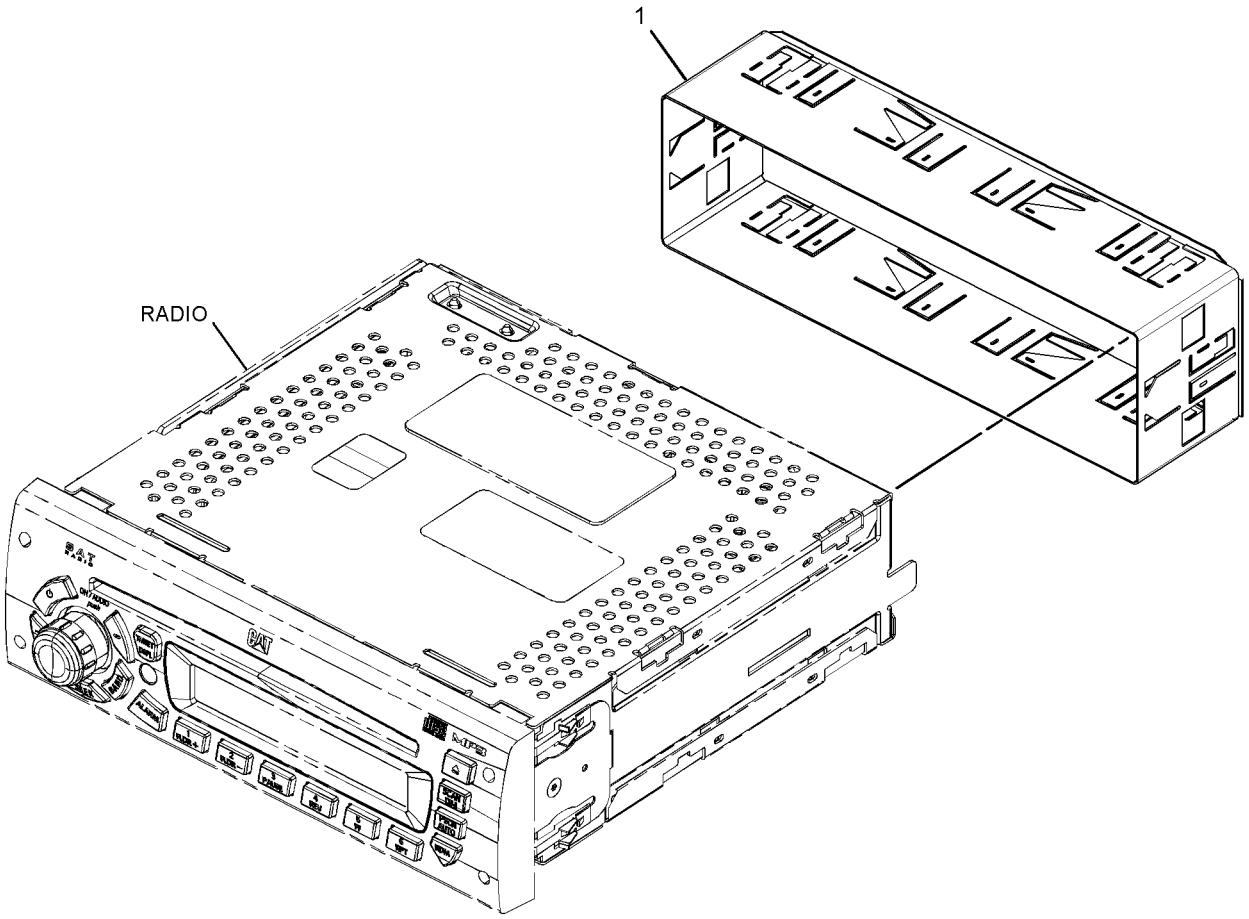

GRAPHIC #1 **<END>** g01821613

OPERATOR STATION

284-8954 RADIO GP–AM/FM/WB/XM/ CD PLAYER

S/N: JAY1-UP

AN ATTACHMENT

SMCS-7338, 733C **i03466742**

NOTE	REF NO	GRAPHIC REF	PART NUMBER	QTY	PART NAME 1 2 3 4 5 6 (PRODUCT LEVEL)	SEE PAGE
	1	1	**192-7054**	1	SLEEVE	

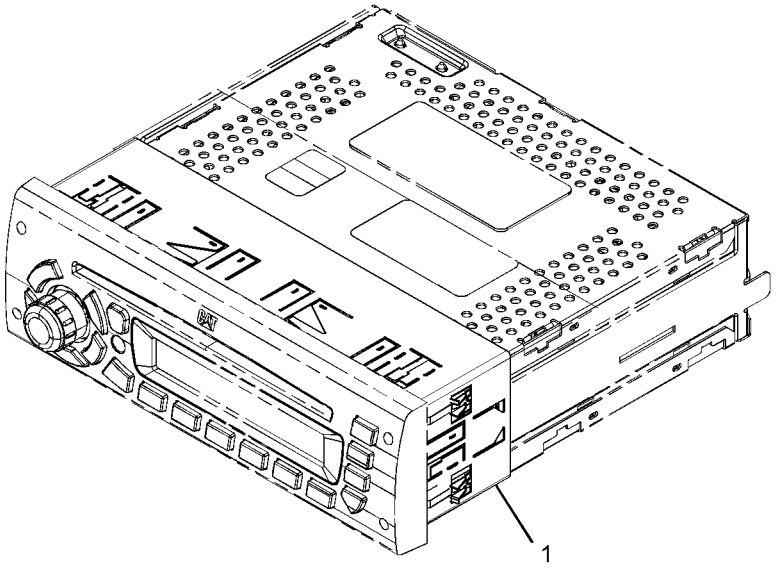

GRAPHIC #1 **<END>** g01813914

OPERATOR STATION

284-8955 RADIO GP–AM/FM/WB/SIRIUS/ CD PLAYER

S/N: JAY1-UP

AN ATTACHMENT

SMCS-7338, 733C **i03466743**

NOTE	REF NO	GRAPHIC REF	PART NUMBER	QTY	PART NAME 1 2 3 4 5 6 (PRODUCT LEVEL)	SEE PAGE
	1	1	**192-7054**	1	SLEEVE	

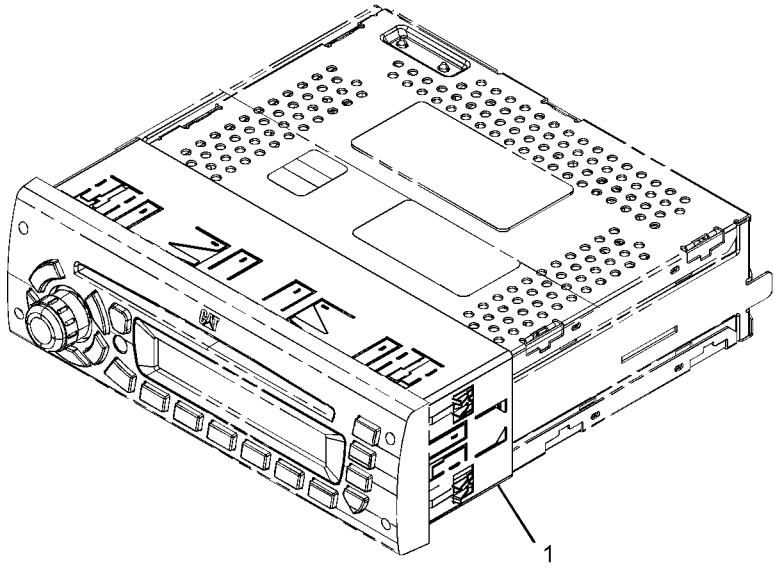

GRAPHIC #1 **<END>** g01813795

OPERATOR STATION

288-1744 RADIO GP—AM/FM/WB/CD PLAYER

S/N: JAY1-UP

AN ATTACHMENT

TYPE 1

SMCS-7338, 733C **i03635717**

NOTE	PART NUMBER	QTY	PART NAME 1 2 3 4 5 6 (PRODUCT LEVEL)	SEE PAGE
Y	**241-4936**	1	RADIO GP (AM/FM/WB/CD PLAYER)	749
	200-5728	1	HARNESS AS-RADIO	
	172-8037	1	CONNECTOR (RADIO)	
	186-3735	7	PIN-CONNECTOR (16-GA TO 18-GA)	
	8T-8737	1	PLUG-SEAL	
	160-3518	1	KIT-RECEPTACLE (8-PIN)	
			(INCLUDES RECEPTACLE AS & WEDGE)	
	172-8039	11	TERMINAL (RADIO)	
	136-5490	1	BUSHING (RADIO MOUNT)	

Y-SEPARATE ILLUSTRATION

<END>

OPERATOR STATION

288-1744 RADIO GP–AM/FM/WB/CD PLAYER

S/N: JAY1-UP
AN ATTACHMENT
TYPE 2

SMCS-7338, 733C **i03572364**

NOTE	REF NO	GRAPHIC REF	PART NUMBER	QTY	PART NAME 1 2 3 4 5 6 (PRODUCT LEVEL)	SEE PAGE
	1	1	**136-5490**	1	BUSHING (RADIO MOUNT)	
	2	1	**200-5728**	1	HARNESS AS-RADIO	
		1	**172-8037**	1	CONNECTOR (RADIO)	
		1	**186-3735**	7	PIN-CONNECTOR (16-GA TO 18-GA)	
		1	**8T-8737**	1	PLUG-SEAL	
		1	**160-3518**	1	KIT-RECEPTACLE (8-PIN)	
					(INCLUDES RECEPTACLE AS & WEDGE)	
CY	3	1	**331-5291**	1	RADIO GP (AM/FM/WB/CD PLAYER)	756

C-CHANGE FROM PREVIOUS TYPE
Y-SEPARATE ILLUSTRATION

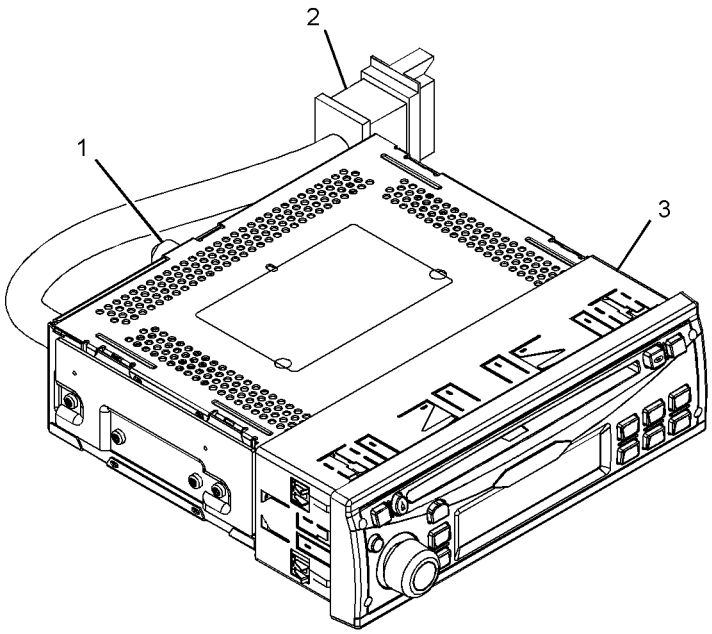

GRAPHIC #1 **<END>** g01812994

OPERATOR STATION

331-5291 RADIO GP–AM/FM/WB/CD PLAYER

S/N: JAY1-UP
PART OF 262-9163, 288-1744 RADIO GP
FOR USE WITH INSTALLATION GP-RADIO
AN ATTACHMENT

SMCS-7338, 733C **i03466569**

NOTE	REF NO	GRAPHIC REF	PART NUMBER	QTY	PART NAME 1 2 3 4 5 6 (PRODUCT LEVEL)	SEE PAGE
	1	1	**192-7054**	1	SLEEVE	

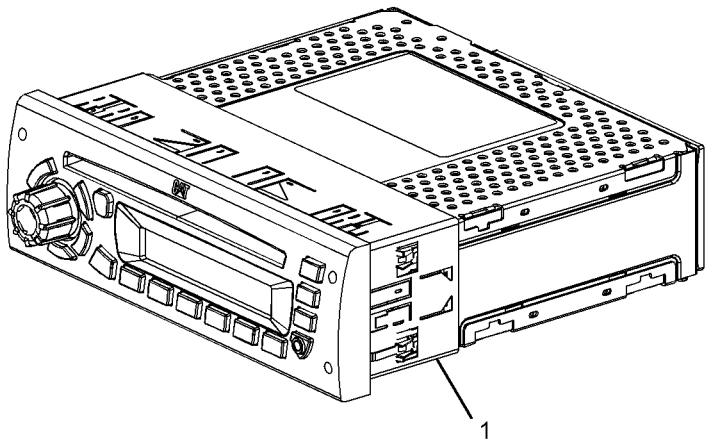

GRAPHIC #1 **<END>** g01813033

331-5292 RADIO GP–AM, FM

S/N: JAY1-UP

PART OF 233-3123 RADIO GP

FIELD REPLACEMENT FOR 200-5729–PAGE 747. FOR USE WITH INSTALLATION GP-RADIO AN ATTACHMENT AND FIELD INSTALLATION

SMCS-7338, 733C **i03466464**

NOTE	REF NO	GRAPHIC REF	PART NUMBER	QTY	PART NAME 1 2 3 4 5 6 (PRODUCT LEVEL)	SEE PAGE
	1	1	**192-7054**	1	SLEEVE	

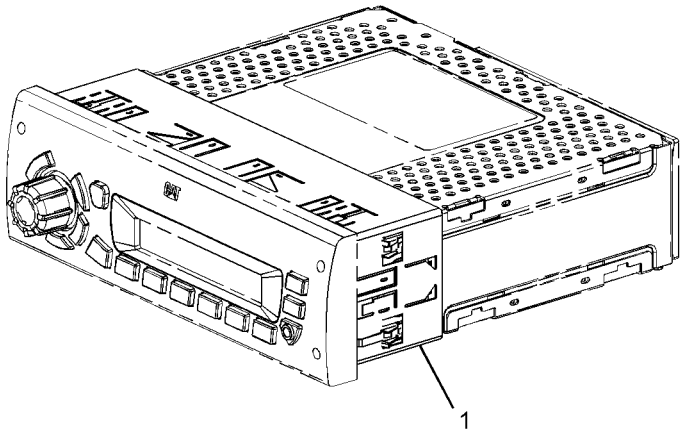

GRAPHIC #1 **<END>** g01813076

OPERATOR STATION

258-4401 SEAT & ARMREST GP

S/N: JAY1-UP
PART OF 258-4052 SEAT & MOUNTING GP
AN ATTACHMENT

SMCS-7307, 7312 **i02839873**

NOTE	REF NO	GRAPHIC REF	PART NUMBER	QTY	PART NAME 1 2 3 4 5 6 (PRODUCT LEVEL)	SEE PAGE
Y	1	1	**258-4055**	1	SEAT GP-SUSPENSION (AIR)	772
Y	2	1	*258-4311*	1	ARMREST & MOUNTING GP	637
M	3	1	**6V-9189**	8	LOCKNUT (M8X1.25-THD)	
	4	1	**8T-4205**	2	WASHER-HARD (7.2X14.5X2-MM THK)	
	5	1	**8T-4224**	12	WASHER-HARD (8.8X16X2-MM THK)	
M	6	1	**8T-4908**	4	BOLT (M8X1.25X25-MM)	
M	7	1	**9X-2045**	2	SCREW-TRUSS HEAD (M6X1X20-MM)	

M-METRIC PART
Y-SEPARATE ILLUSTRATION

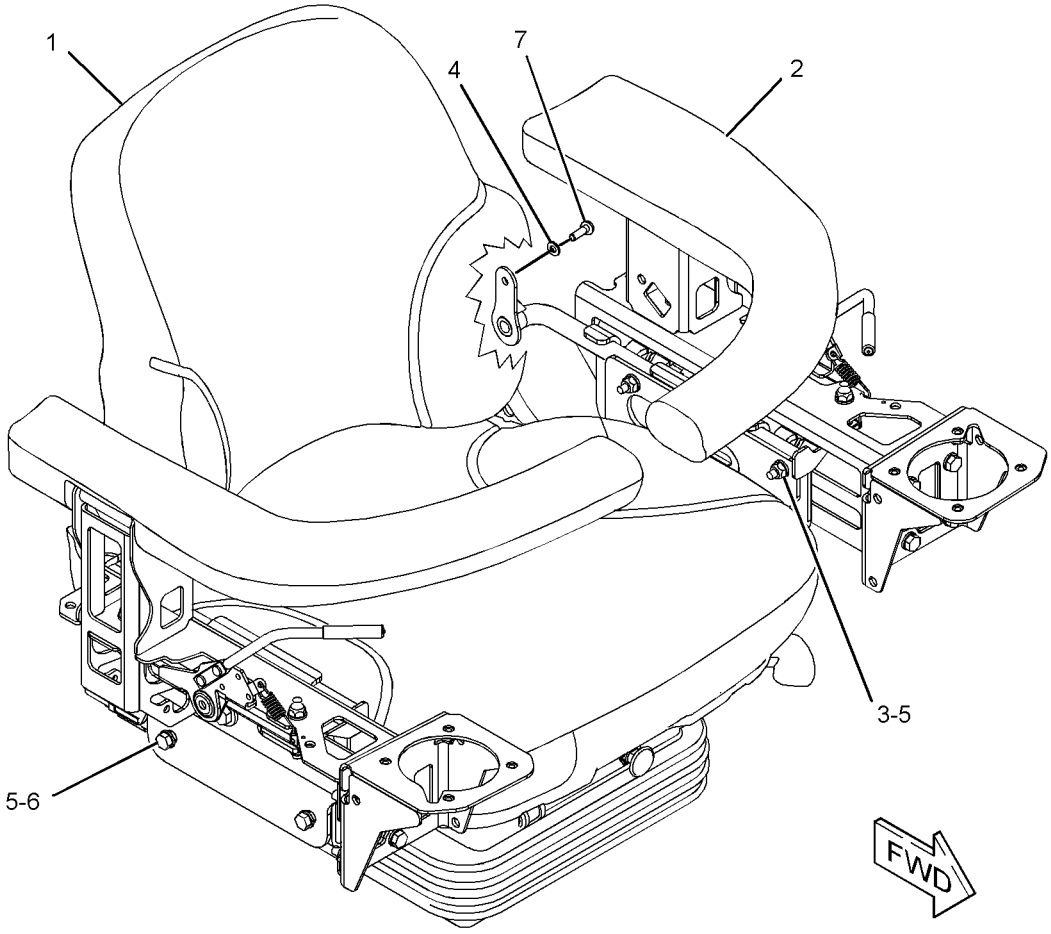

GRAPHIC #1 **<END>** g01344411

OPERATOR STATION

258-4402 SEAT & ARMREST GP–SUSPENSION

S/N: JAY1-UP

PART OF 258-4051 SEAT & MOUNTING GP

AN ATTACHMENT

SMCS-7307, 7312 **i02674930**

NOTE	REF NO	GRAPHIC REF	PART NUMBER	QTY	PART NAME 1 2 3 4 5 6 (PRODUCT LEVEL)	SEE PAGE
Y	1	1	**258-4054**	1	SEAT GP-SUSPENSION (MECHANICAL)	770
Y	2	1	*258-4311*	1	ARMREST & MOUNTING GP	637
M	3	1	**6V-9189**	8	LOCKNUT (M8X1.25-THD)	
	4	1	**8T-4205**	2	WASHER-HARD (7.2X14.5X2-MM THK)	
	5	1	**8T-4224**	12	WASHER-HARD (8.8X16X2-MM THK)	
M	6	1	**8T-4908**	4	BOLT (M8X1.25X25-MM)	
M	7	1	**9X-2045**	2	SCREW-TRUSS HEAD (M6X1X20-MM)	

M-METRIC PART
Y-SEPARATE ILLUSTRATION

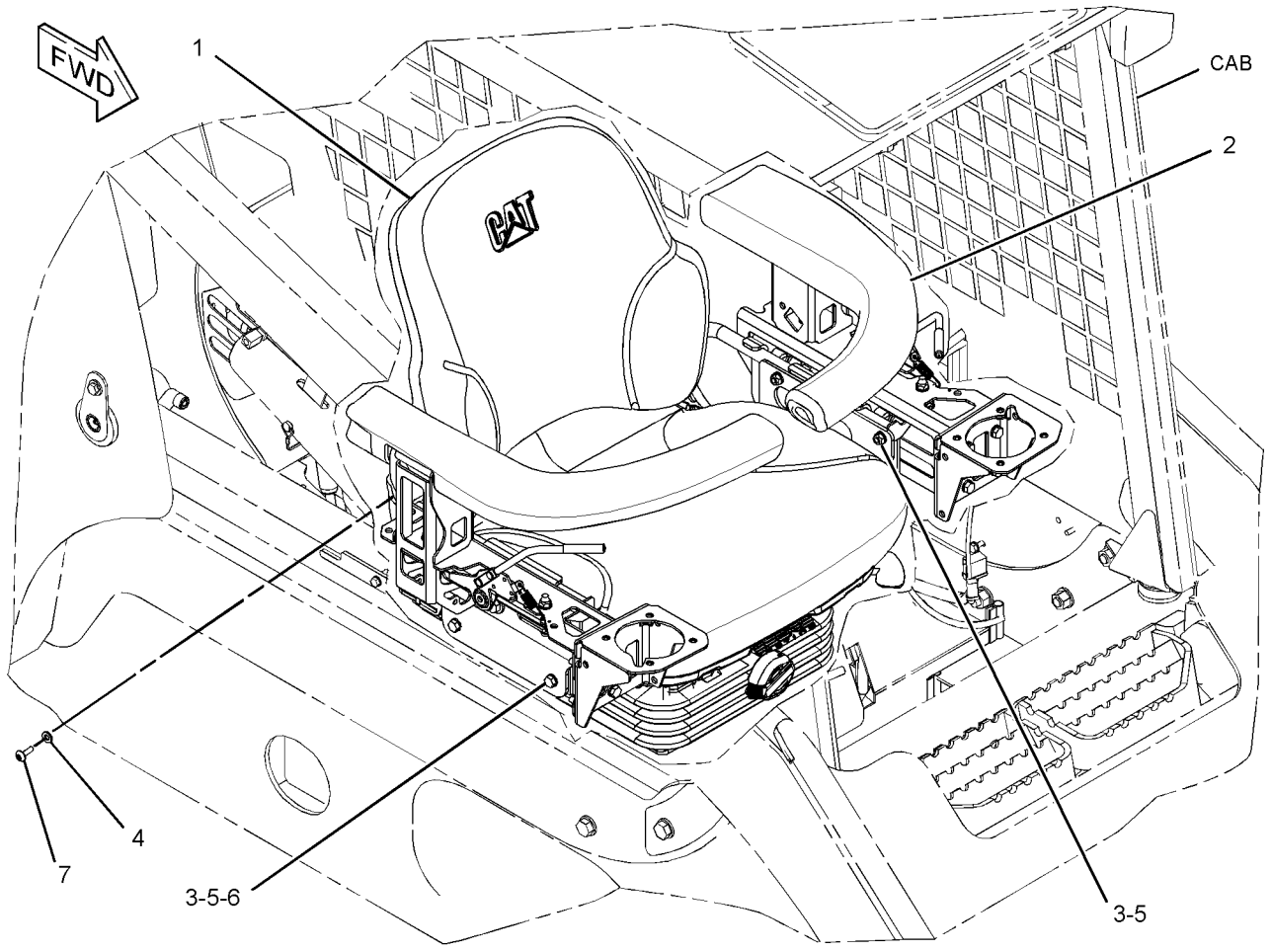

GRAPHIC #1 **<END>** g01344677

OPERATOR STATION

258-4403 SEAT & ARMREST GP–STATIC

S/N: JAY1-UP
PART OF 258-4050 SEAT & MOUNTING GP
AN ATTACHMENT

SMCS-7307, 7312 **i03638373**

NOTE	REF NO	GRAPHIC REF	PART NUMBER	QTY	PART NAME 1 2 3 4 5 6 (PRODUCT LEVEL)	SEE PAGE
	1	1	**258-4049**	1	SUPPORT AS-SEAT	
Y	2	1	**258-4053**	1	SEAT GP (STATIC)	767
Y	3	1	*258-4311*	1	ARMREST & MOUNTING GP	637
M	4	1	**6V-9189**	12	LOCKNUT (M8X1.25-THD)	
	5	1	**8T-4205**	2	WASHER-HARD (7.2X14.5X2-MM THK)	
	6	1	**8T-4224**	16	WASHER-HARD (8.8X16X2-MM THK)	
M	7	1	**8T-4908**	4	BOLT (M8X1.25X25-MM)	
M	8	1	**9X-2045**	2	SCREW-TRUSS HEAD (M6X1X20-MM)	

M-METRIC PART
Y-SEPARATE ILLUSTRATION

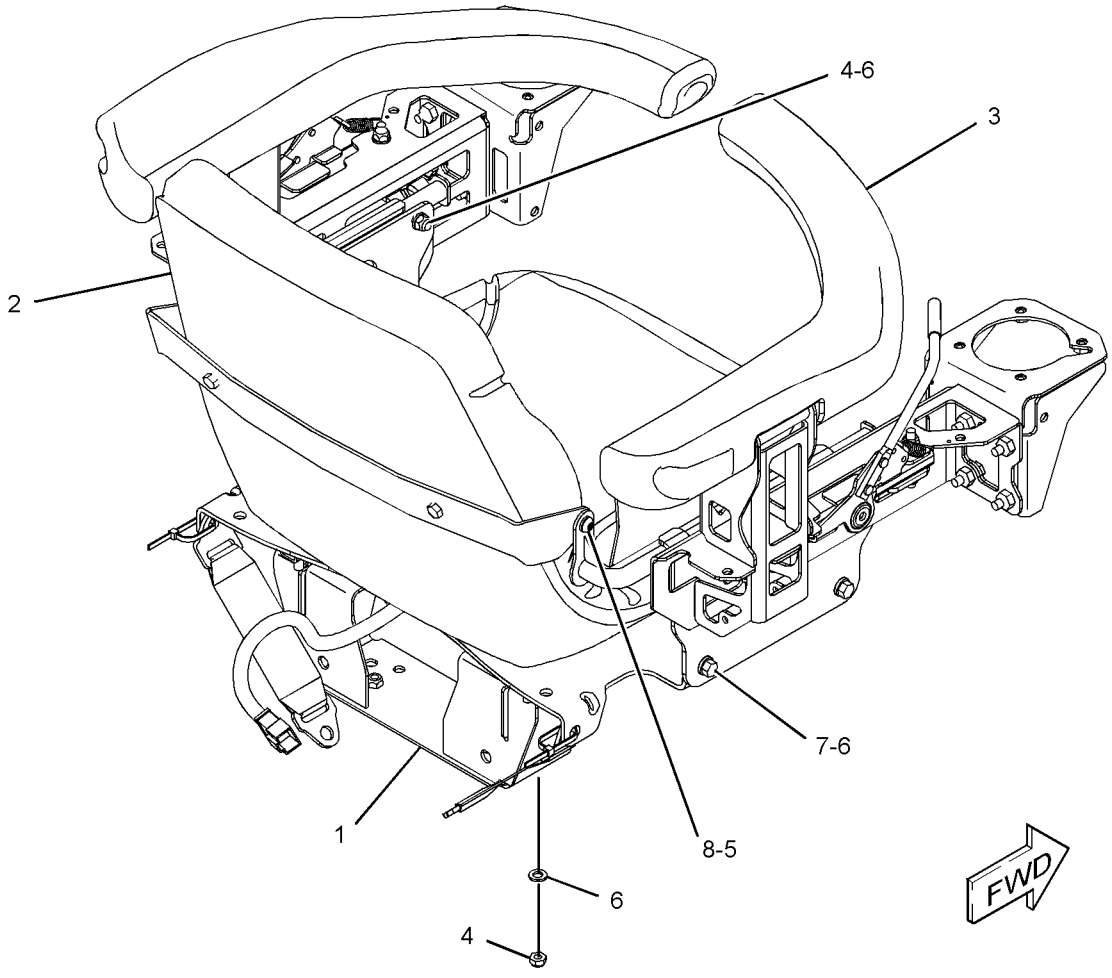

GRAPHIC #1 **<END>** g01311083

OPERATOR STATION

258-4050 SEAT & MOUNTING GP–STATIC

S/N: JAY1-UP
PART OF 258-4310 SEAT AR
AN ATTACHMENT

SMCS-7312 **i02706180**

NOTE	REF NO	GRAPHIC REF	PART NUMBER	QTY	PART NAME 1 2 3 4 5 6 (PRODUCT LEVEL)	SEE PAGE
	1	1	**7X-0507**	2	WASHER-HARD (12X22.5X5-MM THK)	
Y	2	1	*258-4403*	1	SEAT & ARMREST GP (STATIC)	760
	3	1	**156-0283**	4	WASHER-HARD (8.4X35X2.5-MM THK)	
M	4	1	**7X-0818**	4	BOLT (M8X1.25X45-MM)	
	5	1	**8S-0934**	2	LOCKNUT-FLANGE (7/16-20-THD)	
	6	1	**8S-4723**	2	BOLT (7/16-20X1.5-IN)	
	7	1	**8T-4223**	2	WASHER-HARD (13.5X25.5X3-MM THK)	

M-METRIC PART
Y-SEPARATE ILLUSTRATION

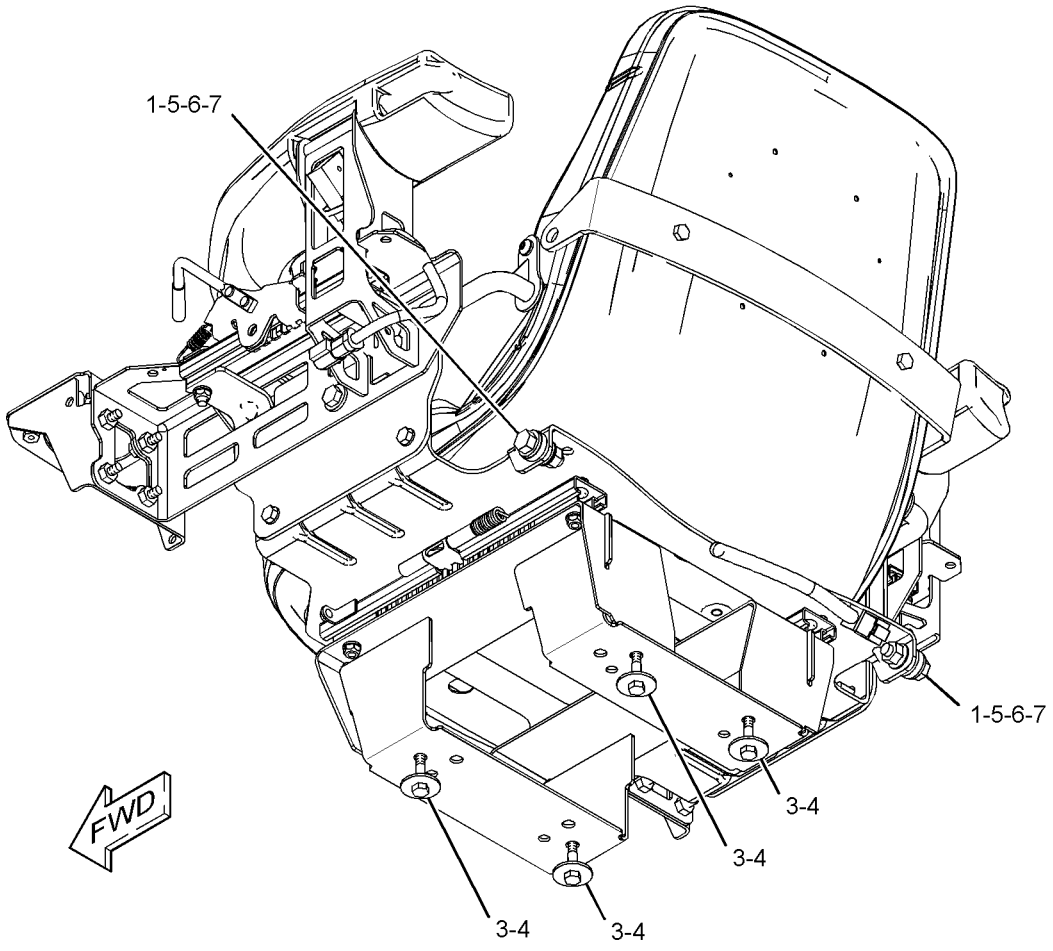

GRAPHIC #1 **<END>** g01310522

OPERATOR STATION

258-4051 SEAT & MOUNTING GP—SUSPENSION

S/N: JAY1-UP
PART OF 258-4320 SEAT AR-SUSPENSION
AN ATTACHMENT

SMCS-7312 **i02706195**

NOTE	REF NO	GRAPHIC REF	PART NUMBER	QTY	PART NAME 1 2 3 4 5 6 (PRODUCT LEVEL)	SEE PAGE
	1	1	**7X-0507**	2	WASHER-HARD (12X22.5X5-MM THK)	
Y	2	1	*258-4402*	1	SEAT & ARMREST GP (SUSPENSION)	759
	3	1	**156-0283**	4	WASHER-HARD (8.4X35X2.5-MM THK)	
M	4	1	**7X-0818**	4	BOLT (M8X1.25X45-MM)	
	5	1	**8S-0934**	2	LOCKNUT-FLANGE (7/16-20-THD)	
	6	1	**8S-4723**	2	BOLT (7/16-20X1.5-IN)	
	7	1	**8T-4223**	2	WASHER-HARD (13.5X25.5X3-MM THK)	

M-METRIC PART
Y-SEPARATE ILLUSTRATION

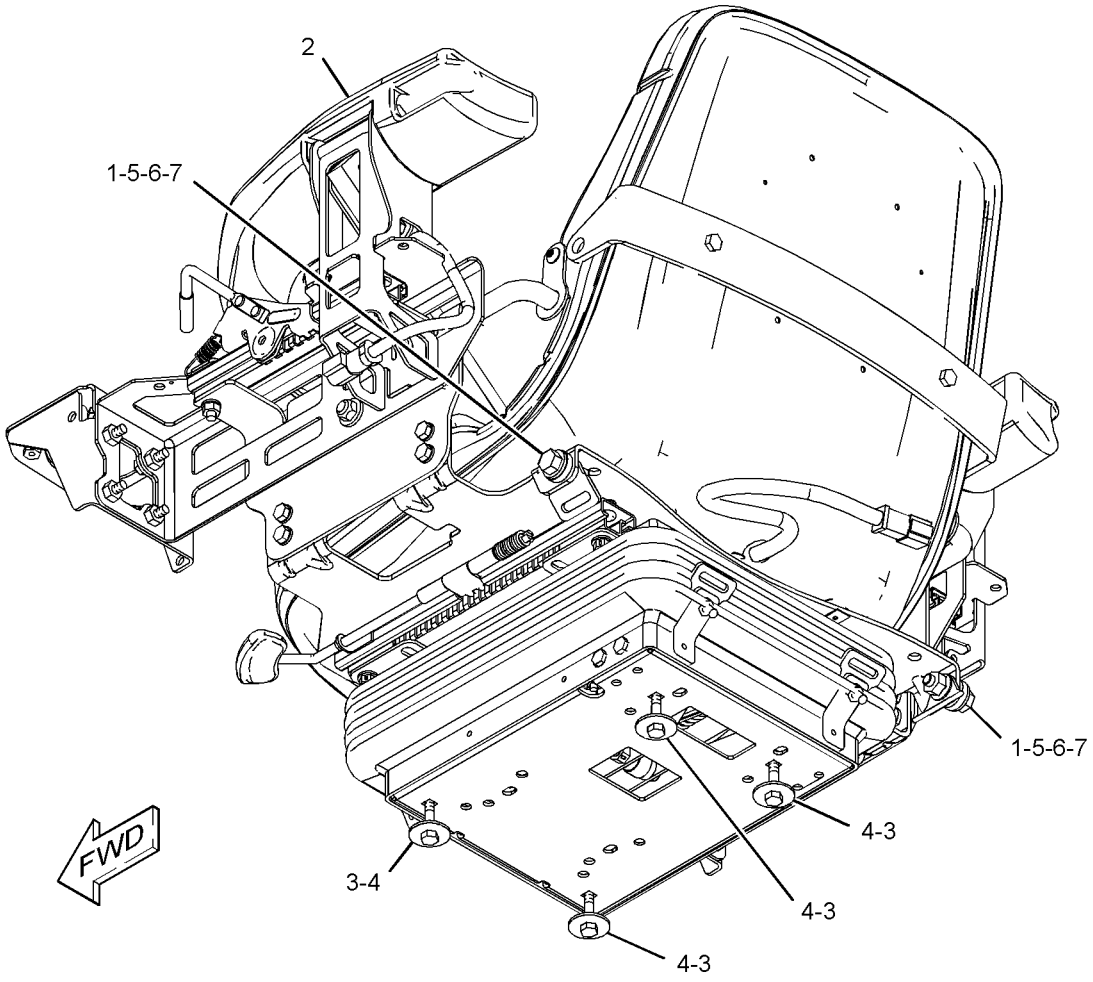

GRAPHIC #1 **<END>** g01310831

OPERATOR STATION

258-4052 SEAT & MOUNTING GP

S/N: JAY1-UP
PART OF 258-4330 SEAT AR-SUSPENSION
AN ATTACHMENT

SMCS-7312 **i02706196**

NOTE	REF NO	GRAPHIC REF	PART NUMBER	QTY	PART NAME 1 2 3 4 5 6 (PRODUCT LEVEL)	SEE PAGE
	1	1	**7X-0507**	2	WASHER-HARD (12X22.5X5-MM THK)	
Y	2	1	*258-4401*	1	SEAT & ARMREST GP	758
	3	1	**156-0283**	4	WASHER-HARD (8.4X35X2.5-MM THK)	
M	4	1	**7X-0818**	4	BOLT (M8X1.25X45-MM)	
	5	1	**8S-0934**	2	LOCKNUT-FLANGE (7/16-20-THD)	
	6	1	**8S-4723**	2	BOLT (7/16-20X1.5-IN)	
	7	1	**8T-4223**	2	WASHER-HARD (13.5X25.5X3-MM THK)	

M-METRIC PART
Y-SEPARATE ILLUSTRATION

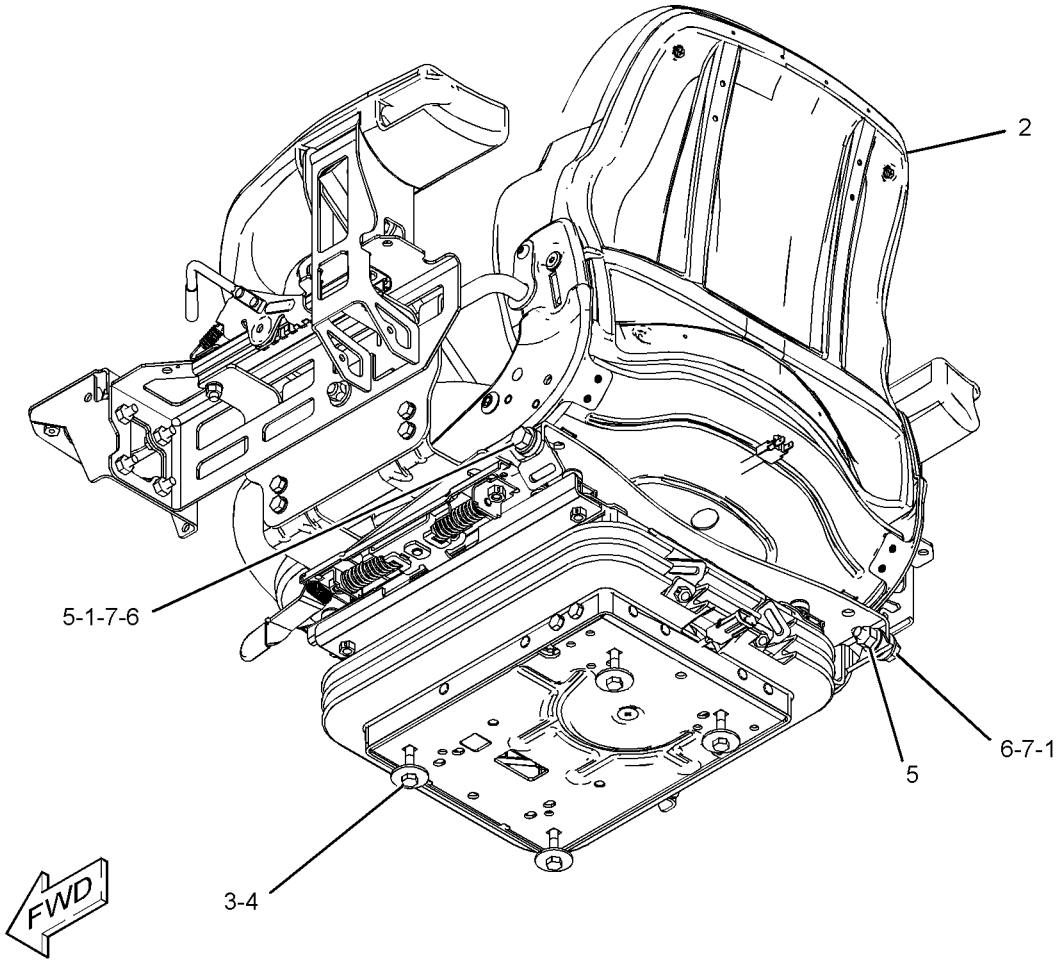

GRAPHIC #1 **<END>** g01319456

OPERATOR STATION

258-4310 SEAT AR—STATIC

S/N: JAY1-UP
PART OF 258-3738 OPTION AR-CAB
AN ATTACHMENT

SMCS-7312 **i02613967**

NOTE	PART NUMBER	QTY	PART NAME 1 2 3 4 5 6 (PRODUCT LEVEL)	SEE PAGE
Y	*258-4314*	1	COVER GP-CONSOLE (RH, LH)	661
Y	*258-4050*	1	SEAT & MOUNTING GP (STATIC)	761

Y-SEPARATE ILLUSTRATION

<END>

258-4320 SEAT AR-SUSPENSION—MECHANICAL

S/N: JAY1-UP
PART OF 258-3740 OPTION AR-CAB
CANNOT BE USED WITH 258-3738—PAGE 738, 258-3738—PAGE 738
AN ATTACHMENT

SMCS-7324 **i02614239**

NOTE	PART NUMBER	QTY	PART NAME 1 2 3 4 5 6 (PRODUCT LEVEL)	SEE PAGE
Y	*258-4314*	1	COVER GP-CONSOLE (RH, LH)	661
Y	*258-4051*	1	SEAT & MOUNTING GP (SUSPENSION)	762

Y-SEPARATE ILLUSTRATION

<END>

258-4330 SEAT AR-SUSPENSION—AIR

S/N: JAY1-UP
CANNOT BE USED WITH 258-3738—PAGE 738
AN ATTACHMENT

SMCS-7324 **i02628656**

NOTE	PART NUMBER	QTY	PART NAME 1 2 3 4 5 6 (PRODUCT LEVEL)	SEE PAGE
Y	*258-4314*	1	COVER GP-CONSOLE (RH, LH)	661
Y	*258-4052*	1	SEAT & MOUNTING GP	763

Y-SEPARATE ILLUSTRATION

<END>

OPERATOR STATION

258-4095 SEAT BELT GP–RETRACTABLE

S/N: JAY1-UP

AN ATTACHMENT

SMCS-7327 **i03505740**

NOTE	REF NO	GRAPHIC REF	PART NUMBER	QTY	PART NAME 1 2 3 4 5 6 (PRODUCT LEVEL)	SEE PAGE
F			**2D-6412**	2	WASHER (7/16X15/16X1/4-IN THK)	
F			**8S-0934**	2	LOCKNUT-FLANGE (7/16-20-THD)	
F			**8S-4723**	2	BOLT (7/16-20X1.5-IN)	
F			**8T-4223**	2	WASHER-HARD (13.5X25.5X3-MM THK)	

F-NOT SHOWN

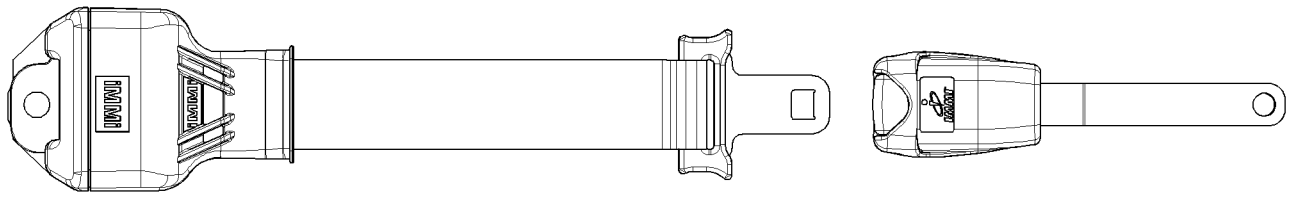

GRAPHIC #1 **<END>** g01345229

OPERATOR STATION

258-4096 SEAT BELT GP–RETRACTABLE

S/N: JAY1-UP

AN ATTACHMENT

SMCS-7327 **i03505761**

NOTE	REF NO	GRAPHIC REF	PART NUMBER	QTY	PART NAME 1 2 3 4 5 6 (PRODUCT LEVEL)	SEE PAGE
F			**2D-6412**	2	WASHER (7/16X15/16X1/4-IN THK)	
F			**8S-0934**	2	LOCKNUT-FLANGE (7/16-20-THD)	
F			**8S-4723**	2	BOLT (7/16-20X1.5-IN)	
F			**8T-4223**	2	WASHER-HARD (13.5X25.5X3-MM THK)	

F-NOT SHOWN

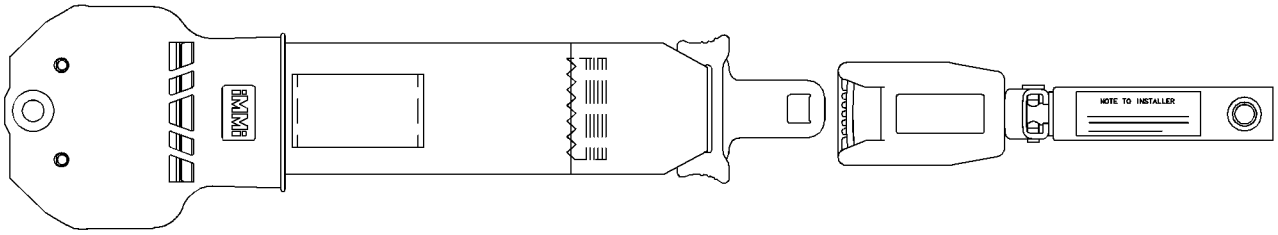

GRAPHIC #1 **<END>** g01196135

OPERATOR STATION

258-4053 SEAT GP

S/N: JAY1-UP
PART OF 258-4403 SEAT & ARMREST GP
AN ATTACHMENT

SMCS-7312, 7324 **i02782129**

NOTE	REF NO	GRAPHIC REF	PART NUMBER	QTY	PART NAME 1 2 3 4 5 6 (PRODUCT LEVEL)	SEE PAGE
	1	1	**8L-8413**	2	STRAP-CABLE	
	2	1	**225-2657**	2	BOLT (5/16-18-THD)	
	3	1	**273-5915**	1	PLATE	
	4	1	**275-5916**	1	SEAT GP	
		1	**293-2870**	1	SWITCH AS (SEAT)	
	5	1	**293-2872**	1	HARNESS AS-SWITCH	
	6	1	**305-7092**	1	SLIDE AS	
	7	1	**305-7093**	1	SLIDE AS	
	8	1	**307-2955**	2	TETHER	
	9	1	**308-6616**	1	PLATE AS	
	10	1	**4M-0061**	4	BOLT (5/16-18X0.75-IN)	
	11	1	**7X-0603**	4	WASHER-HARD (9.9X35X2.5-MM THK)	

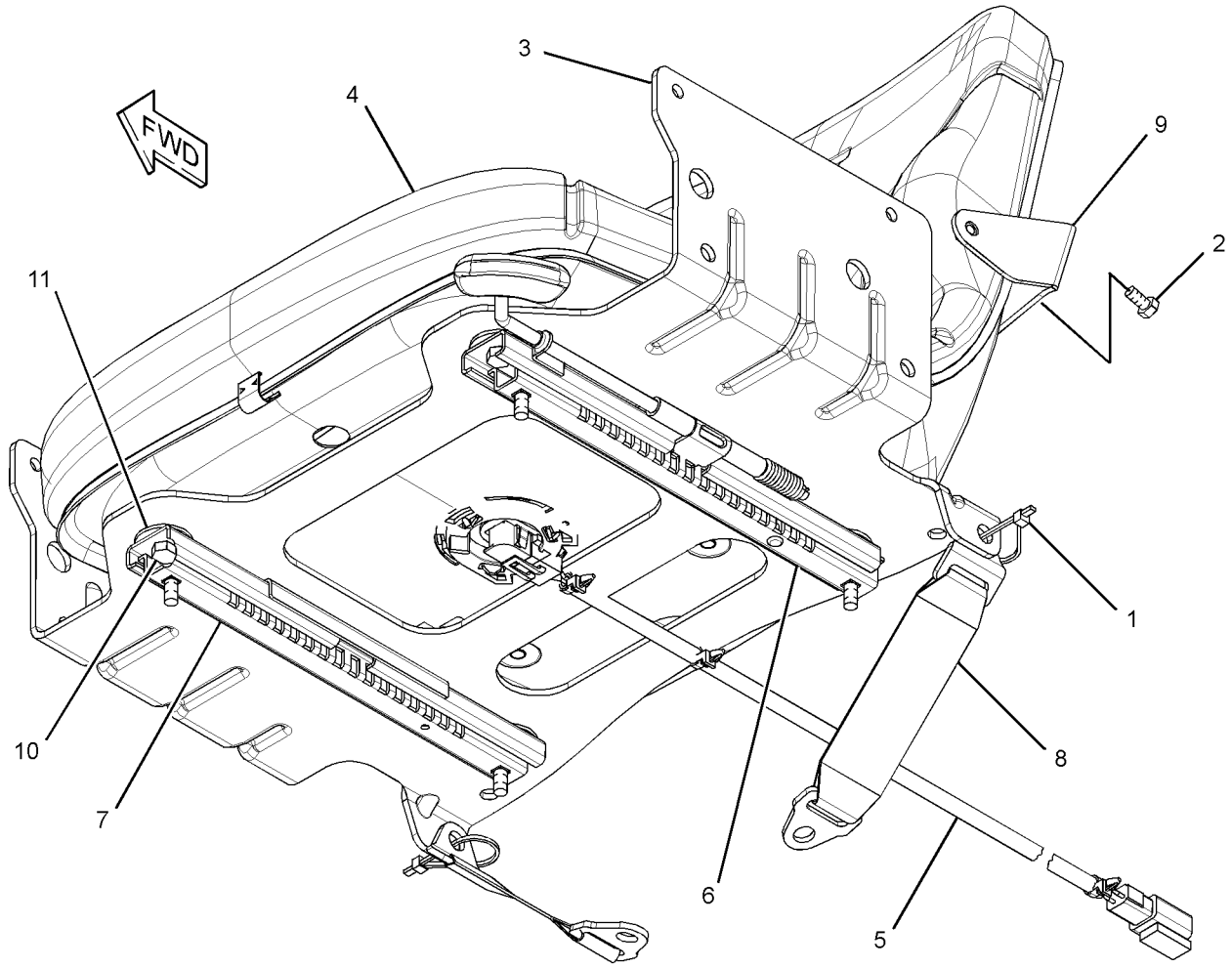

GRAPHIC #1 **<END>** g01574355

OPERATOR STATION

273-5913 SEAT GP–CLOTH, SUSPENSION

S/N: JAY1-UP

PART OF 258-4055 SEAT GP-SUSPENSION

AN ATTACHMENT

SMCS-7312, 7324 **i02958617**

NOTE	REF NO	GRAPHIC REF	PART NUMBER	QTY	PART NAME 1 2 3 4 5 6 (PRODUCT LEVEL)	SEE PAGE
	1	1	**098-8968**	2	WASHER (5X16X1.2-MM THK)	
	2	1	**8T-4224**	2	WASHER-HARD (8.8X16X2-MM THK)	
	3	1	**305-7085**	1	PAN AS-SEAT (FIXED)	
	4	1	**305-7086**	1	CUSHION AS-BACKREST	
	5	1	**305-7087**	1	CUSHION AS-SEAT	
	6	1	**307-2952**	1	PAN AS-SEAT (OPERATOR CONTROL)	
		1	**293-2871**	1	SWITCH AS (SEAT) (OPERATOR SWITCHES)	
		1	**307-2953**	1	SPACER	
		1	**307-2954**	2	SPRING	
	7	1	**119-5026**	2	SCREW-PAN HEAD (10-16X0.63-IN)	
M	8	1	**131-3990**	2	BOLT-CARRIAGE (M8X1.25X30-MM)	
M	9	1	**6V-9189**	2	LOCKNUT (M8X1.25-THD)	
	10	1	**319-4168**	4	SCREW-PAN HEAD	

M-METRIC PART

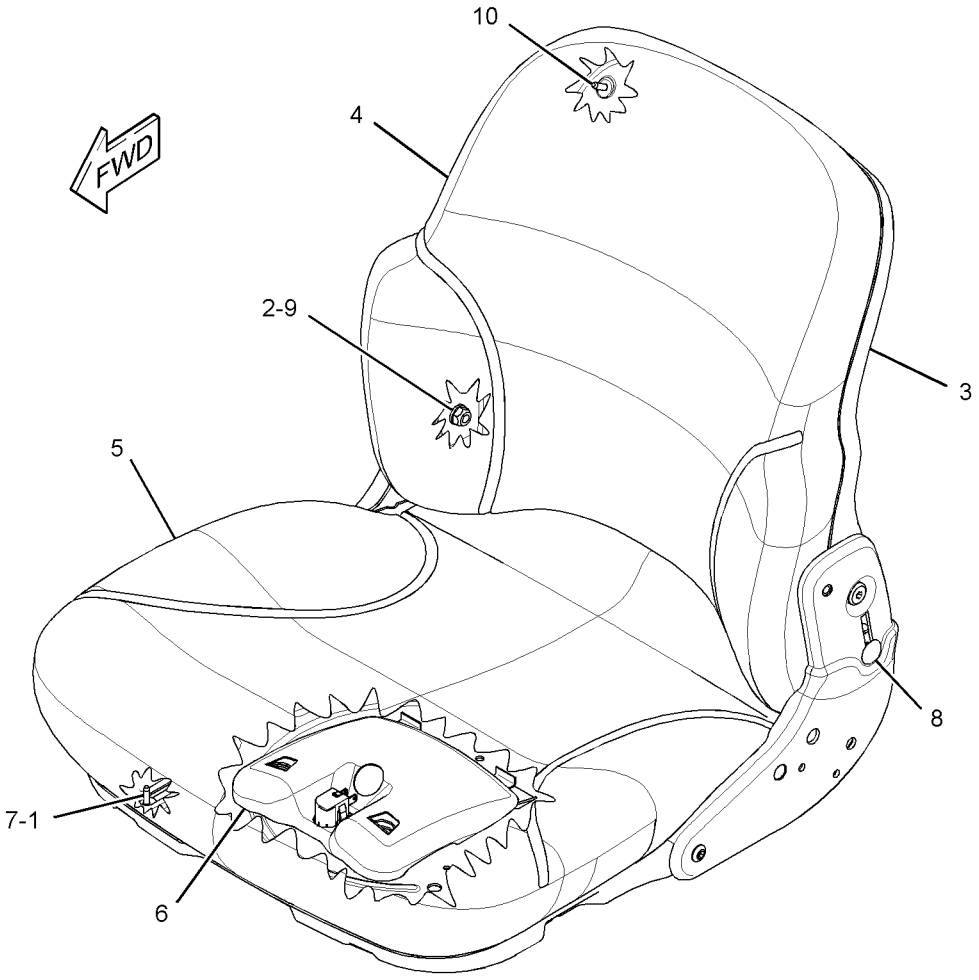

GRAPHIC #1 **<END>** g01556513

OPERATOR STATION

305-7096 SEAT GP–VINYL

S/N: JAY1-UP
PART OF 258-4054 SEAT GP-SUSPENSION
AN ATTACHMENT

SMCS-7312, 7324 **i02958642**

NOTE	REF NO	GRAPHIC REF	PART NUMBER	QTY	PART NAME 1 2 3 4 5 6 (PRODUCT LEVEL)	SEE PAGE
	1	1	**098-8968**	2	WASHER (5X16X1.2-MM THK)	
	2	1	**8T-4224**	2	WASHER-HARD (8.8X16X2-MM THK)	
	3	1	**305-7085**	1	PAN AS-SEAT	
	4	1	**305-7088**	1	CUSHION AS-SEAT	
	5	1	**305-7089**	1	CUSHION AS-SEAT	
	6	1	**307-2952**	1	PAN AS-SEAT	
		1	**293-2871**	1	SWITCH AS (SEAT)	
		1	**307-2953**	1	SPACER	
		1	**307-2954**	2	SPRING	
	7	1	**119-5026**	2	SCREW-PAN HEAD (10-16X0.63-IN)	
M	8	1	**131-3990**	2	BOLT-CARRIAGE (M8X1.25X30-MM)	
M	9	1	**6V-9189**	2	LOCKNUT (M8X1.25-THD)	
	10	1	**319-4168**	4	SCREW-PAN HEAD	

M-METRIC PART

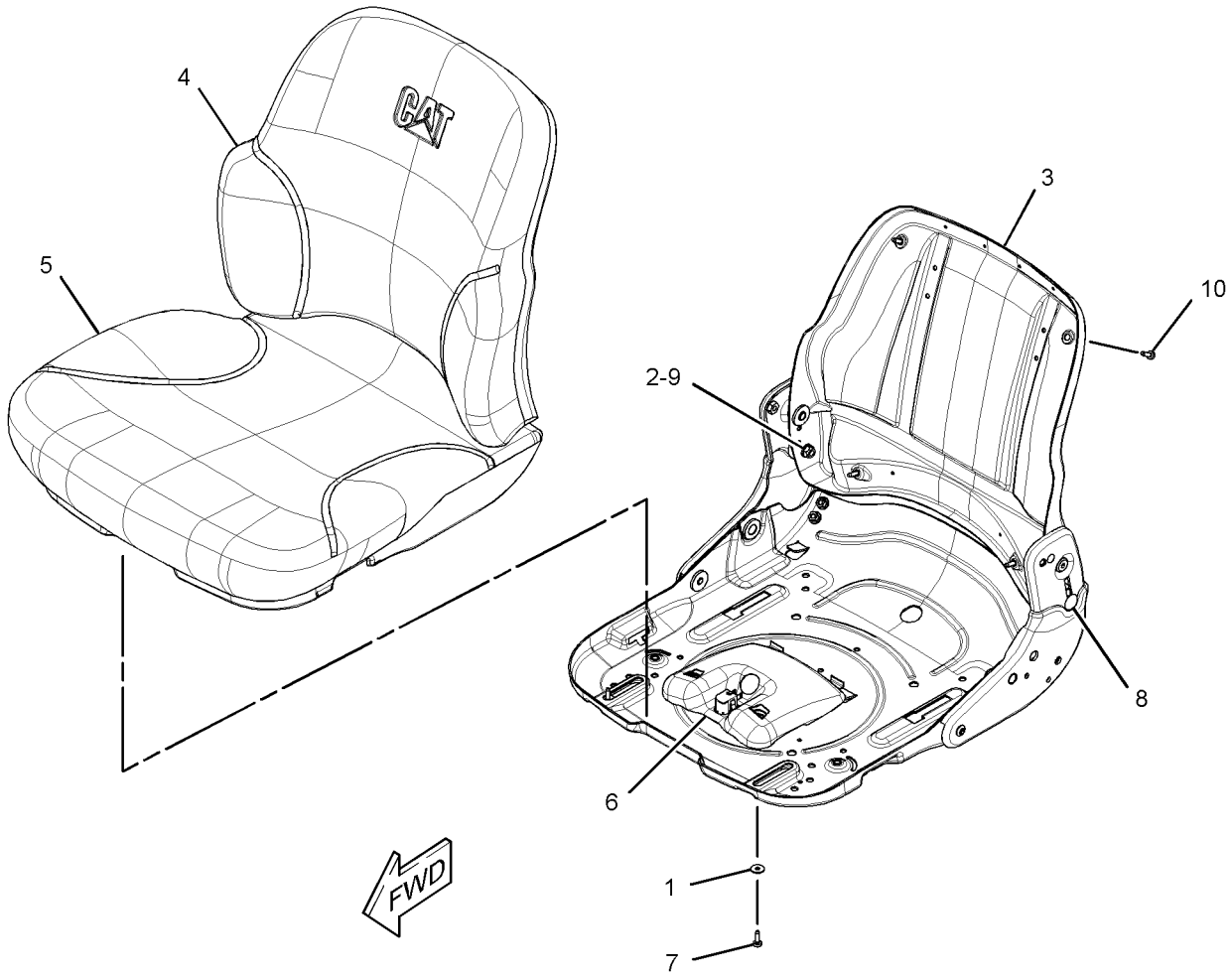

GRAPHIC #1 **<END>** g01508149

OPERATOR STATION

258-4054 SEAT GP-SUSPENSION—MECHANICAL

S/N: JAY1-UP
PART OF 258-4402 SEAT & ARMREST GP
AN ATTACHMENT

SMCS-7312, 7321, 7324 **i03624789**

NOTE	REF NO	GRAPHIC REF	PART NUMBER	QTY	PART NAME 1 2 3 4 5 6 (PRODUCT LEVEL)	SEE PAGE
	1	1	**8L-8413**	2	STRAP-CABLE	
	2	1	**273-5915**	1	PLATE	
Y	3	1	**273-9611**	1	SUSPENSION GP-SEAT (MECHANICAL)	777
	4	1	**293-2872**	1	HARNESS AS-SWITCH	
		1	**102-8804**	1	KIT-RECEPTACLE (4-PIN)	
					(INCLUDES RECEPTACLE AS & WEDGE)	
		1	**186-3735**	2	PIN-CONNECTOR (16-GA TO 18-GA)	
		1	**8T-8737**	2	PLUG-SEAL	
E		1	**211-5358**		CONDUIT-FLEXIBLE (55-CM)	
	5	1	**305-7092**	1	SLIDE AS (LATCHING)	
	6	1	**305-7093**	1	SLIDE AS (SLAVE)	
Y	7	1	*305-7096*	1	SEAT GP	769
	8	1	**307-2955**	2	TETHER	
	9	1	**031-4155**	4	LOCKNUT (5/16-18-THD)	
	10	1	**1P-1210**	4	WASHER (0.391X0.812X0.067-IN THK)	
	11	1	**4M-0061**	4	BOLT (5/16-18X0.75-IN)	
M	12	1	**6V-7687**	2	LOCKNUT (M12X1.75-THD)	
M	13	1	**6V-9189**	4	LOCKNUT (M8X1.25-THD)	
	14	1	**7X-0603**	4	WASHER-HARD (9.9X35X2.5-MM THK)	
	15	1	**8M-4791**	2	WASHER-HARD (13.5X27X3-MM THK)	
M	16	1	**8T-4139**	2	BOLT (M12X1.75X30-MM)	

E-ORDER BY THE CENTIMETER
M-METRIC PART
Y-SEPARATE ILLUSTRATION

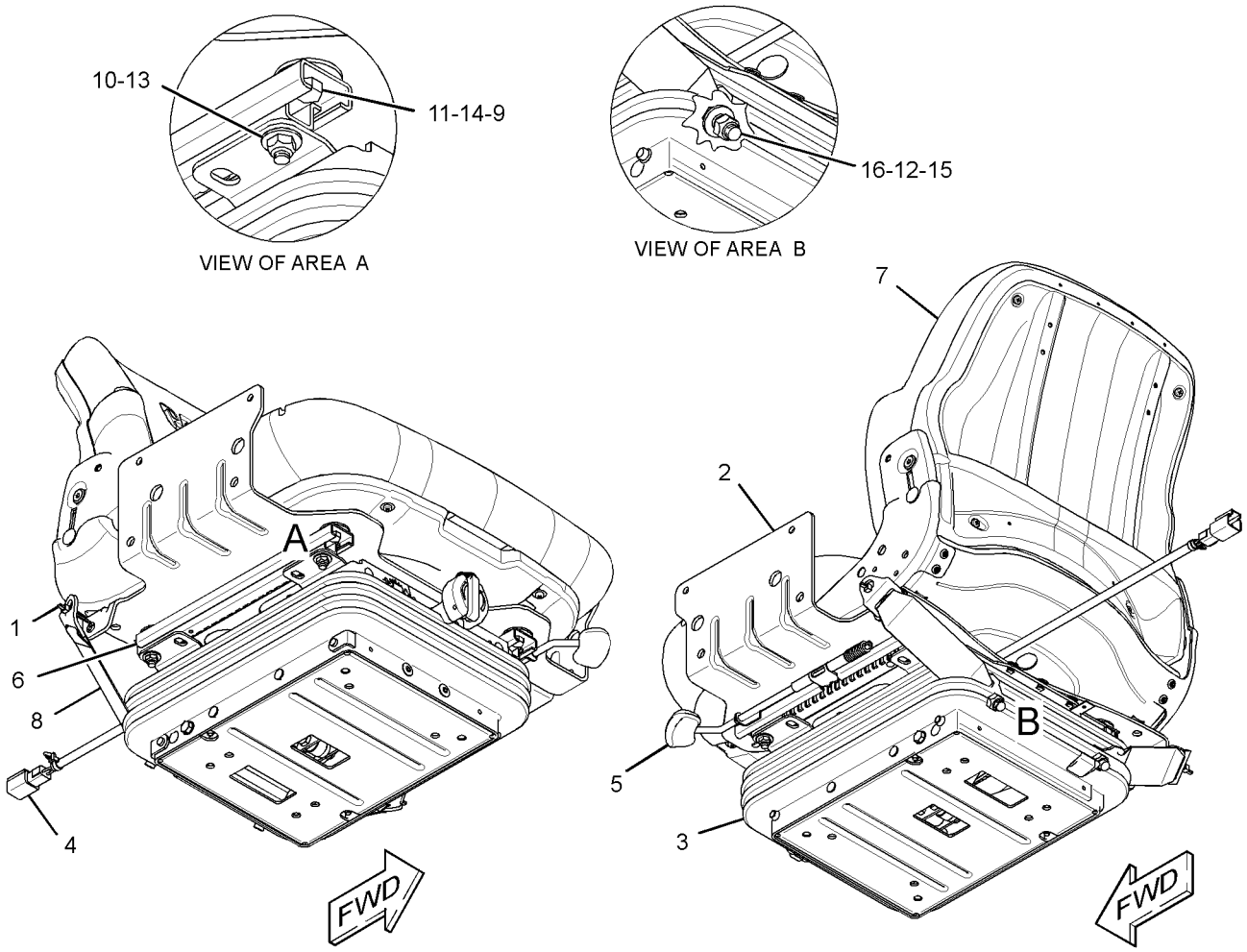

GRAPHIC #1 **<END>** g01420189

OPERATOR STATION

258-4055 SEAT GP-SUSPENSION–AIR

S/N: JAY1-UP
PART OF 258-4401 SEAT & ARMREST GP
AN ATTACHMENT

SMCS-7312, 7321, 7324 **i02839869**

NOTE	REF NO	GRAPHIC REF	PART NUMBER	QTY	PART NAME 1 2 3 4 5 6 (PRODUCT LEVEL)	SEE PAGE
	1	1	**8L-8413**	2	STRAP-CABLE	
Y	2	1	*273-5913*	1	SEAT GP (CLOTH, SUSPENSION)	768
Y	3	1	**273-5914**	1	SUSPENSION GP-SEAT (AIR)	775
	4	1	**273-5915**	1	PLATE	
	5	1	**305-7092**	1	SLIDE AS (LATCHING)	
	6	1	**305-7093**	1	SLIDE AS (SLAVE)	
	7	1	**307-2955**	2	TETHER	
	8	1	**031-4155**	4	LOCKNUT (5/16-18-THD)	
	9	1	**1P-1210**	4	WASHER (0.391X0.812X0.067-IN THK)	
	10	1	**4M-0061**	4	BOLT (5/16-18X0.75-IN)	
M	11	1	**6V-7687**	2	LOCKNUT (M12X1.75-THD)	
M	12	1	**6V-9189**	4	LOCKNUT (M8X1.25-THD)	
	13	1	**7X-0603**	4	WASHER-HARD (9.9X35X2.5-MM THK)	
	14	1	**8M-4791**	2	WASHER-HARD (13.5X27X3-MM THK)	
M	15	1	**8T-4139**	2	BOLT (M12X1.75X30-MM)	

M-METRIC PART
Y-SEPARATE ILLUSTRATION

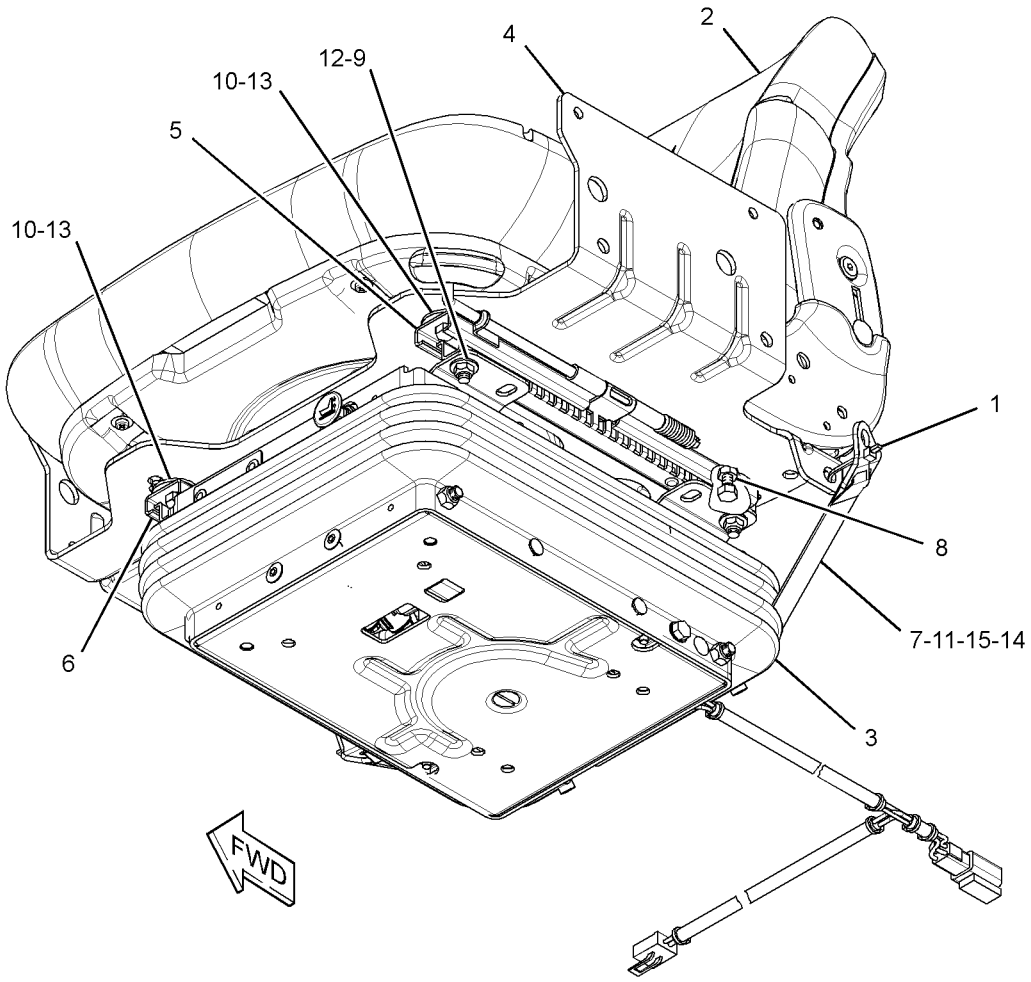

GRAPHIC #1 **<END>** g01421188

OPERATOR STATION

258-4017 SPRING GP-GAS—INCLUDES LIFT HANDLE

S/N: JAY1-UP

PART OF 258-3738, 258-3740 OPTION AR-CAB

AN ATTACHMENT

SMCS-7301 **i02674943**

NOTE	REF NO	GRAPHIC REF	PART NUMBER	QTY	PART NAME 1 2 3 4 5 6 (PRODUCT LEVEL)	SEE PAGE
	1	1	**5T-9400**	1	SPACER (12X25X8.5-MM THK)	
	2	1	**7C-8246**	2	SPACER (10.5X20X24-MM THK)	
	3	1	**095-1325**	1	PIN-CLEVIS	
	4	1	**153-2682**	1	SPRING-GAS (NON-LOCKING)	
	5	1	**153-2683**	1	SPRING-GAS (LOCKING)	
	6	1	**258-4018**	1	HANDLE	
M	7	1	**127-2170**	2	SCREW-TRUSS HEAD (M8X1.25X20-MM)	
	8	1	**5P-0372**	4	LOCK PIN	
	9	1	**6L-3966**	3	PIN (0.374-IN OD)	
	10	1	**198-1725**	2	WASHER-HARD (8.8X25.5X2-M THK)	

M-METRIC PART

258-4017 **SPRING GP-GAS** *(contd.)* **i02674943**

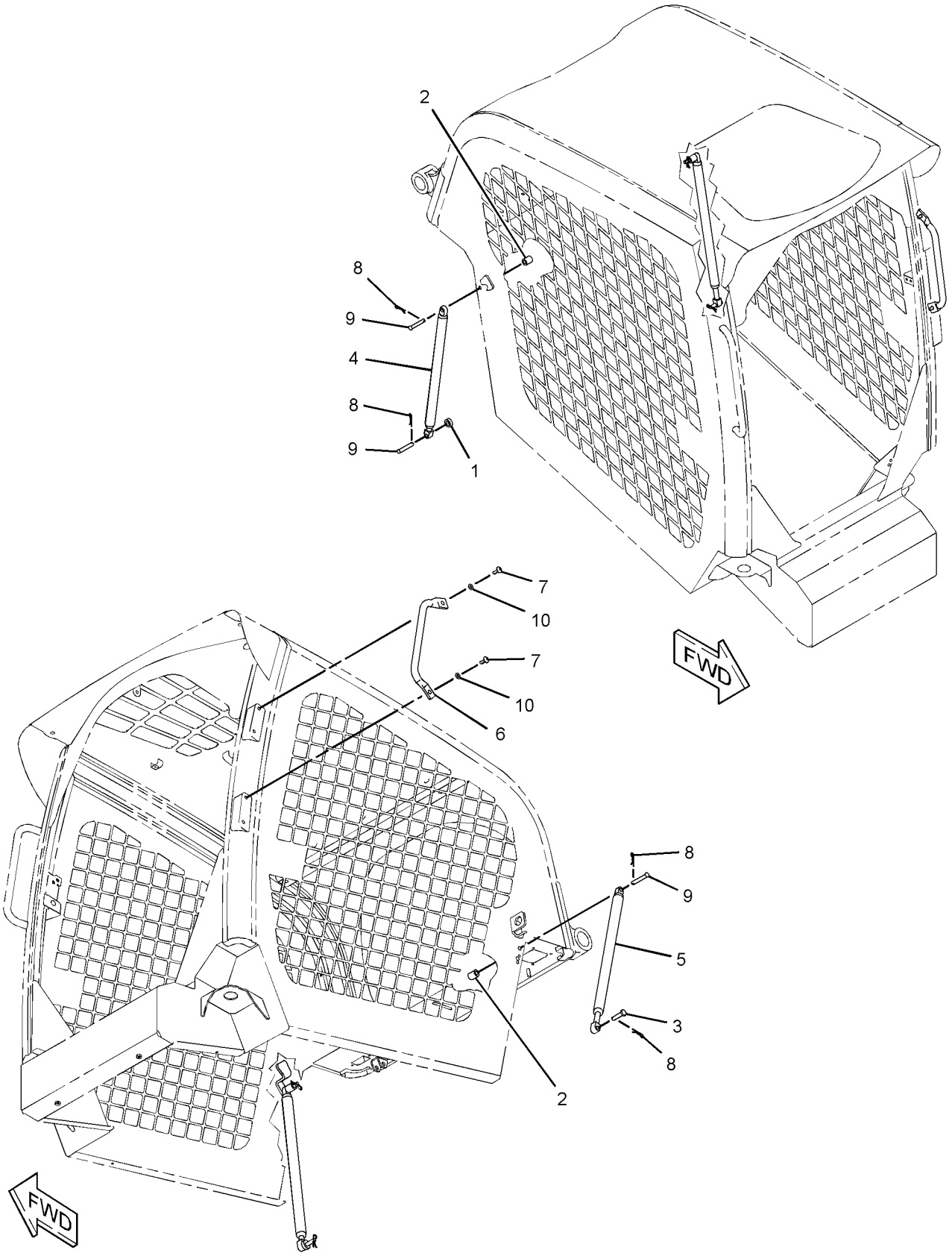

GRAPHIC #1 **<END>** g01309930

OPERATOR STATION

273-5914 SUSPENSION GP-SEAT—AIR

S/N: JAY1-UP
PART OF 258-4055 SEAT GP-SUSPENSION
AN ATTACHMENT

SMCS-7312, 7324 **i03624796**

NOTE	REF NO	GRAPHIC REF	PART NUMBER	QTY	PART NAME 1 2 3 4 5 6 (PRODUCT LEVEL)	SEE PAGE
J	1	1	**2M-7819**	2	RING-RETAINING	
P	2	1	**3D-9369**	1	RING-RETAINING	
N	3	1	**4B-4278**	2	WASHER (10.2X20.5X1.6-MM THK)	
L	4	1	**4V-8577**	6	BEARING	
J	5	1	**8T-4224**	4	WASHER-HARD (8.8X16X2-MM THK)	
	6	1	**8T-9371**	1	BOLT (3/8-16X0.5-IN)	
	7	1	**144-4108**	15	FASTENER	
	8	1	**163-1135**	1	SPRING	
	9	1	**163-1146**	2	FASTENER	
	10	1	**166-6781**	2	FASTENER	
S	11	1	**186-5107**	2	SCREW-DRIVE (NO 8X1.25-IN)	
S	12	1	**237-3943**	1	BRACKET	
	13	1	**293-2873**	1	HARNESS AS-WIRING	
		1	**5P-4571**	2	TERMINAL-BLADE (14-GA TO 16-GA)	
E		1	**211-5358**		CONDUIT-FLEXIBLE (95-CM)	
		1	**186-3735**	4	PIN-CONNECTOR (16-GA TO 18-GA)	
		1	**102-8804**	1	KIT-RECEPTACLE (4-PIN)	
					(INCLUDES RECEPTACLE AS & WEDGE)	
	14	1	**304-1021**	2	ROLLER	
	15	1	**304-1022**	2	BLOCK	
	16	1	**304-1023**	2	BUMPER	
	17	1	**304-1034**	2	BRACKET	
	18	1	**304-1035**	2	BUMPER	
	19	1	**304-1036**	1	BOOT	
	20	1	**305-4353**	2	SPACER (6.4X24X6-MM THK)	
	21	1	**031-4155**	2	LOCKNUT (5/16-18-THD)	
JM	22	1	**129-3178**	1	LOCKNUT (M6X1-THD)	
	23	1	**1B-2705**	2	BOLT-CARRIAGE (5/16-18X0.75-IN)	
	24	1	**108-4311**	1	SCREW-MACHINE (3/8-16X0.75-IN)	
LN	25	1	**2K-4973**	5	LOCKNUT (3/8-16-THD)	
M	26	1	**5C-2890**	2	NUT (M6X1-THD)	
	27	1	**6L-7155**	2	SCREW-MACHINE (1/4-20X0.5-IN)	
	28	1	**6V-7412**	2	SCREW-WASHER HEAD	
					PARTS SHOWN IN GRAPHIC(S) WITHOUT A REFERENCE NUMBER ARE NOT SERVICED SEPARATELY	
					AVAILABLE REPAIR KIT(S):	
J			**304-1052**	1	KIT-SHOCK ABSORBER	
					(ALSO INCLUDES BUSHINGS, SHOCK ABSORBER, BOLT & PIN)	
L			**304-1054**	1	KIT-SHAFT	
					(ALSO INCLUDES SHAFT AS)	
N			**304-1055**	1	KIT-TOGGLE BOLT	
					(ALSO INCLUDES BUSHINGS & BOLTS)	
P			**304-1056**	1	KIT-VALVE	
					(ALSO INCLUDES LOCKWASHER, NUT, VALVE, KNOB AS & FITTING)	
S			**304-1057**	1	KIT-COMPRESSOR	
					(ALSO INCLUDES COMPRESSOR AS & FITTINGS)	

E-ORDER BY THE CENTIMETER
J-KIT MARKED J SERIVES PARTS(S) MARKED J
L-KIT MARKED L SERVICES PART(S) MARKED L
M-METRIC PART
N-KIT MARKED N SERVICES PART(S) MARKED N
P-KIT MARKED P SERVICES PART(S) MARKED P
S-KIT MARKED S SERVICES PART(S) MARKED S

273-5914 SUSPENSION GP-SEAT *(contd.)* i03624796

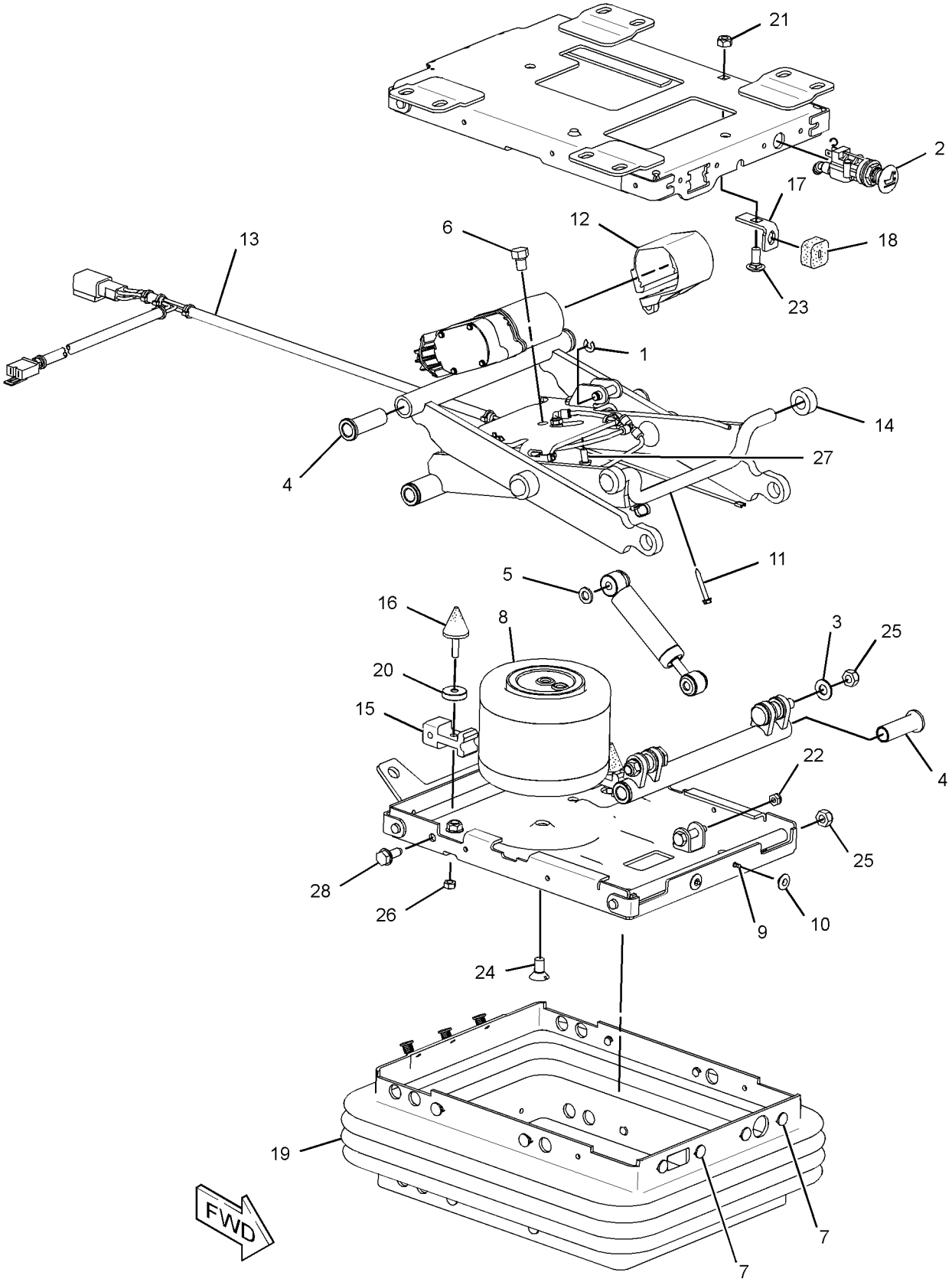

GRAPHIC #1 **<END>** g01559353

OPERATOR STATION

273-9611 SUSPENSION GP-SEAT—MECHANICAL

S/N: JAY1-UP

PART OF 258-4054 SEAT GP-SUSPENSION

AN ATTACHMENT

SMCS-7312, 7324 **i02845460**

NOTE	REF NO	GRAPHIC REF	PART NUMBER	QTY	PART NAME 1 2 3 4 5 6 (PRODUCT LEVEL)	SEE PAGE
	1	1	**4B-4278**	2	WASHER (10.2X20.5X1.6-MM THK)	
	2	1	**4V-8577**	6	BEARING	
	3	1	**5V-1497**	3	RETAINER	
	4	1	**144-4108**	13	FASTENER	
	5	1	**163-1146**	2	FASTENER	
	6	1	**166-6781**	2	FASTENER	
	7	1	**195-7055**	1	WASHER-HARD (9.9X28.5X3.2-MM THK)	
	8	1	**304-1021**	2	ROLLER	
	9	1	**304-1022**	2	BLOCK	
	10	1	**304-1023**	2	BUMPER	
	11	1	**304-1034**	2	BRACKET	
	12	1	**304-1035**	2	BUMPER	
	13	1	**304-1038**	1	BOOT	
	14	1	**304-1043**	1	LINK	
	15	1	**305-4351**	2	BOLT	
	16	1	**305-4353**	2	SPACER	
	17	1	**031-4155**	2	LOCKNUT (5/16-18-THD)	
	18	1	**095-0878**	1	PIN-SPRING	
	19	1	**1B-2705**	2	BOLT-CARRIAGE (5/16-18X0.75-IN)	
	20	1	**2K-4973**	5	LOCKNUT (3/8-16-THD)	
	21	1	**3E-9860**	2	LOCKNUT (5/16-18-THD)	
M	22	1	**5C-2890**	2	NUT (M6X1-THD)	
	23	1	**6V-7412**	2	SCREW-WASHER HEAD	
					PARTS SHOWN IN GRAPHIC(S) WITHOUT A REFERENCE NUMBER ARE NOT SERVICED SEPARATELY	

M-METRIC PART

273-9611 SUSPENSION GP-SEAT *(contd.)* i02845460

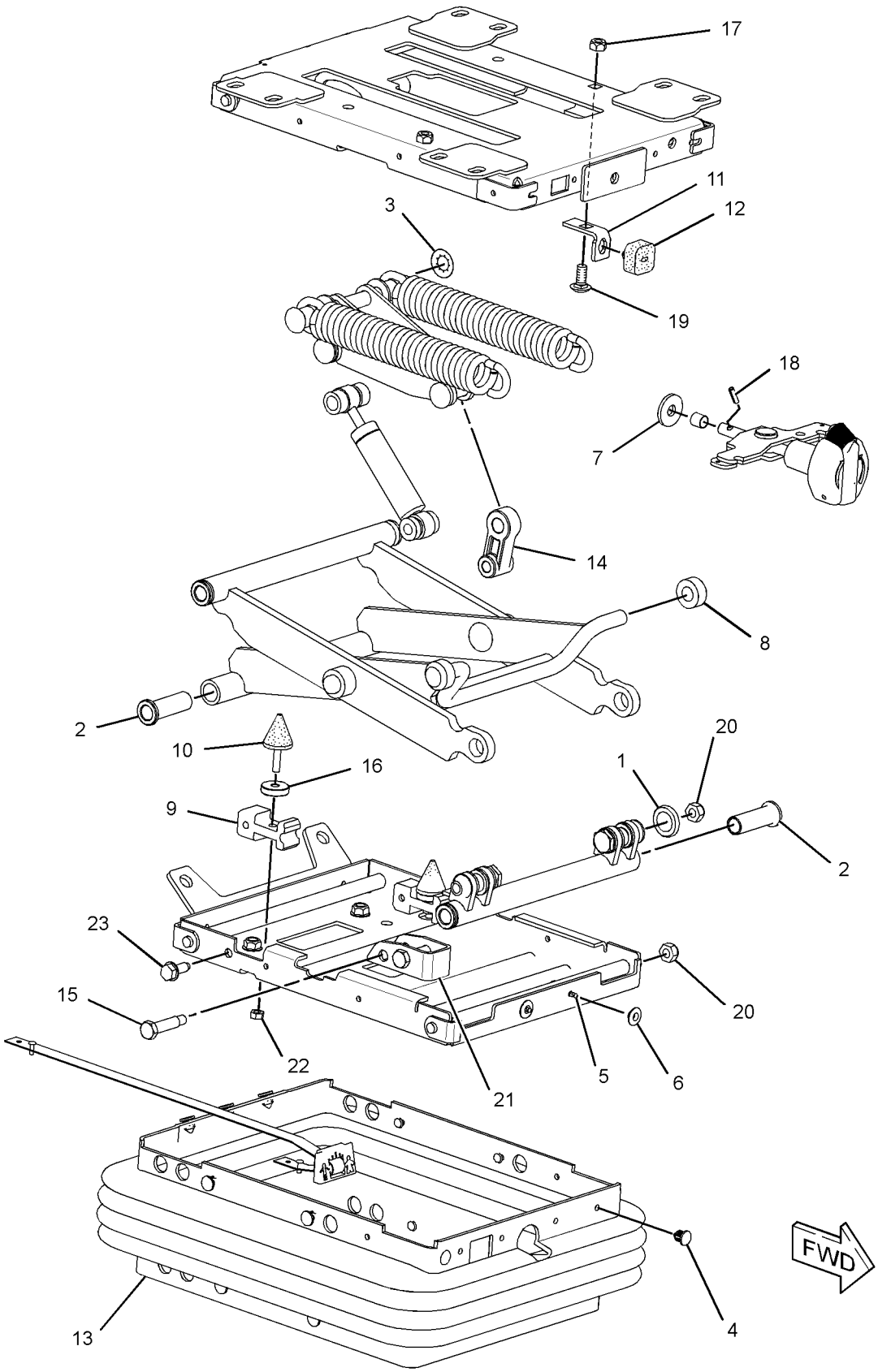

GRAPHIC #1 **<END>** g01420091

OPERATOR STATION

258-3497 VISOR GP-CAB

S/N: JAY1-UP
PART OF 258-3818 CONVERSION AR-MACHINE
AN ATTACHMENT

SMCS-7301 **i02715591**

NOTE	REF NO	GRAPHIC REF	PART NUMBER	QTY	PART NAME 1 2 3 4 5 6 (PRODUCT LEVEL)	SEE PAGE
	1	1	**172-8591**	4	NUT-SPRING	
Y	2	1	**258-4233**	1	VISOR GP-CAB (LH)	780
	3	1	**270-9442**	4	SCREW-TRUSS HEAD (M6X1X20-MM)	

Y-SEPARATE ILLUSTRATION

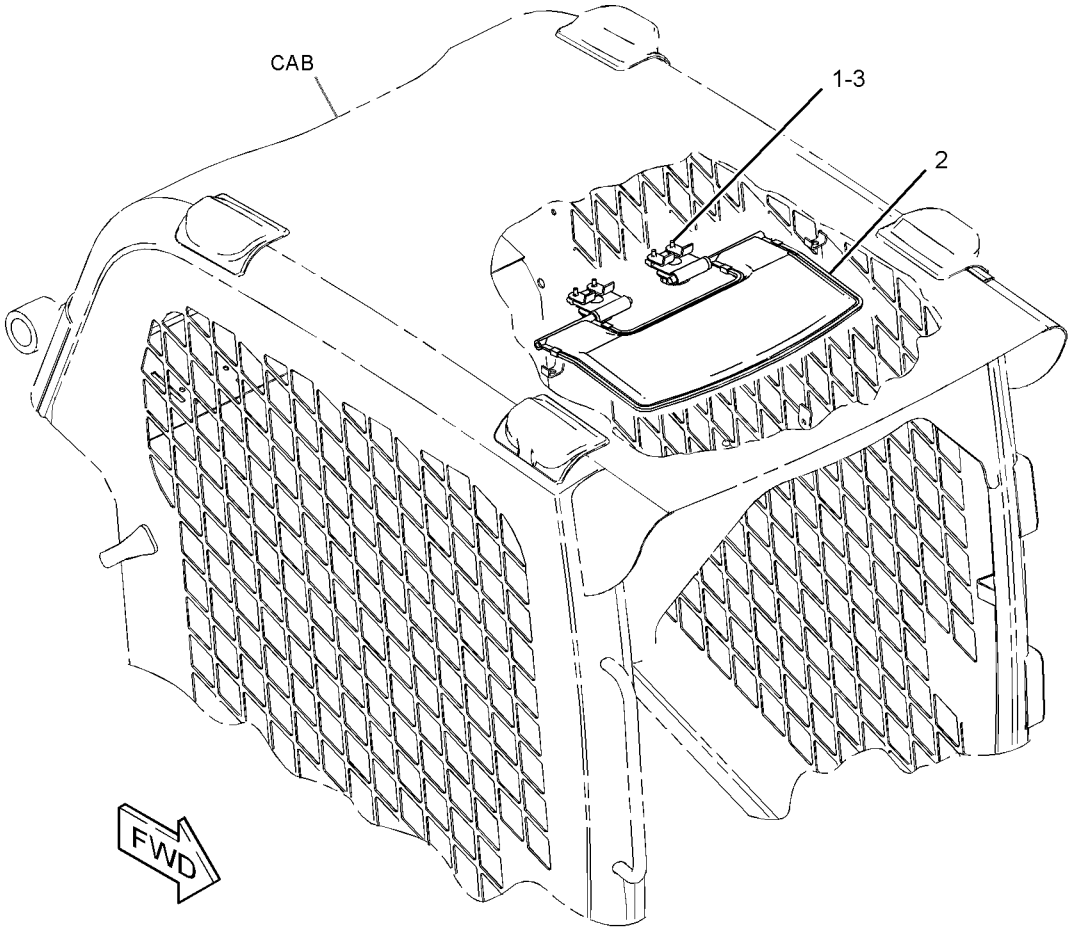

GRAPHIC #1 **<END>** g01336851

OPERATOR STATION

258-4233 VISOR GP-CAB—LH

S/N: JAY1-UP

PART OF 315-7815, 333-7434 KIT-ROADING CONVERSION, 258-3497 VISOR GP-CAB

AN ATTACHMENT

SMCS-7301 **i02664258**

NOTE	REF NO	GRAPHIC REF	PART NUMBER	QTY	PART NAME 1 2 3 4 5 6 (PRODUCT LEVEL)	SEE PAGE
	1	1	**5T-7869**	2	CLAMP	
	2	1	**5T-7870**	2	KNOB	
	3	1	**1D-4677**	2	BOLT-ROUND HEAD (3/8-16X1-IN)	

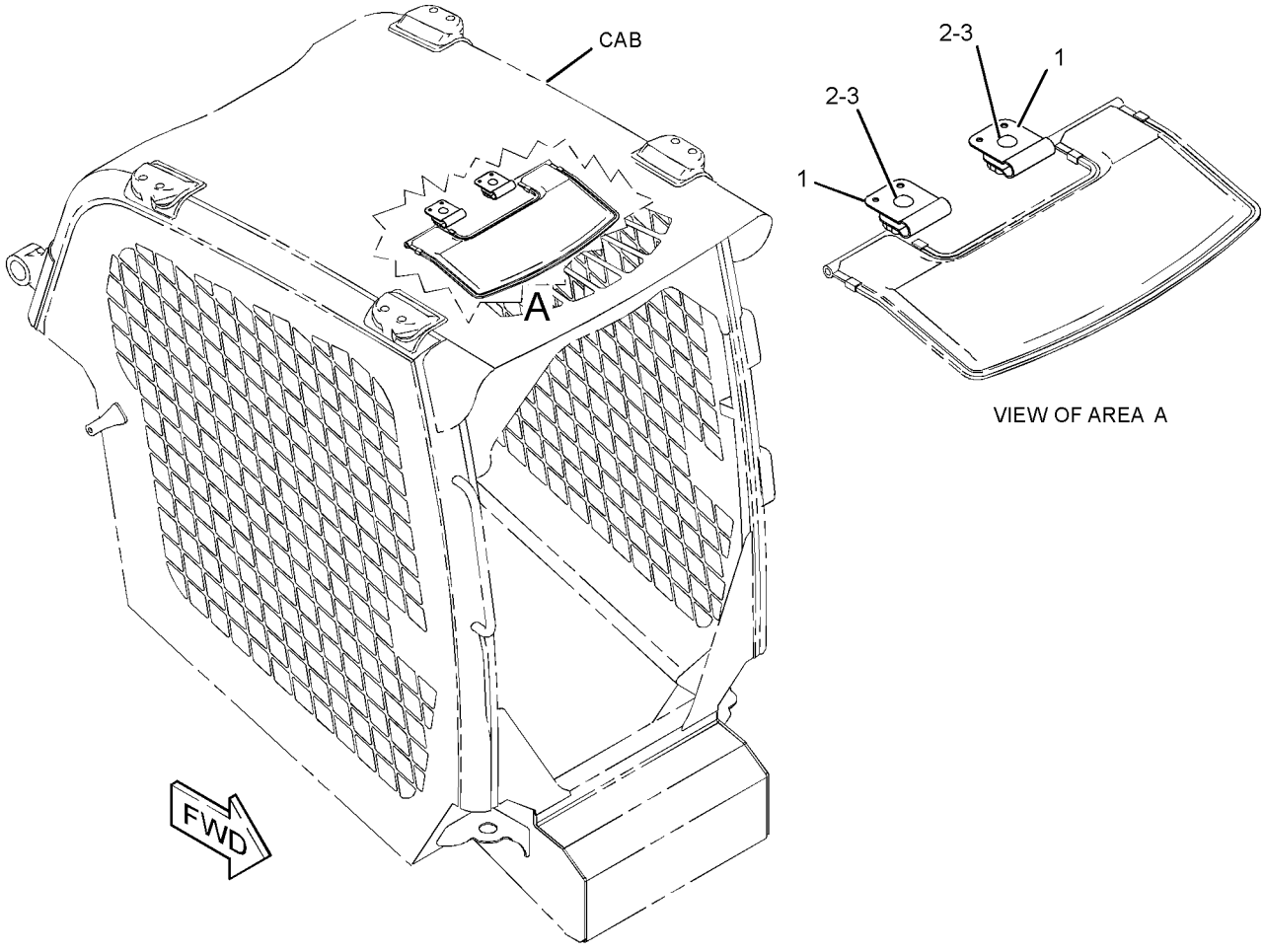

GRAPHIC #1 **<END>** g01339145

OPERATOR STATION

258-3285 WINDOW GP-CAB—SIDE, LH

S/N: JAY1-UP

PART OF 258-2472 KIT-CAB WINDOW, 258-4090 WINDOW GP-CAB

AN ATTACHMENT

SMCS-7310 **i03631030**

NOTE	REF NO	GRAPHIC REF	PART NUMBER	QTY	PART NAME 1 2 3 4 5 6 (PRODUCT LEVEL)	SEE PAGE
	1	1	**258-3283**	1	WINDOW AS (LH FRONT SLIDING GLASS)	
	2	1	**258-3284**	1	WINDOW AS (LH REAR SLIDING GLASS)	
					(EACH WINDOW ASSEMBLY INCLUDES)	
		1	**258-3765**	1	LATCH AS	
	3	1	**258-4019**	1	FRAME AS (LH)	
		1	**258-3776**	1	CATCH AS (INNER)	
		1	**258-3781**	1	CATCH AS (OUTER)	
	4	1	**258-4091**	1	WINDOW AS-CAB (LH)	
		1	**258-4432**		PAD-RUBBER	
					AVAILABLE REPAIR KIT(S):	
			337-9101	1	KIT-SEAL (CAB WINDOW)	
					(INCLUDES SEALS & FOAM)	

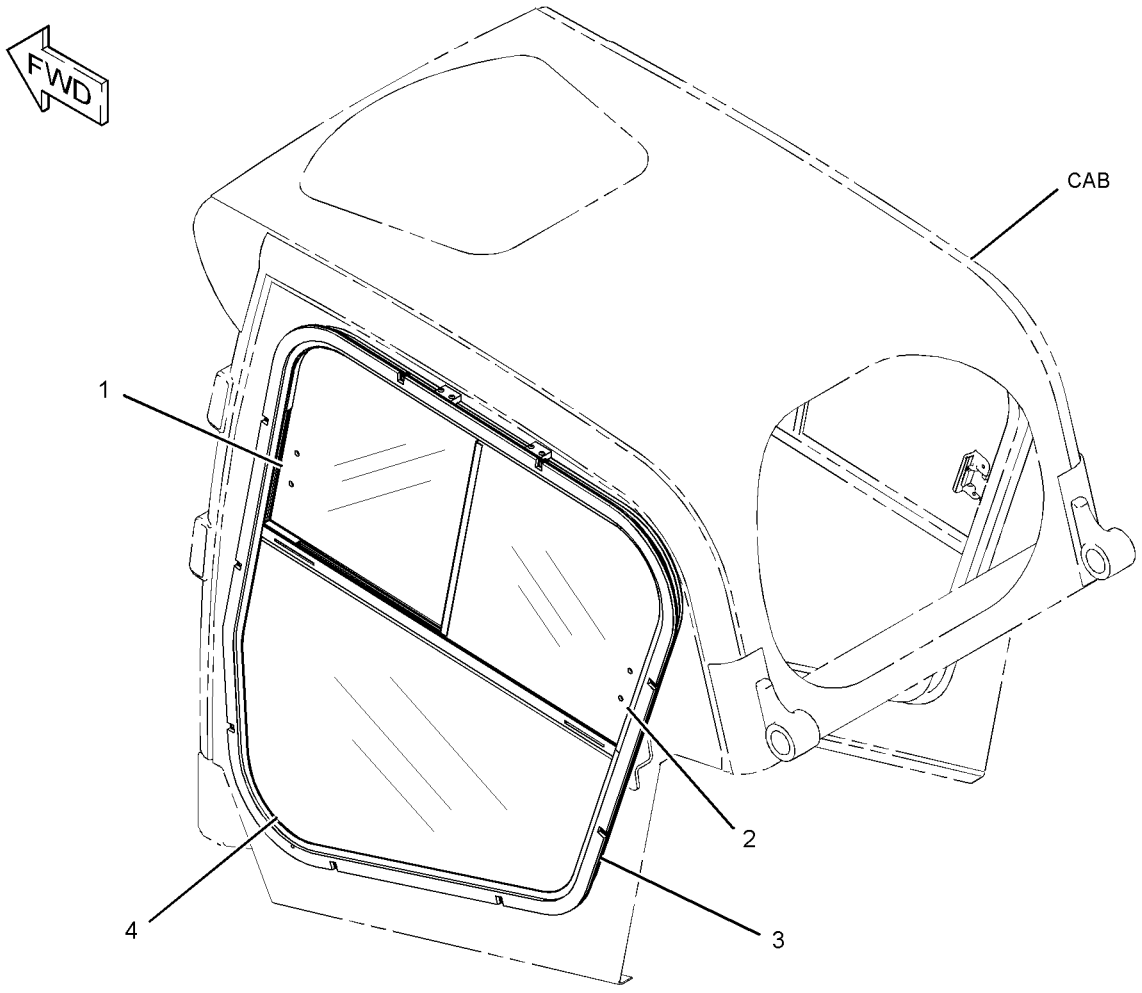

GRAPHIC #1

<END>

g01311244

OPERATOR STATION

258-3286 WINDOW GP-CAB—SIDE, RH

S/N: JAY1-UP

PART OF 258-2472 KIT-CAB WINDOW, 258-4090 WINDOW GP-CAB

AN ATTACHMENT

SMCS-7310 **i03631031**

NOTE	REF NO	GRAPHIC REF	PART NUMBER	QTY	PART NAME 1 2 3 4 5 6 (PRODUCT LEVEL)	SEE PAGE
	1	1	**258-3282**	1	FRAME AS (RH)	
		1	**258-3776**	1	CATCH AS (INNER)	
		1	**258-3781**	1	CATCH AS (OUTER)	
	2	1	**258-4092**	1	WINDOW AS-CAB (RH REAR SLIDING GLASS)	
	3	1	**258-4093**	1	WINDOW AS-CAB (RH FRONT SLIDING GLASS)	
					(EACH WINDOW ASSEMBLY INCLUDES)	
		1	**258-3765**	1	LATCH AS	
	4	1	**258-4094**	1	WINDOW AS-CAB (RH)	
		1	**258-4432**		PAD-RUBBER	
					AVAILABLE REPAIR KIT(S):	
			337-9101	1	KIT-SEAL (CAB WINDOW)	
					(INCLUDES SEALS & FOAM)	

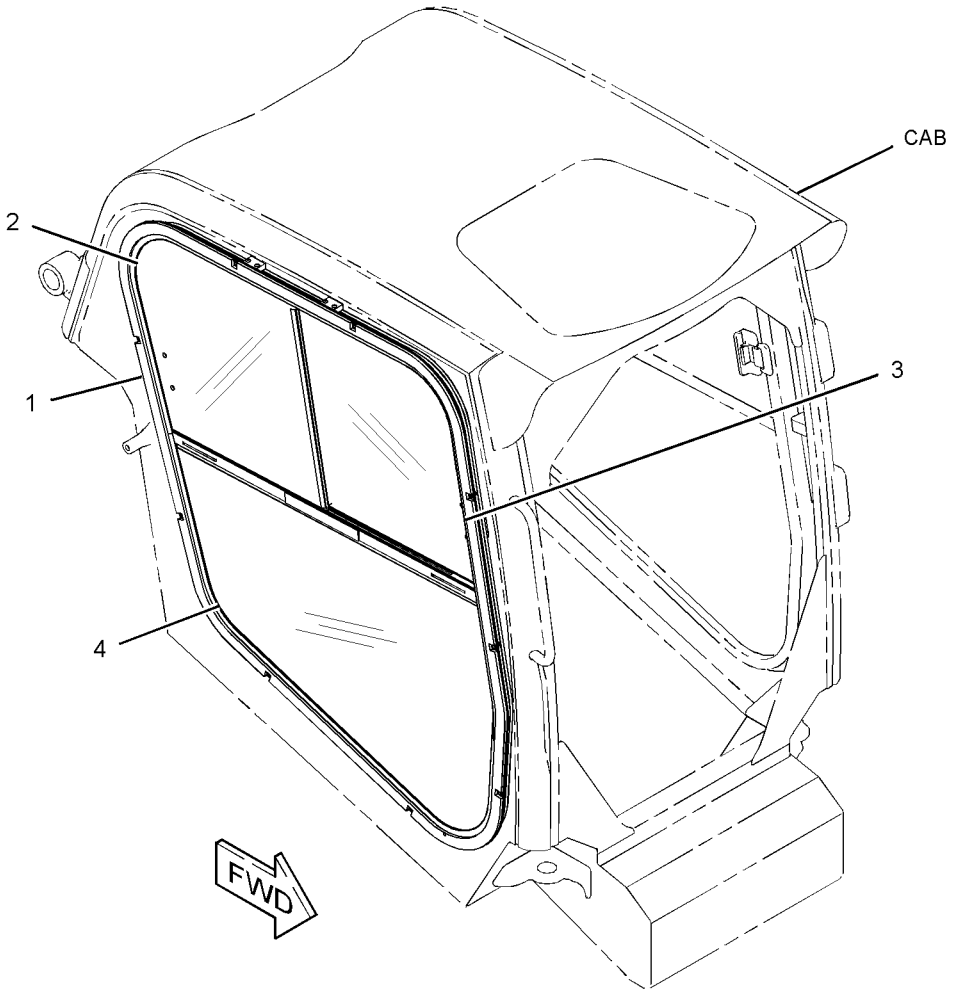

GRAPHIC #1 **<END>** g01311843

OPERATOR STATION

258-4010 WINDOW GP-CAB

S/N: JAY1-UP

PART OF 258-4000 CAB AR-ENCLOSED ROPS

SMCS-7310 **i02764097**

NOTE	REF NO	GRAPHIC REF	PART NUMBER	QTY	PART NAME 1 2 3 4 5 6 (PRODUCT LEVEL)	SEE PAGE
	1	1	**5C-8310**	1	BRACKET-RING	
	2	1	**5C-8311**	1	RING	
	3	1	**258-4429**	1	FILM-INSTRUCTION (ALTERNATE EXIT)	
	4	1	**258-4011**	1	GLASS-REAR	
E	5	1	**108-0656**		SEAL (192-CM)	
E	6	1	**104-5957**		STRIP-LOCKING (186-CM)	

E-ORDER BY THE CENTIMETER

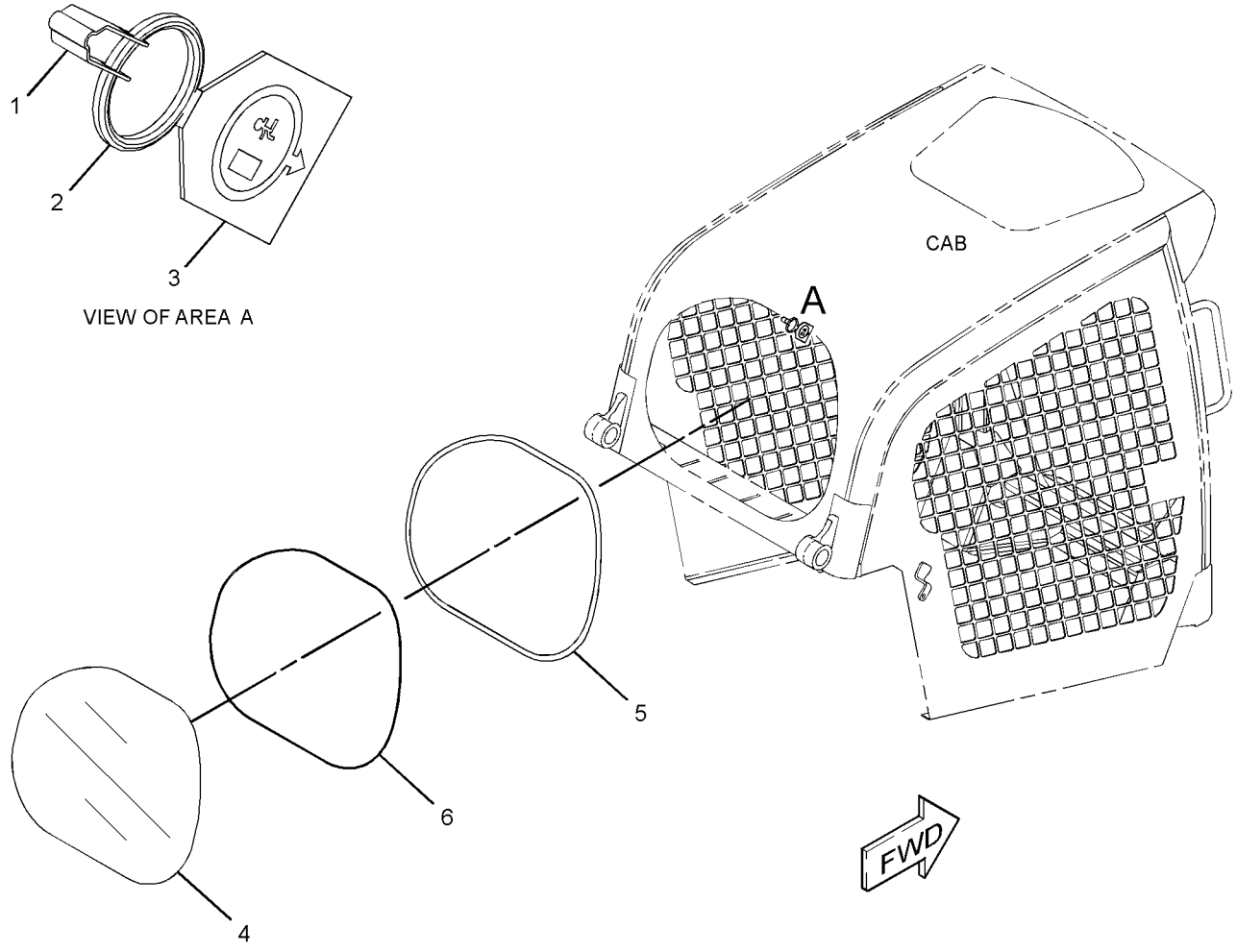

GRAPHIC #1 **<END>** g01317851

OPERATOR STATION

258-4090 WINDOW GP-CAB—SIDE

S/N: JAY1-UP
PART OF 258-3680, 258-3742 CAB AR-ENCLOSED ROPS
AN ATTACHMENT

SMCS-7310 **i02664475**

NOTE	REF NO	GRAPHIC REF	PART NUMBER	QTY	PART NAME 1 2 3 4 5 6 (PRODUCT LEVEL)	SEE PAGE
Y	1	1	*258-3285*	1	WINDOW GP-CAB (SIDE, LH)	781
Y	2	1	*258-3286*	1	WINDOW GP-CAB (SIDE, RH)	782
	3	1	**270-9442**	18	SCREW-TRUSS HEAD (M6X1X20-MM)	

Y-SEPARATE ILLUSTRATION

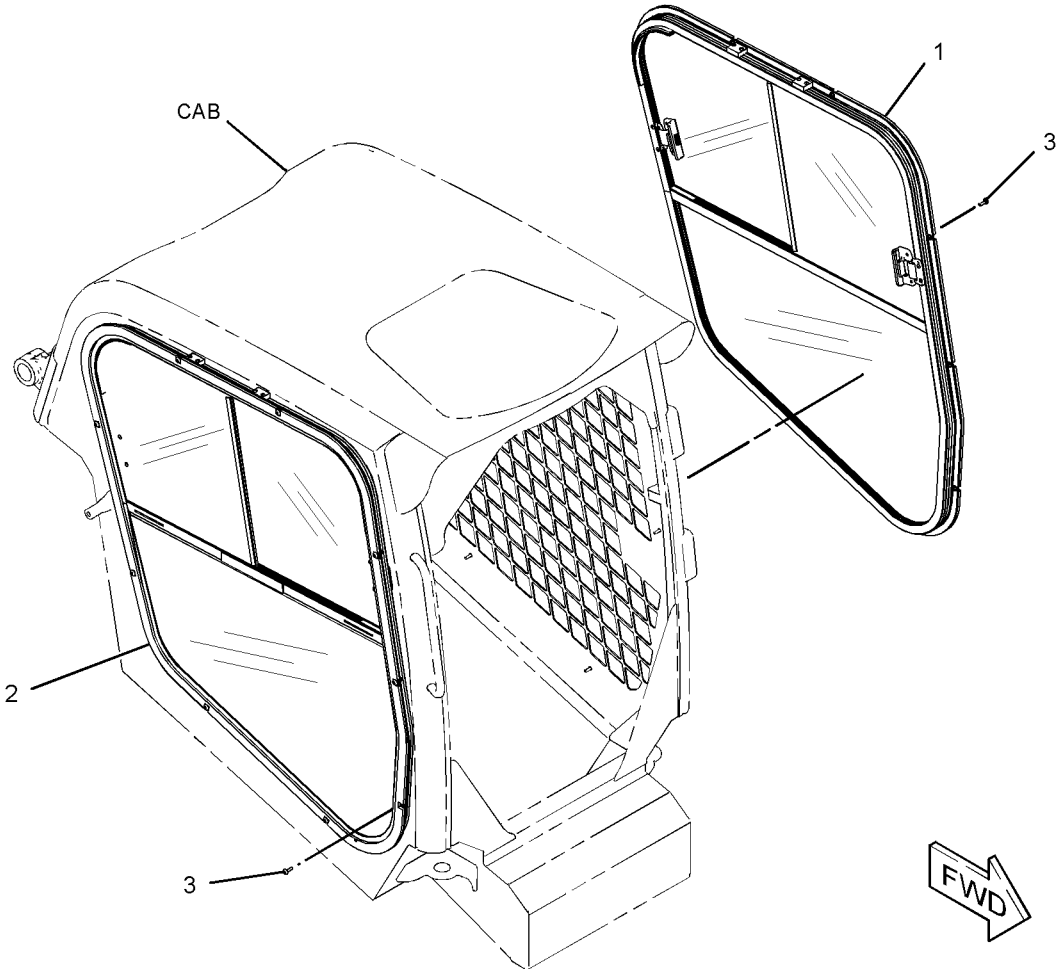

GRAPHIC #1 **<END>** g01311431

SERVICE EQUIPMENT AND SUPPLIES

280-8329 BRACKET GP-MOUNTING—BELT GUARD

S/N: JAY1-2059
PART OF 258-3800 CONVERSION AR-ROADING
AN ATTACHMENT

SMCS-0635, 4200, 7430 **i02717334**

NOTE	REF NO	GRAPHIC REF	PART NUMBER	QTY	PART NAME 1 2 3 4 5 6 (PRODUCT LEVEL)	SEE PAGE
	1	1	**280-8305**	1	BRACKET AS	
	2	1	**280-8335**	2	SPACER	
	3	1	**101-2867**	1	WASHER-HARD (7.2X25X2-MM THK)	
	4	1	**270-9442**	1	SCREW-TRUSS HEAD (M6X1X20-MM)	
M	5	1	**5C-9553**	2	BOLT (M6X1X16-MM)	

M-METRIC PART

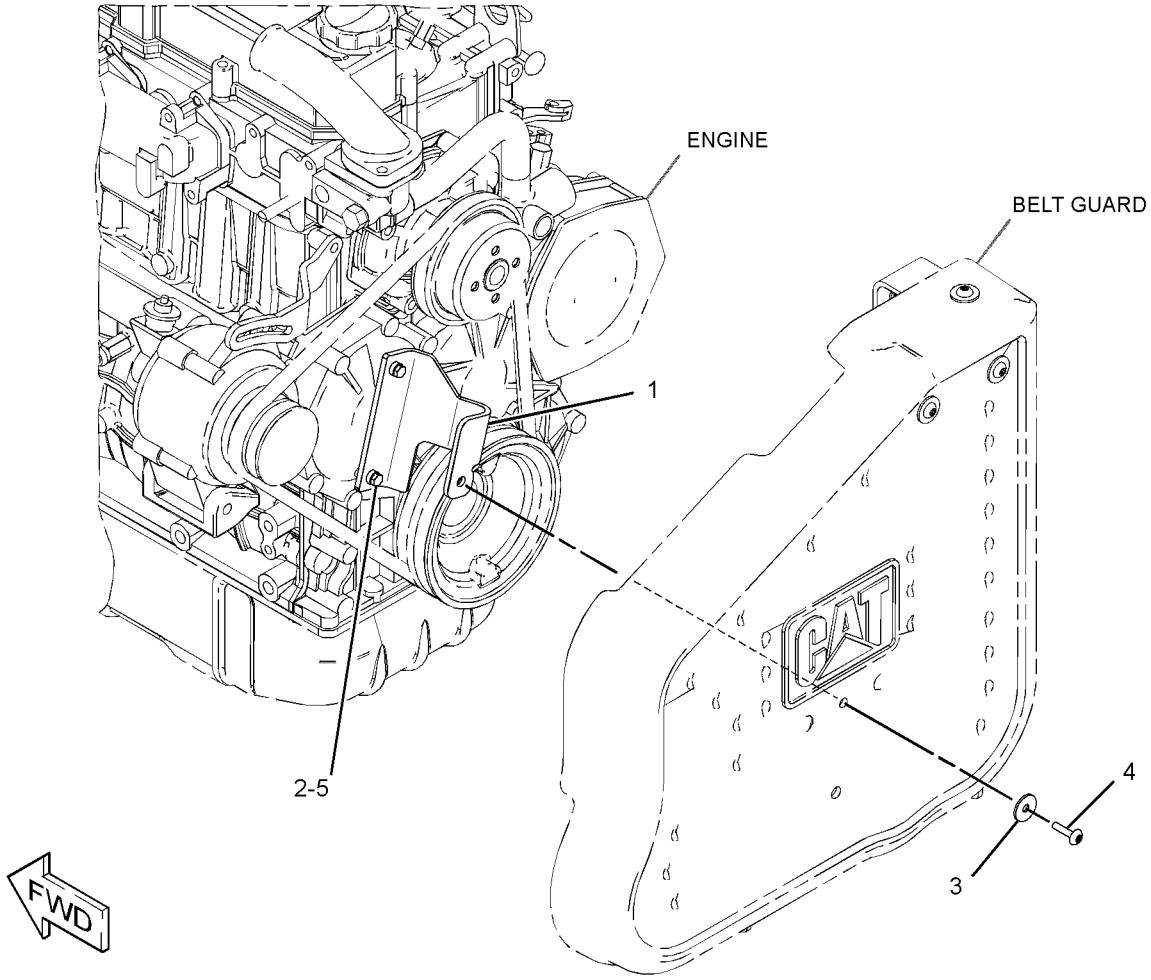

GRAPHIC #1 **<END>** g01345004

SERVICE EQUIPMENT AND SUPPLIES

238-7734 FILM GP–UN

S/N: JAY1-UP

AN ATTACHMENT

SMCS-7557 **i02797728**

NOTE	REF NO	GRAPHIC REF	PART NUMBER	QTY	PART NAME 1 2 3 4 5 6 (PRODUCT LEVEL)	SEE PAGE
	1	1	**252-9015**	1	FILM-IDENTIFICATION (UN)	
	2	1	**252-9016**	2	FILM-IDENTIFICATION (UN)	
	3	1	**252-9017**	2	FILM-IDENTIFICATION (UN)	

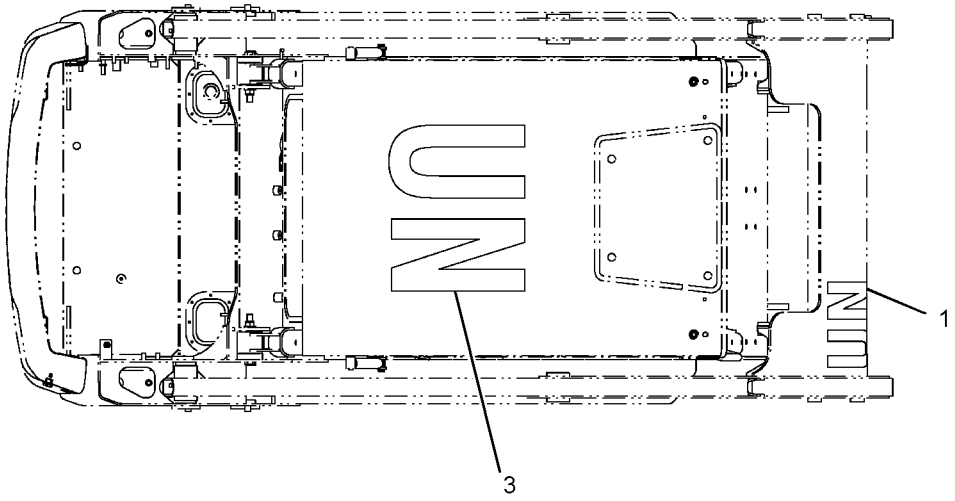

TOP VIEW FWD

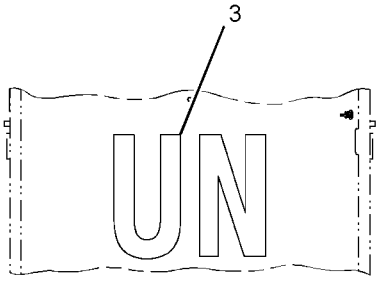

VIEW A-A

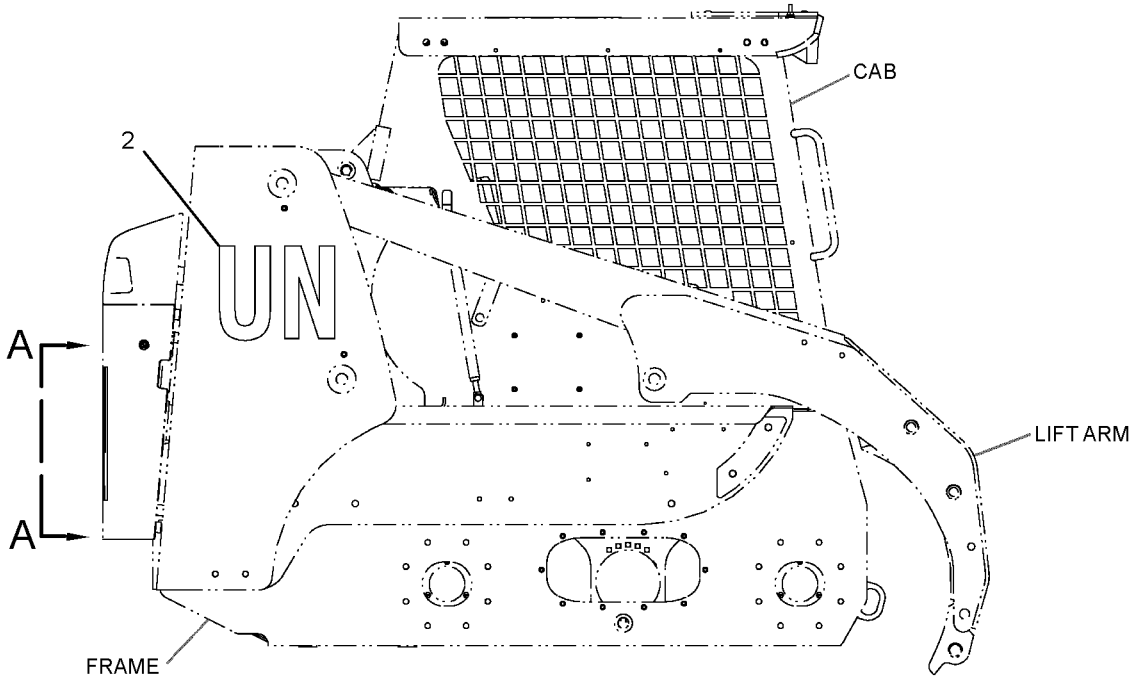

RIGHT SIDE VIEW

GRAPHIC #1 **<END>** g01397986

SERVICE EQUIPMENT AND SUPPLIES

258-3190 FILM GP

S/N: JAY1-UP

PART OF 258-3236, 295-7246 COMMON AR

SMCS-7557 **i02623279**

NOTE	REF NO	GRAPHIC REF	PART NUMBER	QTY	PART NAME 1 2 3 4 5 6 (PRODUCT LEVEL)	SEE PAGE
	1	1	**258-3408**	1	FILM-IDENTIFICATION (246C, LH)	
	2	1	**258-3409**	1	FILM-IDENTIFICATION (246C, RH)	
	3	1	**258-3423**	1	FILM-IDENTIFICATION (CATERPILLAR)	
	4	1	**258-3424**	1	FILM-IDENTIFICATION (CAT, LH)	
	5	1	**258-3425**	1	FILM-IDENTIFICATION (CAT, RH)	
	6	1	**258-3427**	1	FILM-IDENTIFICATION (CAT)	

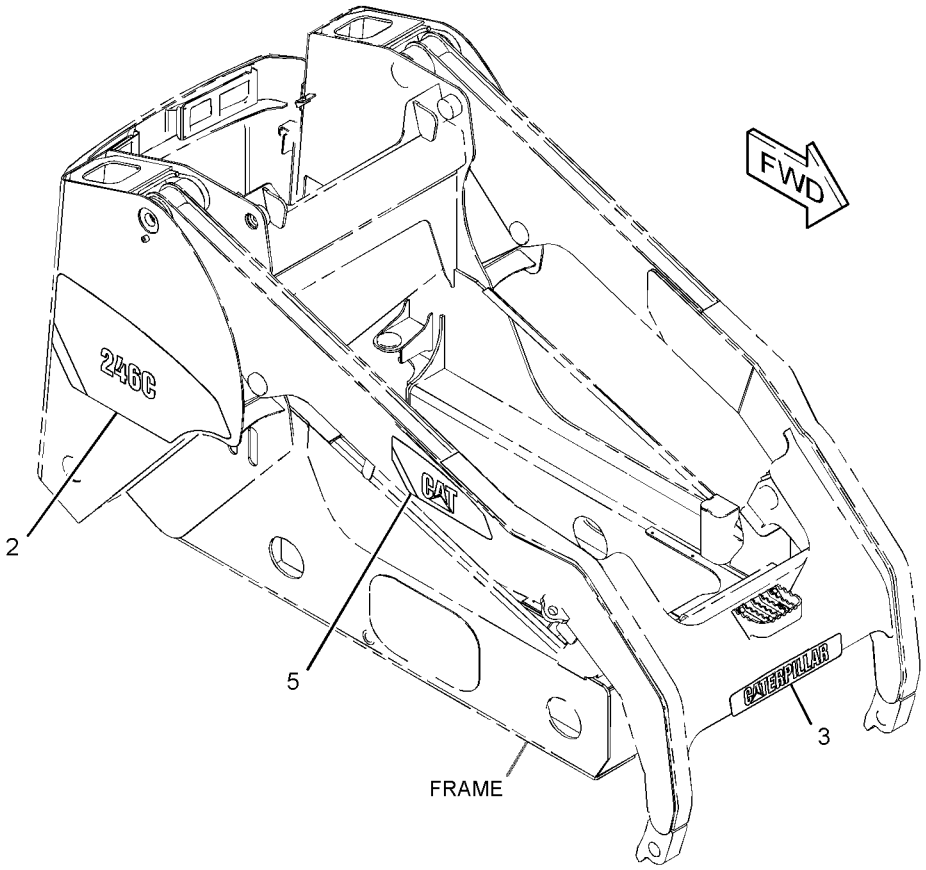

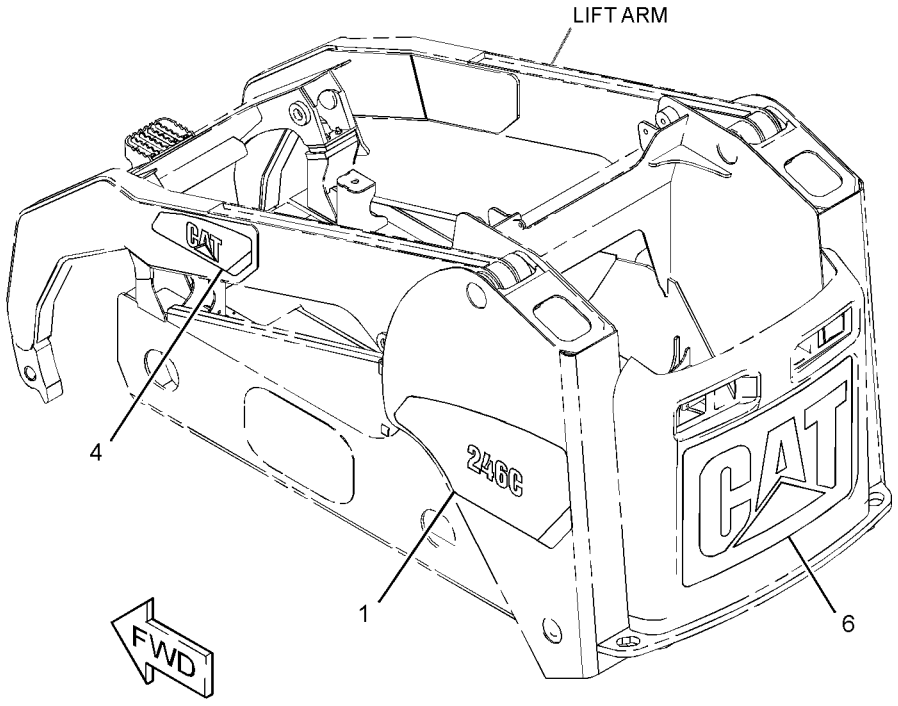

GRAPHIC #1 **<END>** g01328804

SERVICE EQUIPMENT AND SUPPLIES

258-3230 FILM GP–HIGH FLOW XPS

S/N: JAY1-UP

PART OF 258-3182, 258-3733, 261-6264 HYDRAULIC AR

AN ATTACHMENT

SMCS-7557 **i02636007**

NOTE	REF NO	GRAPHIC REF	PART NUMBER	QTY	PART NAME 1 2 3 4 5 6 (PRODUCT LEVEL)	SEE PAGE
	1	1	**258-3231**	2	FILM-IDENTIFICATION (HIGH FLOW XPS)	

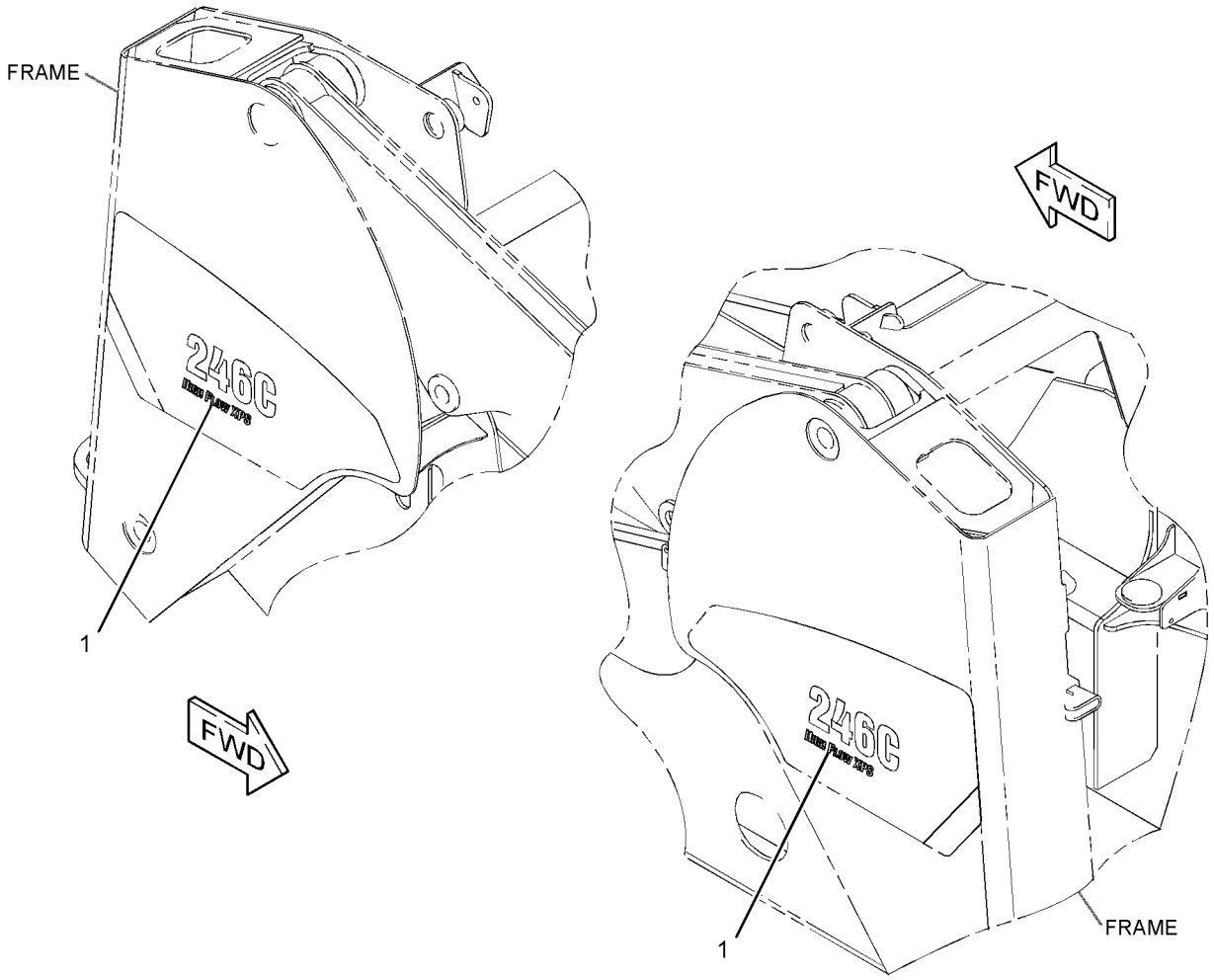

GRAPHIC #1 **<END>** g01326333

SERVICE EQUIPMENT AND SUPPLIES

289-0848 FILM GP–2-SPEED

S/N: JAY1-UP
PART OF 258-3400 POWER TRAIN AR
AN ATTACHMENT

SMCS-7557 **i02635700**

NOTE	REF NO	GRAPHIC REF	PART NUMBER	QTY	PART NAME 1 2 3 4 5 6 (PRODUCT LEVEL)	SEE PAGE
	1	1	**290-2110**	2	FILM-IDENTIFICATION (TWO SPEED)	

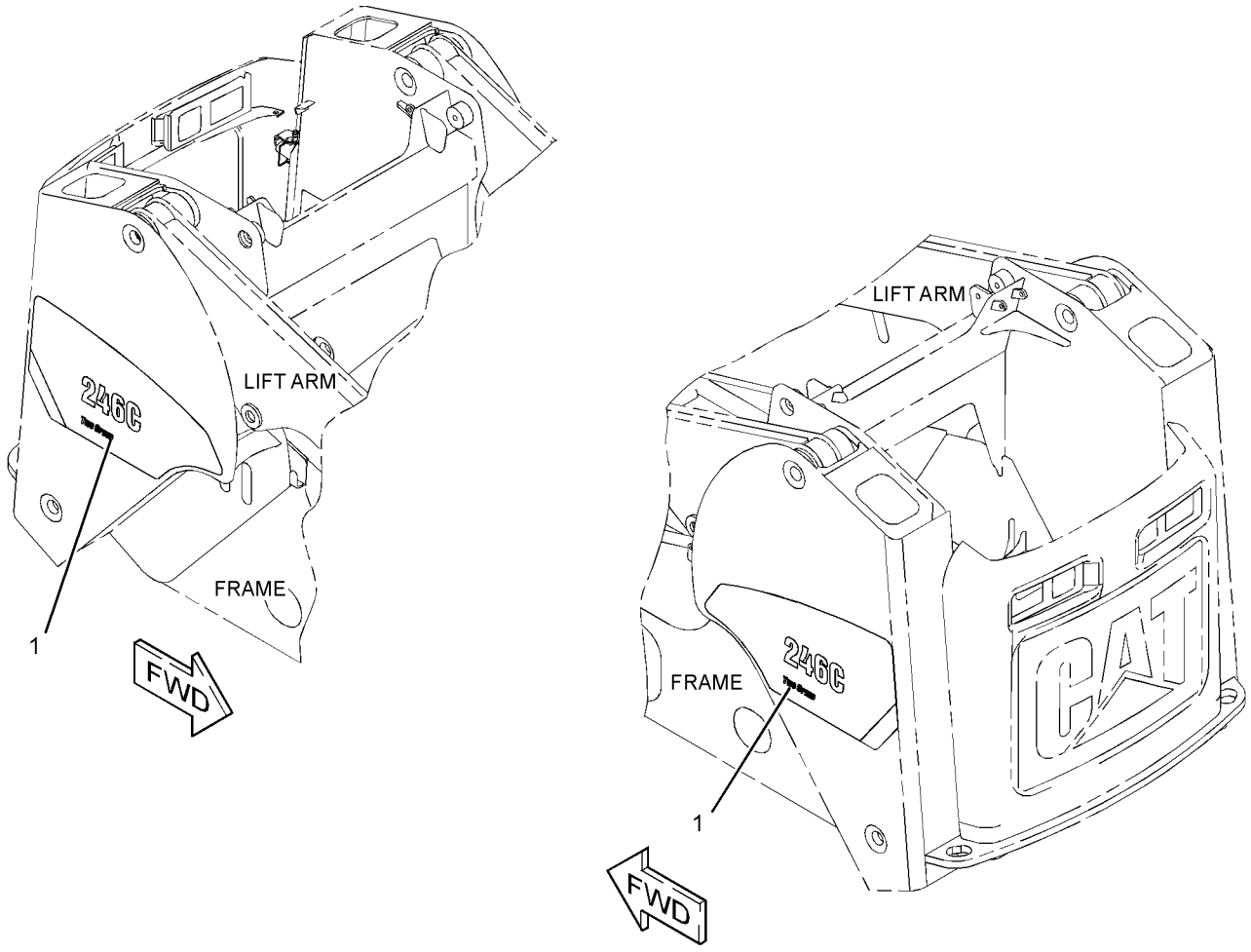

GRAPHIC #1 **<END>** g01327235

SERVICE EQUIPMENT AND SUPPLIES

247-0678 PLATE & FILM GP

S/N: JAY1-UP
PART OF 231-5275, 231-5277 BLADE AR
AN ATTACHMENT

SMCS-7405, 7557 **i02469823**

NOTE	REF NO	GRAPHIC REF	PART NUMBER	QTY	PART NAME 1 2 3 4 5 6 (PRODUCT LEVEL)	SEE PAGE
	1	1	**7X-3229**	4	FILM-INSTRUCTION (LIFT EYE, TIE-DOWN LOCATION)	
	2	1	**226-1242**	2	FILM-WARNING (CRUSH HAZARD, STAY BACK, U.S.)	
	3	1	**228-3581**	1	FILM-WARNING (DO NOT OPERATE, READ OMM)	
	4	1	**159-8035**	1	FILM-WARNING (CRUSH HAZARD, STAY BACK)	
	5	1	**124-2456**	1	FILM-INSTRUCTION (NO STEP)	

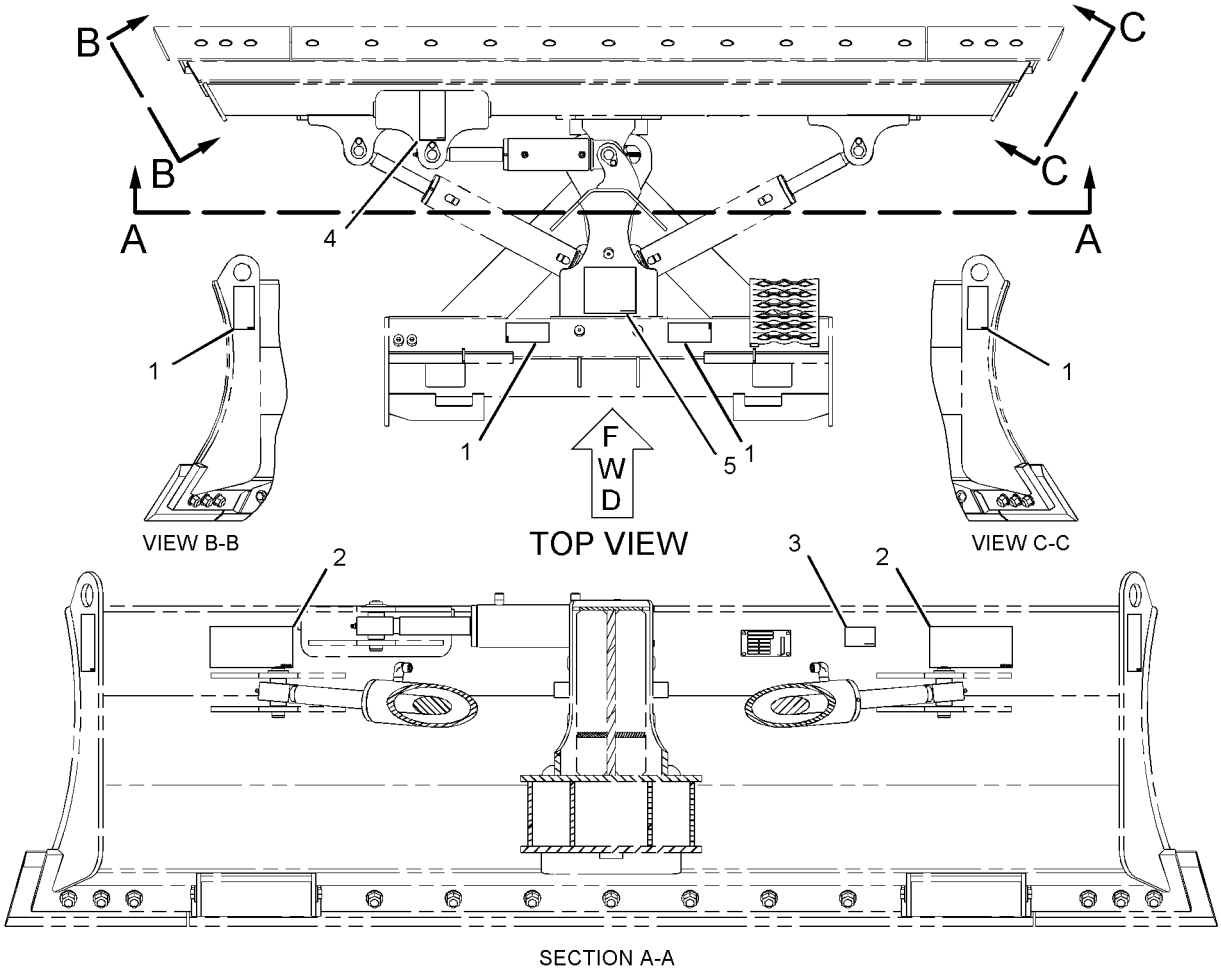

GRAPHIC #1 **<END>** g01120449

SERVICE EQUIPMENT AND SUPPLIES

258-3221 PLATE & FILM GP

S/N: JAY1-2059

AN ATTACHMENT

SMCS-7405, 7557 **i02770318**

NOTE	REF NO	GRAPHIC REF	PART NUMBER	QTY	PART NAME 1 2 3 4 5 6 (PRODUCT LEVEL)	SEE PAGE
	1	2	**157-2853**	1	FILM-INFORMATION (READ OMM)	
	2	2	**169-2876**	1	FILM-IDENTIFICATION (POWER RECEPTACLE, 12-VOLT)	
	3	1	**219-0302**	1	FILM-WARNING (NO WELD, NO DRILL, READ OMM)	
	4	1	**224-7830**	1	FILM-WARNING (HIGH PRESSURE, READ OMM, U.S.)	
	5	3	**224-8945**	1	FILM-WARNING (DO NOT USE ETHER, U.S)	
	6	2	**228-2615**	1	FILM-WARNING (UNIVERSAL, U.S.)	
	7	3	**233-0059**	1	FILM-WARNING (GROUND)	
	8	1	**234-6070**	1	FILM-WARNING (CRUSH HAZARD, CAB, READ OMM)	
	9	2	**234-6072**	1	FILM-WARNING (CRUSH HAZARD, READ OMM)	
	10	2	**234-6074**	1	FILM-WARNING (FALL/CRUSH HAZARD, NO ACCESS)	
	11	2	**234-6077**	1	FILM-WARNING (CRUSH HAZARD, READ OMM)	
	12	2	**295-2567**	1	FILM-INSTRUCTION (BUCKET LOWER)	
	13	2	**235-1365**	1	FILM-WARNING (HOT FLUID UNDER PRESSURE)	
	14	3	**239-6986**	1	PLATE-IDENTIFICATION (MACHINE)	
	15	2	**253-9499**	1	FILM-WARNING (JUMP START, READ OMM) (JUMP START)	
	16	2,3	**263-4836**	4	FILM-SYMBOL (TIE-DOWN)	
	17	3	**302-4389**	1	FILM-WARNING (CRUSH HAZARD, FASTEN SEAT BELT)	
	18	2	**285-2167**	1	FILM-INSTRUCTION (SERVICE CHART, READ OMM)	
	19	1	**285-2171**	1	FILM-WARNING (ROPS, FOPS, READ OMM)	
	20	2	**285-2172**	1	FILM-WARNING (CRUSH HAZARD, READ OMM)	
	21	3	**285-2176**	1	FILM-SPEED (THROTTLE)	
	22	1	**285-2177**	1	FILM-INSTRUCTION (OPERATOR CONSOLE)	
	23	1	**285-2178**	1	FILM-INSTRUCTION (OPERATOR CONTROL)	
	24	3	**308-1439**	1	FILM-WARNING (CRUSH HAZARD, FASTEN SEAT BELT)	
	25	3	**312-7747**	1	PLATE-WARNING (UNIVERSAL)	

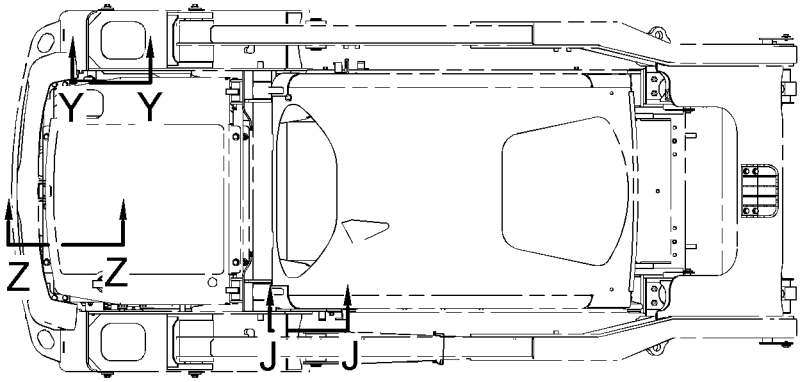

FWD

TOP VIEW

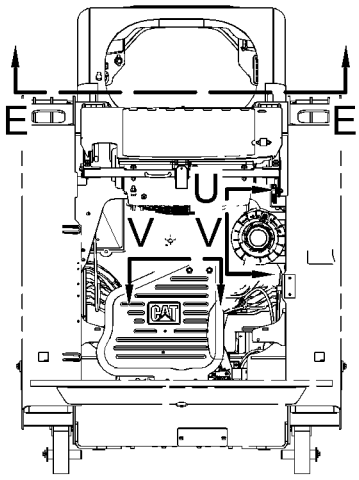

REAR VIEW

(ENGINE DOOR REMOVED FOR CLARITY)

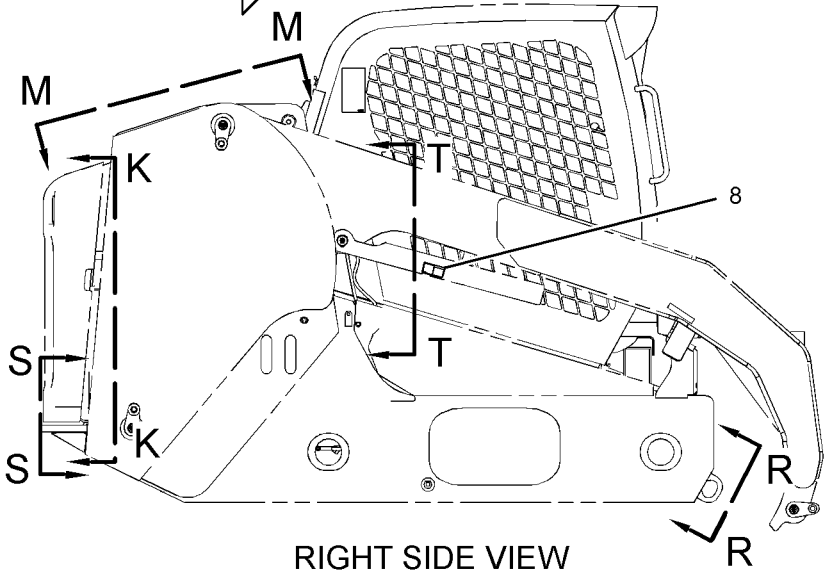

RIGHT SIDE VIEW

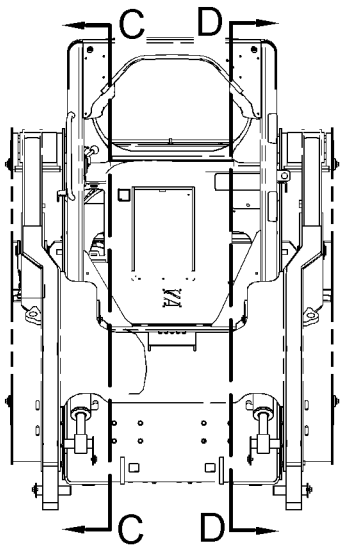

FRONT VIEW

REFER TO ALL ILLUSTRATIONS OF
THIS GROUP FOR AUXILIARY VIEWS

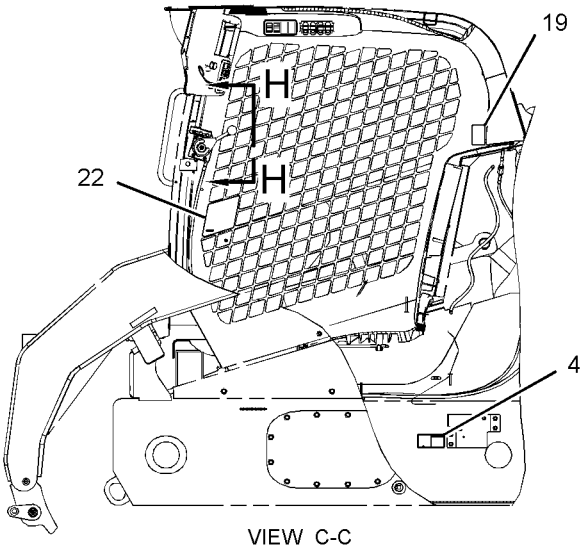

VIEW C-C

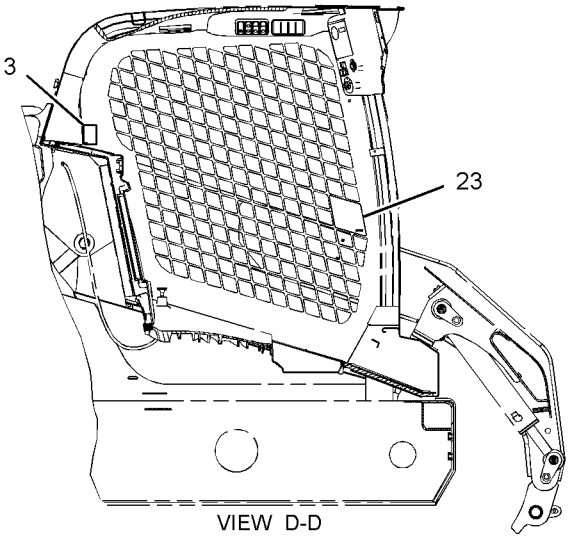

VIEW D-D

GRAPHIC #1

g01410538

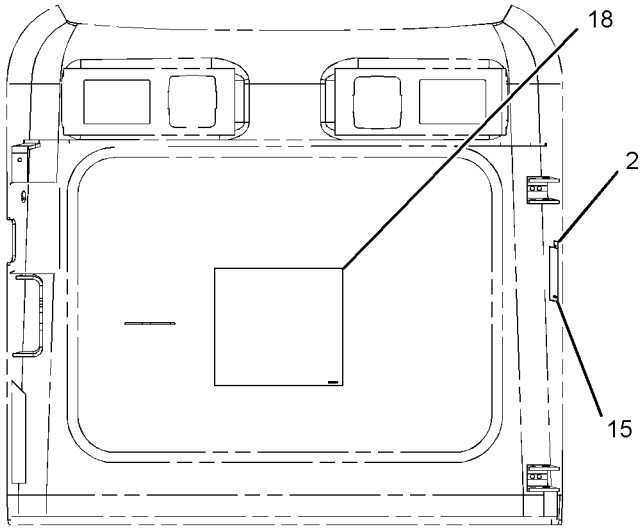

VIEW K-K

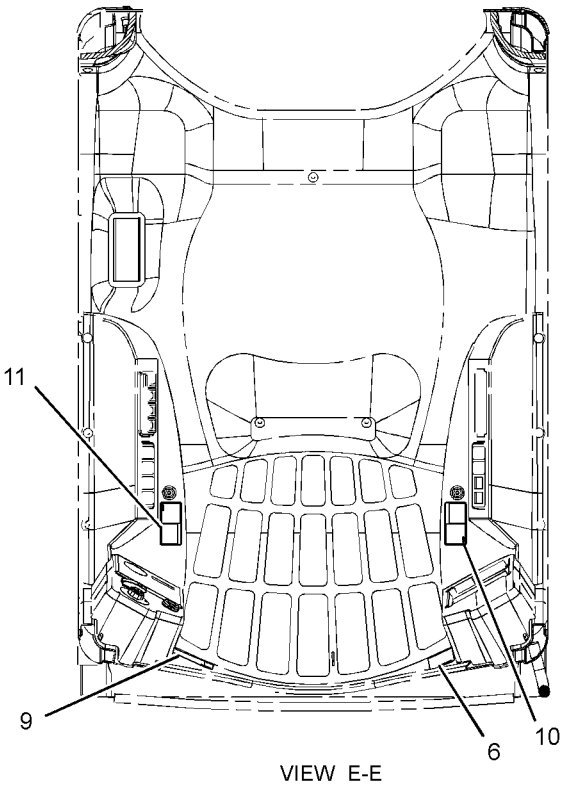

VIEW E-E

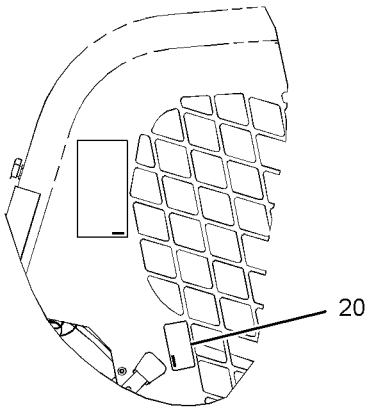

VIEW J-J

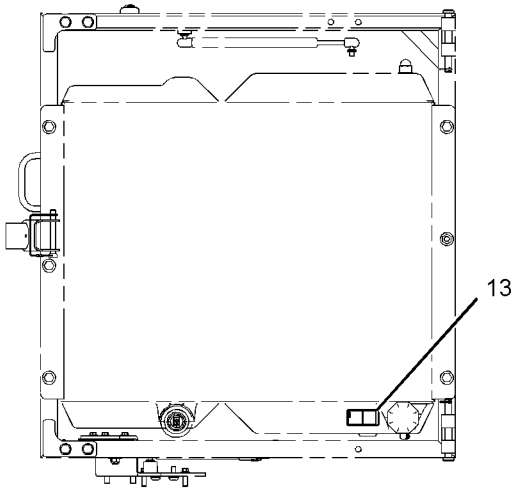

VIEW M-M

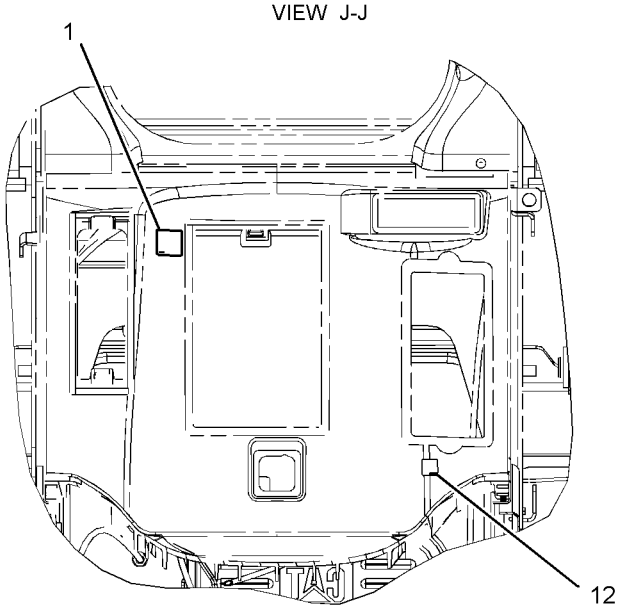

VIEW T-T

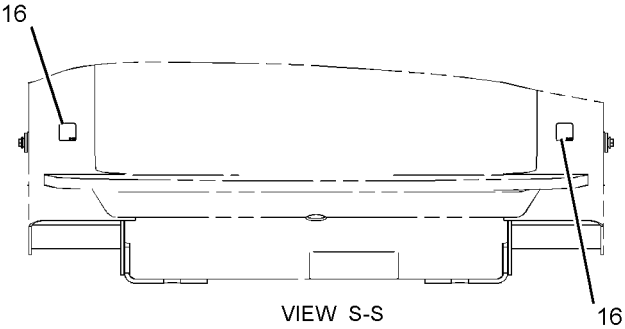

VIEW S-S

GRAPHIC #2

g01333138

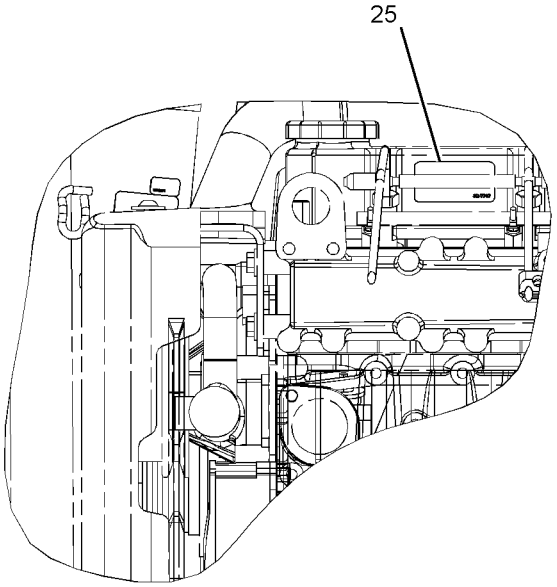

VIEW Z-Z

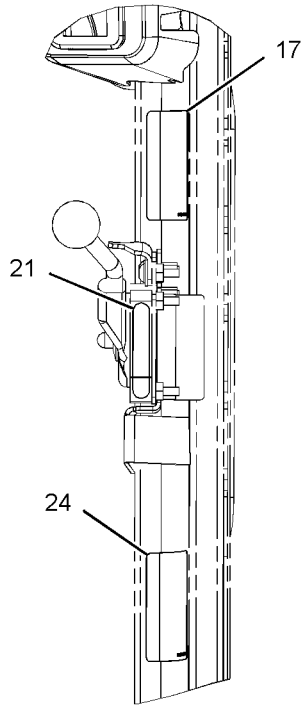

VIEW H-H

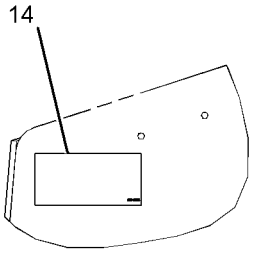

VIEW Y-Y

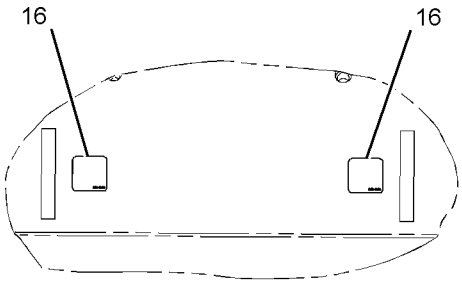

VIEW R-R

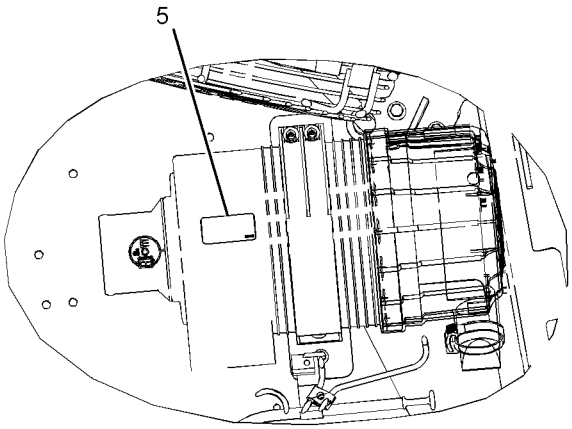

VIEW U

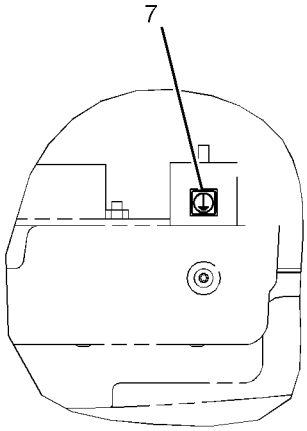

VIEW V-V

GRAPHIC #3 **<END>** g01410539

SERVICE EQUIPMENT AND SUPPLIES

258-3221 PLATE & FILM GP

S/N: JAY2060-UP

AN ATTACHMENT

SMCS-7405, 7557 **i02875454**

NOTE	REF NO	GRAPHIC REF	PART NUMBER	QTY	PART NAME 1 2 3 4 5 6 (PRODUCT LEVEL)	SEE PAGE
	1	2	**157-2853**	1	FILM-INFORMATION (READ OMM)	
	2	2	**169-2876**	1	FILM-IDENTIFICATION (POWER RECEPTACLE, 12-VOLT)	
	3	1	**219-0302**	1	FILM-WARNING (NO WELD, NO DRILL, READ OMM)	
	4	1	**224-7830**	1	FILM-WARNING (HIGH PRESSURE, READ OMM, U.S.)	
	5	3	**224-8945**	1	FILM-WARNING (DO NOT USE ETHER, U.S)	
	6	2	**228-2615**	1	FILM-WARNING (UNIVERSAL, U.S.)	
	7	3	**233-0059**	1	FILM-WARNING (GROUND)	
C	8	1	**295-7317**	1	FILM-WARNING (CRUSH HAZARD, CAB, READ OMM)	
C	9	2	**295-7320**	1	FILM-WARNING (CRUSH HAZARD, READ OMM)	
C	10	2	**295-7318**	1	FILM-WARNING (FALL/CRUSH HAZARD, NO ACCESS)	
C	11	2	**295-7319**	1	FILM-WARNING (CRUSH HAZARD, READ OMM)	
	12	2	**295-2567**	1	FILM-INSTRUCTION (BUCKET LOWER)	
	13	2	**235-1365**	1	FILM-WARNING (HOT FLUID UNDER PRESSURE)	
	14	3	**239-6986**	1	PLATE-IDENTIFICATION (MACHINE)	
	15	2	**253-9499**	1	FILM-WARNING (JUMP START, READ OMM) (JUMP START)	
	16	2,3	**263-4836**	4	FILM-SYMBOL (TIE-DOWN)	
	17	3	**302-4389**	1	FILM-WARNING (CRUSH HAZARD, FASTEN SEAT BELT)	
	18	2	**285-2167**	1	FILM-INSTRUCTION (SERVICE CHART, READ OMM)	
	19	1	**285-2171**	1	FILM-WARNING (ROPS, FOPS, READ OMM)	
C	20	2	**295-7316**	1	FILM-WARNING (CAB SUPPORT) (CRUSH-CAB)	
	21	3	**285-2176**	1	FILM-SPEED (THROTTLE)	
	22	1	**285-2177**	1	FILM-INSTRUCTION (OPERATOR CONSOLE)	
	23	1	**285-2178**	1	FILM-INSTRUCTION (OPERATOR CONTROL)	
C	24	3	**295-7337**	1	FILM-WARNING (ARM CRUSHING HAZARD) (CRUSH EJECT)	
	25	3	**312-7747**	1	PLATE-WARNING (UNIVERSAL)	
C	26	2	**295-7340**	1	FILM-INSTRUCTION (FUEL, READ OMM)	

C-CHANGE FROM PREVIOUS TYPE

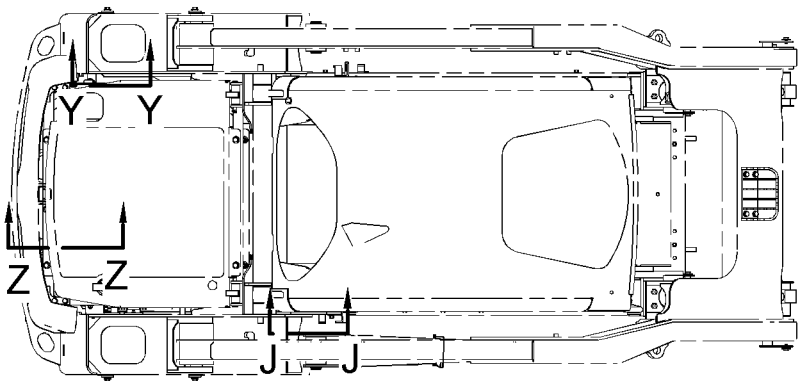

FWD

TOP VIEW

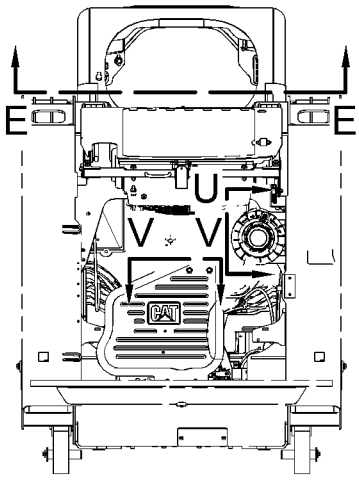

REAR VIEW

(ENGINE DOOR REMOVED FOR CLARITY)

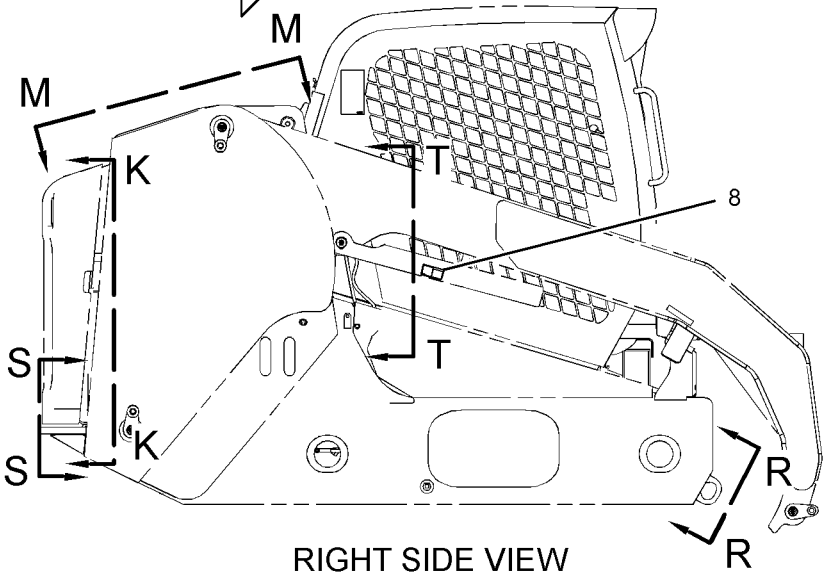

RIGHT SIDE VIEW

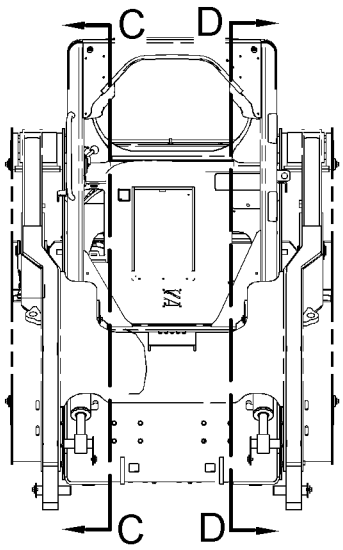

FRONT VIEW

REFER TO ALL ILLUSTRATIONS OF
THIS GROUP FOR AUXILIARY VIEWS

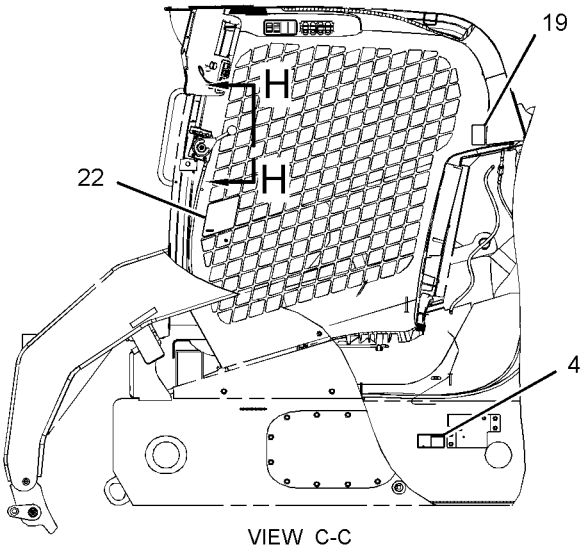

VIEW C-C

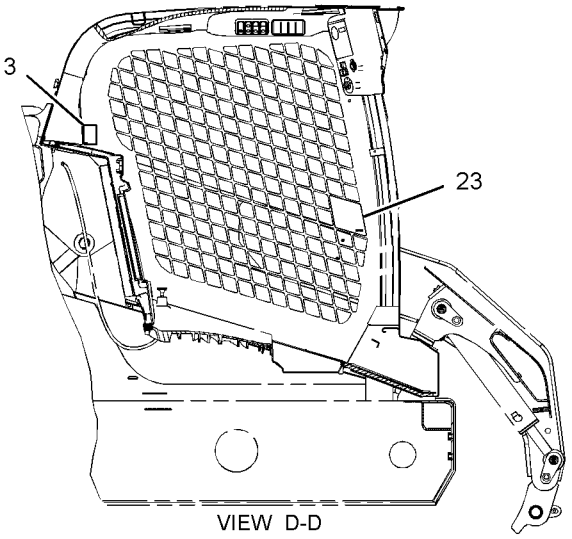

VIEW D-D

GRAPHIC #1

g01410538

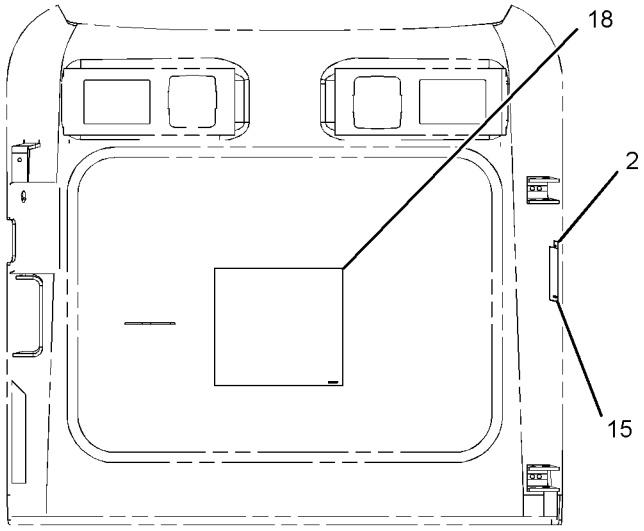

VIEW K-K

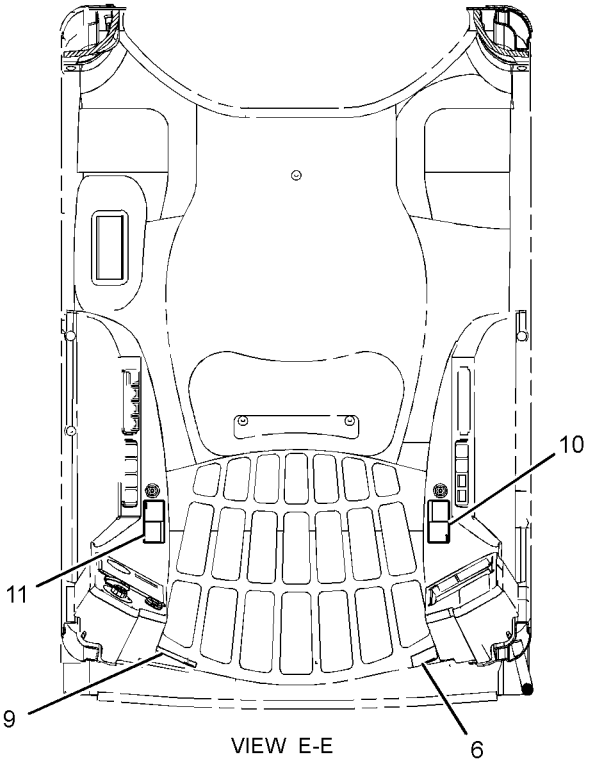

VIEW E-E

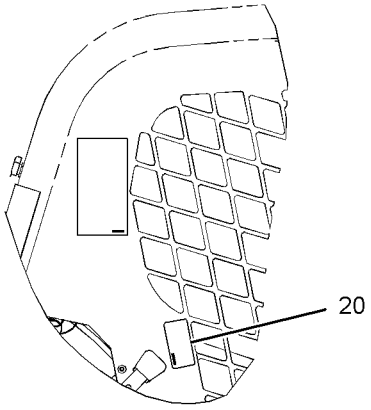

VIEW J-J

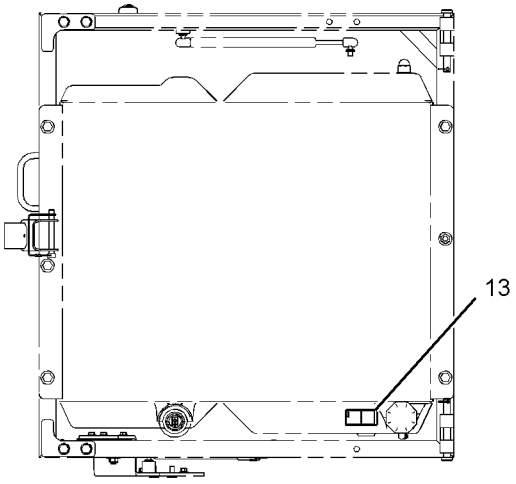

VIEW M-M

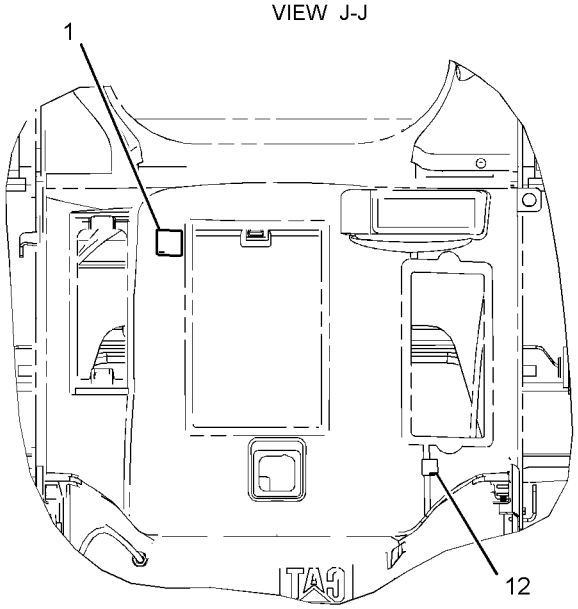

VIEW T-T

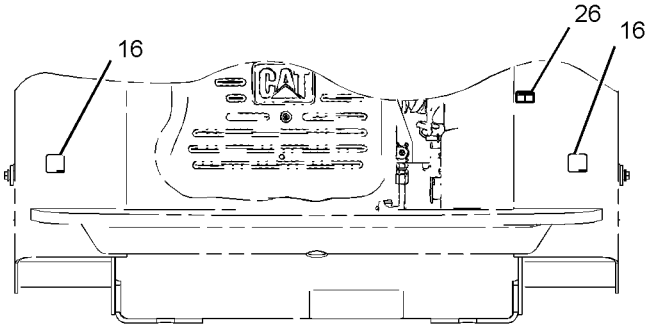

VIEW S-S

GRAPHIC #2

g01455452

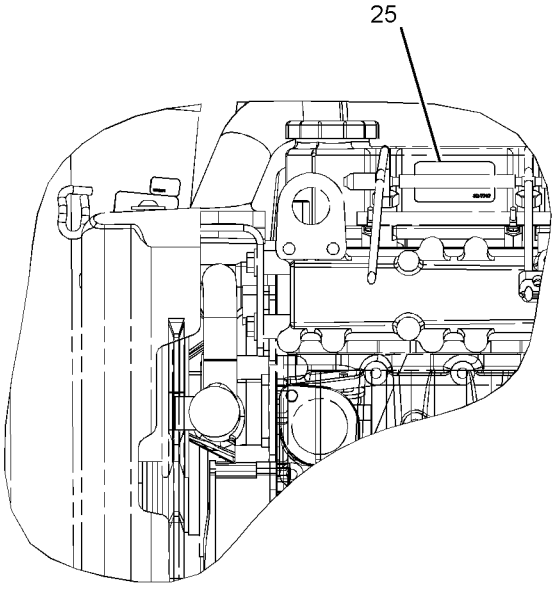

VIEW Z-Z

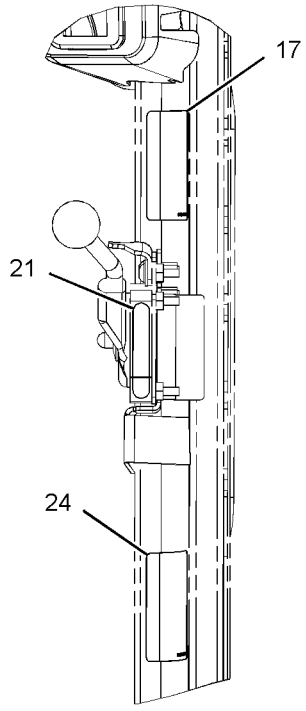

VIEW H-H

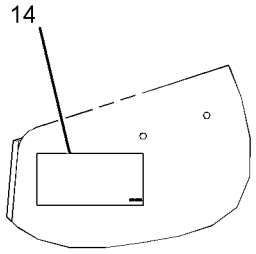

VIEW Y-Y

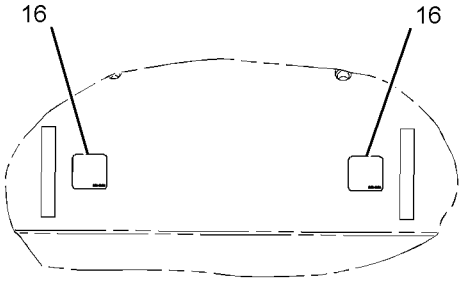

VIEW R-R

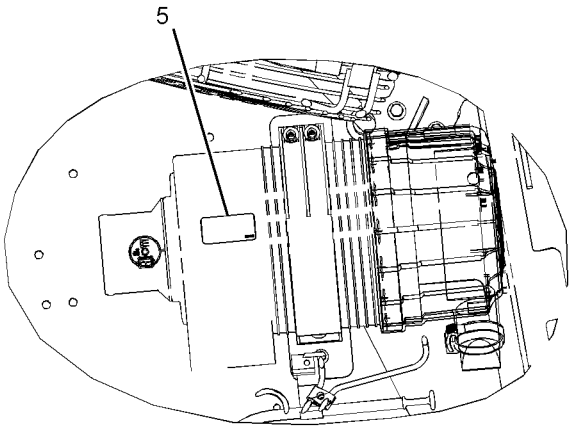

VIEW U

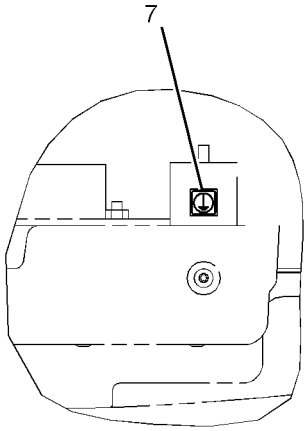

VIEW V-V

GRAPHIC #3 **<END>** g01410539

SERVICE EQUIPMENT AND SUPPLIES

258-3225 PLATE & FILM GP

S/N: JAY1-2059
AN ATTACHMENT

SMCS-7405, 7557 **i02770323**

NOTE	REF NO	GRAPHIC REF	PART NUMBER	QTY	PART NAME 1 2 3 4 5 6 (PRODUCT LEVEL)	SEE PAGE
	1	2	**157-2853**	1	FILM-INFORMATION (READ OMM)	
	2	2	**169-2876**	1	FILM-IDENTIFICATION (POWER RECEPTACLE, 12-VOLT)	
	3	1	**219-0302**	1	FILM-WARNING (NO WELD, NO DRILL, READ OMM)	
	4	1	**224-0672**	1	FILM-WARNING (HIGH PRESSURE, READ OMM, INTL)	
	5	2	**224-8946**	1	FILM-WARNING (NO ETHER SPRAY/AIR INTK, INTL)	
	6	2	**228-2616**	1	FILM-WARNING (UNIVERSAL, READ OMM, INTL)	
	7	2	**233-0059**	1	FILM-WARNING (GROUND)	
	8	1	**234-6071**	1	FILM-WARNING (LIFT ARM BRACE)	
	9	2	**234-6069**	1	FILM-WARNING (CRUSH HAZARD)	
	10	2	**234-6076**	1	FILM-WARNING (NO ACCESS)	
	11	2	**234-6081**	1	FILM-WARNING (WORK TOOL)	
	13	2	**235-1368**	1	FILM-WARNING (RADIATOR)	
	14	2	**239-6986**	1	PLATE-IDENTIFICATION (MACHINE)	
	15	2	**253-7817**	1	FILM-WARNING (JUMP START, READ OMM)	
	16	1,2	**263-4836**	4	FILM-SYMBOL (TIE-DOWN)	
	18	2	**285-2167**	1	FILM-INSTRUCTION (SERVICE CHART, READ OMM)	
	19	1	**285-2171**	1	FILM-WARNING (ROPS, FOPS, READ OMM)	
	20	1	**285-2173**	1	FILM-WARNING (CRUSH HAZARD, READ OMM)	
	21	1	**285-2176**	1	FILM-SPEED (THROTTLE)	
	22	1	**285-2177**	1	FILM-INSTRUCTION (OPERATOR CONSOLE)	
	23	1	**285-2178**	1	FILM-INSTRUCTION (OPERATOR CONTROL)	
	24	2	**295-2567**	1	FILM-INSTRUCTION (BUCKET LOWER)	
	25	1	**302-4390**	1	FILM-WARNING (CRUSH HAZARD, FASTEN SEAT BELT)	
	26	1	**308-1440**	1	FILM-WARNING (CRUSH HAZARD, FASTEN SEAT BELT)	
	27	2	**312-7748**	1	PLATE-WARNING (UNIVERSAL, READ OMM)	

REFER TO ALL ILLUSTRATIONS OF
THIS GROUP FOR AUXILIARY VIEWS

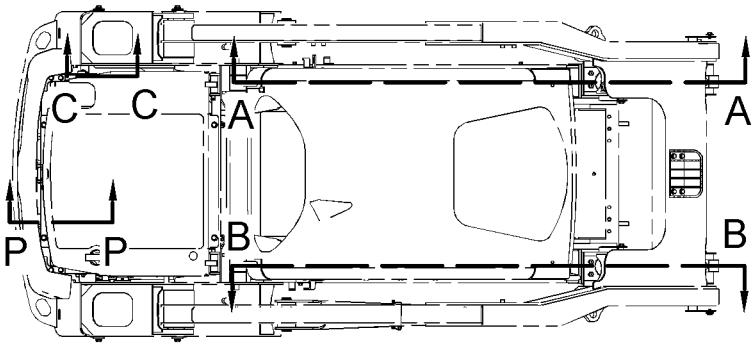

TOP VIEW

FWD

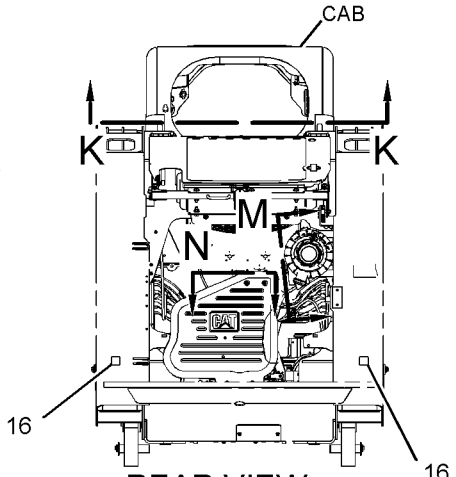

REAR VIEW
(ENGINE DOOR REMOVED FOR CLARITY)

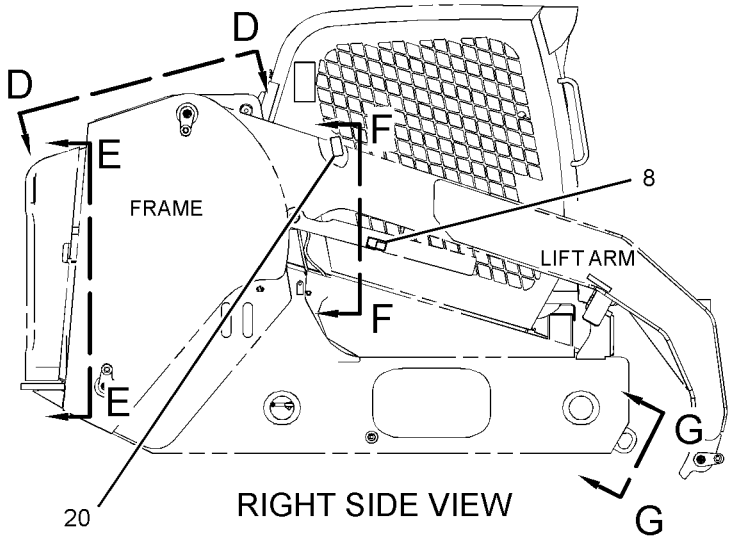

RIGHT SIDE VIEW

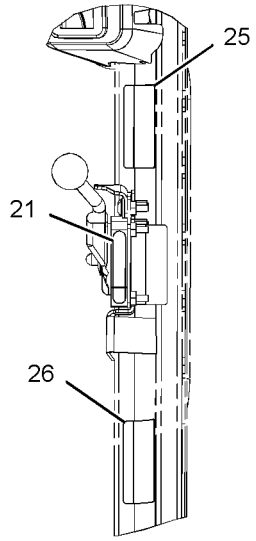

VIEW H-H

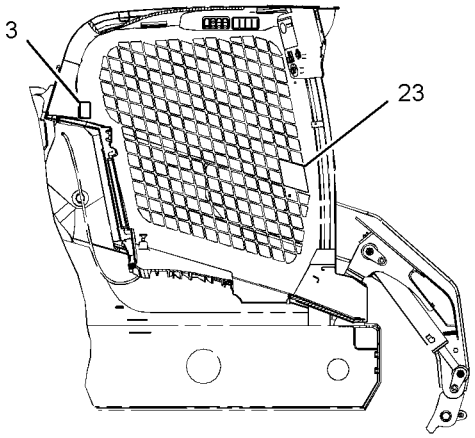

VIEW A-A

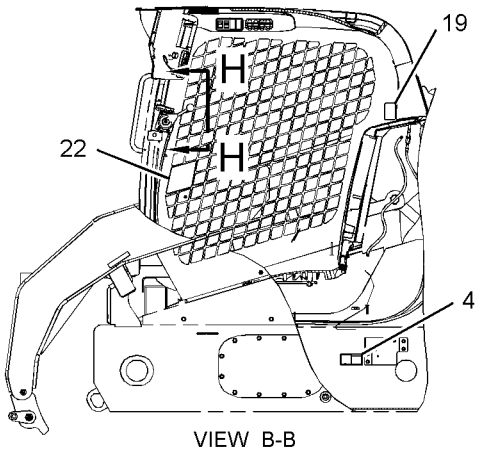

VIEW B-B

GRAPHIC #1

g01413043

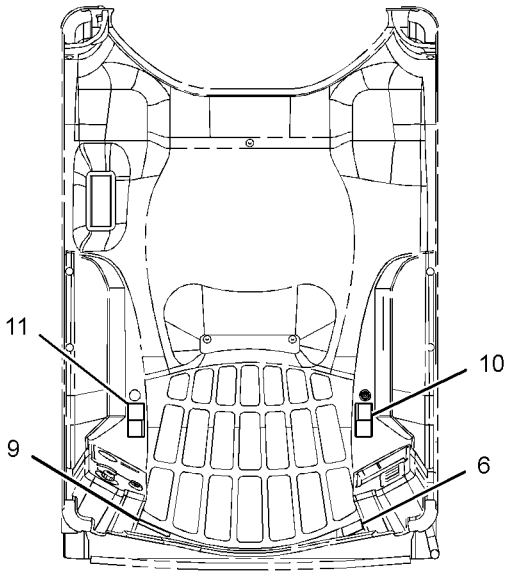

VIEW K-K

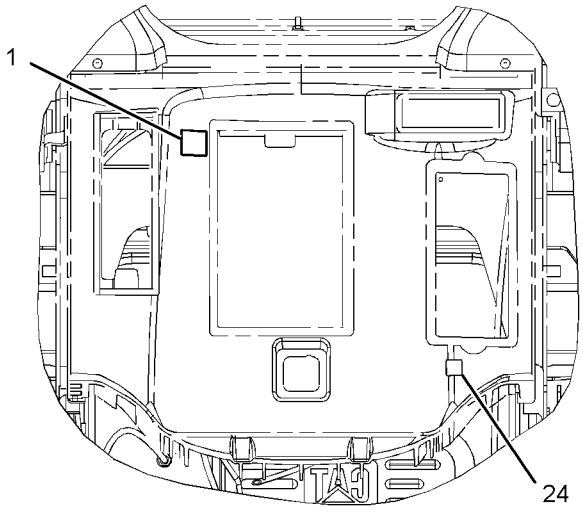

VIEW F-F

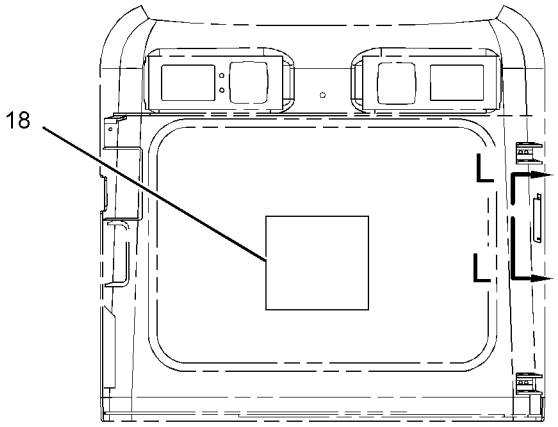

VIEW E-E

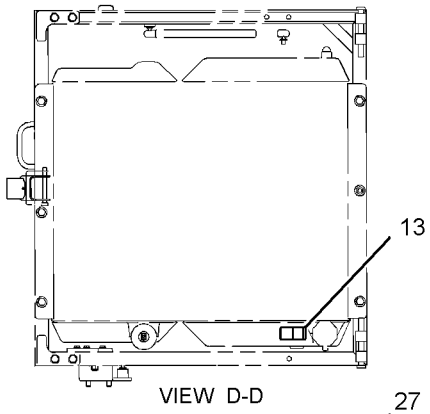

VIEW D-D

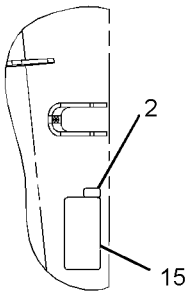

VIEW L-L

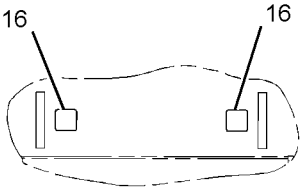

VIEW G-G

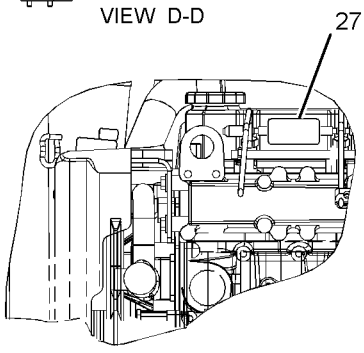

VIEW P-P

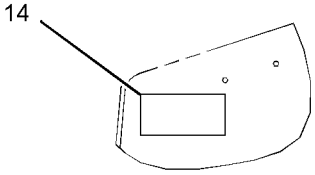

VIEW C-C

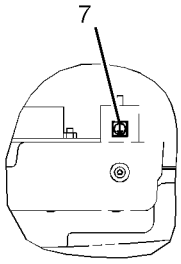

VIEW N

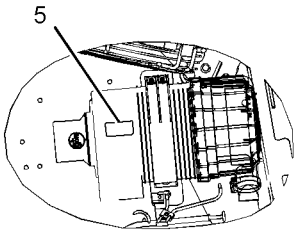

VIEW M

GRAPHIC #2 **<END>** g01413044

SERVICE EQUIPMENT AND SUPPLIES

258-3225 PLATE & FILM GP

S/N: JAY2060-UP
AN ATTACHMENT

SMCS-7405, 7557 **i02875732**

NOTE	REF NO	GRAPHIC REF	PART NUMBER	QTY	PART NAME 1 2 3 4 5 6 (PRODUCT LEVEL)	SEE PAGE
	1	2	**157-2853**	1	FILM-INFORMATION (READ OMM)	
	2	2	**169-2876**	1	FILM-IDENTIFICATION (POWER RECEPTACLE, 12-VOLT)	
	3	1	**219-0302**	1	FILM-WARNING (NO WELD, NO DRILL, READ OMM)	
	4	1	**224-0672**	1	FILM-WARNING (HIGH PRESSURE, READ OMM, INTL)	
	5	2	**224-8946**	1	FILM-WARNING (NO ETHER SPRAY/AIR INTK, INTL)	
	6	2	**228-2616**	1	FILM-WARNING (UNIVERSAL, READ OMM, INTL)	
	7	2	**233-0059**	1	FILM-WARNING (GROUND)	
C	8	1	**295-7327**	1	FILM-WARNING (CRUSH HAZARD, READ OMM)	
C	9	2	**295-7330**	1	FILM-WARNING (CRUSH HAZARD, READ OMM)	
C	10	2	**295-7328**	1	FILM-WARNING (FALL/CRUSH HAZARD, NO ACCESS)	
C	11	2	**295-7329**	1	FILM-WARNING (CRUSH HAZARD, READ OMM)	
	13	2	**235-1368**	1	FILM-WARNING (RADIATOR)	
	14	2	**239-6986**	1	PLATE-IDENTIFICATION (MACHINE)	
	15	2	**253-7817**	1	FILM-WARNING (JUMP START, READ OMM)	
	16	1,2	**263-4836**	4	FILM-SYMBOL (TIE-DOWN)	
	18	2	**285-2167**	1	FILM-INSTRUCTION (SERVICE CHART, READ OMM) (SERVICE CHART)	
	19	1	**285-2171**	1	FILM-WARNING (ROPS, FOPS, READ OMM)	
C	20	1	**295-7326**	1	FILM-WARNING (CRUSH HAZARD, CAB, READ OMM)	
	21	1	**285-2176**	1	FILM-SPEED (THROTTLE)	
	22	1	**285-2177**	1	FILM-INSTRUCTION (OPERATOR CONSOLE)	
	23	1	**285-2178**	1	FILM-INSTRUCTION (OPERATOR CONTROL)	
	24	2	**295-2567**	1	FILM-INSTRUCTION (BUCKET LOWER)	
	25	1	**302-4390**	1	FILM-WARNING (CRUSH HAZARD, FASTEN SEAT BELT)	
C	26	1	**295-7338**	1	FILM-WARNING (CRUSH HAZARD, FASTEN SEAT BELT) (READ OMM)	
	27	2	**312-7748**	1	PLATE-WARNING (UNIVERSAL, READ OMM)	

C-CHANGE FROM PREVIOUS TYPE

REFER TO ALL ILLUSTRATIONS OF
THIS GROUP FOR AUXILIARY VIEWS

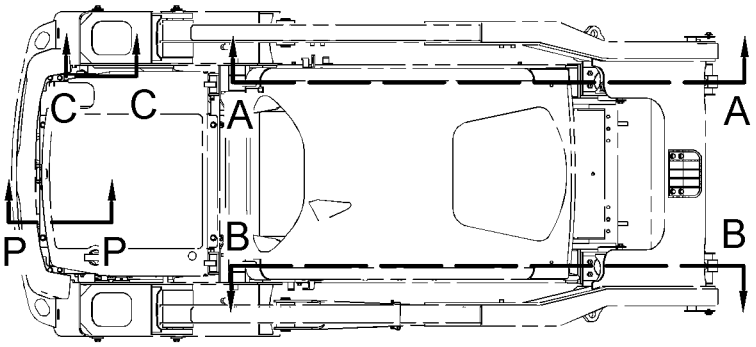

TOP VIEW

FWD

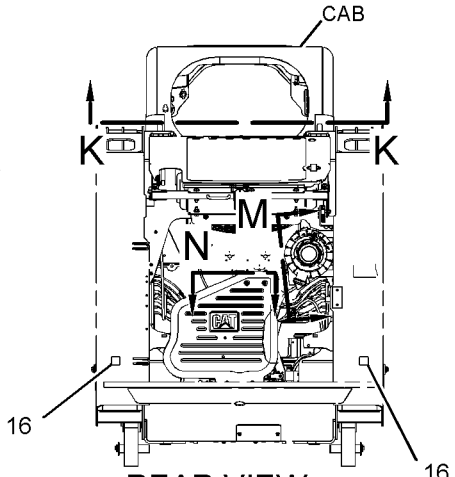

REAR VIEW
(ENGINE DOOR REMOVED FOR CLARITY)

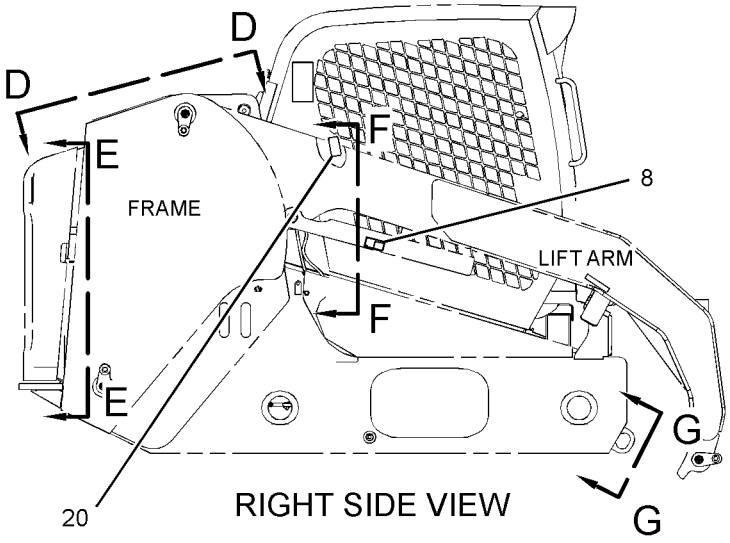

RIGHT SIDE VIEW

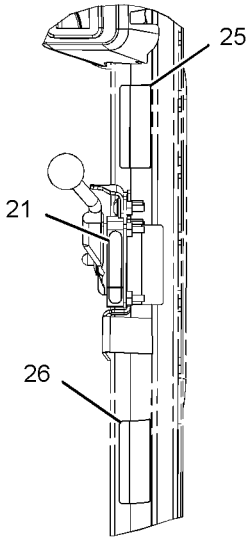

VIEW H-H

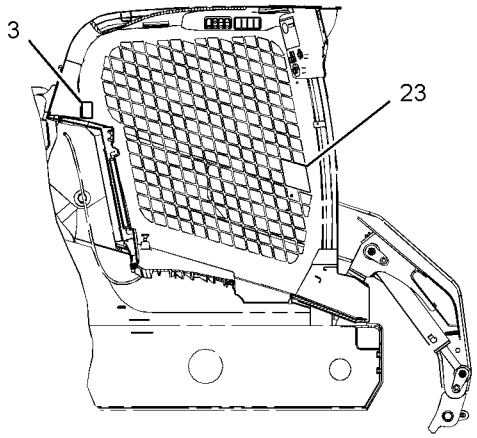

VIEW A-A

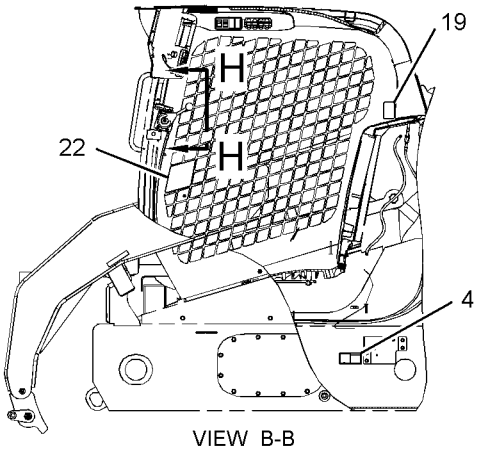

VIEW B-B

GRAPHIC #1

g01413043

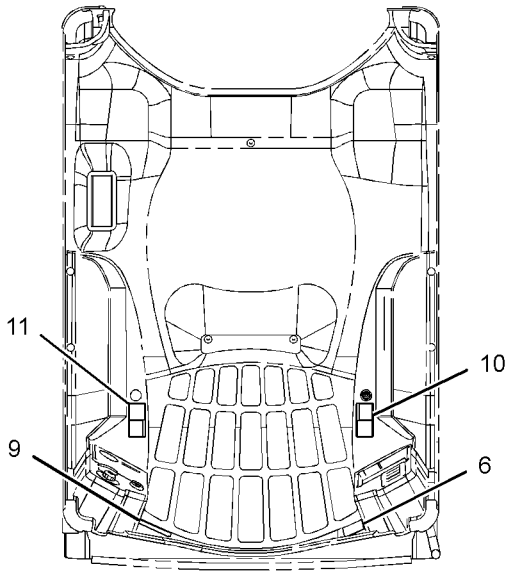

VIEW K-K

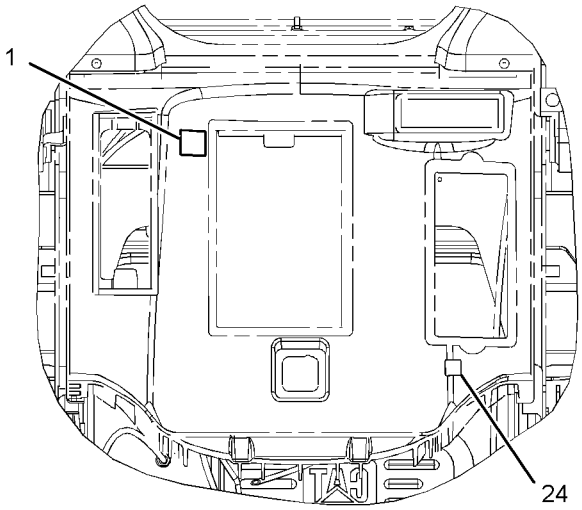

VIEW F-F

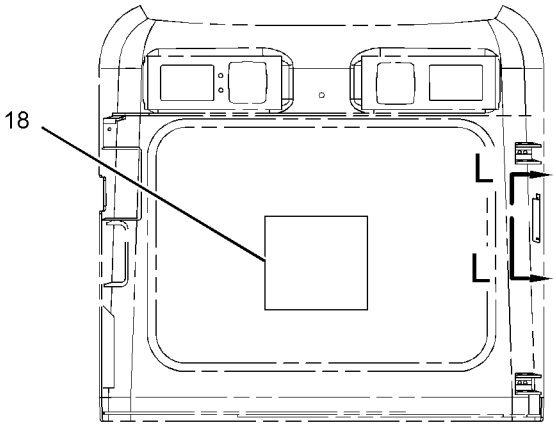

VIEW E-E

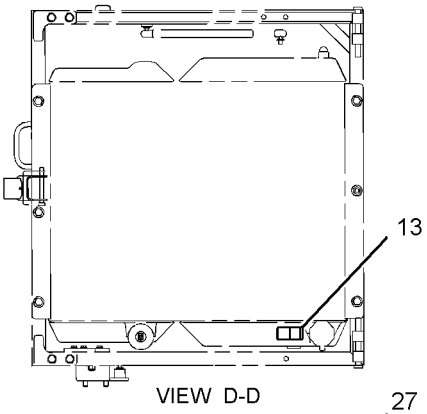

VIEW D-D

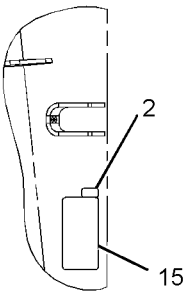

VIEW L-L

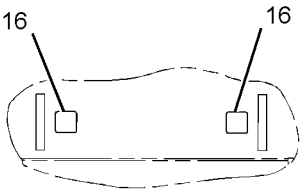

VIEW G-G

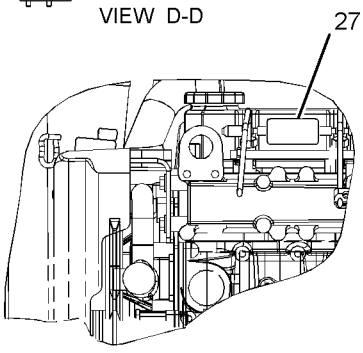

VIEW P-P

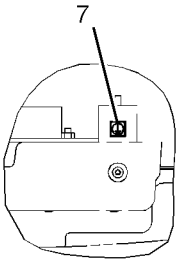

VIEW N

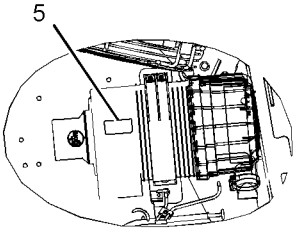

VIEW M

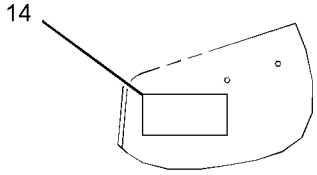

VIEW C-C

GRAPHIC #2 **<END>** g01413044

SERVICE EQUIPMENT AND SUPPLIES

286-9251 PLATE & FILM GP

S/N: JAY1-UP

PART OF 286-9300, 286-9301 BUCKET AR-GRAPPLE

AN ATTACHMENT

SMCS-7405, 7557 **i02723719**

NOTE	REF NO	GRAPHIC REF	PART NUMBER	QTY	PART NAME 1 2 3 4 5 6 (PRODUCT LEVEL)	SEE PAGE
	1	1	**168-8389**	4	TACK-FASTENER	
	2	1	**228-3369**	1	FILM-WARNING (DO NOT OPERATE, READ OMM)	
	3	1	**247-6118**	2	FILM-WARNING (CRUSH HAZARD, STAY BACK)	
	4	1	**248-5245**	2	FILM-INFORMATION (LIFT EYE, TIE-DOWN LOCATION)	
	5	1	**255-6540**	1	PLATE-INSTRUCTION (BUCKET SPECIFICATIONS)	

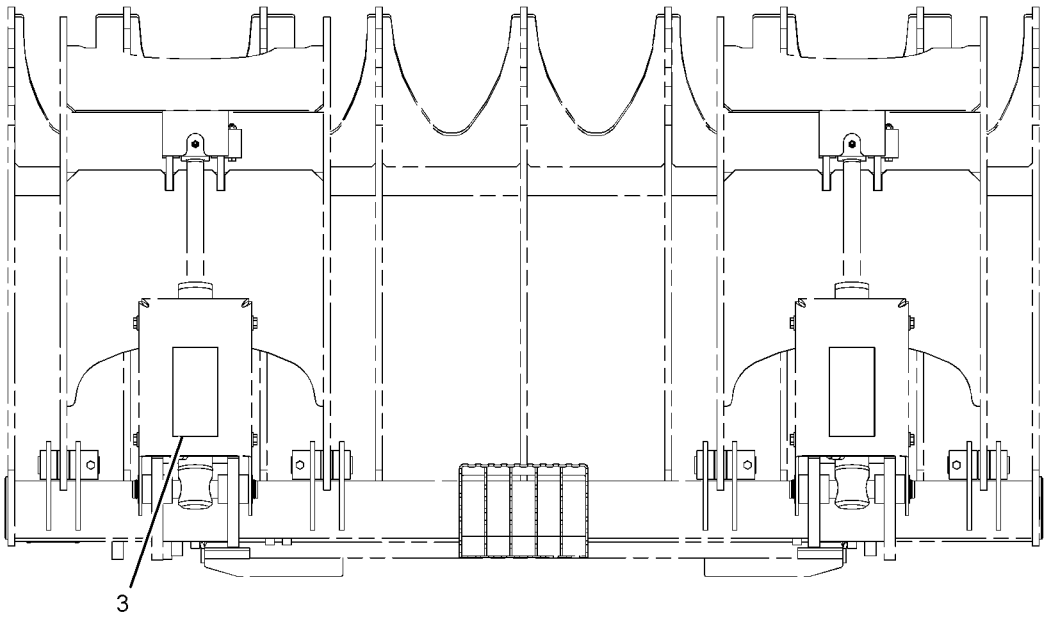

TOP VIEW

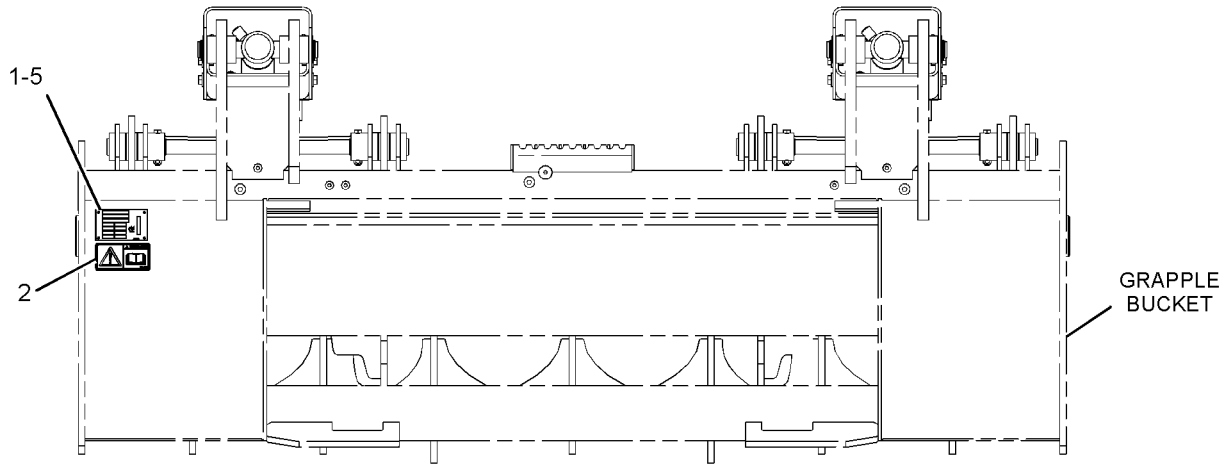

REAR VIEW

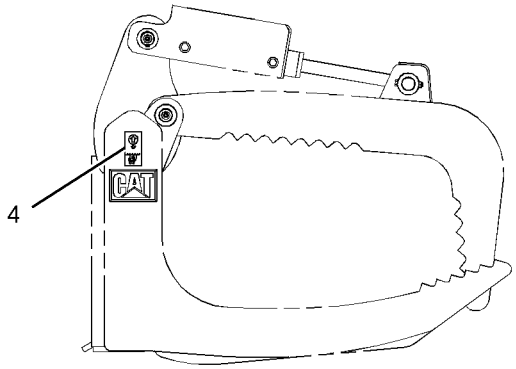

RIGHT SIDE VIEW

GRAPHIC #1

<END>

g01373367

SERVICE EQUIPMENT AND SUPPLIES

304-5237 PLATE & FILM GP

S/N: JAY1-UP

AN ATTACHMENT

SMCS-7405, 7557 **i03505801**

NOTE	REF NO	GRAPHIC REF	PART NUMBER	QTY	PART NAME 1 2 3 4 5 6 (PRODUCT LEVEL)	SEE PAGE
	1	1	**199-3410**	2	FILM-IDENTIFICATION (SYNTHETIC HYD OIL, READ OMM)	

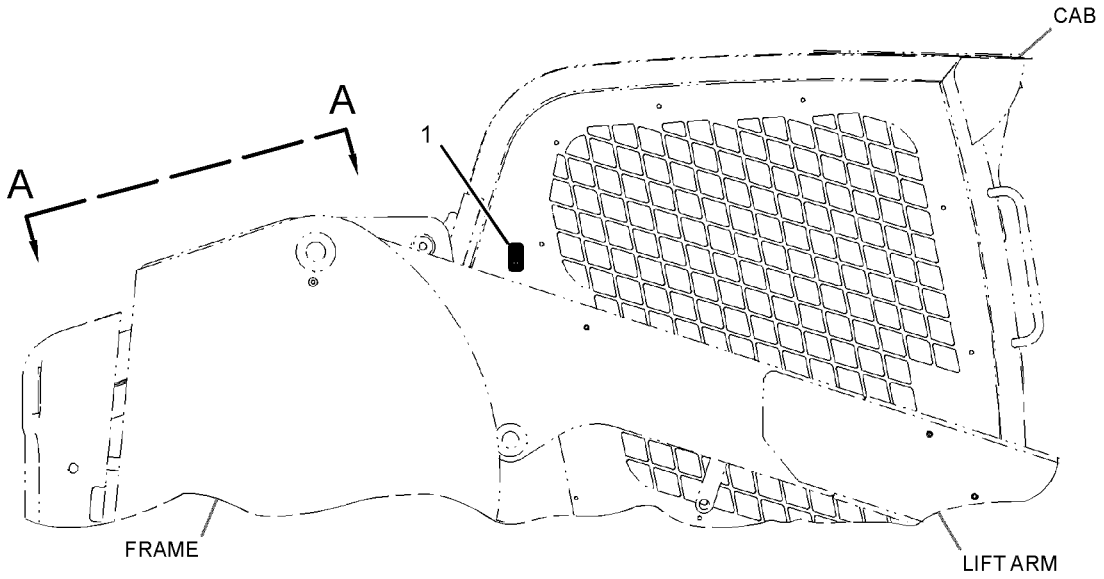

RIGHT SIDE VIEW

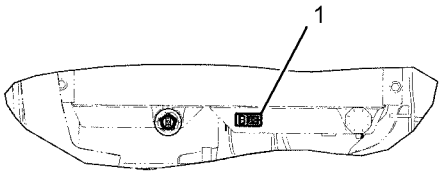

VIEW A-A

GRAPHIC #1 **<END>** g01346444

PART NUMBER INDEX

Part	Page
1	
1B-2705	775
	777
1B-3057	397
1D-4677	780
1F-7567	205
1G-8878	200
1H-3244	131
	162
1H-8134	444
1J-9671	281
	282
1L-2279	613
1M-6119	184
1M-6120	184
1P-0810	137
	178
	181
	184
1P-1210	770
	772
1P-3703	373
	376
	379
	382
	385
	388
	392
1P-4278	32
	81
	111
	119
1P-4578	369
	371
1P-4582	373
	376
	379
	382
	385
	388
	392
1R-0734	69
	70
	71
1S-0994	312
	314
	316
	320
	322
	324
	326
	332
1S-7252	137
	184
1S-9593	149
2	
2D-6412	765
	766
2H-7829	346
	348
2J-6540	328
2K-4821	288
2K-4973	82
	84
	250
	257
	775
	777
2L-8065	178
	181
2L-8067	174
2L-8069	174
	178
	181
	187
2L-8076	187
2L-8077	174
2L-8078	174
2L-8079	187
2M-6102	198
2M-7819	775
2M-9780	198
	201
	203
	296
	297
	298
	303
	307
	310
	312
	314
	316
	318
	320
	322
	324
	326
	328
	330
	332
	334
	336
	338
	341
	344
	346
	348
	351
	353
	354
	356
	358
	360
	362
	394
	410
	425
	434
2P-8104	168
2S-3440	369
	371
	373
	376
	379
	382
	385
	388
	391
2S-4078	369
	371
	373
	376
	379
	382
2S-6408	624
2V-3216	318
	344
2V-8260	740
3	
3B-4505	16
	19
	42
	44
	46
	47
	49
	51
	53
	55
	65
	67
	75
	76
	77
	101
	115
	117
	133
	134
	135
	730
	731
3B-4628	304
	579
3B-7255	613
3B-8488	608
3B-8489	283
	285
	286
	287
	288
	289
	294
	418
	419
	421
	444
	452
	453
	546
	547
	548
	549
	550
	551
	552
	553
3D-2824	198
	201
	203
	210
	212
	310
	350
	351
	353
	354
	364
	369
	371
	373
	376
	379
	382
	385
	388
	391
	396
	400
3D-9369	775
3E-3377	409
3E-4321	198
3E-4352	735
3E-4370	592
3E-5153	168
3E-5154	168
3E-6908	258
3E-7404	318
	344
3E-8020	108
	110
3E-9860	777
3F-5108	583
3F-9556	672
	677
	685
	732
	744
	745
3J-1907	200
	203
	205
	206
	208
	210
	212
	299
	303
	334

► **PRIMARY REFERENCE**

PART NUMBER INDEX

Part	Page
	336
	338
	341
	354
	367
	369
	371
	373
	374
	376
	377
	379
	380
	382
	383
	385
	388
	389
	391
	404
	433
	434
	440
3J-7354	281
	282
	356
	358
	360
	362
	369
	371
	373
	376
	379
	382
	385
	388
	391
	425
	434
	436
3K-0360	130
	205
	206
	208
	210
	212
	296
	297
	307
	336
	353
	364
	396
	397
	400
	402
	403
	429
3K-8782	576
3P-1896	22
	24
	28
3S-2093	108
	110
	111
	149
	155
	157
	172
	175
	178
	181
	184
	188
	190
	191
	260
	261
	266
	274
	304
	338
	341
	613
	635
	637
	646
	649
	650
	651
	652
	653
	672
	675
	678
	682
	686
	689
	699
	705
	706
	717
	726
3S-8665	137
	201
	203
	356
	358
	360
	362
3S-9182	251

4

Part	Page
4B-0418	367
4B-4274	367
4B-4278	775
	777
4B-4863	261
	263
	265
	272
4D-6466	111
	119
	304
	338
	341
4F-3658	583
4I-9404	75
	76
	77
4J-0522	369
	371
4J-0527	373
	376
	379
	382
	385
	388
	392
4J-5267	369
	371
4J-5477	298
	303
	307
	338
	341
	342
	356
	358
	360
	362
	373
	376
	379
	382
	385
	388
	391
4J-7533	434
4K-0367	583
4K-1388	434
4K-4709	443
4K-8864	81
	88
	111
	119
	356
	358
	360
	362
	644
	704
	706
4M-0061	767
	770
	772
4M-5285	419
	421
4P-7428	178
	181
4P-7429	178
	181
	407
	643
	704
	706
4P-7581	108
	110
	175
	178
	181
	186
	188
	307
	354
4P-8134	175
	178
	188
	310
	408
4V-0611	396
4V-0612	396
4V-8577	775
	777

5

Part	Page
5B-0651	444
	578
	579
5B-0935	603
5C-2890	104
	106
	131
	137
	162
	175
	663
	666
	668
	671
	674
	677
	681
	686
	689
	707
	710
	713
	722
	746
	775
	777
5C-7261	82
	84
	137
	162
	175
	186
	188
	201
	203
	205
	210
	212
	250
	274
	307
	314
	373
	376
	379
	382
	385
	388
	392

► **PRIMARY REFERENCE**

PART NUMBER INDEX

Part	Page	Part	Page	Part	Page	Part	Page
	403	5I-7931	100		111		181
	613	5I-7933	104		119		261
	672		106	5P-1478	178		263
	678	5I-8021	96		181		265
	685	5I-8023	96	5P-2230	369		272
	701	5I-8056	38		371		633
	730		39		373		635
	731		79		376		697
	732		80		379		699
	744	5I-8063	65		382		739
	745	5I-8109	104		385		775
5C-8310	783		106		388	5P-4868	97
5C-8311	783	5I-8110	104		391		104
5C-8312	261		106	5P-3092	195		106
	263	5I-8111	102		196		369
	265		103		197		371
	272	5J-3886	121	5P-3454	174		373
5C-9553	98	5K-8451	111	5P-3863	424		376
	104		397		427		379
	106	5K-9090	210	5P-4115	175		382
	111		369		188		385
	119		373	5P-4116	37		388
	175		376		108		391
	261		379		110	5P-4961	111
	266		380		179		119
	271		382		182	5P-5148	346
	278		383		201		348
	580		385		203	5P-5637	633
	644		388		205		635
	645		391		210		697
	704		392		212		699
	706	5K-9660	364		258	5P-5677	147
	744	5P-0372	82		304	5P-5755	722
	745		84		307	5P-5924	704
	785		304		338		706
5H-9743	444		579		341		726
5I-4370	201		663		356	5P-5927	722
5I-4936	35		666		358	5P-7162	175
	36		668		360	5P-7464	374
5I-4993	49		707		362		377
	51		710		373		380
	53		713		376		382
	55		735		379		386
5I-5077	104		773		382		389
	106	5P-0537	113		386		392
5I-7505	58	5P-0597	104		389	5P-7465	374
5I-7525	22		106		392		377
	24		373		397		380
	26		376		403		382
	28		379		406		386
5I-7543	36		382		428		389
5I-7623	104		386		613		392
	106		388		660	5P-7470	81
5I-7625	64		392		691	5P-7471	81
5I-7628	38	5P-0761	137		701	5P-7483	258
	39	5P-1076	48		705		722
	79		274		717	5P-7506	369
	80		336		722		371
5I-7630	64		454	5P-4362	369		373
5I-7678	96		455		371		376
5I-7689	104		606		373		379
	106		607		376		382
5I-7719	64	5P-1420	81		379	5P-7703	81
5I-7728	80		111		382	5P-7957	722
5I-7833	49	5P-1442	32	5P-4571	178	5P-7958	722

► **PRIMARY REFERENCE**

PART NUMBER INDEX

Part	Page	Part	Page	Part	Page	Part	Page
	729		666		125		388
	735		668		127		392
5P-7970	121		707		133	6V-8077	380
5P-8246	613		710		134		383
5P-8247	583		713		135		391
5P-8309	82	6V-0400	373		136	6V-8186	744
	84		376	6V-5221	67		745
5P-8500	729		379		79	6V-8369	648
5P-9909	176		382		80	6V-8397	205
5T-7869	780		386	6V-5698	137		206
5T-7870	780		389	6V-5834	175		208
5T-9400	663		392		740		284
	666	6V-0852	201	6V-5839	73		298
	668		203		735		299
	735		369	6V-6689	691		303
	773		371		704		304
5V-1497	777		373		717		307
5V-8309	82		376	6V-6715	139		310
			379		145		312
6			382	6V-6717	633		314
			385		635		316
			388		697		318
6B-2882	394		391		699		320
6B-6682	286	6V-1889	198	6V-7357	37		322
6D-1641	704		356		42		324
	716		358		104		326
	728		360		106		328
6D-3033	186		362		137		330
6D-4246	210	6V-1970	1		178		332
	212		2		181		334
	644		▶729		258		336
	704	6V-2317	67		278		338
	706		75		672		341
6D-4247	312		76		675		344
	314		77		678		346
	316		104		682		348
	320		106		686		350
	322		113		689		351
	324		115		691		353
	326		117		701		354
	332	6V-3582	366		704		367
6D-4636	358	6V-3940	64		716		373
	362		69	6V-7359	373		376
6E-4701	412		70		376		377
	▶433		71		379		379
6F-4718	214		87		382		380
	215		96		386		382
	216	6V-3965	201		389		383
6I-1418	174		203		392		385
6J-2245	425		369	6V-7412	775		388
6J-7855	425		371		777		389
6K-4148	443		373	6V-7644	454		391
6L-3966	663		376		455		394
	666		379	6V-7687	770		397
	668		382		772		404
	707		385	6V-7699	128		433
	710		388	6V-7743	258	6V-8398	201
	713		391	6V-7744	578		203
	773	6V-5215	15	6V-8076	369		205
6L-7155	775		40		371		210
6N-8863	444		72		374		212
6R-3320	364		113		377		307
6S-4350	633	6V-5217	73		380		310
	635		121		383		350
6T-1375	663		123		385		351

▶ **PRIMARY REFERENCE**

PART NUMBER INDEX

Part	Page	Part	Page	Part	Page	Part	Page
	353		351		421		354
	354		353		452		364
	366	6V-8715	312		453		369
	367		314		546		371
	394		316		547		396
	396		318		548		397
	397		320		549	6V-9828	298
	400		322		550		307
	403		324		551	6V-9829	298
	404		326		552		299
	440		328		553		350
6V-8399	410		330		554		351
6V-8624	201		332		555	6V-9830	310
6V-8625	307		334		556		350
	353		344		557		351
	400		346		558	6V-9836	206
6V-8627	373		348		559	6V-9847	385
	376	6V-8716	201		560		388
	379		203		561		391
	382	6V-8724	206		562	6V-9852	310
	385		208		563		351
	388		299		564		354
	391		303		593		394
6V-8629	310		334		608		400
	351		338		722	6V-9853	396
	353		341		733	6V-9854	380
6V-8632	336		367		734		383
6V-8634	206		404		758	6V-9873	367
	208	6V-8774	206		759		404
	307		208		760	6W-5698	130
	353	6V-8775	396		768	6Y-5839	583
6V-8636	206	6V-8781	208		769	6Y-5840	583
	208	6V-8783	303		770		
	303		338		772		
	336	6V-8788	312	6V-9200	373	**7**	
	338		314		376		
	341		316		379	7B-1597	304
	354		320		382		338
	404		322		385		341
6V-8637	203		324		388		397
	210		326		391	7C-8246	663
	212		332	6V-9335	691		666
	310	6V-8801	137		704		668
	351	6V-8937	304		717		707
	354		338	6V-9509	210		710
6V-8638	203	6V-8949	611		212		713
6V-8639	205		612	6V-9512	385		773
6V-8640	296	6V-8978	210		388	7D-8508	289
	297		212		391		292
6V-8641	303	6V-9002	307	6V-9632	37		293
	338		353	6V-9671	576		294
	341	6V-9004	201	6V-9672	261	7E-2700	268
6V-8642	310	6V-9007	364		263		269
	336	6V-9028	178		265		270
	351		181		272	7E-9898	205
	353	6V-9162	396	6V-9673	367	7F-8268	130
	356	6V-9168	304	6V-9746	201	7G-1060	174
	358		338		203	7G-2950	304
	360		341		210		338
	362	6V-9170	400		212		341
6V-8647	356	6V-9189	254		296	7G-2951	304
	358		258		297		338
	360		418		310		341
	362		419		351	7G-3832	394
6V-8713	350		420		353		397

► **PRIMARY REFERENCE**

PART NUMBER INDEX

Part	Page
	400
7G-3833	394
	397
	400
7G-3834	394
	397
	400
7G-5984	336
7G-5985	336
7G-5986	336
7H-7055	111
	119
	304
	338
	341
7I-5418	206
7J-0204	286
	288
	289
	292
7J-9108	198
	298
	303
	307
	310
	336
	338
	342
	350
	351
	353
	354
	356
	358
	360
	362
	366
	394
	400
	410
7K-1181	81
	149
	155
	174
	179
	182
	184
	186
	187
	190
	191
	260
	266
	303
	310
	354
	366
	367
	404
	448
	450
	643
	705
	706
	726
	739
7M-7410	88
7M-8485	201
	203
	369
	371
	373
	376
	379
	382
	386
	389
	392
7N-7221	739
7R-0476	613
7R-2750	174
7R-2751	174
7R-3029	186
7S-3912	328
	330
7S-3913	328
	330
7S-3916	318
	344
	346
	348
7S-3919	318
	344
	346
	348
7T-1099	249
7T-6087	168
7T-6088	168
7T-6090	168
7T-6092	168
7T-6093	168
7T-6099	168
7T-6739	633
	635
7T-6799	739
7W-3983	430
7X-0495	613
7X-0507	761
	762
	763
7X-0579	260
	263
	265
	272
7X-0603	254
	767
	770
	772
7X-0608	137
7X-0610	195
	196
	197
7X-0613	733
	734
7X-0796	123
	125
7X-0818	86
	101
	175
	761
	762
	763
7X-0848	648
7X-1443	81
7X-2031	691
	704
	717
7X-2475	446
7X-2533	188
7X-2534	175
	307
	403
7X-2535	310
	407
	408
7X-2537	87
7X-2539	254
7X-2543	397
7X-2548	178
	181
7X-2549	248
	255
7X-2553	603
7X-2556	735
7X-2557	735
7X-2561	613
7X-2562	268
	269
	270
7X-2621	578
7X-3229	792
7X-6312	142
7X-7729	82
	84
	88
	250
	251
	283
	304
	338
	341
	346
	348
	397
	421
	428
	444
	578
	603
	637
7X-7888	307
	403
7X-7920	128
7Y-9099	735
8	
8C-3080	121
8C-3095	139
	145
8C-3205	369
	371
8C-3334	686
	689
8C-3413	229
	232
8C-3445	32
8C-3446	32
	358
	362
8C-3451	356
	358
	360
	362
8C-3681	111
	119
8C-3798	672
	675
	678
	682
	686
	689
8C-7524	725
8C-7563	356
	358
	360
	362
8C-8451	144
8C-8478	454
	455
8C-8558	175
8C-8992	195
	196
	197
8C-9778	168
8C-9783	168
8D-9671	397
8E-1118	701
8E-5702	454
	455
8E-8293	663
	666
	668
	707
	710
	713
8F-1434	168
8F-3469	430
8G-1151	671
	674
	677
	681
	685
	688
8J-2880	454
	455
8J-4455	168
8J-8197	356
	360
8L-2779	32
8L-5188	304
	579
8L-8413	145
	147
	149
	172
	174
	175
	187

PART NUMBER INDEX

Part	Page	Part	Page	Part	Page	Part	Page
	190	8T-0352	744		338		643
	191		745		341		660
	303	8T-0379	303		344		696
	396		338		356		704
	448		341		358		706
	450	8T-0389	150		360		721
	646		151		362	8T-4136	111
	671		152		364		119
	674		428		366		121
	677	8T-0404	198		369		304
	681	8T-0642	62		371		318
	685	8T-0737	613		394		338
	688	8T-1158	412		397		341
	703		413		400		344
	716		436		417		364
	739	8T-1576	198		424		366
	767		394		427		431
	770	8T-1687	210		428		432
	772		212		431		569
8M-4791	367	8T-1757	446		432		612
	770	8T-1893	328		569		623
	772		330		578		644
8N-0869	137	8T-1894	328		579		704
	184		330		611		706
8N-1548	174	8T-2444	663		612		716
8N-1549	187		666		623		726
8Q-6027	292		668		643		728
	293		707		644	8T-4137	39
8R-3857	443		710		660		123
8R-9654	140		713		696		125
8S-0934	761	8T-2658	576		705		188
	762	8T-3597	274		706		198
	763	8T-3612	37		717		250
	765	8T-3647	65		726		283
	766	8T-3844	402		728		304
8S-3193	675	8T-3984	108	8T-4122	48		328
	682		110		195		330
	689	8T-4121	35		196		338
8S-4723	761		36		197		341
	762		81		446		397
	763		82		603		603
	765		84		613		611
	766		88		735	8T-4138	108
8S-7803	663		111	8T-4123	454		110
	666		119		455		137
	668		121		615		188
	707		123	8T-4132	48		246
	710		125	8T-4133	82		261
	713		150		84		263
8T-0076	397		154		88		264
8T-0078	201		168		168		265
	203		184		184		272
8T-0119	402		188		188		419
8T-0154	704		198		304	8T-4139	336
	716		203		334		358
	728		225		338		362
8T-0271	417		251		341		454
8T-0276	79		261		356		455
	80		266		358		606
8T-0318	82		271		360		607
8T-0328	175		304		362		770
	744		318		397		772
	745		328		569	8T-4142	701
8T-0337	367		330		579	8T-4149	369
8T-0341	397		334		623		371

► **PRIMARY REFERENCE**

PART NUMBER INDEX

Part	Page
8T-4159	82
	84
8T-4171	318
	344
8T-4172	578
8T-4176	48
8T-4177	101
8T-4181	82
	84
	250
	645
8T-4183	274
	643
	704
	706
8T-4184	374
	377
	380
	383
	386
	389
	392
8T-4185	198
	334
	431
	432
8T-4186	394
	611
	612
8T-4189	93
	95
	133
	134
	135
	198
	261
	263
	265
	272
	274
	304
	312
	316
	320
	322
	324
	326
	332
	338
	341
	356
	358
	360
	362
	397
	406
8T-4191	304
	444
8T-4192	48
	356
	360
	407
8T-4194	622
8T-4195	39
	225
	334
	346
	348
	421
8T-4196	81
	88
	111
	119
	188
	198
	225
	251
	261
	266
	271
	304
	356
	358
	360
	362
	369
	371
	394
	397
	400
	428
	578
	579
	643
	704
	706
8T-4197	18
	744
	745
8T-4200	16
	42
	44
	47
	49
	51
	53
	55
	65
	67
	115
	117
	178
	181
	284
	304
	339
	341
	346
	348
	397
	406
8T-4205	82
	84
	108
	110
	111
	119
	131
	137
	140
	162
	175
	178
	181
	188
	246
	250
	258
	261
	263
	264
	265
	266
	271
	272
	308
	310
	402
	403
	407
	408
	613
	644
	672
	675
	678
	682
	686
	689
	691
	705
	706
	717
	722
	744
	745
	758
	759
	760
8T-4223	48
	248
	255
	256
	356
	358
	360
	362
	374
	377
	380
	383
	386
	389
	392
	407
	422
	423
	424
	427
	606
	607
	622
	624
	643
	663
8T-4224	42
	44
	65
	81
	86
	88
	92
	93
	95
	101
	111
	119
	137
	162
	175
	179
	181
	186
	188
	198
	251
	254
	274
	284
	304
	308
	312
	316
	320
	322
	324
	326
	332
	339
	341
	346
	348
	403
	406
	417
	613
	663
	666
	668
	705
	706
	707
	710
	713
	761
	762
	763
	765
	766

► **PRIMARY REFERENCE**

PART NUMBER INDEX

Part	Page	Part	Page	Part	Page	Part	Page
	758		423		613		713
	759		424	8T-6902	744		716
	760		427		745		717
	768	8T-5091	81		746		739
	769	8T-5093	37	8T-6904	744		748
	775	8T-5095	422		745		750
8T-4244	606		423		746		754
	607		424	8T-6912	608		755
	622		427	8T-6936	663		770
	663	8T-5372	722		666	8T-8799	174
	666		725		707		178
	668	8T-5439	444		710		181
	707	8T-5460	693		713	8T-9371	775
	710	8T-6451	364		722	8T-9655	174
	713	8T-6466	82	8T-7329	40	8X-5489	184
8T-4742	641		84		42	8Y-4489	520
	746		88		44		521
8T-4744	641		364	8T-7547	102		522
	746	8T-6663	354		103	8Y-4615	671
8T-4778	583	8T-6684	210		258		677
	584		369		417		685
	585		373	8T-7934	431	8Y-5947	145
	586		376		432		147
	587		379	8T-8192	334		691
	588		385	8T-8193	334		701
	589		388	8T-8729	633		704
	590		391		705		716
	627	8T-6685	400	8T-8732	174		722
	735		424	8T-8737	145		725
8T-4779	613		427		147		739
8T-4896	39		637		151	8Y-7385	624
	123		643		152	8Y-7386	624
	125		704		155	8Y-8081	137
	127		706		159		633
	133	8T-6726	97		172		635
	134	8T-6868	256		174		697
	135	8T-6869	418		175		699
	136		419		176		
8T-4908	88		420		178		
	111		421		179	**9**	
	113		452		181		
	117		453		186	9F-5644	137
	119		546		187		648
	137		547		188	9G-3695	409
	186		548		260	9G-4191	274
	251		549		266	9G-4336	178
	308		550		396		181
	403		551		576		187
	428		552		635	9G-9314	633
	613		553		646		635
	733		554		654		697
	734		555		655		699
	758		556		656	9M-1974	15
	759		557		657		18
	760		558		659		40
8T-4910	255		559		663		62
	624		560		666		64
8T-4956	422		561		668		67
	423		562		695		69
	424		563		697		70
	427		564		699		71
8T-4970	176		593		701		72
8T-4971	721	8T-6870	304		703		73
8T-5005	88		339		707		75
8T-5049	422		341		710		76

► **PRIMARY REFERENCE**

PART NUMBER INDEX

Part	Page
	77
	79
	80
	87
	96
	104
	106
	113
	115
	117
	121
	123
	125
	127
	133
	134
	135
	136
9M-8406	111
	119
	304
	339
	341
9R-1005	366
9R-1499	155
	157
	159
	260
	274
9R-2004	318
	328
	344
9R-2613	443
9R-2959	452
	453
	597
9R-5301	264
	265
	617
9R-7240	128
9R-7802	366
9R-7803	366
9R-7941	739
9R-7942	153
9R-7958	153
9R-7980	739
9R-9901	92
9S-1350	304
	339
	341
	397
9S-4185	130
	364
9S-4191	210
	212
	369
	371
9S-4200	346
	348
9S-8002	229
	232
	434
	436
9S-8004	229
	232
9S-8006	425
9S-8007	286
	288
	289
	292
9S-8008	229
	232
9T-4884	417
9T-7303	304
	579
9U-6994	369
	371
	373
	376
	379
	382
	385
	388
	391
9U-6998	212
	371
	382
9U-7000	369
	371
	373
	376
	379
	382
	385
	388
	391
9U-8746	701
9V-2714	446
9V-2715	446
9W-0607	150
	188
9W-0844	155
	172
	174
	175
	187
	260
	266
	448
	450
	576
	635
	646
	663
	666
	668
	671
	674
	677
	681
	685
	688
	699
	703
	707
	710
	713
	716
	739
9W-0852	149
	155
	172
	174
	175
	178
	181
	187
	191
	260
	266
	633
	635
	646
	663
	666
	668
	671
	674
	677
	681
	685
	688
	697
	703
	707
	710
	713
	716
	739
9W-1951	174
9W-2471	159
9W-3324	151
	152
9W-3326	155
	157
	260
9W-4216	307
	403
9X-1054	172
	178
	181
	703
	716
9X-1055	178
	181
9X-1056	178
	181
	703
	716
9X-1481	367
9X-1813	165
9X-2026	278
	419
	580
9X-2036	168
9X-2038	108
	110
9X-2040	735
9X-2044	663
	666
	668
	672
	675
	678
	682
	686
	689
	707
	710
	713
	740
9X-2045	633
	635
	697
	699
	722
	758
	759
	760
9X-2092	722
9X-2134	310
	351
	354
9X-2546	649
	650
	651
	652
	653
9X-3401	145
	164
	165
	175
	186
	396
	663
	668
	674
	681
	688
9X-3402	613
	739
9X-3410	184
9X-4244	150
9X-6032	417
9X-6273	312
	314
	316
	320
	322
	324
	326
	332
9X-6274	312
	314
	316
	320
	322
	324
	326
	332
	419
	421
9X-6581	304
	339
9X-6615	410
9X-6763	184
9X-6772	142
	143
9X-7378	704

► **PRIMARY REFERENCE**

PART NUMBER INDEX

Part	Page
	706
	726
9X-7380	704
	706
	726
9X-7381	704
	706
	726
9X-7382	705
	706
	726
9X-7383	705
	706
	726
9X-7408	165
9X-7744	436
9X-8118	153
9X-8121	153
9X-8139	153
9X-8250	704
	716
	728
9X-8256	42
	98
	645
	720
	740
	743
9X-8257	264
	265
	617
9X-8912	38

0

Part	Page
003-2143	613
003-3082	434
004-1964	130
004-6810	704
	716
	728
027-1287	292
	293
030-1705	137
030-1712	178
	181
031-4155	770
	772
	775
	777
032-8139	33
	34
036-1865	88
039-8557	611
	612
064-3843	283
067-2551	613
068-8358	394
069-4080	88
	111
	119
084-4277	739
084-4348	155
	157
	260
085-9513	20
	21
090-8865	735
091-2436	663
	666
	668
	671
	674
	677
	681
	688
	739
094-4628	15
	16
	20
	21
094-7235	113
	115
	117
095-0641	744
	745
095-0878	777
095-1325	663
	666
	668
	707
	710
	713
	773
095-1513	75
	76
	77
095-1537	69
	70
	71
095-1671	69
	70
	71
095-2005	64
096-0194	227
	228
096-2500	42
	98
	104
	106
096-3321	75
	76
	77
096-3741	22
	28
096-4415	38
096-6166	576
096-8475	79
	80
096-8482	51
	53
	55
096-8990	113
096-8994	113
096-8995	113
096-8996	113
096-8997	113
096-9529	40
	42
	44
097-0832	205
097-7234	739
098-8968	768
	769
099-3649	19
	101
099-4420	22
	24
	26
	28
099-7519	113
099-7520	113
099-7521	113
099-7522	113
099-7523	113
099-7524	113
099-7525	113

1

Part	Page
100-3253	151
	152
100-3254	151
	152
100-3255	151
	152
100-3685	168
100-3866	195
	196
	197
100-4112	168
100-4113	168
100-4115	168
100-4118	168
100-4119	168
100-5041	178
	181
	703
	716
100-5805	174
100-6674	172
	633
	697
	703
	716
101-2867	37
	278
	785
101-6544	73
101-7404	424
	427
101-8296	704
	706
	726
101-9759	613
102-7341	113
102-7342	113
102-7343	113
102-7344	113
102-7345	113
102-7346	113
102-7347	113
102-7348	113
102-7349	113
102-7350	113
102-7351	113
102-8703	394
	400
102-8801	155
	175
	187
	260
	266
102-8802	128
	145
	147
	174
	178
	181
	188
	260
	307
	353
	643
	695
	703
	704
	705
	717
	726
102-8803	163
	164
	188
	190
	303
	576
	637
	671
	674
	677
	681
	685
	688
102-8804	145
	147
	155
	157
	159
	165
	172
	186
	188
	260
	261
	263
	265
	266
	272
	274
	409
	671
	678
	685
	703
	716
	732
	739
	770

► **PRIMARY REFERENCE**

PART NUMBER INDEX

Part	Page
	775
102-8805	151
	152
	172
	175
	188
	396
	638
	639
	656
	657
	663
	666
	668
	671
	674
	677
	681
	685
	688
	703
	707
	710
	713
	716
102-8806	149
	175
	188
	191
	613
	633
	635
	697
	699
103-2006	740
103-8133	646
103-9062	22
	24
	26
103-9083	73
103-9246	31
103-9247	31
103-9252	31
103-9253	31
103-9272	15
	16
103-9273	15
	16
103-9275	22
103-9276	22
	24
	28
103-9277	40
	44
103-9279	22
	24
	26
	28
103-9280	38
	39
103-9288	14
103-9289	14
103-9290	14
103-9680	17
103-9703	22
	24
	26
	28
103-9725	74
103-9747	87
104-1218	22
	24
	26
	28
104-1995	671
	674
	677
	681
	688
	739
104-3173	307
	403
104-5957	783
104-8039	113
105-2814	▶131
	133
	134
	136
105-4593	210
	212
105-9411	705
	706
	726
106-3108	414
106-8704	187
107-2417	145
	147
107-3135	178
	181
107-3136	178
	181
107-3659	141
108-0656	783
108-4311	775
109-2356	662
	695
	717
	739
109-5821	201
	203
110-2570	32
110-6326	90
110-6331	90
110-6349	369
	371
	373
	376
	379
	382
	385
	388
	391
110-7887	739
111-0483	536
	600
	601
111-4627	613
	722
111-7899	149
	155
	157
	160
	190
	191
	206
	208
	247
	261
	266
	303
	307
	310
	351
	353
	631
	672
	675
	678
	682
	686
	689
	704
	705
	718
	720
	740
	743
112-1817	367
	▶438
112-9252	431
	432
112-9401	111
	119
112-9717	90
112-9861	438
113-0363	113
	115
	117
113-0364	113
	115
	117
113-0693	643
	704
	706
113-1141	73
113-2004	425
113-4458	131
113-4459	131
113-4460	131
113-4461	131
113-4462	131
113-4463	131
113-4464	131
113-4465	131
113-4466	131
113-4467	131
113-4468	131
113-4469	131
113-4470	131
113-8490	174
113-8491	174
113-8492	174
114-4516	137
115-0468	65
115-1615	178
	181
	644
	704
	705
115-3069	672
	675
	678
	682
	686
	689
115-8161	356
	358
	360
	362
116-2001	613
	▶625
116-7471	140
117-1385	178
	181
117-2827	35
	36
117-2829	35
	36
117-3283	35
117-3285	35
	36
117-3447	40
	44
117-3448	40
	44
117-5015	38
	39
118-2990	48
118-8118	111
	119
119-1414	625
119-1415	625
119-3662	155
	172
	174
	175
	178
	181
	187
	260
	266
	448
	450
	613
	633
	697
	703
	716
	739
119-3859	613
119-5026	768
	769
119-9631	633
	635
122-6869	613
122-7052	88
122-8948	113
	115
	117
122-8949	113

▶ **PRIMARY REFERENCE**

PART NUMBER INDEX

Part	Page	Part	Page	Part	Page	Part	Page
	115		681	129-8542	671		489
	117		685		674		493
123-5798	440		688		677		496
123-5799	440		739		681		542
123-7615	663	125-7876	174		685		▶585
	666	126-1766	174		688	135-9386	447
	668		178	129-8545	671		477
	707		181		674		478
	710		186		677		480
	713	126-1767	145		681		486
	739		164		685		490
124-1916	613		175		688		494
124-1917	613		186	130-1676	439		496
124-2456	303		396	130-5300	186		543
	338		613	130-7596	20		▶586
	341		663		21	135-9387	476
	792		668	131-0749	440		478
124-5640	703		674	131-3540	733		482
	716		681		734		486
125-3518	258		688	131-3990	768		491
125-7874	155	126-1774	174		769		495
	172	127-2170	92	131-5879	578		▶587
	174		663	131-6143	92	135-9393	583
	175		666	132-4720	627	135-9394	584
	178		668	132-5166	260	135-9395	585
	181		707		266	135-9396	586
	186		710		271	135-9397	587
	187		713	132-5789	178	136-1953	704
	190		773		181		716
	260	127-5483	187		188		728
	261	127-5484	174		726	136-4192	671
	263	127-6316	434	132-7551	303		674
	265	128-2016	646		338		677
	266	128-2955	17		341		681
	272	128-2956	17		396		685
	303	128-2958	17		578		688
	307	128-4123	174	132-8487	186	136-5490	748
	353	128-5016	174	134-0404	200		754
	396	128-6985	▶153	134-2540	174		755
	448		160		186	137-6645	178
	450		247	134-2827	258		181
	635		263		722		429
	646		265	134-3987	108	137-8166	750
	663	128-7714	646		110	139-6039	661
	666	128-7721	646	134-7722	37		663
	668	128-8614	111	135-5009	175		666
	671		119	135-7242	720		668
	699	129-1854	247		740		707
	703		263		743		710
	707		265	135-8432	51		713
	710	129-1855	247		53		739
	713		263		55	140-5217	39
	716		265	135-9383	476		123
	739	129-3178	613		▶583		125
125-7875	155		672	135-9384	476		127
	174		675		477	141-0888	415
	178		678		480		416
	181		682		488	141-4999	477
	187		686		493		478
	260		689		496		479
	266		721		541		487
	448		744		▶584		488
	450		745	135-9385	476		489
	674		775		477		490
	677	129-3180	48		480		492

▶ **PRIMARY REFERENCE**

PART NUMBER INDEX

Part	Page
	493
	494
	495
	545
	▶627
141-6704	▶497
	500
141-8061	174
142-4914	583
142-7493	240
	241
	242
	243
142-8731	234
	237
	238
	239
142-8759	234
	235
	236
	237
	240
142-8805	571
	572
	573
	574
	575
142-8832	82
	84
	250
142-8928	130
142-8937	429
142-8997	366
142-9023	193
142-9029	193
142-9033	195
	196
142-9036	195
	196
	197
142-9091	444
142-9094	444
142-9117	646
143-0539	▶168
	170
143-1344	168
143-3088	583
144-0195	663
	666
	668
	707
	710
	713
144-4108	775
	777
144-4531	434
144-4532	434
146-6371	691
	703
	716
146-6729	168
146-9439	149
	155
	157
	174
	191
	260
	307
	310
	351
	353
147-1445	174
147-1446	174
148-2371	260
	266
	271
148-2372	260
	266
	271
148-8315	310
	336
	351
	353
	356
	358
	360
	362
148-8316	356
	358
	360
	362
148-8318	206
	208
	307
	353
148-8319	312
	314
	316
	318
	320
	322
	324
	326
	328
	330
	332
	334
	344
	346
	348
148-8325	303
	338
	341
148-8327	203
	210
	212
	310
	351
	354
148-8336	206
	208
	303
	336
	338
	341
	354
	404
148-8339	201
	203
148-8340	205
148-8341	350
	351
	353
148-8342	336
148-8344	396
148-8345	203
148-8347	364
148-8352	380
	383
148-8354	307
	353
148-8358	201
148-8361	373
	376
	379
	382
	385
	388
	391
148-8362	210
	369
	373
	376
	379
	385
	388
	391
148-8364	307
	353
	400
148-8368	373
	376
	379
	382
	385
	388
	391
148-8378	206
	208
	299
	303
	334
	338
	341
	367
	404
148-8382	198
148-8388	310
	351
	353
148-8392	396
148-8393	310
	351
	353
	394
	400
148-8407	210
	212
148-8411	364
148-8433	206
148-8435	208
148-8436	396
148-8439	206
	208
148-8445	385
	388
	391
149-0686	▶280
	402
149-3488	48
149-4232	553
	555
	560
	▶571
149-5434	502
149-5435	498
	504
	510
	520
	538
	571
149-5436	497
	506
	512
	521
	536
	539
	572
149-5437	508
	514
	522
	529
	540
	573
149-5741	447
	▶588
149-6371	704
	705
	726
150-3056	312
	314
	316
	320
	322
	324
	326
	332
150-3072	210
	212
150-3073	385
	388
	391
150-4034	303
	338
	341
150-4043	367
	404
150-4049	369
	371
150-8599	234
	235
	236
	237
	238
	239
	240
150-8621	1
	▶254
151-5328	65
	67

▶ **PRIMARY REFERENCE**

PART NUMBER INDEX

Part	Page
152-0227	▶498
	499
152-0231	▶541
152-0232	▶542
152-1157	195
	196
	197
152-4898	91
153-2682	663
	666
	668
	707
	710
	713
	773
153-2683	773
153-2994	312
	314
	316
	318
	320
	322
	324
	326
	328
	330
	332
	334
	336
	344
	346
	348
153-2995	318
	328
	330
	334
	336
	344
153-6237	201
153-6248	354
153-6256	356
	358
	360
	362
154-1580	268
	269
	270
	613
	693
154-2704	457
	458
	459
	461
	462
	463
	465
	466
	468
	470
	472
	474
	499
	500
	501
	503
154-5004	487
154-5005	487
	▶553
154-5009	487
	▶554
154-5010	▶487
154-5011	▶418
	487
	488
	489
	490
	491
	492
	493
	494
	495
154-5012	418
	553
	554
	555
	556
	557
	558
	559
	560
	561
	562
	563
	564
154-5013	418
	420
154-5018	▶285
	487
	488
	489
	490
	491
154-5019	▶312
	▶314
	487
154-5020	312
	314
	320
154-5021	312
	314
	320
154-5022	312
	314
	320
154-5024	312
	314
	316
154-5025	312
	314
	316
154-5037	460
	467
154-5046	▶487
154-5052	▶316
	487
154-5053	556
	561
	▶572
154-5059	469
154-5070	554
	557
	562
	▶573
154-5077	456
	471
154-5080	▶456
	458
154-5423	671
	674
	677
	681
	685
	688
155-1279	409
155-2255	155
	172
	174
	175
	187
	260
	266
	703
	716
155-2260	174
	175
	186
	187
	260
	576
	671
	674
	677
	681
	685
	688
155-2265	145
	147
	172
	174
	175
	187
	260
	266
	703
	716
155-2270	145
	147
	172
	174
	178
	181
	187
	190
	260
	303
	307
	353
	396
	448
	450
	613
	646
	703
	716
	739
155-2271	155
	175
	178
	181
	187
	260
	261
	263
	265
	266
	272
	274
	635
	671
	674
	677
	681
	685
	688
	695
	699
	703
	705
	717
	726
	739
155-2274	155
	175
	187
	260
	266
	663
	666
	668
	707
	710
	713
155-5652	193
155-9010	193
155-9432	193
155-9433	193
156-0283	761
	762
	763

▶ **PRIMARY REFERENCE**

PART NUMBER INDEX

Part	Page	Part	Page	Part	Page	Part	Page
156-0884	479		584		382		203
	▶546		585		385	164-5608	210
156-0885	479		586		388		212
	▶547		587		391	164-7556	150
156-0886	480		588	161-4128	580	164-9295	▶287
	▶548		589	161-4130	520		606
156-0887	▶520		590		521	164-9425	187
	523	159-4535	316		522	164-9614	591
156-0888	▶521		324		526		▶592
	524	159-4536	316		571	164-9989	550
156-0889	▶522		324		572		593
	525	159-4537	316		573		594
156-0891	▶419		324		574		598
	479	159-5345	▶457		575		599
	480		553	162-5236	487		602
	481	159-5347	▶458		488	165-0142	227
	591		554		489		228
156-0913	419	159-5411	608		490	165-0312	739
156-1458	149	159-5761	▶240		491	165-2601	49
	191	159-5772	193		492		51
156-1460	149	159-5797	578		493		53
	191	159-8035	419		494		55
	576		608		495	165-4894	613
156-5508	322		792		▶580	165-4895	159
156-5509	322	159-8038	554	162-8154	592	165-4898	▶240
156-5510	322		564	163-1135	775	165-4901	▶234
156-5762	446		571	163-1146	775		240
156-6175	175		572		777	165-4902	▶234
	188		573	163-1385	318		240
157-0940	452		574		334	165-4903	▶241
	453	159-8049	184		344	165-4906	▶234
	546	159-8050	184		346		241
	547	159-8405	250		348	165-4907	▶235
	548	159-9322	174	163-1386	312		241
	549	159-9495	149		314	165-4909	234
	550		191		316		235
	551	159-9496	149		320	165-4931	380
	552		191		322		383
	593	160-2443	▶163		324		391
157-0941	419		744		326	165-6156	▶499
	421	160-3518	701		332		541
157-0942	419		748	163-3955	691	165-6157	▶500
	421		750		704		542
157-2528	144		754		716	165-7095	48
157-2853	794		755	163-9320	344		735
	798	161-0185	318	164-1154	744	165-8731	▶420
	802		344		745		606
	805	161-0186	318	164-2108	441		607
157-4835	569		344	164-3213	285	165-8732	594
157-7223	▶479	161-0187	▶344	164-5557	201		▶597
	480		479	164-5567	201		598
157-7224	▶479		480		203		599
	480		481		369		602
157-7225	480	161-0188	318		371	165-8736	▶598
157-7226	▶480		344		373	165-8737	▶599
157-7227	▶480	161-0189	318		376	165-8738	598
158-5648	546		344		379		▶600
	547		346		382	165-8739	599
	548		348		385		▶601
	549	161-0190	318		388	165-8740	606
	550		344		391		607
	551	161-3357	187	164-5590	358		▶608
	552		373		362	165-8743	608
158-6095	▶480		376	164-5605	397	165-8744	600
159-2953	583		379	164-5606	201	165-8745	601

▶ **PRIMARY REFERENCE**

PART NUMBER INDEX

Part	Page
165-8746	▶536
165-8832	536
165-8835	▶537
165-8837	537
	▶538
166-0319	452
	453
166-2551	613
	▶626
166-2552	613
166-2557	613
166-2558	613
166-2559	613
166-2560	618
	619
166-4041	597
166-6781	775
	777
166-9312	344
167-0608	613
167-4339	227
	228
168-8389	454
	455
	457
	458
	459
	461
	462
	463
	465
	466
	468
	470
	472
	474
	499
	500
	501
	503
	505
	507
	509
	511
	513
	515
	517
	518
	523
	524
	525
	527
	528
	531
	533
	534
	536
	537
	544
	565
	566
	567
	569
	604
	605
168-8772	701
169-0705	174
	175
	178
	181
	187
	739
169-1679	193
169-2876	794
	798
	802
	805
169-3569	608
169-4868	452
	453
169-6715	81
169-8941	▶523
	546
169-8942	▶524
	547
169-8943	▶525
	548
170-1817	750
170-5836	606
	607
170-6705	214
	215
	216
171-5349	165
171-6725	364
172-3998	448
	450
172-5285	287
172-6490	155
	157
	260
172-8037	701
	748
	750
	754
	755
172-8039	754
172-8591	263
	264
	779
172-9287	205
173-3016	246
	263
	264
173-7407	606
	607
	▶624
174-0503	174
174-2388	328
	330
174-2389	328
	330
174-2393	328
	330
174-3091	654
	655
	656
	657
	659
174-3097	328
175-4236	260
	263
	265
	272
175-4238	3
	4
	▶617
175-4239	260
	266
	271
176-1477	178
	181
176-1522	178
	181
176-3900	▶629
176-4079	258
	276
	279
177-1910	334
177-1911	334
	346
	348
177-1912	334
177-1914	603
177-1921	452
	453
177-1941	622
177-1955	603
177-1956	603
177-1957	603
177-1958	291
177-1971	603
177-1972	452
	453
177-1973	622
177-1975	603
177-1981	447
	▶452
177-1982	447
	▶453
177-1983	447
	▶622
177-1986	▶334
	447
177-1987	452
177-1988	453
177-1989	▶447
177-1990	▶447
177-2215	186
177-4122	722
177-7414	612
	620
	621
177-7415	612
	620
	621
177-9150	620
177-9151	621
177-9152	3
	4
	▶611
177-9153	611
178-2247	264
	265
	617
178-2255	82
	84
178-2256	▶241
178-2270	238
	239
178-3620	149
	155
	184
	187
	190
	191
	198
	260
	266
	274
	303
	307
	353
	367
	613
	705
	706
	717
	726
	728
178-7539	739
178-9983	655
	656
	657
	658
	659
179-5434	153
	576
180-7451	410
180-9339	147
	155
	178
	181
	187
	260
	266
	666
	671
	677
	685
	707
	710
	713
	739
180-9340	145
	147
	155
	175
	178
	181
	187
	260
	266
	396
	448
	450
	576
	663
	666

▶ **PRIMARY REFERENCE**

PART NUMBER INDEX

Part	Page
	668
	671
	674
	677
	681
	685
	688
	707
	710
	713
	739
183-4084	328
	330
183-4085	328
	330
183-5916	22
	24
	26
	28
184-6097	611
	▶620
184-6098	611
	▶621
185-4254	434
	436
	▶441
185-7887	312
	314
	316
	320
	322
	324
	326
	332
	346
	348
185-8182	38
185-8662	▶241
185-8663	▶241
185-8666	▶242
185-8667	▶242
185-8674	▶235
	241
185-8675	▶235
	241
185-8676	▶236
	241
185-8677	▶236
	241
185-9928	▶236
	242
185-9929	▶237
	242
185-9930	▶237
	242
185-9931	▶237
	242
185-9933	236
	237
	238
185-9935	235
	236
185-9936	235
185-9937	236
186-2360	247
	263
	265
186-3735	128
	147
	151
	152
	155
	157
	159
	163
	172
	174
	175
	178
	181
	187
	188
	190
	260
	261
	263
	265
	266
	272
	274
	303
	307
	353
	409
	576
	635
	637
	638
	639
	646
	654
	655
	656
	657
	659
	663
	666
	668
	671
	672
	674
	677
	678
	681
	685
	688
	697
	699
	701
	703
	704
	707
	710
	713
	716
	726
	732
	739
	748
	750
	754
	755
	770
	775
186-3736	155
	172
	174
	175
	178
	181
	187
	190
	260
	261
	263
	265
	266
	272
	274
	303
	307
	353
	635
	663
	666
	668
	699
	703
	705
	707
	710
	713
	716
	726
	739
186-5107	775
186-5186	623
186-6190	▶630
	703
	705
	726
187-3230	240
187-3239	▶242
188-0124	▶238
	242
188-0125	▶238
	242
188-2716	501
188-2719	▶543
188-3526	▶501
	543
188-7733	446
	▶623
189-3158	448
	450
190-8962	260
	263
	265
	272
191-3206	104
	106
191-8303	178
	181
191-9762	195
	196
192-2606	626
192-2607	626
192-2637	609
	610
	615
192-2638	615
192-2640	▶290
	303
	581
	582
192-2642	581
	582
	618
	619
192-2645	303
	609
	610
	616
192-7054	747
	749
	751
	752
	753
	756
	757
192-7508	410
193-8308	369
	371
193-8334	400
193-8335	400
194-2903	402
194-5171	672
	675
	678
	682
	686
	688
194-7631	402
194-7632	402
195-0189	▶151
	155
	260
	266
195-0190	▶152
	155
	260
	266
195-0936	108
	110
	701
195-0937	735
195-5124	588
	589
195-6750	394
	400
195-6754	609
	610
	615
195-6768	404
195-6769	404
195-6942	568
	▶595
	596
195-6943	568
	▶595

PART NUMBER INDEX

Part	Page
195-7055	777
195-7124	479
	486
	492
	496
	▶589
195-8211	59
195-8222	65
	75
195-8260	100
195-8324	64
195-8355	113
	117
195-8356	65
195-8364	113
	115
	117
195-8372	111
	119
195-8403	49
	51
	53
	55
195-8449	65
195-8460	87
195-8545	568
	▶595
	596
195-9700	436
	▶442
195-9712	260
	263
	265
	272
196-0271	258
196-3940	206
	208
196-8356	113
	115
	117
197-8940	198
	394
198-1725	663
	666
	668
	707
	710
	713
	773
198-4776	102
	103
198-5389	145
	147
199-2205	46
	65
199-2212	42
199-2235	76
199-2333	125
199-2354	38
199-3410	810
199-5438	▶238
	241
199-5439	▶239
	241
199-5440	238
199-7722	516
	526
	530
	574
199-8308	558
	563
	▶574
199-8309	326
	332
199-8310	326
199-8311	326
	332
199-8316	464
	473
199-8317	574
	239
200-0999	195
	196
	197
200-2371	442
200-5728	701
	748
	750
	754
	755
200-5729	▶747
200-6345	184
	205
	404
201-3304	175
202-0671	438
202-0673	438
202-0674	438
202-6614	150
203-4827	88
204-1471	434
	436
204-1472	436
204-1476	434
	436
204-1481	434
	436
204-1482	434
204-1485	434
204-1486	434
204-1488	434
204-1489	434
204-2281	205
	373
	376
	379
	382
	391
204-8000	704
	706
205-0826	145
	147
205-3692	310
	351
	354
205-8257	145
	147
206-1345	179
	182
	187
	631
	663
	666
	668
	671
	674
	677
	681
	685
	688
	695
	705
	707
	710
	713
	717
	739
206-1667	725
206-2423	111
	172
	704
	717
206-5162	145
	147
206-5206	145
206-9185	691
	704
	716
207-5271	147
207-6154	88
207-9737	303
	338
	341
207-9756	304
	338
	341
207-9785	303
	579
208-6176	82
	84
210-0855	283
210-8754	739
210-8958	137
211-3014	373
	376
	379
	382
	385
	388
	391
	▶440
211-3646	440
211-5358	175
	178
	181
	187
	663
	666
	668
	710
	713
212-0061	442
212-1336	303
	338
212-2204	703
	705
	726
212-4114	410
212-6603	210
	212
212-6604	210
	212
212-6690	303
	338
	341
212-8475	30
212-8499	38
	39
212-8510	38
	39
	121
	123
	125
	127
212-8597	57
213-0139	448
	450
213-3943	283
213-6065	145
	147
213-7489	655
	656
	657
	658
	659
214-5555	291
214-7568	201
	369
	371
	373
	376
	379
	382
215-3191	303
	338
215-3273	410
215-3274	410
215-3275	410
215-3957	581
	582
	▶615
	▶616
215-3962	579
	▶581
215-3963	579
	▶582
215-6406	661
	663
	666
	668
	671
	674
	677
	681

▶ **PRIMARY REFERENCE**

PART NUMBER INDEX

Part	Page
	686
	689
	691
	704
	707
	710
	713
	717
216-2517	145
216-6156	434
216-6157	434
216-6159	434
216-6160	434
	436
216-6161	434
	436
216-7352	733
	734
216-8756	▶446
216-8850	446
217-3572	88
217-3875	410
217-5912	143
217-6226	▶526
	527
217-6227	▶527
	549
217-6228	481
	▶549
217-6229	▶481
	482
217-6230	▶482
218-0404	145
218-0651	739
218-0919	32
218-0942	▶142
218-0943	▶143
218-2373	441
218-5840	▶296
	396
218-5841	▶297
	396
218-5843	296
218-5844	296
218-5845	297
218-5846	297
218-5847	613
218-6332	303
	579
218-6333	303
	579
218-6384	731
218-6645	704
	716
	728
218-6824	295
218-6856	409
218-6857	409
218-6858	409
219-0302	794
	798
	802
	805
219-6314	145
	147
220-4982	532
221-3429	595
	596
221-5245	64
221-5250	64
222-1178	81
222-3963	239
	240
222-7412	454
222-7467	546
	547
	548
	549
	550
	593
222-7545	455
	▶583
222-7546	454
	▶583
222-7724	448
	▶454
222-7725	454
	455
222-8202	35
223-4240	250
223-4275	82
	84
223-9974	198
	▶200
224-0672	802
	805
224-3875	250
224-5132	281
	282
224-5152	281
	282
224-7830	794
	798
224-8945	794
	798
224-8946	802
	805
225-2657	767
225-5249	123
	125
225-5535	143
225-5541	142
225-5642	142
225-5644	143
225-5927	147
225-8015	448
	450
225-9521	283
	▶291
226-0291	250
226-1242	792
226-3693	33
	34
226-3734	243
226-3735	243
226-4560	151
	152
226-4561	151
	152
226-7635	225
226-8204	56
226-9629	441
227-1028	117
227-4315	254
227-7025	410
227-7474	299
227-8807	▶280
228-2615	794
	798
228-2616	802
	805
228-3323	186
228-3369	808
228-3581	792
228-5856	671
	674
	677
	681
	685
	688
	739
228-6051	151
	152
228-6052	151
	152
228-6053	151
	152
228-6054	151
	152
228-6056	151
	152
228-9132	111
	119
229-3432	519
	575
229-4896	643
	703
	705
229-5465	356
	360
229-5466	356
	360
229-5468	396
229-5471	396
229-5473	396
229-7356	643
	703
	705
229-8757	637
	671
	674
	677
	681
	685
	688
229-8796	88
230-3621	48
230-3737	130
230-4009	739
230-4011	178
	181
230-4596	455
230-5406	▶283
	447
230-5407	603
230-5670	447
	▶603
230-6368	137
231-0124	336
231-0125	336
231-0126	336
231-0127	336
231-5266	284
231-5271	454
	455
231-5273	▶336
	448
	450
231-5274	▶284
	448
	450
231-5275	▶448
231-5276	450
	▶455
231-5277	▶450
231-5278	▶406
	448
	450
231-5279	406
231-7156	436
231-7165	436
231-7297	436
231-7299	436
232-1384	633
	635
232-1792	739
232-3121	102
	103
232-3586	425
232-3587	425
232-4703	142
	143
233-0059	794
	798
	802
	805
233-3123	▶748
233-4872	250
233-5453	30
233-5454	30
233-5457	22
	24
	26
	28
233-5460	100
233-5462	30
233-5463	30
233-5464	30
233-5465	30
233-5466	46
	47
233-5468	46
	47
233-5469	64
233-5470	64
233-5471	64
233-5473	8
	▶15
233-5476	64
233-5477	64

▶ **PRIMARY REFERENCE**

PART NUMBER INDEX

Part	Page
233-5478	64
233-5479	15
233-5480	8
	▶18
233-5482	38
	39
233-5483	18
	19
233-5485	15
	16
233-5486	14
233-5488	24
	26
	28
233-5494	72
233-5496	74
233-5497	40
233-5498	40
233-5500	8
	10
	▶30
	▶31
233-5501	64
233-5719	613
233-9856	111
	119
234-4173	425
234-4328	▶150
	154
234-4790	18
234-4791	33
	34
234-4794	20
234-4796	74
234-4797	75
	76
234-4798	75
	76
	77
234-4800	75
	76
	77
234-4801	75
	76
	77
234-4802	75
	76
	77
234-4803	75
	76
	77
234-4805	101
234-4806	101
234-4807	62
234-4809	79
	113
	117
234-4810	46
234-4811	49
234-4812	49
	51
	53
234-4813	49
	55
234-4814	56
234-4815	56
	57
234-4816	56
234-4817	56
234-4818	104
	106
234-4819	104
234-4820	104
	106
234-4821	104
	106
234-4822	104
	106
234-4824	100
234-4826	69
	70
	71
234-4827	69
	70
	71
234-4831	79
	80
234-4835	121
	123
	125
	127
234-4836	121
	127
234-4837	65
	67
	99
234-4838	65
	67
234-4839	65
	67
234-6069	802
234-6070	794
234-6071	802
234-6072	794
234-6074	794
234-6076	802
234-6077	794
234-6081	802
234-7730	150
234-7731	150
234-9525	88
	431
	432
234-9661	206
235-1365	794
	798
235-1368	802
	805
235-1845	137
235-4931	65
	67
235-4937	65
	67
235-4942	65
	67
235-4951	65
	67
235-4955	69
	70
	71
235-4957	49
235-4959	79
	80
235-4960	79
	80
235-4962	133
	134
	135
	136
235-4964	104
235-4966	104
	106
235-4967	104
	106
235-4968	104
	106
235-4969	121
	127
235-4970	121
	127
235-4972	63
235-4973	133
	134
	135
	136
235-5880	9
	10
	▶64
235-5889	9
	▶56
235-5890	8
	▶33
235-5894	9
	▶104
235-5895	9
	10
	▶73
235-5896	8
	▶75
235-5897	8
	▶69
235-5900	8
	▶80
235-5901	8
	▶113
235-5904	8
	10
	▶141
236-6923	704
	705
	726
237-3943	775
237-5396	127
237-7296	108
	110
237-7325	91
238-0112	178
	181
238-0999	284
238-1003	336
238-1004	454
	455
238-1005	454
	455
238-4628	417
238-7693	615
238-7734	▶786
238-8274	166
238-8277	9
	▶166
238-8278	78
238-8279	40
	44
238-8280	56
238-8281	56
238-8282	17
238-8283	17
238-8284	17
238-8285	17
239-0687	113
	117
239-0719	113
	117
239-0720	113
	117
239-0721	113
	117
239-0722	113
	117
239-0728	113
	117
239-0729	113
	117
239-0734	113
239-0771	133
239-0772	135
239-4261	67
239-4292	35
	36
239-5029	606
	607
239-6986	794
	798
	802
	805
239-8429	40
	42
	44
239-8504	22
239-8513	72
	75
239-9368	646
241-0037	281
	282
241-4936	▶749
	754
241-6010	123
	125
	136
241-6215	369
	371
	374
	377
	380
	383
	385
	388
	391
241-6397	48
242-9000	155

▶ **PRIMARY REFERENCE**

PART NUMBER INDEX

Part	Page
	157
	260
243-0001	▶595
243-0002	▶596
243-0003	▶596
243-5601	410
244-1363	410
244-1364	410
244-1365	410
244-1367	454
	455
244-1370	284
244-7127	75
	76
	77
	123
	125
	127
245-1181	412
	413
245-1912	412
	413
246-1258	44
246-1259	42
	278
246-1260	42
	278
246-2622	111
	119
246-4349	627
246-8314	80
246-8315	79
	80
246-9371	174
	695
	716
247-0678	448
	450
	▶792
247-1337	184
247-4877	254
247-6118	808
247-6317	8
	10
	▶96
247-6440	137
248-1497	161
248-5245	808
249-7346	121
249-7347	9
	▶121
252-0346	▶242
252-0347	▶243
252-0366	▶243
252-0377	▶243
252-0413	260
	263
	265
	272
252-1862	671
	674
	677
	681
	685
	688
252-4734	412
	413
252-8595	569
252-9015	786
252-9016	786
252-9017	786
252-9197	227
	228
253-0244	70
253-1817	671
	674
	677
	681
	685
	688
253-5512	98
	99
253-7817	802
	805
253-8329	161
253-9499	794
	798
254-3437	655
	656
	657
	658
	659
254-9097	288
	289
	294
255-0942	289
255-0943	▶288
	607
255-6540	454
	455
	808
255-8058	419
257-1729	161
257-8389	65
	67
257-8390	141
257-8736	30
257-8738	56
257-8739	65
	79
	80
258-0930	159
258-2404	227
	▶229
258-2406	4
	5
	6
	▶227
258-2408	▶214
	226
258-2409	▶215
	226
258-2410	▶1
258-2411	300
	▶366
258-2412	300
	▶394
258-2416	▶216
	226
258-2419	102
258-2421	301
	302
	▶396
258-2422	301
	▶400
258-2424	▶338
	▶341
	577
258-2426	5
	▶300
258-2428	4
	5
	6
	▶300
258-2430	▶201
	226
258-2431	▶203
	226
258-2434	300
	▶428
258-2435	428
	▶429
258-2439	1
	▶128
258-2440	128
	▶130
258-2442	214
	▶217
258-2443	37
258-2444	1
	▶119
258-2445	1
	▶12
258-2447	12
	13
	▶48
258-2448	48
258-2449	48
258-2452	12
	13
	▶32
258-2462	▶102
	245
258-2464	97
258-2465	12
	13
	▶97
258-2466	643
	704
	706
258-2467	643
	703
	705
258-2468	632
	▶643
258-2469	12
	13
	▶37
258-2472	▶717
258-2473	▶707
258-2474	▶703
258-2475	▶705
258-2498	396
258-2499	396
258-2500	577
	▶578
258-2501	577
	▶579
258-2502	301
	▶431
258-2503	301
	302
	▶432
258-2506	431
	▶434
258-2507	432
	▶436
258-2511	92
258-2512	295
258-2514	295
258-2515	295
258-2517	▶7
258-2520	215
	▶219
258-2521	215
	▶221
258-2533	610
258-2534	609
258-2535	578
	▶618
258-2536	▶609
	618
258-2537	578
	▶619
258-2538	▶610
	619
258-2547	81
258-2553	423
258-2554	424
	▶425
	427
258-2555	424
258-2556	301
	▶423
258-2557	301
	▶424
258-2558	1
	▶295
258-2569	431
	432
258-2574	396
	400
258-2577	417
258-2579	3
	4
	245
	▶417
258-2581	▶198
	300
258-2582	301
	▶356
	▶358
258-2585	356
	358
258-2589	▶210
	▶212
	300
258-2590	37
258-2591	▶248
258-2592	256

▶ **PRIMARY REFERENCE**

PART NUMBER INDEX

Part	Page
258-2594	1
	▶250
258-2600	1
	2
	▶300
258-2605	216
	▶223
258-2606	250
258-2607	▶205
	300
258-2608	205
258-2609	205
258-2673	253
258-2674	251
	▶253
258-2675	1
	▶251
258-2679	444
258-2689	360
	362
258-2699	1
	▶444
258-2732	130
258-2780	300
	▶364
258-2781	364
258-2782	364
258-2784	356
	358
	360
	362
258-2786	301
	302
	▶360
	▶362
258-2790	▶577
258-2791	▶577
258-2801	310
	408
	▶409
258-2804	430
258-2806	429
	▶430
258-2829	429
258-2841	304
	338
	341
258-2849	137
258-2852	197
258-2854	196
258-2855	195
258-2856	197
258-2857	▶193
	194
258-2858	195
	196
258-2860	▶195
	226
258-2862	▶196
	226
258-2864	195
258-2865	196
258-2876	300
	▶350
258-2878	300
	▶351
258-2880	350
258-2881	350
	351
	353
258-2884	310
	351
	353
258-2885	310
	351
	353
258-2886	307
	310
	351
	353
258-2887	307
	353
258-2888	307
	353
258-2890	307
	403
258-2891	307
	353
258-2920	444
258-2922	444
258-2927	400
258-2928	400
258-2931	394
	400
258-2932	394
258-2933	394
258-2939	366
258-2947	428
258-2948	128
258-2949	428
258-2952	197
258-2954	193
258-2955	197
258-2958	197
258-2964	366
258-2965	366
258-2966	366
258-2967	366
258-2978	251
258-2981	428
258-2982	428
258-2983	130
258-2988	130
258-2991	428
258-2992	428
258-2995	128
258-3151	▶206
	▶208
	226
258-3157	206
	208
258-3160	407
258-3162	396
258-3164	396
258-3180	▶301
258-3182	▶301
258-3184	251
258-3186	251
258-3190	1
	2
	▶788
258-3200	5
	▶226
258-3221	▶794
	▶798
258-3225	▶802
	▶805
258-3230	301
	302
	▶790
258-3231	790
258-3236	▶1
258-3237	301
	▶369
	▶371
258-3238	301
	302
	▶373
	▶376
	▶379
	▶382
258-3247	400
258-3250	201
258-3251	203
258-3252	201
258-3254	201
258-3255	203
258-3257	201
258-3258	203
258-3259	203
258-3260	422
258-3261	427
258-3279	404
258-3280	671
	674
	677
	681
	685
	688
258-3281	663
	666
	668
	707
	710
	713
258-3282	782
258-3283	781
258-3284	781
258-3285	717
	▶781
	784
258-3286	717
	▶782
	784
258-3288	671
	674
	677
	681
	685
	688
258-3289	671
	674
	677
	681
	685
	688
258-3290	671
	674
	677
	681
	685
	688
258-3292	404
258-3294	671
	674
	677
	681
	685
	688
258-3296	663
	666
	668
	707
	710
	713
258-3298	671
	674
	677
	681
	685
	688
258-3312	251
258-3318	12
	13
	▶225
258-3319	225
258-3320	▶90
	91
258-3330	396
258-3331	396
258-3332	396
258-3333	396
258-3334	396
258-3335	396
258-3336	396
258-3337	396
258-3344	396
258-3351	396
258-3352	396
258-3366	304
	338
	341
258-3367	304
	338
	341
258-3368	303
	338
	341
258-3369	303
	338
	341
258-3393	300
	▶367
258-3394	300
	▶404
258-3399	251
258-3400	4
	5
	6
	▶226

▶ **PRIMARY REFERENCE**

PART NUMBER INDEX

Part	Page
258-3401	302
	▶427
258-3402	301
	▶422
258-3403	2
	▶649
258-3404	2
	301
	302
	▶650
258-3405	2
	▶651
258-3406	2
	▶652
258-3407	301
	302
	▶653
258-3408	788
258-3409	788
258-3423	788
258-3424	788
258-3425	788
258-3427	788
258-3442	111
	119
258-3447	48
258-3451	444
258-3452	444
258-3453	▶91
	92
258-3457	88
258-3458	88
258-3459	12
	13
	▶88
258-3462	▶402
	404
258-3463	206
	208
	▶407
258-3468	300
	302
	▶408
258-3496	3
	4
	245
	▶276
258-3497	3
	▶779
258-3501	367
258-3507	367
258-3530	111
	119
258-3532	111
	119
258-3537	88
258-3539	643
	705
	706
258-3542	12
	13
	▶82
	▶84
258-3543	82
	84
258-3544	82
	84
258-3545	82
	84
258-3546	81
258-3548	88
258-3549	81
258-3551	82
	84
258-3552	12
	13
	▶81
258-3555	82
	84
258-3562	82
	84
258-3620	364
258-3621	295
258-3644	613
258-3645	▶613
258-3660	210
	212
258-3662	119
258-3680	▶640
258-3682	▶4
258-3697	671
	674
	677
	681
	685
	688
258-3725	663
	666
	668
	707
	710
	713
258-3726	663
	666
	668
	707
	710
	713
258-3727	108
	110
	140
	144
	174
	628
	660
	661
	691
	704
	717
	722
	725
	739
258-3728	660
258-3730	▶301
258-3733	▶302
258-3736	1
	▶194
258-3738	▶738
258-3740	▶738
258-3742	▶640
258-3748	▶5
258-3750	▶5
258-3753	▶5
258-3761	663
	666
	668
	707
	710
	713
258-3762	671
	677
	685
258-3764	663
	666
	668
	707
	710
	713
258-3765	781
	782
258-3776	781
	782
258-3781	781
	782
258-3785	722
258-3786	722
258-3787	722
258-3788	722
258-3790	722
258-3792	631
	695
	704
	706
	717
258-3793	691
	704
	717
258-3794	631
	660
	695
	704
	706
	716
258-3795	691
	704
	717
258-3796	691
	704
	717
258-3800	▶245
258-3801	▶245
258-3818	▶3
258-3819	▶3
258-3833	246
	263
	264
258-3840	3
	▶246
258-3841	3
	▶247
258-3844	246
	263
	264
258-3845	364
258-3848	3
	▶272
258-3849	4
	246
	247
258-3850	364
258-3870	369
	371
258-3871	369
	371
258-3872	3
	4
	▶271
258-3873	260
	266
	271
258-3874	369
	371
258-3880	373
	376
	379
	382
	385
	388
	391
258-3881	373
	376
258-3882	369
	371
	373
	376
	379
	382
	385
	388
	391
258-3883	373
	376
	385
	388
258-3884	▶260
258-3889	373
	376
	379
	382
	385
	388
	391
258-3899	373
	376
	379
	382
	385
	388
	391
258-3910	▶303
258-3915	▶310
258-3931	205
258-3958	394
258-3967	373
	376
	379
	382
	385
	388
	391

▶ **PRIMARY REFERENCE**

PART NUMBER INDEX

Part	Page	Part	Page	Part	Page	Part	Page
258-3972	203	258-4049	760		681		260
258-3979	198	258-4050	▶761		685	258-4135	▶162
258-4000	1		764		688		175
	2	258-4051	▶762	258-4085	671	258-4136	175
	▶640		764		674	258-4137	140
258-4001	739	258-4052	▶763		677	258-4138	175
258-4002	739		764		681	258-4141	663
258-4003	739	258-4053	760		685		666
258-4004	739		▶767		688		668
258-4005	739	258-4054	759	258-4086	663		707
258-4006	739		▶770		▶671		710
258-4007	739	258-4055	758		▶674		713
258-4009	4		▶772		707		740
	5	258-4065	722	258-4087	666	258-4143	175
	▶662	258-4066	640		▶677	258-4144	▶140
258-4010	640		▶701		▶681		640
	▶783		738		713	258-4145	▶144
258-4011	783	258-4067	701	258-4090	640	258-4146	▶172
258-4012	245	258-4068	725		▶784		632
258-4013	671	258-4070	▶663	258-4091	781		696
	674	258-4071	671	258-4092	782	258-4147	172
	677		674	258-4093	782		703
	681	258-4073	671	258-4094	782		716
	685		674	258-4095	▶765	258-4148	144
	688		677	258-4096	▶766	258-4149	144
258-4014	671		681	258-4098	628	258-4150	175
	674		685	258-4099	628	258-4154	175
	677		688	258-4100	▶174	258-4155	175
	681	258-4074	701		640	258-4156	671
	685	258-4075	671	258-4101	739		674
	688		674	258-4102	174		677
258-4016	671		677	258-4103	▶167		681
	674		681		175		685
	677		685	258-4106	187		688
	681		688	258-4107	1	258-4157	663
	685	258-4076	671		▶187		666
	688		674	258-4108	187		668
258-4017	738		677	258-4110	▶718		707
	▶773		681	258-4111	▶720		710
258-4018	773		685	258-4115	12		713
258-4019	781		688		13	258-4160	175
258-4020	640	258-4078	663		▶178	258-4162	640
	▶722		666		▶181		▶739
258-4021	722		668	258-4116	178	258-4163	5
258-4024	722		707		181		6
258-4025	725		710	258-4118	137		▶743
258-4026	725		713	258-4120	137	258-4164	▶154
258-4027	660	258-4080	▶666	258-4121	1		640
258-4028	660	258-4081	677		▶137	258-4169	▶159
258-4029	722		681	258-4123	137		245
258-4033	662	258-4082	671	258-4125	2	258-4178	175
258-4034	660		674		▶191		739
258-4039	701		677		301	258-4179	187
258-4041	108		681		302	258-4184	▶160
	110		685	258-4126	149	258-4185	▶145
258-4043	▶744		688		191		▶147
	▶745	258-4083	671	258-4127	▶149	258-4188	184
	746		674	258-4130	3	258-4189	184
258-4045	108		677		4	258-4190	▶190
	110		681		▶155		577
	▶721		685	258-4131	155	258-4191	190
258-4046	721		688		260		303
258-4047	721	258-4084	671		266	258-4192	12
258-4048	108		674	258-4134	155		13
	110		677		157		▶184

▶ **PRIMARY REFERENCE**

PART NUMBER INDEX

Part	Page
258-4196	175
258-4198	576
258-4200	245
258-4220	640
	▶735
258-4221	735
258-4222	3
	4
	245
258-4224	735
258-4225	660
258-4227	735
258-4229	▶628
	640
	738
258-4230	245
	▶730
258-4233	263
	264
	779
	▶780
258-4236	725
258-4242	108
258-4243	108
258-4244	108
258-4245	▶660
	738
258-4248	691
	704
	716
258-4249	691
	704
	716
258-4250	640
	▶696
258-4251	▶695
	696
258-4252	632
	▶691
	696
258-4253	691
	703
	716
258-4254	691
	703
	716
258-4255	632
	696
	▶728
258-4257	691
	703
	716
258-4258	691
	703
	716
258-4259	691
	703
	716
258-4260	▶632
	640
258-4261	▶631
	632
258-4262	703
	705
	726
258-4263	691
	704
	717
258-4264	691
	704
	716
258-4265	632
	▶726
258-4270	695
	▶697
	▶699
	716
258-4271	648
258-4272	648
258-4273	633
	635
	697
	699
258-4274	633
	635
	697
	699
258-4280	632
	▶644
258-4284	644
	703
	705
258-4286	633
	635
258-4287	697
	699
258-4288	648
258-4289	648
258-4290	631
	▶633
	▶635
	703
	705
258-4292	648
258-4295	697
	699
258-4298	633
	635
	697
	699
258-4299	646
	▶648
258-4304	703
	705
	726
258-4308	703
	705
	726
258-4309	703
	705
	726
258-4310	738
	▶764
258-4311	▶637
	758
	759
	760
258-4312	661
258-4313	661
258-4314	▶661
	764
258-4315	661
258-4316	661
258-4318	637
258-4319	637
258-4320	738
	▶764
258-4321	733
258-4322	734
258-4323	733
258-4324	734
258-4325	733
258-4326	734
258-4328	733
258-4329	734
258-4330	▶764
258-4356	663
	666
	668
	707
	710
	713
258-4358	725
258-4359	725
258-4367	701
258-4372	108
	110
258-4373	746
258-4378	691
	703
	716
258-4379	691
	703
	716
258-4380	644
	703
	705
258-4384	691
	704
	717
258-4385	3
	4
	245
	▶268
258-4386	644
	703
	705
258-4387	735
258-4388	703
	705
	726
258-4389	269
	270
	613
	693
258-4390	▶269
258-4391	268
	270
258-4392	269
258-4396	735
258-4397	735
258-4398	693
258-4400	▶693
258-4401	▶758
	763
258-4402	▶759
	762
258-4403	▶760
	761
258-4405	693
258-4408	631
	660
	695
	704
	706
	716
258-4410	▶270
258-4416	735
258-4422	637
258-4429	783
258-4430	672
	675
	678
	682
	686
	689
258-4431	733
	734
258-4432	781
	782
258-4433	722
	▶725
258-4440	▶668
258-4441	685
	688
258-4442	668
	▶685
	▶688
	710
258-4443	▶710
258-9011	406
	▶410
259-1107	576
259-9892	▶243
260-3145	425
260-3146	425
260-3147	425
260-3149	425
260-9213	400
260-9214	400
261-6101	251
261-6167	385
	388
	391
261-6168	379
	382
	385
	388
	391
261-6239	302
	▶385
	▶388
	▶391
261-6264	▶302
261-6378	276
261-6379	258
	276
261-6681	568
	▶569
	570

▶ **PRIMARY REFERENCE**

PART NUMBER INDEX

Part	Page
262-0941	286
262-3764	▶165
	214
	215
	216
262-7288	7
	▶8
262-9163	▶750
263-3452	67
263-3823	672
	678
	685
	732
263-4836	794
	798
	802
	805
263-4996	227
	228
263-5414	739
263-5415	740
263-5416	740
263-5417	310
	351
	353
263-5418	149
	191
263-5419	206
	208
263-5420	720
	743
263-5421	155
	260
	266
263-5422	155
	157
	261
263-5423	160
	247
264-4297	429
264-4407	671
	677
	685
264-4408	672
	674
	678
	682
	685
	688
264-7029	178
	181
264-7034	739
264-8860	740
264-8861	720
	743
265-2898	▶239
	242
265-2899	▶239
	242
265-2900	▶240
	243
265-2901	▶240
	243
265-6618	691
	704
	716
265-6619	691
	704
	716
265-8033	718
265-9424	740
265-9425	740
265-9513	190
	303
265-9526	307
	353
265-9543	155
	157
	261
266-0299	631
	704
	705
266-1467	▶164
	745
266-2425	644
	▶645
	703
	705
266-2429	645
266-2430	631
	▶646
	695
	703
	716
266-2431	648
266-2432	633
	697
266-2433	633
	635
266-2434	633
	635
	697
	699
266-2435	633
266-2436	697
266-3314	137
	188
	631
	660
	695
	704
	716
266-3315	92
	111
	119
	128
	137
	201
	203
	210
	212
	304
	338
	341
	367
	394
	397
	400
	631
	660
	695
	704
	706
	716
	726
	728
266-3316	81
	82
	84
	198
	251
	356
	358
	360
	362
	364
266-6140	292
	293
266-8903	410
267-2680	140
	162
	175
267-2701	162
267-2744	137
267-2746	137
267-2809	155
	157
	260
267-5211	162
	175
267-5213	162
	175
267-8390	430
268-4071	188
268-4083	▶476
268-4084	476
	▶544
269-0257	▶638
	655
	656
	657
269-0258	▶639
	658
	659
269-0259	657
	659
269-0262	652
	▶655
269-0263	653
	▶656
269-0264	651
	▶657
269-0265	650
	▶658
269-0266	649
	▶659
269-9404	367
270-0216	367
270-9442	37
	263
	264
	278
	717
	779
	784
271-2360	422
	423
271-2912	128
271-5604	175
	178
	181
	187
272-1790	149
	▶654
	658
272-3050	103
272-3052	94
272-3062	▶94
273-5913	▶768
	772
273-5914	772
	▶775
273-5915	767
	770
	772
273-9103	655
273-9104	656
273-9611	770
	▶777
274-7409	722
274-8034	414
274-8035	415
	416
274-8044	414
274-8563	402
	▶412
274-8564	407
	▶413
274-9930	284
	▶292
274-9931	284
	▶293
275-0600	175
275-5916	767
276-0074	▶641
	642
276-4878	654
	655
	656
	657
	659
276-9875	643
	703
	705
277-8862	417
278-1969	▶294
	487
	488
	489
	490
	491
	492
	493
	494
	495
278-1970	289
	294
278-1975	▶289
	479

▶ **PRIMARY REFERENCE**

PART NUMBER INDEX

Part	Page
	480
	481
	591
278-4524	292
278-4525	293
278-4875	292
	293
278-8714	422
	423
278-8715	427
278-8716	417
278-8718	425
278-8719	425
278-8722	425
278-8735	229
278-8736	229
	232
278-8737	229
	232
278-8738	229
	232
278-8739	232
278-8740	229
	232
278-8741	229
	232
278-8742	229
	232
278-8743	229
	232
278-8744	229
	232
278-8745	229
278-8746	229
	232
278-8747	229
	232
278-8748	229
	232
278-8749	229
	232
278-8750	229
	232
278-8751	229
	232
279-5350	▶591
279-5351	591
	▶593
279-5352	593
	▶604
279-5353	604
279-5357	605
279-5358	550
	▶605
279-5359	▶550
	591
279-5360	▶591
279-5363	▶510
	511
279-5364	477
	▶511
279-5365	▶477
279-5366	▶477
279-5367	▶512
	513
279-5368	477
	478
	▶513
279-5369	▶477
279-5370	▶478
279-5371	▶514
	515
279-5372	478
	▶515
279-5373	▶478
279-5374	▶478
279-5375	▶516
	517
279-5376	478
	479
	▶517
279-5377	▶478
279-5378	▶479
279-5380	▶488
279-5381	▶488
279-5382	488
279-5383	488
	▶555
279-5384	▶459
	555
279-5385	457
	459
	▶460
279-5387	461
279-5388	▶461
	556
279-5389	489
	▶556
279-5390	▶489
279-5391	▶489
279-5392	▶489
279-5395	462
279-5396	▶462
	557
279-5397	490
	▶557
279-5398	490
279-5399	▶490
279-5400	▶490
279-5401	▶490
279-5402	▶491
279-5403	490
	491
279-5404	491
	▶558
279-5405	▶463
	558
279-5406	463
	▶464
279-5412	▶318
	591
279-5413	▶320
	488
	492
279-5414	▶322
	489
	493
279-5415	▶324
	490
	494
279-5416	▶326
	491
	495
279-5417	320
	322
	324
	326
	332
279-5418	320
	322
	324
	326
	332
279-5420	▶486
279-5421	486
	▶528
279-5422	528
	▶529
279-5423	▶530
	531
279-5424	486
	▶531
279-5425	▶486
279-5428	▶532
	533
279-5429	486
	▶533
279-5430	▶486
279-5433	▶502
	503
279-5434	476
	▶503
279-5435	▶476
279-5436	▶504
	505
279-5437	476
	▶505
279-5438	▶476
279-5439	▶506
	507
279-5440	476
	▶507
279-5441	▶476
280-5164	436
280-6068	722
280-6069	722
280-6070	730
280-6071	722
280-6077	▶716
280-6084	▶713
280-6340	1
	▶108
280-6341	721
280-6342	108
	110
	▶746
280-6344	746
280-7837	217
	223
280-7838	217
	219
	221
	223
280-7839	217
	219
	221
280-7840	217
	219
	221
	223
280-7841	217
	219
	221
280-7843	217
	223
280-7844	223
280-7846	219
	221
280-7848	219
	221
280-7849	219
	221
280-7850	219
	221
280-7860	229
	232
280-8240	102
	103
280-8286	92
280-8293	92
280-8294	12
	13
	▶92
280-8298	90
280-8299	48
280-8302	90
280-8305	785
280-8307	37
	278
280-8308	48
280-8314	37
280-8328	84
280-8329	245
	▶785
280-8330	3
	4
	245
	▶278
280-8335	37
	278
	785
280-8341	102
	103
280-8347	3
	4
	▶103
	245
280-8355	93
	94
	95
280-8361	37
280-8377	102
	103
280-8391	93
	95
280-8392	▶95
280-8393	▶93
	301
	302

▶ **PRIMARY REFERENCE**

PART NUMBER INDEX

Part	Page
280-8911	371
	383
281-6390	672
	675
	678
	682
	686
	689
282-2613	214
	215
	216
283-2458	633
	635
283-3436	184
283-4198	187
284-3914	694
284-6041	645
284-7932	663
	666
	668
	707
	710
	713
284-8953	▶751
284-8954	▶752
284-8955	▶753
285-2167	257
	794
	798
	802
	805
285-2168	257
285-2169	257
285-2170	257
285-2171	794
	798
	802
	805
285-2172	794
285-2173	802
285-2176	794
	798
	802
	805
285-2177	794
	798
	802
	805
285-2178	794
	798
	802
	805
285-2181	718
	719
285-2182	718
	719
285-2185	444
285-2188	396
285-2190	▶298
	577
285-5794	81
285-6088	▶508
	509
285-6089	477
	▶509
285-6090	▶477
285-6093	▶482
285-6095	▶496
285-6096	496
	▶565
285-6098	▶539
	566
285-6099	482
	496
	▶566
285-6100	482
	▶496
285-6101	483
	▶496
285-6102	482
	496
	▶567
285-6103	▶540
	567
285-6104	▶482
285-6105	591
	▶602
285-6110	591
	▶594
285-6111	▶482
285-6112	▶483
285-6113	▶328
	▶330
	606
	607
285-6114	▶591
285-6115	▶591
285-6116	482
	483
	591
	▶606
	▶607
285-9066	40
	42
	86
286-3591	288
286-4863	396
286-4867	373
	376
	379
	382
	385
	388
	391
286-4868	400
286-4869	400
286-9229	551
286-9243	551
	552
286-9244	485
	▶551
286-9248	▶421
	484
	485
286-9249	348
286-9250	▶346
	485
286-9251	484
	485
	▶808
286-9263	346
	348
286-9265	346
286-9266	346
286-9267	346
	348
286-9268	346
	348
286-9271	346
286-9273	421
286-9274	552
286-9278	484
	▶552
286-9279	▶348
	484
286-9280	348
286-9281	348
286-9289	421
286-9300	▶484
286-9301	▶485
287-1844	8
	▶46
287-2416	8
	▶22
287-2922	9
	10
	▶58
287-2983	9
	10
	▶59
287-3074	8
	▶40
287-3357	8
	▶38
287-3921	9
	▶49
287-3922	49
287-4033	8
	10
	▶17
287-4160	▶255
287-4161	▶256
287-4198	253
	▶443
287-4218	251
287-4219	251
287-4220	251
287-4287	251
287-4300	578
	579
287-4649	8
	▶20
287-4748	60
287-4749	9
	▶60
287-4830	8
	▶35
287-4832	9
	10
	▶101
287-5323	9
	10
	▶100
287-5377	8
	10
	▶72
287-5665	9
	10
	▶74
287-6015	65
	67
287-6016	8
	▶65
	▶67
287-6017	65
287-6020	65
287-6021	65
	67
287-6022	65
287-6056	9
	10
	▶86
287-6114	9
	10
	▶62
287-6138	8
	10
	▶63
287-6181	9
	10
	▶170
287-6361	8
	▶133
	▶134
287-7062	645
287-8073	▶10
	11
287-8752	436
287-8753	436
288-1744	▶754
	▶755
289-0841	404
289-0843	367
289-0848	226
	▶791
289-0849	4
	246
	247
	264
	265
289-0850	436
289-6362	228
	▶232
289-6377	232
289-8271	24
	26
289-8537	646
290-2110	791
291-0010	303
	338
	341
	▶414
292-1271	▶161
292-2433	394
292-2434	394
292-2435	394
292-2437	694
292-2438	694
292-2439	226
	▶299

▶ **PRIMARY REFERENCE**

PART NUMBER INDEX

Part	Page
292-2440	369
	371
292-4040	8
	10
	▶78
292-4041	10
	▶14
292-4553	186
292-4554	186
292-5476	613
292-6936	672
	675
	678
	682
	686
	689
292-7927	▶719
292-9223	486
	▶534
292-9224	534
	▶535
292-9257	535
292-9270	479
	▶518
	545
292-9271	518
	▶519
293-0139	▶491
	492
293-0140	▶332
	491
	495
293-0141	491
	▶559
293-0142	▶465
	559
293-0143	465
293-0144	475
293-0148	559
	564
	▶575
293-0152	332
293-2870	767
293-2871	768
	769
293-2872	767
	770
293-2873	775
293-6264	▶286
	484
	485
293-9044	261
	263
	265
	272
293-9426	▶570
293-9427	▶568
293-9428	▶568
293-9429	▶568
294-0075	276
294-0076	276
294-0077	276
294-0078	276
294-0079	276
294-0081	276
294-0082	258
	276
294-0083	258
	276
294-0084	258
	276
294-0085	276
294-0086	276
294-0090	276
294-0091	633
	635
	697
	699
294-1767	74
294-4555	279
294-4556	279
294-4558	276
294-4559	276
294-4560	3
	4
	245
	▶279
294-4890	14
294-4891	14
294-4892	14
294-5060	123
	125
	127
294-5502	318
294-5503	318
294-5504	328
	330
294-5505	328
	330
294-5520	113
	117
294-7915	79
294-7916	134
	135
	136
294-7917	19
294-7922	21
295-0035	276
295-0046	436
295-1799	434
	▶439
295-2567	794
	798
	802
	805
295-3171	637
	▶733
295-3172	637
	▶734
295-5440	633
	635
	697
	699
295-7029	1
	▶111
295-7072	111
295-7113	▶11
295-7118	2
	▶13
295-7125	111
295-7246	▶2
295-7291	▶1
	2
295-7316	798
295-7317	798
295-7318	798
295-7319	798
295-7320	798
295-7326	805
295-7327	805
295-7328	805
295-7329	805
295-7330	805
295-7337	798
295-7338	805
295-7340	798
295-7463	1
	▶110
296-0582	▶576
296-0583	576
296-0584	576
296-5750	201
	203
296-7597	▶486
296-7602	590
296-7680	486
	▶590
296-8055	▶492
296-8057	▶492
296-8191	▶545
296-8192	▶479
297-7941	369
	371
	373
	376
	379
	382
	385
	388
	391
297-7942	369
	371
	373
	376
	379
	382
	385
	388
	391
297-8107	422
	423
298-7197	642
	▶694
298-7198	367
	▶642
299-4645	30
	31
300-1071	9
	10
	▶171
300-2952	113
300-3573	123
	125
300-3867	123
	125
	127
300-3988	123
	125
	127
300-7627	▶197
	226
300-7629	▶5
300-7634	▶6
300-7637	5
	6
	▶226
300-7640	5
	6
	▶228
300-9449	51
	53
	55
300-9546	187
301-3274	75
301-3396	9
	10
	▶61
301-3397	61
301-4213	436
302-0389	304
	338
	341
302-4389	794
	798
302-4390	802
	805
303-2206	415
303-5020	373
	376
	379
	382
	385
	388
	391
	394
	396
	400
303-8767	303
	581
	582
303-8768	303
	581
	582
	616
304-1021	775
	777
304-1022	775
	777
304-1023	775
	777
304-1034	775
	777
304-1035	775
	777

3

▶ PRIMARY REFERENCE

PART NUMBER INDEX

Part	Page	Part	Page	Part	Page	Part	Page
304-1036	775	305-7092	767		55	314-9974	106
304-1038	777		770	309-8968	394	314-9980	115
304-1043	777		772	310-0657	188	314-9981	115
304-1052	775	305-7093	767	310-2682	22	314-9982	115
304-1054	775		770		24	314-9983	115
304-1055	775		772		26	314-9984	115
304-1056	775	305-7096	▶769		28	314-9985	115
304-1057	775		770	310-3990	274	314-9986	115
304-3885	130	305-8034	3	310-4062	274	314-9987	115
304-5080	373		4	310-4772	139	314-9988	115
	376		245	310-5289	▶139	314-9989	115
	379		▶731		147	314-9991	123
	382	305-9194	672	310-6660	303		125
	385		675		616	314-9992	123
	388		678	310-8460	▶281		125
	391		682		307	314-9999	125
304-5237	▶810		686	310-8461	▶282	315-2354	51
304-5687	167		688		403	315-2356	51
304-6740	▶6	306-2165	121	310-8798	18		53
304-6743	6		127		19	315-4664	16
	▶302	307-2275	307	310-9332	258	315-4667	42
304-6745	302		403	310-9334	258	315-4668	42
	▶353		▶415	310-9335	258	315-4669	57
304-6748	307	307-2276	307	311-4928	244	315-4670	57
	403		403	311-8704	▶258	315-4671	57
304-6749	307		▶416	311-9240	303	315-4677	123
	403	307-2277	416		616	315-4686	42
304-6751	307	307-2338	149	312-0131	691	315-4687	42
	353		191		704	315-5381	704
304-6752	298	307-2952	768		717		706
	307		769	312-1024	▶257		726
	341	307-2953	768	312-4965	281	315-5493	304
304-6753	307		769	312-7747	794		609
	353	307-2954	768		798		610
304-6754	▶307		769	312-7748	802		616
304-6755	302	307-2955	767		805	315-6353	▶4
	▶403		770	312-8308	258	315-7700	79
304-6756	307		772	312-8932	274	315-7701	98
	353	307-3043	425	313-5646	422		99
304-8351	128	307-3049	425		423	315-7702	98
304-8352	128	307-3808	330	313-9141	248		99
305-0201	203	307-6237	▶274		255	315-7703	38
305-2893	369	308-1439	794	314-2403	377		39
	373	308-1440	802		380	315-7704	47
	376	308-6423	307		383	315-7761	8
	379		353		389		10
	385	308-6542	444		391		▶47
	388	308-6616	767	314-9860	10	315-7762	8
	391	308-6767	250		▶21		10
305-4185	210	308-7534	258	314-9861	10		▶19
	212	308-7535	258		▶34	315-7764	8
305-4335	735	308-7536	258	314-9900	8		10
305-4337	735	308-7537	258		10		▶39
305-4339	735	308-7538	258		▶76	315-7765	10
305-4351	777	308-7540	258		▶77		▶51
305-4353	775	309-0052	258	314-9901	10		▶53
	777	309-1926	258		▶70	315-7766	10
305-5385	102	309-1927	258	314-9938	28		▶36
	103	309-1936	258	314-9947	42	315-7768	10
305-7085	768	309-2477	258	314-9948	42		▶106
	769	309-4920	250		44	315-7769	10
305-7086	768	309-8907	55	314-9962	57		▶98
305-7087	768	309-8908	55	314-9963	57	315-7815	▶263
305-7088	769	309-8909	51	314-9964	57	315-7816	▶263
305-7089	769		53	314-9972	106	315-8326	123

▶ **PRIMARY REFERENCE**

PART NUMBER INDEX

Part	Page
	125
315-8329	10
	▶16
315-8336	10
	▶42
315-8348	10
	▶57
315-8350	10
	▶115
315-8352	10
	▶123
	▶125
315-8353	8
	10
	▶135
	▶136
315-8355	8
	10
	▶79
315-8697	98
315-8698	98
	99
315-9794	274
316-9040	9
	▶44
317-0691	▶244
317-4998	127
317-5007	99
317-5008	99
317-5010	24
317-5047	9
	▶127
317-5057	8
	▶117
317-5070	8
	▶99
317-5076	8
	▶71
317-5082	9
	▶55
317-5094	8
	▶24
	▶26
317-6894	249
318-0008	310
	351
	353
318-8033	67
319-0710	672
	675
	678
	682
	686
	689
319-2137	303
	616
319-4168	768
	769
319-5901	379
	382
	391
319-7262	31
319-7263	31
319-9480	3
	4
	▶612
319-9481	612
319-9482	612
319-9483	612
319-9484	612
319-9489	612
319-9490	612
321-5709	354
322-0352	130
322-1644	▶249
	257
322-3150	36
322-9633	674
	681
	688
323-6266	49
325-5905	53
325-7034	467
325-7035	▶492
325-7036	492
	493
325-7037	492
	▶560
325-7038	▶466
	560
325-7039	466
	▶467
325-7040	▶493
325-7044	469
325-7045	▶493
325-7046	493
325-7047	493
	▶561
325-7048	▶468
	561
325-7049	468
	▶469
325-7050	▶493
325-7054	471
325-7055	▶494
325-7056	▶494
325-7057	494
	▶562
325-7058	▶470
	562
325-7059	470
	▶471
325-7060	▶494
325-7064	473
325-7065	▶494
325-7066	494
	▶495
325-7067	495
	▶563
325-7068	▶472
	563
325-7069	472
	▶473
325-7070	▶495
325-7074	475
325-7075	▶495
325-7076	▶495
	496
325-7077	495
	▶564
325-7078	▶474
	564
325-7079	474
	▶475
325-7080	▶496
327-0752	166
	171
327-7701	26
328-2044	371
	382
328-2369	635
328-2370	699
328-3317	635
	699
328-5192	100
328-8817	208
328-8818	208
330-4060	257
330-5011	674
	681
	688
	▶732
330-7620	98
330-7621	98
330-7622	98
330-7633	10
	▶28
330-7634	28
331-5291	750
	755
	▶756
331-5292	748
	▶757
331-7171	396
331-8050	674
	681
	688
333-4957	4
	▶157
333-7434	▶264
333-7435	▶265
333-7436	▶266
335-9117	86
	▶87
335-9124	87
335-9125	86
336-0913	161
	▶186
336-0914	161
336-9190	125
336-9856	77
336-9857	77
337-9101	781
	782
340-8931	648
341-3561	9
	10
342-5009	▶2
342-5010	▶2
342-5011	▶2
346-1575	167
346-1576	167

▶ **PRIMARY REFERENCE**



© 2009 CATERPILLAR
ALL RIGHTS
RESERVED

CAT, CATERPILLAR, THEIR RESPECTIVE LOGOS, “CATERPILLAR YELLOW” AND THE POWER EDGE TRADE DRESS, AS WELL AS CORPORATE AND PRODUCT IDENTITY USED HEREIN, ARE TRADEMARKS OF CATERPILLAR AND MAY NOT BE USED WITHOUT PERMISSION.

PRINTED IN
U.S.A.