CATERPILLAR®

SEBP4570
March 2007

RUTHZIL TRATOR COMERCIAL DE PEÇAS LTDA 11 97083-6812 ROLANDO

Parts Manual

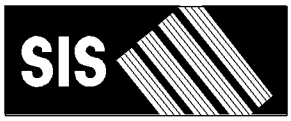

See "General Information" for New Parts Manual Features.

246C Skid Steer Loader

JAY1-Up (Machine)
CJS1-Up (Engine)

Powered By 3044C Engine
This Parts Manual is also available on Compact Disc (CD-ROM) - Caterpillar Form No. SERP4570.

Product and Dealer Information

Note: For product identification plate locations, see the section “Product Identification Information” in the Operation and Maintenance Manual.

Delivery Date: _____

Product Information

Model: _____

Product Identification Number: _____

Engine Serial Number: _____

Transmission Serial Number: _____

Generator Serial Number: _____

Attachment Serial Numbers: _____

Attachment Information: _____

Customer Equipment Number: _____

Dealer Equipment Number: _____

Dealer Information

Name: _____ Branch: _____

Address: _____

_____

_____

	Dealer Contact	Phone Number	Hours
Sales:	_____	_____	_____
Parts:	_____	_____	_____
Service:	_____	_____	_____

Informations produit et concessionnaire

Nota: Voir l'emplacement de la plaque signalétique du produit au chapitre "Informations produit" du guide d'utilisation et d'entretien.

Date de livraison: _____

Informations produit

Modèle: _____

Numéro d'identification produit: _____

Numéro de série du moteur: _____

Numéro de série de la boîte de vitesses: _____

Numéro de série de l'alternateur: _____

Numéros de série d'équipement: _____

Informations sur l'équipement: _____

Numéro matériel client: _____

Numéro matériel concessionnaire: _____

Informations concessionnaire

Nom: _____ Agence: _____

Adresse: _____

_____

_____

	Contact concessionnaire	Numéro de téléphone	Heures
Ventes:			
Pièces:			
Service:			

Información del Producto/Distribuidor

Nota: Para saber la ubicación de las placas de identificación del producto, ver la sección “Información sobre identificación del producto” en el Manual de Operación y Mantenimiento.

Fecha de entrega: _____

Información del producto

Modelo: _____

Número de identificación del producto: _____

Número de serie del motor: _____

Número de serie de la transmisión: _____

Número de serie del generador: _____

Números de serie de los accesorios: _____

Información sobre los accesorios: _____

Número del equipo del cliente: _____

Número del equipo del distribuidor: _____

Información del distribuidor

Nombre: _____ Sucursal: _____

Dirección: _____

_____

_____

Comunicación con el distribuidor	Número de teléfono	Horas
Ventas: _____	_____	_____
Piezas: _____	_____	_____
Servicio: _____	_____	_____

Informações Sobre Produto e Revendedor

Nota: Para localizações da placa de identificação do produto, consulte a seção, “Informações Sobre Identificação do Produto” no Manual de Operação e Manutenção.

Data de Entrega: _____

Informações Sobre o Produto

Modelo: _____

Número de Identificação do Produto: _____

Número de Série do Motor: _____

Número de Série da Transmissão: _____

Número de Série do Gerador: _____

Números de Série de Acessórios: _____

Informações Sobre Acessórios: _____

Número do Equipamento do Cliente: _____

Número do Equipamento do Revendedor: _____

Informações Sobre o Revendedor

Nome: _____ Filial: _____

Endereço: _____

_____

_____

	Contato do Revendedor	Telefone	Horas
Vendas:	_____	_____	_____
Peças:	_____	_____	_____
Serviço:	_____	_____	_____

Produkt- und Händlerinformation

Anmerkung: Für die Lage der Produkt-Identnummer und Seriennummern siehe Abschnitt “Produkt-Identinformation” im Betriebs- und Wartungshandbuch.

Lieferdatum: _____

Produkt-Identinformation

Modell: _____

Produkt-Identnummer: _____

Seriennummer des Motors: _____

Seriennummer des Getriebes: _____

Seriennummer des Generators: _____

Seriennummern der Arbeitsgeräte: _____

Arbeitsgeräteinformation: _____

Kundennummer: _____

Händlernummer: _____

Händlerinformation

Name: _____ Niederlassung: _____

Adresse: _____

_____

_____

	Kontaktperson beim Händler	Telefon	Dienststunden
Verkauf:	_____	_____	_____
Ersatzteile:	_____	_____	_____
Service:	_____	_____	_____

MEMORANDA

TABLE OF CONTENTS

Name	Page
GENERAL INFORMATION	A19
REPAIR ALTERNATIVES	A38
SUPPLEMENTAL COOLANT ADDITIVES	A43
MAINTENANCE PARTS	A48
INDEX	A65
MACHINE ARRANGEMENT	1
CHASSIS AR	1
COMMON AR	1
CONVERSION AR-MACHINE	1
MACHINE AR-SPECIAL	2
ENGINE ARRANGEMENT	4
ENGINE AR	4
ENGINE AR-PRIMARY	5
INSTALLATION AR-ENGINE	6
BASIC ENGINE	7
BELT GP	7
CAMSHAFT GP	8
CONNECTING ROD GP	9
COVER GP-VALVE MECHANISM	10
CRANKSHAFT GP	11
CYLINDER BLOCK GP	13
CYLINDER HEAD GP	15
DRAIN GP-ENGINE OIL	16
FLYWHEEL GP	17
GEAR GP-FRONT	18
GUARD GP-BELT	19
HOUSING GP-FLYWHEEL	20
HOUSING GP-FRONT	21
LIFTING GP-ENGINE	23
MOUNTING GP-ENGINE	24
PAN GP-OIL	25
PISTON & ROD GP	27
PLUG GP-ENGINE	28
PULLEY GP-CRANKSHAFT	30
PULLEY GP-WATER PUMP	31
VALVE MECHANISM GP	32
LUBRICATION SYSTEM	33
BREATHER GP	33
FILTER GP-ENGINE OIL	35
PUMP GP-ENGINE OIL	37
COOLING SYSTEM	38
COOLER GP-ENGINE OIL	38
LINES GP-WATER	39
MOUNTING GP-RAD & OIL COOLER	41
PUMP GP-WATER	43
RADIATOR & HYD OIL COOLER GP	44
AIR INLET AND EXHAUST SYSTEM	46
AIR CLEANER GP	46
KIT-DEBRIS GUARD	49
LINES GP-AIR	50
MANIFOLD GP-EXHAUST	52
MANIFOLD GP-INLET	53
MUFFLER & MOUNTING GP	54
MUFFLER GP	55
TURBOCHARGER GP	56
FUEL SYSTEM	58
CONTROL GP-GOVERNOR	58
LINES GP-FUEL	61
LINES GP-FUEL PRM & FILTER	63
PUMP GP-FUEL INJECTION	65
TANK & MTG GP-FUEL	67
TANK GP-FUEL	69
ELECTRICAL AND STARTING SYSTEM	70
ALTERNATOR GP-CHARGING	70
BATTERY & WIRING GP	73
COVER GP-FUSE PANEL	75
GLOW PLUG GP	76
HEATER GP-JACKET WATER	77
KIT-CONTROL MOUNTING	79
KIT-SECURITY	80
KIT-WORK TOOL WIRING	82
LAMP GP-FLOOD	83
LAMP GP-HEAD & SIGNAL	84
LAMP GP-WARNING BEACON	86
LIGHTING GP-FLOOD	87
LIGHTING GP-ROADING	88
LIGHTING GP-STOP & TAIL	90
LIGHTING GP-WARNING BEACON	91
RELAY AS	92
SENSOR GP-POSITION	93
SENSOR GP-SPEED	94
SENSOR GP-TEMP & PRESS	95
SERVICE GP-MACHINE	96
STARTING MOTOR GP-ELECTRIC	97
WIRING GP-AIR CONDITIONER	100
WIRING GP-CAB	101
WIRING GP-COUPLER	104
WIRING GP-ENGINE	105
WIRING GP-MACHINE	109
WIRING GP-WORK TOOL	112
POWER TRAIN	114
AXLE GP	114
DRIVE GP-TANDEM	118
FILTER & LINES GP-HYDRAULIC	120
FILTER GP-OIL	122
LINES GP-HYDROSTATIC	123
LINES GP-PARKING BRAKE	127
MANIFOLD & LINES GP-CONTROL	128

TABLE OF CONTENTS

Name	Page
MANIFOLD GP-RETURN	130
MOTOR & MTG GP-HYDROSTATIC	132
MOTOR GP-PISTON	134
MOUNTING GP-PUMP	140
POWER TRAIN AR	141
PUMP & MTG GP-HYDROSTATIC	142
PUMP GP-PISTON	143
TIRE & RIM GP	146
WHEEL & TIRE AR	155
FRAME AND BODY	161
CONVERSION AR-ROADING	161
CONVERSION GP-ROADING	162
COUNTERWEIGHT GP	164
ENCLOSURE GP-ENGINE	165
FRAME & MTG GP-MACHINE	166
FRAME GP-MACHINE	168
GUIDE GP-LINES	169
KIT-COUNTERWEIGHT	170
KIT-LIFTING	172
LIFTING GP-MACHINE	173
MIRROR & MTG GP-REAR VIEW	175
MOUNTING GP-REGISTRATION	176
STEP GP	177
SUPPRESSION GP-SOUND	178
HYDRAULIC SYSTEM	182
ACCUMULATOR GP-HYDRAULIC	182
CYLINDER GP-BUCKET	183
CYLINDER GP-GRAPPLE	184
CYLINDER GP-HYDRAULIC	185
CYLINDER GP-LIFT ARM	188
FITTING GP-HYDRAULIC	189
HYDRAULIC AR	192
KIT-QUICK COUPLER CONVERSION	195
KIT-WORK TOOL POSITIONER	199
LINES GP-BUCKET	201
LINES GP-COUPLER	215
LINES GP-HYDRAULIC	218
LINES GP-HYDRAULIC FAN	221
LINES GP-HYDRAULIC OIL COOLER	225
LINES GP-LIFT CYLINDER	227
LINES GP-LOWERING CONTROL	228
LINES GP-PUMP	230
LINES GP-TILT CYLINDER	238
LINES GP-WORK TOOL	240
MANF & SOLENOID MTG GP-ACCUM	246
MANIFOLD & LINES GP-ACCUM	247
MANIFOLD & MTG GP-CONTROL	248
MANIFOLD & SOLENOID GP-CONTROL	250
MANIFOLD GP-CONTROL	251
MOTOR & MTG GP-HYDRAULIC FAN	254
MOUNTING GP-CYLINDER	255
PUMP & MTG GP-GEAR	258
PUMP & MTG GP-WORK TOOL	259
PUMP GP-PISTON	261
PUMP GP-PISTON & GEAR	263
TANK & MTG GP-HYDRAULIC	264
TANK GP-HYDRAULIC	265
VALVE & MTG GP-CONTROL	267
VALVE GP-CHECK	269
VALVE GP-CONTROL	270
VALVE GP-MANUAL	274
VALVE GP-RELIEF	275
VALVE GP-SHUTTLE	277
VALVE GP-SOLENOID	278
IMPLEMENTS	280
PIN GP-LIFT ARM	280
WORK TOOLS	282
BLADE GP-MULTIPURPOSE BUCKET	282
BUCKET AR-DIRT	287
BUCKET AR-GENERAL PURPOSE	288
BUCKET AR-GRAPPLE	290
BUCKET AR-LIGHT MATERIAL	291
BUCKET AR-MULTIPURPOSE	292
BUCKET AR-UTILITY	296
BUCKET AS-DIRT	297
BUCKET AS-GENERAL PURPOSE	302
BUCKET AS-LIGHT MATERIAL	306
BUCKET GP-DIRT	309
BUCKET GP-MULTIPURPOSE	310
BUCKET GP-UTILITY	316
CARRIAGE & FORK AR	320
CARRIAGE GP-FORK	321
COUPLER AR-QUICK	322
COUPLER GP-QUICK	323
COVER GP-LINES	325
CYLINDER & LINK GP-COUPLER	326
EDGE GP-CUTTING	328
FORK AR-GRAPPLE	333
FORK GP-GRAPPLE	335
FORK GP-PALLET	339
FORK GP-UTILITY	340
FRAME GP-FORK	342
FRAME GP-GRAPPLE	344
GRAPPLE GP-UTILITY	345
HANDLE & PIN GP-COUPLER	347
KIT-ROADING PLATE & MOUNTING	349
LINK GP-COUPLER	350
LOCK GP-QUICK COUPLER	351
PLATE GP-ROADING	354
STOP GP-GRAPPLE	356
STRAINER GP-WATER	357
TANK & MTG GP-WATER	358
TANK GP-WATER	360
TOOTH GP-UNI	361

TABLE OF CONTENTS

Name	Page
OPERATOR STATION	362
ACCESSORY GP-CAB	362
ACCUMULATOR GP-REFRIGERANT	363
AIR CONDITIONER & MOUNTING GP	365
AIR CONDITIONER AR	366
AIR CONDITIONER GP	367
ARMREST & MOUNTING GP	369
CAB AR-ENCLOSED ROPS	370
CABLE GP-CONTROL	371
COMPRESSOR & MTG GP-REFRIG	372
CONDENSER & MTG GP-REFRIGERANT	373
CONTROL & WIRING GP-AIR & TEMP	375
CONTROL GP-AIR & TEMPERATURE	376
CONTROL GP-ELECTROHYDRAULIC	377
CONTROL GP-HANDLE	382
CONTROL GP-JOYSTICK	383
COVER GP-CAB	388
COVER GP-CONSOLE	389
COVER GP-INSTRUMENT PANEL	390
DOOR GP-CAB	391
DUCT & FILTER GP-CAB AIR	402
GUARD GP-ROPS/FOPS	404
HEATER & MTG GP-CAB	405
HEATER AR-CAB	406
HEATER GP-CAB	407
INSTALLATION GP-RADIO	408
KIT-AIR COND & HEATER INSTL	410
KIT-AIR CONDITIONER INSTL	412
KIT-CAB DOOR & MOUNTING	414
KIT-CAB HEATER & MOUNTING	415
KIT-CAB WINDOW	417
KIT-CONTROL PATTERN CHANGE	418
KIT-INSTRUMENT PANEL	420
LEVER GP-GOVERNOR	421
LINER GP-CAB	422
LINES GP-AIR CONDITIONER	426
LINES GP-HEATER	428
LITERATURE GP	429
MIRROR GP-REAR VIEW	430
MOUNTING GP-ARMREST	431
MOUNTING GP-ROPS	433
OPTION AR-CAB	436
PANEL GP-INSTRUMENT	437
PEDAL GP-GOVERNOR	442
SEAT & ARMREST GP	443
SEAT & MOUNTING GP	446
SEAT AR	449
SEAT AR-SUSPENSION	449
SEAT BELT GP	450
SEAT GP-SUSPENSION	452
SPRING GP-GAS	453
VISOR GP-CAB	455
WINDOW GP-CAB	457
SERVICE EQUIPMENT AND SUPPLIES	461
BRACKET GP-MOUNTING	461
FILM GP	462
PLATE & FILM GP	466
PART NUMBER INDEX	B1

TABLE DES MATIÈRES

Désignation	Page
GÉNÉRALITÉS	A22
OPTIONS DE RÉPARATION	A39
ADDITIFS POUR LIQUIDE DE REFROIDISSEMENT	A44
PIÈCES DE RECHANGE	A51
INDEX	A73
MACHINE COMPLÈTE	1
VERSION DE CHASSIS	1
VERSION NORMALE	1
VERSION DE TRANSFORMATION MACHINE	1
VERSION DE MACHINE SPÉCIALE	2
MOTEUR COMPLET	4
MOTEUR (VERSION)	4
MOTEUR (VERSION PRINCIPALE)	5
MONTAGE DE MOTEUR (VERSION)	6
MOTEUR DE BASE	7
COURROIE (ASS)	7
ARBRE A CAMES (ASS)	8
BIELLE (ASS)	9
CACHE-SOUPAPES (ASS)	10
VILEBREQUIN (ASS)	11
BLOC-CYLINDRES (ASS)	13
CULASSE (ASS)	15
VIDANGE-HUILE DE MOTEUR (ASS)	16
VOLANT MOTEUR (ASS)	17
PIGNONNERIE AV (ASS)	18
PROTEGE-COURROIE (ASS)	19
CARTER DE VOLANT (ASS)	20
CARTER AV (ASS)	21
OEILLETONS DE LEVAGE MOTEUR (ASS)	23
MONTAGE DE MOTEUR (ASS)	24
HUILE MOTEUR - CARTER (ASS)	25
PISTON ET BIELLE (ASS)	27
BOUCHON DE MOTEUR (ASS)	28
VILEBREQUIN - POULIE (ASS)	30
POULIE DE POMPE À EAU (ASS)	31
CULBUTERIE (ASS)	32
CIRCUIT DE GRAISSAGE	33
RENIFLARD (ASS)	33
FILTRE À HUILE MOTEUR (ASS)	35
POMPE A HUILE MOTEUR (ASS)	37
CIRCUIT DE REFROIDISSEMENT	38
REFROIDISSEUR D'HUILE MOTEUR (ASS)	38
CANALISATIONS D'EAU (ASS)	39
MONTAGE DE RADIATEUR ET REFROIDISSEUR D'HUILE (ASS)	41
POMPE A EAU (ASS)	43
RADIATEUR ET REFROIDISSEUR D'HUILE HYDRAULIQUE (ASS)	44
CIRCUIT D'ADMISSION D'AIR ET D'ÉCHAPPEMENT	46
FILTRE A AIR (ASS)	46
KIT PROTÈGE-DÉBRIS	49
CANALISATIONS D'AIR (ASS)	50
COLLECTEUR D'ÉCHAPPEMENT (ASS)	52
COLLECTEUR D'ADMISSION (ASS)	53
SILENCIEUX ET MONTAGE (ASS)	54
SILENCIEUX (ASS)	55
TURBOCOMPRESSEUR (ASS)	56
CIRCUIT DE CARBURANT	58
COMMANDE DE RÉGULATEUR (ASS)	58
CANALISATIONS DE CARBURANT (ASS)	61
CANALISATIONS DE FILTRE ET D'AMORÇAGE DE CARBURANT (ASS)	63
POMPE D'INJECTION DE CARBURANT (ASS)	65
RÉSERVOIR DE CARBURANT ET MONTAGE (ASS)	67
RÉSERVOIR DE CARBURANT (ASS)	69
CIRCUIT ÉLECTRIQUE ET DE DÉMARRAGE	70
ALTERNATEUR DE CHARGE (ASS)	70
BATTERIE ET CÂBLAGE	73
COUVERCLE - PANNEAU DE FUSIBLES (ASS)	75
BOUGIE DE PRÉCHAUFFAGE (ASS)	76
EAU DES CHEMISES - RECHAUFFEUR (ASS)	77
KIT DE MONTAGE DE COMMANDE	79
KIT DE SÉCURITÉ	80
KIT DE CÂBLAGE D'OUTIL DE TRAVAIL	82
LAMPE - PHARE (ASS)	83
LAMPE - PHARE ET CLIGNOTANT	84
LAMPE - GYROPHARE (ASS)	86
ÉCLAIRAGE - PROJECTEURS (ASS)	87
ÉCLAIRAGE - FEUX DE ROUTE (ASS)	88

* TRADUCTION NON DISPONIBLE AU MOMENT DE LA PUBLICATION

TABLE DES MATIÈRES

Désignation	Page
ÉCLAIRAGE-FEUX DE STOP ET ARRIÈRE (ASS)	90
ÉCLAIRAGE - GYROPHARE (ASS)	91
RELAIS (ENS)	92
SONDE - CIRCUIT DE CARBURANT	93
CAPTEUR DE VITESSE (ASS)	94
CAPTEUR - TEMP. ET PRESSION (ASS)	95
ENTRETIEN DE LA MACHINE (ASS)	96
DÉMARREUR ÉLECTRIQUE (ASS)	97
CABLAGE - CLIMATISEUR (ASS)	100
CABLAGE DE CABINE (ASS)	101
CÂBLAGE-COUPLEUR (ASS)	104
CABLAGE DE MOTEUR (ASS)	105
CABLAGE DE LA MACHINE (ASS)	109
CÂBLAGE - OUTIL DE TRAVAIL (ASS)	112
TRANSMISSION	114
ESSIEU (ASS)	114
ENTRAINEMENT EN TANDEM (ASS)	118
FILTRE ET CANALISATIONS HYRAULIQUES (ASS)	120
FILTRE A HUILE (ASS)	122
CANALISATIONS HYDROSTATIQUES (ASS)	123
CANALISATIONS DU FREIN DE STATIONNEMENT	127
COLLECTEUR ET CANALISATIONS (ASS) - COMMANDE	128
COLLECTEUR-RETOUR (ASS)	130
MOTEUR ET MONTAGE - HYDROSTATIQUE (ASS)	132
GROUPE DE MOTEUR A PISTONS	134
MONTAGE DE POMPE (ASS)	140
TRANSMISSION (VERSION)	141
POMPE HYDROSTATIQUE ET MONTAGE (ASS)	142
POMPE A PISTONS (ASS)	143
PNEU ET JANTE (ASS)	146
ROUE ET PNEU (VERSION)	155
CHÂSSIS ET BENNE	161
VERSION DE TRANSFORMATION POUR DÉPLACEMENT ROUTIER	161
GROUPE DE TRANSFORMATION - DÉPLACEMENT ROUTIER	162
CONTREPOIDS (ASS)	164
CARENAGE DE MOTEUR (ASS)	165
BÂTI DE MACHINE ET MONTAGE (ASS)	166
BÂTI DE MACHINE (ASS)	168
GUIDE - CANALISATIONS (ASS)	169
*KIT-COUNTERWEIGHT	170
*KIT-LIFTING	172
MACHINE DE LEVAGE	173
RÉTROVISEUR ET MONTAGE (ASS)	175
MONTAGE - IMMATRICULATION (ASS)	176
MARCHEPIED (ASS)	177
INSONORISATION (ASS)	178
CIRCUIT HYDRAULIQUE	182
ACCUMULATEUR HYDRAULIQUE (ASS)	182
VERIN DE GODET (ASS)	183
PINCE - VÉRIN (ASS)	184
VÉRIN HYDRAULIQUE (ASS)	185
VÉRIN DE BRAS DE LEVAGE (ASS)	188
GRAISSEUR HYDRAULIQUE (ASS)	189
VERSION HYDRAULIQUE	192
KIT DE TRANSFORMATION DU COUPLEUR EXPRESS	195
KIT DE POSITIONNEUR D'OUTIL DE TRAVAIL	199
ECLAIRAGE DE GODET (ASS)	201
CANALISATIONS DE COUPLEUR (ASS)	215
CANALISATIONS HYDRAULIQUES (ASS)	218
CANALISATIONS HYDRAULIQUES DE VENTILATEUR (ASS)	221
CANALISATIONS DE REFROIDISSEUR D'HUILE HYDR. (ASS)	225
CANALISATIONS DE VÉRIN DE LEVAGE (ASS)	227
CANALISATIONS-COMMANDE D'ABAISSEMENT (ASS)	228
CANALISATIONS DE POMPE (ASS)	230
CANALISATIONS DU VÉRIN D'INCLINAISON (ASS)	238
CANALISATIONS - OUTIL DE TRAVAIL (ASS)	240
MONTAGE DE COLLECTEUR ET SOLÉNOÏDE (ASS)-ACCUM	246
COLLECTEUR ET CANALISATIONS (ASS)-ACCUM	247
COMMANDE DE COLLECTEUR ET MONTAGE (ASS)	248
COLLECTEUR ET SOLÉNOÏDE (ASS)-COMMANDE	250
COLLECTEUR - COMMANDE (ASS)	251
MOTEUR ET MONTAGE DE VENTILATEUR HYDRAULIQUE (ASS)	254
MONTAGE DE VÉRIN (ASS)	255
POMPE ET MONTAGE - PIGNON	258

* TRADUCTION NON DISPONIBLE AU MOMENT DE LA PUBLICATION

TABLE DES MATIÈRES

Désignation	Page
POMPE ET MONTAGE - OUTIL DE TRAVAIL (ASS)	259
POMPE A PISTONS (ASS)	261
POMPES DE PISTONS ET ENGRENAGES (ASS)	263
RÉSERVOIR HYDRAULIQUE ET MONTAGE (ASS)	264
RÉSERVOIR HYDRAULIQUE (ASS)	265
DISTRIBUTEUR ET MONTAGE (ASS)	267
CLAPET DE RETENUE (ENS)	269
DISTRIBUTEUR (ASS)	270
SOUPAPE A COMMANDE MANUELLE (ASS)	274
CLAPET DE DECHARGE (ASS)	275
VANNE PILOTE (ASS)	277
SOUPAPE - SOLÉNOÏDE (ASS)	278
ÉQUIPEMENTS	280
*PIN GP-LIFT ARM	280
OUTILS DE TRAVAIL	282
LAME DE GODET TOUS-TRAVAUX	282
GODET - SALETÉ (VERSION)	287
GODET NORMAL (VERSION)	288
GODET - PINCE (VERSION)	290
GODET - MATÉRIAUX MEUBLES (VERSION)	291
GODET TOUS-TRAVAUX (VERSION)	292
VERSION DE GODET POUR TRAVAUX DE SERVITUDE	296
GODET - SALETÉ (ENS)	297
GODET NORMAL (ENS)	302
GODET POUR MATERIAUX MEUBLES (ENS)	306
GODET POUR TERRASSEMENT (ASS)	309
GODET TOUS-TRAVAUX (ASS)	310
GODET POUR TRAVAUX DE SERVITUDE (ASS)	316
VERSION DE TABLIER ET DE FOURCHE	320
TABLIER - FOURCHE (ASS)	321
COUPLEUR EXPRESS (VERSION)	322
COUPLEUR EXPRESS (ASS)	323
COUVERCLE-CANALISATIONS (ASS)	325
VÉRIN ET BIELLE DE COUPLEUR (ASS)	326
LAME DE COUPE (ASS)	328
FOURCHE - PINCE (VERSION)	333
FOURCHE - PINCE (ASS)	335
FOURCHE PALLETTE (ASS)	339
FOURCHE-RÉSEAU PUBLIC (ASS)	340
BÂTI DE FOURCHE (ASS)	342
PINCE - BÂTI (ASS)	344
PINCE-RÉSEAU PUBLIC (ASS)	345
POIGNÉE ET AXE DE COUPLEUR (ASS)	347
KIT DE PLAQUE DE DÉPLACEMENT ROUTIER ET MONTAGE	349
BIELLE DE COUPLEUR (ASS)	350
VERROUILLAGE DE COUPLEUR EXPRESS (ASS)	351
PLAQUE-DÉPLACEMENT ROUTIER (ASS)	354
ARRÊT-PINCE (ASS)	356
TAMIS D'EAU (ASS)	357
RÉSERVOIR D'EAU ET MONTAGE (ASS)	358
RÉSERVOIR D'EAU (ASS)	360
DENT MONOBLOC (ASS)	361
POSTE DE CONDUITE	362
VISIÈRE - GROUPE AUXILIAIRE	362
ACCUMULATEUR - CLIMATISEUR (ASS)	363
CLIMATISEUR ET MONTAGE (ASS)	365
CLIMATISEUR (VERSION)	366
CLIMATISEUR (ASS)	367
ACCOUDOIR ET MONTAGE (ASS)	369
CABINE ROPS FERMÉE (VERSION)	370
CABLAGE - COMMANDE MANUELLE ELECTRIQUE	371
COMPRESSEUR ET MONTAGE - RÉFRIGÉRANT (ASS)	372
CONDENSATEUR ET MONTAGE (RÉFRIGÉRANT)	373
COMMANDE ET CÂBLAGE (ASS)-AIR ET TEMPÉRATURE	375
COMMANDE - AIR ET TEMPERATURE (ASS)	376
COMMANDE ÉLECTROHYDRAULIQUE (ASS)	377
COMMANDE DE POIGNÉE (ASS)	382
PALONNIER - GROUPE DE COMMANDE (ASS)	383
COUVERCLE - CABINE (ASS)	388
COUVERCLE DE LA CONSOLE (ASS)	389
COUVERCLE DU TABLEAU DE BORD (ASS)	390
PORTIÈRE DE CABINE (ASS)	391
CONDUIT ET FILTRE À AIR DE CABINE (ASS)	402
PROTECTION DE ROPS/FOPS (ASS)	404
CHAUFFAGE ET MONTAGE - CABINE (ASS)	405
CHAUFFAGE DE CABINE (VERSION)	406

* TRADUCTION NON DISPONIBLE AU MOMENT DE LA PUBLICATION

TABLE DES MATIÈRES

Désignation	Page
CHAUFFAGE DE CABINE (ASS)	407
MONTAGE DE RADIO (ASS)	408
KIT DE MONTAGE DE CLIMATISEUR ET CHAUFFAGE	410
KIT DE MONTAGE DE CLIMATISEUR	412
KIT DE PORTE DE CABINE ET MONTAGE	414
KIT DE CHAUFFAGE DE CABINE ET MONTAGE	415
KIT DE VITRE DE CABINE	417
KIT DE MODIFICATION DE GRILLE DE COMMANDE	418
KIT DE TABLEAU DE BORD	420
LEVIER DE RÉGULATEUR (ASS)	421
CABINE - REVÊTEMENT (ASS)	422
CANALISATIONS DE CLIMATISEUR (ASS)	426
CANALISATIONS DE CHAUFFAGE (ASS)	428
LITTÉRATURE (ASS)	429
RÉTROVISEUR (ASS)	430
*MOUNTING GP-ARMREST	431
MONTAGE DU TOIT ROPS (ASS)	433
VERSION D'OPTION DE CABINE	436
TABLEAU DE BORD (ASS)	437
RÉGULATEUR - PÉDALE (ASS)	442
SIÈGE ET ACCOUDOIR (ASS)	443
SIÈGE ET MONTAGE (ASS)	446
SIEGE (VERSION)	449
SIEGE ET SUSPENSION (ASS)	449
CEINTURE DE SECURITE (ASS)	450
SIÈGE AVEC SUSPENSION (ASS)	452
RESSORT-GAZ (ASS)	453
RETROVISEUR - CABINE (ASS)	455
VITRE DE CABINE (ASS)	457
MATÉRIEL ET FOURNITURES D'ENTRETIEN	461
SUPPORT - MONTAGE (ASS)	461
PLAQUE SIGNALÉTIQUE (ASS)	462
PLAQUES SIGNALETIQUES ET AUTOCOLLANTS (ASS)	466
INDEX DE NUMÉROS DE PIÈCES	B1

* TRADUCTION NON DISPONIBLE AU MOMENT DE LA PUBLICATION

CONTENIDO

Nombre	Página
INFORMACIÓN GENERAL	A26
ALTERNATIVAS DE REPARACIÓN	A40
ADITIVOS DE REFRIGERANTE SUPLEMENTARIOS	A45
PIEZAS DE MANTENIMIENTO	A54
INDICE	A83
CONFIGURACION DE LA MAQUINA	1
CHASIS (CONFIG)	1
CONFIGURACIÓN COMÚN	1
CONVERSION DE LA MAQUINA (CONFIG)	1
*MACHINE AR-SPECIAL	2
CONFIGURACION DE MOTOR	4
CONFIGURACIÓN DE MOTORES	4
MOTOR PRIMARIO (CONFIG)	5
CONFIGURACIÓN DE INSTALACIÓN DEL MOTOR	6
MOTOR BASICO	7
*BELT GP	7
ÁRBOL DE LEVAS (GR)	8
BIELA (GR)	9
TAPA DEL MECANISMO DE VÁLVULAS (GR)	10
CIGÜEÑAL (GR)	11
BLOQUE MOTOR (GR)	13
CULATA DE CILINDROS (GR)	15
DRENAJE DEL ACEITE DE MOTOR	16
VOLANTE (GR)	17
ENGRANAJE DELANTERO (GR)	18
PROTECTOR DE CORREA (GR)	19
VOLANTE - CAJA DE (GR)	20
CAJA DELANTERA (GR)	21
CÁNCAMOS DE LEVANTAMIENTO DEL MOTOR (GR)	23
MONTAJE DEL MOTOR (GR)	24
CÁRTER - COLECTOR DEL (GR)	25
PISTÓN Y BIELA (GR)	27
TAPÓN DEL MOTOR (GR)	28
CIGÜEÑAL - POLEA DE (GR)	30
GRUPO, MANIJA, BOMBA DE AGUA	31
MECANISMO DE VÁLVULAS (GR)	32
SISTEMA DE LUBRICACION	33
RESPIRADERO (GR)	33
FILTRO DE ACEITE DEL MOTOR (GR)	35
BOMBA DE ACEITE DEL MOTOR (GR)	37
SISTEMA DE ENFRIAMIENTO	38
ENFRIADOR DE ACEITE DEL MOTOR (GR)	38
TUBERÍAS DEL AGUA (GR)	39
GRUPO DEMONTAJE DE RADIADOR Y ENFRIAMIENTO DE ACEITE	41
BOMBA DE AGUA (GR)	43
RADIADOR Y ENFRIADOR DE ACEITE HIDRÁULICO (GR)	44
SISTEMA DE ESCAPE Y ADMISION DE AIRE	46
FILTRO DE AIRE (GR)	46
*KIT-DEBRIS GUARD	49
AIRE - TUBERÍAS DE (GR)	50
MÚLTIPLE DE ESCAPE (GR)	52
MÚLTIPLE DE ADMISIÓN (GR)	53
SILENCIADOR Y MONTAJE GR	54
SILENCIADOR (GR)	55
TURBOCOMPRESOR (GR)	56
SISTEMA DE COMBUSTIBLE	58
CONTROL DE REGULADOR (GR)	58
TUBERÍAS DE COMBUSTIBLE (GR)	61
TUBERIAS (GR) -COMBUSTIBLE PRIMARIO Y FILTRO	63
BOMBA DE INYECCIÓN DE COMBUSTIBLE (GR)	65
TANQUE DE COMBUSTIBLE Y GRUPO DE MONTAJE	67
COMBUSTIBLE - TANQUE DE (GR)	69
SISTEMA DE ARRANQUE ELECTRICO	70
CARGA - ALTERNADOR DE (GR)	70
BATERÍA Y CABLES (GR)	73
CUBIERTO DEL PANEL DE FUSIBLES (GR)	75
BUJÍA INCANDESCENTE (GR)	76
AGUA DE LAS CAMISAS - CALENTADOR DEL (GR)	77
*KIT-CONTROL MOUNTING	79
*KIT-SECURITY	80
*KIT-WORK TOOL WIRING	82
REFLECTOR (GR)	83
LÁMPARA DE LUZ DELANTERA Y DE SEÑAL (GR)	84
LÁMPARA DE BALIZA DE ADVERTENCIA (GR)	86
LUCES DE REFLECTOR (GR)	87
LUCES DE DESPLAZAMIENTO (GR)	88
LUCES DE PARADA Y DE COLA (GR)	90
LUZ DE BALIZA (GR)	91
RELÉ (CONJ)	92

* NO HAY TRADUCCION DISPONIBLE EN EL MOMENTO DE LA IMPRESION

CONTENIDO

Nombre	Página
DETECTOR DE POSICIÓN (SISTEMA DE COMBUST.) (GR)	93
SENSOR DE VELOCIDAD (GR)	94
GRUPO DE SENSORES DE TEMPERATURA Y PRESIÓN	95
SERVICIO DE MAQUINA (GR)	96
MOTOR DE ARRANQUE ELÉCTRICO (GR)	97
CABLES DEL ACONDICIONADOR DE AIRE (GR)	100
CABLES DE LA CABINA (GR)	101
ALAMBRADO DE ACOPLADOR (GR)	104
CABLES DEL MOTOR (GR)	105
CABLES DE LA MÁQUINA (GR)	109
CABLES DE LA HERRAMIENTA DE TRABAJO (GR)	112
TREN DE FUERZA	114
EJE (GR)	114
MANDO TANDEM (GR)	118
FILTROS Y TUBERÍAS HIDRÁULICAS (GR)	120
FILTRO DE ACEITE (GR)	122
TUBERÍAS HIDROSTÁTICAS (GR)	123
TUBERÍAS DEL FRENO DE ESTACIONAMIENTO (GR)	127
*MANIFOLD & LINES GP-CONTROL	128
RETORNO EN EL MULTIPLE(GR)	130
MOTOR HIDROSTATICO Y MONTAJE (GR)	132
PISTONES DEL MOTOR (GR)	134
MONTAJE DE LA BOMBA (GR)	140
TREN DE FUERZA (CONFIG)	141
HIDROSTATICO, BOMBA Y GRUPO DE MONTAJE	142
BOMBA DE PISTONES (GR)	143
ARO Y LLANTA (GR)	146
RUEDA Y LLANTA (CONFIG)	155
BASTIDOR Y CAJA	161
CONFIGURACIÓN DE TRANSFORMACIÓN PARA CARRETERA	161
CONVERSION PARA DESPLAZAMIENTO POR CARRETERA (GR)	162
CONTRAPESO (GR)	164
COMPARTIMIENTO DEL MOTOR (GR)	165
BASTIDOR Y MONTAJE (GR)-MAQUINA	166
GRUPO DE BASTIDOR, MAQUINARIA	168
TUBERIAS DE LA GUIA (GR)	169
*KIT-COUNTERWEIGHT	170
*KIT-LIFTING	172
LEVANTAMIENTO DE LA MÁQUINA (GR)	173
RETROVISOR Y MONTAJE (GR)	175
MONTAJE-REGISTRO (GR)	176
ESTRIBO DEL OPERADOR (GR)	177
INSONORIZADOR (GR)	178
SISTEMA HIDRAULICO	182
ACUMULADOR HIDRAULICO (GR)	182
CILINDRO DE CUCHARÓN (GR)	183
CILINDRO DE GARFIO (GR)	184
CILINDRO HIDRÁULICO (GRUPO)	185
*CYLINDER GP-LIFT ARM	188
CONEXION HIDRAULICA (GR)	189
HIDRÁULICA (CONFIG)	192
*KIT-QUICK COUPLER CONVERSION	195
*KIT-WORK TOOL POSITIONER	199
TUBERÍAS DEL CUCHARÓN (GR)	201
ACOPLADOR - TUBERÍAS DE (GR)	215
TUBERÍAS HIDRÁULICAS (GR)	218
TUBERÍAS HIDRÁULICAS DEL VENTILADOR (GR)	221
TUBERÍAS DEL ENFRIADOR DE ACEITE HIDRÁULICO (GR)	225
CILINDRO DE LEVANTAMIENTO - TUBERÍAS DEL (GR)	227
*LINES GP-LOWERING CONTROL	228
BOMBA - TUBERÍAS DE (GR)	230
TUBERÍAS DEL CILINDRO DE INCLINACIÓN (GR)	238
TUBERIAS DE LA HERRAMIENTA DE TRABAJO	240
*MANF & SOLENOID MTG GP-ACCUM	246
*MANIFOLD & LINES GP-ACCUM	247
MULTIPLE Y MONTAJE (GR) - CONTROL	248
*MANIFOLD & SOLENOID GP-CONTROL	250
CONTROL DEL MULTIPLE (GR)	251
MOTOR Y MONTAJE DE VENTILADOR HIDRAULICO (GR)	254
MONTAJE DE CILINDRO (GR)	255
BOMBA DE ENGRANJE Y MONTAJE (GR)	258
BOMBA Y MONTAJE DE LA HERRAMIENTA DE TRABAJO (GR)	259
BOMBA DE PISTONES (GR)	261
BOMBAS DE PISTONES Y ENGRANAJES (GR)	263
TANQUE HIDRÁULICO Y MONTAJE (GR)	264
TANQUE HIDRÁULICO (GR)	265

* NO HAY TRADUCCION DISPONIBLE EN EL MOMENTO DE LA IMPRESION

CONTENIDO

Nombre	Página
VÁLVULA DE CONTROL Y MONTAJE (GR)	267
VÁLVULA DE RETENCIÓN (GR)	269
VÁLVULA DE CONTROL (GR)	270
VÁLVULA DE CONTROL MANUAL (GR)	274
VÁLVULA DE ALIVIO (GR)	275
VÁLVULA DE LANZADERA (GR)	277
VÁLVULA DE SOLENOIDE (GR)	278
IMPLEMENTOS	280
*PIN GP-LIFT ARM	280
HERRAMIENTAS	282
GRUPO DE HOJA DE CUCHARÓN DE USO MÚLTIPLE	282
CUCHARON PARA TIERRA (CONF)	287
CUCHARÓN DE USO GENERAL (CONFIG)	288
CUCHARON DE GARFIO (CONF)	290
CUCHARÓN PARA MATERIALES LIVIANOS (CONFIG)	291
CUCHARÓN DE USO MÚLTIPLE (CONFIG)	292
CUCHARON UTILITARIO (CONFIG)	296
CUCHARON PARA TIERRA (CONJ)	297
CUCHARÓN DE USO GENERAL (CONJ)	302
CUCHARÓN PARA MATERIALES LIVIANOS	306
CUCHARÓN PARA TIERRA (GR)	309
CUCHARÓN DE USO MÚLTIPLE (GR)	310
CUCHARÓN UTILITARIO (GR)	316
CARGADOR Y HORQUILLA (CONF)	320
PORTAHORQUILLAS (GR)	321
ACOPLADOR RÁPIDO (CONFIG)	322
ACOPLADOR RÁPIDO (GR)	323
TAPA DE TUBERIAS (GR)	325
GRUPO DE CILINDRO Y ESLABON, ACOPLADOR	326
CUCHILLA (GR)	328
HORQUILLA DE GARFIO (CONF)	333
HORQUILLA DE GARFIO (GR)	335
HORQUILLA PARA TARIMAS (GR)	339
HORQUILLA DE UTILIDAD (GR)	340
GRUPO DE BASTIDOR DE HORQUILLA	342
BASTIDOR DE GARFIO (GR)	344
GARFIO DE UTILIDAD (GR)	345
GRUPO DE MANIJA Y PIN-ACOPLADOR	347
JUEGO-PLACA DE DESPLAZAMIENTO Y MONTAJE	349
GRUPO DE ESLABON, ACOPLADOR	350
TRABA-ACOPLADOR RAPIDO (GR)	351
PLACA DE DESPLAZAMIENTO POR CARRETERA (GR)	354
TOPE DEL GARFIO(GR)	356
COLADOR DEL AGUA (GR)	357
MONTAJE DEL TANQUE DE AGUA (GR)	358
TANQUE DEL AGUA (GR)	360
DIENTE DE UNA PIEZA (UNI-TOOTH) (GR)	361
ESTACION DEL OPERADOR	362
ACCESORIOS DE LA CABINA (GR)	362
ACUMULADOR DEL ACONDICIONADOR DE AIRE (GR)	363
ACONDICIONADOR DE AIRE Y MONTAJE (GR)	365
ACONDICIONADOR DE AIRE (CONFIG)	366
ACONDICIONADOR DE AIRE (GR)	367
POSABRAZOS Y MONTAJE (GR)	369
SISTEMA ROPS DE CABINA CERRADA (CONFIG)	370
CABLE DE CONTROL (GR)	371
COMPRESOR DE REFRIGERANTE Y GRUPO DE MONTAJE	372
CONDENSADOR DEL REFRIGERANTE Y MONTAJE (GR)	373
*CONTROL & WIRING GP-AIR & TEMP	375
CONTROL DE AIRE Y TEMPERATURA (GR)	376
CONTROL ELECTROHIDRAULICO (GR)	377
CONTROL DE MANIJA (GR)	382
PALANCA UNIVERSAL DE CONTROL (GR)	383
TAPA DE LA CABINA (GR)	388
TAPA DE LA CONSOLA (GR)	389
TAPA DEL TABLERO DE INSTRUMENTOS (GR)	390
PUERTA DE CABINA	391
*DUCT & FILTER GP-CAB AIR	402
PROTECTOR DE ROPS/FOPS	404
CALEFACCIÓN Y MONTAJE DE LA CABINA (GR)	405
CALEFACCIÓN DE LA CABINA (CONFIG)	406
CALEFACCIÓN DE LA CABINA (GR)	407
INSTALACIÓN DE RADIO (GR)	408
JUEGO DE INSTALACIÓN DEL ACONDICIONADOR DE AIRE Y CALENTADOR	410

* NO HAY TRADUCCION DISPONIBLE EN EL MOMENTO DE LA IMPRESION

CONTENIDO

Nombre	Página	Nombre	Página
JUEGO DE INSTALACIÓN DE ACONDICIONADOR DE AIRE	412		
JUEGO, PUERTA DE CABINA Y MONTAJE	414		
JUEGO DE CALENTADOR DE CABINA Y MONTAJE	415		
*KIT-CAB WINDOW	417		
*KIT-CONTROL PATTERN CHANGE	418		
*KIT-INSTRUMENT PANEL	420		
GRUPO DE PALANCA-REGULADOR	421		
REVESTIMIENTO DE LA CABINA (GR)	422		
TUBERÍAS DE ACONDICIONADOR DE AIRE (GR)	426		
TUBERÍAS DE LA CALEFACCIÓN (GR)	428		
PUBLICACIONES (GR)	429		
RETROVISOR (GR)	430		
*MOUNTING GP-ARMREST	431		
MONTAJE DE LA ESTRUCTURA ROPS (GR)	433		
*OPTION AR-CAB	436		
TABLERO DE INSTRUMENTOS (GR)	437		
REGULADOR - PEDAL DEL (GR)	442		
*SEAT & ARMREST GP	443		
ASIENTO Y MONTAJE (GR)	446		
CONFIGURACIÓN DE ASIENTO	449		
ASIENTO CON SUSPENSIÓN (CONFIG)	449		
CINTURÓN DE SEGURIDAD (GR)	450		
SUSPENSIÓN - ASIENTO CON (GR)	452		
RESORTE DE GAS (GR)	453		
VISERA (GR)	455		
VENTANA DE LA CABINA (GR)	457		
EQUIPO DE SERVICIO Y SUMINISTROS	461		
SOPORTE DE MONTAJE (GR)	461		
ETIQUETA DE ADVERTENCIA (GR)	462		
CALCOMANÍAS Y PLACAS DE IDENTIFICACIÓN (GR)	466		
INDICE DE NUMEROS DE PIEZA	B1		

* NO HAY TRADUCCION DISPONIBLE EN EL MOMENTO DE LA IMPRESION

ÍNDICE

Designação	Página
INFORMAÇÃO GERAL	A30
ALTERNATIVAS DE REPARO	A41
ADITIVOS SUPLEMENTARES DO LÍQUIDO ARREFECEDOR	A46
PEÇAS DE MANUTENÇÃO	A58
ÍNDICE	A93
ARRANJO DA MÁQUINA	1
CHASSI	1
ARRANJO BÁSICO	1
MÁQUINA - CONVERSÃO	1
MÁQUINA-ESPECIAL	2
ARRANJO DO MOTOR	4
MOTOR	4
MOTOR PRIMÁRIO	5
GRUPO DE INSTALAÇÃO - MOTOR	6
MOTOR BÁSICO	7
CORREIA	7
EIXO-COMANDO DE VÁLVULA	8
BIELA	9
TAMPA - MECANISMO DAS VÁLVULAS	10
VIRABREQUIM	11
BLOCO DO MOTOR	13
CABEÇOTE DO MOTOR	15
DRENO - ÓLEO DO MOTOR	16
VOLANTE DO MOTOR	17
ENGRENAGENS DE DISTRIBUIÇÃO	18
PROTETOR - CORREIAS	19
CAIXA DO VOLANTE DO MOTOR	20
CAIXA DIANTEIRA	21
LEVANTAMENTO DO MOTOR	23
MONTAGEM - MOTOR	24
CÁRTER DO ÓLEO DO MOTOR	25
PISTÃO E BIELA	27
BUJÃO DO MOTOR	28
POLIA DO VIRABREQUIM	30
GRUPO DE POLIA - BOMBA DE ÁGUA	31
MECANISMO DAS VÁLVULAS	32
SISTEMA DE LUBRIFICAÇÃO	33
RESPIRO	33
FILTRO - ÓLEO DO MOTOR	35
BOMBA DE ÓLEO - MOTOR	37
SISTEMA DE ARREFECIMENTO	38
ARREFECEDOR - ÓLEO DO MOTOR	38
TUBOS - ÁGUA	39
SUPORTE - ARREFECEDR DE ÓLEO E RADIADOR	41
BOMBA DE ÁGUA	43
RADIADOR E ARREFECEDOR DO ÓLEO HIDRÁULICO	44
SISTEMA DE ADMISSÃO DE AR E DE ESCAPE	46
PURIFICADOR DE AR	46
JOGO-PROTETOR CONTRA DETRITOS	49
TUBOS - AR	50
COLETOR DE ESCAPE	52
COLETOR DE ADMISSÃO	53
AMORTECEDOR E MONTAGEM	54
SILENCIADOR	55
TURBOALIMENTADOR	56
SISTEMA DE COMBUSTÍVEL	58
CONTROLE DO GOVERNADOR	58
TUBOS - COMBUSTÍVEL	61
TUBULAÇÕES - FILTRO E ESCORVA DO COMBUSTÍVEL	63
BOMBA DE INJEÇÃO DO COMBUSTÍVEL	65
TANQUE DE COMBUSTÍVEL E MONTAGEM	67
TANQUE DE COMBUSTÍVEL	69
SISTEMA ELÉTRICO E DE PARTIDA	70
ALTERNADOR DE CORRENTE	70
BATERIA E CABOS / FIOS ELÉTRICOS	73
TAMPA DO PAINEL DO FUSÍVEL	75
VELA DE AQUECIMENTO; VELA INCANDESCENTE	76
AQUECEDOR DA ÁGUA DO MOTOR	77
JOGO-SUPORTE DE CONTROLE	79
JOGO-SEGURANÇA	80
KIT-FIAÇÃO DA FERRAMENTA DE TRABALHO	82
LÂMPADA - FAROL	83
LÂMPADA DIANTEIRA E DE SINAL	84
LUZ GIRATÓRIA DE ALARME	86
SISTEMA DE ILUMINAÇÃO - FARÓIS	87
ILUMINAÇÃO - RODOVIÁRIA	88
ILUMINAÇÃO - FREIO E MARCHA À RÉ	90
SIST. DE ILUMINAÇÃO - PISCA-PISCA GIRATÓRIO DE ADVERTÊNCIA	91
RELÉ (CONJ)	92
EMISSOR - POSIÇÃO	93
SENSOR DE VELOCIDADE	94
SENSOR DE PRESSÃO E TEMPERATURA	95
GR. DE SERVIÇO - MÁQUINA	96

ÍNDICE

Designação	Página
MOTOR ELÉTRICO DE PARTIDA	97
CABOS/FIOS ELÉTRICOS - AR CONDICIONADO	100
CABOS/FIOS ELÉTRICOS - CABINE	101
CABOS/FIOS ELÉTRICOS - ACOPLADOR	104
CABOS/FIOS ELÉTRICOS - MOTOR	105
CABOS/FIOS ELÉTRICOS - MÁQUINA	109
CABOS/FIOS ELÉTRICOS - FERRAMENTAS DE TRABALHO	112
TREM DE FORÇA	114
EIXO	114
COMANDO DO TANDEM	118
FILTRO HIDRÁULICO E TUBOS	120
FILTRO - ÓLEO	122
TUBOS - SISTEMA HIDROSTÁTICO	123
TUBOS - FREIO DE ESTACIONAMENTO	127
COLETOR E TUBULAÇÕES -CONTROLE	128
COLETOR - RETORNO	130
MOTOR HIDROSTÁTICO E MONTAGEM	132
MOTOR - PISTÃO	134
MONTAGEM - BOMBA	140
TREM DE FORÇA	141
BOMBA E MONTAGEM - HIDROSTÁTICA	142
BOMBA DE PISTÃO	143
PNEU E ARO	146
RODA E PNEU	155
CHASSI E CARROCERIA	161
GRUPO DE CONVERSÃO - ARRANJO RODOVIÁRIO	161
GR. DE CONVERSÃO - OPERAÇÃO RODOVIÁRIA	162
CONTRAPESO	164
COBERTURA DO MOTOR	165
ARMAÇÃO E MONTAGEM - MÁQUINA	166
CHASSI - MÁQUINA	168
GUIA - TUBOS	169
JOGO-CONTRAPESO	170
JOGO DE LEVANTAMENTO	172
LEVANTAMENTO DA MÁQUINA	173
ESPELHO RETROVISOR E MONTAGEM	175
MONTAGEM DA PLACA DE REGISTRO	176
DEGRAU	177
REDUÇÃO DE RUÍDO	178
SISTEMA HIDRÁULICO	182
ACUMULADOR HIDRÁULICO	182
CILINDRO DA CAÇAMBA	183
CILINDRO DA GARRA	184
CILINDRO HIDRÁULICO	185
CILINDRO-BRAÇO DE LEVANTAMENTO	188
CONEXÃO - HIDRÁULICA	189
COMANDO HIDRÁULICO	192
KIT-CONVERSÃO DO ACOPLADOR RÁPIDO	195
JOGO-ASSENTADOR DA FERRAMENTA DE TRABALHO	199
TUBOS - CAÇAMBA	201
TUBOS - ACOPLADOR	215
TUBOS - ÓLEO HIDRÁULICO	218
TUBOS - VENTILADOR HIDRÁULICOS	221
TUBOS - ARREFECEDOR DE ÓLEO HIDRÁULICO	225
TUBOS - CILINDRO DE LEVANTAMENTO	227
TUBULAÇÕES-CONTROLE DE ABAIXAMENTO	228
TUBOS - BOMBA	230
TUBOS - CILINDRO DE INCLINAÇÃO	238
TUBOS - FERRAMENTA DE TRABALHO	240
MONTAGEM DO COLETOR E SOLENÓIDE-ACUM.	246
COLETOR E TUBULAÇÕES-ACUMULADOR	247
COLETOR E MONTAGEM - CONTROLE	248
COLETOR E SOLENÓIDE-CONTROLE	250
COLETOR - CONTROLE	251
MOTOR E MONTAGEM - VENTILADOR HIDRÁULICO	254
MONTAGEM - CILINDRO	255
BOMBA DAS ENGRENAGENS E MONTAGEM	258
BOMBA DA FERRAMENTA DE TRABALHO E MONTAGEM	259
BOMBA DE PISTÃO	261
BOMBA DE PISTÃO E ENGRENAGEM	263
TANQUE DE ÓLEO HIDRÁULICO E MONTAGEM	264
TANQUE HIDRÁULICO	265
VÁLVULA DE CONTROLE E MONTAGEM	267
VÁLVULA DE RETENÇÃO	269
VÁLVULA DE CONTROLE	270
VÁLVULA MANUAL	274
VÁLVULA DE ALÍVIO	275
VÁLVULA DE SEPARAÇÃO	277
VÁLVULA SOLENÓIDE	278

ÍNDICE

Designação	Página
ACESSÓRIOS	280
PINO-BRAÇO DE LEVANTAMENTO	280
FERRAMENTAS DE TRABALHO	282
LÂMINA-CAÇAMBA DE APLICAÇÕES MÚLTIPLAS	282
CAÇAMBA PARA TERRA	287
CAÇAMBA - PARA APLICAÇAO GERAL	288
CAÇAMBA - GARRA	290
CAÇAMBA PARA MATERIAL LEVE	291
CAÇAMBA DE MÚLTIPLAS APLICAÇÕES	292
CAÇAMBA - SERVIÇOS GERAIS	296
CAÇAMBA PARA TERRA	297
CAÇAMBA PARA APLICAÇÃO GERAL	302
CACAMBA PARA MATERIAL LEVE	306
CACAMBA - TERRA	309
CAÇAMBA DE MÚLTIPLAS APLICAÇÕES	310
CAÇAMBA PARA SERVIÇOS GERAIS	316
CACAMBA E GARFO	320
SUPORTE - GARFO	321
ACOPLADOR RÁPIDO	322
TAMPA - TUBULAÇÕES	325
CILINDRO E ARTICULAÇÃO - ACOPLADOR	326
BORDA CORTANTE	328
GARFO DA GARRA	333
GARFO DE PALETAS	339
GARFO - SERVIÇOS PÚBLICOS	340
ARMAÇÃO-GARFO	342
ARMAÇÃO DA GARRA	344
GARRA - SERVIÇOS PÚBLICOS	345
ALÇA E PINO - ACOPLADOR	347
JOGO-PLACA DE RODAGEM E MONTAGEM	349
ARTICULAÇÃO - ACOPLADOR	350
TRAVA - ACOPLADOR RÁPIDO	351
PLACA-RODOVIÁRIO	354
BATENTE - GARRA	356
TELA FILTRANTE - ÁGUA	357
TANQUE DE ÁGUA E MONTAGEM	358
TANQUE DE ÁGUA	360
UNI-DENTE	361
POSTO DO OPERADOR	362
ACESSÓRIO - CABINE	362
ACUMULADOR - AR CONDICIONADO	363
CONDICIONADOR DE AR E MONTAGEM	365
CONDICIONADOR DE AR	366
ENCOSTO DO BRAÇO E MONTAGEM	369
CABINE - ESTRUTURA ROPS COBERTA	370
CABO DE CONTROLE	371
COMPRESSOR DE REFRIGERANTE E MONTAGEM	372
CONDENSADOR DO REFRIGERANTE E MONTAGEM	373
CONTROLE E FIAÇÃO-AR E TEMPERATURA	375
CONTROLE DO AR E TEMPERATURA	376
CONTROLE-ELETROIDRÁULICO	377
CONTROLE-CABO	382
CONTROLE - ALAVANCA	383
TAMPA - CABINE	388
TAMPA - CONSOLO	389
TAMPA - PAINEL DE INSTRUMENTOS	390
PORTA DA CABINE	391
DUTO E FILTRO-AR DA CABINE	402
PROTETOR - ROPS/FOPS	404
AQUECEDOR DA CABINE E MONTAGEM	405
AQUECEDOR DA CABINE	406
INSTALAÇÃO DO RÁDIO	408
JOGO-INSTALAÇÃO DO CONDICIONADOR DE AR E AQUECEDOR	410
JOGO-INSTALAÇÃO DO CONDICIONADOR DE AR	412
JOGO - PORTA DA CABINE E MONTAGEM	414
JOGO-AQUECEDOR DA CABINE E MONTAGEM	415
JOGO-VIDRO DA CABINE	417
JOGO-MUDANÇA DO PADRÃO DE CONTROLE	418
JOGO-PAINEL DE INSTRUMENTOS	420
ALAVANCA - GOVERNADOR	421
REVESTIMENTO DA CABINE	422
TUBOS - AR CONDICIONADO	426
TUBOS - AQUECEDOR	428
PUBLICAÇÃO	429
ESPELHO RETROVISOR	430
MONTAGEM-DESCANSO DO BRAÇO	431
MONTAGEM - ESTRUTURA ROPS	433
OPÇÃO-CABINE	436
PAINEL DE INSTRUMENTOS	437
PEDAL DO GOVERNADOR	442
ASSENTO E DESCANSO DO BRAÇO	443
ASSENTO E MONTAGEM	446
ASSENTO	449
ASSENTO - SUSPENSÃO	449
CINTO DE SEGURANÇA	450
ASSENTO COM SUSPENSÃO	452
MOLA A GÁS	453
PÁRA-SOL DA CABINE	455
JANELA DA CABINE	457

ÍNDICE

Designação	Página	Designação	Página
EQUIPAMENTO DE SERVIÇO E SUPRIMENTOS	461		
SUPORTE - MONTAGEM	461		
DECALQUE	462		
PLACA E DECALQUE	466		
ÍNDICE DE NÚMERO DE PEÇA	B1		

INHALTSVERZEICHNIS

Bezeichnung	Seite
ALLGEMEINE HINWEISE	A34
REPARATURALTERNATIVEN	A42
KÜHLMITTELZUSATZ	A47
WARTUNGSTEILE	A62
STICHWORTVERZEICHNIS	A102
MASCHINE	1
FAHRWERK	1
GRUNDAUSFÜHRUNG	1
MASCHINEN-UMBAUSATZ	1
MASCHINE - SPEZIALAUSFÜHRUNG	2
MOTOR	4
MOTORAUSFÜHRUNG	4
MOTOR-EINBAUSATZ	6
MOTOR - GRUNDAUSFÜHRUNG	7
RIEMEN	7
NOCKENWELLE	8
*CONNECTING ROD GP	9
VENTILDECKEL	10
KURBELWELLE	11
MOTORBLOCK	13
ZYLINDERKOPF	15
MOTORÖLABLASS	16
SCHWUNGRAD	17
STIRNRAD	18
RIEMENSCHUTZ	19
SCHWUNGRADGEHÄUSE	20
STIRNRADGEHÄUSE	21
MOTORHUBÖSE	23
MOTORAUFLAGER	24
ÖLWANNE	25
PLEUELSTANGE UND KOLBEN	27
MOTORSTOPFEN	28
KURBELWELLEN-RIEMENSCHEIBE	30
WASSERPUMPE - RIEMENSCHEIBE	31
VENTILSTEUERUNG	32
SCHMIERSYSTEM	33
ENTLÜFTER	33
ÖLFILTER	35
SCHMIERPUMPE	37
KÜHLSYSTEM	38
MOTORÖLKÜHLER	38
KÜHLWASSERLEITUNGEN	39
KÜHLER U. ÖLKÜHLER - BEFESTIGUNG	41
KÜHLWASSERPUMPE	43
KÜHLER UND HYDRAULIKÖLKÜHLER	44
LUFTANSAUG- UND ABGASSYSTEM	46
LUFTREINIGER	46
*KIT-DEBRIS GUARD	49
DRUCKLUFTLEITUNGEN	50
AUSPUFFKRÜMMER	52
ANSAUGKRÜMMER	53
SCHALLDÄMPFER U. BEFESTIGUNG	54
SCHALLDÄMPFER	55
TURBOLADER	56
KRAFTSTOFFSYSTEM	58
REGLERSTEUERUNG	58
KRAFTSTOFFLEITUNGEN	61
KRAFTSTOFFENTLÜFTUNGS- U. FILTERLEITUNGEN	63
KRAFTSTOFFEINSPRITZPUMPE	65
KRAFTSTOFFTANK U. BEFESTIGUNG	67
KRAFTSTOFFTANK	69
ELEKTRISCHE ANLAGE UND STARTSYSTEM	70
DREHSTROMGENERATOR	70
BATTERIE UND VERDRAHTUNG	73
SICHERUNGSTAFEL - ABDECKUNG	75
GLÜHKERZE	76
UMLAUFKÜHLWASSERHEIZUNG	77
*KIT-CONTROL MOUNTING	79
*KIT-SECURITY	80
*KIT-WORK TOOL WIRING	82
ARBEITSLEUCHTEN	83
SCHEINWERFER U. RICHTUNGSLEUCHTE	84
RUNDUM-KENNLEUCHTE	86
ARBEITSLEUCHTEN	87
BELEUCHTUNGSANLAGE (STRASSENAUSRÜSTUNG)	88
BREMS- UND RÜCKLEUCHTEN	90
RUNDUM-KENNLEUCHTE	91
RELAIS	92
STELLUNGSSENSOR	93
DREHZAHLSENSOR	94
TEMPERATUR- U. DRUCKSENSOR	95
SERVICE MASCHINE	96
STARTERMOTOR	97
KLIMAANLAGENVERDRAHTUNG	100
FAHRERHAUSVERDRAHTUNG	101
SCHNELLWECHSELEINRICHTUNG - VERDRAHTUNG	104

* ÜBERSETZUNG ZUM ZEITPUNKT DER DRUCKLEGUNG NICHT VORHANDEN

INHALTSVERZEICHNIS

Bezeichnung	Seite
MOTORVERDRAHTUNG	105
MASCHINENVERDRAHTUNG	109
ARBEITSGERÄT - VERDRAHTUNG	112
KRAFTSÜBERTRAGUNG	114
ACHSE	114
TANDEMANTRIEB	118
HYDRAULIKFILTER U. LEITUNGEN	120
ÖLFILTER	122
HYDROSTATIKLEITUNGEN	123
FESTSTELLBREMSLEITUNGEN	127
*MANIFOLD & LINES GP-CONTROL	128
RÜCKLAUFVENTIL - VERTEILER	130
HYDROSTATIKMOTOR U. BEFESTIGUNG	132
KOLBENMOTOR	134
PUMPENAUFHÄNGUNG	140
KRAFTÜBERTRAGUNG	141
HYDROSTATIKPUMPE U. BEFESTIGUNG	142
KOLBENPUMPE	143
REIFEN UND FELGE	146
RAD UND REIFEN	155
RAHMEN UND FAHRGESTELL	161
UMBAUSATZ - FÜR STRASSENVERKEHR	161
STRASSENFAHRT - UMRÜSTSATZ	162
GEGENGEWICHT	164
MOTORVERKLEIDUNG	165
MASCHINENRAHMEN U. BEFESTIGUNG	166
MASCHINENRAHMEN	168
LEITUNGSFÜHRUNG	169
*KIT-COUNTERWEIGHT	170
HEBESATZ	172
MASCHINENHUBÖSE	173
RÜCKSPIEGEL U. BEFESTIGUNG	175
TYPENSCHILDBEFESTIGUNG	176
STEIGLEITER	177
SCHALLDÄMPFUNG	178
HYDRAULIKSYSTEM	182
HYDRAULIKDRUCKSPEICHER	182
SCHAUFELZYLINDER	183
GREIFERZYLINDER	184
HYDRAULIKZYLINDER	185
*CYLINDER GP-LIFT ARM	188
HYDRAULIKFITTING	189
HYDRAULIKSYSTEM	192
*KIT-QUICK COUPLER CONVERSION	195
*KIT-WORK TOOL POSITIONER	199
SCHAUFELLEITUNGEN	201
ANSCHLUSSKUPPLUNGSLEITUNGEN	215
HYDRAULIKLEITUNGEN	218
HYDRAULIKLÜFTERLEITUNGEN	221
HYDRAULIKÖLKÜHLERLEITUNGEN	225
HUBZYLINDERLEITUNGEN	227
*LINES GP-LOWERING CONTROL	228
HYDRAULIKPUMPE UND LEITUNGEN	230
NEIGEZYLINDERLEITUNGEN	238
ARBEITSGERÄT - LEITUNGEN	240
*MANF & SOLENOID MTG GP-ACCUM	246
*MANIFOLD & LINES GP-ACCUM	247
KRÜMMERSTEUERUNG U. BEFESTIGUNG	248
*MANIFOLD & SOLENOID GP-CONTROL	250
STEUERKRÜMMER	251
HYDRAULIKKÜHLERMOTOR U. BEFESTIGUNG	254
ZYLINDERAUFHÄNGUNG	255
ZAHNRADPUMPE U. BEFESTIGUNGSTEILE	258
ARBEITSGERÄTEPUMPE U. BEFESTIGUNG	259
KOLBENPUMPE	261
KOLBEN- UND ZAHNRADPUMPE	263
HYDRAULIKTANK UND BEFESTIGUNGSTEILE	264
HYDRAULIKTANK	265
STEUERVENTIL UND BEFESTIGUNGSTEILE	267
SPERRVENTIL	269
STEUERVENTIL	270
VENTIL, MECH.	274
ÜBERDRUCKVENTIL	275
PENDELVENTIL	277
MAGNETVENTIL	278
ARBEITSGERÄTE	280
*PIN GP-LIFT ARM	280
ARBEITSGERÄTE	282
SCHNEIDMESSER - KOMBISCHAUFEL	282
ERDSCHAUFEL	287
KOMBISCHAUFEL	288
GREIFERSCHAUFEL	290
LEICHTGUTSCHAUFEL	291
KOMBISCHAUFEL	292
*BUCKET AR-UTILITY	296
ERDSCHAUFEL	297
UNIVERSALSCHAUFEL	302
LEICHTGUTSCHAUFEL	306

* ÜBERSETZUNG ZUM ZEITPUNKT DER DRUCKLEGUNG NICHT VORHANDEN

INHALTSVERZEICHNIS

Bezeichnung	Seite
ERDSCHAUFEL	309
KOMBISCHAUFEL	310
MEHRZWECKSCHAUFEL	316
TRÄGER U. GABEL	320
GABELTRÄGER	321
SCHNELLWECHSELVORRICHTUNG	322
SCHNELLWECHSELEINRICHTUNG	323
LEITUNGSABDECKUNG	325
SCHNELLWECHSELEINRICHTUNG - ZYLINDER U. VERBINDUNG	326
SCHNEIDMESSER	328
GREIFERGABEL	333
PALETTENGABEL	339
MEHRZWECKGABEL	340
*FRAME GP-FORK	342
GREIFERRAHMEN	344
MEHRZWECKGREIFER	345
GRIFF U. BOLZEN - ANSCHLUSS	347
STRASSENFAHRTSCHILD UND BEFESTIGUNG	349
VERBINDUNG - SCHNELLWECHSELEINRICHTUNG	350
SCHNELLWECHSELEINRICHTUNGSSPERRE	351
SCHILD - STRASSENFAHRT	354
GREIFERANSCHLAG	356
WASSERSIEBEINSATZ	357
WASSERTANK U. BEFESTIGUNGSTEILE	358
WASSERTANK	360
UNIVERSAL-ZAHNSPITZE	361
FAHRERHAUS	362
FAHRERHAUSZUBEHÖR	362
KLIMAANLAGENDRUCKSPEICHER	363
KLIMAANLAGE UND AUFHÄNGUNG	365
KLIMAANLAGE	366
ARNLEHNE U. BEFESTIGUNG	369
FAHRERHAUS MIT ÜBERROLLSCHUTZ	370
STEUERKABEL	371
KÄLTEMITTELKOMPRESSOR U. BEFESTIGUNG	372
KÄLTEMITTELKONDENSATOR U. BEFESTIGUNGSTEILE	373
*CONTROL & WIRING GP-AIR & TEMP	375
LUFTTEMPERATURKONTROLLE	376
ELEKTROHYDRAULISCHE STEUERUNG	377
STEUERHEBEL	382
JOYSTICK -STEUERUNG	383
FAHRERHAUSABDECKUNG	388
STEUERKONSOLENABDECKUNG	389
INSTRUMENTENTAFELABDECKUNG	390
FAHRERHAUSTÜR	391
LUFTKANAL & LUFTFILTER - FAHRERHAUS	402
VERKLEIDUNG - ÜBERROLLSCHUTZ/ STEINSCHLAGSCHUTZ	404
FAHRERHAUSHEIZUNG U. BEFESTIGUNGSTEILE	405
FAHRERHAUSHEIZUNG	406
RADIOEINBAUSATZ	408
EINBAUSATZ - KLIMAANLAGE U. HEIZUNG	410
*KIT-AIR CONDITIONER INSTL	412
FAHRERHAUSTÜR U. BEFESTIGUNG	414
*KIT-CAB HEATER & MOUNTING	415
*KIT-CAB WINDOW	417
*KIT-CONTROL PATTERN CHANGE	418
*KIT-INSTRUMENT PANEL	420
REGELERHEBEL	421
FAHRERHAUSAUSKLEIDUNG	422
KLIMAANLAGENLEITUNGEN	426
HEIZUNGSLEITUNGEN	428
DOKUMENTATION	429
RÜCKSPIEGEL	430
*MOUNTING GP-ARMREST	431
ÜBERROLLSCHUTZAUFLAGER	433
*OPTION AR-CAB	436
INSTRUMENTENTAFEL	437
GASPEDAL	442
*SEAT & ARMREST GP	443
FAHRERSITZ UND UNTERBAU	446
FAHRERSITZ	449
SCHWINGSITZ	449
SICHERHEITSGURT	450
SCHWINGSITZ	452
GASFEDERGRUPPE	453
FAHRERHAUS, SONNENBLENDE	455
FAHRERHAUSFENSTER	457
WARTUNGSAUSRÜSTUNG UND -ZUBEHÖR	461
BEFESTIGUNGSHALTERUNG	461
AUFKLEBER	462
SCHILD UND AUFKLEBER	466
ERSATZTEILNUMMERNINDEX	B1

* ÜBERSETZUNG ZUM ZEITPUNKT DER DRUCKLEGUNG NICHT VORHANDEN

GENERAL INFORMATION

1. MACHINE IDENTIFICATION

Caterpillar machines are identified by Product Identification Numbers (PIN). Some components included in a machine may be identified by Serial Numbers (S/N). Typical components that will be serialized include engines, transmissions, bulldozers, and rippers. The machine and engine are further identified by arrangement numbers and in some cases modification numbers. These numbers are shown on the product identification plate(s) and on the master plate in the operator's compartment.

Caterpillar dealers need all of these numbers to determine accurate parts identification.

SIS *New Feature*

Effective First Quarter 2001 the Caterpillar Product Identification Number (PIN) changed from 8 to 17 characters. In an effort to provide uniform equipment identification, Caterpillar and other construction equipment manufacturers are moving to comply with the latest version of the product identification numbering standard. Non-road machine PINs are defined by ISO 10261. The new PIN format will apply to all Caterpillar machines and generator sets. The PIN plates and frame marking will display the 17 character PIN. The new format will look like the following:

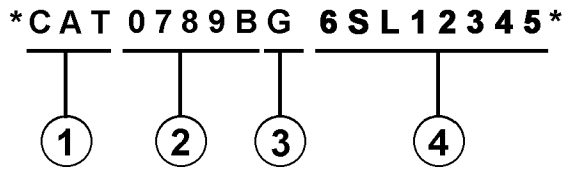

Where:

1. Caterpillar's World Manufacturing Code (characters 1-3)

2. Machine Descriptor (characters 4-8)

3. Check Character (character 9)

4. Machine Indicator Section (MIS) or Product Sequence Number (characters 10-17). These were previously referred to as the Serial Number.

Machines and generator sets produced before First Quarter 2001 will maintain their 8 character PIN format.

Components such as engines, transmissions, axles, etc. and work tools will continue to use an 8 character Serial Number (S/N).

2. ORDERING PARTS

WARNING

When replacement parts are required for this product Caterpillar recommends using Caterpillar replacement parts or parts with equivalent specifications including, but not limited to, physical dimensions, type, strength and material.

Failure to heed this warning can lead to premature failures, product damage, personal injury or death.

Quality Caterpillar replacement parts are available from Caterpillar dealers throughout the world. Their parts inventories are up to date and include all parts normally required to protect your investment in Caterpillar machines. Dealers may offer repair kits or remanufactured parts to allow selection of the most effective repair alternative for a particular situation. When ordering parts, your order should specify the quantity, part number, part name, and the serial number/product identification number of the machine for which the parts are needed.

3. PARTS MANUAL ORGANIZATION

Product information in this manual is presented as "information elements" that represent all of the components for the specific model. Engine Arrangement and Seat Group are examples of information elements. The information elements are organized alphabetically by part name and secondarily by part number within each major section of the manual.

4. TABLE OF CONTENTS

A table of contents (TOC) is found at the beginning of the manual. The TOC lists each section of the manual with a complete list of all information elements organized as they appear in the manual. Page numbers are provided for quick reference to detailed parts identification illustrations and serviceable consist lists.

5. MAINTENANCE PARTS INDEX

The Maintenance Parts Index, located near the beginning of the manual, references most frequently used maintenance part numbers, providing description, quantity, usage and page number. This information is organized alphabetically by part description.

6. INDEX

The index located near the front of the manual is an alphabetical listing of all information elements included in the manual. Page numbers are provided for quick reference to detailed parts identification illustrations and serviceable consist lists.

7. PART NUMBER INDEX

A numerical index listing all part numbers and the corresponding page number(s) appears at the back of the manual.

8. CAPTIONS

Captions located at the beginning of each information element identify the part number and part name along with additional descriptive information. PIN and S/N information found in each caption should be used to select correct information for a specific machine. Field replacement options, identification of optional attachment components, and where used ("part of") information is also provided.

The first line of a caption is shown in larger type font to indicate the beginning of an information element. Captions for additional pages that may be required to illustrate an information element will be shown in standard type font and will include the term *(contd.)* .

9. NON-SERVICED PARTS

In some instances it is necessary to display non-serviced parts that are a link to a lower level serviceable consist lists. These non-serviced part numbers are shown in *italic* type indicating that they are not available.

10. PARTS LIST REFERENCE NUMBERS

Numbers shown in the Ref No column correspond to numbers used in the associated graphic(s). An alphabetic suffix may be added to a reference number to identify lower level consist items. Numbers shown in the Graphic Ref column refer to the graphic number identifier displayed in the lower left corner of each illustration. The Graphic Ref number may be used in combination with the item Ref No to determine the correct part number. There may be intentional omission of a Ref No in a consist list as information is updated to reflect the latest serviceable part numbers.

11. INDENTED PART NAMES

When a part name is indented in a parts list, it is part of (included in) the group or assembly under which it is indented.

12. ILLUSTRATION REFERENCE LETTERS

When necessary, illustrations contain reference letters (A, B, C etc.) that are intended to track lines and harnesses from one point to another. They are also used to show where to reconnect illustrations that have been separated.

13. ABBREVIATIONS AND SYMBOLS

O.D. – Outside Diameter
I.D. – Inside Diameter
A – Not Part Of This Group
B – Use As Required
C – Change From Previous Type
D – Order By The Meter
E – Order By The Centimeter
F – Not Shown
G – Order By The Inch
I – Refer To Hydraulic Information System
M – Metric Part
R – Remfg Part May Be Available
Y – Separate Illustration
Z – Not Serviced Separately

SIS *New Feature*

14. DESCRIPTION OF TYPE CHANGES

Type - A type is defined as any configuration change that requires an additional Information Element for an Arrangement, Group, or Assembly. If serial number breaks for types are not available, a type # (Type 1, Type 2, etc.) will be displayed in the caption. These "type" changes are identified with a "C" note (change from previous type) in the Parts List. Only the "types" that apply to this Parts Manual will be included. Additional types may exist causing "C" notes to appear on an Information Element when no other types are shown.

15.<END>

This symbol indicates the end of an information element.

NOTE:

Continuing improvement and advancement of product design may cause changes to your machine which may not be included in this publication. Whenever a question arises regarding your caterpillar product or this publication, please consult your caterpillar dealer for the latest available information.

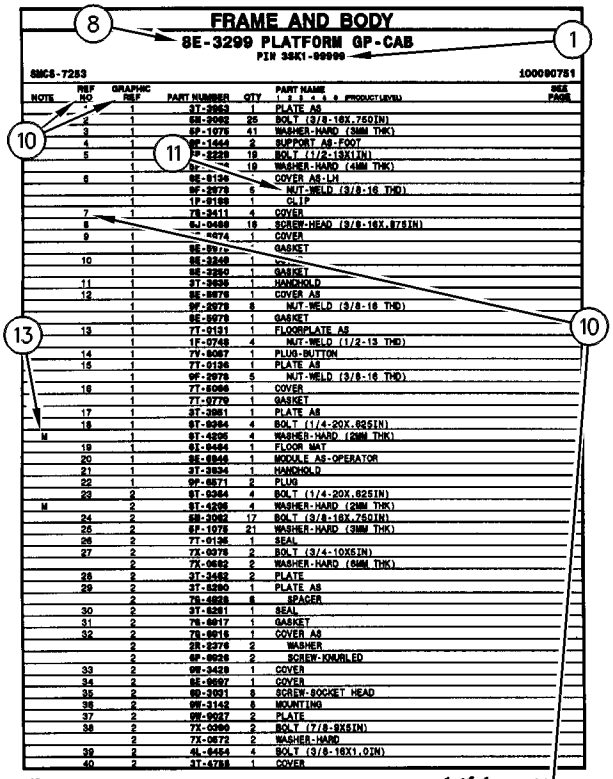
FRAME AND BODY
8E-3299 PLATFORM GP-CAB
PIN 35K1-99999
8MC5-7253
100090751
12 FRAME AND BODY
1 of 4
SELP4570-01

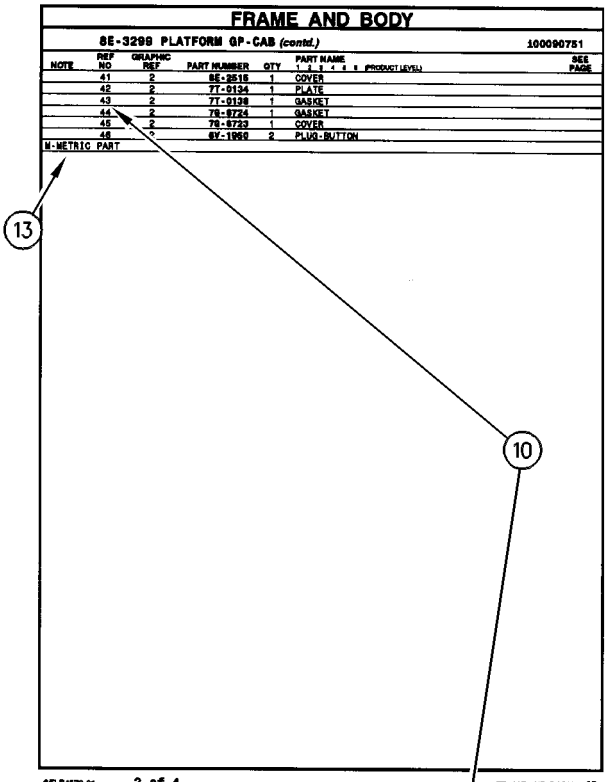
FRAME AND BODY
8E-3299 PLATFORM GP-CAB (contd.)
100090751
SELP4570-01
2 of 4
FRAME AND BODY 13

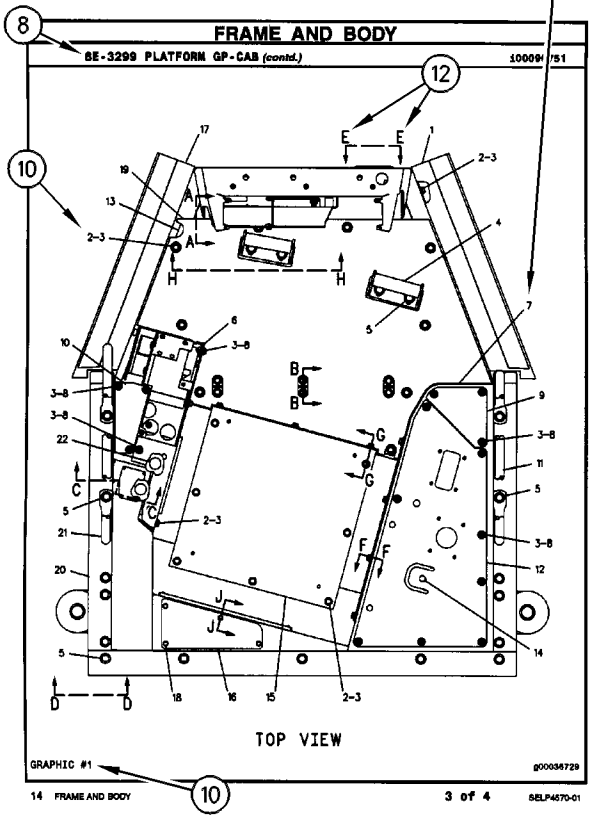
FRAME AND BODY
8E-3299 PLATFORM GP-CAB (contd.)
TOP VIEW
GRAPHIC #1
g00036729
14 FRAME AND BODY
3 of 4
SELP4570-01

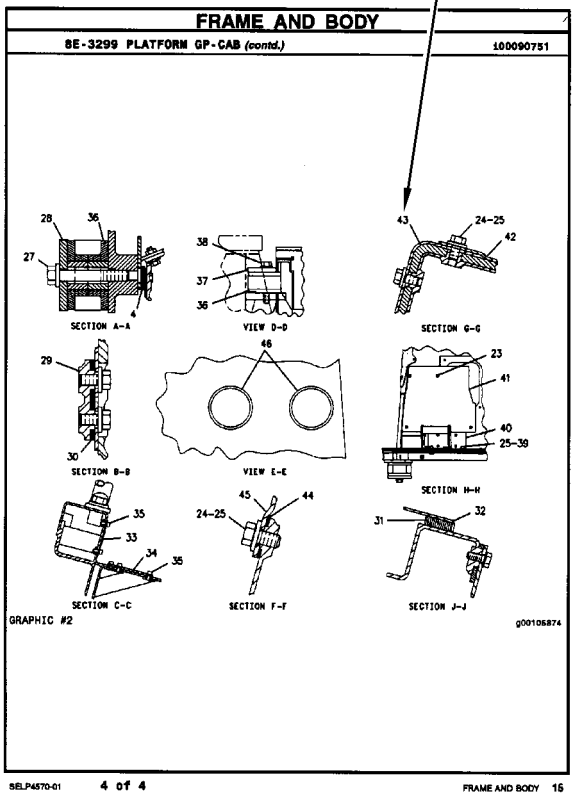
FRAME AND BODY
8E-3299 PLATFORM GP-CAB (contd.)
100090751
SECTION A-A
VIEW D-D
SECTION G-G
SECTION B-B
VIEW E-E
SECTION H-H
SECTION C-C
SECTION F-F
SECTION J-J
GRAPHIC #2
g00105874
SELP4570-01
4 of 4
FRAME AND BODY 16

GÉNÉRALITÉS

1. IDENTIFICATION DE LA MACHINE

Toutes les machines Caterpillar portent un numéro d'identification (PIN). Certains composants des machines peuvent porter des numéros de série (S/N). En général, parmi les composants qui portent des numéros de série il y a les moteurs, les transmissions, les bulldozers et les rippers. En plus, la machine et le moteur peuvent recevoir des numéros de version, et dans certains cas, de modification. Ces numéros figurent sur les plaques de numéro de série et sur la plaque signalétique principale qui se trouve dans le poste de conduite.

Les concessionnaires Caterpillar doivent connaître tous ces numéros pour identifier correctement les pièces.

SIS *Nouvelle Caractéristique*

À partir du premier trimestre 2001, le numéro d'identification produit (PIN) Caterpillar passe de 8 à 17 caractères. Afin de permettre une identification uniforme des matériels, Caterpillar et d'autres constructeurs de machines de travaux publics s'efforcent de se conformer à la norme la plus récente portant sur les numéros d'identification des produits. Les numéros d'identification (PIN) de machines de chantier sont définis par la norme ISO 10261. Le nouveau format du numéro d'identification est valable pour toutes les machines et tous les groupes électrogènes Caterpillar. Le numéro d'identification produit (PIN) figurant sur la plaque et sur le châssis se composera de 17 caractères. Le nouveau format ressemblera à ceci:

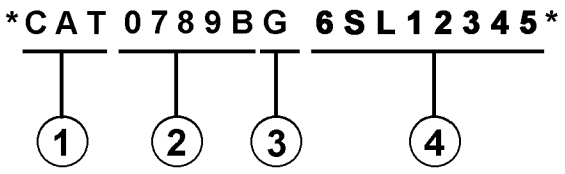

Il se décomposera de la façon suivante:

1. Code international de fabrication de Caterpillar (caractères 1 à 3)

2. Descriptif de la machine (caractères 4 à 8)

3. Contrôle (caractère 9)

4. Indicateur machine (MIS) ou numéro de séquence produit (caractères 10 à 17). Ceux-ci étaient auparavant désignés sous le terme de numéro de série.

Les machines et les groupes électrogènes construits avant le premier trimestre 2001 garderont le format à 8 caractères du numéro d'identification produit (PIN).

Les organes tels que les moteurs, les boîtes de vitesses, les essieux, etc., continueront d'être désignés par un numéro de série (S/N) à 8 caractères.

2. COMMANDE DE PIÈCES

⚠ DANGER

Lorsqu'il faut remplacer des pièces de rechange pour ce produit Caterpillar recommande d'utiliser les pièces de rechange Caterpillar ou les pièces qui ont des spécifications équivalentes dont les dimensions physiques, le type, la force et le matériau. Ces équivalences ne se limitent pas à l'énoncé précédent.

L'inobservation de cette mise en garde peut entraîner des défaillances prématurées, des dommages au produit, des blessures ou même la mort.

Les concessionnaires Caterpillar fournissent dans le monde entier des pièces de rechange de qualité Caterpillar. Leurs stocks de pièces sont constamment réapprovisionnés et comptent toutes les pièces nécessaires pour assurer la bonne marche de vos machines Caterpillar. Certains concessionnaires proposent également des kits de réparation ou des pièces rénovées, ce qui permet de choisir la solution la plus économique dans une situation donnée. Lors des commandes de pièces, mentionner la quantité, le numéro et la désignation des pièces ainsi que le numéro de série ou le numéro d'identification (PIN) de la machine pour laquelle ces pièces sont requises.

3. ORGANISATION DU CATALOGUE DE PIÈCES

Les renseignements sur les produits sont présentés sous forme de "Information element" (élément d'information) représentant tous les composants d'un modèle donné. "Engine Arrangement" (version de moteur) et "Seat Group" (assemblage de siège)" sont des exemples d'éléments d'information. Les éléments d'information sont classés par ordre alphabétique par la désignation standard des pièces et par numéros de pièces dans chaque partie importante du manuel.

4. TABLE DES MATIÈRES

SIS *Nouvelle Caractéristique*

La table des matières se trouve au début du manuel. La table des matières fournit la liste de tous les chapitres du manuel avec une liste complète de tous les éléments d'information classés par ordre d'apparition dans le manuel. Les numéros de page sont fournis afin que l'utilisateur puisse trouver rapidement les illustrations détaillées concernant l'identification des pièces et les listes des pièces d'entretien.

5. INDEX DES PIÈCES D'ENTRETIEN

La rubrique "Index des pièces d'entretien" qui se trouve au début du manuel renvoie aux pièces d'entretien les plus fréquemment utilisées en précisant la désignation, la quantité, là où la pièce est utilisée et le numéro de page. Ces pièces sont classés par ordre alphabétique.

6. INDEX

L'index qui se trouve vers le début du manuel est une liste alphabétique de tous les éléments d'information du manuel. Les numéros de page sont fournis afin que l'utilisateur puisse trouver rapidement les illustrations détaillées concernant l'identification des pièces et les listes des pièces d'entretien.

7. INDEX DES NUMÉROS DE PIÈCES

Une liste numérique de tous les numéros de pièces et des pages correspondantes se trouve à la fin du manuel.

8. LÉGENDES

Les légendes qui se trouvent en haut de chaque page de chaque élément d'information fournissent le numéro de pièce, la désignation ainsi que des renseignements supplémentaires sur les pièces. Les renseignements concernant les numéros de série (S/N) qui se trouvent dans chaque légende doivent être utilisés pour sélectionner les informations correctes pour un moteur donné. Les informations concernant les options de remplacement sur le chantier, l'identification des composants des équipements offerts en option et les lieux d'application sont aussi fournies.

SIS *Nouvelle Caractéristique*

Les lettres de la première ligne d'une légende sont présentées en police plus grande afin d'indiquer le début d'une unité d'information. Les légendes qui pourraient être requises pour des pages supplémentaires afin d'illustrer une unité d'information seront présentées en police standard et comprendront le terme (à suivre).

9. PIÈCES NON FOURNIES

SIS *Nouvelle Caractéristique*

Dans certains cas, il est nécessaire d'indiquer les pièces non fournies qui sont en aval de la liste des pièces d'entretien. Les numéros des pièces non fournies dans la liste des pièces et les légendes seront en italique pour signaler qu'ils ne sont pas disponibles.

10. NUMÉROS DE RÉFÉRENCE DE LA LISTE DES PIÈCES

SIS *Nouvelle Caractéristique*

Les numéros indiqués dans la colonne des numéros de références correspondent aux numéros utilisés dans les illustrations auxquelles ils sont associés. Un suffixe alphabétique peut être ajouté à un numéro de référence pour identifier la liste des articles en aval. Les numéros indiqués dans la colonne de référence de l'illustration renvoient à l'identification du numéro affiché dans le coin inférieur gauche de chaque illustration. Le numéro de référence de l'illustration pourrait être utilisé avec le numéro de référence de l'article pour déterminer le numéro de pièce correct. Il peut y avoir une omission intentionnelle d'un numéro de référence dans une liste de pièces suite à la mise à jour des informations en vue de refléter les numéros de pièces les plus récentes.

11. DÉSIGNATIONS DE PIÈCES EN RETRAIT

Lorsqu'une désignation de pièce est en retrait, cela veut dire que l'article en regard fait partie de l'ensemble sous lequel il figure.

12. LETTRES DE RÉFÉRENCE DES ILLUSTRATIONS

Quand cela est nécessaire, les illustrations comportent des lettres de référence (A, B, C, etc.) pour montrer le trajet des canalisations et faisceaux de câbles d'un point à l'autre. Elles sont utilisées également pour indiquer où relier les illustrations séparées auparavant.

13. ABRÉVIATIONS ET SYMBOLES

O.D. – Diamètre extérieur
I.D. – Diamètre intérieur
A – Ne fait pas partie de ce groupe
B – Utiliser selon besoin
C – Modification
D – Commander par mètre
E – Commander par centimètre
F – Non représenté
G – Commander par pouce
I – Voir "Hydraulic Information System"
M – Pièce métrique
R – Pièce rénovée éventuellement disponible
Y – Illustration séparée
Z – Non fourni séparément

NOTA:

En raison du progrès technique et des améliorations continuelles apportées au matériel, votre machine comporte peut-être des modifications qui n'apparaissent pas dans la présente publication. En cas de doute sur un détail de votre machine Caterpillar ou sur le texte de la présente publication, adressez-vous à votre concessionnaire Caterpillar.

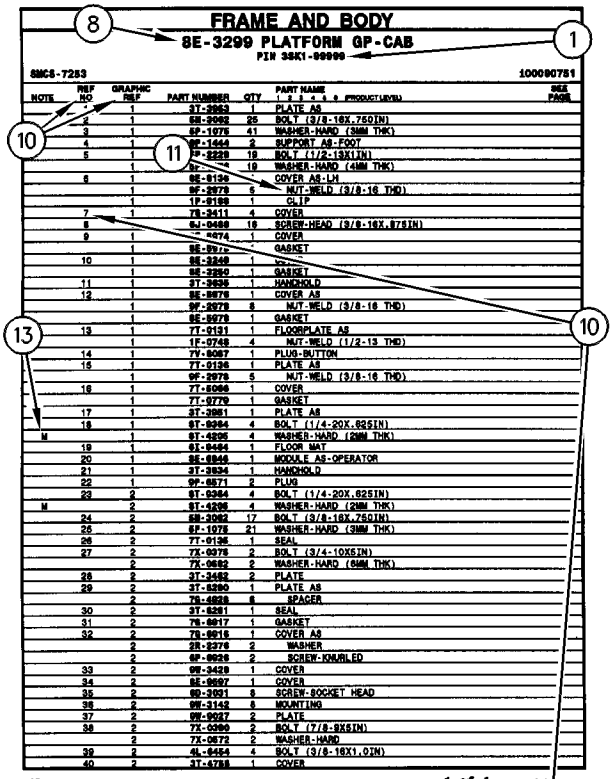
FRAME AND BODY
8E-3299 PLATFORM GP-CAB
PIN 3SK1-99999
SMCS-7283
100090751
NOTE REF NO GRAPHIC REF PART NUMBER QTY PART NAME SEE PAGE
1 1 3T-2853 1 PLATE AS
2 1 6B-2062 25 BOLT (3/8-16X.750IN)
3 1 6P-1076 41 WASHER-HARD (3MM THK)
4 1 9W-1444 2 SUPPORT AS-FOOT
5 1 7P-2229 18 BOLT (1/2-13X1IN)
1 19 WASHER-HARD (4MM THK)
6 1 8E-6136 COVER AS-LH
1 9F-2978 6 NUT-WELD (3/8-16 THD)
1 1P-0189 1 CLIP
7 1 7B-2411 4 COVER
8 9J-0498 18 SCREW-HEAD (3/8-16X.875IN)
9 1 4474 1 COVER
1 8E-8976 GASKET
10 1 8E-3248 1
1 8E-3250 1 GASKET
11 1 3T-2836 1 HANDHOLD
12 1 8E-8978 1 COVER AS
1 9F-2978 8 NUT-WELD (3/8-16 THD)
1 8E-8979 1 GASKET
13 1 7T-0131 1 FLOORPLATE AS
1 1F-0748 4 NUT-WELD (1/2-13 THD)
14 1 7V-8087 1 PLUG-BUTTON
15 1 7T-0136 1 PLATE AS
1 9F-2978 5 NUT-WELD (3/8-16 THD)
16 1 7T-8066 1 COVER
1 7T-8779 1 GASKET
17 1 3T-3851 1 PLATE AS
18 1 6T-8364 4 BOLT (1/4-20X.625IN)
M 1 9T-4295 4 WASHER-HARD (2MM THK)
19 1 6L-8494 1 FLOOR MAT
20 1 8E-8846 1 MODULE AS-OPERATOR
21 1 3T-3834 1 HANDHOLD
22 1 9P-8671 2 PLUG
23 2 6T-8364 4 BOLT (1/4-20X.625IN)
M 2 9T-4295 4 WASHER-HARD (2MM THK)
24 2 6B-2062 17 BOLT (3/8-16X.750IN)
25 2 6P-1076 21 WASHER-HARD (3MM THK)
26 2 7T-0135 1 SEAL
27 2 7X-8078 2 BOLT (3/4-10X5IN)
2 7X-0682 2 WASHER-HARD (6MM THK)
28 2 3T-3452 2 PLATE
29 2 3T-8290 1 PLATE AS
2 7B-4828 8 SPACER
30 2 3T-8281 1 SEAL
31 2 7B-8817 1 GASKET
32 2 7B-8815 1 COVER AS
2 2R-3276 2 WASHER
2 9F-8928 2 SCREW-KNURLED
33 2 9W-3429 1 COVER
34 2 8E-8897 1 COVER
35 2 6D-3031 8 SCREW-SOCKET HEAD
36 2 9W-3142 8 MOUNTING
37 2 9W-8027 2 PLATE
38 2 7X-0390 2 BOLT (7/8-9X8IN)
2 7X-0672 2 WASHER-HARD
39 2 4L-8454 4 BOLT (3/8-16X1.0IN)
40 2 3T-4788 1 COVER

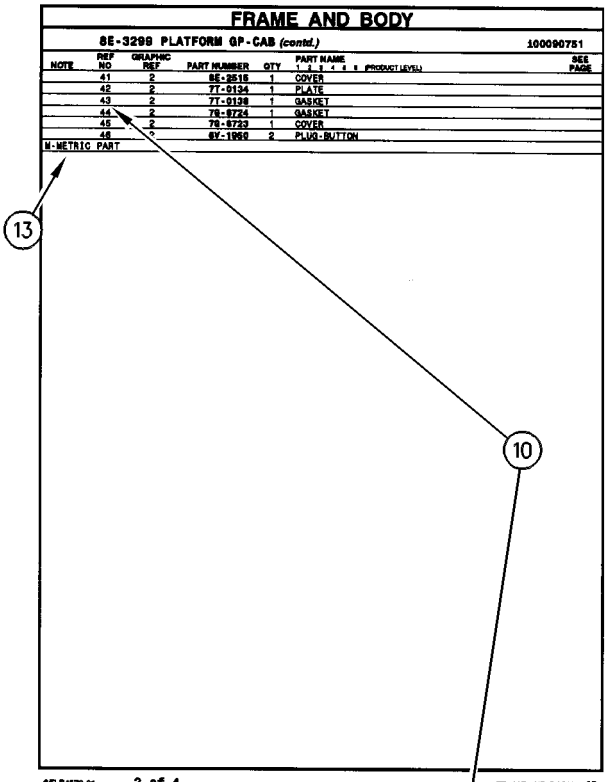
FRAME AND BODY
8E-3299 PLATFORM GP-CAB (contd.)
100090751
NOTE REF NO GRAPHIC REF PART NUMBER QTY PART NAME SEE PAGE
41 2 8E-2516 1 COVER
42 2 7T-0134 1 PLATE
43 2 7T-0138 1 GASKET
44 2 7B-8724 1 GASKET
45 2 7B-8723 1 COVER
46 2 6V-1950 2 PLUG-BUTTON
M-METRIC PART

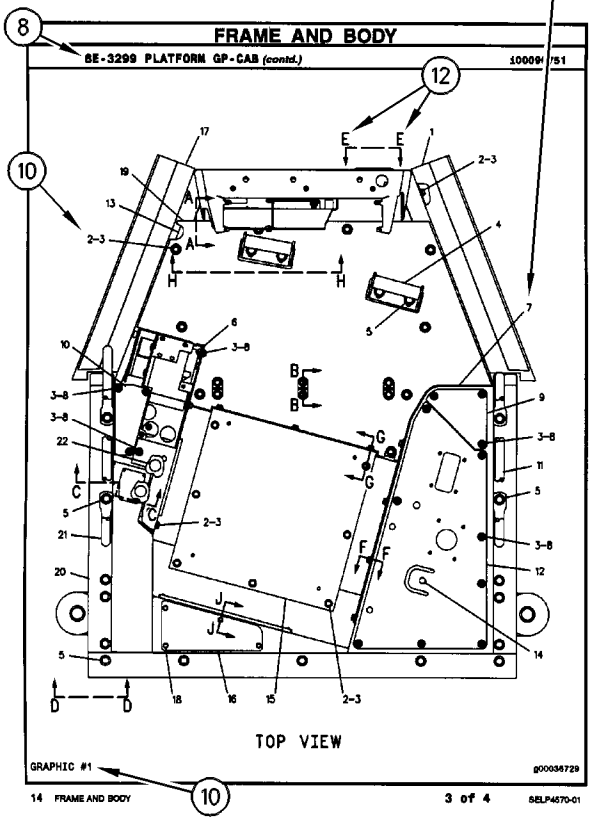
FRAME AND BODY
8E-3299 PLATFORM GP-CAB (contd.)
100090751
TOP VIEW
GRAPHIC #1
g00036729

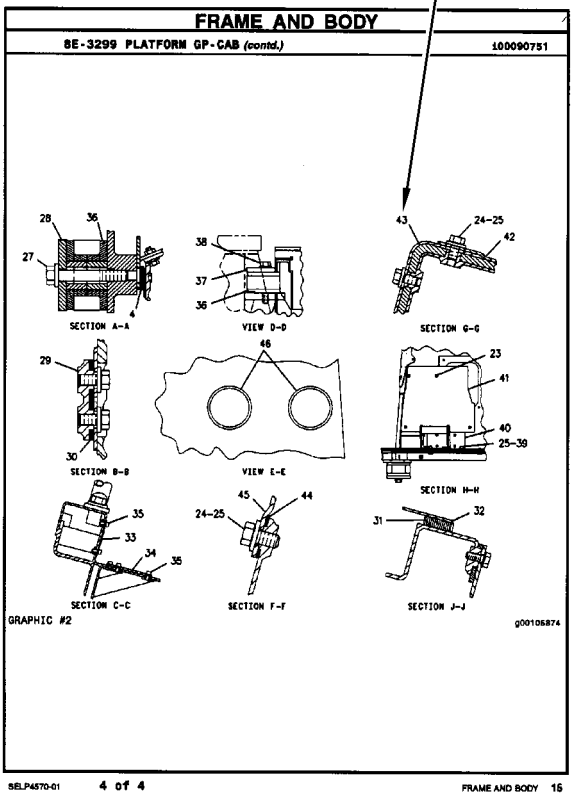
FRAME AND BODY
8E-3299 PLATFORM GP-CAB (contd.)
100090751
SECTION A-A
VIEW D-D
SECTION G-G
SECTION B-B
VIEW E-E
SECTION H-H
SECTION C-C
SECTION F-F
SECTION J-J
GRAPHIC #2
g00105874

INFORMACIÓN GENERAL

1. MÁQUINAS

Las máquinas Caterpillar se identifican con Números de Identificación del Producto (PIN). Algunos componentes incluídos en la máquina pueden estar identificados con Números de Serie (N/S). Los componentes que tienen típicamente esta identificación incluyen motores, transmisiones, hojas topadoras y desgarradores. La máquina y el motor se identifican además con Números de Configuración y en algunos casos, Números de Modificación. Estos números están en las placas de identificación del producto o en la placa principal en la cabina del operador.

Los distribuidores Caterpillar necesitan estos números para identificar con exactitud los números de piezas de repuesto.

SIS *Nueva Característica*

A partir del primer trimestre del 2001, el Número de Identificación de Producto (PIN) de Caterpillar cambió de 8 a 17 caracteres. Para hacer más uniforme el método de identificación de equipos, Caterpillar y otros fabricantes de equipo de construcción han tomado medidas para cumplir con la versión más reciente de la norma de numeración de identificación de productos. Los Números de Identificación de Producto para máquinas que no se operan en carreteras son definidos por la norma ISO 10261. El nuevo formato PIN corresponderá a todas las máquinas y grupos electrógenos Caterpillar. Las placas y los caracteres PIN estampados en el bastidor mostrarán el PIN de 17 caracteres. El nuevo formato tendrá la apariencia siguiente:

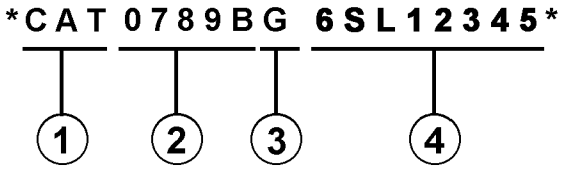

Significado de los caracteres:

1. Código de Fabricación Mundial de Caterpillar (caracteres 1-3)

2. Sección Descriptor de la Máquina (caracteres 4-8)

3. Carácter de Verificación (carácter 9)

4. Sección Indicador de la Máquina (MIS) o Número de Secuencia de Producto (caracteres 10-17). Anteriormente, estos caracteres constituían el Número de Serie.

Las máquinas y grupos electrógenos producidos antes del primer semestre del 2001 mantendrán su formato PIN de 8 caracteres.

Los componentes como motores, transmisiones, ejes, herramientas de trabajo, etc., continuarán usando un Número de Serie (S/N) de 8 caracteres.

2. COMO PEDIR REPUESTOS

⚠ ADVERTENCIA

Cuando se necesiten piezas de repuesto para este producto, Caterpillar recomienda usar piezas de repuesto Caterpillar o piezas que tengan especificaciones equivalentes incluyendo, pero sin estar limitadas a, dimensiones físicas, tipo, fortaleza y material.

El no hacer caso de esta advertencia puede llevar a fallas prematuras, daños al producto y lesiones graves o mortales.

Las piezas de repuesto Caterpillar de calidad están a la disposición de los distribuidores Caterpillar en todo el mundo. Sus existencias actualizadas incluyen todas las piezas normalmente requeridas para proteger su inversión en máquinas Caterpillar. Los distribuidores pueden tener juegos de reparación o piezas remanufacturadas para permitir la selección de la mejor alternativa de reparación en un caso en particular. Al pedir piezas de repuesto, especifique en su pedido la cantidad, el número de pieza, el nombre de la pieza y el número de serie/número de identificación del producto, de la máquina para la cual se necesitan estas piezas.

3. ORGANIZACION DEL MANUAL DE PIEZAS

La información sobre el producto, se presenta en este manual, como "elementos de información" que representan todos los componentes de un modelo específico. Las configuraciones de motores y los grupos de asientos son ejemplos de elementos de información. Los elementos de información están organizados primeramente por nombres de piezas en orden alfabético y en segundo lugar, por el número de pieza dentro de cada sección principal del manual.

4. CONTENIDO

La página de Contenido se encuentra al principio del manual. El Contenido indica cada sección del manual con una lista completa de todos los elementos de información organizados en el orden que aparecen en el manual. Los números de página proporcionan una referencia rápida a las ilustraciones detalladas de identificación de piezas y a las listas de componentes de repuesto de dichas piezas.

5. ÍNDICE DE PIEZAS DE MANTENIMIENTO

Al principio de este catálogo se encuentra un índice de los números de piezas utilizadas más frecuentemente para el mantenimiento, que incluye descripción, cantidad necesaria, lugar de utilización y número de página. Esta información está organizada alfabéticamente, por descripción de la pieza.

6. ÍNDICE

El Índice, ubicado cerca del principio del manual, es una lista en orden alfabético de todos los elementos de información incluídos en el manual. Los números de página proporcionan una referencia rápida a las ilustraciones detalladas de identificación de piezas y a las listas de componentes de repuesto de dichas piezas.

7. INDICE NUMÉRICO DE PIEZAS

Un índice numérico de piezas con el correspondiente número de página aparece al final de este catálogo.

8. TÍTULOS

Los títulos ubicados al principio de cada elemento de información identifican el número y el nombre de la pieza junto con información descriptiva. Se debe usar información sobre los Números de Identificación de Pieza (PIN) y los números de serie (S/N) para seleccionar la información que corresponda a una máquina en particular. También se suministra información sobre las opciones de reparación en el campo, la identificación de componentes de accesorios optativos y el lugar de ubicación de la pieza ("es parte de").

La primera línea del título se muestra con un tipo de letra más grande para indicar el comienzo de un elemento de información. Si se requieren páginas adicionales para ilustrar un elemento de información, los títulos se muestran con un tipo de letra normal y la continuación se indica entre paréntesis.

9. PIEZAS QUE NO SE SUMINISTRAN COMO REPUESTO

En algunos casos es necesario indicar piezas que no se suministran como repuesto pero que pueden estar conectadas a listas de componentes de otras piezas de repuesto. En tal caso, dichas piezas se muestran en cursiva para indicar que no son piezas disponibles.

10. NÚMEROS DE REFERENCIA

Los números en la columna de No. de Referencia corresponden a los números indicados en la ilustración que pertenece a ese número de pieza. Los números que tienen un sufijo alfabético identifican artículos de las listas de componentes de piezas. Los números en la columna de Referencia de la ilustración se identifican en la esquina inferior izquierda de cada ilustración. Para determinar el número de pieza correcto se puede utilizar tanto el No. de Referencia de la ilustración como el No. de Referencia del artículo. A medida que se actualiza la información para indicar los más recientes números de piezas de repuesto, puede omitirse intencionalmente un No. de Referencia en una lista de componentes de piezas.

11. NOMBRES DE PIEZA SANGRADOS

Cuando el nombre de una pieza está sangrado en una lista, significa que esta pieza forma parte del grupo o conjunto del renglón inmediatamente superior.

12. LETRAS DE REFERENCIA DE ILUSTRACIONES

Las ilustraciones contienen algunas veces letras de referencia (A, B, C etc.) cuyo propósito es seguir el trayecto de líneas y mazos de cables de un punto a otro. También se utilizan para mostrar dónde volver a unir ilustraciones que se habían separado.

13. ABREVIATURAS Y SIMBOLOS

O.D. – Diámetro exterior
I.D. – Diámetro interior
A – No es pieza de este grupo
B – Utilizado según la demanda
C – Indica cambio
D – Se pide por metro
E – Se pide por centímetro
F – No se muestra
G – Se pide por pulgada
I – Consulte el sistema de información hidráulica
M – Pieza métrica
R – Puede estar disponible como pieza remanufacturada
Y – Ilustración separada
Z – No se suministra por separado

SIS *Nueva Característica*

14. DESCRIPCIÓN DE LOS CAMBIOS DE TIPO

Tipo – Un tipo se define como cualquier cambio de configuración que requiere un Elemento de información adicional de una Configuración, Grupo o Conjunto. Si el número de serie se clasifica por tipos que no están disponibles, se mostrará un número de tipo (Tipo 1,Tipo 2,etc.) en el comentario de la fotografía. Estos cambios de "tipo" se identifican con una nota "C" (cambio con respecto al tipo anterior) en la Lista de Piezas. Se incluirían sólo los "tipos" que aplican a este Manual de Piezas. Es posible que haya tipos adicionales que causen la aparición de notas "C" en el Elemento de Información cuando no se muestran otros tipos."

15.<END>

Este símbolo indica el final de un elemento de información.

NOTA:

Las contínuas mejoras y adelantos en diseño podrían originar cambios a su máquina que no se incluyen en esta publicación. Cuando tenga alguna pregunta acerca de su producto Caterpillar o de esta publicación, consulte al distribuidor Caterpillar para obtener la información más reciente.

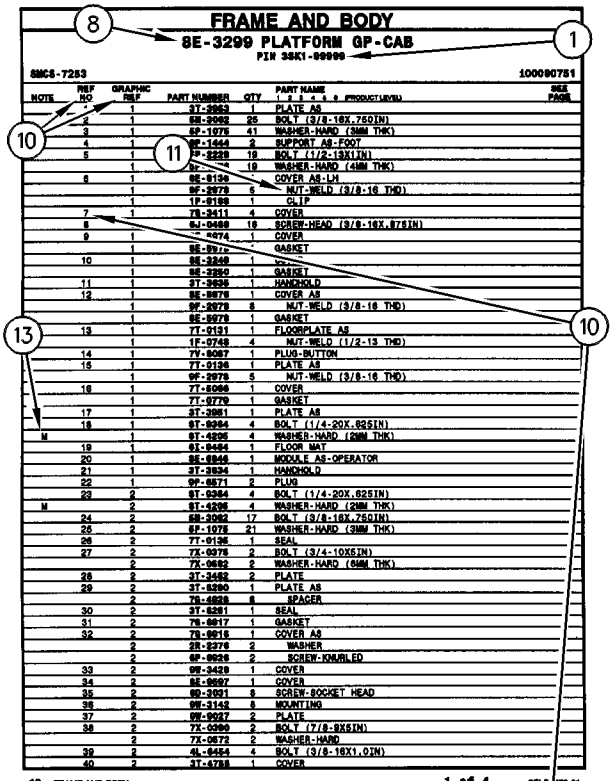

FRAME AND BODY

8E-3299 PLATFORM GP-CAB

PIN 3SK1-09999

SMCS-7253 100090751

NOTE	REF NO	GRAPHIC REF	PART NUMBER	QTY	PART NAME 1 2 3 4 5 6 (PRODUCT LEVEL)	SEE PAGE
	*	1	3T-2863	1	PLATE AS	
	2	1	6B-2062	25	BOLT (3/8-16X.750IN)	
	3	1	6F-1076	41	WASHER-HARD (38MM THK)	
	4	1	9F-1444	2	SUPPORT AS-FOOT	
	5	1	7P-2229	18	BOLT (1/2-13X1IN)	
		1	6F-	18	WASHER-HARD (41MM THK)	
	6	1	8E-6136	*	COVER AS-LH	
		1	9F-2978	5	NUT-WELD (3/8-16 THD)	
		1	1P-0188	1	CLIP	
	7	1	7B-2411	4	COVER	
	8	1	9J-0498	18	SCREW-HEAD (3/8-16X.875IN)	
	9	1	4474	1	COVER	
		1	8E-9[illegible]	1	GASKET	
	10	1	8E-3248	1	[illegible]	
		1	8E-3250	1	GASKET	
	11	1	3T-2636	1	HANDHOLD	
	12	1	8E-9078	1	COVER AS	
		1	9F-2978	8	NUT-WELD (3/8-16 THD)	
		1	8E-9079	1	GASKET	
	13	1	7T-0131	1	FLOORPLATE AS	
		1	1F-0748	4	NUT-WELD (1/2-13 THD)	
	14	1	7V-8087	1	PLUG-BUTTON	
	15	1	7T-0136	1	PLATE AS	
		1	9F-2978	5	NUT-WELD (3/8-16 THD)	
	16	1	7T-8066	1	COVER	
		1	7T-9779	1	GASKET	
	17	1	3T-3861	1	PLATE AS	
	18	1	6T-8364	4	BOLT (1/4-20X.625IN)	
M		1	9T-4295	4	WASHER-HARD (20MM THK)	
	19	1	6L-8494	1	FLOOR MAT	
	20	1	8E-8846	1	MODULE AS-OPERATOR	
	21	1	3T-3834	1	HANDHOLD	
	22	1	9P-8571	2	PLUG	
	23	2	6T-8364	4	BOLT (1/4-20X.625IN)	
M		2	9T-4295	4	WASHER-HARD (20MM THK)	
	24	2	6B-2062	17	BOLT (3/8-16X.750IN)	
	25	2	6F-1076	21	WASHER-HARD (38MM THK)	
	26	2	7T-0135	1	SEAL	
	27	2	7X-0078	2	BOLT (3/4-10X5IN)	
		2	7X-0682	2	WASHER-HARD (64MM THK)	
	28	2	3T-3452	2	PLATE	
	29	2	3T-8290	1	PLATE AS	
		2	7B-4828	8	SPACER	
	30	2	3T-8281	1	SEAL	
	31	2	7B-8817	1	GASKET	
	32	2	7B-8815	1	COVER AS	
		2	2R-2276	2	WASHER	
		2	6P-8926	2	SCREW-KNURLED	
	33	2	9W-3429	1	COVER	
	34	2	8E-8697	1	COVER	
	35	2	6D-3031	8	SCREW-SOCKET HEAD	
	36	2	9W-3142	8	MOUNTING	
	37	2	9W-8027	2	PLATE	
	38	2	7X-0090	2	BOLT (7/8-9X8IN)	
		2	7X-0672	2	WASHER-HARD	
	39	2	4L-8454	4	BOLT (3/8-16X1.0IN)	
	40	2	3T-4788	1	COVER	

12 FRAME AND BODY 1 of 4 SELP4570-01

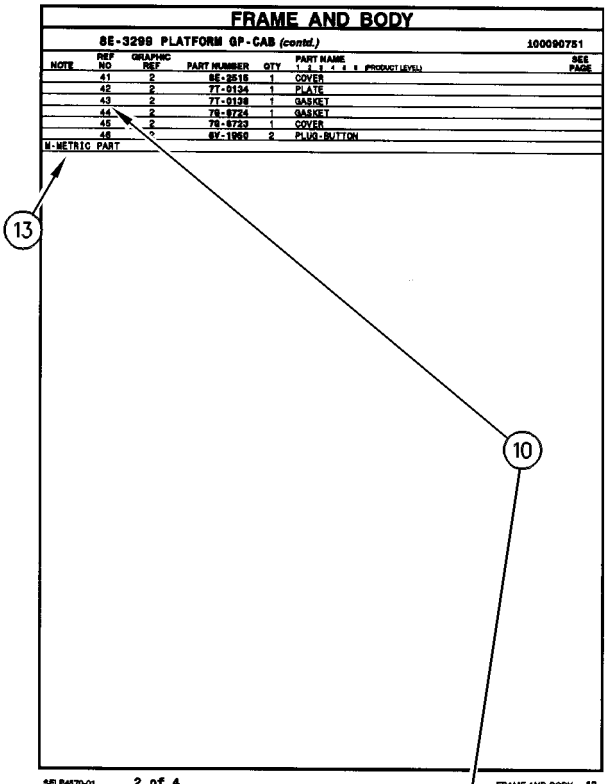

FRAME AND BODY

8E-3299 PLATFORM GP-CAB (contd.) 100090751

NOTE	REF NO	GRAPHIC REF	PART NUMBER	QTY	PART NAME 1 2 3 4 5 6 (PRODUCT LEVEL)	SEE PAGE
	41	2	8E-2516	1	COVER	
	42	2	7T-0134	1	PLATE	
	43	2	7T-0138	1	GASKET	
	44	2	7B-8724	1	GASKET	
	45	2	7B-8723	1	COVER	
	46	2	6V-1950	2	PLUG-BUTTON	

M-METRIC PART

SELP4570-01 2 of 4 FRAME AND BODY 13

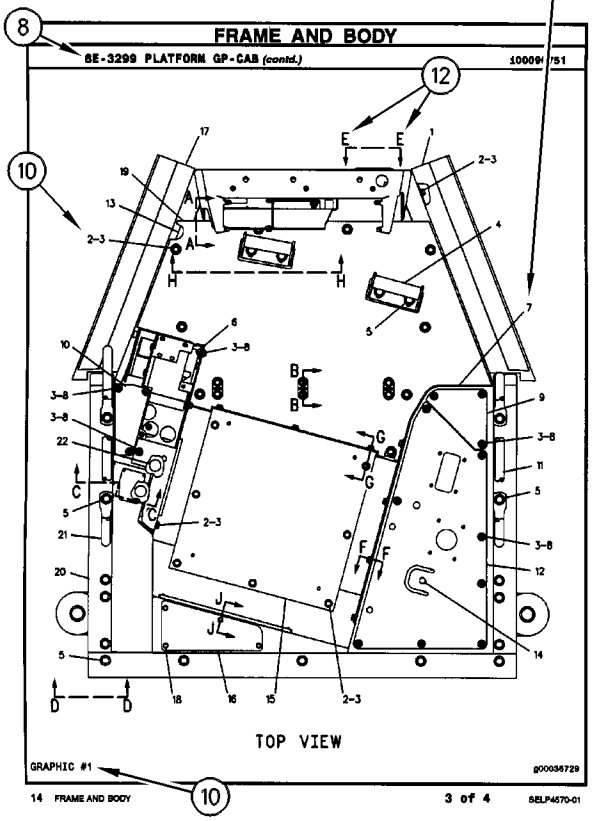

FRAME AND BODY

8E-3299 PLATFORM GP-CAB (contd.) 100090751

GRAPHIC #1 g00036729

TOP VIEW

14 FRAME AND BODY 3 of 4 SELP4570-01

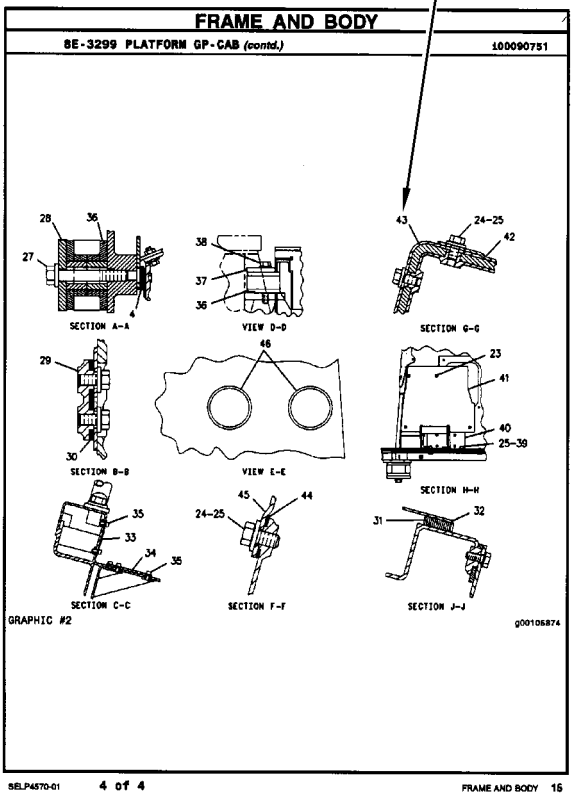

FRAME AND BODY

8E-3299 PLATFORM GP-CAB (contd.) 100090751

SECTION A-A

VIEW D-D

SECTION G-G

SECTION B-B

VIEW E-E

SECTION H-H

SECTION C-C

SECTION F-F

SECTION J-J

GRAPHIC #2 g00105874

SELP4570-01 4 of 4 FRAME AND BODY 16

INFORMAÇÃO GERAL

1. IDENTIFICAÇÃO DA MÁQUINA

As máquinas Caterpillar são identificadas pelos Números de Informação do Produto (PIN). Alguns componentes incluídos numa máquina podem ser identificados por Números de Série (S/N). Componentes típicos que serão enumerados com números de série incluem motores, transmissões, lâminas e ríperes. Além do número de série, a máquina e o motor são ainda identificados por números de arranjo e, em alguns casos, números de modificações. Tais números encontram-se na(s) placa(s) de identificação do produto e na placa mestre no compartimento do operador.

SIS *Novidades*

A partir do primeiro trimestre de 2001 o Número de Identificação de Produto da Caterpillar (PIN) precisa ser mudado de 8 para 17 caracteres. Esforçando-se para fornecer uma identificação uniforme de equipamentos, a Caterpillar e outros fabricantes de equipamento de construção estão mudando para atender a versão mais atualizada do padrão de identificação de produtos. Os números de PIN para produtos de aplicações não rodoviárias são definidos pela ISO 10261. O novo formato de número PIN será adotado em todas as máquinas e grupos geradores Caterpillar. As placas e as marcações do chassi mostrarão os 17 dígitos de PIN. O novo formato terá a seguinte disposição:

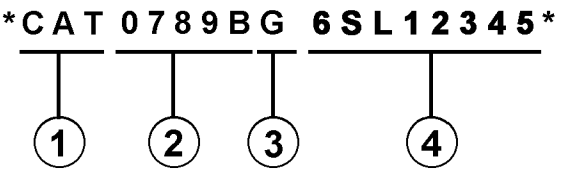

Onde:

1. Código de Fabricação Mundial da Caterpillar (dígitos 1-3)

2. Descrição da Máquina (dígitos 4-8)

3. Dígito de Verificação (dígito 9)

4. Seção de Indicador da Máquina (MIS) ou Número de Seqüência de Produto (dígitos 10-17). Estes eram anteriormente chamados de Número de Série.

Máquinas e grupos geradores produzidos antes do primeiro trimestre de 2001 manterão o formato de 8 caracteres de PIN.

Componentes como motores, transmissões, eixos, ferramentas de trabalho, etc. continuarão a usar Número de Série (S/N) com oito caracteres.

2. COMO OBTER PEÇAS

⚠ CUIDADO

Quando peças de substituição são exigidas para este produto, a Caterpillar recomenda a utilização de peças de substituição Caterpillar ou peças com as especificações equivalentes incluindo, mas não limitadas, à dimensões físicas, tipos, resistência e materiais.

A inobservância desta advertência poderá resultar em falhas prematuras, danos ao produto, ferimentos ou morte.

As Peças de Reposição de Qualidade Caterpillar encontram-se disponíveis nos revendedores Caterpillar no mundo inteiro. Seus estoques de peças são atualizados e incluem todas as peças normalmente necessárias para proteger seu investimento em máquinas Caterpillar. Alguns revendedores podem oferecer jogos de reparo ou peças de troca/remanufaturadas disponíveis como uma opção da alternativa de reparo mais eficaz para uma situação específica. Ao encomendar peças, seu pedido deve especificar a quantidade, o número e o nome da peça e o número de série/número de identificação do produto referentes à máquina para a qual as peças se destinam.

3. ORGANIZAÇÃO DO MANUAL DE PEÇAS

A informação do produto neste manual é apresentada em forma de "elementos de informação" que representam todos os componentes para o modelo específico. Arranjo de Motor e Grupo de Assento são exemplos de elementos de informação. Os elementos de informação são organizados em ordem alfabética por nome de peça ou secundariamente, por número de peça incluído em cada seção principal do manual.

4. LISTA DE CONTEÚDOS

A Lista de Conteúdos (TOC) se encontra no princípio do manual. A Lista de Conteúdos (TOC) relaciona em cada seção do manual uma lista completa com todos os elementos de informação organizados conforme aparecem no manual. Números de página são fornecidos para que se tenha referência rápida de ilustrações de peças detalhadas e listas de conteúdos que podem receber serviço de manutenção.

5. ÍNDICE DE PEÇAS DE MANUTENÇÃO

O Índice de Peças de Manutenção, localizado perto do princípio do manual, faz referência aos números de peça de manutenção usados com maior frequência, fornecendo uma descrição, a quantidade, o uso e o número de página. Esta informação é organizada com a descrição da peça em ordem alfabética.

6. ÍNDICE

O Índice localizado perto do princípio do manual, consiste de uma lista em ordem alfabética de todos os elementos de informação incluídos no manual. Números de página são fornecidos para que se tenha referência rápida de ilustrações de peças detalhadas e listas de conteúdos que podem receber serviço de manutenção.

7. ÍNDICE DE NÚMERO DE PEÇA

Um índice numérico relacionando todos os números de peça e a(s) página(s) correspondentes, aparece no final do manual.

8. LEGENDAS

As legendas localizadas no início de cada elemento de informação identificam o número e o nome de peça, juntamente com informação descritiva adicional. Informações sobre o Número de Informação do Produto (PIN) e o Número de Série (S/N) encontradas em cada legenda devem ser usadas para selecionar a informação correta sobre uma máquina específica. Opções de substituição no campo, identificação de componentes de acessórios opcionais e informações sobre onde são utilizados ("parte de") são também fornecidas.

A primeira linha de uma legenda é indicada em tipo maior para indicar o princípio de um elemento de informação. Legendas para páginas adicionais que podem ser necessárias para ilustrar um elemento de informação serão apresentadas em tipo padrão e incluirão o termo *(continua)* .

9. NÃO DISPONÍVEL SEPARADAMENTE

Em alguns casos, é necessário mostrar peças não disponíveis separadamente que têm uma ligação com listas de conteúdos de nível inferior que podem receber serviço de manutenção. Os números de peça destes componentes não disponíveis aparecerão em *itálico* , a fim de indicar que não estão disponíveis.

10. NÙMEROS DE REFERÊNCIA À LISTA DE PEÇAS

Os números indicados na coluna Ref No (No. de Referência) correspondem-se aos números usados no(s) gráfico(s) correspondente(s). Um sufixo com letras pode ser acrescentado a um número de referência para identificar itens de conteúdo de nível inferior. Os números indicados na coluna Graphic Ref (Referência de Gráfico) referem-se ao identificador de número de gráfico presente no canto esquerdo inferior de cada ilustração. O número de Referência de Gráfico pode ser usado em combinação com o item Ref No para determinar-se o número de peça correto. Poderá haver omissão intencional de um número de referência (Ref No) de uma lista de conteúdos uma vez que as informações são atualizadas para refletir os números de peça mais recentes que podem receber serviço de manutenção.

11. NOMES DE PEÇAS DESALINHADOS

Quando um nome de peça encontra-se desalinhado numa lista de peças, significa que tal item faz parte do (está incluído no) grupo ou conjunto sob o qual está relacionado.

12. LETRAS DE REFERÊNCIA NAS ILUSTRAÇÕES

Quando necessário, as ilustrações contêm letras de referência (A, B, C, etc.) que são utilizadas para seguir tubulações e cabos elétricos de um ponto a outro. Também foram utilizadas para indicar onde se pode reconectar as ilustrações que foram separadas.

13. ABREVIAÇÕES E SÍMBOLOS

O.D. – "Outside Diameter" (Diâmetro Externo)
I.D. – "Inside Diameter" (Diâmetro Interno)
A – Não faz parte deste grupo
B – Use conforme necessário
C – Indica modificação
D – Vendido por metro
E – Vendido por centímetro
F – Não ilustrado
G – Vendido por polegada
I – Consultar o Sistema de Informações Hidráulicas
M – Peça métrica
R – Peça remanufaturada pode estar disponível; consulte o seu revendedor Cat
Y – Ilustração separada
Z – Não disponível separadamente

SIS *Novidades*

14. <END>

Este símbolo indica o final de um elemento de informação.

INFORMAÇÃO GERAL

NOTA:

Os contínuos aperfeiçoamentos e avanços no projeto do produto podem ocasionar modificações em sua máquina que talvez ainda não estejam incluídas nesta publicação. Sempre que surgirem dúvidas quanto a um produto Caterpillar ou quanto à presente publicação, consulte o seu revendedor Caterpillar para obter as informações mais recentes disponíveis.

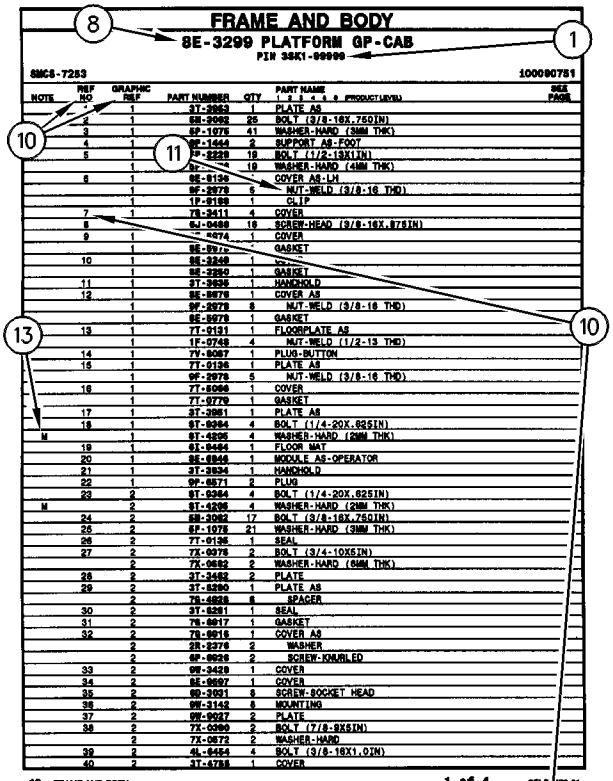

FRAME AND BODY

8E-3299 PLATFORM GP-CAB

PIN 3SK1-99999

SMCS-7253 100090751

NOTE	REF NO	GRAPHIC REF	PART NUMBER	QTY	PART NAME 1 2 3 4 5 6 (PRODUCT LEVEL)	SEE PAGE
		1	3T-2953	1	PLATE AS	
	2	1	6E-2062	25	BOLT (3/8-16X.750IN)	
	3	1	6P-1076	41	WASHER-HARD (38MM THK)	
	4	1	9P-1444	2	SUPPORT AS-FOOT	
	5	1	7P-2229	18	BOLT (1/2-13X1IN)	
		1	9P-[illegible]	18	WASHER-HARD (41MM THK)	
	6	1	8E-6136	1	COVER AS-LH	
		1	9F-2978	6	NUT-WELD (3/8-16 THD)	
		1	1P-0169	1	CLIP	
	7	1	7B-2411	4	COVER	
	8	1	9J-0498	18	SCREW-HEAD (3/8-16X.875IN)	
	9	1	[illegible]-4474	1	COVER	
		1	8E-[illegible]	1	GASKET	
	10	1	8E-3248	1	[illegible]	
		1	8E-3250	1	GASKET	
	11	1	3T-2636	1	HANDHOLD	
	12	1	8E-6076	1	COVER AS	
		1	9F-2978	8	NUT-WELD (3/8-16 THD)	
		1	8E-6078	1	GASKET	
	13	1	7T-0131	1	FLOORPLATE AS	
		1	1F-0748	4	NUT-WELD (1/2-13 THD)	
	14	1	7V-6067	1	PLUG-BUTTON	
	15	1	7T-0136	1	PLATE AS	
		1	9F-2978	5	NUT-WELD (3/8-16 THD)	
	16	1	7T-6066	1	COVER	
		1	7T-0779	1	GASKET	
	17	1	3T-3951	1	PLATE AS	
	18	1	6T-0364	4	BOLT (1/4-20X.625IN)	
M		1	9T-4205	4	WASHER-HARD (28MM THK)	
	19	1	6L-6494	1	FLOOR MAT	
	20	1	8E-6846	1	MODULE AS-OPERATOR	
	21	1	3T-3834	1	HANDHOLD	
	22	1	9P-6671	2	PLUG	
	23	2	6T-0364	4	BOLT (1/4-20X.625IN)	
M		2	9T-4205	4	WASHER-HARD (28MM THK)	
	24	2	6E-2062	17	BOLT (3/8-16X.750IN)	
	25	2	6P-1076	21	WASHER-HARD (38MM THK)	
	26	2	7T-0135	1	SEAL	
	27	2	7X-0078	2	BOLT (3/4-10X5IN)	
		2	7X-0662	2	WASHER-HARD (64MM THK)	
	28	2	3T-3452	2	PLATE	
	29	2	3T-6290	1	PLATE AS	
		2	7B-4828	8	SPACER	
	30	2	3T-6281	1	SEAL	
	31	2	7B-6817	1	GASKET	
	32	2	7B-6815	1	COVER AS	
		2	2R-2276	2	WASHER	
		2	6P-6926	2	SCREW-KNURLED	
	33	2	9W-3429	1	COVER	
	34	2	8E-6697	1	COVER	
	35	2	6D-3031	8	SCREW-SOCKET HEAD	
	36	2	9W-3142	8	MOUNTING	
	37	2	9W-6027	2	PLATE	
	38	2	7X-0390	2	BOLT (7/8-9X8IN)	
		2	7X-0672	2	WASHER-HARD	
	39	2	4L-6454	4	BOLT (3/8-16X1.0IN)	
	40	2	3T-4788	1	COVER	

12 FRAME AND BODY 1 of 4 SELP4570-01

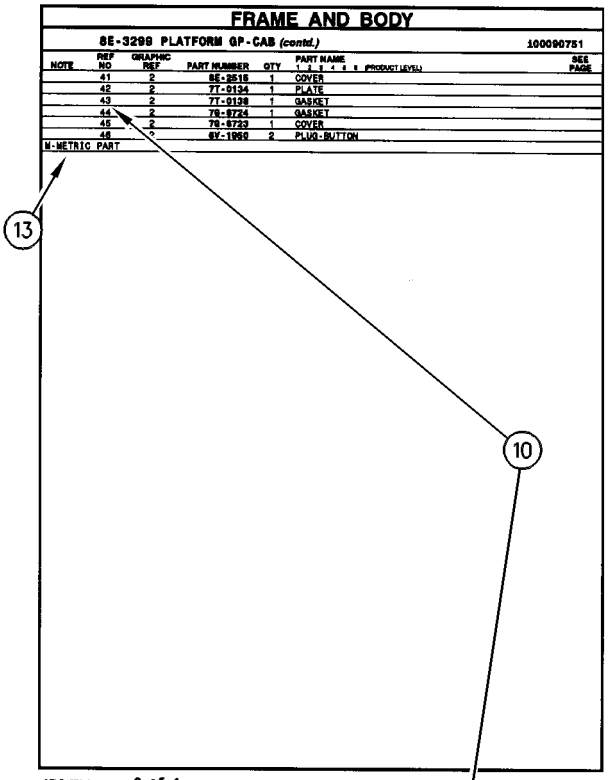

FRAME AND BODY

8E-3299 PLATFORM GP-CAB *(contd.)* 100090751

NOTE	REF NO	GRAPHIC REF	PART NUMBER	QTY	PART NAME 1 2 3 4 5 6 (PRODUCT LEVEL)	SEE PAGE
	41	2	8E-2516	1	COVER	
	42	2	7T-0134	1	PLATE	
	43	2	7T-0138	1	GASKET	
	44	2	7B-6724	1	GASKET	
	45	2	7B-6723	1	COVER	
	46	2	6V-1950	2	PLUG-BUTTON	

M-METRIC PART

SELP4570-01 2 of 4 FRAME AND BODY 13

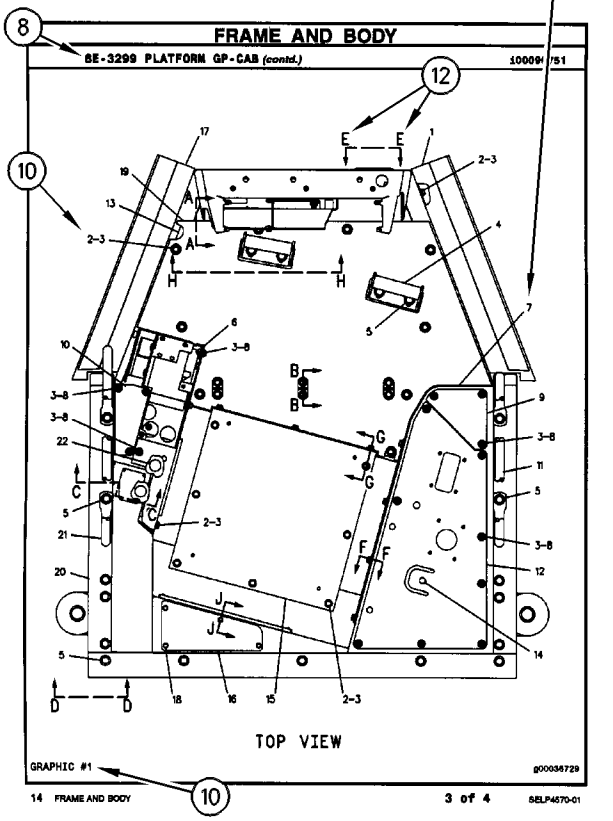

FRAME AND BODY

8E-3299 PLATFORM GP-CAB *(contd.)* 100090751

TOP VIEW

GRAPHIC #1 g00036729

14 FRAME AND BODY 3 of 4 SELP4570-01

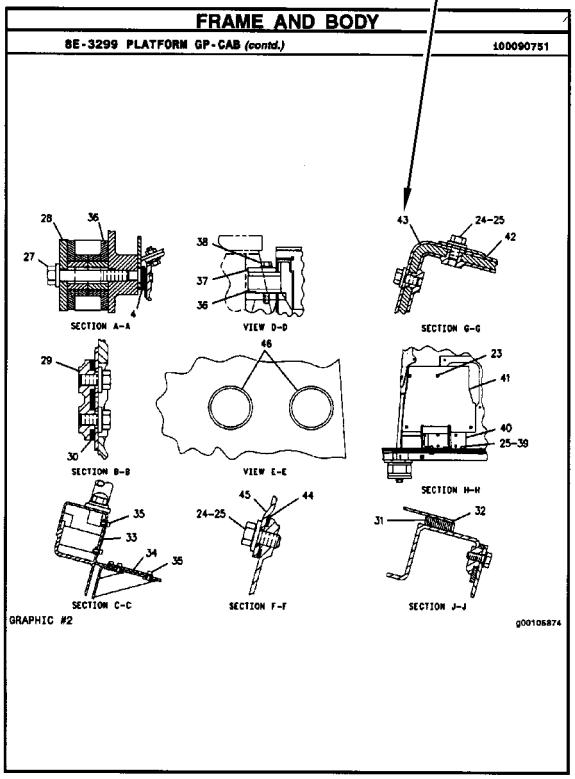

FRAME AND BODY

8E-3299 PLATFORM GP-CAB *(contd.)* 100090751

SECTION A-A

VIEW D-D

SECTION G-G

SECTION B-B

VIEW E-E

SECTION H-H

SECTION C-C

SECTION F-F

SECTION J-J

GRAPHIC #2 g00105874

SELP4570-01 4 of 4 FRAME AND BODY 16

ALLGEMEINE HINWEISE

1. MASCHINENKENNZEICHNUNG

Caterpillar-Maschinen sind mit PRODUCT IDENTIFICATION NUMBERS (PIN) (Produkt-Identnummern) gekennzeichnet. Einige Baugruppen, z.B. Motoren, Getriebe, Planierschilde und Aufreißer, sind mit SERIAL NUMBERS (S/N) (Seriennummern) gekennzeichnet. An der Maschine und am Motor befinden sich außerdem ARRANGEMENT NUMBERS (Ausrüstungsnummern) sowie in einigen Fällen MODIFICATION NUMBERS (Änderungsnummern). Sie befinden sich auf den PIN-Schildern und auf dem Typenschild im Fahrerhaus.

Bei Ersatzteilbestellungen müssen dem Händler alle diese Nummern zur Verfügung gestellt werden.

SIS *Neu im Parts Manual*

Vom ersten Quartal 2001 ab wurde die Caterpillar Produkt-Identnummer (PIN) von 8 auf 17 Zeichen geändert. Um zur Standardisierung der Produkt-Identnummer beizutragen, sind Caterpillar und andere Baumaschinenhersteller bestrebt, die aktuellste Norm zur Produkt-Identnummerierung einzuführen. Produkt-Identnummern für Baumaschinen sind durch ISO 10261 definiert. Das neue Format der Produkt-Identnummern gilt für alle Caterpillar-Maschinen und -Stromaggregate. Die Produkt-Identschilder und -Identrahmenmarkierung enthalten die aus 17 Zeichen bestehende Identnummer. Das neue Format hat folgende Abschnitte:

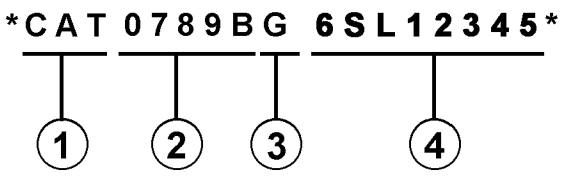

Abschnitte:

1. Caterpillars weltweiter Herstellungscode (Zeichen 1-3)

2. Modell (Zeichen 4-8)

3. Kontrollzeichen (Zeichen 9)

4. Maschinenspezifische Kennung (MIS) oder Produktsequenznummer (Zeichen 10-17). Diese wurde früher als Seriennummer bezeichnet.

Für vor dem ersten Quartal 2001 hergestellte Maschinen und Stromaggregate wird das aus 8 Zeichen bestehende PIN-Format beibehalten.

Bauteile wie z.B. Motoren, Getriebe, Achsen sowie Arbeitsgeräte werden weiterhin eine aus 8 Zeichen bestehende Seriennummer (S/N) aufweisen.

2. BESTELLEN VON ERSATZTEILEN

⚠ WARNUNG

Wenn für diese Maschine Ersatzteile benötigt werden, empfiehlt Caterpillar, ausschließlich Caterpillar-Ersatzteile oder solche zu verwenden, die die gleichen technischen Merkmale hinsichtlich Typ, Festigkeit, Werkzeugeigenschaften und die gleichen Maße aufweisen.

Bei Nichtbeachtung dieser Warnung besteht Verletzungs- oder sogar Lebensgefahr! Ferner kann Nichtbeachtung vorzeitige Ausfälle der Teile und Beschädigung der Maschine zur Folge haben.

Original Caterpillar-Ersatzteile können weltweit bei jedem Caterpillar-Händlern bestellt werden. Die umfangreichen Händlerlager enthalten normalerweise alle Teile, die Sie für Ihre Caterpillar-Maschine benötigen. Einige Händler bieten Reparatursätze, Austausch- oder werküberholte Teile an, so daß Sie eine Auswahl unter verschiedenen Reparaturmöglichkeiten treffen können. Ihre Bestellung muß folgende Angaben enthalten: Anzahl der benötigten Teile, Bestellnummer, Bezeichnung des Teils, Serien-Nr./Produkt-Ident-Nr., Ausrüstungs-Nr. und Änderungs-Nr. der Maschine, für die diese Teile benötigt werden.

3. AUFBAU DES PARTS MANUAL

Die Produktinformationen für alle Komponenten eines bestimmten Modells sind in INFORMATION ELEMENTS (Informationseinheiten) gegliedert. ENGINE ARRANGEMENT (Motorausführung) und SEAT GROUP (Fahrersitz) sind Beispiele für solche Informationseinheiten. Sie sind innerhalb jeder Gruppe alphabetisch, entsprechend der Ersatzteilbezeichnung, und zusätzlich numerisch, entsprechend der Ersatzteilnummer, geordnet.

4. INHALTSVERZEICHNIS

Das Inhaltsverzeichnis befindet sich am Anfang des Buches. Im Inhaltsverzeichnis werden die einzelnen Abschnitte des Buches aufgeführt. Die Abschnitte enthalten eine vollständige Aufstellung aller Informationseinheiten. Diese sind entsprechend ihrem Erscheinen im Buch geordnet. Das Inhaltsverzeichnis enthält Seitenangaben für Schnellverweise auf detaillierte Abbildungen und Teillisten.

ALLGEMEINE HINWEISE

5. INDEX FÜR WARTUNGSTEILE

Der Index für Wartungsteile vorn im Buch enthält die Bestellnummern, Seitenangaben, Mengenangaben und Informationen über den Einsatzbereich für die am häufigsten benötigten Ersatzteile. Die Angaben sind alphabetisch entsprechend der Teilebezeichnung geordnet.

6. INDEX

Der Index vorn im Buch enthält eine alphabetische Liste aller Informationseinheiten. Er enthält Seitenangaben für Schnellverweise auf detaillierte Abbildungen und Teillisten.

7. INDEX FÜR BESTELLNUMMERN

Hinten im Buch befindet sich ein numerischer Index, mit allen Bestellnummern und dem Hinweis auf die Seite, auf der sich die betreffende Abbildung befindet.

8. ÜBERSCHRIFTEN

Die Überschriften, die sich am Anfang jeder der Informationseinheiten befinden, enthalten Bestellnummern, Ersatzteilbezeichnungen und zusätzliche beschreibende Informationen. Produkt-Ident- und Seriennummern in den Überschriften sollten zur Auswahl der richtigen Informationen für die betreffende Maschine verwendet werden. Die Überschriften enthalten außerdem Informationen über möglichen Außendienstersatz, mögliche Baugerätekomponenten und die Baugruppe, zu der das Teil gehört.

Die erste Zeile einer Überschrift erscheint in einer größeren Schriftart, um den Anfang einer Informationseinheit zu kennzeichnen. Überschriften für zusätzliche Seiten, die zur Erläuterung einer Informationseinheit notwendig sind, erscheinen in normaler Schriftart und enthalten den Begriff "(contd.)".

9. NICHT EINZELN LIEFERBARE TEILE

In einigen Fällen ist es notwendig nicht lieferbare Teile, die selbst mit einer eigenen Teilliste im Buch vertreten sind, aufzuführen. Die Bestellnummern dieser nicht einzeln lieferbaren Teile erscheinen kursiv, wodurch angezeigt wird, daß sie nur in Verbindung mit anderen Teilen lieferbar sind.

10. REFERENZNUMMER FÜR ERSATZTEILE

Die Zahlen, die in der Spalte "Ref No" aufgeführt sind, stimmen mit den Zahlen in den beigefügten Abbildungen überein. Ein Buchstaben-Suffix kann zu einer Referenznummer hinzugefügt werden, um zu kennzeichnen, daß das Teil mit einer eigenen Teilliste im Buch aufgeführt ist. Die in der Spalte "Graphic Ref" angeführten Zahlen verweisen auf die Identifikationsnummer der Abbildung, die sich in der linken unteren Ecke der Abbildung befindet. Diese Nummer kann zusammen mit der Referenznummer des Teils angegeben werden, um die richtige Ersatzteilnummer zu ermitteln. Referenznummern können absichtlich weggelassen werden, da die Nummern der lieferbaren Ersatzteile ständig aktualisiert werden.

11. EINGERÜCKTE BEZEICHNUNGEN

Wenn eine Bezeichnung eingerückt ist, wird dadurch angezeigt, daß das Teil zu einer Baugruppe gehört, unter deren Bezeichnung es eingerückt ist.

12. REFERENZBUCHSTABEN

Falls erforderlich sind in den Abbildungen Referenzbuchstaben enthalten (z.B. A, B, C, usw.), die Leitungen und Kabelbäume von einem Punkt zum anderen verfolgen. Außerdem geben sie die Stelle an, an der getrennte Abbildungen fortgesetzt werden.

13. ABKÜRZUNGEN UND SYMBOLE

O.D. – Außendurchmesser
I.D. – Innendurchmesser
A – kein Teil dieser Gruppe
B – nach Bedarf verwenden
C – Hinweis auf eine Änderung
D – in Meter-Länge bestellen
E – in Zentimeter-Länge bestellen
F – nicht gezeigt
G – in Zoll-Länge bestellen
I – siehe Hydraulikinformationssystem
M – metrisches Teil
R – werküberholtes Teil unter Umständen lieferbar
Y – separate Abbildung
Z – nicht einzeln lieferbar

SIS *Neu im Parts Manual*

14. BESCHREIBUNG DER TYPENÄNDERUNGEN

Typ-A bezieht sich auf alle Konfigurationsänderungen, die ein zusätzliches Informationselement für Ausführung, Gruppe oder Einheit benötigen. Wenn kein Seriennummernumbruch für Typen erhältlich ist, wird in der Überschrift eine Typennummer (Typ 1, Typ 2, etc.) angegeben. Diese "Typenänderungen" sind in der Teileliste mit der Anmerkung "C" (Änderung des vorherigen Typs) versehen. Es werden nur die für dieses Ersatzteilhandbuch relevanten "Typen" angegeben. Es können zusätzliche Typen vorhanden sein, was zu "C" Anmerkungen zu einem Informationselement führen kann, wenn keine anderen Typen angegeben werden.

15. <END>

Dieses Symbol zeigt das Ende eines Informationselements an.

ANMERKUNG:

Ständig vorgenommene Verbesserungen und Weiterentwicklungen an Ihrer Maschine können Änderungen verursachen, die in der vorliegenden Ausgabe noch nicht berücksichtigt sind. Fragen zu Ihrer Caterpillar-Maschine oder diesem Ersatzteilbuch beantwortet Ihr Caterpillar-Händler.

ALLGEMEINE HINWEISE

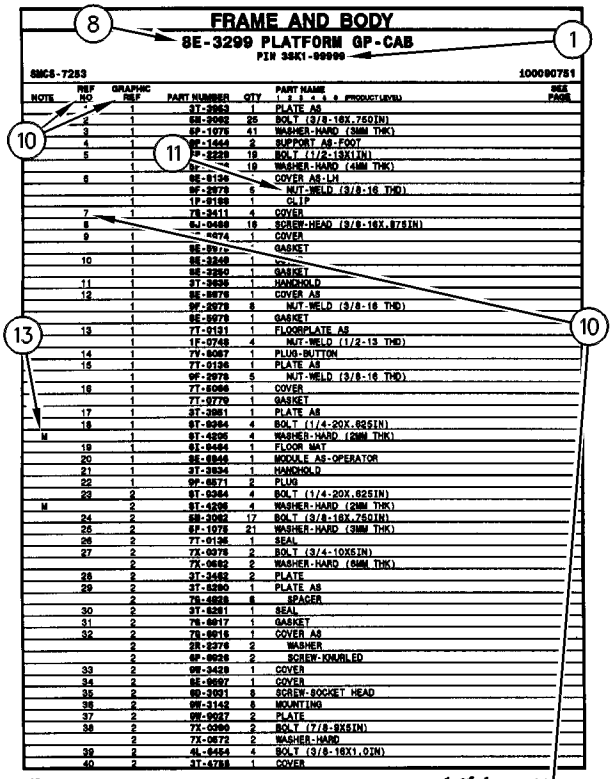

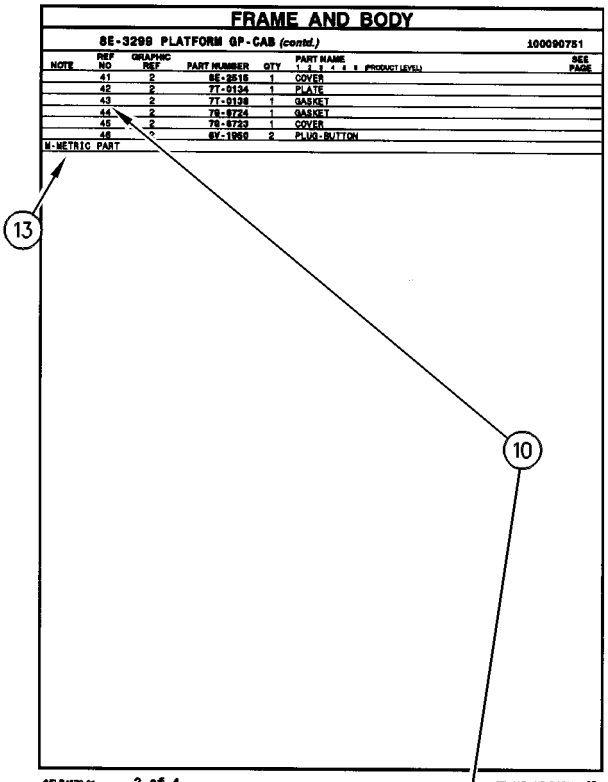

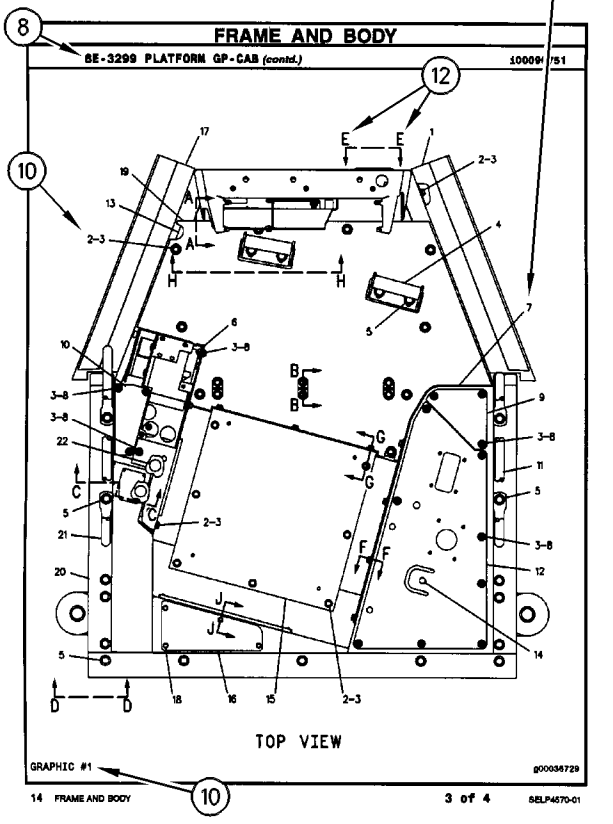

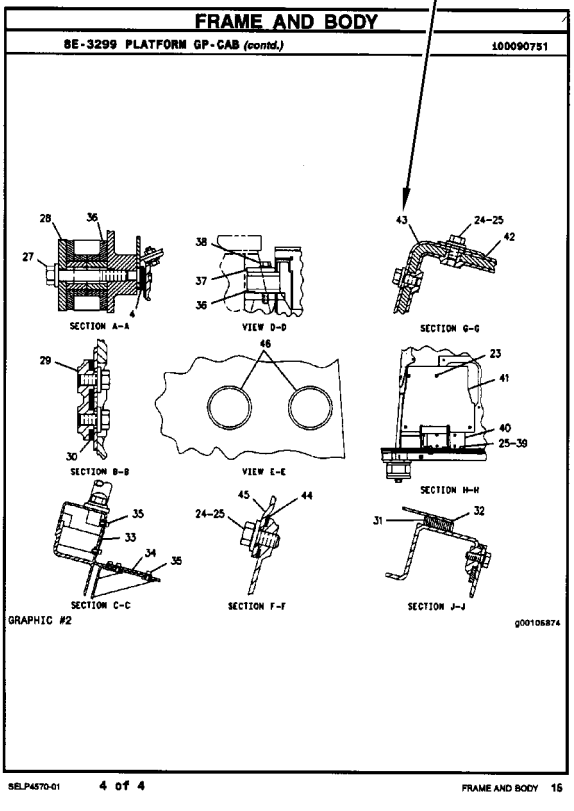

REMANUFACTURED COMPONENTS

As an option when making repairs consider Caterpillar Remanufactured Components. Components that are available through the Caterpillar Remanufactured Program are identified three ways in the parts book:

- with the letter R in the note field of the parts list
- with an R* at the beginning of the first line of the caption
- with an *R at the end of the first line of the caption

Typical components included in the Remanufacturing Program include:

ALTERNATORS
CONNECTING RODS
CRANKSHAFTS - UNDERSIZE
CRANKSHAFTS - UPGRADE TO NEW
CYLINDER HEADS
ELECTRONIC CONTROL MODULES (ECM)
ELECTRONIC SENSORS
FUEL INJECTORS
FUEL NOZZLES
FUEL PUMPS
GOVERNORS
OIL PUMPS
PISTONS
SHORT BLOCKS
STARTERS
TURBOCHARGERS - COMPLETE
TURBOCHARGER CARTRIDGES
WATER PUMPS

Caterpillar Remanufactured engines for many engine arrangements are also available.

OPTIONS DE RÉPARATION

COMPOSANTS RÉNOVÉS

Comme option de réparation, considérer les composants rénovés Caterpillar. Les composants disponibles dans le cadre du programme Caterpillar de composants rénovés sont identifiés de trois façons dans le catalogue de pièces:

- avec la lettre "R" dans l'espace note de la liste des pièces
- avec R* au début de la première ligne des légendes
- avec *R à la fin de la première ligne des légendes

Les composants suivants figurent parmi les composants typiques du programme de rénovation:

ALTERNATEURS
BIELLES
VILEBREQUINS - SOUS-DIMENSIONNÉS
VILEBREQUINS - REMIS À NEUF
CULASSES
MODULES DE COMMANDE ÉLECTRONIQUE (ECM)
CAPTEURS ÉLECTRONIQUES
INJECTEURS
TÊTES D'INJECTEURS
POMPES À CARBURANT
RÉGULATEURS
POMPES À HUILE
PISTONS
BLOCS EMBIELLÉS
DÉMARREURS
TURBOCOMPRESSEURS - COMPLETS
CARTOUCHES DE TURBOCOMPRESSEUR
POMPES À EAU

Des moteurs rénovés sont aussi disponibles pour plusieurs versions de moteur.

ALTERNATIVAS DE REPARACIÓN

COMPONENTES REMANUFACTURADOS

Al hacer reparaciones, tenga en cuenta la opción de Componentes Remanufacturados Caterpillar. Los componentes que están disponibles por medio del programa de Productos Remanufacturados Caterpillar se identifican de tres maneras en el manual de piezas:

- con la letra R en el espacio de Nota de la lista de piezas
- con una R* al comienzo de la primera línea de la leyenda
- con una *R al final de la primera línea de la leyenda

Los componentes que se incluyen típicamente en el Programa de Productos Remanufacturados son:

ALTERNADORES
BIELAS
CIGÜEÑALES - BAJOMEDIDA
CIGÜEÑALES - REMANUFACTURADOS A NUEVO
CULATAS
MÓDULOS DE CONTROL ELECTRÓNICO (ECM)
SENSORES ELECTRONICOS
INYECTORES
BOQUILLAS
BOMBAS DE COMBUSTIBLE
REGULADORES
BOMBAS DE ACEITE
PISTONES
MONOBLOQUES
MOTORES DE ARRANQUE
TURBOCOMPRESORES - COMPLETOS
NÚCLEOS DE TURBOCOMPRESOR
BOMBAS DE AGUA

También hay disponibles motores Remanufacturados Caterpillar para muchas de las configuraciones de motores.

ALTERNATIVAS DE REPARO

COMPONENTES REMANUFATURADOS

Considere o uso de Componentes Remanufaturados Caterpillar ao efetuar reparos. Os componentes disponíveis através do Programa de Remanufatura Caterpillar são identificados de três formas no manual de peças:

- com um R na área da nota da lista de peças
- com um R* no princípio da primeira linha da legenda
- com um *R no final da primeira linha da legenda

Os componentes típicos que constam no Programa de Remanufatura incluem:

ALTERNADORES
BIELAS
VIRABREQUINS - SUBMEDIDAS
VIRABREQUINS - ATUALIZAÇÃO
CABEÇOTES
MÓDULOS DE CONTROLE ELETRÔNICO (ECM)
SENSORES ELETRÔNICOS
INJETORES DE COMBUSTÍVEL
BICOS DE ABASTECIMENTO DE COMBUSTÍVEL
BOMBAS DE COMBUSTÍVEL
GOVERNADORES
BOMBAS DE ÓLEO
PISTÕES
BLOCOS BÁSICOS DO MOTOR
MOTORES DE PARTIDA
TURBOALIMENTADORES - COMPLETOS
CARTUCHOS DE TURBOALIMENTADORES
BOMBAS D'ÁGUA

Motores Remanufaturados Caterpillar também encontram-se disponíveis para diversos arranjos de motor.

REPARATURALTERNATIVEN

WERKÜBERHOLTE AT-PRODUKTE

Bei Reparaturen sollten werküberholte AT-Produkte von Caterpillar in Betracht gezogen werden. Die durch das AT-Programm von Caterpillar erhältlichen Teile sind im Parts Book auf drei verschiedene Arten gekennzeichnet:

- mit dem Buchstaben R in der Spalte NOTE der Ersatzteilliste
- mit einem R* am Anfang der ersten Zeile der Überschrift
- mit einem *R am Ende der ersten Zeile der Überschrift

Das AT-Programm umfaßt u.a. folgende Produkte:

DREHSTROMGENERATOREN
PLEUELSTANGEN
KURBELWELLEN - MIT UNTERMASS
KURBELWELLEN - MIT ORIGINALMASS
ZYLINDERKÖPFE
ELEKTRONISCHE STEUEREINHEITEN (EMC)
ELEKTRONISCHE SENSOREN
PUMPENDÜSEN
EINSPRITZDÜSEN
KRAFTSTOFFPUMPEN
DREHZAHLREGLER
ÖLPUMPEN
KOLBEN
TEILMOTOREN
ANLASSER
TURBOLADER - KOMPLETT
TURBOLADERLAUFZEUGE
KÜHLWASSERPUMPEN

Viele Motoren können durch werküberholte AT-Motoren von Caterpillar ersetzt werden.

SUPPLEMENTAL COOLANT ADDITIVES

CUSTOMER BENEFITS:

Protects against cavitation, foam, erosion, corrosion, and scale buildup in cooling systems.

- Provides measured coolant conditioner.

DESCRIPTION:

Additives deplete from the coolant with normal operation. For this reason, Supplemental Coolant Additives (SCA) must be added to all heavy duty coolants at regular intervals. In addition, when not using a fully formulated, pre-charged antifreeze, like Caterpillar's DEAC, an initial charge of SCA must be added to the cooling system. The amount of SCA added to the system is dependent on the capacity of the system.

The SCA for initial fill is provided as a liquid. SCA's for maintenance intervals are available in liquid form and as a spin-on element. (No Spin-on available for 3600 Family of Engines)

NOTE:

The amount of SCA added at initial fill is not the same as the amount added at maintenance intervals.

The coolant additive elements can be used with any ethylene or propylene glycol type antifreeze which meets ASTM D4985 or ASTM D5345 Specifications.

NOTE:

For use with standard heavy duty coolant only, not for use with Extended Life Coolant.

PARTS NEEDED:

Cooling System Capacity		Liquid SCA at Initial Fill	Liquid SCA at Maintenance*	Spin-on SCA Maintenance Element*
Liters	Gallons			
22-30	(6-8)	3P-2044 (1)	6V-3542 (1)	111-2370 (1)
30-38	(8-10)	3P-2044 (1) 6V-3542 (1)	111-2372 (1)	111-2369 (1)
38-49	(10-13)	3P-2044 (1) 8T-1589 (1)	111-2372 (1)	111-2369 (1)
49-64	(13-17)	3P-2044 (2)	8T-1589 (1)	9N-3368 (1)
64-83	(17-22)	3P-2044 (2) 8T-1589 (1)	111-2372 (1) 6V-3542 (1)	111-2371 (1)
83-114	(22-30)	3P-2044 (3) 8T-1589 (1)	3P-2044 (1)	9N-3718 (1)
114-163	(30-43)	3P-2044 (5)	3P-2044 (1) 6V-3542 (1)	111-2371 (2)
163-242	(43-64)	3P-2044 (8)	3P-2044 (2)	9N-3718 (2)

** Normal maintenance period is 250 hrs. See your Operation and Maintenance Manual for complete coolant maintenance instructions.*

( ) Indicates quantity required.

ADDITIFS POUR LIQUIDE DE REFROIDISSEMENT

AVANTAGES POUR LE CLIENT

L'additif protège contre la cavitation, la mousse, l'érosion, la corrosion et l'accumulation de dépôts dans le circuit de refroidissement.

- L'additif complémentaire fournit une quantité mesurée d'additif.

DESCRIPTION:

Les additifs s'épuisent pendant l'utilisation du moteur. C'est pourquoi l'on doit ajouter de l'additif au liquide de refroidissement/antigel pour moteurs diesel à intervalles réguliers. En plus, si l'on n'utilise pas de l'antigel entièrement formulé et pré-chargé comme le liquide de refroidissement/antigel Caterpillar pour moteurs diesel, une quantité initiale d'additif doit être ajoutée au circuit de refroidissement. La quantité d'additif à ajouter au circuit dépend de la contenance du circuit.

L'additif pour le remplissage initial est fourni sous forme liquide. L'additif pour l'entretien ultérieur est disponible sous forme liquide et sous forme d'élément à visser. (Il n'y a pas d'élément à visser pour les moteurs de la famille 3600).

NOTA:

La quantité d'additif à ajouter au remplissage initial diffère de la quantité à ajouter aux intervalles d'entretien.

Les éléments d'additif peuvent être utilisés avec tout antigel de type éthylène ou propylène-glycol conforme à la norme ASTM D4985 ou ASTM D5345.

NOTA:

A utiliser uniquement avec du liquide de refroidissement pour moteurs diesel et non avec le liquide de refroidissement longue durée.

PIÈCES NÉCESSAIRES:

Contenance du circuit de refroidissement		Additif liquide au remplissage initial	Additif liquide aux intervalles d'entretien*	Elément d'additif à visser aux intervalles d'entretien*
Litres	Gallons U.S.			
22-30	(6-8)	3P-2044 (1)	6V-3542 (1)	111-2370 (1)
30-38	(8-10)	3P-2044 (1) 6V-3542 (1)	111-2372 (1)	111-2369 (1)
38-49	(10-13)	3P-2044 (1) 8T-1589 (1)	111-2372 (1)	111-2369 (1)
49-64	(13-17)	3P-2044 (2)	8T-1589 (1)	9N-3368 (1)
64-83	(17-22)	3P-2044 (2) 8T-1589 (1)	111-2372 (1) 6V-3542 (1)	111-2371 (1)
83-114	(22-30)	3P-2044 (3) 8T-1589 (1)	3P-2044 (1)	9N-3718 (1)
114-163	(30-43)	3P-2044 (5)	3P-2044 (1) 6V-3542 (1)	111-2371 (2)
163-242	(43-64)	3P-2044 (8)	3P-2044 (2)	9N-3718 (2)

** L'intervalle d'entretien normal est de 250 heures-service. Voir le Guide d'utilisation et d'entretien pour de plus amples renseignements concernant l'entretien du circuit de refroidissement.*

( ) Indique la quantité exigée.

ADITIVOS DE REFRIGERANTE SUPLEMENTARIOS

VENTAJAS PARA EL USUARIO:

Protegen contra la cavitación, la formación de espuma, la corrosión y la acumulación de escamas en los sistemas de enfriamiento.

- Suministra un acondicionador dosificado de refrigerante.

DESCRIPCIÓN:

Los aditivos en el refrigerante se agotan con la operación normal. Por esta razón, se debe agregar Aditivo de refrigerante suplementario (SCA) a todos los refrigerantes para servicio pesado, a intervalos regulares. Además, cuando no se usa un anticongelante de precarga completo, tal como el DEAC de Caterpillar, es necesario agregar una cantidad de aditivo de refrigerante suplementario inicial al sistema de enfriamiento. La cantidad de aditivo que se debe agregar depende de la capacidad del sistema.

El SCA de llenado inicial es líquido. El que se usa para el mantenimiento está disponible tanto en líquido como en un elemento enroscable. (No hay elemento enroscable disponible para la Familia de Motores 3600).

NOTA:

La cantidad de aditivo de llenado inicial no es la misma que se agrega en los intervalos de mantenimiento.

Los elementos de aditivo de refrigerante se pueden usar con cualquier anticongelante de tipo glicol etilénico o propílico que esté de acuerdo con las especificaciones de las normas ASTM D4985 o ASTM D5345.

NOTA:

Se debe utilizar únicamente con refrigerante estándar para servicio pesado; no se debe usar con Refrigerante de Larga Duración.

PIEZAS NECESARIAS:

Capacidad del Sistema de Enfriamiento		SCA líquido de llenado inicial	SCA líquido de mantenimiento*	Elemento de mantenimiento enroscable*
litros	gal EE.UU.			
22-30	6-8	3P-2044 (1)	6V-3542 (1)	111-2370 (1)
30-38	8-10	3P-2044 (1) 6V-3542 (1)	111-2372 (1)	111-2369 (1)
38-49	10-13	3P-2044 (1) 8T-1589 (1)	111-2372 (1)	111-2369 (1)
49-64	13-17	3P-2044 (2)	8T-1589 (1)	9N-3368 (1)
64-83	17-22	3P-2044 (2) 8T-1589 (1)	111-2372 (1) 6V-3542 (1)	111-2371 (1)
83-114	22-30	3P-2044 (3) 8T-1589 (1)	3P-2044 (1)	9N-3718 (1)
114-163	30-43	3P-2044 (5)	3P-2044 (1) 6V-3542 (1)	111-2371 (2)
163-242	43-64	3P-2044 (8)	3P-2044 (2)	9N-3718 (2)

** El período normal de mantenimiento es de 250 horas. Para ver las instrucciones completas sobre el mantenimiento del refrigerante, consulte el Manual de Operación y Mantenimiento.*

( ) Indica la cantidad necesaria.

ADITIVOS SUPLEMENTARES DO LÍQUIDO ARREFECEDOR

BENEFÍCIOS PARA O CLIENTE:

Protege contra cavitação, espuma, erosão, corrosão e acúmulo de crostas nos sistemas de arrefecimento.

- Fornece uma quantidade pré-determinada de condicionador de arrefecimento.

DESCRIÇÃO:

Com a operação normal, os aditivos se esgotam do líquido arrefecedor. Por isso, Aditivos Suplementares do Líquido Arrefecedor (SCA) devem ser acrescentados a todos os líquidos arrefecedores para serviço pesado em intervalos regulares. Além disso, quando um anticongelante pré-carregado, totalmente formulado não for usado, como o DEAC Caterpillar, uma carga inicial de SCA deve ser acrescentada ao sistema de arrefecimento. A quantidade de SCA acrescentada ao sistema depende da capacidade do sistema.

O SCA para abastecimento inicial é fornecido em forma de líquido. Os aditivos suplementares (SCA) para intervalos de manutenção estão à disposição em forma líquida e como um elemento com roscas. (Exceto os Motores da Família 3600)

NOTA:

A quantidade de SCA adicionada no abastecimento inicial não é a mesma que a acrescentada nos intervalos de manutenção.

Os elementos do aditivo do líquido arrefecedor podem ser usados com qualquer tipo de anticongelante etileno ou propileno que satisfaz as Especificações ASTM D4985 ou ASTM D5345.

NOTA:

Para uso apenas com líquido arrefecedor para serviço pesado padrão, não deve ser usado com Líquido Arrefecedor de Vida Longa.

PEÇAS NECESSÁRIAS:

Capacidade do Sistema de Arrefecimento		Líquido SCA Durante Abastecimento Inicial	Líquido SCA Durante Manutenção*	Elemento de Manutenção de SCA com Roscas*
Litros	Galões			
22-30	6-8	3P-2044 (1)	6V-3542 (1)	111-2370 (1)
30-38	8-10	3P-2044 (1) 6V-3542 (1)	111-2372 (1)	111-2369 (1)
38-49	10-13	3P-2044 (1) 8T-1589 (1)	111-2372 (1)	111-2369 (1)
49-64	13-17	3P-2044 (2)	8T-1589 (1)	9N-3368 (1)
64-83	17-22	3P-2044 (2) 8T-1589 (1)	111-2372 (1) 6V-3542 (1)	111-2371 (1)
83-114	22-30	3P-2044 (3) 8T-1589 (1)	3P-2044 (1)	9N-3718 (1)
114-163	30-43	3P-2044 (5)	3P-2044 (1) 6V-3542 (1)	111-2371 (2)
163-242	43-64	3P-2044 (8)	3P-2044 (2)	9N-3718 (2)

** O período normal de manutenção é de 250 horas. Consulte o Manual de Operação e Manutenção para obter instruções completas quanto à manutenção do líquido arrefecedor.*

( ) Indica a quantidade exigida.

KÜHLMITTELZUSATZ

VORTEILE FÜR DEN KUNDEN:

Schutz gegen Kavitation, Schaumbildung, Erosion, Korrosion und Kesselsteinbildung in Kühlsystemen.

- Richtig dosierter Kühlmittelzusatz

BESCHREIBUNG:

Additive erschöpfen sich während des Motorbetriebs. Deshalb muß allen HD-Kühlmitteln regelmäßig Kühlmittelzusatz beigefügt werden. Wenn bei Erstfüllung kein vollwertiges Fertigkühlmittel, wie das Frostschutz- und Kühlmittel für Dieselmotoren von Caterpiller (DEAC), verwendet wird, muß bei Erstfüllung Kühlmittelzusatz beigefügt werden. Wieviel Kühlmittelzusatz beigefügt werden muß, hängt vom Inhalt des Kühlsystems ab.

Für Erstfüllung ist Kühlmittelzusatz nur in flüssiger Form erhältlich. Für Wartungsintervalle ist Kühlmittelzusatz in flüssiger Form und als Zusatzelement erhältlich. (Für die Motorbaureihe 3600 sind keine Zusatzelemente erhältlich.)

ANMERKUNG:

Die Kühlmittelmenge bei Erstfüllung ist nicht die gleiche Menge, die bei Wartungsintervallen beigefügt werden muß.

Die Kühlmittelzusatzelemente können mit allen Frostschutzmitteln auf Ethylen- oder Propylenglykolbasis verwendet werden, die den Standards nach ASTM D4985 oder ASTM D5345 entsprechen.

ANMERKUNG:

Den Kühlmittelzusatz nicht mit Langzeitkühlmittel (ELC) von Caterpillar verwenden. Der Kühlmittelzusatz ist nur für HD-Kühlmittel bestimmt.

TEILEBEZEICHNUNG:

Kühlsysteminhalt		Kühlmittelzusatz bei Erstfüllung	Flüssiger Kühlmittelzusatz bei Wartung*	Kühlmittelzusatzelement bei Wartung*
Liter	US-Gall.			
22-30	(6-8)	3P-2044 (1)	6V-3542 (1)	111-2370 (1)
30-38	(8-10)	3P-2044 (1) 6V-3542 (1)	111-2372 (1)	111-2369 (1)
38-49	(10-13)	3P-2044 (1) 8T-1589 (1)	111-2372 (1)	111-2369 (1)
49-64	(13-17)	3P-2044 (2)	8T-1589 (1)	9N-3368 (1)
64-83	(17-22)	3P-2044 (2) 8T-1589 (1)	111-2372 (1) 6V-3542 (1)	111-2371 (1)
83-114	(22-30)	3P-2044 (3) 8T-1589 (1)	3P-2044 (1)	9N-3718 (1)
114-163	(30-43)	3P-2044 (5)	3P-2044 (1) 6V-3542 (1)	111-2371 (2)
163-242	(43-64)	3P-2044 (8)	3P-2044 (2)	9N-3718 (2)

** Der normale Wartungsintervall beträgt 250 Betriebsstunden. Für vollständige Anweisungen zur Wartung des Kühlsystems, siehe Betriebs- und Wartungshandbuch.*

( ) Erforderliche Anzahl

MAINTENANCE PARTS

DESCRIPTION	PART NUMBER	QTY	WHERE USED	PAGE
AIR INLET AND EXHAUST SYSTEM				
FILTER ELEMENT AS-AIR (PRIMARY)	110-6326	1	AIR CLEANER GP	46
FILTER ELEMENT AS-AIR (SECONDARY)	110-6331	1	AIR CLEANER GP	46
BASIC ENGINE				
CAP (ENGINE OIL)	110-2570	1	DRAIN GP-ENGINE OIL	16
CAP-FILLER (ENGINE OIL)	233-5498	1	HOUSING GP-FRONT	21
CAP-OIL FILLER (ENGINE)	199-2182	1	COVER GP-VALVE MECHANISM	10
GASKET (VALVE COVER)	233-5483	1	COVER GP-VALVE MECHANISM	10
KEY	094-4628	1	CAMSHAFT GP	8
		2	CRANKSHAFT GP	11
PLUG-DRAIN (ENGINE OIL PAN)	5I-7833	1	PAN GP-OIL	25
V-BELT	235-4972	1	BELT GP	7
COOLING SYSTEM				
CAP AS-RADIATOR	036-1865	1	RADIATOR & HYD OIL COOLER GP	44
CAP-VENTED (COOLANT RECOVERY)	169-6715	1	LINES GP-WATER	40
GASKET-COVER (WATER PUMP)	103-9750	1	PUMP GP-WATER	43
GASKET (WATER TEMPERATURE REGULATOR)	235-4959	1	LINES GP-WATER	39
REGULATOR AS-WATER TEMPERATURE (THERMOSTAT)	235-4960	1	LINES GP-WATER	39

MAINTENANCE PARTS

DESCRIPTION	PART NUMBER	QTY	WHERE USED	PAGE
ELECTRICAL AND STARTING SYSTEM				
BATTERY (12-VOLT, MAINTENANCE FREE)	230-6368	1	BATTERY & WIRING GP	73
BELT-DRIVE (WARNING BEACON)	9X-8139	1	LAMP GP-WARNING BEACON	86
ELEMENT AS-JACKET WATER HEATER	225-5535	1	HEATER GP-JACKET WATER	78
	225-5541	1	HEATER GP-JACKET WATER	77
FUSE AS (MAIN POWER)	258-4136	1	WIRING GP-CAB	101
FUSE AS (ROADING)	258-4134	1	LIGHTING GP-ROADING	88
FUSE (10-AMPERE)	113-8490	7	WIRING GP-CAB	101
FUSE (100-AMPERE)	235-1845	1	BATTERY & WIRING GP	73
FUSE (15-AMPERE)	113-8491	10	WIRING GP-CAB	101
FUSE (20-AMPERE)	267-2680	2	WIRING GP-CAB	101
	113-8492	3	WIRING GP-CAB	101
	267-2680	2	COVER GP-FUSE PANEL	75
		1	RELAY AS	92
FUSE (60-AMPERE)	267-2701	1	RELAY AS	92
GLOW PLUG	107-3659	4	GLOW PLUG GP	76
KEY AS-ELECTRONIC (SECURITY)	206-5162	2	KIT-SECURITY	80
LAMP GP-HEAD & SIGNAL (HIGH, LOW BEAM, LH)	195-0190	1	LIGHTING GP-ROADING	88
LAMP GP-HEAD & SIGNAL (HIGH, LOW BEAM, RH)	195-0189	1	LIGHTING GP-ROADING	88
LAMP-HEAD (12-VOLT, 60/55-WATT)	9W-3324	1	LAMP GP-HEAD & SIGNAL	84
		1	LAMP GP-HEAD & SIGNAL	85
LAMP (12-VOLT, 21-WATT) (AMBER)	226-4560	1	LAMP GP-HEAD & SIGNAL	84
		1	LAMP GP-HEAD & SIGNAL	85
LAMP (12-VOLT, 5-WATT) (CLEAR)	226-4561	1	LAMP GP-HEAD & SIGNAL	84
		1	LAMP GP-HEAD & SIGNAL	85
LAMP (12-VOLT, 55-WATT)	9W-0607	1	LAMP GP-FLOOD	83
		1	WIRING GP-MACHINE	109
LAMP (12-VOLT, 55-WATT, HID)	9X-8118	1	LAMP GP-WARNING BEACON	86
ENGINE ARRANGEMENT				
BELT GP	287-6138	1	ENGINE AR-PRIMARY	5
FRAME AND BODY				
LAMP (12-VOLT, 10-WATT)	195-9712	1	MOUNTING GP-REGISTRATION	176
PLUG-MAGNETIC (FRAME)	3S-9182	4	FRAME & MTG GP-MACHINE	166
FUEL SYSTEM				
CAP-FUEL	304-3885	1	TANK GP-FUEL	69
FILTER AS-WATER SEP & FUEL	233-9856	1	LINES GP-FUEL PRM & FILTER	63
HYDRAULIC SYSTEM				
BREATHER (HYDRAULIC TANK)	258-2829	1	TANK GP-HYDRAULIC	265
CAP AS-FILLER (HYDRAULIC TANK)	142-8937	1	TANK GP-HYDRAULIC	265
SCREEN (HYDRAULIC)	195-6768	1	MANIFOLD & LINES GP-ACCUM	247
STRAINER AS (HYDRAULIC TANK)	258-2804	1	TANK GP-HYDRAULIC	266
LUBRICATION SYSTEM				
BREATHER	287-6020	1	BREATHER GP	33
FILTER AS-OIL (ENGINE)	1R-0734	1	FILTER GP-ENGINE OIL	35
STRAINER-OIL (ENGINE)	233-5494	1	FILTER GP-ENGINE OIL	36

MAINTENANCE PARTS

DESCRIPTION	PART NUMBER	QTY	WHERE USED	PAGE
OPERATOR STATION				
BLADE AS-WIPER (CAB DOOR)	8Y-4615	1	DOOR GP-CAB	395
		1	DOOR GP-CAB	398
CAP-VENTED (WASHER)	258-3296	1	DOOR GP-CAB	391
		1	DOOR GP-CAB	393
		1	KIT-CAB DOOR & MOUNTING	414
		1	KIT-CAB DOOR & MOUNTING	415
FILTER-CAB AIR (FRESH)	265-6619	1	DUCT & FILTER GP-CAB AIR	402
		1	KIT-AIR COND & HEATER INSTL	411
		1	KIT-CAB HEATER & MOUNTING	416
FILTER-CAB AIR (RECIRCULATION)	265-6618	1	DUCT & FILTER GP-CAB AIR	402
		1	KIT-AIR COND & HEATER INSTL	411
		1	KIT-CAB HEATER & MOUNTING	416
LAMP (12-VOLT) (MINIATURE)	210-8754	1	PANEL GP-INSTRUMENT	437
V-BELT (REFRIGERANT)	258-3539	1	COMPRESSOR & MTG GP-REFRIG	372
		1	KIT-AIR COND & HEATER INSTL	411
		1	KIT-AIR CONDITIONER INSTL	413
POWER TRAIN				
FILTER AS-OIL (ADVANCED EFFICIENCY) (HYDRAULIC)	1G-8878	1	FILTER GP-OIL	122
WORK TOOLS				
CAP AS (WATER TANK)	192-2606	1	TANK GP-WATER	360
FITTING-GREASE (1/8-27 THD)	3B-8488	4	GRAPPLE GP-UTILITY	345
SCREEN (WATER TANK)	119-1414	1	STRAINER GP-WATER	357
STRAINER (WATER TANK FILL)	7R-0476	1	TANK & MTG GP-WATER	358

PIÈCES DE RECHANGE

DESCRIPTION	NUMÉRO DE PIECÈS	QTÉ	DOMAINE D'APPLICATION	PAGE
CHÂSSIS ET BENNE				
AMPOULE (12V, 10W)	195-9712	1	MONTAGE - IMMATRICULATION (ASS)	176
BOUCHON AIMANTÉ (CHÂSSIS)	3S-9182	4	BÂTI DE MACHINE ET MONTAGE (ASS)	166
CIRCUIT D'ADMISSION D'AIR ET D'ÉCHAPPEMENT				
ÉLÉMENT DE FILTRE À AIR (ENS) (PRINCIPAL)	110-6326	1	FILTRE A AIR (ASS)	46
ÉLÉMENT DE FILTRE À AIR (ENS) (SECONDAIRE)	110-6331	1	FILTRE A AIR (ASS)	46
CIRCUIT DE CARBURANT				
BOUCHON DE CARBURANT	304-3885	1	RÉSERVOIR DE CARBURANT (ASS)	69
FILTRE - SÉPARATEUR D'EAU ET DE CARBURANT (ENS)	233-9856	1	CANALISATIONS DE FILTRE ET D'AMORÇAGE DE CARBURANT (ASS)	63
CIRCUIT DE GRAISSAGE				
CRÉPINE D'HUILE (MOTEUR)	233-5494	1	FILTRE À HUILE MOTEUR (ASS)	36
FILTRE À HUILE (ENS) (MOTEUR)	1R-0734	1	FILTRE À HUILE MOTEUR (ASS)	35
RENIFLARD	287-6020	1	RENIFLARD (ASS)	33
CIRCUIT DE REFROIDISSEMENT				
BOUCHON À ÉVENT (RÉSERVOIR D'EXPANSION DU LIQUIDE DE REFROIDISSEMENT)	169-6715	1	CANALISATIONS D'EAU (ASS)	40
BOUCHON DE RADIATEUR (ENS)	036-1865	1	RADIATEUR ET REFROIDISSEUR D'HUILE HYDRAULIQUE (ASS)	44
JOINT DE COUVERCLE (POMPE À EAU)	103-9750	1	POMPE A EAU (ASS)	43
JOINT PLAT (RÉGULATEUR DE TEMPÉRATURE D'EAU)	235-4959	1	CANALISATIONS D'EAU (ASS)	39
RÉGULATEUR DE TEMPÉRATURE D'EAU (ENS) (THERMOSTAT)	235-4960	1	CANALISATIONS D'EAU (ASS)	39

PIÈCES DE RECHANGE

DESCRIPTION	NUMÉRO DE PIECÈS	QTÉ	DOMAINE D'APPLICATION	PAGE
CIRCUIT ÉLECTRIQUE ET DE DÉMARRAGE				
AMPOULE (PROJECTEUR AU XÉNON 12V, 55W)	9X-8118	1	LAMPE - GYROPHARE (ASS)	86
AMPOULE (12-V, 5-W) (EFFACEMENT)	226-4561	1	LAMPE - PHARE ET CLIGNOTANT	84
		1	LAMPE - PHARE ET CLIGNOTANT	85
AMPOULE (12V, 21W) (AMBRE)	226-4560	1	LAMPE - PHARE ET CLIGNOTANT	84
		1	LAMPE - PHARE ET CLIGNOTANT	85
AMPOULE (12V, 55W)	9W-0607	1	CABLAGE DE LA MACHINE (ASS)	109
		1	LAMPE - PHARE (ASS)	83
BATTERIE (12V, SANS ENTRETIEN)	230-6368	1	BATTERIE ET CÂBLAGE	73
BOUGIE DE PRECHAUFFAGE	107-3659	4	BOUGIE DE PRÉCHAUFFAGE (ASS)	76
CLÉ ÉLECTRONIQUE (ENS) (SÉCURITÉ)	206-5162	2	KIT DE SÉCURITÉ	80
ÉLÉMENT DU RÉCHAUFFEUR D'EAU DES CHEMISES (ENS)	225-5535	1	EAU DES CHEMISES - RECHAUFFEUR (ASS)	78
	225-5541	1	EAU DES CHEMISES - RECHAUFFEUR (ASS)	77
ENTRAÎNEMENT POUR COURROIE (GYROPHARE)	9X-8139	1	LAMPE - GYROPHARE (ASS)	86
FUSIBLE (ENS) (DÉPLACEMENT ROUTIER)	258-4134	1	ÉCLAIRAGE - FEUX DE ROUTE (ASS)	88
FUSIBLE (ENS) (PUISSANCE PRINCIPALE)	258-4136	1	CABLAGE DE CABINE (ASS)	101
FUSIBLE (10A)	113-8490	7	CABLAGE DE CABINE (ASS)	101
FUSIBLE (100 AMPÈRES)	235-1845	1	BATTERIE ET CÂBLAGE	73
FUSIBLE (15A)	113-8491	10	CABLAGE DE CABINE (ASS)	101
FUSIBLE (20A)	113-8492	3	CABLAGE DE CABINE (ASS)	101
	267-2680	2	CABLAGE DE CABINE (ASS)	101
		1	RELAIS (ENS)	92
		2	COUVERCLE - PANNEAU DE FUSIBLES (ASS)	75
FUSIBLE (60A)	267-2701	1	RELAIS (ENS)	92
LAMPE - FEUX AV (12-VOLTS, 60/55-WATTS)	9W-3324	1	LAMPE - PHARE ET CLIGNOTANT	84
		1	LAMPE - PHARE ET CLIGNOTANT	85
LAMPE - PHARE ET CLIGNOTANT (POUTRE ÉLEVÉE, BASSE, DROITE)	195-0189	1	ÉCLAIRAGE - FEUX DE ROUTE (ASS)	88
LAMPE - PHARE ET CLIGNOTANT (POUTRE ÉLEVÉE, BASSE, GAUCHE)	195-0190	1	ÉCLAIRAGE - FEUX DE ROUTE (ASS)	88
CIRCUIT HYDRAULIQUE				
BOUCHON DE GOULOTTE DE REMPLISSAGE (ENS) (RÉSERVOIR HYDRAULIQUE)	142-8937	1	RÉSERVOIR HYDRAULIQUE (ASS)	265
CREPINE (ENS) (RÉSERVOIR HYDRAULIQUE)	258-2804	1	RÉSERVOIR HYDRAULIQUE (ASS)	266
ÉCRAN (HYDRAULIQUE)	195-6768	1	COLLECTEUR ET CANALISATIONS (ASS)-ACCUM	247
RENIFLARD (RÉSERVOIR HYDRAULIQUE)	258-2829	1	RÉSERVOIR HYDRAULIQUE (ASS)	265
MOTEUR COMPLET				
COURROIE (ASS)	287-6138	1	MOTEUR (VERSION PRINCIPALE)	5

PIÈCES DE RECHANGE

DESCRIPTION	NUMÉRO DE PIECÈS	QTÉ	DOMAINE D'APPLICATION	PAGE
MOTEUR DE BASE				
BOUCHON DE GOULOTTE DE REMPLISSAGE D'HUILE (MOTEUR)	199-2182	1	CACHE-SOUPAPES (ASS)	10
BOUCHON DE GOULOTTE DE REMPLISSAGE (HUILE MOTEUR)	233-5498	1	CARTER AV (ASS)	21
BOUCHON DE VIDANGE (CARTER D'HUILE MOTEUR)	5I-7833	1	HUILE MOTEUR - CARTER (ASS)	25
CHAPEAU (HUILE MOTEUR)	110-2570	1	VIDANGE-HUILE DE MOTEUR (ASS)	16
CLÉ	094-4628	1	ARBRE A CAMES (ASS)	8
		2	VILEBREQUIN (ASS)	11
COURROIE TRAPEZOIDALE	235-4972	1	COURROIE (ASS)	7
JOINT PLAT (CACHE-SOUPAPES)	233-5483	1	CACHE-SOUPAPES (ASS)	10
OUTILS DE TRAVAIL				
CHAPEAU (ENS) (RÉSERVOIR D'EAU)	192-2606	1	RÉSERVOIR D'EAU (ASS)	360
CREPINE (REMPLISSAGE RÉSERVOIR D'EAU)	7R-0476	1	RÉSERVOIR D'EAU ET MONTAGE (ASS)	358
ÉCRAN (RÉSERVOIR D'EAU)	119-1414	1	TAMIS D'EAU (ASS)	357
GRAISSEUR (FILET 1/8-27)	3B-8488	4	PINCE-RÉSEAU PUBLIC (ASS)	345
POSTE DE CONDUITE				
AMPOULE (12 VOLTS) (MINIATURE)	210-8754	1	TABLEAU DE BORD (ASS)	437
BALAI D'ESSUIE-GLACE (ENS) (PORTE DE CABINE)	8Y-4615	1	PORTIÈRE DE CABINE (ASS)	395
		1	PORTIÈRE DE CABINE (ASS)	398
BOUCHON À ÉVENT (RONDELLE)	258-3296	1	KIT DE PORTE DE CABINE ET MONTAGE	414
		1	KIT DE PORTE DE CABINE ET MONTAGE	415
		1	PORTIÈRE DE CABINE (ASS)	391
		1	PORTIÈRE DE CABINE (ASS)	393
COURROIE TRAPEZOIDALE (RÉFRIGÉRANT)	258-3539	1	COMPRESSEUR ET MONTAGE - RÉFRIGÉRANT (ASS)	372
		1	KIT DE MONTAGE DE CLIMATISEUR	413
		1	KIT DE MONTAGE DE CLIMATISEUR ET CHAUFFAGE	411
FILTRE À AIR DE CABINE (FRAIS)	265-6619	1	CONDUIT ET FILTRE À AIR DE CABINE (ASS)	402
		1	KIT DE CHAUFFAGE DE CABINE ET MONTAGE	416
		1	KIT DE MONTAGE DE CLIMATISEUR ET CHAUFFAGE	411
FILTRE À AIR DE CABINE (RECIRCULATION)	265-6618	1	CONDUIT ET FILTRE À AIR DE CABINE (ASS)	402
		1	KIT DE CHAUFFAGE DE CABINE ET MONTAGE	416
		1	KIT DE MONTAGE DE CLIMATISEUR ET CHAUFFAGE	411
TRANSMISSION				
FILTRE À HUILE (ENS) (EFFICACITÉ AVANCÉE) (HYDRAULIQUE)	1G-8878	1	FILTRE A HUILE (ASS)	122

PIEZAS DE MANTENIMIENTO

DESCRIPCION	NUMERO DE PIEZA	CANT	SE UTILIZA EN	PAGINA
BASTIDOR Y CAJA				
LÁMPARA (12 VOLTIOS, 10 VATIOS)	195-9712	1	MONTAJE-REGISTRO (GR)	176
TAPÓN MAGNÉTICO (BASTIDOR)	3S-9182	4	BASTIDOR Y MONTAJE (GR)-MAQUINA	166
CONFIGURACION DE MOTOR				
*BELT GP	287-6138	1	MOTOR PRIMARIO (CONFIG)	5
ESTACION DEL OPERADOR				
CORREA TRAPEZOIDAL (REFRIGERANTE)	258-3539	1	COMPRESOR DE REFRIGERANTE Y GRUPO DE MONTAJE	372
		1	JUEGO DE INSTALACIÓN DE ACONDICIONADOR DE AIRE	413
		1	JUEGO DE INSTALACIÓN DEL ACONDICIONADOR DE AIRE Y CALENTADOR	411
FILTRO DE AIRE DE CABINA (FRESCO)	265-6619	1	*DUCT & FILTER GP-CAB AIR	402
		1	JUEGO DE CALENTADOR DE CABINA Y MONTAJE	416
		1	JUEGO DE INSTALACIÓN DEL ACONDICIONADOR DE AIRE Y CALENTADOR	411
FILTRO DE AIRE DE CABINA (RECIRCULACIÓN)	265-6618	1	*DUCT & FILTER GP-CAB AIR	402
		1	JUEGO DE CALENTADOR DE CABINA Y MONTAJE	416
		1	JUEGO DE INSTALACIÓN DEL ACONDICIONADOR DE AIRE Y CALENTADOR	411
HOJA DE LIMPIAPARABRISAS (CONJ) (PUERTA, CABINA)	8Y-4615	1	PUERTA DE CABINA	395
		1	PUERTA DE CABINA	398
LÁMPARA (12 VOLTIOS) (MINIATURA)	210-8754	1	TABLERO DE INSTRUMENTOS (GR)	437
TAPA CON RESPIRADERO (ARANDELA)	258-3296	1	JUEGO, PUERTA DE CABINA Y MONTAJE	414
		1	JUEGO, PUERTA DE CABINA Y MONTAJE	415
		1	PUERTA DE CABINA	391
		1	PUERTA DE CABINA	393
HERRAMIENTAS				
COLADOR (LLENADO DEL TANQUE DE AGUA)	7R-0476	1	MONTAJE DEL TANQUE DE AGUA (GR)	358
CONEXIÓN DE ENGRASE (ROSCA DE 1/8-27)	3B-8488	4	GARFIO DE UTILIDAD (GR)	345
REJILLA (TANQUE DE AGUA)	119-1414	1	COLADOR DEL AGUA (GR)	357
TAPÓN (CONJ) (TANQUE DE AGUA)	192-2606	1	TANQUE DEL AGUA (GR)	360

* NO HAY TRADUCCION DISPONIBLE EN EL MOMENTO DE LA IMPRESION

PIEZAS DE MANTENIMIENTO

DESCRIPCION	NUMERO DE PIEZA	CANT	SE UTILIZA EN	PAGINA
MOTOR BASICO				
CORREA TRAPEZOIDAL	235-4972	1	*BELT GP	7
EMPAQUETADURA (TAPA DE VÁLVULA)	233-5483	1	TAPA DEL MECANISMO DE VÁLVULAS (GR)	10
LLAVE	094-4628	1	ÁRBOL DE LEVAS (GR)	8
		2	CIGÜEÑAL (GR)	11
TAPA (ACEITE DEL MOTOR)	110-2570	1	DRENAJE DEL ACEITE DE MOTOR	16
TAPA DEL TUBO DE LLENADO (ACEITE DEL MOTOR)	233-5498	1	CAJA DELANTERA (GR)	21
TAPA DEL TUBO DE LLENADO DE ACEITE (MOTOR)	199-2182	1	TAPA DEL MECANISMO DE VÁLVULAS (GR)	10
TAPÓN DE DRENAJE (COLECTOR DE ACEITE DEL MOTOR)	5I-7833	1	CÁRTER - COLECTOR DEL (GR)	25

* NO HAY TRADUCCION DISPONIBLE EN EL MOMENTO DE LA IMPRESION

PIEZAS DE MANTENIMIENTO

DESCRIPCION	NUMERO DE PIEZA	CANT	SE UTILIZA EN	PAGINA
SISTEMA DE ARRANQUE ELECTRICO				
BATERÍA (12-VOLTIOS, LIBRE DE MANTENIMIENTO)	230-6368	1	BATERÍA Y CABLES (GR)	73
BUJÍA INCANDESCENTE	107-3659	4	BUJÍA INCANDESCENTE (GR)	76
CONJUNTO DE FUSIBLE (CORRIENTE PRINCIPAL)	258-4136	1	CABLES DE LA CABINA (GR)	101
CONJUNTO DE FUSIBLE (DESPLAZAMIENTO POR CARRETERA)	258-4134	1	LUCES DE DESPLAZAMIENTO (GR)	88
CONJUNTO DE LLAVE, ELECTRONICA (SEGURIDAD)	206-5162	2	*KIT-SECURITY	80
ELEMENTO DEL CALENTADOR DEL AGUA DE LAS CAMISAS	225-5535	1	AGUA DE LAS CAMISAS - CALENTADOR DEL (GR)	78
	225-5541	1	AGUA DE LAS CAMISAS - CALENTADOR DEL (GR)	77
FUSIBLE (10-AMPERIOS)	113-8490	7	CABLES DE LA CABINA (GR)	101
FUSIBLE (100-AMPERIOS)	235-1845	1	BATERÍA Y CABLES (GR)	73
FUSIBLE (15 AMPERIOS)	113-8491	10	CABLES DE LA CABINA (GR)	101
FUSIBLE (20-AMPERIOS)	113-8492	3	CABLES DE LA CABINA (GR)	101
	267-2680	2	CABLES DE LA CABINA (GR)	101
		1	RELÉ (CONJ)	92
		2	CUBIERTO DEL PANEL DE FUSIBLES (GR)	75
FUSIBLE (60 AMPERIOS)	267-2701	1	RELÉ (CONJ)	92
LÁMPARA DE FARO DELANTERO (*12-VOLT, 60/55-WATT)	9W-3324	1	LÁMPARA DE LUZ DELANTERA Y DE SEÑAL (GR)	84
		1	LÁMPARA DE LUZ DELANTERA Y DE SEÑAL (GR)	85
LÁMPARA DE LUZ DELANTERA Y DE SEÑAL (GR) (LUZ ALTA Y BAJA, DERECHA)	195-0189	1	LUCES DE DESPLAZAMIENTO (GR)	88
LÁMPARA DE LUZ DELANTERA Y DE SEÑAL (GR) (LUZ ALTA Y BAJA, IZQUIERDA)	195-0190	1	LUCES DE DESPLAZAMIENTO (GR)	88
LÁMPARA (12 VLOTIOS, 5 VATIOS) (SERVICIO)	226-4561	1	LÁMPARA DE LUZ DELANTERA Y DE SEÑAL (GR)	84
		1	LÁMPARA DE LUZ DELANTERA Y DE SEÑAL (GR)	85
LÁMPARA (12 VOLTIOS, 21 VATIOS) (AMBAR)	226-4560	1	LÁMPARA DE LUZ DELANTERA Y DE SEÑAL (GR)	84
		1	LÁMPARA DE LUZ DELANTERA Y DE SEÑAL (GR)	85
LÁMPARA (12 VOLTIOS, 55 VATIOS)	9W-0607	1	REFLECTOR (GR)	83
		1	CABLES DE LA MÁQUINA (GR)	109
LÁMPARA (12 VOLTIOS, 55 VATIOS, HID)	9X-8118	1	LÁMPARA DE BALIZA DE ADVERTENCIA (GR)	86
MANDO DE CORREA (BALIZA DE ADVERTENCIA)	9X-8139	1	LÁMPARA DE BALIZA DE ADVERTENCIA (GR)	86

* NO HAY TRADUCCION DISPONIBLE EN EL MOMENTO DE LA IMPRESION

PIEZAS DE MANTENIMIENTO

DESCRIPCION	NUMERO DE PIEZA	CANT	SE UTILIZA EN	PAGINA
SISTEMA DE COMBUSTIBLE				
FILTRO DE COMBUSTIBLE Y SEPARADOR DE AGUA (CONJ)	233-9856	1	TUBERIAS (GR) -COMBUSTIBLE PRIMARIO Y FILTRO	63
TAPA PARA EL COMBUSTIBLE	304-3885	1	COMBUSTIBLE - TANQUE DE (GR)	69
SISTEMA DE ENFRIAMIENTO				
(CONJ) REGULADOR, TEMPERATURA DEL AGUA (*THERMOSTAT)	235-4960	1	TUBERÍAS DEL AGUA (GR)	39
EMPAQUETADURA (REGULADOR DE TEMPERATURA DEL AGUA)	235-4959	1	TUBERÍAS DEL AGUA (GR)	39
JUNTA DE LA TAPA DE VÁLVULAS (BOMBA DE AGUA)	103-9750	1	BOMBA DE AGUA (GR)	43
TAPA CON RESPIRADERO (RECUPERACIÓN DE REFRIGERANTE)	169-6715	1	TUBERÍAS DEL AGUA (GR)	40
TAPA DE RADIADOR (CONJ)	036-1865	1	RADIADOR Y ENFRIADOR DE ACEITE HIDRÁULICO (GR)	44
SISTEMA DE ESCAPE Y ADMISION DE AIRE				
ELEMENTO DEL FILTRO DE AIRE (CONJ) (PRIMARIO)	110-6326	1	FILTRO DE AIRE (GR)	46
ELEMENTO DEL FILTRO DE AIRE (CONJ) (SECUNDARIO)	110-6331	1	FILTRO DE AIRE (GR)	46
SISTEMA DE LUBRICACION				
COLADOR DE ACEITE (MOTOR)	233-5494	1	FILTRO DE ACEITE DEL MOTOR (GR)	36
FILTRO DE ACEITE (CONJ) (MOTOR)	1R-0734	1	FILTRO DE ACEITE DEL MOTOR (GR)	35
RESPIRADERO	287-6020	1	RESPIRADERO (GR)	33
SISTEMA HIDRAULICO				
COLADOR (CONJ) (TANQUE HIDRÁULICO)	258-2804	1	TANQUE HIDRÁULICO (GR)	266
REJILLA (HIDRÁULICO)	195-6768	1	*MANIFOLD & LINES GP-ACCUM	247
RESPIRADERO (TANQUE HIDRÁULICO)	258-2829	1	TANQUE HIDRÁULICO (GR)	265
TAPA DE LLENADO (CONJ) (TANQUE HIDRAULICO)	142-8937	1	TANQUE HIDRÁULICO (GR)	265
TREN DE FUERZA				
FILTRO DE ACEITE (CONJ) (EFICIENCIA AVANZADA) (HIDRÁULICO)	1G-8878	1	FILTRO DE ACEITE (GR)	122

* NO HAY TRADUCCION DISPONIBLE EN EL MOMENTO DE LA IMPRESION

PEÇAS DE MANUTENÇÃO

DESCRIÇÃO	NÚMERO DE PEÇA	QUANT	UTILIZADA EM	PÁGINA
ARRANJO DO MOTOR				
CORREIA	287-6138	1	MOTOR PRIMÁRIO	5
CHASSI E CARROCERIA				
BUJÃO MAGNÉTICO (ARMAÇÃO)	3S-9182	4	ARMAÇÃO E MONTAGEM - MÁQUINA	166
LÂMPADA (12-VOLTS, 10-WATTS)	195-9712	1	MONTAGEM DA PLACA DE REGISTRO	176
FERRAMENTAS DE TRABALHO				
GRAXEIRA (ROSCA 1/8-27 POL)	3B-8488	4	GARRA - SERVIÇOS PÚBLICOS	345
TAMPA (TANQUE DE ÁGUA)	192-2606	1	TANQUE DE ÁGUA	360
TELA FILTRANTE (ENCHIMENTO DO TANQUE DE ÁGUA)	7R-0476	1	TANQUE DE ÁGUA E MONTAGEM	358
TELA FILTRANTE (TANQUE DE ÁGUA)	119-1414	1	TELA FILTRANTE - ÁGUA	357
MOTOR BÁSICO				
BUJÃO DO DRENO (CÁRTER DE ÓLEO DO MOTOR)	5I-7833	1	CÁRTER DO ÓLEO DO MOTOR	25
CHAVE	094-4628	1	EIXO-COMANDO DE VÁLVULA	8
		2	VIRABREQUIM	11
CORREIA EM V	235-4972	1	CORREIA	7
JUNTA (MECANISMO DAS VÁLVULAS - TAMPA)	233-5483	1	TAMPA - MECANISMO DAS VÁLVULAS	10
TAMPA - BOCAL DE ENCHIMENTO DE ÓLEO (MOTOR)	199-2182	1	TAMPA - MECANISMO DAS VÁLVULAS	10
TAMPA - BOCAL DE ENCHIMENTO (ÓLEO DO MOTOR)	233-5498	1	CAIXA DIANTEIRA	21
TAMPA (ÓLEO DO MOTOR)	110-2570	1	DRENO - ÓLEO DO MOTOR	16

PEÇAS DE MANUTENÇÃO

DESCRIÇÃO	NÚMERO DE PEÇA	QUANT	UTILIZADA EM	PÁGINA
POSTO DO OPERADOR				
CORREIA EM V (REFRIGERANTE)	258-3539	1	COMPRESSOR DE REFRIGERANTE E MONTAGEM	372
		1	JOGO-INSTALAÇÃO DO CONDICIONADOR DE AR	413
		1	JOGO-INSTALAÇÃO DO CONDICIONADOR DE AR E AQUECEDOR	411
FILTRO DE AR DE CABINA (FRESCO)	265-6619	1	DUTO E FILTRO-AR DA CABINE	402
		1	JOGO-AQUECEDOR DA CABINE E MONTAGEM	416
		1	JOGO-INSTALAÇÃO DO CONDICIONADOR DE AR E AQUECEDOR	411
FILTRO DE AR DE CABINA (RECIRCULAÇÃO)	265-6618	1	DUTO E FILTRO-AR DA CABINE	402
		1	JOGO-AQUECEDOR DA CABINE E MONTAGEM	416
		1	JOGO-INSTALAÇÃO DO CONDICIONADOR DE AR E AQUECEDOR	411
LÂMINA DO LIMPADOR DE PÁRA-BRISA (PORTA DA CABINE)	8Y-4615	1	PORTA DA CABINE	395
		1	PORTA DA CABINE	398
LÂMPADA (12-VOLTS) (MINIATURA)	210-8754	1	PAINEL DE INSTRUMENTOS	437
TAMPA COM RESPIRO (ARRUELA)	258-3296	1	JOGO - PORTA DA CABINE E MONTAGEM	414
		1	JOGO - PORTA DA CABINE E MONTAGEM	415
		1	PORTA DA CABINE	391
		1	PORTA DA CABINE	393
SISTEMA DE ADMISSÃO DE AR E DE ESCAPE				
ELEMENTO DO FILTRO DE AR (PRIMÁRIO)	110-6326	1	PURIFICADOR DE AR	46
ELEMENTO DO FILTRO DE AR (SECUNDÁRIO)	110-6331	1	PURIFICADOR DE AR	46
SISTEMA DE ARREFECIMENTO				
JUNTA - TAMPA (BOMBA D'ÁGUA)	103-9750	1	BOMBA DE ÁGUA	43
JUNTA (REGULADOR DA TEMPERATURA DA ÁGUA)	235-4959	1	TUBOS - ÁGUA	39
REGULADOR - TEMPERATURA DA ÁGUA (TERMOSTATO)	235-4960	1	TUBOS - ÁGUA	39
TAMPA - RADIADOR	036-1865	1	RADIADOR E ARREFECEDOR DO ÓLEO HIDRÁULICO	44
TAMPA COM RESPIRO (RECUPERAÇÃO DO LÍQUIDO ARREFECEDOR)	169-6715	1	TUBOS - ÁGUA	40
SISTEMA DE COMBUSTÍVEL				
FILTRO - SEPARADOR DE ÁGUA E COMBUSTÍVEL	233-9856	1	TUBULAÇÕES - FILTRO E ESCORVA DO COMBUSTÍVEL	63
TAMPA - TANQUE DE COMBUSTÍVEL	304-3885	1	TANQUE DE COMBUSTÍVEL	69

PEÇAS DE MANUTENÇÃO

DESCRIÇÃO	NÚMERO DE PEÇA	QUANT	UTILIZADA EM	PÁGINA
SISTEMA DE LUBRIFICAÇÃO				
FILTRO - ÓLEO (MOTOR)	1R-0734	1	FILTRO - ÓLEO DO MOTOR	35
FILTRO DE ÓLEO (MOTOR)	233-5494	1	FILTRO - ÓLEO DO MOTOR	36
RESPIRO	287-6020	1	RESPIRO	33
SISTEMA ELÉTRICO E DE PARTIDA				
BATERIA (12 VOLTS, ISENTO DE MANUTENÇÃO)	230-6368	1	BATERIA E CABOS / FIOS ELÉTRICOS	73
CHAVE - ELETRÔNICO (SEGURANÇA)	206-5162	2	JOGO-SEGURANÇA	80
CORREIA DE COMANDO (PISCA-ALERTA)	9X-8139	1	LUZ GIRATÓRIA DE ALARME	86
ELEMENTO - AQUECEDOR DE ÁGUA DA CAMISA	225-5535	1	AQUECEDOR DA ÁGUA DO MOTOR	78
	225-5541	1	AQUECEDOR DA ÁGUA DO MOTOR	77
FAROL DIANTEIRO (12 VOLTS, 60/55 WATTS)	9W-3324	1	LÂMPADA DIANTEIRA E DE SINAL	84
		1	LÂMPADA DIANTEIRA E DE SINAL	85
FUSÍVEL (POTÊNCIA PRINCIPAL)	258-4136	1	CABOS/FIOS ELÉTRICOS - CABINE	101
FUSÍVEL (RODAGEM)	258-4134	1	ILUMINAÇÃO - RODOVIÁRIA	88
FUSÍVEL (10 AMPERES)	113-8490	7	CABOS/FIOS ELÉTRICOS - CABINE	101
FUSÍVEL (100 AMPÈRES)	235-1845	1	BATERIA E CABOS / FIOS ELÉTRICOS	73
FUSÍVEL (15 AMPERES)	113-8491	10	CABOS/FIOS ELÉTRICOS - CABINE	101
FUSÍVEL (20-AMPERES)	113-8492	3	CABOS/FIOS ELÉTRICOS - CABINE	101
	267-2680	2	CABOS/FIOS ELÉTRICOS - CABINE	101
		1	RELÉ (CONJ)	92
		2	TAMPA DO PAINEL DO FUSÍVEL	75
FUSÍVEL (60 AMPERES)	267-2701	1	RELÉ (CONJ)	92
LÂMPADA DIANTEIRA E DE SINAL (FACHO ALTO, BAIXO, LADO DIREITO)	195-0189	1	ILUMINAÇÃO - RODOVIÁRIA	88
LÂMPADA DIANTEIRA E DE SINAL (FACHO ALTO, BAIXO, LADO ESQUERDO)	195-0190	1	ILUMINAÇÃO - RODOVIÁRIA	88
LÂMPADA (12-VOLTS, 21-WATTS) (ÂMBAR)	226-4560	1	LÂMPADA DIANTEIRA E DE SINAL	84
		1	LÂMPADA DIANTEIRA E DE SINAL	85
LÂMPADA (12 VOLTS, 5 WATTS) (APAGAR)	226-4561	1	LÂMPADA DIANTEIRA E DE SINAL	84
		1	LÂMPADA DIANTEIRA E DE SINAL	85
LÂMPADA (12-VOLTS, 55-WATTS)	9W-0607	1	CABOS/FIOS ELÉTRICOS - MÁQUINA	109
		1	LÂMPADA - FAROL	83
LÂMPADA (12 VOLTS, 55 WATTS, HID)	9X-8118	1	LUZ GIRATÓRIA DE ALARME	86
VELA DE AQUECIMENTO; VELA INCANDESCENTE	107-3659	4	VELA DE AQUECIMENTO; VELA INCANDESCENTE	76
SISTEMA HIDRÁULICO				
RESPIRO (TANQUE HIDRÁULICO)	258-2829	1	TANQUE HIDRÁULICO	265
TAMPA - BOCAL DE ENCHIMENTO (TANQUE HIDRÁULICO)	142-8937	1	TANQUE HIDRÁULICO	265
TELA FILTRANTE (HIDRÁULICO)	195-6768	1	COLETOR E TUBULAÇÕES-ACUMULADOR	247
TELA FILTRANTE (TANQUE HIDRÁULICO)	258-2804	1	TANQUE HIDRÁULICO	266

PEÇAS DE MANUTENÇÃO

DESCRIÇÃO	NÚMERO DE PEÇA	QUANT	UTILIZADA EM	PÁGINA
TREM DE FORÇA				
FILTRO - ÓLEO (EFICIÊNCIA AVANÇADA) (HIDRÁULICO)	1G-8878	1	FILTRO - ÓLEO	122

WARTUNGSTEILE

BESCHREIBUNG	ERSATZTEIL-NUMMER	MENGE	VERWENDET IN	SEITE
ARBEITSGERÄTE				
KAPPE (WASSERTANK)	192-2606	1	WASSERTANK	360
SCHMIERNIPPEL (1/8-27-GEWINDE)	3B-8488	4	MEHRZWECKGREIFER	345
SCREEN (WASSERTANK)	119-1414	1	WASSERSIEBEINSATZ	357
SIEB (WASSERTANKFÜLLUNG)	7R-0476	1	WASSERTANK U. BEFESTIGUNGS-TEILE	358
ELEKTRISCHE ANLAGE UND STARTSYSTEM				
BATTERIE (12 V, WARTUNGSFREI)	230-6368	1	BATTERIE UND VERDRAHTUNG	73
ELEKTRONISCHER SCHLÜSSEL (SICHERHEIT)	206-5162	2	*KIT-SECURITY	80
GLÜHKERZE	107-3659	4	GLÜHKERZE	76
LAUFBAND UND ANTRIEB (RUNDUM-KENNLEUCHTE)	9X-8139	1	RUNDUM-KENNLEUCHTE	86
LEUCHTE (12 V, 21 W) (GELB)	226-4560	1	SCHEINWERFER U. RICHTUNGS-LEUCHTE	84
		1	SCHEINWERFER U. RICHTUNGS-LEUCHTE	85
LEUCHTE (12 V, 5 W) (LÖSCHEN)	226-4561	1	SCHEINWERFER U. RICHTUNGS-LEUCHTE	84
		1	SCHEINWERFER U. RICHTUNGS-LEUCHTE	85
LEUCHTE (12 V, 55 W)	9W-0607	1	ARBEITSLEUCHTEN	83
		1	MASCHINENVERDRAHTUNG	109
LEUCHTE (*12-VOLT, 55-WATT, HID)	9X-8118	1	RUNDUM-KENNLEUCHTE	86
SCHEINWERFER U. RICHTUNGS-LEUCHTE (FERNLICHT, ABBLEND-LICHT, LINKS)	195-0190	1	BELEUCHTUNGSANLAGE (STRASSENAUSRÜSTUNG)	88
SCHEINWERFER U. RICHTUNGS-LEUCHTE (FERNLICHT, ABBLEND-LICHT, RECHTS)	195-0189	1	BELEUCHTUNGSANLAGE (STRASSENAUSRÜSTUNG)	88
SCHEINWERFER (*12-VOLT, 60/55-WATT)	9W-3324	1	SCHEINWERFER U. RICHTUNGS-LEUCHTE	84
		1	SCHEINWERFER U. RICHTUNGS-LEUCHTE	85
SICHERUNG (10 A)	113-8490	7	FAHRERHAUSVERDRAHTUNG	101
SICHERUNG (100 A)	235-1845	1	BATTERIE UND VERDRAHTUNG	73
SICHERUNG (15 A)	113-8491	10	FAHRERHAUSVERDRAHTUNG	101
SICHERUNG (20 A)	113-8492	3	FAHRERHAUSVERDRAHTUNG	101
	267-2680	2	FAHRERHAUSVERDRAHTUNG	101
		1	RELAIS	92
		2	SICHERUNGSTAFEL - ABDECKUNG	75
SICHERUNG (60 A)	267-2701	1	RELAIS	92
SICHERUNGSSATZ (HAUPTSTROM)	258-4136	1	FAHRERHAUSVERDRAHTUNG	101
SICHERUNGSSATZ (STRASSENFAHRT)	258-4134	1	BELEUCHTUNGSANLAGE (STRASSENAUSRÜSTUNG)	88
UMLAUFKÜHLWASSERHEIZUNGS-ELEMENT	225-5535	1	UMLAUFKÜHLWASSERHEIZUNG	78
	225-5541	1	UMLAUFKÜHLWASSERHEIZUNG	77

* ÜBERSETZUNG ZUM ZEITPUNKT DER DRUCKLEGUNG NICHT VORHANDEN

WARTUNGSTEILE

BESCHREIBUNG	ERSATZTEIL-NUMMER	MENGE	VERWENDET IN	SEITE
FAHRERHAUS				
FAHRERHAUSLUFTFILTER (FRISCH)	265-6619	1	EINBAUSATZ - KLIMAANLAGE U. HEIZUNG	411
		1	*KIT-CAB HEATER & MOUNTING	416
		1	LUFTKANAL & LUFTFILTER - FAHRERHAUS	402
FAHRERHAUSLUFTFILTER (UMLAUFLUFT)	265-6618	1	EINBAUSATZ - KLIMAANLAGE U. HEIZUNG	411
		1	*KIT-CAB HEATER & MOUNTING	416
		1	LUFTKANAL & LUFTFILTER - FAHRERHAUS	402
KAPPE MIT ENTLÜFTER (UNTERLEG-SCHEIBE)	258-3296	1	FAHRERHAUSTÜR	391
		1	FAHRERHAUSTÜR	393
		1	FAHRERHAUSTÜR U. BEFESTIGUNG	414
		1	FAHRERHAUSTÜR U. BEFESTIGUNG	415
KEILRIEMEN (KÜHLMITTEL)	258-3539	1	EINBAUSATZ - KLIMAANLAGE U. HEIZUNG	411
		1	*KIT-AIR CONDITIONER INSTL	413
		1	KÄLTEMITTELKOMPRESSOR U. BEFESTIGUNG	372
LEUCHTE (12 V) (MINIATURLEUCHTE)	210-8754	1	INSTRUMENTENTAFEL	437
SCHEIBENWISCHERBLATT (FAHRERHAUSTÜR)	8Y-4615	1	FAHRERHAUSTÜR	395
		1	FAHRERHAUSTÜR	398
HYDRAULIKSYSTEM				
EINFÜLLKAPPE (HYDRAULIKTANK)	142-8937	1	HYDRAULIKTANK	265
ENTLÜFTER (HYDRAULIKTANK)	258-2829	1	HYDRAULIKTANK	265
FILTERSIEB (HYDRAULIKTANK)	258-2804	1	HYDRAULIKTANK	266
SCREEN (HYDRAULIK)	195-6768	1	*MANIFOLD & LINES GP-ACCUM	247
KRAFTSTOFFSYSTEM				
KRAFTSTOFFTANKKAPPE	304-3885	1	KRAFTSTOFFTANK	69
WASSERABSCHEIDER UND KRAFTSTOFFILTER	233-9856	1	KRAFTSTOFFENTLÜFTUNGS- U. FILTERLEITUNGEN	63
KRAFTSÜBERTRAGUNG				
ÖLFILTER (HOCHLEISTUNG) (HYDRAULIK)	1G-8878	1	ÖLFILTER	122
KÜHLSYSTEM				
DICHTUNG (KÜHLWASSERTHERMO-STAT)	235-4959	1	KÜHLWASSERLEITUNGEN	39
KAPPE MIT ENTLÜFTER (KÄLTEMIT-TELRÜCKGEWINNUNG)	169-6715	1	KÜHLWASSERLEITUNGEN	40
KÜHLERKAPPE	036-1865	1	KÜHLER UND HYDRAULIKÖLKÜHLER	44
THERMOSTAT (THEMRMOSTAT)	235-4960	1	KÜHLWASSERLEITUNGEN	39
VENTILDECKELDICHTUNG (WASSERPUMPE)	103-9750	1	KÜHLWASSERPUMPE	43

* ÜBERSETZUNG ZUM ZEITPUNKT DER DRUCKLEGUNG NICHT VORHANDEN

WARTUNGSTEILE

BESCHREIBUNG	ERSATZTEIL-NUMMER	MENGE	VERWENDET IN	SEITE
LUFTANSAUG- UND ABGASSYSTEM				
LUFTFILTER (HAUPTELEMENT)	110-6326	1	LUFTREINIGER	46
LUFTFILTER (HILFSELEMENT)	110-6331	1	LUFTREINIGER	46
MOTOR				
RIEMEN	287-6138	1	MOTORAUSFÜHRUNG	5
MOTOR - GRUNDAUSFÜHRUNG				
ABLASSSTOPFEN (MOTORÖLWANNE)	5I-7833	1	ÖLWANNE	25
DICHTUNG (VENTILDECKEL)	233-5483	1	VENTILDECKEL	10
EINFÜLLSTUTZENKAPPE (MOTORÖL)	233-5498	1	STIRNRADGEHÄUSE	21
KAPPE (MOTORÖL)	110-2570	1	MOTORÖLABLASS	16
KEILRIEMEN	235-4972	1	RIEMEN	7
ÖLEINFÜLLKAPPE (MOTOR)	199-2182	1	VENTILDECKEL	10
SCHLÜSSEL	094-4628	2	KURBELWELLE	11
		1	NOCKENWELLE	8
RAHMEN UND FAHRGESTELL				
LEUCHTE (12 V, 10 W)	195-9712	1	TYPENSCHILDBEFESTIGUNG	176
MAGNETSTOPFEN (RAHMEN)	3S-9182	4	MASCHINENRAHMEN U. BEFESTIGUNG	166
SCHMIERSYSTEM				
ENTLÜFTER	287-6020	1	ENTLÜFTER	33
ÖLFILTER (MOTOR)	1R-0734	1	ÖLFILTER	35
ÖLSIEB (MOTOR)	233-5494	1	ÖLFILTER	36

* ÜBERSETZUNG ZUM ZEITPUNKT DER DRUCKLEGUNG NICHT VORHANDEN

INDEX

Name	Page
A	
ACCESSORY GP-CAB	362
ACCUMULATOR GP-HYDRAULIC–CHARGED	182
ACCUMULATOR GP-HYDRAULIC–UNCHARGED	182
ACCUMULATOR GP-REFRIGERANT–WITH DESICCANT	363
	364
AIR CLEANER GP	46
	47
	48
AIR CONDITIONER & MOUNTING GP	365
AIR CONDITIONER AR	366
AIR CONDITIONER GP	367
ALTERNATOR GP-CHARGING	70
	72
ARM GP-WINDOW WIPER (CAB DOOR)	395
	398
ARMREST & MOUNTING GP	369
AXLE GP	114
	115
	116
	117
B	
BATTERY & WIRING GP	73
BATTERY (12-VOLT, MAINTENANCE FREE)	73
BELT-DRIVE (WARNING BEACON)	86
BELT GP	5
	7
BLADE AS-WIPER (CAB DOOR)	395
	398
BLADE GP-MULTIPURPOSE BUCKET	282
	283
	284
	285
	286
BRACKET GP-MOUNTING–BELT GUARD	461
BREATHER	33
BREATHER GP	33
BREATHER (HYDRAULIC TANK)	265
BUCKET AR-DIRT	287
	288
BUCKET AR-GENERAL PURPOSE	288
	289
	290
BUCKET AR-GRAPPLE	290
	291
BUCKET AR-LIGHT MATERIAL	291
BUCKET AR-MULTIPURPOSE	292
	293
	294
	295
	296
BUCKET AR-UTILITY	296
BUCKET AS-DIRT	297
	298
	300
	301
BUCKET AS-GENERAL PURPOSE	302
	303
	304
	305
BUCKET AS-LIGHT MATERIAL	306
	307
	308
BUCKET GP-DIRT	309
BUCKET GP-MULTIPURPOSE	310
	311
	312
	313
	314
BUCKET GP-MULTIPURPOSE–MULTIPURPOSE BUCKET	315
BUCKET GP-UTILITY	316
	317
	318
C	
CAB AR-ENCLOSED ROPS	370
CAB GP-ENCLOSED ROPS	1
	2
	161
CABLE GP-CONTROL–MANUAL LOWERING	371
CAMSHAFT GP	8
CAP AS-FILLER (HYDRAULIC TANK)	265
CAP AS-RADIATOR	44
CAP AS (WATER TANK)	360
CAP (ENGINE OIL)	16
CAP-FILLER (ENGINE OIL)	21
CAP-FUEL	69
CAP-OIL FILLER (ENGINE)	10
CAP-VALVE	272
CAP-VENTED (COOLANT RECOVERY)	40
CAP-VENTED (WASHER)	393
	414
	415
CAP-VENTED (WASHER)	391
CARRIAGE & FORK AR	320
CARRIAGE GP-FORK	321
	322
CHASSIS AR	1
COIL AS-SOLENOID (12-VOLT)	278
COMMON AR	1
COMPRESSOR & MTG GP-REFRIG	372
COMPRESSOR GP-REFRIGERANT	372

INDEX

Name	Page
	410
	412
CONDENSER & MTG GP-REFRIGERANT	373
	374
CONNECTING ROD GP	9
CONTROL & WIRING GP-AIR & TEMP	375
CONTROL GP-AIR & TEMPERATURE	376
CONTROL GP-AIR CONDITIONER	410
	412
	426
CONTROL GP-ELECTROHYDRAULIC–HIGH FLOW, LH	378
CONTROL GP-ELECTROHYDRAULIC–LH	377
CONTROL GP-ELECTROHYDRAULIC–RH	379
	380
CONTROL GP-ELECTROHYDRAULIC–RH, HIGH FLOW	381
CONTROL GP-GOVERNOR	58
	60
CONTROL GP-HANDLE	383
	385
	387
CONTROL GP-HANDLE–LH	382
CONTROL GP-HANDLE (LH)	82
	386
CONTROL GP-HANDLE (RH)	384
CONTROL GP-JOYSTICK–HIGH FLOW, LH	386
CONTROL GP-JOYSTICK–LH	387
CONTROL GP-JOYSTICK–RH	383
	385
CONTROL GP-JOYSTICK–RH, HIGH FLOW	384
CONTROL GP-UNPROGRAMMED (MACHINE)	96
CONVERSION AR-MACHINE–GERMANY	1
CONVERSION AR-MACHINE–ITALY	2
CONVERSION AR-ROADING	161
CONVERSION GP-ROADING–GERMANY	162
CONVERSION GP-ROADING–ITALY	163
COOLANT HEATER LINES	428
COOLER GP-ENGINE OIL	38
COUNTERWEIGHT GP	164
COUPLER AR-QUICK	322
COUPLER GP-QUICK	323
	324
COVER GP-CAB	388
COVER GP-CONSOLE–RH, LH	389
COVER GP-FUSE PANEL	75
COVER GP-INSTRUMENT PANEL	390
COVER GP-LINES	325
COVER GP-VALVE MECHANISM	10
CRANKSHAFT GP	11
CYLINDER & LINK GP-COUPLER–LH	326
CYLINDER & LINK GP-COUPLER–RH	327
CYLINDER BLOCK GP	13
CYLINDER GP-BUCKET	183
CYLINDER GP-GRAPPLE	184
CYLINDER GP-HYDRAULIC	185
	186
	187
CYLINDER GP-LIFT	188
CYLINDER GP-LIFT ARM	188
CYLINDER GP-TILT (LH)	188
CYLINDER GP-TILT (RH)	188
CYLINDER HEAD GP	15

D

DOOR GP-CAB	391
	393
	395
	398
DRAIN GP-ENGINE OIL	16
DRIVE GP-TANDEM	118
	119
DUCT & FILTER GP-CAB AIR	402

E

EDGE GP-CUTTING	328
	329
	330
	331
	332
	333
ELEMENT AS-JACKET WATER HEATER	77
	78
ENCLOSURE GP-ENGINE	165
ENGINE AR	4
ENGINE AR-PRIMARY	5

F

FAN GP-BLOWER	44
FILM-EXIT	459
FILM-FOPS	404
FILM-FUSE PANEL	75
FILM GP	462
	464
FILM GP–2-SPEED	465
FILM GP (HIGH FLOW)	194
FILM-IDENTIFICATION (BUCKET LOWER)	470
FILM-IDENTIFICATION (BUCKET LOWER)	466
FILM-IDENTIFICATION (HIGH FLOW XPS)	464
FILM-IDENTIFICATION (IGNITION SWITCH)	80
FILM-IDENTIFICATION (TWO SPEED)	465
FILM-IDENTIFICATION (12-VOLT)	466
	470
FILM-INSTRUCTION (CONTROL PATTERN, LH)	418
	419

INDEX

Name	Page
FILM-INSTRUCTION (CONTROL PATTERN, RH)	418, 419
FILM-INSTRUCTION (DO NOT SPRAY, READ OMM)	367, 407
FILM-INSTRUCTION (KEY START SWITCH)	437
FILM-INSTRUCTION (MACHINE SECURITY, READ OMM)	80
FILM-INSTRUCTION (NO STEP)	215
FILM-INSTRUCTION (OPERATOR CONSOLE)	466, 470
FILM-INSTRUCTION (OPERATOR CONTROL)	466, 470
FILM-NOTICE (ALTERNATE EXIT, READ OMM)	391, 393, 414, 415
FILM-NOTICE (STEERING)	162
FILM-PANEL	376
FILM (POWER DISTRIBUTION)	101
FILM (READ OMM)	466, 470
FILM (REFLECTIVE)	354, 355
FILM-SPEED	466
FILM-SPEED (THROTTLE)	470
FILM-STRIPE (REFLECTIVE, RED, WHITE)	354, 355
FILM-SYMBOL (LIFT)	172, 173, 174
FILM-SYMBOL (TIE-DOWN)	470
FILM-WARNING (CRUSH HAZARD)	310, 311, 312, 314, 470
FILM-WARNING (CRUSH HAZARD, READ OMM)	470
FILM-WARNING (CRUSH HAZARD, STAY BACK)	256
FILM-WARNING (CRUSH POINT)	345
FILM-WARNING (DO NOT USE ETHER)	466
FILM-WARNING (GROUND)	466, 470
FILM-WARNING (HIGH PRESSURE, READ OMM, INTL)	470
FILM-WARNING (IMPALED POINT)	336, 337, 341, 344
FILM-WARNING (JUMP START, READ OMM)	470
FILM-WARNING (LIFT ARM BRACE)	470
FILM-WARNING (NO ACCESS)	470
FILM-WARNING (NO WELD, NO DRILL, READ OMM)	466, 470
FILM-WARNING (RADIATOR)	470
FILM-WARNING (ROPS, FOPS, READ OMM)	466, 470
FILM-WARNING (UNIVERSAL, READ OMM)	470
FILM-WARNING (WORK TOOL)	470
FILTER & LINES GP-HYDRAULIC	120
FILTER AS-OIL (ADVANCED EFFICIENCY) (HYDRAULIC)	122
FILTER AS-OIL (ENGINE)	35
FILTER AS-WATER SEP & FUEL	63
FILTER-CAB AIR (FRESH)	402, 411, 416
FILTER-CAB AIR (RECIRCULATION)	402, 411, 416
FILTER ELEMENT AS-AIR (PRIMARY)	46
FILTER ELEMENT AS-AIR (SECONDARY)	46
FILTER GP-ENGINE OIL	35, 36
FILTER GP-OIL–HYDRAULIC	122
FITTING GP	235
FITTING GP-HYDRAULIC	191, 230, 232, 235
FITTING GP-HYDRAULIC–QUICK DISCONNECT, FEMALE, HIGH FLOW	190
FITTING GP-HYDRAULIC–QUICK DISCONNECT, MALE, HIGH FLOW	189
FITTING GP-HYDRAULIC (MANUAL)	322
FITTING GP (RETURN MANIFOLD)	230, 232
FITTING GP-TEE	235
FITTING-GREASE (1/8-27 THD)	345
FLASHER AS (12-VOLT) (12-VOLT) (STOP LIGHT)	88
FLOOR MAT	422
FLYWHEEL GP	17
FORK AR-GRAPPLE	333
FORK AR-GRAPPLE–66-IN, UTILITY	333
FORK AR-GRAPPLE–72-IN, INDUSTRIAL	333
FORK AR-GRAPPLE–72-IN, UTILITY	334
FORK GP-GRAPPLE	335, 337
FORK GP-GRAPPLE–66-IN, INDUSTRIAL	336
FORK GP-PALLET	339
FORK GP-UTILITY	340, 341

INDEX

Name	Page
FRAME & MTG GP-MACHINE	166
FRAME GP-FORK–66-IN, INDUSTRIAL	342
FRAME GP-FORK–72-IN, INDUSTRIAL	343
FRAME GP-GRAPPLE–72-IN, INDUSTRIAL	344
FRAME GP-MACHINE	168
FUSE AS (MAIN POWER)	101
FUSE AS (ROADING)	88
FUSE (10-AMPERE)	101
FUSE (100-AMPERE)	73
FUSE (15-AMPERE)	101
FUSE (20-AMPERE)	75
	101
FUSE (20-AMPERE)	92
FUSE (60-AMPERE)	92

G

GASKET-COVER (WATER PUMP)	43
GASKET (VALVE COVER)	10
GASKET (WATER TEMPERATURE REGULATOR)	39
GAUGE GP-SIGHT (HYDRAULIC TANK)	266
GAUGE-OIL (DIPSTICK, ENGINE)	25
GAUGE-SIGHT (COOLANT LEVEL)	44
GEAR GP-FRONT	18
GLOW PLUG	76
GLOW PLUG GP	76
GRAPPLE GP-UTILITY	345
	346
GUARD GP-BELT	19
GUARD GP-ROPS/FOPS–KIT	404
GUIDE GP-LINES	169

H

HANDLE & PIN GP-COUPLER	347
	348
HARNESS AS-CAB	101
	391
	393
	395
	398
	414
	415
HARNESS AS-CHASSIS	109
HARNESS AS-CONTROL	375
HARNESS AS-ENGINE	105
HARNESS AS-HEATER	407
HARNESS AS-HEATER & AIR COND	100
	366
	367
	410
	416
HARNESS AS-OPERATOR CONTROLS	101
HARNESS AS-PANEL	437
HARNESS AS-RADIO	408
HARNESS AS-REAR	109
HARNESS AS-VALVE	240
HARNESS AS-WORK TOOL	82
	104
	112
	195
	358
HEATER & MTG GP-CAB	405
HEATER AR-CAB	406
HEATER GP-CAB	407
HEATER GP-JACKET WATER	77
	78
HORN	437
HOUSING GP-FLYWHEEL	20
HOUSING GP-FRONT	21
HYDRAULIC AR	192
	193
	194
HYDRAULIC AR–HIGH FLOW	194

I

INSTALLATION AR-ENGINE	6
INSTALLATION GP-RADIO	408

K

KEY	8
	11
KEY AS-ELECTRONIC (SECURITY)	80
KIT-AIR COND & HEATER INSTL	410
KIT-AIR CONDITIONER INSTL	412
KIT-CAB DOOR & MOUNTING–GLASS	414
KIT-CAB DOOR & MOUNTING–POLYCARBONATE	415
KIT-CAB HEATER & MOUNTING	415
KIT-CAB WINDOW	417
KIT-CONTROL MOUNTING	79
KIT-CONTROL PATTERN CHANGE	418
	419
KIT-COUNTERWEIGHT	170
	171
KIT-DEBRIS GUARD	49
KIT-INSTRUMENT PANEL	420
KIT-LIFTING–MACHINE, FOUR POINT	172
KIT-QUICK COUPLER CONVERSION–HYDRAULIC	195
KIT-ROADING PLATE & MOUNTING–BUCKET	349
KIT-SECURITY	80
KIT-WORK TOOL POSITIONER	199
KIT-WORK TOOL WIRING	82

INDEX

Name	Page

L

LAMP GP-DOME	437
LAMP GP-FLOOD–SUSPENDED MOUNT	83
LAMP GP-FLOOD (LONG RANGE)	109
LAMP GP-HEAD & SIGNAL	84 85
LAMP GP-HEAD & SIGNAL (HIGH, LOW BEAM, LH)	88
LAMP GP-HEAD & SIGNAL (HIGH, LOW BEAM, RH)	88
LAMP GP-REGISTRATION PLATE	176
LAMP GP-SIGNAL (STOP, TAIL, TURN)	88
LAMP GP-STOP & TAIL	90
LAMP GP-WARNING BEACON–AMBER, MAGNETIC MOUNT, ROTATING	86
LAMP-HEAD (12-VOLT, 60/55-WATT)	84
LAMP-HEAD (12-VOLT, 60/55-WATT)	85
LAMP (12-VOLT) (MINIATURE)	437
LAMP (12-VOLT, 10-WATT)	176
LAMP (12-VOLT, 21-WATT) (AMBER)	84 85
LAMP (12-VOLT, 5-WATT) (CLEAR)	84 85
LAMP (12-VOLT, 55-WATT)	83 109
LAMP (12-VOLT, 55-WATT, HID)	86
LEVER GP-GOVERNOR	421
LIFTING GP-ENGINE	23
LIFTING GP-MACHINE–FOUR POINT	173
LIFTING GP-MACHINE–SINGLE POINT	174
LIGHTING GP-FLOOD	87
LIGHTING GP-ROADING	88
LIGHTING GP-STOP & TAIL	90
LIGHTING GP-WARNING BEACON	91
LINER GP-CAB	422 425
LINES GP-AIR	50 51
LINES GP-AIR CONDITIONER	426
LINES GP-BUCKET	203 205 207 209 211 213
LINES GP-BUCKET–INDUSTRIAL	201
LINES GP-COUPLER	215
LINES GP-FUEL	61
LINES GP-FUEL PRM & FILTER	63
LINES GP-HEATER	428
LINES GP-HYDRAULIC	218
LINES GP-HYDRAULIC–WORK TOOL POSITIONER	219
LINES GP-HYDRAULIC FAN	223
LINES GP-HYDRAULIC FAN–RADIATOR	221
LINES GP-HYDRAULIC OIL COOLER	225
LINES GP-HYDROSTATIC	123 125
LINES GP-LIFT CYLINDER	227
LINES GP-LOWERING CONTROL	228
LINES GP-PARKING BRAKE	127
LINES GP-PUMP	230 232 235
LINES GP-TILT CYLINDER	238
LINES GP-WATER	39 40
LINES GP-WORK TOOL	240 244
LINK GP-COUPLER	350
LITERATURE GP	429
LOCK GP (ENGINE COVER)	165
LOCK GP-QUICK COUPLER–LH	353
LOCK GP-QUICK COUPLER–MECHANICAL	351
LOCK GP-QUICK COUPLER–RH	352

M

MACHINE AR-SPECIAL	2
MACHINE AR-SPECIAL–RIDE CONTROL, WORK TOOL POSITIONER, 2-SPEED	3
MACHINE AR-SPECIAL–WORK TOOL POSITIONER	3
MACHINE AR-SPECIAL–WORK TOOL POSITIONER, 2-SPEED	2
MANF & SOLENOID MTG GP-ACCUM	246
MANIFOLD & LINES GP-ACCUM	247
MANIFOLD & LINES GP-CONTROL	128
MANIFOLD & MTG GP-CONTROL	249
MANIFOLD & MTG GP-CONTROL–MOTOR, 2-SPEED	248
MANIFOLD & SOLENOID GP-CONTROL	250
MANIFOLD GP-CONTROL–MOTOR, 2-SPEED	252
MANIFOLD GP-CONTROL–PILOT SHUTOFF	251
MANIFOLD GP-CONTROL–QUICK COUPLER	253
MANIFOLD GP-EXHAUST	52
MANIFOLD GP-INLET	53
MANIFOLD GP-RETURN	130
MIRROR & MTG GP-REAR VIEW	175
MIRROR GP-REAR VIEW	430
MODULE GP-DISPLAY	420 437 441
MODULE GP-INTERFACE (KEY)	80
MOTOR & MTG GP-HYDRAULIC FAN	254
MOTOR & MTG GP-HYDROSTATIC	132 133

INDEX

Name	Page
MOTOR GP-GEAR (FAN, DEMAND)	254
MOTOR GP-PISTON	134, 136, 138
MOTOR GP-WINDOW WIPER (CAB DOOR)	395, 398
MOUNTING GP-ARMREST–LH	431
MOUNTING GP-ARMREST–RH	432
MOUNTING GP-CYLINDER	255, 256, 257
MOUNTING GP-ENGINE	24
MOUNTING GP-PUMP	140
MOUNTING GP-RAD & OIL COOLER	41
MOUNTING GP-REGISTRATION	176
MOUNTING GP-ROPS–INCLUDES STEP	433
MUFFLER & MOUNTING GP	54
MUFFLER GP	55

O

Name	Page
OPTION AR-CAB	436

P

Name	Page
PAN GP-OIL	25
PANEL GP-INSTRUMENT	437
PANEL GP-INSTRUMENT–RH	441
PEDAL GP-GOVERNOR	442
PIN GP-LIFT ARM	280
PISTON & ROD GP	27
PLATE & FILM GP	466, 470, 473
PLATE GP-ROADING–LH	354
PLATE GP-ROADING–RH	355
PLATE-IDENTIFICATION (CAT)	310, 311, 312, 314
PLATE-PRODUCT IDENTIFICATION (MACHINE)	466
PLATE-PRODUCT IDENTIFICATION (MACHINE)	470
PLUG-DRAIN (ENGINE OIL PAN)	25
PLUG GP-ENGINE	28, 29
PLUG-MAGNETIC (FRAME)	166
POSITIONER GP-FORK	339
POWER TRAIN AR	141
PULLEY GP-CRANKSHAFT	30
PULLEY GP-WATER PUMP	31
PUMP & MTG GP-GEAR	258
PUMP & MTG GP-HYDROSTATIC	142
PUMP & MTG GP-WORK TOOL	259, 260
PUMP GP-DIAPHRAGM	358
PUMP GP-ENGINE OIL	37
PUMP GP-FUEL INJECTION	65
PUMP GP-FUEL PRM & PRIM FILTER	63
PUMP GP-GEAR	258, 259, 263
PUMP GP-PISTON	143
PUMP GP-PISTON–HIGH FLOW	261
PUMP GP-PISTON & GEAR	263
PUMP GP-WATER	43

R

Name	Page
RADIATOR & HYD OIL COOLER GP	44
RECOVERY GP-COOLANT	40
REGULATOR AS-ALTERNATOR	70
REGULATOR AS-WATER TEMPERATURE (THERMOSTAT)	39
RELAY AS	92
RELAY AS (MAIN POWER)	101
RELAY AS (SHELL)	101, 405, 416
RELAY AS (12-VOLT)	101, 112, 219, 373, 410, 412
RELAY AS (12-VOLT) (COLD START)	105
RELAY AS (12-VOLT) (RIDE CONTROL)	199
RELAY AS (12-VOLT) (STOP LIGHT)	88
RELAY AS (12-VOLT) (WORK TOOL)	82
ROCKER ARM GP	32

S

Name	Page
SCREEN (HYDRAULIC)	247
SCREEN (WATER TANK)	357
SEAL GP (AXLE)	115
SEAT & ARMREST GP	443, 444, 445
SEAT & MOUNTING GP	446, 447, 448
SEAT AR	449
SEAT AR-SUSPENSION–AIR	449
SEAT AR-SUSPENSION–MECHANICAL	449
SEAT BELT GP	450, 451
SEAT GP (STATIC)	445
SEAT GP-SUSPENSION	452

INDEX

Name	Page
SEAT GP-SUSPENSION (AIR)	443
SENDER AS-FUEL LEVEL	67
SENSOR GP-POSITION	93
SENSOR GP-SPEED	94
SENSOR GP-SPEED (ENGINE)	105
SENSOR GP-TEMP & PRESS–ENGINE	95
SENSOR GP-TEMPERATURE (ENGINE COOLANT)	105
SENSOR GP-TEMPERATURE (HYDRAULIC OIL)	265
SERVICE GP-MACHINE	96
SPRING AS-GAS	393
SPRING AS-GAS (CAB)	391
	414
	415
SPRING AS-GAS (DOOR)	391
	414
	415
SPRING AS-GAS (LH)	41
SPRING AS-GAS (LOCKING)	453
SPRING AS-GAS (NON-LOCKING)	453
SPRING AS-GAS (RH)	41
SPRING GP-GAS–INCLUDES LIFT HANDLE	453
STARTING MOTOR GP-ELECTRIC	99
STARTING MOTOR GP-ELECTRIC–12-VOLT	97
STEP GP	177
STOP GP-GRAPPLE	346
STOP GP-GRAPPLE–UTILITY	356
STRAINER AS (HYDRAULIC TANK)	266
STRAINER GP-WATER	357
STRAINER-OIL (ENGINE)	36
STRAINER (WATER TANK FILL)	358
SUN VISOR	455
	456
SUPPRESSION GP-SOUND	181
SUPPRESSION GP-SOUND–ENGINE	180
SUPPRESSION GP-SOUND–MACHINE	178
SWITCH AS (BLOWER FAN SPEED)	376
SWITCH AS-KEY START	437
SWITCH AS-LIMIT (ARMREST, INTERLOCK)	369
SWITCH AS-LIMIT (WIPER)	395
	398
SWITCH AS-PRESSURE (HYDRAULIC OIL)	122
SWITCH AS-PRESSURE (REFRIGERANT)	410
	412
SWITCH AS-PRESSURE (REFRIGERANT COMPR, HIGH SIDE)	426
SWITCH AS-PRESSURE (REFRIGERANT COMPR, LOW SIDE)	426
SWITCH AS-ROCKER (AIR CONDITIONER)	365
	410
	412
SWITCH AS-ROCKER (CONTROL PATTERN CHANGE)	418
SWITCH AS-ROCKER (CREEPER CONTROL)	420
	441
SWITCH AS-ROCKER (DIVERTER VALVE, 4TH FUNCTION)	437
SWITCH AS-ROCKER (FRONT WIPER/WASHER)	398
SWITCH AS-ROCKER (HAZARD)	88
SWITCH AS-ROCKER (HYD LOCKOUT, INTERLOCK OVRD)	437
SWITCH AS-ROCKER (HYDRAULIC QUICK COUPLER)	104
	195
SWITCH AS-ROCKER (MOTOR, 2-SPEED, AUXILIARY)	128
SWITCH AS-ROCKER (PARKING BRAKE)	437
SWITCH AS-ROCKER (ROADING)	88
SWITCH AS-ROCKER (TURN SIGNAL)	88
SWITCH AS-ROCKER (WARNING BEACON)	91
SWITCH AS-ROCKER (WIPER)	395
SWITCH AS-ROCKER (WORK LIGHTS, FRONT)	437
SWITCH AS-ROCKER (WORK LIGHTS, REAR)	437
SWITCH AS-ROCKER (WORK TOOL)	82
	112
SWITCH AS-ROCKER (WORK TOOL POSITIONER)	199
	219
SWITCH AS (STARTING MOTOR)(12-VOLT)	97
SWITCH AS (TEMPERATURE CONTROL)	376
SWITCH-TEMPERATURE (AIR CONDITIONER)	367
SWITCH-TEMPERATURE (ENGINE COOLANT)	95

T

TANK & MTG GP-FUEL	67
TANK & MTG GP-HYDRAULIC	264
TANK & MTG GP-WATER	358
TANK GP-FUEL	69
TANK GP-HYDRAULIC	265
	266
TANK GP-WATER	360
TEE AS	195
	215
TIRE & RIM GP	146
	147
	148
	149
	150
	154
TIRE & RIM GP–LH	146
	147

INDEX

Name	Page
	148
	150
	151
	152
	153
	154
	155
TIRE & RIM GP–RH	146
	147
	149
	151
	152
	153
	155
TOOTH GP-UNI	361
TURBOCHARGER GP	56

V

V-BELT	7
V-BELT (REFRIGERANT)	372
	411
	413
VALVE & MTG GP-CONTROL	267
	268
VALVE AS-RELIEF (ENGINE OIL PRESSURE)	275
VALVE AS-RELIEF (REFRIGERANT COMPRESSOR)	372
VALVE GP-CHECK	269
VALVE GP-CHECK (PILOT)	251
VALVE GP-CONTROL	270
	272
VALVE GP-FLUSHING	134
	136
	138
VALVE GP-MANUAL–RESOLVER–LOWERING CONTROL	274
VALVE GP-PUMP CONTROL	143
	261
VALVE GP-RELIEF	276
VALVE GP-RELIEF–ENGINE OIL PRESSURE	275
VALVE GP-RELIEF (AUXILIARY)	272
VALVE GP-RELIEF (CHARGE)	143
VALVE GP-RELIEF (CROSSOVER)	143
VALVE GP-RELIEF (LIFT)	270
VALVE GP-RELIEF (LIFT, TILT)	272
VALVE GP-RELIEF (TILT)	270
VALVE GP-RELIEF (TILT, AUXILIARY)	272
VALVE GP-SHUTTLE	277
VALVE GP-SOLENOID	254
	279
VALVE GP-SOLENOID–12-VOLT	278
VALVE GP-SOLENOID (MAIN)	272
VALVE GP-SOLENOID (MOTOR, 2-SPEED)	252
VALVE GP-SOLENOID (PARKING BRAKE)	143
VALVE GP-SOLENOID (PILOT SHUTOFF)	251
VALVE GP-SOLENOID (QUICK COUPLER)	253
VALVE GP-SPEED CONTROL (2-SPEED)	136
	138
VALVE MECHANISM GP	32
VALVE-SHUTTLE	277
VISOR GP-CAB	455
VISOR GP-CAB–LH	456

W

WHEEL & TIRE AR	158
	159
WHEEL & TIRE AR–HEAVY DUTY	156
	157
	158
WHEEL & TIRE AR–LOW SIDE WALL	157
	158
WHEEL & TIRE AR–PNEUMATIC	155
	156
WHEEL & TIRE AR–SOLID	156
	160
WINDOW GP-CAB	458
	459
	460
WINDOW GP-CAB–LH	457
WIRING GP-AIR CONDITIONER	100
	366
	406
WIRING GP-CAB	101
WIRING GP-COUPLER	104
WIRING GP-ENGINE	105
	107
WIRING GP-MACHINE	109
WIRING GP-WORK TOOL	112

INDEX

Désignation	Page

A

ACCOUDOIR ET MONTAGE (ASS)	369
ACCUMULATEUR - CLIMATISEUR (ASS)	363, 364
ACCUMULATEUR HYDRAULIQUE (ASS)	182
ALTERNATEUR DE CHARGE (ASS)	72
ALTERNATEUR DE CHARGE (ASS)	70
ALTERNATEUR DE RÉGULATEUR (ENS)	70
AMPOULE (PROJECTEUR AU XÉNON 12V, 55W)	86
AMPOULE (12-V, 5-W) (EFFACEMENT)	84, 85
AMPOULE (12 VOLTS) (MINIATURE)	437
AMPOULE (12V, 10W)	176
AMPOULE (12V, 21W) (AMBRE)	84, 85
AMPOULE (12V, 55W)	83, 109
ARBRE A CAMES (ASS)	8
ARRÊT-PINCE (ASS)	346, 356
AUTOCOLLANT DE MISE EN GARDE (DÉMARRAGE AVEC CÂBLES VOLANTS, LIRE LE GUIDE)	470
AUTOCOLLANT DE MISE EN GARDE (HAUTE PRESSION, LIRE LE GUIDE D'UTILISATION ET D'ENTRETIEN, INTERNATIONAL)	470
AUTOCOLLANT DE MISE EN GARDE (*LIFT ARM BRACE)	470
AUTOCOLLANT DE MISE EN GARDE (MASSE)	466, 470
AUTOCOLLANT DE MISE EN GARDE (NE PAS UTILISER D'ÉTHER)	466
AUTOCOLLANT DE MISE EN GARDE (*NO ACCESS)	470
AUTOCOLLANT DE MISE EN GARDE (OUTIL DE TRAVAIL)	470
AUTOCOLLANT DE MISE EN GARDE (PAS DE SOUDAGE, PAS DE PERÇAGE, LIRE LE GUIDE D'UTILISATION ET D'ENTRETIEN)	466
AUTOCOLLANT DE MISE EN GARDE (PAS DE SOUDAGE, PAS DE PERÇAGE, LIRE LE GUIDE D'UTILISATION ET D'ENTRETIEN)	470
AUTOCOLLANT DE MISE EN GARDE (POINT D'ÉCRASEMENT)	345
AUTOCOLLANT DE MISE EN GARDE (POINT PERCÉ)	336, 337, 341, 344
AUTOCOLLANT DE MISE EN GARDE (RADIATEUR)	470
AUTOCOLLANT DE MISE EN GARDE (RISQUE D'ÉCRASEMENT)	310, 311, 312, 314
AUTOCOLLANT DE MISE EN GARDE (RISQUE D'ÉCRASEMENT)	470
AUTOCOLLANT DE MISE EN GARDE (RISQUE D'ÉCRASEMENT, LIRE LE MANUEL)	470
AUTOCOLLANT DE MISE EN GARDE (RISQUE D'ÉCRASEMENT, RESTER À L'ÉCART)	256
AUTOCOLLANT DE MISE EN GARDE (ROPS, FOPS, LIRE LE GUIDE D'UTILISATION ET D'ENTRETIEN)	466, 470
AUTOCOLLANT DE MISE EN GARDE (UNIVERSEL, LIRE LE GUIDE D'UTILISATION ET D'ENTRETIEN)	470
AUTOCOLLANT DE PANNEAU DE FUSIBLES	75
AUTOCOLLANT DE SYMBOLE (LEVAGE)	172, 173, 174
AUTOCOLLANT DE SYMBOLE (TIRANT)	470
AUTOCOLLANT D'IDENTIFICATION (*BUCKET LOWER)	466
AUTOCOLLANT D'IDENTIFICATION (*BUCKET LOWER)	470
AUTOCOLLANT D'IDENTIFICATION (CONTACTEUR D'ALLUMAGE)	80
AUTOCOLLANT D'IDENTIFICATION (DÉBIT ÉLEVÉ XPS)	464
AUTOCOLLANT D'IDENTIFICATION (DEUX VITESSES)	465
AUTOCOLLANT D'IDENTIFICATION (12 VOLTS)	466, 470
AUTOCOLLANT (DISTRIBUTION DE PUISSANCE)	101
AUTOCOLLANT DU PANNEAU	376
AUTOCOLLANT-FOPS	404
AUTOCOLLANT (LIRE LE GUIDE D'UTILISATION ET D'ENTRETIEN)	466, 470
AUTOCOLLANT (RÉFLECTEUR)	354, 355
AUTOCOLLANT, SORTIE	459
AVERTISSEUR SONORE, KLAXON	437
AXE DE CULBUTEUR (ASS)	32

B

BALAI D'ESSUIE-GLACE (ENS) (PORTE DE CABINE)	395

* TRADUCTION NON DISPONIBLE AU MOMENT DE LA PUBLICATION

INDEX

Désignation	Page
BALAI D'ESSUIE-GLACE (ENS) (PORTE DE CABINE)	398
BANDE AUTOCOLLANTE (RÉFLECTEUR, ROUGE, BLANC)	354, 355
BÂTI DE FOURCHE (ASS)	342, 343
BÂTI DE MACHINE (ASS)	168
BÂTI DE MACHINE ET MONTAGE (ASS)	166
BATTERIE ET CÂBLAGE	73
BATTERIE (12V, SANS ENTRETIEN)	73
BIELLE (ASS)	9
BIELLE DE COUPLEUR (ASS)	350
BLOC-CYLINDRES (ASS)	13
BOBINE DE SOLÉNOÏDE (ENS) (12 VOLTS)	278
BOUCHON À ÉVENT (RÉSERVOIR D'EXPANSION DU LIQUIDE DE REFROIDISSEMENT)	40
BOUCHON À ÉVENT (RONDELLE)	391, 393, 414, 415
BOUCHON AIMANTÉ (CHÂSSIS)	166
BOUCHON DE CARBURANT	69
BOUCHON DE GOULOTTE DE REMPLISSAGE D'HUILE (MOTEUR)	10
BOUCHON DE GOULOTTE DE REMPLISSAGE (ENS) (RÉSERVOIR HYDRAULIQUE)	265
BOUCHON DE GOULOTTE DE REMPLISSAGE (HUILE MOTEUR)	21
BOUCHON DE MOTEUR (ASS)	28, 29
BOUCHON DE RADIATEUR (ENS)	44
BOUCHON DE VIDANGE (CARTER D'HUILE MOTEUR)	25
BOUGIE DE PRECHAUFFAGE	76
BOUGIE DE PRÉCHAUFFAGE (ASS)	76
BRAS D'ESSUIE-GLACE (ASS) (PORTE DE CABINE)	395, 398

C

Désignation	Page
CABINE - REVÊTEMENT (ASS)	422, 425
CABINE-FAISCEAU DE CÂBLES (ENS)	101, 391, 393, 414, 415
CABINE-FAISCEAU DE CÂBLES (ENS)	395, 398
CABINE ROPS FERMÉE (VERSION)	370
CABLAGE - CLIMATISEUR (ASS)	100, 406
CABLAGE - CLIMATISEUR (ASS)	366
CABLAGE - COMMANDE MANUELLE ELECTRIQUE	371
CÂBLAGE - OUTIL DE TRAVAIL (ASS)	112
CÂBLAGE-COUPLEUR (ASS)	104
CABLAGE DE CABINE (ASS)	101
CABLAGE DE LA MACHINE (ASS)	109
CABLAGE DE MOTEUR (ASS)	105, 107
CABLAGE MOTEUR (ENS)	105
CACHE-SOUPAPES (ASS)	10
CANALISATIONS - OUTIL DE TRAVAIL (ASS)	240, 244
CANALISATIONS-COMMANDE D'ABAISSEMENT (ASS)	228
CANALISATIONS D'AIR (ASS)	50, 51
CANALISATIONS DE CARBURANT (ASS)	61
CANALISATIONS DE CHAUFFAGE (ASS)	428
CANALISATIONS DE CLIMATISEUR (ASS)	426
CANALISATIONS DE COUPLEUR (ASS)	215
CANALISATIONS DE FILTRE ET D'AMORÇAGE DE CARBURANT (ASS)	63
CANALISATIONS DE POMPE (ASS)	232, 235
CANALISATIONS DE POMPE (ASS)	230
CANALISATIONS DE RÉCHAUFFEUR DE LIQUIDE DE REFROIDISSEMENT	428
CANALISATIONS DE REFROIDISSEUR D'HUILE HYDR. (ASS)	225
CANALISATIONS DE VÉRIN DE LEVAGE (ASS)	227
CANALISATIONS D'EAU (ASS)	39
CANALISATIONS D'EAU (ASS)	40
CANALISATIONS DU FREIN DE STATIONNEMENT	127
CANALISATIONS DU VÉRIN D'INCLINAISON (ASS)	238
CANALISATIONS HYDRAULIQUES (ASS)	218, 219
CANALISATIONS HYDRAULIQUES DE VENTILATEUR (ASS)	221, 223
CANALISATIONS HYDROSTATIQUES (ASS)	123, 125
CAPTEUR - TEMP. ET PRESSION (ASS)	95
CAPTEUR DE TEMPERATURE (ASS) (HUILE HYDRAULIQUE)	265
CAPTEUR DE TEMPERATURE (ASS) (LIQUIDE DE REFROIDISSEMENT DU MOTEUR)	105
CAPTEUR DE VITESSE (ASS)	94

* TRADUCTION NON DISPONIBLE AU MOMENT DE LA PUBLICATION

INDEX

Désignation	Page
CAPTEUR DE VITESSE (ASS) (MOTEUR)	105
CARENAGE DE MOTEUR (ASS)	165
CARTER AV (ASS)	21
CARTER DE VOLANT (ASS)	20
CEINTURE DE SECURITE (ASS)	450
	451
CHAPEAU DE VALVE	272
CHAPEAU (ENS) (RÉSERVOIR D'EAU)	360
CHAPEAU (HUILE MOTEUR)	16
CHAUFFAGE DE CABINE (ASS)	407
CHAUFFAGE DE CABINE (VERSION)	406
CHAUFFAGE ET MONTAGE - CABINE (ASS)	405
CLAPET DE DECHARGE (ASS)	275
	276
CLAPET DE DECHARGE (ASS) (AUXILIAIRE)	272
CLAPET DE DECHARGE (ASS) (CHARGE)	143
CLAPET DE DECHARGE (ASS) (INCLINAISON)	270
CLAPET DE DECHARGE (ASS) (INCLINAISON, AUXILIAIRE)	272
CLAPET DE DECHARGE (ASS) (LEVAGE)	270
CLAPET DE DECHARGE (ASS) (LEVAGE, INCLINAISON)	272
CLAPET DE DECHARGE (ASS) (LIMITEUR SECONDAIRE)	143
CLAPET DE DECHARGE (COMPRESSEUR DE RÉFRIGÉRANT)	372
CLAPET DE DECHARGE (PRESSION D'HUILE MOTEUR)	275
CLAPET DE RETENUE (ENS)	269
CLAPET DE RETENUE (ENS) (PILOTE)	251
CLÉ	8
	11
CLÉ ÉLECTRONIQUE (ENS) (SÉCURITÉ)	80
CLIGNOTANT (ENS) (12 VOLTS) (12-VOLTS) (FEU DE STOP)	88
CLIMATISEUR (ASS)	367
CLIMATISEUR ET MONTAGE (ASS)	365
CLIMATISEUR (VERSION)	366
COLLECTEUR - COMMANDE (ASS)	251
COLLECTEUR - COMMANDE (ASS)	253
COLLECTEUR - COMMANDE (ASS)	252
COLLECTEUR D'ADMISSION (ASS)	53
COLLECTEUR D'ÉCHAPPEMENT (ASS)	52
COLLECTEUR ET CANALISATIONS (ASS) - COMMANDE	128
COLLECTEUR ET CANALISATIONS (ASS)-ACCUM	247
COLLECTEUR ET SOLÉNOÏDE (ASS)-COMMANDE	250
COLLECTEUR-RETOUR (ASS)	130
COMMANDE - AIR ET TEMPERATURE (ASS)	376
COMMANDE DE CLIMATISEUR (ASS)	410
	412
	426
COMMANDE DE COLLECTEUR ET MONTAGE (ASS)	248
	249
COMMANDE DE FAISCEAU (ENS)	375
COMMANDE DE POIGNÉE (ASS)	382
	383
	385
	387
COMMANDE DE POIGNÉE (ASS) (DROITE)	384
COMMANDE DE POIGNÉE (ASS) (GAUCHE)	386
COMMANDE DE POIGNÉE (ASS) (GAUCHE)	82
COMMANDE DE RÉGULATEUR (ASS)	58
	60
COMMANDE ÉLECTROHYDRAULIQUE (ASS)	377
	378
	379
	380
	381
COMMANDE ET CÂBLAGE (ASS)-AIR ET TEMPÉRATURE	375
COMMANDE NON PROGRAMMEE (ASS) (MACHINE)	96
COMPRESSEUR DE REFRIGERANT (ASS)	372
	410
	412
COMPRESSEUR ET MONTAGE - RÉFRIGÉRANT (ASS)	372
CONDENSATEUR ET MONTAGE (RÉFRIGÉRANT)	373
CONDENSATEUR ET MONTAGE (RÉFRIGÉRANT)	374
CONDUIT ET FILTRE À AIR DE CABINE (ASS)	402
CONTACTEUR DE DÉMARRAGE À CLÉ (ENS)	437
CONTACTEUR (ENS) (COMMANDE DE TEMPÉRATURE)	376
CONTACTEUR (ENS) (MOTEUR DE DÉMARRAGE)(12-VOLTS)	97
CONTACTEUR (ENS) (VITESSE DU VENTILATEUR DE SOUFFLANTE)	376
CONTREPOIDS (ASS)	164
COUPLEUR EXPRESS (ASS)	323
	324
COUPLEUR EXPRESS (VERSION)	322
COUPLEUR EXPRESS (VERSION)	322
COURROIE (ASS)	5
	7
COURROIE TRAPEZOIDALE	7

* TRADUCTION NON DISPONIBLE AU MOMENT DE LA PUBLICATION

INDEX

Désignation	Page
COURROIE TRAPEZOIDALE (RÉFRIGÉRANT)	372
COURROIE TRAPEZOIDALE (RÉFRIGÉRANT)	411
	413
COUVERCLE - CABINE (ASS)	388
COUVERCLE - PANNEAU DE FUSIBLES (ASS)	75
COUVERCLE-CANALISATIONS (ASS)	325
COUVERCLE DE LA CONSOLE (ASS)	389
COUVERCLE DU TABLEAU DE BORD (ASS)	390
CRÉPINE D'HUILE (MOTEUR)	36
CREPINE (ENS) (RÉSERVOIR HYDRAULIQUE)	266
CREPINE (REMPLISSAGE RÉSERVOIR D'EAU)	358
CULASSE (ASS)	15
CULBUTERIE (ASS)	32

D

DÉMARREUR ÉLECTRIQUE (ASS)	97
	99
DENT MONOBLOC (ASS)	361
DISJONCTEUR DE SECURITE (ENS) (ACCOUDOIR, INTERVERROUILLAGE)	369
DISJONCTEUR DE SECURITE (ENS) (ESSUIE-GLACE)	395
	398
DISTRIBUTEUR (ASS)	270
DISTRIBUTEUR (ASS)	272
DISTRIBUTEUR DE POMPE (ASS)	143
	261
DISTRIBUTEUR DE VITESSE (ASS) (2 VITESSES)	136
	138
DISTRIBUTEUR ET MONTAGE (ASS)	267
	268

E

EAU DES CHEMISES - RECHAUFFEUR (ASS)	78
EAU DES CHEMISES - RECHAUFFEUR (ASS)	77
ÉCLAIRAGE - FEUX DE ROUTE (ASS)	88
ÉCLAIRAGE - GYROPHARE (ASS)	91
ÉCLAIRAGE - PROJECTEURS (ASS)	87
ECLAIRAGE DE GODET (ASS)	201
	203
	205
	207
	209
	211
	213
ÉCLAIRAGE-FEUX DE STOP ET ARRIÈRE (ASS)	90
ÉCRAN (HYDRAULIQUE)	247
ÉCRAN (RÉSERVOIR D'EAU)	357
ÉLÉMENT DE FILTRE À AIR (ENS) (PRINCIPAL)	46
ÉLÉMENT DE FILTRE À AIR (ENS) (SECONDAIRE)	46
ÉLÉMENT DU RÉCHAUFFEUR D'EAU DES CHEMISES (ENS)	77
	78
ENTRAINEMENT EN TANDEM (ASS)	118
	119
ENTRAÎNEMENT POUR COURROIE (GYROPHARE)	86
ENTRETIEN DE LA MACHINE (ASS)	96
ESSIEU (ASS)	114
	115
	116
	117

F

FAISCEAU ARRIÈRE (ENS)	109
FAISCEAU DE CHÂSSIS (ENS)	109
FAISCEAU DE CHAUFFAGE ET CLIMATISATION	100
	366
	367
	410
	416
FAISCEAU DE COMMANDES (ENS)	101
FAISCEAU DE RADIO (ENS)	408
FAISCEAU DE SOUPAPE (ENS)	240
FAISCEAU D'OUTIL DE TRAVAIL (ENS)	82
	104
	112
	195
FAISCEAU D'OUTIL DE TRAVAIL (ENS)	358
FEUX ARRIÈRE ET FEUX D'ARRÊT	90
*FILM-SPEED	466
*FILM-SPEED (ACCÉLÉRATEUR)	470
FILTRE - ELECTRONIQUE (ASS)	1
	2
	161
FILTRE - SÉPARATEUR D'EAU ET DE CARBURANT (ENS)	63
FILTRE A AIR (ASS)	46
	47
	48
FILTRE À AIR DE CABINE (FRAIS)	402

* TRADUCTION NON DISPONIBLE AU MOMENT DE LA PUBLICATION

INDEX

Désignation	Page
	411
	416
FILTRE À AIR DE CABINE (RECIRCULATION)	411
	416
FILTRE À AIR DE CABINE (RECIRCULATION)	402
FILTRE A HUILE (ASS)	122
FILTRE À HUILE (ENS) (EFFICACITÉ AVANCÉE) (HYDRAULIQUE)	122
FILTRE À HUILE (ENS) (MOTEUR)	35
FILTRE À HUILE MOTEUR (ASS)	35
FILTRE À HUILE MOTEUR (ASS)	36
FILTRE ET CANALISATIONS HYRAULIQUES (ASS)	120
FOURCHE - PINCE (ASS)	335
	336
	337
FOURCHE - PINCE (VERSION)	333
	334
FOURCHE PALLETTE (ASS)	339
FOURCHE-RÉSEAU PUBLIC (ASS)	340
	341
FUSIBLE (ENS) (DÉPLACEMENT ROUTIER)	88
FUSIBLE (ENS) (PUISSANCE PRINCIPALE)	101
FUSIBLE (10A)	101
FUSIBLE (100 AMPÈRES)	73
FUSIBLE (15A)	101
FUSIBLE (20A)	75
	92
	101
FUSIBLE (60A)	92

G

GODET - MATÉRIAUX MEUBLES (VERSION)	291
GODET - PINCE (VERSION)	290
	291
GODET - SALETÉ (ENS)	297
	298
	300
	301
GODET - SALETÉ (VERSION)	287
	288
GODET NORMAL (ENS)	302
	303
	304
	305
GODET NORMAL (VERSION)	288
	289
	290
GODET POUR MATERIAUX MEUBLES (ENS)	306
	307
	308
GODET POUR TERRASSEMENT (ASS)	309
GODET POUR TRAVAUX DE SERVITUDE (ASS)	316
	317
	318
GODET TOUS-TRAVAUX (ASS)	310
	311
	312
	313
	314
	315
GODET TOUS-TRAVAUX (VERSION)	292
	293
	294
	295
	296
GRAISSEUR (FILET 1/8-27)	345
GRAISSEUR HYDRAULIQUE (ASS)	189
	190
	191
	230
	232
GRAISSEUR HYDRAULIQUE (ASS)	235
GRAISSEUR HYDRAULIQUE (ASS) (MANUEL)	322
GROUPE DE MOTEUR A PISTONS	134
	136
	138
GROUPE DE TRANSFORMATION - DÉPLACEMENT ROUTIER	162
	163
GUIDE - CANALISATIONS (ASS)	169

H

HUILE MOTEUR - CARTER (ASS)	25

I

INSONORISATION (ASS)	178
	180
	181
INTERRUPTEUR BALANCIER (ENS) (CLIGNOTANT DE DIRECTION)	88
INTERRUPTEUR BALANCIER (ENS) (CLIMATISEUR)	410
	412
INTERRUPTEUR BALANCIER (ENS) (CLIMATISEUR)	365
INTERRUPTEUR BALANCIER (ENS) (COMMANDE DE VITESSE ULTRA-LENTE)	441
INTERRUPTEUR BALANCIER (ENS) (COMMANDE DE VITESSE ULTRA-LENTE)	420

* TRADUCTION NON DISPONIBLE AU MOMENT DE LA PUBLICATION

INDEX

Désignation	Page
INTERRUPTEUR BALANCIER (ENS) (COUPLEUR EXPRESS HYDRAULIQUE)	104, 195
INTERRUPTEUR BALANCIER (ENS) (DÉPLACEMENT ROUTIER)	88
INTERRUPTEUR BALANCIER (ENS) (ESSUIE-GLACE)	395
INTERRUPTEUR BALANCIER (ENS) (ESSUIE-GLACE/LAVE-GLACE AVANT)	398
INTERRUPTEUR BALANCIER (ENS) (FEUX DE DÉTRESSE)	88
INTERRUPTEUR BALANCIER (ENS) (FREIN DE STATIONNEMENT)	437
INTERRUPTEUR BALANCIER (ENS) (GYROPHARE)	91
INTERRUPTEUR BALANCIER (ENS) (MODIFICATION DE GRILLE DE COMMANDE)	418
INTERRUPTEUR BALANCIER (ENS) (MOTEUR, 2 VITESSES, AUXILIAIRE)	128
INTERRUPTEUR BALANCIER (ENS) (OUTIL DE TRAVAIL)	82, 112
INTERRUPTEUR BALANCIER (ENS) (POSITIONNEUR D'OUTIL DE TRAVAIL)	199
INTERRUPTEUR BALANCIER (ENS) (POSITIONNEUR D'OUTIL DE TRAVAIL)	219
INTERRUPTEUR BALANCIER (ENS) (PROJECTEURS ARRIÈRE)	437
INTERRUPTEUR BALANCIER (ENS) (PROJECTEURS AVANT)	437
INTERRUPTEUR BALANCIER (ENS) (SOUPAPE DE DÉRIVATION, 4E FONCTION)	437
INTERRUPTEUR BALANCIER (ENS) (VERROUILLAGE HYD, NEUTR INTERVERROUILLAGE)	437

J

Désignation	Page
JAUGE D'HUILE (JAUGE BAÏONETTE DE MOTEUR)	25
JOINT (ASS) (ESSIEU)	115
JOINT DE COUVERCLE (POMPE À EAU)	43
JOINT PLAT (CACHE-SOUPAPES)	10
JOINT PLAT (RÉGULATEUR DE TEMPÉRATURE D'EAU)	39

K

Désignation	Page
*KIT-COUNTERWEIGHT	170, 171
KIT DE CÂBLAGE D'OUTIL DE TRAVAIL	82
KIT DE CHAUFFAGE DE CABINE ET MONTAGE	415
KIT DE MODIFICATION DE GRILLE DE COMMANDE	418, 419
KIT DE MONTAGE DE CLIMATISEUR	412
KIT DE MONTAGE DE CLIMATISEUR ET CHAUFFAGE	410
KIT DE MONTAGE DE COMMANDE	79
KIT DE PLAQUE DE DÉPLACEMENT ROUTIER ET MONTAGE	349
KIT DE PORTE DE CABINE ET MONTAGE	414, 415
KIT DE POSITIONNEUR D'OUTIL DE TRAVAIL	199
KIT DE SÉCURITÉ	80
KIT DE TABLEAU DE BORD	420
KIT DE TRANSFORMATION DU COUPLEUR EXPRESS	195
KIT DE VITRE DE CABINE	417
*KIT-LIFTING	172
KIT PROTÈGE-DÉBRIS	49

L

Désignation	Page
LAME DE COUPE (ASS)	328, 329, 330, 331, 332, 333
LAME DE GODET TOUS-TRAVAUX	282, 283, 284, 285, 286
LAMPE - CLIGNOTANT DE DIRECTION (ASS) (STOP, ARRIÈRE, CLIGNOTANT)	88
LAMPE - FEUX AV (12-VOLTS, 60/55-WATTS)	84, 85
LAMPE - GYROPHARE (ASS)	86
LAMPE - PHARE (ASS)	83
LAMPE - PHARE (ASS) (LONGUE PORTÉE)	109
LAMPE - PHARE ET CLIGNOTANT	84, 85
LAMPE - PHARE ET CLIGNOTANT (POUTRE ÉLEVÉE, BASSE, DROITE)	88
LAMPE - PHARE ET CLIGNOTANT (POUTRE ÉLEVÉE, BASSE, GAUCHE)	88
LAMPE-PLAQUE D'IMMATRICULATION (ASS)	176
LEVIER DE RÉGULATEUR (ASS)	421
LITTÉRATURE (ASS)	429

* TRADUCTION NON DISPONIBLE AU MOMENT DE LA PUBLICATION

INDEX

Désignation	Page
M	
MACHINE DE LEVAGE	173, 174
MANOCONTACT (ENS) (COMPRESSEUR DE RÉFRIGÉRANT, CÔTÉ ÉLEVÉ)	426
MANOCONTACT (ENS) (COMPRESSEUR DE RÉFRIGÉRANT, CÔTÉ INFÉRIEUR)	426
MANOCONTACT (ENS) (HUILE HYDRAULIQUE)	122
MANOCONTACT (ENS) (RÉFRIGÉRANT)	410, 412
MARCHEPIED (ASS)	177
MODULE D'AFFICHAGE (ASS)	420, 437, 441
MODULE-INTERFACE (ASS) (CLAVETTE)	80
MONTAGE - IMMATRICULATION (ASS)	176
MONTAGE DE COLLECTEUR ET SOLÉNOÏDE (ASS)-ACCUM	246
MONTAGE DE MOTEUR (ASS)	24
MONTAGE DE MOTEUR (VERSION)	6
MONTAGE DE POMPE (ASS)	140
MONTAGE DE RADIATEUR ET REFROIDISSEUR D'HUILE (ASS)	41
MONTAGE DE RADIO (ASS)	408
MONTAGE DE VÉRIN (ASS)	255, 256, 257
MONTAGE DU TOIT ROPS (ASS)	433
MOTEUR À ENGRENAGES (ASS) (*FAN, DEMAND)	254
MOTEUR D'ESSUIE-GLACE (ASS) (PORTE DE CABINE)	395, 398
MOTEUR ET MONTAGE - HYDROSTATIQUE (ASS)	132, 133
MOTEUR ET MONTAGE DE VENTILATEUR HYDRAULIQUE (ASS)	254
MOTEUR (VERSION)	4
MOTEUR (VERSION PRINCIPALE)	5
*MOUNTING GP-ARMREST	431, 432
O	
OEILLETONS DE LEVAGE MOTEUR (ASS)	23
P	
PALONNIER - GROUPE DE COMMANDE (ASS)	383, 384, 385, 386, 387
PANNEAU DE FAISCEAU (ENS)	437
PARE-SOLEIL	455, 456
PIGNONNERIE AV (ASS)	18
*PIN GP-LIFT ARM	280
PINCE - BÂTI (ASS)	344
PINCE - VÉRIN (ASS)	184
PINCE-RÉSEAU PUBLIC (ASS)	345, 346
PISTON ET BIELLE (ASS)	27
PLAFONNIER (ASS)	437
PLAQUE-DÉPLACEMENT ROUTIER (ASS)	355
PLAQUE-DÉPLACEMENT ROUTIER (ASS)	354
PLAQUE D'IDENTIFICATION PRODUIT (MACHINE)	466, 470
PLAQUE (IDENTIFICATION) (CAT)	310, 311, 314
PLAQUE (IDENTIFICATION) (CAT)	312
PLAQUE SIGNALÉTIQUE (ASS)	465
PLAQUE SIGNALÉTIQUE (ASS)	462, 464
PLAQUE SIGNALÉTIQUE (ASS) (DÉBIT ÉLEVÉ)	194
PLAQUE SIGNALÉTIQUE (REMARQUE) (AUTRE SORTIE, LIRE LE GUIDE D'UTILISATION ET D'ENTRETIEN)	415
PLAQUE SIGNALÉTIQUE (REMARQUE) (AUTRE SORTIE, LIRE LE GUIDE D'UTILISATION ET D'ENTRETIEN)	414
PLAQUE SIGNALÉTIQUE (REMARQUE) (AUTRE SORTIE, LIRE LE GUIDE D'UTILISATION ET D'ENTRETIEN)	391, 393
PLAQUE SIGNALÉTIQUE (REMARQUE) (DIRECTION)	162
PLAQUES SIGNALETIQUES ET AUTOCOLLANTS (ASS)	466, 470
PLAQUES SIGNALETIQUES ET AUTOCOLLANTS (ASS)	473
PNEU ET JANTE (ASS)	146, 147, 148, 149, 150, 151, 152, 153

* TRADUCTION NON DISPONIBLE AU MOMENT DE LA PUBLICATION

INDEX

Désignation	Page
	154
	155
POIGNÉE ET AXE DE COUPLEUR (ASS)	347
	348
POMPE - DIAPHRAGME (ASS)	358
POMPE A EAU (ASS)	43
POMPE A ENGRENAGES (ASS)	258
	259
	263
POMPE A HUILE MOTEUR (ASS)	37
POMPE A PISTONS (ASS)	143
	261
POMPE D'AMORÇAGE DE CARBURANT ET FILTRE PRINCIPAL	63
POMPE D'INJECTION DE CARBURANT (ASS)	65
POMPE ET MONTAGE - OUTIL DE TRAVAIL (ASS)	259
	260
POMPE ET MONTAGE - PIGNON	258
POMPE HYDROSTATIQUE ET MONTAGE (ASS)	142
POMPES DE PISTONS ET ENGRENAGES (ASS)	263
PORTIÈRE DE CABINE (ASS)	391
	398
PORTIÈRE DE CABINE (ASS)	393
	395
POSITIONNEUR DE FOURCHE (ASS)	339
POULIE DE POMPE À EAU (ASS)	31
PROTECTION DE ROPS/FOPS (ASS)	404
PROTEGE-COURROIE (ASS)	19

R

Désignation	Page
RACCORD (ASS)	235
RACCORD (ASS) (COLLECTEUR DE RETOUR)	230
	232
RACCORD EN T (ASS)	195
	215
	235
RADIATEUR ET REFROIDISSEUR D'HUILE HYDRAULIQUE (ASS)	44
RÉCHAUFFEUR DE FAISCEAU (ENS)	407
REFROIDISSEUR D'HUILE MOTEUR (ASS)	38
REGARD DE NIVEAU (ASS) (RÉSERVOIR HYDRAULIQUE)	266
REGARD DE NIVEAU (NIVEAU DE LIQUIDE DE REFROIDISSEMENT)	44
RÉGULATEUR - PÉDALE (ASS)	442
RÉGULATEUR DE TEMPÉRATURE D'EAU (ENS) (THERMOSTAT)	39
RELAIS (ENS)	92
RELAIS (ENS) (COQUILLE)	101
	405
	416
RELAIS (ENS) (PUISSANCE PRINCIPALE)	101
RELAIS (ENS) (12 VOLTS)	101
	112
	219
	373
	410
	412
RELAIS (ENS) (12 VOLTS) (COMMANDE DE TRANSLATION)	199
RELAIS (ENS) (12 VOLTS) (DÉMARRAGE À FROID)	105
RELAIS (ENS) (12 VOLTS) (FEUX D'ARRÊT)	88
RELAIS (ENS) (12 VOLTS) (OUTIL DE TRAVAIL)	82
RENIFLARD	33
RENIFLARD (ASS)	33
RENIFLARD (RÉSERVOIR HYDRAULIQUE)	265
RÉSERVOIR DE CARBURANT (ASS)	69
RÉSERVOIR DE CARBURANT ET MONTAGE (ASS)	67
RÉSERVOIR D'EAU (ASS)	360
RÉSERVOIR D'EAU ET MONTAGE (ASS)	358
RÉSERVOIR HYDRAULIQUE (ASS)	265
RÉSERVOIR HYDRAULIQUE (ASS)	266
RÉSERVOIR HYDRAULIQUE ET MONTAGE (ASS)	264
RESSORT-GAZ (ASS)	453
RETROVISEUR - CABINE (ASS)	455
	456
RÉTROVISEUR (ASS)	430
RÉTROVISEUR ET MONTAGE (ASS)	175
ROTATION DE LA ROUE DU VENTILATEUR SOUFFLANT (CLÉ DE DÉMARRAGE)	437
ROTATION DE LA ROUE DU VENTILATEUR SOUFFLANT (CONSOLE DE POSTE DE CONDUITE)	466
	470
ROTATION DE LA ROUE DU VENTILATEUR SOUFFLANT (GRILLE DE COMMANDE, CÔTÉ DROIT)	418
ROTATION DE LA ROUE DU VENTILATEUR SOUFFLANT (GRILLE DE COMMANDE, CÔTÉ DROIT)	419
ROTATION DE LA ROUE DU VENTILATEUR SOUFFLANT (GRILLE DE COMMANDE, CÔTÉ GAUCHE)	418
	419
ROTATION DE LA ROUE DU VENTILATEUR SOUFFLANT (N. D'ÉTAPE)	215

* TRADUCTION NON DISPONIBLE AU MOMENT DE LA PUBLICATION

INDEX

Désignation	Page
ROTATION DE LA ROUE DU VENTILATEUR SOUFFLANT (NE PAS VAPORISER, LIRE LE GUIDE D'UTILISATION ET D'ENTRETIEN)	367
ROTATION DE LA ROUE DU VENTILATEUR SOUFFLANT (NE PAS VAPORISER, LIRE LE GUIDE D'UTILISATION ET D'ENTRETIEN)	407
ROTATION DE LA ROUE DU VENTILATEUR SOUFFLANT (*OPERATOR CONTROL)	466 470
ROTATION DE LA ROUE DU VENTILATEUR SOUFFLANT (SÉCURITÉ MACHINE, LIRE LE GUIDE D'UTILISATION ET D'ENTRETIEN)	80
ROUE ET PNEU (VERSION)	155 156 157 158 159 160

S

SIÈGE (ASS) (STATIQUE)	445
SIÈGE AVEC SUSPENSION (ASS)	452
SIÈGE AVEC SUSPENSION (ASS) (AIR)	443
SIÈGE ET ACCOUDOIR (ASS)	444 445
SIÈGE ET ACCOUDOIR (ASS)	443
SIÈGE ET MONTAGE (ASS)	446 447 448
SIEGE ET SUSPENSION (ASS)	449
SIEGE (VERSION)	449
SILENCIEUX (ASS)	55
SILENCIEUX ET MONTAGE (ASS)	54
SONDE - CIRCUIT DE CARBURANT	93
SONDE - NIVEAU DE CARBURANT (ENS)	67
SOUPAPE - SOLÉNOÏDE (ASS)	254 278 279
SOUPAPE - SOLÉNOÏDE (ASS) (ARRÊT PILOTE)	251
SOUPAPE - SOLÉNOÏDE (ASS) (COUPLEUR EXPRESS)	253
SOUPAPE - SOLÉNOÏDE (ASS) (FREIN DE STATIONNEMENT)	143
SOUPAPE - SOLÉNOÏDE (ASS) (MOTEUR, 2 VITESSES)	252
SOUPAPE - SOLÉNOÏDE (ASS) (PRINCIPAL)	272
SOUPAPE A COMMANDE MANUELLE (ASS)	274
SUPPORT - MONTAGE (ASS)	461

T

TABLEAU DE BORD (ASS)	437 441
TABLIER - FOURCHE (ASS)	321 322
TAMIS D'EAU (ASS)	357
TAPIS DE PLANCHER	422
THERMOCONTACT (CLIMATISEUR)	367
THERMOCONTACT (LIQUIDE DE REFROIDISSEMENT DU MOTEUR)	95
TRANSMISSION (VERSION)	141
TURBOCOMPRESSEUR (ASS)	56

V

VANNE DE RINÇAGE (ASS)	134 136 138
VANNE PILOTE	277
VANNE PILOTE (ASS)	277
VASE D'EXPANSION POUR LIQUIDE RÉFRIGERANT	40
VENTILATEUR SOUFFLANT (ASS)	44
VÉRIN DE BRAS DE LEVAGE (ASS)	188
VERIN DE GODET (ASS)	183
VÉRIN DE LEVAGE (ASS)	188
VÉRIN D'INCLINAISON (ASS) (DROITE)	188
VÉRIN D'INCLINAISON (ASS) (GAUCHE)	188
VÉRIN ET BIELLE DE COUPLEUR (ASS)	326 327
VERIN-GAZ (ENS)	393
VERIN-GAZ (ENS) (CABINE)	414 415
VERIN-GAZ (ENS) (CABINE)	391
VERIN-GAZ (ENS) (DROITE)	41
VERIN-GAZ (ENS) (GAUCHE)	41
VERIN-GAZ (ENS) (PORTE)	414 415
VERIN-GAZ (ENS) (PORTE)	391
VERIN-GAZ (ENS) (SANS VERROUILLAGE)	453
VERIN-GAZ (ENS) (VERROUILLAGE)	453
VÉRIN HYDRAULIQUE (ASS)	185 186 187
VERROUILLAGE (ASS) (COUVERCLE DE MOTEUR)	165
VERROUILLAGE DE COUPLEUR EXPRESS (ASS)	351 352 353
VERSION DE CHASSIS	1
VERSION DE GODET POUR TRAVAUX DE SERVITUDE	296

* TRADUCTION NON DISPONIBLE AU MOMENT DE LA PUBLICATION

INDEX

Désignation	Page	Désignation	Page
VERSION DE MACHINE SPÉCIALE	2		
	3		
VERSION DE TABLIER ET DE FOURCHE	320		
VERSION DE TRANSFORMATION MACHINE	1		
	2		
VERSION DE TRANSFORMATION POUR DÉPLACEMENT ROUTIER	161		
VERSION D'OPTION DE CABINE	436		
VERSION HYDRAULIQUE	192		
	193		
	194		
VERSION NORMALE	1		
VIDANGE-HUILE DE MOTEUR (ASS)	16		
VILEBREQUIN - POULIE (ASS)	30		
VILEBREQUIN (ASS)	11		
VISIÈRE - GROUPE AUXILIAIRE	362		
VITRE DE CABINE (ASS)	457		
	458		
	459		
	460		
VOLANT MOTEUR (ASS)	17		

* TRADUCTION NON DISPONIBLE AU MOMENT DE LA PUBLICATION

INDICE

Nombre	Página

A

ACCESORIOS DE LA CABINA (GR) 362
ACONDICIONADOR DE AIRE (CONFIG) 366
ACONDICIONADOR DE AIRE (GR) 367
ACONDICIONADOR DE AIRE Y MONTAJE (GR) 365
ACOPLADOR - TUBERÍAS DE (GR) 215
ACOPLADOR RÁPIDO (CONFIG) 322
ACOPLADOR RÁPIDO (GR) 323
324
ACUMULADOR DEL ACONDICIONADOR DE AIRE (GR) 363
364
ACUMULADOR HIDRAULICO (GR) 182
AGUA DE LAS CAMISAS - CALENTADOR DEL (GR) 77
78
AIRE - TUBERÍAS DE (GR) 50
51
ALAMBRADO DE ACOPLADOR (GR) 104
ALFOMBRILLA DEL PISO 422
ÁRBOL DE LEVAS (GR) 8
ARO Y LLANTA (GR) 146
147
148
149
150
151
152
153
154
155
ASIENTO CON SUSPENSIÓN (CONFIG) 449
ASIENTO (GR) (ESTATICA) 445
ASIENTO Y MONTAJE (GR) 446
447
448

B

BALANCÍN (GR) 32
BASTIDOR DE GARFIO (GR) 344
BASTIDOR Y MONTAJE (GR)-MAQUINA 166
BATERÍA Y CABLES (GR) 73
BATERÍA (12-VOLTIOS, LIBRE DE MANTENIMIENTO) 73
*BELT GP 5
7
BIELA (GR) 9
BLOQUE MOTOR (GR) 13
BOCINA 437
BOMBA - TUBERÍAS DE (GR) 230
232
235
BOMBA DE ACEITE DEL MOTOR (GR) 37
BOMBA DE AGUA (GR) 43
BOMBA DE CEBADO Y FILTRO PRIMARIO DE COMBUSTIBLE (GR) 63
BOMBA DE ENGRANAJES (GR) 258
259
263
BOMBA DE ENGRANJE Y MONTAJE (GR) 258
BOMBA DE INYECCIÓN DE COMBUSTIBLE (GR) 65
BOMBA DE PISTONES (GR) 143
261
BOMBA DEL DIAFRAGMA (GR) 358
BOMBA Y MONTAJE DE LA HERRAMIENTA DE TRABAJO (GR) 259
260
BOMBAS DE PISTONES Y ENGRANAJES (GR) 263
BRAZO DE LIMPIAPARABRISAS (GR) (PUERTA, CABINA) 395
398
BUJÍA INCANDESCENTE 76
BUJÍA INCANDESCENTE (GR) 76

C

CABINA - MAZO DE CABLES DE LA 101
391
393
395
398
414
415
CABINA INCLUYE ROPS (GR) 161
CABINA INCLUYE ROPS (GR) 1
2
CABLE DE CONTROL (GR) 371
CABLES DE LA CABINA (GR) 101
CABLES DE LA HERRAMIENTA DE TRABAJO (GR) 112
CABLES DE LA MÁQUINA (GR) 109
CABLES DEL ACONDICIONADOR DE AIRE (GR) 366
CABLES DEL ACONDICIONADOR DE AIRE (GR) 100
CABLES DEL ACONDICIONADOR DE AIRE (GR) 406
CABLES DEL MOTOR (GR) 105
107
CAJA DELANTERA (GR) 21
CALCOMANÍA DE ADVERTENCIA (ALTA PRESIÓN, LEER OMM, INTL) 470

* NO HAY TRADUCCION DISPONIBLE EN EL MOMENTO DE LA IMPRESION

INDICE

Nombre	Página
CALCOMANÍA DE ADVERTENCIA (*ALTERNATE EXIT, READ OMM)	391, 393, 414, 415
CALCOMANÍA DE ADVERTENCIA (CONSOLA DEL OPERADOR)	466, 470
CALCOMANÍA DE ADVERTENCIA (*CONTROL PATTERN, LH)	418, 419
CALCOMANÍA DE ADVERTENCIA (*CONTROL PATTERN, RH)	418, 419
CALCOMANÍA DE ADVERTENCIA (DIRECCIÓN)	162
CALCOMANÍA DE ADVERTENCIA (*DO NOT SPRAY, READ OMM)	367, 407
CALCOMANÍA DE ADVERTENCIA (*DO NOT USE ETHER)	466
CALCOMANÍA DE ADVERTENCIA (HERRAMIENTA)	470
CALCOMANÍA DE ADVERTENCIA (INTERRUPTOR DE ARRANQUE)	437
CALCOMANÍA DE ADVERTENCIA (*JUMP START, READ OMM)	470
CALCOMANÍA DE ADVERTENCIA (*LIFT ARM BRACE)	470
CALCOMANÍA DE ADVERTENCIA (*NO ACCESS)	470
CALCOMANÍA DE ADVERTENCIA (NO PISAR)	215
CALCOMANÍA DE ADVERTENCIA (NO SUELDE, NO TALADRE, LEA EL OMM)	466, 470
CALCOMANÍA DE ADVERTENCIA (*OPERATOR CONTROL)	466, 470
CALCOMANÍA DE ADVERTENCIA (PELIGRO DE APLASTAMIENTO)	310, 311, 312, 314, 470
CALCOMANÍA DE ADVERTENCIA (PELIGRO DE APLASTAMIENTO, LEER EL MANUAL)	470
CALCOMANÍA DE ADVERTENCIA (PELIGRO DE APLASTAMIENTO, MANTENGASE DETRAS DE ESTE LUGAR)	256
CALCOMANÍA DE ADVERTENCIA (PELIGRO DE EMPALAMIENTO)	341, 344
CALCOMANÍA DE ADVERTENCIA (PELIGRO DE EMPALAMIENTO)	336, 337
CALCOMANÍA DE ADVERTENCIA (PUNTO DE APLASTAMIENTO)	345
CALCOMANÍA DE ADVERTENCIA (RADIADOR)	470
CALCOMANÍA DE ADVERTENCIA (ROPS, FOPS, LEA EL OMM)	466, 470
CALCOMANÍA DE ADVERTENCIA (SEGURIDAD DE LA MÁQUINA, LEA EL OMM)	80
CALCOMANÍA DE ADVERTENCIA (TIERRA)	466, 470
CALCOMANÍA DE ADVERTENCIA (UNIVERSAL, LEA EL OMM)	470
CALCOMANÍA DE IDENTIFICACIÓN (*BUCKET LOWER)	466, 470
CALCOMANÍA DE IDENTIFICACIÓN (DOS VELOCIDADES)	465
CALCOMANÍA DE IDENTIFICACIÓN (*HIGH FLOW XPS)	464
CALCOMANÍA DE IDENTIFICACIÓN (INTERRUPTOR DE ENCENDIDO)	80
CALCOMANÍA DE IDENTIFICACIÓN (12 VOLTIOS)	466, 470
CALCOMANÍA DE RAYAS (*REFLECTIVE, RED, WHITE)	354, 355
CALCOMANÍA DE SÍMBOLO (AMARRE)	470
CALCOMANÍA DE SÍMBOLO (LEVANTAMIENTO)	172, 173, 174
CALCOMANIA-FOPS	404
CALCOMANÍA (LEA EL OMM)	466, 470
CALCOMANÍA (*POWER DISTRIBUTION)	101
CALCOMANÍA (*REFLECTIVE)	354, 355
CALCOMANIA-SALIDA	459
CALCOMANIA, TABLERO DE FUSIBLE	75
CALCOMANÍAS Y PLACAS DE IDENTIFICACIÓN (GR)	466
CALCOMANÍAS Y PLACAS DE IDENTIFICACIÓN (GR)	470, 473
CALEFACCIÓN DE LA CABINA (CONFIG)	406
CALEFACCIÓN DE LA CABINA (GR)	407
CALEFACCIÓN Y MONTAJE DE LA CABINA (GR)	405

* NO HAY TRADUCCION DISPONIBLE EN EL MOMENTO DE LA IMPRESION

INDICE

Nombre	Página
CÁNCAMOS DE LEVANTAMIENTO DEL MOTOR (GR)	23
CARGA - ALTERNADOR DE (GR)	70
	72
CARGADOR Y HORQUILLA (CONF)	320
CÁRTER - COLECTOR DEL (GR)	25
CHASIS (CONFIG)	1
CIGÜEÑAL - POLEA DE (GR)	30
CIGÜEÑAL (GR)	11
CILINDRO DE CUCHARÓN (GR)	183
CILINDRO DE GARFIO (GR)	184
CILINDRO DE LEVANTAMIENTO - TUBERÍAS DEL (GR)	227
CILINDRO DE LEVANTAMIENTO (GR)	188
CILINDRO HIDRÁULICO (GRUPO)	185
	186
	187
CINTURÓN DE SEGURIDAD (GR)	450
	451
*COIL AS-SOLENOID (12 VOLTIOS)	278
COLADOR (CONJ) (TANQUE HIDRÁULICO)	266
COLADOR DE ACEITE (MOTOR)	36
COLADOR DEL AGUA (GR)	357
COLADOR (LLENADO DEL TANQUE DE AGUA)	358
COMBUSTIBLE - TANQUE DE (GR)	69
COMPARTIMIENTO DEL MOTOR (GR)	165
COMPRESOR DE REFRIGERANTE (GR)	372
	410
	412
COMPRESOR DE REFRIGERANTE Y GRUPO DE MONTAJE	372
CONDENSADOR DEL REFRIGERANTE Y MONTAJE (GR)	373
	374
CONEXIÓN DE ENGRASE (ROSCA DE 1/8-27)	345
CONEXIÓN (GR)	235
CONEXIÓN (GR) (MULTIPLE, RETORNO)	230
	232
CONEXION HIDRAULICA (GR)	189
	190
	191
	230
	232
	235
CONEXION HIDRAULICA (GR) (MANUAL)	322
CONFIGURACIÓN COMÚN	1
CONFIGURACIÓN DE ASIENTO	449
CONFIGURACIÓN DE CABLERIA, CALENTADOR Y ACONDICIONADOR DE AIRE	100
	366
	367
	410
	416
CONFIGURACIÓN DE INSTALACIÓN DEL MOTOR	6
CONFIGURACIÓN DE MOTORES	4
CONFIGURACIÓN DE TRANSFORMACIÓN PARA CARRETERA	161
(CONJ) REGULADOR, TEMPERATURA DEL AGUA (*THERMOSTAT)	39
CONJUNTO DE CABLERIA, RADIO	408
CONJUNTO DE CABLES-CALENTADOR	407
CONJUNTO DE CABLES, VÁLVULA	240
CONJUNTO DE DESTELLADOR (12 VOLTIOS) (*12-VOLT) (STOP LIGHT)	88
CONJUNTO DE FUSIBLE (CORRIENTE PRINCIPAL)	101
CONJUNTO DE FUSIBLE (DESPLAZAMIENTO POR CARRETERA)	88
CONJUNTO DE LLAVE, ELECTRONICA (SEGURIDAD)	80
CONJUNTO DE REGULADOR-ALTERNADOR	70
CONJUNTO DE T	195
	215
CONJUNTO MAZO DE CABLES-CONTROLES DEL OPERADOR	101
CONTRAPESO (GR)	164
*CONTROL & WIRING GP-AIR & TEMP	375
CONTROL DE ACONDICIONADOR DE AIRE (GR)	410
	412
	426
CONTROL DE AIRE Y TEMPERATURA (GR)	376
CONTROL DE MANIJA (GR)	382
	383
	385
	387
CONTROL DE MANIJA (GR) (IZQUIERDO)	82
	386
CONTROL DE MANIJA (GR) (LADO DERECHO)	384
CONTROL DE REGULADOR (GR)	58
	60
CONTROL DEL MULTIPLE (GR)	251
	252
	253
CONTROL ELECTROHIDRAULICO (GR)	377
	378
	379
	380
	381
CONTROL NO PROGRAMADO (GR) (MAQUINA)	96

* NO HAY TRADUCCION DISPONIBLE EN EL MOMENTO DE LA IMPRESION

INDICE

Nombre	Página
CONVERSION DE LA MAQUINA (CONFIG)	1, 2
CONVERSION PARA DESPLAZAMIENTO POR CARRETERA (GR)	162, 163
CORREA TRAPEZOIDAL	7
CORREA TRAPEZOIDAL (REFRIGERANTE)	372, 411, 413
CUBIERTO DEL PANEL DE FUSIBLES (GR)	75
CUCHARON DE GARFIO (CONF)	290, 291
CUCHARÓN DE USO GENERAL (CONFIG)	288, 289, 290
CUCHARÓN DE USO GENERAL (CONJ)	302, 303, 304, 305
CUCHARÓN DE USO MÚLTIPLE (CONFIG)	292, 293, 294, 295, 296
CUCHARÓN DE USO MÚLTIPLE (GR)	310, 312, 315
CUCHARÓN DE USO MÚLTIPLE (GR)	311, 313, 314
CUCHARÓN PARA MATERIALES LIVIANOS	306, 307, 308
CUCHARÓN PARA MATERIALES LIVIANOS (CONFIG)	291
CUCHARON PARA TIERRA (CONF)	287, 288
CUCHARON PARA TIERRA (CONJ)	297, 298, 300, 301
CUCHARÓN PARA TIERRA (GR)	309
CUCHARON UTILITARIO (CONFIG)	296
CUCHARÓN UTILITARIO (GR)	316, 317, 318
CUCHILLA (GR)	328, 329, 330, 331, 332, 333
CULATA DE CILINDROS (GR)	15
*CYLINDER GP-LIFT ARM	188

D

DETECTOR DE NIVEL DEL COMBUSTIBLE	67
DETECTOR DE POSICIÓN (SISTEMA DE COMBUST.) (GR)	93
DIENTE DE UNA PIEZA (UNI-TOOTH) (GR)	361
DRENAJE DEL ACEITE DE MOTOR	16
*DUCT & FILTER GP-CAB AIR	402

E

EJE (GR)	114, 115, 116, 117
ELEMENTO DEL CALENTADOR DEL AGUA DE LAS CAMISAS	77, 78
ELEMENTO DEL FILTRO DE AIRE (CONJ) (PRIMARIO)	46
ELEMENTO DEL FILTRO DE AIRE (CONJ) (SECUNDARIO)	46
EMPAQUETADURA (REGULADOR DE TEMPERATURA DEL AGUA)	39
EMPAQUETADURA (TAPA DE VÁLVULA)	10
ENFRIADOR DE ACEITE DEL MOTOR (GR)	38
ENGRANAJE DELANTERO (GR)	18
ESTRIBO DEL OPERADOR (GR)	177
ETIQUETA DE ADVERTENCIA (GR)	465
ETIQUETA DE ADVERTENCIA (GR)	462, 464
ETIQUETA DE ADVERTENCIA (GR) (*HIGH FLOW)	194

F

*FILM-SPEED	466
*FILM-SPEED (ACELERACIÓN)	470
FILTRO DE ACEITE (CONJ) (EFICIENCIA AVANZADA) (HIDRÁULICO)	122
FILTRO DE ACEITE (CONJ) (MOTOR)	35
FILTRO DE ACEITE DEL MOTOR (GR)	35, 36
FILTRO DE ACEITE (GR)	122
FILTRO DE AIRE DE CABINA (FRESCO)	402, 411, 416
FILTRO DE AIRE DE CABINA (RECIRCULACIÓN)	402, 411, 416

* NO HAY TRADUCCION DISPONIBLE EN EL MOMENTO DE LA IMPRESION

INDICE

Nombre	Página
FILTRO DE AIRE (GR)	46, 47, 48
FILTRO DE COMBUSTIBLE Y SEPARADOR DE AGUA (CONJ)	63
FILTROS Y TUBERÍAS HIDRÁULICAS (GR)	120
FUSIBLE (10-AMPERIOS)	101
FUSIBLE (100-AMPERIOS)	73
FUSIBLE (15 AMPERIOS)	101
FUSIBLE (20-AMPERIOS)	75, 92, 101
FUSIBLE (60 AMPERIOS)	92

G

Nombre	Página
GARFIO DE UTILIDAD (GR)	345, 346
GRUPO DE BASTIDOR DE HORQUILLA	342, 343
GRUPO DE BASTIDOR, MAQUINARIA	168
GRUPO DE CILINDRO Y ESLABON, ACOPLADOR	326, 327
GRUPO DE CONEXIÓN EN TE	235
GRUPO DE ESLABON, ACOPLADOR	350
GRUPO DE HOJA DE CUCHARÓN DE USO MÚLTIPLE	282, 283, 284, 285, 286
GRUPO DE MANIJA Y PIN-ACOPLADOR	347, 348
GRUPO DE PALANCA-REGULADOR	421
GRUPO DE POSICIONADOR DE LA HORQUILLA	339
GRUPO DE SELLO (EJE)	115
GRUPO DE SENSORES DE TEMPERATURA Y PRESIÓN	95
GRUPO DEMONTAJE DE RADIADOR Y ENFRIAMIENTO DE ACEITE	41
GRUPO, MANIJA, BOMBA DE AGUA	31

H

Nombre	Página
HIDRÁULICA (CONFIG)	194
HIDRÁULICA (CONFIG)	192, 193, 194
HIDROSTATICO, BOMBA Y GRUPO DE MONTAJE	142
HOJA DE LIMPIAPARABRISAS (CONJ) (PUERTA, CABINA)	398
HOJA DE LIMPIAPARABRISAS (CONJ) (PUERTA, CABINA)	395
HORQUILLA DE GARFIO (CONF)	333, 334
HORQUILLA DE GARFIO (GR)	335, 336, 337
HORQUILLA DE UTILIDAD (GR)	340, 341
HORQUILLA PARA TARIMAS (GR)	339

I

Nombre	Página
INCLINACIÓN HORIZONTAL - CILINDRO DE (GR) (IZQUIERDO)	188
INCLINACIÓN HORIZONTAL - CILINDRO DE (GR) (LADO DERECHO)	188
INSONORIZADOR (GR)	178, 180, 181
INSTALACIÓN DE RADIO (GR)	408
INTERRUPTOR (CONJ) (CONTROL DE TEMPERATURA)	376
INTERRUPTOR (CONJ) (*STARTING MOTOR)(12-VOLT)	97
INTERRUPTOR (CONJ) (VELOCIDAD DEL VENTILADOR)	376
INTERRUPTOR DE ARRANQUE CON LLAVE (CONJ)	437
INTERRUPTOR DE LÍMITE (CONJ) (*ARMREST, INTERLOCK)	369
INTERRUPTOR DE LÍMITE (CONJ) (LIMPIADOR)	395, 398
INTERRUPTOR DE PRESIÓN (CONJ) (ACEITE HIDRÁULICO)	122
INTERRUPTOR DE PRESIÓN (CONJ) (LADO INFERIOR DEL COMPRESOR DE REFRIGERANTE)	426
INTERRUPTOR DE PRESIÓN (CONJ) (*REFRIGERANT COMPR, HIGH SIDE)	426
INTERRUPTOR DE PRESIÓN (CONJ) (REFRIGERANTE)	410, 412
INTERRUPTOR DE TEMPERATURA (AIRE ACONDICIONADO)	367
INTERRUPTOR DE TEMPERATURA (REFRIGERANTE DEL MOTOR)	95
INTERRUPTOR DE VOLQUETE (CONJ) (ACONDICIONADOR DE AIRE)	365, 410

* NO HAY TRADUCCION DISPONIBLE EN EL MOMENTO DE LA IMPRESION

INDICE

Nombre	Página
	412
INTERRUPTOR DE VOLQUETE (CONJ) (BALIZA DE ADVERTENCIA)	91
INTERRUPTOR DE VOLQUETE (CONJ) (*CONTROL PATTERN CHANGE)	418
INTERRUPTOR DE VOLQUETE (CONJ) (*CREEPER CONTROL)	420
	441
INTERRUPTOR DE VOLQUETE (CONJ) (DESPLAZAMIENTO POR CARRETERA)	88
INTERRUPTOR DE VOLQUETE (CONJ) (*DIVERTER VALVE, 4TH FUNCTION)	437
INTERRUPTOR DE VOLQUETE (CONJ) (FRENO DE ESTACIONAMIENTO)	437
INTERRUPTOR DE VOLQUETE (CONJ) (*FRONT WIPER/WASHER)	398
INTERRUPTOR DE VOLQUETE (CONJ) (HERRAMIENTA)	82
INTERRUPTOR DE VOLQUETE (CONJ) (HERRAMIENTA)	112
INTERRUPTOR DE VOLQUETE (CONJ) (*HYD LOCKOUT, INTERLOCK OVRD)	437
INTERRUPTOR DE VOLQUETE (CONJ) (*HYDRAULIC QUICK COUPLER)	104
	195
INTERRUPTOR DE VOLQUETE (CONJ) (LIMPIADOR)	395
INTERRUPTOR DE VOLQUETE (CONJ) (LUCES DE TRABAJO DELANTERAS)	437
INTERRUPTOR DE VOLQUETE (CONJ) (LUCES DE TRABAJO TRASERAS)	437
INTERRUPTOR DE VOLQUETE (CONJ) (*MOTOR, 2-SPEED, AUXILIARY)	128
INTERRUPTOR DE VOLQUETE (CONJ) (RIESGO)	88
INTERRUPTOR DE VOLQUETE (CONJ) (SEÑAL DE VIRAJE)	88
INTERRUPTOR DE VOLQUETE (CONJ) (UBICADOR DE HERRAMIENTA DE TRABAJO)	199
	219

J

Nombre	Página
JUEGO DE CALENTADOR DE CABINA Y MONTAJE	415
JUEGO DE INSTALACIÓN DE ACONDICIONADOR DE AIRE	412
JUEGO DE INSTALACIÓN DEL ACONDICIONADOR DE AIRE Y CALENTADOR	410
JUEGO-PLACA DE DESPLAZAMIENTO Y MONTAJE	349
JUEGO, PUERTA DE CABINA Y MONTAJE	414
	415
JUNTA DE LA TAPA DE VÁLVULAS (BOMBA DE AGUA)	43

K

Nombre	Página
*KIT-CAB WINDOW	417
*KIT-CONTROL MOUNTING	79
*KIT-CONTROL PATTERN CHANGE	418
	419
*KIT-COUNTERWEIGHT	170
	171
*KIT-DEBRIS GUARD	49
*KIT-INSTRUMENT PANEL	420
*KIT-LIFTING	172
*KIT-QUICK COUPLER CONVERSION	195
*KIT-SECURITY	80
*KIT-WORK TOOL POSITIONER	199
*KIT-WORK TOOL WIRING	82

L

Nombre	Página
LÁMPARA DE BALIZA DE ADVERTENCIA (GR)	86
LÁMPARA DE FARO DELANTERO (*12-VOLT, 60/55-WATT)	84
	85
LÁMPARA DE LUZ DELANTERA Y DE SEÑAL (GR)	84
	85
LÁMPARA DE LUZ DELANTERA Y DE SEÑAL (GR) (LUZ ALTA Y BAJA, DERECHA)	88
LÁMPARA DE LUZ DELANTERA Y DE SEÑAL (GR) (LUZ ALTA Y BAJA, IZQUIERDA)	88
LAMPARA DE PLACA DE REGISTRO (GR)	176
LÁMPARA DEL TECHO (GR)	437
LÁMPARA (12 VLOTIOS, 5 VATIOS) (SERVICIO)	84
	85
LÁMPARA (12 VOLTIOS) (MINIATURA)	437
LÁMPARA (12 VOLTIOS, 10 VATIOS)	176
LÁMPARA (12 VOLTIOS, 21 VATIOS) (AMBAR)	84
	85
LÁMPARA (12 VOLTIOS, 55 VATIOS)	83
	109
LÁMPARA (12 VOLTIOS, 55 VATIOS, HID)	86
LEVANTAMIENTO DE LA MÁQUINA (GR)	173
	174
*LINES GP-LOWERING CONTROL	228
LLAVE	8
	11

* NO HAY TRADUCCION DISPONIBLE EN EL MOMENTO DE LA IMPRESION

INDICE

Nombre	Página
*LOCK GP (*ENGINE COVER)	165
LUCES DE DESPLAZAMIENTO (GR)	88
LUCES DE PARADA Y COLA (GR)	90
LUCES DE PARADA Y DE COLA (GR)	90
LUCES DE REFLECTOR (GR)	87
LUZ DE BALIZA (GR)	91
LUZ DE SEÑAL DE GIRO (GR) (PARADA, COLA, GIRO)	88

M

*MACHINE AR-SPECIAL	2 3
MANDO DE CORREA (BALIZA DE ADVERTENCIA)	86
MANDO TANDEM (GR)	118 119
*MANF & SOLENOID MTG GP-ACCUM	246
*MANIFOLD & LINES GP-ACCUM	247
*MANIFOLD & LINES GP-CONTROL	128
*MANIFOLD & SOLENOID GP-CONTROL	250
MAZO DE CABLES DE CONTROL (CONJ)	375
MAZO DE CABLES DE LA HERRAMIENTA	82 104 112 195 358
MAZO DE CABLES DEL CHASIS (CONJ)	109
MAZO DE CABLES DEL MOTOR (CONJ)	105
MAZO DE CABLES DEL TABLERO (CONJ)	437
MAZO DE CABLES TRASERO (CONJ)	109
MECANISMO DE VÁLVULAS (GR)	32
MEDIDOR DE ACEITE (VARILLA DE MEDICION, MOTOR)	25
MIRILLA DE MEDIDOR (GR) (TANQUE HIDRÁULICO)	266
MIRILLA (NIVEL DE REFRIGERANTE)	44
MODULO DE INTERFAZ (GR) (LLAVE)	80
MODULO DE LA PANTALLA (GR)	420 437 441
MONTAJE DE CILINDRO (GR)	257
MONTAJE DE CILINDRO (GR)	255 256
MONTAJE DE LA BOMBA (GR)	140
MONTAJE DE LA ESTRUCTURA ROPS (GR)	433
MONTAJE DEL MOTOR (GR)	24
MONTAJE DEL TANQUE DE AGUA (GR)	358
MONTAJE-REGISTRO (GR)	176
MOTOR DE ARRANQUE ELÉCTRICO (GR)	99
MOTOR DE ARRANQUE ELÉCTRICO (GR)	97
MOTOR DE ENGRANAJES (GR) (*FAN, DEMAND)	254
MOTOR HIDROSTATICO Y MONTAJE (GR)	132 133
MOTOR-LIMPIAPARABRISAS (GR) (PUERTA, CABINA)	395 398
MOTOR PRIMARIO (CONFIG)	5
MOTOR Y MONTAJE DE VENTILADOR HIDRAULICO (GR)	254
*MOUNTING GP-ARMREST	431 432
MUELLE DE GAS (CONJ)	393
MUELLE DE GAS (CONJ) (CABINA)	391 414 415
MUELLE DE GAS (CONJ) (LADO DERECHO)	41
MUELLE DE GAS (CONJ) (LADO IZQUIERDO)	41
MUELLE DE GAS (CONJ) (*NON-LOCKING)	453
MUELLE DE GAS (CONJ) (PUERTA)	391 414 415
MUELLE DE GAS (CONJ) (TRABA)	453
MÚLTIPLE DE ADMISIÓN (GR)	53
MÚLTIPLE DE ESCAPE (GR)	52
MULTIPLE Y MONTAJE (GR) - CONTROL	248 249

O

*OPTION AR-CAB	436

P

PALANCA UNIVERSAL DE CONTROL (GR)	385 386 387
PALANCA UNIVERSAL DE CONTROL (GR)	383 384
*PIN GP-LIFT ARM	280
PISTÓN Y BIELA (GR)	27
PISTONES DEL MOTOR (GR)	134
PISTONES DEL MOTOR (GR)	136 138
PLACA DE DESPLAZAMIENTO POR CARRETERA (GR)	354 355
PLACA DE IDENTIFICACION (CAT)	310 311 314
PLACA DE IDENTIFICACION (CAT)	312
PLACA DEL TABLERO	376
*PLATE-PRODUCT IDENTIFICATION (*MACHINE)	466

* NO HAY TRADUCCION DISPONIBLE EN EL MOMENTO DE LA IMPRESION

INDICE

Nombre	Página
*PLATE-PRODUCT IDENTIFICATION (*MACHINE)	470
PORTAHORQUILLAS (GR)	321
	322
POSABRAZOS Y MONTAJE (GR)	369
PROTECTOR DE CORREA (GR)	19
PROTECTOR DE ROPS/FOPS	404
PUBLICACIONES (GR)	429
PUERTA DE CABINA	391
	393
	395
	398

R

RADIADOR Y ENFRIADOR DE ACEITE HIDRÁULICO (GR)	44
RECUPERACIÓN DEL REFRIGERANTE (GR)	40
REFLECTOR (GR)	83
REFLECTOR (GR) (*LONG RANGE)	109
REGULADOR - PEDAL DEL (GR)	442
REJILLA (HIDRÁULICO)	247
REJILLA (TANQUE DE AGUA)	357
RELÉ (CONJ)	92
RELÉ (CONJ) (CORRIENTE PRINCIPAL)	101
RELÉ (CONJ) (*SHELL)	101
	405
	416
RELÉ (CONJ) (12 VOLTIOS)	101
	112
	219
	373
	410
	412
RELÉ (CONJ) (12 VOLTIOS) (ARRANQUE EN FRIO)	105
RELÉ (CONJ) (12 VOLTIOS) (CONTROL DE AMORT.)	199
RELÉ (CONJ) (12 VOLTIOS) (HERRAMIENTA)	82
RELÉ (CONJ) (12 VOLTIOS) (LUZ DE PARADA)	88
RESORTE DE GAS (GR)	453
RESPIRADERO	33
RESPIRADERO (GR)	33
RESPIRADERO (TANQUE HIDRÁULICO)	265
RETORNO EN EL MULTIPLE(GR)	130
RETROVISOR (GR)	430
RETROVISOR Y MONTAJE (GR)	175
REVESTIMIENTO DE LA CABINA (GR)	422
	425
RUEDA Y LLANTA (CONFIG)	155
	156
	157
	158
	159
	160

S

*SEAT & ARMREST GP	443
	444
	445
SENSOR DE TEMPERATURA (GR) (ACEITE HIDRÁULICO)	265
SENSOR DE TEMPERATURA (GR) (REFRIGERANTE DEL MOTOR)	105
SENSOR DE VELOCIDAD (GR)	94
SENSOR DE VELOCIDAD (GR) (MOTOR)	105
SERVICIO DE MAQUINA (GR)	96
SILENCIADOR (GR)	55
SILENCIADOR Y MONTAJE GR	54
SISTEMA ROPS DE CABINA CERRADA (CONFIG)	370
SOPLADOR - VENTILADOR (GR)	44
SOPORTE DE MONTAJE (GR)	461
SUSPENSIÓN - ASIENTO CON (GR)	452
SUSPENSIÓN - ASIENTO CON (GR) (AIRE)	443

T

TABLERO DE INSTRUMENTOS (GR)	437
	441
TANQUE DE COMBUSTIBLE Y GRUPO DE MONTAJE	67
TANQUE DEL AGUA (GR)	360
TANQUE HIDRÁULICO (GR)	265
	266
TANQUE HIDRÁULICO Y MONTAJE (GR)	264
TAPA	272
TAPA (ACEITE DEL MOTOR)	16
TAPA CON RESPIRADERO (ARANDELA)	391
	393
	414
	415
TAPA CON RESPIRADERO (RECUPERACIÓN DE REFRIGERANTE)	40
TAPA DE LA CABINA (GR)	388
TAPA DE LA CONSOLA (GR)	389
TAPA DE LLENADO (CONJ) (TANQUE HIDRAULICO)	265
TAPA DE RADIADOR (CONJ)	44
TAPA DE TUBERIAS (GR)	325
TAPA DEL MECANISMO DE VÁLVULAS (GR)	10
TAPA DEL TABLERO DE INSTRUMENTOS (GR)	390

* NO HAY TRADUCCION DISPONIBLE EN EL MOMENTO DE LA IMPRESION

INDICE

Nombre	Página
TAPA DEL TUBO DE LLENADO (ACEITE DEL MOTOR)	21
TAPA DEL TUBO DE LLENADO DE ACEITE (MOTOR)	10
TAPA PARA EL COMBUSTIBLE	69
TAPÓN (CONJ) (TANQUE DE AGUA)	360
TAPÓN DE DRENAJE (COLECTOR DE ACEITE DEL MOTOR)	25
TAPÓN DEL MOTOR (GR)	28, 29
TAPÓN MAGNÉTICO (BASTIDOR)	166
TOPE DEL GARFIO(GR)	346, 356
TRABA-ACOPLADOR RAPIDO (GR)	351, 352, 353
TREN DE FUERZA (CONFIG)	141
TUBERÍAS DE ACONDICIONADOR DE AIRE (GR)	426
TUBERIAS DE CALEFACCION	428
TUBERÍAS DE COMBUSTIBLE (GR)	61
TUBERÍAS DE LA CALEFACCIÓN (GR)	428
TUBERIAS DE LA GUIA (GR)	169
TUBERIAS DE LA HERRAMIENTA DE TRABAJO	240, 244
TUBERÍAS DEL AGUA (GR)	39, 40
TUBERÍAS DEL CILINDRO DE INCLINACIÓN (GR)	238
TUBERÍAS DEL CUCHARÓN (GR)	201, 203, 205, 207, 209, 211, 213
TUBERÍAS DEL ENFRIADOR DE ACEITE HIDRÁULICO (GR)	225
TUBERÍAS DEL FRENO DE ESTACIONAMIENTO (GR)	127
TUBERIAS (GR) -COMBUSTIBLE PRIMARIO Y FILTRO	63
TUBERÍAS HIDRÁULICAS DEL VENTILADOR (GR)	221, 223
TUBERÍAS HIDRÁULICAS (GR)	218, 219
TUBERÍAS HIDROSTÁTICAS (GR)	123, 125
TURBOCOMPRESOR (GR)	56

V

Nombre	Página
*VALVE GP-SPEED CONTROL (DOS VELOCIDADES)	136, 138
VALVULA (COMPRESOR DEL REFRIGERANTE)	372
VÁLVULA DE ALIVIO (GR)	275, 276
VÁLVULA DE ALIVIO (GR) (ACEITE DEL MOTOR)	143
VÁLVULA DE ALIVIO (GR) (AUXILIAR)	272
VÁLVULA DE ALIVIO (GR) (CRUCE)	143
VÁLVULA DE ALIVIO (GR) (INCLINACIÓN)	270
VÁLVULA DE ALIVIO (GR) (LEVANTAMIENTO)	270
VÁLVULA DE ALIVIO (GR) (*LIFT, TILT)	272
VÁLVULA DE ALIVIO (GR) (*TILT, AUXILIARY)	272
VALVULA DE CONTROL DE LA BOMBA (GR)	143, 261
VÁLVULA DE CONTROL (GR)	270, 272
VÁLVULA DE CONTROL MANUAL (GR)	274
VÁLVULA DE CONTROL Y MONTAJE (GR)	267, 268
VÁLVULA DE DESCARGA (GR)	134, 136, 138
VALVULA DE LANZADERA	277
VÁLVULA DE LANZADERA (GR)	277
VÁLVULA DE RETENCIÓN (GR)	269
VÁLVULA DE RETENCIÓN (GR) (PILOTO)	251
VÁLVULA DE SOLENOIDE (GR)	254, 279
VÁLVULA DE SOLENOIDE (GR)	278
VÁLVULA DE SOLENOIDE (GR) (ACOPLADOR RAPIDO)	253
VÁLVULA DE SOLENOIDE (GR) (FRENO DE ESTACIONAMIENTO)	143
VÁLVULA DE SOLENOIDE (GR) (*MOTOR, 2-SPEED)	252
VÁLVULA DE SOLENOIDE (GR) (*PILOT SHUTOFF)	251
VÁLVULA DE SOLENOIDE (GR) (PRINCIPAL)	272
VALVULA (PRESIÓN DEL ACEITE DE MOTOR)	275
VENTANA DE LA CABINA (GR)	457, 458, 459, 460
VISERA	455, 456
VISERA (GR)	455, 456

* NO HAY TRADUCCION DISPONIBLE EN EL MOMENTO DE LA IMPRESION

INDICE

Nombre	Página	Nombre	Página
VOLANTE - CAJA DE (GR)	20		
VOLANTE (GR)	17		

* NO HAY TRADUCCION DISPONIBLE EN EL MOMENTO DE LA IMPRESION

ÍNDICE

Designação	Página

A

ACESSÓRIO - CABINE 362
ACOPLADOR RÁPIDO 322
323
324
ACUMULADOR - AR CONDICIONADO 363
364
ACUMULADOR HIDRÁULICO 182
ADESIVO - PAINEL DE FUSÍVEIS 75
ADESIVO-FOPS 404
ADESIVO-SAÍDA 459
ADESIVO-VELOCIDADE 466
ADESIVO-VELOCIDADE (ACELERADOR) 470
ALAVANCA - GOVERNADOR 421
ALÇA E PINO - ACOPLADOR 347
348
ALTERNADOR DE CORRENTE 70
72
AMORTECEDOR E MONTAGEM 54
AQUECEDOR DA ÁGUA DO MOTOR 77
78
AQUECEDOR DA CABINE 406
407
AQUECEDOR DA CABINE E MONTAGEM 405
ARMAÇÃO DA GARRA 344
ARMAÇÃO E MONTAGEM - MÁQUINA 166
ARMAÇÃO-GARFO 342
343
ARRANJO BÁSICO 1
ARREFECEDOR - ÓLEO DO MOTOR 38
ARTICULAÇÃO - ACOPLADOR 350
ARTICULAÇÃO-T 235
ASSENTO 449
ASSENTO - SUSPENSÃO 449
ASSENTO COM SUSPENSÃO 452
ASSENTO COM SUSPENSÃO (AR) 443
ASSENTO E DESCANSO DO BRAÇO 443
444
445
ASSENTO E MONTAGEM 446
447
448
ASSENTO (ESTÁTICO) 445

B

BALANCIM 32
BATENTE - GARRA 346
356
BATERIA E CABOS / FIOS ELÉTRICOS 73
BATERIA
(12 VOLTS, ISENTO DE MANUTENÇÃO) 73
BIELA 9
BLOCO DO MOTOR 13
BOBINA-SOLENÓIDE (12-VOLTS) 278
BOMBA DA FERRAMENTA DE TRABALHO E MONTAGEM 259
260
BOMBA DAS ENGRENAGENS E MONTAGEM . . . 258
BOMBA DE ÁGUA 43
BOMBA DE DIAFRAGMA 358
BOMBA DE ENGRENAGENS 258
259
263
BOMBA DE ESCORVA DO COMBUSTÍVEL E DO FILTRO PRIMÁRIO 63
BOMBA DE INJEÇÃO DO COMBUSTÍVEL 65
BOMBA DE ÓLEO - MOTOR 37
BOMBA DE PISTÃO 143
261
BOMBA DE PISTÃO E ENGRENAGEM 263
BOMBA E MONTAGEM - HIDROSTÁTICA 142
BORDA CORTANTE 328
329
330
331
332
333
BRAÇO DO LIMPADOR (PORTA DA CABINE) . . . 395
398
BUJÃO DO DRENO (CÁRTER DE ÓLEO DO MOTOR) 25
BUJÃO DO MOTOR 28
29
BUJÃO MAGNÉTICO (ARMAÇÃO) 166
BUZINA 437

C

CABEÇOTE DO MOTOR 15
CABINE - ESTRUTURA DE PROTEÇÃO CONTRA CAPOTAMENTO 1
2
161
CABINE - ESTRUTURA ROPS COBERTA 370
CABO DE CONTROLE 371
CABOS/FIOS ELÉTRICOS - ACOPLADOR 104
CABOS/FIOS ELÉTRICOS - AR CONDICIONADO 100
366
406
CABOS/FIOS ELÉTRICOS - CABINE 101
CABOS/FIOS ELÉTRICOS - FERRAMENTAS DE TRABALHO 112
CABOS/FIOS ELÉTRICOS - MÁQUINA 109
CABOS/FIOS ELÉTRICOS - MOTOR 105

* TRADUÇÃO NÃO DISPONÍVEL NO MOMENTO DA IMPRESSÃO

ÍNDICE

Designação	Página
	107
CAÇAMBA - GARRA	290
	291
CAÇAMBA - PARA APLICAÇAO GERAL	288
	289
	290
CAÇAMBA - SERVIÇOS GERAIS	296
CACAMBA - TERRA	309
CAÇAMBA DE MÚLTIPLAS APLICAÇÕES	292
	293
	294
	295
	296
	310
	311
	312
	313
	314
	315
CACAMBA E GARFO	320
CAÇAMBA PARA APLICAÇÃO GERAL	302
	303
	304
	305
CACAMBA PARA MATERIAL LEVE	306
	307
	308
CAÇAMBA PARA MATERIAL LEVE	291
CAÇAMBA PARA SERVIÇOS GERAIS	316
	317
	318
CAÇAMBA PARA TERRA	287
	288
	297
	298
	300
	301
CAIXA DIANTEIRA	21
CAIXA DO VOLANTE DO MOTOR	20
CÁRTER DO ÓLEO DO MOTOR	25
CHASSI	1
CHASSI - MÁQUINA	168
CHAVE	8
	11
CHAVE - ELETRÔNICO (SEGURANÇA)	80
CHAVE INTERRUPTORA DE PARTIDA	437
CHICOTE - CABINE	101
	391
	393
	395
	398
	414
	415

Designação	Página
CHICOTE - CHASSI	109
CHICOTE - MOTOR	105
CHICOTE - TRASEIRO	109
CHICOTE - VÁLVULA	240
CILINDRO-BRAÇO DE LEVANTAMENTO	188
CILINDRO DA CAÇAMBA	183
CILINDRO DA GARRA	184
CILINDRO DE INCLINAÇÃO (LADO DIREITO)	188
CILINDRO DE INCLINAÇÃO (LADO ESQUERDO)	188
CILINDRO DE LEVANTAMENTO	188
CILINDRO E ARTICULAÇÃO - ACOPLADOR	326
	327
CILINDRO HIDRÁULICO	185
	186
	187
CINTO DE SEGURANÇA	450
	451
COBERTURA DO MOTOR	165
COLETOR - CONTROLE	251
	252
	253
COLETOR - RETORNO	130
COLETOR DE ADMISSÃO	53
COLETOR DE ESCAPE	52
COLETOR E MONTAGEM - CONTROLE	248
	249
COLETOR E SOLENÓIDE-CONTROLE	250
COLETOR E TUBULAÇÕES -CONTROLE	128
COLETOR E TUBULAÇÕES-ACUMULADOR	247
COMANDO DO TANDEM	118
	119
COMANDO HIDRÁULICO	192
	193
	194
COMPRESSOR DE REFRIGERANTE	372
	410
	412
COMPRESSOR DE REFRIGERANTE E MONTAGEM	372
CONDENSADOR DO REFRIGERANTE E MONTAGEM	373
	374
CONDICIONADOR DE AR	366
	367
CONDICIONADOR DE AR E MONTAGEM	365
CONEXÃO	235
CONEXÃO - HIDRÁULICA	189
	190
	191
	230
	232
	235

* TRADUÇÃO NÃO DISPONÍVEL NO MOMENTO DA IMPRESSÃO

ÍNDICE

Designação	Página
CONEXÃO - HIDRÁULICA (MANUAL)	322
CONEXÃO (COLETOR DE RETORNO)	230
	232
CONEXAO EM T	195
	215
CONTRAPESO	164
CONTROLE - ALAVANCA	383
	384
	385
	386
	387
CONTROLE - AR CONDICIONADO	410
	412
	426
CONTROLE - NÃO PROGRAMADO (MÁQUINA)	96
CONTROLE-CABO	382
	383
	385
	387
CONTROLE-CABO (LADO DIREITO)	384
CONTROLE-CABO (LADO ESQUERDO)	82
	386
CONTROLE DO AR E TEMPERATURA	376
CONTROLE DO GOVERNADOR	58
	60
CONTROLE E FIAÇÃO-AR E TEMPERATURA	375
CONTROLE-ELETROIDRÁULICO	377
	378
	379
	380
	381
CORREIA	5
	7
CORREIA DE COMANDO (PISCA-ALERTA)	86
CORREIA EM V	7
CORREIA EM V (REFRIGERANTE)	372
	411
	413

D

DECALQUE	462
	464
	465
DECALQUE - ADVERTÊNCIA (ALTA PRESSÃO, CONSULTAR OMM, INTERNACIONAL)	470
DECALQUE - ADVERTÊNCIA (FERRAMENTA DE TRABALHO)	470
DECALQUE - ADVERTÊNCIA (NÃO É ACESSO)	470
DECALQUE - ADVERTÊNCIA (NÃO SOLDAR, NÃO PERFURAR, CONSULTAR OMM)	466
	470
DECALQUE - ADVERTÊNCIA (NÃO USE ÉTER)	466
DECALQUE - ADVERTÊNCIA (PARTIDA COM CABO AUXILIAR, CONSULTAR OMM)	470
DECALQUE - ADVERTÊNCIA (PERIGO DE ESMAGAMENTO)	470
DECALQUE - ADVERTÊNCIA (PERIGO DE ESMAGAMENTO)	310
	311
	312
	314
DECALQUE - ADVERTÊNCIA (PERIGO DE ESMAGAMENTO, LEIA OMM)	470
DECALQUE - ADVERTÊNCIA (PERIGO DE ESMAGAMENTO, MANTENHA DISTÂNCIA)	256
DECALQUE - ADVERTÊNCIA (PONTO DE ESMAGAMENTO)	345
DECALQUE - ADVERTÊNCIA (PONTO DE UNIÃO)	336
	337
	341
	344
DECALQUE - ADVERTÊNCIA (RADIADOR)	470
DECALQUE - ADVERTÊNCIA (ROPS, FOPS, CONSULTAR OMM)	466
DECALQUE - ADVERTÊNCIA (ROPS, FOPS, CONSULTAR OMM)	470
DECALQUE - ADVERTÊNCIA (TERRA)	466
	470
DECALQUE - ADVERTÊNCIA (TIRA DO BRAÇO DE LEVANTAMENTO)	470
DECALQUE - ADVERTÊNCIA (UNIVERSAL, LER OMM)	470
DECALQUE - AVISO (DIREÇÃO)	162
DECALQUE - AVISO (SAÍDA DO ALTERNADOR, CONSULTAR OMM)	414
DECALQUE - AVISO (SAÍDA DO ALTERNADOR, CONSULTAR OMM)	391
	393
	415
DECALQUE - IDENTIFICAÇÃO (ABAIXAR CAÇAMBA)	466
DECALQUE - IDENTIFICAÇÃO (ABAIXAR CAÇAMBA)	470
DECALQUE - IDENTIFICAÇÃO (DUAS VELOCIDADES)	465
DECALQUE - IDENTIFICAÇÃO (IGNIÇÃO)	80
DECALQUE - IDENTIFICAÇÃO (TRANSF. FLUXO ALTO)	464
DECALQUE - IDENTIFICAÇÃO (12-VOLTS)	466
	470

* TRADUÇÃO NÃO DISPONÍVEL NO MOMENTO DA IMPRESSÃO

ÍNDICE

Designação	Página
DECALQUE - INSTRUÇÃO (CHAVE INTERRUPTORA DE PARTIDA)	437
DECALQUE - INSTRUÇÃO (CONSOLE DO OPERADOR)	466, 470
DECALQUE - INSTRUÇÃO (CONTROLE DO OPERADOR)	466, 470
DECALQUE - INSTRUÇÃO (NÃO VAPORIZE, CONSULTE OMM)	367, 407
DECALQUE - INSTRUÇÃO (PADRÃO DE CONTROLE, DIREITO)	418
DECALQUE - INSTRUÇÃO (PADRÃO DE CONTROLE, DIREITO)	419
DECALQUE - INSTRUÇÃO (PADRÃO DE CONTROLE, ESQUERDO)	418, 419
DECALQUE - INSTRUÇÃO (SEGURANÇA DA MÁQUINA, CONSULTAR OMM)	80
DECALQUE - INSTRUÇÃO (SEM DEGRAUS)	215
DECALQUE - PAINEL	376
DECALQUE - SÍMBOLO (AMARRAÇÃO)	470
DECALQUE - SÍMBOLO (LEVANTAMENTO)	172, 173, 174
DECALQUE - TIRA (*REFLECTIVE, RED, WHITE)	354, 355
DECALQUE (CONSULTAR OMM)	470
DECALQUE (CONSULTAR OMM)	466
DECALQUE (DISTRIBUIÇÃO DE ENERGIA)	101
DECALQUE (FLUXO ALTO)	194
DECALQUE (REFLETOR)	354, 355
DEGRAU	177
DRENO - ÓLEO DO MOTOR	16
DUTO E FILTRO-AR DA CABINE	402

E

EIXO	114, 115, 116, 117
EIXO-COMANDO DE VÁLVULA	8
ELEMENTO - AQUECEDOR DE ÁGUA DA CAMISA	77, 78
ELEMENTO DO FILTRO DE AR (PRIMÁRIO)	46
ELEMENTO DO FILTRO DE AR (SECUNDÁRIO)	46
EMISSOR - NÍVEL DO COMBUSTÍVEL	67
EMISSOR - POSIÇÃO	93
ENCOSTO DO BRAÇO E MONTAGEM	369
ENGRENAGENS DE DISTRIBUIÇÃO	18
ESPELHO RETROVISOR	430
ESPELHO RETROVISOR E MONTAGEM	175

F

FAROL DIANTEIRO (12 VOLTS, 60/55 WATTS)	84
FAROL DIANTEIRO (12 VOLTS, 60/55 WATTS)	85
FIAÇÃO - AQUECEDOR E AR CONDICIONADO	100, 366, 367, 410, 416
FIAÇÃO - CONTROLE	375
FIAÇAO - CONTROLES DO OPERADOR	101
FIAÇÃO - FERRAMENTA DE TRABALHO	82, 104, 112, 195, 358
FIAÇÃO - PAINEL	437
FIAÇÃO ELÉTRICA-AQUECEDOR	407
FIAÇÃO-RÁDIO	408
FILTRO - ÓLEO	122
FILTRO - ÓLEO DO MOTOR	35, 36
FILTRO - ÓLEO (EFICIÊNCIA AVANÇADA) (HIDRÁULICO)	122
FILTRO - ÓLEO (MOTOR)	35
FILTRO - SEPARADOR DE ÁGUA E COMBUSTÍVEL	63
FILTRO DE AR DE CABINA (FRESCO)	402, 411, 416
FILTRO DE AR DE CABINA (RECIRCULAÇÃO)	402, 411
FILTRO DE AR DE CABINA (RECIRCULAÇÃO)	416
FILTRO DE ÓLEO (MOTOR)	36
FILTRO HIDRÁULICO E TUBOS	120
FUSÍVEL (POTÊNCIA PRINCIPAL)	101
FUSÍVEL (RODAGEM)	88
FUSÍVEL (10 AMPERES)	101
FUSÍVEL (100 AMPÈRES)	73
FUSÍVEL (15 AMPERES)	101
FUSÍVEL (20-AMPERES)	75, 92

* TRADUÇÃO NÃO DISPONÍVEL NO MOMENTO DA IMPRESSÃO

ÍNDICE

Designação	Página
	101
FUSÍVEL (60 AMPERES)	92

G

GARFO - SERVIÇOS PÚBLICOS	340
	341
GARFO DA GARRA	333
	334
	335
	336
	337
GARFO DE PALETAS	339
GARRA - SERVIÇOS PÚBLICOS	345
	346
GR. DE CONVERSÃO - OPERAÇÃO RODOVIÁRIA	162
	163
GR. DE SERVIÇO - MÁQUINA	96
GRAXEIRA (ROSCA 1/8-27 POL)	345
GRUPO DE CONVERSÃO - ARRANJO RODOVIÁRIO	161
GRUPO DE INSTALAÇÃO - MOTOR	6
GRUPO DE POLIA - BOMBA DE ÁGUA	31
GUIA - TUBOS	169

I

ILUMINAÇÃO - FREIO E MARCHA À RÉ	90
ILUMINAÇÃO - RODOVIÁRIA	88
INSTALAÇÃO DO RÁDIO	408
INTERRUPTOR - BALANCIM (ACOPLADOR RÁPIDO HIDRÁULICO)	104
	195
INTERRUPTOR - BALANCIM (CONDICIONADOR DE AR)	410
	412
INTERRUPTOR - BALANCIM (CONDICIONADOR DE AR)	365
INTERRUPTOR - BALANCIM (CONTROLE DO MOVIMENTO GRADUAL)	420
INTERRUPTOR - BALANCIM (CONTROLE DO MOVIMENTO GRADUAL)	441
INTERRUPTOR - BALANCIM (FERRAMENTA DE TRABALHO)	82
	112
INTERRUPTOR - BALANCIM (FREIO DE ESTACIONAMENTO)	437
INTERRUPTOR - BALANCIM (LIMPADOR)	395
INTERRUPTOR - BALANCIM (LIMPADOR/LAVADOR DIANTEIRO)	398
INTERRUPTOR - BALANCIM (LUZES DE TRABALHO, DIANTEIRAS)	437
INTERRUPTOR - BALANCIM (LUZES DE TRABALHO, TRASEIRAS)	437
INTERRUPTOR - BALANCIM (MOTOR, DUAS VELOCIDADES, AUXILIAR)	128
INTERRUPTOR - BALANCIM (MUDANÇA DO PADRÃO DE CONTROLE)	418
INTERRUPTOR - BALANCIM (PERIGO)	88
INTERRUPTOR - BALANCIM (PISCA-ALERTA)	91
INTERRUPTOR - BALANCIM (POSICIONADOR DA FERRAMENTA DE TRABALHO)	199
	219
INTERRUPTOR - BALANCIM (RODAGEM)	88
INTERRUPTOR - BALANCIM (SETA DE DIREÇÃO)	88
INTERRUPTOR - BALANCIM (TRAVA HIDRÁULICA, TRAVA SUPERIOR)	437
INTERRUPTOR - BALANCIM (VÁLVULA DESVIADORA, QUARTA FUNÇÃO)	437
INTERRUPTOR - LIMITADOR (DESCANSO DO BRAÇO, TRAVA)	369
INTERRUPTOR - LIMITADOR (LIMPADOR)	395
	398
INTERRUPTOR - PRESSÃO (COMPRESSOR DO GÁS REFRIGERANTE, LADO ALTO)	426
INTERRUPTOR - PRESSÃO (ÓLEO HIDRÁULICO)	122
INTERRUPTOR - PRESSÃO (REFRIGERANTE)	410
	412
INTERRUPTOR - PRESSÃO (REFRIGERANTE DO COMPRESSOR, LADO BAIXO)	426
INTERRUPTOR - TEMPERATURA (AR CONDICIONADO)	367
INTERRUPTOR - TEMPERATURA (LÍQUIDO ARREFECEDOR DO MOTOR)	95
INTERRUPTOR (CONTROLE DE TEMPERATURA)	376
INTERRUPTOR (MOTOR DE PARTIDA)(12-VOLT)	97
INTERRUPTOR (VELOCIDADE DO VENTILADOR)	376

J

JANELA DA CABINE	457
	458
	459
	460
JOGO - PORTA DA CABINE E MONTAGEM	414
	415
JOGO-AQUECEDOR DA CABINE E MONTAGEM	415

* TRADUÇÃO NÃO DISPONÍVEL NO MOMENTO DA IMPRESSÃO

ÍNDICE

Designação	Página
JOGO-ASSENTADOR DA FERRAMENTA DE TRABALHO	199
JOGO-CONTRAPESO	170 171
JOGO DE LEVANTAMENTO	172
JOGO-INSTALAÇÃO DO CONDICIONADOR DE AR	412
JOGO-INSTALAÇÃO DO CONDICIONADOR DE AR E AQUECEDOR	410
JOGO-MUDANÇA DO PADRÃO DE CONTROLE	418 419
JOGO-PAINEL DE INSTRUMENTOS	420
JOGO-PLACA DE RODAGEM E MONTAGEM	349
JOGO-PROTETOR CONTRA DETRITOS	49
JOGO-SEGURANÇA	80
JOGO-SUPORTE DE CONTROLE	79
JOGO-VIDRO DA CABINE	417
JUNTA - TAMPA (BOMBA D'ÁGUA)	43
JUNTA (MECANISMO DAS VÁLVULAS - TAMPA)	10
JUNTA (REGULADOR DA TEMPERATURA DA ÁGUA)	39

K

KIT-CONVERSÃO DO ACOPLADOR RÁPIDO	195
KIT-FIAÇÃO DA FERRAMENTA DE TRABALHO	82

L

LÂMINA-CAÇAMBA DE APLICAÇÕES MÚLTIPLAS	282 283 284 285 286
LÂMINA DO LIMPADOR DE PÁRA-BRISA (PORTA DA CABINE)	395 398
LÂMPADA - FAROL	83
LÂMPADA - FAROL (LONGO ALCANCE)	109
LÂMPADA - SINALIZAÇÃO (LUZ DO FREIO, TRASEIRA, SETA DE DIREÇÃO)	88
LÂMPADA - TETO	437
LÂMPADA DIANTEIRA E DE SINAL	84 85
LÂMPADA DIANTEIRA E DE SINAL (FACHO ALTO, BAIXO, LADO DIREITO)	88
LÂMPADA DIANTEIRA E DE SINAL (FACHO ALTO, BAIXO, LADO ESQUERDO)	88
LAMPADA-PLACA DE REGISTRO	176
LÂMPADA (12-VOLTS) (MINIATURA)	437
LÂMPADA (12-VOLTS, 10-WATTS)	176
LÂMPADA (12-VOLTS, 21-WATTS) (ÂMBAR)	84 85
LÂMPADA (12 VOLTS, 5 WATTS) (APAGAR)	84 85
LÂMPADA (12-VOLTS, 55-WATTS)	83 109
LÂMPADA (12 VOLTS, 55 WATTS, HID)	86
LEVANTAMENTO DA MÁQUINA	173 174
LEVANTAMENTO DO MOTOR	23
LUZ GIRATÓRIA DE ALARME	86
LUZ INTERMITENTE (12-VOLTS) (12 VOLTS) (LUZ DE ESTACIONAMENTO)	88
LUZ TRASEIRA E DE FREIO	90

M

MÁQUINA - CONVERSÃO	1 2
MÁQUINA-ESPECIAL	2 3
MECANISMO DAS VÁLVULAS	32
MEDIDOR - ÓLEO (VARETA DE NÍVEL, MOTOR)	25
MÓDULO - INTERFACE (CHAVE)	80
MÓDULO DO VISOR	420 437 441
MOLA A GÁS	453
MOLA ACIONADA A GAS	393
MOLA ACIONADA A GAS (CABINE)	391 414 415
MOLA ACIONADA A GAS (DIREITO)	41
MOLA ACIONADA A GAS (ESQUERDO)	41
MOLA ACIONADA A GAS (PORTA)	391 414 415
MOLA ACIONADA A GAS (SEM TRAVA)	453
MOLA ACIONADA A GAS (TRAVAMENTO)	453
MONTAGEM - BOMBA	140
MONTAGEM - CILINDRO	255 256 257
MONTAGEM - ESTRUTURA ROPS	433
MONTAGEM - MOTOR	24
MONTAGEM DA PLACA DE REGISTRO	176
MONTAGEM-DESCANSO DO BRAÇO	431 432
MONTAGEM DO COLETOR E SOLENÓIDE-ACUM.	246

* TRADUÇÃO NÃO DISPONÍVEL NO MOMENTO DA IMPRESSÃO

ÍNDICE

Designação	Página
MOTOR	4
MOTOR - ENGRENAGENS (VENTILADOR, VARIÁVEL)	254
MOTOR - LIMPADOR DO VIDRO (PORTA DA CABINE)	395
	398
MOTOR - PISTÃO	134
	136
	138
MOTOR E MONTAGEM - VENTILADOR HIDRÁULICO	254
MOTOR ELÉTRICO DE PARTIDA	97
	99
MOTOR HIDROSTÁTICO E MONTAGEM	132
	133
MOTOR PRIMÁRIO	5

O

OPÇÃO-CABINE	436

P

PAINEL DE INSTRUMENTOS	437
	441
PÁRA-SOL	455
	456
PÁRA-SOL DA CABINE	455
	456
PEDAL DO GOVERNADOR	442
PINO-BRAÇO DE LEVANTAMENTO	280
PISTÃO E BIELA	27
PLACA DE IDENTIFICAÇÃO (CATERPILLAR)	310
	311
	312
	314
PLACA E DECALQUE	466
	470
	473
PLACA-IDENTIFICAÇÃO DO PRODUTO (MÁQUINA)	466
	470
PLACA-RODOVIÁRIO	354
	355
PNEU E ARO	146
	147
	148
	149
	150
	151
	152
	153
	154
	155
POLIA DO VIRABREQUIM	30
PORTA DA CABINE	391
	393
	395
	398
POSICIONADOR-GARFO	339
PROTETOR - CORREIAS	19
PROTETOR - ROPS/FOPS	404
PUBLICAÇÃO	429
PURIFICADOR DE AR	46
	47
	48

R

RADIADOR E ARREFECEDOR DO ÓLEO HIDRÁULICO	44
RECUPERAÇÃO DE LÍQUIDO ARREFECEDOR	40
REDUÇÃO DE RUÍDO	178
	180
	181
REGULADOR - ALTERNADOR	70
REGULADOR - TEMPERATURA DA ÁGUA (TERMOSTATO)	39
RELÉ (CONJ)	92
RELÉ (CONJ) (CARCAÇA)	405
	416
RELÉ (CONJ) (CARCAÇA)	101
RELÉ (CONJ) (POTÊNCIA PRINCIPAL)	101
RELÉ (CONJ) (12-VOLTS)	101
	112
	219
	373
	410
	412
RELÉ (CONJ) (12-VOLTS) (FERRAMENTA DE TRABALHO)	82
RELÉ (CONJ) (12-VOLTS) (LUZ DE FREIO)	88
RELÉ (CONJ) (12-VOLTS) (PARTIDA A FRIO)	105
RELÉ (CONJ) (12-VOLTS) (SISTEMA DE ABSORÇÃO DE IMPACTOS)	199
RESPIRO	33
RESPIRO (TANQUE HIDRÁULICO)	265
REVESTIMENTO DA CABINE	422
	425
RODA E PNEU	155
	156
	157
	158
	159
	160

* TRADUÇÃO NÃO DISPONÍVEL NO MOMENTO DA IMPRESSÃO

ÍNDICE

Designação **Página**

S

SENSOR - TEMPERATURA (LÍQUIDO ARREFECEDOR DO MOTOR) 105
SENSOR - TEMPERATURA (ÓLEO HIDRÁULICO) 265
SENSOR DE PRESSÃO E TEMPERATURA 95
SENSOR DE VELOCIDADE 94
SENSOR DE VELOCIDADE (MOTOR) 105
SILENCIADOR 55
SIST. DE ILUMINAÇÃO - PISCA-PISCA GIRATÓRIO DE ADVERTÊNCIA 91
SISTEMA DE ILUMINAÇÃO - FARÓIS 87
SUPORTE - ARREFECEDR DE ÓLEO E RADIADOR 41
SUPORTE - GARFO 321
322
SUPORTE - MONTAGEM 461

T

TAMPA - BOCAL DE ENCHIMENTO DE ÓLEO (MOTOR) 10
TAMPA - BOCAL DE ENCHIMENTO (ÓLEO DO MOTOR) 21
TAMPA - BOCAL DE ENCHIMENTO (TANQUE HIDRÁULICO) 265
TAMPA - CABINE 388
TAMPA - CONSOLO 389
TAMPA - MECANISMO DAS VÁLVULAS 10
TAMPA - PAINEL DE INSTRUMENTOS 390
TAMPA - RADIADOR 44
TAMPA - TANQUE DE COMBUSTÍVEL 69
TAMPA - TUBULAÇÕES 325
TAMPA COM RESPIRO (ARRUELA) 393
414
415
TAMPA COM RESPIRO (ARRUELA) 391
TAMPA COM RESPIRO (RECUPERAÇÃO DO LÍQUIDO ARREFECEDOR) 40
TAMPA DA VÁLVULA 272
TAMPA DO PAINEL DO FUSÍVEL 75
TAMPA (ÓLEO DO MOTOR) 16
TAMPA (TANQUE DE ÁGUA) 360
TANQUE DE ÁGUA 360
TANQUE DE ÁGUA E MONTAGEM 358
TANQUE DE COMBUSTÍVEL 69
TANQUE DE COMBUSTÍVEL E MONTAGEM 67
TANQUE DE ÓLEO HIDRÁULICO E MONTAGEM 264
TANQUE HIDRÁULICO 265
266
TAPETE 422
TELA FILTRANTE - ÁGUA 357

Designação **Página**

TELA FILTRANTE (ENCHIMENTO DO TANQUE DE ÁGUA) 358
TELA FILTRANTE (HIDRÁULICO) 247
TELA FILTRANTE (TANQUE DE ÁGUA) 357
TELA FILTRANTE (TANQUE HIDRÁULICO) 266
TRAVA - ACOPLADOR RÁPIDO 351
352
353
TRAVA (TAMPA DO MOTOR) 165
TREM DE FORÇA 141
TUBOS - ACOPLADOR 215
TUBOS - ÁGUA 39
40
TUBOS - AQUECEDOR 428
TUBOS - AR 50
51
TUBOS - AR CONDICIONADO 426
TUBOS - ARREFECEDOR DE ÓLEO HIDRÁULICO 225
TUBOS - BOMBA 230
232
235
TUBOS - CAÇAMBA 201
203
205
207
209
211
213
TUBOS - CILINDRO DE INCLINAÇÃO 238
TUBOS - CILINDRO DE LEVANTAMENTO 227
TUBOS - COMBUSTÍVEL 61
TUBOS - FERRAMENTA DE TRABALHO 240
244
TUBOS - FREIO DE ESTACIONAMENTO 127
TUBOS - ÓLEO HIDRÁULICO 218
219
TUBOS - SISTEMA HIDROSTÁTICO 123
125
TUBOS - VENTILADOR HIDRÁULICOS 221
223
TUBOS DO AQUECEDOR 428
TUBULAÇÕES - FILTRO E ESCORVA DO COMBUSTÍVEL 63
TUBULAÇÕES-CONTROLE DE ABAIXAMENTO 228
TURBOALIMENTADOR 56

U

UNI-DENTE 361

* TRADUÇÃO NÃO DISPONÍVEL NO MOMENTO DA IMPRESSÃO

ÍNDICE

Designação	Página	Designação	Página

V

VÁLVULA DE ALÍVIO 275
276
VÁLVULA DE ALÍVIO (AUXILIAR) 272
VÁLVULA DE ALÍVIO (CARGA) 143
VÁLVULA DE ALÍVIO
(COMPRESSOR DO REFRIGERANTE) 372
VÁLVULA DE ALÍVIO (DE DUAS DIREÇÕES) . . . 143
VÁLVULA DE ALÍVIO (INCLINAÇÃO) 270
VÁLVULA DE ALÍVIO
(INCLINAÇÃO, AUXILIAR) 272
VÁLVULA DE ALÍVIO (LEVANTAMENTO) 270
VÁLVULA DE ALÍVIO (LEVANTAR, INCLINAR) . . . 272
VÁLVULA DE ALÍVIO
(PRESSÃO DO ÓLEO DO MOTOR) 275
VÁLVULA DE CONTROLE 270
272
VÁLVULA DE CONTROLE DA BOMBA 143
261
VÁLVULA DE CONTROLE DE VELOCIDADE
(2 VELOCIDADES) 136
138
VÁLVULA DE CONTROLE E MONTAGEM 267
268
VÁLVULA DE ENXAGUAR 134
136
138
VÁLVULA DE RETENÇÃO 269
VÁLVULA DE RETENÇÃO (PILOTO) 251
VÁLVULA DE SEPARAÇÃO 277
VÁLVULA MANUAL 274
VÁLVULA SOLENÓIDE 254
278
279
VÁLVULA SOLENÓIDE
(ACOPLADOR RÁPIDO) 253
VÁLVULA SOLENÓIDE
(DESLIGAMENTO DO PILOTO) 251
VÁLVULA SOLENÓIDE
(FREIO DE ESTACIONAMENTO) 143
VÁLVULA SOLENÓIDE
(MOTOR, DUAS VELOCIDADES) 252
VÁLVULA SOLENÓIDE (PRINCIPAL) 272
VEDADOR (EIXO) 115
VELA DE AQUECIMENTO; VELA
INCANDESCENTE 76
VENTILADOR DE SOPRO 44
VIGIA (NÍVEL DO LÍQUIDO ARREFECEDOR) . . . 44
VIRABREQUIM 11
VISOR DE NÍVEL (TANQUE HIDRÁULICO) 266
VOLANTE DO MOTOR 17

* TRADUÇÃO NÃO DISPONÍVEL NO MOMENTO DA IMPRESSÃO

STICHWORTVERZEICHNIS

Bezeichnung	Seite

A

ABLASSSTOPFEN (MOTORÖLWANNE)	25
ACHSE	114
	115
	116
	117
ANSAUGKRÜMMER	53
ANSCHLUSSKUPPLUNGSLEITUNGEN	215
ANSCHLUSSSTÜCK	235
ANSCHLUSSSTÜCK (RÜCKLAUFVERTEILER)	230
	232
ANZEIGEMODUL	420
	437
	441
ARBEITSGERÄT - LEITUNGEN	240
	244
ARBEITSGERÄT - VERDRAHTUNG	112
ARBEITSGERÄTEPUMPE U. BEFESTIGUNG	259
	260
ARBEITSLEUCHTEN	83
	87
ARBEITSLEUCHTEN (*LONG RANGE)	109
ARNLEHNE U. BEFESTIGUNG	369
AUFKLEBER	462
	464
	465
AUFKLEBER - AUSGANG	459
AUFKLEBER - SICHERUNGSTAFEL	75
AUFKLEBER - SYMBOL (FESTZURREN)	470
AUFKLEBER - SYMBOL (HEBEN)	172
	173
	174
AUFKLEBER - ÜBERROLLSCHUTZ	404
AUFKLEBER (*ALTERNATE EXIT, READ OMM)	391
	393
	414
	415
AUFKLEBER (BETRIEBS- U. WARTUNGS-HANDBUCH LESEN)	466
	470
AUFKLEBER (*HIGH FLOW)	194
AUFKLEBER (LENKUNG)	162
AUFKLEBER (REFLEKTIEREND, ROT, WEISS)	354
	355
AUFKLEBER (REFLEKTIV)	354
	355
AUFKLEBER (STROMVERTEILUNG)	101
AUSPUFFKRÜMMER	52

B

BATTERIE UND VERDRAHTUNG	73
BATTERIE (12 V, WARTUNGSFREI)	73
BEDIENUNGSELEMENTE - KABELSTRANG	101
BEFESTIGUNGSHALTERUNG	461
BELEUCHTUNGSANLAGE (STRASSENAUSRÜSTUNG)	88
BLINKER (12 V) (*12-VOLT) (STOP LIGHT)	88
BLINKLEUCHTE (BREMSLICHT, HECKLEUCHTE, RICHTUNGSBLINKER)	88
BREMS- UND RÜCKLEUCHTE	90
BREMS- UND RÜCKLEUCHTEN	90
*BUCKET AR-UTILITY	296

C

*CONNECTING ROD GP	9
*CONTROL & WIRING GP-AIR & TEMP	375
*CYLINDER GP-LIFT ARM	188

D

DICHTUNG (ACHSE)	115
DICHTUNG (KÜHLWASSERTHERMOSTAT)	39
DICHTUNG (VENTILDECKEL)	10
DOKUMENTATION	429
DREHSTROMGENERATOR	70
	72
DREHZAHLSENSOR	94
DREHZAHLSENSOR (MOTOR)	105
DREHZAHLSTEUERVENTIL (2-GANG)	136
	138
DRUCKBEGRENZUNGSVENTIL (KÄLTEMITTELKOMPRESSOR)	372
DRUCKBEGRENZUNGSVENTIL (MOTORÖLDRUCK)	275
DRUCKLÜFTER	44
DRUCKLUFTLEITUNGEN	50
	51
DRUCKSCHALTER (HYDRAULIKÖL)	122
DRUCKSCHALTER (KÄLTEMITTELKOMPRESSOR, OBERE SEITE)	426
DRUCKSCHALTER (KÄLTEMITTELKOMPRESSOR, UNTERE SEITE)	426
DRUCKSCHALTER (KÜHLMITTEL)	410
	412

E

EINBAUSATZ - KLIMAANLAGE U. HEIZUNG	410
EINFÜLLKAPPE (HYDRAULIKTANK)	265
EINFÜLLSTUTZENKAPPE (MOTORÖL)	21
ELEKTROHYDRAULISCHE STEUERUNG	377

* ÜBERSETZUNG ZUM ZEITPUNKT DER DRUCKLEGUNG NICHT VORHANDEN

STICHWORTVERZEICHNIS

Bezeichnung	Seite
	378
	379
	380
	381
ELEKTRONISCHER SCHLÜSSEL (SICHERHEIT)	80
ENDSCHALTER (*ARMREST, INTERLOCK)	369
ENDSCHALTER (SCHEIBENWISCHER)	395
	398
ENTLÜFTER	33
ENTLÜFTER (HYDRAULIKTANK)	265
ERDSCHAUFEL	287
	288
	297
	298
	300
	301
	309

F

FAHRERHAUS-KABELBAUM	101
	391
	393
	395
	398
	414
	415
FAHRERHAUS MIT ÜBERROLLSCHUTZ	1
	2
	161
	370
FAHRERHAUS, SONNENBLENDE	455
	456
FAHRERHAUSABDECKUNG	388
FAHRERHAUSAUSKLEIDUNG	422
	425
FAHRERHAUSBELEUCHTUNG	437
FAHRERHAUSFENSTER	457
	458
	459
	460
FAHRERHAUSHEIZUNG	406
	407
FAHRERHAUSHEIZUNG U. BEFESTIGUNGSTEILE	405
FAHRERHAUSLUFTFILTER (FRISCH)	402
	411
	416
FAHRERHAUSLUFTFILTER (UMLAUFLUFT)	402
	411
	416
FAHRERHAUSTÜR	391
	393
	395
	398
FAHRERHAUSTÜR U. BEFESTIGUNG	414
	415
FAHRERHAUSVERDRAHTUNG	101
FAHRERHAUSZUBEHÖR	362
FAHRERSITZ	449
FAHRERSITZ (STATISCH)	445
FAHRERSITZ UND UNTERBAU	446
	447
	448
FAHRWERK	1
FAHRWERK-KABELBAUM	109
FESTSTELLBREMSLEITUNGEN	127
*FILM-SPEED	466
*FILM-SPEED (GASSTEUERUNG)	470
FILTERSIEB (HYDRAULIKTANK)	266
*FRAME GP-FORK	342
	343
FUSSMATTE	422

G

GABELEINSTELLER	339
GABELTRÄGER	321
	322
GASFEDER	393
GASFEDER (FAHRERHAUS)	391
	414
	415
GASFEDER (LINKS)	41
GASFEDER (*NON-LOCKING)	453
GASFEDER (RECHTS)	41
GASFEDER (SPERRUNG)	453
GASFEDER (TÜR)	391
	414
	415
GASFEDERGRUPPE	453
GASPEDAL	442
GEGENGEWICHT	164
GLÜHKERZE	76
GREIFERANSCHLAG	346
	356
GREIFERGABEL	333
	334
	335
	336
	337
GREIFERRAHMEN	344
GREIFERSCHAUFEL	290
	291
GREIFERZYLINDER	184

* ÜBERSETZUNG ZUM ZEITPUNKT DER DRUCKLEGUNG NICHT VORHANDEN

STICHWORTVERZEICHNIS

Bezeichnung	Seite
GRIFF U. BOLZEN - ANSCHLUSS	347, 348
GRUNDAUSFÜHRUNG	1

H

Bezeichnung	Seite
HEBESATZ	172
HEIZUNGSKABELSTRANG	407
HEIZUNGSLEITUNGEN	428
HINTERER KABELSTRANG	109
HUBZYLINDER	188
HUBZYLINDERLEITUNGEN	227
HYDRAULIKDRUCKSPEICHER	182
HYDRAULIKFILTER U. LEITUNGEN	120
HYDRAULIKFITTING	189, 190, 191, 230, 232, 235
HYDRAULIKFITTING (MANUELL)	322
HYDRAULIKKÜHLERMOTOR U. BEFESTIGUNG	254
HYDRAULIKLEITUNGEN	218, 219
HYDRAULIKLÜFTERLEITUNGEN	221, 223
HYDRAULIKÖLKÜHLERLEITUNGEN	225
HYDRAULIKPUMPE UND LEITUNGEN	230, 232, 235
HYDRAULIKSYSTEM	192, 193, 194
HYDRAULIKTANK	265, 266
HYDRAULIKTANK UND BEFESTIGUNGSTEILE	264
HYDRAULIKZYLINDER	185, 186, 187
HYDROSTATIKLEITUNGEN	123, 125
HYDROSTATIKMOTOR U. BEFESTIGUNG	132, 133
HYDROSTATIKPUMPE U. BEFESTIGUNG	142

I

Bezeichnung	Seite
IDENTIFIKATIONSSCHILD (CAT)	310, 311, 312, 314
IDENTIFIZIERUNGS-AUFKLEBER (*BUCKET LOWER)	466, 470
IDENTIFIZIERUNGS-AUFKLEBER (*HIGH FLOW XPS)	464
IDENTIFIZIERUNGS-AUFKLEBER (START-SCHLÜSSELSCHALTER)	80
IDENTIFIZIERUNGS-AUFKLEBER (ZWEI GESCHWINDIGKEITEN)	465
IDENTIFIZIERUNGS-AUFKLEBER (12 V)	466, 470
INSTRUKTIONS-AUFKLEBER (BEDIENER-KONSOLE)	466, 470
INSTRUKTIONS-AUFKLEBER (*CONTROL PATTERN, LH)	418, 419
INSTRUKTIONS-AUFKLEBER (*CONTROL PATTERN, RH)	418, 419
INSTRUKTIONS-AUFKLEBER (*DO NOT SPRAY, READ OMM)	367, 407
INSTRUKTIONS-AUFKLEBER (MASCHINENSICHERHEIT, HANDBUCH LESEN)	80
INSTRUKTIONS-AUFKLEBER (NICHT BETRETEN)	215
INSTRUKTIONS-AUFKLEBER (*OPERATOR CONTROL)	466, 470
INSTRUKTIONS-AUFKLEBER (STARTSCHLÜSSELSCHALTER)	437
INSTRUMENTENBRETT-AUFKLEBER	376
INSTRUMENTENTAFEL	437, 441
INSTRUMENTENTAFEL-KABELSTRANG	437
INSTRUMENTENTAFELABDECKUNG	390

J

Bezeichnung	Seite
JOYSTICK -STEUERUNG	383, 384, 385, 386, 387

K

Bezeichnung	Seite
KABELSTRANG - ARBEITSGERÄT	82, 104, 112, 195, 358

* ÜBERSETZUNG ZUM ZEITPUNKT DER DRUCKLEGUNG NICHT VORHANDEN

STICHWORTVERZEICHNIS

Bezeichnung	Seite
KABELSTRANG - HEIZUNG U. KLIMAANLAGE	100, 366, 367, 410, 416
KÄLTEMITTELKOMPRESSOR	372, 410, 412
KÄLTEMITTELKOMPRESSOR U. BEFESTIGUNG	372
KÄLTEMITTELKONDENSATOR U. BEFESTIGUNGSTEILE	373, 374
KAPPE MIT ENTLÜFTER (KÄLTEMITTELRÜCKGEWINNUNG)	40
KAPPE MIT ENTLÜFTER (UNTERLEGSCHEIBE)	393, 414, 415
KAPPE MIT ENTLÜFTER (UNTERLEGSCHEIBE)	391
KAPPE (MOTORÖL)	16
KAPPE (WASSERTANK)	360
KEILRIEMEN	7
KEILRIEMEN (KÜHLMITTEL)	372, 411, 413
KIPPSCHALTER (ARBEITSGERÄT)	82
KIPPSCHALTER (ARBEITSGERÄT)	112
KIPPSCHALTER (ARBEITSGERÄTEANORDNUNG)	219
KIPPSCHALTER (ARBEITSGERÄTEANORDNUNG)	199
KIPPSCHALTER (ARBEITSSCHEINWERFER, HINTEN)	437
KIPPSCHALTER (ARBEITSSCHEINWERFER, VORN)	437
KIPPSCHALTER (*CONTROL PATTERN CHANGE)	418
KIPPSCHALTER (*DIVERTER VALVE, 4TH FUNCTION)	437
KIPPSCHALTER (FAHRTRICHTUNGSANZEIGER)	88
KIPPSCHALTER (FESTSTELLBREMSE)	437
KIPPSCHALTER (*FRONT WIPER/WASHER)	398
KIPPSCHALTER (*HYD LOCKOUT, INTERLOCK OVRD)	437
KIPPSCHALTER (*HYDRAULIC QUICK COUPLER)	104, 195
KIPPSCHALTER (KLIMAANLAGE)	365
KIPPSCHALTER (KLIMAANLAGE)	410, 412
KIPPSCHALTER (KRIECHGANGSTEUERUNG)	420, 441
KIPPSCHALTER (*MOTOR, 2-SPEED, AUXILIARY)	128
KIPPSCHALTER (RUNDUM-KENNLEUCHTE)	91
KIPPSCHALTER (SCHEIBENWISCHER)	395
KIPPSCHALTER (STRASSENFAHRT)	88
KIPPSCHALTER (WARNSCHALTER)	88
KIPPZYLINDER (LINKS)	188
KIPPZYLINDER (RECHTS)	188
*KIT-AIR CONDITIONER INSTL	412
*KIT-CAB HEATER & MOUNTING	415
*KIT-CAB WINDOW	417
*KIT-CONTROL MOUNTING	79
*KIT-CONTROL PATTERN CHANGE	418, 419
*KIT-COUNTERWEIGHT	170, 171
*KIT-DEBRIS GUARD	49
*KIT-INSTRUMENT PANEL	420
*KIT-QUICK COUPLER CONVERSION	195
*KIT-SECURITY	80
*KIT-WORK TOOL POSITIONER	199
*KIT-WORK TOOL WIRING	82
KLIMAANLAGE	366, 367
KLIMAANLAGE UND AUFHÄNGUNG	365
KLIMAANLAGENDRUCKSPEICHER	363, 364
KLIMAANLAGENLEITUNGEN	426
KLIMAANLAGENREGELUNG	410, 412, 426
KLIMAANLAGENVERDRAHTUNG	100, 366, 406
KOLBEN- UND ZAHNRADPUMPE	263
KOLBENMOTOR	134, 136, 138
KOLBENPUMPE	143, 261
KOMBISCHAUFEL	288, 289, 290, 292, 293, 294, 295, 296, 310

* ÜBERSETZUNG ZUM ZEITPUNKT DER DRUCKLEGUNG NICHT VORHANDEN

STICHWORTVERZEICHNIS

Bezeichnung	Seite
	311
	312
	313
	314
	315
KRAFTSTOFFEINSPRITZPUMPE	65
KRAFTSTOFFENTLÜFTUNGS- U. FILTERLEITUNGEN	63
KRAFTSTOFFENTLÜFTUNGSPUMPE UND -HAUPTFILTER	63
KRAFTSTOFFLEITUNGEN	61
KRAFTSTOFFSTANDGEBER	67
KRAFTSTOFFTANK	69
KRAFTSTOFFTANK U. BEFESTIGUNG	67
KRAFTSTOFFTANKKAPPE	69
KRAFTÜBERTRAGUNG	141
KRÜMMERSTEUERUNG U. BEFESTIGUNG	248
	249
KÜHLER U. ÖLKÜHLER - BEFESTIGUNG	41
KÜHLER UND HYDRAULIKÖLKÜHLER	44
KÜHLERKAPPE	44
KÜHLMITTELÜBERLAUFBEHÄLTER	40
KÜHLWASSERLEITUNGEN	39
	40
KÜHLWASSERPUMPE	43
KURBELWELLE	11
KURBELWELLEN-RIEMENSCHEIBE	30

L

LAUFBAND UND ANTRIEB (RUNDUM-KENNLEUCHTE)	86
LEICHTGUTSCHAUFEL	291
	306
	307
	308
LEITUNGSABDECKUNG	325
LEITUNGSFÜHRUNG	169
LEUCHTE (12 V) (MINIATURLEUCHTE)	437
LEUCHTE (12 V, 10 W)	176
LEUCHTE (12 V, 21 W) (GELB)	84
	85
LEUCHTE (12 V, 5 W) (LÖSCHEN)	84
	85
LEUCHTE (12 V, 55 W)	83
	109
LEUCHTE (*12-VOLT, 55-WATT, HID)	86
*LINES GP-LOWERING CONTROL	228
*LOCK GP (*ENGINE COVER)	165
LUFTFILTER (HAUPTELEMENT)	46
LUFTFILTER (HILFSELEMENT)	46
LUFTKANAL & LUFTFILTER - FAHRERHAUS	402
LUFTREINIGER	46
	47
	48
LUFTTEMPERATURKONTROLLE	376

M

MAGNETSTOPFEN (RAHMEN)	166
MAGNETVENTIL	254
	278
	279
MAGNETVENTIL (FESTSTELLBREMSE)	143
MAGNETVENTIL (HAUPTUNTERBRECHER)	272
MAGNETVENTIL (*MOTOR, 2-SPEED)	252
MAGNETVENTIL (SCHNELLWECHSELEIN-RICHTUNG)	253
MAGNETVENTIL (VORSTEUERUNG - AUSSCHALTUNG)	251
*MANF & SOLENOID MTG GP-ACCUM	246
*MANIFOLD & LINES GP-ACCUM	247
*MANIFOLD & LINES GP-CONTROL	128
*MANIFOLD & SOLENOID GP-CONTROL	250
MASCHINE - SPEZIALAUSFÜHRUNG	2
	3
MASCHINEN-UMBAUSATZ	1
	2
MASCHINENHUBÖSE	173
	174
MASCHINENRAHMEN	168
MASCHINENRAHMEN U. BEFESTIGUNG	166
MASCHINENVERDRAHTUNG	109
MEHRZWECKGABEL	340
	341
MEHRZWECKGREIFER	345
	346
MEHRZWECKSCHAUFEL	316
	317
	318
MEMBRANPUMPE	358
MOTOR-EINBAUSATZ	6
MOTORANTRIEB (*FAN, DEMAND)	254
MOTORAUFLAGER	24
MOTORAUSFÜHRUNG	4
	5
MOTORBLOCK	13
MOTORHUBÖSE	23
MOTORKABELSTRANG	105
MOTORÖLABLASS	16
MOTORÖLKÜHLER	38
MOTORSTOPFEN	28
	29
MOTORVERDRAHTUNG	105
	107
MOTORVERKLEIDUNG	165

* ÜBERSETZUNG ZUM ZEITPUNKT DER DRUCKLEGUNG NICHT VORHANDEN

STICHWORTVERZEICHNIS

Bezeichnung	Seite
*MOUNTING GP-ARMREST	431, 432
N	
NEIGEZYLINDERLEITUNGEN	238
NOCKENWELLE	8
O	
ÖLANZEIGE (MESSSTAB, MOTOR)	25
ÖLEINFÜLLKAPPE (MOTOR)	10
ÖLFILTER	35, 36, 122
ÖLFILTER (HOCHLEISTUNG) (HYDRAULIK)	122
ÖLFILTER (MOTOR)	35
ÖLSIEB (MOTOR)	36
ÖLWANNE	25
*OPTION AR-CAB	436
P	
PALETTENGABEL	339
PENDELVENTIL	277
*PIN GP-LIFT ARM	280
PLEUELSTANGE UND KOLBEN	27
PUMPENAUFHÄNGUNG	140
PUMPENSTEUERVENTIL	143, 261
R	
RAD UND REIFEN	155, 156, 157, 158, 159, 160
RADIO - KABELSTRANG	408
RADIOEINBAUSATZ	408
REGELERHEBEL	421
REGLERSTEUERUNG	58, 60
REGULATOR - DREHSTROMGENERATOR	70
REIFEN UND FELGE	146, 147, 148, 149, 150, 151, 152, 153, 154, 155
RELAIS	92
RELAIS (HAUPTSTROM)	101
RELAIS (SCHALE)	101, 405, 416
RELAIS (12 V)	101, 112, 219, 373, 410, 412
RELAIS (12 V) (ARBEITSGERÄT)	82
RELAIS (12 V) (BREMSLEUCHTE)	88
RELAIS (12 V) (KALTSTART)	105
RELAIS (12 V) (SCHWINGUNGSDÄMPFUNG)	199
RIEMEN	5, 7
RIEMENSCHUTZ	19
RÜCKLAUFVENTIL - VERTEILER	130
RÜCKSPIEGEL	430
RÜCKSPIEGEL U. BEFESTIGUNG	175
RUNDUM-KENNLEUCHTE	86, 91
S	
SCHALLDÄMPFER	55
SCHALLDÄMPFER U. BEFESTIGUNG	54
SCHALLDÄMPFUNG	178, 180, 181
SCHALTER (GEBLÄSEGESCHWINDIGKEIT)	376
SCHALTER (STARTERMOTOR)(12 V)	97
SCHALTER (TEMPERATURREGELUNG)	376
SCHAUFELLEITUNGEN	201, 203, 205, 207, 209, 211, 213
SCHAUFELZYLINDER	183
SCHAUGLAS (HYDRAULIKTANK)	266
SCHAUGLAS (KÜHLMITTELSTAND)	44
SCHEIBENWISCHERARM (FAHRERHAUS-TÜR)	395, 398
SCHEIBENWISCHERBLATT (FAHRERHAUS-TÜR)	395, 398

* ÜBERSETZUNG ZUM ZEITPUNKT DER DRUCKLEGUNG NICHT VORHANDEN

STICHWORTVERZEICHNIS

Bezeichnung	Seite
SCHEIBENWISCHERMOTOR (FAHRERHAUS-TÜR)	395, 398
SCHEINWERFER U. RICHTUNGSLEUCHTE	84, 85
SCHEINWERFER U. RICHTUNGSLEUCHTE (FERNLICHT, ABBLENDLICHT, LINKS)	88
SCHEINWERFER U. RICHTUNGSLEUCHTE (FERNLICHT, ABBLENDLICHT, RECHTS)	88
SCHEINWERFER (*12-VOLT, 60/55-WATT)	84, 85
SCHILD - PRODUKTIDENTIFIKATION (MASCHINE)	466
SCHILD - PRODUKTIDENTIFIKATION (MASCHINE)	470
SCHILD - STRASSENFAHRT	354, 355
SCHILD UND AUFKLEBER	466, 470, 473
SCHLÜSSEL	8, 11
SCHMIERNIPPEL (1/8-27-GEWINDE)	345
SCHMIERPUMPE	37
SCHNEIDMESSER	328, 329, 330, 331, 332, 333
SCHNEIDMESSER - KOMBISCHAUFEL	282, 283, 284, 285, 286
SCHNELLWECHSELEINRICHTUNG	323, 324
SCHNELLWECHSELEINRICHTUNG - VERDRAHTUNG	104
SCHNELLWECHSELEINRICHTUNG - ZYLINDER U. VERBINDUNG	326, 327
SCHNELLWECHSELEINRICHTUNGSSPERRE	351, 352, 353
SCHNELLWECHSELVORRICHTUNG	322
SCHNITTSTELLENMODUL (TASTE)	80
SCHWINGSITZ	449, 452
SCHWINGSITZ (LUFTFILTER)	443
SCHWUNGRAD	17
SCHWUNGRADGEHÄUSE	20
SCREEN (HYDRAULIK)	247
SCREEN (WASSERTANK)	357
*SEAT & ARMREST GP	443, 444, 445
SERVICE MASCHINE	96
SICHERHEITSGURT	450, 451
SICHERUNG (10 A)	101
SICHERUNG (100 A)	73
SICHERUNG (15 A)	101
SICHERUNG (20 A)	75, 92, 101
SICHERUNG (60 A)	92
SICHERUNGSSATZ (HAUPTSTROM)	101
SICHERUNGSSATZ (STRASSENFAHRT)	88
SICHERUNGSTAFEL - ABDECKUNG	75
SIEB (WASSERTANKFÜLLUNG)	358
SOLENOIDSPULE (12 V)	278
SONNENBLENDE	455, 456
SPERRVENTIL	269
SPERRVENTIL (VORSTEUERUNG)	251
SPÜLVENTIL	134, 136, 138
STARTERMOTOR	97, 99
STARTSCHLÜSSELSCHALTER	437
STEIGLEITER	177
STELLUNGSSENSOR	93
STEUERHEBEL	382, 383, 385, 387
STEUERHEBEL (LINKS)	386
STEUERHEBEL (LINKS)	82
STEUERHEBEL (RECHTS)	384
STEUERKABEL	371
STEUERKONSOLENABDECKUNG	389
STEUERKRÜMMER	251, 252, 253
STEUERUNG - NICHT PROGRAMMIERT (MASCHINE)	96
STEUERUNGS-KABELSTRANG	375
STEUERVENTIL	270, 272
STEUERVENTIL UND BEFESTIGUNGSTEILE	267, 268
STIRNRAD	18
STIRNRADGEHÄUSE	21

* ÜBERSETZUNG ZUM ZEITPUNKT DER DRUCKLEGUNG NICHT VORHANDEN

STICHWORTVERZEICHNIS

Bezeichnung	Seite
STRASSENFAHRT - UMRÜSTSATZ	162, 163
STRASSENFAHRTSCHILD UND BEFESTIGUNG	349

T

T-STÜCK	195, 215, 235
TANDEMANTRIEB	118, 119
TEMPERATUR- U. DRUCKSENSOR	95
TEMPERATURSCHALTER (KLIMAANLAGE)	367
TEMPERATURSCHALTER (MOTORKÜHLMITTEL)	95
TEMPERATURSENSOR (HYDRAULIKÖL)	265
TEMPERATURSENSOR (MOTORKÜHLMITTEL)	105
THERMOSTAT (THEMRMOSTAT)	39
TRÄGER U. GABEL	320
TURBOLADER	56
TYPENSCHILDBEFESTIGUNG	176

U

ÜBERDRUCKVENTIL	275, 276
ÜBERDRUCKVENTIL (HUB)	270
ÜBERDRUCKVENTIL (KIPPEN)	270
ÜBERDRUCKVENTIL (LADUNG)	143
ÜBERDRUCKVENTIL (*LIFT, TILT)	272
ÜBERDRUCKVENTIL (*TILT, AUXILIARY)	272
ÜBERDRUCKVENTIL (UMSCHALTVENTIL)	143
ÜBERDRUCKVENTIL (ZUSATZ)	272
ÜBERROLLSCHUTZAUFLAGER	433
UMBAUSATZ - FÜR STRASSENVERKEHR	161
UMLAUFKÜHLWASSERHEIZUNG	77, 78
UMLAUFKÜHLWASSERHEIZUNGS-ELEMENT	77, 78
UNIVERSAL-ZAHNSPITZE	361
UNIVERSALSCHAUFEL	302, 303, 304, 305

V

VENTIL, MECH.	274
VENTILDECKEL	10
VENTILDECKELDICHTUNG (WASSERPUMPE)	43
VENTILKABELSTRANG	240
VENTILKAPPE	272
VENTILKIPPHEBEL	32
VENTILSTEUERUNG	32
VERBINDUNG - SCHNELLWECHSELEINRICHTUNG	350
VERKLEIDUNG - ÜBERROLLSCHUTZ/STEINSCHLAGSCHUTZ	404

W

WARNAUFKLEBER (ARBEITSGERÄT)	470
WARNAUFKLEBER (AUFGESPIESSTER PUNKT)	336, 337, 341, 344
WARNAUFKLEBER (*CRUSH HAZARD)	310, 311, 312, 314, 470
WARNAUFKLEBER (DRUCKPUNKT)	345
WARNAUFKLEBER (HOCHDRUCK, HANDBICH LESEN, INTL)	470
WARNAUFKLEBER (KEINER ÄTHER VERWENDEN)	466
WARNAUFKLEBER (KÜHLER)	470
WARNAUFKLEBER (*LIFT ARM BRACE)	470
WARNAUFKLEBER (MASSE)	466, 470
WARNAUFKLEBER (NICHT SCHWEISSEN, NICHT BOHREN, HANDBUCH LESEN)	466, 470
WARNAUFKLEBER (*NO ACCESS)	470
WARNAUFKLEBER (QUETSCHGEFAHR, BETRIEBS- U. WARTUNGSHANDBUCH LESEN)	470
WARNAUFKLEBER (QUETSCHGEFAHR, NICHT BETRETEN)	256
WARNAUFKLEBER (STARTHILFEKABEL, HANDBUCH LESEN)	470
WARNAUFKLEBER (ÜBERROLLSCHUTZ, STEINSCHLAGSCHUTZ, HANDBUCH LESEN)	466
WARNAUFKLEBER (ÜBERROLLSCHUTZ, STEINSCHLAGSCHUTZ, HANDBUCH LESEN)	470
WARNAUFKLEBER (UNIVERSAL, HANDBUCH LESEN)	470
WARNHORN	437

* ÜBERSETZUNG ZUM ZEITPUNKT DER DRUCKLEGUNG NICHT VORHANDEN

STICHWORTVERZEICHNIS

Bezeichnung	Seite
WASSERABSCHEIDER UND KRAFTSTOFFILTER	63
WASSERPUMPE - RIEMENSCHEIBE	31
WASSERSIEBEINSATZ	357
WASSERTANK	360
WASSERTANK U. BEFESTIGUNGSTEILE	358
WECHSELVENTIL	277

Z

Bezeichnung	Seite
ZAHNRADPUMPE	258 259 263
ZAHNRADPUMPE U. BEFESTIGUNGSTEILE	258
ZULASSUNGSSCHILDLEUCHTE	176
ZYLINDERAUFHÄNGUNG	255 256 257
ZYLINDERKOPF	15

* ÜBERSETZUNG ZUM ZEITPUNKT DER DRUCKLEGUNG NICHT VORHANDEN

MACHINE ARRANGEMENT

258-2410 CHASSIS AR

S/N: JAY1-UP

PART OF 258-3236 COMMON AR

SMCS-7000 **i02625319**

NOTE	PART NUMBER	QTY	PART NAME 1 2 3 4 5 6 (PRODUCT LEVEL)	SEE PAGE
Y	*258-4121*	1	BATTERY & WIRING GP	73
Y	*280-6340*	1	CONTROL GP-GOVERNOR	58
Y	*258-2558*	1	CYLINDER GP-LIFT ARM	188
Y	*258-2594*	1	ENCLOSURE GP-ENGINE	165
Y	*258-2675*	1	FRAME & MTG GP-MACHINE	166
Y	*150-8621*	1	GUIDE GP-LINES	169
Y	*258-2444*	1	LINES GP-FUEL PRM & FILTER	63
Y	*258-2699*	1	PIN GP-LIFT ARM (WITH SUPPORT)	280
Y	*258-2439*	1	TANK & MTG GP-FUEL	67
Y	*258-4107*	1	WIRING GP-MACHINE	109

Y-SEPARATE ILLUSTRATION

<END>

258-3236 COMMON AR

S/N: JAY1-UP

SMCS-7000 **i02627471**

NOTE	PART NUMBER	QTY	PART NAME 1 2 3 4 5 6 (PRODUCT LEVEL)	SEE PAGE
Y	*258-4000*	1	CAB AR-ENCLOSED ROPS	370
Y	*258-2410*	1	CHASSIS AR	1
Y	*258-3190*	1	FILM GP (246C)	462
Y	*258-2600*	1	HYDRAULIC AR	192
Y	*258-2445*	1	INSTALLATION AR-ENGINE	6
Y	*6V-1970*	1	LITERATURE GP (MACHINE)	429

Y-SEPARATE ILLUSTRATION

<END>

258-3818 CONVERSION AR-MACHINE–GERMANY

S/N: JAY1-UP

AN ATTACHMENT

SMCS-7000 **i02674952**

NOTE	PART NUMBER	QTY	PART NAME 1 2 3 4 5 6 (PRODUCT LEVEL)	SEE PAGE
Y	*258-3840*	1	CONVERSION GP-ROADING (GERMANY)	162
Y	**177-9152**	1	KIT-ROADING PLATE & MOUNTING (BUCKET)	349
Y	*258-4385*	1	LIFTING GP-MACHINE (FOUR POINT)	173
Y	*258-4130*	1	LIGHTING GP-ROADING	88
Y	*175-4238*	1	LOCK GP-QUICK COUPLER (MECHANICAL)	351
Y	*258-3872*	1	MIRROR & MTG GP-REAR VIEW	175
Y	*258-2579*	1	MOTOR & MTG GP-HYDRAULIC FAN	254
Y	*280-8347*	1	MUFFLER GP	55
Y	*258-3496*	1	SUPPRESSION GP-SOUND (MACHINE)	178
Y	*294-4560*	1	SUPPRESSION GP-SOUND	181
Y	*280-8330*	1	SUPPRESSION GP-SOUND (ENGINE)	180
Y	*258-3497*	1	VISOR GP-CAB	455
	258-4222	1	CAB GP-ENCLOSED ROPS	

Y-SEPARATE ILLUSTRATION

<END>

MACHINE ARRANGEMENT

258-3819 CONVERSION AR-MACHINE—ITALY

S/N: JAY1-UP
AN ATTACHMENT

SMCS-7000 **i02674953**

NOTE	PART NUMBER	QTY	PART NAME 1 2 3 4 5 6 (PRODUCT LEVEL)	SEE PAGE
Y	*258-3841*	1	CONVERSION GP-ROADING (ITALY)	163
Y	**177-9152**	1	KIT-ROADING PLATE & MOUNTING (BUCKET)	349
Y	*258-4385*	1	LIFTING GP-MACHINE (FOUR POINT)	173
Y	*258-4130*	1	LIGHTING GP-ROADING	88
Y	*175-4238*	1	LOCK GP-QUICK COUPLER (MECHANICAL)	351
Y	*258-3872*	1	MIRROR & MTG GP-REAR VIEW	175
Y	*258-2579*	1	MOTOR & MTG GP-HYDRAULIC FAN	254
Y	*258-3848*	1	MOUNTING GP-REGISTRATION	176
Y	*280-8347*	1	MUFFLER GP	55
Y	*258-3496*	1	SUPPRESSION GP-SOUND (MACHINE)	178
Y	*280-8330*	1	SUPPRESSION GP-SOUND (ENGINE)	180
Y	*294-4560*	1	SUPPRESSION GP-SOUND	181
	258-4222	1	CAB GP-ENCLOSED ROPS	

Y-SEPARATE ILLUSTRATION

<END>

258-3682 MACHINE AR-SPECIAL—WORK TOOL POSITIONER, 2-SPEED

S/N: JAY1-UP
AN ATTACHMENT

SMCS-7000 **i02650311**

NOTE	PART NUMBER	QTY	PART NAME 1 2 3 4 5 6 (PRODUCT LEVEL)	SEE PAGE
Y	*258-4009*	1	COVER GP-INSTRUMENT PANEL	390
Y	*258-2428*	1	HYDRAULIC AR	192
Y	*258-3400*	1	POWER TRAIN AR	141
Y	*258-2406*	1	PUMP & MTG GP-HYDROSTATIC	142

Y-SEPARATE ILLUSTRATION

<END>

258-3748 MACHINE AR-SPECIAL

S/N: JAY1-UP
AN ATTACHMENT

SMCS-7000 **i02650313**

NOTE	PART NUMBER	QTY	PART NAME 1 2 3 4 5 6 (PRODUCT LEVEL)	SEE PAGE
Y	*258-4009*	1	COVER GP-INSTRUMENT PANEL	390
Y	*258-2426*	1	HYDRAULIC AR	192
Y	*258-3200*	1	POWER TRAIN AR	141
Y	*258-2406*	1	PUMP & MTG GP-HYDROSTATIC	142

Y-SEPARATE ILLUSTRATION

<END>

MACHINE ARRANGEMENT

258-3750 MACHINE AR-SPECIAL–WORK TOOL POSITIONER

S/N: JAY1-UP

AN ATTACHMENT

SMCS-7000 **i02650314**

NOTE	PART NUMBER	QTY	PART NAME 1 2 3 4 5 6 (PRODUCT LEVEL)	SEE PAGE
Y	*258-4009*	1	COVER GP-INSTRUMENT PANEL	390
Y	*258-2428*	1	HYDRAULIC AR	192
Y	*258-3200*	1	POWER TRAIN AR	141
Y	*258-2406*	1	PUMP & MTG GP-HYDROSTATIC	142

Y-SEPARATE ILLUSTRATION

<END>

258-3753 MACHINE AR-SPECIAL–
RIDE CONTROL, WORK TOOL POSITIONER, 2-SPEED

S/N: JAY1-UP

AN ATTACHMENT

SMCS-7000 **i02693288**

NOTE	PART NUMBER	QTY	PART NAME 1 2 3 4 5 6 (PRODUCT LEVEL)	SEE PAGE
Y	*258-2428*	1	HYDRAULIC AR	192
Y	*258-4163*	1	PANEL GP-INSTRUMENT (RH)	441
Y	*258-3400*	1	POWER TRAIN AR	141
Y	*258-2406*	1	PUMP & MTG GP-HYDROSTATIC	142

Y-SEPARATE ILLUSTRATION

<END>

ENGINE ARRANGEMENT

258-2517 ENGINE AR

S/N: JAY1-UP

AN ATTACHMENT

SMCS-1000 **i02645015**

NOTE	PART NUMBER	QTY	PART NAME 1 2 3 4 5 6 (PRODUCT LEVEL)	SEE PAGE
Y	**262-7288**	1	ENGINE AR-PRIMARY	5

Y-SEPARATE ILLUSTRATION

ENGINE ARRANGEMENT

262-7288 ENGINE AR-PRIMARY

S/N: CJS1-UP
53 BRAKE KW (71BHP) AT 2300 RPM
PART OF 258-2517 ENGINE AR
AN ATTACHMENT

SMCS-1000 **i02555593**

NOTE	PART NUMBER	QTY	PART NAME 1 2 3 4 5 6 (PRODUCT LEVEL)	SEE PAGE
Y	*287-6361*	1	ALTERNATOR GP-CHARGING	72
Y	*287-6138*	1	BELT GP	7
Y	*287-6016*	1	BREATHER GP	33
Y	*233-5473*	1	CAMSHAFT GP	8
Y	*287-4033*	1	CONNECTING ROD GP	9
Y	*235-5896*	1	COOLER GP-ENGINE OIL	38
Y	*233-5480*	1	COVER GP-VALVE MECHANISM	10
Y	*287-2416*	1	CYLINDER BLOCK GP	13
Y	*287-4649*	1	CRANKSHAFT GP	11
Y	*233-5500*	1	CYLINDER HEAD GP	15
Y	*235-5897*	1	FILTER GP-ENGINE OIL	35
Y	*287-5377*	1	FILTER GP-ENGINE OIL	36
Y	*235-5890*	1	FLYWHEEL GP	17
Y	*287-4830*	1	GEAR GP-FRONT	18
Y	*235-5904*	1	GLOW PLUG GP	76
Y	*287-3357*	1	HOUSING GP-FLYWHEEL	20
Y	*287-3074*	1	HOUSING GP-FRONT	21
Y	*287-1844*	1	LIFTING GP-ENGINE	23
Y	*247-6317*	1	LINES GP-AIR	50
Y	*235-5901*	1	LINES GP-FUEL	61
Y	*235-5900*	1	LINES GP-WATER	39
Y	*287-5323*	1	MANIFOLD GP-EXHAUST	52
Y	*287-4832*	1	MANIFOLD GP-INLET	53
Y	*287-3921*	1	PAN GP-OIL (ENGINE)	25
Y	*235-5889*	1	PISTON & ROD GP	27
Y	*287-2983*	1	PLUG GP-ENGINE	29
Y	*287-2922*	1	PLUG GP-ENGINE	28
Y	*287-4749*	1	PULLEY GP-CRANKSHAFT	30
Y	*287-6114*	1	PULLEY GP-WATER PUMP	31
Y	*235-5895*	1	PUMP GP-ENGINE OIL	37
Y	*249-7347*	1	PUMP GP-FUEL INJECTION	65
Y	*287-6056*	1	PUMP GP-WATER	43
Y	*238-8277*	1	SENSOR GP-TEMP & PRESS (ENGINE COOLANT, ENGINE OIL)	95
Y	*287-6181*	1	STARTING MOTOR GP-ELECTRIC	99
Y	*235-5894*	1	TURBOCHARGER GP	56
Y	*287-5665*	1	VALVE GP-RELIEF (ENGINE OIL PRESSURE)	275
Y	*235-5880*	1	VALVE MECHANISM GP	32

Y-SEPARATE ILLUSTRATION

ENGINE ARRANGEMENT

258-2445 INSTALLATION AR-ENGINE

S/N: JAY1-UP

PART OF 258-3236 COMMON AR

SMCS-1000 **i02663657**

NOTE	PART NUMBER	QTY	PART NAME 1 2 3 4 5 6 (PRODUCT LEVEL)	SEE PAGE
Y	*280-8294*	1	AIR CLEANER GP	48
Y	*258-2452*	1	DRAIN GP-ENGINE OIL	16
Y	*258-2469*	1	GUARD GP-BELT	19
Y	*258-2465*	1	LINES GP-AIR	51
Y	*258-3552*	1	LINES GP-WATER	40
Y	*258-2447*	1	MOUNTING GP-ENGINE	24
Y	*258-3318*	1	MOUNTING GP-PUMP	140
Y	*258-3542*	1	MOUNTING GP-RAD & OIL COOLER	41
Y	*258-3459*	1	RADIATOR & HYD OIL COOLER GP	44
Y	*258-4115*	1	WIRING GP-ENGINE	105
Y	*258-4192*	1	WIRING GP-ENGINE (BATTERY)	107

Y-SEPARATE ILLUSTRATION

BASIC ENGINE

287-6138 BELT GP

S/N: CJS1-UP

PART OF 262-7288 ENGINE AR-PRIMARY

AN ATTACHMENT

SMCS-1357 **i02712961**

NOTE	REF NO	GRAPHIC REF	PART NUMBER	QTY	PART NAME 1 2 3 4 5 6 (PRODUCT LEVEL)	SEE PAGE
	1	1	**235-4972**	1	V-BELT	

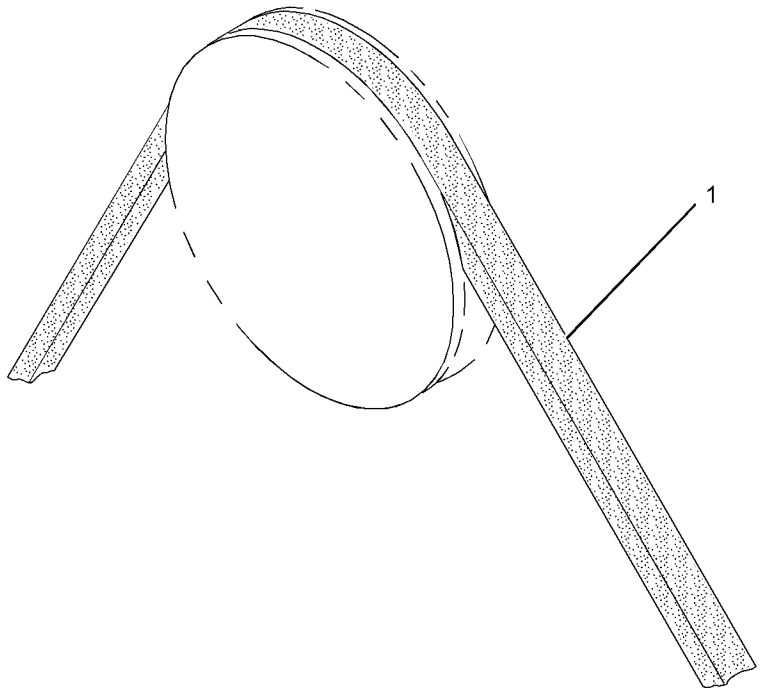

GRAPHIC #1 **<END>** g01321905

BASIC ENGINE

233-5473 CAMSHAFT GP

S/N: CJS1-UP
PART OF 262-7288 ENGINE AR-PRIMARY
AN ATTACHMENT

SMCS-1210, 1211, 1212 **i01941303**

NOTE	REF NO	GRAPHIC REF	PART NUMBER	QTY	PART NAME 1 2 3 4 5 6 (PRODUCT LEVEL)	SEE PAGE
M	1	1	**6V-5215**	2	BOLT (M8X1.25X16-MM)	
	2	1	**9M-1974**	2	WASHER-HARD (8.8X16X2-MM THK)	
	3	1	**094-4628**	1	KEY	
	4	1	**103-9272**	8	TAPPET	
	5	1	**233-5479**	1	CAMSHAFT	
	6	1	**233-5485**	1	PLATE-THRUST	
	7	1	**233-5487**	8	PUSHROD	

M-METRIC PART

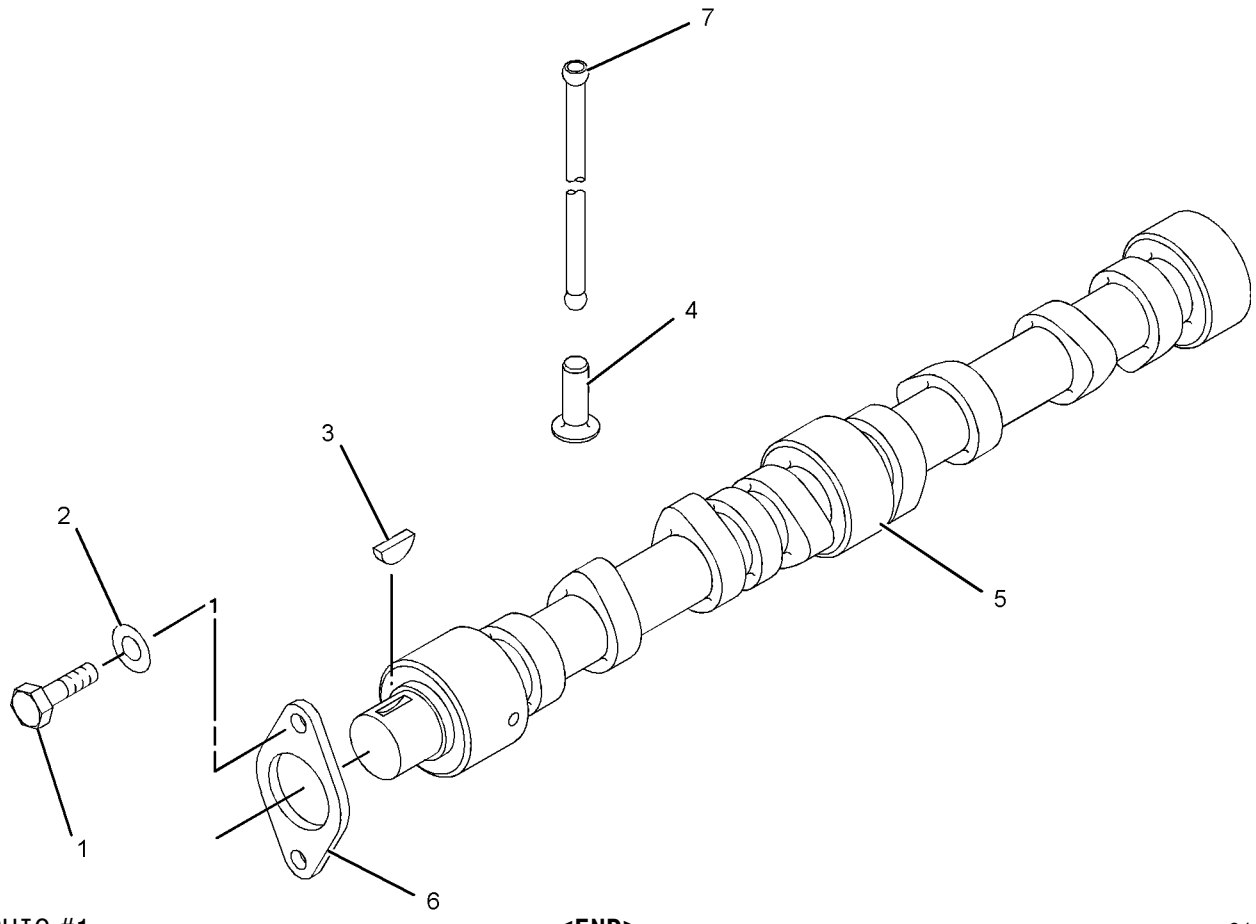

GRAPHIC #1 **<END>** g01010413

287-4033 CONNECTING ROD GP

S/N: CJS1-UP

PART OF 262-7288 ENGINE AR-PRIMARY

AN ATTACHMENT

SMCS-1218 **i02568371**

NOTE	REF NO	GRAPHIC REF	PART NUMBER	QTY	PART NAME 1 2 3 4 5 6 (PRODUCT LEVEL)	SEE PAGE
	1	1	**103-9680**	4	ROD AS-CONNECTING	
					(EACH INCLUDES)	
	1A	1	**128-2955**	2	BOLT-CONNECTING ROD	
	1B	1	**128-2956**	2	NUT	
	1C	1	**128-2958**	1	BUSHING	

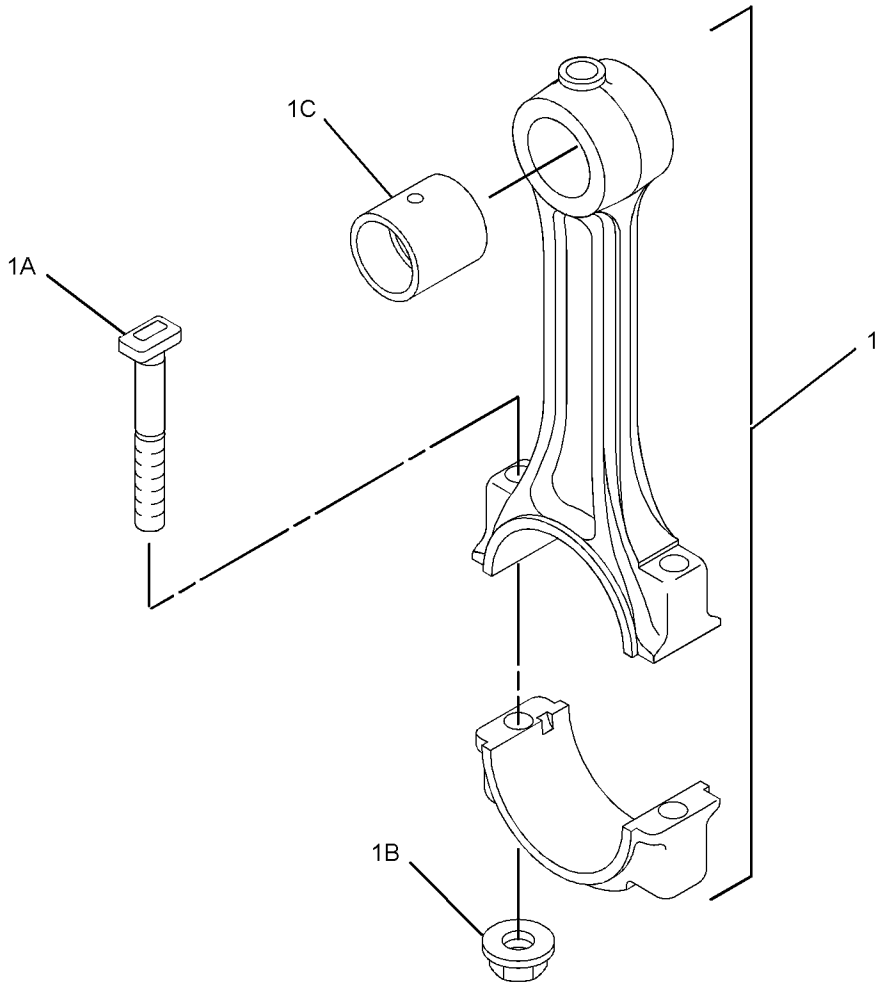

GRAPHIC #1 **<END>** g01349822

BASIC ENGINE

233-5480 COVER GP-VALVE MECHANISM

S/N: CJS1-UP

PART OF 262-7288 ENGINE AR-PRIMARY

AN ATTACHMENT

SMCS-1107 **i02711820**

NOTE	REF NO	GRAPHIC REF	PART NUMBER	QTY	PART NAME 1 2 3 4 5 6 (PRODUCT LEVEL)	SEE PAGE
M	1	1	**8T-4197**	5	BOLT (M8X1.25X40-MM)	
	2	1	**9M-1974**	5	WASHER-HARD (8.8X16X2-MM THK)	
	3	1	**199-2182**	1	CAP-OIL FILLER (ENGINE)	
	4	1	**233-5483**	1	GASKET (VALVE COVER)	
	5	1	**234-4790**	1	COVER AS	

M-METRIC PART

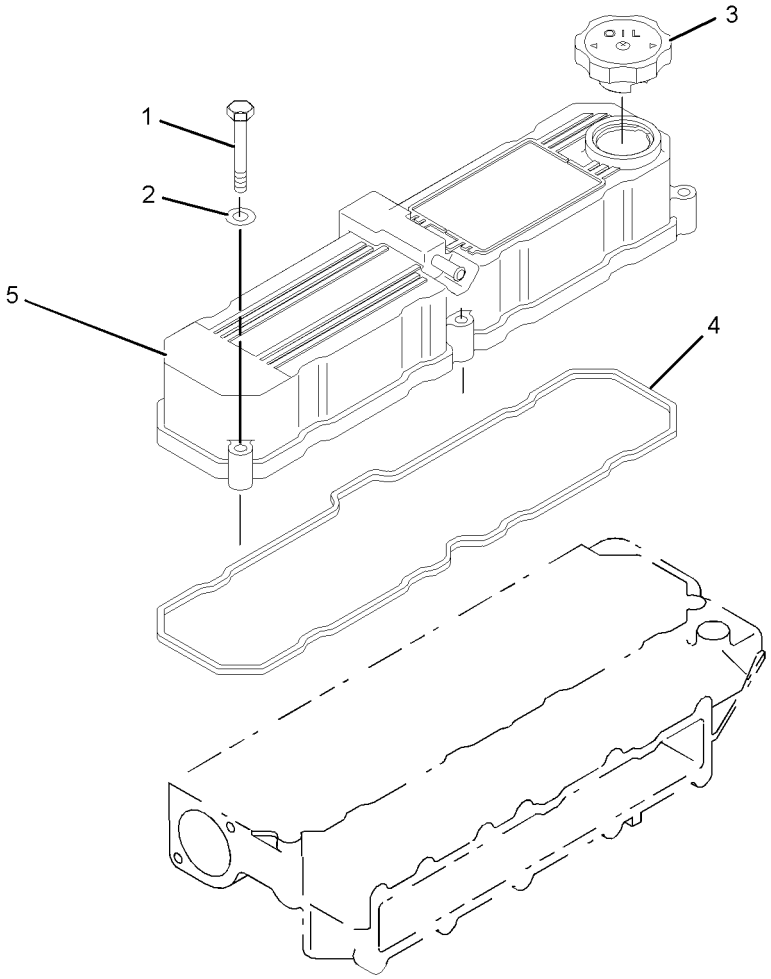

GRAPHIC #1 **<END>** g01011546

287-4649 CRANKSHAFT GP

S/N: CJS1-UP
PART OF 262-7288 ENGINE AR-PRIMARY
AN ATTACHMENT

SMCS-1202 **i02568580**

NOTE	REF NO	GRAPHIC REF	PART NUMBER	QTY	PART NAME 1 2 3 4 5 6 (PRODUCT LEVEL)	SEE PAGE
	1	1	**103-9288**	1	PLATE-THRUST (STANDARD)	
AB		1	**103-9289**	1	PLATE-THRUST (0.15-MM OS)	
AB		1	**103-9290**	1	PLATE-THRUST (0.35-MM OS)	
	2	1	**233-5486**	1	BEARING-MAIN	
AB		1	**233-5491**	1	BEARING (0.5-MM US)	
AB		1	**233-5492**	1	BEARING (0.75-MM US)	
	3	1	**234-4794**	1	CRANKSHAFT AS	
	3A	1	**085-9513**	2	PIN	
	3B	1	**094-4628**	2	KEY	
	3C	1	**117-2829**	1	GEAR (23-TEETH)	
	3D	1	**130-7596**	1	NUT	
	4	1	**238-8282**	1	BEARING	
AB		1	**238-8283**	1	BEARING (0.25-MM US)	
AB		1	**238-8284**	1	BEARING (0.5-MM US)	
AB		1	**238-8285**	1	BEARING (0.75-MM US)	

A-NOT PART OF THIS GROUP
B-USE AS REQUIRED

287-4649 **CRANKSHAFT GP** *(contd.)* **i02568580**

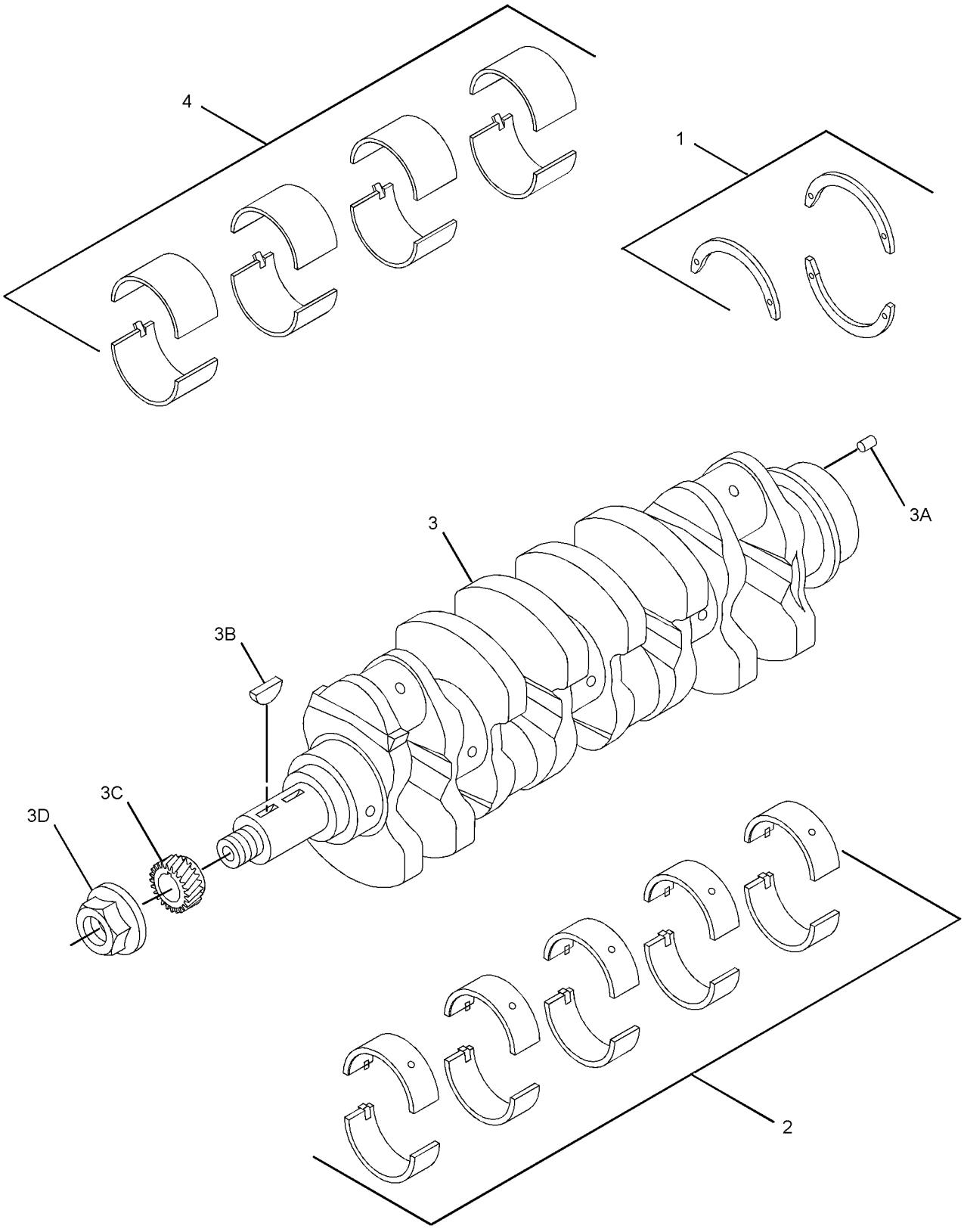

GRAPHIC #1

<END>

g01350110

287-2416 CYLINDER BLOCK GP

S/N: CJS1-UP

PART OF 262-7288 ENGINE AR-PRIMARY

AN ATTACHMENT

SMCS-1201 **i02568379**

NOTE	REF NO	GRAPHIC REF	PART NUMBER	QTY	PART NAME 1 2 3 4 5 6 (PRODUCT LEVEL)	SEE PAGE
	1	1	**5I-7525**	1	PLUG	
	2	1	**096-3741**	6	CAP	
	3	1	**099-4420**	2	PIN	
	4	1	**103-9062**	1	BUSHING	
	5	1	**103-9703**	1	SHAFT-IDLER	
	6	1	**183-5916**	6	PIN-SPRING	
	7	1	**199-2139**	2	PIN	
	8	1	**233-5457**	4	ORIFICE-JET (OIL PISTON COOLING)	
	9	1	**233-5488**	2	PIN	
	11	1	*239-8504*	1	CYLINDER BLOCK GP	
	11A	1	**199-2129**	10	CAP	
	11B	1	**233-5489**	2	SEAL	
	11C	1	**103-9276**	10	BOLT	

287-2416 **CYLINDER BLOCK GP** *(contd.)* **i02568379**

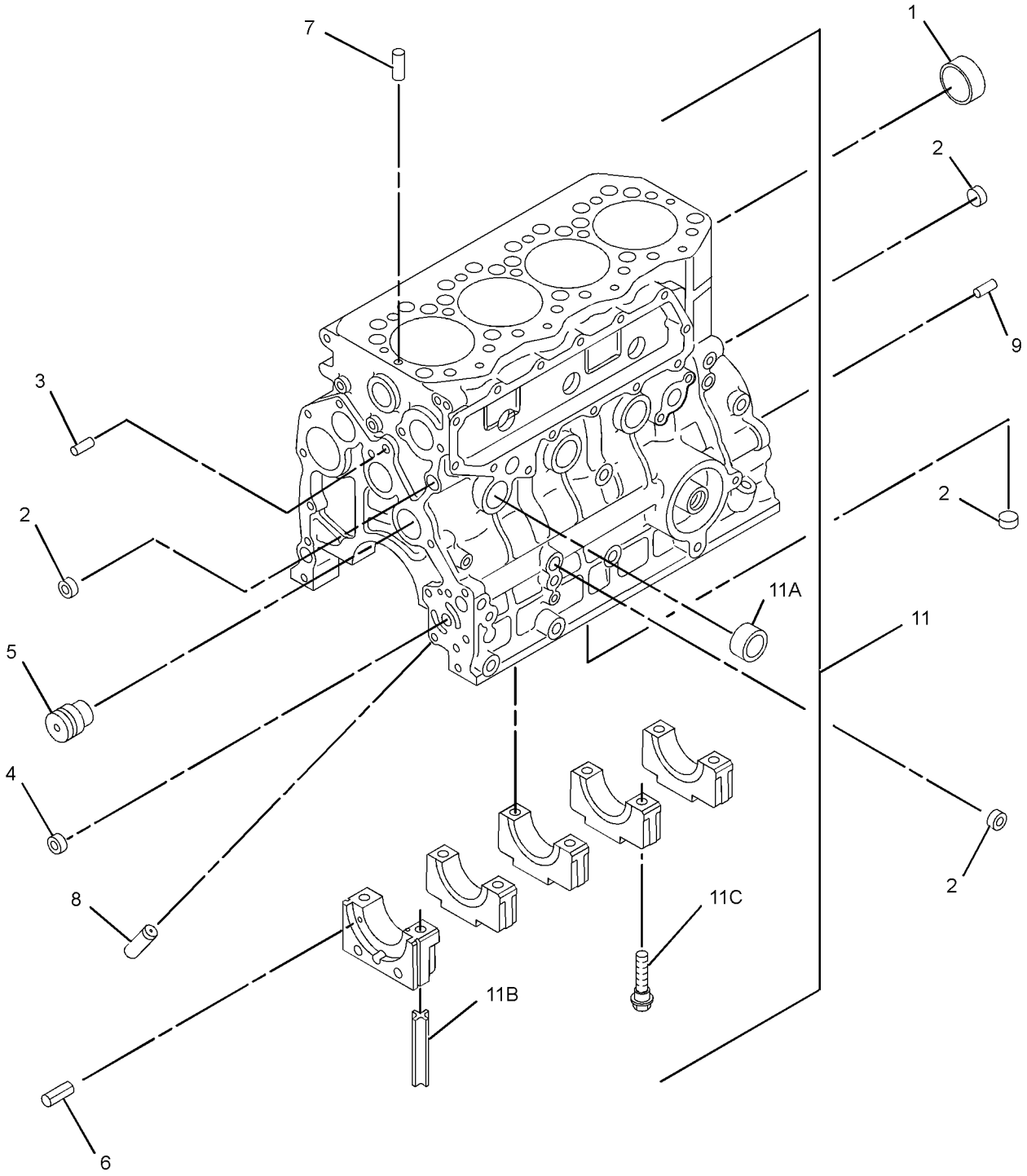

GRAPHIC #1 **<END>** g01323147

233-5500 CYLINDER HEAD GP

S/N: CJS1-UP
PART OF 262-7288 ENGINE AR-PRIMARY
AN ATTACHMENT

SMCS-1100, 1101, 1103, 1104, 1105, 1108, 1109, 1115, 1117, 1121, 1124, 1125

i02613551

NOTE	REF NO	GRAPHIC REF	PART NUMBER	QTY	PART NAME 1 2 3 4 5 6 (PRODUCT LEVEL)	SEE PAGE
	1	1	**233-5454**	17	BOLT	
	2	1	**299-4645**	1	GASKET-HEAD	
	3	1	**233-5465**	1	HEAD AS	
	3A	1	**212-8475**	7	CAP	
	3B	1	**257-8736**	12	CAP-SEALING	
	3C	1	**233-5453**	1	CYLINDER HEAD	
	3D	1	**233-5462**	4	INSERT-INLET	
	3E	1	**233-5463**	4	INSERT-EXHAUST	
	3F	1	**233-5464**	8	GUIDE	

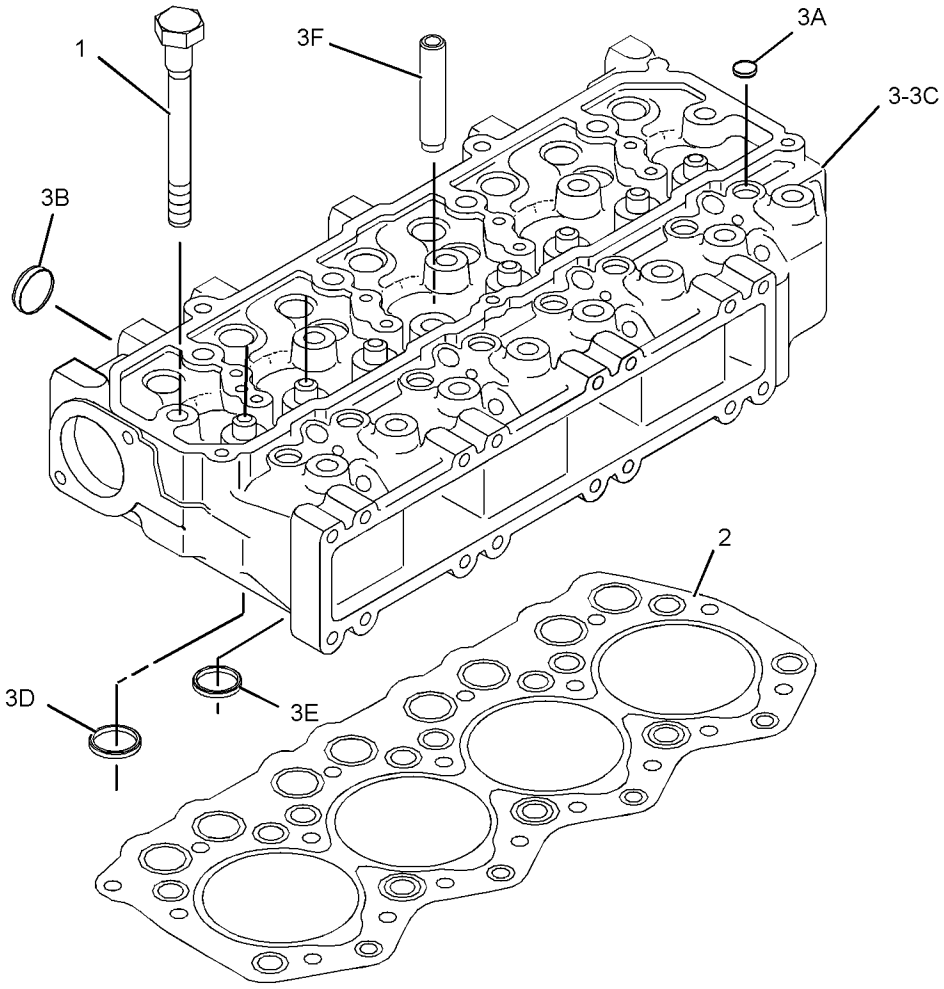

GRAPHIC #1

<END>

g01330815

258-2452 DRAIN GP-ENGINE OIL

S/N: JAY1-UP

PART OF 258-2445 INSTALLATION AR-ENGINE

SMCS-1302 **i02605982**

NOTE	REF NO	GRAPHIC REF	PART NUMBER	QTY	PART NAME 1 2 3 4 5 6 (PRODUCT LEVEL)	SEE PAGE
	1	1	**1P-4278**	1	CLAMP-HOSE	
	2	1	**8C-3445**	1	CAP-DUST	
	3	1	**8C-3446**	1	VALVE-FLUID SAMPLING	
	4	1	**110-2570**	1	CAP (ENGINE OIL)	
	5	1	**218-0919**	1	ADAPTER	
	6	1	**8L-2779**	1	SEAL-O-RING	
E	7	1	**5P-1442**		HOSE (68-CM)	

E-ORDER BY THE CENTIMETER

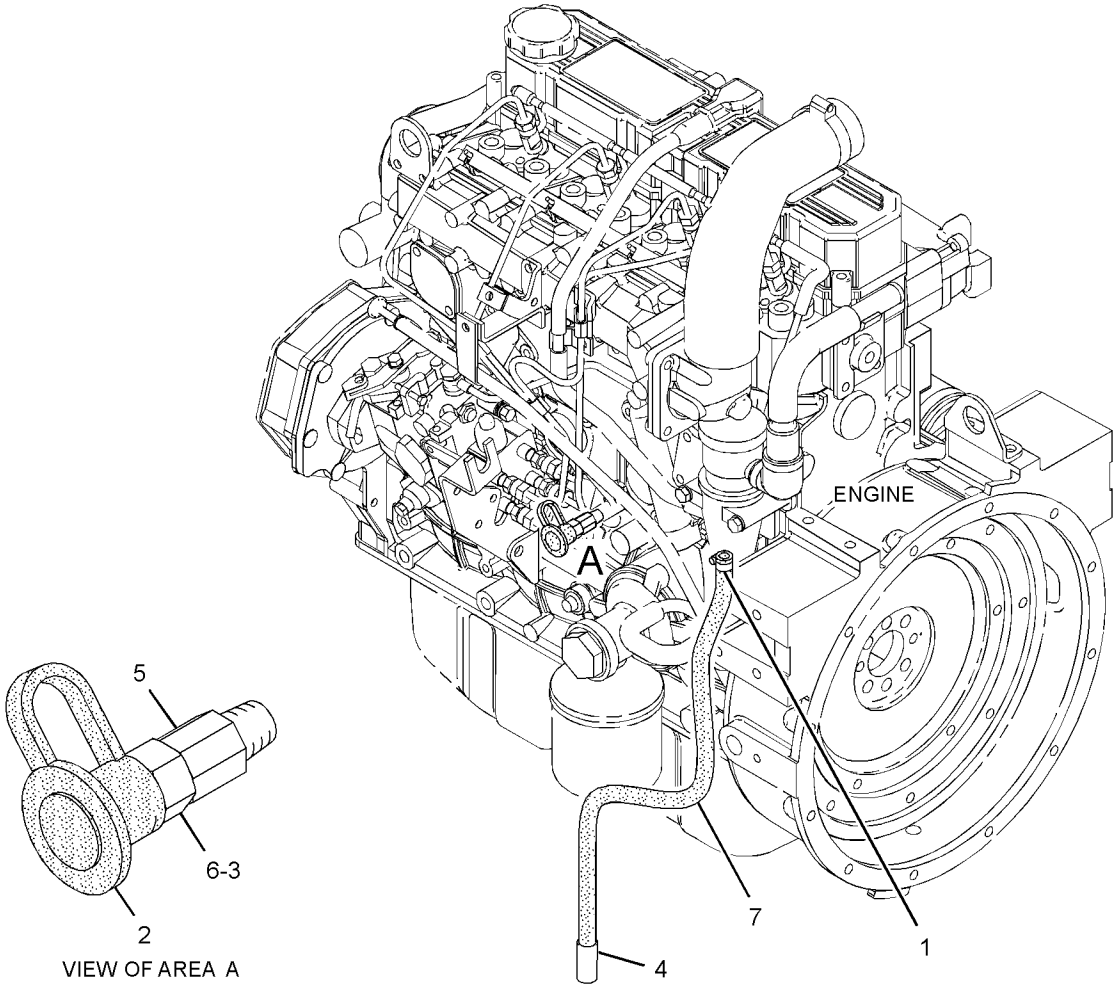

GRAPHIC #1 **<END>** g01319979

235-5890 FLYWHEEL GP

S/N: CJS1-UP

PART OF 262-7288 ENGINE AR-PRIMARY

AN ATTACHMENT

SMCS-1156, 1158 **i02613784**

NOTE	REF NO	GRAPHIC REF	PART NUMBER	QTY	PART NAME 1 2 3 4 5 6 (PRODUCT LEVEL)	SEE PAGE
	1	1	**234-4791**	1	FLYWHEEL AS	
M	1A	1	**226-3693**	4	BOLT (M12X1.25X30-MM)	
	1B	1	**032-8139**	1	GEAR-STARTER (112-TEETH)	

M-METRIC PART

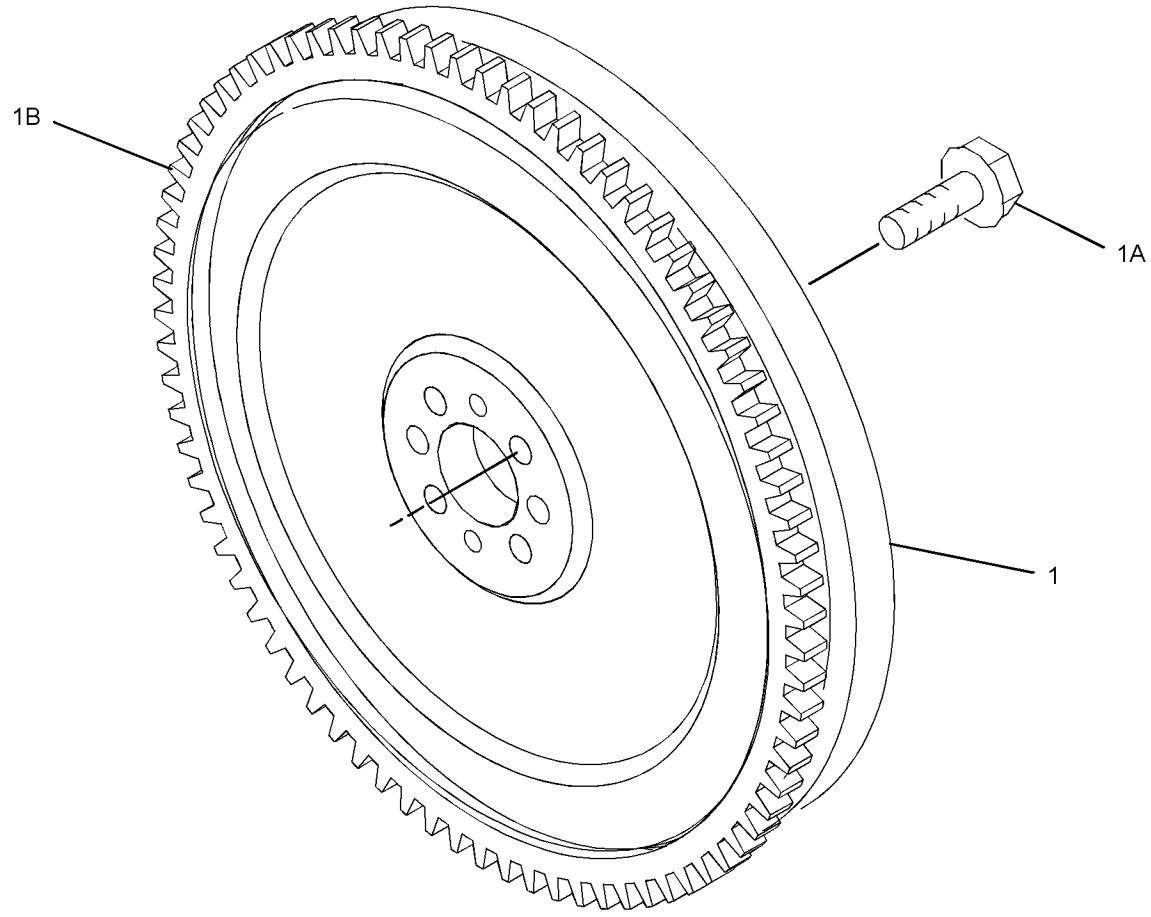

GRAPHIC #1 **<END>** g01310290

BASIC ENGINE

287-4830 GEAR GP-FRONT

S/N: CJS1-UP

PART OF 262-7288 ENGINE AR-PRIMARY

AN ATTACHMENT

SMCS-1206, 1212, 1234, 1288, 1313 **i02568578**

NOTE	REF NO	GRAPHIC REF	PART NUMBER	QTY	PART NAME 1 2 3 4 5 6 (PRODUCT LEVEL)	SEE PAGE
M	1	1	**5I-4936**	1	BOLT (M10X1.25X20-MM)	
	2	1	**222-8202**	1	PLATE	
	3	1	**8T-4121**	1	WASHER-HARD (11X21X2.5-MM THK)	
	4	1	**117-2827**	1	GEAR (46-TEETH)	
	5	1	**117-2829**	1	GEAR (23-TEETH)	
	6	1	**117-3283**	1	GEAR AS-IDLER (49-TEETH)	
	7	1	**117-3285**	1	GEAR-PUMP (OIL, 31-TEETH)	
	8	1	**239-4292**	1	GEAR	

M-METRIC PART

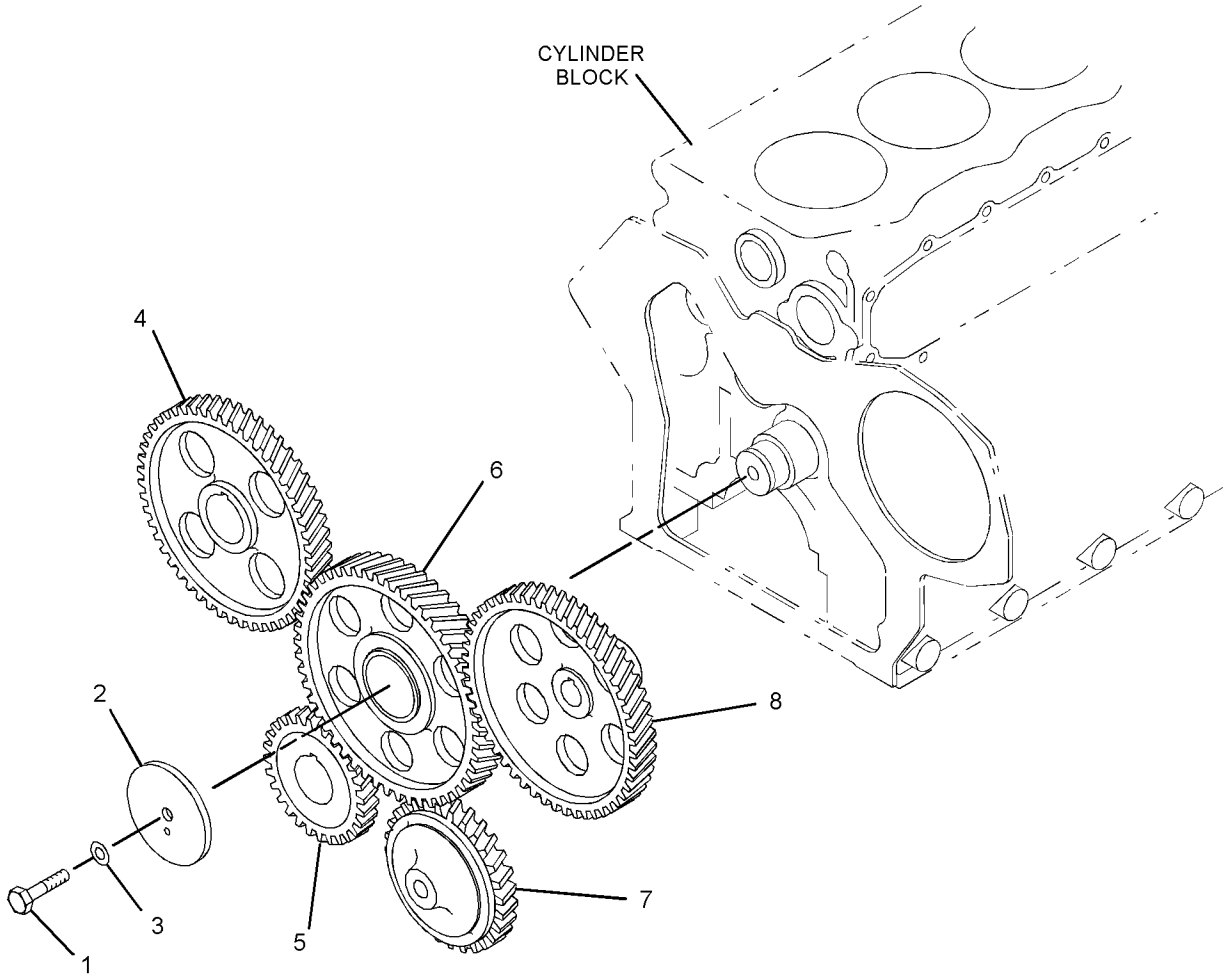

GRAPHIC #1 **<END>** g01322038

258-2469 GUARD GP-BELT

S/N: JAY1-UP

PART OF 258-2445 INSTALLATION AR-ENGINE

SMCS-7174 **i02674938**

NOTE	REF NO	GRAPHIC REF	PART NUMBER	QTY	PART NAME 1 2 3 4 5 6 (PRODUCT LEVEL)	SEE PAGE
	1	1	**258-2443**	1	GUARD-BELT	
	2	1	**258-2590**	1	BRACKET AS	
	3	1	**280-8314**	1	BRACKET AS	
	4	1	**101-2867**	3	WASHER-HARD (7.2X25X2-MM THK)	
M	5	1	**134-7722**	2	BOLT-LOCKING (M8X1.25X16-MM)	
M	6	1	**3E-8020**	3	SCREW-TRUSS HEAD (M6X1X25-MM)	
	7	1	**5P-4116**	6	WASHER-HARD (8.8X20.5X2-MM THK)	
M	8	1	**8T-4908**	4	BOLT (M8X1.25X25-MM)	

M-METRIC PART

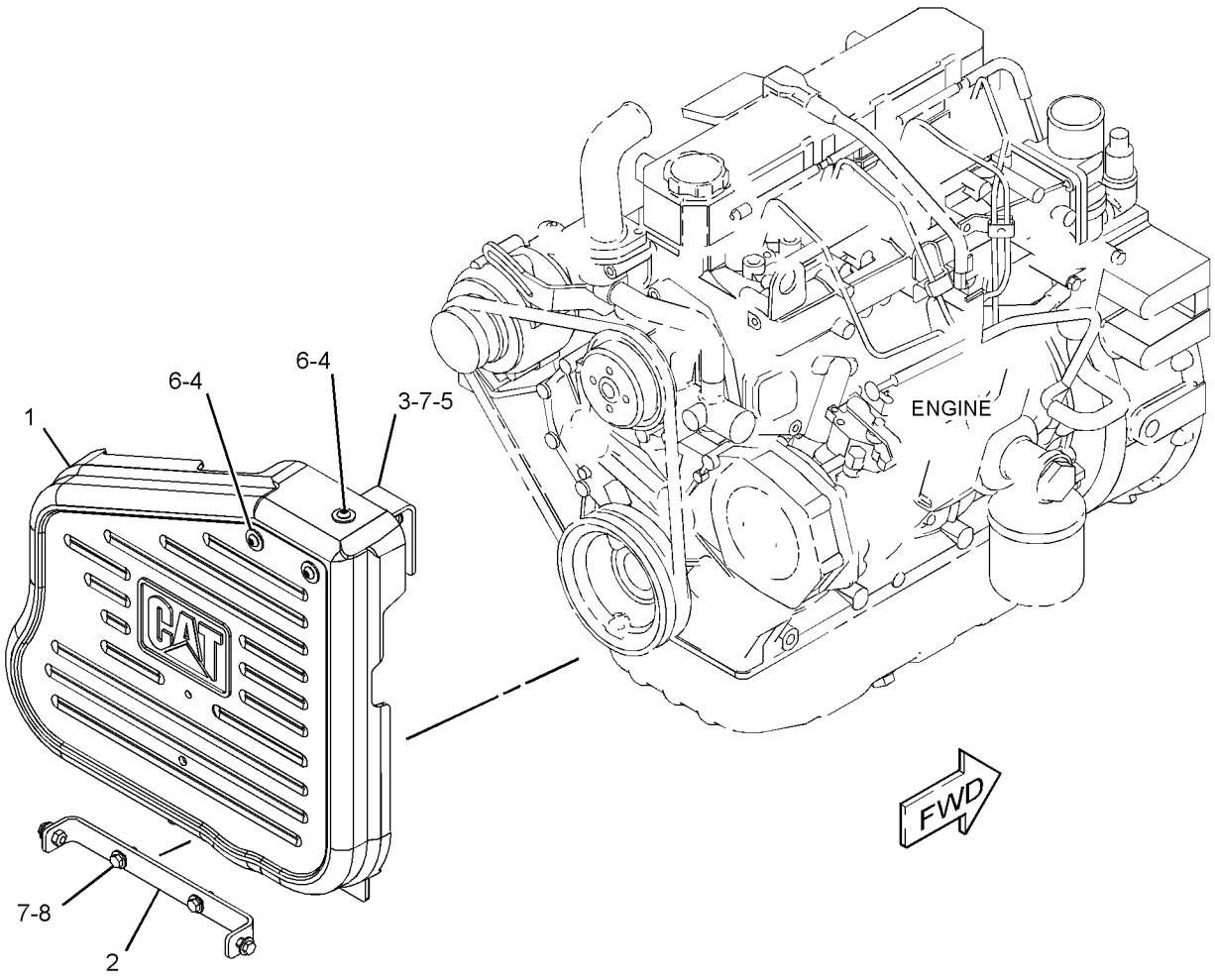

GRAPHIC #1 **<END>** g01344737

287-3357 HOUSING GP-FLYWHEEL

S/N: CJS1-UP

PART OF 262-7288 ENGINE AR-PRIMARY

AN ATTACHMENT

SMCS-1157 **i02568374**

NOTE	REF NO	GRAPHIC REF	PART NUMBER	QTY	PART NAME 1 2 3 4 5 6 (PRODUCT LEVEL)	SEE PAGE
	1	1	**096-4415**	2	LOCKWASHER	
	2	1	**103-9280**	1	GASKET-REAR	
	3	1	**117-5015**	1	SEAL AS-OIL	
M	4	1	**185-8182**	2	BOLT (M10X1.5X20-MM)	
	5	1	**199-2354**	10	BOLT (M10X1.25X25-MM)	
	6	1	**212-8499**	3	STUD	
	7	1	**212-8510**	3	NUT	
M	8	1	**9X-8912**	2	BOLT (M10X1.25X30-MM)	
	9	1	**233-5482**	1	EYE	
	10	1	**287-3355**	1	HOUSING-FLYWHEEL	

M-METRIC PART

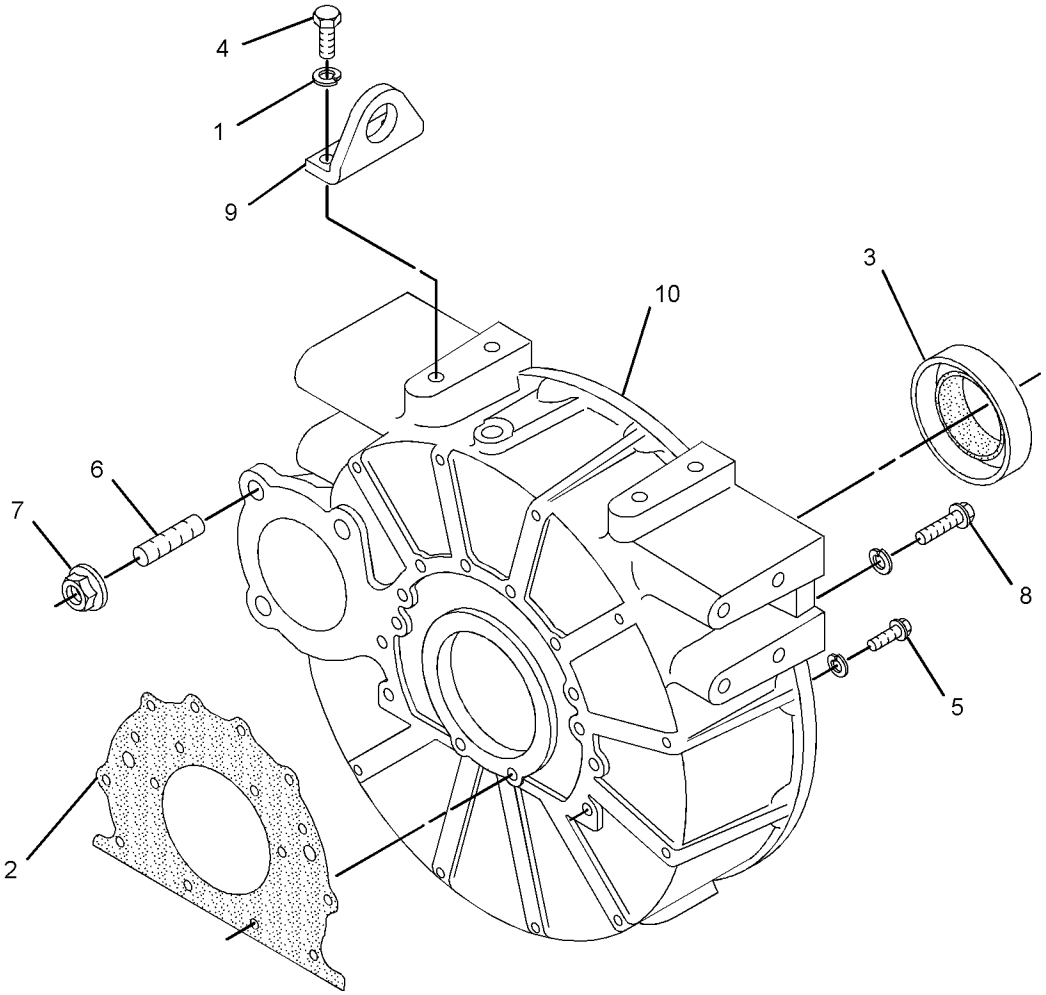

GRAPHIC #1 **<END>** g01325461

287-3074 HOUSING GP-FRONT

S/N: CJS1-UP

PART OF 262-7288 ENGINE AR-PRIMARY

AN ATTACHMENT

SMCS-1151, 1160, 1162, 1166, 3108 **i02674007**

NOTE	REF NO	GRAPHIC REF	PART NUMBER	QTY	PART NAME 1 2 3 4 5 6 (PRODUCT LEVEL)	SEE PAGE
	1	1	**9M-1974**	23	WASHER-HARD (8.8X16X2-MM THK)	
M	2	1	**8T-7329**	13	BOLT (M8X1.25X55-MM)	
	3	1	**096-9529**	1	SEAL-O-RING	
	4	1	**103-9277**	1	GASKET-FRONT PLATE	
	5	1	**117-3447**	1	GASKET	
	6	1	**117-3448**	1	PLATE	
M	7	1	**6V-5215**	5	BOLT (M8X1.25X16-MM)	
	10	1	**233-5497**	1	COVER-GEAR	
	11	1	**233-5498**	1	CAP-FILLER (ENGINE OIL)	
	13	1	**238-8279**	1	HOUSING-FRONT	
	14	1	**239-8429**	1	SEAL AS-CRANKSHAFT	
	15	1	**285-9066**	5	BOLT (M8X1.25X65-MM)	

M-METRIC PART

287-3074 **HOUSING GP-FRONT** *(contd.)* **i02674007**

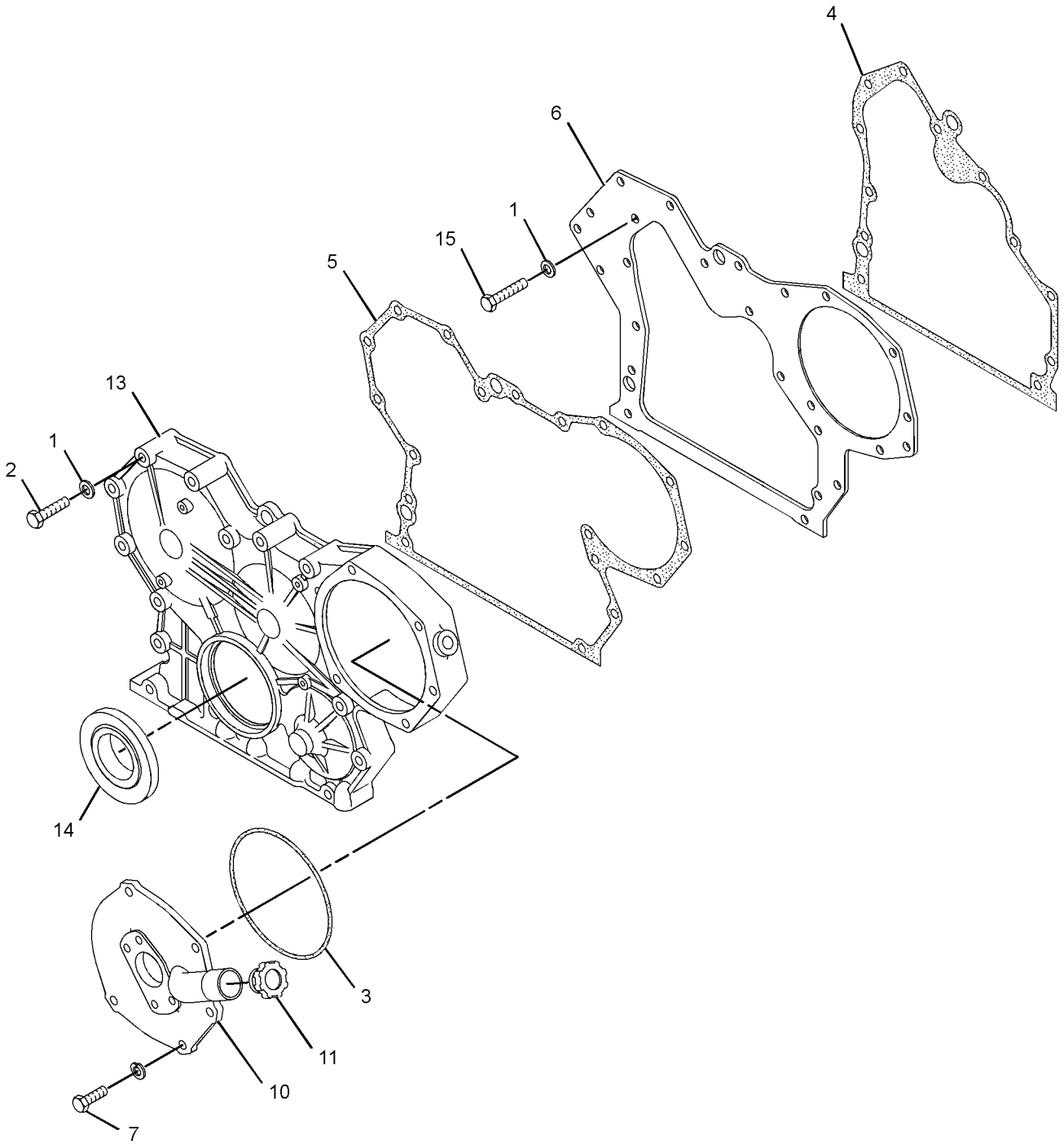

GRAPHIC #1 **<END>** g01351136

287-1844 LIFTING GP-ENGINE

S/N: CJS1-UP
PART OF 262-7288 ENGINE AR-PRIMARY
AN ATTACHMENT

SMCS-1122 **i02565998**

NOTE	REF NO	GRAPHIC REF	PART NUMBER	QTY	PART NAME 1 2 3 4 5 6 (PRODUCT LEVEL)	SEE PAGE
	1	1	**233-5466**	1	EYE	
	2	1	**233-5468**	1	GASKET	
	3	1	**234-4810**	1	COVER-CYLINDER HEAD	
M	4	1	**8T-4189**	4	BOLT (M8X1.25X20-MM)	
	5	1	**3B-4505**	8	LOCKWASHER	

M-METRIC PART

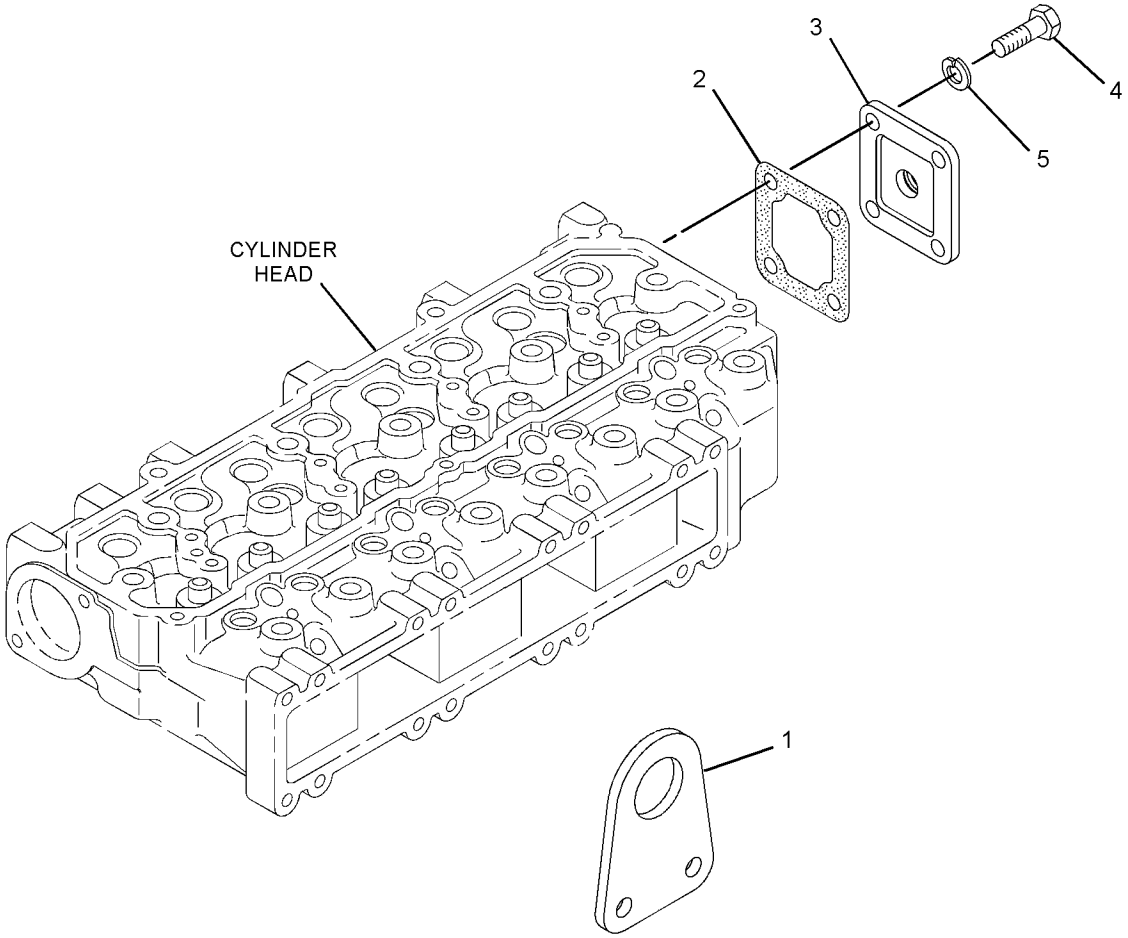

GRAPHIC #1 **<END>** g01352020

258-2447 MOUNTING GP-ENGINE

S/N: JAY1-UP

PART OF 258-2445 INSTALLATION AR-ENGINE

SMCS-1152, 1153, 1154 **i02667707**

NOTE	REF NO	GRAPHIC REF	PART NUMBER	QTY	PART NAME 1 2 3 4 5 6 (PRODUCT LEVEL)	SEE PAGE
	1	1	**280-8308**	4	WASHER	
	2	1	**118-2990**	2	MOUNT AS	
	3	1	**230-3621**	1	MOUNT AS	
	4	1	**258-2448**	1	BRACKET AS	
	5	1	**258-2449**	2	BRACKET AS	
	6	1	**258-3447**	2	BOLT AS	
M	7	1	**129-3180**	1	LOCKNUT (M12X1.75-THD)	
	8	1	**165-7095**	4	WASHER (16.5X71.5X3-MM THK)	
	9	1	**5P-1076**	2	WASHER-HARD (13.5X30X4-MM THK)	
	10	1	**8T-4122**	2	WASHER-HARD (17X32X3.5-MM THK)	
M	11	1	**8T-4132**	2	NUT (M16X2-THD)	
M	12	1	**8T-4176**	1	BOLT (M12X1.75X90-MM)	
M	13	1	**8T-4192**	16	BOLT (M12X1.75X25-MM)	
	14	1	**8T-4223**	16	WASHER-HARD (13.5X25.5X3-MM THK)	
	15	1	**280-8299**	2	ROD	

M-METRIC PART

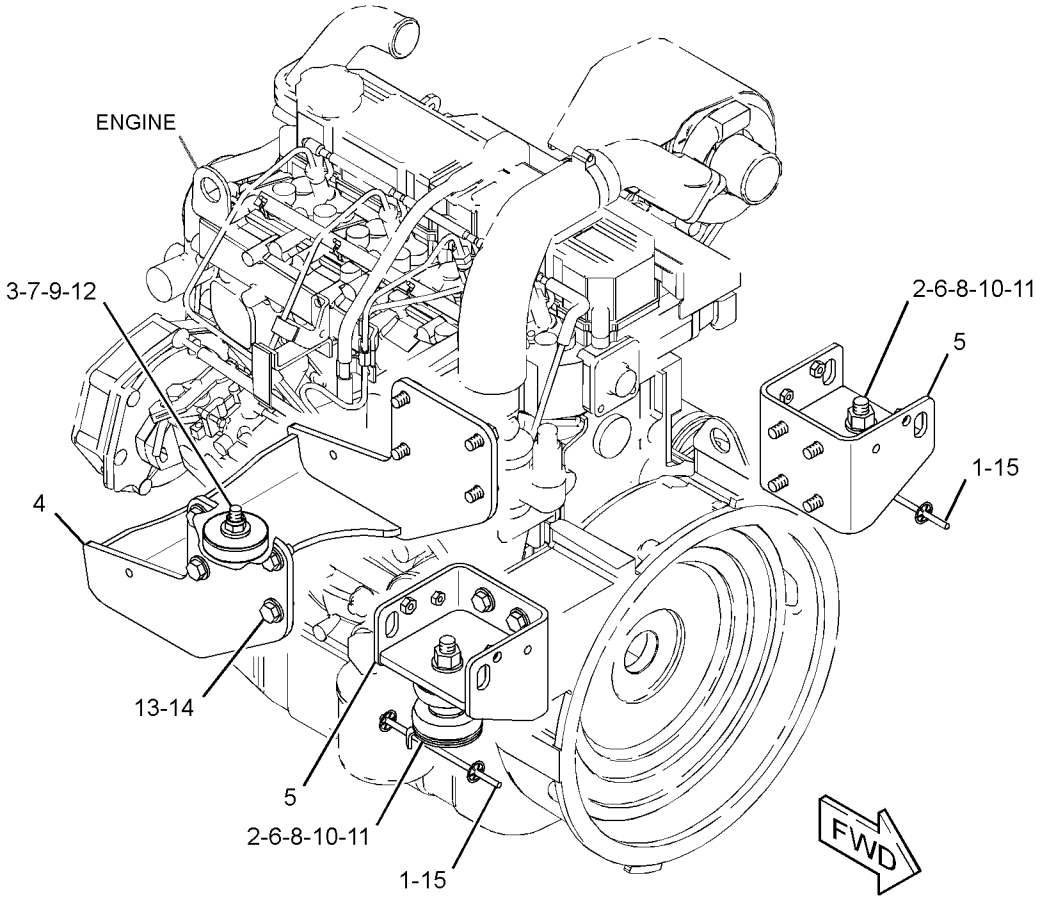

GRAPHIC #1 **<END>** g01341126

BASIC ENGINE

287-3921 PAN GP-OIL

S/N: CJS1-UP
PART OF 262-7288 ENGINE AR-PRIMARY
AN ATTACHMENT

SMCS-1302 **i02712959**

NOTE	REF NO	GRAPHIC REF	PART NUMBER	QTY	PART NAME 1 2 3 4 5 6 (PRODUCT LEVEL)	SEE PAGE
	1	1	**5I-4993**	2	SEAL	
M	2	1	**195-8403**	1	BOLT AS (M6X1X14-MM)	
M	3	1	*199-2205*	25	BOLT AS (M8X1.25X16-MM)	
					(EACH INCLUDES)	
	3A	1	**3B-4505**	1	LOCKWASHER	
M	3B	1	**8T-4200**	1	BOLT (M8X1.25X16-MM)	
	4	1	**234-4812**	1	GUIDE	
	5	1	**234-4813**	1	STAY	
	6	1	**235-4956**	1	GAUGE-OIL (DIPSTICK, ENGINE)	
	7	1	**235-4957**	1	GUIDE	
	8	1	**287-3922**	1	PAN AS-OIL	
	8A	1	**5I-7833**	1	PLUG-DRAIN (ENGINE OIL PAN)	
	8B	1	**234-4811**	1	WASHER	
BF			**165-2601**		SEALANT-SILICONE	
BF			**292-4042**		COMPOUND-SEALING	

B-USE AS REQUIRED
F-NOT SHOWN
M-METRIC PART

287-3921 **PAN GP-OIL** *(contd.)* **i02712959**

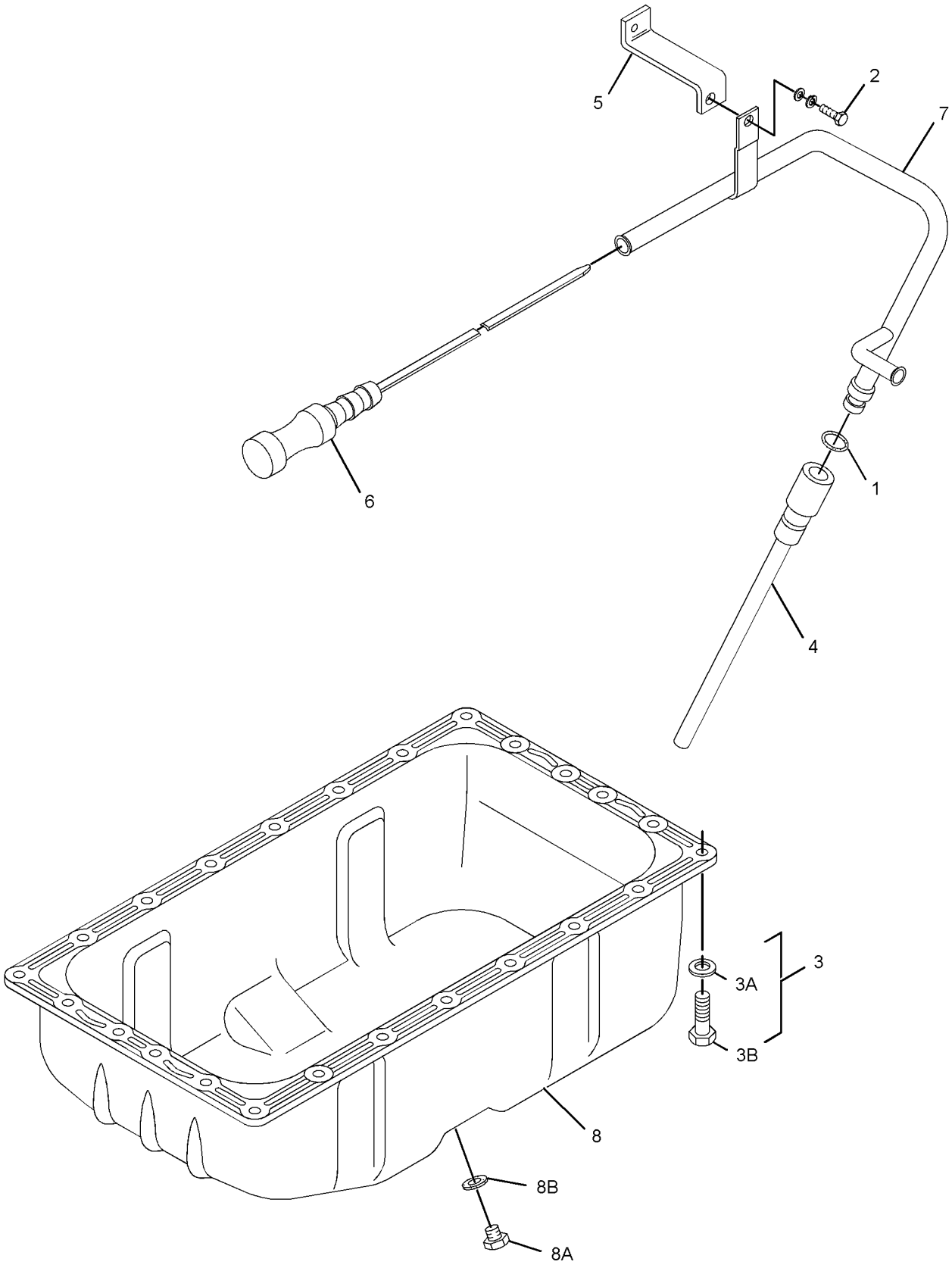

GRAPHIC #1 **<END>** g01325436

235-5889 PISTON & ROD GP

S/N: CJS1-UP
PART OF 262-7288 ENGINE AR-PRIMARY
AN ATTACHMENT

SMCS-1225 **i02503742**

NOTE	REF NO	GRAPHIC REF	PART NUMBER	QTY	PART NAME 1 2 3 4 5 6 (PRODUCT LEVEL)	SEE PAGE
	1	1	**212-8597**	8	RING	
	2	1	**234-4815**	4	PIN-PISTON	
	3	1	**234-4814**	4	PISTON (STANDARD)	
AB		1	**234-4816**		PISTON (0.50-MM OS)	
AB		1	**234-4817**		PISTON (0.25-MM OS)	
	4	1	**226-8204**	4	SET-PISTON RING (STANDARD)	
AB		1	**238-8280**		RING GP-PISTON (0.25MM OS)	
AB		1	**238-8281**		RING GP-PISTON (0.50MM OS)	

A-NOT PART OF THIS GROUP
B-USE AS REQUIRED

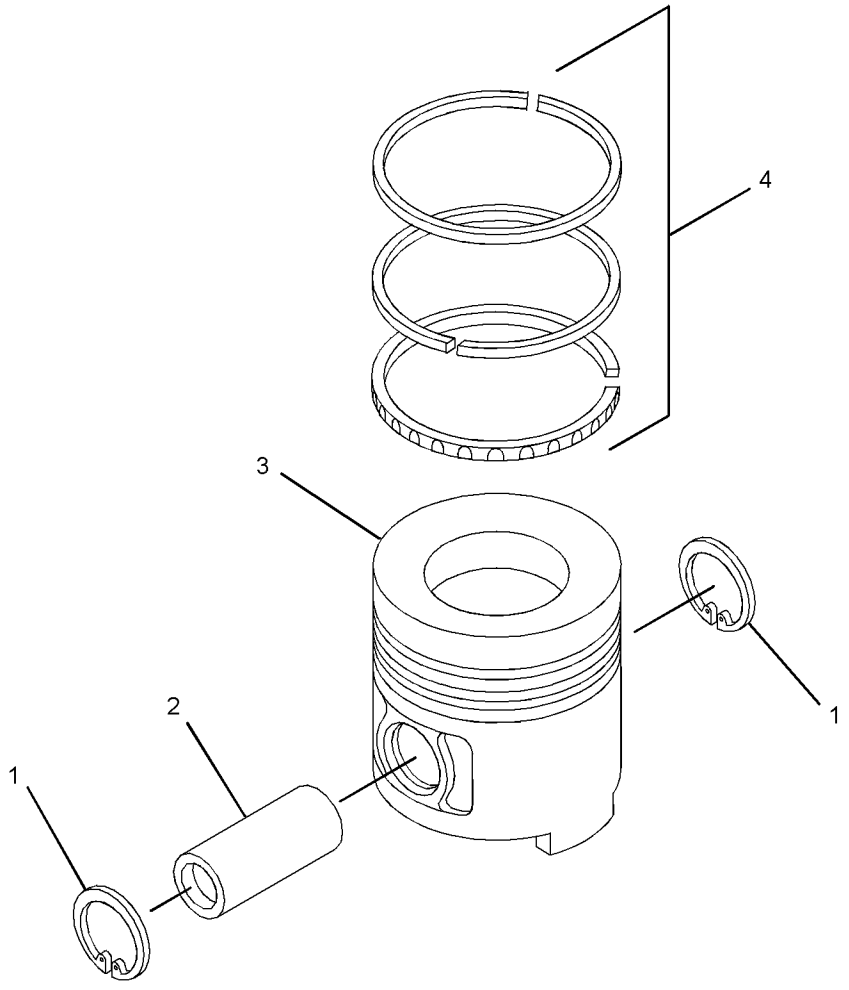

GRAPHIC #1 **<END>** g01348295

BASIC ENGINE

287-2922 PLUG GP-ENGINE

S/N: CJS1-UP
PART OF 262-7288 ENGINE AR-PRIMARY
AN ATTACHMENT

SMCS-1000 **i02568378**

NOTE	REF NO	GRAPHIC REF	PART NUMBER	QTY	PART NAME 1 2 3 4 5 6 (PRODUCT LEVEL)	SEE PAGE
	1	1	**5I-7505**	6	PLUG	

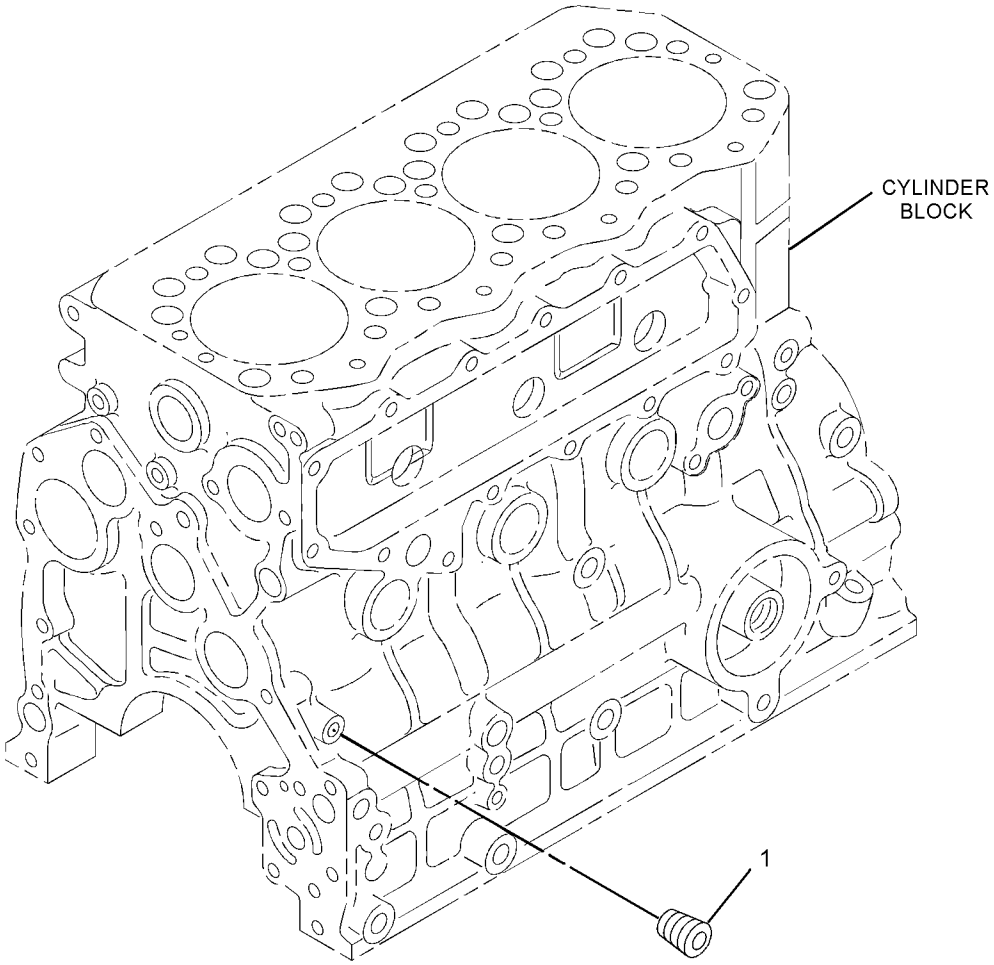

GRAPHIC #1 **<END>** g01325237

287-2983 PLUG GP-ENGINE

S/N: CJS1-UP

PART OF 262-7288 ENGINE AR-PRIMARY

AN ATTACHMENT

SMCS-1000 **i02616574**

NOTE	REF NO	GRAPHIC REF	PART NUMBER	QTY	PART NAME 1 2 3 4 5 6 (PRODUCT LEVEL)	SEE PAGE
	1	1	**195-8211**	1	PLUG	

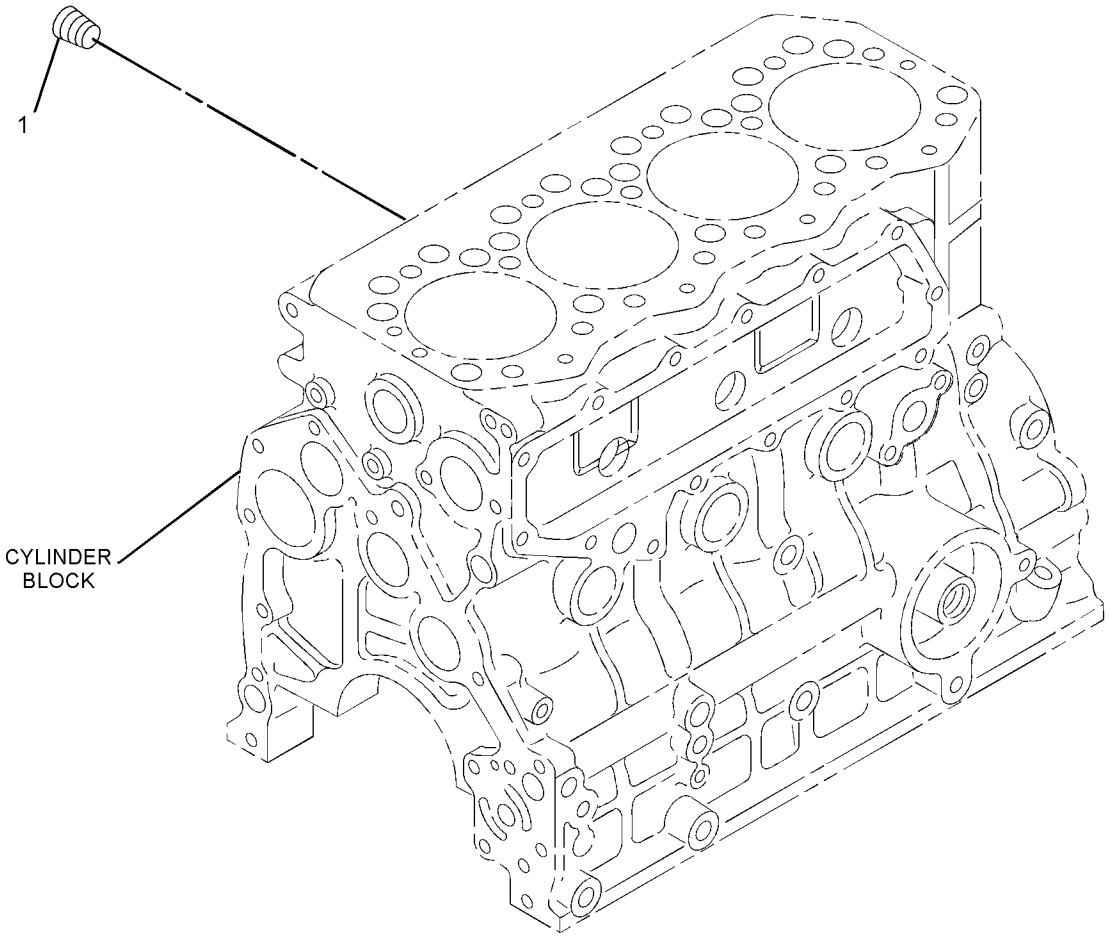

GRAPHIC #1 **<END>** g01325240

BASIC ENGINE

287-4749 PULLEY GP-CRANKSHAFT

S/N: CJS1-UP

PART OF 262-7288 ENGINE AR-PRIMARY

AN ATTACHMENT

SMCS-1205 **i02568579**

NOTE	REF NO	GRAPHIC REF	PART NUMBER	QTY	PART NAME 1 2 3 4 5 6 (PRODUCT LEVEL)	SEE PAGE
	1	1	**287-4748**	1	PULLEY-CRANKSHAFT	

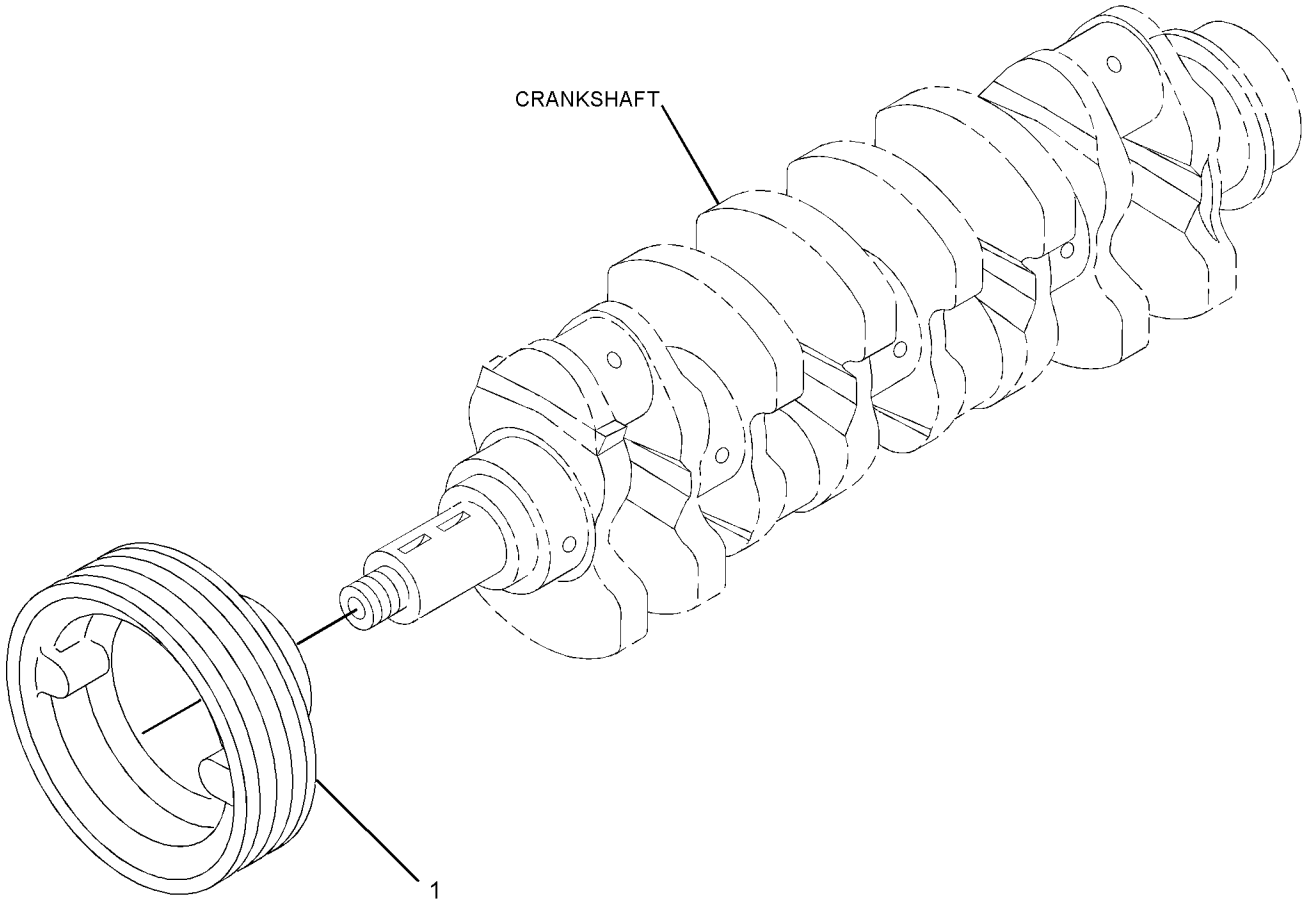

GRAPHIC #1 **<END>** g01321554

287-6114 PULLEY GP-WATER PUMP

S/N: CJS1-UP

PART OF 262-7288 ENGINE AR-PRIMARY

AN ATTACHMENT

SMCS-1384 **i02568573**

NOTE	REF NO	GRAPHIC REF	PART NUMBER	QTY	PART NAME 1 2 3 4 5 6 (PRODUCT LEVEL)	SEE PAGE
M	1	1	**8T-0642**	4	BOLT (M8X1.25X14-MM)	
	2	1	**9M-1974**	4	WASHER-HARD (8.8X16X2-MM THK)	
	3	1	**234-4807**	1	PULLEY	

M-METRIC PART

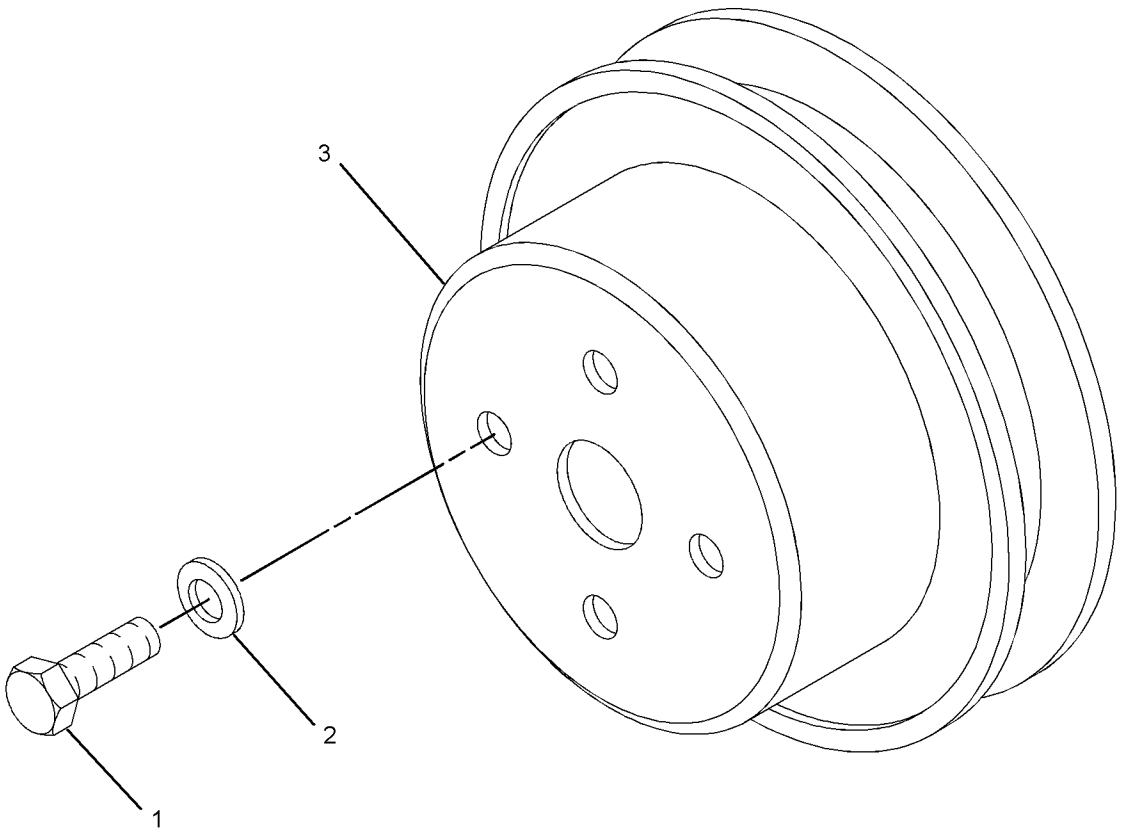

GRAPHIC #1 **<END>** g01326766

BASIC ENGINE

235-5880 VALVE MECHANISM GP

S/N: CJS1-UP

PART OF 262-7288 ENGINE AR-PRIMARY

AN ATTACHMENT

SMCS-1102, 1112, 1121, 1123, 1208, 1209 **i02628721**

NOTE	REF NO	GRAPHIC REF	PART NUMBER	QTY	PART NAME 1 2 3 4 5 6 (PRODUCT LEVEL)	SEE PAGE
	1	1	**5I-7625**	8	RETAINER	
	2	1	**5I-7630**	8	CAP	
	3	1	**5I-7719**	16	RETAINER	
M	4	1	**6V-3940**	4	BOLT (M8X1.25X25-MM)	
	5	1	**9M-1974**	4	WASHER-HARD (8.8X16X2-MM THK)	
	6	1	**233-5469**	4	VALVE-INLET	
	7	1	**233-5470**	4	VALVE-EXHAUST	
	8	1	**233-5471**	8	SPRING-VALVE	
	10	1	**233-5501**	1	ROCKER ARM GP	
		1	**233-5476**	1	SHAFT AS	
	10A	1	**095-2005**	1	CAP	
	10B	1	**195-8324**	2	RING-SNAP	
	10C	1	**221-5245**	8	ROCKER AS	
	10D	1	**221-5250**	3	SPRING	
	10E	1	**233-5477**	4	BRACKET	
	10F	1	**233-5478**	4	BOLT	

M-METRIC PART

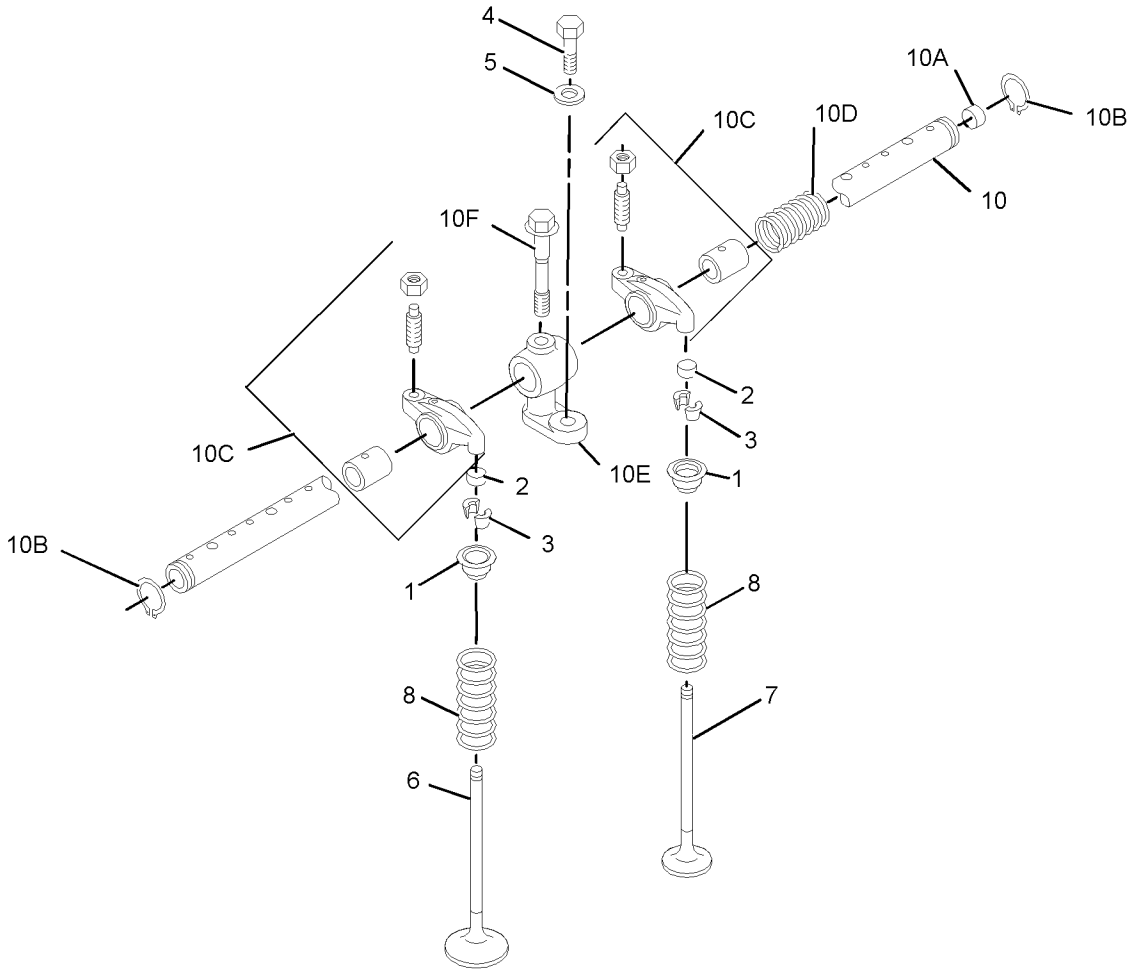

GRAPHIC #1 **<END>** g01348046

LUBRICATION SYSTEM

287-6016 BREATHER GP

S/N: CJS1-UP

PART OF 262-7288 ENGINE AR-PRIMARY

AN ATTACHMENT

SMCS-1317 **i02712960**

NOTE	REF NO	GRAPHIC REF	PART NUMBER	QTY	PART NAME 1 2 3 4 5 6 (PRODUCT LEVEL)	SEE PAGE
	1	1	**5I-8063**	1	CLIP	
	2	1	**115-0468**	2	CLIP	
	3	1	**151-5328**	1	CLAMP	
M	4	1	**195-8222**	2	BOLT AS (M8X1.25X22-MM)	
	5	1	**195-8356**	2	BOLT AS	
M	6	1	**195-8449**	2	BOLT AS (M8X1.25X80-MM)	
M	6A	1	**8T-3647**	1	BOLT (M8X1.25X80-MM)	
	6B	1	**3B-4505**	1	LOCKWASHER	
	6C	1	**8T-4224**	1	WASHER-HARD (8.8X16X2-MM THK)	
M	7	1	**199-2205**	1	BOLT AS (M8X1.25X16-MM)	
M	7A	1	**8T-4200**	1	BOLT (M8X1.25X16-MM)	
	7B	1	**3B-4505**	1	LOCKWASHER	
	8	1	**234-4837**	1	CLIP-HOSE	
	9	1	**234-4838**	1	CLIP	
	10	1	**234-4839**	1	PIPE	
	11	1	**235-4931**	1	HOSE	
	12	1	**235-4937**	1	HOSE	
	13	1	**235-4942**	1	PLATE	
	14	1	**235-4951**	1	ADAPTER	
	15	1	**257-8389**	2	CLIP	
	16	1	**257-8739**	1	CLAMP-HOSE	
	17	1	**287-6015**	1	HOSE	
	18	1	**287-6017**	1	CLAMP-HOSE	
	19	1	**287-6020**	1	BREATHER	
	20	1	**287-6021**	1	HOSE	
	21	1	**287-6022**	1	TUBE-BREATHER	

M-METRIC PART

287-6016 **BREATHER GP** ***(contd.)*** **i02712960**

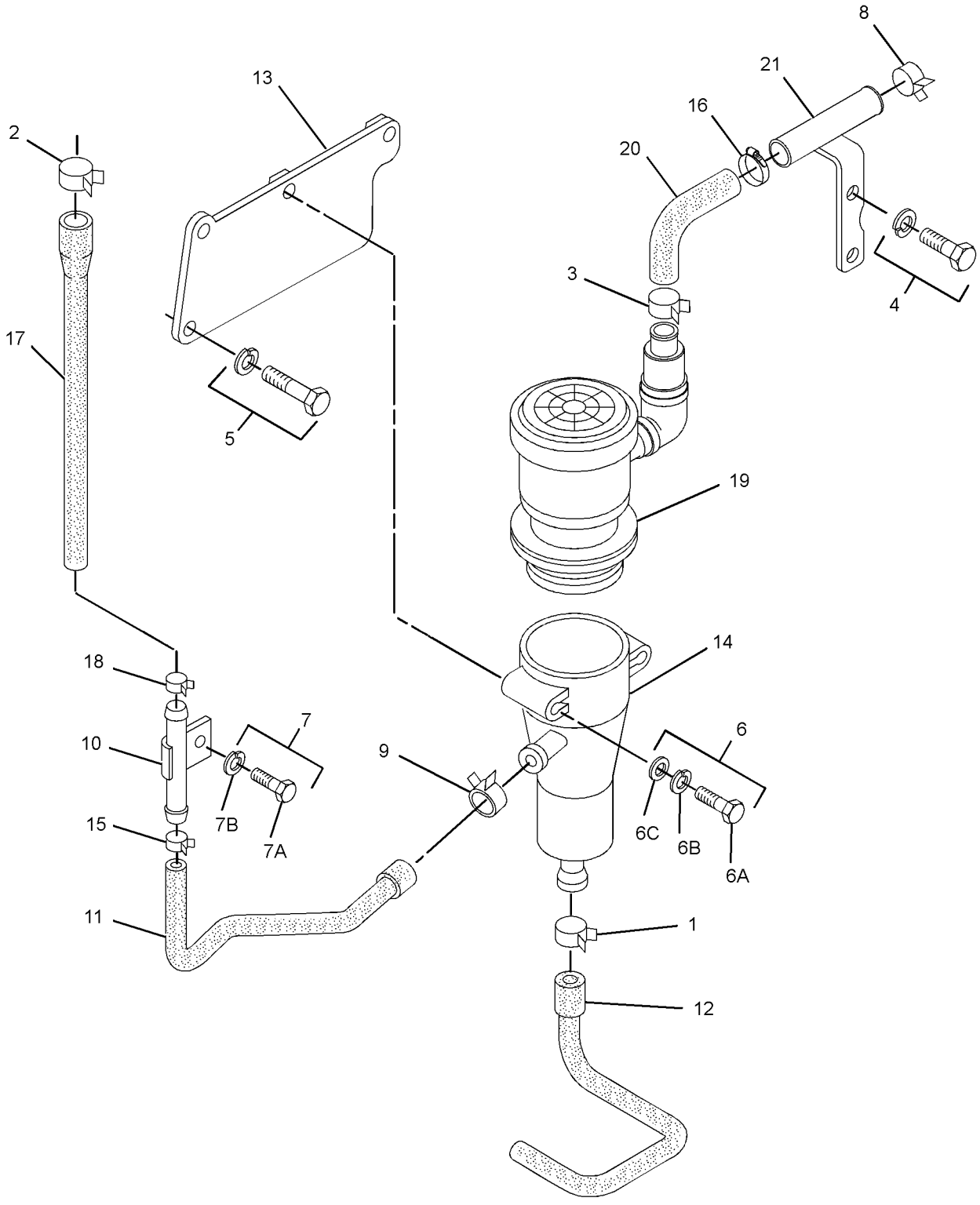

GRAPHIC #1 **<END>** g01355209

LUBRICATION SYSTEM

235-5897 FILTER GP-ENGINE OIL

S/N: CJS1-UP

PART OF 262-7288 ENGINE AR-PRIMARY

AN ATTACHMENT

SMCS-1308 **i02524392**

NOTE	REF NO	GRAPHIC REF	PART NUMBER	QTY	PART NAME 1 2 3 4 5 6 (PRODUCT LEVEL)	SEE PAGE
	1	1	**1R-0734**	1	FILTER AS-OIL (ENGINE)	
M	2	1	**6V-3940**	1	BOLT (M8X1.25X25-MM)	
	3	1	**9M-1974**	1	WASHER-HARD (8.8X16X2-MM THK)	
	4	1	**095-1537**	1	SEAL-O-RING	
	5	1	**095-1671**	1	SEAL-O-RING	
	6	1	**234-4827**	1	BOLT	
	7	1	**235-4955**	1	BRACKET AS	
	7A	1	**234-4826**	1	UNION	

M-METRIC PART

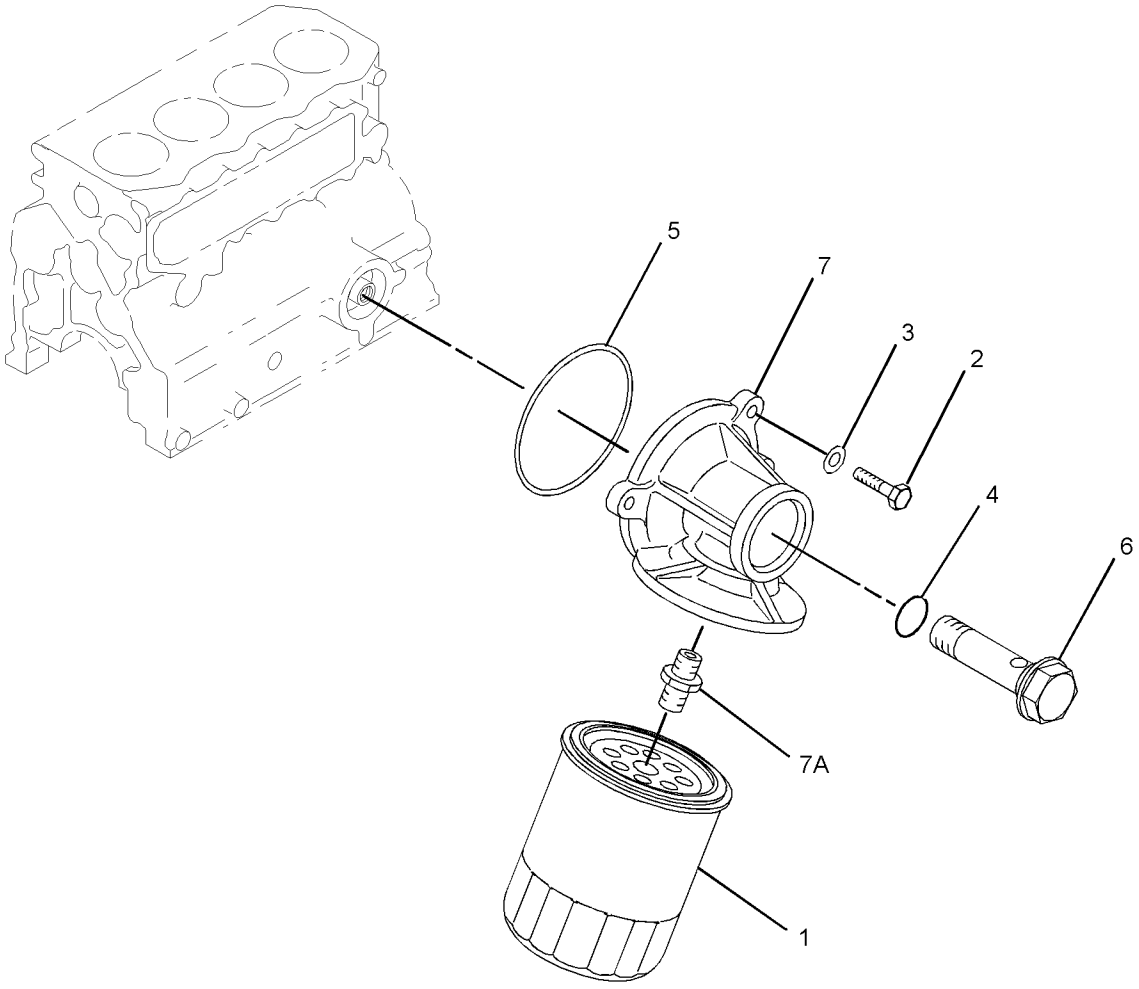

GRAPHIC #1 **<END>** g01347957

LUBRICATION SYSTEM

287-5377 FILTER GP-ENGINE OIL

S/N: CJS1-UP
PART OF 262-7288 ENGINE AR-PRIMARY
AN ATTACHMENT

SMCS-1308 **i02555558**

NOTE	REF NO	GRAPHIC REF	PART NUMBER	QTY	PART NAME 1 2 3 4 5 6 (PRODUCT LEVEL)	SEE PAGE
M	1	1	**6V-5215**	3	BOLT (M8X1.25X16-MM)	
	2	1	**9M-1974**	3	WASHER-HARD (8.8X16X2-MM THK)	
	3	1	**233-5494**	1	STRAINER-OIL (ENGINE)	
	4	1	**239-8513**	1	SEAL-O-RING	

M-METRIC PART

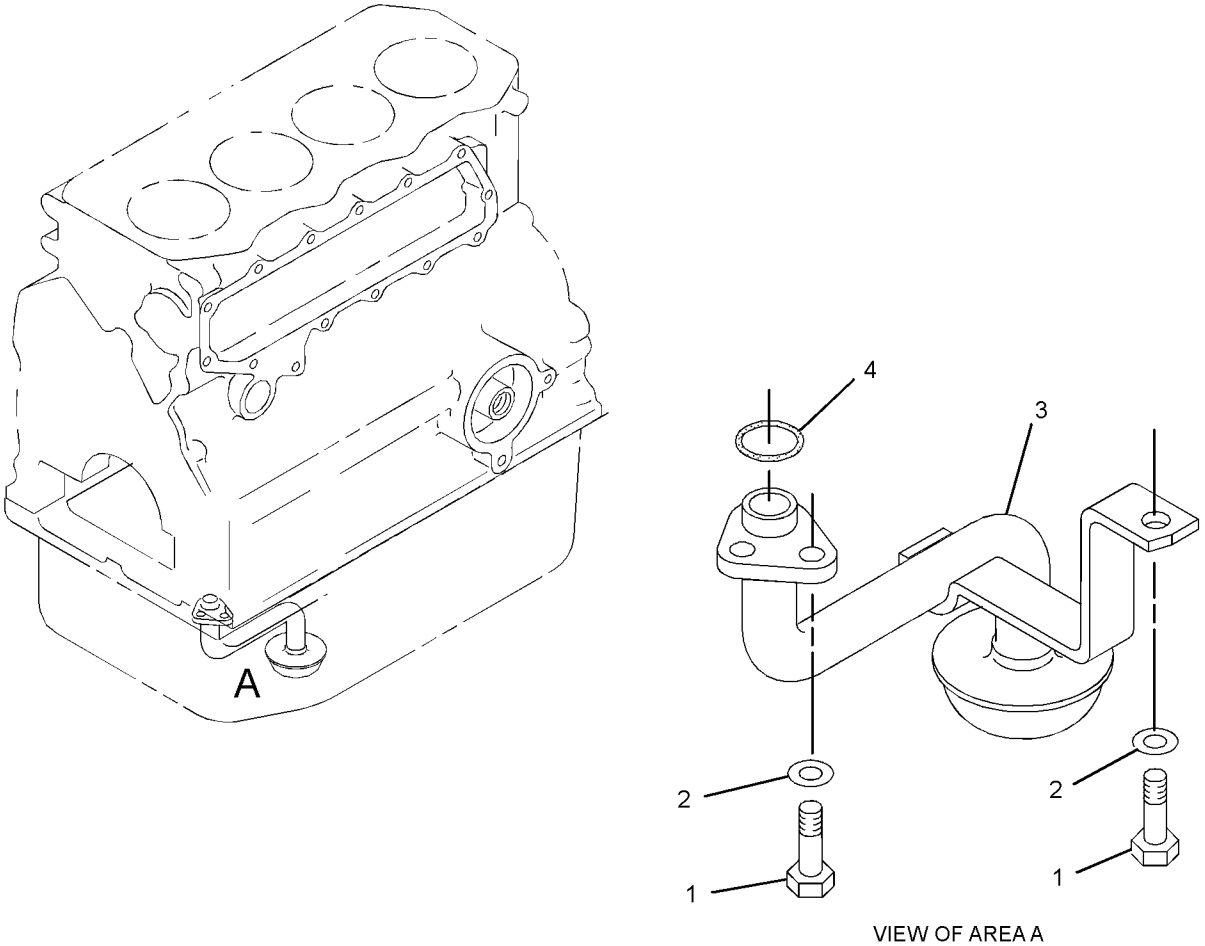

VIEW OF AREA A

GRAPHIC #1 **<END>** g01342337

235-5895 PUMP GP-ENGINE OIL

S/N: CJS1-UP
PART OF 262-7288 ENGINE AR-PRIMARY
AN ATTACHMENT

SMCS-1304, 1315 **i02524390**

NOTE	REF NO	GRAPHIC REF	PART NUMBER	QTY	PART NAME 1 2 3 4 5 6 (PRODUCT LEVEL)	SEE PAGE
M	1	1	**6V-5217**	4	BOLT (M8X1.25X20-MM)	
	2	1	**9M-1974**	4	WASHER-HARD (8.8X16X2-MM THK)	
	3	1	**113-1141**	1	PUMP AS-OIL	
	4	1	**101-6544**	1	NUT	
	5	1	**6V-5839**	1	WASHER (11X21X2.5-MM THK)	
	6	1	**103-9083**	1	SEAL-O-RING	

M-METRIC PART

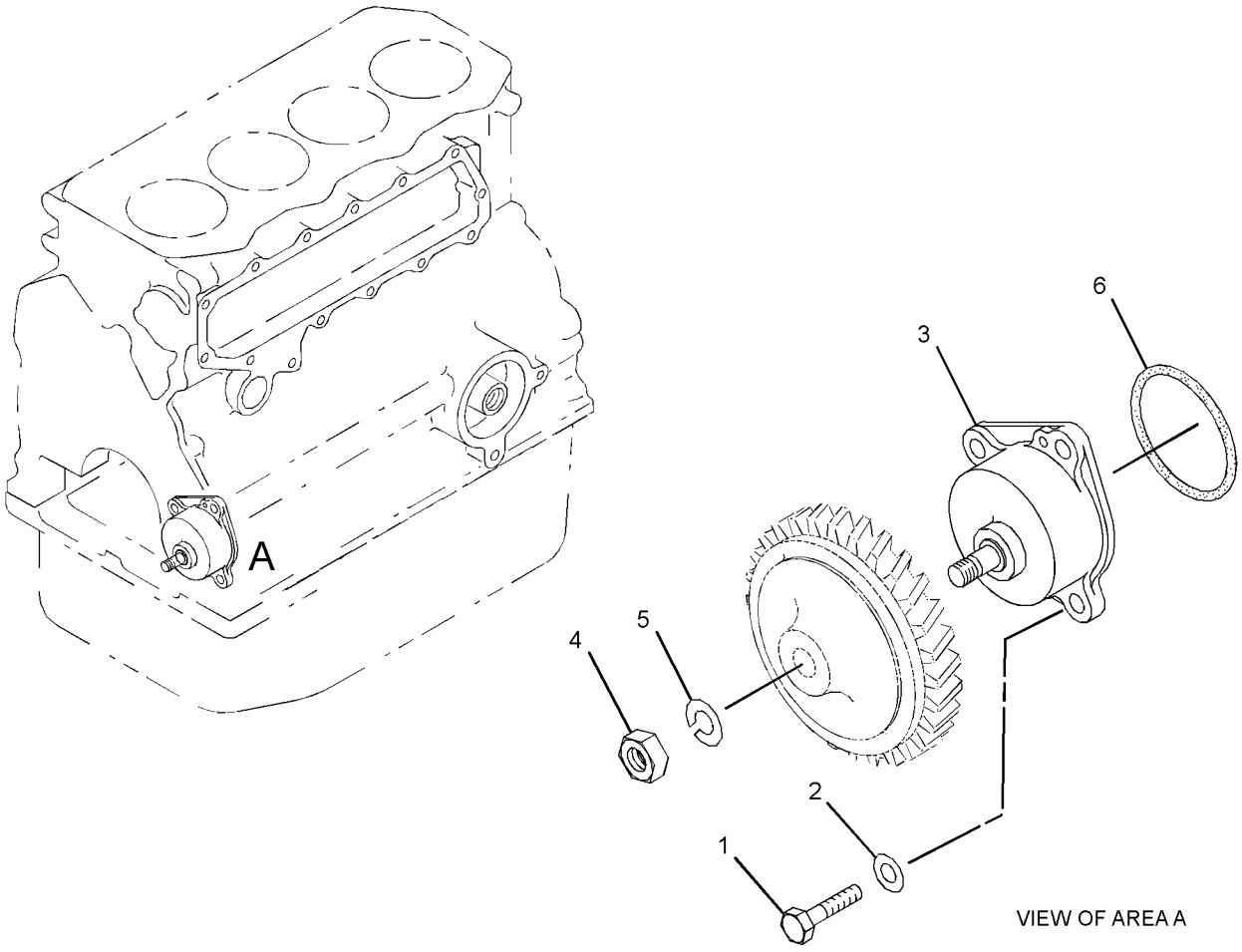

GRAPHIC #1 **<END>** g01348493

COOLING SYSTEM

235-5896 COOLER GP-ENGINE OIL

S/N: CJS1-UP
PART OF 262-7288 ENGINE AR-PRIMARY
AN ATTACHMENT

SMCS-1378 **i02656178**

NOTE	REF NO	GRAPHIC REF	PART NUMBER	QTY	PART NAME 1 2 3 4 5 6 (PRODUCT LEVEL)	SEE PAGE
	1	1	**4I-9404**	2	SEAL-O-RING	
M	2	1	**6V-2317**	1	BOLT (M8X1.25X30-MM)	
M	3	1	**195-8222**	11	BOLT AS (M8X1.25X22-MM)	
	4	1	**9M-1974**	12	WASHER-HARD (8.8X16X2-MM THK)	
	5	1	**095-1513**	4	SEAL-O-RING	
	6	1	**234-4800**	1	GASKET	
	7	1	**234-4798**	1	STUD	
	8	1	**244-7127**	5	NUT-FLANGE	
	9	1	**234-4797**	1	GASKET	
	10	1	**234-4801**	1	COVER	
	11	1	**234-4802**	1	COVER AS	
	11A	1	**096-3321**	2	PLUG	
	12	1	**234-4803**	1	COOLER AS	
	13	1	**239-8513**	2	SEAL-O-RING	
F			**3B-4505**	11	LOCKWASHER	
F			**301-3274**	1	HOUSING-OIL COOLER	

F-NOT SHOWN
M-METRIC PART

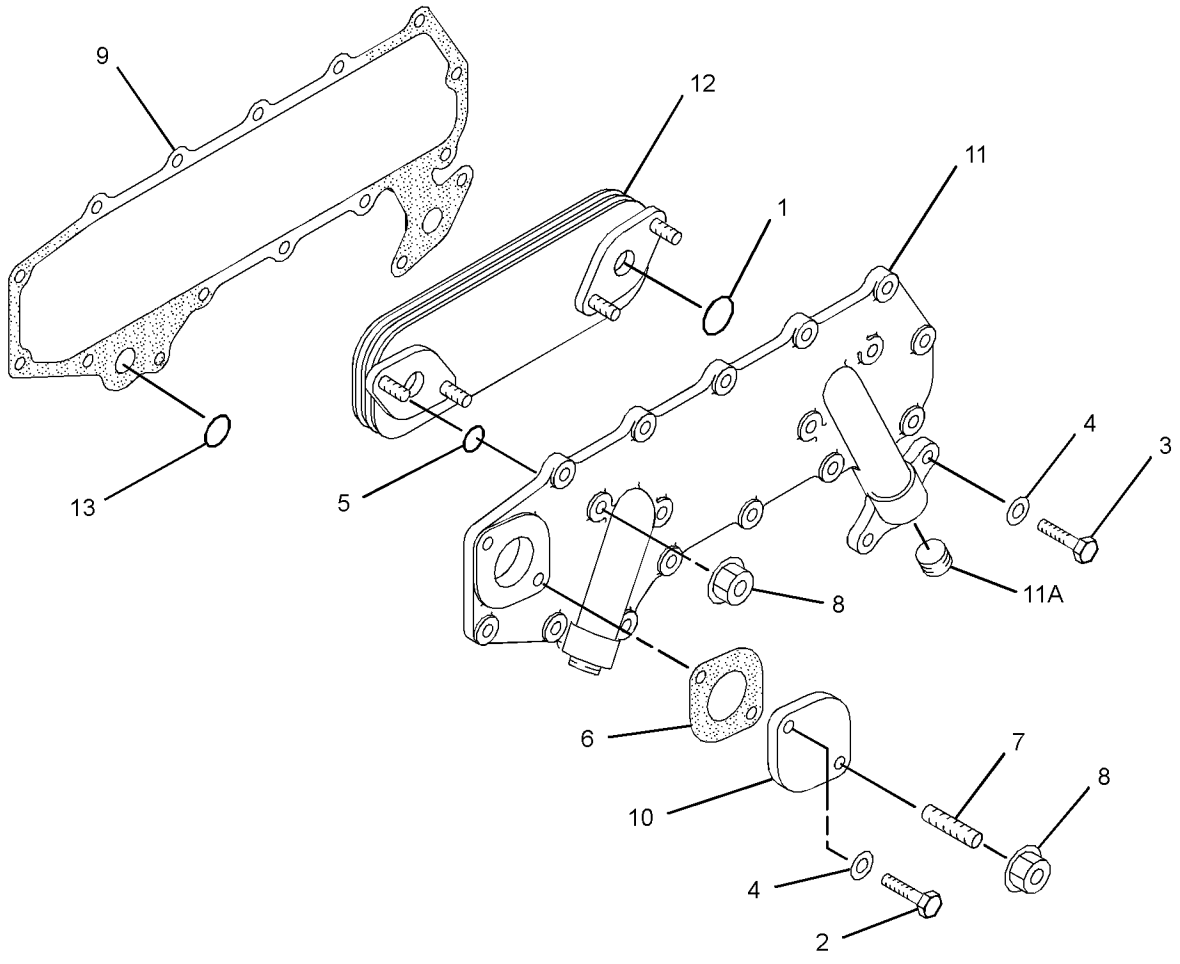

GRAPHIC #1 **<END>** g01354876

COOLING SYSTEM

235-5900 LINES GP-WATER

S/N: CJS1-UP
PART OF 262-7288 ENGINE AR-PRIMARY
AN ATTACHMENT

SMCS-1355, 1380, 1393 **i02643608**

NOTE	REF NO	GRAPHIC REF	PART NUMBER	QTY	PART NAME 1 2 3 4 5 6 (PRODUCT LEVEL)	SEE PAGE
	1	1	**5I-7628**	2	GASKET	
	2	1	**5I-8056**	2	PLUG (DRAIN)	
	3	1	**096-8475**	2	BOLT (25-MM LONG)	
M	4	1	**6V-5221**	1	BOLT (M8X1.25X80-MM)	
M	5	1	**8T-0276**	1	BOLT (M8X1.25X45-MM)	
	6	1	**9M-1974**	4	WASHER-HARD (8.8X16X2-MM THK)	
	7	1	**5I-7728**	1	GASKET	
	8	1	**246-8315**	1	HOSE-BYPASS	
	9	1	**257-8739**	2	CLAMP-HOSE (HOSE)	
	10	1	**234-4831**	1	COVER	
	11	1	**235-4959**	1	GASKET (WATER TEMPERATURE REGULATOR)	
	12	1	**235-4960**	1	REGULATOR AS-WATER TEMPERATURE (THERMOSTAT)	
	13	1	**246-8314**	1	HOUSING	

M-METRIC PART

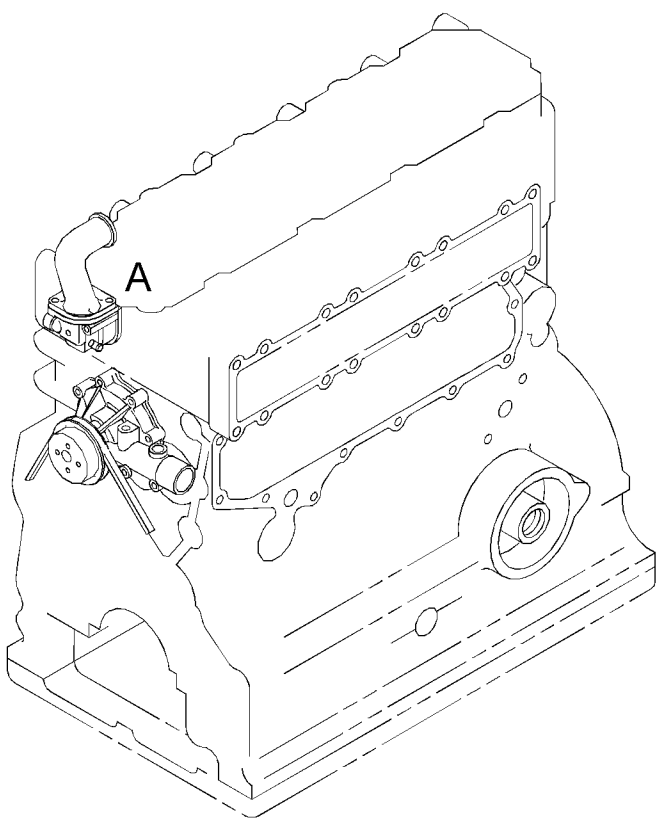

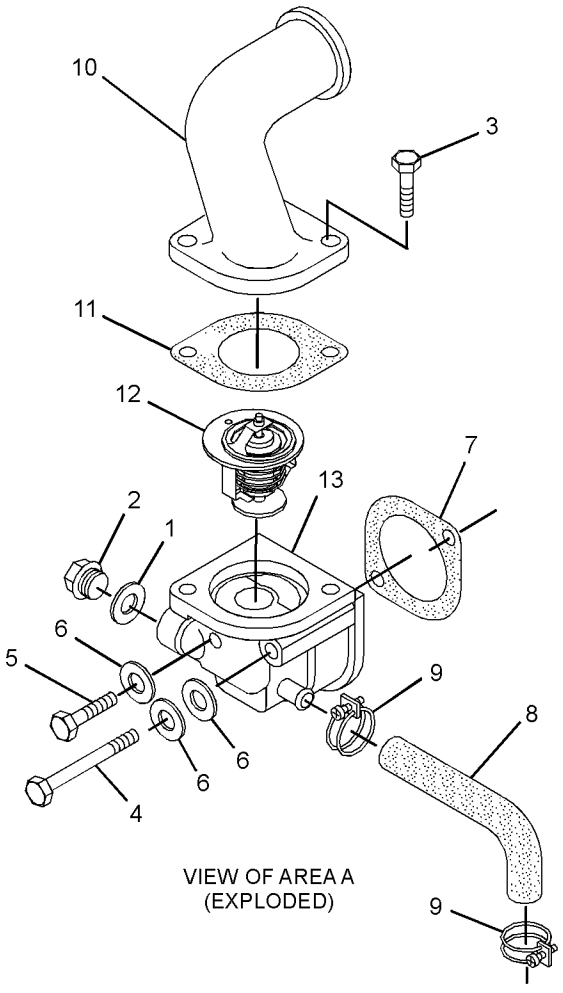

VIEW OF AREA A
(EXPLODED)

GRAPHIC #1 **<END>** g01345074

COOLING SYSTEM

258-3552 LINES GP-WATER

S/N: JAY1-UP

PART OF 258-2445 INSTALLATION AR-ENGINE

SMCS-1355, 1380, 1393 **i02627306**

NOTE	REF NO	GRAPHIC REF	PART NUMBER	QTY	PART NAME 1 2 3 4 5 6 (PRODUCT LEVEL)	SEE PAGE
	1	1	**1P-4278**	2	CLAMP-HOSE	
	2	1	**7K-1181**	1	STRAP-CABLE	
	3	1	**222-1178**	4	CLAMP	
	4	1	**258-2547**	1	HOSE	
	5	1	**258-3546**	1	HOSE	
	6	1	**258-3549**	1	BRACKET AS	
	7	1	**285-5794**	1	RECOVERY GP-COOLANT	
		1	**169-6715**	1	CAP-VENTED (COOLANT RECOVERY)	
	8	1	**266-3316**	3	BOLT-FLANGE HEAD (M10X1.5X25-MM)	
	9	1	**4K-8864**	3	CLIP	
	10	1	**5P-7470**	2	CLIP (SLOT)	
	11	1	**5P-7471**	2	CLIP (TAB)	
	12	1	**5P-7703**	2	GROMMET	
	13	1	**8T-4121**	1	WASHER-HARD (11X21X2.5-MM THK)	
M	14	1	**8T-4136**	1	BOLT (M10X1.5X25-MM)	
	15	1	**8T-4224**	4	WASHER-HARD (8.8X16X2-MM THK)	
M	16	1	**8T-4908**	4	BOLT (M8X1.25X25-MM)	
E	17	1	**5P-1420**		HOSE (222-CM)	

E-ORDER BY THE CENTIMETER
M-METRIC PART

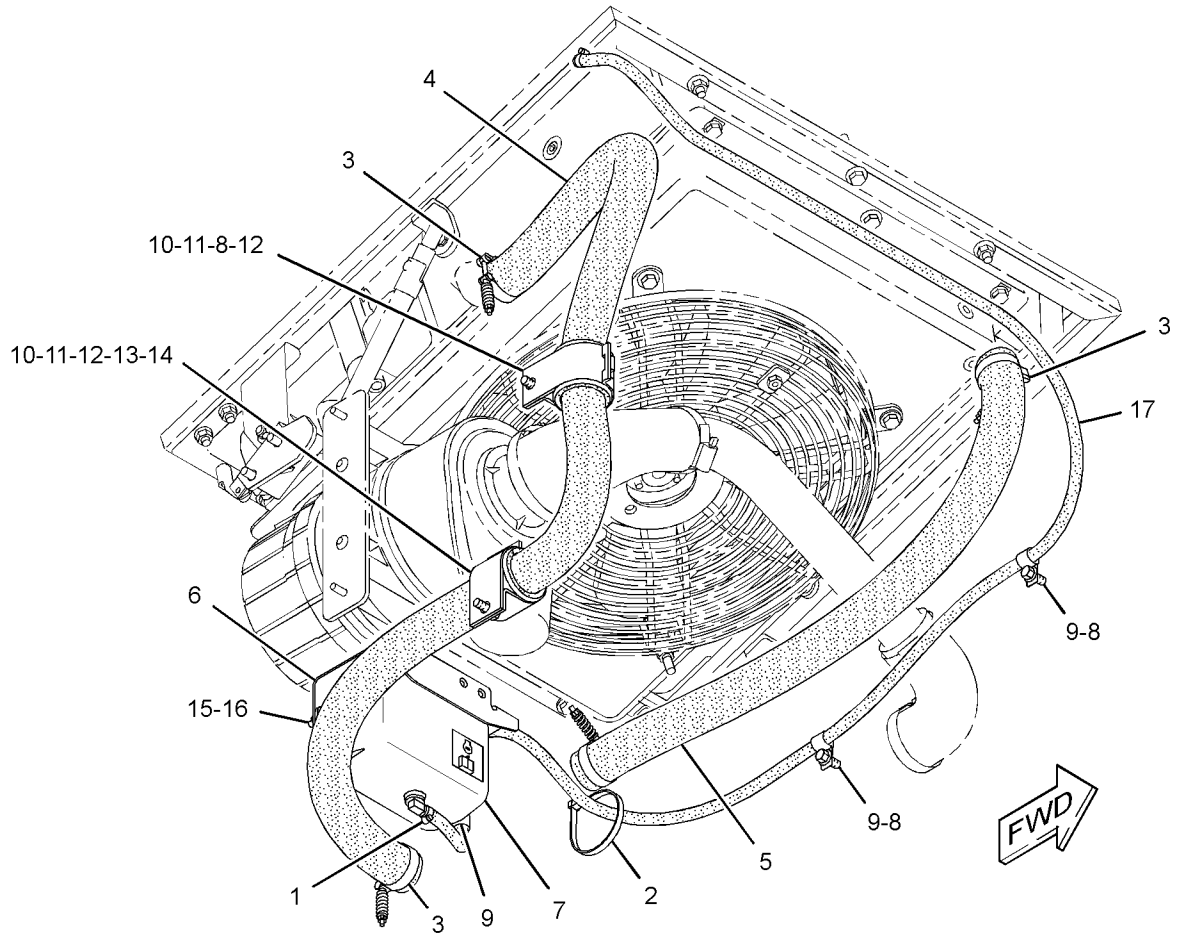

GRAPHIC #1 **<END>** g01321585

258-3542 MOUNTING GP-RAD & OIL COOLER

S/N: JAY1-UP

PART OF 258-2445 INSTALLATION AR-ENGINE

SMCS-1353, 1374 **i02674926**

NOTE	REF NO	GRAPHIC REF	PART NUMBER	QTY	PART NAME 1 2 3 4 5 6 (PRODUCT LEVEL)	SEE PAGE
	1	1	**258-3543**	1	SUPPORT AS (BOTTOM)	
	2	1	**258-3544**	1	SUPPORT AS (TOP)	
	3	1	**258-3545**	1	GRILL AS-RADIATOR	
	4	1	**258-3551**	1	BRACKET AS	
	5	1	**258-3555**	1	SPRING AS-GAS (RH)	
	6	1	**258-3562**	1	SPRING AS-GAS (LH)	
	7	1	**142-8832**	1	PIN AS	
	8	1	**178-2255**	2	PIN	
	9	1	**208-6176**	4	STUD-BALL	
	10	1	**223-4275**	1	LATCH AS	
	11	1	**266-3316**	2	BOLT-FLANGE HEAD (M10X1.5X25-MM)	
	12	1	**2K-4973**	1	LOCKNUT (3/8-16-THD)	
M	13	1	**5C-7261**	1	NUT (M8X1.25-THD)	
	14	1	**5P-0372**	2	LOCK PIN	
	15	1	**5V-8309**	1	STRIKER AS	
	16	1	**7X-7729**	1	WASHER (11X25X3-MM THK)	
	17	1	**8T-0318**	1	SHIM (0.8-MM THK)	
	18	1	**8T-4121**	8	WASHER-HARD (11X21X2.5-MM THK)	
M	19	1	**8T-4133**	4	NUT (M10X1.5-THD)	
	20	1	**8T-4159**	1	BUMPER	
M	21	1	**8T-4181**	3	BOLT (M6X1X20-MM)	
	22	1	**8T-4205**	3	WASHER-HARD (7.2X14.5X2-MM THK)	
M	23	1	**8T-6466**	4	BOLT (M10X1.5X60-MM)	
D	24	1	**5P-8309**		SEAL (0.15-M)	
D	25	1	**5P-8309**		SEAL (0.34-M)	
D	26	1	**5P-8309**		SEAL (0.68-M EACH)	
D	27	1	**5P-8309**		SEAL (0.56-M)	

D-ORDER BY THE METER
M-METRIC PART

258-3542 **MOUNTING GP-RAD & OIL COOLER** *(contd.)* **i02674926**

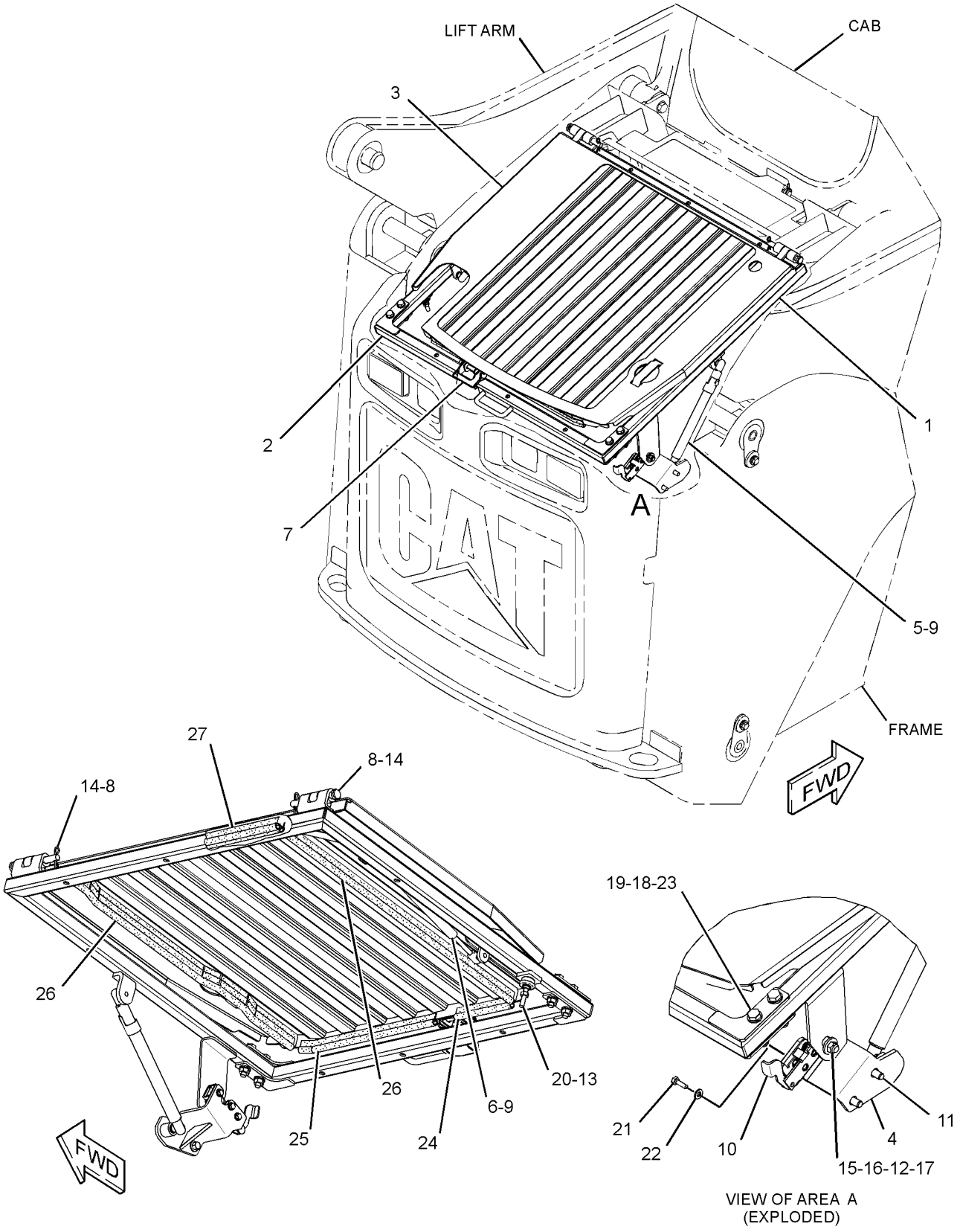

GRAPHIC #1 **<END>** g01345023

287-6056 PUMP GP-WATER

S/N: CJS1-UP
PART OF 262-7288 ENGINE AR-PRIMARY
AN ATTACHMENT

SMCS-1355, 1361 **i02568574**

NOTE	REF NO	GRAPHIC REF	PART NUMBER	QTY	PART NAME 1 2 3 4 5 6 (PRODUCT LEVEL)	SEE PAGE
	1	1	**8T-4224**	1	WASHER-HARD (8.8X16X2-MM THK)	
	2	1	**235-4952**	1	PUMP GP-WATER	
M	2A	1	**6V-3940**	2	BOLT (M8X1.25X25-MM)	
M	2B	1	**8T-7547**	1	BOLT (M8X1.25X30-MM)	
	2C	1	**9M-1974**	3	WASHER-HARD (8.8X16X2-MM THK)	
	2D	1	**234-4832**	1	FLANGE	
	2E	1	**103-9747**	1	COVER-PUMP	
	2F	1	**103-9750**	1	GASKET-COVER (WATER PUMP)	
	3	1	**235-4958**	1	GASKET	
M	4	1	**7X-2537**	1	BOLT (M8X1.25X35-MM)	
	5	1	**285-9066**	1	BOLT (M8X1.25X65-MM)	
F			**287-4833**	4	BOLT	

F-NOT SHOWN
M-METRIC PART

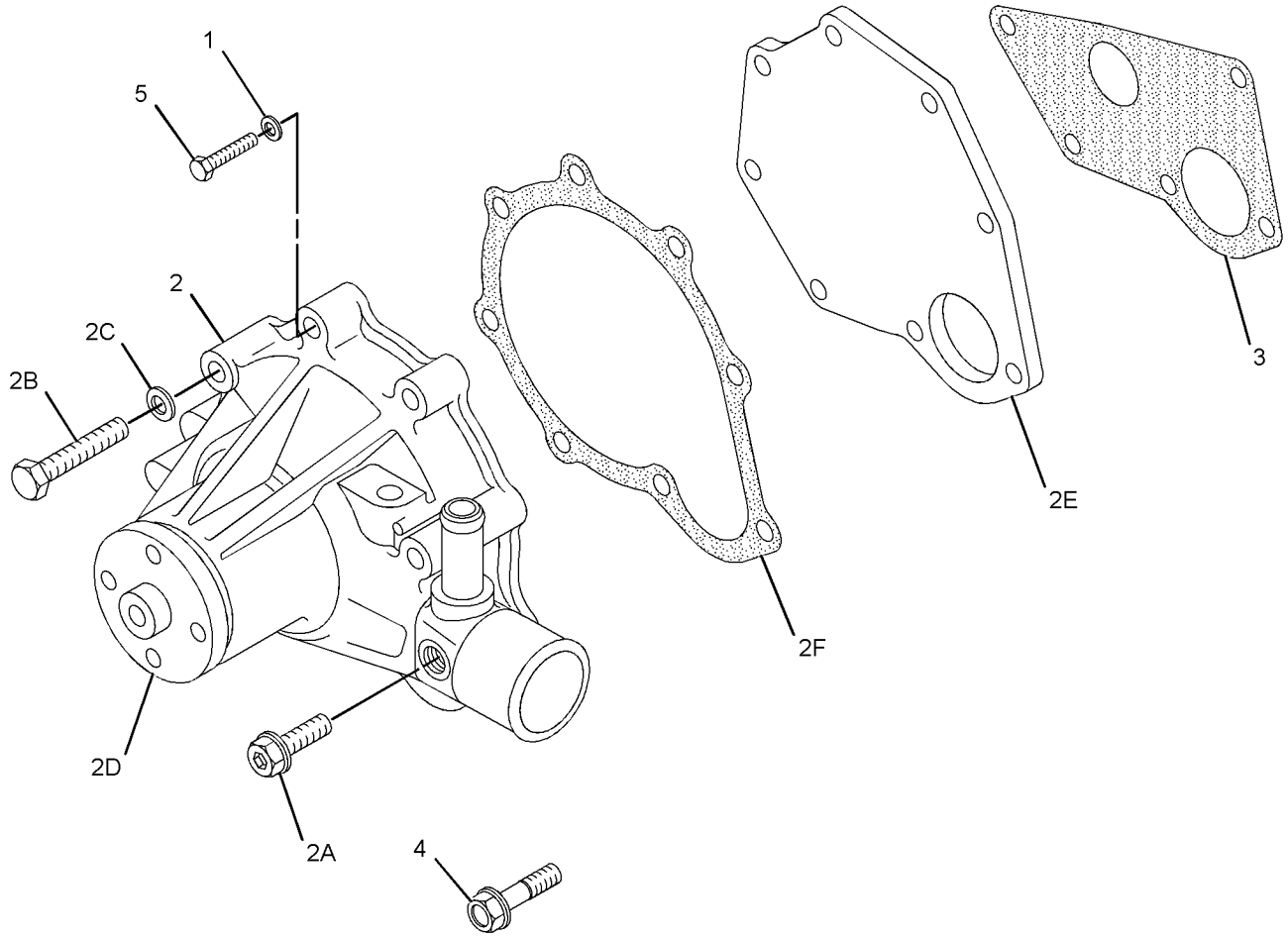

GRAPHIC #1 **<END>** g01352842

COOLING SYSTEM

258-3459 RADIATOR & HYD OIL COOLER GP

S/N: JAY1-UP

PART OF 258-2445 INSTALLATION AR-ENGINE

SMCS-1351, 1356, 1386 **i02622720**

NOTE	REF NO	GRAPHIC REF	PART NUMBER	QTY	PART NAME 1 2 3 4 5 6 (PRODUCT LEVEL)	SEE PAGE
	1	1	**036-1865**	1	CAP AS-RADIATOR	
	2	1	**069-4080**	1	FITTING	
	3	1	**122-7052**	1	SPACER (10.5X20X28-MM THK)	
	4	1	**207-6154**	1	GAUGE-SIGHT (COOLANT LEVEL)	
	5	1	*217-3572*	1	FAN GP-BLOWER	
		1	**8T-4224**	4	WASHER-HARD (8.8X16X2-MM THK)	
M		1	**8T-4908**	4	BOLT (M8X1.25X25-MM)	
		1	**203-4827**	1	FAN AS	
		1	**229-8796**	1	ADAPTER	
	6	1	**258-3457**	1	RADIATOR & HYD OIL COOLER AS	
	7	1	**258-3458**	1	SHROUD AS	
	8	1	**258-3537**	1	GUARD AS-FAN	
	9	1	**258-3548**	1	CAP AS	
	10	1	**234-9525**	1	STUD (M10X1.5-THD)	
	11	1	**4K-8864**	2	CLIP	
	12	1	**7M-7410**	1	PLUG-PIPE	
	13	1	**7X-7729**	25	WASHER (11X25X3-MM THK)	
	14	1	**8T-4121**	2	WASHER-HARD (11X21X2.5-MM THK)	
M	15	1	**8T-4133**	12	NUT (M10X1.5-THD)	
M	16	1	**8T-4196**	9	BOLT (M10X1.5X35-MM)	
M	17	1	**8T-5005**	1	BOLT (M10X1.5X70-MM)	
M	18	1	**8T-6466**	5	BOLT (M10X1.5X60-MM)	
E	19	1	**3E-3892**		SEAL (70-CM EACH)	

E-ORDER BY THE CENTIMETER
M-METRIC PART

258-3459 **RADIATOR & HYD OIL COOLER GP** *(contd.)* **i02622720**

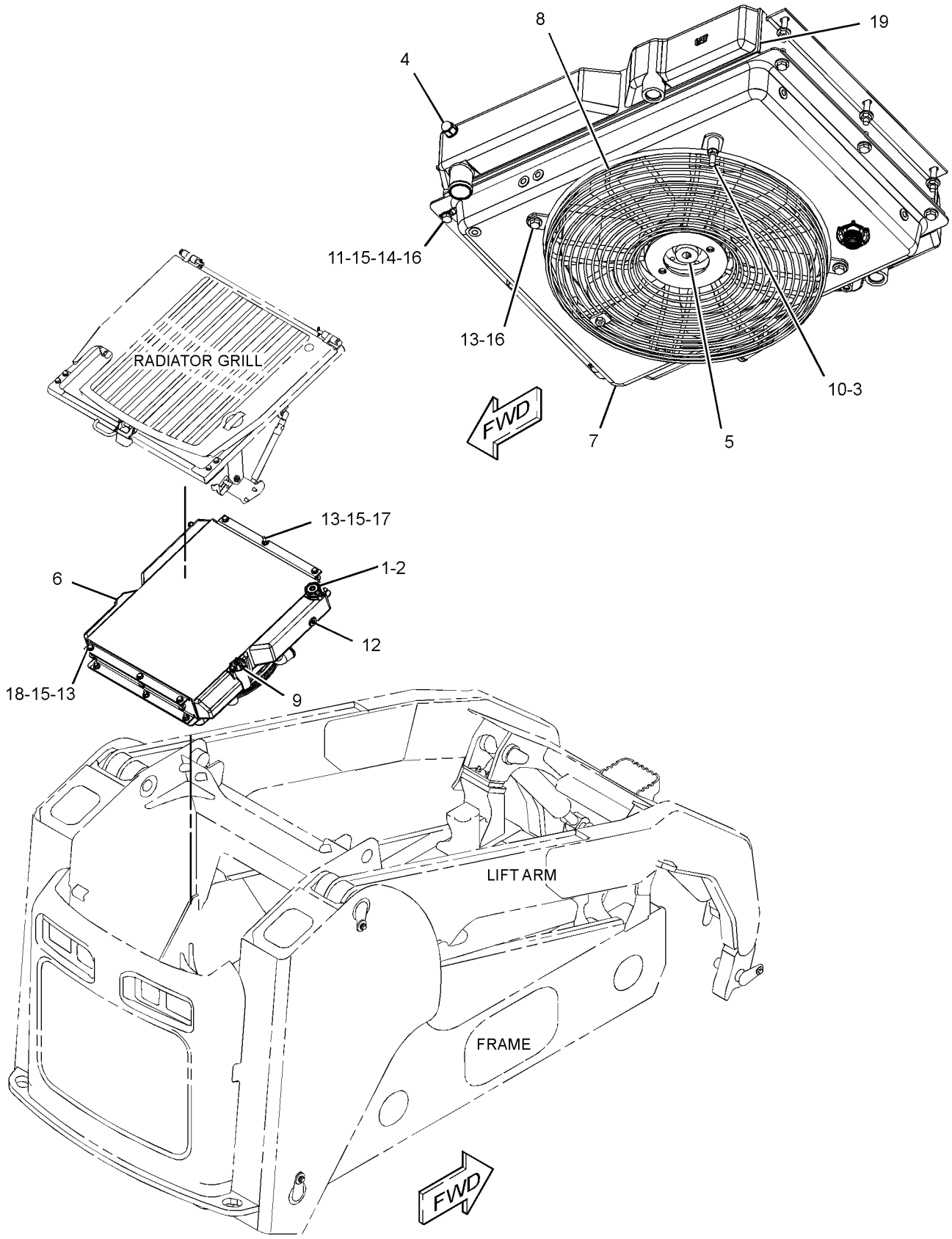

GRAPHIC #1 **<END>** g01320426

AIR INLET AND EXHAUST SYSTEM

258-3320 AIR CLEANER GP

S/N: JAY1-UP

PART OF 258-3453 AIR CLEANER GP

SMCS-1051, 1054 **i02627817**

NOTE	REF NO	GRAPHIC REF	PART NUMBER	QTY	PART NAME 1 2 3 4 5 6 (PRODUCT LEVEL)	SEE PAGE
	1	1	**112-9717**	1	VALVE-VACUATOR	
	2	1	**280-8298**	1	CLAMP	
	3	1	**280-8302**	1	COVER AS	
F			**110-6326**	1	FILTER ELEMENT AS-AIR (PRIMARY)	
F			**110-6331**	1	FILTER ELEMENT AS-AIR (SECONDARY)	

F-NOT SHOWN

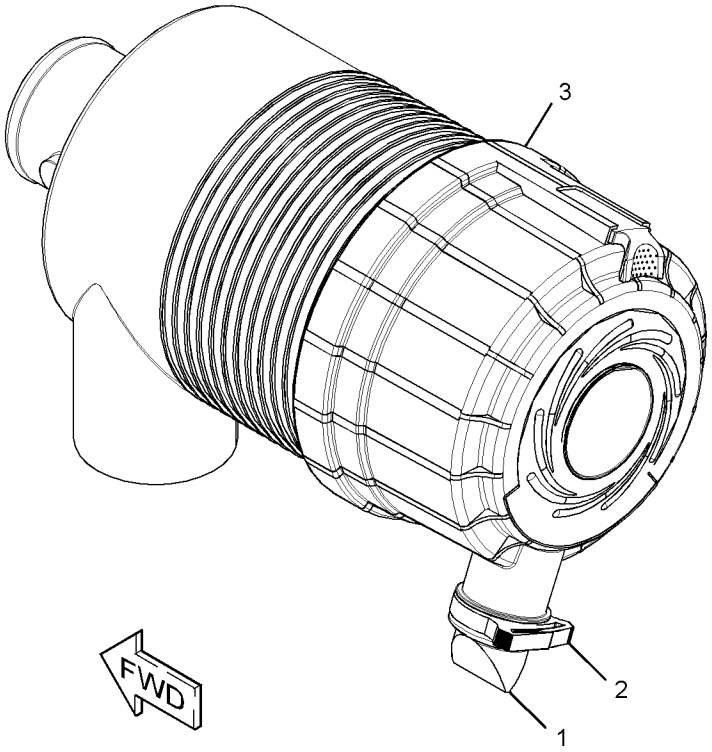

GRAPHIC #1 **<END>** g01352945

AIR INLET AND EXHAUST SYSTEM

258-3453 AIR CLEANER GP

S/N: JAY1-UP

PART OF 280-8294 AIR CLEANER GP

SMCS-1051, 1054 **i02606020**

NOTE	REF NO	GRAPHIC REF	PART NUMBER	QTY	PART NAME 1 2 3 4 5 6 (PRODUCT LEVEL)	SEE PAGE
	1	1	**152-4898**	1	BAND-MOUNTING	
	2	1	**237-7325**	1	INDICATOR	
Y	3	1	**258-3320**	1	AIR CLEANER GP	46

Y-SEPARATE ILLUSTRATION

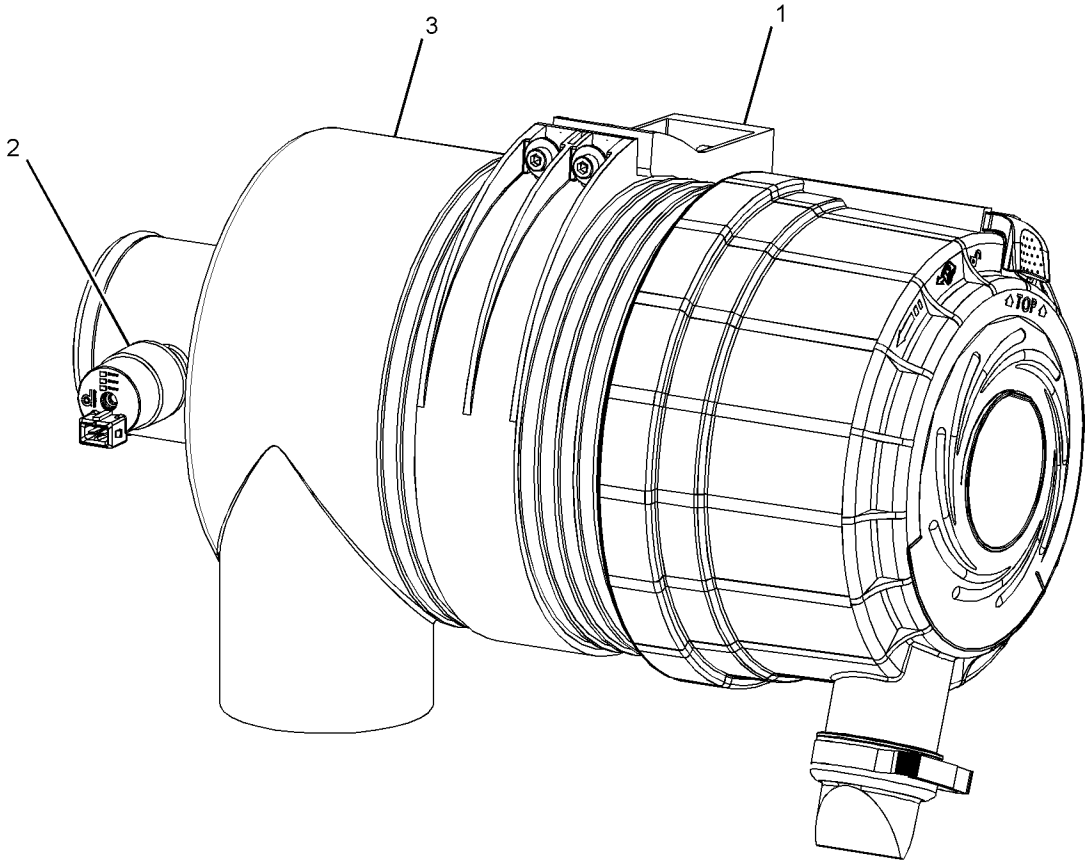

GRAPHIC #1 **<END>** g01318392

AIR INLET AND EXHAUST SYSTEM

280-8294 AIR CLEANER GP

S/N: JAY1-UP

PART OF 258-2445 INSTALLATION AR-ENGINE

SMCS-1051, 1054 **i02663655**

NOTE	REF NO	GRAPHIC REF	PART NUMBER	QTY	PART NAME 1 2 3 4 5 6 (PRODUCT LEVEL)	SEE PAGE
	1	1	**131-6143**	1	CLAMP-HOSE	
	2	1	**258-2511**	1	PLATE	
Y	3	1	*258-3453*	1	AIR CLEANER GP	47
	4	1	**280-8286**	1	COVER	
	5	1	**280-8293**	1	DUCT	
M	6	1	**127-2170**	2	SCREW-TRUSS HEAD (M8X1.25X20-MM)	
M	7	1	**266-3315**	2	BOLT-FLANGE HEAD (M8X1.25X25.5-MM)	
	8	1	**8T-4224**	2	WASHER-HARD (8.8X16X2-MM THK)	
	9	1	**9R-9901**	4	FASTENER (CLIP)	

M-METRIC PART
Y-SEPARATE ILLUSTRATION

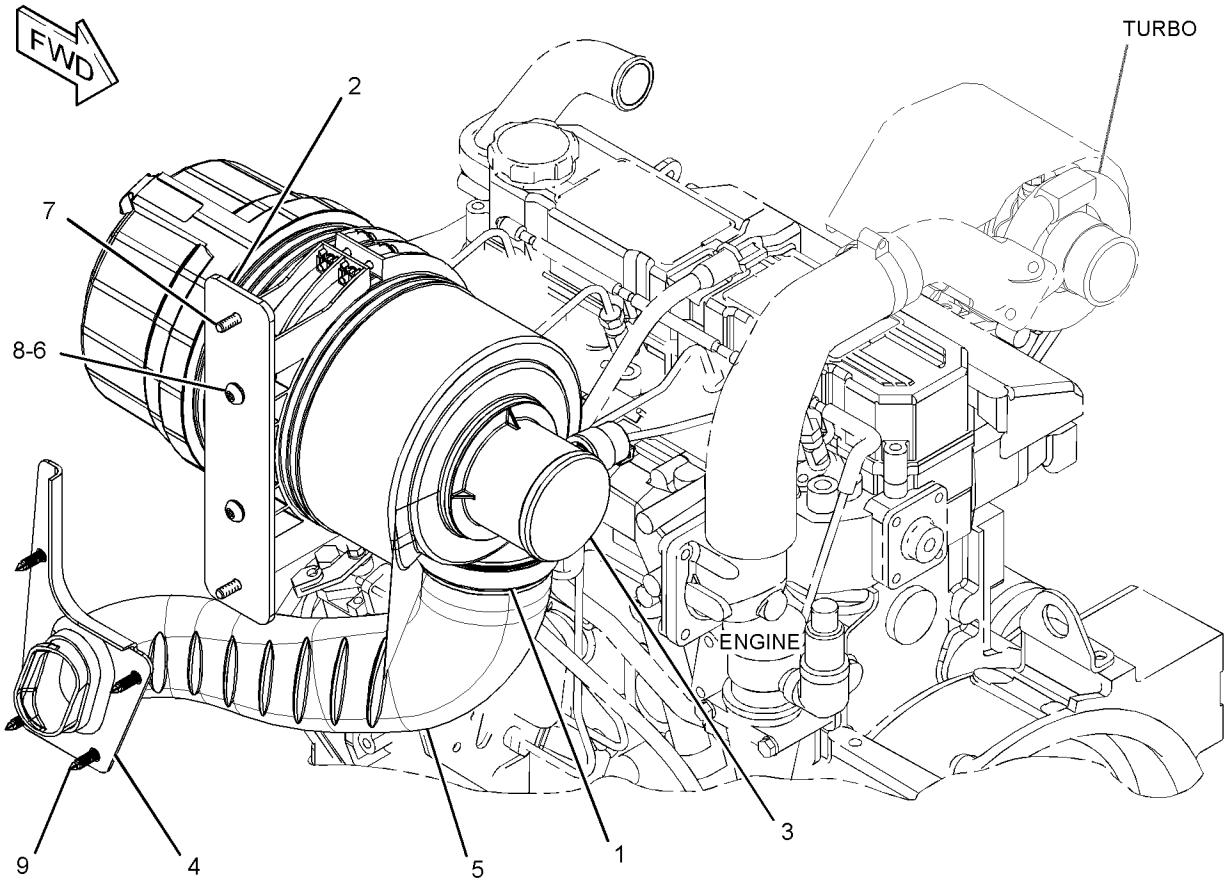

GRAPHIC #1 **<END>** g01340060

AIR INLET AND EXHAUST SYSTEM

272-3062 KIT-DEBRIS GUARD

S/N: JAY1-UP
AN ATTACHMENT

SMCS-1052, 1059 **i02636671**

NOTE	REF NO	GRAPHIC REF	PART NUMBER	QTY	PART NAME 1 2 3 4 5 6 (PRODUCT LEVEL)	SEE PAGE
	1	1	**272-3052**	1	GUARD AS - EXHAUST	
	2	1	**272-3055**	1	GUARD AS - TURBOCHARGER	

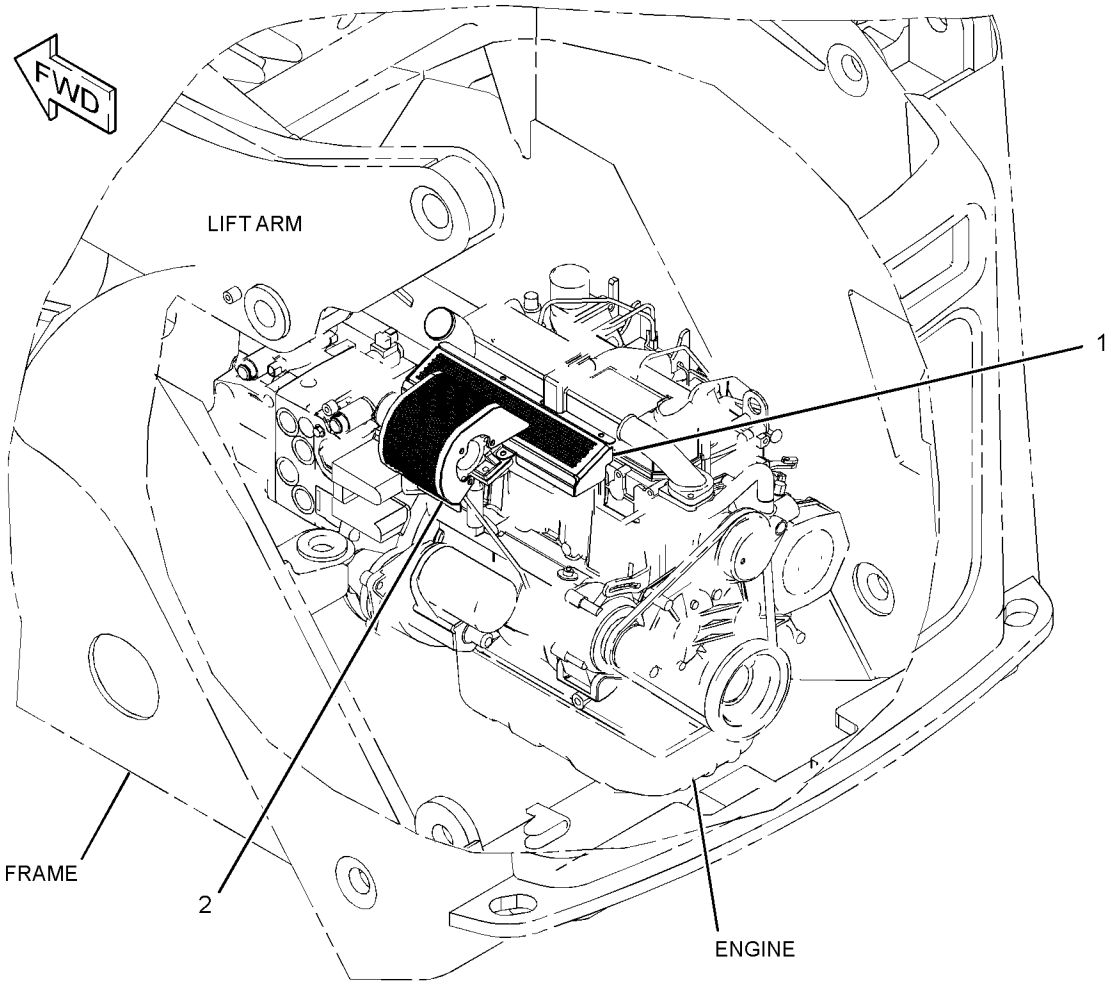

GRAPHIC #1 **<END>** g01327469

AIR INLET AND EXHAUST SYSTEM

247-6317 LINES GP-AIR

S/N: CJS1-UP

PART OF 262-7288 ENGINE AR-PRIMARY

AN ATTACHMENT

SMCS-1071 **i02712952**

NOTE	REF NO	GRAPHIC REF	PART NUMBER	QTY	PART NAME 1 2 3 4 5 6 (PRODUCT LEVEL)	SEE PAGE
M	1	1	**6V-3940**	4	BOLT (M8X1.25X25-MM)	
	2	1	**9M-1974**	4	WASHER-HARD (8.8X16X2-MM THK)	
	3	1	**5I-7678**	1	GASKET	
	4	1	**5I-8021**	1	ELBOW AS	
		1	**5I-8023**	1	PLUG	

M-METRIC PART

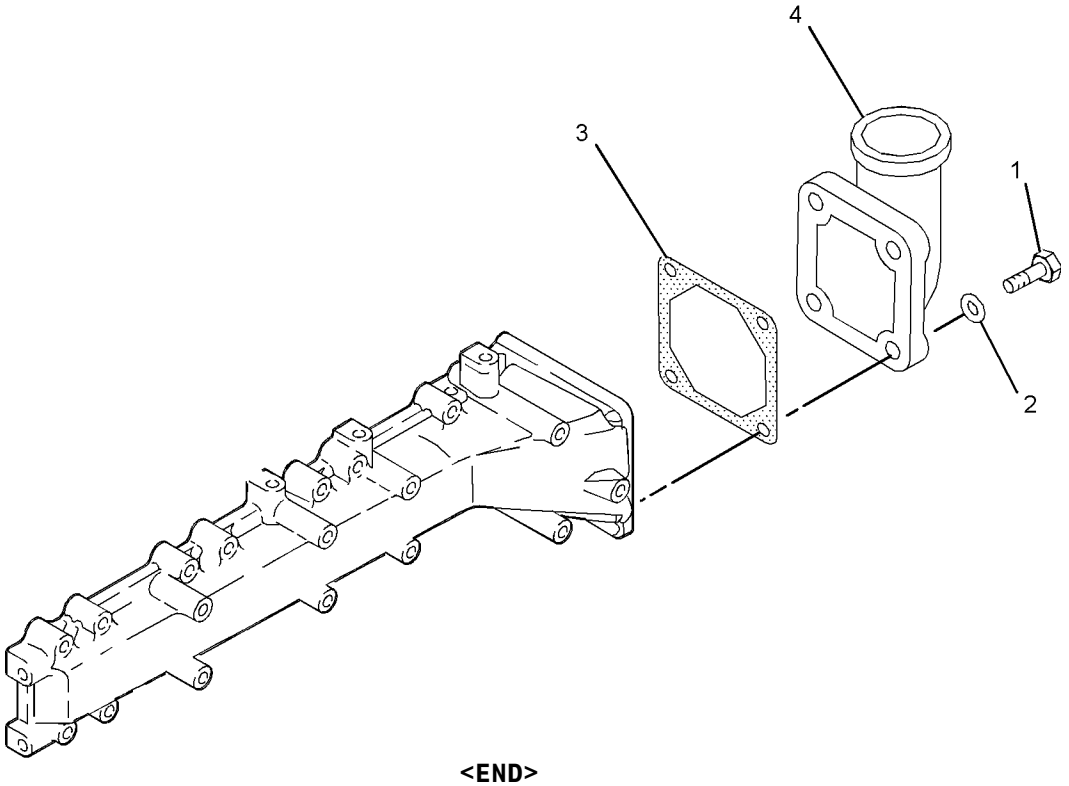

GRAPHIC #1 **<END>** g01048173

AIR INLET AND EXHAUST SYSTEM

258-2465 LINES GP-AIR

S/N: JAY1-UP

PART OF 258-2445 INSTALLATION AR-ENGINE

SMCS-1071 **i02627291**

NOTE	REF NO	GRAPHIC REF	PART NUMBER	QTY	PART NAME 1 2 3 4 5 6 (PRODUCT LEVEL)	SEE PAGE
	1	1	**5P-4868**	1	CLAMP-HOSE	
	2	1	**258-2464**	1	HOSE AS	
	3	1	**8T-6726**	1	CLAMP-HOSE	

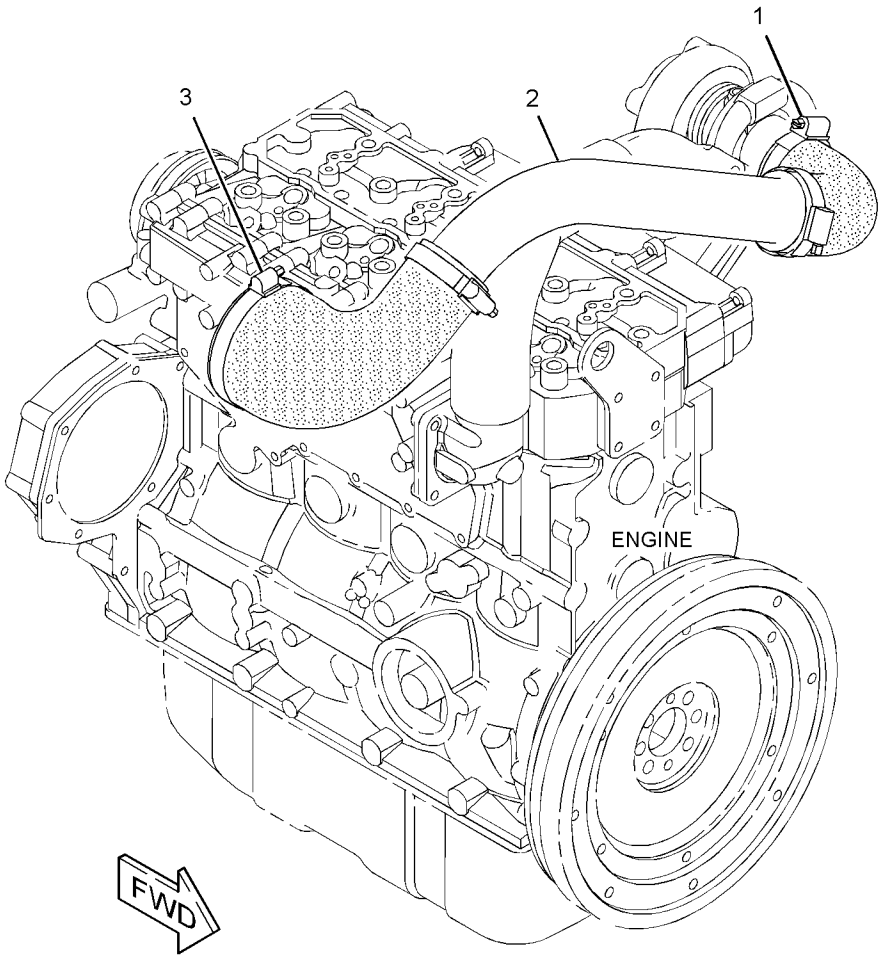

GRAPHIC #1 **<END>** g01321081

AIR INLET AND EXHAUST SYSTEM

287-5323 MANIFOLD GP-EXHAUST

S/N: CJS1-UP

PART OF 262-7288 ENGINE AR-PRIMARY

AN ATTACHMENT

SMCS-1059 **i02674008**

NOTE	REF NO	GRAPHIC REF	PART NUMBER	QTY	PART NAME 1 2 3 4 5 6 (PRODUCT LEVEL)	SEE PAGE
	1	1	**5I-7931**	4	STUD	
	2	1	**195-8260**	8	NUT (M8X1.25-THD)	
	3	1	**233-5460**	8	BOLT	
	4	1	**234-4823**	1	MANIFOLD	
	5	1	**234-4824**	1	GASKET-MANIFOLD	

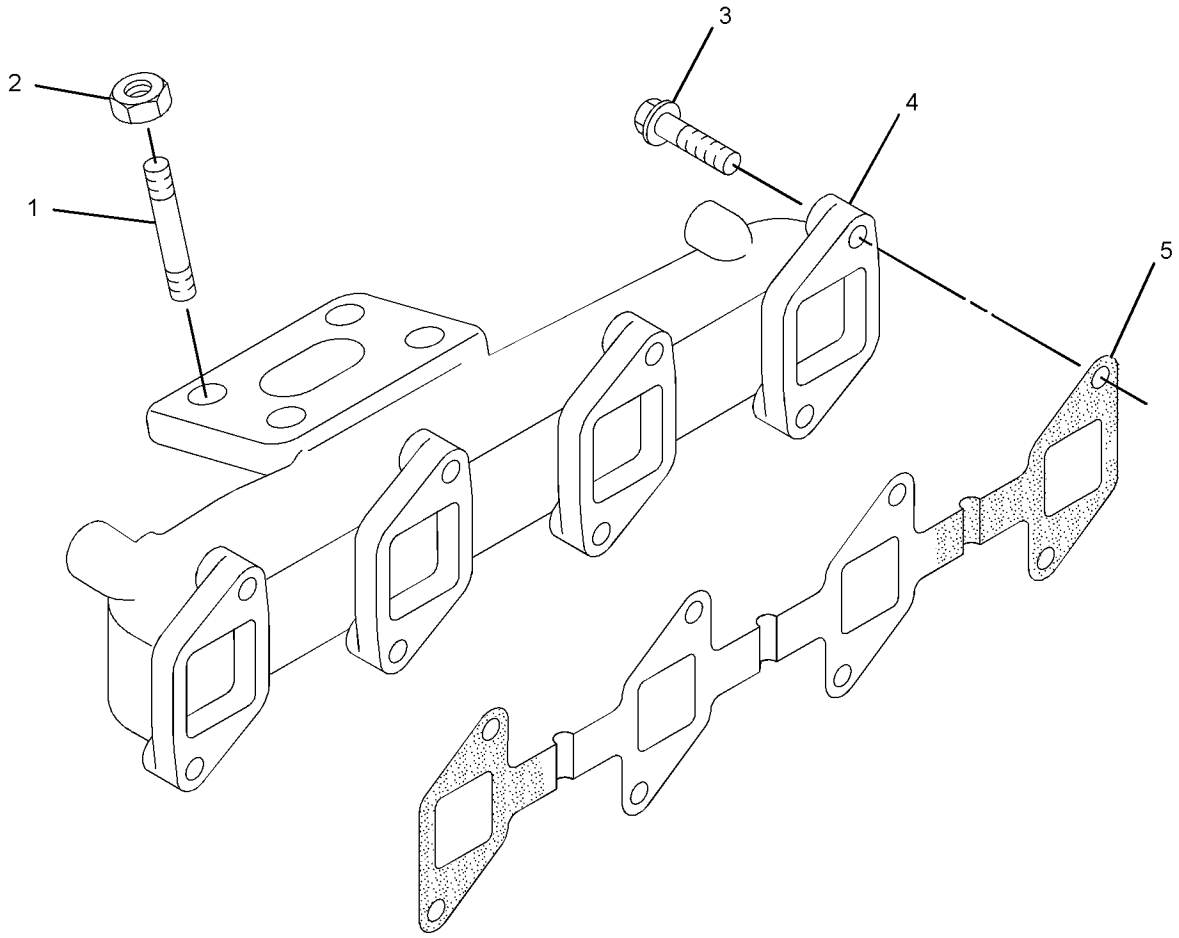

GRAPHIC #1 **<END>** g01327717

287-4832 MANIFOLD GP-INLET

S/N: CJS1-UP
PART OF 262-7288 ENGINE AR-PRIMARY
AN ATTACHMENT

SMCS-1058 **i02568577**

NOTE	REF NO	GRAPHIC REF	PART NUMBER	QTY	PART NAME 1 2 3 4 5 6 (PRODUCT LEVEL)	SEE PAGE
	1	1	**234-4805**	1	MANIFOLD-INLET	
	2	1	**234-4806**	1	GASKET (INLET MANIFOLD)	
M	3	1	**099-3649**	12	BOLT (M8X1.25X40-MM)	
M	4	1	**8T-4177**	2	BOLT (M8X1.25X90-MM)	
	5	1	**3B-4505**	14	LOCKWASHER	
M	6	1	**7X-0818**	2	BOLT (M8X1.25X45-MM)	
	7	1	**8T-4224**	2	WASHER-HARD (8.8X16X2-MM THK)	

M-METRIC PART

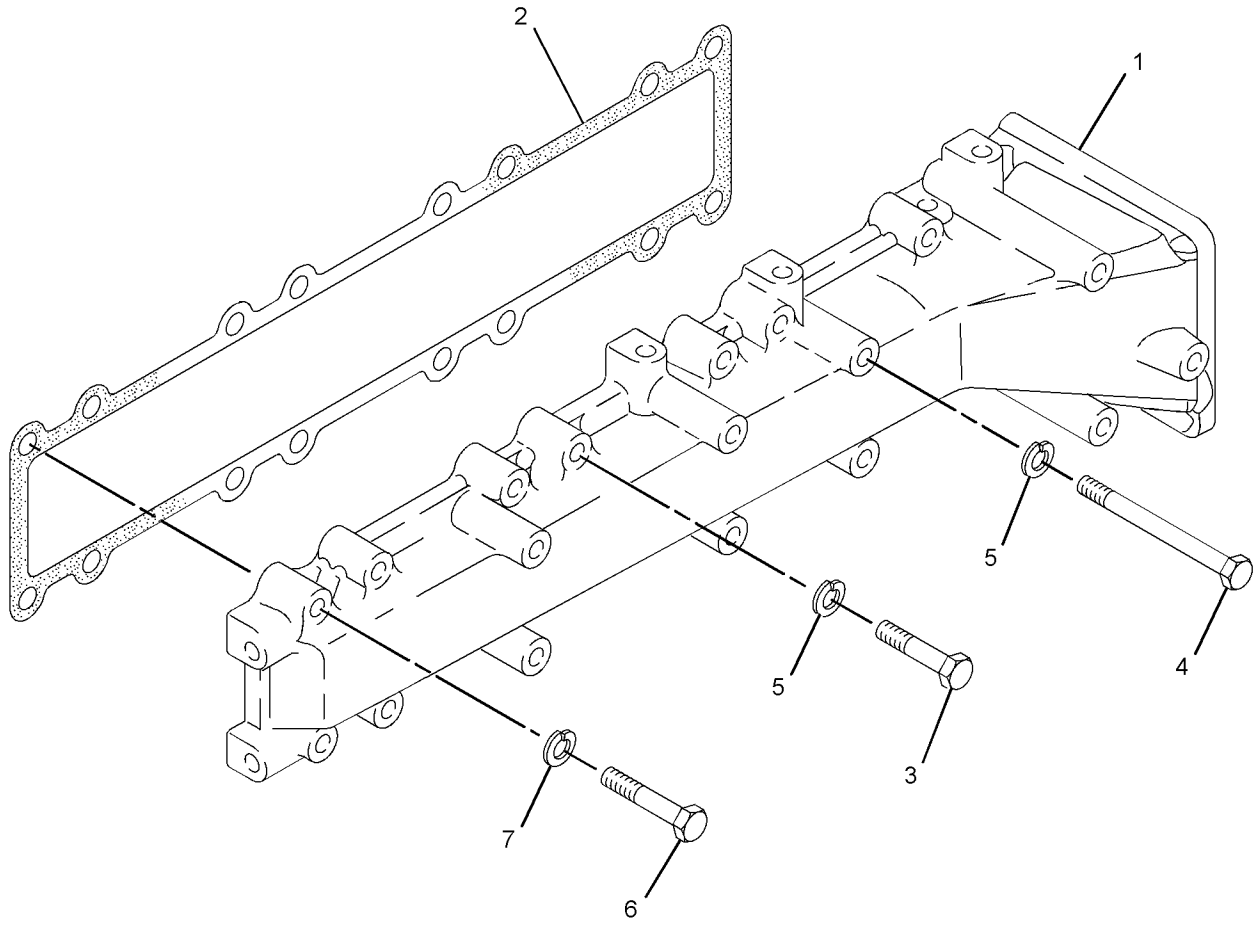

GRAPHIC #1 **<END>** g01327572

AIR INLET AND EXHAUST SYSTEM

258-2462 MUFFLER & MOUNTING GP

S/N: JAY1-UP

PART OF 258-3800 CONVERSION AR-ROADING

AN ATTACHMENT

SMCS-1062 **i02712954**

NOTE	REF NO	GRAPHIC REF	PART NUMBER	QTY	PART NAME 1 2 3 4 5 6 (PRODUCT LEVEL)	SEE PAGE
	1	1	**5I-8111**	1	GASKET	
	2	1	**198-4776**	3	WASHER-HARD (8.8X20X8-MM THK)	
	3	1	**258-2419**	1	MUFFLER AS	
	4	1	**280-8240**	1	PLATE	
M	5	1	**8T-4133**	1	NUT (M10X1.5-THD)	
	6	1	**280-8341**	2	SPACER	
M	7	1	**8T-7547**	3	BOLT (M8X1.25X30-MM)	
	8	1	**280-8346**	1	SPACER	
M	9	1	**8T-6912**	2	BOLT (M8X1.25X50-MM)	

M-METRIC PART

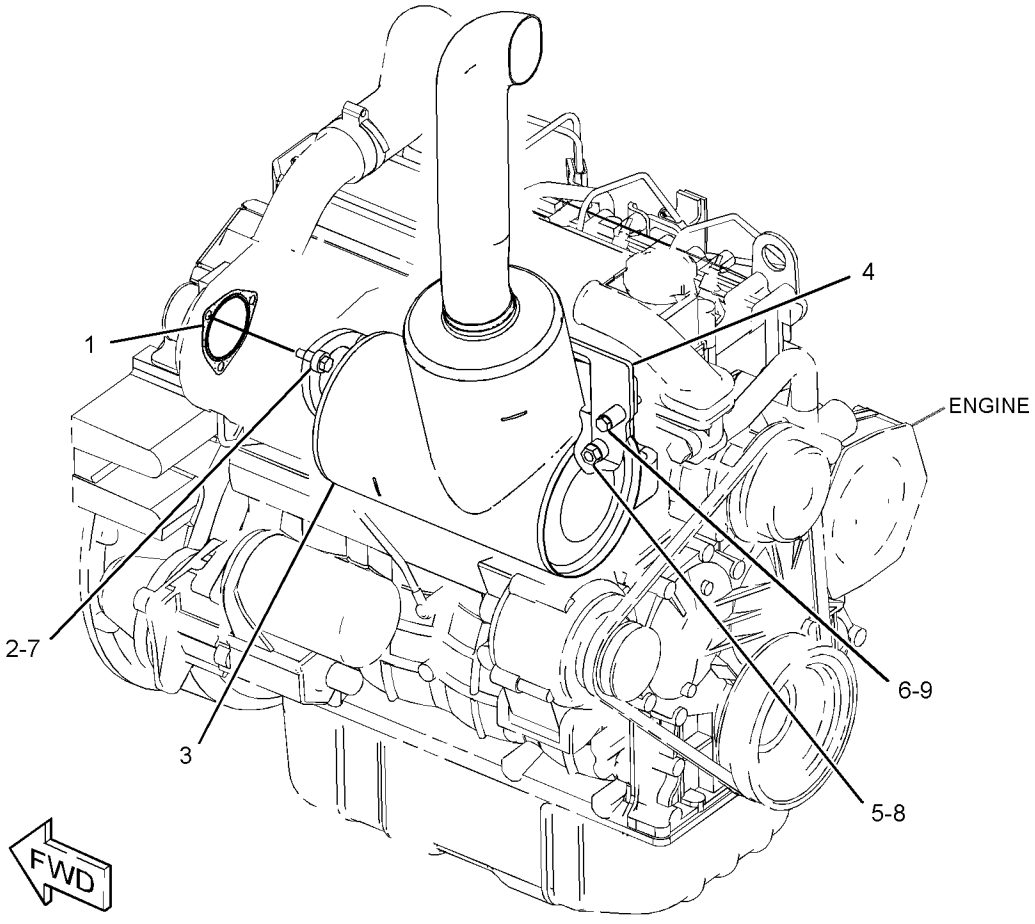

GRAPHIC #1 **<END>** g01345187

280-8347 MUFFLER GP

S/N: JAY1-UP

PART OF 258-3818, 258-3819 CONVERSION AR-MACHINE, 258-3801 CONVERSION AR-ROADING

AN ATTACHMENT

SMCS-1062 **i02712958**

NOTE	REF NO	GRAPHIC REF	PART NUMBER	QTY	PART NAME 1 2 3 4 5 6 (PRODUCT LEVEL)	SEE PAGE
	1	1	**5I-8111**	1	GASKET	
	2	1	**198-4776**	3	WASHER-HARD (8.8X20X8-MM THK)	
	3	1	**272-3050**	1	MUFFLER AS	
	4	1	**280-8240**	1	PLATE	
	5	1	**280-8341**	2	SPACER	
	6	1	**280-8346**	1	SPACER	
M	7	1	**8T-4133**	1	NUT (M10X1.5-THD)	
M	8	1	**8T-6912**	2	BOLT (M8X1.25X50-MM)	
M	9	1	**8T-7547**	3	BOLT (M8X1.25X30-MM)	

M-METRIC PART

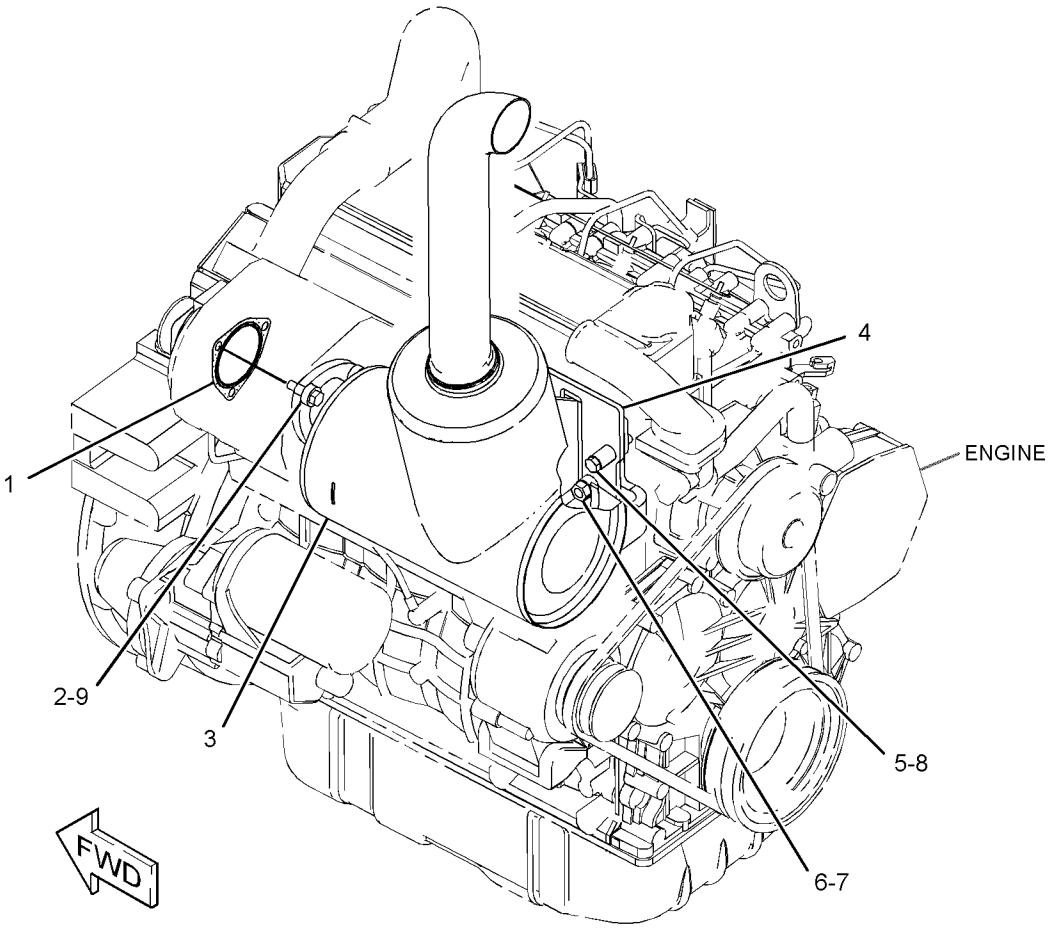

GRAPHIC #1 **<END>** g01345026

AIR INLET AND EXHAUST SYSTEM

235-5894 TURBOCHARGER GP

S/N: CJS1-UP

PART OF 262-7288 ENGINE AR-PRIMARY

AN ATTACHMENT

SMCS-1052, 1053 **i02524388**

NOTE	REF NO	GRAPHIC REF	PART NUMBER	QTY	PART NAME 1 2 3 4 5 6 (PRODUCT LEVEL)	SEE PAGE
	1	1	**5I-7933**	1	GASKET	
	2	1	**5I-5077**	2	CLAMP	
	3	1	**5I-7623**	1	BOLT	
	4	1	**235-4964**	1	TURBOCHARGER GP	
	5	1	**5I-7689**	1	GASKET	
	6	1	**5I-8109**	1	HOSE	
	7	1	**5I-8110**	1	ELBOW	
M	8	1	**6V-7357**	1	BOLT (M6X1X25-MM)	
	9	1	**096-2500**	3	LOCKWASHER	
	10	1	**191-3206**	4	GASKET	
M	11	1	**6V-2317**	2	BOLT (M8X1.25X30-MM)	
	12	1	**9M-1974**	2	WASHER-HARD (8.8X16X2-MM THK)	
	13	1	**5P-0597**	1	CLAMP-HOSE	
	14	1	**5P-4868**	1	CLAMP-HOSE	
	15	1	**234-4818**	1	GASKET	
	16	1	**234-4819**	1	HOSE	
	17	1	**234-4820**	1	PIPE	
	18	1	**234-4821**	1	PIPE	
	19	1	**234-4822**	2	CLAMP	
	20	1	**235-4966**	1	BOLT	
	21	1	**235-4967**	1	CONNECTOR	
	22	1	**235-4968**	1	PIPE	
M	23	1	**5C-2890**	1	NUT (M6X1-THD)	
M	24	1	**5C-9553**	2	BOLT (M6X1X16-MM)	

M-METRIC PART

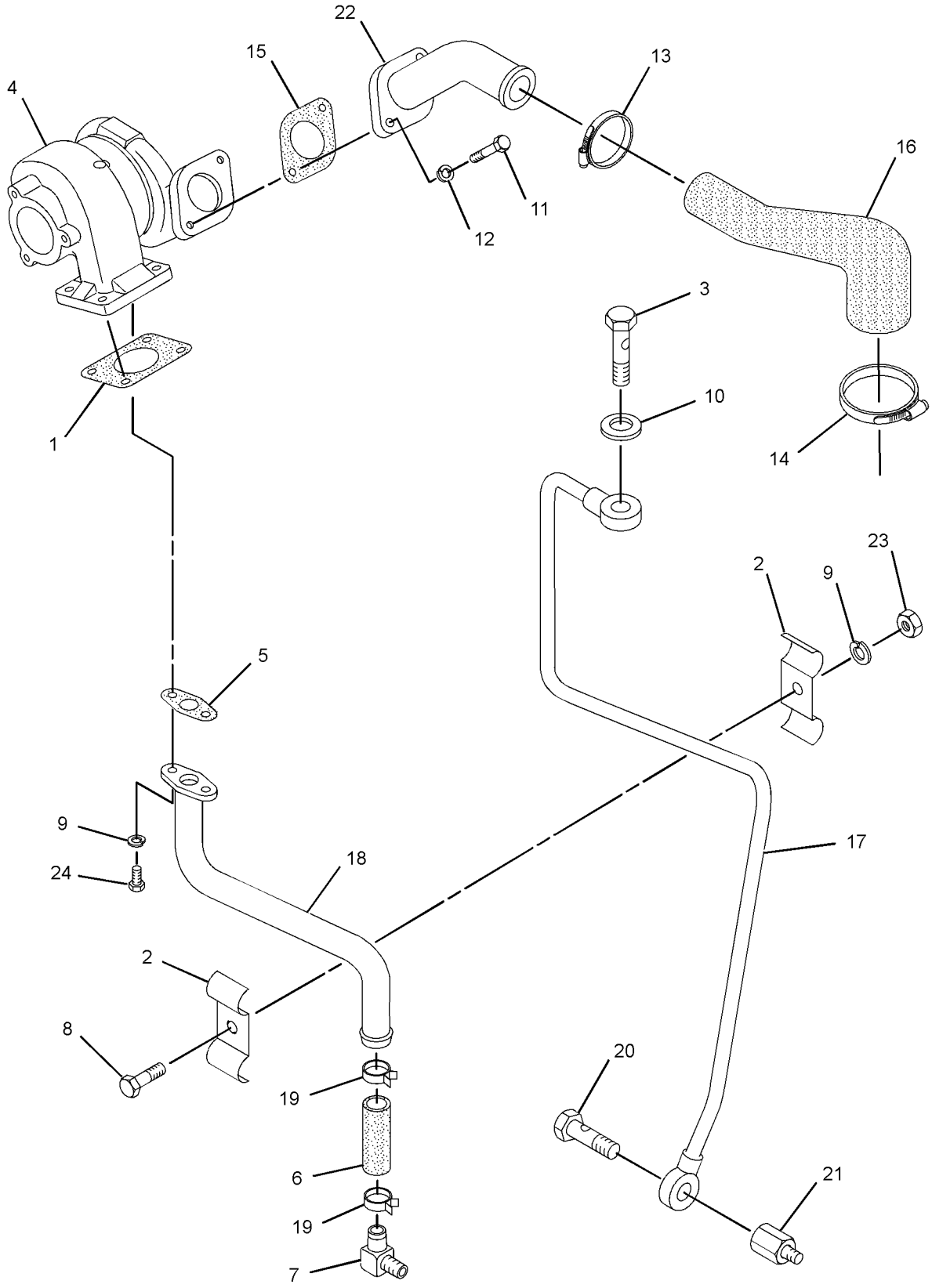

GRAPHIC #1 **<END>** g01345914

FUEL SYSTEM

280-6340 CONTROL GP-GOVERNOR

S/N: JAY1-UP

PART OF 258-2410 CHASSIS AR

SMCS-1265, 1276 **i02659359**

NOTE	REF NO	GRAPHIC REF	PART NUMBER	QTY	PART NAME 1 2 3 4 5 6 (PRODUCT LEVEL)	SEE PAGE
	1	1	**3S-2093**	2	STRAP-CABLE	
	2	1	**4P-7581**	1	CLIP	
	3	1	**8T-3984**	1	KNOB	
	4	1	**258-3727**	1	SCREW-TRUSS HEAD (NO 12X17.46-MM)	
	5	1	**258-4041**	1	BRACKET AS	
Y	6	1	*258-4045*	1	LEVER GP-GOVERNOR	421
	7	1	**258-4048**	1	BRACKET-STOP	
	8	1	**258-4372**	1	CLIP	
Y	9	1	*280-6342*	1	CONTROL GP-GOVERNOR	60
	10	1	**134-3987**	1	CLIP	
	11	1	**237-7296**	4	SCREW-FLAT HEAD (M6X1X35-MM)	
	12	1	**195-0936**	3	INSERT-THREADED (M6X1)	
	13	1	**8T-4205**	5	WASHER-HARD (7.2X14.5X2-MM THK)	
	14	1	**5P-4116**	2	WASHER-HARD (8.8X20.5X2-MM THK)	
M	15	1	**8T-4138**	5	BOLT (M6X1X20-MM)	

M-METRIC PART
Y-SEPARATE ILLUSTRATION

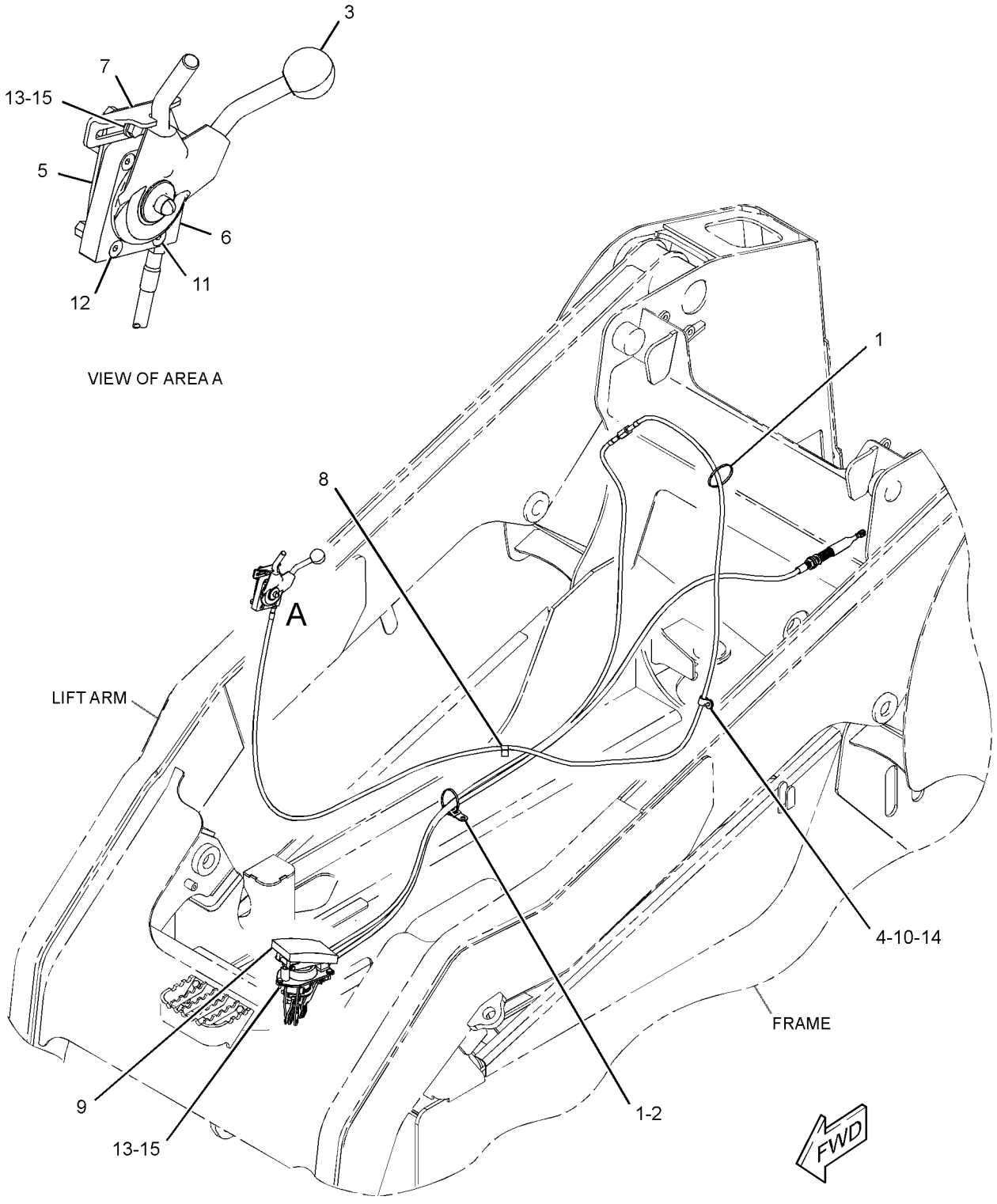

GRAPHIC #1 **<END>** g01337934

FUEL SYSTEM

280-6342 CONTROL GP-GOVERNOR

S/N: JAY1-UP

PART OF 280-6340 CONTROL GP-GOVERNOR

SMCS-1265, 1276 **i02625322**

NOTE	REF NO	GRAPHIC REF	PART NUMBER	QTY	PART NAME 1 2 3 4 5 6 (PRODUCT LEVEL)	SEE PAGE
Y	1	1	**258-4043**	1	PEDAL GP-GOVERNOR	442
	2	1	**258-4373**	1	CABLE AS (HAND CONTROL)	
M		1	**5C-2890**	1	NUT (M6X1-THD)	
		1	**8T-4742**	1	END-YOKE ROD	
		1	**8T-4744**	1	PIN AS-SPRING	
	3	1	**280-6344**	1	CABLE AS (LOW IDLE)	
M		1	**5C-2890**	1	NUT (M6X1-THD)	
		1	**8T-4742**	1	END-YOKE ROD	
		1	**8T-4744**	1	PIN AS-SPRING	
		1	**8T-6902**	1	CLIP	
		1	**8T-6904**	1	PIN-CLEVIS	

M-METRIC PART
Y-SEPARATE ILLUSTRATION

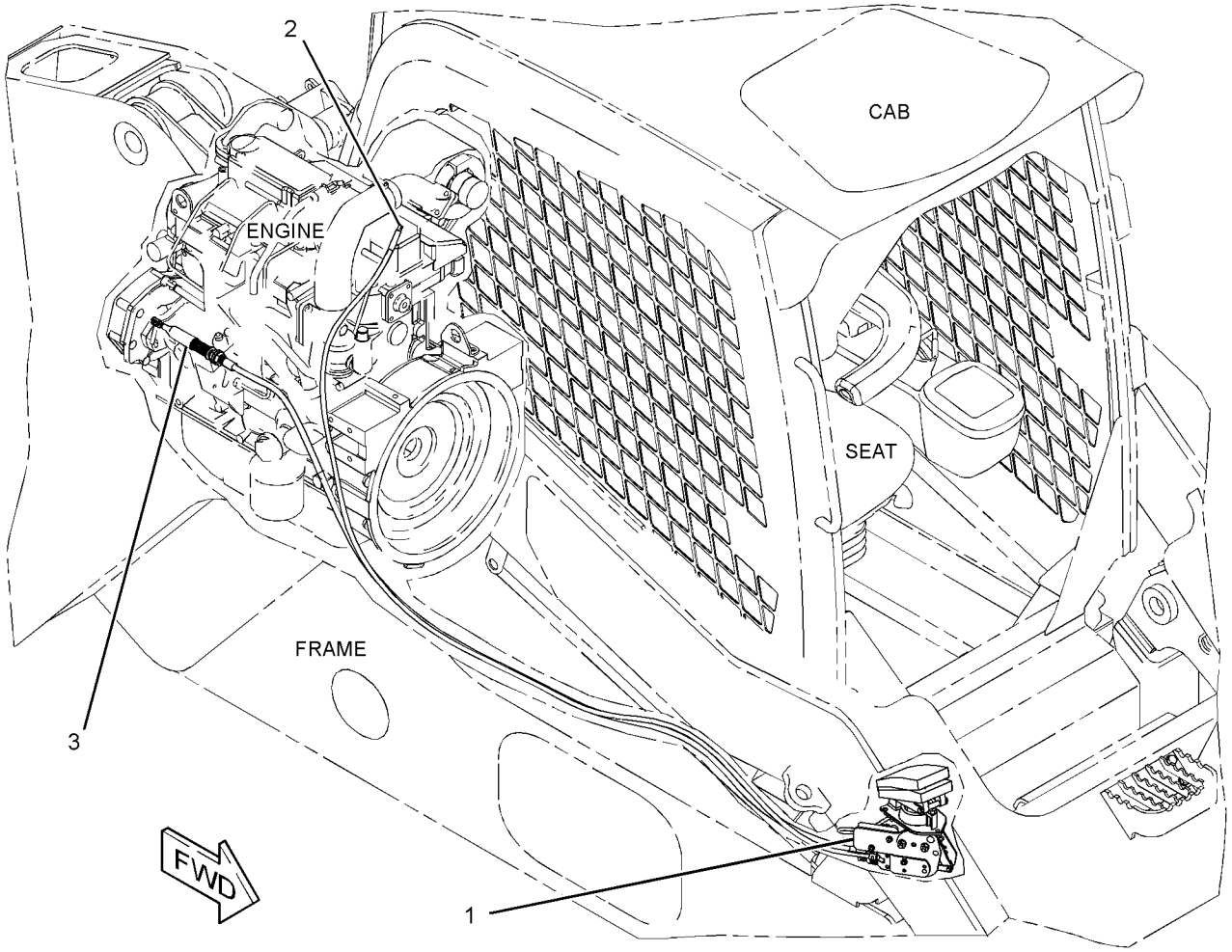

GRAPHIC #1 **<END>** g01316917

FUEL SYSTEM

235-5901 LINES GP-FUEL

S/N: CJS1-UP

PART OF 262-7288 ENGINE AR-PRIMARY

AN ATTACHMENT

SMCS-1274 **i02696541**

NOTE	REF NO	GRAPHIC REF	PART NUMBER	QTY	PART NAME 1 2 3 4 5 6 (PRODUCT LEVEL)	SEE PAGE
	1	1	**113-0363**	4	SUPPORT	
	2	1	**5P-0537**	5	WASHER-HARD (7.2X14.5X2-MM THK)	
M	3	1	**6V-2317**	4	BOLT (M8X1.25X30-MM)	
M	4	1	**8T-4908**	2	BOLT (M8X1.25X25-MM)	
M	5	1	**6V-5215**	3	BOLT (M8X1.25X16-MM)	
	7	1	**9M-1974**	9	WASHER-HARD (8.8X16X2-MM THK)	
	8	1	**113-0364**	4	HOSE	
	9	1	**122-8948**	7	CLAMP	
	10	1	**122-8949**	3	CLAMP	
	11	1	**195-8355**	4	GASKET	
	13	1	**094-7235**	1	CAP	
	14	1	**234-4809**	2	WASHER	
	15	1	**239-0687**	1	TUBE	
	16	1	**239-0719**	1	TUBE AS-FUEL INJECTION (CYL. NO. 1)	
	17	1	**239-0720**	1	TUBE AS-FUEL INJECTION (CYL. NO. 2)	
	18	1	**239-0721**	1	TUBE AS-FUEL INJECTION (CYL. NO.3)	
	19	1	**239-0722**	1	TUBE AS-FUEL INJECTION (CYL. NO.4)	
	20	1	**239-0728**	1	STAY	
	21	1	**239-0729**	1	SUPPORT	
	22	1	*239-0734*	4	NOZZLE AS	
					(EACH INCLUDES)	
		1	**300-2952**	1	NOZZLE	
B		1	**096-8994**		SHIM (0.7-MM THK) (.70-MM THK)	
B		1	**099-7519**		SHIM (0.75-MM THK) (.75-MM THK)	
B		1	**099-7520**		SHIM (0.80-MM THK) (.80-MM THK)	
B		1	**099-7521**		SHIM (0.85-MM THK) (.85-MM THK)	
B		1	**096-8995**		SHIM (0.9-MM THK) (.90-MM THK)	
B		1	**096-8996**		SHIM (0.98-MM THK) (.98-MM THK)	
B		1	**099-7522**		SHIM (1.03-MM THK)	
B		1	**099-7523**		SHIM (1.08-MM THK)	
B		1	**099-7524**		SHIM (1.13-MM THK)	
B		1	**102-7341**		SHIM (1.15-MM THK)	
B		1	**099-7525**		SHIM (1.18-MM THK)	
B		1	**102-7342**		SHIM (1.20-MM THK)	
B		1	**096-8997**		SHIM (1.23-MM THK)	
B		1	**104-8039**		SHIM (1.25-MM THK)	
B		1	**102-7343**		SHIM (1.30-MM THK)	
B		1	**102-7344**		SHIM (1.35-MM THK)	
B		1	**102-7345**		SHIM (1.40-MM THK)	
B		1	**102-7346**		SHIM (1.45-MM THK)	
B		1	**102-7347**		SHIM (1.50-MM THK)	
B		1	**102-7348**		SHIM (1.55-MM THK)	
B		1	**102-7349**		SHIM (1.60-MM THK)	
B		1	**102-7350**		SHIM (1.65-MM THK)	
B		1	**102-7351**		SHIM (1.70-MM THK)	
B		1	**096-8990**		SHIM (1.80-MM THK)	
	23	1	**294-5520**	1	STAY	
M	24	1	**195-8364**	5	BOLT AS (M6X1X25-MM)	

B-USE AS REQUIRED
M-METRIC PART

235-5901 **LINES GP-FUEL** *(contd.)* **i02696541**

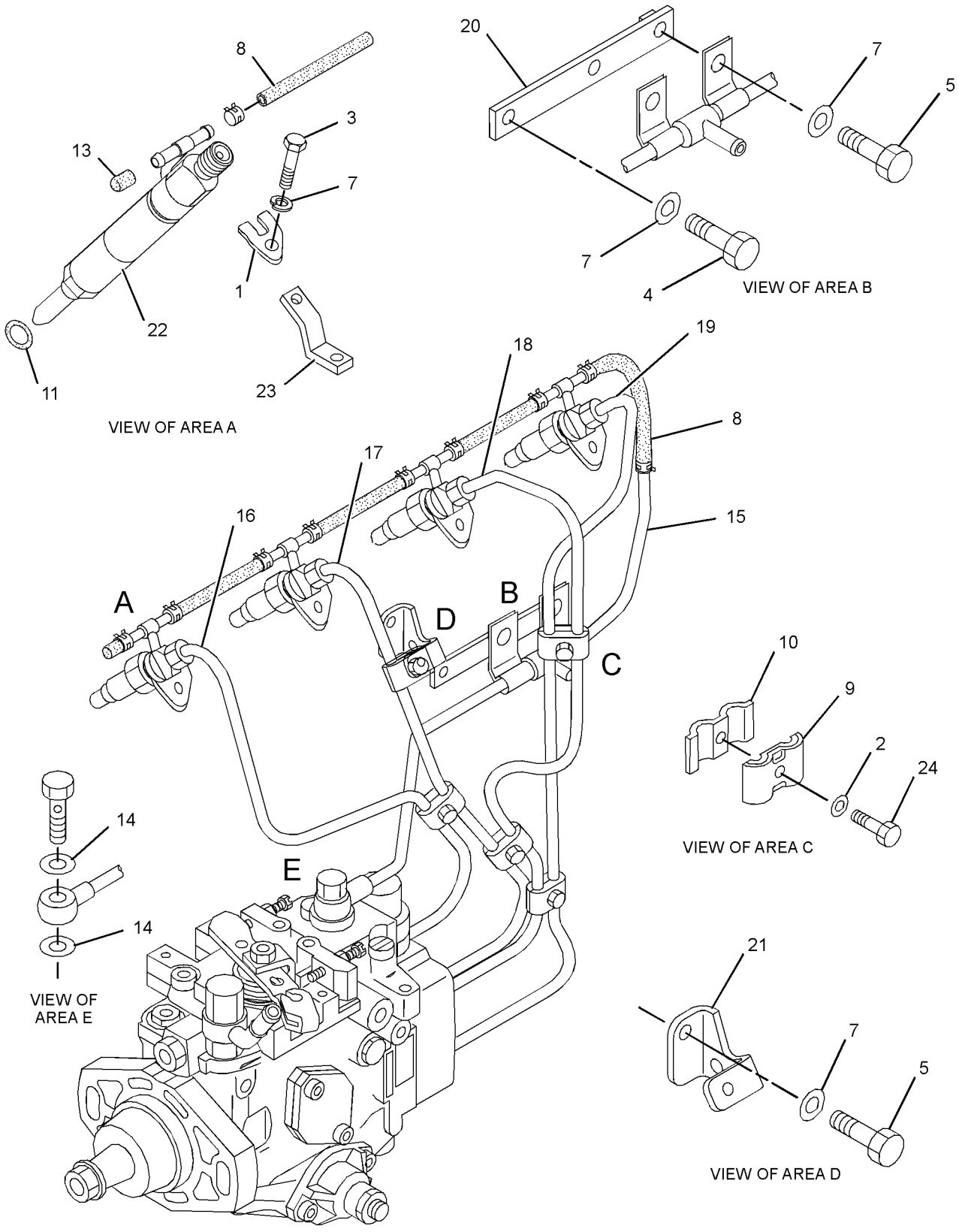

GRAPHIC #1 **<END>** g01350573

258-2444 LINES GP-FUEL PRM & FILTER

S/N: JAY1-UP

PART OF 258-2410 CHASSIS AR

SMCS-1258, 1263, 1274 **i02674923**

NOTE	REF NO	GRAPHIC REF	PART NUMBER	QTY	PART NAME 1 2 3 4 5 6 (PRODUCT LEVEL)	SEE PAGE
	1	1	**1P-4278**	8	CLAMP-HOSE	
	2	1	**5P-4961**	2	CLAMP-HOSE	
	3	1	**069-4080**	1	FITTING	
	4	1	**246-2622**	2	ELBOW	
	5	1	**258-3442**	1	PUMP GP-FUEL PRM & PRIM FILTER	
J		1	**112-9401**	1	BOWL AS-WATER COLLECTION	
		1	**118-8118**	1	RING-RETAINING	
		1	**228-9132**	1	FITTING	
		1	**233-9856**	1	FILTER AS-WATER SEP & FUEL	
	6	1	**258-3530**	1	TUBE AS	
	7	1	**258-3532**	1	BRACKET AS	
	8	1	**258-3662**	1	HOSE	
	9	1	**195-8372**	1	CLIP	
M	10	1	**266-3315**	3	BOLT-FLANGE HEAD (M8X1.25X25.5-MM)	
	11	1	**4D-6466**	5	CLIP	
	12	1	**4K-8864**	2	CLIP	
M	13	1	**5C-9553**	3	BOLT (M6X1X16-MM)	
	14	1	**7H-7055**	2	CLIP	
	15	1	**8T-4121**	4	WASHER-HARD (11X21X2.5-MM THK)	
M	16	1	**8T-4136**	2	BOLT (M10X1.5X25-MM)	
M	17	1	**8T-4196**	2	BOLT (M10X1.5X35-MM)	
	18	1	**8T-4205**	3	WASHER-HARD (7.2X14.5X2-MM THK)	
	19	1	**8T-4224**	4	WASHER-HARD (8.8X16X2-MM THK)	
M	20	1	**8T-4908**	4	BOLT (M8X1.25X25-MM)	
	21	1	**9M-8406**	5	CLIP	
E	23	1	**5P-1442**		HOSE (144-CM)	
E	24	1	**8C-3681**		HOSE (28-CM)	
					AVAILABLE REPAIR KIT(S):	
J			**128-8614**	1	KIT-SEAL (WATER SEPARATOR)	
					(INCLUDES SEALS)	

E-ORDER BY THE CENTIMETER
J-KIT MARKED J AVAILABLE FOR PART MARKED J
M-METRIC PART

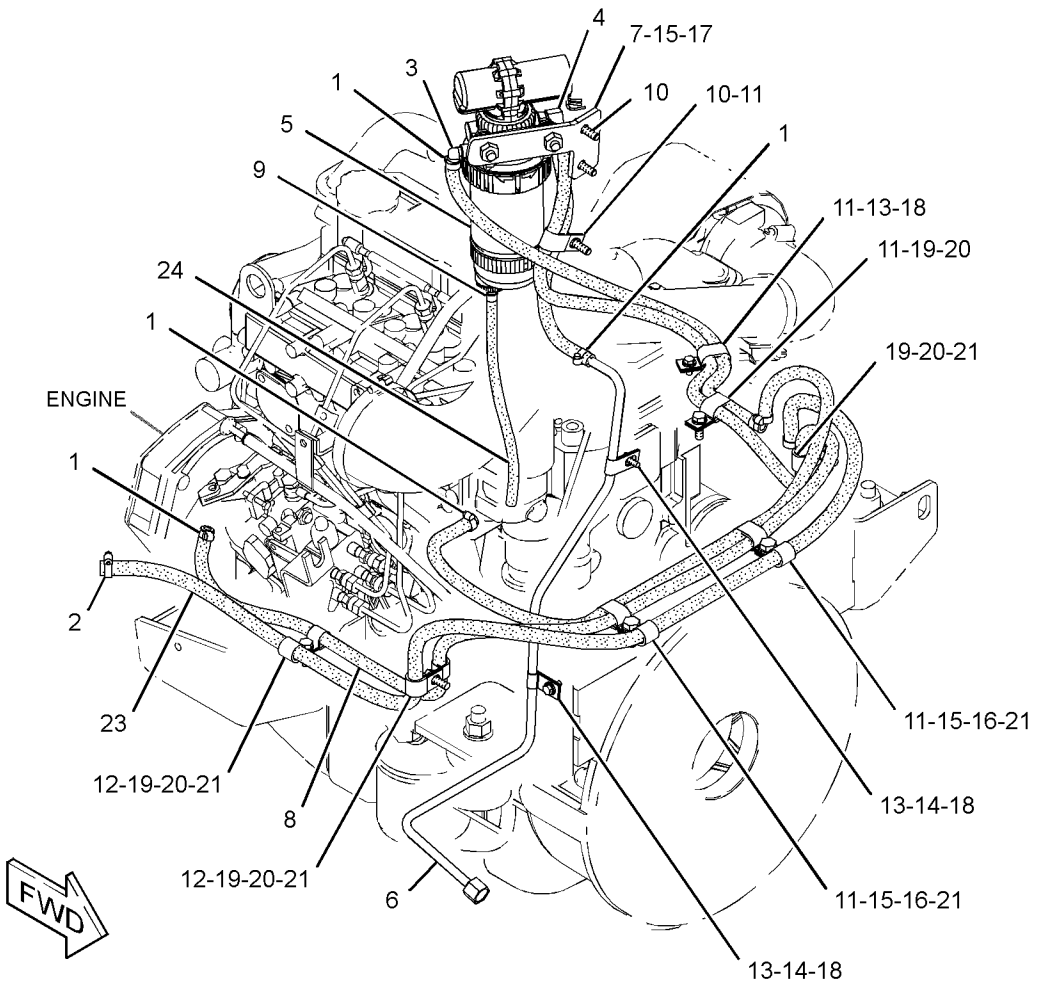

GRAPHIC #1 **<END>** g01345122

249-7347 PUMP GP-FUEL INJECTION

S/N: CJS1-UP

PART OF 262-7288 ENGINE AR-PRIMARY

AN ATTACHMENT

SMCS-1251, 1290, 5479 **i02525864**

NOTE	REF NO	GRAPHIC REF	PART NUMBER	QTY	PART NAME 1 2 3 4 5 6 (PRODUCT LEVEL)	SEE PAGE
	1	1	**5J-3886**	1	SEAL-O-RING	
M	2	1	**5P-7970**	1	NUT (M8X1.25-THD)	
M	3	1	**6V-5217**	3	BOLT (M8X1.25X20-MM)	
	4	1	**9M-1974**	4	WASHER-HARD (8.8X16X2-MM THK)	
	5	1	**8T-4121**	1	WASHER-HARD (11X21X2.5-MM THK)	
M	6	1	**8T-4136**	1	BOLT (M10X1.5X25-MM)	
	7	1	**212-8510**	1	NUT	
	8	1	**8C-3080**	1	SEAL-O-RING	
	9	1	**225-5244**	1	FLANGE	
	10	1	**234-4836**	1	BRACKET	
	11	1	**234-4835**	1	STUD	
C	12	1	**235-4969**	1	BRACKET	
	13	1	**235-4970**	1	BOLT	
	14	1	**249-7346**	1	PUMP AS	

C-CHANGE FROM PREVIOUS TYPE
M-METRIC PART

249-7347 **PUMP GP-FUEL INJECTION** *(contd.)* **i02525864**

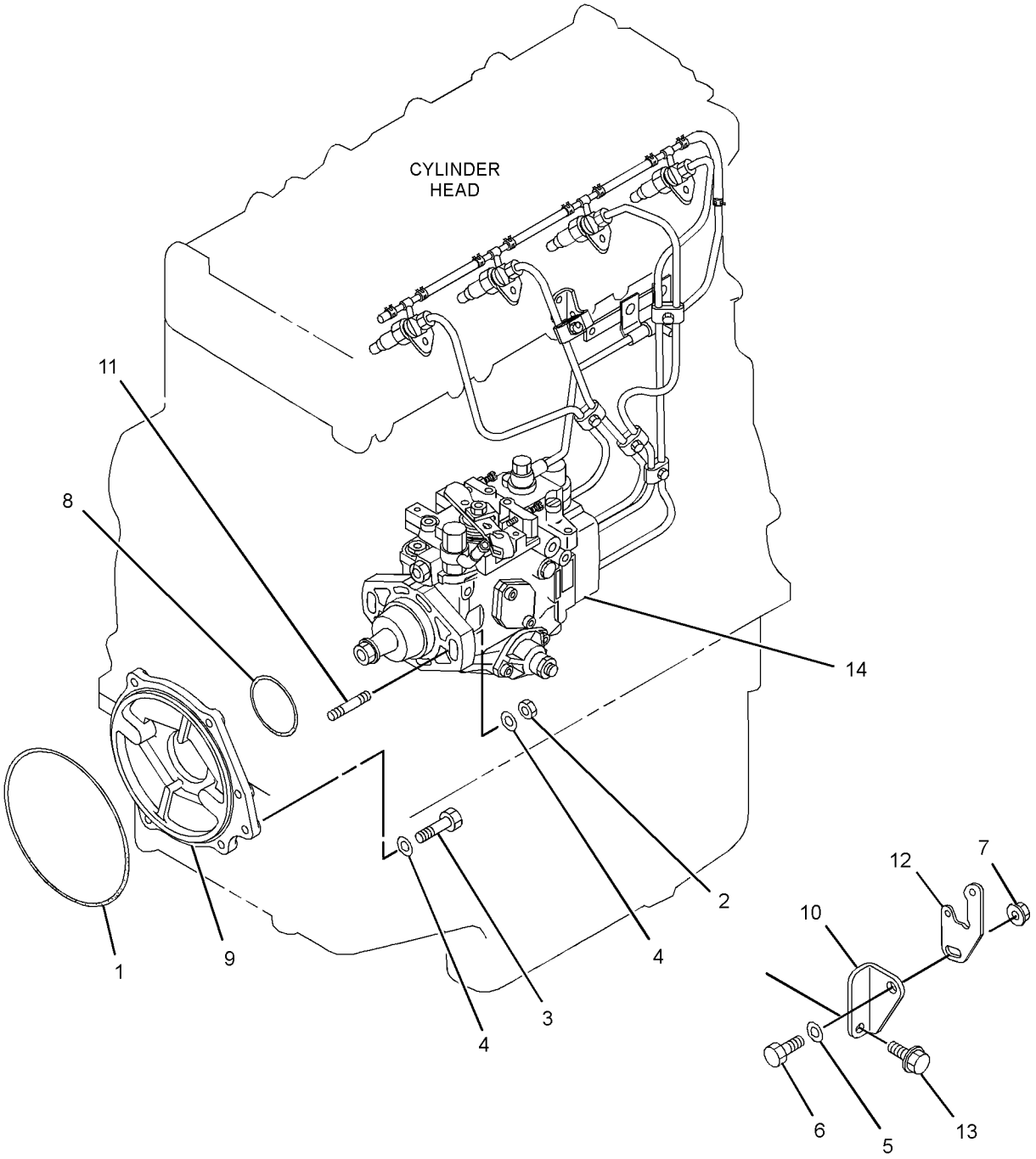

GRAPHIC #1 **<END>** g01354102

FUEL SYSTEM

258-2439 TANK & MTG GP-FUEL

S/N: JAY1-UP

PART OF 258-2410 CHASSIS AR

SMCS-1273 **i02712953**

NOTE	REF NO	GRAPHIC REF	PART NUMBER	QTY	PART NAME 1 2 3 4 5 6 (PRODUCT LEVEL)	SEE PAGE
	1	1	**151-2110**	1	GASKET	
Y	2	1	*258-2440*	1	TANK GP-FUEL	69
	3	1	**258-2948**	2	BRACKET AS	
	4	1	**258-2995**	1	INSULATION (BOTTOM)	
M	5	1	**266-3315**	4	BOLT-FLANGE HEAD (M8X1.25X25.5-MM)	
	6	1	**304-8351**	2	INSULATION	
	7	1	**304-8352**	2	INSULATION	
	8	1	**271-2912**	1	SENDER AS-FUEL LEVEL	
		1	**102-8802**	1	KIT-RECEPTACLE (2-PIN)	
					(INCLUDES RECEPTACLE AS & WEDGE)	
		1	**186-3735**	2	PIN-CONNECTOR (16-GA TO 18-GA)	
M	9	1	**5C-9553**	5	BOLT (M6X1X16-MM)	
	10	1	**8T-4205**	5	WASHER-HARD (7.2X14.5X2-MM THK)	

M-METRIC PART
Y-SEPARATE ILLUSTRATION

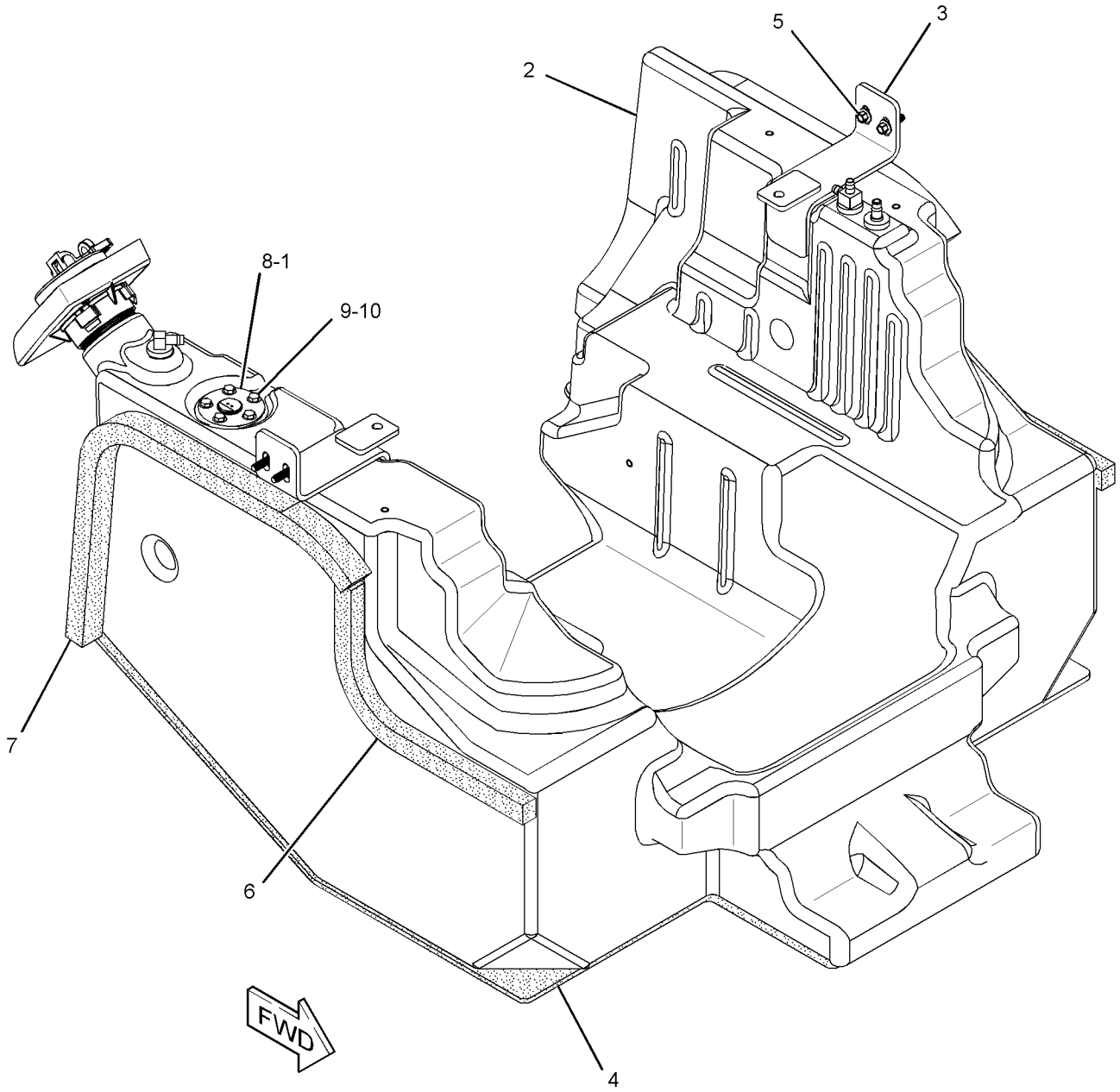

GRAPHIC #1 **<END>** g01344088

FUEL SYSTEM

258-2440 TANK GP-FUEL

S/N: JAY1-UP

PART OF 258-2439 TANK & MTG GP-FUEL

SMCS-1273 **i02667706**

NOTE	REF NO	GRAPHIC REF	PART NUMBER	QTY	PART NAME 1 2 3 4 5 6 (PRODUCT LEVEL)	SEE PAGE
	1	1	**6W-5698**	3	GROMMET	
	2	1	**304-3885**	1	CAP-FUEL	
	3	1	**142-8928**	1	ELBOW	
	4	1	**230-3737**	1	FITTING	
	5	1	**258-2441**	1	TANK AS-FUEL	
	6	1	**258-2732**	1	GUARD AS	
	7	1	**258-2983**	1	TUBE AS	
	8	1	**258-2988**	1	TUBE AS	
	9	1	**3K-0360**	1	SEAL-O-RING	
	10	1	**9S-4185**	1	PLUG-O-RING	

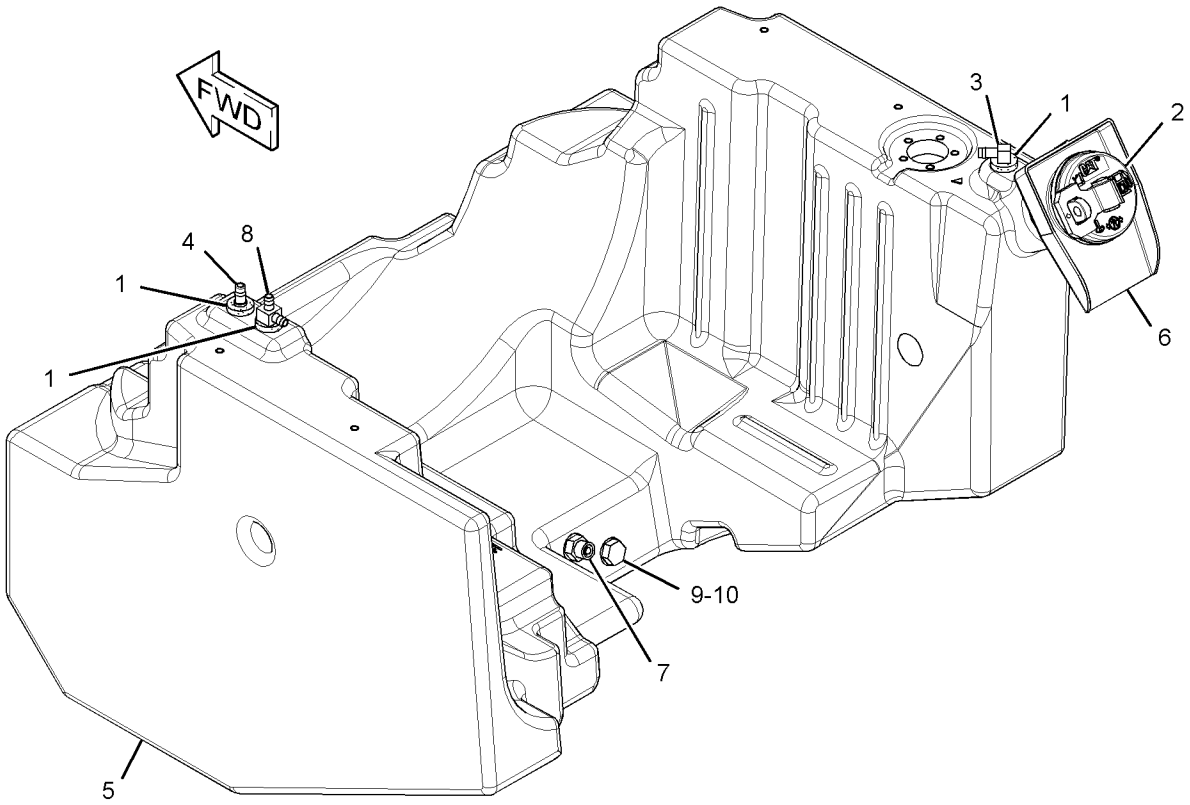

GRAPHIC #1 **<END>** g01329630

ELECTRICAL AND STARTING SYSTEM

105-2814 ALTERNATOR GP-CHARGING*R

S/N: CJS1-UP
12 VOLT, 90 AMPERE
PART OF 287-6361 ALTERNATOR GP-CHARGING
AN ATTACHMENT

SMCS-1405 **i02712949**

NOTE	REF NO	GRAPHIC REF	PART NUMBER	QTY	PART NAME 1 2 3 4 5 6 (PRODUCT LEVEL)	SEE PAGE
	1	1	**113-4458**	1	PULLEY-ALTERNATOR	
	2	1	**113-4459**	1	FRAME AS-ALTERNATOR	
	3	1	**113-4460**	1	ROTOR AS-ALTERNATOR	
	4	1	**113-4461**	1	FRAME AS-ALTERNATOR	
	5	1	**113-4462**	1	REGULATOR AS-ALTERNATOR	
	6	1	**113-4463**	1	RECTIFIER AS-ALTERNATOR	
	7	1	**113-4464**	1	COVER-ALTERNATOR	
	8	1	**113-4469**	4	BUSHING-ALTERNATOR	
	9	1	**113-4470**	1	BUSHING-ALTERNATOR	
M	10	1	**5C-2890**	1	NUT (M6X1-THD)	
	11	1	**8T-4205**	1	WASHER-HARD (7.2X14.5X2-MM THK)	
	12	1	**1H-3244**	1	LOCKWASHER	
					AVAILABLE REPAIR KIT(S):	
			113-4465	1	KIT-ALTERNATOR BEARING	
					(INCLUDES COVERS, BEARINGS & WASHERS)	
			113-4466	1	KIT-REPAIR (ALTERNATOR BRUSHES)	
					(INCLUDES HOLDER ASSEMBLY & SEALS)	
			113-4467	1	KIT-ALTERNATOR TERMINAL	
					(INCLUDES SCREWS, PLATE & NUTS)	
			113-4468	1	KIT-ALTERNATOR HARDWARE	
					(INCLUDES SCREWS)	

M-METRIC PART

105-2814 **ALTERNATOR GP-CHARGING** *(contd.)* **i02712949**

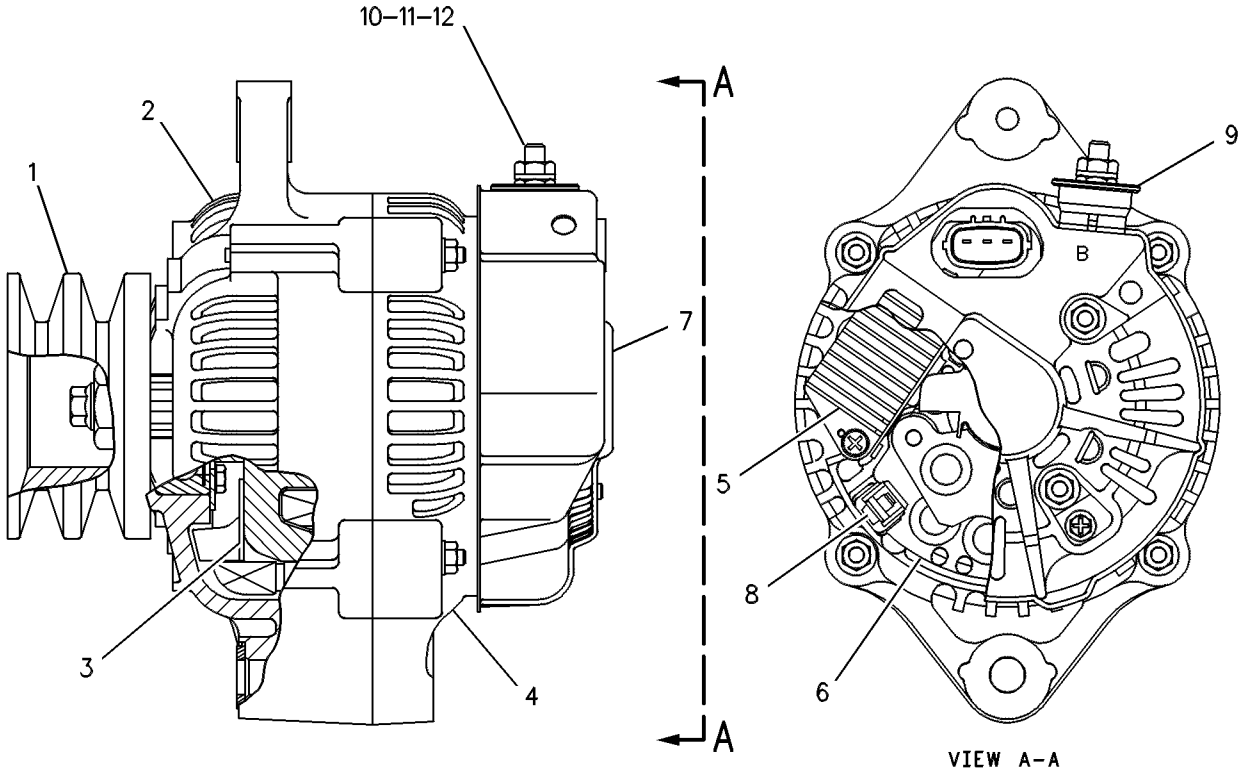

GRAPHIC #1 **<END>** g00128916

287-6361 ALTERNATOR GP-CHARGING

S/N: CJS1-UP

PART OF 262-7288 ENGINE AR-PRIMARY

AN ATTACHMENT

SMCS-1405 **i02568570**

NOTE	REF NO	GRAPHIC REF	PART NUMBER	QTY	PART NAME 1 2 3 4 5 6 (PRODUCT LEVEL)	SEE PAGE
M	1	1	**6V-5217**	1	BOLT (M8X1.25X20-MM)	
	2	1	**8T-4896**	1	WASHER-HARD (10.2X18.5X2.5-MM THK)	
	3	1	**9M-1974**	1	WASHER-HARD (8.8X16X2-MM THK)	
	4	1	**235-4962**	1	PLATE	
	5	1	**235-4973**	1	BOLT (M10X1.5X90-MM)	
	6	1	**239-0771**	1	BRACKET	
YR	7	1	**105-2814**	1	ALTERNATOR GP-CHARGING	70
M	8	1	**294-7251**	2	BOLT AS (M8X20X1-MM)	

M-METRIC PART
R-REMFG PART MAY BE AVAILABLE
Y-SEPARATE ILLUSTRATION

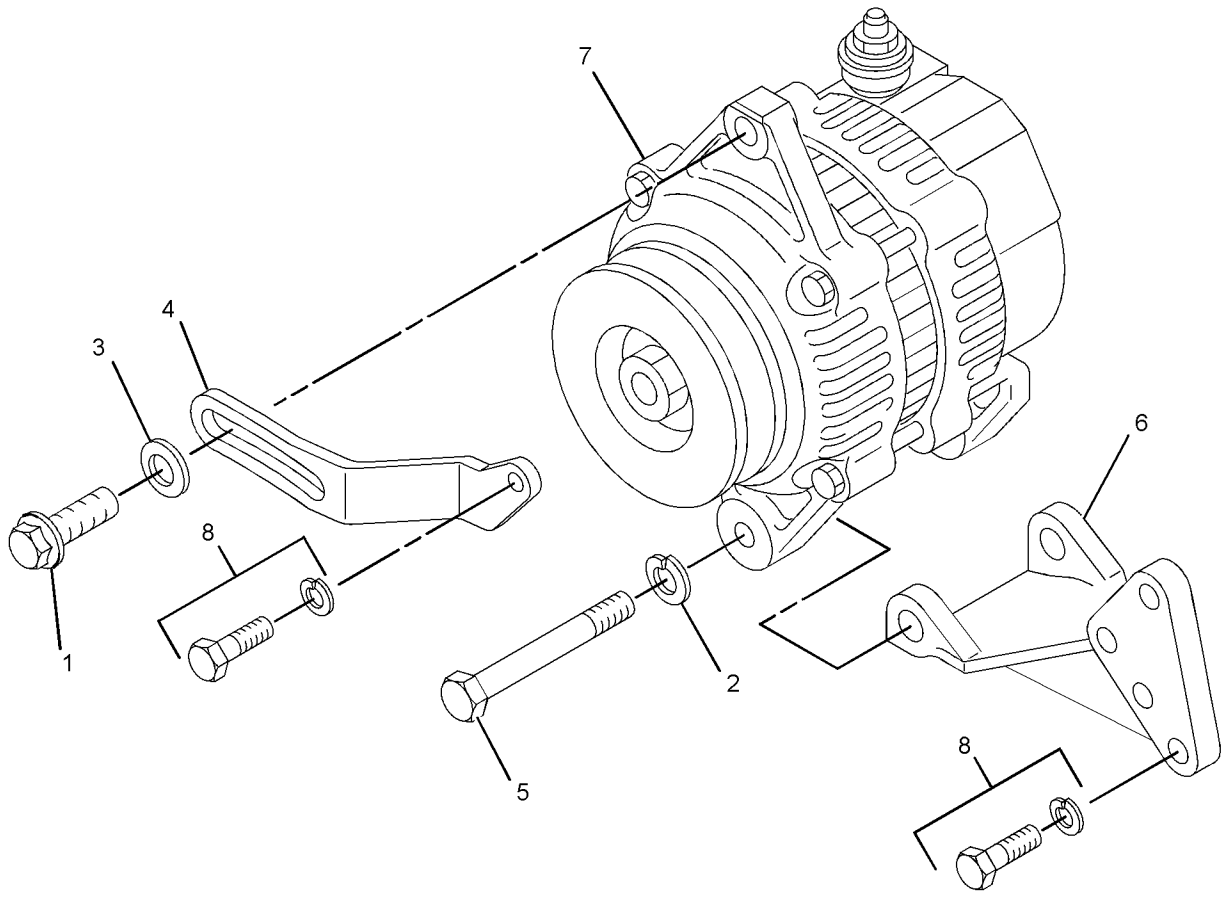

GRAPHIC #1 **<END>** g01346128

258-4121 BATTERY & WIRING GP

S/N: JAY1-UP

PART OF 258-2410 CHASSIS AR

SMCS-1401, 1402 **i02625401**

NOTE	REF NO	GRAPHIC REF	PART NUMBER	QTY	PART NAME 1 2 3 4 5 6 (PRODUCT LEVEL)	SEE PAGE
	1	1	**114-4516**	1	BLOCK	
	2	1	**230-6368**	1	BATTERY (12-VOLT, MAINTENANCE FREE)	
	3	1	**235-1845**	1	FUSE (100-AMPERE)	
	4	1	**247-6440**	1	HOLD-DOWN AS	
	5	1	**258-2849**	1	PLATE AS	
	6	1	**258-4118**	1	CABLE AS-BATTERY (POSITIVE)	
		1	**1S-7252**	1	TERMINAL-RING (FOR 3/8-IN BOLT)	
E		1	**5P-0761**		CABLE (00-GA, RED) (132-CM)	
		1	**8N-0869**	2	COVER-TERMINAL (RED)	
		1	**030-1705**	1	RING-TERMINAL (FOR 5/16-IN BOLT)	
	7	1	**258-4120**	1	WIRE AS	
	8	1	**258-4123**	1	PLATE AS	
	9	1	**267-2744**	1	HOLDER AS-FUSE	
		1	**267-2746**	1	COVER AS	
M		1	**5C-7261**	2	NUT (M8X1.25-THD)	
		1	**7X-0608**	2	WASHER-HARD (10.2X16X2-MM THK)	
		1	**9F-5644**	2	LOCKWASHER	
	10	1	**266-3314**	5	BOLT-FLANGE HEAD (M6X1X20.5-MM)	
M	11	1	**266-3315**	2	BOLT-FLANGE HEAD (M8X1.25X25.5-MM)	
M	12	1	**5C-2890**	2	NUT (M6X1-THD)	
M	13	1	**5C-7261**	1	NUT (M8X1.25-THD)	
M	14	1	**6V-5698**	2	SCREW-BUTTON HEAD (M4X0.7X10-MM)	
M	15	1	**6V-7357**	2	BOLT (M6X1X25-MM)	
	16	1	**7X-0608**	1	WASHER-HARD (10.2X16X2-MM THK)	
M	17	1	**8T-4133**	2	NUT (M10X1.5-THD)	
	18	1	**8T-4205**	4	WASHER-HARD (7.2X14.5X2-MM THK)	
	19	1	**8T-4224**	2	WASHER-HARD (8.8X16X2-MM THK)	
M	20	1	**8T-4908**	1	BOLT (M8X1.25X25-MM)	
	21	1	**9F-5644**	1	LOCKWASHER	
	22	1	**9M-8406**	2	CLIP	

E-ORDER BY THE CENTIMETER
M-METRIC PART

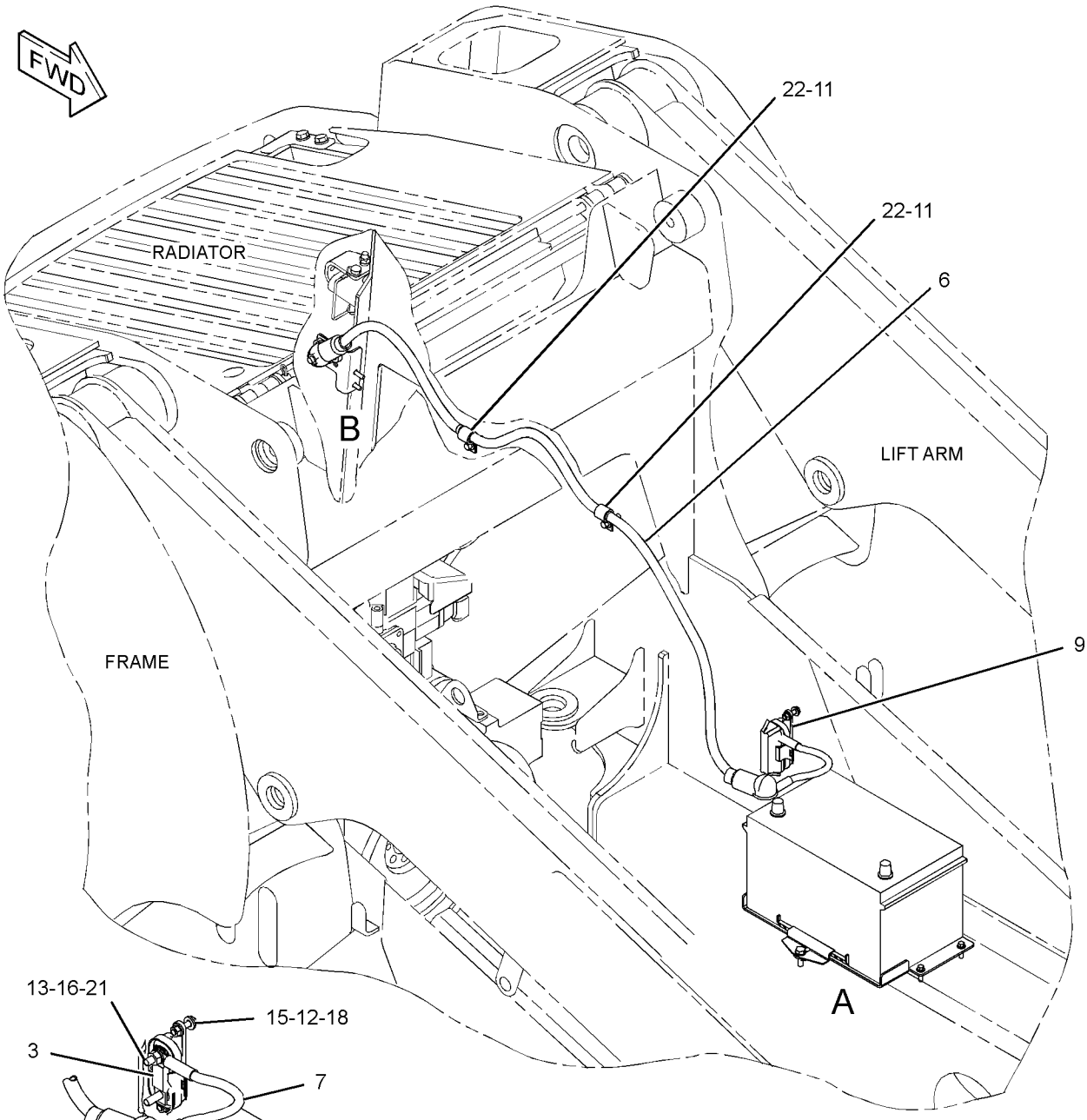

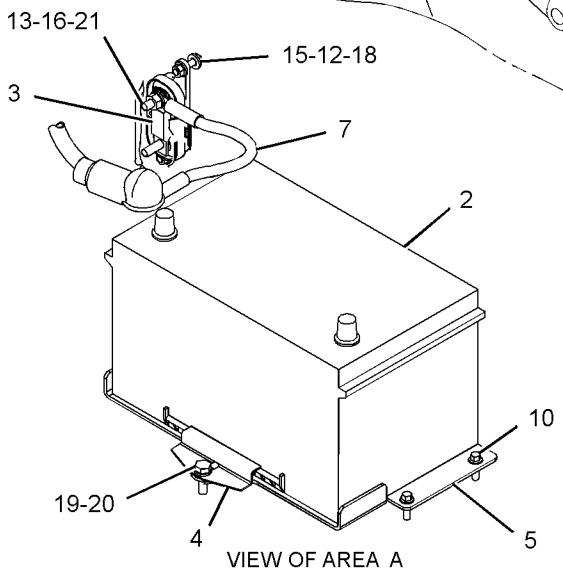

VIEW OF AREA A

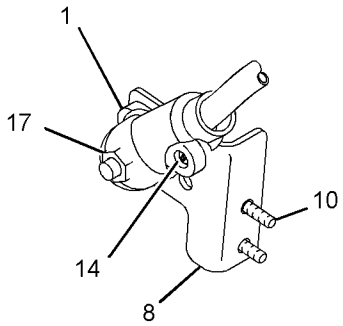

VIEW OF AREA B

GRAPHIC #1 **<END>** g01329148

258-4144 COVER GP-FUSE PANEL

S/N: JAY1-UP

PART OF 258-4000 CAB AR-ENCLOSED ROPS

SMCS-1417 **i02712956**

NOTE	REF NO	GRAPHIC REF	PART NUMBER	QTY	PART NAME 1 2 3 4 5 6 (PRODUCT LEVEL)	SEE PAGE
	1	1	**8R-9654**	1	LANYARD	
	2	1	**116-7471**	1	PULLER-MINIFUSE	
	3	1	**258-3727**	2	SCREW-TRUSS HEAD (NO 12X17.46-MM)	
	4	1	**258-4137**	1	FILM-FUSE PANEL	
	5	1	**267-2680**	2	FUSE (20-AMPERE)	
	6	1	**8T-4205**	3	WASHER-HARD (7.2X14.5X2-MM THK)	

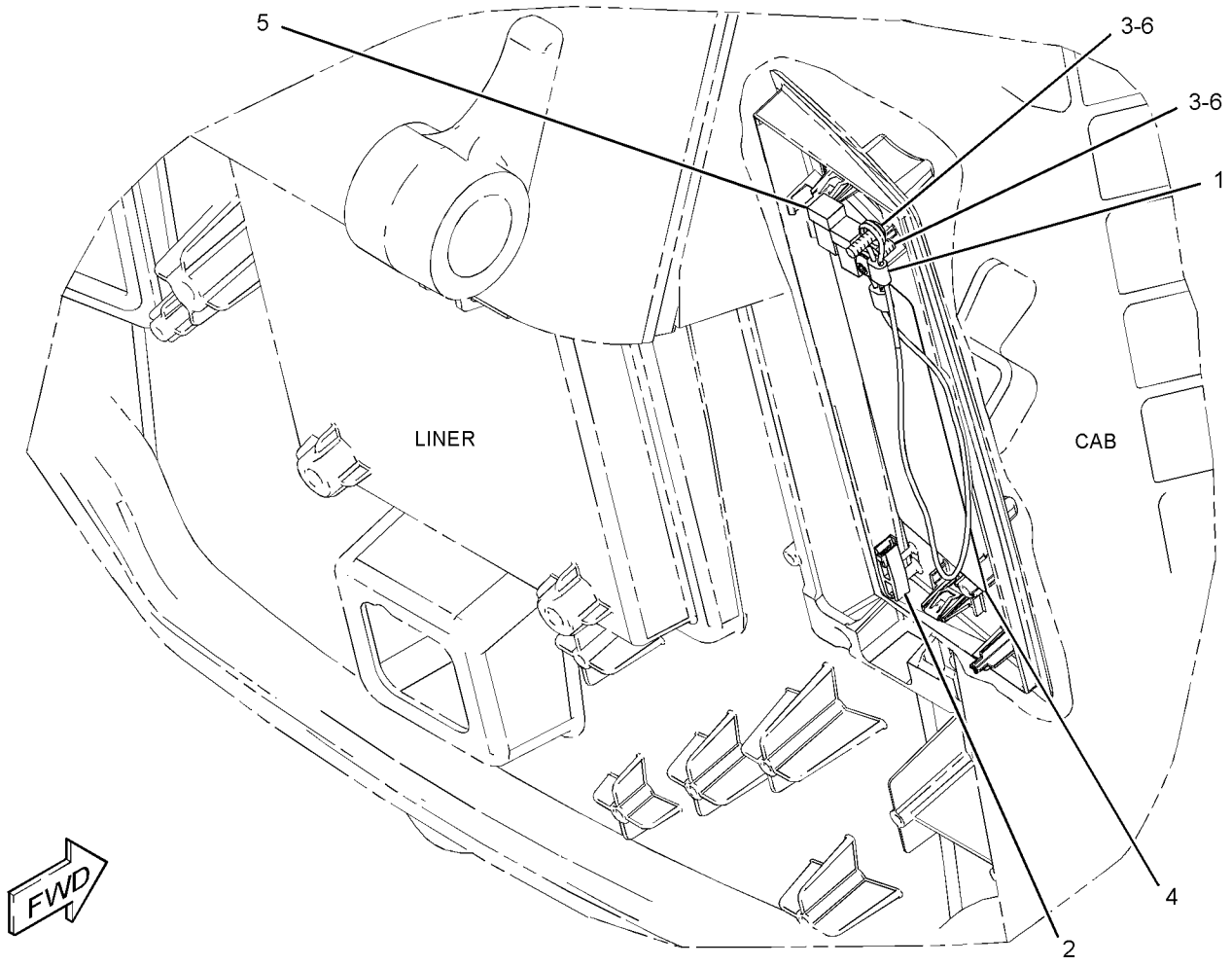

GRAPHIC #1 **<END>** g01339564

235-5904 GLOW PLUG GP

S/N: CJS1-UP
PART OF 262-7288 ENGINE AR-PRIMARY
AN ATTACHMENT

SMCS-1412 **i02162785**

NOTE	REF NO	GRAPHIC REF	PART NUMBER	QTY	PART NAME 1 2 3 4 5 6 (PRODUCT LEVEL)	SEE PAGE
	1	1	**107-3659**	4	GLOW PLUG	
	2	1	**257-8390**	1	PLATE-CONNECTION	

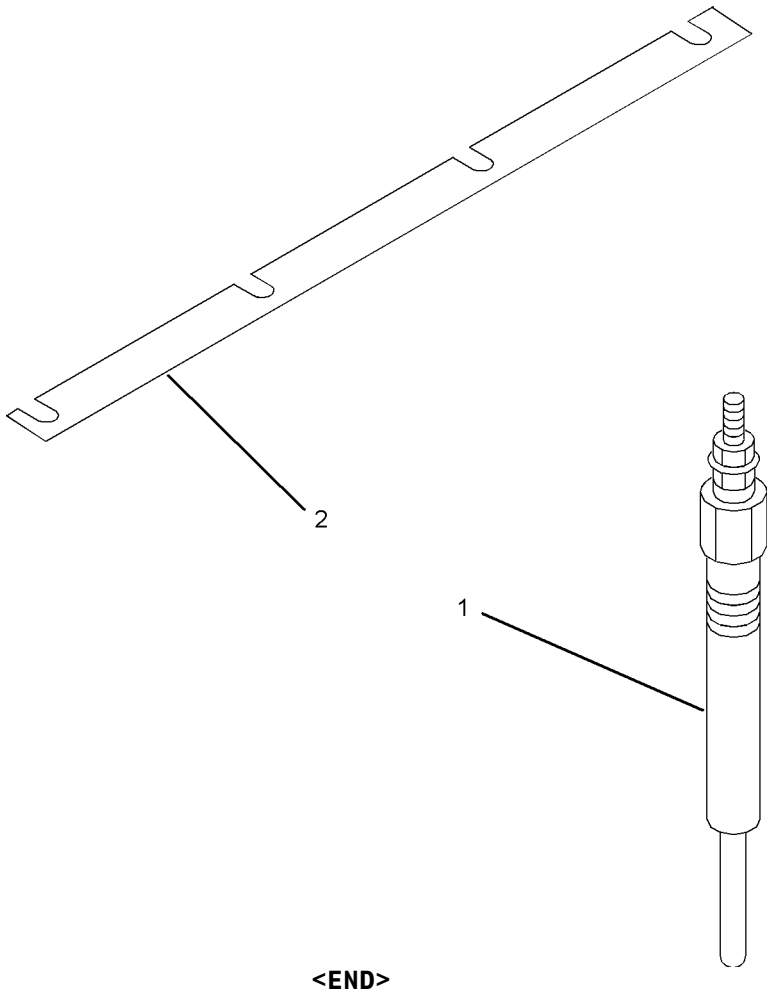

GRAPHIC #1 **<END>** g01011629

218-0942 HEATER GP-JACKET WATER

S/N: JAY1-UP
120VOLT/530 WATT
AN ATTACHMENT

SMCS-1383 **i02655614**

NOTE	REF NO	GRAPHIC REF	PART NUMBER	QTY	PART NAME 1 2 3 4 5 6 (PRODUCT LEVEL)	SEE PAGE
	1	1	**9X-6772**	2	STRAP-CABLE	
	2	1	*225-5642*	1	HEATER GP-JACKET WATER	
	2A	1	**7X-6312**	1	CORD AS-JACKET WATER HEATER	
	2B	1	**225-5541**	1	ELEMENT AS-JACKET WATER HEATER	
	2C	1	**232-4703**	1	GASKET	

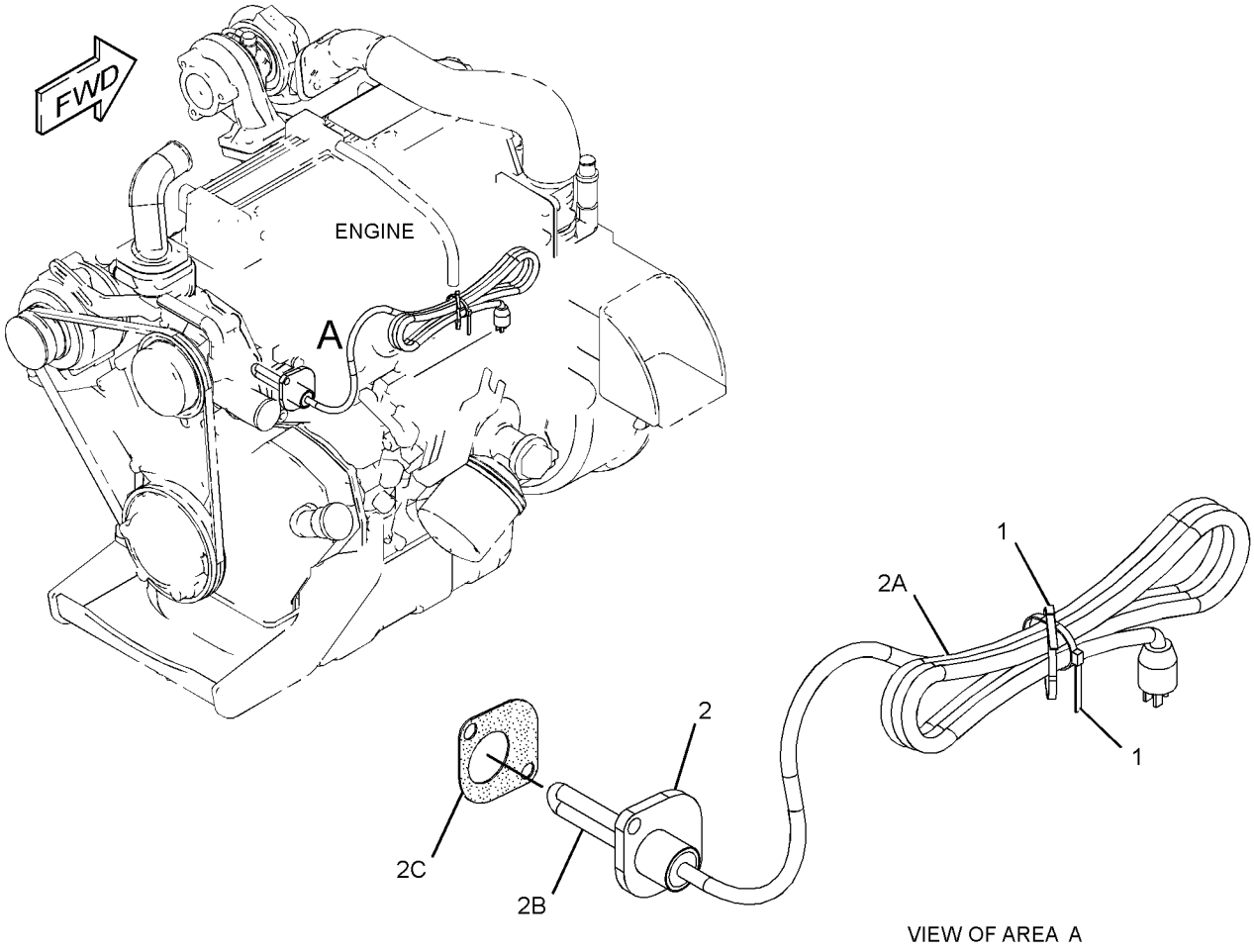

GRAPHIC #1 **<END>** g01335541

218-0943 HEATER GP-JACKET WATER

S/N: JAY1-UP
240 VOLT/530 WATT
AN ATTACHMENT

SMCS-1383 **i02192394**

NOTE	REF NO	GRAPHIC REF	PART NUMBER	QTY	PART NAME 1 2 3 4 5 6 (PRODUCT LEVEL)	SEE PAGE
	1	1	**9X-6772**	2	STRAP-CABLE	
	2	1	*225-5644*	1	HEATER GP-JACKET WATER	
	2A	1	**217-5912**	1	CORD AS	
	2B	1	**225-5535**	1	ELEMENT AS-JACKET WATER HEATER	
	2C	1	**232-4703**	1	GASKET	

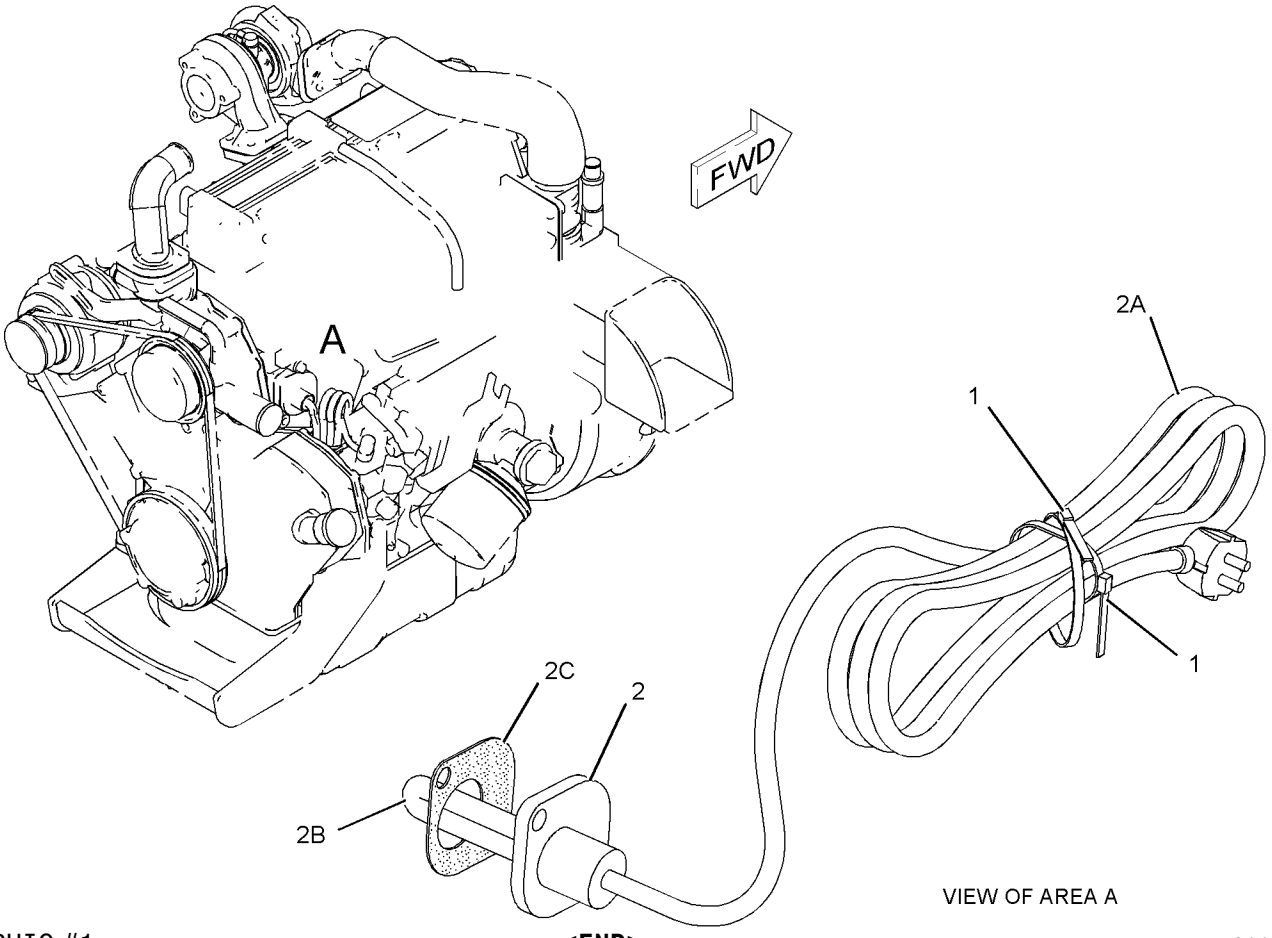

GRAPHIC #1

<END>

g01108040

258-4145 KIT-CONTROL MOUNTING

S/N: JAY1-UP
AN ATTACHMENT

SMCS-7606 **i02637900**

NOTE	REF NO	GRAPHIC REF	PART NUMBER	QTY	PART NAME 1 2 3 4 5 6 (PRODUCT LEVEL)	SEE PAGE
	1	1	**157-2528**	4	SPACER (7X16X20-MM THK)	
	2	1	**258-3727**	9	SCREW-TRUSS HEAD (NO 12X17.46-MM)	
	3	1	**258-4148**	1	PLATE AS	
	4	1	**258-4149**	1	PLATE AS	
M	5	1	**8C-8451**	4	BOLT (M6X1X40-MM)	

M-METRIC PART

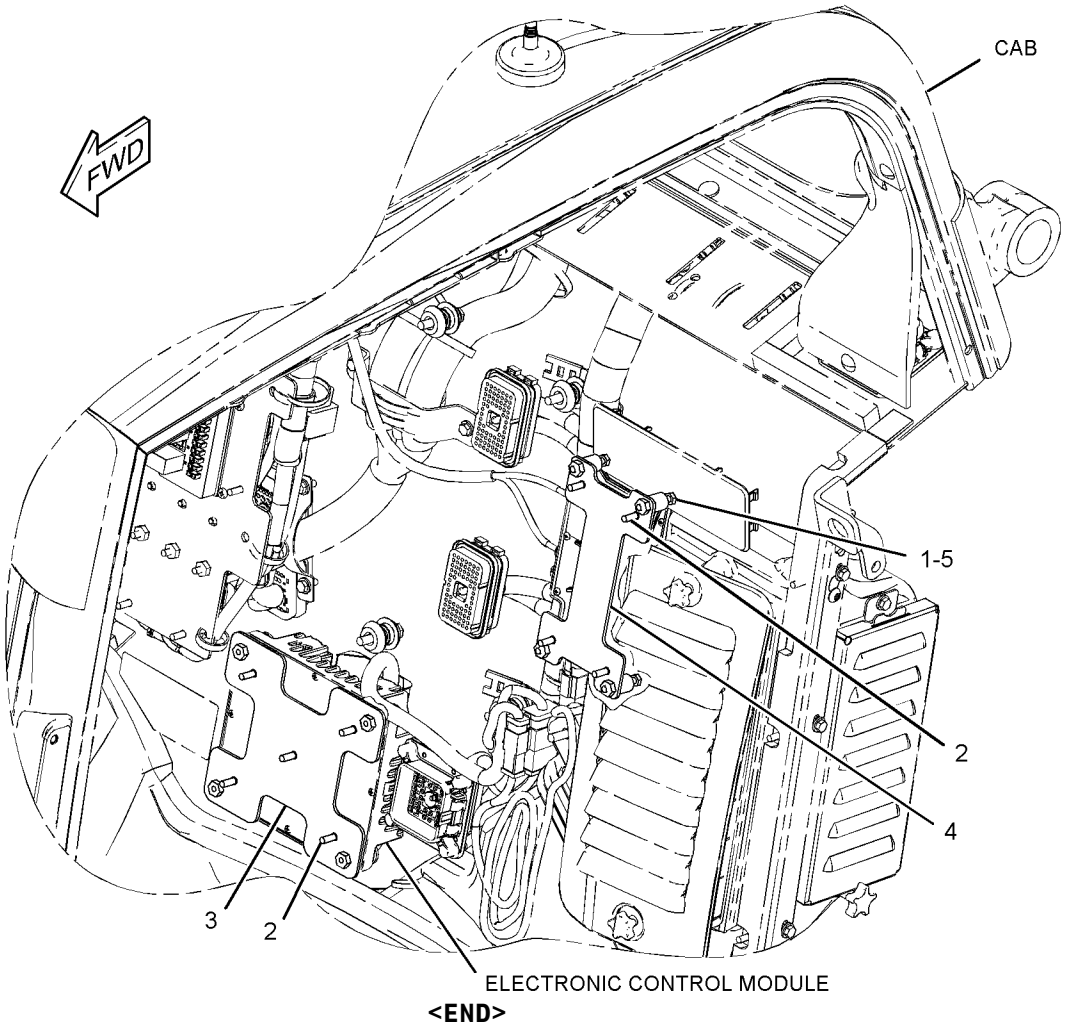

GRAPHIC #1 **<END>** g01328380

ELECTRICAL AND STARTING SYSTEM

258-4185 KIT-SECURITY

S/N: JAY1-UP
AN ATTACHMENT

SMCS-7631 **i02712957**

NOTE	REF NO	GRAPHIC REF	PART NUMBER	QTY	PART NAME 1 2 3 4 5 6 (PRODUCT LEVEL)	SEE PAGE
	1	1	**102-8802**	1	KIT-RECEPTACLE (2-PIN)	
					(INCLUDES RECEPTACLE AS & WEDGE)	
B	2	1	**107-2417**		TAPE (FOAM)	
	3	1	**205-0826**	1	FILM-INSTRUCTION (MACHINE SECURITY, READ OMM)	
	4	1	**206-5162**	2	KEY AS-ELECTRONIC (SECURITY)	
	5	1	*206-5206*	1	COIL AS	
		1	**198-5389**	1	FILM-IDENTIFICATION (IGNITION SWITCH)	
		1	**205-8257**	1	COIL AS (EXCITER)	
	6	1	**213-6065**	1	HARNESS AS-CONTROL (SECURITY)	
		1	**102-8804**	1	KIT-RECEPTACLE (4-PIN)	
					(INCLUDES RECEPTACLE AS & WEDGE)	
		1	**8L-8413**	10	STRAP-CABLE	
		1	**155-2265**	1	KIT-CONNECTING PLUG (8-PIN)	
		1	**155-2270**	1	KIT-CONNECTING PLUG (2-PIN)	
					(EACH PLUG KIT INCLUDES PLUG AS, WEDGE & INTERFACE SEAL)	
	7	1	**218-0404**	1	MODULE GP-INTERFACE (KEY)	
		1	*216-2517*	1	MODULE GP-INTERFACE (KEY)	
		1	**6V-6715**	1	SCREW-PAN HEAD (4-20X0.25-IN)	
		1	**8C-3095**	1	SEAL-O-RING	
	8	1	**219-6314**	2	KEY RING (IDENTIFICATION)	
	9	1	**8Y-5947**	3	FASTENER	

B-USE AS REQUIRED

258-4185 KIT-SECURITY *(contd.)* **i02712957**

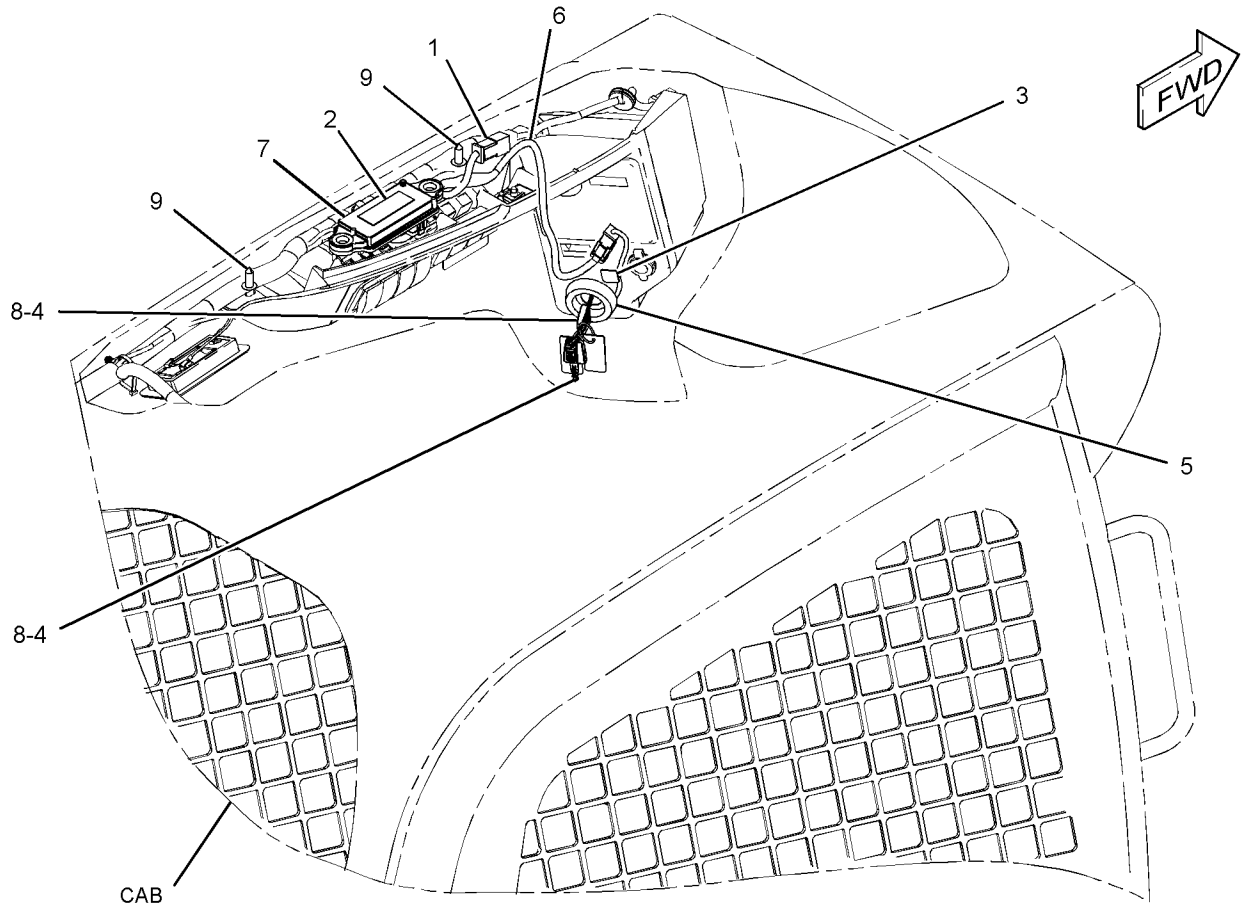

GRAPHIC #1 **<END>** g01328327

258-4127 KIT-WORK TOOL WIRING

S/N: JAY1-UP
CANNOT BE USED WITH FACTORY EQUIPPED HIGH FLOW MACHINES
AN ATTACHMENT

SMCS-1408 **i02706185**

NOTE	REF NO	GRAPHIC REF	PART NUMBER	QTY	PART NAME 1 2 3 4 5 6 (PRODUCT LEVEL)	SEE PAGE
	1	1	**7K-1181**	3	STRAP-CABLE	
	2	1	**146-9439**	3	RELAY AS (12-VOLT) (WORK TOOL)	
	3	1	**159-9495**	1	NUT (1-1/2-18-THD)	
	4	1	**159-9496**	1	LOCKWASHER	
	5	1	**178-3620**	5	STRAP	
	6	1	**258-4126**	1	HARNESS AS-WORK TOOL	
		1	**102-8806**	1	KIT-RECEPTACLE (8-PIN)	
					(INCLUDES RECEPTACLE AS & WEDGE)	
		1	**8L-8413**	1	STRAP-CABLE	
		1	**156-1458**	1	COVER	
		1	**156-1460**	1	RECEPTACLE (8-PIN)	
	7	1	**263-5418**	1	SWITCH AS-ROCKER (WORK TOOL)	
Y	8	1	**272-1790**	1	CONTROL GP-HANDLE (LH)	382
	9	1	**3S-2093**	8	STRAP-CABLE	
	10	1	**1S-9593**	2	STRAP-CABLE	

Y-SEPARATE ILLUSTRATION

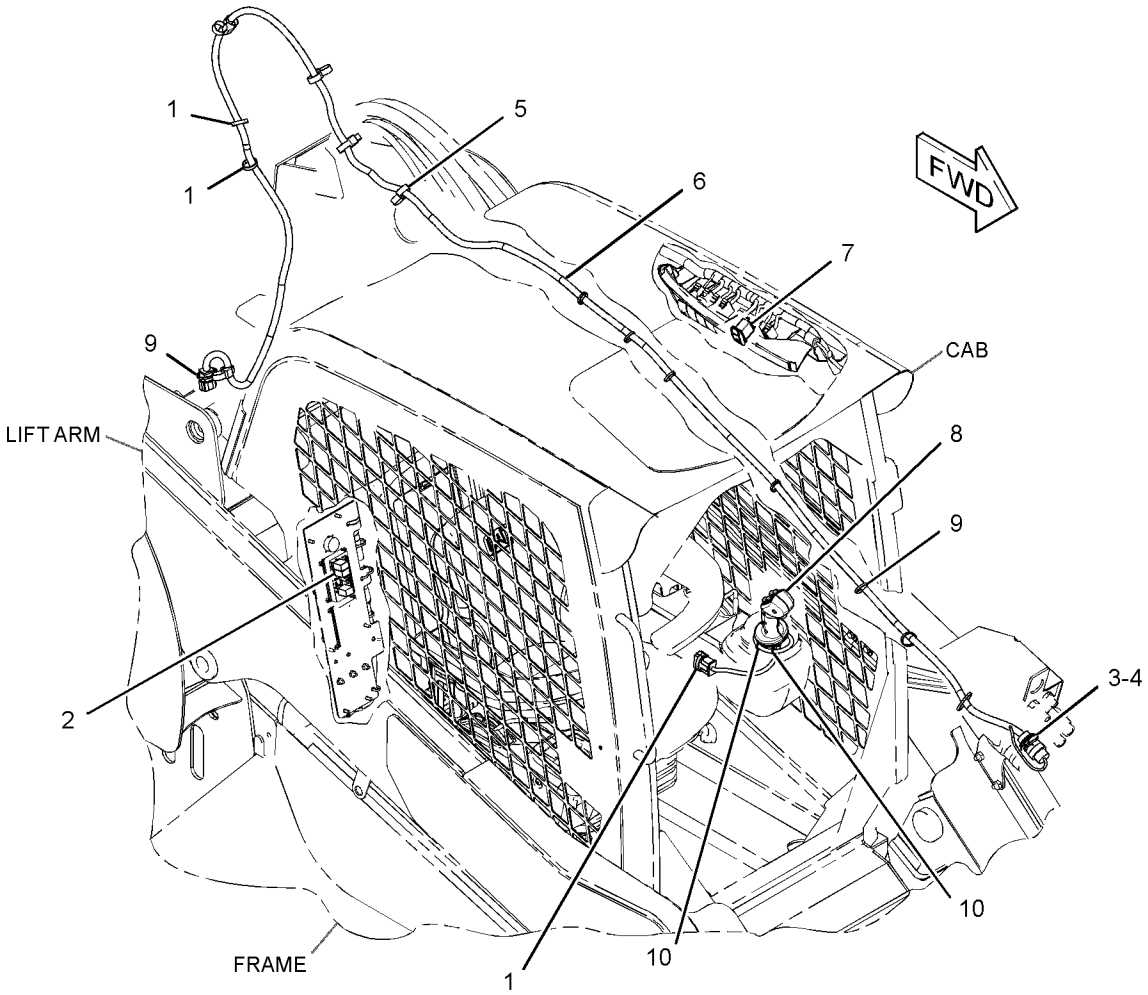

GRAPHIC #1 **<END>** g01359399

234-4328 LAMP GP-FLOOD–SUSPENDED MOUNT

S/N: JAY1-UP

PART OF 258-4164 LIGHTING GP-FLOOD

SMCS-1434 **i02532634**

NOTE	REF NO	GRAPHIC REF	PART NUMBER	QTY	PART NAME 1 2 3 4 5 6 (PRODUCT LEVEL)	SEE PAGE
	1	1	**9W-0607**	1	LAMP (12-VOLT, 55-WATT)	
M	2	1	**8T-0389**	1	LOCKNUT (M10X1.15-THD)	
	3	1	**9X-4244**	2	SCREW-SPECIAL	
	4	1	**202-6614**	1	LENS AS (FLOODLIGHT)	
	5	1	**234-7730**	1	BODY AS	
	6	1	**164-7556**	1	CLIP (LAMP RETAINING)	
	7	1	**234-7731**	1	BRACKET AS	
	8	1	**8T-4121**	1	WASHER-HARD (11X21X2.5-MM THK)	

M-METRIC PART

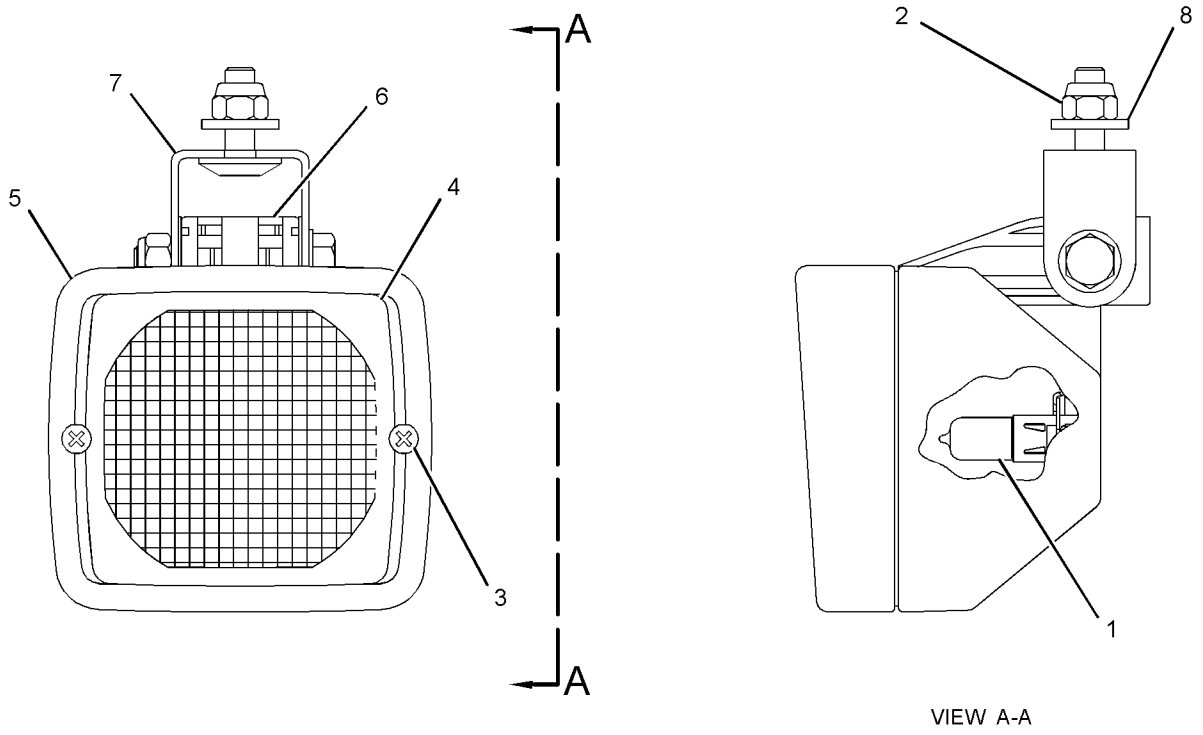

GRAPHIC #1 **<END>** g01283627

195-0189 LAMP GP-HEAD & SIGNAL

S/N: JAY1-UP
PART OF 258-4130 LIGHTING GP-ROADING
AN ATTACHMENT

SMCS-1429, 1430 **i02712950**

NOTE	REF NO	GRAPHIC REF	PART NUMBER	QTY	PART NAME 1 2 3 4 5 6 (PRODUCT LEVEL)	SEE PAGE
	1	1	**228-6053**	1	BODY AS	
	2	1	**228-6054**	1	BEZEL	
	3	1	**228-6051**	1	LENS AS (HEADLIGHT)	
	4	1	**228-6052**	1	LENS AS (TURN SIGNAL)	
	5	1	**228-6056**	6	SCREW (4-32X1.26-IN)	
	6	1	**9W-3324**	1	LAMP-HEAD (12-VOLT, 60/55-WATT)	
	7	1	**226-4560**	1	LAMP (12-VOLT, 21-WATT) (AMBER)	
	8	1	**226-4561**	1	LAMP (12-VOLT, 5-WATT) (CLEAR)	
M	9	1	**8T-0389**	1	LOCKNUT (M10X1.15-THD)	
	10	1	**100-3253**	1	SPACER (SPHERICAL)	
	11	1	**100-3254**	1	SPACER (SPHERICAL)	
	12	1	**100-3255**	1	WASHER (SPHERICAL)	
	13	1	**102-8805**	1	KIT-RECEPTACLE (6-PIN)	
					(INCLUDES RECEPTACLE AS & WEDGE)	
	14	1	**186-3735**	5	PIN-CONNECTOR (16-GA TO 18-GA)	
	15	1	**8T-8737**	1	PLUG-SEAL	

M-METRIC PART

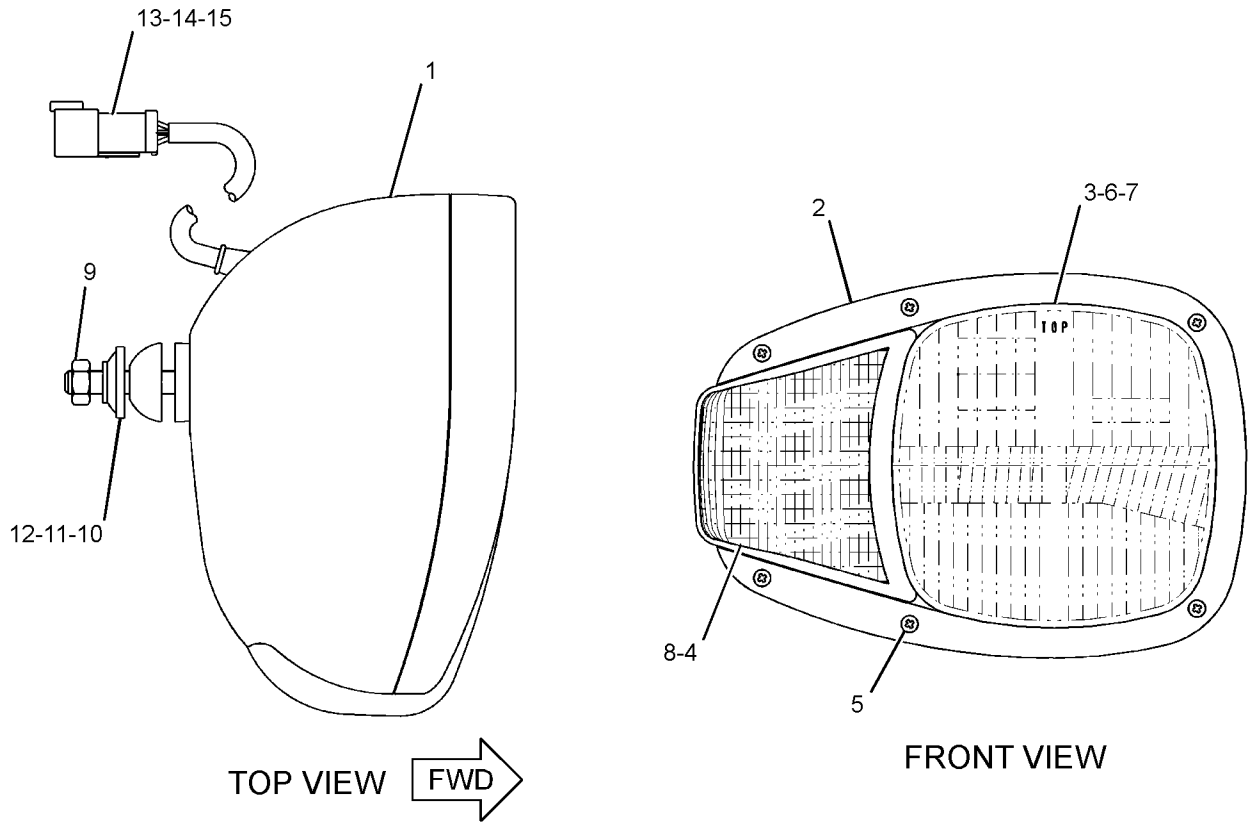

GRAPHIC #1 **<END>** g01313421

195-0190 LAMP GP-HEAD & SIGNAL

S/N: JAY1-UP
PART OF 258-4130 LIGHTING GP-ROADING
AN ATTACHMENT

SMCS-1429, 1430 **i02712951**

NOTE	REF NO	GRAPHIC REF	PART NUMBER	QTY	PART NAME 1 2 3 4 5 6 (PRODUCT LEVEL)	SEE PAGE
	1	1	**228-6053**	1	BODY AS	
	2	1	**228-6054**	1	BEZEL	
	3	1	**228-6051**	1	LENS AS (HEADLIGHT)	
	4	1	**228-6052**	1	LENS AS (TURN SIGNAL)	
	5	1	**228-6056**	6	SCREW (4-32X1.26-IN)	
	6	1	**9W-3324**	1	LAMP-HEAD (12-VOLT, 60/55-WATT)	
	7	1	**226-4560**	1	LAMP (12-VOLT, 21-WATT) (AMBER)	
	8	1	**226-4561**	1	LAMP (12-VOLT, 5-WATT) (CLEAR)	
M	9	1	**8T-0389**	1	LOCKNUT (M10X1.15-THD)	
	10	1	**100-3253**	1	SPACER (SPHERICAL)	
	11	1	**100-3254**	1	SPACER (SPHERICAL)	
	12	1	**100-3255**	1	WASHER (SPHERICAL)	
	13	1	**102-8805**	1	KIT-RECEPTACLE (6-PIN)	
					(INCLUDES RECEPTACLE AS & WEDGE)	
	14	1	**186-3735**	5	PIN-CONNECTOR (16-GA TO 18-GA)	
	15	1	**8T-8737**	1	PLUG-SEAL	

M-METRIC PART

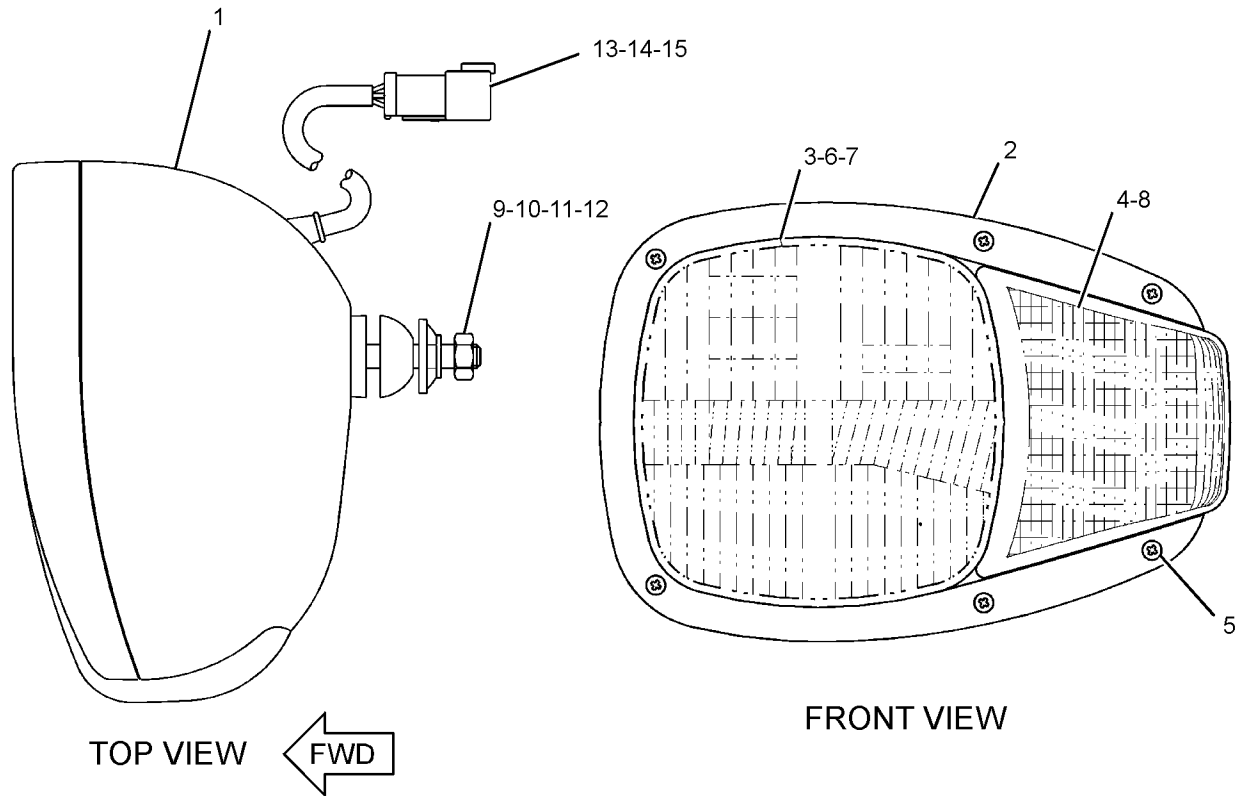

GRAPHIC #1 **<END>** g01313362

128-6985 LAMP GP-WARNING BEACON–

AMBER, MAGNETIC MOUNT, ROTATING

S/N: JAY1-UP

PART OF 258-3841 CONVERSION GP-ROADING, 258-4184 LIGHTING GP-WARNING BEACON AN ATTACHMENT

SMCS-1431 **i02712963**

NOTE	REF NO	GRAPHIC REF	PART NUMBER	QTY	PART NAME 1 2 3 4 5 6 (PRODUCT LEVEL)	SEE PAGE
	1	1	**9X-8121**	1	LENS (AMBER, WARNING BEACON)	
	2	1	**9X-8118**	1	LAMP (12-VOLT, 55-WATT, HID)	
	3	1	**9X-8139**	1	BELT-DRIVE (WARNING BEACON)	
	4	1	**9R-7958**	1	CORD AS	
	5	1	**9R-7942**	1	PLUG AS	

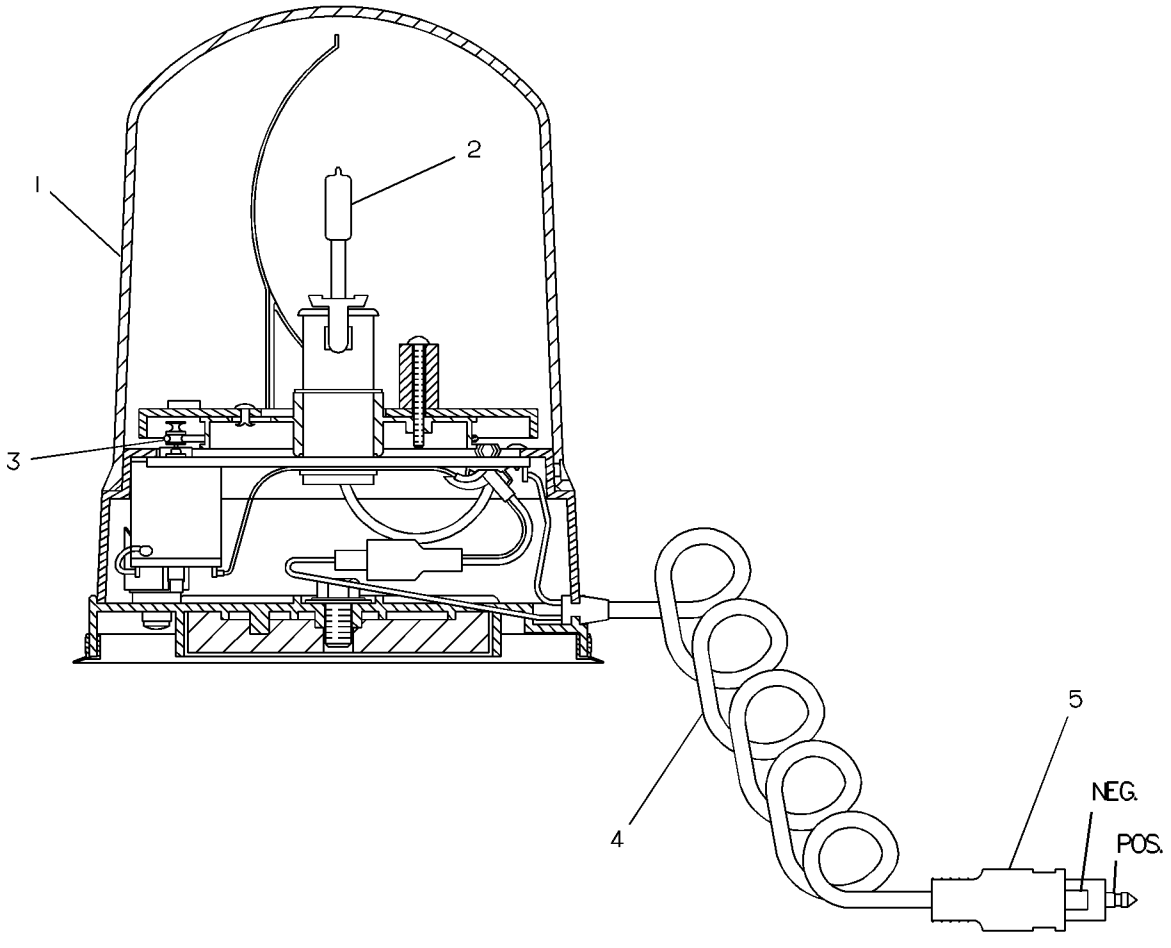

GRAPHIC #1 **<END>** g00130921

258-4164 LIGHTING GP-FLOOD

S/N: JAY1-UP

PART OF 258-4000 CAB AR-ENCLOSED ROPS

SMCS-1434 **i02623269**

NOTE	REF NO	GRAPHIC REF	PART NUMBER	QTY	PART NAME 1 2 3 4 5 6 (PRODUCT LEVEL)	SEE PAGE
Y	1	1	**234-4328**	2	LAMP GP-FLOOD (12-VOLT)	83
	2	1	**8T-4121**	4	WASHER-HARD (11X21X2.5-MM THK)	

Y-SEPARATE ILLUSTRATION

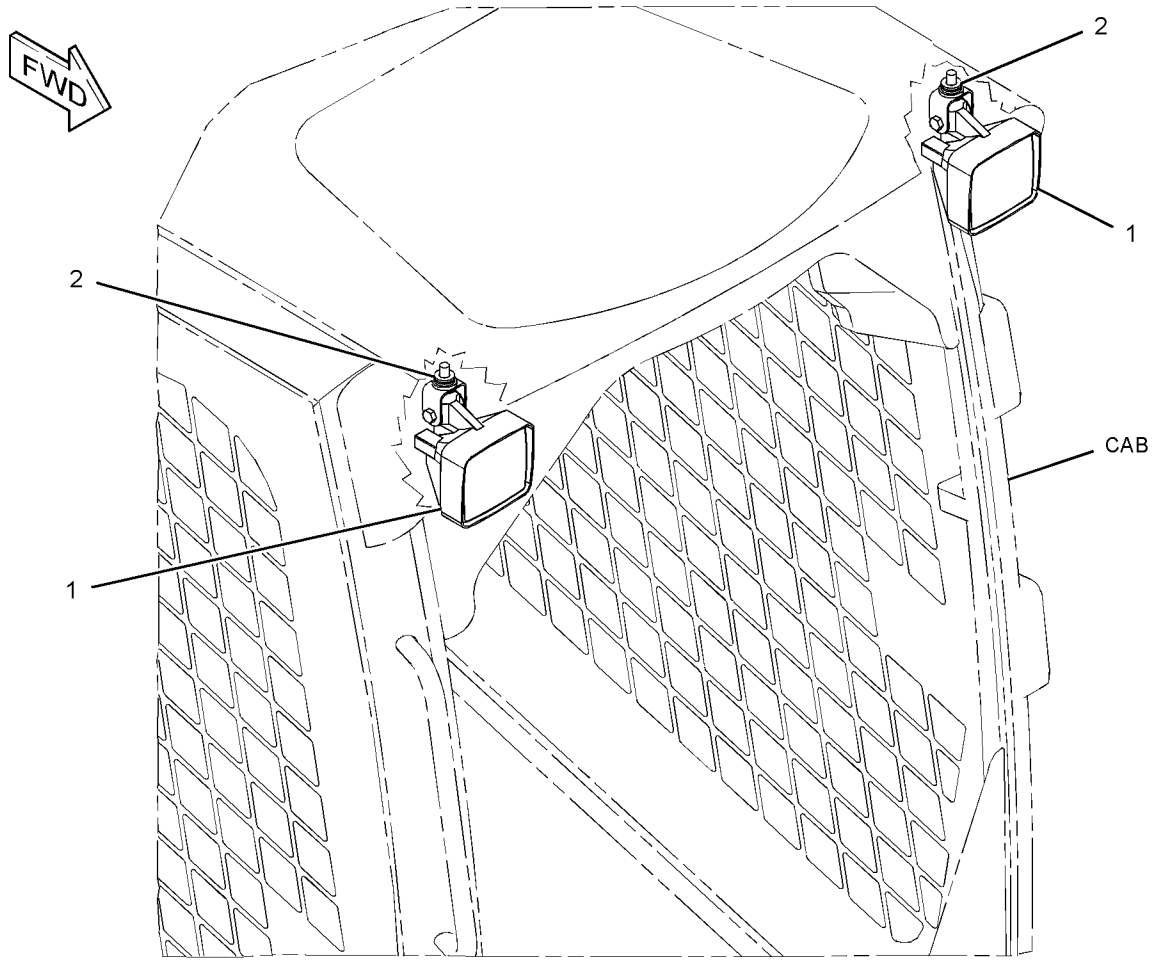

GRAPHIC #1 **<END>** g01316670

ELECTRICAL AND STARTING SYSTEM

258-4130 LIGHTING GP-ROADING

S/N: JAY1-UP
PART OF 258-3818, 258-3819 CONVERSION AR-MACHINE
AN ATTACHMENT

SMCS-1429 **i02615737**

NOTE	REF NO	GRAPHIC REF	PART NUMBER	QTY	PART NAME 1 2 3 4 5 6 (PRODUCT LEVEL)	SEE PAGE
	1	1	**7K-1181**	5	STRAP-CABLE	
	2	1	**9R-1499**	2	REFLECTOR	
	3	1	**146-9439**	1	RELAY AS (12-VOLT) (STOP LIGHT)	
	4	1	**178-3620**	6	STRAP	
Y	5	1	**195-0189**	1	LAMP GP-HEAD & SIGNAL (HIGH, LOW BEAM, RH)	84
Y	6	1	**195-0190**	1	LAMP GP-HEAD & SIGNAL (HIGH, LOW BEAM, LH)	85
	7	1	**242-9000**	1	FLASHER AS (12-VOLT) (12-VOLT) (STOP LIGHT)	
	8	1	**258-4131**	1	HARNESS AS-LIGHTING	
		1	**102-8801**	1	KIT-RECEPTACLE (12-PIN)	
					(INCLUDES RECEPTACLE AS & WEDGE)	
E		1	**125-7874**		TUBE-HEAT SHRINK (5.72-MM DIA) (15-CM)	
E		1	**125-7875**		TUBE-HEAT SHRINK (7.44-MM DIA) (15-CM)	
		1	**155-2255**	1	KIT-CONNECTING PLUG (12-PIN)	
		1	**155-2274**	1	KIT-CONNECTING PLUG (6-PIN)	
					(EACH PLUG KIT INCLUDES PLUG AS & WEDGE)	
	9	1	**258-4134**	1	FUSE AS (ROADING)	
	10	1	**263-5421**	1	SWITCH AS-ROCKER (ROADING)	
	11	1	**263-5422**	1	SWITCH AS-ROCKER (TURN SIGNAL)	
	12	1	**265-9543**	1	SWITCH AS-ROCKER (HAZARD)	
	13	1	**172-6490**	2	LAMP GP-SIGNAL (STOP, TAIL, TURN)	
	14	1	**3S-2093**	21	STRAP-CABLE	

E-ORDER BY THE CENTIMETER
Y-SEPARATE ILLUSTRATION

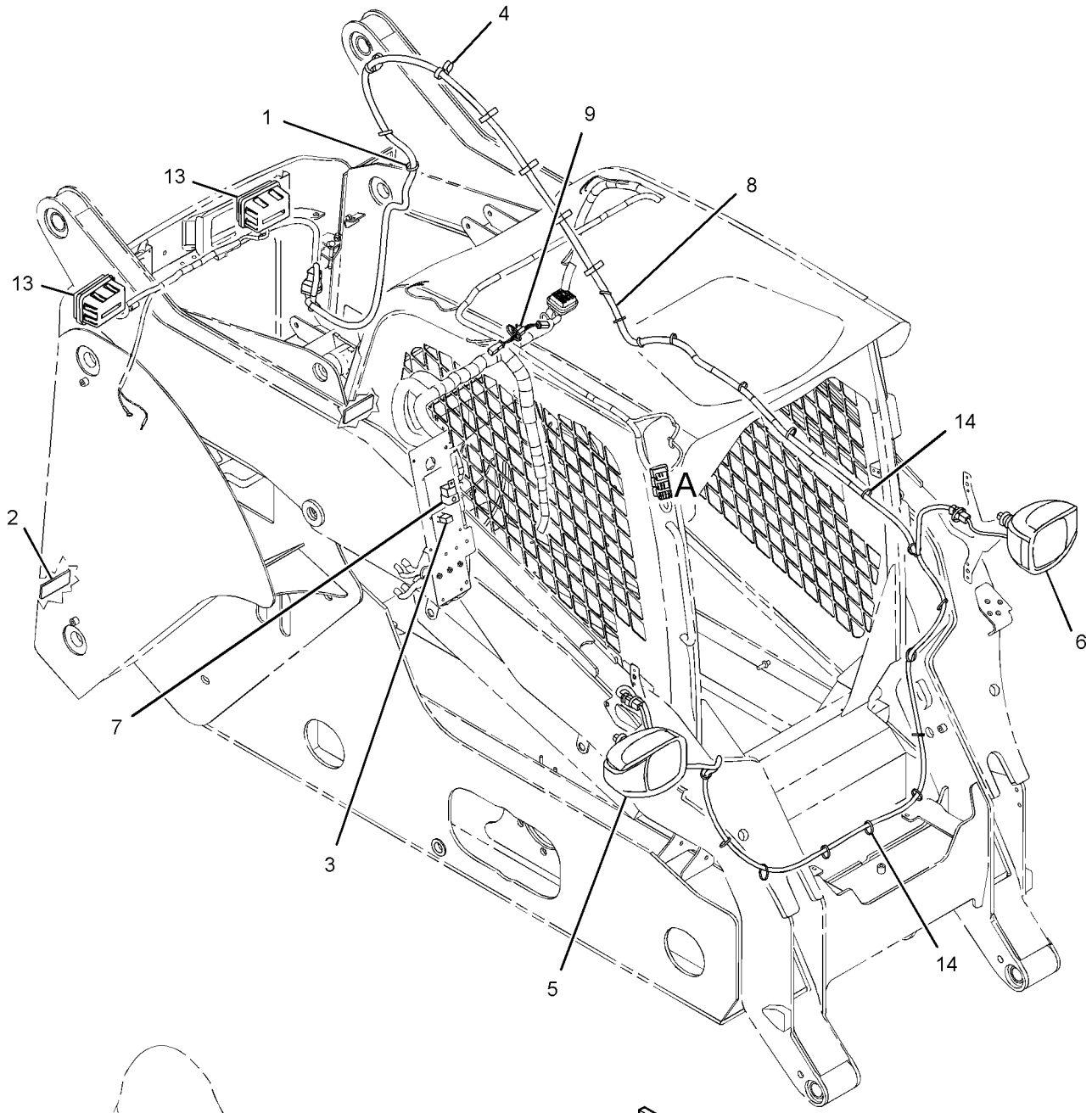

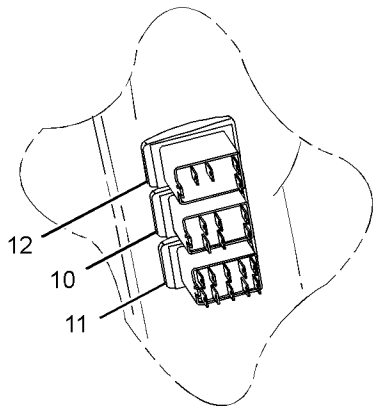

VIEW OF AREA A

GRAPHIC #1 **<END>** g01310738

258-4169 LIGHTING GP-STOP & TAIL

S/N: JAY1-UP
PART OF 258-3800, 258-3801 CONVERSION AR-ROADING AN ATTACHMENT

SMCS-1432 **i02637139**

NOTE	REF NO	GRAPHIC REF	PART NUMBER	QTY	PART NAME 1 2 3 4 5 6 (PRODUCT LEVEL)	SEE PAGE
	1	1	**9R-1499**	2	REFLECTOR	
	2	1	**258-0930**	2	LAMP GP-STOP & TAIL	

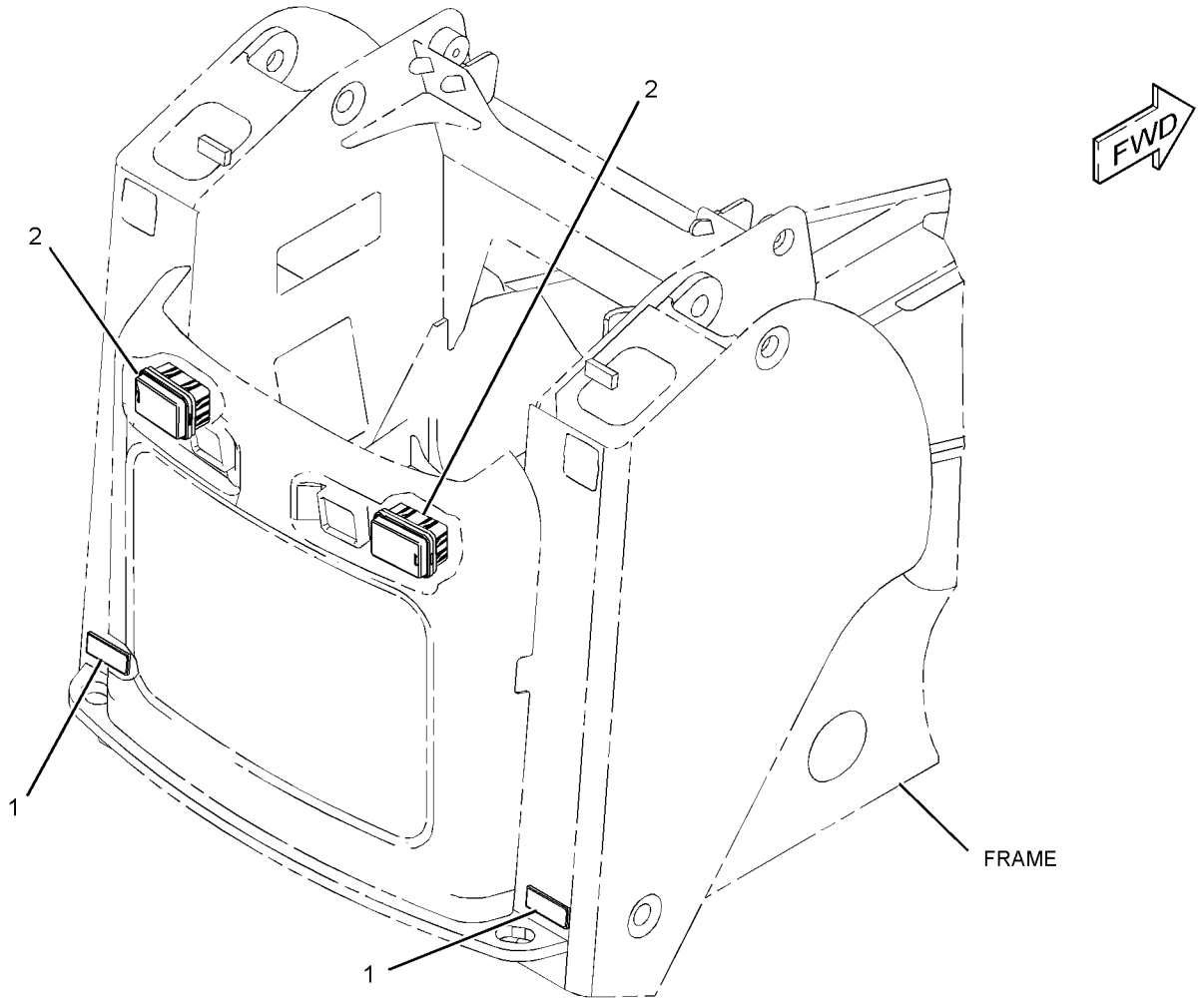

GRAPHIC #1 **<END>** g01325047

258-4184 LIGHTING GP-WARNING BEACON

S/N: JAY1-UP
AN ATTACHMENT

SMCS-1431 **i02615740**

NOTE	REF NO	GRAPHIC REF	PART NUMBER	QTY	PART NAME 1 2 3 4 5 6 (PRODUCT LEVEL)	SEE PAGE
Y	1	1	**128-6985**	1	LAMP GP-WARNING BEACON (12-VOLT, AMBER)	86
	2	1	**263-5423**	1	SWITCH AS-ROCKER (WARNING BEACON)	

Y-SEPARATE ILLUSTRATION

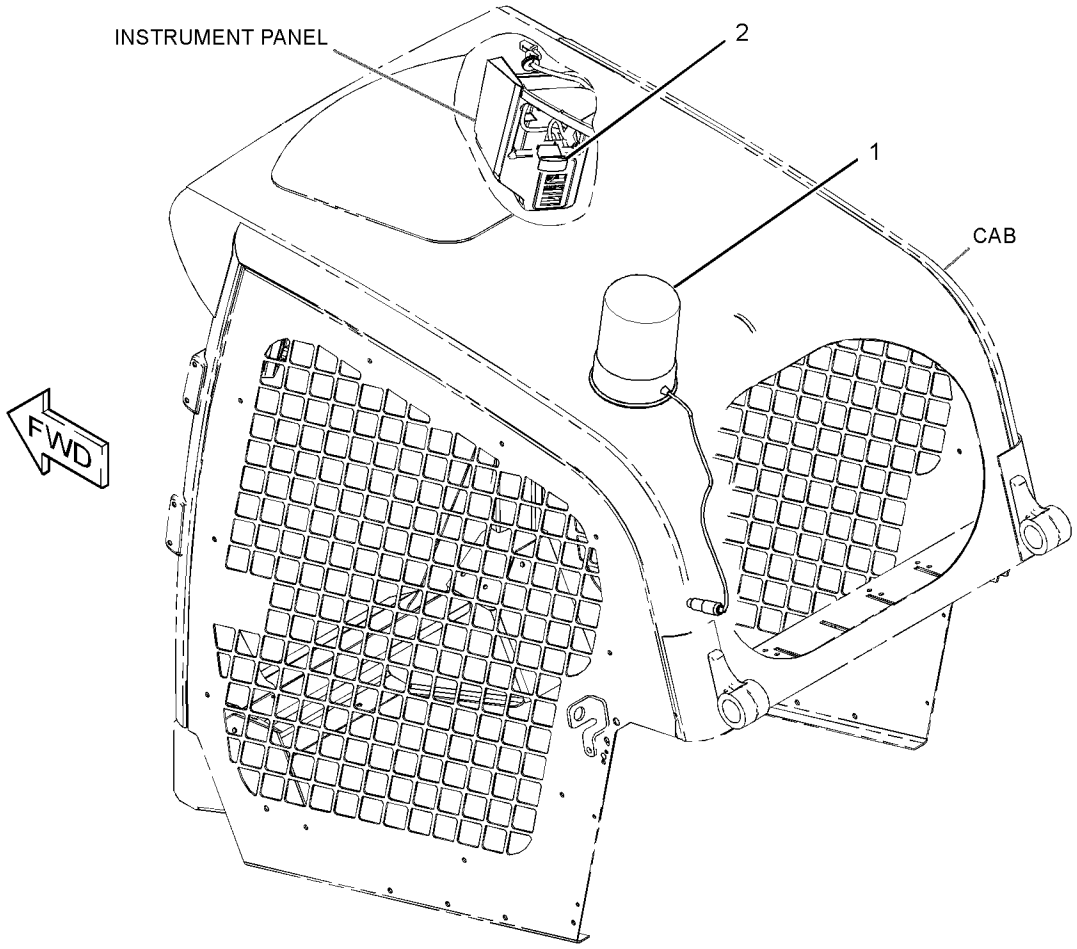

GRAPHIC #1 **<END>** g01311626

258-4135 RELAY AS

S/N: JAY1-UP

PART OF 258-4100 WIRING GP-CAB

SMCS-1422, 4493 **i02645967**

NOTE	REF NO	GRAPHIC REF	PART NUMBER	QTY	PART NAME 1 2 3 4 5 6 (PRODUCT LEVEL)	SEE PAGE
M	1	1	**5C-2890**	2	NUT (M6X1-THD)	
	2	1	**8T-4205**	2	WASHER-HARD (7.2X14.5X2-MM THK)	
	3	1	**1H-3244**	2	LOCKWASHER	
M	4	1	**5C-7261**	1	NUT (M8X1.25-THD)	
	5	1	**8T-4224**	1	WASHER-HARD (8.8X16X2-MM THK)	
	6	1	**267-5213**	1	COVER	
	7	1	**267-5211**	1	SEAL	
	8	1	**267-2680**	1	FUSE (20-AMPERE)	
	9	1	**267-2701**	1	FUSE (60-AMPERE)	

M-METRIC PART

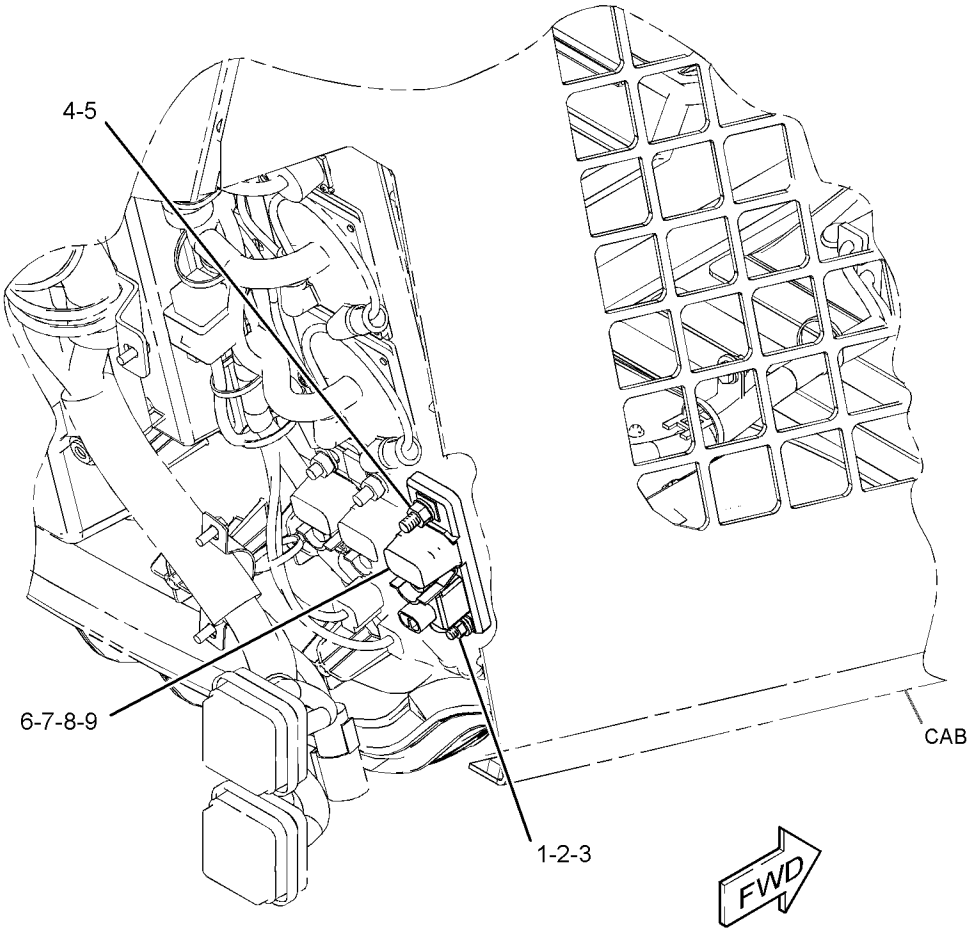

GRAPHIC #1 **<END>** g01328212

160-2443 SENSOR GP-POSITION

S/N: JAY1-UP

PART OF 258-4043 PEDAL GP-GOVERNOR

SMCS-1913 **i02249656**

NOTE	REF NO	GRAPHIC REF	PART NUMBER	QTY	PART NAME 1 2 3 4 5 6 (PRODUCT LEVEL)	SEE PAGE
	1	1	**102-8803**	1	KIT-RECEPTACLE (3-PIN)	
					(INCLUDES RECEPTACLE AS & WEDGE)	
	2	1	**8T-8729**	3	PIN-CONNECTOR	
	3	1	**3E-3371**	1	WEDGE-RECEPTACLE LOCK (3-PIN)	

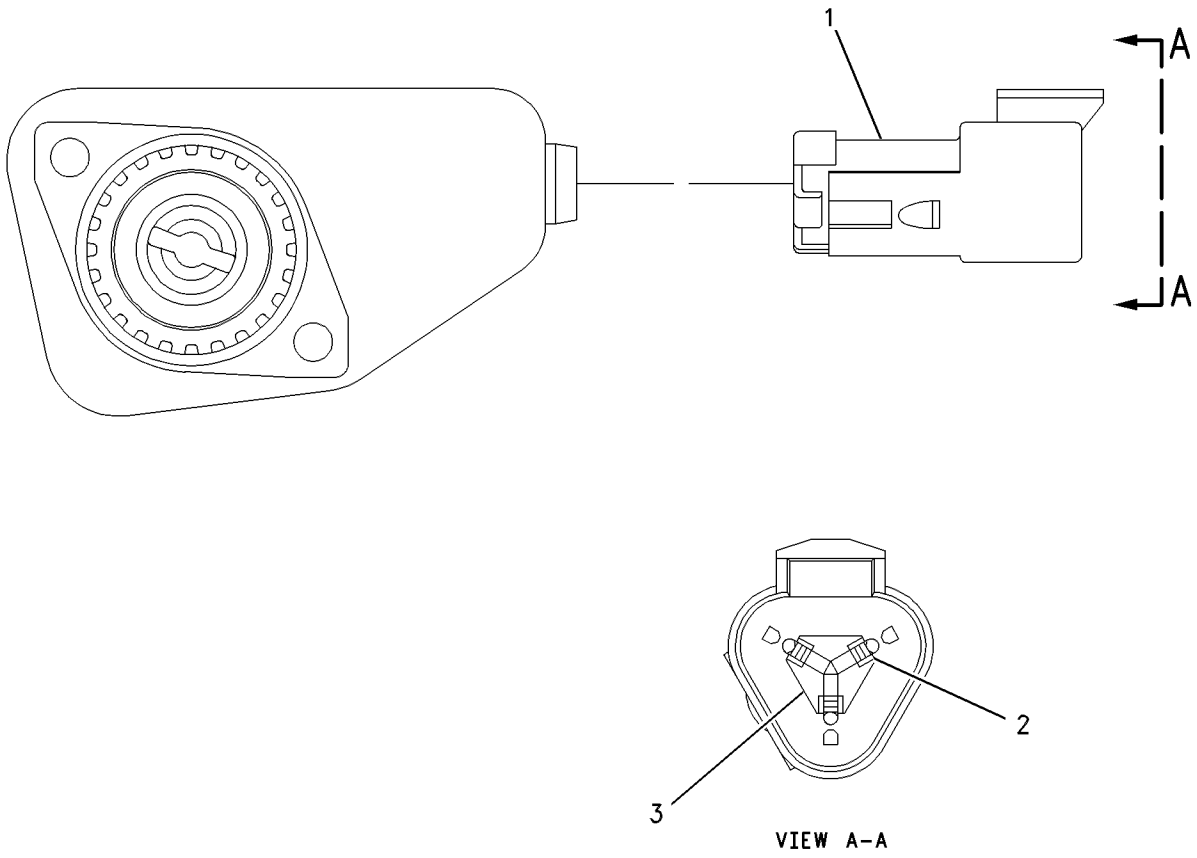

GRAPHIC #1 **<END>** g00637818

262-3764 SENSOR GP-SPEED

S/N: JAY1-UP
PART OF 258-2408, 258-2409 MOTOR & MTG GP-HYDROSTATIC
AN ATTACHMENT

SMCS-4803 **i02635720**

NOTE	REF NO	GRAPHIC REF	PART NUMBER	QTY	PART NAME 1 2 3 4 5 6 (PRODUCT LEVEL)	SEE PAGE
	1	1	**102-8804**	1	KIT-RECEPTACLE (4-PIN)	
					(INCLUDES RECEPTACLE AS & WEDGE)	
	2	1	**9X-3401**	4	PIN-CONNECTOR (16-GA TO 18-GA)	
E	3	1	**9X-1813**		SLEEVE (28-CM)	
	4	1	**9X-7408**	1	SEAL-O-RING	
B	5	1	**171-5349**	1	STRAP-MARKER	

B-USE AS REQUIRED
E-ORDER BY THE CENTIMETER

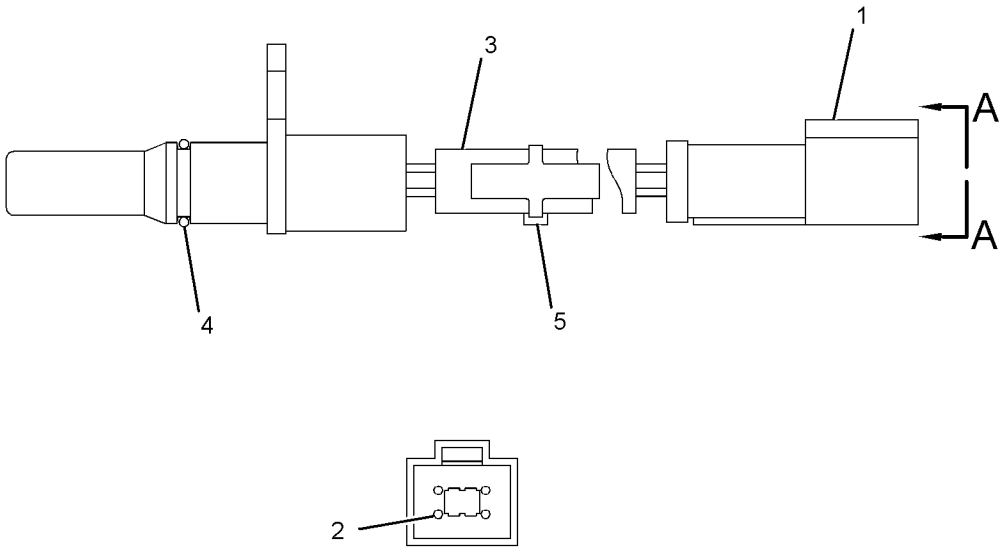

VIEW A-A

GRAPHIC #1 **<END>** g01326248

238-8277 SENSOR GP-TEMP & PRESS–ENGINE

S/N: CJS1-UP
PART OF 262-7288 ENGINE AR-PRIMARY
AN ATTACHMENT

SMCS-1906, 1924 **i02525089**

NOTE	REF NO	GRAPHIC REF	PART NUMBER	QTY	PART NAME 1 2 3 4 5 6 (PRODUCT LEVEL)	SEE PAGE
	1	1	**292-6568**	1	SWITCH-PRESSURE (ENGINE OIL)	
	2	1	**238-8274**	1	SWITCH-TEMPERATURE (ENGINE COOLANT)	

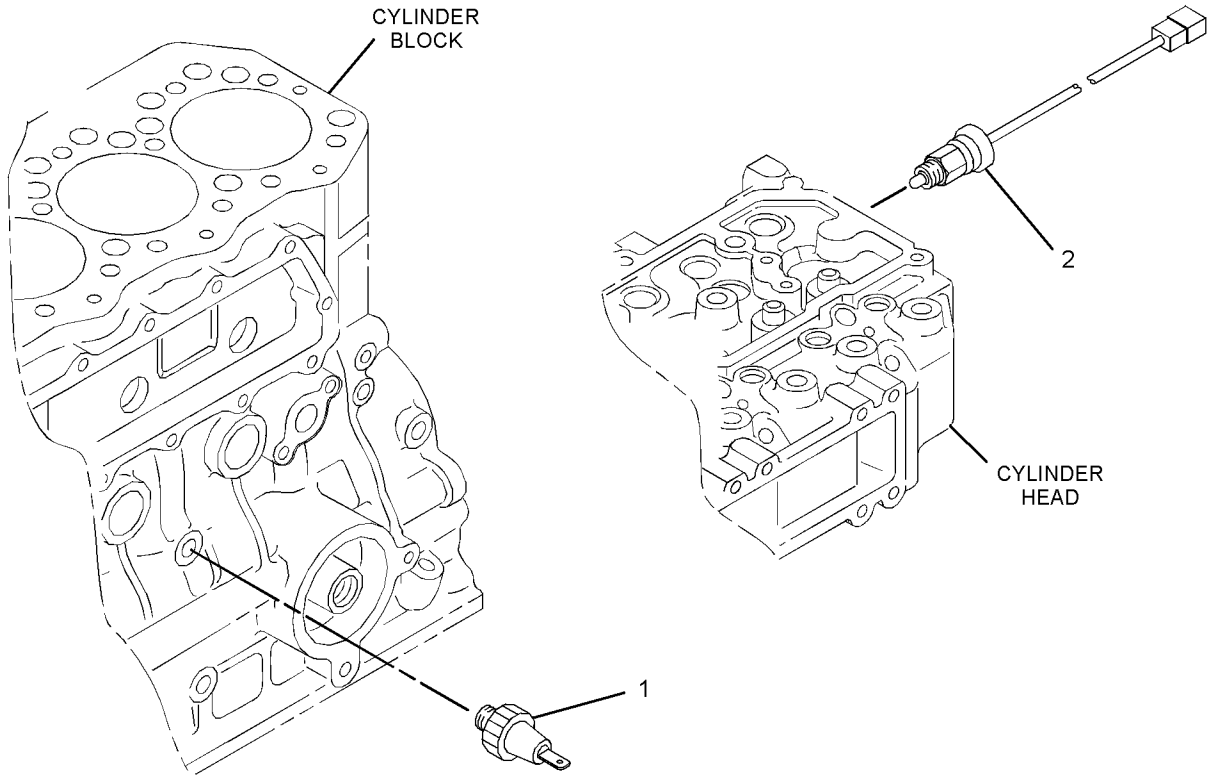

GRAPHIC #1 **<END>** g01341914

ELECTRICAL AND STARTING SYSTEM

258-4103 SERVICE GP-MACHINE

S/N: JAY1-UP

PART OF 258-4100 WIRING GP-CAB

SMCS-7610, 7631 **i02623266**

NOTE	PART NUMBER	QTY	PART NAME 1 2 3 4 5 6 (PRODUCT LEVEL)	SEE PAGE
	286-2470	1	SOFTWARE GP-MACHINE	
			—OR—	
R	**262-1408**	1	CONTROL GP-UNPROGRAMMED (MACHINE)	
			—OR—	
	286-2471	1	SERVICE GP-MACHINE	
			(OPTIONAL SERVICE REPLACEMENT)	
			(INCLUDES CONTROL GP & SOFTWARE)	

R-REMFG PART MAY BE AVAILABLE

<END>

143-0539 STARTING MOTOR GP-ELECTRIC–12-VOLT*R

S/N: CJS1-UP

PART OF 287-6181 STARTING MOTOR GP-ELECTRIC

AN ATTACHMENT

SMCS-1453 **i02712964**

NOTE	REF NO	GRAPHIC REF	PART NUMBER	QTY	PART NAME 1 2 3 4 5 6 (PRODUCT LEVEL)	SEE PAGE
	1	1	**8C-9778**	1	PLUNGER AS	
	2	1	**8C-9783**	1	GASKET	
	3	1	**2P-8104**	1	BEARING	
	4	1	**7T-6092**	1	HOLDER AS-BRUSH	
M	5	1	**8T-4133**	2	NUT (M10X1.5-THD)	
	6	1	**7T-6088**	1	BEARING AS	
	7	1	**7T-6087**	1	WASHER	
	8	1	**7T-6093**	1	CLUTCH AS	
	9	1	**8J-4455**	1	BALL	
	10	1	**7T-6090**	1	SPRING	
	11	1	**8T-4121**	2	WASHER-HARD (11X21X2.5-MM THK)	
	12	1	**3E-5153**	1	COVER-STARTING MOTOR	
M	13	1	**9X-2036**	1	SCREW-PAN HEAD	
	14	1	**8F-1434**	1	LOCKWASHER	
	15	1	**100-4113**	1	SWITCH AS (STARTING MOTOR)(12-VOLT)	
	16	1	**100-4119**	1	ARMATURE AS	
	17	1	**100-4118**	1	CASE AS-STARTING MOTOR	
	18	1	**100-4115**	1	HOUSING-STARTING MOTOR	
	19	1	**143-1344**	1	FRAME-STARTER	
	20	1	**100-3685**	1	CAP	
	21	1	**3E-5154**	1	BUSHING-STARTING MOTOR	
					AVAILABLE REPAIR KIT(S):	
			7T-6099	1	KIT-GEAR (STARTING MOTOR)	
					(INCLUDES RETAINER, PINION & ROLLERS)	
			146-6729	1	KIT-HARDWARE (STARTING MOTOR)	
					(INCLUDES BOLTS, SCREWS, SCREW ASSEMBLIES & PLATE)	
			100-4112	1	KIT-CONTACT (STARTING MOTOR)	
					(INCLUDES NUT, WASHERS, SEAL, BUSHINGS, PLATE & BOLT)	

M-METRIC PART

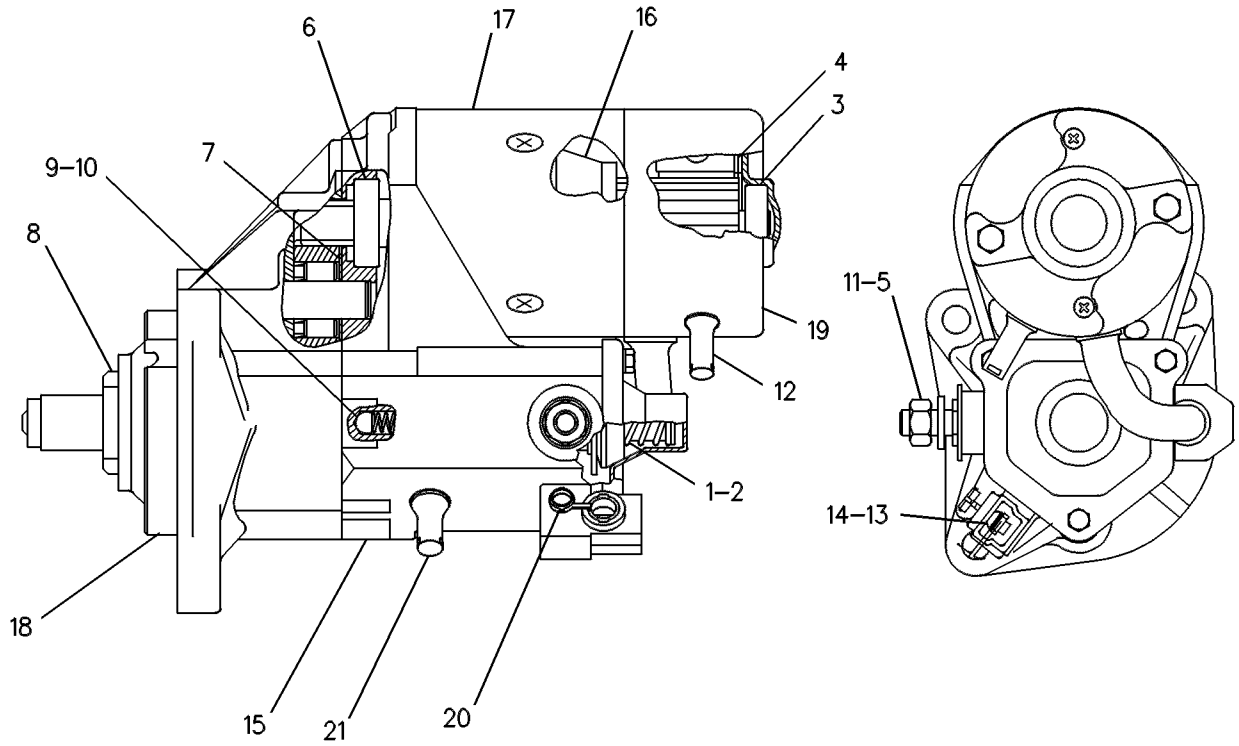

GRAPHIC #1 **<END>** g00131126

287-6181 STARTING MOTOR GP-ELECTRIC

S/N: CJS1-UP
PART OF 262-7288 ENGINE AR-PRIMARY
AN ATTACHMENT

SMCS-1453 **i02568571**

NOTE	REF NO	GRAPHIC REF	PART NUMBER	QTY	PART NAME 1 2 3 4 5 6 (PRODUCT LEVEL)	SEE PAGE
YR	1	1	**143-0539**	1	STARTING MOTOR GP-ELECTRIC	97

R-REMFG PART MAY BE AVAILABLE
Y-SEPARATE ILLUSTRATION

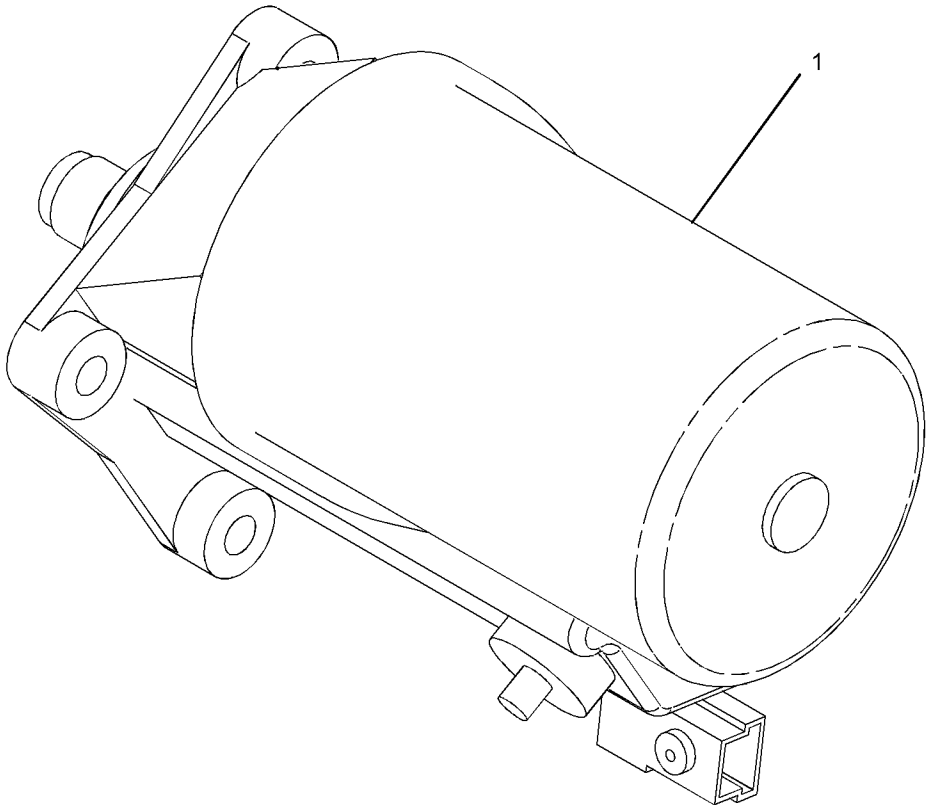

GRAPHIC #1 **<END>** g01345353

258-4146 WIRING GP-AIR CONDITIONER

S/N: JAY1-UP
PART OF 258-4250 HEATER AR-CAB
AN ATTACHMENT

SMCS-1408, 7320 **i02628567**

NOTE	REF NO	GRAPHIC REF	PART NUMBER	QTY	PART NAME 1 2 3 4 5 6 (PRODUCT LEVEL)	SEE PAGE
	1	1	**206-2423**	3	SADDLE	
	2	1	**258-4147**	1	HARNESS AS-HEATER & AIR COND	
		1	**102-8804**	1	KIT-RECEPTACLE (4-PIN)	
		1	**102-8805**	1	KIT-RECEPTACLE (6-PIN)	
					(EACH RECEPTACLE KIT INCLUDES RECEPTACLE AS & WEDGE)	
		1	**8L-8413**	5	STRAP-CABLE	
		1	**9X-1054**	1	PLUG AS-CONNECTOR (4-PIN)	
E		1	**119-3662**		TUBE-HEAT SHRINK (10.85-MM DIA) (7-CM)	
E		1	**125-7874**		TUBE-HEAT SHRINK (5.72-MM DIA) (20-CM)	
		1	**155-2255**	1	KIT-CONNECTING PLUG (12-PIN)	
		1	**155-2265**	1	KIT-CONNECTING PLUG (8-PIN)	
		1	**155-2270**	3	KIT-CONNECTING PLUG (2-PIN)	
					(EACH PLUG KIT INCLUDES PLUG AS, WEDGE & INTERFACE SEAL)	
	3	1	**3S-2093**	18	STRAP-CABLE	

E-ORDER BY THE CENTIMETER

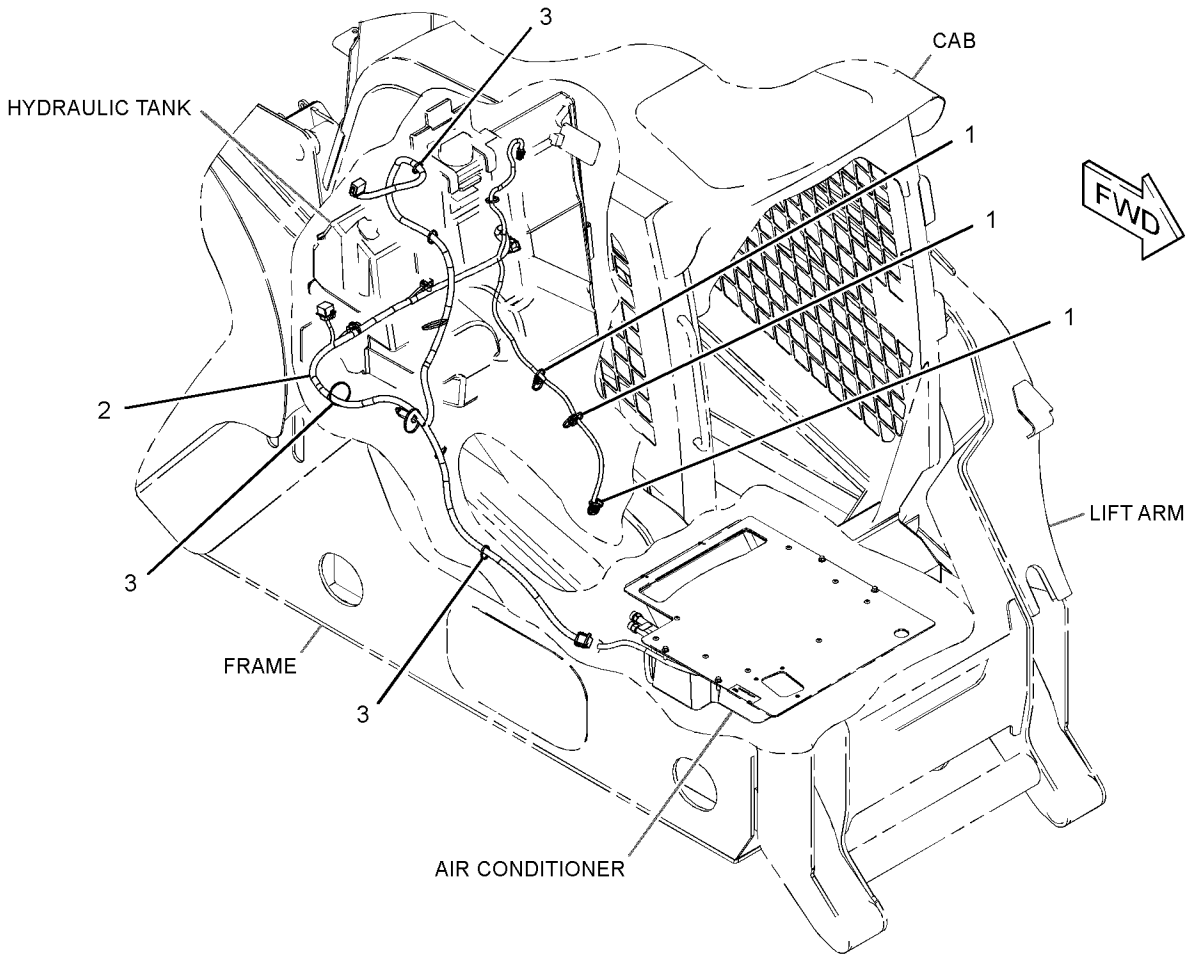

GRAPHIC #1 **<END>** g01320889

258-4100 WIRING GP-CAB

S/N: JAY1-UP

PART OF 258-4000 CAB AR-ENCLOSED ROPS

SMCS-1408, 7301 **i02712970**

NOTE	REF NO	GRAPHIC REF	PART NUMBER	QTY	PART NAME 1 2 3 4 5 6 (PRODUCT LEVEL)	SEE PAGE
	1	1	**6I-1418**	4	SPACER (8.2X12.7X28.7-MM THK)	
	2	1	**7G-1060**	1	STRAP AS-GROUND	
	3	1	**7K-1181**	14	STRAP-CABLE	
	4	1	**8T-9655**	8	MOUNT-ISOLATION	
	5	1	**100-5805**	1	CAP-RECEPTACLE (3-PIN)	
	6	1	**126-1774**	2	COVER-CONNECTOR (ENDBALL-CONNECTOR)	
	7	1	**146-9439**	3	RELAY AS (12-VOLT)	
	8	1	**246-9371**	1	RELAY AS (SHELL)	
	9	1	**258-3727**	8	SCREW-TRUSS HEAD (NO 12X17.46-MM)	
	10	1	**258-4102**	1	HARNESS AS-CAB	
		1	**102-8802**	1	KIT-RECEPTACLE (2-PIN)	
					(INCLUDES RECEPTACLE AS & WEDGE)	
		1	**8L-8413**	92	STRAP-CABLE	
		1	**8T-8799**	6	BOOT	
		1	**113-8490**	7	FUSE (10-AMPERE)	
		1	**113-8491**	10	FUSE (15-AMPERE)	
		1	**113-8492**	3	FUSE (20-AMPERE)	
E		1	**119-3662**		TUBE-HEAT SHRINK (10.85-MM DIA) (33-CM)	
E		1	**125-7874**		TUBE-HEAT SHRINK (5.72-MM DIA) (50-CM)	
E		1	**125-7875**		TUBE-HEAT SHRINK (7.44-MM DIA) (30-CM)	
E		1	**125-7876**		TUBE-HEAT SHRINK (17.78-MM DIA) (6-CM)	
		1	**127-5484**	1	RECEPTACLE AS-CONNECTOR (1-PIN)	
		1	**134-2540**	1	RECEPTACLE AS (120-OHM)	
B		1	**141-8061**		TAPE	
		1	**147-1445**	1	PLUG AS-CONNECTOR (70-PIN)	
		1	**159-9322**	1	SEAL-O-RING	
		1	**147-1446**	1	PLUG AS-CONNECTOR (70-PIN)	
		1	**159-9322**	1	SEAL-O-RING	
		1	**155-2255**	1	KIT-CONNECTING PLUG (12-PIN)	
		1	**155-2265**	1	KIT-CONNECTING PLUG (8-PIN)	
		1	**155-2260**	1	KIT-CONNECTING PLUG (3-PIN)	
		1	**155-2270**	1	KIT-CONNECTING PLUG (2-PIN)	
					(EACH PLUG KIT INCLUDES PLUG AS, WEDGE & INTERFACE SEAL)	
		1	**230-4011**	2	PLUG AS-CONNECTOR (2-PIN)	
E		1	**283-0632**		CONDUIT (100-CM)	
E		1	**283-4198**		CONDUIT (50-CM)	
Y	11	1	*258-4103*	1	SERVICE GP-MACHINE	96
Y	12	1	**258-4135**	2	RELAY AS (MAIN POWER)	92
	13	1	**258-4136**	1	FUSE AS (MAIN POWER)	
		1	**267-2680**	2	FUSE (20-AMPERE)	
		1	**267-5211**	1	SEAL (DUAL FUSE HOLDER)	
		1	**267-5213**	1	COVER	
	14	1	**258-4138**	1	FILM (POWER DISTRIBUTION)	
	15	1	**258-4143**	1	BAR-BUS	
	16	1	**258-4150**	1	PLATE AS	
	17	1	**258-4154**	1	BRACKET	
	18	1	**258-4155**	1	BRACKET	
	19	1	**258-4160**	1	HARNESS AS-OPERATOR CONTROLS	
		1	**8L-8413**	14	STRAP-CABLE	
		1	**102-8805**	1	KIT-RECEPTACLE (6-PIN)	
					(INCLUDES RECEPTACLE AS & WEDGE)	
E		1	**119-3662**		TUBE-HEAT SHRINK (10.85-MM DIA) (7-CM)	
E		1	**125-7874**		TUBE-HEAT SHRINK (5.72-MM DIA) (10-CM)	
		1	**155-2255**	2	KIT-CONNECTING PLUG (12-PIN)	
		1	**155-2260**	1	KIT-CONNECTING PLUG (3-PIN)	

258-4100 **WIRING GP-CAB** ***(contd.)*** **i02712970**

NOTE	REF NO	GRAPHIC REF	PART NUMBER	QTY	PART NAME 1 2 3 4 5 6 (PRODUCT LEVEL)	SEE PAGE
		1	**155-2271**	1	KIT-CONNECTING PLUG (4-PIN)	
		1	**155-2274**	3	KIT-CONNECTING PLUG (6-PIN)	
					(EACH PLUG KIT INCLUDES PLUG AS, WEDGE & INTERFACE SEAL)	
E		1	**211-5358**		CONDUIT-FLEXIBLE (19-CM)	
	20	1	**258-4178**	1	FLANGE-MOUNTING	
	21	1	**258-4196**	2	WIRE AS	
	22	1	**156-6175**	2	CLIP	
	23	1	**102-8806**	1	KIT-RECEPTACLE (8-PIN)	
	24	1	**102-8801**	1	KIT-RECEPTACLE (12-PIN)	
					(EACH RECEPTACLE KIT INCLUDES RECEPTACLE AS & WEDGE)	
	25	1	**3S-2093**	29	STRAP-CABLE	
	26	1	**4P-7581**	2	CLIP	
	27	1	**4P-8134**	2	CLIP	
M	28	1	**5C-2890**	12	NUT (M6X1-THD)	
M	29	1	**5C-7261**	4	NUT (M8X1.25-THD)	
M	30	1	**5C-9553**	6	BOLT (M6X1X16-MM)	
	31	1	**5P-4115**	2	WASHER-HARD (7.2X19X2-MM THK)	
	32	1	**5P-7162**	8	SCREW-MACHINE (10-32X0.5-IN)	
	33	1	**6V-5834**	4	SCREW-HEAD (10-14X0.75-IN)	
M	34	1	**7X-0818**	4	BOLT (M8X1.25X45-MM)	
M	35	1	**7X-2534**	3	BOLT (M6X1X50-MM)	
	36	1	**8C-8558**	2	SCREW-LOCK	
	37	1	**8T-0328**	4	WASHER-HARD (5.5X10X1-MM THK)	
	38	1	**8T-4205**	18	WASHER-HARD (7.2X14.5X2-MM THK)	
	39	1	**8T-4224**	6	WASHER-HARD (8.8X16X2-MM THK)	
	40	1	**8T-8737**	20	PLUG-SEAL	

B-USE AS REQUIRED
E-ORDER BY THE CENTIMETER
M-METRIC PART
Y-SEPARATE ILLUSTRATION

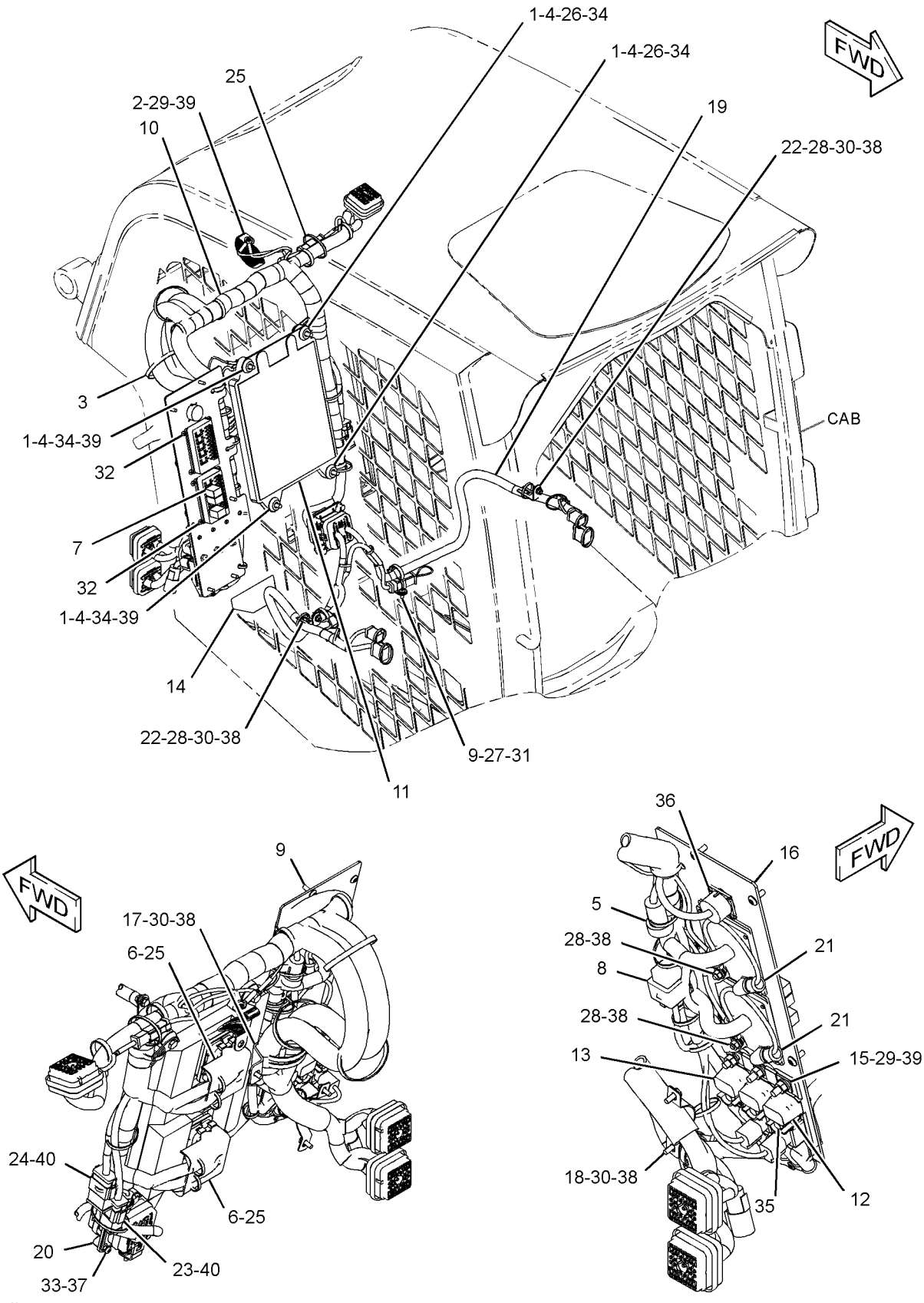

GRAPHIC #1 **<END>** g01323561

258-4190 WIRING GP-COUPLER

S/N: JAY1-UP
PART OF 258-2791 COUPLER AR-QUICK
AN ATTACHMENT

SMCS-1408 **i02646006**

NOTE	REF NO	GRAPHIC REF	PART NUMBER	QTY	PART NAME 1 2 3 4 5 6 (PRODUCT LEVEL)	SEE PAGE
B	1	1	**7K-1181**	1	STRAP-CABLE	
	2	1	**178-3620**	6	STRAP (DUAL CLAMP)	
	3	1	**258-4191**	1	HARNESS AS-WORK TOOL	
		1	**102-8803**	1	KIT-RECEPTACLE (3-PIN)	
					(INCLUDES RECEPTACLE AS & WEDGE)	
		1	**8L-8413**	3	STRAP-CABLE	
E		1	**125-7874**		TUBE-HEAT SHRINK (5.72-MM DIA) (5-CM)	
		1	**155-2270**	2	KIT-CONNECTING PLUG (2-PIN)	
					(EACH INCLUDES PLUG AS, WEDGE & INTERFACE SEAL)	
	4	1	**265-9513**	1	SWITCH AS-ROCKER (HYDRAULIC QUICK COUPLER)	
B	5	1	**3S-2093**	13	STRAP-CABLE	

B-USE AS REQUIRED
E-ORDER BY THE CENTIMETER

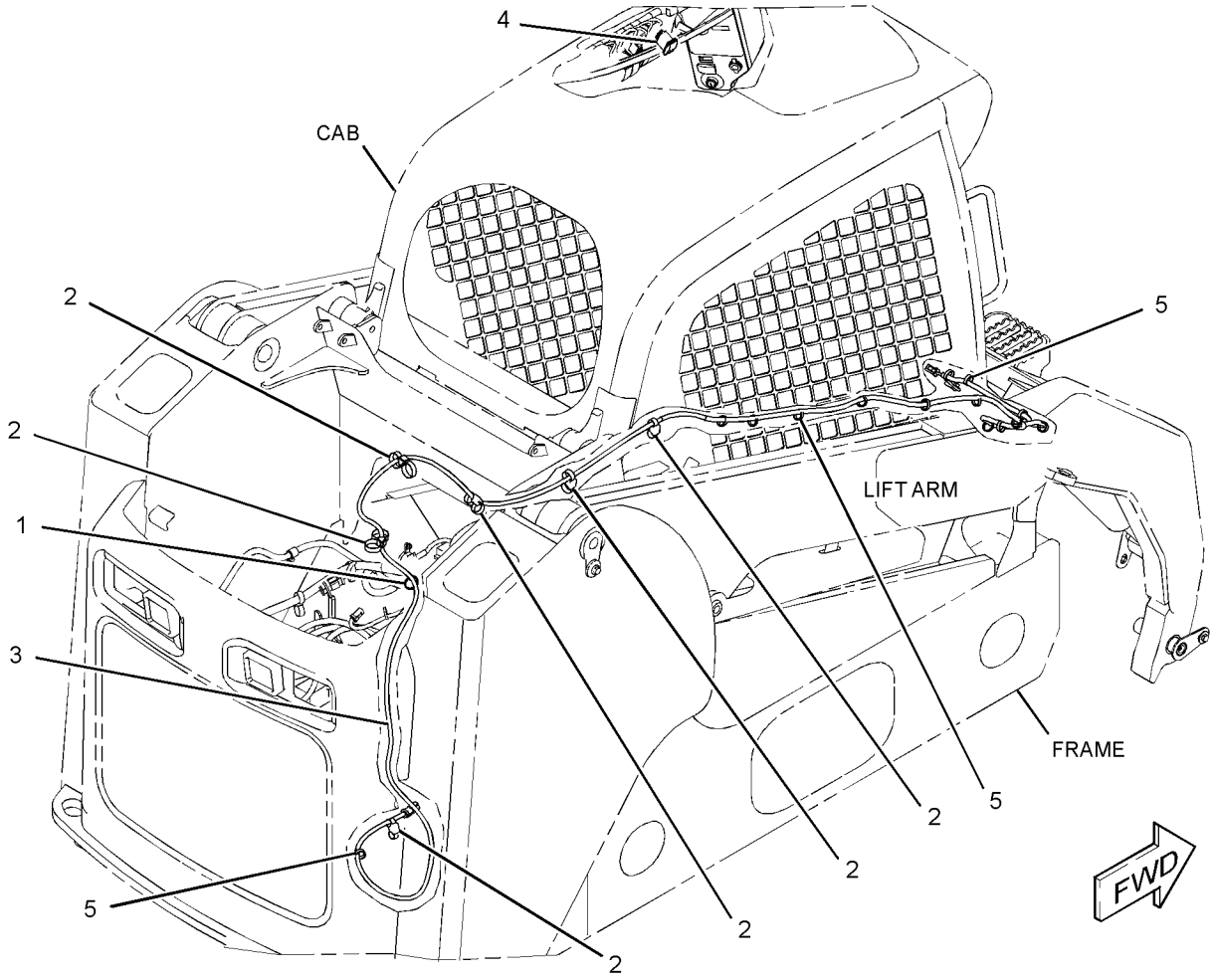

GRAPHIC #1 **<END>** g01329239

258-4115 WIRING GP-ENGINE

S/N: JAY1-UP

PART OF 258-2445 INSTALLATION AR-ENGINE

SMCS-1000, 1408, 1420 **i02711676**

NOTE	REF NO	GRAPHIC REF	PART NUMBER	QTY	PART NAME 1 2 3 4 5 6 (PRODUCT LEVEL)	SEE PAGE
	1	1	**191-8303**	1	SENSOR GP-SPEED (ENGINE)	
		1	**137-6645**	1	PAD	
	2	1	**238-0112**	1	SENSOR GP-TEMPERATURE (ENGINE COOLANT)	
	3	1	**258-4116**	1	HARNESS AS-ENGINE	
E		1	**119-3662**		TUBE-HEAT SHRINK (10.85-MM DIA) (13-CM)	
E		1	**125-7874**		TUBE-HEAT SHRINK (5.72-MM DIA) (10-CM)	
E		1	**125-7875**		TUBE-HEAT SHRINK (7.44-MM DIA) (5-CM)	
		1	**9X-1054**	2	PLUG AS-CONNECTOR (4-PIN)	
		1	**230-4011**	1	PLUG AS-CONNECTOR (2-PIN)	
		1	**176-1477**	1	PLUG AS	
		1	**155-2270**	8	KIT-CONNECTING PLUG (2-PIN)	
		1	**155-2271**	2	KIT-CONNECTING PLUG (4-PIN)	
					(EACH PLUG KIT INCLUDES PLUG AS, INTERFACE SEAL & WEDGE)	
		1	**8L-8413**	14	STRAP-CABLE	
		1	**8T-8799**	1	BOOT	
		1	**107-3134**	1	HOUSING-CONNECTOR	
		1	**176-1522**	2	SEAL	
	4	1	**115-1615**	2	RELAY AS (12-VOLT) (COLD START)	
	5	1	**117-1385**	1	SEAL-O-RING	
	6	1	**132-5789**	1	CLIP (LADDER)	
B	7	1	**102-8802**	2	KIT-RECEPTACLE (2-PIN)	
					(EACH INCLUDES RECEPTACLE AS & WEDGE)	
	8	1	**3S-2093**	10	STRAP-CABLE	
	9	1	**4P-7428**	1	CLIP (LADDER)	
	10	1	**4P-7429**	1	CLIP (LADDER)	
	11	1	**4P-7581**	3	CLIP (LADDER)	
	12	1	**4P-8134**	4	CLIP	
M	13	1	**6V-7357**	2	BOLT (M6X1X25-MM)	
	14	1	**6V-9028**	1	SEAL-O-RING	
M	15	1	**7X-2548**	1	BOLT (M12X1.75X16-MM)	
M	16	1	**8T-4200**	2	BOLT (M8X1.25X16-MM)	
	17	1	**8T-4205**	1	WASHER-HARD (7.2X14.5X2-MM THK)	
	18	1	**8T-4224**	1	WASHER-HARD (8.8X16X2-MM THK)	
B	19	1	**8T-8737**	4	PLUG-SEAL	
	20	1	**7K-1181**	3	STRAP-CABLE	
	21	1	**5P-4116**	3	WASHER-HARD (8.8X20.5X2-MM THK)	
M	22	1	**8T-4908**	1	BOLT (M8X1.25X25-MM)	
M	23	1	**5C-7261**	1	NUT (M8X1.25-THD)	

B-USE AS REQUIRED
E-ORDER BY THE CENTIMETER
M-METRIC PART

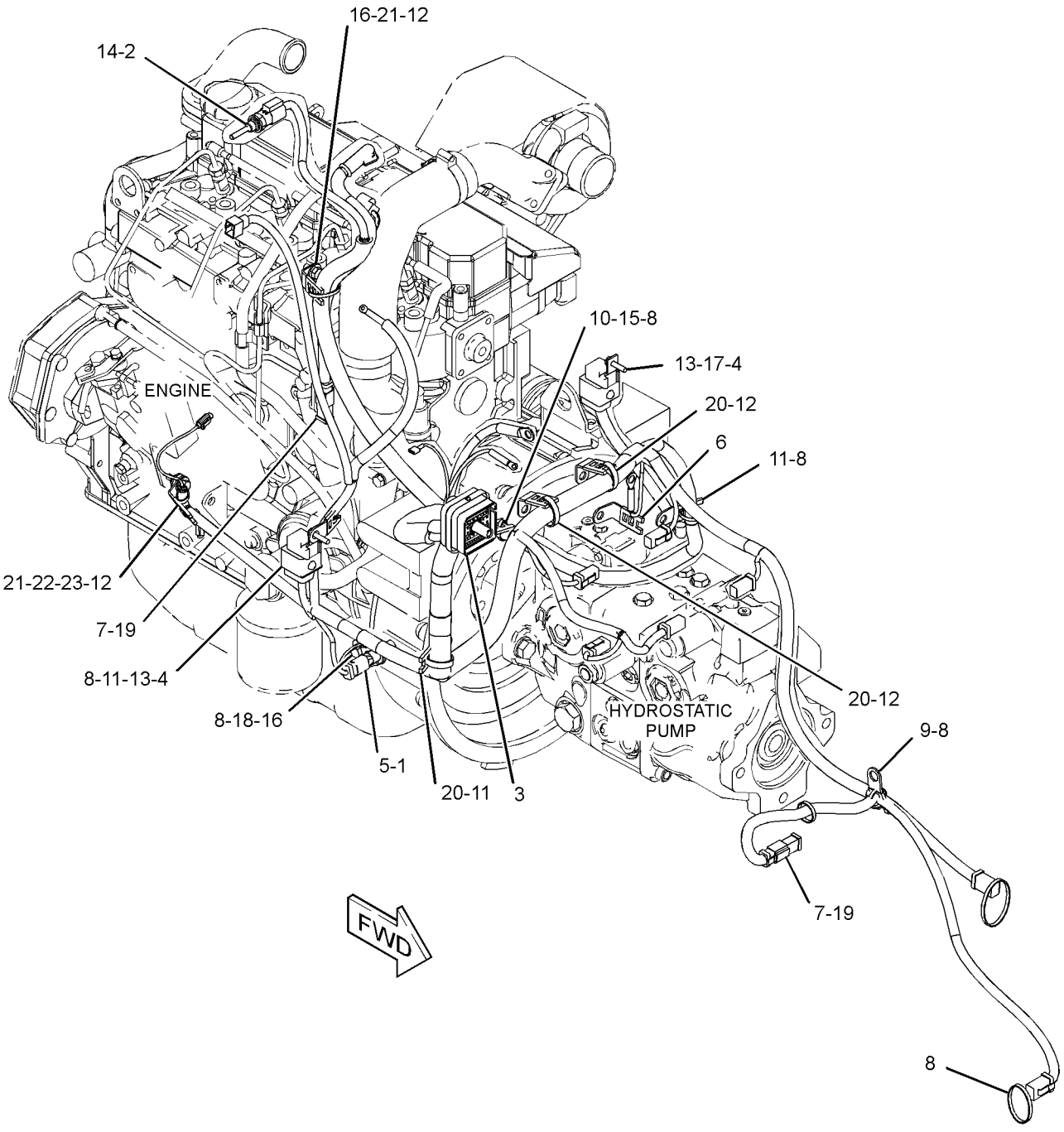

GRAPHIC #1 **<END>** g01359320

258-4192 WIRING GP-ENGINE

S/N: JAY1-UP

PART OF 258-2445 INSTALLATION AR-ENGINE

SMCS-1000, 1408, 1420 **i02645973**

NOTE	REF NO	GRAPHIC REF	PART NUMBER	QTY	PART NAME 1 2 3 4 5 6 (PRODUCT LEVEL)	SEE PAGE
	1	1	**7K-1181**	4	STRAP-CABLE	
	2	1	**178-3620**	5	STRAP (DUAL CLAMP)	
	3	1	**200-6345**	2	MOUNT (DUAL SWIVEL)	
	4	1	**258-4188**	1	CABLE AS-BATTERY (NEGATIVE)	
		1	**3S-2093**	1	STRAP-CABLE	
B		1	**1P-0810**		TAPE-ELECTRICAL	
		1	**9X-3410**	1	COVER-TERMINAL	
		1	**9X-6763**	1	TERMINAL AS (NEGATIVE)	
E		1	**159-8050**		CABLE (00-GA, BLACK) (141-CM)	
	5	1	**258-4189**	1	CABLE AS-BATTERY (POSITIVE)	
		1	*247-1337*	1	TERMINAL AS-BATTERY	
		1	**1M-6119**	1	BOLT (5/16-18X1.375-IN)	
		1	**1M-6120**	2	NUT (5/16-18-THD)	
		1	**283-3436**	1	COVER-TERMINAL	
B		1	**1P-0810**		TAPE-ELECTRICAL	
		1	**1S-7252**	1	TERMINAL-RING (FOR 3/8-IN BOLT)	
		1	**8N-0869**	1	COVER-TERMINAL (RED)	
E		1	**159-8049**		CABLE (00-GA, RED) (87-CM)	
	6	1	**3S-2093**	1	STRAP-CABLE	
	7	1	**8T-4121**	1	WASHER-HARD (11X21X2.5-MM THK)	
M	8	1	**8T-4133**	1	NUT (M10X1.5-THD)	

B-USE AS REQUIRED
E-ORDER BY THE CENTIMETER
M-METRIC PART

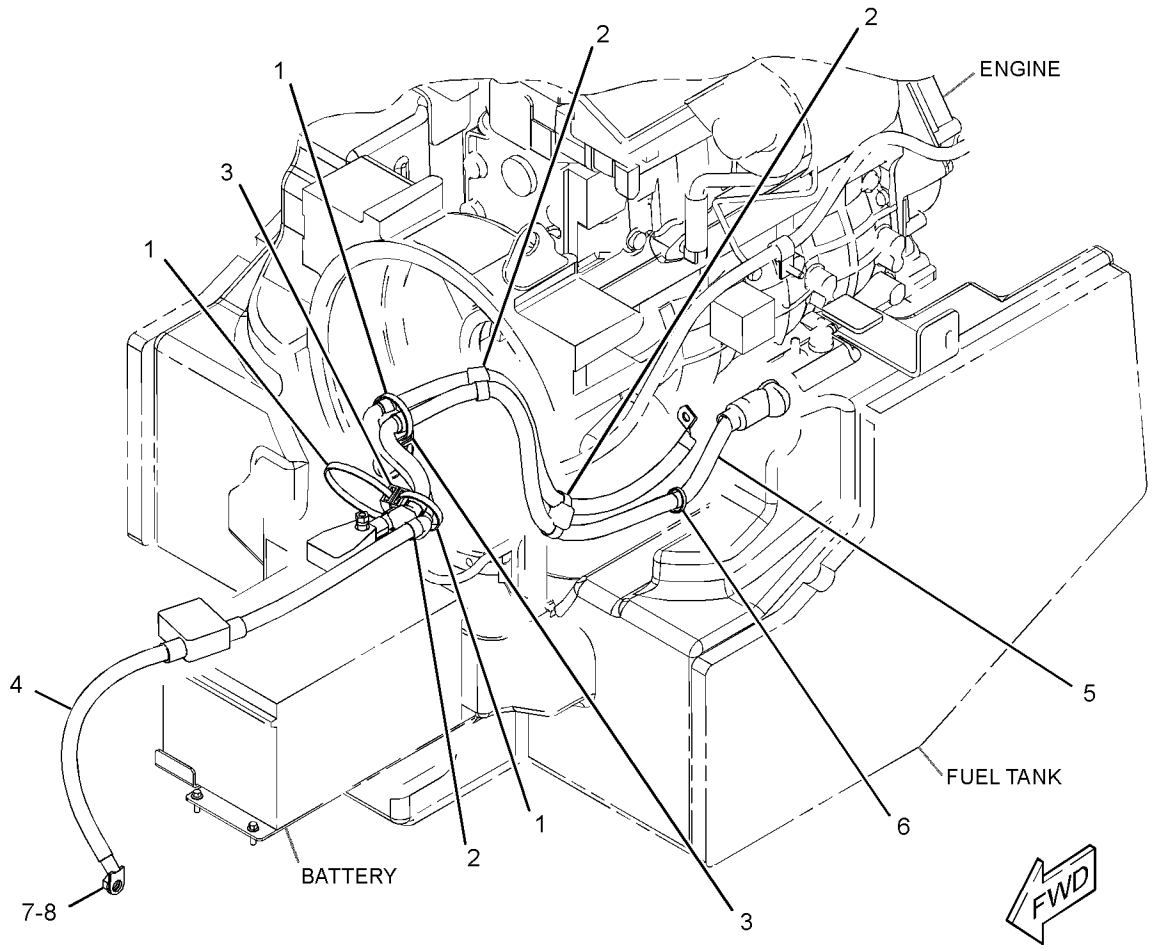

GRAPHIC #1 **<END>** g01329968

258-4107 WIRING GP-MACHINE

S/N: JAY1-UP

PART OF 258-2410 CHASSIS AR

SMCS-1408 **i02676283**

NOTE	REF NO	GRAPHIC REF	PART NUMBER	QTY	PART NAME 1 2 3 4 5 6 (PRODUCT LEVEL)	SEE PAGE
	1	1	**7K-1181**	2	STRAP-CABLE	
	2	1	**106-8704**	1	SUPPRESSOR AS-ARC	
		1	**102-8802**	1	KIT-RECEPTACLE (2-PIN)	
					(INCLUDES RECEPTACLE AS & WEDGE)	
		1	**186-3735**	2	PIN-CONNECTOR (16-GA TO 18-GA)	
	3	1	**300-9546**	1	ALARM AS (BACKUP)	
D		1	**5P-5623**		WIRE-ELECTRICAL (16-GA, BLACK) (0.4-M EACH)	
E		1	**9X-1813**		SLEEVE (31-CM)	
		1	**102-8802**	1	KIT-RECEPTACLE (2-PIN)	
					(INCLUDES RECEPTACLE AS & WEDGE)	
		1	**186-3735**	2	PIN-CONNECTOR (16-GA TO 18-GA)	
	4	1	**161-3357**	1	SPACER (10-MM THK)	
	5	1	**164-9425**	1	HORN AS (24-VOLT, LOW TONE)	
	6	1	**178-3620**	11	STRAP (DUAL CLAMP)	
	7	1	**206-1345**	1	STRAP-CABLE	
	8	1	**258-4106**	1	HARNESS AS-REAR	
		1	**102-8801**	1	KIT-RECEPTACLE (12-PIN)	
					(INCLUDES RECEPTACLE AS & WEDGE)	
		1	**8L-8413**	4	STRAP-CABLE	
E		1	**119-3662**		TUBE-HEAT SHRINK (10.85-MM DIA) (7-CM)	
E		1	**125-7874**		TUBE-HEAT SHRINK (5.72-MM DIA) (5-CM)	
E		1	**125-7875**		TUBE-HEAT SHRINK (7.44-MM DIA) (5-CM)	
		1	**155-2270**	3	KIT-CONNECTING PLUG (2-PIN)	
		1	**155-2271**	2	KIT-CONNECTING PLUG (4-PIN)	
					(EACH PLUG KIT INCLUDES PLUG AS, WEDGE & INTERFACE SEAL)	
	9	1	**258-4108**	1	HARNESS AS-CHASSIS	
E		1	**119-3662**		TUBE-HEAT SHRINK (10.85-MM DIA) (13-CM)	
E		1	**125-7874**		TUBE-HEAT SHRINK (5.72-MM DIA) (20-CM)	
E		1	**125-7875**		TUBE-HEAT SHRINK (7.44-MM DIA) (5-CM)	
		1	**127-5483**	1	PLUG AS-CONNECTOR (1-PIN)	
		1	**155-2260**	2	KIT-CONNECTING PLUG (3-PIN)	
					(EACH INCLUDES PLUG AS, WEDGES & INTERFACE SEAL)	
		1	**155-2255**	1	KIT-CONNECTING PLUG (12-PIN)	
		1	**155-2265**	1	KIT-CONNECTING PLUG (8-PIN)	
		1	**155-2270**	15	KIT-CONNECTING PLUG (2-PIN)	
		1	**155-2271**	1	KIT-CONNECTING PLUG (4-PIN)	
		1	**155-2274**	2	KIT-CONNECTING PLUG (6-PIN)	
					(EACH PLUG KIT INCLUDES PLUG AS, WEDGE & INTERFACE SEAL)	
E		1	**211-5358**		CONDUIT-FLEXIBLE (57-CM)	
E		1	**283-4198**		CONDUIT (59-CM)	
	10	1	**258-4179**	1	RAIL-MOUNTING	
	11	1	**268-4071**	2	LAMP GP-FLOOD (LONG RANGE)	
					(EACH INCLUDES)	
		1	**9W-0607**	1	LAMP (12-VOLT, 55-WATT)	
		1	**102-8802**	1	KIT-RECEPTACLE (2-PIN)	
					(INCLUDES RECEPTACLE AS & WEDGE)	
		1	**186-3735**	2	PIN-CONNECTOR (16-GA TO 18-GA)	
	12	1	**132-5789**	1	CLIP (LADDER)	
	13	1	**156-6175**	1	CLIP (LADDER)	
	14	1	**266-3314**	1	BOLT-FLANGE HEAD (M6X1X20.5-MM)	
B	15	1	**102-8802**	2	KIT-RECEPTACLE (2-PIN)	
B	16	1	**102-8803**	1	KIT-RECEPTACLE (3-PIN)	
B	17	1	**102-8804**	1	KIT-RECEPTACLE (4-PIN)	

258-4107 **WIRING GP-MACHINE** ***(contd.)*** **i02676283**

NOTE	REF NO	GRAPHIC REF	PART NUMBER	QTY	PART NAME 1 2 3 4 5 6 (PRODUCT LEVEL)	SEE PAGE
B	18	1	**102-8805**	2	KIT-RECEPTACLE (6-PIN)	
B	19	1	**102-8806**	1	KIT-RECEPTACLE (8-PIN)	
					(EACH RECEPTACLE KIT INCLUDES RECEPTACLE AS & WEDGE)	
	20	1	**3S-2093**	23	STRAP-CABLE	
	21	1	**4P-7581**	3	CLIP (LADDER)	
	22	1	**4P-8134**	1	CLIP (LADDER)	
M	23	1	**5C-7261**	1	NUT (M8X1.25-THD)	
M	24	1	**5C-9553**	2	BOLT (M6X1X16-MM)	
M	25	1	**7X-2533**	2	BOLT (M6X1X35-MM)	
	26	1	**8T-4121**	2	WASHER-HARD (11X21X2.5-MM THK)	
M	27	1	**8T-4133**	2	NUT (M10X1.5-THD)	
M	28	1	**8T-4137**	2	BOLT (M10X1.5X20-MM)	
M	29	1	**8T-4196**	1	BOLT (M10X1.5X35-MM)	
	30	1	**8T-4205**	4	WASHER-HARD (7.2X14.5X2-MM THK)	
	31	1	**8T-4224**	1	WASHER-HARD (8.8X16X2-MM THK)	
B	32	1	**8T-8737**	31	PLUG-SEAL	

B-USE AS REQUIRED
D-ORDER BY THE METER
E-ORDER BY THE CENTIMETER
M-METRIC PART

258-4107 **WIRING GP-MACHINE** *(contd.)* **i02676283**

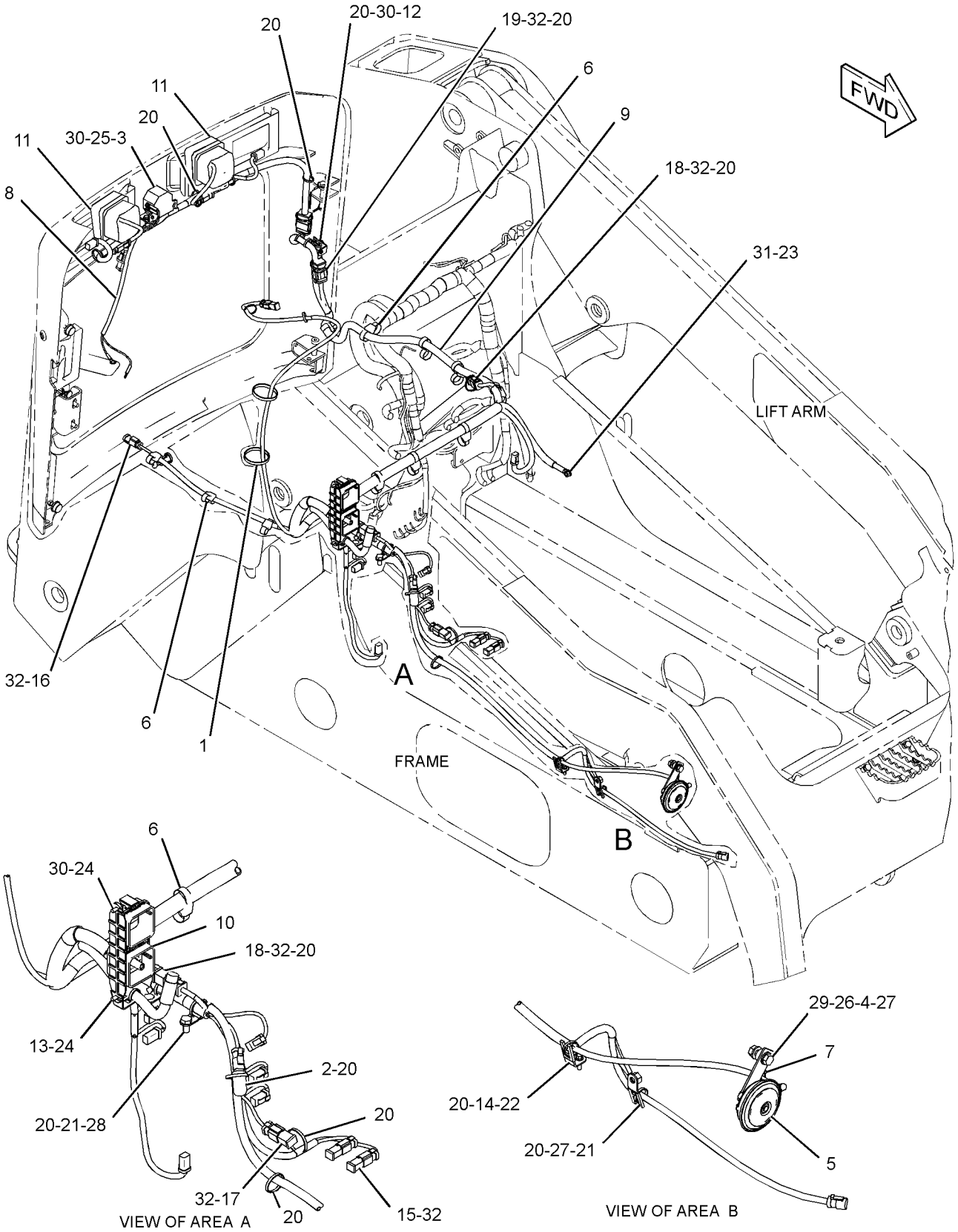

GRAPHIC #1 **<END>** g01344894

258-4125 WIRING GP-WORK TOOL

S/N: JAY1-UP

PART OF 258-3182, 258-3733, 261-6264 HYDRAULIC AR

AN ATTACHMENT

SMCS-1408 **i02613913**

NOTE	REF NO	GRAPHIC REF	PART NUMBER	QTY	PART NAME 1 2 3 4 5 6 (PRODUCT LEVEL)	SEE PAGE
	1	1	**7K-1181**	2	STRAP-CABLE	
	2	1	**146-9439**	5	RELAY AS (12-VOLT)	
	3	1	**159-9495**	1	NUT (1-1/2-18-THD)	
	4	1	**159-9496**	1	LOCKWASHER	
	5	1	**178-3620**	6	STRAP	
	6	1	**258-4126**	1	HARNESS AS-WORK TOOL	
		1	**102-8806**	1	KIT-RECEPTACLE (8-PIN)	
					(INCLUDES RECEPTACLE AS & WEDGE)	
		1	**8L-8413**	1	STRAP-CABLE	
		1	**156-1458**	1	COVER	
		1	**156-1460**	1	RECEPTACLE (8-PIN)	
	7	1	**263-5418**	1	SWITCH AS-ROCKER (WORK TOOL)	
	8	1	**3S-2093**	8	STRAP-CABLE	

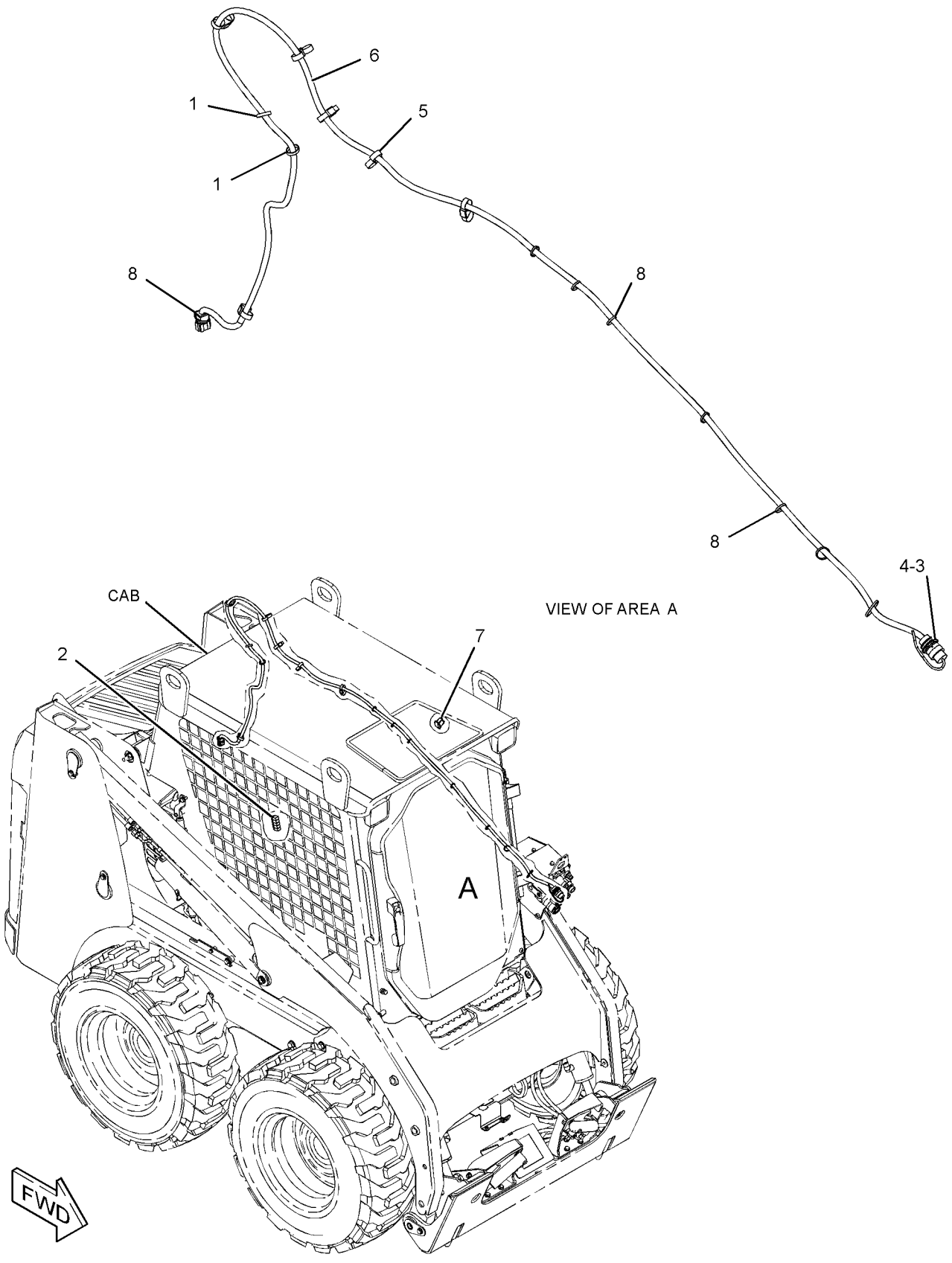

GRAPHIC #1 **<END>** g01310145

258-2857 AXLE GP

S/N: JAY1-UP
PART OF 258-3736 AXLE GP
AN ATTACHMENT

SMCS-3278 **i02628507**

NOTE	REF NO	GRAPHIC REF	PART NUMBER	QTY	PART NAME 1 2 3 4 5 6 (PRODUCT LEVEL)	SEE PAGE
	1	1	**142-9023**	1	HOUSING-AXLE	
	2	1	**142-9029**	1	SPACER (57.16X69.85X27.54-MM THK)	
	3	1	**155-5652**	1	SEAL-LIP TYPE	
	4	1	**155-9010**	1	CONE-BEARING	
	5	1	**155-9432**	1	CONE-BEARING	
	6	1	**155-9433**	2	CUP-BEARING	
	7	1	**159-5772**	8	STUD	
	8	1	**169-1679**	1	SEAL-LIP TYPE	
	9	1	**258-2954**	1	SPINDLE (WHEEL)	

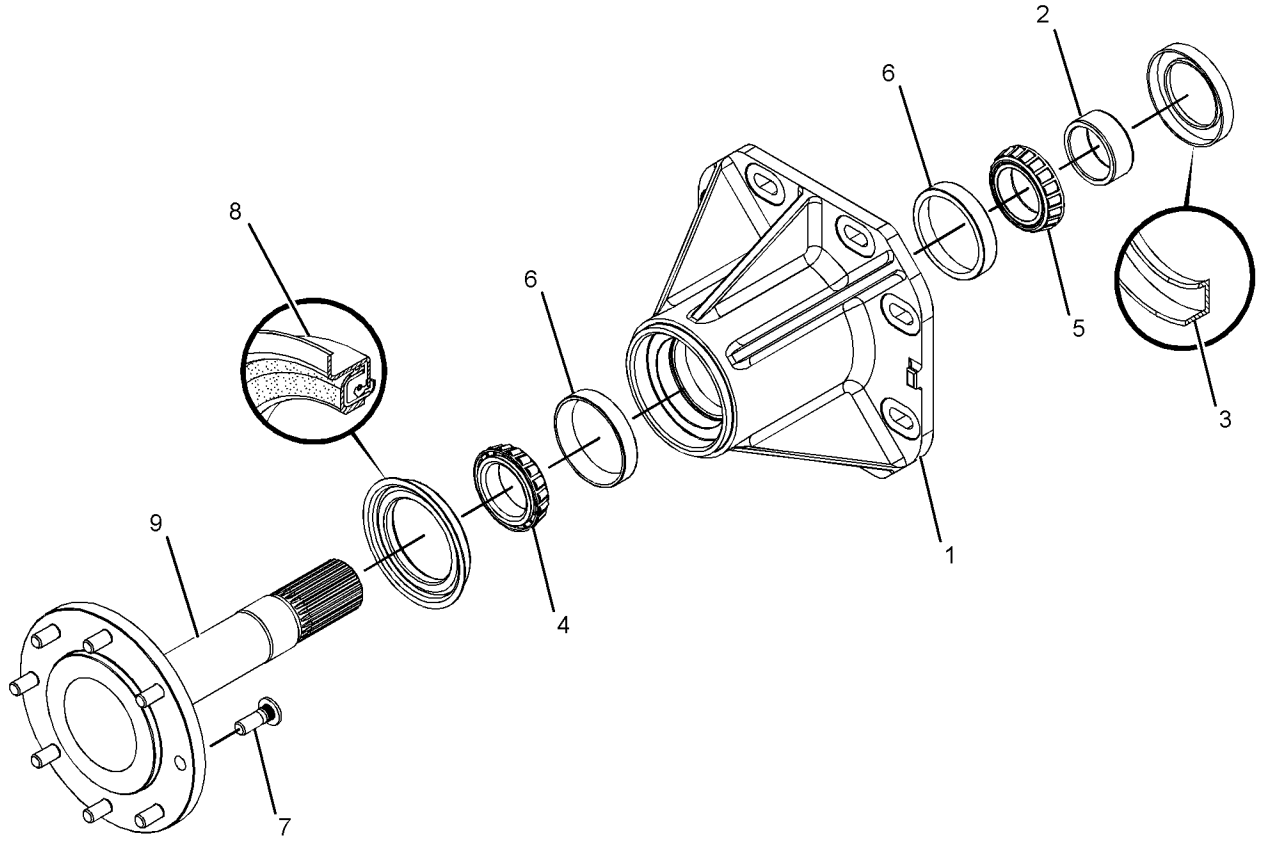

GRAPHIC #1 **<END>** g01321899

258-2957 AXLE GP

S/N: JAY1-UP
PART OF 258-3737 AXLE GP
AN ATTACHMENT

SMCS-3278 **i02613952**

NOTE	REF NO	GRAPHIC REF	PART NUMBER	QTY	PART NAME 1 2 3 4 5 6 (PRODUCT LEVEL)	SEE PAGE
	1	1	**142-9029**	1	SPACER (57.16X69.85X27.54-MM THK)	
	2	1	**155-5652**	1	SEAL-LIP TYPE	
	3	1	**155-9010**	1	CONE-BEARING	
	4	1	**155-9432**	1	CONE-BEARING	
	5	1	**155-9433**	2	CUP-BEARING	
	6	1	**159-5772**	8	STUD	
	8	1	**258-2954**	1	SPINDLE	
	9	1	**264-4320**	1	RETAINER-SEAL	
	10	1	**266-3142**	1	SEAL GP (AXLE)	
	11	1	**2B-0858**	1	PLUG-PIPE	
					PARTS SHOWN IN GRAPHIC(S) WITHOUT A REFERENCE NUMBER ARE NOT SERVICED SEPARATELY	

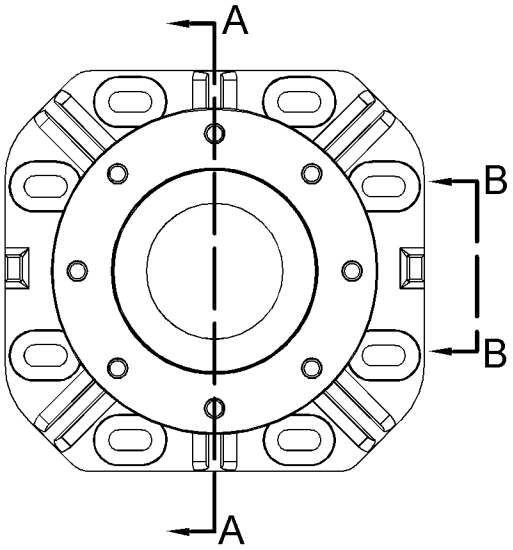

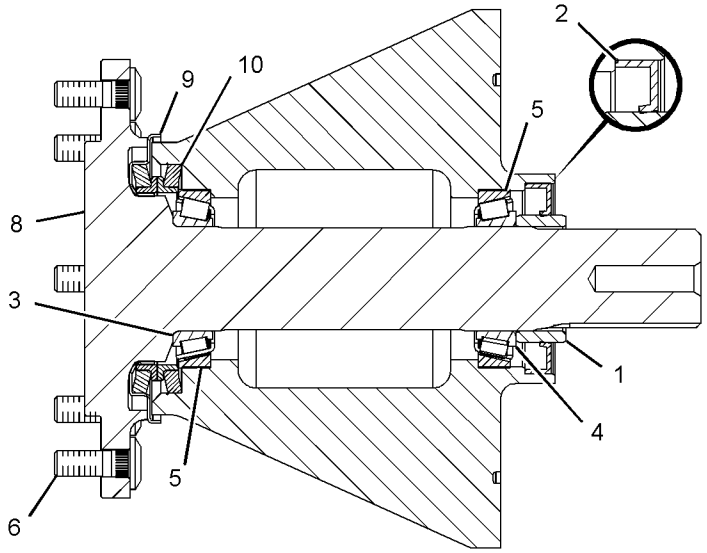

SECTION A-A

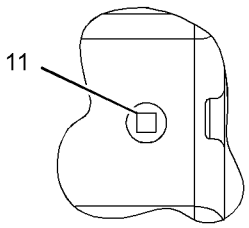

VIEW B-B

GRAPHIC #1 **<END>** g01311152

POWER TRAIN

258-3736 AXLE GP

S/N: JAY1-UP
AN ATTACHMENT

SMCS-3278 **i02628508**

NOTE	REF NO	GRAPHIC REF	PART NUMBER	QTY	PART NAME 1 2 3 4 5 6 (PRODUCT LEVEL)	SEE PAGE
Y	1	1	*258-2857*	4	AXLE GP	114

Y-SEPARATE ILLUSTRATION

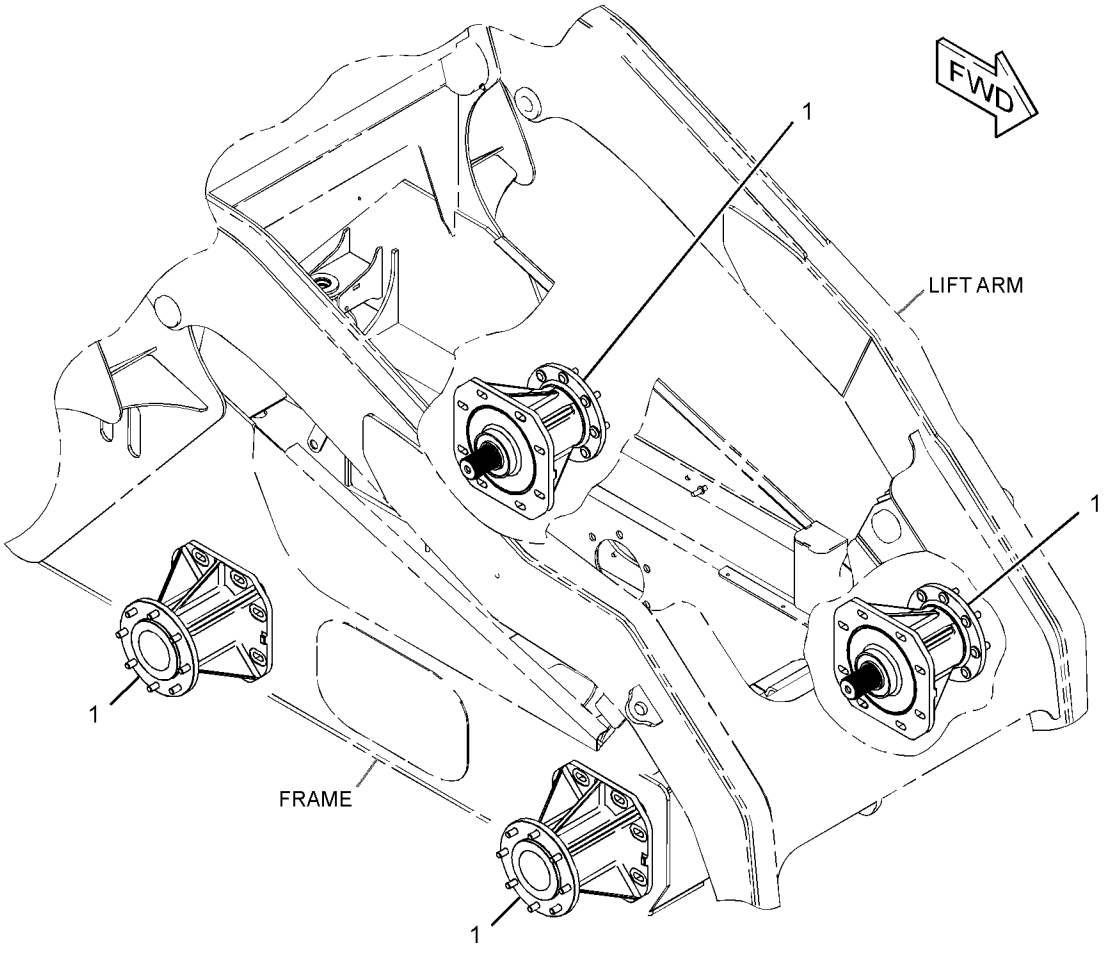

GRAPHIC #1 **<END>** g01321923

POWER TRAIN

258-3737 AXLE GP

S/N: JAY1-UP
AN ATTACHMENT

SMCS-3278 **i02613956**

NOTE	REF NO	GRAPHIC REF	PART NUMBER	QTY	PART NAME 1 2 3 4 5 6 (PRODUCT LEVEL)	SEE PAGE
Y	1	1	*258-2957*	4	AXLE GP (HEAVY-DUTY)	115

Y-SEPARATE ILLUSTRATION

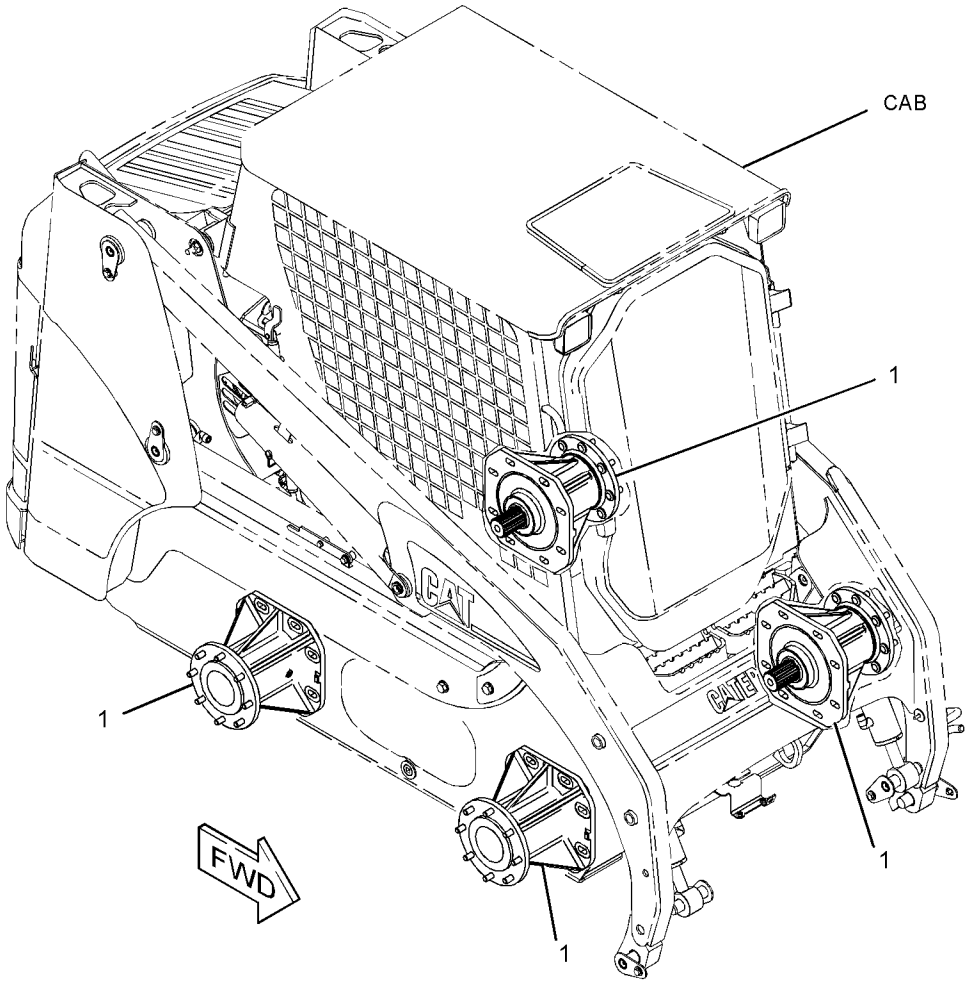

GRAPHIC #1 **<END>** g01309410

258-2860 DRIVE GP-TANDEM

S/N: JAY1-UP
PART OF 258-3200 POWER TRAIN AR
AN ATTACHMENT

SMCS-4062 **i02659358**

NOTE	REF NO	GRAPHIC REF	PART NUMBER	QTY	PART NAME 1 2 3 4 5 6 (PRODUCT LEVEL)	SEE PAGE
	1	1	**5P-3092**	4	SEAL-O-RING	
	2	1	**142-9033**	2	RETAINER	
	3	1	**152-1157**	32	WASHER (15.5X32X8-MM THK)	
	4	1	**191-9762**	4	CHAIN AS	
	5	1	**200-0999**	32	STUD (9/16-18-THD)	
	6	1	**258-2855**	4	SPROCKET	
	7	1	**258-2858**	2	SPACER (63.9X75X13.13-MM THK)	
	8	1	**258-2864**	2	SPROCKET-MOTOR	
M	9	1	**100-3866**	4	BOLT-SELF-LOCKING (M16X2X40-MM)	
	10	1	**142-9036**	32	NUT (9/16-18-THD)	
	11	1	**7X-0610**	4	WASHER-HARD (20X75X6-MM THK)	
M	12	1	**8C-8992**	2	BOLT-LOCKING (M12X1.75X30-MM)	
	13	1	**8T-4122**	4	WASHER-HARD (17X32X3.5-MM THK)	

M-METRIC PART

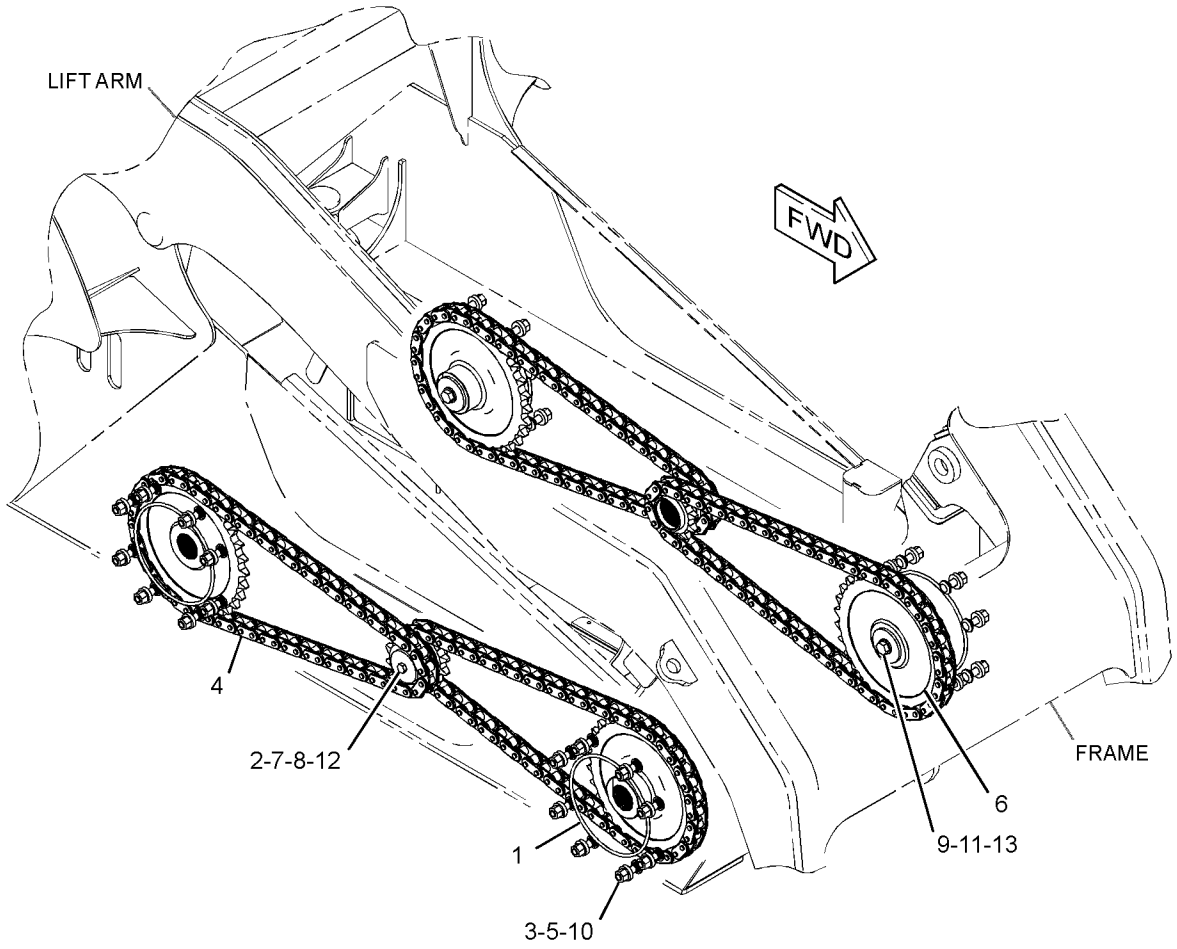

GRAPHIC #1 **<END>** g01325924

258-2862 DRIVE GP-TANDEM

S/N: JAY1-UP
PART OF 258-3400 POWER TRAIN AR
AN ATTACHMENT

SMCS-4062 **i02636748**

NOTE	REF NO	GRAPHIC REF	PART NUMBER	QTY	PART NAME 1 2 3 4 5 6 (PRODUCT LEVEL)	SEE PAGE
	1	1	**5P-3092**	4	SEAL-O-RING	
	2	1	**142-9033**	2	RETAINER	
	3	1	**152-1157**	32	WASHER (15.5X32X8-MM THK)	
	4	1	**191-9762**	4	CHAIN AS	
	5	1	**200-0999**	32	STUD	
	6	1	**258-2854**	4	SPROCKET (AXLE)	
	7	1	**258-2858**	2	SPACER (63.9X75X13.13-MM THK)	
	8	1	**258-2865**	4	SPROCKET-MOTOR	
M	9	1	**100-3866**	4	BOLT-SELF-LOCKING (M16X2X40-MM)	
	10	1	**142-9036**	32	NUT (9/16-18-THD)	
	11	1	**7X-0610**	4	WASHER-HARD (20X75X6-MM THK)	
M	12	1	**8C-8992**	2	BOLT-LOCKING (M12X1.75X30-MM)	
	13	1	**8T-4122**	4	WASHER-HARD (17X32X3.5-MM THK)	

M-METRIC PART

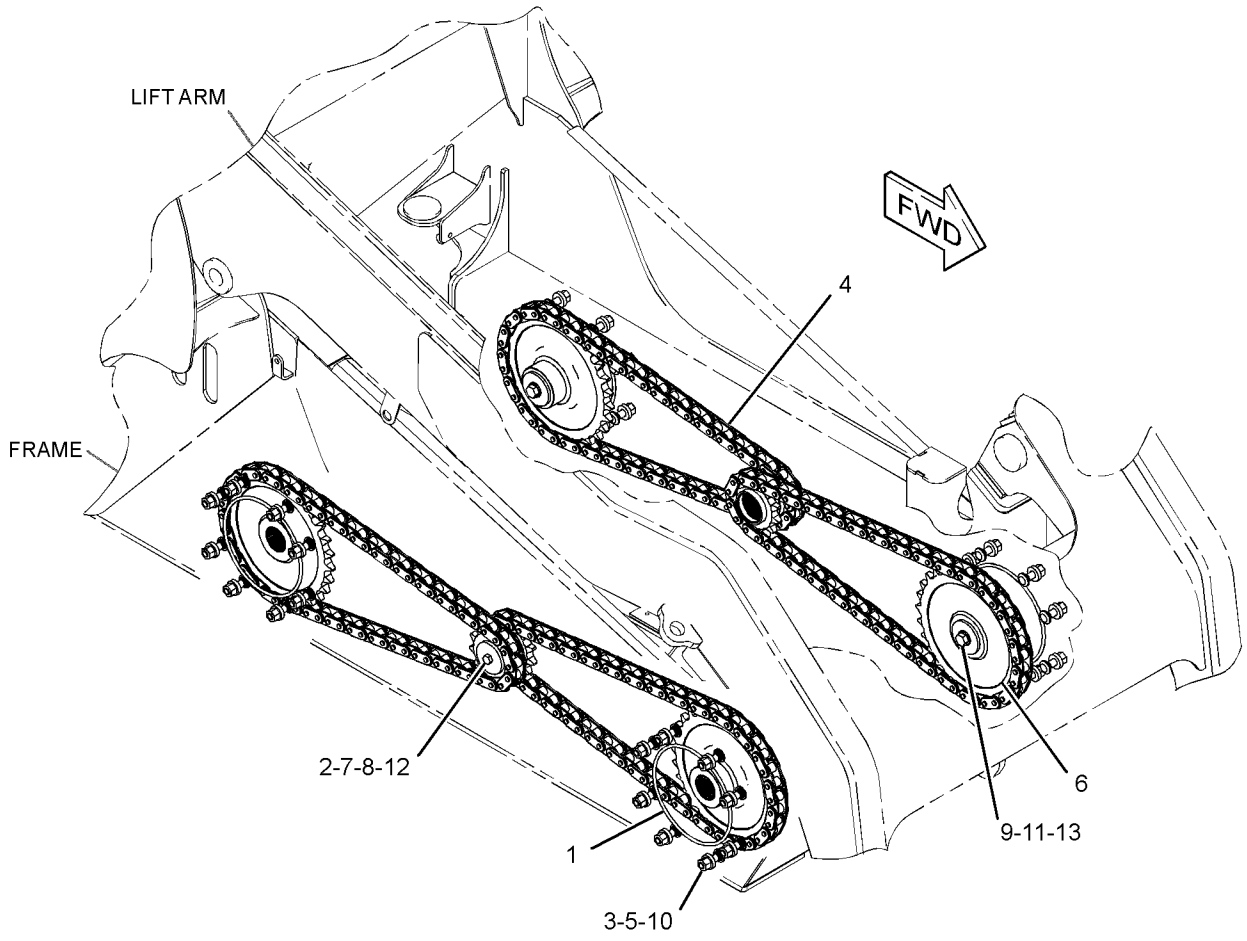

GRAPHIC #1 **<END>** g01326192

258-2581 FILTER & LINES GP-HYDRAULIC

S/N: JAY1-UP

PART OF 258-2600 HYDRAULIC AR

SMCS-5057, 5068 **i02659392**

NOTE	REF NO	GRAPHIC REF	PART NUMBER	QTY	PART NAME 1 2 3 4 5 6 (PRODUCT LEVEL)	SEE PAGE
	1	1	*197-8940*	1	CONNECTOR AS	
		1	**2M-9780**	1	SEAL-O-RING	
		1	**7J-9108**	1	SEAL-O-RING	
		1	**8T-1576**	1	CONNECTOR (FACE SEAL)	
Y	2	1	**223-9974**	1	FILTER GP-OIL (HYDRAULIC)	122
	3	1	**258-3979**	1	HOSE AS	
	4	1	*148-8382*	2	ELBOW AS	
					(EACH INCLUDES)	
		1	**3D-2824**	1	SEAL-O-RING	
		1	**7J-9108**	1	SEAL-O-RING	
		1	**8T-0404**	1	ELBOW	
	5	1	**266-3316**	1	BOLT-FLANGE HEAD (M10X1.5X25-MM)	
	6	1	**2M-6102**	1	PIPE	
	7	1	**3E-4321**	7	CLIP	
	8	1	**6V-1889**	1	CLIP	
	9	1	**8T-4121**	7	WASHER-HARD (11X21X2.5-MM THK)	
M	10	1	**8T-4137**	4	BOLT (M10X1.5X20-MM)	
M	11	1	**8T-4185**	1	BOLT (M10X1.5X50-MM)	
M	12	1	**8T-4189**	2	BOLT (M8X1.25X20-MM)	
	13	1	**8T-4224**	2	WASHER-HARD (8.8X16X2-MM THK)	
M	14	1	**8T-4196**	2	BOLT (M10X1.5X35-MM)	
	15	1	**178-3620**	1	STRAP (DUAL CLAMP)	

M-METRIC PART
Y-SEPARATE ILLUSTRATION

258-2581 **FILTER & LINES GP-HYDRAULIC** *(contd.)* **i02659392**

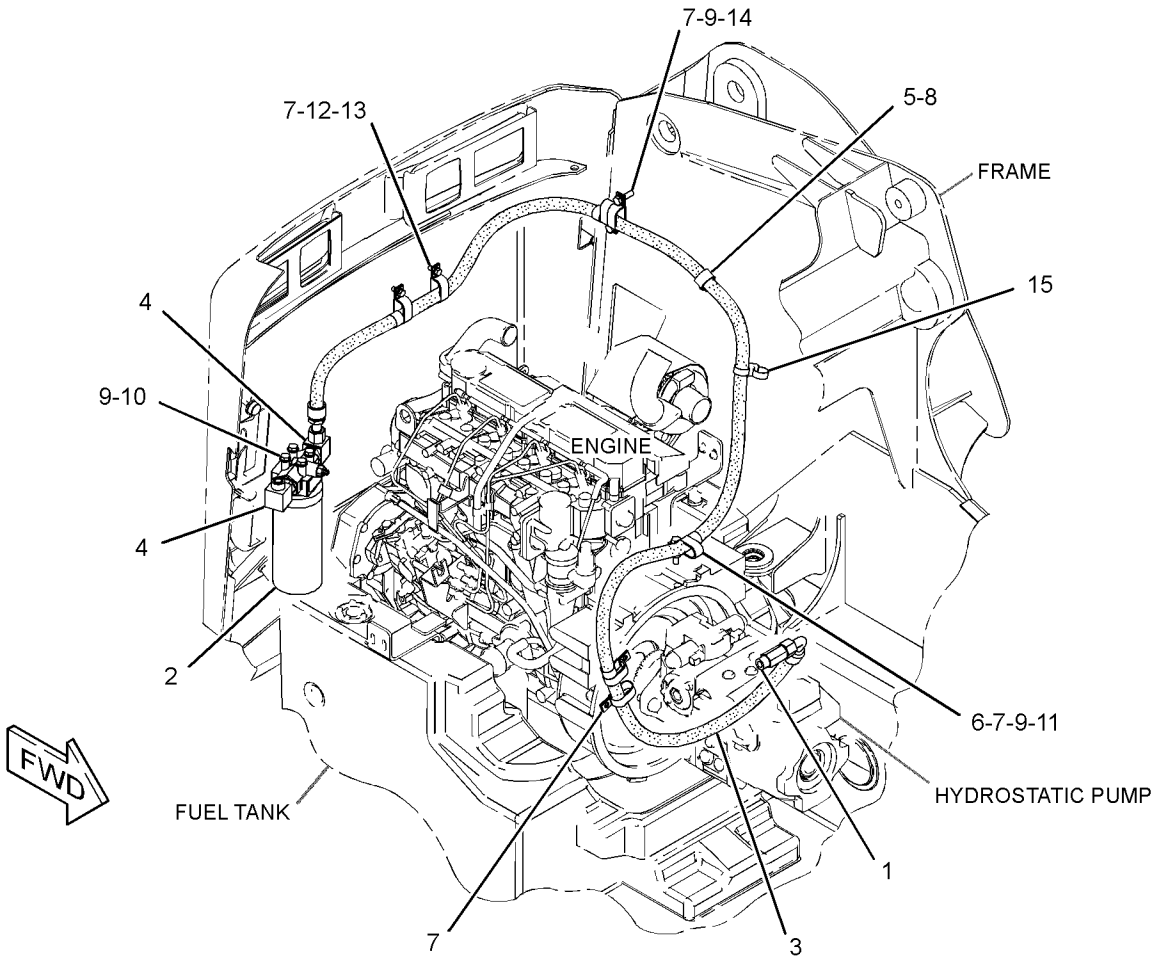

GRAPHIC #1 **<END>** g01337656

223-9974 FILTER GP-OIL–HYDRAULIC

S/N: JAY1-UP

PART OF 258-2581 FILTER & LINES GP-HYDRAULIC

SMCS-5068 **i02469830**

NOTE	REF NO	GRAPHIC REF	PART NUMBER	QTY	PART NAME 1 2 3 4 5 6 (PRODUCT LEVEL)	SEE PAGE
	1	1	**3J-1907**	1	SEAL-O-RING	
	2	1	**134-0404**	1	SWITCH AS-PRESSURE (HYDRAULIC OIL)	
	3	1	**1G-8878**	1	FILTER AS-OIL (ADVANCED EFFICIENCY) (HYDRAULIC)	

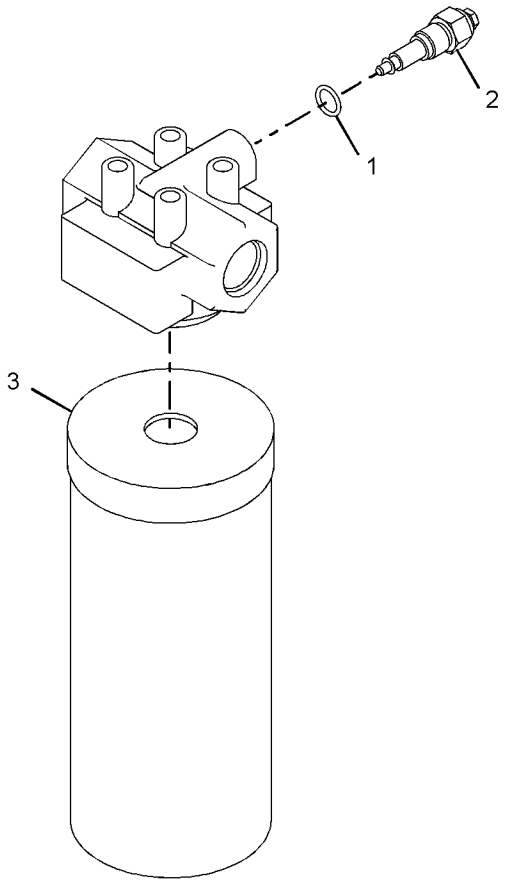

GRAPHIC #1

<END>

g01035150

258-2430 LINES GP-HYDROSTATIC

S/N: JAY1-UP
PART OF 258-3200 POWER TRAIN AR
AN ATTACHMENT

SMCS-3154 **i02674947**

NOTE	REF NO	GRAPHIC REF	PART NUMBER	QTY	PART NAME 1 2 3 4 5 6 (PRODUCT LEVEL)	SEE PAGE
	1	1	**6V-0852**	4	CAP-DUST	
	2	1	*153-6237*	2	ELBOW AS	
					(EACH INCLUDES)	
		1	**3D-2824**	1	SEAL-O-RING	
		1	**6V-9004**	1	ELBOW	
		1	**6V-9746**	1	SEAL-O-RING	
	3	1	*164-5567*	4	FITTING AS (QUICK DISCONNECT, MALE)	
					(EACH INCLUDES)	
		1	**3J-1907**	1	SEAL-O-RING	
		1	**6V-3965**	1	FITTING-COUPLER	
I	4	1	**258-3250**	2	HOSE AS	
I	5	1	**258-3252**	2	HOSE AS	
I	6	1	**258-3254**	1	HOSE AS	
I	7	1	**258-3257**	1	HOSE AS	
	8	1	*296-5750*	1	CONNECTOR AS	
		1	**6V-9746**	1	SEAL-O-RING	
		1	**7M-8485**	1	SEAL-O-RING	
		1	**109-5821**	1	CONNECTOR	
	9	1	*148-8339*	3	CONNECTOR AS	
					(EACH INCLUDES)	
		1	**6V-8716**	1	CONNECTOR	
		1	**6V-9746**	1	SEAL-O-RING	
		1	**7M-8485**	1	SEAL-O-RING	
	10	1	*148-8358*	1	ELBOW AS	
		1	**2M-9780**	1	SEAL-O-RING	
		1	**6V-8398**	1	SEAL-O-RING	
		1	**6V-8624**	1	ELBOW	
	11	1	*164-5557*	1	CONNECTOR AS	
		1	**2M-9780**	1	SEAL-O-RING	
		1	**5I-4370**	1	CONNECTOR	
		1	**6V-8398**	1	SEAL-O-RING	
	12	1	*164-5606*	2	CONNECTOR AS	
					(EACH INCLUDES)	
		1	**3D-2824**	1	SEAL-O-RING	
		1	**6V-9746**	1	SEAL-O-RING	
		1	**8T-0078**	1	CONNECTOR	
M	13	1	**266-3315**	1	BOLT-FLANGE HEAD (M8X1.25X25.5-MM)	
	14	1	**3S-8665**	1	CLIP	
M	15	1	**5C-7261**	1	NUT (M8X1.25-THD)	
	16	1	**5P-4116**	1	WASHER-HARD (8.8X20.5X2-MM THK)	

I-REFER TO HYDRAULIC INFORMATION SYSTEM
M-METRIC PART

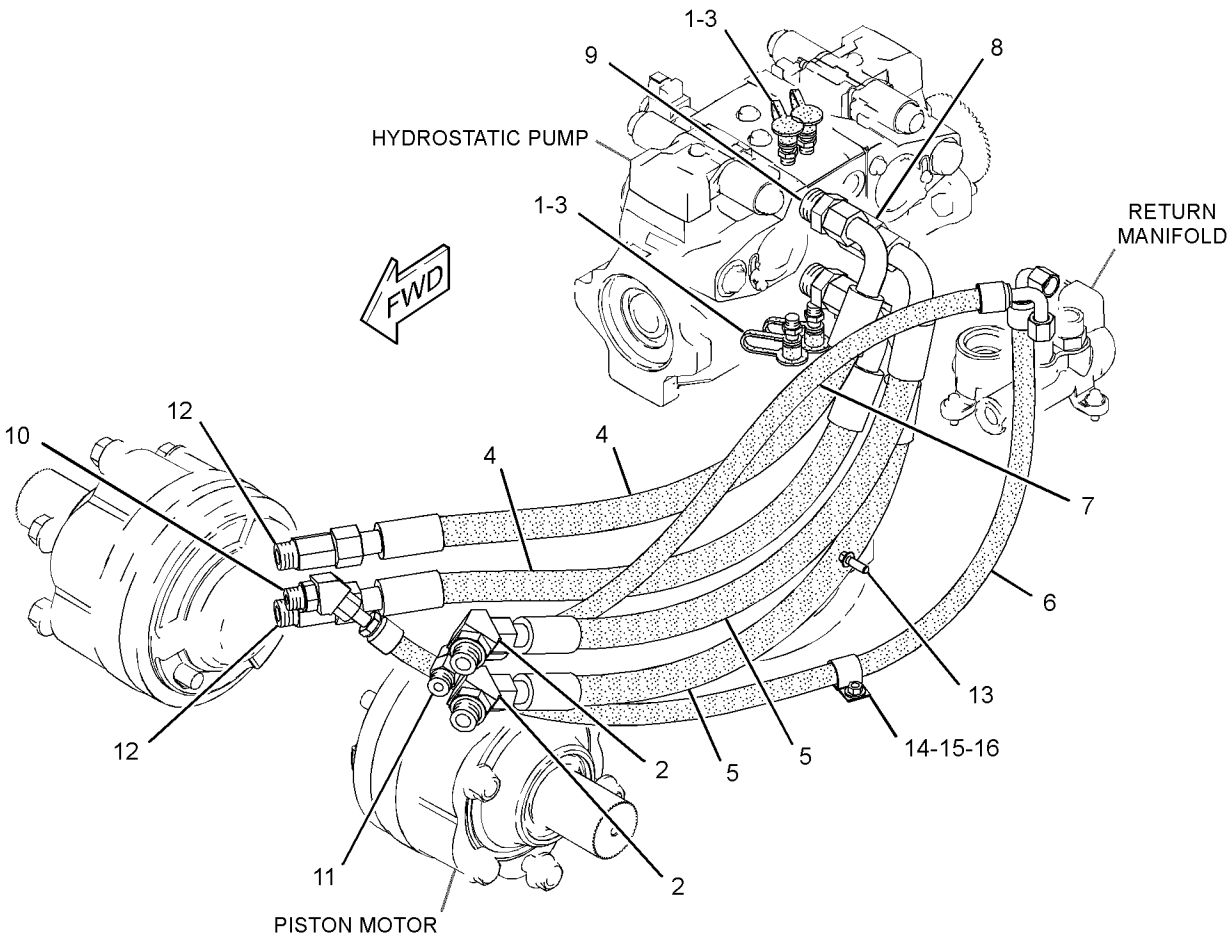

GRAPHIC #1 **<END>** g01344341

258-2431 LINES GP-HYDROSTATIC

S/N: JAY1-UP
PART OF 258-3400 POWER TRAIN AR
AN ATTACHMENT

SMCS-3154 **i02693331**

NOTE	REF NO	GRAPHIC REF	PART NUMBER	QTY	PART NAME 1 2 3 4 5 6 (PRODUCT LEVEL)	SEE PAGE
	1	1	**6V-0852**	4	CAP-DUST	
	2	1	*164-5567*	4	FITTING AS (QUICK DISCONNECT, MALE)	
					(EACH INCLUDES)	
		1	**3J-1907**	1	SEAL-O-RING	
		1	**6V-3965**	1	FITTING-COUPLER	
I	3	1	**258-3251**	1	HOSE AS	
I	4	1	**258-3255**	1	HOSE AS	
I	5	1	**258-3258**	1	HOSE AS	
I	6	1	**258-3259**	1	HOSE AS	
I	7	1	**258-3972**	1	HOSE AS	
	8	1	*296-5750*	1	CONNECTOR AS	
		1	**6V-9746**	1	SEAL-O-RING	
		1	**7M-8485**	1	SEAL-O-RING	
		1	**109-5821**	1	CONNECTOR	
	9	1	*148-8327*	3	CONNECTOR AS	
					(EACH INCLUDES)	
		1	**3D-2824**	1	SEAL-O-RING	
		1	**6V-8637**	1	CONNECTOR	
		1	**6V-9746**	1	SEAL-O-RING	
	10	1	*148-8339*	3	CONNECTOR AS	
					(EACH INCLUDES)	
		1	**6V-8716**	1	CONNECTOR	
		1	**6V-9746**	1	SEAL-O-RING	
		1	**7M-8485**	1	SEAL-O-RING	
	11	1	*148-8345*	2	CONNECTOR AS	
					(EACH INCLUDES)	
		1	**2M-9780**	1	SEAL-O-RING	
		1	**6V-8398**	1	SEAL-O-RING	
		1	**6V-8638**	1	CONNECTOR	
M	12	1	**266-3315**	1	BOLT-FLANGE HEAD (M8X1.25X25.5-MM)	
	13	1	**3S-8665**	3	CLIP	
M	14	1	**5C-7261**	2	NUT (M8X1.25-THD)	
	15	1	**5P-4116**	2	WASHER-HARD (8.8X20.5X2-MM THK)	
	16	1	**305-0201**	1	HOSE AS	
	17	1	*164-5606*	1	CONNECTOR AS	
		1	**3D-2824**	1	SEAL-O-RING	
		1	**6V-9746**	1	SEAL-O-RING	
		1	**8T-0078**	1	CONNECTOR	
	18	1	**8T-4121**	1	WASHER-HARD (11X21X2.5-MM THK)	

I-REFER TO HYDRAULIC INFORMATION SYSTEM
M-METRIC PART

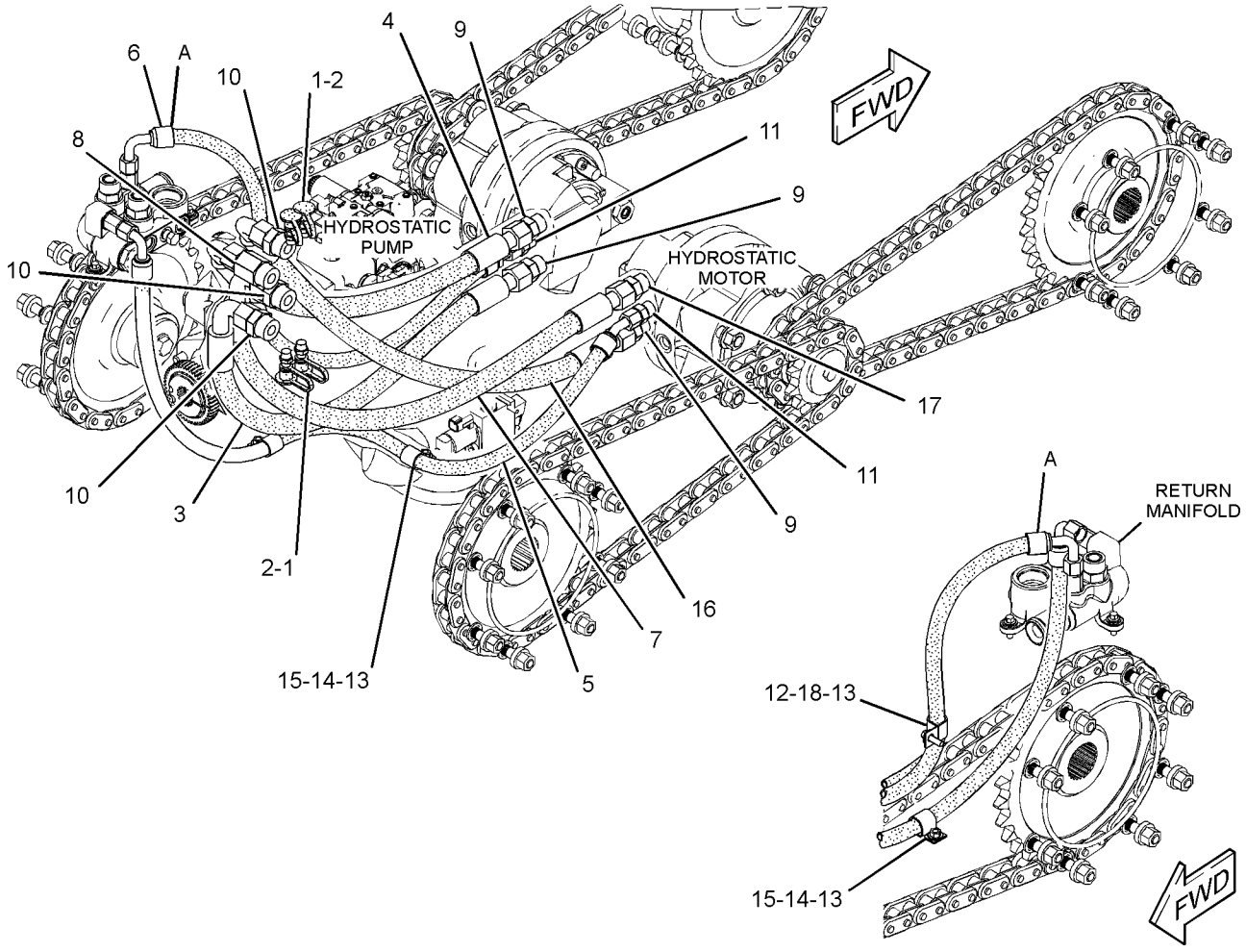

GRAPHIC #1 **<END>** g01351477

258-2607 LINES GP-PARKING BRAKE

S/N: JAY1-UP

PART OF 258-2600 HYDRAULIC AR

SMCS-4284 **i02674948**

NOTE	REF NO	GRAPHIC REF	PART NUMBER	QTY	PART NAME 1 2 3 4 5 6 (PRODUCT LEVEL)	SEE PAGE
	1	1	**097-0832**	2	SPACER (14-MM THK)	
I	2	1	**258-2608**	1	HOSE AS	
I	3	1	**258-2609**	2	HOSE AS	
	4	1	**258-3931**	1	TUBE AS	
	5	1	*148-8340*	2	CONNECTOR AS	
					(EACH INCLUDES)	
		1	**3K-0360**	1	SEAL-O-RING	
		1	**6V-8398**	1	SEAL-O-RING	
		1	**6V-8639**	1	CONNECTOR	
	6	1	*172-9287*	1	CONNECTOR AS	
		1	**3J-1907**	1	SEAL-O-RING	
		1	**6V-8397**	1	SEAL-O-RING	
		1	**7E-9898**	1	CONNECTOR	
	7	1	**1F-7567**	2	CLIP (LOOP)	
M	8	1	**5C-7261**	2	NUT (M8X1.25-THD)	
	9	1	**5P-4116**	2	WASHER-HARD (8.8X20.5X2-MM THK)	
	10	1	**6V-8397**	3	SEAL-O-RING	
	11	1	**204-2281**	2	STRAP-TIE	
	12	1	**200-6345**	1	MOUNT (DUAL SWIVEL)	

I-REFER TO HYDRAULIC INFORMATION SYSTEM
M-METRIC PART

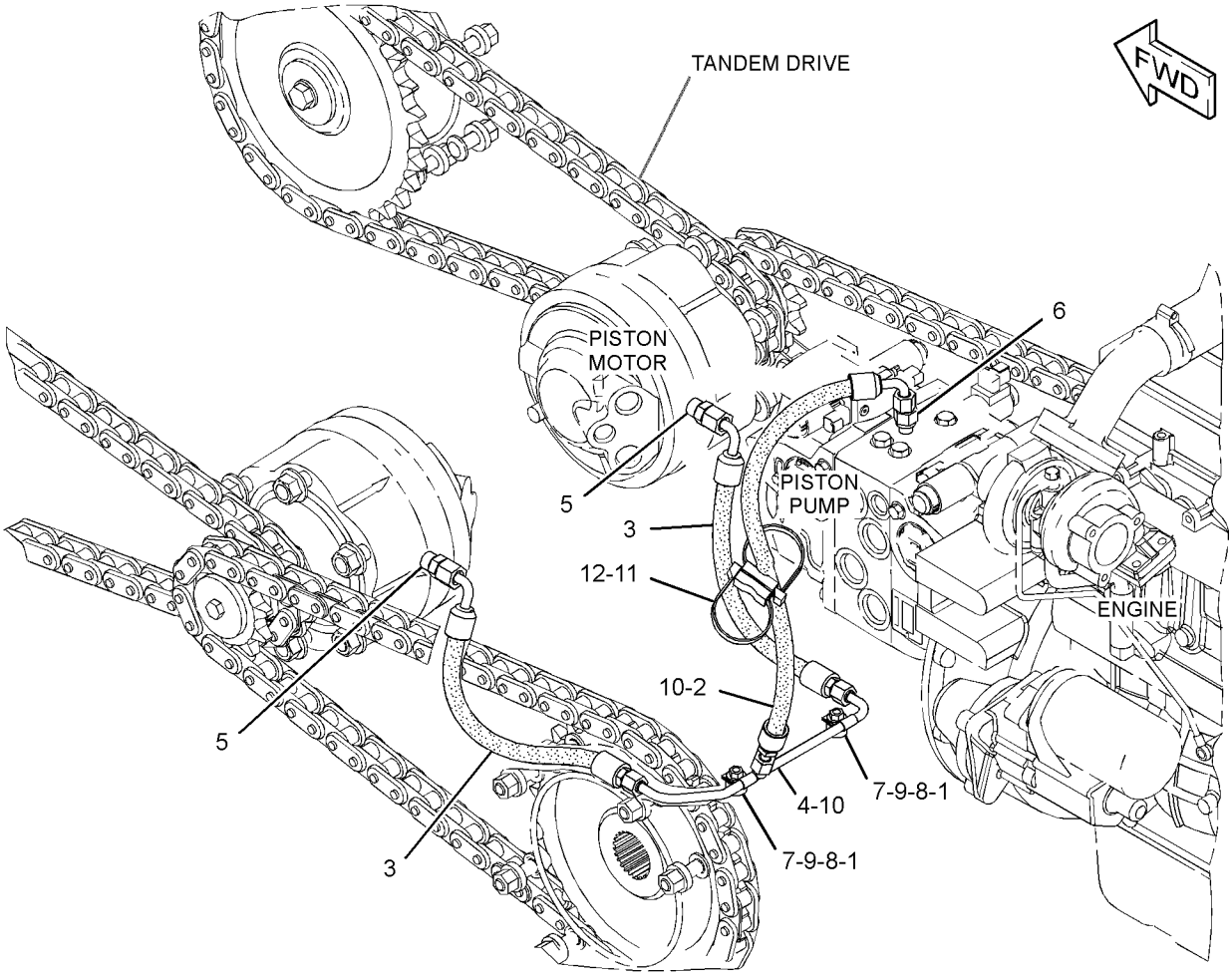

GRAPHIC #1 **<END>** g01344996

258-3151 MANIFOLD & LINES GP-CONTROL

S/N: JAY1-UP
PART OF 258-3400 POWER TRAIN AR
AN ATTACHMENT

SMCS-5057, 5264, 5479 **i02667713**

NOTE	REF NO	GRAPHIC REF	PART NUMBER	QTY	PART NAME 1 2 3 4 5 6 (PRODUCT LEVEL)	SEE PAGE
I	1	1	**243-0564**	1	HOSE AS	
	2	1	**258-3157**	1	TUBE AS	
Y	3	1	*258-3463*	1	MANIFOLD & MTG GP-CONTROL	248
	4	1	**263-5419**	1	SWITCH AS-ROCKER (MOTOR, 2-SPEED, AUXILIARY)	
	5	1	*148-8336*	1	CONNECTOR AS	
		1	**3J-1907**	1	SEAL-O-RING	
		1	**6V-8397**	1	SEAL-O-RING	
		1	**6V-8636**	1	CONNECTOR	
	6	1	*148-8378*	2	ELBOW AS	
					(EACH INCLUDES)	
		1	**3J-1907**	1	SEAL-O-RING	
		1	**6V-8397**	1	SEAL-O-RING	
		1	**6V-8724**	1	ELBOW	
	7	1	*148-8433*	1	TEE AS	
		1	**6V-8397**	2	SEAL-O-RING	
		1	**6V-9836**	1	TEE-SWIVEL	
	8	1	*148-8439*	1	TEE AS	
		1	**3J-1907**	1	SEAL-O-RING	
		1	**6V-8397**	2	SEAL-O-RING	
		1	**6V-8774**	1	TEE	
I	9	1	**196-3940**	1	HOSE AS	
I	10	1	**7I-5418**	1	HOSE AS	
	11	1	*148-8318*	2	CONNECTOR AS	
					(EACH INCLUDES)	
		1	**3J-1907**	1	SEAL-O-RING	
		1	**6V-8397**	1	SEAL-O-RING	
		1	**6V-8636**	1	CONNECTOR	

I-REFER TO HYDRAULIC INFORMATION SYSTEM
Y-SEPARATE ILLUSTRATION

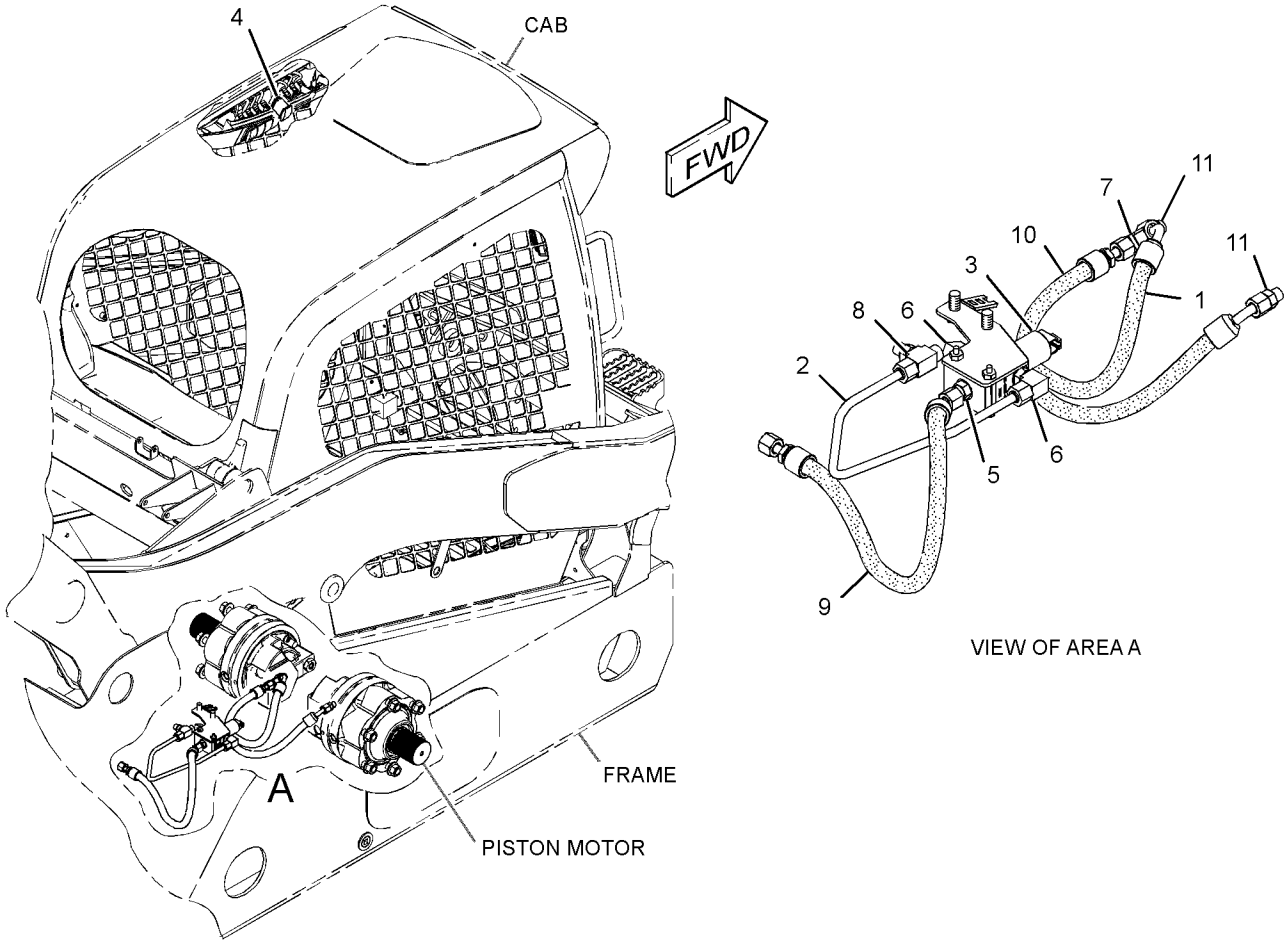

GRAPHIC #1 **<END>** g01340854

258-2589 MANIFOLD GP-RETURN

S/N: JAY1-UP

PART OF 258-2600 HYDRAULIC AR

SMCS-5264 **i02693316**

NOTE	REF NO	GRAPHIC REF	PART NUMBER	QTY	PART NAME 1 2 3 4 5 6 (PRODUCT LEVEL)	SEE PAGE
	1	1	**105-4593**	1	POPPET	
	2	1	*148-8407*	1	PLUG AS (STORAGE)	
		1	**3J-1907**	1	SEAL-O-RING	
		1	**9S-4191**	1	PLUG-O-RING	
	3	1	**212-6603**	1	PLUG AS	
		1	**6V-8978**	1	SEAL-O-RING	
	4	1	**212-6604**	1	SPRING	
	5	1	**305-4185**	1	BLOCK	
I	6	1	**258-3660**	1	HOSE AS	
	7	1	*148-8327*	2	CONNECTOR AS	
					(EACH INCLUDES)	
		1	**3D-2824**	1	SEAL-O-RING	
		1	**6V-8637**	1	CONNECTOR	
		1	**6V-9746**	1	SEAL-O-RING	
	8	1	*150-3072*	1	PLUG AS	
		1	**6V-8398**	1	SEAL-O-RING	
		1	**6V-9509**	1	PLUG (13/16-16-THD)	
	9	1	*164-5608*	2	CONNECTOR AS	
					(EACH INCLUDES)	
		1	**3K-0360**	1	SEAL-O-RING	
		1	**6V-8398**	1	SEAL-O-RING	
		1	**8T-1687**	1	CONNECTOR	
M	10	1	**266-3315**	3	BOLT-FLANGE HEAD (M8X1.25X25.5-MM)	
M	11	1	**5C-7261**	1	NUT (M8X1.25-THD)	
	12	1	**5P-4116**	4	WASHER-HARD (8.8X20.5X2-MM THK)	
	13	1	**6D-4246**	1	CLIP	
	14	1	*148-8362*	1	ELBOW AS	
		1	**3D-2824**	1	SEAL-O-RING	
		1	**5K-9090**	1	SEAL-O-RING	
		1	**8T-6684**	1	ELBOW	

I-REFER TO HYDRAULIC INFORMATION SYSTEM
M-METRIC PART

258-2589 **MANIFOLD GP-RETURN** *(contd.)* **i02693316**

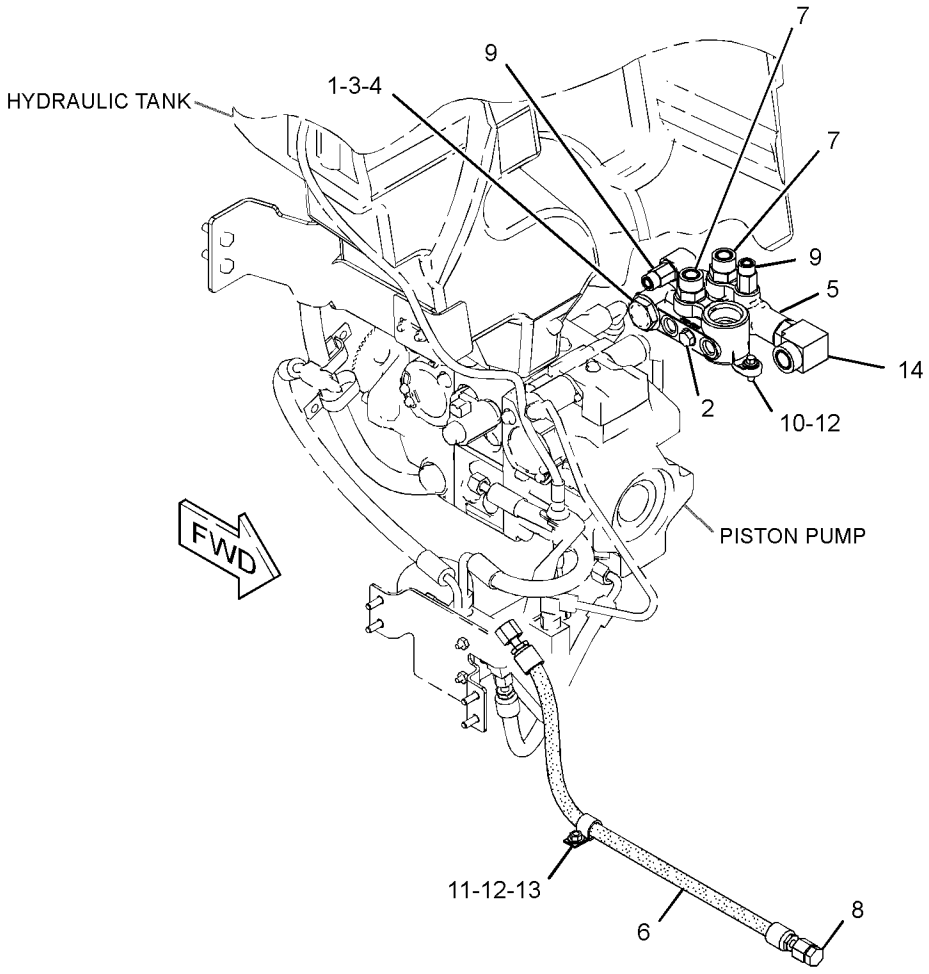

GRAPHIC #1 **<END>** g01352597

258-2408 MOTOR & MTG GP-HYDROSTATIC

S/N: JAY1-UP
PART OF 258-3200 POWER TRAIN AR
AN ATTACHMENT

SMCS-5058 **i02636730**

NOTE	REF NO	GRAPHIC REF	PART NUMBER	QTY	PART NAME 1 2 3 4 5 6 (PRODUCT LEVEL)	SEE PAGE
Y	1	1	**258-2442**	2	MOTOR GP-PISTON	134
Y	2	1	*262-3764*	2	SENSOR GP-SPEED	94
M	3	1	**282-2613**	12	NUT-FLANGE (M18X1.5-THD)	
M	4	1	**170-6705**	2	BOLT-SOCKET HEAD (M8X1.25X12-MM)	
	5	1	**6F-4718**	2	SEAL-O-RING	

M-METRIC PART
Y-SEPARATE ILLUSTRATION

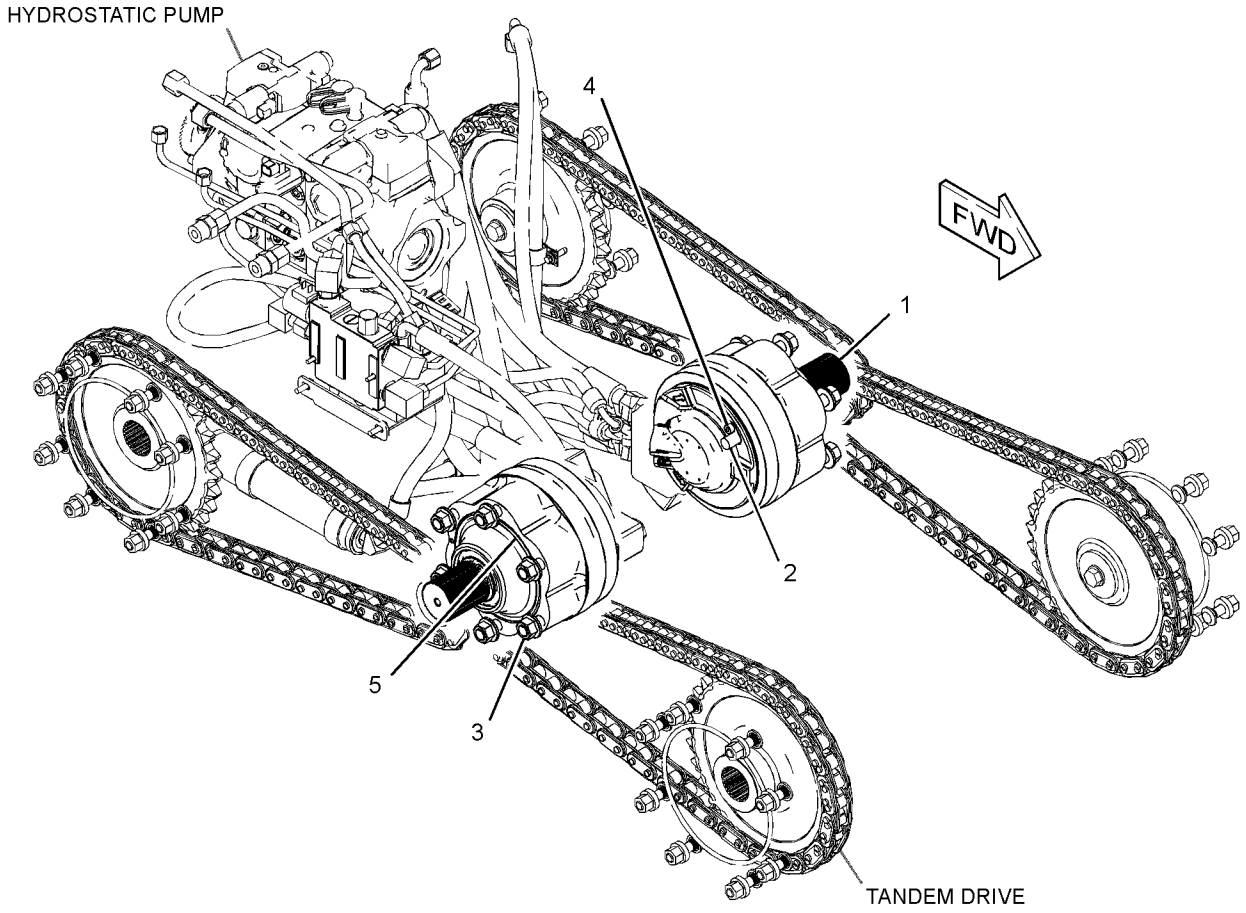

GRAPHIC #1 **<END>** g01326148

258-2409 MOTOR & MTG GP-HYDROSTATIC

S/N: JAY1-UP
PART OF 258-3400 POWER TRAIN AR
AN ATTACHMENT

SMCS-5058 **i02636731**

NOTE	REF NO	GRAPHIC REF	PART NUMBER	QTY	PART NAME 1 2 3 4 5 6 (PRODUCT LEVEL)	SEE PAGE
Y	1	1	**258-2520**	1	MOTOR GP-PISTON (2-SPEED, LH)	136
Y	2	1	**258-2521**	1	MOTOR GP-PISTON (2-SPEED, RH)	138
Y	3	1	*262-3764*	2	SENSOR GP-SPEED	94
M	4	1	**282-2613**	12	NUT-FLANGE (M18X1.5-THD)	
M	5	1	**170-6705**	2	BOLT-SOCKET HEAD (M8X1.25X12-MM)	
	6	1	**6F-4718**	2	SEAL-O-RING	

M-METRIC PART
Y-SEPARATE ILLUSTRATION

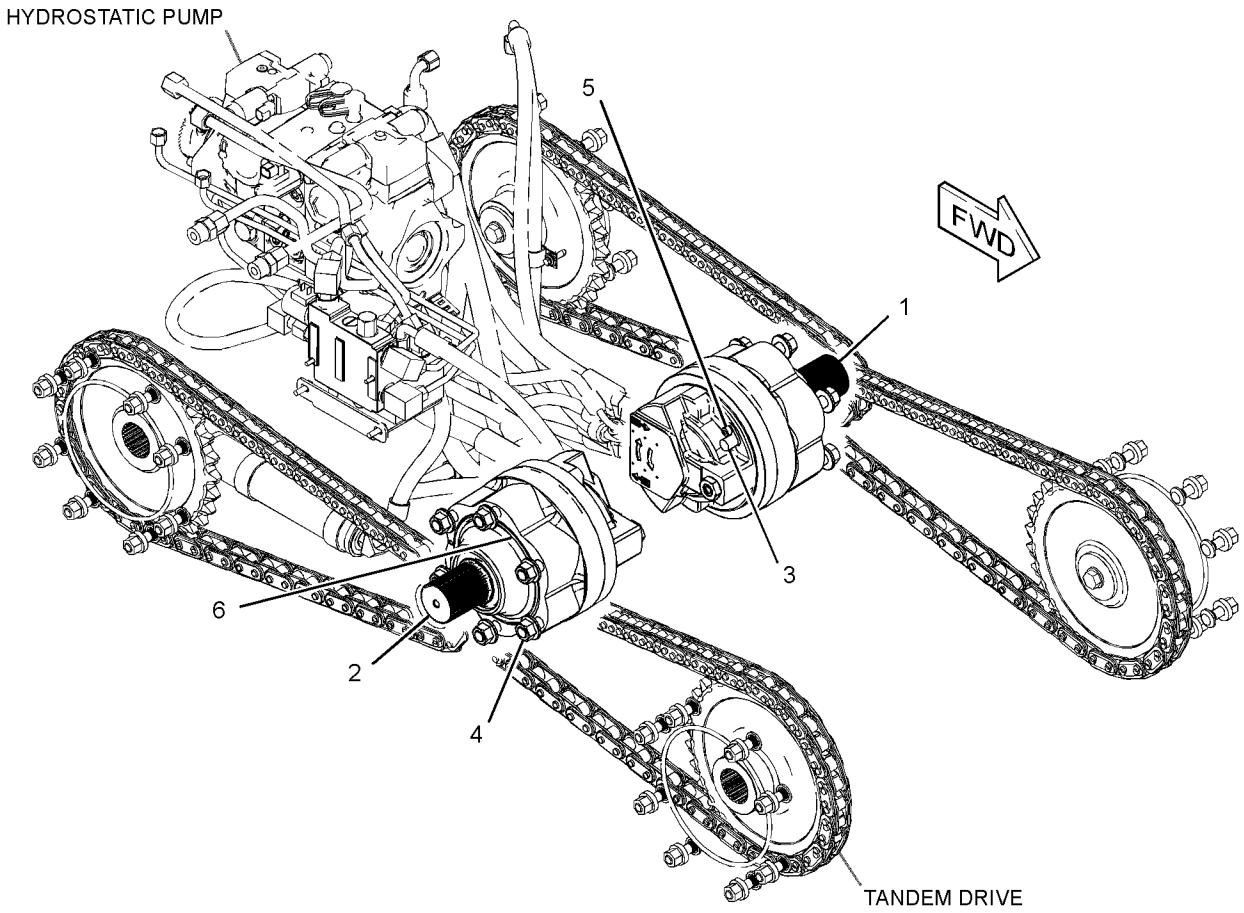

GRAPHIC #1 **<END>** g01326160

258-2442 MOTOR GP-PISTON

S/N: JAY1-UP

PART OF 258-2408 MOTOR & MTG GP-HYDROSTATIC

AN ATTACHMENT

SMCS-5058 **i02636739**

NOTE	REF NO	GRAPHIC REF	PART NUMBER	QTY	PART NAME 1 2 3 4 5 6 (PRODUCT LEVEL)	SEE PAGE
	1	1	**280-7843**	1	VALVE GP-FLUSHING	
	2	1	**280-7837**	1	KIT-VALVE	
					(INCLUDES DISTRIBUTION VALVE BODY, PIN, RINGS & SPRINGS)	
	3	1	**280-7838**	1	KIT-BEARING	
					(INCLUDES INCLUDES SEALS, TAPERED ROLLER BEARINGS, WASHER & RING)	
	4	1	**280-7839**	6	STUD	
	5	1	**280-7840**	1	KIT-BRAKE	
					(INCLUDES STEEL BRAKE PISTON, SEALS & SPRINGS)	
	6	1	**280-7841**	1	SHAFT-DRIVE	
					PARTS SHOWN IN GRAPHIC(S) WITHOUT A REFERENCE NUMBER ARE NOT SERVICED SEPARATELY	
					AVAILABLE REPAIR KIT(S):	
			280-7842	1	KIT-VALVE	
					(INCLUDES RINGS, SEALS & PINS)	

258-2442 MOTOR GP-PISTON *(contd.)* **i02636739**

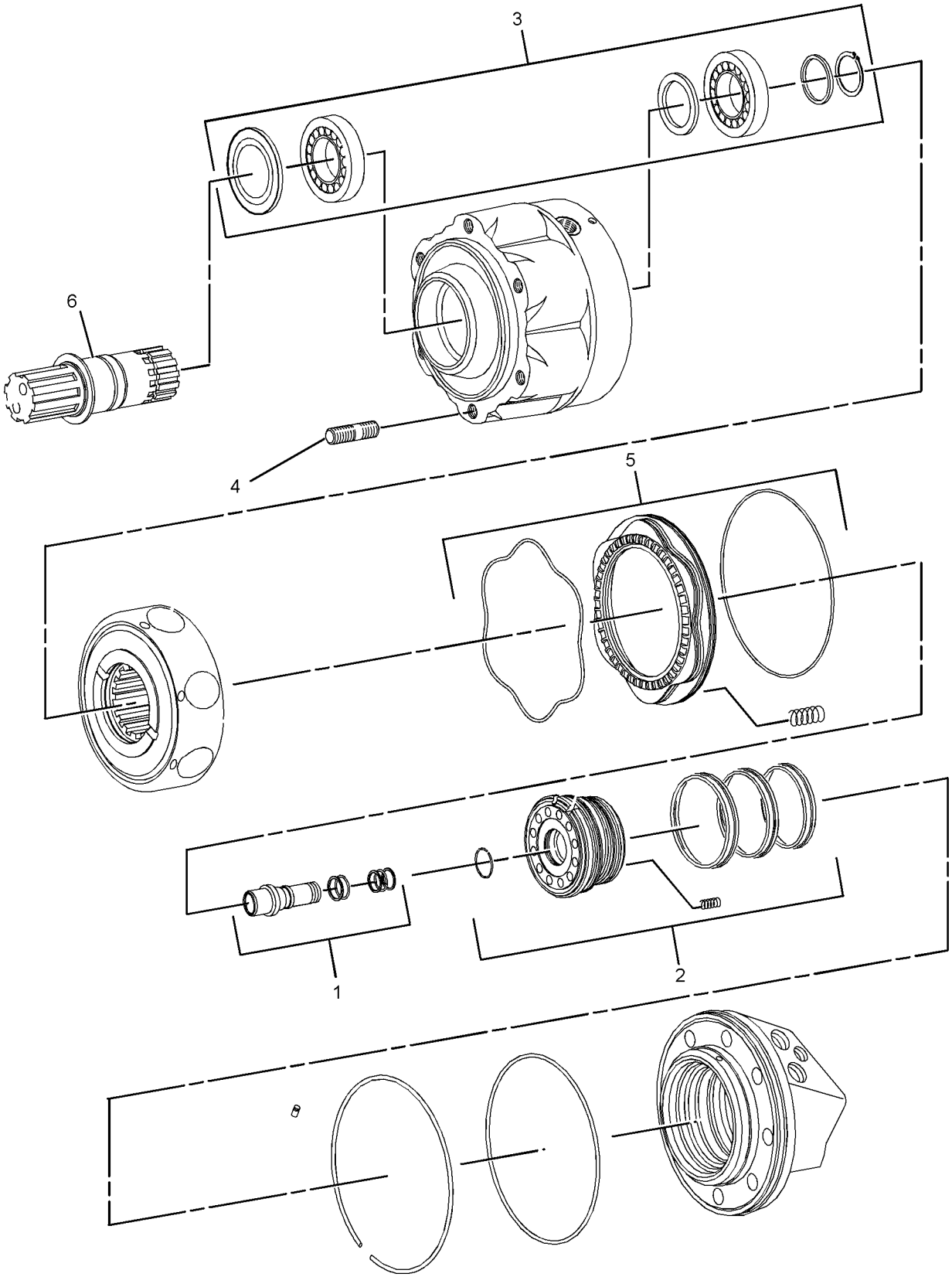

GRAPHIC #1 **<END>** g01327439

258-2520 MOTOR GP-PISTON

S/N: JAY1-UP

PART OF 258-2409 MOTOR & MTG GP-HYDROSTATIC

AN ATTACHMENT

SMCS-5058 **i02636745**

NOTE	REF NO	GRAPHIC REF	PART NUMBER	QTY	PART NAME 1 2 3 4 5 6 (PRODUCT LEVEL)	SEE PAGE
	1	1	**280-7846**	1	VALVE GP-SPEED CONTROL (2-SPEED)	
	2	1	**280-7850**	1	KIT-VALVE (DISTRIBUTION)	
					(INCLUDES DISTRIBUTION VALVE BODY, PIN, RINGS, SPRINGS & SEAL)	
	3	1	**280-7838**	1	KIT-BEARING (PISTON MOTOR)	
					(INCLUDES SEALS, TAPERED ROLLER BEARINGS, WASHER & RING)	
	4	1	**280-7839**	6	STUD	
	5	1	**280-7840**	1	KIT-BRAKE (PISTON MOTOR)	
					(INCLUDES STEEL BRAKE PISTON, SEALS & SPRINGS)	
	6	1	**280-7841**	1	SHAFT-DRIVE	
	7	1	**280-7848**	1	VALVE GP-FLUSHING	
					PARTS SHOWN IN GRAPHIC(S) WITHOUT A REFERENCE NUMBER ARE NOT SERVICED SEPARATELY	
					AVAILABLE REPAIR KIT(S):	
			280-7849	1	KIT-VALVE (PISTON MOTOR)	
					(INCLUDES RINGS, SEALS & PINS)	

258-2520 MOTOR GP-PISTON *(contd.)* **i02636745**

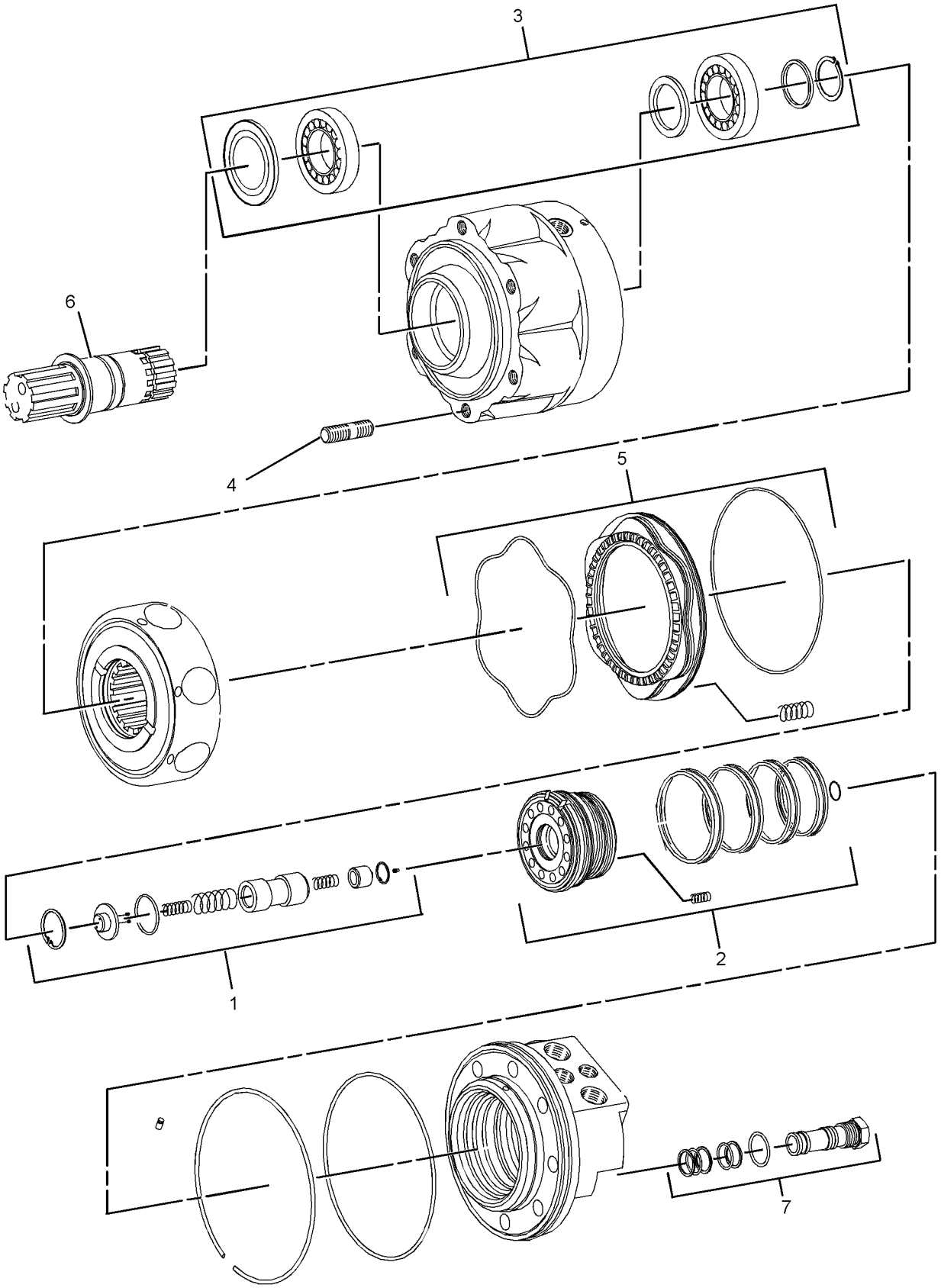

GRAPHIC #1 **<END>** g01327254

258-2521 MOTOR GP-PISTON

S/N: JAY1-UP

PART OF 258-2409 MOTOR & MTG GP-HYDROSTATIC

AN ATTACHMENT

SMCS-5058 **i02636746**

NOTE	REF NO	GRAPHIC REF	PART NUMBER	QTY	PART NAME 1 2 3 4 5 6 (PRODUCT LEVEL)	SEE PAGE
	1	1	**280-7846**	1	VALVE GP-SPEED CONTROL (2-SPEED)	
	2	1	**280-7850**	1	KIT-VALVE	
					(INCLUDES DISTRIBUTION VALVE BODY, PIN, RINGS, SPRINGS & SEAL)	
	3	1	**280-7838**	1	KIT-BEARING	
					(INCLUDES SEALS, TAPERED ROLLER BEARINGS, WASHER & RING)	
	4	1	**280-7839**	6	STUD	
	5	1	**280-7840**	1	KIT-BRAKE	
					(INCLUDES STEEL BRAKE PISTON, SEALS & SPRINGS)	
	6	1	**280-7841**	1	SHAFT-DRIVE	
	7	1	**280-7848**	1	VALVE GP-FLUSHING	
					PARTS SHOWN IN GRAPHIC(S) WITHOUT A REFERENCE NUMBER ARE NOT SERVICED SEPARATELY	
					AVAILABLE REPAIR KIT(S):	
			280-7849	1	KIT-VALVE	
					(INCLUDES RINGS, SEALS & PINS)	

258-2521 MOTOR GP-PISTON *(contd.)* **i02636746**

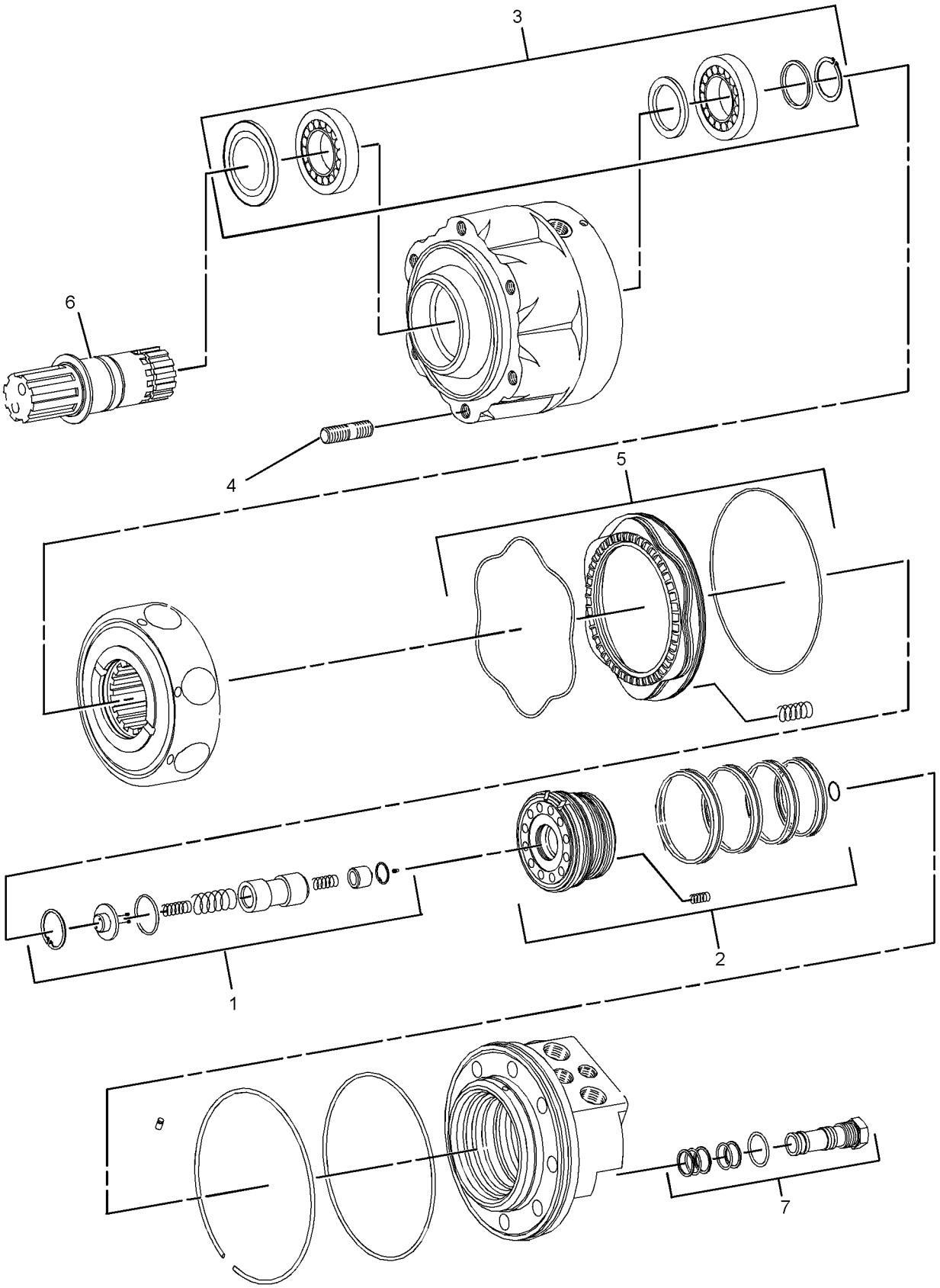

GRAPHIC #1 **<END>** g01327254

258-3318 MOUNTING GP-PUMP

S/N: JAY1-UP

PART OF 258-2445 INSTALLATION AR-ENGINE

SMCS-3203, 5062, 5070 **i02606322**

NOTE	REF NO	GRAPHIC REF	PART NUMBER	QTY	PART NAME 1 2 3 4 5 6 (PRODUCT LEVEL)	SEE PAGE
	1	1	**226-7635**	1	FLANGE	
	2	1	**258-3319**	1	PLATE-ADAPTER	
	3	1	**8T-4121**	12	WASHER-HARD (11X21X2.5-MM THK)	
M	4	1	**8T-4195**	8	BOLT (M10X1.5X30-MM)	
M	5	1	**8T-4196**	12	BOLT (M10X1.5X35-MM)	

M-METRIC PART

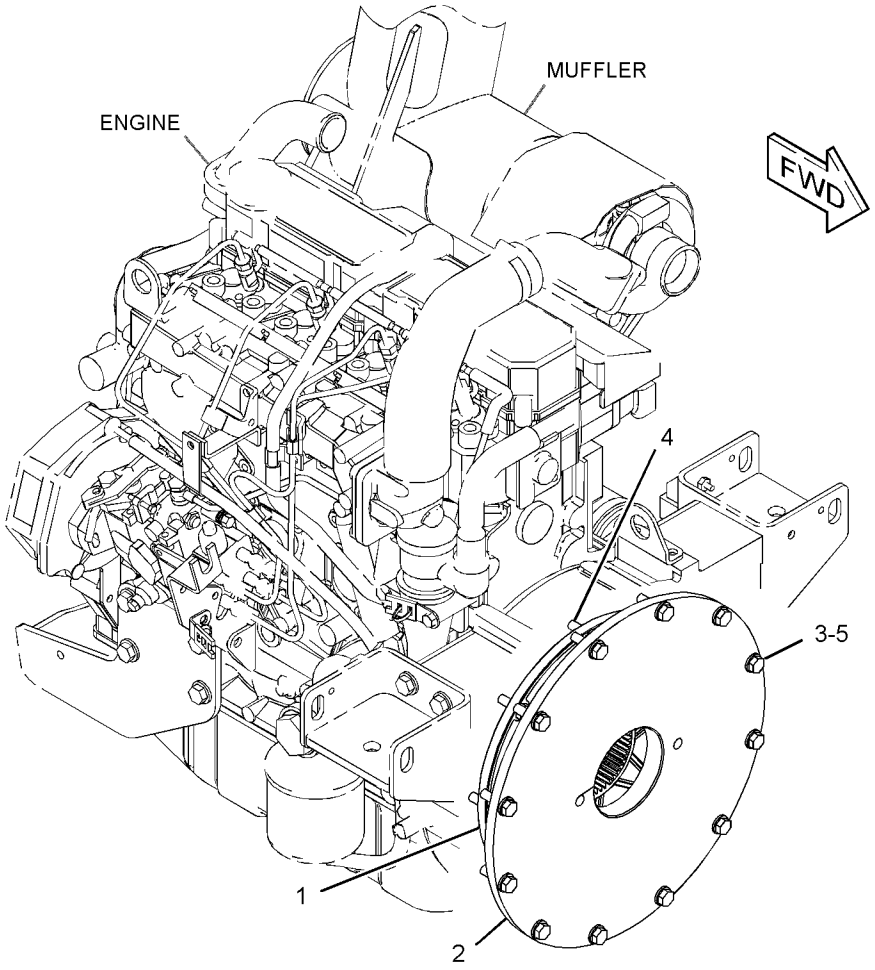

GRAPHIC #1 **<END>** g01320472

258-3200 POWER TRAIN AR

S/N: JAY1-UP
PART OF 258-3748, 258-3750 MACHINE AR-SPECIAL
AN ATTACHMENT

SMCS-3203, 4062, 5058, 5070 **i02636750**

NOTE	PART NUMBER	QTY	PART NAME 1 2 3 4 5 6 (PRODUCT LEVEL)	SEE PAGE
Y	*258-2860*	1	DRIVE GP-TANDEM	118
Y	*292-2439*	1	FITTING GP-HYDRAULIC	191
Y	*258-2430*	1	LINES GP-HYDROSTATIC	123
Y	*258-2408*	1	MOTOR & MTG GP-HYDROSTATIC	132
Y-SEPARATE ILLUSTRATION				

<END>

258-3400 POWER TRAIN AR

S/N: JAY1-UP
PART OF 258-3682, 258-3753 MACHINE AR-SPECIAL
AN ATTACHMENT

SMCS-3203, 4062, 5058, 5070 **i02636753**

NOTE	PART NUMBER	QTY	PART NAME 1 2 3 4 5 6 (PRODUCT LEVEL)	SEE PAGE
Y	*258-2862*	1	DRIVE GP-TANDEM	119
Y	*289-0848*	1	FILM GP (2-SPEED)	465
Y	*258-2431*	1	LINES GP-HYDROSTATIC	125
Y	*258-3151*	1	MANIFOLD & LINES GP-CONTROL (MOTOR, 2-SPEED)	128
Y	*258-2409*	1	MOTOR & MTG GP-HYDROSTATIC	133
Y-SEPARATE ILLUSTRATION				

<END>

258-2406 PUMP & MTG GP-HYDROSTATIC

S/N: JAY1-UP

PART OF 258-3682, 258-3748, 258-3750, 258-3753 MACHINE AR-SPECIAL AN ATTACHMENT

SMCS-3203, 5070 **i02625433**

NOTE	REF NO	GRAPHIC REF	PART NUMBER	QTY	PART NAME 1 2 3 4 5 6 (PRODUCT LEVEL)	SEE PAGE
	1	1	**165-0142**	2	WASHER-HARD (14.8X27X3-MM THK)	
M	2	1	**167-4339**	2	BOLT (M14X2X40-MM)	
	3	1	**252-9197**	1	BOLT-SOCKET HEAD (M12X1.75X35-MM)	
Y	4	1	**258-2404**	1	PUMP GP-PISTON	143
	5	1	**263-4996**	1	HUB AS-COUPLING	
		1	**096-0194**	1	RING-RETAINING	

M-METRIC PART
Y-SEPARATE ILLUSTRATION

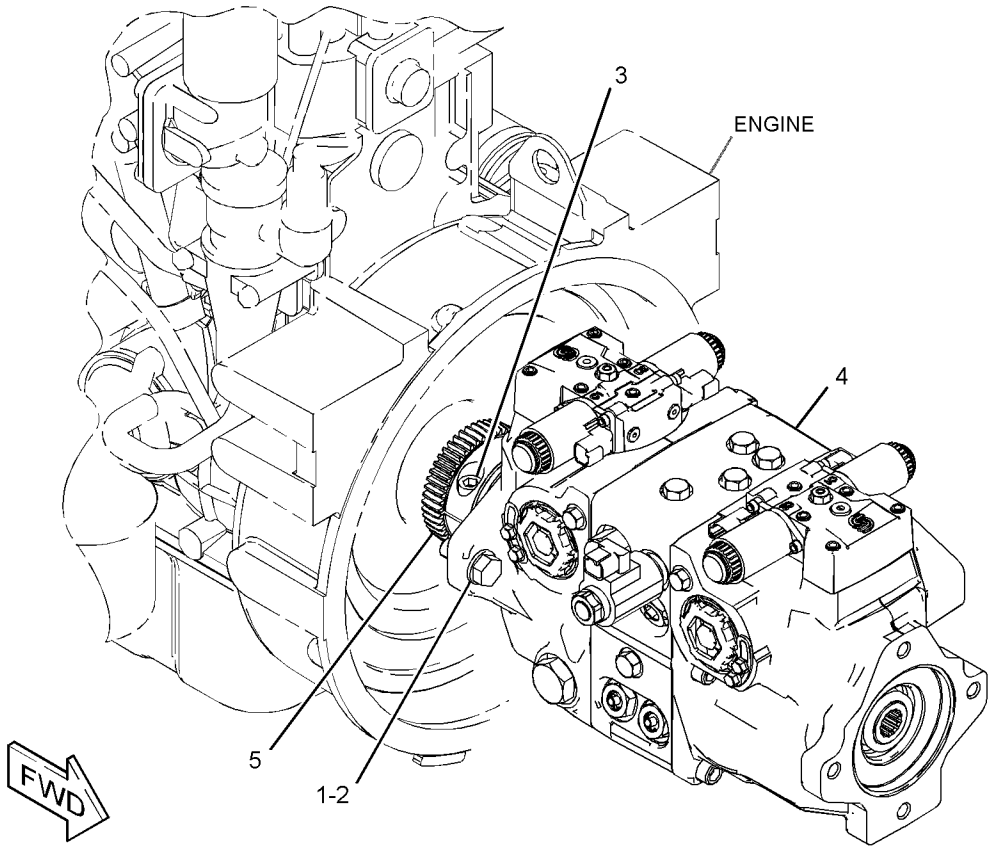

GRAPHIC #1 **<END>** g01333116

258-2404 PUMP GP-PISTON

S/N: JAY1-UP

PART OF 258-2406 PUMP & MTG GP-HYDROSTATIC

AN ATTACHMENT

SMCS-3203, 5070 **i02625443**

NOTE	REF NO	GRAPHIC REF	PART NUMBER	QTY	PART NAME 1 2 3 4 5 6 (PRODUCT LEVEL)	SEE PAGE
	1	1,2	**278-8737**	2	VALVE GP-PUMP CONTROL	
	2	1,2	**278-8740**	2	SWASHPLATE	
	3	1	**278-8748**	1	SHAFT-DRIVE	
L	4	1,2	**280-7860**	2	BLOCK-SLIDER	
L	5	1,2	**278-8751**	4	SPRING	
	6	1	**278-8746**	1	VALVE GP-RELIEF (CHARGE)	
	7	1	**278-8743**	1	VALVE GP-SOLENOID (PARKING BRAKE)	
	8	1	**278-8745**	4	VALVE GP-RELIEF (CROSSOVER)	
	9	1	**278-8750**	1	PLATE	
	10	1	**278-8749**	1	PLATE	
	11	2	**278-8747**	1	SHAFT-DRIVE	
	12	1,2	**9S-8002**	4	PLUG	
	13	1	**9S-8004**	1	PLUG-O-RING	
	14	2	**9S-8008**	2	PLUG-O-RING	
	15	1,2	**278-8741**	2	KIT-BEARING	
	16	1,2	**278-8735**	2	KIT-CYLINDER BLOCK	
M	17	1	**8C-3413**	6	BOLT-SOCKET HEAD (M12X1.75X120-MM)	
					PARTS SHOWN IN GRAPHIC(S) WITHOUT A REFERENCE NUMBER ARE NOT SERVICED SEPARATELY	
					AVAILABLE REPAIR KIT(S):	
			278-8736	1	KIT-SEAL	
					(KIT INCLUDES O-RINGS, RINGS, PINS, GASKETS, SEAL & RETAINER)	
L			**278-8738**	2	KIT-PISTON	
			278-8742	1	KIT-BEARING	
					(KIT INCLUDES COUPLING, BEARINGS & RINGS)	
			278-8744	4	KIT-SOLENOID	

L-KIT MARKED L SERVICES PARTS MARKED L
M-METRIC PART

258-2404 PUMP GP-PISTON *(contd.)* **i02625443**

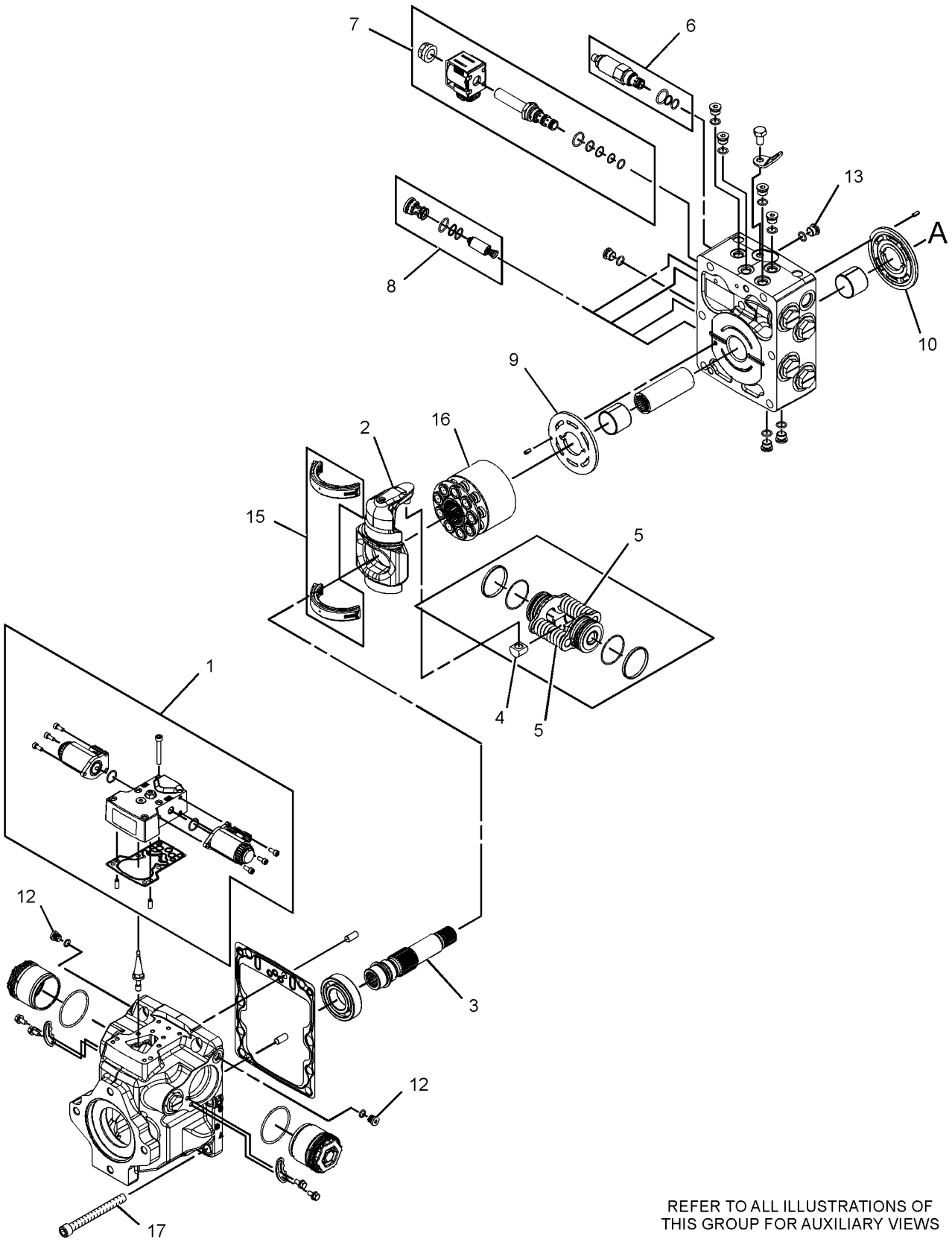

REFER TO ALL ILLUSTRATIONS OF
THIS GROUP FOR AUXILIARY VIEWS

GRAPHIC #1

g01332812

258-2404 PUMP GP-PISTON *(contd.)* **i02625443**

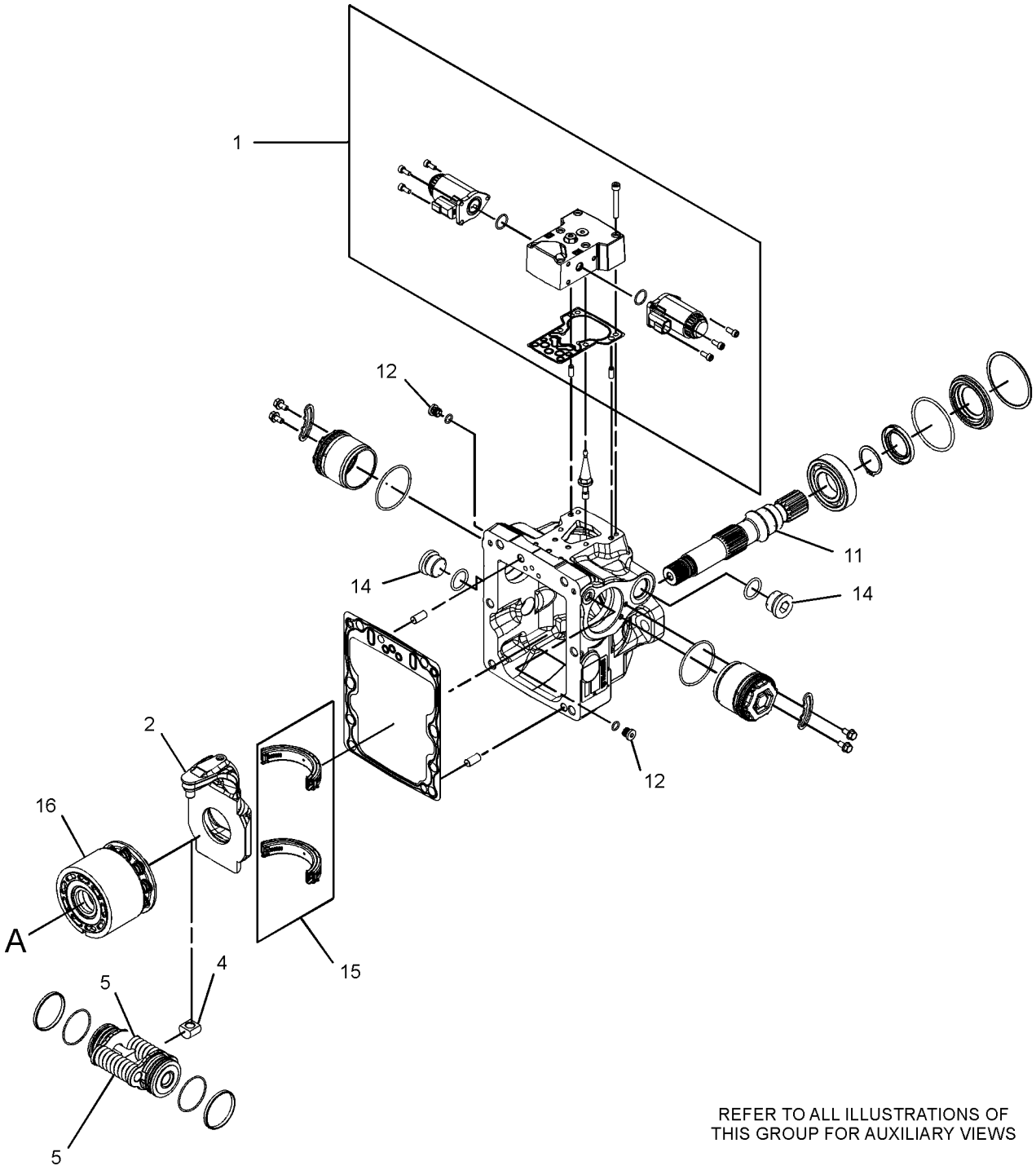

REFER TO ALL ILLUSTRATIONS OF
THIS GROUP FOR AUXILIARY VIEWS

GRAPHIC #2 **<END>** g01332841

142-8728 TIRE & RIM GP–LH

S/N: JAY1-UP
(16.5X9.75). DIRECTIONAL TIRE
PART OF 142-7494 WHEEL & TIRE AR
AN ATTACHMENT

SMCS-4202 **i02570908**

NOTE	PART NUMBER	QTY	PART NAME 1 2 3 4 5 6 (PRODUCT LEVEL)	SEE PAGE
	150-8599	1	VALVE AS-TIRE	
	142-8731	1	WHEEL AS	
	142-8726	1	TIRE (12-R16.5)	

<END>

142-8737 TIRE & RIM GP–RH

S/N: JAY1-UP
(16.5X9.75). DIRECTIONAL TIRE
PART OF 142-7494 WHEEL & TIRE AR
AN ATTACHMENT

SMCS-4202 **i02570909**

NOTE	PART NUMBER	QTY	PART NAME 1 2 3 4 5 6 (PRODUCT LEVEL)	SEE PAGE
	150-8599	1	VALVE AS-TIRE	
	142-8731	1	WHEEL AS	
	142-8726	1	TIRE (12-R16.5)	

<END>

142-8738 TIRE & RIM GP

S/N: JAY1-UP
(16.5X9.75). DIRECTIONAL TIRE
PART OF 142-7495 WHEEL & TIRE AR
AN ATTACHMENT

SMCS-4202 **i02570926**

NOTE	PART NUMBER	QTY	PART NAME 1 2 3 4 5 6 (PRODUCT LEVEL)	SEE PAGE
	150-8599	1	VALVE AS-TIRE	
	142-8759	1	WHEEL AS	
	142-8726	1	TIRE (12-R16.5)	

<END>

142-9025 TIRE & RIM GP

S/N: JAY1-UP
(16.5X9.75). DIRECTIONAL TIRE
PART OF 142-7495 WHEEL & TIRE AR
AN ATTACHMENT

SMCS-4202 **i02570929**

NOTE	PART NUMBER	QTY	PART NAME 1 2 3 4 5 6 (PRODUCT LEVEL)	SEE PAGE
	150-8599	1	VALVE AS-TIRE	
	142-8759	1	WHEEL AS	
	142-8726	1	TIRE (12-R16.5)	

<END>

154-3978 TIRE & RIM GP—LH

S/N: JAY1-UP
(16.5X9.75). DIRECTIONAL TIRE, HEAVY DUTY
PART OF 154-3972 WHEEL & TIRE AR
AN ATTACHMENT

SMCS-4202 **i02474350**

NOTE	PART NUMBER	QTY	PART NAME 1 2 3 4 5 6 (PRODUCT LEVEL)	SEE PAGE
	150-8599	1	VALVE AS-TIRE	
	142-8731	1	WHEEL AS	
	154-3982	1	TIRE (12-R16.5)	

<END>

154-3979 TIRE & RIM GP—RH

S/N: JAY1-UP
(16.5X9.75). DIRECTIONAL TIRE, HEAVY DUTY
PART OF 154-3972 WHEEL & TIRE AR
AN ATTACHMENT

SMCS-4202 **i02474380**

NOTE	PART NUMBER	QTY	PART NAME 1 2 3 4 5 6 (PRODUCT LEVEL)	SEE PAGE
	150-8599	1	VALVE AS-TIRE	
	142-8731	1	WHEEL AS	
	154-3982	1	TIRE (12-R16.5)	

<END>

154-3980 TIRE & RIM GP

S/N: JAY1-UP
(16.5X9.75). DIRECTIONAL TIRE, HEAVY DUTY
PART OF 154-3973 WHEEL & TIRE AR
AN ATTACHMENT

SMCS-4202 **i02571039**

NOTE	PART NUMBER	QTY	PART NAME 1 2 3 4 5 6 (PRODUCT LEVEL)	SEE PAGE
	150-8599	1	VALVE AS-TIRE	
	142-8759	1	WHEEL AS	
	154-3982	1	TIRE (12-R16.5)	

<END>

154-3981 TIRE & RIM GP

S/N: JAY1-UP
(16.5X9.75). DIRECTIONAL TIRE, HEAVY DUTY
PART OF 154-3973 WHEEL & TIRE AR
AN ATTACHMENT

SMCS-4202 **i02571034**

NOTE	PART NUMBER	QTY	PART NAME 1 2 3 4 5 6 (PRODUCT LEVEL)	SEE PAGE
	142-8759	1	WHEEL AS	
	150-8599	1	VALVE AS-TIRE	
	154-3982	1	TIRE (12-R16.5)	

<END>

165-4901 TIRE & RIM GP—LH

S/N: JAY1-UP
(16.5X9.75). DIRECTIONAL TIRE, HEAVY DUTY
PART OF 165-4898 WHEEL & TIRE AR
AN ATTACHMENT

SMCS-4202 **i02474449**

NOTE	PART NUMBER	QTY	PART NAME 1 2 3 4 5 6 (PRODUCT LEVEL)	SEE PAGE
	150-8599	1	VALVE AS-TIRE	
	142-8731	1	WHEEL AS	
	165-4909	1	TIRE (12-16.5)	

<END>

165-4902 TIRE & RIM GP—RH

S/N: JAY1-UP
(16.5X9.75). DIRECTIONAL TIRE, HEAVY DUTY
PART OF 165-4898 WHEEL & TIRE AR
AN ATTACHMENT

SMCS-4202 **i02474458**

NOTE	PART NUMBER	QTY	PART NAME 1 2 3 4 5 6 (PRODUCT LEVEL)	SEE PAGE
	150-8599	1	VALVE AS-TIRE	
	142-8731	1	WHEEL AS	
	165-4909	1	TIRE (12-16.5)	

<END>

165-4906 TIRE & RIM GP

S/N: JAY1-UP
(16.5X9.75). DIRECTIONAL TIRE, HEAVY DUTY
PART OF 165-4903 WHEEL & TIRE AR
AN ATTACHMENT

SMCS-4202 **i02571051**

NOTE	PART NUMBER	QTY	PART NAME 1 2 3 4 5 6 (PRODUCT LEVEL)	SEE PAGE
	150-8599	1	VALVE AS-TIRE	
	142-8759	1	WHEEL AS	
	165-4909	1	TIRE (12-16.5)	

<END>

165-4907 TIRE & RIM GP

S/N: JAY1-UP
(16.5X9.75). DIRECTIONAL TIRE, HEAVY DUTY
PART OF 165-4903 WHEEL & TIRE AR
AN ATTACHMENT

SMCS-4202 **i02571052**

NOTE	PART NUMBER	QTY	PART NAME 1 2 3 4 5 6 (PRODUCT LEVEL)	SEE PAGE
	150-8599	1	VALVE AS-TIRE	
	142-8759	1	WHEEL AS	
	165-4909	1	TIRE (12-16.5)	

<END>

185-8674 TIRE & RIM GP

S/N: JAY1-UP
(546X248). DIRECTIONAL TIRE
PART OF 185-8662 WHEEL & TIRE AR
AN ATTACHMENT

SMCS-4202 **i02571069**

NOTE	PART NUMBER	QTY	PART NAME 1 2 3 4 5 6 (PRODUCT LEVEL)	SEE PAGE
	150-8599	1	VALVE AS-TIRE	
	185-9936	1	WHEEL AS	
	185-9935	1	TIRE (305-546)	

<END>

185-8675 TIRE & RIM GP

S/N: JAY1-UP
(546X248). DIRECTIONAL TIRE
PART OF 185-8662 WHEEL & TIRE AR
AN ATTACHMENT

SMCS-4202 **i02571070**

NOTE	PART NUMBER	QTY	PART NAME 1 2 3 4 5 6 (PRODUCT LEVEL)	SEE PAGE
	150-8599	1	VALVE AS-TIRE	
	185-9936	1	WHEEL AS	
	185-9935	1	TIRE (305-546)	

<END>

185-8676 TIRE & RIM GP—LH

S/N: JAY1-UP
(546X248). DIRECTIONAL TIRE
PART OF 185-8663 WHEEL & TIRE AR
AN ATTACHMENT

SMCS-4202 **i02474467**

NOTE	PART NUMBER	QTY	PART NAME 1 2 3 4 5 6 (PRODUCT LEVEL)	SEE PAGE
	150-8599	1	VALVE AS-TIRE	
	185-9937	1	WHEEL AS	
	185-9935	1	TIRE (305-546)	

<END>

185-8677 TIRE & RIM GP–RH

S/N: JAY1-UP
(547X248). DIRECTIONAL TIRE
PART OF 185-8663 WHEEL & TIRE AR
AN ATTACHMENT

SMCS-4202 **i02474504**

NOTE	PART NUMBER	QTY	PART NAME 1 2 3 4 5 6 (PRODUCT LEVEL)	SEE PAGE
	150-8599	1	VALVE AS-TIRE	
	185-9937	1	WHEEL AS	
	185-9935	1	TIRE (305-546)	

<END>

185-9928 TIRE & RIM GP–LH

S/N: JAY1-UP
(16.5X9.75). DIRECTIONAL TIRE
PART OF 185-8666 WHEEL & TIRE AR
AN ATTACHMENT

SMCS-4202 **i02571082**

NOTE	PART NUMBER	QTY	PART NAME 1 2 3 4 5 6 (PRODUCT LEVEL)	SEE PAGE
	150-8599	1	VALVE AS-TIRE	
	142-8759	1	WHEEL AS	
	185-9933	1	TIRE (12-16.5)	

<END>

185-9929 TIRE & RIM GP–RH

S/N: JAY1-UP
(16.5X9.75). DIRECTIONAL TIRE
PART OF 185-8666 WHEEL & TIRE AR
AN ATTACHMENT

SMCS-4202 **i02571083**

NOTE	PART NUMBER	QTY	PART NAME 1 2 3 4 5 6 (PRODUCT LEVEL)	SEE PAGE
	150-8599	1	VALVE AS-TIRE	
	142-8759	1	WHEEL AS	
	185-9933	1	TIRE (12-16.5)	

<END>

185-9930 TIRE & RIM GP–LH

S/N: JAY1-UP
(16.5X9.75). DIRECTIONAL TIRE
PART OF 185-8667 WHEEL & TIRE AR
AN ATTACHMENT

SMCS-4202 **i02362232**

NOTE	PART NUMBER	QTY	PART NAME 1 2 3 4 5 6 (PRODUCT LEVEL)	SEE PAGE
	150-8599	1	VALVE AS-TIRE	
	142-8731	1	WHEEL AS	
	185-9933	1	TIRE (12-16.5)	

<END>

185-9931 TIRE & RIM GP–RH

S/N: JAY1-UP
(16.5X9.75). DIRECTIONAL TIRE
PART OF 185-8667 WHEEL & TIRE AR
AN ATTACHMENT

SMCS-4202 **i02362236**

NOTE	PART NUMBER	QTY	PART NAME 1 2 3 4 5 6 (PRODUCT LEVEL)	SEE PAGE
	150-8599	1	VALVE AS-TIRE	
	142-8731	1	WHEEL AS	
	185-9933	1	TIRE (12-16.5)	

<END>

188-0124 TIRE & RIM GP–LH

S/N: JAY1-UP
(16.5X9.75). DIRECTIONAL TIRE
PART OF 187-3239 WHEEL & TIRE AR
AN ATTACHMENT

SMCS-4202 **i02474523**

NOTE	PART NUMBER	QTY	PART NAME 1 2 3 4 5 6 (PRODUCT LEVEL)	SEE PAGE
	142-8731	1	WHEEL AS	
	150-8599	1	VALVE AS-TIRE	
	185-9933	1	TIRE (12-16.5)	

<END>

188-0125 TIRE & RIM GP–RH

S/N: JAY1-UP
(16.5X9.75). DIRECTIONAL TIRE
PART OF 187-3239 WHEEL & TIRE AR
AN ATTACHMENT

SMCS-4202 **i02474537**

NOTE	PART NUMBER	QTY	PART NAME 1 2 3 4 5 6 (PRODUCT LEVEL)	SEE PAGE
	142-8731	1	WHEEL AS	
	150-8599	1	VALVE AS-TIRE	
	185-9933	1	TIRE (12-16.5)	

<END>

199-5438 TIRE & RIM GP–LH

S/N: JAY1-UP
(16.5X12). DIRECTIONAL TIRE
PART OF 178-2256 WHEEL & TIRE AR
AN ATTACHMENT

SMCS-4202 **i02362244**

NOTE	PART NUMBER	QTY	PART NAME 1 2 3 4 5 6 (PRODUCT LEVEL)	SEE PAGE
	150-8599	1	VALVE AS-TIRE	
	178-2270	1	WHEEL AS	
	199-5440	1	TIRE (33-15.5-16.5)	

<END>

199-5439 TIRE & RIM GP–RH

S/N: JAY1-UP
(16.5X12). DIRECTIONAL TIRE
PART OF 178-2256 WHEEL & TIRE AR
AN ATTACHMENT

SMCS-4202 **i02362243**

NOTE	PART NUMBER	QTY	PART NAME 1 2 3 4 5 6 (PRODUCT LEVEL)	SEE PAGE
	150-8599	1	VALVE AS-TIRE	
	178-2270	1	WHEEL AS	
	199-5440	1	TIRE (33-15.5-16.5)	

<END>

228-9220 TIRE & RIM GP

S/N: JAY1-UP
(16.5X9.75)
PART OF 228-9217 WHEEL & TIRE AR
AN ATTACHMENT

SMCS-4202 **i02571288**

NOTE	PART NUMBER	QTY	PART NAME 1 2 3 4 5 6 (PRODUCT LEVEL)	SEE PAGE
	150-8599	1	VALVE AS-TIRE	
	142-8731	1	WHEEL AS	
	225-9269	1	TIRE (12-R16.5)	

<END>

228-9221 TIRE & RIM GP

S/N: JAY1-UP
(16.5X9.75)
PART OF 228-9219 WHEEL & TIRE AR
AN ATTACHMENT

SMCS-4202 **i02571289**

NOTE	PART NUMBER	QTY	PART NAME 1 2 3 4 5 6 (PRODUCT LEVEL)	SEE PAGE
	150-8599	1	VALVE AS-TIRE	
	142-8759	1	WHEEL AS	
	225-9269	1	TIRE (12-R16.5)	

<END>

265-2898 TIRE & RIM GP—LH

S/N: JAY1-UP
PART OF 252-0346 WHEEL & TIRE AR
AN ATTACHMENT

SMCS-4202 **i02361217**

NOTE	PART NUMBER	QTY	PART NAME 1 2 3 4 5 6 (PRODUCT LEVEL)	SEE PAGE
	150-8599	1	VALVE AS-TIRE	
	142-8731	1	WHEEL AS	
	222-3963	1	TIRE (12-16.5)	

<END>

265-2899 TIRE & RIM GP—RH

S/N: JAY1-UP
PART OF 252-0346 WHEEL & TIRE AR
AN ATTACHMENT

SMCS-4202 **i02361220**

NOTE	PART NUMBER	QTY	PART NAME 1 2 3 4 5 6 (PRODUCT LEVEL)	SEE PAGE
	150-8599	1	VALVE AS-TIRE	
	142-8731	1	WHEEL AS	
	222-3963	1	TIRE (12-16.5)	

<END>

265-2900 TIRE & RIM GP—LH

S/N: JAY1-UP
PART OF 252-0347 WHEEL & TIRE AR
AN ATTACHMENT

SMCS-4202 **i02279760**

NOTE	PART NUMBER	QTY	PART NAME 1 2 3 4 5 6 (PRODUCT LEVEL)	SEE PAGE
	150-8599	1	VALVE AS-TIRE	
	142-8759	1	WHEEL AS	
	222-3963	1	TIRE (12-16.5)	

<END>

265-2901 TIRE & RIM GP—RH

S/N: JAY1-UP
PART OF 252-0347 WHEEL & TIRE AR
AN ATTACHMENT

SMCS-4202 **i02279766**

NOTE	PART NUMBER	QTY	PART NAME 1 2 3 4 5 6 (PRODUCT LEVEL)	SEE PAGE
	150-8599	1	VALVE AS-TIRE	
	142-8759	1	WHEEL AS	
	222-3963	1	TIRE (12-16.5)	

<END>

142-7494 WHEEL & TIRE AR—PNEUMATIC

S/N: JAY1-UP
AN ATTACHMENT

SMCS-4200, 4201, 4203 **i02361111**

NOTE	PART NUMBER	QTY	PART NAME 1 2 3 4 5 6 (PRODUCT LEVEL)	SEE PAGE
Y	*142-8728*	2	TIRE & RIM GP (LH)	146
Y	*142-8737*	2	TIRE & RIM GP (RH)	146
	142-7493	32	NUT-LUG (9/16-18-2B THD)	

Y-SEPARATE ILLUSTRATION

<END>

142-7495 WHEEL & TIRE AR—PNEUMATIC

S/N: JAY1-UP
AN ATTACHMENT

SMCS-4200, 4201, 4203 **i02570997**

NOTE	PART NUMBER	QTY	PART NAME 1 2 3 4 5 6 (PRODUCT LEVEL)	SEE PAGE
Y	*142-8738*	2	TIRE & RIM GP (LH)	146
Y	*142-9025*	2	TIRE & RIM GP (RH)	147
	142-7493	32	NUT-LUG (9/16-18-2B-THD)	

Y-SEPARATE ILLUSTRATION

<END>

154-3972 WHEEL & TIRE AR—HEAVY DUTY

S/N: JAY1-UP
AN ATTACHMENT

SMCS-4200, 4201, 4203 **i02361146**

NOTE	PART NUMBER	QTY	PART NAME 1 2 3 4 5 6 (PRODUCT LEVEL)	SEE PAGE
Y	*154-3978*	2	TIRE & RIM GP (LH)	147
Y	*154-3979*	2	TIRE & RIM GP (RH)	147
	142-7493	32	NUT-LUG (9/16-18-2B THD)	

Y-SEPARATE ILLUSTRATION

<END>

154-3973 WHEEL & TIRE AR—HEAVY DUTY

S/N: JAY1-UP
AN ATTACHMENT

SMCS-4200, 4201, 4203 **i02571032**

NOTE	PART NUMBER	QTY	PART NAME 1 2 3 4 5 6 (PRODUCT LEVEL)	SEE PAGE
Y	*154-3980*	2	TIRE & RIM GP (LH)	148
Y	*154-3981*	2	TIRE & RIM GP (RH)	148
	142-7493	32	NUT-LUG (9/16-18-2B-THD)	

Y-SEPARATE ILLUSTRATION

<END>

159-5761 WHEEL & TIRE AR—SOLID

S/N: JAY1-UP
AN ATTACHMENT

SMCS-4200, 4201, 4203 **i02361156**

NOTE	PART NUMBER	QTY	PART NAME 1 2 3 4 5 6 (PRODUCT LEVEL)	SEE PAGE
	142-7493	32	NUT-LUG (9/16-18-2B THD)	
	187-3230	4	TIRE-SOLID (33X6X8)	

<END>

165-4898 WHEEL & TIRE AR—HEAVY DUTY

S/N: JAY1-UP
AN ATTACHMENT

SMCS-4200, 4201, 4203 **i02361187**

NOTE	PART NUMBER	QTY	PART NAME 1 2 3 4 5 6 (PRODUCT LEVEL)	SEE PAGE
Y	*165-4901*	2	TIRE & RIM GP (LH)	148
Y	*165-4902*	2	TIRE & RIM GP (RH)	149
	142-7493	32	NUT-LUG (9/16-18-2B THD)	

Y-SEPARATE ILLUSTRATION

<END>

165-4903 WHEEL & TIRE AR—HEAVY DUTY

S/N: JAY1-UP
AN ATTACHMENT

SMCS-4200, 4201, 4203 **i02571050**

NOTE	PART NUMBER	QTY	PART NAME 1 2 3 4 5 6 (PRODUCT LEVEL)	SEE PAGE
Y	*165-4906*	2	TIRE & RIM GP (LH)	149
Y	*165-4907*	2	TIRE & RIM GP (RH)	149
	142-7493	32	NUT-LUG (9/16-18-2B-THD)	

Y-SEPARATE ILLUSTRATION

<END>

178-2256 WHEEL & TIRE AR—HEAVY DUTY

S/N: JAY1-UP
AN ATTACHMENT

SMCS-4200, 4201, 4203 **i02361189**

NOTE	PART NUMBER	QTY	PART NAME 1 2 3 4 5 6 (PRODUCT LEVEL)	SEE PAGE
Y	*199-5438*	2	TIRE & RIM GP (LH)	153
Y	*199-5439*	2	TIRE & RIM GP (RH)	153
	142-7493	32	NUT-LUG (9/16-18-2B THD)	

Y-SEPARATE ILLUSTRATION

<END>

185-8662 WHEEL & TIRE AR—LOW SIDE WALL

S/N: JAY1-UP
AN ATTACHMENT

SMCS-4200, 4201, 4203 **i02571068**

NOTE	PART NUMBER	QTY	PART NAME 1 2 3 4 5 6 (PRODUCT LEVEL)	SEE PAGE
Y	*185-8674*	2	TIRE & RIM GP (LH)	150
Y	*185-8675*	2	TIRE & RIM GP (RH)	150
	142-7493	32	NUT-LUG (9/16-18-2B-THD)	

Y-SEPARATE ILLUSTRATION

<END>

POWER TRAIN

185-8663 WHEEL & TIRE AR—LOW SIDE WALL

S/N: JAY1-UP
AN ATTACHMENT

SMCS-4200, 4201, 4203 **i02361197**

NOTE	PART NUMBER	QTY	PART NAME 1 2 3 4 5 6 (PRODUCT LEVEL)	SEE PAGE
Y	*185-8676*	2	TIRE & RIM GP (LH)	150
Y	*185-8677*	2	TIRE & RIM GP (RH)	151
	142-7493	32	NUT-LUG (9/16-18-2B THD)	

Y-SEPARATE ILLUSTRATION

<END>

185-8666 WHEEL & TIRE AR—HEAVY DUTY

S/N: JAY1-UP
AN ATTACHMENT

SMCS-4200, 4201, 4203 **i02571081**

NOTE	PART NUMBER	QTY	PART NAME 1 2 3 4 5 6 (PRODUCT LEVEL)	SEE PAGE
Y	*185-9928*	2	TIRE & RIM GP (LH)	151
Y	*185-9929*	2	TIRE & RIM GP (RH)	151
	142-7493	32	NUT-LUG (9/16-18-2B-THD)	

Y-SEPARATE ILLUSTRATION

<END>

185-8667 WHEEL & TIRE AR—HEAVY DUTY

S/N: JAY1-UP
AN ATTACHMENT

SMCS-4200, 4201, 4203 **i02361203**

NOTE	PART NUMBER	QTY	PART NAME 1 2 3 4 5 6 (PRODUCT LEVEL)	SEE PAGE
Y	*185-9930*	2	TIRE & RIM GP (LH)	152
Y	*185-9931*	2	TIRE & RIM GP (RH)	152
	142-7493	32	NUT-LUG (9/16-18-2B THD)	

Y-SEPARATE ILLUSTRATION

<END>

187-3239 WHEEL & TIRE AR

S/N: JAY1-UP
AN ATTACHMENT

SMCS-4200, 4201, 4203 **i02361206**

NOTE	PART NUMBER	QTY	PART NAME 1 2 3 4 5 6 (PRODUCT LEVEL)	SEE PAGE
Y	*188-0124*	2	TIRE & RIM GP (LH)	152
Y	*188-0125*	2	TIRE & RIM GP (RH)	153
	142-7493	32	NUT-LUG (9/16-18-2B THD)	

Y-SEPARATE ILLUSTRATION

<END>

POWER TRAIN

228-9217 WHEEL & TIRE AR

S/N: JAY1-UP
AN ATTACHMENT

SMCS-4200, 4201, 4203 **i02571293**

NOTE	PART NUMBER	QTY	PART NAME 1 2 3 4 5 6 (PRODUCT LEVEL)	SEE PAGE
Y	*228-9220*	4	TIRE & RIM GP	154
	142-7493	32	NUT-LUG (9/16-18-2B-THD)	

Y-SEPARATE ILLUSTRATION

<END>

228-9219 WHEEL & TIRE AR

S/N: JAY1-UP
AN ATTACHMENT

SMCS-4200, 4201, 4203 **i02571294**

NOTE	PART NUMBER	QTY	PART NAME 1 2 3 4 5 6 (PRODUCT LEVEL)	SEE PAGE
Y	*228-9221*	4	TIRE & RIM GP	154
	142-7493	32	NUT-LUG (9/16-18-2B-THD)	

Y-SEPARATE ILLUSTRATION

<END>

252-0346 WHEEL & TIRE AR

S/N: JAY1-UP
AN ATTACHMENT

SMCS-4200, 4201, 4203 **i02279611**

NOTE	PART NUMBER	QTY	PART NAME 1 2 3 4 5 6 (PRODUCT LEVEL)	SEE PAGE
Y	**265-2899**	2	TIRE & RIM GP (RH)	155
Y	**265-2898**	2	TIRE & RIM GP (LH)	154
	142-7493	32	NUT-LUG (9/16-18-2B THD)	

Y-SEPARATE ILLUSTRATION

<END>

252-0347 WHEEL & TIRE AR

S/N: JAY1-UP
AN ATTACHMENT

SMCS-4200, 4201, 4203 **i02279615**

NOTE	PART NUMBER	QTY	PART NAME 1 2 3 4 5 6 (PRODUCT LEVEL)	SEE PAGE
Y	**265-2900**	2	TIRE & RIM GP (LH)	155
Y	**265-2901**	2	TIRE & RIM GP (RH)	155
	142-7493	32	NUT-LUG (9/16-18-2B THD)	

Y-SEPARATE ILLUSTRATION

<END>

252-0366 WHEEL & TIRE AR—SOLID

S/N: JAY1-UP
33X6X11
AN ATTACHMENT

SMCS-4200, 4201, 4203 **i02233317**

NOTE	PART NUMBER	QTY	PART NAME 1 2 3 4 5 6 (PRODUCT LEVEL)	SEE PAGE
	142-7493	32	NUT-LUG (9/16-18-2B THD)	
	226-3734	2	TIRE-SOLID (33X6X11) (LH)	
	226-3735	2	TIRE-SOLID (33X6X11) (RH)	

<END>

252-0377 WHEEL & TIRE AR—SOLID

S/N: JAY1-UP
33X6X11
AN ATTACHMENT

SMCS-4200, 4201, 4203 **i02233313**

NOTE	PART NUMBER	QTY	PART NAME 1 2 3 4 5 6 (PRODUCT LEVEL)	SEE PAGE
	142-7493	32	NUT-LUG (9/16-18-2B THD)	
	226-3734	2	TIRE-SOLID (33X6X11) (RH)	
	226-3735	2	TIRE-SOLID (33X6X11) (LH)	

<END>

258-3800 CONVERSION AR-ROADING

S/N: JAY1-UP
AN ATTACHMENT

SMCS-7000 **i02674950**

NOTE	PART NUMBER	QTY	PART NAME 1 2 3 4 5 6 (PRODUCT LEVEL)	SEE PAGE
Y	*280-8329*	1	BRACKET GP-MOUNTING (BELT GUARD)	461
Y	*258-4169*	1	LIGHTING GP-STOP & TAIL	90
Y	*258-2579*	1	MOTOR & MTG GP-HYDRAULIC FAN	254
Y	*258-2462*	1	MUFFLER & MOUNTING GP	54
	258-4200	1	CANOPY AS	

Y-SEPARATE ILLUSTRATION

<END>

258-3801 CONVERSION AR-ROADING

S/N: JAY1-UP
AN ATTACHMENT

SMCS-7000 **i02674951**

NOTE	PART NUMBER	QTY	PART NAME 1 2 3 4 5 6 (PRODUCT LEVEL)	SEE PAGE
Y	*258-4385*	1	LIFTING GP-MACHINE (FOUR POINT)	173
Y	*258-4169*	1	LIGHTING GP-STOP & TAIL	90
Y	*258-2579*	1	MOTOR & MTG GP-HYDRAULIC FAN	254
Y	*280-8347*	1	MUFFLER GP	55
Y	*258-3496*	1	SUPPRESSION GP-SOUND (MACHINE)	178
Y	*294-4560*	1	SUPPRESSION GP-SOUND	181
Y	*280-8330*	1	SUPPRESSION GP-SOUND (ENGINE)	180
	258-4222	1	CAB GP-ENCLOSED ROPS	

Y-SEPARATE ILLUSTRATION

<END>

258-3840 CONVERSION GP-ROADING–GERMANY

S/N: JAY1-UP

PART OF 258-3818 CONVERSION AR-MACHINE

AN ATTACHMENT

SMCS-7000 **i02664456**

NOTE	REF NO	GRAPHIC REF	PART NUMBER	QTY	PART NAME 1 2 3 4 5 6 (PRODUCT LEVEL)	SEE PAGE
	1	1	**258-3833**	1	FILM-NOTICE (STEERING)	
	2	1	**173-3016**	1	CHOCK	
	3	1	**258-3844**	1	BRACKET AS	
	4	1	**258-3849**	1	PLATE	
	5	1	**289-0849**	1	BLOCK AS	
M	6	1	**8T-4138**	1	BOLT (M6X1X20-MM)	
	7	1	**8T-4205**	1	WASHER-HARD (7.2X14.5X2-MM THK)	

M-METRIC PART

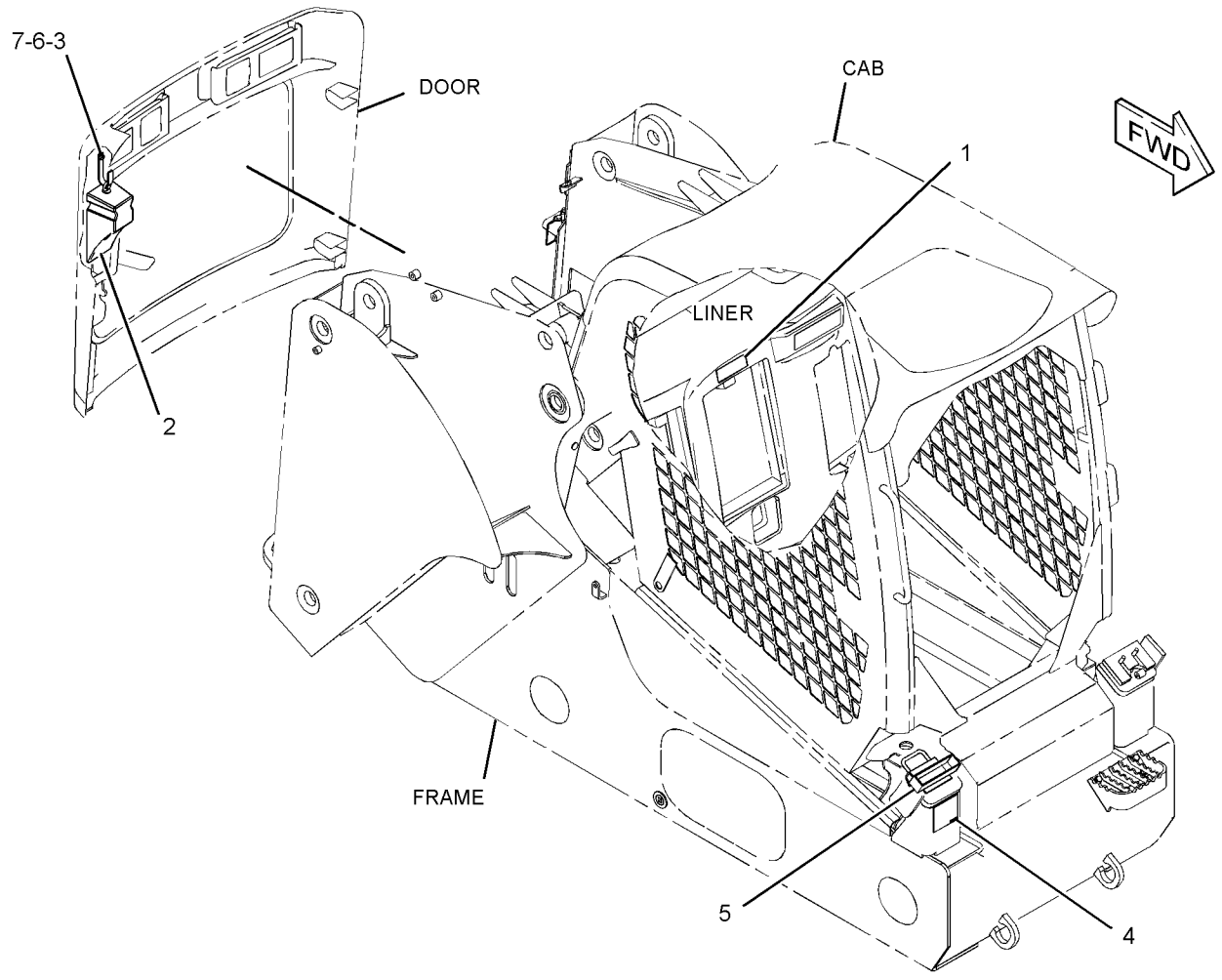

GRAPHIC #1 **<END>** g01314590

258-3841 CONVERSION GP-ROADING–ITALY

S/N: JAY1-UP

PART OF 258-3819 CONVERSION AR-MACHINE

AN ATTACHMENT

SMCS-7000 **i02615731**

NOTE	REF NO	GRAPHIC REF	PART NUMBER	QTY	PART NAME 1 2 3 4 5 6 (PRODUCT LEVEL)	SEE PAGE
Y	1	1	**128-6985**	1	LAMP GP-WARNING BEACON (12-VOLT, AMBER)	86
	2	1	**186-2360**	4	COVER AS	
					(EACH INCLUDES)	
		1	**129-1854**	10	FASTENER-LOOP	
		1	**129-1855**	10	FASTENER-HOOK	
	3	1	**258-3849**	1	PLATE	
	4	1	**289-0849**	1	BLOCK AS	

Y-SEPARATE ILLUSTRATION

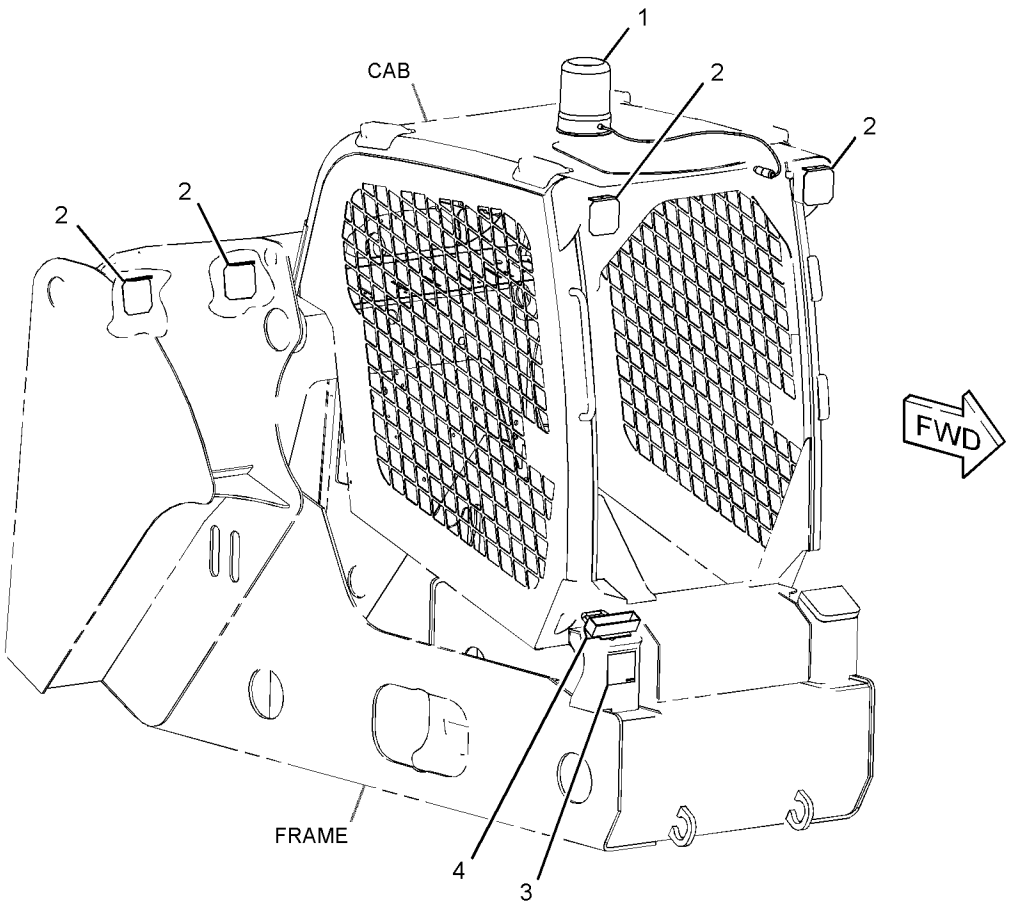

GRAPHIC #1 **<END>** g01311966

258-2591 COUNTERWEIGHT GP

S/N: JAY1-UP
AN ATTACHMENT

SMCS-7056 **i02645961**

NOTE	REF NO	GRAPHIC REF	PART NUMBER	QTY	PART NAME 1 2 3 4 5 6 (PRODUCT LEVEL)	SEE PAGE
	1	1	**258-2592**	8	PLATE	
	2	1	**8T-4223**	4	WASHER-HARD (13.5X25.5X3-MM THK)	
M	3	1	**8T-6868**	4	BOLT (M12X1.75X80-MM)	

M-METRIC PART

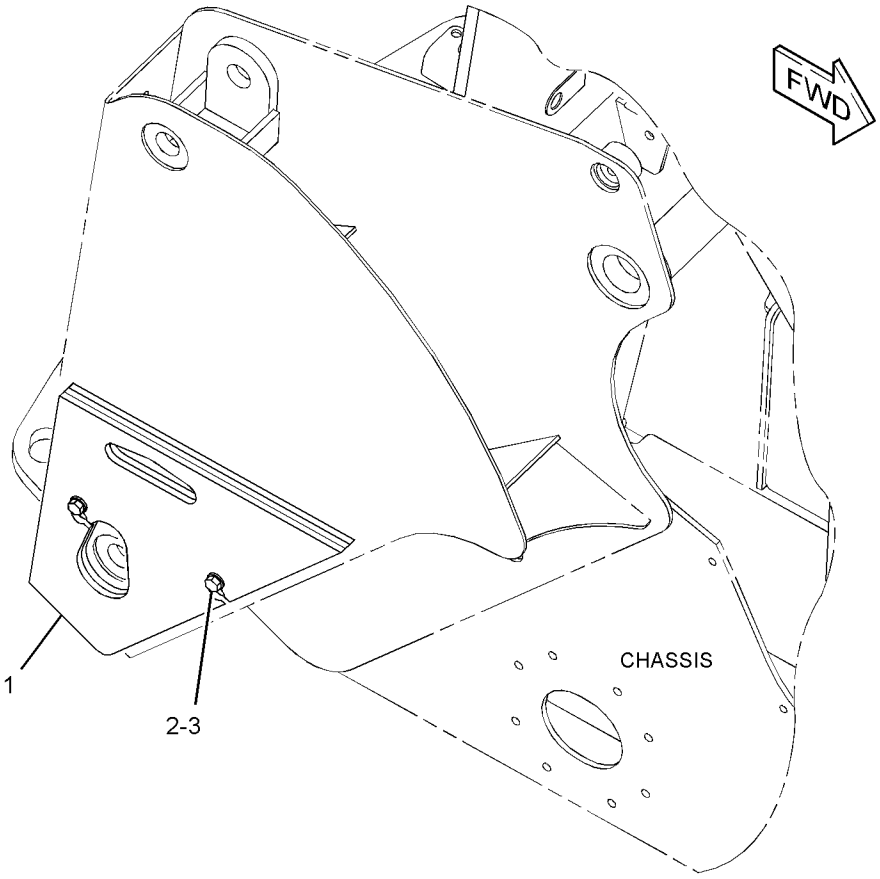

GRAPHIC #1 **<END>** g01330983

258-2594 ENCLOSURE GP-ENGINE

S/N: JAY1-UP

PART OF 258-2410 CHASSIS AR

SMCS-7263 **i02625352**

NOTE	REF NO	GRAPHIC REF	PART NUMBER	QTY	PART NAME 1 2 3 4 5 6 (PRODUCT LEVEL)	SEE PAGE
	1	1	**142-8831**	1	STRIKER AS	
	2	1	**159-8405**	2	BOLT-SHOULDER	
	3	1	**223-4240**	1	LATCH AS	
	4	1	*224-3875*	1	LOCK GP (ENGINE COVER)	
		1	**226-0291**	1	LOCK AS	
		1	**233-4872**	1	CAM	
	5	1	**258-2606**	1	DOOR AS	
	6	1	**142-8832**	1	PIN AS	
	7	1	**2K-4973**	2	LOCKNUT (3/8-16-THD)	
M	8	1	**5C-7261**	2	NUT (M8X1.25-THD)	
	9	1	**7X-7729**	2	WASHER (11X25X3-MM THK)	
M	10	1	**8T-4137**	2	BOLT (M10X1.5X20-MM)	
	11	1	**8T-4159**	2	BUMPER	
M	12	1	**8T-4181**	4	BOLT (M6X1X20-MM)	
	13	1	**8T-4205**	4	WASHER-HARD (7.2X14.5X2-MM THK)	

M-METRIC PART

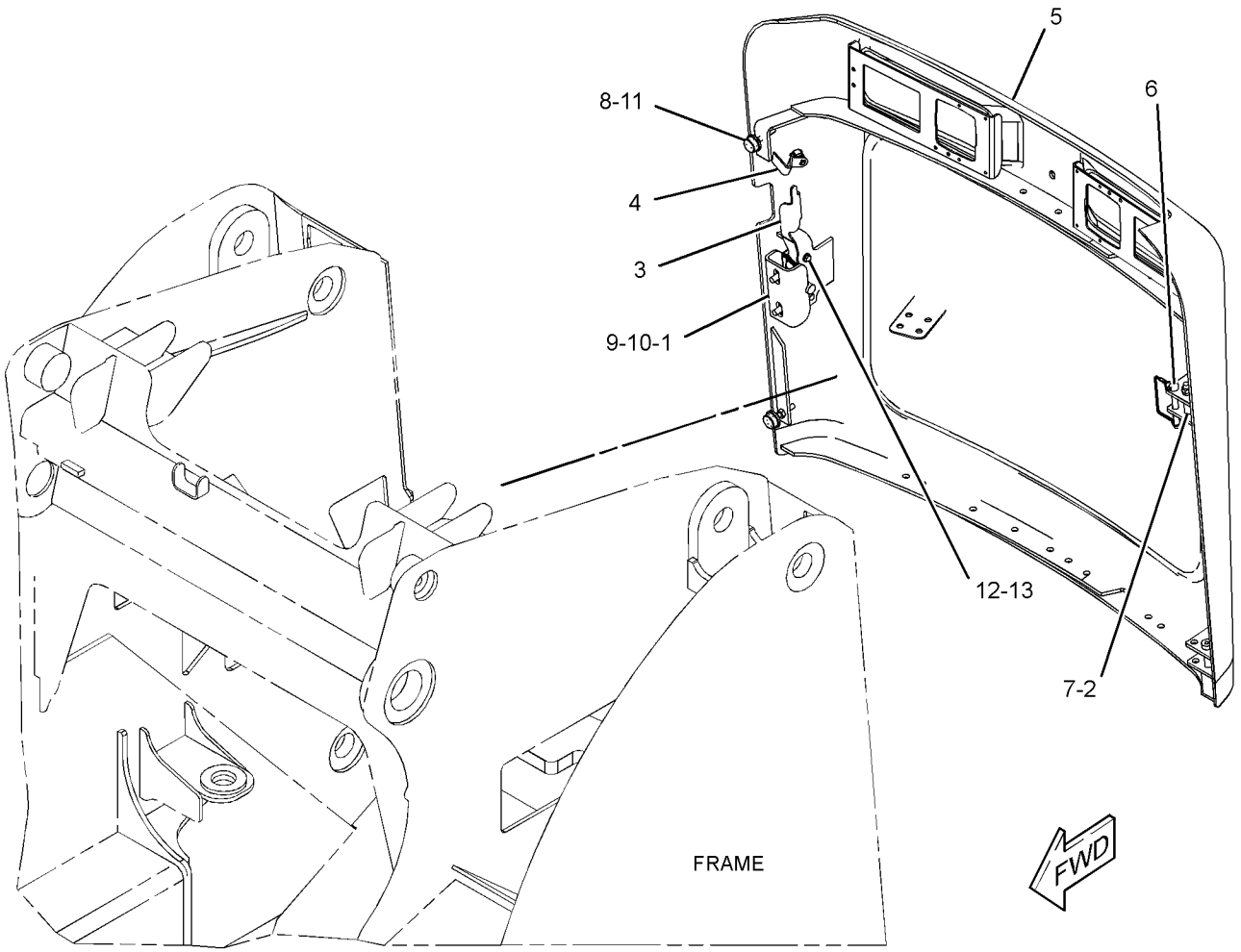

GRAPHIC #1 **<END>** g01317331

258-2675 FRAME & MTG GP-MACHINE

S/N: JAY1-UP

PART OF 258-2410 CHASSIS AR

SMCS-6119, 7050, 7481 **i02712974**

NOTE	REF NO	GRAPHIC REF	PART NUMBER	QTY	PART NAME 1 2 3 4 5 6 (PRODUCT LEVEL)	SEE PAGE
	1	1	**3S-9182**	4	PLUG-MAGNETIC (FRAME)	
Y	2	1	*258-2674*	1	FRAME GP-MACHINE	168
	3	1	**258-2978**	1	PLATE AS	
	4	1	**258-3184**	2	COVER	
	5	1	**258-3186**	1	PLATE AS	
	6	1	**258-3312**	1	PLATE	
	7	1	**258-3399**	1	PLATE	
	8	1	**261-6101**	4	COVER	
	9	1	**287-4218**	2	PLATE	
	10	1	**287-4219**	1	STEP AS	
	11	1	**266-3316**	31	BOLT-FLANGE HEAD (M10X1.5X25-MM)	
	12	1	**7X-7729**	4	WASHER (11X25X3-MM THK)	
	13	1	**8T-4121**	4	WASHER-HARD (11X21X2.5-MM THK)	
M	14	1	**8T-4196**	8	BOLT (M10X1.5X35-MM)	
	15	1	**8T-4224**	6	WASHER-HARD (8.8X16X2-MM THK)	
M	16	1	**8T-4908**	6	BOLT (M8X1.25X25-MM)	
	17	1	**287-4287**	2	PLATE	
B	18	1	**287-4220**	6	SHIM	

B-USE AS REQUIRED
M-METRIC PART
Y-SEPARATE ILLUSTRATION

258-2675 **FRAME & MTG GP-MACHINE** *(contd.)* **i02712974**

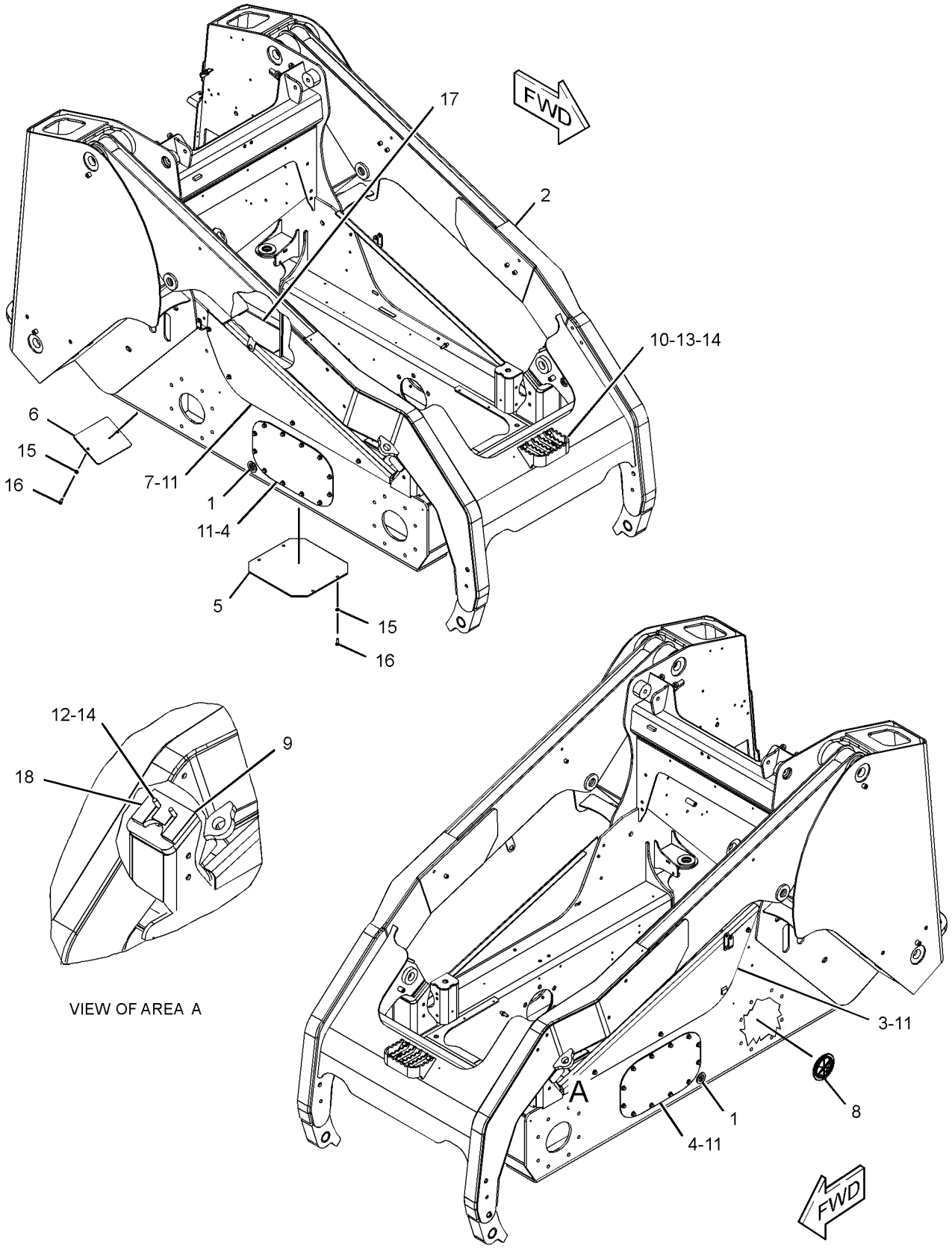

GRAPHIC #1 **<END>** g01344432

258-2674 FRAME GP-MACHINE

S/N: JAY1-UP

PART OF 258-2675 FRAME & MTG GP-MACHINE

SMCS-6119, 7050 **i02625362**

NOTE	PART NUMBER	QTY	PART NAME 1 2 3 4 5 6 (PRODUCT LEVEL)	SEE PAGE
	287-4198	1	ARM AS-LIFT	
	4K-4709	4	BEARING-SLEEVE	
	6K-4148	4	BEARING-SLEEVE	
	8R-3857	6	BOSS (M8X1.2X12-MM)	
M	**9R-2613**	2	BOSS-WELD (M10X1.5X25-MM OAL)	
	258-2673	1	FRAME AS	

M-METRIC PART

<END>

FRAME AND BODY

150-8621 GUIDE GP-LINES

S/N: JAY1-UP

PART OF 258-2410 CHASSIS AR

SMCS-5057 **i02059885**

NOTE	REF NO	GRAPHIC REF	PART NUMBER	QTY	PART NAME 1 2 3 4 5 6 (PRODUCT LEVEL)	SEE PAGE
	1	1	**227-4315**	1	PLATE AS	
	2	1	**247-4877**	1	BOLT (M8X1.25X12-MM)	
M	3	1	**6V-9189**	1	LOCKNUT (M8X1.25-THD)	
	4	1	**7X-0603**	2	WASHER-HARD (9.9X35X2.5-MM THK)	
M	5	1	**7X-2539**	1	BOLT (M8X1.25X110-MM)	
	6	1	**8T-4224**	1	WASHER-HARD (8.8X16X2-MM THK)	

M-METRIC PART

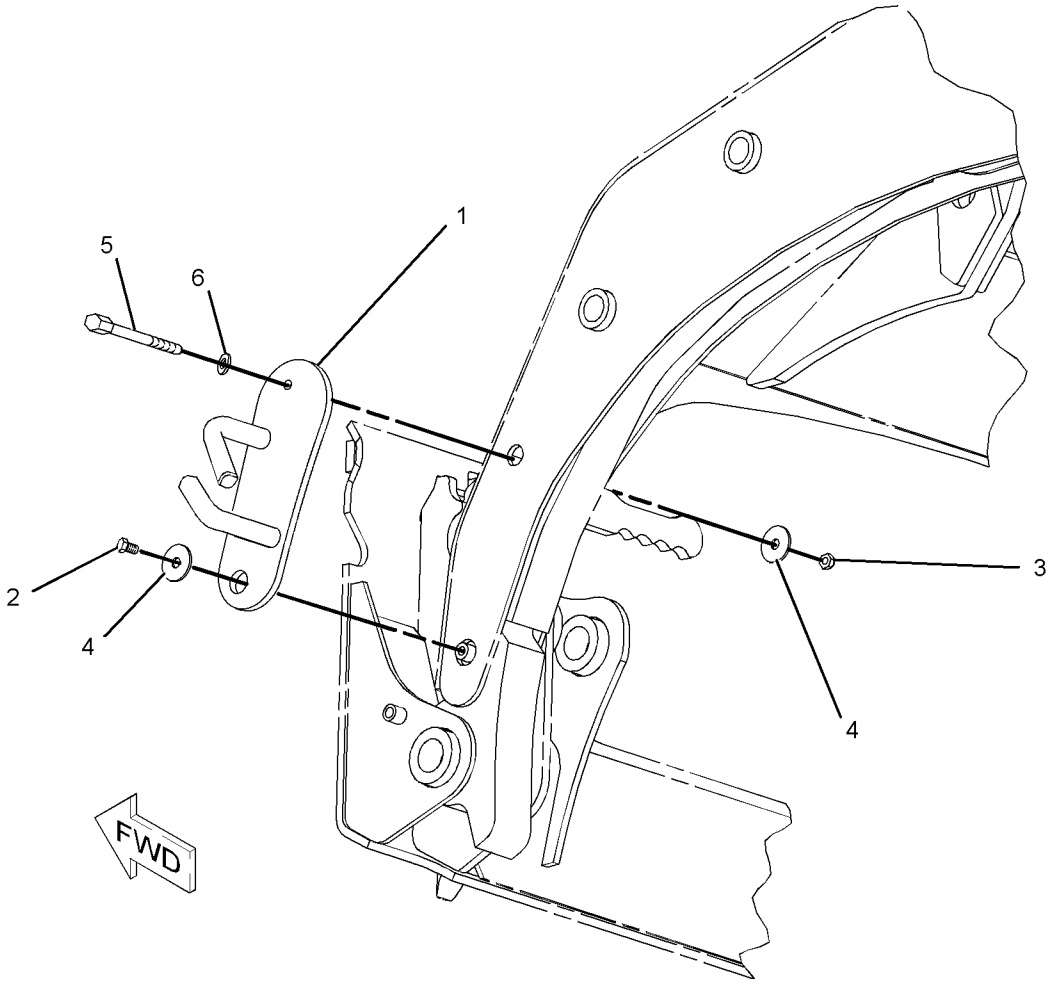

GRAPHIC #1 **<END>** g01056803

287-4160 KIT-COUNTERWEIGHT

S/N: JAY1-UP
AN ATTACHMENT

SMCS-7056 **i02675250**

NOTE	REF NO	GRAPHIC REF	PART NUMBER	QTY	PART NAME 1 2 3 4 5 6 (PRODUCT LEVEL)	SEE PAGE
	1	1	**258-2592**	4	PLATE	
	2	1	**8T-4223**	4	WASHER-HARD (13.5X25.5X3-MM THK)	
M	3	1	**8T-4910**	4	BOLT (M12X1.75X60-MM)	

M-METRIC PART

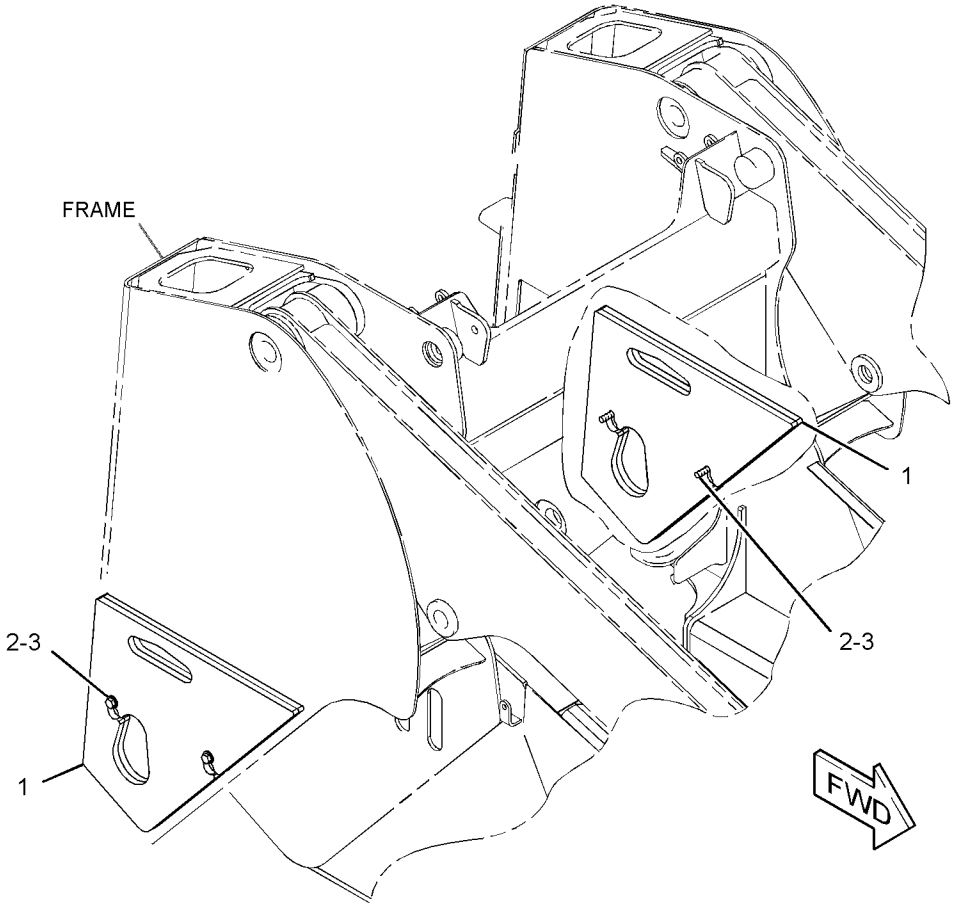

GRAPHIC #1 **<END>** g01344998

FRAME AND BODY

287-4161 KIT-COUNTERWEIGHT

S/N: JAY1-UP
AN ATTACHMENT

SMCS-7056 **i02675253**

NOTE	REF NO	GRAPHIC REF	PART NUMBER	QTY	PART NAME 1 2 3 4 5 6 (PRODUCT LEVEL)	SEE PAGE
	1	1	**258-2592**	8	PLATE	
	2	1	**8T-4223**	4	WASHER-HARD (13.5X25.5X3-MM THK)	
M	3	1	**8T-6868**	4	BOLT (M12X1.75X80-MM)	

M-METRIC PART

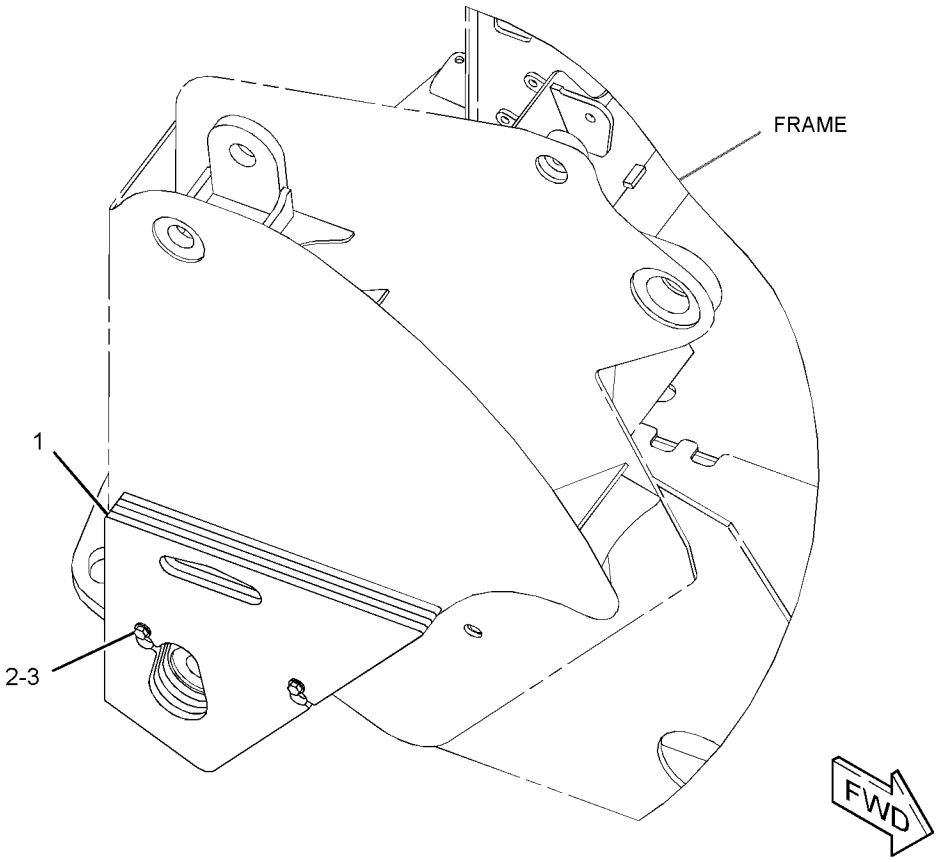

GRAPHIC #1 **<END>** g01344895

258-4410 KIT-LIFTING—MACHINE, FOUR POINT

S/N: JAY1-UP

CANNOT BE USED WITH 258-4390—PAGE 174, 258-4400—PAGE 404

AN ATTACHMENT

SMCS-1122, 6459, 7000 **i02674936**

NOTE	REF NO	GRAPHIC REF	PART NUMBER	QTY	PART NAME 1 2 3 4 5 6 (PRODUCT LEVEL)	SEE PAGE
	1	1	**7E-2700**	4	FILM-SYMBOL (LIFT)	
	2	1	**258-4389**	4	MOUNT	
	3	1	**258-4391**	4	PLATE-LIFT	
	4	1	**154-1580**	8	WASHER-HARD (M22X38X6-MM THK)	
M	5	1	**7X-2562**	8	BOLT (M20X2.5X45-MM)	

M-METRIC PART

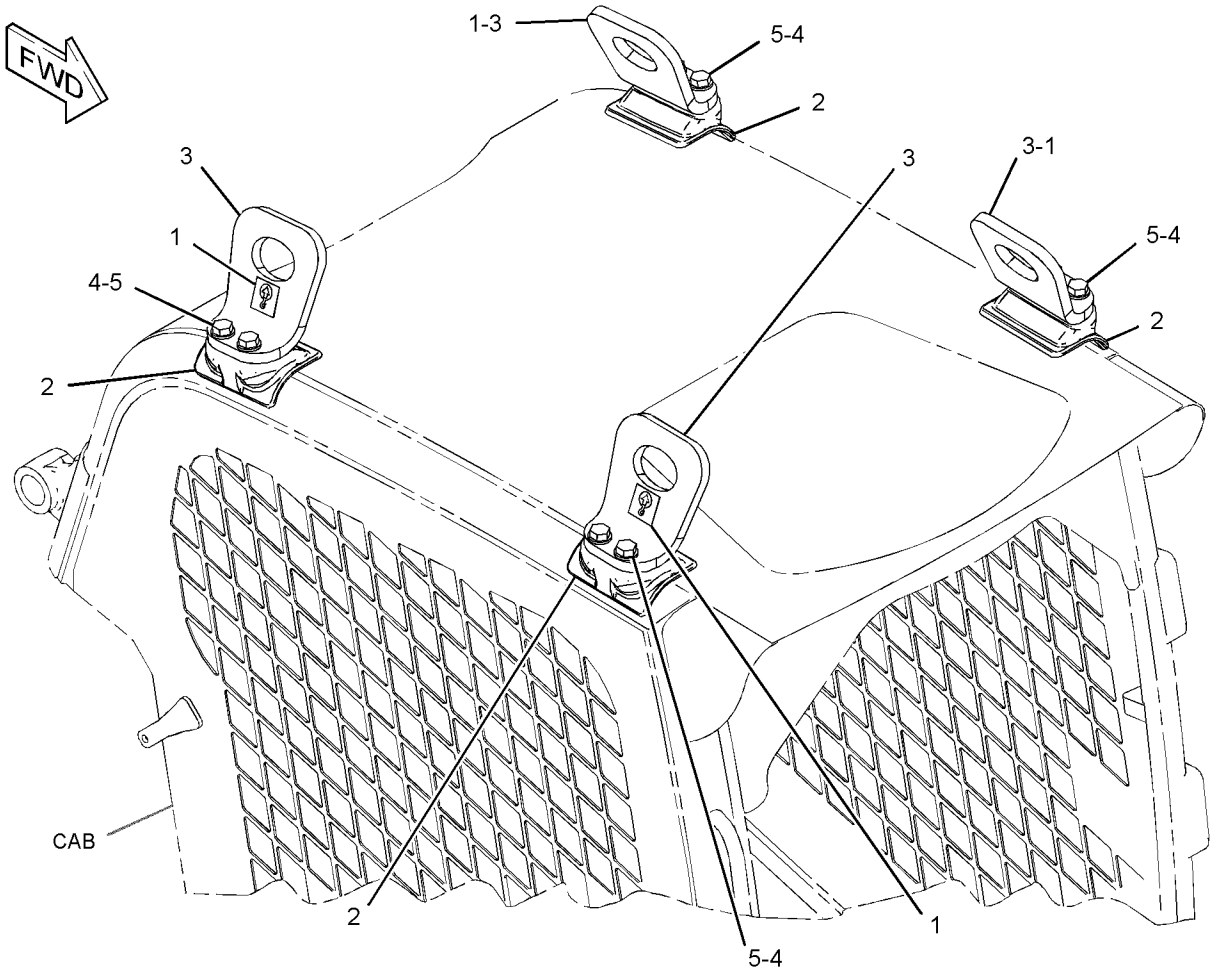

GRAPHIC #1 **<END>** g01344723

258-4385 LIFTING GP-MACHINE—FOUR POINT

S/N: JAY1-UP

PART OF 258-3818, 258-3819 CONVERSION AR-MACHINE, 258-3801 CONVERSION AR-ROADING

CANNOT BE USED WITH 258-4390—PAGE 174

AN ATTACHMENT

SMCS-1122, 6459, 7000 **i02664269**

NOTE	REF NO	GRAPHIC REF	PART NUMBER	QTY	PART NAME 1 2 3 4 5 6 (PRODUCT LEVEL)	SEE PAGE
	1	1	**7E-2700**	4	FILM-SYMBOL (LIFT)	
	2	1	**258-4391**	4	PLATE-LIFT	
M	3	1	**7X-2562**	8	BOLT (M20X2.5X45-MM)	
	4	1	**154-1580**	8	WASHER-HARD (M22X38X6-MM THK)	

M-METRIC PART

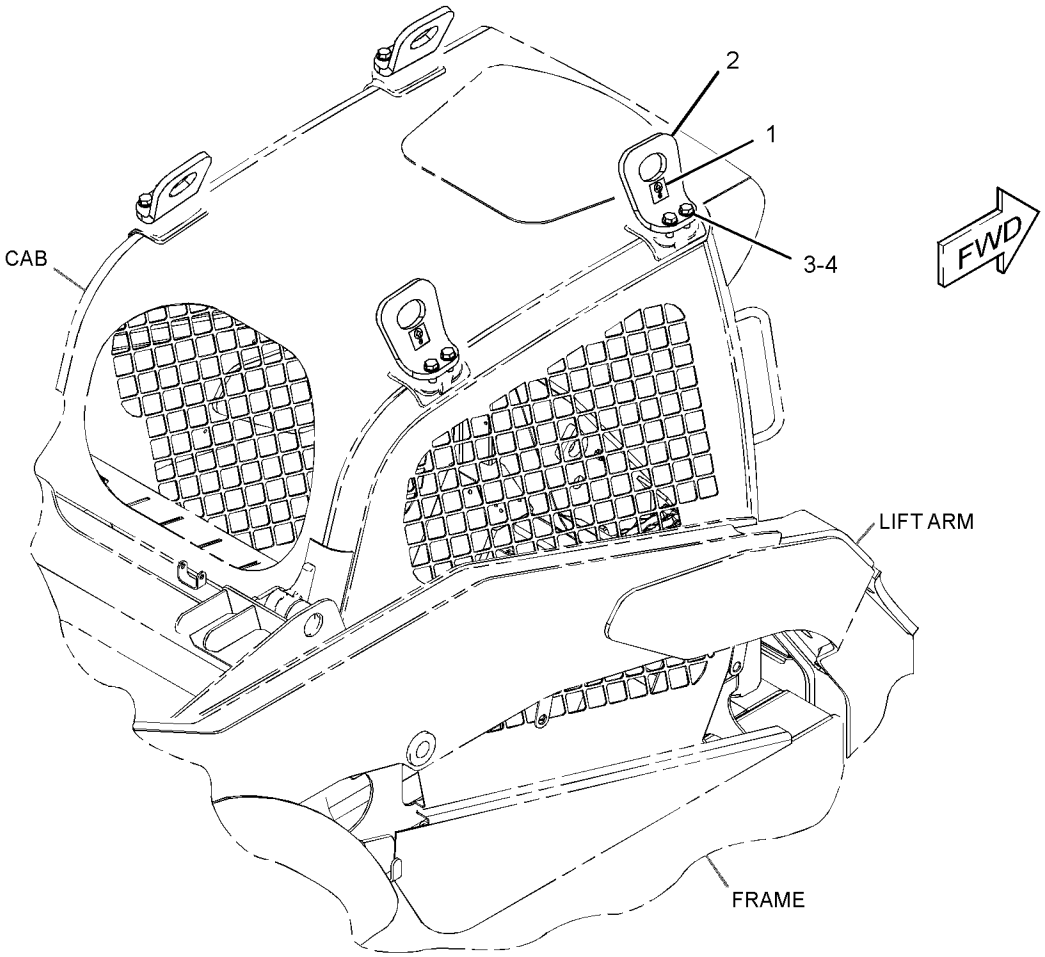

GRAPHIC #1 **<END>** g01322822

258-4390 LIFTING GP-MACHINE—SINGLE POINT

S/N: JAY1-UP

CANNOT BE USED WITH 258-4410—PAGE 172

AN ATTACHMENT

SMCS-1122, 6459, 7000 **i02664245**

NOTE	REF NO	GRAPHIC REF	PART NUMBER	QTY	PART NAME 1 2 3 4 5 6 (PRODUCT LEVEL)	SEE PAGE
	1	1	**7E-2700**	2	FILM-SYMBOL (LIFT)	
	2	1	**258-4389**	4	MOUNT	
	3	1	**258-4392**	1	BRACKET AS	
	4	1	**154-1580**	8	WASHER-HARD (M22X38X6-MM THK)	
M	5	1	**7X-2562**	8	BOLT (M20X2.5X45-MM)	

M-METRIC PART

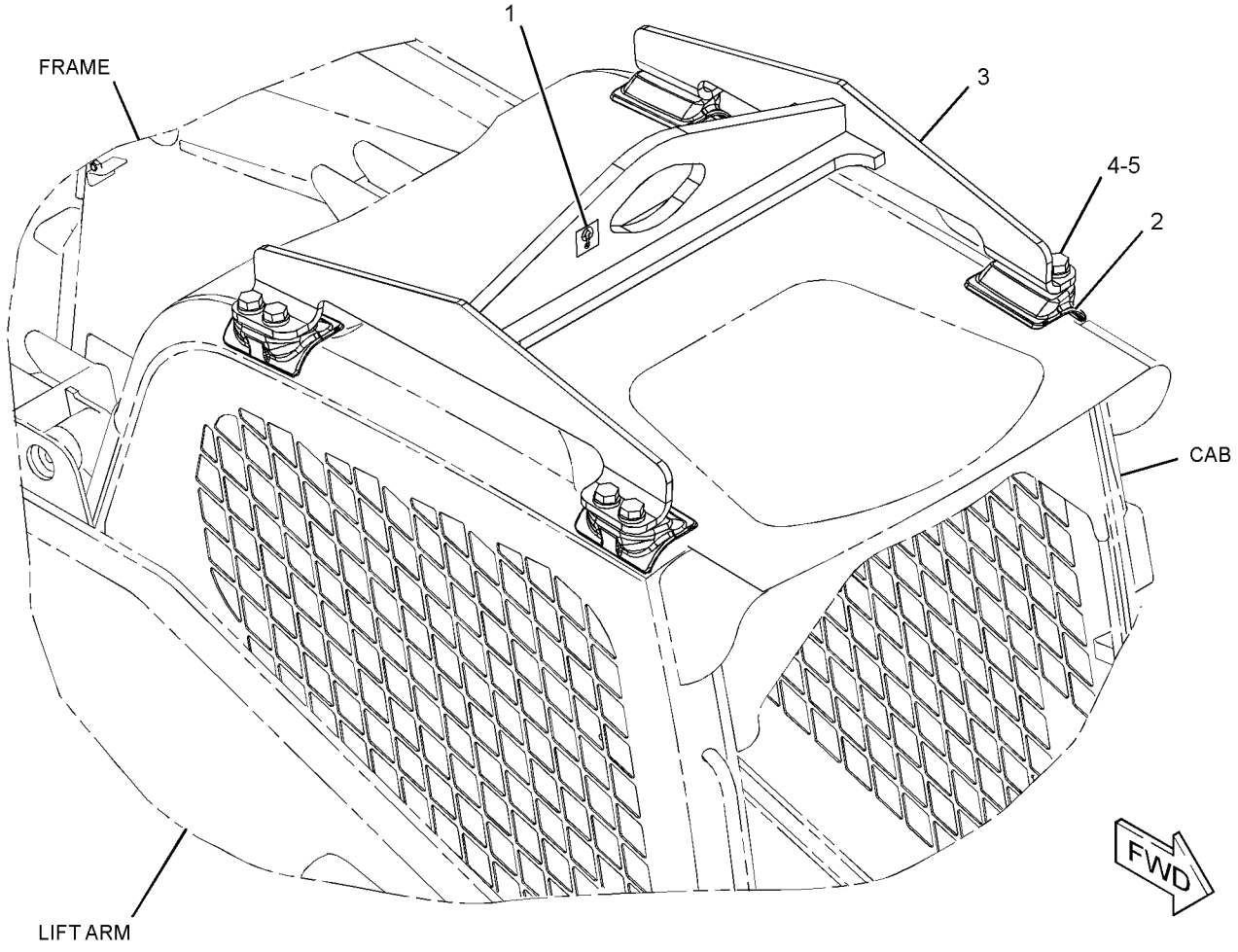

GRAPHIC #1 **<END>** g01339251

258-3872 MIRROR & MTG GP-REAR VIEW

S/N: JAY1-UP
PART OF 258-3818, 258-3819 CONVERSION AR-MACHINE
AN ATTACHMENT

SMCS-7319 **i02615733**

NOTE	REF NO	GRAPHIC REF	PART NUMBER	QTY	PART NAME 1 2 3 4 5 6 (PRODUCT LEVEL)	SEE PAGE
	1	1	**132-5166**	2	MIRROR GP (REAR VIEW)	
					(EACH INCLUDES)	
		1	**148-2371**	1	CLAMP (TOP)	
		1	**148-2372**	1	CLAMP (BOTTOM)	
	2	1	**175-4239**	2	BRACKET AS	
	3	1	**258-3873**	2	BRACKET	
M	4	1	**5C-9553**	4	BOLT (M6X1X16-MM)	
	5	1	**8T-4121**	4	WASHER-HARD (11X21X2.5-MM THK)	
M	6	1	**8T-4196**	4	BOLT (M10X1.5X35-MM)	
	7	1	**8T-4205**	4	WASHER-HARD (7.2X14.5X2-MM THK)	

M-METRIC PART

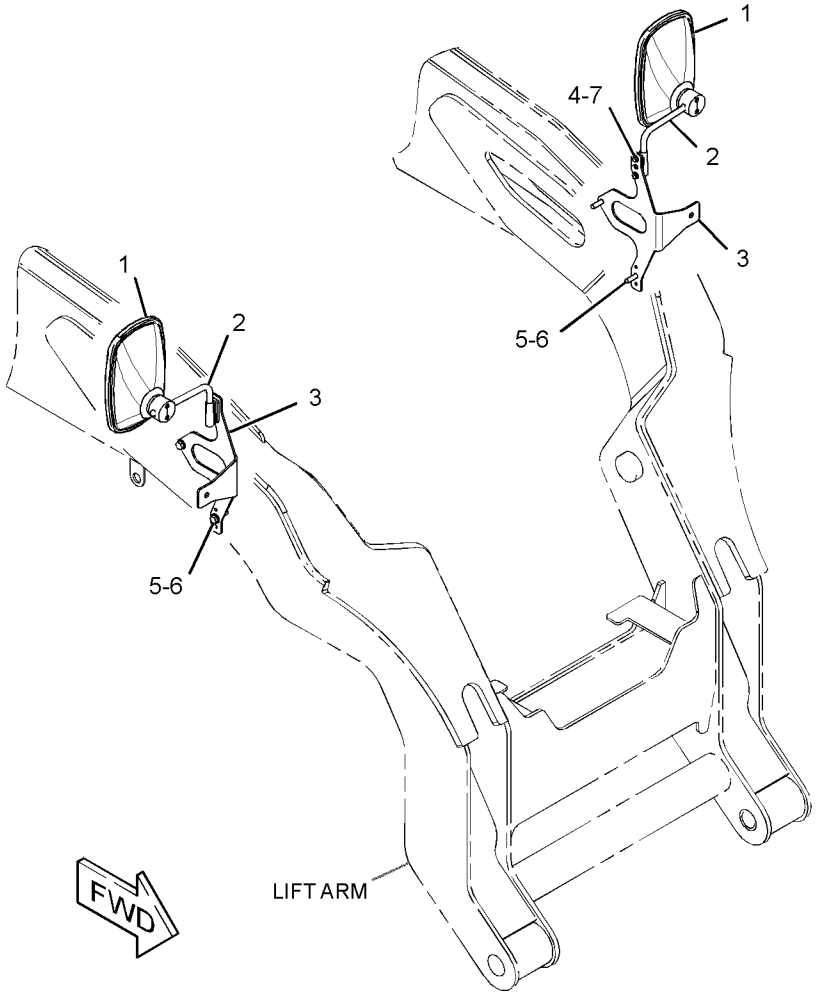

GRAPHIC #1 **<END>** g01313245

258-3848 MOUNTING GP-REGISTRATION

S/N: JAY1-UP
PART OF 258-3819 CONVERSION AR-MACHINE
AN ATTACHMENT

SMCS-1408, 1429, 7050 **i02674954**

NOTE	REF NO	GRAPHIC REF	PART NUMBER	QTY	PART NAME 1 2 3 4 5 6 (PRODUCT LEVEL)	SEE PAGE
	1	1	**175-4236**	1	PLATE	
	2	1	**190-8962**	1	LAMP GP-REGISTRATION PLATE	
		1	**195-9712**	1	LAMP (12-VOLT, 10-WATT)	
	3	1	**252-0413**	1	BRACKET AS	
	4	1	**4B-4863**	2	WASHER (4.7X11X1.2-MM THK)	
M	5	1	**5C-8312**	2	NUT (M4X0.7-THD)	
	6	1	**7X-0579**	1	WASHER-HARD (8.8X25.5X2-MM THK)	
M	7	1	**6V-9672**	2	SCREW-MACHINE (M4X0.7X16-MM)	
M	8	1	**8T-4138**	2	BOLT (M6X1X20-MM)	
M	9	1	**8T-4189**	1	BOLT (M8X1.25X20-MM)	
	10	1	**8T-4205**	2	WASHER-HARD (7.2X14.5X2-MM THK)	

M-METRIC PART

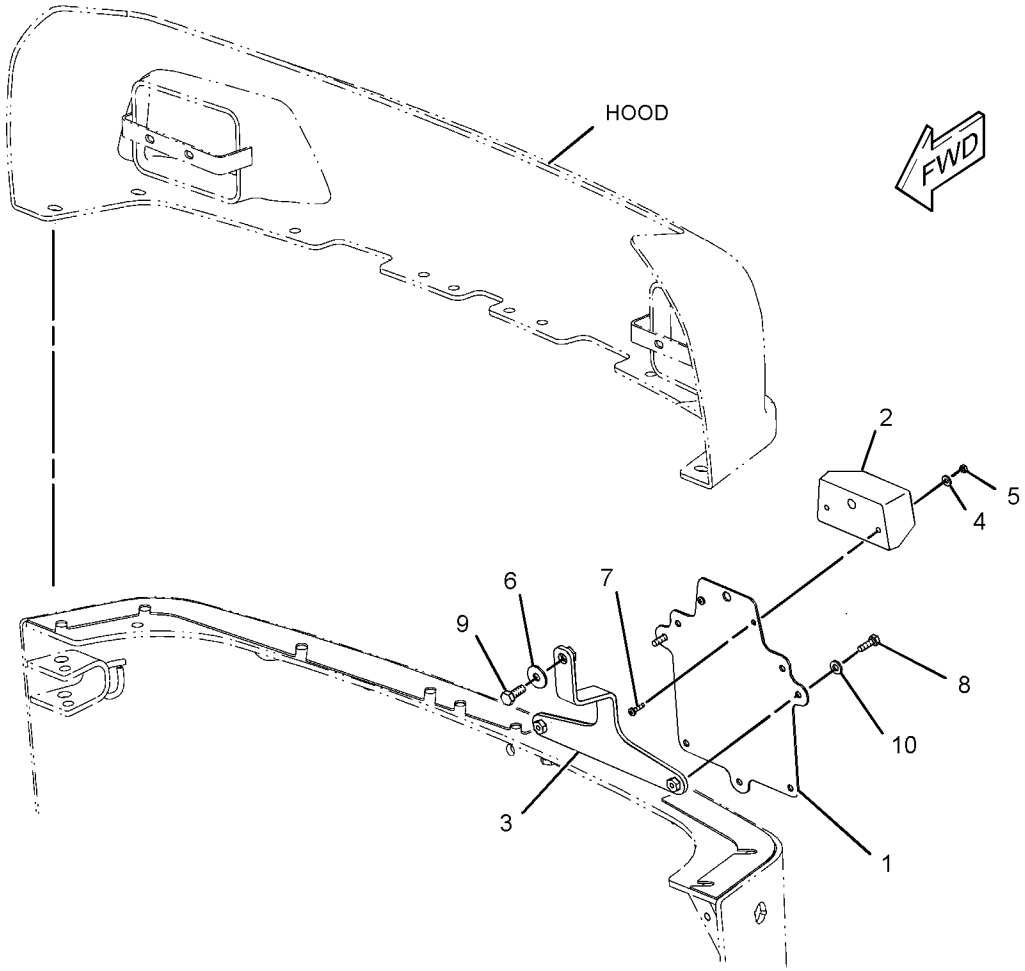

GRAPHIC #1 **<END>** g01310515

FRAME AND BODY

258-3639 STEP GP

S/N: JAY1-UP
AN ATTACHMENT

SMCS-7254 **i02674979**

NOTE	REF NO	GRAPHIC REF	PART NUMBER	QTY	PART NAME 1 2 3 4 5 6 (PRODUCT LEVEL)	SEE PAGE
	1	1	**170-5707**	8	LOCK PIN	
	2	1	**258-3630**	1	STEP AS	
	3	1	**287-4151**	2	SUPPORT AS	
	4	1	**287-4158**	4	PIN	
	5	1	**287-4159**	4	PIN-DETENT	

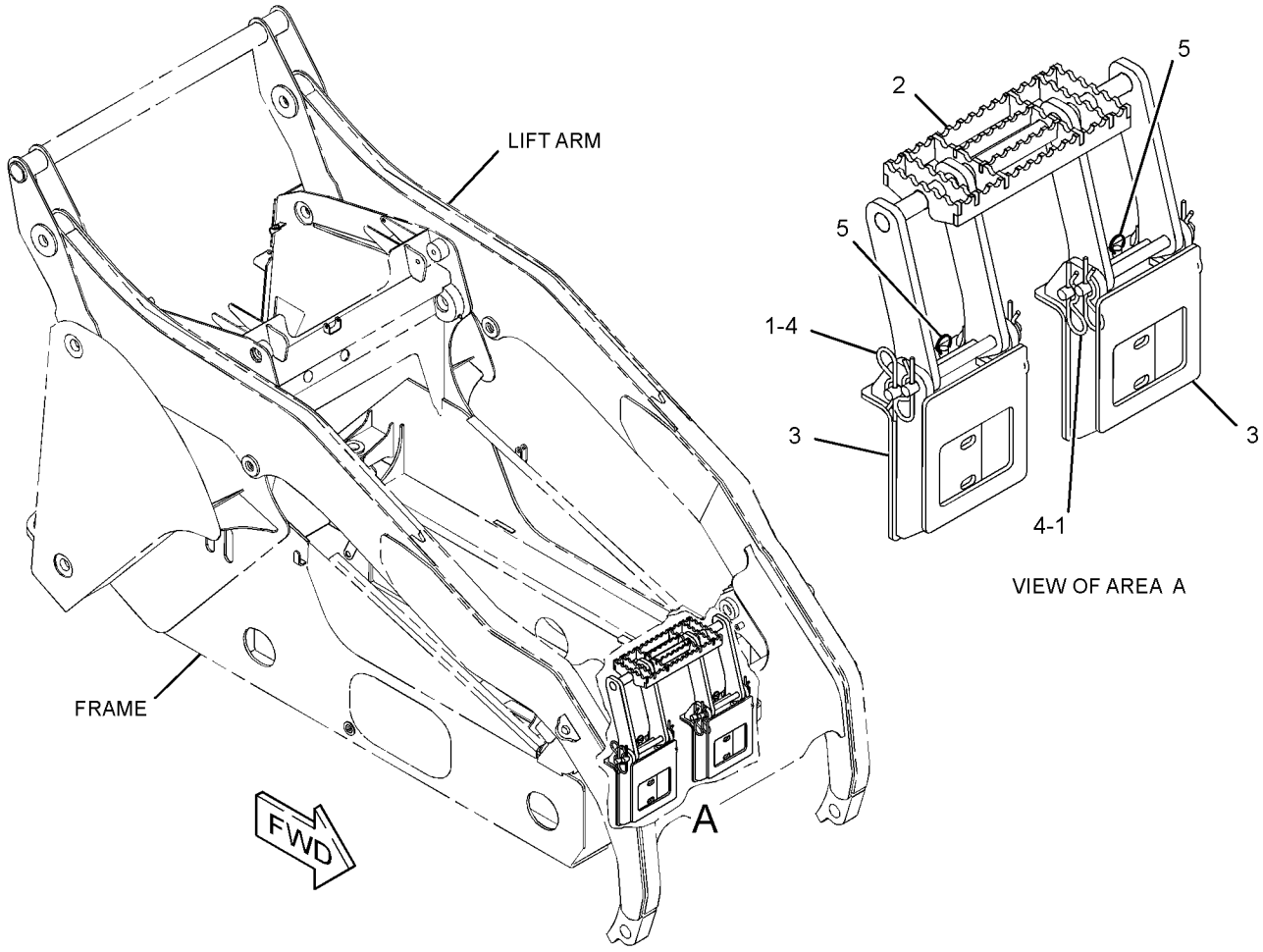

GRAPHIC #1 **<END>** g01346205

258-3496 SUPPRESSION GP-SOUND—MACHINE

S/N: JAY1-UP

PART OF 258-3818, 258-3819 CONVERSION AR-MACHINE, 258-3801 CONVERSION AR-ROADING

AN ATTACHMENT

SMCS-1801, 7076 **i02645971**

NOTE	REF NO	GRAPHIC REF	PART NUMBER	QTY	PART NAME 1 2 3 4 5 6 (PRODUCT LEVEL)	SEE PAGE
	1	1	**176-4079**	1	INSULATION	
	3	1	**261-6378**	1	INSULATION	
	4	1	**261-6379**	1	INSULATION	
	5	1	**294-0075**	1	INSULATION	
	6	1	**294-0076**	1	INSULATION	
	7	1	**294-0077**	1	INSULATION	
	8	1	**294-0078**	1	INSULATION	
	9	1	**294-0079**	1	INSULATION	
	10	1	**294-0081**	1	INSULATION	
	11	1	**294-0082**	1	INSULATION	
	12	1	**294-0083**	1	INSULATION	
	13	1	**294-0084**	1	INSULATION	
	14	1	**294-0085**	1	INSULATION	
	15	1	**294-0086**	1	INSULATION	
	18	1	**294-0090**	1	INSULATION	
	19	1	**294-4558**	1	INSULATION	
	20	1	**294-4559**	1	INSULATION	
	21	1	**295-0035**	1	INSULATION	

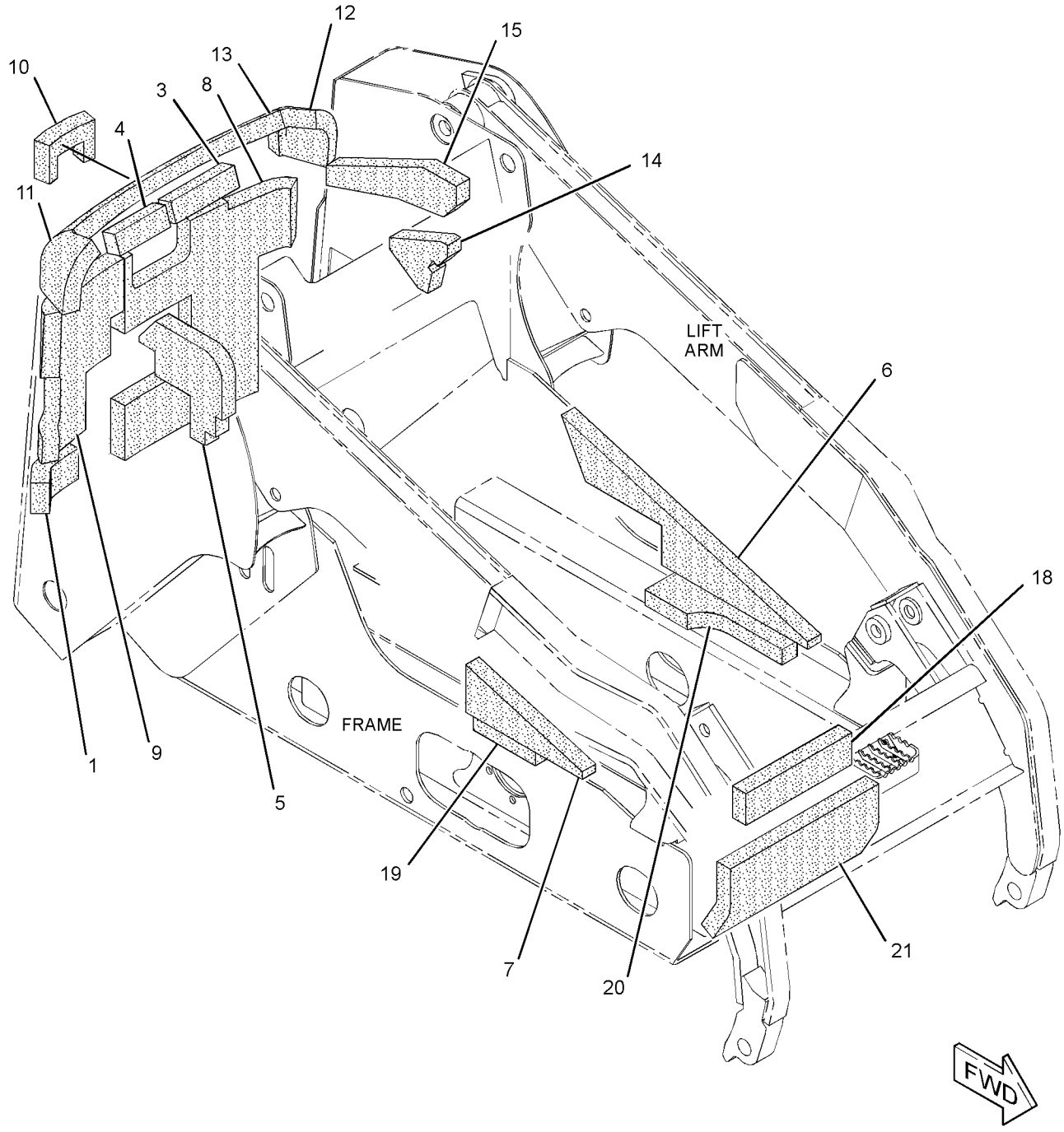

GRAPHIC #1 **<END>** g01329402

280-8330 SUPPRESSION GP-SOUND–ENGINE

S/N: JAY1-UP

PART OF 258-3818, 258-3819 CONVERSION AR-MACHINE, 258-3801 CONVERSION AR-ROADING

AN ATTACHMENT

SMCS-1801, 7076 **i02674997**

NOTE	REF NO	GRAPHIC REF	PART NUMBER	QTY	PART NAME 1 2 3 4 5 6 (PRODUCT LEVEL)	SEE PAGE
	1	1	**246-1259**	1	COVER-INSULATION (LH)	
	2	1	**246-1260**	1	COVER-INSULATION (RH)	
	3	1	**280-8307**	1	BRACKET AS	
	4	1	**280-8335**	6	SPACER	
	5	1	**101-2867**	1	WASHER-HARD (7.2X25X2-MM THK)	
M	6	1	**3E-8020**	1	SCREW-TRUSS HEAD (M6X1X25-MM)	
M	7	1	**6V-7357**	2	BOLT (M6X1X25-MM)	
M	8	1	**8T-4181**	4	BOLT (M6X1X20-MM)	

M-METRIC PART

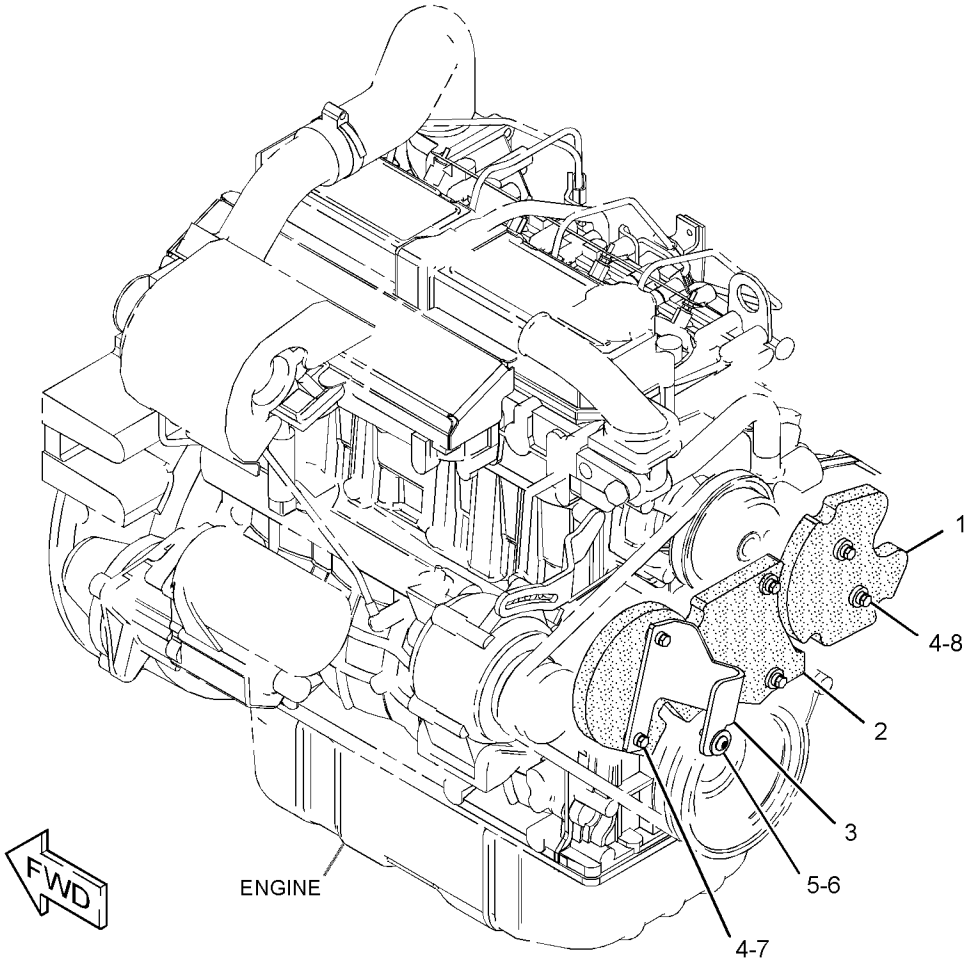

GRAPHIC #1 **<END>** g01345222

294-4560 SUPPRESSION GP-SOUND

S/N: JAY1-UP
PART OF 258-3818, 258-3819 CONVERSION AR-MACHINE, 258-3801 CONVERSION AR-ROADING
AN ATTACHMENT

SMCS-1801, 7076 **i02645129**

NOTE	REF NO	GRAPHIC REF	PART NUMBER	QTY	PART NAME 1 2 3 4 5 6 (PRODUCT LEVEL)	SEE PAGE
	1	1	**176-4079**	2	INSULATION	
	2	1	**294-4555**	1	INSULATION	
	3	1	**294-4556**	1	INSULATION	

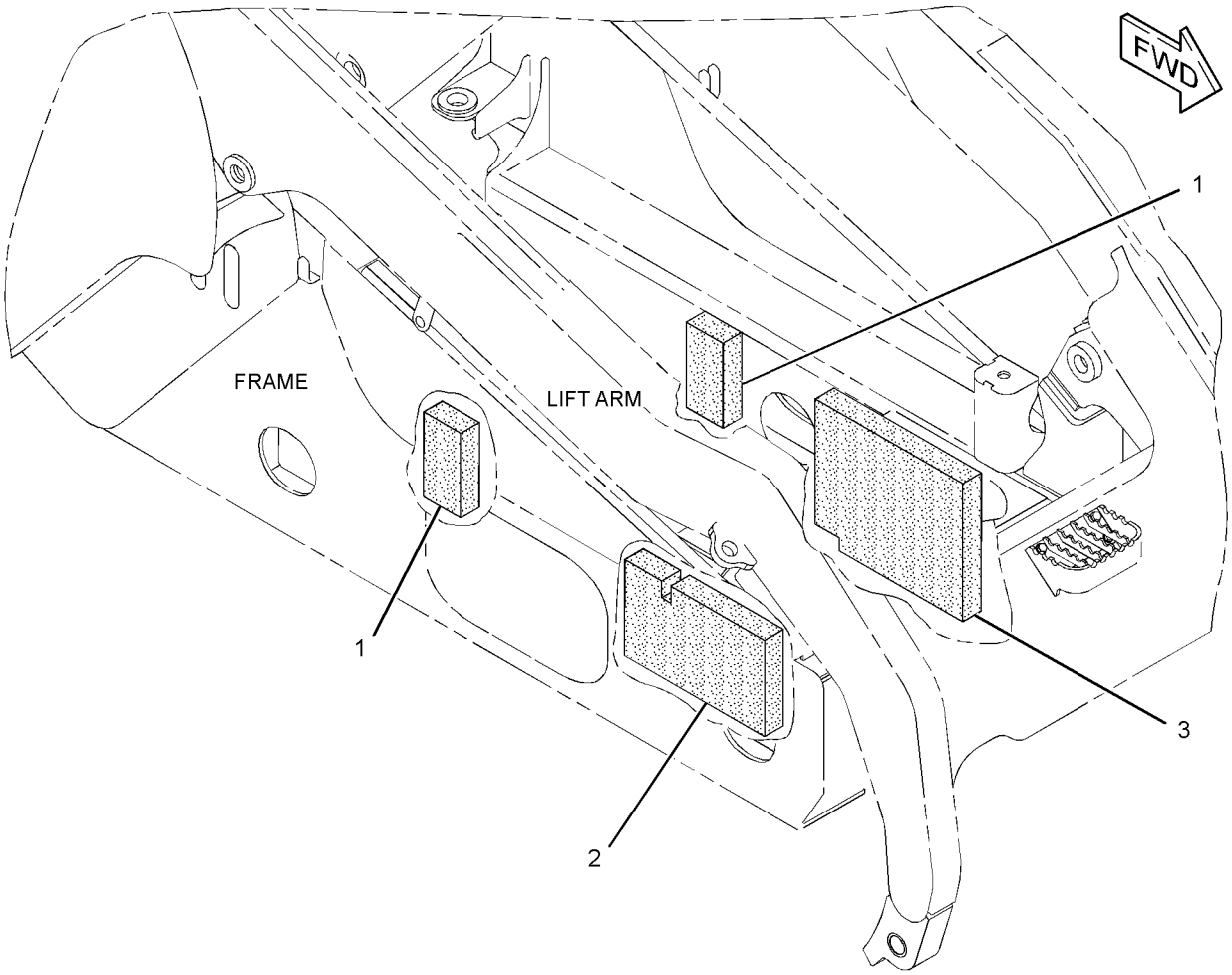

GRAPHIC #1 **<END>** g01332926

HYDRAULIC SYSTEM

149-0686 ACCUMULATOR GP-HYDRAULIC—CHARGED

S/N: JAY1-UP

PART OF 258-3462 MANF & SOLENOID MTG GP-ACCUM

FIELD REPLACEMENT ORDER 227-8807—PAGE 182

SMCS-5077 **i02036049**

NOTE	PART NUMBER	QTY	PART NAME 1 2 3 4 5 6 (PRODUCT LEVEL)	SEE PAGE
			(NO SERVICED PARTS)	

<END>

227-8807 ACCUMULATOR GP-HYDRAULIC—UNCHARGED

S/N: JAY1-UP

SMCS-5077 **i02036588**

NOTE	PART NUMBER	QTY	PART NAME 1 2 3 4 5 6 (PRODUCT LEVEL)	SEE PAGE
			(NO SERVICED PARTS)	

<END>

154-5018 CYLINDER GP-BUCKET

S/N: JAY1-UP
60-MM(2.3-IN)BORE X 200-MM(7.7-IN)STROKE
PART OF 279-5382, 279-5390, 279-5398, 279-5403 BUCKET AR-MULTIPURPOSE AN ATTACHMENT

SMCS-5498 **i02712981**

NOTE	REF NO	GRAPHIC REF	PART NUMBER	QTY	PART NAME 1 2 3 4 5 6 (PRODUCT LEVEL)	SEE PAGE
	1	1	**3B-8489**	1	FITTING-GREASE	
					AVAILABLE REPAIR KIT(S):	
			164-3213	1	KIT-SEAL	
					(INCLUDES O-RINGS, SEALS, BACK RINGS, PISTON GUIDE RING, SET SCREW, & WIPER RING)	

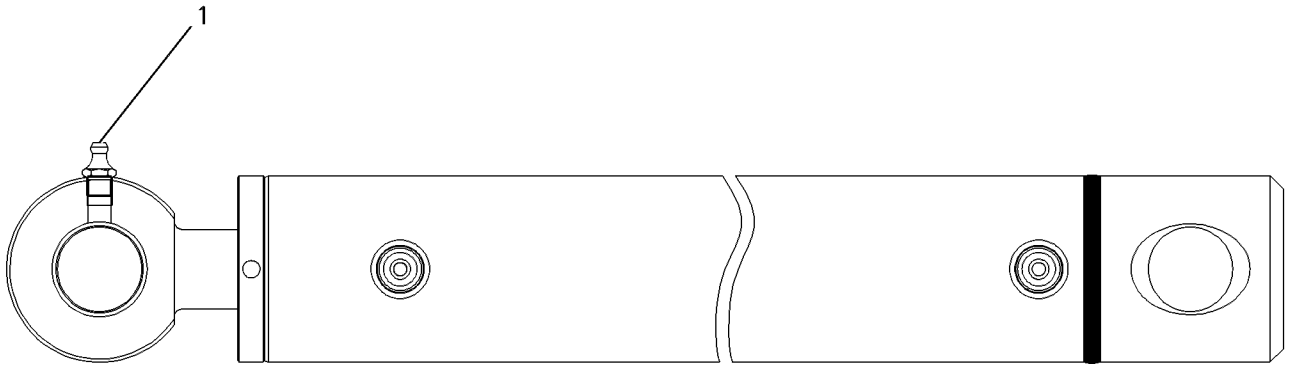

GRAPHIC #1 **<END>** g00564347

164-9295 CYLINDER GP-GRAPPLE

S/N: JAY1-UP
40-MM (1.58-IN) BORE X 200-MM (7.7-IN) STROKE
PART OF 285-6116 GRAPPLE GP-UTILITY
AN ATTACHMENT

SMCS-5457 **i01217084**

NOTE	REF NO	GRAPHIC REF	PART NUMBER	QTY	PART NAME 1 2 3 4 5 6 (PRODUCT LEVEL)	SEE PAGE
	1	1	**3B-8489**	1	FITTING-GREASE	
					AVAILABLE REPAIR KIT(S):	
			172-5285	1	KIT-SEAL	
					(INCLUDES WIPER RING, PISTON GUIDE RING, PISTON SEAL AND O-RINGS)	

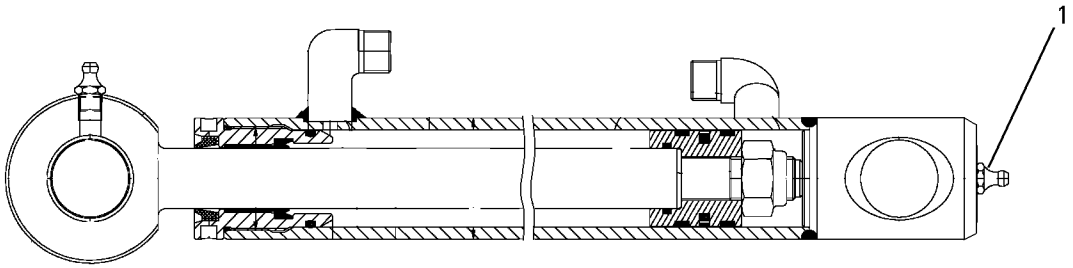

GRAPHIC #1 **<END>** g00604934

HYDRAULIC SYSTEM

192-2640 CYLINDER GP-HYDRAULIC

S/N: JAY1-UP
35-MM (1.4-IN) BORE X 103.5-MM (4.14-IN) STROKE
PART OF 215-3962, 215-3963 CYLINDER & LINK GP-COUPLER, 258-3910 KIT-QUICK COUPLER CONVERSION
AN ATTACHMENT

SMCS-5362, 7562 **i01672784**

NOTE	PART NUMBER	QTY	PART NAME 1 2 3 4 5 6 (PRODUCT LEVEL)	SEE PAGE
			(NO SERVICED PARTS)	

<END>

278-1969 CYLINDER GP-HYDRAULIC

S/N: JAY1-UP
60-MM (2.36-IN) BORE X 200-MM (7.9-IN) STROKE
PART OF 293-0139 BUCKET AR-MULTIPURPOSE
AN ATTACHMENT

SMCS-5362, 7562 **i02712982**

NOTE	REF NO	GRAPHIC REF	PART NUMBER	QTY	PART NAME 1 2 3 4 5 6 (PRODUCT LEVEL)	SEE PAGE
	1	1	**7D-8508**	1	NUT-FULL (7/8-14-THD)	
	2	1	**254-9097**	1	BEARING-SLEEVE	
	3	1	**3B-8489**	1	FITTING-GREASE	
					AVAILABLE REPAIR KIT(S):	
			278-1970	1	KIT-SEAL (HYDRAULIC CYLINDER)	
					(INCLUDES RINGS & SEALS)	

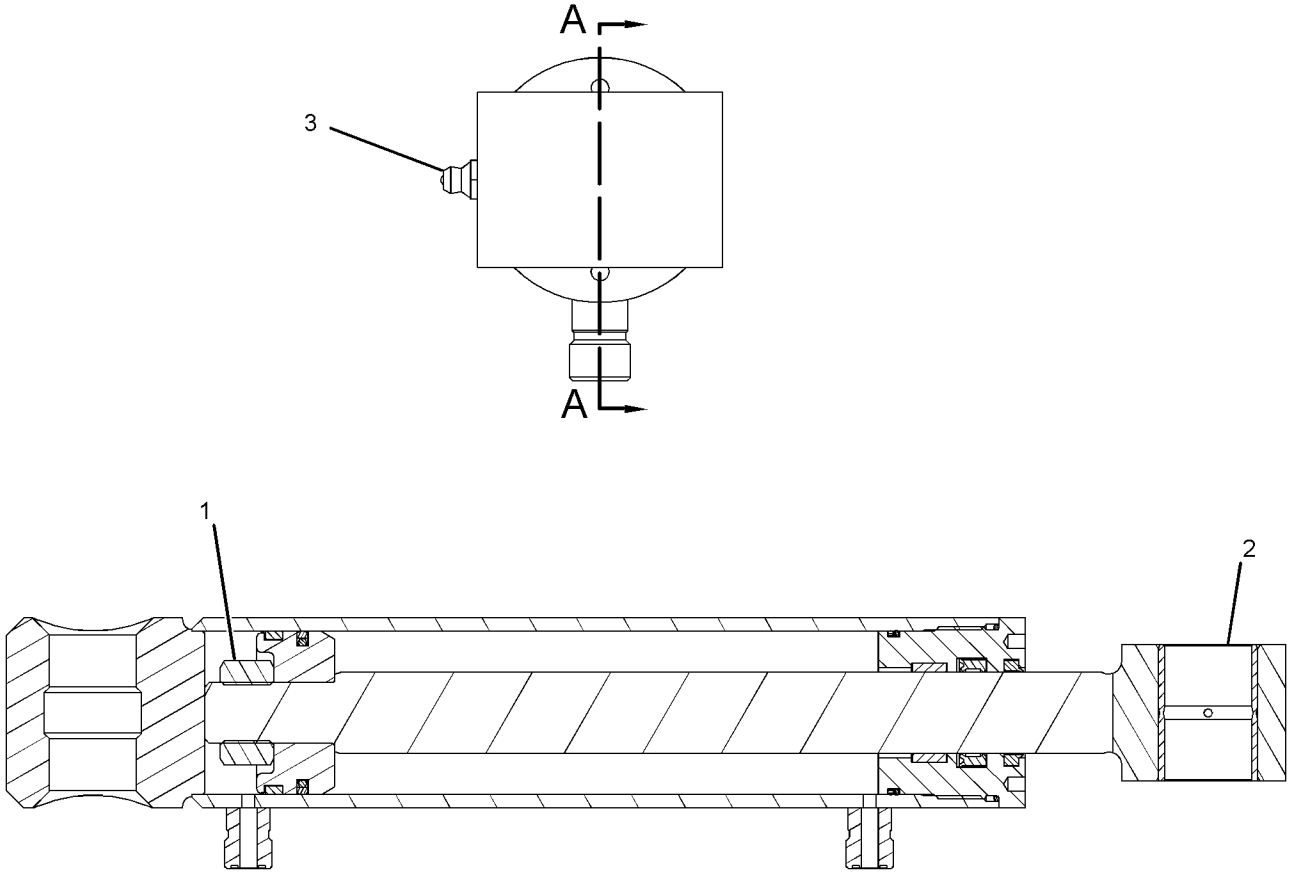

SECTION A-A

GRAPHIC #1 **<END>** g01281180

278-1975 CYLINDER GP-HYDRAULIC

S/N: JAY1-UP
60-MM (2.3-IN) BORE X 200-MM (7.7-IN) STROKE
PART OF 279-5350, 279-5360 FORK AR-GRAPPLE
AN ATTACHMENT

SMCS-5362, 7562 **i02712984**

NOTE	REF NO	GRAPHIC REF	PART NUMBER	QTY	PART NAME 1 2 3 4 5 6 (PRODUCT LEVEL)	SEE PAGE
	1	1	**7D-8508**	1	NUT-FULL (7/8-14-THD)	
	2	1	**254-9097**	1	BEARING-SLEEVE	
	3	1	**255-0942**	1	BEARING-SLEEVE	
	4	1	**3B-8489**	1	FITTING-GREASE	
	5	1	**7J-0204**	2	SEAL-O-RING	
	6	1	**9S-8007**	2	PLUG	
					AVAILABLE REPAIR KIT(S):	
			278-1970	1	KIT-SEAL (HYDRAULIC CYLINDER)	
					(INCLUDES RINGS, SEALS & SEAL-O-RINGS)	

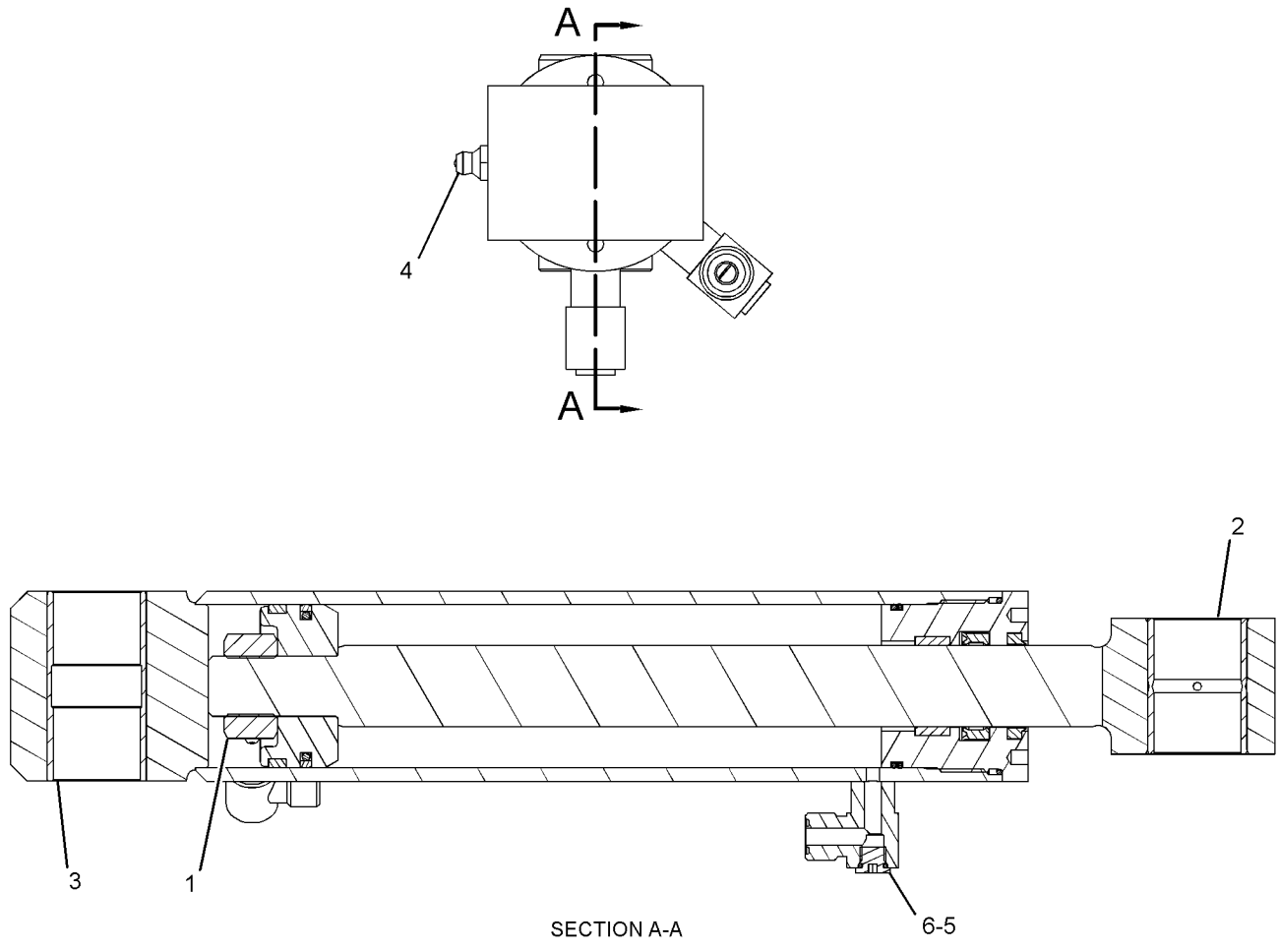

GRAPHIC #1 **<END>** g01280909

HYDRAULIC SYSTEM

258-2558 CYLINDER GP-LIFT ARM

S/N: JAY1-UP

PART OF 258-2410 CHASSIS AR

SMCS-5102, 5104 **i02712989**

NOTE	REF NO	GRAPHIC REF	PART NUMBER	QTY	PART NAME 1 2 3 4 5 6 (PRODUCT LEVEL)	SEE PAGE
J	1	1	**258-2512**	2	CYLINDER GP-LIFT	
H	2	1	**258-2514**	1	CYLINDER GP-TILT (RH)	
H	3	1	**258-2515**	1	CYLINDER GP-TILT (LH)	
					AVAILABLE REPAIR KIT(S):	
J			**218-6824**	2	KIT-SEAL (LIFT)	
					(INCLUDES PISTON SEAL, PISTON WEAR BAND, WIPER SEAL, ROD SEAL & RINGS)	
H			**258-3621**	2	KIT-SEAL (TILT)	
					(INCLUDES SETSCREW, SEALS & RINGS)	

H-KITS MARKED H AVAILABLE FOR PARTS MARKED H
J-KIT MARKED J AVAILABLE FOR PART MARKED J

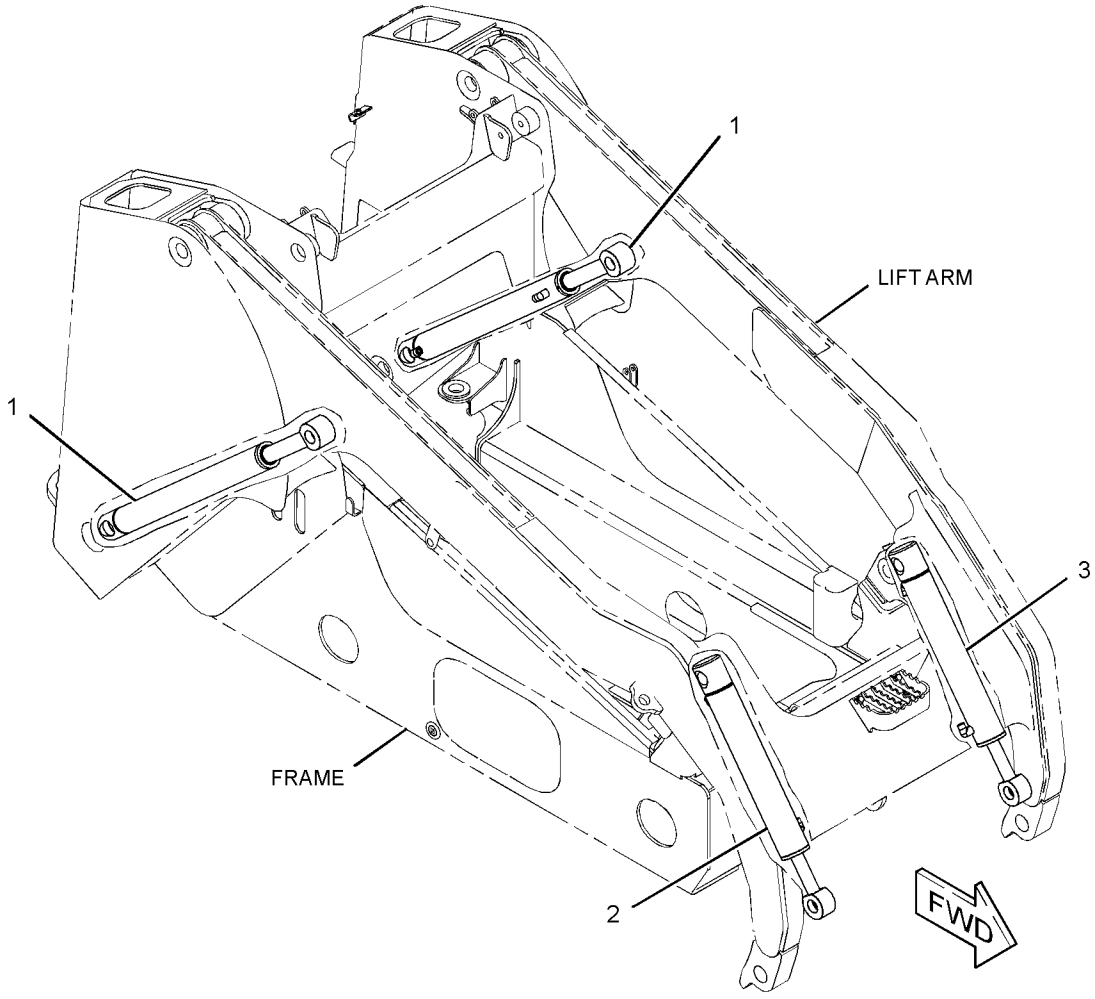

GRAPHIC #1 **<END>** g01317320

218-5840 FITTING GP-HYDRAULIC–
QUICK DISCONNECT, MALE, HIGH FLOW
S/N: JAY1-UP
PART OF 258-2421 LINES GP-WORK TOOL
AN ATTACHMENT

SMCS-5057 **i01974387**

NOTE	REF NO	GRAPHIC REF	PART NUMBER	QTY	PART NAME 1 2 3 4 5 6 (PRODUCT LEVEL)	SEE PAGE
	1	1	**218-5843**	1	FITTING AS (QUICK DISCONNECT, MALE)	
	2	1	**218-5844**	1	FITTING AS (QUICK DISCONNECT, MALE)	
	3	1	**2M-9780**	1	SEAL-O-RING	
	4	1	**6V-8640**	1	CONNECTOR	
	5	1	**6V-9746**	1	SEAL-O-RING	

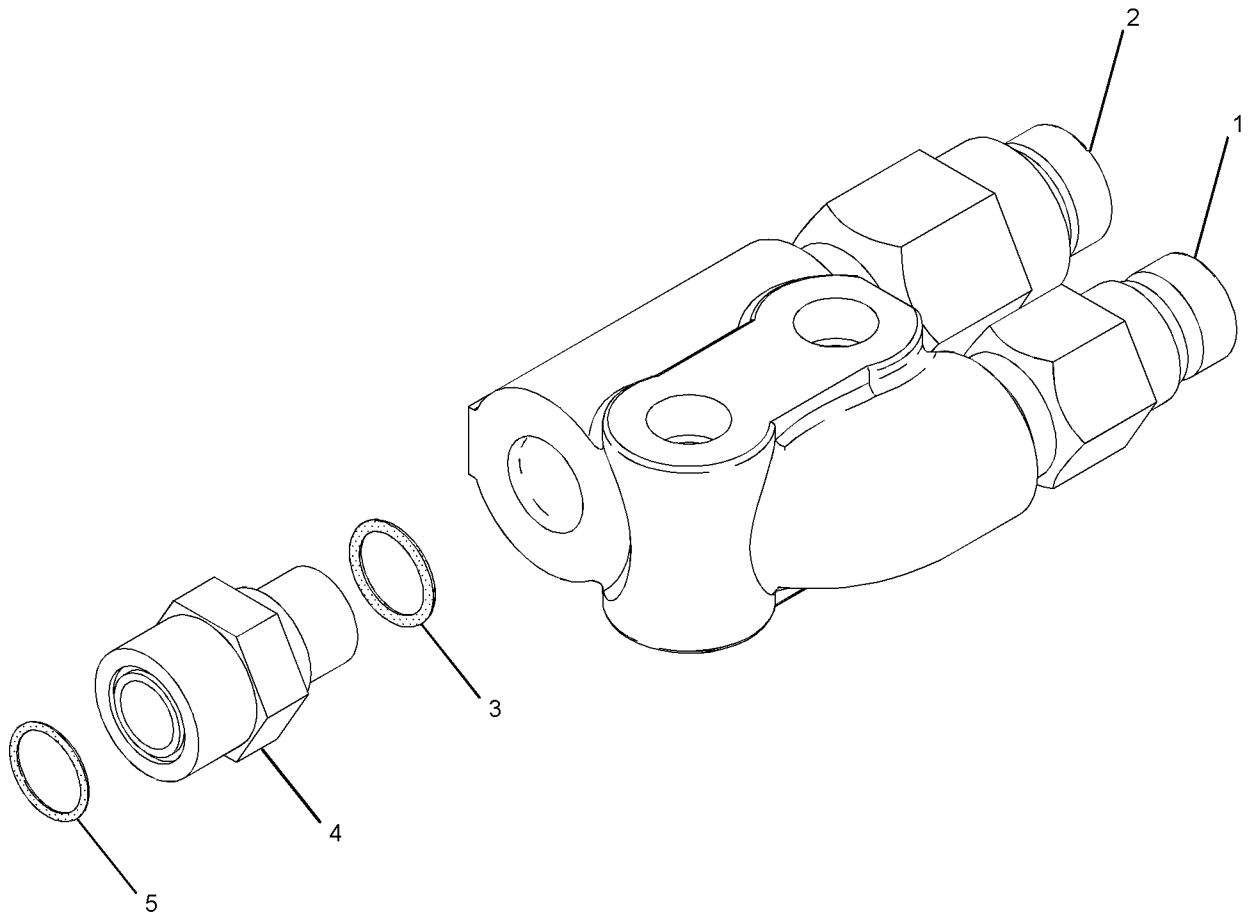

GRAPHIC #1 **<END>** g01026062

218-5841 FITTING GP-HYDRAULIC–
QUICK DISCONNECT, FEMALE, HIGH FLOW
S/N: JAY1-UP
PART OF 258-2421 LINES GP-WORK TOOL
AN ATTACHMENT

SMCS-5057 **i02129402**

NOTE	REF NO	GRAPHIC REF	PART NUMBER	QTY	PART NAME 1 2 3 4 5 6 (PRODUCT LEVEL)	SEE PAGE
	1	1	**218-5845**	1	FITTING AS (QUICK DISCONNECT, FEMALE)	
	2	1	**218-5846**	1	FITTING AS (QUICK DISCONNECT, FEMALE)	
	3	1	**2M-9780**	1	SEAL-O-RING	
	4	1	**6V-8640**	1	CONNECTOR	
	5	1	**6V-9746**	1	SEAL-O-RING	

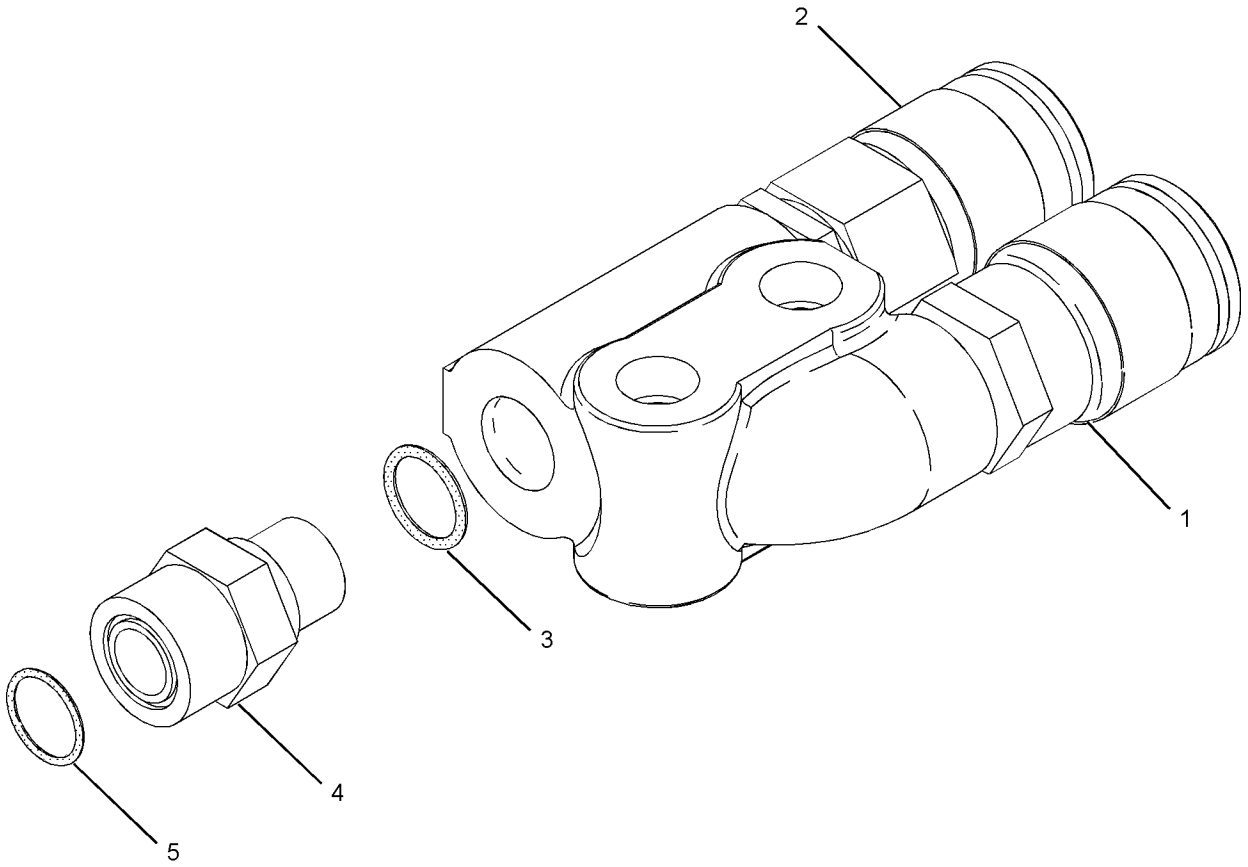

GRAPHIC #1 **<END>** g01084158

292-2439 FITTING GP-HYDRAULIC

S/N: JAY1-UP
PART OF 258-3200 POWER TRAIN AR
AN ATTACHMENT

SMCS-5057 **i02674983**

NOTE	REF NO	GRAPHIC REF	PART NUMBER	QTY	PART NAME 1 2 3 4 5 6 (PRODUCT LEVEL)	SEE PAGE
	1	1	*148-8378*	1	ELBOW AS	
		1	**3J-1907**	1	SEAL-O-RING	
		1	**6V-8397**	1	SEAL-O-RING	
		1	**6V-8724**	1	ELBOW	
	2	1	**6V-9829**	1	CAP AS (AUX HYD FUNCTION)	

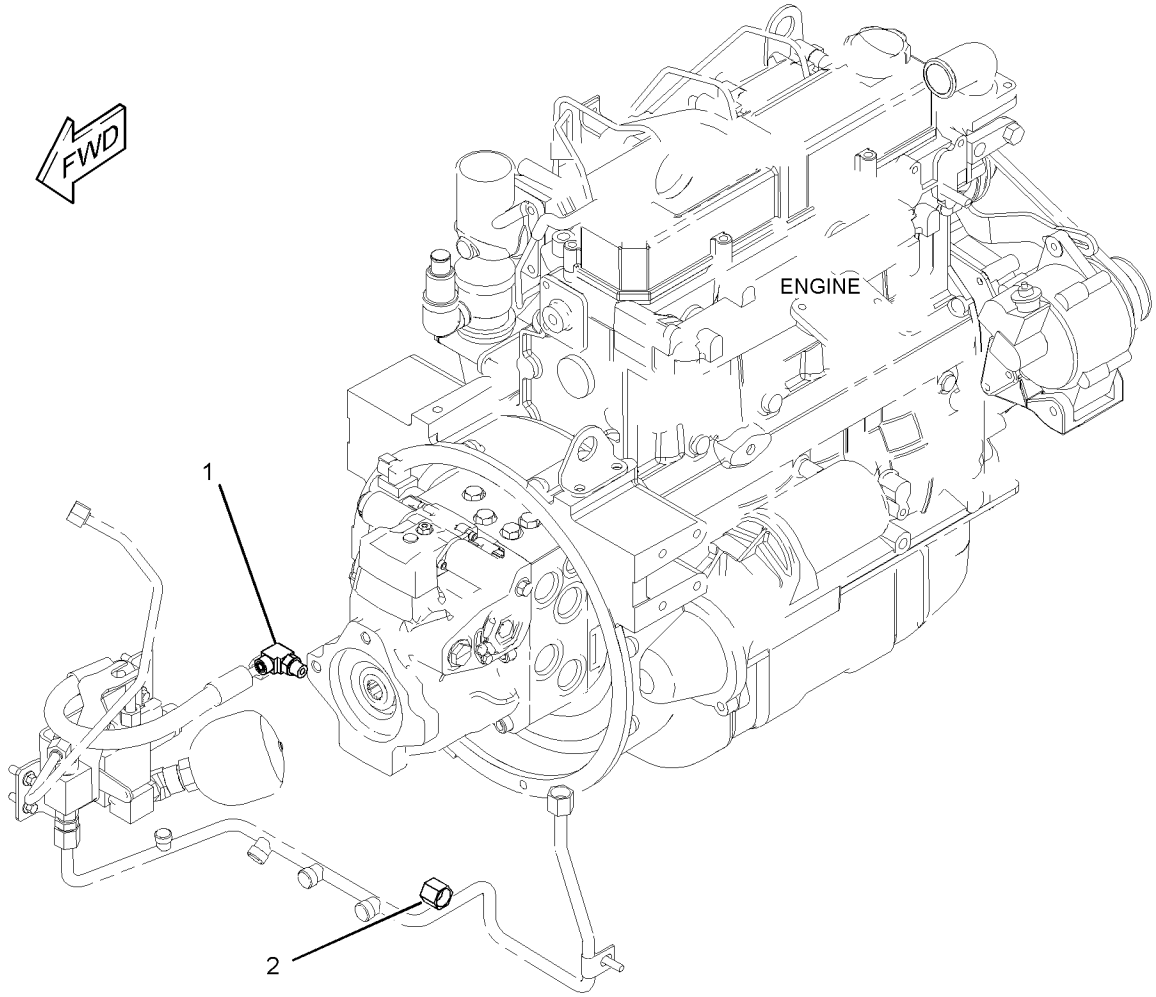

GRAPHIC #1 **<END>** g01326207

HYDRAULIC SYSTEM

258-2426 HYDRAULIC AR

S/N: JAY1-UP
PART OF 258-3748 MACHINE AR-SPECIAL
AN ATTACHMENT

SMCS-5050 **i02636295**

NOTE	PART NUMBER	QTY	PART NAME 1 2 3 4 5 6 (PRODUCT LEVEL)	SEE PAGE
Y	*258-2876*	1	LINES GP-HYDRAULIC	218
Y-SEPARATE ILLUSTRATION				

<END>

258-2428 HYDRAULIC AR

S/N: JAY1-UP
PART OF 258-3682, 258-3750, 258-3753 MACHINE AR-SPECIAL
AN ATTACHMENT

SMCS-5050 **i02637882**

NOTE	PART NUMBER	QTY	PART NAME 1 2 3 4 5 6 (PRODUCT LEVEL)	SEE PAGE
Y	*258-2878*	1	LINES GP-HYDRAULIC (SELF LEVEL)	219
Y	*258-3468*	1	MANIFOLD & MTG GP-CONTROL	249
Y-SEPARATE ILLUSTRATION				

<END>

258-2600 HYDRAULIC AR

S/N: JAY1-UP
PART OF 258-3236 COMMON AR

SMCS-5050 **i02706199**

NOTE	PART NUMBER	QTY	PART NAME 1 2 3 4 5 6 (PRODUCT LEVEL)	SEE PAGE
Y	*258-2581*	1	FILTER & LINES GP-HYDRAULIC	120
Y	*258-2780*	1	LINES GP-HYDRAULIC OIL COOLER	225
Y	*258-2411*	1	LINES GP-LIFT CYLINDER	227
Y	*258-3393*	1	LINES GP-LOWERING CONTROL (MANUAL)	228
Y	*258-2607*	1	LINES GP-PARKING BRAKE	127
Y	*258-2412*	1	LINES GP-TILT CYLINDER	238
Y	*258-3394*	1	MANIFOLD & LINES GP-ACCUM	247
Y	*258-2589*	1	MANIFOLD GP-RETURN	130
Y	*258-2434*	1	TANK & MTG GP-HYDRAULIC	264
Y-SEPARATE ILLUSTRATION				

<END>

HYDRAULIC SYSTEM

258-3180 HYDRAULIC AR

S/N: JAY1-UP
AN ATTACHMENT

SMCS-5050 **i02637842**

NOTE	PART NUMBER	QTY	PART NAME 1 2 3 4 5 6 (PRODUCT LEVEL)	SEE PAGE
Y	*258-3403*	1	CONTROL GP-ELECTROHYDRAULIC (LH)	377
Y	*258-2582*	1	LINES GP-HYDRAULIC FAN	221
Y	*258-3237*	1	LINES GP-PUMP	230
Y	*258-2422*	1	LINES GP-WORK TOOL	244
Y	*258-2556*	1	PUMP & MTG GP-WORK TOOL	259
Y	*258-2502*	1	VALVE & MTG GP-CONTROL	267
Y-SEPARATE ILLUSTRATION				

<END>

258-3182 HYDRAULIC AR

S/N: JAY1-UP
AN ATTACHMENT

SMCS-5050 **i02637843**

NOTE	PART NUMBER	QTY	PART NAME 1 2 3 4 5 6 (PRODUCT LEVEL)	SEE PAGE
Y	*258-3404*	1	CONTROL GP-ELECTROHYDRAULIC (LH)	378
Y	*258-3407*	1	CONTROL GP-ELECTROHYDRAULIC (RH)	381
Y	*258-3230*	1	FILM GP (HIGH FLOW)	464
Y	*258-2786*	1	LINES GP-HYDRAULIC FAN	223
Y	*258-3238*	1	LINES GP-PUMP	232
Y	*258-2421*	1	LINES GP-WORK TOOL	240
Y	*258-2557*	1	PUMP & MTG GP-WORK TOOL	260
Y	*258-2503*	1	VALVE & MTG GP-CONTROL	268
Y	*258-4125*	1	WIRING GP-WORK TOOL	112
Y-SEPARATE ILLUSTRATION				

<END>

258-3730 HYDRAULIC AR

S/N: JAY1-UP
AN ATTACHMENT

SMCS-5050 **i02637844**

NOTE	PART NUMBER	QTY	PART NAME 1 2 3 4 5 6 (PRODUCT LEVEL)	SEE PAGE
Y	*258-3403*	1	CONTROL GP-ELECTROHYDRAULIC (LH)	377
Y	*258-2582*	1	LINES GP-HYDRAULIC FAN	221
Y	*258-3237*	1	LINES GP-PUMP	230
Y	*258-2422*	1	LINES GP-WORK TOOL	244
Y	*258-3402*	1	PUMP & MTG GP-GEAR	258
Y	*258-2502*	1	VALVE & MTG GP-CONTROL	267
Y-SEPARATE ILLUSTRATION				

<END>

HYDRAULIC SYSTEM

258-3733 HYDRAULIC AR

S/N: JAY1-UP
AN ATTACHMENT

SMCS-5050 **i02637845**

NOTE	PART NUMBER	QTY	PART NAME 1 2 3 4 5 6 (PRODUCT LEVEL)	SEE PAGE
Y	*258-3404*	1	CONTROL GP-ELECTROHYDRAULIC (LH)	378
Y	*258-3407*	1	CONTROL GP-ELECTROHYDRAULIC (RH)	381
Y	*258-3230*	1	FILM GP (HIGH FLOW)	464
Y	*258-2786*	1	LINES GP-HYDRAULIC FAN	223
Y	*258-3238*	1	LINES GP-PUMP	232
Y	*258-2421*	1	LINES GP-WORK TOOL	240
Y	*258-3401*	1	PUMP GP-PISTON & GEAR	263
Y	*258-2503*	1	VALVE & MTG GP-CONTROL	268
Y	*258-4125*	1	WIRING GP-WORK TOOL	112

Y-SEPARATE ILLUSTRATION

<END>

261-6264 HYDRAULIC AR—HIGH FLOW

S/N: JAY1-UP
AN ATTACHMENT

SMCS-5050 **i02693218**

NOTE	PART NUMBER	QTY	PART NAME 1 2 3 4 5 6 (PRODUCT LEVEL)	SEE PAGE
Y	*258-3404*	1	CONTROL GP-ELECTROHYDRAULIC (LH)	378
Y	*258-3407*	1	CONTROL GP-ELECTROHYDRAULIC (RH)	381
Y	*258-3230*	1	FILM GP	464
Y	*258-2786*	1	LINES GP-HYDRAULIC FAN	223
Y	*261-6239*	1	LINES GP-PUMP	235
Y	*258-2421*	1	LINES GP-WORK TOOL	240
Y	*258-3401*	1	PUMP GP-PISTON & GEAR	263
Y	*258-2503*	1	VALVE & MTG GP-CONTROL	268
Y	*258-4125*	1	WIRING GP-WORK TOOL	112

Y-SEPARATE ILLUSTRATION

<END>

258-3910 KIT-QUICK COUPLER CONVERSION—HYDRAULIC

S/N: JAY1-UP
AN ATTACHMENT

SMCS-5057, 5133, 5479, 6129 **i02663672**

NOTE	REF NO	GRAPHIC REF	PART NUMBER	QTY	PART NAME 1 2 3 4 5 6 (PRODUCT LEVEL)	SEE PAGE
	1	1	**7K-1181**	15	STRAP-CABLE	
	2	1	**124-2456**	1	FILM-INSTRUCTION (NO STEP)	
	3	2	**166-2560**	2	PIN-SPRING	
	4	1	**178-3620**	6	STRAP	
	5	2	**192-2637**	2	PLATE	
	6	2	**192-2638**	2	BRACKET	
Y	7	2	**192-2640**	2	CYLINDER GP-HYDRAULIC	185
	8	2	**195-6754**	6	PIN-SPRING	
	9	2	**207-9737**	1	BRACKET AS	
	10	2	**207-9785**	2	PIN	
	11	2	**212-6690**	1	GUARD	
	12	2	**218-6332**	1	BRACKET AS	
	13	2	**218-6333**	1	BRACKET AS	
	14	2	**238-7693**	2	SPRING	
	15	1	**258-3368**	1	TUBE AS	
	16	1	**258-3369**	1	TUBE AS	
	17	1	**258-4191**	1	HARNESS AS-WORK TOOL	
		1	**102-8803**	1	KIT-RECEPTACLE (3-PIN)	
					(INCLUDES RECEPTACLE AS & WEDGE)	
		1	**8L-8413**	3	STRAP-CABLE	
E		1	**125-7874**		TUBE-HEAT SHRINK (5.72-MM DIA) (5-CM)	
		1	**155-2270**	2	KIT-CONNECTING PLUG (2-PIN)	
					(EACH INCLUDES PLUG AS, WEDGE & INTERFACE SEAL)	
	18	1	**265-9513**	1	SWITCH AS-ROCKER (HYDRAULIC QUICK COUPLER)	
Y	19	1	**291-0010**	1	MANIFOLD GP-CONTROL (QUICK COUPLER)	253
	20	1,2	**124-2113**	6	COUPLING-PERMANENT	
	21	1	**124-2129**	1	COUPLING-PERMANENT	
	22	1,2	**124-2140**	5	COUPLING-PERMANENT	
	23	2	**124-2141**	2	COUPLING-PERMANENT	
	24	1	**132-7551**	1	SPACER (11X19X6-MM THK)	
	25	2	*148-8325*	4	CONNECTOR AS	
					(EACH INCLUDES)	
		2	**3J-1907**	1	SEAL-O-RING	
		2	**4J-5477**	1	SEAL-O-RING	
		2	**6V-8641**	1	CONNECTOR	
	26	1	*148-8336*	2	CONNECTOR AS	
					(EACH INCLUDES)	
		1	**3J-1907**	1	SEAL-O-RING	
		1	**6V-8397**	1	SEAL-O-RING	
		1	**6V-8636**	1	CONNECTOR	
	27	1	*148-8378*	2	ELBOW AS	
					(EACH INCLUDES)	
		1	**3J-1907**	1	SEAL-O-RING	
		1	**6V-8397**	1	SEAL-O-RING	
		1	**6V-8724**	1	ELBOW	
	28	2	*150-4034*	2	TEE AS	
					(EACH INCLUDES)	
		2	**6V-8397**	3	SEAL-O-RING	
		2	**8T-0379**	1	TEE-BULKHEAD	
	29	1	*212-1336*	1	TEE AS	
		1	**2M-9780**	1	SEAL-O-RING	
		1	**6V-8783**	1	TEE-FACE SEAL	
		1	**7J-9108**	2	SEAL-O-RING	
	30	1	*215-3191*	1	REDUCER AS	
		1	**4J-5477**	1	SEAL-O-RING	

258-3910 KIT-QUICK COUPLER CONVERSION *(contd.)* i02663672

NOTE	REF NO	GRAPHIC REF	PART NUMBER	QTY	PART NAME 1 2 3 4 5 6 (PRODUCT LEVEL)	SEE PAGE
		1	**6V-8937**	1	REDUCER-O-RING	
	31	1	**242-9532**	2	COUPLING AS-PERMANENT	
M	32	1	**266-3315**	2	BOLT-FLANGE HEAD (M8X1.25X25.5-MM)	
	33	2	**3B-4628**	2	PIN-COTTER	
	34	1	**3S-2093**	2	STRAP-CABLE	
	35	1	**4D-6466**	3	CLIP	
	36	2	**5P-0372**	2	LOCK PIN	
	37	1	**5P-4116**	2	WASHER-HARD (8.8X20.5X2-MM THK)	
	38	1	**6V-8397**	2	SEAL-O-RING	
	39	2	**6V-9168**	2	NUT (11/16-16-THD)	
	40	1	**7B-1597**	2	CLIP	
	41	2	**7G-2950**	1	CLIP (SLOT)	
	42	2	**7G-2951**	1	CLIP (TAB)	
	43	1	**7H-7055**	2	CLIP	
	44	2	**7X-7729**	3	WASHER (11X25X3-MM THK)	
	45	2	**8L-5188**	2	PIN	
	46	1,2	**8T-4121**	12	WASHER-HARD (11X21X2.5-MM THK)	
	47	2	**8T-4123**	4	WASHER-PLATED (22X35X3.5-MM THK)	
M	48	1,2	**8T-4133**	5	NUT (M10X1.5-THD)	
M	49	1,2	**8T-4136**	4	BOLT (M10X1.5X25-MM)	
M	50	1	**8T-4137**	1	BOLT (M10X1.5X20-MM)	
M	51	2	**8T-4189**	2	BOLT (M8X1.25X20-MM)	
M	52	1	**8T-4191**	1	BOLT (M10X1.5X16-MM)	
M	53	2	**8T-4196**	4	BOLT (M10X1.5X35-MM)	
M	54	1	**8T-4200**	2	BOLT (M8X1.25X16-MM)	
	55	1,2	**8T-4224**	4	WASHER-HARD (8.8X16X2-MM THK)	
M	56	1	**8T-6870**	2	BOLT (M8X1.25X70-MM)	
	57	1	**9M-8406**	2	CLIP	
	58	1	**9S-1350**	2	CLIP	
	59	2	**9T-7303**	4	SPACER (16X28X1.5-MM THK)	
	60	1	**9X-6581**	1	NUT-O-RING SEAL (1-14-THD)	
GI	61	1	**122-6867**		HOSE (34-IN EACH)	
GI	62	2	**122-6867**		HOSE (9.8-IN EACH)	
E	63	1	**213-8708**		HOSE-HYDRAULIC (293-CM)	
E	64	1	**213-8708**		HOSE-HYDRAULIC (325-CM)	
G	65	2	**160-2243**		SLEEVE-ABRASION (11.4-IN EACH)	
G	66	1	**160-2243**		SLEEVE-ABRASION (38.2-IN EACH)	

E-ORDER BY THE CENTIMETER
G-ORDER BY THE INCH
I-REFER TO HYDRAULIC INFORMATION SYSTEM
M-METRIC PART
Y-SEPARATE ILLUSTRATION

258-3910 KIT-QUICK COUPLER CONVERSION *(contd.)* i02663672

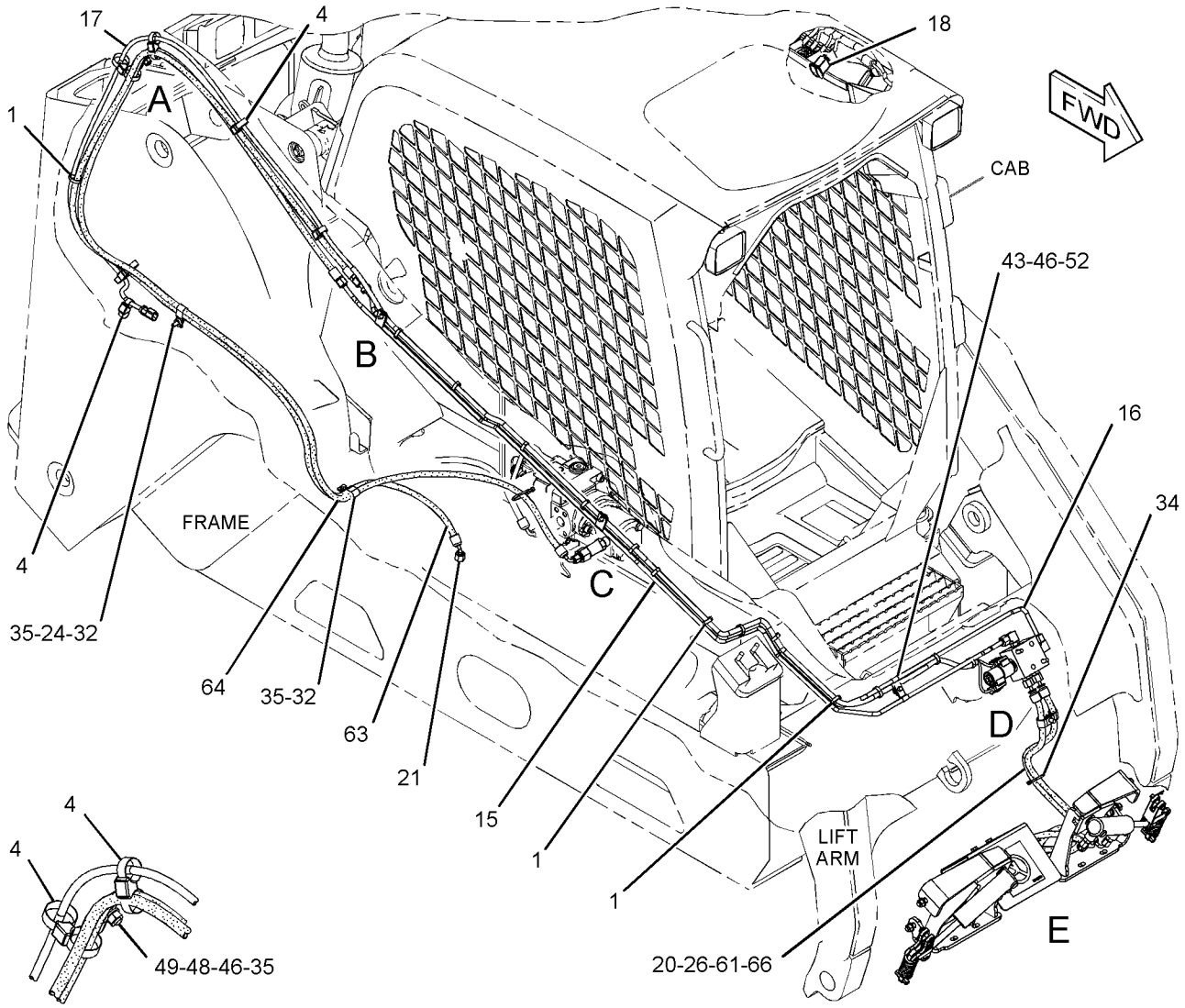

VIEW OF AREA A

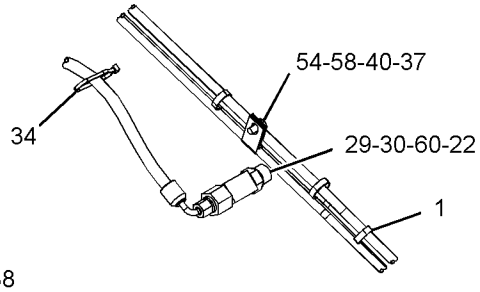

VIEW OF AREA C

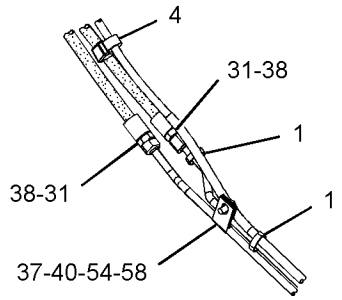

VIEW OF AREA B

REFER TO ALL ILLUSTRATIONS OF THIS GROUP FOR AUXILIARY VIEWS

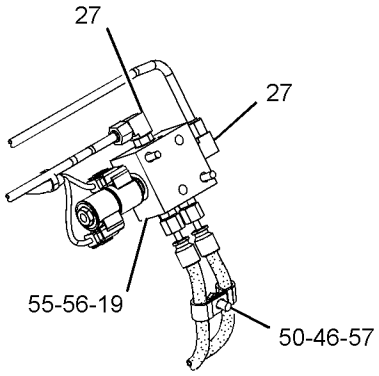

VIEW OF AREA D

GRAPHIC #1

g01340424

258-3910 KIT-QUICK COUPLER CONVERSION *(contd.)* i02663672

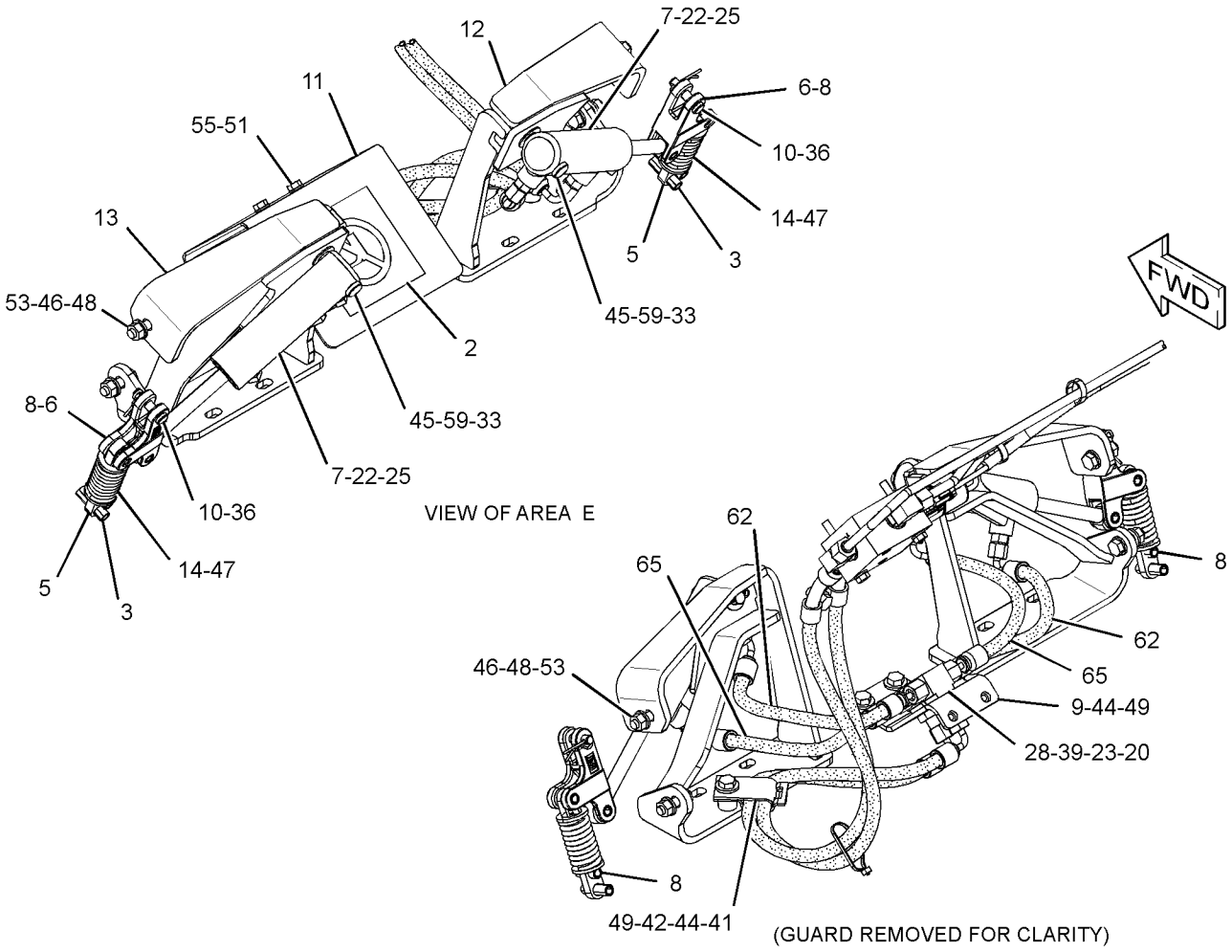

GRAPHIC #2 **<END>** g01340669

258-3915 KIT-WORK TOOL POSITIONER

S/N: JAY1-UP
AN ATTACHMENT

SMCS-5112 **i02667635**

NOTE	REF NO	GRAPHIC REF	PART NUMBER	QTY	PART NAME 1 2 3 4 5 6 (PRODUCT LEVEL)	SEE PAGE
	1	1	**146-9439**	1	RELAY AS (12-VOLT) (RIDE CONTROL)	
Y	2	1	**258-2801**	1	MANIFOLD & SOLENOID GP-CONTROL (WORK TOOL POSITIONER)	250
	3	1	**258-2883**	1	TUBE AS	
	4	1	**258-2884**	1	TUBE AS	
	5	1	**258-2885**	1	TUBE AS	
	6	1	**258-2886**	1	TUBE AS	
	7	1	**263-5417**	1	SWITCH AS-ROCKER (WORK TOOL POSITIONER)	
	8	1	*148-8315*	1	CONNECTOR AS	
		1	**2M-9780**	1	SEAL-O-RING	
		1	**6V-8642**	1	CONNECTOR	
		1	**7J-9108**	1	SEAL-O-RING	
	9	1	*148-8390*	1	ELBOW AS	
		1	**2M-9780**	1	SEAL-O-RING	
		1	**6V-8626**	1	ELBOW	
		1	**7J-9108**	1	SEAL-O-RING	
	10	1	*148-8393*	1	ELBOW AS	
		1	**6V-9852**	1	ELBOW (SWIVEL)	
		1	**7J-9108**	1	SEAL-O-RING	
	11	1	*205-3692*	2	ELBOW AS	
					(EACH INCLUDES)	
		1	**2M-9780**	1	SEAL-O-RING	
		1	**6V-8397**	1	SEAL-O-RING	
		1	**9X-2134**	1	ELBOW	
	12	1	**4P-8134**	1	CLIP	
	13	1	**6V-8398**	1	SEAL-O-RING	
	14	1	**6V-9830**	1	CAP AS	
M	15	1	**7X-2535**	2	BOLT (M6X1X60-MM)	
	16	1	**8T-4205**	1	WASHER-HARD (7.2X14.5X2-MM THK)	

M-METRIC PART
Y-SEPARATE ILLUSTRATION

258-3915 KIT-WORK TOOL POSITIONER *(contd.)* i02667635

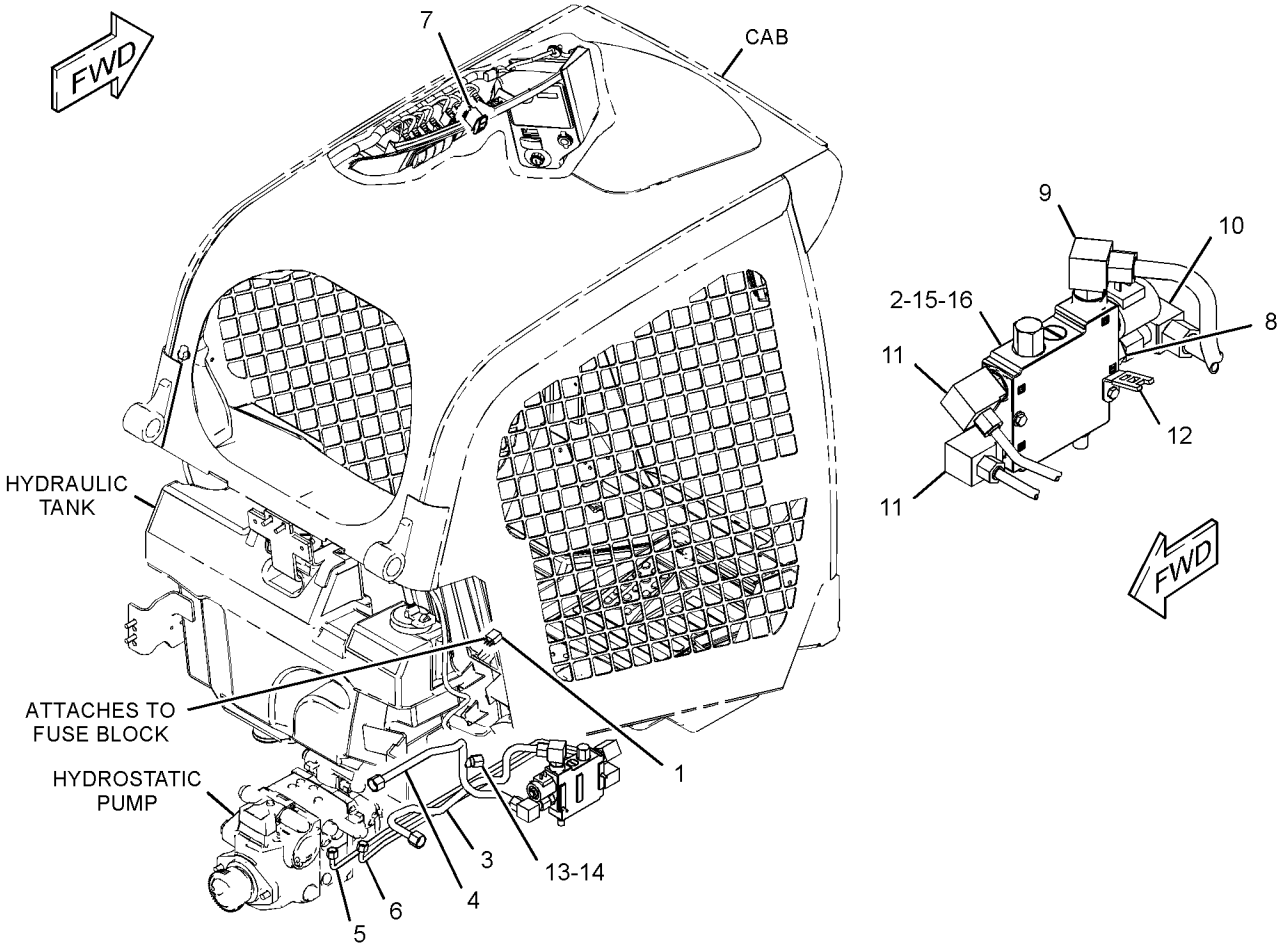

GRAPHIC #1 **<END>** g01326007

HYDRAULIC SYSTEM

279-5412 LINES GP-BUCKET—INDUSTRIAL

S/N: JAY1-UP

PART OF 279-5350, 279-5360 FORK AR-GRAPPLE

AN ATTACHMENT

SMCS-5057 **i02616554**

NOTE	REF NO	GRAPHIC REF	PART NUMBER	QTY	PART NAME 1 2 3 4 5 6 (PRODUCT LEVEL)	SEE PAGE
	1	1	**3E-7404**	2	CLAMP-HOSE	
I	2	1	**294-5503**	1	HOSE AS	
	3	1	**153-2994**	1	FITTING AS (QUICK DISCONNECT, FEMALE)	
	4	1	**153-2995**	1	FITTING AS (QUICK DISCONNECT, MALE)	
	5	1	**161-0185**	1	TUBE AS	
	6	1	**161-0186**	1	TUBE AS	
	7	1	**161-0188**	2	TUBE AS	
I	8	1	**161-0189**	2	HOSE AS	
I	9	1	**161-0190**	2	HOSE AS	
	10	1	**163-1385**	1	ELBOW	
I	11	1	**294-5502**	1	HOSE AS	
	12	1	*148-8319*	2	CONNECTOR AS	
					(EACH INCLUDES)	
		1	**2M-9780**	1	SEAL-O-RING	
		1	**6V-8397**	1	SEAL-O-RING	
		1	**6V-8715**	1	CONNECTOR	
	13	1	**2V-3216**	6	CLIP	
	14	1	**6V-8397**	13	SEAL-O-RING	
	15	1	**7S-3916**	2	CLIP (TAB)	
	16	1	**7S-3919**	2	CLIP (SLOT)	
	17	1	**8T-4121**	2	WASHER-HARD (11X21X2.5-MM THK)	
M	18	1	**8T-4136**	2	BOLT (M10X1.5X25-MM)	
M	19	1	**8T-4171**	4	BOLT (M6X1X12-MM)	
	20	1	**9R-2004**	2	BLOCK	

I-REFER TO HYDRAULIC INFORMATION SYSTEM
M-METRIC PART

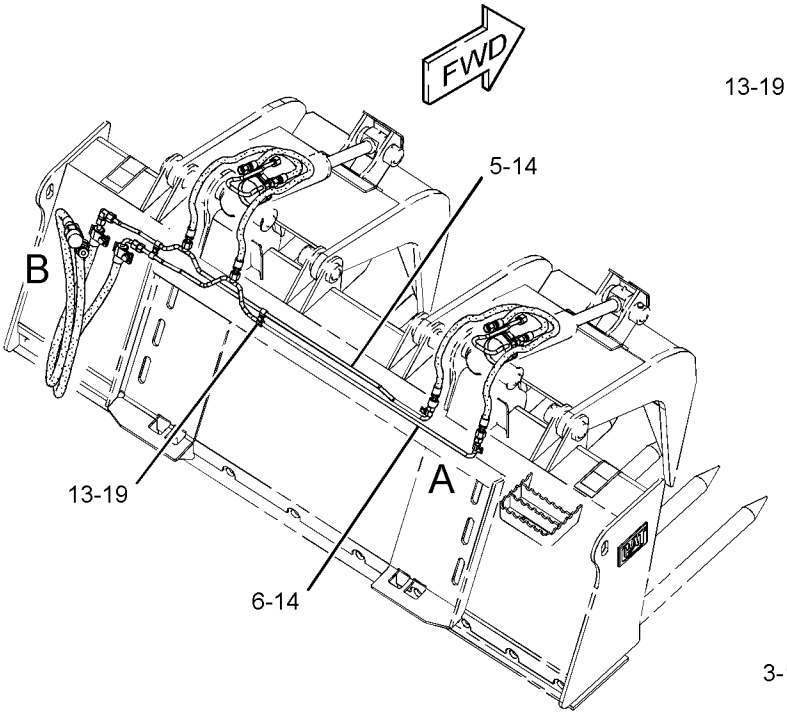

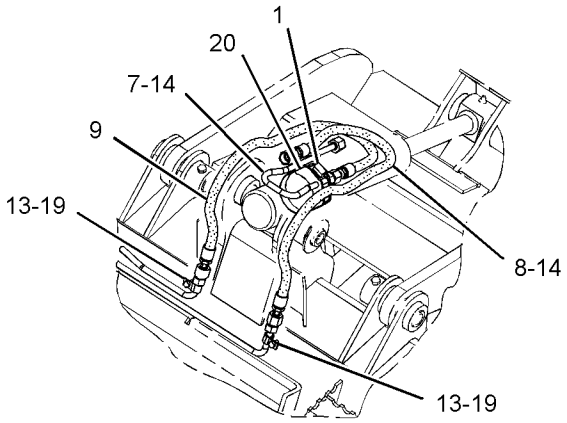

VIEW OF AREA A

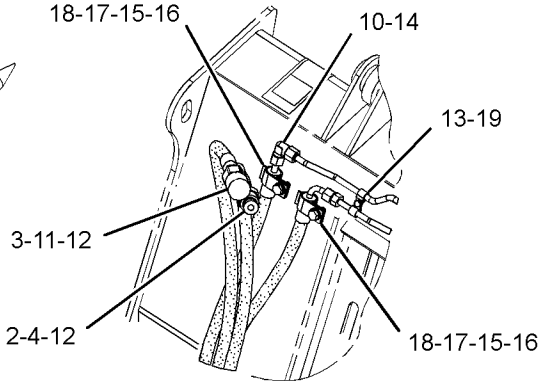

VIEW OF AREA B

GRAPHIC #1 **<END>** g01280859

HYDRAULIC SYSTEM

279-5413 LINES GP-BUCKET

S/N: JAY1-UP

PART OF 279-5382 BUCKET AR-MULTIPURPOSE

AN ATTACHMENT

SMCS-5057 **i02552042**

NOTE	REF NO	GRAPHIC REF	PART NUMBER	QTY	PART NAME 1 2 3 4 5 6 (PRODUCT LEVEL)	SEE PAGE
	1	1	**153-2994**	1	FITTING AS (QUICK DISCONNECT, FEMALE)	
I	2	1	**154-5020**	2	HOSE AS	
I	3	1	**154-5021**	1	HOSE AS	
I	4	1	**154-5022**	1	HOSE AS	
		1	**163-8811**	2	CLAMP	
	5	1	**163-1386**	1	TEE-UNION	
	6	1	**185-7887**	1	FITTING AS (QUICK DISCONNECT, MALE)	
I	7	1	**279-5417**	1	HOSE AS	
I	8	1	**279-5418**	1	HOSE AS	
	9	1	*148-8319*	2	CONNECTOR AS	
					(EACH INCLUDES)	
		1	**2M-9780**	1	SEAL-O-RING	
		1	**6V-8397**	1	SEAL-O-RING	
		1	**6V-8715**	1	CONNECTOR	
	10	1	*150-3056*	1	TEE AS	
		1	**6V-8397**	3	SEAL-O-RING	
		1	**6V-8788**	1	TEE	
	11	1	**1S-0994**	1	CLIP	
	12	1	**6D-4247**	3	CLIP	
	13	1	**6V-8397**	7	SEAL-O-RING	
M	14	1	**8T-4189**	4	BOLT (M8X1.25X20-MM)	
	15	1	**8T-4224**	4	WASHER-HARD (8.8X16X2-MM THK)	
B	16	1	**9X-6273**	2	WASHER (32.5X50X0.8-MM THK)	
B	17	1	**9X-6274**	2	WASHER (32.5X50X1.6-MM THK)	

B-USE AS REQUIRED
I-REFER TO HYDRAULIC INFORMATION SYSTEM
M-METRIC PART

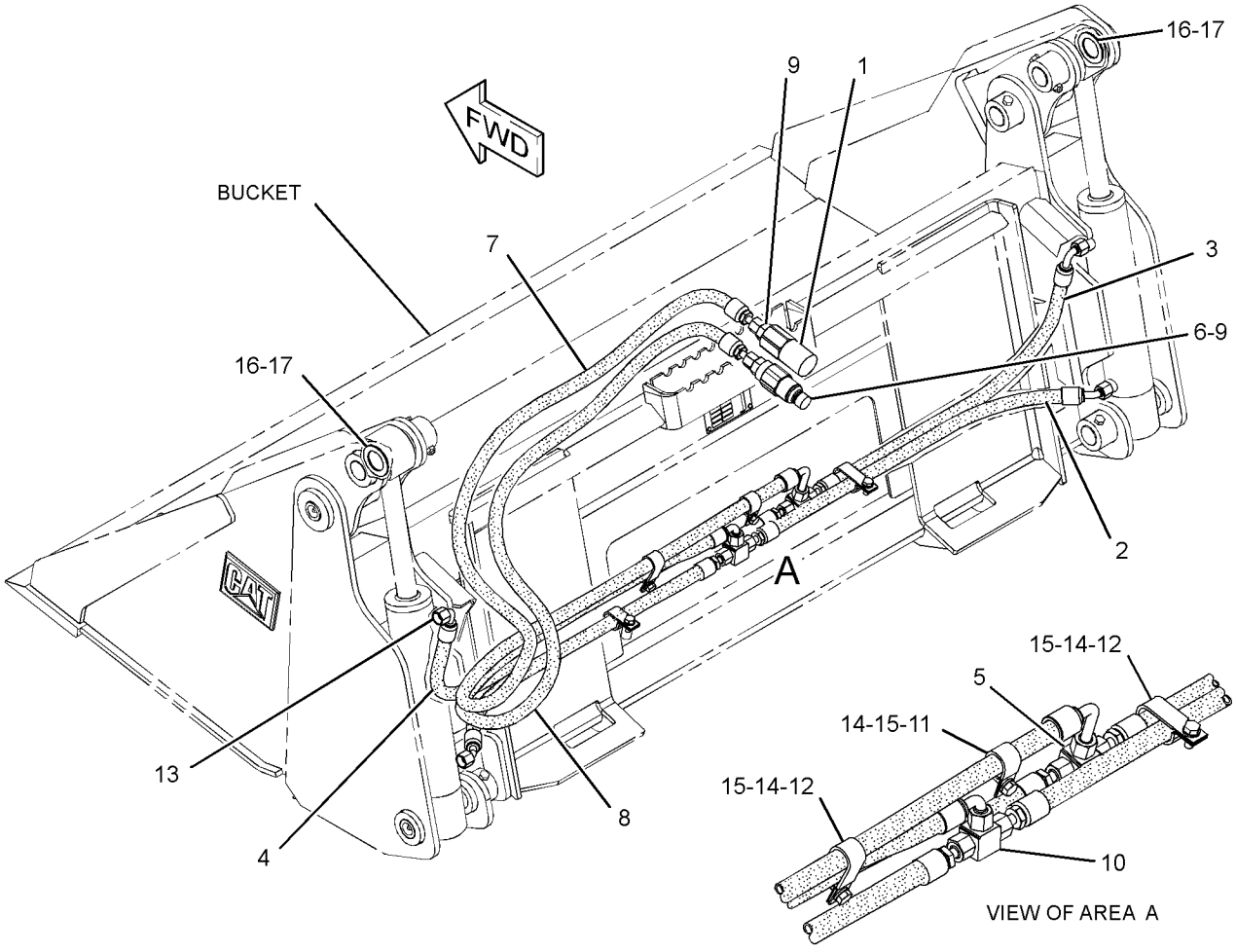

GRAPHIC #1 **<END>** g01278435

HYDRAULIC SYSTEM

279-5414 LINES GP-BUCKET

S/N: JAY1-UP

PART OF 279-5390 BUCKET AR-MULTIPURPOSE

AN ATTACHMENT

SMCS-5057 **i02664837**

NOTE	REF NO	GRAPHIC REF	PART NUMBER	QTY	PART NAME 1 2 3 4 5 6 (PRODUCT LEVEL)	SEE PAGE
	1	1	**153-2994**	1	FITTING AS (QUICK DISCONNECT, FEMALE)	
I	2	1	**156-5508**	1	HOSE AS	
I	3	1	**156-5509**	2	HOSE AS	
I	4	1	**156-5510**	1	HOSE AS	
	5	1	**163-1386**	1	TEE-UNION	
	6	1	**185-7887**	1	FITTING AS (QUICK DISCONNECT, MALE)	
I	7	1	**279-5417**	1	HOSE AS	
I	8	1	**279-5418**	1	HOSE AS	
	9	1	*148-8319*	2	CONNECTOR AS	
					(EACH INCLUDES)	
		1	**2M-9780**	1	SEAL-O-RING	
		1	**6V-8397**	1	SEAL-O-RING	
		1	**6V-8715**	1	CONNECTOR	
	10	1	*150-3056*	1	TEE AS	
		1	**6V-8397**	3	SEAL-O-RING	
		1	**6V-8788**	1	TEE	
	11	1	**1S-0994**	1	CLIP	
	12	1	**6D-4247**	3	CLIP	
	13	1	**6V-8397**	7	SEAL-O-RING	
M	14	1	**8T-4189**	4	BOLT (M8X1.25X20-MM)	
	15	1	**8T-4224**	4	WASHER-HARD (8.8X16X2-MM THK)	
B	16	1	**9X-6273**	2	WASHER (32.5X50X0.8-MM THK)	
B	17	1	**9X-6274**	2	WASHER (32.5X50X1.6-MM THK)	

B-USE AS REQUIRED
I-REFER TO HYDRAULIC INFORMATION SYSTEM
M-METRIC PART

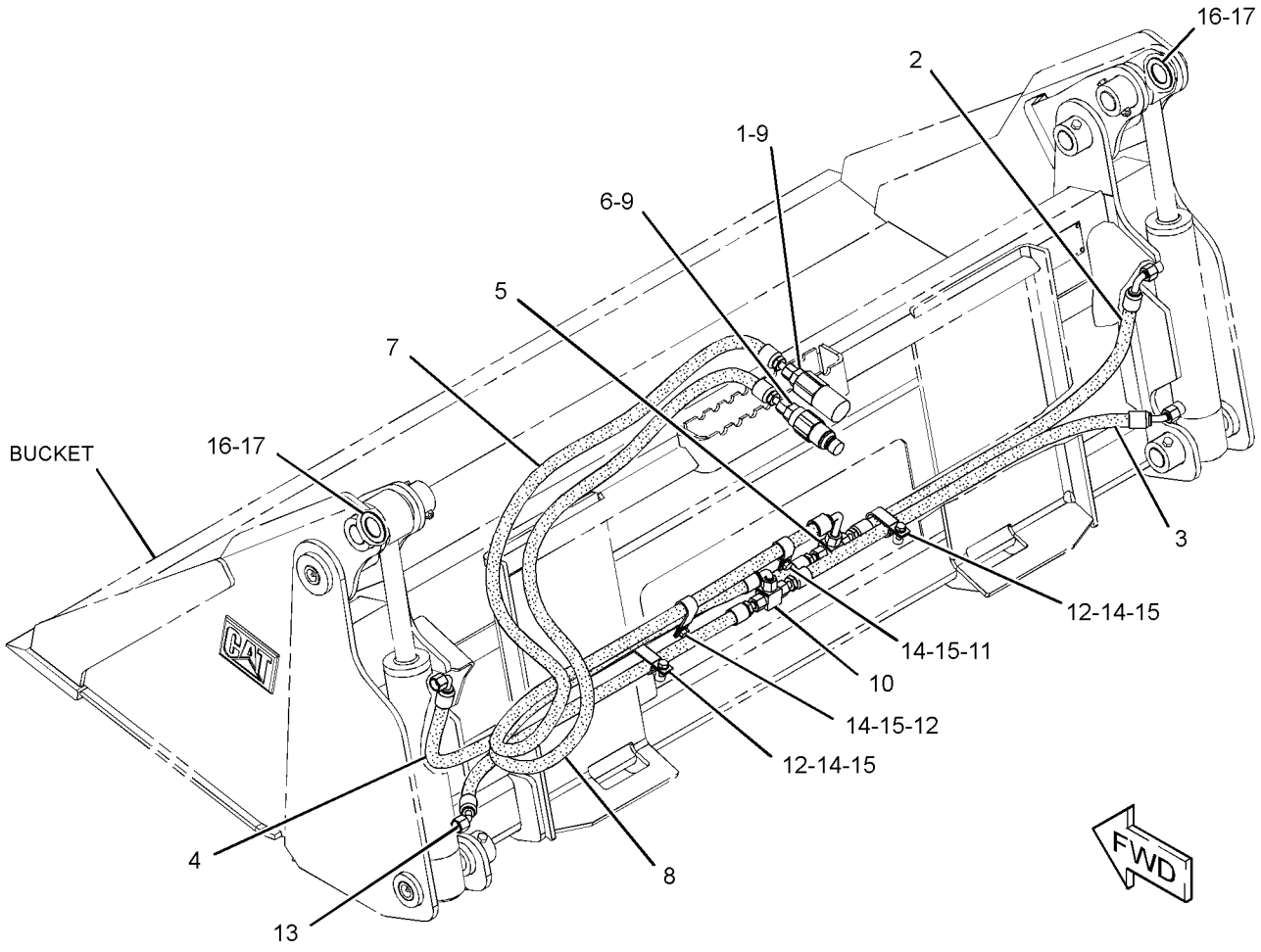

GRAPHIC #1 **<END>** g01339126

HYDRAULIC SYSTEM

279-5415 LINES GP-BUCKET

S/N: JAY1-UP

PART OF 279-5398 BUCKET AR-MULTIPURPOSE

AN ATTACHMENT

SMCS-5057 **i02552160**

NOTE	REF NO	GRAPHIC REF	PART NUMBER	QTY	PART NAME 1 2 3 4 5 6 (PRODUCT LEVEL)	SEE PAGE
	1	1	**153-2994**	1	FITTING AS (QUICK DISCONNECT, FEMALE)	
I	2	1	**159-4535**	1	HOSE AS	
I	3	1	**159-4536**	2	HOSE AS	
I	4	1	**159-4537**	1	HOSE AS	
	5	1	**163-1386**	1	TEE-UNION	
	6	1	**185-7887**	1	FITTING AS (QUICK DISCONNECT, MALE)	
I	7	1	**279-5417**	1	HOSE AS	
I	8	1	**279-5418**	1	HOSE AS	
	9	1	*148-8319*	2	CONNECTOR AS	
					(EACH INCLUDES)	
		1	**2M-9780**	1	SEAL-O-RING	
		1	**6V-8397**	1	SEAL-O-RING	
		1	**6V-8715**	1	CONNECTOR	
	10	1	*150-3056*	1	TEE AS	
		1	**6V-8397**	3	SEAL-O-RING	
		1	**6V-8788**	1	TEE	
	11	1	**1S-0994**	1	CLIP	
	12	1	**6D-4247**	3	CLIP	
	13	1	**6V-8397**	7	SEAL-O-RING	
M	14	1	**8T-4189**	4	BOLT (M8X1.25X20-MM)	
	15	1	**8T-4224**	4	WASHER-HARD (8.8X16X2-MM THK)	
B	16	1	**9X-6273**	2	WASHER (32.5X50X0.8-MM THK)	
B	17	1	**9X-6274**	2	WASHER (32.5X50X1.6-MM THK)	

B-USE AS REQUIRED
I-REFER TO HYDRAULIC INFORMATION SYSTEM
M-METRIC PART

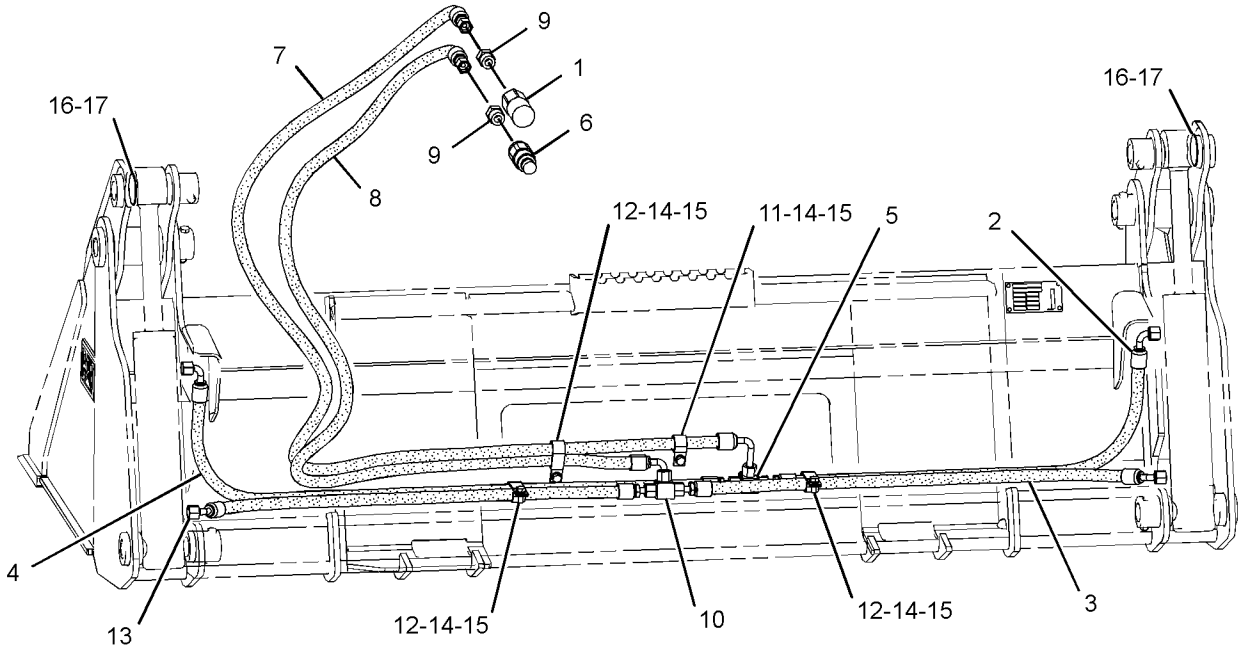

REAR VIEW
(UPPER LEFT)

GRAPHIC #1 **<END>** g01280163

HYDRAULIC SYSTEM

279-5416 LINES GP-BUCKET

S/N: JAY1-UP

PART OF 279-5403 BUCKET AR-MULTIPURPOSE

AN ATTACHMENT

SMCS-5057 **i02552257**

NOTE	REF NO	GRAPHIC REF	PART NUMBER	QTY	PART NAME 1 2 3 4 5 6 (PRODUCT LEVEL)	SEE PAGE
	1	1	**153-2994**	1	FITTING AS (QUICK DISCONNECT, FEMALE)	
	2	1	**163-1386**	1	TEE-UNION	
	3	1	**185-7887**	1	FITTING AS (QUICK DISCONNECT, MALE)	
I	4	1	**199-8309**	1	HOSE AS	
I	5	1	**199-8310**	2	HOSE AS	
I	6	1	**199-8311**	1	HOSE AS	
I	7	1	**279-5417**	1	HOSE AS	
I	8	1	**279-5418**	1	HOSE AS	
	9	1	*148-8319*	2	CONNECTOR AS	
					(EACH INCLUDES)	
		1	**2M-9780**	1	SEAL-O-RING	
		1	**6V-8397**	1	SEAL-O-RING	
		1	**6V-8715**	1	CONNECTOR	
	10	1	*150-3056*	1	TEE AS	
		1	**6V-8397**	3	SEAL-O-RING	
		1	**6V-8788**	1	TEE	
	11	1	**1S-0994**	1	CLIP	
	12	1	**6D-4247**	3	CLIP	
	13	1	**6V-8397**	7	SEAL-O-RING	
M	14	1	**8T-4189**	4	BOLT (M8X1.25X20-MM)	
	15	1	**8T-4224**	4	WASHER-HARD (8.8X16X2-MM THK)	
B	16	1	**9X-6273**	2	WASHER (32.5X50X0.8-MM THK)	
B	17	1	**9X-6274**	2	WASHER (32.5X50X1.6-MM THK)	

B-USE AS REQUIRED
I-REFER TO HYDRAULIC INFORMATION SYSTEM
M-METRIC PART

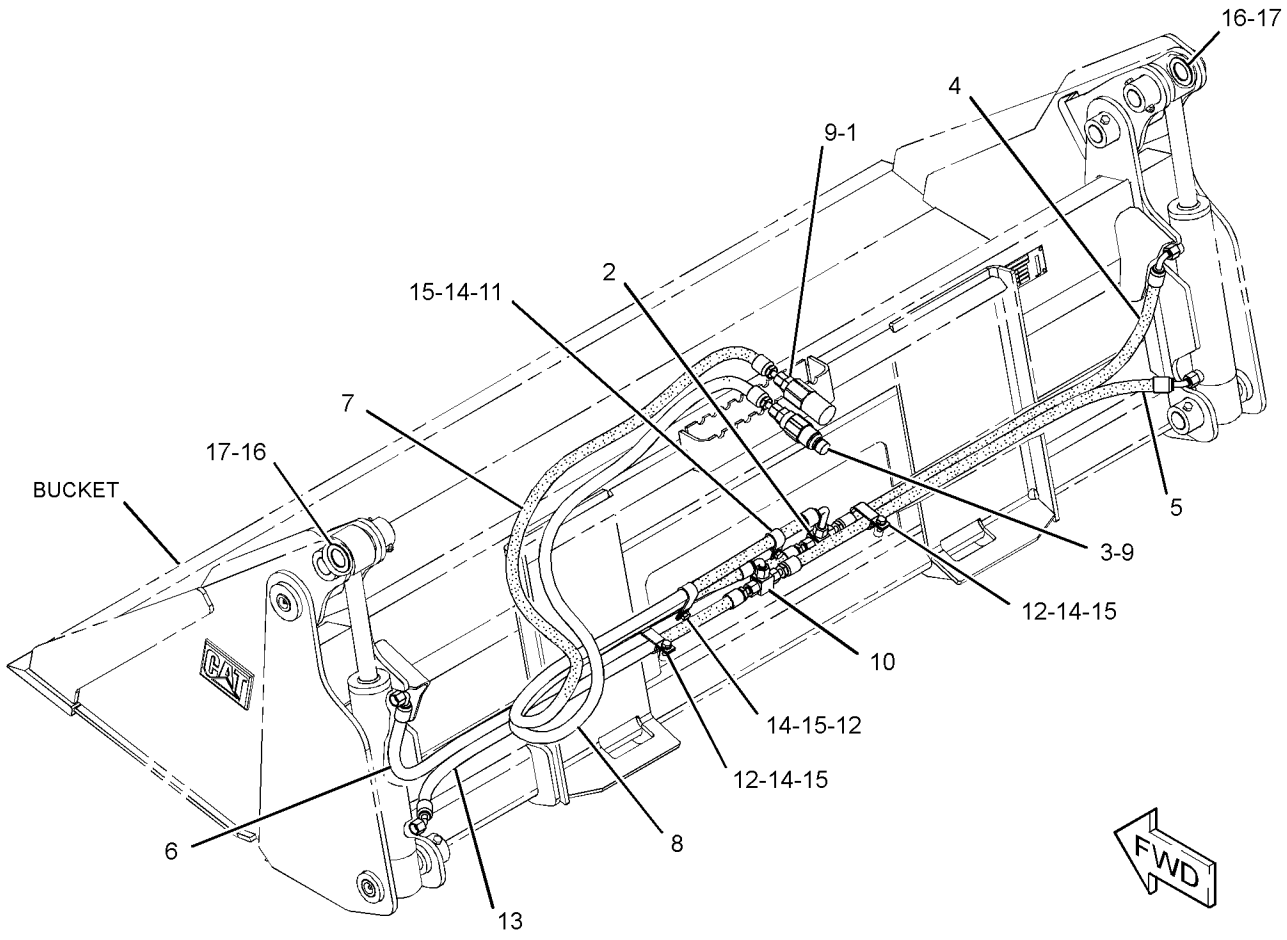

GRAPHIC #1 **<END>** g01278627

HYDRAULIC SYSTEM

285-6113 LINES GP-BUCKET

S/N: JAY1-UP
PART OF 285-6116 GRAPPLE GP-UTILITY
AN ATTACHMENT

SMCS-5057 **i02645962**

NOTE	REF NO	GRAPHIC REF	PART NUMBER	QTY	PART NAME 1 2 3 4 5 6 (PRODUCT LEVEL)	SEE PAGE
	1	1	**2J-6540**	1	CLAMP (HOSE)	
	2	1	**153-2994**	1	FITTING AS (QUICK DISCONNECT, FEMALE)	
	3	1	**153-2995**	1	FITTING AS (QUICK DISCONNECT, MALE)	
	4	1	**174-2388**	1	TUBE AS	
	5	1	**174-2389**	1	TUBE AS	
I	6	1	**174-2393**	2	HOSE AS	
	7	1	**174-3097**	1	TUBE AS	
	8	1	*183-4085*	1	ELBOW AS	
		1	**6V-8397**	2	SEAL-O-RING	
		1	**183-4084**	1	ELBOW	
I	9	1	**294-5504**	1	HOSE AS	
I	10	1	**294-5505**	1	HOSE AS	
	11	1	*148-8319*	2	CONNECTOR AS	
					(EACH INCLUDES)	
		1	**2M-9780**	1	SEAL-O-RING	
		1	**6V-8397**	1	SEAL-O-RING	
		1	**6V-8715**	1	CONNECTOR	
	12	1	**6V-8397**	6	SEAL-O-RING	
	13	1	**7S-3912**	2	CLIP (TAB)	
	14	1	**7S-3913**	2	CLIP (SLOT)	
	15	1	**8T-1893**	2	CLIP (SLOT)	
	16	1	**8T-1894**	2	CLIP (TAB)	
	17	1	**8T-4121**	6	WASHER-HARD (11X21X2.5-MM THK)	
M	18	1	**8T-4137**	4	BOLT (M10X1.5X20-MM)	
	19	1	**9R-2004**	1	BLOCK	

I-REFER TO HYDRAULIC INFORMATION SYSTEM
M-METRIC PART

285-6113 **LINES GP-BUCKET** *(contd.)* **i02645962**

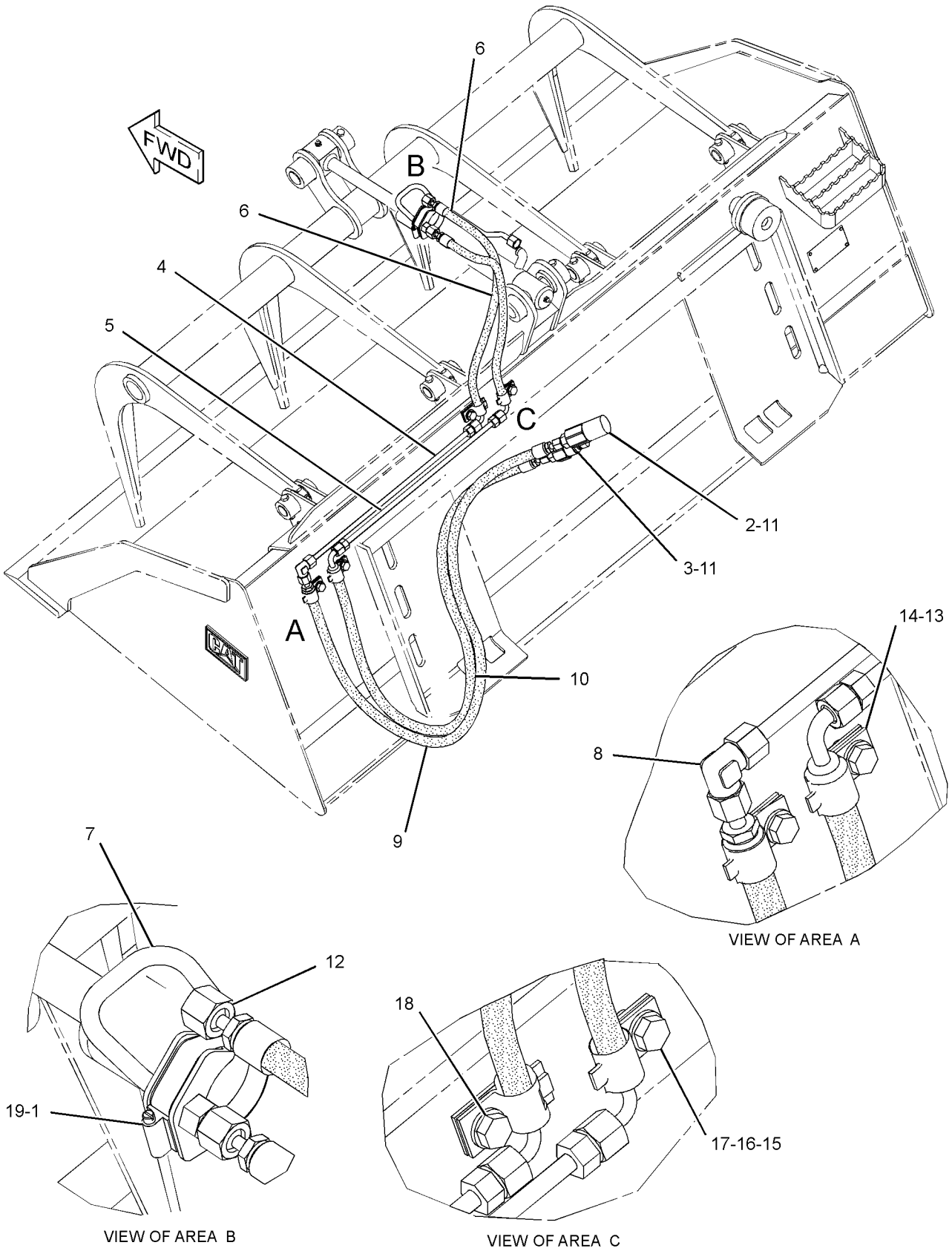

GRAPHIC #1

<END>

g01279537

HYDRAULIC SYSTEM

293-0140 LINES GP-BUCKET

S/N: JAY1-UP

PART OF 293-0139 BUCKET AR-MULTIPURPOSE

AN ATTACHMENT

SMCS-5057 **i02636472**

NOTE	REF NO	GRAPHIC REF	PART NUMBER	QTY	PART NAME 1 2 3 4 5 6 (PRODUCT LEVEL)	SEE PAGE
	1	1	**153-2994**	1	FITTING AS (QUICK DISCONNECT, FEMALE)	
	2	1	**163-1386**	1	TEE-UNION	
	3	1	**185-7887**	1	FITTING AS (QUICK DISCONNECT, MALE)	
I	4	1	**199-8309**	1	HOSE AS	
I	5	1	**199-8311**	1	HOSE AS	
I	6	1	**279-5417**	1	HOSE AS	
I	7	1	**279-5418**	1	HOSE AS	
I	8	1	**293-0152**	2	HOSE AS	
	9	1	*148-8319*	2	CONNECTOR AS	
					(EACH INCLUDES)	
		1	**2M-9780**	1	SEAL-O-RING	
		1	**6V-8397**	1	SEAL-O-RING	
		1	**6V-8715**	1	CONNECTOR	
	10	1	*150-3056*	1	TEE AS	
		1	**6V-8397**	3	SEAL-O-RING	
		1	**6V-8788**	1	TEE	
	11	1	**1S-0994**	1	CLIP	
	12	1	**6D-4247**	3	CLIP	
	13	1	**6V-8397**	7	SEAL-O-RING	
M	14	1	**8T-4189**	4	BOLT (M8X1.25X20-MM)	
	15	1	**8T-4224**	4	WASHER-HARD (8.8X16X2-MM THK)	
B	16	1	**9X-6273**	2	WASHER (32.5X50X0.8-MM THK)	
B	17	1	**9X-6274**	2	WASHER (32.5X50X1.6-MM THK)	

B-USE AS REQUIRED
I-REFER TO HYDRAULIC INFORMATION SYSTEM
M-METRIC PART

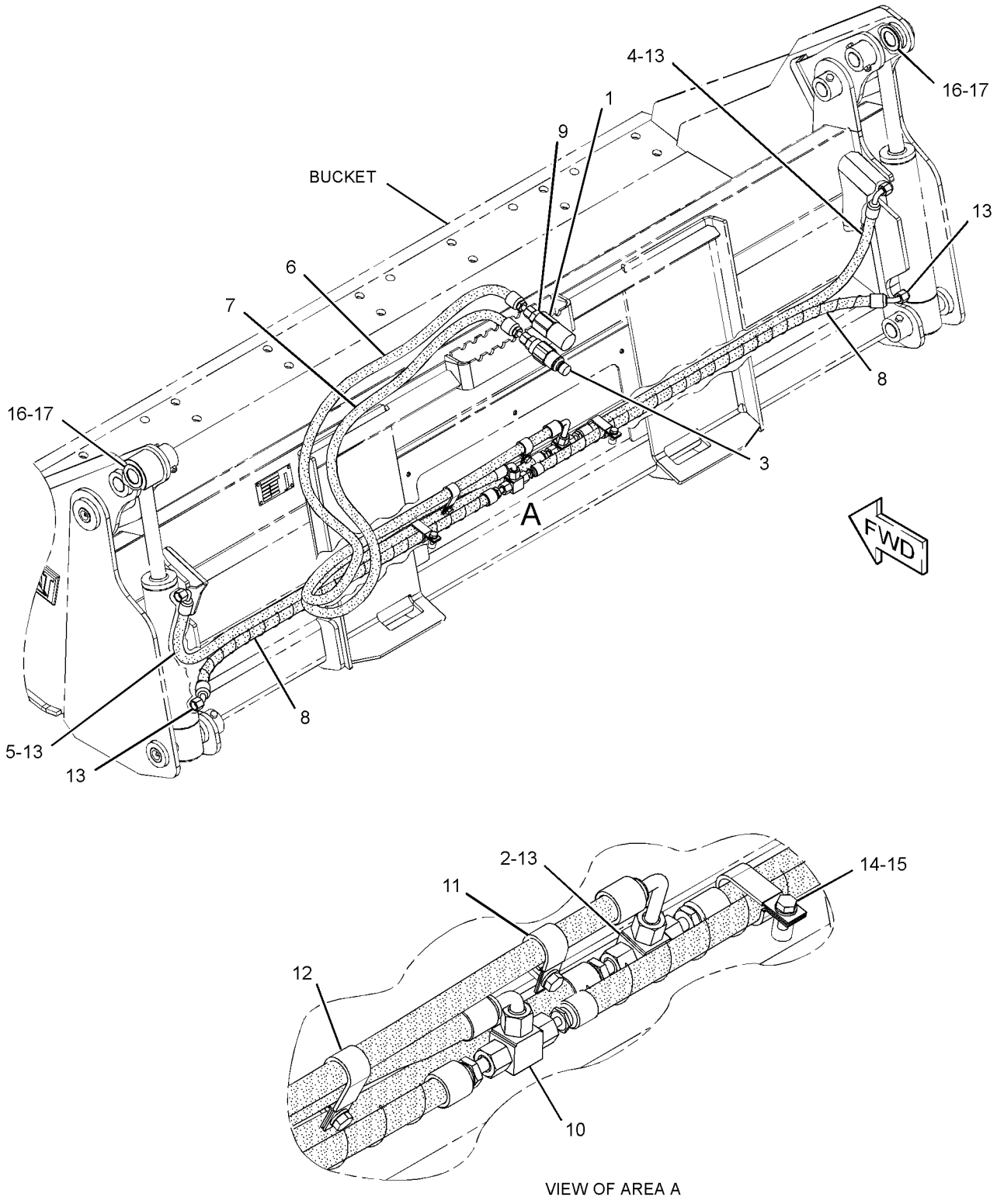

VIEW OF AREA A

GRAPHIC #1 **<END>** g01327736

HYDRAULIC SYSTEM

258-2424 LINES GP-COUPLER

S/N: JAY1-UP

PART OF 258-2791 COUPLER AR-QUICK

AN ATTACHMENT

SMCS-5057, 6129 **i02667714**

NOTE	REF NO	GRAPHIC REF	PART NUMBER	QTY	PART NAME 1 2 3 4 5 6 (PRODUCT LEVEL)	SEE PAGE
	1	1	**124-2456**	1	FILM-INSTRUCTION (NO STEP)	
	2	1	**207-9737**	1	BRACKET AS	
I	3	1	**207-9756**	4	HOSE AS	
	4	1	**212-6690**	1	GUARD	
I	5	1	**258-2841**	2	HOSE AS	
I	6	1	**258-3366**	1	HOSE AS	
I	7	1	**258-3367**	1	HOSE AS	
	8	1	**258-3368**	1	TUBE AS	
	9	1	**258-3369**	1	TUBE AS	
Y	10	1	**291-0010**	1	MANIFOLD GP-CONTROL (QUICK COUPLER)	253
	11	1	**302-0389**	1	BRACKET AS	
	12	1	**132-7551**	1	SPACER (11X19X6-MM THK)	
	13	1	*148-8325*	4	CONNECTOR AS	
					(EACH INCLUDES)	
		1	**3J-1907**	1	SEAL-O-RING	
		1	**4J-5477**	1	SEAL-O-RING	
		1	**6V-8641**	1	CONNECTOR	
	14	1	*148-8336*	2	CONNECTOR AS	
					(EACH INCLUDES)	
		1	**3J-1907**	1	SEAL-O-RING	
		1	**6V-8397**	1	SEAL-O-RING	
		1	**6V-8636**	1	CONNECTOR	
	15	1	*148-8378*	2	ELBOW AS	
					(EACH INCLUDES)	
		1	**3J-1907**	1	SEAL-O-RING	
		1	**6V-8397**	1	SEAL-O-RING	
		1	**6V-8724**	1	ELBOW	
	16	1	*150-4034*	2	TEE AS	
					(EACH INCLUDES)	
		1	**6V-8397**	3	SEAL-O-RING	
		1	**8T-0379**	1	TEE-BULKHEAD	
	17	1	*212-1336*	1	TEE AS	
		1	**2M-9780**	1	SEAL-O-RING	
		1	**6V-8783**	1	TEE-FACE SEAL	
		1	**7J-9108**	2	SEAL-O-RING	
	18	1	*215-3191*	1	REDUCER AS	
		1	**4J-5477**	1	SEAL-O-RING	
		1	**6V-8937**	1	REDUCER-O-RING	
M	19	1	**266-3315**	2	BOLT-FLANGE HEAD (M8X1.25X25.5-MM)	
	20	1	**3S-2093**	2	STRAP-CABLE	
	21	1	**4D-6466**	3	CLIP	
	22	1	**5P-4116**	2	WASHER-HARD (8.8X20.5X2-MM THK)	
	23	1	**6V-8397**	2	SEAL-O-RING	
	24	1	**6V-9168**	2	NUT (11/16-16-THD)	
	25	1	**7B-1597**	2	CLIP (LOOP)	
	26	1	**7G-2950**	1	CLIP (SLOT)	
	27	1	**7G-2951**	1	CLIP (TAB)	
	28	1	**7H-7055**	2	CLIP	
	29	1	**7X-7729**	3	WASHER (11X25X3-MM THK)	
	30	1	**8T-4121**	5	WASHER-HARD (11X21X2.5-MM THK)	
M	31	1	**8T-4133**	1	NUT (M10X1.5-THD)	
M	32	1	**8T-4136**	4	BOLT (M10X1.5X25-MM)	
M	33	1	**8T-4137**	3	BOLT (M10X1.5X20-MM)	
M	34	1	**8T-4189**	2	BOLT (M8X1.25X20-MM)	
M	35	1	**8T-4200**	2	BOLT (M8X1.25X16-MM)	

258-2424 **LINES GP-COUPLER** *(contd.)* **i02667714**

NOTE	REF NO	GRAPHIC REF	PART NUMBER	QTY	PART NAME 1 2 3 4 5 6 (PRODUCT LEVEL)	SEE PAGE
	36	1	**8T-4224**	4	WASHER-HARD (8.8X16X2-MM THK)	
M	37	1	**8T-6870**	2	BOLT (M8X1.25X70-MM)	
	38	1	**9M-8406**	2	CLIP	
	39	1	**9S-1350**	2	CLIP	
	40	1	**9X-6581**	1	NUT-O-RING SEAL (1-14-THD)	

I-REFER TO HYDRAULIC INFORMATION SYSTEM
M-METRIC PART
Y-SEPARATE ILLUSTRATION

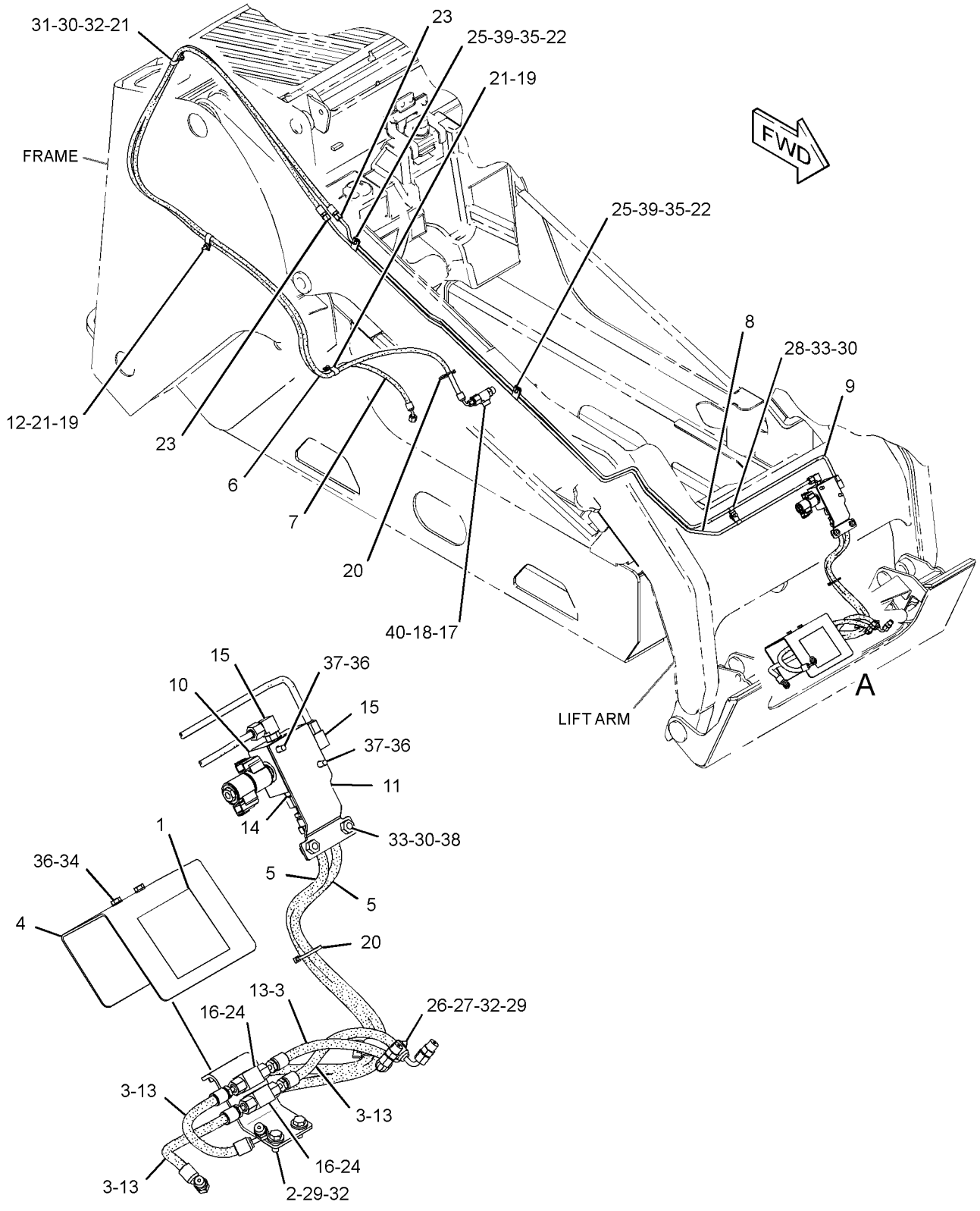

VIEW OF AREA A
(EXPLODED)

GRAPHIC #1 **<END>** g01341345

HYDRAULIC SYSTEM

258-2876 LINES GP-HYDRAULIC

S/N: JAY1-UP
PART OF 258-2426 HYDRAULIC AR
AN ATTACHMENT

SMCS-5057 **i02636300**

NOTE	REF NO	GRAPHIC REF	PART NUMBER	QTY	PART NAME 1 2 3 4 5 6 (PRODUCT LEVEL)	SEE PAGE
	1	1	**258-2880**	1	TUBE AS	
	2	1	**258-2881**	1	TUBE AS	
	3	1	*148-8341*	2	CONNECTOR AS	
					(EACH INCLUDES)	
		1	**3D-2824**	1	SEAL-O-RING	
		1	**6V-8713**	1	CONNECTOR	
		1	**7J-9108**	1	SEAL-O-RING	
	4	1	**6V-8397**	1	SEAL-O-RING	
	5	1	**6V-8398**	2	SEAL-O-RING	
	6	1	**6V-9829**	2	CAP AS	
	7	1	**6V-9830**	3	CAP AS	

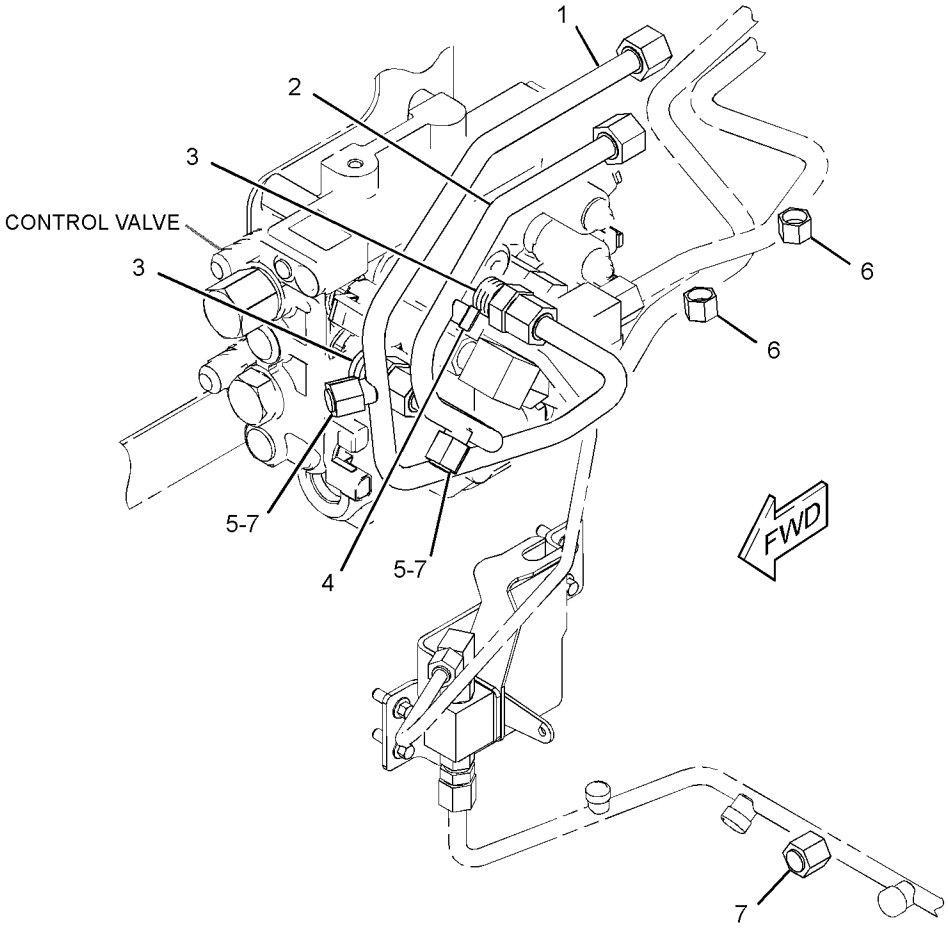

GRAPHIC #1 **<END>** g01327563

258-2878 LINES GP-HYDRAULIC—WORK TOOL POSITIONER

S/N: JAY1-UP
PART OF 258-2428 HYDRAULIC AR
AN ATTACHMENT

SMCS-5057 **i02630070**

NOTE	REF NO	GRAPHIC REF	PART NUMBER	QTY	PART NAME 1 2 3 4 5 6 (PRODUCT LEVEL)	SEE PAGE
	1	1	**146-9439**	1	RELAY AS (12-VOLT)	
	2	1	**258-2881**	1	TUBE AS	
	3	1	**258-2883**	1	TUBE AS	
	4	1	**258-2884**	1	TUBE AS	
	5	1	**258-2885**	1	TUBE AS	
	6	1	**258-2886**	1	TUBE AS	
	7	1	**263-5417**	1	SWITCH AS-ROCKER (WORK TOOL POSITIONER)	
	8	1	*148-8315*	1	CONNECTOR AS	
		1	**2M-9780**	1	SEAL-O-RING	
		1	**6V-8642**	1	CONNECTOR	
		1	**7J-9108**	1	SEAL-O-RING	
	9	1	*148-8341*	2	CONNECTOR AS	
					(EACH INCLUDES)	
		1	**3D-2824**	1	SEAL-O-RING	
		1	**6V-8713**	1	CONNECTOR	
		1	**7J-9108**	1	SEAL-O-RING	
	10	1	*148-8390*	1	ELBOW AS	
		1	**2M-9780**	1	SEAL-O-RING	
		1	**6V-8626**	1	ELBOW	
		1	**7J-9108**	1	SEAL-O-RING	
	11	1	*148-8393*	1	ELBOW AS	
		1	**6V-9852**	1	ELBOW (SWIVEL)	
		1	**7J-9108**	1	SEAL-O-RING	
	12	1	*205-3692*	2	ELBOW AS	
					(EACH INCLUDES)	
		1	**2M-9780**	1	SEAL-O-RING	
		1	**6V-8397**	1	SEAL-O-RING	
		1	**9X-2134**	1	ELBOW	
	13	1	**6V-8397**	1	SEAL-O-RING	
	14	1	**6V-8398**	2	SEAL-O-RING	
	15	1	**6V-9830**	3	CAP AS	

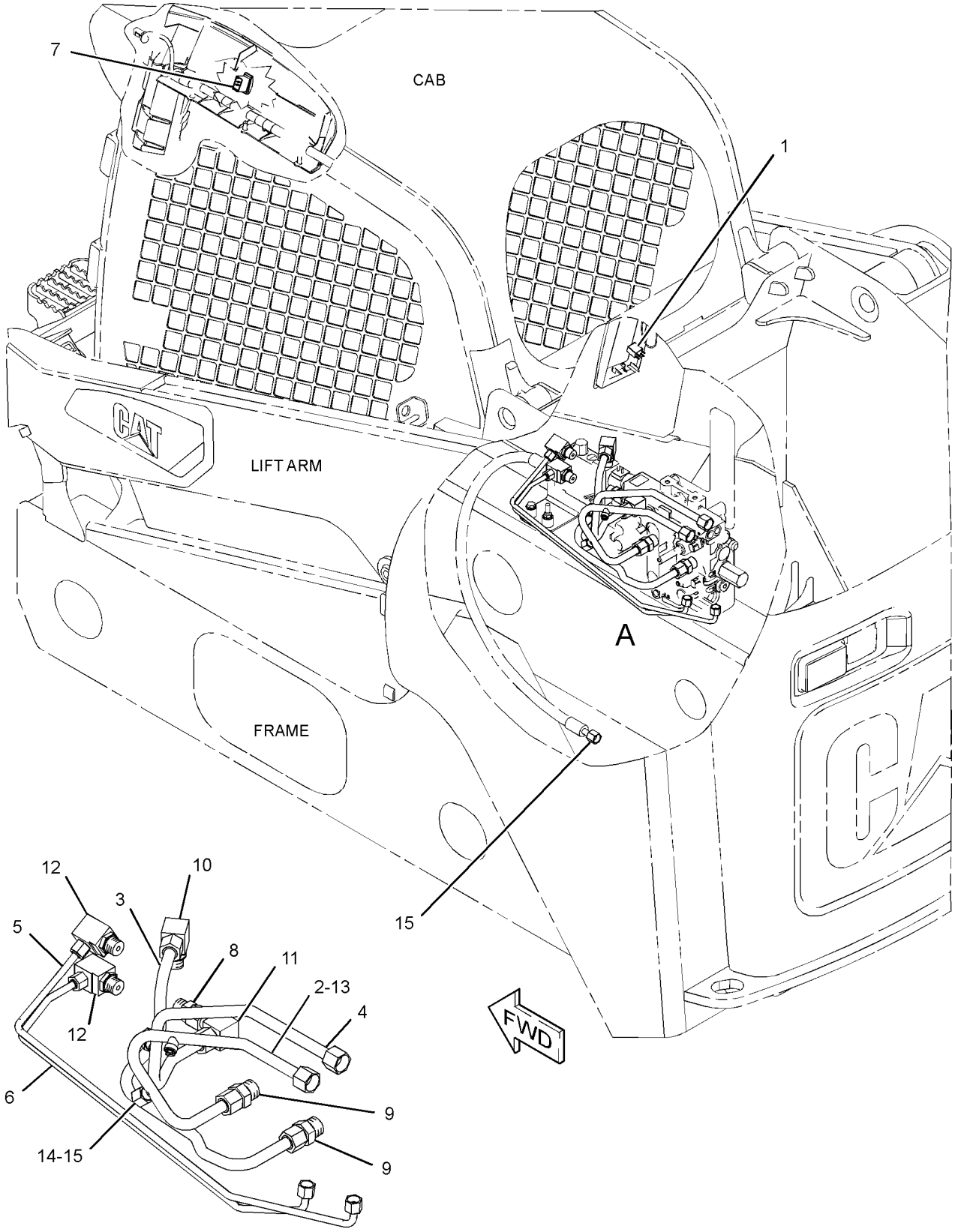

VIEW OF AREA A

GRAPHIC #1 **<END>** g01322472

258-2582 LINES GP-HYDRAULIC FAN–RADIATOR

S/N: JAY1-UP

PART OF 258-3180, 258-3730 HYDRAULIC AR

AN ATTACHMENT

SMCS-5057 **i02659388**

NOTE	REF NO	GRAPHIC REF	PART NUMBER	QTY	PART NAME 1 2 3 4 5 6 (PRODUCT LEVEL)	SEE PAGE
I	1	1	**115-8161**	1	HOSE AS	
	2	1	**229-5466**	1	FITTING AS	
		1	**3J-7354**	1	SEAL-O-RING	
		1	**229-5465**	1	FITTING	
	3	1	**258-2585**	1	HOSE AS	
I	4	1	**258-2784**	1	HOSE AS	
	5	1	*148-8315*	2	CONNECTOR AS	
					(EACH INCLUDES)	
		1	**2M-9780**	1	SEAL-O-RING	
		1	**6V-8642**	1	CONNECTOR	
		1	**7J-9108**	1	SEAL-O-RING	
	6	1	*148-8316*	2	CONNECTOR AS	
					(EACH INCLUDES)	
		1	**3J-7354**	1	SEAL-O-RING	
		1	**4J-5477**	1	SEAL-O-RING	
		1	**6V-8647**	1	CONNECTOR	
	7	1	*153-6256*	1	ELBOW AS	
		1	**8C-7563**	1	ELBOW	
		1	**7J-9108**	1	SEAL-O-RING	
	8	1	**266-3316**	2	BOLT-FLANGE HEAD (M10X1.5X25-MM)	
	9	1	**3S-8665**	1	CLIP	
	10	1	**4K-8864**	2	CLIP	
	11	1	**5P-4116**	1	WASHER-HARD (8.8X20.5X2-MM THK)	
	12	1	**6V-1889**	4	CLIP	
	13	1	**8C-3451**	1	CAP-DUST	
	14	1	**8J-8197**	1	CLIP	
	15	1	**8T-4121**	3	WASHER-HARD (11X21X2.5-MM THK)	
M	16	1	**8T-4133**	1	NUT (M10X1.5-THD)	
M	17	1	**8T-4196**	2	BOLT (M10X1.5X35-MM)	
M	18	1	**8T-4189**	1	BOLT (M8X1.25X20-MM)	
M	19	1	**8T-4192**	1	BOLT (M12X1.75X25-MM)	
	20	1	**8T-4223**	1	WASHER-HARD (13.5X25.5X3-MM THK)	

I-REFER TO HYDRAULIC INFORMATION SYSTEM
M-METRIC PART

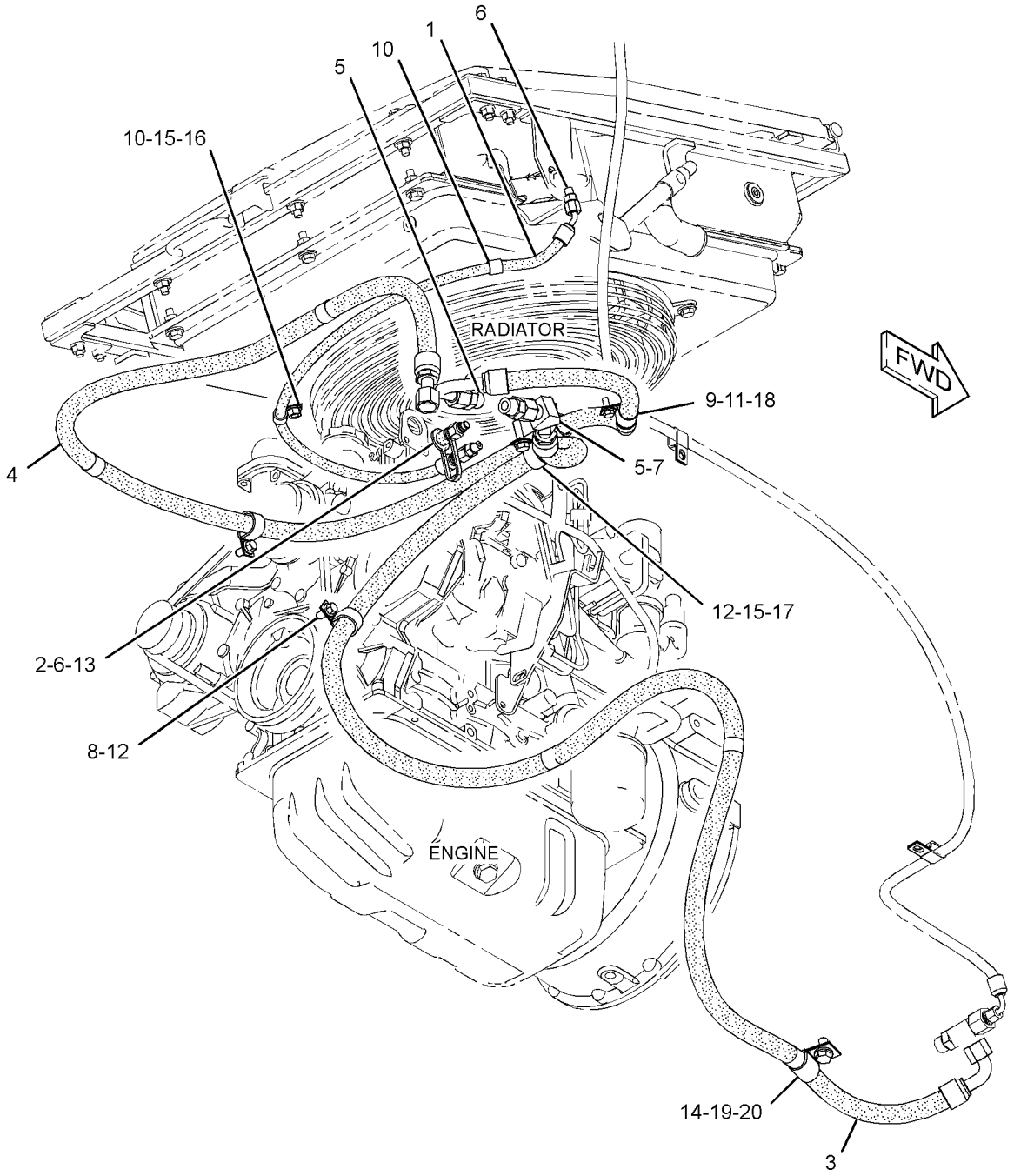

GRAPHIC #1 **<END>** g01337527

HYDRAULIC SYSTEM

258-2786 LINES GP-HYDRAULIC FAN

S/N: JAY1-UP

PART OF 258-3182, 258-3733, 261-6264 HYDRAULIC AR AN ATTACHMENT

SMCS-5057 **i02659369**

NOTE	REF NO	GRAPHIC REF	PART NUMBER	QTY	PART NAME 1 2 3 4 5 6 (PRODUCT LEVEL)	SEE PAGE
I	1	1	**115-8161**	1	HOSE AS	
	2	1	**229-5466**	1	FITTING AS	
		1	**3J-7354**	2	SEAL-O-RING	
		1	**229-5465**	2	FITTING	
I	3	1	**258-2689**	1	HOSE AS	
I	4	1	**258-2784**	1	HOSE AS	
	5	1	*148-8315*	2	CONNECTOR AS	
					(EACH INCLUDES)	
		1	**2M-9780**	1	SEAL-O-RING	
		1	**6V-8642**	1	CONNECTOR	
		1	**7J-9108**	1	SEAL-O-RING	
	6	1	*148-8316*	2	CONNECTOR AS	
					(EACH INCLUDES)	
		1	**3J-7354**	1	SEAL-O-RING	
		1	**4J-5477**	1	SEAL-O-RING	
		1	**6V-8647**	1	CONNECTOR	
	7	1	*153-6256*	1	ELBOW AS	
		1	**7J-9108**	1	SEAL-O-RING	
		1	**8C-7563**	1	ELBOW	
	8	1	**266-3316**	2	BOLT-FLANGE HEAD (M10X1.5X25-MM)	
	9	1	**3S-8665**	1	CLIP	
	10	1	**4K-8864**	2	CLIP	
	11	1	**5P-4116**	1	WASHER-HARD (8.8X20.5X2-MM THK)	
	12	1	**6V-1889**	4	CLIP	
	13	1	**8C-3451**	1	CAP-DUST	
	14	1	**8J-8197**	1	CLIP	
	15	1	**8T-4121**	3	WASHER-HARD (11X21X2.5-MM THK)	
M	16	1	**8T-4133**	1	NUT (M10X1.5-THD)	
M	17	1	**8T-4196**	2	BOLT (M10X1.5X35-MM)	
M	18	1	**8T-4189**	1	BOLT (M8X1.25X20-MM)	
M	19	1	**8T-4192**	1	BOLT (M12X1.75X25-MM)	
	20	1	**8T-4223**	1	WASHER-HARD (13.5X25.5X3-MM THK)	

I-REFER TO HYDRAULIC INFORMATION SYSTEM
M-METRIC PART

258-2786 **LINES GP-HYDRAULIC FAN** *(contd.)* **i02659369**

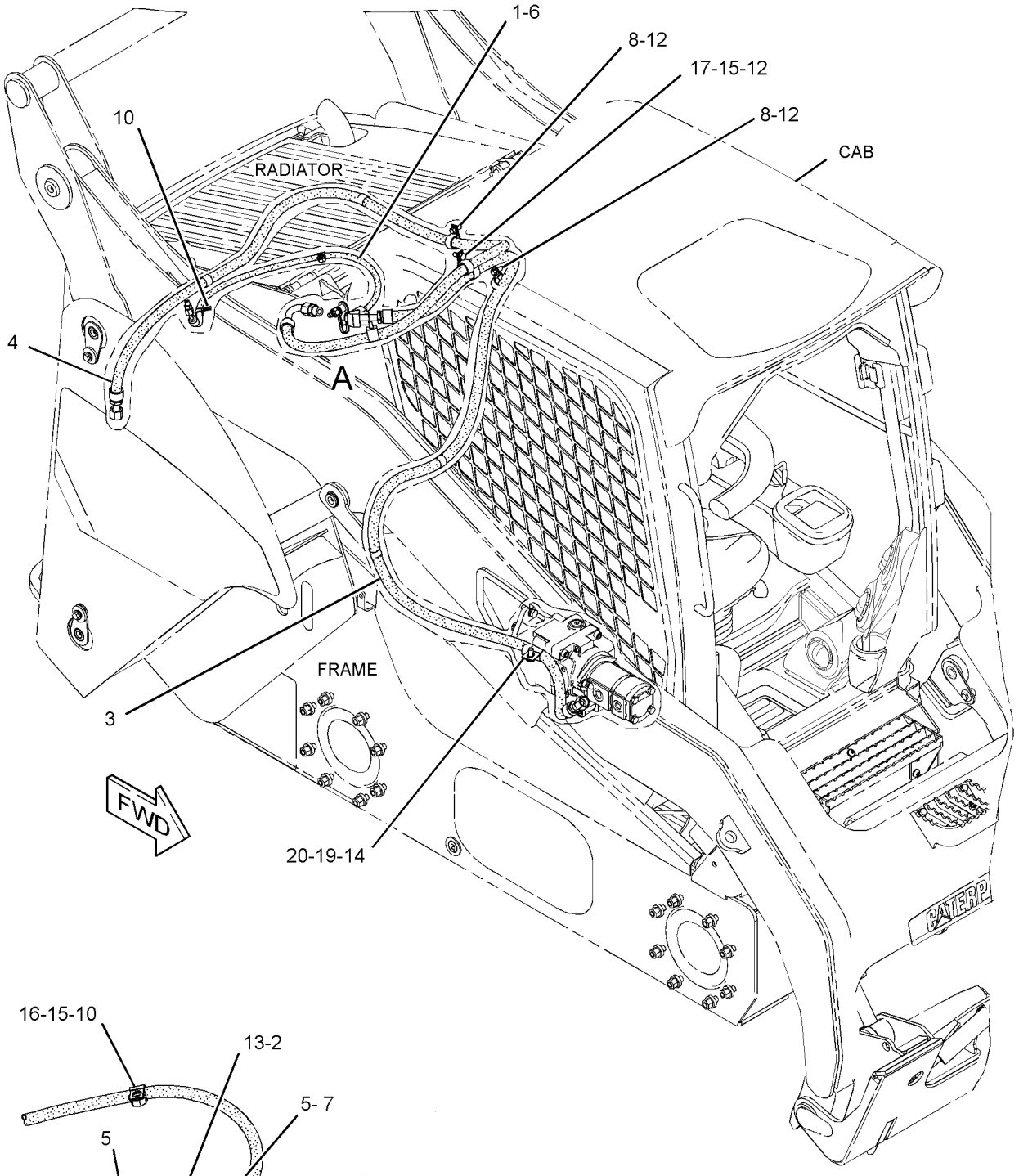

VIEW OF AREA A

GRAPHIC #1 **<END>** g01336901

258-2780 LINES GP-HYDRAULIC OIL COOLER

S/N: JAY1-UP

PART OF 258-2600 HYDRAULIC AR

SMCS-5057 **i02659364**

NOTE	REF NO	GRAPHIC REF	PART NUMBER	QTY	PART NAME 1 2 3 4 5 6 (PRODUCT LEVEL)	SEE PAGE
	1	1	**6R-3320**	2	COVER	
	2	1	**258-2781**	1	TUBE AS	
I	3	1	**258-2782**	2	HOSE AS	
	4	1	**258-3620**	1	BRACKET AS	
	5	1	**258-3845**	1	BRACKET AS	
	6	1	**258-3850**	4	CLAMP-HALF	
	7	1	*148-8347*	1	ELBOW AS	
		1	**3D-2824**	1	SEAL-O-RING	
		1	**6V-9007**	1	ELBOW (90-DEG)	
		1	**6V-9746**	1	SEAL-O-RING	
	8	1	*148-8411*	1	PLUG AS	
		1	**3K-0360**	1	SEAL-O-RING	
		1	**9S-4185**	1	PLUG-O-RING	
	9	1	*171-6725*	1	ELBOW AS	
		1	**3D-2824**	1	SEAL-O-RING	
		1	**8T-6451**	1	ELBOW	
	10	1	**266-3316**	2	BOLT-FLANGE HEAD (M10X1.5X25-MM)	
	11	1	**5K-9660**	2	CLIP (LOOP)	
	12	1	**6V-9746**	2	SEAL-O-RING	
	13	1	**8T-4121**	5	WASHER-HARD (11X21X2.5-MM THK)	
M	14	1	**8T-4136**	4	BOLT (M10X1.5X25-MM)	
M	15	1	**8T-6466**	1	BOLT (M10X1.5X60-MM)	
M	16	1	**303-8205**	2	BOLT (M8X1.25X60-MM)	

I-REFER TO HYDRAULIC INFORMATION SYSTEM
M-METRIC PART

258-2780 **LINES GP-HYDRAULIC OIL COOLER** *(contd.)* **i02659364**

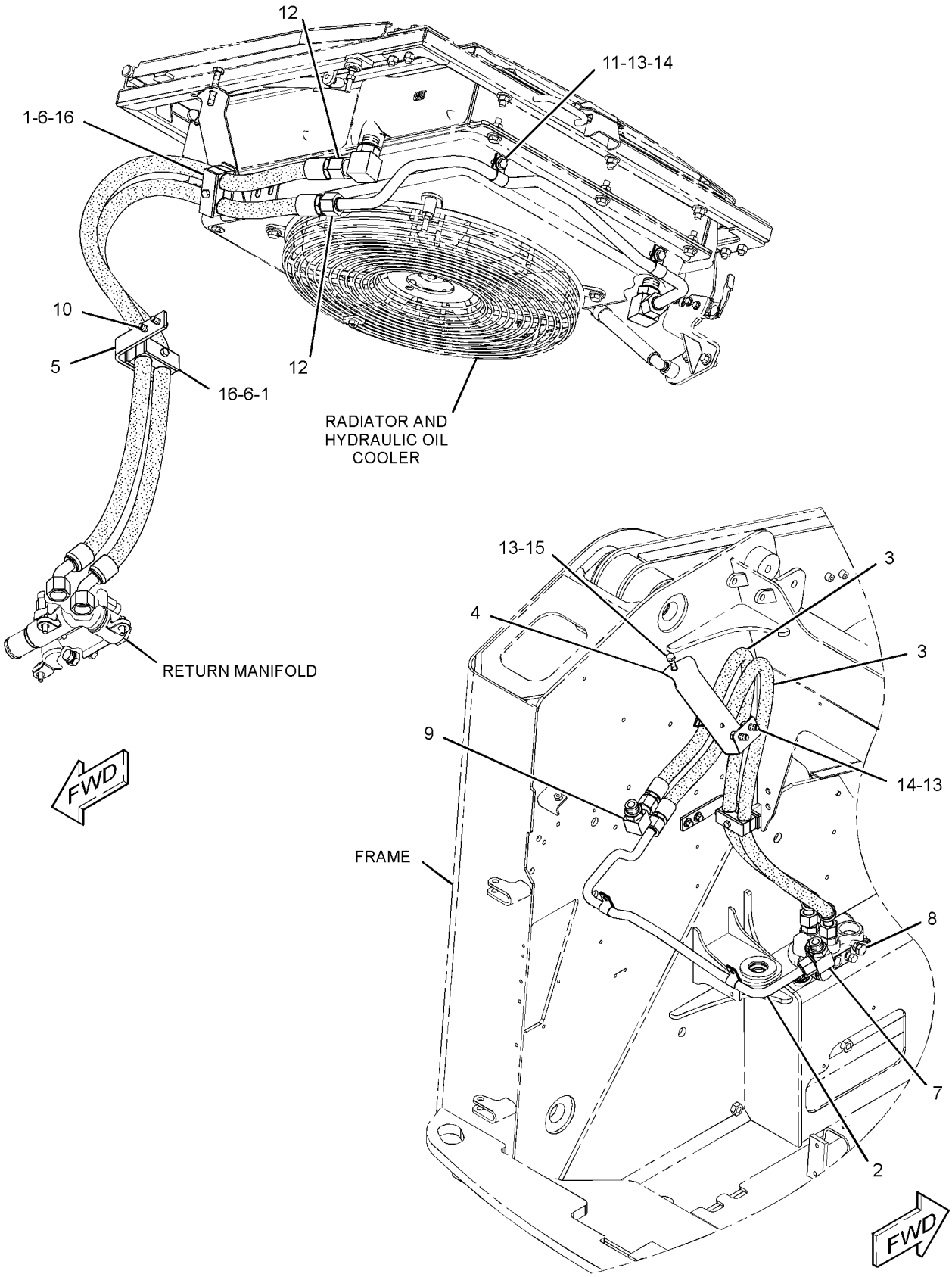

GRAPHIC #1

<END>

g01329836

258-2411 LINES GP-LIFT CYLINDER

S/N: JAY1-UP

PART OF 258-2600 HYDRAULIC AR

SMCS-5057, 5102 **i02659356**

NOTE	REF NO	GRAPHIC REF	PART NUMBER	QTY	PART NAME 1 2 3 4 5 6 (PRODUCT LEVEL)	SEE PAGE
	1	1	**6V-3582**	2	CLAMP-HOSE	
	2	1	**9R-1005**	2	CLIP (SLOT)	
	3	1	**9R-7802**	2	CLIP (SLOT)	
	4	1	**9R-7803**	2	CLIP (TAB)	
	5	1	**142-8997**	2	BLOCK	
	6	1	**258-2939**	4	HOSE AS	
	7	1	**258-2964**	1	TUBE AS	
	8	1	**258-2965**	1	TUBE AS	
	9	1	**258-2966**	1	TUBE AS	
	10	1	**258-2967**	1	TUBE AS	
	11	1	**6V-8398**	6	SEAL-O-RING	
	12	1	**7J-9108**	6	SEAL-O-RING	
	13	1	**8T-4121**	2	WASHER-HARD (11X21X2.5-MM THK)	
M	14	1	**8T-4136**	2	BOLT (M10X1.5X25-MM)	
	15	1	**7K-1181**	1	STRAP-CABLE	

M-METRIC PART

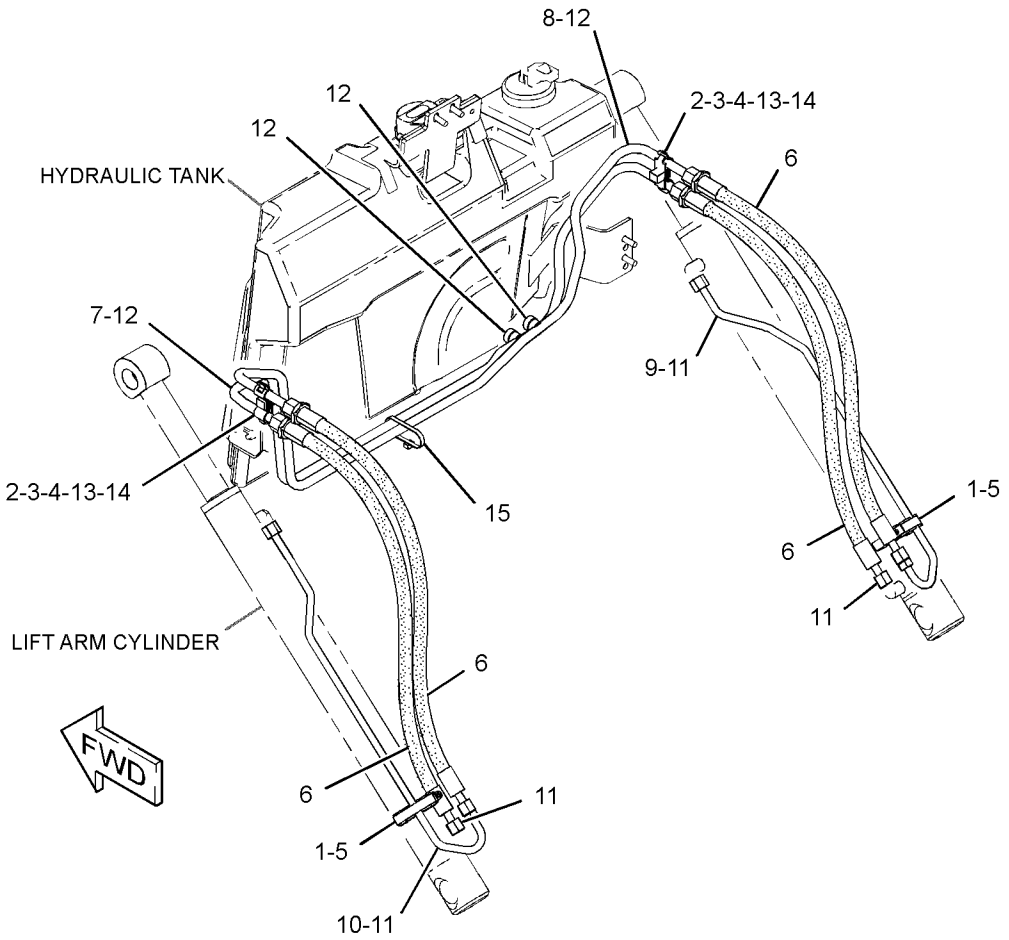

GRAPHIC #1 **<END>** g01337933

HYDRAULIC SYSTEM

258-3393 LINES GP-LOWERING CONTROL

S/N: JAY1-UP

PART OF 258-2600 HYDRAULIC AR

SMCS-5057, 5147 **i02693332**

NOTE	REF NO	GRAPHIC REF	PART NUMBER	QTY	PART NAME 1 2 3 4 5 6 (PRODUCT LEVEL)	SEE PAGE
	1	1	**7K-1181**	3	STRAP-CABLE	
Y	2	1	**112-1817**	1	VALVE GP-MANUAL	274
	3	1	**178-3620**	3	STRAP	
	4	1	**200-6345**	1	MOUNT (DUAL SWIVEL)	
	5	1	**258-3501**	1	BRACKET AS	
	6	1	**258-3507**	1	TUBE AS	
Y	7	1	**258-3515**	1	CABLE GP-CONTROL (MANUAL LOWERING)	371
	8	1	**269-9404**	1	BRACKET	
	9	1	**270-0216**	1	BRACKET	
	10	1	**289-0843**	1	TUBE AS	
	11	1	*148-8378*	1	ELBOW AS	
		1	**3J-1907**	1	SEAL-O-RING	
		1	**6V-8397**	1	SEAL-O-RING	
		1	**6V-8724**	1	ELBOW	
	12	1	*150-4043*	1	CONNECTOR AS	
		1	**3J-1907**	1	SEAL-O-RING	
		1	**6V-8398**	1	SEAL-O-RING	
		1	**6V-9873**	1	CONNECTOR	
M	13	1	**266-3315**	5	BOLT-FLANGE HEAD (M8X1.25X25.5-MM)	
	14	1	**4B-0418**	1	CLIP (LOOP)	
	15	1	**4B-4274**	1	WASHER (5.5X13X1.2-MM THK)	
	16	1	**4B-4863**	4	WASHER (4.7X11X1.2-MM THK)	
	17	1	**6V-8397**	2	SEAL-O-RING	
	18	1	**6V-8398**	3	SEAL-O-RING	
M	19	1	**6V-9673**	1	SCREW-MACHINE (M5X0.8X12-MM)	
	20	1	**8M-4791**	2	WASHER-HARD (13.5X27X3-MM THK)	
M	21	1	**8T-0337**	4	SCREW-MACHINE (M4X0.7X12-MM)	
	22	1	**9X-1481**	1	WASHER (13X25.4X1.6-MM THK)	

M-METRIC PART
Y-SEPARATE ILLUSTRATION

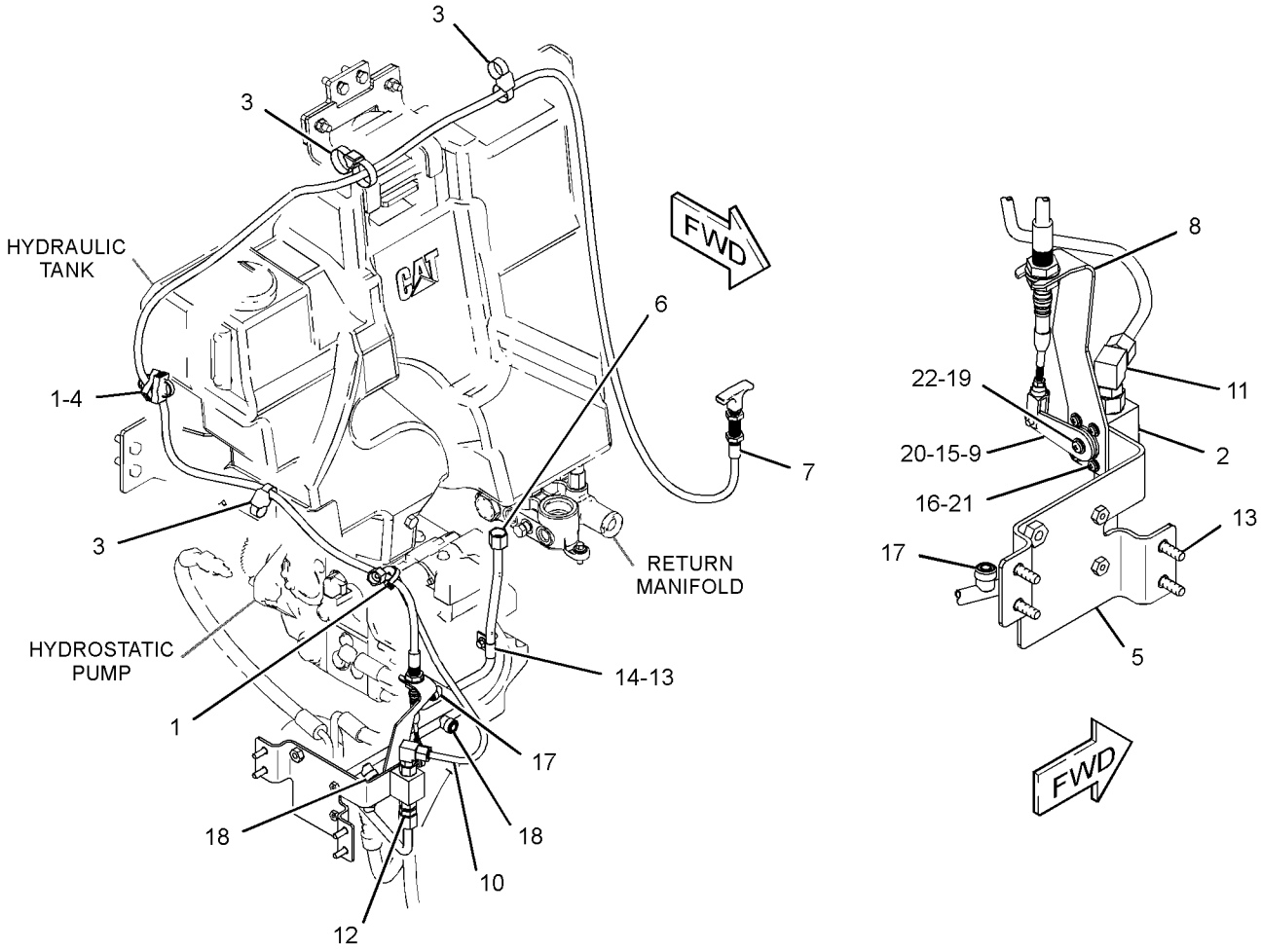

GRAPHIC #1 **<END>** g01352021

HYDRAULIC SYSTEM

258-3237 LINES GP-PUMP

S/N: JAY1-UP
PART OF 258-3180, 258-3730 HYDRAULIC AR
AN ATTACHMENT

SMCS-5057 **i02693297**

NOTE	REF NO	GRAPHIC REF	PART NUMBER	QTY	PART NAME 1 2 3 4 5 6 (PRODUCT LEVEL)	SEE PAGE
	1	1	**2S-3440**	1	CLAMP-HOSE	
	2	1	**3J-1907**	1	SEAL-O-RING	
	3	1	**5P-2230**	4	CLAMP-HOSE	
	4	1	**5P-4868**	1	CLAMP-HOSE	
	5	1	**6V-0852**	2	CAP-DUST	
	6	1	**9U-6994**	1	FITTING GP (RETURN MANIFOLD)	
	7	1	*148-8362*	1	ELBOW AS (PUMP CASE DRAIN)	
		1	**3D-2824**	1	SEAL-O-RING	
		1	**5K-9090**	1	SEAL-O-RING	
		1	**8T-6684**	1	ELBOW	
	8	1	**9U-7000**	1	FITTING GP-HYDRAULIC	
	9	1	**9S-4191**	1	PLUG-O-RING	
	10	1	*241-6215*	1	ELBOW AS	
		1	**3J-1907**	1	SEAL-O-RING	
		1	**6V-8076**	1	ELBOW	
	11	1	**193-8308**	1	ADAPTER	
	12	1	**258-3870**	1	HOSE	
I	13	1	**258-3871**	1	HOSE AS	
	14	1	**258-3874**	1	HOSE	
	15	1	**258-3882**	1	HOSE	
	16	1	**305-2893**	1	HOSE AS	
	17	1	**292-2440**	1	FITTING GP-HYDRAULIC	
		1	**6V-9746**	1	SEAL-O-RING	
	18	1	*150-4049*	1	ELBOW AS	
		1	**6V-9746**	1	SEAL-O-RING	
		1	**7M-8485**	1	SEAL-O-RING	
		1	**8T-4149**	1	ELBOW	
	19	1	*164-5567*	2	FITTING AS (QUICK DISCONNECT, MALE)	
					(EACH INCLUDES)	
		1	**3J-1907**	1	SEAL-O-RING	
		1	**6V-3965**	1	FITTING-COUPLER	
	20	1	**1P-4578**	2	FLANGE-HALF	
	21	1	**4J-0522**	1	SEAL-O-RING	
	22	1	**4J-5267**	1	SEAL-O-RING	
	23	1	**8C-3205**	2	FLANGE-HALF	
	24	1	**8T-4121**	8	WASHER-HARD (11X21X2.5-MM THK)	
M	25	1	**8T-4196**	8	BOLT (M10X1.5X35-MM)	

I-REFER TO HYDRAULIC INFORMATION SYSTEM
M-METRIC PART

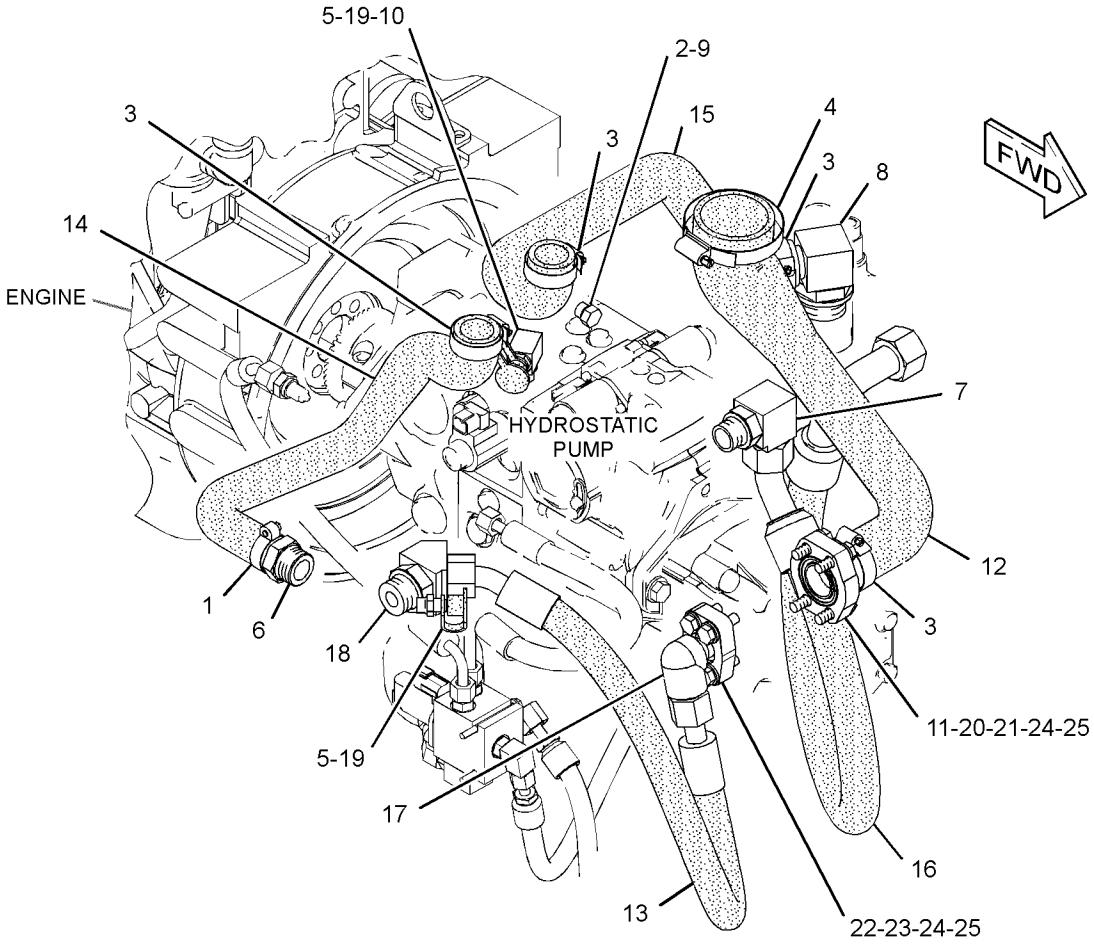

GRAPHIC #1 **<END>** g01352466

HYDRAULIC SYSTEM

258-3238 LINES GP-PUMP

S/N: JAY1-UP
PART OF 258-3182, 258-3733 HYDRAULIC AR
AN ATTACHMENT

SMCS-5057 **i02693319**

NOTE	REF NO	GRAPHIC REF	PART NUMBER	QTY	PART NAME 1 2 3 4 5 6 (PRODUCT LEVEL)	SEE PAGE
	1	1	**2S-3440**	1	CLAMP-HOSE	
	2	1	**5P-0597**	1	CLAMP-HOSE	
	3	1	**5P-2230**	3	CLAMP-HOSE	
	4	1	**5P-4868**	1	CLAMP-HOSE	
	5	1	**6V-0852**	4	CAP-DUST	
	6	1	**9U-6994**	1	FITTING GP (RETURN MANIFOLD)	
		1	**7M-8485**	1	SEAL-O-RING	
	7	1	*148-8362*	1	ELBOW AS	
		1	**3D-2824**	1	SEAL-O-RING	
		1	**5K-9090**	1	SEAL-O-RING	
		1	**8T-6684**	1	ELBOW	
	8	1	**9U-7000**	1	FITTING GP-HYDRAULIC	
		1	**2S-4078**	1	SEAL-O-RING	
	9	1	**161-3357**	2	SPACER (10-MM THK)	
	10	1	**110-6349**	2	FITTING AS (QUICK DISCONNECT) (MALE)	
	11	1	**204-2281**	1	STRAP-TIE	
Y	12	1	**211-3014**	1	VALVE GP-SHUTTLE	277
	13	1	**258-3880**	1	HOSE	
I	14	1	**258-3881**	1	HOSE AS	
	15	1	**258-3882**	1	HOSE	
I	16	1	**258-3883**	1	HOSE AS	
	17	1	**258-3889**	1	HOSE	
	18	1	**304-5080**	1	TUBE AS	
	19	1	**258-3899**	1	ADAPTER AS	
	20	1	**258-3967**	1	HOSE AS	
	21	1	**305-2893**	1	HOSE AS	
	22	1	*148-8361*	1	ELBOW AS	
		1	**3J-7354**	1	SEAL-O-RING	
		1	**6V-8397**	1	SEAL-O-RING	
		1	**6V-9200**	1	ELBOW	
	23	1	*297-7942*	1	ELBOW AS	
		1	**3J-7354**	1	SEAL-O-RING	
		1	**297-7941**	1	ELBOW	
	24	1	**303-5020**	1	ELBOW	
	25	1	*148-8368*	2	ELBOW AS	
					(EACH INCLUDES)	
		1	**3J-1907**	1	SEAL-O-RING	
		1	**4J-5477**	1	SEAL-O-RING	
		1	**6V-8627**	1	ELBOW	
	26	1	*164-5567*	2	FITTING AS (QUICK DISCONNECT, MALE)	
					(EACH INCLUDES)	
		1	**3J-1907**	1	SEAL-O-RING	
		1	**6V-3965**	1	FITTING-COUPLER	
	27	1	**286-4867**	1	HOSE AS	
	28	1	**1P-3703**	1	SEAL-RECTANGULAR	
	29	1	**1P-4582**	2	FLANGE-HALF	
	30	1	**4J-0527**	1	SEAL-O-RING	
M	31	1	**5C-7261**	2	NUT (M8X1.25-THD)	
	32	1	**5K-9090**	3	SEAL-O-RING	
	33	1	**5P-4116**	2	WASHER-HARD (8.8X20.5X2-MM THK)	
	34	1	**6V-0400**	2	FLANGE-HALF	
	35	1	**6V-7359**	3	GROMMET	
	36	1	**7M-8485**	1	SEAL-O-RING	
	37	1	**5P-7464**	2	CLIP (SLOT)	
	38	1	**5P-7465**	2	CLIP (TAB)	

258-3238 **LINES GP-PUMP** ***(contd.)*** **i02693319**

NOTE	REF NO	GRAPHIC REF	PART NUMBER	QTY	PART NAME 1 2 3 4 5 6 (PRODUCT LEVEL)	SEE PAGE
M	39	1	**8T-4184**	8	BOLT (M12X1.75X45-MM)	
	40	1	**8T-4223**	8	WASHER-HARD (13.5X25.5X3-MM THK)	
	41	1	*241-6215*	1	ELBOW AS	
		1	**3J-1907**	1	SEAL-O-RING	
		1	**6V-8076**	1	ELBOW	

I-REFER TO HYDRAULIC INFORMATION SYSTEM
M-METRIC PART
Y-SEPARATE ILLUSTRATION

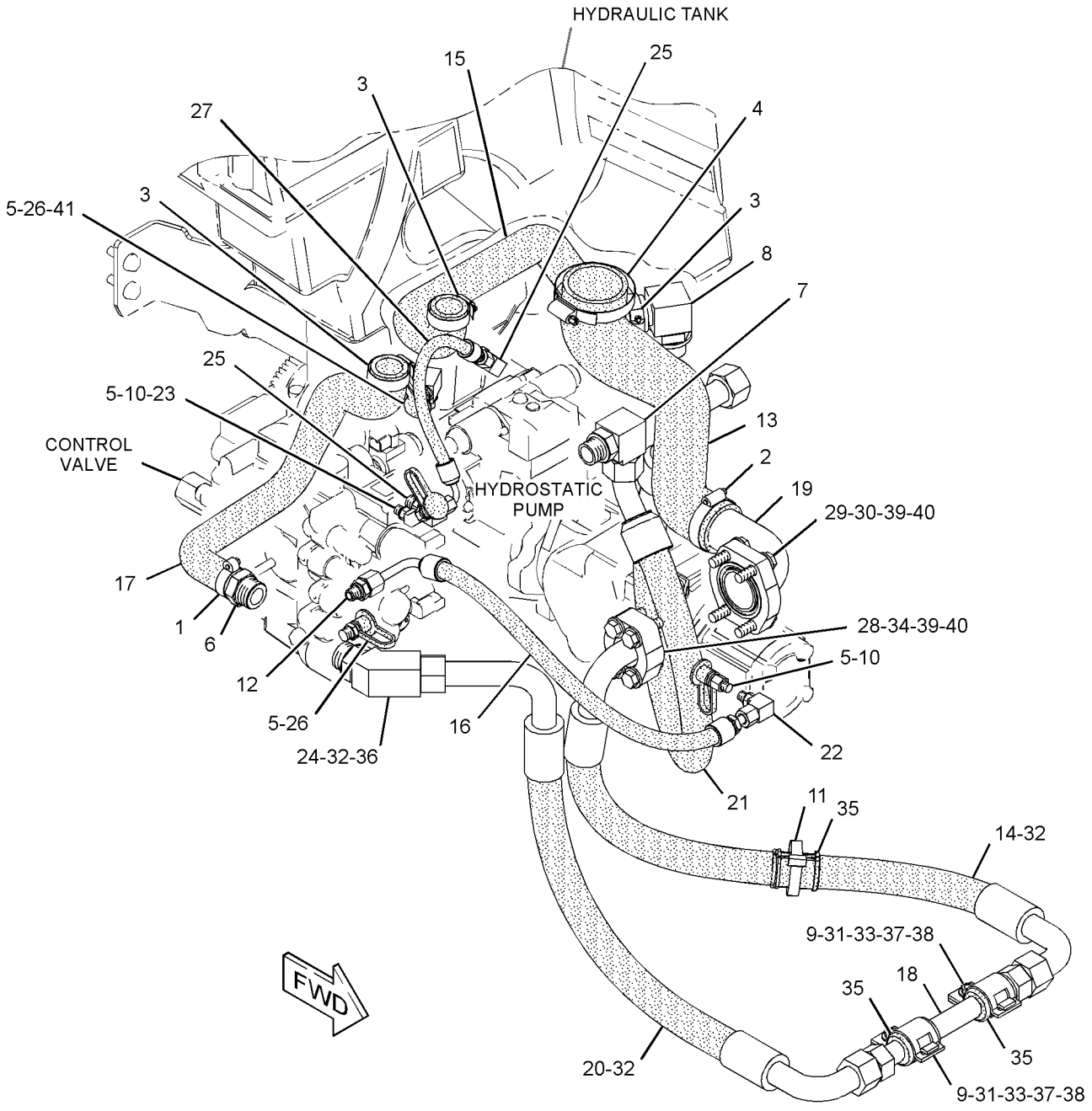

GRAPHIC #1 **<END>** g01352748

HYDRAULIC SYSTEM

261-6239 LINES GP-PUMP

S/N: JAY1-UP
PART OF 261-6264 HYDRAULIC AR
AN ATTACHMENT

SMCS-5057 **i02693439**

NOTE	REF NO	GRAPHIC REF	PART NUMBER	QTY	PART NAME 1 2 3 4 5 6 (PRODUCT LEVEL)	SEE PAGE
	1	1	**2S-3440**	1	CLAMP-HOSE	
	2	1	**5P-2230**	3	CLAMP-HOSE	
	3	1	**5P-4868**	1	CLAMP-HOSE	
	4	1	**6V-0852**	4	CAP-DUST	
	5	1	**9U-6994**	1	FITTING GP	
	6	1	**9U-7000**	1	FITTING GP-HYDRAULIC	
	7	1	**110-6349**	2	FITTING AS (QUICK DISCONNECT)	
Y	8	1	**211-3014**	1	VALVE GP-SHUTTLE	277
	9	1	**258-3880**	1	HOSE	
	10	1	**258-3882**	1	HOSE	
I	11	1	**258-3883**	1	HOSE AS	
	12	1	**258-3889**	1	HOSE	
	13	1	**258-3899**	1	ADAPTER AS	
	14	1	**258-3967**	1	HOSE AS	
I	15	1	**261-6167**	1	HOSE AS	
I	16	1	**261-6168**	1	HOSE AS	
	17	1	*297-7942*	1	ELBOW AS	
		1	**3J-7354**	1	SEAL-O-RING	
		1	**297-7941**	1	ELBOW	
	18	1	**303-5020**	1	ELBOW	
	19	1	**304-5080**	1	TUBE AS	
	20	1	**305-2893**	1	HOSE AS	
	21	1	*148-8361*	1	ELBOW AS	
		1	**3J-7354**	1	SEAL-O-RING	
		1	**6V-8397**	1	SEAL-O-RING	
		1	**6V-9200**	1	ELBOW	
	22	1	*148-8362*	1	ELBOW AS	
		1	**3D-2824**	1	SEAL-O-RING	
		1	**5K-9090**	1	SEAL-O-RING	
		1	**8T-6684**	1	ELBOW	
	23	1	*148-8368*	2	ELBOW AS	
					(EACH INCLUDES)	
		1	**3J-1907**	1	SEAL-O-RING	
		1	**4J-5477**	1	SEAL-O-RING	
		1	**6V-8627**	1	ELBOW	
	24	1	*148-8445*	1	FITTING GP-TEE	
		1	**5K-9090**	2	SEAL-O-RING	
		1	**6V-9847**	1	TEE-SWIVEL	
	25	1	*150-3073*	1	PLUG AS	
		1	**5K-9090**	1	SEAL-O-RING	
		1	**6V-9512**	1	PLUG (1-7/16-12-THD)	
	26	1	**161-3357**	2	SPACER (10-MM THK)	
	27	1	*164-5567*	2	FITTING AS (QUICK DISCONNECT, MALE)	
					(EACH INCLUDES)	
		1	**3J-1907**	1	SEAL-O-RING	
		1	**6V-3965**	1	FITTING-COUPLER	
	28	1	*241-6215*	1	ELBOW AS	
		1	**3J-1907**	2	SEAL-O-RING	
		1	**6V-8076**	2	ELBOW	
	29	1	**286-4867**	1	HOSE AS	
	30	1	**1P-3703**	1	SEAL-RECTANGULAR	
	31	1	**1P-4582**	2	FLANGE-HALF	
	32	1	**4J-0527**	1	SEAL-O-RING	
M	33	1	**5C-7261**	2	NUT (M8X1.25-THD)	
	34	1	**5K-9090**	3	SEAL-O-RING	

261-6239 **LINES GP-PUMP** *(contd.)* **i02693439**

NOTE	REF NO	GRAPHIC REF	PART NUMBER	QTY	PART NAME 1 2 3 4 5 6 (PRODUCT LEVEL)	SEE PAGE
	35	1	**5P-0597**	1	CLAMP-HOSE	
	36	1	**5P-4116**	2	WASHER-HARD (8.8X20.5X2-MM THK)	
	37	1	**5P-7464**	2	CLIP (SLOT)	
	38	1	**5P-7465**	2	CLIP (TAB)	
	39	1	**6V-0400**	2	FLANGE-HALF	
	40	1	**6V-7359**	2	GROMMET	
	41	1	**7M-8485**	1	SEAL-O-RING	
M	42	1	**8T-4184**	8	BOLT (M12X1.75X45-MM)	
	43	1	**8T-4223**	8	WASHER-HARD (13.5X25.5X3-MM THK)	

I-REFER TO HYDRAULIC INFORMATION SYSTEM
M-METRIC PART
Y-SEPARATE ILLUSTRATION

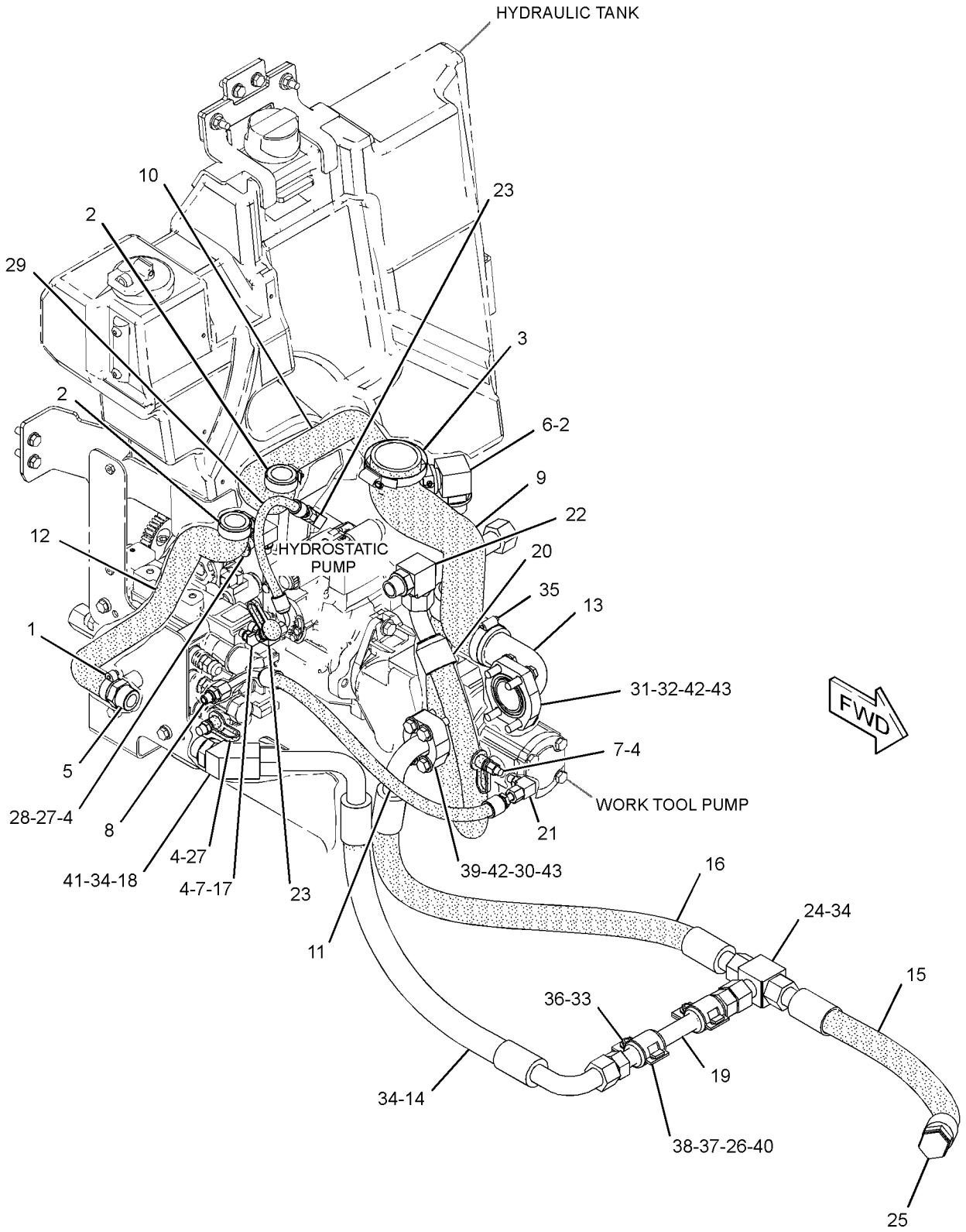

GRAPHIC #1 **<END>** g01352758

HYDRAULIC SYSTEM

258-2412 LINES GP-TILT CYLINDER

S/N: JAY1-UP

PART OF 258-2600 HYDRAULIC AR

SMCS-5057, 5104 **i02625493**

NOTE	REF NO	GRAPHIC REF	PART NUMBER	QTY	PART NAME 1 2 3 4 5 6 (PRODUCT LEVEL)	SEE PAGE
	1	1	**9R-7802**	2	CLIP (SLOT)	
	2	1	**9R-7803**	2	CLIP (TAB)	
	3	1	**102-8703**	3	PLATE-COVER	
	4	1	**195-6750**	6	CLAMP-DOUBLE	
	5	1	*197-8940*	2	CONNECTOR AS	
					(EACH INCLUDES)	
		1	**2M-9780**	1	SEAL-O-RING	
		1	**7J-9108**	1	SEAL-O-RING	
		1	**8T-1576**	1	CONNECTOR (FACE SEAL)	
I	6	1	**258-2931**	2	HOSE AS	
	7	1	**258-2932**	1	TUBE AS	
	8	1	**258-2933**	1	TUBE AS	
	9	1	**258-3958**	4	HOSE AS	
	10	1	**292-2433**	1	BRACKET AS	
	11	1	**292-2434**	1	TUBE AS	
	12	1	**292-2435**	1	TUBE AS	
M	13	1	**303-8205**	3	BOLT (M8X1.25X60-MM)	
	14	1	*148-8393*	2	ELBOW AS	
					(EACH INCLUDES)	
		1	**6V-9852**	1	ELBOW (SWIVEL)	
		1	**7J-9108**	1	SEAL-O-RING	
M	15	1	**266-3315**	2	BOLT-FLANGE HEAD (M8X1.25X25.5-MM)	
	16	1	**6V-8397**	2	SEAL-O-RING	
	17	1	**6V-8398**	8	SEAL-O-RING	
	18	1	**7G-3832**	1	GROMMET	
	19	1	**7G-3833**	1	CLIP (TAB)	
	20	1	**7G-3834**	1	CLIP (SLOT)	
	21	1	**7J-9108**	4	SEAL-O-RING	
	22	1	**8T-4121**	4	WASHER-HARD (11X21X2.5-MM THK)	
M	23	1	**8T-4196**	4	BOLT (M10X1.5X35-MM)	
	24	1	**9R-1005**	2	CLIP (SLOT)	

I-REFER TO HYDRAULIC INFORMATION SYSTEM
M-METRIC PART

258-2412 LINES GP-TILT CYLINDER *(contd.)* i02625493

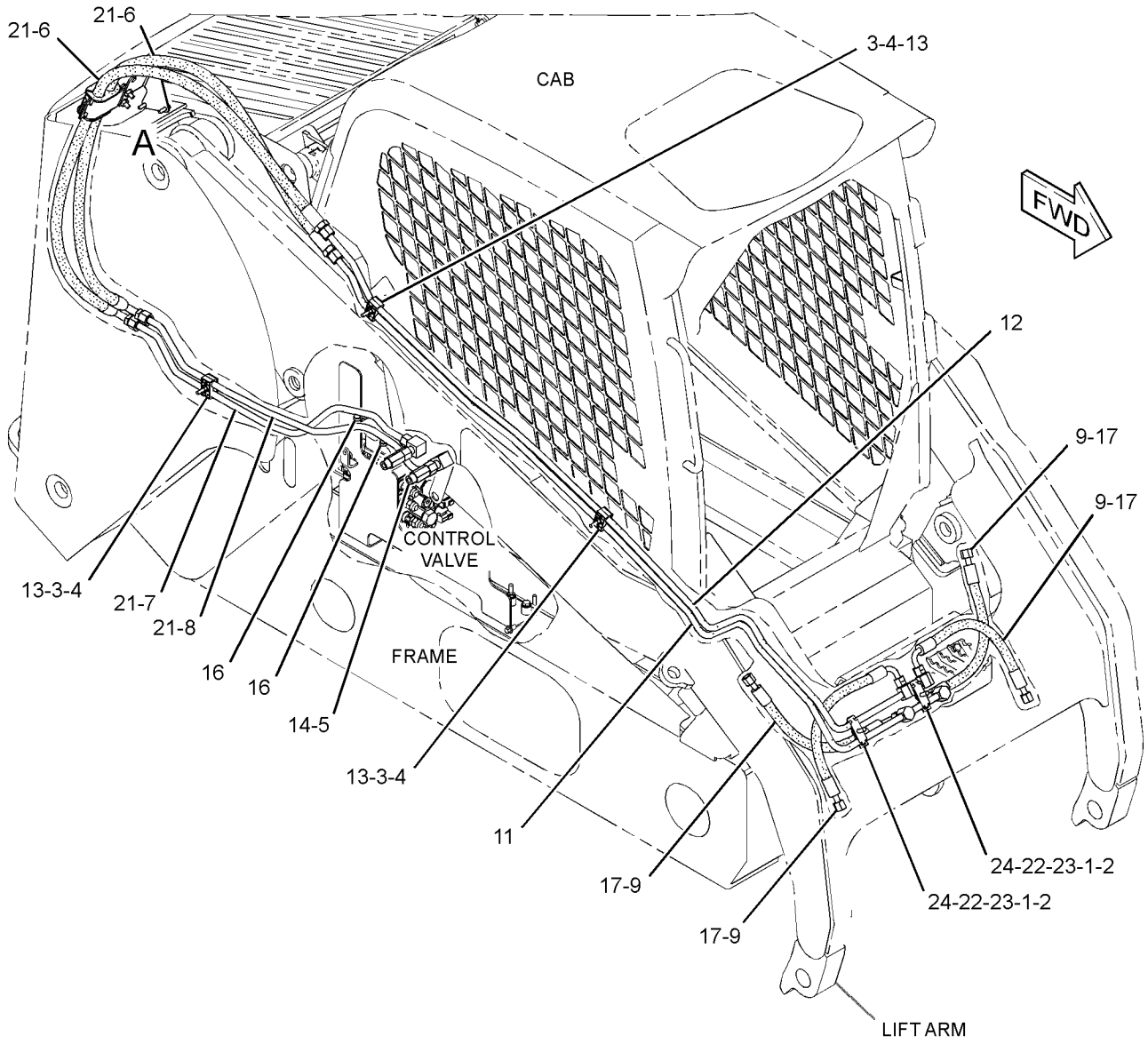

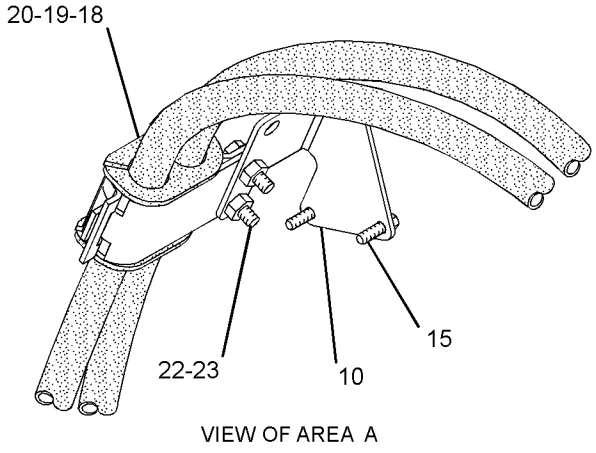

VIEW OF AREA A

GRAPHIC #1 **<END>** g01332881

HYDRAULIC SYSTEM

258-2421 LINES GP-WORK TOOL

S/N: JAY1-UP

PART OF 258-3182, 258-3733, 261-6264 HYDRAULIC AR

AN ATTACHMENT

SMCS-5057 **i02712993**

NOTE	REF NO	GRAPHIC REF	PART NUMBER	QTY	PART NAME 1 2 3 4 5 6 (PRODUCT LEVEL)	SEE PAGE
	1	1,2	**4V-0611**	6	CLAMP (DOUBLE)	
	2	1,2	**4V-0612**	3	PLATE	
Y	3	1	**218-5840**	1	FITTING GP-HYDRAULIC (QUICK DISCONNECT, MALE)	189
Y	4	1	**218-5841**	1	FITTING GP-HYDRAULIC (QUICK DISCONNECT, FEMALE)	190
	5	1	**229-5468**	1	FITTING AS (QUICK DISCONNECT, MALE)	
	6	1	**229-5471**	1	FITTING AS (QUICK DISCONNECT, FEMALE)	
	7	1	**229-5473**	1	FITTING AS (QUICK DISCONNECT, MALE)	
	8	1	**258-2498**	1	TUBE AS	
	9	1	**258-2499**	1	TUBE AS	
	10	1	**258-2574**	1	BRACKET AS	
	11	2	**258-3162**	2	BLOCK	
	12	2	**258-3164**	2	PLATE	
	13	1	**258-3330**	1	TUBE AS	
	14	1	**258-3331**	1	TUBE AS	
	15	2	**258-3332**	1	TUBE AS	
	16	1	**258-3333**	2	HOSE AS	
	17	1	**258-3334**	1	HOSE AS	
	18	1	**258-3335**	1	TUBE AS	
	19	1	**258-3336**	1	TUBE AS	
	20	1	**258-3337**	1	TUBE AS	
	21	1	**258-3344**	1	COVER	
	22	1	**258-3351**	1	TUBE AS	
	23	1	**258-3352**	1	TUBE AS	
	24	1	**258-4128**	1	HARNESS AS-VALVE	
		1	**102-8805**	1	KIT-RECEPTACLE (6-PIN)	
					(INCLUDES RECEPTACLE AS & WEDGE)	
		1	**8L-8413**	4	STRAP-CABLE	
E		1	**125-7874**		TUBE-HEAT SHRINK (5.72-MM DIA) (5-CM)	
		1	**155-2270**	3	KIT-CONNECTING PLUG (2-PIN)	
					(EACH INCLUDES PLUG AS, WEDGE & INTERFACE SEAL)	
I	25	1	**285-2188**	2	HOSE AS	
	26	1	**286-4863**	1	BRACKET AS	
M	27	1,2	**303-8205**	3	BOLT (M8X1.25X60-MM)	
	28	2	**132-7551**	1	SPACER (11X19X6-MM THK)	
	29	1	*148-8344*	2	CONNECTOR AS	
					(EACH INCLUDES)	
		1	**3D-2824**	1	SEAL-O-RING	
		1	**6V-9162**	1	CONNECTOR	
		1	**6V-9746**	1	SEAL-O-RING	
	30	1	*148-8392*	2	ELBOW AS	
					(EACH INCLUDES)	
		1	**6V-9746**	1	SEAL-O-RING	
		1	**6V-9853**	1	ELBOW	
	31	2	*148-8436*	1	TEE AS	
		2	**3K-0360**	1	SEAL-O-RING	
		2	**6V-8398**	2	SEAL-O-RING	
		2	**6V-8775**	1	TEE-FACE SEAL	
	32	1	*164-5605*	2	CONNECTOR AS	
					(EACH INCLUDES)	
		1	**3K-0360**	1	SEAL-O-RING	
		1	**6V-8397**	1	SEAL-O-RING	
		1	**8T-0076**	1	CONNECTOR	
M	33	1,2	**266-3315**	4	BOLT-FLANGE HEAD (M8X1.25X25.5-MM)	
	34	1,2	**1B-3057**	2	CLIP	

258-2421 **LINES GP-WORK TOOL** *(contd.)* **i02712993**

NOTE	REF NO	GRAPHIC REF	PART NUMBER	QTY	PART NAME 1 2 3 4 5 6 (PRODUCT LEVEL)	SEE PAGE
	35	1	**5K-8451**	1	CLIP	
	36	1,2	**5P-4116**	4	WASHER-HARD (8.8X20.5X2-MM THK)	
	37	1,2	**6V-8397**	4	SEAL-O-RING	
	38	1,2	**6V-8398**	2	SEAL-O-RING	
	39	1,2	**6V-9746**	4	SEAL-O-RING	
	40	1,2	**7B-1597**	2	CLIP	
	41	1	**7G-3832**	1	GROMMET	
	42	1	**7G-3833**	1	CLIP (TAB)	
	43	1	**7G-3834**	1	CLIP (SLOT)	
M	44	1	**7X-2543**	2	BOLT (M10X1.5X120-MM)	
	45	1	**7X-7729**	4	WASHER (11X25X3-MM THK)	
	46	1	**8D-9671**	1	CLIP	
M	47	1	**8T-0341**	4	BOLT-SOCKET HEAD (M10X1.5X60-MM)	
	48	1	**8T-4121**	5	WASHER-HARD (11X21X2.5-MM THK)	
M	49	1	**8T-4133**	3	NUT (M10X1.5-THD)	
M	50	1	**8T-4137**	1	BOLT (M10X1.5X20-MM)	
M	51	1	**8T-4189**	1	BOLT (M8X1.25X20-MM)	
M	52	1	**8T-4196**	3	BOLT (M10X1.5X35-MM)	
M	53	1,2	**8T-4200**	4	BOLT (M8X1.25X16-MM)	
	54	1	**8T-4224**	1	WASHER-HARD (8.8X16X2-MM THK)	
	55	1,2	**9S-1350**	2	CLIP	

E-ORDER BY THE CENTIMETER
I-REFER TO HYDRAULIC INFORMATION SYSTEM
M-METRIC PART
Y-SEPARATE ILLUSTRATION

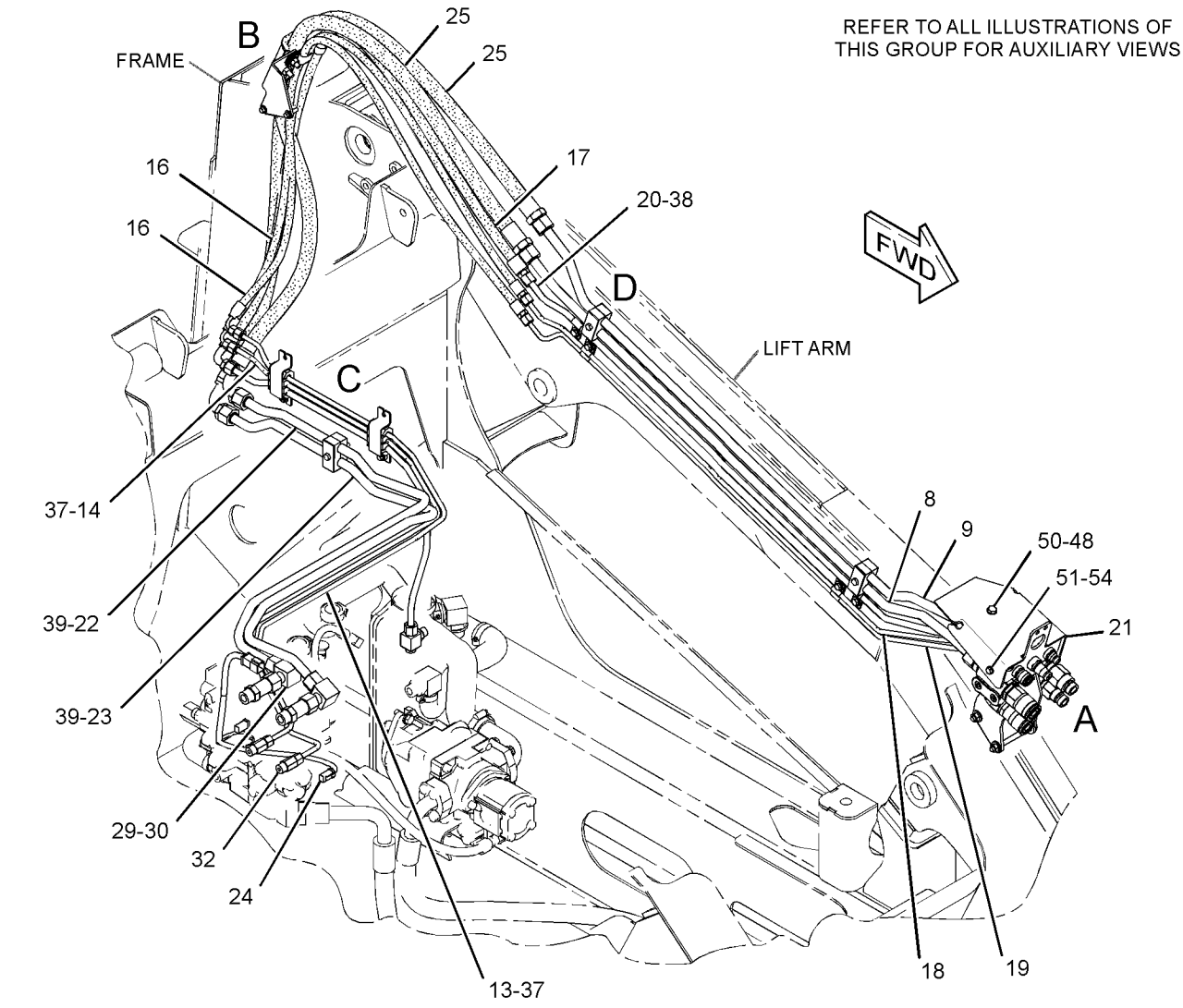

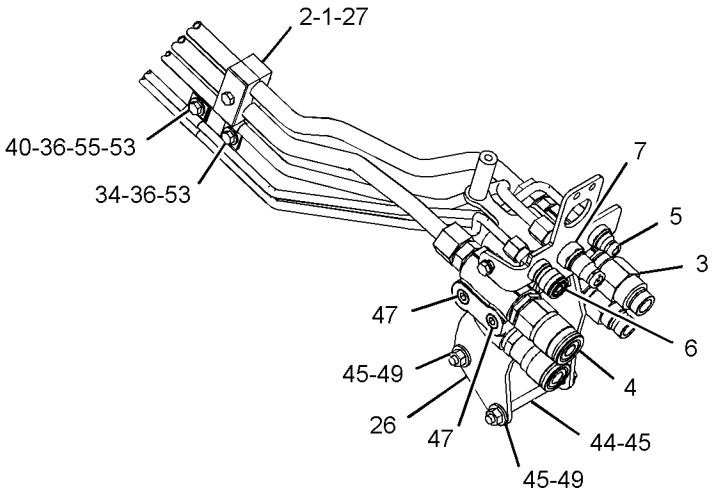

VIEW OF AREA A
(COVER REMOVED FOR CLARITY)

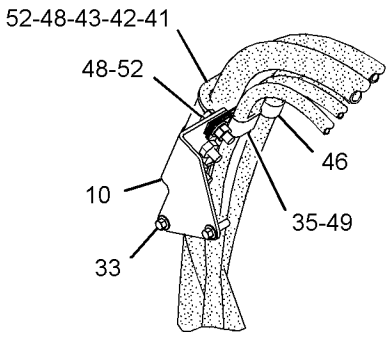

VIEW OF AREA B

GRAPHIC #1

g01341435

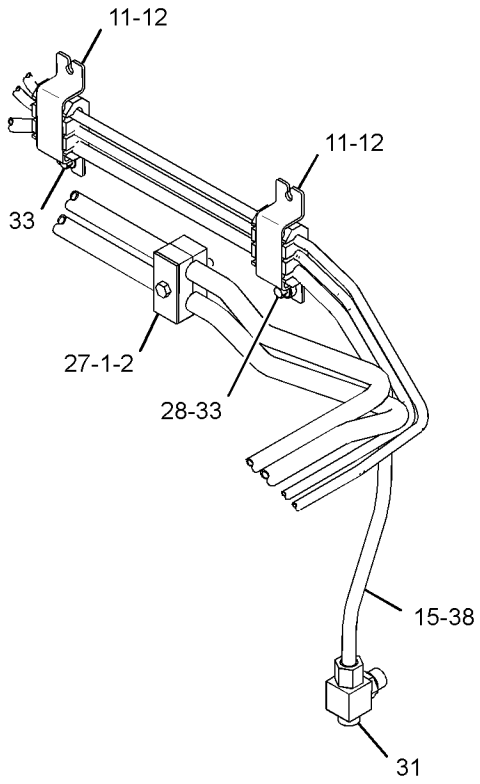

VIEW OF AREA C

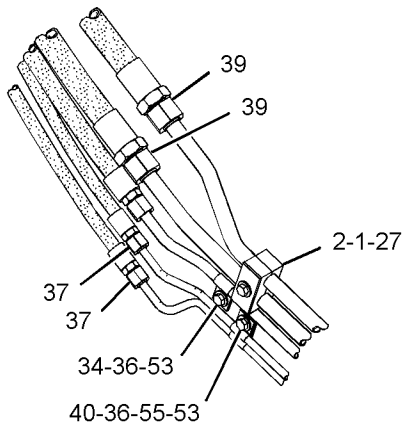

VIEW OF AREA D

GRAPHIC #2 **<END>** g01341436

HYDRAULIC SYSTEM

258-2422 LINES GP-WORK TOOL

S/N: JAY1-UP
PART OF 258-3180, 258-3730 HYDRAULIC AR
AN ATTACHMENT

SMCS-5057 **i02637849**

NOTE	REF NO	GRAPHIC REF	PART NUMBER	QTY	PART NAME 1 2 3 4 5 6 (PRODUCT LEVEL)	SEE PAGE
	1	1	**102-8703**	3	PLATE-COVER	
	2	1	**193-8334**	1	FITTING AS (QUICK DISCONNECT, MALE)	
	3	1	**193-8335**	1	FITTING AS (QUICK DISCONNECT, FEMALE)	
	4	1	**195-6750**	6	CLAMP-DOUBLE	
	5	1	**258-2574**	1	BRACKET AS	
	6	1	**258-2927**	1	TUBE AS	
	7	1	**258-2928**	1	TUBE AS	
I	8	1	**258-2931**	2	HOSE AS	
	9	1	**258-3247**	1	BRACKET AS	
	10	1	*260-9214*	2	CONNECTOR AS	
					(EACH INCLUDES)	
		1	**3D-2824**	1	SEAL-O-RING	
		1	**7J-9108**	1	SEAL-O-RING	
		1	**260-9213**	1	CONNECTOR	
	11	1	**286-4868**	1	TUBE AS	
	12	1	**286-4869**	1	TUBE AS	
M	13	1	**303-8205**	3	BOLT (M8X1.25X60-MM)	
	14	1	*148-8364*	1	ELBOW AS	
		1	**3K-0360**	1	SEAL-O-RING	
		1	**6V-8398**	1	SEAL-O-RING	
		1	**6V-8625**	1	ELBOW	
	15	1	*148-8393*	2	ELBOW AS	
					(EACH INCLUDES)	
		1	**6V-9852**	1	ELBOW (SWIVEL)	
		1	**7J-9108**	1	SEAL-O-RING	
M	16	1	**266-3315**	2	BOLT-FLANGE HEAD (M8X1.25X25.5-MM)	
	17	1	**6V-9170**	2	NUT-BULKHEAD (1-14-THD)	
	18	1	**7G-3832**	1	GROMMET	
	19	1	**7G-3833**	1	CLIP (TAB)	
	20	1	**7G-3834**	1	CLIP (SLOT)	
	21	1	**7J-9108**	6	SEAL-O-RING	
	22	1	**8T-4121**	4	WASHER-HARD (11X21X2.5-MM THK)	
M	23	1	**8T-4196**	2	BOLT (M10X1.5X35-MM)	
M	24	1	**8T-6685**	2	BOLT (M10X1.5X110-MM)	

I-REFER TO HYDRAULIC INFORMATION SYSTEM
M-METRIC PART

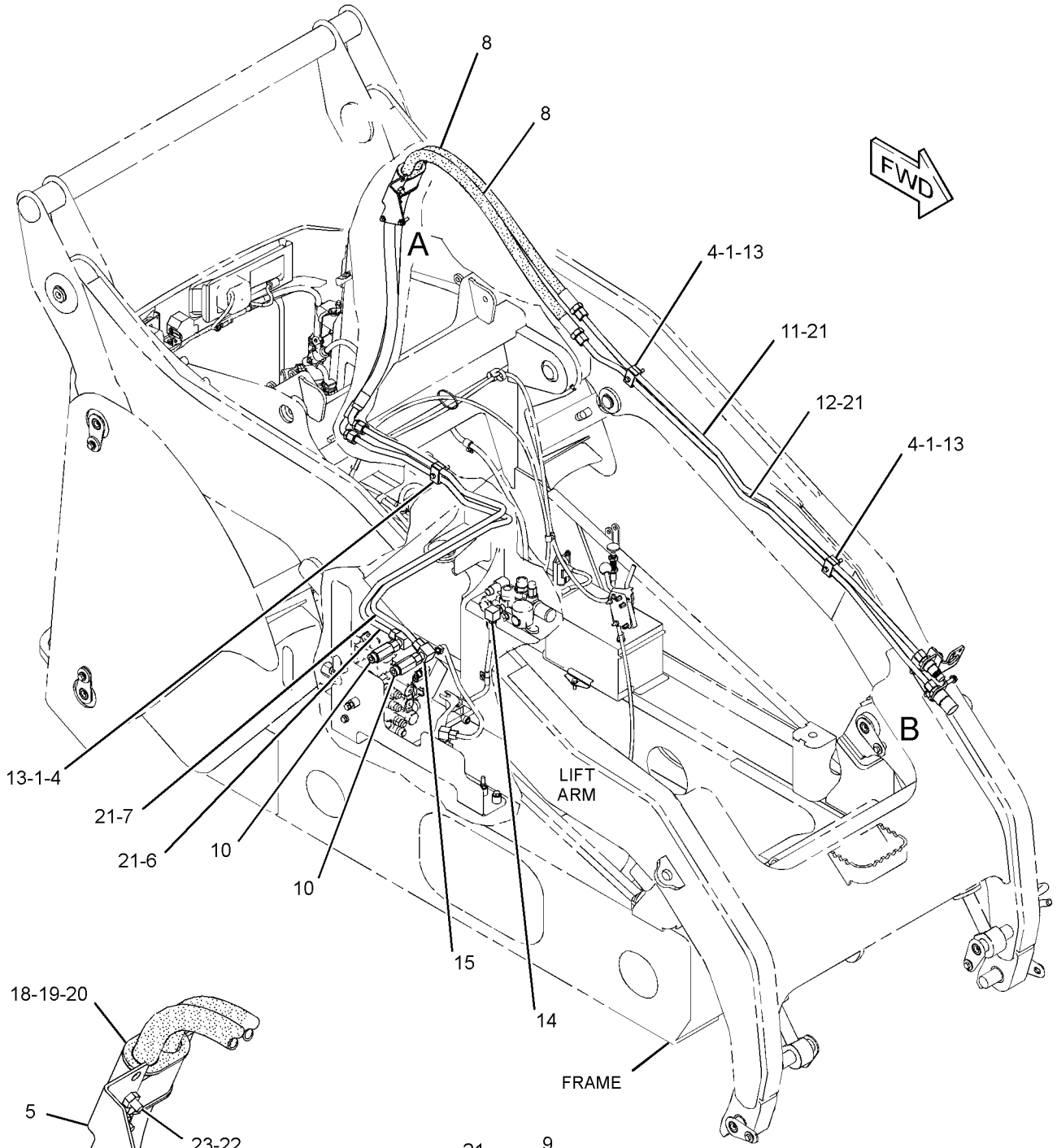

GRAPHIC #1

<END>

g01328658

258-3462 MANF & SOLENOID MTG GP-ACCUM

S/N: JAY1-UP

PART OF 258-3394 MANIFOLD & LINES GP-ACCUM

SMCS-5077, 5264, 5479 **i02626050**

NOTE	REF NO	GRAPHIC REF	PART NUMBER	QTY	PART NAME 1 2 3 4 5 6 (PRODUCT LEVEL)	SEE PAGE
Y	1	1	*149-0686*	1	ACCUMULATOR GP-HYDRAULIC (CHARGED)	182
	2	1	*194-7632*	1	ELBOW AS	
		1	**3K-0360**	1	SEAL-O-RING	
		1	**194-7631**	1	ELBOW	
Y	3	1	**274-8563**	1	MANIFOLD GP-CONTROL (PILOT SHUTOFF)	251
	4	1	*194-2903*	1	ELBOW AS	
		1	**3K-0360**	1	SEAL-O-RING	
		1	**8T-0119**	1	ELBOW	
	5	1	**3K-0360**	1	SEAL-O-RING	
M	6	1	**8T-3844**	2	BOLT (M6X1X70-MM)	
	7	1	**8T-4205**	2	WASHER-HARD (7.2X14.5X2-MM THK)	

M-METRIC PART
Y-SEPARATE ILLUSTRATION

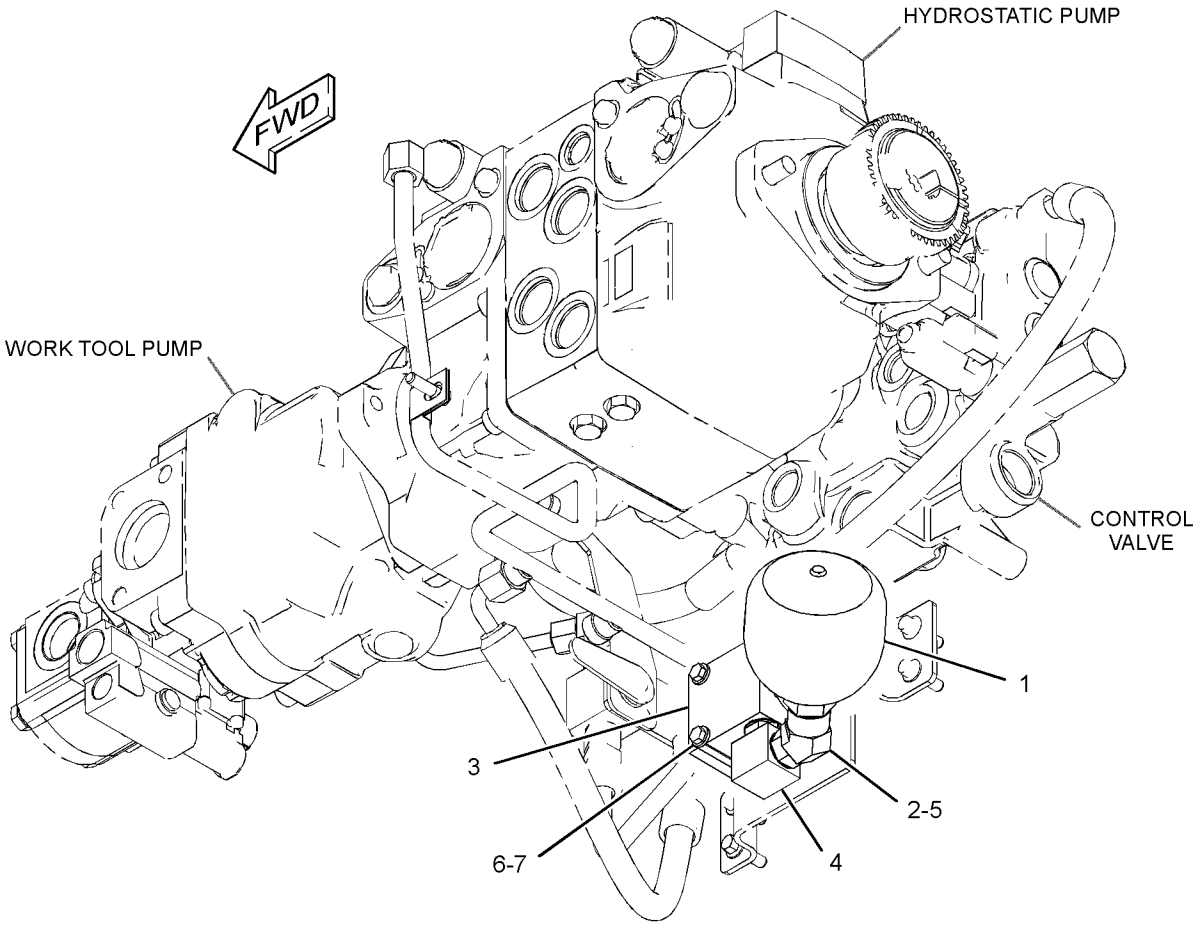

GRAPHIC #1 **<END>** g01329523

258-3394 MANIFOLD & LINES GP-ACCUM

S/N: JAY1-UP

PART OF 258-2600 HYDRAULIC AR

SMCS-5057, 5077, 5264 **i02626049**

NOTE	REF NO	GRAPHIC REF	PART NUMBER	QTY	PART NAME 1 2 3 4 5 6 (PRODUCT LEVEL)	SEE PAGE
	1	1	**195-6768**	1	SCREEN (HYDRAULIC)	
	2	1	**195-6769**	1	WASHER (6.99X12.7X5.46-MM THK)	
I	3	1	**258-3279**	1	HOSE AS	
I	4	1	**258-3292**	1	HOSE AS	
Y	5	1	*258-3462*	1	MANF & SOLENOID MTG GP-ACCUM	246
I	6	1	**289-0841**	1	HOSE AS	
	7	1	*148-8336*	1	CONNECTOR AS	
		1	**3J-1907**	1	SEAL-O-RING	
		1	**6V-8397**	1	SEAL-O-RING	
		1	**6V-8636**	1	CONNECTOR	
	8	1	*148-8378*	1	ELBOW AS	
		1	**3J-1907**	1	SEAL-O-RING	
		1	**6V-8397**	1	SEAL-O-RING	
		1	**6V-8724**	1	ELBOW	
	9	1	*150-4043*	1	CONNECTOR AS	
		1	**3J-1907**	1	SEAL-O-RING	
		1	**6V-8398**	1	SEAL-O-RING	
		1	**6V-9873**	1	CONNECTOR	

I-REFER TO HYDRAULIC INFORMATION SYSTEM
Y-SEPARATE ILLUSTRATION

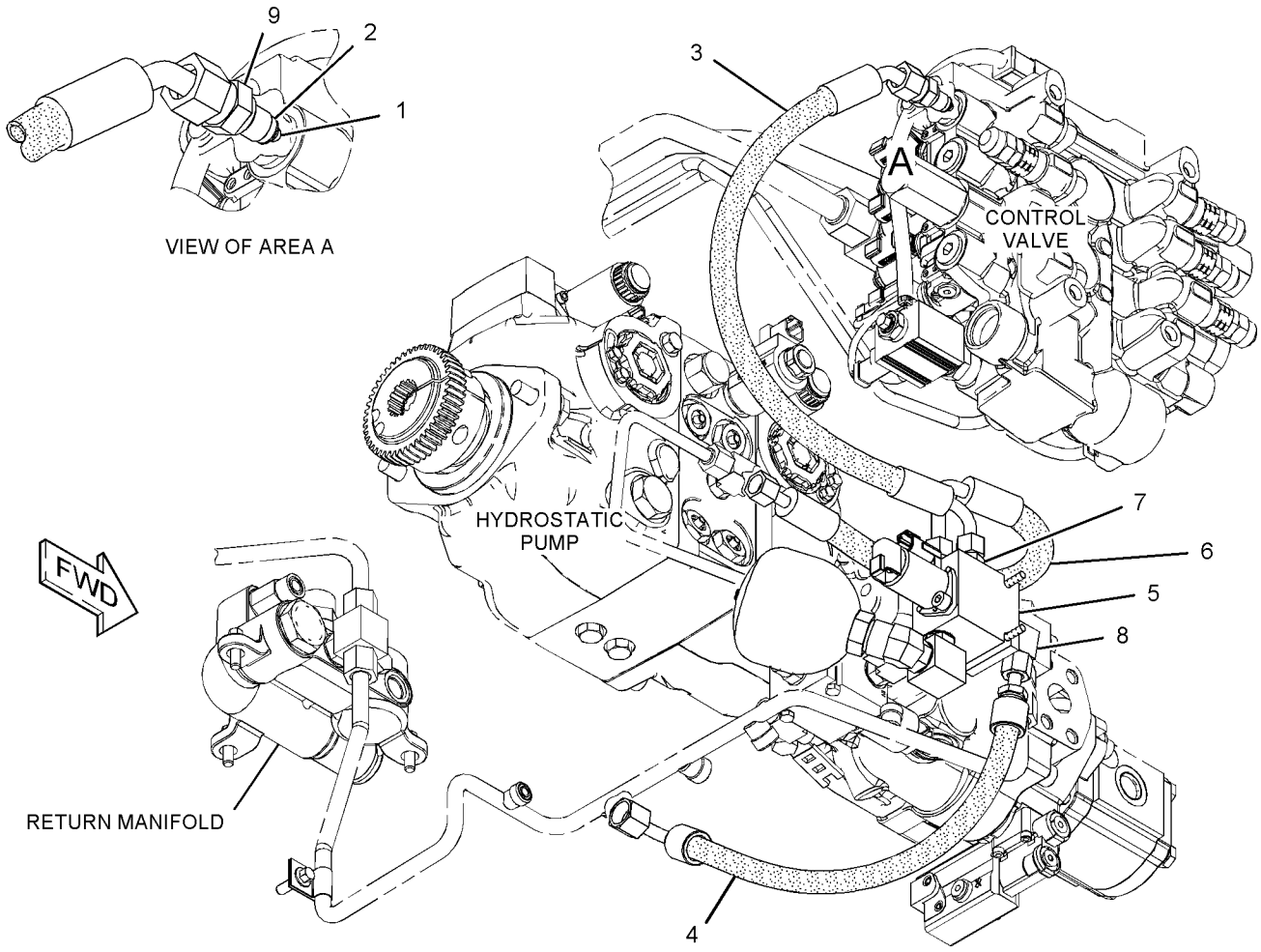

GRAPHIC #1 **<END>** g01330088

258-3463 MANIFOLD & MTG GP-CONTROL—MOTOR, 2-SPEED

S/N: JAY1-UP

PART OF 258-3151 MANIFOLD & LINES GP-CONTROL

AN ATTACHMENT

SMCS-5264 **i02711962**

NOTE	REF NO	GRAPHIC REF	PART NUMBER	QTY	PART NAME 1 2 3 4 5 6 (PRODUCT LEVEL)	SEE PAGE
	1	1	**258-3160**	1	BRACKET AS	
Y	2	1	**274-8564**	1	MANIFOLD GP-CONTROL (MOTOR, 2-SPEED)	252
	3	1	**4P-7429**	1	CLIP (LADDER)	
M	4	1	**7X-2535**	2	BOLT (M6X1X60-MM)	
	5	1	**8T-4223**	1	WASHER-HARD (13.5X25.5X3-MM THK)	
M	6	1	**8T-4192**	1	BOLT (M12X1.75X25-MM)	
	7	1	**8T-4205**	2	WASHER-HARD (7.2X14.5X2-MM THK)	

M-METRIC PART
Y-SEPARATE ILLUSTRATION

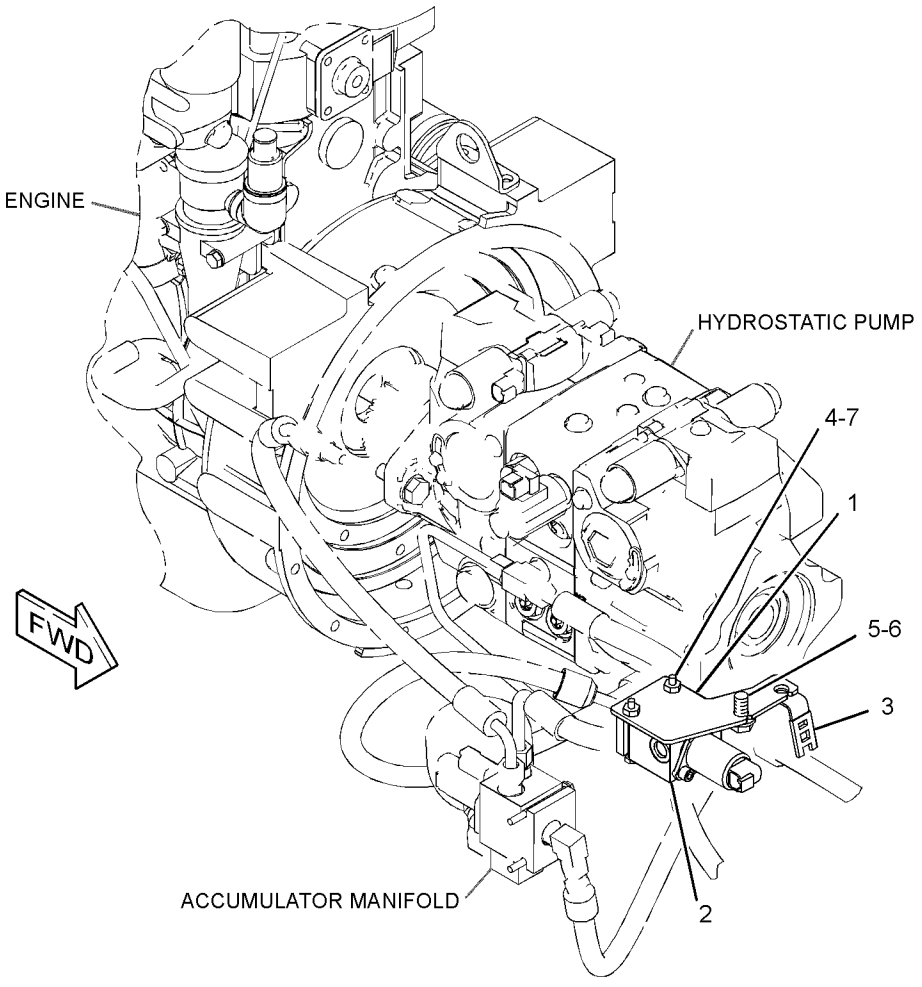

GRAPHIC #1 **<END>** g01341142

258-3468 MANIFOLD & MTG GP-CONTROL

S/N: JAY1-UP
PART OF 258-2428 HYDRAULIC AR
AN ATTACHMENT

SMCS-5264 **i02667634**

NOTE	REF NO	GRAPHIC REF	PART NUMBER	QTY	PART NAME 1 2 3 4 5 6 (PRODUCT LEVEL)	SEE PAGE
Y	1	1	**258-2801**	1	MANIFOLD & SOLENOID GP-CONTROL (WORK TOOL POSITIONER)	250
	2	1	**4P-8134**	1	CLIP	
M	3	1	**7X-2535**	2	BOLT (M6X1X60-MM)	
	4	1	**8T-4205**	1	WASHER-HARD (7.2X14.5X2-MM THK)	

M-METRIC PART
Y-SEPARATE ILLUSTRATION

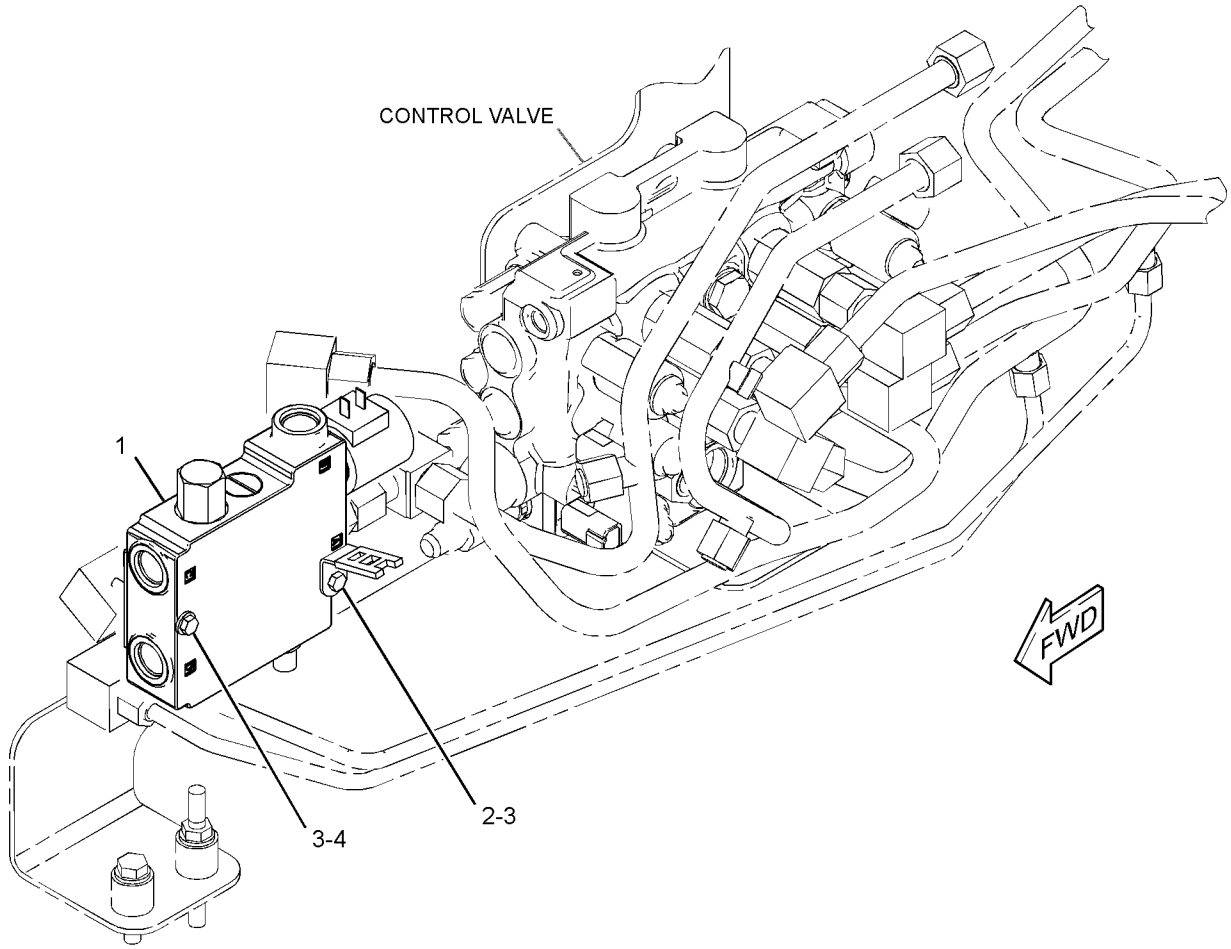

GRAPHIC #1 **<END>** g01328256

258-2801 MANIFOLD & SOLENOID GP-CONTROL

S/N: JAY1-UP

PART OF 258-3915 KIT-WORK TOOL POSITIONER, 258-3468 MANIFOLD & MTG GP-CONTROL

AN ATTACHMENT

SMCS-5264, 5479 **i02667626**

NOTE	REF NO	GRAPHIC REF	PART NUMBER	QTY	PART NAME 1 2 3 4 5 6 (PRODUCT LEVEL)	SEE PAGE
	1	1	**102-8804**	1	KIT-RECEPTACLE (4-PIN)	
					(INCLUDES RECEPTACLE AS & WEDGE)	
	2	1	**3E-3377**	1	WEDGE-RECEPTACLE LOCK (4-PIN)	
	3	1	**186-3735**	2	PIN-CONNECTOR (16-GA TO 18-GA)	
	4	1	**9G-3695**	2	PLUG (GROMMET SEALING)	
	5	1	**218-6858**	1	CARTRIDGE AS-VALVE	
	6	1	**218-6857**	1	COIL AS	
					AVAILABLE REPAIR KIT(S):	
			218-6856	1	KIT-SEAL (DIVERTER VALVE)	
					(INCLUDES O-RINGS, COVER & BACK-UP WASHER)	
			155-1279	1	KIT-SEAL (DIVERTER VALVE)	
					(INCLUDES SEAL-O-RINGS & RING-BACKUP)	

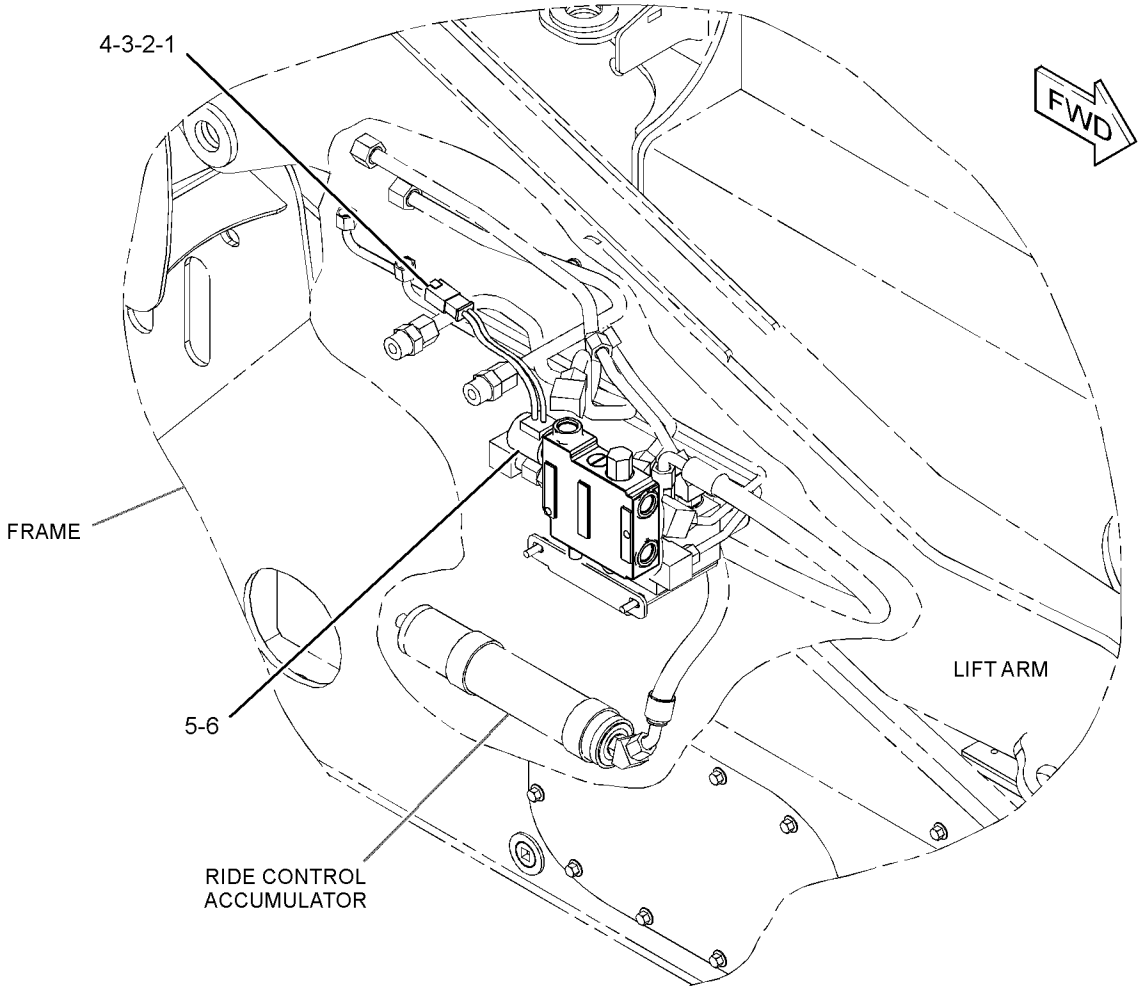

GRAPHIC #1 **<END>** g01341164

274-8563 MANIFOLD GP-CONTROL—PILOT SHUTOFF

S/N: JAY1-UP

PART OF 258-3462 MANF & SOLENOID MTG GP-ACCUM

SMCS-5117, 5264, 5479 **i02667716**

NOTE	REF NO	GRAPHIC REF	PART NUMBER	QTY	PART NAME 1 2 3 4 5 6 (PRODUCT LEVEL)	SEE PAGE
	1	1	**245-1181**	1	FLANGE	
J	2	1	**252-4734**	1	VALVE GP-SOLENOID (PILOT SHUTOFF)	
Y	3	1	**6E-4701**	1	VALVE GP-CHECK (PILOT)	269
M	4	1	**8T-1158**	1	BOLT-SOCKET HEAD (M8X1.25X20-MM)	
					AVAILABLE REPAIR KIT(S):	
J			**245-1912**	1	KIT-SEAL	
					(INCLUDES SEAL-O-RINGS)	

J-(KIT MARKED J AVAILABLE FOR PART MARKED J)
M-METRIC PART
Y-SEPARATE ILLUSTRATION

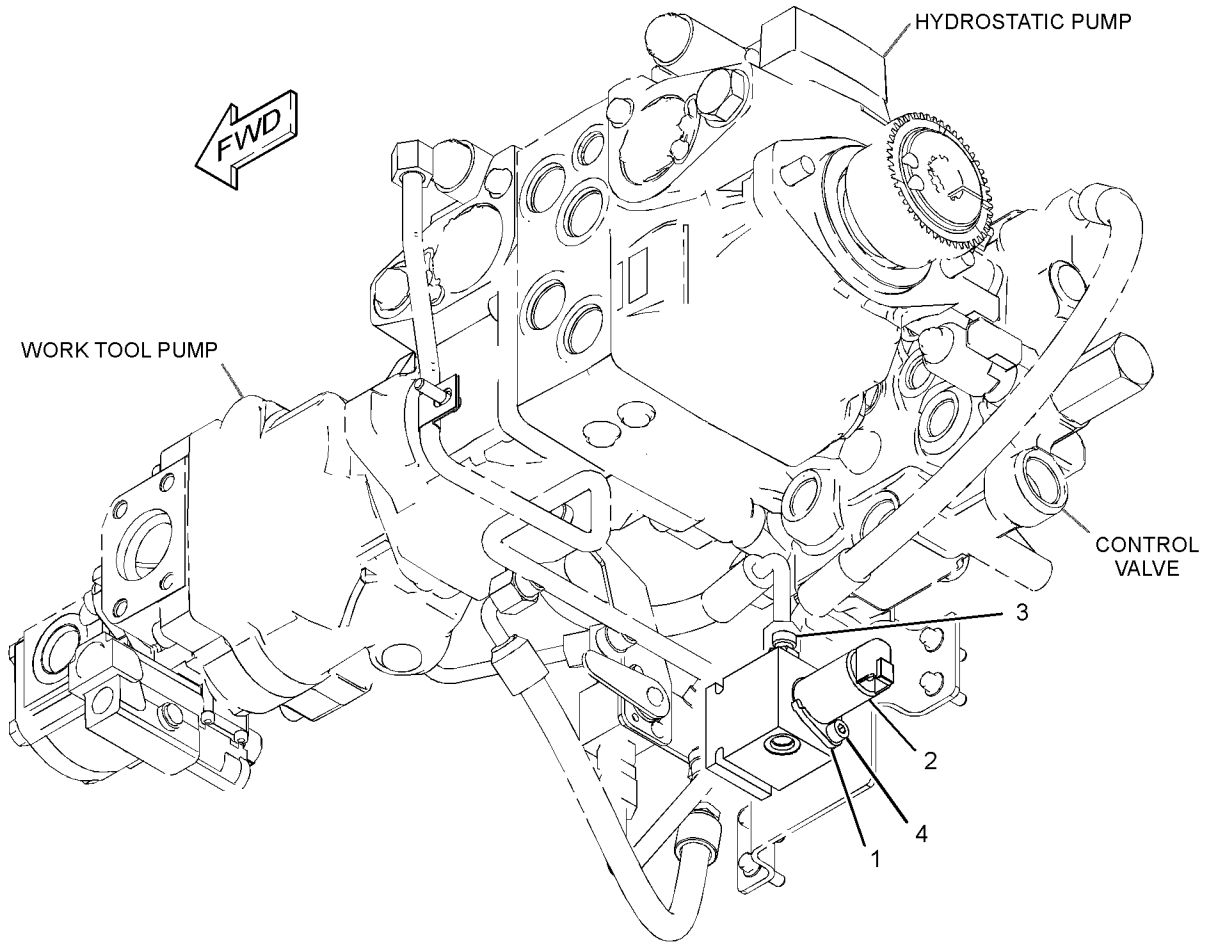

GRAPHIC #1 **<END>** g01341170

274-8564 MANIFOLD GP-CONTROL–MOTOR, 2-SPEED

S/N: JAY1-UP

PART OF 258-3463 MANIFOLD & MTG GP-CONTROL

AN ATTACHMENT

SMCS-5117, 5264, 5479 **i02633858**

NOTE	REF NO	GRAPHIC REF	PART NUMBER	QTY	PART NAME 1 2 3 4 5 6 (PRODUCT LEVEL)	SEE PAGE
	1	1	**245-1181**	1	FLANGE	
J	2	1	**252-4734**	1	VALVE GP-SOLENOID (MOTOR, 2-SPEED)	
M	3	1	**8T-1158**	1	BOLT-SOCKET HEAD (M8X1.25X20-MM)	
					AVAILABLE REPAIR KIT(S):	
J			**245-1912**	1	KIT-SEAL (SOLENOID VALVE)	
					(INCLUDES SEAL-O-RINGS)	

J-KIT MARKED J SERVICES PART MARKED J
M-METRIC PART

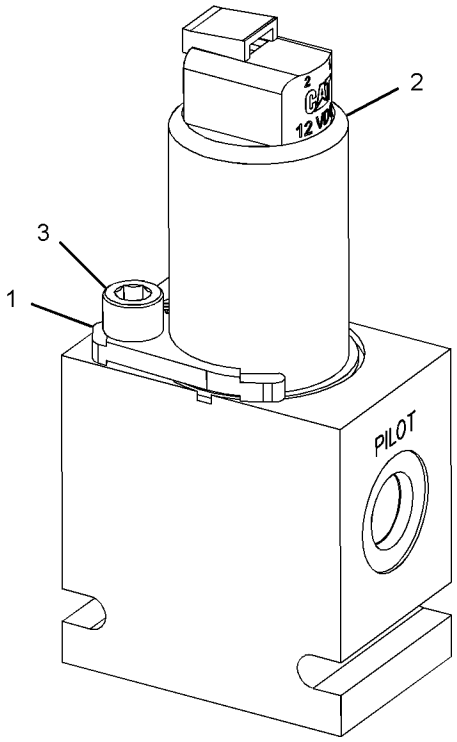

GRAPHIC #1 **<END>** g01322427

291-0010 MANIFOLD GP-CONTROL–QUICK COUPLER

S/N: JAY1-UP

PART OF 258-3910 KIT-QUICK COUPLER CONVERSION, 258-2424 LINES GP-COUPLER AN ATTACHMENT

SMCS-5117, 5264, 5479 **i02629794**

NOTE	REF NO	GRAPHIC REF	PART NUMBER	QTY	PART NAME 1 2 3 4 5 6 (PRODUCT LEVEL)	SEE PAGE
	1	1	**245-1911**	1	WIRE AS	
J	2	1	**274-8044**	1	VALVE GP-SOLENOID (QUICK COUPLER)	
		1	**274-8034**	2	COIL AS (12V)	
					AVAILABLE REPAIR KIT(S):	
J			**106-3108**	1	KIT-SEAL (QUICK COUPLER VALVE)	

J-KIT MARKED J SERVICES PART MARKED J

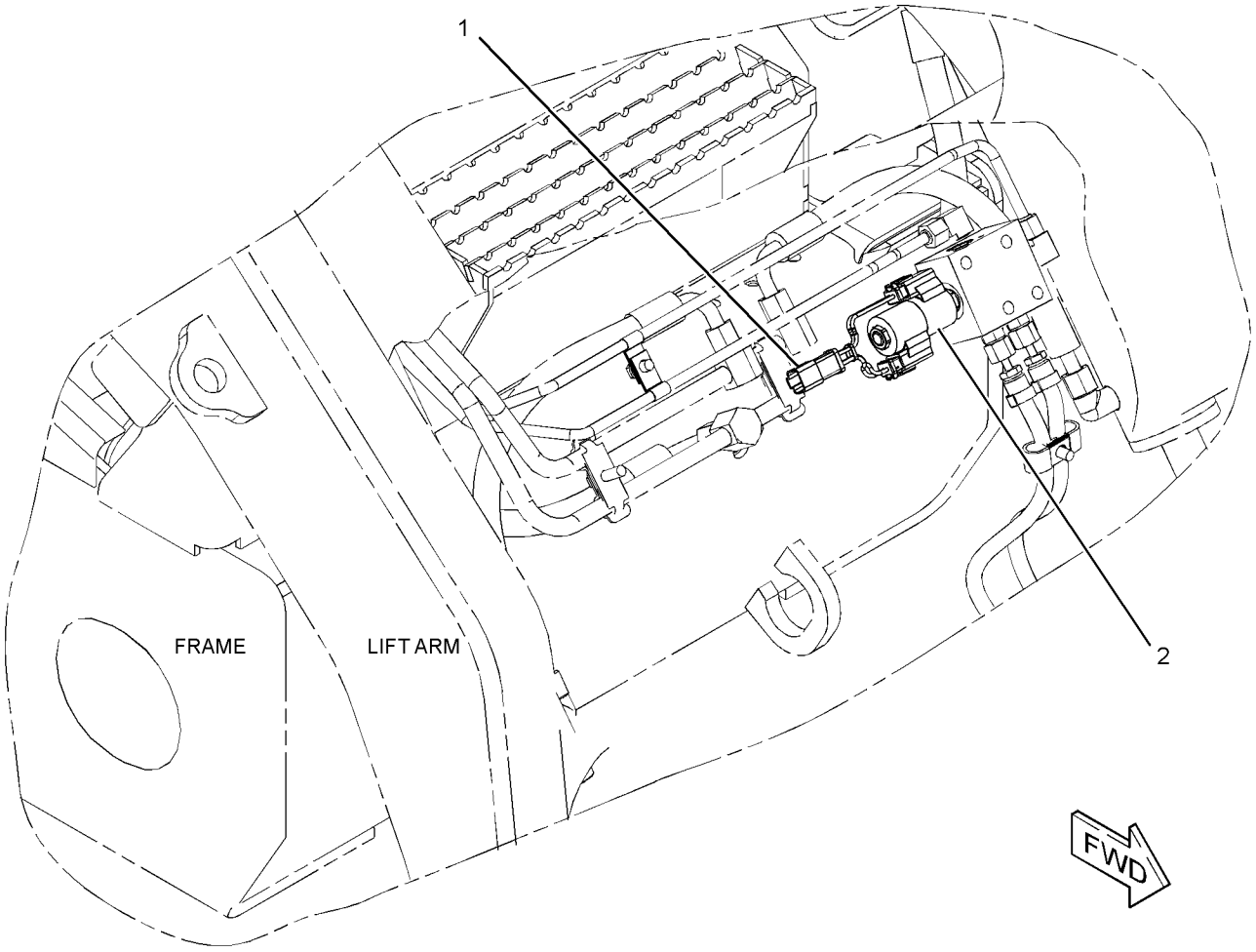

GRAPHIC #1 **<END>** g01322366

258-2579 MOTOR & MTG GP-HYDRAULIC FAN

S/N: JAY1-UP

PART OF 258-3818, 258-3819 CONVERSION AR-MACHINE, 258-3800, 258-3801 CONVERSION AR-ROADING

AN ATTACHMENT

SMCS-1386 **i02711956**

NOTE	REF NO	GRAPHIC REF	PART NUMBER	QTY	PART NAME 1 2 3 4 5 6 (PRODUCT LEVEL)	SEE PAGE
	1	1	**258-2577**	1	MOTOR GP-GEAR (FAN, DEMAND)	
	2	1	**277-8862**	1	VALVE GP-SOLENOID	
		1	**261-6728**	1	COIL AS	
	3	1	**8T-4121**	2	WASHER-HARD (11X21X2.5-MM THK)	
	4	1	**8T-4224**	1	WASHER-HARD (8.8X16X2-MM THK)	
M	5	1	**8T-7547**	1	BOLT (M8X1.25X30-MM)	
M	6	1	**9X-6032**	2	BOLT-SOCKET HEAD (M10X1.5X30-MM)	

M-METRIC PART

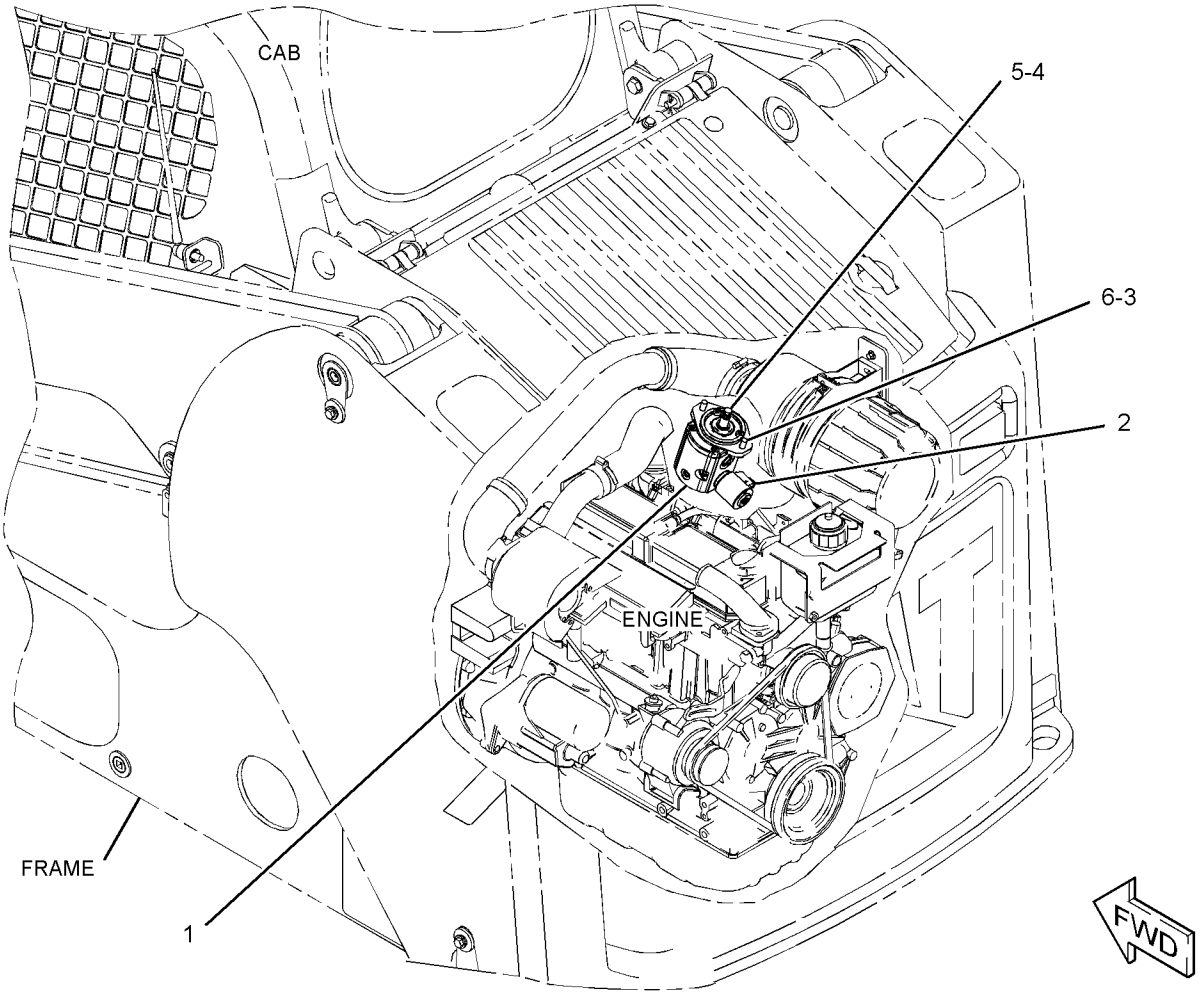

GRAPHIC #1 **<END>** g01315096

HYDRAULIC SYSTEM

154-5011 MOUNTING GP-CYLINDER

S/N: JAY1-UP

PART OF 279-5382, 279-5390, 279-5398, 279-5403, 293-0139 BUCKET AR-MULTIPURPOSE AN ATTACHMENT

SMCS-5498 **i01066088**

NOTE	REF NO	GRAPHIC REF	PART NUMBER	QTY	PART NAME 1 2 3 4 5 6 (PRODUCT LEVEL)	SEE PAGE
	1	1	**154-5012**	2	PIN	
	2	1	**154-5013**	2	PIN	
	3	1	**3B-8489**	2	FITTING-GREASE	
M	4	1	**6V-9189**	4	LOCKNUT (M8X1.25-THD)	
M	5	1	**8T-6869**	4	BOLT (M8X1.25X60-MM)	

M-METRIC PART

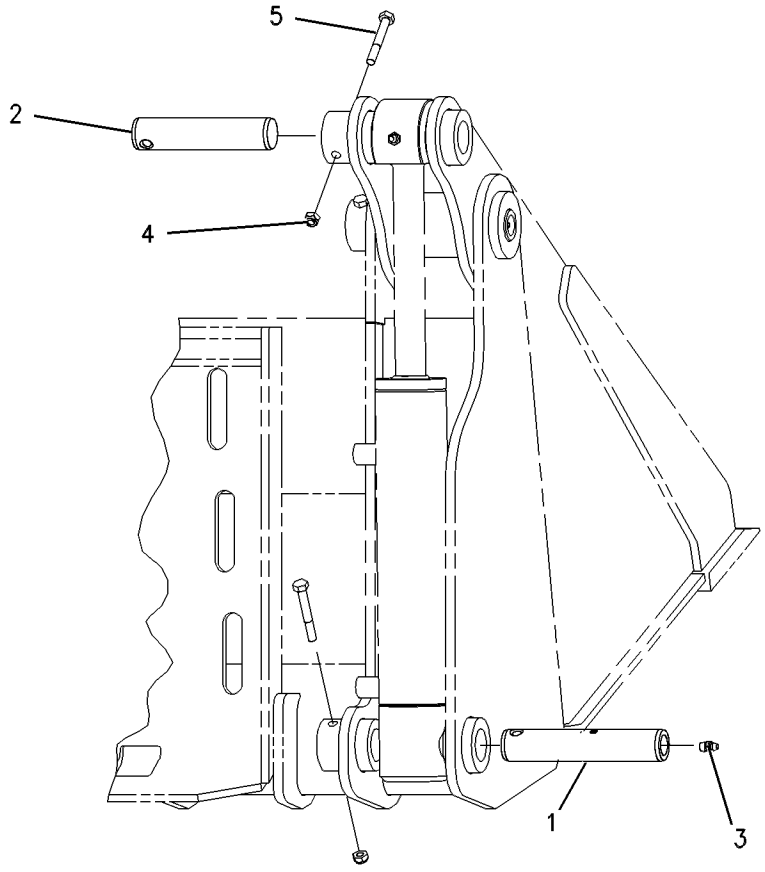

GRAPHIC #1 **<END>** g00560356

HYDRAULIC SYSTEM

156-0891 MOUNTING GP-CYLINDER

S/N: JAY1-UP
INDUSTRIAL
PART OF 279-5350, 279-5360 FORK AR-GRAPPLE
AN ATTACHMENT

SMCS-5498 **i02578037**

NOTE	REF NO	GRAPHIC REF	PART NUMBER	QTY	PART NAME 1 2 3 4 5 6 (PRODUCT LEVEL)	SEE PAGE
	1	1	**255-8058**	2	PLATE	
	2	1	**156-0913**	1	PLATE	
	3	1	**157-0941**	2	PIN	
	4	1	**157-0942**	2	PIN	
	5	1	**159-8035**	2	FILM-WARNING (CRUSH HAZARD, STAY BACK)	
	6	1	**3B-8489**	2	FITTING-GREASE	
	7	1	**4M-5285**	4	RING-RETAINING (EXTERNAL)	
M	8	1	**6V-9189**	2	LOCKNUT (M8X1.25-THD)	
M	9	1	**8T-4138**	3	BOLT (M6X1X20-MM)	
M	10	1	**8T-6869**	2	BOLT (M8X1.25X60-MM)	
	11	1	**9X-2026**	3	WASHER (6.5X17X1-MM THK)	
	12	1	**9X-6274**	4	WASHER (32.5X50X1.6-MM THK)	

M-METRIC PART

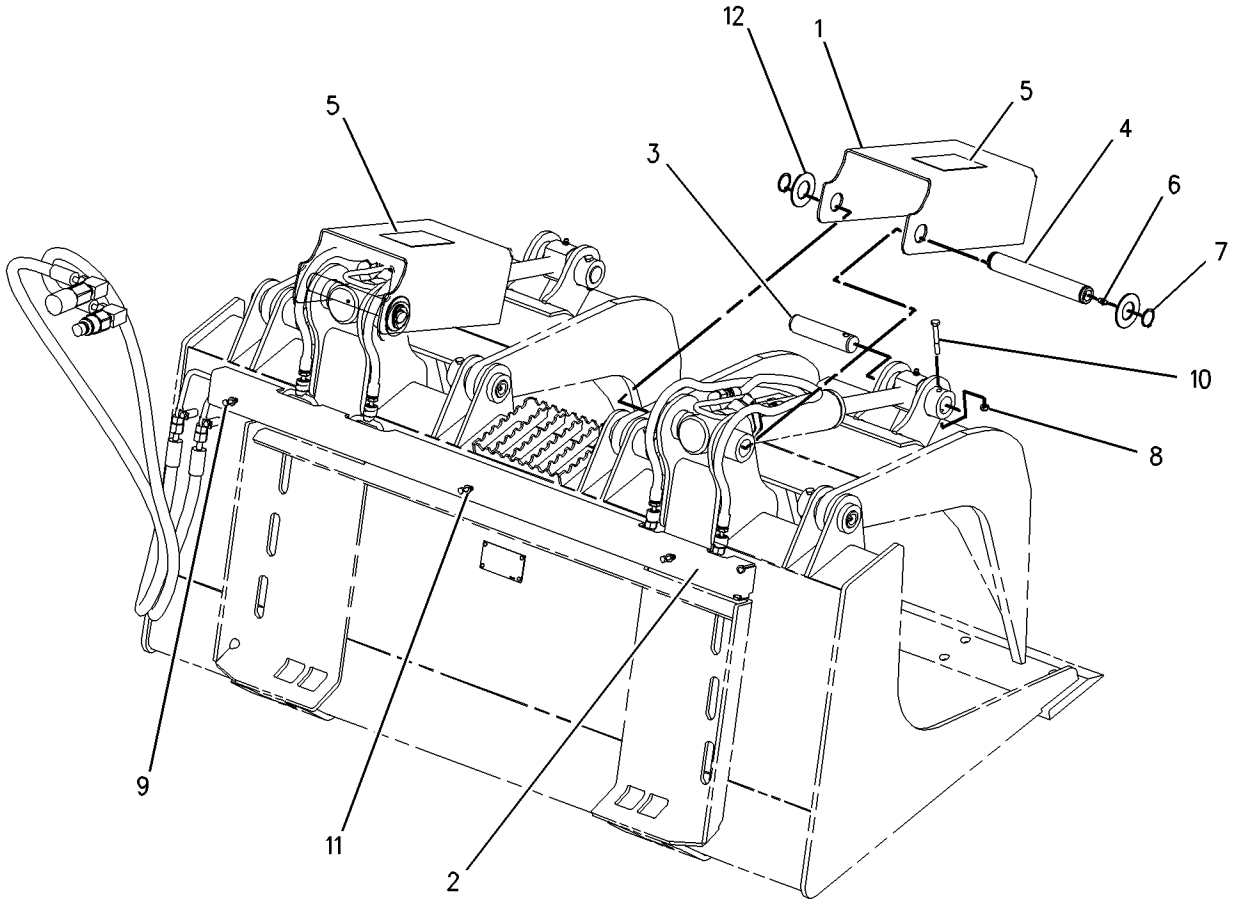

GRAPHIC #1 **<END>** g00777681

165-8731 MOUNTING GP-CYLINDER

S/N: JAY1-UP
UTILITY
PART OF 285-6116 GRAPPLE GP-UTILITY
AN ATTACHMENT

SMCS-5498 **i02017132**

NOTE	REF NO	GRAPHIC REF	PART NUMBER	QTY	PART NAME 1 2 3 4 5 6 (PRODUCT LEVEL)	SEE PAGE
	1	1	**154-5013**	2	PIN	
M	2	1	**6V-9189**	2	LOCKNUT (M8X1.25-THD)	
M	3	1	**8T-6869**	2	BOLT (M8X1.25X60-MM)	

M-METRIC PART

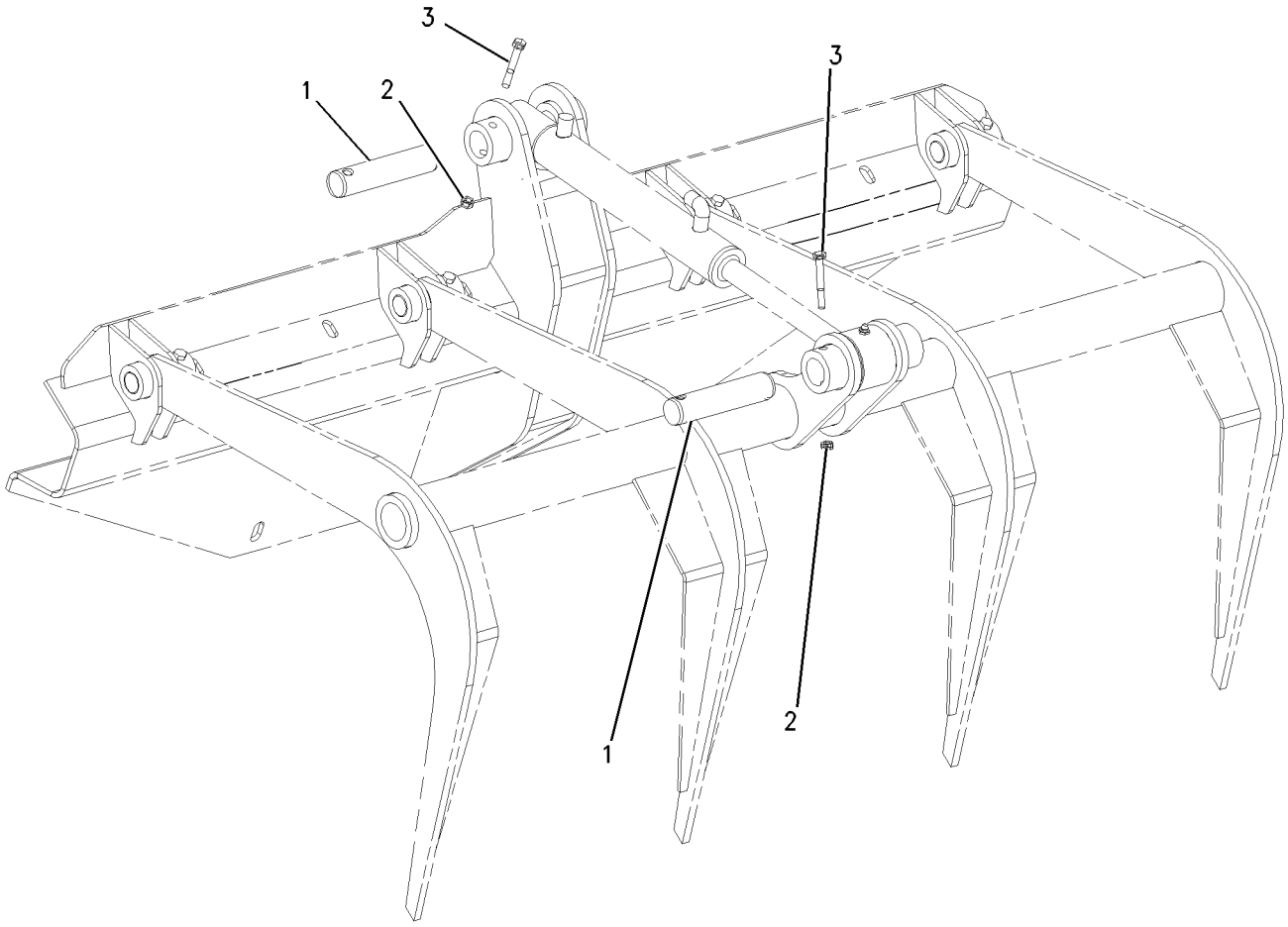

GRAPHIC #1 **<END>** g00652937

HYDRAULIC SYSTEM

258-3402 PUMP & MTG GP-GEAR

S/N: JAY1-UP
PART OF 258-3730 HYDRAULIC AR
AN ATTACHMENT

SMCS-5073 **i02636756**

NOTE	REF NO	GRAPHIC REF	PART NUMBER	QTY	PART NAME 1 2 3 4 5 6 (PRODUCT LEVEL)	SEE PAGE
J	1	1	**258-3260**	1	PUMP GP-GEAR	
	2	1	**8T-4223**	2	WASHER-HARD (13.5X25.5X3-MM THK)	
M	3	1	**8T-4956**	2	BOLT (M12X1.75X35-MM)	
	4	1	**8T-5049**	1	SEAL-O-RING	
					AVAILABLE REPAIR KIT(S):	
J			**278-8714**	1	KIT-SEAL (GEAR PUMP)	
					(INCLUDES SNAP RING & SEALS)	

J-KITS MARKED J AVAILABLE FOR PART MARKED J
M-METRIC PART

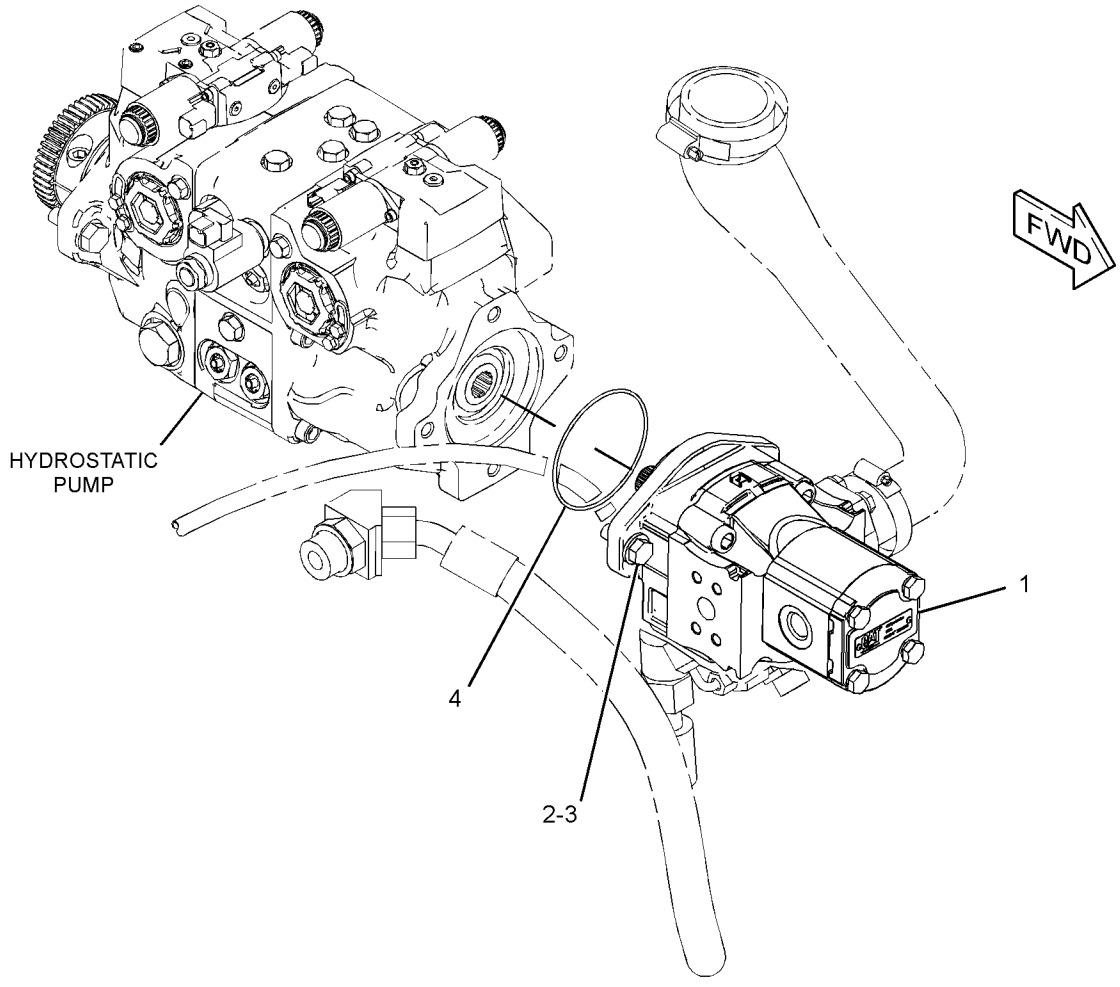

GRAPHIC #1 **<END>** g01326166

HYDRAULIC SYSTEM

258-2556 PUMP & MTG GP-WORK TOOL

S/N: JAY1-UP
PART OF 258-3180 HYDRAULIC AR
AN ATTACHMENT

SMCS-6700 **i02637863**

NOTE	REF NO	GRAPHIC REF	PART NUMBER	QTY	PART NAME 1 2 3 4 5 6 (PRODUCT LEVEL)	SEE PAGE
J	1	1	**258-2553**	1	PUMP GP-GEAR	
	2	1	**8T-4223**	2	WASHER-HARD (13.5X25.5X3-MM THK)	
M	3	1	**8T-4956**	2	BOLT (M12X1.75X35-MM)	
	4	1	**8T-5049**	1	SEAL-O-RING	
					AVAILABLE REPAIR KIT(S):	
J			**278-8714**	1	KIT-SEAL (GEAR PUMP)	
					(INCLUDES SEALS, SNAP RING & RINGS)	

J-KIT MARKED J SERVICES PART MARKED J
M-METRIC PART

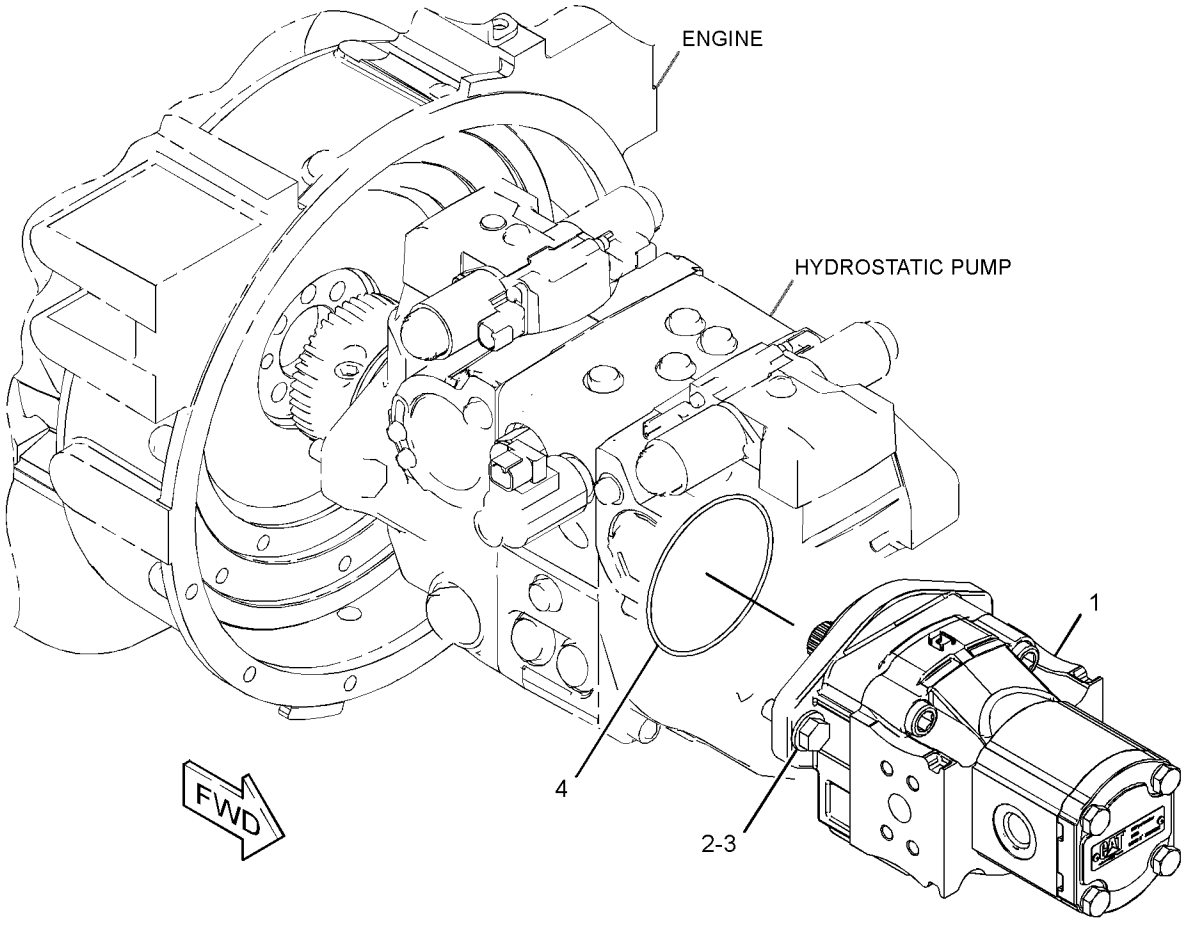

GRAPHIC #1 **<END>** g01328229

258-2557 PUMP & MTG GP-WORK TOOL

S/N: JAY1-UP
PART OF 258-3182 HYDRAULIC AR
AN ATTACHMENT

SMCS-6700 **i02614196**

NOTE	REF NO	GRAPHIC REF	PART NUMBER	QTY	PART NAME 1 2 3 4 5 6 (PRODUCT LEVEL)	SEE PAGE
Y	1	1	**258-2554**	1	PUMP GP-PISTON (WORK TOOL HYDRAULIC)	261
	2	1	**258-2555**	1	PUMP GP-GEAR (WORK TOOL HYDRAULIC)	
M	3	1	**101-7404**	2	BOLT-SOCKET HEAD (M10X1.5X30-MM)	
	4	1	**5P-3863**	1	SEAL-O-RING	
	5	1	**8T-4121**	2	WASHER-HARD (11X21X2.5-MM THK)	
	6	1	**8T-4223**	2	WASHER-HARD (13.5X25.5X3-MM THK)	
M	7	1	**8T-4956**	2	BOLT (M12X1.75X35-MM)	
	8	1	**8T-5049**	1	SEAL-O-RING	

M-METRIC PART
Y-SEPARATE ILLUSTRATION

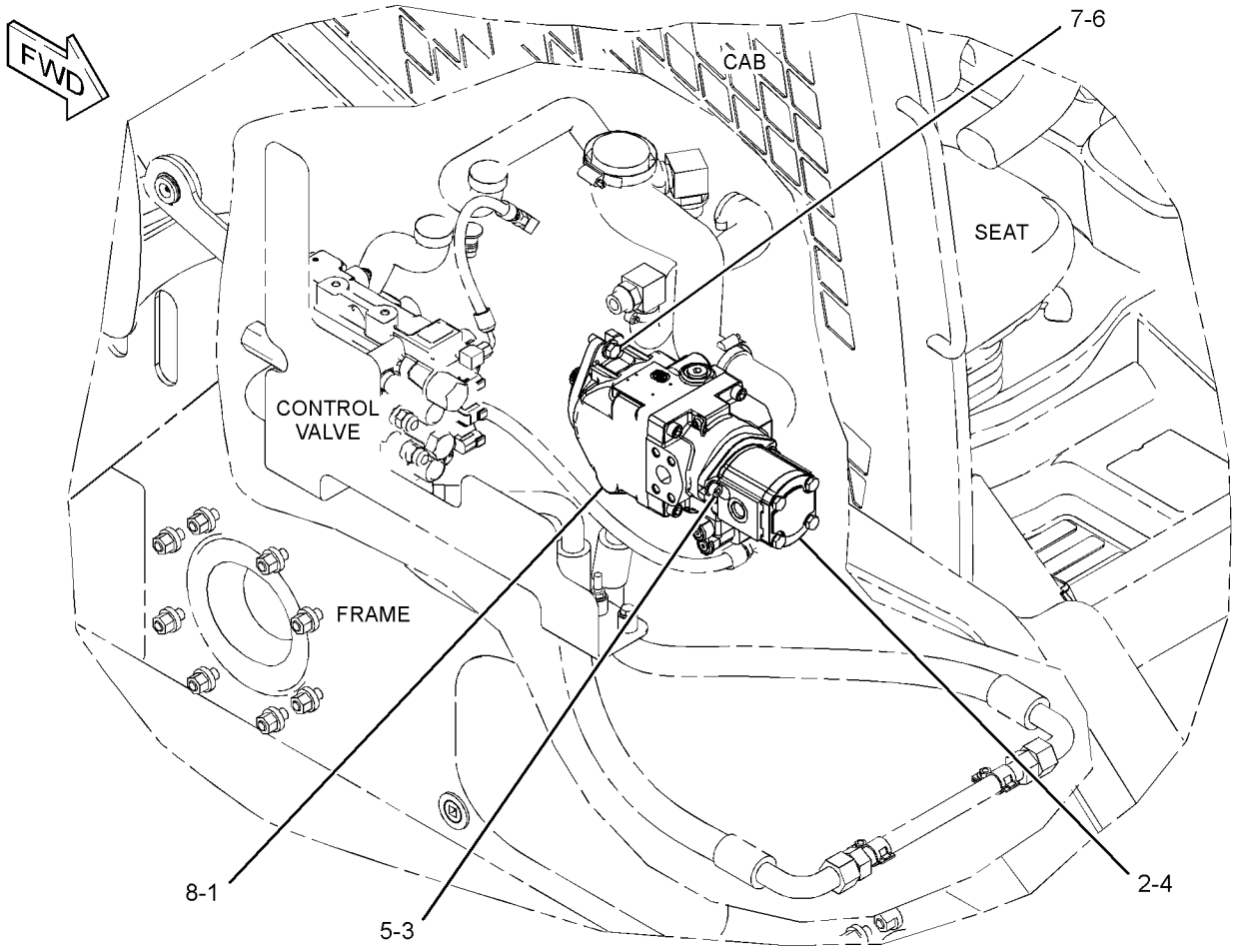

GRAPHIC #1 **<END>** g01314720

258-2554 PUMP GP-PISTON–HIGH FLOW

S/N: JAY1-UP

PART OF 258-2557 PUMP & MTG GP-WORK TOOL, 258-3401 PUMP GP-PISTON & GEAR AN ATTACHMENT

SMCS-5070 **i02614218**

NOTE	REF NO	GRAPHIC REF	PART NUMBER	QTY	PART NAME 1 2 3 4 5 6 (PRODUCT LEVEL)	SEE PAGE
	1	1	**232-3587**	1	KIT-BEARING (PISTON PUMP)	
	2	1	**232-3586**	1	KIT-BEARING (PISTON PUMP)	
					(EACH BEARING KIT INCLUDES TAPERED ROLLER BEARING)	
	3	1	**260-3146**	1	SWASHPLATE	
	4	1	**260-3149**	1	KIT-CYLINDER (PISTON PUMP)	
					(KIT INCLUDES PISTON AS, RETAINER, GUIDE, PINS, BLOCK, SPRING SEATS, SPRING & RING)	
	5	1	**260-3147**	1	PLATE	
	6	1	**260-3145**	1	KIT-SWASHPLATE (PISTON PUMP)	
					(KIT INCLUDES PINS & BEARINGS)	
J	7	1	**278-8718**	1	VALVE GP-PUMP CONTROL	
	8	1	**278-8719**	1	SHAFT-DRIVE	
	9	1	**6J-7855**	1	RING-LOCK	
	10	1	*216-9063*	2	PLUG AS	
					(EACH INCLUDES)	
J		1	**216-8996**	1	SEAL-O-RING	
		1	**216-9062**	1	PLUG	
M	11	1	**113-2004**	4	BOLT-SOCKET HEAD (M12X1.75X45-MM)	
	12	1	**278-8722**	1	ADAPTER	
					AVAILABLE REPAIR KIT(S):	
J			**260-3150**	1	KIT-SEAL (PISTON PUMP)	
					(KIT INCLUDES O-RINGS, SEALS, CAP & PISTON RINGS)	

J-KIT MARKED J SERVICES PARTS MARKED J
M-METRIC PART

258-2554 PUMP GP-PISTON *(contd.)* **i02614218**

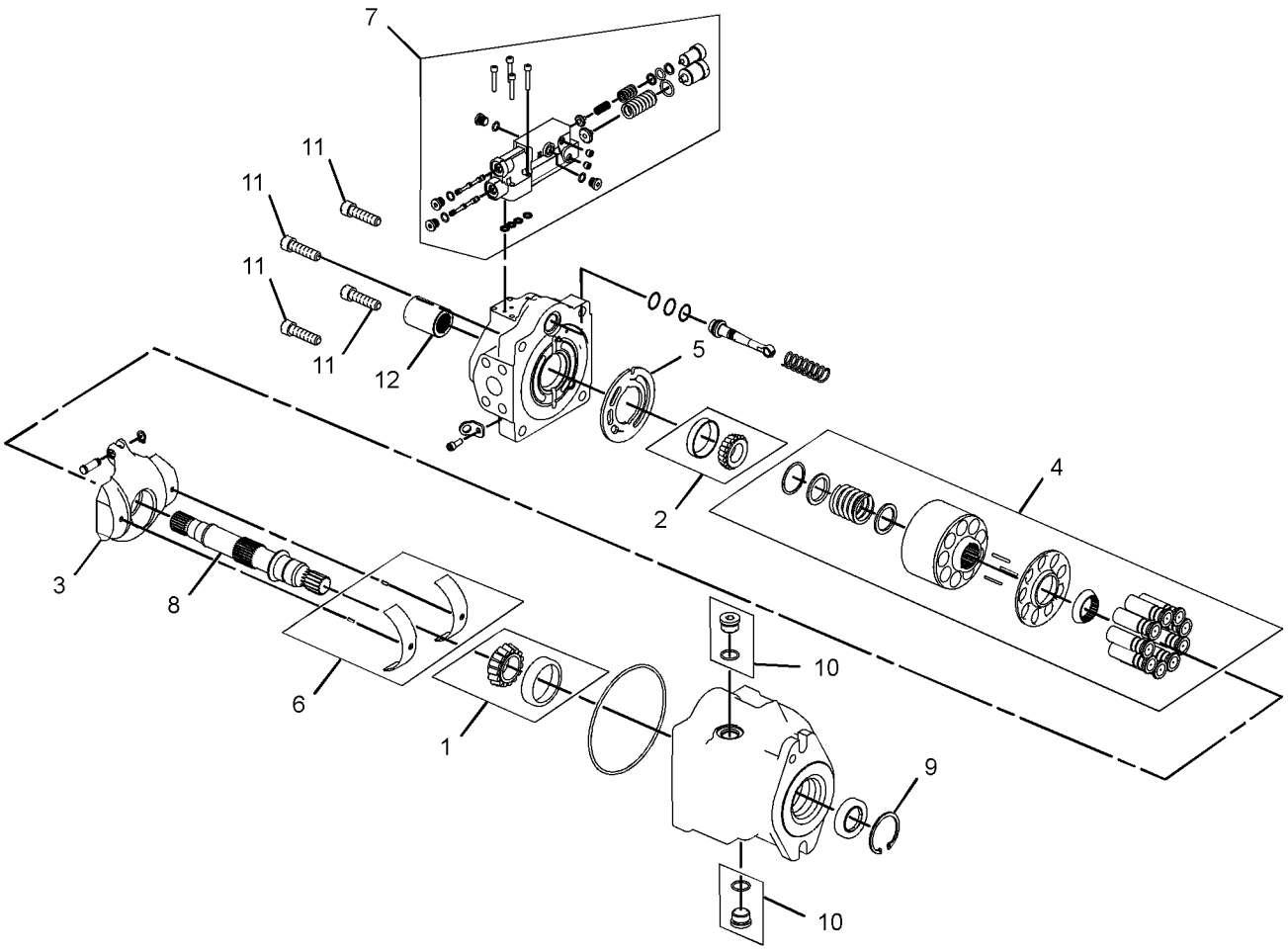

GRAPHIC #1 **<END>** g01311670

HYDRAULIC SYSTEM

258-3401 PUMP GP-PISTON & GEAR

S/N: JAY1-UP
PART OF 258-3733, 261-6264 HYDRAULIC AR
AN ATTACHMENT

SMCS-3203, 5070, 5073 **i02636754**

NOTE	REF NO	GRAPHIC REF	PART NUMBER	QTY	PART NAME 1 2 3 4 5 6 (PRODUCT LEVEL)	SEE PAGE
Y	1	1	**258-2554**	1	PUMP GP-PISTON	261
J	2	1	**258-3261**	1	PUMP GP-GEAR	
M	3	1	**101-7404**	2	BOLT-SOCKET HEAD (M10X1.5X30-MM)	
	4	1	**5P-3863**	1	SEAL-O-RING	
	5	1	**8T-4121**	2	WASHER-HARD (11X21X2.5-MM THK)	
	6	1	**8T-4223**	2	WASHER-HARD (13.5X25.5X3-MM THK)	
M	7	1	**8T-4956**	2	BOLT (M12X1.75X35-MM)	
	8	1	**8T-5049**	1	SEAL-O-RING	
					AVAILABLE REPAIR KIT(S):	
J			**278-8715**	1	KIT-SEAL	
					(INCLUDES SEALS & RINGS)	

J-KIT MARKED J AVAILABLE FOR PART MARKED J
M-METRIC PART
Y-SEPARATE ILLUSTRATION

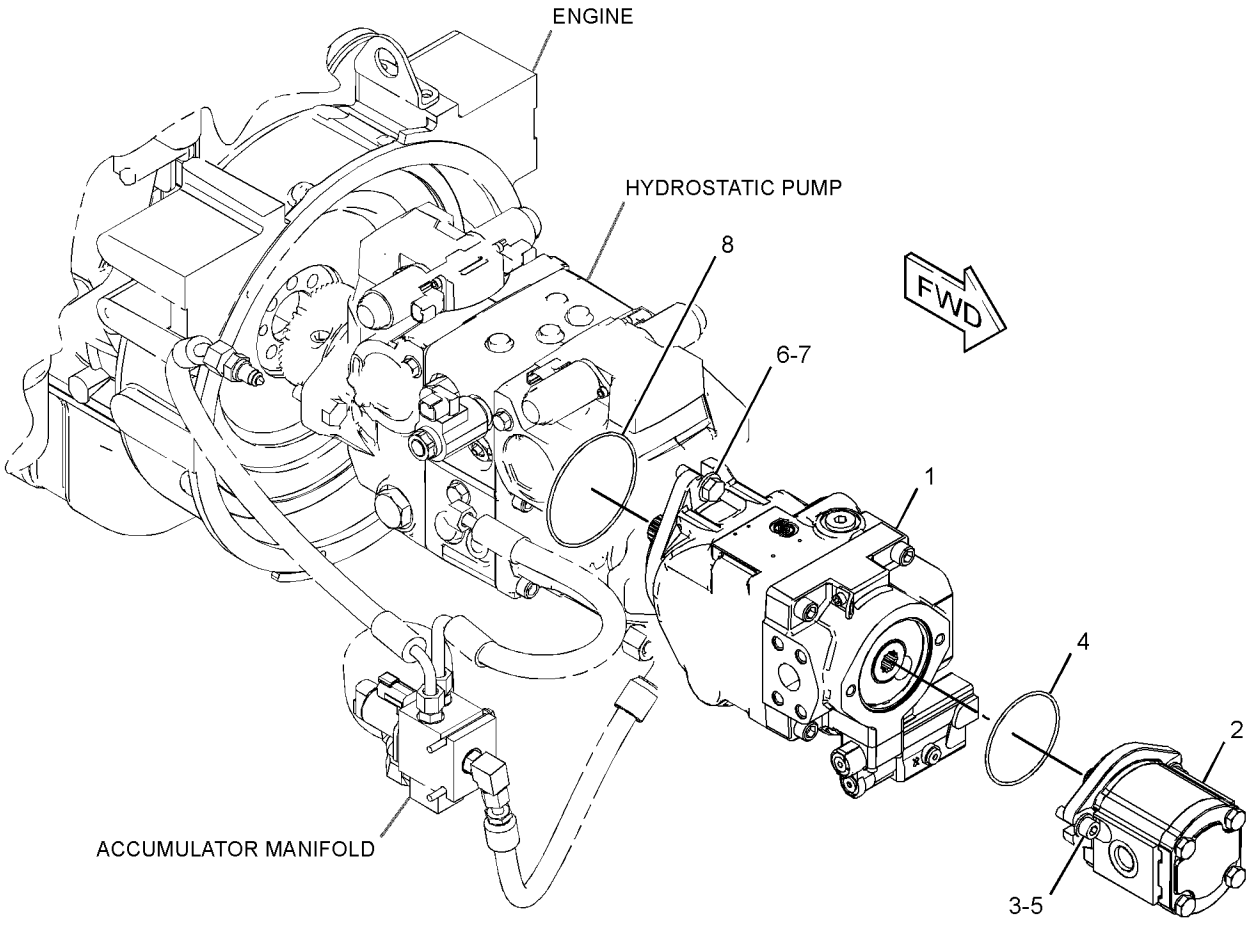

GRAPHIC #1 **<END>** g01327061

HYDRAULIC SYSTEM

258-2434 TANK & MTG GP-HYDRAULIC

S/N: JAY1-UP

PART OF 258-2600 HYDRAULIC AR

SMCS-5056 **i02667709**

NOTE	REF NO	GRAPHIC REF	PART NUMBER	QTY	PART NAME 1 2 3 4 5 6 (PRODUCT LEVEL)	SEE PAGE
Y	1	1	*258-2435*	1	TANK GP-HYDRAULIC	265
	2	1	**258-2947**	1	BRACKET	
	3	1	**258-2949**	1	BRACKET AS	
	4	1	**258-2981**	1	BRACKET AS	
	5	1	**258-2982**	1	BRACKET	
	6	1	**258-2991**	1	BRACKET AS	
	7	1	**258-2992**	1	BRACKET	
	8	1	**5P-4116**	4	WASHER-HARD (8.8X20.5X2-MM THK)	
	9	1	**7X-7729**	2	WASHER (11X25X3-MM THK)	
	10	1	**8T-4121**	6	WASHER-HARD (11X21X2.5-MM THK)	
M	11	1	**8T-4133**	2	NUT (M10X1.5-THD)	
M	12	1	**8T-4196**	6	BOLT (M10X1.5X35-MM)	
M	13	1	**8T-4908**	4	BOLT (M8X1.25X25-MM)	

M-METRIC PART
Y-SEPARATE ILLUSTRATION

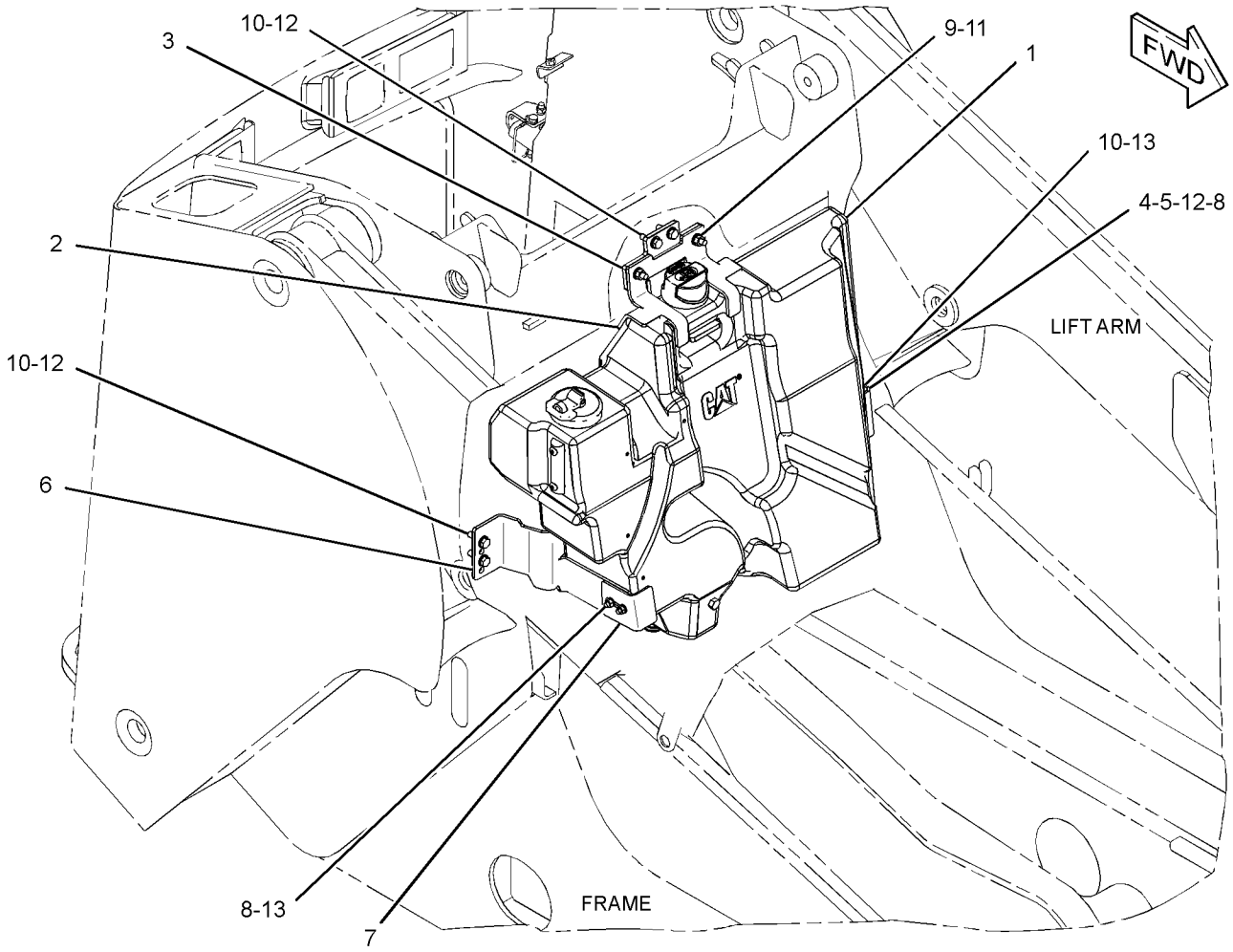

GRAPHIC #1 **<END>** g01340814

258-2435 TANK GP-HYDRAULIC

S/N: JAY1-UP

PART OF 258-2434 TANK & MTG GP-HYDRAULIC

SMCS-5056 **i02655613**

NOTE	REF NO	GRAPHIC REF	PART NUMBER	QTY	PART NAME 1 2 3 4 5 6 (PRODUCT LEVEL)	SEE PAGE
	1	1	**142-8937**	1	CAP AS-FILLER (HYDRAULIC TANK)	
Y	2	1	**258-2806**	1	TANK GP-HYDRAULIC	266
	3	1	**258-2829**	1	BREATHER (HYDRAULIC TANK)	
	4	1	**264-4297**	1	SENSOR GP-TEMPERATURE (HYDRAULIC OIL)	
		1	**137-6645**	1	PAD	
	5	1	**3K-0360**	1	SEAL-O-RING	

Y-SEPARATE ILLUSTRATION

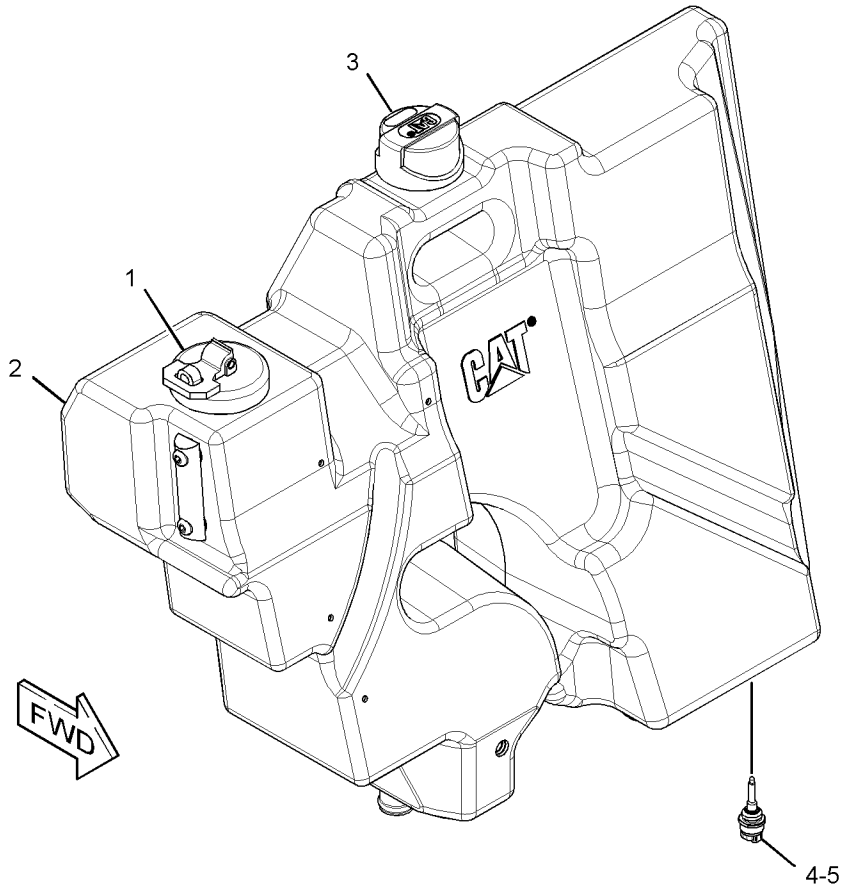

GRAPHIC #1 **<END>** g01335539

HYDRAULIC SYSTEM

258-2806 TANK GP-HYDRAULIC

S/N: JAY1-UP

PART OF 258-2435 TANK GP-HYDRAULIC

SMCS-5056 **i02712995**

NOTE	REF NO	GRAPHIC REF	PART NUMBER	QTY	PART NAME 1 2 3 4 5 6 (PRODUCT LEVEL)	SEE PAGE
	1	1	**258-2804**	1	STRAINER AS (HYDRAULIC TANK)	
	2	1	**267-8390**	1	GAUGE GP-SIGHT (HYDRAULIC TANK)	
		1	**7W-3983**	2	RING-RETAINING	
		1	**8F-3469**	2	SEAL-O-RING	
					PARTS SHOWN IN GRAPHIC(S) WITHOUT A REFERENCE NUMBER ARE NOT SERVICED SEPARATELY	

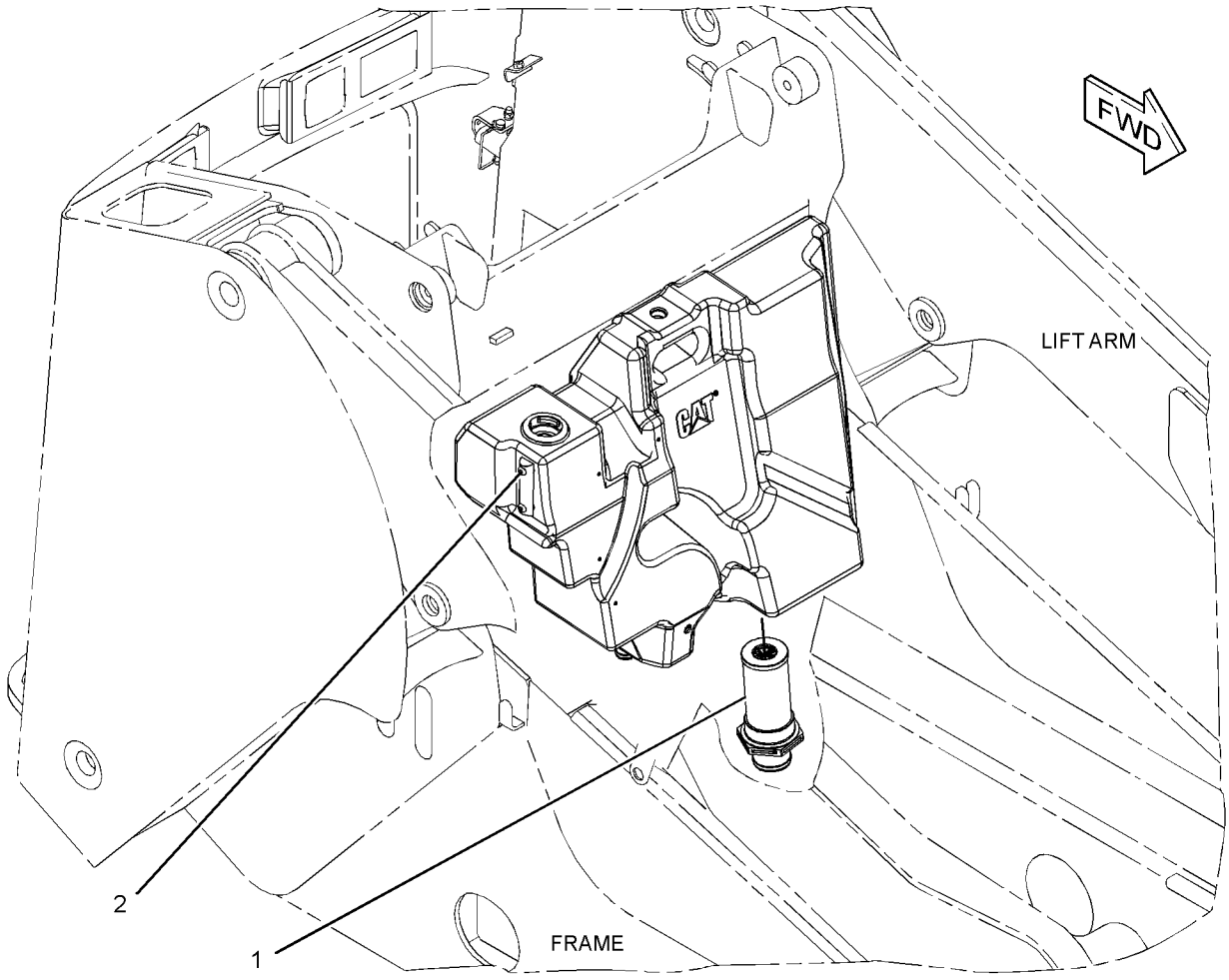

GRAPHIC #1 **<END>** g01330021

258-2502 VALVE & MTG GP-CONTROL

S/N: JAY1-UP
PART OF 258-3180, 258-3730 HYDRAULIC AR
AN ATTACHMENT

SMCS-5051 **i02659361**

NOTE	REF NO	GRAPHIC REF	PART NUMBER	QTY	PART NAME 1 2 3 4 5 6 (PRODUCT LEVEL)	SEE PAGE
Y	1	1	**258-2506**	1	VALVE GP-CONTROL	270
	2	1	**258-2569**	1	BRACKET AS	
	3	1	**8T-4121**	3	WASHER-HARD (11X21X2.5-MM THK)	
M	4	1	**8T-4136**	3	BOLT (M10X1.5X25-MM)	
M	5	1	**8T-4185**	2	BOLT (M10X1.5X50-MM)	
	6	1	**234-9525**	1	STUD	
	7	1	**112-9252**	2	SPACER (13X25X22.14-MM THK)	
	8	1	**8T-7934**	3	WASHER-HARD (11X21X5-MM THK)	

M-METRIC PART
Y-SEPARATE ILLUSTRATION

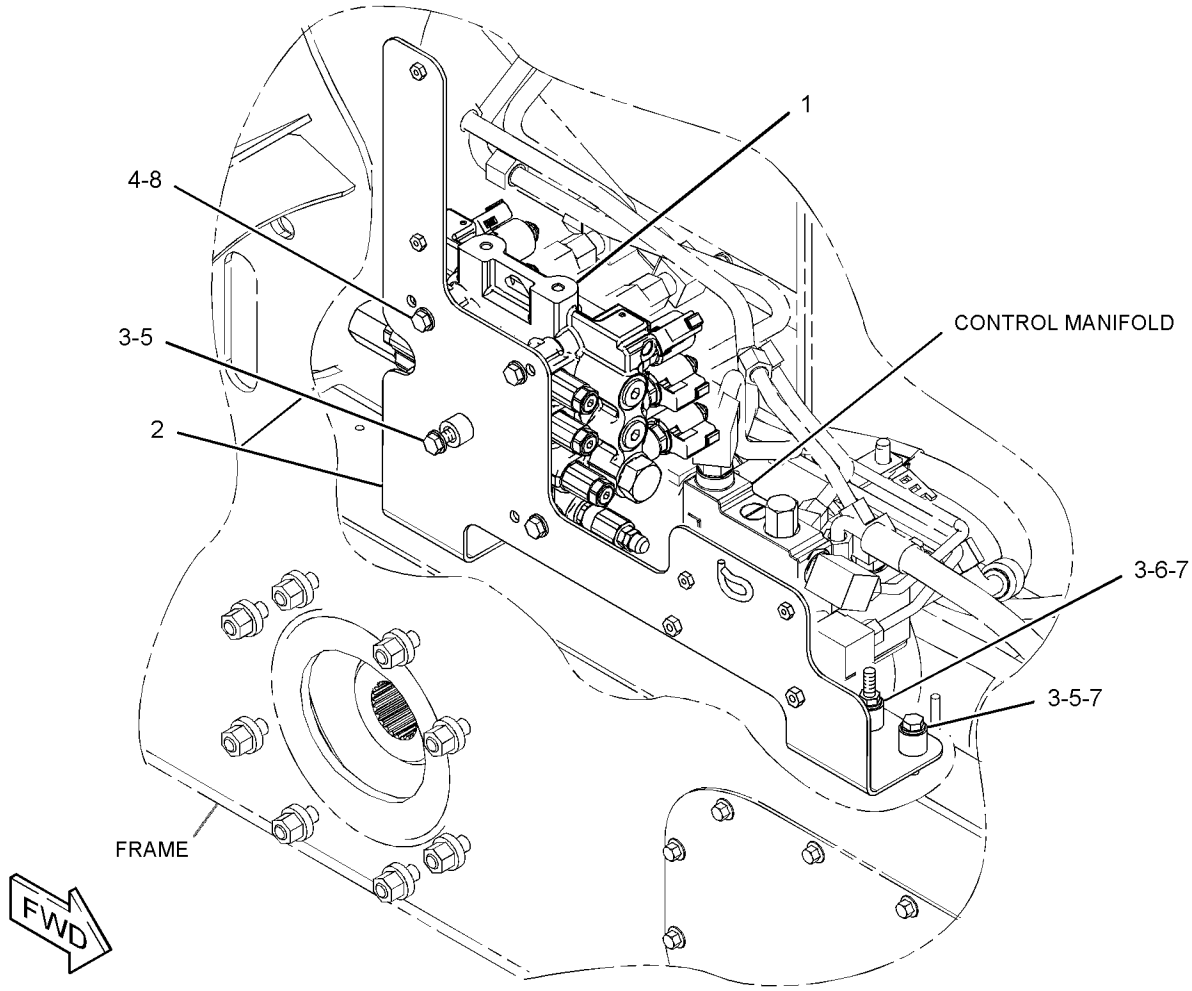

GRAPHIC #1 **<END>** g01336995

258-2503 VALVE & MTG GP-CONTROL

S/N: JAY1-UP

PART OF 258-3182, 258-3733, 261-6264 HYDRAULIC AR

AN ATTACHMENT

SMCS-5051 **i02659368**

NOTE	REF NO	GRAPHIC REF	PART NUMBER	QTY	PART NAME 1 2 3 4 5 6 (PRODUCT LEVEL)	SEE PAGE
	1	1	**112-9252**	2	SPACER (13X25X22.14-MM THK)	
Y	2	1	**258-2507**	1	VALVE GP-CONTROL (HIGH FLOW)	272
	3	1	**258-2569**	1	BRACKET AS	
	4	1	**234-9525**	1	STUD (BOLT)	
	5	1	**8T-4121**	3	WASHER-HARD (11X21X2.5-MM THK)	
M	6	1	**8T-4136**	3	BOLT (M10X1.5X25-MM)	
M	7	1	**8T-4185**	2	BOLT (M10X1.5X50-MM)	
	8	1	**8T-7934**	3	WASHER-HARD (11X21X5-MM THK)	

M-METRIC PART
Y-SEPARATE ILLUSTRATION

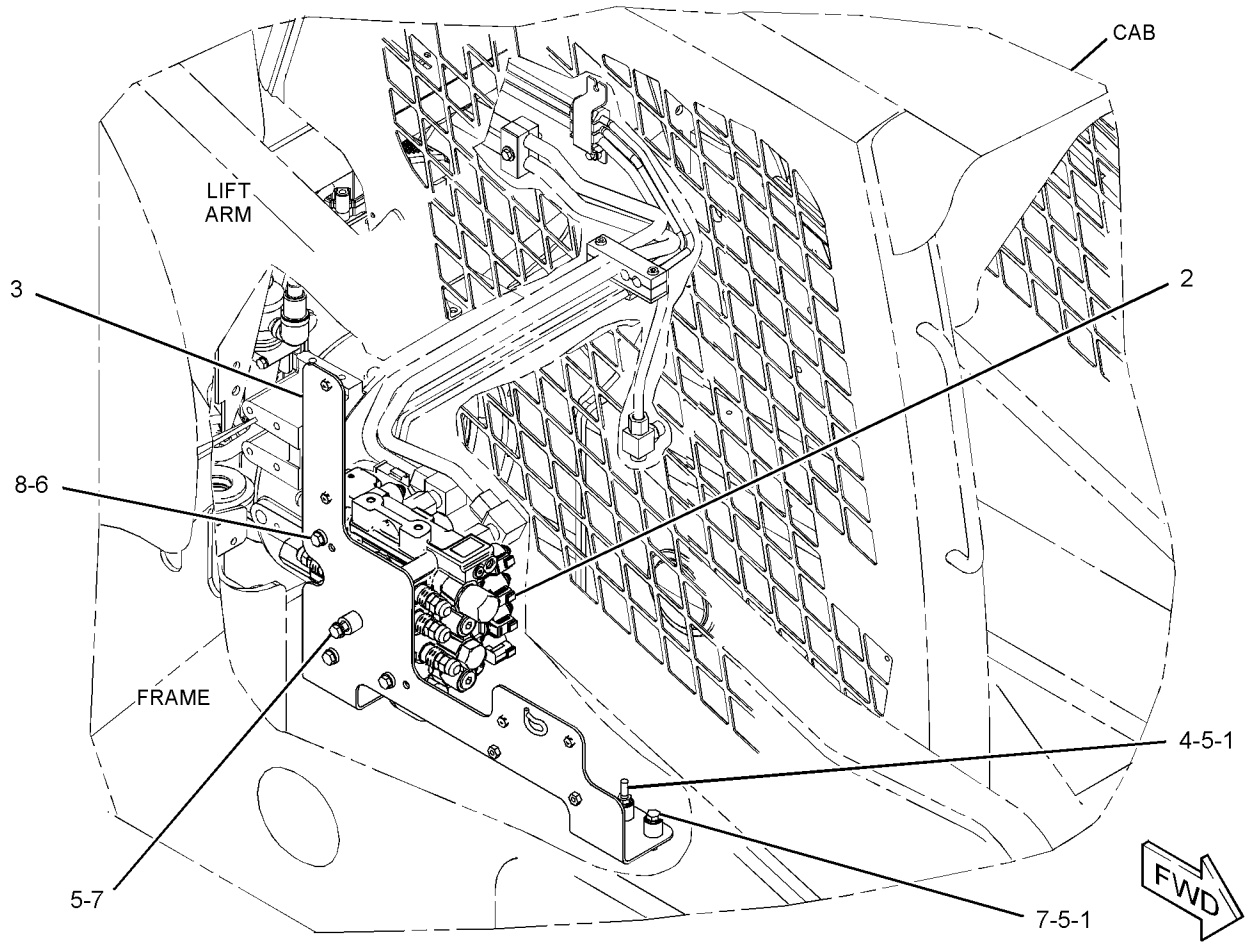

GRAPHIC #1 **<END>** g01337533

6E-4701 VALVE GP-CHECK

S/N: JAY1-UP

PART OF 274-8563 MANIFOLD GP-CONTROL

SMCS-5067 **i00707119**

NOTE	PART NUMBER	QTY	PART NAME 1 2 3 4 5 6 (PRODUCT LEVEL)	SEE PAGE
	6E-4721	1	VALVE GP-CHECK	
			—OR—	
	6E-4722	1	VALVE GP-CHECK	
			—OR—	
	6E-4723	1	VALVE GP-CHECK	
			—OR—	
	6E-4726	1	VALVE GP-CHECK	

<END>

HYDRAULIC SYSTEM

258-2506 VALVE GP-CONTROL

S/N: JAY1-UP

PART OF 258-2502 VALVE & MTG GP-CONTROL

AN ATTACHMENT

SMCS-5051 **i02637862**

NOTE	REF NO	GRAPHIC REF	PART NUMBER	QTY	PART NAME 1 2 3 4 5 6 (PRODUCT LEVEL)	SEE PAGE
Y	1	1	**295-1799**	1	VALVE GP-RELIEF (MAIN)	276
	2	1	**216-6160**	3	VALVE GP-RELIEF (TILT)	
	3	1	**216-6161**	1	VALVE GP-RELIEF (LIFT)	
Y	4	1	**185-4254**	6	VALVE GP-SOLENOID (12-VOLT) (12-VOLT)	278
	5	1	**4J-7533**	1	SEAL-O-RING	
	6	1	**204-1485**	6	WASHER (0.47X0.75X0.02-MM THK)	
	7	1	**204-1482**	1	SPRING	
	8	1	**204-1488**	1	SPRING	
	9	1	**204-1489**	4	SPRING	
	10	1	**204-1486**	1	WASHER (0.32X0.74X0.02-MM THK)	
	11	1	**127-6316**	1	BOLT-SHOULDER	
	12	1	**204-1476**	4	PLUG	
	13	1	**4K-1388**	2	SEAL-O-RING	
	14	1	**204-1471**	1	CAP	
	15	1	**204-1481**	1	CAP	
	16	1	**144-4531**	3	VALVE-CHECK	
	17	1	**003-3082**	3	SPRING	
	18	1	**2M-9780**	7	SEAL-O-RING	
	19	1	**144-4532**	3	PLUG	
	20	1	**216-6156**	1	VALVE-CHECK	
	21	1	**216-6157**	1	SPRING	
	22	1	**3J-1907**	1	SEAL-O-RING	
	23	1	**216-6159**	1	PLUG	
	24	1	**9S-8002**	1	PLUG (STRAIGHT THREAD O-RING)	
	25	1	**3J-7354**	1	SEAL-O-RING	

Y-SEPARATE ILLUSTRATION

258-2506 VALVE GP-CONTROL *(contd.)* i02637862

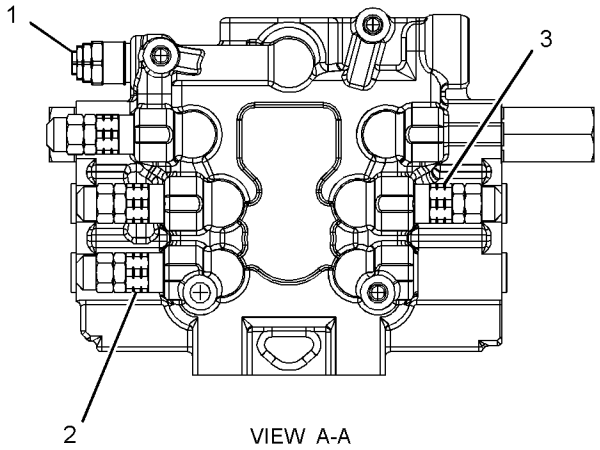

VIEW A-A

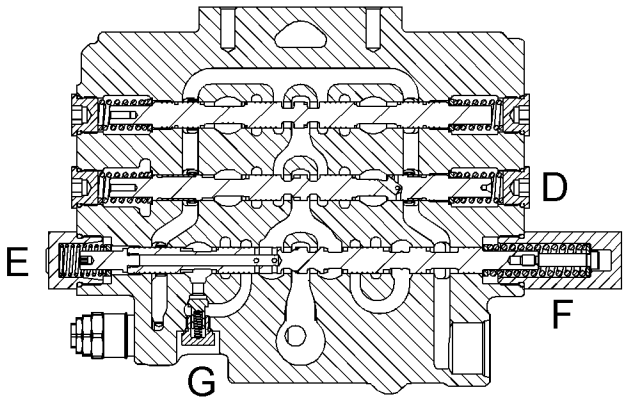

SECTION B-B

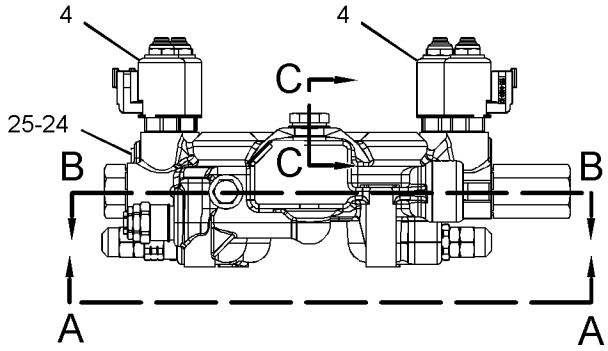

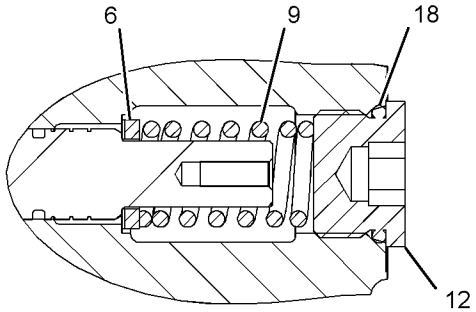

VIEW OF AREA D

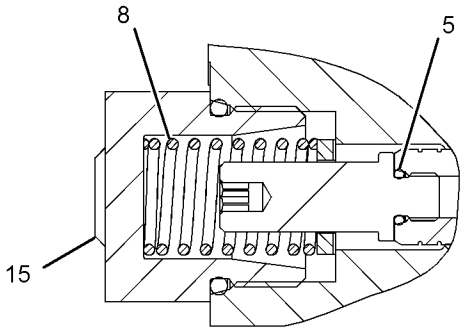

VIEW OF AREA E

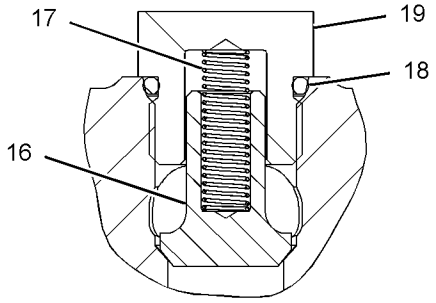

SECTION C-C

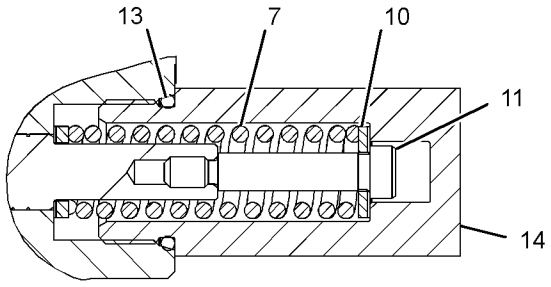

VIEW OF AREA F

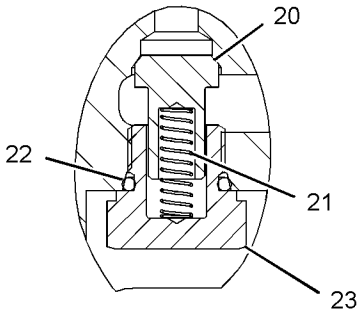

VIEW OF AREA G

GRAPHIC #1 **<END>** g01327679

HYDRAULIC SYSTEM

258-2507 VALVE GP-CONTROL

S/N: JAY1-UP
PART OF 258-2503 VALVE & MTG GP-CONTROL
AN ATTACHMENT

SMCS-5051 **i02693286**

NOTE	REF NO	GRAPHIC REF	PART NUMBER	QTY	PART NAME 1 2 3 4 5 6 (PRODUCT LEVEL)	SEE PAGE
Y	1	1	**185-4254**	6	VALVE GP-SOLENOID (12-VOLT) (12-VOLT)	278
Y	2	1	**195-9700**	2	VALVE GP-SOLENOID (12-VOLT)	279
	3	1	**204-1471**	1	CAP	
	4	1	**204-1476**	9	PLUG	
	5	1	**204-1481**	1	CAP	
	6	1	**216-6160**	2	VALVE GP-RELIEF (TILT, AUXILIARY)	
	7	1	**216-6161**	1	VALVE GP-RELIEF (LIFT, TILT)	
	8	1	**289-0850**	1	VALVE GP-RELIEF (AUXILIARY)	
	9	1	**295-0046**	1	VALVE GP-SOLENOID (MAIN)	
		1	**287-8753**	1	SCREEN	
		1	**301-4213**	1	SPACER	
	10	1	**231-7156**	1	CAP-VALVE	
	11	1	**9S-8002**	4	PLUG	
	12	1	**231-7165**	1	PLUG-VALVE	
	13	1	**231-7297**	7	SPRING	
	14	1	**280-5164**	3	SPOOL (ISOLATOR)	
	15	1	**231-7299**	3	SPOOL (COMP)	
	16	1	**287-8752**	1	SPOOL (COMP)	
	17	1	**287-8753**	1	SCREEN	
M	18	1	**8T-1158**	2	BOLT-SOCKET HEAD (M8X1.25X20-MM)	
	19	1	**3J-7354**	4	SEAL-O-RING	
	20	1	**204-1472**	2	SEAL-O-RING	
	21	1	**9X-7744**	1	SEAL-O-RING	

M-METRIC PART
Y-SEPARATE ILLUSTRATION

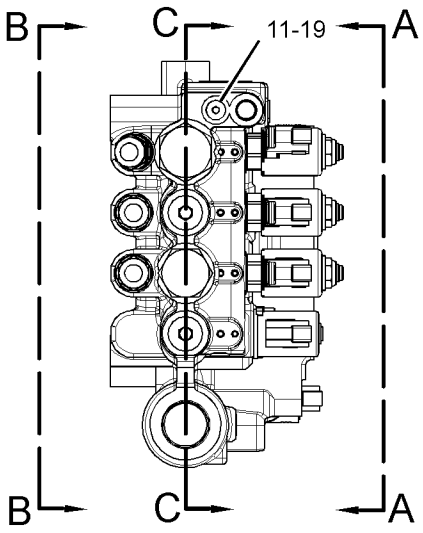

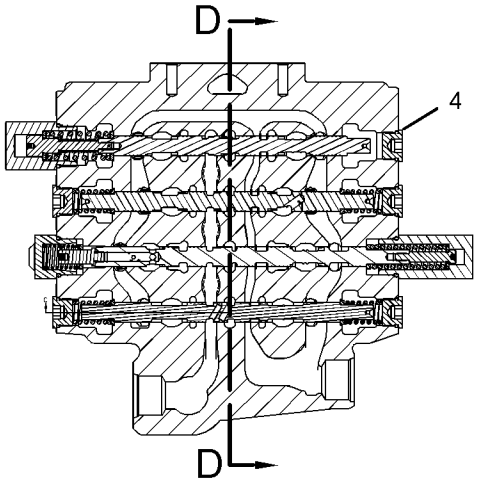

SECTION C-C

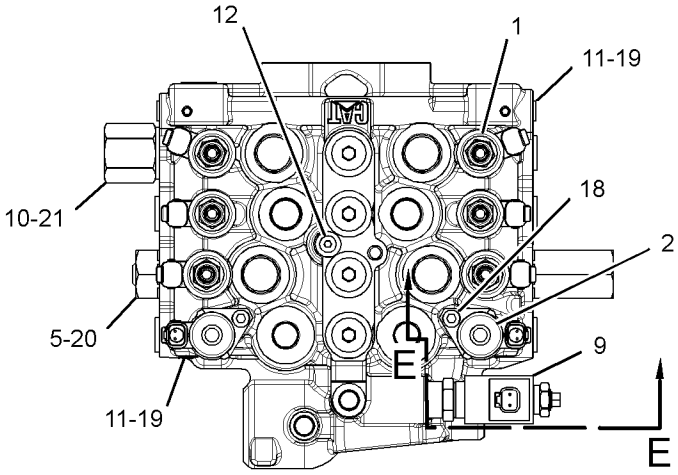

VIEW A-A

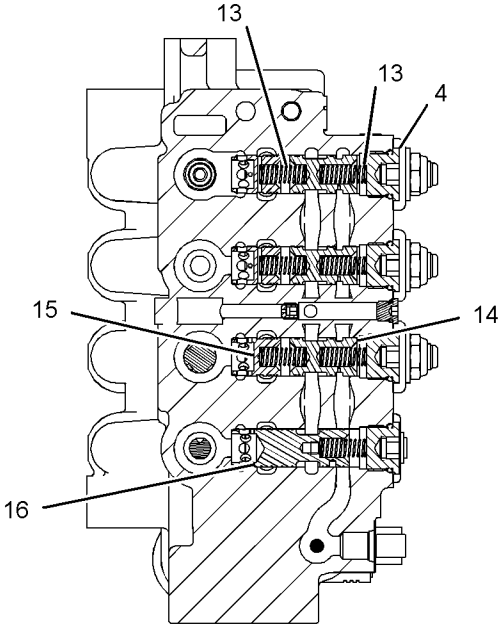

SECTION D-D

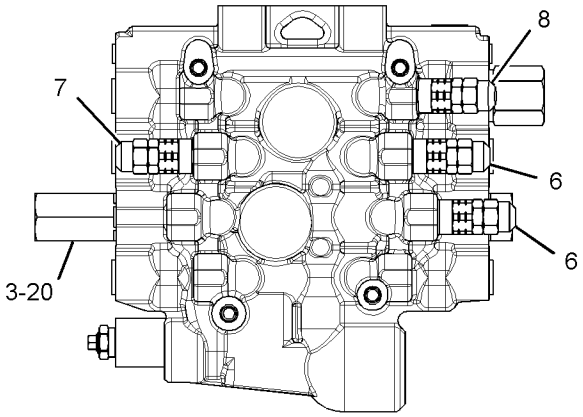

VIEW B-B

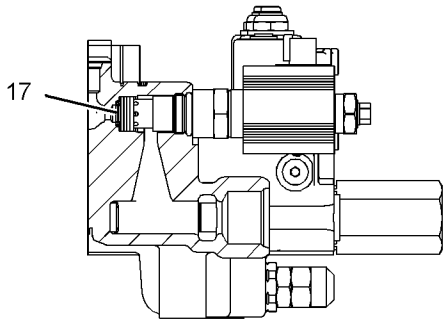

SECTION E-E

GRAPHIC #1 **<END>** g01328897

112-1817 VALVE GP-MANUAL–RESOLVER–LOWERING CONTROL

S/N: JAY1-UP

PART OF 258-3393 LINES GP-LOWERING CONTROL

SMCS-5147 **i02712997**

NOTE	PART NUMBER	QTY	PART NAME 1 2 3 4 5 6 (PRODUCT LEVEL)	SEE PAGE
J	*202-0671*	1	VALVE GP-MANUAL (MANUAL LOWERING CONTROL)	
			–OR–	
J	*202-0673*	1	VALVE GP-MANUAL (MANUAL LOWERING CONTROL)	
			–OR–	
J	*202-0674*	1	VALVE GP-MANUAL (MANUAL LOWERING CONTROL)	
			AVAILABLE REPAIR KIT(S):	
J	**112-9861**	1	KIT-SEAL (DEAD ENGINE LOWERING)	
			(INCLUDES SEALS, CONNECTORS & THRUST RING)	

J-KIT MARKED J SERVICES PARTS MARKED J

<END>

287-5665 VALVE GP-RELIEF–ENGINE OIL PRESSURE

S/N: CJS1-UP

PART OF 262-7288 ENGINE AR-PRIMARY

AN ATTACHMENT

SMCS-5069, 5117 **i02555581**

NOTE	REF NO	GRAPHIC REF	PART NUMBER	QTY	PART NAME 1 2 3 4 5 6 (PRODUCT LEVEL)	SEE PAGE
	1	1	**107-3672**	1	VALVE AS-RELIEF (ENGINE OIL PRESSURE)	
	2	1	**103-9725**	1	VALVE AS (OIL BYPASS) (ENGINE)	
	3	1	**233-5496**	1	GASKET	
	4	1	**234-4796**	1	GASKET	

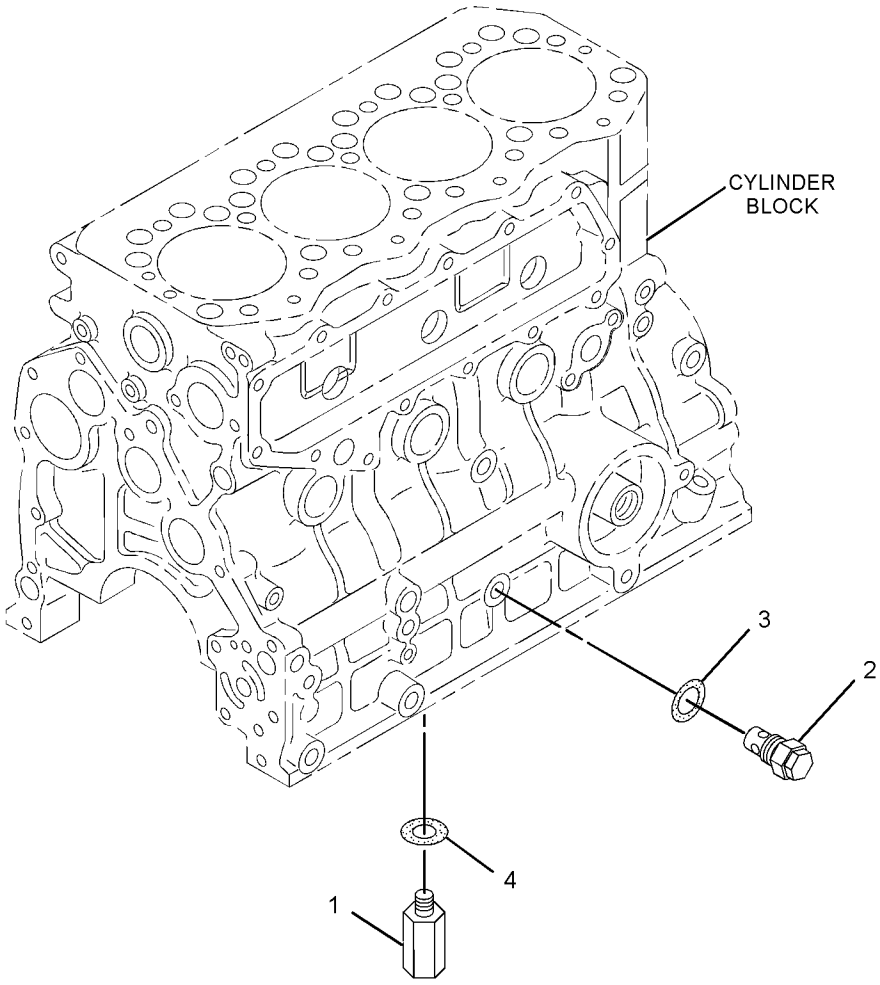

GRAPHIC #1 **<END>** g01323255

HYDRAULIC SYSTEM

295-1799 VALVE GP-RELIEF

S/N: JAY1-UP
PART OF 258-2506 VALVE GP-CONTROL
AN ATTACHMENT

SMCS-5069, 5117 **i02605603**

NOTE	REF NO	GRAPHIC REF	PART NUMBER	QTY	PART NAME 1 2 3 4 5 6 (PRODUCT LEVEL)	SEE PAGE
	1	1	**130-1676**	1	SEAL-O-RING	

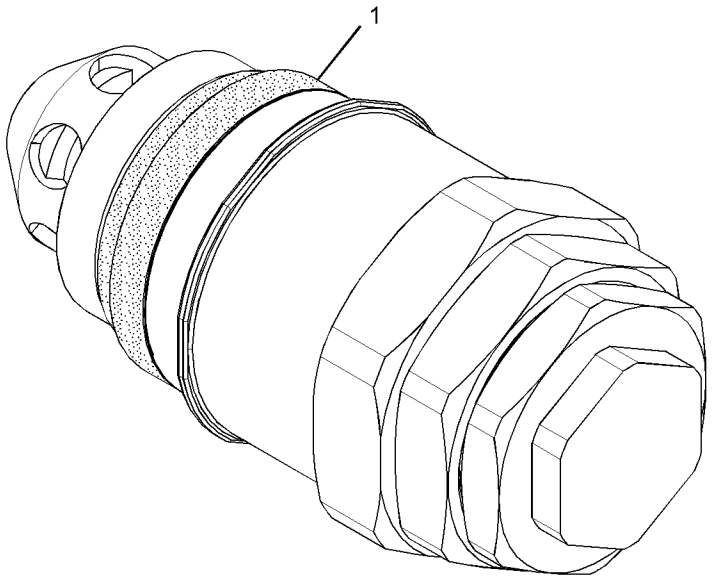

GRAPHIC #1 **<END>** g01304645

211-3014 VALVE GP-SHUTTLE

S/N: JAY1-UP
PART OF 258-3238, 261-6239 LINES GP-PUMP
AN ATTACHMENT

SMCS-5079 **i02014740**

NOTE	REF NO	GRAPHIC REF	PART NUMBER	QTY	PART NAME 1 2 3 4 5 6 (PRODUCT LEVEL)	SEE PAGE
	1	1	**123-5798**	1	SEAT	
	2	1	**123-5799**	1	SEAT	
	3	1	**131-0749**	1	CONNECTOR	
	4	1	**211-3646**	1	VALVE-SHUTTLE	
	5	1	**3J-1907**	1	SEAL-O-RING	
	6	1	**6V-8398**	1	SEAL-O-RING	

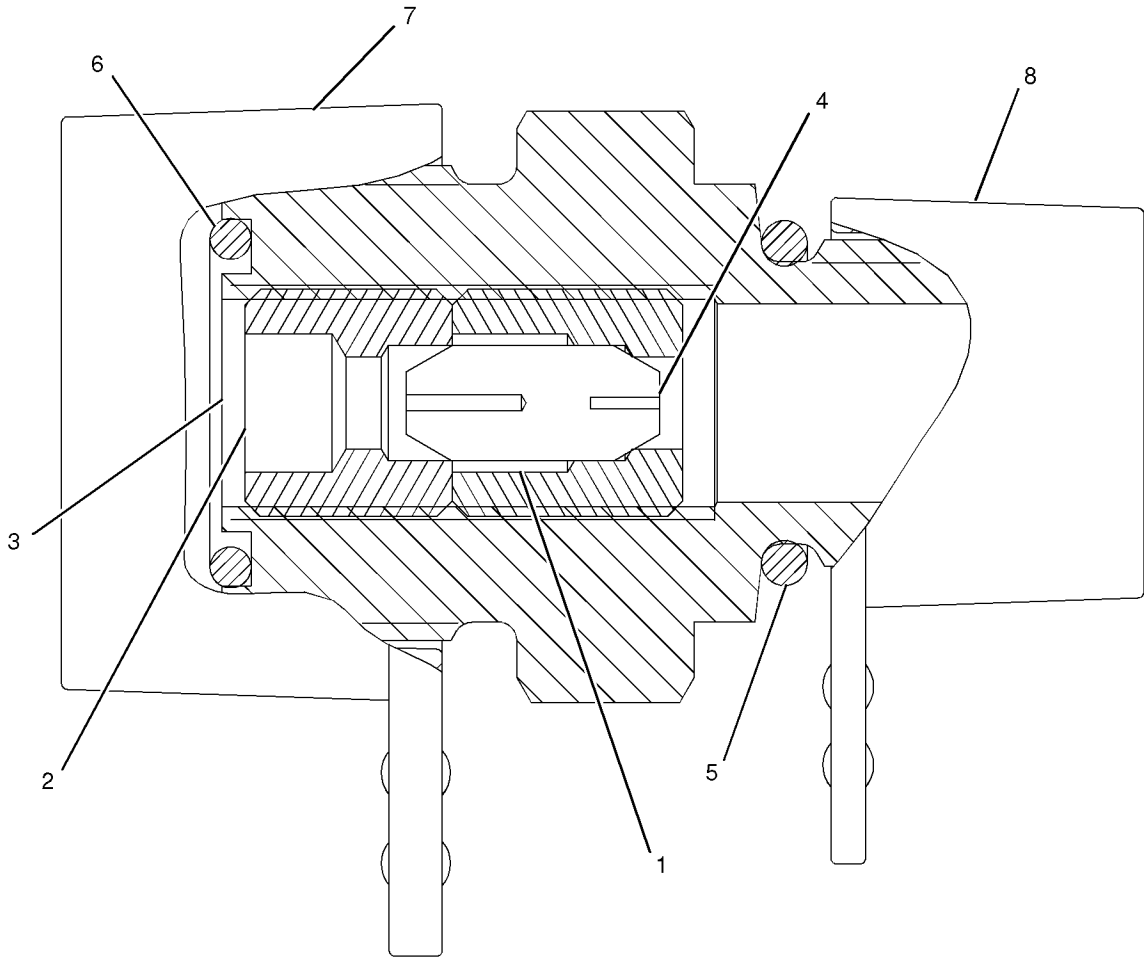

GRAPHIC #1 **<END>** g01041755

185-4254 VALVE GP-SOLENOID–12-VOLT

S/N: JAY1-UP
PART OF 258-2506, 258-2507 VALVE GP-CONTROL
AN ATTACHMENT

SMCS-5479 **i02372783**

NOTE	REF NO	GRAPHIC REF	PART NUMBER	QTY	PART NAME 1 2 3 4 5 6 (PRODUCT LEVEL)	SEE PAGE
	1	1	**226-9629**	1	COIL AS-SOLENOID (12-VOLT)	
	2	1	**164-2108**	1	WASHER (13.03X25.4X2.38-MM THK)	
	3	1	**218-2373**	1	NUT (1/2-28-THD)	
	4	1	*185-4253*	1	VALVE AS	

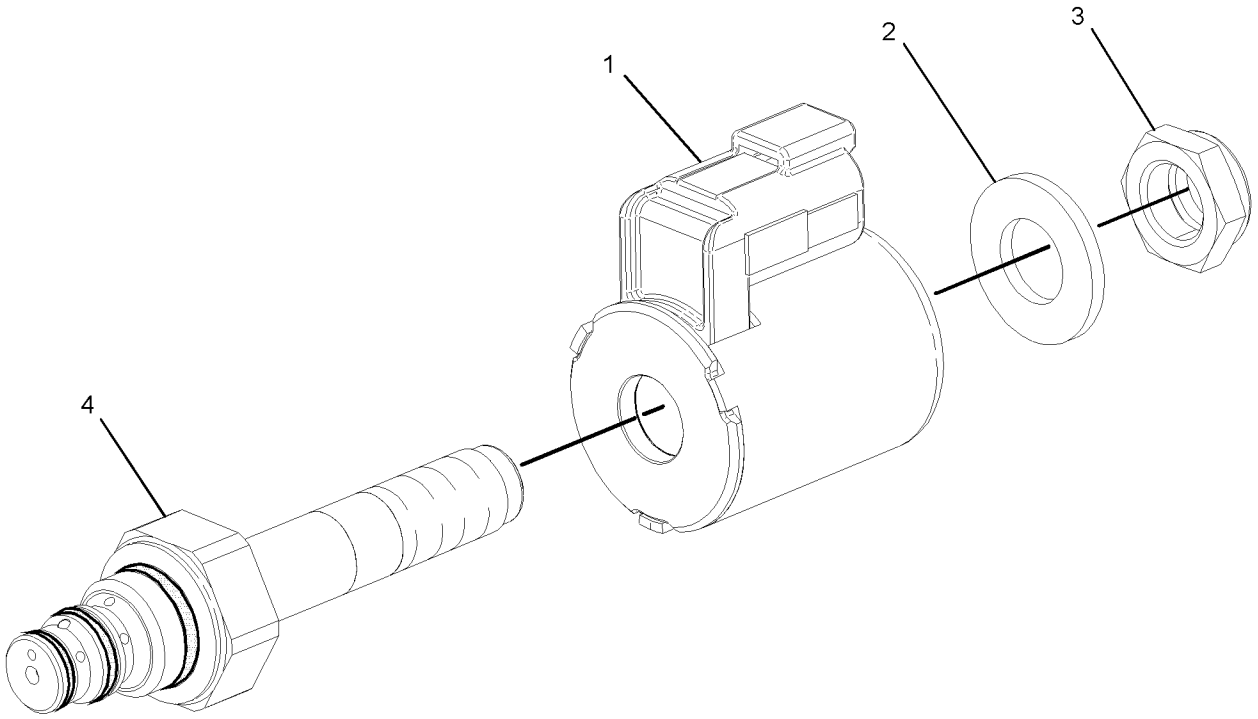

GRAPHIC #1 **<END>** g01185611

195-9700 VALVE GP-SOLENOID

S/N: JAY1-UP
PART OF 258-2507 VALVE GP-CONTROL
AN ATTACHMENT

SMCS-5479 **i02712998**

NOTE	REF NO	GRAPHIC REF	PART NUMBER	QTY	PART NAME 1 2 3 4 5 6 (PRODUCT LEVEL)	SEE PAGE
	1	1	**212-0061**	1	FLANGE	
					AVAILABLE REPAIR KIT(S):	
			200-2371	1	KIT-SEAL	
					(INCLUDES 3 SEALS)	

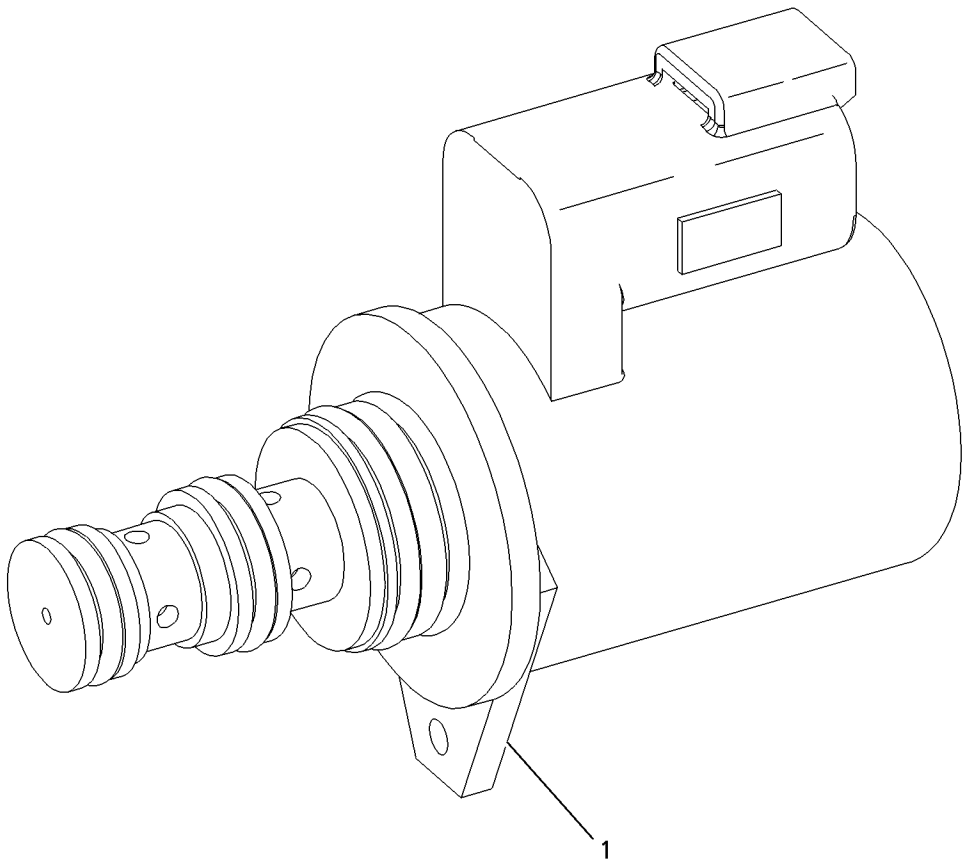

GRAPHIC #1 **<END>** g00947284

258-2699 PIN GP-LIFT ARM

S/N: JAY1-UP

PART OF 258-2410 CHASSIS AR

SMCS-6119, 7507 **i02625365**

NOTE	REF NO	GRAPHIC REF	PART NUMBER	QTY	PART NAME 1 2 3 4 5 6 (PRODUCT LEVEL)	SEE PAGE
	1	1	**142-9091**	2	PIN AS	
	2	1	**142-9094**	1	PIN	
	3	1	**258-2679**	2	PIN AS	
	4	1	**258-2920**	4	PIN AS	
	5	1	**258-2922**	2	PIN AS	
	6	1	**258-3451**	1	PIN	
	7	1	**258-3452**	1	SUPPORT (LIFT ARM BRACE)	
	8	1	**285-2185**	1	PIN AS	
	9	1	**1H-8134**	4	RING-RETAINING (EXTERNAL)	
	10	1	**3B-8489**	8	FITTING-GREASE	
	11	1	**5B-0651**	4	FITTING-STRAIGHT	
	12	1	**5H-9743**	1	GROMMET	
	13	1	**6N-8863**	6	WASHER (10.2X32X2.5-MM THK)	
	14	1	**7X-7729**	4	WASHER (11X25X3-MM THK)	
M	15	1	**8T-4191**	10	BOLT (M10X1.5X16-MM)	
	16	1	**8T-5439**	4	WASHER (21.5X45X6-MM THK)	

M-METRIC PART

258 - 2699 **PIN GP-LIFT ARM** *(contd.)* **i02625365**

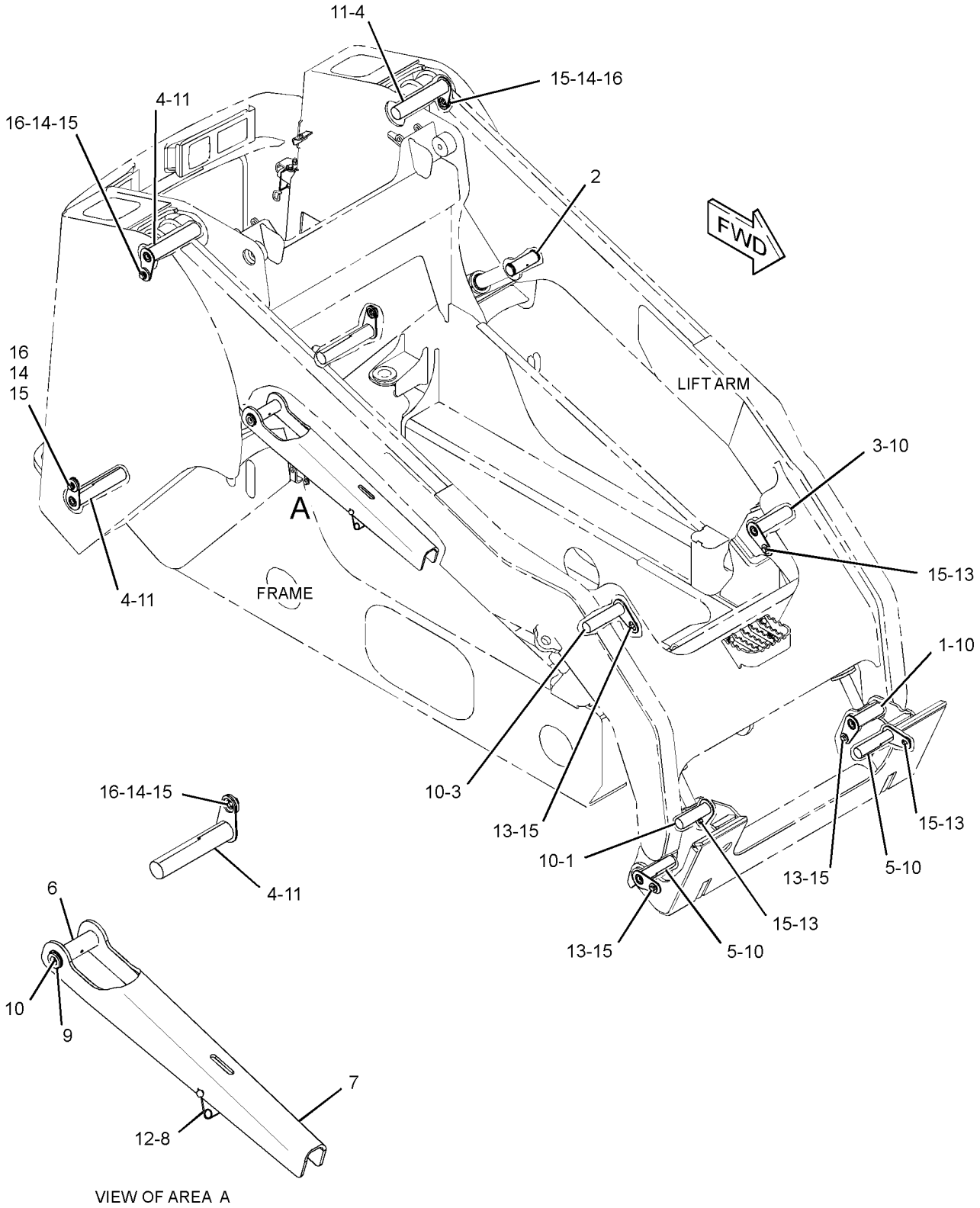

VIEW OF AREA A

GRAPHIC #1 **<END>** g01329231

279-5384 BLADE GP-MULTIPURPOSE BUCKET

S/N: JAY1-UP
1524-MM (60-IN)
PART OF 279-5383 BUCKET GP-MULTIPURPOSE
AN ATTACHMENT

SMCS-6060, 6104 **i02552040**

NOTE	REF NO	GRAPHIC REF	PART NUMBER	QTY	PART NAME 1 2 3 4 5 6 (PRODUCT LEVEL)	SEE PAGE
	1	1	**154-2704**	1	PLATE-INSTRUCTION (BUCKET SPECIFICATIONS)	
	2	1	**168-8389**	4	TACK-FASTENER	
	3	1	**279-5385**	1	BLADE AS	

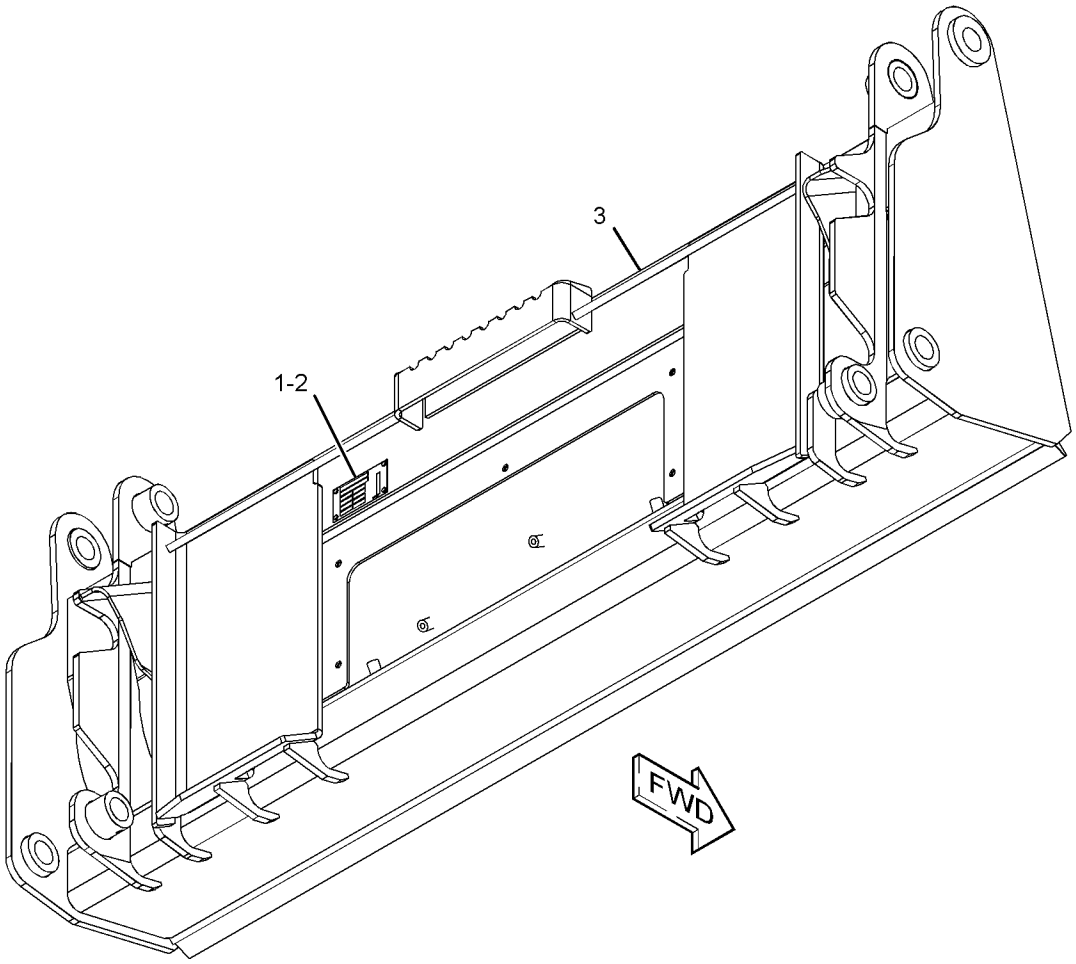

GRAPHIC #1 **<END>** g01278496

WORK TOOLS

279-5388 BLADE GP-MULTIPURPOSE BUCKET

S/N: JAY1-UP
1676-MM (66-IN)
PART OF 279-5389 BUCKET GP-MULTIPURPOSE
AN ATTACHMENT

SMCS-6060, 6104 **i02552100**

NOTE	REF NO	GRAPHIC REF	PART NUMBER	QTY	PART NAME 1 2 3 4 5 6 (PRODUCT LEVEL)	SEE PAGE
	1	1	**154-2704**	1	PLATE-INSTRUCTION (BUCKET SPECIFICATIONS)	
	2	1	**168-8389**	4	TACK-FASTENER	
	3	1	**279-5387**	1	BLADE AS	

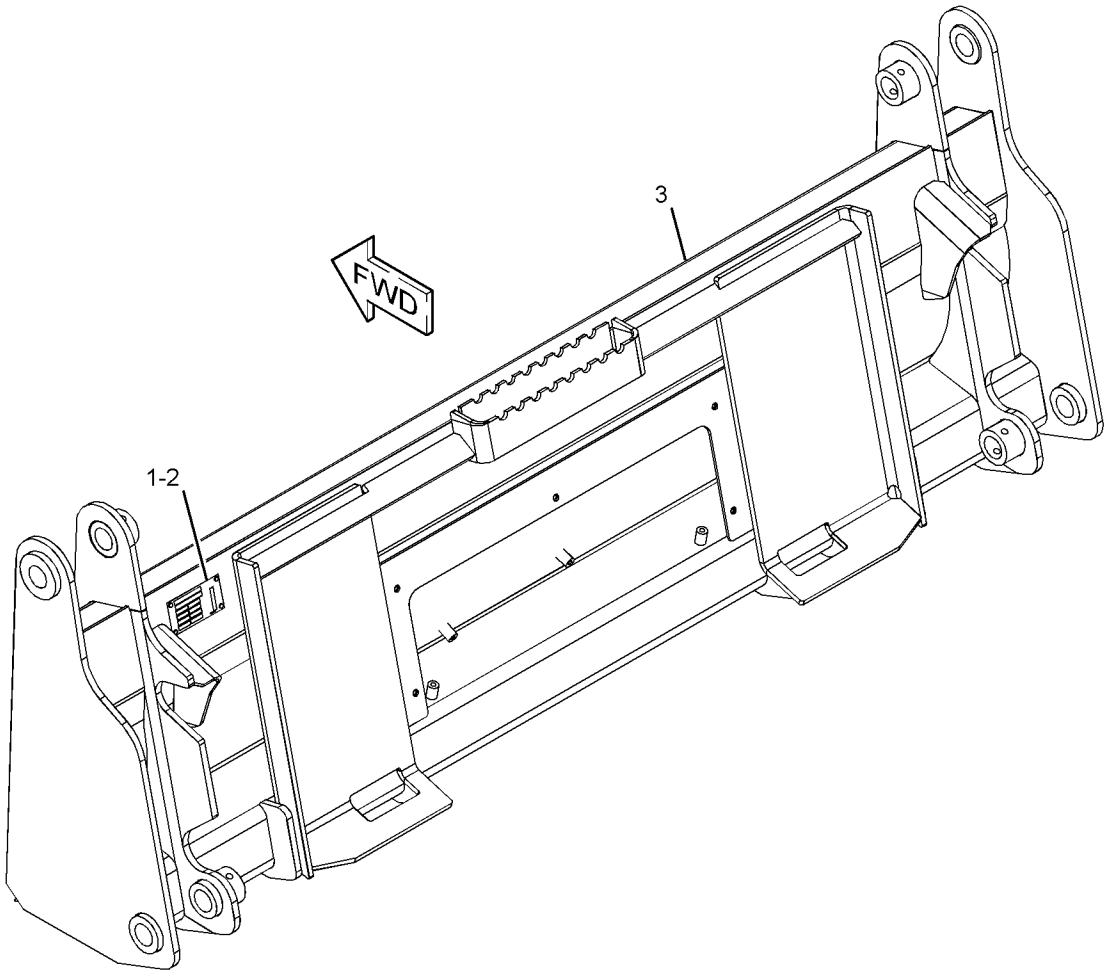

GRAPHIC #1 **<END>** g01279242

279-5396 BLADE GP-MULTIPURPOSE BUCKET

S/N: JAY1-UP
1829-MM (72-IN)
PART OF 279-5397 BUCKET GP-MULTIPURPOSE
AN ATTACHMENT

SMCS-6060, 6104 **i02552170**

NOTE	REF NO	GRAPHIC REF	PART NUMBER	QTY	PART NAME 1 2 3 4 5 6 (PRODUCT LEVEL)	SEE PAGE
	1	1	**154-2704**	1	PLATE-INSTRUCTION (BUCKET SPECIFICATIONS)	
	2	1	**168-8389**	4	TACK-FASTENER	
	3	1	**279-5395**	1	BLADE AS	

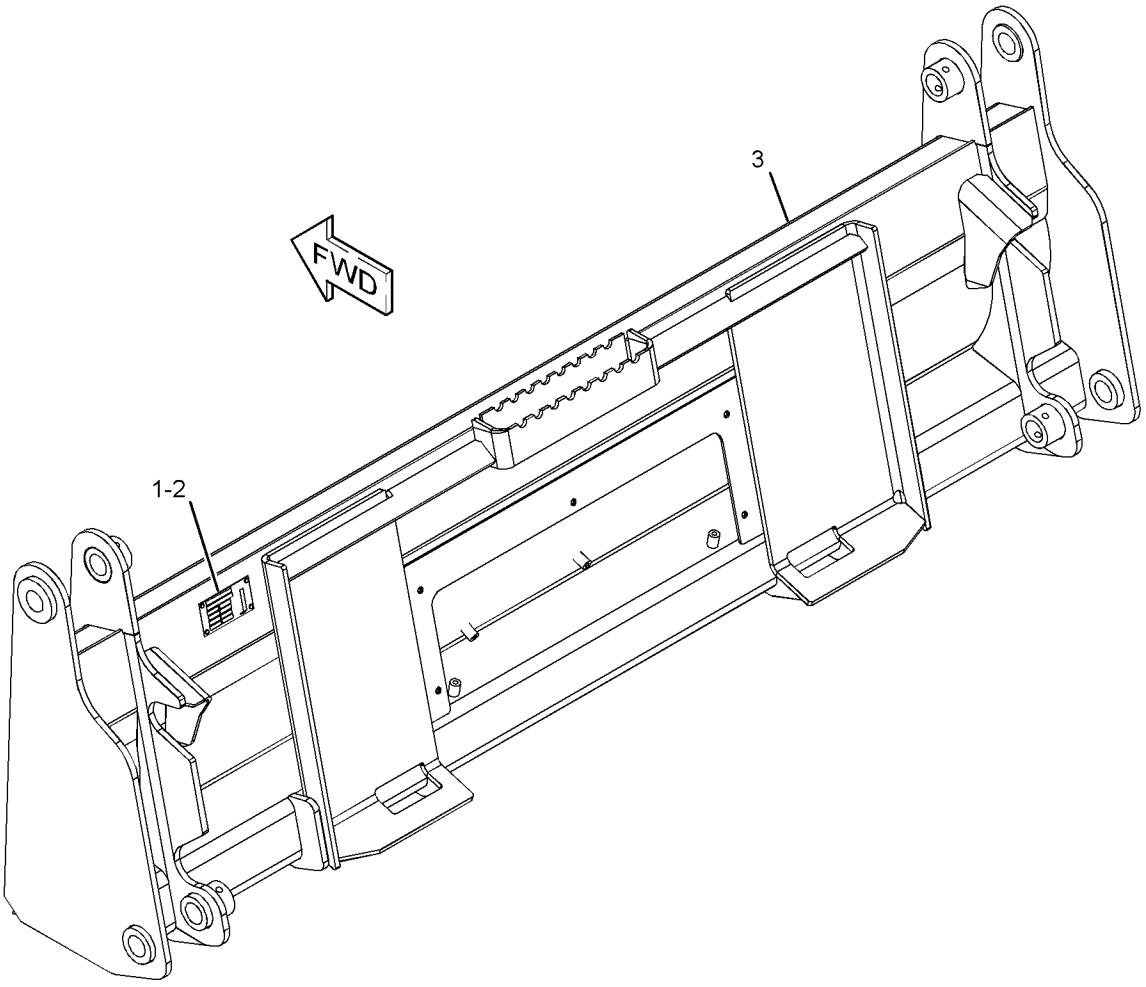

GRAPHIC #1 **<END>** g01279973

279-5405 BLADE GP-MULTIPURPOSE BUCKET

S/N: JAY1-UP
1981-MM (78-IN)
PART OF 279-5404 BUCKET GP-MULTIPURPOSE
AN ATTACHMENT

SMCS-6060, 6104 **i02552256**

NOTE	REF NO	GRAPHIC REF	PART NUMBER	QTY	PART NAME 1 2 3 4 5 6 (PRODUCT LEVEL)	SEE PAGE
	1	1	**154-2704**	1	PLATE-INSTRUCTION (BUCKET SPECIFICATIONS)	
	2	1	**168-8389**	4	TACK-FASTENER	
	3	1	**279-5406**	1	BLADE AS	

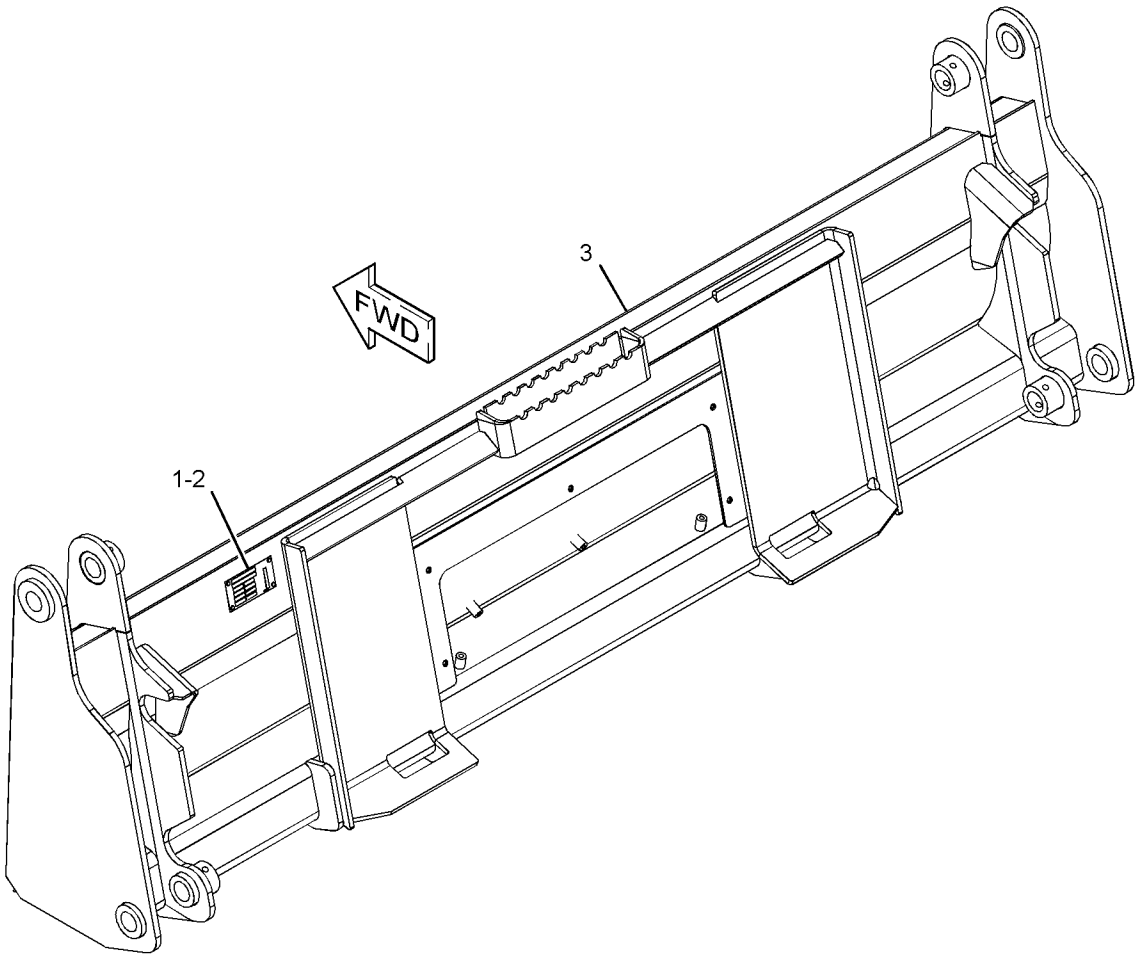

GRAPHIC #1 **<END>** g01278518

293-0142 BLADE GP-MULTIPURPOSE BUCKET

S/N: JAY1-UP
PART OF 293-0141 BUCKET GP-MULTIPURPOSE
AN ATTACHMENT

SMCS-6060, 6104 **i02636486**

NOTE	REF NO	GRAPHIC REF	PART NUMBER	QTY	PART NAME 1 2 3 4 5 6 (PRODUCT LEVEL)	SEE PAGE
	1	1	**154-2704**	1	PLATE-INSTRUCTION (BUCKET SPECIFICATIONS)	
	2	1	**168-8389**	4	TACK-FASTENER	
	3	1	**293-0143**	1	BLADE AS	

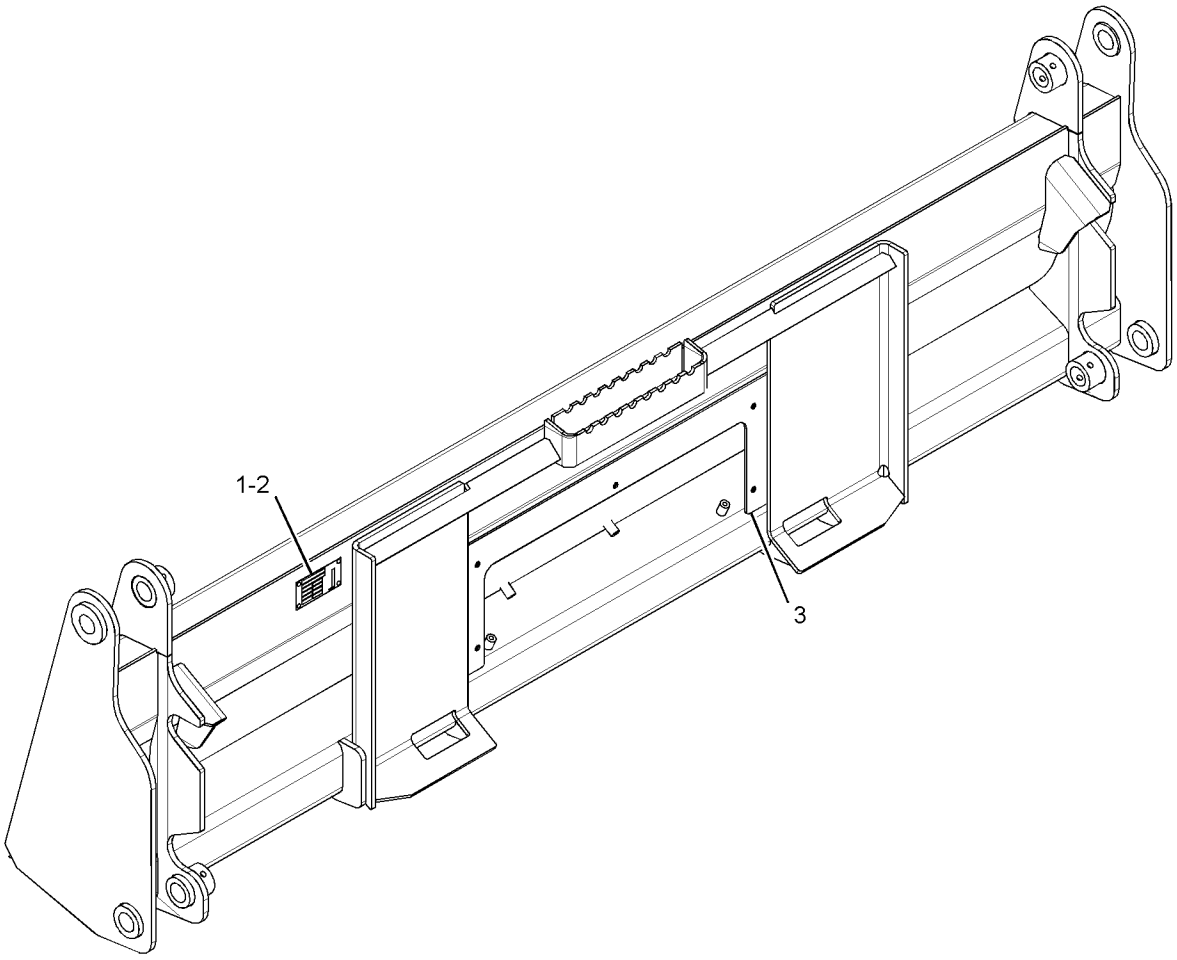

GRAPHIC #1 **<END>** g01327412

268-4083 BUCKET AR-DIRT

S/N: JAY1-UP
1981-MM (78-IN)
FIELD REPLACEMENT FOR 268-4084 BUCKET GP-DIRT
AN ATTACHMENT

SMCS-6001 **i02539980**

NOTE	PART NUMBER	QTY	PART NAME 1 2 3 4 5 6 (PRODUCT LEVEL)	SEE PAGE
Y	**268-4084**	1	BUCKET GP-DIRT	309
Y	*135-9387*	1	EDGE GP-CUTTING	332
Y-SEPARATE ILLUSTRATION				

<END>

279-5435 BUCKET AR-DIRT

S/N: JAY1-UP
1372-MM (54-IN)
AN ATTACHMENT

SMCS-6001 **i02552331**

NOTE	PART NUMBER	QTY	PART NAME 1 2 3 4 5 6 (PRODUCT LEVEL)	SEE PAGE
Y	**279-5434**	1	BUCKET AS-DIRT	297
Y	*135-9383*	1	EDGE GP-CUTTING	328
Y-SEPARATE ILLUSTRATION				

<END>

279-5438 BUCKET AR-DIRT

S/N: JAY1-UP
1524-MM (60-IN)
AN ATTACHMENT

SMCS-6001 **i02571312**

NOTE	PART NUMBER	QTY	PART NAME 1 2 3 4 5 6 (PRODUCT LEVEL)	SEE PAGE
Y	**279-5437**	1	BUCKET AS-DIRT	298
Y	*135-9384*	1	EDGE GP-CUTTING	329
Y-SEPARATE ILLUSTRATION				

<END>

279-5441 BUCKET AR-DIRT

S/N: JAY1-UP
1676-MM (66-IN)
AN ATTACHMENT

SMCS-6001 **i02571314**

NOTE	PART NUMBER	QTY	PART NAME 1 2 3 4 5 6 (PRODUCT LEVEL)	SEE PAGE
Y	**279-5440**	1	BUCKET AS-DIRT	300
Y	*135-9385*	1	EDGE GP-CUTTING	330
Y-SEPARATE ILLUSTRATION				

<END>

WORK TOOLS

285-6090 BUCKET AR-DIRT

S/N: JAY1-UP
1829-MM (72-IN)
AN ATTACHMENT

SMCS-6001 **i02552446**

NOTE	PART NUMBER	QTY	PART NAME 1 2 3 4 5 6 (PRODUCT LEVEL)	SEE PAGE
Y	**285-6089**	1	BUCKET AS-DIRT	301
Y	*135-9386*	1	EDGE GP-CUTTING (DIRT)	331

Y-SEPARATE ILLUSTRATION

<END>

279-5365 BUCKET AR-GENERAL PURPOSE

S/N: JAY1-UP
1524-MM (60-IN)
AN ATTACHMENT

SMCS-6101 **i02550406**

NOTE	PART NUMBER	QTY	PART NAME 1 2 3 4 5 6 (PRODUCT LEVEL)	SEE PAGE
Y	**279-5364**	1	BUCKET AS-GENERAL PURPOSE	302
Y	*135-9384*	1	EDGE GP-CUTTING	329

Y-SEPARATE ILLUSTRATION

<END>

279-5366 BUCKET AR-GENERAL PURPOSE

S/N: JAY1-UP
1524-MM (60-IN)
AN ATTACHMENT

SMCS-6101 **i02550436**

NOTE	PART NUMBER	QTY	PART NAME 1 2 3 4 5 6 (PRODUCT LEVEL)	SEE PAGE
Y	**279-5364**	1	BUCKET AS-GENERAL PURPOSE	302
Y	*141-4999*	8	TOOTH GP-UNI	361

Y-SEPARATE ILLUSTRATION

<END>

279-5369 BUCKET AR-GENERAL PURPOSE

S/N: JAY1-UP
1676-MM (66-IN)
AN ATTACHMENT

SMCS-6101 **i02551081**

NOTE	PART NUMBER	QTY	PART NAME 1 2 3 4 5 6 (PRODUCT LEVEL)	SEE PAGE
Y	**279-5368**	1	BUCKET AS-GENERAL PURPOSE	303
Y	*135-9385*	1	EDGE GP-CUTTING	330

Y-SEPARATE ILLUSTRATION

<END>

WORK TOOLS

279-5370 BUCKET AR-GENERAL PURPOSE

S/N: JAY1-UP
1676-MM (66-IN)
AN ATTACHMENT

SMCS-6101 **i02551084**

NOTE	PART NUMBER	QTY	PART NAME 1 2 3 4 5 6 (PRODUCT LEVEL)	SEE PAGE
Y	**279-5368**	1	BUCKET AS-GENERAL PURPOSE	303
Y	*141-4999*	8	TOOTH GP-UNI	361
Y-SEPARATE ILLUSTRATION				

<END>

279-5373 BUCKET AR-GENERAL PURPOSE

S/N: JAY1-UP
1829-MM (72-IN)
AN ATTACHMENT

SMCS-6101 **i02552012**

NOTE	PART NUMBER	QTY	PART NAME 1 2 3 4 5 6 (PRODUCT LEVEL)	SEE PAGE
Y	**279-5372**	1	BUCKET AS-GENERAL PURPOSE	304
Y	*135-9386*	1	EDGE GP-CUTTING	331
Y-SEPARATE ILLUSTRATION				

<END>

279-5374 BUCKET AR-GENERAL PURPOSE

S/N: JAY1-UP
1829-MM (72-IN)
AN ATTACHMENT

SMCS-6101 **i02552011**

NOTE	PART NUMBER	QTY	PART NAME 1 2 3 4 5 6 (PRODUCT LEVEL)	SEE PAGE
Y	**279-5372**	1	BUCKET AS-GENERAL PURPOSE	304
Y	*141-4999*	8	TOOTH GP-UNI	361
Y-SEPARATE ILLUSTRATION				

<END>

279-5377 BUCKET AR-GENERAL PURPOSE

S/N: JAY1-UP
1981-MM (78-IN)
AN ATTACHMENT

SMCS-6101 **i02552020**

NOTE	PART NUMBER	QTY	PART NAME 1 2 3 4 5 6 (PRODUCT LEVEL)	SEE PAGE
Y	**279-5376**	1	BUCKET AS-GENERAL PURPOSE	305
Y	*135-9387*	1	EDGE GP-CUTTING	332
Y-SEPARATE ILLUSTRATION				

<END>

WORK TOOLS

279-5378 BUCKET AR-GENERAL PURPOSE

S/N: JAY1-UP
1981-MM (78-IN)
AN ATTACHMENT

SMCS-6101 **i02552018**

NOTE	PART NUMBER	QTY	PART NAME 1 2 3 4 5 6 (PRODUCT LEVEL)	SEE PAGE
Y	**279-5376**	1	BUCKET AS-GENERAL PURPOSE	305
Y	*141-4999*	9	TOOTH GP-UNI	361
Y-SEPARATE ILLUSTRATION				

<END>

285-6093 BUCKET AR-GRAPPLE

S/N: JAY1-UP
1676-MM (66-IN)
AN ATTACHMENT

SMCS-6704 **i02552451**

NOTE	PART NUMBER	QTY	PART NAME 1 2 3 4 5 6 (PRODUCT LEVEL)	SEE PAGE
Y	**285-6099**	1	BUCKET GP-UTILITY (66-IN)	317
Y	*285-6116*	1	GRAPPLE GP-UTILITY	346
Y-SEPARATE ILLUSTRATION				

<END>

285-6104 BUCKET AR-GRAPPLE

S/N: JAY1-UP
1829-MM (72-IN)
AN ATTACHMENT

SMCS-6704 **i02552487**

NOTE	PART NUMBER	QTY	PART NAME 1 2 3 4 5 6 (PRODUCT LEVEL)	SEE PAGE
Y	**285-6102**	1	BUCKET GP-UTILITY (72-IN)	318
Y	*285-6116*	1	GRAPPLE GP-UTILITY	346
Y-SEPARATE ILLUSTRATION				

<END>

285-6111 BUCKET AR-GRAPPLE

S/N: JAY1-UP
1676-MM (66-IN)
AN ATTACHMENT

SMCS-6704 **i02552741**

NOTE	PART NUMBER	QTY	PART NAME 1 2 3 4 5 6 (PRODUCT LEVEL)	SEE PAGE
Y	**285-6100**	1	BUCKET AR-UTILITY	296
Y	*285-6116*	1	GRAPPLE GP-UTILITY	346
Y-SEPARATE ILLUSTRATION				

<END>

WORK TOOLS

285-6112 BUCKET AR-GRAPPLE

S/N: JAY1-UP
1829-MM (72-IN)
AN ATTACHMENT

SMCS-6704 **i02552759**

NOTE	PART NUMBER	QTY	PART NAME 1 2 3 4 5 6 (PRODUCT LEVEL)	SEE PAGE
Y	**285-6101**	1	BUCKET AR-UTILITY	296
Y	*285-6116*	1	GRAPPLE GP-UTILITY	346
Y-SEPARATE ILLUSTRATION				

<END>

279-5420 BUCKET AR-LIGHT MATERIAL

S/N: JAY1-UP
1829-MM (72-IN)
AN ATTACHMENT

SMCS-6103 **i02552302**

NOTE	PART NUMBER	QTY	PART NAME 1 2 3 4 5 6 (PRODUCT LEVEL)	SEE PAGE
Y	**279-5421**	1	BUCKET AS-LIGHT MATERIAL	306
Y	*135-9386*	1	EDGE GP-CUTTING	331
Y-SEPARATE ILLUSTRATION				

<END>

279-5425 BUCKET AR-LIGHT MATERIAL

S/N: JAY1-UP
1981-MM (78-IN)
AN ATTACHMENT

SMCS-6103 **i02552308**

NOTE	PART NUMBER	QTY	PART NAME 1 2 3 4 5 6 (PRODUCT LEVEL)	SEE PAGE
Y	**279-5424**	1	BUCKET AS-LIGHT MATERIAL	307
Y	*135-9387*	1	EDGE GP-CUTTING	332
Y-SEPARATE ILLUSTRATION				

<END>

279-5430 BUCKET AR-LIGHT MATERIAL

S/N: JAY1-UP
2134-MM (84-IN)
AN ATTACHMENT

SMCS-6103 **i02552313**

NOTE	PART NUMBER	QTY	PART NAME 1 2 3 4 5 6 (PRODUCT LEVEL)	SEE PAGE
Y	**279-5429**	1	BUCKET AS-LIGHT MATERIAL	308
Y	*195-7124*	1	EDGE GP-CUTTING	333
Y-SEPARATE ILLUSTRATION				

<END>

279-5380 BUCKET AR-MULTIPURPOSE

S/N: JAY1-UP
1524-MM (60-IN)
AN ATTACHMENT

SMCS-6104 **i02552027**

NOTE	PART NUMBER	QTY	PART NAME 1 2 3 4 5 6 (PRODUCT LEVEL)	SEE PAGE
Y	**279-5382**	1	BUCKET AR-MULTIPURPOSE	292
Y	*141-4999*	8	TOOTH GP-UNI	361
Y-SEPARATE ILLUSTRATION				

<END>

279-5381 BUCKET AR-MULTIPURPOSE

S/N: JAY1-UP
1524-MM (60-IN)
AN ATTACHMENT

SMCS-6104 **i02552030**

NOTE	PART NUMBER	QTY	PART NAME 1 2 3 4 5 6 (PRODUCT LEVEL)	SEE PAGE
Y	**279-5382**	1	BUCKET AR-MULTIPURPOSE	292
Y	*135-9384*	1	EDGE GP-CUTTING	329
Y-SEPARATE ILLUSTRATION				

<END>

279-5382 BUCKET AR-MULTIPURPOSE

S/N: JAY1-UP
1524-MM (60-IN)
PART OF 279-5380, 279-5381 BUCKET AR-MULTIPURPOSE
AN ATTACHMENT

SMCS-6104 **i02561093**

NOTE	PART NUMBER	QTY	PART NAME 1 2 3 4 5 6 (PRODUCT LEVEL)	SEE PAGE
Y	*279-5383*	1	BUCKET GP-MULTIPURPOSE (60-IN)	310
Y	*162-5236*	1	COVER GP-LINES	325
Y	**154-5018**	2	CYLINDER GP-BUCKET	183
Y	*279-5413*	1	LINES GP-BUCKET	203
Y	*154-5011*	1	MOUNTING GP-CYLINDER	255
Y-SEPARATE ILLUSTRATION				

<END>

279-5390 BUCKET AR-MULTIPURPOSE

S/N: JAY1-UP
1676-MM (66-IN)
PART OF 279-5391, 279-5392 BUCKET AR-MULTIPURPOSE
AN ATTACHMENT

SMCS-6104 **i02552080**

NOTE	PART NUMBER	QTY	PART NAME 1 2 3 4 5 6 (PRODUCT LEVEL)	SEE PAGE
Y	*279-5389*	1	BUCKET GP-MULTIPURPOSE	311
Y	*162-5236*	1	COVER GP-LINES	325
Y	**154-5018**	2	CYLINDER GP-BUCKET	183
Y	*279-5414*	1	LINES GP-BUCKET	205
Y	*154-5011*	1	MOUNTING GP-CYLINDER	255
Y-SEPARATE ILLUSTRATION				

<END>

279-5391 BUCKET AR-MULTIPURPOSE

S/N: JAY1-UP
1676-MM (66-IN)
AN ATTACHMENT

SMCS-6104 **i02552078**

NOTE	PART NUMBER	QTY	PART NAME 1 2 3 4 5 6 (PRODUCT LEVEL)	SEE PAGE
Y	**279-5390**	1	BUCKET AR-MULTIPURPOSE	293
Y	*135-9385*	1	EDGE GP-CUTTING	330
Y-SEPARATE ILLUSTRATION				

<END>

279-5392 BUCKET AR-MULTIPURPOSE

S/N: JAY1-UP
1676-MM (66-IN)
AN ATTACHMENT

SMCS-6104 **i02552071**

NOTE	PART NUMBER	QTY	PART NAME 1 2 3 4 5 6 (PRODUCT LEVEL)	SEE PAGE
Y	**279-5390**	1	BUCKET AR-MULTIPURPOSE	293
Y	*141-4999*	8	TOOTH GP-UNI	361
Y-SEPARATE ILLUSTRATION				

<END>

WORK TOOLS

279-5398 BUCKET AR-MULTIPURPOSE

S/N: JAY1-UP
1829-MM (72-IN)
PART OF 279-5400 BUCKET AR-MULTIPURPOSE, 279-5399 BUCKET GP-MULTIPURPOSE
AN ATTACHMENT

SMCS-6104 **i02561094**

NOTE	PART NUMBER	QTY	PART NAME 1 2 3 4 5 6 (PRODUCT LEVEL)	SEE PAGE
Y	*279-5397*	1	BUCKET GP-MULTIPURPOSE	312
Y	*162-5236*	1	COVER GP-LINES	325
Y	**154-5018**	2	CYLINDER GP-BUCKET	183
Y	*279-5415*	1	LINES GP-BUCKET	207
Y	*154-5011*	1	MOUNTING GP-CYLINDER	255
Y-SEPARATE ILLUSTRATION				

<END>

279-5400 BUCKET AR-MULTIPURPOSE

S/N: JAY1-UP
1829-MM (72-IN)
AN ATTACHMENT

SMCS-6104 **i02552121**

NOTE	PART NUMBER	QTY	PART NAME 1 2 3 4 5 6 (PRODUCT LEVEL)	SEE PAGE
Y	**279-5398**	1	BUCKET AR-MULTIPURPOSE	294
Y	*141-4999*	8	TOOTH GP-UNI	361
Y-SEPARATE ILLUSTRATION				

<END>

279-5401 BUCKET AR-MULTIPURPOSE

S/N: JAY1-UP
1981-MM (78-IN)
AN ATTACHMENT

SMCS-6104 **i02552198**

NOTE	PART NUMBER	QTY	PART NAME 1 2 3 4 5 6 (PRODUCT LEVEL)	SEE PAGE
Y	**279-5403**	1	BUCKET AR-MULTIPURPOSE	295
Y	*141-4999*	9	TOOTH GP-UNI	361
Y-SEPARATE ILLUSTRATION				

<END>

279-5402 BUCKET AR-MULTIPURPOSE

S/N: JAY1-UP
1981-MM (78-IN)
AN ATTACHMENT

SMCS-6104 **i02552200**

NOTE	PART NUMBER	QTY	PART NAME 1 2 3 4 5 6 (PRODUCT LEVEL)	SEE PAGE
Y	**279-5403**	1	BUCKET AR-MULTIPURPOSE	295
Y	*135-9387*	1	EDGE GP-CUTTING	332
Y-SEPARATE ILLUSTRATION				

<END>

WORK TOOLS

279-5403 BUCKET AR-MULTIPURPOSE

S/N: JAY1-UP
1981-MM (78-IN)
PART OF 279-5401, 279-5402 BUCKET AR-MULTIPURPOSE
AN ATTACHMENT

SMCS-6104 **i02561095**

NOTE	PART NUMBER	QTY	PART NAME 1 2 3 4 5 6 (PRODUCT LEVEL)	SEE PAGE
Y	*279-5404*	1	BUCKET GP-MULTIPURPOSE (78-IN)	314
Y	*162-5236*	1	COVER GP-LINES	325
Y	**154-5018**	2	CYLINDER GP-BUCKET	183
Y	*279-5416*	1	LINES GP-BUCKET	209
Y	*154-5011*	1	MOUNTING GP-CYLINDER	255
Y-SEPARATE ILLUSTRATION				

<END>

293-0139 BUCKET AR-MULTIPURPOSE

S/N: JAY1-UP
2134-MM (84-IN)
PART OF 296-8055, 296-8057 BUCKET AR-MULTIPURPOSE
AN ATTACHMENT

SMCS-6104 **i02636470**

NOTE	PART NUMBER	QTY	PART NAME 1 2 3 4 5 6 (PRODUCT LEVEL)	SEE PAGE
Y	*293-0141*	1	BUCKET GP-MULTIPURPOSE	315
Y	*162-5236*	1	COVER GP-LINES	325
Y	**278-1969**	2	CYLINDER GP-HYDRAULIC	186
Y	*293-0140*	1	LINES GP-BUCKET	213
Y	*154-5011*	1	MOUNTING GP-CYLINDER	255
Y-SEPARATE ILLUSTRATION				

<END>

296-8055 BUCKET AR-MULTIPURPOSE

S/N: JAY1-UP
2134-MM (84-IN)
AN ATTACHMENT

SMCS-6104 **i02636475**

NOTE	PART NUMBER	QTY	PART NAME 1 2 3 4 5 6 (PRODUCT LEVEL)	SEE PAGE
Y	*293-0139*	1	BUCKET AR-MULTIPURPOSE	295
Y	*141-4999*	9	TOOTH GP-UNI	361
Y-SEPARATE ILLUSTRATION				

<END>

WORK TOOLS

296-8057 BUCKET AR-MULTIPURPOSE

S/N: JAY1-UP
2134-MM (84-IN)
AN ATTACHMENT

SMCS-6104 **i02636476**

NOTE	PART NUMBER	QTY	PART NAME 1 2 3 4 5 6 (PRODUCT LEVEL)	SEE PAGE
Y	*293-0139*	1	BUCKET AR-MULTIPURPOSE	295
Y	*195-7124*	1	EDGE GP-CUTTING	333
Y-SEPARATE ILLUSTRATION				

<END>

285-6095 BUCKET AR-UTILITY

S/N: JAY1-UP
1524-MM (60-IN)
AN ATTACHMENT

i02552467

NOTE	PART NUMBER	QTY	PART NAME 1 2 3 4 5 6 (PRODUCT LEVEL)	SEE PAGE
Y	**285-6096**	1	BUCKET GP-UTILITY (60-IN)	316
Y	*135-9384*	1	EDGE GP-CUTTING	329
Y-SEPARATE ILLUSTRATION				

<END>

285-6100 BUCKET AR-UTILITY

S/N: JAY1-UP
1676-MM (66-IN)
PART OF 285-6111 BUCKET AR-GRAPPLE
AN ATTACHMENT

i02552478

NOTE	PART NUMBER	QTY	PART NAME 1 2 3 4 5 6 (PRODUCT LEVEL)	SEE PAGE
Y	**285-6099**	1	BUCKET GP-UTILITY (66-IN)	317
Y	*135-9385*	1	EDGE GP-CUTTING	330
Y-SEPARATE ILLUSTRATION				

<END>

285-6101 BUCKET AR-UTILITY

S/N: JAY1-UP
1829-MM (72-IN)
PART OF 285-6112 BUCKET AR-GRAPPLE
AN ATTACHMENT

i02552482

NOTE	PART NUMBER	QTY	PART NAME 1 2 3 4 5 6 (PRODUCT LEVEL)	SEE PAGE
Y	**285-6102**	1	BUCKET GP-UTILITY (72-IN)	318
Y	*135-9386*	1	EDGE GP-CUTTING	331
Y-SEPARATE ILLUSTRATION				

<END>

WORK TOOLS

279-5434 BUCKET AS-DIRT

S/N: JAY1-UP
1372-MM (54-IN)
PART OF 279-5435 BUCKET AR-DIRT
AN ATTACHMENT

SMCS-6001 **i02552332**

NOTE	REF NO	GRAPHIC REF	PART NUMBER	QTY	PART NAME 1 2 3 4 5 6 (PRODUCT LEVEL)	SEE PAGE
	1	1	**154-2704**	1	PLATE-INSTRUCTION (BUCKET SPECIFICATIONS)	
	2	1	**168-8389**	4	TACK-FASTENER	
					PARTS SHOWN IN GRAPHIC WITHOUT A REFERENCE NUMBER ARE NOT SERVICED SEPARATELY	

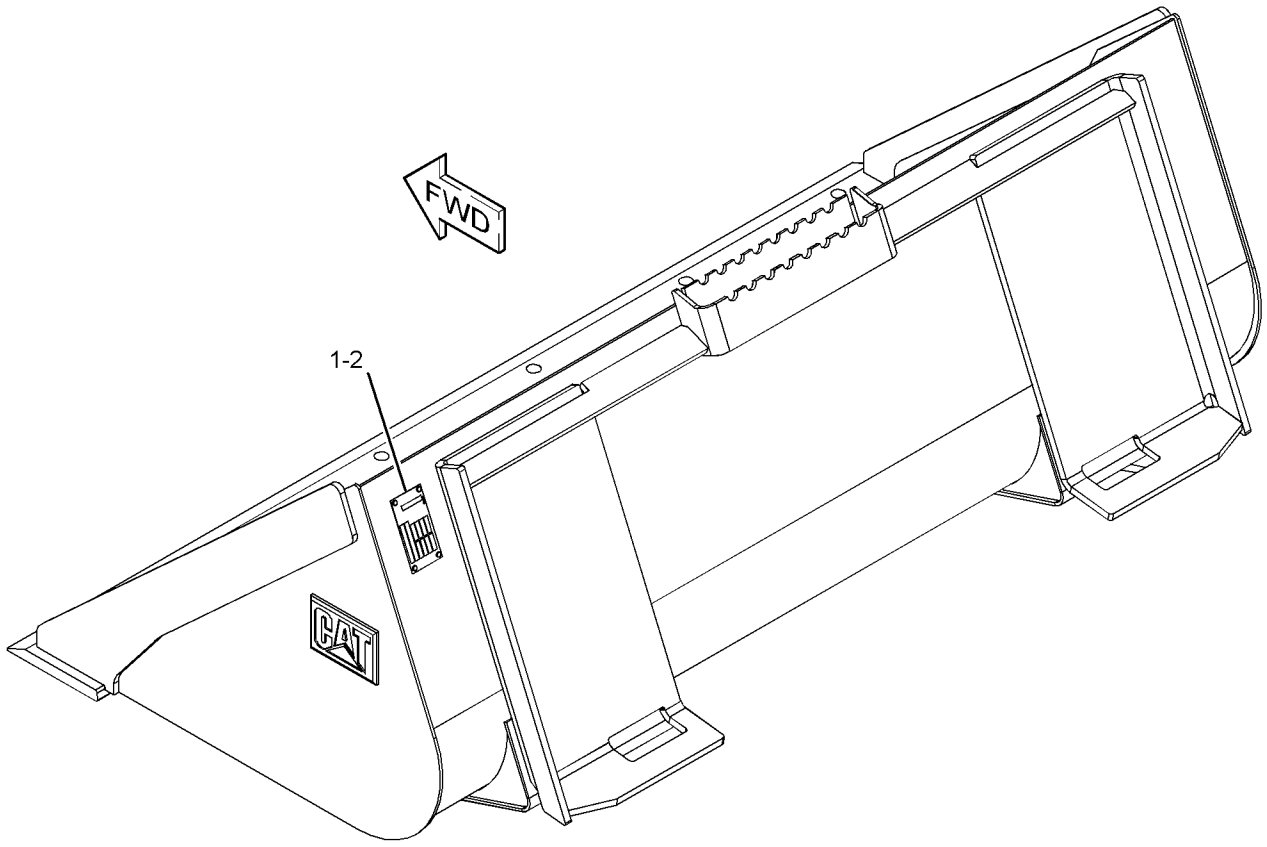

GRAPHIC #1 **<END>** g01280557

WORK TOOLS

279-5437 BUCKET AS-DIRT

S/N: JAY1-UP
1524-MM (60-IN)
PART OF 279-5438 BUCKET AR-DIRT
AN ATTACHMENT

SMCS-6001 **i02552380**

NOTE	REF NO	GRAPHIC REF	PART NUMBER	QTY	PART NAME 1 2 3 4 5 6 (PRODUCT LEVEL)	SEE PAGE
	1	1	**154-2704**	1	PLATE-INSTRUCTION (BUCKET SPECIFICATIONS)	
	2	1	**168-8389**	4	TACK-FASTENER	
					PARTS SHOWN IN GRAPHIC WITHOUT A REFERENCE NUMBER ARE NOT SERVICED SEPARATELY	

279-5437 BUCKET AS-DIRT *(contd.)* **i02552380**

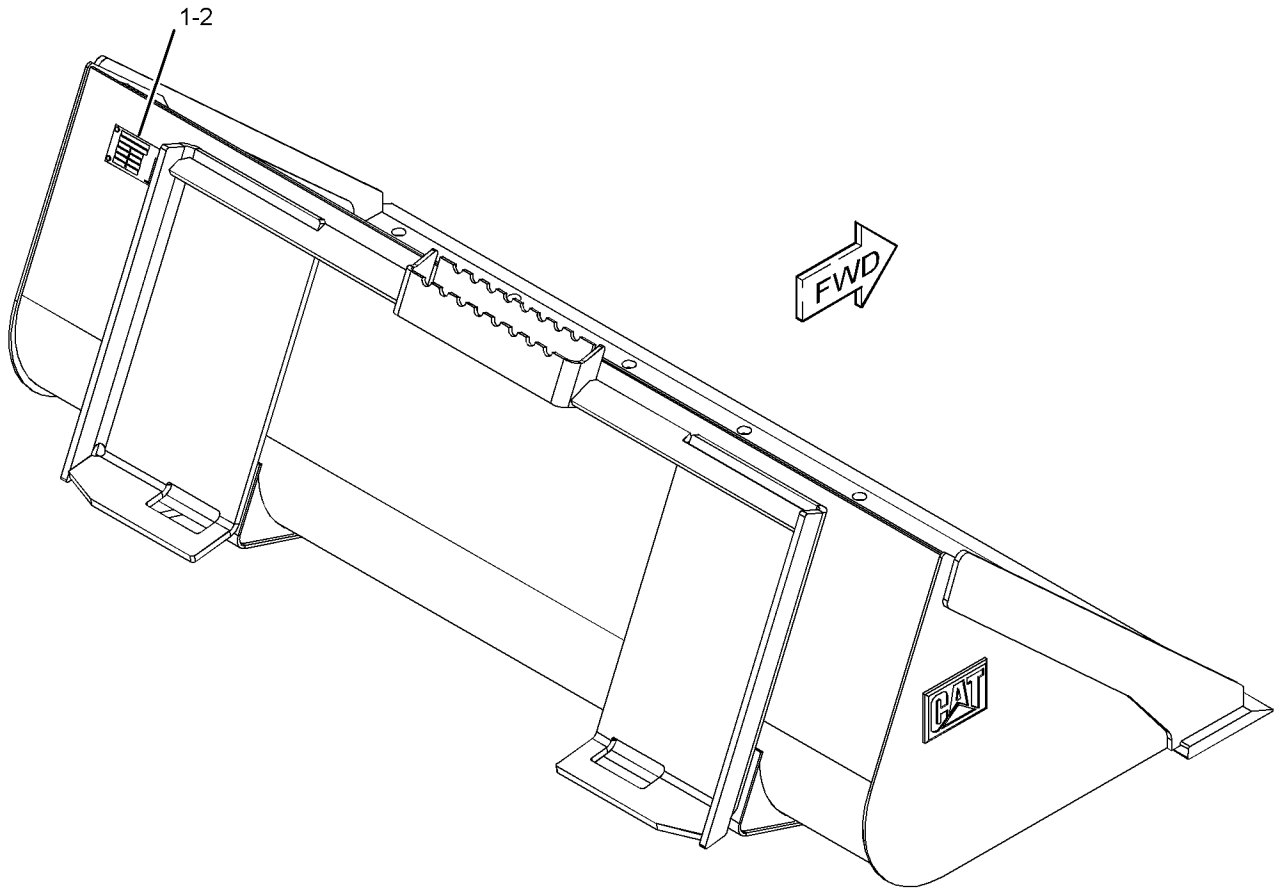

GRAPHIC #1 **<END>** g01280555

WORK TOOLS

279-5440 BUCKET AS-DIRT

S/N: JAY1-UP
1676-MM (66-IN)
PART OF 279-5441 BUCKET AR-DIRT
AN ATTACHMENT

SMCS-6001 **i02552428**

NOTE	REF NO	GRAPHIC REF	PART NUMBER	QTY	PART NAME 1 2 3 4 5 6 (PRODUCT LEVEL)	SEE PAGE
	1	1	**154-2704**	1	PLATE-INSTRUCTION (BUCKET SPECIFICATIONS)	
	2	1	**168-8389**	4	TACK-FASTENER	
					PARTS SHOWN IN GRAPHIC WITHOUT A REFERENCE NUMBER ARE NOT SERVICED SEPARATELY	

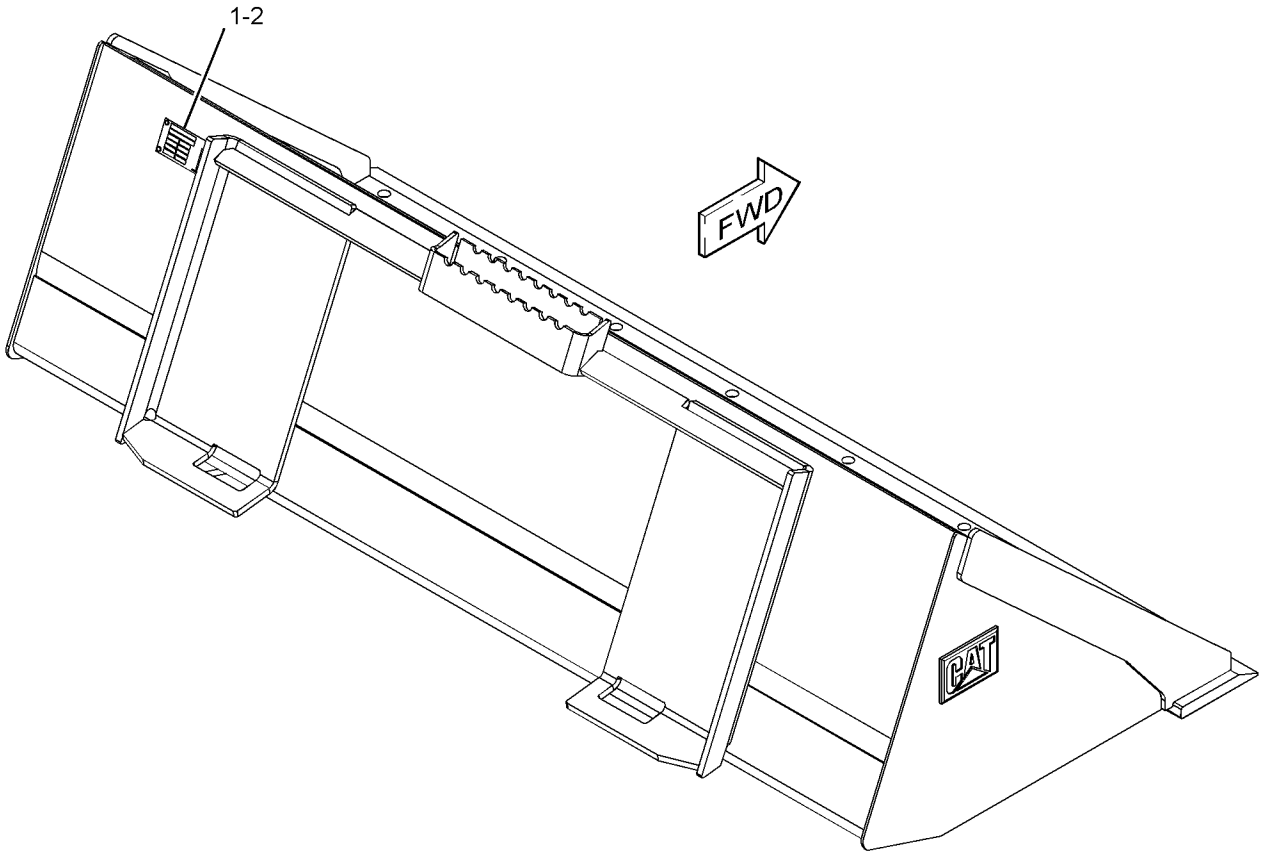

GRAPHIC #1 **<END>** g01280552

WORK TOOLS

285-6089 BUCKET AS-DIRT

S/N: JAY1-UP
1829-MM (72-IN)
PART OF 285-6090 BUCKET AR-DIRT
AN ATTACHMENT

SMCS-6001 **i02552447**

NOTE	REF NO	GRAPHIC REF	PART NUMBER	QTY	PART NAME 1 2 3 4 5 6 (PRODUCT LEVEL)	SEE PAGE
	1	1	**154-2704**	1	PLATE-INSTRUCTION (BUCKET SPECIFICATIONS)	
	2	1	**168-8389**	4	TACK-FASTENER	
					PARTS SHOWN IN GRAPHIC(S) WITHOUT A REFERENCE NUMBER ARE NOT SERVICED SEPARATELY	

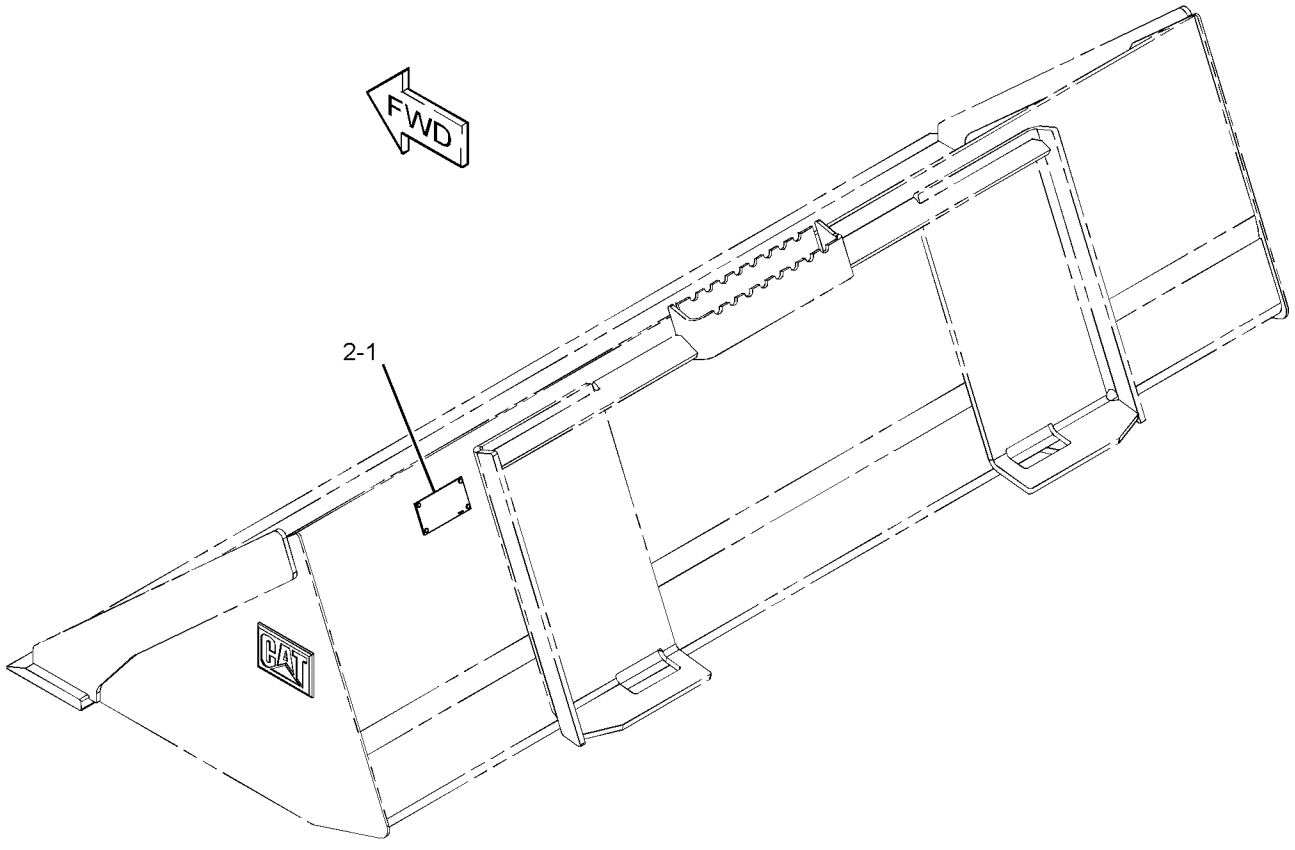

GRAPHIC #1 **<END>** g01279287

WORK TOOLS

279-5364 BUCKET AS-GENERAL PURPOSE

S/N: JAY1-UP
1524-MM (60-IN)
PART OF 279-5365, 279-5366 BUCKET AR-GENERAL PURPOSE
AN ATTACHMENT

SMCS-6101 **i02550408**

NOTE	REF NO	GRAPHIC REF	PART NUMBER	QTY	PART NAME 1 2 3 4 5 6 (PRODUCT LEVEL)	SEE PAGE
	1	1	**154-2704**	1	PLATE-INSTRUCTION (BUCKET SPECIFICATIONS)	
	2	1	**168-8389**	4	TACK-FASTENER	
					PARTS SHOWN IN GRAPHIC(S) WITHOUT A REFERENCE NUMBER ARE NOT SERVICED SEPARATELY	

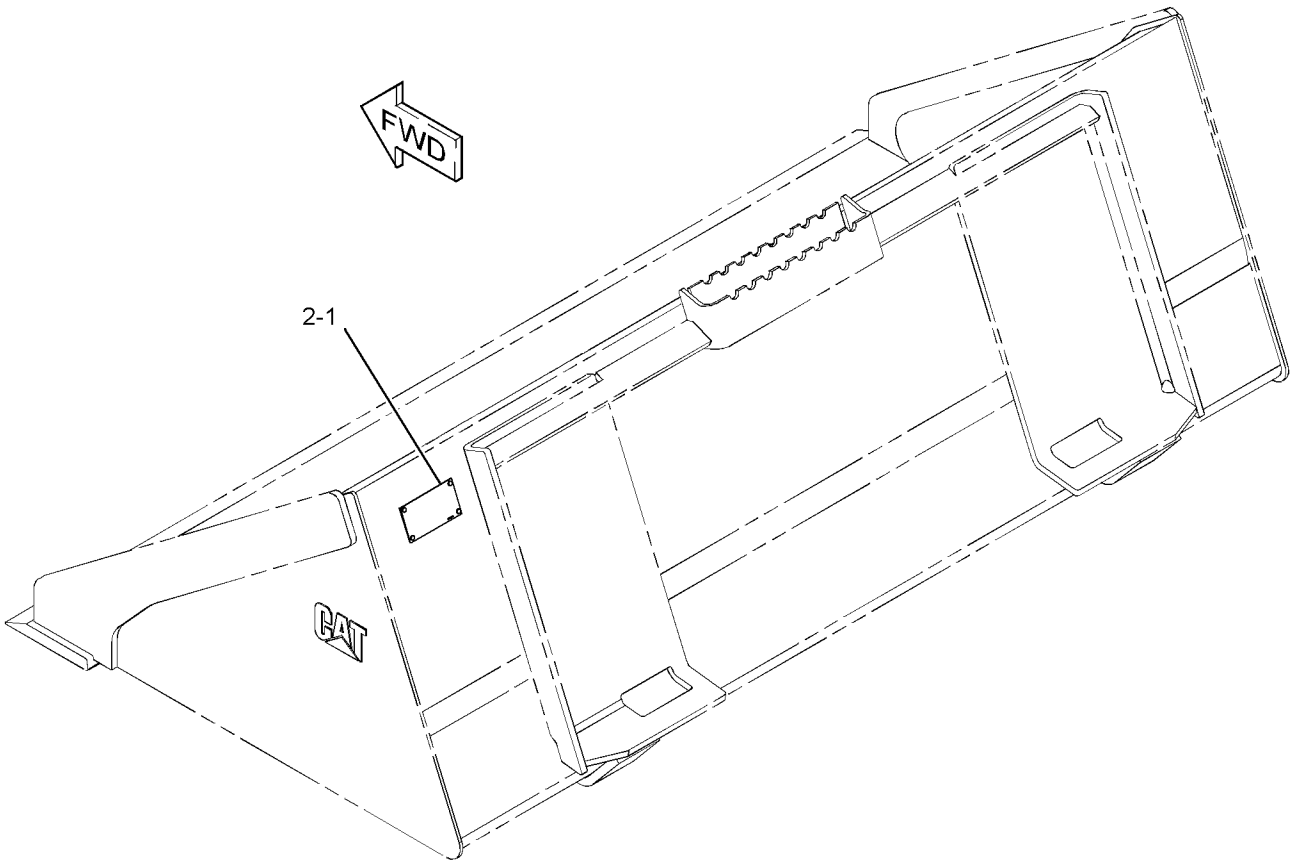

GRAPHIC #1 **<END>** g01279308

WORK TOOLS

279-5368 BUCKET AS-GENERAL PURPOSE

S/N: JAY1-UP
1676-MM (66-IN)
PART OF 279-5369, 279-5370 BUCKET AR-GENERAL PURPOSE
AN ATTACHMENT

SMCS-6101 **i02551091**

NOTE	REF NO	GRAPHIC REF	PART NUMBER	QTY	PART NAME 1 2 3 4 5 6 (PRODUCT LEVEL)	SEE PAGE
	1	1	**154-2704**	1	PLATE-INSTRUCTION (BUCKET SPECIFICATIONS)	
	2	1	**168-8389**	4	TACK-FASTENER	
					PARTS SHOWN IN GRAPHIC(S) WITHOUT A REFERENCE NUMBER ARE NOT SERVICED SEPARATELY	

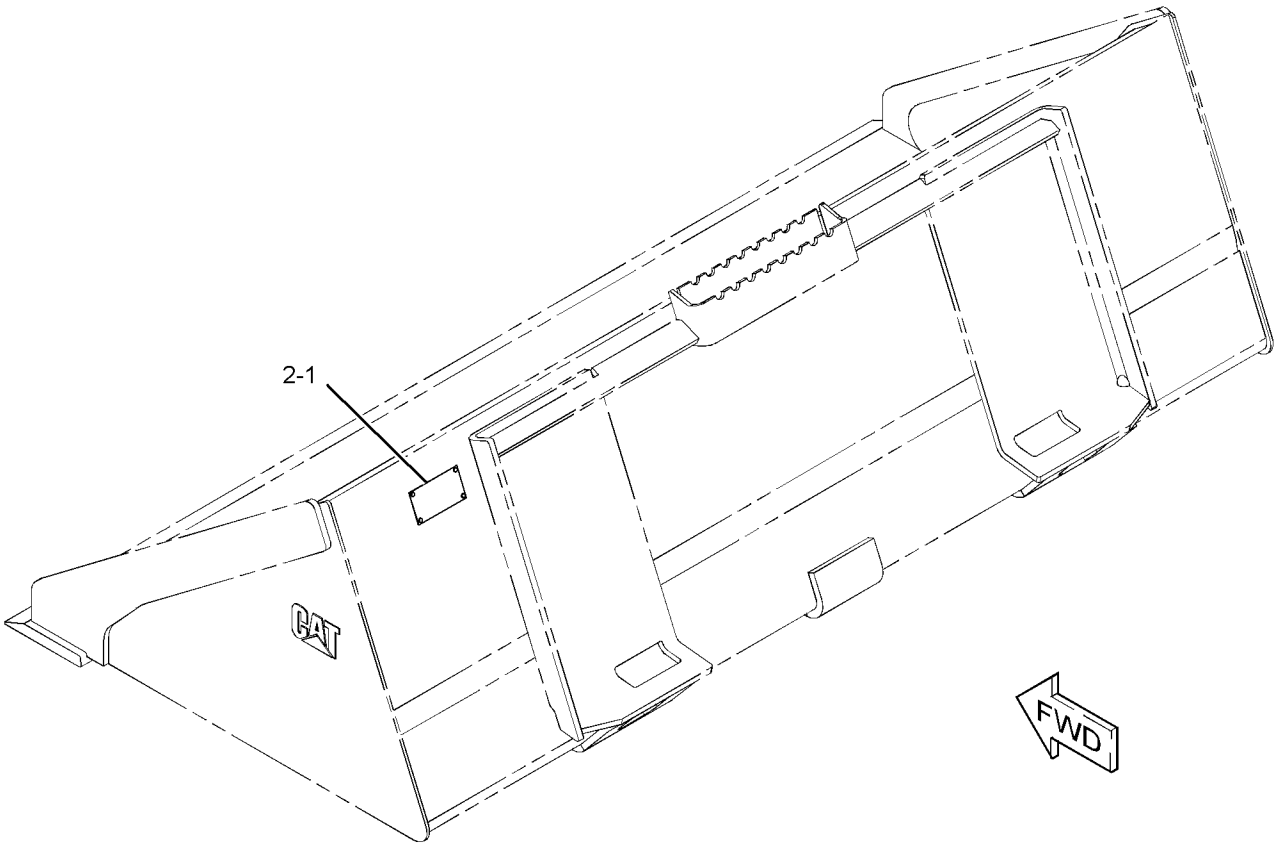

GRAPHIC #1 **<END>** g01279437

279-5372 BUCKET AS-GENERAL PURPOSE

S/N: JAY1-UP
1829-MM (72-IN)
PART OF 279-5373, 279-5374 BUCKET AR-GENERAL PURPOSE
AN ATTACHMENT

SMCS-6101 **i02552014**

NOTE	REF NO	GRAPHIC REF	PART NUMBER	QTY	PART NAME 1 2 3 4 5 6 (PRODUCT LEVEL)	SEE PAGE
	1	1	**154-2704**	1	PLATE-INSTRUCTION (BUCKET SPECIFICATIONS)	
	2	1	**168-8389**	4	TACK-FASTENER	
					PARTS SHOWN IN GRAPHIC(S) WITHOUT A REFERENCE NUMBER ARE NOT SERVICED SEPARATELY	

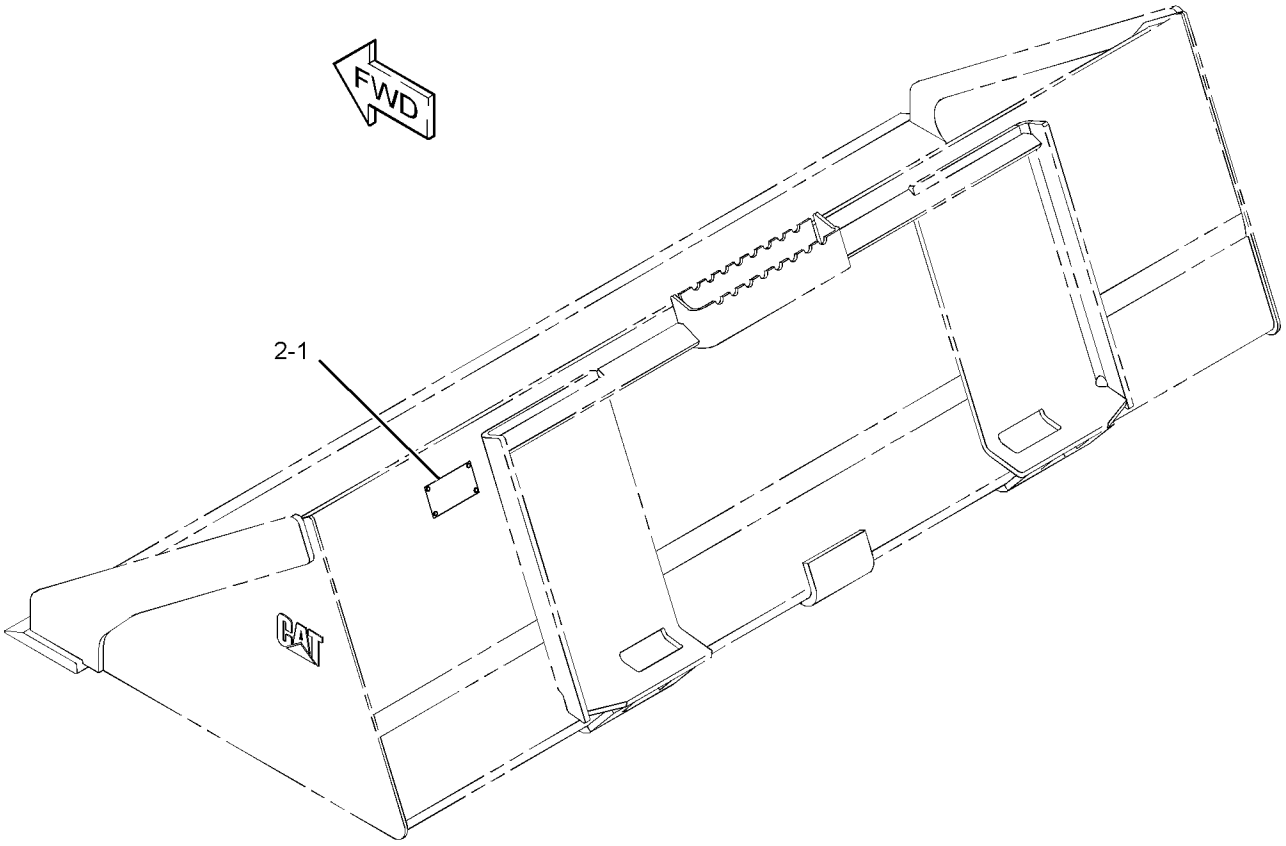

GRAPHIC #1 **<END>** g01279461

WORK TOOLS

279-5376 BUCKET AS-GENERAL PURPOSE

S/N: JAY1-UP
1981-MM (78-IN)
PART OF 279-5377, 279-5378 BUCKET AR-GENERAL PURPOSE
AN ATTACHMENT

SMCS-6101 **i02571315**

NOTE	REF NO	GRAPHIC REF	PART NUMBER	QTY	PART NAME 1 2 3 4 5 6 (PRODUCT LEVEL)	SEE PAGE
	1	1	**154-2704**	1	PLATE-INSTRUCTION (BUCKET SPECIFICATIONS)	
	2	1	**168-8389**	4	TACK-FASTENER	
					PARTS SHOWN IN GRAPHIC(S) WITHOUT A REFERENCE NUMBER ARE NOT SERVICED SEPARATELY	

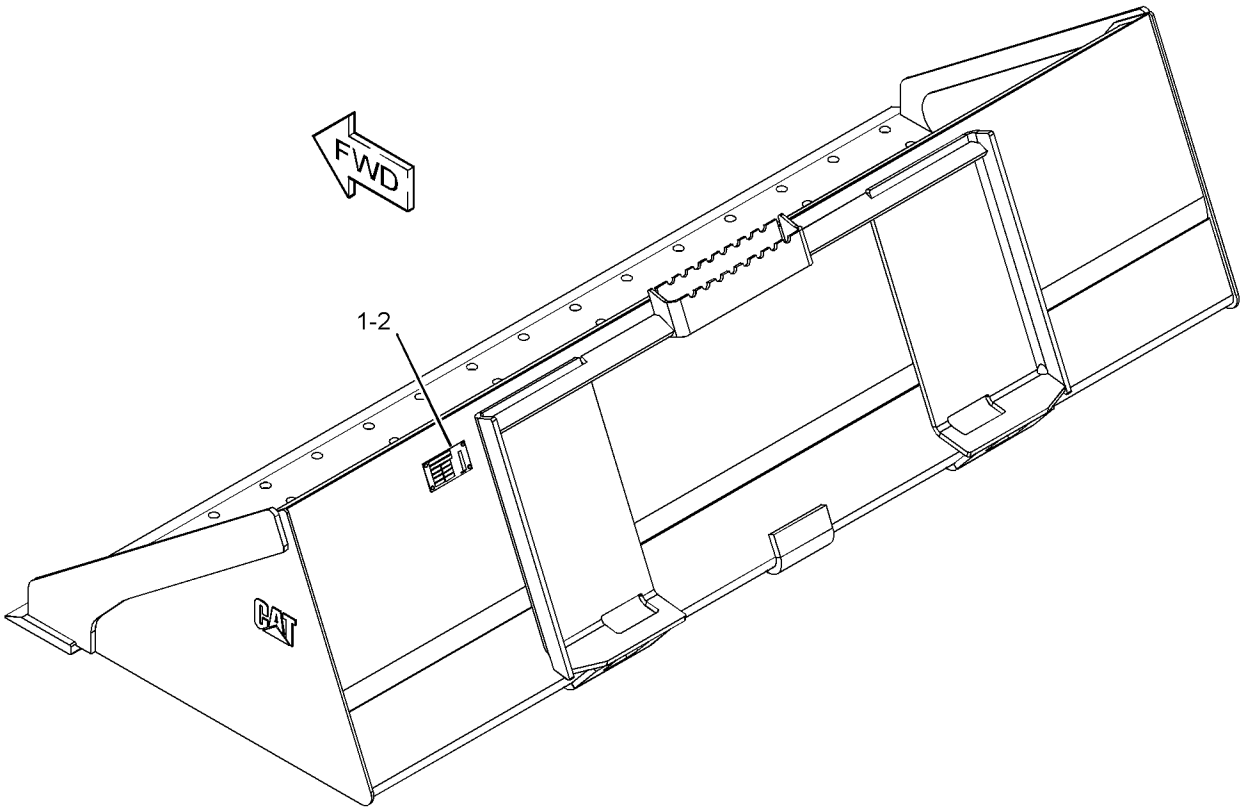

GRAPHIC #1 **<END>** g01288290

WORK TOOLS

279-5421 BUCKET AS-LIGHT MATERIAL

S/N: JAY1-UP
1829-MM (72-IN)
PART OF 279-5420 BUCKET AR-LIGHT MATERIAL
AN ATTACHMENT

SMCS-6103 **i02571326**

NOTE	REF NO	GRAPHIC REF	PART NUMBER	QTY	PART NAME 1 2 3 4 5 6 (PRODUCT LEVEL)	SEE PAGE
	1	1	**154-2704**	1	PLATE-INSTRUCTION (BUCKET SPECIFICATIONS)	
	2	1	**168-8389**	4	TACK-FASTENER	
					PARTS SHOWN IN GRAPHIC(S) WITHOUT A REFERENCE NUMBER ARE NOT SERVICED SEPARATELY	

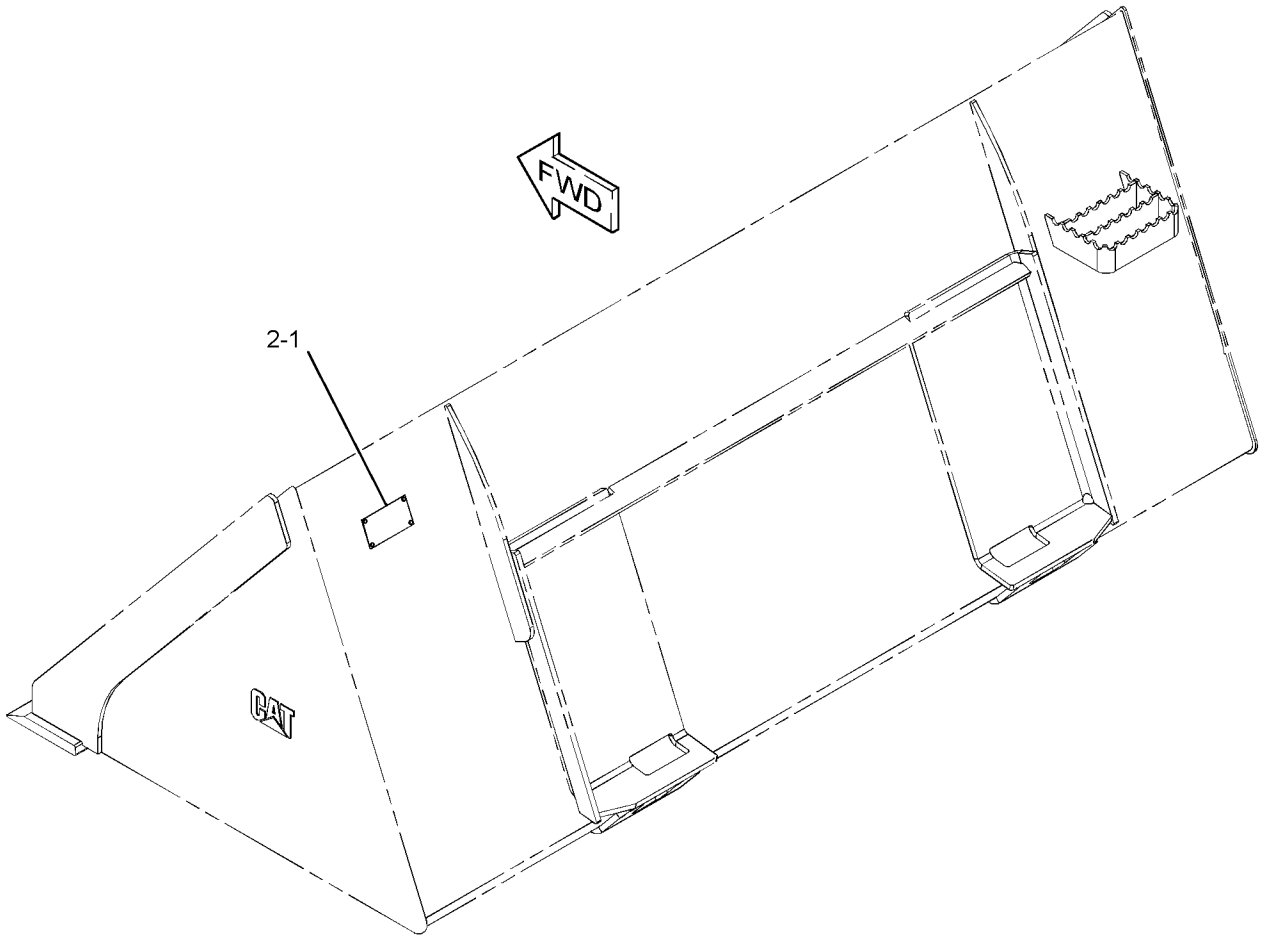

GRAPHIC #1 **<END>** g01278476

WORK TOOLS

279-5424 BUCKET AS-LIGHT MATERIAL

S/N: JAY1-UP
1981-MM (78-IN)
PART OF 279-5425 BUCKET AR-LIGHT MATERIAL
AN ATTACHMENT

SMCS-6103 **i02571330**

NOTE	REF NO	GRAPHIC REF	PART NUMBER	QTY	PART NAME 1 2 3 4 5 6 (PRODUCT LEVEL)	SEE PAGE
	1	1	**154-2704**	1	PLATE-INSTRUCTION (BUCKET SPECIFICATIONS)	
	2	1	**168-8389**	4	TACK-FASTENER	
					PARTS SHOWN IN GRAPHIC(S) WITHOUT A REFERENCE NUMBER ARE NOT SERVICED SEPARATELY	

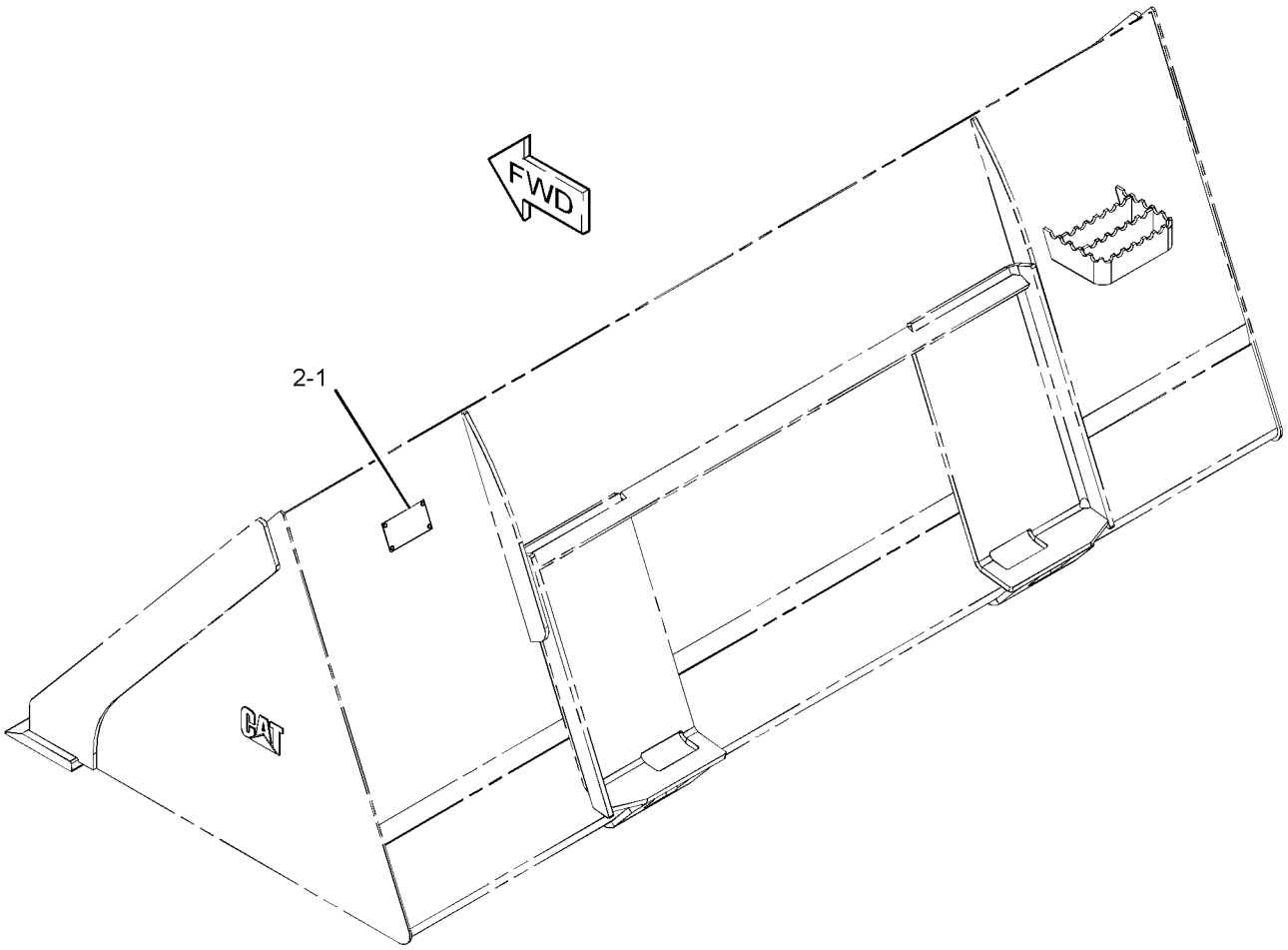

GRAPHIC #1 **<END>** g01278485

279-5429 BUCKET AS-LIGHT MATERIAL

S/N: JAY1-UP
2134-MM (84-IN)
PART OF 279-5430 BUCKET AR-LIGHT MATERIAL
AN ATTACHMENT

SMCS-6103 **i02571331**

NOTE	REF NO	GRAPHIC REF	PART NUMBER	QTY	PART NAME 1 2 3 4 5 6 (PRODUCT LEVEL)	SEE PAGE
	1	1	**154-2704**	1	PLATE-INSTRUCTION (BUCKET SPECIFICATIONS)	
	2	1	**168-8389**	4	TACK-FASTENER	
					PARTS SHOWN IN GRAPHIC(S) WITHOUT A REFERENCE NUMBER ARE NOT SERVICED SEPARATELY	

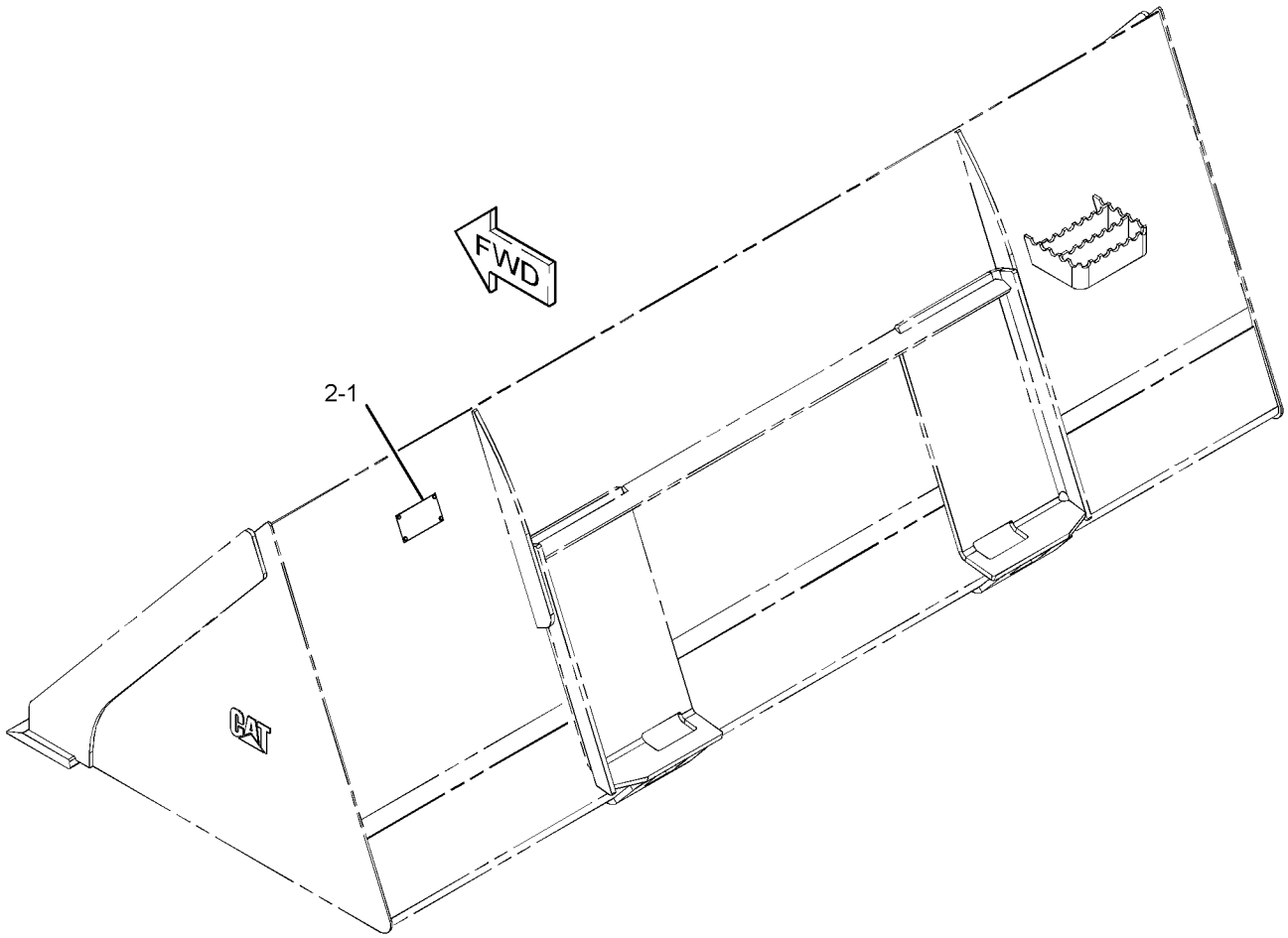

GRAPHIC #1 **<END>** g01278489

268-4084 BUCKET GP-DIRT

S/N: JAY1-UP
1981-MM (78-IN)
PART OF 268-4083 BUCKET AR-DIRT
FIELD REPLACEMENT ORDER 268-4083 BUCKET AR-DIRT
AN ATTACHMENT

SMCS-6001 **i02540002**

NOTE	REF NO	GRAPHIC REF	PART NUMBER	QTY	PART NAME 1 2 3 4 5 6 (PRODUCT LEVEL)	SEE PAGE
	1	1	**154-2704**	1	PLATE-INSTRUCTION (BUCKET SPECIFICATIONS)	
	2	1	**168-8389**	4	TACK-FASTENER	
					PARTS SHOWN IN GRAPHIC(S) WITHOUT A REFERENCE NUMBER ARE NOT SERVICED SEPARATELY	

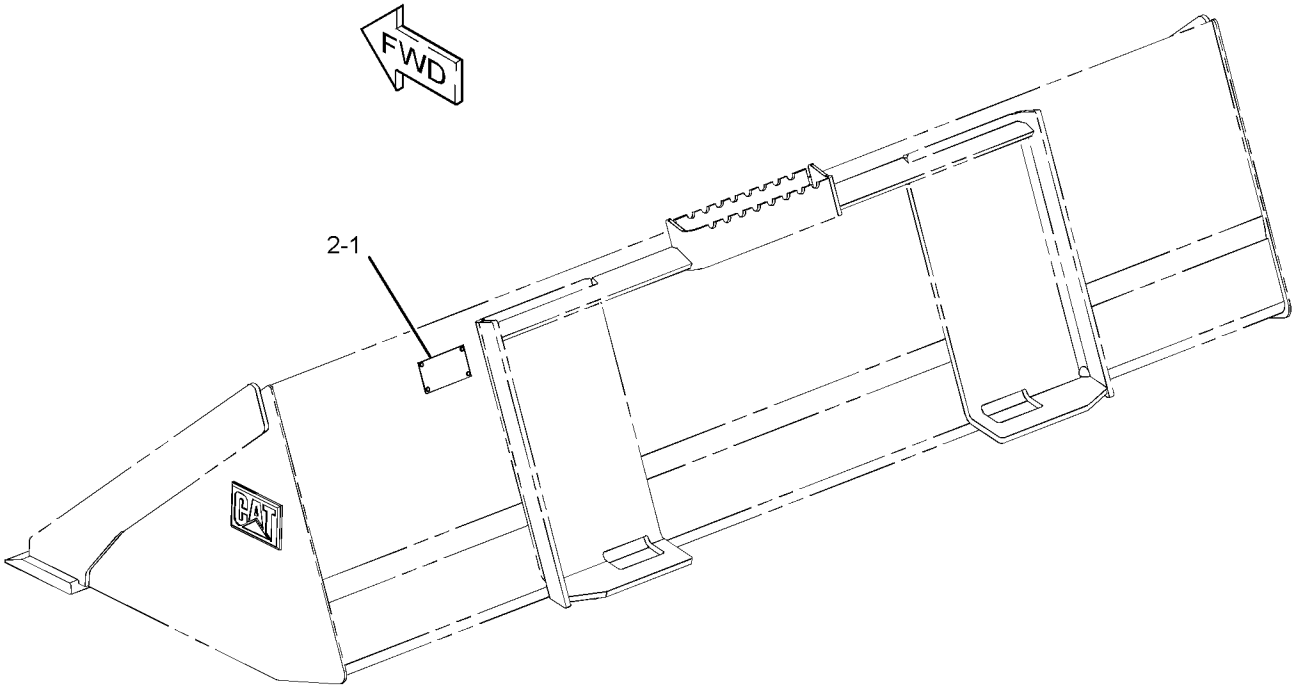

GRAPHIC #1 **<END>** g01279383

279-5383 BUCKET GP-MULTIPURPOSE

S/N: JAY1-UP
1524-MM (60-IN)
PART OF 279-5382 BUCKET AR-MULTIPURPOSE
AN ATTACHMENT

SMCS-6104 **i02711969**

NOTE	REF NO	GRAPHIC REF	PART NUMBER	QTY	PART NAME 1 2 3 4 5 6 (PRODUCT LEVEL)	SEE PAGE
	1	1	**149-4232**	1	CLAM AS	
		1	**159-8038**	2	FILM-WARNING (CRUSH HAZARD)	
	1A	1	**142-8805**	4	BEARING-SLEEVE	
	1B	1	**149-5435**	1	EDGE	
	1C	1	**161-4130**	2	PLATE-IDENTIFICATION (CAT)	
	2	1	**154-5012**	2	PIN	
	3	1	**159-8038**	2	FILM-WARNING (CRUSH HAZARD)	
Y	4	1	*279-5384*	1	BLADE GP-MULTIPURPOSE BUCKET (60-IN)	282
	5	1	**3B-8489**	2	FITTING-GREASE	
M	6	1	**6V-9189**	2	LOCKNUT (M8X1.25-THD)	
M	7	1	**8T-6869**	2	BOLT (M8X1.25X60-MM)	

M-METRIC PART
Y-SEPARATE ILLUSTRATION

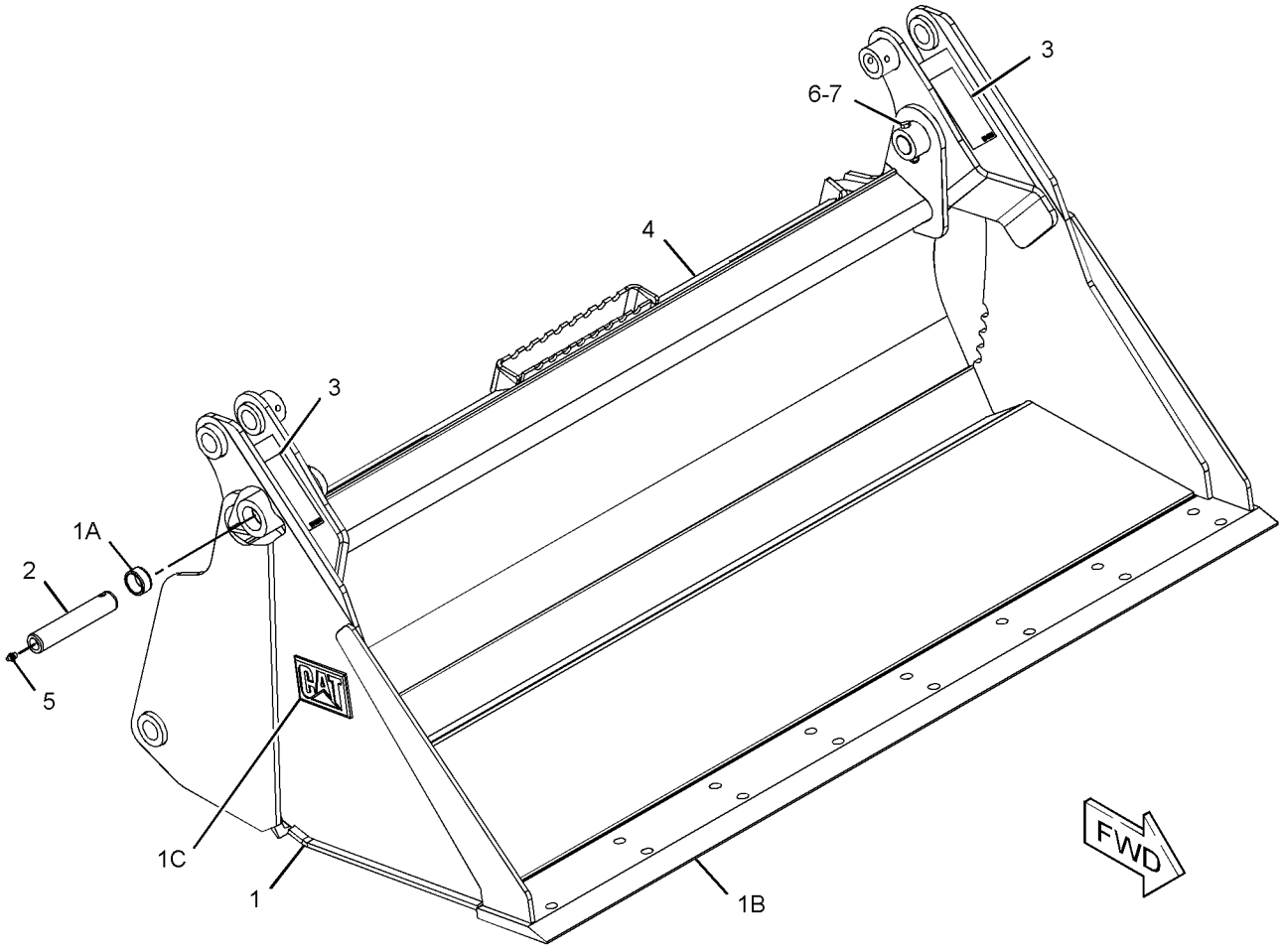

GRAPHIC #1 **<END>** g01278464

WORK TOOLS

279-5389 BUCKET GP-MULTIPURPOSE

S/N: JAY1-UP
1676-MM (66-IN)
PART OF 279-5390 BUCKET AR-MULTIPURPOSE
AN ATTACHMENT

SMCS-6104 **i02552096**

NOTE	REF NO	GRAPHIC REF	PART NUMBER	QTY	PART NAME 1 2 3 4 5 6 (PRODUCT LEVEL)	SEE PAGE
	1	1	**154-5012**	2	PIN	
	2	1	**154-5053**	1	CLAM AS	
	2A	1	**142-8805**	4	BEARING-SLEEVE	
	2B	1	**149-5436**	1	EDGE	
	2C	1	**159-8038**	2	FILM-WARNING (CRUSH HAZARD)	
	2D	1	**161-4130**	2	PLATE-IDENTIFICATION (CAT)	
Y	3	1	*279-5388*	1	BLADE GP-MULTIPURPOSE BUCKET	283
	4	1	**3B-8489**	2	FITTING-GREASE	
M	5	1	**6V-9189**	2	LOCKNUT (M8X1.25-THD)	
M	6	1	**8T-6869**	2	BOLT (M8X1.25X60-MM)	

M-METRIC PART
Y-SEPARATE ILLUSTRATION

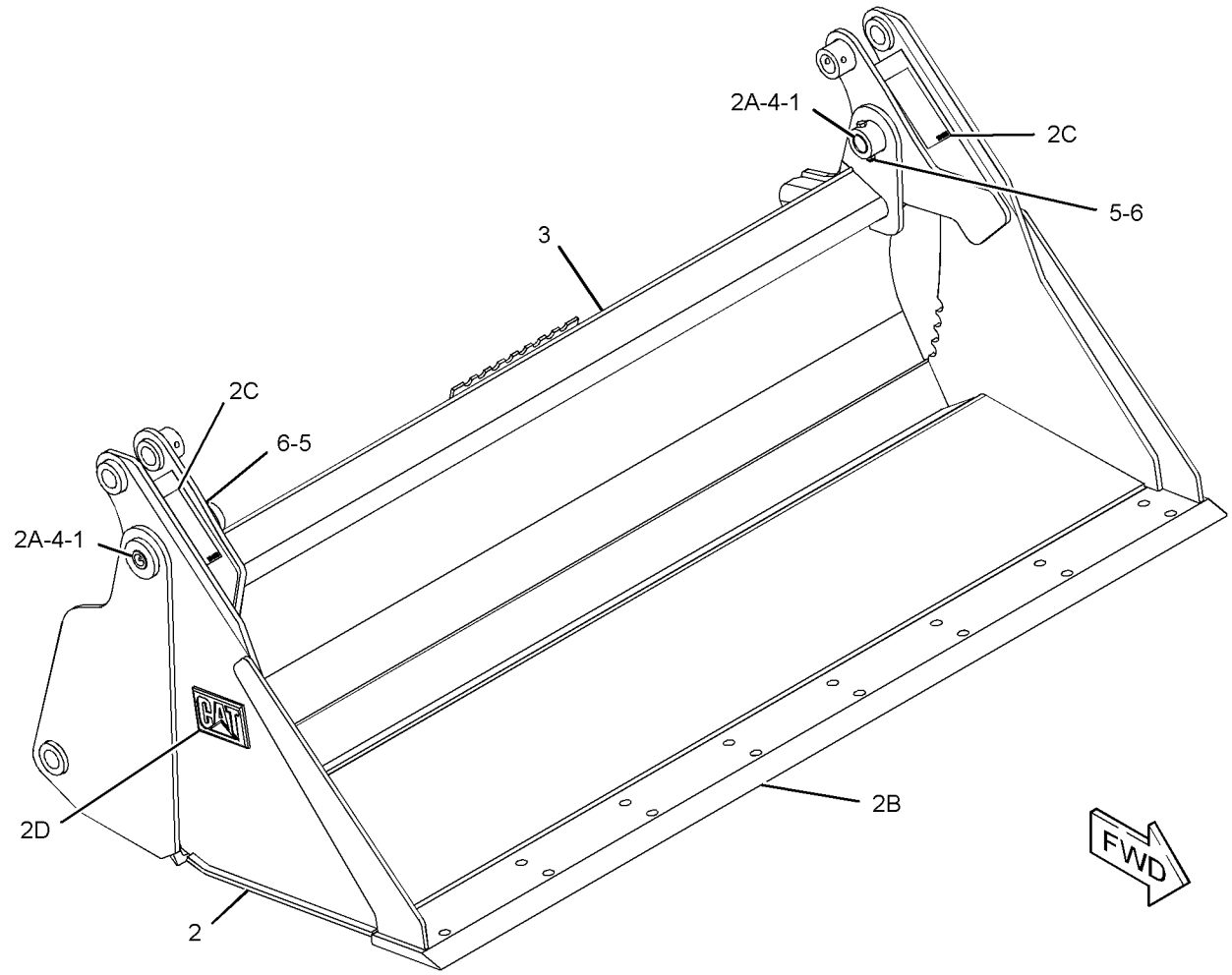

GRAPHIC #1 **<END>** g01279399

279-5397 BUCKET GP-MULTIPURPOSE

S/N: JAY1-UP
1829-MM (72-IN)
PART OF 279-5398 BUCKET AR-MULTIPURPOSE
AN ATTACHMENT

SMCS-6104 **i02552164**

NOTE	REF NO	GRAPHIC REF	PART NUMBER	QTY	PART NAME 1 2 3 4 5 6 (PRODUCT LEVEL)	SEE PAGE
	1	1	**154-5012**	2	PIN	
	2	1	**154-5070**	1	CLAM AS	
	2A	1	**142-8805**	4	BEARING-SLEEVE	
	2B	1	**149-5437**	1	EDGE	
	2C	1	**161-4130**	2	PLATE-IDENTIFICATION (CAT)	
	2D	1	**159-8038**	2	FILM-WARNING (CRUSH HAZARD)	
M	3	1	**8T-6869**	2	BOLT (M8X1.25X60-MM)	
Y	4	1	*279-5396*	1	BLADE GP-MULTIPURPOSE BUCKET (72-IN)	284
	5	1	**3B-8489**	2	FITTING-GREASE	
M	6	1	**6V-9189**	2	LOCKNUT (M8X1.25-THD)	

M-METRIC PART
Y-SEPARATE ILLUSTRATION

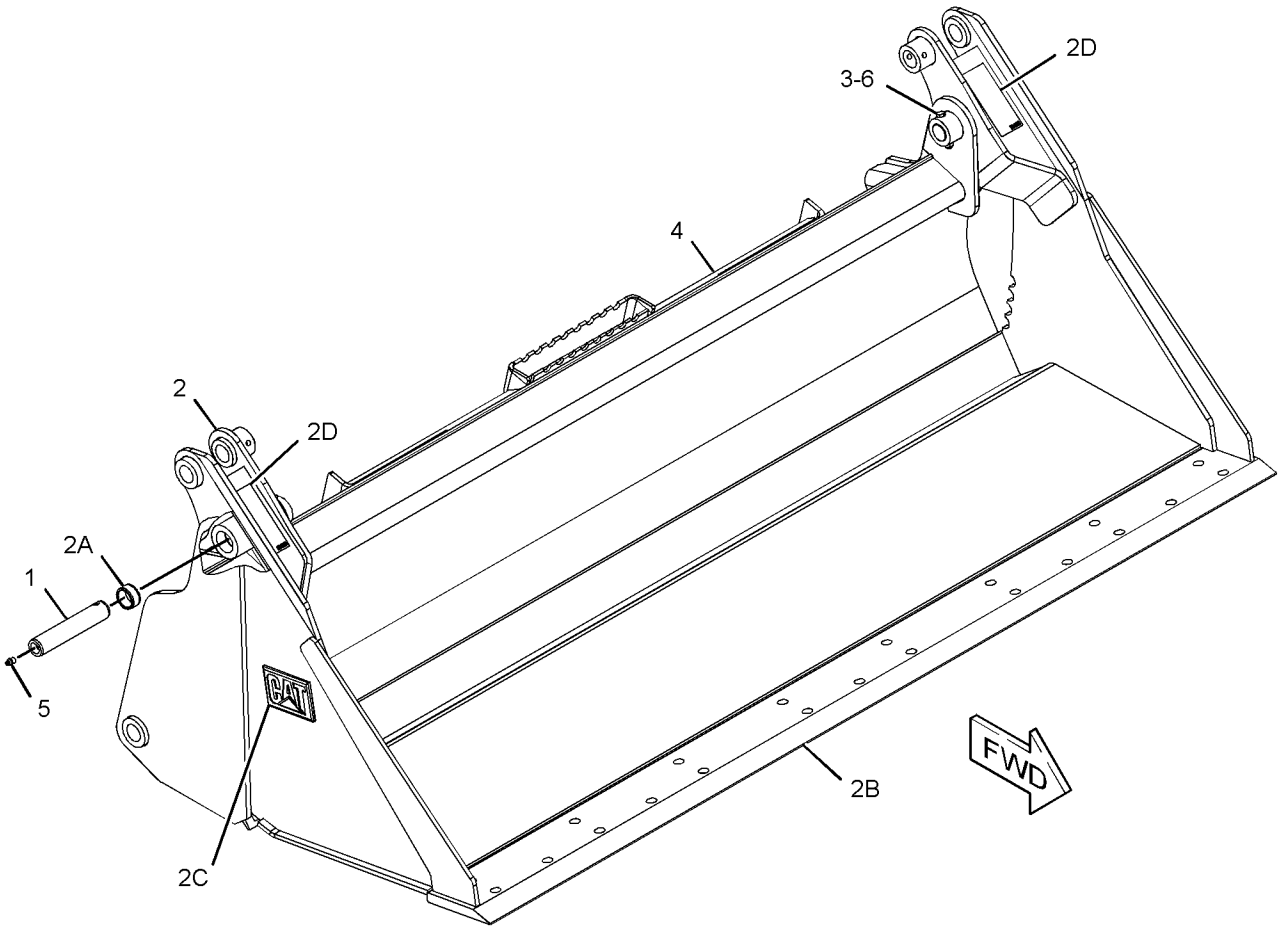

GRAPHIC #1 **<END>** g01280800

WORK TOOLS

279-5399 BUCKET GP-MULTIPURPOSE

S/N: JAY1-UP
1829-MM (72-IN)
AN ATTACHMENT

SMCS-6104 **i02552131**

NOTE	PART NUMBER	QTY	PART NAME 1 2 3 4 5 6 (PRODUCT LEVEL)	SEE PAGE
Y	**279-5398**	1	BUCKET AR-MULTIPURPOSE	294
Y	*135-9386*	1	EDGE GP-CUTTING	331

Y-SEPARATE ILLUSTRATION

<END>

279-5404 BUCKET GP-MULTIPURPOSE

S/N: JAY1-UP
1981-MM (78-IN)
PART OF 279-5403 BUCKET AR-MULTIPURPOSE
AN ATTACHMENT

SMCS-6104 **i02552254**

NOTE	REF NO	GRAPHIC REF	PART NUMBER	QTY	PART NAME 1 2 3 4 5 6 (PRODUCT LEVEL)	SEE PAGE
	1	1	**154-5012**	2	PIN	
	2	1	**159-8038**	2	FILM-WARNING (CRUSH HAZARD)	
	3	1	**199-8308**	1	CLAM AS	
		1	**142-8805**	4	BEARING-SLEEVE	
		1	**159-8038**	2	FILM-WARNING (CRUSH HAZARD)	
		1	**161-4130**	2	PLATE-IDENTIFICATION (CAT)	
		1	**199-7722**	1	EDGE	
		1	**199-8317**	1	EDGE	
Y	4	1	*279-5405*	1	BLADE GP-MULTIPURPOSE BUCKET (78-IN)	285
	5	1	**3B-8489**	2	FITTING-GREASE	
M	6	1	**6V-9189**	2	LOCKNUT (M8X1.25-THD)	
M	7	1	**8T-6869**	2	BOLT (M8X1.25X60-MM)	

M-METRIC PART
Y-SEPARATE ILLUSTRATION

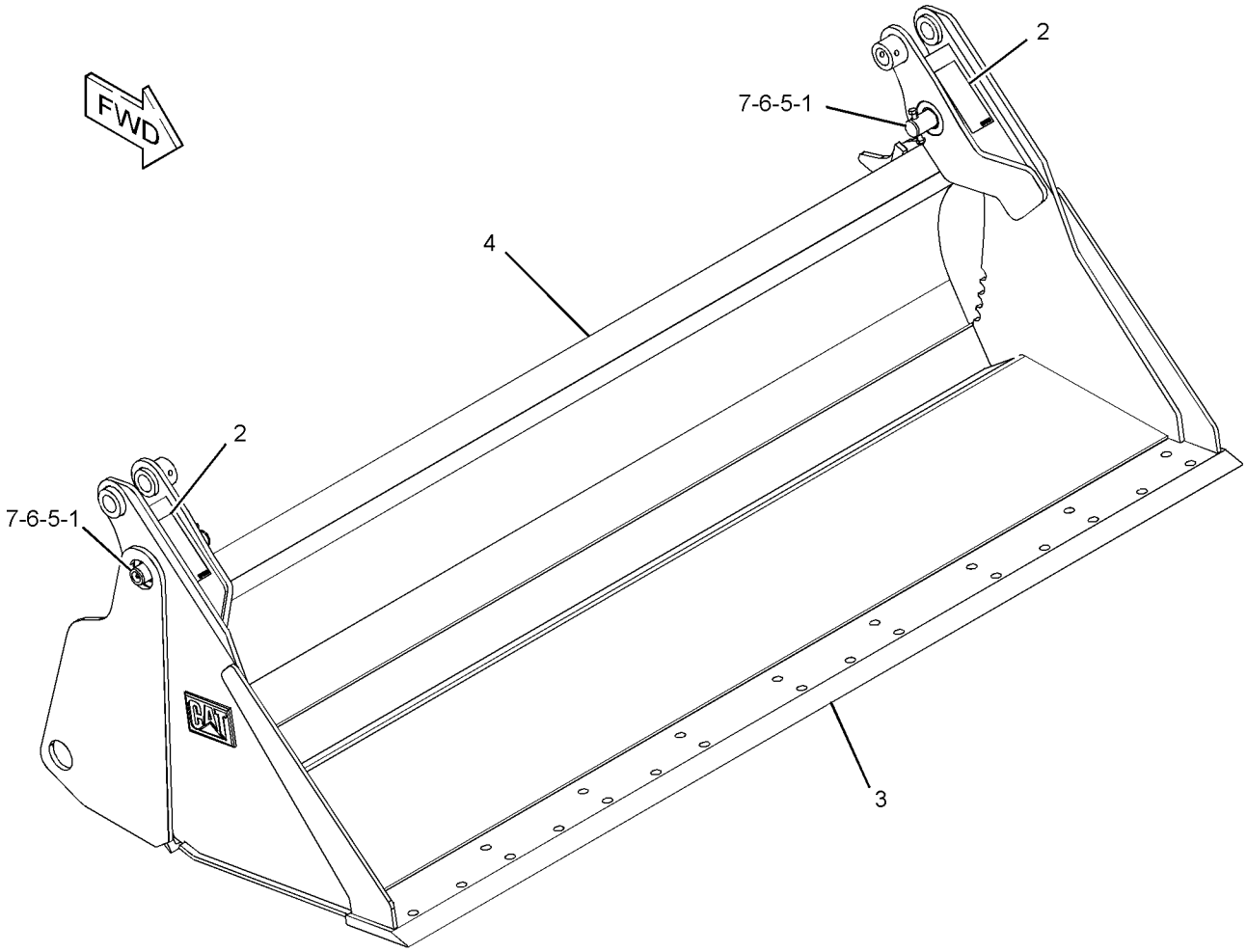

GRAPHIC #1 **<END>** g01278497

293-0141 BUCKET GP-MULTIPURPOSE–MULTIPURPOSE BUCKET

S/N: JAY1-UP
2134-MM (84-IN)
PART OF 293-0139 BUCKET AR-MULTIPURPOSE
AN ATTACHMENT

SMCS-6104 **i02636473**

NOTE	REF NO	GRAPHIC REF	PART NUMBER	QTY	PART NAME 1 2 3 4 5 6 (PRODUCT LEVEL)	SEE PAGE
	1	1	**154-5012**	2	PIN	
Y	2	1	*293-0142*	1	BLADE GP-MULTIPURPOSE BUCKET	286
	3	1	**293-0148**	1	CLAM AS	
	4	1	**3B-8489**	2	FITTING-GREASE	
M	5	1	**6V-9189**	2	LOCKNUT (M8X1.25-THD)	
M	6	1	**8T-6869**	2	BOLT (M8X1.25X60-MM)	

M-METRIC PART
Y-SEPARATE ILLUSTRATION

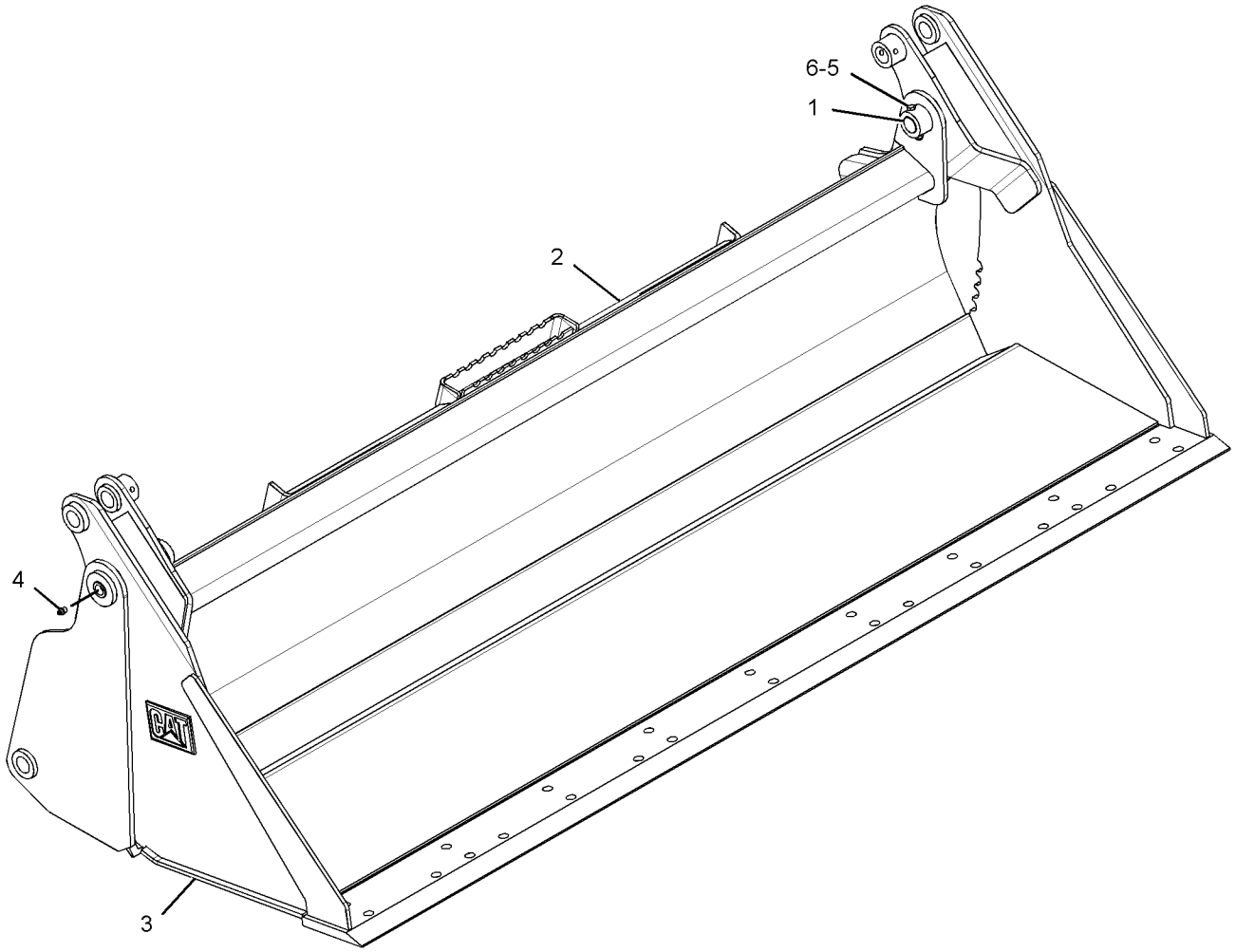

GRAPHIC #1 **<END>** g01327400

285-6096 BUCKET GP-UTILITY

S/N: JAY1-UP
1524-MM (60-IN)
PART OF 285-6095 BUCKET AR-UTILITY
AN ATTACHMENT

SMCS-6101 **i02552472**

NOTE	REF NO	GRAPHIC REF	PART NUMBER	QTY	PART NAME 1 2 3 4 5 6 (PRODUCT LEVEL)	SEE PAGE
	1	1	**154-2704**	1	PLATE-INSTRUCTION (BUCKET SPECIFICATIONS)	
	2	1	**168-8389**	4	TACK-FASTENER	

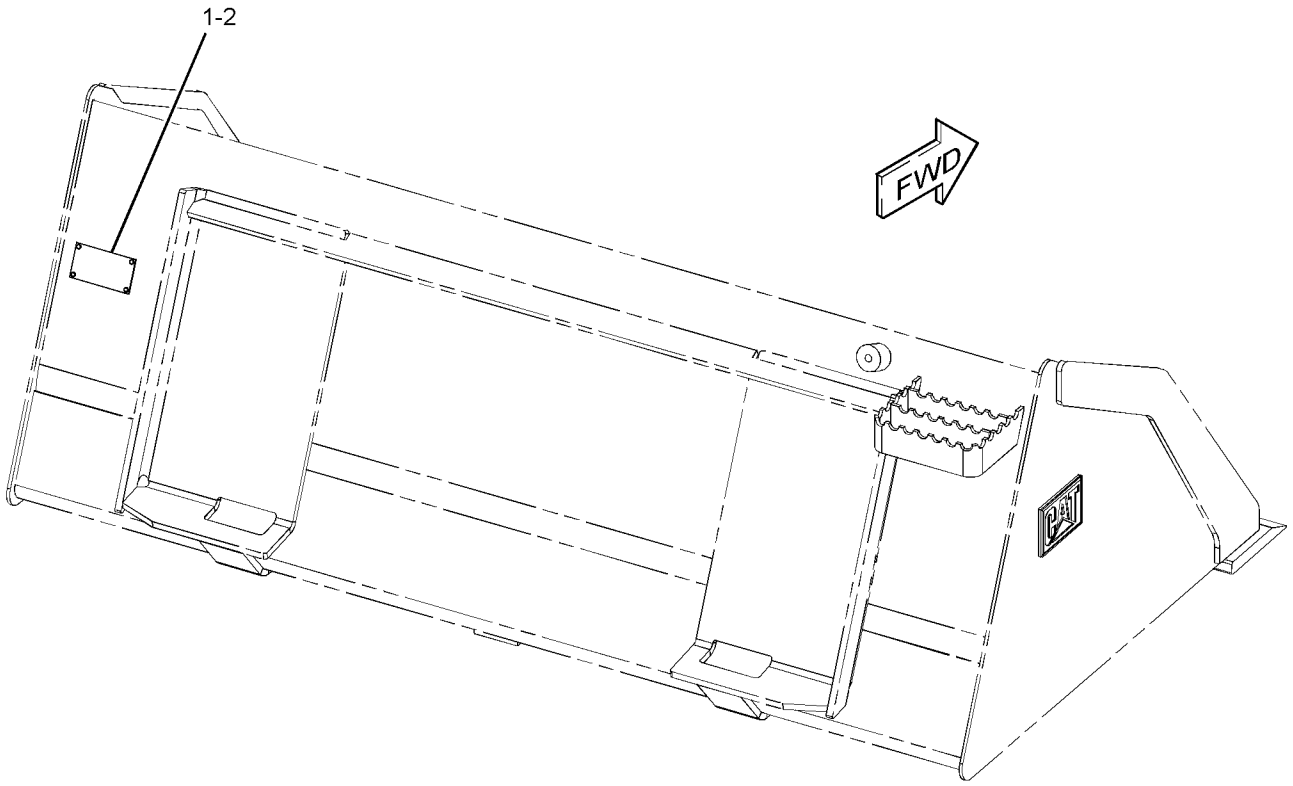

GRAPHIC #1 **<END>** g01278644

WORK TOOLS

285-6099 BUCKET GP-UTILITY

S/N: JAY1-UP
1676-MM (66-IN)
PART OF 285-6093 BUCKET AR-GRAPPLE, 285-6100 BUCKET AR-UTILITY
AN ATTACHMENT

SMCS-6101 **i02552452**

NOTE	REF NO	GRAPHIC REF	PART NUMBER	QTY	PART NAME 1 2 3 4 5 6 (PRODUCT LEVEL)	SEE PAGE
	1	1	**154-2704**	1	PLATE-INSTRUCTION (BUCKET SPECIFICATIONS)	
	2	1	**168-8389**	4	TACK-FASTENER	
					PARTS SHOWN IN GRAPHIC(S) WITHOUT A REFERENCE NUMBER ARE NOT SERVICED SEPARATELY	

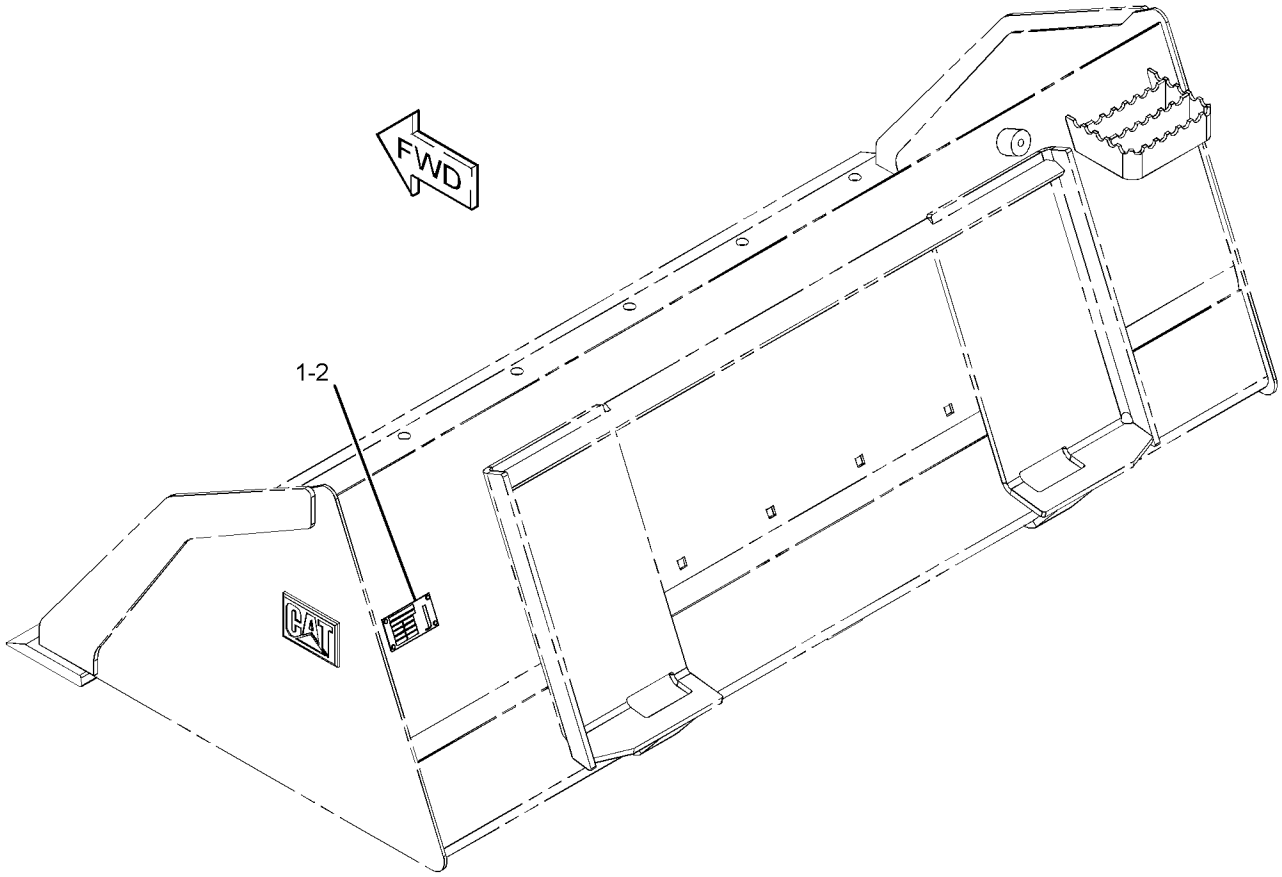

GRAPHIC #1 **<END>** g01279288

WORK TOOLS

285-6102 BUCKET GP-UTILITY

S/N: JAY1-UP
1829-MM (72-IN)
PART OF 285-6104 BUCKET AR-GRAPPLE, 285-6101 BUCKET AR-UTILITY
AN ATTACHMENT

SMCS-6101 **i02711971**

NOTE	REF NO	GRAPHIC REF	PART NUMBER	QTY	PART NAME 1 2 3 4 5 6 (PRODUCT LEVEL)	SEE PAGE
	1	1	**154-2704**	1	PLATE-INSTRUCTION (BUCKET SPECIFICATIONS)	
	2	1	**168-8389**	4	TACK-FASTENER	

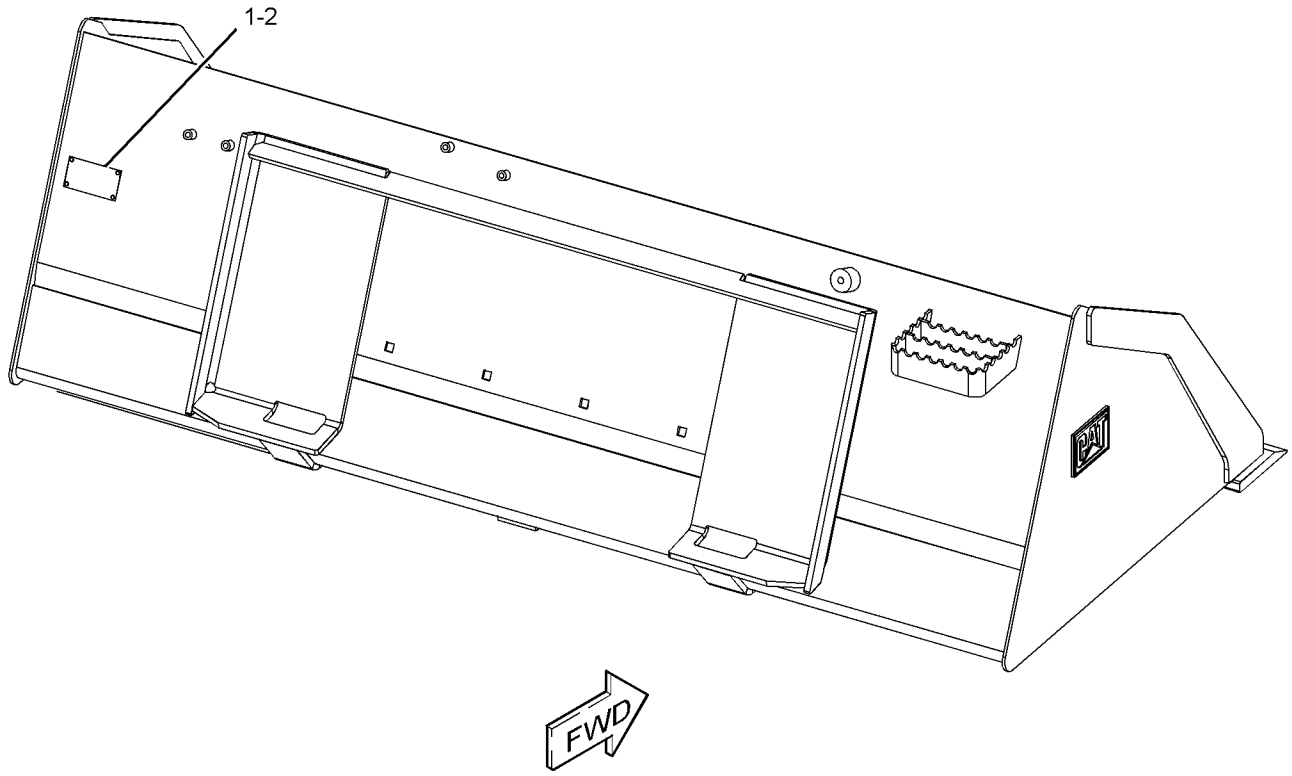

GRAPHIC #1 **<END>** g01361699

293-9427 CARRIAGE & FORK AR

S/N: JAY1-UP
AN ATTACHMENT

SMCS-6136, 6402 **i02628876**

NOTE	PART NUMBER	QTY	PART NAME 1 2 3 4 5 6 (PRODUCT LEVEL)	SEE PAGE
Y	**261-6681**	1	CARRIAGE GP-FORK	321
Y	**195-6943**	2	FORK GP-PALLET (36-IN)	339

Y-SEPARATE ILLUSTRATION

<END>

293-9428 CARRIAGE & FORK AR

S/N: JAY1-UP
AN ATTACHMENT

SMCS-6136, 6402 **i02628877**

NOTE	PART NUMBER	QTY	PART NAME 1 2 3 4 5 6 (PRODUCT LEVEL)	SEE PAGE
Y	**261-6681**	1	CARRIAGE GP-FORK	321
Y	**195-6942**	2	FORK GP-PALLET (42-IN)	339

Y-SEPARATE ILLUSTRATION

<END>

293-9429 CARRIAGE & FORK AR

S/N: JAY1-UP
AN ATTACHMENT

SMCS-6136, 6402 **i02628878**

NOTE	PART NUMBER	QTY	PART NAME 1 2 3 4 5 6 (PRODUCT LEVEL)	SEE PAGE
Y	**261-6681**	1	CARRIAGE GP-FORK	321
Y	**195-8545**	2	FORK GP-PALLET (48-IN)	339

Y-SEPARATE ILLUSTRATION

<END>

WORK TOOLS

261-6681 CARRIAGE GP-FORK

S/N: JAY1-UP

PART OF 293-9427, 293-9428, 293-9429 CARRIAGE & FORK AR, 293-9426 CARRIAGE GP-FORK

AN ATTACHMENT

SMCS-6402 **i02539756**

NOTE	REF NO	GRAPHIC REF	PART NUMBER	QTY	PART NAME 1 2 3 4 5 6 (PRODUCT LEVEL)	SEE PAGE
	1	1	**157-4835**	1	PLATE-INSTRUCTION	
	2	1	**168-8389**	4	TACK-FASTENER	
	3	1	**252-8595**	1	STEP AS	
	4	1	**8T-4121**	2	WASHER-HARD (11X21X2.5-MM THK)	
M	5	1	**8T-4133**	2	NUT (M10X1.5-THD)	
M	6	1	**8T-4136**	2	BOLT (M10X1.5X25-MM)	
					PARTS SHOWN IN GRAPHIC(S) WITHOUT A REFERENCE NUMBER ARE NOT SERVICED SEPARATELY	

M-METRIC PART

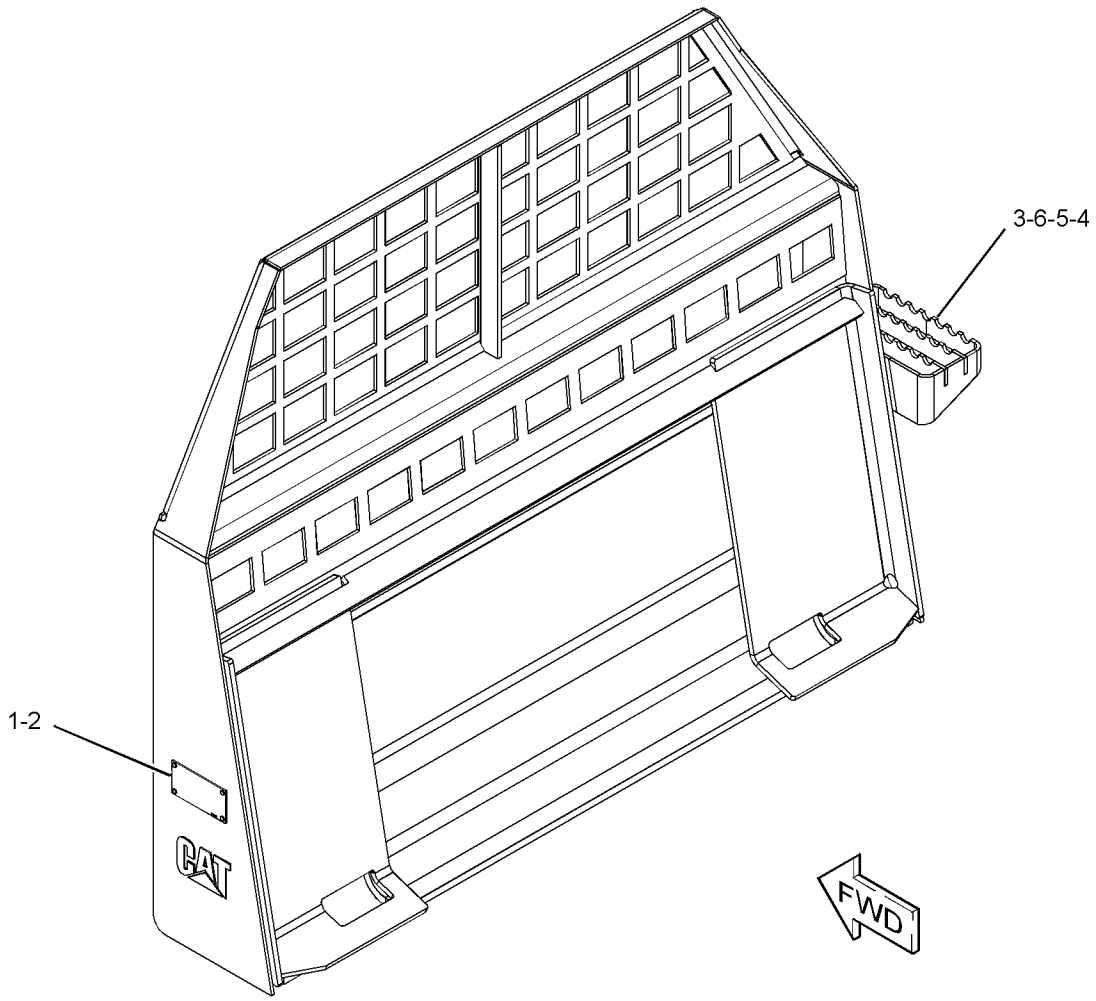

GRAPHIC #1 **<END>** g01282475

WORK TOOLS

293-9426 CARRIAGE GP-FORK

S/N: JAY1-UP
AN ATTACHMENT

SMCS-6402 **i02628875**

NOTE	PART NUMBER	QTY	PART NAME 1 2 3 4 5 6 (PRODUCT LEVEL)	SEE PAGE
Y	**261-6681**	6	CARRIAGE GP-FORK	321
Y-SEPARATE ILLUSTRATION				

<END>

258-2790 COUPLER AR-QUICK

S/N: JAY1-UP
AN ATTACHMENT

SMCS-6129 **i02625571**

NOTE	PART NUMBER	QTY	PART NAME 1 2 3 4 5 6 (PRODUCT LEVEL)	SEE PAGE
Y	*258-2500*	1	COUPLER GP-QUICK	323
	285-2190	1	FITTING GP-HYDRAULIC (MANUAL)	
	6V-9829	1	CAP AS	
	148-8390	1	ELBOW AS	
	2M-9780	1	SEAL-O-RING	
	6V-8626	1	ELBOW	
	7J-9108	1	SEAL-O-RING	
Y-SEPARATE ILLUSTRATION				

<END>

258-2791 COUPLER AR-QUICK

S/N: JAY1-UP
AN ATTACHMENT

SMCS-6129 **i02629811**

NOTE	PART NUMBER	QTY	PART NAME 1 2 3 4 5 6 (PRODUCT LEVEL)	SEE PAGE
Y	*258-2501*	1	COUPLER GP-QUICK (HYDRAULIC)	324
Y	*258-2424*	1	LINES GP-COUPLER	215
Y	*258-4190*	1	WIRING GP-COUPLER	104
Y-SEPARATE ILLUSTRATION				

<END>

258-2500 COUPLER GP-QUICK

S/N: JAY1-UP
PART OF 258-2790 COUPLER AR-QUICK
AN ATTACHMENT

SMCS-6129 **i02711953**

NOTE	REF NO	GRAPHIC REF	PART NUMBER	QTY	PART NAME 1 2 3 4 5 6 (PRODUCT LEVEL)	SEE PAGE
	1	1	**159-5797**	2	SPRING	
Y	2	1	*258-2537*	1	LOCK GP-QUICK COUPLER (LH)	353
Y	3	1	*258-2535*	1	LOCK GP-QUICK COUPLER (RH)	352
	4	1	**287-4300**	1	COUPLER AS	
	5	1	**131-5879**	2	WASHER (11X32X3-MM THK)	
	6	1	**132-7551**	2	SPACER (11X19X6-MM THK)	
	7	1	**5B-0651**	2	FITTING-STRAIGHT	
M	8	1	**6V-7744**	2	LOCKNUT (M10X1.15-THD)	
M	9	1	**7X-2621**	2	BOLT (M10X1.5X12-MM)	
	10	1	**7X-7729**	4	WASHER (11X25X3-MM THK)	
	11	1	**8T-4121**	6	WASHER-HARD (11X21X2.5-MM THK)	
M	12	1	**8T-4172**	2	BOLT (M10X1.5X80-MM)	
M	13	1	**8T-4196**	4	BOLT (M10X1.5X35-MM)	

M-METRIC PART
Y-SEPARATE ILLUSTRATION

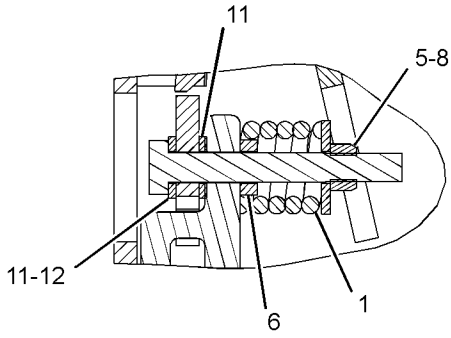

SECTION A-A

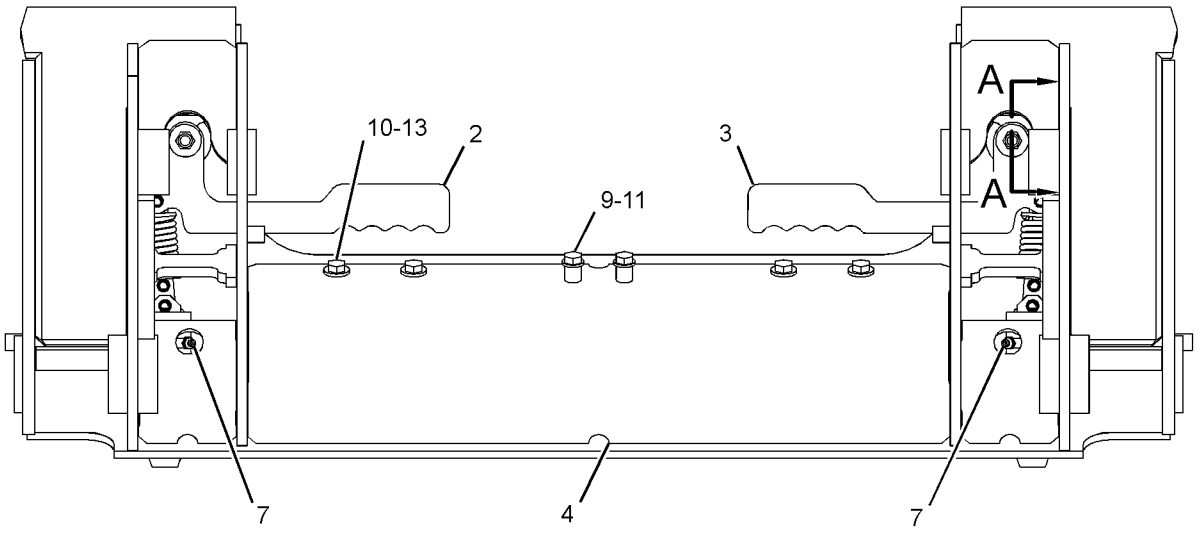

FRONT VIEW

GRAPHIC #1 **<END>** g01320262

WORK TOOLS

258-2501 COUPLER GP-QUICK

S/N: JAY1-UP
PART OF 258-2791 COUPLER AR-QUICK
AN ATTACHMENT

SMCS-6129 **i02625579**

NOTE	REF NO	GRAPHIC REF	PART NUMBER	QTY	PART NAME 1 2 3 4 5 6 (PRODUCT LEVEL)	SEE PAGE
	1	1	**207-9785**	2	PIN	
Y	2	1	*215-3962*	1	CYLINDER & LINK GP-COUPLER (LH)	326
Y	3	1	*215-3963*	1	CYLINDER & LINK GP-COUPLER (RH)	327
	4	1	**218-6332**	1	BRACKET AS	
	5	1	**218-6333**	1	BRACKET AS	
	6	1	**287-4300**	1	COUPLER AS	
	7	1	**3B-4628**	2	PIN-COTTER	
	8	1	**5B-0651**	2	FITTING-STRAIGHT	
	9	1	**5P-0372**	2	LOCK PIN	
	10	1	**8L-5188**	2	PIN	
	11	1	**8T-4121**	12	WASHER-HARD (11X21X2.5-MM THK)	
M	12	1	**8T-4133**	4	NUT (M10X1.5-THD)	
M	13	1	**8T-4196**	8	BOLT (M10X1.5X35-MM)	
	14	1	**9T-7303**	4	SPACER (16X28X1.5-MM THK)	

M-METRIC PART
Y-SEPARATE ILLUSTRATION

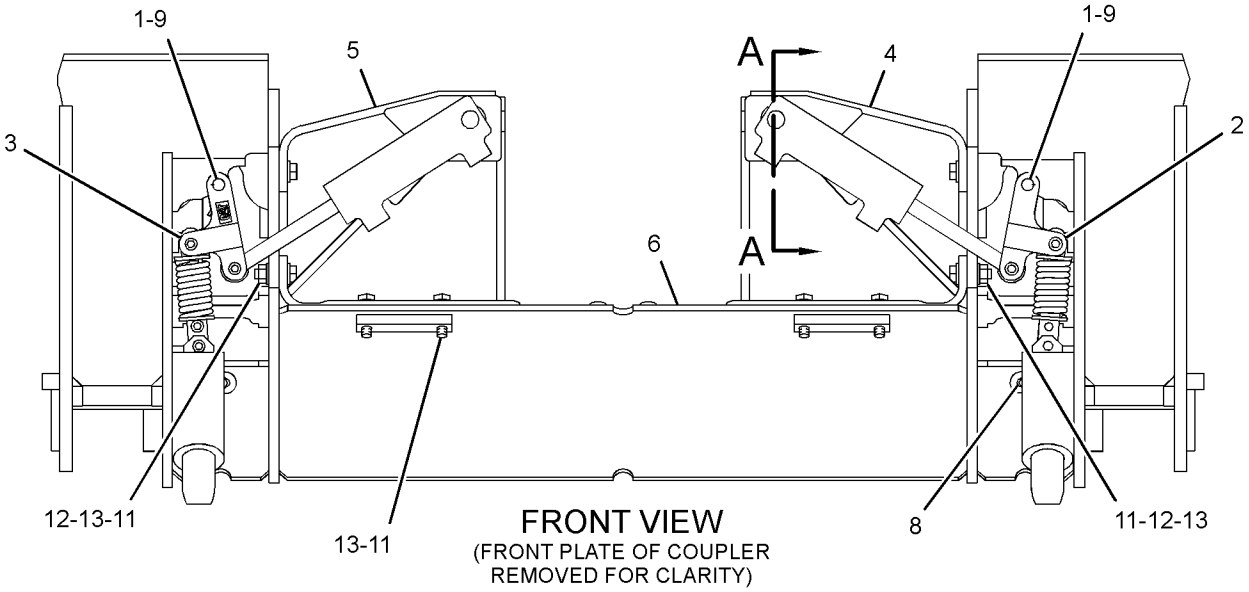

FRONT VIEW
(FRONT PLATE OF COUPLER REMOVED FOR CLARITY)

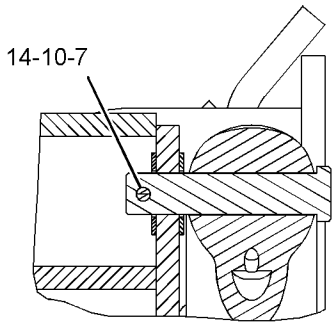

SECTION A-A

GRAPHIC #1 **<END>** g01322741

WORK TOOLS

162-5236 COVER GP-LINES

S/N: JAY1-UP

PART OF 279-5382, 279-5390, 279-5398, 279-5403, 293-0139 BUCKET AR-MULTIPURPOSE AN ATTACHMENT

SMCS-5057 **i01227894**

NOTE	REF NO	GRAPHIC REF	PART NUMBER	QTY	PART NAME 1 2 3 4 5 6 (PRODUCT LEVEL)	SEE PAGE
	1	1	**161-4128**	1	PLATE	
M	2	1	**5C-9553**	5	BOLT (M6X1.0X16MM)	
	3	1	**9X-2026**	5	WASHER (1MM THK)	

M-METRIC PART

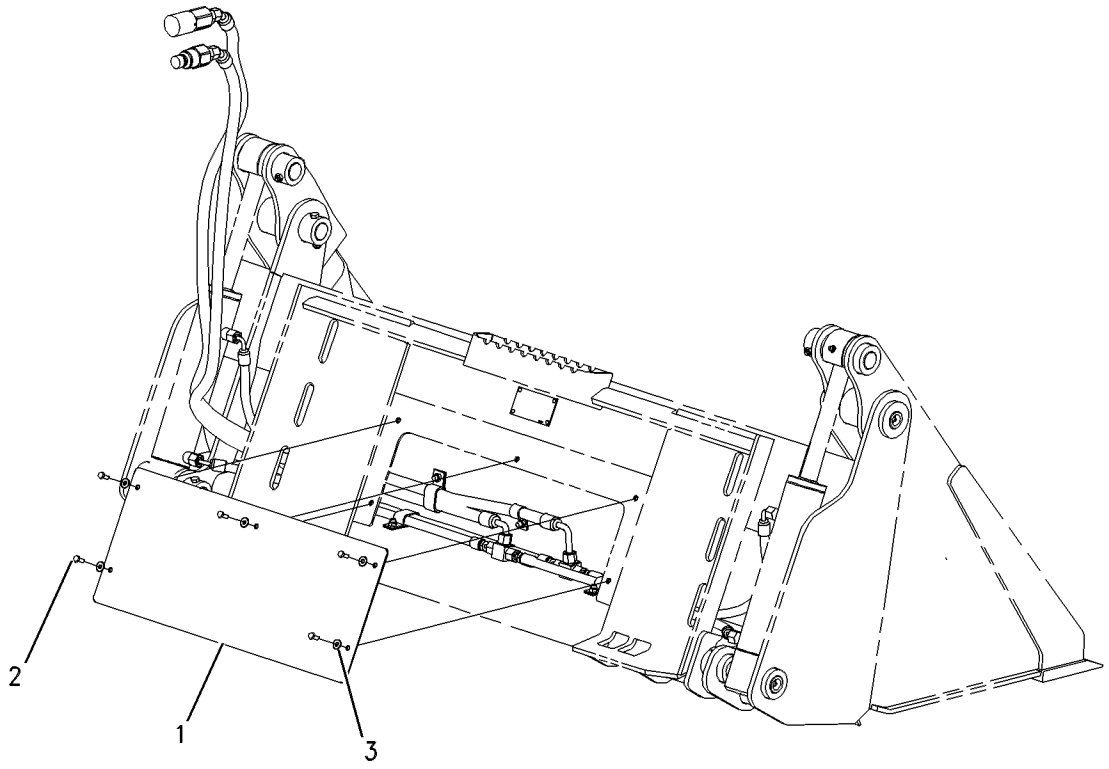

GRAPHIC #1 **<END>** g00560360

215-3962 CYLINDER & LINK GP-COUPLER—LH

S/N: JAY1-UP
PART OF 258-2501 COUPLER GP-QUICK
AN ATTACHMENT

SMCS-5133, 6129 **i02711951**

NOTE	REF NO	GRAPHIC REF	PART NUMBER	QTY	PART NAME 1 2 3 4 5 6 (PRODUCT LEVEL)	SEE PAGE
	1	1	**166-2560**	1	PIN-SPRING	
Y	2	1	**192-2640**	1	CYLINDER GP-HYDRAULIC (COUPLER)	185
	3	1	**192-2642**	1	PIN	
	4	1	**195-6754**	1	PIN-SPRING	
Y	5	1	*215-3957*	1	LINK GP-COUPLER	350

Y-SEPARATE ILLUSTRATION

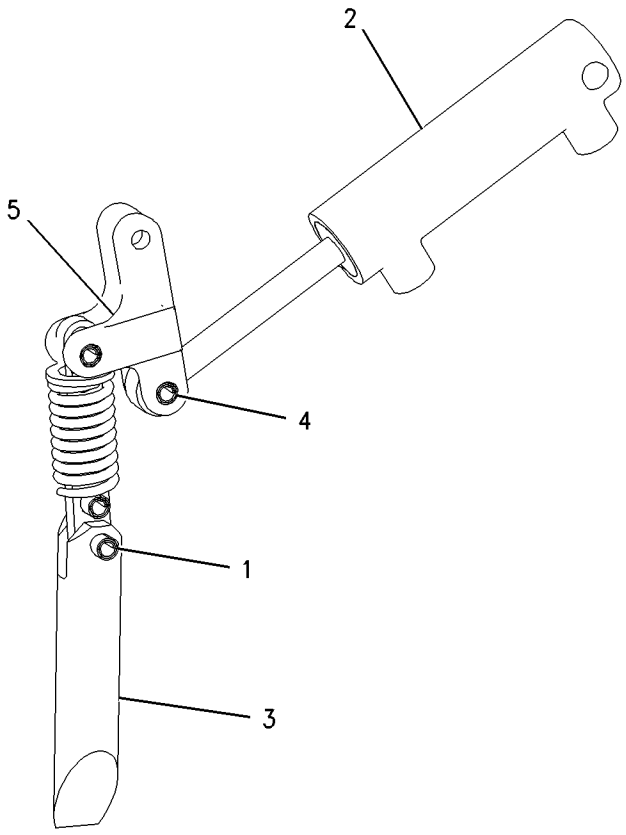

GRAPHIC #1 **<END>** g00871294

215-3963 CYLINDER & LINK GP-COUPLER–RH

S/N: JAY1-UP
PART OF 258-2501 COUPLER GP-QUICK
AN ATTACHMENT

SMCS-5133, 6129 **i02711952**

NOTE	REF NO	GRAPHIC REF	PART NUMBER	QTY	PART NAME 1 2 3 4 5 6 (PRODUCT LEVEL)	SEE PAGE
	1	1	**166-2560**	1	PIN-SPRING	
Y	2	1	**192-2640**	1	CYLINDER GP-HYDRAULIC (COUPLER)	185
	3	1	**192-2642**	1	PIN	
	4	1	**195-6754**	1	PIN-SPRING	
Y	5	1	*215-3957*	1	LINK GP-COUPLER	350

Y-SEPARATE ILLUSTRATION

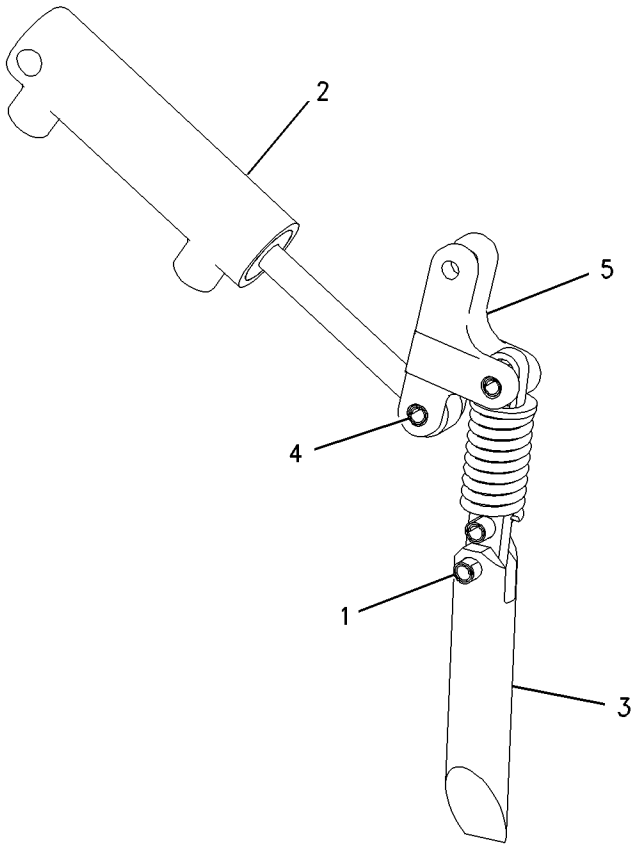

GRAPHIC #1 **<END>** g00871299

WORK TOOLS

135-9383 EDGE GP-CUTTING

S/N: JAY1-UP
PART OF 279-5435 BUCKET AR-DIRT
FOR USE WITH 137.20-CM (54-IN) BUCKET
AN ATTACHMENT

SMCS-6801 **i02571125**

NOTE	PART NUMBER	QTY	PART NAME 1 2 3 4 5 6 (PRODUCT LEVEL)	SEE PAGE
	135-9393	1	EDGE-CUTTING	
M	**8T-4778**	6	LOCKNUT (M16X2-THD)	
M	**159-2953**	6	SCREW-FLAT HEAD (M16X2-THD)	

M-METRIC PART

<END>

WORK TOOLS

135-9384 EDGE GP-CUTTING

S/N: JAY1-UP

PART OF 279-5438 BUCKET AR-DIRT, 279-5365 BUCKET AR-GENERAL PURPOSE, 279-5381 BUCKET AR-MULTIPURPOSE, 285-6095 BUCKET AR-UTILITY

FOR USE WITH 152.40-CM (60-IN) BUCKET

AN ATTACHMENT

SMCS-6801 **i01372033**

NOTE	REF NO	GRAPHIC REF	PART NUMBER	QTY	PART NAME 1 2 3 4 5 6 (PRODUCT LEVEL)	SEE PAGE
	1	1	**135-9394**	1	EDGE-CUTTING	
M	2	1	**8T-4778**	8	LOCKNUT (M16X2.00 THD)	
M	3	1	**159-2953**	8	SCREW-FLAT HEAD (M16X2.00 THD)	

M-METRIC PART

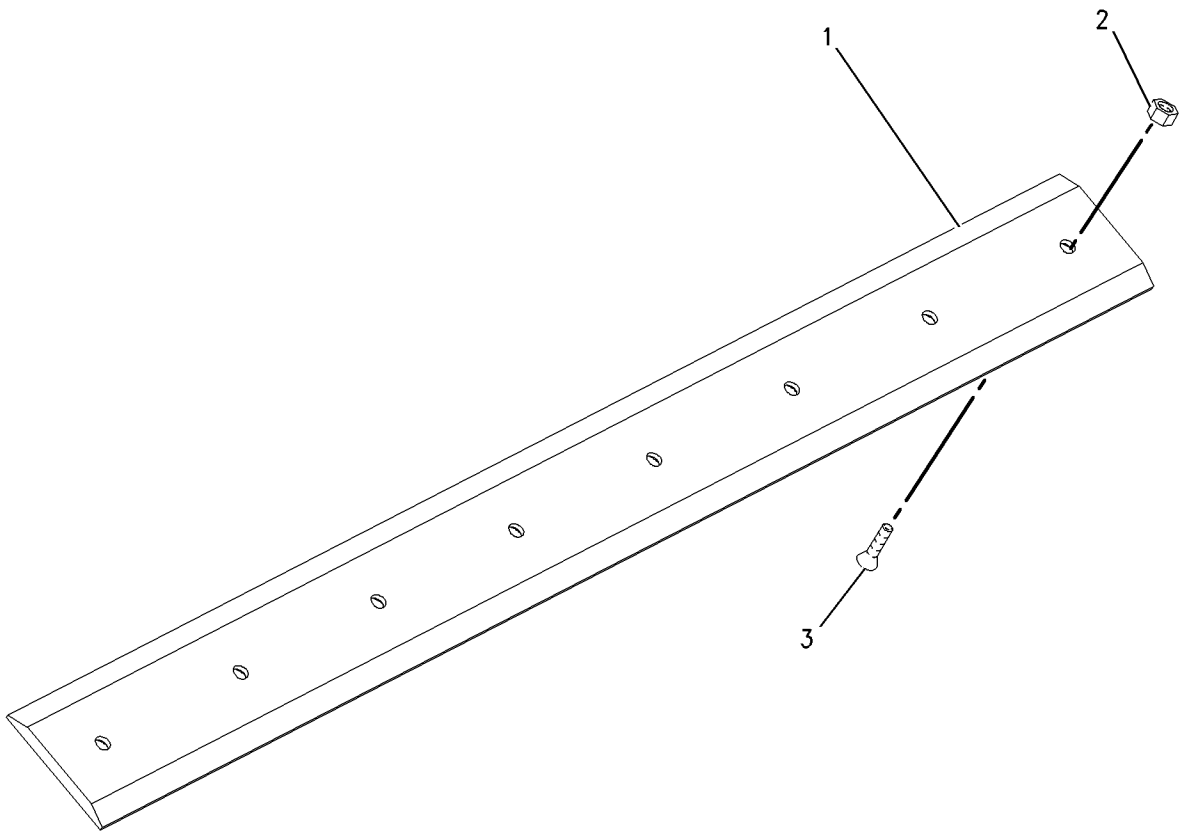

GRAPHIC #1 **<END>** g00724087

135-9385 EDGE GP-CUTTING

S/N: JAY1-UP
PART OF 279-5441 BUCKET AR-DIRT, 279-5369 BUCKET AR-GENERAL PURPOSE, 279-5391 BUCKET AR-MULTIPURPOSE, 285-6100 BUCKET AR-UTILITY
FOR USE WITH 167.64-CM (66-IN) BUCKET
AN ATTACHMENT

SMCS-6801 **i01228508**

NOTE	REF NO	GRAPHIC REF	PART NUMBER	QTY	PART NAME 1 2 3 4 5 6 (PRODUCT LEVEL)	SEE PAGE
	1	1	**135-9395**	1	EDGE-CUTTING	
M	2	1	**8T-4778**	8	LOCKNUT (M16X2.00 THD)	
M	3	1	**159-2953**	8	SCREW-FLAT HEAD (M16X2.00 THD)	

M-METRIC PART

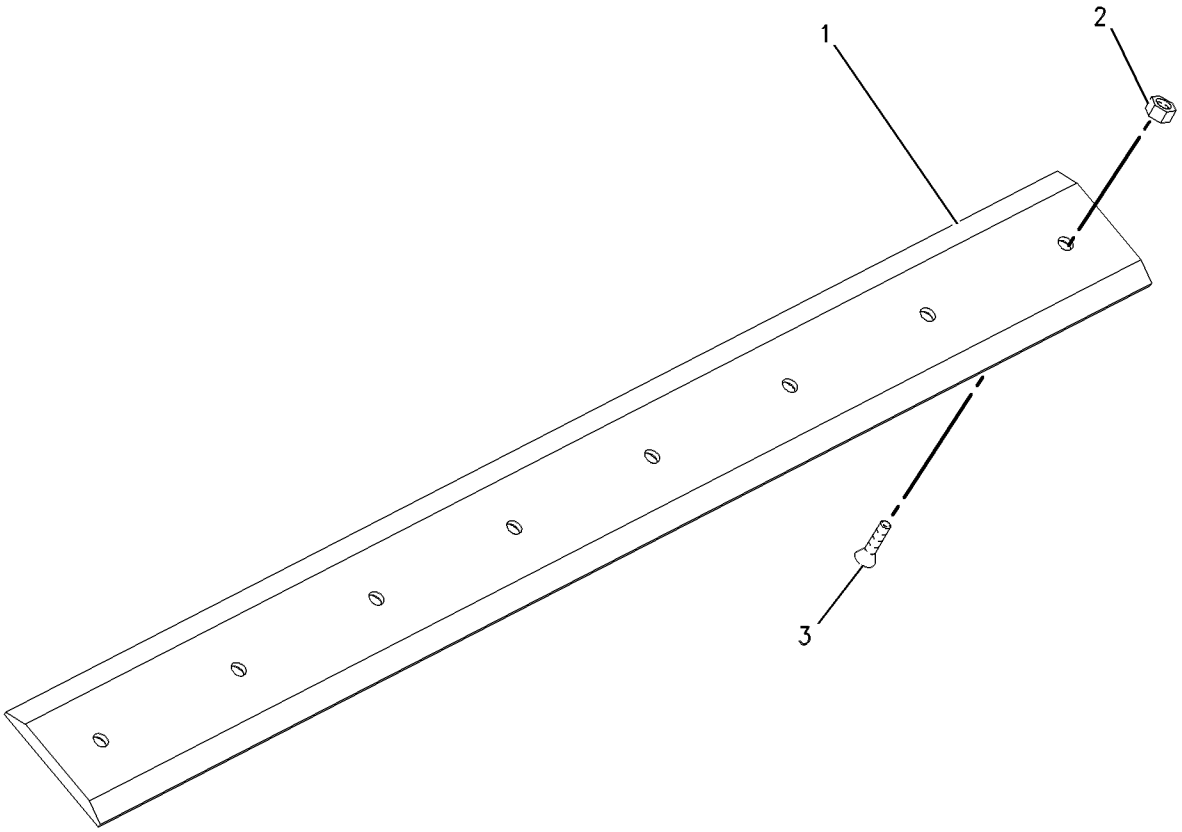

GRAPHIC #1 **<END>** g00657004

135-9386 EDGE GP-CUTTING

S/N: JAY1-UP

PART OF 285-6090 BUCKET AR-DIRT, 279-5373 BUCKET AR-GENERAL PURPOSE, 279-5420 BUCKET AR-LIGHT MATERIAL, 285-6101 BUCKET AR-UTILITY, 279-5399 BUCKET GP-MULTIPURPOSE

FOR USE WITH 182.88-CM (72-IN) BUCKET

AN ATTACHMENT

SMCS-6801 **i01372498**

NOTE	REF NO	GRAPHIC REF	PART NUMBER	QTY	PART NAME 1 2 3 4 5 6 (PRODUCT LEVEL)	SEE PAGE
	1	1	**135-9396**	1	EDGE-CUTTING	
M	2	1	**8T-4778**	11	LOCKNUT (M16X2.00 THD)	
M	3	1	**159-2953**	11	SCREW-FLAT HEAD (M16X2.00 THD)	

M-METRIC PART

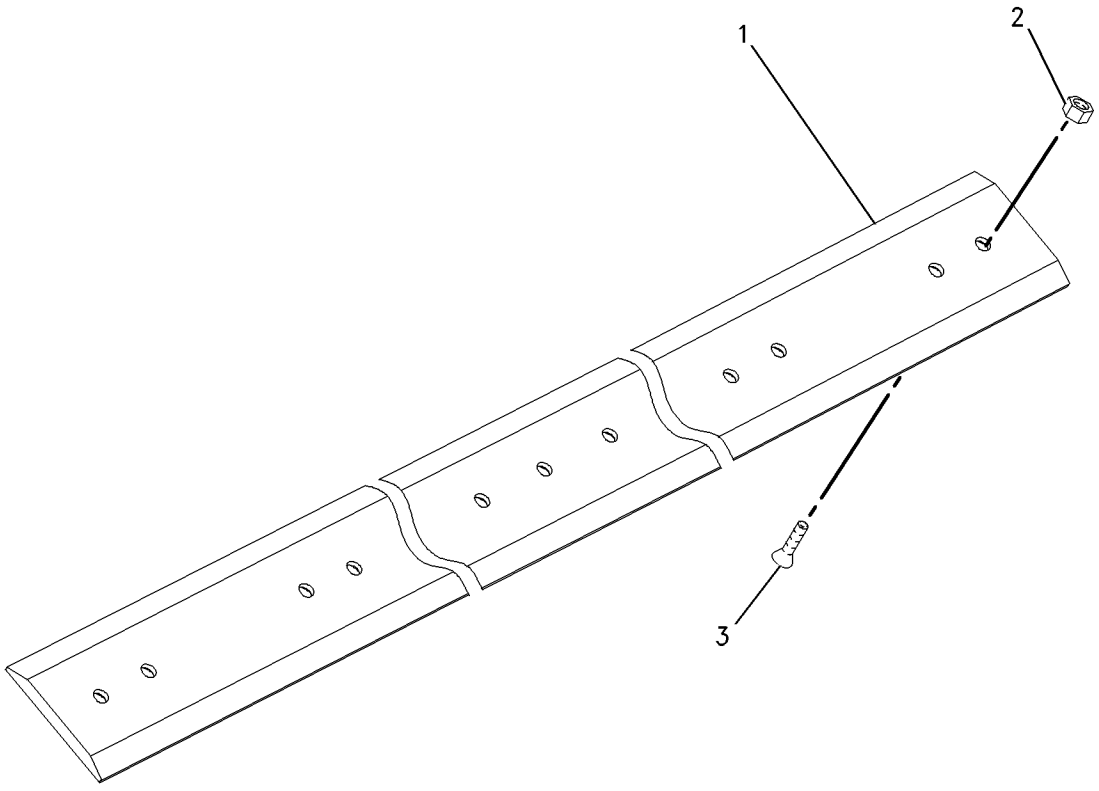

GRAPHIC #1 **<END>** g00724435

135-9387 EDGE GP-CUTTING

S/N: JAY1-UP
PART OF 268-4083 BUCKET AR-DIRT, 279-5377 BUCKET AR-GENERAL PURPOSE, 279-5425 BUCKET AR-LIGHT MATERIAL, 279-5402 BUCKET AR-MULTIPURPOSE
FOR USE WITH 198.12-CM (78-IN) BUCKET
AN ATTACHMENT

SMCS-6801 **i01755490**

NOTE	REF NO	GRAPHIC REF	PART NUMBER	QTY	PART NAME 1 2 3 4 5 6 (PRODUCT LEVEL)	SEE PAGE
	1	1	**135-9397**	1	EDGE-CUTTING	
M	2	1	**8T-4778**	11	LOCKNUT (M16X2 THD)	
M	3	1	**159-2953**	11	SCREW-FLAT HEAD (M16X2.00 THD)	

M-METRIC PART

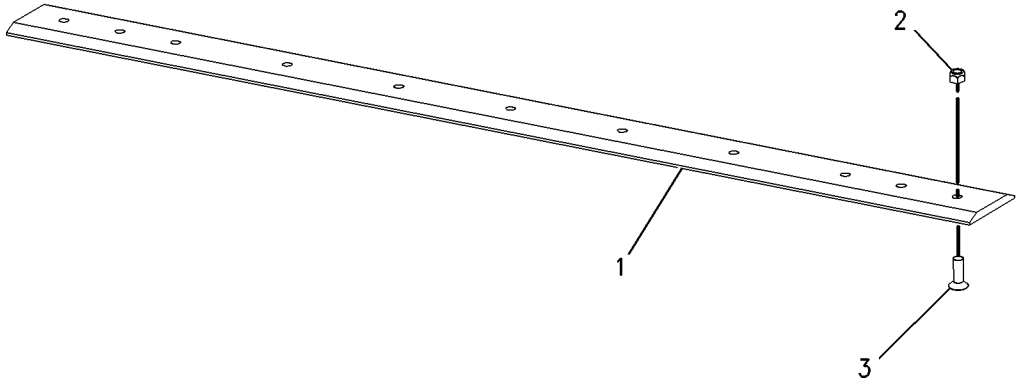

GRAPHIC #1 **<END>** g00898154

195-7124 EDGE GP-CUTTING

S/N: JAY1-UP
PART OF 279-5430 BUCKET AR-LIGHT MATERIAL, 296-8057 BUCKET AR-MULTIPURPOSE
FOR USE WITH 213.36CM (84 IN) BUCKET
AN ATTACHMENT

SMCS-6801 **i01859534**

NOTE	PART NUMBER	QTY	PART NAME 1 2 3 4 5 6 (PRODUCT LEVEL)	SEE PAGE
	195-5124	1	EDGE-CUTTING	
M	**8T-4778**	11	LOCKNUT (M16X2 THD)	
M	**159-2953**	11	SCREW-FLAT HEAD (M16X2.00 THD)	

M-METRIC PART

<END>

279-5350 FORK AR-GRAPPLE

S/N: JAY1-UP
167.6-CM (66-INCH). UTILITY
AN ATTACHMENT

SMCS-6705 **i02711967**

NOTE	PART NUMBER	QTY	PART NAME 1 2 3 4 5 6 (PRODUCT LEVEL)	SEE PAGE
Y	**278-1975**	2	CYLINDER GP-HYDRAULIC	187
Y	*164-9614*	9	FORK GP-GRAPPLE	335
Y	*279-5351*	1	FORK GP-GRAPPLE	336
Y	*279-5412*	1	LINES GP-BUCKET (INDUSTRIAL)	201
Y	*156-0891*	1	MOUNTING GP-CYLINDER (INDUSTRIAL)	256

Y-SEPARATE ILLUSTRATION

<END>

279-5360 FORK AR-GRAPPLE–72-IN, INDUSTRIAL

S/N: JAY1-UP
AN ATTACHMENT

SMCS-6705 **i02711968**

NOTE	PART NUMBER	QTY	PART NAME 1 2 3 4 5 6 (PRODUCT LEVEL)	SEE PAGE
Y	**278-1975**	2	CYLINDER GP-HYDRAULIC	187
Y	*164-9614*	2	FORK GP-GRAPPLE	335
Y	*279-5359*	1	FRAME GP-GRAPPLE (72-IN, INDUSTRIAL)	344
Y	*279-5412*	1	LINES GP-BUCKET (INDUSTRIAL)	201
Y	*156-0891*	1	MOUNTING GP-CYLINDER (INDUSTRIAL)	256

Y-SEPARATE ILLUSTRATION

<END>

285-6114 FORK AR-GRAPPLE–66-IN, UTILITY

S/N: JAY1-UP
AN ATTACHMENT

SMCS-6705 **i02552497**

NOTE	PART NUMBER	QTY	PART NAME 1 2 3 4 5 6 (PRODUCT LEVEL)	SEE PAGE
Y	**285-6105**	1	FORK GP-UTILITY (66-IN)	341
Y	*285-6116*	1	GRAPPLE GP-UTILITY	346

Y-SEPARATE ILLUSTRATION

<END>

WORK TOOLS

285-6115 FORK AR-GRAPPLE–72-IN, UTILITY

S/N: JAY1-UP

AN ATTACHMENT

SMCS-6705 **i02552699**

NOTE	PART NUMBER	QTY	PART NAME 1 2 3 4 5 6 (PRODUCT LEVEL)	SEE PAGE
Y	**285-6110**	1	FORK GP-GRAPPLE	337
Y	*285-6116*	1	GRAPPLE GP-UTILITY	346

Y-SEPARATE ILLUSTRATION

<END>

164-9614 FORK GP-GRAPPLE

S/N: JAY1-UP
INDUSTRIAL
PART OF 279-5350, 279-5360 FORK AR-GRAPPLE
AN ATTACHMENT

SMCS-6705 **i01075196**

NOTE	REF NO	GRAPHIC REF	PART NUMBER	QTY	PART NAME 1 2 3 4 5 6 (PRODUCT LEVEL)	SEE PAGE
	1	1	**3E-4370**	1	PIN-SPRING	
	2	1	**162-8154**	1	TINE	

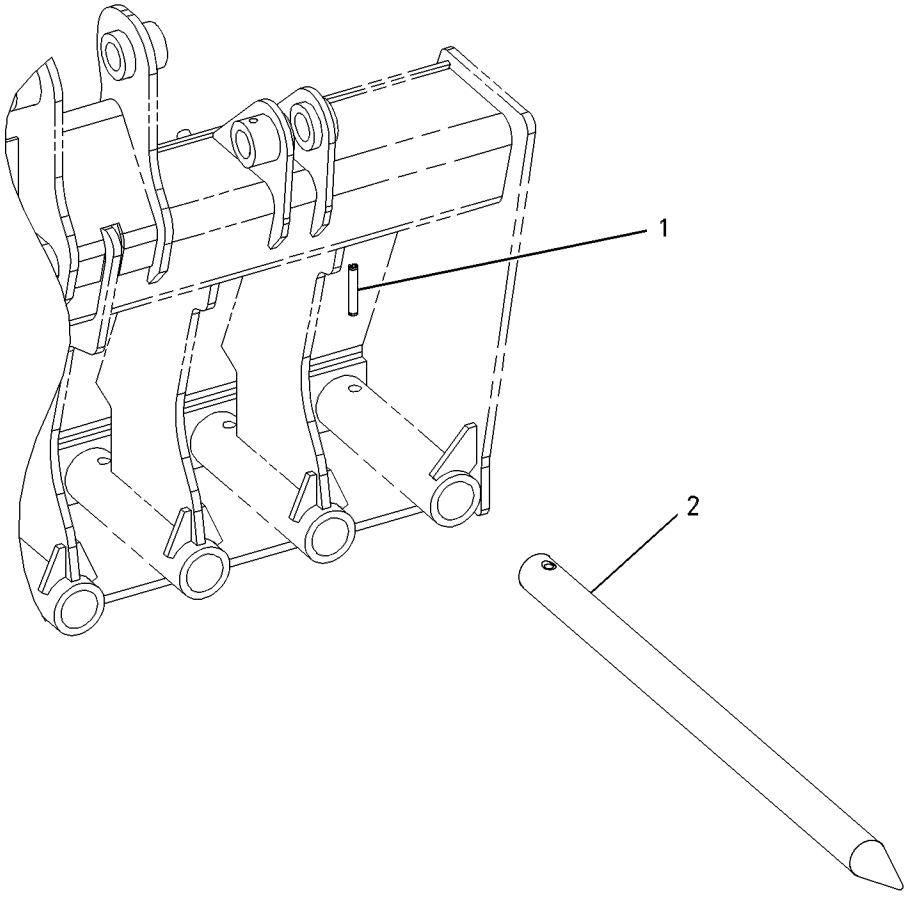

GRAPHIC #1 **<END>** g00559648

279-5351 FORK GP-GRAPPLE–66-IN, INDUSTRIAL

S/N: JAY1-UP

PART OF 279-5350 FORK AR-GRAPPLE

AN ATTACHMENT

SMCS-6705 **i02571199**

NOTE	REF NO	GRAPHIC REF	PART NUMBER	QTY	PART NAME 1 2 3 4 5 6 (PRODUCT LEVEL)	SEE PAGE
	1	1	**157-0940**	4	PIN	
	2	1	**164-9989**	2	FILM-WARNING (IMPALED POINT)	
	3	1	**222-7467**	2	FORK AS	
Y	4	1	*279-5352*	1	FRAME GP-FORK (66-IN, INDUSTRIAL)	342
	5	1	**3B-8489**	4	FITTING-GREASE	
M	6	1	**6V-9189**	4	LOCKNUT (M8X1.25-THD)	
M	7	1	**8T-6869**	4	BOLT (M8X1.25X60-MM)	

M-METRIC PART
Y-SEPARATE ILLUSTRATION

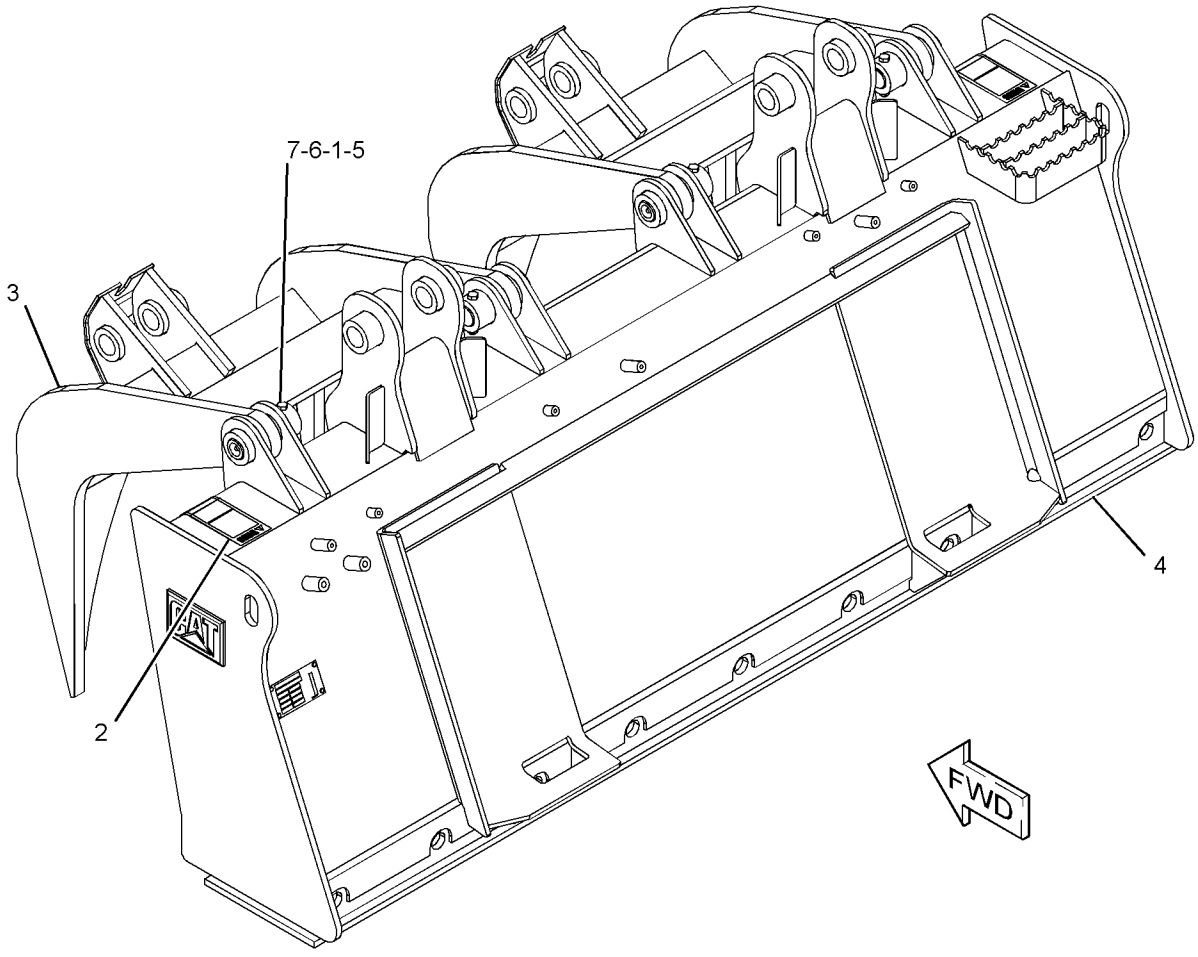

GRAPHIC #1 **<END>** g01279797

WORK TOOLS

285-6110 FORK GP-GRAPPLE

S/N: JAY1-UP
1829-MM (72-IN)
PART OF 285-6115 FORK AR-GRAPPLE
AN ATTACHMENT

SMCS-6705 **i02552704**

NOTE	REF NO	GRAPHIC REF	PART NUMBER	QTY	PART NAME 1 2 3 4 5 6 (PRODUCT LEVEL)	SEE PAGE
	1	1	**164-9989**	2	FILM-WARNING (IMPALED POINT)	
Y	2	1	*165-8732*	9	FORK GP-UTILITY	340
					PARTS SHOWN IN GRAPHIC(S) WITHOUT A REFERENCE NUMBER ARE NOT SERVICED SEPARATELY	

Y-SEPARATE ILLUSTRATION

285-6110 FORK GP-GRAPPLE *(contd.)* **i02552704**

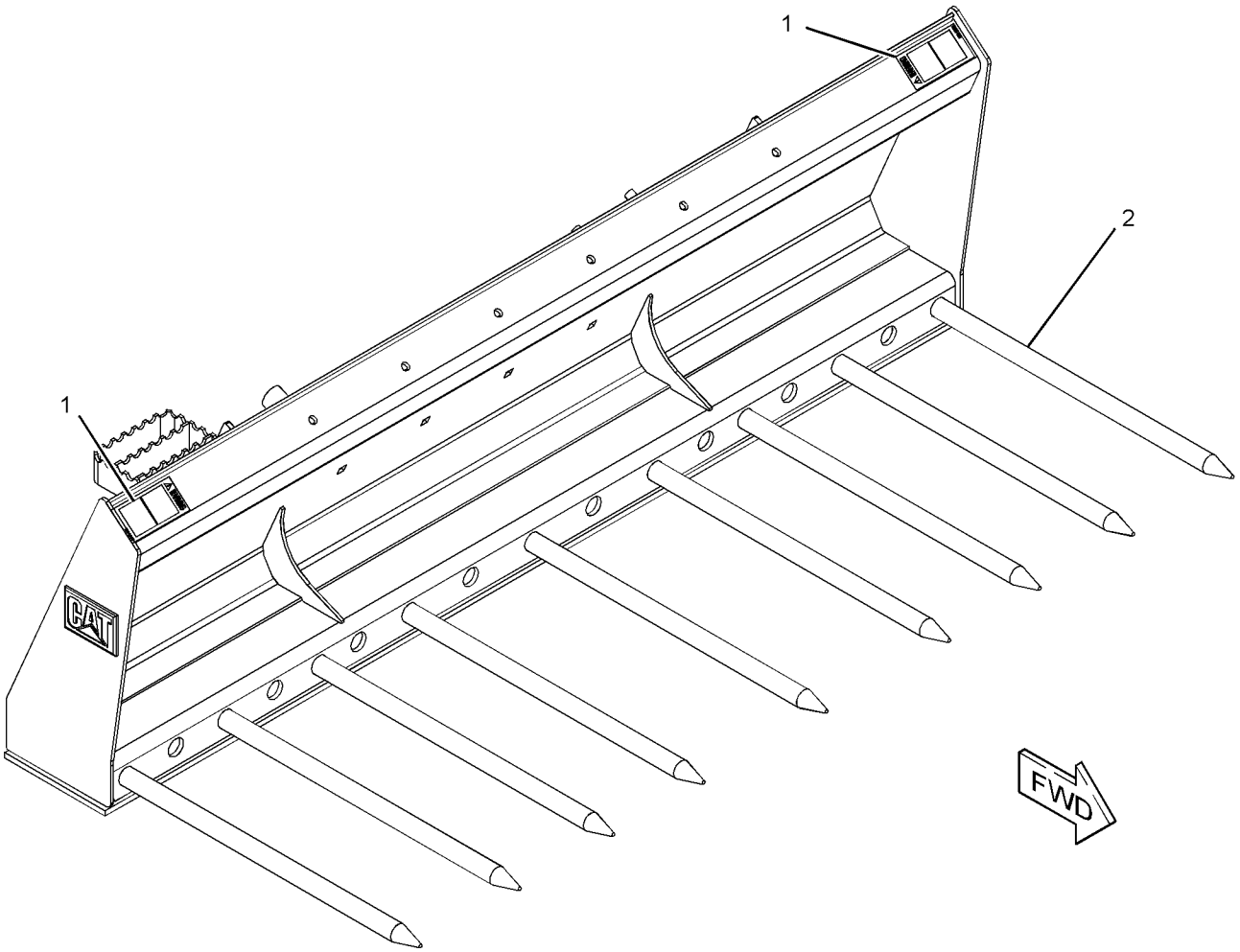

GRAPHIC #1 **<END>** g01280416

195-6942 FORK GP-PALLET

S/N: JAY1-UP
106.68-CM (42-IN)
PART OF 293-9428 CARRIAGE & FORK AR
AN ATTACHMENT

SMCS-6136 **i02569271**

NOTE	PART NUMBER	QTY	PART NAME 1 2 3 4 5 6 (PRODUCT LEVEL)	SEE PAGE
	221-3429	1	POSITIONER GP-FORK	

<END>

195-6943 FORK GP-PALLET

S/N: JAY1-UP
91.44-CM (36-IN)
PART OF 293-9427 CARRIAGE & FORK AR
AN ATTACHMENT

SMCS-6136 **i02569272**

NOTE	PART NUMBER	QTY	PART NAME 1 2 3 4 5 6 (PRODUCT LEVEL)	SEE PAGE
	221-3429	1	POSITIONER GP-FORK	

<END>

195-8545 FORK GP-PALLET

S/N: JAY1-UP
121.92-CM (48-IN)
PART OF 293-9429 CARRIAGE & FORK AR
AN ATTACHMENT

SMCS-6136 **i02569274**

NOTE	PART NUMBER	QTY	PART NAME 1 2 3 4 5 6 (PRODUCT LEVEL)	SEE PAGE
	221-3429	1	POSITIONER GP-FORK	

<END>

165-8732 FORK GP-UTILITY

S/N: JAY1-UP
85.0-CM (33.4-IN)
PART OF 285-6110 FORK GP-GRAPPLE, 285-6105 FORK GP-UTILITY
AN ATTACHMENT

SMCS-6458 **i01204324**

NOTE	REF NO	GRAPHIC REF	PART NUMBER	QTY	PART NAME 1 2 3 4 5 6 (PRODUCT LEVEL)	SEE PAGE
	1	1	**9R-2959**	1	CLIP	
	2	1	**166-4041**	1	TINE	

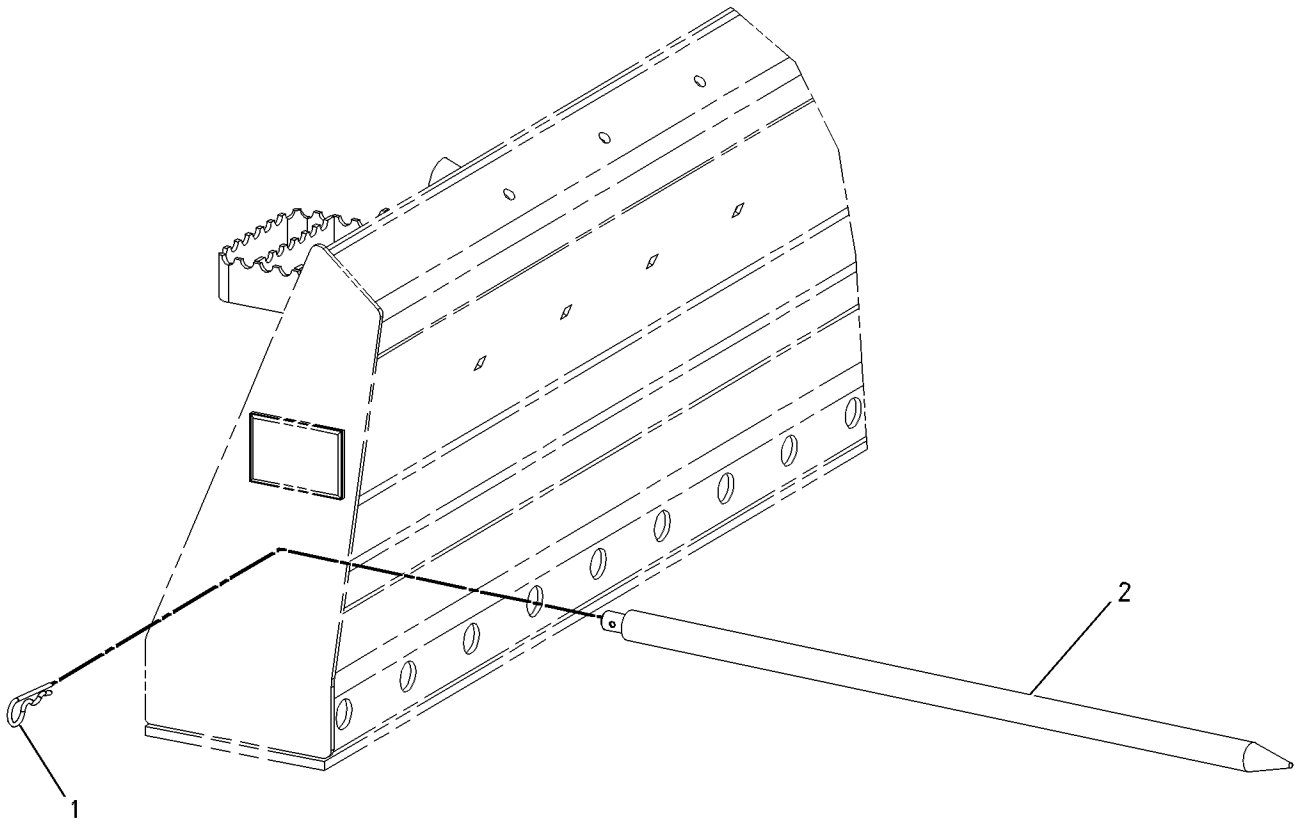

GRAPHIC #1 **<END>** g00639778

WORK TOOLS

285-6105 FORK GP-UTILITY

S/N: JAY1-UP
1676-MM (66-IN)
PART OF 285-6114 FORK AR-GRAPPLE
AN ATTACHMENT

SMCS-6458 **i02552504**

NOTE	REF NO	GRAPHIC REF	PART NUMBER	QTY	PART NAME 1 2 3 4 5 6 (PRODUCT LEVEL)	SEE PAGE
	1	1	**164-9989**	2	FILM-WARNING (IMPALED POINT)	
Y	2	1	*165-8732*	7	FORK GP-UTILITY	340
					PARTS SHOWN IN GRAPHIC(S) WITHOUT A REFERENCE NUMBER ARE NOT SERVICED SEPARATELY	

Y-SEPARATE ILLUSTRATION

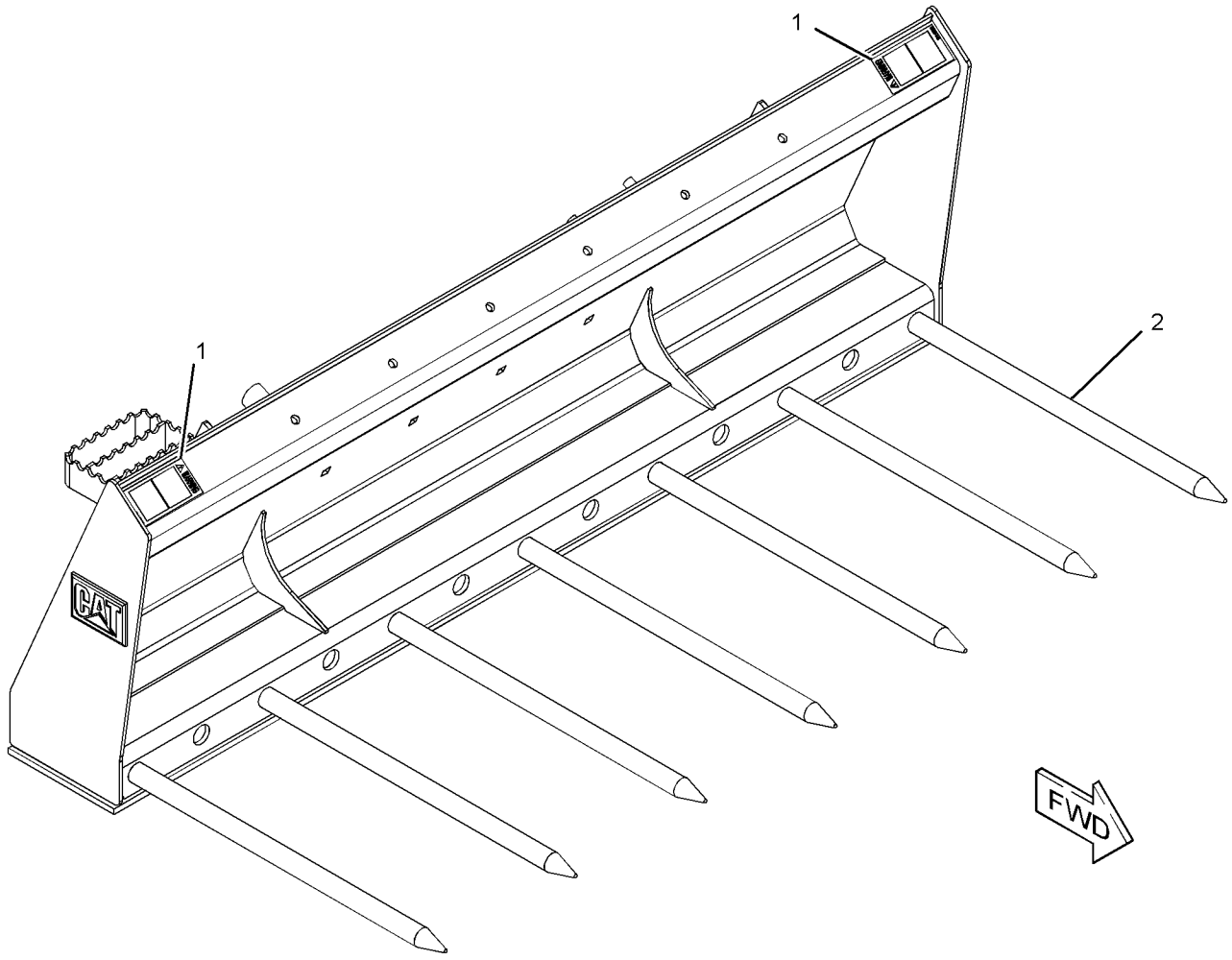

GRAPHIC #1 **<END>** g01280417

279-5352 FRAME GP-FORK–66-IN, INDUSTRIAL

S/N: JAY1-UP
PART OF 279-5351 FORK GP-GRAPPLE
AN ATTACHMENT

SMCS-6705 **i02550300**

NOTE	REF NO	GRAPHIC REF	PART NUMBER	QTY	PART NAME 1 2 3 4 5 6 (PRODUCT LEVEL)	SEE PAGE
	1	1	**154-2704**	1	PLATE-INSTRUCTION (BUCKET SPECIFICATIONS)	
	2	1	**168-8389**	4	TACK-FASTENER	
	3	1	**279-5353**	1	FORK AS	

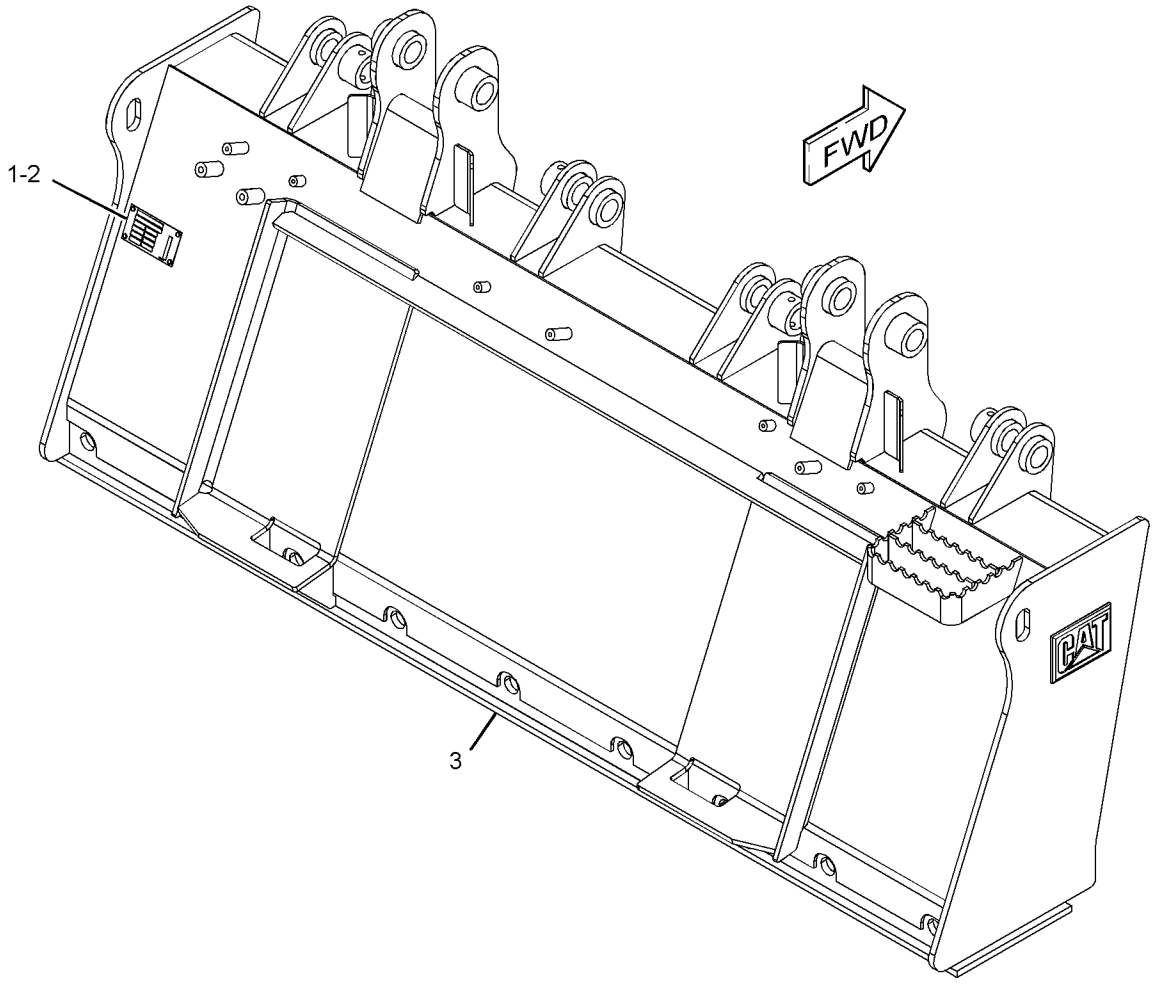

GRAPHIC #1 **<END>** g01280687

279-5358 FRAME GP-FORK–72-IN, INDUSTRIAL

S/N: JAY1-UP

PART OF 279-5359 FRAME GP-GRAPPLE

AN ATTACHMENT

SMCS-6705 **i02550334**

NOTE	REF NO	GRAPHIC REF	PART NUMBER	QTY	PART NAME 1 2 3 4 5 6 (PRODUCT LEVEL)	SEE PAGE
	1	1	**154-2704**	1	PLATE-INSTRUCTION (BUCKET SPECIFICATIONS)	
	2	1	**168-8389**	4	TACK-FASTENER	
	3	1	**279-5357**	1	FORK AS	

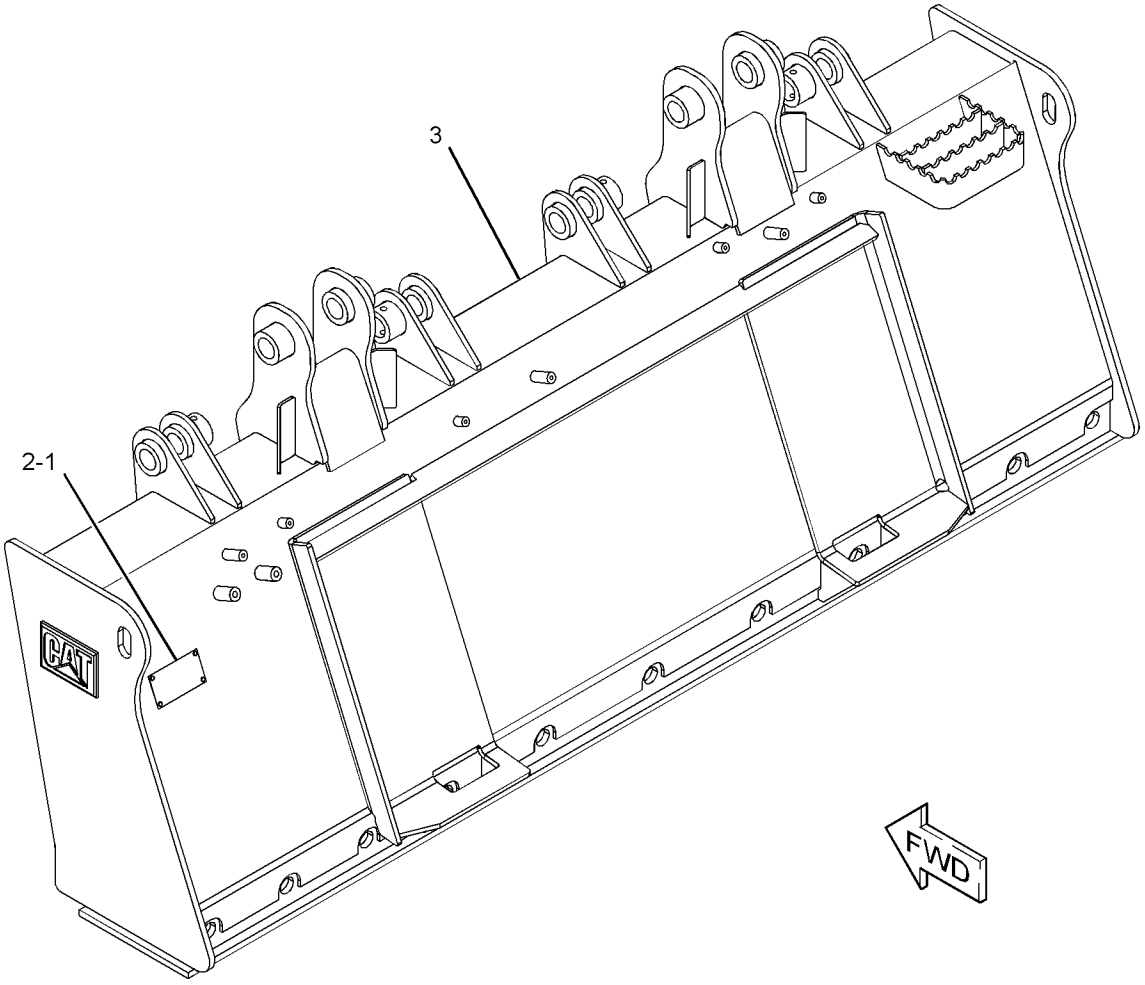

GRAPHIC #1 **<END>** g01279388

279-5359 FRAME GP-GRAPPLE–72-IN, INDUSTRIAL

S/N: JAY1-UP
PART OF 279-5360 FORK AR-GRAPPLE
AN ATTACHMENT

SMCS-6705 **i02550333**

NOTE	REF NO	GRAPHIC REF	PART NUMBER	QTY	PART NAME 1 2 3 4 5 6 (PRODUCT LEVEL)	SEE PAGE
	1	1	**157-0940**	4	PIN	
	2	1	**164-9989**	2	FILM-WARNING (IMPALED POINT)	
	3	1	**222-7467**	2	FORK AS	
Y	4	1	*279-5358*	1	FRAME GP-FORK (72-IN, INDUSTRIAL)	343
	5	1	**3B-8489**	4	FITTING-GREASE	
M	6	1	**6V-9189**	4	LOCKNUT (M8X1.25-THD)	
M	7	1	**8T-6869**	4	BOLT (M8X1.25X60-MM)	

M-METRIC PART
Y-SEPARATE ILLUSTRATION

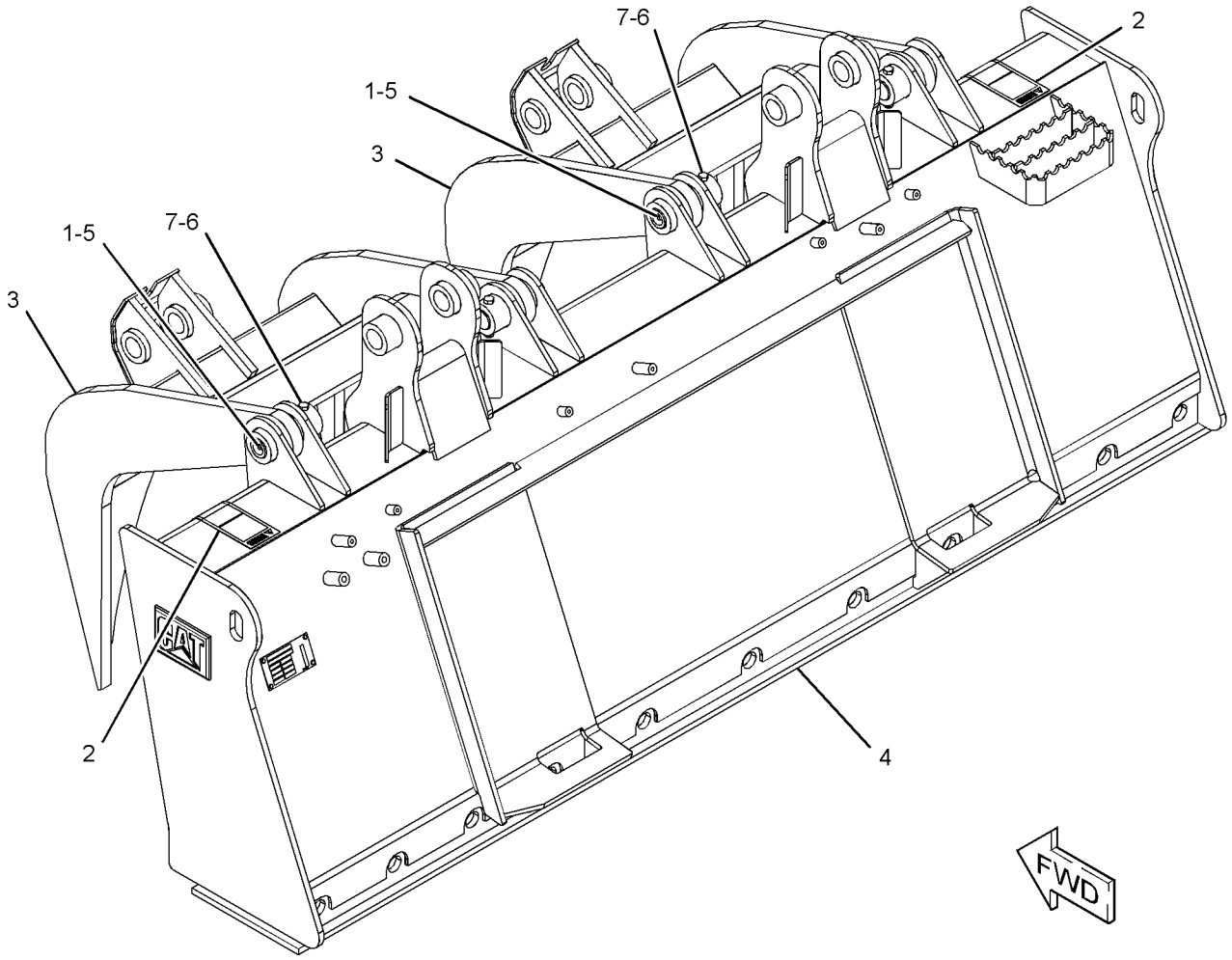

GRAPHIC #1 **<END>** g01280924

WORK TOOLS

165-8740 GRAPPLE GP-UTILITY

S/N: JAY1-UP
PART OF 285-6116 GRAPPLE GP-UTILITY
AN ATTACHMENT

SMCS-6307 **i01905762**

NOTE	REF NO	GRAPHIC REF	PART NUMBER	QTY	PART NAME 1 2 3 4 5 6 (PRODUCT LEVEL)	SEE PAGE
	1	1	**3B-8488**	4	FITTING-GREASE (1/8-27 THD)	
	2	1	**159-5411**	4	PIN	
	3	1	**165-8743**	1	ARM AS	
	4	1	**169-3569**	1	BRACKET AS	
		1	**159-8035**	2	FILM-WARNING (CRUSH POINT)	
M	5	1	**6V-9189**	4	LOCKNUT (M8X1.25 THD)	
M	6	1	**8T-6912**	4	BOLT (M8X1.25X50MM)	

M-METRIC PART

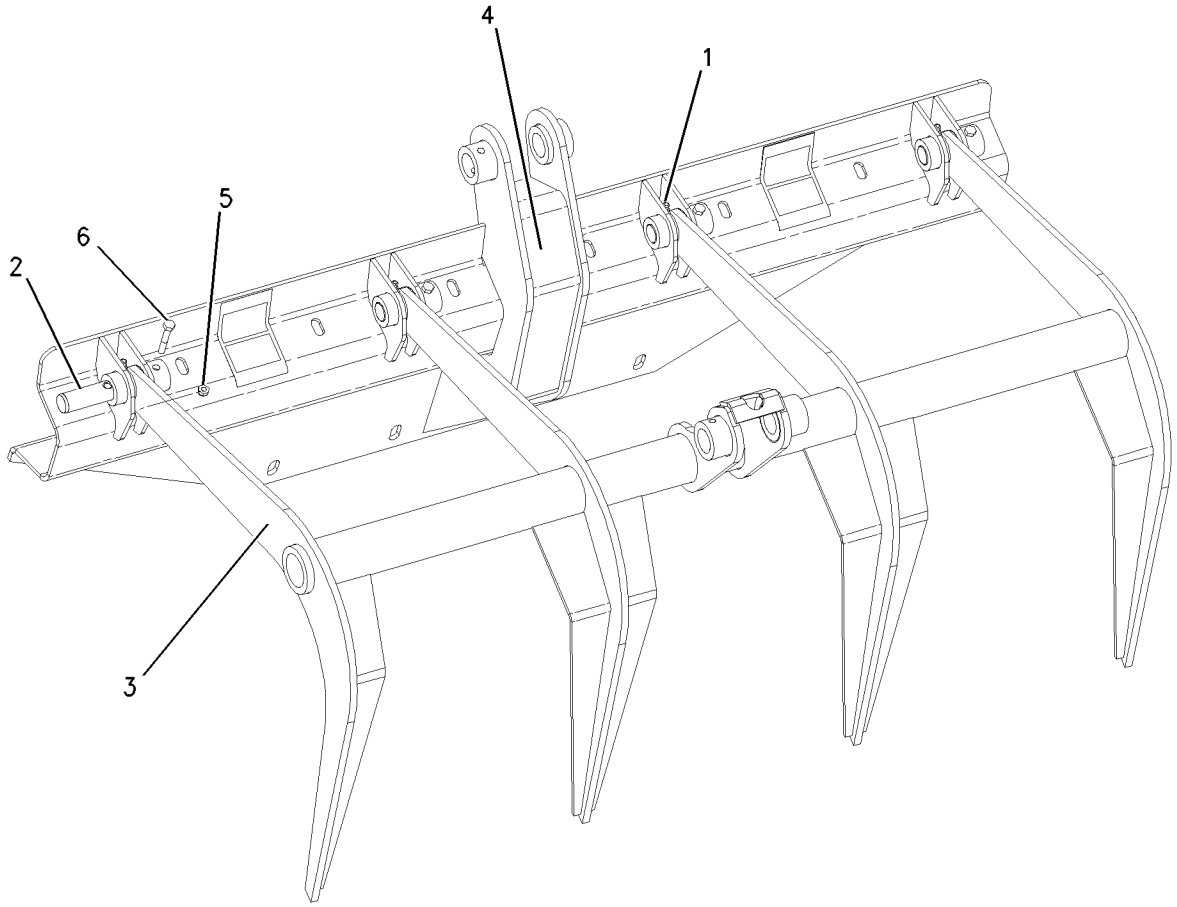

GRAPHIC #1 **<END>** g00777325

WORK TOOLS

285-6116 GRAPPLE GP-UTILITY

S/N: JAY1-UP

PART OF 285-6093, 285-6104, 285-6111, 285-6112 BUCKET AR-GRAPPLE, 285-6114, 285-6115 FORK AR-GRAPPLE

AN ATTACHMENT

SMCS-6307 **i02711972**

NOTE	REF NO	GRAPHIC REF	PART NUMBER	QTY	PART NAME 1 2 3 4 5 6 (PRODUCT LEVEL)	SEE PAGE
Y	1	1	**164-9295**	1	CYLINDER GP-GRAPPLE	184
Y	2	1	*165-8731*	1	MOUNTING GP-CYLINDER (UTILITY)	257
Y	3	1	*165-8740*	1	GRAPPLE GP-UTILITY	345
M	4	1	**170-5836**	4	BOLT	
Y	5	1	*173-7407*	1	STOP GP-GRAPPLE	356
	6	1	**239-5029**	1	GUARD	
Y	7	1	*285-6113*	1	LINES GP-BUCKET	211
	8	1	**5P-1076**	4	WASHER-HARD (13.5X30X4-MM THK)	
M	9	1	**8T-4139**	6	BOLT (M12X1.75X30-MM)	
	10	1	**8T-4223**	6	WASHER-HARD (13.5X25.5X3-MM THK)	
M	11	1	**8T-4244**	10	NUT (M12X1.75-THD)	

M-METRIC PART
Y-SEPARATE ILLUSTRATION

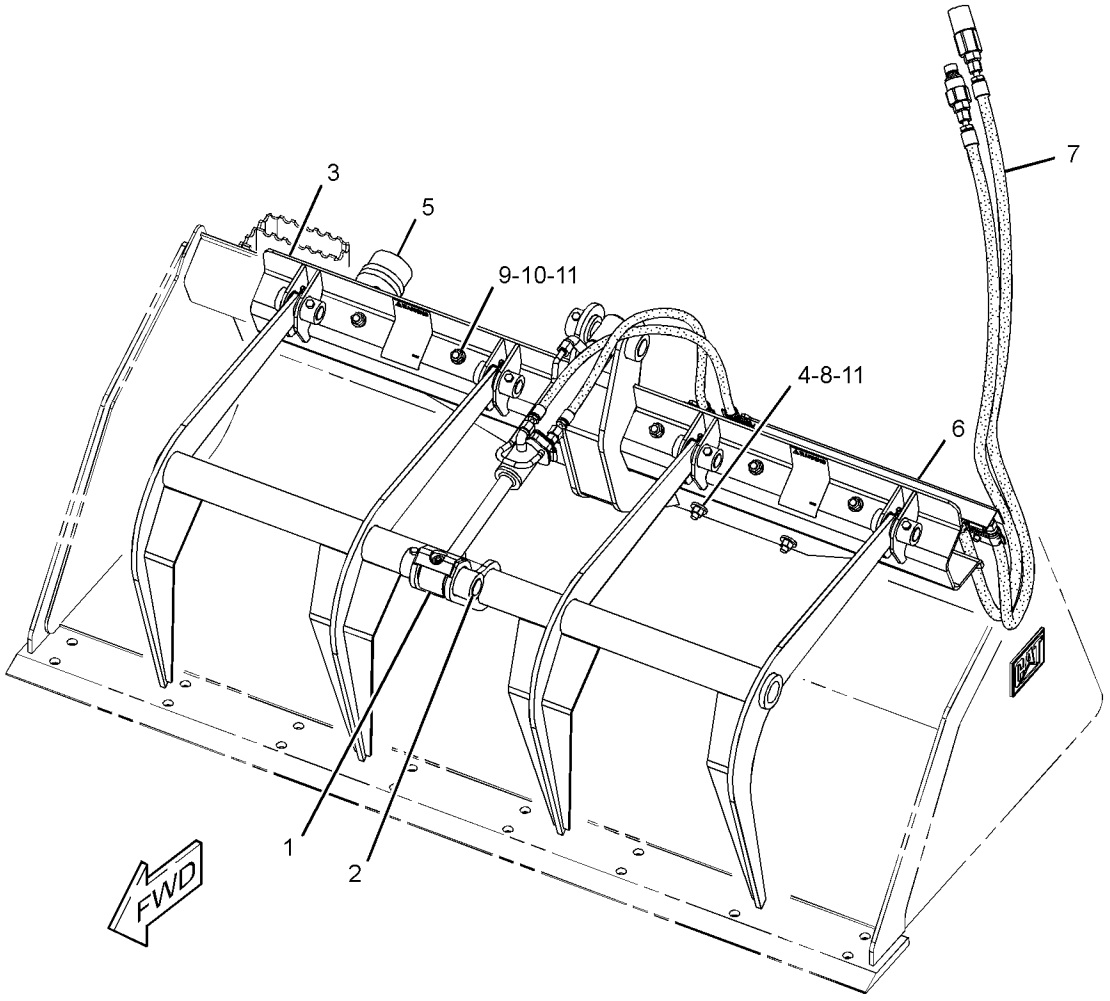

GRAPHIC #1 **<END>** g01278678

258-2536 HANDLE & PIN GP-COUPLER

S/N: JAY1-UP
PART OF 258-2535 LOCK GP-QUICK COUPLER
AN ATTACHMENT

i02655608

NOTE	REF NO	GRAPHIC REF	PART NUMBER	QTY	PART NAME 1 2 3 4 5 6 (PRODUCT LEVEL)	SEE PAGE
	1	1	**192-2637**	1	PLATE	
	2	1	**195-6754**	2	PIN-SPRING	
	3	1	**238-7693**	1	SPRING	
	4	1	**258-2534**	1	HANDLE-RH	
	5	1	**8T-4123**	2	WASHER-PLATED (22X35X3.5-MM THK)	

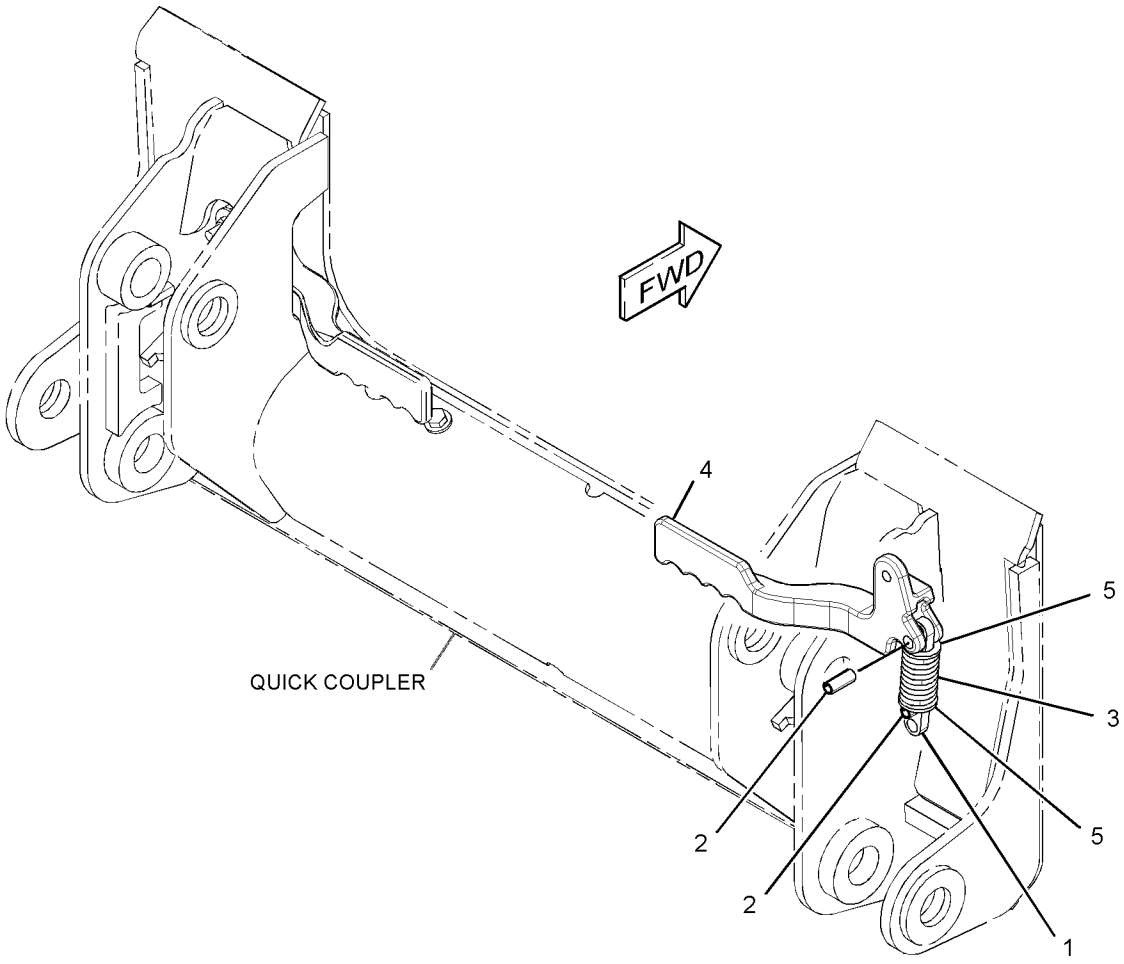

GRAPHIC #1

<END>

g01335572

258-2538 HANDLE & PIN GP-COUPLER

S/N: JAY1-UP
PART OF 258-2537 LOCK GP-QUICK COUPLER
AN ATTACHMENT

i02655611

NOTE	REF NO	GRAPHIC REF	PART NUMBER	QTY	PART NAME 1 2 3 4 5 6 (PRODUCT LEVEL)	SEE PAGE
	1	1	**192-2637**	1	PLATE	
	2	1	**195-6754**	2	PIN-SPRING	
	3	1	**238-7693**	1	SPRING	
	4	1	**258-2533**	1	HANDLE-LH	
	5	1	**8T-4123**	2	WASHER-PLATED (22X35X3.5-MM THK)	

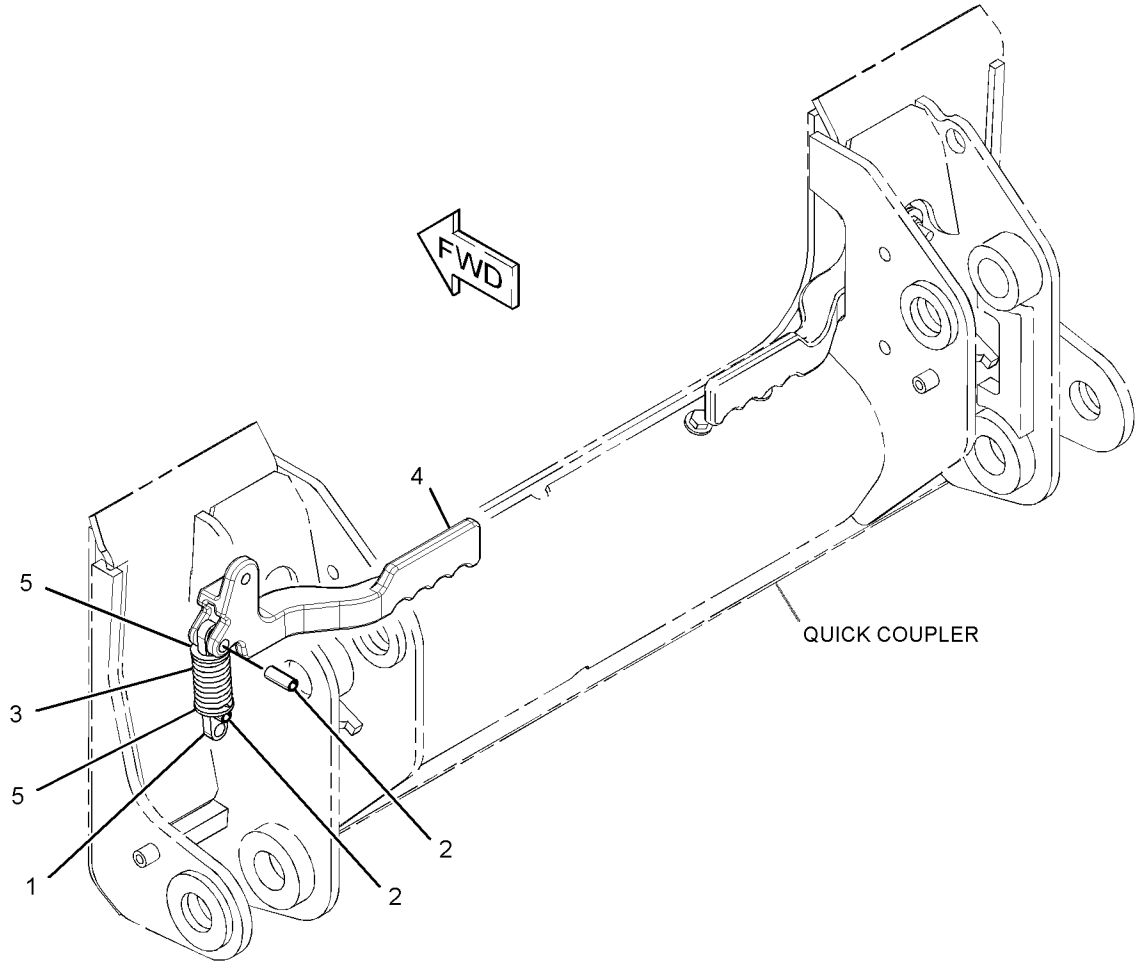

GRAPHIC #1 **<END>** g01335567

177-9152 KIT-ROADING PLATE & MOUNTING—BUCKET

S/N: JAY1-UP
PART OF 258-3818, 258-3819 CONVERSION AR-MACHINE
AN ATTACHMENT

SMCS-7405, 7557 **i01905397**

NOTE	REF NO	GRAPHIC REF	PART NUMBER	QTY	PART NAME 1 2 3 4 5 6 (PRODUCT LEVEL)	SEE PAGE
	1	1	**177-9153**	2	PLATE	
Y	2	1	*184-6097*	1	PLATE GP-ROADING (LH)	354
Y	3	1	*184-6098*	1	PLATE GP-ROADING (RH)	355
	4	1	**039-8557**	2	WASHER (13X26X6-MM THK)	
M	5	1	**6V-8949**	4	NUT (M10X1.5-6H THD)	
	6	1	**8T-4121**	8	WASHER-HARD (11X21X2.5-MM THK)	
M	7	1	**8T-4137**	2	BOLT (M10X1.5X20-MM)	
M	8	1	**8T-4186**	2	BOLT (M10X1.5X40-MM)	

M-METRIC PART
Y-SEPARATE ILLUSTRATION

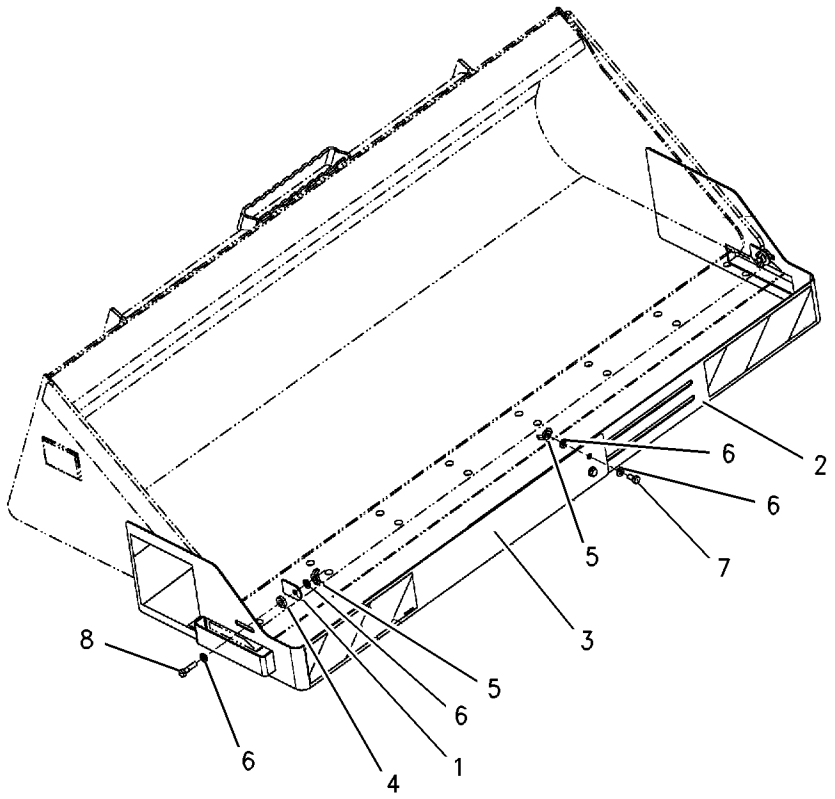

GRAPHIC #1 **<END>** g00778934

WORK TOOLS

215-3957 LINK GP-COUPLER

S/N: JAY1-UP

PART OF 215-3962, 215-3963 CYLINDER & LINK GP-COUPLER

AN ATTACHMENT

SMCS-6129 **i02232650**

NOTE	REF NO	GRAPHIC REF	PART NUMBER	QTY	PART NAME 1 2 3 4 5 6 (PRODUCT LEVEL)	SEE PAGE
	1	1	**192-2637**	1	PLATE	
	2	1	**192-2638**	1	BRACKET	
C	3	1	**238-7693**	1	SPRING	
	4	1	**195-6754**	2	PIN-SPRING	
C	5	1	**8T-4123**	2	WASHER-PLATED (22X35X3.5-MM THK)	

C-CHANGE FROM PREVIOUS TYPE

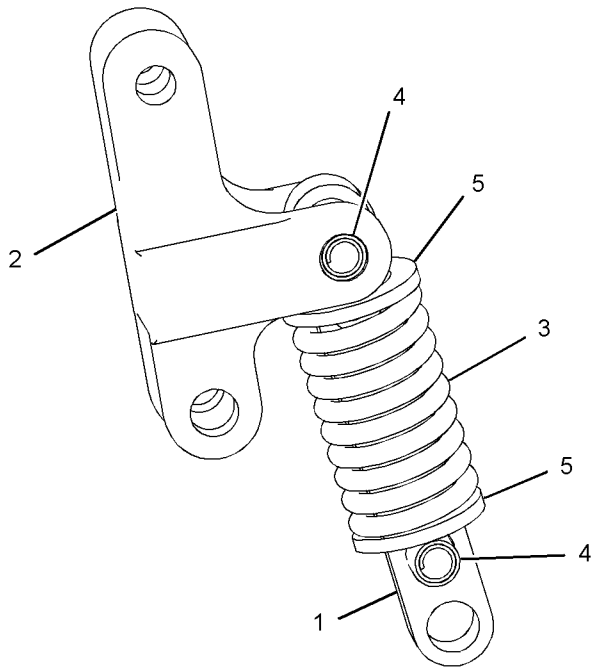

GRAPHIC #1 **<END>** g01130555

175-4238 LOCK GP-QUICK COUPLER–MECHANICAL

S/N: JAY1-UP
PART OF 258-3818, 258-3819 CONVERSION AR-MACHINE
AN ATTACHMENT

SMCS-6129 **i01408856**

NOTE	REF NO	GRAPHIC REF	PART NUMBER	QTY	PART NAME 1 2 3 4 5 6 (PRODUCT LEVEL)	SEE PAGE
	1	1	**9R-5301**	1	PIN-COTTER	
	2	1	**178-2247**	1	PIN	
	3	1	**9X-8257**	1	WASHER (17.5X30X3.5-MM THK)	

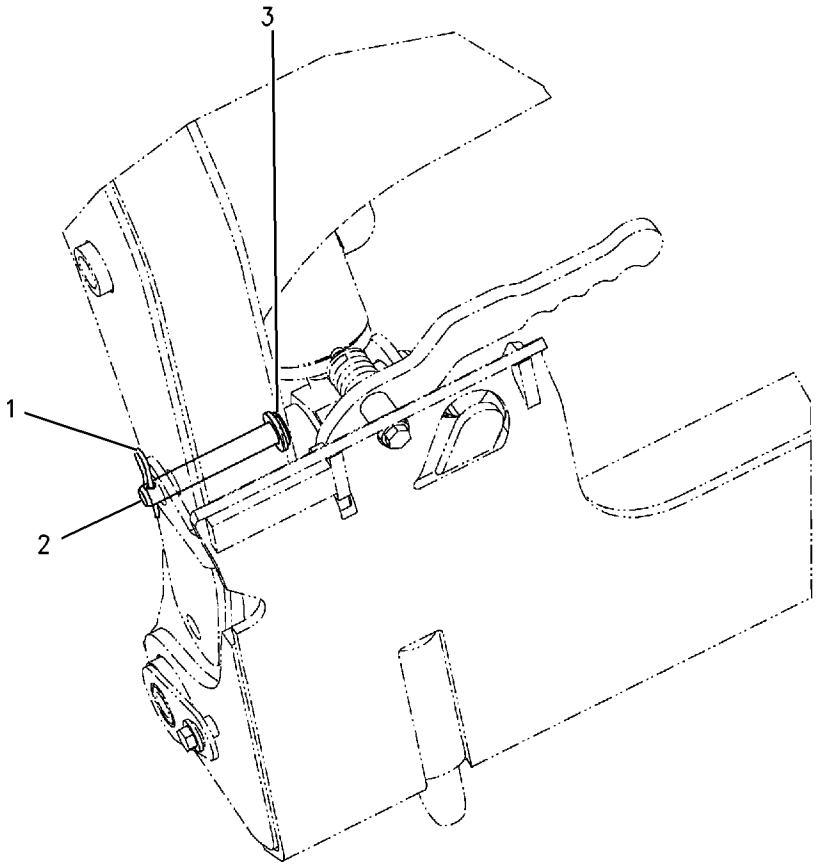

GRAPHIC #1 **<END>** g00741828

258-2535 LOCK GP-QUICK COUPLER–RH

S/N: JAY1-UP
PART OF 258-2500 COUPLER GP-QUICK
AN ATTACHMENT

SMCS-6129 **i02655596**

NOTE	REF NO	GRAPHIC REF	PART NUMBER	QTY	PART NAME 1 2 3 4 5 6 (PRODUCT LEVEL)	SEE PAGE
	1	1	**166-2560**	1	PIN-SPRING	
	2	1	**192-2642**	1	PIN	
Y	3	1	*258-2536*	1	HANDLE & PIN GP-COUPLER	347

Y-SEPARATE ILLUSTRATION

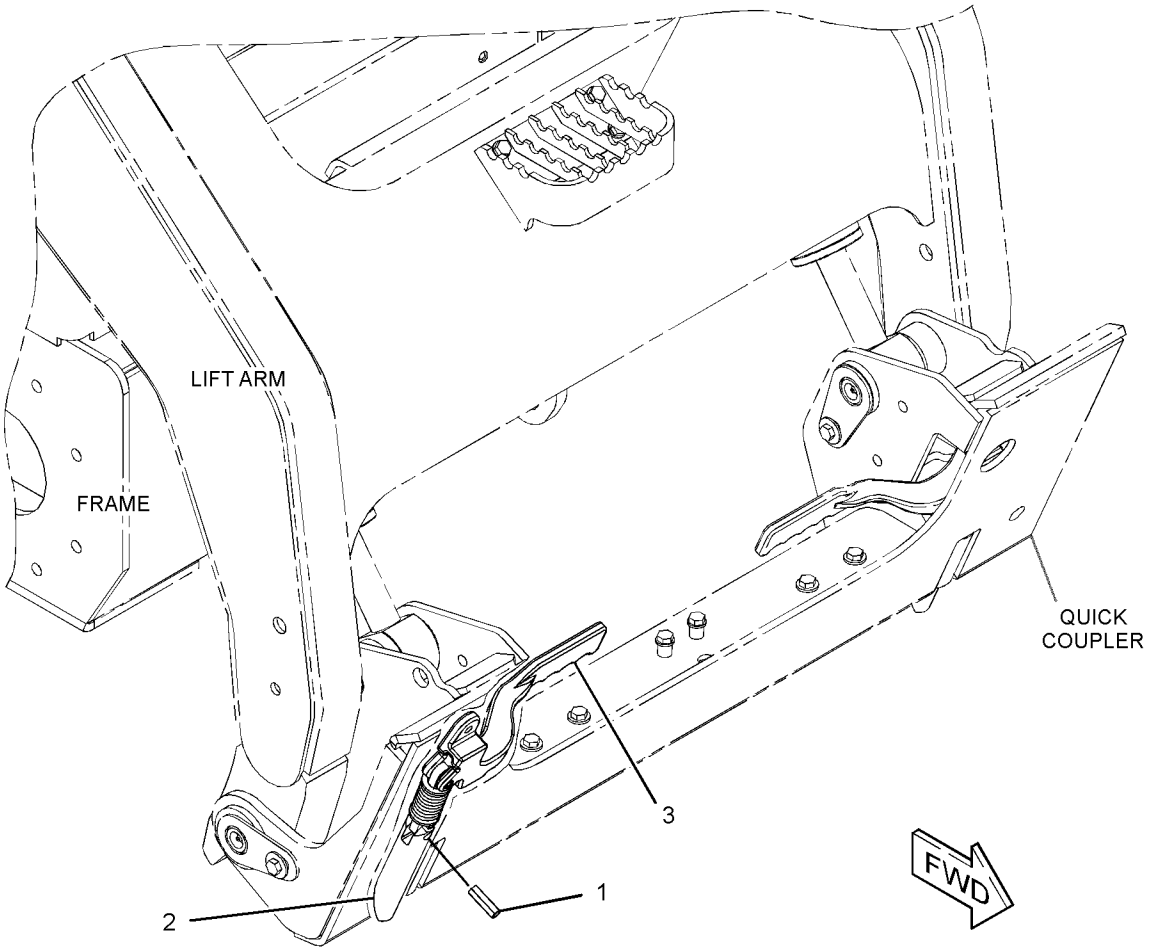

GRAPHIC #1 **<END>** g01335585

258-2537 LOCK GP-QUICK COUPLER–LH

S/N: JAY1-UP
PART OF 258-2500 COUPLER GP-QUICK
AN ATTACHMENT

SMCS-6129 **i02655597**

NOTE	REF NO	GRAPHIC REF	PART NUMBER	QTY	PART NAME 1 2 3 4 5 6 (PRODUCT LEVEL)	SEE PAGE
	1	1	**166-2560**	1	PIN-SPRING	
	2	1	**192-2642**	1	PIN	
Y	3	1	*258-2538*	1	HANDLE & PIN GP-COUPLER	348

Y-SEPARATE ILLUSTRATION

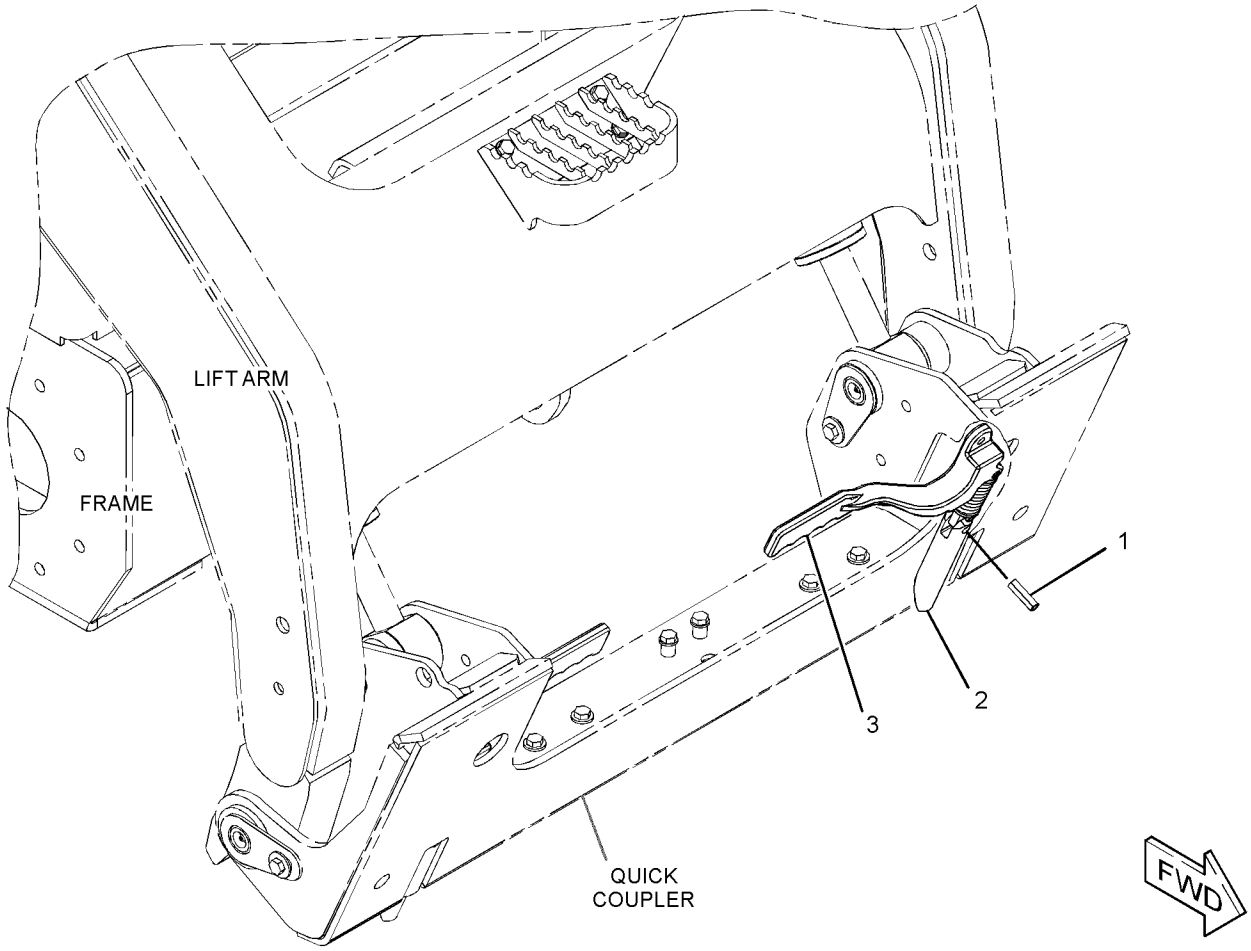

GRAPHIC #1 **<END>** g01335566

184-6097 PLATE GP-ROADING–LH

S/N: JAY1-UP

PART OF 177-9152 KIT-ROADING PLATE & MOUNTING

AN ATTACHMENT

SMCS-7405, 7557 **i02253410**

NOTE	REF NO	GRAPHIC REF	PART NUMBER	QTY	PART NAME 1 2 3 4 5 6 (PRODUCT LEVEL)	SEE PAGE
	1	1	**177-7414**	1	FILM-STRIPE (REFLECTIVE, RED, WHITE)	
	2	1	**177-7415**	1	FILM (REFLECTIVE)	
	3	1	**177-9150**	1	PLATE AS (LH)	

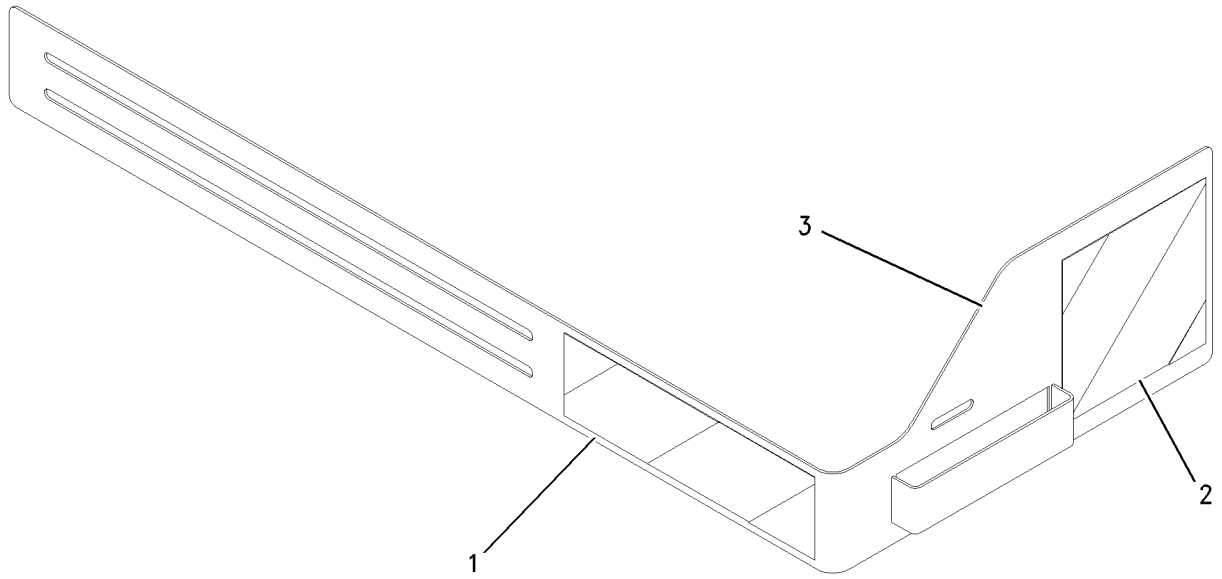

GRAPHIC #1 **<END>** g00995785

184-6098 PLATE GP-ROADING–RH

S/N: JAY1-UP

PART OF 177-9152 KIT-ROADING PLATE & MOUNTING

AN ATTACHMENT

SMCS-7405, 7557 **i02253411**

NOTE	REF NO	GRAPHIC REF	PART NUMBER	QTY	PART NAME 1 2 3 4 5 6 (PRODUCT LEVEL)	SEE PAGE
	1	1	**177-7414**	1	FILM-STRIPE (REFLECTIVE, RED, WHITE)	
	2	1	**177-7415**	1	FILM (REFLECTIVE)	
	3	1	**177-9151**	1	PLATE AS (RH)	

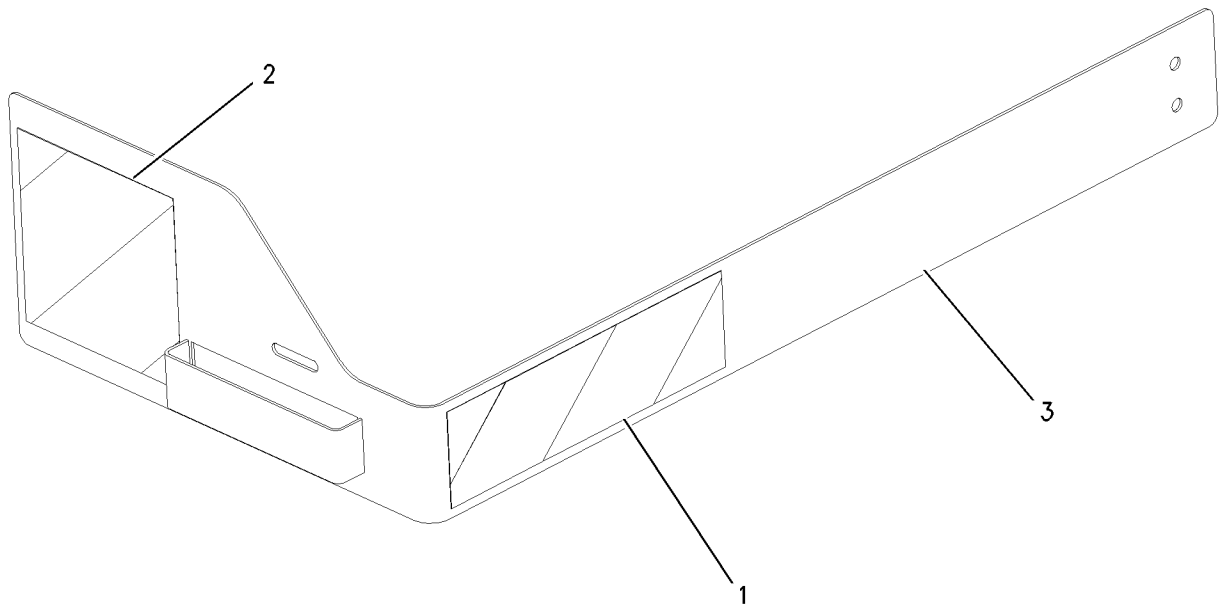

GRAPHIC #1 **<END>** g00995786

WORK TOOLS

173-7407 STOP GP-GRAPPLE–UTILITY

S/N: JAY1-UP
PART OF 285-6116 GRAPPLE GP-UTILITY
AN ATTACHMENT

SMCS-6307 **i01218895**

NOTE	REF NO	GRAPHIC REF	PART NUMBER	QTY	PART NAME 1 2 3 4 5 6 (PRODUCT LEVEL)	SEE PAGE
	1	1	**8Y-7386**	1	SPACER (12.5X17.1X16.5-MM THK)	
	2	1	**2S-6408**	2	WASHER-RETAINING (0.531X3.25X0.438-IN THK)	
	3	1	**8T-4223**	1	WASHER-HARD (13.5X25.5X3-MM THK)	
M	4	1	**8T-4910**	1	BOLT (M12X1.75X60-MM)	
	5	1	**8Y-7385**	1	STOP	

M-METRIC PART

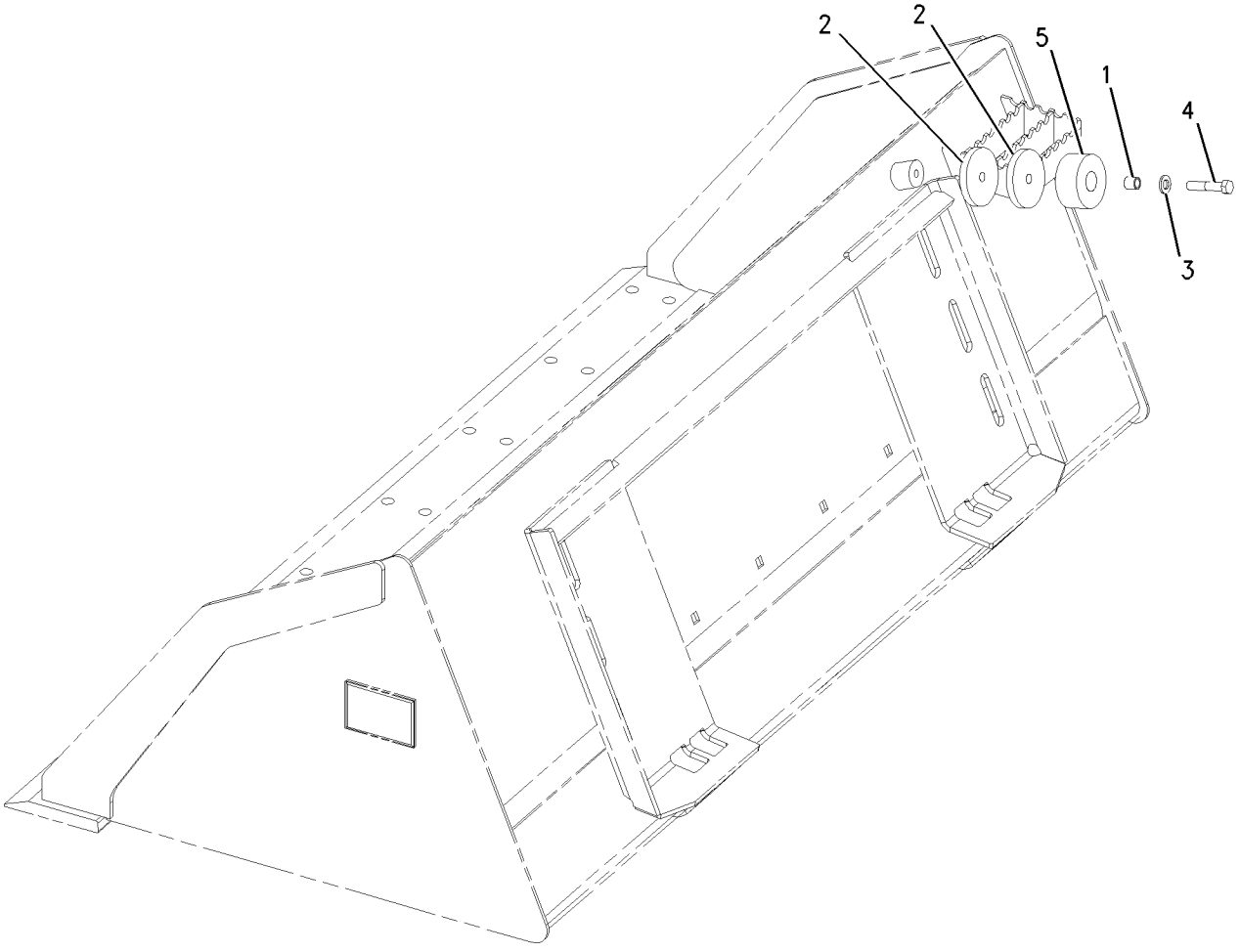

GRAPHIC #1 **<END>** g00651574

116-2001 STRAINER GP-WATER

S/N: JAY1-UP
PART OF 258-3645 TANK & MTG GP-WATER
AN ATTACHMENT

SMCS-5612 **i02571404**

NOTE	REF NO	GRAPHIC REF	PART NUMBER	QTY	PART NAME 1 2 3 4 5 6 (PRODUCT LEVEL)	SEE PAGE
	1	1	**119-1415**	1	GASKET	
	2	1	**119-1414**	1	SCREEN (WATER TANK)	

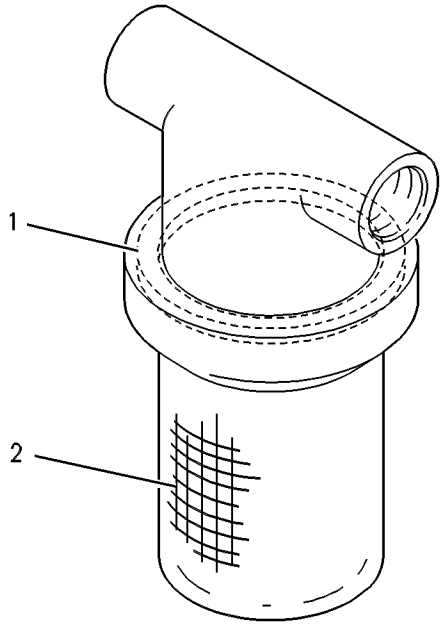

GRAPHIC #1 **<END>** g00293866

WORK TOOLS

258-3645 TANK & MTG GP-WATER

S/N: JAY1-UP
AN ATTACHMENT

SMCS-5613 **i02713033**

NOTE	REF NO	GRAPHIC REF	PART NUMBER	QTY	PART NAME 1 2 3 4 5 6 (PRODUCT LEVEL)	SEE PAGE
	1	1	**3B-7255**	1	BUSHING-REDUCING	
	2	1	**3S-2093**	4	STRAP-CABLE	
	3	1	**7X-0495**	1	ADAPTER	
	4	1	**8T-0737**	1	VALVE-SHUTOFF	
Y	5	1	**116-2001**	1	STRAINER GP-WATER	357
	6	1	**124-1916**	1	COUPLING-PERMANENT	
	7	1	**124-1917**	1	COUPLING-PERMANENT	
	8	1	**165-4894**	1	HARNESS AS-WORK TOOL	
		1	**102-8806**	1	KIT-RECEPTACLE (8-PIN)	
					(INCLUDES RECEPTACLE AS & WEDGE)	
E		1	**119-3662**		TUBE-HEAT SHRINK (10.85-MM DIA) (13-CM)	
		1	**155-2265**	1	KIT-CONNECTING PLUG (8-PIN)	
		1	**155-2270**	1	KIT-CONNECTING PLUG (2-PIN)	
					(EACH PLUG KIT INCLUDES PLUG AS, WEDGE & INTERFACE SEAL)	
Y	9	1	**166-2551**	1	TANK GP-WATER	360
I	10	1	**166-2552**	1	HOSE AS	
	11	1	**166-2557**	1	PLATE	
	12	1	**166-2558**	1	COUPLING	
	13	1	**166-2559**	2	BRACKET	
	14	1	**218-5847**	1	PLATE	
	15	1	**233-5719**	1	PUMP GP-DIAPHRAGM	
	16	1	**258-3644**	1	BRACKET AS	
	17	1	**7R-0476**	1	STRAINER (WATER TANK FILL)	
B	18	1	**292-5476**	1	BRACKET	
	19	1	**003-2143**	1	ELBOW (PIPE) (PIPE)	
	20	1	**067-2551**	4	CLIP	
B	21	1	**101-9759**	1	SPACER (9X20X39.2-MM THK)	
M	22	1	**111-4627**	4	SCREW-MACHINE (M6X1X30-MM)	
	23	1	**119-3859**	6	SCREW-PAN HEAD (10-16X0.75-IN)	
M	24	1	**129-3178**	4	LOCKNUT (M6X1-THD)	
	25	1	**1L-2279**	1	ELBOW (PIPE)	
BM	26	1	**5C-7261**	5	NUT (M8X1.25-THD)	
B	27	1	**5P-4116**	6	WASHER-HARD (8.8X20.5X2-MM THK)	
	28	1	**5P-8246**	2	WASHER-HARD (15.5X29X3-MM THK)	
	29	1	**8T-4122**	4	WASHER-HARD (17X32X3.5-MM THK)	
	30	1	**154-1580**	1	WASHER-HARD (M22X38X6-MM THK)	
	31	1	**8T-4205**	4	WASHER-HARD (7.2X14.5X2-MM THK)	
	32	1	**8T-4224**	4	WASHER-HARD (8.8X16X2-MM THK)	
M	33	1	**8T-4779**	4	BOLT (M16X2X35-MM)	
M	34	1	**8T-4908**	4	BOLT (M8X1.25X25-MM)	
BM	35	1	**8T-6870**	1	BOLT (M8X1.25X70-MM)	
M	36	1	**7X-2561**	8	BOLT (M20X2.5X35-MM)	
E	37	1	**167-0608**		SEAL (86-CM)	
BE	38	1	**122-6869**		HOSE-HYDRAULIC (410-CM)	
BE	38A	1	**122-6869**		HOSE-HYDRAULIC (370-CM)	
BE	38B	1	**122-6869**		HOSE-HYDRAULIC (360-CM)	
	39	1	**258-4389**	4	MOUNT	
	40	1	**178-3620**	2	STRAP (DUAL CLAMP)	

B-USE AS REQUIRED
E-ORDER BY THE CENTIMETER
I-REFER TO HYDRAULIC INFORMATION SYSTEM
M-METRIC PART
Y-SEPARATE ILLUSTRATION

258-3645 TANK & MTG GP-WATER *(contd.)* **i02713033**

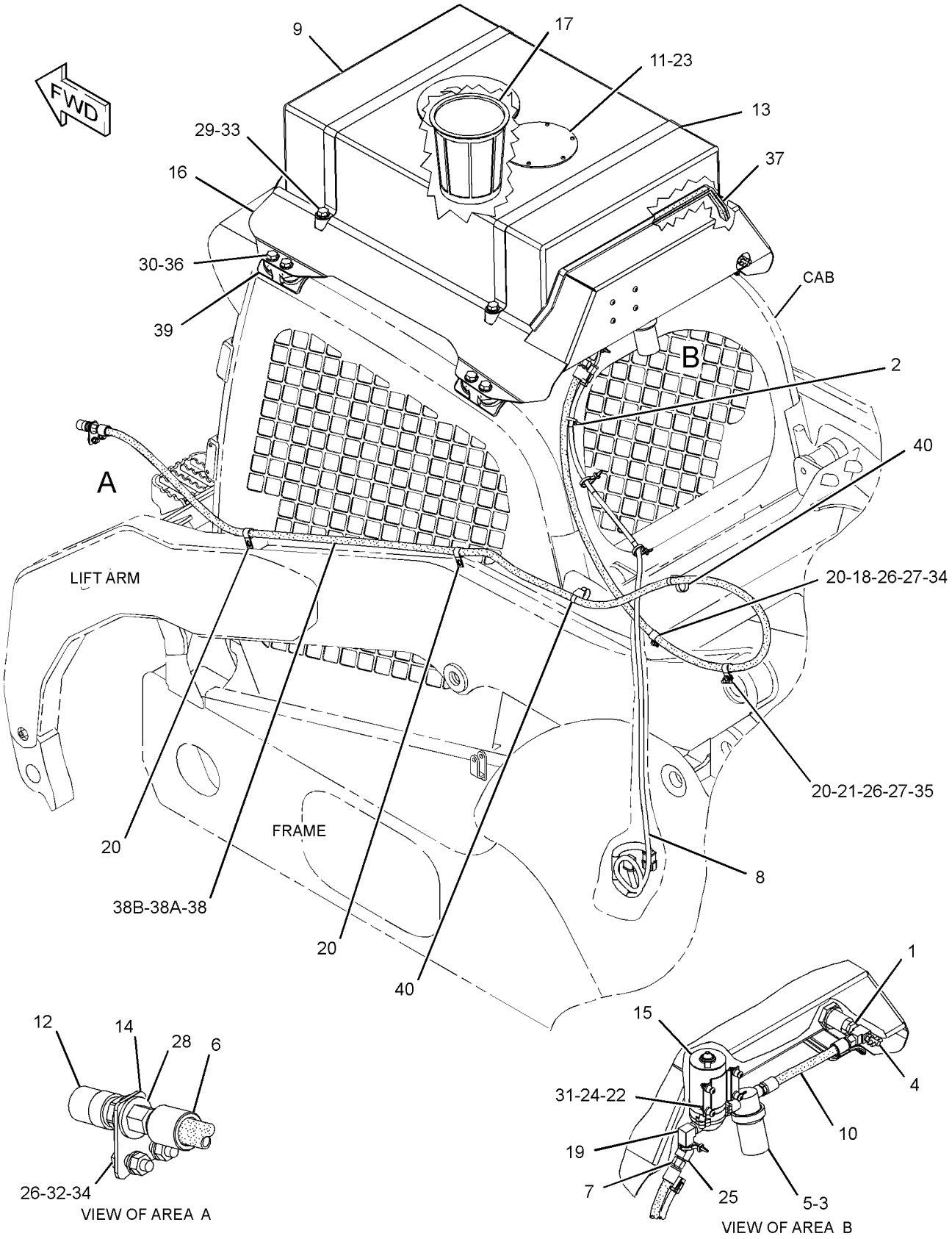

GRAPHIC #1 **<END>** g01359396

WORK TOOLS

166-2551 TANK GP-WATER

S/N: JAY1-UP
PART OF 258-3645 TANK & MTG GP-WATER
AN ATTACHMENT

SMCS-5613 **i02571400**

NOTE	REF NO	GRAPHIC REF	PART NUMBER	QTY	PART NAME 1 2 3 4 5 6 (PRODUCT LEVEL)	SEE PAGE
	1	1	**192-2606**	1	CAP AS (WATER TANK)	
	2	1	**192-2607**	1	OUTLET	

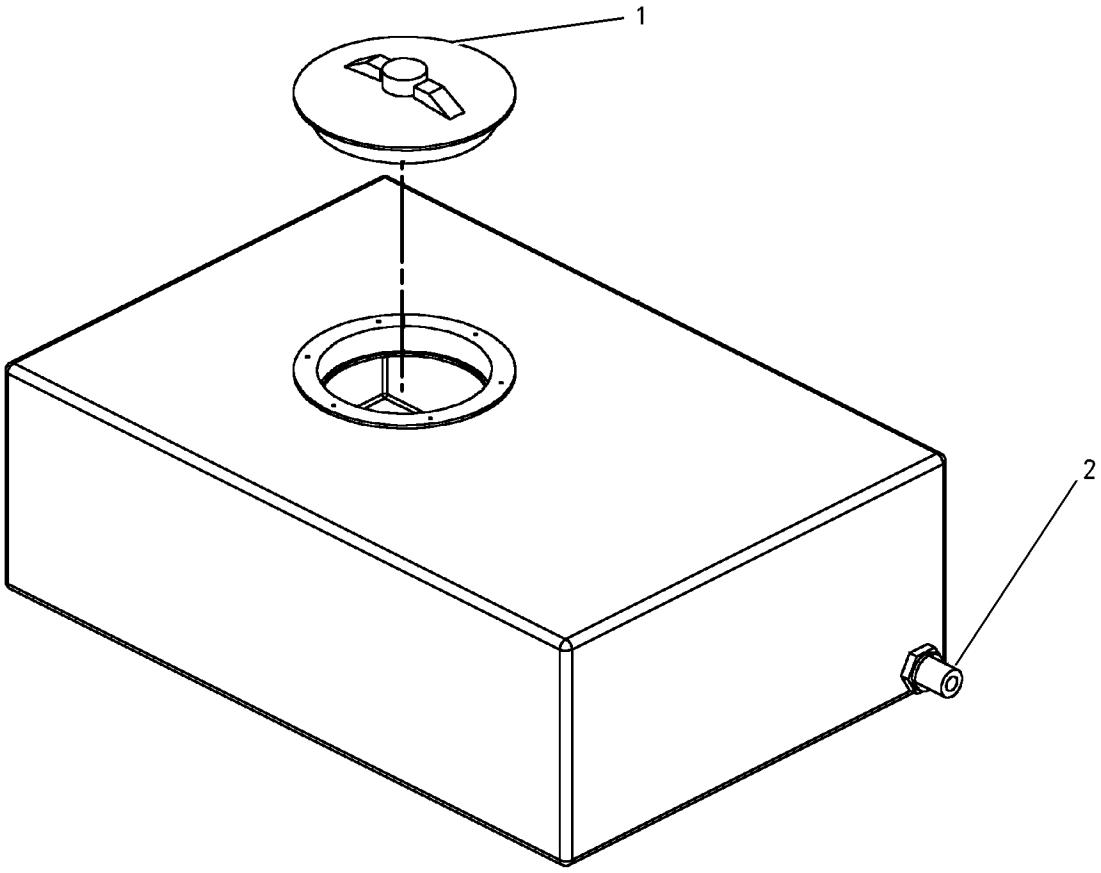

GRAPHIC #1 **<END>** g00742953

WORK TOOLS

141-4999 TOOTH GP-UNI

S/N: JAY1-UP

PART OF 279-5366, 279-5370, 279-5374, 279-5378 BUCKET AR-GENERAL PURPOSE, 279-5380, 279-5392, 279-5400, 279-5401, 296-8055 BUCKET AR-MULTIPURPOSE AN ATTACHMENT

SMCS-6822 **i02163942**

NOTE	REF NO	GRAPHIC REF	PART NUMBER	QTY	PART NAME 1 2 3 4 5 6 (PRODUCT LEVEL)	SEE PAGE
	1	1	**132-4720**	1	TOOTH-UNI-SINGLE STRAP	
	2	1	**246-4349**	2	SCREW-FLAT HEAD (M16X2-THD)	
M	3	1	**8T-4778**	2	LOCKNUT (M16X2-THD)	

M-METRIC PART

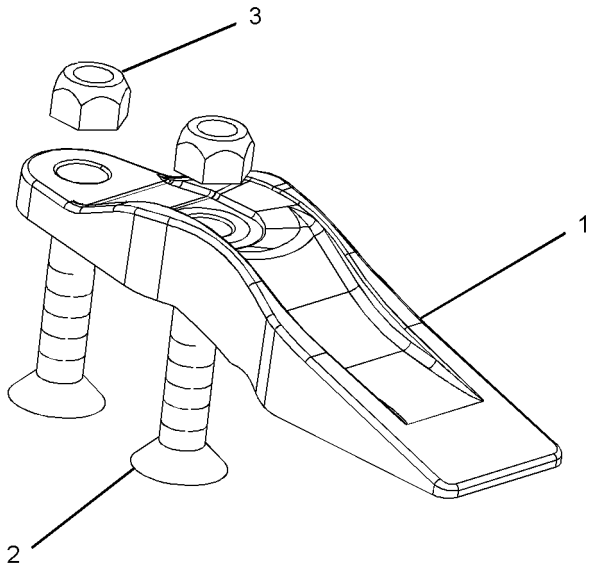

GRAPHIC #1 **<END>** g01097424

OPERATOR STATION

258-4229 ACCESSORY GP-CAB

S/N: JAY1-UP

PART OF 258-3680, 258-3742 CAB AR-ENCLOSED ROPS, 258-3740 OPTION AR-CAB AN ATTACHMENT

SMCS-7301, 731C **i02629783**

NOTE	REF NO	GRAPHIC REF	PART NUMBER	QTY	PART NAME 1 2 3 4 5 6 (PRODUCT LEVEL)	SEE PAGE
	1	1	**258-3727**	4	SCREW-TRUSS HEAD (NO 12X17.46-MM)	
	2	1	**258-4098**	1	HOLDER-CUP	
	3	1	**258-4099**	1	TRAY (CHANGE)	

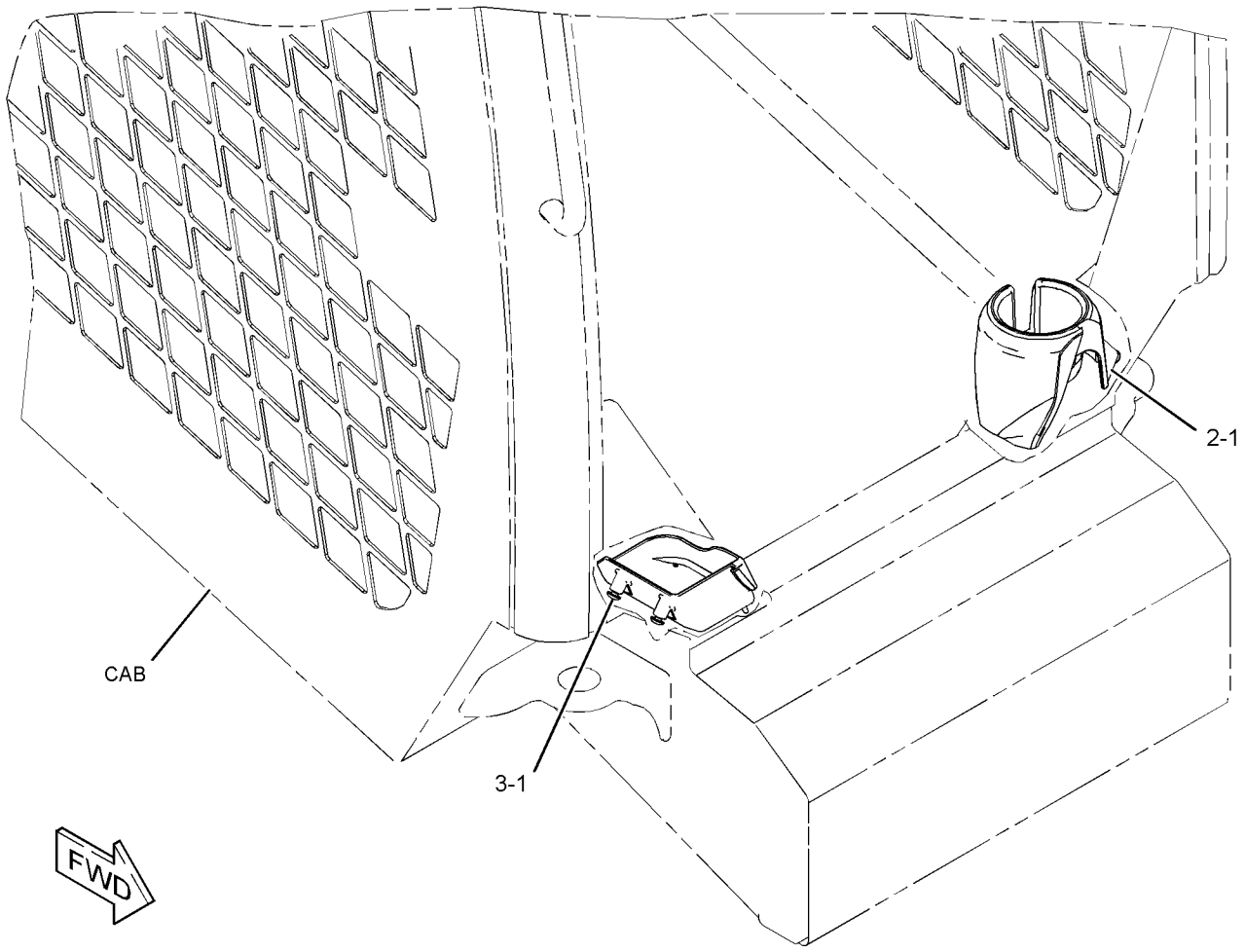

GRAPHIC #1 **<END>** g01322422

OPERATOR STATION

176-3900 ACCUMULATOR GP-REFRIGERANT—WITH DESICCANT

S/N: JAY1-UP

FIELD REPLACEMENT FOR 186-6190—PAGE 364

SMCS-7320 **i02195254**

NOTE	REF NO	GRAPHIC REF	PART NUMBER	QTY	PART NAME 1 2 3 4 5 6 (PRODUCT LEVEL)	SEE PAGE
					(NO SERVICED PARTS)	

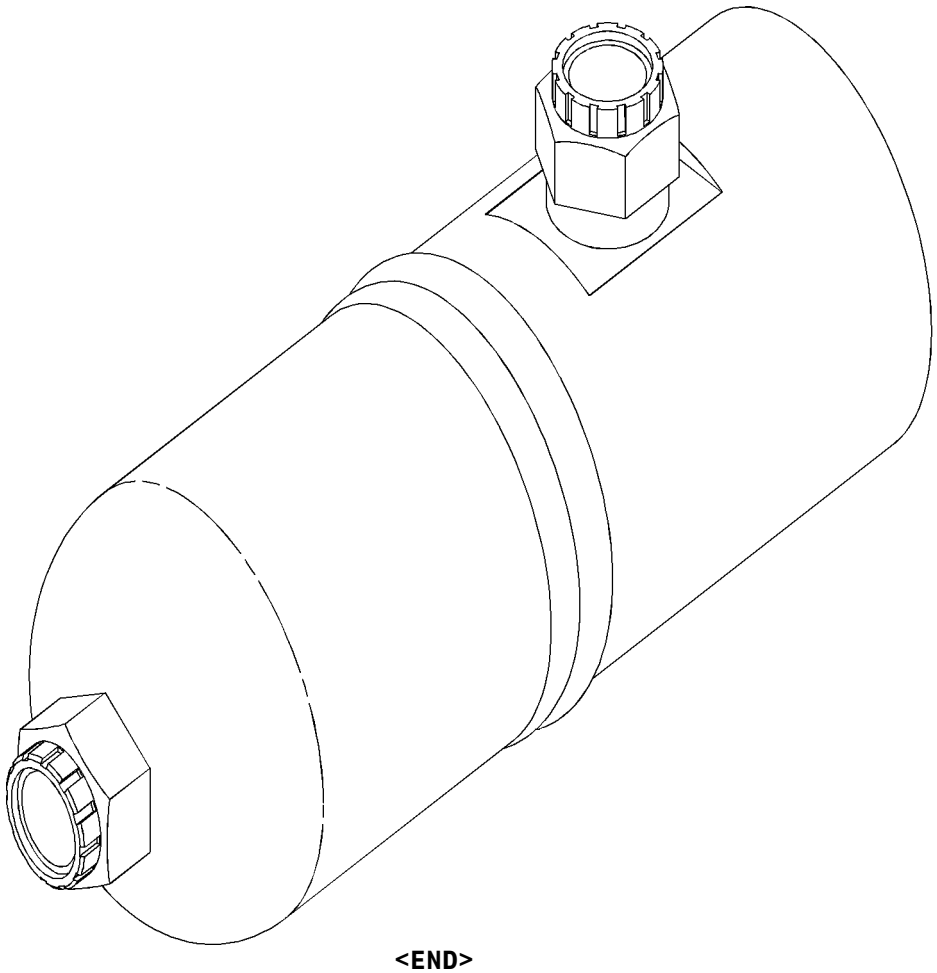

GRAPHIC #1 **<END>** g01035076

OPERATOR STATION

186-6190 ACCUMULATOR GP-REFRIGERANT—WITH DESICCANT

S/N: JAY1-UP
PART OF 258-2474 KIT-AIR COND & HEATER INSTL, 258-2475 KIT-AIR CONDITIONER INSTL, 258-4265 LINES GP-AIR CONDITIONER
FIELD REPLACEMENT ORDER 176-3900—PAGE 363
AN ATTACHMENT

SMCS-7320 **i02306357**

NOTE	REF NO	GRAPHIC REF	PART NUMBER	QTY	PART NAME 1 2 3 4 5 6 (PRODUCT LEVEL)	SEE PAGE
					(NO SERVICED PARTS)	

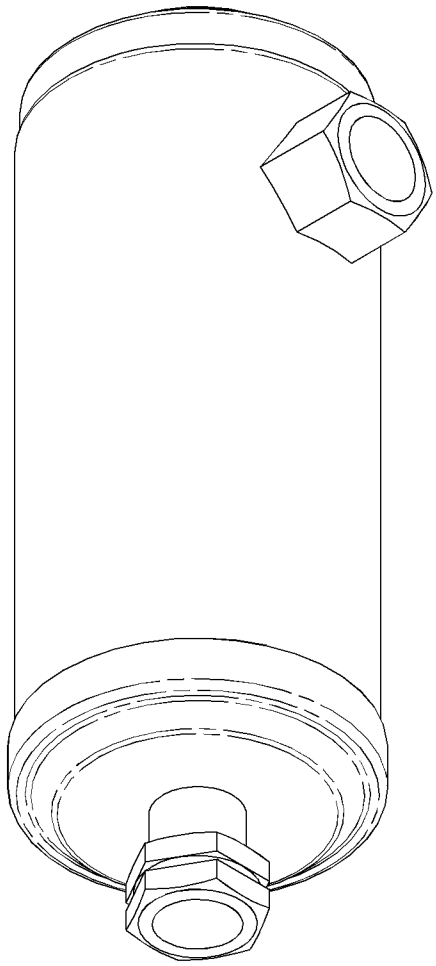

GRAPHIC #1 **<END>** g01155244

OPERATOR STATION

258-4261 AIR CONDITIONER & MOUNTING GP

S/N: JAY1-UP
PART OF 258-4260 AIR CONDITIONER AR
AN ATTACHMENT

SMCS-7320 **i02614210**

NOTE	REF NO	GRAPHIC REF	PART NUMBER	QTY	PART NAME 1 2 3 4 5 6 (PRODUCT LEVEL)	SEE PAGE
	1	1	**206-1345**	2	STRAP-CABLE	
	2	1	**258-3792**	1	SEAL	
	3	1	**258-3794**	1	INSULATION	
Y	4	1	*258-4290*	1	AIR CONDITIONER GP	367
	5	1	**258-4408**	1	INSULATION	
	6	1	**266-0299**	1	SWITCH AS-ROCKER (AIR CONDITIONER)	
Y	7	1	*266-2430*	1	CONTROL & WIRING GP-AIR & TEMP	375
M	8	1	**266-3315**	4	BOLT-FLANGE HEAD (M8X1.25X25.5-MM)	
	9	1	**266-3314**	2	BOLT-FLANGE HEAD (M6X1X20.5-MM)	

M-METRIC PART
Y-SEPARATE ILLUSTRATION

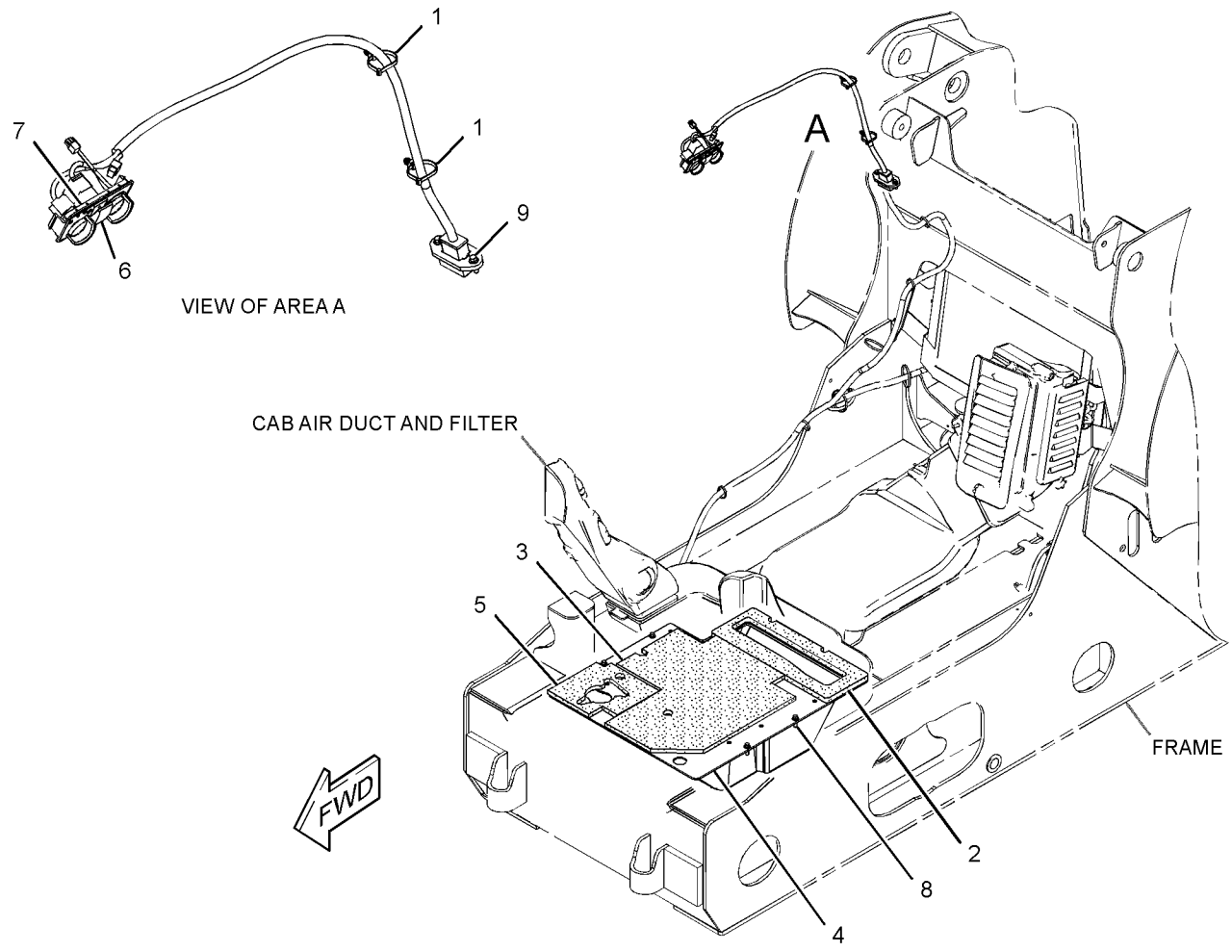

GRAPHIC #1 **<END>** g01311283

OPERATOR STATION

258-4260 AIR CONDITIONER AR

S/N: JAY1-UP
PART OF 258-3680 CAB AR-ENCLOSED ROPS
AN ATTACHMENT

SMCS-7320 **i02614209**

NOTE	PART NUMBER	QTY	PART NAME 1 2 3 4 5 6 (PRODUCT LEVEL)	SEE PAGE
Y	*258-4261*	1	AIR CONDITIONER & MOUNTING GP	365
Y	*258-2468*	1	COMPRESSOR & MTG GP-REFRIG	372
Y	*258-4280*	1	CONDENSER & MTG GP-REFRIGERANT	373
Y	*258-4252*	1	DUCT & FILTER GP-CAB AIR	402
Y	*258-4265*	1	LINES GP-AIR CONDITIONER	426
Y	*258-4255*	1	LINES GP-HEATER	428
	258-4146	1	WIRING GP-AIR CONDITIONER	
	3S-2093	18	STRAP-CABLE	
	206-2423	3	SADDLE	
	258-4147	1	HARNESS AS-HEATER & AIR COND	
	102-8804	1	KIT-RECEPTACLE (4-PIN)	
	102-8805	1	KIT-RECEPTACLE (6-PIN)	
			(EACH RECEPTACLE KIT INCLUDES RECEPTACLE AS & WEDGE)	
	8L-8413	5	STRAP-CABLE	
	9X-1054	1	PLUG AS-CONNECTOR (4-PIN)	
	9X-1056	2	TERMINAL-RECEPTACLE	
	100-5041	2	TERMINAL-RECEPTACLE	
	100-6674	2	SEAL-CONNECTOR	
E	**119-3662**		TUBE-HEAT SHRINK (10.85-MM DIA) (7-CM)	
	124-5640	2	TERMINAL-SOCKET	
E	**125-7874**		TUBE-HEAT SHRINK (5.72-MM DIA) (20-CM)	
	155-2255	1	KIT-CONNECTING PLUG (12-PIN)	
	155-2265	1	KIT-CONNECTING PLUG (8-PIN)	
	155-2270	3	KIT-CONNECTING PLUG (2-PIN)	
			(EACH PLUG KIT INLCUDES PLUG AS, WEDGE & INTERFCE SEAL)	

E-ORDER BY THE CENTIMETER
Y-SEPARATE ILLUSTRATION

<END>

OPERATOR STATION

258-4290 AIR CONDITIONER GP

S/N: JAY1-UP

PART OF 258-4261 AIR CONDITIONER & MOUNTING GP, 258-2474 KIT-AIR COND & HEATER INSTL, 258-2475 KIT-AIR CONDITIONER INSTL

AN ATTACHMENT

SMCS-7320 **i02664220**

NOTE	REF NO	GRAPHIC REF	PART NUMBER	QTY	PART NAME 1 2 3 4 5 6 (PRODUCT LEVEL)	SEE PAGE
	1	1	**119-9631**	1	SWITCH-TEMPERATURE (AIR CONDITIONER)	
	2	1	**295-5440**	1	MOTOR (BLOWER)	
	3	1	**232-1384**	1	TUBE (ORIFICE)	
	4	1	**258-4273**	1	CASE AS	
	5	1	**258-4274**	1	GASKET	
	6	1	**258-4286**	1	TUBE	
	7	1	**258-4298**	1	PLATE AS	
	8	1	**266-2432**	1	VALVE AS-WATER	
	9	1	**266-2433**	1	COIL AS-EVAPORATOR	
	10	1	**266-2434**	1	COIL AS-HEATER	
	11	1	**266-2435**	1	HARNESS AS-HEATER & AIR COND	
		1	**102-8806**	1	KIT-RECEPTACLE (8-PIN)	
					(INCLUDES RECEPTACLE AS & WEDGE)	
E		1	**8Y-8081**		TUBE-CONVOLUTED (50-CM)	
E		1	**119-3662**		TUBE-HEAT SHRINK (10.85-MM DIA) (7-CM)	
	12	1	**283-2458**	2	NUT-SPEED	
	13	1	**6V-6717**	4	SCREW-WASHER HEAD (8-32X9.52-MM)	
M	14	1	**9X-2045**	9	SCREW-TRUSS HEAD (M6X1X20-MM)	
D	15	1	**5P-5637**		SEAL (0.17-M EACH)	
	16	1	**294-0091**	1	FILM-INSTRUCTION (DO NOT SPRAY, READ OMM)	

D-ORDER BY THE METER
E-ORDER BY THE CENTIMETER
M-METRIC PART

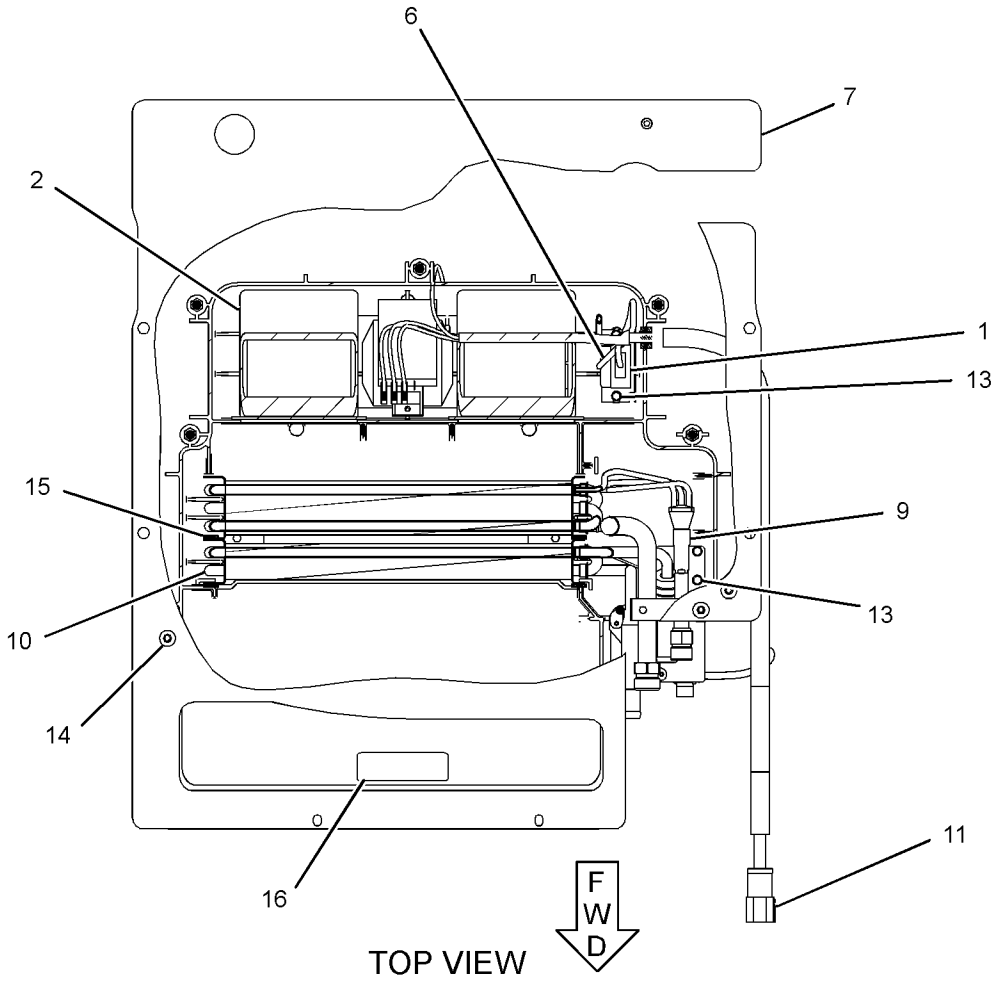

TOP VIEW

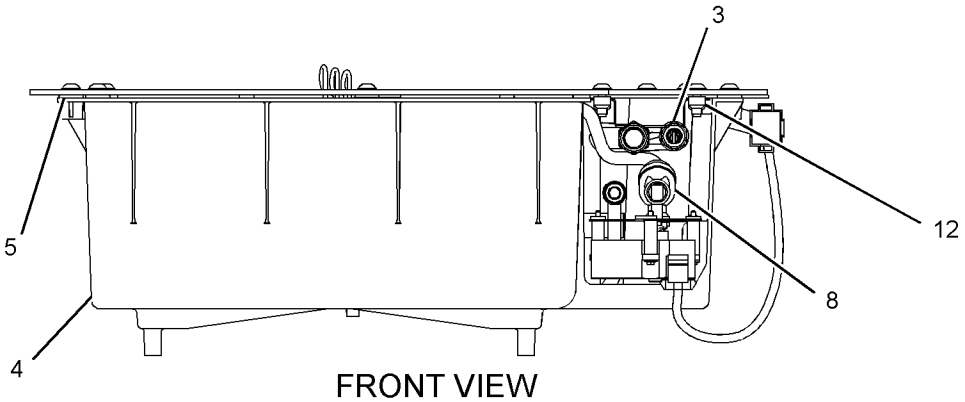

FRONT VIEW

GRAPHIC #1

<END>

g01339586

OPERATOR STATION

258-4311 ARMREST & MOUNTING GP

S/N: JAY1-UP

PART OF 258-4401, 258-4402, 258-4403 SEAT & ARMREST GP

AN ATTACHMENT

SMCS-7307 **i02674969**

NOTE	REF NO	GRAPHIC REF	PART NUMBER	QTY	PART NAME 1 2 3 4 5 6 (PRODUCT LEVEL)	SEE PAGE
	1	1	**229-8757**	1	SWITCH AS-LIMIT (ARMREST, INTERLOCK)	
		1	**102-8803**	1	KIT-RECEPTACLE (3-PIN)	
					(KIT INCLUDES RECEPTACLE AS & WEDGE)	
		1	**186-3735**	3	PIN-CONNECTOR (16-GA TO 18-GA)	
	2	1	**258-4318**	1	ARMREST AS (LH)	
	3	1	**258-4319**	1	ARMREST AS (RH)	
	4	1	**7X-7729**	6	WASHER (11X25X3-MM THK)	
	5	1	**258-4422**	2	WASHER-SPRING	
Y	6	1	*295-3171*	1	MOUNTING GP-ARMREST (LH)	431
Y	7	1	*295-3172*	1	MOUNTING GP-ARMREST (RH)	432
	8	1	**3S-2093**	1	STRAP-CABLE	
M	9	1	**8T-6685**	2	BOLT (M10X1.5X110-MM)	

M-METRIC PART
Y-SEPARATE ILLUSTRATION

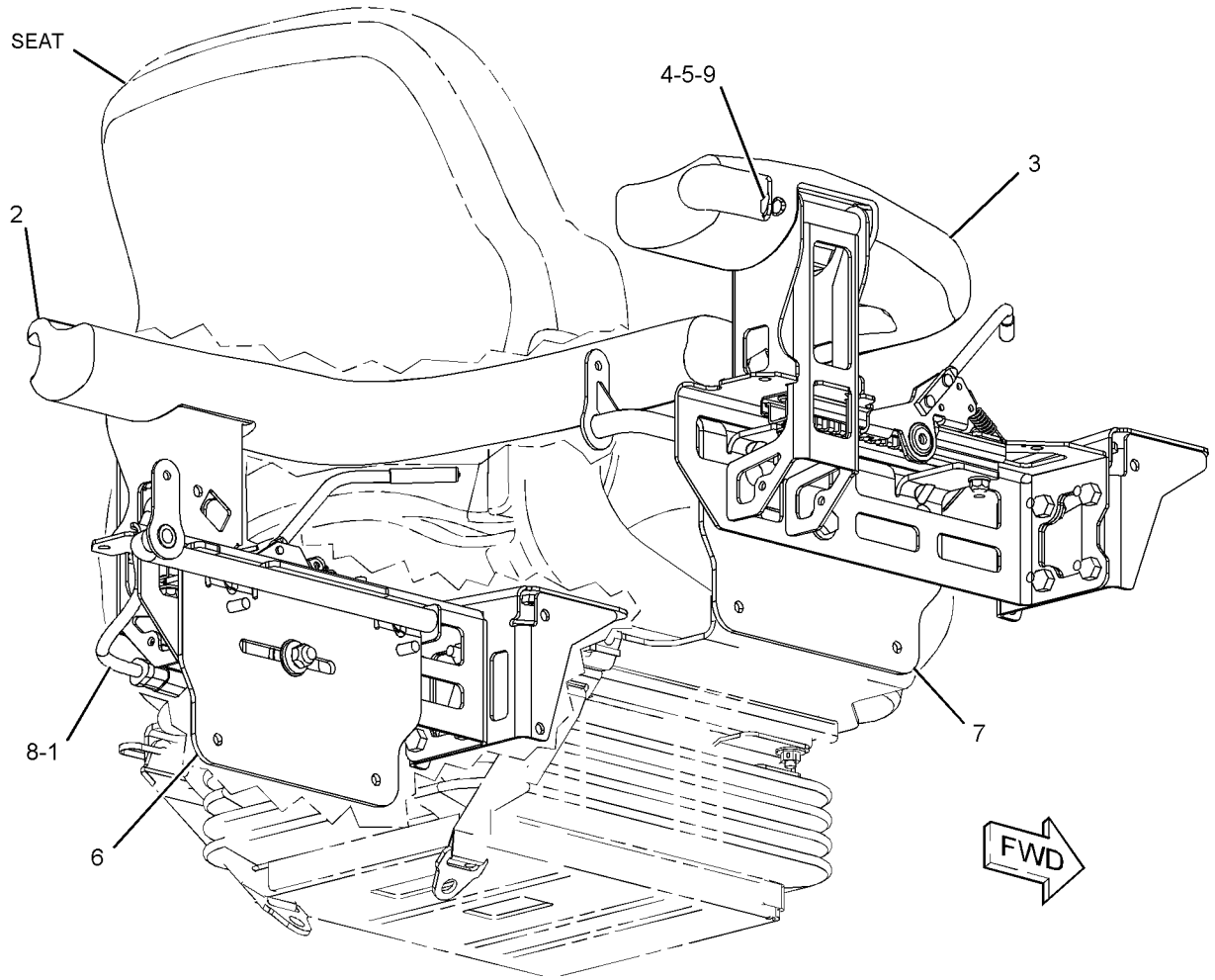

GRAPHIC #1 **<END>** g01312099

OPERATOR STATION

258-3680 CAB AR-ENCLOSED ROPS

S/N: JAY1-UP

AN ATTACHMENT

SMCS-7301 **i02664231**

NOTE	PART NUMBER	QTY	PART NAME 1 2 3 4 5 6 (PRODUCT LEVEL)	SEE PAGE
Y	*258-4229*	1	ACCESSORY GP-CAB	362
Y	*258-4260*	1	AIR CONDITIONER AR	366
Y	*258-4066*	1	INSTALLATION GP-RADIO	408
Y	*258-4090*	1	WINDOW GP-CAB	460

Y-SEPARATE ILLUSTRATION

<END>

258-3742 CAB AR-ENCLOSED ROPS

S/N: JAY1-UP

AN ATTACHMENT

SMCS-7301 **i02664492**

NOTE	PART NUMBER	QTY	PART NAME 1 2 3 4 5 6 (PRODUCT LEVEL)	SEE PAGE
Y	*258-4229*	1	ACCESSORY GP-CAB	362
Y	*258-4250*	1	HEATER AR-CAB	406
Y	*258-4066*	1	INSTALLATION GP-RADIO	408
Y	*258-4090*	1	WINDOW GP-CAB	460

Y-SEPARATE ILLUSTRATION

<END>

258-4000 CAB AR-ENCLOSED ROPS

S/N: JAY1-UP

PART OF 258-3236 COMMON AR

SMCS-7301 **i02664458**

NOTE	PART NUMBER	QTY	PART NAME 1 2 3 4 5 6 (PRODUCT LEVEL)	SEE PAGE
Y	*258-4144*	1	COVER GP-FUSE PANEL	75
Y	*258-4164*	1	LIGHTING GP-FLOOD (WORK LIGHTS, FRONT)	87
Y	*258-4020*	1	LINER GP-CAB	422
Y	*258-4230*	1	MIRROR GP-REAR VIEW	430
Y	*258-4220*	1	MOUNTING GP-ROPS (INCLUDES STEP)	433
Y	*258-4162*	1	PANEL GP-INSTRUMENT	437
Y	*258-4010*	1	WINDOW GP-CAB	459
Y	*258-4100*	1	WIRING GP-CAB	101

Y-SEPARATE ILLUSTRATION

<END>

258-3515 CABLE GP-CONTROL—MANUAL LOWERING

S/N: JAY1-UP

PART OF 258-3393 LINES GP-LOWERING CONTROL

SMCS-5154 **i02628230**

NOTE	REF NO	GRAPHIC REF	PART NUMBER	QTY	PART NAME 1 2 3 4 5 6 (PRODUCT LEVEL)	SEE PAGE
	1	1	**8T-4744**	1	PIN AS-SPRING	
	2	1	**196-5070**	1	NUT (9/16-18-THD)	
	3	1	**292-2436**	1	HANDLE	
	4	1	**292-2437**	1	NUT	
	5	1	**292-2438**	1	SEAL	
M	6	1	**095-1209**	2	NUT (M16X2-THD)	
	7	1	**6V-8185**	1	NUT (1/4-20-THD)	
	8	1	**8T-4742**	1	END-YOKE ROD	

M-METRIC PART

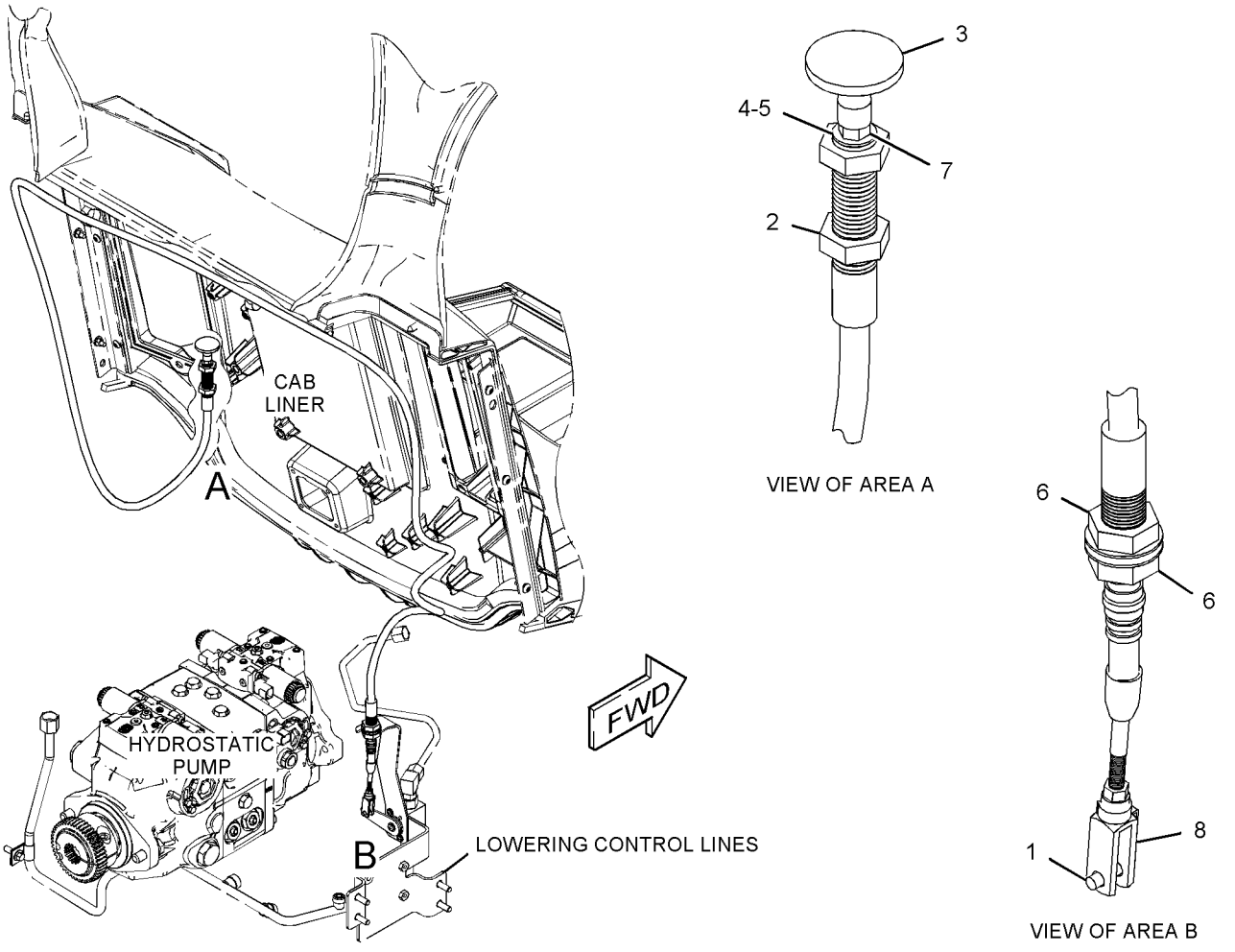

GRAPHIC #1 **<END>** g01333254

OPERATOR STATION

258-2468 COMPRESSOR & MTG GP-REFRIG

S/N: JAY1-UP
PART OF 258-4260 AIR CONDITIONER AR
AN ATTACHMENT

SMCS-1802 **i02713030**

NOTE	REF NO	GRAPHIC REF	PART NUMBER	QTY	PART NAME 1 2 3 4 5 6 (PRODUCT LEVEL)	SEE PAGE
	1	1	**258-2466**	1	BRACKET	
	2	1	**258-2467**	1	BRACKET AS	
	3	1	**258-3539**	1	V-BELT (REFRIGERANT)	
	4	1	**276-9875**	1	COMPRESSOR GP-REFRIGERANT	
		1	**102-8802**	1	KIT-RECEPTACLE (2-PIN)	
					(INCLUDES RECEPTACLE AS & WEDGE)	
		1	**229-4896**	2	SEAL-O-RING	
		1	**229-7356**	1	VALVE AS-RELIEF (REFRIGERANT COMPRESSOR)	
	5	1	**113-0693**	1	LOCKWASHER	
	6	1	**8T-4121**	8	WASHER-HARD (11X21X2.5-MM THK)	
M	7	1	**8T-4133**	3	NUT (M10X1.5-THD)	
M	8	1	**8T-4196**	3	BOLT (M10X1.5X35-MM)	
	9	1	**8T-4223**	3	WASHER-HARD (13.5X25.5X3-MM THK)	
M	10	1	**8T-4956**	3	BOLT (M12X1.75X35-MM)	
M	11	1	**8T-6685**	1	BOLT (M10X1.5X110-MM)	

M-METRIC PART

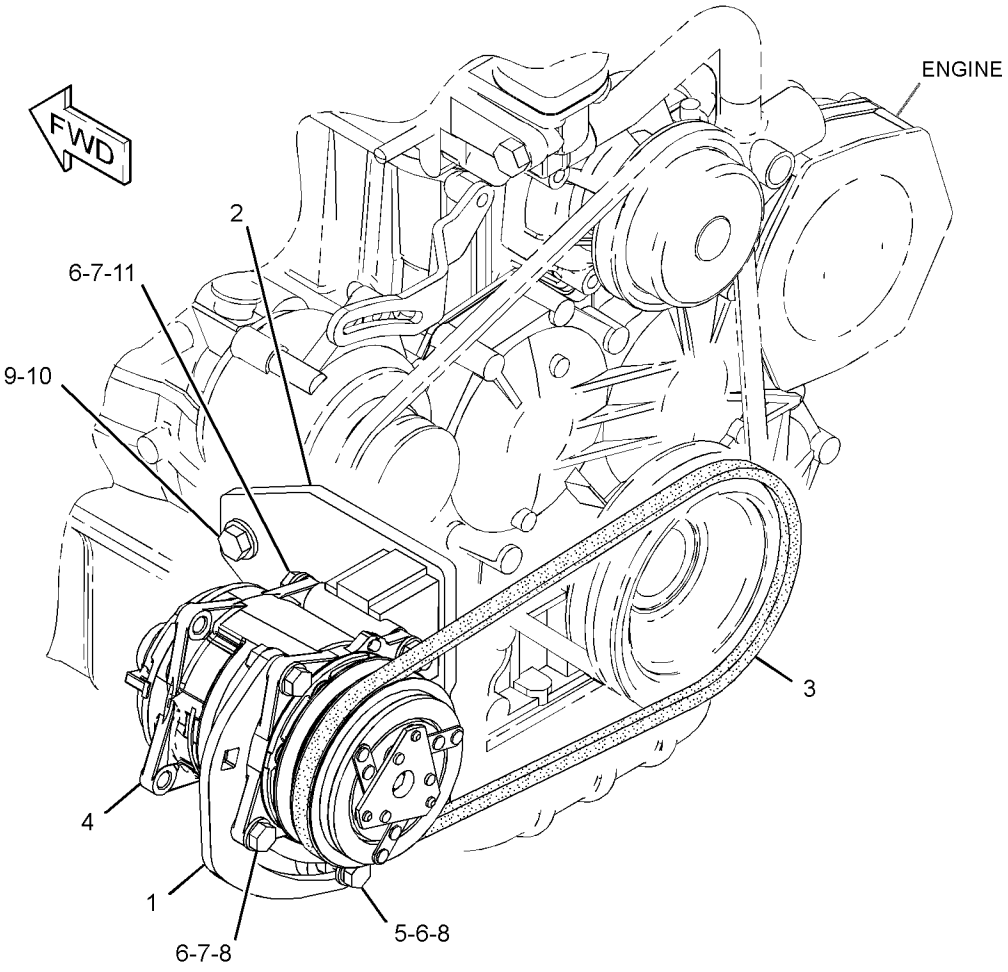

GRAPHIC #1 **<END>** g01311528

258-4280 CONDENSER & MTG GP-REFRIGERANT

S/N: JAY1-UP
PART OF 258-4260 AIR CONDITIONER AR
AN ATTACHMENT

SMCS-1805 **i02664464**

NOTE	REF NO	GRAPHIC REF	PART NUMBER	QTY	PART NAME 1 2 3 4 5 6 (PRODUCT LEVEL)	SEE PAGE
	1	1	**115-1615**	1	RELAY AS (12-VOLT)	
	2	1	**258-4284**	1	BRACKET AS (UPPER LH)	
	3	1	**258-4380**	1	BRACKET AS (LOWER LEFT)	
	4	1	**258-4386**	1	BRACKET AS (RIGHT)	
Y	6	1	*266-2425*	1	CONDENSER & MTG GP-REFRIGERANT	374
	7	1	**4K-8864**	2	CLIP	
M	8	1	**5C-9553**	10	BOLT (M6X1X16-MM)	
	9	1	**6D-4246**	1	CLIP	
	10	1	**8T-4121**	2	WASHER-HARD (11X21X2.5-MM THK)	
M	11	1	**8T-4136**	2	BOLT (M10X1.5X25-MM)	
	12	1	**8T-4205**	10	WASHER-HARD (7.2X14.5X2-MM THK)	

M-METRIC PART
Y-SEPARATE ILLUSTRATION

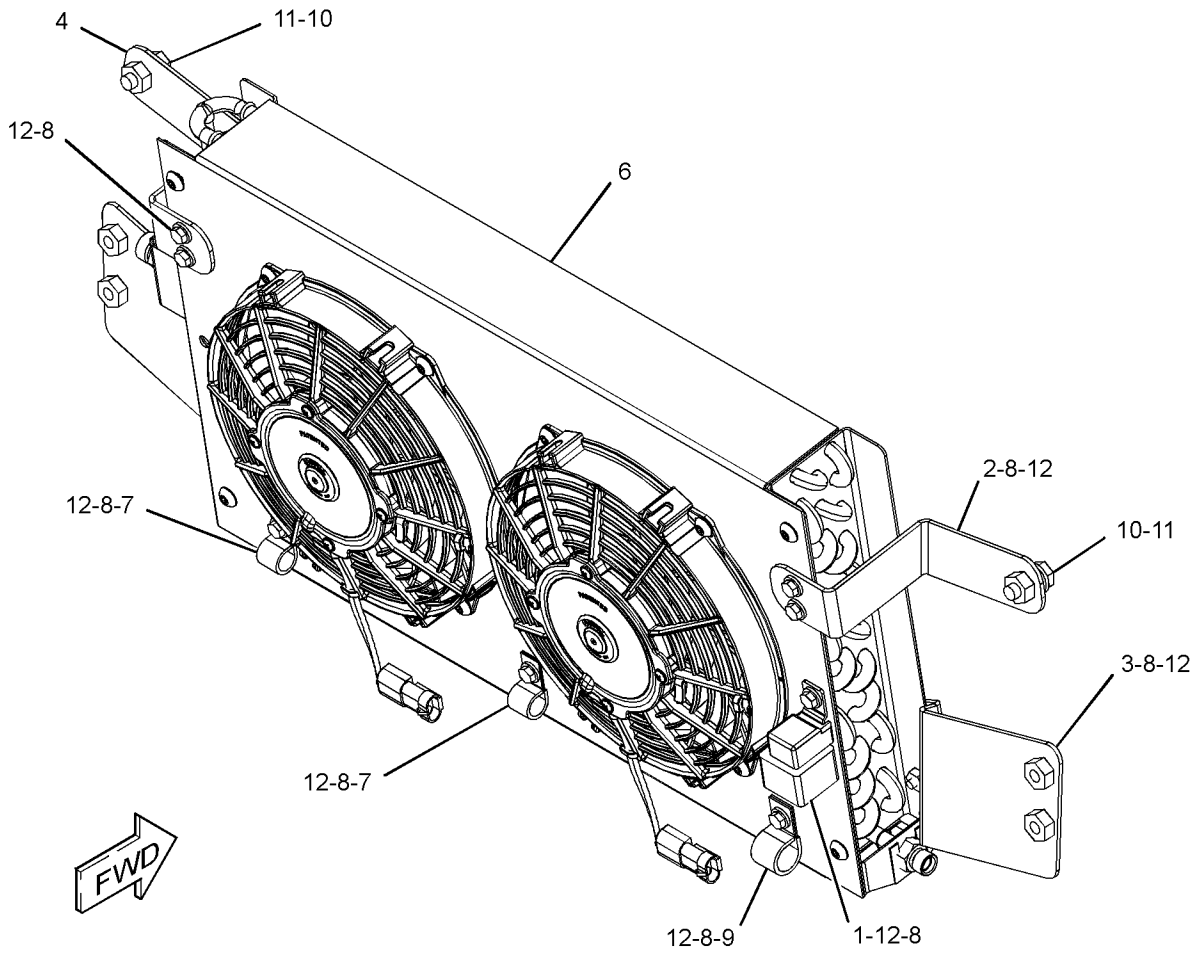

GRAPHIC #1 **<END>** g01339547

OPERATOR STATION

266-2425 CONDENSER & MTG GP-REFRIGERANT

S/N: JAY1-UP

PART OF 258-4280 CONDENSER & MTG GP-REFRIGERANT, 258-2474 KIT-AIR COND & HEATER INSTL, 258-2475 KIT-AIR CONDITIONER INSTL

AN ATTACHMENT

SMCS-1805 **i02614216**

NOTE	REF NO	GRAPHIC REF	PART NUMBER	QTY	PART NAME 1 2 3 4 5 6 (PRODUCT LEVEL)	SEE PAGE
	1	1	**266-2429**	1	SHROUD AS	
	2	1	**284-6041**	1	COIL AS	
	3	1	**287-7062**	2	FAN AS (REFRIGERANT)	
M	4	1	**5C-9553**	4	BOLT (M6X1X16-MM)	
M	5	1	**8T-4181**	8	BOLT (M6X1X20-MM)	
	6	1	**9X-8256**	12	WASHER (6.6X12X2-MM THK)	

M-METRIC PART

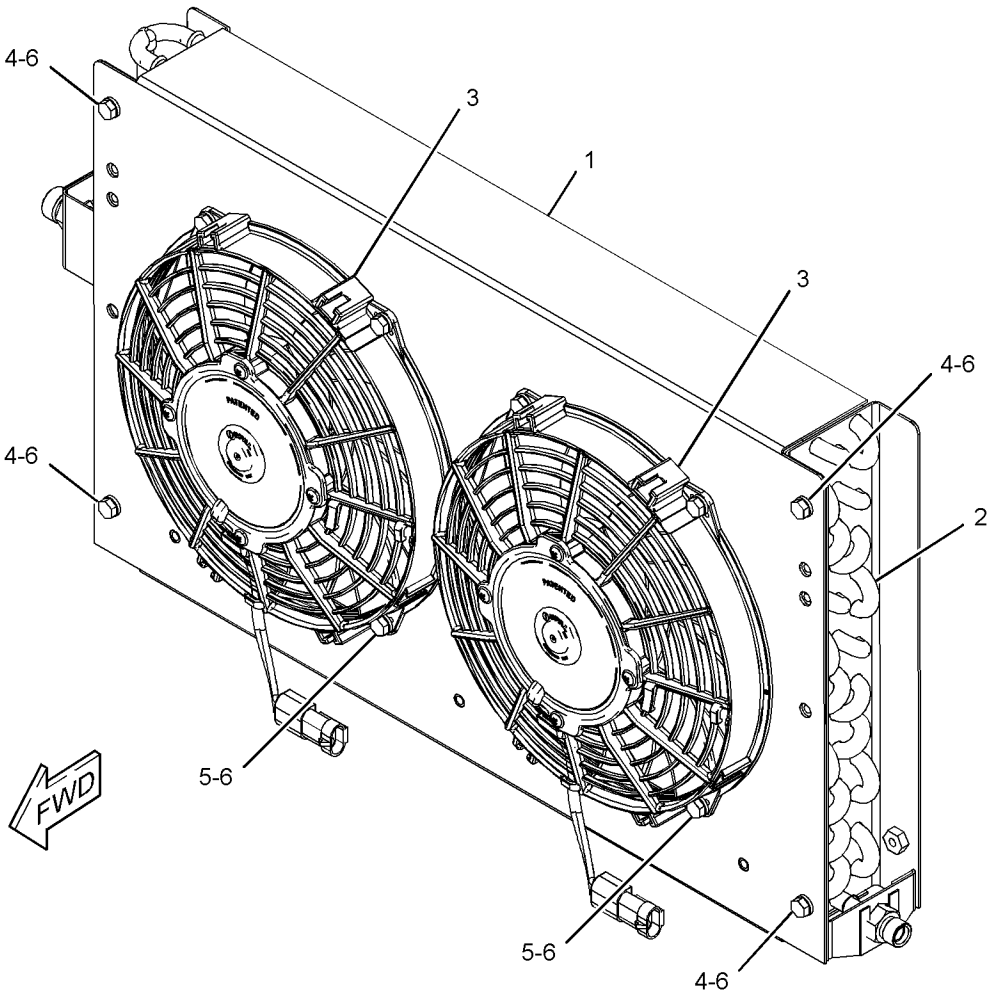

GRAPHIC #1 **<END>** g01311051

266-2430 CONTROL & WIRING GP-AIR & TEMP

S/N: JAY1-UP

PART OF 258-4261 AIR CONDITIONER & MOUNTING GP, 258-4251 HEATER & MTG GP-CAB, 258-2474 KIT-AIR COND & HEATER INSTL, 280-6077 KIT-CAB HEATER & MOUNTING AN ATTACHMENT

SMCS-1408, 7451 **i02664839**

NOTE	REF NO	GRAPHIC REF	PART NUMBER	QTY	PART NAME 1 2 3 4 5 6 (PRODUCT LEVEL)	SEE PAGE
	1	1	**289-8537**	1	HARNESS AS-CONTROL	
		1	**103-8133**	1	KIT-RECEPTACLE (12-PIN)	
					(INCLUDES RECEPTACLE AS & WEDGE)	
E		1	**125-7874**		TUBE-HEAT SHRINK (5.72-MM DIA) (10-CM)	
		1	**128-7721**	1	CONNECTOR	
		1	**142-9117**	1	CONNECTOR	
		1	**155-2270**	1	KIT-CONNECTING PLUG (2-PIN)	
					(INCLUDES PLUG AS, WEDGE & INTERFACE SEAL)	
Y	2	1	**258-4299**	1	CONTROL GP-AIR & TEMPERATURE	376
	3	1	**239-9368**	1	RESISTOR AS	
	4	1	**3S-2093**	1	STRAP-CABLE	

E-ORDER BY THE CENTIMETER
Y-SEPARATE ILLUSTRATION

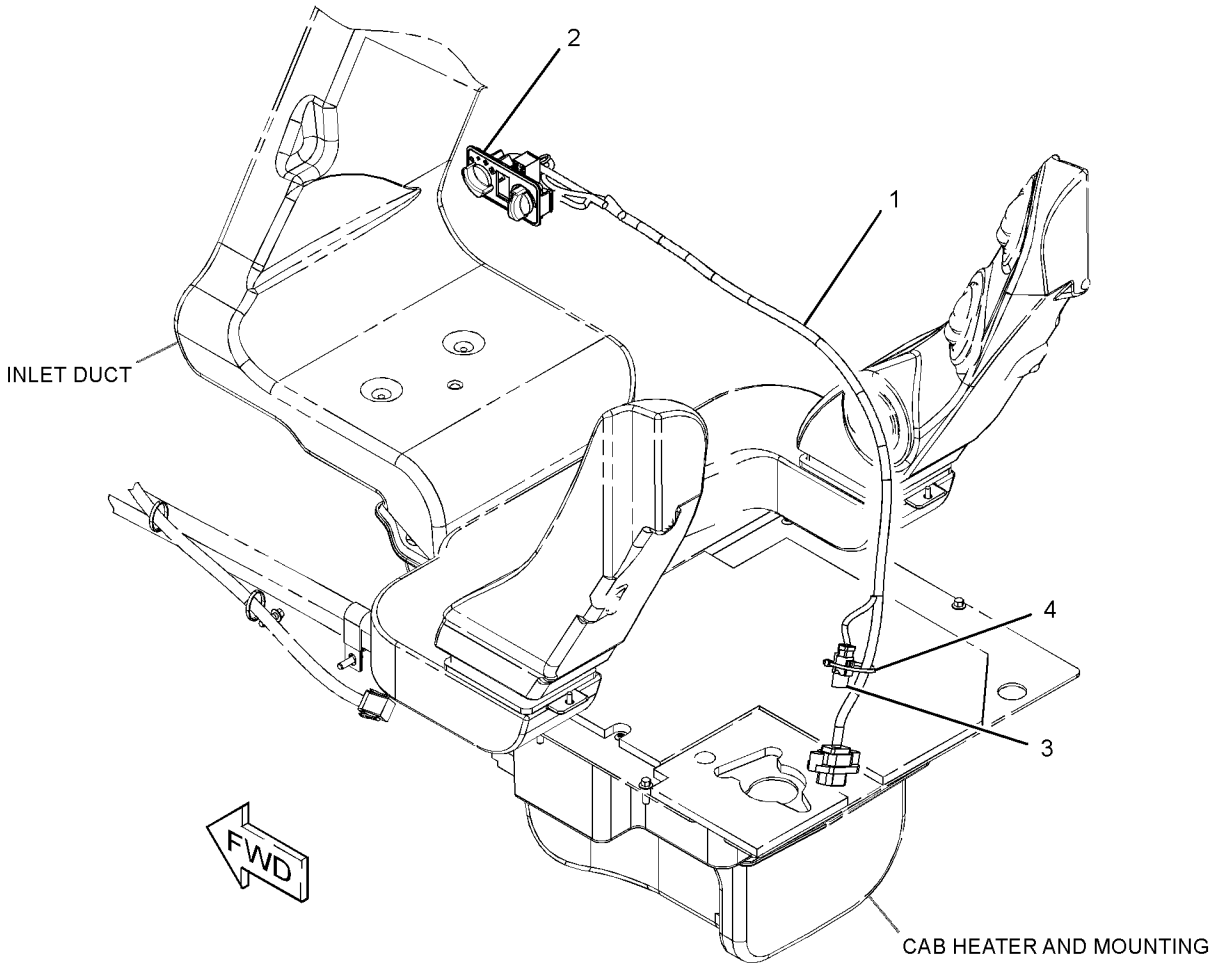

GRAPHIC #1 **<END>** g01339310

258-4299 CONTROL GP-AIR & TEMPERATURE

S/N: JAY1-UP

PART OF 266-2430 CONTROL & WIRING GP-AIR & TEMP

AN ATTACHMENT

SMCS-7451 **i02664465**

NOTE	REF NO	GRAPHIC REF	PART NUMBER	QTY	PART NAME 1 2 3 4 5 6 (PRODUCT LEVEL)	SEE PAGE
	1	1	**6V-8369**	1	NUT (7/16-28-THD)	
	2	1	**206-7398**	2	KNOB-CONTROL (TEMPERATURE SELECT)	
	3	1	**258-4271**	1	SWITCH AS (TEMPERATURE CONTROL)	
	4	1	**258-4272**	1	SWITCH AS (BLOWER FAN SPEED)	
	5	1	**258-4288**	1	KNOB	
	6	1	**258-4289**	1	STOP	
	7	1	**258-4292**	1	FILM-PANEL	
	8	1	**266-2431**	1	PANEL	
	9	1	**7X-0848**	1	NUT-BULKHEAD (3/8-32-THD)	
	10	1	**9F-5644**	1	LOCKWASHER	

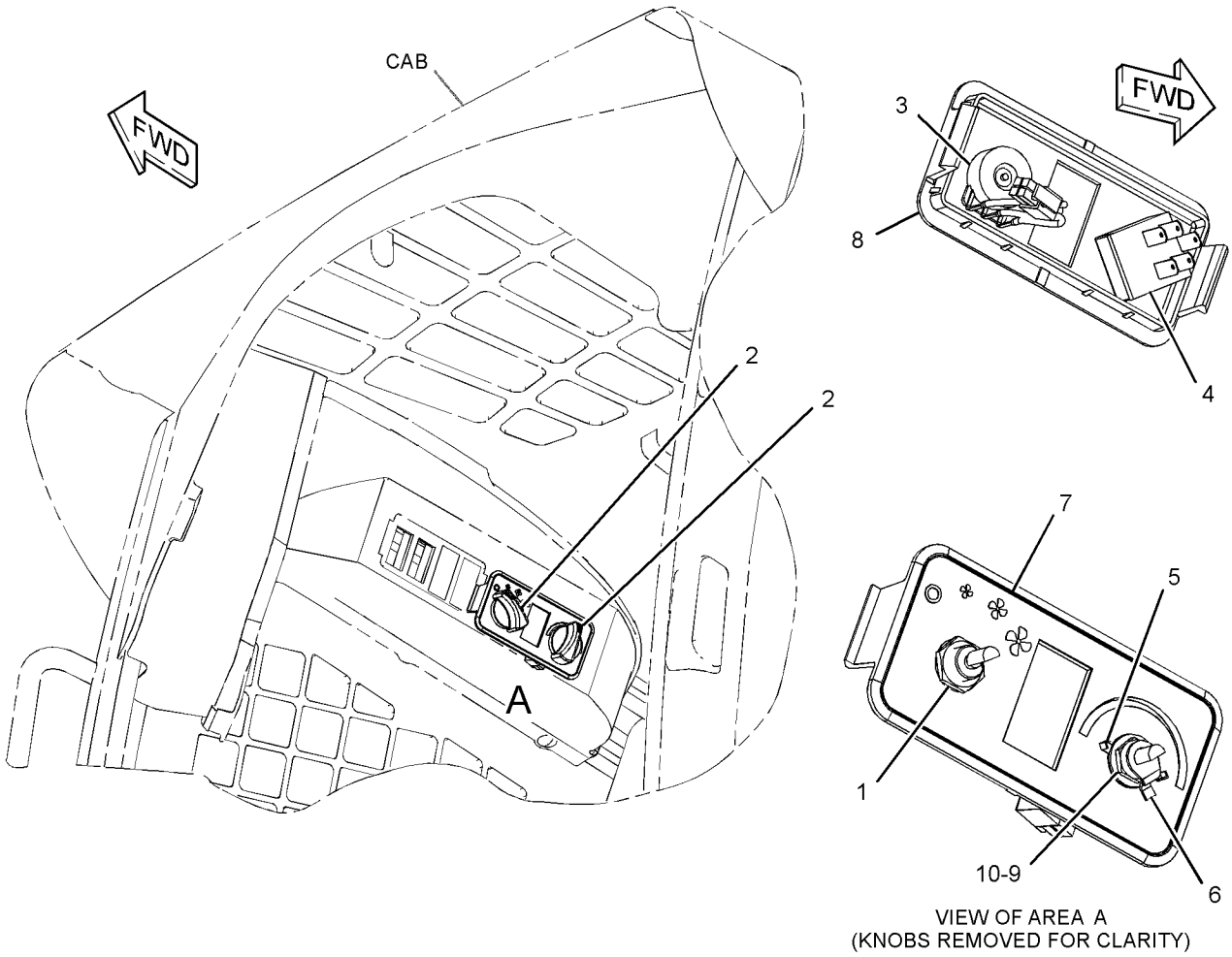

VIEW OF AREA A
(KNOBS REMOVED FOR CLARITY)

GRAPHIC #1 **<END>** g01339840

258-3403 CONTROL GP-ELECTROHYDRAULIC–LH

S/N: JAY1-UP

PART OF 258-3180, 258-3730 HYDRAULIC AR

AN ATTACHMENT

SMCS-5702, 5705 **i02711960**

NOTE	REF NO	GRAPHIC REF	PART NUMBER	QTY	PART NAME 1 2 3 4 5 6 (PRODUCT LEVEL)	SEE PAGE
M	1	1	**9X-2546**	4	BOLT (M6X1X20-MM)	
Y	2	1	**269-0266**	1	CONTROL GP-JOYSTICK (LH)	387
	3	1	**3S-2093**	2	STRAP-CABLE	

M-METRIC PART
Y-SEPARATE ILLUSTRATION

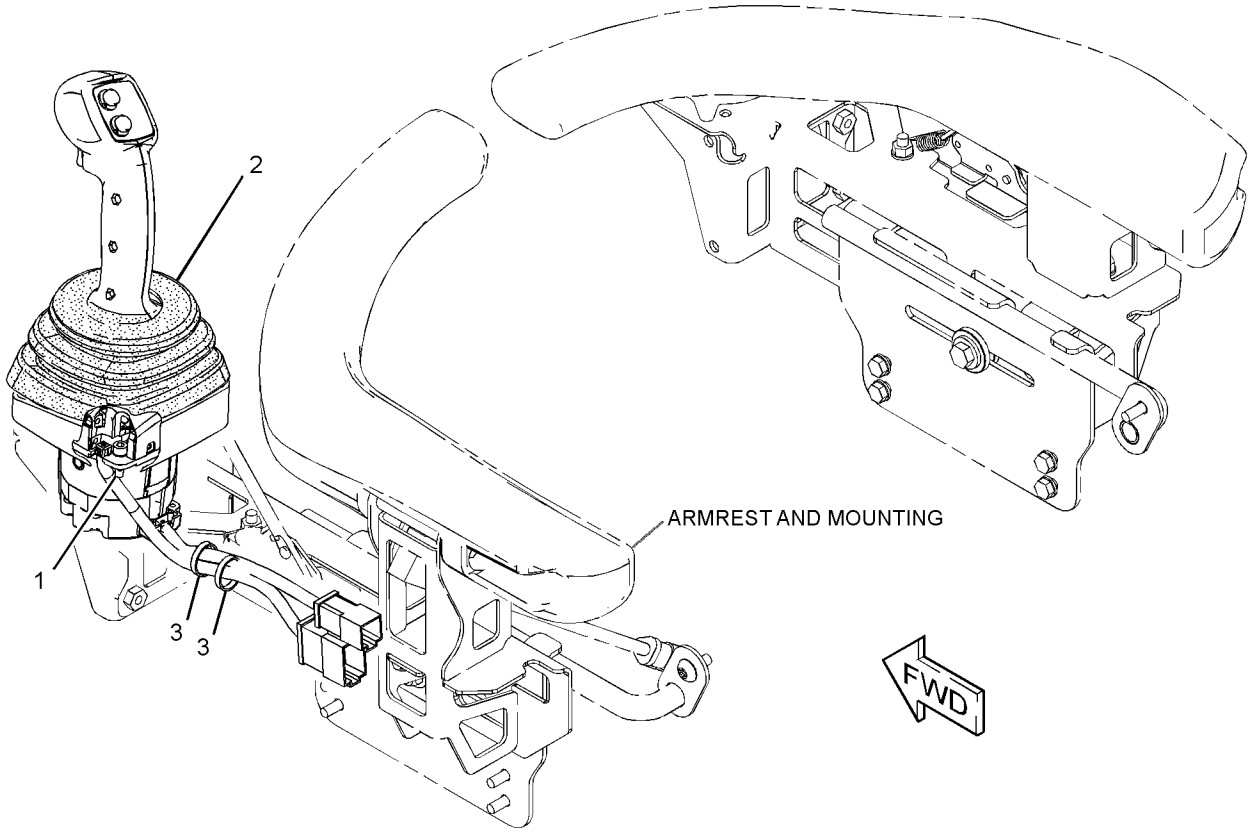

GRAPHIC #1 **<END>** g01337550

OPERATOR STATION

258-3404 CONTROL GP-ELECTROHYDRAULIC—HIGH FLOW, LH

S/N: JAY1-UP

PART OF 258-3182, 258-3733, 261-6264 HYDRAULIC AR

AN ATTACHMENT

SMCS-5702, 5705 **i02711961**

NOTE	REF NO	GRAPHIC REF	PART NUMBER	QTY	PART NAME 1 2 3 4 5 6 (PRODUCT LEVEL)	SEE PAGE
M	1	1	**9X-2546**	4	BOLT (M6X1X20-MM)	
Y	2	1	**269-0265**	1	CONTROL GP-JOYSTICK (HIGH FLOW, LH)	386
	3	1	**3S-2093**	2	STRAP-CABLE	

M-METRIC PART
Y-SEPARATE ILLUSTRATION

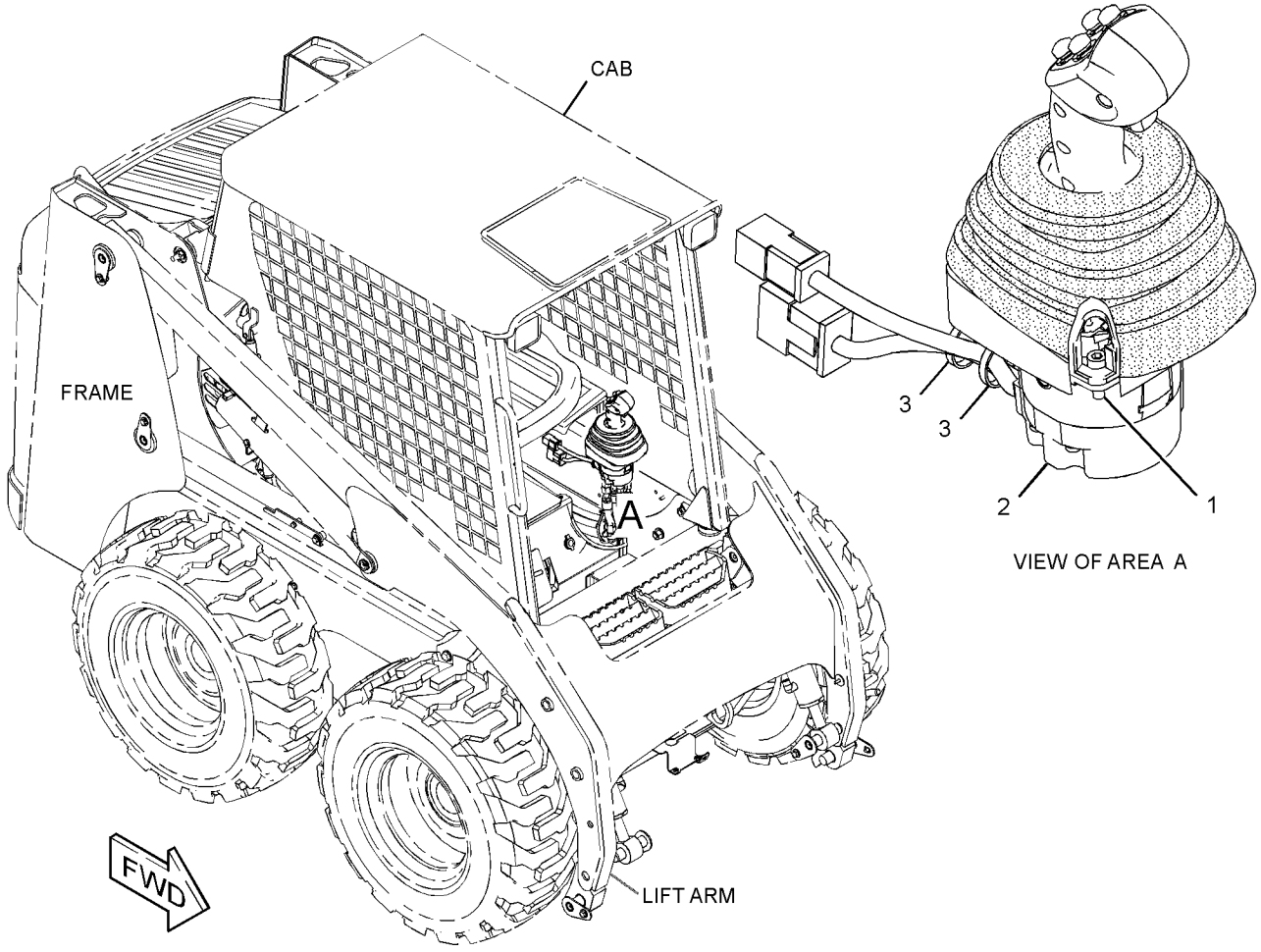

GRAPHIC #1 **<END>** g01336967

OPERATOR STATION

258-3405 CONTROL GP-ELECTROHYDRAULIC—RH

S/N: JAY1-UP

FOR USE WITH 258-3180—PAGE 193, 258-3730—PAGE 193. CANNOT BE USED WITH 258-3406—PAGE 380, 258-3182—PAGE 193, 258-3733—PAGE 194

AN ATTACHMENT

SMCS-5702, 5705 **i02659395**

NOTE	REF NO	GRAPHIC REF	PART NUMBER	QTY	PART NAME 1 2 3 4 5 6 (PRODUCT LEVEL)	SEE PAGE
M	1	1	**9X-2546**	4	BOLT (M6X1X20-MM)	
Y	2	1	**269-0264**	1	CONTROL GP-JOYSTICK (RH)	385
	3	1	**3S-2093**	2	STRAP-CABLE	

M-METRIC PART
Y-SEPARATE ILLUSTRATION

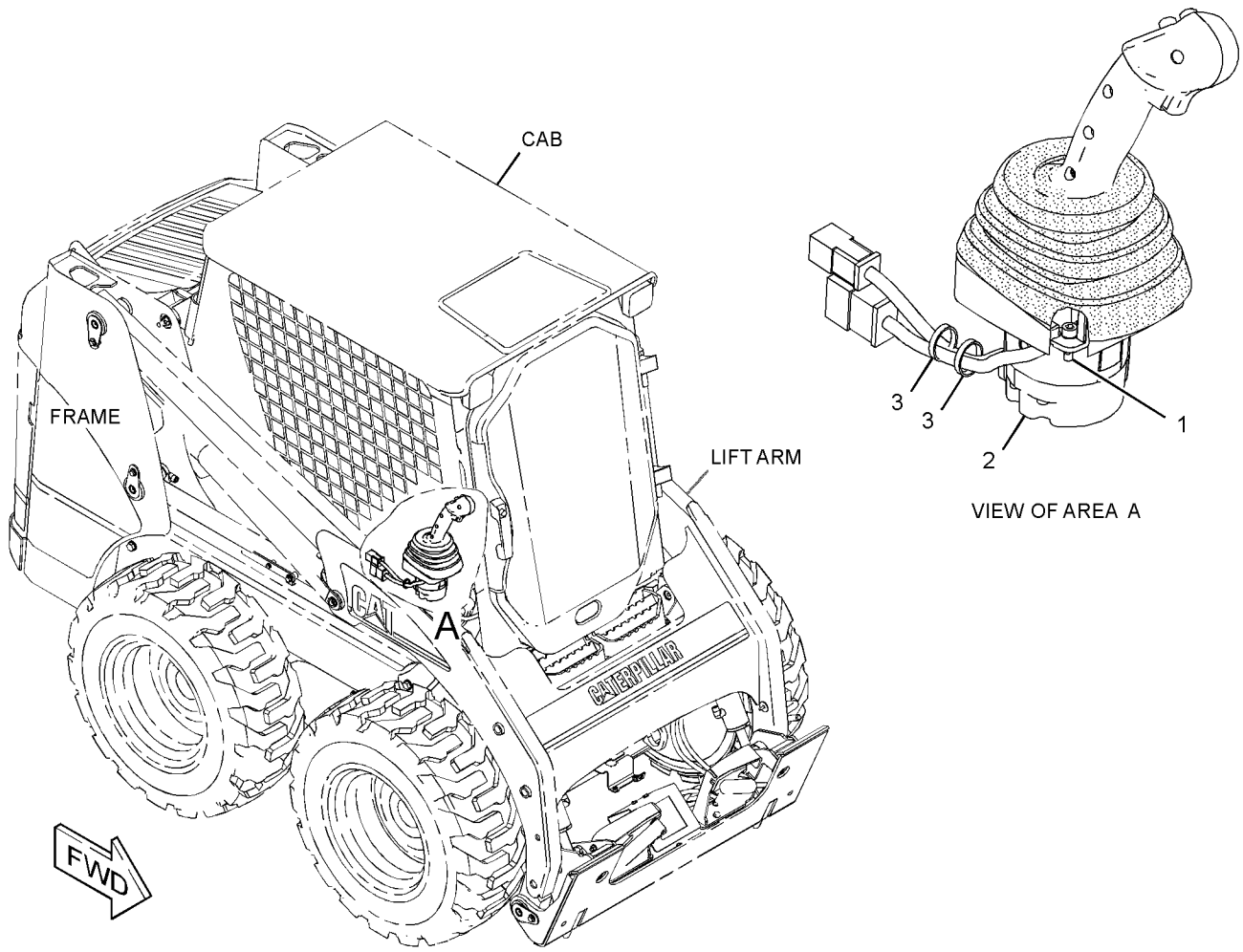

GRAPHIC #1 **<END>** g01337551

OPERATOR STATION

258-3406 CONTROL GP-ELECTROHYDRAULIC—RH

S/N: JAY1-UP

FOR USE WITH 258-3180—PAGE 193, 258-3730—PAGE 193. CANNOT BE USED WITH 258-3405—PAGE 379, 258-3182—PAGE 193, 258-3733—PAGE 194 AN ATTACHMENT

SMCS-5702, 5705 **i02659382**

NOTE	REF NO	GRAPHIC REF	PART NUMBER	QTY	PART NAME 1 2 3 4 5 6 (PRODUCT LEVEL)	SEE PAGE
M	1	1	**9X-2546**	4	BOLT (M6X1X20-MM)	
Y	2	1	**269-0262**	1	CONTROL GP-JOYSTICK (RH)	383
	3	1	**3S-2093**	2	STRAP-CABLE	

M-METRIC PART
Y-SEPARATE ILLUSTRATION

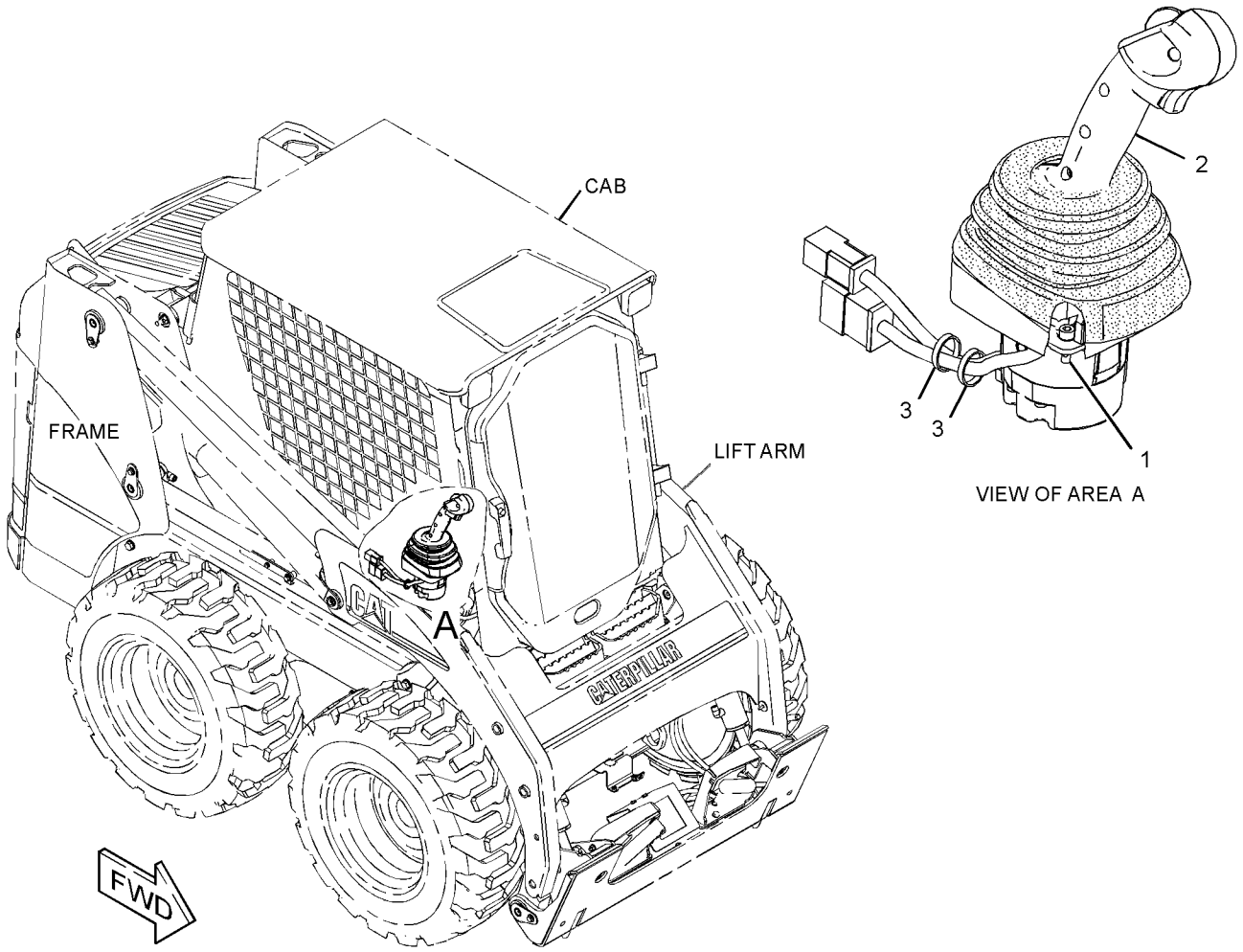

GRAPHIC #1 **<END>** g01337510

OPERATOR STATION

258-3407 CONTROL GP-ELECTROHYDRAULIC—RH, HIGH FLOW

S/N: JAY1-UP

PART OF 258-3182, 258-3733, 261-6264 HYDRAULIC AR

AN ATTACHMENT

SMCS-5702, 5705 **i02659383**

NOTE	REF NO	GRAPHIC REF	PART NUMBER	QTY	PART NAME 1 2 3 4 5 6 (PRODUCT LEVEL)	SEE PAGE
M	1	1	**9X-2546**	4	BOLT (M6X1X20-MM)	
Y	2	1	**269-0263**	1	CONTROL GP-JOYSTICK (RH, HIGH FLOW)	384
	3	1	**3S-2093**	2	STRAP-CABLE	

M-METRIC PART
Y-SEPARATE ILLUSTRATION

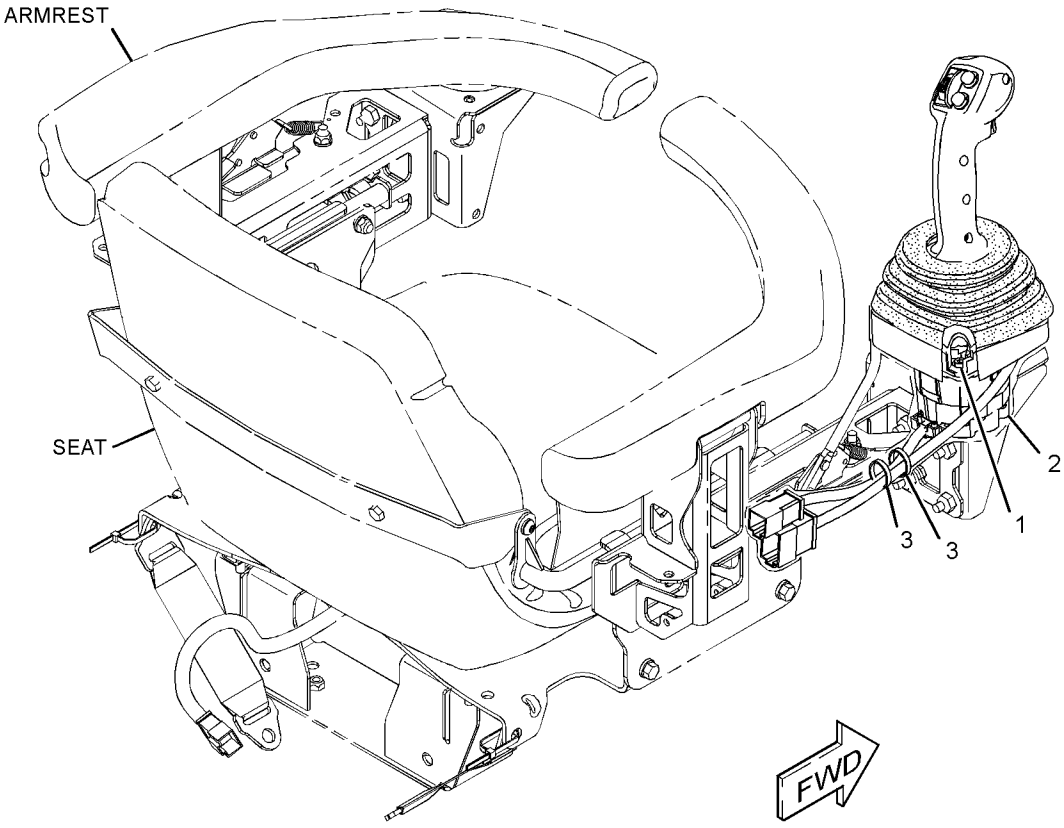

GRAPHIC #1 **<END>** g01336965

OPERATOR STATION

272-1790 CONTROL GP-HANDLE–LH

S/N: JAY1-UP
PART OF 258-4127 KIT-WORK TOOL WIRING
AN ATTACHMENT

SMCS-5705 **i02629793**

NOTE	REF NO	GRAPHIC REF	PART NUMBER	QTY	PART NAME 1 2 3 4 5 6 (PRODUCT LEVEL)	SEE PAGE
	1	1	**174-3091**	1	KIT-RECEPTACLE (12-PIN)	
					(INCLUDES RECEPTACLE AS & WEDGE)	
	2	1	**186-3735**	9	PIN-CONNECTOR (16-GA TO 18-GA)	
	3	1	**8T-8737**	3	PLUG-SEAL	
	4	1	**276-4878**	1	GROMMET	

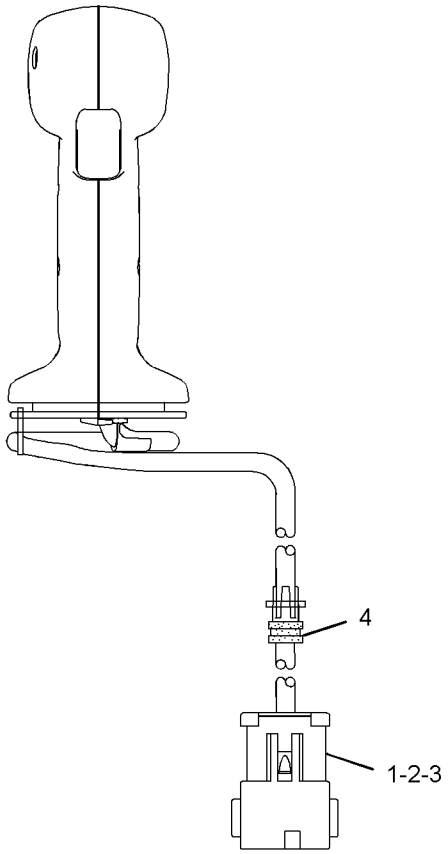

FRONT VIEW

GRAPHIC #1 **<END>** g01322784

OPERATOR STATION

269-0262 CONTROL GP-JOYSTICK–RH

S/N: JAY1-UP
PART OF 258-3406 CONTROL GP-ELECTROHYDRAULIC
AN ATTACHMENT

SMCS-5705 **i02613972**

NOTE	REF NO	GRAPHIC REF	PART NUMBER	QTY	PART NAME 1 2 3 4 5 6 (PRODUCT LEVEL)	SEE PAGE
	1	1	**254-3437**	1	BOOT	
	2	1	**269-0257**	1	BASE AS-JOYSTICK (RH)	
	2A	1	**102-8805**	1	KIT-RECEPTACLE (6-PIN)	
					(INCLUDES RECEPTACLE AS & WEDGE)	
	2B	1	**186-3735**	6	PIN-CONNECTOR (16-GA TO 18-GA)	
	3	1	**273-9103**	1	CONTROL GP-HANDLE	
	3A	1	**8T-8737**	5	PLUG-SEAL	
	3B	1	**174-3091**	1	KIT-RECEPTACLE (12-PIN)	
					(INCLUDES RECEPTACLE AS & WEDGE)	
	3C	1	**186-3735**	7	PIN-CONNECTOR (16-GA TO 18-GA)	
		1	**276-4878**	1	GROMMET	
M	4	1	**213-7489**	3	SCREW (M4X25-MM)	
M	5	1	**178-9983**	3	LOCKNUT (M4X0.7-THD)	

M-METRIC PART

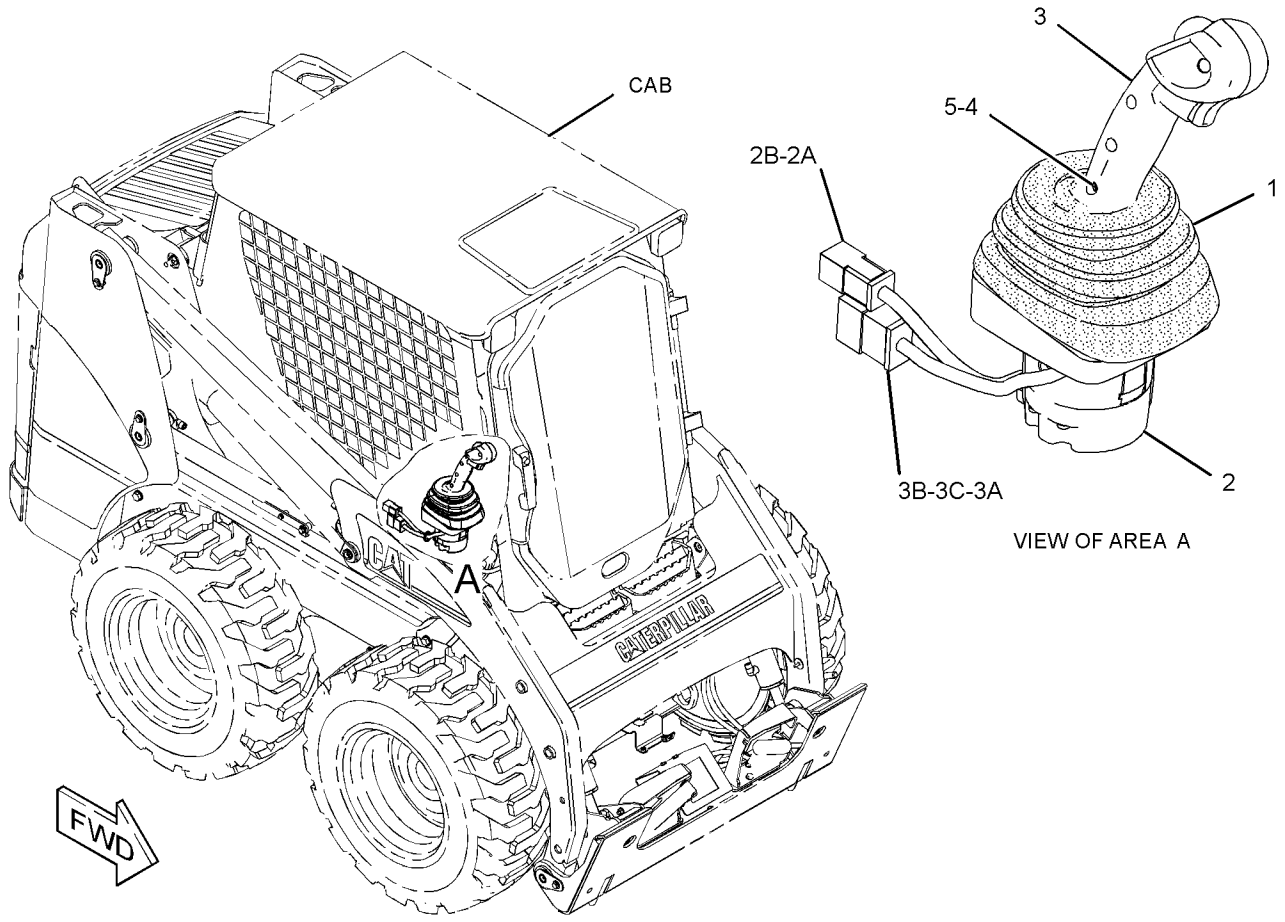

GRAPHIC #1 **<END>** g01309748

OPERATOR STATION

269-0263 CONTROL GP-JOYSTICK–RH, HIGH FLOW

S/N: JAY1-UP

PART OF 258-3407 CONTROL GP-ELECTROHYDRAULIC

AN ATTACHMENT

SMCS-5705 **i02616635**

NOTE	REF NO	GRAPHIC REF	PART NUMBER	QTY	PART NAME 1 2 3 4 5 6 (PRODUCT LEVEL)	SEE PAGE
	1	1	**254-3437**	1	BOOT	
	2	1	**269-0257**	1	BASE AS-JOYSTICK (RH)	
		1	**102-8805**	1	KIT-RECEPTACLE (6-PIN)	
					(INCLUDES RECEPTACLE AS & WEDGE)	
		1	**186-3735**	6	PIN-CONNECTOR (16-GA TO 18-GA)	
	3	1	**273-9104**	1	CONTROL GP-HANDLE (RH)	
		1	**8T-8737**	1	PLUG-SEAL	
		1	**174-3091**	1	KIT-RECEPTACLE (12-PIN)	
					(INCLUDES RECEPTACLE AS & WEDGE)	
		1	**186-3735**	11	PIN-CONNECTOR (16-GA TO 18-GA)	
		1	**276-4878**	1	GROMMET	
M	4	1	**213-7489**	3	SCREW (M4X25-MM)	
M	5	1	**178-9983**	3	LOCKNUT (M4X0.7-THD)	
	6	1	**174-3091**	1	KIT-RECEPTACLE (12-PIN)	
	7	1	**102-8805**	1	KIT-RECEPTACLE (6-PIN)	
					(EACH RECEPTACLE KIT INCLUDES RECEPTACLE AS & WEDGE)	
	8	1	**186-3735**	17	PIN-CONNECTOR (16-GA TO 18-GA)	
	9	1	**8T-8737**	1	PLUG-SEAL	

M-METRIC PART

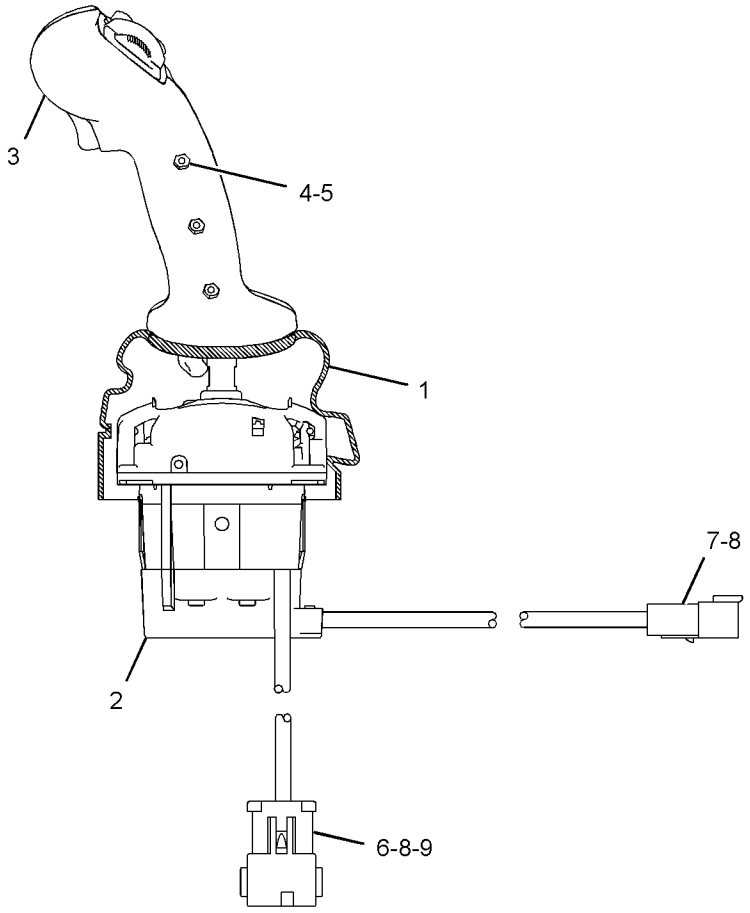

LEFT SIDE VIEW

GRAPHIC #1 **<END>** g01317881

OPERATOR STATION

269-0264 CONTROL GP-JOYSTICK—RH

S/N: JAY1-UP
PART OF 258-3405 CONTROL GP-ELECTROHYDRAULIC
AN ATTACHMENT

SMCS-5705 **i02611117**

NOTE	REF NO	GRAPHIC REF	PART NUMBER	QTY	PART NAME 1 2 3 4 5 6 (PRODUCT LEVEL)	SEE PAGE
	1	1	**254-3437**	1	BOOT	
	2	1	**269-0257**	1	BASE AS-JOYSTICK (RH)	
	2A	1	**186-3735**	6	PIN-CONNECTOR (16-GA TO 18-GA)	
	2B	1	**102-8805**	1	KIT-RECEPTACLE (6-PIN)	
					(INCLUDES RECEPTACLE AS & WEDGE)	
	3	1	**269-0259**	1	CONTROL GP-HANDLE	
	3A	1	**8T-8737**	6	PLUG-SEAL	
	3B	1	**186-3735**	6	PIN-CONNECTOR (16-GA TO 18-GA)	
	3C	1	**174-3091**	1	KIT-RECEPTACLE (12-PIN)	
					(INCLUDES RECEPTACLE AS & WEDGE)	
		1	**276-4878**	1	GROMMET	
M	4	1	**213-7489**	3	SCREW (M4X25-MM)	
M	5	1	**178-9983**	3	LOCKNUT (M4X0.7-THD)	

M-METRIC PART

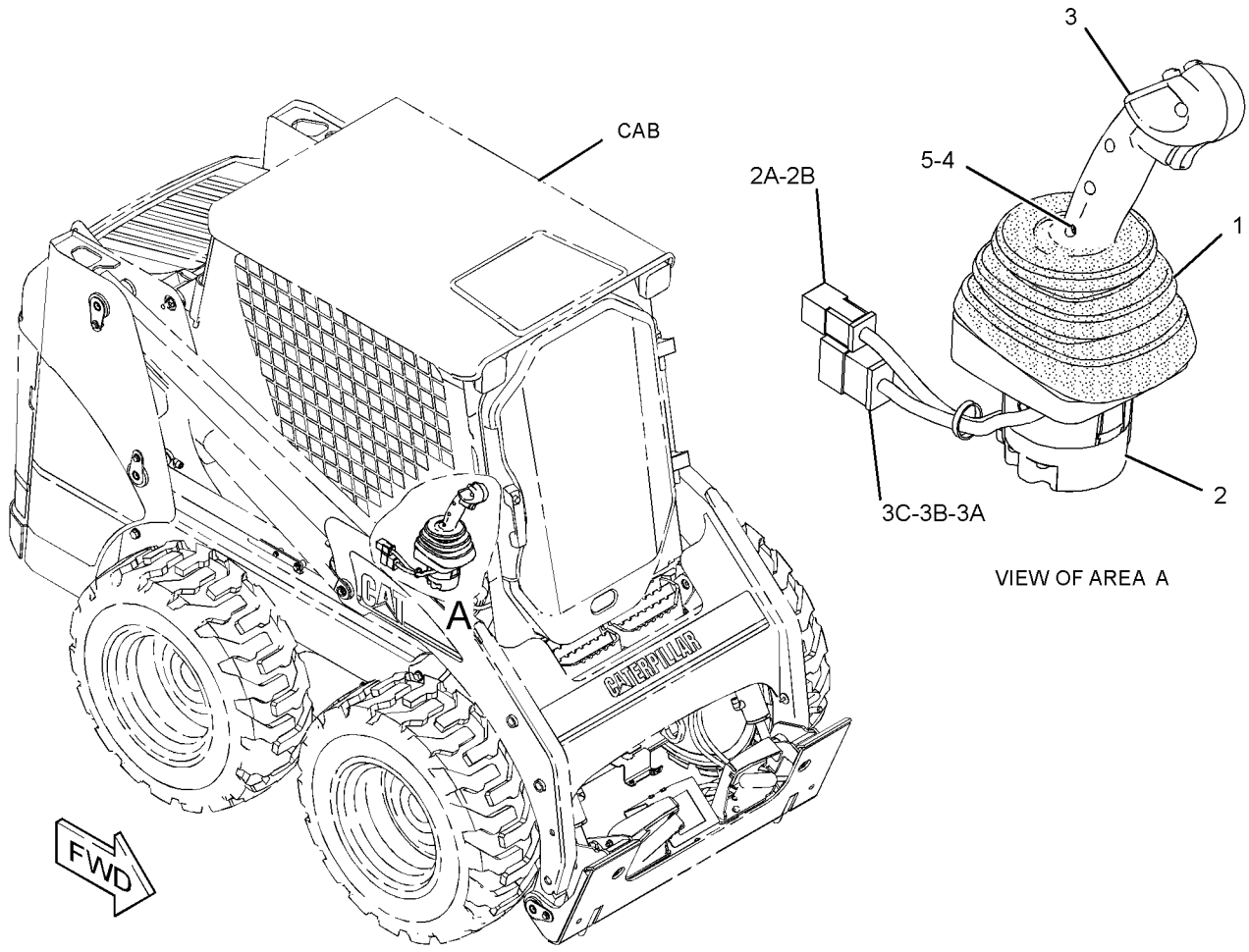

GRAPHIC #1 **<END>** g01309693

OPERATOR STATION

269-0265 CONTROL GP-JOYSTICK—HIGH FLOW, LH

S/N: JAY1-UP

PART OF 258-3404 CONTROL GP-ELECTROHYDRAULIC

AN ATTACHMENT

SMCS-5705 **i02611071**

NOTE	REF NO	GRAPHIC REF	PART NUMBER	QTY	PART NAME 1 2 3 4 5 6 (PRODUCT LEVEL)	SEE PAGE
	1	1	**254-3437**	1	BOOT	
	2	1	**269-0258**	1	BASE AS-JOYSTICK (LH)	
	2A	1	**186-3735**	6	PIN-CONNECTOR (16-GA TO 18-GA)	
	2B	1	**102-8805**	1	KIT-RECEPTACLE (6-PIN)	
					(INCLUDES RECEPTACLE AS & WEDGE)	
	3	1	**272-1790**	1	CONTROL GP-HANDLE (LH)	
	3A	1	**8T-8737**	3	PLUG-SEAL	
	3B	1	**186-3735**	9	PIN-CONNECTOR (16-GA TO 18-GA)	
	3C	1	**174-3091**	1	KIT-RECEPTACLE (12-PIN)	
					(INCLUDES RECEPTACLE AS & WEDGE)	
		1	**276-4878**	1	GROMMET	
M	4	1	**213-7489**	3	SCREW (M4X25-MM)	
M	5	1	**178-9983**	3	LOCKNUT (M4X0.7-THD)	

M-METRIC PART

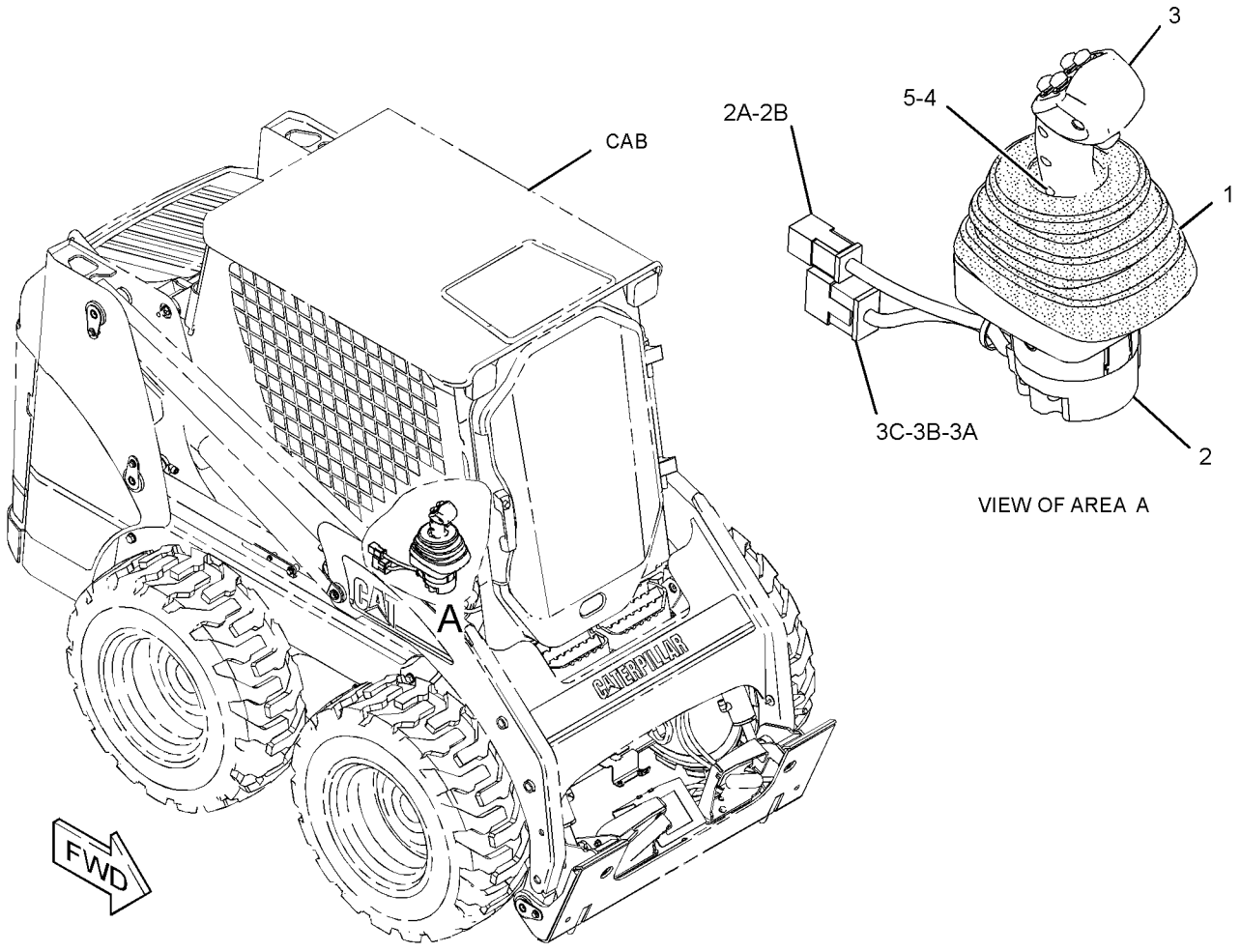

GRAPHIC #1 **<END>** g01309715

269-0266 CONTROL GP-JOYSTICK–LH

S/N: JAY1-UP
PART OF 258-3403 CONTROL GP-ELECTROHYDRAULIC
AN ATTACHMENT

SMCS-5705 **i02628671**

NOTE	REF NO	GRAPHIC REF	PART NUMBER	QTY	PART NAME 1 2 3 4 5 6 (PRODUCT LEVEL)	SEE PAGE
	1	1	**269-0258**	1	BASE AS-JOYSTICK (LH)	
	1A	1	**102-8805**	1	KIT-RECEPTACLE (6-PIN)	
					(INCLUDES RECEPTACLE AS & WEDGE)	
	1B	1	**186-3735**	6	PIN-CONNECTOR (16-GA TO 18-GA)	
	2	1	**269-0259**	1	CONTROL GP-HANDLE	
	2A	1	**8T-8737**	6	PLUG-SEAL	
	2B	1	**174-3091**	1	KIT-RECEPTACLE (12-PIN)	
					(INCLUDES RECEPTACLE AS & WEDGE)	
	2C	1	**186-3735**	6	PIN-CONNECTOR (16-GA TO 18-GA)	
		1	**276-4878**	1	GROMMET	
	3	1	**254-3437**	1	BOOT	
M	4	1	**213-7489**	3	SCREW (M4X25-MM)	
M	5	1	**178-9983**	3	LOCKNUT (M4X0.7-THD)	

M-METRIC PART

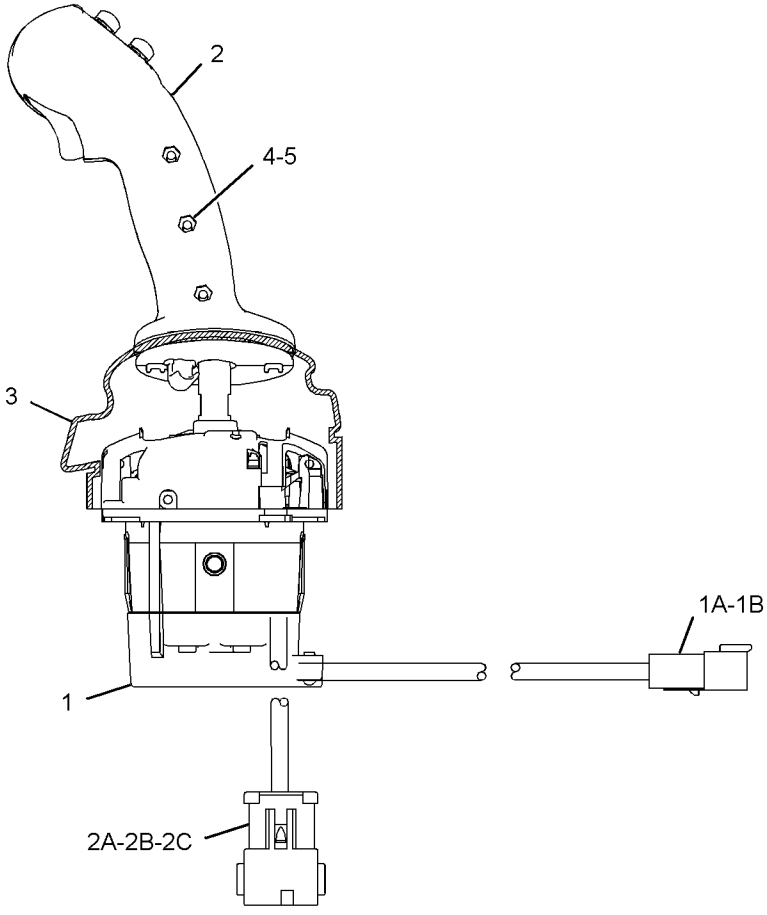

LEFT SIDE VIEW

GRAPHIC #1 **<END>** g01320412

OPERATOR STATION

258-4245 COVER GP-CAB

S/N: JAY1-UP
PART OF 258-3738, 258-3740 OPTION AR-CAB
AN ATTACHMENT

SMCS-7301 **i02613965**

NOTE	REF NO	GRAPHIC REF	PART NUMBER	QTY	PART NAME 1 2 3 4 5 6 (PRODUCT LEVEL)	SEE PAGE
	1	1	**258-3727**	2	SCREW-TRUSS HEAD (NO 12X17.46-MM)	
	2	1	**258-3728**	1	PLATE	
	3	1	**258-3794**	1	INSULATION	
	4	1	**258-4027**	1	COVER	
	5	1	**258-4028**	2	COVER-DUCT	
	6	1	**258-4034**	1	COVER-SWITCH	
	7	1	**258-4225**	1	FLOORPLATE AS	
	8	1	**258-4408**	1	INSULATION	
	9	1	**266-3314**	2	BOLT-FLANGE HEAD (M6X1X20.5-MM)	
M	10	1	**266-3315**	8	BOLT-FLANGE HEAD (M8X1.25X25.5-MM)	
	11	1	**5P-4116**	2	WASHER-HARD (8.8X20.5X2-MM THK)	
	12	1	**8T-4121**	4	WASHER-HARD (11X21X2.5-MM THK)	
M	13	1	**8T-4133**	4	NUT (M10X1.5-THD)	

M-METRIC PART

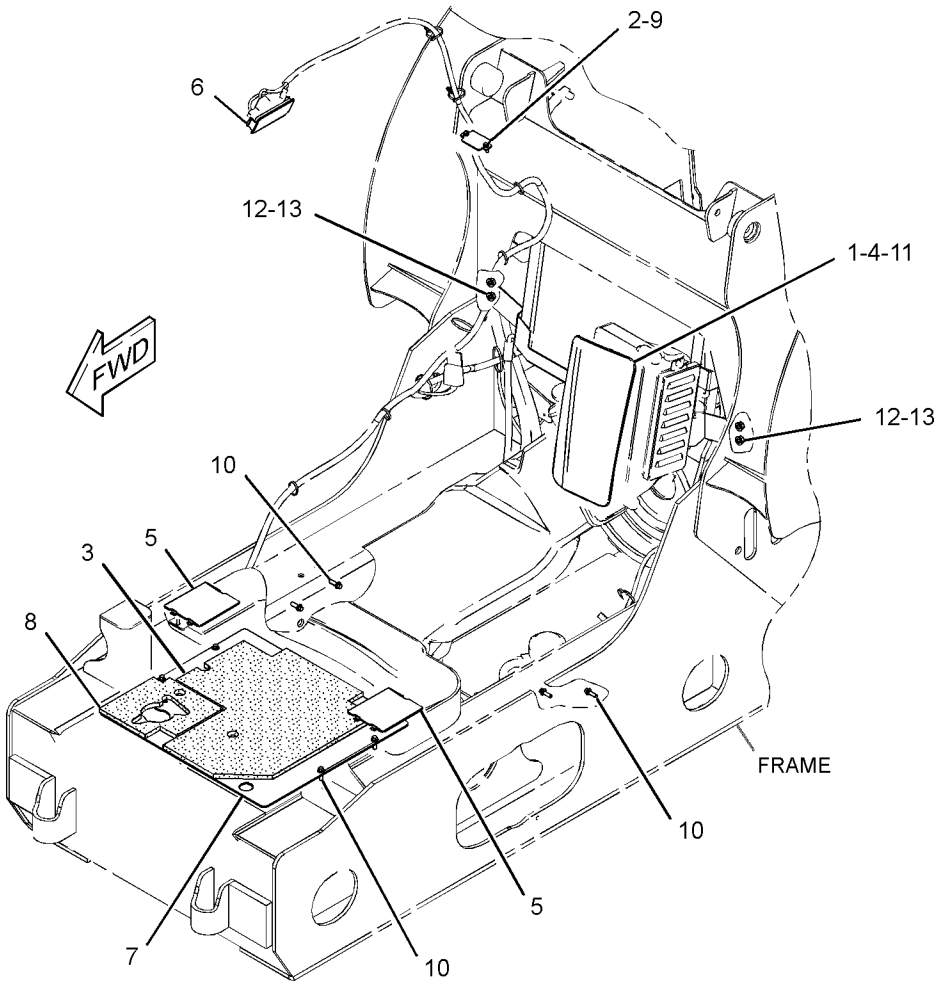

GRAPHIC #1 **<END>** g01313308

OPERATOR STATION

258-4314 COVER GP-CONSOLE–RH, LH

S/N: JAY1-UP

PART OF 258-4310 SEAT AR, 258-4320, 258-4330 SEAT AR-SUSPENSION

AN ATTACHMENT

SMCS-5258 **i02711965**

NOTE	REF NO	GRAPHIC REF	PART NUMBER	QTY	PART NAME 1 2 3 4 5 6 (PRODUCT LEVEL)	SEE PAGE
	1	1	**139-6039**	10	NUT (U-TYPE RETAINER)	
	2	1	**258-3727**	6	SCREW-TRUSS HEAD (NO 12X17.46-MM)	
	3	1	**258-4312**	1	COVER (INNER, LH)	
	4	1	**258-4313**	1	COVER (OUTER, LH)	
	5	1	**258-4315**	1	COVER (INNER, RH)	
	6	1	**258-4316**	1	COVER (OUTER, RH)	
M	7	1	**215-6406**	10	SCREW-TRUSS HEAD (M6X1X16-MM)	

M-METRIC PART

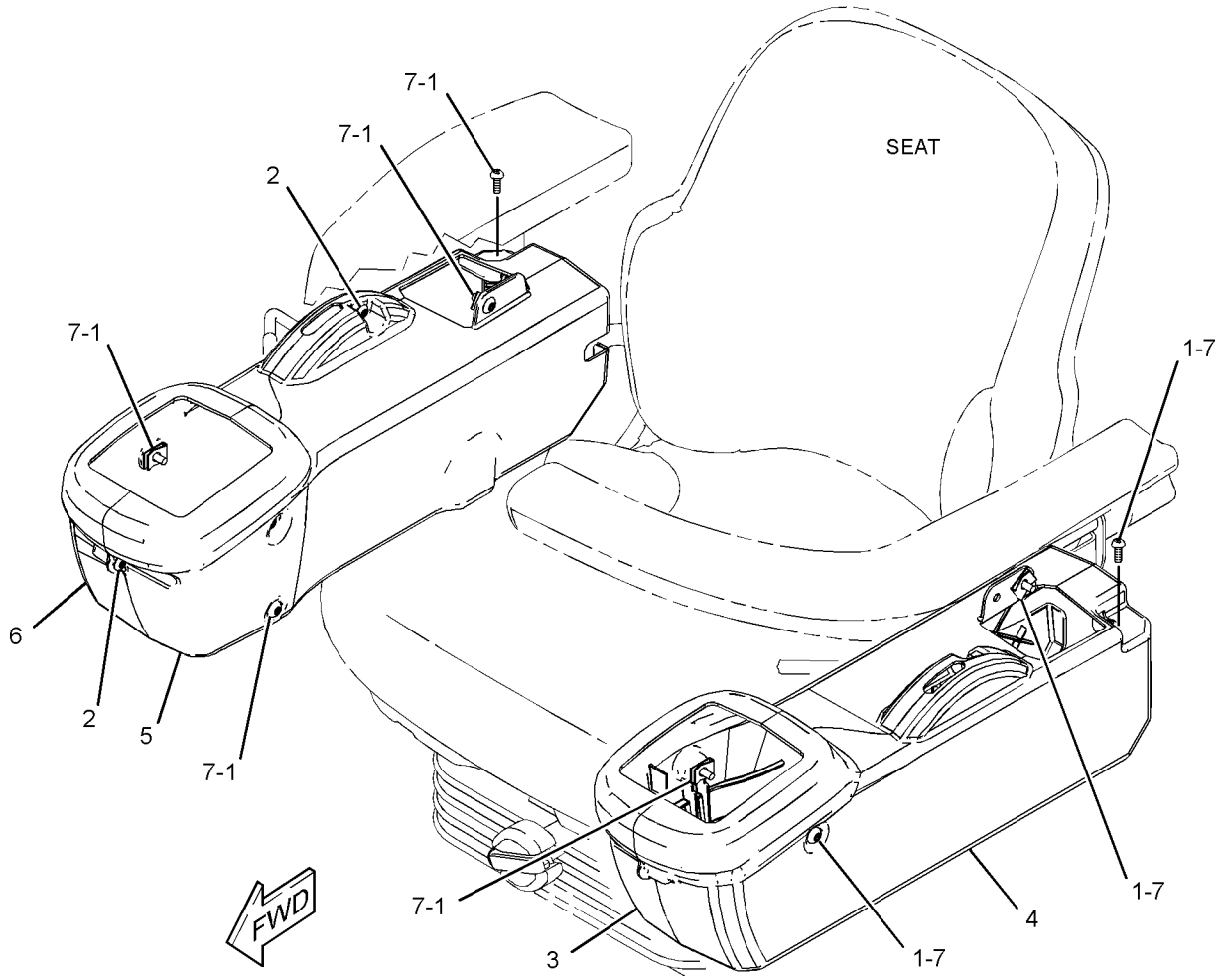

GRAPHIC #1 **<END>** g01312002

OPERATOR STATION

258-4009 COVER GP-INSTRUMENT PANEL

S/N: JAY1-UP

PART OF 258-3682, 258-3748, 258-3750 MACHINE AR-SPECIAL

AN ATTACHMENT

SMCS-1408, 7451, 7478 **i02630066**

NOTE	REF NO	GRAPHIC REF	PART NUMBER	QTY	PART NAME 1 2 3 4 5 6 (PRODUCT LEVEL)	SEE PAGE
	1	1	**109-2356**	6	PLUG	
	2	1	**258-4033**	1	COVER (CLUSTER)	

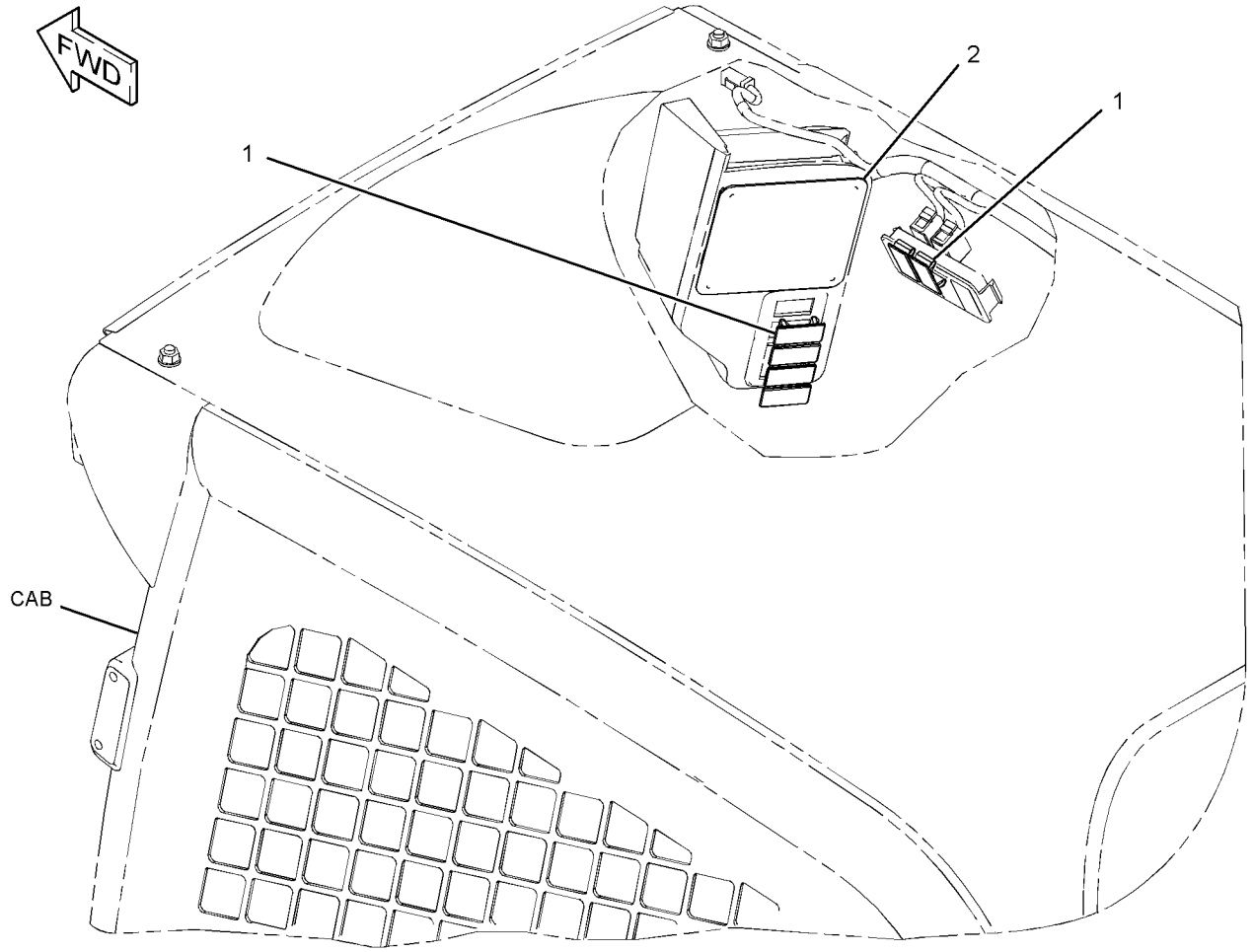

GRAPHIC #1 **<END>** g01321985

OPERATOR STATION

258-4070 DOOR GP-CAB

S/N: JAY1-UP

CANNOT BE USED WITH 258-4080—PAGE 393, 258-3738—PAGE 436, 258-3740—PAGE 436 AN ATTACHMENT

SMCS-7308 **i02664237**

NOTE	REF NO	GRAPHIC REF	PART NUMBER	QTY	PART NAME 1 2 3 4 5 6 (PRODUCT LEVEL)	SEE PAGE
M	1	1	**5C-2890**	1	NUT (M6X1-THD)	
M	2	1	**215-6406**	1	SCREW-TRUSS HEAD (M6X1X16-MM)	
	3	1	**5T-9400**	1	SPACER (12X25X8.5-MM THK)	
	4	1	**7C-8246**	2	SPACER (10.5X20X24-MM THK)	
	5	1	**8T-2444**	2	STUD-BALL	
	6	1	**095-1325**	1	PIN-CLEVIS	
	7	1	**139-6039**	1	NUT (U-TYPE RETAINER)	
	8	1	**153-2682**	2	SPRING AS-GAS (CAB)	
	9	1	**198-1725**	4	WASHER-HARD (8.8X25.5X2-M THK)	
	10	1	**206-1345**	4	STRAP-CABLE	
	11	1	**258-3281**	1	BRACKET AS	
	12	1	**258-3725**	1	HINGE	
	13	1	**258-3726**	2	PIN	
	14	1	**258-3761**	1	SPRING AS-GAS (DOOR)	
	15	1	**258-3764**	1	STRIKER AS	
	16	1	**258-4078**	1	TANK AS-WINDOW WASHER (WASHER)	
		1	**6T-1375**	1	PUMP AS-WASHER	
		1	**8E-8293**	1	GROMMET	
		1	**258-3296**	1	CAP-VENTED (WASHER)	
Y	17	1	*258-4086*	1	DOOR GP-CAB	395
	18	1	**258-4141**	2	CLIP	
	19	1	**258-4157**	1	HARNESS AS-CAB	
		1	**102-8805**	1	KIT-RECEPTACLE (6-PIN)	
					(INCLUDES RECEPTACLE AS & WEDGE)	
E		1	**125-7874**		TUBE-HEAT SHRINK (5.72-MM DIA) (5-CM)	
		1	**155-2274**	1	KIT-CONNECTING PLUG (6-PIN)	
					(INCLUDES PLUG AS, WEDGE & INTERFACE SEAL)	
E		1	**211-5358**		CONDUIT-FLEXIBLE (63-CM)	
	20	1	**258-4356**	1	BRACKET AS	
	21	1	**284-7932**	1	FILM-NOTICE (ALTERNATE EXIT, READ OMM)	
M	22	1	**127-2170**	4	SCREW-TRUSS HEAD (M8X1.25X20-MM)	
	23	1	**5P-0372**	4	LOCK PIN	
	24	1	**6L-3966**	3	PIN	
	25	1	**8S-7803**	2	RING-RETAINING	
	27	1	**8T-4224**	2	WASHER-HARD (8.8X16X2-MM THK)	
M	28	1	**8T-4244**	1	NUT (M12X1.75-THD)	
M	29	1	**9X-2044**	3	SCREW-TRUSS HEAD (M6X1X16-MM)	
E	30	1	**144-0195**		HOSE (90-CM)	

E-ORDER BY THE CENTIMETER
M-METRIC PART
Y-SEPARATE ILLUSTRATION

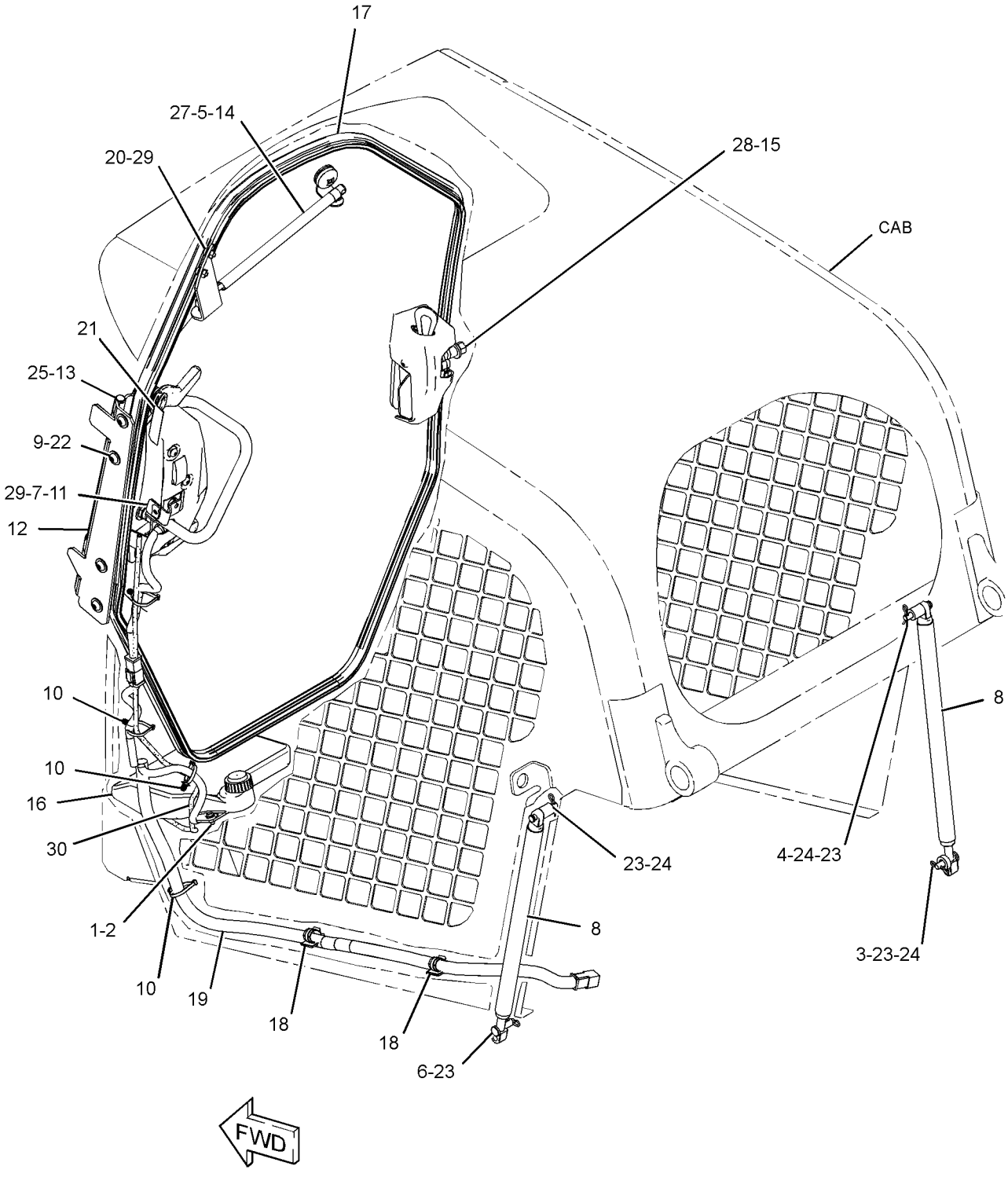

GRAPHIC #1 **<END>** g01339339

OPERATOR STATION

258-4080 DOOR GP-CAB

S/N: JAY1-UP

CANNOT BE USED WITH 258-4070—PAGE 391, 258-3738—PAGE 436, 258-3740—PAGE 436 AN ATTACHMENT

SMCS-7308 **i02664460**

NOTE	REF NO	GRAPHIC REF	PART NUMBER	QTY	PART NAME 1 2 3 4 5 6 (PRODUCT LEVEL)	SEE PAGE
M	1	1	**5C-2890**	1	NUT (M6X1-THD)	
	2	1	**5T-9400**	1	SPACER (12X25X8.5-MM THK)	
	3	1	**7C-8246**	2	SPACER (10.5X20X24-MM THK)	
	4	1	**8T-2444**	2	STUD-BALL	
	5	1	**095-1325**	1	PIN-CLEVIS	
	6	1	**139-6039**	2	NUT (U-TYPE RETAINER)	
	7	1	**153-2682**	2	SPRING AS-GAS	
	8	1	**198-1725**	4	WASHER-HARD (8.8X25.5X2-M THK)	
	9	1	**206-1345**	4	STRAP-CABLE	
	10	1	**258-3281**	1	BRACKET AS	
	11	1	**258-3725**	1	HINGE	
	12	1	**258-3726**	2	PIN	
	13	1	**258-3761**	1	SPRING AS-GAS	
	14	1	**258-3764**	1	STRIKER AS	
	15	1	**258-4078**	1	TANK AS-WINDOW WASHER (WASHER)	
		1	**6T-1375**	1	PUMP AS-WASHER	
		1	**8E-8293**	1	GROMMET	
		1	**258-3296**	1	CAP-VENTED (WASHER)	
Y	16	1	*258-4087*	1	DOOR GP-CAB	398
	17	1	**258-4141**	2	CLIP	
	18	1	**258-4157**	1	HARNESS AS-CAB	
		1	**102-8805**	1	KIT-RECEPTACLE (6-PIN)	
					(INCLUDES RECEPTACLE AS & WEDGE)	
		1	**155-2274**	1	KIT-CONNECTING PLUG (6-PIN)	
					(INCLUDES PLUG AS, WEDGE & INTERFACE SEAL)	
		1	**125-7874**		TUBE-HEAT SHRINK (5.72-MM DIA) (5-CM)	
	19	1	**258-4356**	1	BRACKET AS	
	20	1	**284-7932**	1	FILM-NOTICE (ALTERNATE EXIT, READ OMM)	
M	21	1	**127-2170**	4	SCREW-TRUSS HEAD (M8X1.25X20-MM)	
M	22	1	**215-6406**	1	SCREW-TRUSS HEAD (M6X1X16-MM)	
	23	1	**5P-0372**	4	LOCK PIN	
	24	1	**6L-3966**	3	PIN	
	25	1	**8S-7803**	2	RING-RETAINING	
	26	1	**8T-4224**	2	WASHER-HARD (8.8X16X2-MM THK)	
M	27	1	**8T-4244**	1	NUT (M12X1.75-THD)	
M	28	1	**9X-2044**	3	SCREW-TRUSS HEAD (M6X1X16-MM)	
E	29	1	**144-0195**		HOSE (90-CM)	

E-ORDER BY THE CENTIMETER
M-METRIC PART
Y-SEPARATE ILLUSTRATION

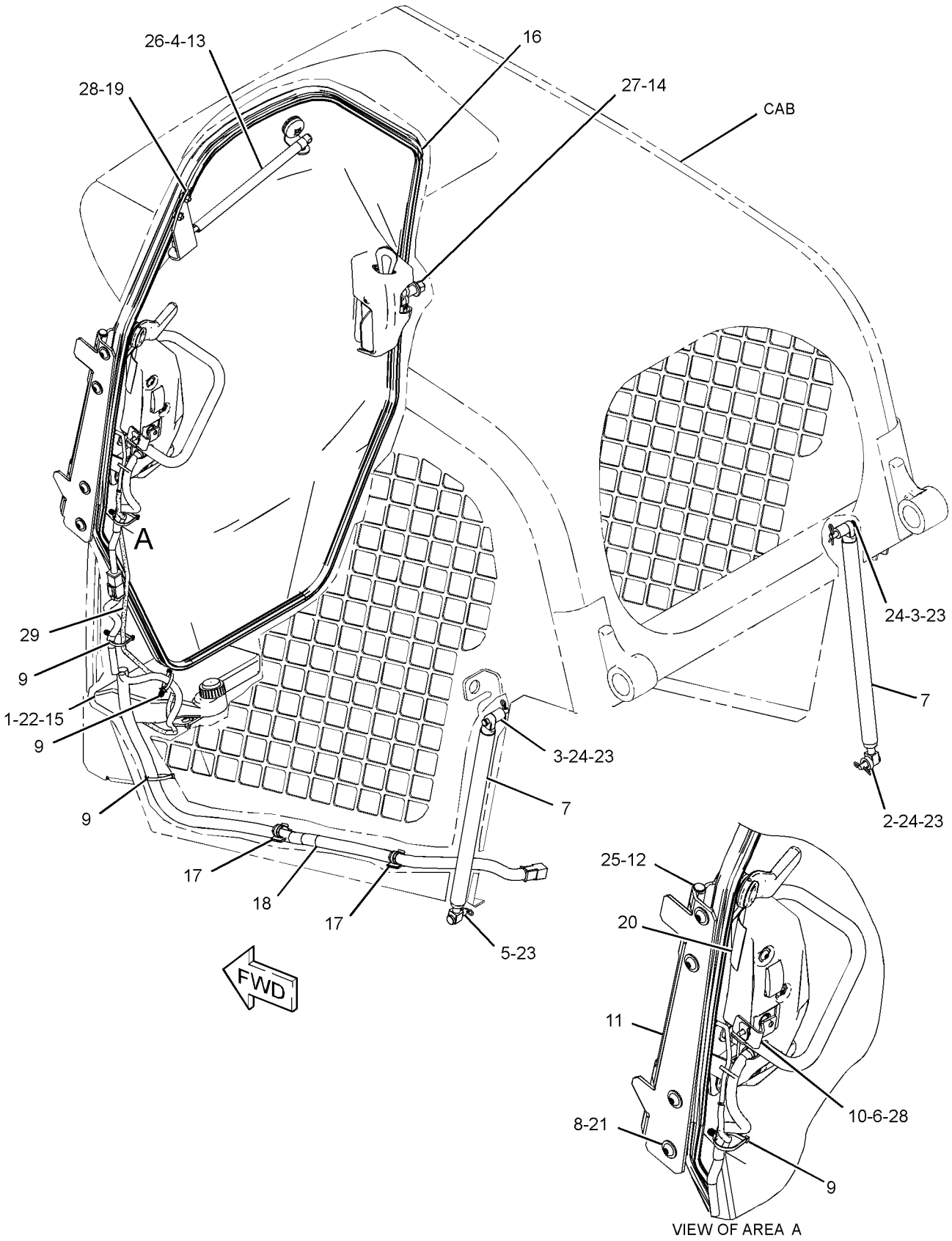

GRAPHIC #1 **<END>** g01339890

OPERATOR STATION

258-4086 DOOR GP-CAB

S/N: JAY1-UP

PART OF 258-4070 DOOR GP-CAB, 258-2473 KIT-CAB DOOR & MOUNTING

AN ATTACHMENT

SMCS-7308 **i02693290**

NOTE	REF NO	GRAPHIC REF	PART NUMBER	QTY	PART NAME 1 2 3 4 5 6 (PRODUCT LEVEL)	SEE PAGE
M	1	1	**5C-2890**	1	NUT (M6X1-THD)	
	2	1	**8G-1151**	1	CONNECTOR (HOSE)	
	3	1	**8Y-4615**	1	BLADE AS-WIPER (CAB DOOR)	
	4	1	**129-8542**	2	RETAINER	
	5	1	**129-8545**	2	WASHER (13X40X3-MM THK)	
M	6	1	**136-4192**	1	BOLT (M6X1X35-MM)	
	7	1	**154-5423**	1	SPACER (6.6X12.7X17-MM THK)	
	8	1	**206-1345**	2	STRAP-CABLE	
M	9	1	**215-6406**	6	SCREW-TRUSS HEAD (M6X1X16-MM)	
	10	1	**229-8757**	1	SWITCH AS-LIMIT (WIPER)	
	11	1	**252-1862**	1	HANDLE AS (PULL)	
	12	1	**253-1817**	1	SPACER (6.5X14.5X12-MM THK)	
	13	1	**258-3280**	1	LATCH AS	
	14	1	**258-3288**	1	HANDLE AS (LOWER)	
	15	1	**258-3289**	2	LATCH AS (OUTER)	
	16	1	**258-3290**	1	GASKET	
	17	1	**258-3294**	1	HANDLE AS (UPPER)	
	18	1	**258-3298**	1	GROMMET	
	19	1	**258-3697**	1	WASHER-NYLON (7X20X2-MM THK)	
	20	1	**258-3762**	2	GROMMET	
	21	1	**258-4013**	1	BRACKET AS	
	22	1	**258-4014**	1	HINGE	
	23	1	**258-4016**	1	COVER (WIPER)	
	24	1	**258-4071**	1	GLASS (DOOR)	
	25	1	**258-4073**	1	HINGE	
	26	1	**258-4075**	4	GASKET	
	27	1	**258-4076**	1	HANDLE AS	
	28	1	**258-4082**	1	GASKET	
	29	1	**258-4083**	1	COVER-LATCH	
	30	1	**258-4084**	1	BRACKET	
	31	1	**258-4085**	2	BUSHING	
	32	1	**258-4156**	1	HARNESS AS-CAB	
		1	**102-8805**	1	KIT-RECEPTACLE (6-PIN)	
					(INCLUDES RECEPTACLE AS & WEDGE)	
		1	**8L-8413**	5	STRAP-CABLE	
E		1	**125-7875**		TUBE-HEAT SHRINK (7.44-MM DIA) (10-CM)	
		1	**155-2260**	1	KIT-CONNECTING PLUG (3-PIN)	
		1	**155-2271**	1	KIT-CONNECTING PLUG (4-PIN)	
					(EACH PLUG KIT INCLUDES PLUG AS, WEDGE & INTERFACE SEAL)	
J	33	1	*264-4407*	1	MOTOR GP-WINDOW WIPER (CAB DOOR)	
		1	**3F-9556**	1	LOCKWASHER	
M		1	**5C-7261**	1	NUT (M8X1.25-THD)	
		1	**186-3735**	4	PIN-CONNECTOR (16-GA TO 18-GA)	
		1	**263-3823**	1	CAP-WIPER	
	34	1	*264-4408*	1	ARM GP-WINDOW WIPER (CAB DOOR)	
		1	**136-3194**	1	NOZZLE AS-WASHER	
E		1	**194-5171**		HOSE (50-CM)	
	35	1	**281-6390**	1	SWITCH AS-ROCKER (WIPER)	
	36	1	**292-6936**	1	BOLT (M6X1X70-MM)	
	37	1	**115-3069**	1	CLIP AS-CONNECTOR (3-PIN)	
		1	**8C-3334**	1	RIVET-TUBULAR	
	38	1	**3S-2093**	2	STRAP-CABLE	
M	39	1	**6V-7357**	4	BOLT (M6X1X25-MM)	
M	40	1	**8C-3798**	3	BOLT-LOCKING (M6X1X30)	

258-4086 **DOOR GP-CAB** *(contd.)* **i02693290**

NOTE	REF NO	GRAPHIC REF	PART NUMBER	QTY	PART NAME 1 2 3 4 5 6 (PRODUCT LEVEL)	SEE PAGE
	41	1	**8T-4205**	1	WASHER-HARD (7.2X14.5X2-MM THK)	
M	42	1	**9X-2044**	1	SCREW-TRUSS HEAD (M6X1X16-MM)	
E	43	1	**258-4430**		SEAL (329-CM)	
M	44	1	**129-3178**	1	LOCKNUT (M6X1-THD)	
					AVAILABLE REPAIR KIT(S):	
J			**102-8804**	1	KIT-RECEPTACLE (4-PIN)	
					(INCLUDES RECEPTACLE AS & WEDGE)	

E-ORDER BY THE CENTIMETER
J-KIT MARKED J SERVICES PART MARKED J
M-METRIC PART

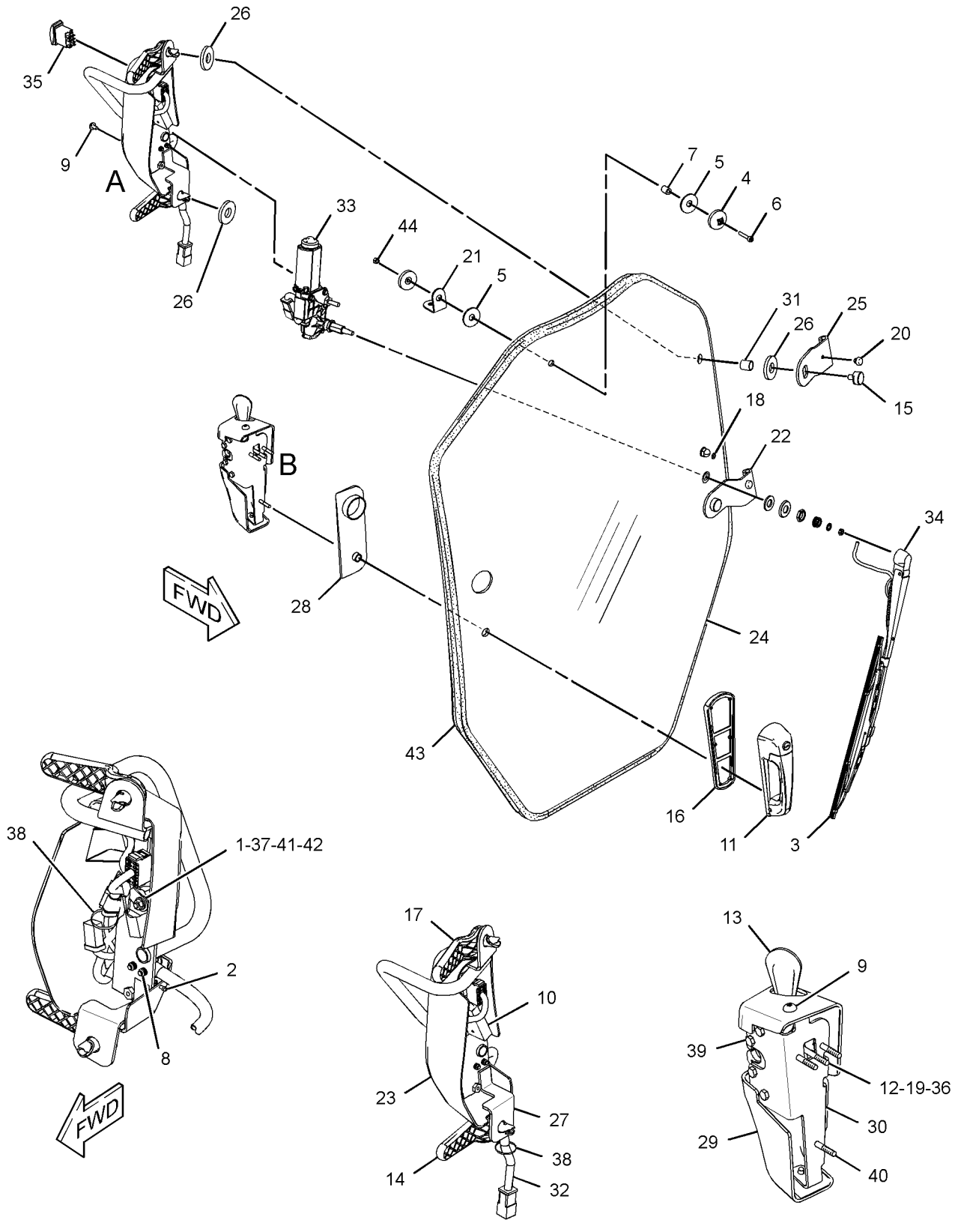

VIEW OF AREA A

VIEW OF AREA B

GRAPHIC #1

<END>

g01351406

OPERATOR STATION

258-4087 DOOR GP-CAB

S/N: JAY1-UP

PART OF 258-4080 DOOR GP-CAB, 280-6084 KIT-CAB DOOR & MOUNTING

AN ATTACHMENT

SMCS-7308 **i02693334**

NOTE	REF NO	GRAPHIC REF	PART NUMBER	QTY	PART NAME 1 2 3 4 5 6 (PRODUCT LEVEL)	SEE PAGE
M	1	2	**5C-2890**	1	NUT (M6X1-THD)	
	2	2	**8G-1151**	1	CONNECTOR (HOSE)	
	3	2	**8Y-4615**	1	BLADE AS-WIPER (CAB DOOR)	
	4	1	**129-8542**	2	RETAINER (GLASS MOUNT)	
	5	1	**129-8545**	2	WASHER (13X40X3-MM THK)	
M	6	1	**136-4192**	1	BOLT (M6X1X35-MM)	
	7	1	**154-5423**	1	SPACER (6.6X12.7X17-MM THK)	
	8	2	**206-1345**	2	STRAP-CABLE	
M	9	1,2	**215-6406**	6	SCREW-TRUSS HEAD (M6X1X16-MM)	
	10	2	**229-8757**	1	SWITCH AS-LIMIT (WIPER)	
	11	1	**252-1862**	1	HANDLE AS (PULL)	
	12	1	**253-1817**	1	SPACER (6.5X14.5X12-MM THK)	
	13	1	**258-3280**	1	LATCH AS	
	14	2	**258-3288**	1	HANDLE AS (LOWER)	
	15	2	**258-3289**	2	LATCH AS (OUTER)	
	16	1	**258-3290**	1	GASKET	
	17	2	**258-3294**	1	HANDLE AS (UPPER)	
	18	2	**258-3298**	1	GROMMET	
	19	1	**258-3697**	1	WASHER-NYLON (7X20X2-MM THK)	
	20	2	**258-3762**	2	GROMMET	
	21	1	**258-4013**	1	BRACKET AS	
	22	2	**258-4014**	1	HINGE (LOWER)	
	23	2	**258-4016**	1	COVER (WIPER)	
	24	2	**258-4073**	1	HINGE (UPPER)	
	25	2	**258-4075**	4	GASKET	
	26	2	**258-4076**	1	HANDLE AS	
	27	1	**258-4081**	1	WINDOW (CAB DOOR)	
	28	1	**258-4082**	1	GASKET	
	29	1	**258-4083**	1	COVER-LATCH	
	30	1	**258-4084**	1	BRACKET	
	31	2	**258-4085**	2	BUSHING	
	32	2	**258-4156**	1	HARNESS AS-CAB	
E		1	**125-7875**		TUBE-HEAT SHRINK (7.44-MM DIA) (10-CM)	
		1	**228-5856**	1	CONNECTOR	
		2	**8L-8413**	5	STRAP-CABLE	
		2	**102-8805**	1	KIT-RECEPTACLE (6-PIN)	
					(INCLUDES RECEPTACLE AS & WEDGE)	
		2	**155-2260**	1	KIT-CONNECTING PLUG (3-PIN)	
					(INCLUDES PLUG AS, WEDGES & INTERFACE SEAL)	
		2	**155-2271**	1	KIT-CONNECTING PLUG (4-PIN)	
					(INCLUDES PLUG AS, WEDGE & INTERFACE SEAL)	
	33	2	*264-4407*	1	MOTOR GP-WINDOW WIPER (CAB DOOR)	
		2	**3F-9556**	1	LOCKWASHER	
M		2	**5C-7261**	1	NUT (M8X1.25-THD)	
		2	**102-8804**	1	KIT-RECEPTACLE (4-PIN)	
					(INCLUDES RECEPTACLE AS & WEDGE)	
		2	**186-3735**	4	PIN-CONNECTOR (16-GA TO 18-GA)	
		2	**263-3823**	1	CAP-WIPER	
	34	2	*264-4408*	1	ARM GP-WINDOW WIPER (CAB DOOR)	
		2	**136-3194**	1	NOZZLE AS-WASHER	
E		2	**194-5171**		HOSE (50-CM)	
	35	2	**281-6390**	1	SWITCH AS-ROCKER (FRONT WIPER/WASHER)	
	36	1	**292-6936**	1	BOLT (M6X1X70-MM)	
	37	2	**115-3069**	1	CLIP AS-CONNECTOR (3-PIN)	
		2	**8C-3334**	1	RIVET-TUBULAR	

258-4087 **DOOR GP-CAB** ***(contd.)*** **i02693334**

NOTE	REF NO	GRAPHIC REF	PART NUMBER	QTY	PART NAME 1 2 3 4 5 6 (PRODUCT LEVEL)	SEE PAGE
	38	2	**3S-2093**	2	STRAP-CABLE	
M	39	1	**6V-7357**	4	BOLT (M6X1X25-MM)	
M	40	1	**8C-3798**	3	BOLT-LOCKING (M6X1X30)	
	41	2	**8T-4205**	1	WASHER-HARD (7.2X14.5X2-MM THK)	
M	42	2	**9X-2044**	1	SCREW-TRUSS HEAD (M6X1X16-MM)	
E	43	1	**258-4430**		SEAL (331-CM)	
M	44	1	**129-3178**	1	LOCKNUT (M6X1-THD)	

E-ORDER BY THE CENTIMETER
M-METRIC PART

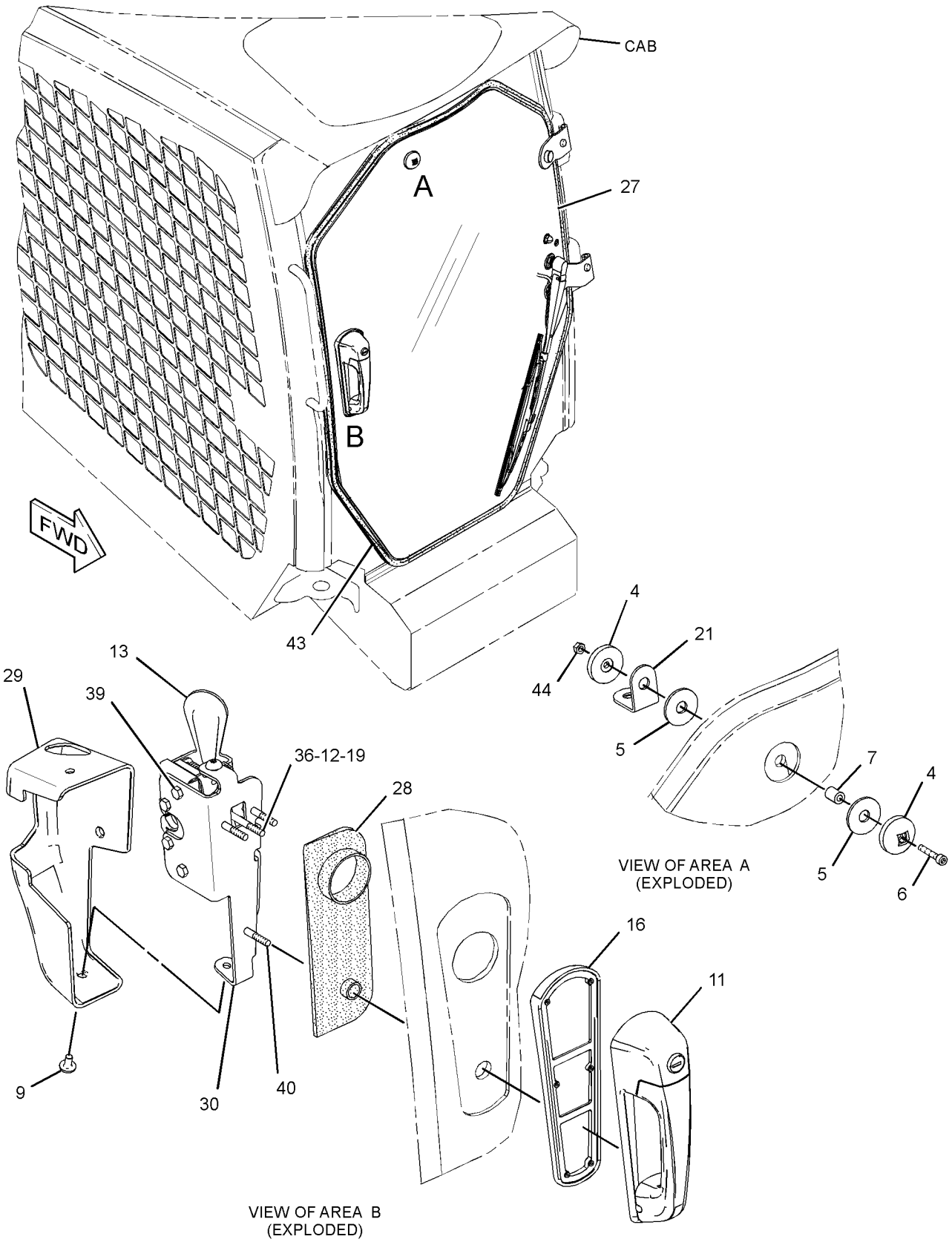

GRAPHIC #1

g01351578

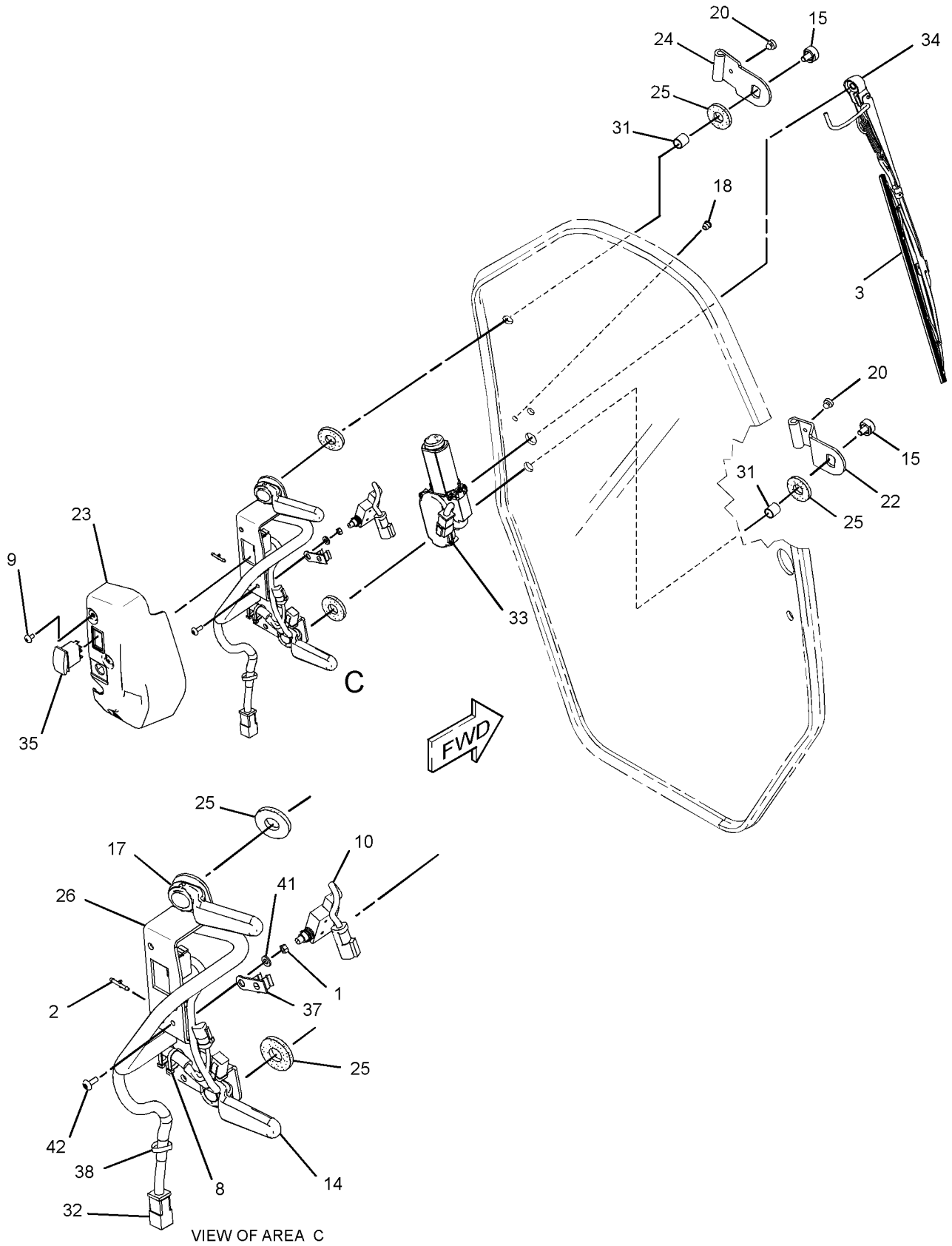

GRAPHIC #2 **<END>** g01313607

OPERATOR STATION

258-4252 DUCT & FILTER GP-CAB AIR

S/N: JAY1-UP

PART OF 258-4260 AIR CONDITIONER AR, 258-4250 HEATER AR-CAB

AN ATTACHMENT

SMCS-7342, 734D **i02693320**

NOTE	REF NO	GRAPHIC REF	PART NUMBER	QTY	PART NAME 1 2 3 4 5 6 (PRODUCT LEVEL)	SEE PAGE
	1	1	**8Y-5947**	2	FASTENER	
	2	1	**146-6371**	6	LOUVER AS	
	3	1	**206-9185**	1	BOLT (SELF LOCKING)	
	4	1	**258-3727**	7	SCREW-TRUSS HEAD (NO 12X17.46-MM)	
	5	1	**258-3793**	1	SEAL	
	6	1	**258-3795**	2	SEAL	
	7	1	**258-3796**	1	SEAL	
	8	1	**258-4248**	1	COVER-LOUVER	
	9	1	**258-4249**	1	DUCT-INLET	
	10	1	**258-4253**	1	DUCT AS (INTERIOR)	
	11	1	**258-4257**	1	DUCT AS (INLET)	
	12	1	**258-4258**	1	DUCT AS (PLENUM)	
	13	1	**258-4263**	1	PLATE	
	14	1	**258-4264**	1	COVER-FILTER	
	15	1	**258-4378**	2	KNOB AS	
	16	1	**258-4379**	1	KNOB AS	
	17	1	**258-4384**	1	SCREEN	
	18	1	**265-6618**	1	FILTER-CAB AIR (RECIRCULATION)	
	19	1	**265-6619**	1	FILTER-CAB AIR (FRESH)	
M	20	1	**163-3955**	2	BOLT (M6X1X35-MM)	
M	21	1	**215-6406**	7	SCREW-TRUSS HEAD (M6X1X16-MM)	
	22	1	**258-4254**	1	DUCT AS (INTERIOR)	
	23	1	**258-4259**	1	DUCT AS-OUTLET	
	24	1	**5P-4116**	1	WASHER-HARD (8.8X20.5X2-MM THK)	
	25	1	**6V-6689**	2	SCREW-SELF-TAPPING (10-16X.625-IN)	
M	26	1	**6V-7357**	4	BOLT (M6X1X25-MM)	
	27	1	**7X-2031**	3	RETAINER	
	28	1	**8T-4205**	8	WASHER-HARD (7.2X14.5X2-MM THK)	
D	29	1	**6V-9335**		SEAL (0.33-M EACH)	
D	29A	1	**6V-9335**		SEAL (0.14-M EACH)	

D-ORDER BY THE METER
M-METRIC PART

258-4252 **DUCT & FILTER GP-CAB AIR** *(contd.)* **i02693320**

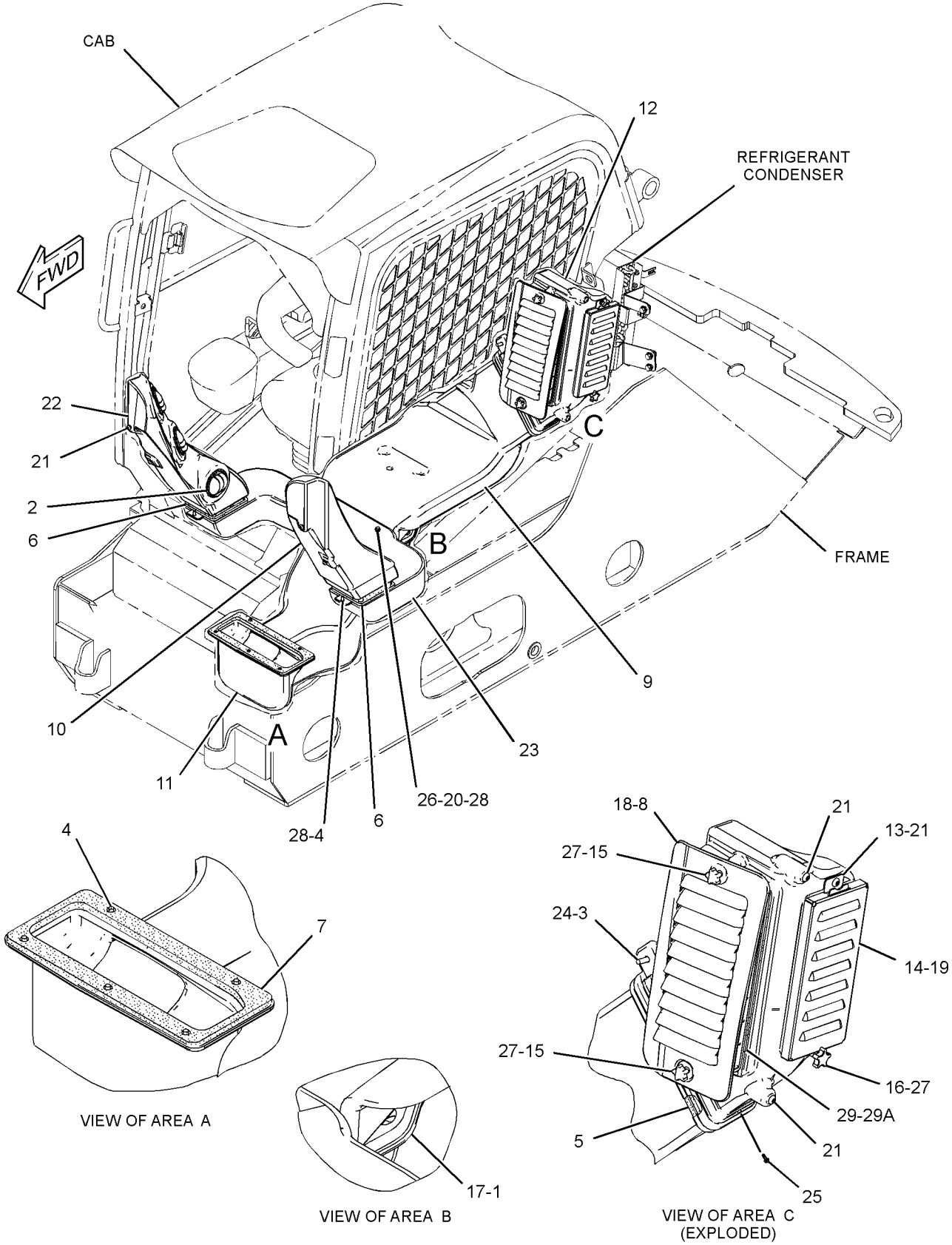

GRAPHIC #1 **<END>** g01354647

OPERATOR STATION

258-4400 GUARD GP-ROPS/FOPS—KIT

S/N: JAY1-UP

CANNOT BE USED WITH 258-4410—PAGE 172

AN ATTACHMENT

SMCS-7323 **i02664221**

NOTE	REF NO	GRAPHIC REF	PART NUMBER	QTY	PART NAME 1 2 3 4 5 6 (PRODUCT LEVEL)	SEE PAGE
	1	1	**258-4389**	4	MOUNT	
	2	1	**258-4398**	1	FILM-FOPS	
	3	1	**258-4405**	1	PLATE AS	
	4	1	**154-1580**	8	WASHER-HARD (M22X38X6-MM THK)	
M	5	1	**8T-5460**	8	BOLT (M20X2.5X40-MM)	

M-METRIC PART

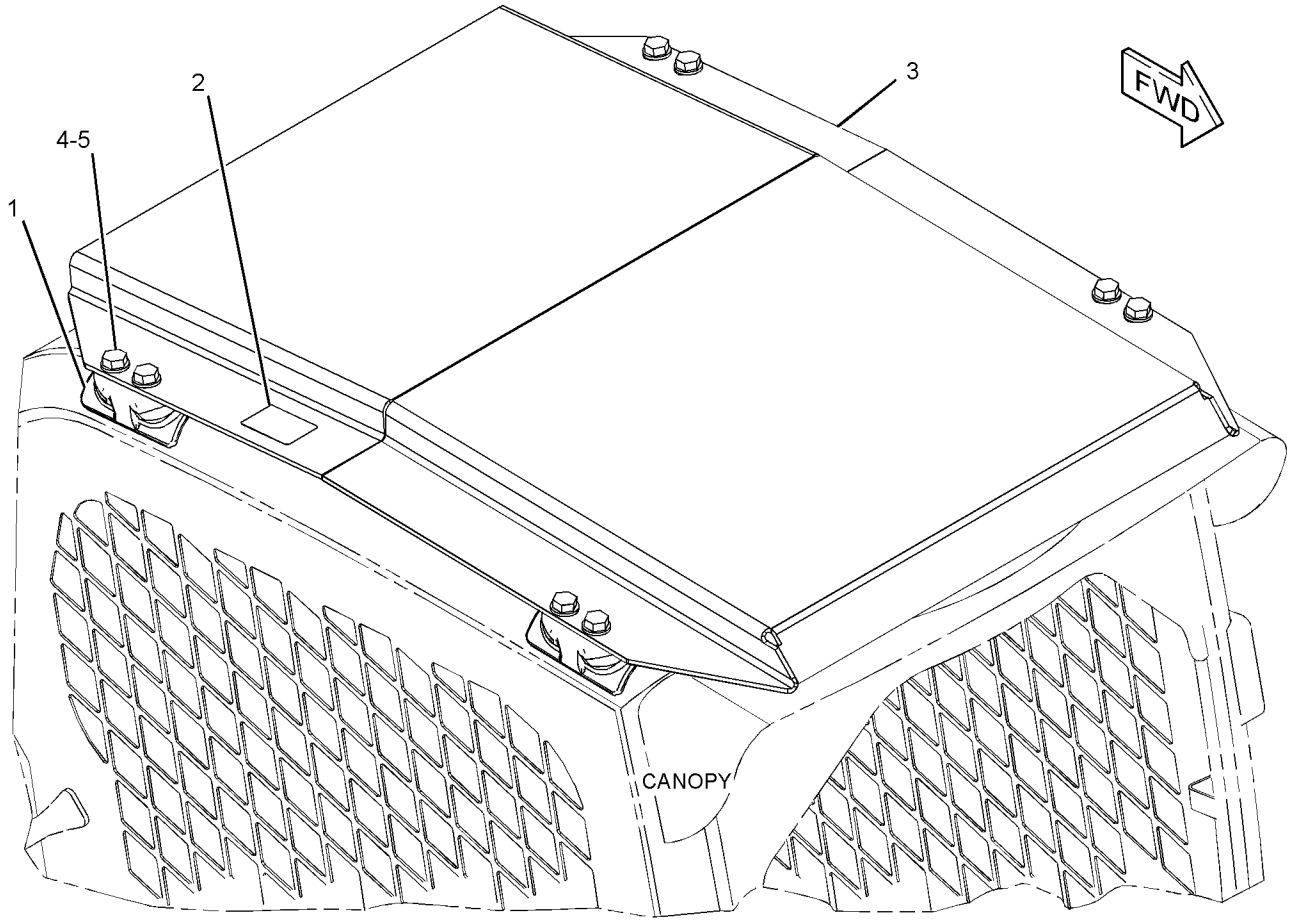

GRAPHIC #1 **<END>** g01339107

OPERATOR STATION

258-4251 HEATER & MTG GP-CAB

S/N: JAY1-UP
PART OF 258-4250 HEATER AR-CAB
AN ATTACHMENT

SMCS-7304 **i02628667**

NOTE	REF NO	GRAPHIC REF	PART NUMBER	QTY	PART NAME 1 2 3 4 5 6 (PRODUCT LEVEL)	SEE PAGE
	1	1	**8T-8737**	10	PLUG-SEAL	
	2	1	**109-2356**	1	PLUG	
	3	1	**206-1345**	2	STRAP-CABLE	
	4	1	**246-9371**	1	RELAY AS (SHELL)	
	5	1	**258-3792**	1	SEAL	
	6	1	**258-3794**	1	INSULATION	
Y	7	1	*258-4270*	1	HEATER GP-CAB	407
	8	1	**258-4408**	1	INSULATION	
Y	9	1	*266-2430*	1	CONTROL & WIRING GP-AIR & TEMP	375
	10	1	**155-2271**	1	KIT-CONNECTING PLUG (4-PIN)	
					(INCLUDES PLUG AS, WEDGE & INTERFACE SEAL)	
	11	1	**266-3314**	2	BOLT-FLANGE HEAD (M6X1X20.5-MM)	
M	12	1	**266-3315**	7	BOLT-FLANGE HEAD (M8X1.25X25.5-MM)	
	13	1	**102-8802**	3	KIT-RECEPTACLE (2-PIN)	
					(EACH INCLUDES RECEPTACLE AS & WEDGE)	

M-METRIC PART
Y-SEPARATE ILLUSTRATION

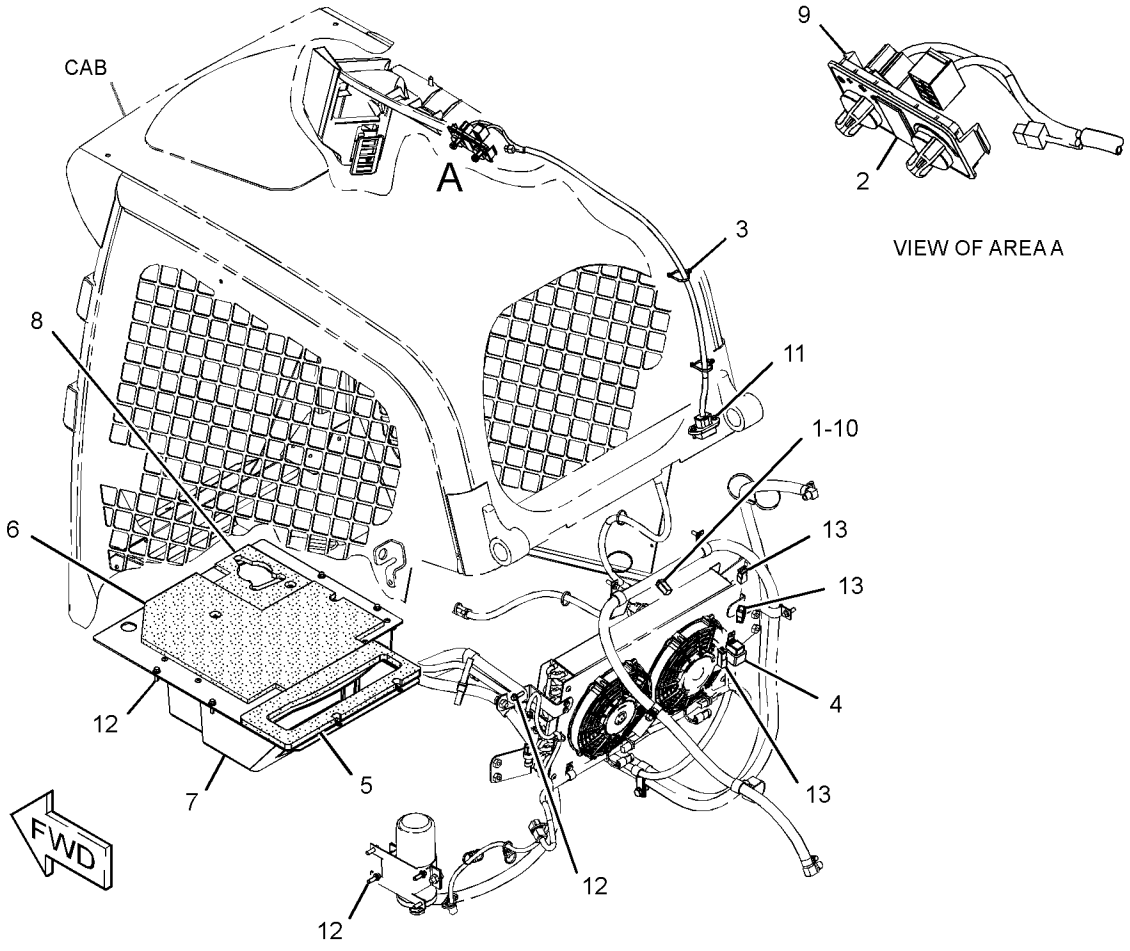

GRAPHIC #1 **<END>** g01325906

OPERATOR STATION

258-4250 HEATER AR-CAB

S/N: JAY1-UP
PART OF 258-3742 CAB AR-ENCLOSED ROPS
AN ATTACHMENT

SMCS-7304 **i02629844**

NOTE	REF NO	GRAPHIC REF	PART NUMBER	QTY	PART NAME 1 2 3 4 5 6 (PRODUCT LEVEL)	SEE PAGE
Y	1	1	*258-4146*	1	WIRING GP-AIR CONDITIONER	100
Y	2	1	*258-4251*	1	HEATER & MTG GP-CAB	405
Y	3	1	*258-4252*	1	DUCT & FILTER GP-CAB AIR	402
Y	4	1	*258-4255*	1	LINES GP-HEATER	428
	5	1	**8T-4121**	4	WASHER-HARD (11X21X2.5-MM THK)	
M	6	1	**8T-4133**	4	NUT (M10X1.5-THD)	

M-METRIC PART
Y-SEPARATE ILLUSTRATION

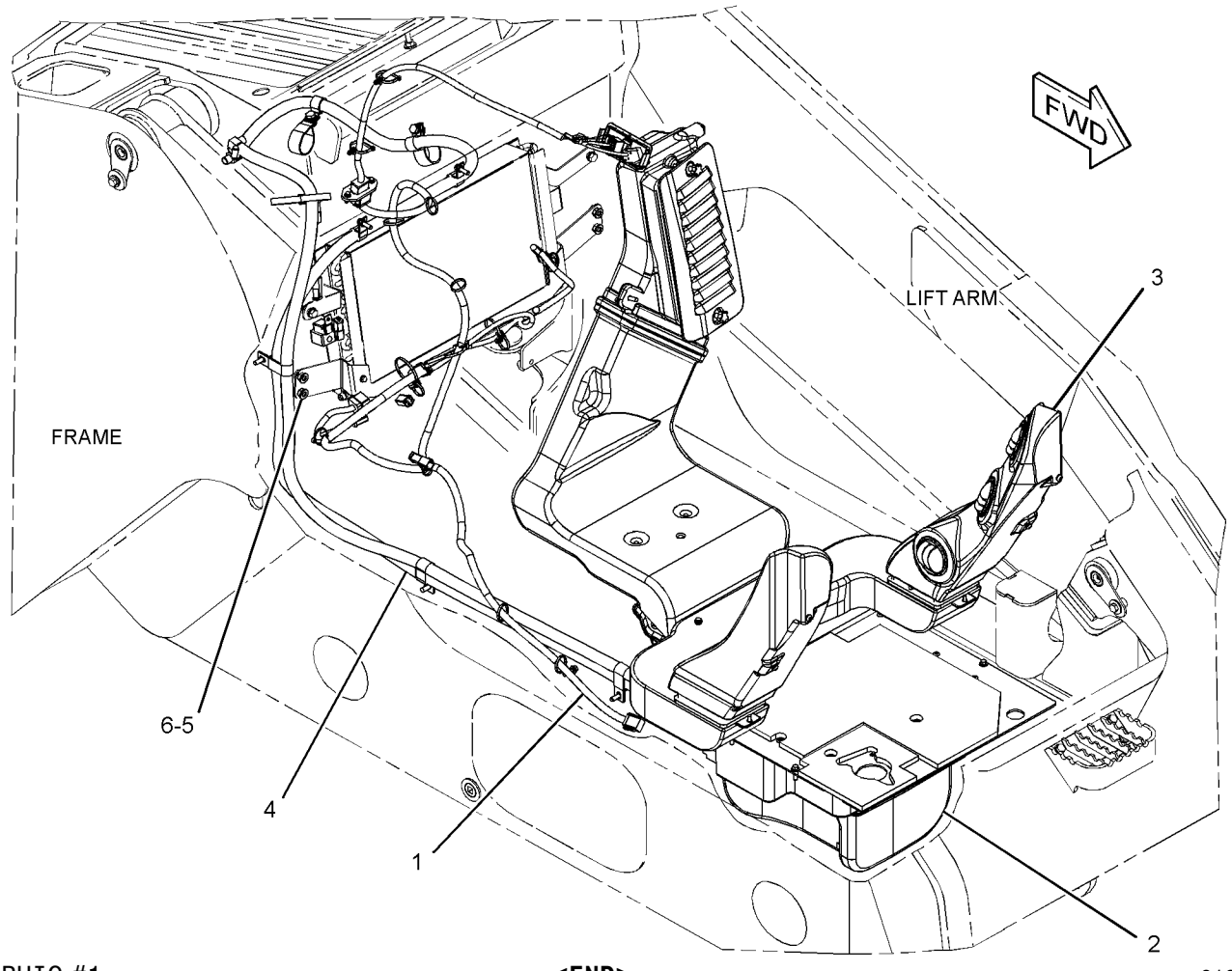

GRAPHIC #1 **<END>** g01323037

OPERATOR STATION

258-4270 HEATER GP-CAB

S/N: JAY1-UP

PART OF 258-4251 HEATER & MTG GP-CAB, 280-6077 KIT-CAB HEATER & MOUNTING

AN ATTACHMENT

SMCS-7304 **i02664242**

NOTE	REF NO	GRAPHIC REF	PART NUMBER	QTY	PART NAME 1 2 3 4 5 6 (PRODUCT LEVEL)	SEE PAGE
	1	1	**295-5440**	1	MOTOR (BLOWER)	
	2	1	**258-4273**	1	CASE AS	
	3	1	**258-4274**	1	GASKET	
	4	1	**258-4287**	1	BAFFLE	
	5	1	**258-4295**	1	CLIP (RETAINER)	
	6	1	**258-4298**	1	PLATE AS	
	7	1	**266-2432**	1	VALVE AS-WATER	
	8	1	**266-2434**	1	COIL AS-HEATER	
	9	1	**266-2436**	1	HARNESS AS-HEATER	
		1	**102-8806**	1	KIT-RECEPTACLE (8-PIN)	
					(INCLUDES RECEPTACLE AS & WEDGE)	
E		1	**8Y-8081**		TUBE-CONVOLUTED (50-CM)	
E		1	**119-3662**		TUBE-HEAT SHRINK (10.85-MM DIA) (7-CM)	
	10	1	**6V-6717**	2	SCREW-WASHER HEAD (8-32X9.52-MM)	
M	11	1	**9X-2045**	7	SCREW-TRUSS HEAD (M6X1X20-MM)	
D	12	1	**5P-5637**		SEAL (0.17-M EACH)	
	13	1	**294-0091**	1	FILM-INSTRUCTION (DO NOT SPRAY, READ OMM)	

D-ORDER BY THE METER
E-ORDER BY THE CENTIMETER
M-METRIC PART

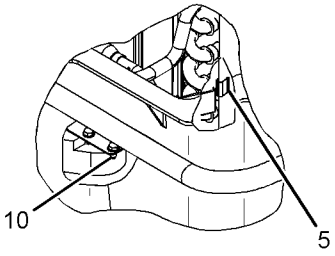

VIEW OF AREA B

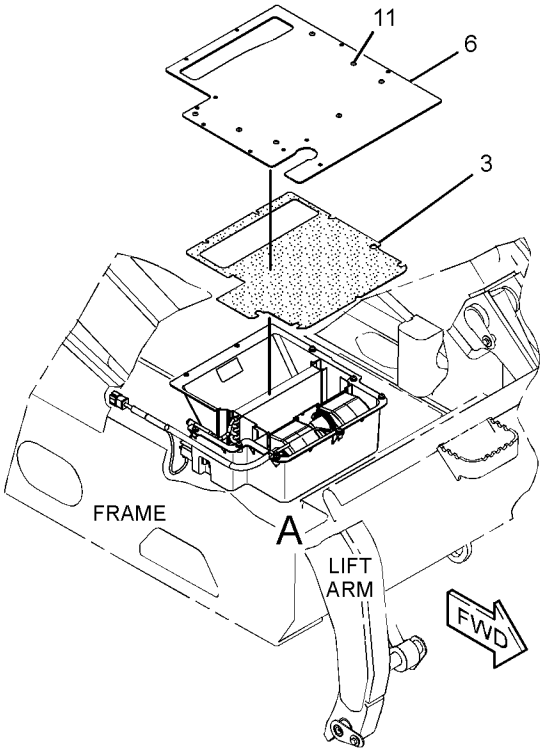

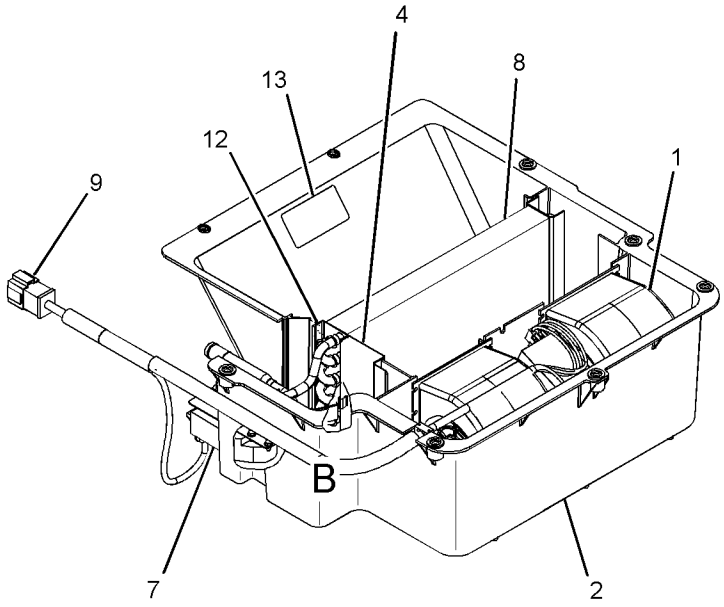

VIEW OF AREA A

GRAPHIC #1 **<END>** g01339603

OPERATOR STATION

258-4066 INSTALLATION GP-RADIO

S/N: JAY1-UP

PART OF 258-3680, 258-3742 CAB AR-ENCLOSED ROPS, 258-3740 OPTION AR-CAB AN ATTACHMENT

SMCS-1408, 7338 **i02664218**

NOTE	REF NO	GRAPHIC REF	PART NUMBER	QTY	PART NAME 1 2 3 4 5 6 (PRODUCT LEVEL)	SEE PAGE
	1	1	**8E-1118**	1	ANTENNA AS	
	2	1	**8Y-5947**	1	FASTENER	
	3	1	**9U-8746**	1	CABLE AS-COAXIAL	
	4	1	**168-8772**	2	SPEAKER AS-RADIO	
	5	1	**200-5728**	1	HARNESS AS-RADIO	
		1	**160-3518**	1	KIT-RECEPTACLE (8-PIN)	
					(INCLUDES RECEPTACLE AS & WEDGE)	
	6	1	**258-4038**	1	SPACER	
	7	1	**258-4039**	1	SPACER	
	8	1	**258-4062**	2	SPACER	
	9	1	**258-4067**	1	COVER (RADIO)	
	10	1	**258-4074**	1	BRACKET	
	11	1	**258-4367**	2	BRACKET	
	12	1	**258-4368**	1	SPACER	
	13	1	**195-0936**	4	INSERT-THREADED (M6X1)	
M	14	1	**6V-7357**	4	BOLT (M6X1X25-MM)	
	15	1	**8C-6440**	8	SCREW-PAN HEAD (10-16X0.5-IN)	
	16	1	**8T-4224**	4	WASHER-HARD (8.8X16X2-MM THK)	
M	17	1	**5C-7261**	1	NUT (M8X1.25-THD)	
	18	1	**5P-4116**	1	WASHER-HARD (8.8X20.5X2-MM THK)	

M-METRIC PART

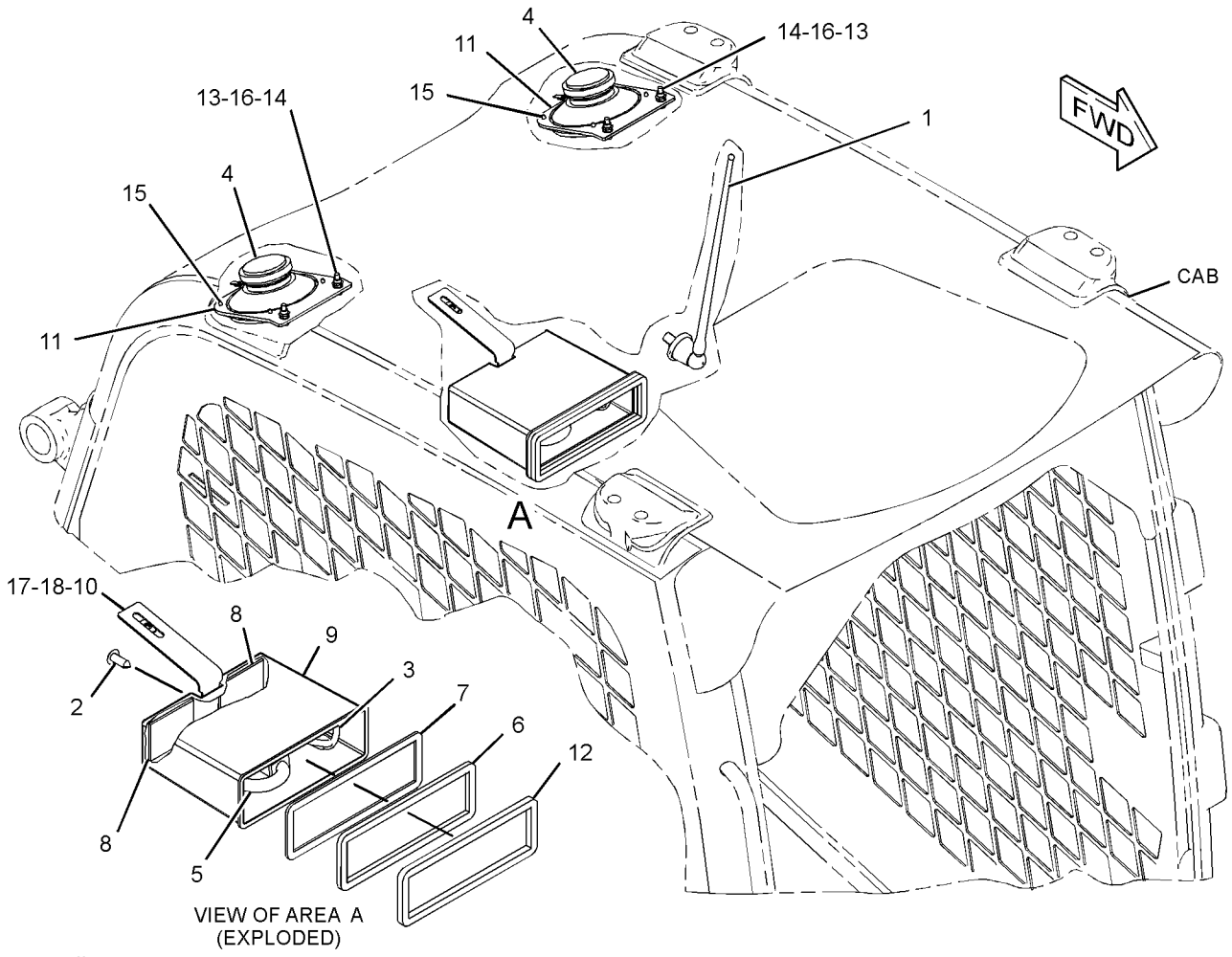

GRAPHIC #1 **<END>** g01339318

OPERATOR STATION

258-2474 KIT-AIR COND & HEATER INSTL

S/N: JAY1-UP

AN ATTACHMENT

SMCS-1405, 1802, 1805, 1808, 7174, 7304, 7320, 734D **i02706193**

NOTE	PART NUMBER	QTY	PART NAME 1 2 3 4 5 6 (PRODUCT LEVEL)	SEE PAGE
Y	*186-6190*	1	ACCUMULATOR GP-REFRIGERANT (WITH DESICCANT)	364
Y	*258-4290*	1	AIR CONDITIONER GP	367
Y	*266-2425*	1	CONDENSER & MTG GP-REFRIGERANT	374
Y	*266-2430*	1	CONTROL & WIRING GP-AIR & TEMP	375
J	**276-9875**	1	COMPRESSOR GP-REFRIGERANT	
	212-2204	1	CONTROL GP-AIR CONDITIONER	
	155-2271	1	KIT-CONNECTING PLUG (4-PIN)	
			(INCLUDES PLUG AS, WEDGE & INTERFACE SEAL)	
	186-3736	4	SOCKET-CONNECTOR (16-GA TO 18-GA)	
	258-2467	1	BRACKET AS	
	258-4284	1	BRACKET AS	
	258-4380	1	BRACKET AS	
	258-4386	1	BRACKET AS	
	258-4388	1	BRACKET AS	
	258-4253	1	DUCT AS (INTERIOR)	
	258-4254	1	DUCT AS (INTERIOR)	
	258-4257	1	DUCT AS (INLET)	
	258-4258	1	DUCT AS (PLENUM)	
	258-4259	1	DUCT AS-OUTLET	
	258-4147	1	HARNESS AS-HEATER & AIR COND	
	102-8804	1	KIT-RECEPTACLE (4-PIN)	
	102-8805	1	KIT-RECEPTACLE (6-PIN)	
			(EACH RECEPTACLE KIT INCLUDES RECEPTACLE AS & WEDGE)	
	8L-8413	5	STRAP-CABLE	
	9X-1054	1	PLUG AS-CONNECTOR (4-PIN)	
E	**119-3662**		TUBE-HEAT SHRINK (10.85-MM DIA) (7-CM)	
E	**125-7874**		TUBE-HEAT SHRINK (5.72-MM DIA) (20-CM)	
	155-2255	1	KIT-CONNECTING PLUG (12-PIN)	
	155-2265	1	KIT-CONNECTING PLUG (8-PIN)	
	155-2270	3	KIT-CONNECTING PLUG (2-PIN)	
			(EACH PLUG KIT INCLUDES PLUG AS, WEDGE & INTERFACE SEAL)	
	258-4262	1	HOSE AS	
	258-4304	1	HOSE AS	
I	**258-4308**	1	HOSE AS	
I	**258-4309**	1	HOSE AS	
	258-4378	2	KNOB AS	
	258-4379	1	KNOB AS	
	146-6371	6	LOUVER AS	
	115-1615	1	RELAY AS (12-VOLT)	
	149-6371	1	SWITCH AS-PRESSURE (REFRIGERANT)	
	102-8802	1	KIT-RECEPTACLE (2-PIN)	
			(INCLUDES RECEPTACLE AS & WEDGE)	
	186-3735	2	PIN-CONNECTOR (16-GA TO 18-GA)	
	236-6923	1	SWITCH AS-PRESSURE (REFRIGERANT)	
	266-0299	1	SWITCH AS-ROCKER (AIR CONDITIONER)	
	204-8000	1	ANCHOR-TIE (WRAP)	
M	**5C-9553**	10	BOLT (M6X1X16-MM)	
M	**6V-7357**	6	BOLT (M6X1X25-MM)	
M	**8T-4136**	12	BOLT (M10X1.5X25-MM)	
M	**8T-4189**	1	BOLT (M8X1.25X20-MM)	
M	**8T-4196**	3	BOLT (M10X1.5X35-MM)	

258-2474 KIT-AIR COND & HEATER INSTL *(contd.)* i02706193

NOTE	PART NUMBER	QTY	PART NAME 1 2 3 4 5 6 (PRODUCT LEVEL)	SEE PAGE
M	**8T-4956**	3	BOLT (M12X1.75X35-MM)	
M	**8T-6685**	1	BOLT (M10X1.5X110-MM)	
	206-9185	1	BOLT	
M	**266-3315**	6	BOLT-FLANGE HEAD (M8X1.25X25.5-MM)	
	258-2466	1	BRACKET	
	8T-0154	4	CLAMP-HOSE	
	4K-8864	2	CLIP	
	6D-1641	3	CLIP (LOOP)	
	6D-4246	1	CLIP	
	6V-2235	2	CLIP	
	9X-8250	4	CLIP (LOOP)	
	101-8296	2	CLIP	
	258-4264	1	COVER-FILTER	
	258-4248	1	COVER-LOUVER	
	258-4249	1	DUCT-INLET	
	004-6810	1	ELBOW	
	218-6645	1	ELBOW	
	8Y-5947	2	FASTENER	
	265-6618	1	FILTER-CAB AIR (RECIRCULATION)	
	265-6619	1	FILTER-CAB AIR (FRESH)	
E	**136-1953**		HOSE (515-CM)	
	258-3794	1	INSULATION	
	258-4408	1	INSULATION	
	113-0693	1	LOCKWASHER	
M	**8T-4133**	5	NUT (M10X1.5-THD)	
	258-4263	1	PLATE	
	223-9636	1	PLATE-INSTRUCTION	
	7X-2031	3	RETAINER	
	206-2423	3	SADDLE	
	258-4384	1	SCREEN	
	6V-6689	2	SCREW-SELF-TAPPING (10-16X.625-IN)	
M	**215-6406**	7	SCREW-TRUSS HEAD (M6X1X16-MM)	
	258-3727	7	SCREW-TRUSS HEAD (NO 12X17.46-MM)	
D	**5P-5924**		SEAL (0.3-M)	
D	**6V-9335**		SEAL (0.9-M)	
	258-3792	1	SEAL	
	258-3793	1	SEAL	
	258-3795	2	SEAL	
	258-3796	1	SEAL	
	9X-7378	2	SEAL-O-RING	
	9X-7380	1	SEAL-O-RING	
	9X-7381	2	SEAL-O-RING	
	9X-7382	1	SEAL-O-RING	
	9X-7383	2	SEAL-O-RING	
	178-3620	5	STRAP (DUAL CLAMP)	
	3S-2093	20	STRAP-CABLE	
	206-1345	2	STRAP-CABLE	
	105-9411	1	SUPPORT	
	258-3539	1	V-BELT (REFRIGERANT)	
	5P-4116	2	WASHER-HARD (8.8X20.5X2-MM THK)	
	8T-4121	22	WASHER-HARD (11X21X2.5-MM THK)	
	8T-4205	20	WASHER-HARD (7.2X14.5X2-MM THK)	
	8T-4223	3	WASHER-HARD (13.5X25.5X3-MM THK)	
			AVAILABLE REPAIR KIT(S):	
J	**102-8802**	1	KIT-RECEPTACLE (2-PIN)	
			(INCLUDES RECEPTACLE AS & WEDGE)	

D-ORDER BY THE METER
E-ORDER BY THE CENTIMETER
I-REFER TO HYDRAULIC INFORMATION SYSTEM
J-KIT MARKED J SERVICES PART MARKED J

258-2474 KIT-AIR COND & HEATER INSTL *(contd.)* **i02706193**

M-METRIC PART
Y-SEPARATE ILLUSTRATION

<END>

258-2475 KIT-AIR CONDITIONER INSTL

S/N: JAY1-UP
AN ATTACHMENT

SMCS-1405, 1802, 1805, 1808, 7174, 7320, 734D **i02706197**

NOTE	PART NUMBER	QTY	PART NAME 1 2 3 4 5 6 (PRODUCT LEVEL)	SEE PAGE
Y	*186-6190*	1	ACCUMULATOR GP-REFRIGERANT (WITH DESICCANT)	364
Y	*258-4290*	1	AIR CONDITIONER GP	367
Y	*266-2425*	2	CONDENSER & MTG GP-REFRIGERANT	374
J	**276-9875**	1	COMPRESSOR GP-REFRIGERANT	
	212-2204	1	CONTROL GP-AIR CONDITIONER	
	155-2271	1	KIT-CONNECTING PLUG (4-PIN)	
			(INCLUDES PLUG AS, WEDGE & INTERFACE SEAL)	
	186-3736	4	SOCKET-CONNECTOR (16-GA TO 18-GA)	
	258-2467	1	BRACKET AS	
	258-4284	1	BRACKET AS	
	258-4380	1	BRACKET AS	
	258-4386	1	BRACKET AS	
	258-4388	1	BRACKET AS	
	258-4262	1	HOSE AS	
	258-4304	1	HOSE AS	
I	**258-4308**	1	HOSE AS	
I	**258-4309**	1	HOSE AS	
	115-1615	1	RELAY AS (12-VOLT)	
	149-6371	1	SWITCH AS-PRESSURE (REFRIGERANT)	
	102-8802	1	KIT-RECEPTACLE (2-PIN)	
			(INCLUDES RECEPTACLE AS & WEDGE)	
	186-3735	2	PIN-CONNECTOR (16-GA TO 18-GA)	
	236-6923	1	SWITCH AS-PRESSURE (REFRIGERANT)	
	266-0299	1	SWITCH AS-ROCKER (AIR CONDITIONER)	
	204-8000	1	ANCHOR-TIE (WRAP)	
M	**5C-9553**	10	BOLT (M6X1X16-MM)	
M	**8T-4136**	9	BOLT (M10X1.5X25-MM)	
M	**8T-4196**	3	BOLT (M10X1.5X35-MM)	
M	**8T-4956**	3	BOLT (M12X1.75X35-MM)	
M	**8T-6685**	1	BOLT (M10X1.5X110-MM)	
M	**266-3315**	3	BOLT-FLANGE HEAD (M8X1.25X25.5-MM)	
	258-2466	1	BRACKET	
	1P-7009	1	CLIP	
	4K-8864	2	CLIP	
	6D-4246	1	CLIP	
	9X-8250	4	CLIP	
	101-8296	2	CLIP	
	258-3794	1	INSULATION	
	258-4408	1	INSULATION	
	113-0693	1	LOCKWASHER	
M	**8T-4133**	3	NUT (M10X1.5-THD)	
	223-9636	1	PLATE-INSTRUCTION	
M	**215-6406**	5	SCREW-TRUSS HEAD (M6X1X16-MM)	
D	**5P-5924**		SEAL (0.3-M)	
	258-3792	1	SEAL	
	9X-7378	2	SEAL-O-RING	

258-2475 KIT-AIR CONDITIONER INSTL *(contd.)* i02706197

NOTE	PART NUMBER	QTY	PART NAME 1 2 3 4 5 6 (PRODUCT LEVEL)	SEE PAGE
	9X-7380	1	SEAL-O-RING	
	9X-7381	2	SEAL-O-RING	
	9X-7382	1	SEAL-O-RING	
	9X-7383	2	SEAL-O-RING	
	178-3620	3	STRAP (DUAL CLAMP)	
	3S-2093	2	STRAP-CABLE	
	105-9411	1	SUPPORT	
	258-3539	1	V-BELT (REFRIGERANT)	
	8T-4121	17	WASHER-HARD (11X21X2.5-MM THK)	
	8T-4205	12	WASHER-HARD (7.2X14.5X2-MM THK)	
	8T-4223	3	WASHER-HARD (13.5X25.5X3-MM THK)	
			AVAILABLE REPAIR KIT(S):	
J	**102-8802**	1	KIT-RECEPTACLE (2-PIN)	
			(INCLUDES RECEPTACLE AS & WEDGE)	

D-ORDER BY THE METER
I-REFER TO HYDRAULIC INFORMATION SYSTEM
J-KIT MARKED J SERVICES PART MARKED J
M-METRIC PART
Y-SEPARATE ILLUSTRATION

<END>

OPERATOR STATION

258-2473 KIT-CAB DOOR & MOUNTING—GLASS

S/N: JAY1-UP
AN ATTACHMENT

SMCS-7308 **i02693123**

NOTE	PART NUMBER	QTY	PART NAME 1 2 3 4 5 6 (PRODUCT LEVEL)	SEE PAGE
Y	*258-4086*	1	DOOR GP-CAB	395
	258-4078	1	TANK AS-WINDOW WASHER	
	6T-1375	1	PUMP AS-WASHER	
	8E-8293	1	GROMMET	
	258-3296	1	CAP-VENTED (WASHER)	
	258-3281	1	BRACKET AS	
	258-4356	1	BRACKET AS	
	258-4157	1	HARNESS AS-CAB	
	102-8805	1	KIT-RECEPTACLE (6-PIN)	
			(INCLUDES RECEPTACLE AS & WEDGE)	
E	**125-7874**		TUBE-HEAT SHRINK (5.72-MM DIA) (5-CM)	
	155-2274	1	KIT-CONNECTING PLUG (6-PIN)	
			(INCLUDES PLUG AS, WEDGE & INTERFACE SEAL)	
	153-2682	1	SPRING AS-GAS (CAB)	
	258-3761	1	SPRING AS-GAS (DOOR)	
	258-3764	1	STRIKER AS	
	258-4141	2	CLIP	
	284-7932	1	FILM-NOTICE (ALTERNATE EXIT, READ OMM)	
	258-3725	1	HINGE	
E	**144-0195**		HOSE (90-CM)	
	5P-0372	2	LOCK PIN	
M	**5C-2890**	1	NUT (M6X1-THD)	
	139-6039	1	NUT (U-TYPE RETAINER)	
M	**8T-4244**	1	NUT (M12X1.75-THD)	
	258-3726	2	PIN	
	6L-3966	1	PIN	
	095-1325	1	PIN-CLEVIS	
	8S-7803	2	RING-RETAINING	
M	**215-6406**	1	SCREW-TRUSS HEAD (M6X1X16-MM)	
M	**127-2170**	4	SCREW-TRUSS HEAD (M8X1.25X20-MM)	
M	**9X-2044**	3	SCREW-TRUSS HEAD (M6X1X16-MM)	
	7C-8246	1	SPACER (10.5X20X24-MM THK)	
	206-1345	4	STRAP-CABLE	
	8T-2444	2	STUD-BALL	
	198-1725	4	WASHER-HARD (8.8X25.5X2-M THK)	
	8T-4224	2	WASHER-HARD (8.8X16X2-MM THK)	

E-ORDER BY THE CENTIMETER
M-METRIC PART
Y-SEPARATE ILLUSTRATION

<END>

OPERATOR STATION

280-6084 KIT-CAB DOOR & MOUNTING—POLYCARBONATE

S/N: JAY1-UP
AN ATTACHMENT

SMCS-7308 **i02693299**

NOTE	PART NUMBER	QTY	PART NAME 1 2 3 4 5 6 (PRODUCT LEVEL)	SEE PAGE
Y	*258-4087*	1	DOOR GP-CAB	398
	258-4078	1	TANK AS-WINDOW WASHER	
	6T-1375	1	PUMP AS-WASHER	
	8E-8293	1	GROMMET	
	258-3296	1	CAP-VENTED (WASHER)	
	258-3281	1	BRACKET AS	
	258-4356	1	BRACKET AS	
	258-4141	2	CLIP	
	284-7932	1	FILM-NOTICE (ALTERNATE EXIT, READ OMM)	
	258-4157	1	HARNESS AS-CAB	
	102-8805	1	KIT-RECEPTACLE (6-PIN)	
			(INCLUDES RECEPTACLE AS & WEDGE)	
E	**125-7874**		TUBE-HEAT SHRINK (5.72-MM DIA) (5-CM)	
	155-2274	1	KIT-CONNECTING PLUG (6-PIN)	
			(INCLUDES PLUG AS, WEDGE & INTERFACE SEAL)	
	258-3725	1	HINGE	
E	**144-0195**		HOSE (90-CM)	
	5P-0372	2	LOCK PIN	
M	**5C-2890**	1	NUT (M6X1-THD)	
M	**8T-4244**	1	NUT (M12X1.75-THD)	
	139-6039	1	NUT (U-TYPE RETAINER)	
	6L-3966	1	PIN	
	258-3726	2	PIN	
	095-1325	1	PIN-CLEVIS	
	8S-7803	2	RING-RETAINING	
M	**9X-2044**	3	SCREW-TRUSS HEAD (M6X1X16-MM)	
M	**127-2170**	4	SCREW-TRUSS HEAD (M8X1.25X20-MM)	
M	**215-6406**	1	SCREW-TRUSS HEAD (M6X1X16-MM)	
	7C-8246	1	SPACER (10.5X20X24-MM THK)	
	153-2682	1	SPRING AS-GAS (CAB)	
	258-3761	1	SPRING AS-GAS (DOOR)	
	206-1345	4	STRAP-CABLE	
	258-3764	1	STRIKER AS	
	8T-2444	2	STUD-BALL	
	8T-4224	2	WASHER-HARD (8.8X16X2-MM THK)	

E-ORDER BY THE CENTIMETER
M-METRIC PART
Y-SEPARATE ILLUSTRATION

<END>

280-6077 KIT-CAB HEATER & MOUNTING

S/N: JAY1-UP
AN ATTACHMENT

SMCS-7304 **i02711970**

NOTE	PART NUMBER	QTY	PART NAME 1 2 3 4 5 6 (PRODUCT LEVEL)	SEE PAGE
Y	*266-2430*	1	CONTROL & WIRING GP-AIR & TEMP	375
Y	*258-4270*	1	HEATER GP-CAB	407
M	**6V-7357**	6	BOLT (M6X1X25-MM)	
M	**8T-4136**	3	BOLT (M10X1.5X25-MM)	
M	**8T-4189**	1	BOLT (M8X1.25X20-MM)	
	206-9185	1	BOLT	
	266-3314	2	BOLT-FLANGE HEAD (M6X1X20.5-MM)	

OPERATOR STATION

280-6077 KIT-CAB HEATER & MOUNTING *(contd.)* i02711970

NOTE	PART NUMBER	QTY	PART NAME 1 2 3 4 5 6 (PRODUCT LEVEL)	SEE PAGE
M	**266-3315**	10	BOLT-FLANGE HEAD (M8X1.25X25.5-MM)	
	8T-0154	4	CLAMP-HOSE	
	6D-1641	3	CLIP (LOOP)	
	7D-1553	2	CLIP	
	9X-8250	5	CLIP	
	258-4264	1	COVER-FILTER	
	258-4248	1	COVER-LOUVER	
	258-4253	1	DUCT AS (INTERIOR)	
	258-4254	1	DUCT AS (INTERIOR)	
	258-4257	1	DUCT AS (INLET)	
	258-4258	1	DUCT AS (PLENUM)	
	258-4259	1	DUCT AS-OUTLET	
	258-4249	1	DUCT-INLET	
	004-6810	1	ELBOW	
	218-6645	1	ELBOW	
	8Y-5947	2	FASTENER	
	265-6618	1	FILTER-CAB AIR (RECIRCULATION)	
	265-6619	1	FILTER-CAB AIR (FRESH)	
	258-4147	1	HARNESS AS-HEATER & AIR COND	
	102-8804	1	KIT-RECEPTACLE (4-PIN)	
	102-8805	1	KIT-RECEPTACLE (6-PIN)	
			(EACH RECEPTACLE KIT INCLUDES RECEPTACLE AS & WEDGE)	
	8L-8413	5	STRAP-CABLE	
	9X-1054	1	PLUG AS-CONNECTOR (4-PIN)	
	9X-1056	2	TERMINAL-RECEPTACLE	
	100-5041	2	TERMINAL-RECEPTACLE	
	100-6674	2	SEAL-CONNECTOR	
E	**119-3662**		TUBE-HEAT SHRINK (10.85-MM DIA) (7-CM)	
	124-5640	2	TERMINAL-SOCKET	
E	**125-7874**		TUBE-HEAT SHRINK (5.72-MM DIA) (20-CM)	
	155-2255	1	KIT-CONNECTING PLUG (12-PIN)	
	155-2265	1	KIT-CONNECTING PLUG (8-PIN)	
	155-2270	3	KIT-CONNECTING PLUG (2-PIN)	
			'(EACH PLUG KIT INCLUDES PLUG AS, EDGE & INTERFACE SEAL)	
E	**136-1953**		HOSE (2-CM)	
	258-3794	1	INSULATION	
	258-4408	1	INSULATION	
	155-2271	1	KIT-CONNECTING PLUG (4-PIN)	
			(INCLUDES PLUG AS, WEDGE & INTERFACE SEAL)	
	102-8802	3	KIT-RECEPTACLE (2-PIN)	
			(EACH INCLUDES RECEPTACLE AS & WEDGE)	
	258-4378	2	KNOB AS	
	258-4379	1	KNOB AS	
	146-6371	6	LOUVER AS	
M	**8T-4133**	2	NUT (M10X1.5-THD)	
	258-4263	1	PLATE	
	109-2356	1	PLUG	
	8T-8737	10	PLUG-SEAL	
	246-9371	1	RELAY AS (SHELL)	
	7X-2031	3	RETAINER	
	206-2423	3	SADDLE	
	258-4384	1	SCREEN	
	6V-6689	2	SCREW-SELF-TAPPING (10-16X.625-IN)	
M	**215-6406**	7	SCREW-TRUSS HEAD (M6X1X16-MM)	
	258-3727	7	SCREW-TRUSS HEAD (NO 12X17.46-MM)	
D	**6V-9335**		SEAL (1-M)	
	258-3792	1	SEAL	

280-6077 KIT-CAB HEATER & MOUNTING *(contd.)* **i02711970**

NOTE	PART NUMBER	QTY	PART NAME 1 2 3 4 5 6 (PRODUCT LEVEL)	SEE PAGE
	258-3793	1	SEAL	
	258-3795	2	SEAL	
	258-3796	1	SEAL	
	178-3620	1	STRAP	
	3S-2093	18	STRAP-CABLE	
	206-1345	2	STRAP-CABLE	
	5P-4116	2	WASHER-HARD (8.8X20.5X2-MM THK)	
	8T-4121	5	WASHER-HARD (11X21X2.5-MM THK)	
	8T-4205	8	WASHER-HARD (7.2X14.5X2-MM THK)	

D-ORDER BY THE METER
E-ORDER BY THE CENTIMETER
M-METRIC PART
Y-SEPARATE ILLUSTRATION

<END>

258-2472 KIT-CAB WINDOW

S/N: JAY1-UP
AN ATTACHMENT

SMCS-7310 **i02645952**

NOTE	PART NUMBER	QTY	PART NAME 1 2 3 4 5 6 (PRODUCT LEVEL)	SEE PAGE
Y	*258-3285*	1	WINDOW GP-CAB (LH)	457
Y	*258-3286*	1	WINDOW GP-CAB (RH)	458
	270-9442	18	SCREW-TRUSS HEAD (M6X1X20-MM)	

Y-SEPARATE ILLUSTRATION

<END>

OPERATOR STATION

258-4110 KIT-CONTROL PATTERN CHANGE

S/N: JAY1-UP
AN ATTACHMENT

SMCS-5705, 7557, 7620 **i02674929**

NOTE	REF NO	GRAPHIC REF	PART NUMBER	QTY	PART NAME 1 2 3 4 5 6 (PRODUCT LEVEL)	SEE PAGE
	1	1	**265-8033**	1	SWITCH AS-ROCKER (CONTROL PATTERN CHANGE)	
	2	1	**285-2181**	1	FILM-INSTRUCTION (CONTROL PATTERN, RH)	
	3	1	**285-2182**	1	FILM-INSTRUCTION (CONTROL PATTERN, LH)	

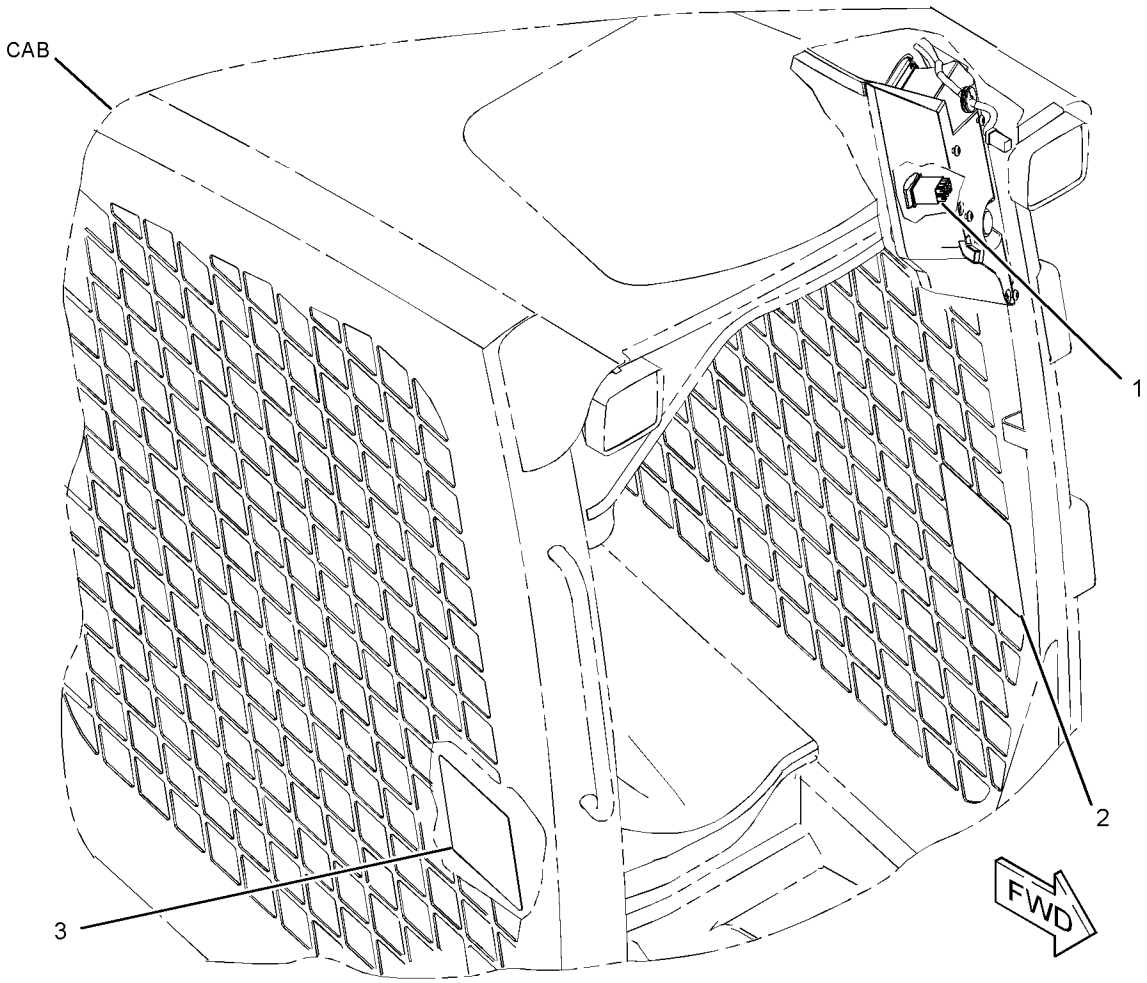

GRAPHIC #1 **<END>** g01328348

OPERATOR STATION

292-7927 KIT-CONTROL PATTERN CHANGE

S/N: JAY1-UP
AN ATTACHMENT

SMCS-5705, 7557, 7620 **i02674956**

NOTE	REF NO	GRAPHIC REF	PART NUMBER	QTY	PART NAME 1 2 3 4 5 6 (PRODUCT LEVEL)	SEE PAGE
	1	1	**285-2181**	1	FILM-INSTRUCTION (CONTROL PATTERN, RH)	
	2	1	**285-2182**	1	FILM-INSTRUCTION (CONTROL PATTERN, LH)	
FJ			*292-7981*	1	CONFIGURATION-PREMIUM	

F-NOT SHOWN
J-DLR INSTALL CONFIG:SEE IRM:EES03-01

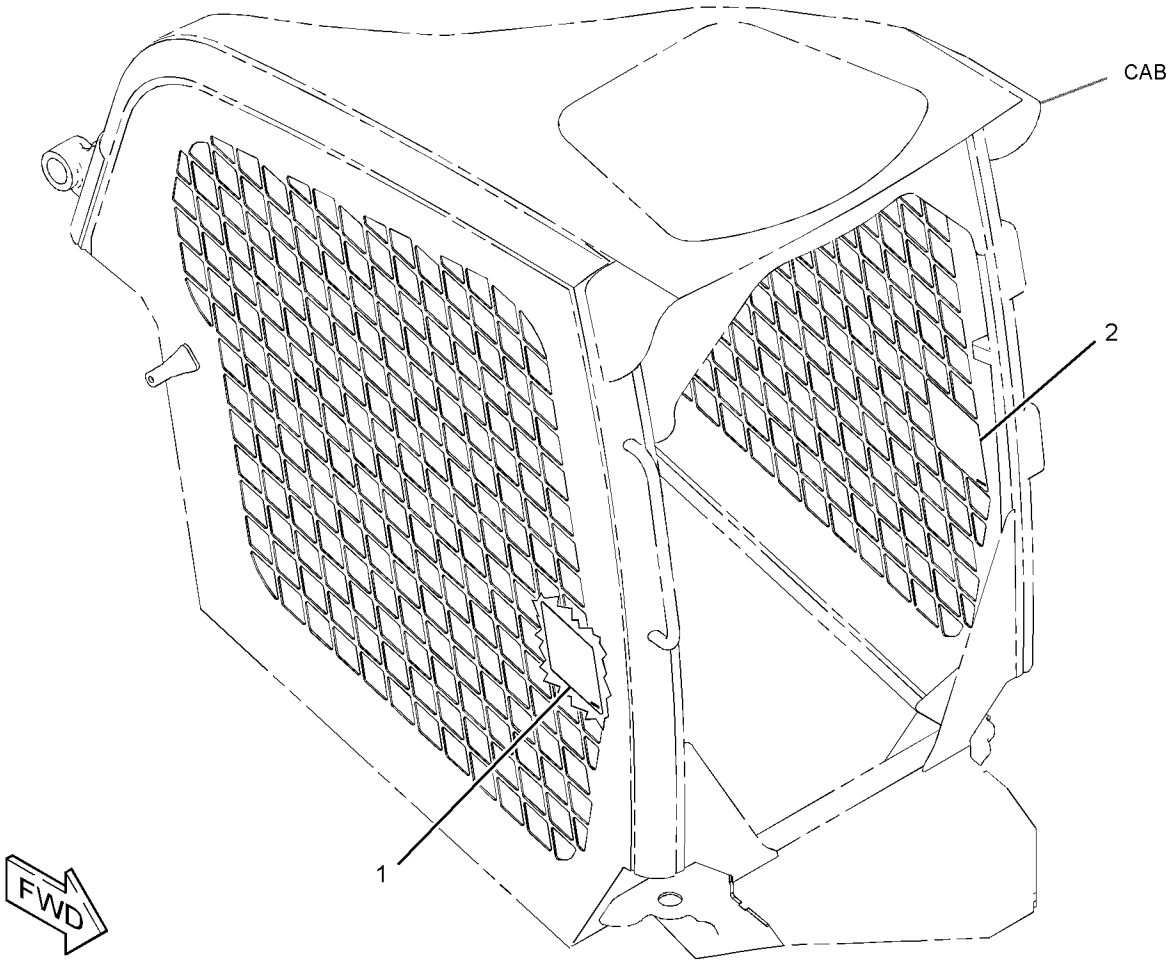

GRAPHIC #1 **<END>** g01349478

OPERATOR STATION

258-4111 KIT-INSTRUMENT PANEL

S/N: JAY1-UP

CANNOT BE USED WITH MACHINE EQUIPPED WITH THE RH INTRUMENT CLUSTER AN ATTACHMENT

SMCS-1435, 7450, 7490 **i02637896**

NOTE	REF NO	GRAPHIC REF	PART NUMBER	QTY	PART NAME 1 2 3 4 5 6 (PRODUCT LEVEL)	SEE PAGE
	1	1	**263-5420**	1	SWITCH AS-ROCKER (CREEPER CONTROL)	
	2	1	**264-8861**	1	MODULE GP-DISPLAY	
M	3	1	**135-7242**	4	SCREW-PAN HEAD (M5X2.3X18.8-MM)	
	4	1	**9X-8256**	4	WASHER (6.6X12X2-MM THK)	

M-METRIC PART

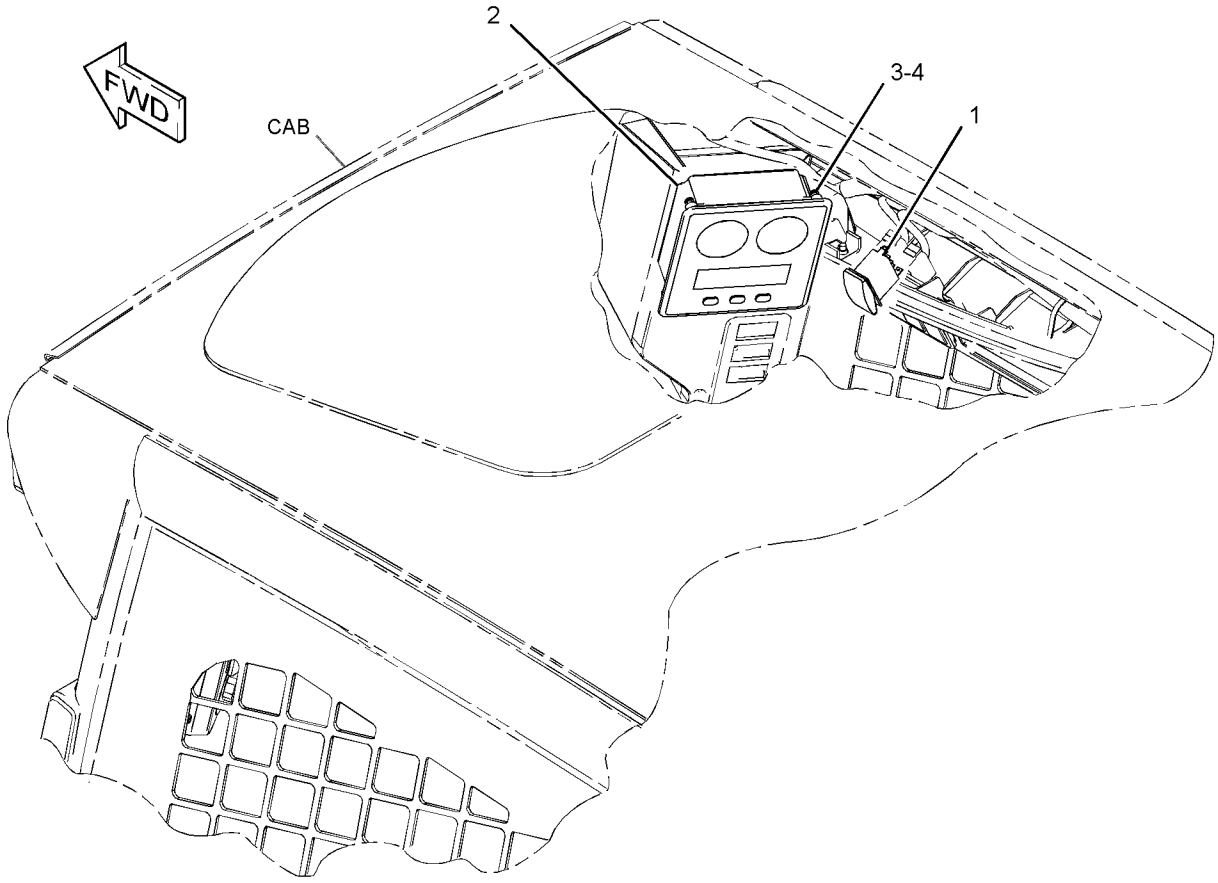

GRAPHIC #1 **<END>** g01328352

OPERATOR STATION

258-4045 LEVER GP-GOVERNOR

S/N: JAY1-UP

PART OF 280-6340 CONTROL GP-GOVERNOR

SMCS-1265, 1276 **i02625324**

NOTE	REF NO	GRAPHIC REF	PART NUMBER	QTY	PART NAME 1 2 3 4 5 6 (PRODUCT LEVEL)	SEE PAGE
	1	1	**258-4046**	1	LEVER GP-GOVERNOR	
M		1	**8T-4971**	1	BOLT (M6X1X30-MM)	
M		1	**129-3178**	1	LOCKNUT (M6X1-THD)	
	2	1	**258-4047**	1	CABLE AS	
M		1	**8T-4133**	1	NUT (M10X1.5-THD)	
		1	**280-6341**	1	NUT (M10X1.5-MM THD)	

M-METRIC PART

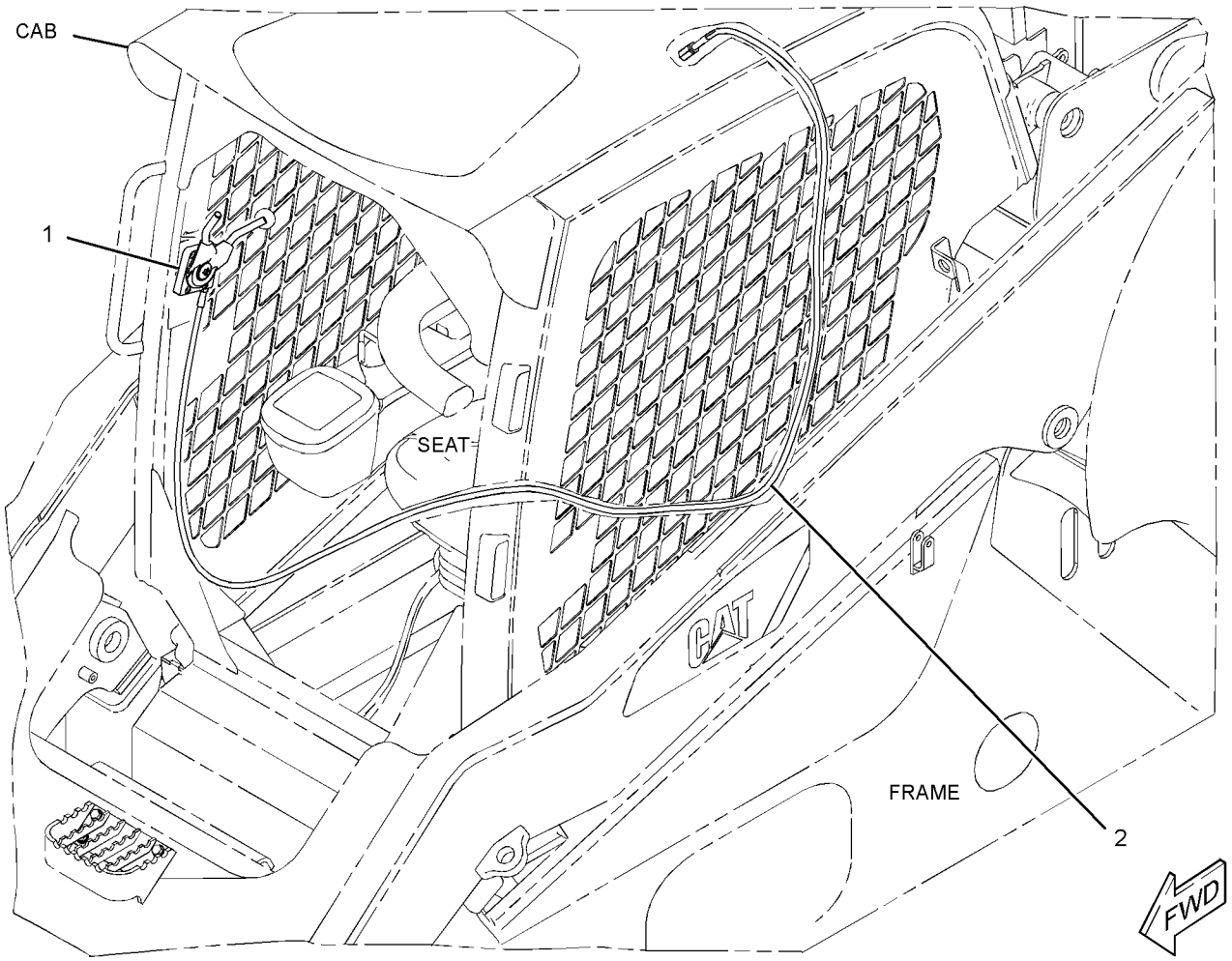

GRAPHIC #1 **<END>** g01316881

OPERATOR STATION

258-4020 LINER GP-CAB

S/N: JAY1-UP

PART OF 258-4000 CAB AR-ENCLOSED ROPS

SMCS-7268, 7329 **i02667871**

NOTE	REF NO	GRAPHIC REF	PART NUMBER	QTY	PART NAME 1 2 3 4 5 6 (PRODUCT LEVEL)	SEE PAGE
	1	1	**8Y-5947**	7	FASTENER	
	2	1	**258-3727**	5	SCREW-TRUSS HEAD (NO 12X17.46-MM)	
	3	1	**258-3785**	2	SEAL	
	4	2	**258-3786**	1	SEAL	
	5	2	**258-3787**	1	SEAL	
	6	2	**258-3788**	1	SEAL	
	7	2	**258-3790**	1	SEAL	
	8	1	**258-4021**	1	HEADLINER	
	9	1	**258-4024**	1	LINER (FLOOR)	
Y	10	1	*258-4433*	1	LINER GP-CAB	425
	11	1	**258-4029**	1	SUPPORT AS-SEAT	
	12	1	**258-4065**	1	FLOOR MAT	
	13	1	**5P-7957**	1	LANYARD	
	16	2	**280-6068**	1	COVER (LH)	
	17	1	**280-6069**	1	COVER (RH)	
	18	2	**280-6071**	5	CLIP	
	19	1	**274-7409**	6	SCREW-TRUSS HEAD	
M	20	1	**5C-2890**	6	NUT (M6X1-THD)	
	21	1	**5P-4116**	2	WASHER-HARD (8.8X20.5X2-MM THK)	
M	22	1	**6V-9189**	6	LOCKNUT (M8X1.25-THD)	
	23	1	**8T-4205**	6	WASHER-HARD (7.2X14.5X2-MM THK)	
	24	1	**8T-4224**	6	WASHER-HARD (8.8X16X2-MM THK)	
M	25	1	**9X-2045**	6	SCREW-TRUSS HEAD (M6X1X20-MM)	
M	26	1	**111-4627**	2	SCREW-MACHINE (M6X1X30-MM)	
E	27	2	**134-2827**		SEAL (89-CM)	
E	28	1	**148-5353**		SEAL (13-CM EACH)	
E	29	1	**177-4122**		SEAL (48-CM)	
D	30	2	**5P-5927**		SEAL (0.86-M EACH)	
D	31	2	**5P-5755**		SEAL (0.13-M EACH)	
D	32	2	**5P-7483**		SEAL (0.53-M)	
D	34	2	**8T-6936**		SEAL (0.04-M EACH)	
D	35	1	**8T-5372**		SEAL (0.33-M EACH)	
D	36	1	**8T-5372**		SEAL (0.09-M EACH)	
D	37	2	**8T-5372**		SEAL (0.36-M EACH)	
D	38	2	**8T-5372**		SEAL (0.1-M EACH)	
E	41	1	**9X-2092**		STRIP-EDGE (75-CM)	
E	42	1	**9X-2092**		STRIP-EDGE (70.6-CM)	

D-ORDER BY THE METER
E-ORDER BY THE CENTIMETER
M-METRIC PART
Y-SEPARATE ILLUSTRATION

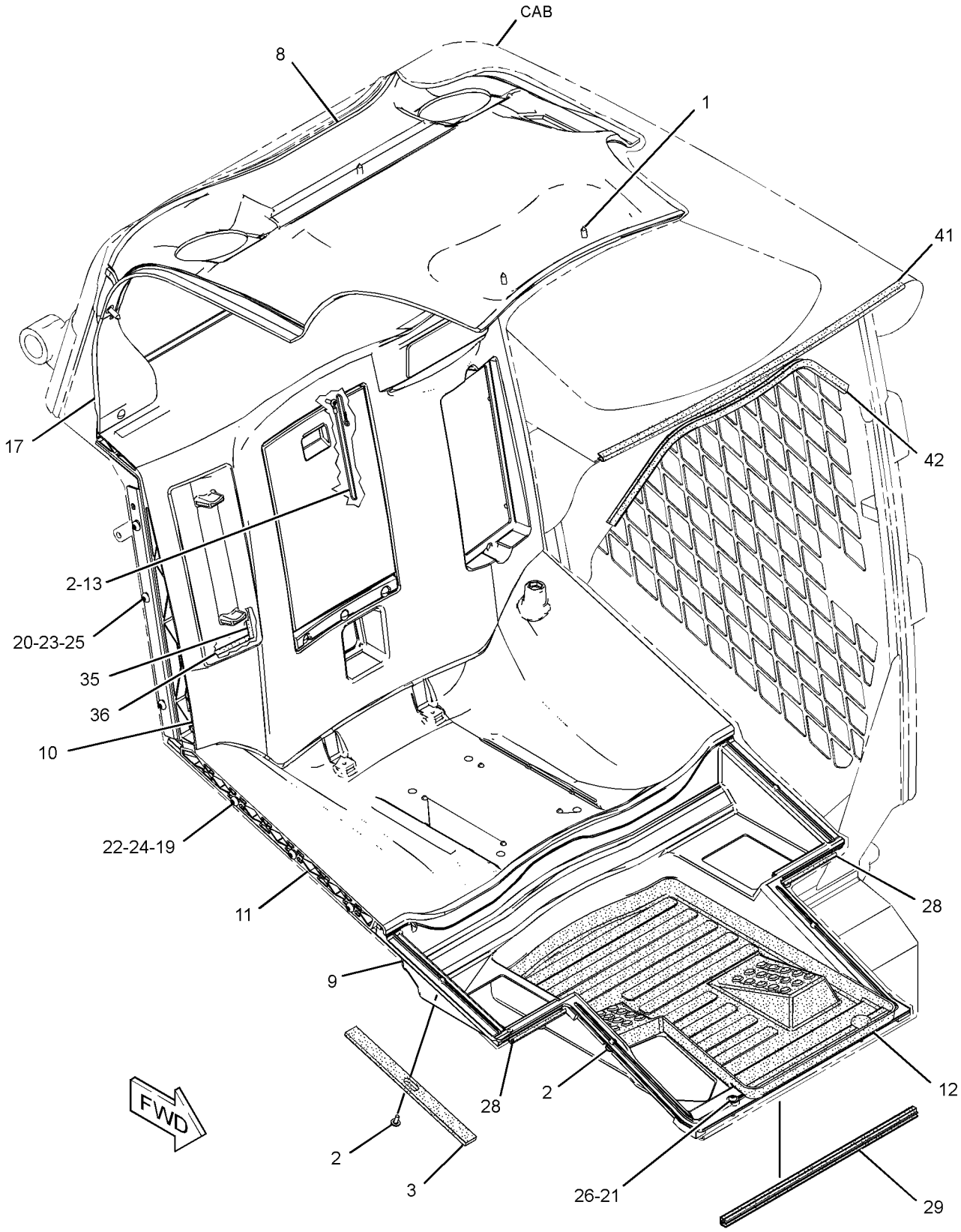

GRAPHIC #1

g01339270

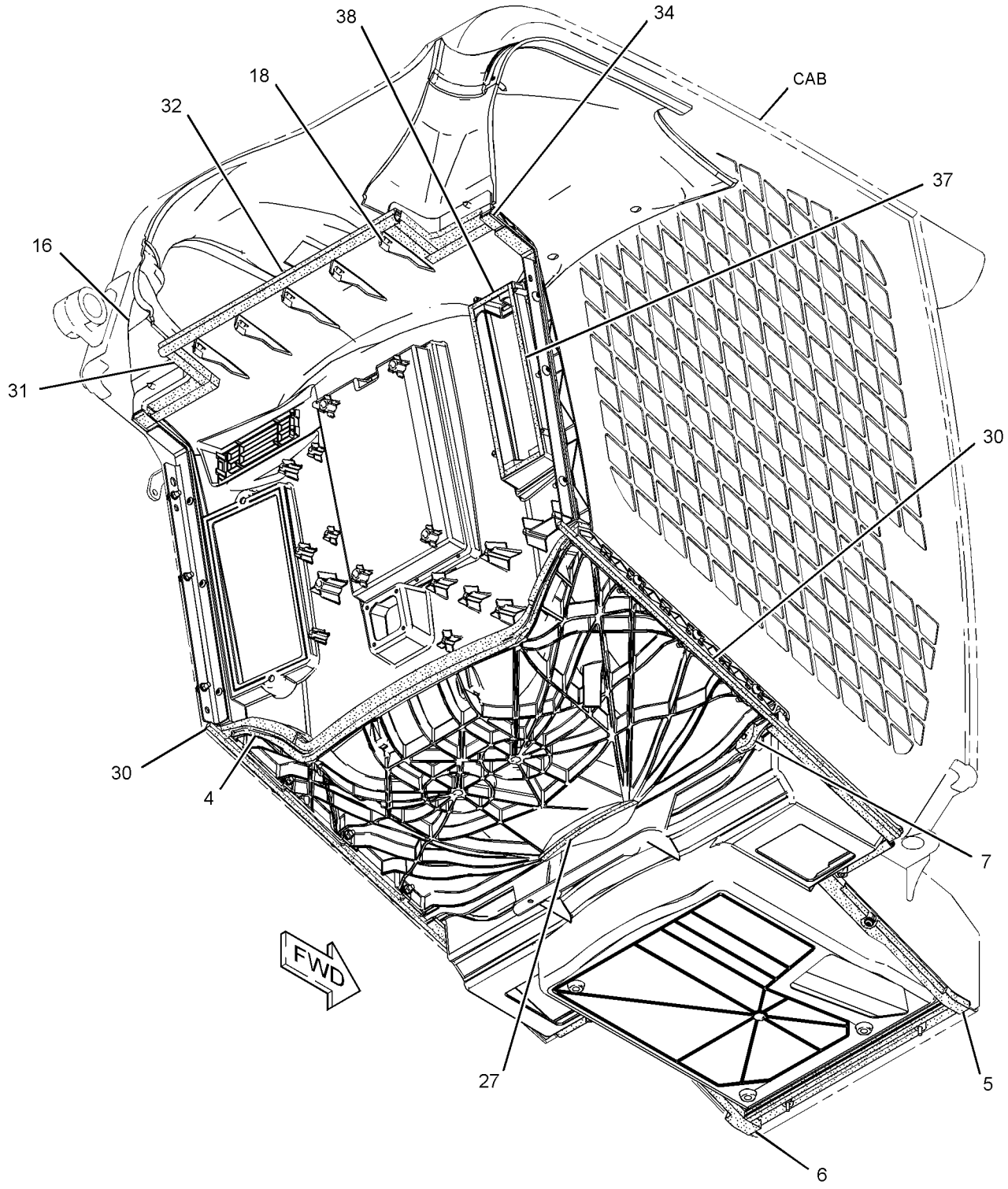

GRAPHIC #2 **<END>** g01339269

OPERATOR STATION

258-4433 LINER GP-CAB

S/N: JAY1-UP

PART OF 258-4020 LINER GP-CAB

SMCS-7268, 7329 **i02663693**

NOTE	REF NO	GRAPHIC REF	PART NUMBER	QTY	PART NAME 1 2 3 4 5 6 (PRODUCT LEVEL)	SEE PAGE
	1	1	**8Y-5947**	3	FASTENER	
	2	1	**258-3727**	6	SCREW-TRUSS HEAD (NO 12X17.46-MM)	
	3	1	**258-4025**	1	LINER AS	
	4	1	**258-4026**	1	COVER AS	
	5	1	**258-4068**	1	COVER	
	6	1	**258-4236**	1	COVER AS	
	7	1	**258-4358**	1	PLATE	
	8	1	**258-4359**	1	PLATE	
E	9	1	**8C-7524**		SEAL (64-CM EACH)	
D	10	1	**8T-5372**		SEAL (0.25-M)	
D	11	1	**8T-5372**		SEAL (0.37-M EACH)	

D-ORDER BY THE METER
E-ORDER BY THE CENTIMETER

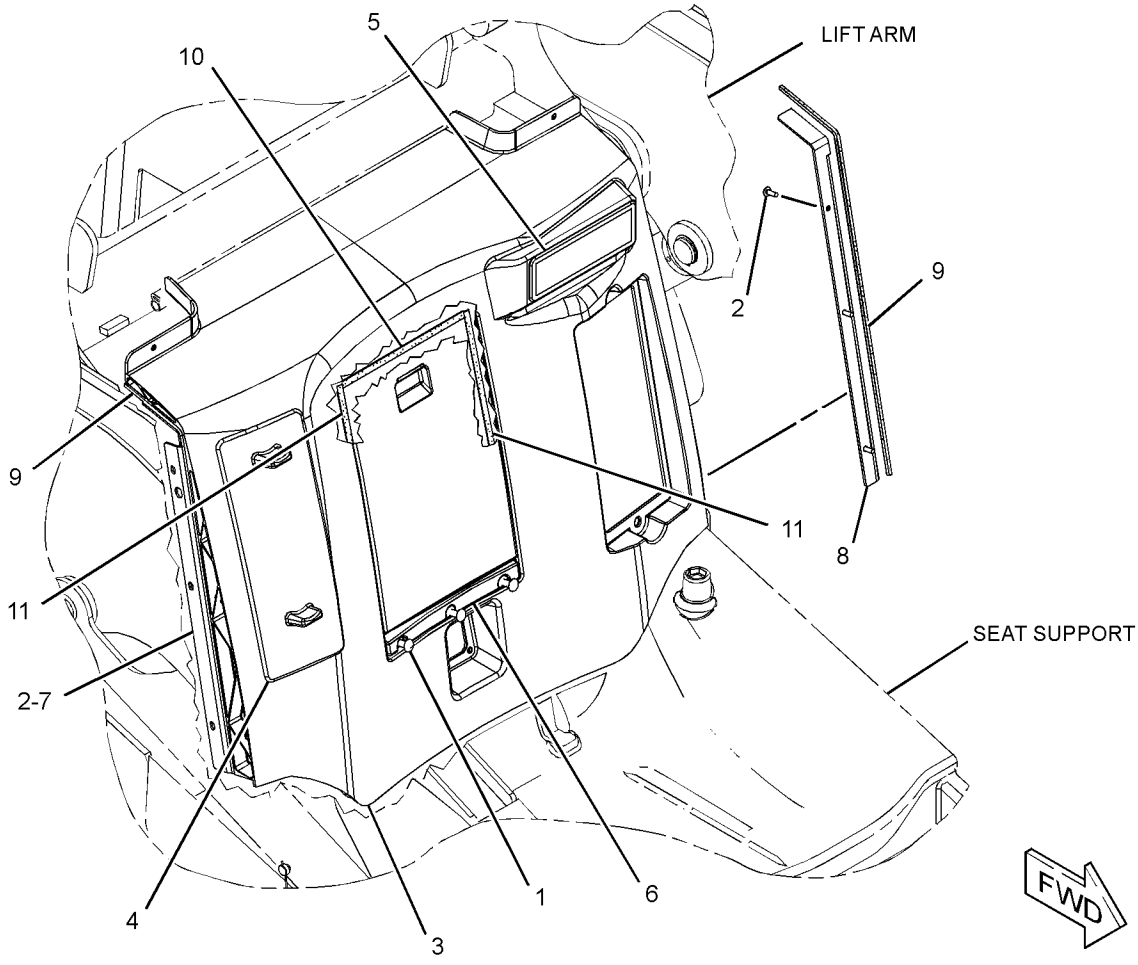

GRAPHIC #1 **<END>** g01339672

OPERATOR STATION

258-4265 LINES GP-AIR CONDITIONER

S/N: JAY1-UP
PART OF 258-4260 AIR CONDITIONER AR
AN ATTACHMENT

SMCS-1808, 7320 **i02706203**

NOTE	REF NO	GRAPHIC REF	PART NUMBER	QTY	PART NAME 1 2 3 4 5 6 (PRODUCT LEVEL)	SEE PAGE
	1	1	**3S-2093**	2	STRAP-CABLE	
	2	1	**9X-7378**	2	SEAL-O-RING	
	3	1	**101-8296**	2	CLIP	
	4	1	**105-9411**	1	SUPPORT	
	5	1	**149-6371**	1	SWITCH AS-PRESSURE (REFRIGERANT COMPR, LOW SIDE)	
		1	**102-8802**	1	KIT-RECEPTACLE (2-PIN)	
					(INCLUDES RECEPTACLE AS & WEDGE)	
		1	**186-3735**	2	PIN-CONNECTOR (16-GA TO 18-GA)	
	6	1,1	**178-3620**	4	STRAP	
	7	1	**212-2204**	1	CONTROL GP-AIR CONDITIONER	
		1	**155-2271**	1	KIT-CONNECTING PLUG (4-PIN)	
					(INCLUDES PLUG AS, WEDGE & INTERFACE SEAL)	
		1	**186-3736**	4	SOCKET-CONNECTOR (16-GA TO 18-GA)	
	8	1	**236-6923**	1	SWITCH AS-PRESSURE (REFRIGERANT COMPR, HIGH SIDE)	
	9	1	**258-4262**	1	HOSE AS	
	10	1	**258-4304**	1	HOSE AS	
I	11	1	**258-4308**	1	HOSE AS	
I	12	1	**258-4309**	1	HOSE AS	
	13	1	**258-4388**	1	BRACKET AS	
Y	14	1	*186-6190*	1	ACCUMULATOR GP-REFRIGERANT (WITH DESICCANT)	364
	15	1	**223-9636**	1	PLATE-INSTRUCTION	
M	16	1	**266-3315**	3	BOLT-FLANGE HEAD (M8X1.25X25.5-MM)	
	18	1	**8T-4121**	3	WASHER-HARD (11X21X2.5-MM THK)	
M	19	1	**8T-4136**	3	BOLT (M10X1.5X25-MM)	
	21	1	**9X-7380**	1	SEAL-O-RING	
	22	1	**9X-7381**	2	SEAL-O-RING	
	23	1	**9X-7382**	1	SEAL-O-RING	
	24	1	**9X-7383**	2	SEAL-O-RING	
	25	1	**204-8000**	1	ANCHOR-TIE (LOOP)	
D	26	1	**5P-5924**		SEAL (0.15-M EACH)	

D-ORDER BY THE METER
I-REFER TO HYDRAULIC INFORMATION SYSTEM
M-METRIC PART
Y-SEPARATE ILLUSTRATION

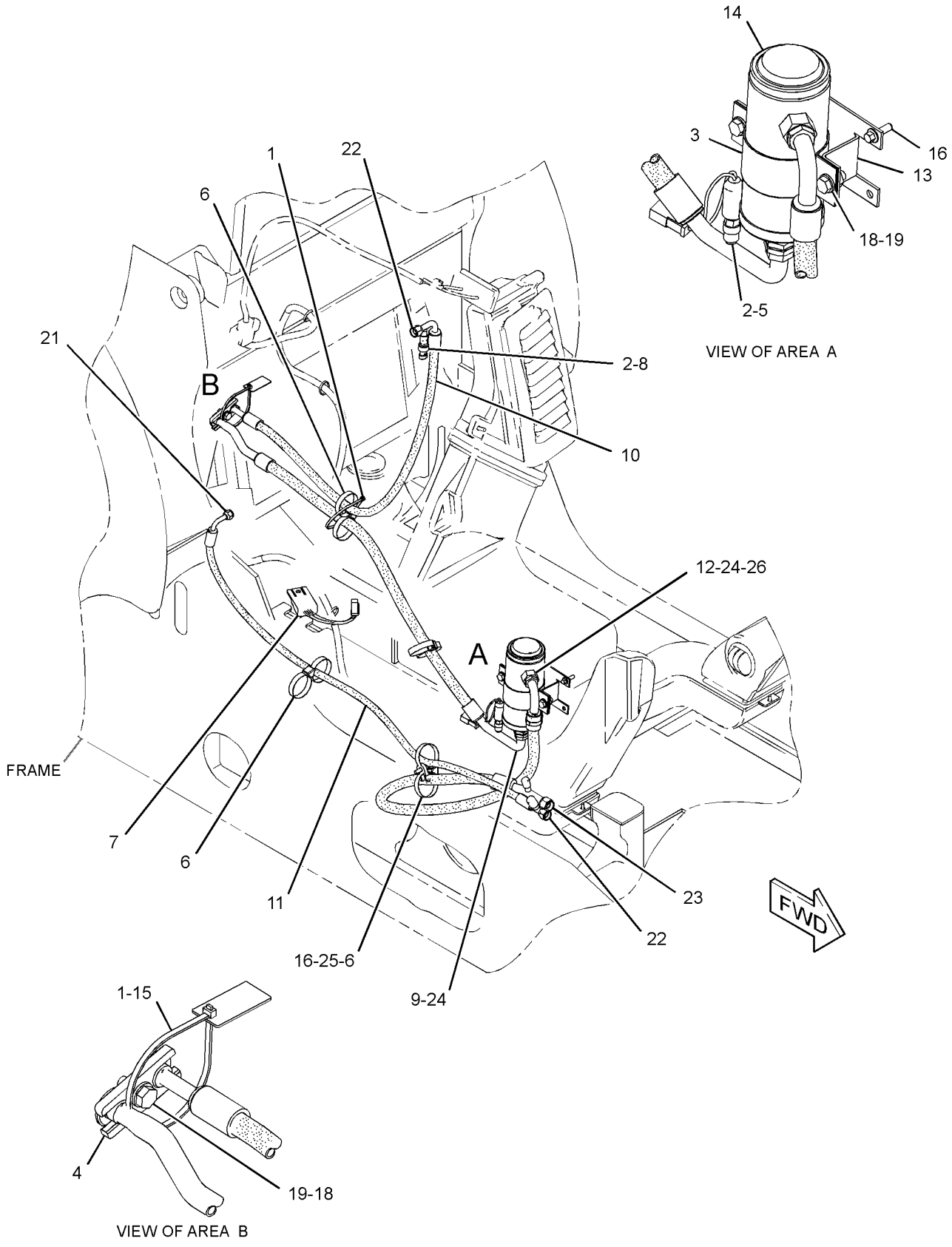

GRAPHIC #1 **<END>** g01359339

OPERATOR STATION

258-4255 LINES GP-HEATER

S/N: JAY1-UP

PART OF 258-4260 AIR CONDITIONER AR, 258-4250 HEATER AR-CAB

AN ATTACHMENT

SMCS-1812, 7304 **i02664476**

NOTE	REF NO	GRAPHIC REF	PART NUMBER	QTY	PART NAME 1 2 3 4 5 6 (PRODUCT LEVEL)	SEE PAGE
	1	1	**8T-0154**	4	CLAMP-HOSE	
	2	1	**004-6810**	1	ELBOW	
	3	1	**178-3620**	1	STRAP	
	4	1	**218-6645**	1	ELBOW	
M	5	1	**266-3315**	4	BOLT-FLANGE HEAD (M8X1.25X25.5-MM)	
	6	1	**6D-1641**	3	CLIP (LOOP)	
	7	1	**6V-2235**	2	CLIP	
	8	1	**8T-4121**	5	WASHER-HARD (11X21X2.5-MM THK)	
M	9	1	**8T-4133**	2	NUT (M10X1.5-THD)	
M	10	1	**8T-4136**	3	BOLT (M10X1.5X25-MM)	
	11	1	**9X-8250**	4	CLIP	
E	12	1	**136-1953**		HOSE (315-CM)	
E	13	1	**136-1953**		HOSE (215-CM)	

E-ORDER BY THE CENTIMETER
M-METRIC PART

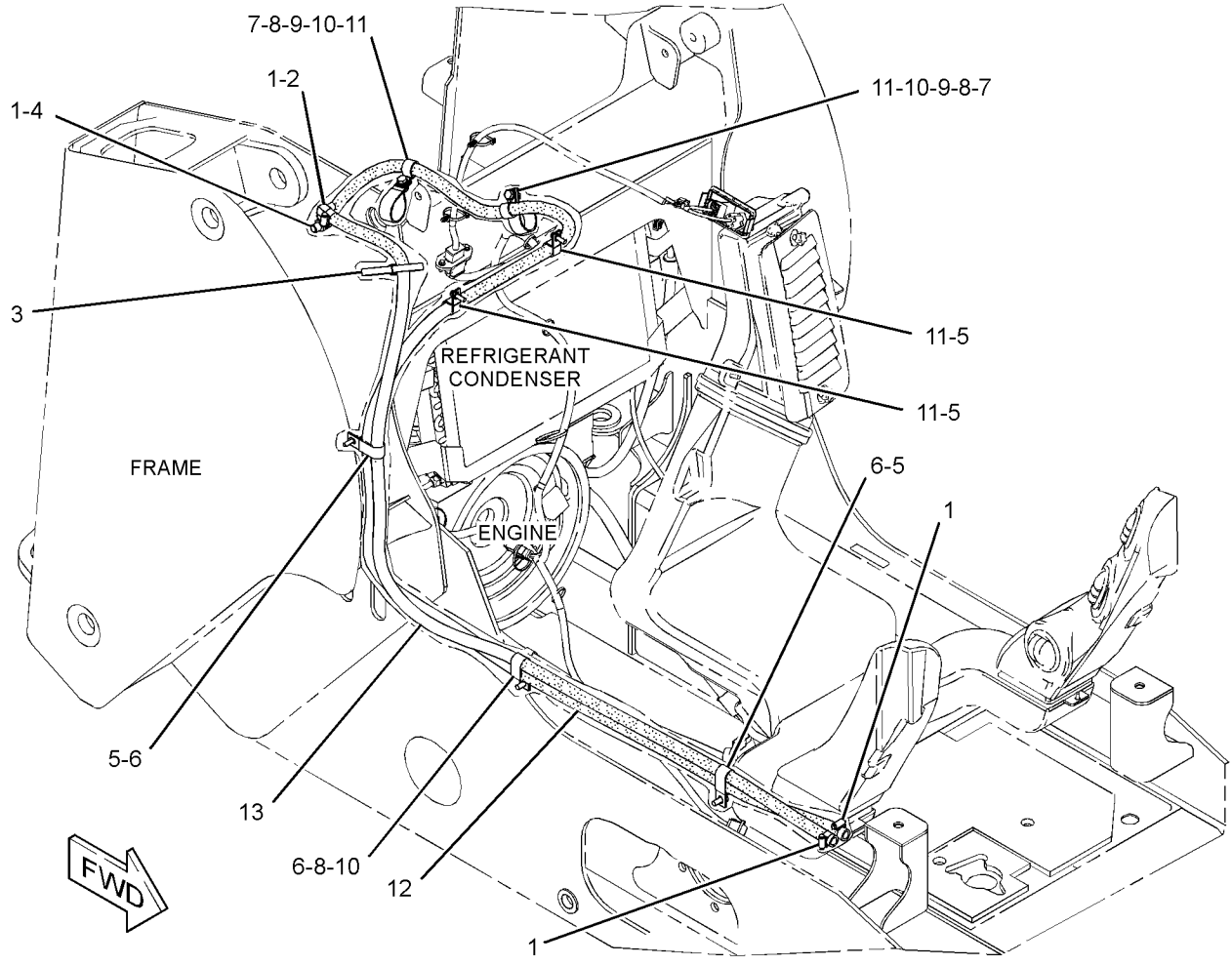

GRAPHIC #1 **<END>** g01311937

OPERATOR STATION

6V-1970 LITERATURE GP

S/N: JAY1-UP

PART OF 258-3236 COMMON AR

SMCS-0374, 0375, 7300 **i02300827**

NOTE	PART NUMBER	QTY	PART NAME 1 2 3 4 5 6 (PRODUCT LEVEL)	SEE PAGE
	5P-8500	2	KEY (CORPORATE) (LITERATURE COMPARTMENT)	
	5P-7958	1	SLEEVE-CABLE SPLICE	

<END>

OPERATOR STATION

258-4230 MIRROR GP-REAR VIEW

S/N: JAY1-UP

PART OF 258-4000 CAB AR-ENCLOSED ROPS

SMCS-7319 **i02623271**

NOTE	REF NO	GRAPHIC REF	PART NUMBER	QTY	PART NAME 1 2 3 4 5 6 (PRODUCT LEVEL)	SEE PAGE
	1	1	**280-6070**	1	MIRROR AS (REAR VIEW)	
	2	1	**3B-4505**	1	LOCKWASHER	
M	3	1	**5C-7261**	1	NUT (M8X1.25-THD)	
	4	1	**8T-4224**	1	WASHER-HARD (8.8X16X2-MM THK)	

M-METRIC PART

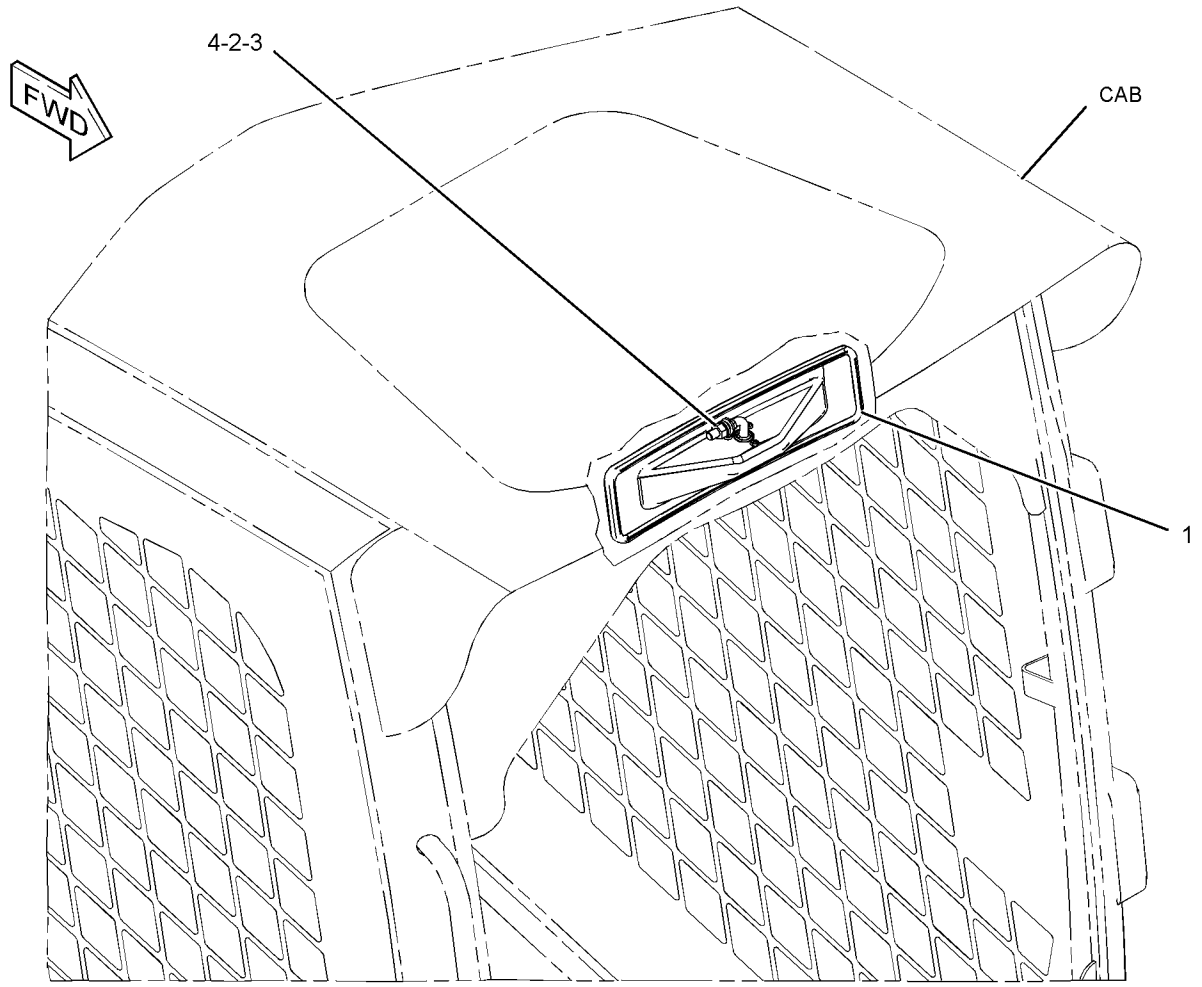

GRAPHIC #1 **<END>** g01316638

295-3171 MOUNTING GP-ARMREST–LH

S/N: JAY1-UP

PART OF 258-4311 ARMREST & MOUNTING GP

AN ATTACHMENT

SMCS-7307 **i02674944**

NOTE	REF NO	GRAPHIC REF	PART NUMBER	QTY	PART NAME 1 2 3 4 5 6 (PRODUCT LEVEL)	SEE PAGE
	1	1	**258-4321**	1	BRACKET AS-MOUNTING (FRONT)	
	2	1	**258-4323**	1	BRACKET AS-MOUNTING (REAR)	
	3	1	**258-4325**	1	SLIDE AS (LH)	
	4	1	**258-4328**	1	SUPPORT AS	
	5	1	**258-4431**	2	BLOCK	
	6	1	**287-6692**	2	SCREW-TRUSS HEAD	
M	7	1	**6V-9189**	4	LOCKNUT (M8X1.25-THD)	
	8	1	**7X-3393**	2	WASHER-HARD (8.3X19X1.83-MM THK)	
	9	1	**8T-4224**	8	WASHER-HARD (8.8X16X2-MM THK)	
M	10	1	**8T-4908**	4	BOLT (M8X1.25X25-MM)	
M	11	1	**131-3540**	2	LOCKNUT (M8X1.25-THD)	

M-METRIC PART

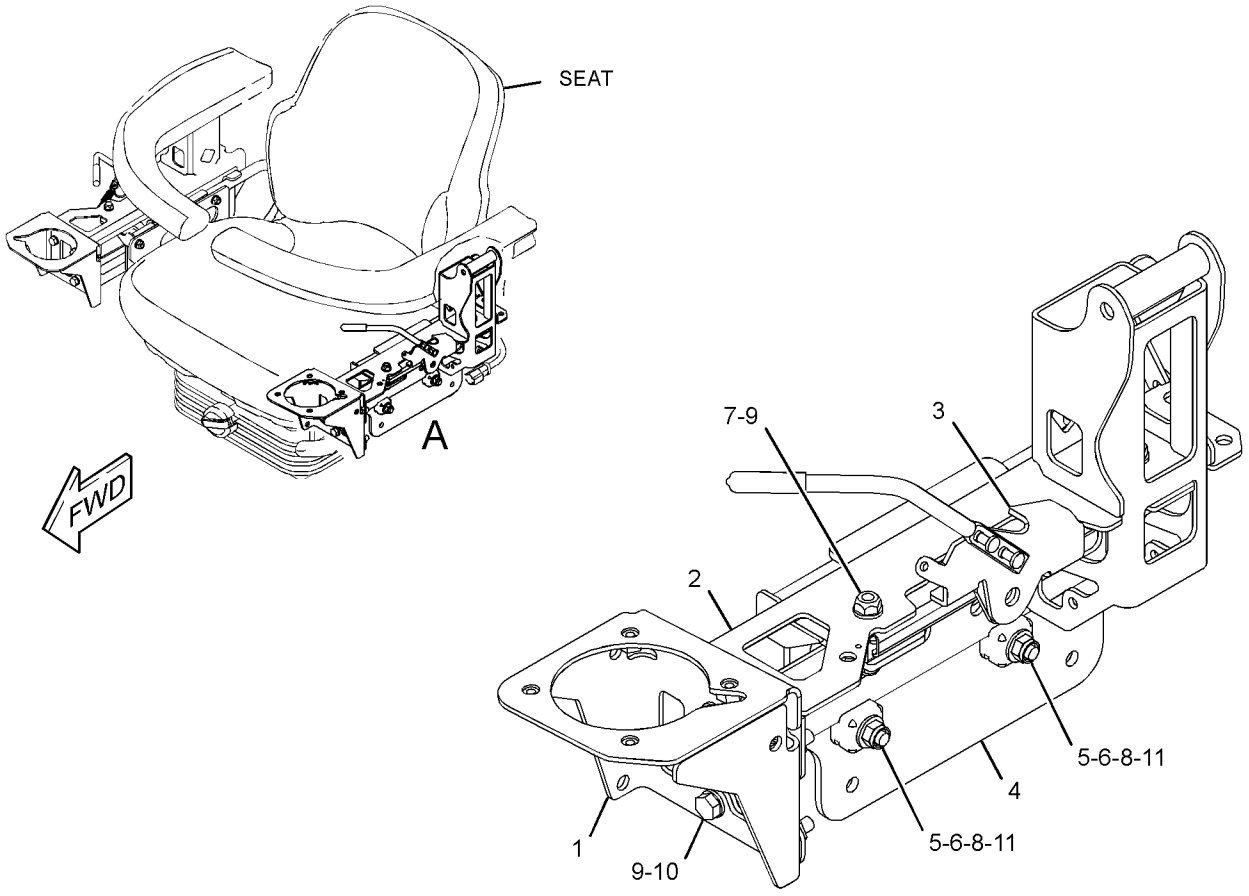

VIEW OF AREA A

GRAPHIC #1 **<END>** g01345430

OPERATOR STATION

295-3172 MOUNTING GP-ARMREST–RH

S/N: JAY1-UP
PART OF 258-4311 ARMREST & MOUNTING GP
AN ATTACHMENT

SMCS-7307 **i02674984**

NOTE	REF NO	GRAPHIC REF	PART NUMBER	QTY	PART NAME 1 2 3 4 5 6 (PRODUCT LEVEL)	SEE PAGE
	1	1	**258-4322**	1	BRACKET AS-MOUNTING (FRONT)	
	2	1	**258-4324**	1	BRACKET AS-MOUNTING (REAR)	
	3	1	**258-4326**	1	SLIDE AS	
	4	1	**258-4329**	1	SUPPORT AS	
	5	1	**258-4431**	2	BLOCK	
M	6	1	**131-3540**	2	LOCKNUT (M8X1.25-THD)	
	7	1	**287-6692**	2	SCREW-TRUSS HEAD	
M	8	1	**6V-9189**	4	LOCKNUT (M8X1.25-THD)	
	9	1	**7X-3393**	2	WASHER-HARD (8.3X19X1.83-MM THK)	
	10	1	**8T-4224**	8	WASHER-HARD (8.8X16X2-MM THK)	
M	11	1	**8T-4908**	4	BOLT (M8X1.25X25-MM)	

M-METRIC PART

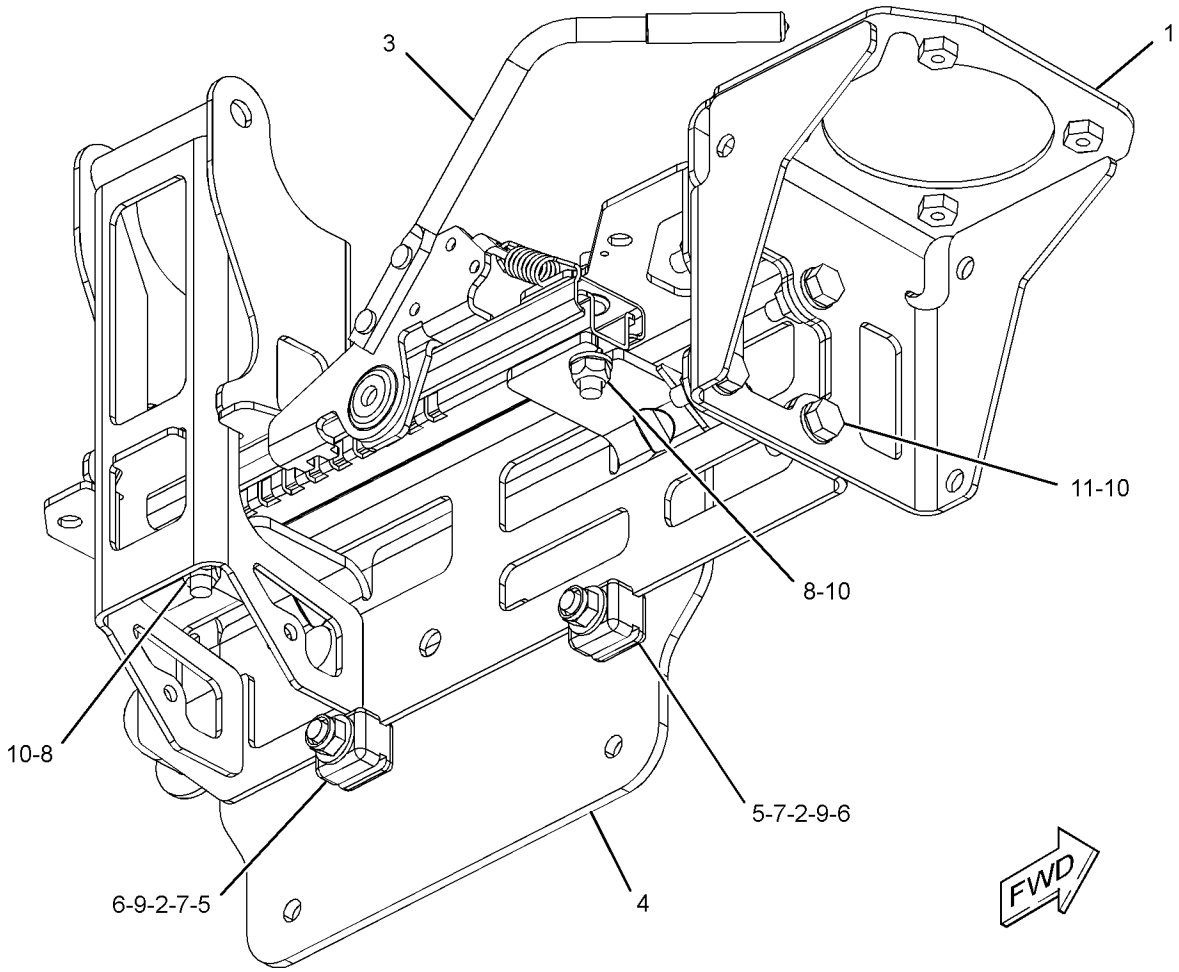

GRAPHIC #1 **<END>** g01346210

OPERATOR STATION

258-4220 MOUNTING GP-ROPS—INCLUDES STEP

S/N: JAY1-UP

PART OF 258-4000 CAB AR-ENCLOSED ROPS

SMCS-7266, 7325 **i02676025**

NOTE	REF NO	GRAPHIC REF	PART NUMBER	QTY	PART NAME 1 2 3 4 5 6 (PRODUCT LEVEL)	SEE PAGE
	1	2	**5P-7958**	2	SLEEVE-CABLE SPLICE	
	2	2	**5T-9400**	1	SPACER (12X25X8.5-MM THK)	
	4	1	**305-4339**	2	MOUNT AS	
	5	2	**305-4333**	2	MOUNT AS	
	6	1	**258-4221**	2	SPACER	
	7	2	**258-4224**	1	SPRING	
	8	2	**258-4227**	1	BRACKET AS	
	9	2	**258-4387**	1	KNOB	
	10	2	**258-4396**	1	PIN	
	11	2	**258-4397**	1	LANYARD	
	12	1	**258-4416**	1	STEP AS	
	13	1	**090-8865**	2	SPACER (17X40X3-MM THK)	
	14	1	**165-7095**	4	WASHER (16.5X71.5X3-MM THK)	
	15	1	**195-0937**	1	INSERT-THREADED (M8X1.25)	
	16	1	**3E-4352**	1	WASHER-HARD (8.8X20.5X2.5-MM THK)	
	17	2	**5P-0372**	1	LOCK PIN	
	18	1	**6V-5839**	4	WASHER (11X21X2.5-MM THK)	
M	19	2	**7X-2475**	2	BOLT (M16X2X130-MM)	
M	20	1	**7X-2556**	2	BOLT (M16X2X100-MM)	
M	21	1	**7Y-9099**	1	SCREW-TRUSS HEAD (M8X1.25X25-MM)	
	22	2	**8T-4122**	4	WASHER-HARD (17X32X3.5-MM THK)	
M	23	1,2	**8T-4778**	4	LOCKNUT (M16X2-THD)	
M	24	1	**9X-2040**	4	SCREW-TRUSS HEAD (M10X1.5X25-MM)	
	25	2	**258-4428**	4	SPACER	

PARTS SHOWN IN GRAPHIC(S) WITHOUT A REFERENCE NUMBER ARE NOT SERVICED SEPARATELY

M-METRIC PART

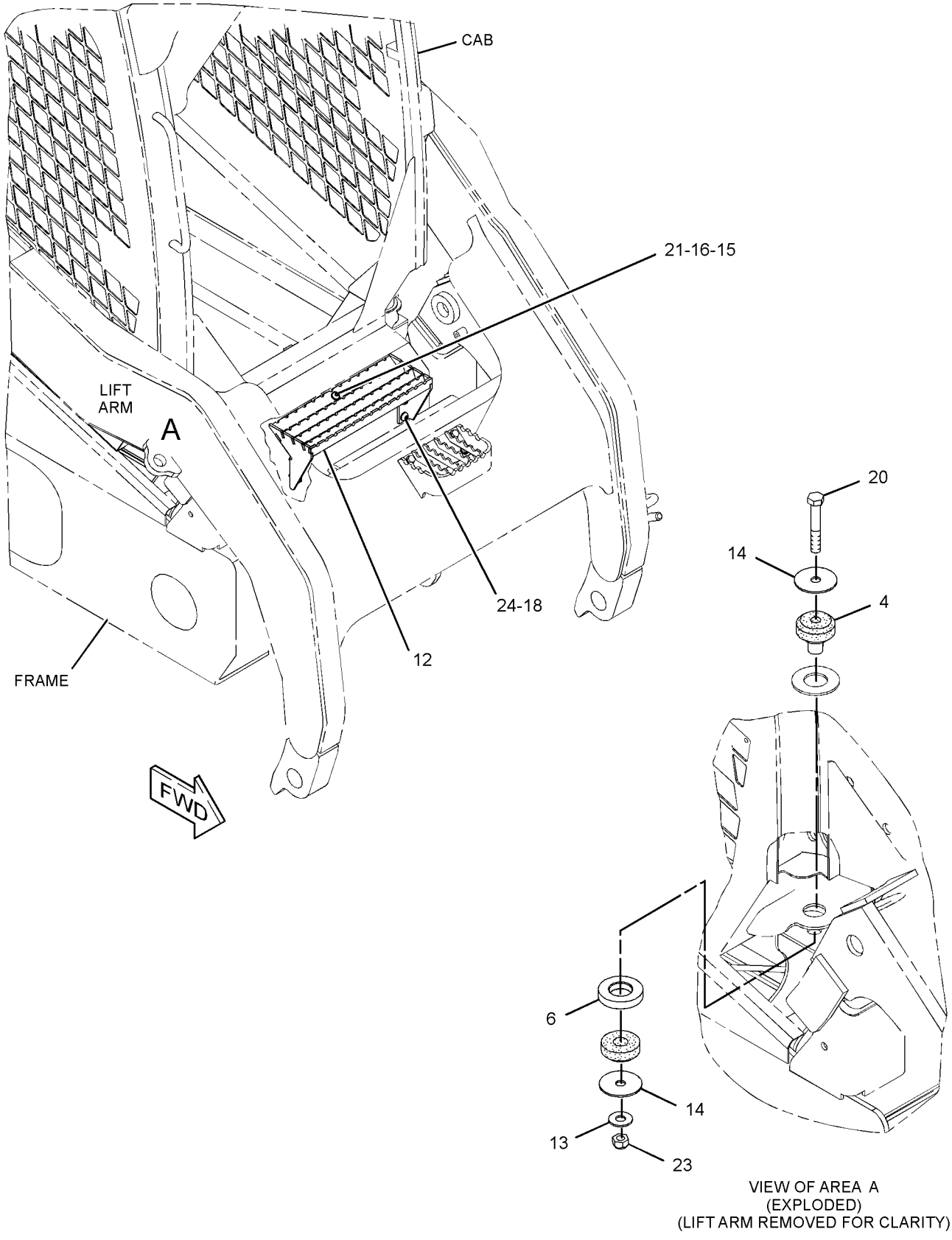

VIEW OF AREA A
(EXPLODED)
(LIFT ARM REMOVED FOR CLARITY)

GRAPHIC #1

g01345079

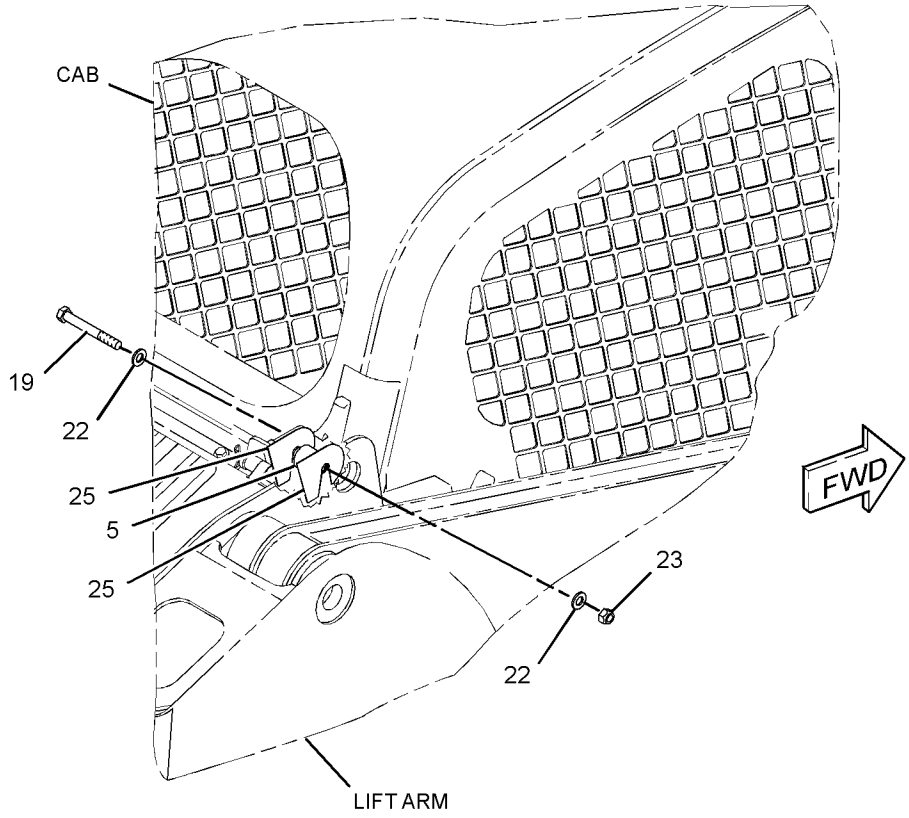

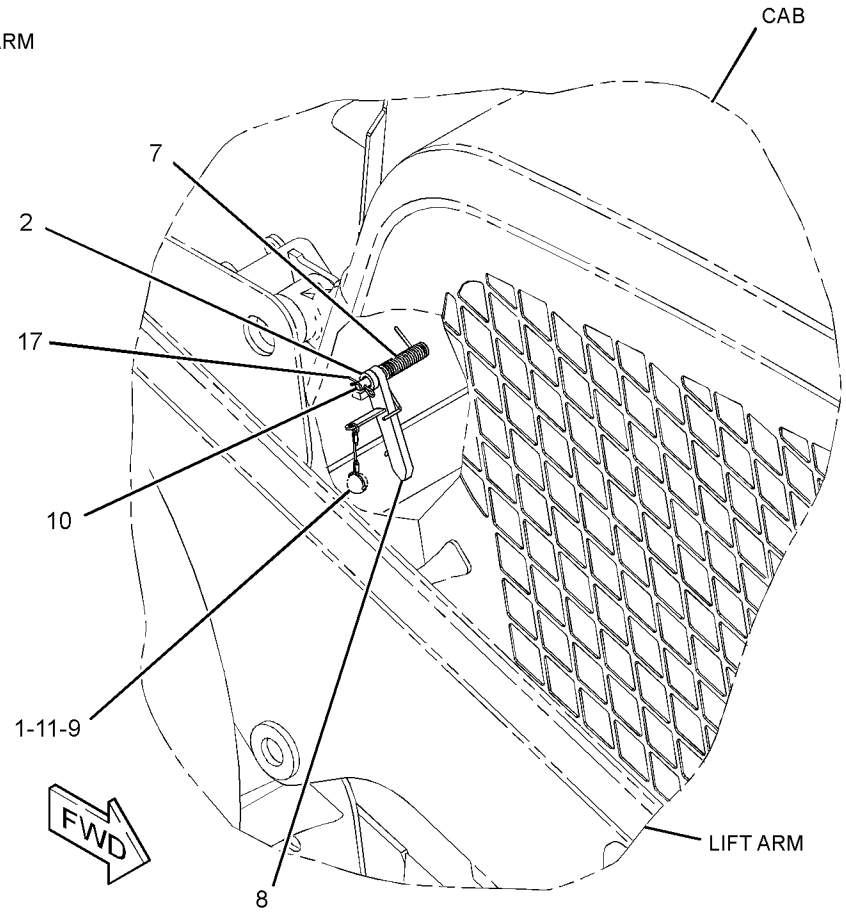

GRAPHIC #2 **<END>** g01345080

OPERATOR STATION

258-3738 OPTION AR-CAB

S/N: JAY1-UP

AN ATTACHMENT

SMCS-7301 **i02613958**

NOTE	PART NUMBER	QTY	PART NAME 1 2 3 4 5 6 (PRODUCT LEVEL)	SEE PAGE
Y	*258-4245*	1	COVER GP-CAB	388
Y	*258-4310*	1	SEAT AR (STATIC)	449
Y	*258-4017*	1	SPRING GP-GAS (INCLUDES LIFT HANDLE)	453

Y-SEPARATE ILLUSTRATION

<END>

258-3740 OPTION AR-CAB

S/N: JAY1-UP

AN ATTACHMENT

SMCS-7301 **i02629830**

NOTE	PART NUMBER	QTY	PART NAME 1 2 3 4 5 6 (PRODUCT LEVEL)	SEE PAGE
Y	*258-4229*	1	ACCESSORY GP-CAB	362
Y	*258-4245*	1	COVER GP-CAB	388
Y	*258-4066*	1	INSTALLATION GP-RADIO	408
Y	*258-4320*	1	SEAT AR-SUSPENSION (MECHANICAL)	449
Y	*258-4017*	1	SPRING GP-GAS (INCLUDES LIFT HANDLE)	453

Y-SEPARATE ILLUSTRATION

<END>

OPERATOR STATION

258-4162 PANEL GP-INSTRUMENT

S/N: JAY1-UP

PART OF 258-4000 CAB AR-ENCLOSED ROPS

SMCS-7451 **i02623268**

NOTE	REF NO	GRAPHIC REF	PART NUMBER	QTY	PART NAME 1 2 3 4 5 6 (PRODUCT LEVEL)	SEE PAGE
	1	1	**7K-1181**	3	STRAP-CABLE	
	2	3	**8Y-5947**	6	FASTENER	
	3	1	**9R-7941**	1	SOCKET AS	
		1	**9R-7980**	1	COVER	
	4	1	**084-4277**	1	LAMP GP-DOME	
		1	**210-8754**	1	LAMP (12-VOLT) (MINIATURE)	
B	5	1,2	**109-2356**	6	PLUG	
	6	3	**139-6039**	2	NUT (U-TYPE RETAINER)	
J	7	1	**142-8858**	1	SWITCH AS-KEY START	
		1	**167-1530**	1	NUT (1-32-THD)	
	8	2,3	**165-0312**	2	WIRE AS	
	9	1	**178-7539**	1	RECEPTACLE AS (POWER SUPPLY)	
	10	1,3	**206-1345**	6	STRAP-CABLE	
	11	1	**218-0651**	1	FILM-INSTRUCTION (KEY START SWITCH)	
	12	3	**232-1792**	1	HORN	
	13	3	**258-3727**	8	SCREW-TRUSS HEAD (NO 12X17.46-MM)	
	14	1	**258-4001**	1	PANEL (LH)	
	15	1	**258-4002**	1	COVER (FRONT, LH)	
	16	3	**258-4003**	1	COVER (REAR, LH)	
	17	2	**258-4004**	1	PANEL (RH)	
	18	2	**258-4005**	1	COVER (RH, FRONT)	
	19	3	**258-4006**	1	COVER (RH, REAR)	
	20	1,2	**258-4007**	4	COVER-SWITCH	
	21	2	**258-4101**	1	HARNESS AS-PANEL	
		2	**8L-8413**	94	STRAP-CABLE	
E		2	**119-3662**		TUBE-HEAT SHRINK (10.85-MM DIA) (26-CM)	
E		2	**125-7874**		TUBE-HEAT SHRINK (5.72-MM DIA) (60-CM)	
E		2	**125-7875**		TUBE-HEAT SHRINK (7.44-MM DIA) (25-CM)	
		2	**155-2270**	2	KIT-CONNECTING PLUG (2-PIN)	
		2	**155-2271**	2	KIT-CONNECTING PLUG (4-PIN)	
					(EACH PLUG KIT INCLUDES PLUG AS, WEDGE & INERFACE SEAL)	
		2	**230-4009**	2	PLUG AS-CONNECTOR (12-PIN)	
	22	1	**258-4178**	1	FLANGE-MOUNTING	
	23	1	**263-5414**	1	SWITCH AS-ROCKER (PARKING BRAKE)	
	24	1	**263-5415**	1	SWITCH AS-ROCKER (HYD LOCKOUT, INTERLOCK OVRD)	
	25	1	**263-5416**	1	SWITCH AS-ROCKER (DIVERTER VALVE, 4TH FUNCTION)	
	26	1	**264-8860**	1	MODULE GP-DISPLAY	
	27	1	**265-9424**	1	SWITCH AS-ROCKER (WORK LIGHTS, FRONT)	
	28	1	**265-9425**	1	SWITCH AS-ROCKER (WORK LIGHTS, REAR)	
	29	1,3	**103-2006**	12	SCREW-PAN HEAD (6-19X0.37-IN)	
M	30	1	**135-7242**	4	SCREW-PAN HEAD (M5X2.3X18.8-MM)	
	31	3	**2V-8260**	2	GROMMET	
	32	1	**6V-5834**	4	SCREW-HEAD (10-14X0.75-IN)	
M	33	3	**9X-2044**	2	SCREW-TRUSS HEAD (M6X1X16-MM)	
	34	1	**9X-8256**	8	WASHER (6.6X12X2-MM THK)	

B-USE AS REQUIRED
E-ORDER BY THE CENTIMETER
J-REQUIRES 5P8500 KEY
M-METRIC PART

258-4162 **PANEL GP-INSTRUMENT** *(contd.)* **i02623268**

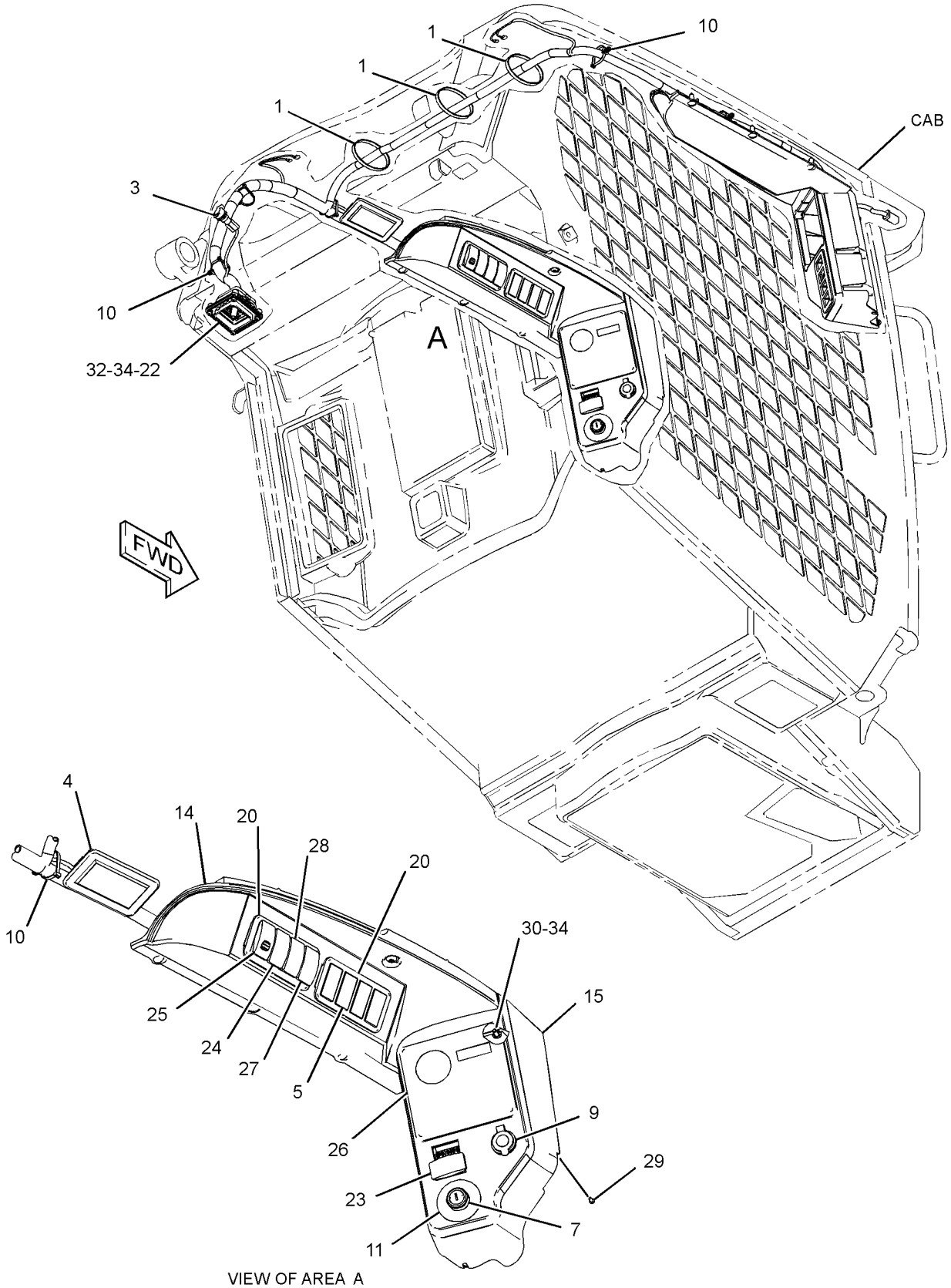

VIEW OF AREA A

GRAPHIC #1 g01317364

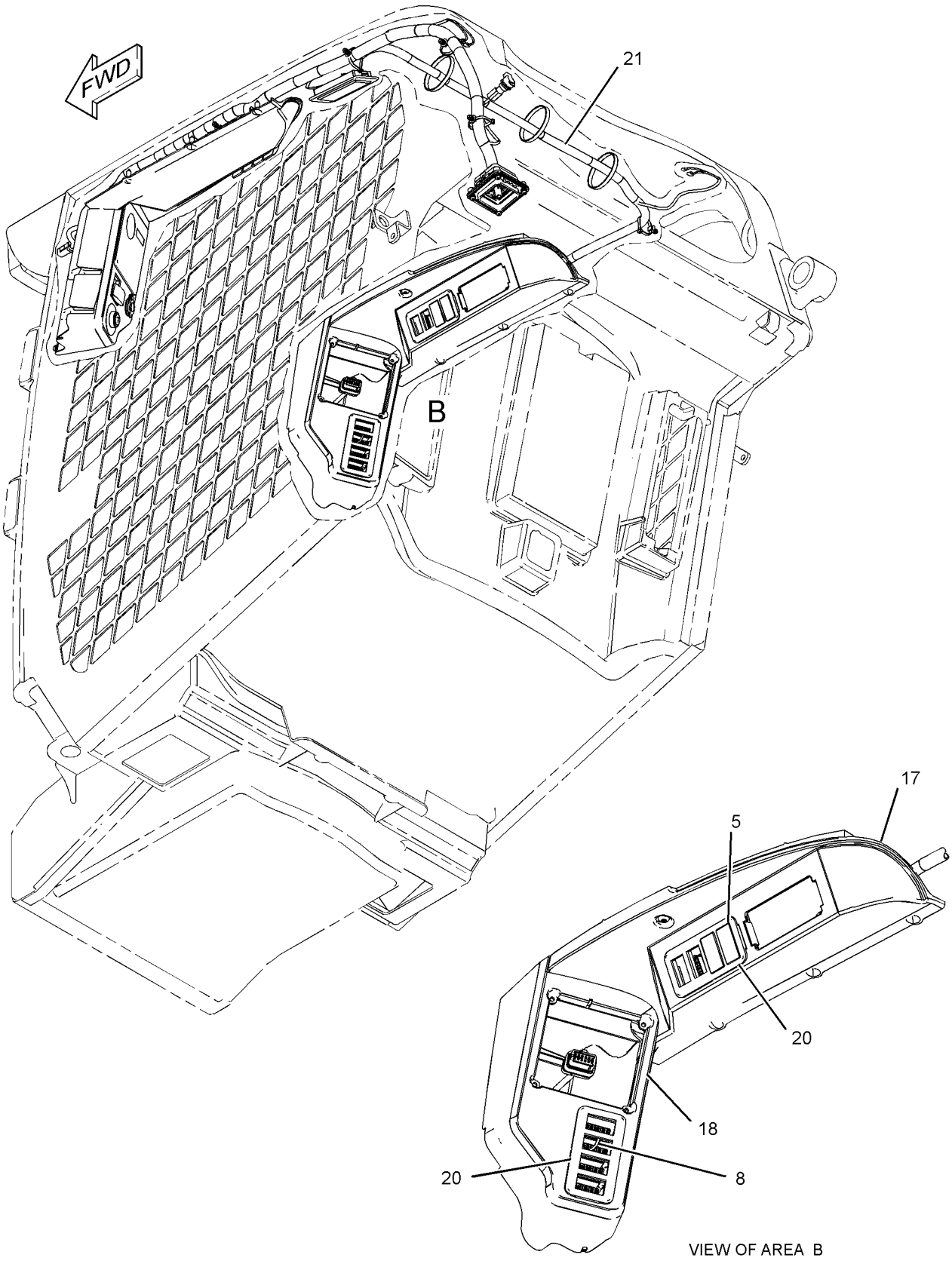

GRAPHIC #2

g01317452

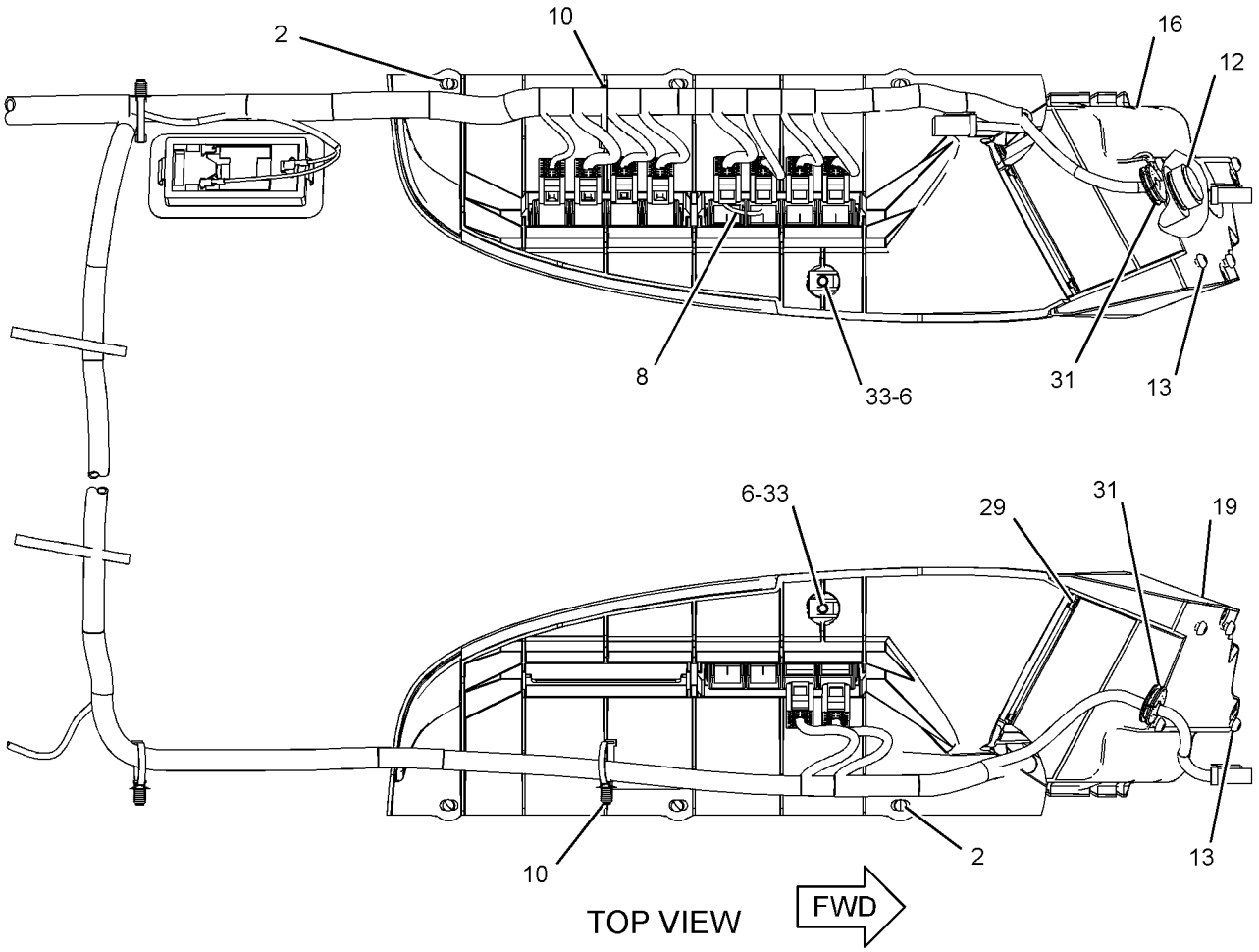

GRAPHIC #3 **<END>** g01317503

OPERATOR STATION

258-4163 PANEL GP-INSTRUMENT–RH

S/N: JAY1-UP

PART OF 258-3753 MACHINE AR-SPECIAL

AN ATTACHMENT

SMCS-7451 **i02636408**

NOTE	REF NO	GRAPHIC REF	PART NUMBER	QTY	PART NAME 1 2 3 4 5 6 (PRODUCT LEVEL)	SEE PAGE
	1	1	**263-5420**	1	SWITCH AS-ROCKER (CREEPER CONTROL)	
	2	1	**264-8861**	1	MODULE GP-DISPLAY	
M	3	1	**135-7242**	4	SCREW-PAN HEAD (M5X2.3X18.8-MM)	
	4	1	**9X-8256**	4	WASHER (6.6X12X2-MM THK)	

M-METRIC PART

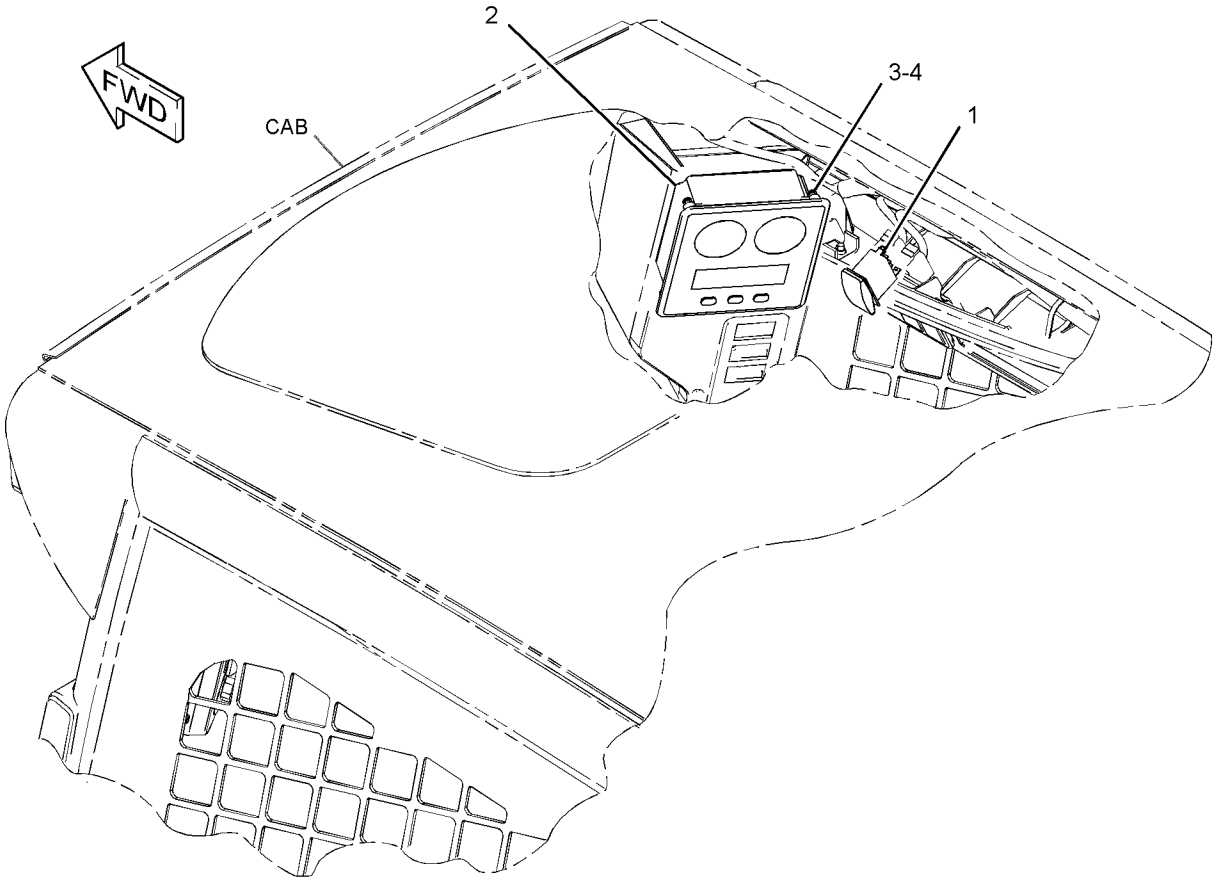

GRAPHIC #1 **<END>** g01327575

OPERATOR STATION

258-4043 PEDAL GP-GOVERNOR

S/N: JAY1-UP

PART OF 280-6342 CONTROL GP-GOVERNOR

SMCS-1265, 1276 **i02664234**

NOTE	REF NO	GRAPHIC REF	PART NUMBER	QTY	PART NAME 1 2 3 4 5 6 (PRODUCT LEVEL)	SEE PAGE
	1	1	**8T-0328**	2	WASHER-HARD (5.5X10X1-MM THK)	
M	2	1	**8T-0352**	2	BOLT (M5X0.8X45-MM)	
	3	1	**8T-6904**	2	PIN-CLEVIS	
M	4	1	**095-0641**	4	BOLT-SOCKET HEAD (M4X0.7X10-MM)	
Y	5	1	**160-2443**	1	SENSOR GP-POSITION (ROTARY)	93
M	6	1	**129-3178**	1	LOCKNUT (M6X1-THD)	
	7	1	**3F-9556**	2	LOCKWASHER	
M	8	1	**5C-7261**	1	NUT (M8X1.25-THD)	
M	9	1	**5C-9553**	1	BOLT (M6X1X16-MM)	
	10	1	**6V-8186**	2	NUT-FULL (5/16-24-THD)	
M	11	1	**8T-4197**	1	BOLT (M8X1.25X40-MM)	
	12	1	**8T-4205**	1	WASHER-HARD (7.2X14.5X2-MM THK)	
	13	1	**8T-6902**	3	CLIP	
					AVAILABLE REPAIR KIT(S):	
			164-1154	1	KIT-SERVICE (PEDAL)	
					(INCLUDES CABLE CLAMPS & SCREWS)	

M-METRIC PART
Y-SEPARATE ILLUSTRATION

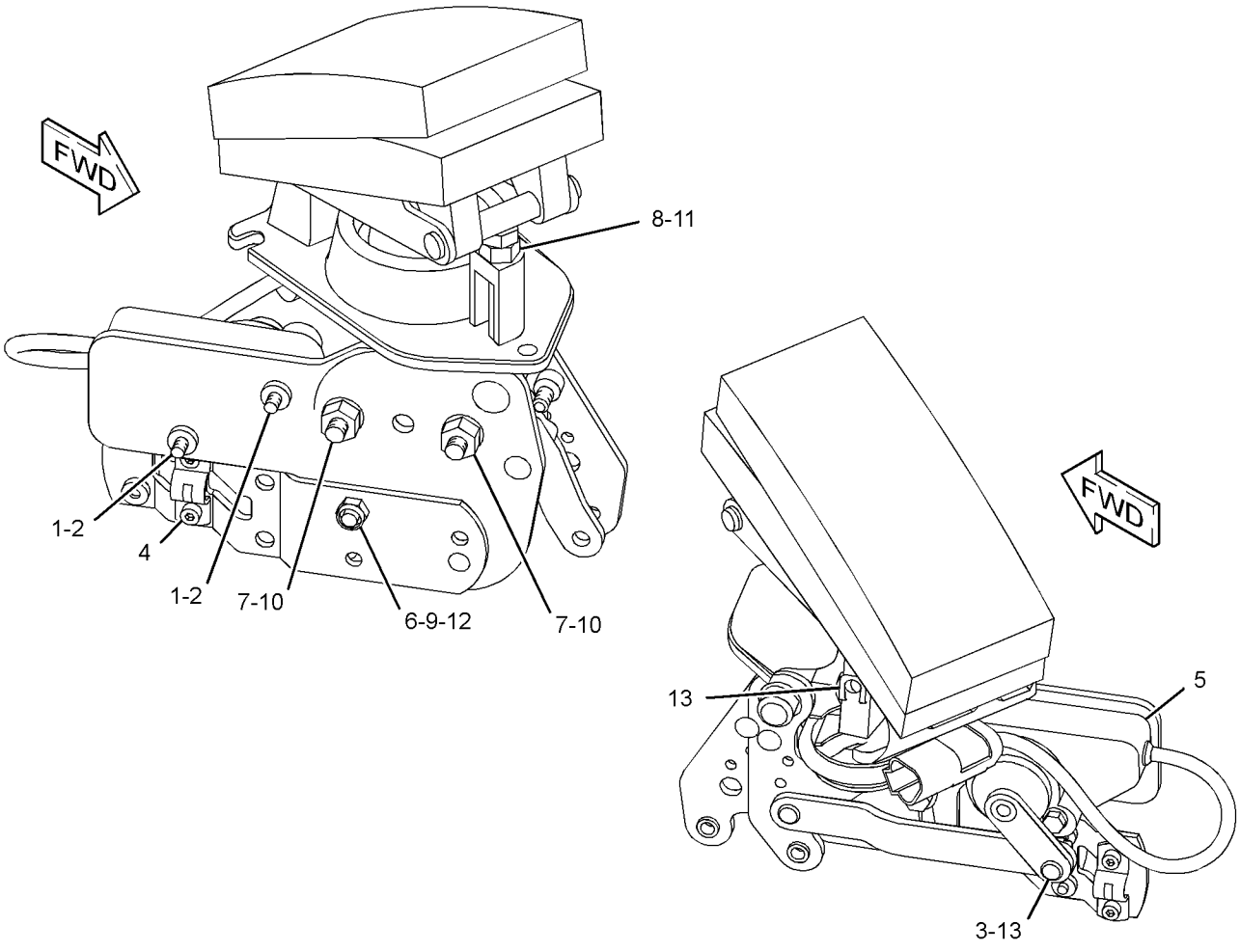

GRAPHIC #1 **<END>** g01339285

OPERATOR STATION

258-4401 SEAT & ARMREST GP

S/N: JAY1-UP

PART OF 258-4052 SEAT & MOUNTING GP

AN ATTACHMENT

SMCS-7307, 7312 **i02674955**

NOTE	REF NO	GRAPHIC REF	PART NUMBER	QTY	PART NAME 1 2 3 4 5 6 (PRODUCT LEVEL)	SEE PAGE
	1	1	**258-4055**	1	SEAT GP-SUSPENSION (AIR)	
Y	2	1	*258-4311*	1	ARMREST & MOUNTING GP	369
M	3	1	**6V-9189**	8	LOCKNUT (M8X1.25-THD)	
	4	1	**8T-4205**	2	WASHER-HARD (7.2X14.5X2-MM THK)	
	5	1	**8T-4224**	12	WASHER-HARD (8.8X16X2-MM THK)	
M	6	1	**8T-4908**	4	BOLT (M8X1.25X25-MM)	
M	7	1	**9X-2045**	2	SCREW-TRUSS HEAD (M6X1X20-MM)	

M-METRIC PART
Y-SEPARATE ILLUSTRATION

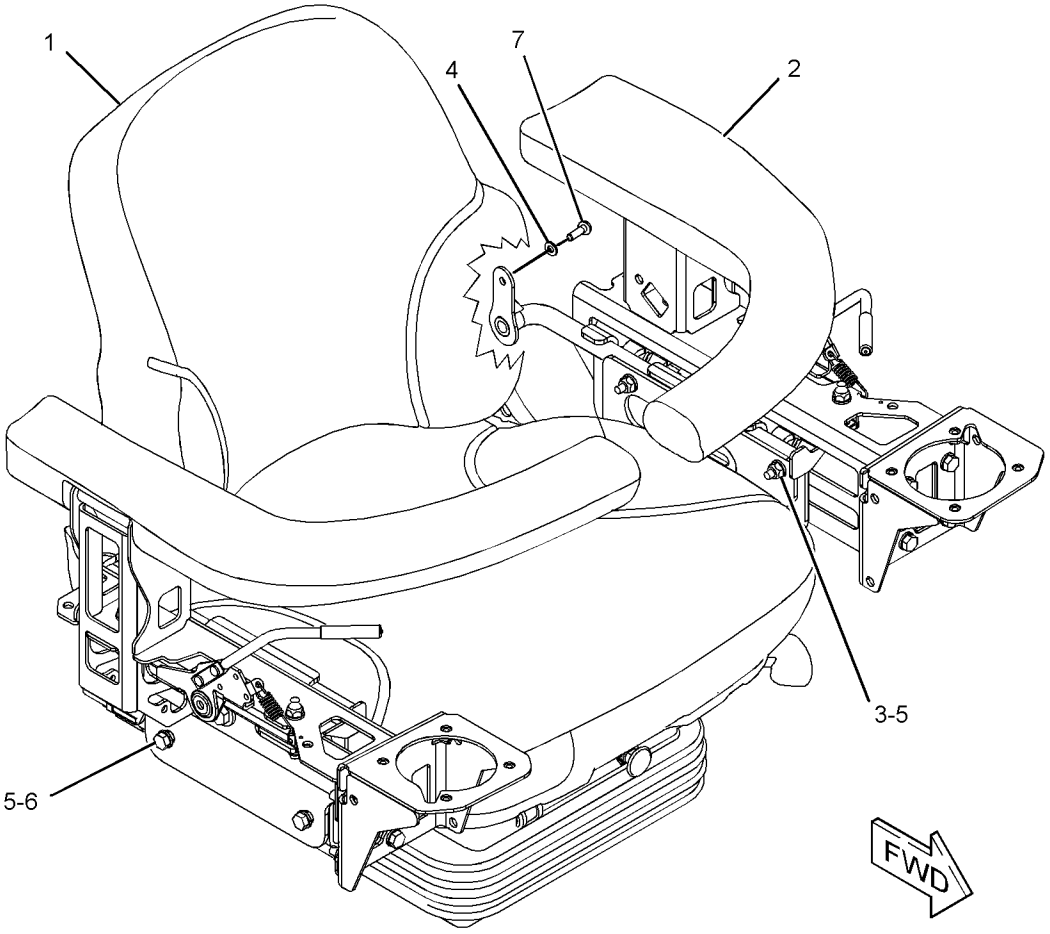

GRAPHIC #1 **<END>** g01344411

OPERATOR STATION

258-4402 SEAT & ARMREST GP

S/N: JAY1-UP
PART OF 258-4051 SEAT & MOUNTING GP
AN ATTACHMENT

SMCS-7307, 7312 **i02674930**

NOTE	REF NO	GRAPHIC REF	PART NUMBER	QTY	PART NAME 1 2 3 4 5 6 (PRODUCT LEVEL)	SEE PAGE
Y	1	1	**258-4054**	1	SEAT GP-SUSPENSION (MECHANICAL)	452
Y	2	1	*258-4311*	1	ARMREST & MOUNTING GP	369
M	3	1	**6V-9189**	8	LOCKNUT (M8X1.25-THD)	
	4	1	**8T-4205**	2	WASHER-HARD (7.2X14.5X2-MM THK)	
	5	1	**8T-4224**	12	WASHER-HARD (8.8X16X2-MM THK)	
M	6	1	**8T-4908**	4	BOLT (M8X1.25X25-MM)	
M	7	1	**9X-2045**	2	SCREW-TRUSS HEAD (M6X1X20-MM)	

M-METRIC PART
Y-SEPARATE ILLUSTRATION

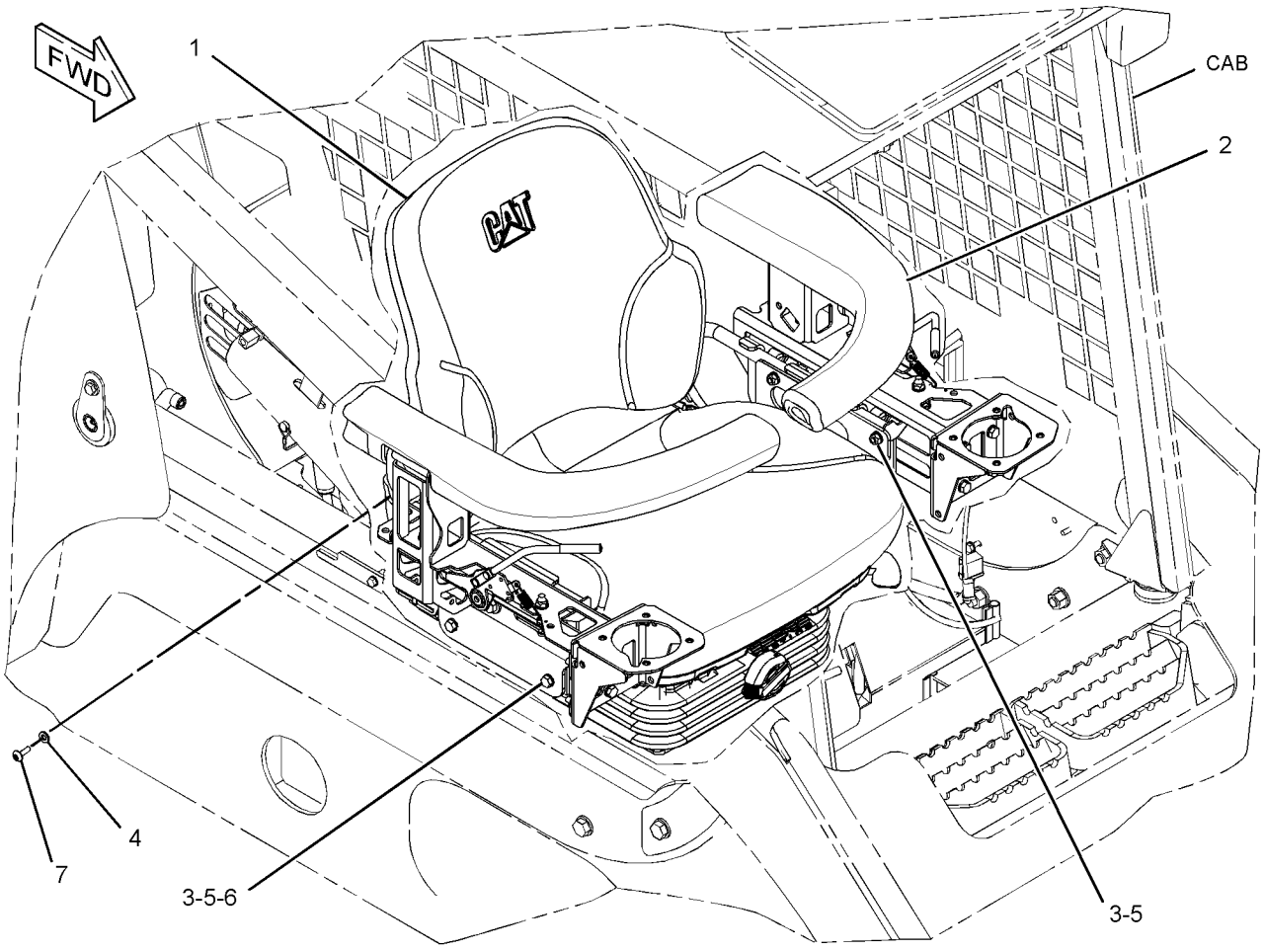

GRAPHIC #1 **<END>** g01344677

OPERATOR STATION

258-4403 SEAT & ARMREST GP

S/N: JAY1-UP

PART OF 258-4050 SEAT & MOUNTING GP

AN ATTACHMENT

SMCS-7307, 7312 **i02675010**

NOTE	REF NO	GRAPHIC REF	PART NUMBER	QTY	PART NAME 1 2 3 4 5 6 (PRODUCT LEVEL)	SEE PAGE
	1	1	**258-4049**	1	SUPPORT AS-SEAT	
	2	1	**258-4053**	1	SEAT GP (STATIC)	
Y	3	1	*258-4311*	1	ARMREST & MOUNTING GP	369
M	4	1	**6V-9189**	12	LOCKNUT (M8X1.25-THD)	
	5	1	**8T-4205**	2	WASHER-HARD (7.2X14.5X2-MM THK)	
	6	1	**8T-4224**	16	WASHER-HARD (8.8X16X2-MM THK)	
M	7	1	**8T-4908**	4	BOLT (M8X1.25X25-MM)	
M	8	1	**9X-2045**	2	SCREW-TRUSS HEAD (M6X1X20-MM)	

M-METRIC PART
Y-SEPARATE ILLUSTRATION

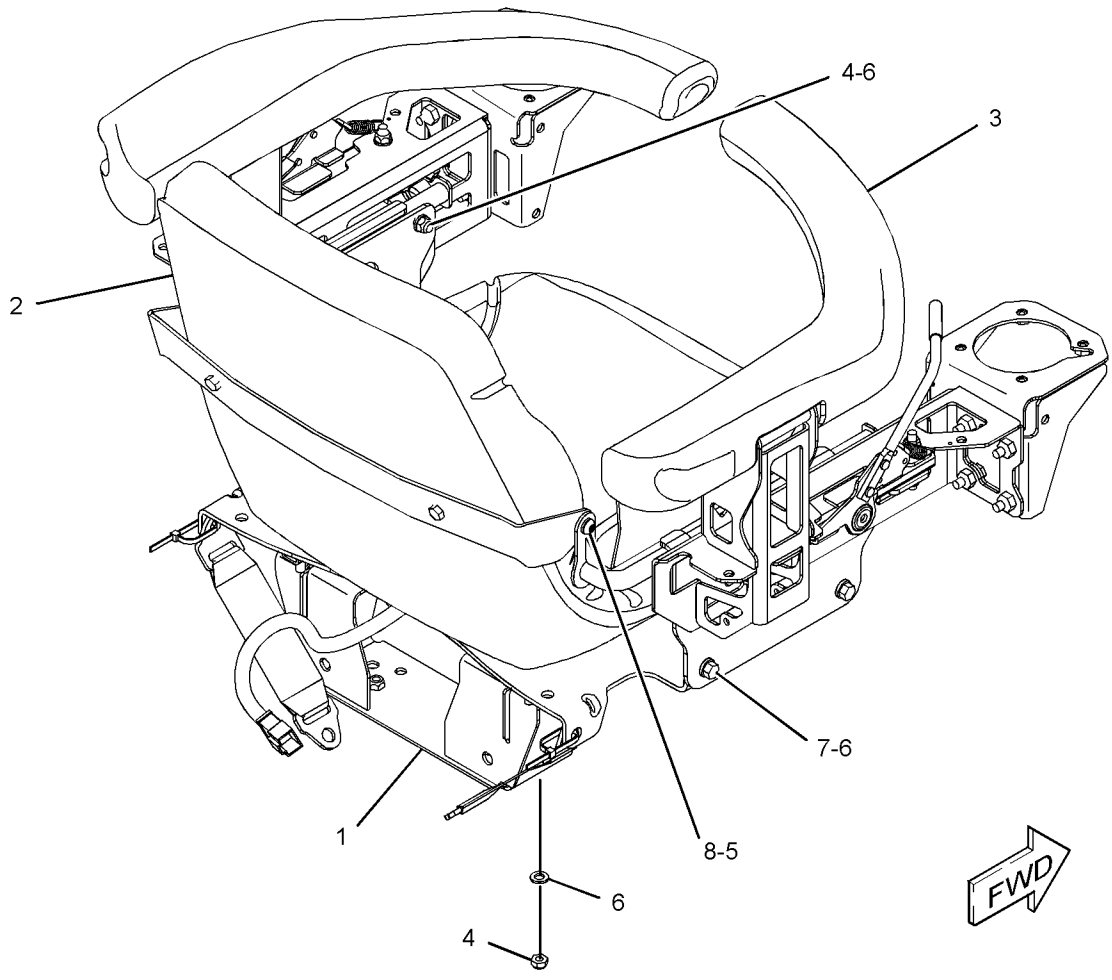

GRAPHIC #1 **<END>** g01311083

OPERATOR STATION

258-4050 SEAT & MOUNTING GP

S/N: JAY1-UP
PART OF 258-4310 SEAT AR
AN ATTACHMENT

SMCS-7312 **i02706180**

NOTE	REF NO	GRAPHIC REF	PART NUMBER	QTY	PART NAME 1 2 3 4 5 6 (PRODUCT LEVEL)	SEE PAGE
	1	1	**7X-0507**	2	WASHER-HARD (12X22.5X5-MM THK)	
Y	2	1	*258-4403*	1	SEAT & ARMREST GP (STATIC)	445
	3	1	**156-0283**	4	WASHER-HARD (8.4X35X2.5-MM THK)	
M	4	1	**7X-0818**	4	BOLT (M8X1.25X45-MM)	
	5	1	**8S-0934**	2	LOCKNUT-FLANGE (7/16-20-THD)	
	6	1	**8S-4723**	2	BOLT (7/16-20X1.5-IN)	
	7	1	**8T-4223**	2	WASHER-HARD (13.5X25.5X3-MM THK)	

M-METRIC PART
Y-SEPARATE ILLUSTRATION

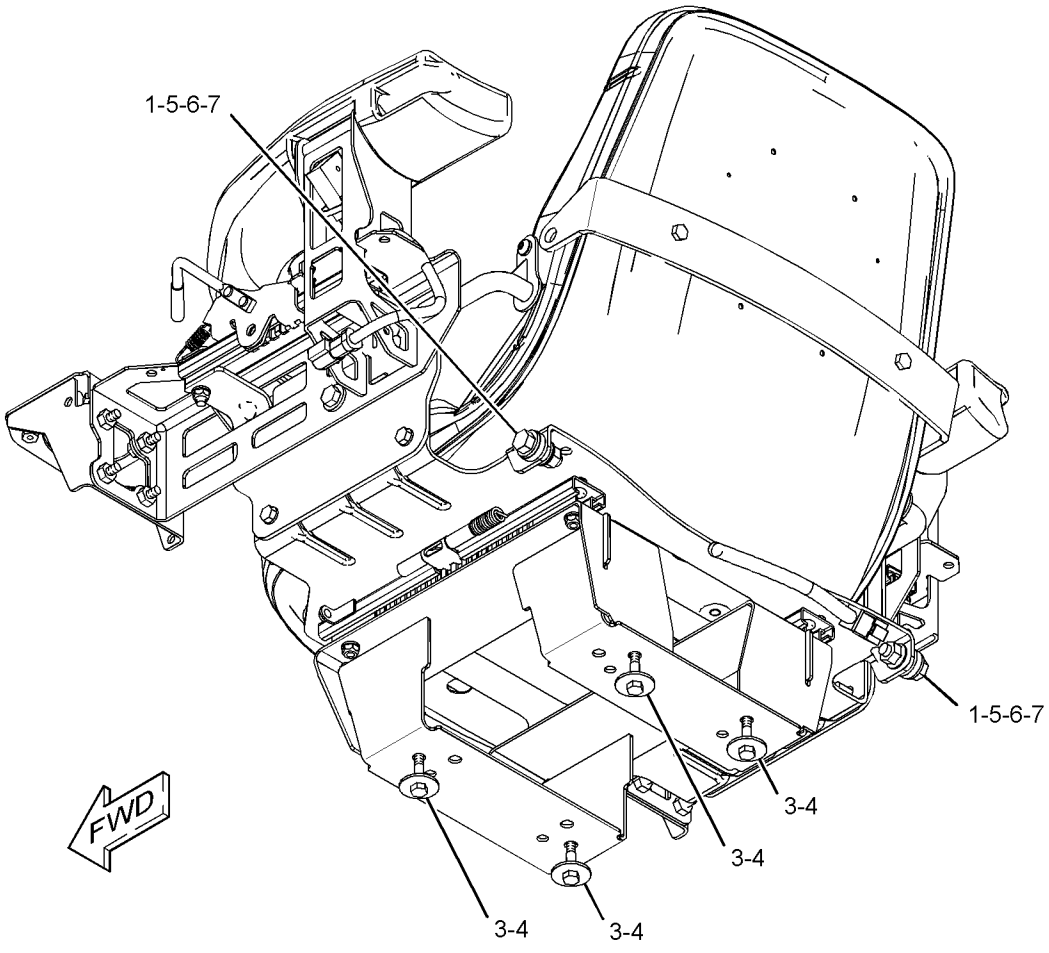

GRAPHIC #1 **<END>** g01310522

OPERATOR STATION

258-4051 SEAT & MOUNTING GP

S/N: JAY1-UP
PART OF 258-4320 SEAT AR-SUSPENSION
AN ATTACHMENT

SMCS-7312 **i02706195**

NOTE	REF NO	GRAPHIC REF	PART NUMBER	QTY	PART NAME 1 2 3 4 5 6 (PRODUCT LEVEL)	SEE PAGE
	1	1	**7X-0507**	2	WASHER-HARD (12X22.5X5-MM THK)	
Y	2	1	*258-4402*	1	SEAT & ARMREST GP (SUSPENSION)	444
	3	1	**156-0283**	4	WASHER-HARD (8.4X35X2.5-MM THK)	
M	4	1	**7X-0818**	4	BOLT (M8X1.25X45-MM)	
	5	1	**8S-0934**	2	LOCKNUT-FLANGE (7/16-20-THD)	
	6	1	**8S-4723**	2	BOLT (7/16-20X1.5-IN)	
	7	1	**8T-4223**	2	WASHER-HARD (13.5X25.5X3-MM THK)	

M-METRIC PART
Y-SEPARATE ILLUSTRATION

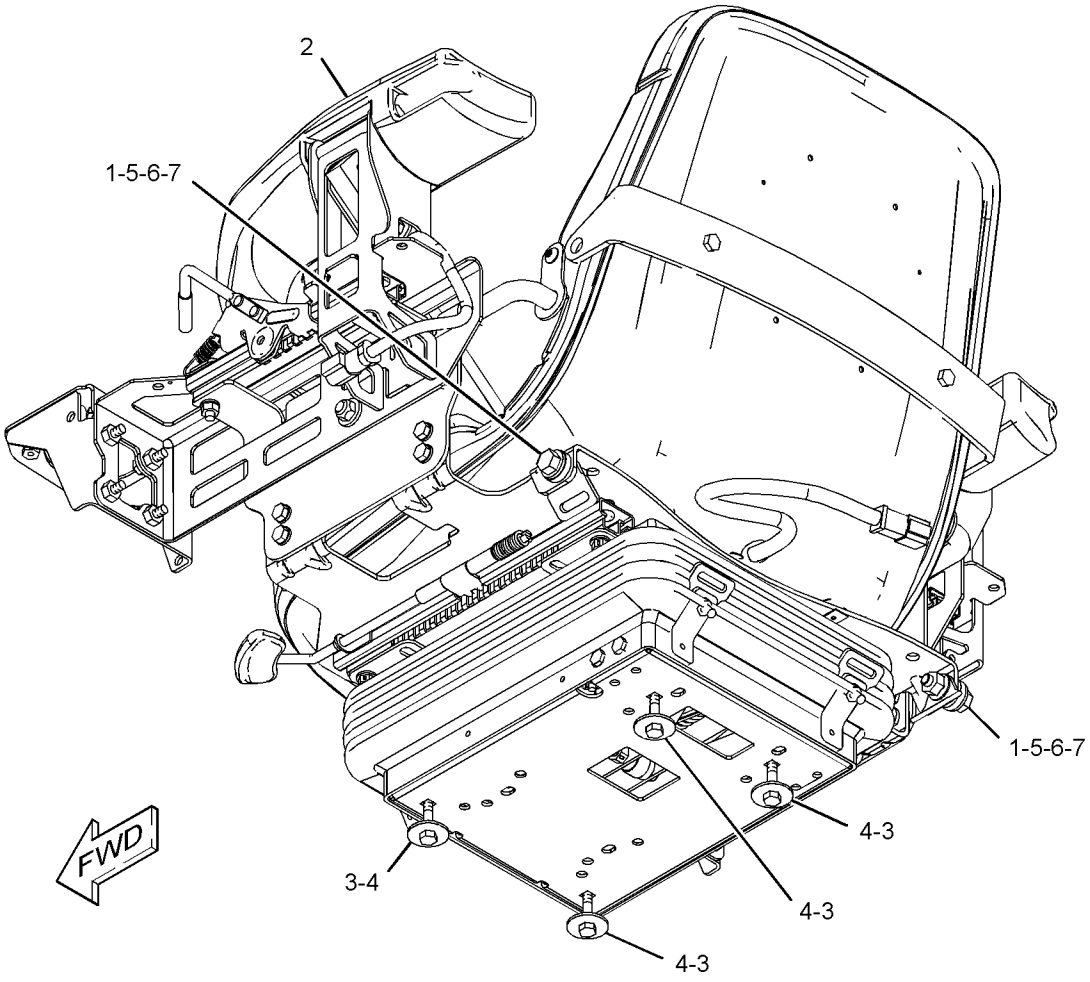

GRAPHIC #1 **<END>** g01310831

OPERATOR STATION

258-4052 SEAT & MOUNTING GP

S/N: JAY1-UP
PART OF 258-4330 SEAT AR-SUSPENSION
AN ATTACHMENT

SMCS-7312 **i02706196**

NOTE	REF NO	GRAPHIC REF	PART NUMBER	QTY	PART NAME 1 2 3 4 5 6 (PRODUCT LEVEL)	SEE PAGE
	1	1	**7X-0507**	2	WASHER-HARD (12X22.5X5-MM THK)	
Y	2	1	*258-4401*	1	SEAT & ARMREST GP	443
	3	1	**156-0283**	4	WASHER-HARD (8.4X35X2.5-MM THK)	
M	4	1	**7X-0818**	4	BOLT (M8X1.25X45-MM)	
	5	1	**8S-0934**	2	LOCKNUT-FLANGE (7/16-20-THD)	
	6	1	**8S-4723**	2	BOLT (7/16-20X1.5-IN)	
	7	1	**8T-4223**	2	WASHER-HARD (13.5X25.5X3-MM THK)	

M-METRIC PART
Y-SEPARATE ILLUSTRATION

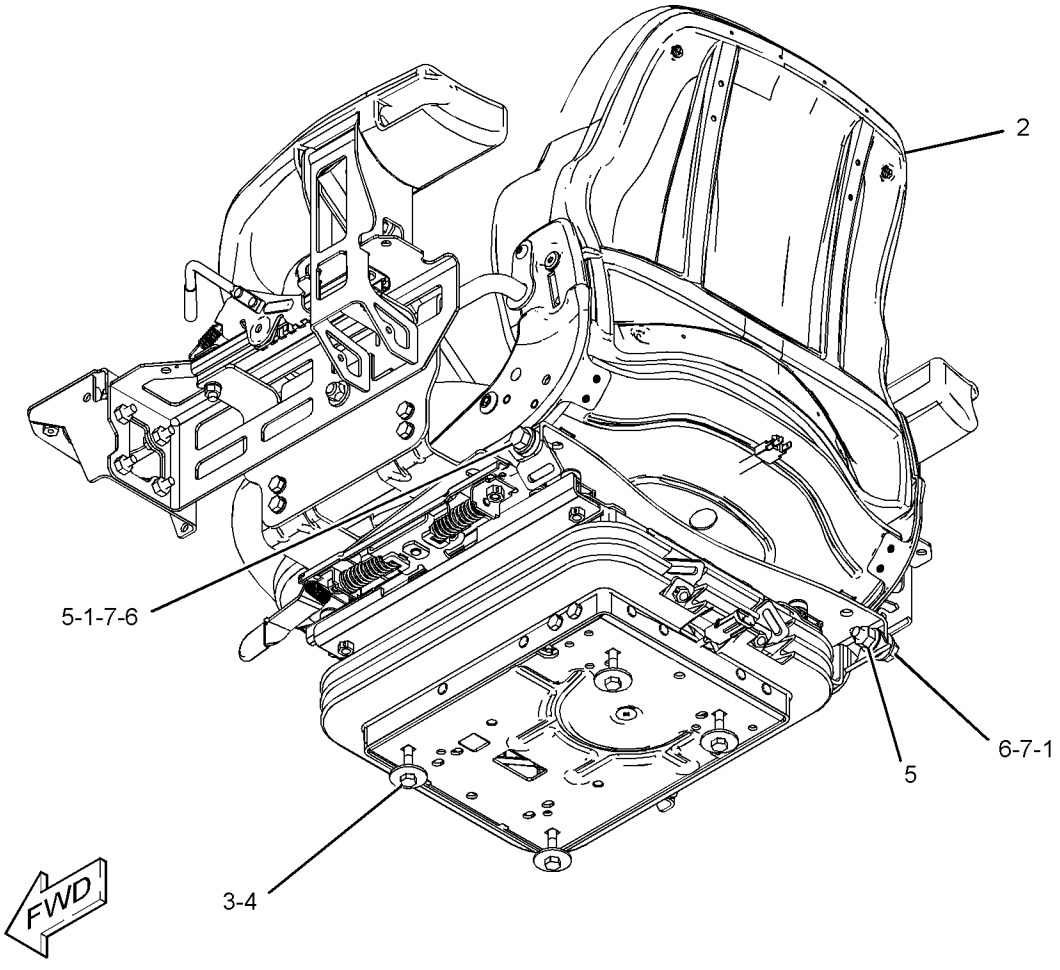

GRAPHIC #1 **<END>** g01319456

OPERATOR STATION

258-4310 SEAT AR

S/N: JAY1-UP
PART OF 258-3738 OPTION AR-CAB
AN ATTACHMENT

SMCS-7312 **i02613967**

NOTE	PART NUMBER	QTY	PART NAME 1 2 3 4 5 6 (PRODUCT LEVEL)	SEE PAGE
Y	*258-4314*	1	COVER GP-CONSOLE (RH, LH)	389
Y	*258-4050*	1	SEAT & MOUNTING GP (STATIC)	446

Y-SEPARATE ILLUSTRATION

<END>

258-4320 SEAT AR-SUSPENSION—MECHANICAL

S/N: JAY1-UP
PART OF 258-3740 OPTION AR-CAB
CANNOT BE USED WITH 258-3738—PAGE 436
AN ATTACHMENT

SMCS-7324 **i02614239**

NOTE	PART NUMBER	QTY	PART NAME 1 2 3 4 5 6 (PRODUCT LEVEL)	SEE PAGE
Y	*258-4314*	1	COVER GP-CONSOLE (RH, LH)	389
Y	*258-4051*	1	SEAT & MOUNTING GP (SUSPENSION)	447

Y-SEPARATE ILLUSTRATION

<END>

258-4330 SEAT AR-SUSPENSION—AIR

S/N: JAY1-UP
CANNOT BE USED WITH 258-3738—PAGE 436
AN ATTACHMENT

SMCS-7324 **i02628656**

NOTE	PART NUMBER	QTY	PART NAME 1 2 3 4 5 6 (PRODUCT LEVEL)	SEE PAGE
Y	*258-4314*	1	COVER GP-CONSOLE (RH, LH)	389
Y	*258-4052*	1	SEAT & MOUNTING GP	448

Y-SEPARATE ILLUSTRATION

<END>

OPERATOR STATION

258-4095 SEAT BELT GP

S/N: JAY1-UP

AN ATTACHMENT

SMCS-7327 **i02674788**

NOTE	REF NO	GRAPHIC REF	PART NUMBER	QTY	PART NAME 1 2 3 4 5 6 (PRODUCT LEVEL)	SEE PAGE
					NO SERVICED PARTS AT TIME OF PUBLICATION	

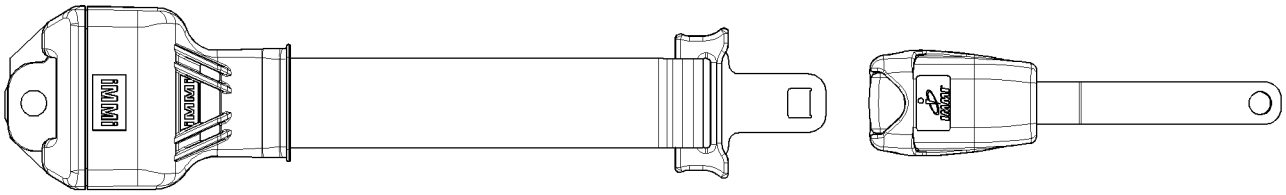

GRAPHIC #1 **<END>** g01345229

OPERATOR STATION

258-4096 SEAT BELT GP

S/N: JAY1-UP
AN ATTACHMENT

SMCS-7327 **i02637360**

NOTE	REF NO	GRAPHIC REF	PART NUMBER	QTY	PART NAME 1 2 3 4 5 6 (PRODUCT LEVEL)	SEE PAGE
					(NO SERVICED PARTS)	

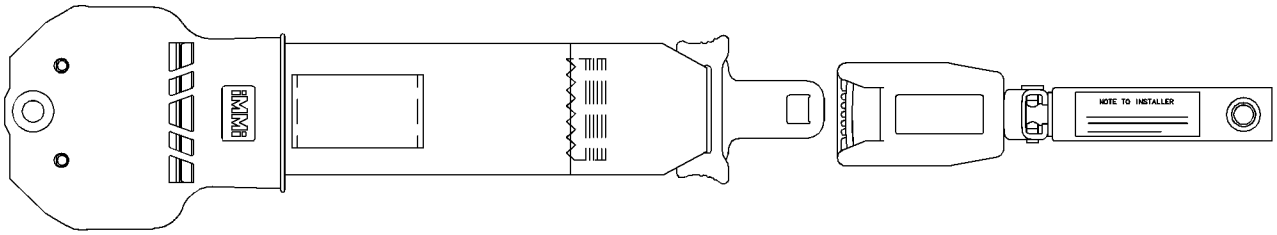

GRAPHIC #1 **<END>** g01196135

OPERATOR STATION

258-4054 SEAT GP-SUSPENSION

S/N: JAY1-UP

PART OF 258-4402 SEAT & ARMREST GP

AN ATTACHMENT

SMCS-7312, 7321, 7324 **i02614241**

NOTE	PART NUMBER	QTY	PART NAME 1 2 3 4 5 6 (PRODUCT LEVEL)	SEE PAGE
			NO BREAKDOWN OF SERVICEABLE PARTS AVAILABLE AT TIME OF PUBLICATION	

<END>

258-4017 SPRING GP-GAS—INCLUDES LIFT HANDLE

S/N: JAY1-UP

PART OF 258-3738, 258-3740 OPTION AR-CAB

AN ATTACHMENT

SMCS-7301 **i02674943**

NOTE	REF NO	GRAPHIC REF	PART NUMBER	QTY	PART NAME 1 2 3 4 5 6 (PRODUCT LEVEL)	SEE PAGE
	1	1	**5T-9400**	1	SPACER (12X25X8.5-MM THK)	
	2	1	**7C-8246**	2	SPACER (10.5X20X24-MM THK)	
	3	1	**095-1325**	1	PIN-CLEVIS	
	4	1	**153-2682**	1	SPRING AS-GAS (NON-LOCKING)	
	5	1	**153-2683**	1	SPRING AS-GAS (LOCKING)	
	6	1	**258-4018**	1	HANDLE	
M	7	1	**127-2170**	2	SCREW-TRUSS HEAD (M8X1.25X20-MM)	
	8	1	**5P-0372**	4	LOCK PIN	
	9	1	**6L-3966**	3	PIN	
	10	1	**198-1725**	2	WASHER-HARD (8.8X25.5X2-M THK)	

M-METRIC PART

258-4017 **SPRING GP-GAS** *(contd.)* **i02674943**

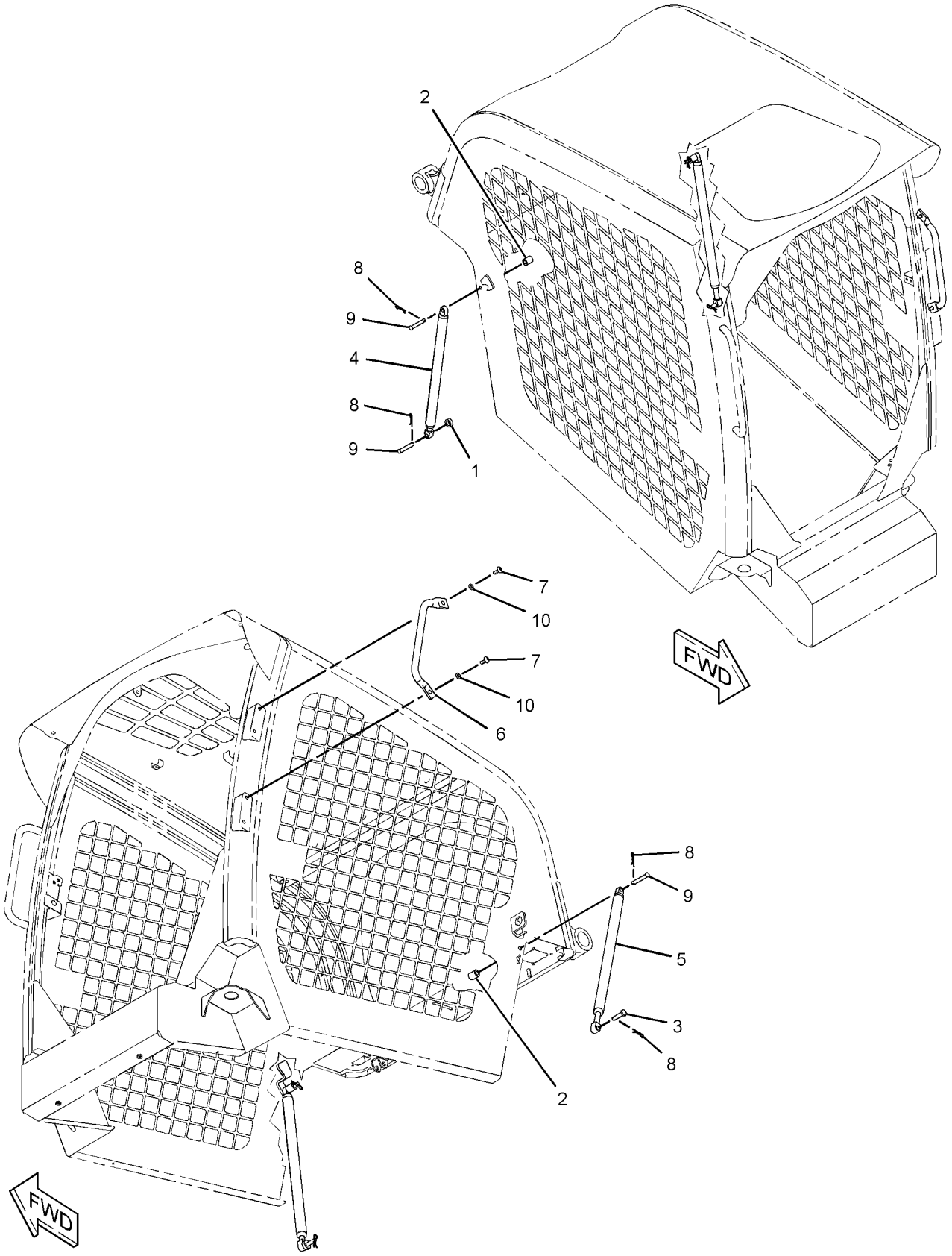

GRAPHIC #1 **<END>** g01309930

OPERATOR STATION

258-3497 VISOR GP-CAB

S/N: JAY1-UP
PART OF 258-3818 CONVERSION AR-MACHINE
AN ATTACHMENT

SMCS-7301 **i02659396**

NOTE	REF NO	GRAPHIC REF	PART NUMBER	QTY	PART NAME 1 2 3 4 5 6 (PRODUCT LEVEL)	SEE PAGE
	1	1	**172-8591**	4	NUT-SPRING	
Y	2	1	**258-4233**	1	VISOR GP-CAB	456
	3	1	**270-9442**	4	SCREW-TRUSS HEAD (M6X1X20-MM)	

Y-SEPARATE ILLUSTRATION

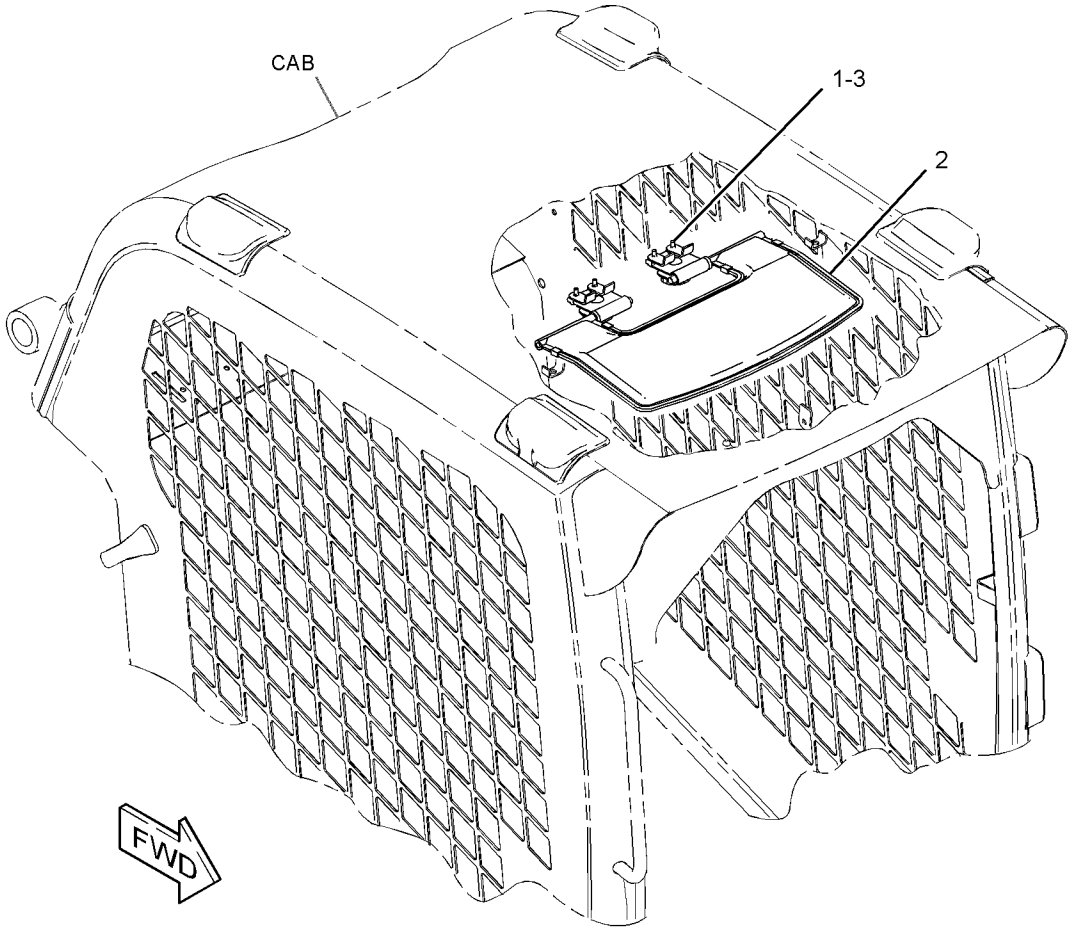

GRAPHIC #1 **<END>** g01336851

OPERATOR STATION

258-4233 VISOR GP-CAB—LH

S/N: JAY1-UP
PART OF 258-3497 VISOR GP-CAB
AN ATTACHMENT

SMCS-7301 **i02664258**

NOTE	REF NO	GRAPHIC REF	PART NUMBER	QTY	PART NAME 1 2 3 4 5 6 (PRODUCT LEVEL)	SEE PAGE
	1	1	**5T-7869**	2	CLAMP	
	2	1	**5T-7870**	2	KNOB	
	3	1	**1D-4677**	2	BOLT-ROUND HEAD (3/8-16X1-IN)	

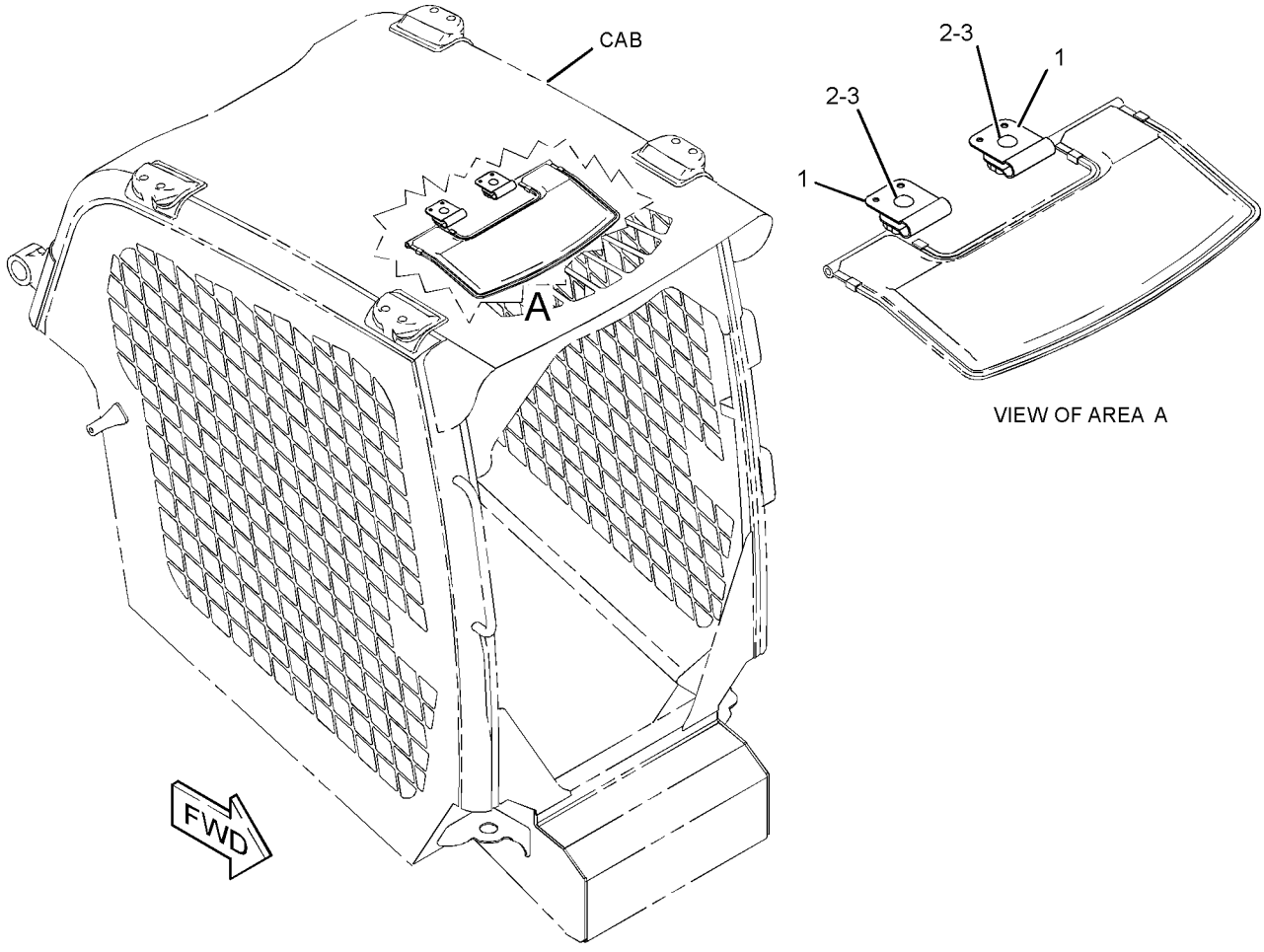

GRAPHIC #1 **<END>** g01339145

258-3285 WINDOW GP-CAB—LH

S/N: JAY1-UP

PART OF 258-2472 KIT-CAB WINDOW, 258-4090 WINDOW GP-CAB

AN ATTACHMENT

SMCS-7310 **i02659394**

NOTE	REF NO	GRAPHIC REF	PART NUMBER	QTY	PART NAME 1 2 3 4 5 6 (PRODUCT LEVEL)	SEE PAGE
J	1	1	**258-3283**	1	WINDOW AS (LH FRONT SLIDING GLASS)	
		1	**258-3765**	1	LATCH AS	
J	2	1	**258-3284**	1	WINDOW AS (LH REAR SLIDING GLASS)	
		1	**258-3765**	1	LATCH AS	
J	3	1	**258-4019**	1	FRAME AS (LH)	
		1	**258-3776**	1	CATCH AS (INNER)	
		1	**258-3781**	1	CATCH AS (OUTER)	
J	4	1	**258-4091**	1	WINDOW AS-CAB (LH)	
E		1	**258-3767**		SEAL (16-CM)	
					AVAILABLE REPAIR KIT(S):	
J			**258-4426**	1	KIT-SEAL (CAB WINDOW)	
					(INCLUDES SEALS)	

E-ORDER BY THE CENTIMETER
J-KIT MARKED J SERVICES PARTS MARKED J

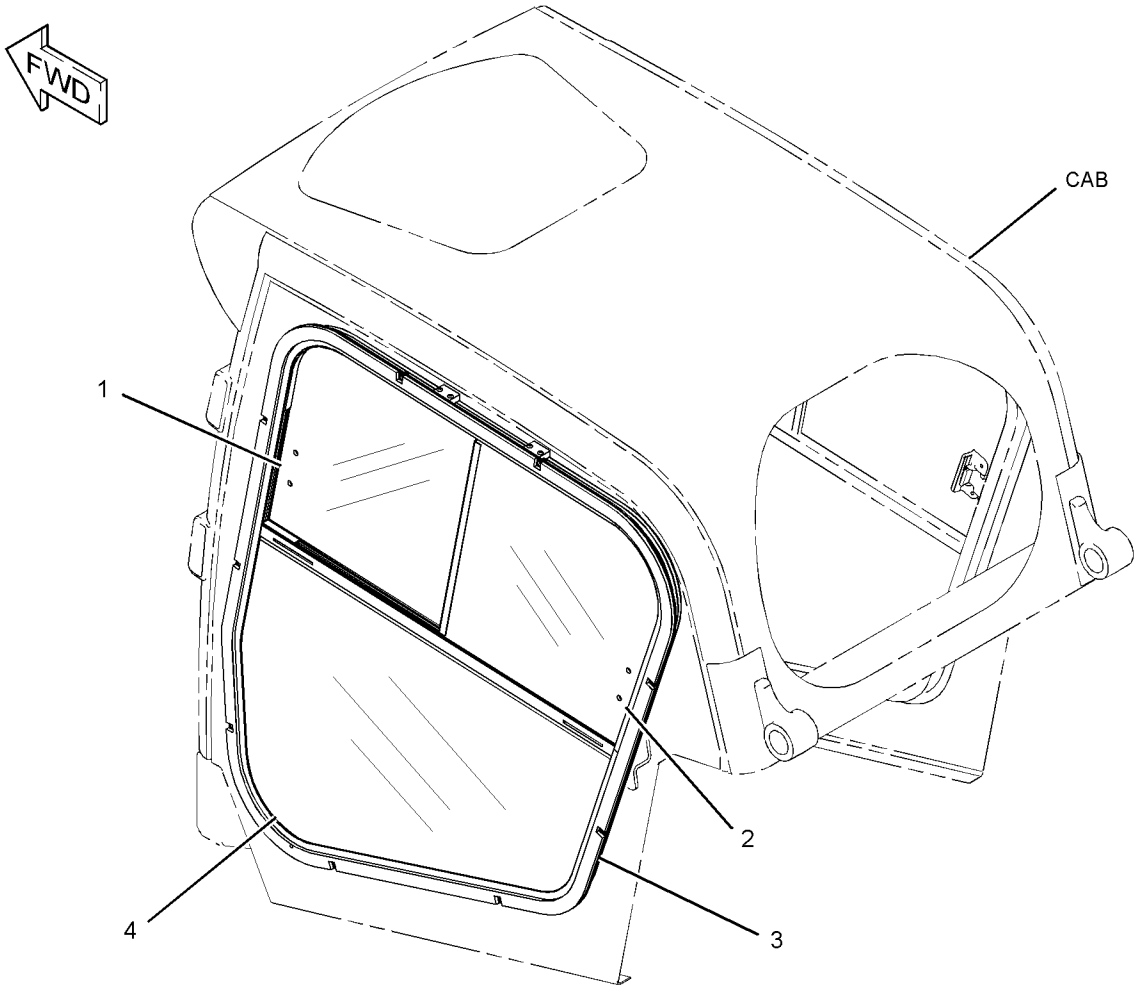

GRAPHIC #1 **<END>** g01311244

OPERATOR STATION

258-3286 WINDOW GP-CAB

S/N: JAY1-UP

PART OF 258-2472 KIT-CAB WINDOW, 258-4090 WINDOW GP-CAB

AN ATTACHMENT

SMCS-7310 **i02659381**

NOTE	REF NO	GRAPHIC REF	PART NUMBER	QTY	PART NAME 1 2 3 4 5 6 (PRODUCT LEVEL)	SEE PAGE
J	1	1	**258-3282**	1	FRAME AS (RH)	
		1	**258-3776**	1	CATCH AS (INNER)	
		1	**258-3781**	1	CATCH AS (OUTER)	
J	2	1	**258-4092**	1	WINDOW AS-CAB (RH REAR SLIDING GLASS)	
		1	**258-3765**	1	LATCH AS	
J	3	1	**258-4093**	1	WINDOW AS-CAB (RH FRONT SLIDING GLASS)	
		1	**258-3765**	1	LATCH AS	
J	4	1	**258-4094**	1	WINDOW AS-CAB (RH)	
E		1	**258-3767**		SEAL (16-CM)	
					AVAILABLE REPAIR KIT(S):	
J			**258-4426**	1	KIT-SEAL (CAB WINDOW)	
					(INCLUDES SEALS)	

E-ORDER BY THE CENTIMETER
J-KIT MARKED J SERVICES PARTS MARKED J

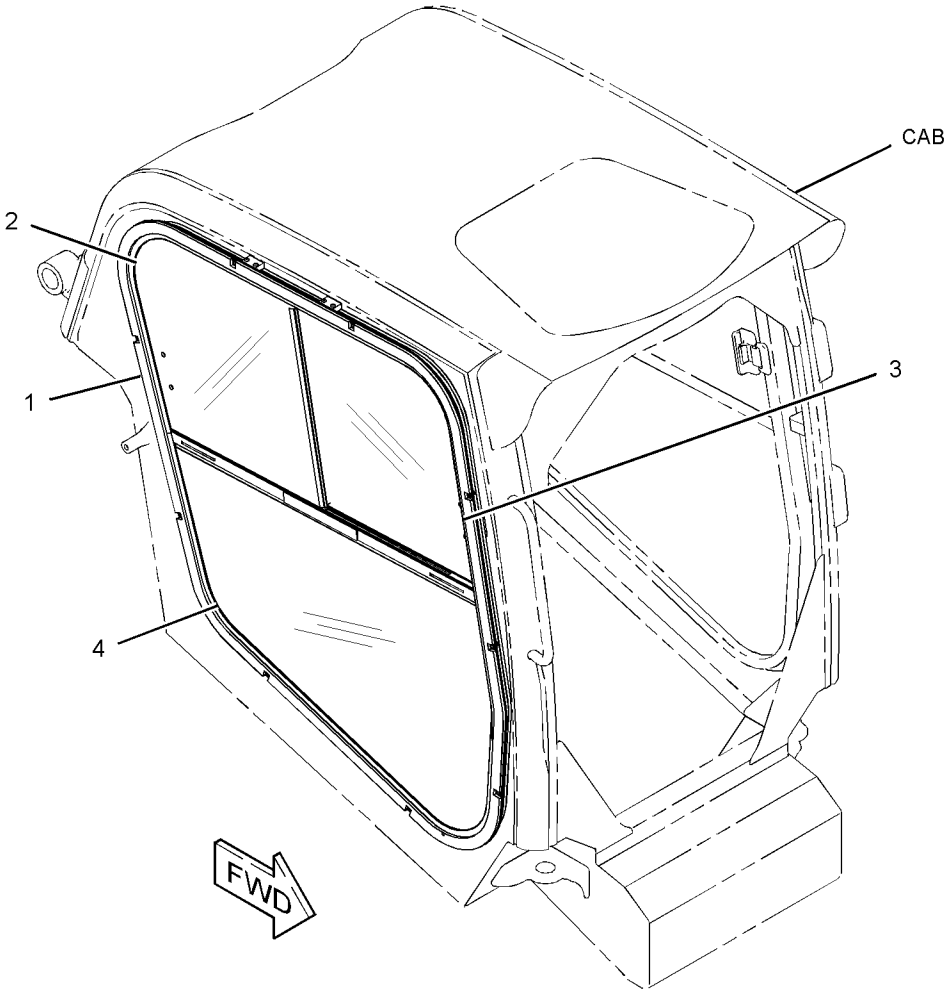

GRAPHIC #1 **<END>** g01311843

OPERATOR STATION

258-4010 WINDOW GP-CAB

S/N: JAY1-UP

PART OF 258-4000 CAB AR-ENCLOSED ROPS

SMCS-7310 **i02664493**

NOTE	REF NO	GRAPHIC REF	PART NUMBER	QTY	PART NAME 1 2 3 4 5 6 (PRODUCT LEVEL)	SEE PAGE
	1	1	**5C-8310**	1	BRACKET-RING	
	2	1	**5C-8311**	1	RING	
	3	1	**258-4429**	1	FILM-EXIT	
	4	1	**258-4011**	1	GLASS-REAR	
E	5	1	**108-0656**		SEAL (192-CM)	
E	6	1	**104-5957**		STRIP-LOCKING (186-CM)	

E-ORDER BY THE CENTIMETER

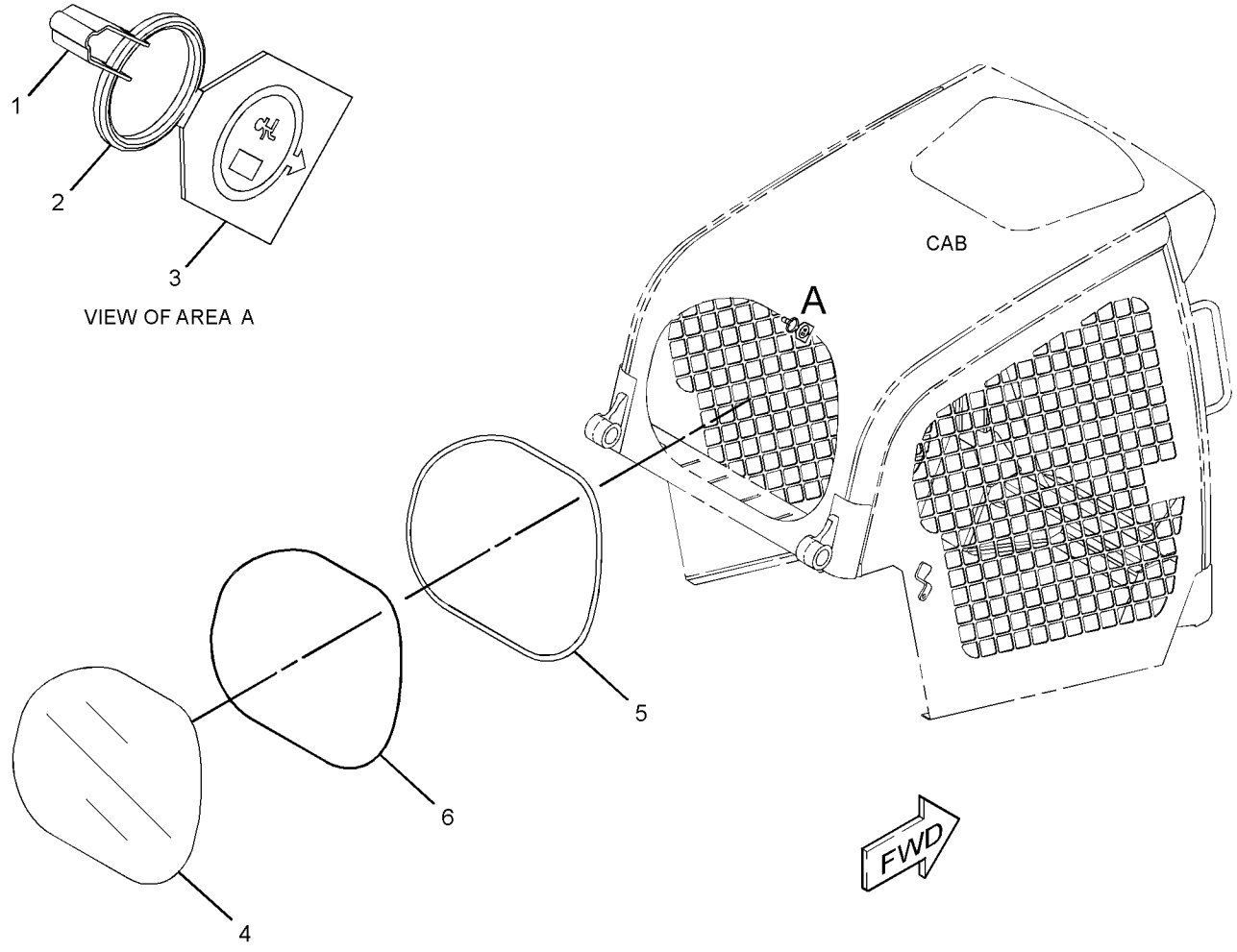

GRAPHIC #1 **<END>** g01317851

OPERATOR STATION

258-4090 WINDOW GP-CAB

S/N: JAY1-UP
PART OF 258-3680, 258-3742 CAB AR-ENCLOSED ROPS
AN ATTACHMENT

SMCS-7310 **i02664475**

NOTE	REF NO	GRAPHIC REF	PART NUMBER	QTY	PART NAME 1 2 3 4 5 6 (PRODUCT LEVEL)	SEE PAGE
Y	1	1	*258-3285*	1	WINDOW GP-CAB (LH)	457
Y	2	1	*258-3286*	1	WINDOW GP-CAB (RH)	458
	3	1	**270-9442**	18	SCREW-TRUSS HEAD (M6X1X20-MM)	

Y-SEPARATE ILLUSTRATION

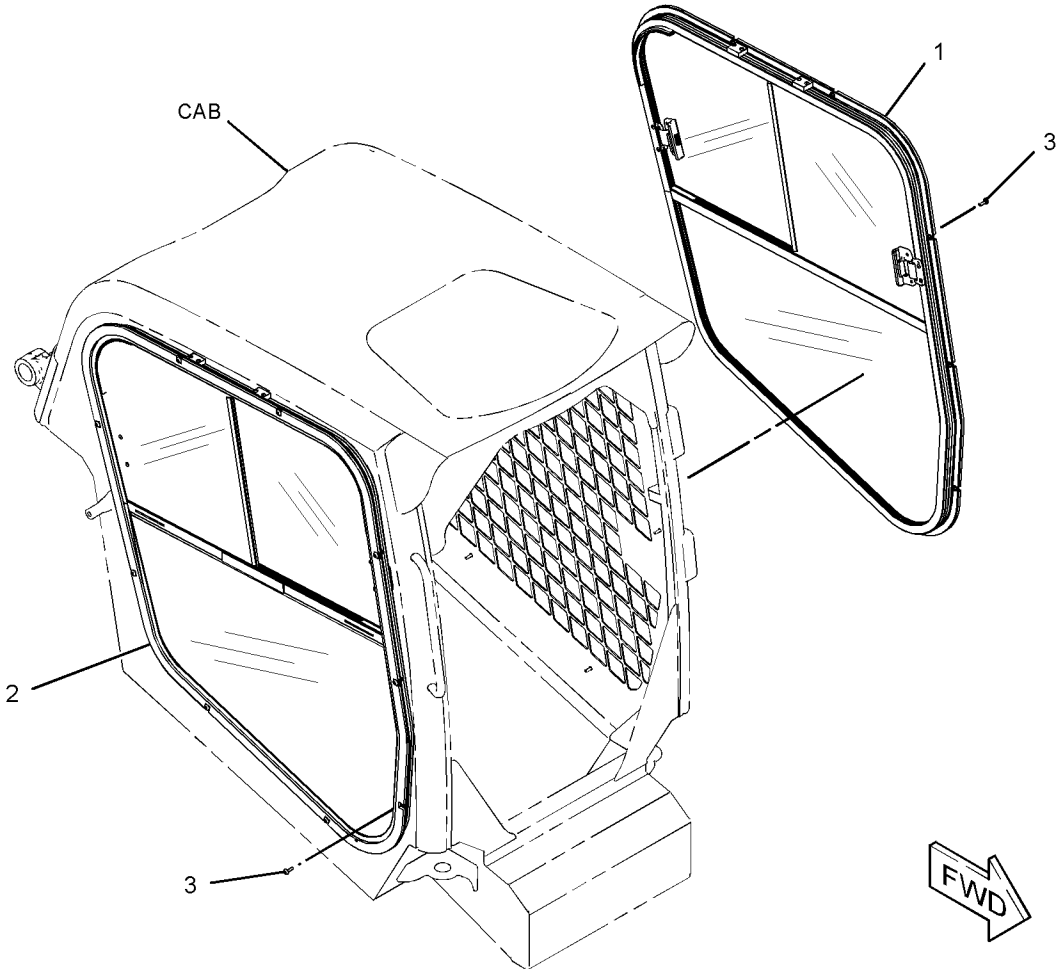

GRAPHIC #1 **<END>** g01311431

280-8329 BRACKET GP-MOUNTING—BELT GUARD

S/N: JAY1-UP
PART OF 258-3800 CONVERSION AR-ROADING
AN ATTACHMENT

SMCS-4200 **i02674922**

NOTE	REF NO	GRAPHIC REF	PART NUMBER	QTY	PART NAME 1 2 3 4 5 6 (PRODUCT LEVEL)	SEE PAGE
	1	1	**280-8305**	1	BRACKET AS	
M		1	**6V-9632**	1	NUT-WELD (M6X1-THD)	
	2	1	**280-8335**	2	SPACER	
	3	1	**101-2867**	1	WASHER-HARD (7.2X25X2-MM THK)	
M	4	1	**3E-8020**	1	SCREW-TRUSS HEAD (M6X1X25-MM)	
M	5	1	**5C-9553**	2	BOLT (M6X1X16-MM)	

M-METRIC PART

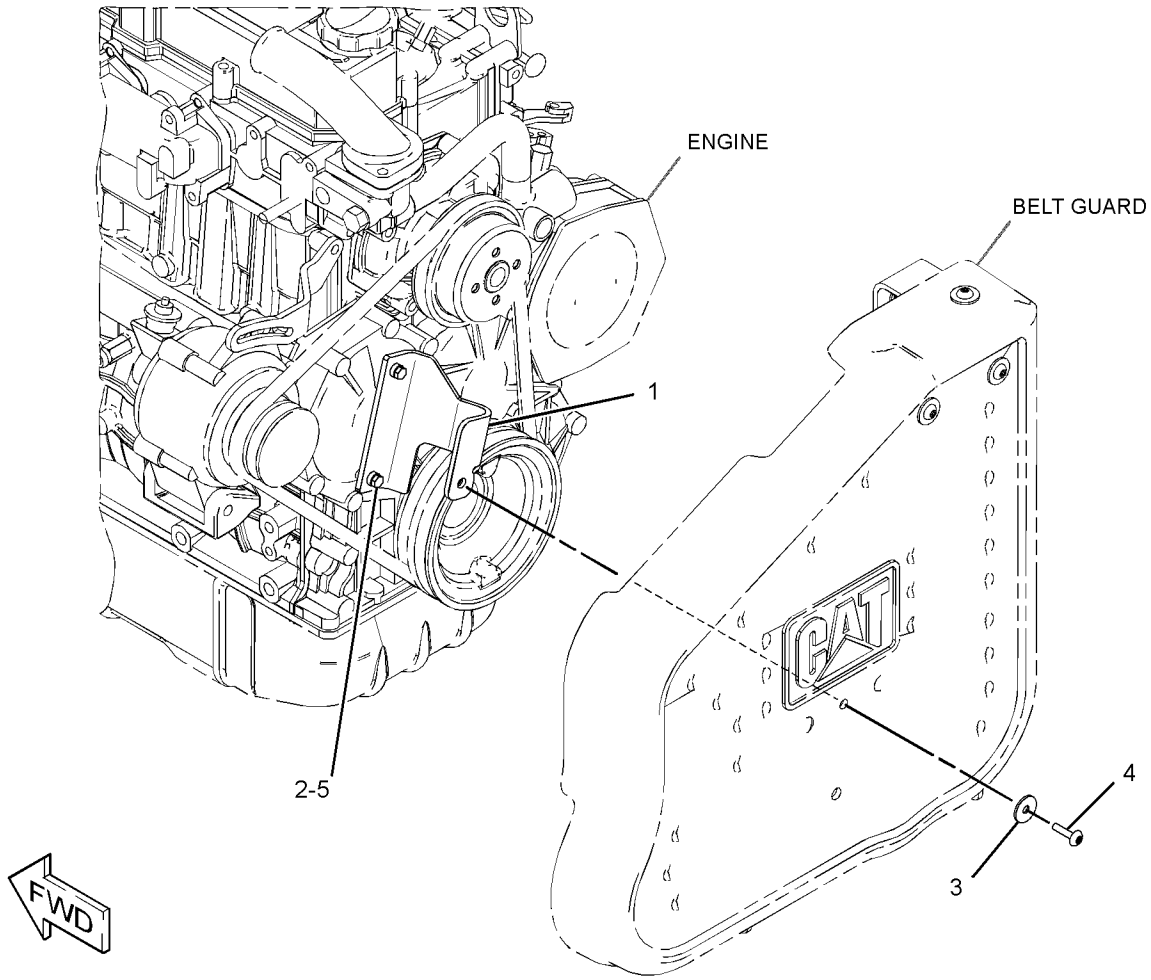

GRAPHIC #1 **<END>** g01345004

SERVICE EQUIPMENT AND SUPPLIES

258-3190 FILM GP

S/N: JAY1-UP

PART OF 258-3236 COMMON AR

SMCS-7557 **i02623279**

NOTE	REF NO	GRAPHIC REF	PART NUMBER	QTY	PART NAME 1 2 3 4 5 6 (PRODUCT LEVEL)	SEE PAGE
	1	1	**258-3408**	1	FILM-IDENTIFICATION (246C, LH)	
	2	1	**258-3409**	1	FILM-IDENTIFICATION (246C, RH)	
	3	1	**258-3423**	1	FILM-IDENTIFICATION (CATERPILLAR)	
	4	1	**258-3424**	1	FILM-IDENTIFICATION (CAT, LIFT ARM, LH)	
	5	1	**258-3425**	1	FILM-IDENTIFICATION (CAT, LIFT ARM, RH)	
	6	1	**258-3427**	1	FILM-IDENTIFICATION (CAT, REAR)	

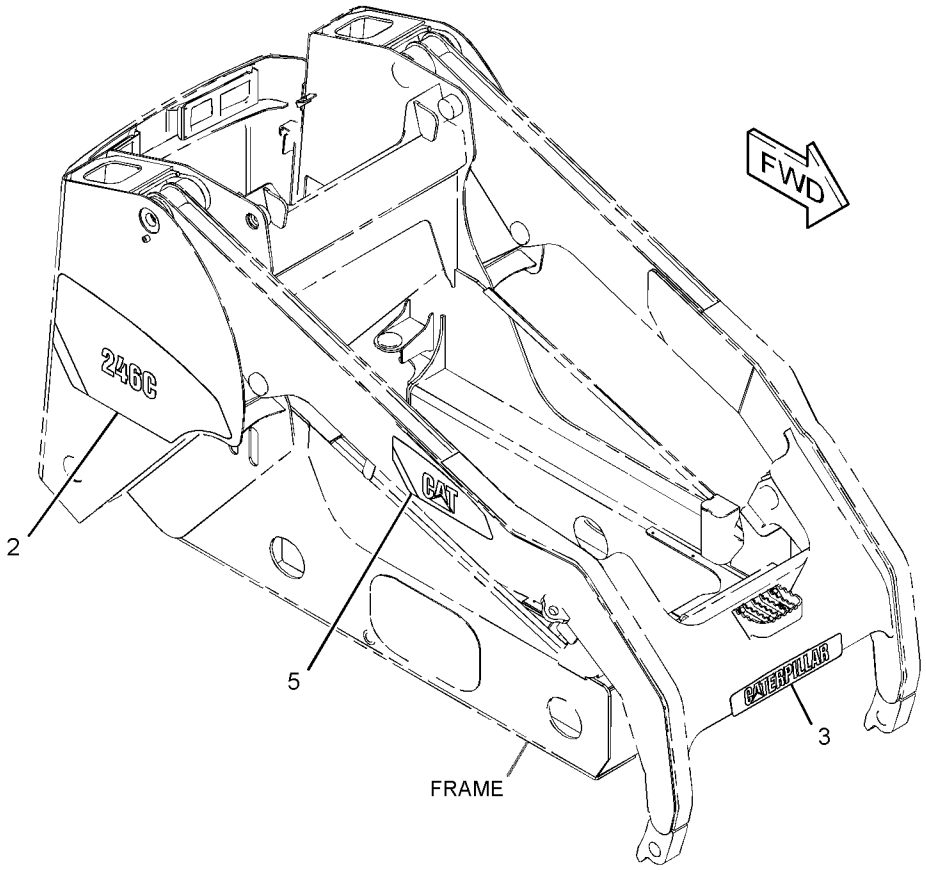

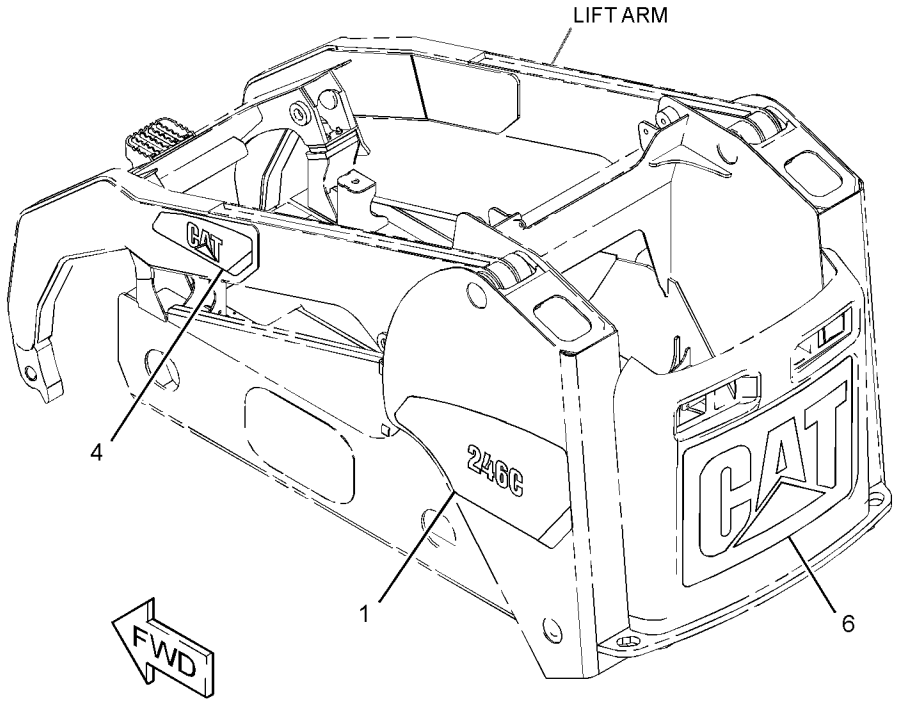

GRAPHIC #1 **<END>** g01328804

SERVICE EQUIPMENT AND SUPPLIES

258-3230 FILM GP

S/N: JAY1-UP
PART OF 258-3182, 258-3733, 261-6264 HYDRAULIC AR
AN ATTACHMENT

SMCS-7557 **i02636007**

NOTE	REF NO	GRAPHIC REF	PART NUMBER	QTY	PART NAME 1 2 3 4 5 6 (PRODUCT LEVEL)	SEE PAGE
	1	1	**258-3231**	2	FILM-IDENTIFICATION (HIGH FLOW XPS)	

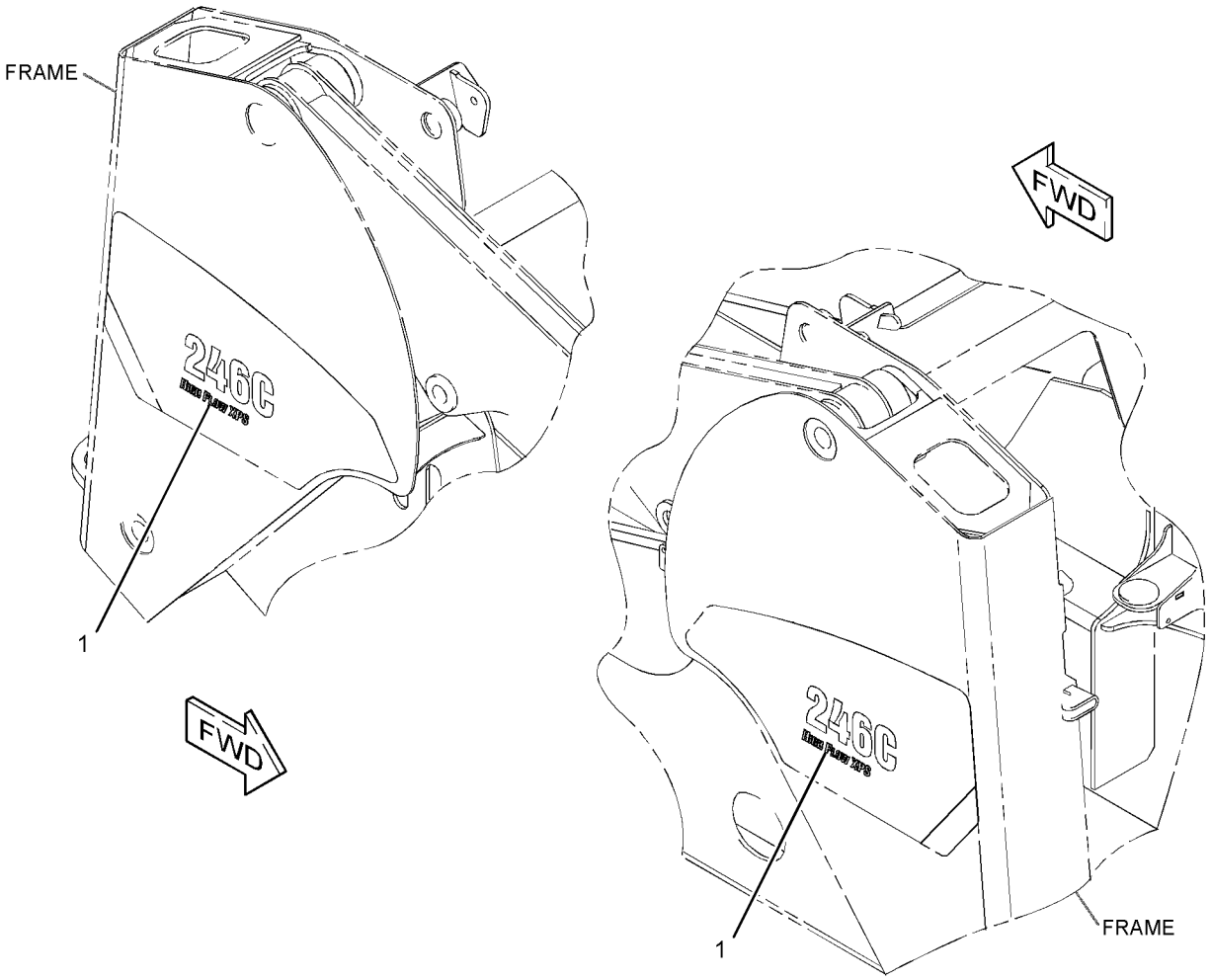

GRAPHIC #1 **<END>** g01326333

SERVICE EQUIPMENT AND SUPPLIES

289-0848 FILM GP–2-SPEED

S/N: JAY1-UP
PART OF 258-3400 POWER TRAIN AR
AN ATTACHMENT

SMCS-7557 **i02635700**

NOTE	REF NO	GRAPHIC REF	PART NUMBER	QTY	PART NAME 1 2 3 4 5 6 (PRODUCT LEVEL)	SEE PAGE
	1	1	**290-2110**	2	FILM-IDENTIFICATION (TWO SPEED)	

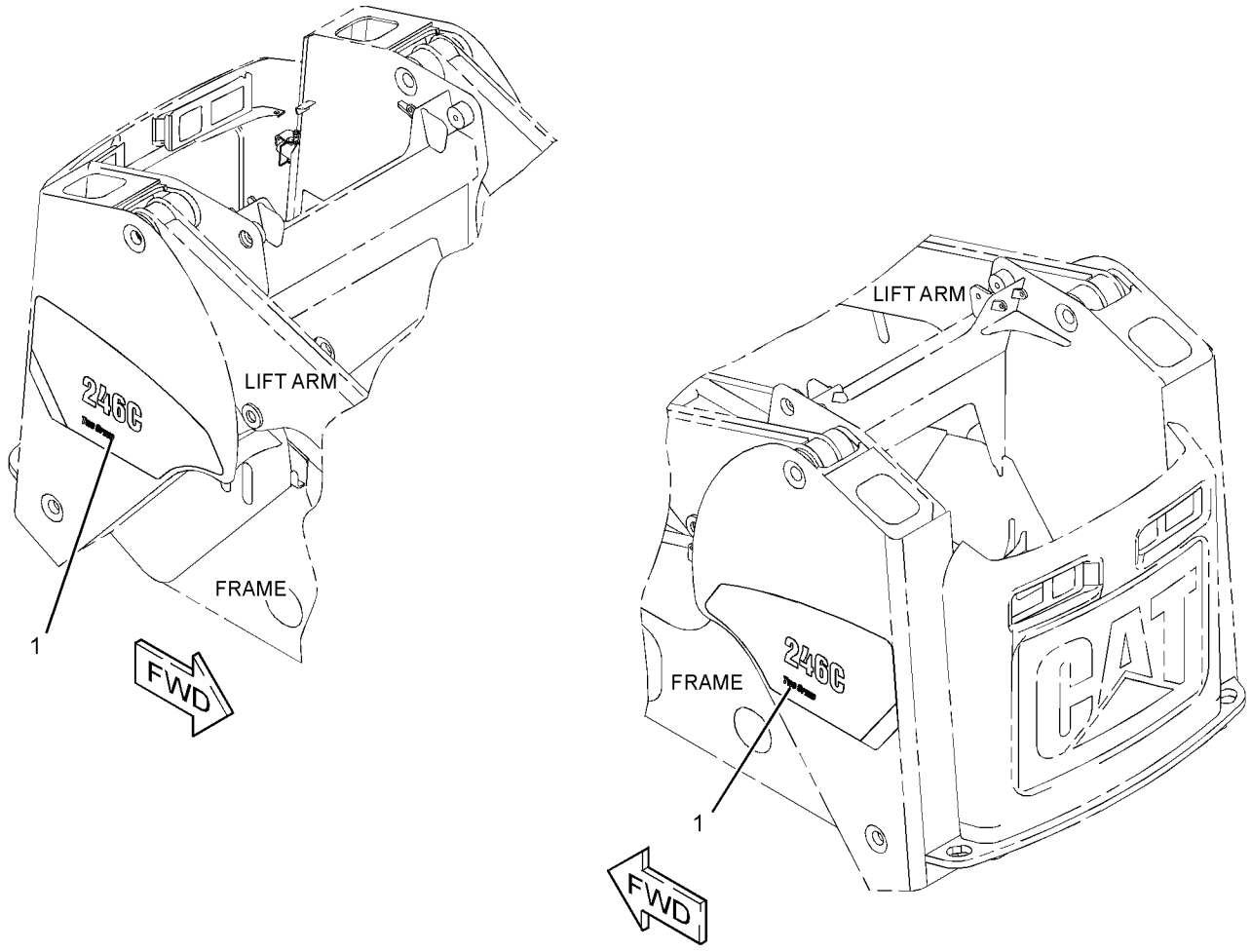

GRAPHIC #1 **<END>** g01327235

SERVICE EQUIPMENT AND SUPPLIES

258-3221 PLATE & FILM GP

S/N: JAY1-UP

AN ATTACHMENT

SMCS-7405, 7557 **i02706200**

NOTE	REF NO	GRAPHIC REF	PART NUMBER	QTY	PART NAME 1 2 3 4 5 6 (PRODUCT LEVEL)	SEE PAGE
	1	2	**157-2853**	1	FILM (READ OMM)	
	2	2	**169-2876**	1	FILM-IDENTIFICATION (12-VOLT)	
	3	1	**219-0302**	1	FILM-WARNING (NO WELD, NO DRILL, READ OMM)	
	4	1	**224-7830**	1	FILM-WARNING (HIGH PRESSURE, READ OMM, U.S.)	
	5	3	**224-8945**	1	FILM-WARNING (DO NOT USE ETHER)	
	6	2	**228-2615**	1	FILM-WARNING (UNIVERSAL)	
	7	3	**233-0059**	1	FILM-WARNING (GROUND)	
	8	1	**234-6070**	1	FILM-WARNING (LIFT ARM BRACE)	
	9	2	**234-6072**	1	FILM-WARNING (CRUSH HAZARD)	
	10	2	**234-6074**	1	FILM-WARNING (NO ACCESS)	
	11	2	**234-6077**	1	FILM-WARNING (WORK TOOL)	
	12	2	**295-2567**	1	FILM-IDENTIFICATION (BUCKET LOWER)	
	13	2	**235-1365**	1	FILM-WARNING (HOT FLUID UNDER PRESSURE)	
	14	3	**239-6986**	1	PLATE-PRODUCT IDENTIFICATION (MACHINE)	
	15	2	**253-9499**	1	FILM-WARNING	
	16	2,3	**263-4836**	4	FILM-SYMBOL (TIE-DOWN)	
	17	3	**302-4389**	1	FILM-WARNING (CRUSH HAZARD)	
	18	2	**285-2167**	1	FILM-INSTRUCTION	
	19	1	**285-2171**	1	FILM-WARNING (ROPS, FOPS, READ OMM)	
	20	2	**285-2172**	1	FILM-WARNING (CRUSH HAZARD, READ OMM)	
	21	3	**285-2176**	1	FILM-SPEED	
	22	1	**285-2177**	1	FILM-INSTRUCTION (OPERATOR CONSOLE)	
	23	1	**285-2178**	1	FILM-INSTRUCTION (OPERATOR CONTROL)	
	24	3	**308-1439**	1	FILM-WARNING (CRUSH HAZARD, FASTEN SEAT BELT)	

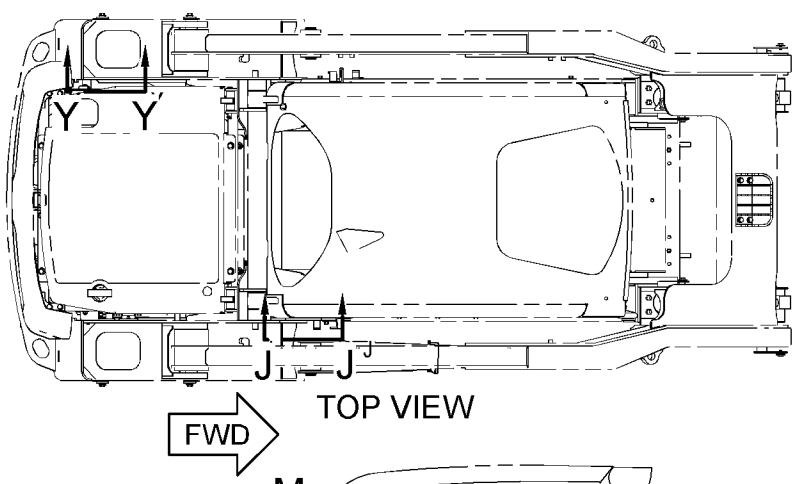

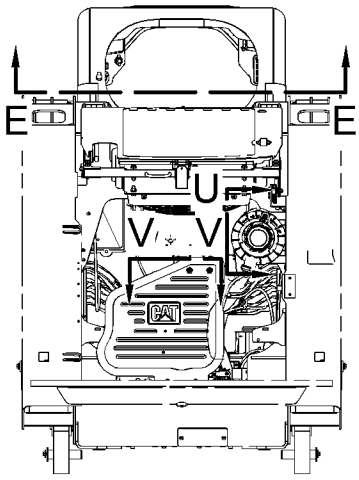

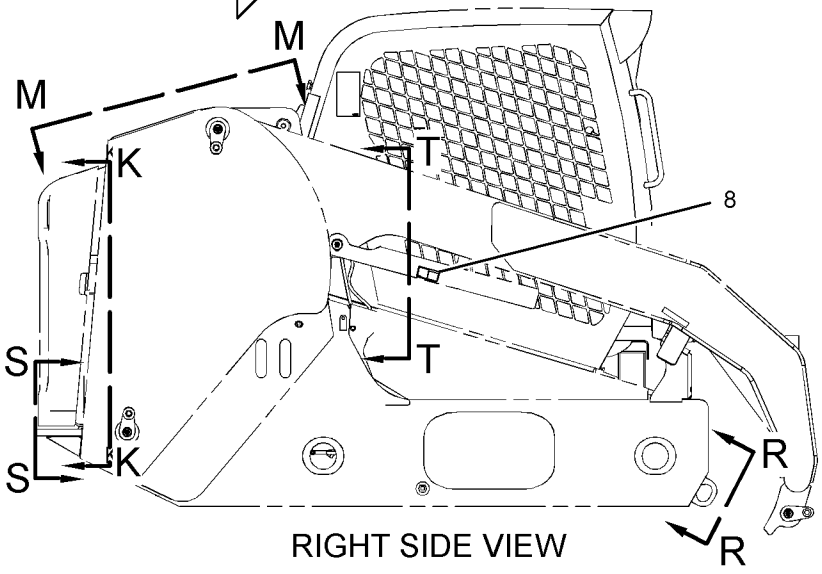

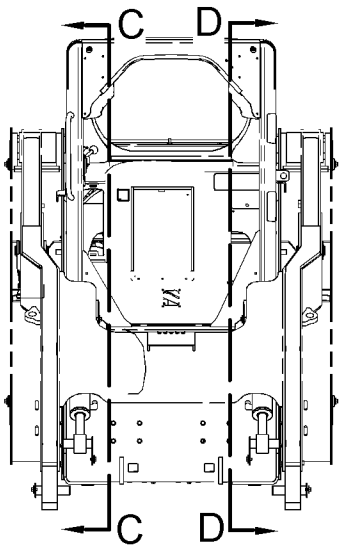

REFER TO ALL ILLUSTRATIONS OF
THIS GROUP FOR AUXILIARY VIEWS

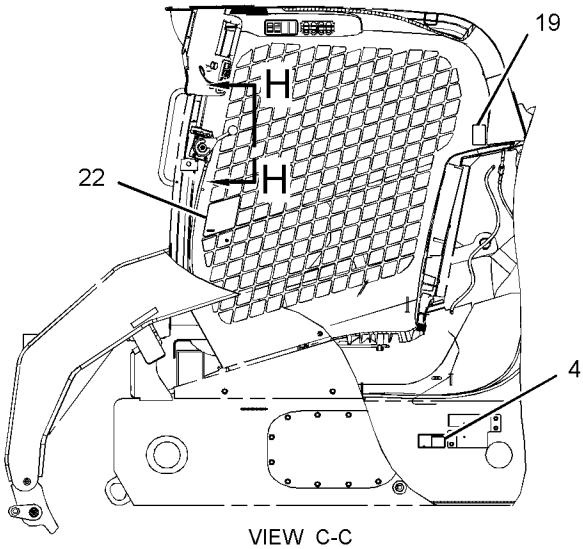

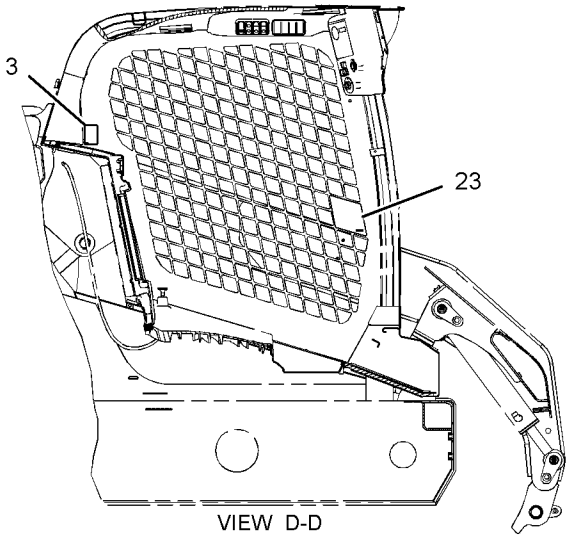

GRAPHIC #1

g01333119

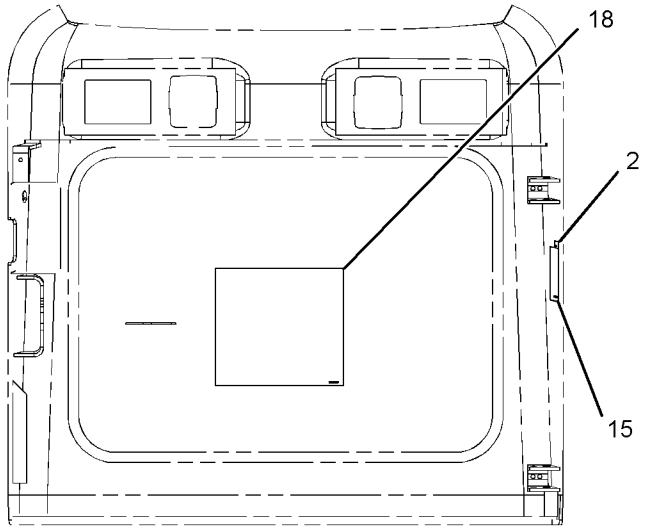

VIEW K-K

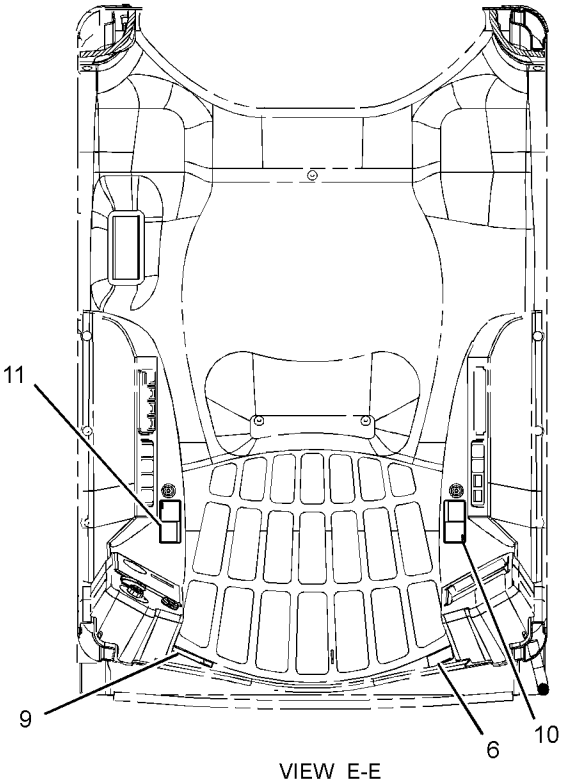

VIEW E-E

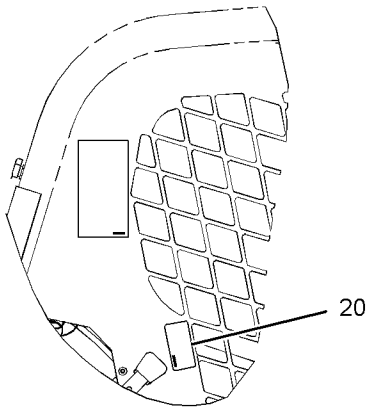

VIEW J-J

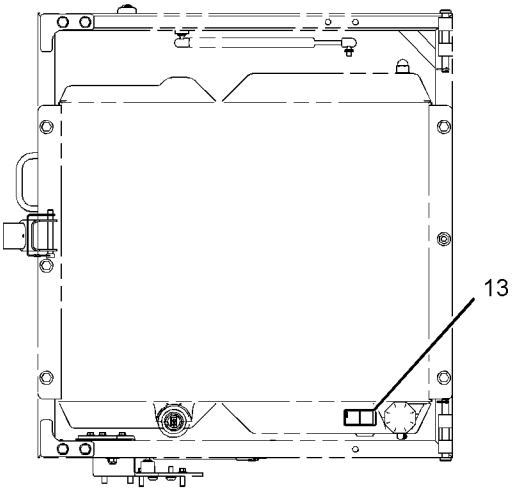

VIEW M-M

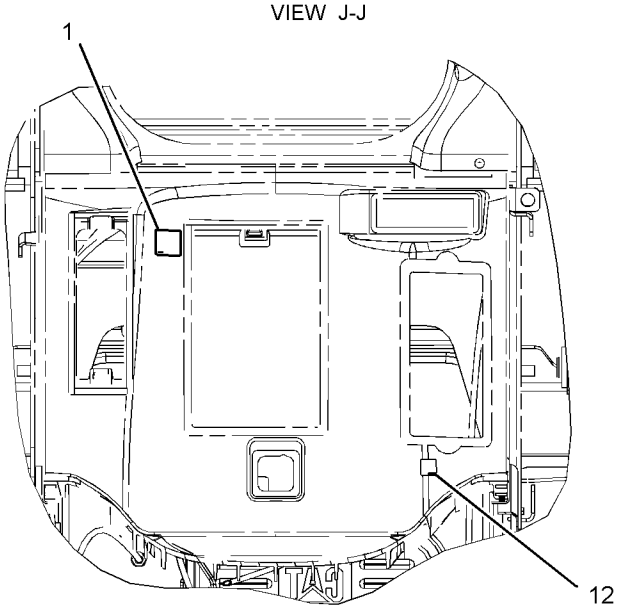

VIEW T-T

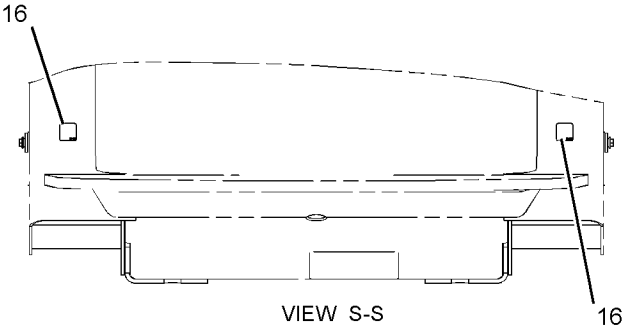

VIEW S-S

GRAPHIC #2

g01333138

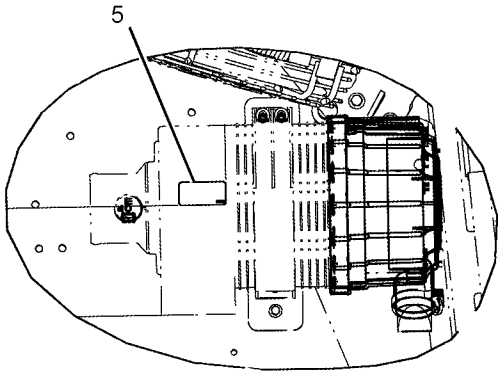

VIEW U

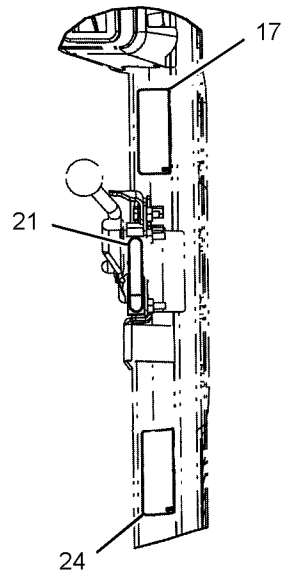

VIEW H-H

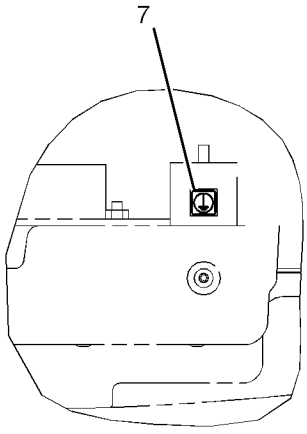

VIEW V-V

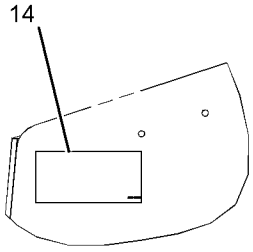

VIEW Y-Y

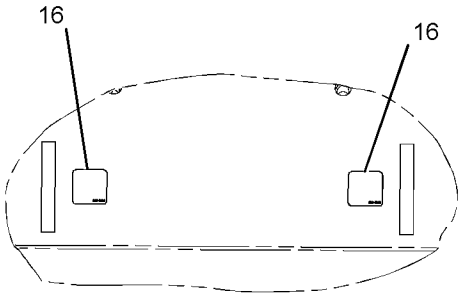

VIEW R-R

GRAPHIC #3 **<END>** g01359601

SERVICE EQUIPMENT AND SUPPLIES

258-3225 PLATE & FILM GP

S/N: JAY1-UP

AN ATTACHMENT

SMCS-7405, 7557 **i02706201**

NOTE	REF NO	GRAPHIC REF	PART NUMBER	QTY	PART NAME 1 2 3 4 5 6 (PRODUCT LEVEL)	SEE PAGE
	1	2	**157-2853**	1	FILM (READ OMM)	
	2	2	**169-2876**	1	FILM-IDENTIFICATION (12-VOLT)	
	3	1	**219-0302**	1	FILM-WARNING (NO WELD, NO DRILL, READ OMM)	
	4	1	**224-0672**	1	FILM-WARNING (HIGH PRESSURE, READ OMM, INTL)	
	5	2	**224-8946**	1	FILM-WARNING (DO NOT USE ETHER)	
	6	2	**228-2616**	1	FILM-WARNING (UNIVERSAL, READ OMM)	
	7	1	**233-0059**	1	FILM-WARNING (GROUND)	
	8	1	**234-6071**	1	FILM-WARNING (LIFT ARM BRACE)	
	9	2	**234-6069**	1	FILM-WARNING (CRUSH HAZARD)	
	10	2	**234-6076**	1	FILM-WARNING (NO ACCESS)	
	11	2	**234-6081**	1	FILM-WARNING (WORK TOOL)	
	13	2	**235-1368**	1	FILM-WARNING (RADIATOR)	
	14	1	**239-6986**	1	PLATE-PRODUCT IDENTIFICATION (MACHINE)	
	15	2	**253-7817**	1	FILM-WARNING (JUMP START, READ OMM)	
	16	1	**263-4836**	4	FILM-SYMBOL (TIE-DOWN)	
	18	2	**285-2167**	1	FILM-INSTRUCTION	
	19	1	**285-2171**	1	FILM-WARNING (ROPS, FOPS, READ OMM)	
	20	1	**285-2173**	1	FILM-WARNING (CRUSH HAZARD, READ OMM)	
	21	1	**285-2176**	1	FILM-SPEED (THROTTLE)	
	22	1	**285-2177**	1	FILM-INSTRUCTION (OPERATOR CONSOLE)	
	23	1	**285-2178**	1	FILM-INSTRUCTION (OPERATOR CONTROL)	
	24	2	**295-2567**	1	FILM-IDENTIFICATION (BUCKET LOWER)	
	25	1	**302-4390**	1	FILM-WARNING (CRUSH HAZARD, FASTEN SEAT BELT)	
	26	1	**308-1440**	1	FILM-WARNING (CRUSH HAZARD, FASTEN SEAT BELT)	

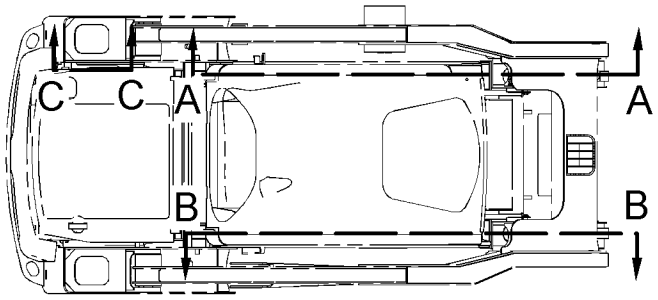

TOP VIEW FWD

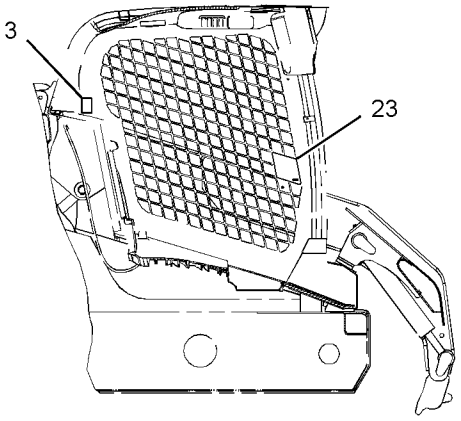

VIEW A-A

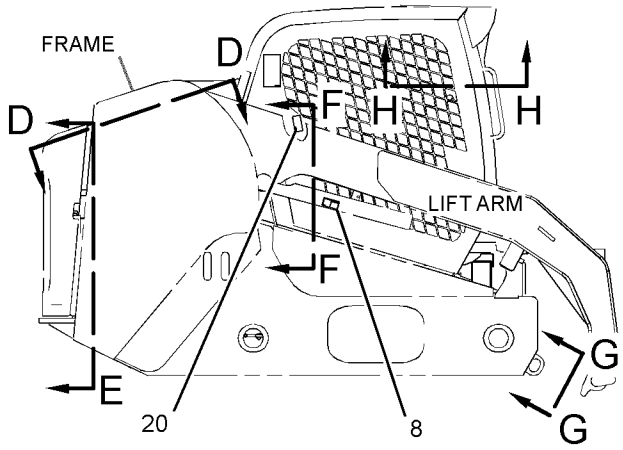

RIGHT SIDE VIEW

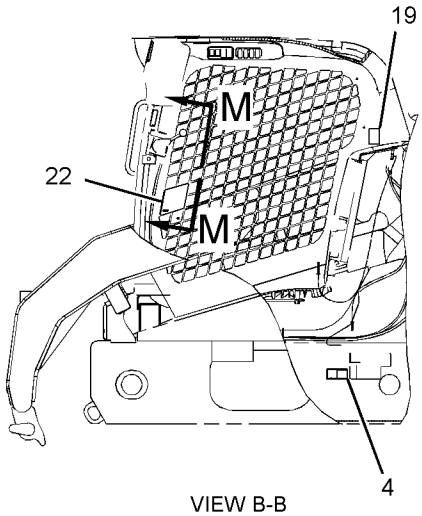

VIEW B-B

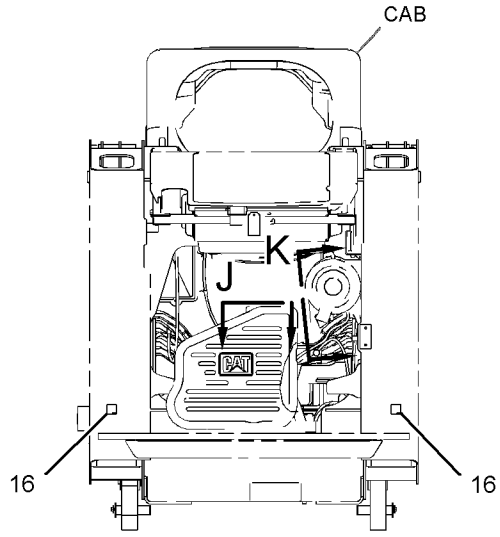

REAR VIEW

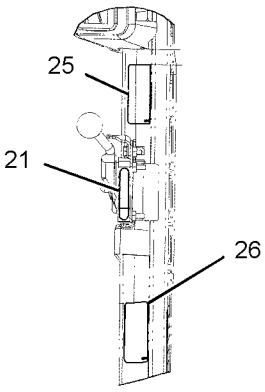

VIEW M-M

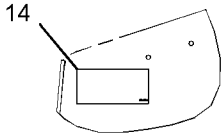

VIEW C-C

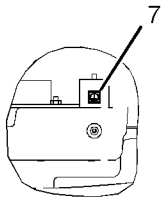

VIEW J

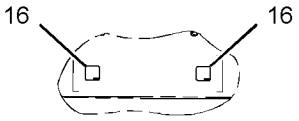

VIEW G-G

REFER TO ALL ILLUSTRATIONS OF THIS GROUP FOR AUXILIARY VIEWS

GRAPHIC #1

g01359599

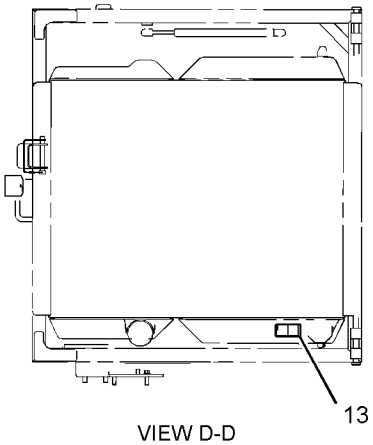

VIEW D-D

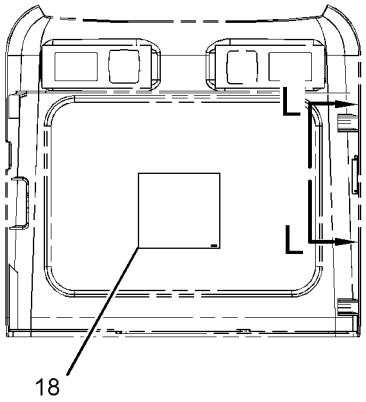

VIEW E

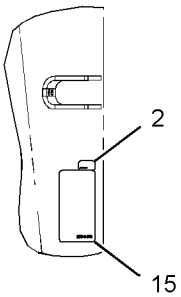

VIEW L-L

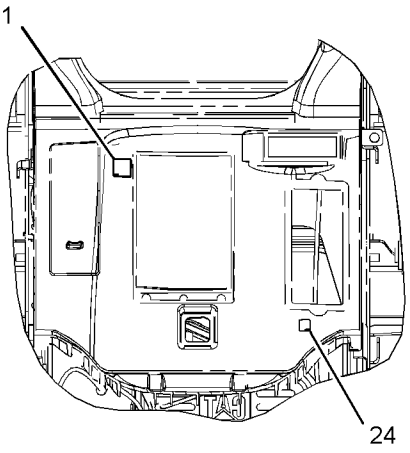

VIEW F-F

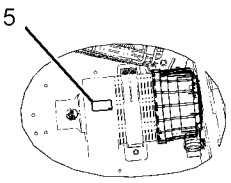

VIEW K

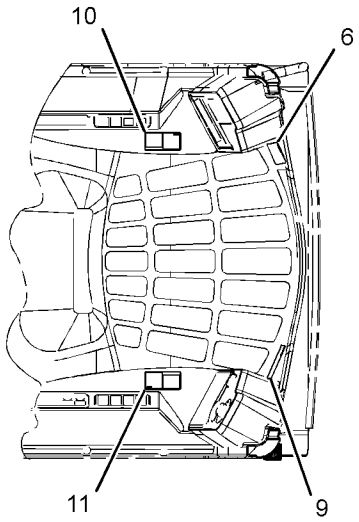

VIEW H-H

GRAPHIC #2 **<END>** g01359600

SERVICE EQUIPMENT AND SUPPLIES

304-5237 PLATE & FILM GP

S/N: JAY1-UP
AN ATTACHMENT

SMCS-7405, 7557 **i02674957**

NOTE	REF NO	GRAPHIC REF	PART NUMBER	QTY	PART NAME 1 2 3 4 5 6 (PRODUCT LEVEL)	SEE PAGE
	1	1	**199-3410**	2	FILM (OIL)	

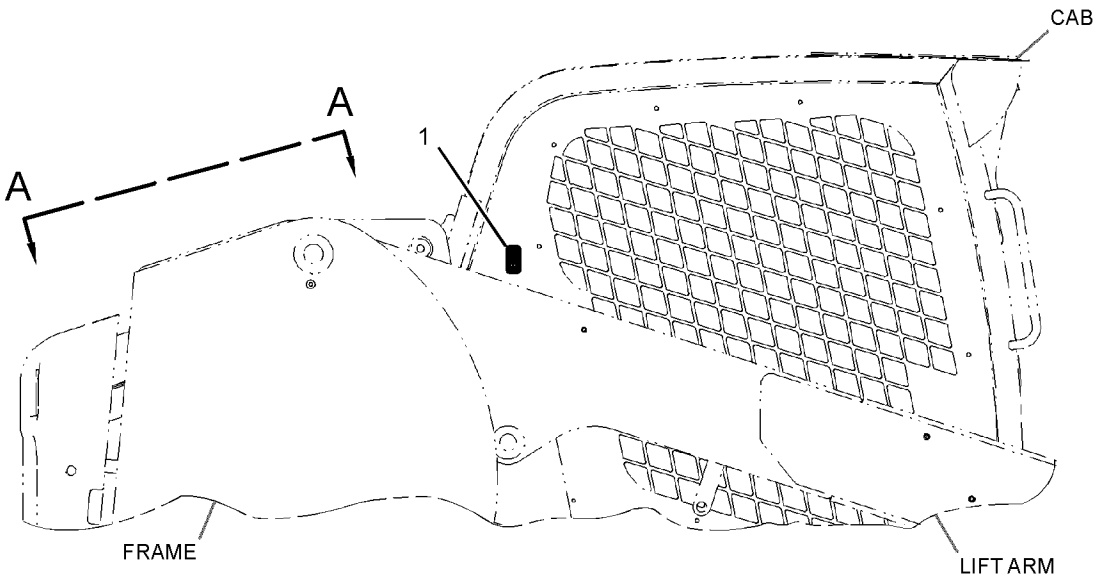

RIGHT SIDE VIEW

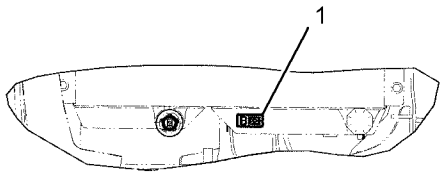

VIEW A-A

GRAPHIC #1 **<END>** g01346444

MEMORANDA

PART NUMBER INDEX

Part	Page
1	
1B-3057	240
1D-4677	456
1F-7567	127
1G-8878	122
1H-3244	70
	92
1H-8134	280
1L-2279	358
1M-6119	107
1M-6120	107
1P-0810	107
1P-3703	232
	235
1P-4278	16
	40
	63
1P-4578	230
1P-4582	232
	235
1P-7009	412
1R-0734	35
1S-0994	203
	205
	207
	209
	213
1S-7252	73
	107
1S-9593	82
2	
2B-0858	115
2J-6540	211
2K-4973	41
	165
2M-6102	120
2M-9780	120
	123
	125
	189
	190
	195
	199
	201
	203
	205
	207
	209
	211
	213
	215
	219
	221
	223
	238
	270
	322
2P-8104	97
2S-3440	230
	232
	235
2S-4078	232
2S-6408	356
2V-3216	201
2V-8260	437
3	
3B-4505	23
	25
	33
	38
	53
	430
3B-4628	196
	324
3B-7255	358
3B-8488	345
3B-8489	183
	184
	186
	187
	255
	256
	280
	310
	311
	312
	314
	315
	336
	344
3D-2824	120
	123
	125
	130
	218
	219
	225
	230
	232
	235
	240
	244
3E-3371	93
3E-3377	250
3E-3892	44
3E-4321	120
3E-4352	433
3E-4370	335
3E-5153	97
3E-5154	97
3E-7404	201
3E-8020	19
	180
	461
3F-9556	395
	398
	442
3J-1907	122
	123
	125
	127
	128
	130
	191
	195
	215
	228
	230
	232
	233
	235
	247
	270
	277
3J-7354	221
	223
	232
	235
	270
	272
3K-0360	69
	127
	130
	225
	240
	244
	246
	265
3S-2093	58
	82
	88
	100
	102
	104
	105
	107
	110
	112
	196
	215
	358
	366
	369
	375
	377
	378
	379
	380
	381
	395
	399
	411
	413
	417
	426
3S-8665	123
	125
	221
	223
3S-9182	166
4	
4B-0418	228
4B-4274	228
4B-4863	176
	228
4D-6466	63
	196
	215
4I-9404	38
4J-0522	230
4J-0527	232
	233
	235
4J-5267	230
4J-5477	195
	215
	221
	223
	232
	235
4J-7533	270
4K-1388	270
4K-4709	168
4K-8864	40
	44
	63
	221
	223
	373
	411
	412
4M-5285	256
4P-7428	105
4P-7429	105
	248
4P-7581	58
	102
	105
	110
4P-8134	102
	105
	110
	199
	249
4V-0611	240
4V-0612	240
5	
5B-0651	280
	323
	324
5C-2890	56
	60
	70
	73
	92
	102
	391
	393
	395
	398
	414
	415
	422
5C-7261	41
	73
	92
	102
	105

► **PRIMARY REFERENCE**

PART NUMBER INDEX

Part	Page
	110
	123
	125
	127
	130
	165
	232
	235
	358
	395
	398
	408
	430
	442
5C-8310	459
5C-8311	459
5C-8312	176
5C-9553	56
	63
	67
	102
	110
	175
	325
	373
	374
	410
	412
	442
	461
5H-9743	280
5I-4370	123
5I-4936	18
5I-4993	25
5I-5077	56
5I-7505	28
5I-7525	13
5I-7623	56
5I-7625	32
5I-7628	39
5I-7630	32
5I-7678	50
5I-7689	56
5I-7719	32
5I-7728	39
5I-7833	25
5I-7931	52
5I-7933	56
5I-8021	50
5I-8023	50
5I-8056	39
5I-8063	33
5I-8109	56
5I-8110	56
5I-8111	54
	55
5J-3886	65
5K-8451	241
5K-9090	130
	230
	232
	235
5K-9660	225
5P-0372	41
	196
	324
	391
	393
	414
	415
	433
	453
5P-0537	61
5P-0597	56
	232
	236
5P-0761	73
5P-1076	24
	346
5P-1420	40
5P-1442	16
	63
5P-2230	230
	232
	235
5P-3092	118
	119
5P-3863	260
	263
5P-4115	102
5P-4116	19
	58
	105
	123
	125
	127
	130
	196
	215
	221
	223
	232
	236
	241
	264
	358
	388
	402
	408
	411
	417
	422
5P-4868	51
	56
	230
	232
	235
5P-4961	63
5P-5623	109
5P-5637	367
	407
5P-5755	422
5P-5924	411
	412
	426
5P-5927	422
5P-7162	102
5P-7464	232
	236
5P-7465	232
	236
5P-7470	40
5P-7471	40
5P-7483	422
5P-7703	40
5P-7957	422
5P-7958	429
	433
5P-7970	65
5P-8246	358
5P-8309	41
5P-8500	429
5T-7869	456
5T-7870	456
5T-9400	391
	393
	433
	453
5V-8309	41
6D-1641	411
	416
	428
6D-4246	130
	373
	411
	412
6D-4247	203
	205
	207
	209
	213
6E-4701	251
	▶269
6E-4721	269
6E-4722	269
6E-4723	269
6E-4726	269
6F-4718	132
	133
6I-1418	101
6J-7855	261
6K-4148	168
6L-3966	391
	393
	414
	415
	453
6N-8863	280
6R-3320	225
6T-1375	391
	393
	414
	415
6V-0400	232
	236
6V-0852	123
	125
	230
	232
	235
6V-1889	120
	221
	223
6V-1970	1
	▶429
6V-2235	411
	428
6V-2317	38
	56
	61
6V-3582	227
6V-3940	32
	35
	43
	50
6V-3965	123
	125
	230
	232
	235
6V-5215	8
	21
	36
	61
6V-5217	37
	65
	72
6V-5221	39
6V-5698	73
6V-5834	102
	437
6V-5839	37
	433
6V-6689	402
	411
	416
6V-6715	80
6V-6717	367
	407
6V-7357	56
	73
	105
	180
	395
	399
	402
	408
	410
	415
6V-7359	232
	236
6V-7744	323
6V-8076	230
	233
	235
6V-8185	371
6V-8186	442
6V-8369	376
6V-8397	127
	128
	191
	195
	196
	199
	201
	203

6

▶ PRIMARY REFERENCE

PART NUMBER INDEX

Part	Page	Part	Page	Part	Page	Part	Page
	205		125		218	7K-1181	40
	207	6V-8724	128		322		82
	209		191	6V-9830	199		88
	211		195		218		101
	213		215		219		104
	215		228	6V-9836	128		105
	218		247	6V-9847	235		107
	219	6V-8774	128	6V-9852	199		109
	228	6V-8775	240		219		112
	232	6V-8783	195		238		195
	235		215		244		227
	238	6V-8788	203	6V-9853	240		228
	240		205	6V-9873	228		437
	241		207		247	7M-7410	44
	247		209	6W-5698	69	7M-8485	123
6V-8398	123		213				125
	125	6V-8937	196				230
	127		215	**7**			232
	130	6V-8949	349				236
	199	6V-8978	130	7B-1597	196	7R-0476	358
	218	6V-9004	123		215	7S-3912	211
	219	6V-9007	225		241	7S-3913	211
	227	6V-9028	105	7C-8246	391	7S-3916	201
	228	6V-9162	240		393	7S-3919	201
	238	6V-9168	196		414	7T-6087	97
	240		215		415	7T-6088	97
	241	6V-9170	244		453	7T-6090	97
	244	6V-9189	169	7D-1553	416	7T-6092	97
	247		255	7D-8508	186	7T-6093	97
	277		256		187	7T-6099	97
6V-8624	123		257	7E-2700	172	7W-3983	266
6V-8625	244		310		173	7X-0495	358
6V-8626	199		311		174	7X-0507	446
	219		312	7E-9898	127		447
	322		314	7G-1060	101		448
6V-8627	232		315	7G-2950	196	7X-0579	176
	235		336		215	7X-0603	169
6V-8636	128		344	7G-2951	196	7X-0608	73
	195		345		215	7X-0610	118
	215		422	7G-3832	238		119
	247		431		241	7X-0818	53
6V-8637	125		432		244		102
	130		443	7G-3833	238		446
6V-8638	125		444		241		447
6V-8639	127		445		244		448
6V-8640	189	6V-9200	232	7G-3834	238	7X-0848	376
	190		235		241	7X-2031	402
6V-8641	195	6V-9335	402		244		411
	215		411	7H-7055	63		416
6V-8642	199		416		196	7X-2475	433
	219	6V-9509	130		215	7X-2533	110
	221	6V-9512	235	7I-5418	128	7X-2534	102
	223	6V-9632	461	7J-0204	187	7X-2535	199
6V-8647	221	6V-9672	176	7J-9108	120		248
	223	6V-9673	228		195		249
6V-8713	218	6V-9746	123		199	7X-2537	43
	219		125		215	7X-2539	169
6V-8715	201		130		218	7X-2543	241
	203		189		219	7X-2548	105
	205		190		221	7X-2556	433
	207		225		223	7X-2561	358
	209		230		227	7X-2562	172
	211		240		238		173
	213		241		244		174
6V-8716	123	6V-9829	191		322	7X-2621	323

► **PRIMARY REFERENCE**

PART NUMBER INDEX

Part	Page
7X-3393	431
	432
7X-6312	77
7X-7729	41
	44
	165
	166
	196
	215
	241
	264
	280
	323
	369
7Y-9099	433
8	
8C-3080	65
8C-3095	80
8C-3205	230
8C-3334	395
	398
8C-3413	143
8C-3445	16
8C-3446	16
8C-3451	221
	223
8C-3681	63
8C-3798	395
	399
8C-6440	408
8C-7524	425
8C-7563	221
	223
8C-8451	79
8C-8558	102
8C-8992	118
	119
8C-9778	97
8C-9783	97
8D-9671	241
8E-1118	408
8E-8293	391
	393
	414
	415
8F-1434	97
8F-3469	266
8G-1151	395
	398
8J-4455	97
8J-8197	221
	223
8L-2779	16
8L-5188	196
	324
8L-8413	80
	82
	100
	101
	104
	105
	109
	112
	195
	240
	366
	395
	398
	410
	416
	437
8M-4791	228
8N-0869	73
	107
8R-3857	168
8R-9654	75
8S-0934	446
	447
	448
8S-4723	446
	447
	448
8S-7803	391
	393
	414
	415
8T-0076	240
8T-0078	123
	125
8T-0119	246
8T-0154	411
	416
	428
8T-0276	39
8T-0318	41
8T-0328	102
	442
8T-0337	228
8T-0341	241
8T-0352	442
8T-0379	195
	215
8T-0389	83
	84
	85
8T-0404	120
8T-0642	31
8T-0737	358
8T-1158	251
	252
	272
8T-1576	120
	238
8T-1687	130
8T-1893	211
8T-1894	211
8T-2444	391
	393
	414
	415
8T-3647	33
8T-3844	246
8T-3984	58
8T-4121	18
	40
	41
	44
	63
	65
	83
	87
	97
	107
	110
	120
	125
	140
	166
	175
	196
	201
	211
	215
	221
	223
	225
	227
	230
	238
	241
	244
	254
	260
	263
	264
	267
	268
	321
	323
	324
	349
	372
	373
	406
	411
	413
	417
	426
	428
8T-4122	24
	118
	119
	358
	433
8T-4123	196
	347
	348
	350
8T-4132	24
8T-4133	41
	44
	54
	55
	73
	97
	107
	110
	196
	215
	221
	223
8T-4136	40
	63
	65
	196
	201
	215
	225
	227
	267
	268
	321
	373
	410
	412
	415
	426
	428
8T-4137	110
	120
	165
	196
	211
	215
	241
	349
8T-4138	58
	162
	176
	256
8T-4139	346
8T-4149	230
8T-4159	41
	165
8T-4171	201
8T-4172	323
8T-4176	24
8T-4177	53
8T-4181	41
	165
	180
	374
8T-4184	233
	236
8T-4185	120
	267
	268
8T-4186	349
8T-4189	23
	120
	176
	196
	203
	205

PART NUMBER INDEX

Part	Page	Part	Page	Part	Page	Part	Page
	207		396		432	8T-6685	244
	209		399		443		369
	213		402		444		372
	215		411		445		411
	221		413	8T-4244	346		412
	223		417		391	8T-6726	51
	241		422		393	8T-6868	164
	410		442		414		171
	415		443		415	8T-6869	255
8T-4191	196		444	8T-4742	60		256
	280		445		371		257
8T-4192	24	8T-4223	24	8T-4744	60		310
	221		164		371		311
	223		170	8T-4778	328		312
	248		171		329		314
8T-4195	140		221		330		315
8T-4196	44		223		331		336
	63		233		332		344
	110		236		333	8T-6870	196
	120		248		361		216
	140		258		433		358
	166		259	8T-4779	358	8T-6902	60
	175		260	8T-4896	72		442
	196		263	8T-4908	19	8T-6904	60
	221		346		40		442
	223		356		44	8T-6912	54
	230		372		61		55
	238		411		63		345
	241		413		73	8T-6936	422
	244		446		105	8T-7329	21
	264		447		166	8T-7547	43
	323		448		264		54
	324	8T-4224	33		358		55
	372		40		431		254
	410		43		432	8T-7934	267
	412		44		443		268
8T-4197	10		48		444	8T-8729	93
	442		53		445	8T-8737	84
8T-4200	25		63	8T-4910	170		85
	33		73		356		102
	105		92	8T-4956	258		105
	196		102		259		110
	215		105		260		382
	241		110		263		383
8T-4205	41		120		372		384
	58		166		411		385
	63		169		412		386
	67		196	8T-4971	421		387
	70		203	8T-5005	44		405
	73		205	8T-5049	258		416
	75		207		259	8T-8799	101
	92		209		260		105
	102		213		263	8T-9655	101
	105		216	8T-5372	422	8Y-4615	395
	110		241		425		398
	162		254	8T-5439	280	8Y-5947	80
	165		358	8T-5460	404		402
	175		391	8T-6451	225		408
	176		393	8T-6466	41		411
	199		408		44		416
	246		414		225		422
	248		415	8T-6684	130		425
	249		422		230		437
	358		430		232	8Y-7385	356
	373		431		235	8Y-7386	356

► **PRIMARY REFERENCE**

PART NUMBER INDEX

Part	Page
8Y-8081	367
	407
9	
9F-5644	73
	376
9G-3695	250
9M-1974	8
	10
	21
	31
	32
	35
	36
	37
	38
	39
	43
	50
	56
	61
	65
	72
9M-8406	63
	73
	196
	216
9R-1005	227
	238
9R-1499	88
	90
9R-2004	201
	211
9R-2613	168
9R-2959	340
9R-5301	351
9R-7802	227
	238
9R-7803	227
	238
9R-7941	437
9R-7942	86
9R-7958	86
9R-7980	437
9R-9901	48
9S-1350	196
	216
	241
9S-4185	69
	225
9S-4191	130
	230
9S-8002	143
	270
	272
9S-8004	143
9S-8007	187
9S-8008	143
9T-7303	196
	324
9U-6994	230
	232
	235
9U-7000	230
	232
	235
9U-8746	408
9W-0607	83
	109
9W-3324	84
	85
9X-1054	100
	105
	366
	410
	416
9X-1056	366
	416
9X-1481	228
9X-1813	94
	109
9X-2026	256
	325
9X-2036	97
9X-2040	433
9X-2044	391
	393
	396
	399
	414
	415
	437
9X-2045	367
	407
	422
	443
	444
	445
9X-2092	422
9X-2134	199
	219
9X-2546	377
	378
	379
	380
	381
9X-3401	94
9X-3410	107
9X-4244	83
9X-6032	254
9X-6273	203
	205
	207
	209
	213
9X-6274	203
	205
	207
	209
	213
	256
9X-6581	196
	216
9X-6763	107
9X-6772	77
	78
9X-7378	411
	412
	426
9X-7380	411
	413
	426
9X-7381	411
	413
	426
9X-7382	411
	413
	426
9X-7383	411
	413
	426
9X-7408	94
9X-7744	272
9X-8118	86
9X-8121	86
9X-8139	86
9X-8250	411
	412
	416
	428
9X-8256	374
	420
	437
	441
9X-8257	351
9X-8912	20
0	
003-2143	358
003-3082	270
004-6810	411
	416
	428
030-1705	73
032-8139	17
036-1865	44
039-8557	349
067-2551	358
069-4080	44
	63
084-4277	437
085-9513	11
090-8865	433
094-4628	8
	11
094-7235	61
095-0641	442
095-1209	371
095-1325	391
	393
	414
	415
	453
095-1513	38
095-1537	35
095-1671	35
095-2005	32
096-0194	142
096-2500	56
096-3321	38
096-3741	13
096-4415	20
096-8475	39
096-8990	61
096-8994	61
096-8995	61
096-8996	61
096-8997	61
096-9529	21
097-0832	127
099-3649	53
099-4420	13
099-7519	61
099-7520	61
099-7521	61
099-7522	61
099-7523	61
099-7524	61
099-7525	61
1	
100-3253	84
	85
100-3254	84
	85
100-3255	84
	85
100-3685	97
100-3866	118
	119
100-4112	97
100-4113	97
100-4115	97
100-4118	97
100-4119	97
100-5041	366
	416
100-5805	101
100-6674	366
	416
101-2867	19
	180
	461
101-6544	37
101-7404	260
	263
101-8296	411
	412
	426
101-9759	358
102-7341	61
102-7342	61
102-7343	61
102-7344	61
102-7345	61
102-7346	61
102-7347	61
102-7348	61
102-7349	61
102-7350	61
102-7351	61
102-8703	238
	244
102-8801	88

PART NUMBER INDEX

Part	Page	Part	Page	Part	Page	Part	Page
	102	103-9288	11	113-8492	101		366
	109	103-9289	11	114-4516	73		375
102-8802	67	103-9290	11	115-0468	33		391
	80	103-9680	9	115-1615	105		393
	101	103-9703	13		373		410
	105	103-9725	275		410		414
	109	103-9747	43		412		415
	372	103-9750	43	115-3069	395		416
	405	104-5957	459		398		437
	410	104-8039	61	115-8161	221	125-7875	88
	411	105-2814	▶70		223		101
	412		72	116-2001	▶357		105
	413	105-4593	130		358		109
	416	105-9411	411	116-7471	75		395
	426		413	117-1385	105		398
102-8803	93		426	117-2827	18		437
	104	106-3108	253	117-2829	11	125-7876	101
	109	106-8704	109		18	126-1774	101
	195	107-2417	80	117-3283	18	127-2170	48
	369	107-3134	105	117-3285	18		391
102-8804	80	107-3659	76	117-3447	21		393
	94	107-3672	275	117-3448	21		414
	100	108-0656	459	117-5015	20		415
	109	109-2356	390	118-2990	24		453
	250		405	118-8118	63	127-5483	109
	366		416	119-1414	357	127-5484	101
	396		437	119-1415	357	127-6316	270
	398	109-5821	123	119-3662	100	128-2955	9
	410		125		101	128-2956	9
	416	110-2570	16		105	128-2958	9
102-8805	84	110-6326	46		109	128-6985	▶86
	85	110-6331	46		358		91
	100	110-6349	232		366		163
	101		235		367	128-7721	375
	110	111-4627	358		407	128-8614	63
	240		422		410	129-1854	163
	366	112-1817	228		416	129-1855	163
	383		▶274		437	129-3178	358
	384	112-9252	267	119-3859	358		396
	385		268	119-9631	367		399
	386	112-9401	63	122-6867	196		421
	387	112-9717	46	122-6869	358		442
	391	112-9861	274	122-7052	44	129-3180	24
	393	113-0363	61	122-8948	61	129-8542	395
	395	113-0364	61	122-8949	61		398
	398	113-0693	372	123-5798	277	129-8545	395
	410		411	123-5799	277		398
	414		412	124-1916	358	130-1676	276
	415	113-1141	37	124-1917	358	130-7596	11
	416	113-2004	261	124-2113	195	131-0749	277
102-8806	82	113-4458	70	124-2129	195	131-3540	431
	102	113-4459	70	124-2140	195		432
	110	113-4460	70	124-2141	195	131-5879	323
	112	113-4461	70	124-2456	195	131-6143	48
	358	113-4462	70		215	132-4720	361
	367	113-4463	70	124-5640	366	132-5166	175
	407	113-4464	70		416	132-5789	105
103-2006	437	113-4465	70	125-7874	88		109
103-8133	375	113-4466	70		100	132-7551	195
103-9062	13	113-4467	70		101		215
103-9083	37	113-4468	70		104		240
103-9272	8	113-4469	70		105		323
103-9276	13	113-4470	70		109	134-0404	122
103-9277	21	113-8490	101		195	134-2540	101
103-9280	20	113-8491	101		240	134-2827	422

▶ **PRIMARY REFERENCE**

PART NUMBER INDEX

Part	Page
134-3987	58
134-7722	19
135-7242	420
	437
	441
135-9383	287
	▶328
135-9384	287
	288
	292
	296
	▶329
135-9385	287
	288
	293
	296
	▶330
135-9386	288
	289
	291
	296
	313
	▶331
135-9387	287
	289
	291
	294
	▶332
135-9393	328
135-9394	329
135-9395	330
135-9396	331
135-9397	332
136-1953	411
	416
	428
136-3194	395
	398
136-4192	395
	398
137-6645	105
	265
139-6039	389
	391
	393
	414
	415
	437
141-4999	288
	289
	290
	292
	293
	294
	295
	▶361
141-8061	101
142-7493	155
	156
	157
	158
	159
	160
142-7494	▶155
142-7495	▶156
142-8726	146
	147
142-8728	▶146
	155
142-8731	146
	147
	148
	149
	152
	153
	154
	155
142-8737	▶146
	155
142-8738	▶146
	156
142-8759	146
	147
	148
	149
	151
	154
	155
142-8805	310
	311
	312
	314
142-8831	165
142-8832	41
	165
142-8858	437
142-8928	69
142-8937	265
142-8997	227
142-9023	114
142-9025	▶147
	156
142-9029	114
	115
142-9033	118
	119
142-9036	118
	119
142-9091	280
142-9094	280
142-9117	375
143-0539	▶97
	99
143-1344	97
144-0195	391
	393
	414
	415
144-4531	270
144-4532	270
146-6371	402
	410
	416
146-6729	97
146-9439	82
	88
	101
	112
	199
	219
147-1445	101
147-1446	101
148-2371	175
148-2372	175
148-5353	422
148-8315	199
	219
	221
	223
148-8316	221
	223
148-8318	128
148-8319	201
	203
	205
	207
	209
	211
	213
148-8325	195
	215
148-8327	125
	130
148-8336	128
	195
	215
	247
148-8339	123
	125
148-8340	127
148-8341	218
	219
148-8344	240
148-8345	125
148-8347	225
148-8358	123
148-8361	232
	235
148-8362	130
	230
	232
	235
148-8364	244
148-8368	232
	235
148-8378	128
	191
	195
	215
	228
	247
148-8382	120
148-8390	199
	219
	322
148-8392	240
148-8393	199
	219
	238
	244
148-8407	130
148-8411	225
148-8433	128
148-8436	240
148-8439	128
148-8445	235
149-0686	▶182
	246
149-4232	310
149-5435	310
149-5436	311
149-5437	312
149-6371	410
	412
	426
150-3056	203
	205
	207
	209
	213
150-3072	130
150-3073	235
150-4034	195
	215
150-4043	228
	247
150-4049	230
150-8599	146
	147
	148
	149
	150
	151
	152
	153
	154
	155
150-8621	1
	▶169
151-2110	67
151-5328	33
152-1157	118
	119
152-4898	47
153-2682	391
	393
	414
	415
	453
153-2683	453
153-2994	201
	203
	205
	207
	209
	211
	213
153-2995	201
	211
153-6237	123
153-6256	221
	223
154-1580	172
	173
	174
	358
	404
154-2704	282
	283
	284

PART NUMBER INDEX

Part	Page	Part	Page	Part	Page	Part	Page
	285		109		109		213
	286		395	157-0940	336	163-3955	402
	297		398		344	163-8811	203
	298	155-2265	80	157-0941	256	164-1154	442
	300		100	157-0942	256	164-2108	278
	301		101	157-2528	79	164-3213	183
	302		109	157-2853	466	164-5557	123
	303		358		470	164-5567	123
	304		366	157-4835	321		125
	305		410	159-2953	328		230
	306		416		329		232
	307	155-2270	80		330		235
	308		100		331	164-5605	240
	309		101		332	164-5606	123
	316		104		333		125
	317		105	159-4535	207	164-5608	130
	318		109	159-4536	207	164-7556	83
	342		195	159-4537	207	164-9295	▶184
	343		240	159-5411	345		346
154-3972	▶156		358	159-5761	▶156	164-9425	109
154-3973	▶156		366	159-5772	114	164-9614	333
154-3978	▶147		375		115		▶335
	156		410	159-5797	323	164-9989	336
154-3979	▶147		416	159-8035	256		337
	156		437		345		341
154-3980	▶148	155-2271	102	159-8038	310		344
	156		105		311	165-0142	142
154-3981	▶148		109		312	165-0312	437
	156		395		314	165-2601	25
154-3982	147		398	159-8049	107	165-4894	358
	148		405	159-8050	107	165-4898	▶157
154-5011	▶255		410	159-8405	165	165-4901	▶148
	292		412	159-9322	101		157
	293		416	159-9495	82	165-4902	▶149
	294		426		112		157
	295		437	159-9496	82	165-4903	▶157
154-5012	255	155-2274	88		112	165-4906	▶149
	310		102	160-2243	196		157
	311		109	160-2443	▶93	165-4907	▶149
	312		391		442		157
	314		393	160-3518	408	165-4909	148
	315		414	161-0185	201		149
154-5013	255		415	161-0186	201	165-7095	24
	257	155-5652	114	161-0188	201		433
154-5018	▶183		115	161-0189	201	165-8731	▶257
	292	155-9010	114	161-0190	201		346
	293		115	161-3357	109	165-8732	337
	294	155-9432	114		232		▶340
	295		115		235		341
154-5020	203	155-9433	114	161-4128	325	165-8740	▶345
154-5021	203		115	161-4130	310		346
154-5022	203	156-0283	446		311	165-8743	345
154-5053	311		447		312	166-2551	358
154-5070	312		448		314		▶360
154-5423	395	156-0891	▶256	162-5236	292	166-2552	358
	398		333		293	166-2557	358
155-1279	250	156-0913	256		294	166-2558	358
155-2255	88	156-1458	82		295	166-2559	358
	100		112		▶325	166-2560	195
	101	156-1460	82	162-8154	335		326
	109		112	163-1385	201		327
	366	156-5508	205	163-1386	203		352
	410	156-5509	205		205		353
	416	156-5510	205		207	166-4041	340
155-2260	101	156-6175	102		209	167-0608	358

▶ **PRIMARY REFERENCE**

PART NUMBER INDEX

Part	Page
167-1530	437
167-4339	142
168-8389	282
	283
	284
	285
	286
	297
	298
	300
	301
	302
	303
	304
	305
	306
	307
	308
	309
	316
	317
	318
	321
	342
	343
168-8772	408
169-1679	114
169-2876	466
	470
169-3569	345
169-6715	40
170-5707	177
170-5836	346
170-6705	132
	133
171-5349	94
171-6725	225
172-5285	184
172-6490	88
172-8591	455
172-9287	127
173-3016	162
173-7407	346
	▶356
174-2388	211
174-2389	211
174-2393	211
174-3091	382
	383
	384
	385
	386
	387
174-3097	211
175-4236	176
175-4238	1
	2
	▶351
175-4239	175
176-1477	105
176-1522	105
176-3900	▶363
176-4079	178
	181
177-4122	422
177-7414	354
	355
177-7415	354
	355
177-9150	354
177-9151	355
177-9152	1
	2
	▶349
177-9153	349
178-2247	351
178-2255	41
178-2256	▶157
178-2270	153
178-3620	82
	88
	104
	107
	109
	112
	120
	195
	228
	358
	411
	413
	417
	426
	428
178-7539	437
178-9983	383
	384
	385
	386
	387
183-4084	211
183-4085	211
183-5916	13
184-6097	349
	▶354
184-6098	349
	▶355
185-4253	278
185-4254	270
	272
	▶278
185-7887	203
	205
	207
	209
	213
185-8182	20
185-8662	▶157
185-8663	▶158
185-8666	▶158
185-8667	▶158
185-8674	▶150
	157
185-8675	▶150
	157
185-8676	▶150
	158
185-8677	▶151
	158
185-9928	▶151
	158
185-9929	▶151
	158
185-9930	▶152
	158
185-9931	▶152
	158
185-9933	151
	152
	153
185-9935	150
	151
185-9936	150
185-9937	150
	151
186-2360	163
186-3735	67
	84
	85
	109
	250
	369
	382
	383
	384
	385
	386
	387
	395
	398
	410
	412
	426
186-3736	410
	412
	426
186-6190	▶364
	410
	412
	426
187-3230	156
187-3239	▶158
188-0124	▶152
	158
188-0125	▶153
	158
190-8962	176
191-3206	56
191-8303	105
191-9762	118
	119
192-2606	360
192-2607	360
192-2637	195
	347
	348
	350
192-2638	195
	350
192-2640	▶185
	195
	326
	327
192-2642	326
	327
	352
	353
193-8308	230
193-8334	244
193-8335	244
194-2903	246
194-5171	395
	398
194-7631	246
194-7632	246
195-0189	▶84
	88
195-0190	▶85
	88
195-0936	58
	408
195-0937	433
195-5124	333
195-6750	238
	244
195-6754	195
	326
	327
	347
	348
	350
195-6768	247
195-6769	247
195-6942	320
	▶339
195-6943	320
	▶339
195-7124	291
	296
	▶333
195-8211	29
195-8222	33
	38
195-8260	52
195-8324	32
195-8355	61
195-8356	33
195-8364	61
195-8372	63
195-8403	25
195-8449	33
195-8545	320
	▶339
195-9700	272
	▶279
195-9712	176
196-3940	128
196-5070	371
197-8940	120
	238
198-1725	391
	393
	414
	453
198-4776	54
	55
198-5389	80
199-2129	13
199-2139	13
199-2182	10

▶ PRIMARY REFERENCE

PART NUMBER INDEX

Part	Page
199-2205	25
	33
199-2354	20
199-3410	473
199-5438	▶153
	157
199-5439	▶153
	157
199-5440	153
199-7722	314
199-8308	314
199-8309	209
	213
199-8310	209
199-8311	209
	213
199-8317	314
2	
200-0999	118
	119
200-2371	279
200-5728	408
200-6345	107
	127
	228
202-0671	274
202-0673	274
202-0674	274
202-6614	83
203-4827	44
204-1471	270
	272
204-1472	272
204-1476	270
	272
204-1481	270
	272
204-1482	270
204-1485	270
204-1486	270
204-1488	270
204-1489	270
204-2281	127
	232
204-8000	410
	412
	426
205-0826	80
205-3692	199
	219
205-8257	80
206-1345	109
	365
	391
	393
	395
	398
	405
	411
	414
	415
	417
	437
206-2423	100
	366
	411
	416
206-5162	80
206-5206	80
206-7398	376
206-9185	402
	411
	415
207-6154	44
207-9737	195
	215
207-9756	215
207-9785	195
	324
208-6176	41
210-8754	437
211-3014	232
	235
	▶277
211-3646	277
211-5358	102
	109
	391
212-0061	279
212-1336	195
	215
212-2204	410
	412
	426
212-6603	130
212-6604	130
212-6690	195
	215
212-8475	15
212-8499	20
212-8510	20
	65
212-8597	27
213-6065	80
213-7489	383
	384
	385
	386
	387
213-8708	196
215-3191	195
	215
215-3957	326
	327
	▶350
215-3962	324
	▶326
215-3963	324
	▶327
215-6406	389
	391
	393
	395
	398
	402
	411
	412
	414
	415
	416
216-2517	80
216-6156	270
216-6157	270
216-6159	270
216-6160	270
	272
216-6161	270
	272
216-8996	261
216-9062	261
216-9063	261
217-3572	44
217-5912	78
218-0404	80
218-0651	437
218-0919	16
218-0942	▶77
218-0943	▶78
218-2373	278
218-5840	▶189
	240
218-5841	▶190
	240
218-5843	189
218-5844	189
218-5845	190
218-5846	190
218-5847	358
218-6332	195
	324
218-6333	195
	324
218-6645	411
	416
	428
218-6824	188
218-6856	250
218-6857	250
218-6858	250
219-0302	466
	470
219-6314	80
221-3429	339
221-5245	32
221-5250	32
222-1178	40
222-3963	154
	155
222-7467	336
	344
222-8202	18
223-4240	165
223-4275	41
223-9636	411
	412
	426
223-9974	120
	▶122
224-0672	470
224-3875	165
224-7830	466
224-8945	466
224-8946	470
225-5244	65
225-5535	78
225-5541	77
225-5642	77
225-5644	78
225-9269	154
226-0291	165
226-3693	17
226-3734	160
226-3735	160
226-4560	84
	85
226-4561	84
	85
226-7635	140
226-8204	27
226-9629	278
227-4315	169
227-8807	▶182
228-2615	466
228-2616	470
228-5856	398
228-6051	84
	85
228-6052	84
	85
228-6053	84
	85
228-6054	84
	85
228-6056	84
	85
228-9132	63
228-9217	▶159
228-9219	▶159
228-9220	▶154
	159
228-9221	▶154
	159
229-4896	372
229-5465	221
	223
229-5466	221
	223
229-5468	240
229-5471	240
229-5473	240
229-7356	372
229-8757	369
	395
	398
229-8796	44
230-3621	24
230-3737	69
230-4009	437
230-4011	101
	105
230-6368	73
231-7156	272
231-7165	272
231-7297	272
231-7299	272
232-1384	367
232-1792	437

▶ **PRIMARY REFERENCE**

PART NUMBER INDEX

Part	Page
232-3586	261
232-3587	261
232-4703	77
	78
233-0059	466
	470
233-4872	165
233-5453	15
233-5454	15
233-5457	13
233-5460	52
233-5462	15
233-5463	15
233-5464	15
233-5465	15
233-5466	23
233-5468	23
233-5469	32
233-5470	32
233-5471	32
233-5473	5
	▶8
233-5476	32
233-5477	32
233-5478	32
233-5479	8
233-5480	5
	▶10
233-5482	20
233-5483	10
233-5485	8
233-5486	11
233-5487	8
233-5488	13
233-5489	13
233-5491	11
233-5492	11
233-5494	36
233-5496	275
233-5497	21
233-5498	21
233-5500	5
	▶15
233-5501	32
233-5719	358
233-9856	63
234-4328	▶83
	87
234-4790	10
234-4791	17
234-4794	11
234-4796	275
234-4797	38
234-4798	38
234-4800	38
234-4801	38
234-4802	38
234-4803	38
234-4805	53
234-4806	53
234-4807	31
234-4809	61
234-4810	23
234-4811	25
234-4812	25
234-4813	25
234-4814	27
234-4815	27
234-4816	27
234-4817	27
234-4818	56
234-4819	56
234-4820	56
234-4821	56
234-4822	56
234-4823	52
234-4824	52
234-4826	35
234-4827	35
234-4831	39
234-4832	43
234-4835	65
234-4836	65
234-4837	33
234-4838	33
234-4839	33
234-6069	470
234-6070	466
234-6071	470
234-6072	466
234-6074	466
234-6076	470
234-6077	466
234-6081	470
234-7730	83
234-7731	83
234-9525	44
	267
	268
235-1365	466
235-1368	470
235-1845	73
235-4931	33
235-4937	33
235-4942	33
235-4951	33
235-4952	43
235-4955	35
235-4956	25
235-4957	25
235-4958	43
235-4959	39
235-4960	39
235-4962	72
235-4964	56
235-4966	56
235-4967	56
235-4968	56
235-4969	65
235-4970	65
235-4972	7
235-4973	72
235-5880	5
	▶32
235-5889	5
	▶27
235-5890	5
	▶17
235-5894	5
	▶56
235-5895	5
	▶37
235-5896	5
	▶38
235-5897	5
	▶35
235-5900	5
	▶39
235-5901	5
	▶61
235-5904	5
	▶76
236-6923	410
	412
	426
237-7296	58
237-7325	47
238-0112	105
238-7693	195
	347
	348
	350
238-8274	95
238-8277	5
	▶95
238-8279	21
238-8280	27
238-8281	27
238-8282	11
238-8283	11
238-8284	11
238-8285	11
239-0687	61
239-0719	61
239-0720	61
239-0721	61
239-0722	61
239-0728	61
239-0729	61
239-0734	61
239-0771	72
239-4292	18
239-5029	346
239-6986	466
	470
239-8429	21
239-8504	13
239-8513	36
	38
239-9368	375
241-6215	230
	233
	235
242-9000	88
242-9532	196
243-0564	128
244-7127	38
245-1181	251
	252
245-1911	253
245-1912	251
	252
246-1259	180
246-1260	180
246-2622	63
246-4349	361
246-8314	39
246-8315	39
246-9371	101
	405
	416
247-1337	107
247-4877	169
247-6317	5
	▶50
247-6440	73
249-7346	65
249-7347	5
	▶65
252-0346	▶159
252-0347	▶159
252-0366	▶160
252-0377	▶160
252-0413	176
252-1862	395
	398
252-4734	251
	252
252-8595	321
252-9197	142
253-1817	395
	398
253-7817	470
253-9499	466
254-3437	383
	384
	385
	386
	387
254-9097	186
	187
255-0942	187
255-8058	256
257-8389	33
257-8390	76
257-8736	15
257-8739	33
	39
258-0930	90
258-2404	142
	▶143
258-2406	2
	3
	▶142
258-2408	▶132
	141
258-2409	▶133
	141
258-2410	1
258-2411	192
	▶227
258-2412	192
	▶238
258-2419	54
258-2421	193
	194
	▶240
258-2422	193
	▶244
258-2424	▶215

▶ **PRIMARY REFERENCE**

PART NUMBER INDEX

Part	Page
	322
258-2426	2
	▶192
258-2428	2
	3
	▶192
258-2430	▶123
	141
258-2431	▶125
	141
258-2434	192
	▶264
258-2435	264
	▶265
258-2439	1
	▶67
258-2440	67
	▶69
258-2441	69
258-2442	132
	▶134
258-2443	19
258-2444	1
	▶63
258-2445	1
	▶6
258-2447	6
	▶24
258-2448	24
258-2449	24
258-2452	6
	▶16
258-2462	▶54
	161
258-2464	51
258-2465	6
	▶51
258-2466	372
	411
	412
258-2467	372
	410
	412
258-2468	366
	▶372
258-2469	6
	▶19
258-2472	▶417
258-2473	▶414
258-2474	▶410
258-2475	▶412
258-2498	240
258-2499	240
258-2500	322
	▶323
258-2501	322
	▶324
258-2502	193
	▶267
258-2503	193
	194
	▶268
258-2506	267
	▶270
258-2507	268
	▶272
258-2511	48
258-2512	188
258-2514	188
258-2515	188
258-2517	▶4
258-2520	133
	▶136
258-2521	133
	▶138
258-2533	348
258-2534	347
258-2535	323
	▶352
258-2536	▶347
	352
258-2537	323
	▶353
258-2538	▶348
	353
258-2547	40
258-2553	259
258-2554	260
	▶261
	263
258-2555	260
258-2556	193
	▶259
258-2557	193
	▶260
258-2558	1
	▶188
258-2569	267
	268
258-2574	240
	244
258-2577	254
258-2579	1
	2
	161
	▶254
258-2581	▶120
	192
258-2582	193
	▶221
258-2585	221
258-2589	▶130
	192
258-2590	19
258-2591	▶164
258-2592	164
	170
	171
258-2594	1
	▶165
258-2600	1
	▶192
258-2606	165
258-2607	▶127
	192
258-2608	127
258-2609	127
258-2673	168
258-2674	166
	▶168
258-2675	1
	▶166
258-2679	280
258-2689	223
258-2699	1
	▶280
258-2732	69
258-2780	192
	▶225
258-2781	225
258-2782	225
258-2784	221
	223
258-2786	193
	194
	▶223
258-2790	▶322
258-2791	▶322
258-2801	199
	249
	▶250
258-2804	266
258-2806	265
	▶266
258-2829	265
258-2841	215
258-2849	73
258-2854	119
258-2855	118
258-2857	▶114
	116
258-2858	118
	119
258-2860	▶118
	141
258-2862	▶119
	141
258-2864	118
258-2865	119
258-2876	192
	▶218
258-2878	192
	▶219
258-2880	218
258-2881	218
	219
258-2883	199
	219
258-2884	199
	219
258-2885	199
	219
258-2886	199
	219
258-2920	280
258-2922	280
258-2927	244
258-2928	244
258-2931	238
	244
258-2932	238
258-2933	238
258-2939	227
258-2947	264
258-2948	67
258-2949	264
258-2954	114
	115
258-2957	▶115
	117
258-2964	227
258-2965	227
258-2966	227
258-2967	227
258-2978	166
258-2981	264
258-2982	264
258-2983	69
258-2988	69
258-2991	264
258-2992	264
258-2995	67
258-3151	▶128
	141
258-3157	128
258-3160	248
258-3162	240
258-3164	240
258-3180	▶193
258-3182	▶193
258-3184	166
258-3186	166
258-3190	1
	▶462
258-3200	2
	3
	▶141
258-3221	▶466
258-3225	▶470
258-3230	193
	194
	▶464
258-3231	464
258-3236	▶1
258-3237	193
	▶230
258-3238	193
	194
	▶232
258-3247	244
258-3250	123
258-3251	125
258-3252	123
258-3254	123
258-3255	125
258-3257	123
258-3258	125
258-3259	125
258-3260	258
258-3261	263
258-3279	247
258-3280	395
	398
258-3281	391
	393
	414
	415
258-3282	458
258-3283	457
258-3284	457

▶ **PRIMARY REFERENCE**

PART NUMBER INDEX

Part	Page
258-3285	417
	▶457
	460
258-3286	417
	▶458
	460
258-3288	395
	398
258-3289	395
	398
258-3290	395
	398
258-3292	247
258-3294	395
	398
258-3296	391
	393
	414
	415
258-3298	395
	398
258-3312	166
258-3318	6
	▶140
258-3319	140
258-3320	▶46
	47
258-3330	240
258-3331	240
258-3332	240
258-3333	240
258-3334	240
258-3335	240
258-3336	240
258-3337	240
258-3344	240
258-3351	240
258-3352	240
258-3366	215
258-3367	215
258-3368	195
	215
258-3369	195
	215
258-3393	192
	▶228
258-3394	192
	▶247
258-3399	166
258-3400	2
	3
	▶141
258-3401	194
	▶263
258-3402	193
	▶258
258-3403	193
	▶377
258-3404	193
	194
	▶378
258-3405	▶379
258-3406	▶380
258-3407	193
	194
	▶381
258-3408	462
258-3409	462
258-3423	462
258-3424	462
258-3425	462
258-3427	462
258-3442	63
258-3447	24
258-3451	280
258-3452	280
258-3453	▶47
	48
258-3457	44
258-3458	44
258-3459	6
	▶44
258-3462	▶246
	247
258-3463	128
	▶248
258-3468	192
	▶249
258-3496	1
	2
	161
	▶178
258-3497	1
	▶455
258-3501	228
258-3507	228
258-3515	228
	▶371
258-3530	63
258-3532	63
258-3537	44
258-3539	372
	411
	413
258-3542	6
	▶41
258-3543	41
258-3544	41
258-3545	41
258-3546	40
258-3548	44
258-3549	40
258-3551	41
258-3552	6
	▶40
258-3555	41
258-3562	41
258-3620	225
258-3621	188
258-3630	177
258-3639	▶177
258-3644	358
258-3645	▶358
258-3660	130
258-3662	63
258-3680	▶370
258-3682	▶2
258-3697	395
	398
258-3725	391
	393
	414
	415
258-3726	391
	393
	414
	415
258-3727	58
	75
	79
	101
	362
	388
	389
	402
	411
	416
	422
	425
	437
258-3728	388
258-3730	▶193
258-3733	▶194
258-3736	▶116
258-3737	▶117
258-3738	▶436
258-3740	▶436
258-3742	▶370
258-3748	▶2
258-3750	▶3
258-3753	▶3
258-3761	391
	393
	414
	415
258-3762	395
	398
258-3764	391
	393
	414
	415
258-3765	457
	458
258-3767	457
	458
258-3776	457
	458
258-3781	457
	458
258-3785	422
258-3786	422
258-3787	422
258-3788	422
258-3790	422
258-3792	365
	405
	411
	412
	416
	417
258-3793	402
	411
	417
258-3794	365
	388
	405
	411
	412
	416
258-3795	402
	411
	417
258-3796	402
	411
	417
258-3800	▶161
258-3801	▶161
258-3818	▶1
258-3819	▶2
258-3833	162
258-3840	1
	▶162
258-3841	2
	▶163
258-3844	162
258-3845	225
258-3848	2
	▶176
258-3849	162
	163
258-3850	225
258-3870	230
258-3871	230
258-3872	1
	2
	▶175
258-3873	175
258-3874	230
258-3880	232
	235
258-3881	232
258-3882	230
	232
	235
258-3883	232
	235
258-3889	232
	235
258-3899	232
	235
258-3910	▶195
258-3915	▶199
258-3931	127
258-3958	238
258-3967	232
	235
258-3972	125
258-3979	120
258-4000	1
	▶370
258-4001	437
258-4002	437
258-4003	437
258-4004	437
258-4005	437
258-4006	437
258-4007	437
258-4009	2
	3
	▶390
258-4010	370

▶ PRIMARY REFERENCE

PART NUMBER INDEX

Part	Page
	▶459
258-4011	459
258-4013	395
	398
258-4014	395
	398
258-4016	395
	398
258-4017	436
	▶453
258-4018	453
258-4019	457
258-4020	370
	▶422
258-4021	422
258-4024	422
258-4025	425
258-4026	425
258-4027	388
258-4028	388
258-4029	422
258-4033	390
258-4034	388
258-4038	408
258-4039	408
258-4041	58
258-4043	60
	▶442
258-4045	58
	▶421
258-4046	421
258-4047	421
258-4048	58
258-4049	445
258-4050	▶446
	449
258-4051	▶447
	449
258-4052	▶448
	449
258-4053	445
258-4054	444
	▶452
258-4055	443
258-4062	408
258-4065	422
258-4066	370
	▶408
	436
258-4067	408
258-4068	425
258-4070	▶391
258-4071	395
258-4073	395
	398
258-4074	408
258-4075	395
	398
258-4076	395
	398
258-4078	391
	393
	414
	415
258-4080	▶393
258-4081	398
258-4082	395
	398
258-4083	395
	398
258-4084	395
	398
258-4085	395
	398
258-4086	391
	▶395
	414
258-4087	393
	▶398
	415
258-4090	370
	▶460
258-4091	457
258-4092	458
258-4093	458
258-4094	458
258-4095	▶450
258-4096	▶451
258-4098	362
258-4099	362
258-4100	▶101
	370
258-4101	437
258-4102	101
258-4103	▶96
	101
258-4106	109
258-4107	1
	▶109
258-4108	109
258-4110	▶418
258-4111	▶420
258-4115	6
	▶105
258-4116	105
258-4118	73
258-4120	73
258-4121	1
	▶73
258-4123	73
258-4125	▶112
	193
	194
258-4126	82
	112
258-4127	▶82
258-4128	240
258-4130	1
	2
	▶88
258-4131	88
258-4134	88
258-4135	▶92
	101
258-4136	101
258-4137	75
258-4138	101
258-4141	391
	393
	414
	415
258-4143	101
258-4144	▶75
	370
258-4145	▶79
258-4146	▶100
	366
	406
258-4147	100
	366
	410
	416
258-4148	79
258-4149	79
258-4150	101
258-4154	101
258-4155	101
258-4156	395
	398
258-4157	391
	393
	414
	415
258-4160	101
258-4162	370
	▶437
258-4163	3
	▶441
258-4164	▶87
	370
258-4169	▶90
	161
258-4178	102
	437
258-4179	109
258-4184	▶91
258-4185	▶80
258-4188	107
258-4189	107
258-4190	▶104
	322
258-4191	104
	195
258-4192	6
	▶107
258-4196	102
258-4200	161
258-4220	370
	▶433
258-4221	433
258-4222	1
	2
	161
258-4224	433
258-4225	388
258-4227	433
258-4229	▶362
	370
	436
258-4230	370
	▶430
258-4233	455
	▶456
258-4236	425
258-4245	▶388
	415
258-4248	402
	411
	416
258-4249	402
	411
	416
258-4250	370
	▶406
258-4251	▶405
	406
258-4252	366
	▶402
	406
258-4253	402
	410
	416
258-4254	402
	410
	416
258-4255	366
	406
	▶428
258-4257	402
	410
	416
258-4258	402
	410
	416
258-4259	402
	410
	416
258-4260	▶366
	370
258-4261	▶365
	366
258-4262	410
	412
	426
258-4263	402
	411
	416
258-4264	402
	411
	416
258-4265	366
	▶426
258-4270	405
	▶407
	415
258-4271	376
258-4272	376
258-4273	367
	407
258-4274	367
	407
258-4280	366
	▶373
258-4284	373
	410
	412
258-4286	367
258-4287	407
258-4288	376
258-4289	376

▶ **PRIMARY REFERENCE**

PART NUMBER INDEX

Part	Page
258-4290	365
	▶367
	410
	412
258-4292	376
258-4295	407
258-4298	367
	407
258-4299	375
	▶376
258-4304	410
	412
	426
258-4308	410
	412
	426
258-4309	410
	412
	426
258-4310	436
	▶449
258-4311	▶369
	443
	444
	445
258-4312	389
258-4313	389
258-4314	▶389
	449
258-4315	389
258-4316	389
258-4318	369
258-4319	369
258-4320	436
	▶449
258-4321	431
258-4322	432
258-4323	431
258-4324	432
258-4325	431
258-4326	432
258-4328	431
258-4329	432
258-4330	▶449
258-4356	391
	393
	414
	415
258-4358	425
258-4359	425
258-4367	408
258-4368	408
258-4372	58
258-4373	60
258-4378	402
	410
	416
258-4379	402
	410
	416
258-4380	373
	410
	412
258-4384	402
	411
	416
258-4385	1
	2
	161
	▶173
258-4386	373
	410
	412
258-4387	433
258-4388	410
	412
	426
258-4389	172
	174
	358
	404
258-4390	▶174
258-4391	172
	173
258-4392	174
258-4396	433
258-4397	433
258-4398	404
258-4400	▶404
258-4401	▶443
	448
258-4402	▶444
	447
258-4403	▶445
	446
258-4405	404
258-4408	365
	388
	405
	411
	412
	416
258-4410	▶172
258-4416	433
258-4422	369
258-4426	457
	458
258-4428	433
258-4429	459
258-4430	396
	399
258-4431	431
	432
258-4433	422
	▶425
260-3145	261
260-3146	261
260-3147	261
260-3149	261
260-3150	261
260-9213	244
260-9214	244
261-6101	166
261-6167	235
261-6168	235
261-6239	194
	▶235
261-6264	▶194
261-6378	178
261-6379	178
261-6681	320
	▶321
	322
261-6728	254
262-1408	96
262-3764	▶94
	132
	133
262-7288	4
	▶5
263-3823	395
	398
263-4836	466
	470
263-4996	142
263-5414	437
263-5415	437
263-5416	437
263-5417	199
	219
263-5418	82
	112
263-5419	128
263-5420	420
	441
263-5421	88
263-5422	88
263-5423	91
264-4297	265
264-4320	115
264-4407	395
	398
264-4408	395
	398
264-8860	437
264-8861	420
	441
265-2898	▶154
	159
265-2899	▶155
	159
265-2900	▶155
	159
265-2901	▶155
	159
265-6618	402
	411
	416
265-6619	402
	411
	416
265-8033	418
265-9424	437
265-9425	437
265-9513	104
	195
265-9543	88
266-0299	365
	410
	412
266-2425	373
	▶374
	410
	412
266-2429	374
266-2430	365
	▶375
	405
	410
	415
266-2431	376
266-2432	367
	407
266-2433	367
266-2434	367
	407
266-2435	367
266-2436	407
266-3142	115
266-3314	73
	109
	365
	388
	405
	415
266-3315	48
	63
	67
	73
	123
	125
	130
	196
	215
	228
	238
	240
	244
	365
	388
	405
	411
	412
	416
	426
	428
266-3316	40
	41
	120
	166
	221
	223
	225
267-2680	75
	92
	101
267-2701	92
267-2744	73
267-2746	73
267-5211	92
	101
267-5213	92
	101
267-8390	266
268-4071	109
268-4083	▶287
268-4084	287
	▶309
269-0257	383
	384

▶ PRIMARY REFERENCE

PART NUMBER INDEX

Part	Page
	385
269-0258	386
	387
269-0259	385
	387
269-0262	380
	▶383
269-0263	381
	▶384
269-0264	379
	▶385
269-0265	378
	▶386
269-0266	377
	▶387
269-9404	228
270-0216	228
270-9442	417
	455
	460
271-2912	67
272-1790	82
	▶382
	386
272-3050	55
272-3052	49
272-3055	49
272-3062	▶49
273-9103	383
273-9104	384
274-7409	422
274-8034	253
274-8044	253
274-8563	246
	▶251
274-8564	248
	▶252
276-4878	382
	383
	384
	385
	386
	387
276-9875	372
	410
	412
277-8862	254
278-1969	▶186
	295
278-1970	186
	187
278-1975	▶187
	333
278-8714	258
	259
278-8715	263
278-8718	261
278-8719	261
278-8722	261
278-8735	143
278-8736	143
278-8737	143
278-8738	143
278-8740	143
278-8741	143
278-8742	143
278-8743	143
278-8744	143
278-8745	143
278-8746	143
278-8747	143
278-8748	143
278-8749	143
278-8750	143
278-8751	143
279-5350	▶333
279-5351	333
	▶336
279-5352	336
	▶342
279-5353	342
279-5357	343
279-5358	▶343
	344
279-5359	333
	▶344
279-5360	▶333
279-5364	288
	▶302
279-5365	▶288
279-5366	▶288
279-5368	288
	289
	▶303
279-5369	▶288
279-5370	▶289
279-5372	289
	▶304
279-5373	▶289
279-5374	▶289
279-5376	289
	290
	▶305
279-5377	▶289
279-5378	▶290
279-5380	▶292
279-5381	▶292
279-5382	▶292
279-5383	292
	▶310
279-5384	▶282
	310
279-5385	282
279-5387	283
279-5388	▶283
	311
279-5389	293
	▶311
279-5390	293
279-5391	▶293
279-5392	▶293
279-5395	284
279-5396	▶284
	312
279-5397	294
	▶312
279-5398	294
	313
279-5399	▶313
279-5400	▶294
279-5401	▶294
279-5402	▶294
279-5403	294
	▶295
279-5404	295
	▶314
279-5405	▶285
	314
279-5406	285
279-5412	▶201
	333
279-5413	▶203
	292
279-5414	▶205
	293
279-5415	▶207
	294
279-5416	▶209
	295
279-5417	203
	205
	207
	209
	213
279-5418	203
	205
	207
	209
	213
279-5420	▶291
279-5421	291
	▶306
279-5424	291
	▶307
279-5425	▶291
279-5429	291
	▶308
279-5430	▶291
279-5434	287
	▶297
279-5435	▶287
279-5437	287
	▶298
279-5438	▶287
279-5440	287
	▶300
279-5441	▶287
280-5164	272
280-6068	422
280-6069	422
280-6070	430
280-6071	422
280-6077	▶415
280-6084	▶415
280-6340	1
	▶58
280-6341	421
280-6342	58
	▶60
280-6344	60
280-7837	134
280-7838	134
	136
	138
280-7839	134
	136
	138
280-7840	134
	▶295
	136
	138
280-7841	134
	▶285
	136
	138
280-7842	134
280-7843	134
280-7846	136
	138
280-7848	136
	138
280-7849	136
	138
280-7850	136
	138
280-7860	143
280-8240	54
	55
280-8286	48
280-8293	48
280-8294	6
	▶48
280-8298	46
280-8299	24
280-8302	46
280-8305	461
280-8307	180
280-8308	24
280-8314	19
280-8329	161
	▶461
280-8330	1
	2
	161
	▶180
280-8335	180
	461
280-8341	54
	55
280-8346	54
	55
280-8347	1
	2
	▶55
	161
281-6390	395
	398
282-2613	132
	133
283-0632	101
283-2458	367
283-3436	107
283-4198	101
	109
284-6041	374
284-7932	391
	393
	414
	415
285-2167	466
	470
285-2171	466

▶ **PRIMARY REFERENCE**

PART NUMBER INDEX

Part	Page
	470
285-2172	466
285-2173	470
285-2176	466
	470
285-2177	466
	470
285-2178	466
	470
285-2181	418
	419
285-2182	418
	419
285-2185	280
285-2188	240
285-2190	322
285-5794	40
285-6089	288
	▶301
285-6090	▶288
285-6093	▶290
285-6095	▶296
285-6096	296
	▶316
285-6099	290
	296
	▶317
285-6100	290
	▶296
285-6101	291
	▶296
285-6102	290
	296
	▶318
285-6104	▶290
285-6105	333
	▶341
285-6110	334
	▶337
285-6111	▶290
285-6112	▶291
285-6113	▶211
	346
285-6114	▶333
285-6115	▶334
285-6116	290
	291
	333
	334
	▶346
285-9066	21
	43
286-2470	96
286-2471	96
286-4863	240
286-4867	232
	235
286-4868	244
286-4869	244
287-1844	5
	▶23
287-2416	5
	▶13
287-2922	5
	▶28
287-2983	5
	▶29
287-3074	5
	▶21
287-3355	20
287-3357	5
	▶20
287-3921	5
	▶25
287-3922	25
287-4033	5
	▶9
287-4151	177
287-4158	177
287-4159	177
287-4160	▶170
287-4161	▶171
287-4198	168
287-4218	166
287-4219	166
287-4220	166
287-4287	166
287-4300	323
	324
287-4649	5
	▶11
287-4748	30
287-4749	5
	▶30
287-4830	5
	▶18
287-4832	5
	▶53
287-4833	43
287-5323	5
	▶52
287-5377	5
	▶36
287-5665	5
	▶275
287-6015	33
287-6016	5
	▶33
287-6017	33
287-6020	33
287-6021	33
287-6022	33
287-6056	5
	▶43
287-6114	5
	▶31
287-6138	5
	▶7
287-6181	5
	▶99
287-6361	5
	▶72
287-6692	431
	432
287-7062	374
287-8752	272
287-8753	272
289-0841	247
289-0843	228
289-0848	141
289-0849	162
	163
289-0850	272
289-8537	375
290-2110	465
291-0010	195
	215
	▶253
292-2433	238
292-2434	238
292-2435	238
292-2436	371
292-2437	371
292-2438	371
292-2439	141
	▶191
292-2440	230
292-4042	25
292-5476	358
292-6568	95
292-6936	395
	398
292-7927	▶419
292-7981	419
293-0139	295
	296
293-0140	▶213
	295
293-0141	295
	▶315
293-0142	▶286
	315
293-0143	286
293-0148	315
293-0152	213
293-9426	▶322
293-9427	▶320
293-9428	▶320
293-9429	▶320
294-0075	178
294-0076	178
294-0077	178
294-0078	178
294-0079	178
294-0081	178
294-0082	178
294-0083	178
294-0084	178
294-0085	178
294-0086	178
294-0090	178
294-0091	367
	407
294-4555	181
294-4556	181
294-4558	178
294-4559	178
294-4560	1
	2
	161
	▶181
294-5502	201
294-5503	201
294-5504	211
294-5505	211
294-5520	61
294-7251	72
295-0035	178
295-0046	272
295-1799	270
	▶276
295-2567	466
	470
295-3171	369
	▶431
295-3172	369
	▶432
295-5440	367
	407
296-5750	123
	125
296-8055	▶295
296-8057	▶296
297-7941	232
	235
297-7942	232
	235
299-4645	15

3

Part	Page
300-2952	61
300-9546	109
301-3274	38
301-4213	272
302-0389	215
302-4389	466
302-4390	470
303-5020	232
	235
303-8205	225
	238
	240
	244
304-3885	69
304-5080	232
	235
304-5237	▶473
304-8351	67
304-8352	67
305-0201	125
305-2893	230
	232
	235
305-4185	130
305-4333	433
305-4339	433
308-1439	466
308-1440	470



© 2007 Caterpillar
All Rights Reserved

Printed in U.S.A.