SEBP6856
June 2013

RUTHZIL TRATOR COMERCIAL DE PEÇAS LTDA 11 97083-6812 ROLANDO

Parts Manual

246D Skid Steer Loader

HMR1-Up (Machine)
JSL1-Up (Machine)

Powered By C3.3B Engine

Product and Dealer Information

Note: For product identification plate locations, see the section “Product Identification Information” in the Operation and Maintenance Manual.

Delivery Date: _____

Product Information

Model: _____

Product Identification Number: _____

Engine Serial Number: _____

Transmission Serial Number: _____

Generator Serial Number: _____

Attachment Serial Numbers: _____

Attachment Information: _____

Customer Equipment Number: _____

Dealer Equipment Number: _____

Dealer Information

Name: _____ Branch: _____

Address: _____

_____

_____

	Dealer Contact	Phone Number	Hours
Sales:	_____	_____	_____
Parts:	_____	_____	_____
Service:	_____	_____	_____

MEMORANDA

TABLE OF CONTENTS

NAME	PAGE
GENERAL INFORMATION	**A4**
REPAIR ALTERNATIVES	**A7**
SUPPLEMENTAL COOLANT ADDITIVES	A8
MAINTENANCE PARTS	**A9**
INDEX	**A12**
MACHINE ARRANGEMENT	**1**
CHASSIS AR	1
COMMON AR	1
CONFIGURATION AR	2
MACHINE AR-SPECIAL	2
ENGINE ARRANGEMENT	**4**
ENGINE AR-COMPLETE	4
ENGINE AR-PRIMARY	5
INSTALLATION AR-ENGINE	6
BASIC ENGINE	**8**
CAMSHAFT GP	8
COVER GP-VALVE MECHANISM	9
CRANKSHAFT GP	13
CYLINDER BLOCK AS	15
CYLINDER BLOCK GP	16
CYLINDER HEAD AS	17
CYLINDER HEAD GP	21
DRAIN GP-ENGINE OIL	23
FLYWHEEL GP	24
GUARD GP-BELT	25
HOUSING GP-FRONT	26
LIFTING GP-ENGINE	28
MOUNTING GP-ENGINE	29
PAN GP-OIL	30
PISTON & ROD GP	31
PULLEY GP	33
VALVE MECHANISM GP	34
LUBRICATION SYSTEM	**36**
FILLER GP-ENGINE OIL	36
GAUGE GP-OIL LEVEL (DIPSTICK)	37
LINES GP-ENGINE OIL	38
COOLING SYSTEM	**39**
FAN GP-BLOWER	39
LINES GP-WATER	40
PUMP GP-WATER	42
RADIATOR & HYD OIL COOLER GP	43
SUPPORT GP-RADIATOR	46
AIR INLET AND EXHAUST SYSTEM	**47**
AIR CLEANER GP	47
COOLER GP-EXHAUST	50
EXTENSION GP-EXHAUST	52
LINES GP-AIR	53
LINES GP-COOLING	55
MANIFOLD GP-EXHAUST	56
MANIFOLD GP-INLET	57
MUFFLER & MOUNTING GP	59
PRECLEANER GP	60
TURBOCHARGER GP	63
FUEL SYSTEM	**66**
CONTROL GP-GOVERNOR	66
FILTER GP-FUEL	68
GOVERNOR GP	69
HOUSING GP-FUEL PUMP	71
LINES GP-FUEL	72
LINES GP-FUEL INJECTION	75
NOZZLE GP-UNIT INJECTOR	76
PUMP AS-FUEL INJECTION	77
PUMP GP-FUEL INJECTION	78
PUMP GP-FUEL TRANSFER	84
TANK & MTG GP-FUEL	85
TANK GP-FUEL	86
ELECTRICAL AND STARTING SYSTEM	87
ALTERNATOR GP-CHARGING	87
BATTERY & WIRING GP	88
CAMERA GP	92
COVER GP-FUSE PANEL	93
ELECTRONICS GP-MACHINE	94
ELECTRONICS GP-MONITOR	94
GLOW PLUG GP	95
HARNESS AS-CAB	96
HARNESS AS-ENGINE	100
HARNESS AS-FRONT	101
HARNESS AS-HEATER & AIR COND	101
HARNESS AS-LIGHTING	103
HARNESS AS-PANEL	104
HARNESS AS-PLATFORM	105
HARNESS AS-QUICK COUPLER	107
HARNESS AS-RADIO	108
HARNESS AS-REAR LIGHTING	109
HARNESS AS-RIDE CONTROL	109
HARNESS AS-SENSOR	110
HARNESS AS-SOLENOID	111
HARNESS AS-WIRING	112
HARNESS AS-WORK TOOL	112
HEATER GP-JACKET WATER	114
INSTALLATION GP-COMMUNICATION	115
KIT-CAMERA	116
KIT-WORK TOOL WIRING	117
LAMP GP-FLOOD	121
LAMP GP-HEAD & SIGNAL	123
LAMP GP-STOP & TAIL	125

TABLE OF CONTENTS

NAME	PAGE
LAMP GP-WARNING BEACON	126
LIGHTING GP-FLOOD	127
LIGHTING GP-ROADING	128
LIGHTING GP-STOP & TAIL	130
RELAY GP	131
SENSOR GP-SPEED	133
SOFTWARE GP-MACHINE	134
STARTING MOTOR GP-ELECTRIC	135
WIRING GP-AIR CONDITIONER	136
WIRING GP-CAB	138
WIRING GP-CAMERA	140
WIRING GP-ENGINE	141
WIRING GP-HEATER	142
WIRING GP-PLATFORM	143
WIRING GP-QUICK COUPLER	145
WIRING GP-RIDE CONTROL	146
WIRING GP-WORK TOOL	147
POWER TRAIN	**155**
AXLE GP	155
DRIVE GP-TANDEM	157
FILTER GP-OIL	158
LINES GP-HYDROSTATIC	160
MOTOR & MOUNTING GP	165
MOTOR GP-PISTON	167
MOUNTING GP-PUMP	170
POWER TRAIN AR	171
PUMP & MTG GP-HYDROSTATIC	172
PUMP GP-PISTON	173
TIRE & RIM GP	176
WHEEL & TIRE AR	179
FRAME AND BODY	**182**
CONVERSION AR-ROADING	182
CONVERSION GP-ROADING	183
COUNTERWEIGHT & MOUNTING GP	184
COUNTERWEIGHT GP	185
ENCLOSURE GP-ENGINE	186
FRAME GP-LOADER	189
KIT-COUNTERWEIGHT	191
KIT-MACHINE ENCLOSURE SEAL	192
KIT-MOUNTING	195
KIT-ROADING CONVERSION	196
LIFTING GP-MACHINE	199
MIRROR & MTG GP-REAR VIEW	200
MOUNTING GP-REGISTRATION	201
MOUNTING GP-ROADING LIGHTS	202
HYDRAULIC SYSTEM	**204**
ACCUMULATOR GP-HYDRAULIC	204
ACCUMULATOR GP-RIDE CONTROL	206
CONTROL AR-HYDRAULIC	208
CYLINDER & MTG GP-ANGLE BLADE	209
CYLINDER GP-HYDRAULIC	210
CYLINDER GP-LIFT	213
CYLINDER GP-LIFT ARM	214
CYLINDER GP-TILT	215
FITTING GP-HYDRAULIC	219
HYDRAULIC AR	220
KIT-COVER	222
KIT-QUICK COUPLER CONVERSION	223
KIT-RIDE CONTROL	225
LINES GP-AUXILIARY HYDRAULIC	227
LINES GP-BUCKET	231
LINES GP-CONNECTING	241
LINES GP-HYDRAULIC	243
LINES GP-HYDRAULIC OIL COOLER	249
LINES GP-LIFT CYLINDER	250
LINES GP-PUMP	254
LINES GP-TILT CYLINDER	260
MANIFOLD & MTG GP-CONTROL	264
MANIFOLD GP-CONTROL	265
MANIFOLD GP-RIDE CONTROL	268
MOTOR & MTG GP-HYDRAULIC FAN	269
MOUNTING GP-CYLINDER	270
PUMP & MTG GP-HYDRAULIC	271
PUMP & MTG GP-WORK TOOL	272
PUMP GP-GEAR	273
TANK & MTG GP-HYDRAULIC	274
VALVE & MTG GP-CONTROL	276
IMPLEMENTS	**278**
PIN GP-LIFT ARM	278
WORK TOOLS	**280**
BLADE AR	280
BLADE AS-ANGLING	282
BLADE GP-ANGLING	284
BLADE GP-MULTIPURPOSE BUCKET	286
BUCKET AR-MULTIPURPOSE	305
BUCKET GP-MULTIPURPOSE	315
CLAM AS-MULTIPURPOSE BUCKET	324
COUPLER AR-QUICK	329
COUPLER GP-QUICK	330
COVER GP-LINES	333
EDGE GP-BIT & CUTTING	334
EDGE GP-CUTTING	336
KIT-ROADING PLATE & MOUNTING	340
LINK GP-COUPLER	341
LOCK GP-QUICK COUPLER	345
TOOTH GP-UNI	348
OPERATOR STATION	**349**
ACCESSORY GP-CAB	349

TABLE OF CONTENTS

NAME	PAGE
ACCUMULATOR GP-REFRIGERANT	351
AIR CONDITIONER & MOUNTING GP	352
AIR CONDITIONER AR	354
ARMREST & MOUNTING GP	355
ARMREST GP	357
BLOWER GP-CAB	359
CAB AR	360
CAB AR-ENCLOSED ROPS	360
CAB AR-OPEN ROPS	360
CABLE GP-CONTROL	362
COMPRESSOR GP-REFRIGERANT	363
CONDENSER & MTG GP-REFRIGERANT	364
CONTROL GP-AIR & TEMPERATURE	365
CONTROL GP-ELECTROHYDRAULIC	367
CONTROL GP-HANDLE	373
CONTROL GP-JOYSTICK	376
COVER GP-CAB	381
COVER GP-CONSOLE	382
DOOR GP-CAB	384
GUARD GP-ROPS/FOPS	392
HANDHOLD GP	393
HANDLE GP	394
HEATER AR-CAB	395
HEATER GP-CAB	396
INSTALLATION GP-RADIO	398
KIT-COIL	400
KIT-AIR CONDITIONER BREATHER	404
KIT-CAB DOOR & MOUNTING	405
KIT-COIL	409
KIT-CAB WINDOW	414
KIT-INSTRUMENT PANEL	415
KIT-PEDAL	416
KIT-RADIO	417
LINER GP-CAB	419
LINES GP-AIR CONDITIONER	421
LINES GP-HEATER	423
LITERATURE GP	424
MOTOR GP-WINDOW WIPER	425
MOUNTING GP-ARMREST	426
MOUNTING GP-ROPS	428
PANEL GP-INSTRUMENT	430
PEDAL GP-GOVERNOR	436
RADIO GP	437
SEAT & ARMREST GP	439
SEAT & MOUNTING GP	441
SEAT AR-SUSPENSION	448
SEAT BELT GP	449
SEAT GP-SUSPENSION	451
SUSPENSION GP-SEAT	455
WINDOW GP-CAB	457
SERVICE EQUIPMENT AND SUPPLIES	461
FILM GP	461
PLATE & FILM GP	466
PART NUMBER INDEX	**B1**

1. MACHINE IDENTIFICATION

Cat machines are identified by Product Identification Numbers (PIN). Some components included in a machine may be identified by Serial Numbers (S/N). Typical components that will be serialized include engines, transmissions, bulldozers, and rippers. The machine and engine are further identified by arrangement numbers and in some cases modification numbers. These numbers are shown on the product identification plate(s) and on the master plate in the operator's compartment.

Cat dealers need all of these numbers to determine accurate parts identification.

Effective First Quarter 2001 the Cat Product Identification Number (PIN) changed from 8 to 17 characters. In an effort to provide uniform equipment identification, Caterpillar and other construction equipment manufacturers are moving to comply with the latest version of the product identification numbering standard. Non-road machine PINs are defined by ISO 10261. The new PIN format will apply to all Cat machines and generator sets. The PIN plates and frame marking will display the 17 character PIN. The new format will look like the following:

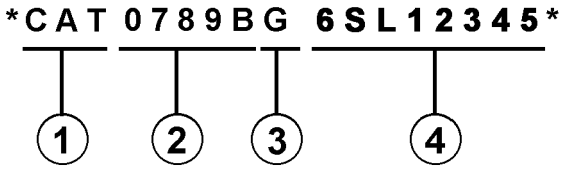

Where:

1. Caterpillar's World Manufacturing Code (characters 1-3)

2. Machine Descriptor (characters 4-8)

3. Check Character (character 9)

4. Machine Indicator Section (MIS) or Product Sequence Number (characters 10-17). These were previously referred to as the Serial Number.

Machines and generator sets produced before First Quarter 2001 will maintain their 8 character PIN format.

Components such as engines, transmissions, axles, etc. and work tools will continue to use an 8 character Serial Number (S/N).

2. ORDERING PARTS

⚠ WARNING

When replacement parts are required for this product Caterpillar recommends using Caterpillar replacement parts or parts with equivalent specifications including, but not limited to, physical dimensions, type, strength and material.

Failure to heed this warning can lead to premature failures, product damage, personal injury or death.

Quality Cat replacement parts are available from Cat dealers throughout the world. Their parts inventories are up to date and include all parts normally required to protect your investment in Cat machines. Dealers may offer repair kits or remanufactured parts to allow selection of the most effective repair alternative for a particular situation. When ordering parts, your order should specify the quantity, part number, part name, and the serial number/product identification number of the machine for which the parts are needed.

3. PARTS MANUAL ORGANIZATION

Product information in this manual is presented as "information elements" that represent all of the components for the specific model. Engine Arrangement and Seat Group are examples of information elements. The information elements are organized alphabetically by part name and secondarily by part number within each major section of the manual.

4. TABLE OF CONTENTS

A table of contents (TOC) is found at the beginning of the manual. The TOC lists each section of the manual with a complete list of all information elements organized as they appear in the manual. Page numbers are provided for quick reference to detailed parts identification illustrations and serviceable consist lists.

5. MAINTENANCE PARTS INDEX

The Maintenance Parts Index, located near the beginning of the manual, references most frequently used maintenance part numbers, providing description, quantity, usage and page number. This information is organized alphabetically by part description.

6. INDEX

The index located near the front of the manual is an alphabetical listing of all information elements included in the manual. Page numbers are provided for quick reference to detailed parts identification illustrations and serviceable consist lists.

7. PART NUMBER INDEX

A numerical index listing all part numbers and the corresponding page number(s) appears at the back of the manual.

8. CAPTIONS

Captions located at the beginning of each information element identify the part number and part name along with additional descriptive information. PIN and S/N information found in each caption should be used to select correct information for a specific machine. Field replacement options, identification of optional attachment components, and where used ("part of") information is also provided.

The first line of a caption is shown in larger type font to indicate the beginning of an information element. Captions for additional pages that may be required to illustrate an information element will be shown in standard type font and will include the term *(contd.)* .

9. NON-SERVICED PARTS

In some instances it is necessary to display non-serviced parts that are a link to a lower level serviceable consist lists. These non-serviced part numbers are shown in *italic* type indicating that they are not available.

10. PARTS LIST REFERENCE NUMBERS

Numbers shown in the Ref No column correspond to numbers used in the associated graphic(s). An alphabetic suffix may be added to a reference number to identify lower level consist items. Numbers shown in the Graphic Ref column refer to the graphic number identifier displayed in the lower left corner of each illustration. The Graphic Ref number may be used in combination with the item Ref No to determine the correct part number. There may be intentional omission of a Ref No in a consist list as information is updated to reflect the latest serviceable part numbers.

11. INDENTED PART NAMES

When a part name is indented in a parts list, it is part of (included in) the group or assembly under which it is indented.

12. ILLUSTRATION REFERENCE LETTERS

When necessary, illustrations contain reference letters (A, B, C etc.) that are intended to track lines and harnesses from one point to another. They are also used to show where to reconnect illustrations that have been separated.

13. ABBREVIATIONS AND SYMBOLS

O.D. – Outside Diameter
I.D. – Inside Diameter
A – Not Part Of This Group
B – Use As Required
C – Change From Previous Type
D – Order By The Meter
E – Order By The Centimeter
F – Not Shown
G – Order By The Inch
I – Refer To Hydraulic Information System
M – Metric Part
R – Remfg Part May Be Available
Y – Separate Illustration
Z – Not Serviced Separately

14. DESCRIPTION OF TYPE CHANGES

Type - A type is defined as any configuration change that requires an additional Information Element for an Arrangement, Group, or Assembly. If serial number breaks for types are not available, a type # (Type 1, Type 2, etc.) will be displayed in the caption. These "type" changes are identified with a "C" note (change from previous type) in the Parts List. Only the "types" that apply to this Parts Manual will be included. Additional types may exist causing "C" notes to appear on an Information Element when no other types are shown.

15.<END>

This symbol indicates the end of an information element.

NOTE:

Continuing improvement and advancement of product design may cause changes to your machine which may not be included in this publication. Whenever a question arises regarding your Cat product or this publication, please consult your Cat dealer for the latest available information.

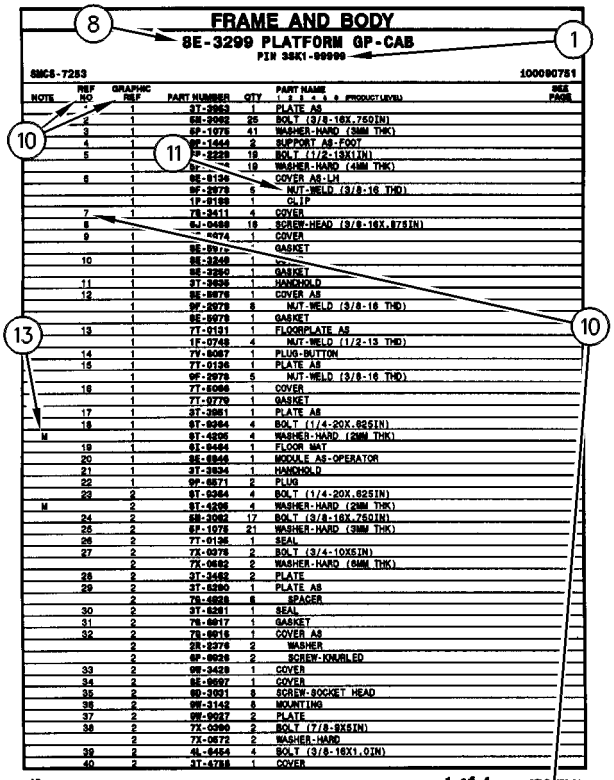

FRAME AND BODY

8E-3299 PLATFORM GP-CAB

PIN 3SK1-99999

SMCS-7283 100090751

NOTE	REF NO	GRAPHIC REF	PART NUMBER	QTY	PART NAME 1 2 3 4 5 6 (PRODUCT LEVEL)	SEE PAGE
	1	1	3T-3963	1	PLATE AS	
	2	1	6M-3982	25	BOLT (3/8-16X.75DIN)	
	3	1	5P-1078	41	WASHER-HARD (3MM THK)	
	4	1	9P-1444	2	SUPPORT AS-FOOT	
	5	1	7P-2229	19	BOLT (1/2-13X1IN)	
		1	5P-[illegible]	19	WASHER-HARD (4MM THK)	
	6	1	8E-8136	1	COVER AS-LH	
		1	9P-2979	6	NUT-WELD (3/8-16 THD)	
		1	1P-8199	1	CLIP	
	7	1	7S-3411	4	COVER	
	8		5J-0488	19	SCREW-HEAD (3/8-16X.875IN)	
	9	1	[illegible]-0474	1	COVER	
		1	8E-8976	1	GASKET	
	10	1	8E-3249	1	[illegible]	
		1	8E-3250	1	GASKET	
	11	1	3T-3935	1	HANDHOLD	
	12	1	8E-8978	1	COVER AS	
		1	9P-2979	8	NUT-WELD (3/8-16 THD)	
		1	8E-8979	1	GASKET	
	13	1	7T-0131	1	FLOORPLATE AS	
		1	1F-0748	4	NUT-WELD (1/2-13 THD)	
	14	1	7V-8067	1	PLUG-BUTTON	
	15	1	7T-0136	1	PLATE AS	
		1	9P-2979	5	NUT-WELD (3/8-16 THD)	
	16	1	7T-8066	1	COVER	
		1	7T-0779	1	GASKET	
	17	1	3T-3961	1	PLATE AS	
	18	1	6T-9364	4	BOLT (1/4-20X.625IN)	
M		1	6T-4236	4	WASHER-HARD (2MM THK)	
	19	1	6T-8464	1	FLOOR MAT	
	20	1	8E-8946	1	MODULE AS-OPERATOR	
	21	1	3T-3934	1	HANDHOLD	
	22	1	9P-8571	2	PLUG	
	23	2	6T-9364	4	BOLT (1/4-20X.625IN)	
M		2	6T-4236	4	WASHER-HARD (2MM THK)	
	24	2	6M-3982	17	BOLT (3/8-16X.75DIN)	
	25	2	5P-1078	21	WASHER-HARD (3MM THK)	
	26	2	7T-0136	1	SEAL	
	27	2	7X-0378	2	BOLT (3/4-10X5IN)	
		2	7X-0682	2	WASHER-HARD (6MM THK)	
	28	2	3T-3462	2	PLATE	
	29	2	3T-8280	1	PLATE AS	
		2	7S-4828	6	SPACER	
	30	2	3T-8281	1	SEAL	
	31	2	7S-8917	1	GASKET	
	32	2	7S-8916	1	COVER AS	
		2	2S-2376	2	WASHER	
		2	6P-8626	2	SCREW-KNURLED	
	33	2	9W-3429	1	COVER	
	34	2	8E-8697	1	COVER	
	35	2	9D-3931	8	SCREW-SOCKET HEAD	
	36	2	9W-3142	8	MOUNTING	
	37	2	9W-9927	2	PLATE	
	38	2	7X-0290	2	BOLT (7/8-9X5IN)	
		2	7X-0572	2	WASHER-HARD	
	39	2	4L-6454	4	BOLT (3/8-16X1.0IN)	
	40	2	3T-4788	1	COVER	

12 FRAME AND BODY 1 of 4 SELP4570-01

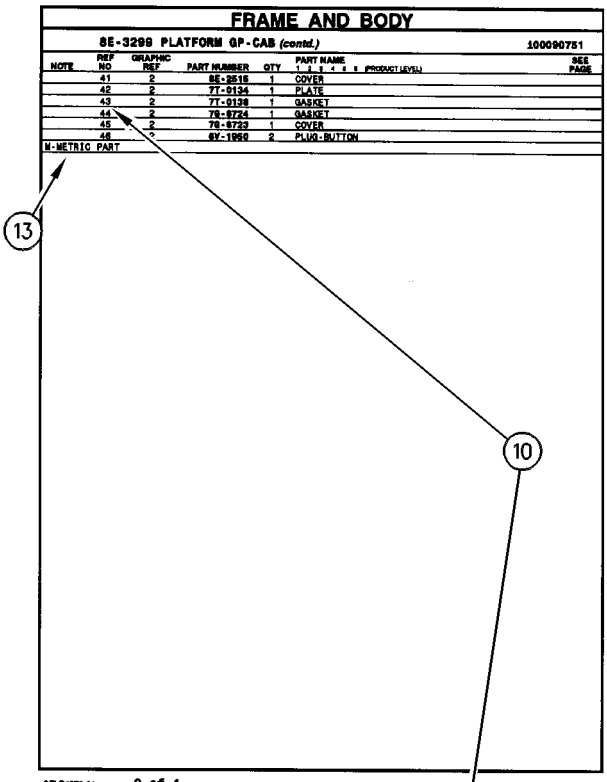

FRAME AND BODY

8E-3299 PLATFORM GP-CAB (contd.) 100090751

NOTE	REF NO	GRAPHIC REF	PART NUMBER	QTY	PART NAME 1 2 3 4 5 6 (PRODUCT LEVEL)	SEE PAGE
	41	2	8E-2516	1	COVER	
	42	2	7T-0134	1	PLATE	
	43	2	7T-0138	1	GASKET	
	44	2	7S-8724	1	GASKET	
	45	2	7S-8723	1	COVER	
	46	2	6V-1960	2	PLUG-BUTTON	

M-METRIC PART

SELP4570-01 2 of 4 FRAME AND BODY 13

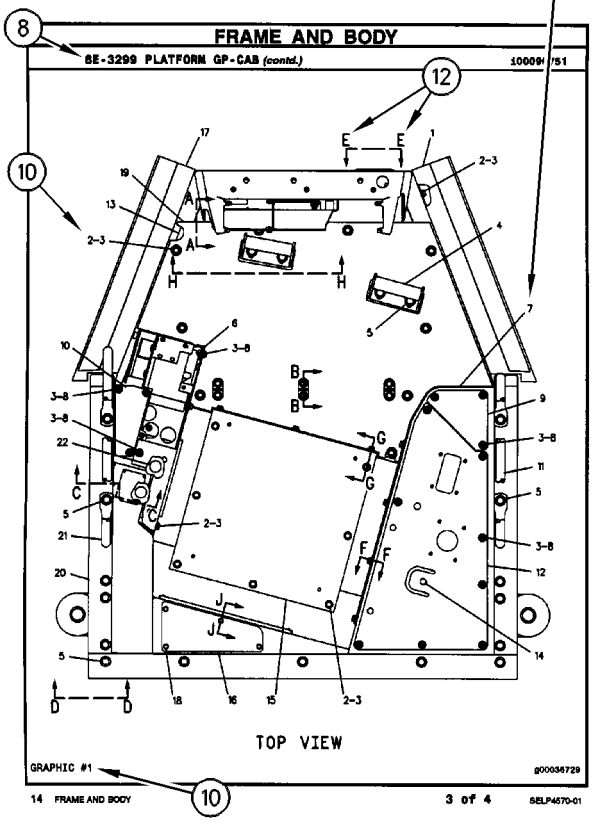

FRAME AND BODY

8E-3299 PLATFORM GP-CAB (contd.) 100090751

TOP VIEW

GRAPHIC #1 g00036729

14 FRAME AND BODY 3 of 4 SELP4570-01

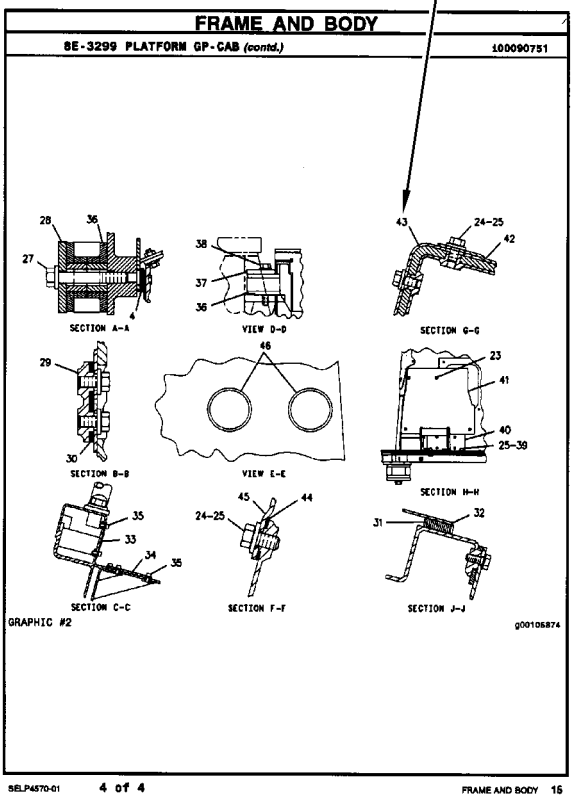

FRAME AND BODY

8E-3299 PLATFORM GP-CAB (contd.) 100090751

SECTION A-A

VIEW D-D

SECTION G-G

SECTION B-B

VIEW E-E

SECTION H-H

SECTION C-C

SECTION F-F

SECTION J-J

GRAPHIC #2 g00105874

SELP4570-01 4 of 4 FRAME AND BODY 15

REMANUFACTURED COMPONENTS

As an option when making repairs consider Cat Remanufactured Components. Components that are available through the Cat Remanufactured Program are identified three ways in the parts book:

- with the letter R in the note field of the parts list
- with an R* at the beginning of the first line of the caption
- with an *R at the end of the first line of the caption

Typical components included in the Remanufacturing Program include:

ALTERNATORS
CONNECTING RODS
CRANKSHAFTS - UNDERSIZE
CRANKSHAFTS - UPGRADE TO NEW
CYLINDER HEADS
ELECTRONIC CONTROL MODULES (ECM)
ELECTRONIC SENSORS
FUEL INJECTORS
FUEL NOZZLES
FUEL PUMPS
GOVERNORS
OIL PUMPS
PISTONS
SHORT BLOCKS
STARTERS
TURBOCHARGERS - COMPLETE
TURBOCHARGER CARTRIDGES
WATER PUMPS

Cat Remanufactured engines for many engine arrangements are also available.

SUPPLEMENTAL COOLANT ADDITIVES

CUSTOMER BENEFITS:

Protects against cavitation, foam, erosion, corrosion, and scale buildup in cooling systems.

- Provides measured coolant conditioner.

DESCRIPTION:

Additives deplete from the coolant with normal operation. For this reason, Supplemental Coolant Additives (SCA) must be added to all heavy duty coolants at regular intervals. In addition, when not using a fully formulated, pre-charged antifreeze, like Cat DEAC, an initial charge of SCA must be added to the cooling system. The amount of SCA added to the system is dependent on the capacity of the system.

The SCA for initial fill is provided as a liquid. SCA's for maintenance intervals are available in liquid form and as a spin-on element. (No Spin-on available for 3600 Family of Engines)

NOTE:

The amount of SCA added at initial fill is not the same as the amount added at maintenance intervals.

The coolant additive elements can be used with any ethylene or propylene glycol type antifreeze which meets ASTM D4985 or ASTM D5345 Specifications.

NOTE:

For use with standard heavy duty coolant only, not for use with Extended Life Coolant.

PARTS NEEDED:

Cooling System Capacity		Liquid SCA at Initial Fill	Liquid SCA at Maintenance*	Spin-on SCA Maintenance Element*
Liters	Gallons			
22-30	(6-8)	3P-2044 (1)	6V-3542 (1)	111-2370 (1)
30-38	(8-10)	3P-2044 (1) 6V-3542 (1)	111-2372 (1)	111-2369 (1)
38-49	(10-13)	3P-2044 (1) 8T-1589 (1)	111-2372 (1)	111-2369 (1)
49-64	(13-17)	3P-2044 (2)	8T-1589 (1)	9N-3368 (1)
64-83	(17-22)	3P-2044 (2) 8T-1589 (1)	111-2372 (1) 6V-3542 (1)	111-2371 (1)
83-114	(22-30)	3P-2044 (3) 8T-1589 (1)	3P-2044 (1)	9N-3718 (1)
114-163	(30-43)	3P-2044 (5)	3P-2044 (1) 6V-3542 (1)	111-2371 (2)
163-242	(43-64)	3P-2044 (8)	3P-2044 (2)	9N-3718 (2)

** Normal maintenance period is 250 hrs. See your Operation and Maintenance Manual for complete coolant maintenance instructions.*

( ) Indicates quantity required.

MAINTENANCE PARTS

DESCRIPTION	PART NUMBER	QTY	WHERE USED	PAGE
AIR INLET AND EXHAUST SYSTEM				
CAP AS-VENTED (COOLANT RECOVERY)	229-3469	1	LINES GP-COOLING	55
FILTER ELEMENT AS-AIR (PRIMARY)	110-6326	1	AIR CLEANER GP	48
FILTER ELEMENT AS-AIR (SECONDARY)	110-6331	1	AIR CLEANER GP	48
		1	AIR CLEANER GP	49
BASIC ENGINE				
ELEMENT (BREATHER)	388-7488	4	COVER GP-VALVE MECHANISM	10
		4	COVER GP-VALVE MECHANISM	12
STRAINER-OIL (PAN)	387-9861	1	PAN GP-OIL	30
V-BELT (FAN DRIVE PULLEY)	437-2564	1	PULLEY GP	33
COOLING SYSTEM				
CAP AS-RADIATOR	036-1865	1	RADIATOR & HYD OIL COOLER GP	43
REGULATOR AS	389-5308	1	LINES GP-WATER	41
REGULATOR AS (WATER TEMPERATURE)	389-5308	1	LINES GP-WATER	40
ELECTRICAL AND STARTING SYSTEM				
BATTERY (12-VOLT, 880-CCA)	230-6368	1	BATTERY & WIRING GP	90
BELT-DRIVE (WARNING BEACON)	9X-8139	1	LAMP GP-WARNING BEACON	126
CAP AS-FILLER (BATTERY)	123-1373	6	BATTERY & WIRING GP	88
CIRCUIT BREAKER AS	373-1592	1	HARNESS AS-QUICK COUPLER	108
		1	HARNESS AS-WORK TOOL	113
FLASHER AS (12-VOLT)	242-9000	1	LIGHTING GP-ROADING	128
FUSE (10-AMPERE)	113-8490	6	HARNESS AS-CAB	97
FUSE (100-AMPERE)	378-1012	1	WIRING GP-PLATFORM	143
FUSE (15-AMPERE)	113-8491	10	HARNESS AS-CAB	97
	9W-1441	1	HARNESS AS-CAB	97
FUSE (20-AMPERE)	113-8492	4	HARNESS AS-CAB	97
	267-2680	2	COVER GP-FUSE PANEL	93
		1	RELAY GP	131
		1	RELAY GP	132
FUSE (30-AMPERE)	274-9872	1	RELAY GP	132
FUSE (50-AMPERE)	396-8366	1	WIRING GP-PLATFORM	143
FUSE (60-AMPERE)	267-2701	1	RELAY GP	131
FUSE AS	258-4134	1	LIGHTING GP-ROADING	128
GLOW PLUG	387-9899	4	GLOW PLUG GP	95
LAMP (12-VOLT, 21-WATT) (AMBER)	226-4560	1	LAMP GP-HEAD & SIGNAL	123
		1	LAMP GP-HEAD & SIGNAL	124
LAMP (12-VOLT, 21-WATT) (TURN SIGNAL)	9W-3326	1	LIGHTING GP-ROADING	128
LAMP (12-VOLT, 5-WATT) (CLEAR)	226-4561	1	LAMP GP-HEAD & SIGNAL	123
		1	LAMP GP-HEAD & SIGNAL	124

MAINTENANCE PARTS

DESCRIPTION	PART NUMBER	QTY	WHERE USED	PAGE
LAMP (12-VOLT, 5-WATT) (STOP, TAIL)	084-4348	1	LIGHTING GP-ROADING	128
LAMP (12-VOLT, 55-WATT) (FLOODLIGHT)	9W-0607	1	LAMP GP-FLOOD	121
		1	LAMP GP-FLOOD	122
LAMP (12-VOLT, 55-WATT) (WARNING BEACON)	9X-8118	1	LAMP GP-WARNING BEACON	126
LAMP (12-VOLT) (STOP, TAIL)	9W-2471	1	LAMP GP-STOP & TAIL	125
LAMP-HEAD (12-VOLT, 60/55-WATT) (CLEAR)	9W-3324	1	LAMP GP-HEAD & SIGNAL	123
		1	LAMP GP-HEAD & SIGNAL	124
FRAME AND BODY				
LAMP (12-VOLT, 10-WATT)	195-9712	1	KIT-ROADING CONVERSION	198
		1	MOUNTING GP-REGISTRATION	201
PLUG-MAGNETIC	3S-9182	4	FRAME GP-LOADER	189
FUEL SYSTEM				
CAP-FUEL (FILLER)	304-3885	1	TANK GP-FUEL	86
FILTER AS-FUEL (FUEL TRANSFER PUMP)	363-5823	1	PUMP GP-FUEL TRANSFER	84
FILTER AS-WATER SEP & FUEL (FUEL, WATER SEPARATOR)	363-5819	1	FILTER GP-FUEL	68
KEY (FUEL INJECTION PUMP)	388-7517	1	PUMP GP-FUEL INJECTION	78
		1	PUMP GP-FUEL INJECTION	80
HYDRAULIC SYSTEM				
BREATHER (HYDRAULIC TANK)	258-2829	1	TANK & MTG GP-HYDRAULIC	274
CAP AS-FILLER (HYDRAULIC TANK)	142-8937	1	TANK & MTG GP-HYDRAULIC	274
STRAINER AS (HYDRAULIC TANK)	262-5689	1	TANK & MTG GP-HYDRAULIC	274
LUBRICATION SYSTEM				
FILTER-ENGINE OIL	377-6969	1	LINES GP-ENGINE OIL	38
OPERATOR STATION				
BLADE AS-WIPER (500-MM)	146-6433	1	DOOR GP-CAB	384
		1	DOOR GP-CAB	388
		1	KIT-CAB DOOR & MOUNTING	405
		1	KIT-CAB DOOR & MOUNTING	407
CAP-VENTED (WASHER)	258-3296	1	KIT-CAB DOOR & MOUNTING	405
		1	KIT-CAB DOOR & MOUNTING	407
CAP-VENTED (WINDOW WASHER TANK)	258-3296	1	DOOR GP-CAB	386
		1	DOOR GP-CAB	390
FILTER ELEMENT-CAB AIR (FRESH AIR)	265-6619	1	AIR CONDITIONER & MOUNTING GP	352
		1	KIT-COIL	400
		1	KIT-COIL	412

MAINTENANCE PARTS

DESCRIPTION	PART NUMBER	QTY	WHERE USED	PAGE
FILTER ELEMENT-CAB AIR (RECIRCULATION)	265-6618	1	AIR CONDITIONER & MOUNTING GP	352
		1	KIT-COIL	400
		1	KIT-COIL	412
LAMP (12-VOLT)	210-8754	1	PANEL GP-INSTRUMENT	430
V-BELT	198-8354	1	COMPRESSOR GP-REFRIGERANT	363
		1	KIT-COIL	400
		1	KIT-COIL	409
POWER TRAIN				
FILTER ELEMENT AS-OIL (HYDRAULIC)	348-1862	1	FILTER GP-OIL	158
		1	FILTER GP-OIL	159

INDEX

NAME PAGE

A

ACCESSORY GP-CAB 349
350
ACCUMULATOR GP-HYDRAULIC–CHARGED . . . 204
ACCUMULATOR GP-HYDRAULIC–UNCHARGED 205
ACCUMULATOR GP-REFRIGERANT (CHARGED) 400
409
421
ACCUMULATOR GP-REFRIGERANT–CHARGED 351
ACCUMULATOR GP-RIDE CONTROL–CHARGED 206
ACCUMULATOR GP-RIDE CONTROL–UNCHARGED 207
ACTUATOR GP (GOVERNOR CONTROL) 66
ACTUATOR GP (QUICK COUPLER) 145
223
AIR CLEANER GP 47
48
49
AIR CONDITIONER & MOUNTING GP 352
AIR CONDITIONER AR 354
ALTERNATOR GP-CHARGING 87
ARM GP-WINDOW WIPER (CAB DOOR) 384
388
405
407
ARMREST & MOUNTING GP 355
356
ARMREST GP–LH 358
ARMREST GP–RH 357
AXLE GP–STANDARD 155
156

B

BATTERY (12-VOLT, 880-CCA) 90
BATTERY & WIRING GP 90
BATTERY & WIRING GP–HEAVY-DUTY 88
BATTERY GP (12-VOLT, MAINTENANCE FREE, WET) 88
BELT-DRIVE (WARNING BEACON) 126
BLADE AR–ANGLING 280
281
BLADE AS-ANGLING 282
283
BLADE AS-WIPER (500-MM) 384
388
405
407
BLADE GP-ANGLING 284
285

NAME PAGE

BLADE GP-MULTIPURPOSE BUCKET 286
287
288
289
290
291
292
293
294
295
296
297
298
299
300
301
302
303
304
315
BLOWER GP-CAB 359
BREATHER (HYDRAULIC TANK) 274
BUCKET AR-MULTIPURPOSE 305
306
307
308
309
310
311
312
313
314
BUCKET GP-MULTIPURPOSE 315
316
317
318
319
320
321
322
323

C

CAB AR 360
CAB AR-ENCLOSED ROPS 360
CAB AR-OPEN ROPS 361
CAB AR-OPEN ROPS–STANDARD 360
CABLE GP-CONTROL 362
CAMERA GP (12-VOLT, 24-VOLT) 140
CAMERA GP (12-VOLT, 24-VOLT) (WORK AREA VISUAL SYSTEM, REAR) 116
CAMERA GP–WORK AREA VISUAL SYSTEM, REAR 92
CAMSHAFT GP 8
CAP AS-FILLER (BATTERY) 88
CAP AS-FILLER (HYDRAULIC TANK) 274
CAP AS-RADIATOR 43
CAP AS-VENTED (COOLANT RECOVERY) 55
CAP-FUEL (FILLER) 86

INDEX

NAME	PAGE
CAP-VENTED (WASHER)	405, 407
CAP-VENTED (WINDOW WASHER TANK)	386, 390
CHASSIS AR	1
CIRCUIT BREAKER AS	108, 113
CLAM AS-MULTIPURPOSE BUCKET	324, 325, 326, 327, 328
COMMON AR	1
COMPRESSOR GP-REFRIGERANT	363, 400, 409
CONDENSER & MTG GP-REFRIGERANT	364
CONFIGURATION AR–RIDE CONTROL	2
CONTROL AR-HYDRAULIC	208
CONTROL GP-AIR & TEMPERATURE	365, 366
CONTROL GP-COMMUNICATION (PL421)	115
CONTROL GP-ELECTROHYDRAULIC	367, 368, 370, 372
CONTROL GP-ELECTROHYDRAULIC–LH, HIGH FLOW	371
CONTROL GP-ELECTROHYDRAULIC–ON, OFF AUXILIARY CONTROL	367
CONTROL GP-ELECTROHYDRAULIC–RH, HIGH FLOW	369
CONTROL GP-ELECTRONIC	94
CONTROL GP-GOVERNOR	66
CONTROL GP-HANDLE	373, 375
CONTROL GP-HANDLE (RH)	376
CONTROL GP-HANDLE–LH	374
CONTROL GP-JOYSTICK	376, 378, 380
CONTROL GP-JOYSTICK–LH, HIGH FLOW	379
CONTROL GP-JOYSTICK–RH, HIGH FLOW	377
CONTROL GP-UNPRGMED MONITOR	94
CONTROL GP-UNPRGMED MONITOR (OPTIONAL)	415
CONTROL GP-UNPROGRAMMED (MACHINE)	94
CONVERSION AR-ROADING	182
CONVERSION AR-ROADING–NACD	182
CONVERSION GP-ROADING	183
COOLER GP-EXHAUST	50
COOLER GP-NRS	50
COUNTERWEIGHT & MOUNTING GP	184
COUNTERWEIGHT GP	185
COUPLER AR-QUICK	329
COUPLER GP-QUICK	330, 331
COVER GP-CAB	381
COVER GP-CONSOLE	382
COVER GP-CONSOLE–RH, LH	383
COVER GP-FUSE PANEL	93
COVER GP-LINES	333
COVER GP-VALVE MECHANISM	9, 10, 11, 12
CRANKSHAFT GP	13
CYLINDER & MTG GP-ANGLE BLADE	209
CYLINDER BLOCK AS	15
CYLINDER BLOCK GP	16
CYLINDER GP-HYDRAULIC–ANGLE BLADE	210
CYLINDER GP-HYDRAULIC–BUCKET	212
CYLINDER GP-HYDRAULIC–TILT	211
CYLINDER GP-LIFT	213
CYLINDER GP-LIFT ARM–VERTICAL LIFT	214
CYLINDER GP-TILT–LH	217
CYLINDER GP-TILT–RH	215
CYLINDER HEAD AS	17, 19
CYLINDER HEAD GP	21, 22

D

NAME	PAGE
DOOR GP-CAB–BASIC-POLY	388
DOOR GP-CAB–GLASS	384, 386
DOOR GP-CAB–POLY	390
DRAIN GP-ENGINE OIL	23
DRIVE GP-TANDEM	157

E

NAME	PAGE
EDGE GP-BIT & CUTTING	334, 335
EDGE GP-CUTTING	336, 337, 338, 339, 340
ELECTRONICS GP-MACHINE	94
ELECTRONICS GP-MONITOR	94
ELEMENT (BREATHER)	10, 12
ENCLOSURE GP-ENGINE	186, 188
ENGINE AR-COMPLETE	4
ENGINE AR-PRIMARY	5, 6
EXTENSION GP-EXHAUST	52

F

NAME	PAGE
FAN GP-BLOWER	39
FILLER GP-ENGINE OIL	36
FILM (REFLECTIVE)	340
FILM GP	461, 462
FILM GP–2-SPEED	463

INDEX

NAME PAGE

FILM GP–RIDE CONTROL ANSI. 464
FILM GP–RIDE CONTROL ISO 465
FILM-FUSE/RELAY. 93
FILM-IDENTIFICATION (ALTERNATE EXIT, READ OMM). 386
390
405
407
FILM-IDENTIFICATION (HYDRAULIC OIL FILL) 478
486
FILM-IDENTIFICATION (POWER DISTRIBUTION) 138
FILM-IDENTIFICATION (POWER RECEPTACLE, 12-VOLT) 468
478
482
486
489
FILM-IDENTIFICATION (THROTTLE) 430
FILM-INFORMATION (LIFT EYE LOCATION) . . . 199
FILM-INSTRUCTION (ALTERNATE EXIT) 457
FILM-INSTRUCTION (EGRESS SYSTEM, READ OMM). 384
388
405
407
FILM-PANEL (BLOWER, TEMPERATURE CONTROL). 365
FILM-STRIPE (REFLECTIVE, RED, WHITE) 340
FILM-STRIPE (ROUND RED REFLECTIVE). 130
FILM-WARNING (CRUSH HAZARD, STAY BACK) 315
316
317
318
319
320
321
322
323
324
325
326
327
328
466
FILM-WARNING (DIESEL FUEL). 478
482
486
FILM-WARNING (DO NOT OPERATE, READ OMM). 466
FILM-WARNING (FOPS, READ OMM). 392
FILM-WARNING (HIGH PRESSURE, READ OMM). 206
207
FILM-WARNING (UNIVERSAL WARNING) 478
FILTER AS-FUEL (FUEL TRANSFER PUMP) 84
FILTER AS-WATER SEP & FUEL (FUEL, WATER SEPARATOR) 68

NAME PAGE

FILTER ELEMENT AS-AIR (PRIMARY). 48
FILTER ELEMENT AS-AIR (SECONDARY) 48
49
FILTER ELEMENT AS-OIL (HYDRAULIC) 158
159
FILTER ELEMENT-CAB AIR (FRESH AIR) 352
400
412
FILTER ELEMENT-CAB AIR (RECIRCULATION). 352
400
412
FILTER GP-FUEL. 68
FILTER GP-OIL–HYDRAULIC OIL. 159
FILTER GP-OIL–HYDRAULIC, TRANSMISSION 158
FILTER-ENGINE OIL. 38
FITTING GP-ELBOW. 257
FITTING GP-HYDRAULIC 219
FITTING GP-HYDRAULIC (QUICK DISCONNECT, MALE) 219
FLASHER AS (12-VOLT). 128
FLOOR MAT 419
FLYWHEEL GP 24
FRAME GP-BLADE 284
FRAME GP-BLADE (WORK TOOL) 285
FRAME GP-LOADER 189
FUSE (10-AMPERE) 97
FUSE (100-AMPERE) 143
FUSE (15-AMPERE) 97
FUSE (20-AMPERE) 93
97
131
132
FUSE (30-AMPERE) 132
FUSE (50-AMPERE) 143
FUSE (60-AMPERE) 131
FUSE AS 128

G

GAUGE GP-OIL LEVEL (DIPSTICK) 37
GAUGE-OIL LEVEL (DIPSTICK, ENGINE) 37
GAUGE-SIGHT (COOLANT LEVEL) 43
GAUGE-SIGHT (HYDRAULIC TANK) 274
GLOW PLUG. 95
GLOW PLUG GP. 95
GOVERNOR GP. 69
GUARD GP-BELT 25
GUARD GP-ROPS/FOPS. 392

H

HANDHOLD GP 393
HANDLE GP 394
HARDWARE GP-PROTECTION. 2
HARNESS AS-CAB 96
97
100

INDEX

NAME PAGE

HARNESS AS-CAB–AUXILIARY. 99
HARNESS AS-CAB–WIPER, WASHER 99
HARNESS AS-CONTROL (PRODUCT LINK) 115
HARNESS AS-ENGINE 100
HARNESS AS-FRONT–IMPLEMENT VALVE 101
HARNESS AS-HEATER 453
HARNESS AS-HEATER & AIR COND 101
102
HARNESS AS-LIGHTING. 103
HARNESS AS-MOTOR. 359
HARNESS AS-PANEL. 104
HARNESS AS-PLATFORM 143
HARNESS AS-PLATFORM (FRONT) 143
HARNESS AS-PLATFORM (REAR) 143
HARNESS AS-PLATFORM–FRONT 106
HARNESS AS-PLATFORM–REAR. 105
HARNESS AS-PLATFORM–REAR, RH 106
HARNESS AS-QUICK COUPLER 107
108
HARNESS AS-RADIO. 108
398
417
418
HARNESS AS-RADIO (BLUETOOTH) 437
HARNESS AS-RADIO (FLANGE). 437
HARNESS AS-REAR LIGHTING (STOP, TAIL, TURN) 198
201
HARNESS AS-REAR LIGHTING–STOP, TAIL, TURN. 109
HARNESS AS-RIDE CONTROL. 109
146
225
HARNESS AS-SENSOR. 147
HARNESS AS-SENSOR (SELF LEVEL) 149
HARNESS AS-SENSOR–SELF LEVEL 110
111
HARNESS AS-SOLENOID. 153
HARNESS AS-SOLENOID–IMPLEMENT VALVE. 111
HARNESS AS-THERMOSTAT 396
HARNESS AS-WIRING. 436
455
HARNESS AS-WIRING (PEDAL) 416
HARNESS AS-WIRING–PEDAL 112
HARNESS AS-WORK TOOL 112
113
HARNESS AS-WORK TOOL–QUICK COUPLER 113
HEATER AR-CAB 395
HEATER GP-CAB 396
HEATER GP-JACKET WATER. 114
HOUSING GP-FRONT 26
27
HOUSING GP-FUEL PUMP 71
HYDRAULIC AR. 220
HYDRAULIC AR–HIGH FLOW 221
HYDRAULIC AR–STANDARD FLOW 220

NAME PAGE

I

INDICATOR-RESTRICTION (AIR CLEANER) 48
49
INSTALLATION AR-ENGINE. 6
7
INSTALLATION GP-COMMUNICATION–PRODUCT LINK 421 115
INSTALLATION GP-RADIO 398

K

KEY (FUEL INJECTION PUMP) 78
80
KIT-AIR CONDITIONER BREATHER 404
KIT-CAB DOOR & MOUNTING–GLASS 405
KIT-CAB DOOR & MOUNTING–POLYCARBONATE 407
KIT-CAB WINDOW. 414
KIT-CAMERA–REAR VIEW 116
KIT-COIL–CONVERSION 409
KIT-COIL–HEATER. 412
KIT-COIL–HVAC 400
KIT-COUNTERWEIGHT–COUNTERWEIGHT. 191
KIT-COVER–HYDRAULIC. 222
KIT-FLUSHING VALVE. 167
169
KIT-FLUSHING VALVE (PISTON MOTOR). 168
KIT-INSTRUMENT PANEL–ADVANCED DISPLAY. 415
KIT-MACHINE ENCLOSURE SEAL–DEBRIS BARRIER 192
KIT-MOUNTING–BACKHOE. 195
KIT-PEDAL–THROTTLE 416
KIT-QUICK COUPLER CONVERSION 223
KIT-RADIO–AM/FM. 417
KIT-RADIO–AM/FM/WB/CD/XM/USB/BLUETOOTH. 418
KIT-RIDE CONTROL–RIDE CONTROL 225
KIT-ROADING CONVERSION–ROADING LIGHTS, FRONT 196
198
KIT-ROADING PLATE & MOUNTING–BUCKET 340
KIT-WORK TOOL WIRING–ELECTRICAL 117
KIT-WORK TOOL WIRING–JOYSTICK, LH. 120
KIT-WORK TOOL WIRING–SELF LEVEL 118

L

LAMP (12-VOLT, 10-WATT) 198
201
LAMP (12-VOLT, 21-WATT) (AMBER). 123
124
LAMP (12-VOLT, 21-WATT) (TURN SIGNAL) . . . 128
LAMP (12-VOLT, 5-WATT) (CLEAR) 123
124
LAMP (12-VOLT, 5-WATT) (STOP, TAIL). 128

INDEX

NAME	PAGE
LAMP (12-VOLT, 55-WATT) (FLOODLIGHT)	121, 122
LAMP (12-VOLT, 55-WATT) (WARNING BEACON)	126
LAMP (12-VOLT)	430
LAMP (12-VOLT) (STOP, TAIL)	125
LAMP GP-DOME (12-VOLT) (CAB)	430
LAMP GP-FLOOD	121, 122
LAMP GP-FLOOD (12-VOLT)	143
LAMP GP-HEAD & SIGNAL–LH	124
LAMP GP-HEAD & SIGNAL–RH	123
LAMP GP-REGISTRATION PLATE	198, 201
LAMP GP-SIGNAL (REAR, LH)	128
LAMP GP-SIGNAL (REAR, RH)	128
LAMP GP-STOP & TAIL	125
LAMP GP-WARNING BEACON–AMBER	126
LAMP-HEAD (12-VOLT, 60/55-WATT) (CLEAR)	123, 124
LIFTING GP-ENGINE	28
LIFTING GP-MACHINE–FOUR POINT	199
LIGHTING GP-FLOOD–WORK LIGHTS, FRONT	127
LIGHTING GP-ROADING	128
LIGHTING GP-STOP & TAIL	130
LINER GP-CAB	419, 420
LINES GP-AIR	53, 54
LINES GP-AIR CONDITIONER	421
LINES GP-AUXILIARY HYDRAULIC	227, 229
LINES GP-BUCKET–MULTIPURPOSE	231, 233, 235, 237, 239
LINES GP-CONNECTING	241
LINES GP-COOLING	55
LINES GP-ENGINE OIL	38
LINES GP-FUEL	72, 74
LINES GP-FUEL INJECTION	75
LINES GP-HEATER	423
LINES GP-HYDRAULIC OIL COOLER	249
LINES GP-HYDRAULIC–CHARGE	243, 245
LINES GP-HYDRAULIC–RIDE CONTROL	247
LINES GP-HYDROSTATIC	160, 162
LINES GP-LIFT CYLINDER	250, 252
LINES GP-PUMP–IMPLEMENT	254, 257
LINES GP-TILT CYLINDER	260, 262
LINES GP-WATER	40, 41
LINK GP-COUPLER–LH	341, 344
LINK GP-COUPLER–RH	342, 343
LITERATURE GP	1, 424
LOCK GP	188
LOCK GP-QUICK COUPLER–LH	346
LOCK GP-QUICK COUPLER–MECHANICAL	345
LOCK GP-QUICK COUPLER–RH	347

M

MACHINE AR-SPECIAL	2
MACHINE AR-SPECIAL–2-SPEED	2
MACHINE AR-SPECIAL–RIDE CONTROL	3
MANIFOLD & MTG GP-CONTROL–ANGLING BLADE	264
MANIFOLD GP-CONTROL (PILOT SHUTOFF)	160
MANIFOLD GP-CONTROL–ANGLING BLADE	265
MANIFOLD GP-CONTROL–MOTOR, 2-SPEED	267
MANIFOLD GP-EXHAUST	56
MANIFOLD GP-INLET	57, 58
MANIFOLD GP-RIDE CONTROL–RIDE	268
MIRROR & MTG GP-REAR VIEW	200
MIRROR GP-REAR VIEW	196, 202
MOTOR & MOUNTING GP–1-SPEED	165
MOTOR & MOUNTING GP–2-SPEED	166
MOTOR & MTG GP-HYDRAULIC FAN	269
MOTOR GP-GEAR (FAN, DEMAND)	269
MOTOR GP-PISTON	167, 168, 169
MOTOR GP-WINDOW WIPER	425
MOUNTING GP-ARMREST	426, 427
MOUNTING GP-CYLINDER	270
MOUNTING GP-ENGINE	29
MOUNTING GP-LICENSE PLATE	201
MOUNTING GP-PUMP	170
MOUNTING GP-REGISTRATION	201
MOUNTING GP-ROADING LIGHTS	202
MOUNTING GP-ROADING LIGHTS–NACD	203
MOUNTING GP-ROPS	428
MUFFLER & MOUNTING GP	59

N

NOZZLE GP-UNIT INJECTOR	76

O

ORIFICE AS-AIR CONDITIONER	396

INDEX

NAME PAGE

P

PAN GP-OIL 30
PANEL GP-INSTRUMENT 430
PANEL GP-INSTRUMENT–ADVANCED DISPLAY 434
PANEL GP-INSTRUMENT–BASE DISPLAY 433
PANEL GP-INSTRUMENT–RH 435
PEDAL GP-GOVERNOR 436
PIN GP-LIFT ARM–WITH SUPPORT 278
PISTON & ROD GP 31
PLATE & FILM GP 466 468 471 474 475 476 477 478 482 486 489
PLUG-MAGNETIC 189
POWER TRAIN AR 171
PRECLEANER GP 61
PRECLEANER GP–TURBINE 60
PULLEY GP 33
PUMP & MTG GP-HYDRAULIC 271
PUMP & MTG GP-HYDROSTATIC 172
PUMP & MTG GP-WORK TOOL 272
PUMP AS-FUEL INJECTION 77
PUMP GP-FUEL INJECTION 78 80 82 83
PUMP GP-FUEL TRANSFER 84
PUMP GP-FUEL TRANSFER (WATER SEPARATOR) 72
PUMP GP-GEAR 273
PUMP GP-PISTON (WORK TOOL) 272
PUMP GP-PISTON–HYDROSTATIC 173
PUMP GP-WATER 42

R

RADIATOR & HYD OIL COOLER GP 43
RADIO GP (AM/FM/WB/CD/XM/USB/BLUETOOTH) 418 437
RADIO GP–AM/FM 437
RECOVERY GP-COOLANT 55
REGULATOR AS 41
REGULATOR AS (WATER TEMPERATURE) 40
RELAY AS (12-VOLT) 128 143 151 223 401 409
RELAY AS (12-VOLT) (AIR CONDITIONER) 136
RELAY AS (12-VOLT) (FUSE BLOCK) 138 146 153
RELAY AS (12-VOLT) (QUICK COUPLER) 145
RELAY AS (12-VOLT) (RIDE CONTROL) 225
RELAY AS (12-VOLT) (WORK TOOL) 117 120 154
RELAY GP 132
RELAY GP (12-VOLT) (MAIN POWER) 138
RELAY GP–MAIN POWER 131
ROTATING GP-PUMP (VIBRATORY) 173

S

SEAT & ARMREST GP 439 440
SEAT & MOUNTING GP 442
SEAT & MOUNTING GP–SUSPENSION 441 443 444 445 447
SEAT AR-SUSPENSION 448
SEAT BELT GP–RETRACTABLE 449
SEAT BELT GP–RETRACTABLE, 76-MM (3-IN) 450
SEAT GP-SUSPENSION 439 451
SEAT GP-SUSPENSION–VINYL 453
SENDER AS-FUEL LEVEL 85
SENSOR (WATER TEMPERATURE) 38
SENSOR AS-POSITION 118
SENSOR AS-POSITION (BOOM RETRACTED) 147 149
SENSOR AS-POSITION (QUICK COUPLER) 118 147 149
SENSOR AS-TEMPERATURE (HYDRAULIC OIL) 274
SENSOR GP-POSITION (ROTARY) 430
SENSOR GP-PRESSURE 118
SENSOR GP-PRESSURE (LIFT CYLINDER) 149
SENSOR GP-PRESSURE (QUICK COUPLER) 147
SENSOR GP-SPEED 133 165
SENSOR GP-SPEED (MOTOR) 166
SENSOR-SPEED (ENGINE) 38
SERVICE GP-MACHINE 94
SERVICE GP-MONITOR 94
SOFTWARE GP-MACHINE 94
SOFTWARE GP-MACHINE–BUCKET POSITION 134
SOFTWARE GP-MONITOR 94 415
SOLENOID AS (GOVERNOR CONTROL) 69
SOLENOID AS (SWING BOOM, WORK TOOL) 265

INDEX

NAME	PAGE
SPRING AS-GAS (CAB)	386, 393
SPRING AS-GAS (DOOR)	390, 405, 407
SPRING AS-GAS (LOCKING)	393
SPRING GP-GAS	46
STARTING MOTOR GP-ELECTRIC	135
STRAINER AS (HYDRAULIC TANK)	274
STRAINER-OIL (PAN)	30
SUPPORT GP-RADIATOR	46
SUSPENSION GP-SEAT–AIR	455
SWITCH (12-VOLT) (SEAT BELT)	447
SWITCH (SEAT BELT)	445
SWITCH AS (BLOWER FAN SPEED)	365
SWITCH AS (SEAT)	453
SWITCH AS (TEMPERATURE CONTROL)	365
SWITCH AS-MAGNETIC (LOAD CONTROL)	355, 358, 386, 390, 405, 407
SWITCH AS-PRESSURE (AIR CONDITIONER)	421
SWITCH AS-PRESSURE (HYDRAULIC OIL)	158
SWITCH AS-PRESSURE (REFRIGERANT, LOW SIDE)	400, 409
SWITCH AS-PRESSURE (REFRIGERANT)	400, 409, 421
SWITCH AS-ROCKER	386
SWITCH AS-ROCKER (AIR CONDITIONER)	136, 400, 409
SWITCH AS-ROCKER (CONTINUOUS FLOW)	430
SWITCH AS-ROCKER (FRONT WIPER, WASHER)	390, 407
SWITCH AS-ROCKER (HAZARD WARNING LIGHTS)	128
SWITCH AS-ROCKER (MOTOR, 2-SPEED, AUXILIARY)	162
SWITCH AS-ROCKER (OVERRIDE, HYDRAULIC LOCKOUT)	430
SWITCH AS-ROCKER (PARKING BRAKE)	430
SWITCH AS-ROCKER (QUICK COUPLER)	145, 223
SWITCH AS-ROCKER (RIDE CONTROL)	146, 225
SWITCH AS-ROCKER (ROADING LIGHTS)	128, 196
SWITCH AS-ROCKER (TURN SIGNAL)	128
SWITCH AS-ROCKER (WIPER)	405
SWITCH AS-ROCKER (WORK LIGHTS, FRONT)	430
SWITCH AS-ROCKER (WORK LIGHTS, REAR)	430
SWITCH AS-ROCKER (WORK TOOL POSITIONER)	118, 147, 149
SWITCH AS-ROCKER (WORK TOOL)	117, 120, 151, 154
SWITCH AS-START (KEY)	430
SWITCH-OIL PRESSURE	38
SWITCH-ROCKER (HEATED SEAT)	453
SWITCH-TEMPERATURE (HVAC)	396

T

TANK & MTG GP-FUEL	85
TANK & MTG GP-HYDRAULIC	274
TANK GP-FUEL	86
TANK GP-HYDRAULIC	274
TIRE & RIM GP–HEAVY-DUTY, LH	176
TIRE & RIM GP–HEAVY-DUTY, RH	176
TIRE & RIM GP–LH	177, 178, 179
TIRE & RIM GP–RH	177, 178, 179
TOOTH GP-UNI	305, 306, 307, 308, 309, 310, 311, 348
TURBOCHARGER GP	63

V

V-BELT	363, 400, 409
V-BELT (FAN DRIVE PULLEY)	33
VALVE & MTG GP-CONTROL–IMPLEMENT	276, 277
VALVE AS-RELIEF (FUEL LINES)	72
VALVE GP-BANK 3 (IMPLEMENT)	276
VALVE GP-CHECK	225, 254, 265
VALVE GP-CHECK (PUMP CASE DRAIN)	257
VALVE GP-CHECK (RIDE CONTROL)	247
VALVE GP-CONTROL	268, 277
VALVE GP-MANUAL (LIFT CYLINDER)	250, 252
VALVE GP-PUMP CONTROL	173
VALVE GP-RELIEF	173
VALVE GP-RELIEF (CHARGE)	173

NAME PAGE

VALVE GP-RELIEF (SWING BOOM, WORK TOOL) 265
VALVE GP-SOLENOID (12 VDC) (AUXILIARY) 160
VALVE GP-SOLENOID (12 VDC) (SPEED) 267
VALVE GP-SOLENOID (12-VOLT) (ANGLE) 265
VALVE GP-SOLENOID (12-VOLT) (TILT) 265
VALVE GP-SOLENOID (REAR AXLE FAN UNLOADER) 269
VALVE GP-SPEED CONTROL. 169
VALVE GP-SPEED CONTROL (2-SPEED). 168
VALVE MECHANISM GP. 34

W

WHEEL & TIRE AR 180
181
WHEEL & TIRE AR–HEAVY DUTY 179
180
WHEEL & TIRE AR–SOLID 181
WINDOW GP-CAB. 457
458
WINDOW GP-CAB–LH 459
WINDOW GP-CAB–RH. 460
WIRING GP-AIR CONDITIONER 136
WIRING GP-CAB 138
WIRING GP-CAMERA–REAR VIEW 140
WIRING GP-COMMUNICATION 115
WIRING GP-ENGINE. 141
WIRING GP-HEATER 142
WIRING GP-PLATFORM 143
WIRING GP-QUICK COUPLER 145
WIRING GP-RIDE CONTROL. 146
WIRING GP-WORK TOOL. 147
151
WIRING GP-WORK TOOL–IMPLEMENT VALVE. 153
WIRING GP-WORK TOOL–LIFT ARM 154
WIRING GP-WORK TOOL–SELF LEVEL 149

MEMORANDA

MACHINE ARRANGEMENT

345-5247 CHASSIS AR

PART OF 388-8246, 388-8247 COMMON AR

SMCS-7000 **i05166873**

NOTE	PART NUMBER	QTY	PART NAME 1 2 3 4 5 6 (PRODUCT LEVEL)	SEE PAGE
Y	*258-3736*	1	AXLE GP (STANDARD)	156
Y	**375-0714**	1	CYLINDER GP-LIFT ARM	214
Y	*345-5010*	1	ENCLOSURE GP-ENGINE (SEAL)	186
Y	*345-6450*	1	ENCLOSURE GP-ENGINE (DOOR) (DOOR ACCESS)	188
Y	*345-5775*	1	FRAME GP-LOADER	189
Y	*345-6220*	1	MOUNTING GP-ROPS (INCLUDES STEP)	428
Y	*345-5199*	1	PIN GP-LIFT ARM (WITH SUPPORT)	278
Y	*345-5500*	1	TANK & MTG GP-FUEL	85
Y	*361-6390*	1	WIRING GP-PLATFORM	143

Y - SEPARATE ILLUSTRATION

<END>

388-8246 COMMON AR

S/N: JSL1-UP

SMCS-7000 **i05310890**

NOTE	PART NUMBER	QTY	PART NAME 1 2 3 4 5 6 (PRODUCT LEVEL)	SEE PAGE
Y	*345-5454*	1	CAB AR	360
Y	*345-5247*	1	CHASSIS AR	1
Y	*393-7338*	1	ENGINE AR-COMPLETE	4
Y	*345-5248*	1	HYDRAULIC AR	220
Y	*378-6680*	1	INSTALLATION AR-ENGINE	6
Y	*345-5249*	1	FILM GP	461
Y	*6V-1970*	1	LITERATURE GP	424

Y - SEPARATE ILLUSTRATION

<END>

388-8247 COMMON AR

S/N: HMR1-UP

SMCS-7000 **i05310850**

NOTE	PART NUMBER	QTY	PART NAME 1 2 3 4 5 6 (PRODUCT LEVEL)	SEE PAGE
Y	*345-5454*	1	CAB AR	360
Y	*345-5247*	1	CHASSIS AR	1
Y	*393-7339*	1	ENGINE AR-COMPLETE	4
Y	*345-5248*	1	HYDRAULIC AR	220
Y	*393-7330*	1	INSTALLATION AR-ENGINE	7
Y	*345-5249*	1	FILM GP	461
Y	*6V-1970*	1	LITERATURE GP	424

Y - SEPARATE ILLUSTRATION

<END>

MACHINE ARRANGEMENT

388-7932 CONFIGURATION AR–RIDE CONTROL

1-SPEED

AN ATTACHMENT

SMCS-0645, 1433, 7000, 7405, 7431, 7557 **i05156562**

NOTE	PART NUMBER	QTY	PART NAME 1 2 3 4 5 6 (PRODUCT LEVEL)	SEE PAGE
Y	*345-5950*	1	LINES GP-HYDRAULIC (CHARGE)	245
Y	*345-6499*	1	LINES GP-HYDRAULIC (RIDE CONTROL)	247
Y	*345-4925*	1	POWER TRAIN AR	171
Y	*356-6096*	1	WIRING GP-RIDE CONTROL	146

Y - SEPARATE ILLUSTRATION

<END>

345-4923 MACHINE AR-SPECIAL

AN ATTACHMENT

SMCS-7000 **i05153061**

NOTE	PART NUMBER	QTY	PART NAME 1 2 3 4 5 6 (PRODUCT LEVEL)	SEE PAGE
Y	*345-5946*	1	LINES GP-HYDRAULIC	243
Y	*345-4925*	1	POWER TRAIN AR	171
	345-4761	1	HARDWARE GP-PROTECTION	
M	**266-3315**	3	BOLT-FLANGE HEAD (M8X1.25X25.5-MM)	

M - METRIC PART
Y - SEPARATE ILLUSTRATION

<END>

345-4927 MACHINE AR-SPECIAL–2-SPEED

AN ATTACHMENT

SMCS-7000 **i05153060**

NOTE	PART NUMBER	QTY	PART NAME 1 2 3 4 5 6 (PRODUCT LEVEL)	SEE PAGE
Y	*388-8116*	1	FILM GP (2-SPEED)	463
Y	*345-5946*	1	LINES GP-HYDRAULIC (CHARGE)	243
Y	*345-4931*	1	POWER TRAIN AR	171
	345-4761	1	HARDWARE GP-PROTECTION	
M	**266-3315**	3	BOLT-FLANGE HEAD (M8X1.25X25.5-MM)	

M - METRIC PART
Y - SEPARATE ILLUSTRATION

<END>

MACHINE ARRANGEMENT

345-4929 MACHINE AR-SPECIAL—RIDE CONTROL

2-SPEED

AN ATTACHMENT

SMCS-7000 **i05153059**

NOTE	PART NUMBER	QTY	PART NAME 1 2 3 4 5 6 (PRODUCT LEVEL)	SEE PAGE
Y	*388-8116*	1	FILM GP (2-SPEED)	463
Y	*345-5950*	1	LINES GP-HYDRAULIC (CHARGE)	245
Y	*345-6499*	1	LINES GP-HYDRAULIC (RIDE CONTROL)	247
Y	*345-4931*	1	POWER TRAIN AR (2-SPEED)	171
Y	*356-6096*	1	WIRING GP-RIDE CONTROL	146

Y - SEPARATE ILLUSTRATION

<END>

ENGINE ARRANGEMENT

393-7338 ENGINE AR-COMPLETE

S/N: JSL1-UP

PART OF 388-8246 COMMON AR

SMCS-1000 **i05299986**

NOTE	PART NUMBER	QTY	PART NAME 1 2 3 4 5 6 (PRODUCT LEVEL)	SEE PAGE
Y	**380-1768**	1	ENGINE AR-PRIMARY	5
Y	*416-5688*	1	PLATE & FILM GP	474

Y - SEPARATE ILLUSTRATION

<END>

393-7339 ENGINE AR-COMPLETE

S/N: HMR1-UP

PART OF 388-8247 COMMON AR

SMCS-1000 **i05299982**

NOTE	PART NUMBER	QTY	PART NAME 1 2 3 4 5 6 (PRODUCT LEVEL)	SEE PAGE
Y	**380-1769**	1	ENGINE AR-PRIMARY	6
Y	*416-5689*	1	PLATE & FILM GP	475

Y - SEPARATE ILLUSTRATION

<END>

ENGINE ARRANGEMENT

380-1768 ENGINE AR-PRIMARY

S/N: JSL1-UP
55 BRAKE KW (74 BHP) AT 2400 RPM
PART OF 393-7338 ENGINE AR-COMPLETE

SMCS-1000 **i05341856**

NOTE	PART NUMBER	QTY	PART NAME 1 2 3 4 5 6 (PRODUCT LEVEL)	SEE PAGE
Y	*396-0901*	1	ALTERNATOR GP-CHARGING	87
Y	*387-9068*	1	CAMSHAFT GP	8
Y	*396-0902*	1	COOLER GP-EXHAUST	50
Y	*396-0903*	1	COVER GP-VALVE MECHANISM	9
Y	*387-9070*	1	CRANKSHAFT GP	13
Y	*420-8851*	1	CYLINDER BLOCK GP	16
Y	*396-0908*	1	CYLINDER HEAD GP	21
Y	*396-0905*	1	FILLER GP-ENGINE OIL	36
Y	*437-2562*	1	FLYWHEEL GP	24
Y	*437-5953*	1	GAUGE GP-OIL LEVEL (DIPSTICK)	37
Y	*387-9089*	1	GLOW PLUG GP	95
Y	*396-0909*	1	HOUSING GP-FRONT	26
Y	*396-0910*	1	LIFTING GP-ENGINE	28
Y	*396-0912*	1	LINES GP-ENGINE OIL	38
Y	*396-0911*	1	LINES GP-FUEL	74
Y	*387-9078*	1	LINES GP-FUEL INJECTION	75
Y	*396-0913*	1	LINES GP-WATER	40
Y	*396-0914*	1	MANIFOLD GP-EXHAUST	56
Y	*387-9083*	1	MANIFOLD GP-INLET	57
Y	*396-0916*	1	NOZZLE GP-UNIT INJECTOR	76
Y	*387-9087*	1	PAN GP-OIL	30
Y	*387-9088*	1	PISTON & ROD GP	31
Y	*437-2566*	1	PULLEY GP	33
Y	*438-1290*	1	PUMP GP-FUEL INJECTION	83
Y	*387-9091*	1	PUMP GP-WATER	42
Y	*396-0915*	1	STARTING MOTOR GP-ELECTRIC	135
Y	*437-5955*	1	TURBOCHARGER GP	63
Y	*387-9084*	1	VALVE MECHANISM GP	34

Y - SEPARATE ILLUSTRATION

<END>

ENGINE ARRANGEMENT

380-1769 ENGINE AR-PRIMARY

S/N: HMR1-UP
55 BRAKE KW (74 BHP) AT 2400 RPM
PART OF 393-7339 ENGINE AR-COMPLETE

SMCS-1000 **i05341857**

NOTE	PART NUMBER	QTY	PART NAME 1 2 3 4 5 6 (PRODUCT LEVEL)	SEE PAGE
Y	*396-0901*	1	ALTERNATOR GP-CHARGING	87
Y	*387-9068*	1	CAMSHAFT GP	8
Y	*420-8852*	1	COVER GP-VALVE MECHANISM	11
Y	*387-9070*	1	CRANKSHAFT GP	13
Y	*420-8851*	1	CYLINDER BLOCK GP	16
Y	*420-8853*	1	CYLINDER HEAD GP	22
Y	*437-2562*	1	FLYWHEEL GP	24
Y	*437-5953*	1	GAUGE GP-OIL LEVEL (DIPSTICK)	37
Y	*387-9089*	1	GLOW PLUG GP	95
Y	*396-0909*	1	HOUSING GP-FRONT	26
Y	*396-0910*	1	LIFTING GP-ENGINE	28
Y	*396-0912*	1	LINES GP-ENGINE OIL	38
Y	*396-0911*	1	LINES GP-FUEL	74
Y	*387-9078*	1	LINES GP-FUEL INJECTION	75
Y	*420-8855*	1	LINES GP-WATER	41
Y	*396-0914*	1	MANIFOLD GP-EXHAUST	56
Y	*420-8856*	1	MANIFOLD GP-INLET	58
Y	*396-0916*	1	NOZZLE GP-UNIT INJECTOR	76
Y	*387-9087*	1	PAN GP-OIL	30
Y	*387-9088*	1	PISTON & ROD GP	31
Y	*437-2566*	1	PULLEY GP	33
Y	*437-5954*	1	PUMP GP-FUEL INJECTION	82
Y	*387-9091*	1	PUMP GP-WATER	42
Y	*396-0915*	1	STARTING MOTOR GP-ELECTRIC	135
Y	*437-5955*	1	TURBOCHARGER GP	63
Y	*387-9084*	1	VALVE MECHANISM GP	34

Y - SEPARATE ILLUSTRATION

<END>

378-6680 INSTALLATION AR-ENGINE

S/N: JSL1-UP
PART OF 388-8246 COMMON AR

SMCS-1000 **i05164436**

NOTE	PART NUMBER	QTY	PART NAME 1 2 3 4 5 6 (PRODUCT LEVEL)	SEE PAGE
Y	*345-3498*	1	AIR CLEANER GP	47
Y	*378-6812*	1	CONTROL GP-GOVERNOR	66
Y	*345-3495*	1	DRAIN GP-ENGINE OIL	23
Y	*345-3475*	1	EXTENSION GP-EXHAUST	52
Y	*345-3620*	1	GUARD GP-BELT	25
Y	*393-7333*	1	LINES GP-AIR	54
Y	*345-3576*	1	LINES GP-COOLING	55
Y	*378-6681*	1	LINES GP-FUEL	72
Y	*345-3605*	1	MOUNTING GP-ENGINE	29
Y	*345-3602*	1	MOUNTING GP-PUMP	170
Y	*378-6751*	1	MUFFLER & MOUNTING GP	59
Y	*345-3459*	1	RADIATOR & HYD OIL COOLER GP	43
Y	*378-1022*	1	WIRING GP-ENGINE	141

Y - SEPARATE ILLUSTRATION

<END>

ENGINE ARRANGEMENT

393-7330 INSTALLATION AR-ENGINE

S/N: HMR1-UP

PART OF 388-8247 COMMON AR

SMCS-1000 **i05163028**

NOTE	PART NUMBER	QTY	PART NAME 1 2 3 4 5 6 (PRODUCT LEVEL)	SEE PAGE
Y	*345-3498*	1	AIR CLEANER GP	47
Y	*378-6812*	1	CONTROL GP-GOVERNOR	66
Y	*345-3495*	1	DRAIN GP-ENGINE OIL	23
Y	*345-3475*	1	EXTENSION GP-EXHAUST	52
Y	*345-3620*	1	GUARD GP-BELT	25
Y	*378-6692*	1	LINES GP-AIR	53
Y	*345-3576*	1	LINES GP-COOLING	55
Y	*378-6681*	1	LINES GP-FUEL	72
Y	*345-3605*	1	MOUNTING GP-ENGINE	29
Y	*345-3602*	1	MOUNTING GP-PUMP	170
Y	*378-6751*	1	MUFFLER & MOUNTING GP	59
Y	*345-3459*	1	RADIATOR & HYD OIL COOLER GP	43
Y	*378-1022*	1	WIRING GP-ENGINE	141

Y - SEPARATE ILLUSTRATION

<END>

387-9068 CAMSHAFT GP

PART OF 380-1768, 380-1769 ENGINE AR-PRIMARY

SMCS-1210, 1211, 1212 **i05341878**

NOTE	REF NO	GRAPHIC REF	PART NUMBER	QTY	PART NAME 1 2 3 4 5 6 (PRODUCT LEVEL)	SEE PAGE
	1	1	**387-9780**	1	CUP-SEAL	
	2	1	**387-9785**	3	BOLT-FLANGE HEAD	
	3	1	**387-9798**	2	BOLT-FLANGE HEAD	
	4	1	**387-9830**	8	TAPPET	
	5	1	**387-9831**	8	PUSHROD	
	6	1	**387-9832**	1	CAMSHAFT AS	
		1	**388-7493**	1	CAMSHAFT	
	6A	1	**388-7494**	1	BEARING	
	6B	1	**388-7495**	1	GEAR	
	6C	1	**383-0227**	1	KEY-FEATHER	
	6D	1	**388-7496**	1	STOP	
	7	1	**387-9847**	1	SHAFT-GEAR	
	8	1	**387-9848**	1	COLLAR	
	9	1	**387-9849**	1	COLLAR	
	10	1	**387-9850**	1	GEAR AS-IDLER	
	10A	1	**388-7507**	1	BUSHING	

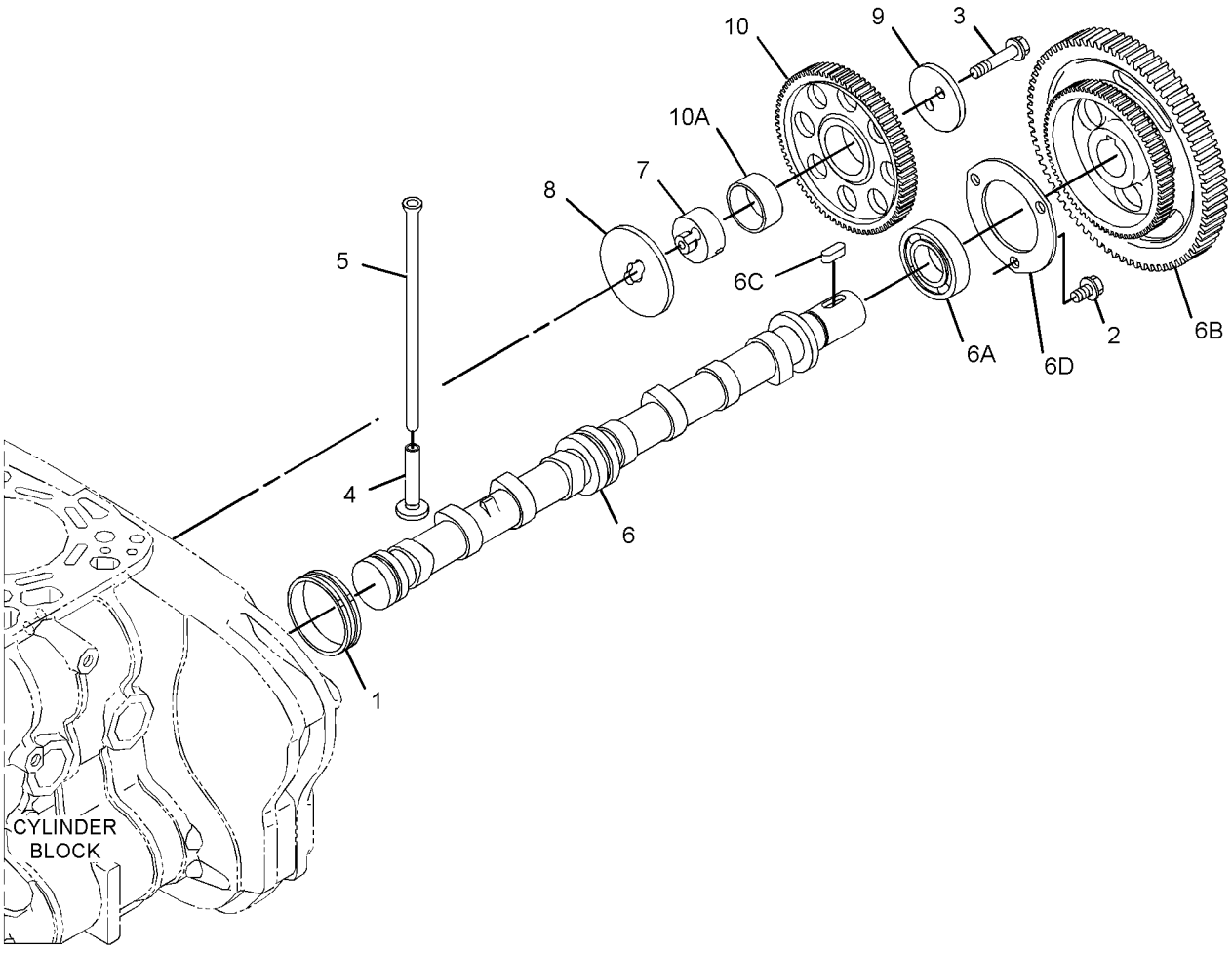

GRAPHIC #1 **<END>** g02882649

396-0903 COVER GP-VALVE MECHANISM

S/N: JSL1-UP

PART OF 380-1768 ENGINE AR-PRIMARY

SMCS-1107 **i05341884**

NOTE	REF NO	GRAPHIC REF	PART NUMBER	QTY	PART NAME 1 2 3 4 5 6 (PRODUCT LEVEL)	SEE PAGE
	1	1	**383-0574**	10	BOLT	
	2	1	**438-5693**	1	PIPE-BREATHER	
	3	1	**438-1313**	1	HOSE-BREATHER	
	4	1	**387-9802**	2	CLAMP-HOSE	
Y	5	1	**398-1476**	1	COVER GP-VALVE MECHANISM	10
	6	1	**393-2882**	1	CONDUIT	
	7	1	**387-9829**	1	GASKET	
	8	1	**388-7474**	2	CLAMP	
	9	1	**393-2881**	1	HOSE-BREATHER	
	10	1	**383-0187**	1	BOLT	
	11	1	**397-9056**	1	CLAMP	

Y - SEPARATE ILLUSTRATION

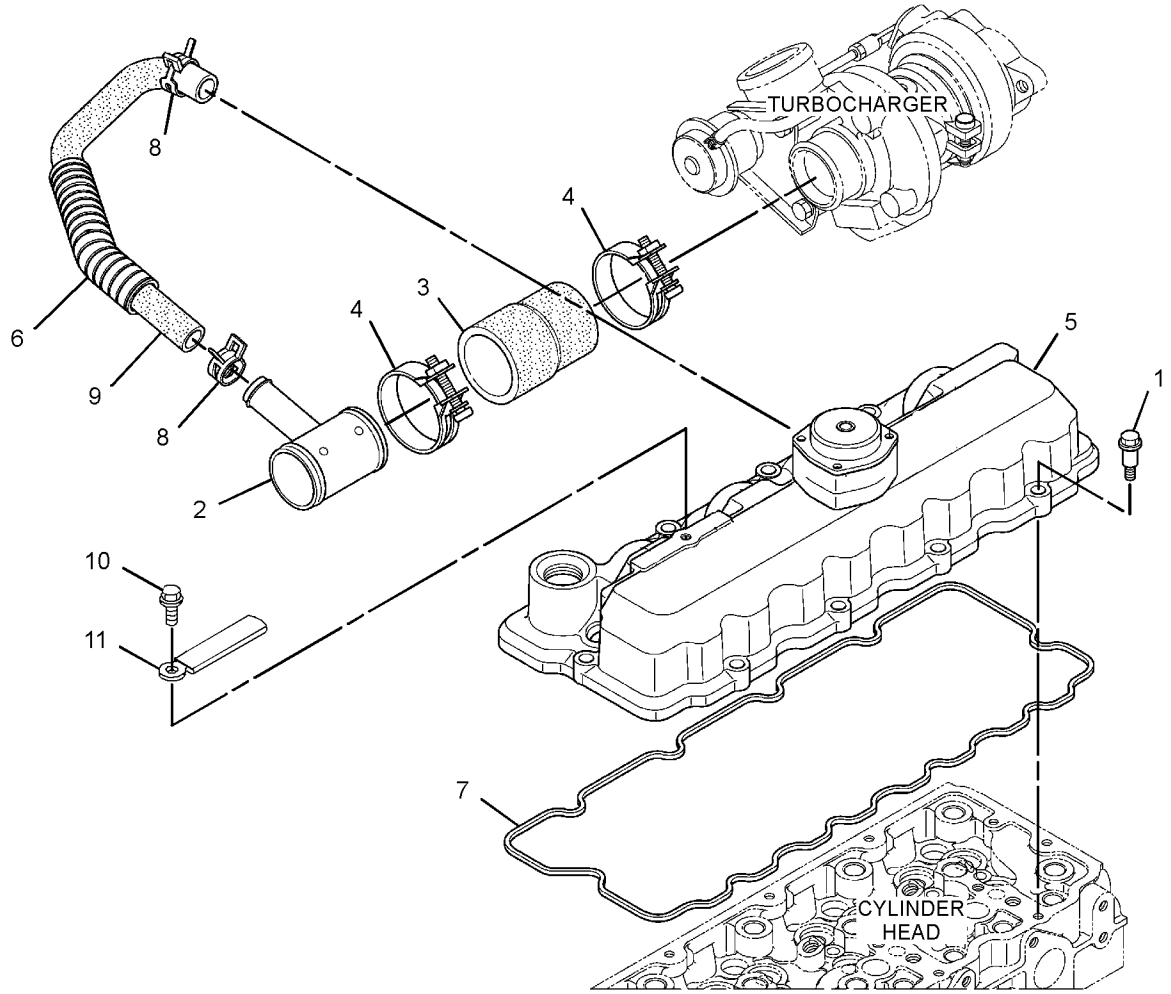

GRAPHIC #1 **<END>** g02948720

398-1476 COVER GP-VALVE MECHANISM

S/N: JSL1-UP

PART OF 396-0903 COVER GP-VALVE MECHANISM

SMCS-1107 **i05342502**

NOTE	REF NO	GRAPHIC REF	PART NUMBER	QTY	PART NAME 1 2 3 4 5 6 (PRODUCT LEVEL)	SEE PAGE
	1	1	**388-7488**	4	ELEMENT (BREATHER)	
	2	1	**383-0524**	1	COVER	
	3	1	**383-0563**	1	VALVE-BREATHER	
	4	1	**388-7489**	1	CONNECTOR AS	
	5	1	**388-7490**	1	SEAL-O-RING	
	6	1	**388-7491**	4	SCREW	
	7	1	**388-7492**	4	SEAL	

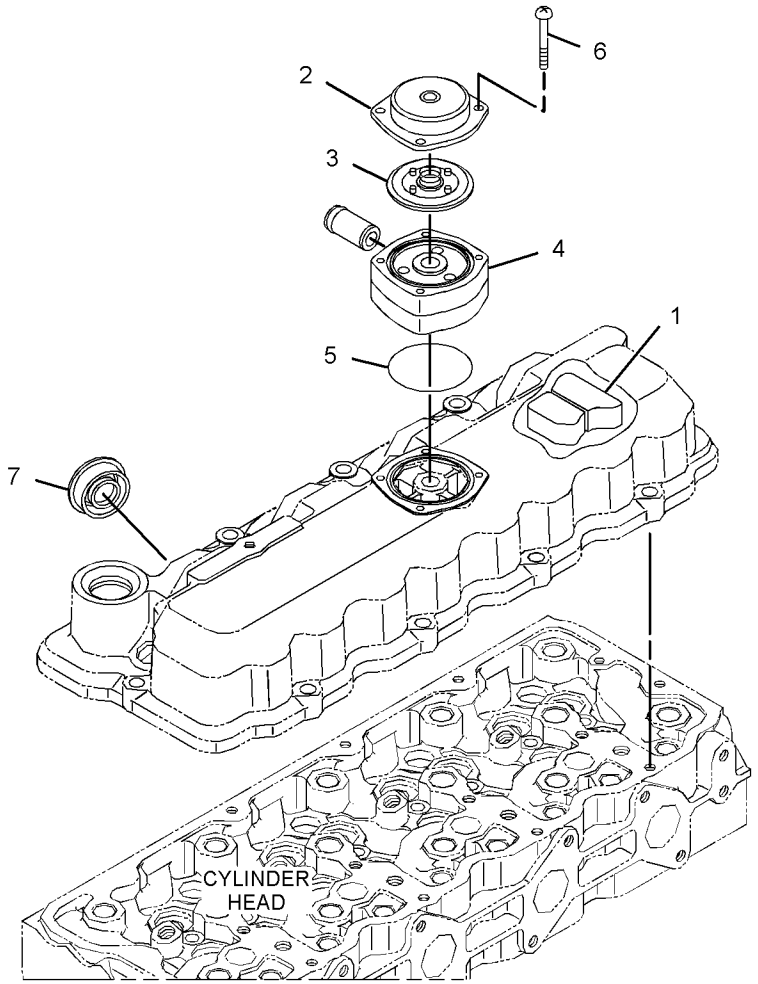

GRAPHIC #1 **<END>** g02948623

420-8852 COVER GP-VALVE MECHANISM

S/N: HMR1-UP

PART OF 380-1769 ENGINE AR-PRIMARY

SMCS-1107 **i05342118**

NOTE	REF NO	GRAPHIC REF	PART NUMBER	QTY	PART NAME 1 2 3 4 5 6 (PRODUCT LEVEL)	SEE PAGE
	1	1	**383-0213**	1	SEAL-O-RING	
	2	1	**383-0217**	1	SEAL-O-RING	
	3	1	**383-0245**	1	PLUG-FILLER	
	4	1	**383-0574**	10	BOLT	
	5	1	**387-9829**	1	GASKET	
	6	1	**388-7474**	1	CLAMP	
	7	1	**397-9988**	1	FLANGE-OIL FILLER	
	8	1	**421-1876**	1	HOSE-BREATHER	
Y	9	1	**421-1877**	1	COVER GP-VALVE MECHANISM	12

Y - SEPARATE ILLUSTRATION

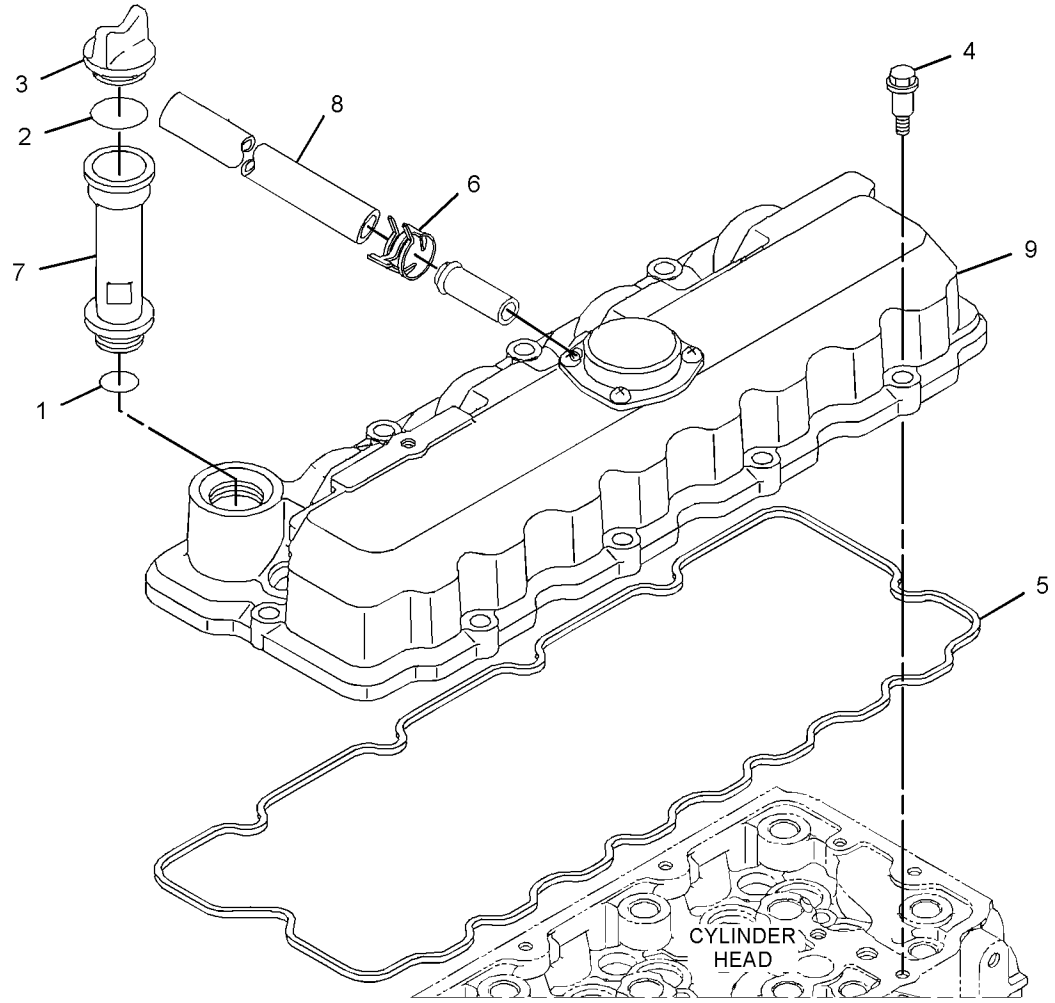

GRAPHIC #1 **<END>** g03267436

421-1877 COVER GP-VALVE MECHANISM

S/N: HMR1-UP

PART OF 420-8852 COVER GP-VALVE MECHANISM

SMCS-1107 **i05342498**

NOTE	REF NO	GRAPHIC REF	PART NUMBER	QTY	PART NAME 1 2 3 4 5 6 (PRODUCT LEVEL)	SEE PAGE
	1	1	**388-7488**	4	ELEMENT (BREATHER)	
	2	1	**388-7490**	1	SEAL-O-RING	
	3	1	**388-7492**	4	SEAL	
	4	1	**389-5153**	1	ADAPTER	
	5	1	**389-5154**	4	SCREW	
	6	1	**418-0969**	1	COVER-BREATHER	

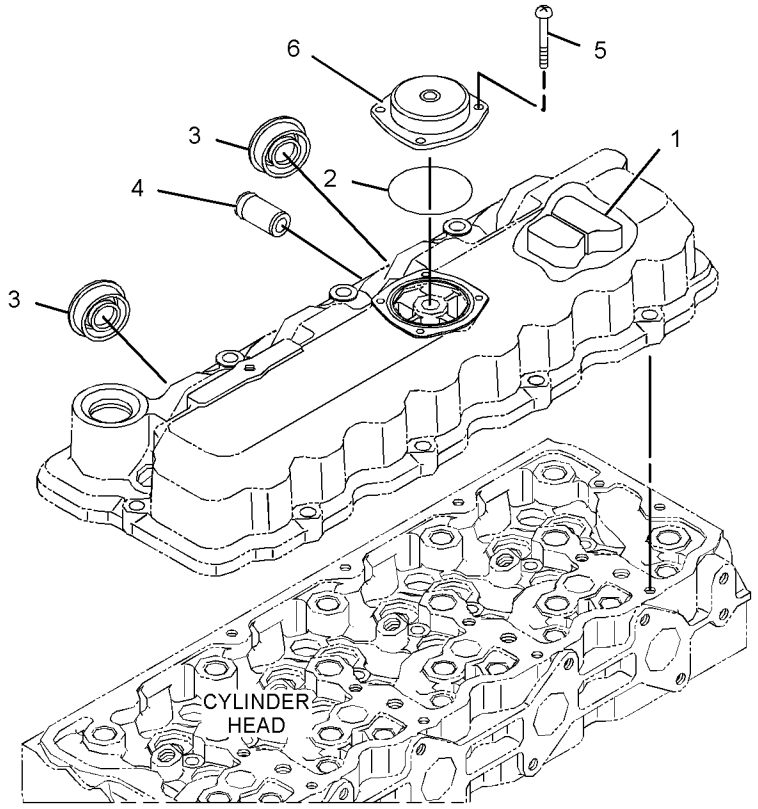

GRAPHIC #1 **<END>** g03262277

387-9070 CRANKSHAFT GP

PART OF 380-1768, 380-1769 ENGINE AR-PRIMARY

SMCS-1202 **i05299148**

NOTE	REF NO	GRAPHIC REF	PART NUMBER	QTY	PART NAME 1 2 3 4 5 6 (PRODUCT LEVEL)	SEE PAGE
	1	1	**387-9840**	1	CRANKSHAFT AS	
	1A	1	**388-7502**	1	GEAR	
	2	1	**387-9841**	1	GEAR AS-CRANKSHAFT	
	2A	1	**383-0220**	1	PIN	
	3	1	**387-9842**	1	KEY (STRAIGHT)	
JO	4	1	**387-9843**	5	BEARING (STANDARD)	
JO	5	1	**387-9844**	5	BEARING (STANDARD)	
J	6	1	**387-9845**	2	BEARING (STANDARD)	
J	7	1	**387-9846**	2	BEARING (STANDARD)	
ABLQ		1	**393-2897**		BEARING (0.20-MM US)	
ABNT		1	**393-2898**		BEARING (0.40-MM US)	
ABLQ		1	**393-2899**		BEARING (0.20-MM US)	
ABNT		1	**393-2900**		BEARING (0.40-MM US)	
ABL		1	**393-2901**		BEARING (0.20-MM OS)	
ABN		1	**393-2902**		BEARING (0.40-MM OS)	
ABL		1	**393-2903**		BEARING (0.20-MM OS)	
ABN		1	**393-2904**		BEARING (0.40-MM OS)	
					AVAILABLE REPAIR KIT(S):	
J			**393-2911**	1	KIT-BEARING	
L			**393-2912**	1	KIT-BEARING	
N			**393-2913**	1	KIT-BEARING	
O			**393-2914**	5	KIT-CRANKSHAFT BEARING	
Q			**393-2915**	5	KIT-CRANKSHAFT BEARING	
T			**393-2916**	5	KIT-CRANKSHAFT BEARING	

A - NOT PART OF THIS GROUP
B - USE AS REQUIRED
J - KIT MARKED J SERVICES PARTS MARKED J
L - KIT MARKED L SERVICES PARTS MARKED L
N - KIT MARKED N SERVICES PARTS MARKED N
O - KIT MARKED O SERVICES PARTS MARKED O
Q - KIT MARKED Q SERVICES PARTS MARKED Q
T - KIT MARKED T SERVICES PARTS MARKED T

387-9070 **CRANKSHAFT GP (*contd.*)** **i05299148**

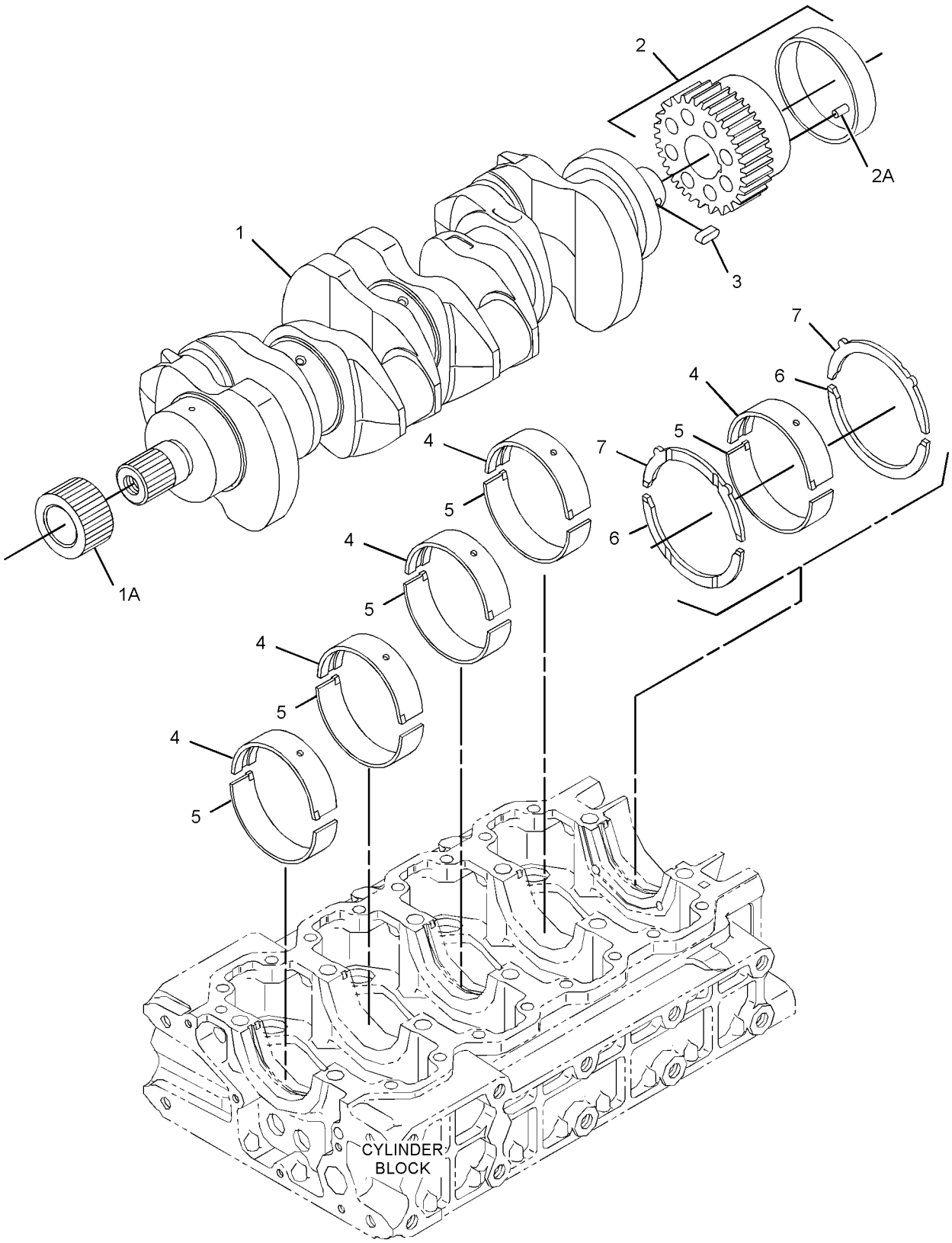

GRAPHIC #1 **<END>** g02882759

421-1883 CYLINDER BLOCK AS

PART OF 420-8851 CYLINDER BLOCK GP

SMCS-1117, 1200, 1201, 1203, 1211, 1216, 1217, 1221, 1222, 1223, 1224, 1238, 1239, 1240, 1331

i05342493

NOTE	REF NO	GRAPHIC REF	PART NUMBER	QTY	PART NAME 1 2 3 4 5 6 (PRODUCT LEVEL)	SEE PAGE
	1	1	**418-0931**	3	CAP	
	2	1	**398-5520**	1	BALL	
	4	1	**383-0303**	1	PLUG	
	7	1	**388-7434**	9	CAP	
	8	1	**388-7435**	1	PLUG	
	9	1	**389-5106**	2	PIN	
	10	1	**393-7577**	10	BOLT	
	11	1	**393-7582**	16	BOLT-FLANGE HEAD	

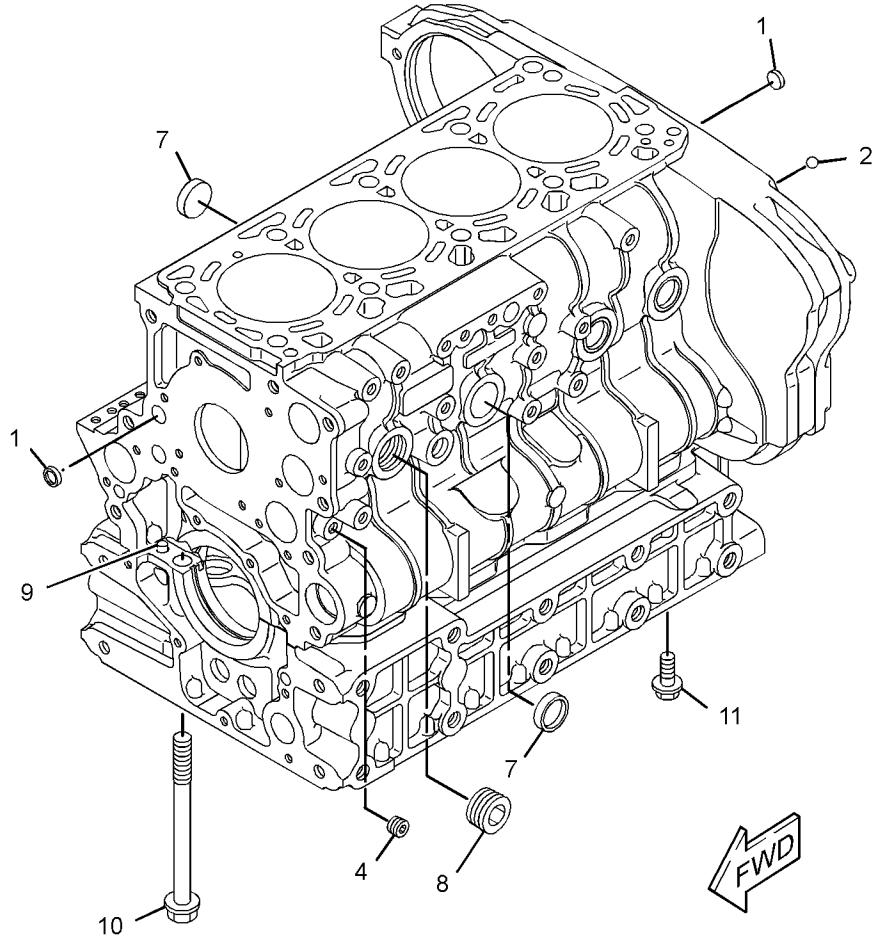

GRAPHIC #1

<END>

g03242296

420-8851 CYLINDER BLOCK GP

PART OF 380-1768, 380-1769 ENGINE AR-PRIMARY

SMCS-1201 **i05341887**

NOTE	REF NO	GRAPHIC REF	PART NUMBER	QTY	PART NAME 1 2 3 4 5 6 (PRODUCT LEVEL)	SEE PAGE
	1	1	**383-0262**	4	CAP	
Y	2	1	**421-1883**	1	CYLINDER BLOCK AS	15
	3	1	**387-9779**	4	PIN	
	4	1	**389-5106**	2	PIN	
	5	1	**389-5111**	1	VALVE	

Y - SEPARATE ILLUSTRATION

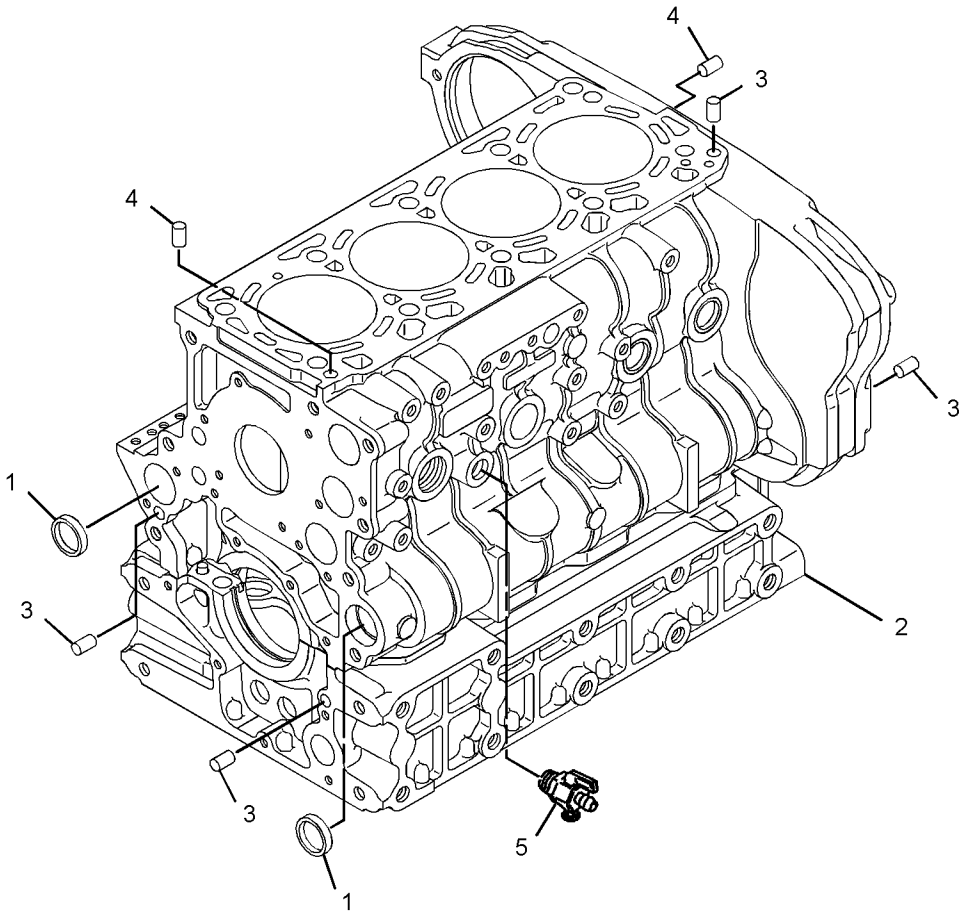

GRAPHIC #1 **<END>** g02929681

387-9788 CYLINDER HEAD AS

S/N: JSL1-UP

PART OF 396-0908 CYLINDER HEAD GP

SMCS-1100 **i05342503**

NOTE	REF NO	GRAPHIC REF	PART NUMBER	QTY	PART NAME 1 2 3 4 5 6 (PRODUCT LEVEL)	SEE PAGE
	1	1	**383-0262**	2	CAP	
	2	1	**383-0358**	8	CAP	
	3	1	**388-7434**	1	CAP	
	4	1	**389-0691**	8	GUIDE-VALVE	
	5	1	**389-0692**	8	GUIDE-VALVE	
	6	1	**389-0695**	8	VALVE-INLET	
	7	1	**389-0696**	8	VALVE-EXHAUST	
	8	1	**389-0697**	16	SPRING-VALVE	
	9	1	**389-0698**	16	RETAINER	
	10	1	**389-0699**	16	GUIDE-SPRING	
	11	1	**389-0700**	16	SEAL	
	12	1	**389-0701**	8	SHAFT	

387-9788 **CYLINDER HEAD AS (*contd.*)** **i05342503**

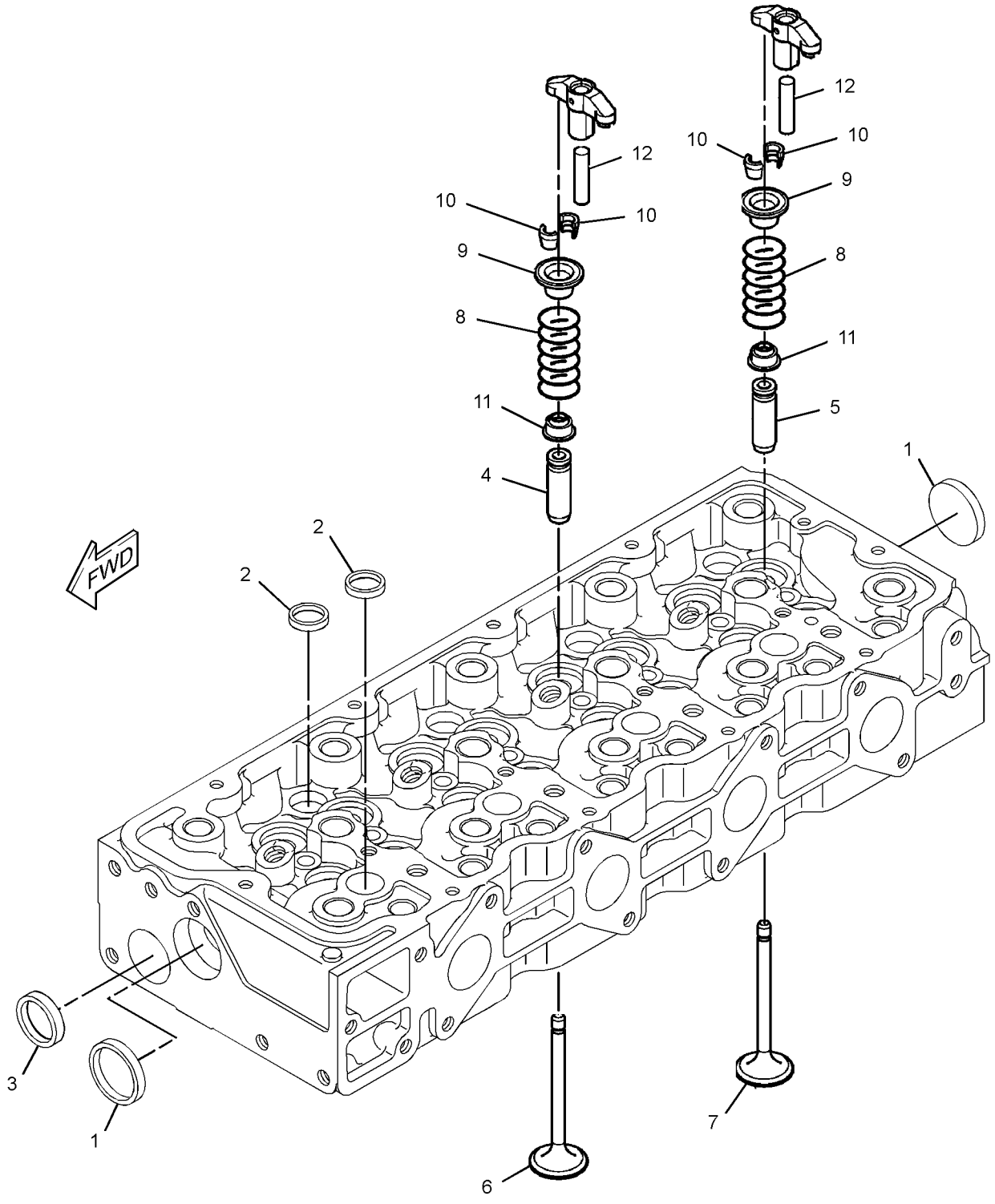

GRAPHIC #1 **<END>** g02925236

421-1881 CYLINDER HEAD AS

S/N: HMR1-UP

PART OF 420-8853 CYLINDER HEAD GP

SMCS-1100 **i05342500**

NOTE	REF NO	GRAPHIC REF	PART NUMBER	QTY	PART NAME 1 2 3 4 5 6 (PRODUCT LEVEL)	SEE PAGE
	1	1	**389-0701**	8	SHAFT	
	2	1	**383-0358**	8	CAP	
	3	1	**388-7434**	2	CAP	
	4	1	**389-0691**	8	GUIDE-VALVE	
	5	1	**389-0692**	8	GUIDE-VALVE	
	6	1	**389-0695**	8	VALVE-INLET	
	7	1	**389-0696**	8	VALVE-EXHAUST	
	8	1	**389-0697**	16	SPRING-VALVE	
	9	1	**389-0698**	16	RETAINER	
	10	1	**389-5137**	16	GUIDE	
	11	1	**389-0700**	16	SEAL	

421-1881 **CYLINDER HEAD AS (*contd.*)** **i05342500**

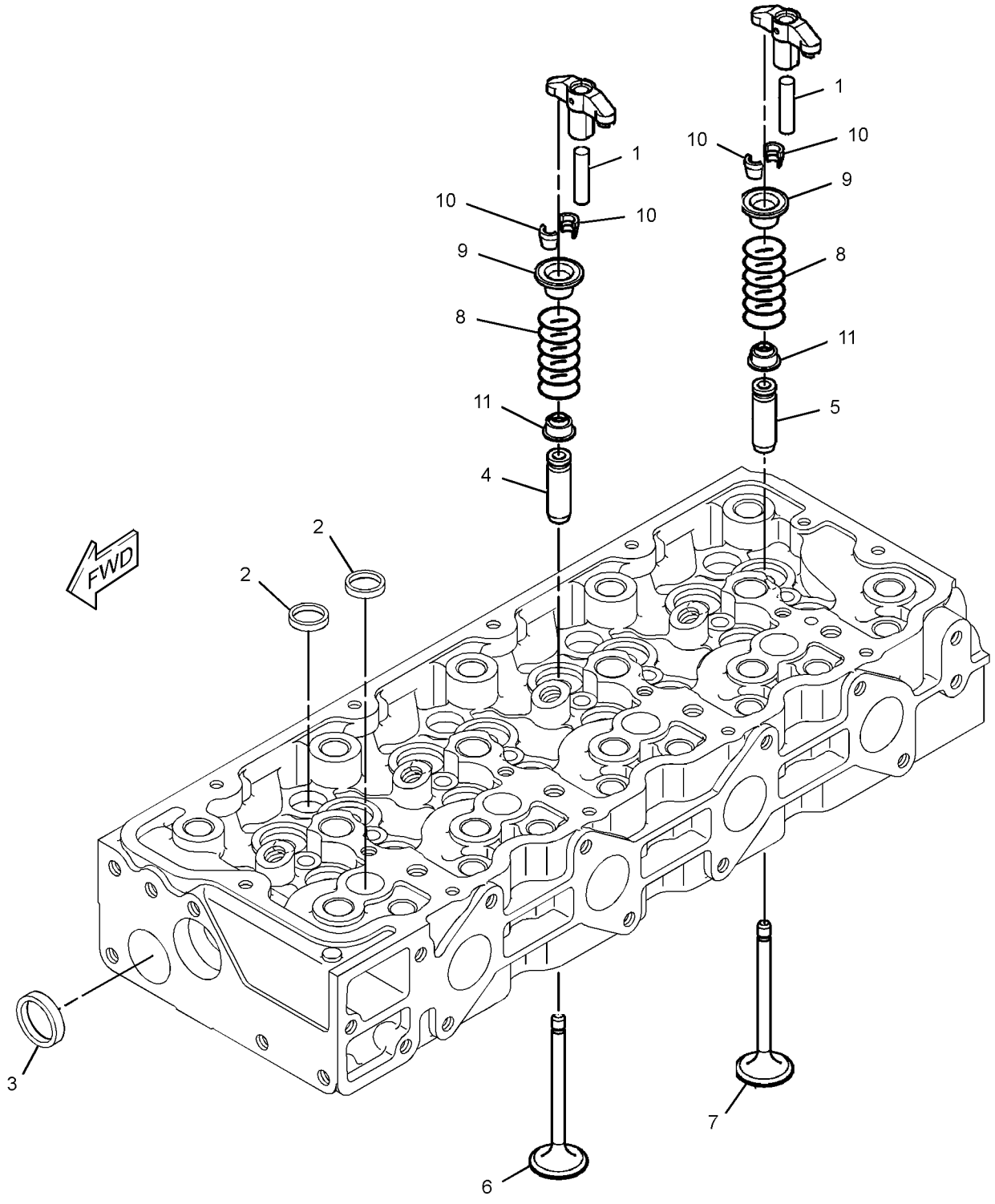

GRAPHIC #1 **<END>** g03244637

396-0908 CYLINDER HEAD GP

S/N: JSL1-UP

PART OF 380-1768 ENGINE AR-PRIMARY

SMCS-1100, 1101, 1103, 1104, 1105, 1108, 1109, 1115, 1117, 1121, 1124, 1125

i05341915

NOTE	REF NO	GRAPHIC REF	PART NUMBER	QTY	PART NAME 1 2 3 4 5 6 (PRODUCT LEVEL)	SEE PAGE
	1	1	**383-0303**	1	PLUG	
Y	2	1	**387-9788**	1	CYLINDER HEAD AS	17
B	3	1	**387-9790**	1	GASKET	
B		1	**387-9791**	1	GASKET	
B		1	**387-9792**	1	GASKET	
	4	1	**387-9827**	8	PAD	
	5	1	**393-7577**	10	BOLT	
	6	1	**387-9826**	8	ARM (CYLINDER HEAD)	
					PARTS SHOWN IN GRAPHIC(S) WITHOUT A REFERENCE NUMBER ARE NOT SERVICED SEPARATELY	

B - USE AS REQUIRED
Y - SEPARATE ILLUSTRATION

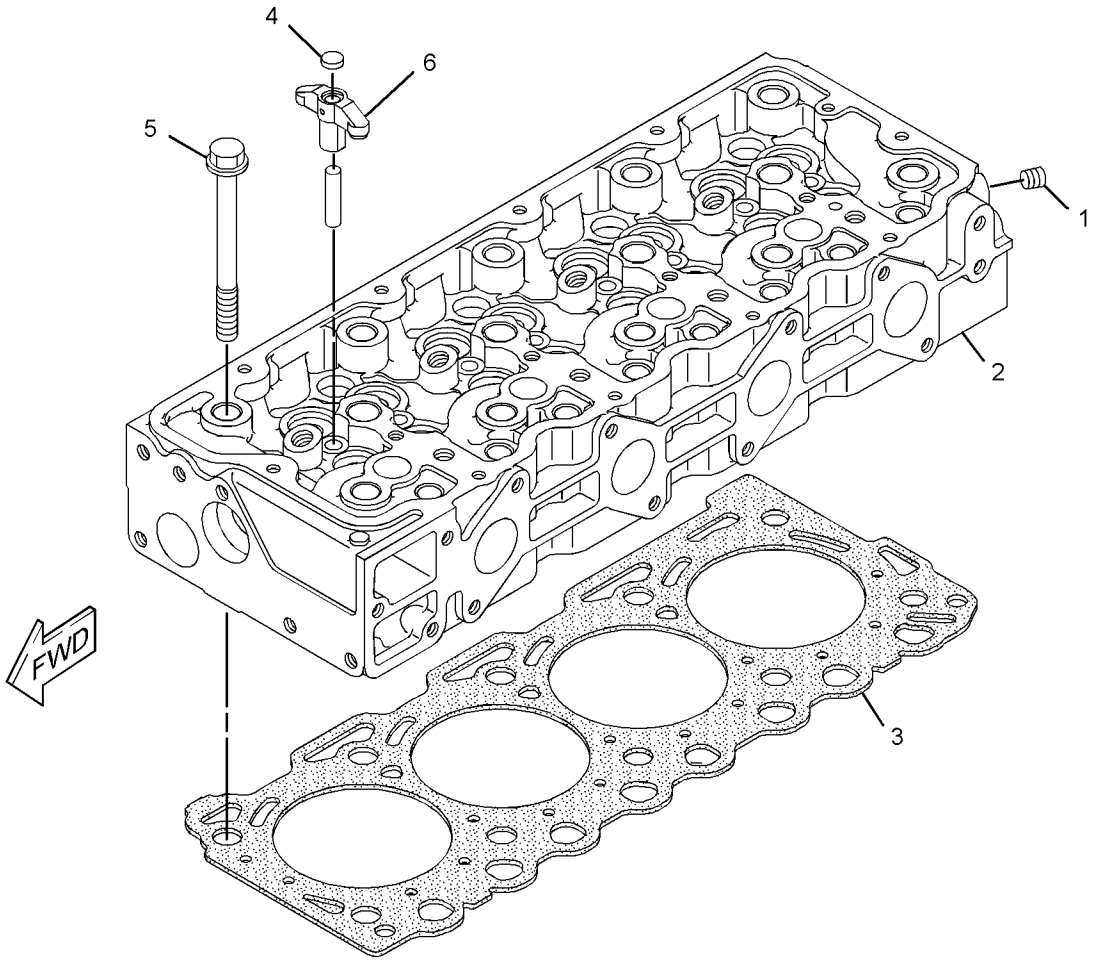

GRAPHIC #1

<END>

g02929439

420-8853 CYLINDER HEAD GP

S/N: HMR1-UP

PART OF 380-1769 ENGINE AR-PRIMARY

SMCS-1100, 1101, 1103, 1104, 1105, 1108, 1109, 1115, 1117, 1121, 1124, 1125

i05342122

NOTE	REF NO	GRAPHIC REF	PART NUMBER	QTY	PART NAME 1 2 3 4 5 6 (PRODUCT LEVEL)	SEE PAGE
	1	1	**383-0303**	1	PLUG	
B	2	1	**387-9790**	1	GASKET	
B		1	**387-9791**	1	GASKET	
B		1	**387-9792**	1	GASKET	
	3	1	**393-7577**	10	BOLT	
Y	4	1	**421-1881**	1	CYLINDER HEAD AS	19

B - USE AS REQUIRED
Y - SEPARATE ILLUSTRATION

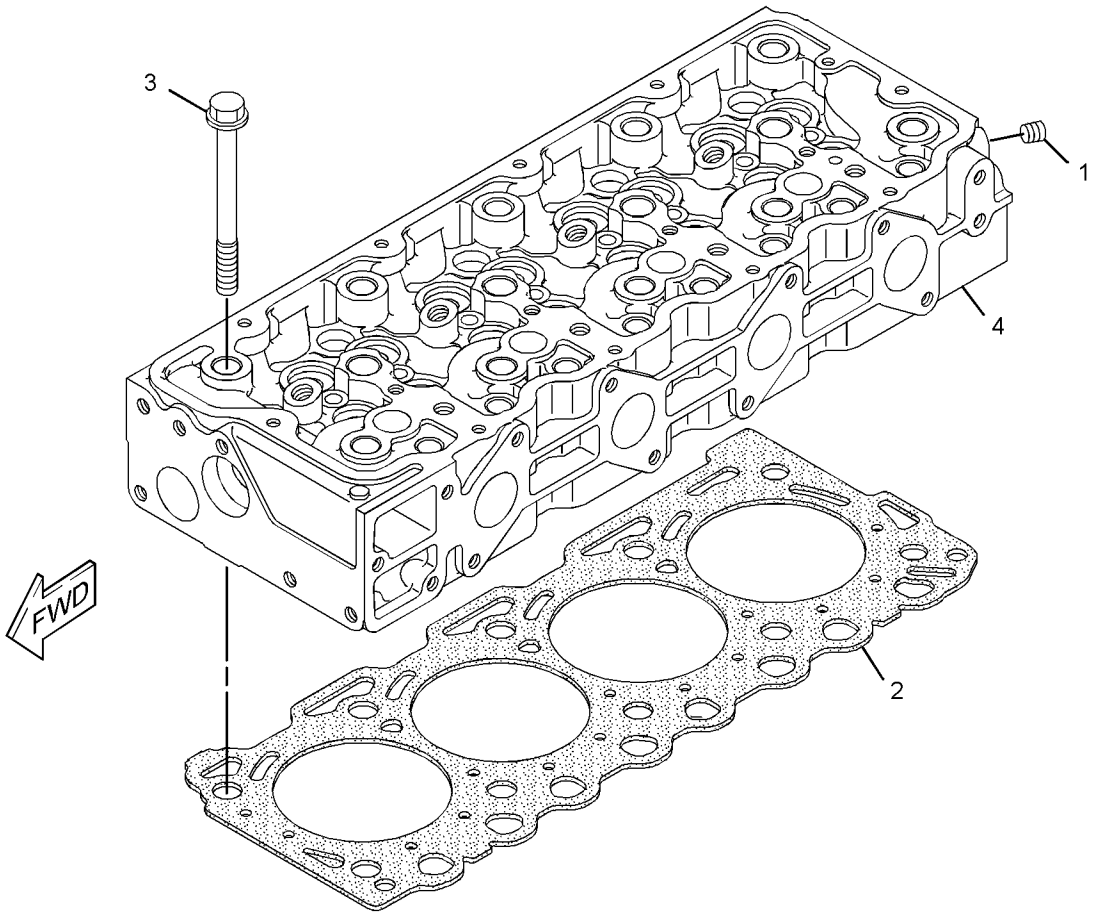

GRAPHIC #1 **<END>** g03239816

345-3495 DRAIN GP-ENGINE OIL

PART OF 378-6680, 393-7330 INSTALLATION AR-ENGINE

SMCS-1302 **i04765964**

NOTE	REF NO	GRAPHIC REF	PART NUMBER	QTY	PART NAME 1 2 3 4 5 6 (PRODUCT LEVEL)	SEE PAGE
	1	1	**1P-4278**	1	CLAMP-HOSE	
E	2	1	**5P-1442**		HOSE (70-CM)	
	3	1	**110-2570**	1	CAP	

E - ORDER BY THE CENTIMETER

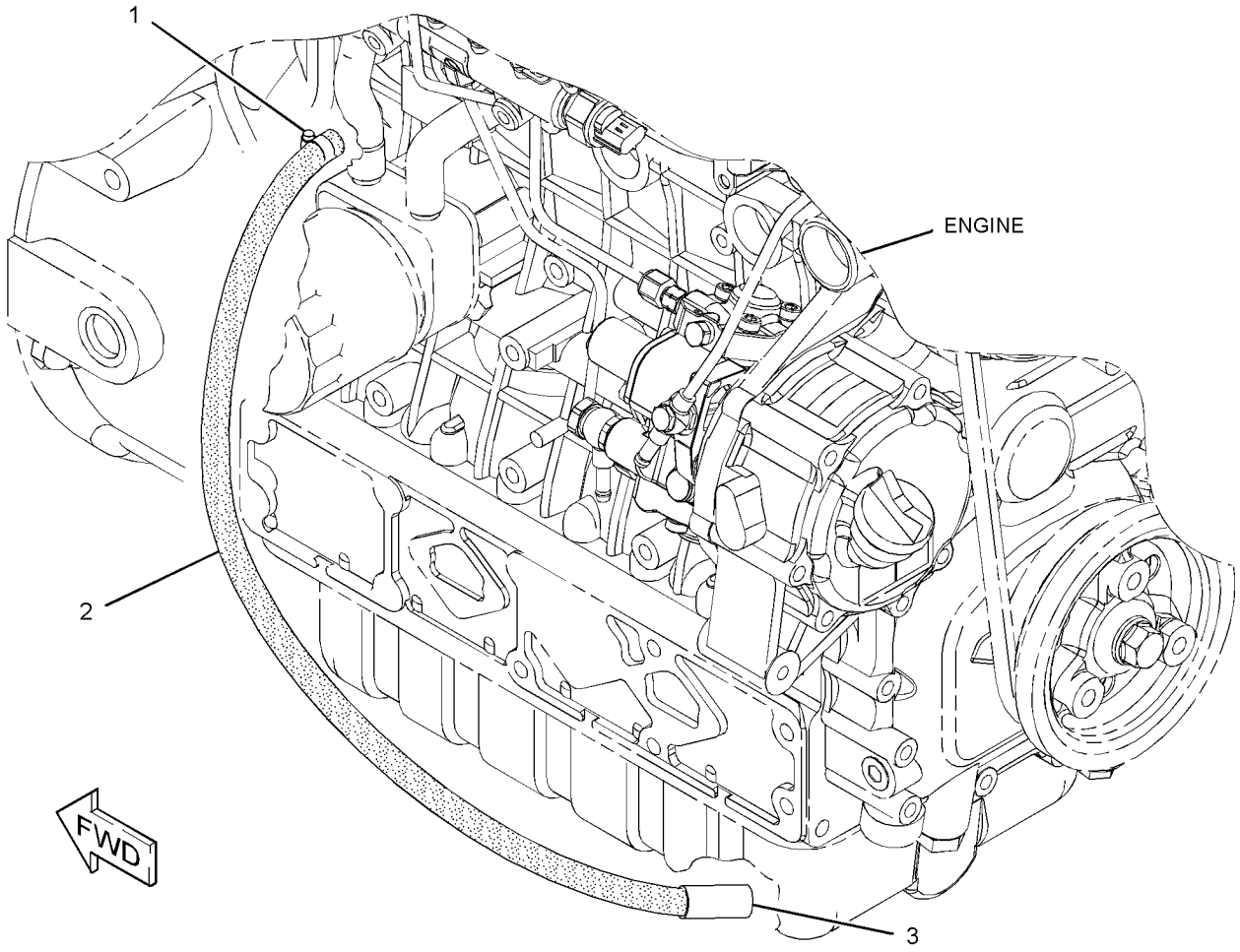

GRAPHIC #1 **<END>** g02877398

437-2562 FLYWHEEL GP

PART OF 380-1768, 380-1769 ENGINE AR-PRIMARY

SMCS-1156, 1158 **i05330914**

NOTE	REF NO	GRAPHIC REF	PART NUMBER	QTY	PART NAME 1 2 3 4 5 6 (PRODUCT LEVEL)	SEE PAGE
	1	1	**397-9944**	1	FLYWHEEL AS	
		1	**388-7508**	1	GEAR	
	2	1	**393-7583**	8	BOLT-FLANGE HEAD	
	3	1	**387-9854**	1	SEAL	
	4	1	**387-9855**	1	COVER	
	5	1	**436-0817**	1	PLUG AS (ENGINE OIL FILLER)	
		1	**383-0217**	1	SEAL-O-RING	
	6	1	**387-9857**	1	PLUG	
	7	1	**387-9858**	1	GASKET	
	8	1	**387-9859**	8	BOLT-FLANGE HEAD	
	9	1	**393-7579**	8	BOLT-SPECIAL	

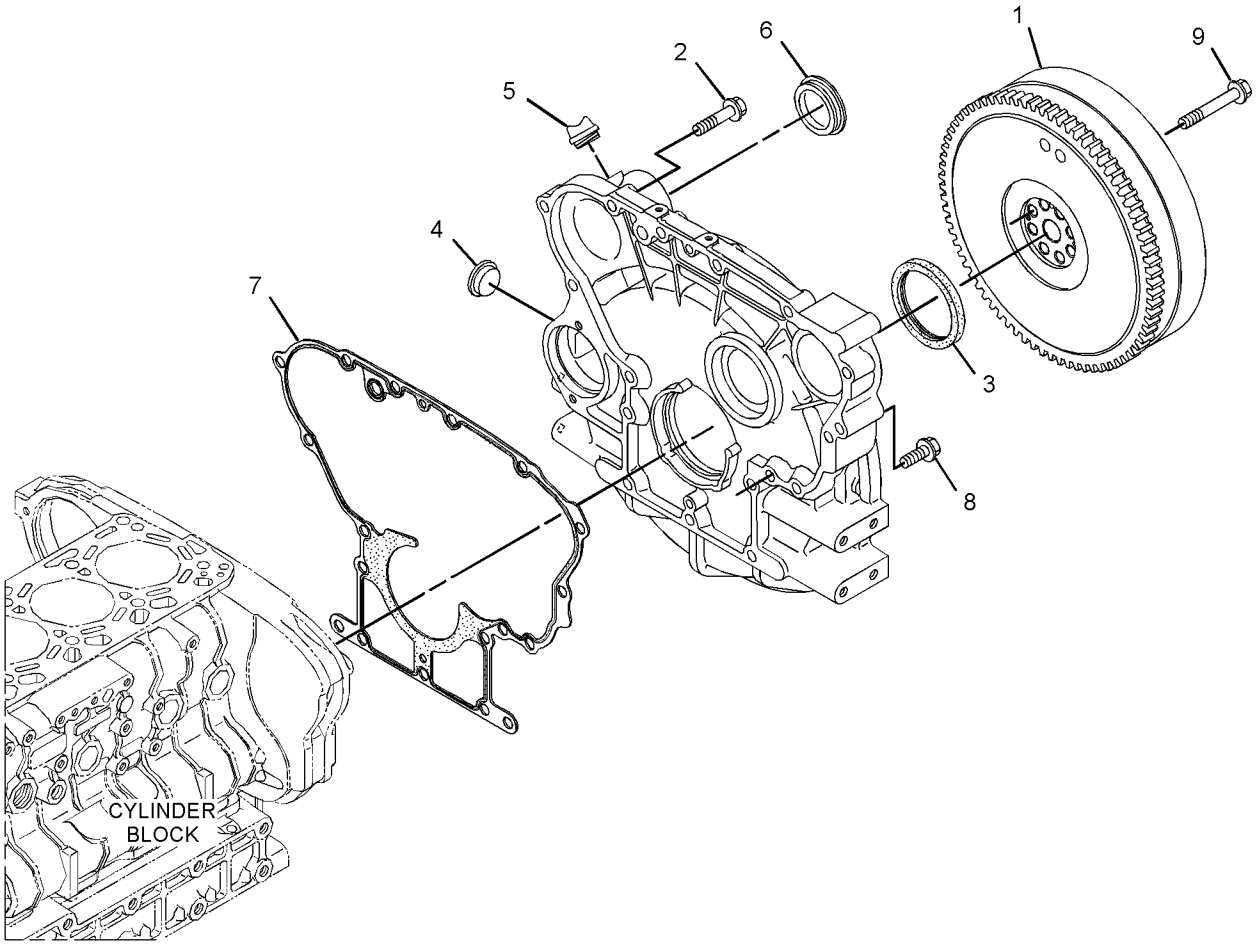

GRAPHIC #1 **<END>** g03379369

345-3620 GUARD GP-BELT

PART OF 378-6680, 393-7330 INSTALLATION AR-ENGINE

SMCS-7174 **i05295516**

NOTE	REF NO	GRAPHIC REF	PART NUMBER	QTY	PART NAME 1 2 3 4 5 6 (PRODUCT LEVEL)	SEE PAGE
	1	1	**345-3621**	1	GUARD-BELT	
	2	1	**388-6646**	5	FASTENER	
	3	1	**388-6647**	5	RETAINER	
	4	1	**388-6648**	5	CLIP	
	5	1	**416-5690**	1	BRACKET AS	
M		1	**159-9540**	2	NUT-WELD (M8X1.25-THD)	
	6	1	**416-5691**	1	BRACKET	
	7	1	**416-5692**	1	BRACKET	
M	8	1	**174-9194**	7	BOLT (M8X1.25X16-MM)	

M - METRIC PART

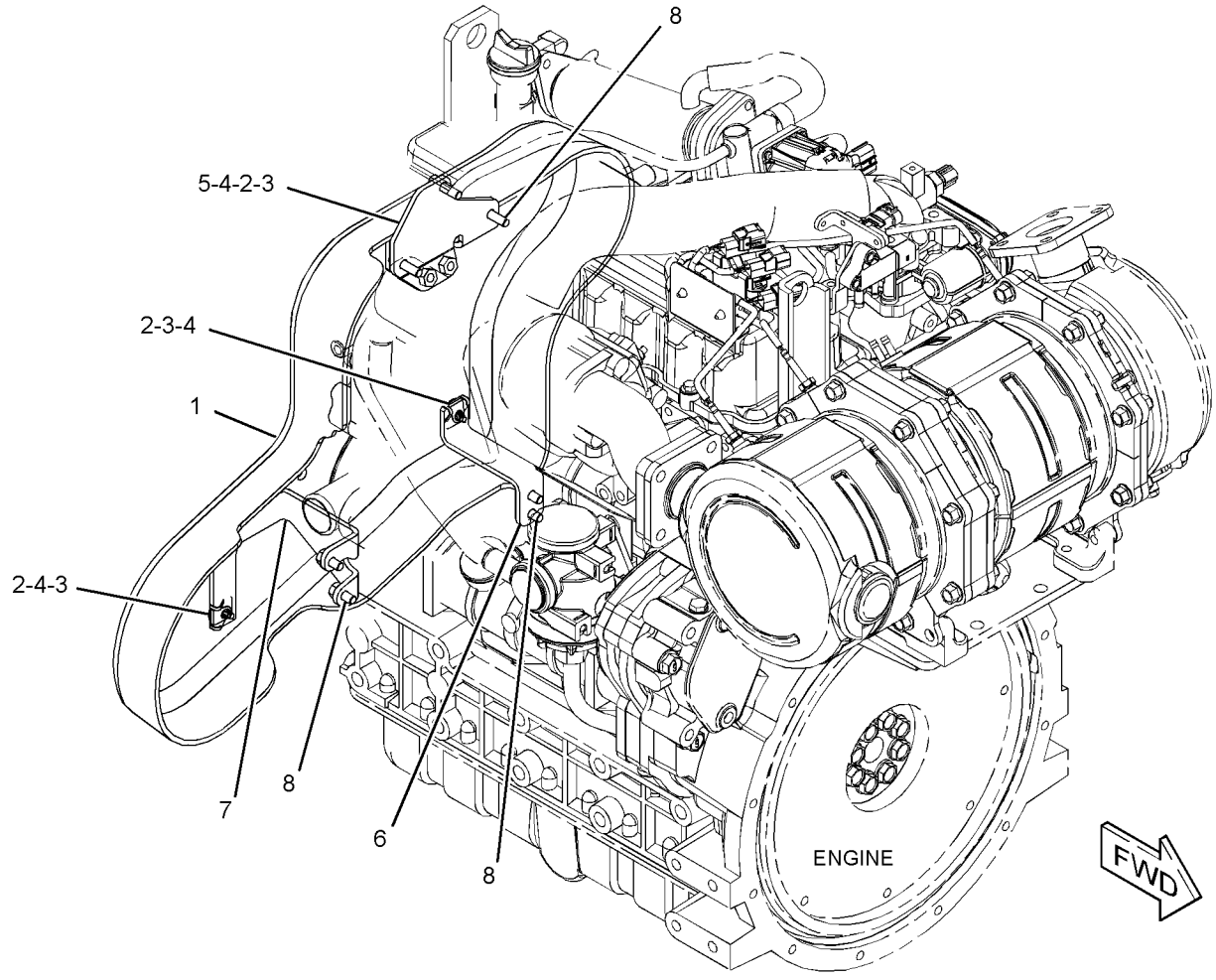

GRAPHIC #1 **<END>** g03365164

396-0909 HOUSING GP-FRONT

PART OF 380-1768, 380-1769 ENGINE AR-PRIMARY

SMCS-1151, 1160, 1162, 1166, 3108 **i05330863**

NOTE	REF NO	GRAPHIC REF	PART NUMBER	QTY	PART NAME 1 2 3 4 5 6 (PRODUCT LEVEL)	SEE PAGE
Y	1	1	**397-9057**	1	HOUSING GP-FRONT	27
	2	1	**387-9796**	1	SEAL	
	3	1	**387-9797**	1	GASKET	
	4	1	**387-9798**	13	BOLT-FLANGE HEAD	

Y - SEPARATE ILLUSTRATION

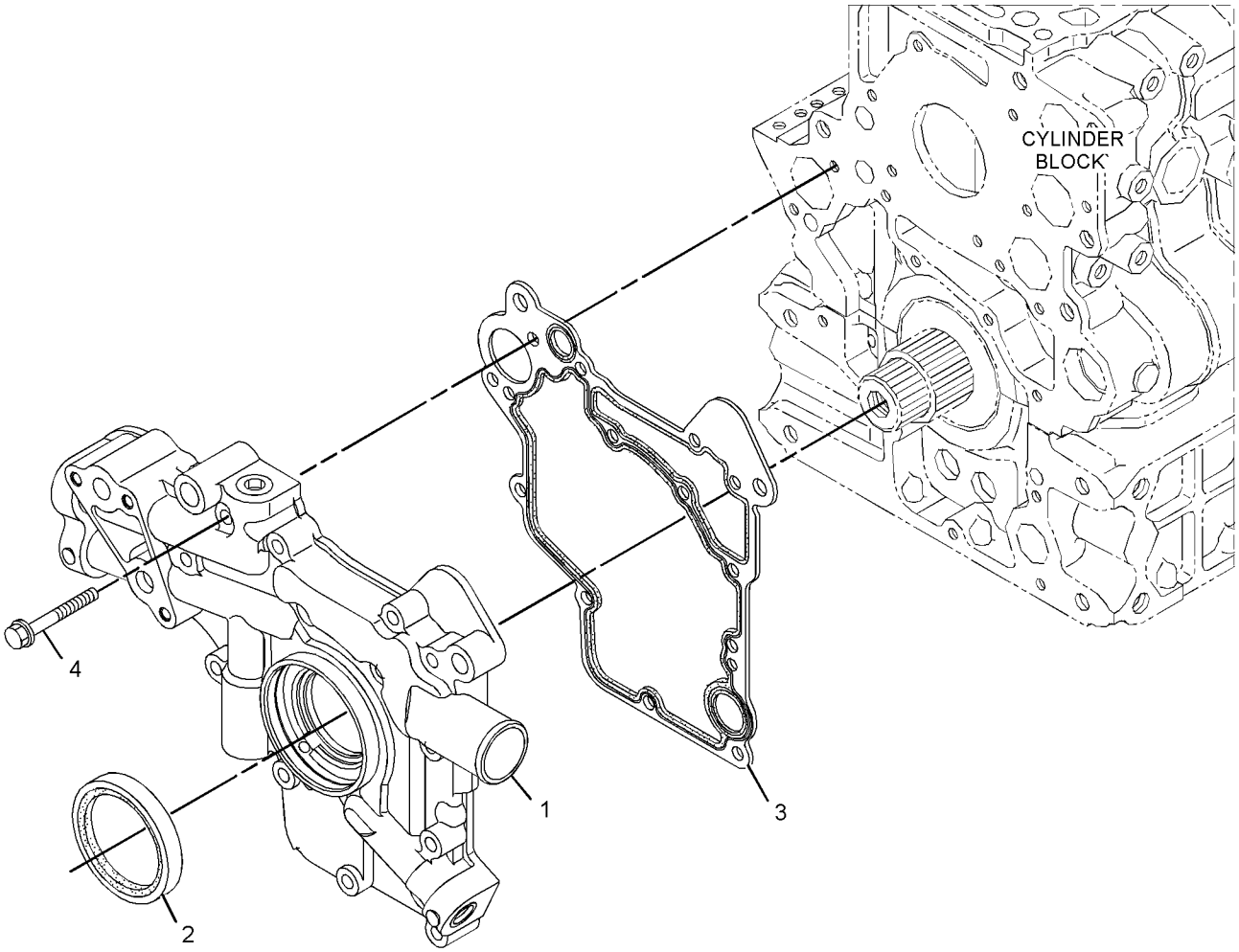

GRAPHIC #1 **<END>** g02902976

397-9057 HOUSING GP-FRONT

PART OF 396-0909 HOUSING GP-FRONT

SMCS-1151, 1160, 1162, 1166, 3108 **i05333904**

NOTE	REF NO	GRAPHIC REF	PART NUMBER	QTY	PART NAME 1 2 3 4 5 6 (PRODUCT LEVEL)	SEE PAGE
	1	1	**383-0291**	1	GASKET	
	2	1	**383-0358**	1	CAP	
	3	1	**389-5159**	1	SPRING	
	4	1	**388-7440**	1	VALVE (FRONT HOUSING)	
	5	1	**389-5160**	1	PLUG	
	6	1	**388-7442**	1	GEAR AS	
	7	1	**388-7443**	1	COVER	
	8	1	**388-7444**	7	SCREW	
	9	1	**388-7445**	3	PLUG	

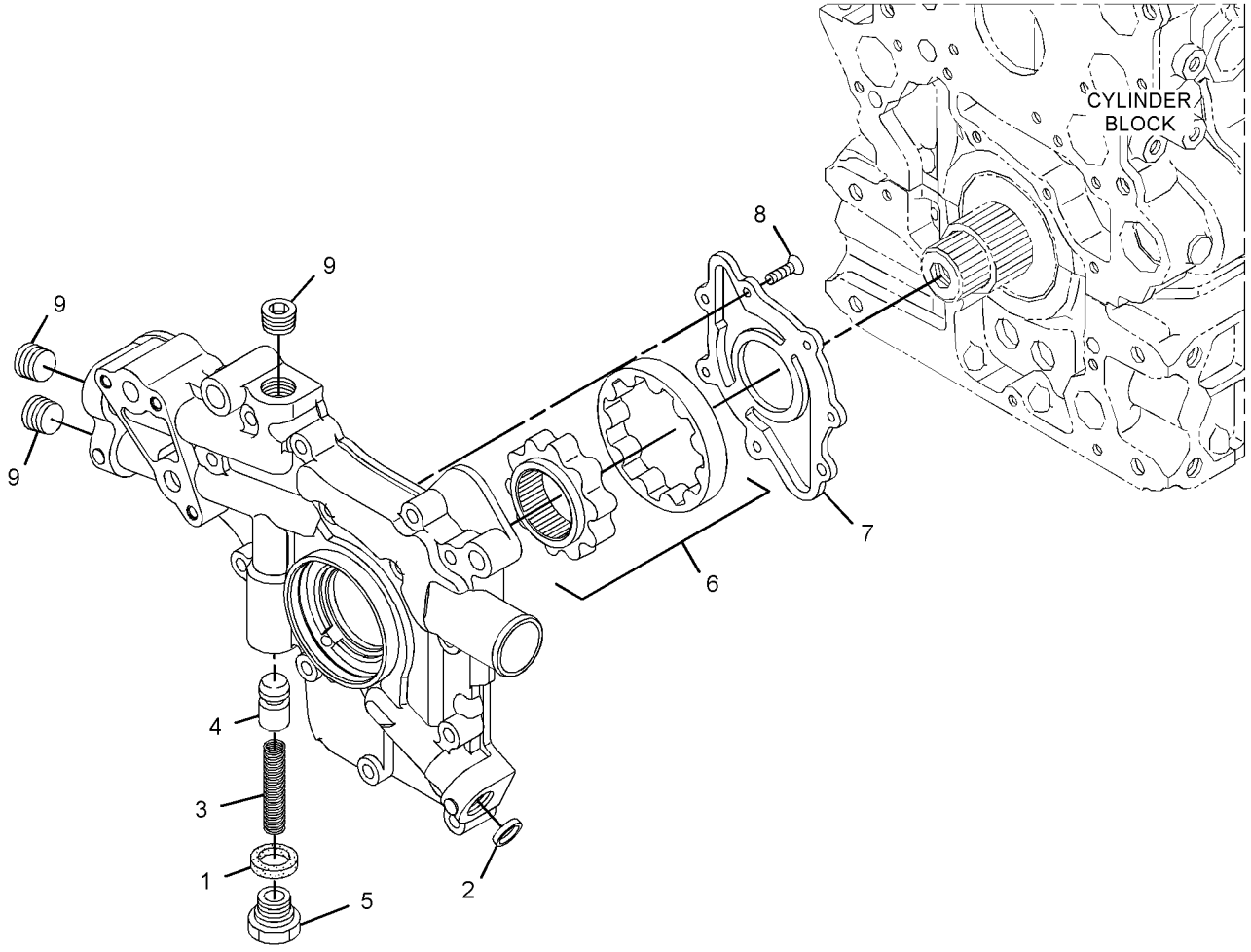

GRAPHIC #1 **<END>** g02902897

396-0910 LIFTING GP-ENGINE

PART OF 380-1768, 380-1769 ENGINE AR-PRIMARY

SMCS-1122 **i05341944**

NOTE	REF NO	GRAPHIC REF	PART NUMBER	QTY	PART NAME 1 2 3 4 5 6 (PRODUCT LEVEL)	SEE PAGE
	1	1	**397-9054**	1	PLATE-LIFTING	
	2	1	**397-9055**	1	PLATE-LIFTING	
	3	1	**393-7573**	4	BOLT-FLANGE HEAD	

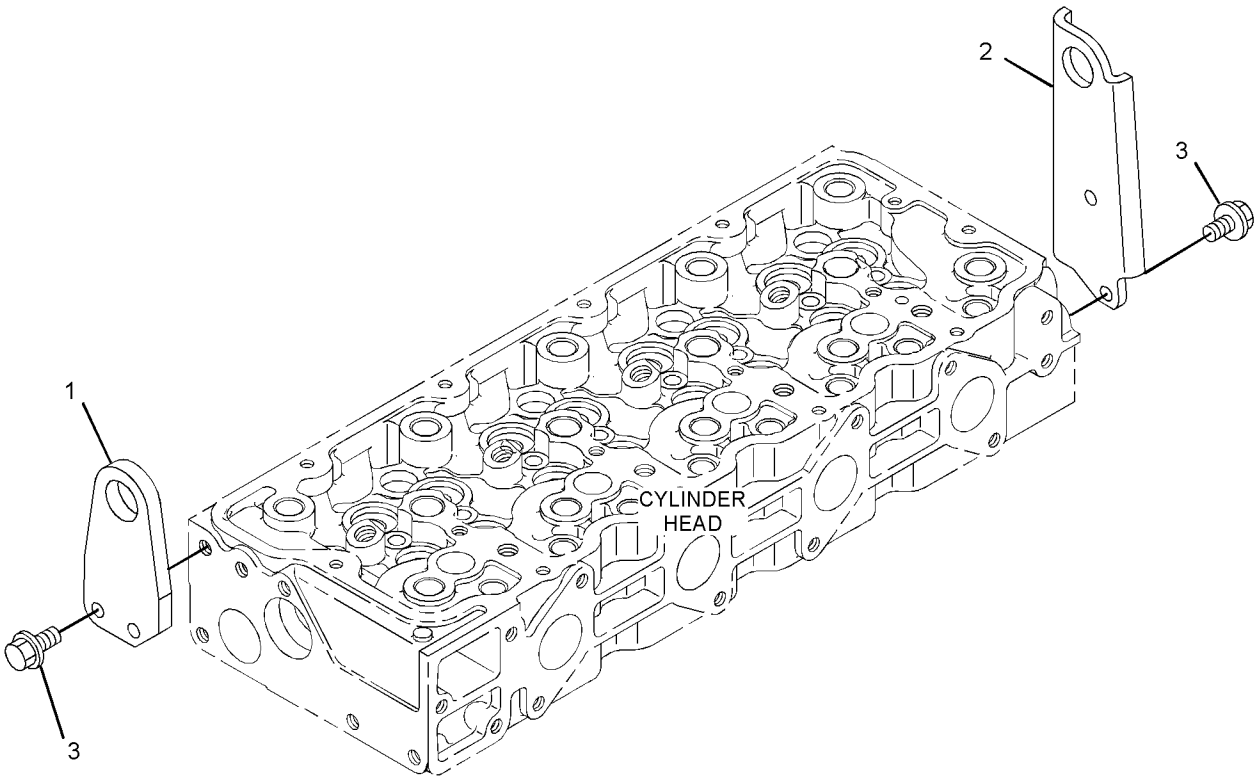

GRAPHIC #1 **<END>** g02882720

345-3605 MOUNTING GP-ENGINE

PART OF 378-6680, 393-7330 INSTALLATION AR-ENGINE

SMCS-1152, 1153, 1154 **i05156650**

NOTE	REF NO	GRAPHIC REF	PART NUMBER	QTY	PART NAME 1 2 3 4 5 6 (PRODUCT LEVEL)	SEE PAGE
	1	1	**152-5878**	2	MOUNT AS	
	2	1	**230-3621**	1	MOUNT AS	
		1	**149-3488**	2	MOUNT-ENGINE	
		1	**241-6397**	1	SLEEVE	
	3	1	**258-3447**	2	BOLT AS	
	4	1	**345-3565**	1	BRACKET	
	5	1	**396-3352**	4	BOLT-FLANGE HEAD (M12X1.25X35-MM)	
M	6	1	**129-3180**	1	LOCKNUT (M12X1.75-THD)	
	7	1	**165-7095**	4	WASHER (16.5X71.5X3-MM THK)	
	8	1	**5P-1076**	2	WASHER-HARD (13.5X30X4-MM THK)	
	9	1	**8T-4122**	2	WASHER-HARD (17X32X3.5-MM THK)	
M	10	1	**8T-4132**	2	NUT (M16X2-THD)	
M	11	1	**8T-4176**	1	BOLT (M12X1.75X90-MM)	

M - METRIC PART

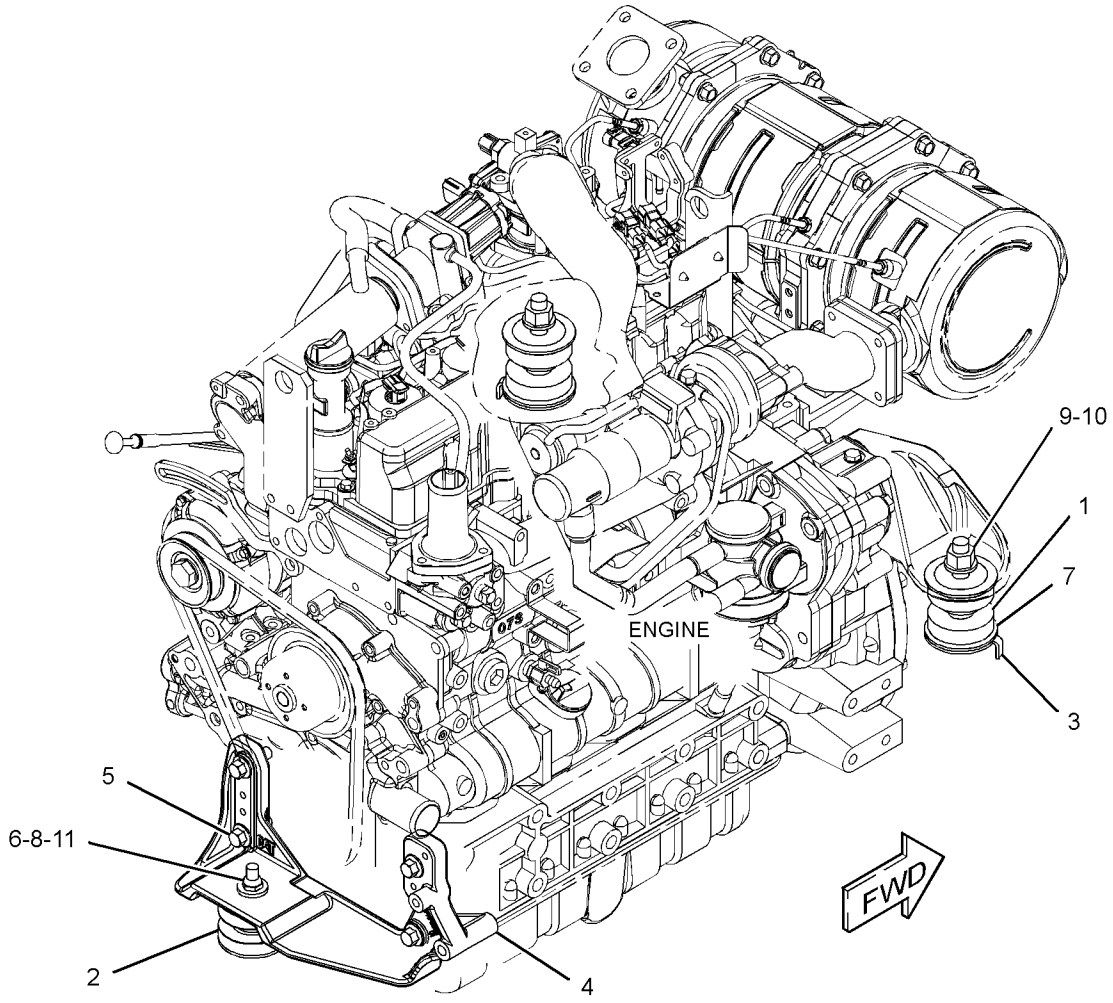

GRAPHIC #1 **<END>** g03322980

387-9087 PAN GP-OIL

PART OF 380-1768, 380-1769 ENGINE AR-PRIMARY

SMCS-1302 **i05330864**

NOTE	REF NO	GRAPHIC REF	PART NUMBER	QTY	PART NAME 1 2 3 4 5 6 (PRODUCT LEVEL)	SEE PAGE
	1	1	**383-0313**	1	PLUG	
	2	1	**387-9785**	26	BOLT-FLANGE HEAD	
	3	1	**387-9861**	1	STRAINER-OIL (PAN)	
	4	1	**388-7436**	1	PAN-OIL	
	5	1	**388-7437**	1	GASKET	
	6	1	**393-2878**	1	SEAL-O-RING	

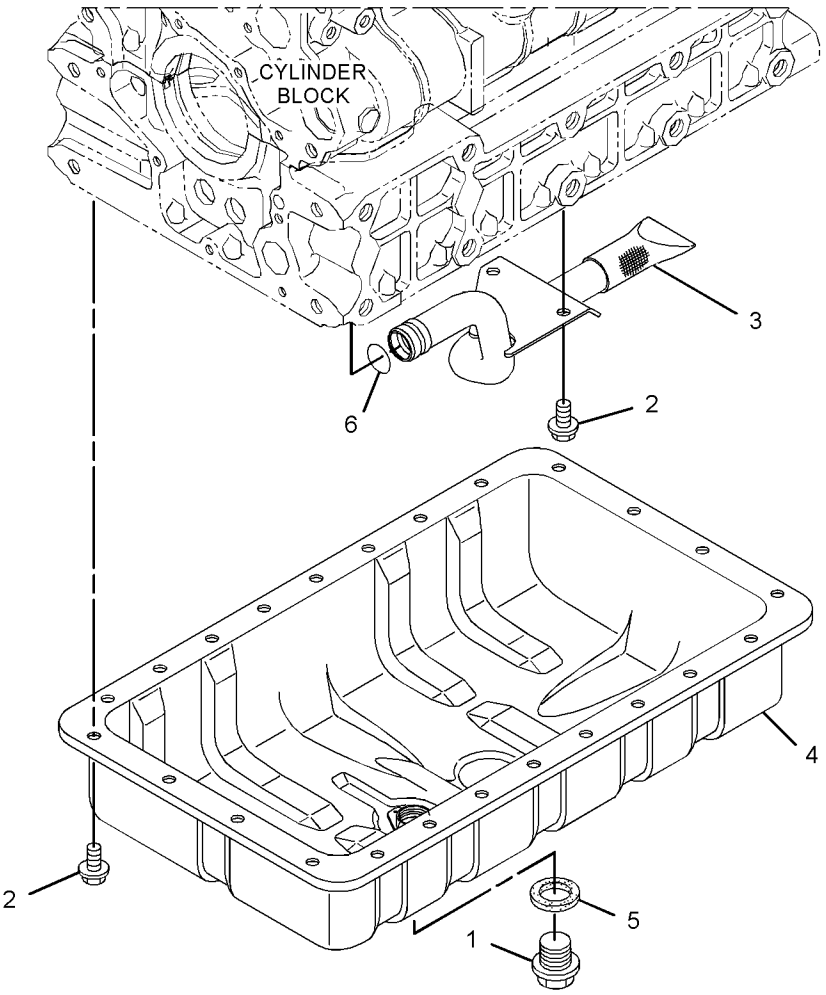

GRAPHIC #1 **<END>** g02848708

387-9088 PISTON & ROD GP

PART OF 380-1768, 380-1769 ENGINE AR-PRIMARY

SMCS-1225 **i05342477**

NOTE	REF NO	GRAPHIC REF	PART NUMBER	QTY	PART NAME 1 2 3 4 5 6 (PRODUCT LEVEL)	SEE PAGE
Q	1	1	**387-9833**	4	PISTON (STANDARD, H05)	
ABJ		1	**387-9834**		PISTON (STANDARD, H00)	
ABN		1	**387-9835**		PISTON (STANDARD, H10)	
ABT		1	**393-2885**		PISTON (0.50-MM OS, H05)	
ABL		1	**393-2886**		PISTON (0.50-MM OS, H00)	
ABO		1	**393-2887**		PISTON (0.50-MM OS, H10)	
JNQ	2	1	**387-9836**	4	RING AS-PISTON (STANDARD)	
ABLOT		1	**393-2889**		RING AS-PISTON (0.50-MM OS)	
JLNOQT	3	1	**387-9838**	8	CLIP	
	4	1	**387-9839**	4	ROD AS-CONNECTING	
					(EACH INCLUDES)	
JLNOQT		1	**393-2894**	1	BEARING	
		1	**393-7578**	2	BOLT	
	5	1	**388-7501**	4	BEARING (STANDARD) (STANDARD)	
AB		1	**388-7500**		BEARING (BLUE)	
AB		1	**393-2895**		BEARING (0.20-MM US)	
AB		1	**393-2896**		BEARING (0.40-MM US)	
JLNOQT	6	1	**393-2891**	4	PIN-PISTON	
					AVAILABLE REPAIR KIT(S):	
J			**393-2907**	4	KIT-PISTON (STANDARD, H00)	
L			**393-2908**	4	KIT-PISTON (0.50-MM OS, H00)	
N			**393-2909**	4	KIT-PISTON (STANDARD, H10)	
O			**393-2910**	4	KIT-PISTON (0.50-MM OS, H10)	
Q			**393-2905**	4	KIT-PISTON (STANDARD, H05)	
T			**393-2906**	4	KIT-PISTON (0.50-MM OS, H05)	

A - NOT PART OF THIS GROUP
B - USE AS REQUIRED
J - KIT MARKED J SERVICES PARTS MARKED J
L - KIT MARKED L SERVICES PARTS MARKED L
N - KIT MARKED N SERVICES PARTS MARKED N
O - KIT MARKED O SERVICES PARTS MARKED O
Q - KIT MARKED Q SERVICES PARTS MARKED Q
T - KIT MARKED T SERVICES PARTS MARKED T

387-9088 **PISTON & ROD GP (*contd.*)** **i05342477**

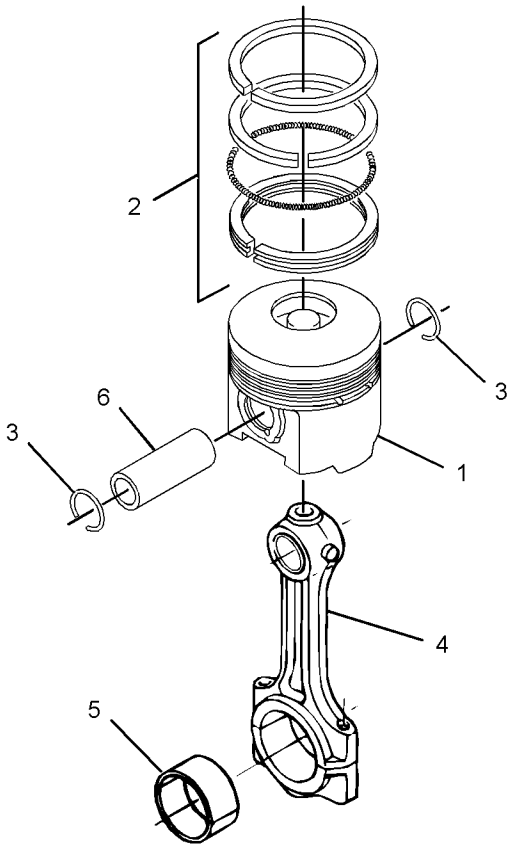

GRAPHIC #1 **<END>** g02848709

437-2566 PULLEY GP

PART OF 380-1768, 380-1769 ENGINE AR-PRIMARY

SMCS-1205, 1207, 1357, 1358, 1359, 1384, 1425 **i05307389**

NOTE	REF NO	GRAPHIC REF	PART NUMBER	QTY	PART NAME 1 2 3 4 5 6 (PRODUCT LEVEL)	SEE PAGE
	1	1	**383-0383**	1	PULLEY-FAN	
	2	1	**393-7570**	4	BOLT-FLANGE HEAD	
	3	1	**397-9968**	1	PULLEY-FAN DRIVE	
	4	1	**393-7584**	1	BOLT	
	5	1	**437-2564**	1	V-BELT (FAN DRIVE PULLEY)	

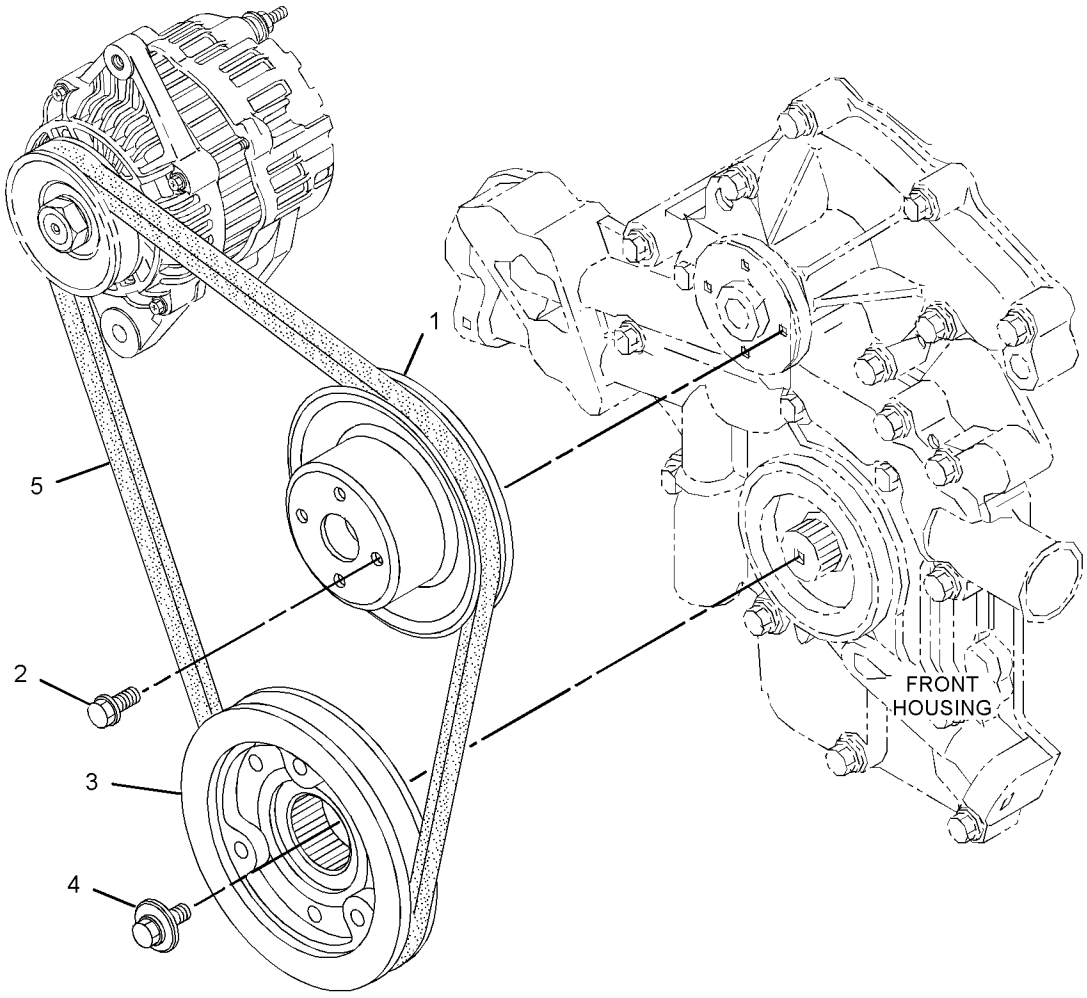

GRAPHIC #1 **<END>** g02957517

387-9084 VALVE MECHANISM GP

PART OF 380-1768, 380-1769 ENGINE AR-PRIMARY

SMCS-1102, 1112, 1121, 1123, 1208, 1209 **i05342113**

NOTE	REF NO	GRAPHIC REF	PART NUMBER	QTY	PART NAME 1 2 3 4 5 6 (PRODUCT LEVEL)	SEE PAGE
	1	1	**383-0180**	2	BOLT	
	2	1	**383-0205**	2	WASHER	
	3	1	**383-0207**	2	WASHER	
	4	1	**398-5522**	1	SPRING	
	5	1	**387-9825**	4	BOLT-FLANGE HEAD	
	6	1	**388-7479**	1	SHAFT	
	7	1	**388-7480**	4	BRACKET	
	8	1	**388-7481**	2	WASHER	
	9	1	**388-7482**	3	SPRING	
	10	1	**388-7483**	4	ARM AS (INTAKE)	
	11	1	**388-7484**	4	ARM AS (EXHAUST)	
	12	1	**388-7485**	4	PIN	

387-9084 **VALVE MECHANISM GP (*contd.*)** **i05342113**

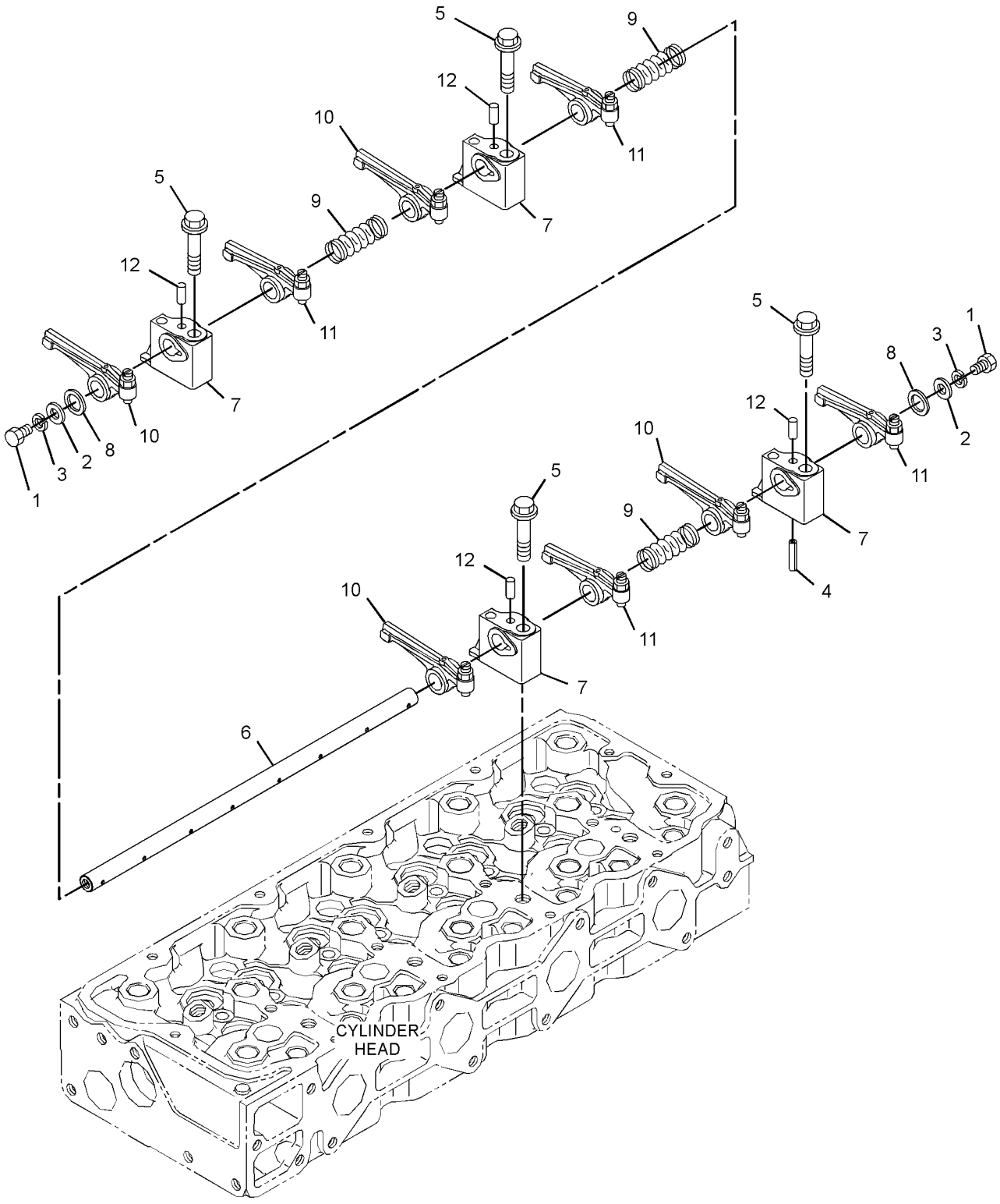

GRAPHIC #1 **<END>** g02904997

396-0905 FILLER GP-ENGINE OIL

S/N: JSL1-UP

PART OF 380-1768 ENGINE AR-PRIMARY

SMCS-1316 **i05330780**

NOTE	REF NO	GRAPHIC REF	PART NUMBER	QTY	PART NAME 1 2 3 4 5 6 (PRODUCT LEVEL)	SEE PAGE
	1	1	**383-0213**	1	SEAL-O-RING	
	2	1	**387-9856**	1	PLUG AS	
		1	**383-0217**	1	SEAL-O-RING	
		1	**389-5156**	1	PLUG	
	3	1	**397-9988**	1	FLANGE-OIL FILLER	

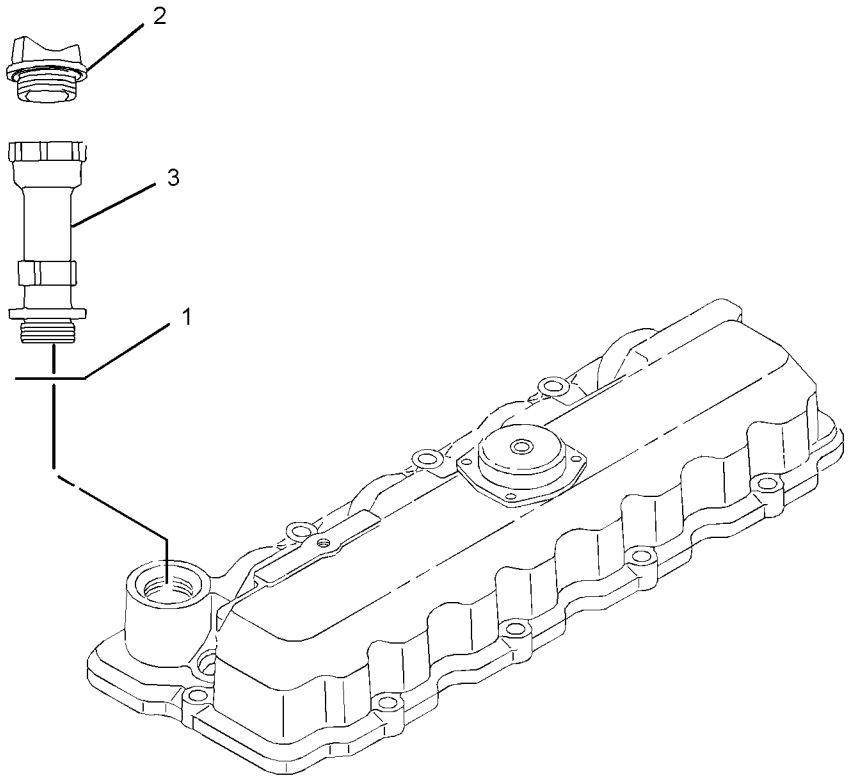

GRAPHIC #1 **<END>** g02948696

437-5953 GAUGE GP-OIL LEVEL (DIPSTICK)

PART OF 380-1768, 380-1769 ENGINE AR-PRIMARY

SMCS-1326 **i05341906**

NOTE	REF NO	GRAPHIC REF	PART NUMBER	QTY	PART NAME 1 2 3 4 5 6 (PRODUCT LEVEL)	SEE PAGE
	1	1	**393-7573**	1	BOLT-FLANGE HEAD	
	2	1	**437-3432**	1	GAUGE-OIL LEVEL (DIPSTICK, ENGINE)	
	3	1	**437-5968**	1	TUBE AS	

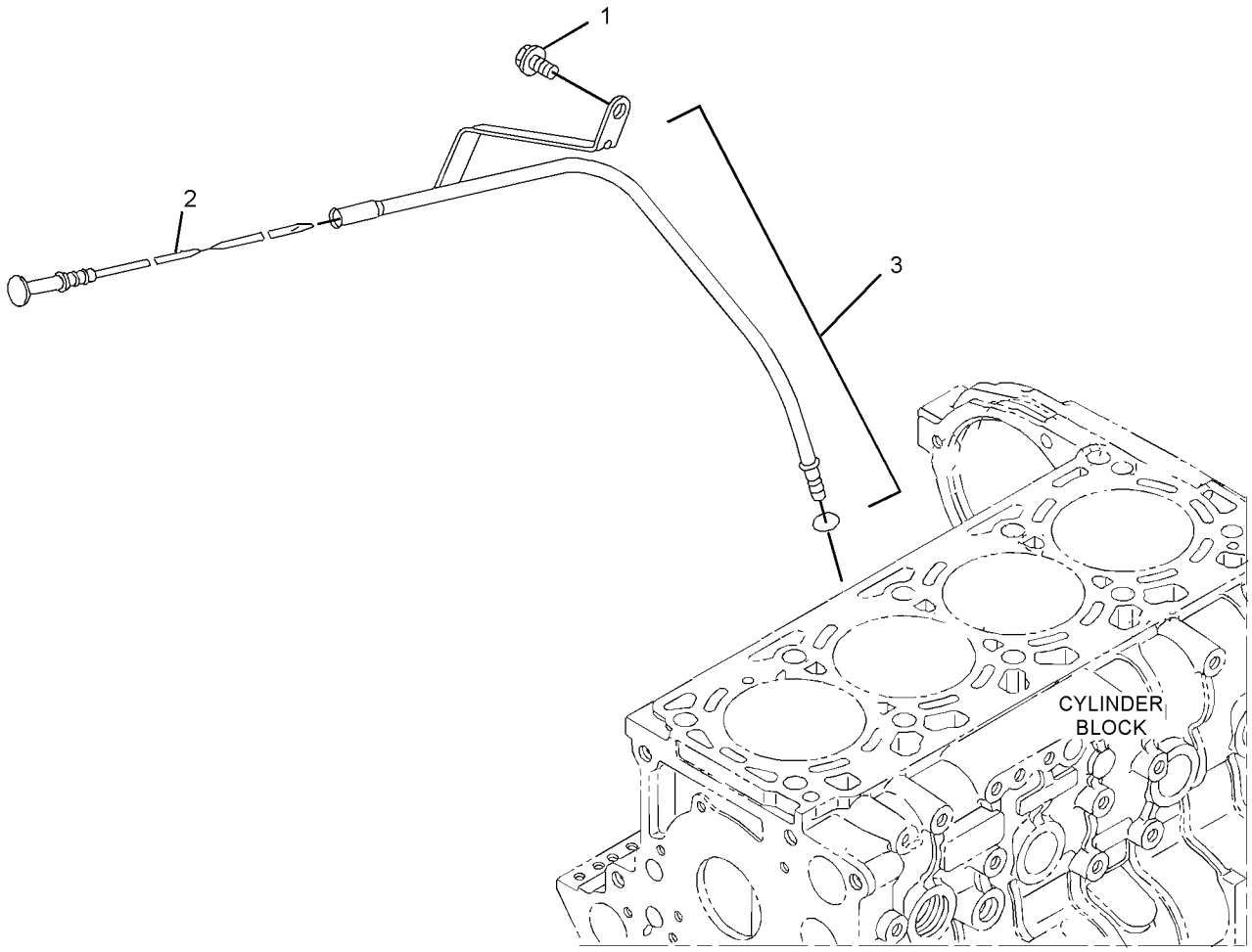

GRAPHIC #1 **<END>** g03374002

396-0912 LINES GP-ENGINE OIL

PART OF 380-1768, 380-1769 ENGINE AR-PRIMARY

SMCS-1307 **i05341953**

NOTE	REF NO	GRAPHIC REF	PART NUMBER	QTY	PART NAME 1 2 3 4 5 6 (PRODUCT LEVEL)	SEE PAGE
	1	1	**377-6954**	1	SENSOR (WATER TEMPERATURE)	
	2	1	**389-5292**	1	WASHER	
	3	1	**377-6965**	1	SWITCH-OIL PRESSURE	
	4	1	**397-9960**	1	BOLT	
	5	1	**398-0826**	1	SENSOR-SPEED (ENGINE)	
	6	1	**388-7473**	1	CLAMP	
	7	1	**388-7474**	1	CLAMP	
	8	1	**387-9872**	1	COOLER AS-ENGINE OIL	
	8A	1	**388-7509**	1	SEAL-O-RING	
	9	1	**393-2948**	1	HOSE	
	10	1	**387-9783**	2	PIPE	
	11	1	**377-6969**	1	FILTER-ENGINE OIL	
	12	1	**387-9873**	1	JOINT	
	13	1	**436-0817**	1	PLUG AS (ENGINE OIL FILLER)	
	13A	1	**383-0217**	1	SEAL-O-RING	

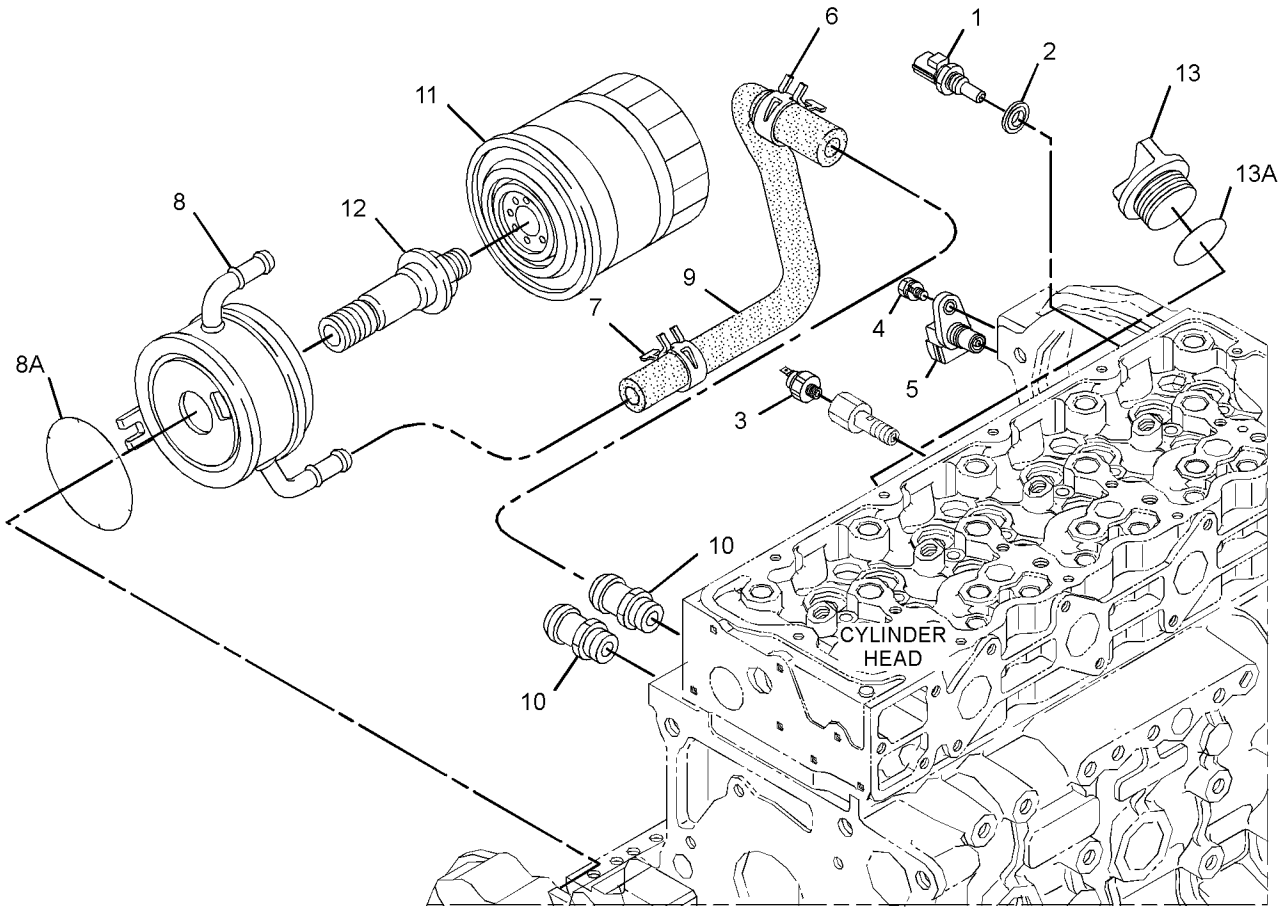

GRAPHIC #1 **<END>** g02955817

345-3465 FAN GP-BLOWER

PART OF 345-3459 RADIATOR & HYD OIL COOLER GP

SMCS-1356, 1360 **i04769341**

NOTE	REF NO	GRAPHIC REF	PART NUMBER	QTY	PART NAME 1 2 3 4 5 6 (PRODUCT LEVEL)	SEE PAGE
	1	1	**229-8796**	1	ADAPTER	
	2	1	**345-3464**	1	FAN (6-BLADE)	
	3	1	**8T-4224**	4	WASHER-HARD (8.8X16X2-MM THK)	
M	4	1	**8T-4908**	4	BOLT (M8X1.25X25-MM)	

M - METRIC PART

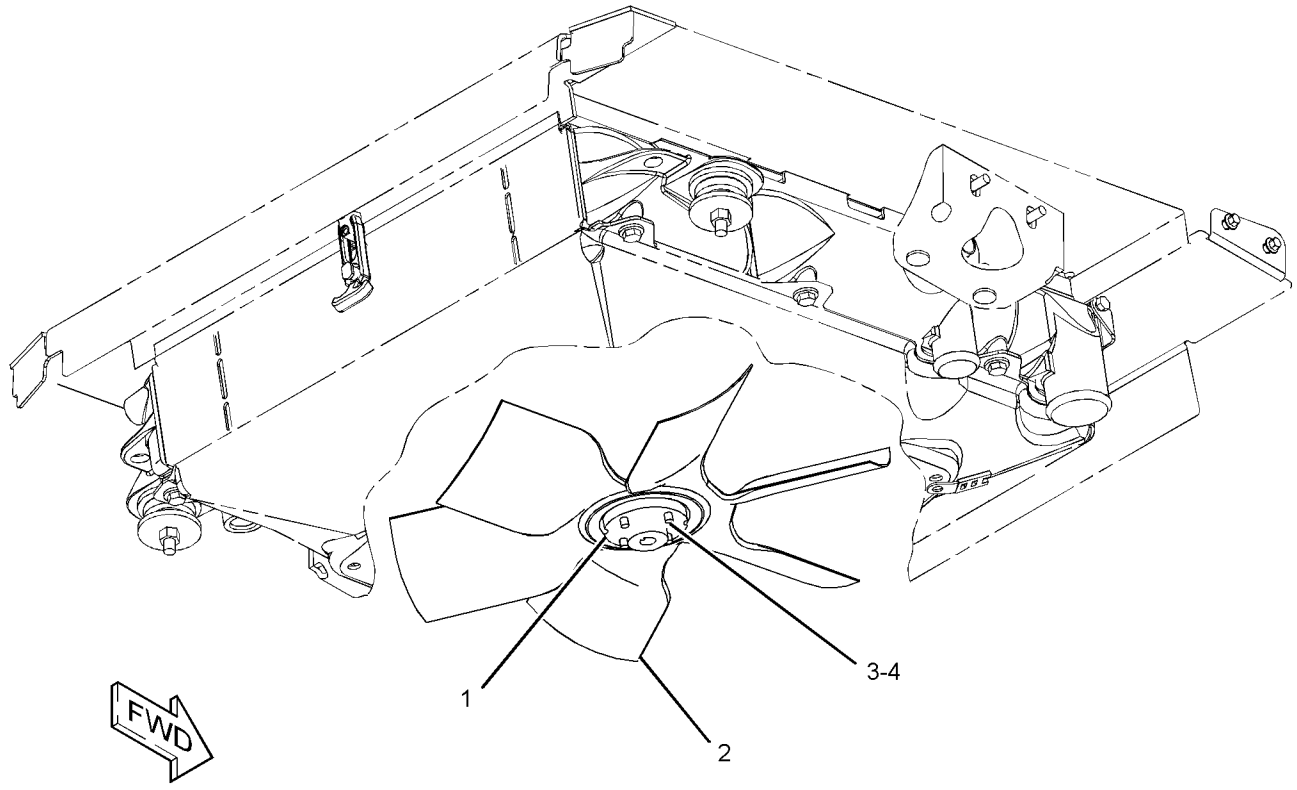

GRAPHIC #1 **<END>** g02879476

396-0913 LINES GP-WATER

S/N: JSL1-UP

PART OF 380-1768 ENGINE AR-PRIMARY

SMCS-1355, 1380, 1393 **i05300052**

NOTE	REF NO	GRAPHIC REF	PART NUMBER	QTY	PART NAME 1 2 3 4 5 6 (PRODUCT LEVEL)	SEE PAGE
	1	1	**387-9906**	1	GASKET	
	2	1	**387-9907**	3	BOLT-FLANGE HEAD	
	3	1	**393-7574**	3	BOLT-FLANGE HEAD	
	4	1	**397-9961**	1	COVER AS	
		1	**383-0233**	1	BALL	
		1	**397-9962**	1	PIPE	
	5	1	**388-7547**	1	GASKET	
	6	1	**397-9963**	1	FLANGE AS	
		1	**397-9964**	1	FLANGE	
		1	**397-9965**	2	PLUG	
	7	1	**389-5308**	1	REGULATOR AS (WATER TEMPERATURE)	

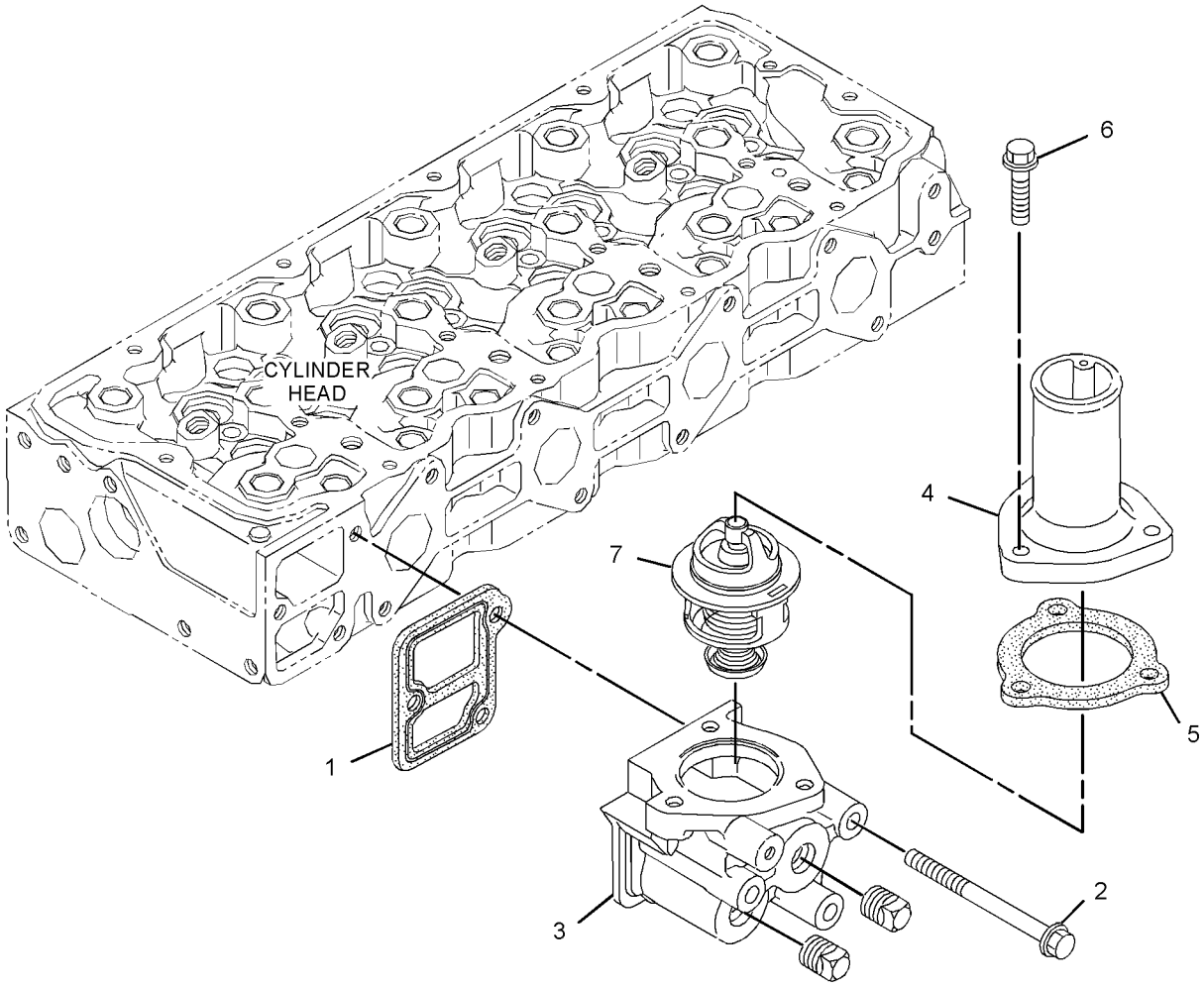

GRAPHIC #1 **<END>** g02948496

420-8855 LINES GP-WATER

S/N: HMR1-UP

PART OF 380-1769 ENGINE AR-PRIMARY

SMCS-1355, 1380, 1393

i05342462

NOTE	REF NO	GRAPHIC REF	PART NUMBER	QTY	PART NAME 1 2 3 4 5 6 (PRODUCT LEVEL)	SEE PAGE
	1	1	**387-9906**	1	GASKET	
	2	1	**387-9907**	3	BOLT-FLANGE HEAD	
	3	1	**421-1879**	1	FLANGE AS	
	3A	1	**389-5308**	1	REGULATOR AS	
	3B	1	**388-7547**	1	GASKET	
	3C	1	**421-1880**	1	COVER-THERMOSTAT	
	3D	1	**397-9963**	1	FLANGE AS	
	3E	1	**393-7574**	3	BOLT-FLANGE HEAD	

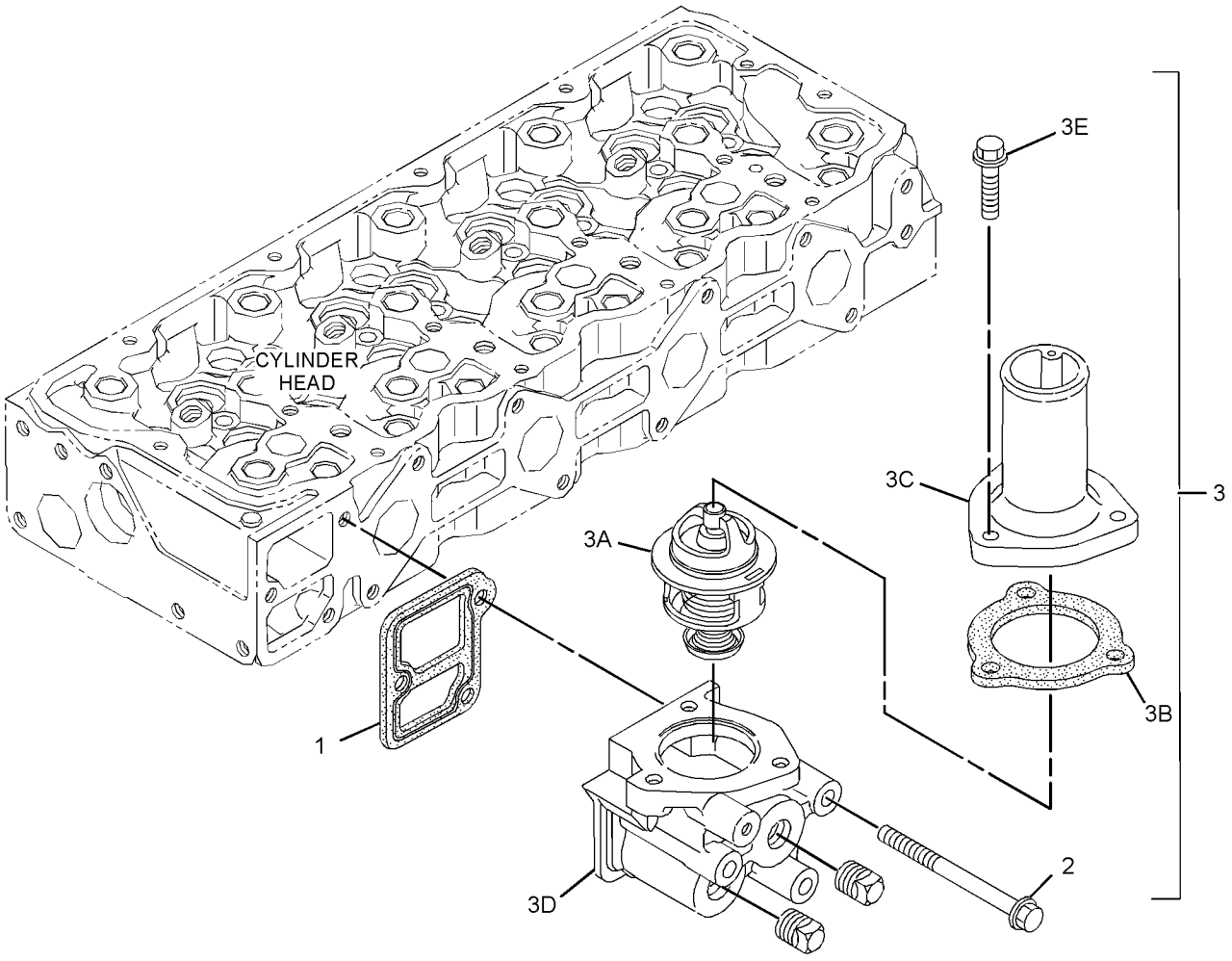

GRAPHIC #1

<END>

g03241336

387-9091 PUMP GP-WATER

PART OF 380-1768, 380-1769 ENGINE AR-PRIMARY

SMCS-1355, 1361 **i05300031**

NOTE	REF NO	GRAPHIC REF	PART NUMBER	QTY	PART NAME 1 2 3 4 5 6 (PRODUCT LEVEL)	SEE PAGE
	1		**383-0190**	7	BOLT	
	2		**387-9903**	1	PUMP AS-WATER	
	3		**387-9904**	1	GASKET	

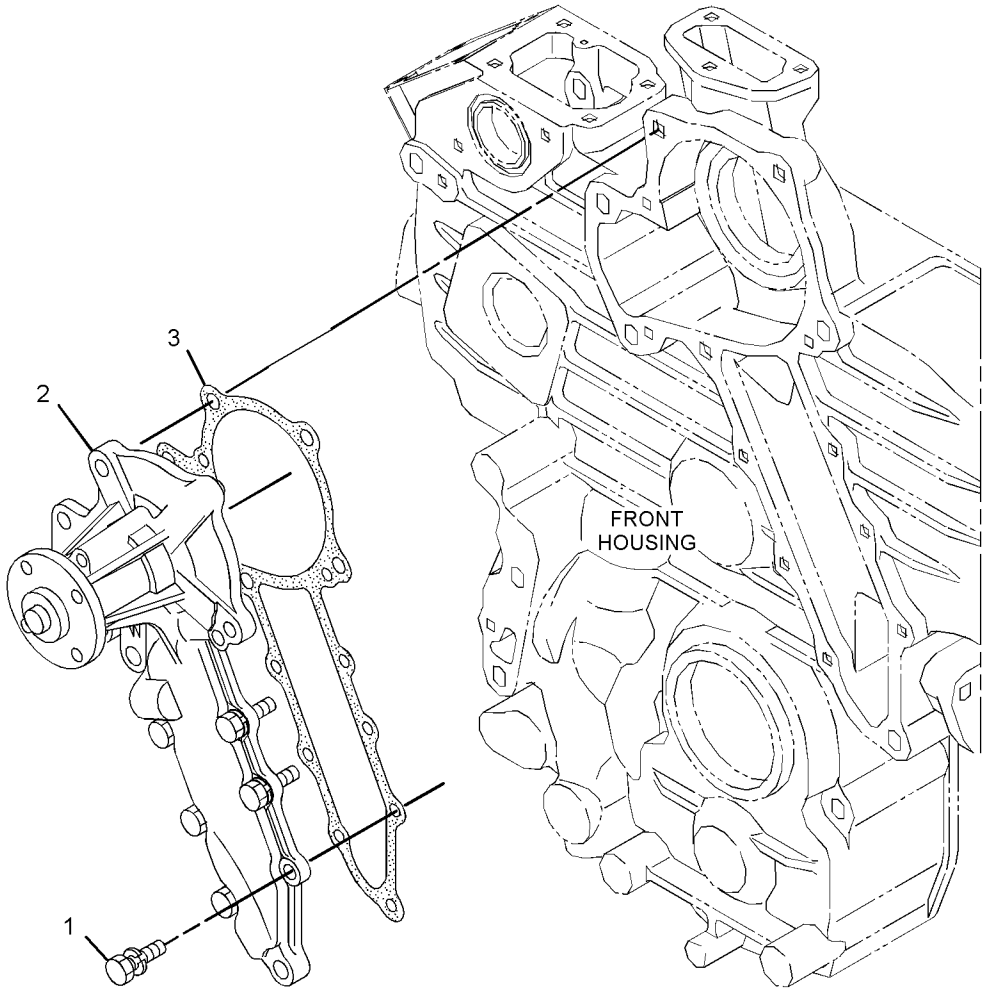

GRAPHIC #1 **<END>** g02840757

345-3459 RADIATOR & HYD OIL COOLER GP

PART OF 378-6680, 393-7330 INSTALLATION AR-ENGINE

SMCS-1351, 1356, 1386 **i05295502**

NOTE	REF NO	GRAPHIC REF	PART NUMBER	QTY	PART NAME 1 2 3 4 5 6 (PRODUCT LEVEL)	SEE PAGE
	1	2	**9M-1853**	2	MOUNTING	
	2	2	**036-1865**	1	CAP AS-RADIATOR	
	3	2	**069-4080**	1	FITTING	
	4	2	**159-5794**	1	SPRING	
	5	2	**345-3463**	1	GUARD AS-FAN	
Y	6	2	*345-3465*	1	FAN GP-BLOWER	39
	7	2	**345-3473**	1	RADIATOR & HYD OIL COOLER GP	
	8	2	**345-3537**	2	MOUNTING	
	9	2	**362-2973**	1	GAUGE-SIGHT (COOLANT LEVEL)	
	10	1	**376-8659**	1	PLATE AS	
M		1	**159-9541**	2	NUT-WELD (M10X1.5-THD)	
		1	**364-6428**	2	STUD-WELD	
	11	2	**376-8660**	1	PLATE AS	
M		2	**159-9541**	2	NUT-WELD (M10X1.5-THD)	
		2	**364-6428**	2	STUD-WELD	
	12	2	**376-8677**	1	BRACKET	
	13	2	**383-6639**	1	BRACKET AS	
M		2	**159-9541**	1	NUT-WELD (M10X1.5-THD)	
	14	2	**383-6642**	1	PLATE	
Y	16	2	*391-8031*	1	SUPPORT GP-RADIATOR	46
	18	2	**393-7332**	1	SHROUD AS	
M	19	2	**105-3478**	1	BOLT-SOCKET HEAD (M10X1.5X35-MM)	
	21	1	**343-4072**	2	BOLT-FLANGE HEAD (M6X1X25-MM)	
	22	2	**5P-1076**	2	WASHER-HARD (13.5X30X4-MM THK)	
	23	1	**5P-4115**	2	WASHER-HARD (7.2X19X2-MM THK)	
	24	2	**5R-5927**	4	WASHER (14X65X6-MM THK)	
	25	2	**6V-3251**	1	SEAL-O-RING	
	26	2	**7X-7729**	20	WASHER (11X25X3-MM THK)	
	27	2	**8T-2561**	2	WASHER-HARD (10.5X28.5X5-MM THK)	
M	28	2	**8T-4133**	4	NUT (M10X1.5-THD)	
M	29	2	**8T-4136**	12	BOLT (M10X1.5X25-MM)	
M	30	2	**8T-4186**	1	BOLT (M10X1.5X40-MM)	
M	31	2	**8T-4196**	4	BOLT (M10X1.5X35-MM)	
M	32	2	**8T-4244**	2	NUT (M12X1.75-THD)	
M	33	2	**8T-4648**	2	BOLT (M12X1.75X70-MM)	
E	35	2	**3E-3892**		SEAL (61-CM EACH)	

E - ORDER BY THE CENTIMETER
M - METRIC PART
Y - SEPARATE ILLUSTRATION

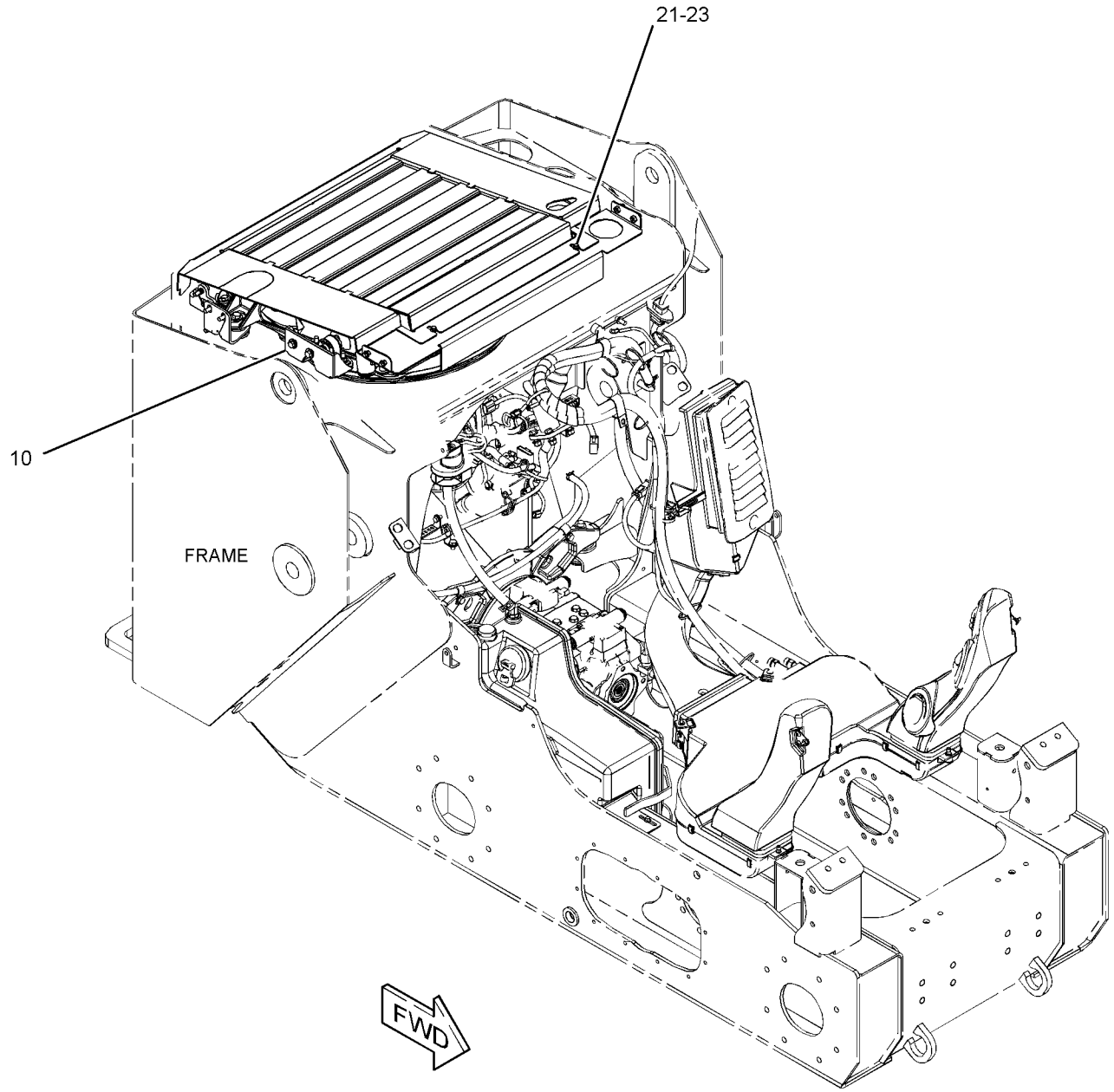

GRAPHIC #1 g03347339

345-3459 **RADIATOR & HYD OIL COOLER GP (*contd.*)** **i05295502**

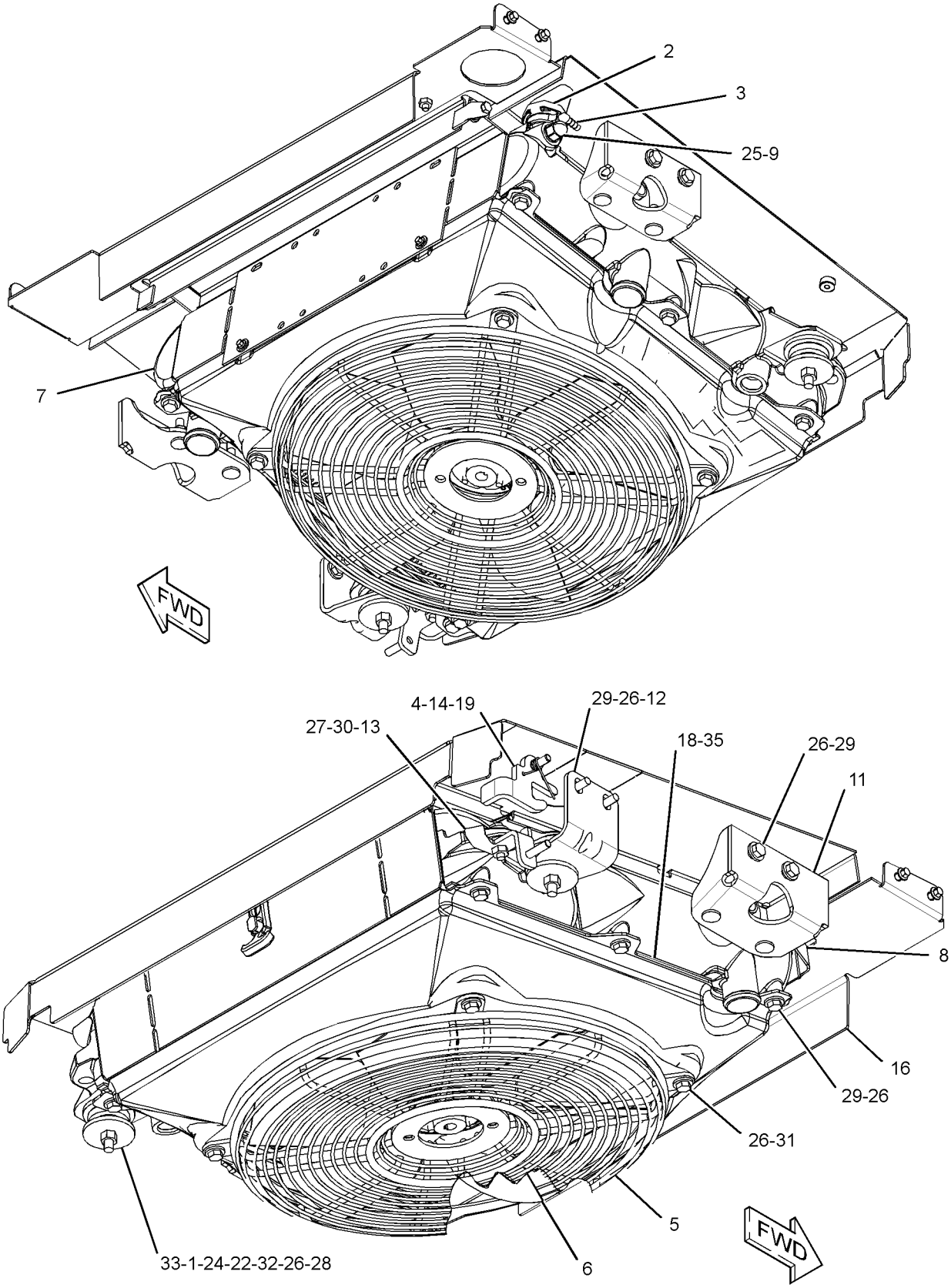

GRAPHIC #2 **<END>** g03364368

391-8031 SUPPORT GP-RADIATOR

PART OF 345-3459 RADIATOR & HYD OIL COOLER GP

SMCS-1351, 1353 **i05295511**

NOTE	REF NO	GRAPHIC REF	PART NUMBER	QTY	PART NAME 1 2 3 4 5 6 (PRODUCT LEVEL)	SEE PAGE
	1	1	**345-3540**	1	LATCH AS	
	2	1	**386-2422**	1	COVER AS	
	3	1	*391-8028*	1	COVER AS-GRILL	
M		1	**159-9540**	6	NUT-WELD (M8X1.25-THD)	
	4	1	*391-8030*	1	GRILL AS	
		1	**8R-3857**	2	BOSS (M8X1.25X12-MM)	
M		1	**159-9540**	1	NUT-WELD (M8X1.25-THD)	
M	5	1	**135-7242**	2	SCREW-SELF-TAPPING (M5X2.3X18.8-MM)	
M	6	1	**192-1329**	2	BOLT-SPECIAL	
	7	1	**342-9920**	6	BOLT-FLANGE HEAD (M8X1.25X20-MM)	
D	8	1	**5P-8309**		SEAL (0.6-M EACH)	
D	8A	1	**5P-8309**		SEAL (0.3-M EACH)	
	9	1	**415-2796**	1	SPRING GP-GAS	
		1	**208-6176**	2	STUD-BALL	
	10	1	**5P-4116**	4	WASHER-HARD (8.8X20.5X2-MM THK)	

D - ORDER BY THE METER
M - METRIC PART

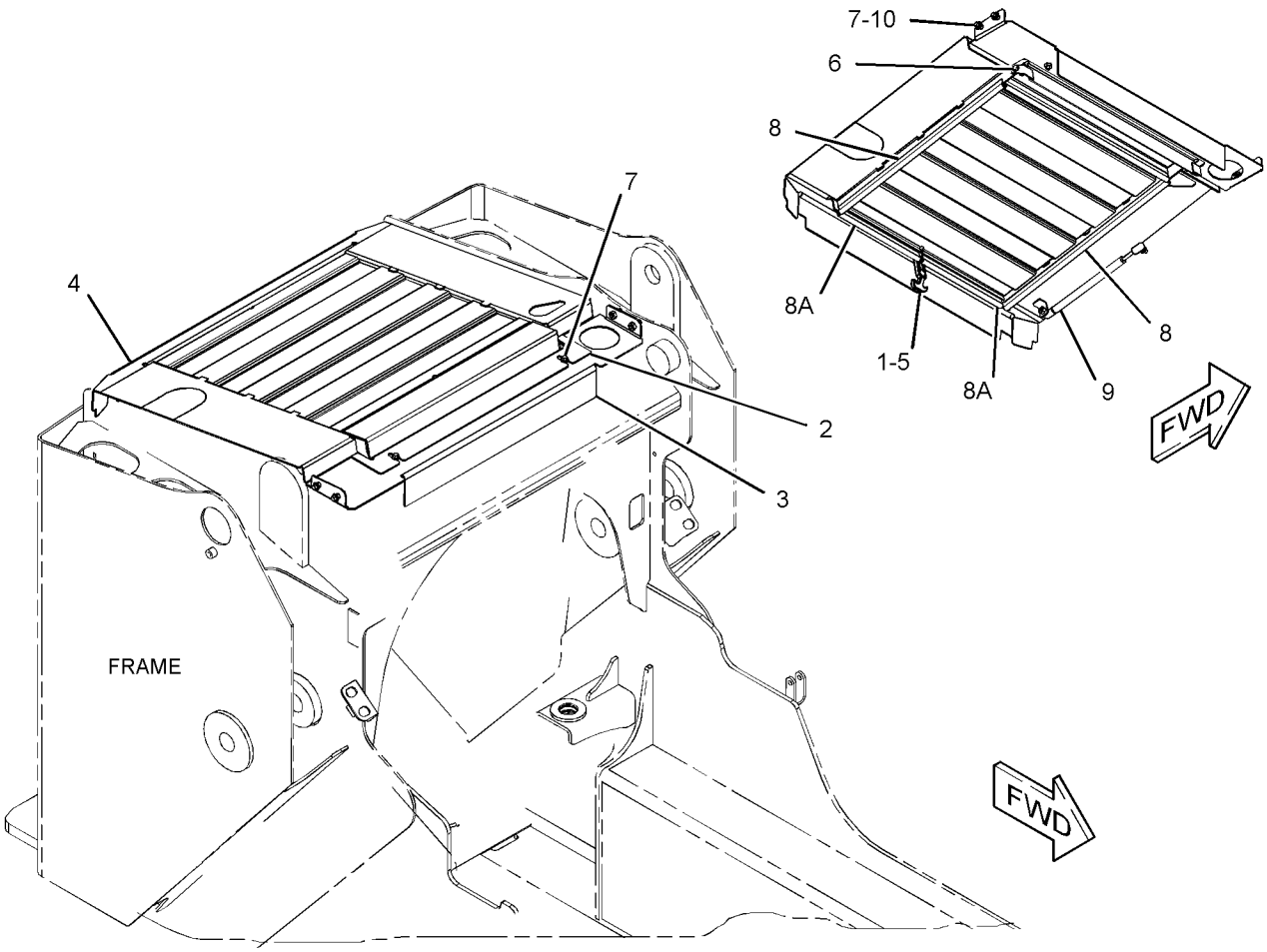

GRAPHIC #1 **<END>** g03366008

345-3498 AIR CLEANER GP

PART OF 378-6680, 393-7330 INSTALLATION AR-ENGINE

SMCS-1051, 1054 **i04765956**

NOTE	REF NO	GRAPHIC REF	PART NUMBER	QTY	PART NAME 1 2 3 4 5 6 (PRODUCT LEVEL)	SEE PAGE
Y	1	1	**345-3499**	1	AIR CLEANER GP	48
M	2	1	**266-3315**	2	BOLT-FLANGE HEAD (M8X1.25X25.5-MM)	

M - METRIC PART
Y - SEPARATE ILLUSTRATION

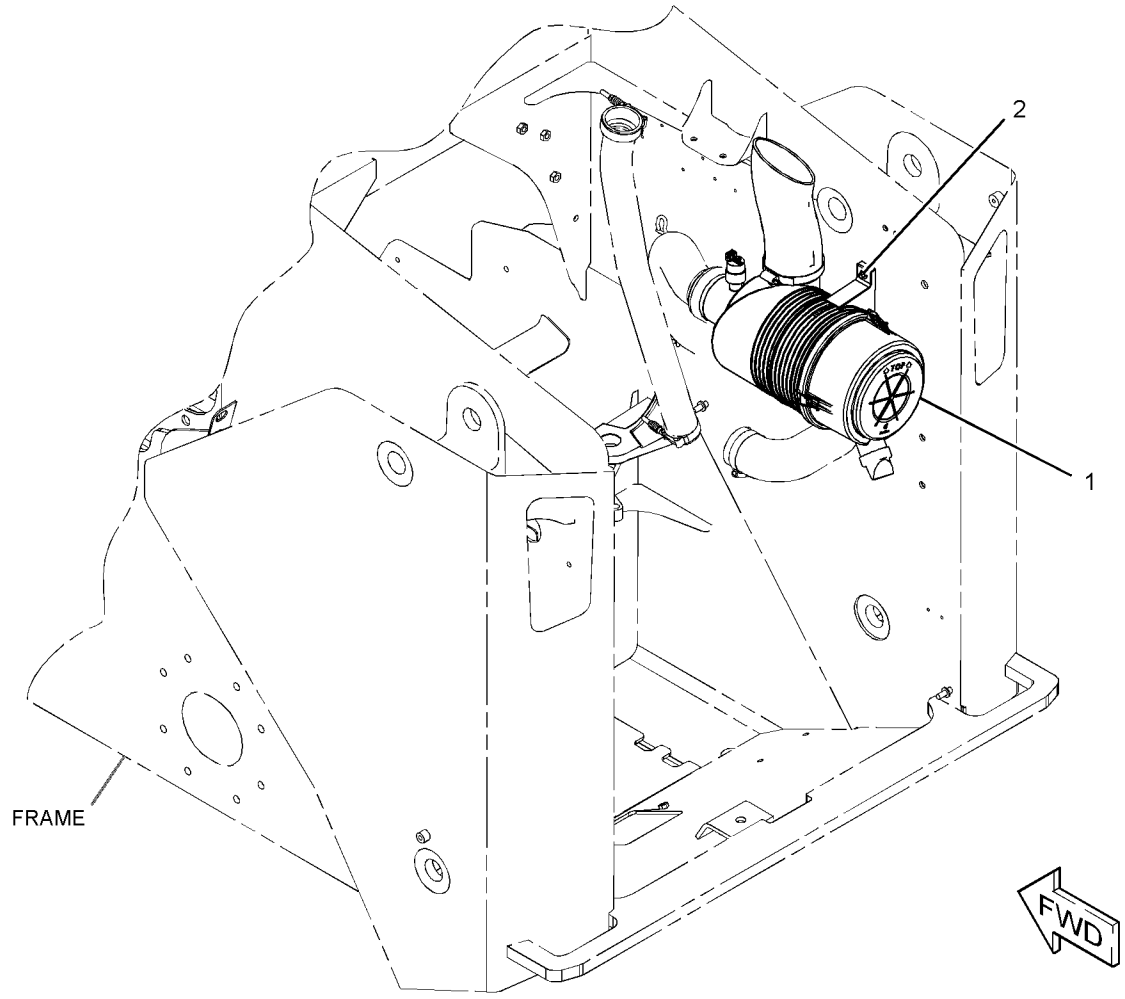

GRAPHIC #1 **<END>** g02877656

345-3499 AIR CLEANER GP

PART OF 345-3498 AIR CLEANER GP

SMCS-1051, 1054 **i04769366**

NOTE	REF NO	GRAPHIC REF	PART NUMBER	QTY	PART NAME 1 2 3 4 5 6 (PRODUCT LEVEL)	SEE PAGE
	1	1	**5L-3233**	1	FITTING-CONNECTOR	
	2	1	**110-6326**	1	FILTER ELEMENT AS-AIR (PRIMARY)	
	3	1	**110-6331**	1	FILTER ELEMENT AS-AIR (SECONDARY)	
	4	1	**112-9717**	1	VALVE-DUST (AIR CLEANER)	
	5	1	**211-3499**	1	COVER	
	6	1	**387-9572**	1	INDICATOR-RESTRICTION (AIR CLEANER)	

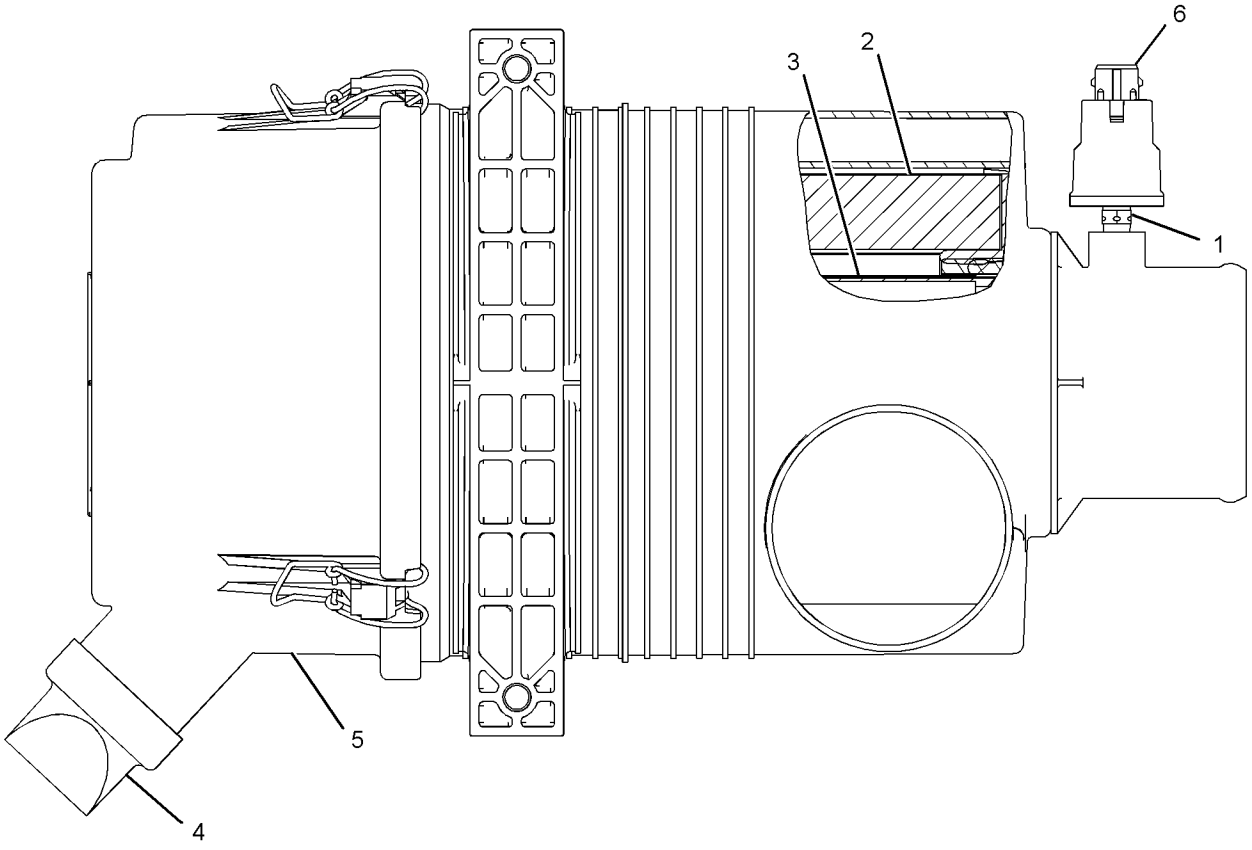

GRAPHIC #1 **<END>** g02878740

376-8669 AIR CLEANER GP

PART OF 415-2795 PRECLEANER GP

AN ATTACHMENT

SMCS-1051, 1054 **i04753150**

NOTE	REF NO	GRAPHIC REF	PART NUMBER	QTY	PART NAME 1 2 3 4 5 6 (PRODUCT LEVEL)	SEE PAGE
	1	1	**5L-3233**	1	FITTING-CONNECTOR	
	2	1	**110-6331**	1	FILTER ELEMENT AS-AIR (SECONDARY)	
	3	1	**112-9717**	1	VALVE-DUST (AIR CLEANER)	
	4	1	**211-3499**	1	COVER	
	5	1	**361-3532**	1	FILTER ELEMENT AS-AIR (PRIMARY)	
	6	1	**387-9572**	1	INDICATOR-RESTRICTION (AIR CLEANER)	

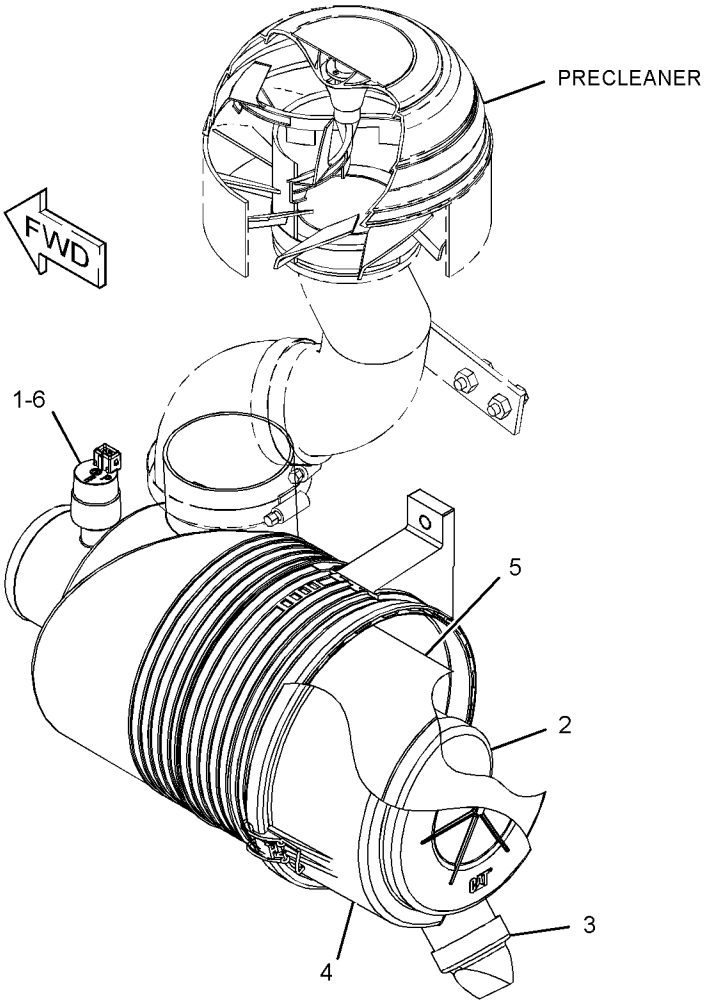

GRAPHIC #1 **<END>** g02851380

396-0902 COOLER GP-EXHAUST

S/N: JSL1-UP

PART OF 380-1768 ENGINE AR-PRIMARY

SMCS-108G **i05341879**

NOTE	REF NO	GRAPHIC REF	PART NUMBER	QTY	PART NAME 1 2 3 4 5 6 (PRODUCT LEVEL)	SEE PAGE
	1	1	**383-0188**	6	BOLT	
	2	1	**398-5550**	4	CLAMP-HOSE	
	3	1	**383-0396**	2	CLAMP-HOSE	
	4	1	**387-9819**	1	GASKET	
	5	1	**387-9820**	2	BOLT-FLANGE HEAD	
	6	1	**387-9821**	1	GASKET	
	7	1	**387-9822**	1	COVER-EGR	
	8	1	**397-9975**	1	VALVE AS (EGR)	
	9	1	**388-7464**	1	COOLER AS (EGR)	
	10	1	**388-7465**	1	GASKET	
	11	1	**388-7466**	1	VALVE	
	12	1	**388-7467**	1	GASKET	
	13	1	**397-9974**	1	HOUSING	
	14	1	**388-7469**	1	GASKET	
	15	1	**388-7471**	1	GASKET	
	16	1	**388-7472**	1	HOSE	
	17	1	**388-7473**	3	CLAMP	
	18	1	**388-7474**	1	CLAMP	
	19	1	**388-7476**	1	HOSE	
	20	1	**388-7477**	1	VALVE	
	21	1	**393-2944**	1	HOSE	
	22	1	**397-9976**	1	BASE (EGR)	
	23	1	**393-2946**	1	HOSE-WATER	
	24	1	**393-2947**	1	HOSE	
	25	1	**393-7571**	2	BOLT	
	26	1	**393-7573**	3	BOLT-FLANGE HEAD	
	27	1	**393-7574**	2	BOLT-FLANGE HEAD	
	28	1	**393-7575**	2	BOLT-FLANGE HEAD	
	29	1	**389-5383**	2	CLAMP	
	30	1	**397-9966**	1	PIPE	
	31	1	**397-9967**	1	TUBE	
	32	1	**397-9977**	1	CLAMP	
	33	1	**418-0967**	1	BOLT-FLANGE HEAD	

396-0902 **COOLER GP-EXHAUST (*contd.*)** **i05341879**

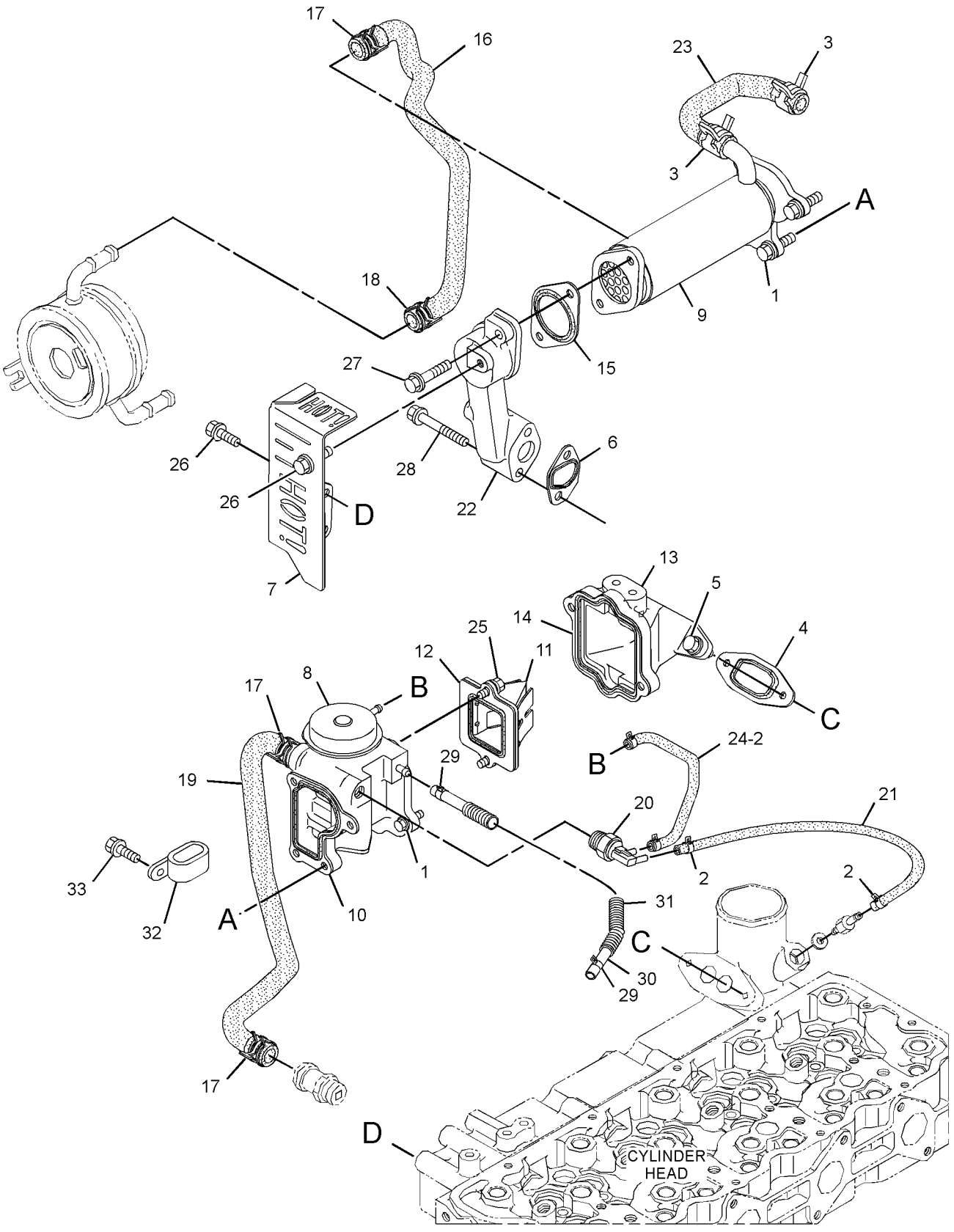

GRAPHIC #1 **<END>** g02954562

345-3475 EXTENSION GP-EXHAUST

PART OF 378-6680, 393-7330 INSTALLATION AR-ENGINE

SMCS-1061 **i05295510**

NOTE	REF NO	GRAPHIC REF	PART NUMBER	QTY	PART NAME 1 2 3 4 5 6 (PRODUCT LEVEL)	SEE PAGE
	1	1	*345-3466*	1	PIPE AS	
M		1	**159-9540**	1	NUT-WELD (M8X1.25-THD)	
	2	1	**345-3579**	1	GASKET-EXHAUST	
	3	1	**345-3646**	1	PIPE AS	
	4	1	**342-9920**	2	BOLT-FLANGE HEAD (M8X1.25X20-MM)	
	5	1	**5P-4116**	1	WASHER-HARD (8.8X20.5X2-MM THK)	
	6	1	**8T-4121**	8	WASHER-HARD (11X21X2.5-MM THK)	
M	7	1	**8T-4133**	4	NUT (M10X1.5-THD)	
M	8	1	**8T-4196**	4	BOLT (M10X1.5X35-MM)	

M - METRIC PART

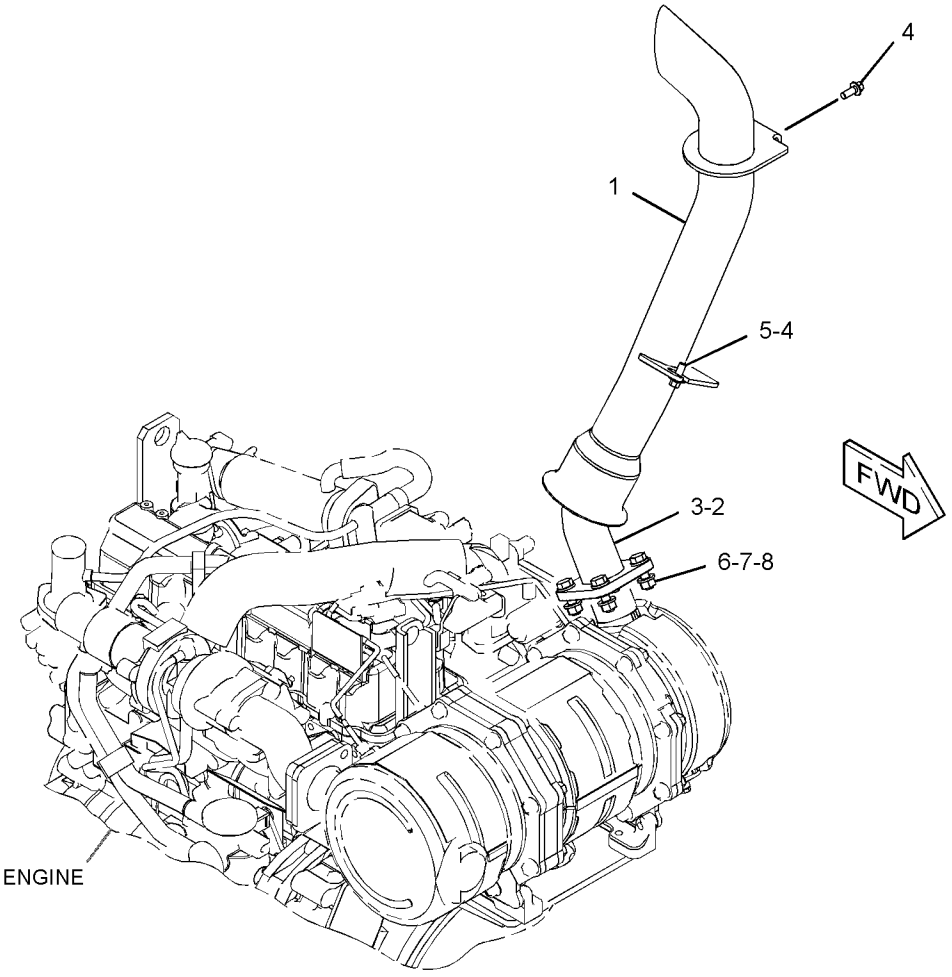

GRAPHIC #1 **<END>** g03369778

378-6692 LINES GP-AIR

S/N: HMR1-UP

PART OF 393-7330 INSTALLATION AR-ENGINE

SMCS-1071 **i05162956**

NOTE	REF NO	GRAPHIC REF	PART NUMBER	QTY	PART NAME 1 2 3 4 5 6 (PRODUCT LEVEL)	SEE PAGE
	1	1	**180-3007**	1	CLAMP-HOSE	
	2	1	**345-3514**	1	HOSE	
	3	1	**378-6697**	1	PIPE	
	4	1	**393-7329**	1	HOSE	
	5	1	**122-3606**	2	CLIP	
	6	1	**2B-0941**	2	SPACER (10.5X19X19-MM THK)	
M	7	1	**5C-7261**	2	NUT (M8X1.25-THD)	
	8	1	**5P-4868**	2	CLAMP-HOSE	
	9	1	**8T-4224**	2	WASHER-HARD (8.8X16X2-MM THK)	
	10	1	**8T-6726**	1	CLAMP-HOSE	
M	11	1	**9X-2098**	2	STUD-TAPERLOCK (BOLT)	

M - METRIC PART

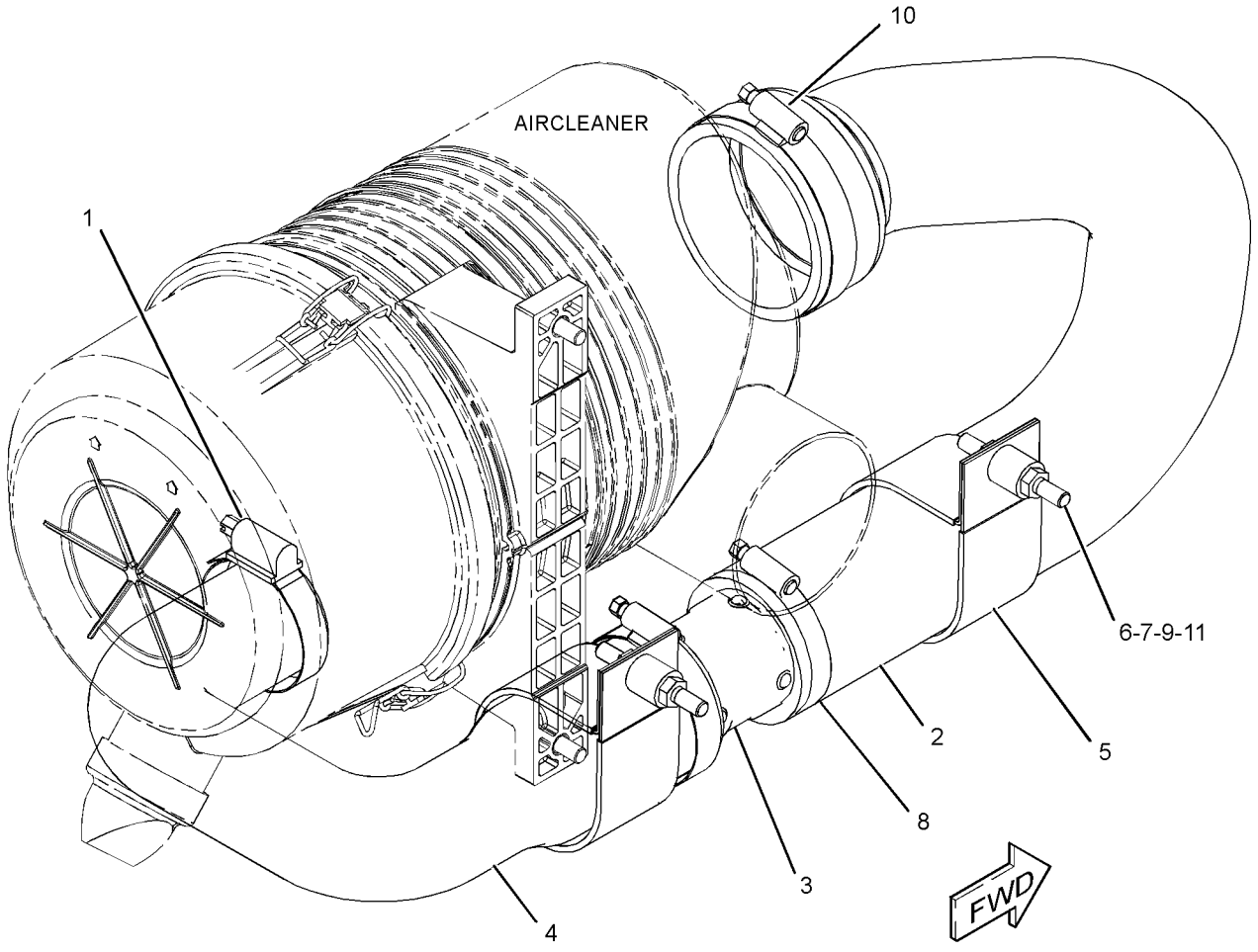

GRAPHIC #1 **<END>** g03320310

AIR INLET AND EXHAUST SYSTEM

393-7333 LINES GP-AIR

S/N: JSL1-UP

PART OF 378-6680 INSTALLATION AR-ENGINE

SMCS-1071 **i05164434**

NOTE	REF NO	GRAPHIC REF	PART NUMBER	QTY	PART NAME 1 2 3 4 5 6 (PRODUCT LEVEL)	SEE PAGE
	1	1	**180-3007**	1	CLAMP-HOSE	
	2	1	**345-3514**	1	HOSE	
	3	1	**378-6697**	1	PIPE	
	4	1	**393-7328**	1	HOSE	
	5	1	**122-3606**	2	CLIP	
	6	1	**2B-0941**	2	SPACER (10.5X19X19-MM THK)	
M	7	1	**5C-7261**	2	NUT (M8X1.25-THD)	
	8	1	**5P-4868**	2	CLAMP-HOSE	
	9	1	**8T-4224**	2	WASHER-HARD (8.8X16X2-MM THK)	
	10	1	**8T-6726**	1	CLAMP-HOSE	
M	11	1	**9X-2098**	2	STUD-TAPERLOCK (BOLT)	

M - METRIC PART

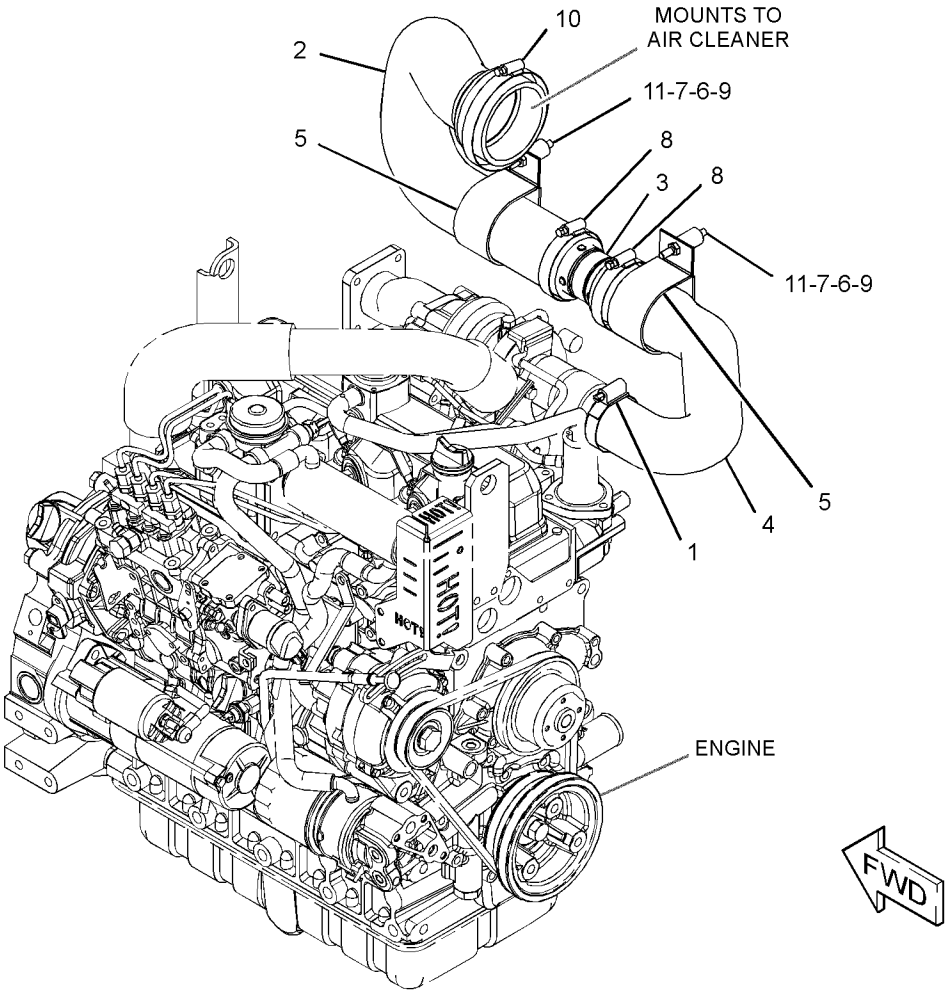

GRAPHIC #1 **<END>** g03321346

345-3576 LINES GP-COOLING

PART OF 378-6680, 393-7330 INSTALLATION AR-ENGINE

SMCS-1087, 1380 **i05156649**

NOTE	REF NO	GRAPHIC REF	PART NUMBER	QTY	PART NAME 1 2 3 4 5 6 (PRODUCT LEVEL)	SEE PAGE
	1	1	**7K-1181**	3	STRAP-CABLE	
	2	1	**206-2423**	1	SADDLE	
	3	1	**314-7599**	2	CLAMP-BAND	
	4	1	**345-3480**	1	RECOVERY GP-COOLANT	
		1	**229-3469**	1	CAP AS-VENTED (COOLANT RECOVERY)	
	5	1	**345-3577**	1	HOSE	
	6	1	**345-3578**	1	HOSE	
	7	1	**345-3588**	1	TUBE	
	8	1	**153-8462**	1	CLIP (SLOT)	
	9	1	**153-8463**	1	CLIP (TAB)	
	10	1	**1P-4278**	2	CLAMP-HOSE	
M	11	1	**266-3315**	4	BOLT-FLANGE HEAD (M8X1.25X25.5-MM)	
	12	1	**300-6036**	4	CLAMP-BAND	
	13	1	**342-9922**	2	BOLT-FLANGE HEAD (M8X1.25X25-MM)	
	14	1	**5P-8444**	1	GROMMET	
	15	1	**123-7971**	1	HOSE	
E	16	1	**5P-1420**		HOSE (87-CM)	

E - ORDER BY THE CENTIMETER
M - METRIC PART

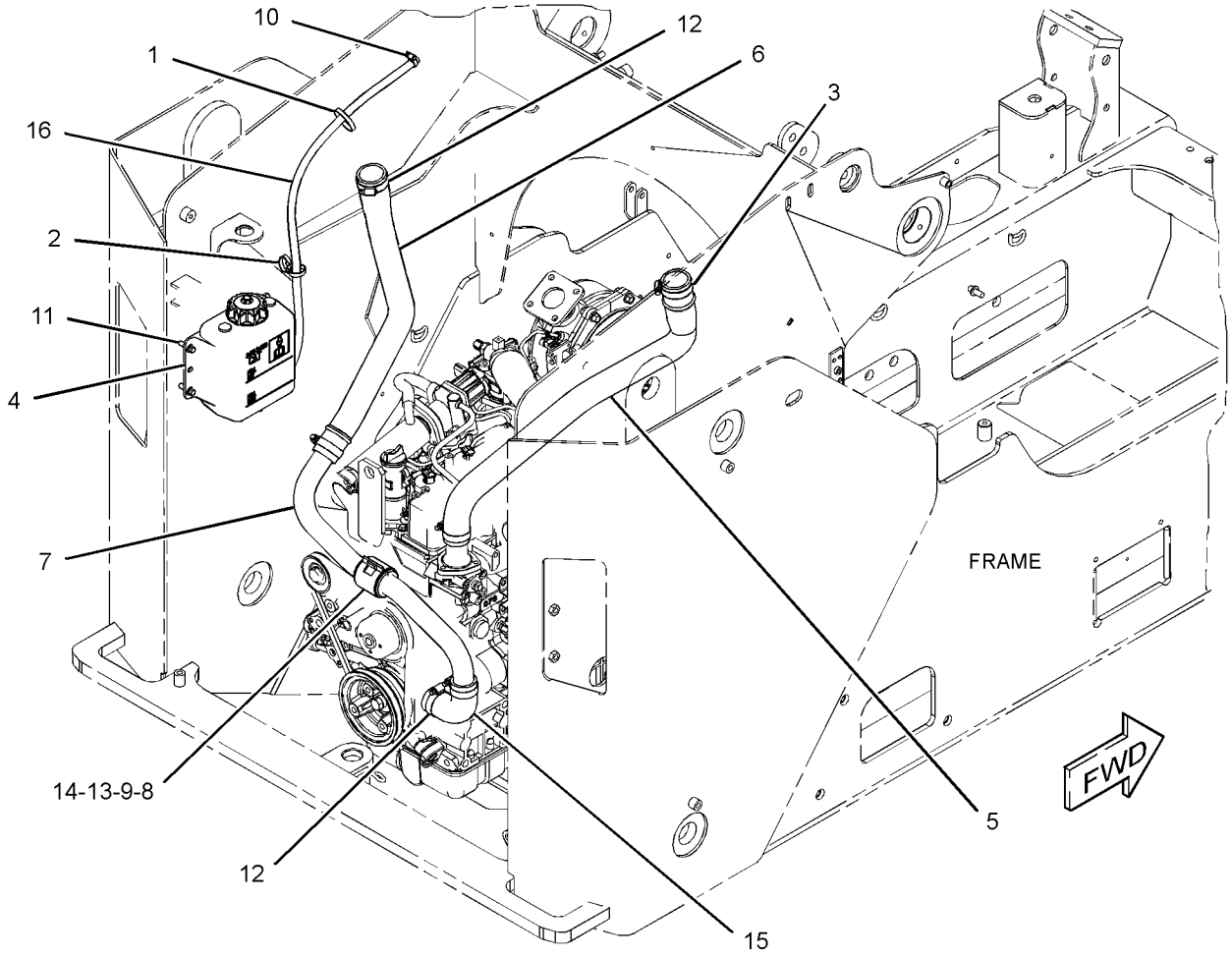

GRAPHIC #1 **<END>** g03322942

396-0914 MANIFOLD GP-EXHAUST

PART OF 380-1768, 380-1769 ENGINE AR-PRIMARY

SMCS-1059 **i05342029**

NOTE	REF NO	GRAPHIC REF	PART NUMBER	QTY	PART NAME 1 2 3 4 5 6 (PRODUCT LEVEL)	SEE PAGE
	1	1	**397-9973**	1	MANIFOLD-EXHAUST	
	2	1	**387-9815**	1	GASKET	
	3	1	**393-7585**	4	BOLT-FLANGE HEAD	
	4	1	**387-9817**	2	STUD	
	5	1	**398-2306**	4	NUT	
	6	1	**387-9813**	1	SHIELD-EXHAUST	
	7	1	**387-9814**	1	BOLT-FLANGE HEAD	
	8	1	**397-9982**	2	STUD	

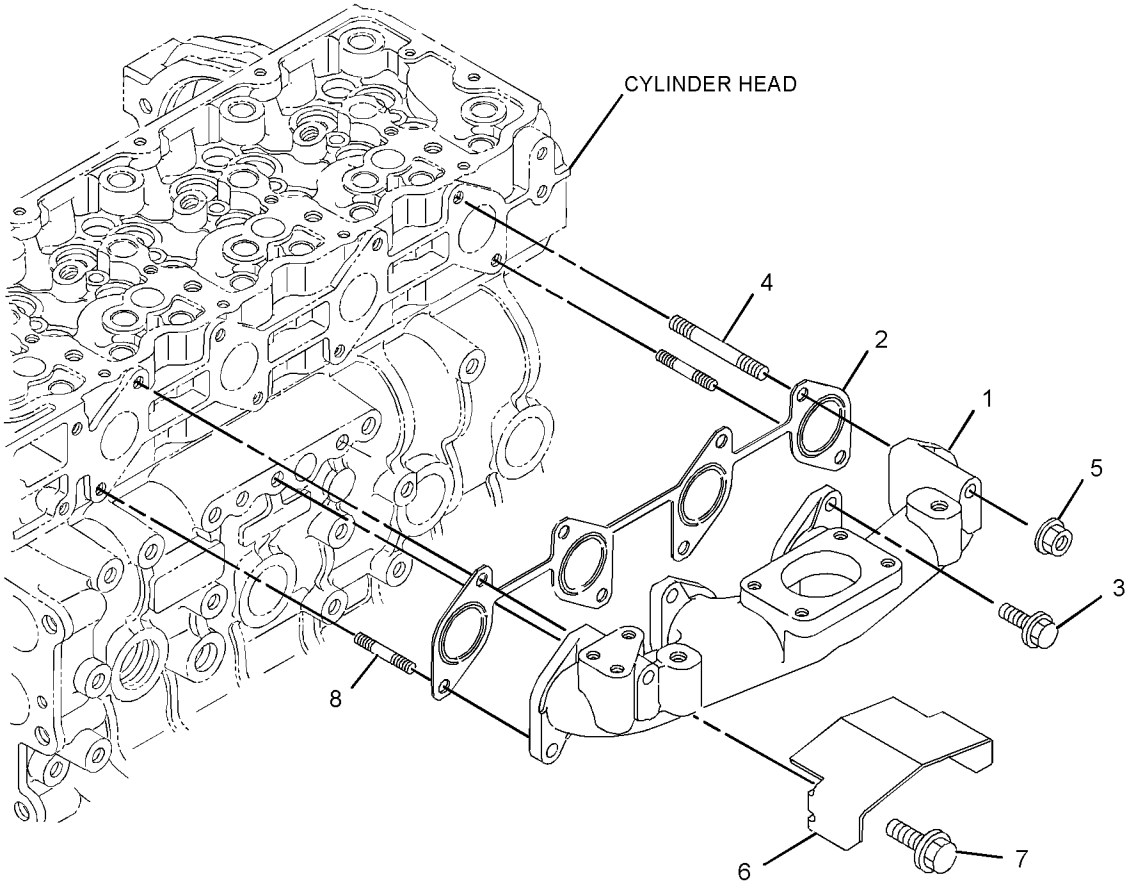

GRAPHIC #1 **<END>** g02948576

387-9083 MANIFOLD GP-INLET

S/N: JSL1-UP

PART OF 380-1768 ENGINE AR-PRIMARY

SMCS-1058 **i05342066**

NOTE	REF NO	GRAPHIC REF	PART NUMBER	QTY	PART NAME 1 2 3 4 5 6 (PRODUCT LEVEL)	SEE PAGE
	1	1	**383-0190**	7	BOLT	
	2	1	**383-0308**	1	GASKET	
	3	1	**387-9804**	1	MANIFOLD AS-INLET	
		1	**388-7446**	1	MANIFOLD-INLET	
		1	**383-0308**	1	GASKET	
		1	**388-7447**	1	ADAPTER	
	4	1	**387-9805**	1	GASKET	
	5	1	**387-9806**	2	BOLT-FLANGE HEAD	
	6	1	**388-7447**	1	ADAPTER	

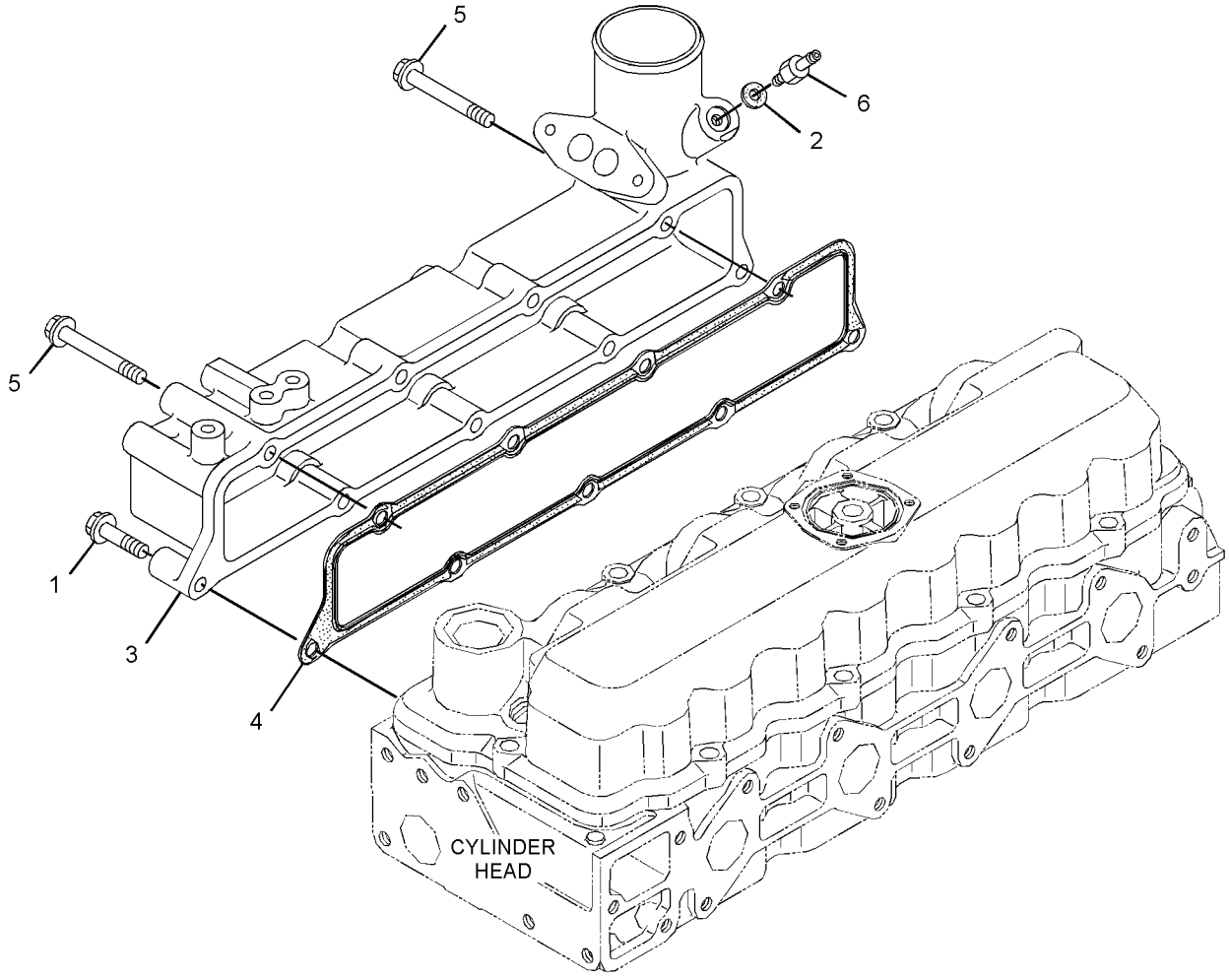

GRAPHIC #1 **<END>** g02894676

420-8856 MANIFOLD GP-INLET

S/N: HMR1-UP

PART OF 380-1769 ENGINE AR-PRIMARY

SMCS-1058 **i05342475**

NOTE	REF NO	GRAPHIC REF	PART NUMBER	QTY	PART NAME 1 2 3 4 5 6 (PRODUCT LEVEL)	SEE PAGE
	1	1	**383-0190**	7	BOLT	
	2	1	**387-9806**	2	BOLT-FLANGE HEAD	
	3	1	**421-1882**	1	MANIFOLD-INLET	
	4	1	**387-9805**	1	GASKET	

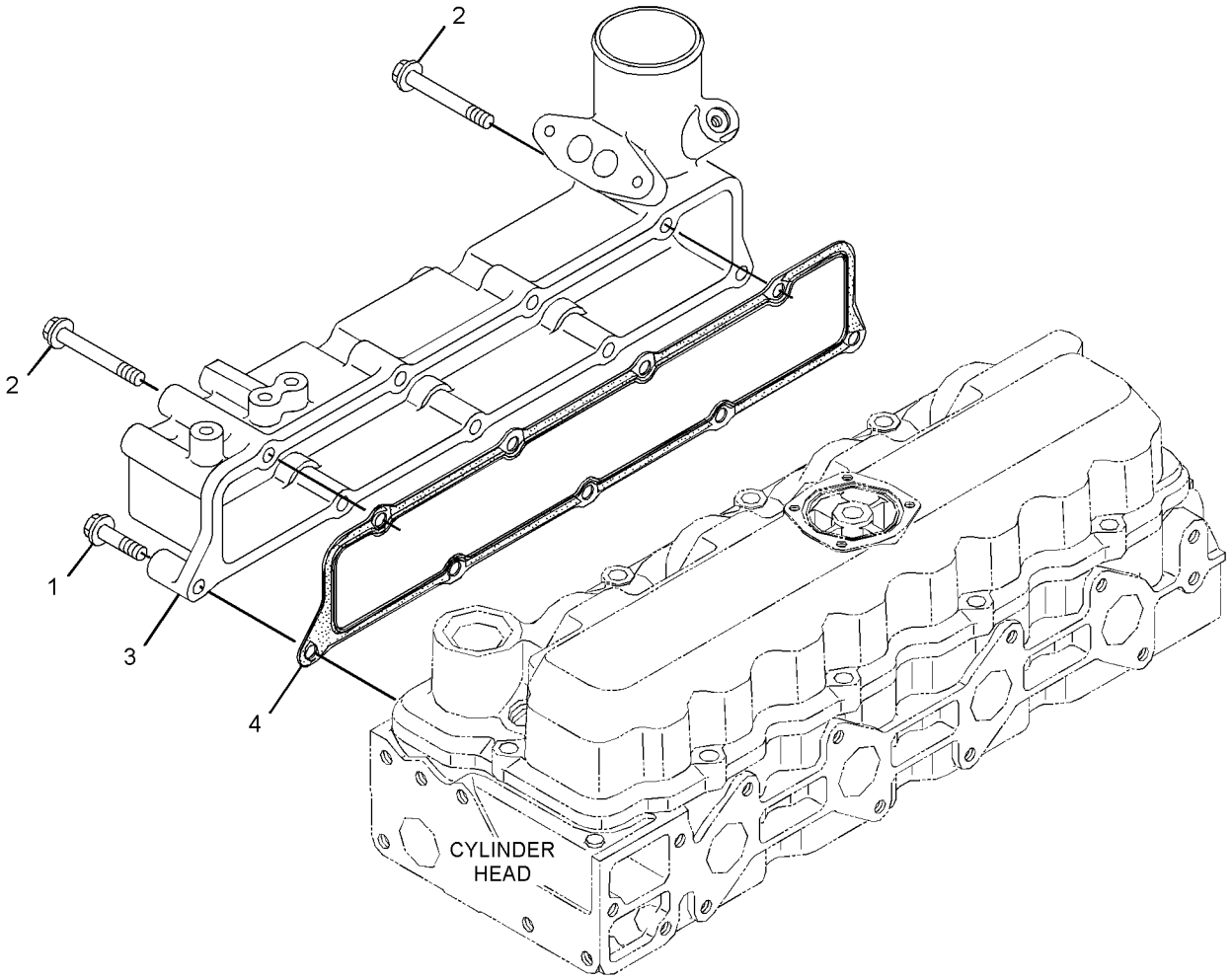

GRAPHIC #1 **<END>** g03241161

378-6751 MUFFLER & MOUNTING GP

PART OF 378-6680, 393-7330 INSTALLATION AR-ENGINE

SMCS-1062 **i05162955**

NOTE	REF NO	GRAPHIC REF	PART NUMBER	QTY	PART NAME 1 2 3 4 5 6 (PRODUCT LEVEL)	SEE PAGE
	1	1	**232-3121**	4	NUT (M10X1.25-THD)	
	2	1	**345-3579**	1	GASKET-EXHAUST	
	3	1	**378-6752**	1	MUFFLER AS	
	4	1	**396-3352**	4	BOLT-FLANGE HEAD (M12X1.25X35-MM)	
	5	1	**415-2810**	1	PLATE	
	6	1	**8T-4121**	4	WASHER-HARD (11X21X2.5-MM THK)	

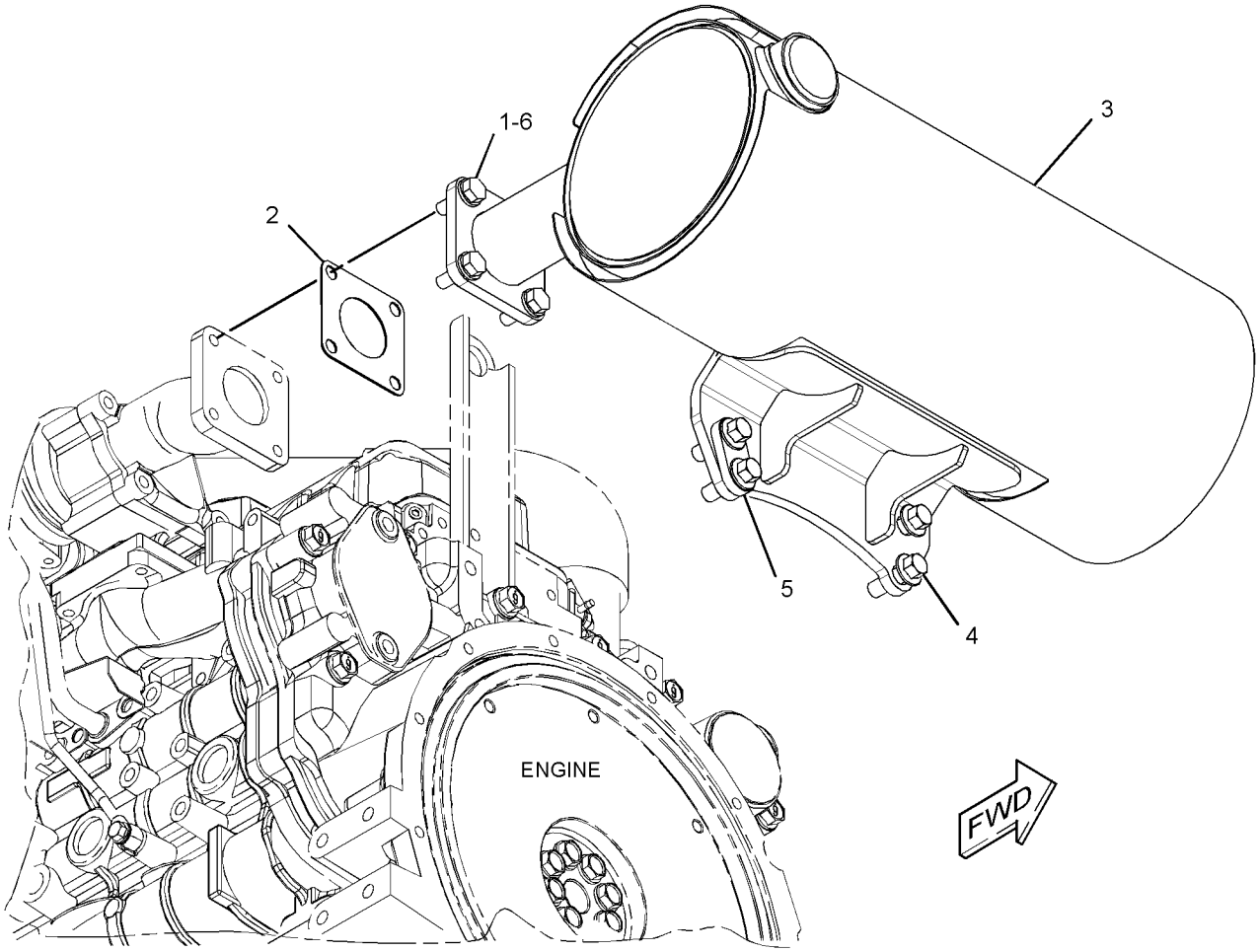

GRAPHIC #1 **<END>** g03320563

AIR INLET AND EXHAUST SYSTEM

130-3279 PRECLEANER GP–TURBINE

PART OF 415-2795 PRECLEANER GP

AN ATTACHMENT

SMCS-1055 **i03620661**

NOTE	REF NO	GRAPHIC REF	PART NUMBER	QTY	PART NAME 1 2 3 4 5 6 (PRODUCT LEVEL)	SEE PAGE
	1	1	**174-5414**	1	CLAMP	

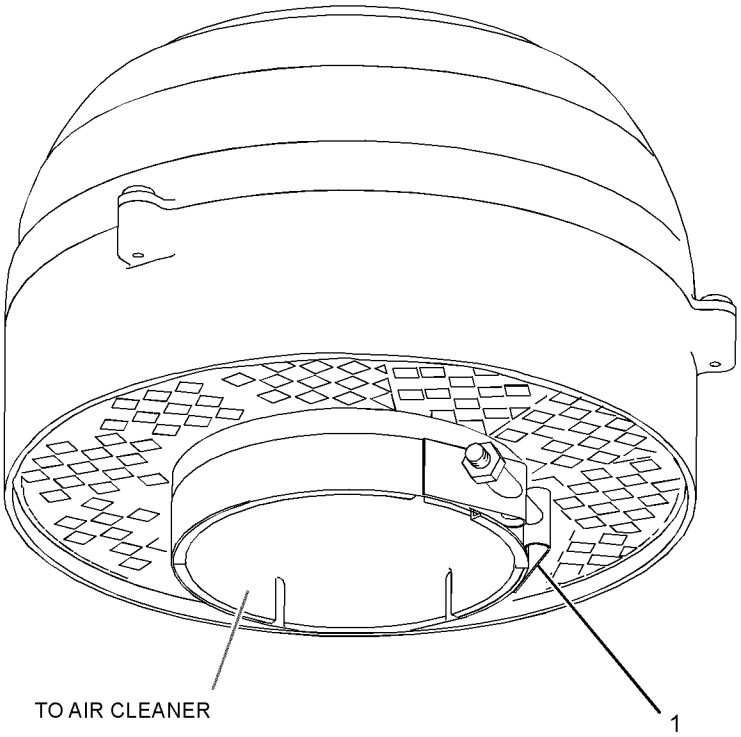

GRAPHIC #1 **<END>** g01945409

415-2795 PRECLEANER GP

AN ATTACHMENT

SMCS-1055 **i05293743**

NOTE	REF NO	GRAPHIC REF	PART NUMBER	QTY	PART NAME 1 2 3 4 5 6 (PRODUCT LEVEL)	SEE PAGE
	1	1	**116-0400**	1	KIT-INSTALLATION	
Y	2	1	**130-3279**	1	PRECLEANER GP (TURBINE)	60
	3	1	**261-6101**	1	COVER	
Y	4	1	**376-8669**	1	AIR CLEANER GP	49
	5	1	**376-8670**	1	CLAMP AS	
	6	1	**376-8678**	1	SHIELD	
	7	1	**388-6650**	1	HOSE	
	8	1	**388-6657**	1	PIPE AS	
M		1	**159-9540**	2	NUT-WELD (M8X1.25-THD)	
M	9	1	**5C-7261**	3	NUT (M8X1.25-THD)	
	10	1	**6V-3582**	1	CLAMP-HOSE	
	11	1	**7X-0613**	2	WASHER-HARD (8.8X25.5X5-MM THK)	
	12	1	**8T-4224**	6	WASHER-HARD (8.8X16X2-MM THK)	
M	13	1	**8T-4908**	5	BOLT (M8X1.25X25-MM)	
	14	1	**8T-6726**	1	CLAMP-HOSE	

M - METRIC PART
Y - SEPARATE ILLUSTRATION

415-2795 **PRECLEANER GP (*contd.*)** **i05293743**

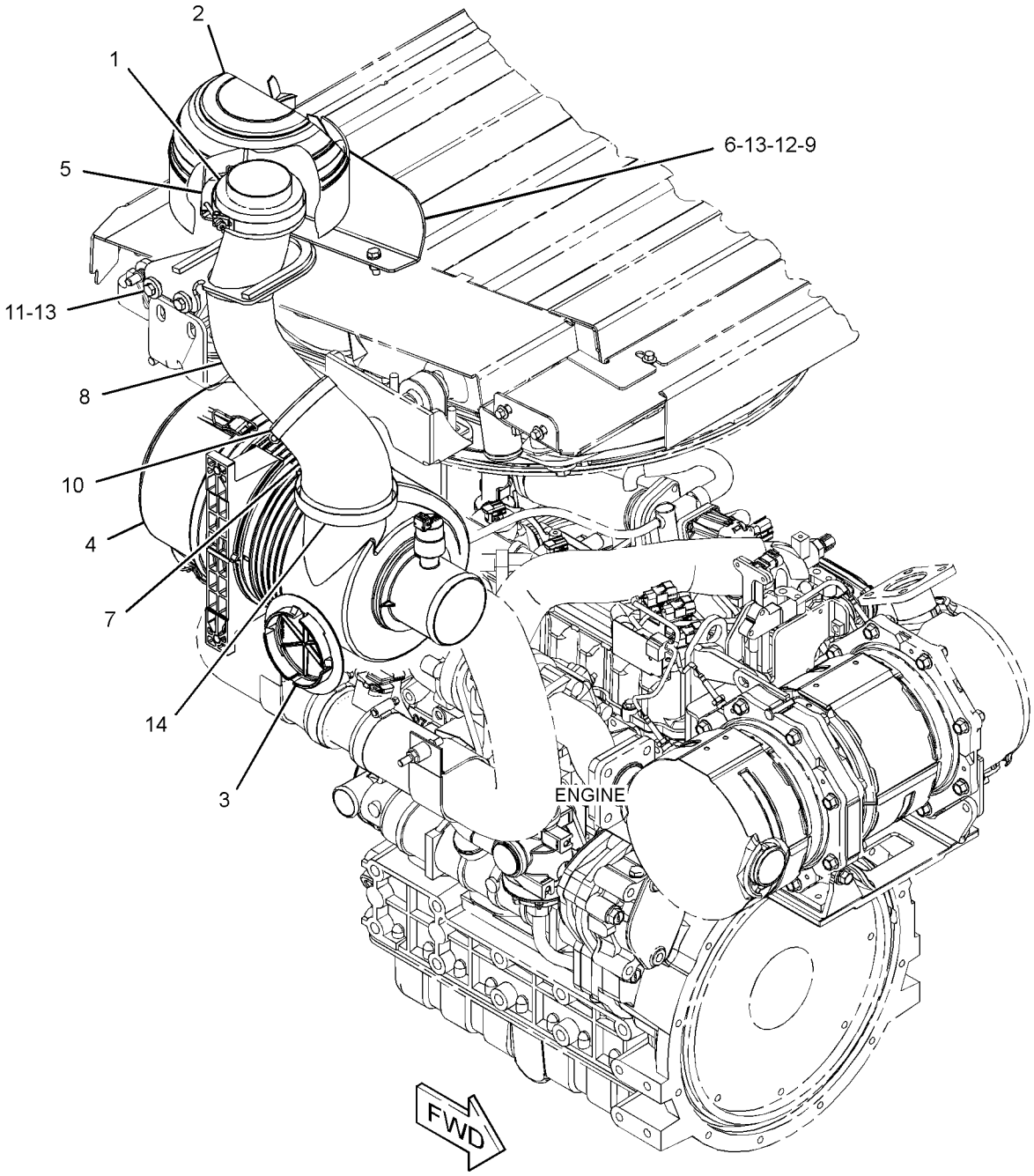

GRAPHIC #1 **<END>** g03364143

437-5955 TURBOCHARGER GP

PART OF 380-1768, 380-1769 ENGINE AR-PRIMARY

SMCS-1052, 1053 **i05342110**

NOTE	REF NO	GRAPHIC REF	PART NUMBER	QTY	PART NAME 1 2 3 4 5 6 (PRODUCT LEVEL)	SEE PAGE
	1	2	**383-0199**	4	NUT-FLANGE	
	2	2	**387-9802**	3	CLAMP-HOSE	
	3	2	**387-9811**	1	CLAMP-HOSE	
	4	1	**387-9814**	1	BOLT-FLANGE HEAD	
	5	1	**387-9865**	1	EYEBOLT	
	6	1	**387-9870**	1	GASKET	
	7	1	**388-7456**	1	GASKET	
	8	1	**388-7458**	1	GASKET	
	9	1	**388-7461**	1	SEAL-O-RING	
	10	2	**389-5353**	1	GASKET	
	11	1	**393-7570**	2	BOLT-FLANGE HEAD	
	12	2	**393-7586**	1	BOLT	
	13	2	**393-7587**	4	BOLT	
	14	1	**393-7588**	1	BOLT	
	15	2	**397-9970**	1	PIPE	
	16	2	**397-9971**	1	HOSE	
	17	2	**397-9972**	1	HOSE	
	18	2	**397-9979**	1	TURBOCHARGER AS	
	18A	2	**397-9980**	1	HOSE AS	
	18B	2	**397-9981**	2	CLAMP-HOSE	
	19	2	**397-9982**	4	STUD	
	20	2	**397-9984**	1	GASKET	
	21	2	**397-9985**	4	STUD	
	22	1	**397-9986**	1	TUBE AS-OIL	
	23	1	**397-9987**	1	TUBE AS-OIL	
	24	1	**421-1884**	1	CLAMP	
	25	2	**436-0822**	1	PIPE-EXHAUST	

437-5955 **TURBOCHARGER GP (*contd.*)** **i05342110**

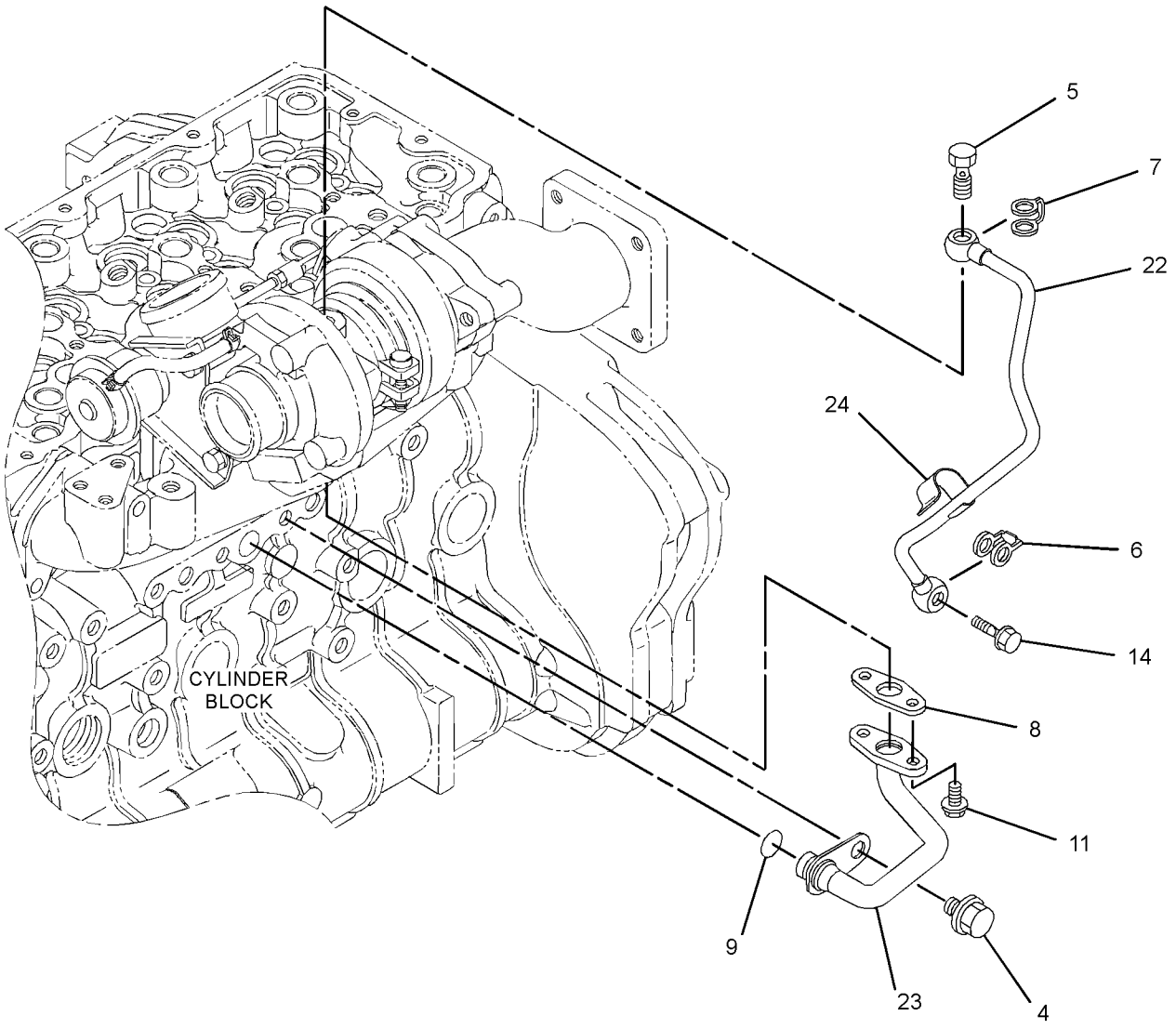

GRAPHIC #1 g03374084

437-5955 **TURBOCHARGER GP (*contd.*)** **i05342110**

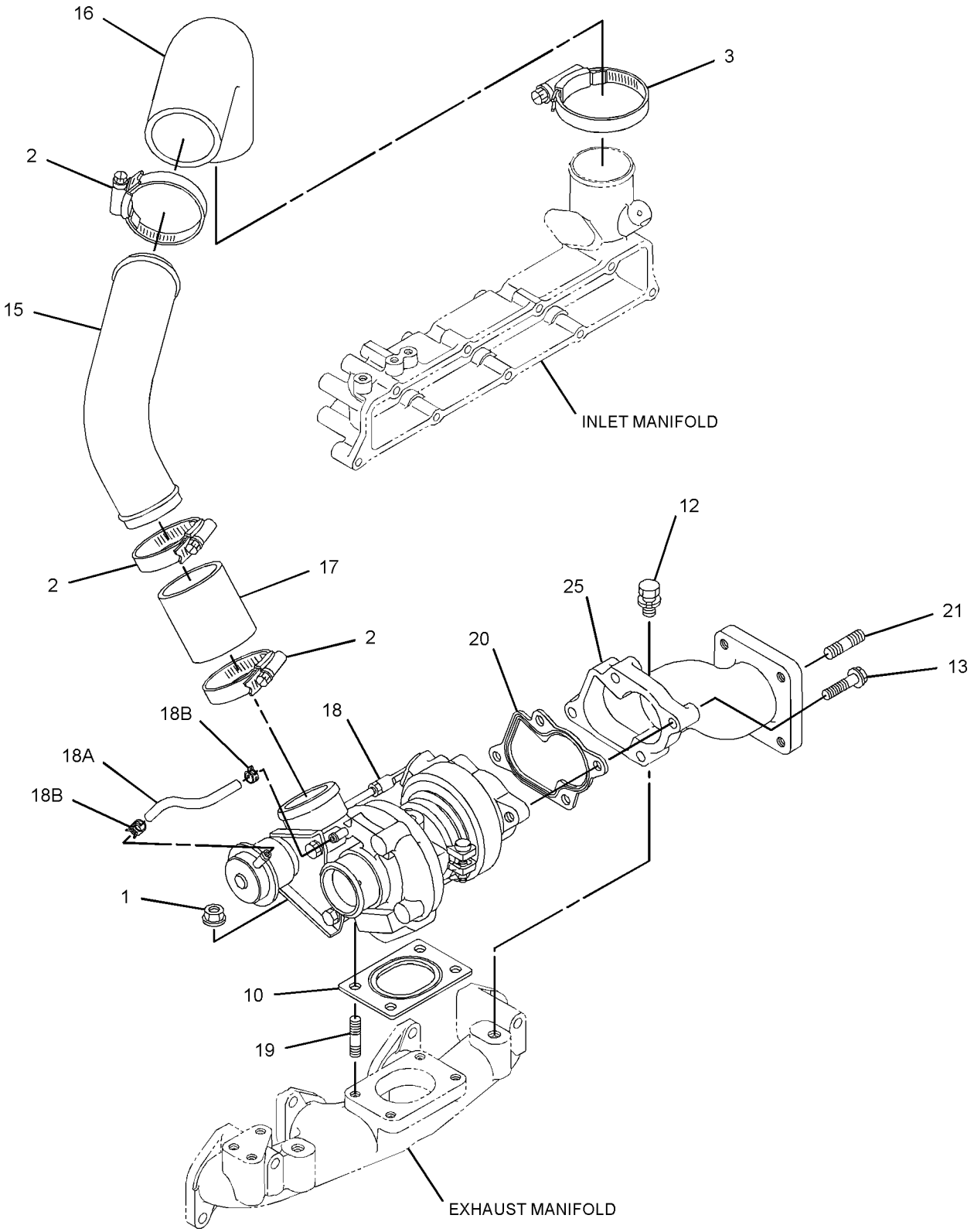

GRAPHIC #2 **<END>** g03374275

378-6812 CONTROL GP-GOVERNOR

PART OF 378-6680, 393-7330 INSTALLATION AR-ENGINE

SMCS-1265, 1276 **i05162954**

NOTE	REF NO	GRAPHIC REF	PART NUMBER	QTY	PART NAME 1 2 3 4 5 6 (PRODUCT LEVEL)	SEE PAGE
	1	1	**378-1020**	1	ACTUATOR GP (GOVERNOR CONTROL)	
		1	**362-3872**	4	CONNECTOR (BLADE)	
		1	**396-8363**	1	RECEPTACLE AS	
	2	1	**378-6802**	1	LINK	
	3	1	**378-6804**	1	MOUNT AS	
M		1	**159-9539**	3	NUT-WELD (M6X1-THD)	
M		1	**159-9540**	1	NUT-WELD (M8X1.25-THD)	
M		1	**165-8719**	1	NUT-WELD	
	4	1	**378-6805**	1	BRACKET	
	5	1	**378-6807**	1	ROD AS	
M		1	**5C-2890**	1	NUT (M6X1-THD)	
	6	1	**378-6814**	1	BRACKET AS	
M		1	**159-9540**	2	NUT-WELD (M8X1.25-THD)	
	7	1	**388-8015**	1	END-JOINT	
	8	1	**388-8016**	1	END-JOINT	
M	9	1	**129-3178**	2	LOCKNUT (M6X1-THD)	
M	10	1	**5C-2890**	1	NUT (M6X1-THD)	
M	11	1	**7X-2534**	3	BOLT (M6X1X50-MM)	
M	12	1	**8T-0389**	1	LOCKNUT (M10X1.5-THD)	
M	13	1	**8T-4139**	1	BOLT (M12X1.75X30-MM)	
M	14	1	**8T-4189**	2	BOLT (M8X1.25X20-MM)	
M	15	1	**8T-4199**	2	BOLT (M8X1.25X12-MM)	
	16	1	**8T-4223**	3	WASHER-HARD (13.5X25.5X3-MM THK)	
	17	1	**8T-4224**	4	WASHER-HARD (8.8X16X2-MM THK)	
M	18	1	**8T-4244**	1	NUT (M12X1.75-THD)	
M	19	1	**8T-4956**	1	BOLT (M12X1.75X35-MM)	
	20	1	**9X-8256**	3	WASHER (6.6X12X2-MM THK)	

M - METRIC PART

378-6812 **CONTROL GP-GOVERNOR (*contd.*)** **i05162954**

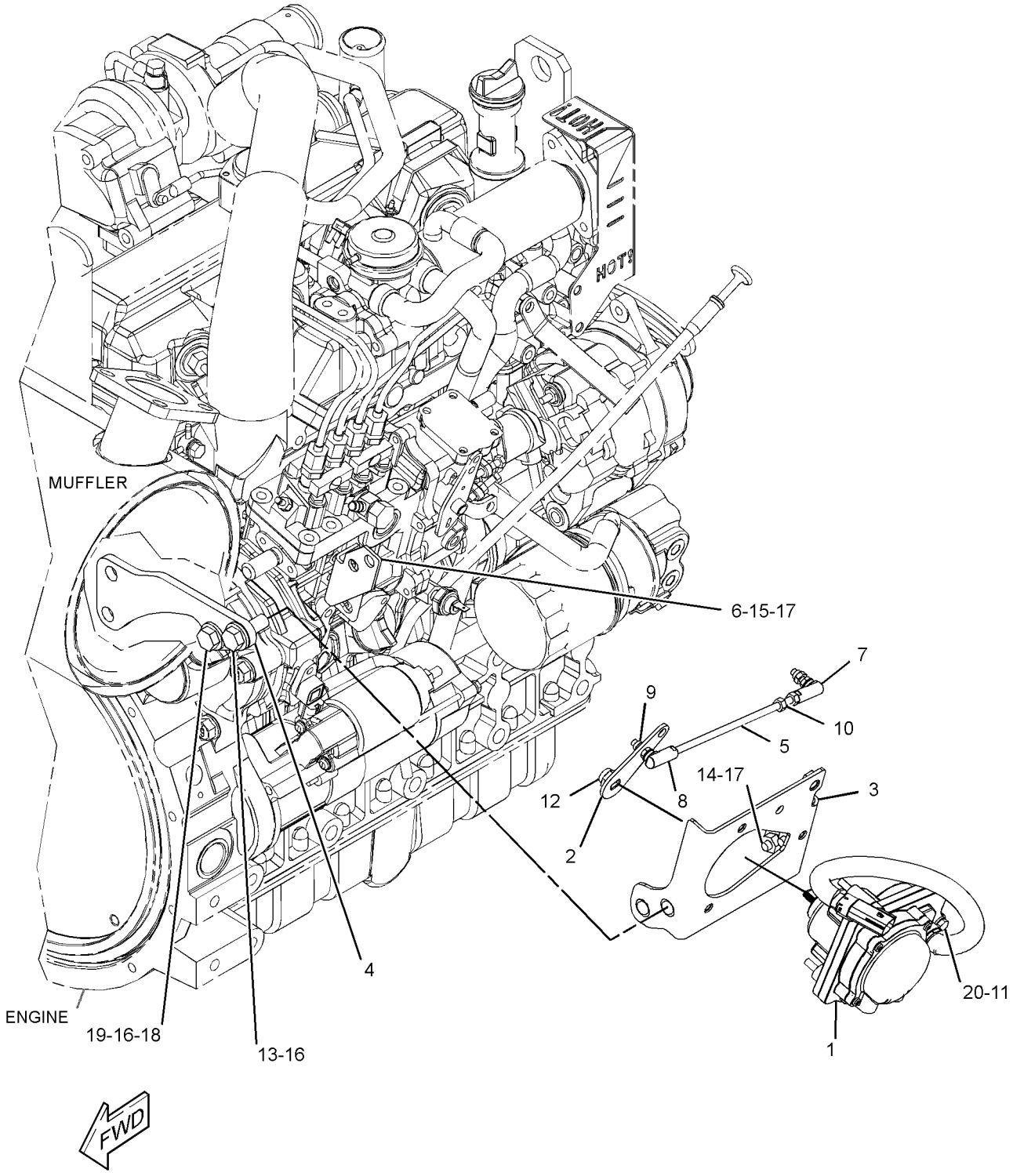

GRAPHIC #1 **<END>** g03320633

363-5818 FILTER GP-FUEL

PART OF 378-6681 LINES GP-FUEL

SMCS-1261 **i05156704**

NOTE	REF NO	GRAPHIC REF	PART NUMBER	QTY	PART NAME 1 2 3 4 5 6 (PRODUCT LEVEL)	SEE PAGE
	1	1	**151-1975**	1	CONNECTOR	
	2	1	**246-2622**	2	ELBOW AS	
					(EACH INCLUDES)	
		1	**214-7567**	1	SEAL-O-RING	
	3	1	**345-3623**	1	VALVE AS-CHECK (FUEL FILTER)	
		1	**5P-7814**	1	SEAL-O-RING	
J	4	1	**363-5819**	1	FILTER AS-WATER SEP & FUEL (FUEL, WATER SEPARATOR)	
		1	**4L-7711**	1	SEAL-O-RING	
		1	**5P-3863**	1	SEAL-O-RING	
	5	1	**5P-7814**	1	SEAL-O-RING	
					AVAILABLE REPAIR KIT(S):	
J			**345-3624**	1	KIT-FILTER (FUEL)	
					(ALSO INCLUDES BOWL & SENSOR AS)	

J - KIT MARKED J SERVICES PART MARKED J

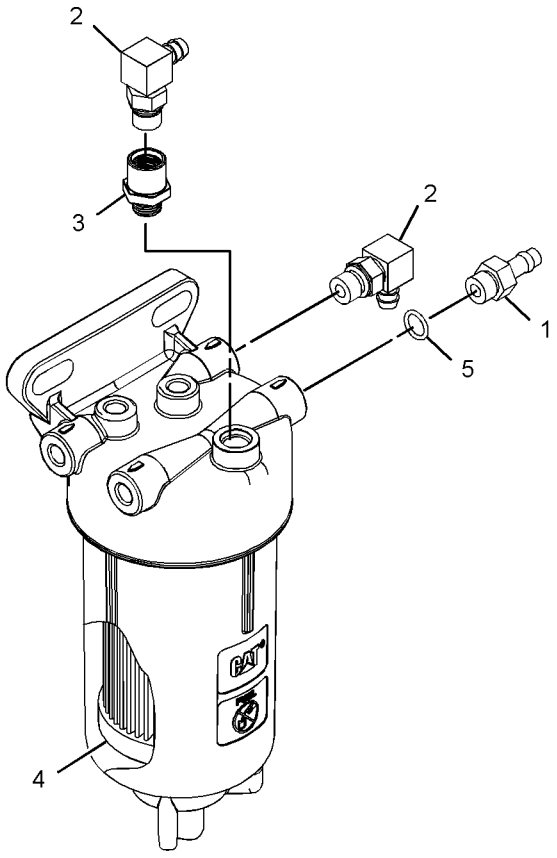

VIEW OF AREA A
(EXPLODED)

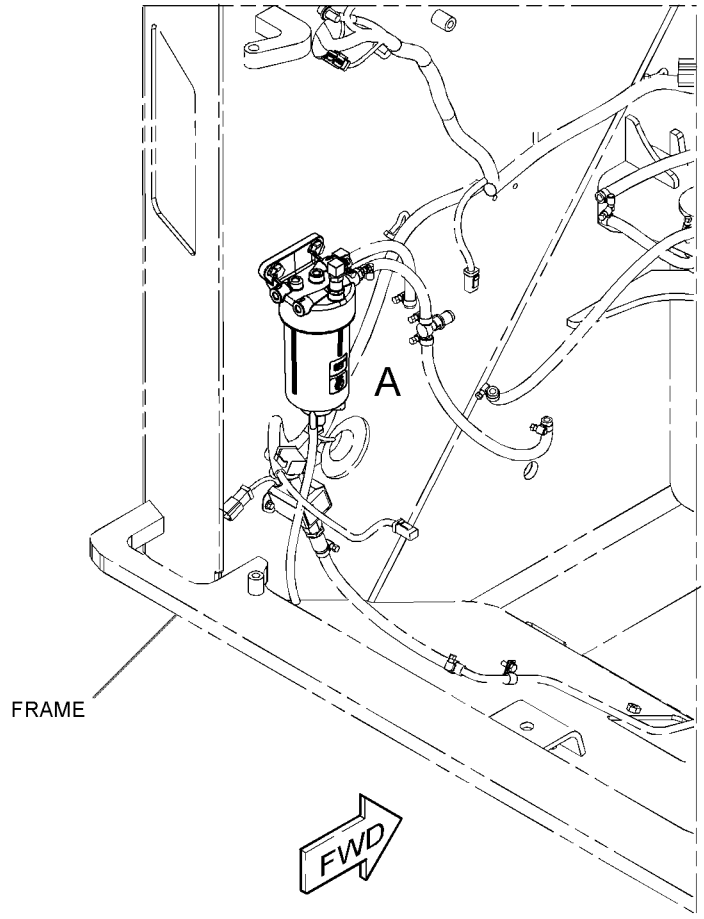

GRAPHIC #1 **<END>** g03323386

396-0907 GOVERNOR GP

S/N: HMR1-UP

PART OF 437-5954 PUMP GP-FUEL INJECTION

SMCS-1264, 1908 **i05342509**

NOTE	REF NO	GRAPHIC REF	PART NUMBER	QTY	PART NAME 1 2 3 4 5 6 (PRODUCT LEVEL)	SEE PAGE
	1	1	**383-0195**	2	NUT-HEX	
	2	1	**383-0198**	1	NUT-FLANGE	
	3	1	**383-0214**	1	SEAL-O-RING	
	4	1	**383-0222**	1	PIN-SPRING	
	5	1	**383-0256**	4	GASKET	
	6	1	**383-0308**	4	GASKET	
	7	1	**383-0317**	2	CAP	
	8	1	**383-0416**	1	GASKET	
	9	1	**387-9886**	1	SOLENOID AS (GOVERNOR CONTROL)	
	10	1	**387-9887**	2	BOLT-SOCKET HEAD	
	11	1	**397-9950**	1	BOLT-ADJUSTMENT	
	12	1	**388-7526**	1	COVER	
	13	1	**388-7527**	1	BLOCK AS	
	14	1	**388-7528**	1	NUT-FLANGE	
	15	1	**388-7530**	1	LEVER AS	
	16	1	**397-9949**	1	SHAFT	
	17	1	**388-7532**	1	SPRING	
	18	1	**388-7533**	1	SPRING	
	19	1	**388-7534**	1	GASKET	
	20	1	**388-7535**	6	BOLT-FLANGE HEAD	
	21	1	**388-7536**	1	NUT	
	22	1	**388-7540**	1	COVER	
	23	1	**393-2923**	1	SLEEVE	
	24	1	**397-9948**	1	HOUSING	
	25	1	**393-2925**	1	LEVER AS	
	26	1	**393-2926**	1	SPRING	
	27	1	**393-2927**	1	LEVER AS	
	28	1	**387-9884**	1	NUT	
	29	1	**393-7572**	2	BOLT	
	30	1	**387-9885**	1	CAP	
	31	1	**393-2932**	1	PIN	
	32	1	**393-2933**	1	PIN	
	33	1	**393-2934**	1	STUD	
	34	1	**393-2935**	1	BOLT-ADJUSTMENT	
	35	1	**393-2936**	1	BOLT-ADJUSTMENT	
	36	1	**393-2950**	2	SEAL-O-RING	
	37	1	**393-2951**	2	NUT	
	38	1	**393-7569**	2	STUD	
	39	1	**393-7570**	3	BOLT-FLANGE HEAD	
	40	1	**393-7581**	2	BOLT	

396-0907 **GOVERNOR GP (*contd.*)** **i05342509**

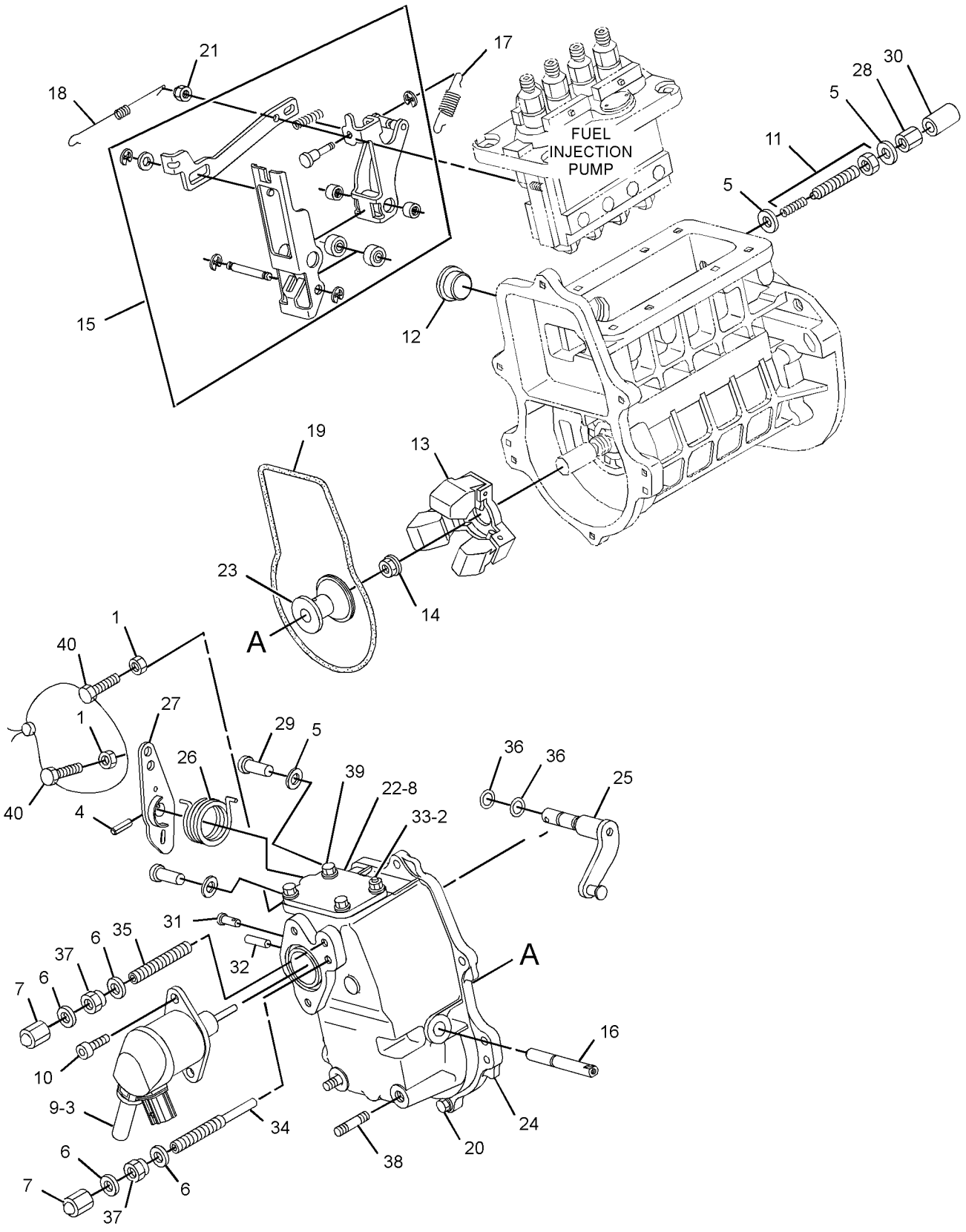

GRAPHIC #1 **<END>** g02949536

388-7510 HOUSING GP-FUEL PUMP

S/N: JSL1-UP

PART OF 397-9945 PUMP GP-FUEL INJECTION

SMCS-1253 **i05342511**

NOTE	REF NO	GRAPHIC REF	PART NUMBER	QTY	PART NAME 1 2 3 4 5 6 (PRODUCT LEVEL)	SEE PAGE
	1	1	**393-2917**	2	STUD	
	2	1	**383-0279**	2	STUD	
	3	1	**393-2918**	2	STUD	
	4	1	**393-2919**	2	PIN	
	5	1	**383-0219**	2	PIN	

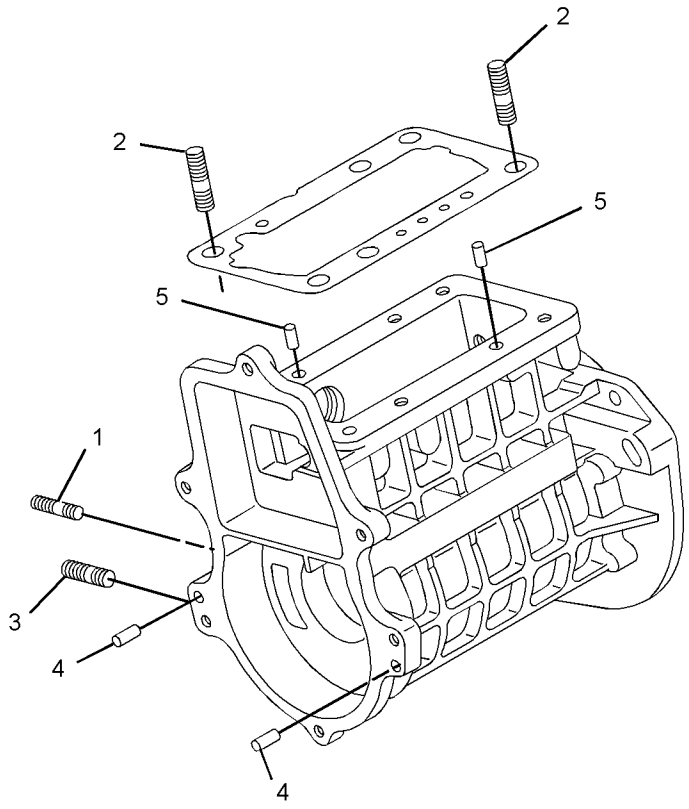

GRAPHIC #1 **<END>** g03375324

378-6681 LINES GP-FUEL

PART OF 378-6680, 393-7330 INSTALLATION AR-ENGINE

SMCS-1274 **i05162957**

NOTE	REF NO	GRAPHIC REF	PART NUMBER	QTY	PART NAME 1 2 3 4 5 6 (PRODUCT LEVEL)	SEE PAGE
	1	1	**178-3620**	1	STRAP-DUAL CLAMP	
	2	1	**335-6983**	2	CLAMP-BAND	
	3	1	**345-3516**	1	VALVE AS-RELIEF (FUEL LINES)	
Y	4	1	**345-3520**	1	PUMP GP-FUEL TRANSFER (WATER SEPARATOR)	84
Y	5	1	**363-5818**	1	FILTER GP-FUEL (ENGINE)	68
	6	1	**376-8665**	1	TUBE AS	
	7	1	**386-7013**	1	VALVE AS-CHECK (FUEL)	
	8	1	**393-7327**	1	FITTING-REDUCER	
M	9	1	**174-9194**	1	BOLT (M8X1.25X16-MM)	
	10	1	**1P-4278**	18	CLAMP-HOSE	
	11	1	**266-3314**	2	BOLT-FLANGE HEAD (M6X1X20.5-MM)	
M	12	1	**266-3315**	2	BOLT-FLANGE HEAD (M8X1.25X25.5-MM)	
	13	1	**4D-6466**	1	CLIP	
M	14	1	**5C-9553**	2	BOLT (M6X1X16-MM)	
	15	1	**5P-4115**	2	WASHER-HARD (7.2X19X2-MM THK)	
	16	1	**6V-3265**	2	CLIP	
	17	1	**8T-2173**	1	CONNECTOR-HOSE	
	18	1	**8T-4121**	2	WASHER-HARD (11X21X2.5-MM THK)	
M	19	1	**8T-4137**	2	BOLT (M10X1.5X20-MM)	
	20	1	**9M-8406**	2	CLIP	
E	21	1	**8C-3681**		HOSE (28-CM)	
E	22	1	**263-0768**		HOSE (7-CM EACH)	
E	22A	1	**263-0768**		HOSE (19-CM)	
E	23	1	**103-2529**		HOSE (90-CM)	
E	24	1	**5P-1507**		HOSE (8.2-CM)	
E	24A	1	**5P-1507**		HOSE (12-CM)	
E	24B	1	**5P-1507**		HOSE (24-CM)	
E	24C	1	**5P-1507**		HOSE (33-CM)	
E	24D	1	**5P-1507**		HOSE (34.5-CM)	
E	24E	1	**5P-1507**		HOSE (44.5-CM)	

E - ORDER BY THE CENTIMETER
M - METRIC PART
Y - SEPARATE ILLUSTRATION

378-6681 **LINES GP-FUEL (*contd.*)** **i05162957**

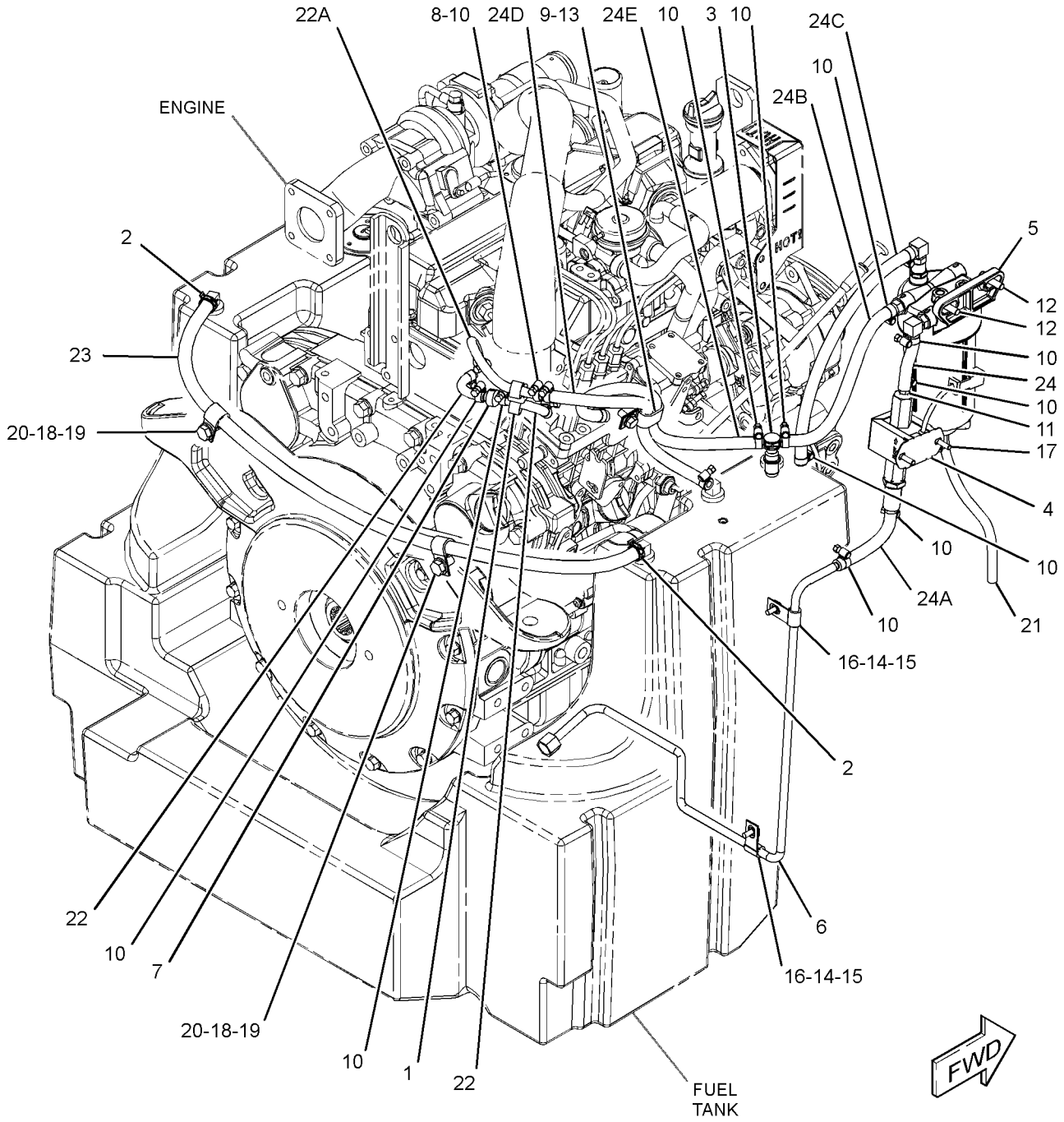

GRAPHIC #1 **<END>** g03321166

396-0911 LINES GP-FUEL

PART OF 380-1768, 380-1769 ENGINE AR-PRIMARY

SMCS-1274 **i05341958**

NOTE	REF NO	GRAPHIC REF	PART NUMBER	QTY	PART NAME 1 2 3 4 5 6 (PRODUCT LEVEL)	SEE PAGE
	1	1	**387-9874**	1	TUBE AS	
	2	1	**383-0474**	5	BOLT	
	3	1	**383-0475**	5	GASKET	
	4	1	**393-7589**	1	BOLT	
	5	1	**387-9875**	1	CONNECTOR	
	6	1	**383-0256**	2	GASKET	

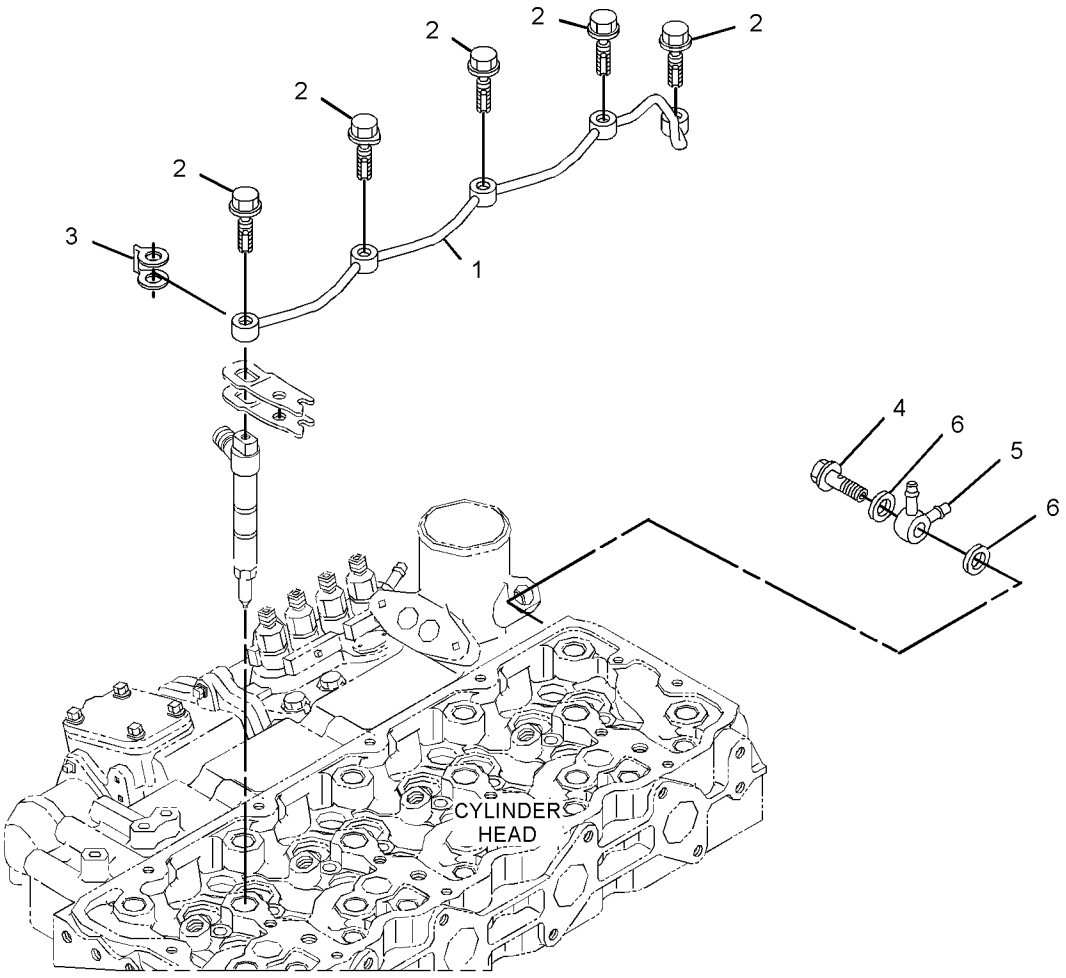

GRAPHIC #1 **<END>** g03373024

387-9078 LINES GP-FUEL INJECTION

PART OF 380-1768, 380-1769 ENGINE AR-PRIMARY

SMCS-1252, 1254 **i05341968**

NOTE	REF NO	GRAPHIC REF	PART NUMBER	QTY	PART NAME 1 2 3 4 5 6 (PRODUCT LEVEL)	SEE PAGE
	1	1	**383-0202**	2	SCREW	
	2	1	**383-0319**	2	CLAMP-PIPE	
	3	1	**383-0320**	2	CLAMP-PIPE	
	4	1	**388-7542**	1	PIPE-INJECTION	
	5	1	**388-7543**	1	PIPE-INJECTION	
	6	1	**388-7544**	1	PIPE-INJECTION	
	7	1	**388-7545**	1	PIPE-INJECTION	

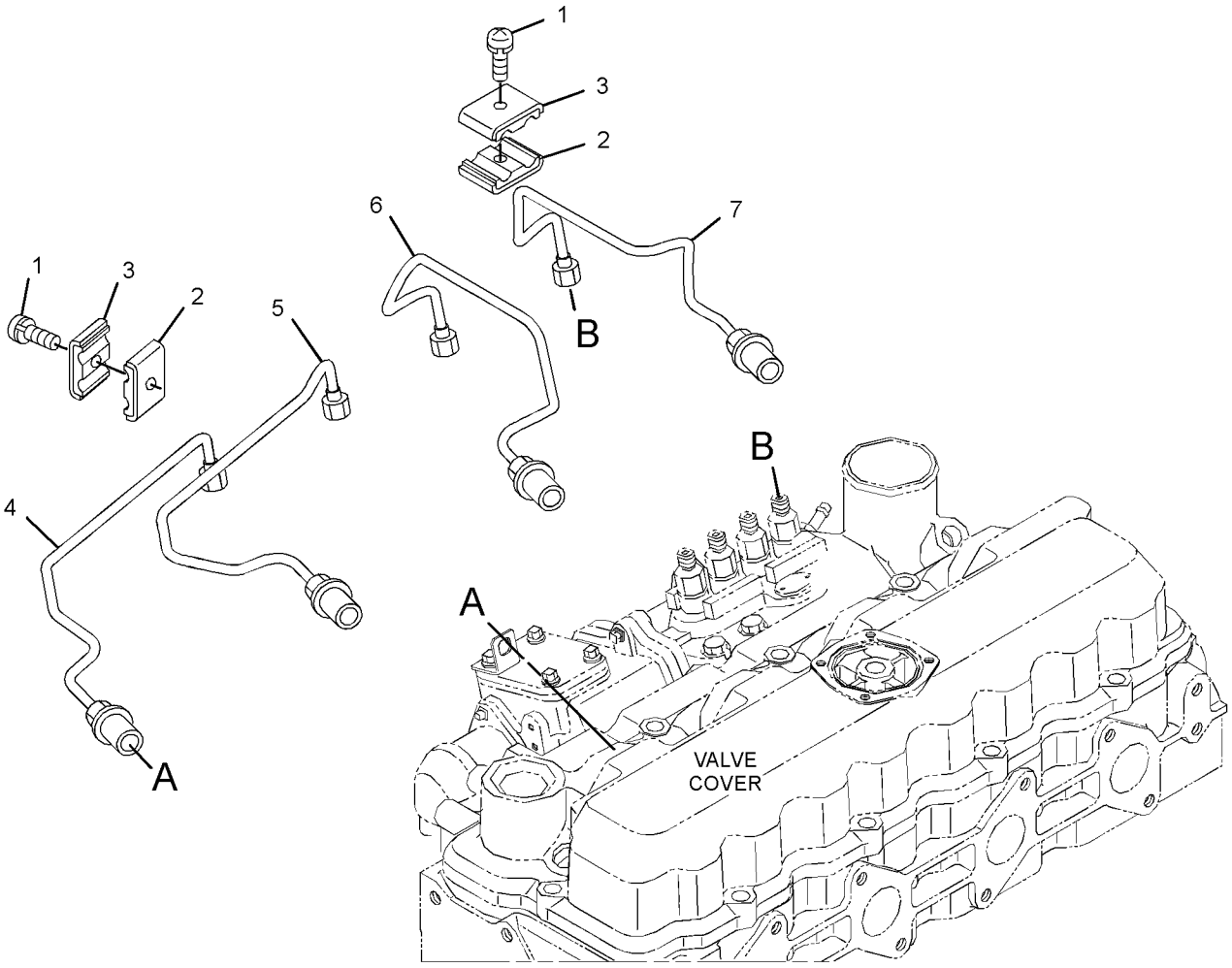

GRAPHIC #1 **<END>** g02896620

396-0916 NOZZLE GP-UNIT INJECTOR

PART OF 380-1768, 380-1769 ENGINE AR-PRIMARY

SMCS-1254, 1290 **i05342094**

NOTE	REF NO	GRAPHIC REF	PART NUMBER	QTY	PART NAME 1 2 3 4 5 6 (PRODUCT LEVEL)	SEE PAGE
	1	1	**383-0519**	4	PACKING	
	2	1	**387-9889**	8	CLAMP	
	3	1	**387-9890**	4	BOLT-FLANGE HEAD	
	4	1	**389-5234**	4	SEAL-O-RING	
	5	1	**397-9952**	4	NOZZLE AS	
	6	1	**393-2942**	4	SEAL-O-RING	

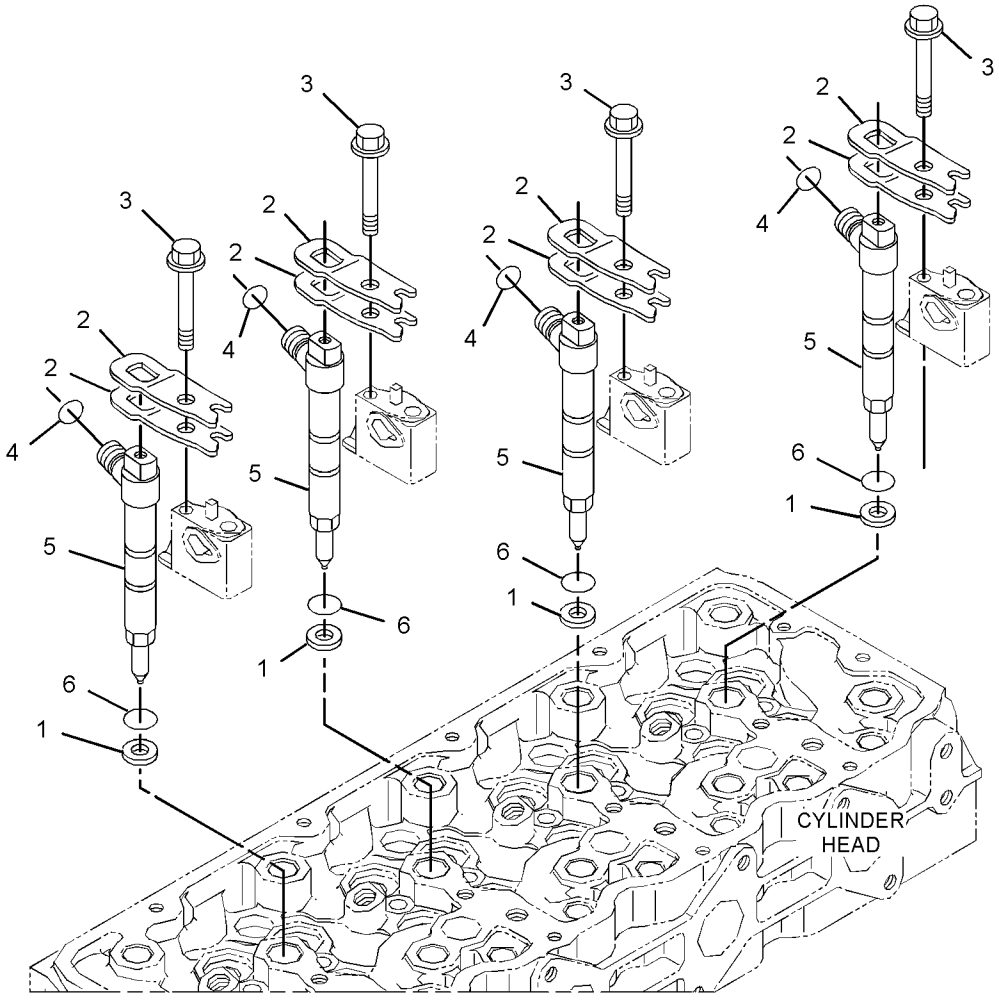

GRAPHIC #1 **<END>** g02901923

387-9878 PUMP AS-FUEL INJECTION

S/N: JSL1-UP

PART OF 397-9945 PUMP GP-FUEL INJECTION

SMCS-1251 **i05342510**

NOTE	REF NO	GRAPHIC REF	PART NUMBER	QTY	PART NAME 1 2 3 4 5 6 (PRODUCT LEVEL)	SEE PAGE
	1	1	**393-2921**	1	BOLT	
	2	1	**393-2922**	2	GASKET	

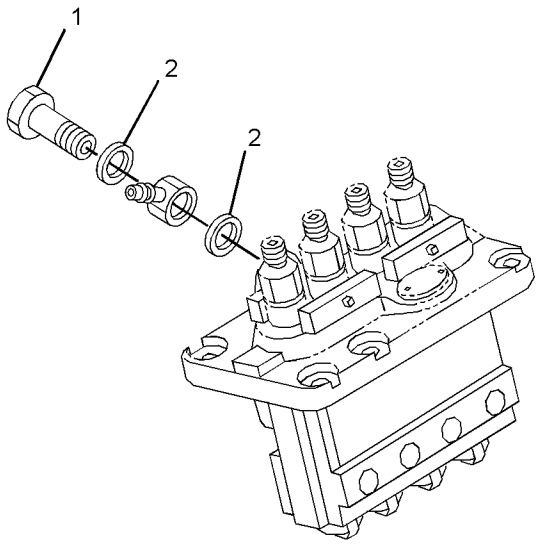

GRAPHIC #1 **<END>** g03375376

397-9945 PUMP GP-FUEL INJECTION

S/N: JSL1-UP

PART OF 438-1290 PUMP GP-FUEL INJECTION

SMCS-1251, 1290, 5479

i05342507

NOTE	REF NO	GRAPHIC REF	PART NUMBER	QTY	PART NAME 1 2 3 4 5 6 (PRODUCT LEVEL)	SEE PAGE
Y	1	1	**388-7510**	1	HOUSING GP-FUEL PUMP	71
Y	2	1	**387-9878**	1	PUMP AS-FUEL INJECTION	77
	3	1	**388-7522**	1	SCREW	
	4	1	**383-0256**	1	GASKET	
	5	1	**393-7574**	4	BOLT-FLANGE HEAD	
	6	1	**383-0199**	2	NUT-FLANGE	
	7	1	**383-0252**	1	JOINT	
	8	1	**383-0507**	1	SHIM (0.35-MM THK)	
	9	1	**393-2920**	1	COVER	
	10	1	**388-7524**	1	GASKET	
	11	1	**383-0198**	2	NUT-FLANGE	
	12	1	**388-7511**	1	CAMSHAFT AS	
	13	1	**388-7512**	1	COLLAR	
	14	1	**388-7513**	1	BEARING	
	15	1	**388-7514**	1	BEARING	
	16	1	**388-7515**	1	STOP	
	17	1	**388-7516**	6	SCREW	
	18	1	**388-7517**	1	KEY (FUEL INJECTION PUMP)	
	19	1	**388-7518**	1	STOP	
	20	1	**393-7570**	6	BOLT-FLANGE HEAD	
	21	1	**387-9879**	1	GASKET	

Y - SEPARATE ILLUSTRATION

397-9945 **PUMP GP-FUEL INJECTION (*contd.*)** **i05342507**

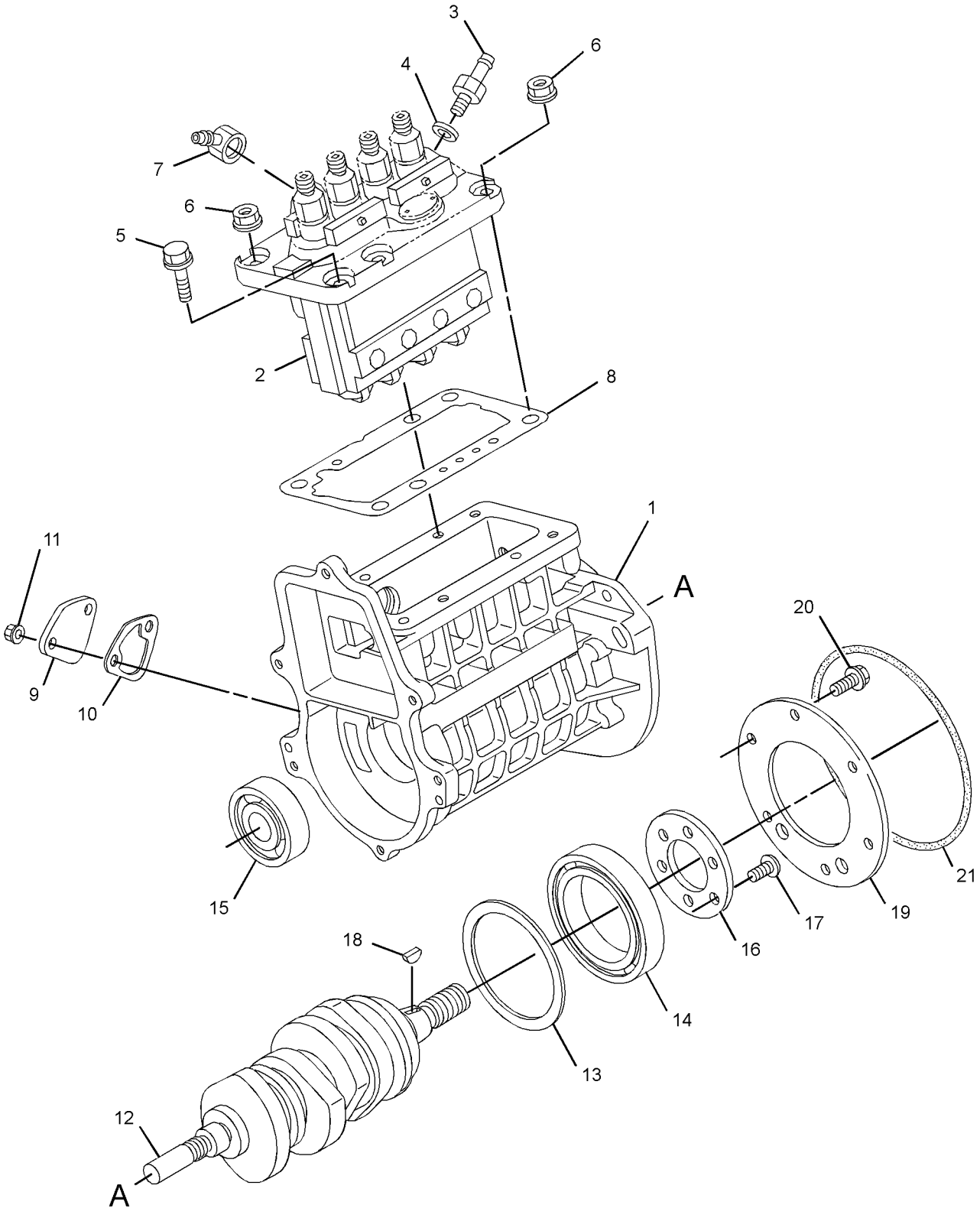

GRAPHIC #1 **<END>** g03372999

421-1878 PUMP GP-FUEL INJECTION

S/N: HMR1-UP

PART OF 437-5954 PUMP GP-FUEL INJECTION

SMCS-1251, 1290, 5479

i05307529

NOTE	REF NO	GRAPHIC REF	PART NUMBER	QTY	PART NAME 1 2 3 4 5 6 (PRODUCT LEVEL)	SEE PAGE
	1	1	**388-7510**	1	HOUSING AS-PUMP	
	1A	1	**383-0219**	2	PIN	
	1B	1	**383-0279**	2	STUD	
	1C	1	**393-2917**	2	STUD	
	1D	1	**393-2918**	2	STUD	
	1E	1	**393-2919**	2	PIN	
	2	1	**387-9878**	1	PUMP AS-FUEL INJECTION	
	2A	1	**393-2921**	1	BOLT	
	2B	1	**393-2922**	2	GASKET	
	3	1	**388-7522**	1	SCREW	
	4	1	**383-0256**	1	GASKET	
	5	1	**393-7574**	4	BOLT-FLANGE HEAD	
	6	1	**383-0199**	2	NUT-FLANGE	
	7	1	**383-0252**	1	JOINT	
	8	1	**383-0507**	1	SHIM	
	9	1	**393-2920**	1	COVER	
	10	1	**388-7524**	1	GASKET	
	11	1	**383-0198**	2	NUT-FLANGE	
	12	1	**388-7511**	1	CAMSHAFT AS	
	13	1	**388-7512**	1	COLLAR	
	14	1	**388-7513**	1	BEARING	
	15	1	**388-7514**	1	BEARING	
	16	1	**388-7515**	1	STOP	
	17	1	**388-7516**	6	SCREW	
	18	1	**388-7517**	1	KEY (FUEL INJECTION PUMP)	
	19	1	**388-7518**	1	STOP	
	20	1	**393-7570**	6	BOLT-FLANGE HEAD	
	21	1	**387-9879**	1	GASKET	

421-1878 **PUMP GP-FUEL INJECTION (*contd.*)** **i05307529**

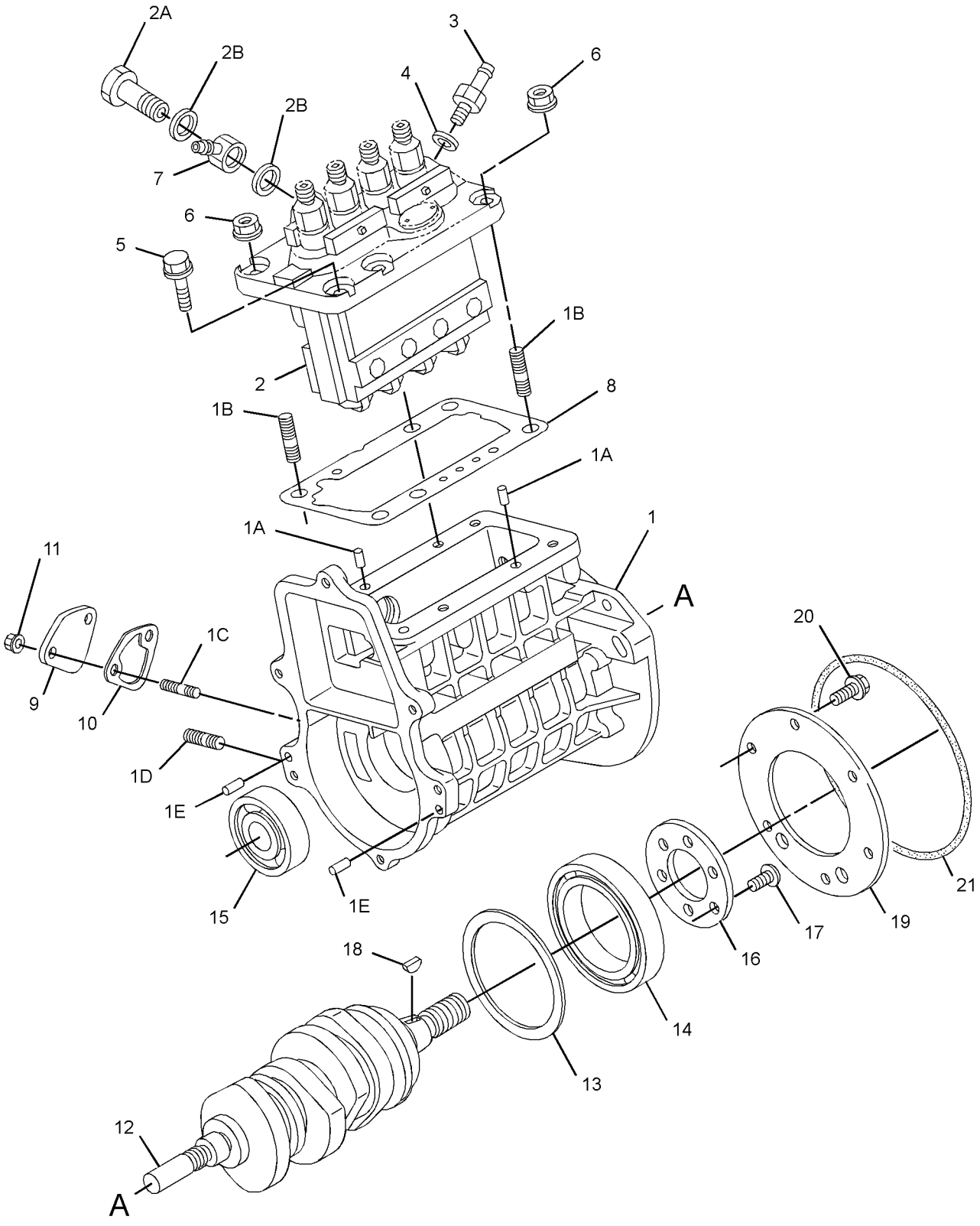

GRAPHIC #1 **<END>** g02957837

437-5954 PUMP GP-FUEL INJECTION

S/N: HMR1-UP

PART OF 380-1769 ENGINE AR-PRIMARY

SMCS-1251, 1290, 5479 **i05307471**

NOTE	REF NO	GRAPHIC REF	PART NUMBER	QTY	PART NAME 1 2 3 4 5 6 (PRODUCT LEVEL)	SEE PAGE
	1	1	**387-9781**	3	STUD	
	2	1	**387-9864**	1	TUBE AS	
	3	1	**387-9865**	1	EYEBOLT	
	4	1	**387-9866**	1	GASKET	
	5	1	**393-7580**	1	BOLT	
	6	1	**387-9868**	1	GASKET	
Y	7	1	**421-1878**	1	PUMP GP-FUEL INJECTION	80
	8	1	**387-9880**	1	GEAR-PUMP	
	9	1	**387-9881**	1	NUT	
	10	1	**383-0199**	5	NUT-FLANGE	
	11	1	**387-9882**	1	BRACKET	
Y	12	1	**396-0907**	1	GOVERNOR GP	69
	13	1	**393-7572**	4	BOLT	

Y - SEPARATE ILLUSTRATION

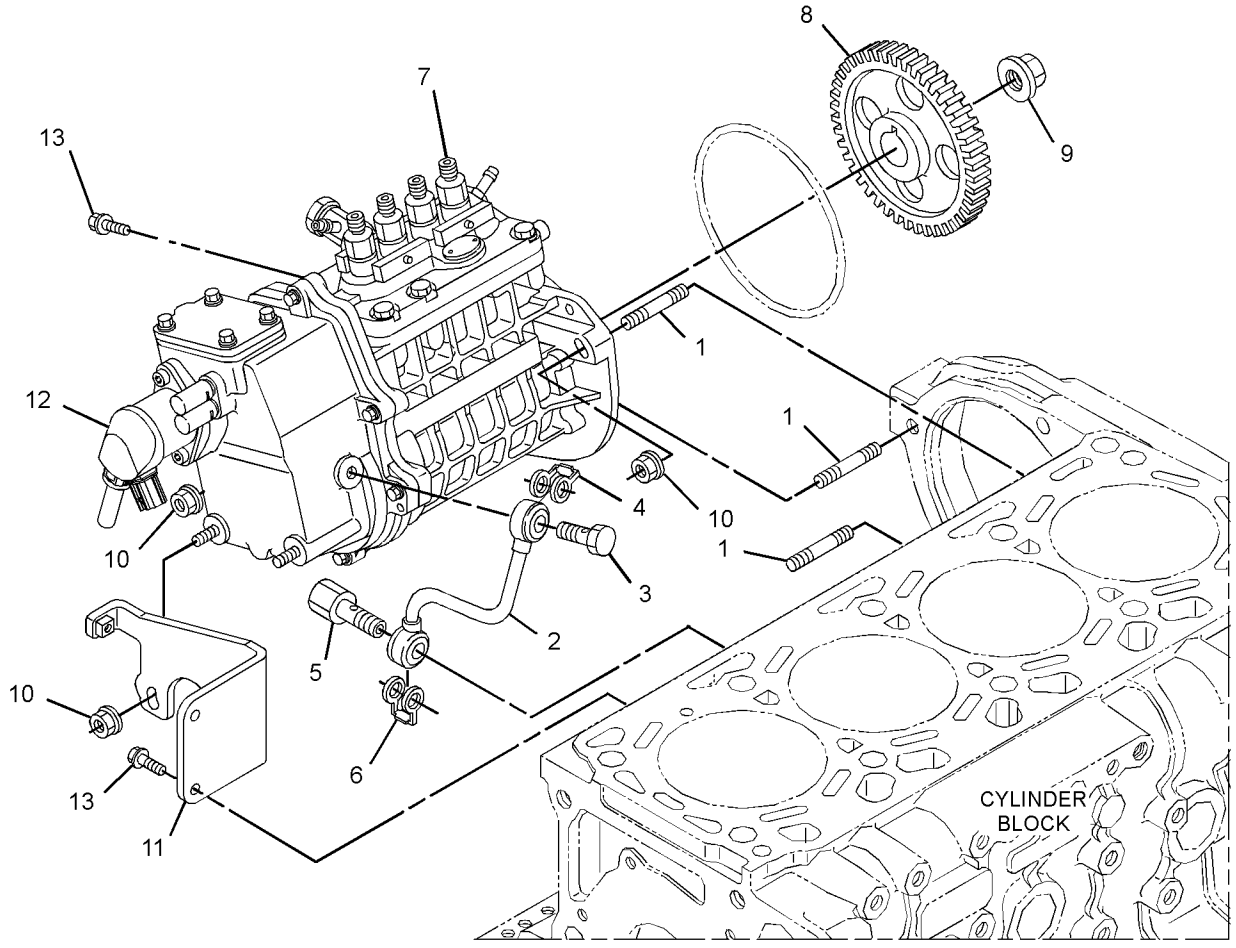

GRAPHIC #1 **<END>** g03367383

438-1290 PUMP GP-FUEL INJECTION

S/N: JSL1-UP

PART OF 380-1768 ENGINE AR-PRIMARY

SMCS-1251, 1290, 5479 **i05342105**

NOTE	REF NO	GRAPHIC REF	PART NUMBER	QTY	PART NAME 1 2 3 4 5 6 (PRODUCT LEVEL)	SEE PAGE
	1	1	**383-0199**	5	NUT-FLANGE	
	2	1	**387-9781**	3	STUD	
	3	1	**387-9864**	1	TUBE AS	
	4	1	**387-9865**	1	EYEBOLT	
	5	1	**387-9866**	1	GASKET	
	6	1	**387-9868**	1	GASKET	
	7	1	**387-9881**	1	NUT	
	8	1	**387-9882**	1	BRACKET	
	9	1	**393-7572**	2	BOLT	
	10	1	**393-7580**	1	BOLT	
Y	11	1	**397-9945**	1	PUMP GP-FUEL INJECTION	78
	12	1	**397-9946**	1	GEAR-PUMP	

Y - SEPARATE ILLUSTRATION

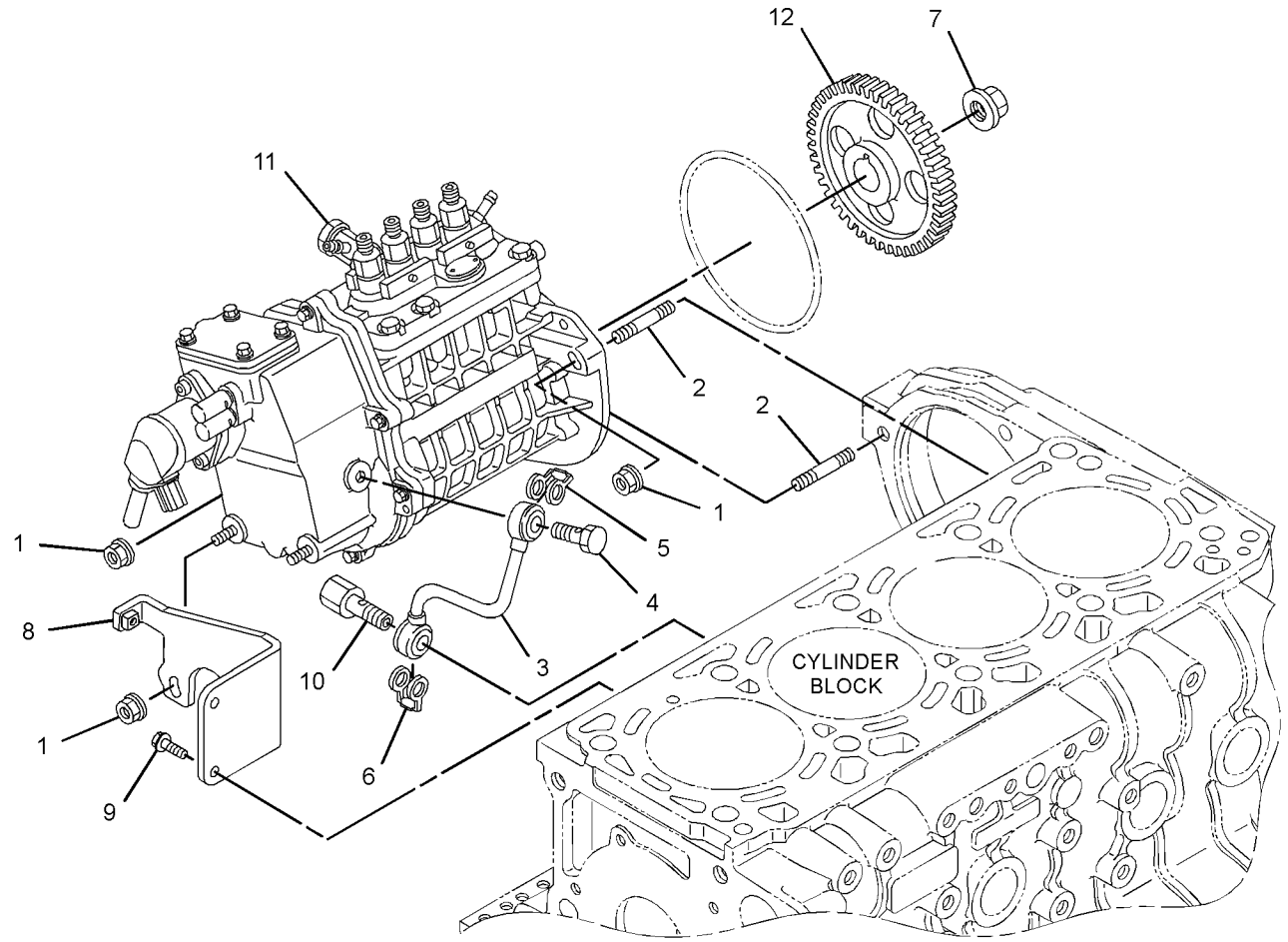

GRAPHIC #1 **<END>** g03373986

345-3520 PUMP GP-FUEL TRANSFER

PART OF 378-6681 LINES GP-FUEL

SMCS-1256 **i05162996**

NOTE	REF NO	GRAPHIC REF	PART NUMBER	QTY	PART NAME 1 2 3 4 5 6 (PRODUCT LEVEL)	SEE PAGE
F			**363-5823**	1	FILTER AS-FUEL (FUEL TRANSFER PUMP)	
F			**5P-7814**	1	SEAL-O-RING	
					AVAILABLE REPAIR KIT(S):	
			102-8802	1	KIT-RECEPTACLE (2-PIN)	
					(INCLUDES RECEPTACLE AS & WEDGE)	

F - NOT SHOWN

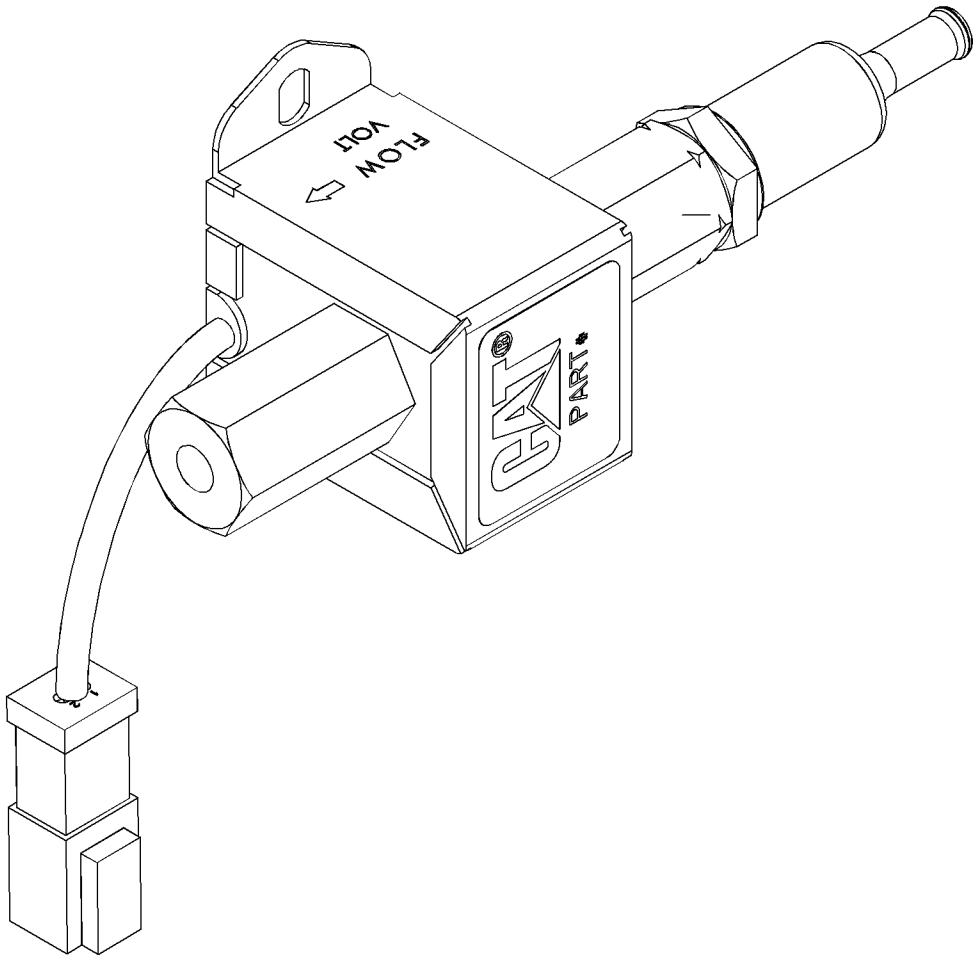

GRAPHIC #1 **<END>** g03319603

345-5500 TANK & MTG GP-FUEL

PART OF 345-5247 CHASSIS AR

SMCS-1273 **i05162982**

NOTE	REF NO	GRAPHIC REF	PART NUMBER	QTY	PART NAME 1 2 3 4 5 6 (PRODUCT LEVEL)	SEE PAGE
	1	1	**345-4703**	1	SENDER AS-FUEL LEVEL	
		1	**9X-3401**	2	PIN-CONNECTOR (16-GA TO 18-GA)	
		1	**102-8802**	1	KIT-RECEPTACLE (2-PIN)	
					(INCLUDES RECEPTACLE AS & WEDGE)	
Y	2	1	**345-5501**	1	TANK GP-FUEL	86
M	3	1	**7X-7920**	5	BOLT (M5X0.8X14-MM)	
	4	1	**9R-7240**	1	GASKET	
	5	1	**345-4708**	2	BRACKET	
M	6	1	**266-3315**	4	BOLT-FLANGE HEAD (M8X1.25X25.5-MM)	
	7	1	**6V-7699**	5	WASHER-HARD (5.5X13X1.6-MM THK)	

M - METRIC PART
Y - SEPARATE ILLUSTRATION

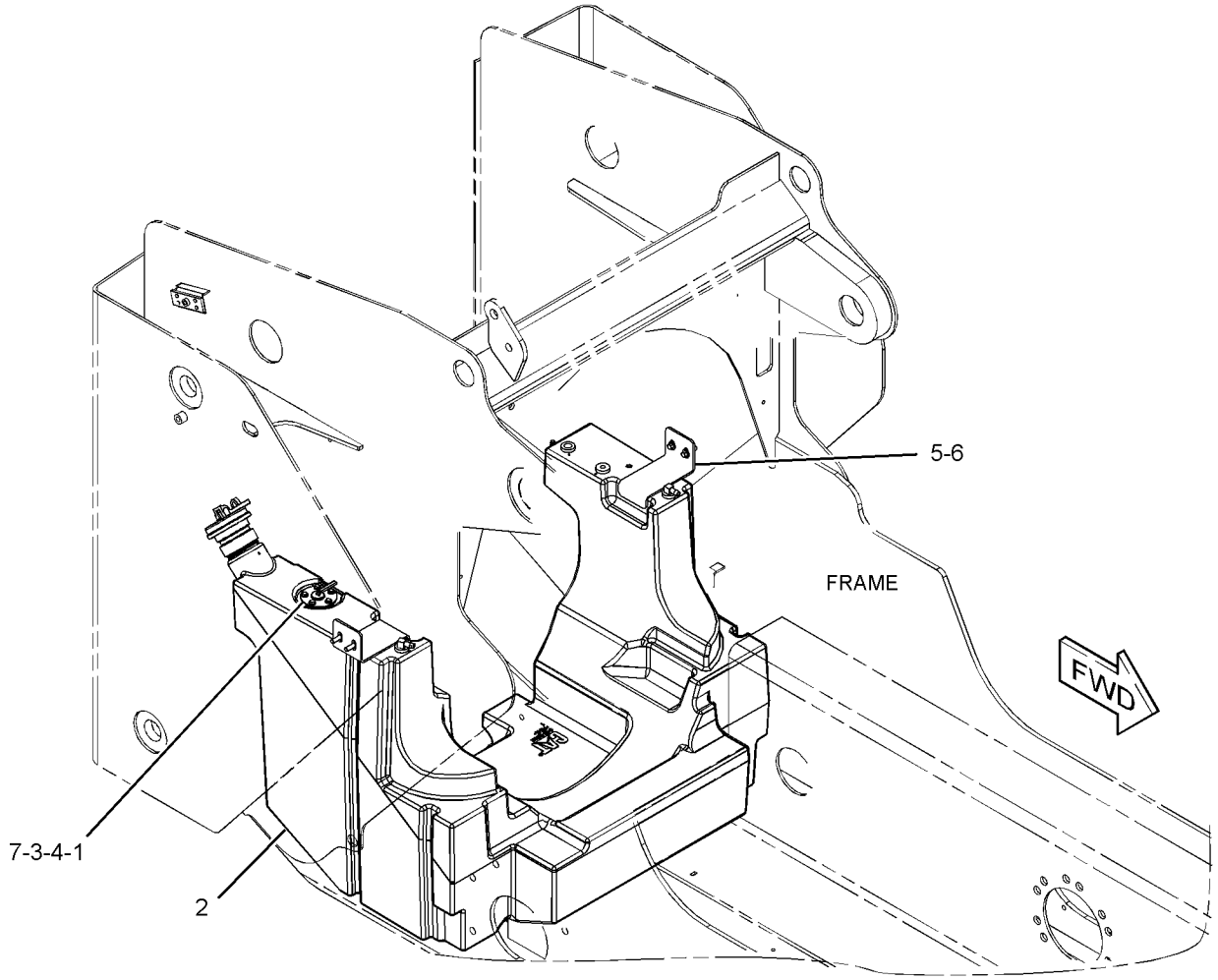

GRAPHIC #1 **<END>** g03320297

345-5501 TANK GP-FUEL

105-L (27.8-US GAL)

PART OF 345-5500 TANK & MTG GP-FUEL

SMCS-1273 **i05166931**

NOTE	REF NO	GRAPHIC REF	PART NUMBER	QTY	PART NAME 1 2 3 4 5 6 (PRODUCT LEVEL)	SEE PAGE
	1	1	**6W-5698**	4	GROMMET	
	2	1	**142-8928**	2	ELBOW	
	3	1	**258-2983**	1	TUBE AS	
		1	**3K-0360**	1	SEAL-O-RING	
		1	**6V-8397**	1	SEAL-O-RING	
	4	1	**304-3885**	1	CAP-FUEL (FILLER)	
	5	1	**9S-4185**	1	PLUG-O-RING	
	6	1	**345-5502**	1	TANK AS-FUEL	
	7	1	**385-5360**	1	ADAPTER-FUEL CAP	
	8	1	**385-5361**	1	GROMMET	
	9	1	**3K-0360**	1	SEAL-O-RING	

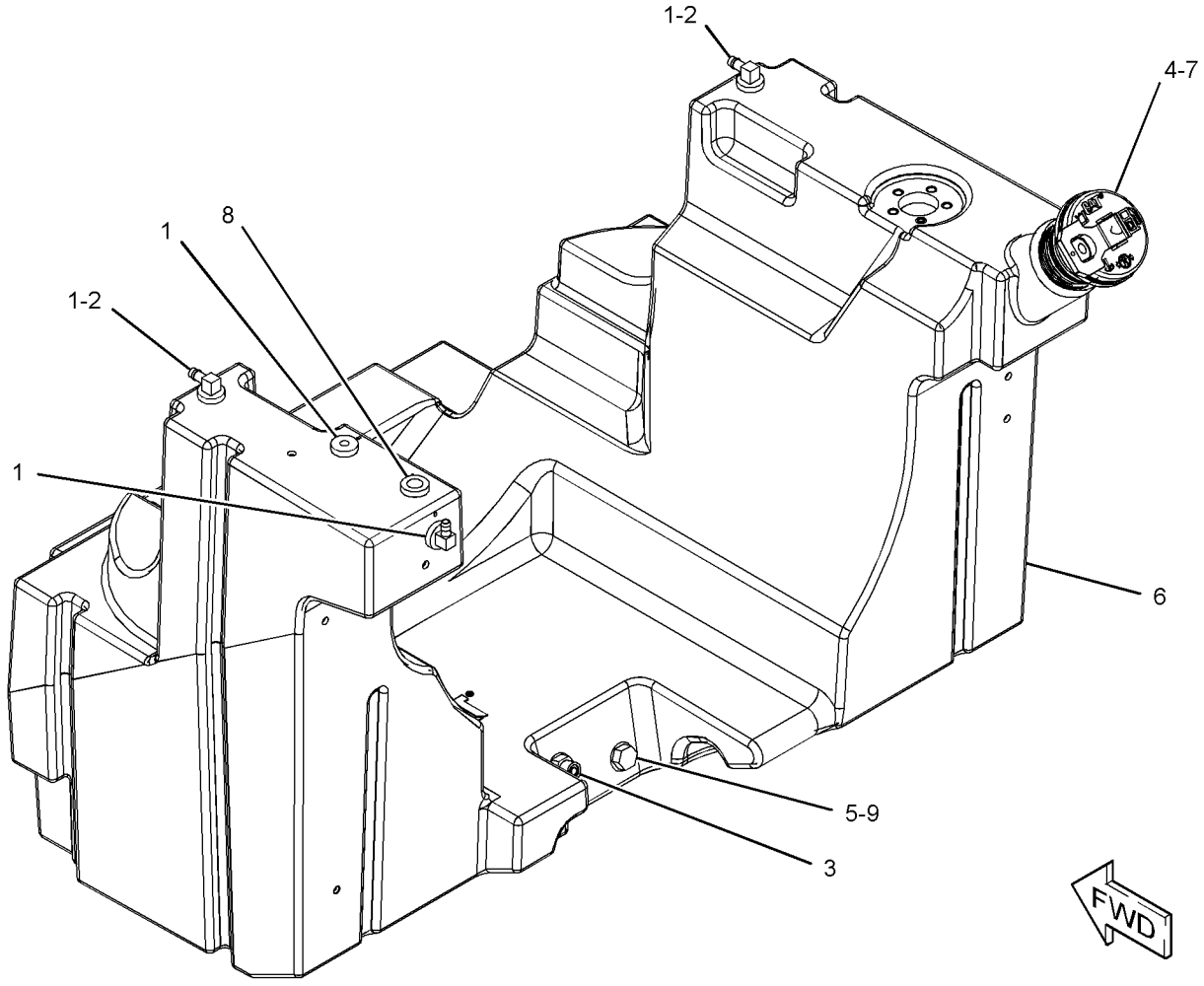

GRAPHIC #1 **<END>** g03323690

396-0901 ALTERNATOR GP-CHARGING

12-VOLT, 80-AMPERE

PART OF 380-1768, 380-1769 ENGINE AR-PRIMARY

SMCS-1405 **i05350846**

NOTE	REF NO	GRAPHIC REF	PART NUMBER	QTY	PART NAME 1 2 3 4 5 6 (PRODUCT LEVEL)	SEE PAGE
	1	1	**397-9953**	1	ALTERNATOR AS (12-VOLT, 80-AMPERE)	
	2	1	**397-9954**	1	BRACKET	
	3	1	**397-9955**	1	SUPPORT	
	4	1	**393-7574**	1	BOLT-FLANGE HEAD	
	5	1	**389-5248**	1	WASHER	
	6	1	**387-9897**	1	BOLT-FLANGE HEAD	
	7	1	**387-9820**	2	BOLT-FLANGE HEAD	
	8	1	**397-9956**	1	BOLT	
	9	1	**397-9957**	1	WASHER	
	10	1	**397-9958**	1	WASHER	
	11	1	**397-9959**	1	NUT	

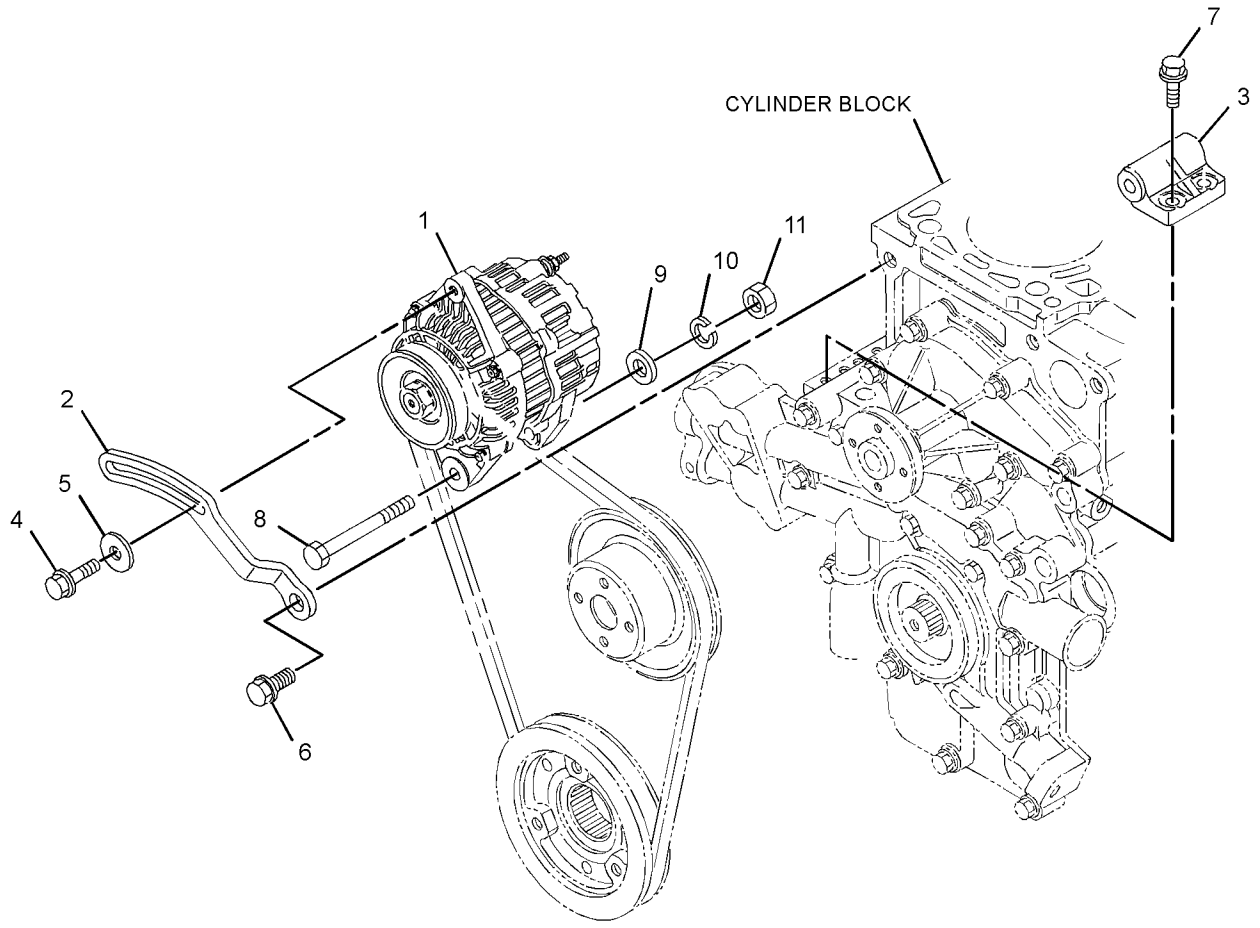

GRAPHIC #1 **<END>** g02948336

361-6372 BATTERY & WIRING GP–HEAVY-DUTY

AN ATTACHMENT

SMCS-1401, 1402 **i05296339**

NOTE	REF NO	GRAPHIC REF	PART NUMBER	QTY	PART NAME 1 2 3 4 5 6 (PRODUCT LEVEL)	SEE PAGE
	1	1	**7K-1181**	2	STRAP-CABLE	
	2	1	**115-2422**	1	BATTERY GP (12-VOLT, MAINTENANCE FREE, WET)	
		1	**123-1373**	6	CAP AS-FILLER (BATTERY)	
	3	1	**178-3620**	1	STRAP-DUAL CLAMP	
	4	1	**361-6387**	1	CABLE AS-GROUND	
		1	**1S-7252**	1	TERMINAL-CABLE (00-GA, 3/8-IN SCREW)	
E		1	**090-2151**		CABLE-WELDING (00-GA) (37-CM)	
		1	**391-7091**	1	COVER-TERMINAL	
		1	*391-7092*	1	TERMINAL AS-BATTERY (NEGATIVE)	
		1	**1M-6120**	2	NUT (5/16-18-THD)	
		1	**3T-3349**	1	STUD (5/16-18X0.5-IN, 5/16-18X1.5-IN)	
	5	1	**361-6388**	1	CABLE AS-POWER	
D		1	**6V-2369**		CABLE (4-GA, BLACK) (0.5-M)	
		1	**5P-3454**	1	TERMINAL-RING (4-GA, 5/16-IN SCREW)	
		1	**135-2543**	1	BOOT (RED)	
E		1	**159-8047**		CABLE-ELECTRICAL (0-GA, RED) (37-CM)	
		1	**195-3253**	1	TERMINAL-RING	
		1	**276-1786**	1	COVER-TERMINAL (RED)	
		1	*391-7093*	1	TERMINAL AS-BATTERY (POSITIVE)	
		1	**1M-6120**	2	NUT (5/16-18-THD)	
		1	**3T-3349**	1	STUD (5/16-18X0.5-IN, 5/16-18X1.5-IN)	
	6	1	**361-6389**	1	CABLE AS-GROUND	
		1	**030-1705**	1	TERMINAL-CABLE (00-GA, 5/16-IN SCREW)	
E		1	**090-2151**		CABLE-WELDING (00-GA) (28-CM)	
		1	**276-7278**	1	TERMINAL-RING	
	7	1	**378-1032**	1	WIRE AS	
	8	1	**383-6245**	1	PLATE AS	
M		1	**159-9540**	1	NUT-WELD (M8X1.25-THD)	
	9	1	**396-7207**	1	CLAMP	
	10	1	**232-3121**	1	NUT (M10X1.25-THD)	
M	11	1	**266-3315**	1	BOLT-FLANGE HEAD (M8X1.25X25.5-MM)	
	12	1	**3S-2093**	2	STRAP-CABLE	
	13	1	**4P-7581**	2	CLIP	
M	14	1	**5C-2890**	1	NUT (M6X1-THD)	
M	15	1	**5C-7261**	2	NUT (M8X1.25-THD)	
M	16	1	**5C-9553**	1	BOLT (M6X1X16-MM)	
	17	1	**5P-4115**	1	WASHER-HARD (7.2X19X2-MM THK)	
	18	1	**5P-4116**	3	WASHER-HARD (8.8X20.5X2-MM THK)	
	19	1	**6V-0826**	2	GROMMET	
M	20	1	**7X-2537**	1	BOLT (M8X1.25X35-MM)	
	21	1	**7P-1695**	2	WASHER (10.5X19X3-MM THK)	
M	22	1	**8T-4133**	1	NUT (M10X1.5-THD)	
M	23	1	**8T-4200**	2	BOLT (M8X1.25X16-MM)	
	24	1	**1A-8912**	1	WASHER (6.7X12.7X1.6-MM THK)	
	25	1	**8F-7242**	2	WASHER (8.7X15.9X1.6-MM THK)	
	26	1	**206-1345**	1	STRAP-CABLE	
	27	1	**4P-8134**	1	CLIP	
	28	1	**7X-0510**	2	WASHER-HARD (15.5X29X3-MM THK)	
	29	1	**436-1607**	1	PLATE AS	
M		1	**159-9540**	1	NUT-WELD (M8X1.25-THD)	
	30	1	**038-9317**	1	TREAD-NONSKID	
M	31	1	**8T-4189**	1	BOLT (M8X1.25X20-MM)	
M	32	1	**141-5453**	2	BOLT (M14X1.5X30-MM)	
	33	1	**8T-4224**	1	WASHER-HARD (8.8X16X2-MM THK)	

D - ORDER BY THE METER
E - ORDER BY THE CENTIMETER
M - METRIC PART

361-6372 **BATTERY & WIRING GP (*contd.*)** **i05296339**

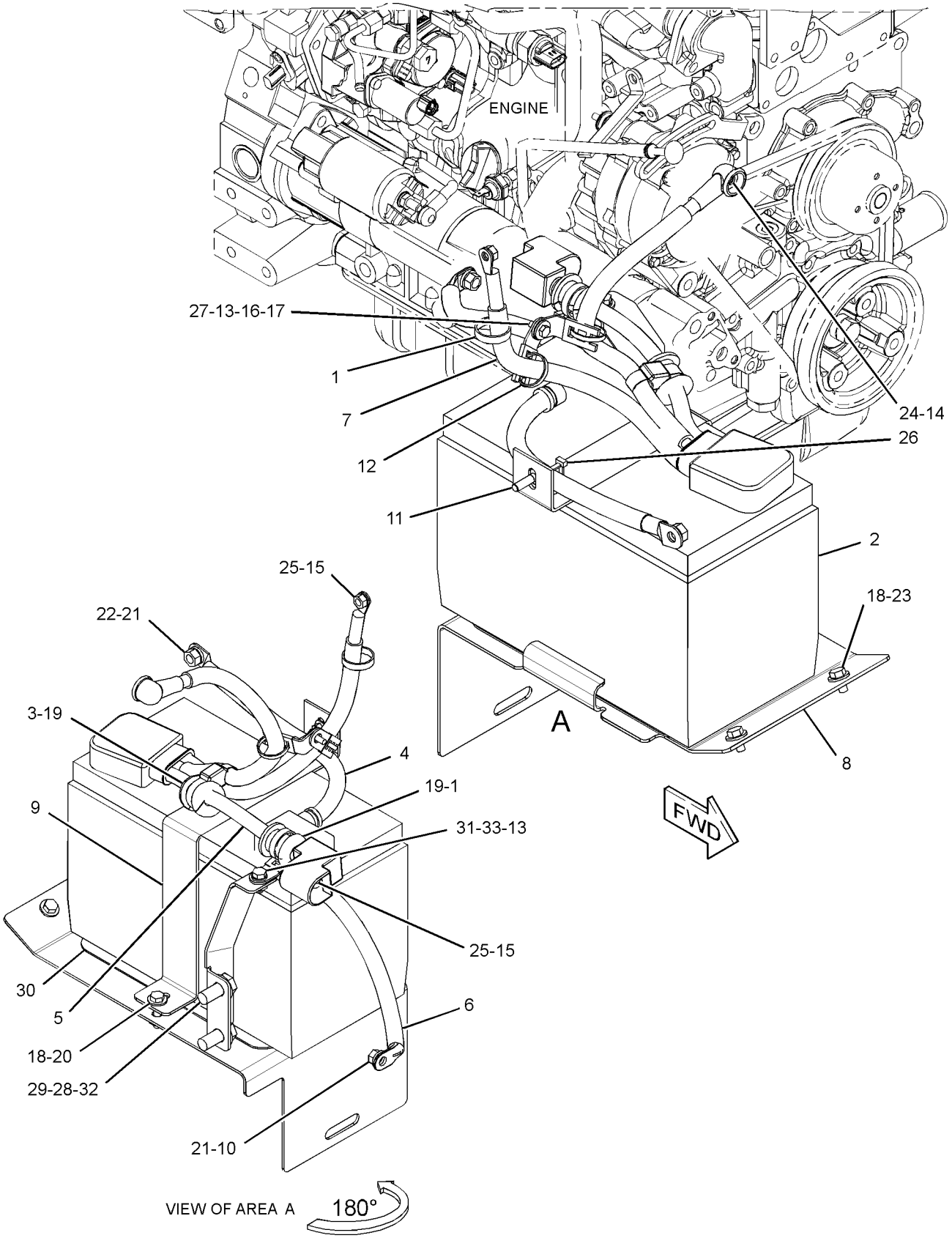

GRAPHIC #1 **<END>** g03365903

361-6386 BATTERY & WIRING GP

AN ATTACHMENT

SMCS-1401, 1402 **i05296338**

NOTE	REF NO	GRAPHIC REF	PART NUMBER	QTY	PART NAME 1 2 3 4 5 6 (PRODUCT LEVEL)	SEE PAGE
	1	1	**7K-1181**	2	STRAP-CABLE	
	2	1	**178-3620**	1	STRAP-DUAL CLAMP	
	3	1	**230-6368**	1	BATTERY (12-VOLT, 880-CCA)	
	4	1	**361-6387**	1	CABLE AS-GROUND	
		1	**1S-7252**	1	TERMINAL-CABLE (00-GA, 3/8-IN SCREW)	
E		1	**090-2151**		CABLE-WELDING (00-GA) (37-CM)	
		1	**391-7091**	1	COVER-TERMINAL	
		1	*391-7092*	1	TERMINAL AS-BATTERY (NEGATIVE)	
		1	**1M-6120**	2	NUT (5/16-18-THD)	
		1	**3T-3349**	1	STUD (5/16-18X0.5-IN, 5/16-18X1.5-IN)	
	5	1	**361-6388**	1	CABLE AS-POWER	
D		1	**6V-2369**		CABLE (4-GA, BLACK) (0.5-M)	
		1	**5P-3454**	1	TERMINAL-RING (4-GA, 5/16-IN SCREW)	
		1	**135-2543**	1	BOOT (RED)	
E		1	**159-8047**		CABLE-ELECTRICAL (0-GA, RED) (37-CM)	
		1	**195-3253**	1	TERMINAL-RING	
		1	**276-1786**	1	COVER-TERMINAL (RED)	
		1	*391-7093*	1	TERMINAL AS-BATTERY (POSITIVE)	
		1	**1M-6120**	2	NUT (5/16-18-THD)	
		1	**3T-3349**	1	STUD (5/16-18X0.5-IN, 5/16-18X1.5-IN)	
	6	1	**361-6389**	1	CABLE AS-GROUND	
		1	**030-1705**	1	TERMINAL-CABLE (00-GA, 5/16-IN SCREW)	
E		1	**090-2151**		CABLE-WELDING (00-GA) (28-CM)	
		1	**276-7278**	1	TERMINAL-RING	
	7	1	**378-1032**	1	WIRE AS	
	8	1	**383-6245**	1	PLATE AS	
M		1	**159-9540**	1	NUT-WELD (M8X1.25-THD)	
	9	1	**396-7206**	1	CLAMP	
	10	1	**232-3121**	1	NUT (M10X1.25-THD)	
M	11	1	**266-3315**	1	BOLT-FLANGE HEAD (M8X1.25X25.5-MM)	
	12	1	**3S-2093**	2	STRAP-CABLE	
	13	1	**4P-7581**	2	CLIP	
M	14	1	**5C-2890**	1	NUT (M6X1-THD)	
M	15	1	**5C-7261**	2	NUT (M8X1.25-THD)	
M	16	1	**5C-9553**	1	BOLT (M6X1X16-MM)	
	17	1	**5P-4115**	1	WASHER-HARD (7.2X19X2-MM THK)	
	18	1	**5P-4116**	3	WASHER-HARD (8.8X20.5X2-MM THK)	
	19	1	**6V-0826**	2	GROMMET	
M	20	1	**7X-2537**	1	BOLT (M8X1.25X35-MM)	
	21	1	**7P-1695**	2	WASHER (10.5X19X3-MM THK)	
M	22	1	**8T-4133**	1	NUT (M10X1.5-THD)	
M	23	1	**8T-4200**	2	BOLT (M8X1.25X16-MM)	
	24	1	**1A-8912**	1	WASHER (6.7X12.7X1.6-MM THK)	
	25	1	**8F-7242**	2	WASHER (8.7X15.9X1.6-MM THK)	
	26	1	**436-1607**	1	PLATE AS	
M		1	**159-9540**	1	NUT-WELD (M8X1.25-THD)	
	27	1	**7X-0510**	2	WASHER-HARD (15.5X29X3-MM THK)	
	28	1	**4P-8134**	1	CLIP	
	29	1	**038-9317**	1	TREAD-NONSKID	
M	30	1	**8T-4189**	1	BOLT (M8X1.25X20-MM)	
M	31	1	**141-5453**	2	BOLT (M14X1.5X30-MM)	
	32	1	**8T-4224**	1	WASHER-HARD (8.8X16X2-MM THK)	

D - ORDER BY THE METER
E - ORDER BY THE CENTIMETER
M - METRIC PART

361-6386 **BATTERY & WIRING GP (*contd.*)** **i05296338**

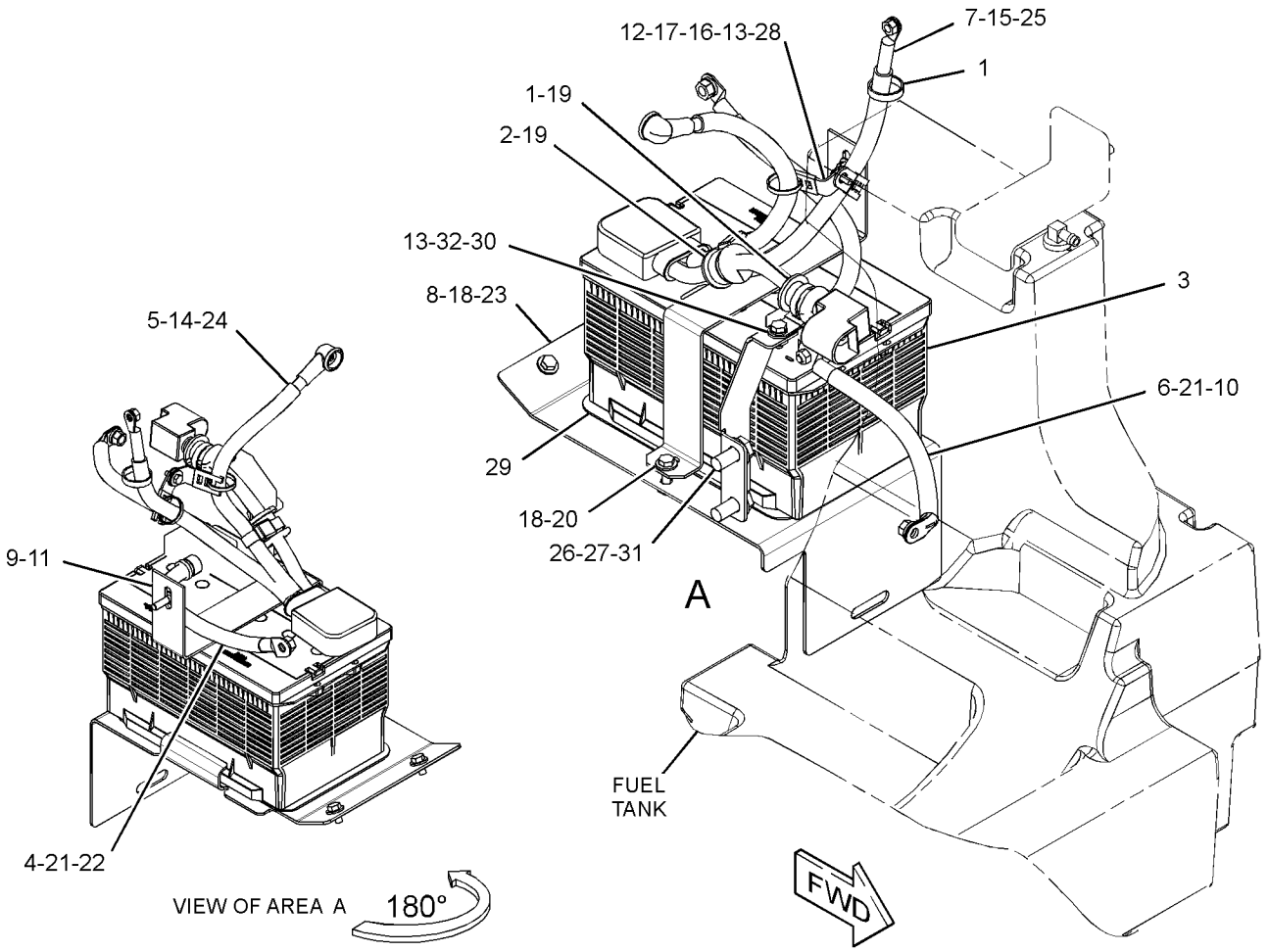

GRAPHIC #1 **<END>** g03365898

336-6684 CAMERA GP—WORK AREA VISUAL SYSTEM, REAR

12-VOLT/24-VOLT. COLOR

PART OF 388-8284 KIT-CAMERA, 396-7209 WIRING GP-CAMERA

AN ATTACHMENT

SMCS-7348 **i03756452**

NOTE	REF NO	GRAPHIC REF	PART NUMBER	QTY	PART NAME 1 2 3 4 5 6 (PRODUCT LEVEL)	SEE PAGE
					AVAILABLE REPAIR KIT(S):	
			251-4162	1	KIT-BRACKET (CAMERA)	
					(INCLUDES BRACKET, BOLTS, LOCK NUTS, GASKET & ALLEN KEY)	

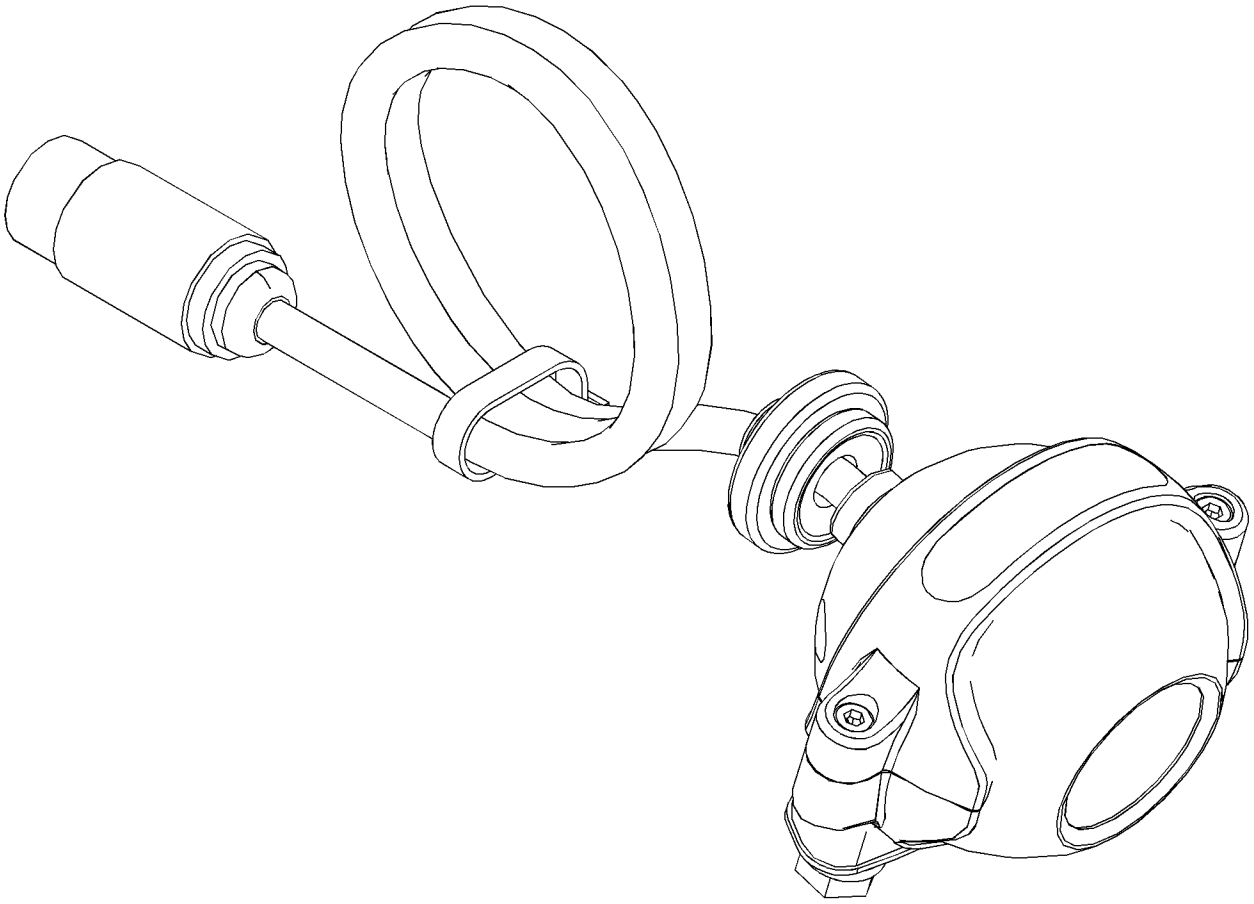

GRAPHIC #1 **<END>** g02034339

383-6243 COVER GP-FUSE PANEL

PART OF 345-5454 CAB AR

SMCS-1417 **i05156961**

NOTE	REF NO	GRAPHIC REF	PART NUMBER	QTY	PART NAME 1 2 3 4 5 6 (PRODUCT LEVEL)	SEE PAGE
	1	1	**8R-9654**	1	LANYARD	
	2	1	**116-7471**	1	PULLER-MINIFUSE	
	3	1	**258-3727**	2	SCREW-TRUSS HEAD (SPECIAL)	
	4	1	**267-2680**	2	FUSE (20-AMPERE)	
	5	1	**383-6244**	1	FILM-FUSE/RELAY	
	6	1	**8T-4205**	3	WASHER-HARD (7.2X14.5X2-MM THK)	

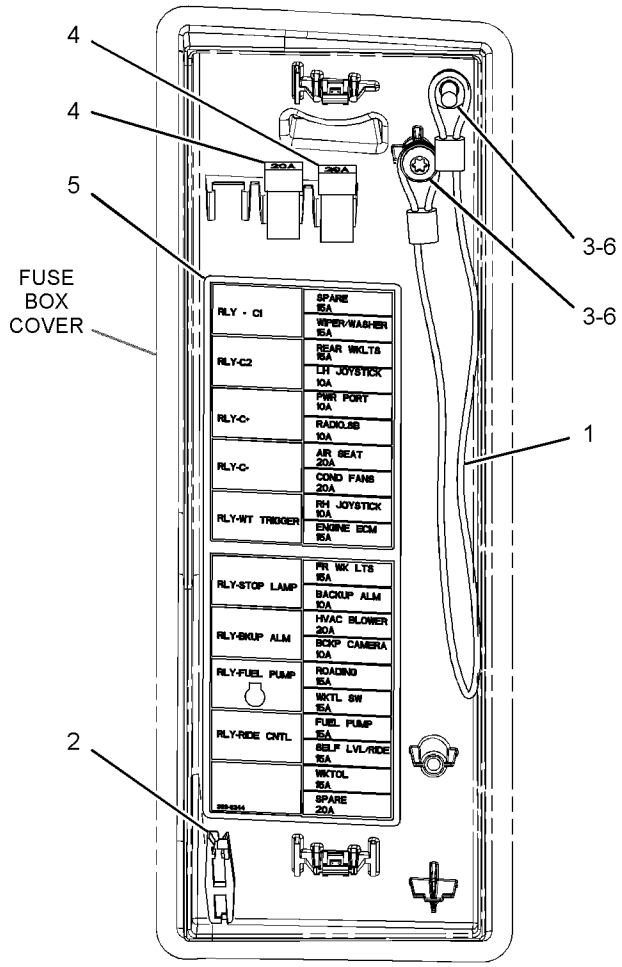

REAR VIEW

GRAPHIC #1 **<END>** g03323508

361-6395 ELECTRONICS GP-MACHINE

PART OF 361-6400 WIRING GP-CAB

SMCS-7610, 7620 **i05162969**

NOTE	PART NUMBER	QTY	PART NAME 1 2 3 4 5 6 (PRODUCT LEVEL)	SEE PAGE
	383-7621	1	SOFTWARE GP-MACHINE	
			—OR—	
	369-3556	1	CONTROL GP-UNPROGRAMMED (MACHINE)	
			—OR—	
	383-7622	1	SERVICE GP-MACHINE	
			(OPTIONAL SERVICE REPLACEMENT)(INCLUDES CONTROL GP & SOFTWARE)	
			<END>	

378-1035 ELECTRONICS GP-MONITOR

PART OF 378-1033 PANEL GP-INSTRUMENT

AN ATTACHMENT

SMCS-7490, 7494, 7601, 7603, 7610, 7620 **i05170297**

NOTE	PART NUMBER	QTY	PART NAME 1 2 3 4 5 6 (PRODUCT LEVEL)	SEE PAGE
	383-7615	1	SOFTWARE GP-MONITOR	
			—OR—	
	378-1005	1	CONTROL GP-ELECTRONIC	
			—OR—	
	383-7616	1	SERVICE GP-MONITOR	
			(OPTIONAL SERVICE REPLACEMENT)(INCLUDES CONTROL GP & SOFTWARE)	
			<END>	

378-1036 ELECTRONICS GP-MONITOR

PART OF 378-1034, 416-9265 PANEL GP-INSTRUMENT

AN ATTACHMENT

SMCS-7490, 7494, 7601, 7603, 7610, 7620 **i05166021**

NOTE	PART NUMBER	QTY	PART NAME 1 2 3 4 5 6 (PRODUCT LEVEL)	SEE PAGE
	383-7619	1	SOFTWARE GP-MONITOR	
			—OR—	
	378-1006	1	CONTROL GP-UNPRGMED MONITOR	
			—OR—	
	383-7620	1	SERVICE GP-MONITOR	
			(OPTIONAL SERVICE REPLACEMENT)(INCLUDES CONTROL GP & SOFTWARE)	
			<END>	

387-9089 GLOW PLUG GP

PART OF 380-1768, 380-1769 ENGINE AR-PRIMARY

SMCS-1412 **i05341941**

NOTE	REF NO	GRAPHIC REF	PART NUMBER	QTY	PART NAME 1 2 3 4 5 6 (PRODUCT LEVEL)	SEE PAGE
	1	1	**383-0200**	4	NUT-FLANGE	
	2	1	**387-9899**	4	GLOW PLUG	
	3	1	**387-9900**	4	GASKET	
	4	1	**387-9901**	1	WIRE-GLOW PLUG	

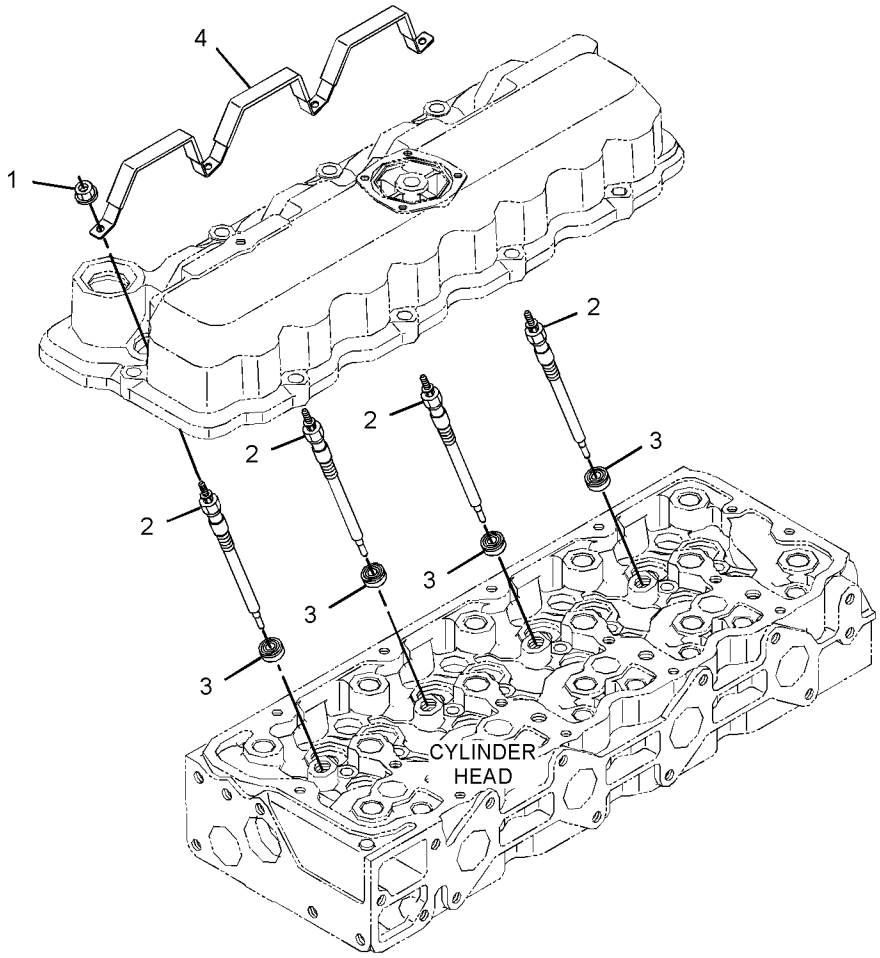

GRAPHIC #1 **<END>** g02882598

361-6397 HARNESS AS-CAB

PART OF 361-6400 WIRING GP-CAB

SMCS-1408 **i05162968**

NOTE	PART NUMBER	QTY	PART NAME 1 2 3 4 5 6 (PRODUCT LEVEL)	SEE PAGE
E	**211-5358**		CONDUIT-FLEXIBLE (19-CM)	
E	**201-3304**		CONDUIT (138-CM)	
E	**232-0893**		CONDUIT-FLEXIBLE (6.2-MM ID) (25-CM)	
	8T-8729	3	PIN-CONNECTOR (16-GA TO 18-GA)	
	9W-0852	4	PIN-CONNECTOR (14-GA TO 16-GA)	
	9X-3401	3	PIN-CONNECTOR (16-GA TO 18-GA)	
			—OR—	
	126-1767	3	PIN-CONNECTOR (14-GA TO 16-GA)	
	262-9151	3	PIN-CONNECTOR (12-GA TO 14-GA)	
	275-0600	19	PIN-CONNECTOR (16-GA TO 18-GA)	
	155-2255	2	KIT-CONNECTING PLUG (12-PIN)	
	155-2260	1	KIT-CONNECTING PLUG (3-PIN)	
	155-2271	1	KIT-CONNECTING PLUG (4-PIN)	
	155-2274	3	KIT-CONNECTING PLUG (6-PIN)	
			(EACH PLUG KIT INCLUDES PLUG AS, WEDGE & INTERFACE SEAL)	
	8T-8737	26	PLUG-SEAL	
	102-8805	1	KIT-RECEPTACLE (6-PIN)	
			(INCLUDES RECEPTACLE AS & WEDGE)	
	258-4170	1	RECEPTACLE AS	
	169-0705	5	SEAL	
	8T-8730	14	SOCKET-CONNECTOR (16-GA TO 18-GA)	
	9W-0844	6	SOCKET-CONNECTOR (14-GA TO 16-GA)	
	194-5226	20	WIRE AS (16-GA)	
			—OR—	
	194-5227	20	WIRE AS (14-GA)	
	3S-2093	10	STRAP-CABLE	
E	**119-3662**		TUBE-HEAT SHRINK (10.85-MM DIA) (7-CM)	
E	**125-7874**		TUBE-HEAT SHRINK (5.72-MM DIA) (10-CM)	

E - ORDER BY THE CENTIMETER

<END>

361-6399 HARNESS AS-CAB

PART OF 361-6400 WIRING GP-CAB

SMCS-1408 **i05341674**

NOTE	PART NUMBER	QTY	PART NAME 1 2 3 4 5 6 (PRODUCT LEVEL)	SEE PAGE
	313-9053	2	BLOCK AS-FUSE	
			(EACH INCLUDES)	
	1H-3244	2	LOCKWASHER	
M	**5C-2890**	2	NUT (M6X1-THD)	
	8T-4205	2	WASHER-HARD (7.2X14.5X2-MM THK)	
	8T-8799	8	BOOT (RED)	
	374-7468	1	CAP-SEAL	
E	**283-0632**		CONDUIT (104-CM)	
E	**283-4198**		CONDUIT (185-CM)	
	9W-1441	1	FUSE (15-AMPERE)	
	113-8490	6	FUSE (10-AMPERE)	
	113-8491	10	FUSE (15-AMPERE)	
	113-8492	4	FUSE (20-AMPERE)	
	203-9007	1	NUT (1-1/2-18-THD)	
	213-0139	15	PIN	
	8T-8729	12	PIN-CONNECTOR (16-GA TO 18-GA)	
	9W-0852	1	PIN-CONNECTOR (14-GA TO 16-GA)	
	9X-3401	13	PIN-CONNECTOR (16-GA TO 18-GA)	
			–OR–	
	126-1767	13	PIN-CONNECTOR (14-GA TO 16-GA)	
	258-4172	2	PLUG AS-CONNECTOR	
	127-5483	1	PLUG AS-CONNECTOR (1-PIN)	
	155-2255	1	KIT-CONNECTING PLUG (12-PIN)	
	155-2265	2	KIT-CONNECTING PLUG (8-PIN)	
	155-2260	1	KIT-CONNECTING PLUG (3-PIN)	
	155-2270	2	KIT-CONNECTING PLUG (2-PIN)	
	155-2274	2	KIT-CONNECTING PLUG (6-PIN)	
			(EACH PLUG KIT INCLUDES PLUG AS, WEDGE & INTERFACE SEAL)	
	167-3693	1	PLUG AS-CONNECTOR (31-PIN)	
	230-4011	3	PLUG AS-CONNECTOR (2-PIN)	
			(EACH INCLUDES)	
	264-7029	1	SEAL-CONNECTOR	
	344-1682	1	PLUG AS-CONNECTOR	
	374-8331	1	PLUG AS-CONNECTOR	
	374-8333	1	PLUG AS-CONNECTOR	
			(EACH PLUG AS INCLUDES)	
	435-5221		BOLT AS	
	225-3854	1	PLUG AS-CONNECTOR (31-PIN)	
	7R-2751	22	PLUG-CONNECTOR	
	8T-8737	50	PLUG-SEAL	
	7G-7917	1	PLUG-SEAL	
	102-8802	1	KIT-RECEPTACLE (2-PIN)	
			(INCLUDES RECEPTACLE AS & WEDGE)	
	265-4123	1	RECEPTACLE-CONNECTOR	
	169-0705	77	SEAL	
	128-4123	17	SEAL	
	128-5016	26	SEAL-CABLE	
	7R-2750	5	SEAL-CONNECTOR	
	7T-0094	4	SOCKET-CONNECTOR (12-GA TO 14-GA)	
	8N-1549	1	SOCKET-CONNECTOR (4-GA)	
	8T-8730	48	SOCKET-CONNECTOR (16-GA TO 18-GA)	
	9W-0844	13	SOCKET-CONNECTOR (14-GA TO 16-GA)	
	9X-3402	6	SOCKET-CONNECTOR (16-GA TO 18-GA)	
			–OR–	
	126-1768	6	SOCKET-CONNECTOR (14-GA TO 16-GA)	
	194-5226	25	WIRE AS (16-GA)	
			–OR–	

361-6399 **HARNESS AS-CAB (*contd.*)** **i05341674**

NOTE	PART NUMBER	QTY	PART NAME 1 2 3 4 5 6 (PRODUCT LEVEL)	SEE PAGE
	194-5227	25	WIRE AS (14-GA)	
	202-0313	26	TERMINAL AS	
	202-0314	22	TERMINAL AS	
			(EACH TERMINAL AS INCLUDES)	
	128-4123	1	SEAL	
	374-8372	40	SOCKET-CONNECTOR (16-GA TO 18-GA)	
			—OR—	
	283-8106	40	SOCKET-CONNECTOR (20-GA)	
	3S-2093	38	STRAP-CABLE	
	189-3158	1	SUPPRESSOR-ARC	
B	**329-3734**		TAPE	
	2L-8069	2	TERMINAL-RING (2-GA TO 10-GA, 3/8-IN SCREW)	
	2L-8079	2	TERMINAL-RING (14-GA TO 16-GA, 3/8-IN SCREW)	
	2L-8078	2	TERMINAL-RING (14-GA TO 16-GA, 5/16-IN SCREW)	
	5P-3454	1	TERMINAL-RING (4-GA, 5/16-IN SCREW)	
	2L-8050	4	TERMINAL-RING (6-GA, 1/4-IN SCREW)	
			—OR—	
	2L-8058	4	TERMINAL-RING (8-GA, 1/4-IN SCREW)	
	2L-8067	3	TERMINAL-RING (10-GA TO 12-GA, 1/4-IN SCREW)	
	2L-8077	1	TERMINAL-RING (14-GA TO 16-GA, 1/4-IN SCREW)	
	204-6466	1	TERMINAL AS-RING	
E	**119-3662**		TUBE-HEAT SHRINK (10.85-MM DIA) (33-CM)	
E	**125-7874**		TUBE-HEAT SHRINK (5.72-MM DIA) (105-CM)	
E	**125-7875**		TUBE-HEAT SHRINK (7.44-MM DIA) (20-CM)	
	270-2679	1	LOCKWASHER	

B - USE AS REQUIRED
E - ORDER BY THE CENTIMETER
M - METRIC PART

<END>

378-1028 HARNESS AS-CAB—AUXILIARY

FRONT

PART OF 345-6240, 345-6260 DOOR GP-CAB, 388-8276, 388-8281 KIT-CAB DOOR & MOUNTING AN ATTACHMENT

SMCS-1408 **i05166116**

NOTE	PART NUMBER	QTY	PART NAME 1 2 3 4 5 6 (PRODUCT LEVEL)	SEE PAGE
E	**232-0895**		CONDUIT-FLEXIBLE (9.6-MM ID) (40-CM)	
	123-7615	1	CONNECTOR	
	8T-8729	2	PIN-CONNECTOR (16-GA TO 18-GA)	
	9W-0852	1	PIN-CONNECTOR (14-GA TO 16-GA)	
	9X-3401	2	PIN-CONNECTOR (16-GA TO 18-GA)	
			—OR—	
	126-1767	2	PIN-CONNECTOR (14-GA TO 16-GA)	
	155-2260	1	KIT-CONNECTING PLUG (3-PIN)	
	155-2271	1	KIT-CONNECTING PLUG (4-PIN)	
			(EACH PLUG KIT INCLUDES PLUG AS, WEDGE & INTERFACE SEAL)	
	8T-8737	1	PLUG-SEAL	
	102-8805	1	KIT-RECEPTACLE (6-PIN)	
			(INCLUDES RECEPTACLE AS & WEDGE)	
	8T-8730	4	SOCKET-CONNECTOR (16-GA TO 18-GA)	
	194-5226	3	WIRE AS (16-GA)	
			—OR—	
	194-5227	3	WIRE AS (14-GA)	
	3S-2093	3	STRAP-CABLE	
	091-2436	2	TERMINAL-BLADE (18-GA TO 22-GA)	
E	**125-7874**		TUBE-HEAT SHRINK (5.72-MM DIA) (5-CM)	

E - ORDER BY THE CENTIMETER

<END>

388-1436 HARNESS AS-CAB—WIPER, WASHER

PART OF 345-6240, 345-6260 DOOR GP-CAB, 388-8276, 388-8281 KIT-CAB DOOR & MOUNTING AN ATTACHMENT

SMCS-1408 **i05166115**

NOTE	PART NUMBER	QTY	PART NAME 1 2 3 4 5 6 (PRODUCT LEVEL)	SEE PAGE
	8T-8729	2	PIN-CONNECTOR (16-GA TO 18-GA)	
	9W-0852	2	PIN-CONNECTOR (14-GA TO 16-GA)	
	155-2271	1	KIT-CONNECTING PLUG (4-PIN)	
			(INCLUDES PLUG AS, WEDGE & INTERFACE SEAL)	
	102-8804	1	KIT-RECEPTACLE (4-PIN)	
			(INCLUDES RECEPTACLE AS & WEDGE)	
	8T-8730	2	SOCKET-CONNECTOR (16-GA TO 18-GA)	
	9W-0844	2	SOCKET-CONNECTOR (14-GA TO 16-GA)	
	3S-2093	4	STRAP-CABLE	
	091-2436	4	TERMINAL-BLADE (18-GA TO 22-GA)	
	104-1995	3	TERMINAL-BLADE (14-GA TO 18-GA)	
E	**125-7874**		TUBE-HEAT SHRINK (5.72-MM DIA) (5-CM)	
E	**125-7875**		TUBE-HEAT SHRINK (7.44-MM DIA) (5-CM)	

E - ORDER BY THE CENTIMETER

<END>

396-7210 HARNESS AS-CAB

PART OF 388-8284 KIT-CAMERA, 396-7209 WIRING GP-CAMERA
AN ATTACHMENT

SMCS-1408 **i05156467**

NOTE	PART NUMBER	QTY	PART NAME 1 2 3 4 5 6 (PRODUCT LEVEL)	SEE PAGE
	8T-8729	4	PIN-CONNECTOR (16-GA TO 18-GA)	
	102-8804	1	KIT-RECEPTACLE (4-PIN)	
			(INCLUDES RECEPTACLE AS & WEDGE)	
E	**125-7874**		TUBE-HEAT SHRINK (5.72-MM DIA) (20-CM)	
D	**6V-2689**		TUBE-HEAT SHRINK (6.35-MM DIA) (3-M)	

D - ORDER BY THE METER
E - ORDER BY THE CENTIMETER

<END>

378-1023 HARNESS AS-ENGINE

PART OF 378-1022 WIRING GP-ENGINE

SMCS-1403, 1408 **i05162961**

NOTE	PART NUMBER	QTY	PART NAME 1 2 3 4 5 6 (PRODUCT LEVEL)	SEE PAGE
	131-3201	1	BOOT	
	7Y-3995	1	CONNECTOR-PLUG	
	125-4791	1	CONNECTOR-RECEPTACLE	
	8T-8729	4	PIN-CONNECTOR (16-GA TO 18-GA)	
	9X-3401	3	PIN-CONNECTOR (16-GA TO 18-GA)	
	262-9151	2	PIN-CONNECTOR (12-GA TO 14-GA)	
	155-2255	1	KIT-CONNECTING PLUG (12-PIN)	
	155-2260	1	KIT-CONNECTING PLUG (3-PIN)	
			(EACH PLUG KIT INCLUDES PLUG AS, WEDGE & INTERFACE SEAL)	
	383-0808	1	PLUG AS-CONNECTOR	
	396-8364	1	PLUG AS-CONNECTOR	
	8T-8737	7	PLUG-SEAL	
	102-8806	1	KIT-RECEPTACLE (8-PIN)	
	177-9645	1	KIT-RECEPTACLE (2-PIN)	
			(EACH RECEPTACLE KIT INCLUDES RECEPTACLE AS & WEDGE)	
	134-2540	1	RESISTOR AS-CONNECTION (3-PIN)	
	125-4794	1	SEAL	
	314-7328	1	SEAL	
	383-0805	3	SEAL	
	8T-8730	5	SOCKET-CONNECTOR (16-GA TO 18-GA)	
	194-5226	4	WIRE AS (16-GA)	
			—OR—	
	194-5227	4	WIRE AS (14-GA)	
	366-6036	4	SOCKET-CONNECTOR	
	3S-2093	5	STRAP-CABLE	
	2L-8079	1	TERMINAL-RING (14-GA TO 16-GA, 3/8-IN SCREW)	
	7N-7221	1	TERMINAL-BLADE (18-GA TO 22-GA)	
	2L-8067	1	TERMINAL-RING (10-GA TO 12-GA, 1/4-IN SCREW)	
	7Y-3996	1	TERMINAL-BLADE (14-GA TO 20-GA)	
	125-4793	1	TERMINAL (FEMALE)	
	383-0806	3	TERMINAL (FEMALE)	
E	**125-7874**		TUBE-HEAT SHRINK (5.72-MM DIA) (30-CM)	

E - ORDER BY THE CENTIMETER

<END>

378-1029 HARNESS AS-FRONT—IMPLEMENT VALVE

PART OF 345-5219, 345-5225 HYDRAULIC AR
AN ATTACHMENT

SMCS-1408 **i05166866**

NOTE	PART NUMBER	QTY	PART NAME 1 2 3 4 5 6 (PRODUCT LEVEL)	SEE PAGE
	155-2270	6	KIT-CONNECTING PLUG (2-PIN)	
			(EACH INCLUDES PLUG AS, WEDGE & INTERFACE SEAL)	
	344-1678	1	PLUG AS-CONNECTOR	
	344-1690	2	PLUG-SEAL	
	8T-8730	12	SOCKET-CONNECTOR (16-GA TO 18-GA)	
	3S-2093	6	STRAP-CABLE	
E	**125-7874**		TUBE-HEAT SHRINK (5.72-MM DIA) (5-CM)	
E	**125-7875**		TUBE-HEAT SHRINK (7.44-MM DIA) (5-CM)	

E - ORDER BY THE CENTIMETER

<END>

356-6106 HARNESS AS-HEATER & AIR COND

PART OF 356-6113 CONTROL GP-AIR & TEMPERATURE, 388-8267 KIT-AIR COND & HEATER INSTL, 388-8268 KIT-CAB HEATER & MOUNTING
AN ATTACHMENT

SMCS-1408 **i05163088**

NOTE	PART NUMBER	QTY	PART NAME 1 2 3 4 5 6 (PRODUCT LEVEL)	SEE PAGE
	228-5856	1	CONNECTOR	
	8T-8729	2	PIN-CONNECTOR (16-GA TO 18-GA)	
	9W-0852	5	PIN-CONNECTOR (14-GA TO 16-GA)	
	8T-8737	5	PLUG-SEAL	
	103-8134	1	KIT-RECEPTACLE (12-PIN)	
			(INCLUDES RECEPTACLE AS & WEDGE)	
	3S-2093	21	STRAP-CABLE	
	091-2436	2	TERMINAL-BLADE (18-GA TO 22-GA)	
	104-1995	2	TERMINAL-BLADE (14-GA TO 18-GA)	
	128-7714	5	TERMINAL	
E	**125-7874**		TUBE-HEAT SHRINK (5.72-MM DIA) (15-CM)	

E - ORDER BY THE CENTIMETER

<END>

361-6398 HARNESS AS-HEATER & AIR COND

PART OF 388-8267 KIT-AIR COND & HEATER INSTL, 388-8266 KIT-CAB HEATER & MOUNTING, 361-6396 WIRING GP-AIR CONDITIONER
AN ATTACHMENT

SMCS-1408 **i05303620**

NOTE	PART NUMBER	QTY	PART NAME 1 2 3 4 5 6 (PRODUCT LEVEL)	SEE PAGE
	8T-8729	2	PIN-CONNECTOR (16-GA TO 18-GA)	
	9X-3401	2	PIN-CONNECTOR (16-GA TO 18-GA)	
			—OR—	
	126-1767	2	PIN-CONNECTOR (14-GA TO 16-GA)	
	9X-1054	1	PLUG AS-CONNECTOR (4-PIN)	
	155-2270	3	KIT-CONNECTING PLUG (2-PIN)	
			(EACH INCLUDES PLUG AS, WEDGE & INTERFACE SEAL)	
	8T-8737	2	PLUG-SEAL	
	102-8805	1	KIT-RECEPTACLE (6-PIN)	
			(INCLUDES RECEPTACLE AS & WEDGE)	
	100-6674	2	SEAL-CONNECTOR	
	8T-8730	6	SOCKET-CONNECTOR (16-GA TO 18-GA)	
	124-5640	2	TERMINAL-SOCKET	
	3S-2093	4	STRAP-CABLE	
	189-3158	1	SUPPRESSOR-ARC	
	2L-8069	1	TERMINAL-RING (2-GA TO 10-GA, 3/8-IN SCREW)	
	9X-1056	3	TERMINAL-RECEPTACLE (14-GA TO 16-GA)	
	100-5041	1	TERMINAL-RECEPTACLE (18-GA TO 20-GA)	
E	**125-7874**		TUBE-HEAT SHRINK (5.72-MM DIA) (10-CM)	
E	**125-7875**		TUBE-HEAT SHRINK (7.44-MM DIA) (5-CM)	

E - ORDER BY THE CENTIMETER

<END>

378-1024 HARNESS AS-HEATER & AIR COND

PART OF 388-8267 KIT-AIR COND & HEATER INSTL, 388-8268 KIT-CAB HEATER & MOUNTING, 361-6396 WIRING GP-AIR CONDITIONER, 361-6384 WIRING GP-HEATER
AN ATTACHMENT

SMCS-1408 **i05163091**

NOTE	PART NUMBER	QTY	PART NAME 1 2 3 4 5 6 (PRODUCT LEVEL)	SEE PAGE
	8T-8729	2	PIN-CONNECTOR (16-GA TO 18-GA)	
	9W-0852	1	PIN-CONNECTOR (14-GA TO 16-GA)	
	155-2255	1	KIT-CONNECTING PLUG (12-PIN)	
	155-2270	1	KIT-CONNECTING PLUG (2-PIN)	
	155-2271	2	KIT-CONNECTING PLUG (4-PIN)	
			(EACH PLUG KIT INCLUDES PLUG AS, WEDGE & INTERFACE SEAL)	
	8T-8737	6	PLUG-SEAL	
	102-8803	1	KIT-RECEPTACLE (3-PIN)	
			(INCLUDES RECEPTACLE AS & WEDGE)	
	8T-8730	5	SOCKET-CONNECTOR (16-GA TO 18-GA)	
	9W-0844	10	SOCKET-CONNECTOR (14-GA TO 16-GA)	
	194-5226	1	WIRE AS (16-GA)	
			—OR—	
	194-5227	1	WIRE AS (14-GA)	
	3S-2093	2	STRAP-CABLE	
	2L-8069	1	TERMINAL-RING (2-GA TO 10-GA, 3/8-IN SCREW)	
E	**125-7874**		TUBE-HEAT SHRINK (5.72-MM DIA) (10-CM)	
E	**125-7875**		TUBE-HEAT SHRINK (7.44-MM DIA) (5-CM)	

E - ORDER BY THE CENTIMETER

<END>

356-6075 HARNESS AS-LIGHTING

PART OF 422-3323 KIT-ROADING CONVERSION, 356-6074 LIGHTING GP-ROADING
AN ATTACHMENT

SMCS-1408 **i05256754**

NOTE	PART NUMBER	QTY	PART NAME 1 2 3 4 5 6 (PRODUCT LEVEL)	SEE PAGE
	8T-8729	4	PIN-CONNECTOR (16-GA TO 18-GA)	
	9W-0852	1	PIN-CONNECTOR (14-GA TO 16-GA)	
	155-2271	1	KIT-CONNECTING PLUG (4-PIN)	
	155-2274	1	KIT-CONNECTING PLUG (6-PIN)	
			(EACH PLUG KIT INCLUDES PLUG AS, WEDGE & INTERFACE SEAL)	
	8T-8737	3	PLUG-SEAL	
	102-8802	1	KIT-RECEPTACLE (2-PIN)	
	102-8804	1	KIT-RECEPTACLE (4-PIN)	
			(EACH RECEPTACLE KIT INCLUDES RECEPTACLE AS & WEDGE)	
	8T-8730	8	SOCKET-CONNECTOR (16-GA TO 18-GA)	
E	**125-7874**		TUBE-HEAT SHRINK (5.72-MM DIA) (15-CM)	

E - ORDER BY THE CENTIMETER

<END>

356-6077 HARNESS AS-LIGHTING

PART OF 356-6074 LIGHTING GP-ROADING
AN ATTACHMENT

SMCS-1408 **i05256755**

NOTE	PART NUMBER	QTY	PART NAME 1 2 3 4 5 6 (PRODUCT LEVEL)	SEE PAGE
	228-5856	1	CONNECTOR	
	8T-8729	3	PIN-CONNECTOR (16-GA TO 18-GA)	
	9W-0852	4	PIN-CONNECTOR (14-GA TO 16-GA)	
	7R-2751	3	PLUG-CONNECTOR	
	8T-8737	1	PLUG-SEAL	
	102-8806	1	KIT-RECEPTACLE (8-PIN)	
			(INCLUDES RECEPTACLE AS & WEDGE)	
	128-5016	3	SEAL-CABLE	
	202-0313	2	TERMINAL AS	
			(EACH INCLUDES)	
	128-5016	1	SEAL-CABLE	
	202-0314	1	TERMINAL AS	
	128-4123	1	SEAL	
	3S-2093	24	STRAP-CABLE	
	091-2436	8	TERMINAL-BLADE (18-GA TO 22-GA)	
	104-1995	12	TERMINAL-BLADE (14-GA TO 18-GA)	
E	**125-7874**		TUBE-HEAT SHRINK (5.72-MM DIA) (30-CM)	
E	**125-7875**		TUBE-HEAT SHRINK (7.44-MM DIA) (5-CM)	

E - ORDER BY THE CENTIMETER

<END>

378-1026 HARNESS AS-PANEL

PART OF 378-1025 PANEL GP-INSTRUMENT

SMCS-1408, 7451 **i05341675**

NOTE	PART NUMBER	QTY	PART NAME 1 2 3 4 5 6 (PRODUCT LEVEL)	SEE PAGE
	374-7465	1	CAP-SEAL	
	374-7467	1	CAP-SEAL	
	123-7615	1	CONNECTOR	
	142-9117	2	CONNECTOR	
	228-5856	3	CONNECTOR	
	8T-8729	1	PIN-CONNECTOR (16-GA TO 18-GA)	
	9W-0852	4	PIN-CONNECTOR (14-GA TO 16-GA)	
	9X-3401	7	PIN-CONNECTOR (16-GA TO 18-GA)	
			—OR—	
	126-1767	7	PIN-CONNECTOR (14-GA TO 16-GA)	
	262-9151	12	PIN-CONNECTOR (12-GA TO 14-GA)	
	275-0600	21	PIN-CONNECTOR (16-GA TO 18-GA)	
	155-2265	1	KIT-CONNECTING PLUG (8-PIN)	
	155-2260	1	KIT-CONNECTING PLUG (3-PIN)	
	155-2270	2	KIT-CONNECTING PLUG (2-PIN)	
	155-2271	2	KIT-CONNECTING PLUG (4-PIN)	
			(EACH PLUG KIT INCLUDES PLUG AS, WEDGE & INTERFACE SEAL)	
	230-4009	1	PLUG AS-CONNECTOR (12-PIN)	
	264-7034	1	SEAL-CONNECTOR	
	8T-8737	4	PLUG-SEAL	
	258-4170	1	RECEPTACLE AS	
	169-0705	3	SEAL	
	8T-8730	13	SOCKET-CONNECTOR (16-GA TO 18-GA)	
	9W-0844	6	SOCKET-CONNECTOR (14-GA TO 16-GA)	
	9X-3402	10	SOCKET-CONNECTOR (16-GA TO 18-GA)	
			—OR—	
	126-1768	10	SOCKET-CONNECTOR (14-GA TO 16-GA)	
	194-5226	2	WIRE AS (16-GA)	
			—OR—	
	194-5227	2	WIRE AS (14-GA)	
	3S-2093	27	STRAP-CABLE	
B	**329-3734**		TAPE	
	122-4401	6	TERMINAL	
	5P-4571	4	TERMINAL-BLADE (14-GA TO 16-GA)	
	097-7234	4	TERMINAL-BLADE (18-GA TO 22-GA)	
	7N-7221	2	TERMINAL-BLADE (18-GA TO 22-GA)	
	091-2436	33	TERMINAL-BLADE (18-GA TO 22-GA)	
	112-9611	26	TERMINAL-BLADE	
	3E-9179	1	TERMINAL-RECEPTACLE (14-GA TO 18-GA)	
E	**119-3662**		TUBE-HEAT SHRINK (10.85-MM DIA) (26-CM)	
E	**125-7874**		TUBE-HEAT SHRINK (5.72-MM DIA) (30-CM)	
E	**125-7875**		TUBE-HEAT SHRINK (7.44-MM DIA) (10-CM)	

B - USE AS REQUIRED
E - ORDER BY THE CENTIMETER

<END>

361-6391 HARNESS AS-PLATFORM–REAR

PART OF 361-6390 WIRING GP-PLATFORM

SMCS-1408 **i05341062**

NOTE	PART NUMBER	QTY	PART NAME 1 2 3 4 5 6 (PRODUCT LEVEL)	SEE PAGE
	374-7463	2	CAP-SEAL	
	211-0052	1	NUT (1-11/16-18-THD)	
	213-0139	2	PIN	
	8N-1548	1	PIN-CONNECTOR (4-GA)	
	8T-8729	26	PIN-CONNECTOR (16-GA TO 18-GA)	
	9W-0852	5	PIN-CONNECTOR (14-GA TO 16-GA)	
	9X-3401	5	PIN-CONNECTOR (16-GA TO 18-GA)	
	9X-1054	2	PLUG AS-CONNECTOR (4-PIN)	
	155-2265	1	KIT-CONNECTING PLUG (8-PIN)	
	155-2270	7	KIT-CONNECTING PLUG (2-PIN)	
	155-2271	1	KIT-CONNECTING PLUG (4-PIN)	
	177-9648	1	KIT-CONNECTING PLUG (2-PIN)	
			(EACH PLUG KIT INCLUDES PLUG AS, WEDGE & INTERFACE SEAL)	
	8T-8737	8	PLUG-SEAL	
	102-8801	1	KIT-RECEPTACLE (12-PIN)	
			(INCLUDES RECEPTACLE AS & WEDGE)	
	167-3692	1	RECEPTACLE AS-CONNECTOR (31-PIN)	
	188-6210	1	RECEPTACLE AS-CONNECTOR (1-PIN)	
	8T-8730	20	SOCKET-CONNECTOR (16-GA TO 18-GA)	
	9W-0844	5	SOCKET-CONNECTOR (14-GA TO 16-GA)	
	3S-2093	5	STRAP-CABLE	
B	**329-3734**		TAPE	
	2L-8069	1	TERMINAL-RING (2-GA TO 10-GA, 3/8-IN SCREW)	
	2L-8066	2	TERMINAL-RING (10-GA TO 12-GA, NO. 10 SCREW)	
	378-1015	1	TERMINAL AS	
	378-1014	1	TERMINAL-RING	
E	**125-7876**		TUBE-HEAT SHRINK (17.78-MM DIA) (4-CM)	
	9X-1055	4	TERMINAL-RECEPTACLE (12-GA)	
	100-5041	4	TERMINAL-RECEPTACLE (18-GA TO 20-GA)	
E	**119-3662**		TUBE-HEAT SHRINK (10.85-MM DIA) (7-CM)	
E	**125-7874**		TUBE-HEAT SHRINK (5.72-MM DIA) (10-CM)	
	128-4249	1	LOCKWASHER	

B - USE AS REQUIRED
E - ORDER BY THE CENTIMETER

<END>

361-6393 HARNESS AS-PLATFORM–FRONT

PART OF 361-6390 WIRING GP-PLATFORM

SMCS-1408 **i05163075**

NOTE	PART NUMBER	QTY	PART NAME 1 2 3 4 5 6 (PRODUCT LEVEL)	SEE PAGE
	374-7463	4	CAP-SEAL	
	211-0052	1	NUT (1-11/16-18-THD)	
	155-2270	11	KIT-CONNECTING PLUG (2-PIN)	
	155-2271	2	KIT-CONNECTING PLUG (4-PIN)	
			(EACH PLUG KIT INCLUDES PLUG AS, WEDGE & INTERFACE SEAL)	
	8T-8737	12	PLUG-SEAL	
	225-3861	1	RECEPTACLE AS (31-PIN)	
	8T-8730	29	SOCKET-CONNECTOR (16-GA TO 18-GA)	
	9W-0844	3	SOCKET-CONNECTOR (14-GA TO 16-GA)	
	194-5226	17	WIRE AS (16-GA)	
			–OR–	
	194-5227	17	WIRE AS (14-GA)	
	2L-8079	1	TERMINAL-RING (14-GA TO 16-GA, 3/8-IN SCREW)	
E	**125-7874**		TUBE-HEAT SHRINK (5.72-MM DIA) (15-CM)	
E	**125-7875**		TUBE-HEAT SHRINK (7.44-MM DIA) (10-CM)	
	128-4249	1	LOCKWASHER	

E - ORDER BY THE CENTIMETER

<END>

383-6247 HARNESS AS-PLATFORM–REAR, RH

PART OF 361-6390 WIRING GP-PLATFORM

SMCS-1408 **i05162952**

NOTE	PART NUMBER	QTY	PART NAME 1 2 3 4 5 6 (PRODUCT LEVEL)	SEE PAGE
	374-7463	1	CAP-SEAL	
	176-1477	1	PLUG AS (2-PIN)	
	155-2260	1	KIT-CONNECTING PLUG (3-PIN)	
	155-2270	4	KIT-CONNECTING PLUG (2-PIN)	
	155-2271	1	KIT-CONNECTING PLUG (4-PIN)	
			(EACH PLUG KIT INCLUDES PLUG AS, WEDGE & INTERFACE SEAL)	
	8T-8737	1	PLUG-SEAL	
	7G-7917	2	PLUG-SEAL	
	185-1861	2	SEAL-WIRE	
	8T-8730	14	SOCKET-CONNECTOR (16-GA TO 18-GA)	
	3S-2093	6	STRAP-CABLE	
	176-1521	2	TERMINAL	
	2L-8071	1	TERMINAL-RING (10-GA TO 12-GA, 1/2-IN SCREW)	
E	**125-7875**		TUBE-HEAT SHRINK (7.44-MM DIA) (5-CM)	

E - ORDER BY THE CENTIMETER

<END>

356-6111 HARNESS AS-QUICK COUPLER

PART OF 361-6378 WIRING GP-QUICK COUPLER

AN ATTACHMENT

SMCS-1408, 6129 **i05156476**

NOTE	PART NUMBER	QTY	PART NAME 1 2 3 4 5 6 (PRODUCT LEVEL)	SEE PAGE
G	**122-6870**		HOSE-HYDRAULIC (26-INCH)	
	213-0139	2	PIN	
	262-9151	2	PIN-CONNECTOR (12-GA TO 14-GA)	
	177-9648	1	KIT-CONNECTING PLUG (2-PIN)	
			(INCLUDES PLUG AS, WEDGE & INTERFACE SEAL)	
	177-9645	1	KIT-RECEPTACLE (2-PIN)	
			(INCLUDES RECEPTACLE AS & WEDGE)	
E	**317-1204**		SLEEVE (150-CM)	
	3S-2093	2	STRAP-CABLE	
E	**8T-2225**		TUBE-HEAT SHRINK (25.4-MM DIA) (15-CM)	

E - ORDER BY THE CENTIMETER
G - ORDER BY THE INCH

<END>

383-6246 HARNESS AS-QUICK COUPLER

PART OF 388-8264 KIT-QUICK COUPLER CONVERSION

AN ATTACHMENT

SMCS-1408, 6129 **i05322267**

NOTE	PART NUMBER	QTY	PART NAME 1 2 3 4 5 6 (PRODUCT LEVEL)	SEE PAGE
	1S-0178	2	CONNECTOR-HOSE	
G	**122-6870**		HOSE-HYDRAULIC (26-IN)	
	213-0139	2	PIN	
	262-9151	2	PIN-CONNECTOR (12-GA TO 14-GA)	
	177-9648	1	KIT-CONNECTING PLUG (2-PIN)	
			(INCLUDES PLUG AS, WEDGE & INTERFACE SEAL)	
	177-9645	1	KIT-RECEPTACLE (2-PIN)	
			(INCLUDES RECEPTACLE AS & WEDGE)	
E	**317-1204**		SLEEVE (150-CM)	
	3S-2093	2	STRAP-CABLE	
B	**329-3734**		TAPE	
E	**8T-2225**		TUBE-HEAT SHRINK (25.4-MM DIA) (15-CM)	

B - USE AS REQUIRED
E - ORDER BY THE CENTIMETER
G - ORDER BY THE INCH

<END>

436-1609 HARNESS AS-QUICK COUPLER

PART OF 388-8264 KIT-QUICK COUPLER CONVERSION

AN ATTACHMENT

SMCS-1408, 6129 **i05327155**

NOTE	PART NUMBER	QTY	PART NAME 1 2 3 4 5 6 (PRODUCT LEVEL)	SEE PAGE
	373-1592	1	CIRCUIT BREAKER AS	
	373-1587	1	CONNECTOR AS	
	373-1589	1	SEAL	
	213-0139	2	PIN	
	8T-8729	3	PIN-CONNECTOR (16-GA TO 18-GA)	
	360-7527	2	PLUG AS-CONNECTOR	
	177-9648	1	KIT-CONNECTING PLUG (2-PIN)	
			(INCLUDES PLUG AS, WEDGE & INTERFACE SEAL)	
	102-8803	1	KIT-RECEPTACLE (3-PIN)	
			(INCLUDES RECEPTACLE AS & WEDGE)	
	173-8919	2	SEAL-CONNECTOR	
	196-2414	2	TERMINAL AS	
	173-8919	1	SEAL-CONNECTOR	
	3S-2093	5	STRAP-CABLE	
	2L-8071	1	TERMINAL-RING (10-GA TO 12-GA, 1/2-IN SCREW)	
	2L-8066	1	TERMINAL-RING (10-GA TO 12-GA, NO. 10 SCREW)	
	9X-1055	6	TERMINAL-RECEPTACLE (12-GA)	
	100-5041	4	TERMINAL-RECEPTACLE (18-GA TO 20-GA)	
E	**125-7874**		TUBE-HEAT SHRINK (5.72-MM DIA) (5-CM)	
E	**125-7875**		TUBE-HEAT SHRINK (7.44-MM DIA) (10-CM)	

E - ORDER BY THE CENTIMETER

<END>

200-5728 HARNESS AS-RADIO

PART OF 388-8283 KIT-RADIO

AN ATTACHMENT

SMCS-1408 **i05346149**

NOTE	PART NUMBER	QTY	PART NAME 1 2 3 4 5 6 (PRODUCT LEVEL)	SEE PAGE
	172-8037	1	CONNECTOR (RADIO)	
	160-3518	1	KIT-RECEPTACLE (8-PIN)	
			(INCLUDES RECEPTACLE AS & WEDGE)	
	8T-8729	7	PIN-CONNECTOR (16-GA TO 18-GA)	
	8T-8737	1	PLUG-SEAL	
	172-8039	11	TERMINAL (RADIO)	

<END>

293-9044 HARNESS AS-REAR LIGHTING—STOP, TAIL, TURN

PART OF 422-3324 KIT-ROADING CONVERSION

AN ATTACHMENT

SMCS-1408 **i05347115**

NOTE	PART NUMBER	QTY	PART NAME 1 2 3 4 5 6 (PRODUCT LEVEL)	SEE PAGE
	155-2271	1	KIT-CONNECTING PLUG (4-PIN)	
			(INCLUDES PLUG AS, WEDGE & INTERFACE SEAL)	
	102-8804	1	KIT-RECEPTACLE (4-PIN)	
			(INCLUDES RECEPTACLE AS & WEDGE)	
	8T-8729	4	PIN-CONNECTOR (16-GA TO 18-GA)	
	8T-8730	4	SOCKET-CONNECTOR (16-GA TO 18-GA)	
	5P-4571	2	TERMINAL-BLADE (14-GA TO 16-GA)	
E	**125-7874**		TUBE-HEAT SHRINK (5.72-MM DIA) (10-CM)	

E - ORDER BY THE CENTIMETER

<END>

356-6095 HARNESS AS-RIDE CONTROL

PART OF 388-8272 KIT-RIDE CONTROL

AN ATTACHMENT

SMCS-1408 **i05348568**

NOTE	PART NUMBER	QTY	PART NAME 1 2 3 4 5 6 (PRODUCT LEVEL)	SEE PAGE
	155-2270	4	KIT-CONNECTING PLUG (2-PIN)	
			(EACH INCLUDES PLUG AS,WEDGE & INTERFACE SEAL)	
	102-8802	1	KIT-RECEPTACLE (2-PIN)	
			(INCLUDES RECEPTACLE AS & WEDGE)	
	8T-8729	2	PIN-CONNECTOR (16-GA TO 18-GA)	
	8T-8730	8	SOCKET-CONNECTOR (16-GA TO 18-GA)	
	189-3158	1	SUPPRESSOR-ARC	
E	**125-7875**		TUBE-HEAT SHRINK (7.44-MM DIA) (10-CM)	

E - ORDER BY THE CENTIMETER

<END>

356-6072 HARNESS AS-SENSOR—SELF LEVEL

PART OF 356-6107, 416-9264 WIRING GP-WORK TOOL

AN ATTACHMENT

SMCS-1408, 1901 **i05256617**

NOTE	PART NUMBER	QTY	PART NAME 1 2 3 4 5 6 (PRODUCT LEVEL)	SEE PAGE
G	**122-6870**		HOSE-HYDRAULIC (26-IN)	
	9X-3401	6	PIN-CONNECTOR (16-GA TO 18-GA)	
			—OR—	
	126-1767	6	PIN-CONNECTOR (14-GA TO 16-GA)	
	155-2271	2	KIT-CONNECTING PLUG (4-PIN)	
			(EACH INCLUDES PLUG AS, WEDGE & INTERFACE SEAL)	
	230-4013	1	PLUG AS-CONNECTOR (3-PIN)	
	264-7030	1	SEAL-CONNECTOR	
	8T-8737	1	PLUG-SEAL	
	102-8805	1	KIT-RECEPTACLE (6-PIN)	
			(INCLUDES RECEPTACLE AS & WEDGE)	
	274-3781	1	CAP-SEAL	
E	**317-1204**		SLEEVE (110-CM)	
	9X-3402	3	SOCKET-CONNECTOR (16-GA TO 18-GA)	
			—OR—	
	126-1768	3	SOCKET-CONNECTOR (14-GA TO 16-GA)	
	194-5226	7	WIRE AS (16-GA)	
			—OR—	
	194-5227	7	WIRE AS (14-GA)	
E	**125-7874**		TUBE-HEAT SHRINK (5.72-MM DIA) (10-CM)	
E	**108-1304**		TUBE-HEAT SHRINK (33-MM DIA) (1-CM)	

E - ORDER BY THE CENTIMETER
G - ORDER BY THE INCH

<END>

421-4206 HARNESS AS-SENSOR—SELF LEVEL

PART OF 388-8270 KIT-WORK TOOL WIRING
AN ATTACHMENT

SMCS-1408, 1901 **i05322266**

NOTE	PART NUMBER	QTY	PART NAME 1 2 3 4 5 6 (PRODUCT LEVEL)	SEE PAGE
	1S-0178	2	CONNECTOR-HOSE	
G	**122-6870**		HOSE-HYDRAULIC (26.8-IN)	
	9X-3401	6	PIN-CONNECTOR (16-GA TO 18-GA)	
			—OR—	
	126-1767	6	PIN-CONNECTOR (14-GA TO 16-GA)	
	155-2271	2	KIT-CONNECTING PLUG (4-PIN)	
			(EACH INCLUDES PLUG AS, WEDGE & INTERFACE SEAL)	
	230-4013	1	PLUG AS-CONNECTOR (3-PIN)	
	264-7030	1	SEAL-CONNECTOR	
	8T-8737	1	PLUG-SEAL	
	102-8805	1	KIT-RECEPTACLE (6-PIN)	
			(INLUDES RECEPTACLE AS & WEDGE)	
E	**317-1204**		SLEEVE (110-CM)	
	9X-3402	3	SOCKET-CONNECTOR (16-GA TO 18-GA)	
			—OR—	
	126-1768	3	SOCKET-CONNECTOR (14-GA TO 16-GA)	
	194-5226	7	WIRE AS (16-GA)	
			—OR—	
	194-5227	7	WIRE AS (14-GA)	
	3S-2093	2	STRAP-CABLE	
B	**329-3734**		TAPE	
E	**8T-2225**		TUBE-HEAT SHRINK (25.4-MM DIA) (15-CM)	
E	**125-7874**		TUBE-HEAT SHRINK (5.72-MM DIA) (10-CM)	

B - USE AS REQUIRED
E - ORDER BY THE CENTIMETER
G - ORDER BY THE INCH

<END>

421-4222 HARNESS AS-SOLENOID—IMPLEMENT VALVE

PART OF 421-4223 WIRING GP-WORK TOOL
AN ATTACHMENT

SMCS-1408, 1467 **i05256618**

NOTE	PART NUMBER	QTY	PART NAME 1 2 3 4 5 6 (PRODUCT LEVEL)	SEE PAGE
	155-2270	7	KIT-CONNECTING PLUG (2-PIN)	
			(EACH INCLUDES PLUG AS, WEDGE & INTERFACE SEAL)	
	344-1678	1	PLUG AS-CONNECTOR	
	8T-8730	14	SOCKET-CONNECTOR (16-GA TO 18-GA)	
B	**329-3734**		TAPE	
E	**125-7874**		TUBE-HEAT SHRINK (5.72-MM DIA) (5-CM)	
E	**125-7875**		TUBE-HEAT SHRINK (7.44-MM DIA) (5-CM)	

B - USE AS REQUIRED
E - ORDER BY THE CENTIMETER

<END>

378-1027 HARNESS AS-WIRING—PEDAL

PART OF 388-8285 KIT-PEDAL

AN ATTACHMENT

SMCS-1408 **i05327028**

NOTE	PART NUMBER	QTY	PART NAME 1 2 3 4 5 6 (PRODUCT LEVEL)	SEE PAGE
	289-3195		CONDUIT (98-CM)	
	8T-8729	3	PIN-CONNECTOR (16-GA TO 18-GA)	
	102-8803	1	KIT-RECEPTACLE (3-PIN)	
			(INCLUDES RECEPTACLE AS, & WEDGE)	

<END>

356-6115 HARNESS AS-WORK TOOL

PART OF 388-8265, 388-8273 KIT-WORK TOOL WIRING, 421-4207, 421-4225 WIRING GP-WORK TOOL

AN ATTACHMENT

SMCS-1408 **i05245169**

NOTE	PART NUMBER	QTY	PART NAME 1 2 3 4 5 6 (PRODUCT LEVEL)	SEE PAGE
	156-1458	1	COVER	
	8T-8729	6	PIN-CONNECTOR (16-GA TO 18-GA)	
	9W-0852	11	PIN-CONNECTOR (14-GA TO 16-GA)	
	8T-8737	5	PLUG-SEAL	
	102-8806	1	KIT-RECEPTACLE (8-PIN)	
			(INCLUDES RECEPTACLE AS & WEDGE)	
	344-6145	1	RECEPTACLE AS	
E	**317-1204**		SLEEVE (149-CM)	
	2L-8079	1	TERMINAL-RING (14-GA TO 16-GA, 3/8-IN SCREW)	

E - ORDER BY THE CENTIMETER

<END>

361-6379 HARNESS AS-WORK TOOL—QUICK COUPLER

PART OF 361-6378 WIRING GP-QUICK COUPLER

AN ATTACHMENT

SMCS-1408 **i05177722**

NOTE	PART NUMBER	QTY	PART NAME 1 2 3 4 5 6 (PRODUCT LEVEL)	SEE PAGE
	373-1592	1	CIRCUIT BREAKER AS	
	373-1587	1	CONNECTOR AS	
	373-1589	1	SEAL	
	213-0139	2	PIN	
	8T-8729	3	PIN-CONNECTOR (16-GA TO 18-GA)	
	360-7527	2	PLUG AS-CONNECTOR	
	177-9648	1	KIT-CONNECTING PLUG (2-PIN)	
			(INCLUDES PLUG AS, WEDGE & INTERFACE SEAL)	
	8T-8737	1	PLUG-SEAL	
	102-8803	1	KIT-RECEPTACLE (3-PIN)	
			(INCLUDES RECEPTACLE AS & WEDGE)	
	196-2414	4	TERMINAL AS	
			(EACH INCLUDES)	
	173-8919	1	SEAL-CONNECTOR	
	3S-2093	5	STRAP-CABLE	
	2L-8071	1	TERMINAL-RING (10-GA TO 12-GA, 1/2-IN SCREW)	
	2L-8066	1	TERMINAL-RING (10-GA TO 12-GA, NO. 10 SCREW)	
	9X-1055	6	TERMINAL-RECEPTACLE (12-GA)	
	100-5041	4	TERMINAL-RECEPTACLE (18-GA TO 20-GA)	
E	**125-7874**		TUBE-HEAT SHRINK (5.72-MM DIA) (5-CM)	
E	**125-7875**		TUBE-HEAT SHRINK (7.44-MM DIA) (10-CM)	

E - ORDER BY THE CENTIMETER

<END>

378-3722 HARNESS AS-WORK TOOL

PART OF 424-0450, 424-0451 BLADE AR

AN ATTACHMENT

SMCS-1408 **i05292896**

NOTE	PART NUMBER	QTY	PART NAME 1 2 3 4 5 6 (PRODUCT LEVEL)	SEE PAGE
	155-2270	8	KIT-CONNECTING PLUG (2-PIN)	
			(EACH INCLUDES PLUG AS, WEDGE & INTERFACE SEAL)	
	344-6144	1	PLUG AS-CONNECTOR (14-PIN)	
	8T-8737	9	PLUG-SEAL	
	8T-8730	7	SOCKET-CONNECTOR (16-GA TO 18-GA)	
	9W-0844	14	SOCKET-CONNECTOR (14-GA TO 16-GA)	
	3S-2093	12	STRAP-CABLE	
	189-3158	2	SUPPRESSOR-ARC	
E	**119-3662**		TUBE-HEAT SHRINK (10.85-MM DIA) (7-CM)	
E	**125-7874**		TUBE-HEAT SHRINK (5.72-MM DIA) (20-CM)	

E - ORDER BY THE CENTIMETER

<END>

345-3556 HEATER GP-JACKET WATER

115-VOLT, 400-WATT

AN ATTACHMENT

SMCS-1383 **i05172938**

NOTE	REF NO	GRAPHIC REF	PART NUMBER	QTY	PART NAME 1 2 3 4 5 6 (PRODUCT LEVEL)	SEE PAGE
	1	1	**345-3557**	1	ELEMENT AS-JACKET WATER HEATER	
	2	1	**345-3567**	1	CORD AS-HEATER ELEMENT (115-VOLT, 10-AMPERE)	
	3	1	**3S-2093**	1	STRAP-CABLE	

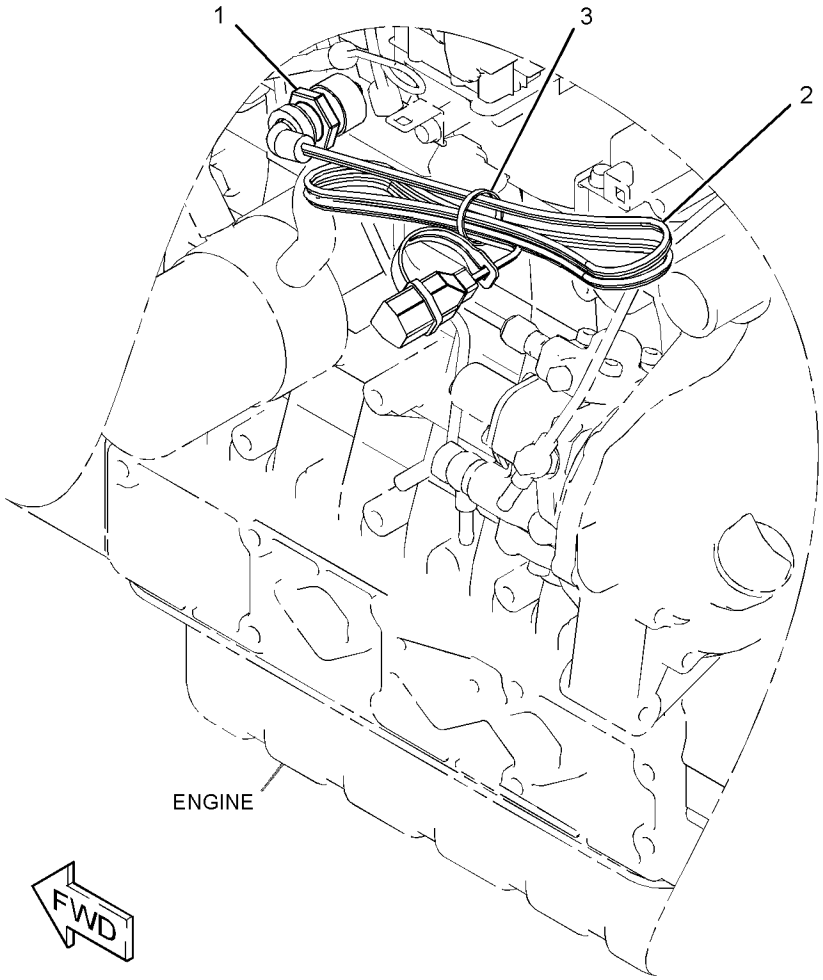

GRAPHIC #1 **<END>** g03162718

380-2437 INSTALLATION GP-COMMUNICATION–PRODUCT LINK 421

AN ATTACHMENT

SMCS-1408, 1901, 1902, 5267, 7602, 7606, 7610, 7620 **i05228090**

NOTE	REF NO	GRAPHIC REF	PART NUMBER	QTY	PART NAME 1 2 3 4 5 6 (PRODUCT LEVEL)	SEE PAGE
	1	1	**3E-0105**	2	MOUNT	
	2	1	**258-3727**	4	SCREW-TRUSS HEAD (SPECIAL)	
	3	1	**386-3004**	1	CONTROL GP-COMMUNICATION (PL421)	
		1	**390-2764**	1	BRACKET	
	4	1	**389-0463**	1	ANTENNA AS	
	5	1	*399-5841*	1	WIRING GP-COMMUNICATION	
		1	**392-4904**	1	HARNESS AS-CONTROL (PRODUCT LINK)	
E		1	**317-1204**		SLEEVE (300-CM)	
		1	**9X-3401**	6	PIN-CONNECTOR (16-GA TO 18-GA)	
					–OR–	
		1	**126-1767**	1	PIN-CONNECTOR (14-GA TO 16-GA)	
		1	**8T-8737**	6	PLUG-SEAL	
		1	**102-8801**	1	KIT-RECEPTACLE (12-PIN)	
					(INCLUDES RECEPTACLE AS & WEDGE)	
	6	1	**416-9266**	1	PLATE AS	
M		1	**159-9539**	2	NUT-WELD (M6X1-THD)	
	7	1	**3S-2093**	9	STRAP-CABLE	
M	8	1	**8C-8451**	2	BOLT (M6X1X40-MM)	
	9	1	**8T-4205**	2	WASHER-HARD (7.2X14.5X2-MM THK)	
B	10	1	**9G-1307**	1	GROMMET	

B - USE AS REQUIRED
E - ORDER BY THE CENTIMETER
M - METRIC PART

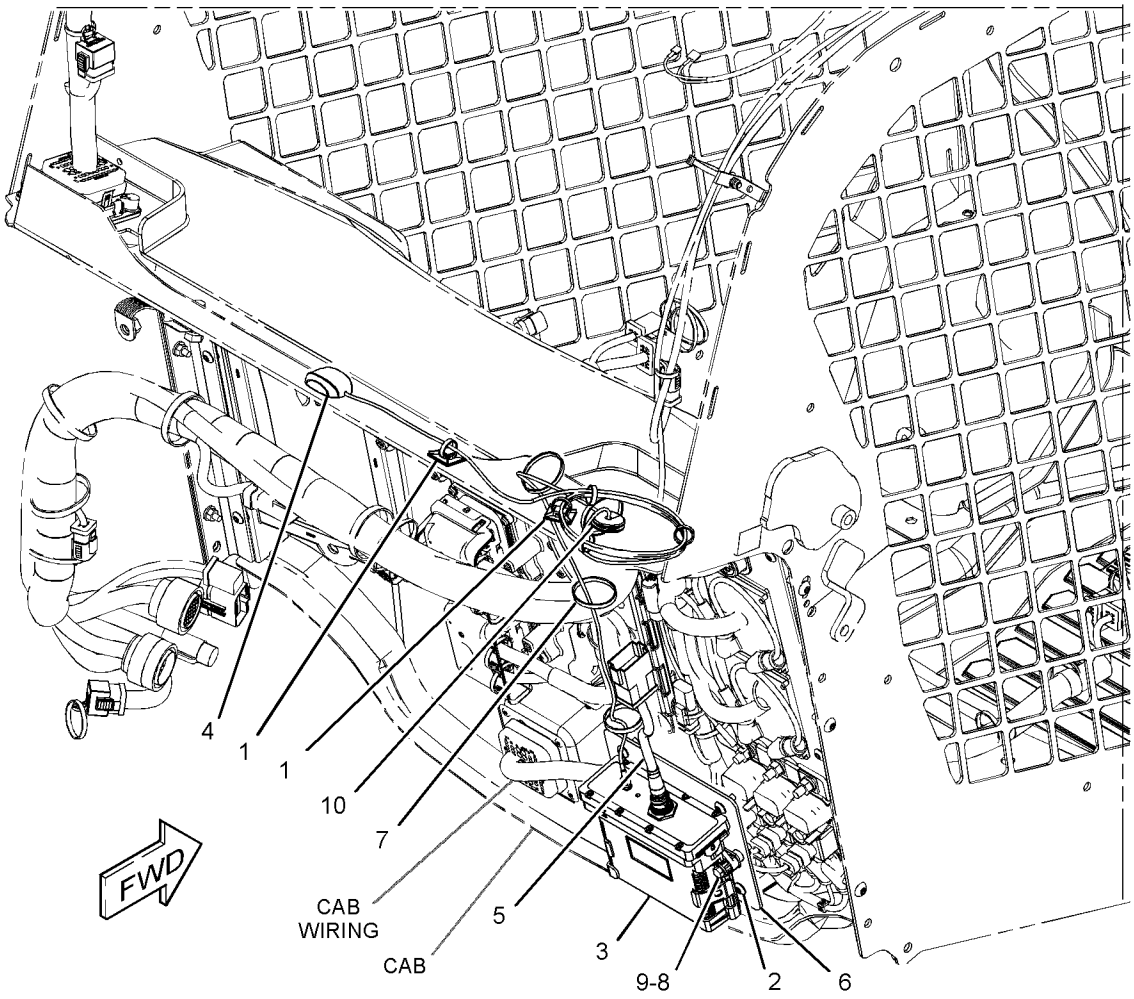

GRAPHIC #1 **<END>** g03349746

388-8284 KIT-CAMERA—REAR VIEW

FOR USE WITH 388-8274—PAGE: 415

AN ATTACHMENT

SMCS-7348 **i05327127**

NOTE	REF NO	GRAPHIC REF	PART NUMBER	QTY	PART NAME 1 2 3 4 5 6 (PRODUCT LEVEL)	SEE PAGE
D	1	1	**5P-9909**	1	SEAL (0.1-M)	
	2	1	**7K-1181**	13	STRAP-CABLE	
	3	1	**8Y-5947**	1	FASTENER	
Y	4	1	**336-6684**	1	CAMERA GP (12-VOLT, 24-VOLT) (WORK AREA VISUAL SYSTEM, REAR)	92
Y	5	1	**396-7210**	1	HARNESS AS-CAB (CAMERA)	100
	6	1	**3S-2093**	1	STRAP-CABLE	
	7	1	**9G-1307**	1	GROMMET	

D - ORDER BY THE METER
Y - SEPARATE ILLUSTRATION

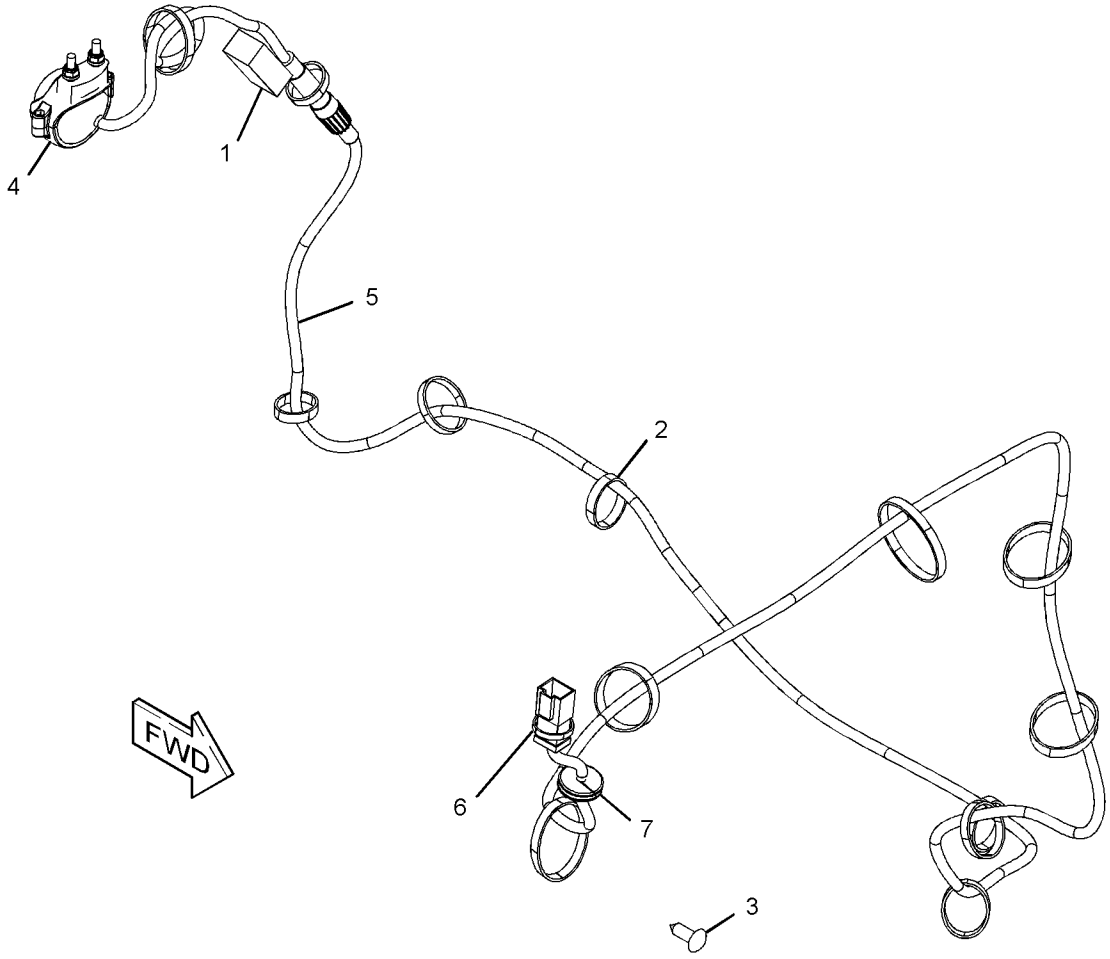

GRAPHIC #1 **<END>** g03384475

388-8265 KIT-WORK TOOL WIRING—ELECTRICAL
AN ATTACHMENT

SMCS-1408 **i05327135**

NOTE	REF NO	GRAPHIC REF	PART NUMBER	QTY	PART NAME 1 2 3 4 5 6 (PRODUCT LEVEL)	SEE PAGE
	1	1	**7K-1181**	5	STRAP-CABLE	
	2	1	**146-9439**	5	RELAY AS (12-VOLT) (WORK TOOL)	
	3	1	**159-9495**	1	NUT (1-1/2-18-THD)	
	4	1	**178-3620**	5	STRAP-DUAL CLAMP	
	5	1	**263-5418**	1	SWITCH AS-ROCKER (WORK TOOL)	
		1	**111-7899**	1	GASKET	
Y	6	1	**356-6115**	1	HARNESS AS-WORK TOOL	112
	7	1	**396-7208**	1	BRACKET	
	8	1	**159-9496**	1	LOCKWASHER	
	9	1	**266-3316**	2	BOLT-FLANGE HEAD (M10X1.5X25-MM)	
	10	1	**7P-1695**	1	WASHER (10.5X19X3-MM THK)	
	11	1	**8T-4121**	1	WASHER-HARD (11X21X2.5-MM THK)	
M	12	1	**8T-4133**	1	NUT (M10X1.5-THD)	

M - METRIC PART
Y - SEPARATE ILLUSTRATION

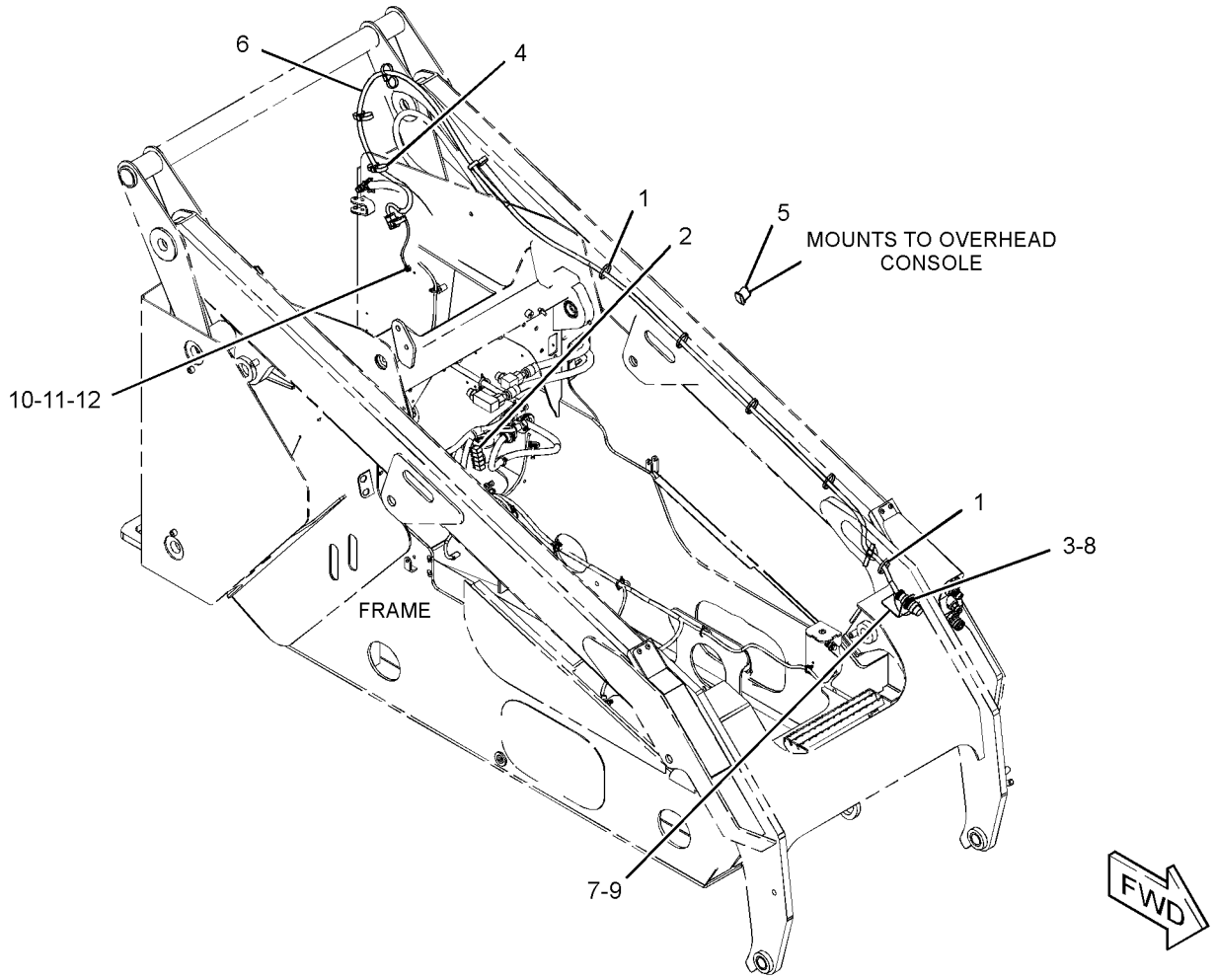

GRAPHIC #1 **<END>** g03385155

388-8270 KIT-WORK TOOL WIRING—SELF LEVEL AN ATTACHMENT

SMCS-1408 **i05342659**

NOTE	REF NO	GRAPHIC REF	PART NUMBER	QTY	PART NAME 1 2 3 4 5 6 (PRODUCT LEVEL)	SEE PAGE
	1	1	**7K-1181**	8	STRAP-CABLE	
	2	1	**8V-5718**	4	CLAMP	
	3	1	**178-3620**	9	STRAP-DUAL CLAMP	
	4	1	**102-8705**	2	PLATE	
	5	1	**247-4818**	1	SENSOR AS-POSITION	
		1	**102-8804**	1	KIT-RECEPTACLE (4-PIN)	
					(INCLUDES RECEPTACLE AS & WEDGE)	
		1	**126-1767**	4	PIN-CONNECTOR (14-GA TO 16-GA)	
E			**8Y-8080**		TUBE-CONVOLUTED (23-CM)	
	6	1	**263-5417**	1	SWITCH AS-ROCKER (WORK TOOL POSITIONER)	
		1	**111-7899**	1	GASKET	
	7	1	**344-7391**	1	SENSOR GP-PRESSURE	
	8	1	**356-6119**	1	SENSOR AS-POSITION (QUICK COUPLER)	
	9	1	**416-9259**	1	PLATE AS	
	10	1	**416-9260**	1	PLATE	
Y	11	1	**421-4206**	1	HARNESS AS-SENSOR	111
	12	1	**436-1608**	1	BRACKET AS	
	13	1	**266-3316**	2	BOLT-FLANGE HEAD (M10X1.5X25-MM)	
	14	1	**3J-1907**	1	SEAL-O-RING	
	15	1	**4B-4863**	2	WASHER (4.7X11X1.2-MM THK)	
M	16	1	**5C-8312**	2	NUT (M4X0.7-THD)	
M	17	1	**7X-0818**	2	BOLT (M8X1.25X45-MM)	
M	18	1	**7X-2537**	2	BOLT (M8X1.25X35-MM)	
M	19	1	**8C-4982**	2	BOLT-SOCKET HEAD (M4X0.7X20-MM)	
M	20	1	**8T-4171**	2	BOLT (M6X1X12-MM)	
	21	1	**8T-4205**	2	WASHER-HARD (7.2X14.5X2-MM THK)	
	22	1	**8T-4224**	2	WASHER-HARD (8.8X16X2-MM THK)	

E - ORDER BY THE CENTIMETER
M - METRIC PART
Y - SEPARATE ILLUSTRATION

388-8270 **KIT-WORK TOOL WIRING (*contd.*)** **i05342659**

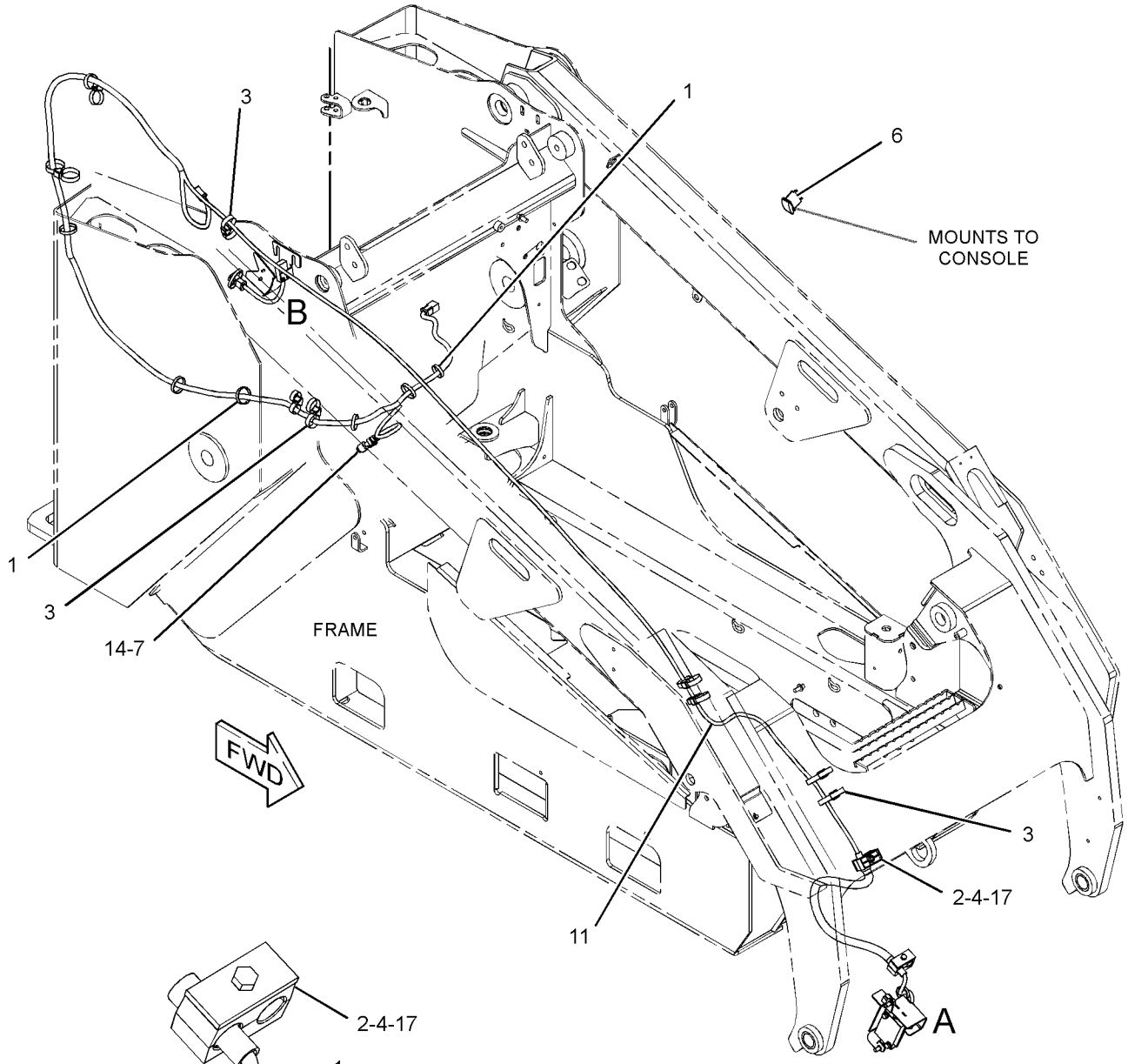

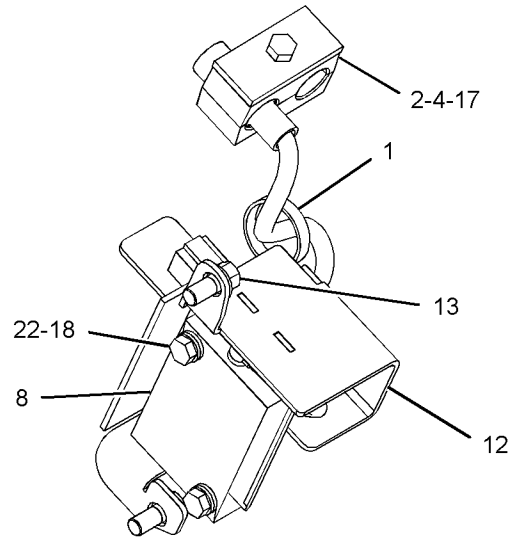

VIEW OF AREA A

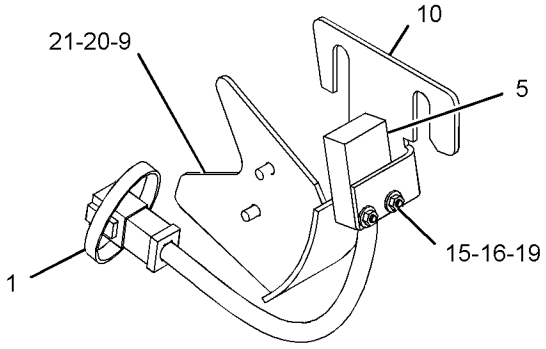

VIEW OF AREA B

GRAPHIC #1 **<END>** g03390076

388-8273 KIT-WORK TOOL WIRING—JOYSTICK, LH
AN ATTACHMENT

SMCS-1408 **i05327159**

NOTE	REF NO	GRAPHIC REF	PART NUMBER	QTY	PART NAME 1 2 3 4 5 6 (PRODUCT LEVEL)	SEE PAGE
	1	1	**7K-1181**	5	STRAP-CABLE	
M	2	1	**9X-2546**	4	BOLT (M6X1X20-MM)	
	3	1	**146-9439**	5	RELAY AS (12-VOLT) (WORK TOOL)	
	4	1	**159-9495**	1	NUT (1-1/2-18-THD)	
	5	1	**178-3620**	5	STRAP-DUAL CLAMP	
	6	1	**263-5418**	1	SWITCH AS-ROCKER (WORK TOOL)	
		1	**111-7899**	1	GASKET	
Y	7	1	**356-6115**	1	HARNESS AS-WORK TOOL	112
Y	8	1	**379-1615**	1	CONTROL GP-JOYSTICK (LH)	379
	9	1	**396-7208**	1	BRACKET	
	10	1	**159-9496**	1	LOCKWASHER	
	11	1	**266-3316**	2	BOLT-FLANGE HEAD (M10X1.5X25-MM)	
	12	1	**3S-2093**	4	STRAP-CABLE	
B	13	1	**7P-1695**	1	WASHER (10.5X19X3-MM THK)	
B	14	1	**8T-4121**	1	WASHER-HARD (11X21X2.5-MM THK)	
M	15	1	**8T-4133**	1	NUT (M10X1.5-THD)	

B - USE AS REQUIRED
M - METRIC PART
Y - SEPARATE ILLUSTRATION

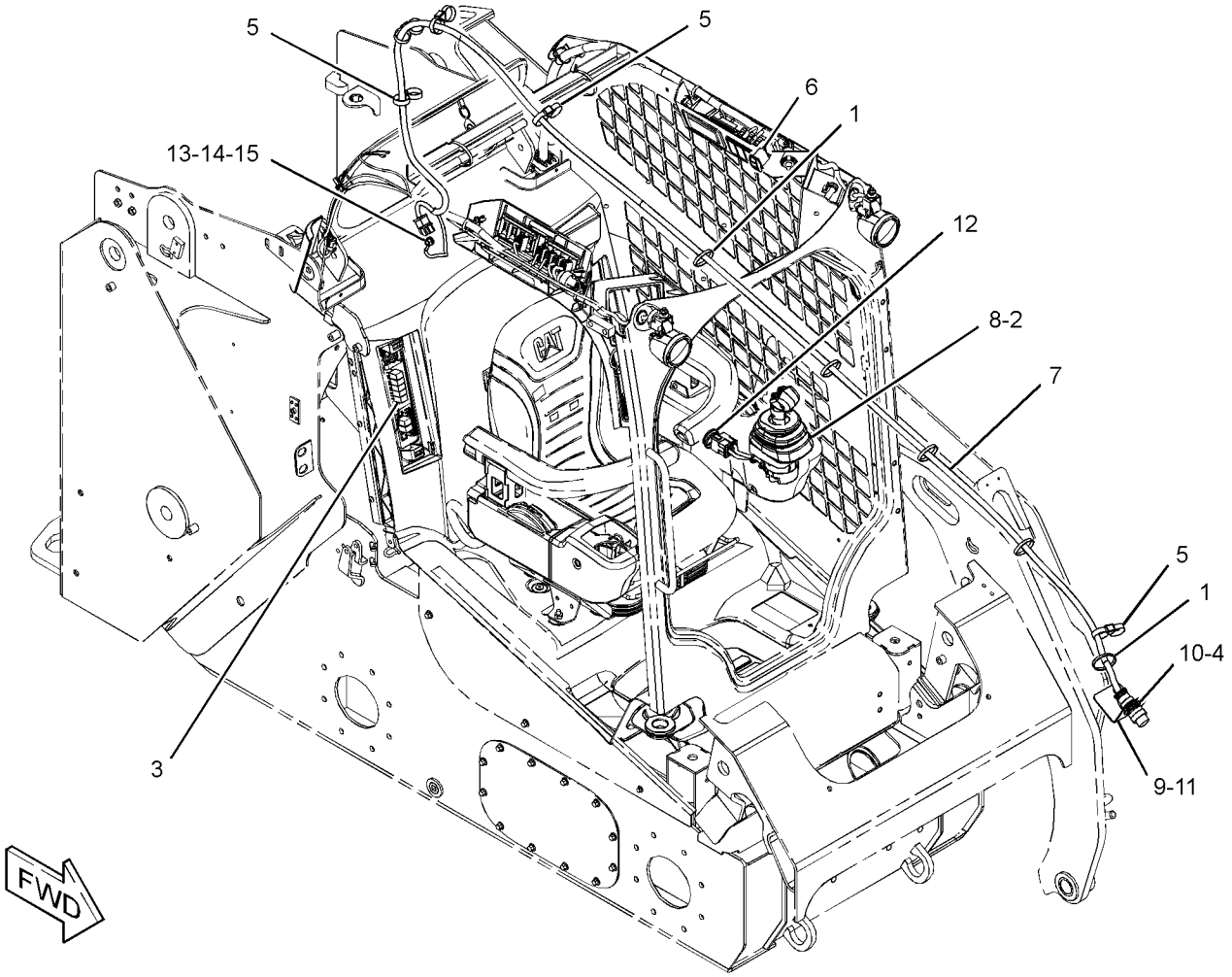

GRAPHIC #1 **<END>** g03384618

268-4071 LAMP GP-FLOOD

12-VOLT

PART OF 361-6390 WIRING GP-PLATFORM

SMCS-1434 **i05041394**

NOTE	REF NO	GRAPHIC REF	PART NUMBER	QTY	PART NAME 1 2 3 4 5 6 (PRODUCT LEVEL)	SEE PAGE
	1	1	**9W-0607**	1	LAMP (12-VOLT, 55-WATT) (FLOODLIGHT)	
	2	1	**102-8802**	1	KIT-RECEPTACLE (2-PIN)	
					(INCLUDES RECEPTACLE AS & WEDGE)	
	3	1	**8T-8729**	2	PIN-CONNECTOR (16-GA TO 18-GA)	
	4	1	**383-6901**	1	LENS AS (FLOODLIGHT)	

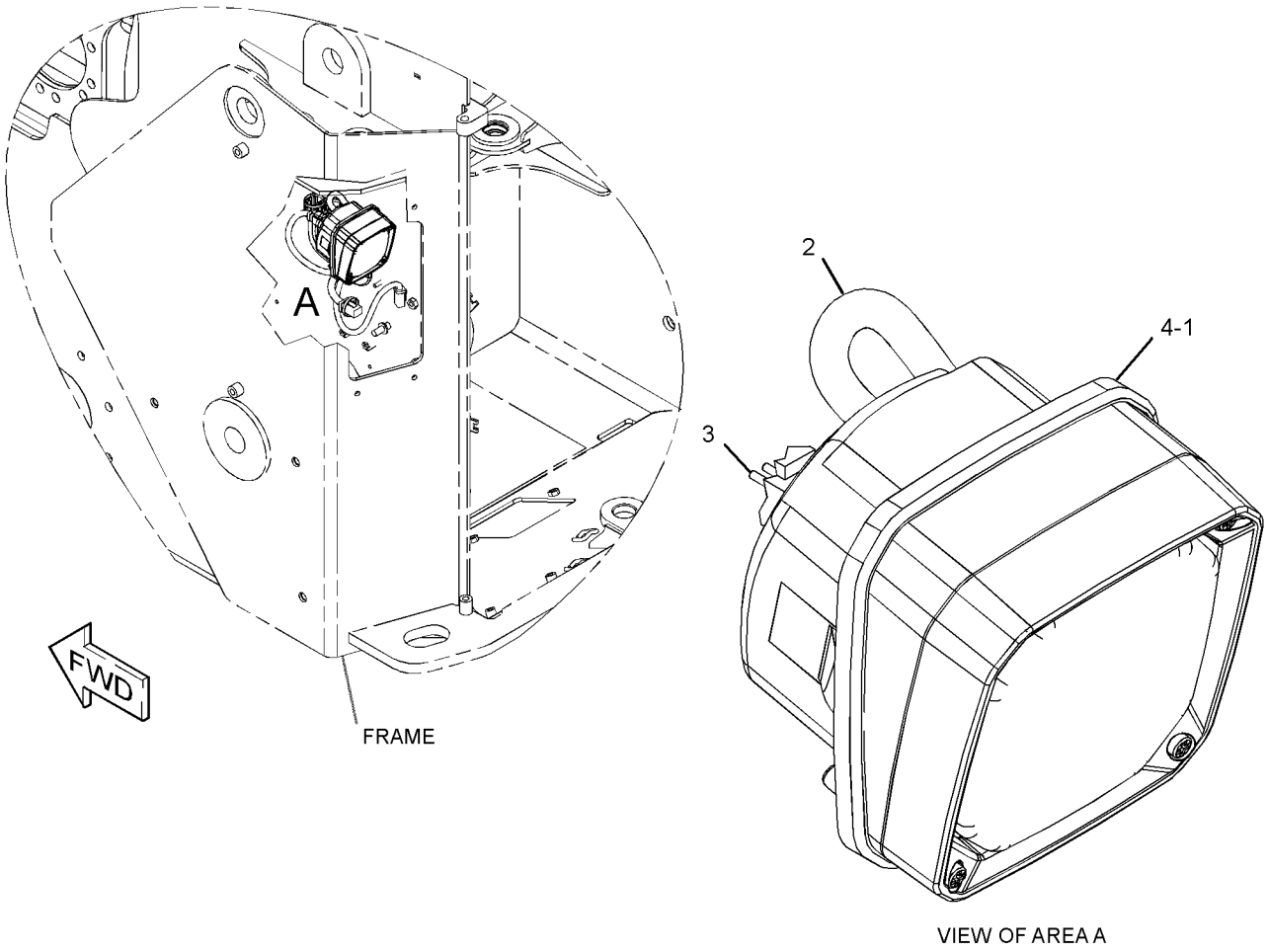

GRAPHIC #1 **<END>** g03211957

388-3782 LAMP GP-FLOOD

24-VOLT, 70-WATT

PART OF 394-5387 LIGHTING GP-FLOOD

SMCS-1434 **i05162951**

NOTE	REF NO	GRAPHIC REF	PART NUMBER	QTY	PART NAME 1 2 3 4 5 6 (PRODUCT LEVEL)	SEE PAGE
	1	1	**175-4291**	1	BRACKET AS	
	2	1	**9X-4244**	2	SCREW-SPECIAL (M4X1.79X25-MM)	
	3	1	**9W-0607**	1	LAMP (12-VOLT, 55-WATT) (FLOODLIGHT)	
	4	1	**8T-4224**	1	WASHER-HARD (8.8X16X2-MM THK)	
M	5	1	**8T-7547**	1	BOLT (M8X1.25X30-MM)	
M	6	1	**5C-7261**	1	NUT (M8X1.25-THD)	

M - METRIC PART

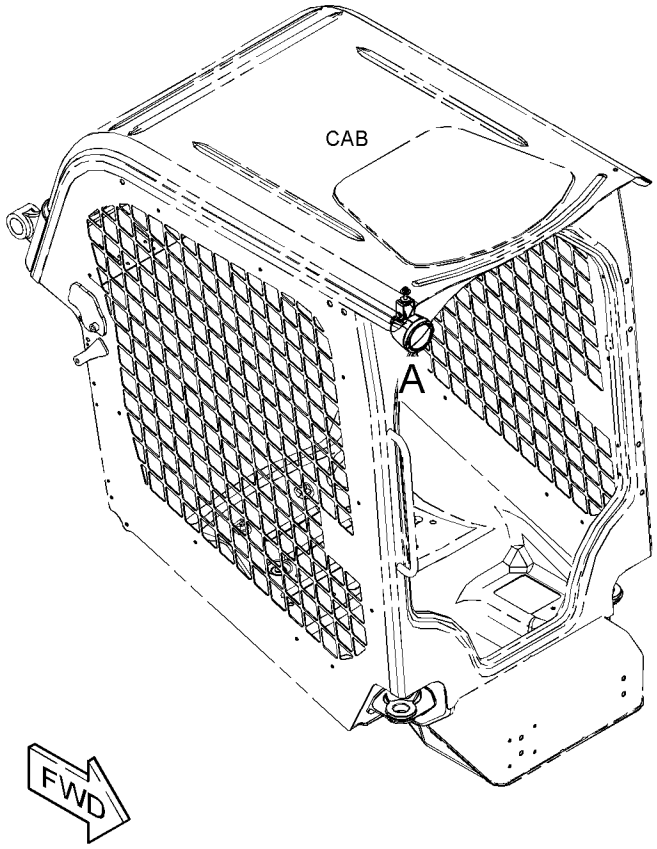

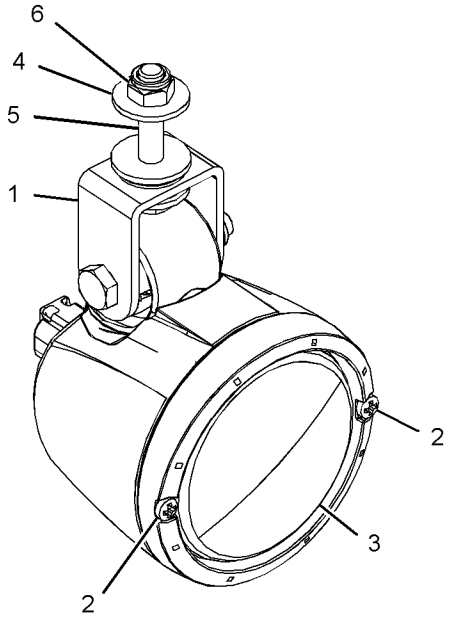

VIEW OF AREA A

GRAPHIC #1 **<END>** g03320357

195-0189 LAMP GP-HEAD & SIGNAL–RH

12-VOLT

PART OF 422-3323 KIT-ROADING CONVERSION, 356-6074 LIGHTING GP-ROADING AN ATTACHMENT

SMCS-1429, 1430 **i03877491**

NOTE	REF NO	GRAPHIC REF	PART NUMBER	QTY	PART NAME 1 2 3 4 5 6 (PRODUCT LEVEL)	SEE PAGE
	1	1	**228-6053**	1	BODY AS	
	2	1	**228-6054**	1	BEZEL	
	3	1	**348-7240**	1	LENS AS (HEADLIGHT)	
	4	1	**228-6052**	1	LENS AS (TURN SIGNAL)	
	5	1	**228-6056**	6	SCREW (4-32X1.26-IN)	
	6	1	**9W-3324**	1	LAMP-HEAD (12-VOLT, 60/55-WATT) (CLEAR)	
	7	1	**226-4560**	1	LAMP (12-VOLT, 21-WATT) (AMBER)	
	8	1	**226-4561**	1	LAMP (12-VOLT, 5-WATT) (CLEAR)	
M	9	1	**8T-0389**	1	LOCKNUT (M10X1.5-THD)	
	10	1	**100-3253**	1	SPACER (SPHERICAL)	
	11	1	**100-3254**	1	SPACER (SPHERICAL)	
	12	1	**100-3255**	2	WASHER (SPHERICAL)	
	13	1	**102-8805**	1	KIT-RECEPTACLE (6-PIN)	
					(INCLUDES RECEPTACLE AS & WEDGE)	
	14	1	**8T-8729**	5	PIN-CONNECTOR (16-GA TO 18-GA)	
	15	1	**8T-8737**	1	PLUG-SEAL	

M - METRIC PART

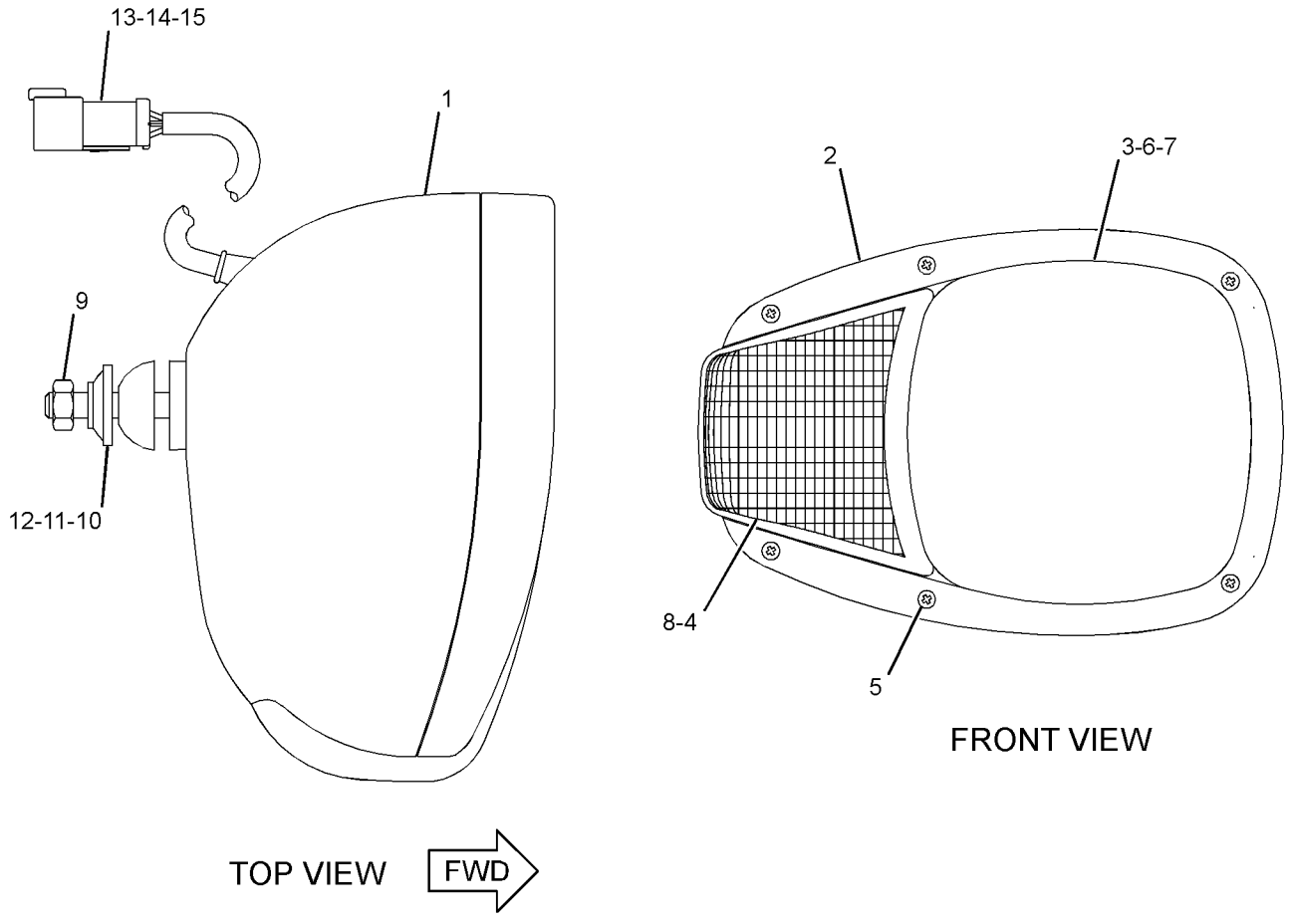

GRAPHIC #1 **<END>** g02157912

195-0190 LAMP GP-HEAD & SIGNAL–LH

12-VOLT

PART OF 422-3323 KIT-ROADING CONVERSION, 356-6074 LIGHTING GP-ROADING AN ATTACHMENT

SMCS-1429, 1430

i03877492

NOTE	REF NO	GRAPHIC REF	PART NUMBER	QTY	PART NAME 1 2 3 4 5 6 (PRODUCT LEVEL)	SEE PAGE
	1	1	**228-6053**	1	BODY AS	
	2	1	**228-6054**	1	BEZEL	
	3	1	**348-7240**	1	LENS AS (HEADLIGHT)	
	4	1	**228-6052**	1	LENS AS (TURN SIGNAL)	
	5	1	**228-6056**	6	SCREW (4-32X1.26-IN)	
	6	1	**9W-3324**	1	LAMP-HEAD (12-VOLT, 60/55-WATT) (CLEAR)	
	7	1	**226-4560**	1	LAMP (12-VOLT, 21-WATT) (AMBER)	
	8	1	**226-4561**	1	LAMP (12-VOLT, 5-WATT) (CLEAR)	
M	9	1	**8T-0389**	1	LOCKNUT (M10X1.5-THD)	
	10	1	**100-3253**	1	SPACER (SPHERICAL)	
	11	1	**100-3254**	1	SPACER (SPHERICAL)	
	12	1	**100-3255**	2	WASHER (SPHERICAL)	
	13	1	**102-8805**	1	KIT-RECEPTACLE (6-PIN)	
					(INCLUDES RECEPTACLE AS & WEDGE)	
	14	1	**8T-8729**	5	PIN-CONNECTOR (16-GA TO 18-GA)	
	15	1	**8T-8737**	1	PLUG-SEAL	

M - METRIC PART

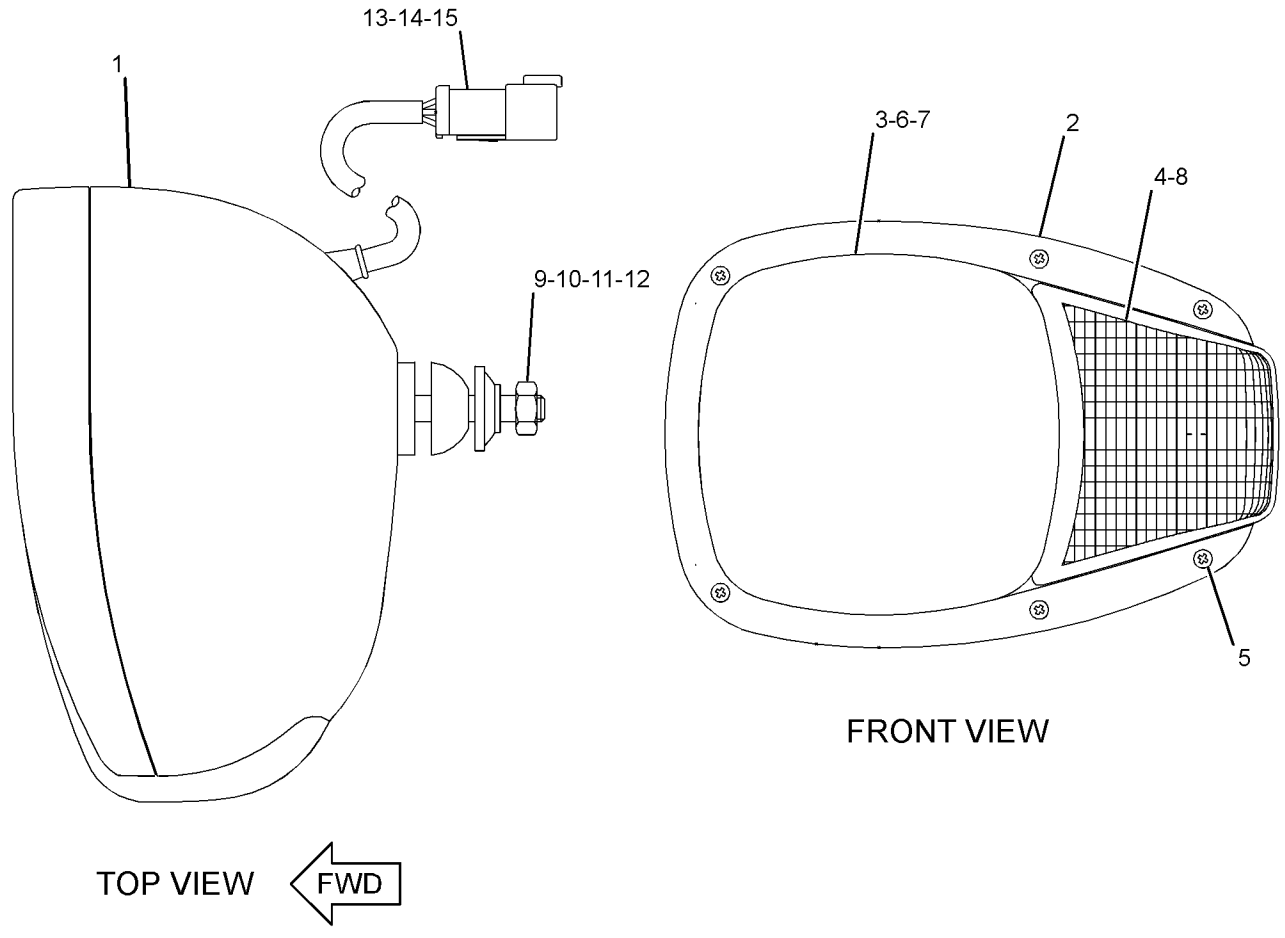

GRAPHIC #1

<END>

g02157921

258-0930 LAMP GP-STOP & TAIL

PART OF 356-6082 LIGHTING GP-STOP & TAIL

AN ATTACHMENT

SMCS-1432 **i05337687**

NOTE	REF NO	GRAPHIC REF	PART NUMBER	QTY	PART NAME 1 2 3 4 5 6 (PRODUCT LEVEL)	SEE PAGE
F		1	**8T-8737**	1	PLUG-SEAL	
F		1	**9W-2471**	1	LAMP (12-VOLT) (STOP, TAIL)	
F		1	**102-8804**	1	KIT-RECEPTACLE (4-PIN)	
					(INCLUDES RECEPTACLE AS & WEDGE)	
F		1	**165-4895**	1	LENS	
F		1	**8T-8729**	2	PIN-CONNECTOR (16-GA TO 18-GA)	

F - NOT SHOWN

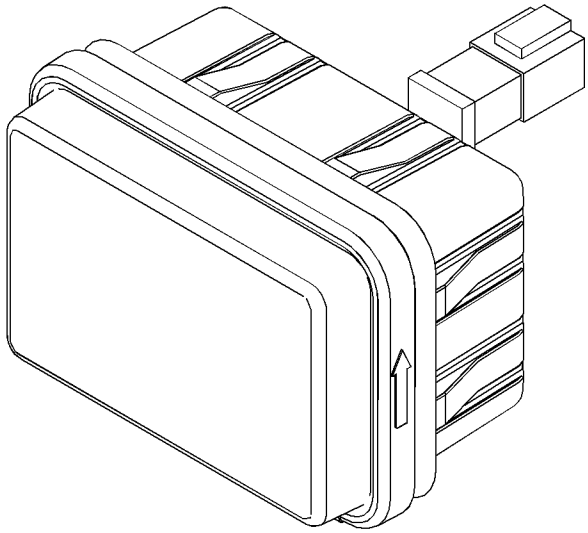

GRAPHIC #1 **<END>** g03383516

309-1325 LAMP GP-WARNING BEACON–AMBER

12-VOLT

PART OF 422-3400 CONVERSION GP-ROADING, 422-3324 KIT-ROADING CONVERSION

AN ATTACHMENT

SMCS-1431 **i05090816**

NOTE	REF NO	GRAPHIC REF	PART NUMBER	QTY	PART NAME 1 2 3 4 5 6 (PRODUCT LEVEL)	SEE PAGE
	1	1	**272-9800**	1	LENS (AMBER) (WARNING BEACON)	
	2	1	**9X-8118**	1	LAMP (12-VOLT, 55-WATT) (WARNING BEACON)	
	3	1	**9X-8139**	1	BELT-DRIVE (WARNING BEACON)	
	4	1	**9R-7958**	1	CORD AS	
	4A	1	**9R-7942**	1	PLUG AS	

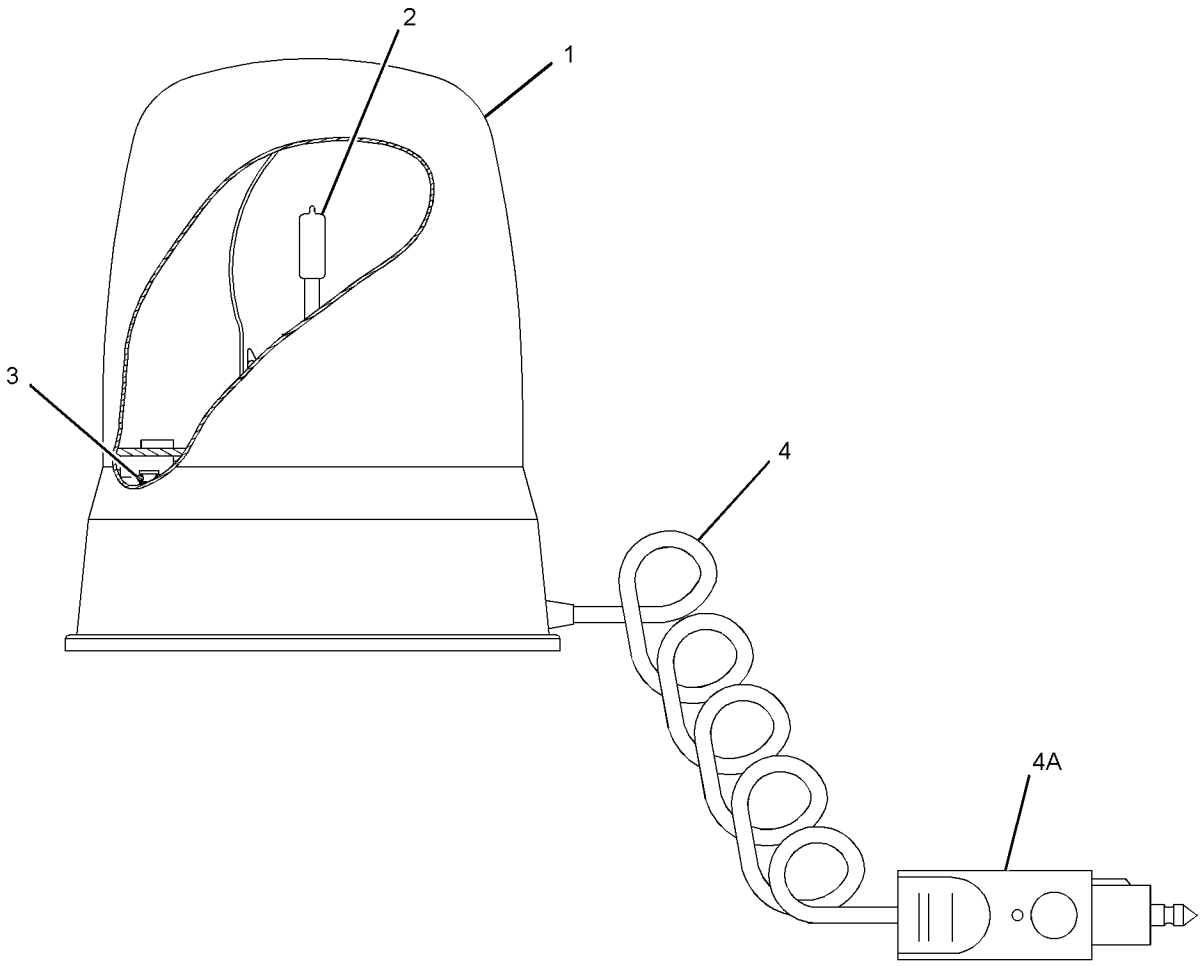

GRAPHIC #1 **<END>** g01382357

394-5387 LIGHTING GP-FLOOD—WORK LIGHTS, FRONT

PART OF 345-5454 CAB AR

SMCS-1434 **i05295451**

NOTE	REF NO	GRAPHIC REF	PART NUMBER	QTY	PART NAME 1 2 3 4 5 6 (PRODUCT LEVEL)	SEE PAGE
Y	1	1	**388-3782**	2	LAMP GP-FLOOD	122

Y - SEPARATE ILLUSTRATION

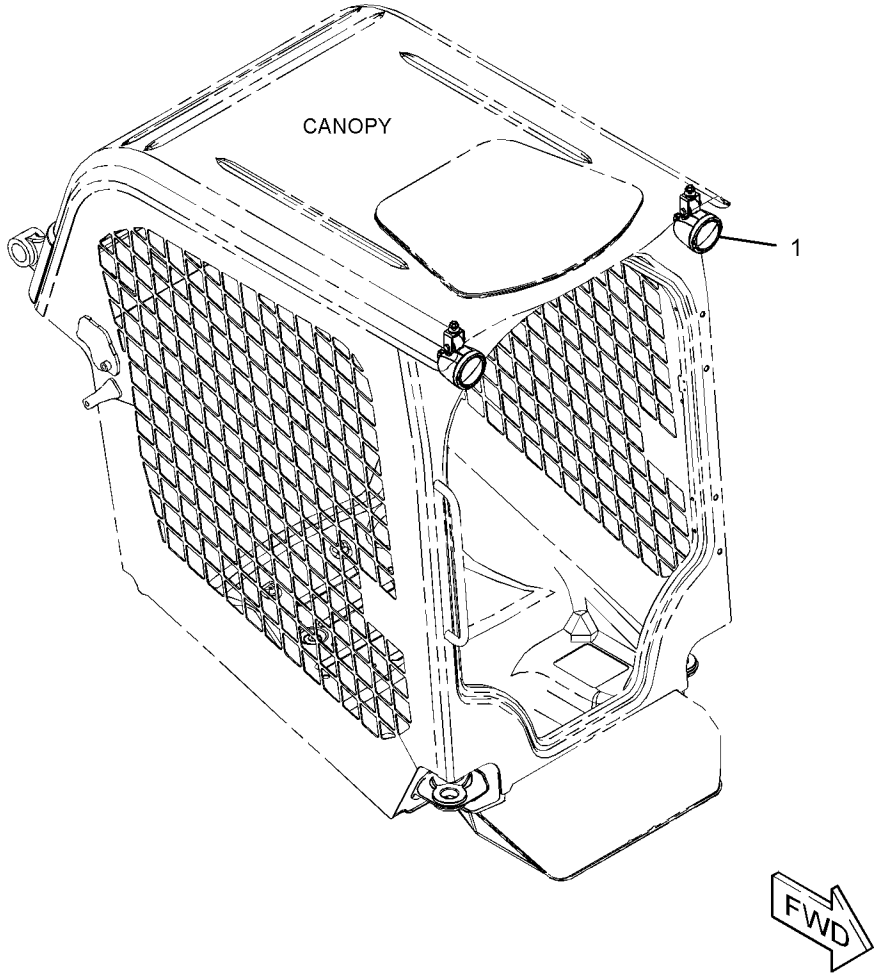

GRAPHIC #1 **<END>** g03366020

356-6074 LIGHTING GP-ROADING

PART OF 422-3401, 422-3403 CONVERSION AR-ROADING

AN ATTACHMENT

SMCS-1429 **i05256752**

NOTE	REF NO	GRAPHIC REF	PART NUMBER	QTY	PART NAME 1 2 3 4 5 6 (PRODUCT LEVEL)	SEE PAGE
	1	1	**9R-1499**	2	REFLECTOR (RED)	
	2	1	**146-9439**	1	RELAY AS (12-VOLT)	
	3	1	**172-6490**	1	LAMP GP-SIGNAL (REAR, RH)	
	3A	1	**172-6490**	1	LAMP GP-SIGNAL (REAR, LH)	
					(EACH INCLUDES)	
		1	**8T-8729**	4	PIN-CONNECTOR (16-GA TO 18-GA)	
		1	**9W-3326**	1	LAMP (12-VOLT, 21-WATT) (TURN SIGNAL)	
		1	**084-4348**	1	LAMP (12-VOLT, 5-WATT) (STOP, TAIL)	
		1	**102-8804**	1	KIT-RECEPTACLE (4-PIN)	
					(INCLUDES RECEPTACLE AS & WEDGE)	
		1	**363-8597**	1	LENS	
Y	4	1	**195-0189**	1	LAMP GP-HEAD & SIGNAL (FRONT, RH)	123
Y	5	1	**195-0190**	1	LAMP GP-HEAD & SIGNAL (FRONT, LH)	124
	6	1	**242-9000**	1	FLASHER AS (12-VOLT)	
	7	1	**258-4134**	1	FUSE AS	
	8	1	**263-5421**	1	SWITCH AS-ROCKER (ROADING LIGHTS)	
	9	1	**263-5422**	1	SWITCH AS-ROCKER (TURN SIGNAL)	
	10	1	**265-9543**	1	SWITCH AS-ROCKER (HAZARD WARNING LIGHTS)	
					(EACH SWITCH AS INCLUDES)	
		1	**111-7899**	1	GASKET	
Y	11	1	**356-6075**	2	HARNESS AS-LIGHTING	103
Y	12	1	**356-6077**	1	HARNESS AS-LIGHTING	103
	13	1	**388-8223**	1	BRACKET (LH)	
	14	1	**388-8224**	1	BRACKET (RH)	
	15	1	**132-5789**	2	CLIP	
	16	1	**3S-2093**	7	STRAP-CABLE	
	17	1	**4P-7581**	2	CLIP	
	18	1	**7K-1181**	22	STRAP-CABLE	

Y - SEPARATE ILLUSTRATION

356-6074 **LIGHTING GP-ROADING (*contd.*)** **i05256752**

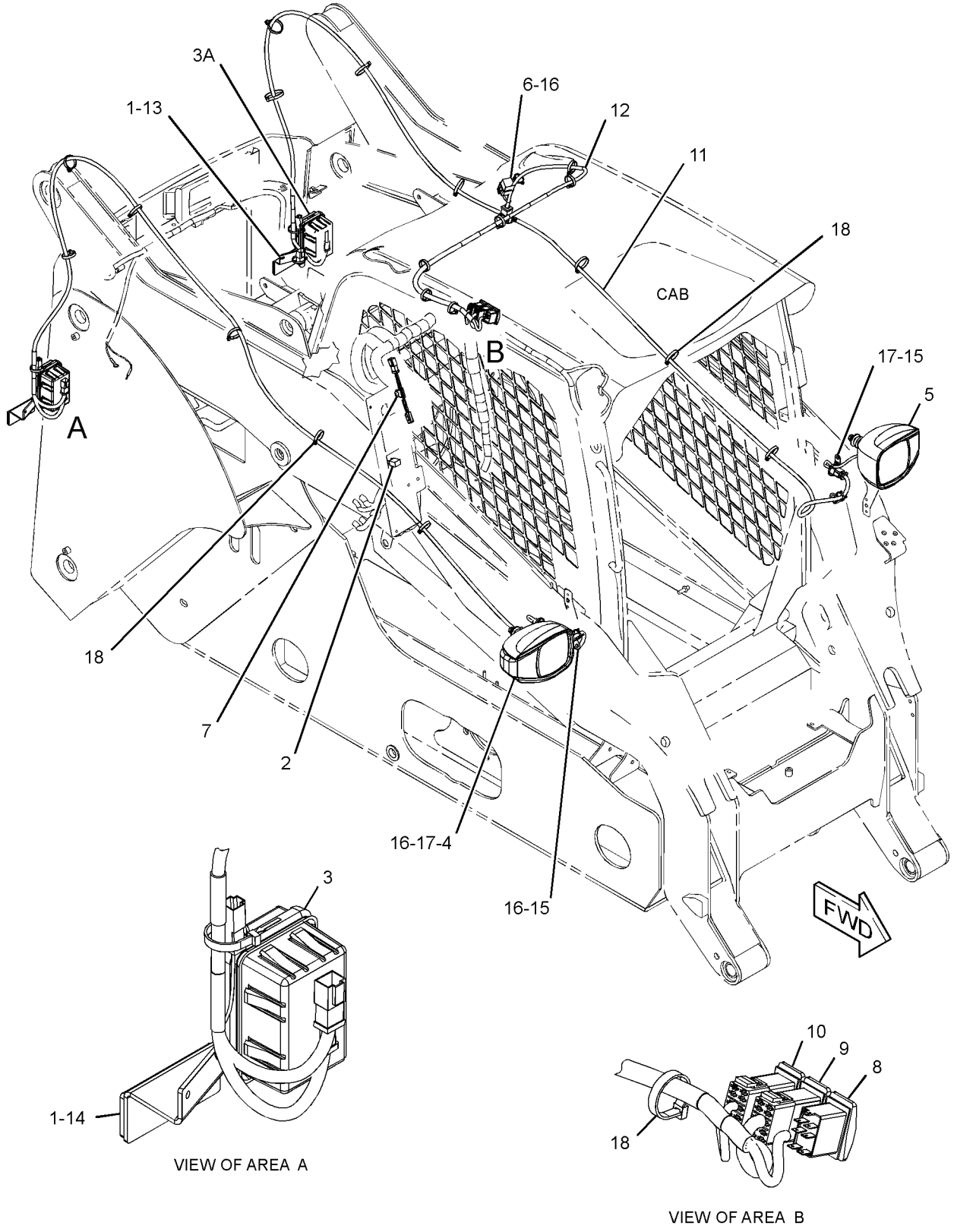

GRAPHIC #1 **<END>** g03350041

356-6082 LIGHTING GP-STOP & TAIL

PART OF 345-5911, 422-3405 CONVERSION AR-ROADING
AN ATTACHMENT

SMCS-1432 **i04758931**

NOTE	REF NO	GRAPHIC REF	PART NUMBER	QTY	PART NAME 1 2 3 4 5 6 (PRODUCT LEVEL)	SEE PAGE
	1	1	**190-5386**	2	FILM-STRIPE (ROUND RED REFLECTIVE)	
Y	2	1	**258-0930**	2	LAMP GP-STOP & TAIL	125

Y - SEPARATE ILLUSTRATION

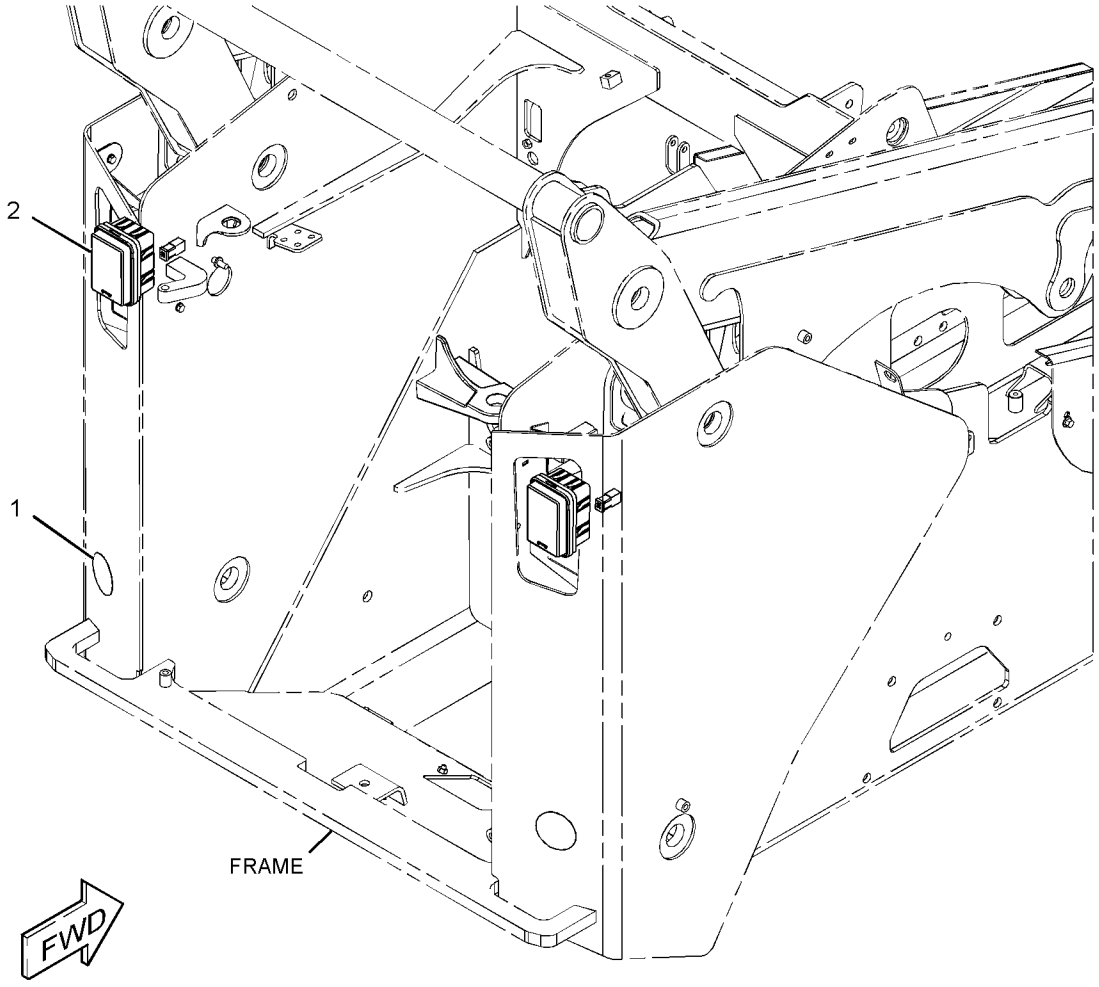

GRAPHIC #1 **<END>** g02872697

258-4135 RELAY GP–MAIN POWER

12-VOLT

PART OF 361-6400 WIRING GP-CAB

SMCS-1422, 4493 **i03959893**

NOTE	REF NO	GRAPHIC REF	PART NUMBER	QTY	PART NAME 1 2 3 4 5 6 (PRODUCT LEVEL)	SEE PAGE
M	1	1	**5C-2890**	2	NUT (M6X1-THD)	
	2	1	**8T-4205**	2	WASHER-HARD (7.2X14.5X2-MM THK)	
	3	1	**1H-3244**	2	LOCKWASHER	
M	4	1	**5C-7261**	1	NUT (M8X1.25-THD)	
	5	1	**8T-4224**	1	WASHER-HARD (8.8X16X2-MM THK)	
	6	1	**267-5213**	1	COVER (FUSE)	
	7	1	**267-5211**	1	SEAL	
	8	1	**267-2680**	1	FUSE (20-AMPERE)	
	9	1	**267-2701**	1	FUSE (60-AMPERE)	

M - METRIC PART

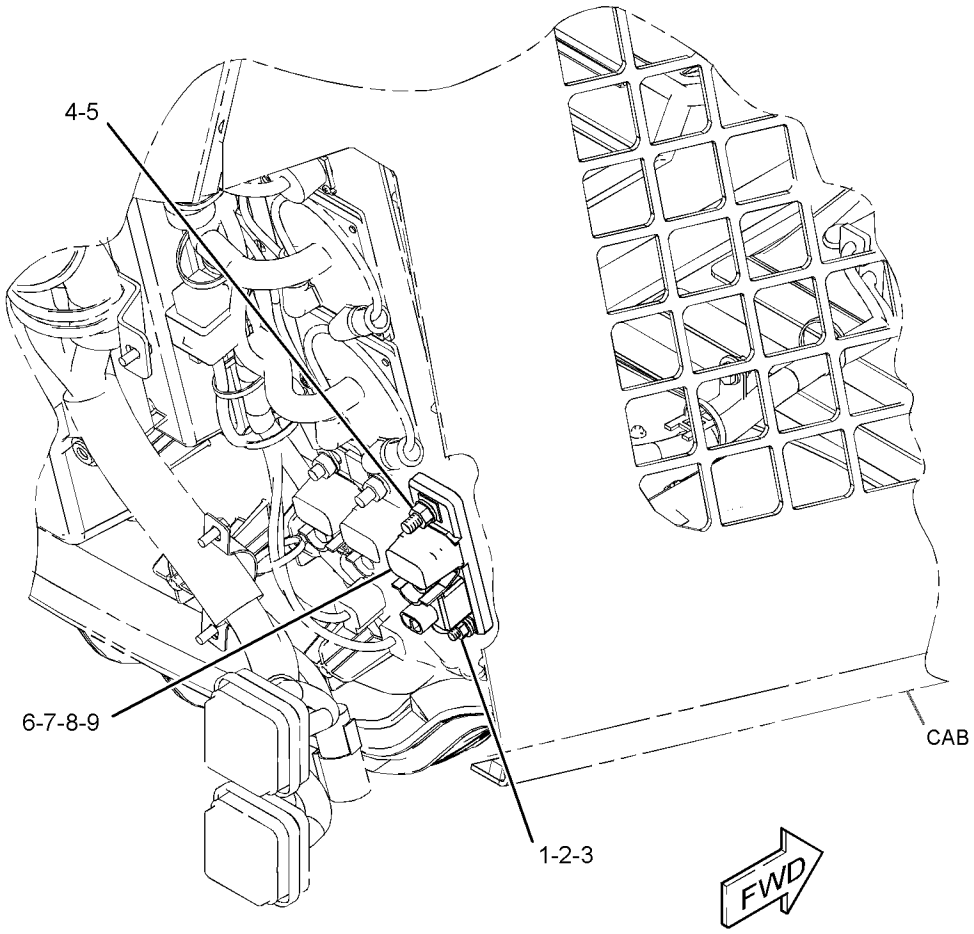

GRAPHIC #1 **<END>** g01328212

386-9954 RELAY GP

12-VOLT

PART OF 361-6400 WIRING GP-CAB

SMCS-1422, 4493 **i04823042**

NOTE	REF NO	GRAPHIC REF	PART NUMBER	QTY	PART NAME 1 2 3 4 5 6 (PRODUCT LEVEL)	SEE PAGE
	1	1	**267-2680**	1	FUSE (20-AMPERE)	
	2	1	**274-9872**	1	FUSE (30-AMPERE)	
	3	1	**267-5213**	1	COVER (FUSE)	
	4	1	**267-5211**	1	SEAL	
M	5	1	**5C-2890**	2	NUT (M6X1-THD)	
	6	1	**8T-4205**	2	WASHER-HARD (7.2X14.5X2-MM THK)	
	7	1	**1H-3244**	2	LOCKWASHER	
M	8	1	**5C-7261**	1	NUT (M8X1.25-THD)	
	9	1	**8T-4224**	1	WASHER-HARD (8.8X16X2-MM THK)	
	10	1	**9F-5644**	1	LOCKWASHER	

M - METRIC PART

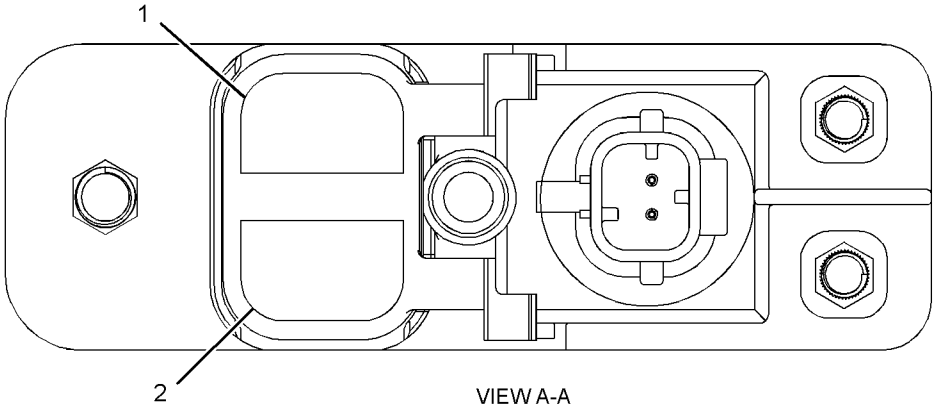

VIEW A-A
(FUSE COVER REMOVED FOR CLARITY

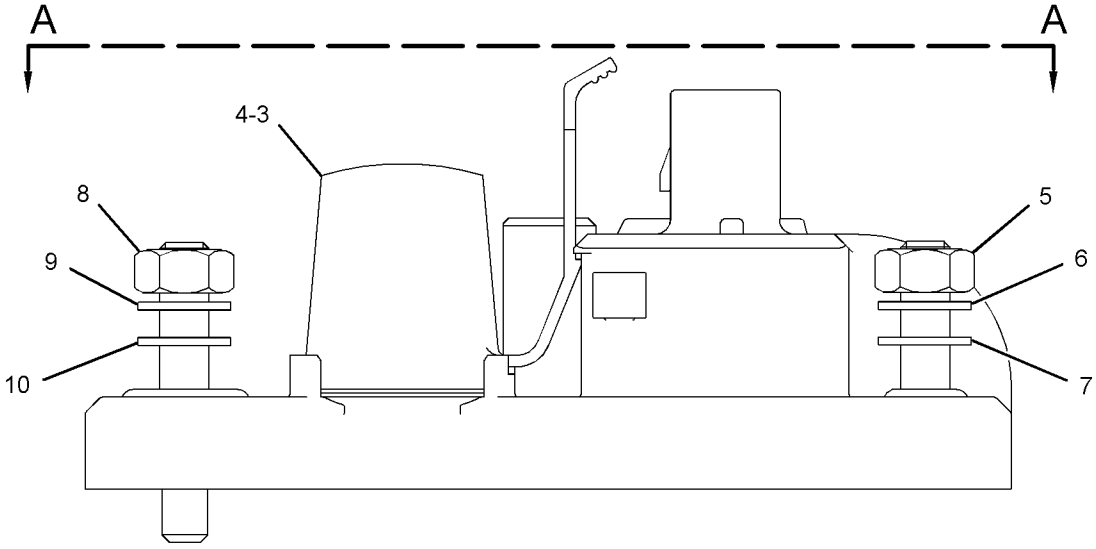

GRAPHIC #1 **<END>** g02958476

262-3764 SENSOR GP-SPEED

PART OF 345-6501, 345-6502 MOTOR & MOUNTING GP

AN ATTACHMENT

SMCS-4803 **i02635720**

NOTE	REF NO	GRAPHIC REF	PART NUMBER	QTY	PART NAME 1 2 3 4 5 6 (PRODUCT LEVEL)	SEE PAGE
	1	1	**102-8804**	1	KIT-RECEPTACLE (4-PIN)	
					(INCLUDES RECEPTACLE AS & WEDGE)	
	2	1	**9X-3401**	4	PIN-CONNECTOR (16-GA TO 18-GA)	
E	3	1	**9X-1813**		SLEEVE (28-CM)	
	4	1	**9X-7408**	1	SEAL-O-RING	
B	5	1	**171-5349**	1	STRAP-MARKER	

B - USE AS REQUIRED
E - ORDER BY THE CENTIMETER

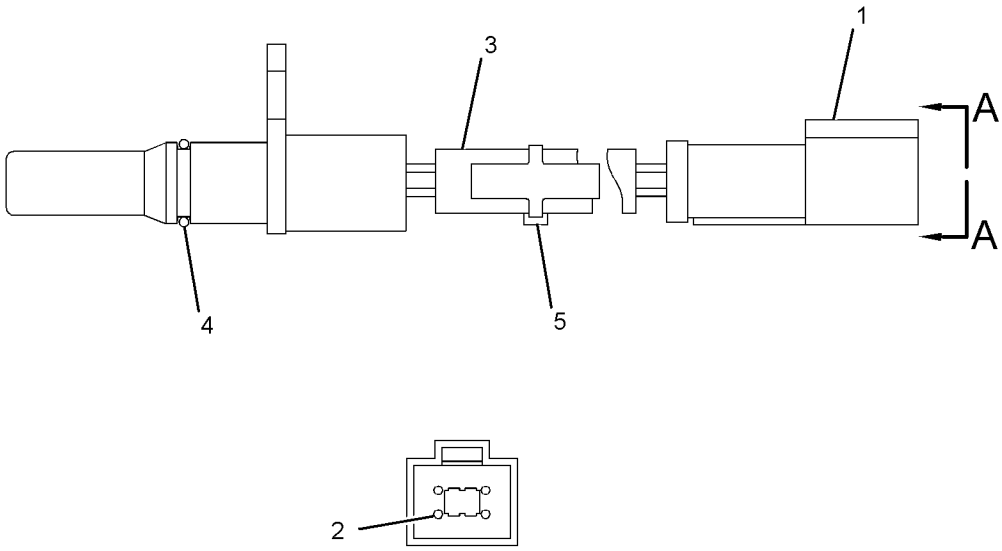

VIEW A-A

GRAPHIC #1 **<END>** g01326248

345-5234 SOFTWARE GP-MACHINE–BUCKET POSITION
AN ATTACHMENT

SMCS-7620 **i05269457**

NOTE	PART NUMBER	QTY	PART NAME 1 2 3 4 5 6 (PRODUCT LEVEL)	SEE PAGE
			(NO SERVICED PARTS)	

<END>

396-0915 STARTING MOTOR GP-ELECTRIC

PART OF 380-1768, 380-1769 ENGINE AR-PRIMARY

SMCS-1453 **i05330874**

NOTE	REF NO	GRAPHIC REF	PART NUMBER	QTY	PART NAME 1 2 3 4 5 6 (PRODUCT LEVEL)	SEE PAGE
	1	1	**383-0196**	1	NUT-HEX	
	2	1	**383-0201**	1	NUT-FLANGE	
	3	1	**383-0207**	1	WASHER	
	4	1	**385-5044**	1	STARTING MOTOR AS	
	5	1	**389-5256**	1	BOLT	
	6	1	**387-9894**	1	STUD	

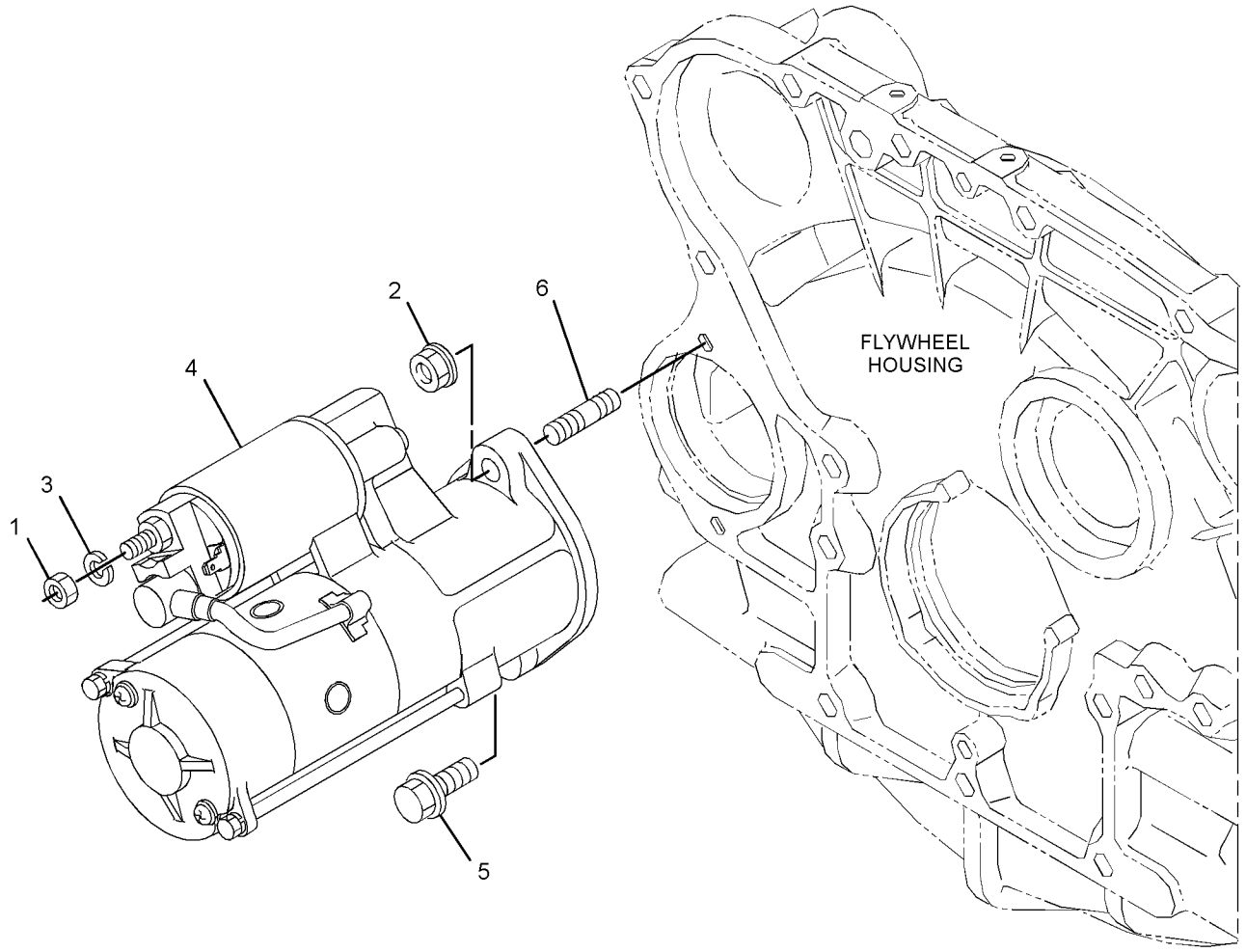

GRAPHIC #1 **<END>** g02895060

361-6396 WIRING GP-AIR CONDITIONER

PART OF 345-4921 AIR CONDITIONER AR

AN ATTACHMENT

SMCS-1408, 7320 **i05166861**

NOTE	REF NO	GRAPHIC REF	PART NUMBER	QTY	PART NAME 1 2 3 4 5 6 (PRODUCT LEVEL)	SEE PAGE
	1	1	**266-0299**	1	SWITCH AS-ROCKER (AIR CONDITIONER)	
		1	**111-7899**	1	GASKET	
Y	2	1	*356-6113*	1	CONTROL GP-AIR & TEMPERATURE	366
Y	3	1	**361-6398**	1	HARNESS AS-HEATER & AIR COND (REAR)	102
Y	4	1	**378-1024**	1	HARNESS AS-HEATER & AIR COND (FRONT)	102
	5	1	**396-7201**	1	BRACKET	
	6	1	**115-1615**	2	RELAY AS (12-VOLT) (AIR CONDITIONER)	
	7	1	**132-5789**	1	CLIP	
	8	1	**266-3314**	2	BOLT-FLANGE HEAD (M6X1X20.5-MM)	
	9	1	**3S-2093**	28	STRAP-CABLE	
M	10	1	**5C-2890**	2	NUT (M6X1-THD)	
M	11	1	**5C-9553**	2	BOLT (M6X1X16-MM)	
	12	1	**8T-4121**	2	WASHER-HARD (11X21X2.5-MM THK)	
M	13	1	**8T-4133**	1	NUT (M10X1.5-THD)	
M	14	1	**8T-4171**	2	BOLT (M6X1X12-MM)	
M	15	1	**8T-4195**	1	BOLT (M10X1.5X30-MM)	
	16	1	**8T-4205**	6	WASHER-HARD (7.2X14.5X2-MM THK)	

M - METRIC PART
Y - SEPARATE ILLUSTRATION

361-6396 **WIRING GP-AIR CONDITIONER (*contd.*)** **i05166861**

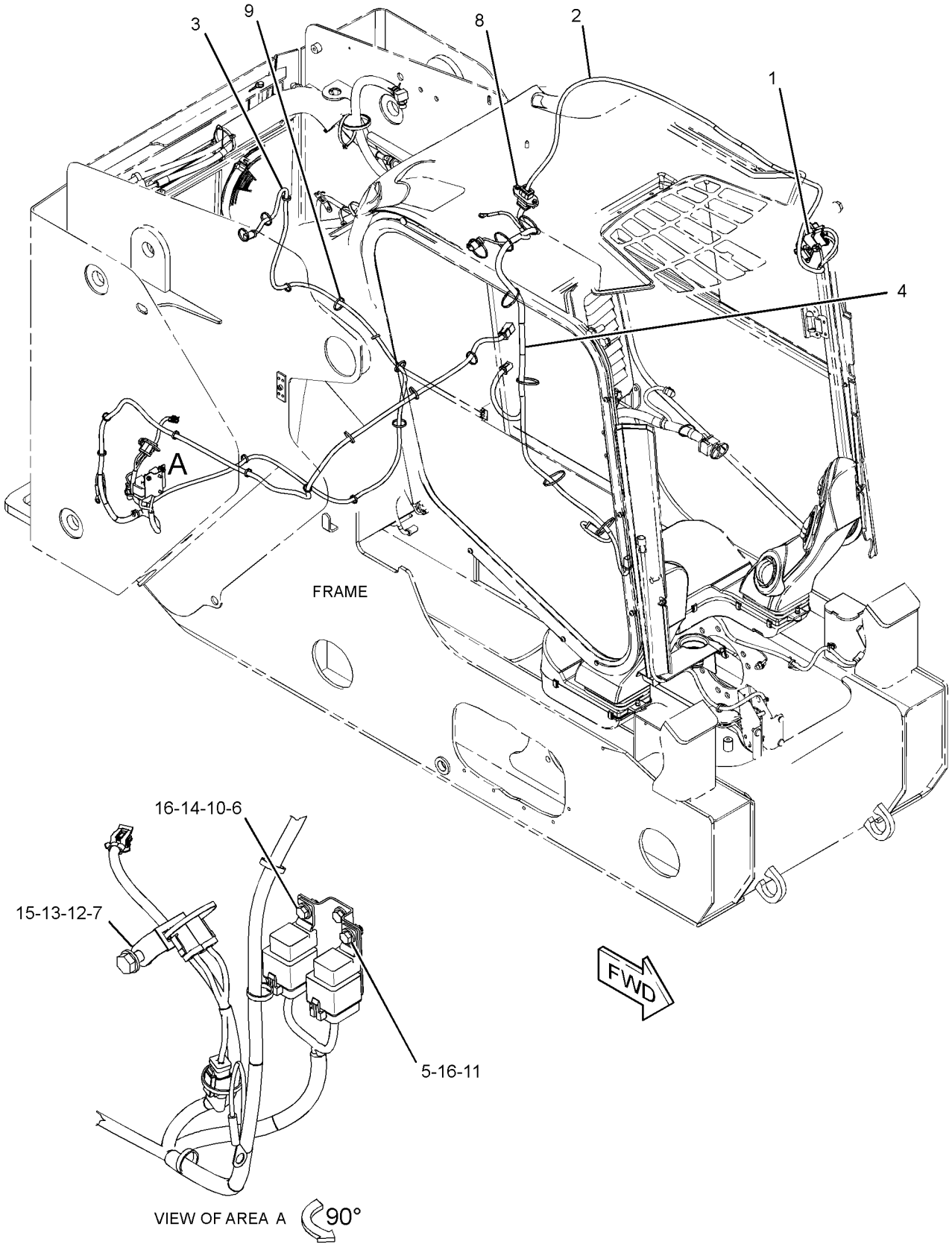

GRAPHIC #1 **<END>** g03327119

361-6400 WIRING GP-CAB

PART OF 345-5454 CAB AR

SMCS-1408, 7301 **i05296313**

NOTE	REF NO	GRAPHIC REF	PART NUMBER	QTY	PART NAME 1 2 3 4 5 6 (PRODUCT LEVEL)	SEE PAGE
	1	1	**7G-1060**	1	STRAP AS-GROUND	
	2	1	**7K-1181**	11	STRAP-CABLE	
	3	1	**8F-7242**	9	WASHER (8.7X15.9X1.6-MM THK)	
	4	1	**146-9439**	2	RELAY AS (12-VOLT) (FUSE BLOCK)	
	5	1	**258-3727**	6	SCREW-TRUSS HEAD (SPECIAL)	
Y	6	1	**258-4135**	2	RELAY GP (12-VOLT) (MAIN POWER)	131
	7	1	**258-4143**	1	BAR-BUS	
	8	1	**258-4178**	1	FLANGE-MOUNTING	
	9	1	**258-4196**	2	WIRE AS	
	10	1	**356-6067**	1	PLATE AS	
M		1	**159-9539**	3	NUT-WELD (M6X1-THD)	
	11	1	**356-6092**	1	FILM-IDENTIFICATION (POWER DISTRIBUTION)	
Y	12	1	*361-6395*	1	ELECTRONICS GP-MACHINE	94
Y	13	1	**361-6397**	1	HARNESS AS-CAB (SEAT)	96
Y	14	1	**361-6399**	1	HARNESS AS-CAB (BACK)	97
B	15	1	**374-7464**	1	CAP-SEAL	
B	16	1	**374-7466**	2	CAP-SEAL	
B	17	1	**374-7467**	2	CAP-SEAL	
Y	18	1	**386-9954**	1	RELAY GP (12-VOLT) (MAIN POWER)	132
	19	1	**110-2028**	4	SCREW-PAN HEAD (10-14X0.75-IN)	
	20	1	**1A-8912**	10	WASHER (6.7X12.7X1.6-MM THK)	
	21	1	**3S-2093**	26	STRAP-CABLE	
	22	1	**4P-8134**	4	CLIP	
M	23	1	**5C-2890**	12	NUT (M6X1-THD)	
M	24	1	**5C-7261**	3	NUT (M8X1.25-THD)	
M	25	1	**5C-9553**	2	BOLT (M6X1X16-MM)	
	26	1	**5P-4115**	4	WASHER-HARD (7.2X19X2-MM THK)	
	28	1	**5P-7162**	8	SCREW-MACHINE (10-32X0.5-IN)	
	29	1	**7P-1695**	2	WASHER (10.5X19X3-MM THK)	
M	30	1	**7X-2534**	3	BOLT (M6X1X50-MM)	
M	31	1	**7X-2537**	4	BOLT (M8X1.25X35-MM)	
	32	1	**8T-0328**	4	WASHER-HARD (5.5X10X1-MM THK)	
M	33	1	**8T-4133**	2	NUT (M10X1.5-THD)	
	34	1	**8T-4205**	3	WASHER-HARD (7.2X14.5X2-MM THK)	

B - USE AS REQUIRED
M - METRIC PART
Y - SEPARATE ILLUSTRATION

361-6400 **WIRING GP-CAB (*contd.*)** **i05296313**

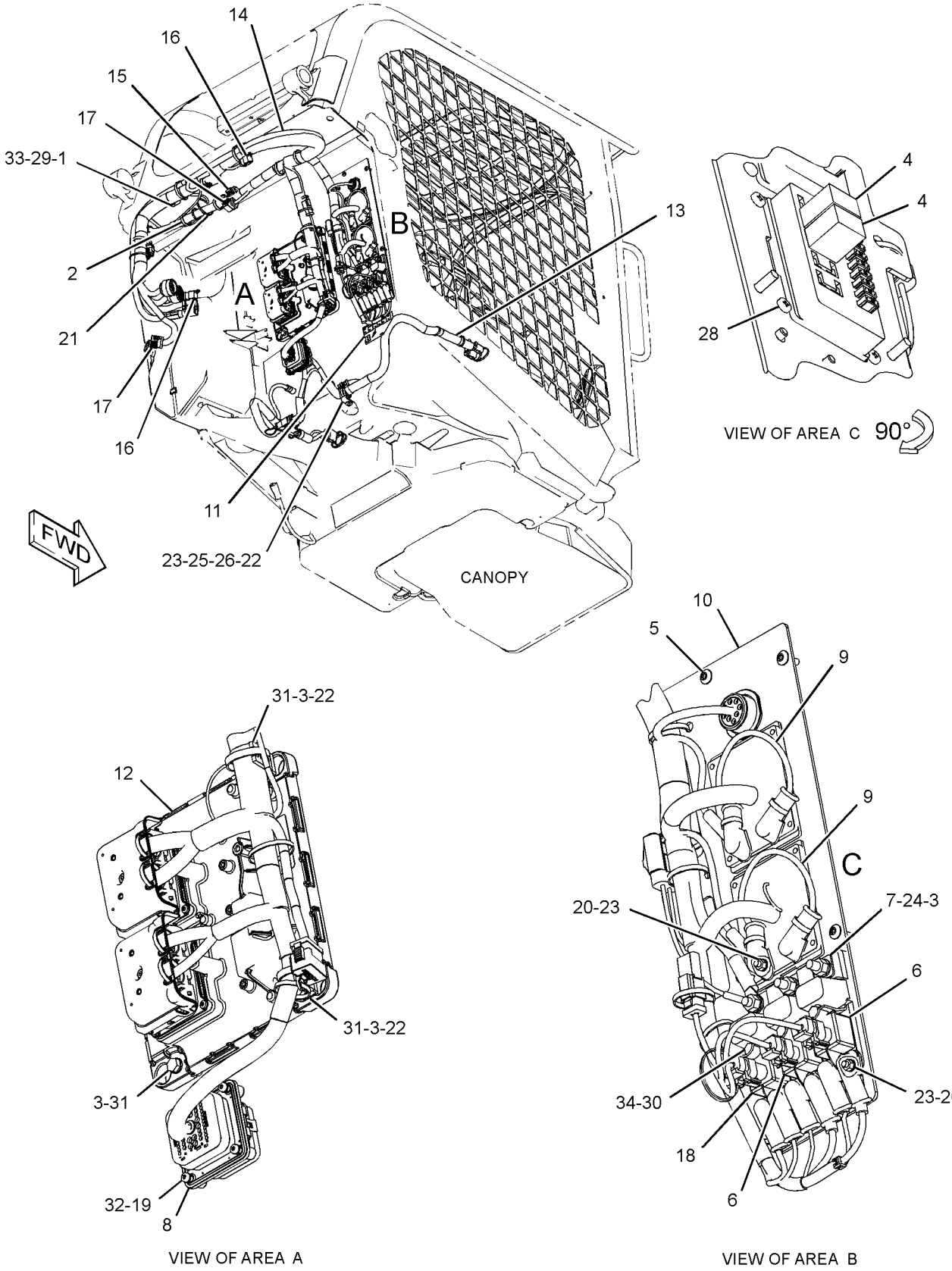

GRAPHIC #1 **<END>** g03385457

396-7209 WIRING GP-CAMERA—REAR VIEW

PART OF 416-9265 PANEL GP-INSTRUMENT
AN ATTACHMENT

SMCS-1408, 7348 **i05156469**

NOTE	REF NO	GRAPHIC REF	PART NUMBER	QTY	PART NAME 1 2 3 4 5 6 (PRODUCT LEVEL)	SEE PAGE
D	1	1	**5P-9909**	1	SEAL (0.1-M)	
	2	1	**7K-1181**	13	STRAP-CABLE	
Y	3	1	**336-6684**	1	CAMERA GP (12-VOLT, 24-VOLT)	92
Y	4	1	**396-7210**	1	HARNESS AS-CAB	100
	5	1	**9G-1307**	1	GROMMET	

D - ORDER BY THE METER
Y - SEPARATE ILLUSTRATION

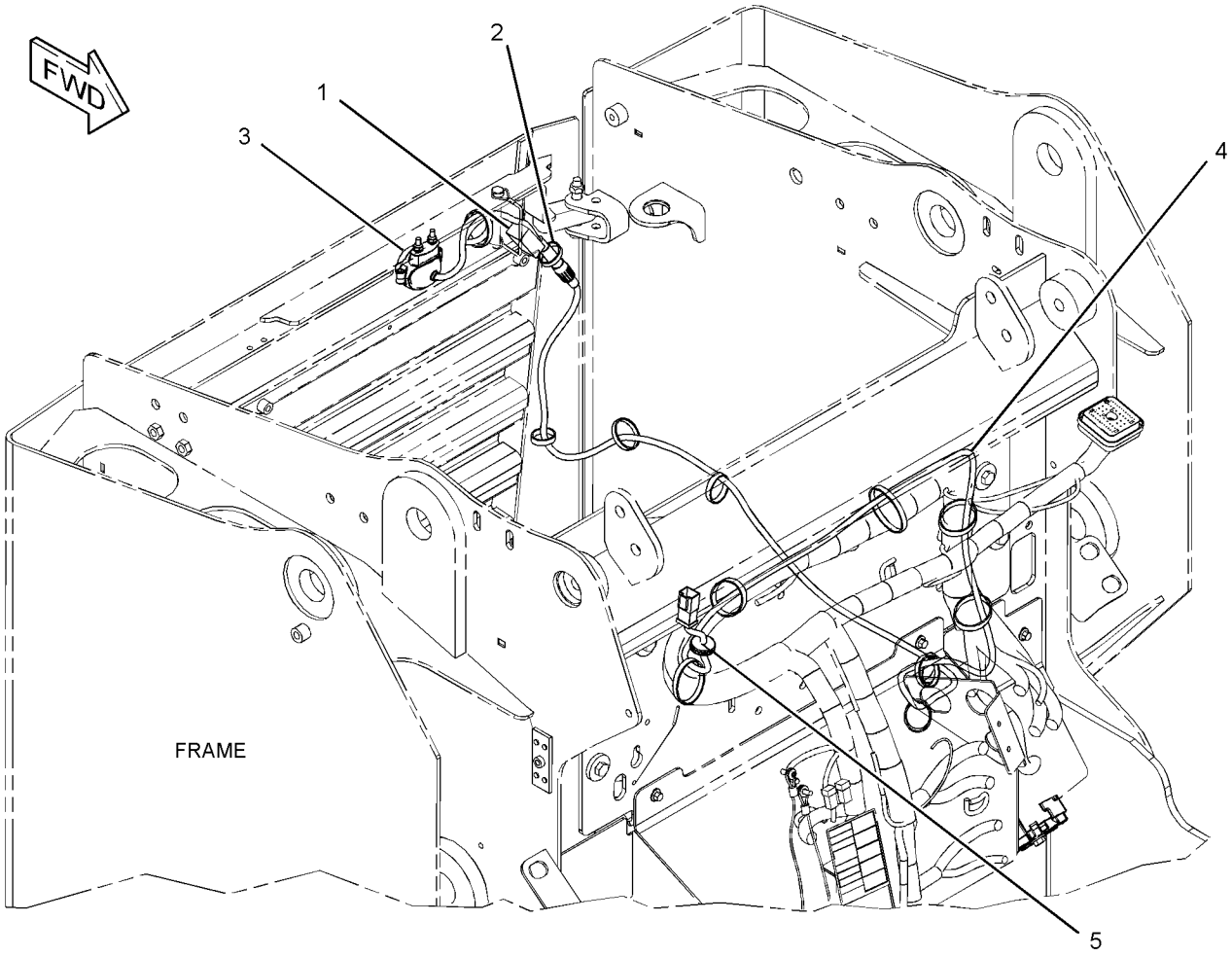

GRAPHIC #1 **<END>** g03323586

378-1022 WIRING GP-ENGINE

PART OF 378-6680, 393-7330 INSTALLATION AR-ENGINE

SMCS-1000, 1408, 1420 **i05162965**

NOTE	REF NO	GRAPHIC REF	PART NUMBER	QTY	PART NAME 1 2 3 4 5 6 (PRODUCT LEVEL)	SEE PAGE
Y	1	1	**378-1023**	1	HARNESS AS-ENGINE	100
	2	1	**104-6202**	1	CLIP	
	3	1	**132-5789**	3	CLIP	
	4	1	**345-4709**	1	BOLT (M10X1.25X20-MM)	
	5	1	**350-5720**	1	CLIP	
	6	1	**3S-2093**	14	STRAP-CABLE	
M	7	1	**5C-7261**	1	NUT (M8X1.25-THD)	
	8	1	**7P-1695**	1	WASHER (10.5X19X3-MM THK)	
M	9	1	**8T-4200**	2	BOLT (M8X1.25X16-MM)	
	10	1	**8T-4224**	3	WASHER-HARD (8.8X16X2-MM THK)	

M - METRIC PART
Y - SEPARATE ILLUSTRATION

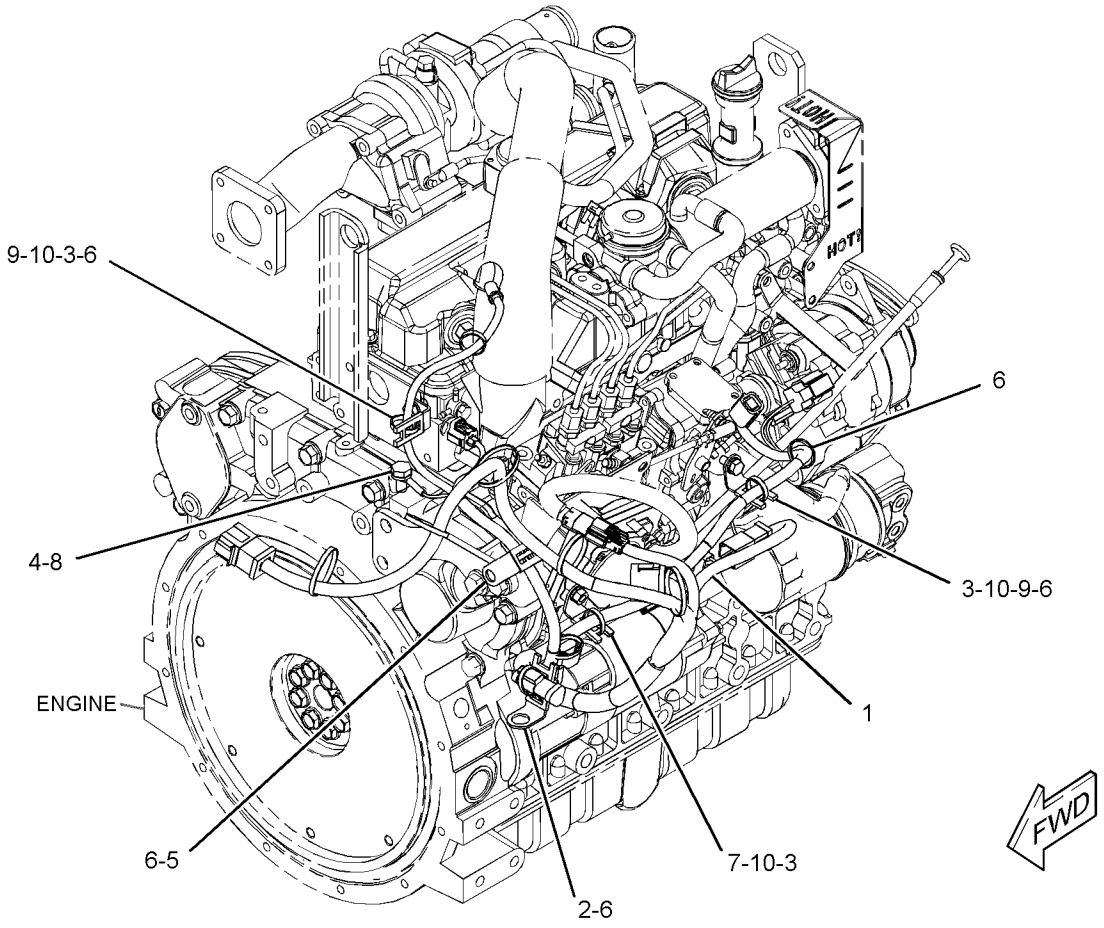

GRAPHIC #1 **<END>** g03320316

361-6384 WIRING GP-HEATER

PART OF 345-4917 HEATER AR-CAB

AN ATTACHMENT

SMCS-1090, 1408, 1900, 7304 **i05295540**

NOTE	REF NO	GRAPHIC REF	PART NUMBER	QTY	PART NAME 1 2 3 4 5 6 (PRODUCT LEVEL)	SEE PAGE
	1	1	**109-2356**	1	PLUG	
Y	2	1	*356-6113*	1	CONTROL GP-AIR & TEMPERATURE	366
	3	1	**374-7463**	1	CAP-SEAL	
Y	4	1	**378-1024**	1	HARNESS AS-HEATER & AIR COND	102
	5	1	**266-3314**	2	BOLT-FLANGE HEAD (M6X1X20.5-MM)	
	6	1	**3S-2093**	8	STRAP-CABLE	

Y - SEPARATE ILLUSTRATION

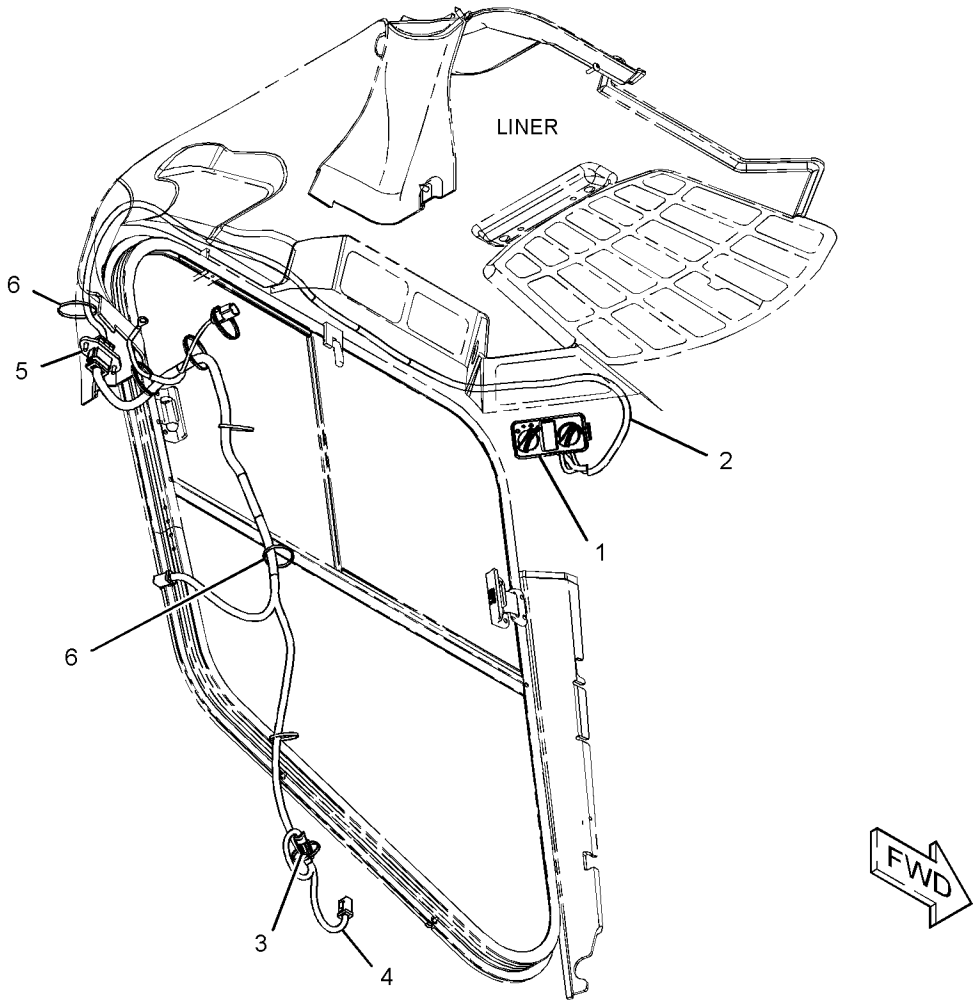

GRAPHIC #1 **<END>** g03384941

361-6390 WIRING GP-PLATFORM

PART OF 345-5247 CHASSIS AR

SMCS-1408, 1429 **i05162970**

NOTE	REF NO	GRAPHIC REF	PART NUMBER	QTY	PART NAME 1 2 3 4 5 6 (PRODUCT LEVEL)	SEE PAGE
	1	1	**7K-1181**	12	STRAP-CABLE	
	2	1	**164-9425**	1	HORN AS (12-VOLT, LOW TONE)	
	3	1	**206-1345**	1	STRAP-CABLE	
Y	4	1	**268-4071**	2	LAMP GP-FLOOD (12-VOLT)	121
	5	1	**290-5562**	1	MOUNT (DUAL SWIVEL)	
	6	1	**300-9546**	1	ALARM AS (BACKUP)	
BD		1	**5P-5623**		WIRE-ELECTRICAL (16-GA, BLACK)	
		1	**8T-8729**	2	PIN-CONNECTOR (16-GA TO 18-GA)	
E		1	**9X-1813**		SLEEVE (31-CM)	
		1	**102-8802**	1	KIT-RECEPTACLE (2-PIN)	
					(INCLUDES RECEPTACLE AS & WEDGE)	
Y	7	1	**361-6391**	1	HARNESS AS-PLATFORM (REAR)	105
Y	8	1	**361-6393**	1	HARNESS AS-PLATFORM (FRONT)	106
	9	1	**374-7463**	1	CAP-SEAL	
	10	1	**374-7464**	1	CAP-SEAL	
	11	1	**374-7467**	1	CAP-SEAL	
	12	1	**378-1011**	1	HOLDER AS-FUSE	
		1	**378-1012**	1	FUSE (100-AMPERE)	
		1	**378-1013**	3	COVER	
		1	**396-8366**	1	FUSE (50-AMPERE)	
Y	13	1	**383-6247**	1	HARNESS AS-PLATFORM	106
	14	1	**396-7203**	1	PLATE	
M	15	1	**113-8694**	2	BOLT (M6X1X20-MM)	
	16	1	**115-1615**	2	RELAY AS (12-VOLT)	
	17	1	**161-3357**	1	SPACER (12X20X10-MM THK)	
	18	1	**266-3314**	3	BOLT-FLANGE HEAD (M6X1X20.5-MM)	
M	19	1	**266-3315**	2	BOLT-FLANGE HEAD (M8X1.25X25.5-MM)	
	20	1	**3K-5178**	2	GROMMET	
	21	1	**3S-2093**	34	STRAP-CABLE	
	22	1	**4B-4863**	4	WASHER (4.7X11X1.2-MM THK)	
	23	1	**4P-7581**	4	CLIP	
	24	1	**4P-8134**	1	CLIP	
M	25	1	**5C-2874**	3	NUT (M5X0.8-THD)	
M	26	1	**5C-2890**	2	NUT (M6X1-THD)	
	27	1	**6D-5729**	2	GROMMET	
M	28	1	**8C-4982**	4	BOLT-SOCKET HEAD (M4X0.7X20-MM)	
	29	1	**8T-0328**	3	WASHER-HARD (5.5X10X1-MM THK)	
	30	1	**8T-4121**	3	WASHER-HARD (11X21X2.5-MM THK)	
M	31	1	**8T-4133**	3	NUT (M10X1.5-THD)	
M	32	1	**8T-4171**	3	BOLT (M6X1X12-MM)	
M	33	1	**8T-4196**	1	BOLT (M10X1.5X35-MM)	
	34	1	**8T-4205**	5	WASHER-HARD (7.2X14.5X2-MM THK)	

B - USE AS REQUIRED
D - ORDER BY THE METER
E - ORDER BY THE CENTIMETER
M - METRIC PART
Y - SEPARATE ILLUSTRATION

361-6390 **WIRING GP-PLATFORM (*contd.*)** **i05162970**

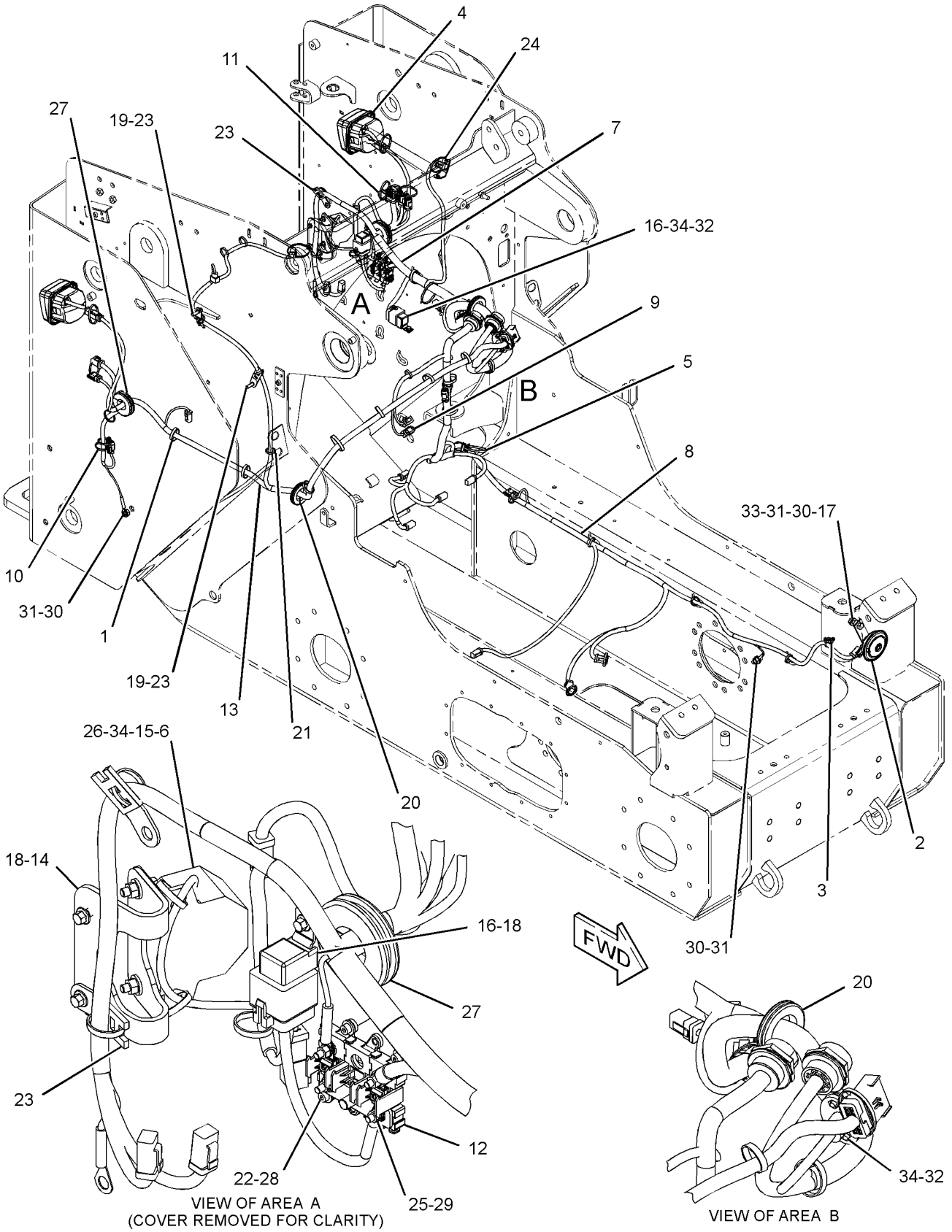

GRAPHIC #1 **<END>** g03320305

361-6378 WIRING GP-QUICK COUPLER

PART OF 345-4744 COUPLER AR-QUICK

AN ATTACHMENT

SMCS-1408, 6129 **i05165181**

NOTE	REF NO	GRAPHIC REF	PART NUMBER	QTY	PART NAME 1 2 3 4 5 6 (PRODUCT LEVEL)	SEE PAGE
	1	1	**7K-1181**	3	STRAP-CABLE	
	2	1	**8V-5718**	4	CLAMP	
	3	1	**178-3620**	8	STRAP-DUAL CLAMP	
	4	1	**239-9833**	2	PLATE (TOP)	
	5	1	**265-9513**	1	SWITCH AS-ROCKER (QUICK COUPLER)	
		1	**111-7899**	1	GASKET	
Y	6	1	**356-6111**	1	HARNESS AS-QUICK COUPLER	107
Y	7	1	**361-6379**	1	HARNESS AS-WORK TOOL (QUICK COUPLER)	113
	8	1	**419-0088**	1	ACTUATOR GP (QUICK COUPLER)	
	9	1	**115-1615**	2	RELAY AS (12-VOLT) (QUICK COUPLER)	
	10	1	**266-3314**	2	BOLT-FLANGE HEAD (M6X1X20.5-MM)	
	11	1	**3S-2093**	10	STRAP-CABLE	
M	12	1	**5C-2874**	1	NUT (M5X0.8-THD)	
M	13	1	**7X-0818**	2	BOLT (M8X1.25X45-MM)	
	14	1	**8T-0328**	1	WASHER-HARD (5.5X10X1-MM THK)	

M - METRIC PART
Y - SEPARATE ILLUSTRATION

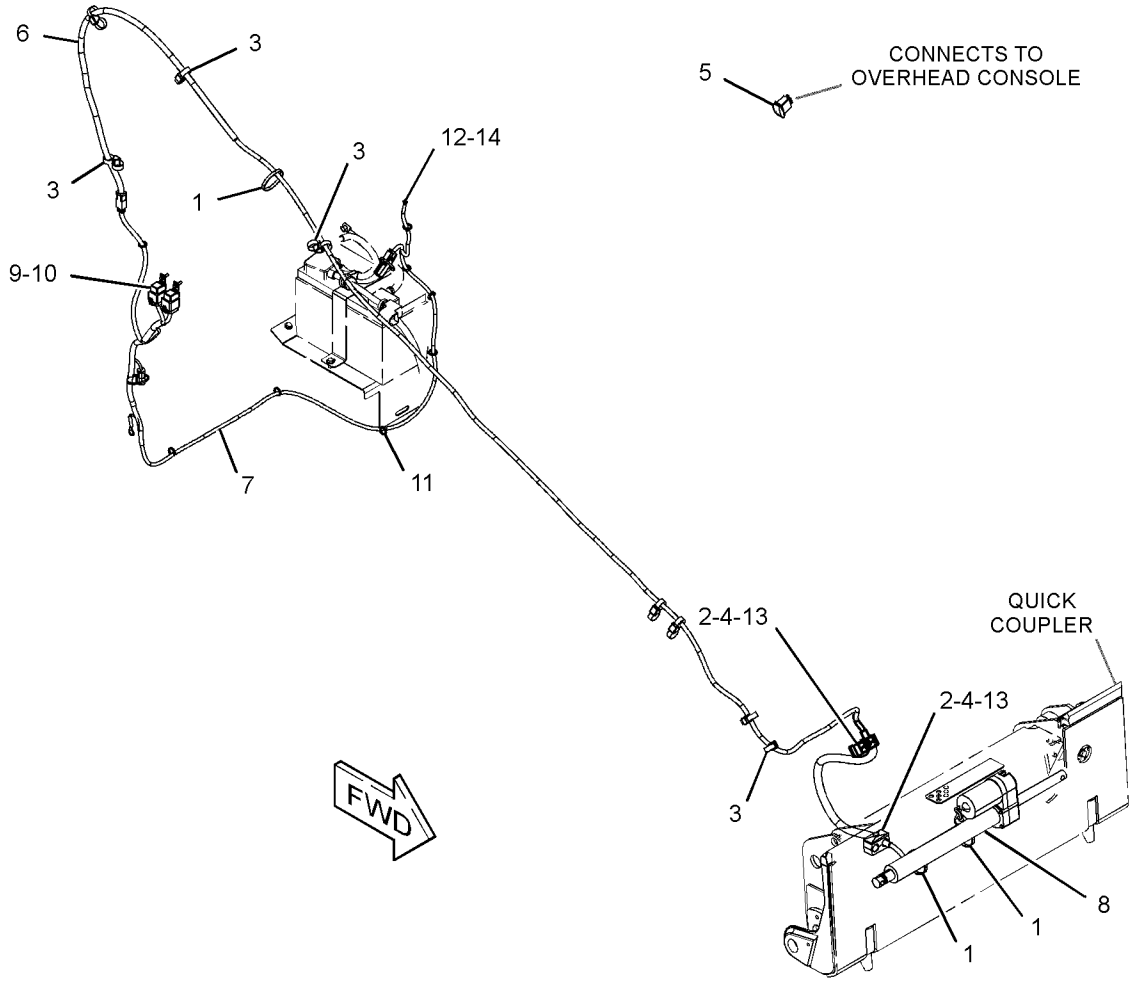

GRAPHIC #1 **<END>** g03323521

356-6096 WIRING GP-RIDE CONTROL

PART OF 388-7932 CONFIGURATION AR, 345-4929 MACHINE AR-SPECIAL
AN ATTACHMENT

SMCS-1408, 5004, 5734 **i04762441**

NOTE	REF NO	GRAPHIC REF	PART NUMBER	QTY	PART NAME 1 2 3 4 5 6 (PRODUCT LEVEL)	SEE PAGE
	1	1	**146-9439**	1	RELAY AS (12-VOLT) (FUSE BLOCK)	
	2	1	**265-9526**	1	SWITCH AS-ROCKER (RIDE CONTROL)	
		1	**111-7899**	1	GASKET	
	3	1	**290-5562**	2	MOUNT (DUAL SWIVEL)	
	4	1	**356-6095**	1	HARNESS AS-RIDE CONTROL	
		1	**8T-8729**	2	PIN-CONNECTOR (16-GA TO 18-GA)	
		1	**155-2270**	4	KIT-CONNECTING PLUG (2-PIN)	
					(EACH INCLUDES PLUG AS, WEDGE & INTERFACE SEAL)	
		1	**102-8802**	1	KIT-RECEPTACLE (2-PIN)	
					(INCLUDES RECEPTACLE AS & WEDGE)	
		1	**8T-8730**	8	SOCKET-CONNECTOR (16-GA TO 18-GA)	
		1	**189-3158**	1	SUPPRESSOR-ARC	
E		1	**125-7875**		TUBE-HEAT SHRINK (7.44-MM DIA) (10-CM)	
	5	1	**3S-2093**	5	STRAP-CABLE	

E - ORDER BY THE CENTIMETER

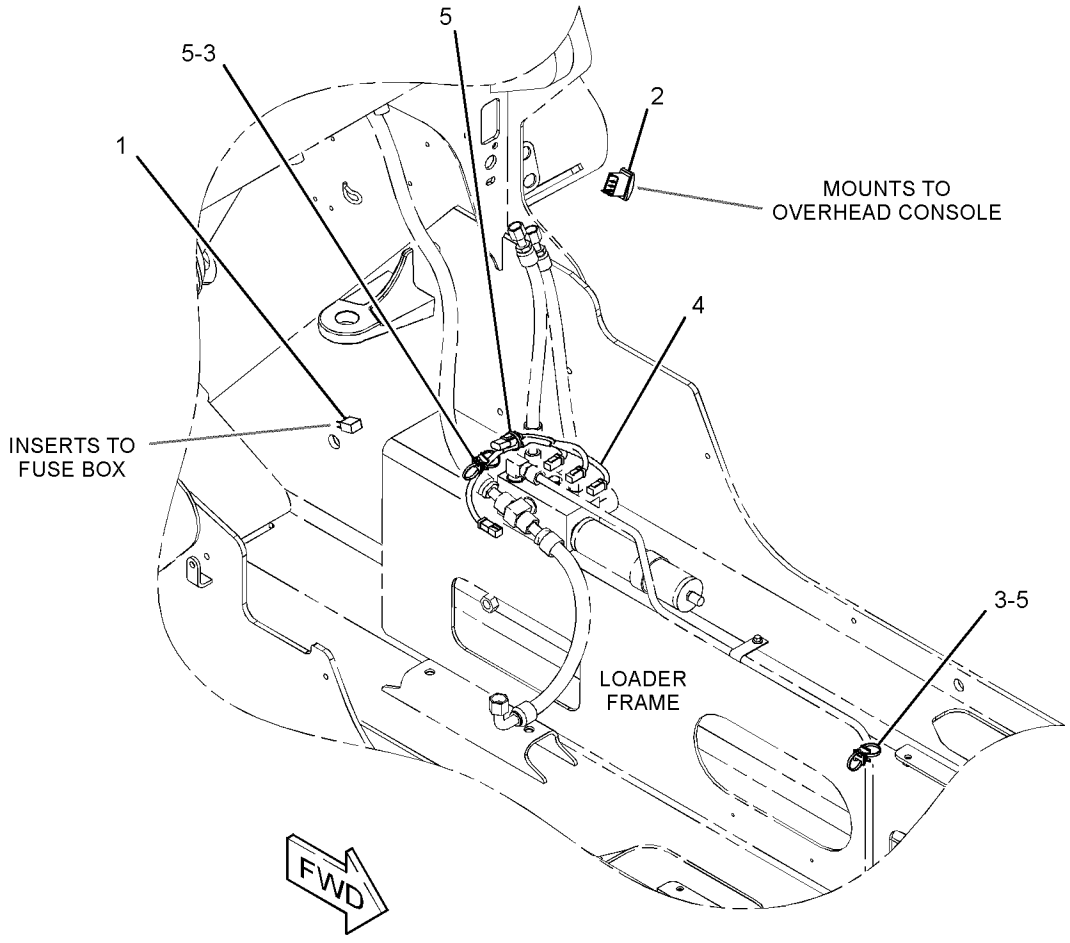

GRAPHIC #1 **<END>** g02884976

356-6107 WIRING GP-WORK TOOL

PART OF 345-5225 HYDRAULIC AR

AN ATTACHMENT

SMCS-1408 **i05296318**

NOTE	REF NO	GRAPHIC REF	PART NUMBER	QTY	PART NAME 1 2 3 4 5 6 (PRODUCT LEVEL)	SEE PAGE
	1	1	**7K-1181**	19	STRAP-CABLE	
	2	1	**178-3620**	7	STRAP-DUAL CLAMP	
	3	1	**247-4818**	1	SENSOR AS-POSITION (BOOM RETRACTED)	
		1	**9X-3401**	4	PIN-CONNECTOR (16-GA TO 18-GA)	
					—OR—	
		1	**126-1767**	4	PIN-CONNECTOR (14-GA TO 16-GA)	
		1	**102-8804**	1	KIT-RECEPTACLE (4-PIN)	
					(INCLUDES RECEPTACLE AS & WEDGE)	
E		1	**8Y-8080**		TUBE-CONVOLUTED (23-CM)	
	4	1	**263-5417**	1	SWITCH AS-ROCKER (WORK TOOL POSITIONER)	
		1	**111-7899**	1	GASKET	
	5	1	**344-7391**	1	SENSOR GP-PRESSURE (QUICK COUPLER)	
	6	1	**423-3678**	1	BRACKET AS	
Y	7	1	**356-6072**	1	HARNESS AS-SENSOR	110
	8	1	**356-6119**	1	SENSOR AS-POSITION (QUICK COUPLER)	
	9	1	**388-7874**	1	PLATE	
	10	1	**388-7886**	1	PLATE	
	11	1	**388-7887**	1	PLATE	
M	12	1	**112-9118**	2	BOLT-SOCKET HEAD (M4X0.7X30-MM)	
	13	1	**266-3314**	4	BOLT-FLANGE HEAD (M6X1X20.5-MM)	
	14	1	**266-3316**	2	BOLT-FLANGE HEAD (M10X1.5X25-MM)	
	15	1	**3J-1907**	1	SEAL-O-RING	
M	16	1	**7X-0818**	2	BOLT (M8X1.25X45-MM)	
	17	1	**8T-4205**	4	WASHER-HARD (7.2X14.5X2-MM THK)	
	18	1	**8T-4224**	2	WASHER-HARD (8.8X16X2-MM THK)	

E - ORDER BY THE CENTIMETER
M - METRIC PART
Y - SEPARATE ILLUSTRATION

356-6107 **WIRING GP-WORK TOOL (*contd.*)** **i05296318**

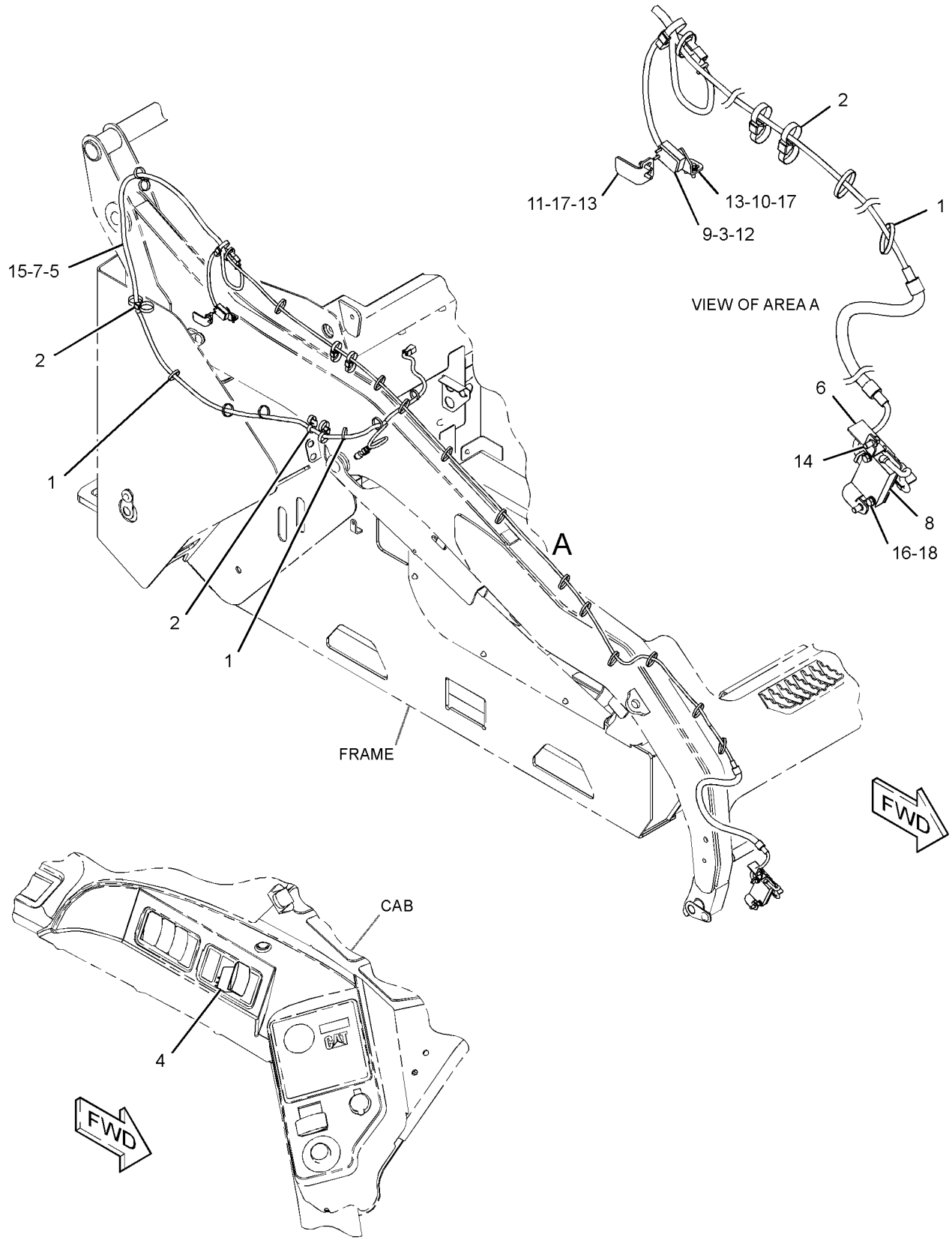

GRAPHIC #1 **<END>** g03370017

416-9264 WIRING GP-WORK TOOL—SELF LEVEL

PART OF 345-5447 HYDRAULIC AR
AN ATTACHMENT

SMCS-1408 **i05231930**

NOTE	REF NO	GRAPHIC REF	PART NUMBER	QTY	PART NAME 1 2 3 4 5 6 (PRODUCT LEVEL)	SEE PAGE
	1	1	**7K-1181**	8	STRAP-CABLE	
	2	1	**8V-5718**	4	CLAMP	
	3	1	**178-3620**	9	STRAP-DUAL CLAMP	
	4	1	**102-8705**	2	PLATE	
	5	1	**247-4818**	1	SENSOR AS-POSITION (BOOM RETRACTED)	
		1	**102-8804**	1	KIT-RECEPTACLE (4-PIN)	
					(INCLUDES RECEPTACLE AS & WEDGE)	
		1	**9X-3401**	4	PIN-CONNECTOR (16-GA TO 18-GA)	
					—OR—	
		1	**126-1767**	4	PIN-CONNECTOR (14-GA TO 16-GA)	
E		1	**8Y-8080**		TUBE-CONVOLUTED (23-CM)	
	6	1	**263-5417**	1	SWITCH AS-ROCKER (WORK TOOL POSITIONER)	
		1	**111-7899**	1	GASKET	
	7	1	**344-7391**	1	SENSOR GP-PRESSURE (LIFT CYLINDER)	
	8	1	**345-5141**	1	BRACKET AS	
M		1	**159-9540**	2	NUT-WELD (M8X1.25-THD)	
Y	9	1	**356-6072**	1	HARNESS AS-SENSOR (SELF LEVEL)	110
	10	1	**356-6119**	1	SENSOR AS-POSITION (QUICK COUPLER)	
	11	1	**416-9259**	1	PLATE AS	
	12	1	**416-9260**	1	PLATE	
	13	1	**266-3316**	2	BOLT-FLANGE HEAD (M10X1.5X25-MM)	
	14	1	**3J-1907**	1	SEAL-O-RING	
	15	1	**4B-4863**	2	WASHER (4.7X11X1.2-MM THK)	
M	16	1	**5C-8312**	2	NUT (M4X0.7-THD)	
M	17	1	**7X-0818**	4	BOLT (M8X1.25X45-MM)	
M	18	1	**8C-4982**	2	BOLT-SOCKET HEAD (M4X0.7X20-MM)	
M	19	1	**8T-4171**	2	BOLT (M6X1X12-MM)	
	20	1	**8T-4205**	2	WASHER-HARD (7.2X14.5X2-MM THK)	
	21	1	**8T-4224**	2	WASHER-HARD (8.8X16X2-MM THK)	

E - ORDER BY THE CENTIMETER
M - METRIC PART
Y - SEPARATE ILLUSTRATION

416-9264 **WIRING GP-WORK TOOL (*contd.*)** **i05231930**

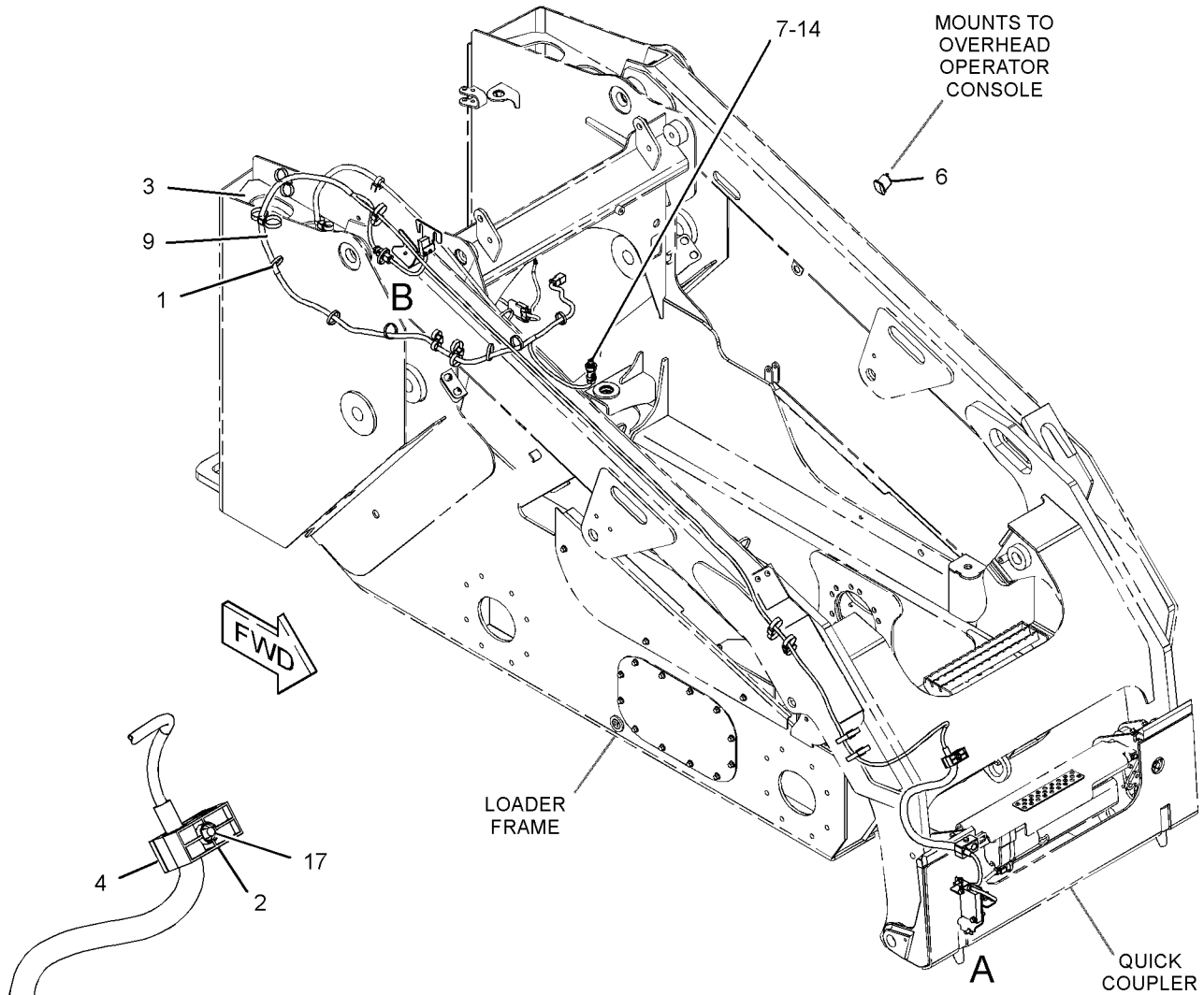

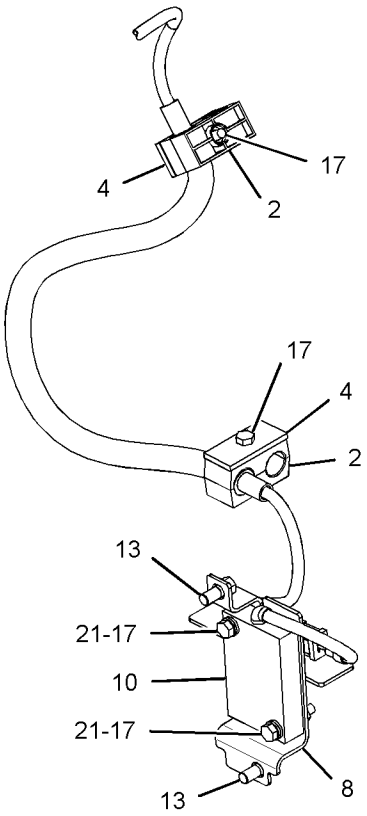

VIEW OF AREA A

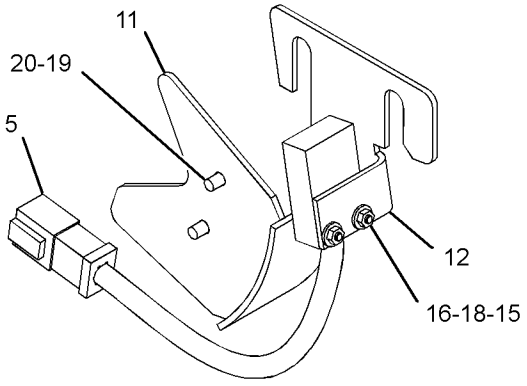

VIEW OF AREA B
(PARTS REMOVED FOR CLARITY)

GRAPHIC #1 **<END>** g03351240

421-4207 WIRING GP-WORK TOOL

PART OF 345-5447 HYDRAULIC AR
AN ATTACHMENT

SMCS-1408 **i05160110**

NOTE	REF NO	GRAPHIC REF	PART NUMBER	QTY	PART NAME 1 2 3 4 5 6 (PRODUCT LEVEL)	SEE PAGE
	1	1	**146-9439**	5	RELAY AS (12-VOLT)	
	2	1	**159-9495**	1	NUT (1-1/2-18-THD)	
	3	1	**178-3620**	5	STRAP-DUAL CLAMP	
	4	1	**263-5418**	1	SWITCH AS-ROCKER (WORK TOOL)	
		1	**111-7899**	1	GASKET	
Y	5	1	**356-6115**	1	HARNESS AS-WORK TOOL	112
	6	1	**396-7208**	1	BRACKET	
	7	1	**159-9496**	1	LOCKWASHER	
	8	1	**266-3316**	2	BOLT-FLANGE HEAD (M10X1.5X25-MM)	
	9	1	**8T-4121**	1	WASHER-HARD (11X21X2.5-MM THK)	
M	10	1	**8T-4133**	1	NUT (M10X1.5-THD)	

M - METRIC PART
Y - SEPARATE ILLUSTRATION

421-4207 **WIRING GP-WORK TOOL (*contd.*)** **i05160110**

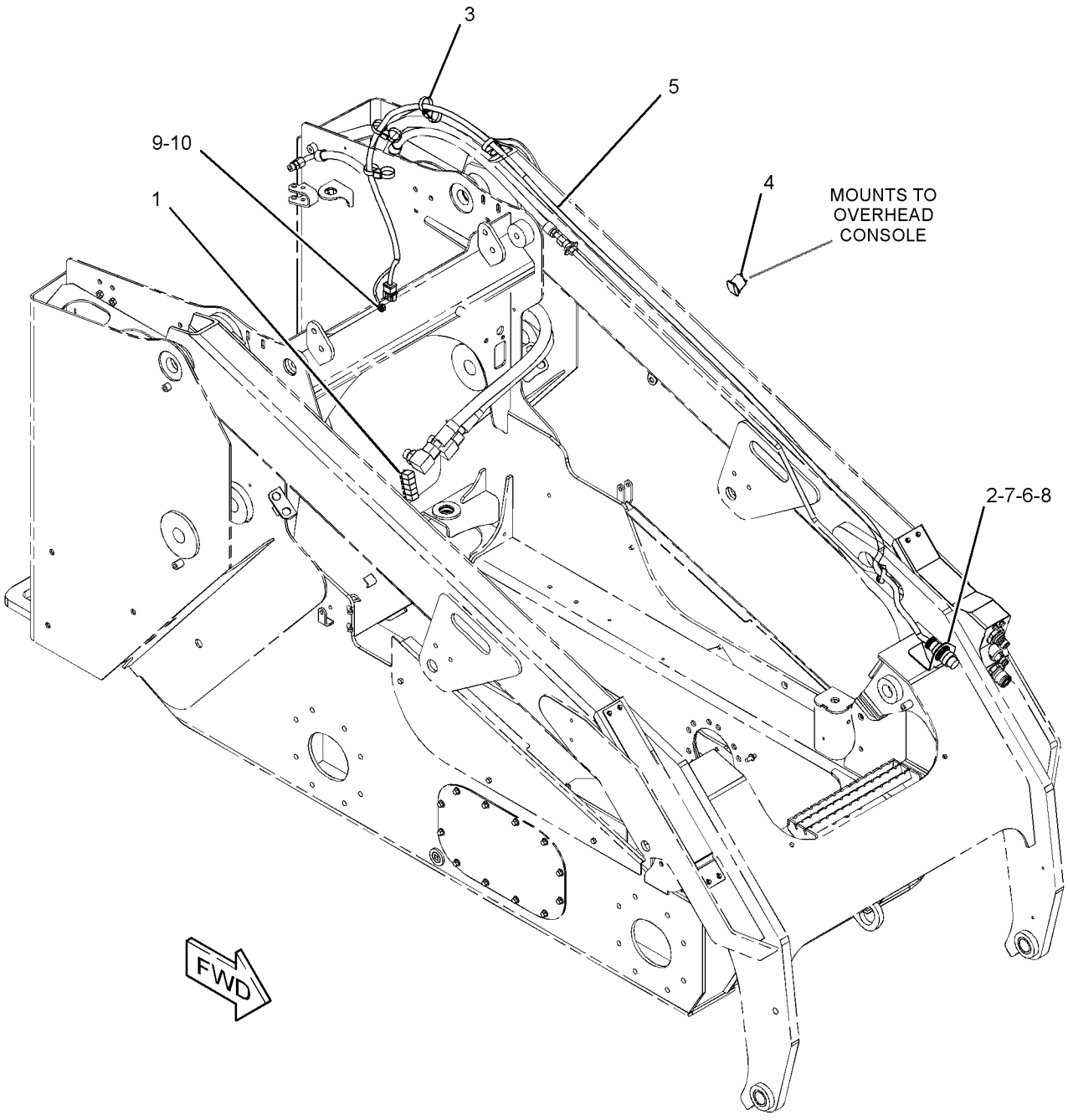

GRAPHIC #1 **<END>** g03350144

421-4223 WIRING GP-WORK TOOL–IMPLEMENT VALVE

PART OF 345-5447 HYDRAULIC AR
AN ATTACHMENT

SMCS-1408 **i05223370**

NOTE	REF NO	GRAPHIC REF	PART NUMBER	QTY	PART NAME 1 2 3 4 5 6 (PRODUCT LEVEL)	SEE PAGE
	1	1	**7K-1181**	2	STRAP-CABLE	
	2	1	**146-9439**	1	RELAY AS (12-VOLT) (FUSE BLOCK)	
Y	3	1	**421-4222**	1	HARNESS AS-SOLENOID	111
	4	1	**3S-2093**	1	STRAP-CABLE	
	5	1	**4P-8134**	1	CLIP	

Y - SEPARATE ILLUSTRATION

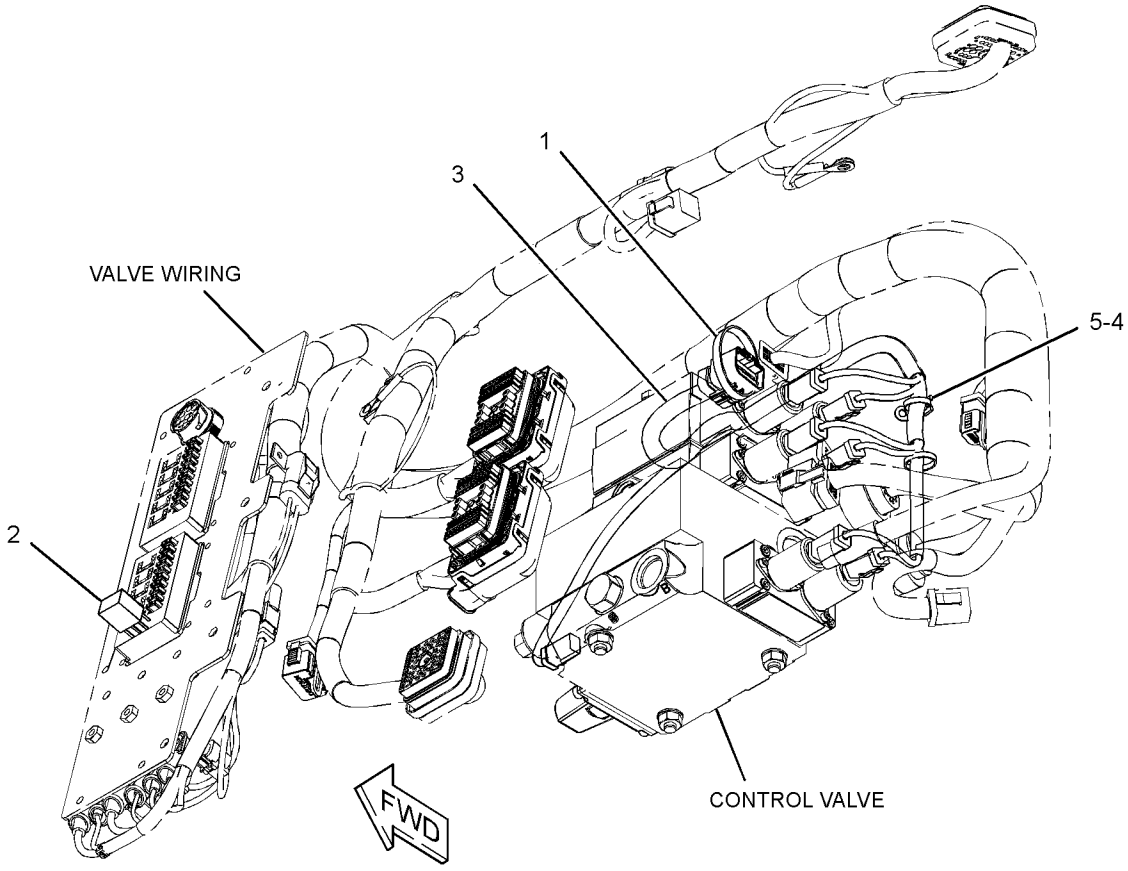

GRAPHIC #1 **<END>** g03350976

421-4225 WIRING GP-WORK TOOL–LIFT ARM

PART OF 387-5383 CONTROL AR-HYDRAULIC
AN ATTACHMENT

SMCS-1408 **i05296344**

NOTE	REF NO	GRAPHIC REF	PART NUMBER	QTY	PART NAME 1 2 3 4 5 6 (PRODUCT LEVEL)	SEE PAGE
	1	1	**7K-1181**	5	STRAP-CABLE	
	2	1	**146-9439**	5	RELAY AS (12-VOLT) (WORK TOOL)	
	3	1	**159-9495**	1	NUT (1-1/2-18-THD)	
	4	1	**178-3620**	5	STRAP-DUAL CLAMP	
	5	1	**263-5418**	1	SWITCH AS-ROCKER (WORK TOOL)	
		1	**111-7899**	1	GASKET	
Y	6	1	**356-6115**	1	HARNESS AS-WORK TOOL	112
	7	1	**396-7208**	1	BRACKET	
	8	1	**159-9496**	1	LOCKWASHER	
	9	1	**266-3316**	2	BOLT-FLANGE HEAD (M10X1.5X25-MM)	
	10	1	**7P-1695**	1	WASHER (10.5X19X3-MM THK)	
M	11	1	**8T-4133**	1	NUT (M10X1.5-THD)	

M - METRIC PART
Y - SEPARATE ILLUSTRATION

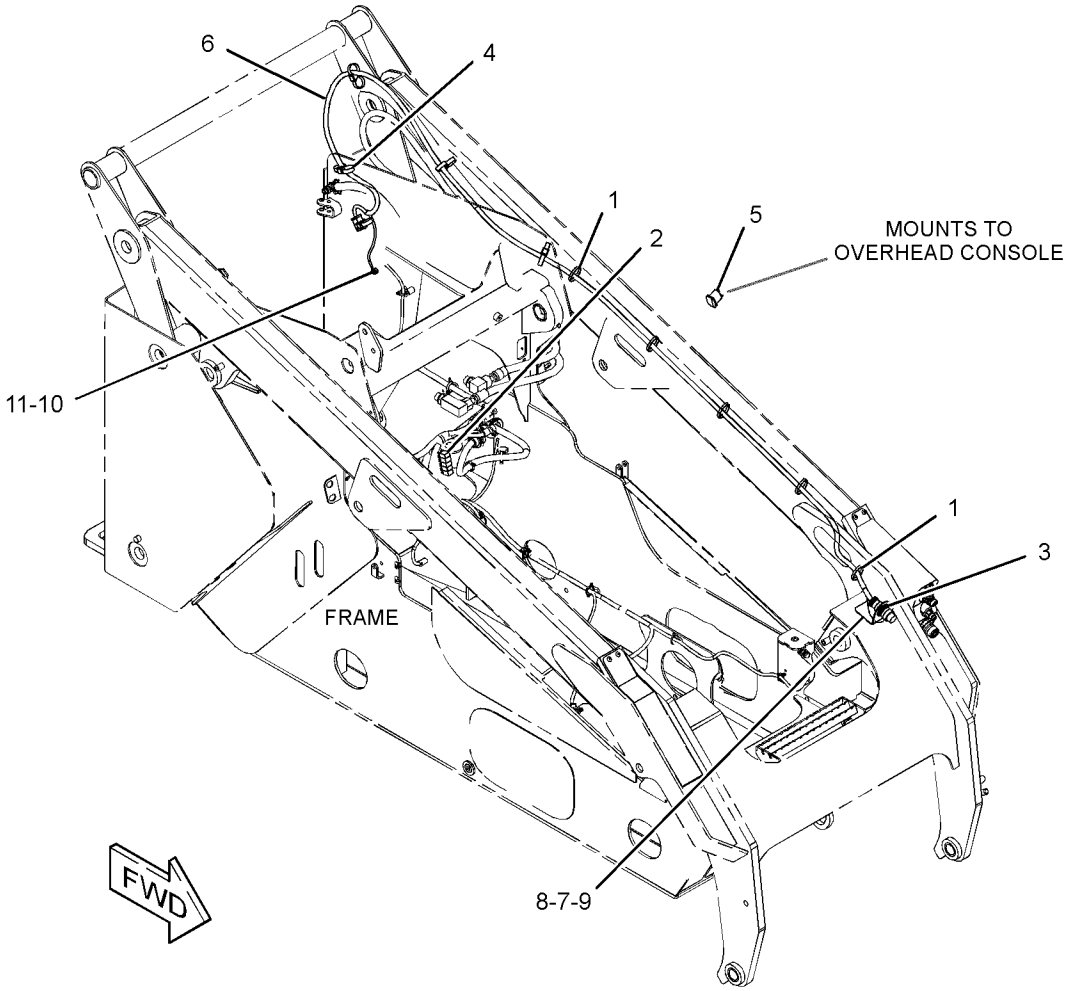

GRAPHIC #1 **<END>** g03384979

258-2857 AXLE GP–STANDARD

PART OF 258-3736 AXLE GP

SMCS-3278 **i02628507**

NOTE	REF NO	GRAPHIC REF	PART NUMBER	QTY	PART NAME 1 2 3 4 5 6 (PRODUCT LEVEL)	SEE PAGE
	1	1	**142-9023**	1	HOUSING-AXLE	
	2	1	**142-9029**	1	SPACER (57.16X69.85X27.54-MM THK)	
	3	1	**155-5652**	1	SEAL-LIP TYPE	
	4	1	**155-9010**	1	CONE-BEARING	
	5	1	**155-9432**	1	CONE-BEARING	
	6	1	**155-9433**	2	CUP-BEARING	
	7	1	**159-5772**	8	STUD	
	8	1	**169-1679**	1	SEAL-LIP TYPE	
	9	1	**258-2954**	1	SPINDLE (WHEEL)	

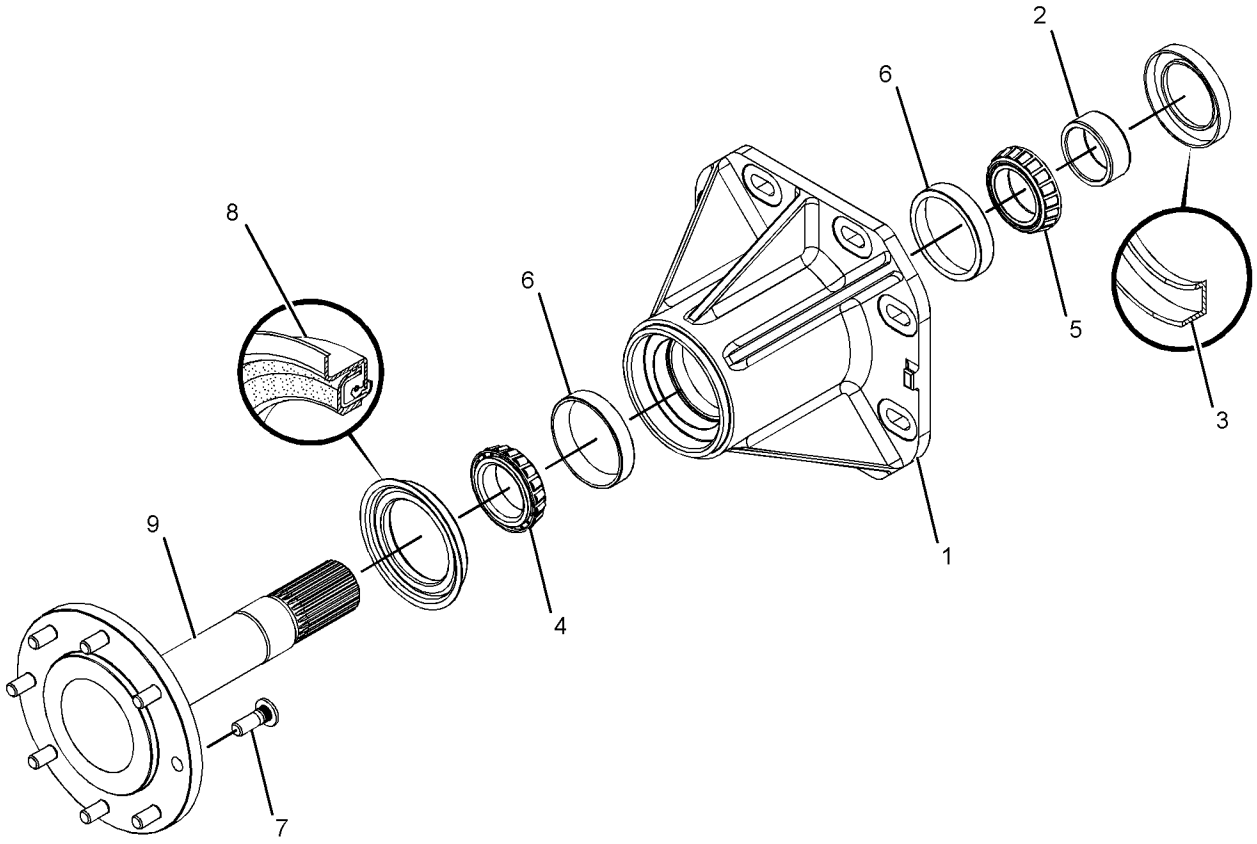

GRAPHIC #1 **<END>** g01321899

258-3736 AXLE GP–STANDARD

PART OF 345-5247 CHASSIS AR

SMCS-3278 **i02628508**

NOTE	REF NO	GRAPHIC REF	PART NUMBER	QTY	PART NAME 1 2 3 4 5 6 (PRODUCT LEVEL)	SEE PAGE
Y	1	1	*258-2857*	4	AXLE GP	155

Y - SEPARATE ILLUSTRATION

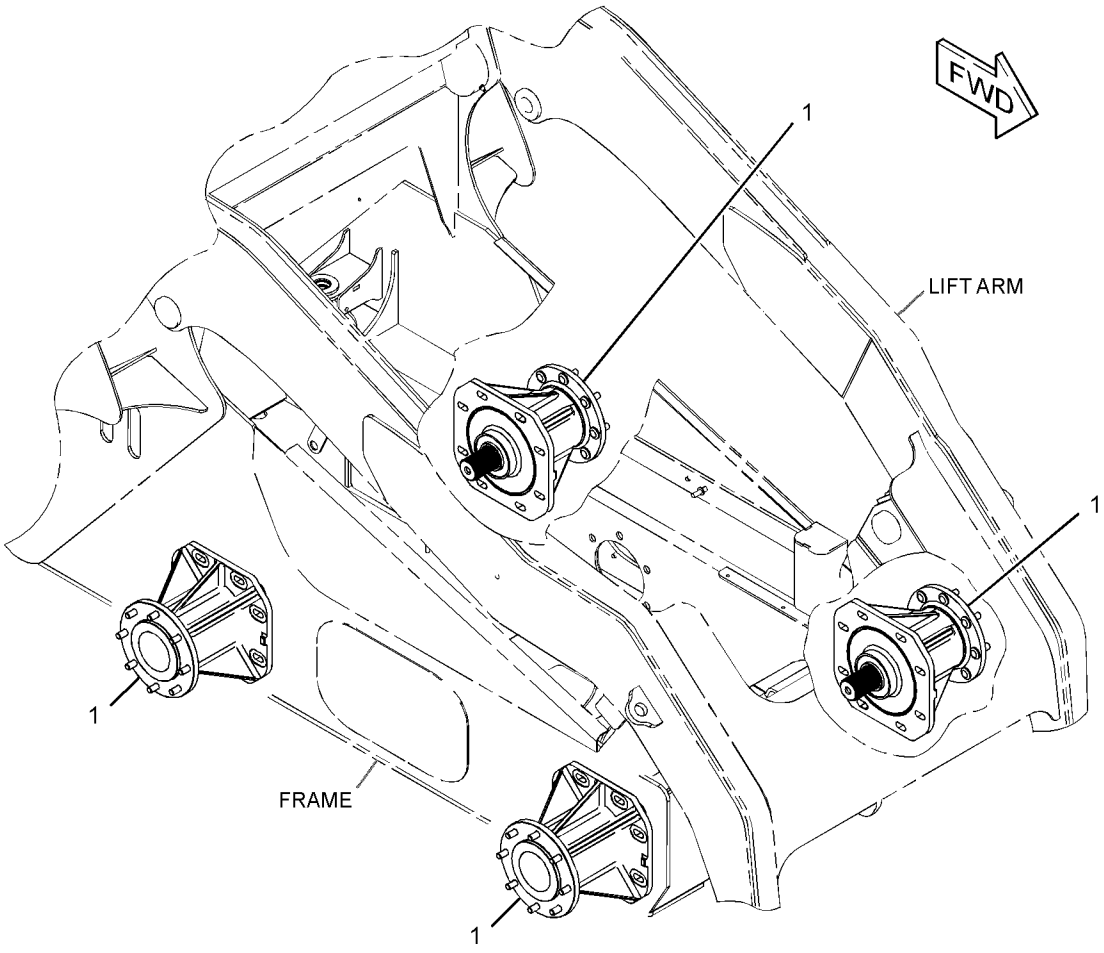

GRAPHIC #1 **<END>** g01321923

435-8712 DRIVE GP-TANDEM

PART OF 345-4925, 345-4931 POWER TRAIN AR
AN ATTACHMENT

SMCS-4062 **i05295866**

NOTE	REF NO	GRAPHIC REF	PART NUMBER	QTY	PART NAME 1 2 3 4 5 6 (PRODUCT LEVEL)	SEE PAGE
	1	1	**142-9033**	2	RETAINER	
	2	1	**152-1157**	32	WASHER (15.5X32X8-MM THK)	
	3	1	**200-0999**	32	STUD	
	4	1	**258-2858**	2	SPACER (63.9X75X13.13-MM THK)	
	5	1	**422-3212**	4	SPROCKET-MOTOR	
	6	1	**422-3350**	2	CHAIN AS	
	7	1	**422-3366**	2	CHAIN AS	
	8	1	**435-8725**	4	SPROCKET-AXLE	
M	9	1	**100-3866**	4	BOLT-SELF-LOCKING (M16X2X40-MM)	
	10	1	**142-9036**	32	NUT (9/16-18-THD)	
	11	1	**5P-3092**	4	SEAL-O-RING	
	12	1	**7X-0610**	4	WASHER-HARD (20X75X6-MM THK)	
M	13	1	**8C-8992**	2	BOLT-LOCKING (M12X1.75X30-MM)	
	14	1	**8T-4122**	4	WASHER-HARD (17X32X3.5-MM THK)	

M - METRIC PART

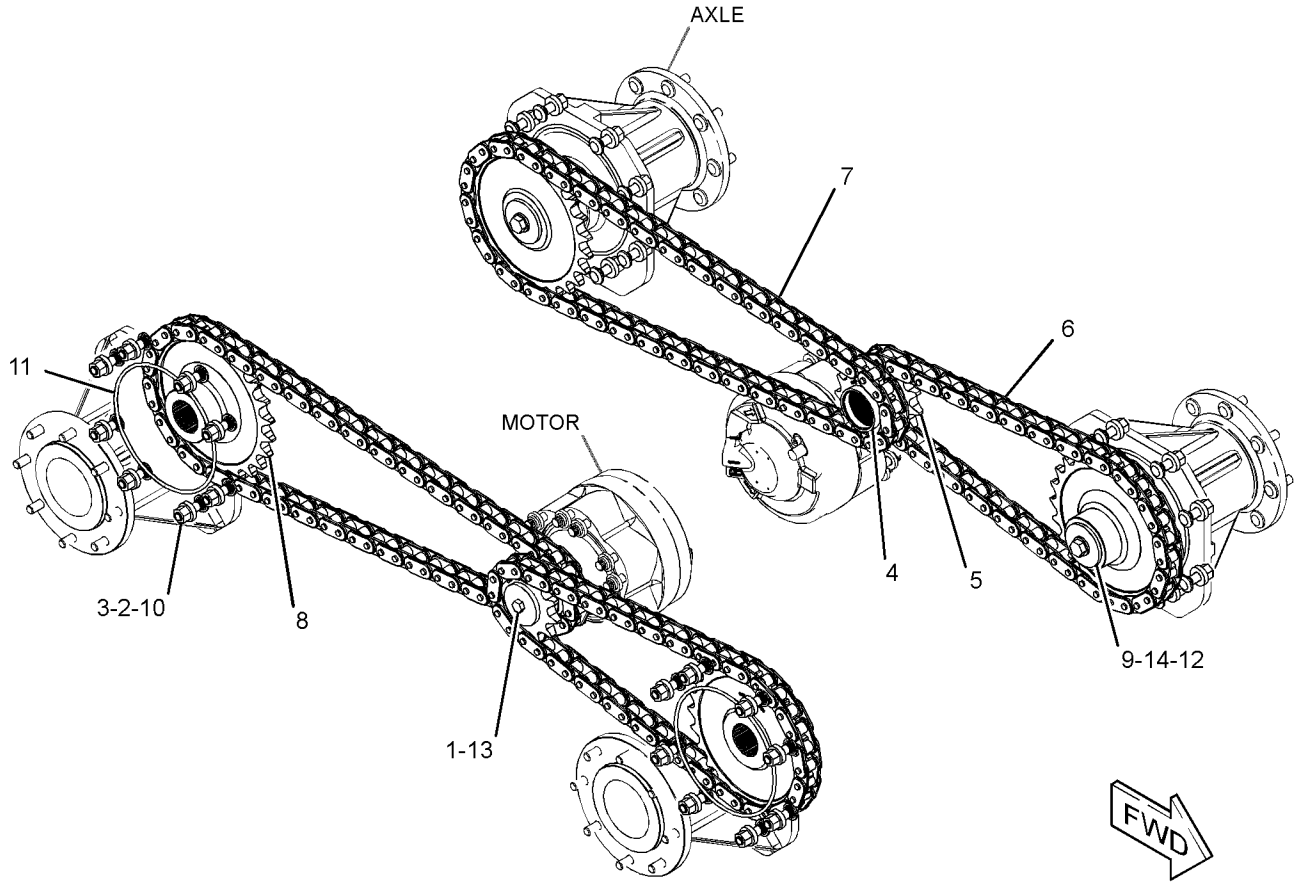

GRAPHIC #1 **<END>** g03370029

346-5576 FILTER GP-OIL—HYDRAULIC, TRANSMISSION

PART OF 345-5946, 345-5950 LINES GP-HYDRAULIC

AN ATTACHMENT

SMCS-5068 **i05164923**

NOTE	REF NO	GRAPHIC REF	PART NUMBER	QTY	PART NAME 1 2 3 4 5 6 (PRODUCT LEVEL)	SEE PAGE
	1	1	**346-5577**	1	BASE AS-FILTER (HYDRAULIC OIL)	
		1	**6V-5048**	1	SEAL-O-RING	
		1	**9S-4182**	1	PLUG-O-RING	
		1	**9S-4191**	1	PLUG-O-RING	
		1	**214-7568**	1	SEAL-O-RING	
Y	2	1	**349-6096**	1	FILTER GP-OIL (HYDRAULIC)	159
	3	1	**349-6097**	1	SWITCH AS-PRESSURE (HYDRAULIC OIL)	
		1	**033-6033**	1	SEAL-O-RING	
		1	**206-9295**	1	SEAL-O-RING	
	4	1	**348-1862**	1	FILTER ELEMENT AS-OIL (HYDRAULIC)	
	4A	1	**095-1671**	1	SEAL-O-RING	

Y - SEPARATE ILLUSTRATION

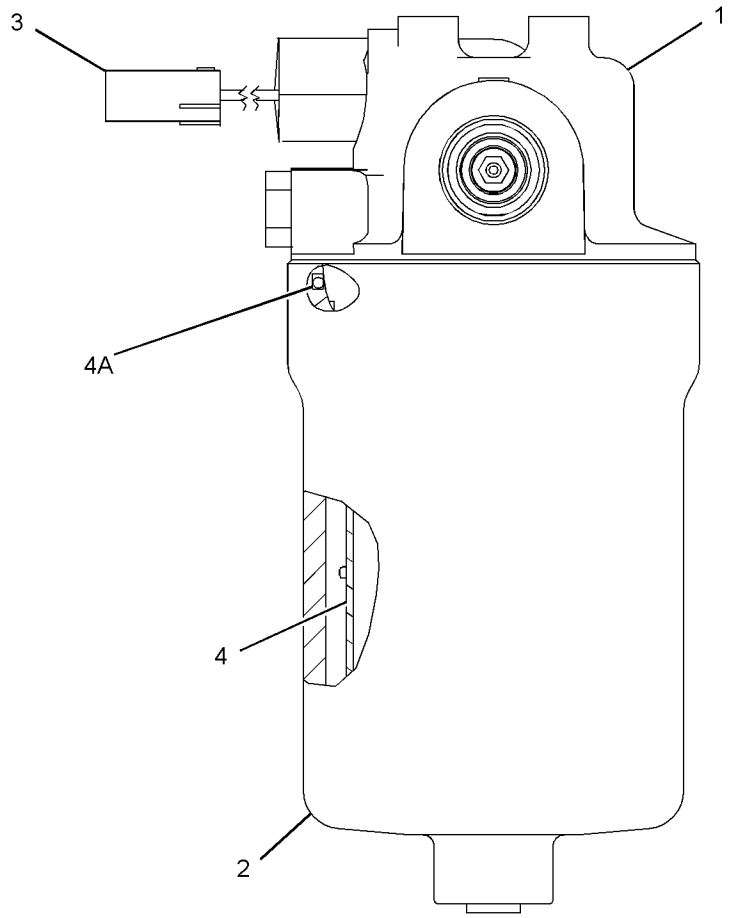

GRAPHIC #1 **<END>** g03319613

349-6096 FILTER GP-OIL—HYDRAULIC OIL

PART OF 346-5576 FILTER GP-OIL

AN ATTACHMENT

SMCS-5068 **i04771918**

NOTE	REF NO	GRAPHIC REF	PART NUMBER	QTY	PART NAME 1 2 3 4 5 6 (PRODUCT LEVEL)	SEE PAGE
	1	1	**348-1862**	1	FILTER ELEMENT AS-OIL (HYDRAULIC)	
		1	**095-1671**	1	SEAL-O-RING	
	2	1	**352-1756**	1	TUBE-CENTER	
	3	1	**9S-8002**	1	PLUG-O-RING	
	4	1	**6V-5048**	1	SEAL-O-RING	

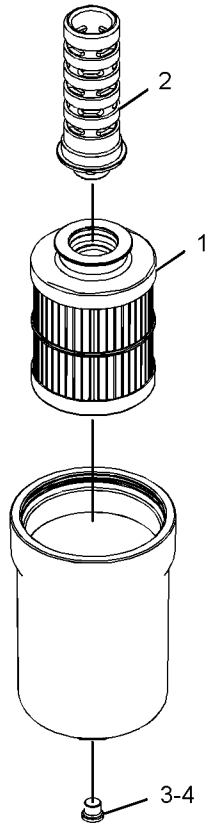

GRAPHIC #1 **<END>** g02794098

345-6590 LINES GP-HYDROSTATIC

PART OF 345-4925 POWER TRAIN AR
AN ATTACHMENT

SMCS-3154 **i05295883**

NOTE	REF NO	GRAPHIC REF	PART NUMBER	QTY	PART NAME 1 2 3 4 5 6 (PRODUCT LEVEL)	SEE PAGE
	1	1	**7K-1181**	4	STRAP-CABLE	
Y	2	1	*149-0686*	1	ACCUMULATOR GP-HYDRAULIC (CHARGED)	204
	3	1	**290-5562**	1	MOUNT (DUAL SWIVEL)	
I	5	1	**345-4638**	1	HOSE AS	
I	6	1	**345-4848**	2	HOSE AS	
I	7	1	**345-4849**	2	HOSE AS	
I	8	1	**345-5496**	1	HOSE AS	
	9	1	**359-7220**	1	MANIFOLD GP-CONTROL (PILOT SHUTOFF)	
M		1	**095-0641**	2	BOLT-SOCKET HEAD (M4X0.7X10-MM)	
		1	**362-3212**	1	VALVE GP-SOLENOID (12 VDC) (AUXILIARY)	
I	10	1	**388-5551**	1	HOSE AS	
I	11	1	**397-9546**	1	HOSE AS	
I	12	1	**397-9547**	1	HOSE AS	
	13	1	*148-8336*	1	CONNECTOR AS	
		1	**3J-1907**	1	SEAL-O-RING	
		1	**6V-8397**	1	SEAL-O-RING	
		1	**6V-8636**	1	CONNECTOR	
	14	1	*148-8339*	2	CONNECTOR AS	
					(EACH INCLUDES)	
		1	**6V-8716**	1	CONNECTOR (STRAIGHT)	
		1	**6V-9746**	1	SEAL-O-RING	
		1	**7M-8485**	1	SEAL-O-RING	
	15	1	*148-8340*	1	CONNECTOR AS	
		1	**3K-0360**	1	SEAL-O-RING	
		1	**6V-8398**	1	SEAL-O-RING	
		1	**6V-8639**	1	CONNECTOR	
	16	1	*148-8358*	1	ELBOW AS	
		1	**2M-9780**	1	SEAL-O-RING	
		1	**6V-8398**	1	SEAL-O-RING	
		1	**6V-8624**	1	ELBOW	
	17	1	*148-8378*	1	ELBOW AS	
		1	**3J-1907**	1	SEAL-O-RING	
		1	**6V-8397**	1	SEAL-O-RING	
		1	**6V-8724**	1	ELBOW	
	18	1	*148-8428*	1	TEE AS	
		1	**3K-0360**	1	SEAL-O-RING	
		1	**6V-8398**	2	SEAL-O-RING	
		1	**6V-8782**	1	TEE	
	19	1	*150-3036*	1	ELBOW AS	
		1	**3J-1907**	1	SEAL-O-RING	
		1	**6V-8397**	1	SEAL-O-RING	
		1	**8T-1905**	1	ELBOW	
	20	1	*153-6237*	2	ELBOW AS	
					(EACH INCLUDES)	
		1	**3D-2824**	1	SEAL-O-RING	
		1	**6V-9004**	1	ELBOW	
		1	**6V-9746**	1	SEAL-O-RING	
	21	1	*153-6242*	2	CONNECTOR AS	
					(EACH INCLUDES)	
		1	**6V-9746**	1	SEAL-O-RING	
		1	**7M-8485**	1	SEAL-O-RING	
		1	**8T-0197**	1	CONNECTOR	
	22	1	*164-5557*	1	CONNECTOR AS	
		1	**2M-9780**	1	SEAL-O-RING	
		1	**5I-4370**	1	CONNECTOR	
		1	**6V-8398**	1	SEAL-O-RING	
	23	1	*164-5567*	2	COUPLER AS-QUICK DISCONNECT (MALE)	
					(EACH INCLUDES)	
		1	**6V-3965**	1	FITTING (QUICK DISCONNECT)	

345-6590 **LINES GP-HYDROSTATIC (*contd.*)** **i05295883**

NOTE	REF NO	GRAPHIC REF	PART NUMBER	QTY	PART NAME 1 2 3 4 5 6 (PRODUCT LEVEL)	SEE PAGE
		1	**214-7568**	1	SEAL-O-RING	
	24	1	*164-5606*	2	CONNECTOR AS	
					(EACH INCLUDES)	
		1	**3D-2824**	1	SEAL-O-RING	
		1	**6V-9746**	1	SEAL-O-RING	
		1	**8T-0078**	1	CONNECTOR	
	25	1	**3K-0360**	1	SEAL-O-RING	
	26	1	**6V-0852**	2	CAP-DUST	
	27	1	**8T-4205**	2	WASHER-HARD (7.2X14.5X2-MM THK)	
M	28	1	**8T-6974**	2	BOLT (M6X1X80-MM)	

I - REFER TO HYDRAULIC INFORMATION SYSTEM
M - METRIC PART
Y - SEPARATE ILLUSTRATION

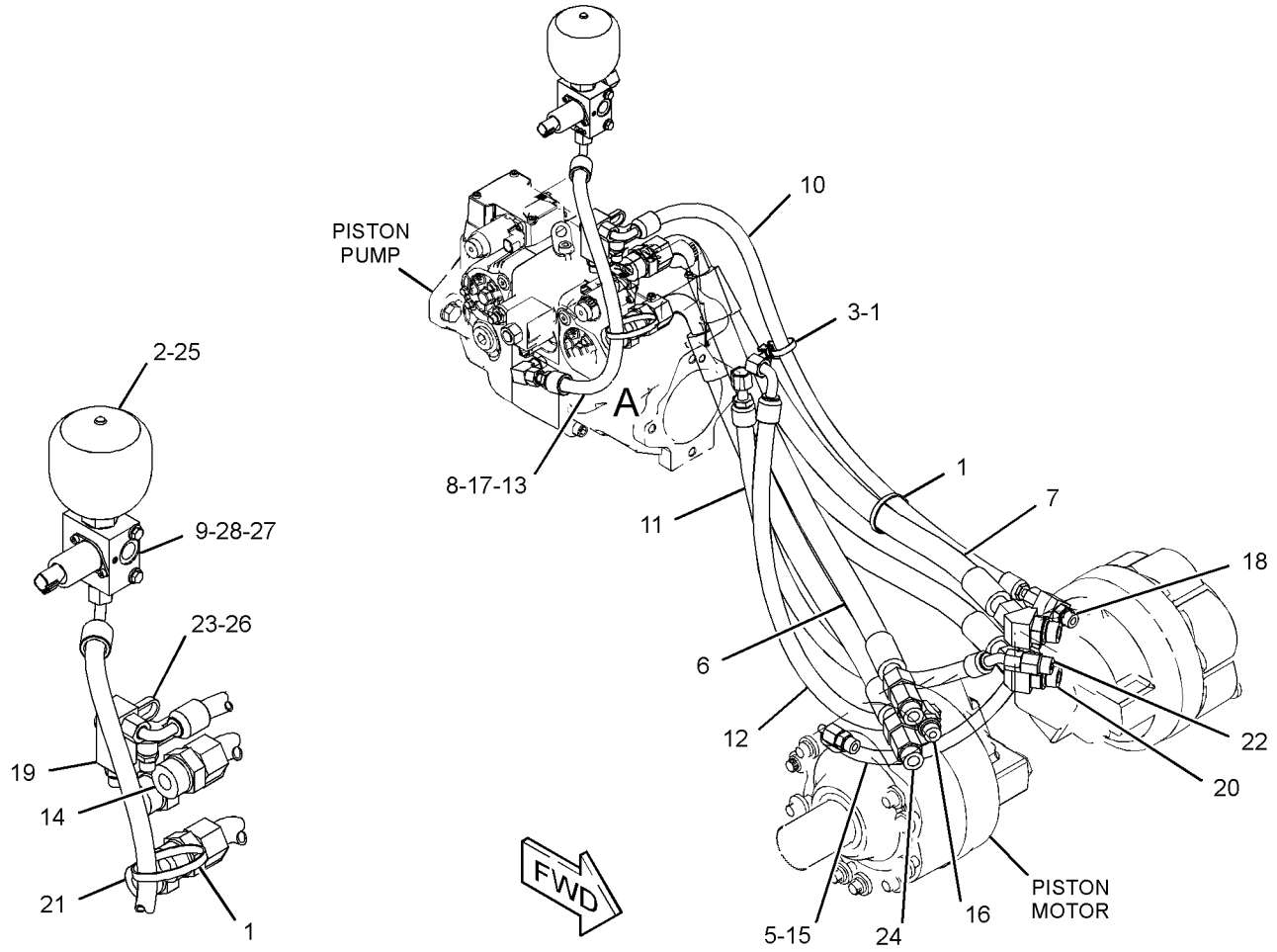

VIEW OF AREA A

GRAPHIC #1 **<END>** g03363059

345-6591 LINES GP-HYDROSTATIC

PART OF 345-4931 POWER TRAIN AR
AN ATTACHMENT

SMCS-3154 **i05295884**

NOTE	REF NO	GRAPHIC REF	PART NUMBER	QTY	PART NAME 1 2 3 4 5 6 (PRODUCT LEVEL)	SEE PAGE
	1	1	**7K-1181**	7	STRAP-CABLE	
Y	2	1	*149-0686*	1	ACCUMULATOR GP-HYDRAULIC (CHARGED)	204
	3	1	*260-9175*	1	CONNECTOR AS	
		1	**2M-9780**	1	SEAL-O-RING	
		1	**6V-8398**	1	SEAL-O-RING	
		1	**126-9903**	1	CONNECTOR	
	4	1	**263-5419**	1	SWITCH AS-ROCKER (MOTOR, 2-SPEED, AUXILIARY)	
		1	**111-7899**	1	GASKET	
	5	1	**290-5562**	2	MOUNT (DUAL SWIVEL)	
I	7	1	**345-4638**	1	HOSE AS	
I	8	1	**345-4641**	1	HOSE AS	
I	9	1	**345-4642**	1	HOSE AS	
I	10	1	**345-4847**	2	HOSE AS	
I	11	1	**345-5496**	1	HOSE AS	
I	12	1	**345-5688**	1	HOSE AS	
Y	13	1	**359-7222**	1	MANIFOLD GP-CONTROL	267
I	14	1	**387-4511**	1	HOSE AS	
I	15	1	**388-5551**	1	HOSE AS	
I	16	1	**397-8721**	2	HOSE AS	
	17	1	*148-8318*	2	CONNECTOR AS	
					(EACH INCLUDES)	
		1	**3K-0360**	1	SEAL-O-RING	
		1	**6V-8397**	1	SEAL-O-RING	
		1	**6V-8634**	1	CONNECTOR	
	18	1	*148-8327*	2	CONNECTOR AS	
					(EACH INCLUDES)	
		1	**3D-2824**	1	SEAL-O-RING	
		1	**6V-8637**	1	CONNECTOR	
		1	**6V-9746**	1	SEAL-O-RING	
	19	1	*148-8336*	1	CONNECTOR AS	
		1	**3J-1907**	1	SEAL-O-RING	
		1	**6V-8397**	1	SEAL-O-RING	
		1	**6V-8636**	1	CONNECTOR	
	20	1	*148-8339*	2	CONNECTOR AS	
					(EACH INCLUDES)	
		1	**6V-8716**	1	CONNECTOR (STRAIGHT)	
		1	**6V-9746**	1	SEAL-O-RING	
		1	**7M-8485**	1	SEAL-O-RING	
	21	1	*148-8340*	1	CONNECTOR AS	
		1	**3K-0360**	1	SEAL-O-RING	
		1	**6V-8398**	1	SEAL-O-RING	
		1	**6V-8639**	1	CONNECTOR	
	22	1	*148-8378*	2	ELBOW AS	
					(EACH INCLUDES)	
		1	**3J-1907**	1	SEAL-O-RING	
		1	**6V-8397**	1	SEAL-O-RING	
		1	**6V-8724**	1	ELBOW	
	23	1	*148-8428*	1	TEE AS	
		1	**3K-0360**	1	SEAL-O-RING	
		1	**6V-8398**	2	SEAL-O-RING	
		1	**6V-8782**	1	TEE	
	24	1	*148-8433*	1	TEE AS	
		1	**6V-8397**	2	SEAL-O-RING	
		1	**6V-9836**	1	TEE-SWIVEL	
	25	1	*150-3036*	1	ELBOW AS	
		1	**3J-1907**	1	SEAL-O-RING	
		1	**6V-8397**	1	SEAL-O-RING	
		1	**8T-1905**	1	ELBOW	
	26	1	*153-6237*	2	ELBOW AS	

345-6591 **LINES GP-HYDROSTATIC (*contd.*)** **i05295884**

NOTE	REF NO	GRAPHIC REF	PART NUMBER	QTY	PART NAME 1 2 3 4 5 6 (PRODUCT LEVEL)	SEE PAGE
					(EACH INCLUDES)	
		1	**3D-2824**	1	SEAL-O-RING	
		1	**6V-9004**	1	ELBOW	
		1	**6V-9746**	1	SEAL-O-RING	
	27	1	*153-6241*	1	ELBOW AS	
		1	**6V-8398**	1	SEAL-O-RING	
		1	**8C-8989**	1	ELBOW	
	28	1	*153-6242*	2	CONNECTOR AS	
					(EACH INCLUDES)	
		1	**6V-9746**	1	SEAL-O-RING	
		1	**7M-8485**	1	SEAL-O-RING	
		1	**8T-0197**	1	CONNECTOR	
	29	1	*164-5557*	1	CONNECTOR AS	
		1	**2M-9780**	1	SEAL-O-RING	
		1	**5I-4370**	1	CONNECTOR	
		1	**6V-8398**	1	SEAL-O-RING	
	30	1	*164-5567*	2	COUPLER AS-QUICK DISCONNECT (MALE)	
					(EACH INCLUDES)	
		1	**6V-3965**	1	FITTING (QUICK DISCONNECT)	
		1	**214-7568**	1	SEAL-O-RING	
	31	1	**3K-0360**	1	SEAL-O-RING	
	32	1	**6V-0852**	2	CAP-DUST	
M	33	1	**7X-2534**	2	BOLT (M6X1X50-MM)	
	34	1	**8T-4205**	2	WASHER-HARD (7.2X14.5X2-MM THK)	

I - REFER TO HYDRAULIC INFORMATION SYSTEM
M - METRIC PART
Y - SEPARATE ILLUSTRATION

345-6591 **LINES GP-HYDROSTATIC (*contd.*)** **i05295884**

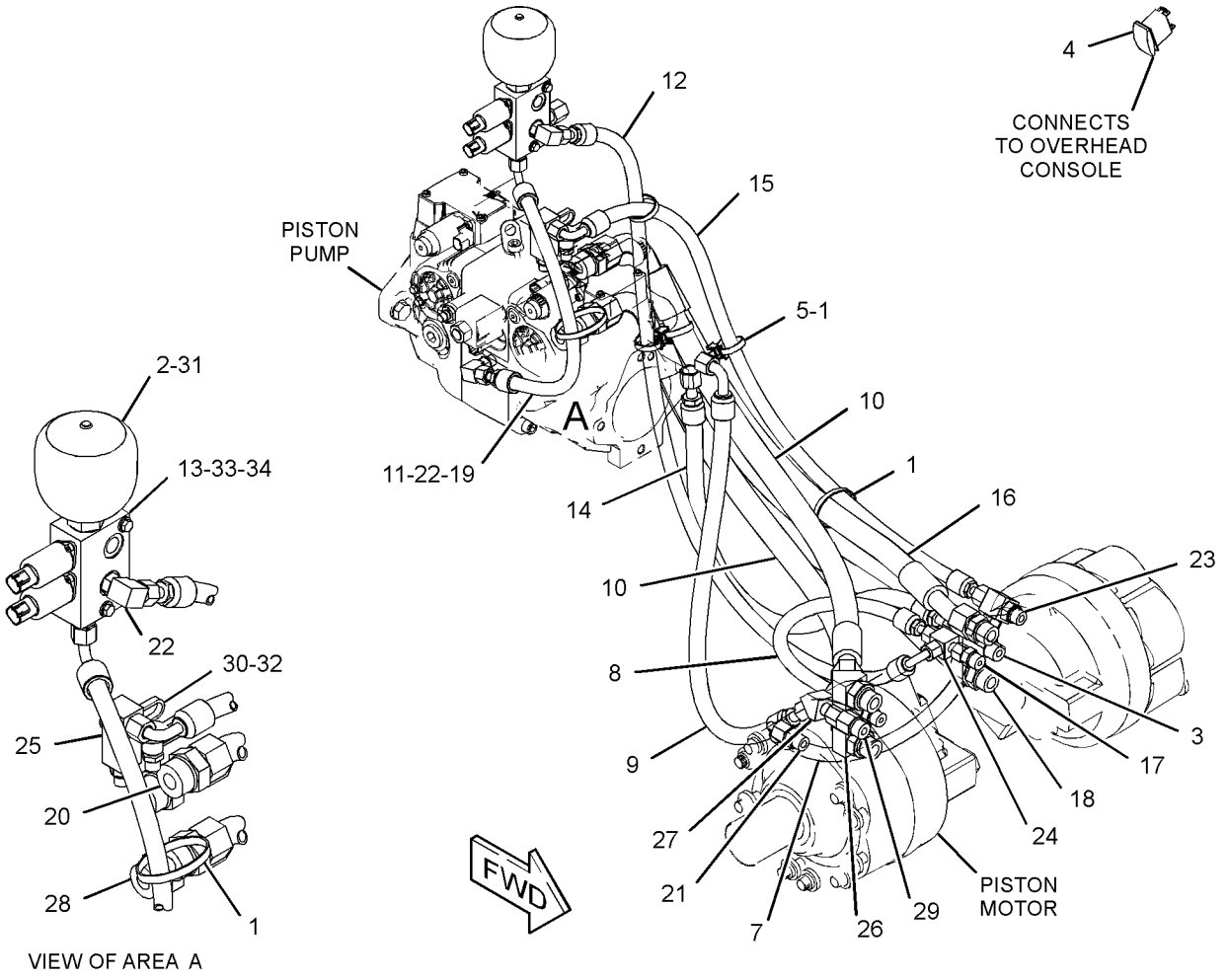

GRAPHIC #1 **<END>** g03363080

345-6501 MOTOR & MOUNTING GP–1-SPEED

PART OF 345-4925 POWER TRAIN AR

AN ATTACHMENT

SMCS-5058, 5084 **i05295879**

NOTE	REF NO	GRAPHIC REF	PART NUMBER	QTY	PART NAME 1 2 3 4 5 6 (PRODUCT LEVEL)	SEE PAGE
Y	1	1	**262-3764**	2	SENSOR GP-SPEED	133
Y	2	1	**358-5003**	2	MOTOR GP-PISTON	167
	3	1	**390-5018**	24	WASHER-HARD (15.5X30X12-MM THK)	
M	4	1	**170-6705**	2	BOLT-SOCKET HEAD (M8X1.25X12-MM)	
	5	1	**285-6125**	24	BOLT (M14X2-THD)	
	6	1	**6F-4718**	2	SEAL-O-RING	

M - METRIC PART
Y - SEPARATE ILLUSTRATION

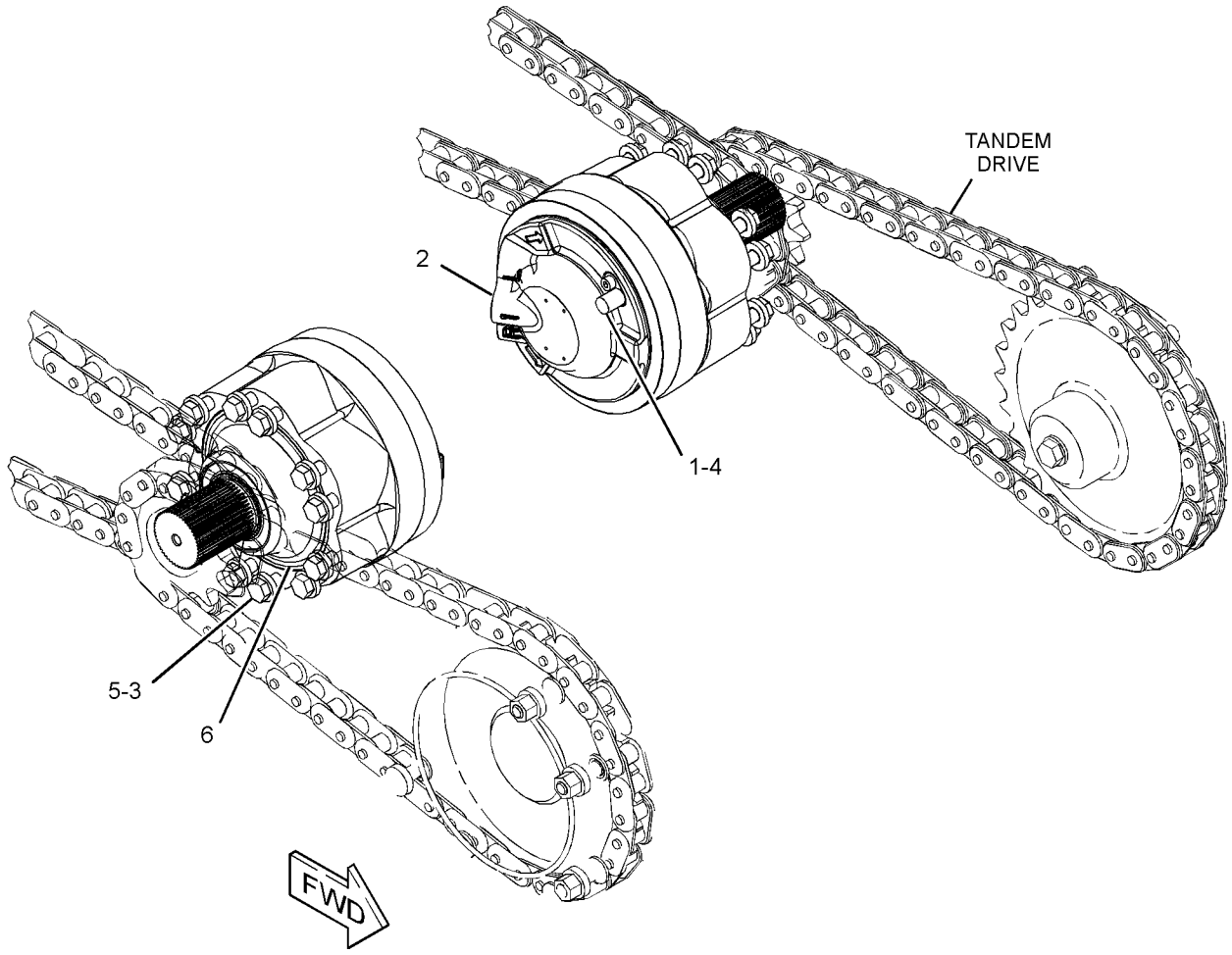

GRAPHIC #1 **<END>** g03365016

345-6502 MOTOR & MOUNTING GP–2-SPEED

PART OF 345-4931 POWER TRAIN AR

AN ATTACHMENT

SMCS-5058, 5084 **i05295881**

NOTE	REF NO	GRAPHIC REF	PART NUMBER	QTY	PART NAME 1 2 3 4 5 6 (PRODUCT LEVEL)	SEE PAGE
Y	1	1	**262-3764**	2	SENSOR GP-SPEED (MOTOR)	133
Y	2	1	*358-5005*	1	MOTOR GP-PISTON (2-SPEED, LH)	168
Y	3	1	*358-5007*	1	MOTOR GP-PISTON (2-SPEED, RH)	169
	4	1	**390-5018**	24	WASHER-HARD (15.5X30X12-MM THK)	
M	5	1	**170-6705**	2	BOLT-SOCKET HEAD (M8X1.25X12-MM)	
	6	1	**285-6125**	24	BOLT (M14X2-THD)	
	7	1	**6F-4718**	2	SEAL-O-RING	

M - METRIC PART
Y - SEPARATE ILLUSTRATION

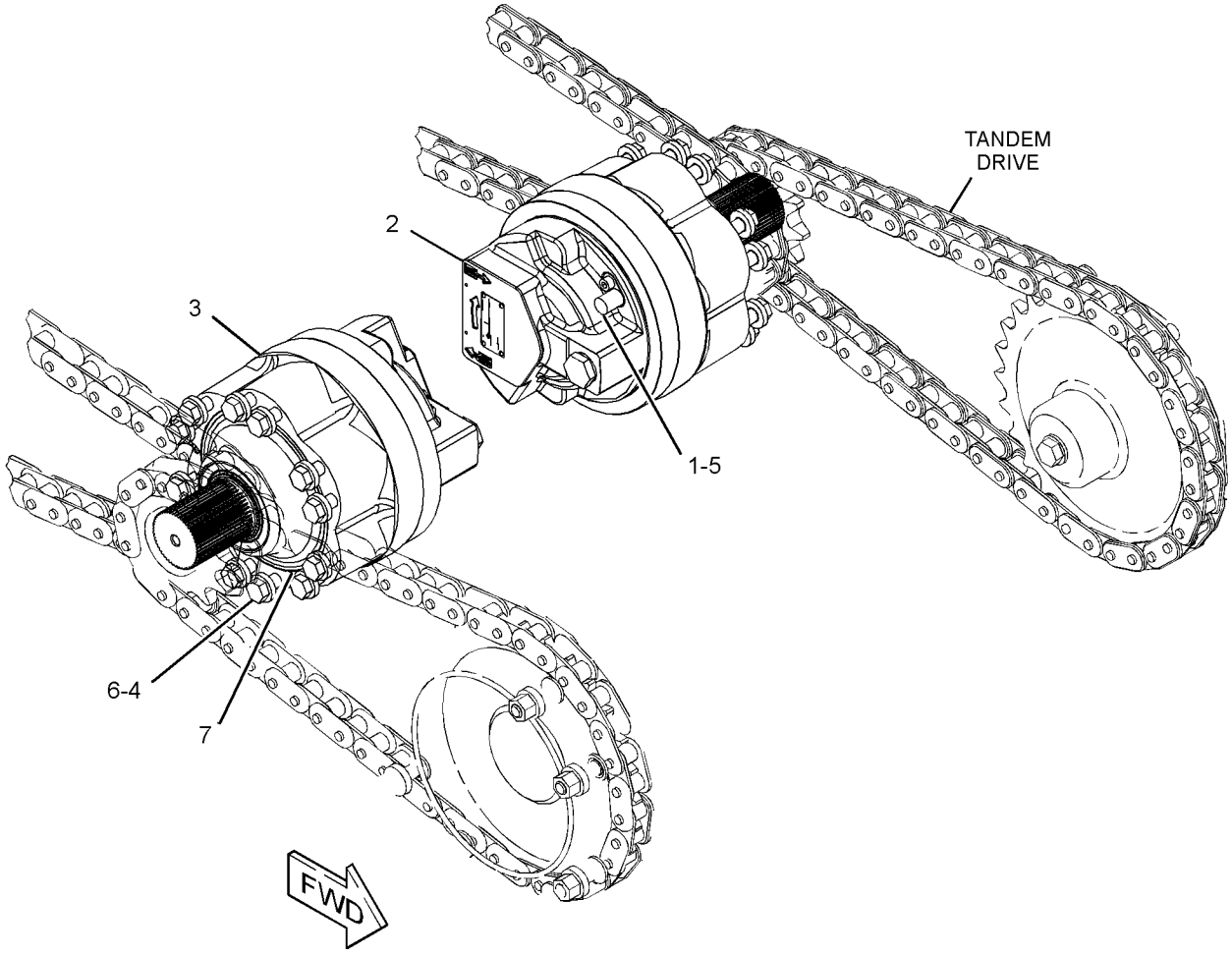

GRAPHIC #1 **<END>** g03365894

358-5003 MOTOR GP-PISTON

PART OF 345-6501 MOTOR & MOUNTING GP

AN ATTACHMENT

SMCS-4351, 5058 **i05165997**

NOTE	REF NO	GRAPHIC REF	PART NUMBER	QTY	PART NAME 1 2 3 4 5 6 (PRODUCT LEVEL)	SEE PAGE
	1	1	**280-7838**	1	KIT-BEARING	
					(INCLUDES SEALS, BEARINGS & WASHERS)	
	2	1	**280-7843**	1	KIT-FLUSHING VALVE	
	3	1	**280-7840**	1	KIT-BRAKE	
					(INCLUDES BRAKE PISTON, SEALS & SPRINGS)	
					PARTS SHOWN IN GRAPHIC(S) WITHOUT A REFERENCE NUMBER ARE NOT SERVICED SEPARATELY	
					AVAILABLE REPAIR KIT(S):	
			280-7842		KIT-VALVE	
					(INCLUDES SEALS, BACKUP RINGS, DOWEL PIN, SEAL RING SET, RETAINING PIN, RETAINING RING & O-RING SEALS)	

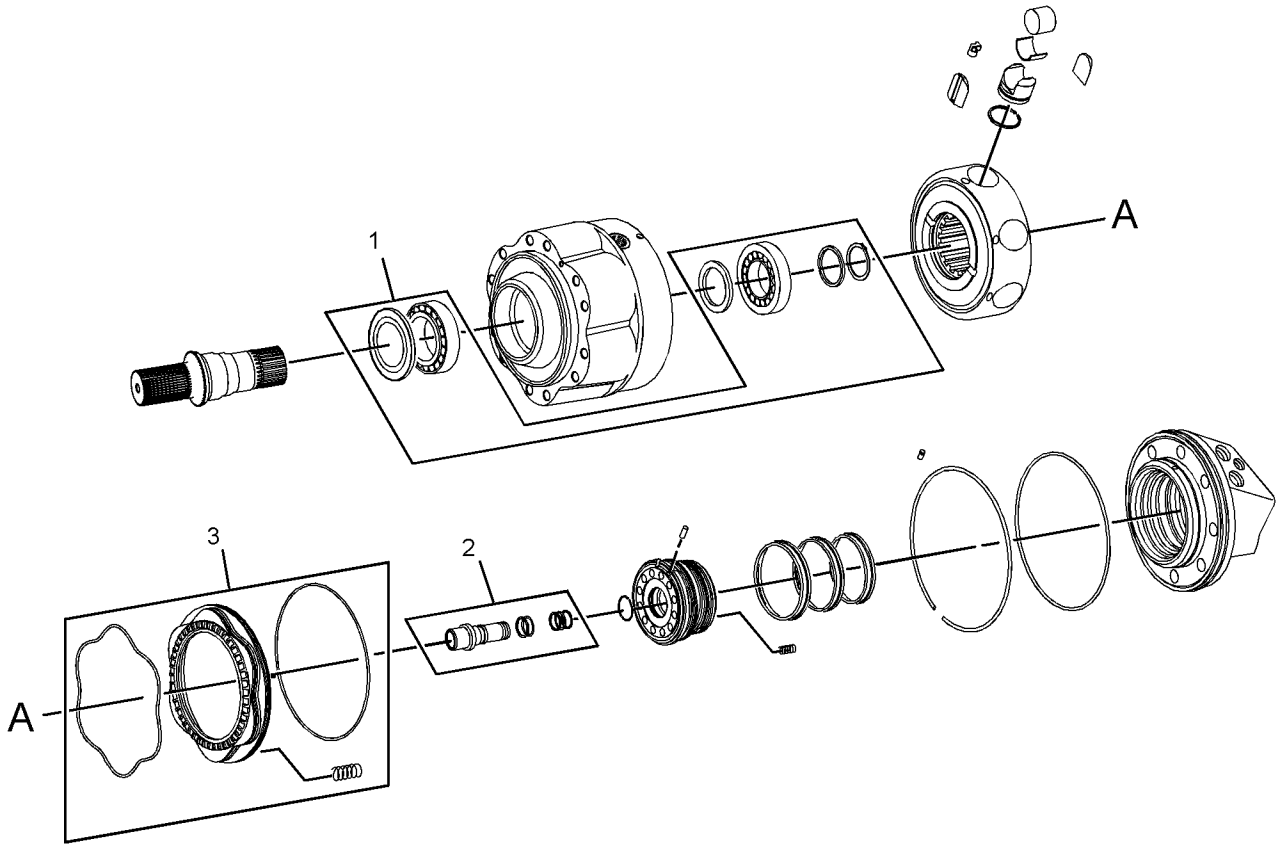

GRAPHIC #1 **<END>** g03318889

358-5005 MOTOR GP-PISTON

PART OF 345-6502 MOTOR & MOUNTING GP

AN ATTACHMENT

SMCS-4351, 5058 **i05166033**

NOTE	REF NO	GRAPHIC REF	PART NUMBER	QTY	PART NAME 1 2 3 4 5 6 (PRODUCT LEVEL)	SEE PAGE
	1	1	**280-7838**	1	KIT-BEARING (PISTON MOTOR)	
					(INCLUDES BEARINGS, SEAL & O-RING)	
	2	1	**280-7848**	1	KIT-FLUSHING VALVE (PISTON MOTOR)	
					(INCLUDES O-RING SEALS & BOLT)	
	3	1	**280-7840**	1	KIT-BRAKE (PISTON MOTOR)	
					(INCLUDES STEEL BRAKE PISTON, SEAL, SPRINGS & O-RING)	
	4	1	**341-7647**	1	VALVE GP-SPEED CONTROL (2-SPEED)	
					PARTS SHOWN IN GRAPHIC(S) WITHOUT A REFERENCE NUMBER ARE NOT SERVICED SEPARATELY	
					AVAILABLE REPAIR KIT(S):	
			280-7849		KIT-SEAL	
					(INCLUDES O-RING SEALS, BACKUP RINGS, SEALS, PINS & ALSO PARTS MARKED J IN GRAPHIC)	

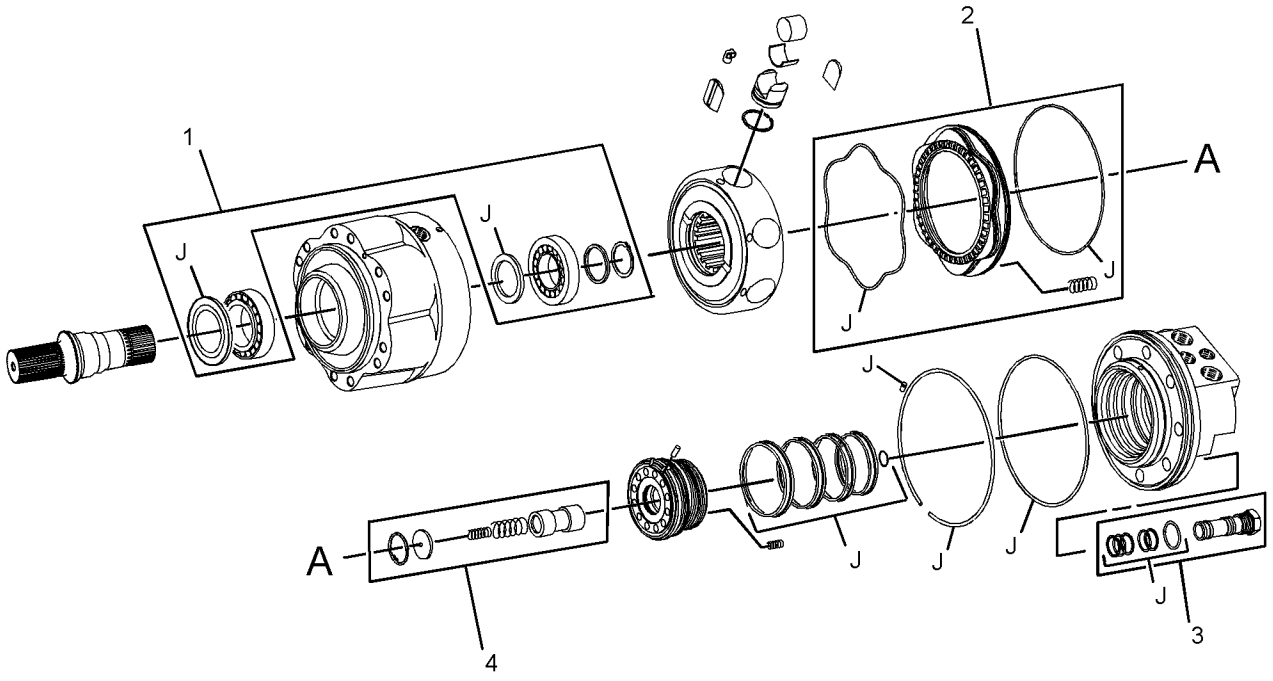

GRAPHIC #1 **<END>** g03337456

358-5007 MOTOR GP-PISTON

PART OF 345-6502 MOTOR & MOUNTING GP

AN ATTACHMENT

SMCS-4351, 5058 **i05166035**

NOTE	REF NO	GRAPHIC REF	PART NUMBER	QTY	PART NAME 1 2 3 4 5 6 (PRODUCT LEVEL)	SEE PAGE
	1	1	**280-7838**	1	KIT-BEARING	
					(INCLUDES BEARINGS, WASHERS & RINGS)	
	2	1	**280-7848**	1	KIT-FLUSHING VALVE	
					(INCLUDES O-RINGS & BOLT)	
	3	1	**280-7840**	1	KIT-BRAKE	
					(INCLUDES STEEL BRAKE PISTON, SEALS & SPRINGS)	
	4	1	**341-7647**	1	VALVE GP-SPEED CONTROL	
					PARTS SHOWN IN GRAPHIC(S) WITHOUT A REFERENCE NUMBER ARE NOT SERVICED SEPARATELY	
					AVAILABLE REPAIR KIT(S):	
			280-7849	1	KIT-SEAL	
					(INCLUDES SEALS, BACKUP RINGS, PINS, O-RING SEALS & ALSO PARTS MARKED J IN GRAPHIC)	

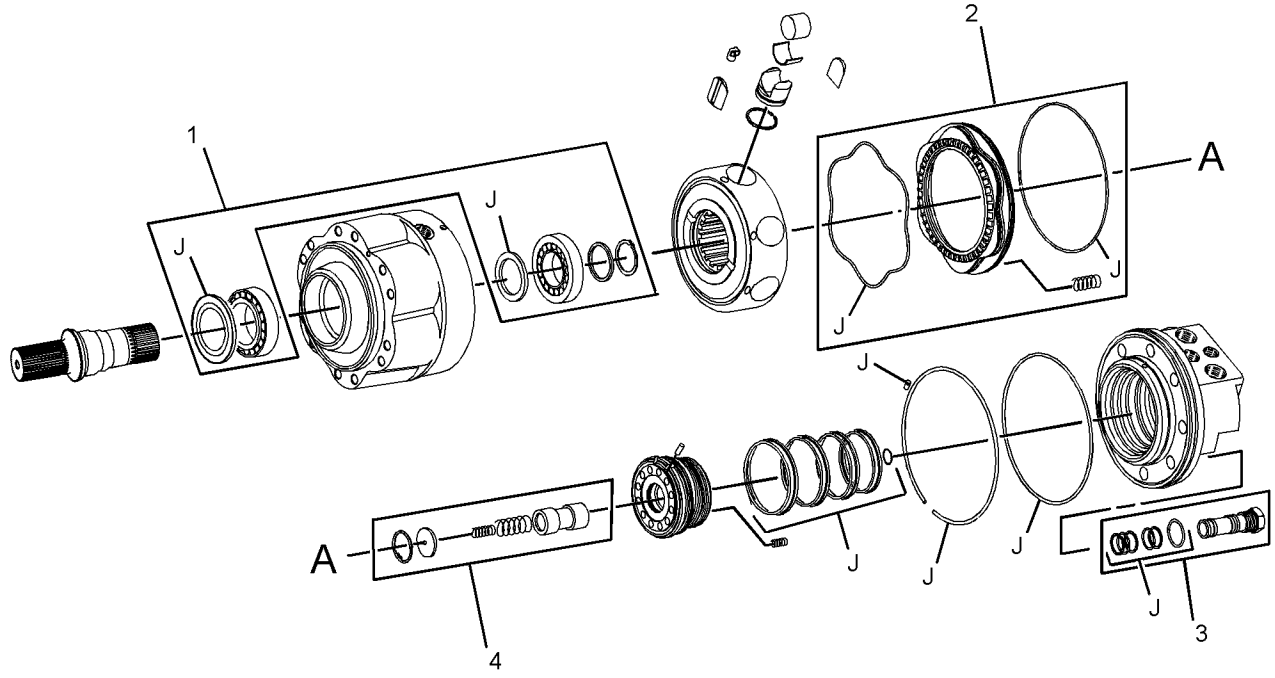

GRAPHIC #1 **<END>** g03337455

345-3602 MOUNTING GP-PUMP

PART OF 378-6680, 393-7330 INSTALLATION AR-ENGINE

SMCS-3203, 5062, 5070 **i05162992**

NOTE	REF NO	GRAPHIC REF	PART NUMBER	QTY	PART NAME 1 2 3 4 5 6 (PRODUCT LEVEL)	SEE PAGE
	1	1	**345-3548**	1	COUPLING	
	2	1	**345-3601**	1	PLATE-ADAPTER	
	3	1	**362-0154**	20	BOLT-FLANGE HEAD (M10X1.25X40-MM)	

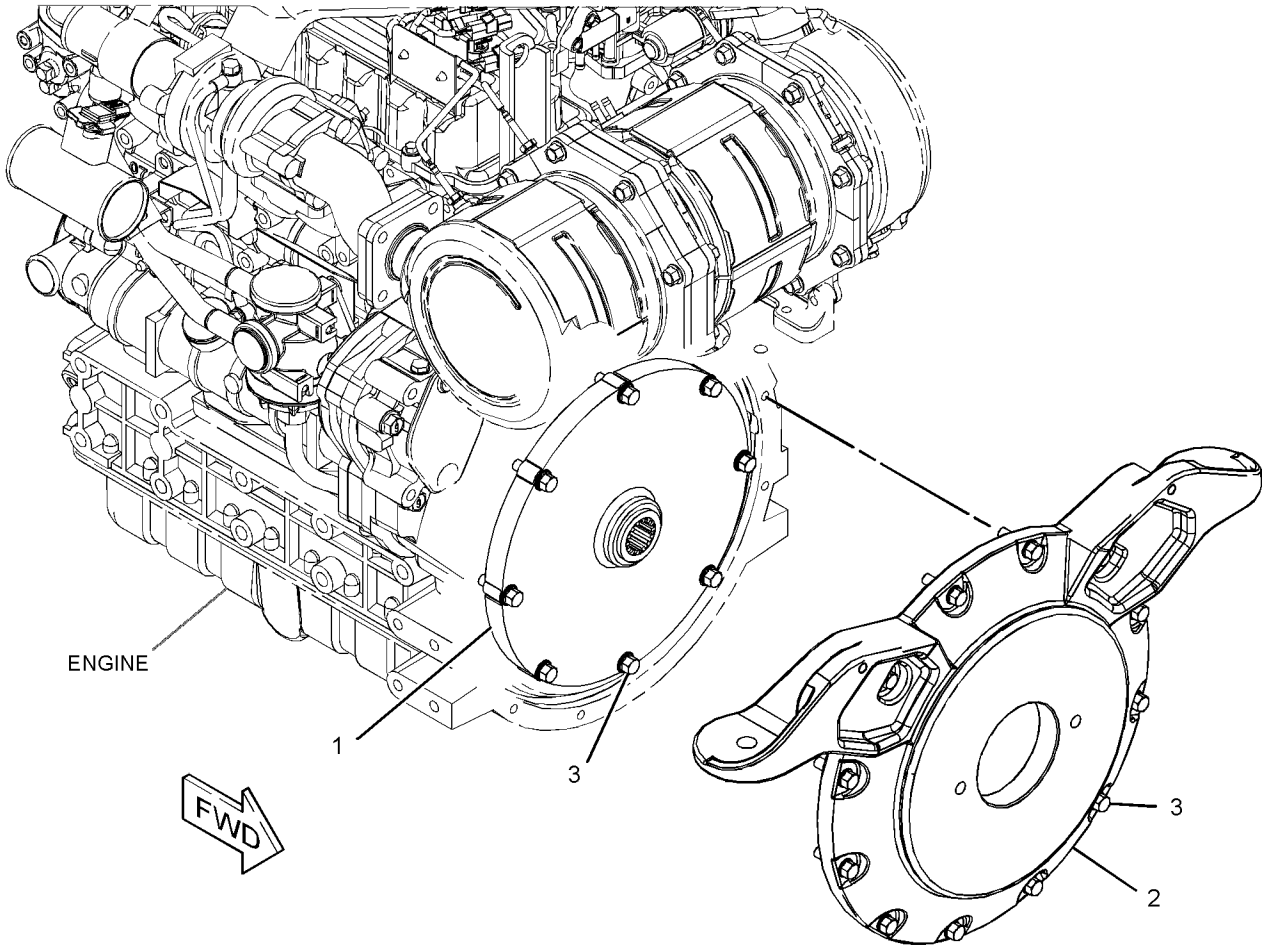

GRAPHIC #1 **<END>** g03319600

345-4925 POWER TRAIN AR

PART OF 388-7932 CONFIGURATION AR, 345-4923 MACHINE AR-SPECIAL
AN ATTACHMENT

SMCS-3203, 4062, 5058, 5070 **i05295876**

NOTE	PART NUMBER	QTY	PART NAME 1 2 3 4 5 6 (PRODUCT LEVEL)	SEE PAGE
Y	*435-8712*	1	DRIVE GP-TANDEM	157
Y	*345-6590*	1	LINES GP-HYDROSTATIC	160
Y	*345-6501*	1	MOTOR & MOUNTING GP	165

Y - SEPARATE ILLUSTRATION

<END>

345-4931 POWER TRAIN AR

PART OF 345-4927, 345-4929 MACHINE AR-SPECIAL
AN ATTACHMENT

SMCS-3203, 4062, 5058, 5070 **i05295877**

NOTE	PART NUMBER	QTY	PART NAME 1 2 3 4 5 6 (PRODUCT LEVEL)	SEE PAGE
Y	*435-8712*	1	DRIVE GP-TANDEM	157
Y	*345-6591*	1	LINES GP-HYDROSTATIC	162
Y	*345-6502*	1	MOTOR & MOUNTING GP	166

Y - SEPARATE ILLUSTRATION

<END>

378-2856 PUMP & MTG GP-HYDROSTATIC

PART OF 345-5248 HYDRAULIC AR

SMCS-3203, 5070 **i05162958**

NOTE	REF NO	GRAPHIC REF	PART NUMBER	QTY	PART NAME 1 2 3 4 5 6 (PRODUCT LEVEL)	SEE PAGE
	1	1	**165-0142**	2	WASHER-HARD (14.8X27X3-MM THK)	
Y	2	1	**341-7625**	1	PUMP GP-PISTON (HYDROSTATIC)	173
	3	1	**361-2657**	2	BOLT-12 POINT HEAD (M14X2X40-MM)	

Y - SEPARATE ILLUSTRATION

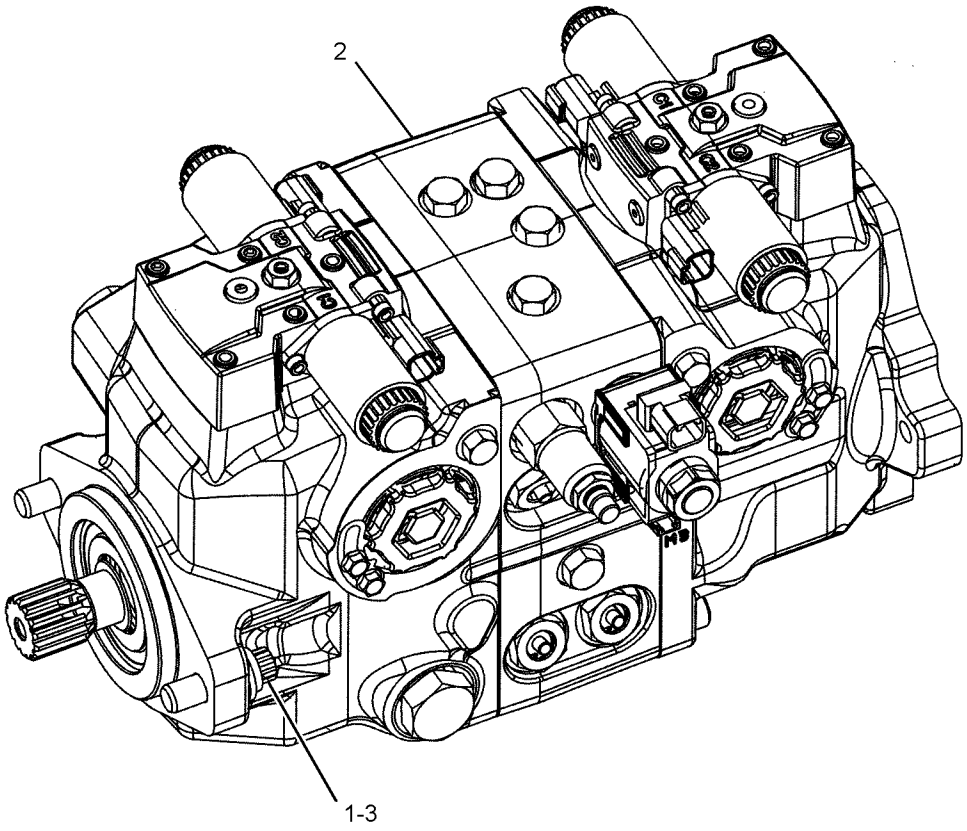

GRAPHIC #1 **<END>** g03320833

341-7625 PUMP GP-PISTON—HYDROSTATIC

PART OF 378-2856 PUMP & MTG GP-HYDROSTATIC

SMCS-3203, 5070, 5117, 5455, 5479 **i04728571**

NOTE	REF NO	GRAPHIC REF	PART NUMBER	QTY	PART NAME 1 2 3 4 5 6 (PRODUCT LEVEL)	SEE PAGE
	1	1,2	**278-8737**	2	VALVE GP-PUMP CONTROL	
	2	1,2	**278-8740**	2	SWASHPLATE	
	3	1	**278-8748**	1	SHAFT-DRIVE	
J	4	1,2	**280-7860**	2	BLOCK-SLIDER	
J	5	1,2	**278-8751**	4	SPRING	
	6	1	**278-8746**	1	VALVE GP-RELIEF (CHARGE)	
	7	1	**278-8743**	1	VALVE GP-SOLENOID (PARKING BRAKE)	
	8	1	**341-7658**	4	VALVE GP-RELIEF	
	9	1	**278-8750**	1	PLATE (CCW)	
	10	1	**278-8749**	1	PLATE (CW)	
	11	2	**278-8747**	1	SHAFT-DRIVE	
	12	1,2	**9S-8002**	4	PLUG-O-RING	
	13	1	**9S-8004**	1	PLUG-O-RING	
	14	2	**9S-8008**	2	PLUG-O-RING	
	15	1,2	**341-7637**	2	KIT-BEARING (PISTON PUMP)	
	16	1,2	**278-8739**	2	ROTATING GP-PUMP (VIBRATORY)	
M	17	1	**8C-3413**	6	BOLT-SOCKET HEAD (M12X1.75X120-MM)	
					PARTS SHOWN IN GRAPHIC(S) WITHOUT A REFERENCE NUMBER ARE NOT SERVICED SEPARATELY	
					AVAILABLE REPAIR KIT(S):	
J			**278-8738**	2	KIT-PISTON	
			278-8736	1	KIT-SEAL	
					(INCLUDES O-RINGS, PISTON SEAL RINGS, BACKUP RINGS, RETAINING RING, DOWEL PIN, SLOTTED PIN, GASKETS, SHAFT SEAL	
					& RETAINER)	
			278-8742	1	KIT-BEARING	
					(INCLUDES COUPLING, BEARING SLEEVE, RETAINING RING & BEARING SHAFT)	
			278-8744	4	KIT-SOLENOID	

J - KIT MARKED J SERVICES PARTS MARKED J
M - METRIC PART

341-7625 **PUMP GP-PISTON (*contd.*)** **i04728571**

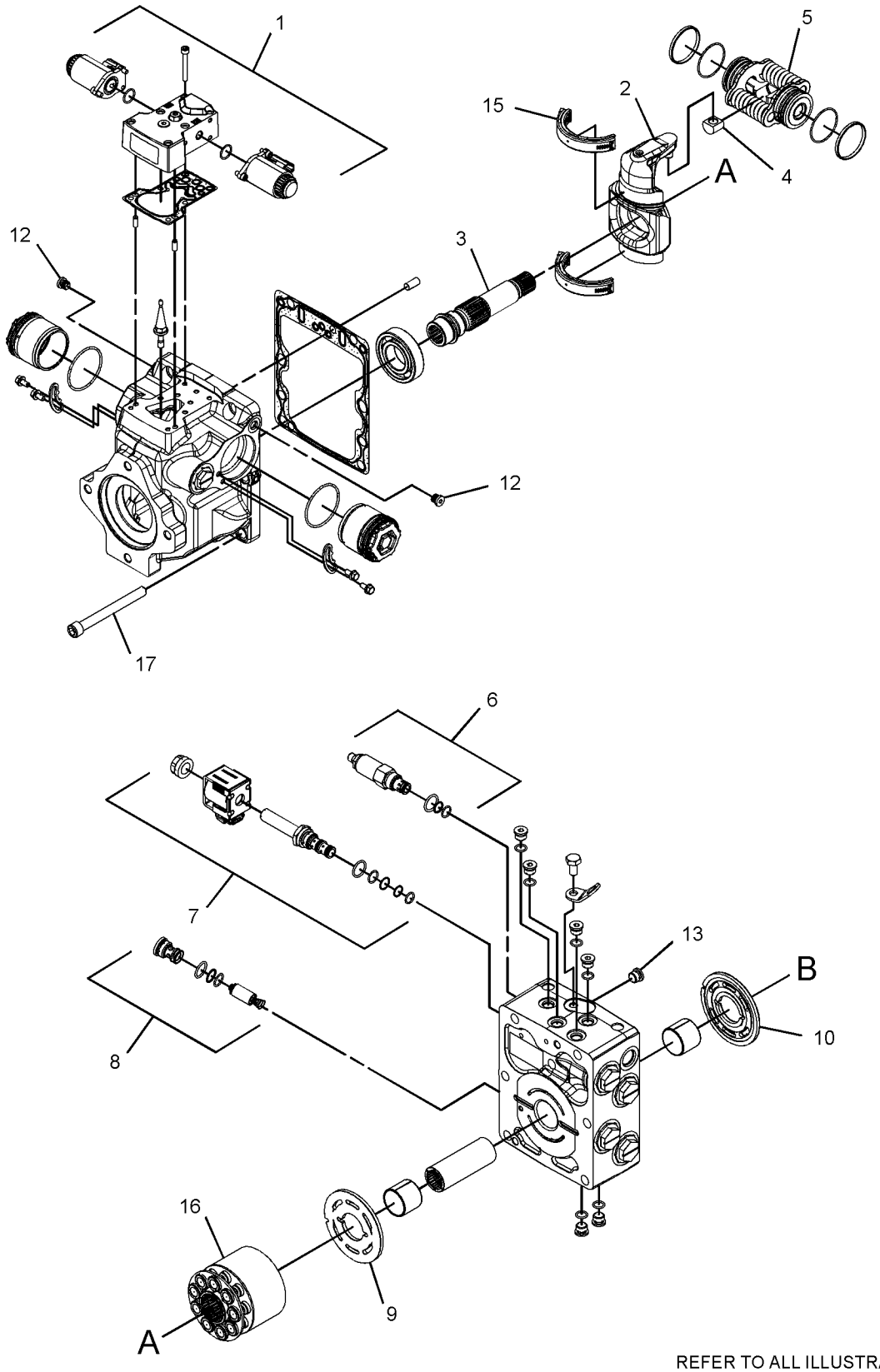

REFER TO ALL ILLUSTRATIONS OF
THIS GROUP FOR AUXILIARY VIEWS

GRAPHIC #1

g02840399

341-7625 **PUMP GP-PISTON (*contd.*)** **i04728571**

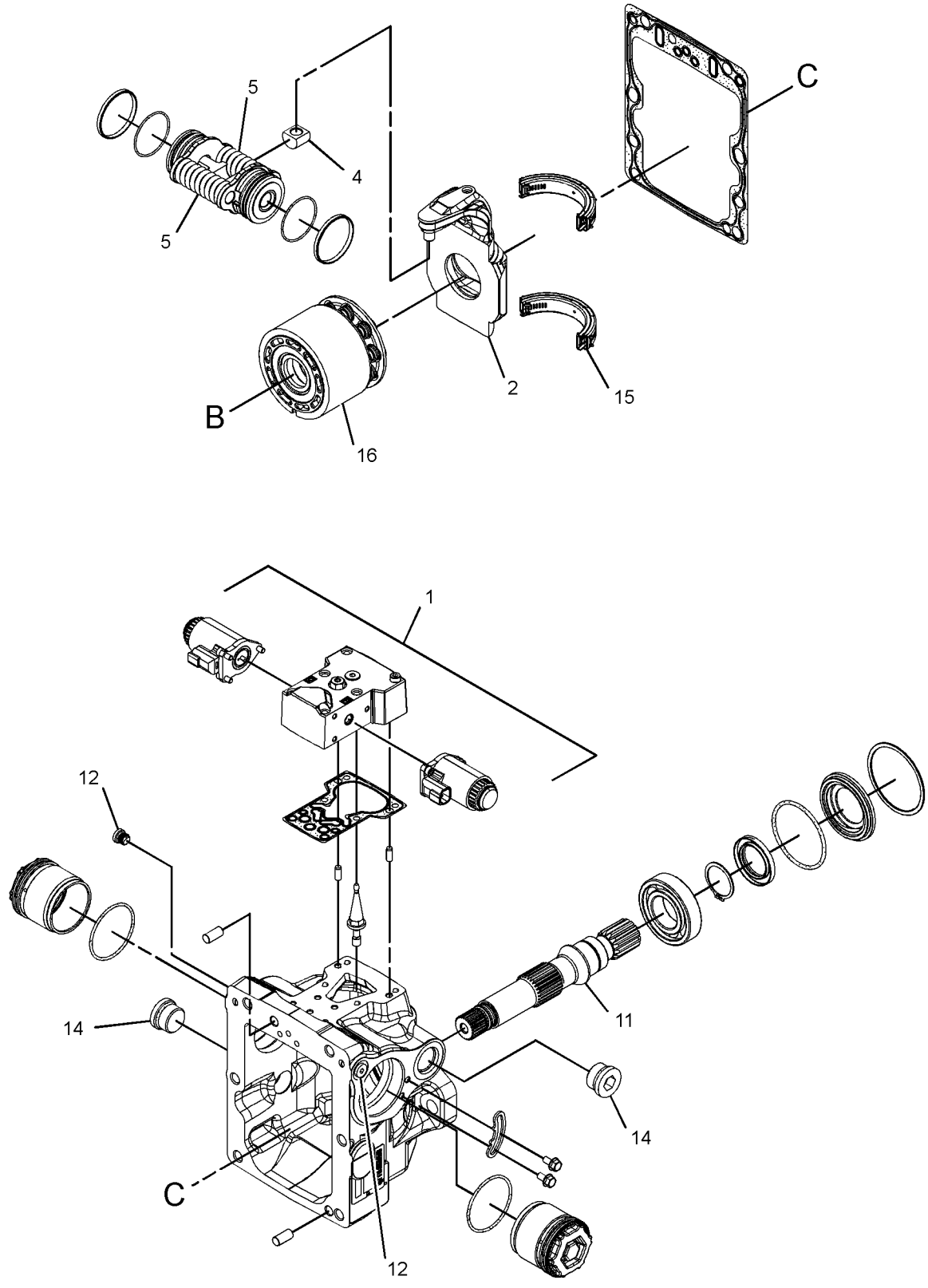

GRAPHIC #2 **<END>** g02840401

165-4901 TIRE & RIM GP—HEAVY-DUTY, LH

(16.5X9.75). DIRECTIONAL TIRE
PART OF 165-4898 WHEEL & TIRE AR
AN ATTACHMENT

SMCS-4202 **i02474449**

NOTE	PART NUMBER	QTY	PART NAME 1 2 3 4 5 6 (PRODUCT LEVEL)	SEE PAGE
	150-8599	1	VALVE AS-TIRE	
	142-8731	1	WHEEL AS	
	165-4909	1	TIRE (12-16.5)	

<END>

165-4902 TIRE & RIM GP—HEAVY-DUTY, RH

(16.5X9.75). DIRECTIONAL TIRE
PART OF 165-4898 WHEEL & TIRE AR
AN ATTACHMENT

SMCS-4202 **i02474458**

NOTE	PART NUMBER	QTY	PART NAME 1 2 3 4 5 6 (PRODUCT LEVEL)	SEE PAGE
	150-8599	1	VALVE AS-TIRE	
	142-8731	1	WHEEL AS	
	165-4909	1	TIRE (12-16.5)	

<END>

165-4906 TIRE & RIM GP—HEAVY-DUTY, LH

(16.5X9.75). DIRECTIONAL TIRE
PART OF 165-4903 WHEEL & TIRE AR
AN ATTACHMENT

SMCS-4202 **i02571051**

NOTE	PART NUMBER	QTY	PART NAME 1 2 3 4 5 6 (PRODUCT LEVEL)	SEE PAGE
	150-8599	1	VALVE AS-TIRE	
	142-8759	1	WHEEL AS	
	165-4909	1	TIRE (12-16.5)	

<END>

165-4907 TIRE & RIM GP—HEAVY-DUTY, RH

(16.5X9.75). DIRECTIONAL TIRE
PART OF 165-4903 WHEEL & TIRE AR
AN ATTACHMENT

SMCS-4202 **i02571052**

NOTE	PART NUMBER	QTY	PART NAME 1 2 3 4 5 6 (PRODUCT LEVEL)	SEE PAGE
	150-8599	1	VALVE AS-TIRE	
	142-8759	1	WHEEL AS	
	165-4909	1	TIRE (12-16.5)	

<END>

185-9928 TIRE & RIM GP–LH

(16.5X9.75). DIRECTIONAL TIRE
PART OF 185-8666 WHEEL & TIRE AR
AN ATTACHMENT

SMCS-4202 **i04285185**

NOTE	PART NUMBER	QTY	PART NAME 1 2 3 4 5 6 (PRODUCT LEVEL)	SEE PAGE
	150-8599	1	VALVE AS-TIRE	
	142-8759	1	WHEEL AS	
	185-9933	1	TIRE (12-16.5)	

<END>

185-9929 TIRE & RIM GP–RH

(16.5X9.75). DIRECTIONAL TIRE
PART OF 185-8666 WHEEL & TIRE AR
AN ATTACHMENT

SMCS-4202 **i04285792**

NOTE	PART NUMBER	QTY	PART NAME 1 2 3 4 5 6 (PRODUCT LEVEL)	SEE PAGE
	150-8599	1	VALVE AS-TIRE	
	142-8759	1	WHEEL AS	
	185-9933	1	TIRE (12-16.5)	

<END>

185-9930 TIRE & RIM GP–LH

(16.5X9.75). DIRECTIONAL TIRE
PART OF 185-8667 WHEEL & TIRE AR
AN ATTACHMENT

SMCS-4202 **i02362232**

NOTE	PART NUMBER	QTY	PART NAME 1 2 3 4 5 6 (PRODUCT LEVEL)	SEE PAGE
	150-8599	1	VALVE AS-TIRE	
	142-8731	1	WHEEL AS	
	185-9933	1	TIRE (12-16.5)	

<END>

185-9931 TIRE & RIM GP–RH

(16.5X9.75). DIRECTIONAL TIRE
PART OF 185-8667 WHEEL & TIRE AR
AN ATTACHMENT

SMCS-4202 **i02362236**

NOTE	PART NUMBER	QTY	PART NAME 1 2 3 4 5 6 (PRODUCT LEVEL)	SEE PAGE
	150-8599	1	VALVE AS-TIRE	
	142-8731	1	WHEEL AS	
	185-9933	1	TIRE (12-16.5)	

<END>

199-5438 TIRE & RIM GP–LH

(16.5X12). DIRECTIONAL TIRE
PART OF 178-2256 WHEEL & TIRE AR
AN ATTACHMENT

SMCS-4202 **i02362244**

NOTE	PART NUMBER	QTY	PART NAME 1 2 3 4 5 6 (PRODUCT LEVEL)	SEE PAGE
	150-8599	1	VALVE AS-TIRE	
	178-2270	1	WHEEL AS	
	199-5440	1	TIRE (33/15.5-16.5)	

<END>

199-5439 TIRE & RIM GP–RH

(16.5X12). DIRECTIONAL TIRE
PART OF 178-2256 WHEEL & TIRE AR
AN ATTACHMENT

SMCS-4202 **i02362243**

NOTE	PART NUMBER	QTY	PART NAME 1 2 3 4 5 6 (PRODUCT LEVEL)	SEE PAGE
	150-8599	1	VALVE AS-TIRE	
	178-2270	1	WHEEL AS	
	199-5440	1	TIRE (33/15.5-16.5)	

<END>

265-2898 TIRE & RIM GP–LH

(16.5X9.75)
PART OF 252-0346 WHEEL & TIRE AR
AN ATTACHMENT

SMCS-4202 **i04367600**

NOTE	PART NUMBER	QTY	PART NAME 1 2 3 4 5 6 (PRODUCT LEVEL)	SEE PAGE
	150-8599	1	VALVE AS-TIRE	
	142-8731	1	WHEEL AS	
	222-3963	1	TIRE (12-16.5)	

<END>

265-2899 TIRE & RIM GP–RH

(16.5X9.75)
PART OF 252-0346 WHEEL & TIRE AR
AN ATTACHMENT

SMCS-4202 **i04367601**

NOTE	PART NUMBER	QTY	PART NAME 1 2 3 4 5 6 (PRODUCT LEVEL)	SEE PAGE
	150-8599	1	VALVE AS-TIRE	
	142-8731	1	WHEEL AS	
	222-3963	1	TIRE (12-16.5)	

<END>

265-2900 TIRE & RIM GP—LH

(16.5X9.75)
PART OF 252-0347 WHEEL & TIRE AR
AN ATTACHMENT

SMCS-4202 **i02279760**

NOTE	PART NUMBER	QTY	PART NAME 1 2 3 4 5 6 (PRODUCT LEVEL)	SEE PAGE
	150-8599	1	VALVE AS-TIRE	
	142-8759	1	WHEEL AS	
	222-3963	1	TIRE (12-16.5)	

<END>

265-2901 TIRE & RIM GP—RH

(16.5X9.75)
PART OF 252-0347 WHEEL & TIRE AR
AN ATTACHMENT

SMCS-4202 **i02279766**

NOTE	PART NUMBER	QTY	PART NAME 1 2 3 4 5 6 (PRODUCT LEVEL)	SEE PAGE
	150-8599	1	VALVE AS-TIRE	
	142-8759	1	WHEEL AS	
	222-3963	1	TIRE (12-16.5)	

<END>

165-4898 WHEEL & TIRE AR—HEAVY DUTY

AN ATTACHMENT

SMCS-4200, 4201, 4203 **i04889636**

NOTE	PART NUMBER	QTY	PART NAME 1 2 3 4 5 6 (PRODUCT LEVEL)	SEE PAGE
Y	*165-4901*	2	TIRE & RIM GP (LH)	176
Y	*165-4902*	2	TIRE & RIM GP (RH)	176
	142-7493	32	NUT-LUG (9/16-18-THD)	

Y - SEPARATE ILLUSTRATION

<END>

165-4903 WHEEL & TIRE AR—HEAVY DUTY

AN ATTACHMENT

SMCS-4200, 4201, 4203 **i04889740**

NOTE	PART NUMBER	QTY	PART NAME 1 2 3 4 5 6 (PRODUCT LEVEL)	SEE PAGE
Y	*165-4906*	2	TIRE & RIM GP (LH)	176
Y	*165-4907*	2	TIRE & RIM GP (RH)	176
	142-7493	32	NUT-LUG (9/16-18-THD)	

Y - SEPARATE ILLUSTRATION

<END>

178-2256 WHEEL & TIRE AR–HEAVY DUTY

AN ATTACHMENT

SMCS-4200, 4201, 4203 **i02361189**

NOTE	PART NUMBER	QTY	PART NAME 1 2 3 4 5 6 (PRODUCT LEVEL)	SEE PAGE
Y	*199-5438*	2	TIRE & RIM GP (LH)	178
Y	*199-5439*	2	TIRE & RIM GP (RH)	178
	142-7493	32	NUT-LUG (9/16-18-2B THD)	

Y - SEPARATE ILLUSTRATION

<END>

185-8666 WHEEL & TIRE AR–HEAVY DUTY

AN ATTACHMENT

SMCS-4200, 4201, 4203 **i04881496**

NOTE	PART NUMBER	QTY	PART NAME 1 2 3 4 5 6 (PRODUCT LEVEL)	SEE PAGE
Y	*185-9928*	2	TIRE & RIM GP (LH)	177
Y	*185-9929*	2	TIRE & RIM GP (RH)	177
	142-7493	32	NUT-LUG (9/16-18-THD)	

Y - SEPARATE ILLUSTRATION

<END>

185-8667 WHEEL & TIRE AR–HEAVY DUTY

AN ATTACHMENT

SMCS-4200, 4201, 4203 **i02361203**

NOTE	PART NUMBER	QTY	PART NAME 1 2 3 4 5 6 (PRODUCT LEVEL)	SEE PAGE
Y	*185-9930*	2	TIRE & RIM GP (LH)	177
Y	*185-9931*	2	TIRE & RIM GP (RH)	177
	142-7493	32	NUT-LUG (9/16-18-2B THD)	

Y - SEPARATE ILLUSTRATION

<END>

252-0346 WHEEL & TIRE AR

AN ATTACHMENT

SMCS-4200, 4201, 4203 **i02279611**

NOTE	PART NUMBER	QTY	PART NAME 1 2 3 4 5 6 (PRODUCT LEVEL)	SEE PAGE
Y	**265-2899**	2	TIRE & RIM GP (RH)	178
Y	**265-2898**	2	TIRE & RIM GP (LH)	178
	142-7493	32	NUT-LUG (9/16-18-2B THD)	

Y - SEPARATE ILLUSTRATION

<END>

252-0347 WHEEL & TIRE AR

AN ATTACHMENT

SMCS-4200, 4201, 4203 **i02279615**

NOTE	PART NUMBER	QTY	PART NAME 1 2 3 4 5 6 (PRODUCT LEVEL)	SEE PAGE
Y	**265-2900**	2	TIRE & RIM GP (LH)	179
Y	**265-2901**	2	TIRE & RIM GP (RH)	179
	142-7493	32	NUT-LUG (9/16-18-2B THD)	

Y - SEPARATE ILLUSTRATION

<END>

252-0377 WHEEL & TIRE AR—SOLID

AN ATTACHMENT

SMCS-4200, 4201, 4203 **i04683697**

NOTE	PART NUMBER	QTY	PART NAME 1 2 3 4 5 6 (PRODUCT LEVEL)	SEE PAGE
	142-7493	32	NUT-LUG (9/16-18-THD)	
	329-6783	2	TIRE-SOLID (12X16.5)	
	329-6784	2	TIRE-SOLID (12X16.5, LH)	

<END>

345-5911 CONVERSION AR-ROADING—NACD

AN ATTACHMENT

SMCS-7000 **i05156415**

NOTE	PART NUMBER	QTY	PART NAME 1 2 3 4 5 6 (PRODUCT LEVEL)	SEE PAGE
Y	*356-6082*	1	LIGHTING GP-STOP & TAIL	130
Y	*422-7656*	1	MOUNTING GP-ROADING LIGHTS (REAR LIGHTS)	203

Y - SEPARATE ILLUSTRATION

<END>

422-3401 CONVERSION AR-ROADING

AN ATTACHMENT

SMCS-7000 **i05256761**

NOTE	PART NUMBER	QTY	PART NAME 1 2 3 4 5 6 (PRODUCT LEVEL)	SEE PAGE
Y	*422-3400*	1	CONVERSION GP-ROADING	183
Y	**319-9480**	1	KIT-ROADING PLATE & MOUNTING (BUCKET)	340
Y	*417-4606*	1	LIFTING GP-MACHINE	199
Y	*356-6074*	1	LIGHTING GP-ROADING	128
Y	*175-4238*	1	LOCK GP-QUICK COUPLER (MECHANICAL)	345
Y	*422-3333*	1	MOUNTING GP-REGISTRATION	201
Y	*422-3334*	1	MOUNTING GP-ROADING LIGHTS	202

Y - SEPARATE ILLUSTRATION

<END>

422-3403 CONVERSION AR-ROADING

ITALY

AN ATTACHMENT

SMCS-7000 **i05293765**

NOTE	PART NUMBER	QTY	PART NAME 1 2 3 4 5 6 (PRODUCT LEVEL)	SEE PAGE
Y	*422-3400*	1	CONVERSION GP-ROADING	183
Y	**319-9480**	1	KIT-ROADING PLATE & MOUNTING (BUCKET)	340
Y	*417-4606*	1	LIFTING GP-MACHINE	199
Y	*356-6074*	1	LIGHTING GP-ROADING	128
Y	*175-4238*	1	LOCK GP-QUICK COUPLER (MECHANICAL)	345
Y	*422-3333*	1	MOUNTING GP-REGISTRATION	201
Y	*422-3334*	1	MOUNTING GP-ROADING LIGHTS	202

Y - SEPARATE ILLUSTRATION

<END>

422-3405 CONVERSION AR-ROADING

EUROPEAN MARKET

AN ATTACHMENT

SMCS-7000 **i05296425**

NOTE	PART NUMBER	QTY	PART NAME 1 2 3 4 5 6 (PRODUCT LEVEL)	SEE PAGE
Y	*417-4606*	1	LIFTING GP-MACHINE	199
Y	*356-6082*	1	LIGHTING GP-STOP & TAIL	130

Y - SEPARATE ILLUSTRATION

<END>

422-3400 CONVERSION GP-ROADING

ITALY

PART OF 422-3401, 422-3403 CONVERSION AR-ROADING

AN ATTACHMENT

SMCS-7000 **i05358557**

NOTE	REF NO	GRAPHIC REF	PART NUMBER	QTY	PART NAME 1 2 3 4 5 6 (PRODUCT LEVEL)	SEE PAGE
	1	1	**258-3849**	1	PLATE-IDENTIFICATION (ENGLISH, GERMAN, ITALIAN)	
Y	2	1	**309-1325**	1	LAMP GP-WARNING BEACON (12-VOLT, AMBER)	126
	3	1	**442-5904**	1	BLOCK AS	
	4	1	**3S-2093**	2	STRAP-CABLE	

Y - SEPARATE ILLUSTRATION

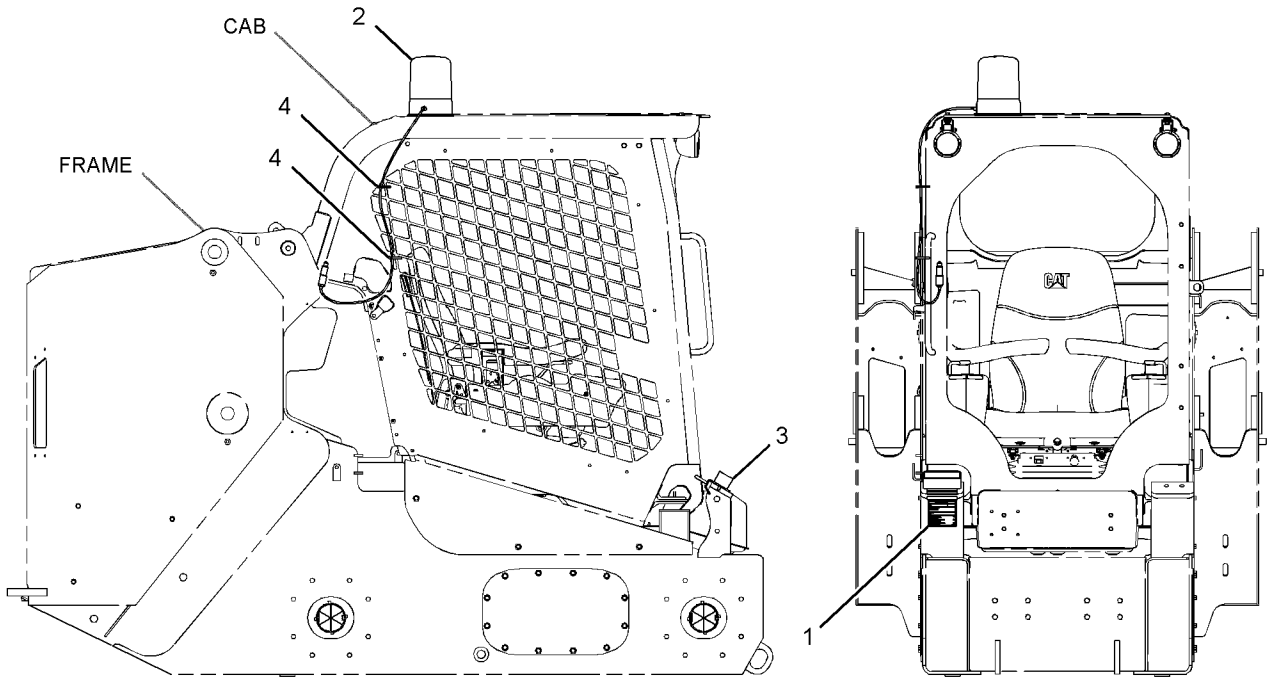

RIGHT SIDE VIEW FRONT VIEW

GRAPHIC #1 **<END>** g03349702

396-8293 COUNTERWEIGHT & MOUNTING GP

AN ATTACHMENT

SMCS-7056 **i05156466**

NOTE	REF NO	GRAPHIC REF	PART NUMBER	QTY	PART NAME 1 2 3 4 5 6 (PRODUCT LEVEL)	SEE PAGE
	1	1	**396-7434**	2	COUNTERWEIGHT	
	2	1	**7X-0550**	4	WASHER-HARD (13.5X32X5-MM THK)	
M	3	1	**8T-4139**	4	BOLT (M12X1.75X30-MM)	

M - METRIC PART

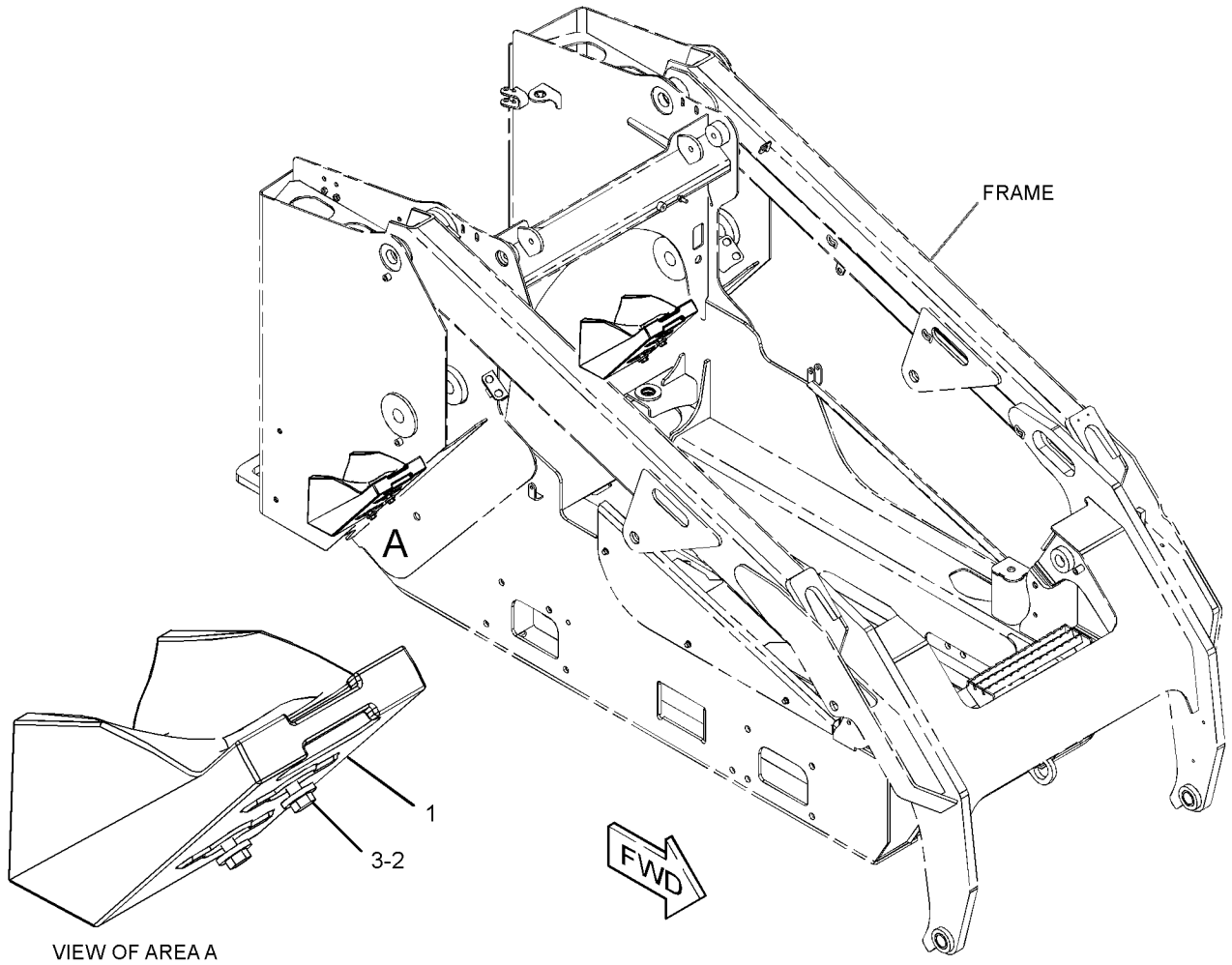

VIEW OF AREA A

GRAPHIC #1 **<END>** g03323568

345-5148 COUNTERWEIGHT GP

AN ATTACHMENT

SMCS-7056 **i05172879**

NOTE	REF NO	GRAPHIC REF	PART NUMBER	QTY	PART NAME 1 2 3 4 5 6 (PRODUCT LEVEL)	SEE PAGE
	1	1	**345-5147**	4	COUNTERWEIGHT	
	2	1	**5P-1076**	6	WASHER-HARD (13.5X30X4-MM THK)	
M	3	1	**8T-5001**	6	BOLT (M12X1.75X130-MM)	

M - METRIC PART

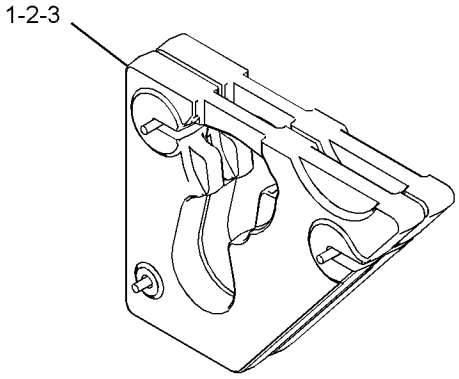

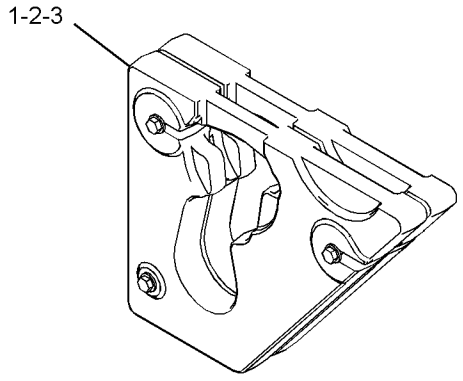



GRAPHIC #1 **<END>** g02817579

345-5010 ENCLOSURE GP-ENGINE

PART OF 345-5247 CHASSIS AR

SMCS-7263, 7273 **i05162987**

NOTE	REF NO	GRAPHIC REF	PART NUMBER	QTY	PART NAME 1 2 3 4 5 6 (PRODUCT LEVEL)	SEE PAGE
	1	1	**156-0283**	3	WASHER-HARD (8.4X35X2.5-MM THK)	
	2	1	**227-7474**	6	SPACER (13X20X7-MM THK)	
	3	1	**345-4719**	1	BLOCK	
	4	1	**345-4807**	2	PLATE	
	5	1	**345-5011**	1	BRACKET AS	
M		1	**159-9540**	2	NUT-WELD (M8X1.25-THD)	
	6	1	**345-5012**	1	COVER AS-PROTECTION	
M		1	**159-9539**	3	NUT-WELD (M6X1-THD)	
		1	**7T-1099**	4	LINK	
M		1	**159-9540**	2	NUT-WELD (M8X1.25-THD)	
M		1	**159-9541**	1	NUT-WELD (M10X1.5-THD)	
	7	1	**345-5013**	1	SEAL	
	8	1	**345-5014**	1	BRACKET AS	
	9	1	**345-5015**	1	BRACKET AS	
	10	1	**345-6519**	1	BLOCK AS	
	11	1	**190-7979**	1	BOLT (M8X1.25X80-MM)	
M	12	1	**266-3315**	2	BOLT-FLANGE HEAD (M8X1.25X25.5-MM)	
	13	1	**266-3316**	2	BOLT-FLANGE HEAD (M10X1.5X25-MM)	
	14	1	**342-9920**	2	BOLT-FLANGE HEAD (M8X1.25X20-MM)	
	15	1	**3S-2093**	6	STRAP-CABLE	
M	16	1	**3T-0852**	5	LOCKNUT (M8X1.25-THD)	
	17	1	**5P-4116**	5	WASHER-HARD (8.8X20.5X2-MM THK)	
	18	1	**7X-0632**	6	WASHER-HARD (11X36X6-MM THK)	
M	19	1	**8T-4196**	6	BOLT (M10X1.5X35-MM)	
M	20	1	**8T-5091**	2	BOLT (M8X1.25X20-MM)	

M - METRIC PART

345-5010 **ENCLOSURE GP-ENGINE (*contd.*)** **i05162987**

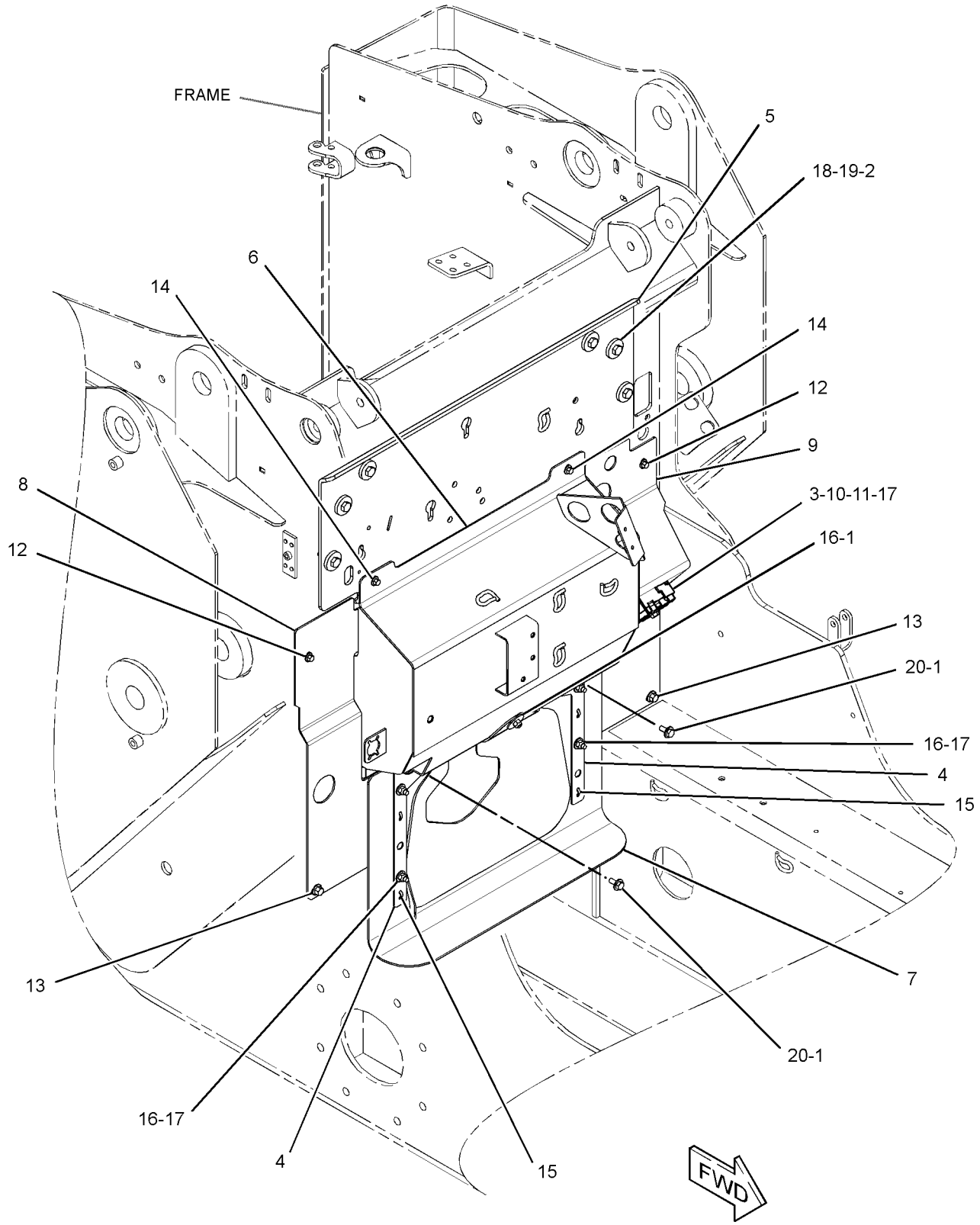

GRAPHIC #1 **<END>** g03319726

345-6450 ENCLOSURE GP-ENGINE

PART OF 345-5247 CHASSIS AR

SMCS-7263, 7273 **i05162972**

NOTE	REF NO	GRAPHIC REF	PART NUMBER	QTY	PART NAME 1 2 3 4 5 6 (PRODUCT LEVEL)	SEE PAGE
	1	1	**110-0885**	2	BUMPER	
	2	1	**142-8832**	1	PIN AS	
	3	1	**345-5604**	1	DOOR AS-ACCESS	
	4	1	**345-5640**	1	LATCH AS	
	5	1	*345-5645*	1	LOCK GP	
		1	**418-8096**	1	CAM	
J		1	**226-0294**	1	LOCK AS	
	6	1	**388-8120**	1	STRIKER AS	
M	7	1	**160-8500**	2	NUT (M8X1.25-THD)	
	8	1	**221-8058**	1	BOLT-SPECIAL	
	9	1	**343-4076**	1	BOLT-SPECIAL	
M	10	1	**6V-7744**	1	LOCKNUT (M10X1.5-THD)	
	11	1	**8T-4121**	2	WASHER-HARD (11X21X2.5-MM THK)	
M	12	1	**8T-4181**	4	BOLT (M6X1X20-MM)	
M	13	1	**8T-4196**	2	BOLT (M10X1.5X35-MM)	
	14	1	**8T-4205**	4	WASHER-HARD (7.2X14.5X2-MM THK)	

J - REQUIRES CORPORATE KEY
M - METRIC PART

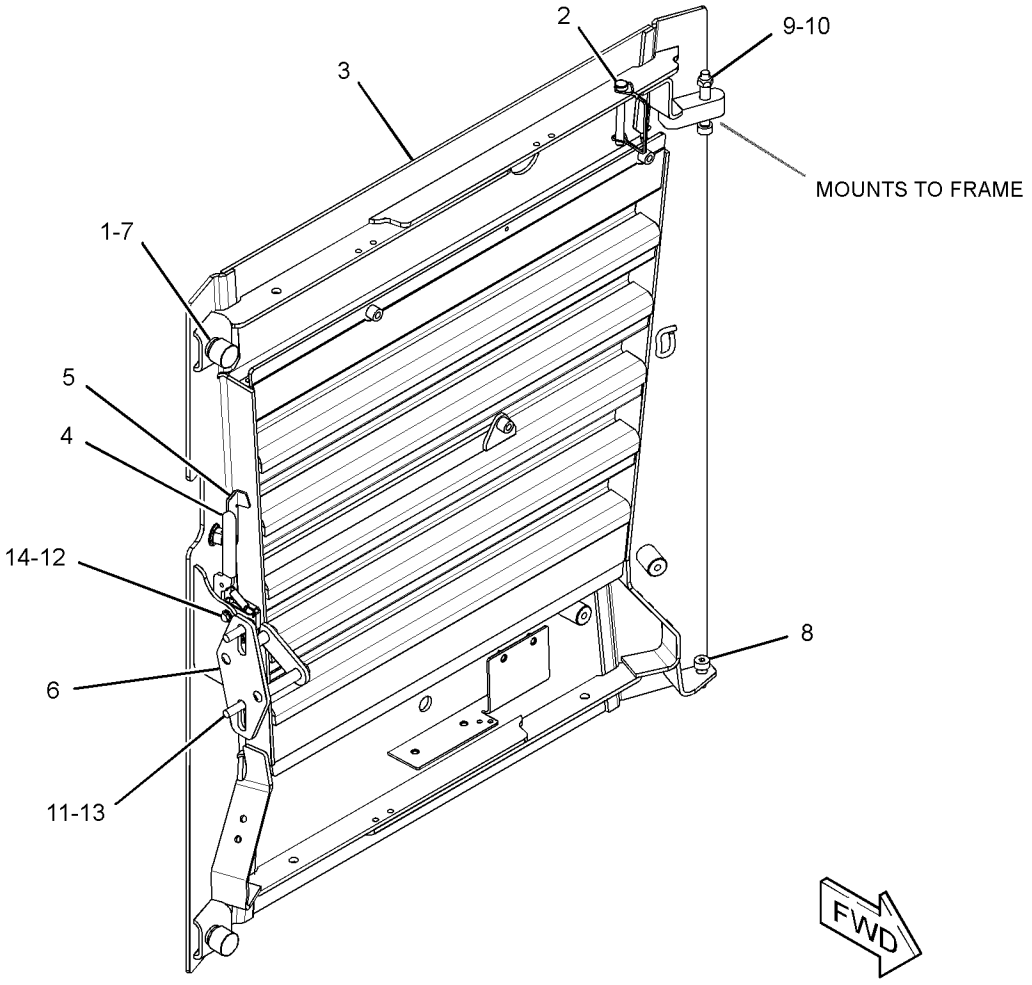

GRAPHIC #1 **<END>** g03319453

345-5775 FRAME GP-LOADER

PART OF 345-5247 CHASSIS AR

SMCS-7054 **i05166881**

NOTE	REF NO	GRAPHIC REF	PART NUMBER	QTY	PART NAME 1 2 3 4 5 6 (PRODUCT LEVEL)	SEE PAGE
	1	1	**3S-9182**	4	PLUG-MAGNETIC	
M	2	1	**246-7853**	4	NUT-SPECIAL (M8X1.25-THD)	
	3	1	**258-3184**	2	COVER	
	4	1	**258-3186**	1	PLATE AS	
	5	1	**258-3312**	1	PLATE	
	6	1	**261-6101**	4	COVER	
	7	1	**287-4218**	2	PLATE	
	8	1	**345-5198**	1	ARM AS-LIFT	
	8A	1	**4K-4709**	4	BUSHING	
	8B	1	**6K-4148**	4	BUSHING	
		1	**7T-1099**	1	LINK	
		1	**239-8534**	5	PLATE-WELD	
	9	1	**388-8118**	1	PLATE	
	10	1	**388-8119**	1	PLATE	
	11	1	**345-5773**	1	FRAME AS	
	12	1	**345-6403**	1	PLATE AS	
	13	1	**345-6404**	1	PLATE AS	
					(EACH PLATE AS INCLUDES)	
M		1	**159-9539**	4	NUT-WELD (M6X1-THD)	
M	14	1	**8T-4196**	5	BOLT (M10X1.5X35-MM)	
M	15	1	**266-3315**	4	BOLT-FLANGE HEAD (M8X1.25X25.5-MM)	
	16	1	**266-3316**	30	BOLT-FLANGE HEAD (M10X1.5X25-MM)	
	17	1	**342-9920**	2	BOLT-FLANGE HEAD (M8X1.25X20-MM)	
	18	1	**342-9922**	4	BOLT-FLANGE HEAD (M8X1.25X25-MM)	
	19	1	**7X-7729**	4	WASHER (11X25X3-MM THK)	
M	20	1	**8T-3991**	10	SCREW-BUTTON HEAD (M6X1X20-MM)	
	21	1	**419-8315**	1	COVER AS	
	22	1	**416-9605**	2	PLATE	
B	23	1	**287-4220**	6	SHIM (2-MM THK)	
	24	1	**8T-4121**	1	WASHER-HARD (11X21X2.5-MM THK)	

B - USE AS REQUIRED
M - METRIC PART

345-5775 **FRAME GP-LOADER (*contd.*)** **i05166881**

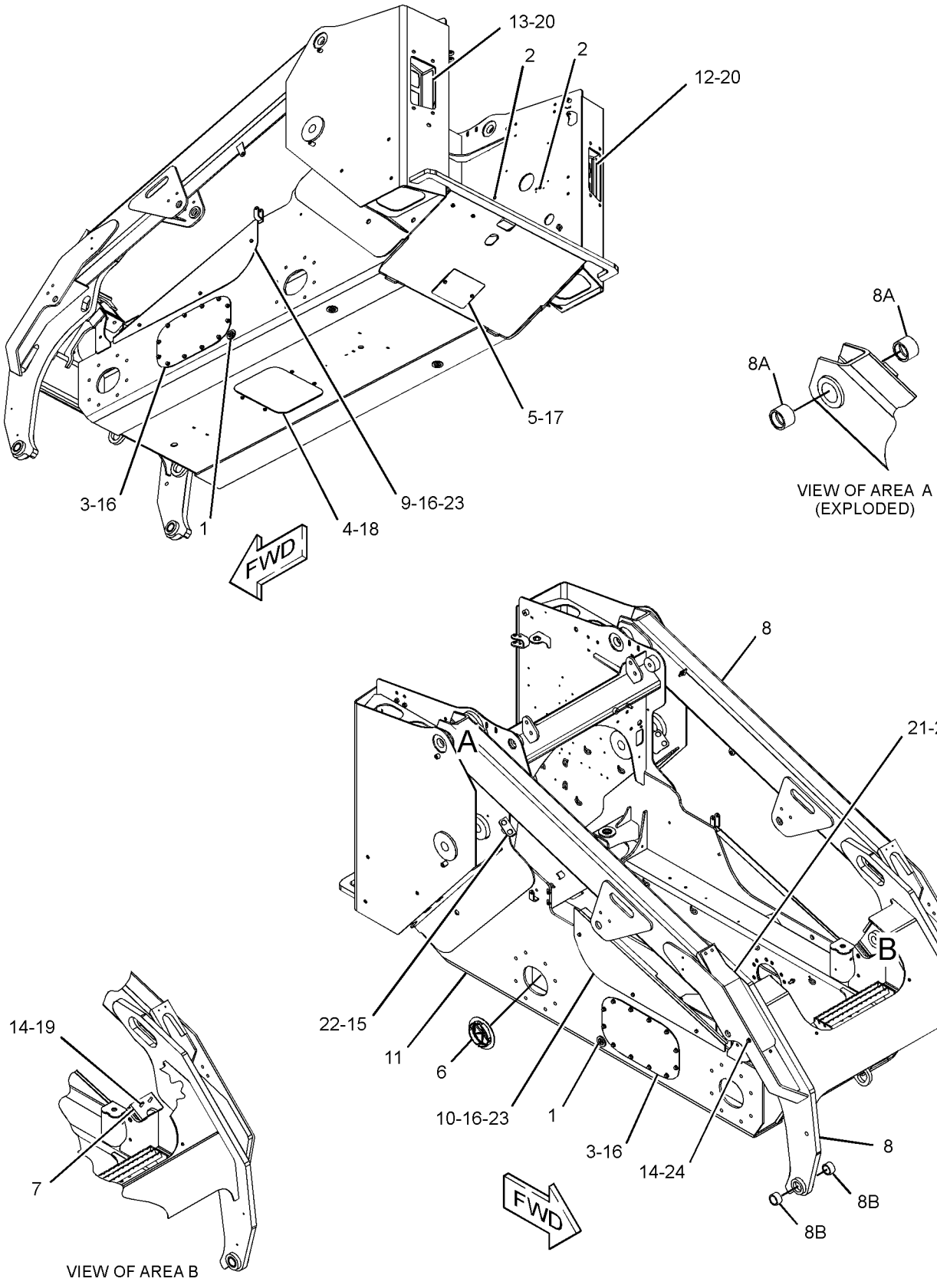

GRAPHIC #1 **<END>** g03393077

388-7875 KIT-COUNTERWEIGHT—COUNTERWEIGHT AN ATTACHMENT

SMCS-7056 **i04803481**

NOTE	REF NO	GRAPHIC REF	PART NUMBER	QTY	PART NAME 1 2 3 4 5 6 (PRODUCT LEVEL)	SEE PAGE
	1	1	**345-5147**	2	COUNTERWEIGHT	
	2	1	**8T-4223**	6	WASHER-HARD (13.5X25.5X3-MM THK)	

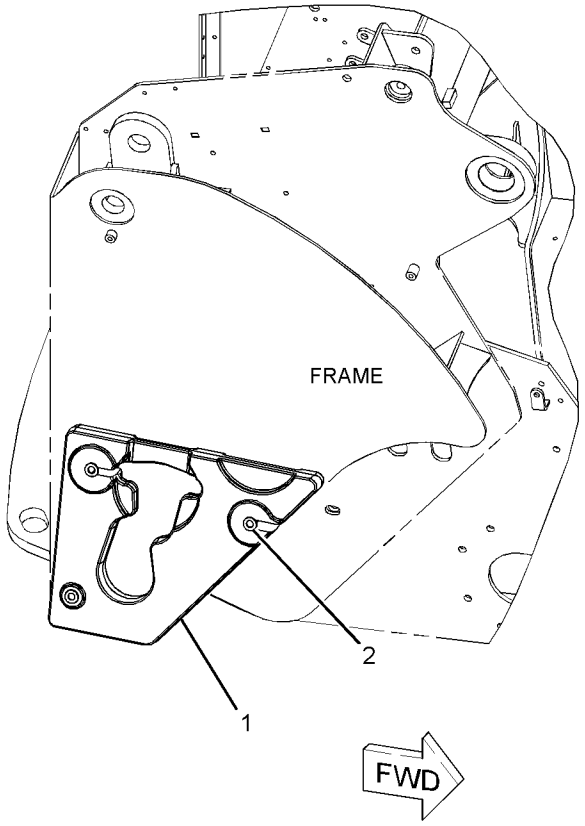

GRAPHIC #1 **<END>** g02925600

416-0720 KIT-MACHINE ENCLOSURE SEAL—DEBRIS BARRIER

AN ATTACHMENT

SMCS-7276 **i05156464**

NOTE	REF NO	GRAPHIC REF	PART NUMBER	QTY	PART NAME 1 2 3 4 5 6 (PRODUCT LEVEL)	SEE PAGE
	1	1	**8T-6726**	2	CLAMP-HOSE	
	2	1	**345-5864**	1	GASKET	
	3	1	**345-5865**	1	PLATE	
	4	1	**380-1714**	1	PLATE AS	
	5	1	**380-1715**	1	PLATE AS	
	6	1	**388-5352**	2	PLATE	
	7	1	**388-5353**	2	GASKET	
	8	1	**391-5623**	2	PLATE	
	9	1	**415-7162**	2	BOOT AS	
	10	1	**416-0721**	2	SUPPORT AS-TOP	
					(EACH INCLUDES)	
M		1	**159-9539**	9	NUT-WELD (M6X1-THD)	
	11	1	**416-0722**	1	SUPPORT AS	
	12	1	**416-0723**	1	SUPPORT AS	
					(EACH SUPPORT AS INCLUDES)	
M		1	**159-9539**	7	NUT-WELD (M6X1-THD)	
	13	1	**416-0724**	1	PLATE AS	
	14	1	**416-0725**	1	PLATE AS (LH)	
	15	1	**416-0726**	1	PLATE AS (RH)	
	16	1	**416-0727**	1	PLATE AS	
	17	1	**416-0728**	2	GROMMET	
	18	1	**416-0729**	4	INSULATION	
	19	1	**416-0730**	2	ANGLE	
	20	1	**416-0737**	1	GASKET-LH	
	21	1	**416-0738**	1	GASKET-LH	
	22	1	**416-0739**	1	PLATE	
	23	1	**416-0741**	1	PLATE	
	24	1	**416-0742**	1	GASKET-RH	
	25	1	**416-0743**	1	PLATE	
	26	1	**416-0744**	1	PLATE	
	27	1	**416-0745**	1	GASKET-LH	
	28	1	**416-0746**	1	PLATE	
	29	1	**416-0747**	1	GASKET-RH	
	30	1	**416-0748**	1	PLATE	
	31	1	**416-0749**	1	PLATE	
	32	1	**416-0750**	1	GASKET	
	33	1	**416-0751**	1	PLATE	
	34	1	**416-0752**	2	PLATE	
	35	1	**416-0753**	1	PLATE	
	36	1	**416-0754**	1	PLATE	
	37	1	**416-0755**	2	BRUSH AS	
	38	1	**416-0759**	1	PLATE	
	39	1	**416-0760**	1	PLATE AS (LH)	
	40	1	**416-0761**	1	PLATE AS (RH)	
					(EACH PLATE AS INCLUDES)	
M		1	**159-9540**	3	NUT-WELD (M8X1.25-THD)	
	41	1	**416-1848**	1	HOOD AS	
M	42	1	**174-9194**	2	BOLT (M8X1.25X16-MM)	
	43	1	**266-3314**	4	BOLT-FLANGE HEAD (M6X1X20.5-MM)	
	44	1	**342-9920**	2	BOLT-FLANGE HEAD (M8X1.25X20-MM)	
	45	1	**342-9922**	2	BOLT-FLANGE HEAD (M8X1.25X25-MM)	
M	46	1	**3E-8020**	51	SCREW-TRUSS HEAD (M6X1X25-MM)	
M	47	1	**5C-9553**	16	BOLT (M6X1X16-MM)	
M	48	1	**6V-7357**	16	BOLT (M6X1X25-MM)	
M	49	1	**6V-7743**	51	LOCKNUT (M6X1-THD)	
M	50	1	**8T-4139**	2	BOLT (M12X1.75X30-MM)	
	51	1	**8T-4205**	83	WASHER-HARD (7.2X14.5X2-MM THK)	
	52	1	**8T-4223**	2	WASHER-HARD (13.5X25.5X3-MM THK)	

416-0720 **KIT-MACHINE ENCLOSURE SEAL (*contd.*)** **i05156464**

NOTE	REF NO	GRAPHIC REF	PART NUMBER	QTY	PART NAME 1 2 3 4 5 6 (PRODUCT LEVEL)	SEE PAGE
D	53	1	**5P-7483**		SEAL (0.7-M)	
E	54	1	**132-8502**		SEAL (84-CM EACH)	

D - ORDER BY THE METER
E - ORDER BY THE CENTIMETER
M - METRIC PART

416-0720 **KIT-MACHINE ENCLOSURE SEAL (*contd.*)** **i05156464**

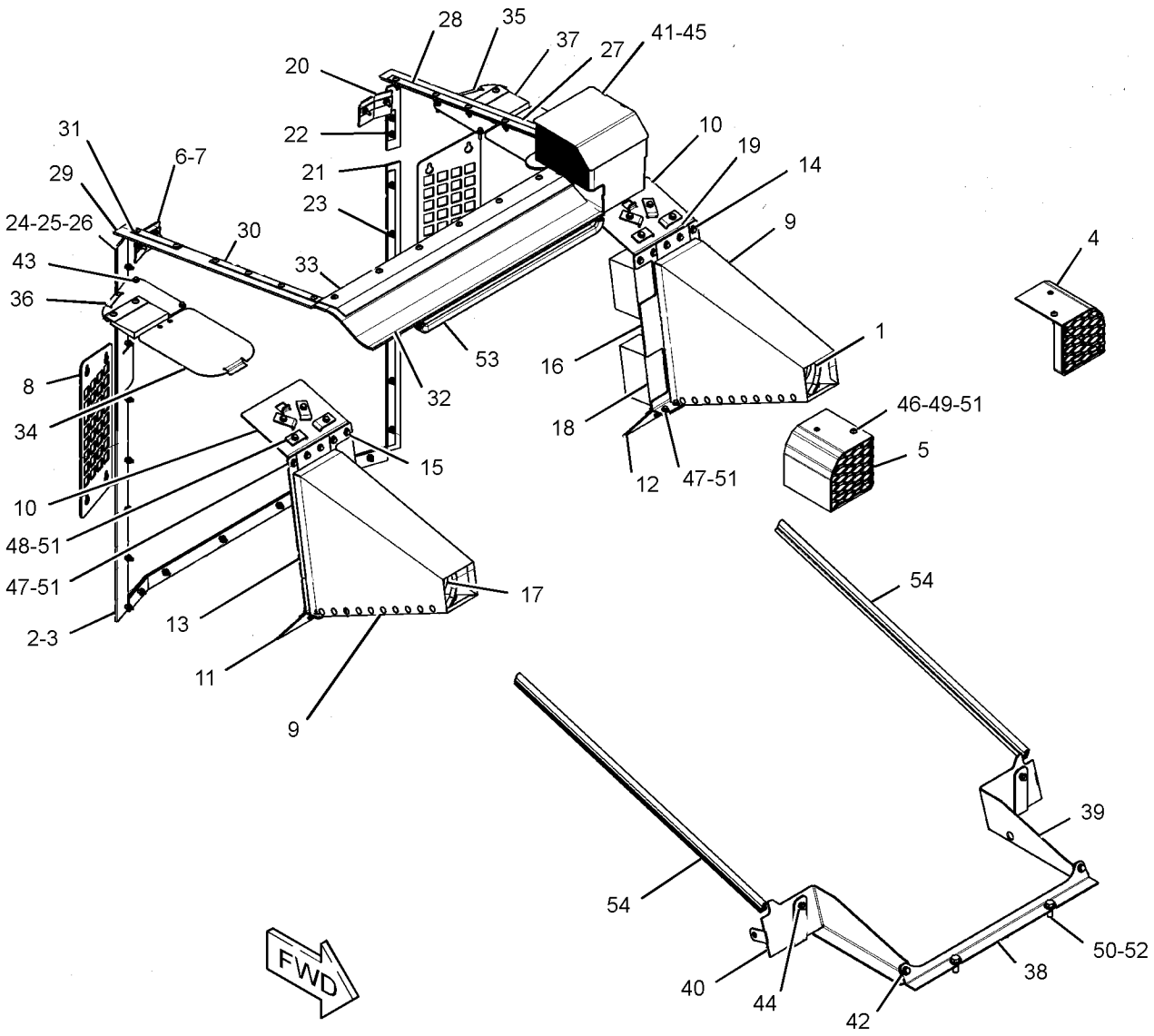

GRAPHIC #1 **<END>** g03386032

345-5286 KIT-MOUNTING-BACKHOE
AN ATTACHMENT

SMCS-7050, 7259 **i05270561**

NOTE	REF NO	GRAPHIC REF	PART NUMBER	QTY	PART NAME 1 2 3 4 5 6 (PRODUCT LEVEL)	SEE PAGE
	1	1	**170-5707**	8	LOCK PIN	
	2	1	**287-4159**	4	PIN-DETENT	
	3	1	**287-4218**	2	PLATE	
	4	1	**345-5603**	1	STEP	
	5	1	**345-5672**	4	PIN	
	6	1	**345-6507**	2	SUPPORT AS	
M	7	1	**7X-2553**	8	BOLT (M16X2X40-MM)	
	8	1	**8T-4122**	16	WASHER-HARD (17X32X3.5-MM THK)	
M	9	1	**8T-4183**	2	BOLT (M12X1.75X40-MM)	
	10	1	**8T-4223**	2	WASHER-HARD (13.5X25.5X3-MM THK)	
M	11	1	**8T-4778**	8	LOCKNUT (M16X2-THD)	
M	12	1	**8T-6466**	4	BOLT (M10X1.5X60-MM)	

M - METRIC PART

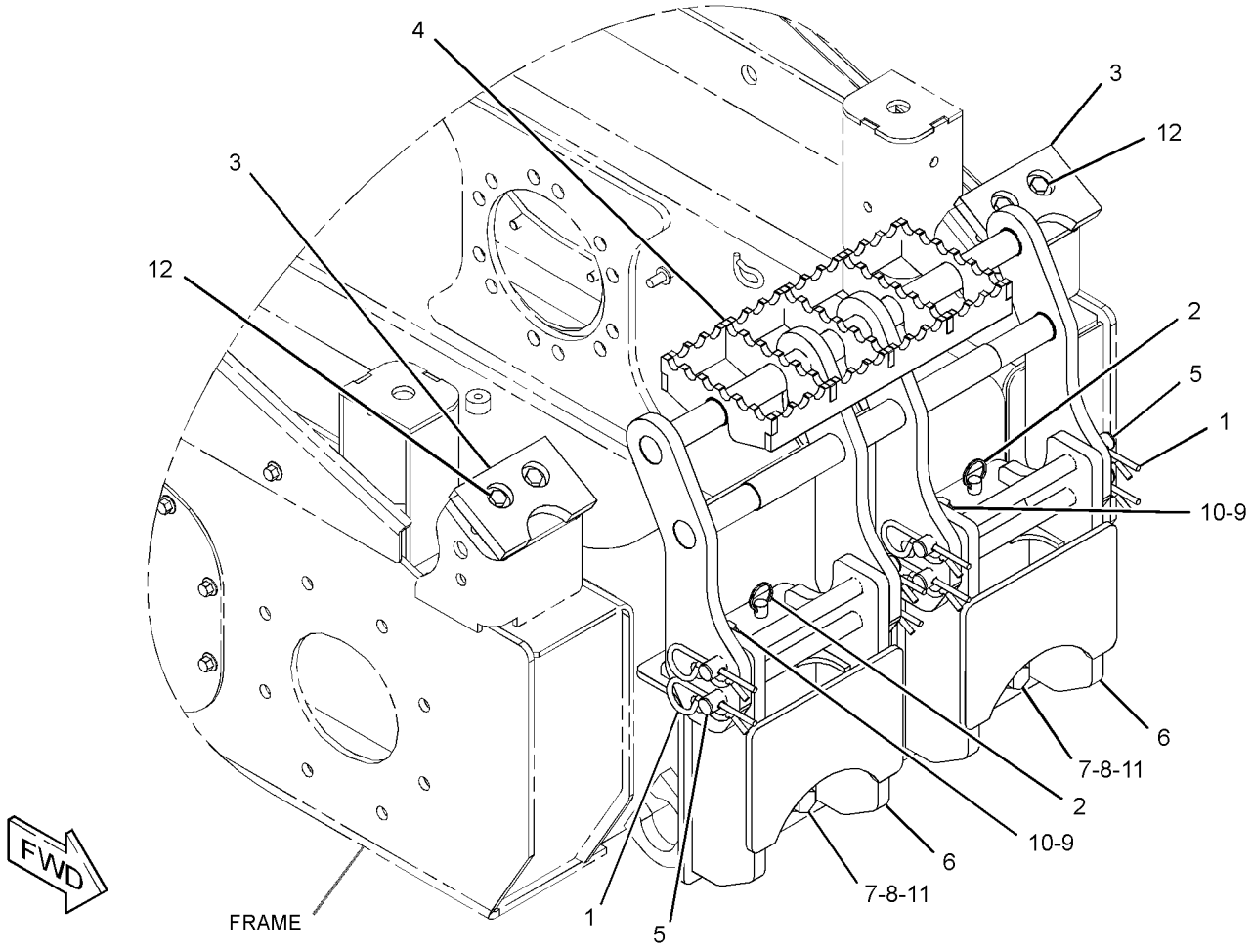

GRAPHIC #1 **<END>** g03323207

422-3323 KIT-ROADING CONVERSION—ROADING LIGHTS, FRONT

FOR USE WITH 422-3324—PAGE: 198, 319-9480—PAGE: 340

AN ATTACHMENT

SMCS-1408, 1429, 1430, 1432, 7000, 7319 **i05342662**

NOTE	REF NO	GRAPHIC REF	PART NUMBER	QTY	PART NAME 1 2 3 4 5 6 (PRODUCT LEVEL)	SEE PAGE
	1	1	**9R-1499**	2	REFLECTOR (RED)	
	2	1	**132-5166**	2	MIRROR GP-REAR VIEW	
					(EACH INCLUDES)	
		1	**148-2371**	1	CLAMP (TOP)	
		1	**148-2372**	1	CLAMP (BOTTOM)	
	3	1	**175-4239**	2	BRACKET AS	
Y	4	1	**195-0189**	1	LAMP GP-HEAD & SIGNAL (FRONT, RH)	123
Y	5	1	**195-0190**	1	LAMP GP-HEAD & SIGNAL (FRONT, LH)	124
	6	1	**263-5421**	1	SWITCH AS-ROCKER (ROADING LIGHTS)	
		1	**111-7899**	1	GASKET	
Y	7	1	**356-6075**	2	HARNESS AS-LIGHTING	103
	8	1	**388-8222**	2	BRACKET	
	9	1	**388-8223**	1	BRACKET (LH)	
	10	1	**388-8224**	1	BRACKET (RH)	
	11	1	**132-5789**	2	CLIP	
	12	1	**266-3316**	4	BOLT-FLANGE HEAD (M10X1.5X25-MM)	
	13	1	**3S-2093**	8	STRAP-CABLE	
	14	1	**4P-7581**	2	CLIP	
M	15	1	**5C-9553**	4	BOLT (M6X1X16-MM)	
	16	1	**7K-1181**	14	STRAP-CABLE	
	17	1	**8T-4205**	4	WASHER-HARD (7.2X14.5X2-MM THK)	

M - METRIC PART
Y - SEPARATE ILLUSTRATION

422-3323 **KIT-ROADING CONVERSION (*contd.*)** **i05342662**

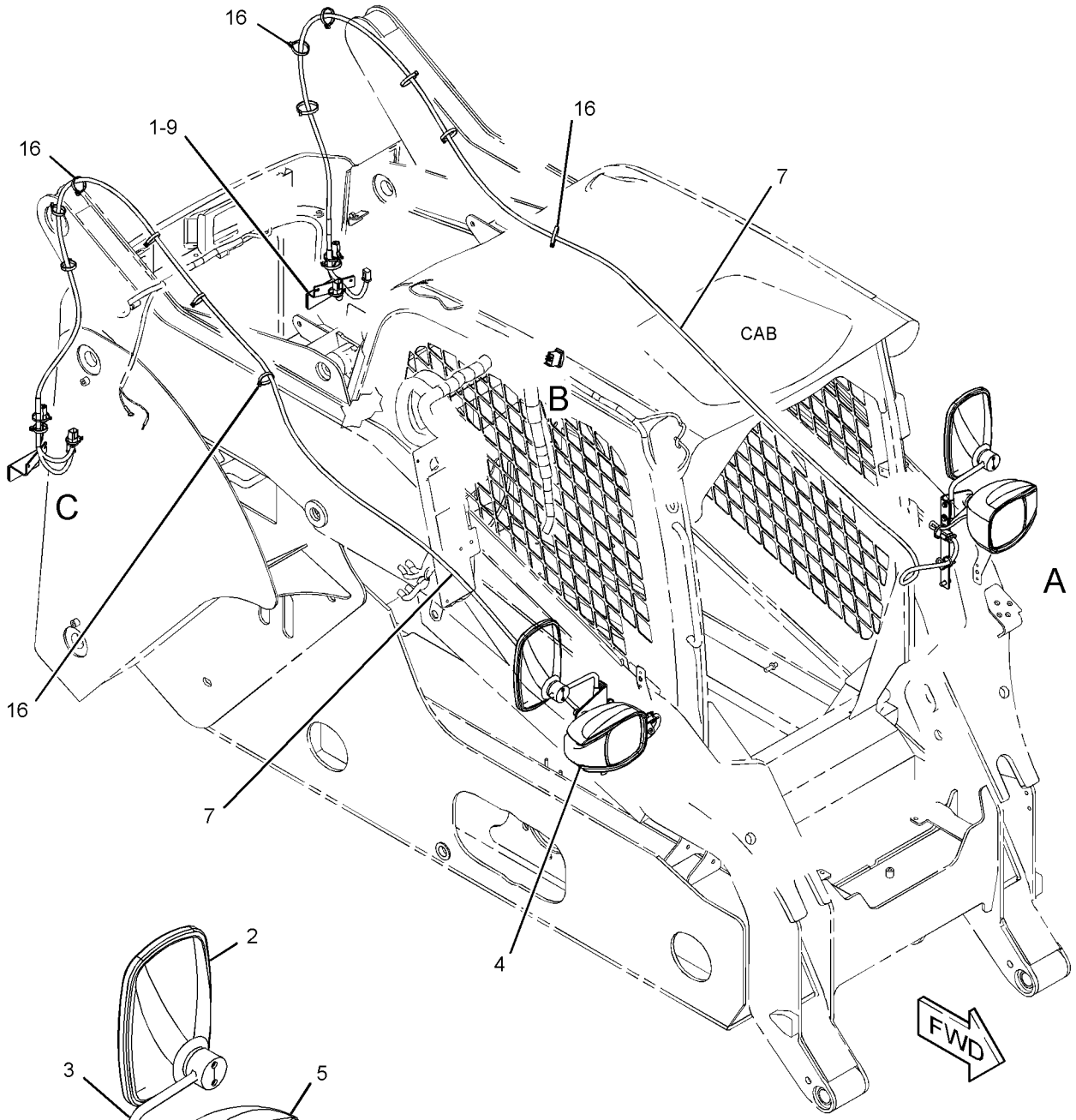

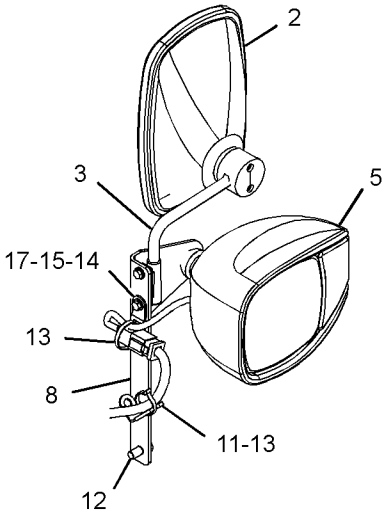

VIEW OF AREA A

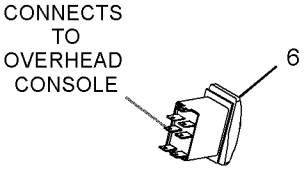

VIEW OF AREA B

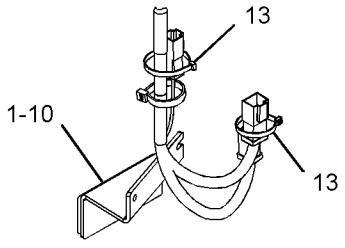

VIEW OF AREA C

GRAPHIC #1 **<END>** g03385742

422-3324 KIT-ROADING CONVERSION—ROADING LIGHTS, FRONT

FOR USE WITH 422-3323—PAGE: 196, 319-9480—PAGE: 340

AN ATTACHMENT

SMCS-1408, 1429, 1430, 1432, 7000, 7319 **i05342663**

NOTE	REF NO	GRAPHIC REF	PART NUMBER	QTY	PART NAME 1 2 3 4 5 6 (PRODUCT LEVEL)	SEE PAGE
	1	1	**9R-5301**	1	PIN-COTTER	
	2	1	**190-8962**	1	LAMP GP-REGISTRATION PLATE	
		1	**195-9712**	1	LAMP (12-VOLT, 10-WATT)	
	3	1	**258-3849**	1	PLATE-IDENTIFICATION (ENGLISH, GERMAN, ITALIAN)	
Y	4	1	**293-9044**	1	HARNESS AS-REAR LIGHTING (STOP, TAIL, TURN)	109
Y	5	1	**309-1325**	1	LAMP GP-WARNING BEACON (12-VOLT, AMBER)	126
	6	1	**422-3232**	1	BRACKET AS	
	7	1	**442-5904**	1	BLOCK AS	
	8	1	**178-2247**	1	PIN	
M	9	1	**266-3315**	1	BOLT-FLANGE HEAD (M8X1.25X25.5-MM)	
	10	1	**3S-2093**	2	STRAP-CABLE	
	11	1	**4B-4863**	2	WASHER (4.7X11X1.2-MM THK)	
M	12	1	**5C-8312**	2	NUT (M4X0.7-THD)	
M	13	1	**6V-9672**	2	SCREW-MACHINE (M4X0.7X16-MM)	
	14	1	**9X-8257**	1	WASHER (17.5X30X3.5-MM THK)	

M - METRIC PART
Y - SEPARATE ILLUSTRATION

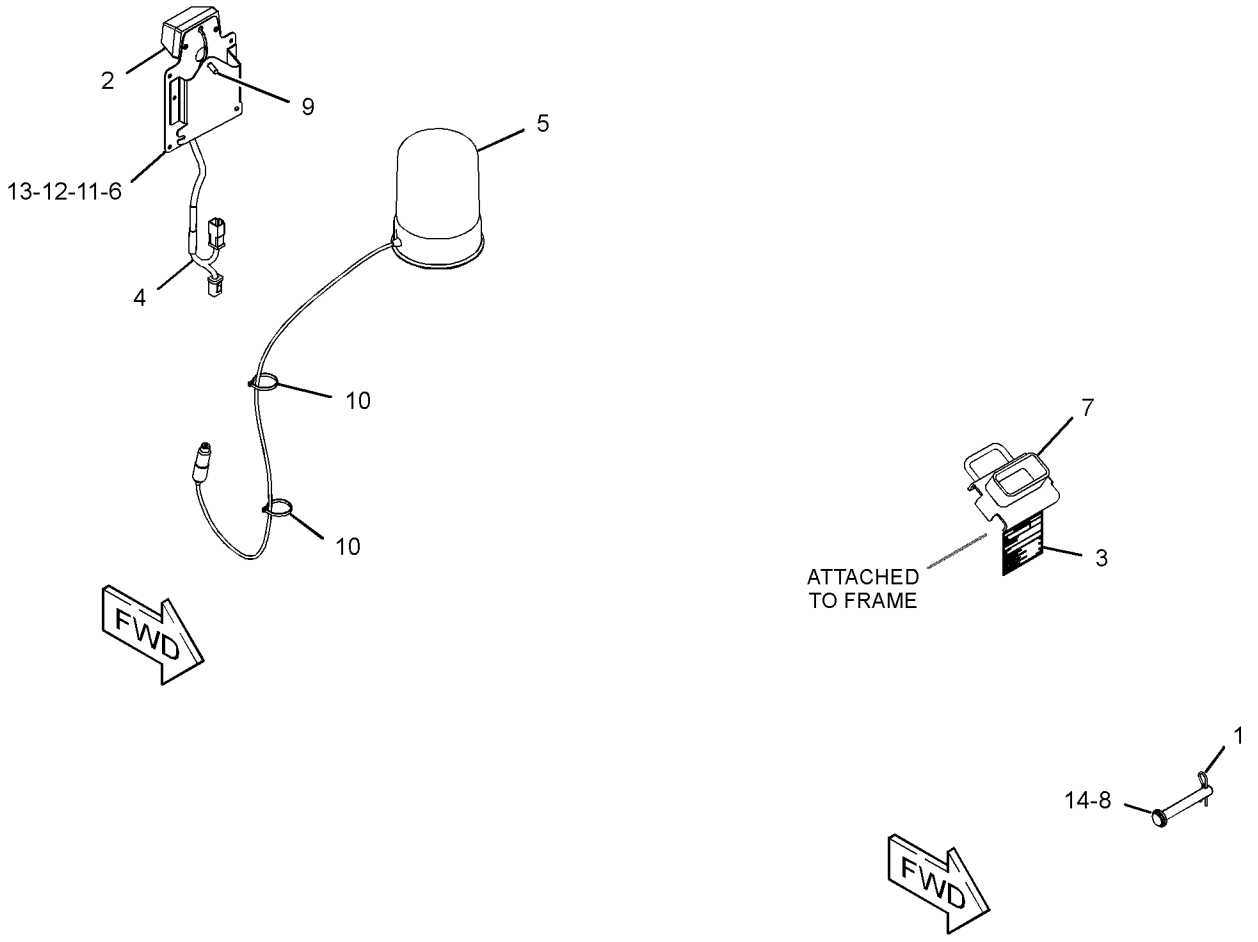

GRAPHIC #1 **<END>** g03385943

417-4606 LIFTING GP-MACHINE—FOUR POINT

PART OF 422-3401, 422-3403, 422-3405 CONVERSION AR-ROADING AN ATTACHMENT

SMCS-1122, 6459, 7000 **i05245120**

NOTE	REF NO	GRAPHIC REF	PART NUMBER	QTY	PART NAME 1 2 3 4 5 6 (PRODUCT LEVEL)	SEE PAGE
	1	1	**7E-2700**	2	FILM-INFORMATION (LIFT EYE LOCATION)	
	2	1	**345-6073**	2	PLATE	
	3	1	**388-7936**	2	PLATE	
	4	1	**417-4607**	2	PLATE-LIFT	
	5	1	**418-8763**	2	FILM-IDENTIFICATION (LIFT POINT)	
M	6	1	**159-2953**	4	SCREW-FLAT HEAD (M16X2-THD)	
M	7	1	**6V-5845**	2	BOLT (M20X2.5X70-MM)	
M	8	1	**6V-7688**	2	LOCKNUT (M20X2.5-THD)	
	9	1	**7X-0521**	4	WASHER-HARD (20X36.5X5-MM THK)	
M	10	1	**7X-2559**	2	BOLT (M16X2X160-MM)	
	11	1	**8T-4122**	8	WASHER-HARD (17X32X3.5-MM THK)	
M	12	1	**8T-4190**	4	BOLT (M16X2X25-MM)	
M	13	1	**8T-4778**	2	LOCKNUT (M16X2-THD)	

M - METRIC PART

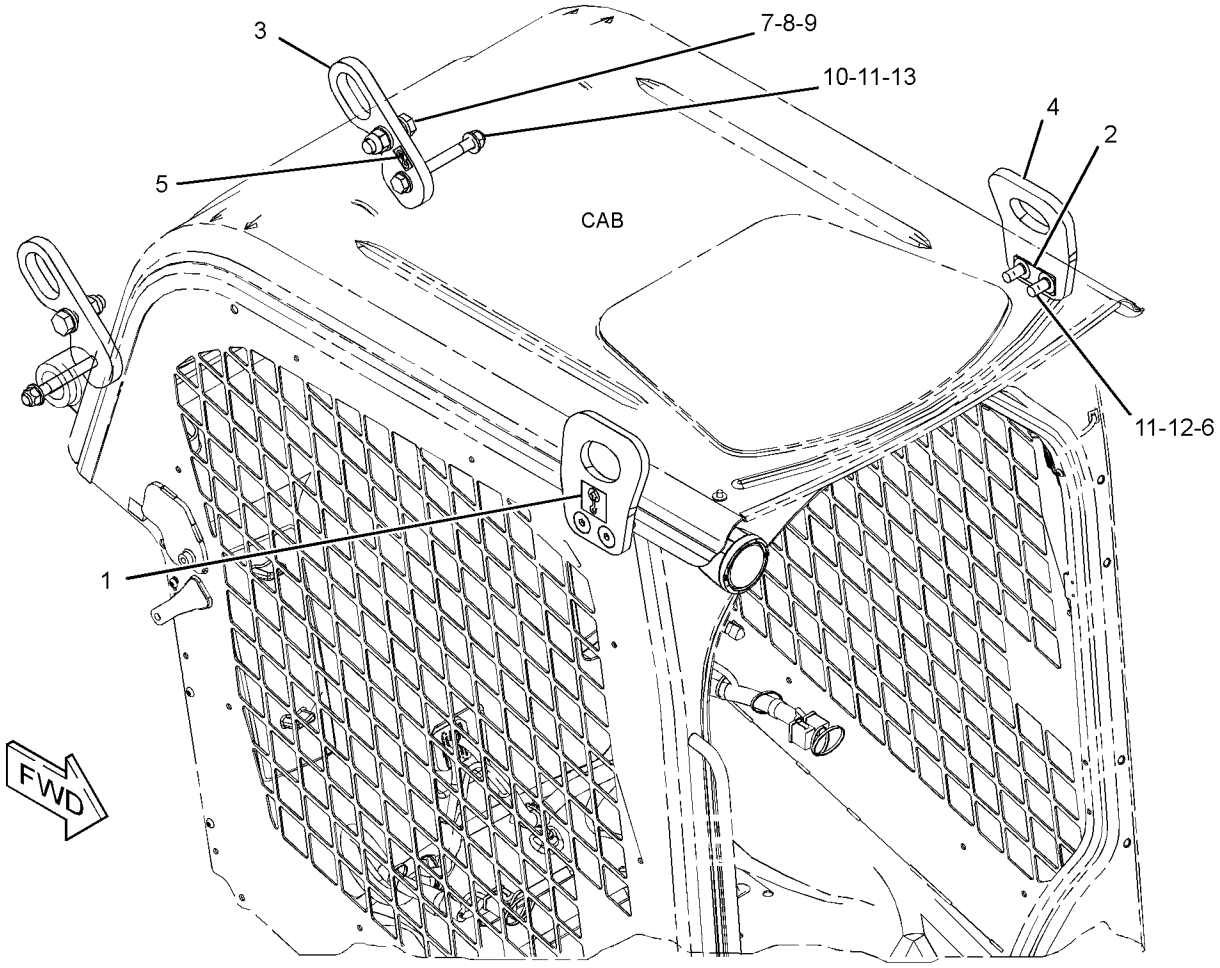

GRAPHIC #1 **<END>** g03364471

345-6130 MIRROR & MTG GP-REAR VIEW

PART OF 345-5454 CAB AR

SMCS-7319 **i04758930**

NOTE	REF NO	GRAPHIC REF	PART NUMBER	QTY	PART NAME 1 2 3 4 5 6 (PRODUCT LEVEL)	SEE PAGE
	1	1	**345-6131**	1	MIRROR AS (REAR VIEW)	
	2	1	**3B-4505**	1	LOCKWASHER	
M	3	1	**5C-7261**	1	NUT (M8X1.25-THD)	
	4	1	**8T-4224**	1	WASHER-HARD (8.8X16X2-MM THK)	

M - METRIC PART

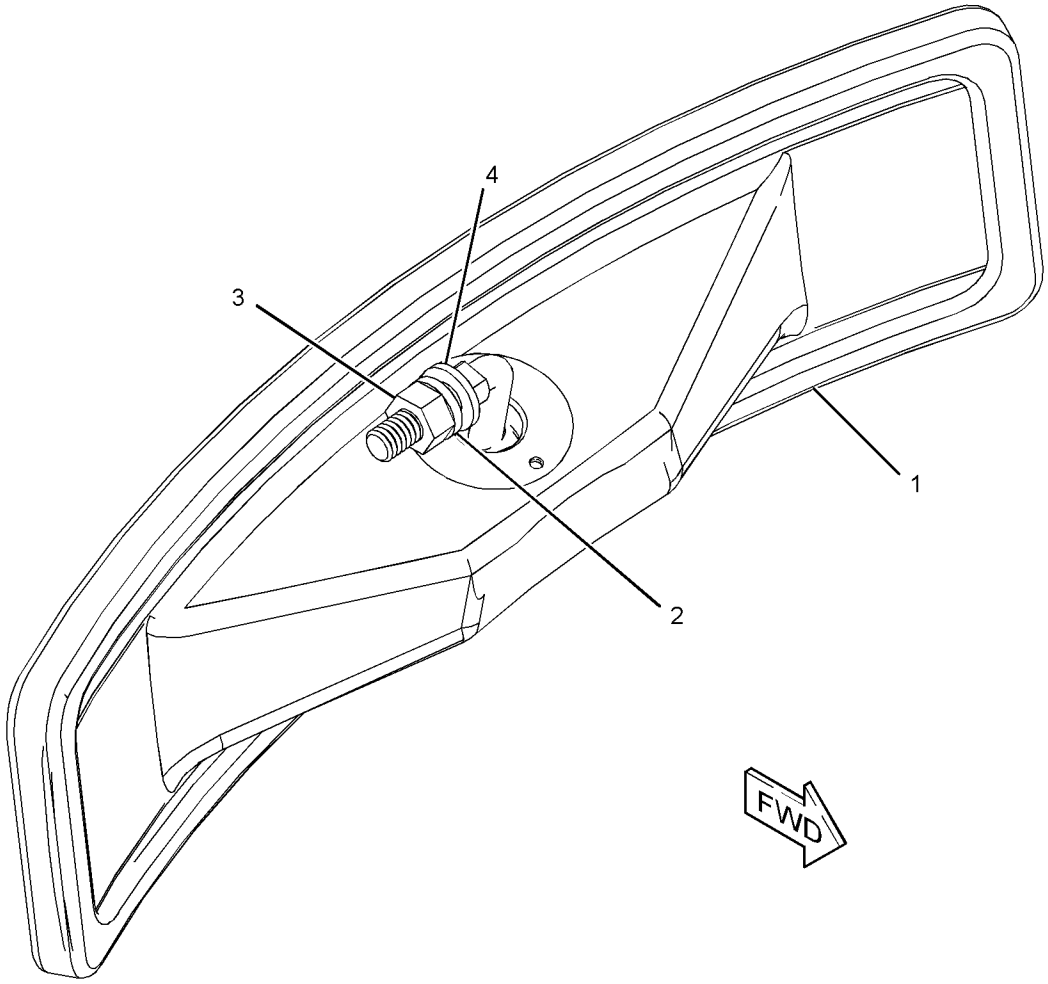

GRAPHIC #1 **<END>** g02873037

422-3333 MOUNTING GP-REGISTRATION

PART OF 422-3401, 422-3403 CONVERSION AR-ROADING
AN ATTACHMENT

SMCS-1408, 1429, 7050 **i05256757**

NOTE	REF NO	GRAPHIC REF	PART NUMBER	QTY	PART NAME 1 2 3 4 5 6 (PRODUCT LEVEL)	SEE PAGE
	1	1	**190-8962**	1	LAMP GP-REGISTRATION PLATE	
		1	**195-9712**	1	LAMP (12-VOLT, 10-WATT)	
	2	1	**293-9044**	1	HARNESS AS-REAR LIGHTING (STOP, TAIL, TURN)	
		1	**8T-8729**	4	PIN-CONNECTOR (16-GA TO 18-GA)	
		1	**155-2271**	1	KIT-CONNECTING PLUG (4-PIN)	
					(INCLUDES PLUG AS, WEDGE & INTERFACE SEAL)	
		1	**102-8804**	1	KIT-RECEPTACLE (4-PIN)	
					(INCLUDES RECEPTACLE AS & WEDGE)	
		1	**8T-8730**	4	SOCKET-CONNECTOR (16-GA TO 18-GA)	
		1	**5P-4571**	2	TERMINAL-BLADE (14-GA TO 16-GA)	
E		1	**125-7874**		TUBE-HEAT SHRINK (5.72-MM DIA) (10-CM)	
	3	1	**422-3232**	1	BRACKET AS	
M	4	1	**266-3315**	1	BOLT-FLANGE HEAD (M8X1.25X25.5-MM)	
	5	1	**4B-4863**	2	WASHER (4.7X11X1.2-MM THK)	
M	6	1	**5C-8312**	2	NUT (M4X0.7-THD)	
M	7	1	**6V-9672**	2	SCREW-MACHINE (M4X0.7X16-MM)	

E - ORDER BY THE CENTIMETER
M - METRIC PART

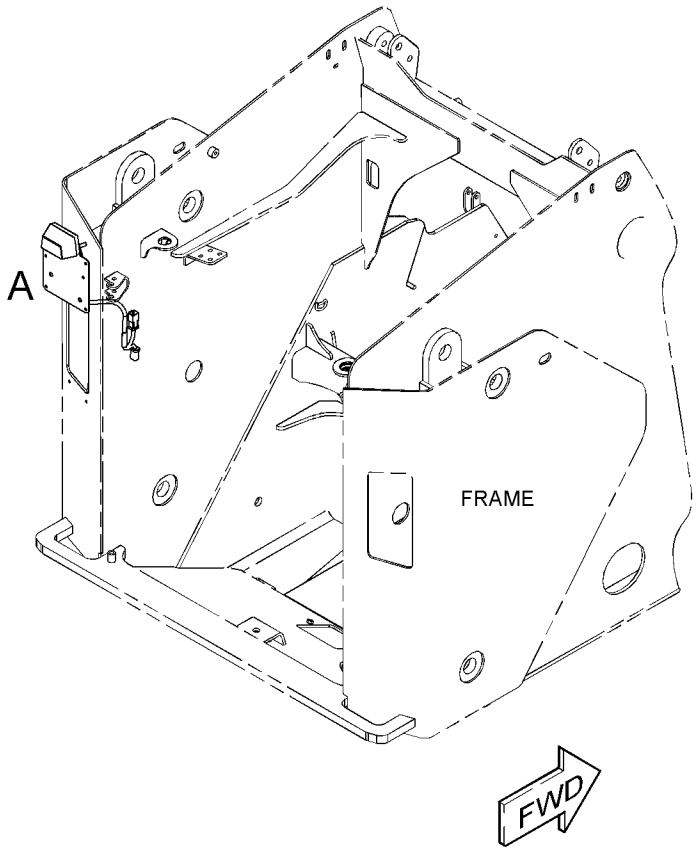

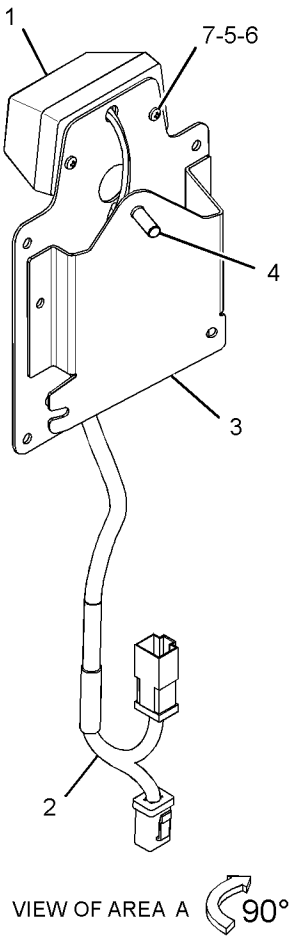

GRAPHIC #1 **<END>** g03350178

422-3334 MOUNTING GP-ROADING LIGHTS

PART OF 422-3401, 422-3403 CONVERSION AR-ROADING

AN ATTACHMENT

SMCS-1429 **i05335948**

NOTE	REF NO	GRAPHIC REF	PART NUMBER	QTY	PART NAME 1 2 3 4 5 6 (PRODUCT LEVEL)	SEE PAGE
	1	1	**132-5166**	2	MIRROR GP-REAR VIEW	
					(EACH INCLUDES)	
		1	**148-2371**	1	CLAMP (TOP)	
		1	**148-2372**	1	CLAMP (BOTTOM)	
	2	1	**175-4239**	2	BRACKET AS	
	3	1	**388-8222**	2	BRACKET	
	4	1	**266-3316**	4	BOLT-FLANGE HEAD (M10X1.5X25-MM)	
M	5	1	**5C-9553**	4	BOLT (M6X1X16-MM)	
	6	1	**8T-4205**	4	WASHER-HARD (7.2X14.5X2-MM THK)	

M - METRIC PART

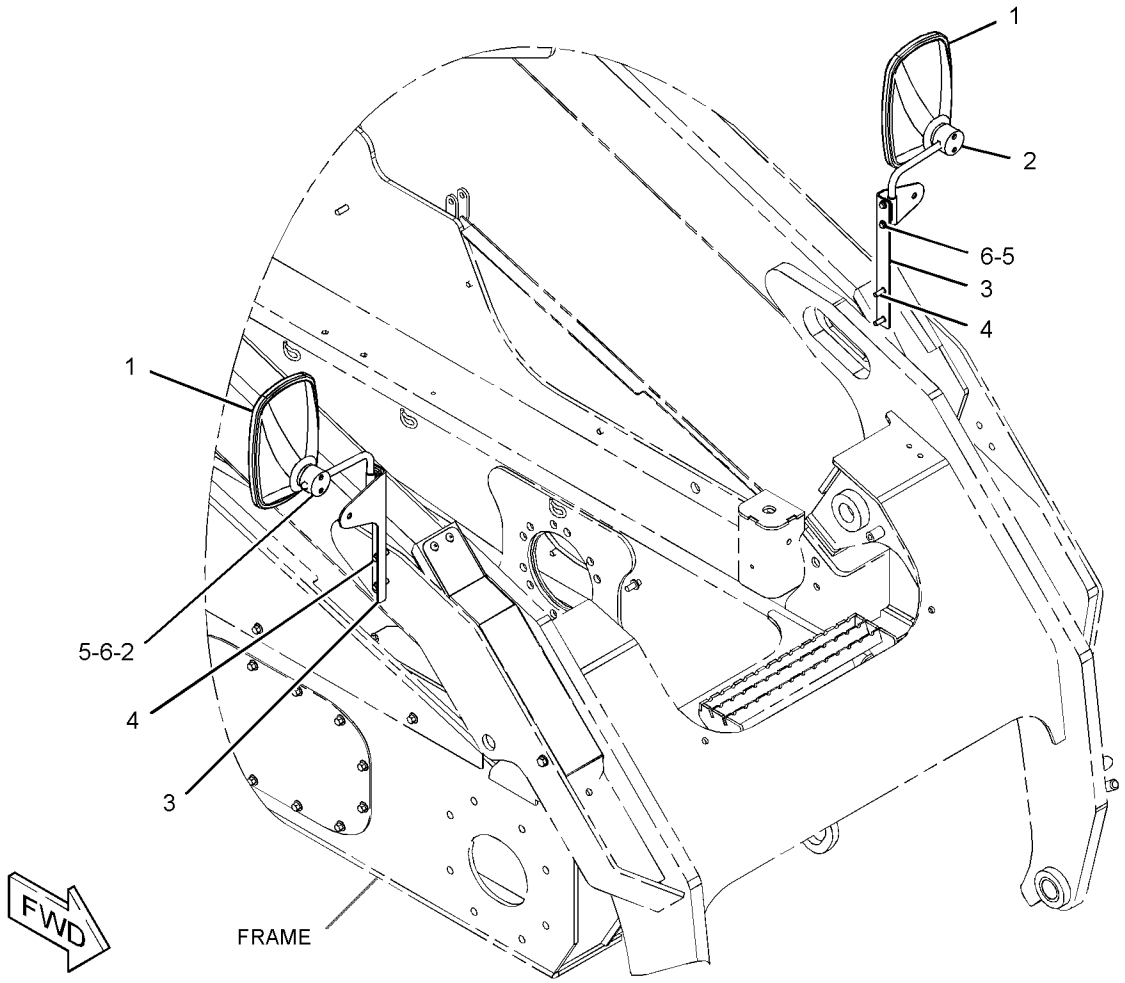

GRAPHIC #1 **<END>** g03349697

422-7656 MOUNTING GP-ROADING LIGHTS—NACD

PART OF 345-5911 CONVERSION AR-ROADING
AN ATTACHMENT

SMCS-1429 **i05222669**

NOTE	REF NO	GRAPHIC REF	PART NUMBER	QTY	PART NAME 1 2 3 4 5 6 (PRODUCT LEVEL)	SEE PAGE
M	1	1	**7X-2557**	2	BOLT (M16X2X140-MM)	
	2	1	**8T-4122**	4	WASHER-HARD (17X32X3.5-MM THK)	
M	3	1	**8T-4190**	4	BOLT (M16X2X25-MM)	

M - METRIC PART

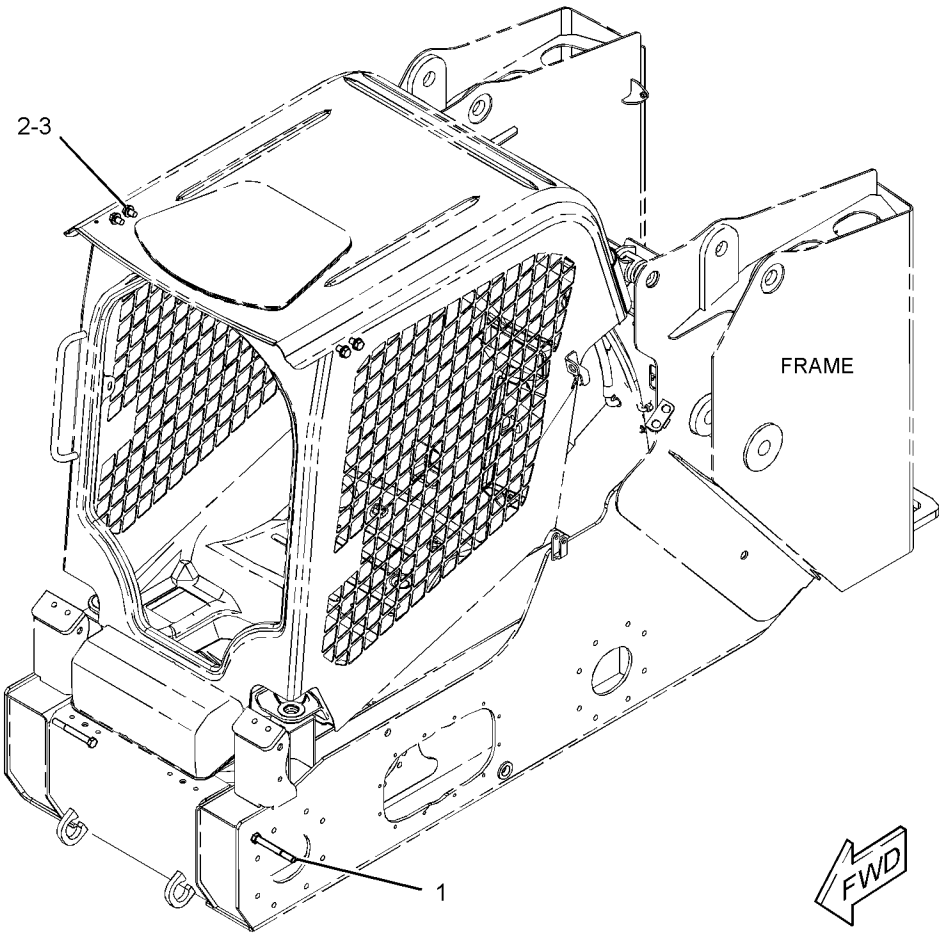

GRAPHIC #1 **<END>** g03350355

149-0686 ACCUMULATOR GP-HYDRAULIC—CHARGED

FIELD REPLACEMENT ORDER 227-8807—PAGE: 205
PART OF 345-6590, 345-6591 LINES GP-HYDROSTATIC
AN ATTACHMENT

SMCS-5077 **i03971211**

NOTE	REF NO	GRAPHIC REF	PART NUMBER	QTY	PART NAME 1 2 3 4 5 6 (PRODUCT LEVEL)	SEE PAGE
					(NO SERVICED PARTS)	

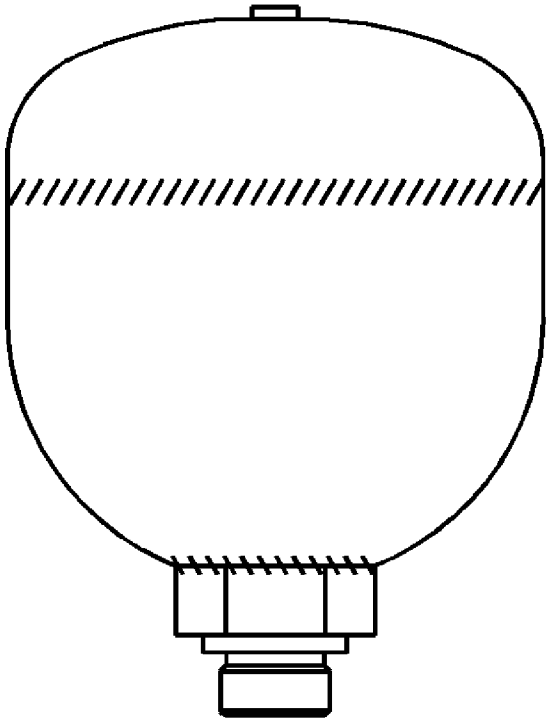

GRAPHIC #1 **<END>** g02162624

227-8807 ACCUMULATOR GP-HYDRAULIC—UNCHARGED

FIELD REPLACEMENT FOR 149-0686—PAGE: 204

SMCS-5077 **i03971213**

NOTE	REF NO	GRAPHIC REF	PART NUMBER	QTY	PART NAME 1 2 3 4 5 6 (PRODUCT LEVEL)	SEE PAGE
					(NO SERVICED PARTS)	

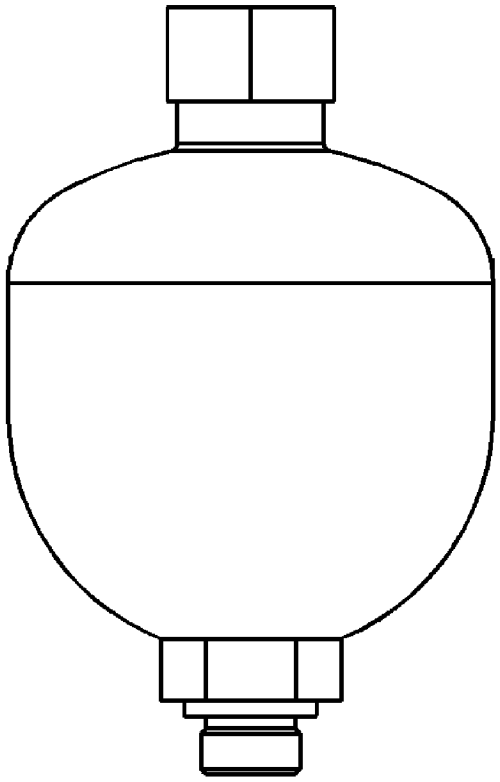

GRAPHIC #1 **<END>** g02162620

310-8460 ACCUMULATOR GP-RIDE CONTROL–CHARGED

FIELD REPLACEMENT ORDER 310-8461–PAGE: 207
PART OF 345-6499 LINES GP-HYDRAULIC
AN ATTACHMENT

SMCS-5077 **i02840193**

NOTE	REF NO	GRAPHIC REF	PART NUMBER	QTY	PART NAME 1 2 3 4 5 6 (PRODUCT LEVEL)	SEE PAGE
	1	1	**224-5132**	1	CAP (GAS VALVE)	
	2	1	**224-5152**	1	VALVE-GAS	
	3	1	**3J-7354**	1	SEAL-O-RING	
	4	1	**1J-9671**	1	SEAL-O-RING	
	5	1	**241-0037**	1	FILM-WARNING (HIGH PRESSURE, READ OMM)	
	6	1	**312-4965**	1	LABEL	

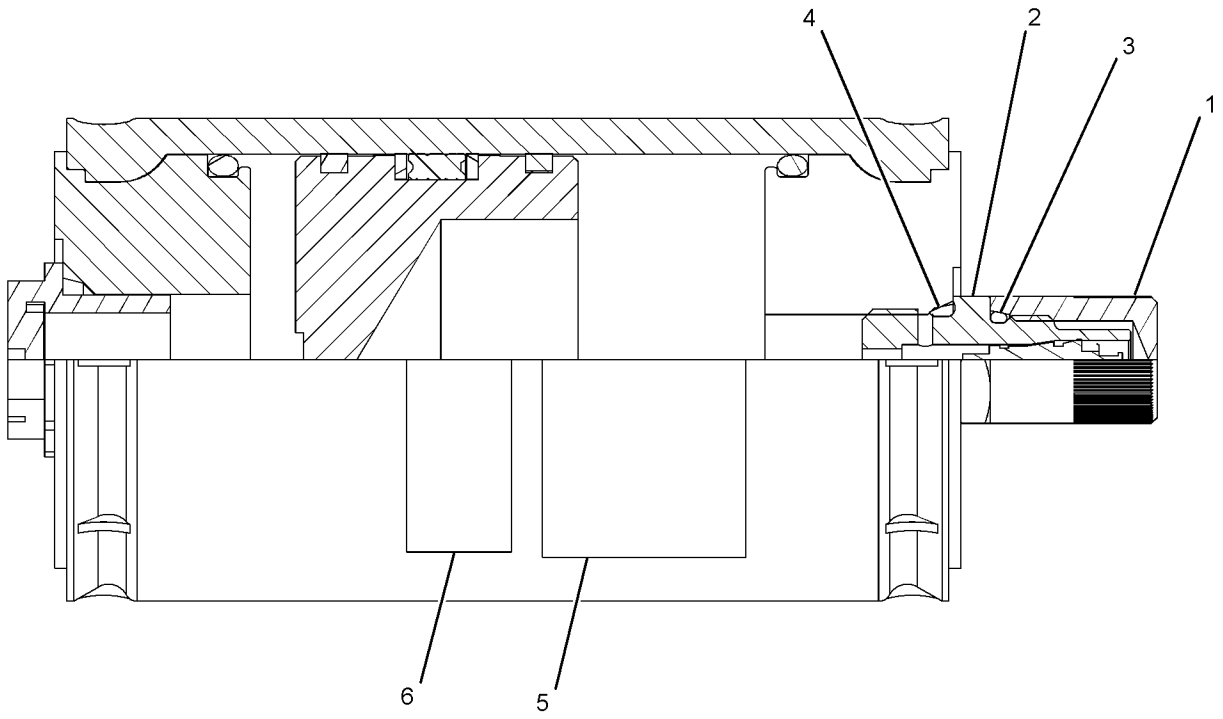

GRAPHIC #1 **<END>** g01417908

310-8461 ACCUMULATOR GP-RIDE CONTROL–UNCHARGED

FIELD REPLACEMENT FOR 310-8460–PAGE: 206
PART OF 388-8272 KIT-RIDE CONTROL
AN ATTACHMENT

SMCS-5077 **i02840194**

NOTE	REF NO	GRAPHIC REF	PART NUMBER	QTY	PART NAME 1 2 3 4 5 6 (PRODUCT LEVEL)	SEE PAGE
	1	1	**224-5132**	1	CAP (GAS VALVE)	
	2	1	**224-5152**	1	VALVE-GAS	
	3	1	**3J-7354**	1	SEAL-O-RING	
	4	1	**1J-9671**	1	SEAL-O-RING	
	5	1	**241-0037**	1	FILM-WARNING (HIGH PRESSURE, READ OMM)	

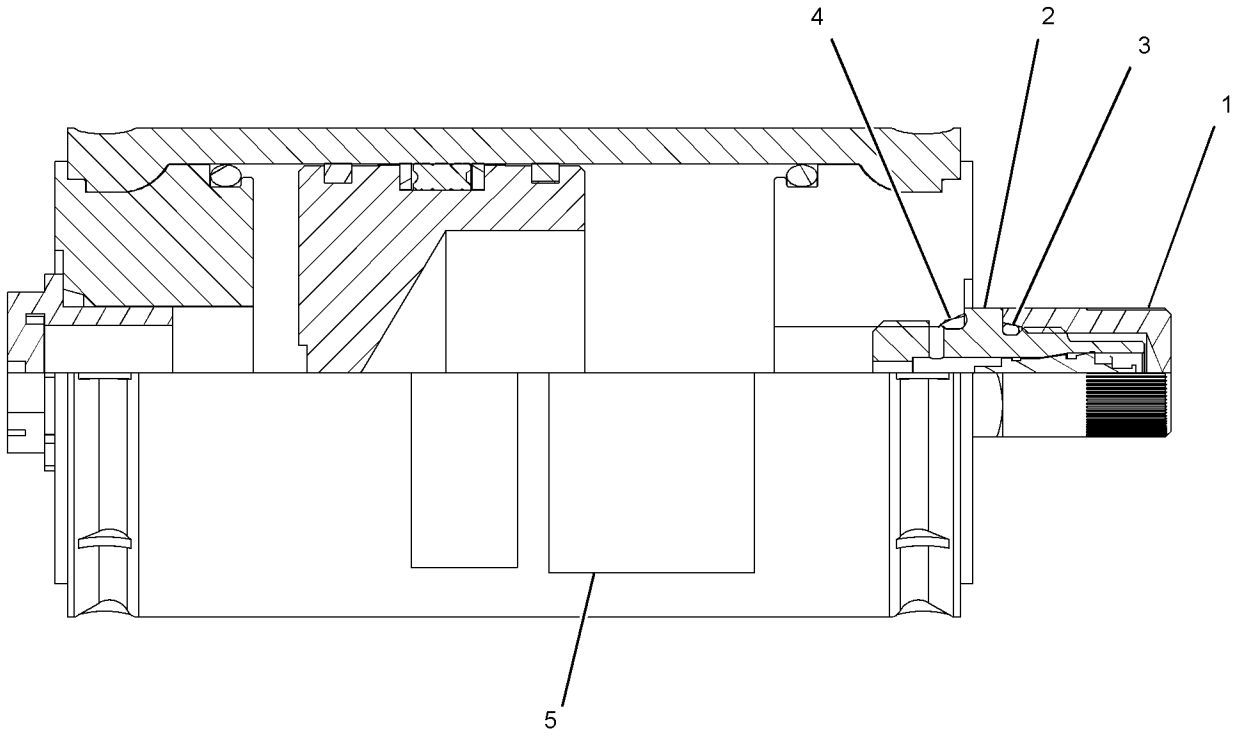

GRAPHIC #1 **<END>** g01417987

387-5383 CONTROL AR-HYDRAULIC

AN ATTACHMENT

SMCS-5057, 5063 **i05296345**

NOTE	PART NUMBER	QTY	PART NAME 1 2 3 4 5 6 (PRODUCT LEVEL)	SEE PAGE
Y	*345-6580*	1	CONTROL GP-ELECTROHYDRAULIC (RH, HIGH FLOW)	368
Y	*345-6583*	1	CONTROL GP-ELECTROHYDRAULIC (LH, HIGH FLOW)	371
Y	*421-4225*	1	WIRING GP-WORK TOOL	154

Y - SEPARATE ILLUSTRATION

<END>

231-5274 CYLINDER & MTG GP-ANGLE BLADE

PART OF 424-0450, 424-0451 BLADE AR
AN ATTACHMENT

SMCS-6701 **i04358472**

NOTE	REF NO	GRAPHIC REF	PART NUMBER	QTY	PART NAME 1 2 3 4 5 6 (PRODUCT LEVEL)	SEE PAGE
CY	1	1	**274-9930**	2	CYLINDER GP-HYDRAULIC (ANGLE BLADE)	210
CY	2	1	**274-9931**	1	CYLINDER GP-HYDRAULIC (TILT)	211
	3	1	**231-5266**	6	PIN AS	
	4	1	**238-0999**	12	SPACER (25.4X28.4X13-MM THK)	
M	5	1	**8T-4200**	6	BOLT (M8X1.25X16-MM)	
	6	1	**6V-8397**	6	SEAL-O-RING	
	7	1	**8T-4224**	6	WASHER-HARD (8.8X16X2-MM THK)	
	8	1	**244-1370**	6	SPACER (8.2X13X6-MM THK)	

C - CHANGE FROM PREVIOUS TYPE
M - METRIC PART
Y - SEPARATE ILLUSTRATION

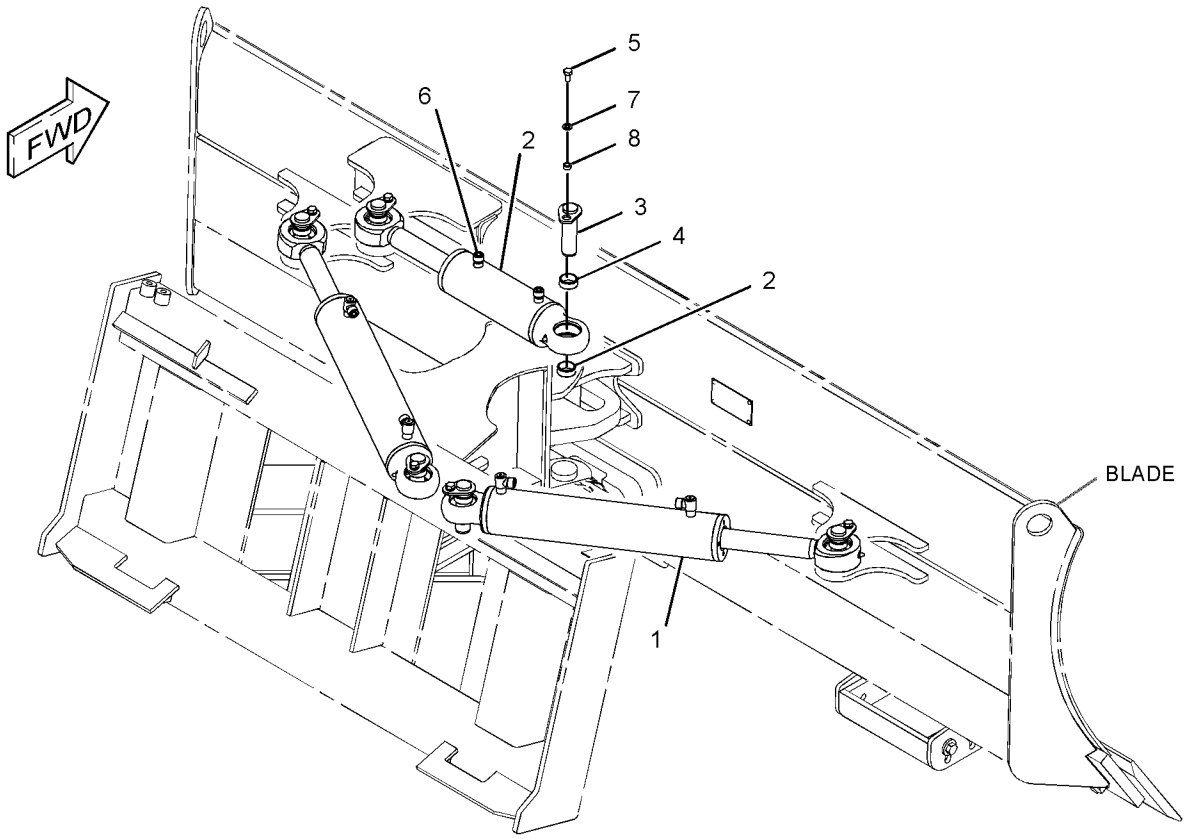

GRAPHIC #1 **<END>** g01270108

274-9930 CYLINDER GP-HYDRAULIC–ANGLE BLADE

70-MM (2.8-IN) BORE X 314-MM (12.4-IN) STROKE
PART OF 231-5274 CYLINDER & MTG GP-ANGLE BLADE
AN ATTACHMENT

SMCS-5362, 7562

i03590840

NOTE	REF NO	GRAPHIC REF	PART NUMBER	QTY	PART NAME 1 2 3 4 5 6 (PRODUCT LEVEL)	SEE PAGE
	1	1	**7D-8508**	1	NUT-FULL (7/8-14-THD)	
	2	1	**8Q-6027**	2	BEARING-SPHERICAL	
	3	1	**027-1287**	2	FITTING-GREASE	
	4	1	**278-4524**	1	ROD AS	
	5	1	**278-4875**	2	RING-RETAINING	
	6	1	**7J-0204**	2	SEAL-O-RING	
	7	1	**9S-8007**	2	PLUG	
					AVAILABLE REPAIR KIT(S):	
			266-6140	1	KIT-SEAL (SWING CYLINDER)	
					(INCLUDES SEAL-O-RINGS, WEAR RINGS, BACKUP RING, SEAL-U CUP, SEAL & SETSCREW)	

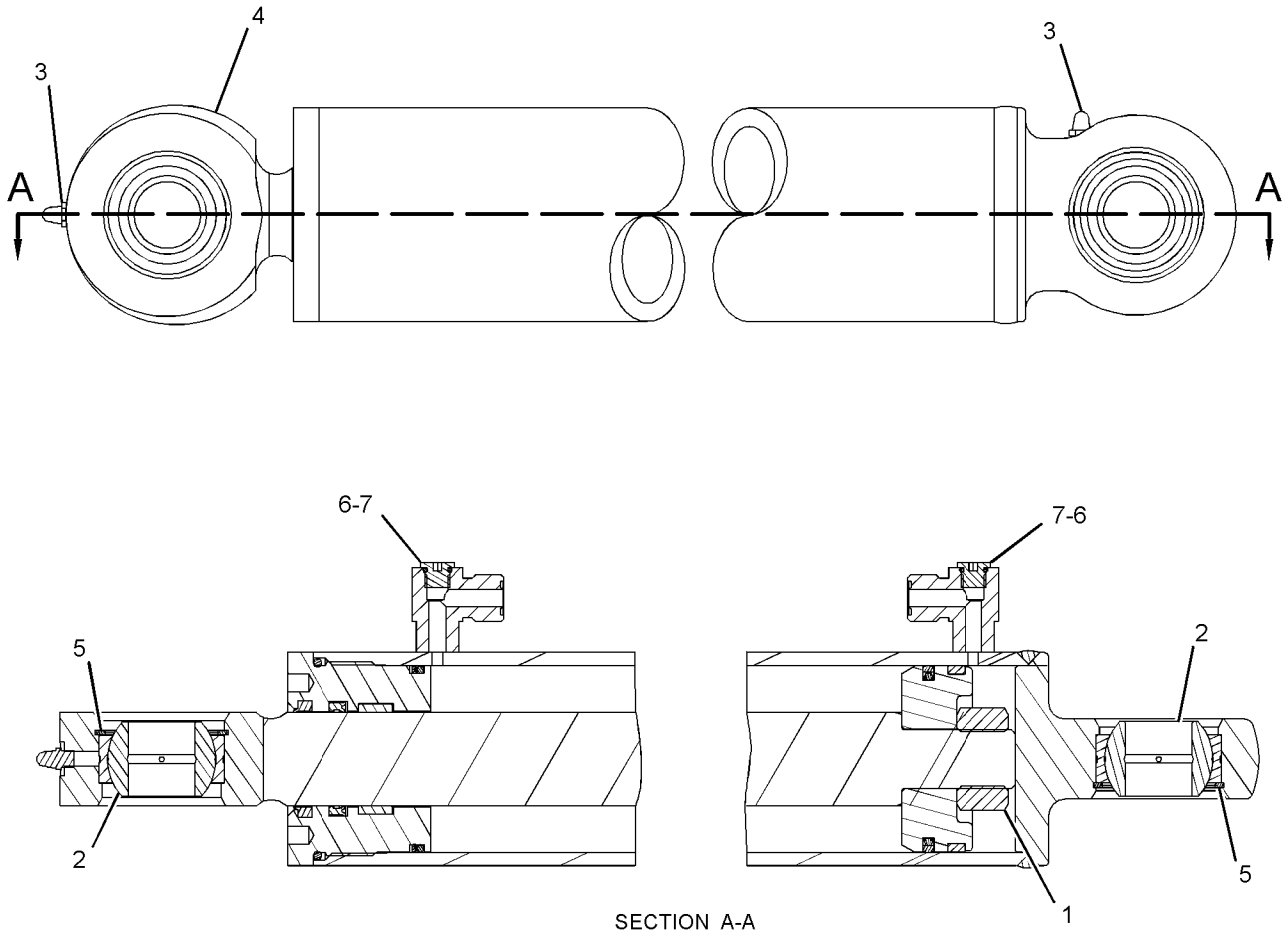

SECTION A-A

GRAPHIC #1

<END>

g01305293

274-9931 CYLINDER GP-HYDRAULIC—TILT

70-MM (2.8-IN) BORE X 120-MM (4.7-IN) STROKE
PART OF 231-5274 CYLINDER & MTG GP-ANGLE BLADE
AN ATTACHMENT

SMCS-5362, 7562

i03690346

NOTE	REF NO	GRAPHIC REF	PART NUMBER	QTY	PART NAME 1 2 3 4 5 6 (PRODUCT LEVEL)	SEE PAGE
	1	1	**7D-8508**	1	NUT-FULL (7/8-14-THD)	
	2	1	**8Q-6027**	2	BEARING-SPHERICAL	
	3	1	**027-1287**	2	FITTING-GREASE	
	4	1	**278-4525**	1	ROD AS	
	5	1	**278-4875**	2	RING-RETAINING	
					AVAILABLE REPAIR KIT(S):	
			266-6140	1	KIT-SEAL (SWING CYLINDER)	
					(INCLUDES SEAL-O-RINGS, WEAR RINGS, BACKUP RING, SEAL-U CUP, SEAL & SETSCREW)	

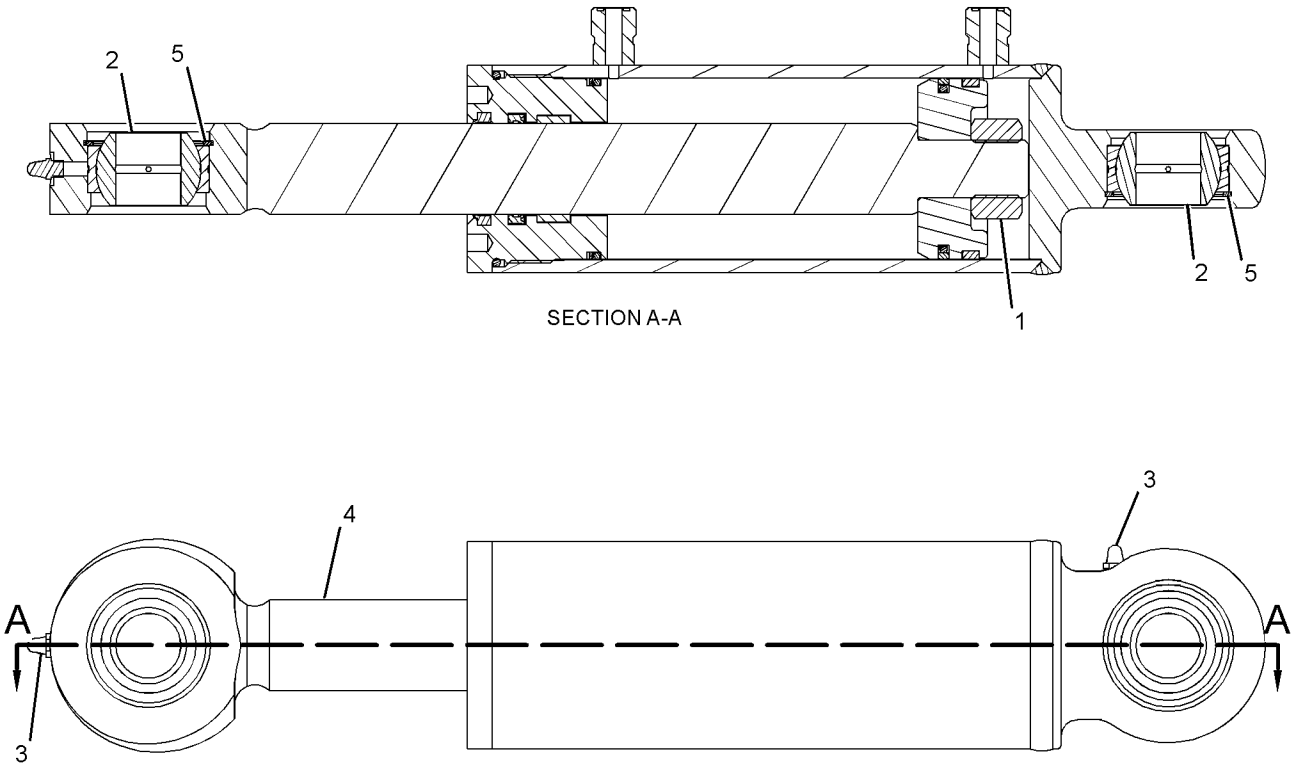

GRAPHIC #1

<END>

g01270194

278-1969 CYLINDER GP-HYDRAULIC—BUCKET

60-MM (2.4-IN) BORE X 200-MM (7.9-IN) STROKE
PART OF 423-4291, 426-6492, 426-6537, 426-6549, 426-6559, 426-6933, 426-6940, 426-6947, 426-6970, 426-6992 BUCKET AR-MULTIPURPOSE
AN ATTACHMENT

SMCS-5362, 7562 **i04038468**

NOTE	REF NO	GRAPHIC REF	PART NUMBER	QTY	PART NAME 1 2 3 4 5 6 (PRODUCT LEVEL)	SEE PAGE
	1	1	**7D-8508**	1	NUT-FULL (7/8-14-THD)	
	2	1	**254-9097**	1	BUSHING	
	3	1	**3B-8489**	1	FITTING-GREASE	
					AVAILABLE REPAIR KIT(S):	
			278-1970	1	KIT-SEAL (HYDRAULIC CYLINDER)	
					(INCLUDES O-RINGS, WEAR RINGS, BACKUP RING, U-CUP SEAL, WIPER SEAL & SEAL)	

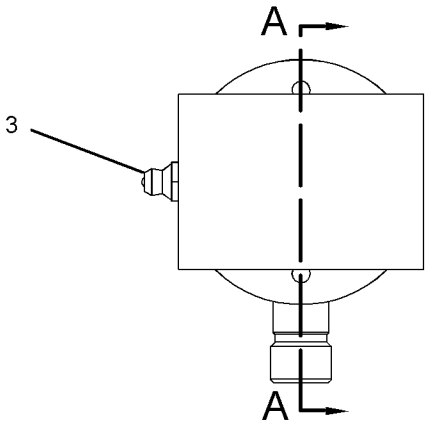

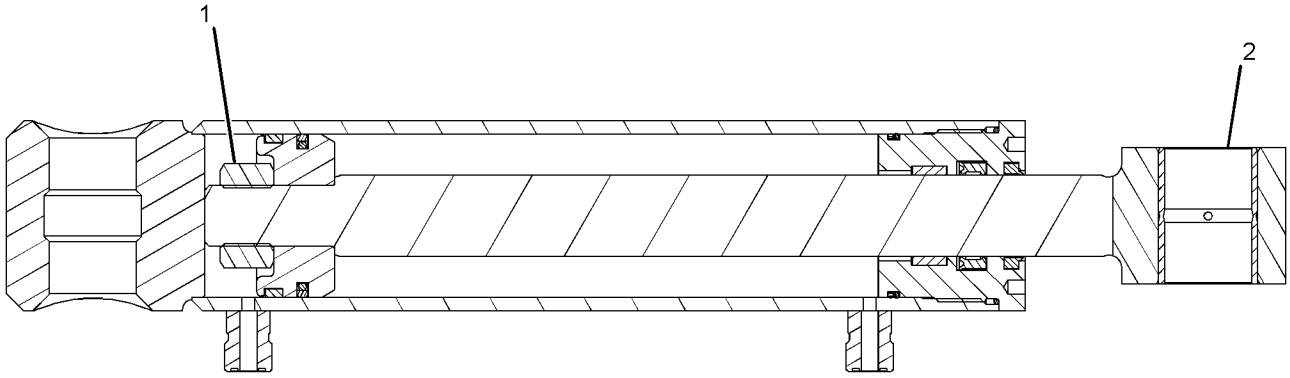

SECTION A-A

GRAPHIC #1 **<END>** g01281180

375-7845 CYLINDER GP-LIFT

70-MM (2.8-IN) BORE X 575-MM (22.6-IN) STROKE
PART OF 375-0714 CYLINDER GP-LIFT ARM

SMCS-5102 **i05162963**

NOTE	REF NO	GRAPHIC REF	PART NUMBER	QTY	PART NAME 1 2 3 4 5 6 (PRODUCT LEVEL)	SEE PAGE
	1	1	*348-0310*	1	HEAD AS	
	1A	1	**351-2184**	1	BUSHING	
		1	**5H-8848**	1	SEAL-O-RING	
		1	**338-2414**	1	SEAL-WIPER	
		1	**340-9308**	1	SEAL-O-RING	
		1	**348-0309**	1	HEAD	
		1	**351-2179**	1	SEAL-U-CUP	
	2	1	*348-0313*	1	PISTON AS	
		1	**161-7145**	1	SEAL-PISTON	
		1	**340-6272**	2	RING-WEAR	
		1	**340-9312**	1	SEAL-O-RING	
	3	1	**350-3842**	2	SET SCREW (SPECIAL)	
	4	1	*162-0177*	1	PLUG AS	
		1	**3J-1907**	1	SEAL-O-RING	
		1	**9S-8004**	1	PLUG-O-RING	
	5	1	**6V-8398**	1	SEAL-O-RING	

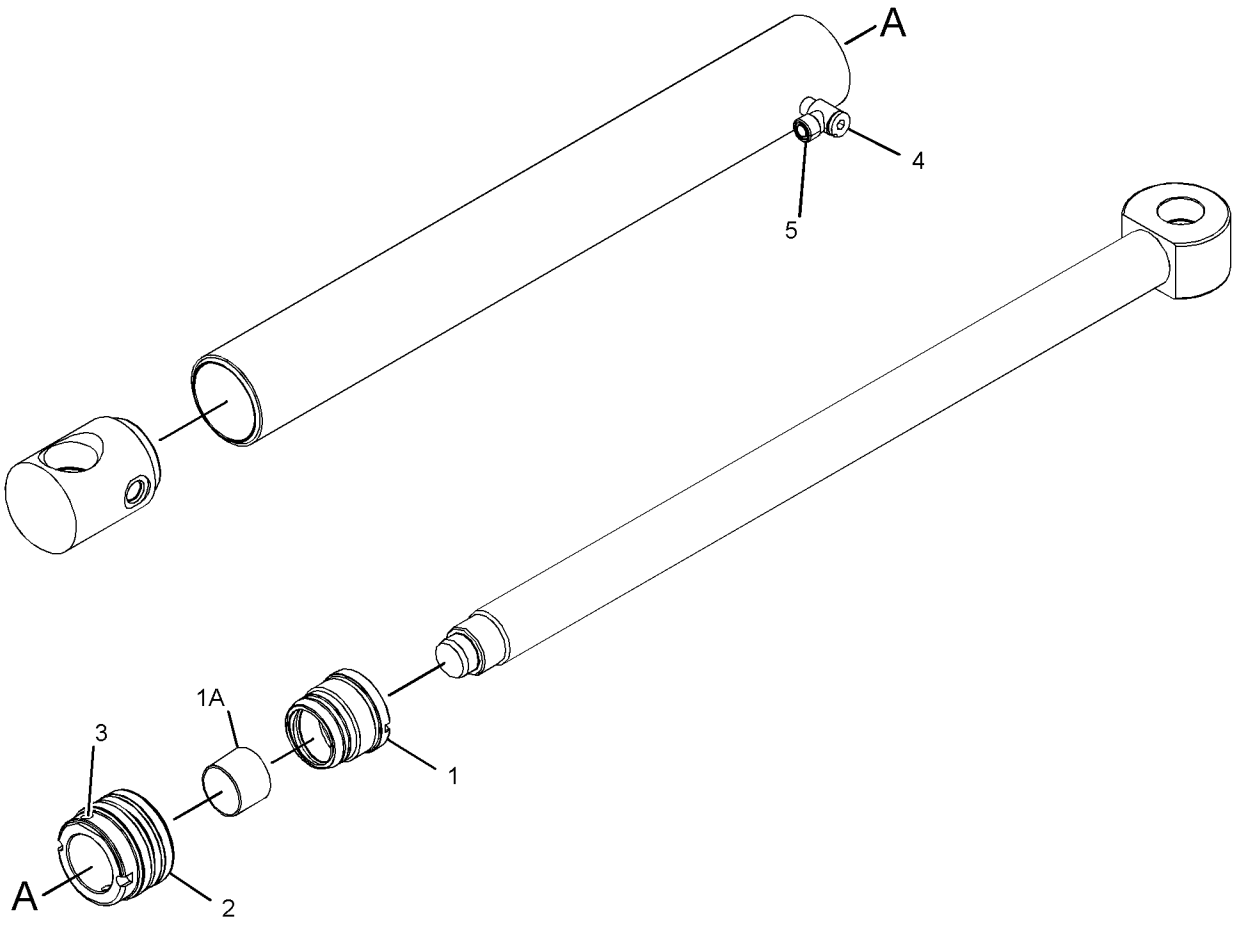

GRAPHIC #1 **<END>** g03335581

375-0714 CYLINDER GP-LIFT ARM—VERTICAL LIFT

PART OF 345-5247 CHASSIS AR

SMCS-5102, 5104 **i05162964**

NOTE	REF NO	GRAPHIC REF	PART NUMBER	QTY	PART NAME 1 2 3 4 5 6 (PRODUCT LEVEL)	SEE PAGE
Y	1	1	**293-5711**	1	CYLINDER GP-TILT (RH)	215
Y	2	1	**293-5712**	1	CYLINDER GP-TILT (LH)	217
Y	3	1	**375-7845**	2	CYLINDER GP-LIFT	213

Y - SEPARATE ILLUSTRATION

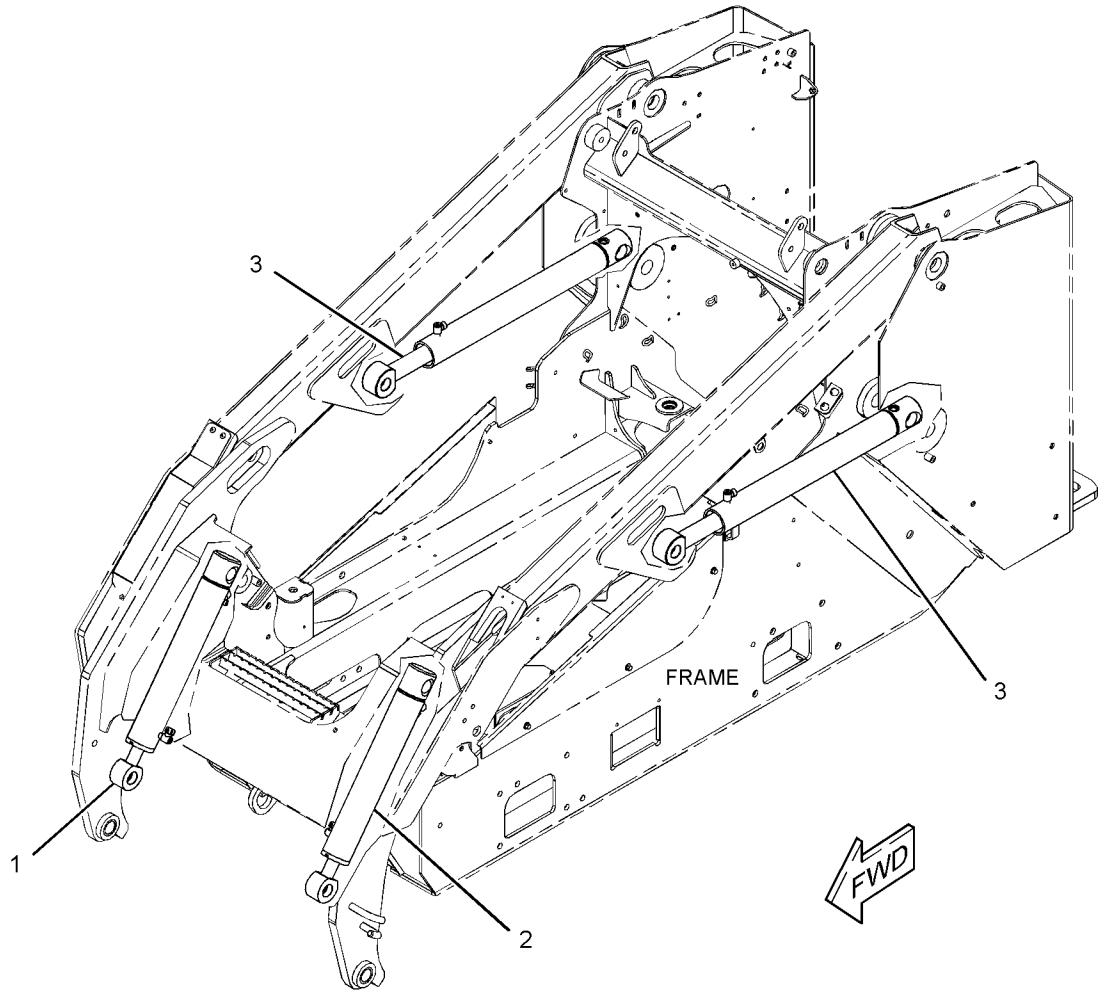

GRAPHIC #1 **<END>** g03321371

293-5711 CYLINDER GP-TILT–RH

75-MM (3-IN) BORE X 391.5-MM (15.5-IN) STROKE
PART OF 375-0714 CYLINDER GP-LIFT ARM

SMCS-5104 **i04699409**

NOTE	REF NO	GRAPHIC REF	PART NUMBER	QTY	PART NAME 1 2 3 4 5 6 (PRODUCT LEVEL)	SEE PAGE
J	1	1	**3E-6730**	1	SEAL-O-RING	
J	2	1	**5P-0908**	1	SEAL-O-RING	
J	3	1	**140-2392**	1	SEAL-LIP TYPE	
J	4	1	**161-7146**	1	SEAL-PISTON	
	5	1	**295-4464**	1	HEAD	
	6	1	**295-4465**	1	PISTON	
	7	1	**295-4468**	1	ROD AS	
	8	1	**296-5140**	1	RING-WEAR	
	9	1	**295-4472**	1	CYLINDER AS	
J	10	1	**140-2377**	1	SEAL-U-CUP	
J	11	1	**150-9402**	1	RING-WEAR	
	12	1	*162-0177*	2	PLUG AS	
					(EACH INCLUDES)	
		1	**3J-1907**	1	SEAL-O-RING	
		1	**9S-8004**	1	PLUG-O-RING	
J	13	1	**329-2591**	1	RING-BACKUP	
	14	1	**6V-8398**	2	SEAL-O-RING	
M	15	1	**9X-6611**	1	SETSCREW-SOCKET (M10X1.5X16-MM)	
F			**3K-2151**	1	BUSHING	
					AVAILABLE REPAIR KIT(S):	
J			**371-2751**	1	KIT-HYD CYLINDER SEAL	

F - NOT SHOWN
J - KIT MARKED J SERVICES PARTS MARKED J
M - METRIC PART

293-5711 **CYLINDER GP-TILT (*contd.*)** **i04699409**

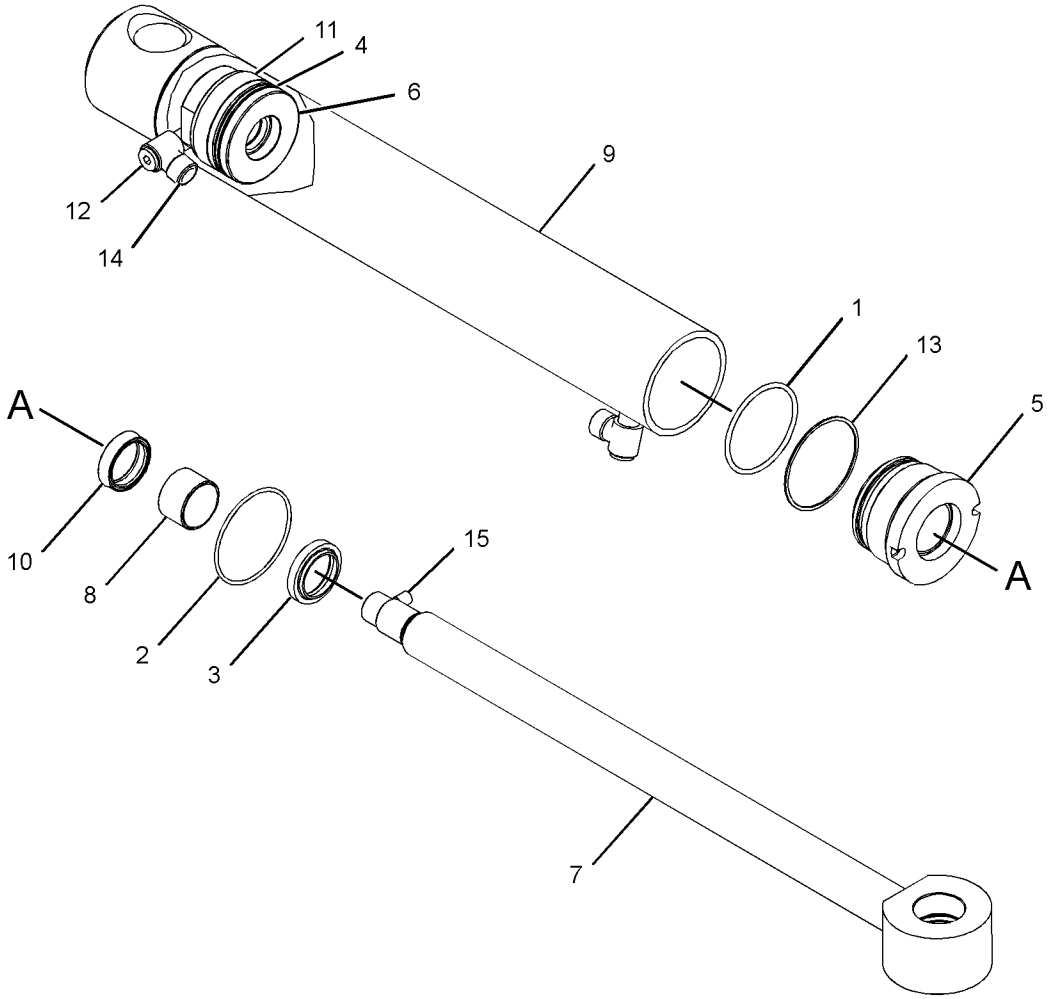

GRAPHIC #1 **<END>** g02185354

293-5712 CYLINDER GP-TILT–LH

75-MM (3-IN) BORE X 391.5-MM (15.5-IN) STROKE
PART OF 375-0714 CYLINDER GP-LIFT ARM

SMCS-5104 **i04699410**

NOTE	REF NO	GRAPHIC REF	PART NUMBER	QTY	PART NAME 1 2 3 4 5 6 (PRODUCT LEVEL)	SEE PAGE
J	1	1	**3E-6730**	1	SEAL-O-RING	
J	2	1	**5P-0908**	1	SEAL-O-RING	
J	3	1	**140-2392**	1	SEAL-LIP TYPE	
J	4	1	**161-7146**	1	SEAL-PISTON	
	5	1	**295-4464**	1	HEAD	
	6	1	**295-4465**	1	PISTON	
	7	1	**295-4468**	1	ROD AS	
	8	1	**296-5140**	1	RING-WEAR	
	9	1	**295-4471**	1	CYLINDER AS	
J	10	1	**140-2377**	1	SEAL-U-CUP	
J	11	1	**150-9402**	1	RING-WEAR	
	12	1	*162-0177*	2	PLUG AS	
					(EACH INCLUDES)	
		1	**3J-1907**	1	SEAL-O-RING	
		1	**9S-8004**	1	PLUG-O-RING	
J	13	1	**329-2591**	1	RING-BACKUP	
	14	1	**6V-8398**	2	SEAL-O-RING	
M	15	1	**9X-6611**	1	SETSCREW-SOCKET (M10X1.5X16-MM)	
F		1	**3K-2151**	1	BUSHING	
					AVAILABLE REPAIR KIT(S):	
			371-2751	1	KIT-HYD CYLINDER SEAL	

F - NOT SHOWN
J - KIT MARKED J SERVICES PARTS MARKED J
M - METRIC PART

293-5712 **CYLINDER GP-TILT (*contd.*)** **i04699410**

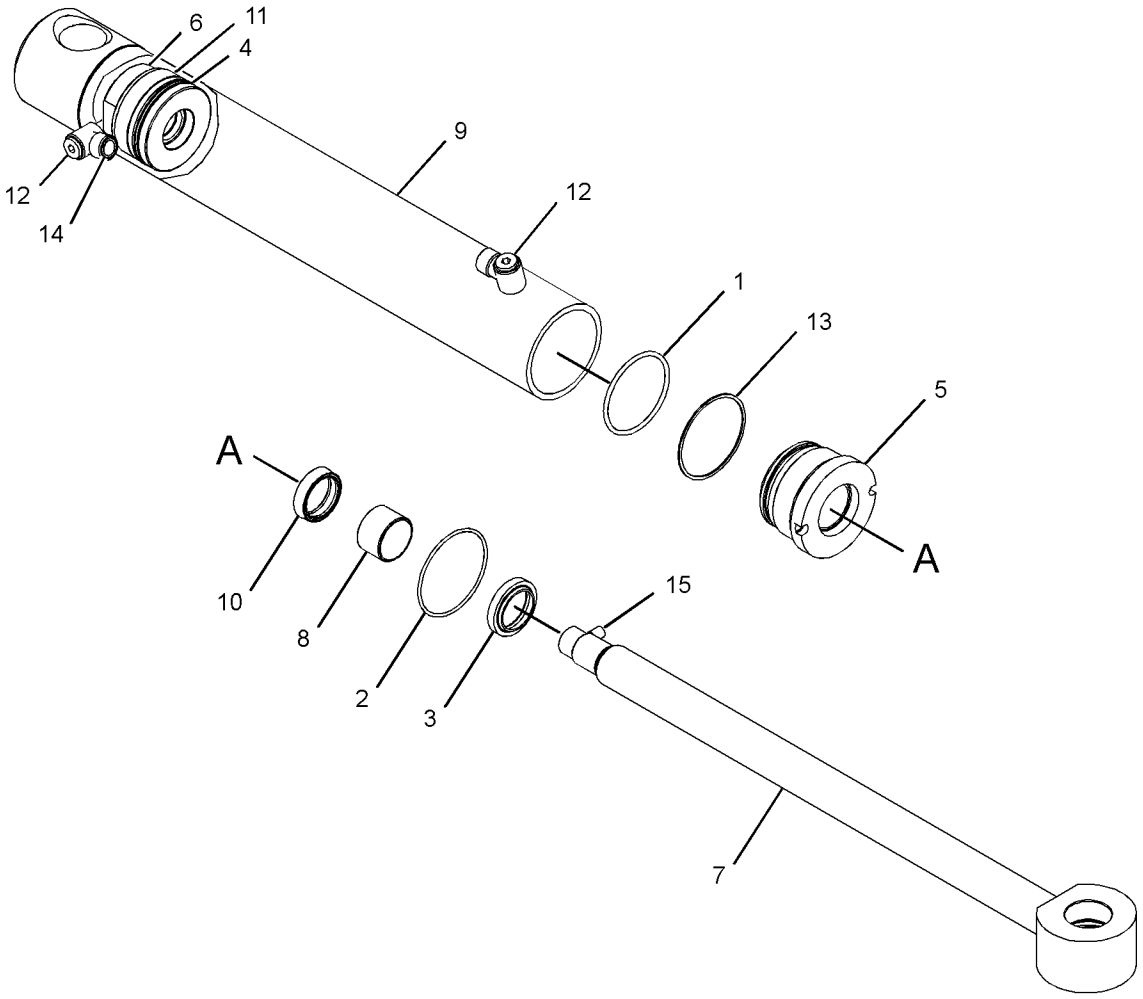

GRAPHIC #1 **<END>** g02184195

345-5165 FITTING GP-HYDRAULIC

PART OF 345-6452, 345-6456 LINES GP-AUXILIARY HYDRAULIC AN ATTACHMENT

SMCS-5057 **i04753190**

NOTE	REF NO	GRAPHIC REF	PART NUMBER	QTY	PART NAME 1 2 3 4 5 6 (PRODUCT LEVEL)	SEE PAGE
	1	1	**6V-9746**	2	SEAL-O-RING	
	2	1	**373-6967**	1	FITTING GP-HYDRAULIC (QUICK DISCONNECT, MALE)	
	3	1	**373-6968**	1	FITTING AS (QUICK DISCONNECT, FEMALE)	
	4	1	**373-7037**	1	KIT-COUPLING (INCLUDES O-RING, SPRING, GUIDE VALVE, NIPPLE & SEAL RING)	

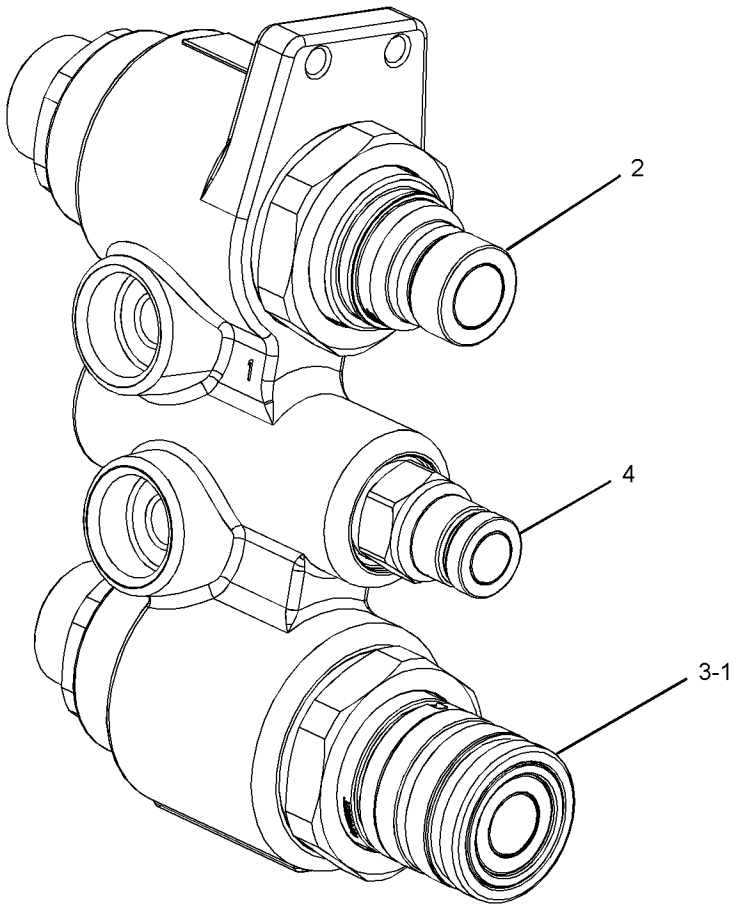

GRAPHIC #1 **<END>** g02853996

345-5219 HYDRAULIC AR

AN ATTACHMENT

SMCS-5050 **i05153052**

NOTE	PART NUMBER	QTY	PART NAME 1 2 3 4 5 6 (PRODUCT LEVEL)	SEE PAGE
Y	**378-1029**	1	HARNESS AS-FRONT	101
Y	*345-6456*	1	LINES GP-AUXILIARY HYDRAULIC	229
Y	*345-6457*	1	LINES GP-LIFT CYLINDER	252
Y	*345-6414*	1	LINES GP-PUMP	257
Y	*345-6455*	1	LINES GP-TILT CYLINDER	262
Y	*378-2853*	1	PUMP & MTG GP-HYDRAULIC	271
Y	*373-7035*	1	VALVE & MTG GP-CONTROL	277
	148-8407	1	PLUG AS	
	3J-1907	1	SEAL-O-RING	
	9S-4191	1	PLUG-O-RING	

Y - SEPARATE ILLUSTRATION

<END>

345-5225 HYDRAULIC AR—STANDARD FLOW

AN ATTACHMENT

SMCS-5050 **i05153170**

NOTE	PART NUMBER	QTY	PART NAME 1 2 3 4 5 6 (PRODUCT LEVEL)	SEE PAGE
Y	*378-1029*	1	HARNESS AS-FRONT	101
Y	*345-6456*	1	LINES GP-AUXILIARY HYDRAULIC	229
Y	*345-6457*	1	LINES GP-LIFT CYLINDER	252
Y	*345-6414*	1	LINES GP-PUMP (IMPLEMENT)	257
Y	*345-6455*	1	LINES GP-TILT CYLINDER	262
Y	*378-2853*	1	PUMP & MTG GP-HYDRAULIC	271
Y	*373-7035*	1	VALVE & MTG GP-CONTROL	277
Y	*356-6107*	1	WIRING GP-WORK TOOL (SELF LEVEL)	147

Y - SEPARATE ILLUSTRATION

<END>

345-5248 HYDRAULIC AR

PART OF 388-8246, 388-8247 COMMON AR

SMCS-5050 **i05162984**

NOTE	PART NUMBER	QTY	PART NAME 1 2 3 4 5 6 (PRODUCT LEVEL)	SEE PAGE
Y	*345-5953*	1	LINES GP-HYDRAULIC OIL COOLER	249
Y	*258-2579*	1	MOTOR & MTG GP-HYDRAULIC FAN	269
Y	*378-2856*	1	PUMP & MTG GP-HYDROSTATIC	172
Y	*397-9558*	1	TANK & MTG GP-HYDRAULIC	274

Y - SEPARATE ILLUSTRATION

<END>

345-5447 HYDRAULIC AR–HIGH FLOW
AN ATTACHMENT

SMCS-5050 **i05153630**

NOTE	PART NUMBER	QTY	PART NAME 1 2 3 4 5 6 (PRODUCT LEVEL)	SEE PAGE
Y	*345-6581*	1	CONTROL GP-ELECTROHYDRAULIC (RH, HIGH FLOW)	369
Y	*345-6583*	1	CONTROL GP-ELECTROHYDRAULIC (LH, HIGH FLOW)	371
Y	*388-8115*	1	FILM GP (HIGH FLOW XPS)	462
Y	*345-6452*	1	LINES GP-AUXILIARY HYDRAULIC	227
Y	*345-6453*	1	LINES GP-LIFT CYLINDER	250
Y	*345-6410*	1	LINES GP-PUMP (IMPLEMENT)	254
Y	*345-6451*	1	LINES GP-TILT CYLINDER	260
Y	*358-4977*	1	PUMP & MTG GP-WORK TOOL	272
Y	*373-7031*	1	VALVE & MTG GP-CONTROL (IMPLEMENT)	276
Y	*421-4223*	1	WIRING GP-WORK TOOL (IMPLEMENT VALVE)	153
Y	*421-4207*	1	WIRING GP-WORK TOOL (HIGH FLOW)	151
Y	*416-9264*	1	WIRING GP-WORK TOOL (SELF LEVEL)	149
	7K-1181	1	STRAP-CABLE	

Y - SEPARATE ILLUSTRATION

<END>

345-5504 KIT-COVER—HYDRAULIC
AN ATTACHMENT

SMCS-7315 **i04972249**

NOTE	REF NO	GRAPHIC REF	PART NUMBER	QTY	PART NAME 1 2 3 4 5 6 (PRODUCT LEVEL)	SEE PAGE
J	1	1	**275-0572**	1	LATCH AS	
	2	1	**345-5505**	1	PLATE	
	3	1	**345-5506**	1	COVER AS	
	4	1	**345-5508**	1	GASKET	
	5	1	**345-5509**	1	CAM	
M	6	1	**6V-7743**	2	LOCKNUT (M6X1-THD)	
M	7	1	**6V-9189**	1	LOCKNUT (M8X1.25-THD)	
M	8	1	**8T-3647**	1	BOLT (M8X1.25X80-MM)	
	9	1	**8T-4205**	2	WASHER-HARD (7.2X14.5X2-MM THK)	
M	10	1	**9X-2045**	2	SCREW-TRUSS HEAD (M6X1X20-MM)	

J - REQUIRES CORPORATE KEY
M - METRIC PART

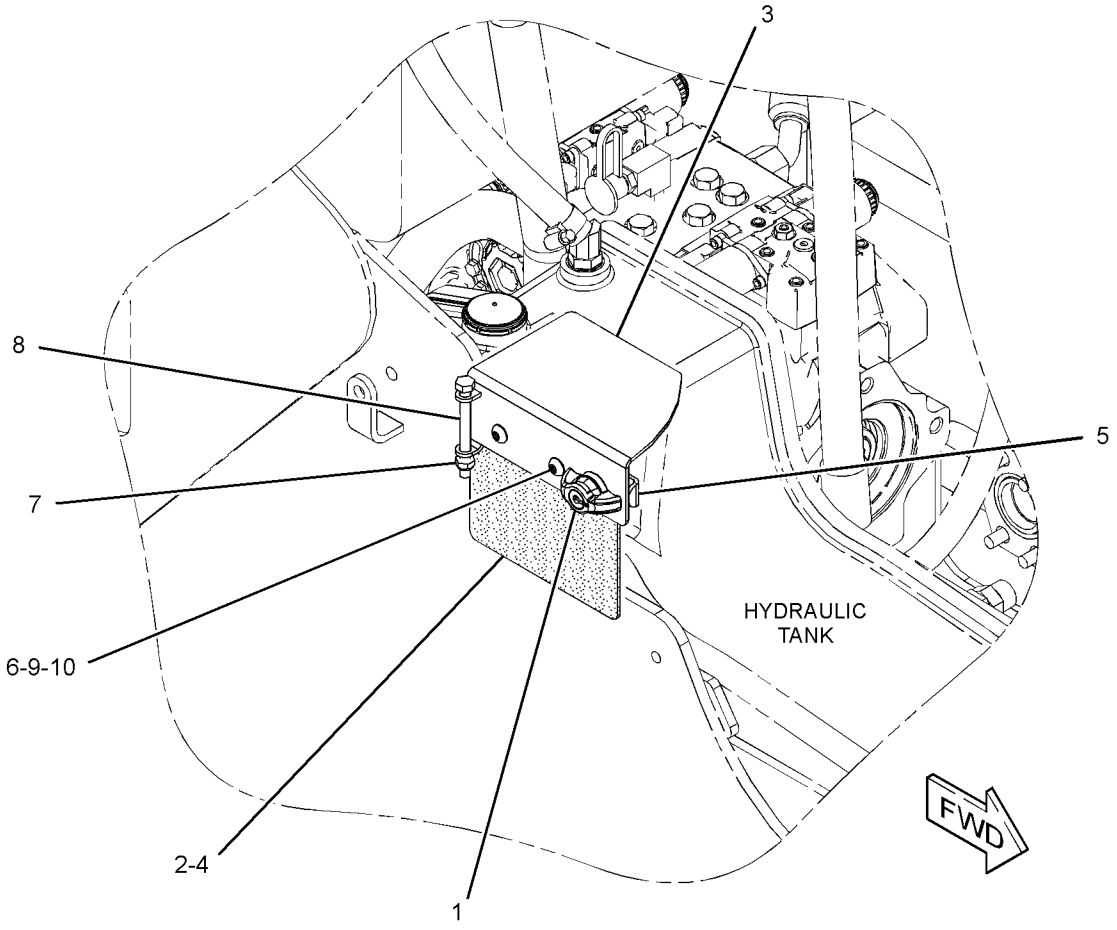

GRAPHIC #1 **<END>** g02848457

388-8264 KIT-QUICK COUPLER CONVERSION

AN ATTACHMENT

SMCS-5057, 5133, 5479, 6129 **i05327156**

NOTE	REF NO	GRAPHIC REF	PART NUMBER	QTY	PART NAME 1 2 3 4 5 6 (PRODUCT LEVEL)	SEE PAGE
F			**7K-1181**	3	STRAP-CABLE	
F			**8V-5718**	4	CLAMP	
F			**178-3620**	8	STRAP-DUAL CLAMP	
F			**192-2645**	2	SPRING	
F			**102-8705**	2	PLATE	
F			**265-9513**	1	SWITCH AS-ROCKER (QUICK COUPLER)	
F			**111-7899**	1	GASKET	
F			**310-6660**	4	PIN-SPRING	
FM			**315-5493**	4	WASHER-HARD (22.5X35X4.5-MM THK)	
F			**345-5112**	1	COVER AS-GUARD	
FY			**383-6246**	1	HARNESS AS-QUICK COUPLER	107
F			**384-2261**	2	PLATE-COVER	
F			**388-7978**	2	PLATE	
F			**388-8173**	1	LINK AS	
F			**388-8174**	1	LINK AS	
F			**396-7201**	1	BRACKET	
F			**419-0088**	1	ACTUATOR GP (QUICK COUPLER)	
F			**424-5546**	2	PIN	
FY			**436-1609**	1	HARNESS AS-QUICK COUPLER	108
F			**115-1615**	2	RELAY AS (12-VOLT)	
F			**132-7551**	4	SPACER (11X19X6-MM THK)	
F			**266-3316**	6	BOLT-FLANGE HEAD (M10X1.5X25-MM)	
F			**3B-4617**	2	PIN-COTTER	
F			**3S-2093**	10	STRAP-CABLE	
FM			**5C-2874**	1	NUT (M5X0.8-THD)	
FM			**5C-2890**	2	NUT (M6X1-THD)	
FM			**5C-9553**	2	BOLT (M6X1X16-MM)	
FM			**6V-7744**	2	LOCKNUT (M10X1.5-THD)	
F			**6W-5752**	2	PIN	
FM			**7X-0818**	2	BOLT (M8X1.25X45-MM)	
F			**8T-0328**	1	WASHER-HARD (5.5X10X1-MM THK)	
F			**8T-4121**	4	WASHER-HARD (11X21X2.5-MM THK)	
FM			**8T-4136**	2	BOLT (M10X1.5X25-MM)	
FM			**8T-4171**	2	BOLT (M6X1X12-MM)	
FM			**8T-4198**	2	BOLT (M10X1.5X100-MM)	
F			**8T-4205**	6	WASHER-HARD (7.2X14.5X2-MM THK)	
F			**8T-4223**	2	WASHER-HARD (13.5X25.5X3-MM THK)	

F - NOT SHOWN
M - METRIC PART
Y - SEPARATE ILLUSTRATION

388-8264 **KIT-QUICK COUPLER CONVERSION (*contd.*)** **i05327156**

NO GRAPHIC AVAILABLE AT TIME OF PUBLICATION

GRAPHIC #1 **<END>** g01269539

388-8272 KIT-RIDE CONTROL—RIDE CONTROL
AN ATTACHMENT

SMCS-5004 **i05342661**

NOTE	REF NO	GRAPHIC REF	PART NUMBER	QTY	PART NAME 1 2 3 4 5 6 (PRODUCT LEVEL)	SEE PAGE
Y	1	1	**345-4755**	1	MANIFOLD GP-RIDE CONTROL (RIDE)	268
	2	1	**7K-1181**	3	STRAP-CABLE	
	3	1	**146-9439**	1	RELAY AS (12-VOLT) (RIDE CONTROL)	
	4	1	**178-3620**	1	STRAP-DUAL CLAMP	
	5	1	*189-5719*	1	ADAPTER AS	
		1	**3K-0360**	2	SEAL-O-RING	
		1	**6V-0467**	1	CONNECTOR	
	6	1	**265-9526**	1	SWITCH AS-ROCKER (RIDE CONTROL)	
		1	**111-7899**	1	GASKET	
	7	1	**290-5562**	2	MOUNT (DUAL SWIVEL)	
	8	1	**304-6756**	1	VALVE GP-CHECK	
		1	**3K-0360**	1	SEAL-O-RING	
		1	**6V-8398**	1	SEAL-O-RING	
Y	9	1	**310-8461**	1	ACCUMULATOR GP-RIDE CONTROL (UNCHARGED)	207
I	10	1	**345-4571**	1	HOSE AS	
	11	1	**345-4749**	1	TUBE AS	
I	12	1	**345-5951**	1	HOSE AS	
I	13	1	**345-5952**	1	HOSE AS	
I	14	1	**345-6494**	2	HOSE AS	
Y	15	1	**356-6095**	1	HARNESS AS-RIDE CONTROL	109
	16	1	*148-8340*	2	CONNECTOR AS	
					(EACH INCLUDES)	
		1	**3K-0360**	1	SEAL-O-RING	
		1	**6V-8398**	1	SEAL-O-RING	
		1	**6V-8639**	1	CONNECTOR	
	17	1	**149-9129**	1	CLIP	
M	18	1	**174-9194**	1	BOLT (M8X1.25X16-MM)	
	19	1	*194-2903*	1	ELBOW AS	
		1	**3K-0360**	1	SEAL-O-RING	
		1	**8T-0119**	1	ELBOW	
M	20	1	**266-3315**	1	BOLT-FLANGE HEAD (M8X1.25X25.5-MM)	
	21	1	*296-5725*	1	TEE AS	
		1	**3K-0360**	1	SEAL-O-RING	
		1	**7J-9108**	2	SEAL-O-RING	
		1	**109-5811**	1	TEE-O-RING PORT	
	22	1	**3S-2093**	5	STRAP-CABLE	
	23	1	**6V-8398**	4	SEAL-O-RING	
	24	1	**7J-9108**	2	SEAL-O-RING	
M	25	1	**7X-2538**	2	BOLT (M8X1.25X100-MM)	
	26	1	**8F-1179**	1	CLIP	
	27	1	**8T-4224**	2	WASHER-HARD (8.8X16X2-MM THK)	

I - REFER TO HYDRAULIC INFORMATION SYSTEM
M - METRIC PART
Y - SEPARATE ILLUSTRATION

388-8272 **KIT-RIDE CONTROL (*contd.*)** **i05342661**

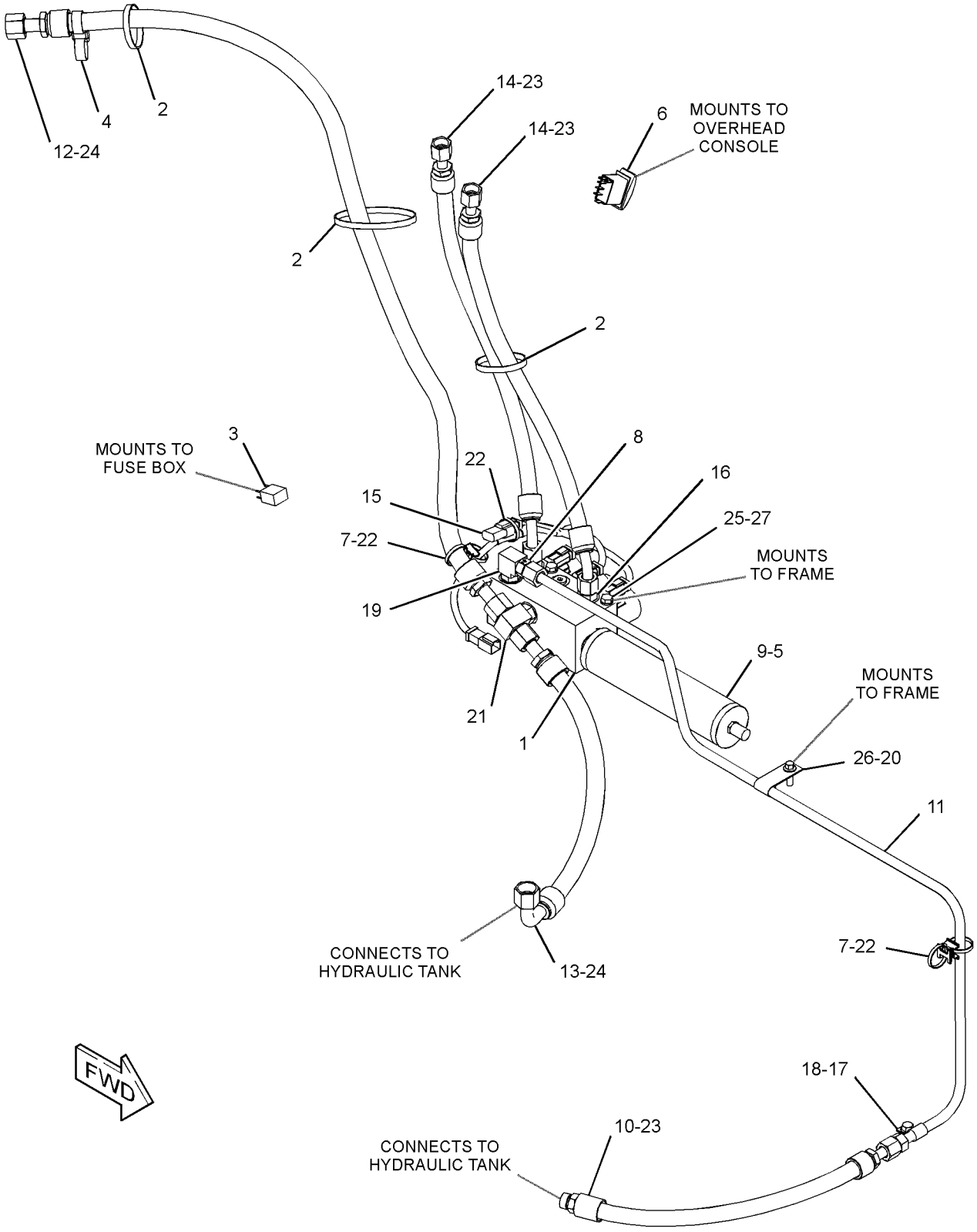

GRAPHIC #1 **<END>** g03385983

345-6452 LINES GP-AUXILIARY HYDRAULIC

PART OF 345-5447 HYDRAULIC AR
AN ATTACHMENT

SMCS-5057 **i05167533**

NOTE	REF NO	GRAPHIC REF	PART NUMBER	QTY	PART NAME 1 2 3 4 5 6 (PRODUCT LEVEL)	SEE PAGE
	1	1	**6R-3320**	3	COVER	
Y	2	1	**345-5165**	1	FITTING GP-HYDRAULIC (QUICK DISCONNECT, MALE)	219
	3	1	**345-5715**	6	CLAMP-HALF	
	4	1	**345-5754**	1	BRACKET AS	
		1	**239-8534**	1	PLATE-WELD	
	5	1	**345-5833**	1	TUBE AS	
I	6	1	**345-6427**	1	HOSE AS	
I	7	1	**345-6464**	1	HOSE AS	
I	8	1	**345-6465**	1	HOSE AS	
I	9	1	**345-6466**	1	HOSE AS	
	10	1	**394-4539**	1	COVER AS	
	11	1	**395-2971**	1	BRACKET AS	
M		1	**159-9541**	2	NUT-WELD (M10X1.5-THD)	
	12	1	*148-8340*	1	CONNECTOR AS	
		1	**3K-0360**	1	SEAL-O-RING	
		1	**6V-8398**	1	SEAL-O-RING	
		1	**6V-8639**	1	CONNECTOR	
	13	1	*148-8362*	2	ELBOW AS	
					(EACH INCLUDES)	
		1	**3D-2824**	1	SEAL-O-RING	
		1	**5K-9090**	1	SEAL-O-RING	
		1	**8T-6684**	1	ELBOW	
	14	1	*148-8375*	1	ELBOW AS	
		1	**6V-8398**	2	SEAL-O-RING	
		1	**6V-8981**	1	ELBOW	
	15	1	*150-4043*	1	CONNECTOR AS	
		1	**3J-1907**	1	SEAL-O-RING	
		1	**6V-8398**	1	SEAL-O-RING	
		1	**6V-9873**	1	CONNECTOR	
	16	1	**190-7979**	1	BOLT (M8X1.25X80-MM)	
M	17	1	**266-3315**	2	BOLT-FLANGE HEAD (M8X1.25X25.5-MM)	
	18	1	**2H-3755**	2	BOLT (5/16-18X0.43-IN)	
	19	1	**343-4072**	2	BOLT-FLANGE HEAD (M6X1X25-MM)	
	20	1	**6V-9169**	2	NUT (13/16-16-THD)	
	21	1	**8T-4121**	4	WASHER-HARD (11X21X2.5-MM THK)	
M	22	1	**8T-4133**	2	NUT (M10X1.5-THD)	
M	23	1	**8T-4172**	2	BOLT (M10X1.5X80-MM)	
M	24	1	**8T-4196**	2	BOLT (M10X1.5X35-MM)	
	25	1	**8T-4224**	2	WASHER-HARD (8.8X16X2-MM THK)	
M	26	1	**8T-6912**	2	BOLT (M8X1.25X50-MM)	

I - REFER TO HYDRAULIC INFORMATION SYSTEM
M - METRIC PART
Y - SEPARATE ILLUSTRATION

345-6452 **LINES GP-AUXILIARY HYDRAULIC (*contd.*)** **i05167533**

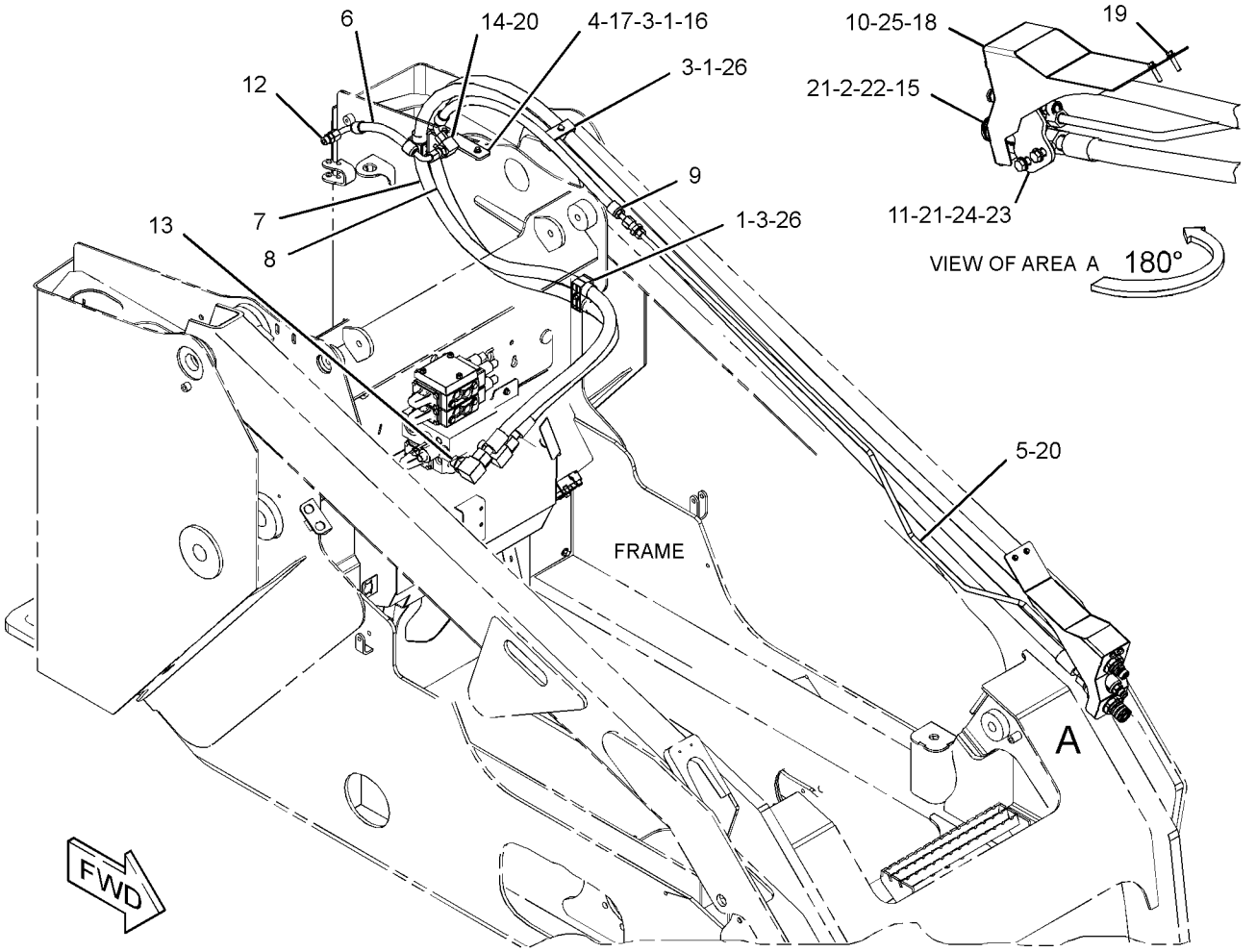

GRAPHIC #1 **<END>** g03324060

345-6456 LINES GP-AUXILIARY HYDRAULIC

PART OF 345-5219, 345-5225 HYDRAULIC AR
AN ATTACHMENT

SMCS-5057 **i05166850**

NOTE	REF NO	GRAPHIC REF	PART NUMBER	QTY	PART NAME 1 2 3 4 5 6 (PRODUCT LEVEL)	SEE PAGE
	1	1	**4V-0612**	3	PLATE	
	2	1	*106-8715*	2	ELBOW AS	
					(EACH INCLUDES)	
		1	**3D-2824**	1	SEAL-O-RING	
		1	**6V-9746**	1	SEAL-O-RING	
		1	**8C-8400**	1	ELBOW	
	3	1	**154-6583**	6	CLAMP-HALF	
Y	4	1	**345-5165**	1	FITTING GP-HYDRAULIC (QUICK DISCONNECT, MALE)	219
	5	1	**345-5754**	1	BRACKET AS	
	6	1	**345-5833**	1	TUBE AS	
I	7	1	**345-6427**	1	HOSE AS	
I	8	1	**345-6466**	1	HOSE AS	
	9	1	**345-6484**	1	HOSE AS	
	10	1	**345-6485**	1	HOSE AS	
	11	1	**394-4539**	1	COVER AS	
	12	1	**395-2971**	1	BRACKET AS	
	13	1	*148-8340*	1	CONNECTOR AS	
		1	**3K-0360**	1	SEAL-O-RING	
		1	**6V-8398**	1	SEAL-O-RING	
		1	**6V-8639**	1	CONNECTOR	
	14	1	*148-8375*	1	ELBOW AS	
		1	**6V-8398**	2	SEAL-O-RING	
		1	**6V-8981**	1	ELBOW	
	15	1	*150-4043*	1	CONNECTOR AS	
		1	**3J-1907**	1	SEAL-O-RING	
		1	**6V-8398**	1	SEAL-O-RING	
		1	**6V-9873**	1	CONNECTOR	
M	16	1	**266-3315**	2	BOLT-FLANGE HEAD (M8X1.25X25.5-MM)	
	17	1	**2H-3755**	2	BOLT (5/16-18X0.43-IN)	
	18	1	**343-4072**	2	BOLT-FLANGE HEAD (M6X1X25-MM)	
	19	1	**6V-9169**	2	NUT (13/16-16-THD)	
	20	1	**8T-4121**	4	WASHER-HARD (11X21X2.5-MM THK)	
M	21	1	**8T-4133**	2	NUT (M10X1.5-THD)	
M	22	1	**8T-4172**	2	BOLT (M10X1.5X80-MM)	
M	23	1	**8T-4196**	2	BOLT (M10X1.5X35-MM)	
	24	1	**8T-4224**	2	WASHER-HARD (8.8X16X2-MM THK)	
M	25	1	**8T-6912**	3	BOLT (M8X1.25X50-MM)	

I - REFER TO HYDRAULIC INFORMATION SYSTEM
M - METRIC PART
Y - SEPARATE ILLUSTRATION

345-6456 **LINES GP-AUXILIARY HYDRAULIC (*contd.*)** **i05166850**

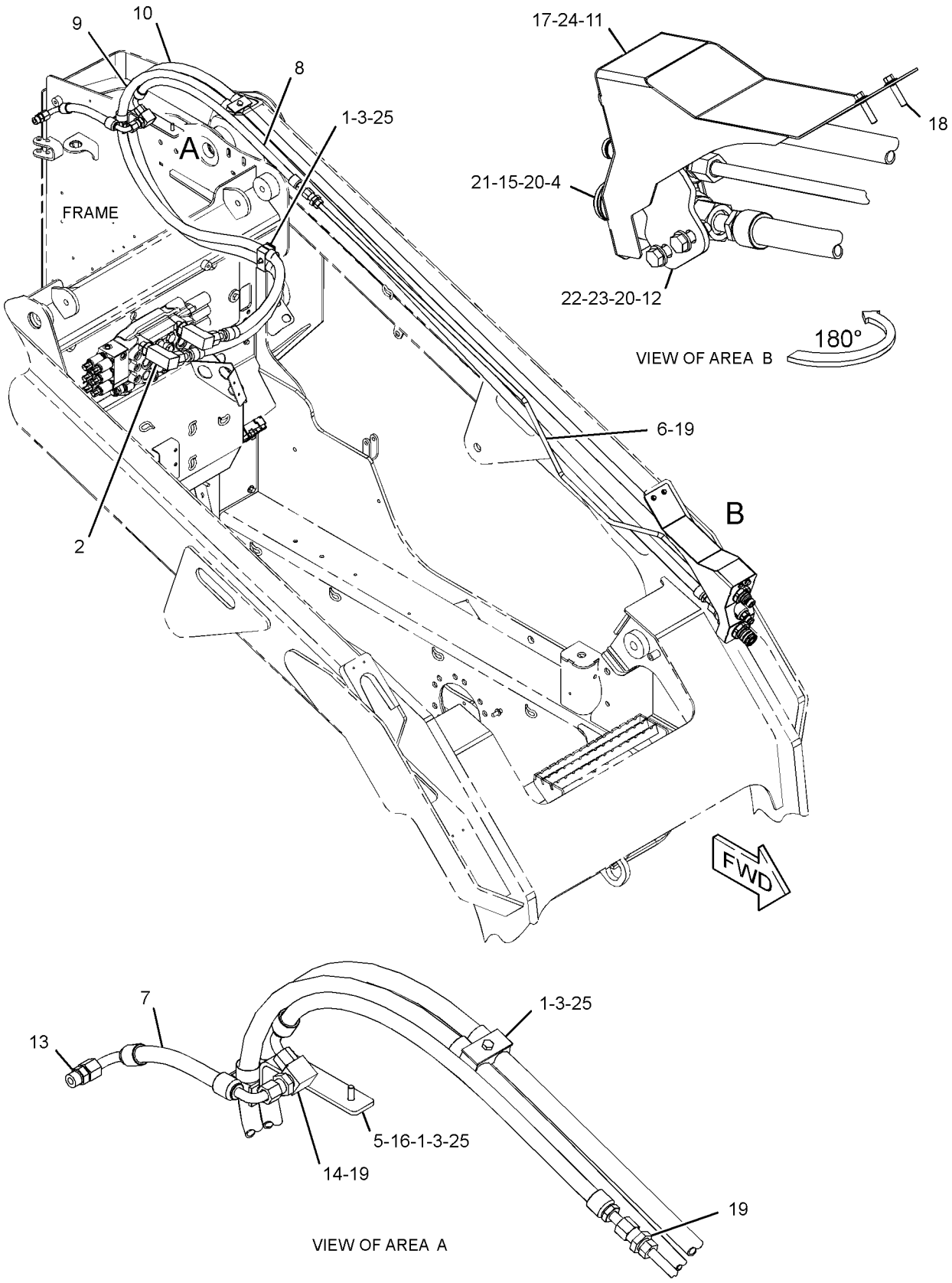

GRAPHIC #1 **<END>** g03334245

279-5413 LINES GP-BUCKET—MULTIPURPOSE

PART OF 423-4291, 426-6933 BUCKET AR-MULTIPURPOSE
AN ATTACHMENT

SMCS-5057 **i05296426**

NOTE	REF NO	GRAPHIC REF	PART NUMBER	QTY	PART NAME 1 2 3 4 5 6 (PRODUCT LEVEL)	SEE PAGE
	1	1	**153-2994**	1	COUPLING (FEMALE)	
I	2	1	**154-5020**	2	HOSE AS	
I	3	1	**154-5021**	1	HOSE AS	
I	4	1	**154-5022**	1	HOSE AS	
	5	1	**163-1386**	1	TEE-UNION	
	6	1	**421-6171**	1	COUPLER AS-QUICK DISCONNECT (MALE)	
I	7	1	**279-5417**	1	HOSE AS	
I	8	1	**279-5418**	1	HOSE AS	
	9	1	*148-8319*	2	CONNECTOR AS	
					(EACH INCLUDES)	
		1	**2M-9780**	1	SEAL-O-RING	
		1	**6V-8397**	1	SEAL-O-RING	
		1	**6V-8715**	1	CONNECTOR	
	10	1	*150-3056*	1	TEE AS	
		1	**6V-8397**	3	SEAL-O-RING	
		1	**6V-8788**	1	TEE	
	11	1	**1S-0994**	1	CLIP	
	12	1	**6D-4247**	3	CLIP	
	13	1	**6V-8397**	7	SEAL-O-RING	
M	14	1	**8T-4189**	4	BOLT (M8X1.25X20-MM)	
	15	1	**8T-4224**	4	WASHER-HARD (8.8X16X2-MM THK)	
B	16	1	**9X-6273**	2	WASHER (32.5X50X0.8-MM THK)	
B	17	1	**9X-6274**	2	WASHER (32.5X50X1.6-MM THK)	

B - USE AS REQUIRED
I - REFER TO HYDRAULIC INFORMATION SYSTEM
M - METRIC PART

279-5413 **LINES GP-BUCKET (*contd.*)** **i05296426**

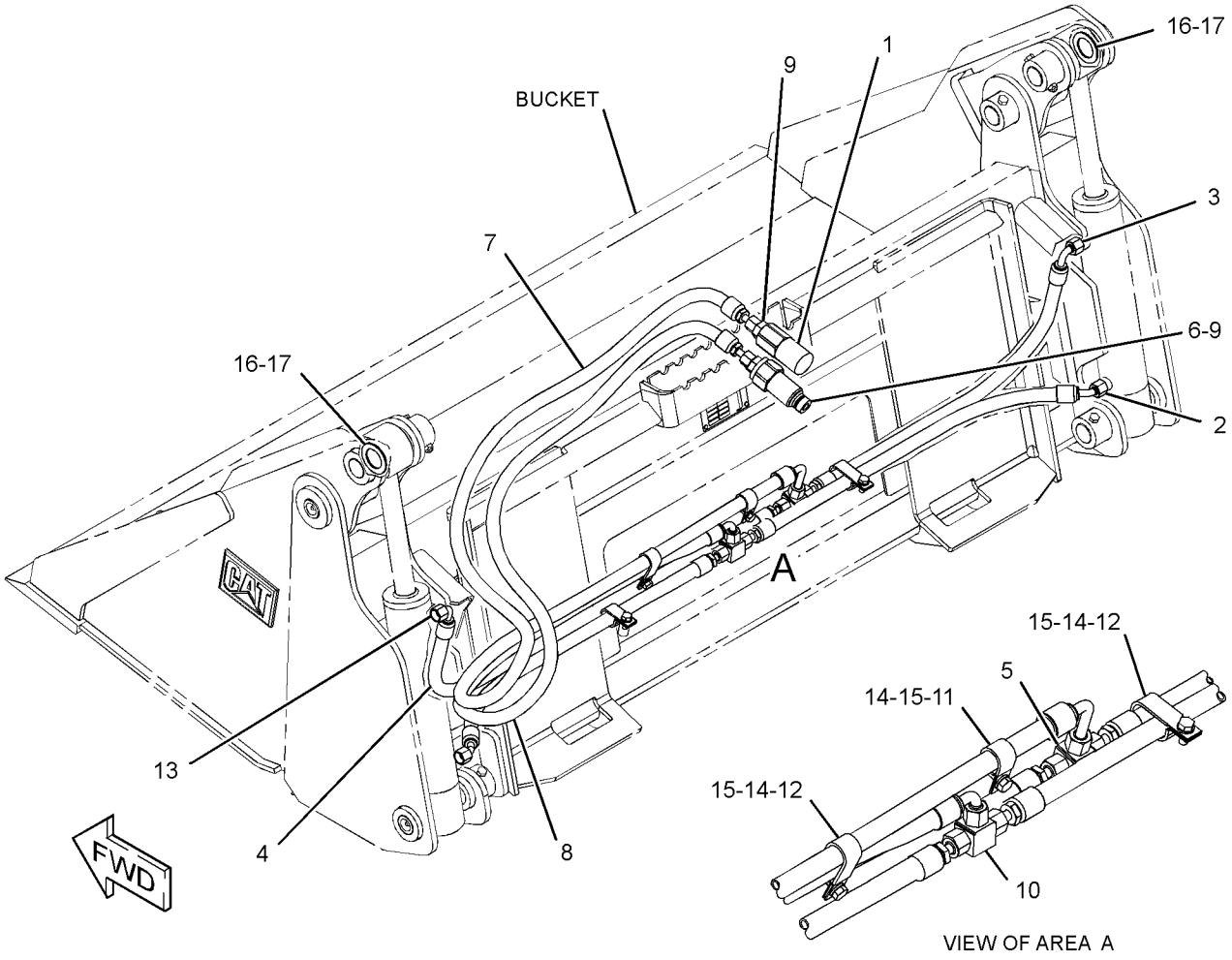

GRAPHIC #1 **<END>** g03363875

279-5414 LINES GP-BUCKET—MULTIPURPOSE

PART OF 426-6492, 426-6940 BUCKET AR-MULTIPURPOSE
AN ATTACHMENT

SMCS-5057 **i05296447**

NOTE	REF NO	GRAPHIC REF	PART NUMBER	QTY	PART NAME 1 2 3 4 5 6 (PRODUCT LEVEL)	SEE PAGE
	1	1	**153-2994**	1	COUPLING (FEMALE)	
I	2	1	**156-5508**	1	HOSE AS	
I	3	1	**156-5509**	2	HOSE AS	
I	4	1	**156-5510**	1	HOSE AS	
	5	1	**163-1386**	1	TEE-UNION	
	6	1	**421-6171**	1	COUPLER AS-QUICK DISCONNECT (MALE)	
I	7	1	**279-5417**	1	HOSE AS	
I	8	1	**279-5418**	1	HOSE AS	
	9	1	*148-8319*	2	CONNECTOR AS	
					(EACH INCLUDES)	
		1	**2M-9780**	1	SEAL-O-RING	
		1	**6V-8397**	1	SEAL-O-RING	
		1	**6V-8715**	1	CONNECTOR	
	10	1	*150-3056*	1	TEE AS	
		1	**6V-8397**	3	SEAL-O-RING	
		1	**6V-8788**	1	TEE	
	11	1	**1S-0994**	1	CLIP	
	12	1	**6D-4247**	3	CLIP	
	13	1	**6V-8397**	7	SEAL-O-RING	
M	14	1	**8T-4189**	4	BOLT (M8X1.25X20-MM)	
	15	1	**8T-4224**	4	WASHER-HARD (8.8X16X2-MM THK)	
B	16	1	**9X-6273**	2	WASHER (32.5X50X0.8-MM THK)	
B	17	1	**9X-6274**	2	WASHER (32.5X50X1.6-MM THK)	

B - USE AS REQUIRED
I - REFER TO HYDRAULIC INFORMATION SYSTEM
M - METRIC PART

279-5414 **LINES GP-BUCKET (*contd.*)** **i05296447**

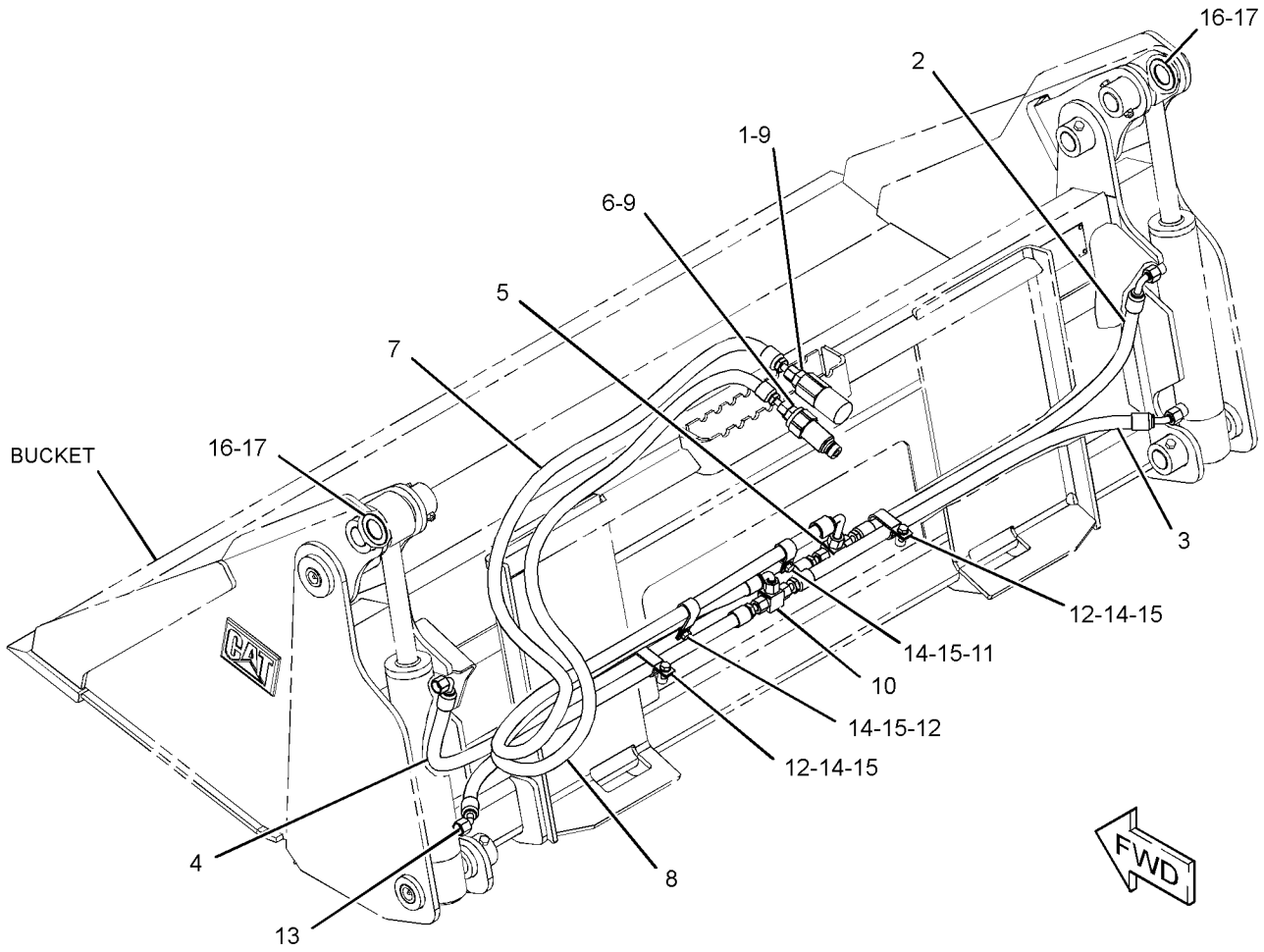

GRAPHIC #1 **<END>** g03364244

279-5415 LINES GP-BUCKET—MULTIPURPOSE

PART OF 426-6537, 426-6947 BUCKET AR-MULTIPURPOSE
AN ATTACHMENT

SMCS-5057 **i05295475**

NOTE	REF NO	GRAPHIC REF	PART NUMBER	QTY	PART NAME 1 2 3 4 5 6 (PRODUCT LEVEL)	SEE PAGE
	1	1	**153-2994**	1	COUPLING (FEMALE)	
I	2	1	**159-4535**	1	HOSE AS	
I	3	1	**159-4536**	2	HOSE AS	
I	4	1	**159-4537**	1	HOSE AS	
	5	1	**163-1386**	1	TEE-UNION	
	6	1	**421-6171**	1	COUPLER AS-QUICK DISCONNECT (MALE)	
I	7	1	**279-5417**	1	HOSE AS	
I	8	1	**279-5418**	1	HOSE AS	
	9	1	*148-8319*	2	CONNECTOR AS	
					(EACH INCLUDES)	
		1	**2M-9780**	1	SEAL-O-RING	
		1	**6V-8397**	1	SEAL-O-RING	
		1	**6V-8715**	1	CONNECTOR	
	10	1	*150-3056*	1	TEE AS	
		1	**6V-8397**	3	SEAL-O-RING	
		1	**6V-8788**	1	TEE	
	11	1	**1S-0994**	1	CLIP	
	12	1	**6D-4247**	3	CLIP	
	13	1	**6V-8397**	7	SEAL-O-RING	
M	14	1	**8T-4189**	4	BOLT (M8X1.25X20-MM)	
	15	1	**8T-4224**	4	WASHER-HARD (8.8X16X2-MM THK)	
B	16	1	**9X-6273**	2	WASHER (32.5X50X0.8-MM THK)	
B	17	1	**9X-6274**	2	WASHER (32.5X50X1.6-MM THK)	

B - USE AS REQUIRED
I - REFER TO HYDRAULIC INFORMATION SYSTEM
M - METRIC PART

279-5415 **LINES GP-BUCKET (*contd.*)** **i05295475**

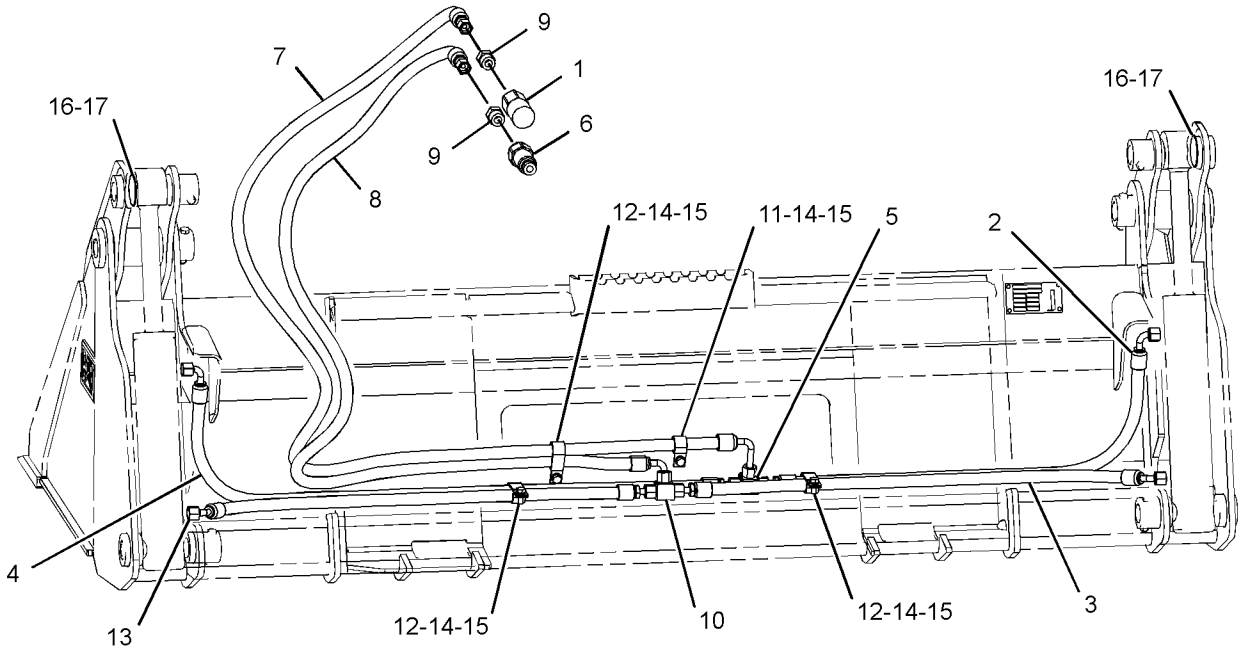

REAR VIEW
(UPPER LEFT)

GRAPHIC #1 **<END>** g03364246

279-5416 LINES GP-BUCKET—MULTIPURPOSE

PART OF 426-6549, 426-6970 BUCKET AR-MULTIPURPOSE
AN ATTACHMENT

SMCS-5057 **i05295474**

NOTE	REF NO	GRAPHIC REF	PART NUMBER	QTY	PART NAME 1 2 3 4 5 6 (PRODUCT LEVEL)	SEE PAGE
	1	1	**153-2994**	1	COUPLING (FEMALE)	
	2	1	**163-1386**	1	TEE-UNION	
	3	1	**421-6171**	1	COUPLER AS-QUICK DISCONNECT (MALE)	
I	4	1	**199-8309**	1	HOSE AS	
I	5	1	**199-8310**	2	HOSE AS	
I	6	1	**199-8311**	1	HOSE AS	
I	7	1	**279-5417**	1	HOSE AS	
I	8	1	**279-5418**	1	HOSE AS	
	9	1	*148-8319*	2	CONNECTOR AS	
					(EACH INCLUDES)	
		1	**2M-9780**	1	SEAL-O-RING	
		1	**6V-8397**	1	SEAL-O-RING	
		1	**6V-8715**	1	CONNECTOR	
	10	1	*150-3056*	1	TEE AS	
		1	**6V-8397**	3	SEAL-O-RING	
		1	**6V-8788**	1	TEE	
	11	1	**1S-0994**	1	CLIP	
	12	1	**6D-4247**	3	CLIP	
	13	1	**6V-8397**	7	SEAL-O-RING	
M	14	1	**8T-4189**	4	BOLT (M8X1.25X20-MM)	
	15	1	**8T-4224**	4	WASHER-HARD (8.8X16X2-MM THK)	
B	16	1	**9X-6273**	2	WASHER (32.5X50X0.8-MM THK)	
B	17	1	**9X-6274**	2	WASHER (32.5X50X1.6-MM THK)	

B - USE AS REQUIRED
I - REFER TO HYDRAULIC INFORMATION SYSTEM
M - METRIC PART

279-5416 **LINES GP-BUCKET (*contd.*)** **i05295474**

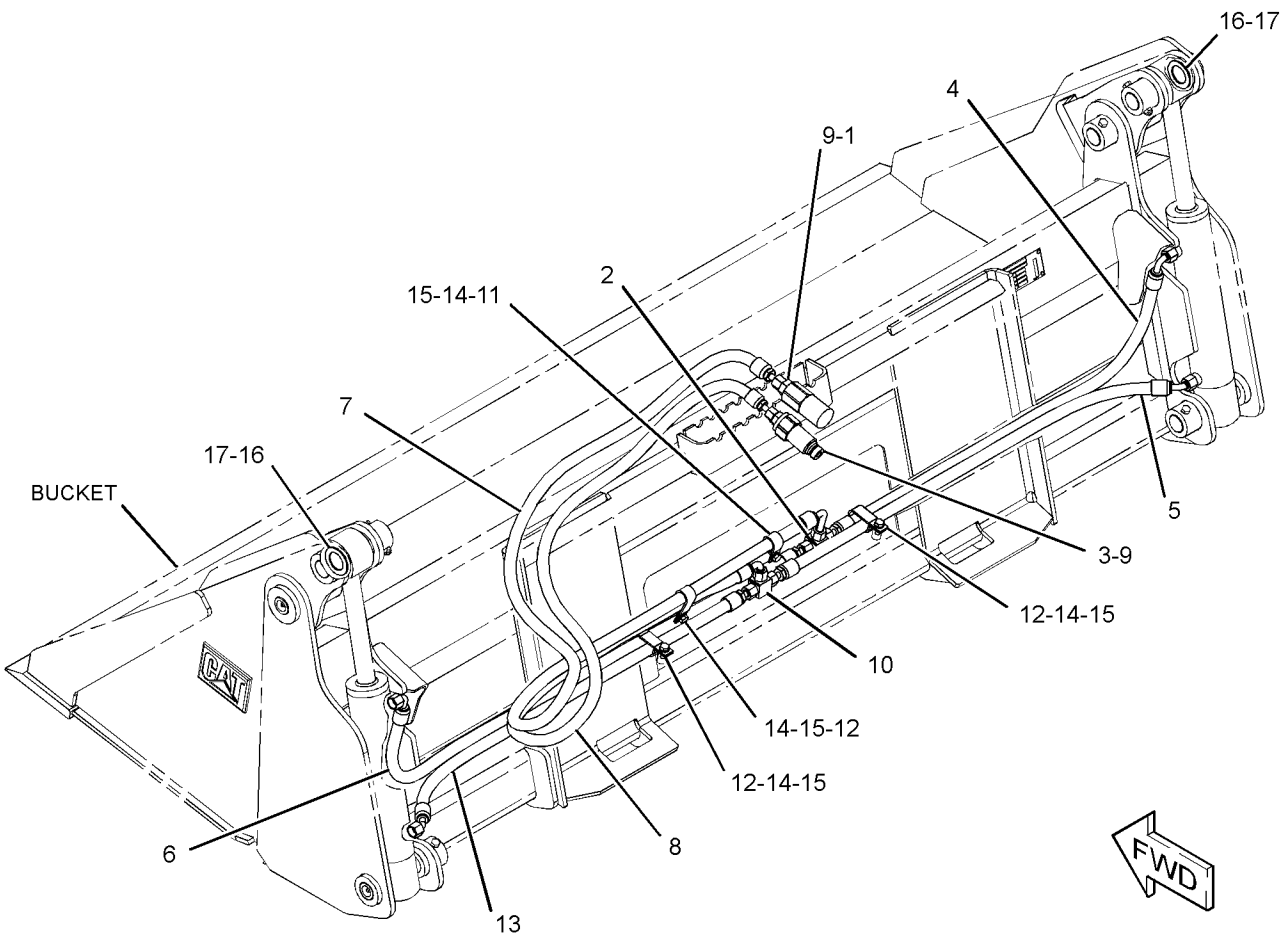

GRAPHIC #1 **<END>** g03364209

293-0140 LINES GP-BUCKET—MULTIPURPOSE

PART OF 426-6559, 426-6992 BUCKET AR-MULTIPURPOSE
AN ATTACHMENT

SMCS-5057 **i05295473**

NOTE	REF NO	GRAPHIC REF	PART NUMBER	QTY	PART NAME 1 2 3 4 5 6 (PRODUCT LEVEL)	SEE PAGE
	1	1	**153-2994**	1	COUPLING (FEMALE)	
	2	1	**163-1386**	1	TEE-UNION	
	3	1	**421-6171**	1	COUPLER AS-QUICK DISCONNECT (MALE)	
I	4	1	**199-8309**	1	HOSE AS	
I	5	1	**199-8311**	1	HOSE AS	
I	6	1	**279-5417**	1	HOSE AS	
I	7	1	**279-5418**	1	HOSE AS	
I	8	1	**293-0152**	2	HOSE AS	
	9	1	*148-8319*	2	CONNECTOR AS	
					(EACH INCLUDES)	
		1	**2M-9780**	1	SEAL-O-RING	
		1	**6V-8397**	1	SEAL-O-RING	
		1	**6V-8715**	1	CONNECTOR	
	10	1	*150-3056*	1	TEE AS	
		1	**6V-8397**	3	SEAL-O-RING	
		1	**6V-8788**	1	TEE	
	11	1	**1S-0994**	1	CLIP	
	12	1	**6D-4247**	3	CLIP	
	13	1	**6V-8397**	7	SEAL-O-RING	
M	14	1	**8T-4189**	4	BOLT (M8X1.25X20-MM)	
	15	1	**8T-4224**	4	WASHER-HARD (8.8X16X2-MM THK)	
B	16	1	**9X-6273**	2	WASHER (32.5X50X0.8-MM THK)	
B	17	1	**9X-6274**	2	WASHER (32.5X50X1.6-MM THK)	

B - USE AS REQUIRED
I - REFER TO HYDRAULIC INFORMATION SYSTEM
M - METRIC PART

293-0140 **LINES GP-BUCKET (*contd.*)** **i05295473**

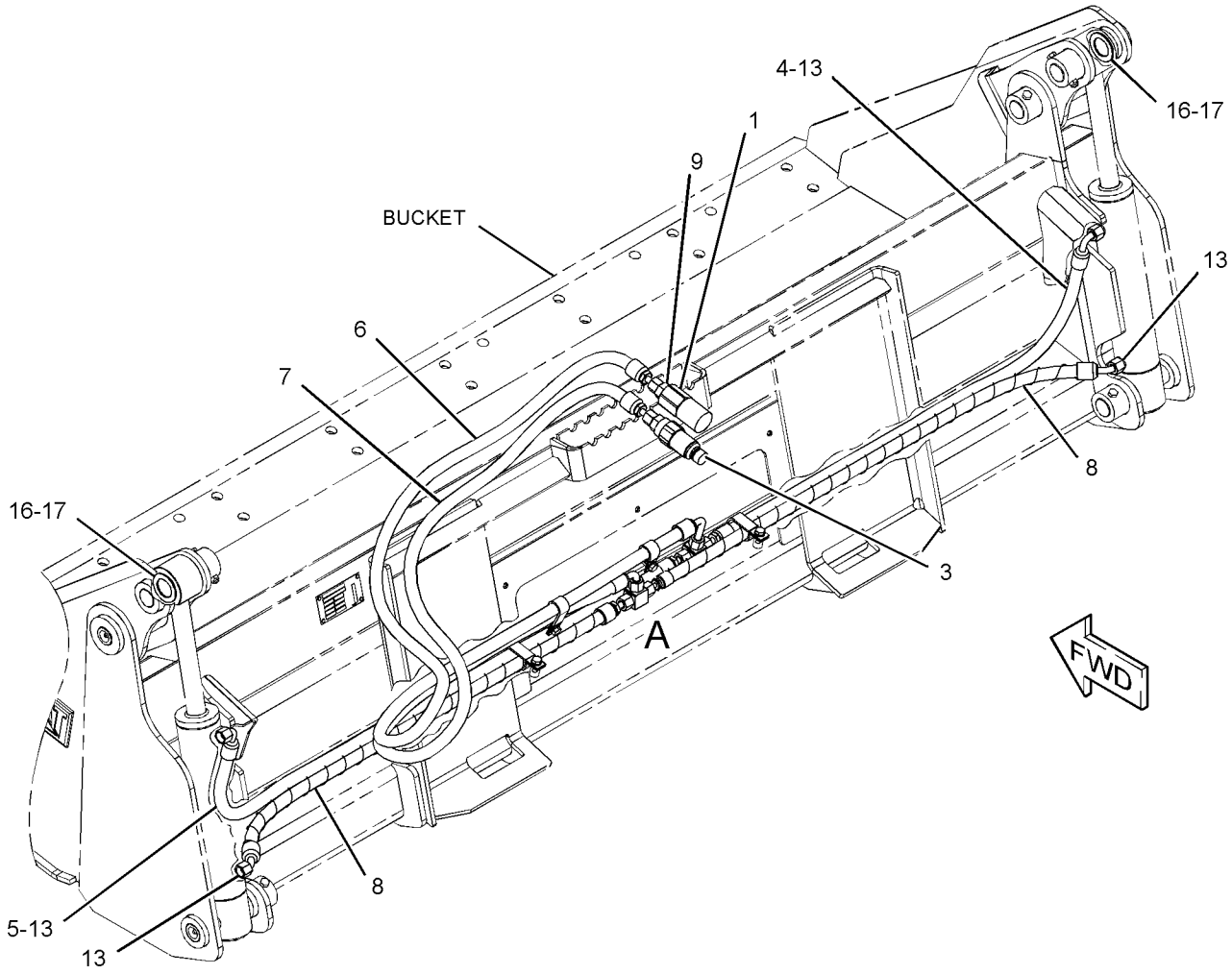

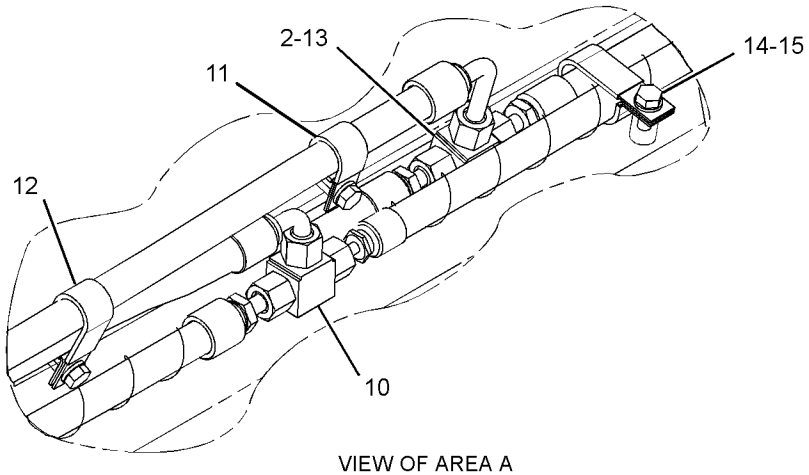

VIEW OF AREA A

GRAPHIC #1 **<END>** g03364224

231-5273 LINES GP-CONNECTING

PART OF 424-0450, 424-0451 BLADE AR
AN ATTACHMENT

SMCS-5057 **i01964116**

NOTE	REF NO	GRAPHIC REF	PART NUMBER	QTY	PART NAME 1 2 3 4 5 6 (PRODUCT LEVEL)	SEE PAGE
	1	1	**153-2994**	1	COUPLING (FEMALE)	
	2	1	**153-2995**	1	COUPLING (MALE)	
I	3	1	**231-0124**	2	HOSE AS	
I	4	1	**231-0125**	1	HOSE AS	
I	5	1	**231-0126**	2	HOSE AS	
I	6	1	**231-0127**	2	HOSE AS	
I	7	1	**238-1003**	1	HOSE AS	
	8	1	*148-8315*	2	CONNECTOR AS	
					(EACH INCLUDES)	
		1	**2M-9780**	1	SEAL-O-RING	
		1	**6V-8642**	1	CONNECTOR	
		1	**7J-9108**	1	SEAL-O-RING	
	9	1	*148-8336*	6	CONNECTOR AS	
					(EACH INCLUDES)	
		1	**3J-1907**	1	SEAL-O-RING	
		1	**6V-8397**	1	SEAL-O-RING	
		1	**6V-8636**	1	CONNECTOR	
	10	1	*148-8342*	2	CONNECTOR AS	
					(EACH INCLUDES)	
		1	**3K-0360**	1	SEAL-O-RING	
		1	**6V-8632**	1	CONNECTOR	
		1	**7J-9108**	1	SEAL-O-RING	
	11	1	**5P-1076**	2	WASHER-HARD (13.5X30X4-MM THK)	
	12	1	**7G-5984**	1	CLIP (TAB)	
	13	1	**7G-5985**	1	CLIP (SLOT)	
	14	1	**7G-5986**	1	GROMMET	
M	15	1	**8T-4139**	2	BOLT (M12X1.75X30-MM)	

I - REFER TO HYDRAULIC INFORMATION SYSTEM
M - METRIC PART

231-5273 **LINES GP-CONNECTING (*contd.*)** **i01964116**

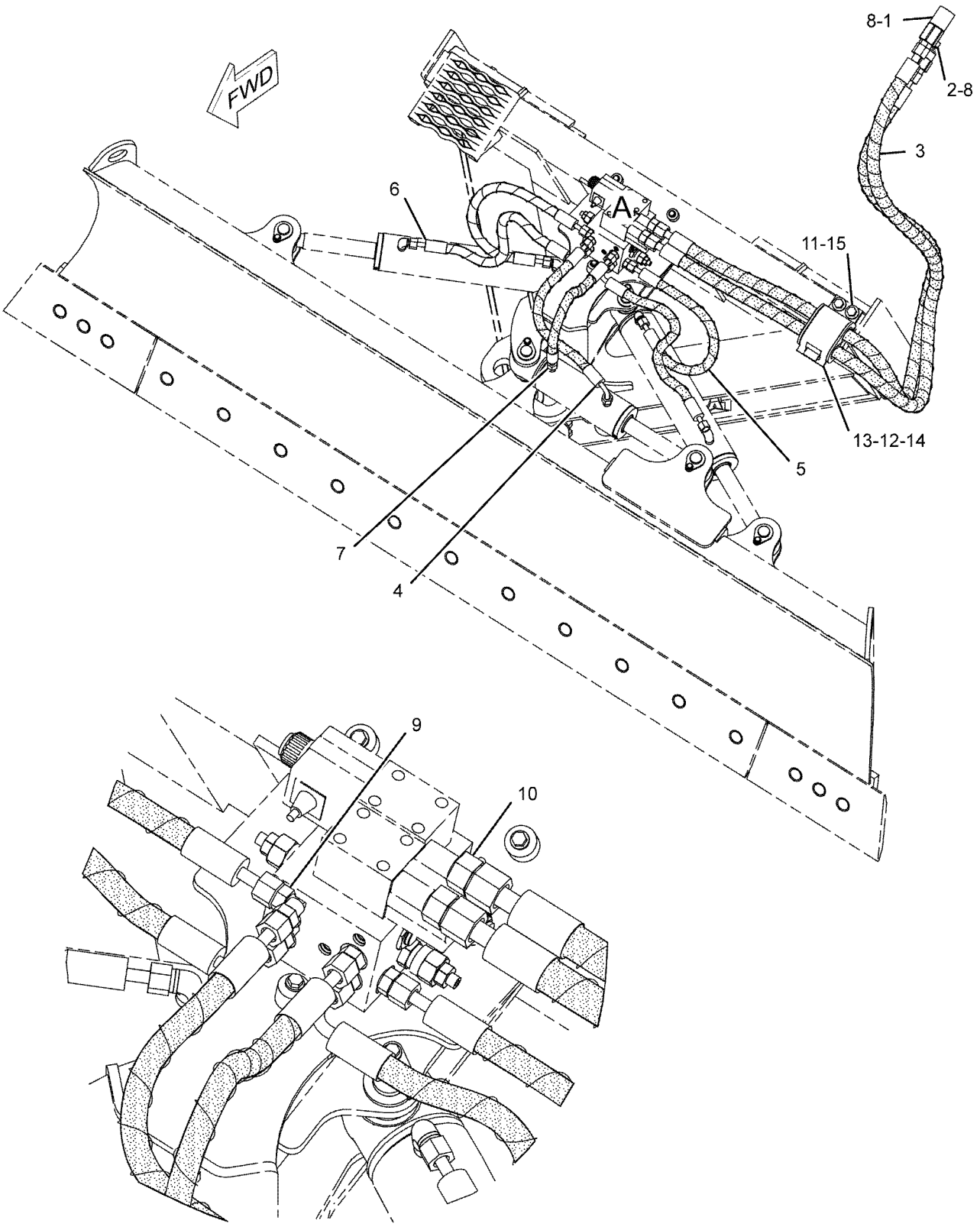

VIEW OF AREA A

GRAPHIC #1 **<END>** g01041993

345-5946 LINES GP-HYDRAULIC–CHARGE

PART OF 345-4923, 345-4927 MACHINE AR-SPECIAL
AN ATTACHMENT

SMCS-5057 **i05295878**

NOTE	REF NO	GRAPHIC REF	PART NUMBER	QTY	PART NAME 1 2 3 4 5 6 (PRODUCT LEVEL)	SEE PAGE
	1	1	**3E-4091**	1	ELBOW	
	2	1	**178-3620**	1	STRAP-DUAL CLAMP	
	3	1	**335-6983**	2	CLAMP-BAND	
I	4	1	**345-5947**	1	HOSE AS	
I	5	1	**345-5948**	1	HOSE AS	
I	6	1	**345-5949**	1	HOSE AS	
Y	7	1	*346-5576*	1	FILTER GP-OIL (HYDRAULIC, TRANSMISSION)	158
	8	1	**388-7909**	1	BRACKET	
	10	1	*148-8315*	3	CONNECTOR AS	
					(EACH INCLUDES)	
		1	**2M-9780**	1	SEAL-O-RING	
		1	**6V-8642**	1	CONNECTOR	
		1	**7J-9108**	1	SEAL-O-RING	
	11	1	*148-8347*	2	ELBOW AS	
					(EACH INCLUDES)	
		1	**3D-2824**	1	SEAL-O-RING	
		1	**6V-9007**	1	ELBOW	
		1	**6V-9746**	1	SEAL-O-RING	
	12	1	*148-8390*	1	ELBOW AS	
		1	**2M-9780**	1	SEAL-O-RING	
		1	**6V-8626**	1	ELBOW	
		1	**7J-9108**	1	SEAL-O-RING	
	13	1	*148-8393*	1	ELBOW AS	
		1	**6V-9852**	1	ELBOW	
		1	**7J-9108**	1	SEAL-O-RING	
	14	1	*150-3072*	1	PLUG AS	
		1	**6V-8398**	1	SEAL-O-RING	
		1	**6V-9509**	1	PLUG (13/16-16-THD)	
	15	1	**154-9023**	1	VALVE-SAMPLING (HYDRAULIC OIL)	
	16	1	**223-3490**	1	CLIP	
M	17	1	**266-3315**	3	BOLT-FLANGE HEAD (M8X1.25X25.5-MM)	
	18	1	**3J-7354**	2	SEAL-O-RING	
	20	1	**6V-9830**	2	CAP AS	
	21	1	**7K-1181**	4	STRAP-CABLE	
	22	1	**8C-3451**	1	CAP-DUST (HYDRAULIC OIL)	
	23	1	**8T-4121**	4	WASHER-HARD (11X21X2.5-MM THK)	
M	24	1	**8T-4136**	4	BOLT (M10X1.5X25-MM)	
E	25	1	**5P-1442**		HOSE (112.5-CM)	

E - ORDER BY THE CENTIMETER
I - REFER TO HYDRAULIC INFORMATION SYSTEM
M - METRIC PART
Y - SEPARATE ILLUSTRATION

345-5946 **LINES GP-HYDRAULIC (*contd.*)** **i05295878**

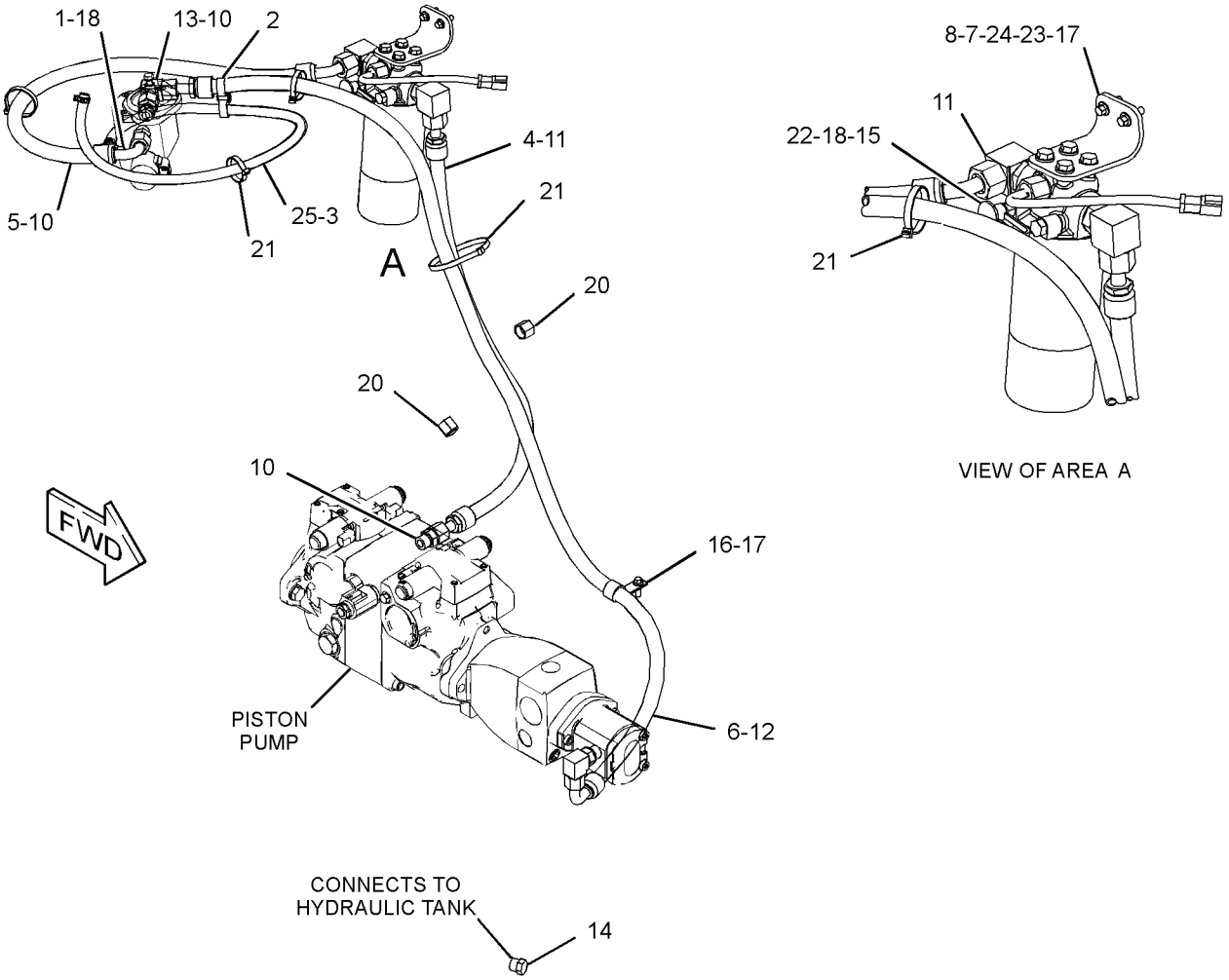

GRAPHIC #1 **<END>** g03364422

345-5950 LINES GP-HYDRAULIC–CHARGE

PART OF 388-7932 CONFIGURATION AR, 345-4929 MACHINE AR-SPECIAL
AN ATTACHMENT

SMCS-5057 **i05296323**

NOTE	REF NO	GRAPHIC REF	PART NUMBER	QTY	PART NAME 1 2 3 4 5 6 (PRODUCT LEVEL)	SEE PAGE
	1	1	**3E-4091**	1	ELBOW	
	2	1	**178-3620**	1	STRAP-DUAL CLAMP	
	3	1	**335-6983**	2	CLAMP-BAND	
I	4	1	**345-5947**	1	HOSE AS	
I	5	1	**345-5948**	1	HOSE AS	
I	6	1	**345-5951**	1	HOSE AS	
I	7	1	**345-5952**	1	HOSE AS	
Y	8	1	*346-5576*	1	FILTER GP-OIL (HYDRAULIC, TRANSMISSION)	158
	9	1	**388-7909**	1	BRACKET	
	11	1	*148-8315*	3	CONNECTOR AS	
					(EACH INCLUDES)	
		1	**2M-9780**	1	SEAL-O-RING	
		1	**6V-8642**	1	CONNECTOR	
		1	**7J-9108**	1	SEAL-O-RING	
	12	1	*148-8347*	2	ELBOW AS	
					(EACH INCLUDES)	
		1	**3D-2824**	1	SEAL-O-RING	
		1	**6V-9007**	1	ELBOW	
		1	**6V-9746**	1	SEAL-O-RING	
	13	1	*148-8390*	1	ELBOW AS	
		1	**2M-9780**	1	SEAL-O-RING	
		1	**6V-8626**	1	ELBOW	
		1	**7J-9108**	1	SEAL-O-RING	
	14	1	*148-8393*	1	ELBOW AS	
		1	**6V-9852**	1	ELBOW	
		1	**7J-9108**	1	SEAL-O-RING	
	15	1	**154-9023**	1	VALVE-SAMPLING (HYDRAULIC OIL)	
M	16	1	**266-3315**	2	BOLT-FLANGE HEAD (M8X1.25X25.5-MM)	
	17	1	*296-5725*	1	TEE AS	
		1	**3K-0360**	1	SEAL-O-RING	
		1	**7J-9108**	2	SEAL-O-RING	
		1	**109-5811**	1	TEE-O-RING PORT	
	18	1	**3J-7354**	2	SEAL-O-RING	
	20	1	**7K-1181**	4	STRAP-CABLE	
	21	1	**8C-3451**	1	CAP-DUST (HYDRAULIC OIL)	
	22	1	**8T-4121**	4	WASHER-HARD (11X21X2.5-MM THK)	
M	23	1	**8T-4136**	4	BOLT (M10X1.5X25-MM)	
E	24	1	**423-1982**		HOSE (112.5-CM)	

E - ORDER BY THE CENTIMETER
I - REFER TO HYDRAULIC INFORMATION SYSTEM
M - METRIC PART
Y - SEPARATE ILLUSTRATION

345-5950 **LINES GP-HYDRAULIC (*contd.*)** **i05296323**

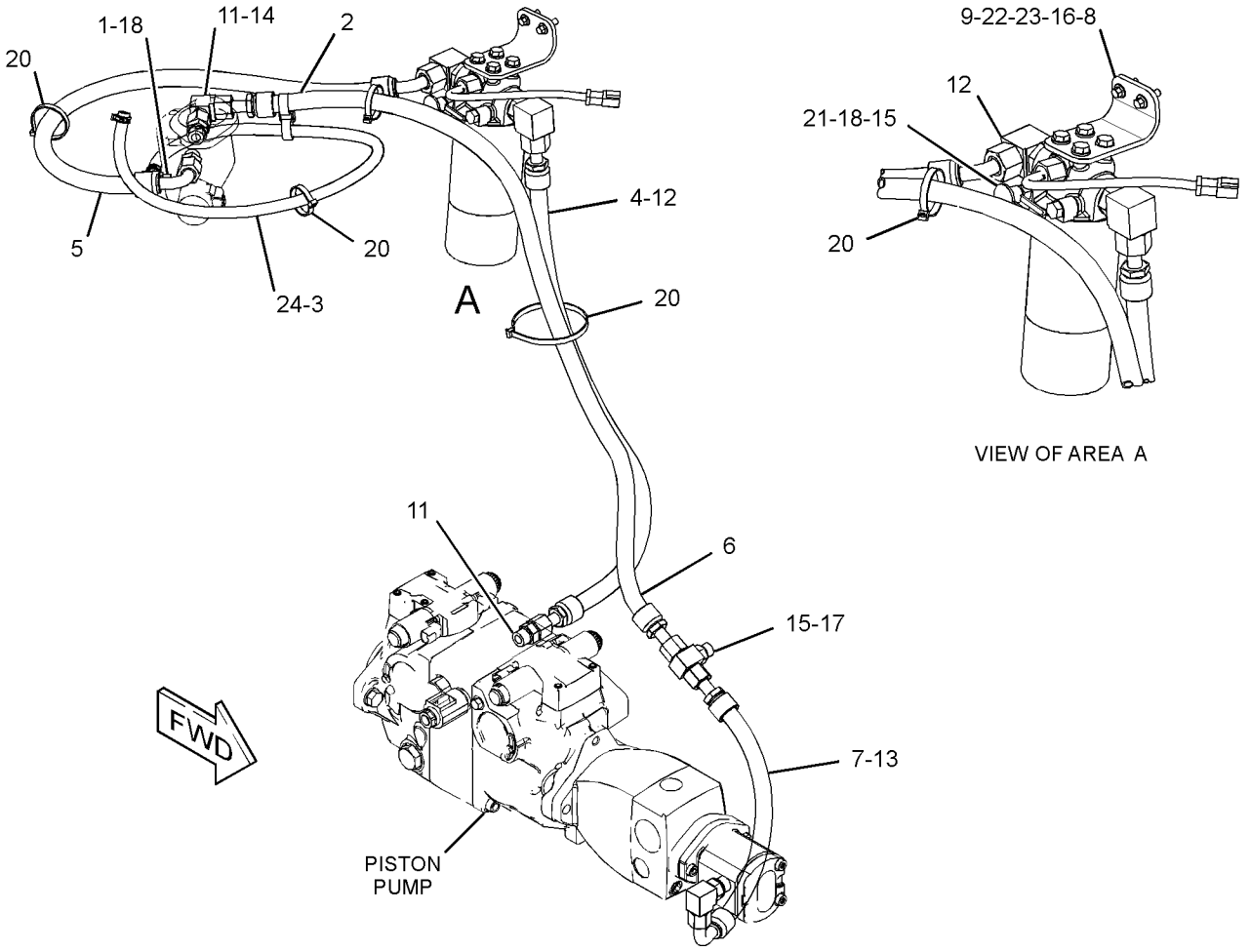

GRAPHIC #1 **<END>** g03364444

345-6499 LINES GP-HYDRAULIC–RIDE CONTROL

PART OF 388-7932 CONFIGURATION AR, 345-4929 MACHINE AR-SPECIAL
AN ATTACHMENT

SMCS-5057 **i05297525**

NOTE	REF NO	GRAPHIC REF	PART NUMBER	QTY	PART NAME 1 2 3 4 5 6 (PRODUCT LEVEL)	SEE PAGE
Y	1	1	**345-4755**	1	MANIFOLD GP-RIDE CONTROL	268
	2	1	*189-5719*	1	ADAPTER AS	
		1	**3K-0360**	2	SEAL-O-RING	
		1	**6V-0467**	1	CONNECTOR	
	3	1	**304-6756**	1	VALVE GP-CHECK (RIDE CONTROL)	
		1	**3K-0360**	1	SEAL-O-RING	
		1	**6V-8398**	1	SEAL-O-RING	
Y	4	1	*310-8460*	1	ACCUMULATOR GP-RIDE CONTROL (CHARGED)	206
I	5	1	**345-4571**	1	HOSE AS	
	6	1	**345-4749**	1	TUBE AS	
I	7	1	**345-6494**	2	HOSE AS	
	9	1	*148-8340*	2	CONNECTOR AS	
					(EACH INCLUDES)	
		1	**3K-0360**	1	SEAL-O-RING	
		1	**6V-8398**	1	SEAL-O-RING	
		1	**6V-8639**	1	CONNECTOR	
	10	1	**149-9129**	1	CLIP	
M	11	1	**174-9194**	1	BOLT (M8X1.25X16-MM)	
	12	1	*194-2903*	1	ELBOW AS	
		1	**3K-0360**	1	SEAL-O-RING	
		1	**8T-0119**	1	ELBOW	
M	13	1	**266-3315**	1	BOLT-FLANGE HEAD (M8X1.25X25.5-MM)	
	14	1	**6V-8398**	2	SEAL-O-RING	
	15	1	**7K-1181**	1	STRAP-CABLE	
M	16	1	**7X-2538**	2	BOLT (M8X1.25X100-MM)	
	17	1	**8F-1179**	1	CLIP	
	18	1	**8T-4224**	2	WASHER-HARD (8.8X16X2-MM THK)	

I - REFER TO HYDRAULIC INFORMATION SYSTEM
M - METRIC PART
Y - SEPARATE ILLUSTRATION

345-6499 **LINES GP-HYDRAULIC (*contd.*)** **i05297525**

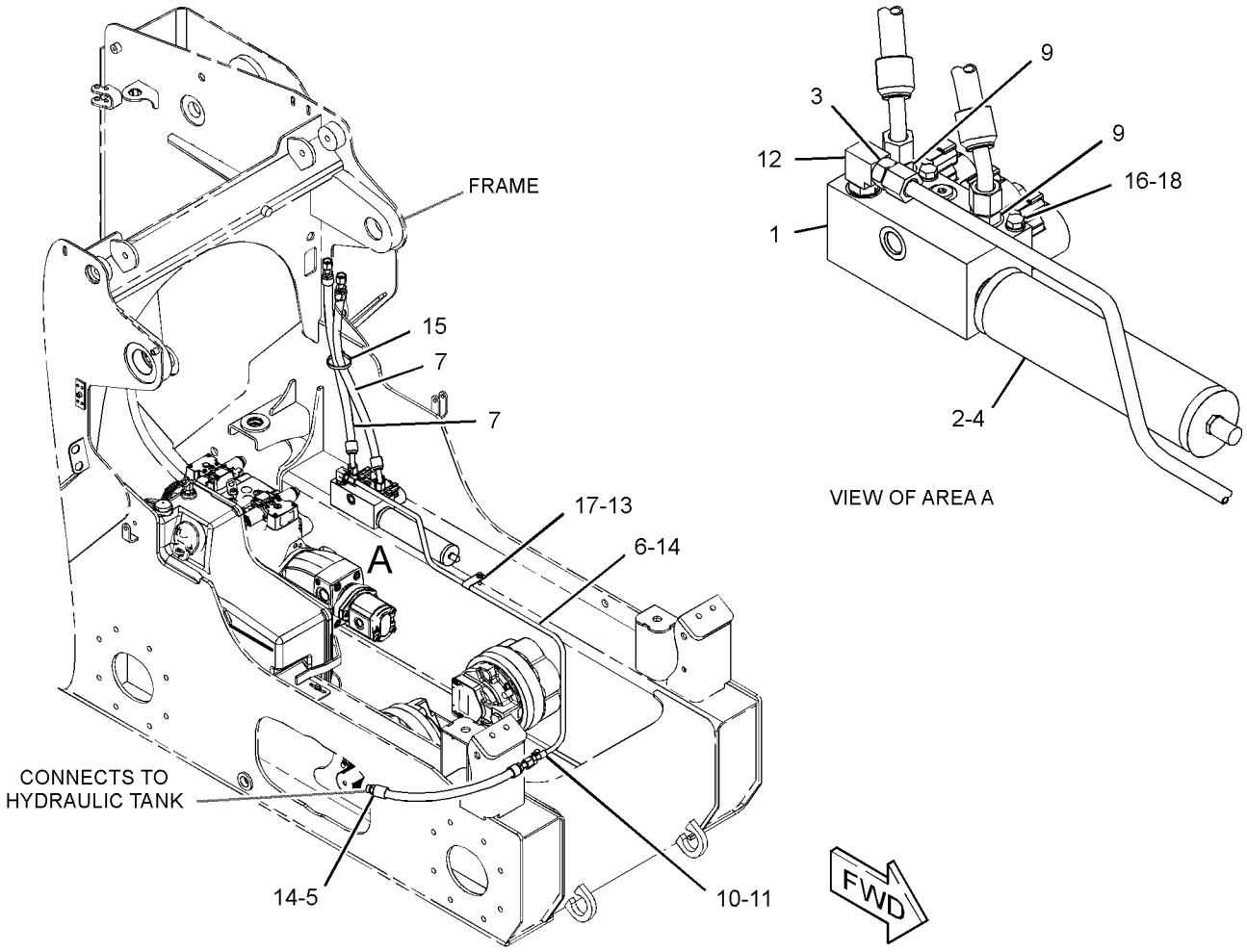

GRAPHIC #1 **<END>** g03371723

345-5953 LINES GP-HYDRAULIC OIL COOLER

PART OF 345-5248 HYDRAULIC AR

SMCS-5057 **i05296308**

NOTE	REF NO	GRAPHIC REF	PART NUMBER	QTY	PART NAME 1 2 3 4 5 6 (PRODUCT LEVEL)	SEE PAGE
	1	1	**345-4623**	1	TUBE AS	
M	2	1	**8T-4136**	1	BOLT (M10X1.5X25-MM)	
I	3	1	**388-8011**	1	HOSE AS	
	4	1	*148-8347*	1	ELBOW AS	
		1	**3D-2824**	1	SEAL-O-RING	
		1	**6V-9007**	1	ELBOW	
		1	**6V-9746**	1	SEAL-O-RING	
	5	1	*153-6237*	1	ELBOW AS	
		1	**3D-2824**	1	SEAL-O-RING	
		1	**6V-9004**	1	ELBOW	
		1	**6V-9746**	1	SEAL-O-RING	
	6	1	*164-5574*	1	TEE AS	
		1	**3D-2824**	1	SEAL-O-RING	
		1	**6V-8784**	1	TEE-FACE SEAL	
		1	**6V-9746**	2	SEAL-O-RING	
	7	1	**296-5724**	1	TEE	
	8	1	**6D-4246**	1	CLIP	
	9	1	**6V-8398**	2	SEAL-O-RING	
	10	1	**8T-4121**	1	WASHER-HARD (11X21X2.5-MM THK)	

I - REFER TO HYDRAULIC INFORMATION SYSTEM
M - METRIC PART

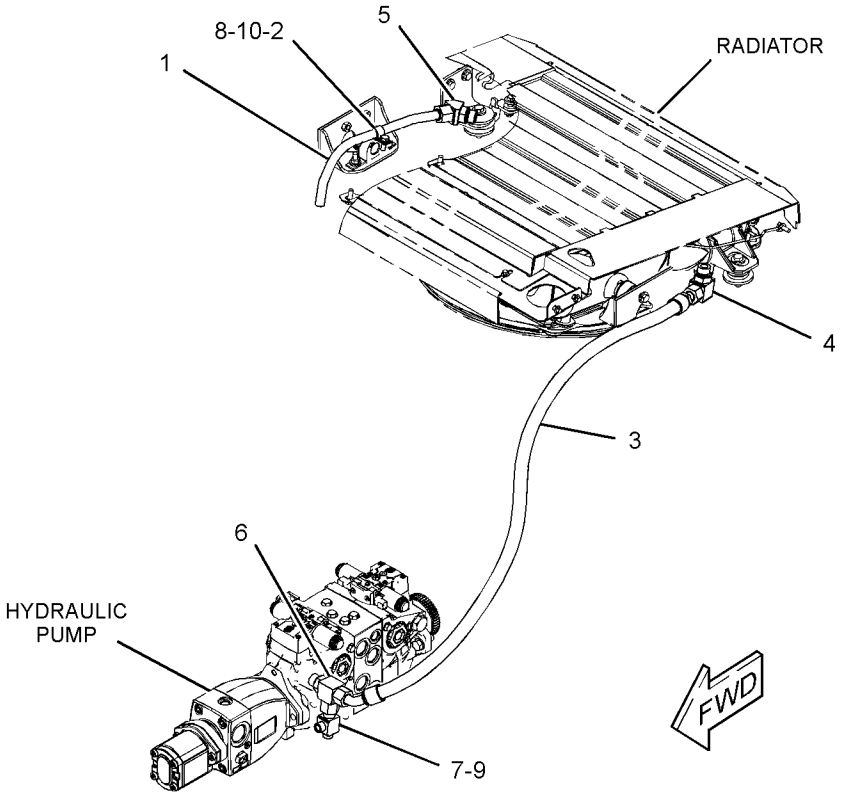

GRAPHIC #1 **<END>** g03364464

345-6453 LINES GP-LIFT CYLINDER

PART OF 345-5447 HYDRAULIC AR
AN ATTACHMENT

SMCS-5057, 5102 **i05167535**

NOTE	REF NO	GRAPHIC REF	PART NUMBER	QTY	PART NAME 1 2 3 4 5 6 (PRODUCT LEVEL)	SEE PAGE
	1	1	**112-1817**	1	VALVE GP-MANUAL (LIFT CYLINDER)	
	2	1	**178-3620**	2	STRAP-DUAL CLAMP	
	3	1	*197-8940*	2	CONNECTOR AS	
					(EACH INCLUDES)	
		1	**2M-9780**	1	SEAL-O-RING	
		1	**7J-9108**	1	SEAL-O-RING	
		1	**8T-1576**	1	CONNECTOR	
	4	1	**269-9404**	1	BRACKET	
I	5	1	**345-4696**	2	HOSE AS	
Y	6	1	**345-5703**	1	CABLE GP-CONTROL	362
I	7	1	**345-6430**	1	HOSE AS	
I	8	1	**345-6431**	1	HOSE AS	
I	9	1	**345-6443**	1	HOSE AS	
	10	1	**345-6480**	1	TUBE AS	
	11	1	**345-6481**	1	TUBE AS	
I	12	1	**345-6491**	2	HOSE AS	
	13	1	**370-8008**	1	LEVER AS	
		1	**270-0216**	1	BRACKET	
	14	1	*148-8364*	2	ELBOW AS	
					(EACH INCLUDES)	
		1	**3K-0360**	1	SEAL-O-RING	
		1	**6V-8398**	1	SEAL-O-RING	
		1	**6V-8625**	1	ELBOW	
	15	1	*148-8378*	1	ELBOW AS	
		1	**3J-1907**	1	SEAL-O-RING	
		1	**6V-8397**	1	SEAL-O-RING	
		1	**6V-8724**	1	ELBOW	
	16	1	*161-8560*	1	CONNECTOR AS	
		1	**3J-1907**	1	SEAL-O-RING	
		1	**7J-9108**	1	SEAL-O-RING	
		1	**8C-6758**	1	CONNECTOR	
M	17	1	**271-9408**	1	SCREW-TRUSS HEAD (M5X0.8X10-MM)	
	18	1	**6V-8397**	1	SEAL-O-RING	
	19	1	**6V-8398**	8	SEAL-O-RING	
	20	1	**6V-9169**	4	NUT (13/16-16-THD)	
	21	1	**7J-9108**	2	SEAL-O-RING	
	22	1	**7K-1181**	1	STRAP-CABLE	
M	23	1	**8T-0337**	4	SCREW-MACHINE (M4X0.7X12-MM)	

I - REFER TO HYDRAULIC INFORMATION SYSTEM
M - METRIC PART
Y - SEPARATE ILLUSTRATION

345-6453 **LINES GP-LIFT CYLINDER (*contd.*)** **i05167535**

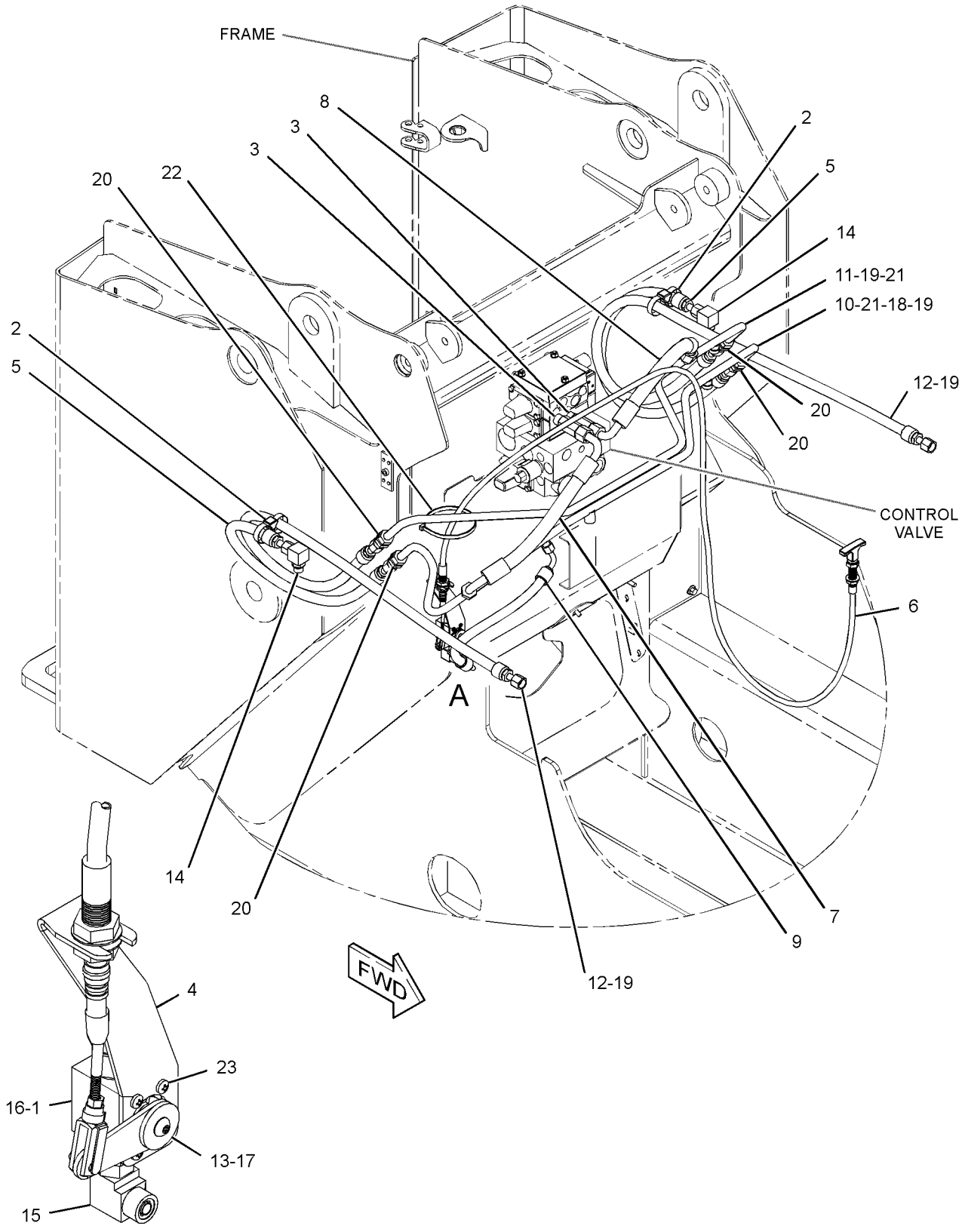

VIEW OF AREA A
(PARTS REMOVED FOR CLARITY)

GRAPHIC #1 **<END>** g03323873

345-6457 LINES GP-LIFT CYLINDER

PART OF 345-5219, 345-5225 HYDRAULIC AR
AN ATTACHMENT

SMCS-5057, 5102 **i05166849**

NOTE	REF NO	GRAPHIC REF	PART NUMBER	QTY	PART NAME 1 2 3 4 5 6 (PRODUCT LEVEL)	SEE PAGE
	1	1	**112-1817**	1	VALVE GP-MANUAL (LIFT CYLINDER)	
	2	1	**178-3620**	2	STRAP-DUAL CLAMP	
	3	1	**269-9404**	1	BRACKET	
I	4	1	**345-4696**	2	HOSE AS	
Y	5	1	**345-5703**	1	CABLE GP-CONTROL	362
I	6	1	**345-6443**	1	HOSE AS	
I	7	1	**345-6475**	1	HOSE AS	
I	8	1	**345-6476**	1	HOSE AS	
	9	1	**345-6480**	1	TUBE AS	
	10	1	**345-6481**	1	TUBE AS	
I	11	1	**345-6491**	2	HOSE AS	
	12	1	**370-8008**	1	LEVER AS	
		1	**270-0216**	1	BRACKET	
	13	1	*148-8341*	1	CONNECTOR AS	
		1	**3D-2824**	1	SEAL-O-RING	
		1	**6V-8713**	1	CONNECTOR	
		1	**7J-9108**	1	SEAL-O-RING	
	14	1	*148-8347*	1	ELBOW AS	
		1	**3D-2824**	1	SEAL-O-RING	
		1	**6V-9007**	1	ELBOW	
		1	**6V-9746**	1	SEAL-O-RING	
	15	1	*148-8364*	2	ELBOW AS	
					(EACH INCLUDES)	
		1	**3K-0360**	1	SEAL-O-RING	
		1	**6V-8398**	1	SEAL-O-RING	
		1	**6V-8625**	1	ELBOW	
	16	1	*148-8378*	1	ELBOW AS	
		1	**3J-1907**	1	SEAL-O-RING	
		1	**6V-8397**	1	SEAL-O-RING	
		1	**6V-8724**	1	ELBOW	
	17	1	*148-8392*	1	ELBOW AS	
		1	**6V-9746**	1	SEAL-O-RING	
		1	**6V-9853**	1	ELBOW	
	18	1	*148-8393*	1	ELBOW AS	
		1	**6V-9852**	1	ELBOW	
		1	**7J-9108**	1	SEAL-O-RING	
	19	1	*161-8560*	1	CONNECTOR AS	
		1	**3J-1907**	1	SEAL-O-RING	
		1	**7J-9108**	1	SEAL-O-RING	
		1	**8C-6758**	1	CONNECTOR	
M	20	1	**271-9408**	1	SCREW-TRUSS HEAD (M5X0.8X10-MM)	
	21	1	**6V-8397**	1	SEAL-O-RING	
	22	1	**6V-8398**	8	SEAL-O-RING	
	23	1	**6V-9169**	4	NUT (13/16-16-THD)	
	24	1	**7J-9108**	2	SEAL-O-RING	
	25	1	**7K-1181**	1	STRAP-CABLE	
M	26	1	**8T-0337**	4	SCREW-MACHINE (M4X0.7X12-MM)	

I - REFER TO HYDRAULIC INFORMATION SYSTEM
M - METRIC PART
Y - SEPARATE ILLUSTRATION

345-6457 **LINES GP-LIFT CYLINDER (*contd.*)** **i05166849**

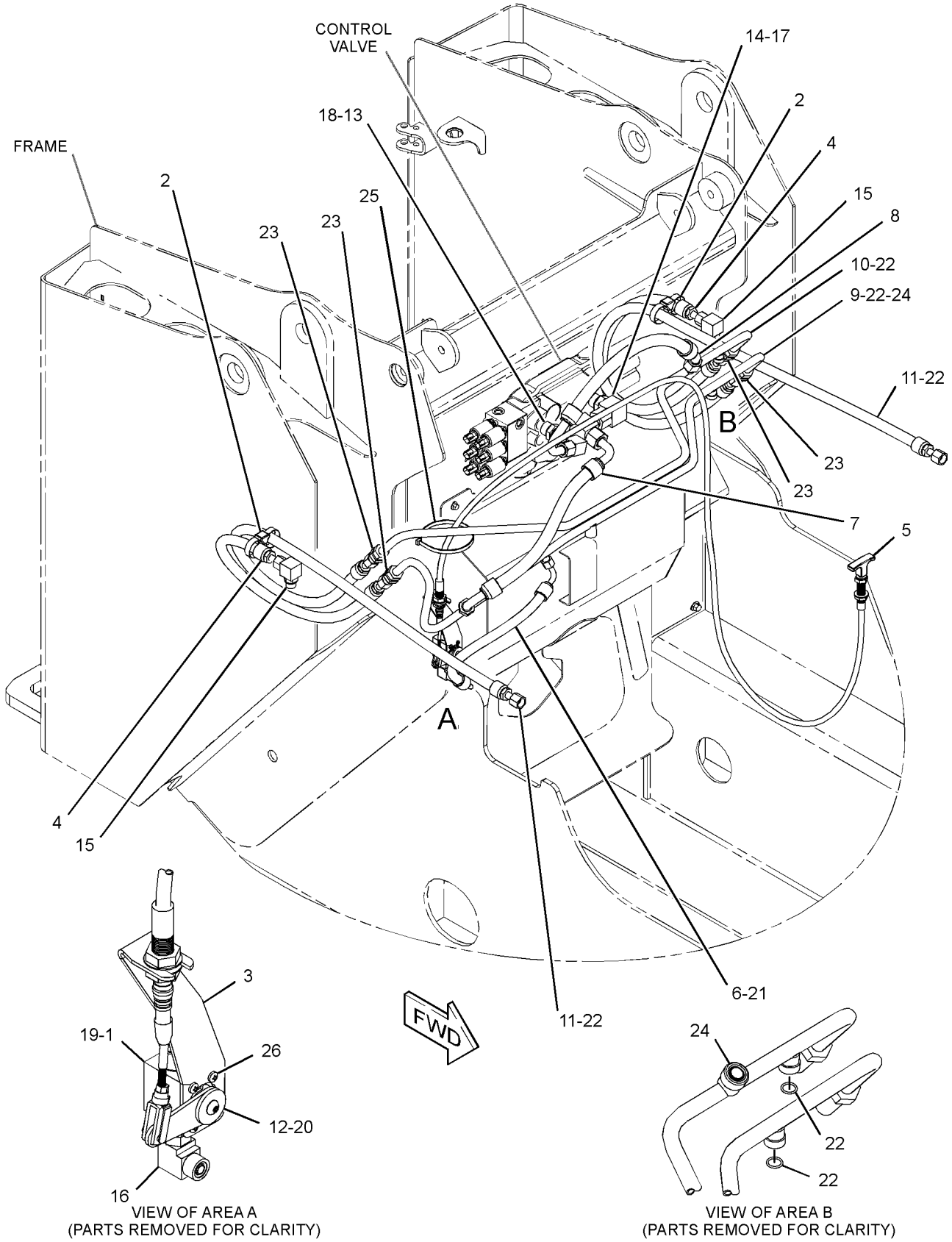

GRAPHIC #1 **<END>** g03323687

345-6410 LINES GP-PUMP–IMPLEMENT

PART OF 345-5447 HYDRAULIC AR
AN ATTACHMENT

SMCS-5057 **i05167536**

NOTE	REF NO	GRAPHIC REF	PART NUMBER	QTY	PART NAME 1 2 3 4 5 6 (PRODUCT LEVEL)	SEE PAGE
	1	1	**204-2281**	2	STRAP-CABLE	
	2	1	*241-6215*	2	ELBOW AS	
					(EACH INCLUDES)	
		1	**3J-1907**	1	SEAL-O-RING	
		1	**6V-8076**	1	ELBOW	
	3	1	*330-9751*	1	FITTING AS	
		1	**7M-8485**	1	SEAL-O-RING	
		1	**9X-3962**	1	FITTING	
	4	1	**335-6983**	2	CLAMP-BAND	
	5	1	**345-3753**	1	MOUNTING-CABLE TIE	
G	6	1	**423-1985**		HOSE (22.4-IN)	
	7	1	**345-4767**	1	TUBE AS	
	8	1	**345-4792**	1	BRACKET AS	
M		1	**159-9539**	2	NUT-WELD (M6X1-THD)	
I	9	1	**345-6418**	1	HOSE AS	
I	10	1	**345-6449**	1	HOSE AS	
	11	1	**345-6479**	1	HOSE AS	
	12	1	**373-7039**	1	VALVE GP-CHECK	
		1	**3D-2824**	1	SEAL-O-RING	
	13	1	**388-7954**	1	TUBE AS	
I	14	1	**398-0001**	1	HOSE AS	
	15	1	**110-6349**	1	FITTING AS (QUICK DISCONNECT)	
	16	1	*148-8336*	2	CONNECTOR AS	
					(EACH INCLUDES)	
		1	**3J-1907**	1	SEAL-O-RING	
		1	**6V-8397**	1	SEAL-O-RING	
		1	**6V-8636**	1	CONNECTOR	
	17	1	*148-8355*	1	ELBOW AS	
		1	**5K-9090**	1	SEAL-O-RING	
		1	**6V-9005**	1	ELBOW	
		1	**7M-8485**	1	SEAL-O-RING	
	18	1	*148-8357*	1	ELBOW AS	
		1	**5K-9090**	1	SEAL-O-RING	
		1	**6V-9008**	1	ELBOW	
		1	**7M-8485**	1	SEAL-O-RING	
	19	1	*148-8361*	1	ELBOW AS	
		1	**3J-7354**	1	SEAL-O-RING	
		1	**6V-8397**	1	SEAL-O-RING	
		1	**6V-9200**	1	ELBOW	
	20	1	*148-8378*	1	ELBOW AS	
		1	**3J-1907**	1	SEAL-O-RING	
		1	**6V-8397**	1	SEAL-O-RING	
		1	**6V-8724**	1	ELBOW	
	21	1	*150-3024*	2	ELBOW AS	
					(EACH INCLUDES)	
		1	**3J-1907**	1	SEAL-O-RING	
		1	**5P-4924**	1	ELBOW	
	22	1	*164-5567*	2	COUPLER AS-QUICK DISCONNECT (MALE)	
					(EACH INCLUDES)	
		1	**6V-3965**	1	FITTING (QUICK DISCONNECT)	
		1	**214-7568**	1	SEAL-O-RING	
	23	1	**266-3314**	1	BOLT-FLANGE HEAD (M6X1X20.5-MM)	
M	24	1	**266-3315**	1	BOLT-FLANGE HEAD (M8X1.25X25.5-MM)	
	25	1	**343-6821**	2	CLAMP-BAND	
	26	1	**347-4163**	2	CLAMP-BAND	
	27	1	**373-7621**	2	CLAMP-BAND	
	28	1	**373-7622**	2	CLAMP-BAND	
	29	1	**373-7623**	2	CLAMP-BAND	
	30	1	**4J-0527**	1	SEAL-O-RING	

345-6410 **LINES GP-PUMP (*contd.*)** **i05167536**

NOTE	REF NO	GRAPHIC REF	PART NUMBER	QTY	PART NAME 1 2 3 4 5 6 (PRODUCT LEVEL)	SEE PAGE
	31	1	**6V-0852**	3	CAP-DUST	
	32	1	**6V-8398**	1	SEAL-O-RING	
	33	1	**7K-1181**	2	STRAP-CABLE	
M	34	1	**8T-4136**	1	BOLT (M10X1.5X25-MM)	
M	35	1	**8T-4192**	4	BOLT (M12X1.75X25-MM)	
	36	1	**8T-4223**	4	WASHER-HARD (13.5X25.5X3-MM THK)	
	37	1	**345-6419**	1	HOSE	
	38	1	**345-6420**	1	HOSE	
G	39	1	**423-1982**		HOSE (14.8-IN)	
G	40	1	**423-1984**		HOSE (16.4-IN)	

G - ORDER BY THE INCH
I - REFER TO HYDRAULIC INFORMATION SYSTEM
M - METRIC PART

345-6410 **LINES GP-PUMP (*contd.*)** **i05167536**

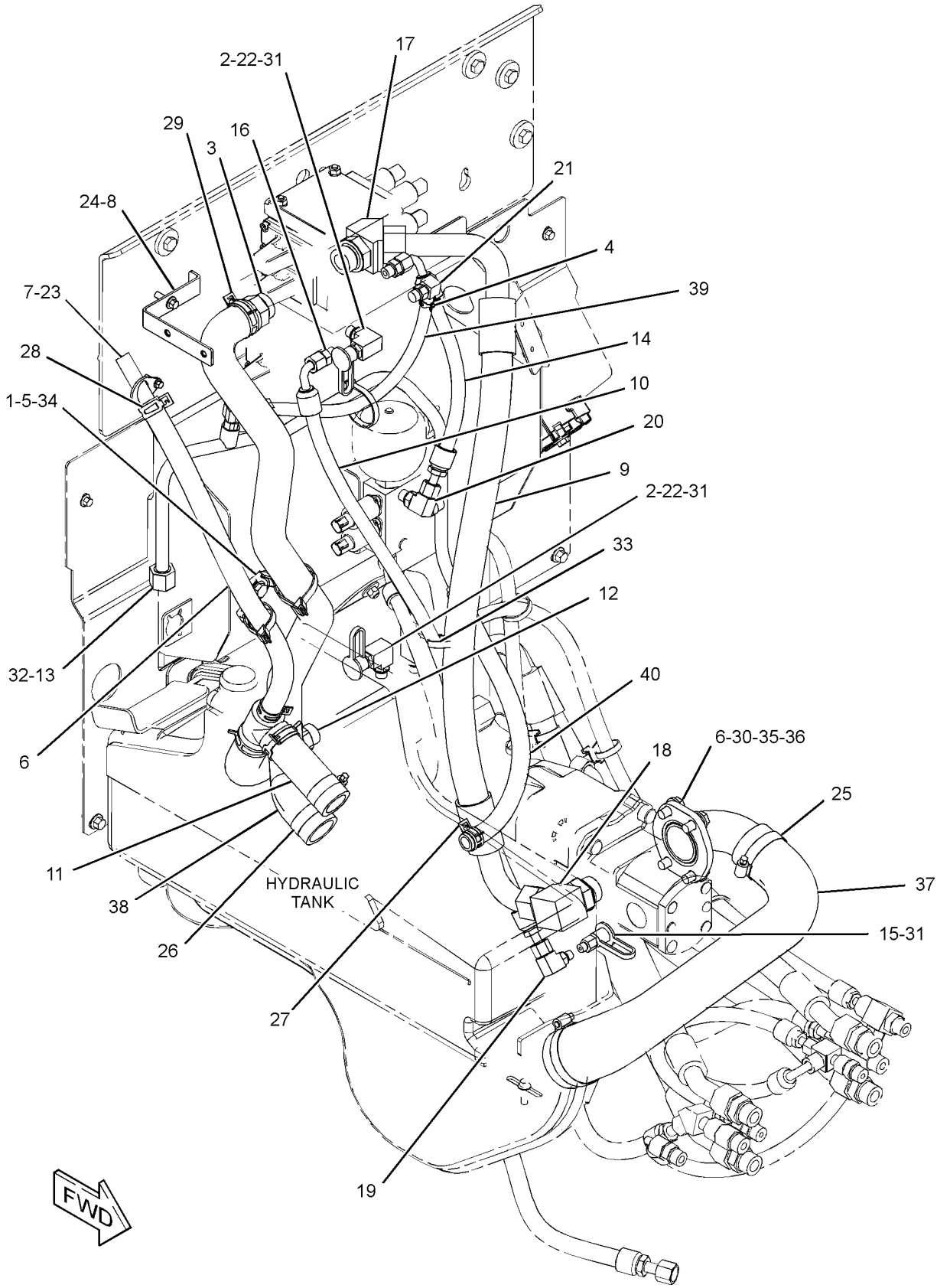

GRAPHIC #1 **<END>** g03324113

345-6414 LINES GP-PUMP–IMPLEMENT

PART OF 345-5219, 345-5225 HYDRAULIC AR
AN ATTACHMENT

SMCS-5057 **i05166847**

NOTE	REF NO	GRAPHIC REF	PART NUMBER	QTY	PART NAME 1 2 3 4 5 6 (PRODUCT LEVEL)	SEE PAGE
	1	1	**9U-6999**	1	FITTING GP-ELBOW	
		1	**7M-8485**	1	SEAL-O-RING	
		1	**034-4202**	1	ELBOW	
	2	1	*164-5562*	1	CONNECTOR AS	
		1	**3J-1907**	1	SEAL-O-RING	
		1	**5P-1046**	1	CONNECTOR	
	3	1	**204-2281**	2	STRAP-CABLE	
	4	1	*241-6215*	1	ELBOW AS	
		1	**3J-1907**	1	SEAL-O-RING	
		1	**6V-8076**	1	ELBOW	
	5	1	**335-6983**	2	CLAMP-BAND	
	6	1	**345-3753**	1	MOUNTING-CABLE TIE	
	7	1	**345-4767**	1	TUBE AS	
	8	1	**345-4792**	1	BRACKET AS	
M		1	**159-9539**	2	NUT-WELD (M6X1-THD)	
I	9	1	**345-6421**	1	HOSE AS	
I	10	1	**345-6458**	1	HOSE AS	
	11	1	**345-6459**	1	HOSE	
	12	1	**345-6460**	1	HOSE	
	13	1	**345-6479**	1	HOSE AS	
I	14	1	**345-6496**	1	HOSE AS	
	15	1	**373-7039**	1	VALVE GP-CHECK (PUMP CASE DRAIN)	
		1	**3D-2824**	1	SEAL-O-RING	
	16	1	*377-9610*	1	ELBOW AS	
		1	**2S-4078**	1	SEAL-O-RING	
		1	**8C-9022**	1	ELBOW	
	17	1	**388-7954**	1	TUBE AS	
	18	1	*148-8336*	1	CONNECTOR AS	
		1	**3J-1907**	1	SEAL-O-RING	
		1	**6V-8397**	1	SEAL-O-RING	
		1	**6V-8636**	1	CONNECTOR	
	19	1	*148-8347*	2	ELBOW AS	
					(EACH INCLUDES)	
		1	**3D-2824**	1	SEAL-O-RING	
		1	**6V-9007**	1	ELBOW	
		1	**6V-9746**	1	SEAL-O-RING	
	20	1	*148-8361*	1	ELBOW AS	
		1	**3J-7354**	1	SEAL-O-RING	
		1	**6V-8397**	1	SEAL-O-RING	
		1	**6V-9200**	1	ELBOW	
	21	1	*148-8378*	2	ELBOW AS	
					(EACH INCLUDES)	
		1	**3J-1907**	1	SEAL-O-RING	
		1	**6V-8397**	1	SEAL-O-RING	
		1	**6V-8724**	1	ELBOW	
	22	1	*150-3024*	1	ELBOW AS	
		1	**3J-1907**	1	SEAL-O-RING	
		1	**5P-4924**	1	ELBOW	
	23	1	*164-5567*	2	COUPLER AS-QUICK DISCONNECT (MALE)	
					(EACH INCLUDES)	
		1	**6V-3965**	1	FITTING (QUICK DISCONNECT)	
		1	**214-7568**	1	SEAL-O-RING	
	24	1	**266-3314**	1	BOLT-FLANGE HEAD (M6X1X20.5-MM)	
M	25	1	**266-3315**	1	BOLT-FLANGE HEAD (M8X1.25X25.5-MM)	
	26	1	**280-8911**	1	CLAMP-BAND	
	27	1	**343-6821**	1	CLAMP-BAND	
	28	1	**347-4163**	3	CLAMP-BAND	
	29	1	**373-7621**	2	CLAMP-BAND	
	30	1	**373-7622**	2	CLAMP-BAND	

345-6414 **LINES GP-PUMP (*contd.*)** **i05166847**

NOTE	REF NO	GRAPHIC REF	PART NUMBER	QTY	PART NAME 1 2 3 4 5 6 (PRODUCT LEVEL)	SEE PAGE
	31	1	**373-7623**	1	CLAMP-BAND	
	32	1	**6V-0852**	2	CAP-DUST	
	33	1	**6V-8398**	1	SEAL-O-RING	
	34	1	**7K-1181**	3	STRAP-CABLE	
M	35	1	**8T-4136**	1	BOLT (M10X1.5X25-MM)	
E	36	1	**5P-1442**		HOSE (23-CM)	
E	37	1	**5P-0743**		HOSE (42-CM)	
E	38	1	**136-1955**		HOSE (57-CM)	

E - ORDER BY THE CENTIMETER
I - REFER TO HYDRAULIC INFORMATION SYSTEM
M - METRIC PART

345-6414 **LINES GP-PUMP (*contd.*)** **i05166847**

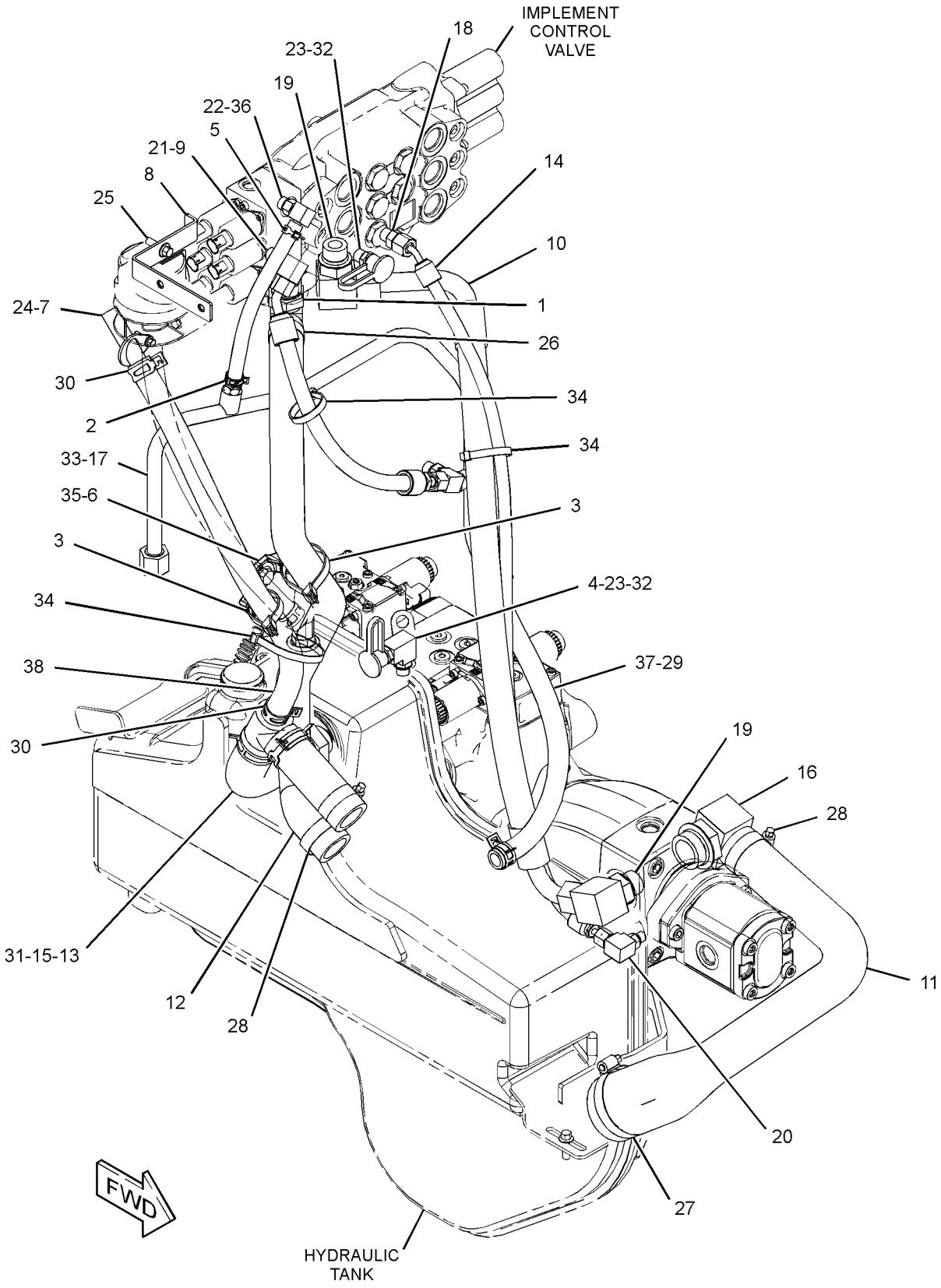

GRAPHIC #1 **<END>** g03359161

345-6451 LINES GP-TILT CYLINDER

PART OF 345-5447 HYDRAULIC AR
AN ATTACHMENT

SMCS-5057, 5104 **i05167538**

NOTE	REF NO	GRAPHIC REF	PART NUMBER	QTY	PART NAME 1 2 3 4 5 6 (PRODUCT LEVEL)	SEE PAGE
	1	1	**6R-3320**	5	COVER	
	2	1	**258-3850**	10	CLAMP-HALF	
M	3	1	**303-8205**	1	BOLT (M8X1.25X60-MM)	
I	4	1	**345-4775**	4	HOSE AS	
	5	1	**345-4798**	1	BRACKET	
	6	1	**345-5754**	1	BRACKET AS	
		1	**239-8534**	1	PLATE-WELD	
I	7	1	**345-6468**	1	HOSE AS	
I	8	1	**345-6469**	1	HOSE AS	
	9	1	*377-9543*	2	TEE AS	
					(EACH INCLUDES)	
		1	**6V-8398**	2	SEAL-O-RING	
		1	**7J-9108**	1	SEAL-O-RING	
		1	**148-6757**	1	TEE-UNION	
	10	1	*148-8315*	1	CONNECTOR AS	
		1	**2M-9780**	1	SEAL-O-RING	
		1	**6V-8642**	1	CONNECTOR	
		1	**7J-9108**	1	SEAL-O-RING	
	11	1	*148-8390*	1	ELBOW AS	
		1	**2M-9780**	1	SEAL-O-RING	
		1	**6V-8626**	1	ELBOW	
		1	**7J-9108**	1	SEAL-O-RING	
	12	1	*148-8393*	1	ELBOW AS	
		1	**6V-9852**	1	ELBOW	
		1	**7J-9108**	1	SEAL-O-RING	
M	13	1	**266-3315**	2	BOLT-FLANGE HEAD (M8X1.25X25.5-MM)	
	14	1	**266-3316**	2	BOLT-FLANGE HEAD (M10X1.5X25-MM)	
	15	1	**6V-9169**	2	NUT (13/16-16-THD)	
M	16	1	**8T-6912**	4	BOLT (M8X1.25X50-MM)	

I - REFER TO HYDRAULIC INFORMATION SYSTEM
M - METRIC PART

345-6451 **LINES GP-TILT CYLINDER (*contd.*)** **i05167538**

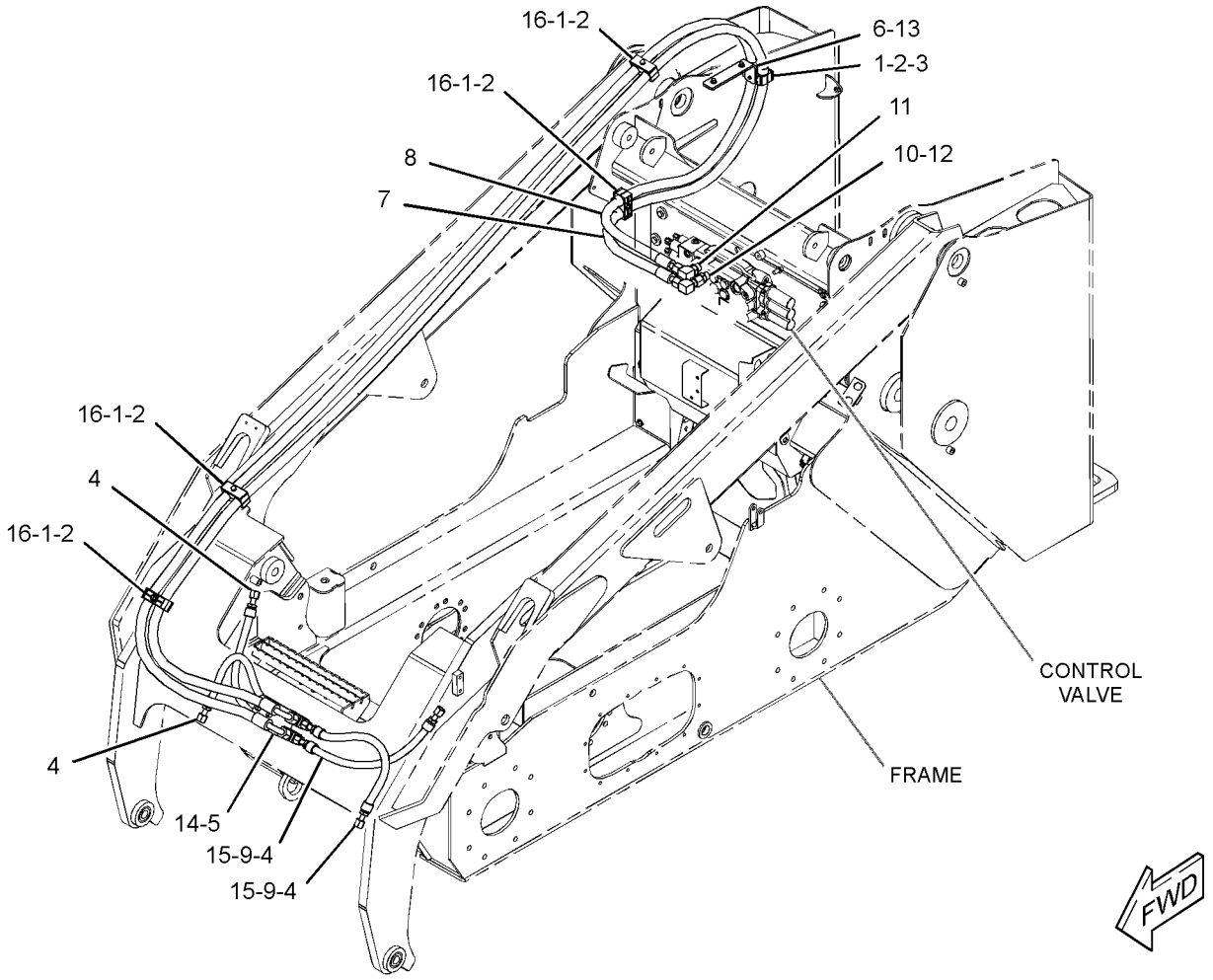

GRAPHIC #1 **<END>** g03323718

345-6455 LINES GP-TILT CYLINDER

PART OF 345-5219, 345-5225 HYDRAULIC AR
AN ATTACHMENT

SMCS-5057, 5104 **i05166848**

NOTE	REF NO	GRAPHIC REF	PART NUMBER	QTY	PART NAME 1 2 3 4 5 6 (PRODUCT LEVEL)	SEE PAGE
	1	1	**4V-0612**	5	PLATE	
	2	1	*106-8715*	1	ELBOW AS	
		1	**3D-2824**	1	SEAL-O-RING	
		1	**6V-9746**	1	SEAL-O-RING	
		1	**8C-8400**	1	ELBOW	
	3	1	**154-6583**	10	CLAMP-HALF	
I	4	1	**345-4775**	4	HOSE AS	
	5	1	**345-4798**	1	BRACKET	
	6	1	**345-5754**	1	BRACKET AS	
	7	1	**345-6486**	1	HOSE AS	
	8	1	**345-6487**	1	HOSE AS	
	9	1	*377-9543*	2	TEE AS	
					(EACH INCLUDES)	
		1	**6V-8398**	2	SEAL-O-RING	
		1	**7J-9108**	1	SEAL-O-RING	
		1	**148-6757**	1	TEE-UNION	
	10	1	*148-8347*	1	ELBOW AS	
		1	**3D-2824**	1	SEAL-O-RING	
		1	**6V-9007**	1	ELBOW	
		1	**6V-9746**	1	SEAL-O-RING	
M	11	1	**266-3315**	2	BOLT-FLANGE HEAD (M8X1.25X25.5-MM)	
	12	1	**266-3316**	2	BOLT-FLANGE HEAD (M10X1.5X25-MM)	
	13	1	**6V-9169**	2	NUT (13/16-16-THD)	
M	14	1	**8T-6912**	5	BOLT (M8X1.25X50-MM)	

I - REFER TO HYDRAULIC INFORMATION SYSTEM
M - METRIC PART

345-6455 **LINES GP-TILT CYLINDER (*contd.*)** **i05166848**

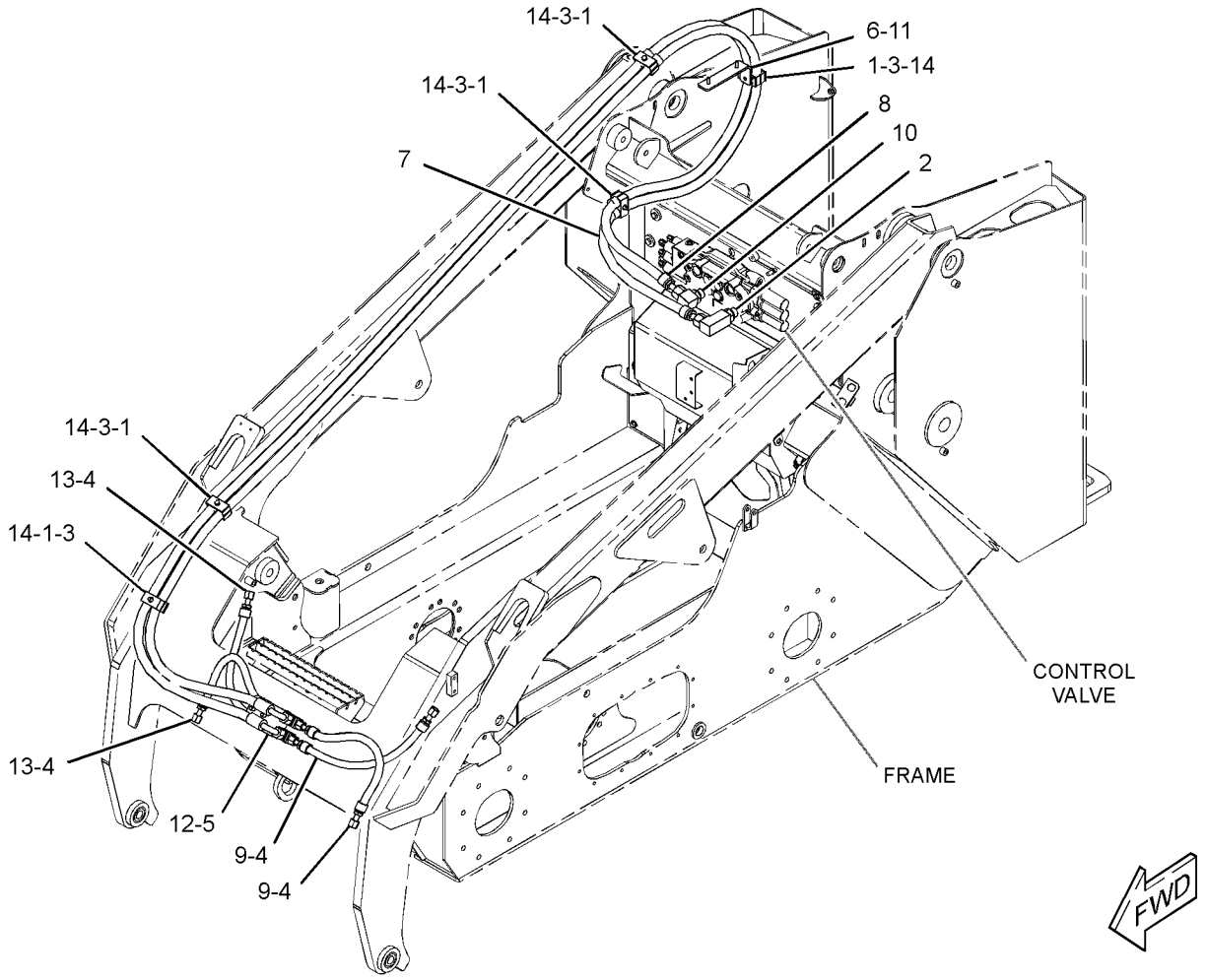

GRAPHIC #1 **<END>** g03323657

231-5278 MANIFOLD & MTG GP-CONTROL–ANGLING BLADE

PART OF 424-0450, 424-0451 BLADE AR
AN ATTACHMENT

SMCS-5264 **i02337085**

NOTE	REF NO	GRAPHIC REF	PART NUMBER	QTY	PART NAME 1 2 3 4 5 6 (PRODUCT LEVEL)	SEE PAGE
Y	1	1	**258-9011**	1	MANIFOLD GP-CONTROL (ANGLING BLADE)	265
	2	1	**231-5279**	1	COVER	
	3	1	**5P-4116**	3	WASHER-HARD (8.8X20.5X2-MM THK)	
M	4	1	**8T-4189**	2	BOLT (M8X1.25X20-MM)	
M	5	1	**8T-4200**	3	BOLT (M8X1.25X16-MM)	
	6	1	**8T-4224**	2	WASHER-HARD (8.8X16X2-MM THK)	

M - METRIC PART
Y - SEPARATE ILLUSTRATION

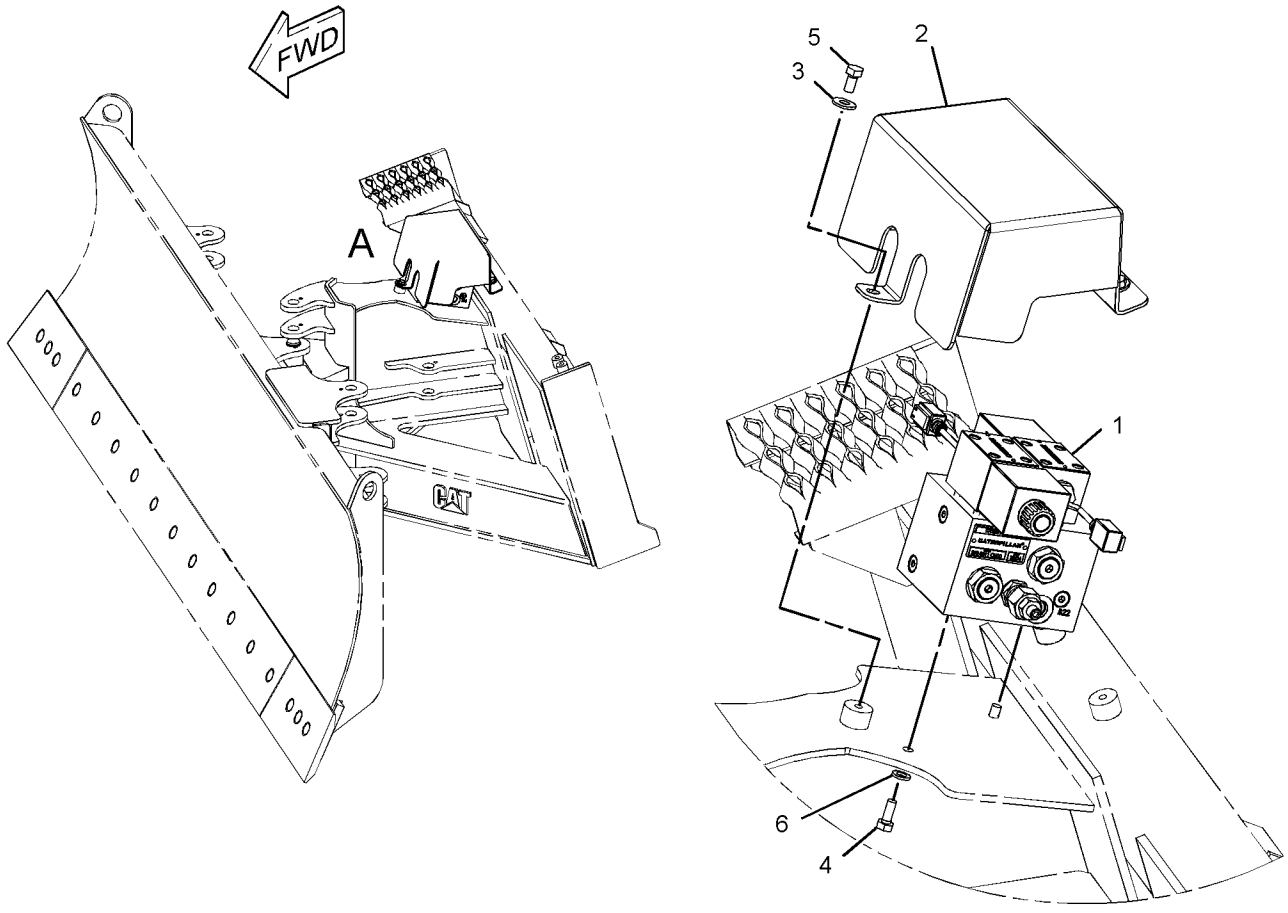

VIEW OF AREA A

GRAPHIC #1 **<END>** g01167422

258-9011 MANIFOLD GP-CONTROL—ANGLING BLADE

PART OF 231-5278 MANIFOLD & MTG GP-CONTROL

AN ATTACHMENT

SMCS-5117, 5264, 5479 **i04280581**

NOTE	REF NO	GRAPHIC REF	PART NUMBER	QTY	PART NAME 1 2 3 4 5 6 (PRODUCT LEVEL)	SEE PAGE
M	1	1	**9X-6615**	8	BOLT (M5X0.8X30-MM)	
	2	1	**243-5601**	7	PLUG	
J	3	1	**244-1363**	1	VALVE GP-SOLENOID (12-VOLT) (ANGLE)	
		1	**227-7025**	1	SOLENOID AS (SWING BOOM, WORK TOOL)	
		1	**215-3273**	1	CARTRIDGE AS-VALVE	
		1	**6V-8399**	1	SEAL-O-RING	
		1	**215-3274**	1	SEAL & RETAINER AS	
		1	**217-3875**	1	SEAL-O-RING	
		1	**212-4114**	1	SEAL-O-RING	
J	4	1	**244-1364**	1	VALVE GP-SOLENOID (12-VOLT) (TILT)	
		1	**227-7025**	1	SOLENOID AS (SWING BOOM, WORK TOOL)	
		1	**215-3273**	1	CARTRIDGE AS-VALVE	
		1	**6V-8399**	1	SEAL-O-RING	
		1	**215-3274**	1	SEAL & RETAINER AS	
		1	**217-3875**	1	SEAL-O-RING	
		1	**212-4114**	1	SEAL-O-RING	
	5	1	**244-1365**	2	VALVE GP-RELIEF (SWING BOOM, WORK TOOL)	
					(EACH INCLUDES)	
		1	**192-7508**	1	SEAL-O-RING	
	6	1	**266-8903**	4	VALVE GP-CHECK	
					(EACH INCLUDES)	
		1	**2M-9780**	1	SEAL-O-RING	
		1	**7J-9108**	1	SEAL-O-RING	
	7	1	**180-7451**	8	WASHER-HARD (5.3X8.8X2-MM THK)	
					AVAILABLE REPAIR KIT(S):	
J			**215-3275**	1	KIT-SEAL	
					(INLCUDES O-RING SEALS)	

J - KIT MARKED J SERVICES PARTS MARKED J
M - METRIC PART

258-9011 **MANIFOLD GP-CONTROL (*contd.*)** **i04280581**

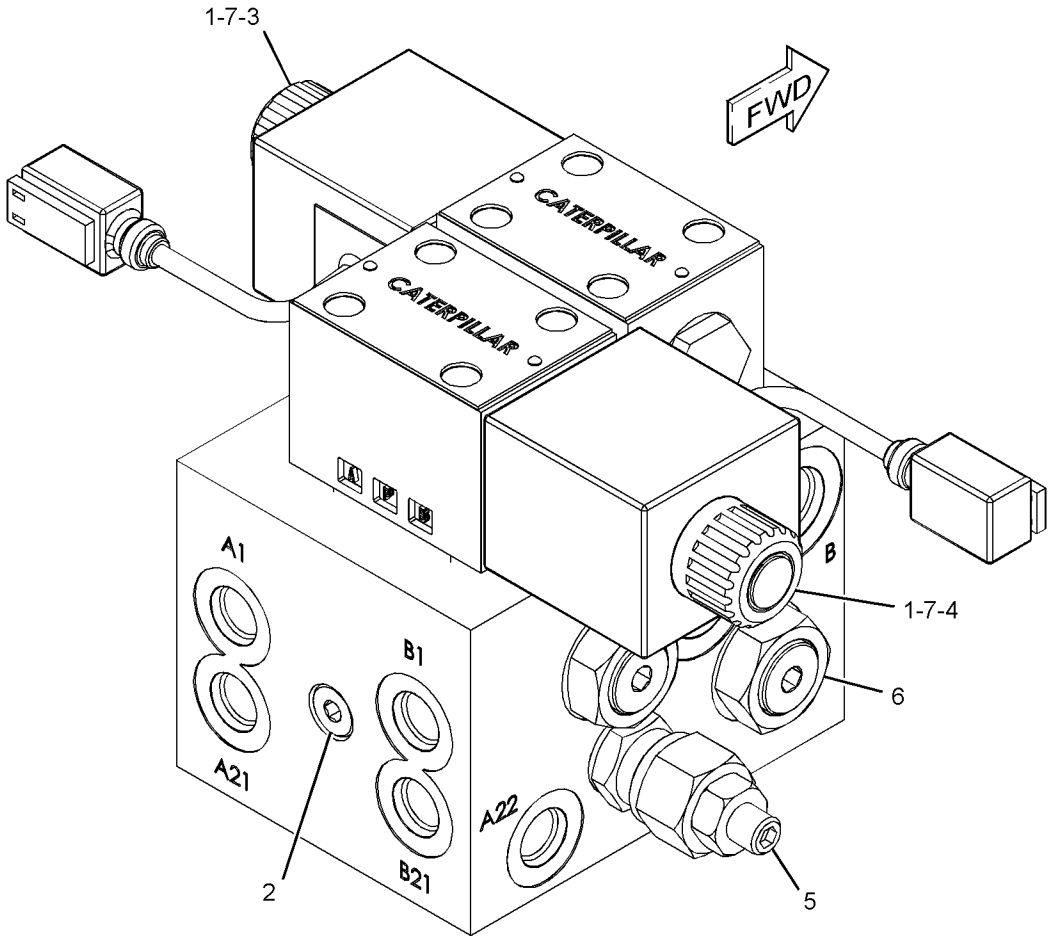

GRAPHIC #1 **<END>** g01178679

359-7222 MANIFOLD GP-CONTROL–MOTOR, 2-SPEED

PART OF 345-6591 LINES GP-HYDROSTATIC

AN ATTACHMENT

SMCS-5117, 5264, 5479 **i04762484**

NOTE	REF NO	GRAPHIC REF	PART NUMBER	QTY	PART NAME 1 2 3 4 5 6 (PRODUCT LEVEL)	SEE PAGE
	1	1	**362-3212**	2	VALVE GP-SOLENOID (12 VDC) (SPEED)	
M	2	1	**095-0641**	4	BOLT-SOCKET HEAD (M4X0.7X10-MM)	

M - METRIC PART

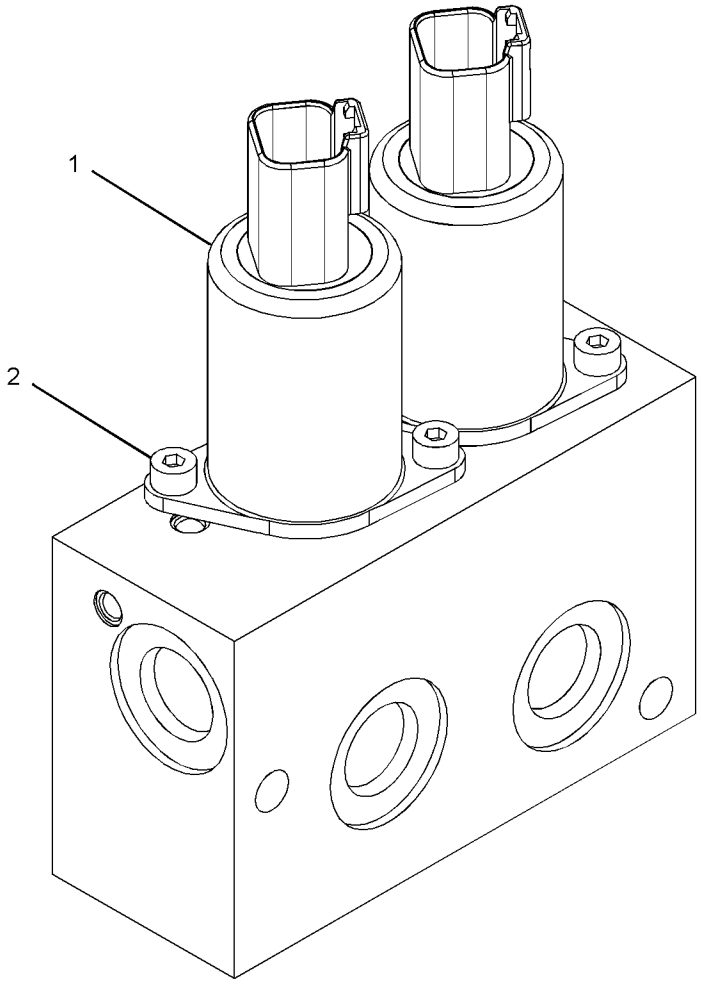

GRAPHIC #1 **<END>** g02877322

345-4755 MANIFOLD GP-RIDE CONTROL–RIDE

PART OF 388-8272 KIT-RIDE CONTROL, 345-6499 LINES GP-HYDRAULIC
AN ATTACHMENT

SMCS-5264 **i04762444**

NOTE	REF NO	GRAPHIC REF	PART NUMBER	QTY	PART NAME 1 2 3 4 5 6 (PRODUCT LEVEL)	SEE PAGE
	1	1	**238-4628**	3	COIL AS (12-VOLT)	
	2	1	**359-7229**	1	VALVE GP-CONTROL	
	3	1	**359-7230**	2	VALVE GP-CONTROL	
	4	1	**359-7231**	3	KIT-SEAL (RIDE CONTROL)	
					(EACH INCLUDES O-RING SEALS)	

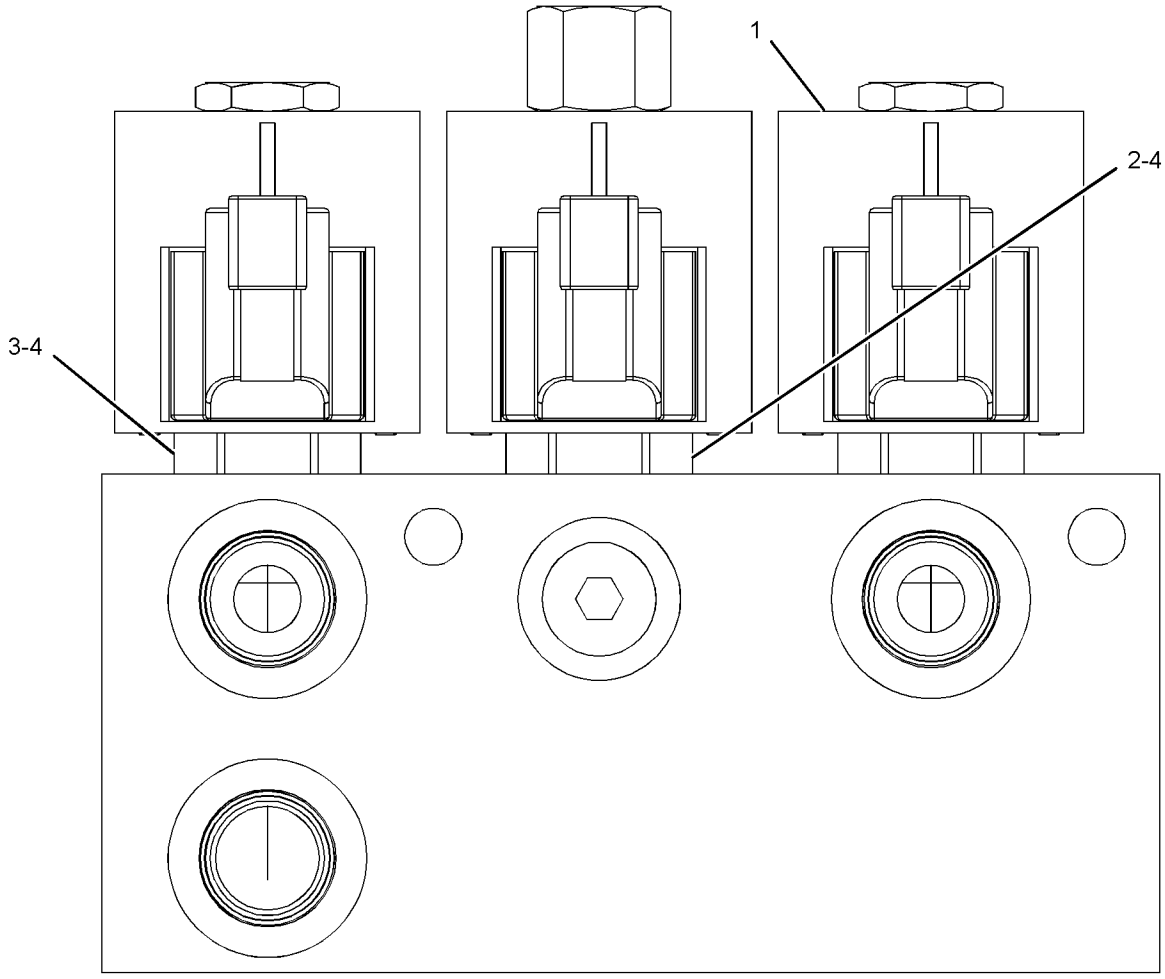

GRAPHIC #1 **<END>** g02875117

258-2579 MOTOR & MTG GP-HYDRAULIC FAN

PART OF 345-5248 HYDRAULIC AR

SMCS-1386 **i05282532**

NOTE	REF NO	GRAPHIC REF	PART NUMBER	QTY	PART NAME 1 2 3 4 5 6 (PRODUCT LEVEL)	SEE PAGE
J	1	1	**258-2577**	1	MOTOR GP-GEAR (FAN, DEMAND)	
M		1	**8T-0271**	2	BOLT-SOCKET HEAD (M10X1.5X35-MM)	
M		1	**9T-4884**	2	BOLT (M10X1.5X30-MM)	
	2	1	**277-8862**	1	VALVE GP-SOLENOID (REAR AXLE FAN UNLOADER)	
		1	**238-4628**	1	COIL AS (12-VOLT) (12-VOLT)	
	3	1	**8T-4121**	2	WASHER-HARD (11X21X2.5-MM THK)	
	4	1	**8T-4224**	1	WASHER-HARD (8.8X16X2-MM THK)	
M	5	1	**8T-7547**	1	BOLT (M8X1.25X30-MM)	
M	6	1	**9X-6032**	2	BOLT-SOCKET HEAD (M10X1.5X30-MM)	
					AVAILABLE REPAIR KIT(S):	
J			**278-8716**	1	KIT-SEAL	
					(INCLUDES E-SEALS, O-RINGS, SHAFT SEAL, SNAP RING, BACKUP SEALS, AXIAL SEAL KIT & SEALS)	

J - KIT MARKED J SERVICES PARTS MARKED J
M - METRIC PART

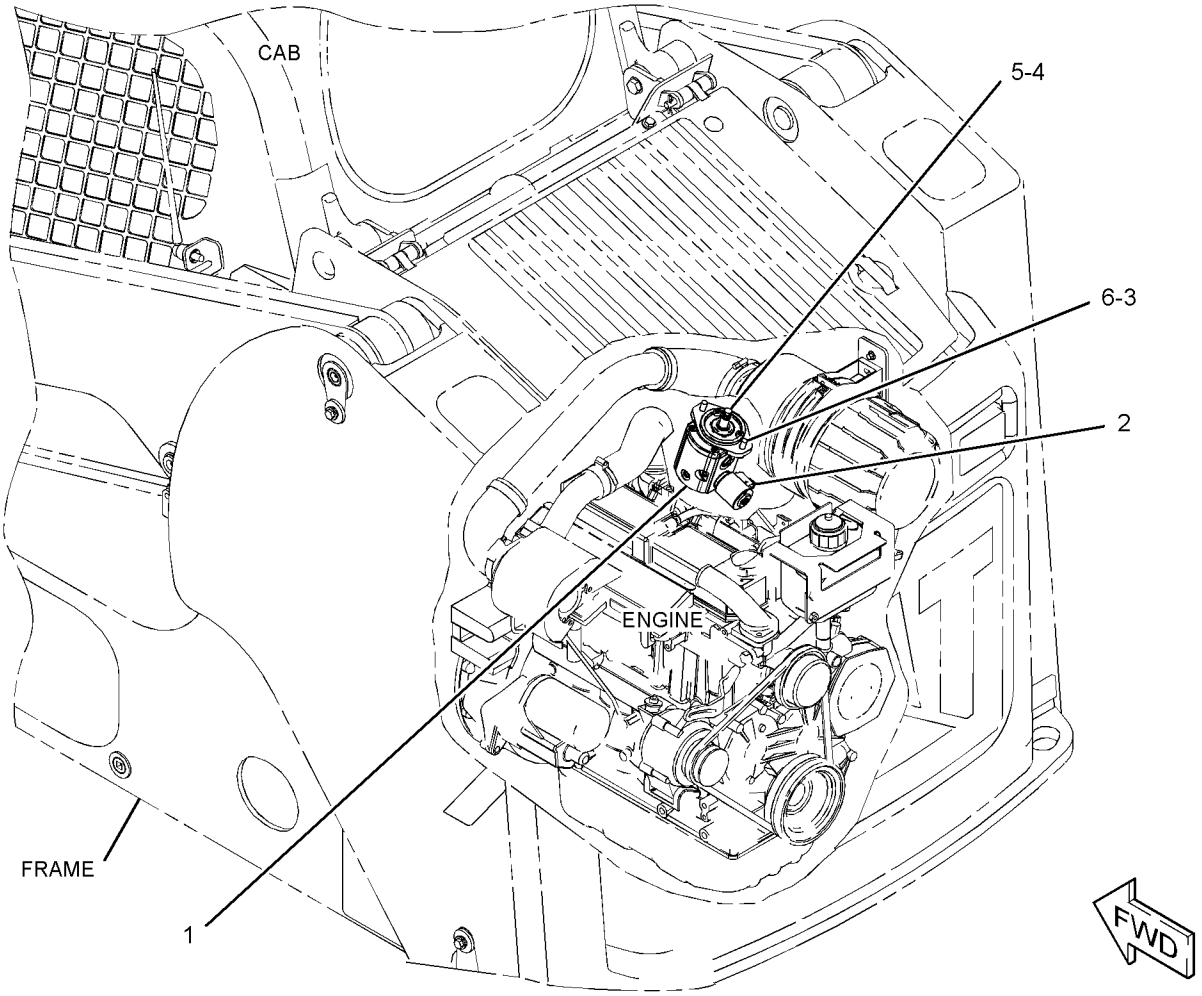

GRAPHIC #1 **<END>** g01315096

154-5011 MOUNTING GP-CYLINDER

PART OF 423-4291, 426-6492, 426-6537, 426-6549, 426-6559, 426-6933, 426-6940, 426-6947, 426-6970, 426-6992 BUCKET AR-MULTIPURPOSE
AN ATTACHMENT

SMCS-5498 **i01066088**

NOTE	REF NO	GRAPHIC REF	PART NUMBER	QTY	PART NAME 1 2 3 4 5 6 (PRODUCT LEVEL)	SEE PAGE
	1	1	**154-5012**	2	PIN	
	2	1	**154-5013**	2	PIN	
	3	1	**3B-8489**	2	FITTING-GREASE	
M	4	1	**6V-9189**	4	LOCKNUT (M8X1.25-THD)	
M	5	1	**8T-6869**	4	BOLT (M8X1.25X60-MM)	

M - METRIC PART

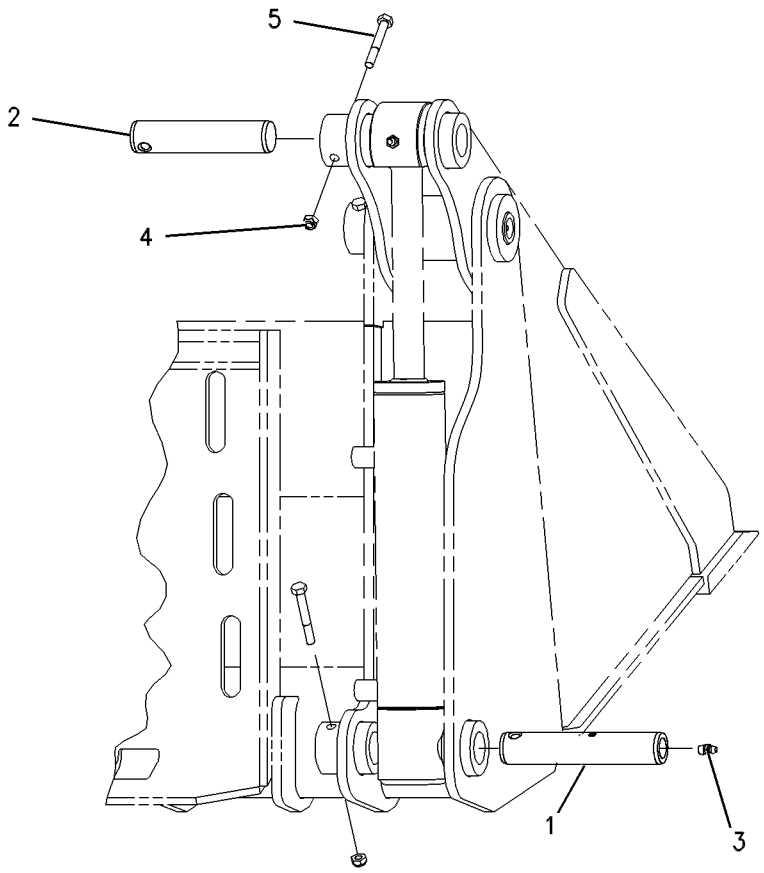

GRAPHIC #1 **<END>** g00560356

378-2853 PUMP & MTG GP-HYDRAULIC

PART OF 345-5219, 345-5225 HYDRAULIC AR
AN ATTACHMENT

SMCS-1387, 4324, 5055, 5070, 5073, 5084 **i05166865**

NOTE	REF NO	GRAPHIC REF	PART NUMBER	QTY	PART NAME 1 2 3 4 5 6 (PRODUCT LEVEL)	SEE PAGE
Y	1	1	**358-5010**	1	PUMP GP-GEAR (IMPLEMENT CHARGE)	273
	2	1	**8T-4223**	2	WASHER-HARD (13.5X25.5X3-MM THK)	
M	3	1	**8T-4956**	2	BOLT (M12X1.75X35-MM)	
	4	1	**8T-5049**	1	SEAL-O-RING	

M - METRIC PART
Y - SEPARATE ILLUSTRATION

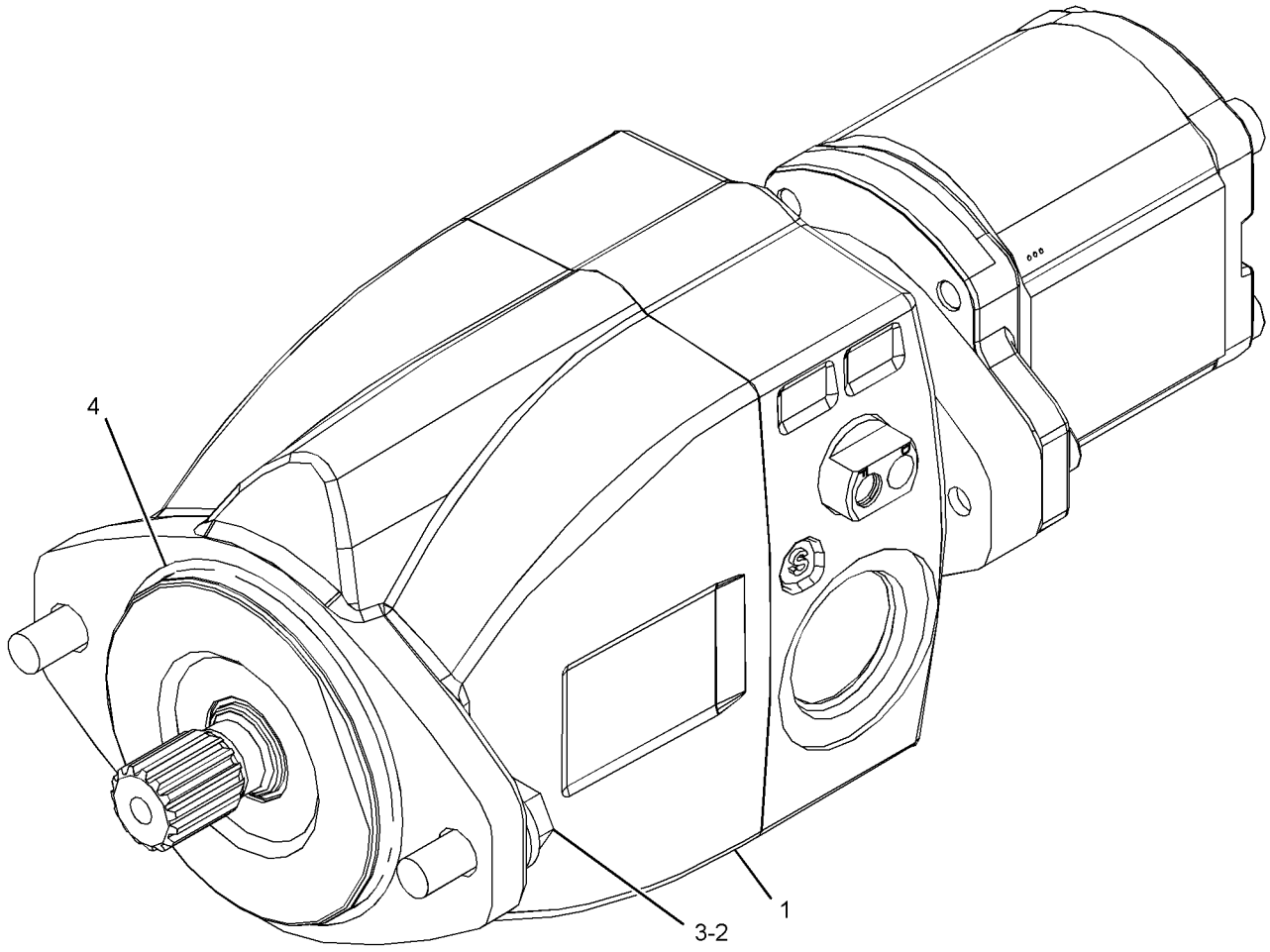

GRAPHIC #1 **<END>** g03323644

358-4977 PUMP & MTG GP-WORK TOOL

PART OF 345-5447 HYDRAULIC AR
AN ATTACHMENT

SMCS-6700 **i04758992**

NOTE	REF NO	GRAPHIC REF	PART NUMBER	QTY	PART NAME 1 2 3 4 5 6 (PRODUCT LEVEL)	SEE PAGE
	1	1	**341-7635**	1	PUMP GP-PISTON (WORK TOOL)	
	2	1	**8T-4223**	2	WASHER-HARD (13.5X25.5X3-MM THK)	
M	3	1	**8T-4956**	2	BOLT (M12X1.75X35-MM)	
	4	1	**8T-5049**	1	SEAL-O-RING	

M - METRIC PART

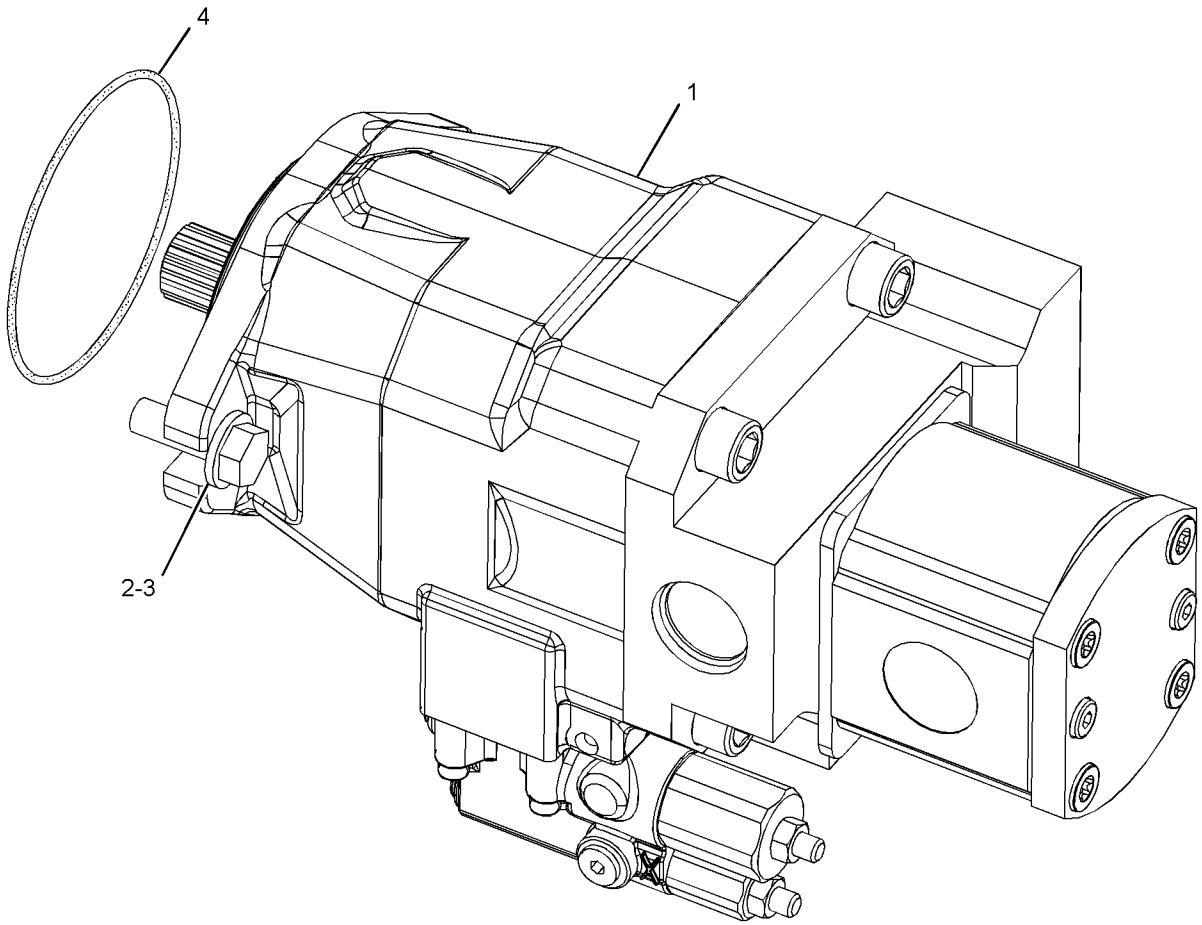

GRAPHIC #1 **<END>** g02873056

358-5010 PUMP GP-GEAR

PART OF 378-2853 PUMP & MTG GP-HYDRAULIC

AN ATTACHMENT

SMCS-5073 **i05166862**

NOTE	REF NO	GRAPHIC REF	PART NUMBER	QTY	PART NAME 1 2 3 4 5 6 (PRODUCT LEVEL)	SEE PAGE
					(NO BREAKDOWN OF SERVICEABLE PARTS AVAILABLE AT TIME OF PUBLICATION)	

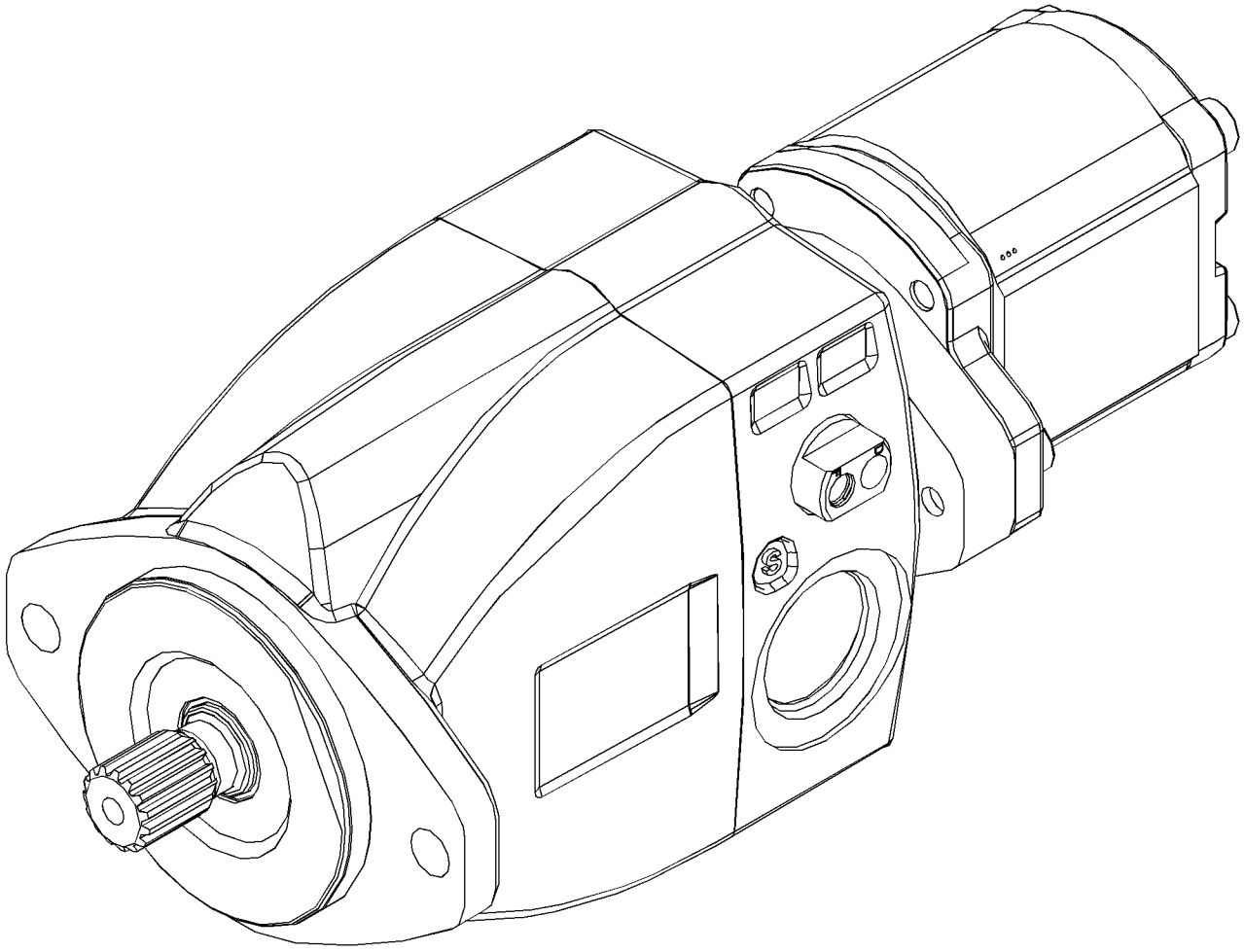

GRAPHIC #1 **<END>** g03323641

397-9558 TANK & MTG GP-HYDRAULIC

PART OF 345-5248 HYDRAULIC AR

SMCS-5056 **i05162944**

NOTE	REF NO	GRAPHIC REF	PART NUMBER	QTY	PART NAME 1 2 3 4 5 6 (PRODUCT LEVEL)	SEE PAGE
I	1	1	**345-4585**	1	HOSE AS	
	2	1	**345-4791**	1	ADAPTER	
	3	1	**142-8937**	1	CAP AS-FILLER (HYDRAULIC TANK)	
	4	1	*250-1482*	1	CONNECTOR AS	
		1	**3K-0360**	1	SEAL-O-RING	
		1	**5P-9615**	1	CONNECTOR	
	5	1	**258-2829**	1	BREATHER (HYDRAULIC TANK)	
	6	1	**262-5689**	1	STRAINER AS (HYDRAULIC TANK)	
		1	**135-7940**	1	SEAL-O-RING	
	7	1	**264-4297**	1	SENSOR AS-TEMPERATURE (HYDRAULIC OIL)	
		1	**137-6645**	1	PAD-CONNECTOR	
	8	1	**345-4581**	1	TANK GP-HYDRAULIC	
		1	**345-4583**	1	GAUGE-SIGHT (HYDRAULIC TANK)	
	9	1	**345-4589**	1	INSULATION	
	10	1	**345-4981**	1	BRACKET AS	
	11	1	*148-8340*	1	CONNECTOR AS	
		1	**3K-0360**	1	SEAL-O-RING	
		1	**6V-8398**	1	SEAL-O-RING	
		1	**6V-8639**	1	CONNECTOR	
M	12	1	**266-3315**	2	BOLT-FLANGE HEAD (M8X1.25X25.5-MM)	
	13	1	**373-7621**	2	CLAMP-BAND	
	14	1	**3K-0360**	1	SEAL-O-RING	
M	15	1	**7X-2534**	2	BOLT (M6X1X50-MM)	
	16	1	**8T-4205**	2	WASHER-HARD (7.2X14.5X2-MM THK)	
E	17	1	**5P-0743**		HOSE (41-CM)	

E - ORDER BY THE CENTIMETER
I - REFER TO HYDRAULIC INFORMATION SYSTEM
M - METRIC PART

397-9558 **TANK & MTG GP-HYDRAULIC (*contd.*)** **i05162944**

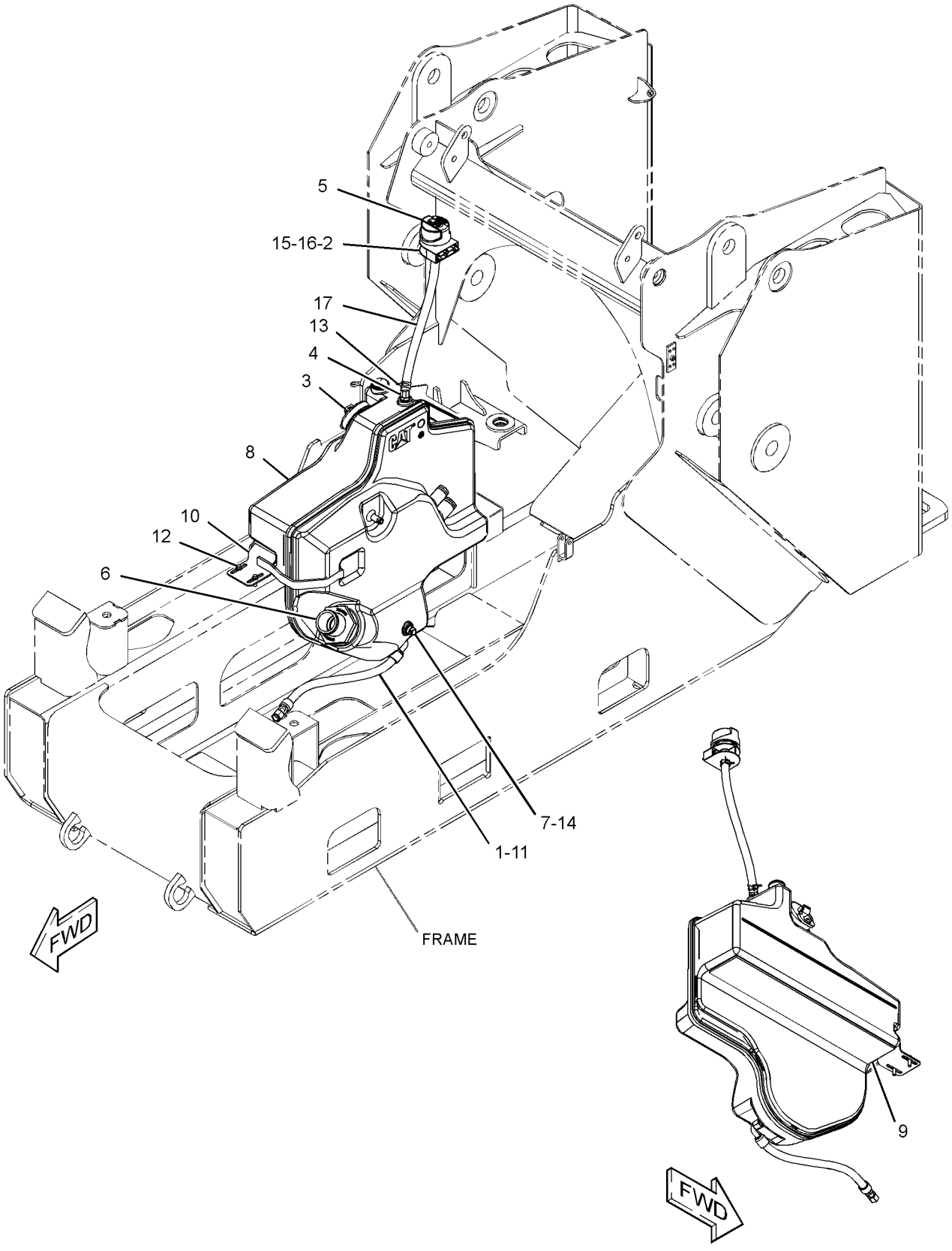

GRAPHIC #1 **<END>** g03320315

373-7031 VALVE & MTG GP-CONTROL–IMPLEMENT

PART OF 345-5447 HYDRAULIC AR
AN ATTACHMENT

SMCS-5051 **i05167539**

NOTE	REF NO	GRAPHIC REF	PART NUMBER	QTY	PART NAME 1 2 3 4 5 6 (PRODUCT LEVEL)	SEE PAGE
	1	1	**373-6958**	1	VALVE GP-BANK 3 (IMPLEMENT)	
M	2	1	**8T-4136**	3	BOLT (M10X1.5X25-MM)	
	3	1	**8T-7934**	3	WASHER-HARD (11X21X5-MM THK)	

M - METRIC PART

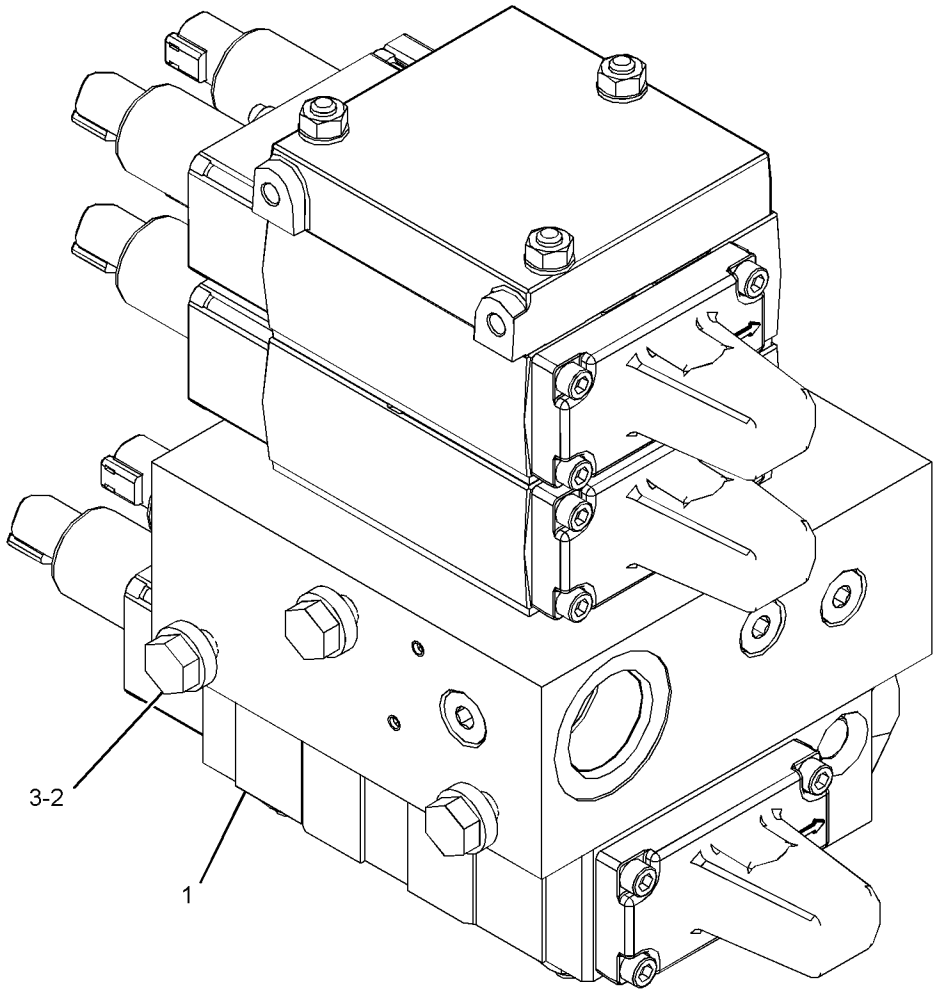

GRAPHIC #1 **<END>** g03323715

373-7035 VALVE & MTG GP-CONTROL–IMPLEMENT

PART OF 345-5219, 345-5225 HYDRAULIC AR
AN ATTACHMENT

SMCS-5051 **i05166863**

NOTE	REF NO	GRAPHIC REF	PART NUMBER	QTY	PART NAME 1 2 3 4 5 6 (PRODUCT LEVEL)	SEE PAGE
	1	1	**373-6956**	1	VALVE GP-CONTROL	
	2	1	**208-9281**	1	BOLT-FLANGE HEAD (M8X1.25X20-MM)	
	3	1	**3E-4352**	2	WASHER-HARD (8.8X20.5X2.5-MM THK)	
M	4	1	**8T-6869**	2	BOLT (M8X1.25X60-MM)	

M - METRIC PART

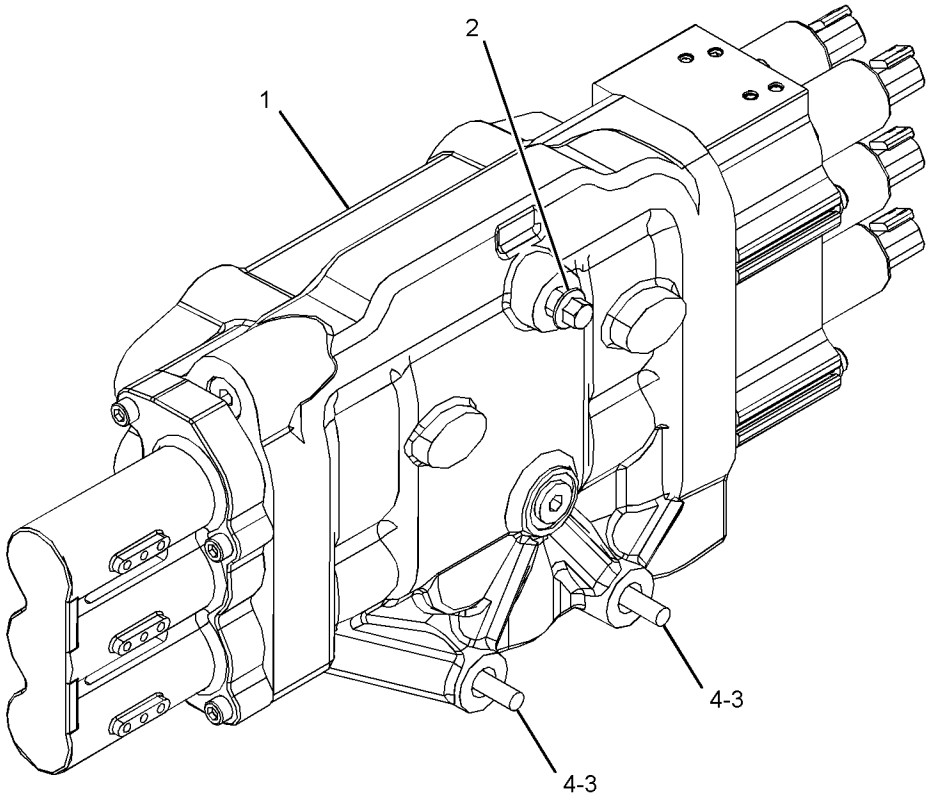

GRAPHIC #1 **<END>** g03337270

345-5199 PIN GP-LIFT ARM—WITH SUPPORT

PART OF 345-5247 CHASSIS AR

SMCS-6119, 7507 **i05325116**

NOTE	REF NO	GRAPHIC REF	PART NUMBER	QTY	PART NAME 1 2 3 4 5 6 (PRODUCT LEVEL)	SEE PAGE
	1	1	**142-8832**	1	PIN AS	
	2	1	**142-8833**	2	SPACER (11X14.3X9-MM THK)	
	3	1	**142-9091**	2	PIN AS	
	4	1	**258-2679**	2	PIN AS	
	5	1	**258-3451**	2	PIN	
	6	1	**3S-8536**	2	SPACER (0.406X0.656X0.38-IN THK)	
	7	1	**422-3195**	1	SUPPORT AS	
		1	**5H-3182**	1	PIN-SPRING	
	8	1	**345-5792**	2	PIN AS	
	9	1	**8T-5439**	4	WASHER-HARD (21.5X45X6-MM THK)	
	10	1	**345-6511**	2	PIN AS	
	11	1	**1H-8134**	4	RING-RETAINING (EXTERNAL)	
	12	1	**3B-8489**	8	FITTING-GREASE	
	13	1	**5B-0651**	4	FITTING-STRAIGHT	
	14	1	**5H-9743**	1	GROMMET	
	15	1	**6N-8863**	6	WASHER (10.2X32X2.5-MM THK)	
	16	1	**7X-7729**	4	WASHER (11X25X3-MM THK)	
M	17	1	**8T-4136**	2	BOLT (M10X1.5X25-MM)	
M	18	1	**8T-4191**	8	BOLT (M10X1.5X16-MM)	

M - METRIC PART

345-5199 **PIN GP-LIFT ARM (*contd.*)** **i05325116**

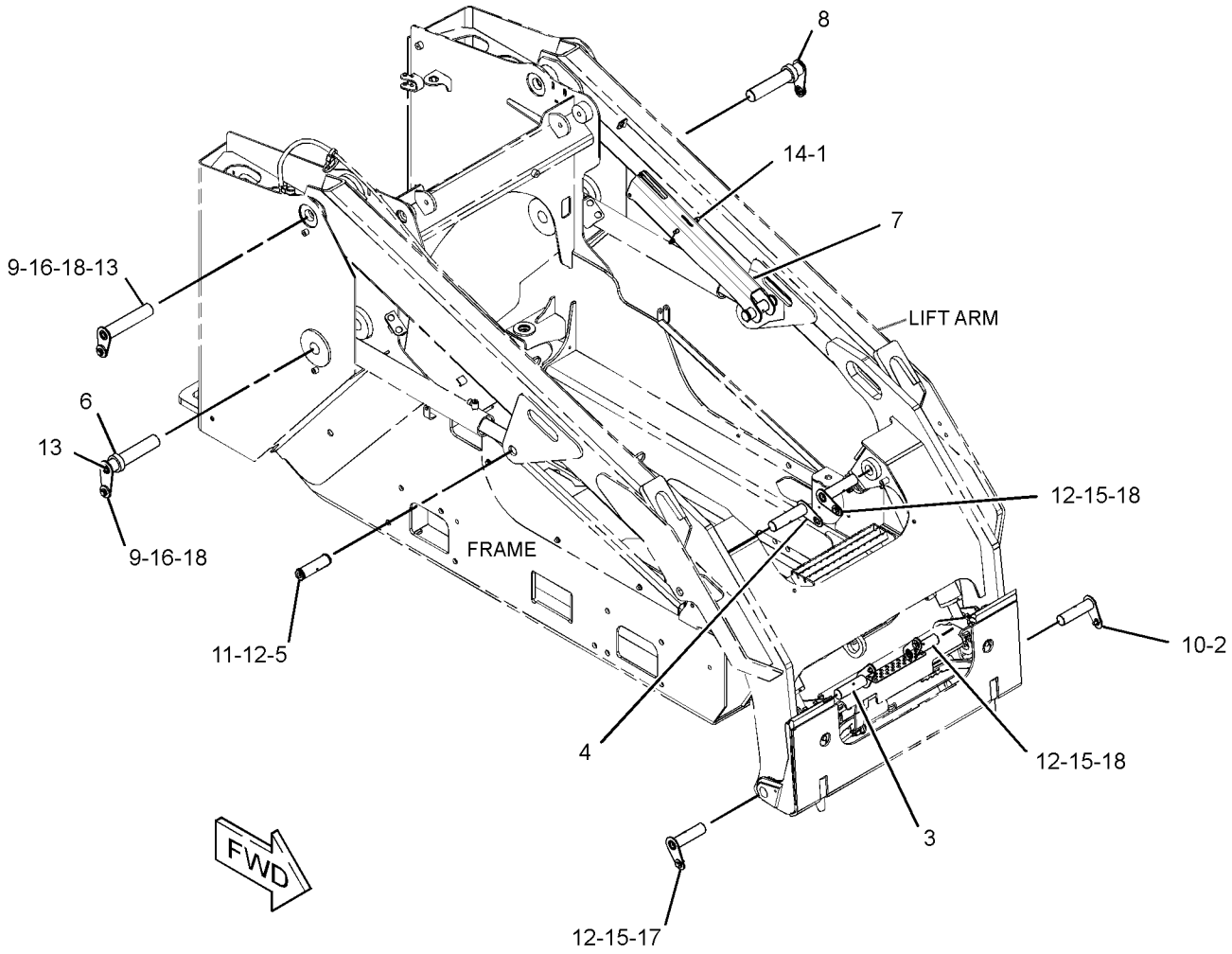

GRAPHIC #1 **<END>** g03320318

424-0450 BLADE AR–ANGLING

AN ATTACHMENT

SMCS-6060, 6701 **i05292892**

NOTE	REF NO	GRAPHIC REF	PART NUMBER	QTY	PART NAME 1 2 3 4 5 6 (PRODUCT LEVEL)	SEE PAGE
	1	1	**7K-1181**	3	STRAP-CABLE	
Y	2	1	*231-5273*	1	LINES GP-CONNECTING	241
Y	3	1	*231-5274*	1	CYLINDER & MTG GP-ANGLE BLADE	209
Y	4	1	*231-5276*	1	BLADE GP-ANGLING	285
Y	5	1	*231-5278*	1	MANIFOLD & MTG GP-CONTROL (ANGLING BLADE)	264
Y	6	1	*247-0678*	1	PLATE & FILM GP	466
Y	7	1	**378-3722**	1	HARNESS AS-WORK TOOL	113

Y - SEPARATE ILLUSTRATION

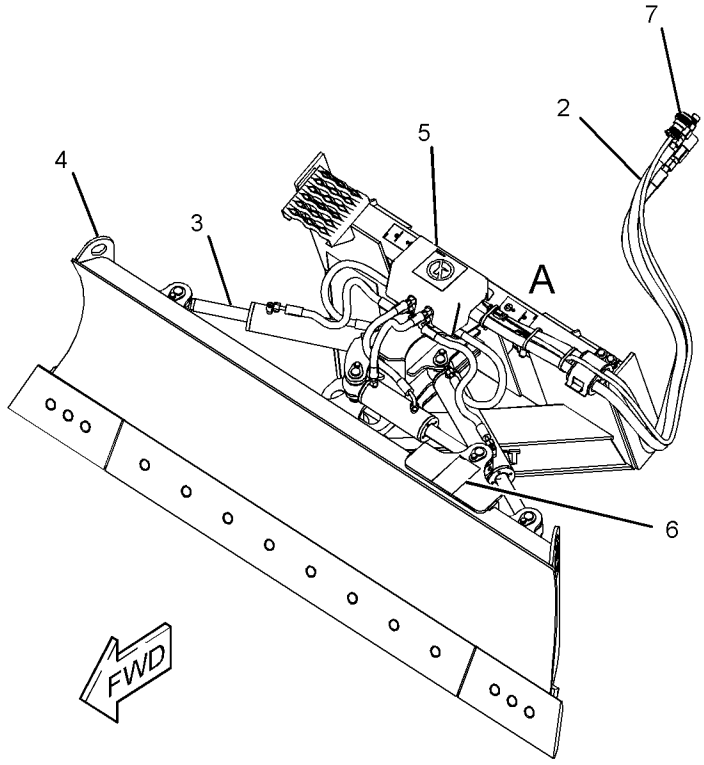

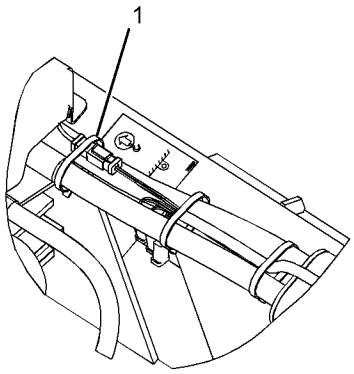

VIEW OF AREA A

GRAPHIC #1 **<END>** g03363910

424-0451 BLADE AR–ANGLING
AN ATTACHMENT

SMCS-6060, 6701 **i05292891**

NOTE	REF NO	GRAPHIC REF	PART NUMBER	QTY	PART NAME 1 2 3 4 5 6 (PRODUCT LEVEL)	SEE PAGE
	1	1	**7K-1181**	3	STRAP-CABLE	
Y	2	1	*222-7724*	1	BLADE GP-ANGLING	284
Y	3	1	*231-5273*	1	LINES GP-CONNECTING	241
Y	4	1	*231-5274*	1	CYLINDER & MTG GP-ANGLE BLADE	209
Y	5	1	*231-5278*	1	MANIFOLD & MTG GP-CONTROL (ANGLING BLADE)	264
Y	6	1	*247-0678*	1	PLATE & FILM GP	466
Y	7	1	**378-3722**	1	HARNESS AS-WORK TOOL	113

Y - SEPARATE ILLUSTRATION

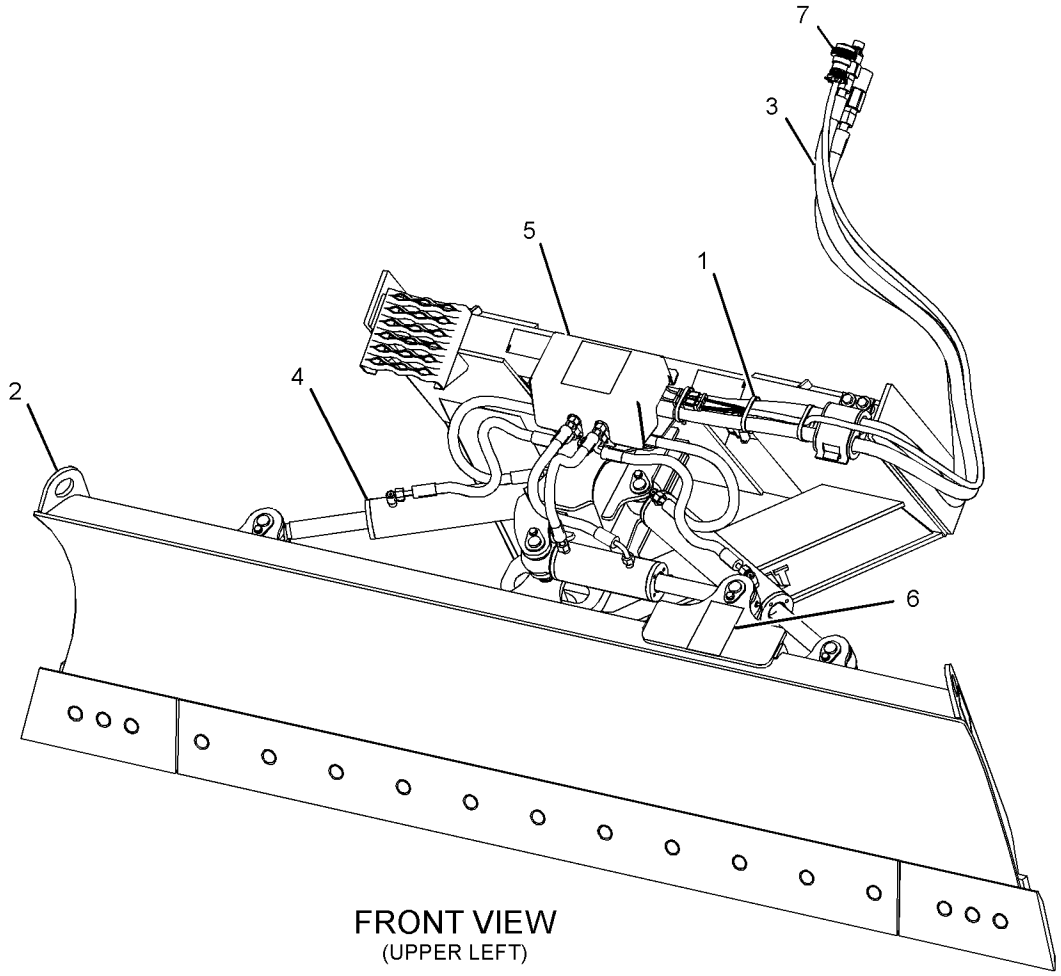

FRONT VIEW
(UPPER LEFT)

GRAPHIC #1 **<END>** g03370076

222-7412 BLADE AS-ANGLING

2337-MM (92-IN)
PART OF 222-7724 BLADE GP-ANGLING
AN ATTACHMENT

SMCS-6052, 6060

i03646971

NOTE	REF NO	GRAPHIC REF	PART NUMBER	QTY	PART NAME 1 2 3 4 5 6 (PRODUCT LEVEL)	SEE PAGE
	1	1	**222-7421**	1	TRUNNION AS	
	2	1	**222-7479**	1	PLATE AS	
	3	1	**222-7728**	1	PLATE AS	

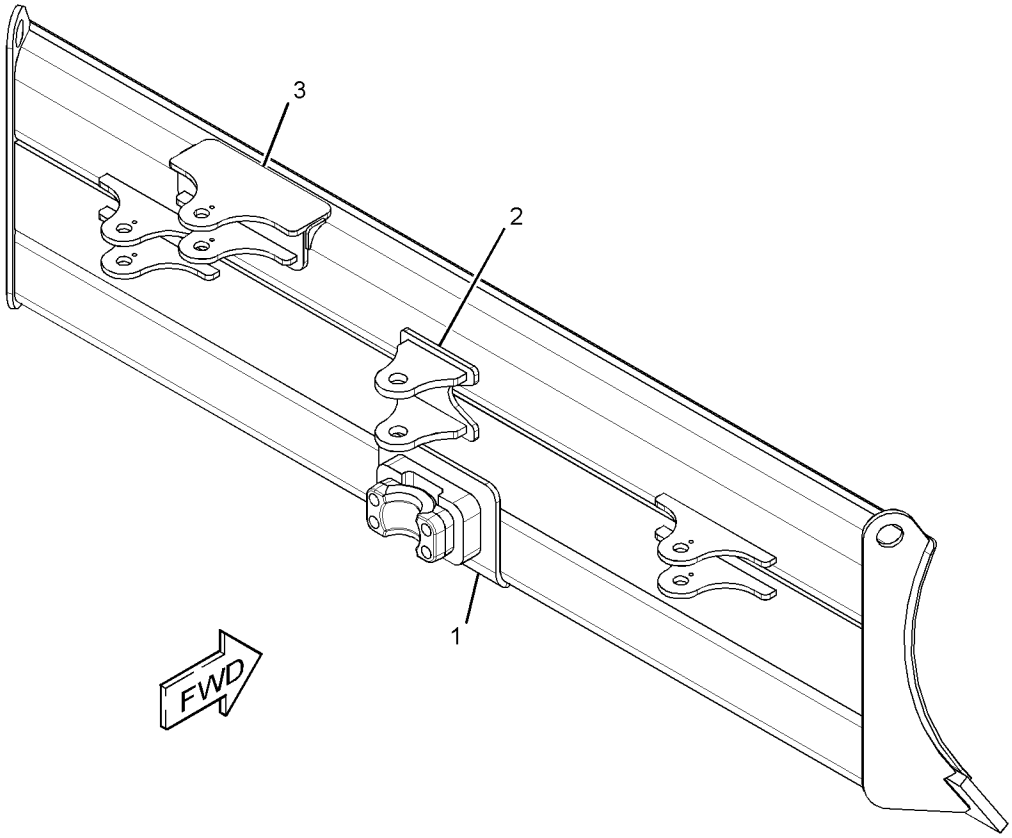

GRAPHIC #1

<END>

g01960536

230-4596 BLADE AS-ANGLING

2007-MM (79-IN)
PART OF 231-5276 BLADE GP-ANGLING
AN ATTACHMENT

SMCS-6052, 6060

i03646970

NOTE	REF NO	GRAPHIC REF	PART NUMBER	QTY	PART NAME 1 2 3 4 5 6 (PRODUCT LEVEL)	SEE PAGE
	1	1	**222-7421**	1	TRUNNION AS	
	2	1	**222-7479**	1	PLATE AS	
	3	1	**222-7728**	1	PLATE AS	

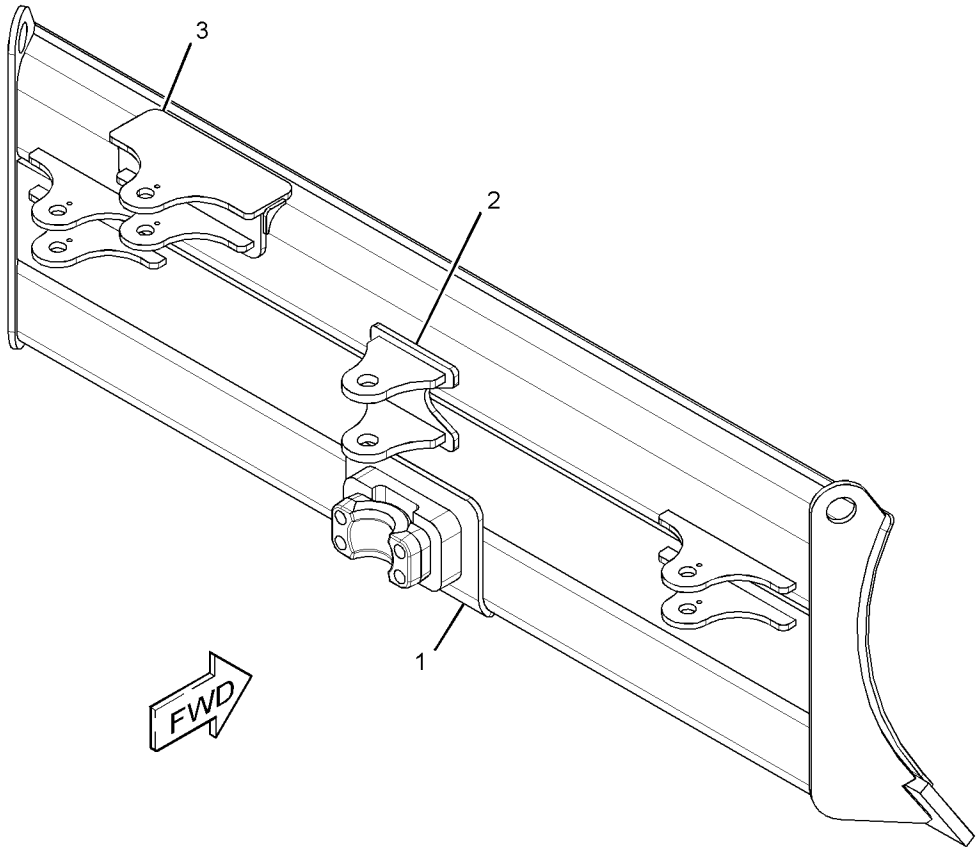

GRAPHIC #1

<END>

g01960542

222-7724 BLADE GP-ANGLING

PART OF 424-0451 BLADE AR

AN ATTACHMENT

SMCS-6060, 6701 **i04156826**

NOTE	REF NO	GRAPHIC REF	PART NUMBER	QTY	PART NAME 1 2 3 4 5 6 (PRODUCT LEVEL)	SEE PAGE
B	1	1	**8E-5702**	22	SHIM (0.8-MM THK)	
	2	1	**358-4944**	1	PLATE-IDENTIFICATION (BUCKET SPECIFICATIONS)	
	3	1	**168-8389**	4	TACK-FASTENER	
Y	4	1	**222-7412**	1	BLADE AS-ANGLING	282
	5	1	**222-7725**	1	FRAME GP-BLADE	
	6	1	**231-5271**	1	PIN	
	7	1	**238-1004**	2	MOUNT AS	
	8	1	**238-1005**	2	SKID AS	
	9	1	**244-1367**	1	BUSHING	
Y	10	1	*222-7546*	1	EDGE GP-BIT & CUTTING	335
	11	1	**5P-1076**	8	WASHER-HARD (13.5X30X4-MM THK)	
	12	1	**6V-7644**	2	RING-RETAINING	
M	13	1	**8C-8478**	4	BOLT (M20X2.5X140-MM)	
	14	1	**8J-2880**	1	CAP-BEARING	
	15	1	**8T-4123**	4	WASHER (22X35X3.5-MM THK)	
M	16	1	**8T-4139**	8	BOLT (M12X1.75X30-MM)	

B - USE AS REQUIRED
M - METRIC PART
Y - SEPARATE ILLUSTRATION

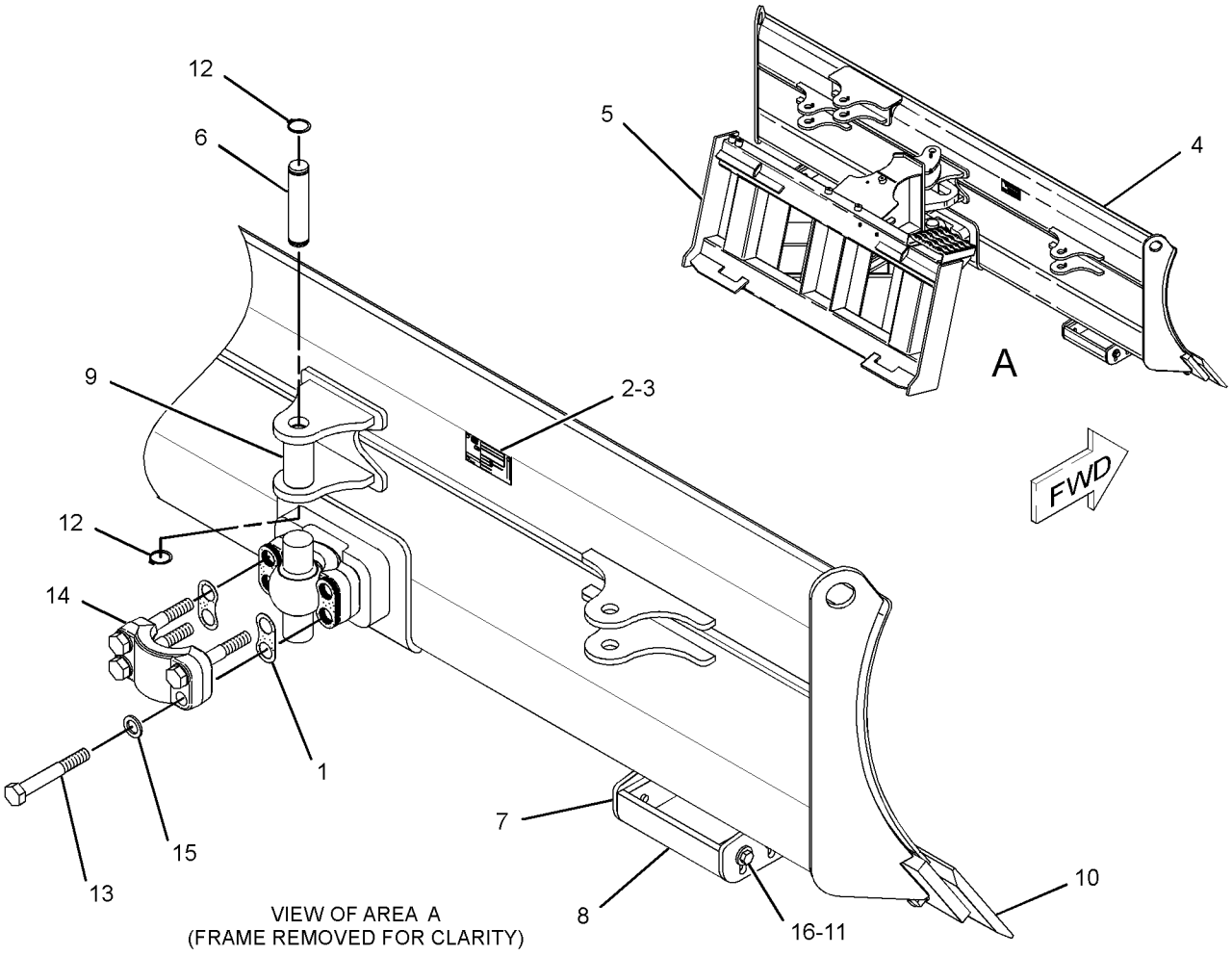

GRAPHIC #1 **<END>** g02379077

231-5276 BLADE GP-ANGLING

PART OF 424-0450 BLADE AR

AN ATTACHMENT

SMCS-6060, 6701 **i04319649**

NOTE	REF NO	GRAPHIC REF	PART NUMBER	QTY	PART NAME 1 2 3 4 5 6 (PRODUCT LEVEL)	SEE PAGE
B	1	1	**8E-5702**	22	SHIM (0.8-MM THK)	
	2	1	**358-4944**	1	PLATE-IDENTIFICATION (BUCKET SPECIFICATIONS)	
	3	1	**168-8389**	4	TACK-FASTENER	
	4	1	**222-7725**	1	FRAME GP-BLADE (WORK TOOL)	
Y	5	1	**230-4596**	1	BLADE AS-ANGLING	283
	6	1	**231-5271**	1	PIN	
	7	1	**238-1004**	2	MOUNT AS	
	8	1	**238-1005**	2	SKID AS	
	9	1	**244-1367**	1	BUSHING	
Y	10	1	*222-7545*	1	EDGE GP-BIT & CUTTING	334
	11	1	**5P-1076**	8	WASHER-HARD (13.5X30X4-MM THK)	
	12	1	**6V-7644**	2	RING-RETAINING	
M	13	1	**8C-8478**	4	BOLT (M20X2.5X140-MM)	
	14	1	**8J-2880**	1	CAP-BEARING	
	15	1	**8T-4123**	4	WASHER (22X35X3.5-MM THK)	
M	16	1	**8T-4139**	8	BOLT (M12X1.75X30-MM)	

B - USE AS REQUIRED
M - METRIC PART
Y - SEPARATE ILLUSTRATION

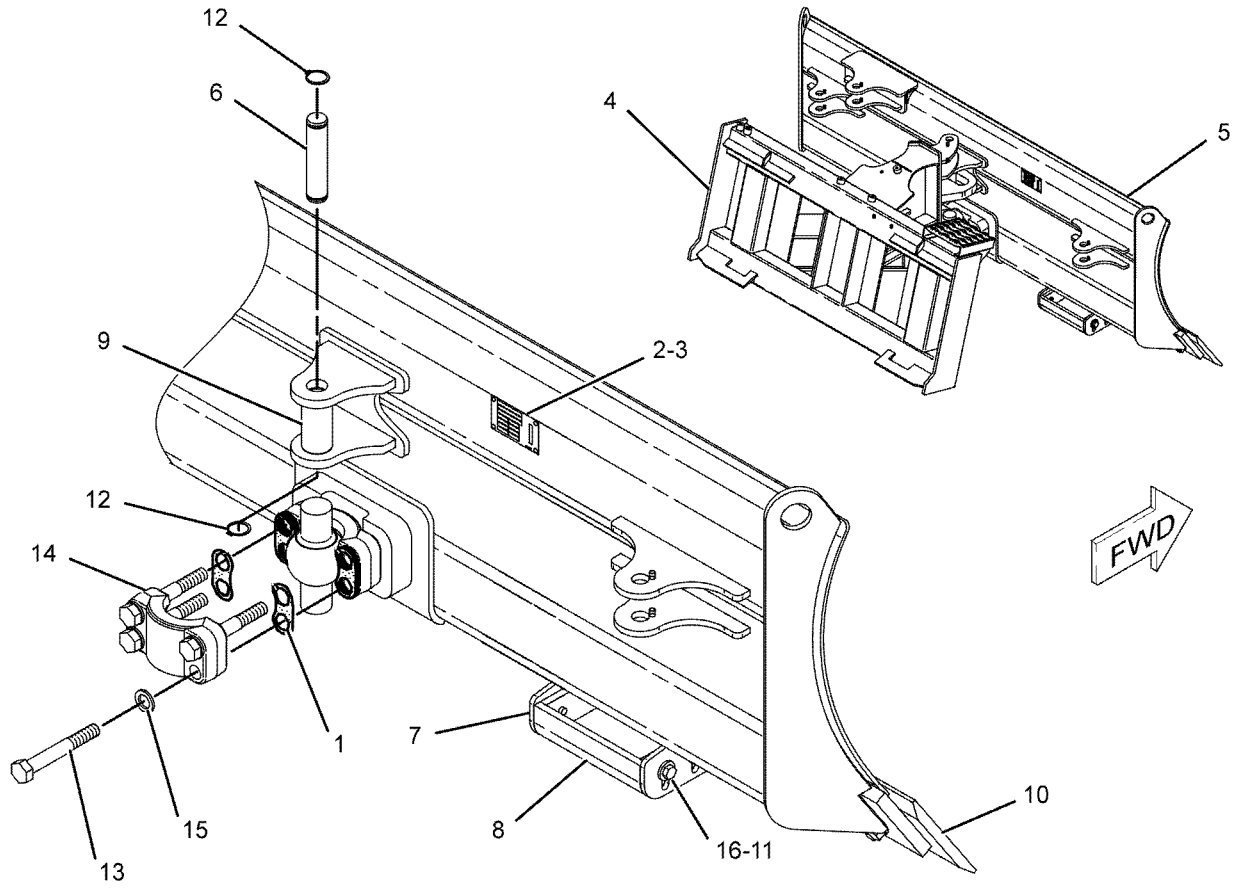

GRAPHIC #1 **<END>** g01020723

423-4298 BLADE GP-MULTIPURPOSE BUCKET

PART OF 423-4294 BUCKET GP-MULTIPURPOSE

AN ATTACHMENT

SMCS-6060, 6104 **i05288709**

NOTE	REF NO	GRAPHIC REF	PART NUMBER	QTY	PART NAME 1 2 3 4 5 6 (PRODUCT LEVEL)	SEE PAGE
	1	1	**168-8389**	4	TACK-FASTENER	
Y	2	1	**423-4300**	1	BLADE GP-MULTIPURPOSE BUCKET	287
	3	1	**358-4944**	1	PLATE-IDENTIFICATION (BUCKET SPECIFICATIONS)	

Y - SEPARATE ILLUSTRATION

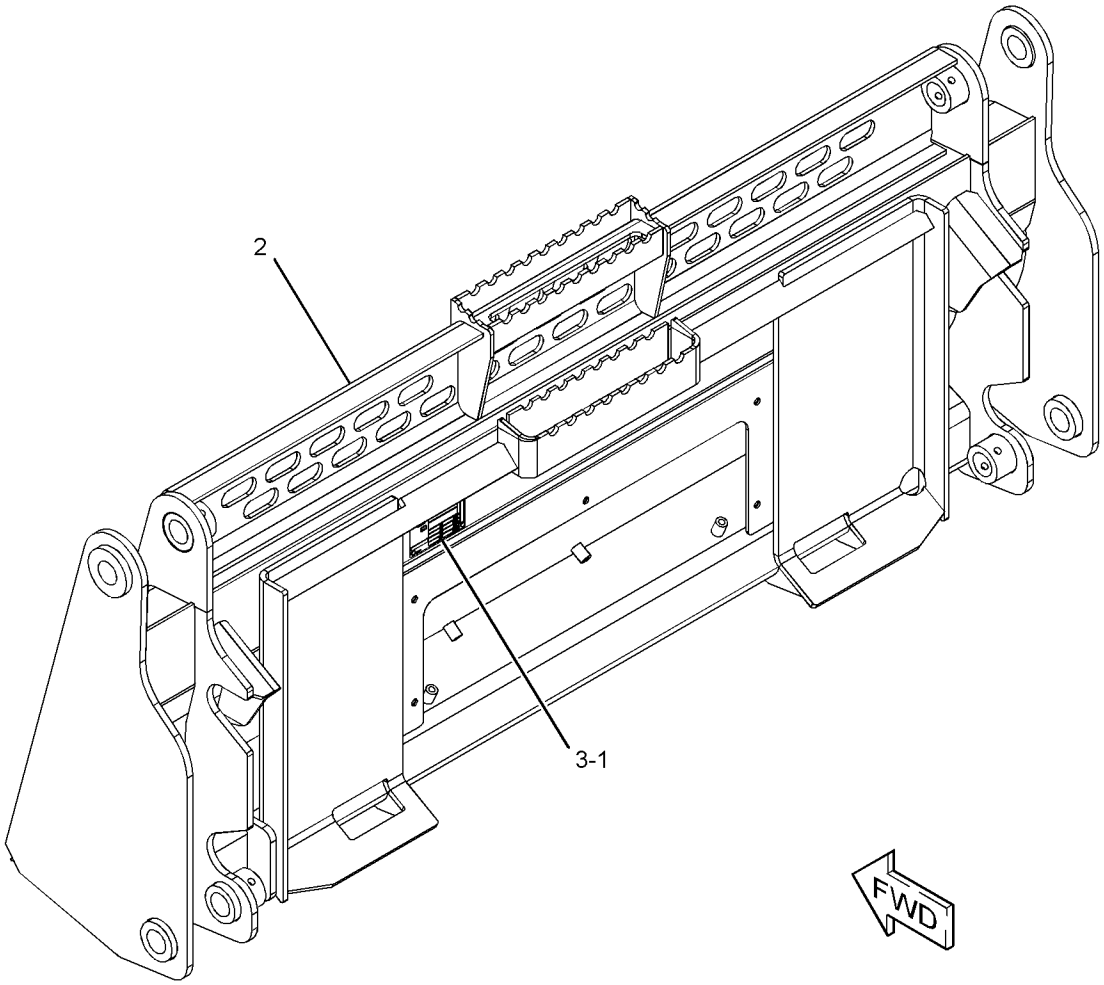

GRAPHIC #1 **<END>** g03363398

423-4300 BLADE GP-MULTIPURPOSE BUCKET

1524-MM (60-IN)
PART OF 423-4298 BLADE GP-MULTIPURPOSE BUCKET
AN ATTACHMENT

SMCS-6060, 6104

i05295834

NOTE	REF NO	GRAPHIC REF	PART NUMBER	QTY	PART NAME 1 2 3 4 5 6 (PRODUCT LEVEL)	SEE PAGE
	1	1	**154-5037**	1	EDGE	
	2	1	**325-7034**	1	GUARD AS (60-IN)	

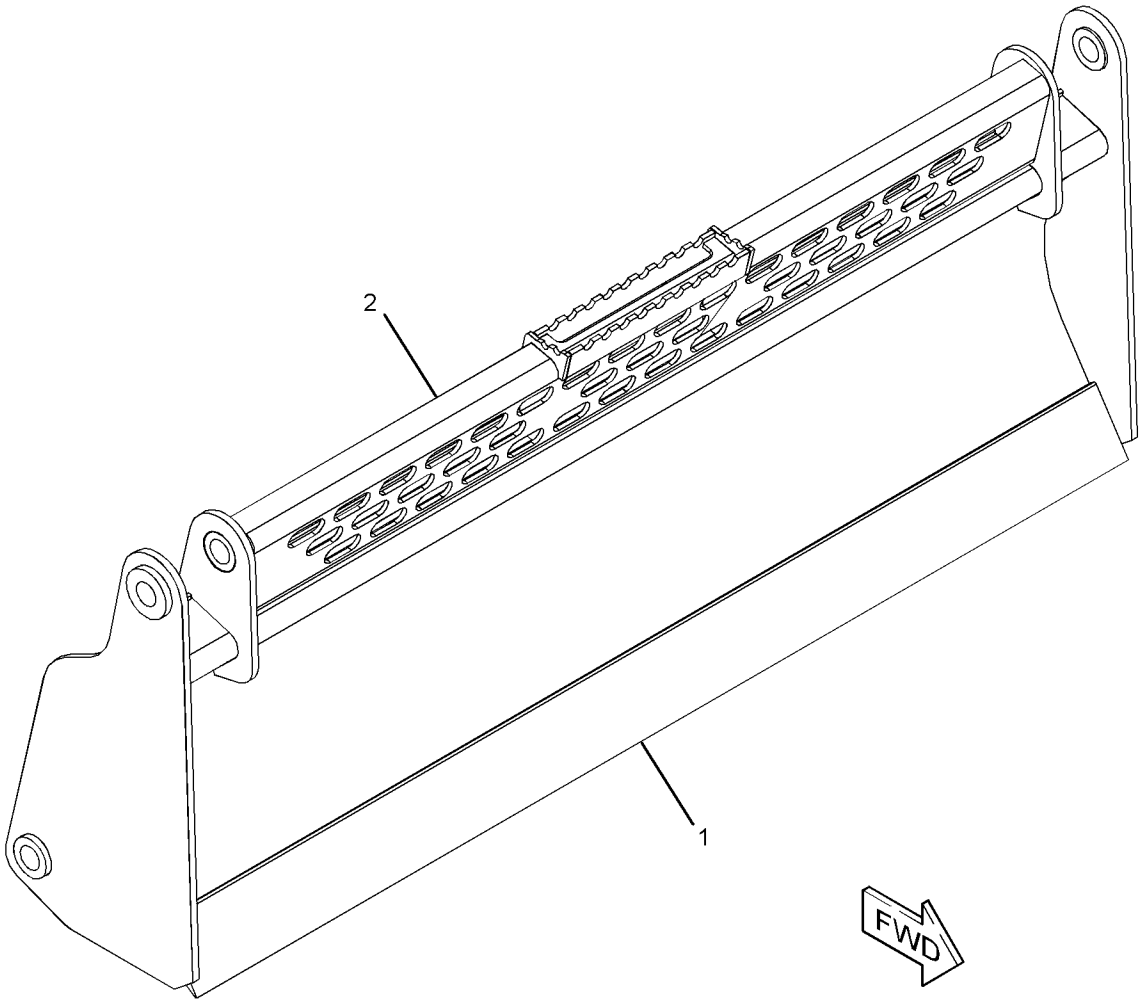

GRAPHIC #1

<END>

g03363412

426-6503 BLADE GP-MULTIPURPOSE BUCKET

PART OF 426-6495 BUCKET GP-MULTIPURPOSE

AN ATTACHMENT

SMCS-6060, 6104 **i05288621**

NOTE	REF NO	GRAPHIC REF	PART NUMBER	QTY	PART NAME 1 2 3 4 5 6 (PRODUCT LEVEL)	SEE PAGE
	1	1	**168-8389**	4	TACK-FASTENER	
Y	2	1	**426-6505**	1	BLADE GP-MULTIPURPOSE BUCKET	289
	3	1	**358-4944**	1	PLATE-IDENTIFICATION (BUCKET SPECIFICATIONS)	

Y - SEPARATE ILLUSTRATION

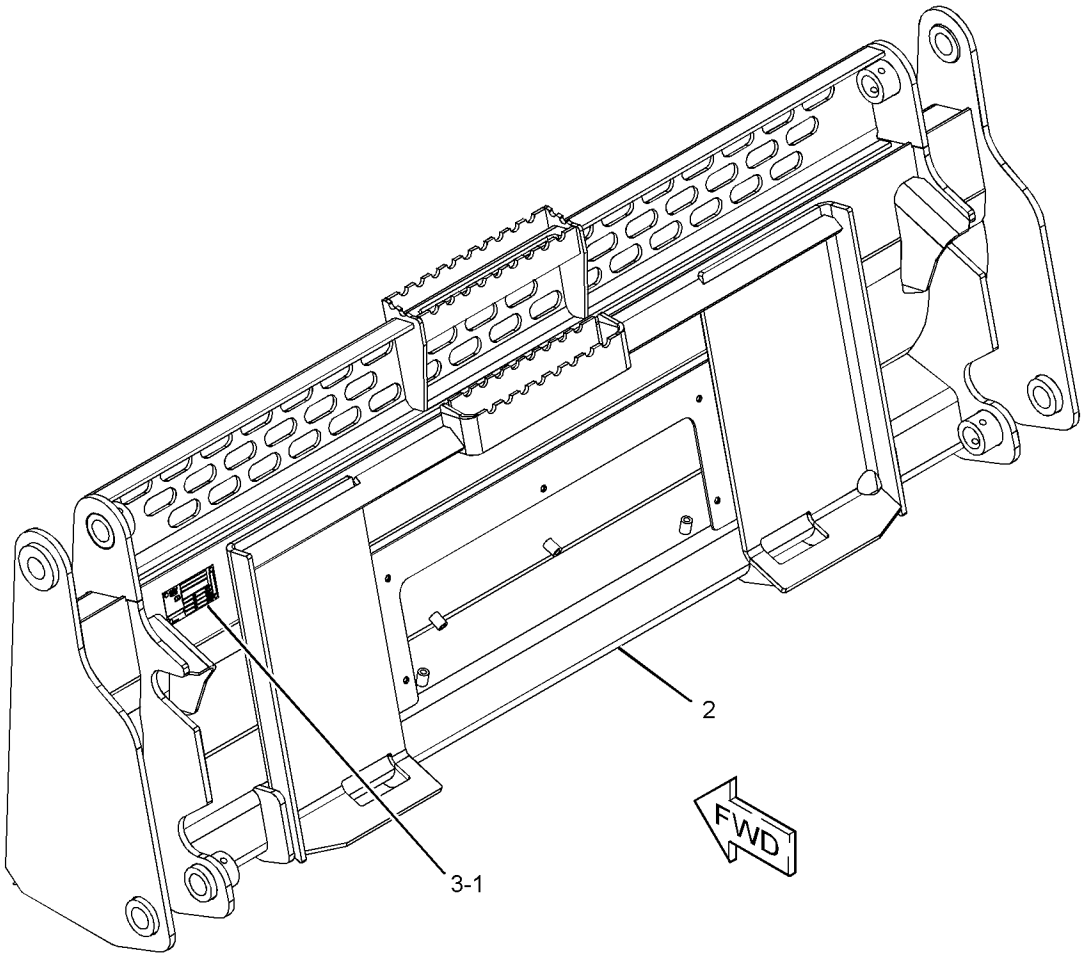

GRAPHIC #1 **<END>** g03362637

426-6505 BLADE GP-MULTIPURPOSE BUCKET

1676.4-MM (66-IN)

PART OF 426-6503 BLADE GP-MULTIPURPOSE BUCKET

AN ATTACHMENT

SMCS-6060, 6104

i05295420

NOTE	REF NO	GRAPHIC REF	PART NUMBER	QTY	PART NAME 1 2 3 4 5 6 (PRODUCT LEVEL)	SEE PAGE
	1	1	**154-5059**	1	EDGE	
	2	1	**325-7044**	1	GUARD AS (66-IN)	

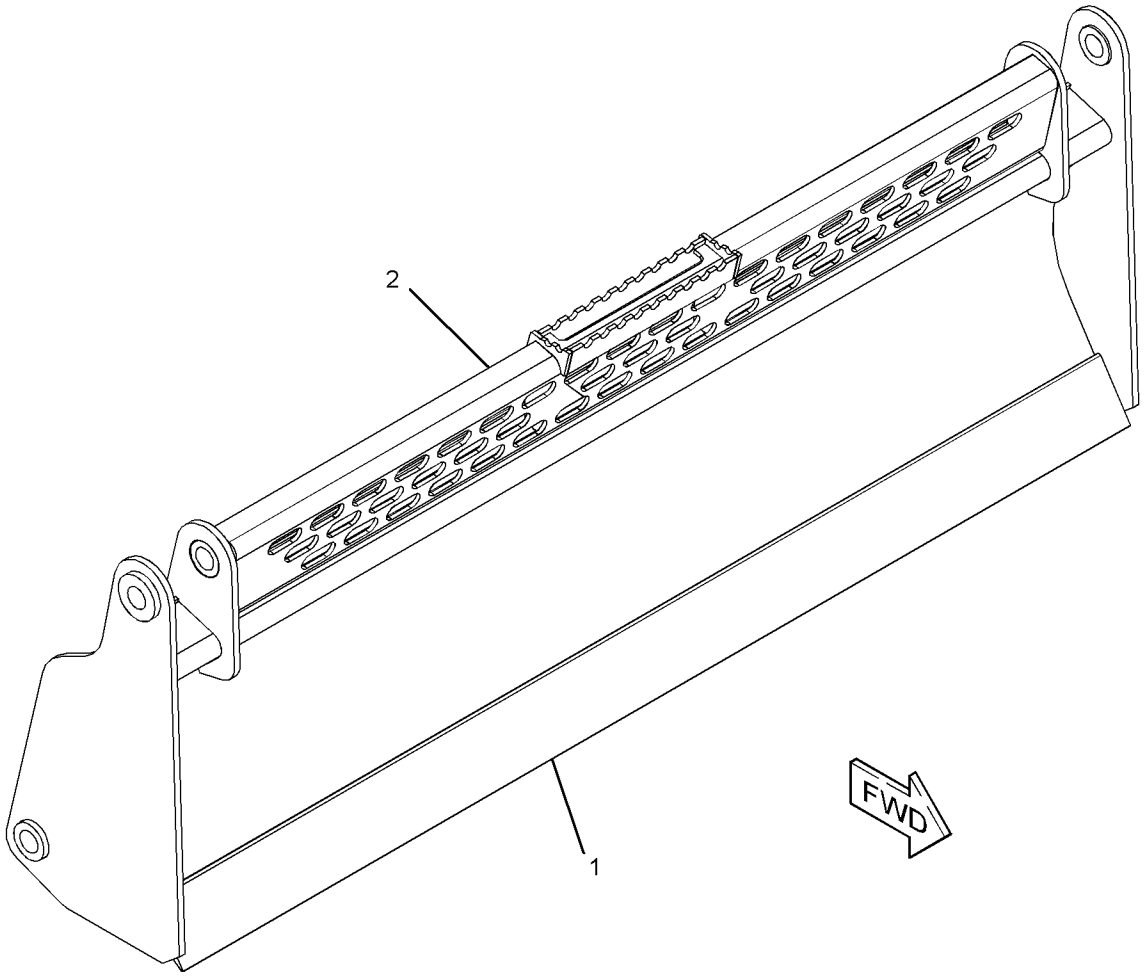

GRAPHIC #1

<END>

g03365348

426-6544 BLADE GP-MULTIPURPOSE BUCKET

PART OF 426-6538 BUCKET GP-MULTIPURPOSE

AN ATTACHMENT

SMCS-6060, 6104 **i05288702**

NOTE	REF NO	GRAPHIC REF	PART NUMBER	QTY	PART NAME 1 2 3 4 5 6 (PRODUCT LEVEL)	SEE PAGE
	1	1	**168-8389**	4	TACK-FASTENER	
Y	2	1	**426-6545**	1	BLADE GP-MULTIPURPOSE BUCKET	291
	3	1	**358-4944**	1	PLATE-IDENTIFICATION (BUCKET SPECIFICATIONS)	

Y - SEPARATE ILLUSTRATION

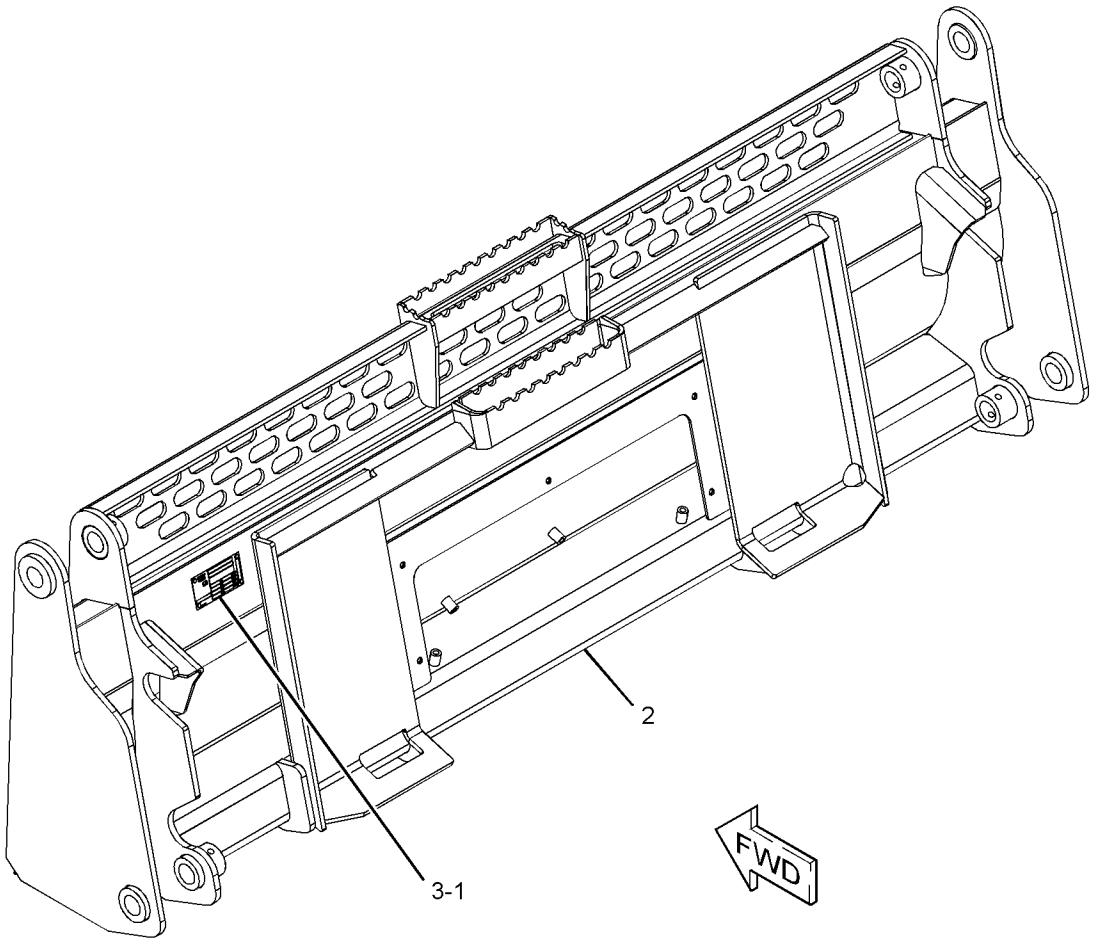

GRAPHIC #1 **<END>** g03365159

426-6545 BLADE GP-MULTIPURPOSE BUCKET

1828.8-MM (72-IN)

PART OF 426-6544 BLADE GP-MULTIPURPOSE BUCKET

AN ATTACHMENT

SMCS-6060, 6104 **i05295631**

NOTE	REF NO	GRAPHIC REF	PART NUMBER	QTY	PART NAME 1 2 3 4 5 6 (PRODUCT LEVEL)	SEE PAGE
	1	1	**154-5077**	1	EDGE	
	2	1	**325-7054**	1	GUARD AS (72-IN)	

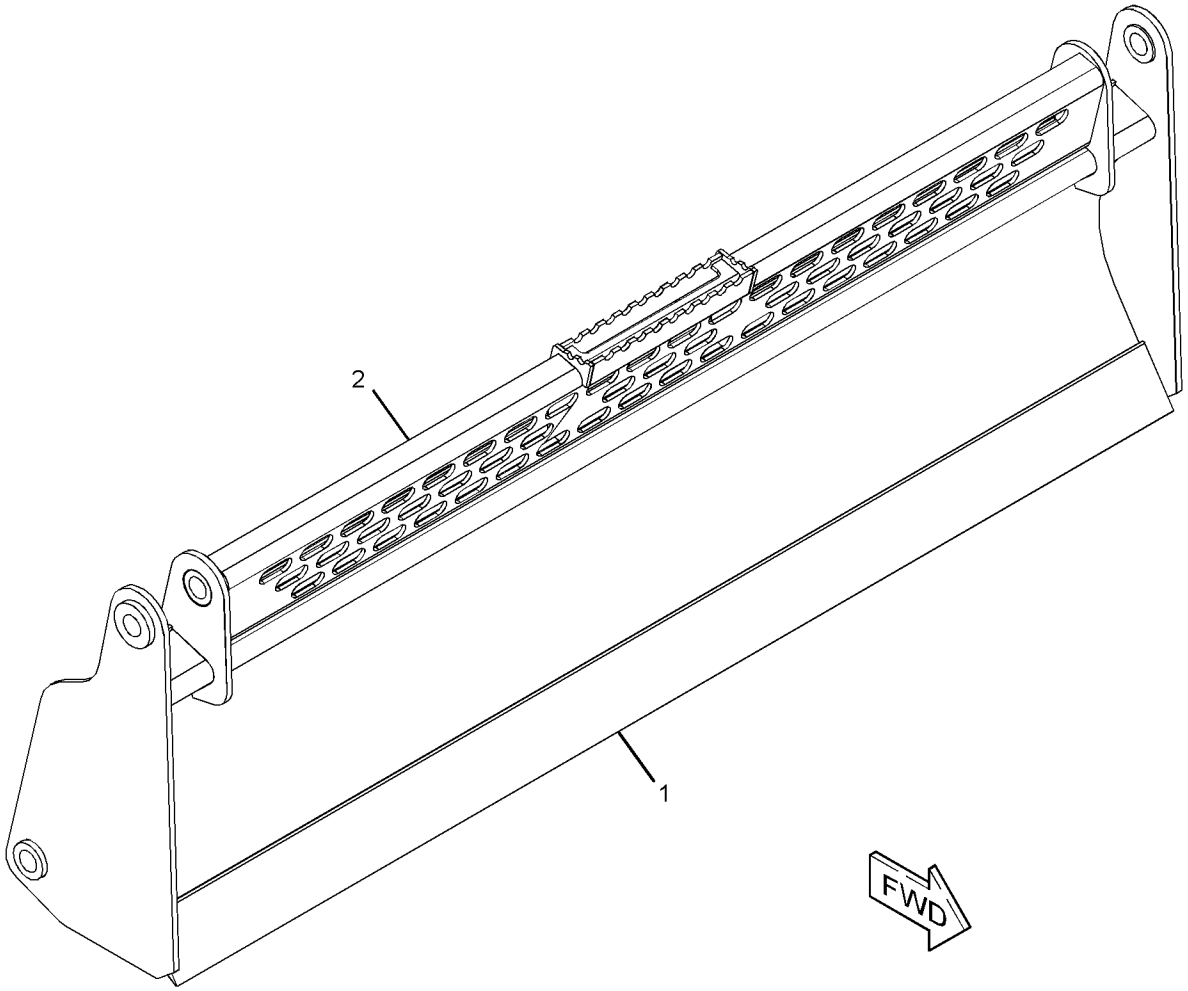

GRAPHIC #1 **<END>** g03363415

426-6554 BLADE GP-MULTIPURPOSE BUCKET

PART OF 426-6550 BUCKET GP-MULTIPURPOSE

AN ATTACHMENT

SMCS-6060, 6104 **i05284510**

NOTE	REF NO	GRAPHIC REF	PART NUMBER	QTY	PART NAME 1 2 3 4 5 6 (PRODUCT LEVEL)	SEE PAGE
	1	1	**168-8389**	4	TACK-FASTENER	
	2	1	**358-4944**	1	PLATE-IDENTIFICATION (BUCKET SPECIFICATIONS)	
Y	3	1	**426-6555**	1	BLADE GP-MULTIPURPOSE BUCKET	293

Y - SEPARATE ILLUSTRATION

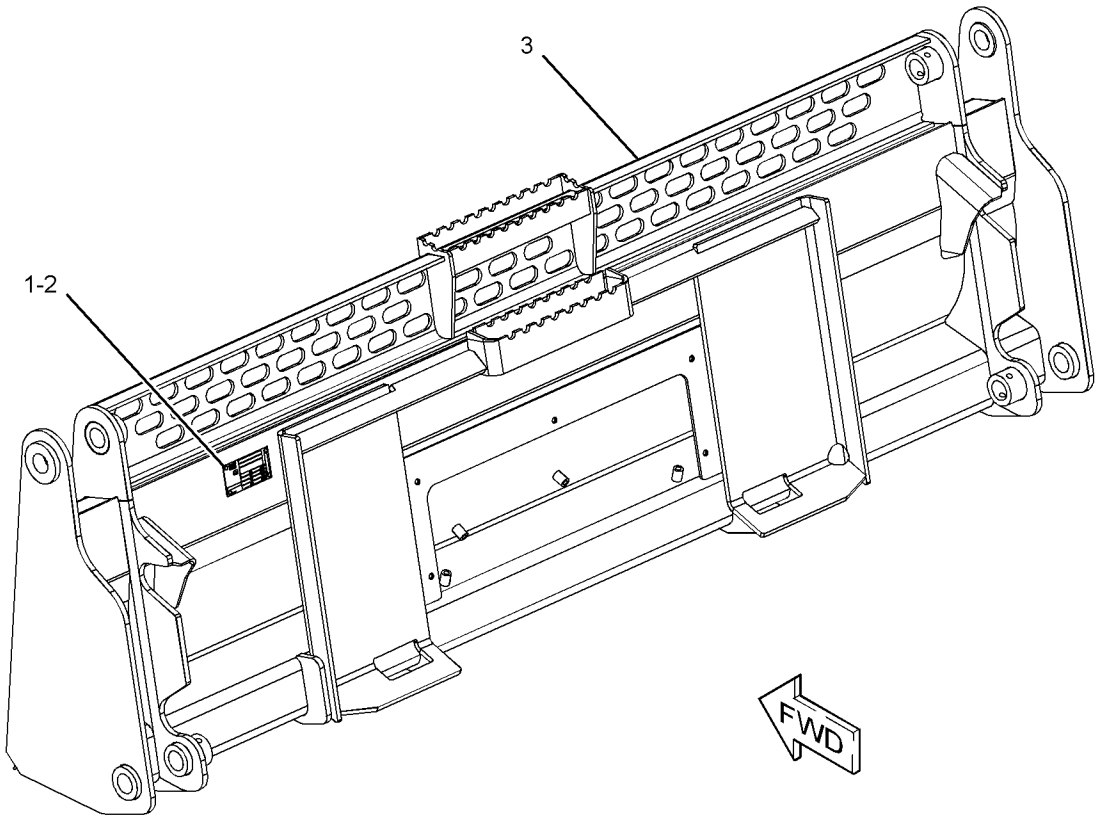

GRAPHIC #1 **<END>** g03358953

426-6555 BLADE GP-MULTIPURPOSE BUCKET

78-IN (1981.2-MM)

PART OF 426-6554 BLADE GP-MULTIPURPOSE BUCKET

AN ATTACHMENT

SMCS-6060, 6104

i05292061

NOTE	REF NO	GRAPHIC REF	PART NUMBER	QTY	PART NAME 1 2 3 4 5 6 (PRODUCT LEVEL)	SEE PAGE
	1	1	**199-8316**	1	EDGE	
	2	1	**325-7064**	1	GUARD AS (78-IN)	

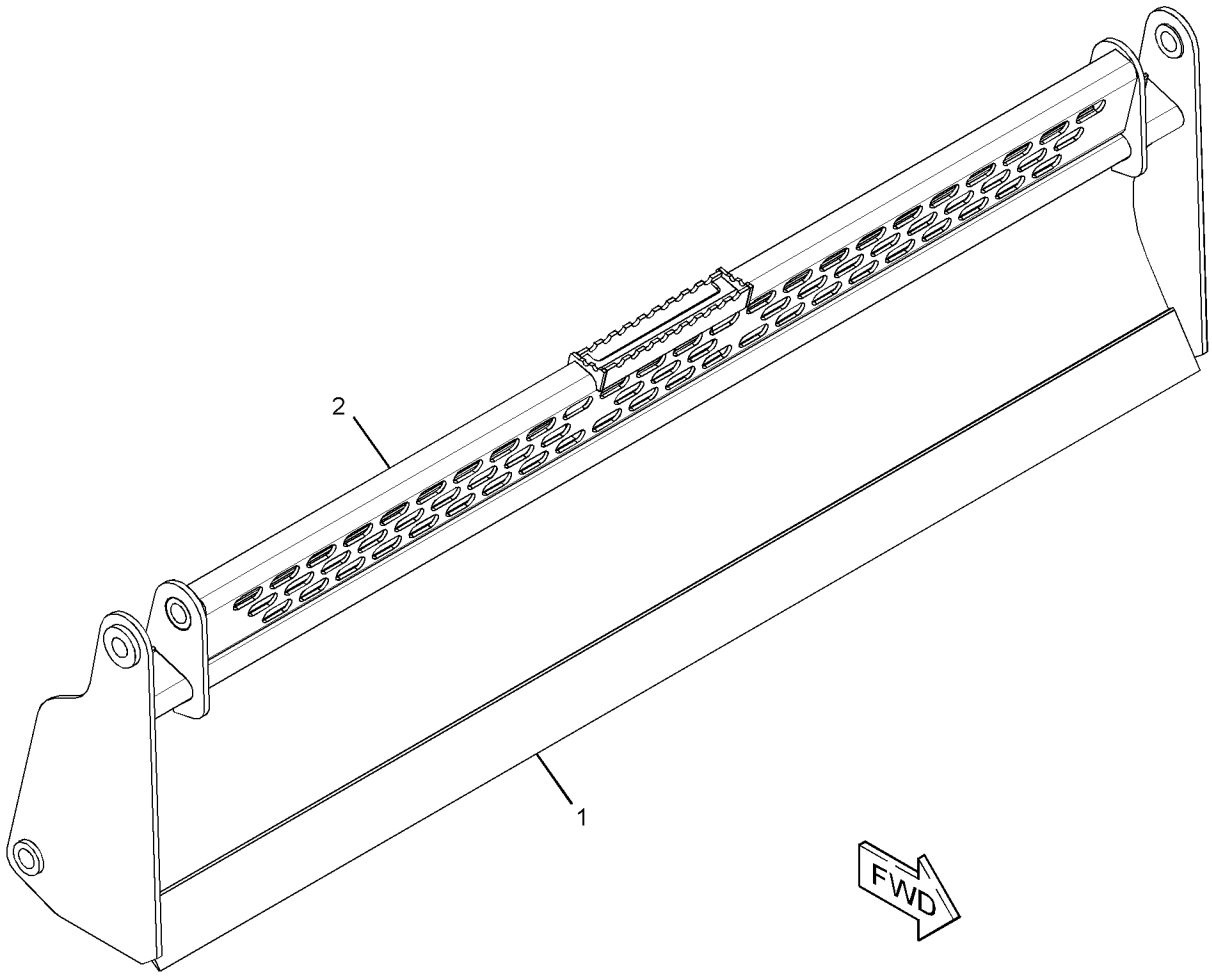

GRAPHIC #1

<END>

g03362202

426-6564 BLADE GP-MULTIPURPOSE BUCKET

PART OF 426-6560 BUCKET GP-MULTIPURPOSE

AN ATTACHMENT

SMCS-6060, 6104 **i05284601**

NOTE	REF NO	GRAPHIC REF	PART NUMBER	QTY	PART NAME 1 2 3 4 5 6 (PRODUCT LEVEL)	SEE PAGE
	1	1	**168-8389**	4	TACK-FASTENER	
	2	1	**358-4944**	1	PLATE-IDENTIFICATION (BUCKET SPECIFICATIONS)	
Y	3	1	**426-6565**	1	BLADE GP-MULTIPURPOSE BUCKET	295

Y - SEPARATE ILLUSTRATION

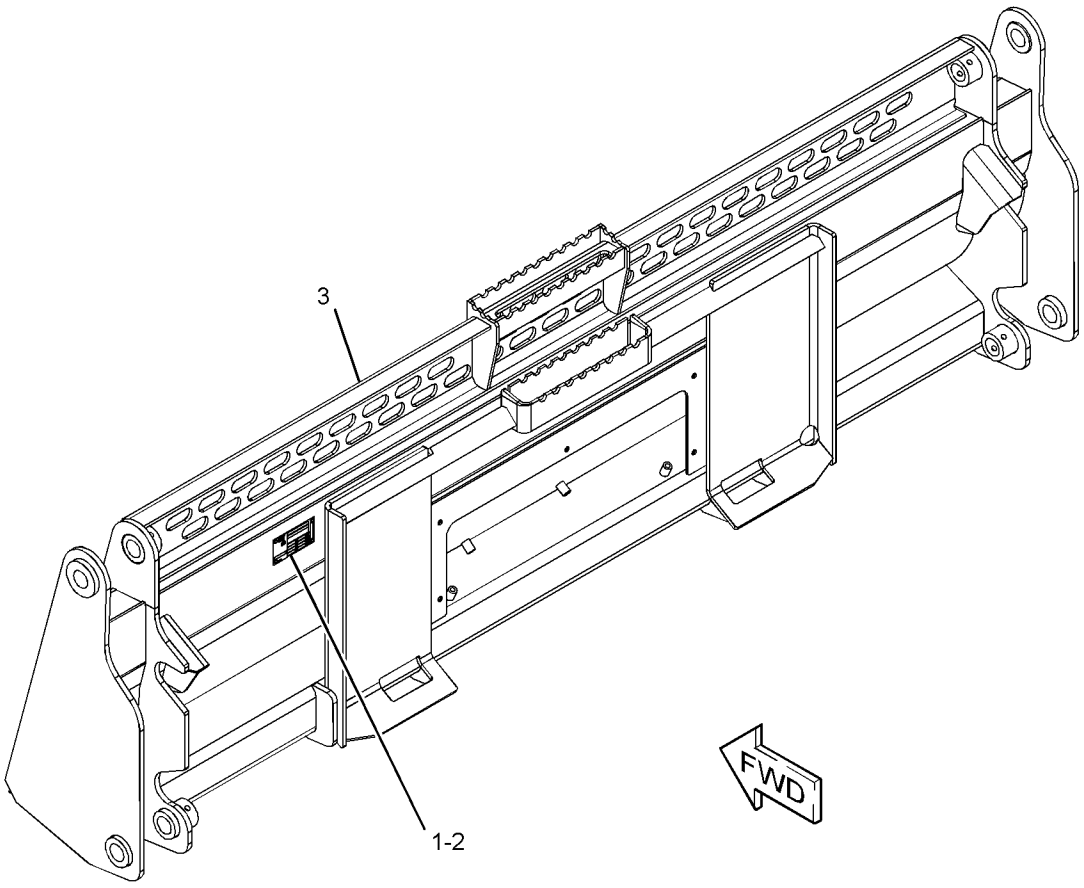

GRAPHIC #1 **<END>** g03358665

426-6565 BLADE GP-MULTIPURPOSE BUCKET

84-IN (2133.6-MM)

PART OF 426-6564 BLADE GP-MULTIPURPOSE BUCKET

AN ATTACHMENT

SMCS-6060, 6104

i05291363

NOTE	REF NO	GRAPHIC REF	PART NUMBER	QTY	PART NAME 1 2 3 4 5 6 (PRODUCT LEVEL)	SEE PAGE
	1	1	**293-0144**	1	EDGE	
	2	1	**325-7074**	1	GUARD AS (84-IN)	

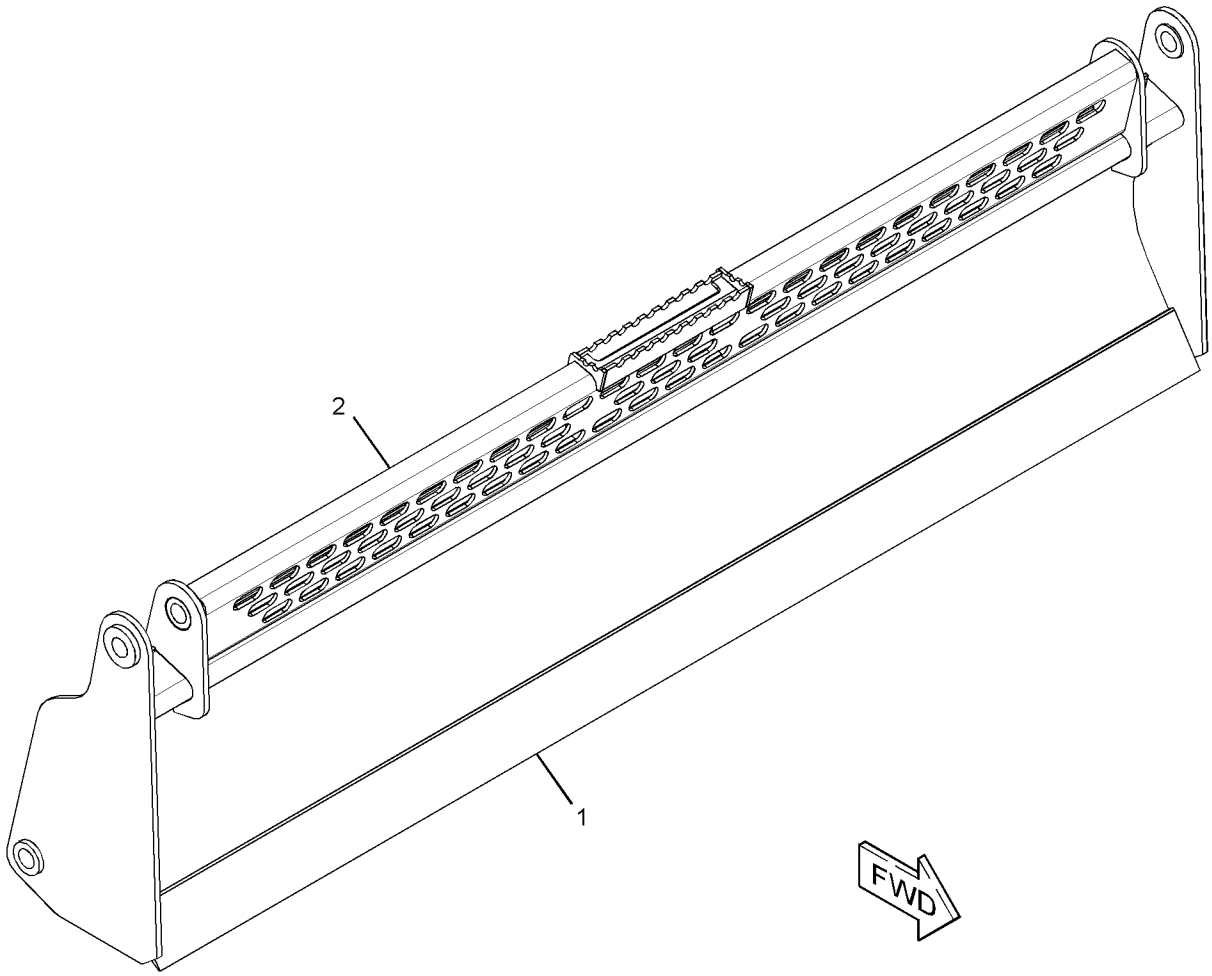

GRAPHIC #1

<END>

g03362202

426-6935 BLADE GP-MULTIPURPOSE BUCKET

PART OF 426-6934 BUCKET GP-MULTIPURPOSE

AN ATTACHMENT

SMCS-6060, 6104 **i05284449**

NOTE	REF NO	GRAPHIC REF	PART NUMBER	QTY	PART NAME 1 2 3 4 5 6 (PRODUCT LEVEL)	SEE PAGE
	1	1	**168-8389**	4	TACK-FASTENER	
Y	2	1	**426-6937**	1	BLADE GP-MULTIPURPOSE BUCKET (60-IN)	297
	3	1	**358-4944**	1	PLATE-IDENTIFICATION (BUCKET SPECIFICATIONS)	

Y - SEPARATE ILLUSTRATION

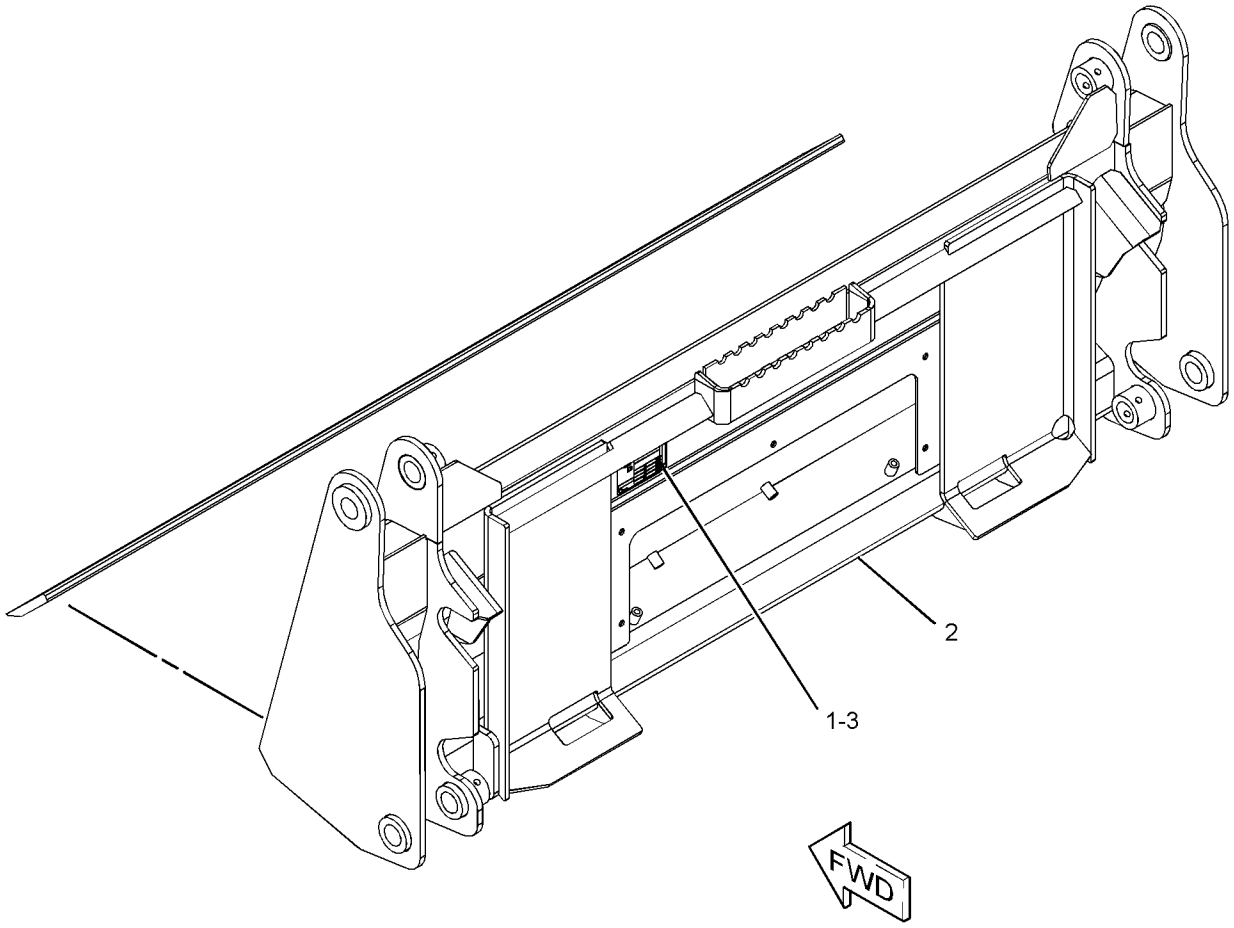

GRAPHIC #1 **<END>** g03360255

426-6937 BLADE GP-MULTIPURPOSE BUCKET

60-IN (1524-MM)

PART OF 426-6935 BLADE GP-MULTIPURPOSE BUCKET

AN ATTACHMENT

SMCS-6060, 6104

i05291364

NOTE	REF NO	GRAPHIC REF	PART NUMBER	QTY	PART NAME 1 2 3 4 5 6 (PRODUCT LEVEL)	SEE PAGE
	1	1	**154-5037**	1	EDGE	

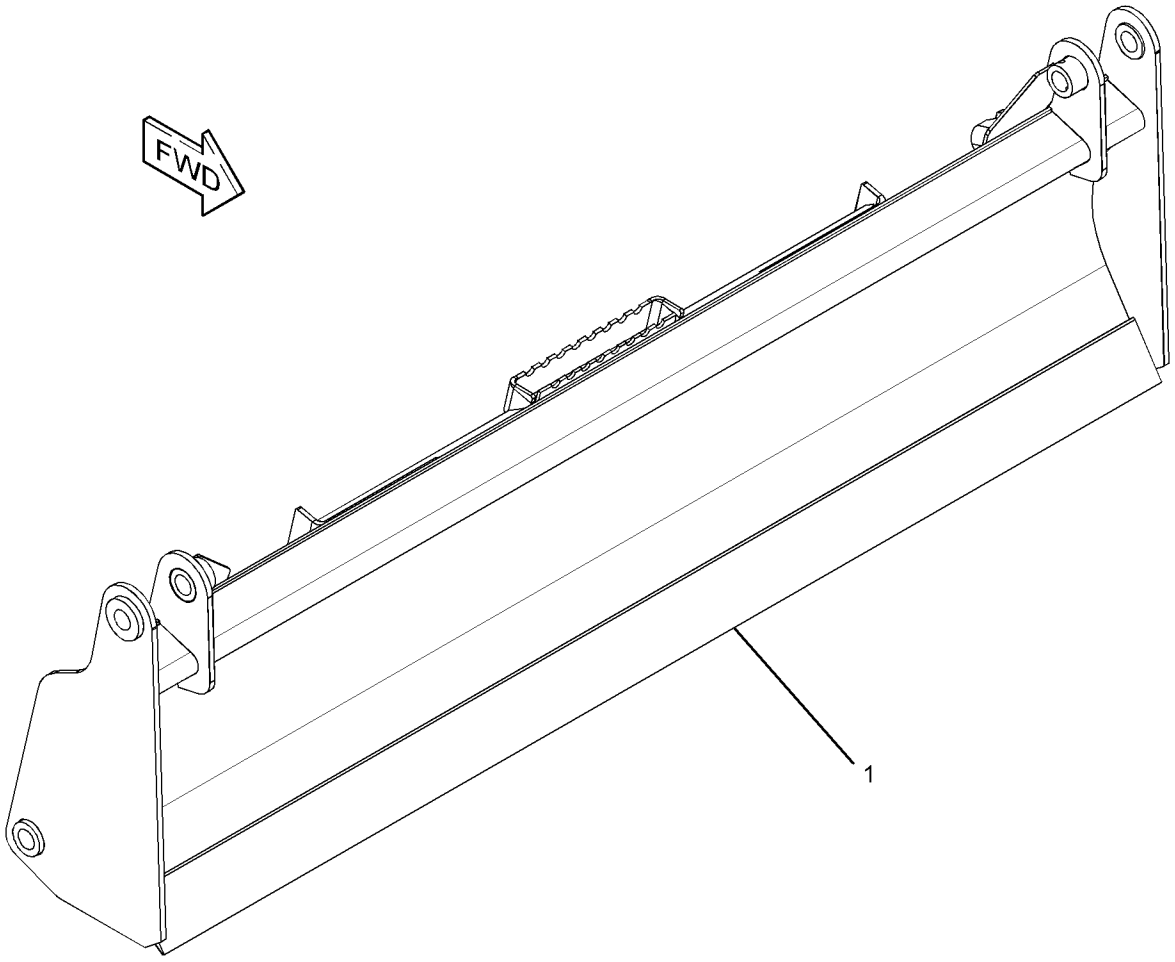

GRAPHIC #1

<END>

g01954566

426-6943 BLADE GP-MULTIPURPOSE BUCKET

1676.4-MM (66-IN)
PART OF 426-6941 BUCKET GP-MULTIPURPOSE
AN ATTACHMENT

SMCS-6060, 6104 **i05295861**

NOTE	REF NO	GRAPHIC REF	PART NUMBER	QTY	PART NAME 1 2 3 4 5 6 (PRODUCT LEVEL)	SEE PAGE
	1	1	**154-5059**	1	EDGE	

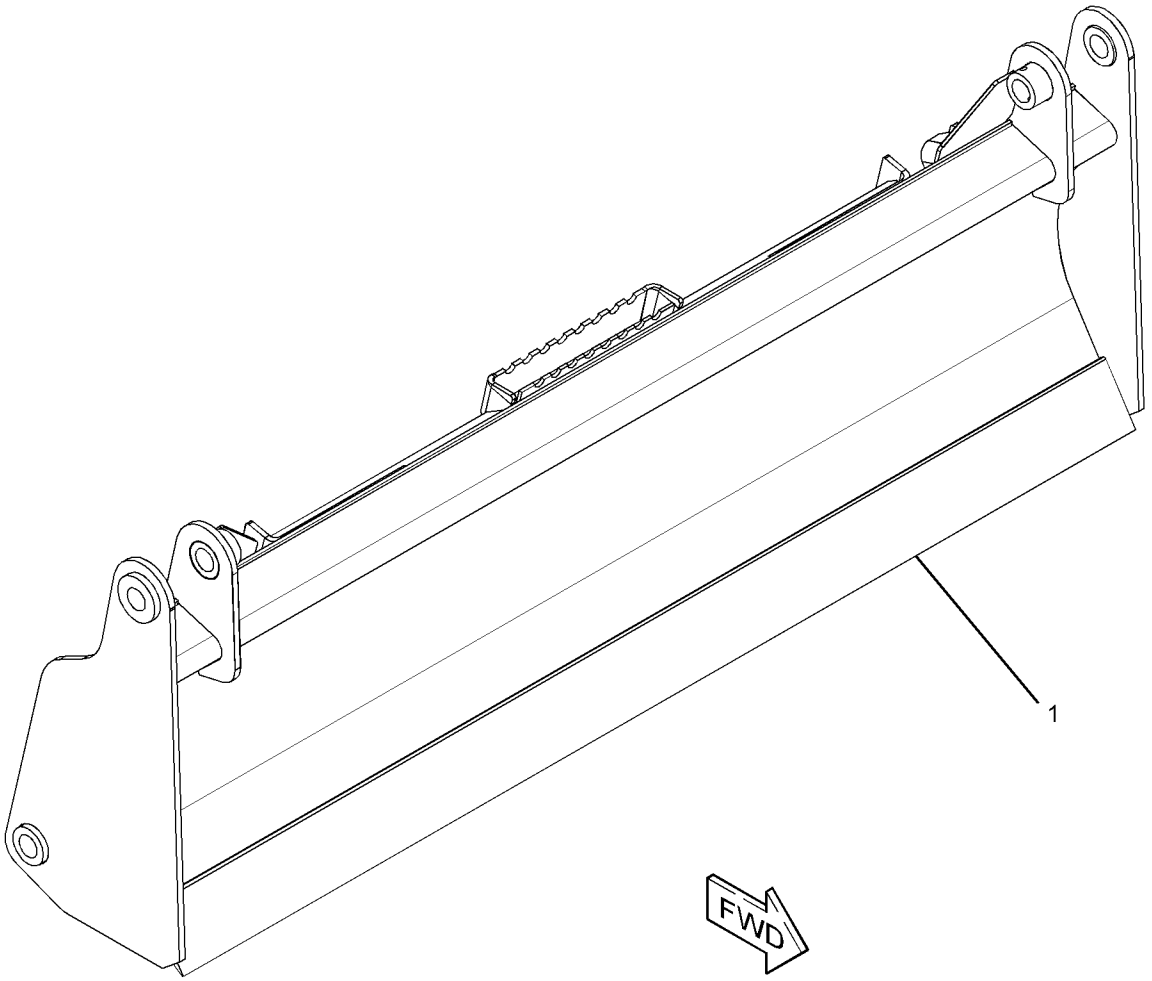

GRAPHIC #1 **<END>** g01960204

426-6957 BLADE GP-MULTIPURPOSE BUCKET

PART OF 426-6951 BUCKET GP-MULTIPURPOSE

AN ATTACHMENT

SMCS-6060, 6104 **i05288631**

NOTE	REF NO	GRAPHIC REF	PART NUMBER	QTY	PART NAME 1 2 3 4 5 6 (PRODUCT LEVEL)	SEE PAGE
	1	1	**168-8389**	4	TACK-FASTENER	
Y	2	1	**426-6959**	1	BLADE GP-MULTIPURPOSE BUCKET	300
	3	1	**358-4944**	1	PLATE-IDENTIFICATION (BUCKET SPECIFICATIONS)	

Y - SEPARATE ILLUSTRATION

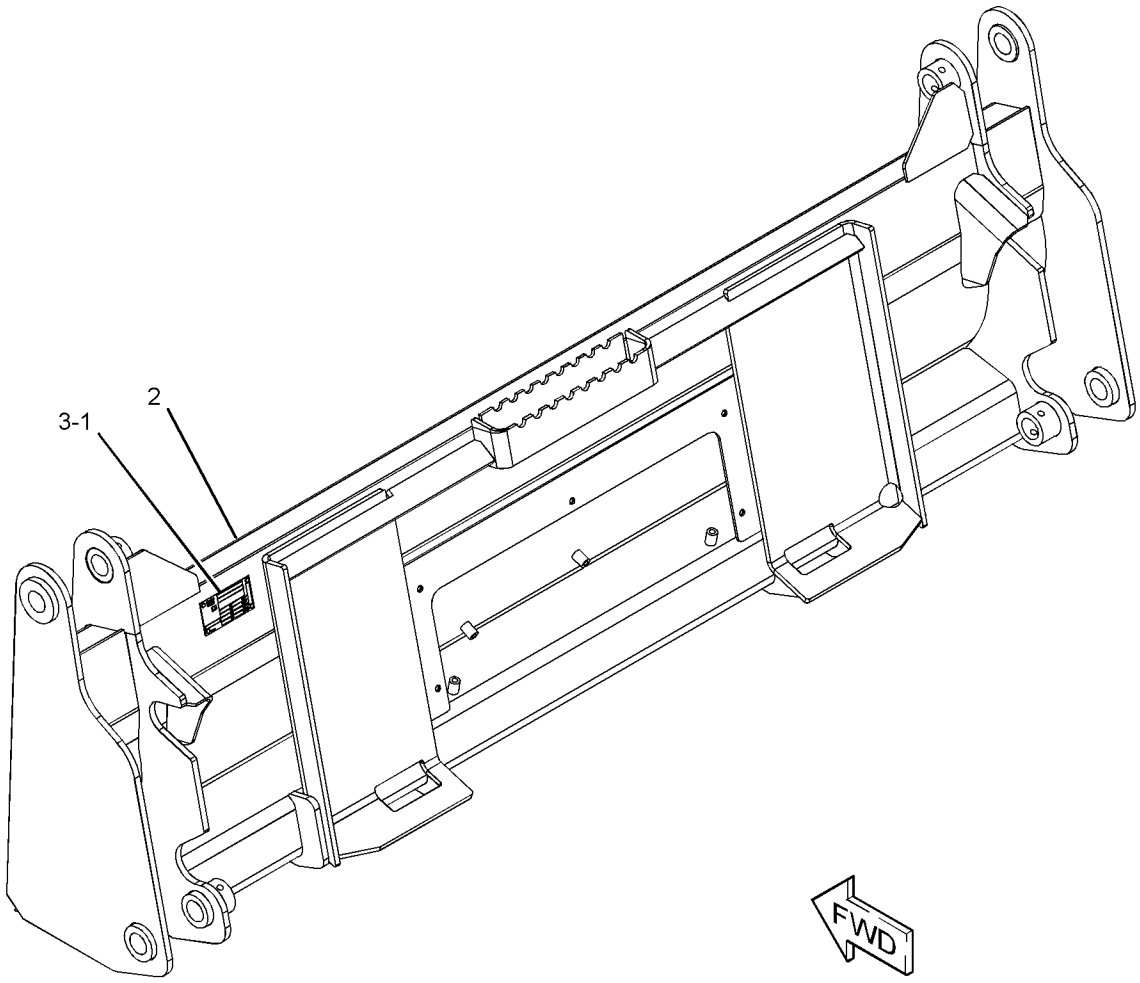

GRAPHIC #1 **<END>** g03365162

426-6959 BLADE GP-MULTIPURPOSE BUCKET

1828.8-MM (72-IN)
PART OF 426-6957 BLADE GP-MULTIPURPOSE BUCKET
AN ATTACHMENT

SMCS-6060, 6104 **i05295541**

NOTE	REF NO	GRAPHIC REF	PART NUMBER	QTY	PART NAME 1 2 3 4 5 6 (PRODUCT LEVEL)	SEE PAGE
	1	1	**154-5077**	1	EDGE	

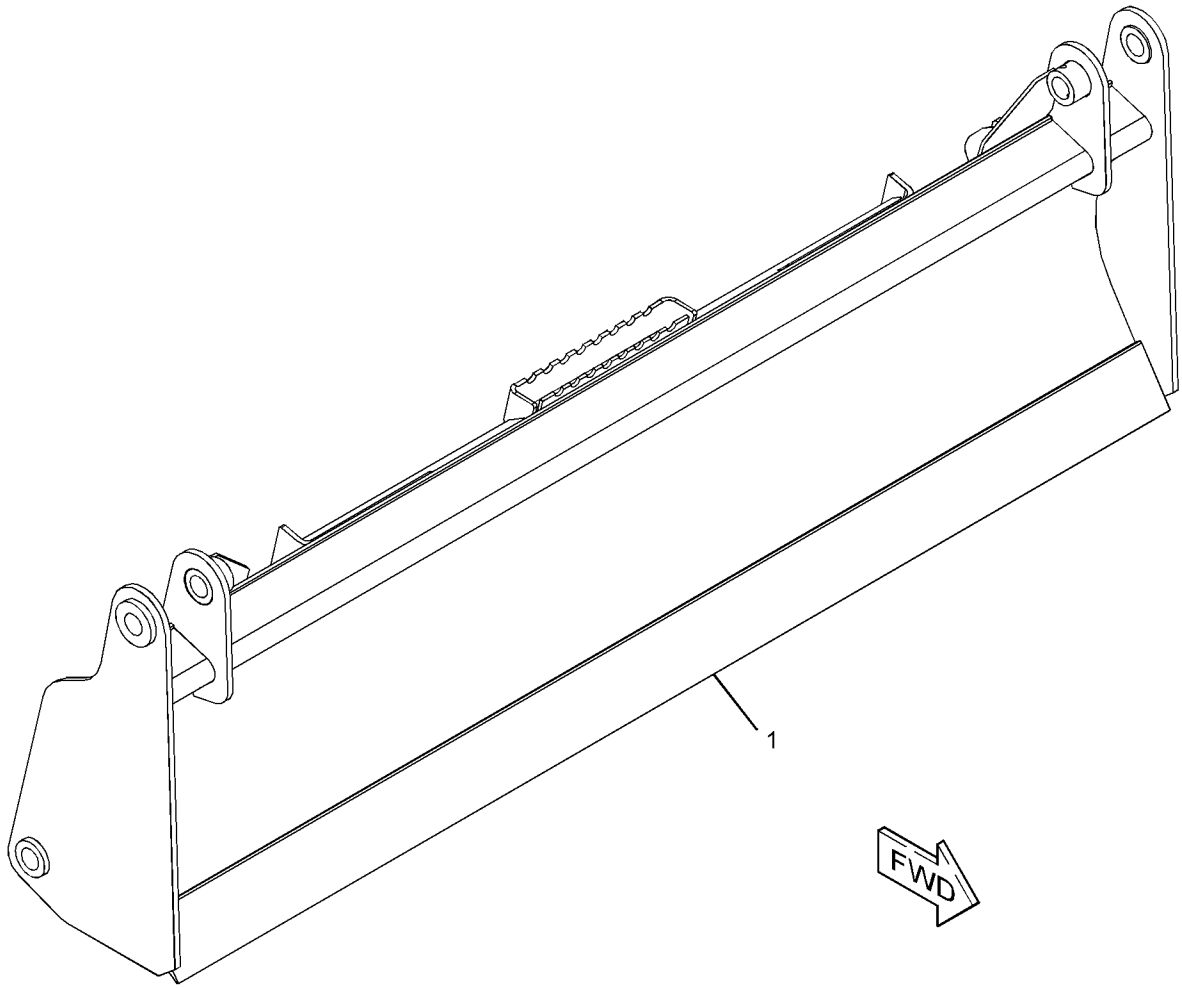

GRAPHIC #1 **<END>** g03363409

426-6978 BLADE GP-MULTIPURPOSE BUCKET

PART OF 426-7102 BUCKET GP-MULTIPURPOSE
AN ATTACHMENT

SMCS-6060, 6104 **i05284600**

NOTE	REF NO	GRAPHIC REF	PART NUMBER	QTY	PART NAME 1 2 3 4 5 6 (PRODUCT LEVEL)	SEE PAGE
	1	1	**168-8389**	4	TACK-FASTENER	
	2	1	**358-4944**	1	PLATE-IDENTIFICATION (BUCKET SPECIFICATIONS)	
Y	3	1	**426-6981**	1	BLADE GP-MULTIPURPOSE BUCKET (78-IN)	302

Y - SEPARATE ILLUSTRATION

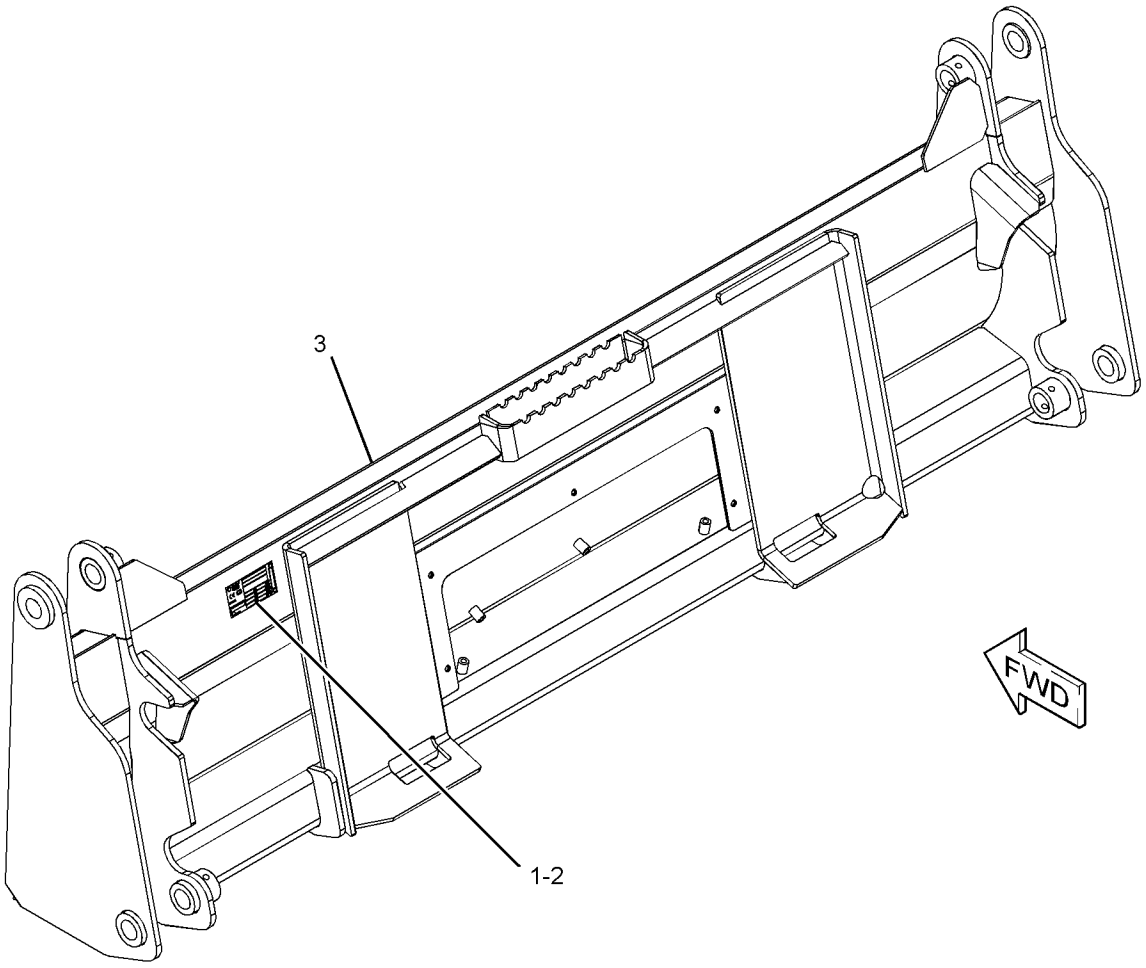

GRAPHIC #1 **<END>** g03358673

426-6981 BLADE GP-MULTIPURPOSE BUCKET

78-IN (1981.2-MM)

PART OF 426-6978 BLADE GP-MULTIPURPOSE BUCKET

AN ATTACHMENT

SMCS-6060, 6104 **i05291366**

NOTE	REF NO	GRAPHIC REF	PART NUMBER	QTY	PART NAME 1 2 3 4 5 6 (PRODUCT LEVEL)	SEE PAGE
	1	1	**199-8316**	1	EDGE	

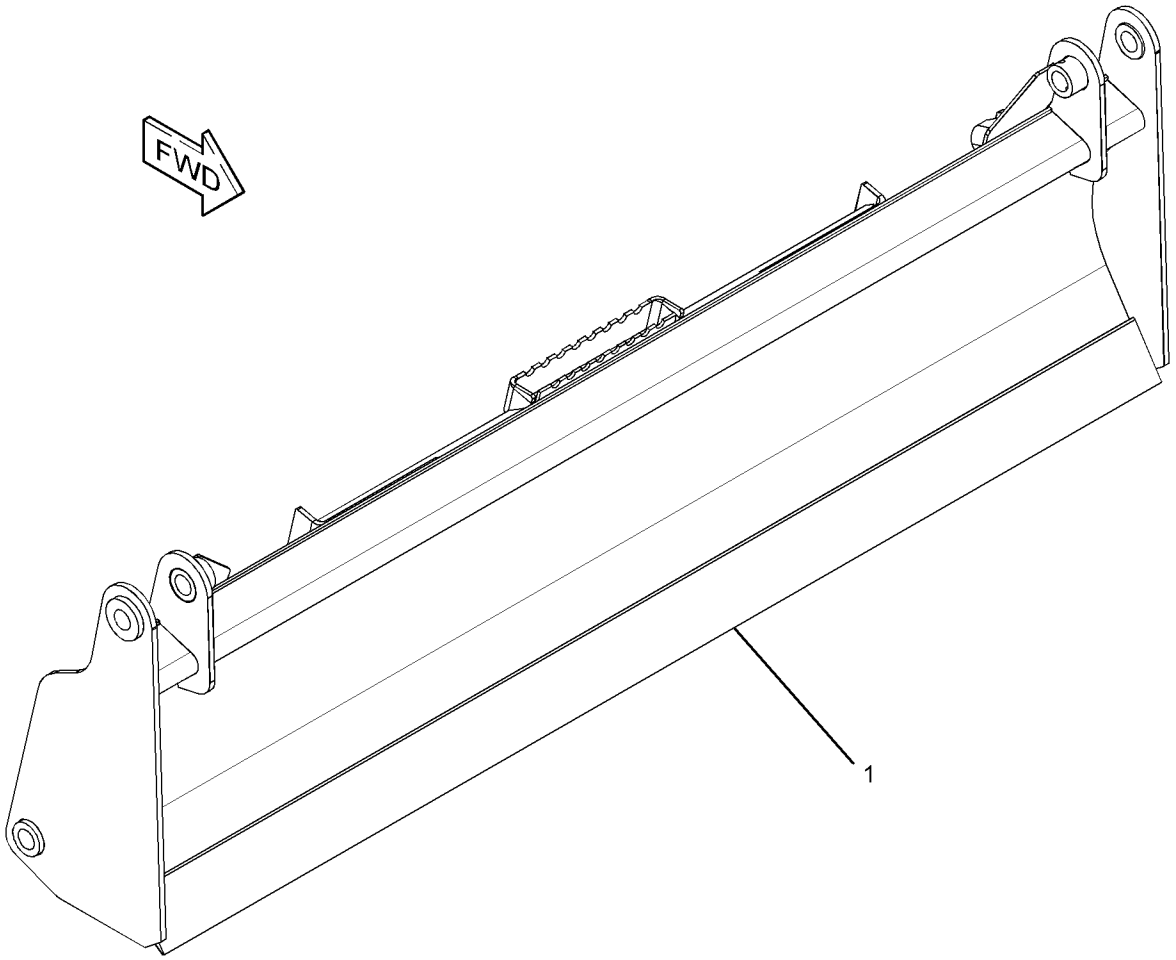

GRAPHIC #1 **<END>** g01954566

426-7001 BLADE GP-MULTIPURPOSE BUCKET

PART OF 426-6995 BUCKET AR-MULTIPURPOSE

AN ATTACHMENT

SMCS-6060, 6104 **i05277419**

NOTE	REF NO	GRAPHIC REF	PART NUMBER	QTY	PART NAME 1 2 3 4 5 6 (PRODUCT LEVEL)	SEE PAGE
	1	1	**168-8389**	4	TACK-FASTENER	
	2	1	**358-4944**	1	PLATE-IDENTIFICATION (BUCKET SPECIFICATIONS)	
Y	3	1	**426-7003**	1	BLADE GP-MULTIPURPOSE BUCKET (84-IN)	304

Y - SEPARATE ILLUSTRATION

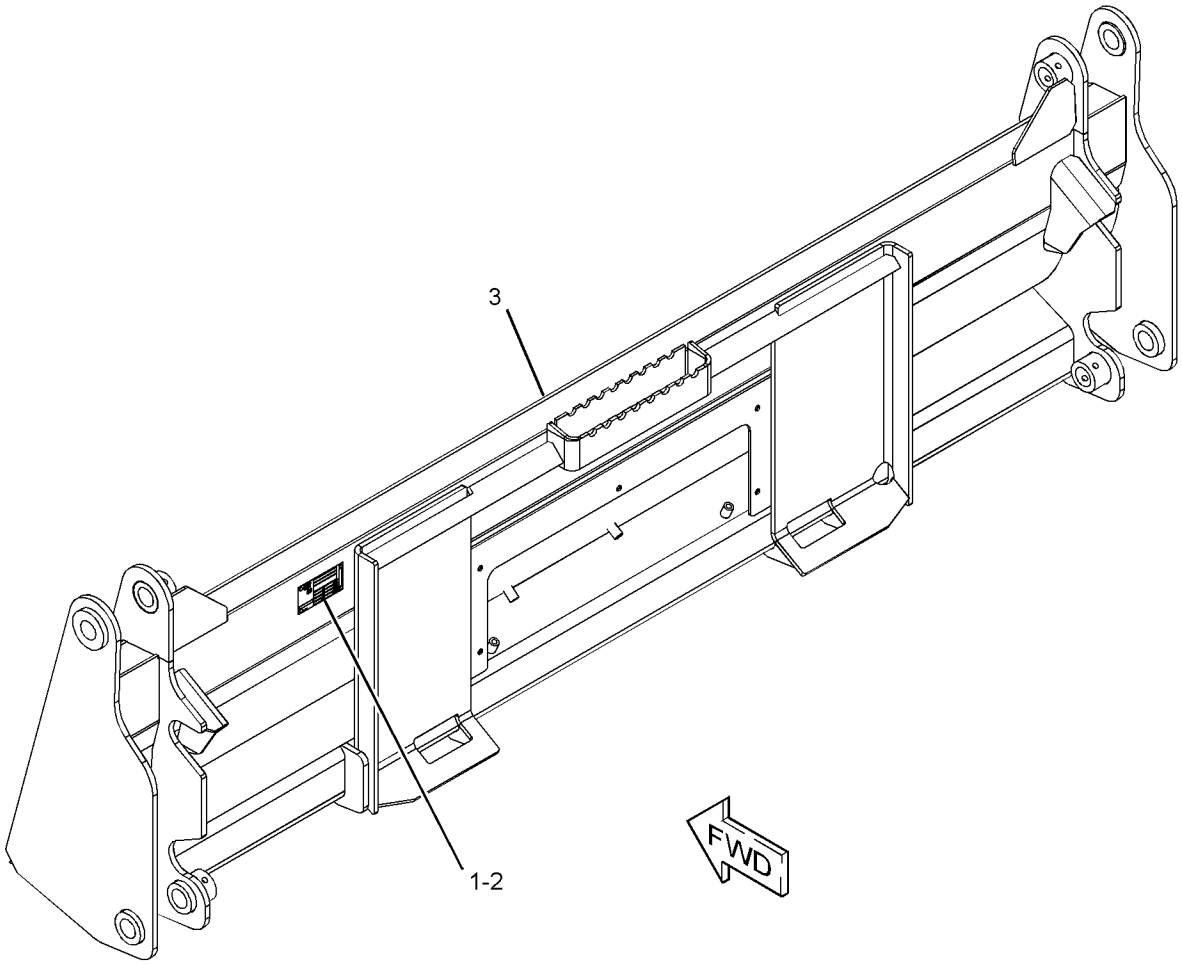

GRAPHIC #1 **<END>** g03358660

426-7003 BLADE GP-MULTIPURPOSE BUCKET

84-IN (2133.6-MM)

PART OF 426-7001 BLADE GP-MULTIPURPOSE BUCKET

AN ATTACHMENT

SMCS-6060, 6104 **i05291368**

NOTE	REF NO	GRAPHIC REF	PART NUMBER	QTY	PART NAME 1 2 3 4 5 6 (PRODUCT LEVEL)	SEE PAGE
	1	1	**293-0144**	1	EDGE	

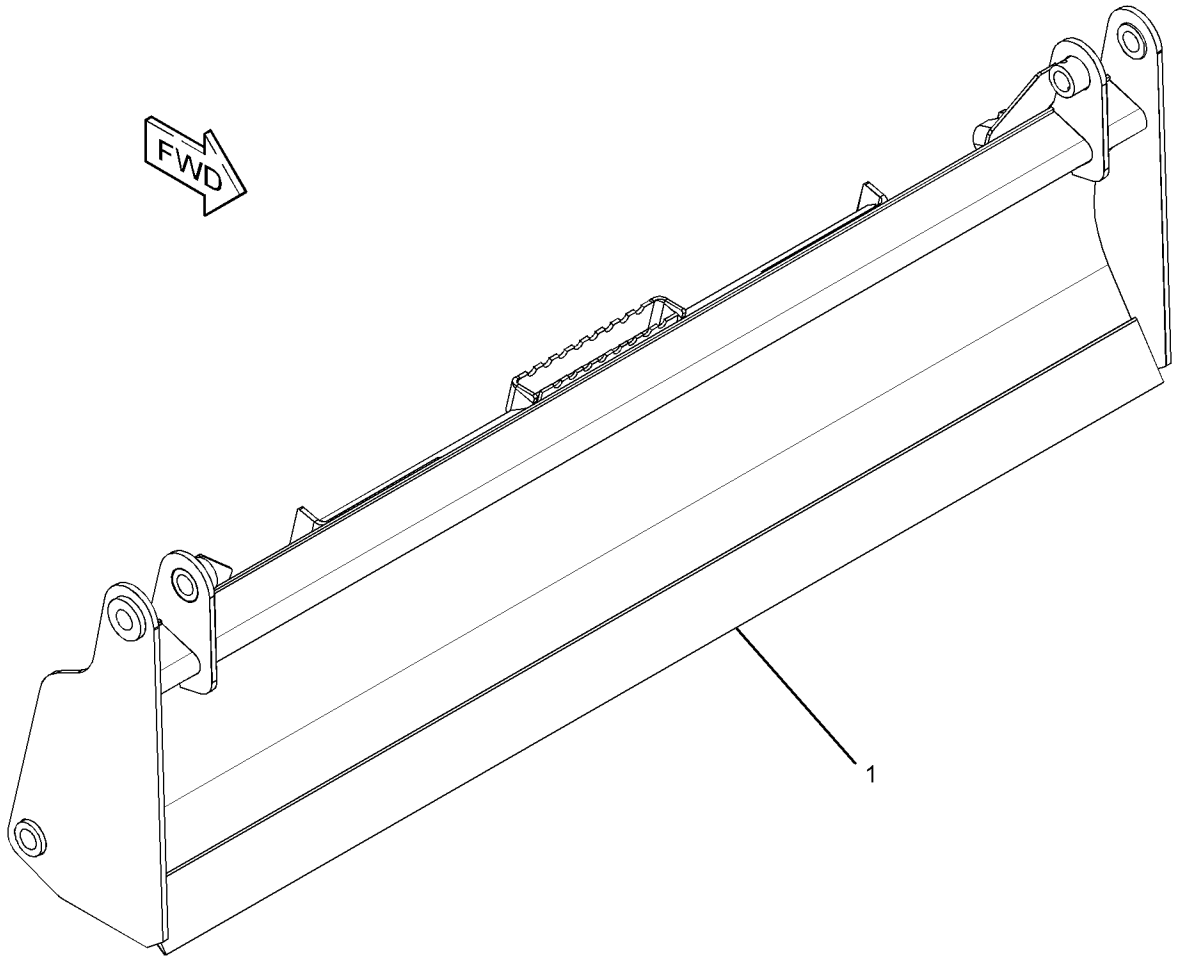

GRAPHIC #1 **<END>** g01954566

423-4287 BUCKET AR-MULTIPURPOSE

AN ATTACHMENT

SMCS-6104 **i05275300**

NOTE	PART NUMBER	QTY	PART NAME 1 2 3 4 5 6 (PRODUCT LEVEL)	SEE PAGE
Y	*423-4291*	1	BUCKET AR-MULTIPURPOSE	305
Y	*141-4999*	8	TOOTH GP-UNI	348

Y - SEPARATE ILLUSTRATION

<END>

423-4291 BUCKET AR-MULTIPURPOSE

PART OF 423-4287, 431-5570 BUCKET AR-MULTIPURPOSE

AN ATTACHMENT

SMCS-6104 **i05277297**

NOTE	PART NUMBER	QTY	PART NAME 1 2 3 4 5 6 (PRODUCT LEVEL)	SEE PAGE
Y	*423-4294*	1	BUCKET GP-MULTIPURPOSE (60-IN)	315
Y	*162-5236*	1	COVER GP-LINES	333
Y	**278-1969**	2	CYLINDER GP-HYDRAULIC	212
Y	*279-5413*	1	LINES GP-BUCKET	231
Y	*154-5011*	1	MOUNTING GP-CYLINDER	270

Y - SEPARATE ILLUSTRATION

<END>

426-6487 BUCKET AR-MULTIPURPOSE

AN ATTACHMENT

SMCS-6104 **i05275299**

NOTE	PART NUMBER	QTY	PART NAME 1 2 3 4 5 6 (PRODUCT LEVEL)	SEE PAGE
Y	*426-6492*	1	BUCKET AR-MULTIPURPOSE (66-IN)	306
Y	*141-4999*	8	TOOTH GP-UNI	348

Y - SEPARATE ILLUSTRATION

<END>

426-6490 BUCKET AR-MULTIPURPOSE

AN ATTACHMENT

SMCS-6104 **i05275298**

NOTE	PART NUMBER	QTY	PART NAME 1 2 3 4 5 6 (PRODUCT LEVEL)	SEE PAGE
Y	*426-6492*	1	BUCKET AR-MULTIPURPOSE (66-IN)	306
Y	*135-9385*	1	EDGE GP-CUTTING	337

Y - SEPARATE ILLUSTRATION

<END>

426-6492 BUCKET AR-MULTIPURPOSE

PART OF 426-6487, 426-6490 BUCKET AR-MULTIPURPOSE

AN ATTACHMENT

SMCS-6104 **i05277432**

NOTE	PART NUMBER	QTY	PART NAME 1 2 3 4 5 6 (PRODUCT LEVEL)	SEE PAGE
Y	*426-6495*	1	BUCKET GP-MULTIPURPOSE (66-IN)	316
Y	*162-5236*	1	COVER GP-LINES	333
Y	**278-1969**	2	CYLINDER GP-HYDRAULIC	212
Y	*279-5414*	1	LINES GP-BUCKET	233
Y	*154-5011*	1	MOUNTING GP-CYLINDER	270

Y - SEPARATE ILLUSTRATION

<END>

426-6535 BUCKET AR-MULTIPURPOSE

AN ATTACHMENT

SMCS-6104 **i05275297**

NOTE	PART NUMBER	QTY	PART NAME 1 2 3 4 5 6 (PRODUCT LEVEL)	SEE PAGE
Y	*426-6537*	1	BUCKET AR-MULTIPURPOSE (72-IN)	306
Y	*141-4999*	8	TOOTH GP-UNI	348

Y - SEPARATE ILLUSTRATION

<END>

426-6536 BUCKET AR-MULTIPURPOSE

AN ATTACHMENT

SMCS-6104 **i05275296**

NOTE	PART NUMBER	QTY	PART NAME 1 2 3 4 5 6 (PRODUCT LEVEL)	SEE PAGE
Y	*426-6537*	1	BUCKET AR-MULTIPURPOSE (72-IN)	306
Y	*135-9386*	1	EDGE GP-CUTTING	338

Y - SEPARATE ILLUSTRATION

<END>

426-6537 BUCKET AR-MULTIPURPOSE

PART OF 426-6535, 426-6536 BUCKET AR-MULTIPURPOSE

AN ATTACHMENT

SMCS-6104 **i05277431**

NOTE	PART NUMBER	QTY	PART NAME 1 2 3 4 5 6 (PRODUCT LEVEL)	SEE PAGE
Y	*426-6538*	1	BUCKET GP-MULTIPURPOSE (72-IN)	317
Y	*162-5236*	1	COVER GP-LINES	333
Y	**278-1969**	2	CYLINDER GP-HYDRAULIC	212
Y	*279-5415*	1	LINES GP-BUCKET	235
Y	*154-5011*	1	MOUNTING GP-CYLINDER	270

Y - SEPARATE ILLUSTRATION

<END>

426-6547 BUCKET AR-MULTIPURPOSE

AN ATTACHMENT

SMCS-6104 **i05275295**

NOTE	PART NUMBER	QTY	PART NAME 1 2 3 4 5 6 (PRODUCT LEVEL)	SEE PAGE
Y	*426-6549*	1	BUCKET AR-MULTIPURPOSE (78-IN)	307
Y	*141-4999*	9	TOOTH GP-UNI	348

Y - SEPARATE ILLUSTRATION

<END>

426-6548 BUCKET AR-MULTIPURPOSE

AN ATTACHMENT

SMCS-6104 **i05275294**

NOTE	PART NUMBER	QTY	PART NAME 1 2 3 4 5 6 (PRODUCT LEVEL)	SEE PAGE
Y	*426-6549*	1	BUCKET AR-MULTIPURPOSE (78-IN)	307
Y	*135-9387*	1	EDGE GP-CUTTING	339

Y - SEPARATE ILLUSTRATION

<END>

426-6549 BUCKET AR-MULTIPURPOSE

PART OF 426-6547, 426-6548 BUCKET AR-MULTIPURPOSE

AN ATTACHMENT

SMCS-6104 **i05277430**

NOTE	PART NUMBER	QTY	PART NAME 1 2 3 4 5 6 (PRODUCT LEVEL)	SEE PAGE
Y	*426-6550*	1	BUCKET GP-MULTIPURPOSE (78-IN)	318
Y	*162-5236*	1	COVER GP-LINES	333
Y	**278-1969**	2	CYLINDER GP-HYDRAULIC	212
Y	*279-5416*	1	LINES GP-BUCKET	237
Y	*154-5011*	1	MOUNTING GP-CYLINDER	270

Y - SEPARATE ILLUSTRATION

<END>

426-6557 BUCKET AR-MULTIPURPOSE

AN ATTACHMENT

SMCS-6104 **i05275293**

NOTE	PART NUMBER	QTY	PART NAME 1 2 3 4 5 6 (PRODUCT LEVEL)	SEE PAGE
Y	*426-6559*	1	BUCKET AR-MULTIPURPOSE	308
Y	*141-4999*	9	TOOTH GP-UNI	348

Y - SEPARATE ILLUSTRATION

<END>

426-6558 BUCKET AR-MULTIPURPOSE

AN ATTACHMENT

SMCS-6104 **i05281189**

NOTE	PART NUMBER	QTY	PART NAME 1 2 3 4 5 6 (PRODUCT LEVEL)	SEE PAGE
Y	*426-6559*	1	BUCKET AR-MULTIPURPOSE (84-IN)	308
Y	*195-7124*	1	EDGE GP-CUTTING	340

Y - SEPARATE ILLUSTRATION

<END>

426-6559 BUCKET AR-MULTIPURPOSE

PART OF 426-6557, 426-6558 BUCKET AR-MULTIPURPOSE

AN ATTACHMENT

SMCS-6104 **i05277429**

NOTE	PART NUMBER	QTY	PART NAME 1 2 3 4 5 6 (PRODUCT LEVEL)	SEE PAGE
Y	*426-6560*	1	BUCKET GP-MULTIPURPOSE (84-IN)	319
Y	*162-5236*	1	COVER GP-LINES	333
Y	**278-1969**	2	CYLINDER GP-HYDRAULIC	212
Y	*293-0140*	1	LINES GP-BUCKET	239
Y	*154-5011*	1	MOUNTING GP-CYLINDER	270

Y - SEPARATE ILLUSTRATION

<END>

426-6931 BUCKET AR-MULTIPURPOSE

AN ATTACHMENT

SMCS-6104 **i05275291**

NOTE	PART NUMBER	QTY	PART NAME 1 2 3 4 5 6 (PRODUCT LEVEL)	SEE PAGE
Y	*426-6933*	1	BUCKET AR-MULTIPURPOSE (60-IN)	309
Y	*141-4999*	8	TOOTH GP-UNI	348

Y - SEPARATE ILLUSTRATION

<END>

426-6932 BUCKET AR-MULTIPURPOSE

AN ATTACHMENT

SMCS-6104 **i05275290**

NOTE	PART NUMBER	QTY	PART NAME 1 2 3 4 5 6 (PRODUCT LEVEL)	SEE PAGE
Y	*426-6933*	1	BUCKET AR-MULTIPURPOSE (60-IN)	309
Y	*135-9384*	1	EDGE GP-CUTTING	336

Y - SEPARATE ILLUSTRATION

<END>

426-6933 BUCKET AR-MULTIPURPOSE

PART OF 426-6931, 426-6932 BUCKET AR-MULTIPURPOSE
AN ATTACHMENT

SMCS-6104 **i05277428**

NOTE	PART NUMBER	QTY	PART NAME 1 2 3 4 5 6 (PRODUCT LEVEL)	SEE PAGE
Y	*426-6934*	1	BUCKET GP-MULTIPURPOSE (60-IN)	320
Y	*162-5236*	1	COVER GP-LINES	333
Y	**278-1969**	2	CYLINDER GP-HYDRAULIC	212
Y	*279-5413*	1	LINES GP-BUCKET	231
Y	*154-5011*	1	MOUNTING GP-CYLINDER	270

Y - SEPARATE ILLUSTRATION

<END>

426-6938 BUCKET AR-MULTIPURPOSE

AN ATTACHMENT

SMCS-6104 **i05275288**

NOTE	PART NUMBER	QTY	PART NAME 1 2 3 4 5 6 (PRODUCT LEVEL)	SEE PAGE
Y	*426-6940*	1	BUCKET AR-MULTIPURPOSE (66-IN)	309
Y	*141-4999*	8	TOOTH GP-UNI	348

Y - SEPARATE ILLUSTRATION

<END>

426-6939 BUCKET AR-MULTIPURPOSE

AN ATTACHMENT

SMCS-6104 **i05275287**

NOTE	PART NUMBER	QTY	PART NAME 1 2 3 4 5 6 (PRODUCT LEVEL)	SEE PAGE
Y	*426-6940*	1	BUCKET AR-MULTIPURPOSE (66-IN)	309
Y	*135-9385*	1	EDGE GP-CUTTING	337

Y - SEPARATE ILLUSTRATION

<END>

426-6940 BUCKET AR-MULTIPURPOSE

PART OF 426-6938, 426-6939 BUCKET AR-MULTIPURPOSE
AN ATTACHMENT

SMCS-6104 **i05277426**

NOTE	PART NUMBER	QTY	PART NAME 1 2 3 4 5 6 (PRODUCT LEVEL)	SEE PAGE
Y	*426-6941*	1	BUCKET GP-MULTIPURPOSE (66-IN)	321
Y	*162-5236*	1	COVER GP-LINES	333
Y	**278-1969**	2	CYLINDER GP-HYDRAULIC	212
Y	*279-5414*	1	LINES GP-BUCKET	233
Y	*154-5011*	1	MOUNTING GP-CYLINDER	270

Y - SEPARATE ILLUSTRATION

<END>

426-6944 BUCKET AR-MULTIPURPOSE

AN ATTACHMENT

SMCS-6104 **i05275286**

NOTE	PART NUMBER	QTY	PART NAME 1 2 3 4 5 6 (PRODUCT LEVEL)	SEE PAGE
Y	*426-6947*	1	BUCKET AR-MULTIPURPOSE (72-IN)	310
Y	*141-4999*	8	TOOTH GP-UNI	348

Y - SEPARATE ILLUSTRATION

<END>

426-6945 BUCKET AR-MULTIPURPOSE

AN ATTACHMENT

SMCS-6104 **i05275284**

NOTE	PART NUMBER	QTY	PART NAME 1 2 3 4 5 6 (PRODUCT LEVEL)	SEE PAGE
Y	*426-6947*	1	BUCKET AR-MULTIPURPOSE (72-IN)	310
Y	*135-9386*	1	EDGE GP-CUTTING	338

Y - SEPARATE ILLUSTRATION

<END>

426-6947 BUCKET AR-MULTIPURPOSE

PART OF 426-6944, 426-6945 BUCKET AR-MULTIPURPOSE

AN ATTACHMENT

SMCS-6104 **i05277425**

NOTE	PART NUMBER	QTY	PART NAME 1 2 3 4 5 6 (PRODUCT LEVEL)	SEE PAGE
Y	*426-6951*	1	BUCKET GP-MULTIPURPOSE (72-IN)	322
Y	*162-5236*	1	COVER GP-LINES	333
Y	***278-1969***	2	CYLINDER GP-HYDRAULIC	212
Y	*279-5415*	1	LINES GP-BUCKET	235
Y	*154-5011*	1	MOUNTING GP-CYLINDER	270

Y - SEPARATE ILLUSTRATION

<END>

426-6965 BUCKET AR-MULTIPURPOSE

AN ATTACHMENT

SMCS-6104 **i05275283**

NOTE	PART NUMBER	QTY	PART NAME 1 2 3 4 5 6 (PRODUCT LEVEL)	SEE PAGE
Y	*426-6970*	1	BUCKET AR-MULTIPURPOSE (78-IN)	311
Y	*141-4999*	9	TOOTH GP-UNI	348

Y - SEPARATE ILLUSTRATION

<END>

426-6967 BUCKET AR-MULTIPURPOSE

AN ATTACHMENT

SMCS-6104 **i05275281**

NOTE	PART NUMBER	QTY	PART NAME 1 2 3 4 5 6 (PRODUCT LEVEL)	SEE PAGE
Y	*426-6970*	1	BUCKET AR-MULTIPURPOSE (78-IN)	311
Y	*135-9387*	1	EDGE GP-CUTTING	339

Y - SEPARATE ILLUSTRATION

<END>

426-6970 BUCKET AR-MULTIPURPOSE

PART OF 426-6965, 426-6967 BUCKET AR-MULTIPURPOSE

AN ATTACHMENT

SMCS-6104 **i05277424**

NOTE	PART NUMBER	QTY	PART NAME 1 2 3 4 5 6 (PRODUCT LEVEL)	SEE PAGE
Y	*426-7102*	1	BUCKET GP-MULTIPURPOSE (78-IN)	323
Y	*162-5236*	1	COVER GP-LINES	333
Y	**278-1969**	2	CYLINDER GP-HYDRAULIC	212
Y	*279-5416*	1	LINES GP-BUCKET	237
Y	*154-5011*	1	MOUNTING GP-CYLINDER	270

Y - SEPARATE ILLUSTRATION

<END>

426-6985 BUCKET AR-MULTIPURPOSE

AN ATTACHMENT

SMCS-6104 **i05278849**

NOTE	PART NUMBER	QTY	PART NAME 1 2 3 4 5 6 (PRODUCT LEVEL)	SEE PAGE
Y	*426-6992*	1	BUCKET AR-MULTIPURPOSE	312
Y	*141-4999*	9	TOOTH GP-UNI	348

Y - SEPARATE ILLUSTRATION

<END>

426-6989 BUCKET AR-MULTIPURPOSE

AN ATTACHMENT

SMCS-6104 **i05275279**

NOTE	PART NUMBER	QTY	PART NAME 1 2 3 4 5 6 (PRODUCT LEVEL)	SEE PAGE
Y	*426-6992*	1	BUCKET AR-MULTIPURPOSE	312
Y	*195-7124*	1	EDGE GP-CUTTING	340

Y - SEPARATE ILLUSTRATION

<END>

426-6992 BUCKET AR-MULTIPURPOSE

PART OF 426-6985, 426-6989 BUCKET AR-MULTIPURPOSE

AN ATTACHMENT

SMCS-6104 **i05277298**

NOTE	PART NUMBER	QTY	PART NAME 1 2 3 4 5 6 (PRODUCT LEVEL)	SEE PAGE
Y	*426-6995*	1	BUCKET AR-MULTIPURPOSE (84-IN)	313
Y	*162-5236*	1	COVER GP-LINES	333
Y	**278-1969**	2	CYLINDER GP-HYDRAULIC	212
Y	*293-0140*	1	LINES GP-BUCKET	239
Y	*154-5011*	1	MOUNTING GP-CYLINDER	270

Y - SEPARATE ILLUSTRATION

<END>

426-6995 BUCKET AR-MULTIPURPOSE

PART OF 426-6992 BUCKET AR-MULTIPURPOSE
AN ATTACHMENT

SMCS-6104 **i05277422**

NOTE	REF NO	GRAPHIC REF	PART NUMBER	QTY	PART NAME 1 2 3 4 5 6 (PRODUCT LEVEL)	SEE PAGE
	1	1	**154-5012**	2	PIN	
Y	2	1	**426-6561**	1	CLAM AS-MULTIPURPOSE BUCKET	328
Y	3	1	*426-7001*	1	BLADE GP-MULTIPURPOSE BUCKET	303
	4	1	**3B-8489**	2	FITTING-GREASE	
M	5	1	**6V-9189**	2	LOCKNUT (M8X1.25-THD)	
M	6	1	**8T-6869**	2	BOLT (M8X1.25X60-MM)	

M - METRIC PART
Y - SEPARATE ILLUSTRATION

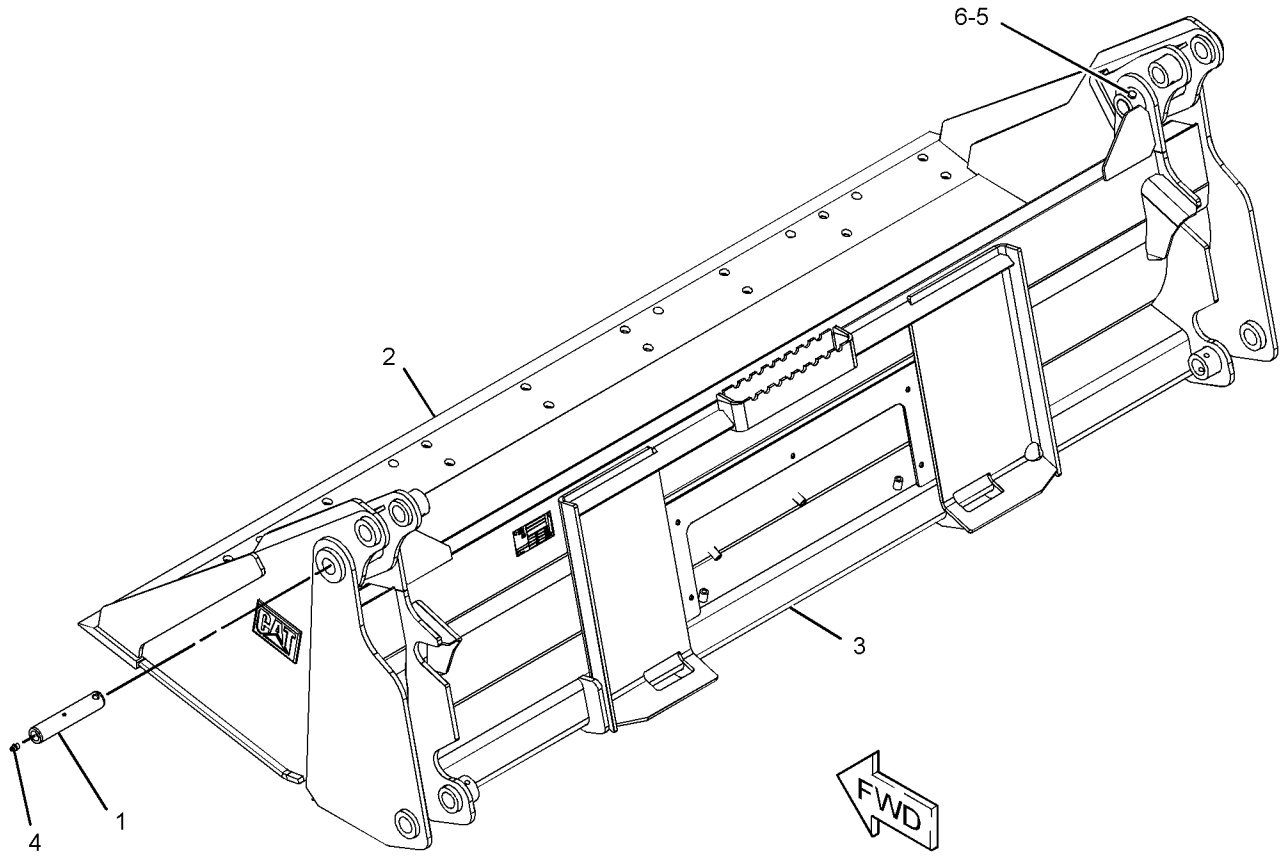

GRAPHIC #1 **<END>** g03359069

431-5570 BUCKET AR-MULTIPURPOSE

AN ATTACHMENT

SMCS-6104 **i05275276**

NOTE	PART NUMBER	QTY	PART NAME 1 2 3 4 5 6 (PRODUCT LEVEL)	SEE PAGE
Y	*423-4291*	1	BUCKET AR-MULTIPURPOSE	305
Y	*135-9384*	1	EDGE GP-CUTTING	336

Y - SEPARATE ILLUSTRATION

<END>

423-4294 BUCKET GP-MULTIPURPOSE

PART OF 423-4291 BUCKET AR-MULTIPURPOSE
AN ATTACHMENT

SMCS-6104 **i05277423**

NOTE	REF NO	GRAPHIC REF	PART NUMBER	QTY	PART NAME 1 2 3 4 5 6 (PRODUCT LEVEL)	SEE PAGE
	1	1	**154-5012**	2	PIN	
	2	1	**159-8038**	2	FILM-WARNING (CRUSH HAZARD, STAY BACK)	
Y	3	1	**423-4297**	1	CLAM AS-MULTIPURPOSE BUCKET	324
Y	4	1	*423-4298*	1	BLADE GP-MULTIPURPOSE BUCKET	286
	5	1	**3B-8489**	2	FITTING-GREASE	
M	6	1	**6V-9189**	2	LOCKNUT (M8X1.25-THD)	
M	7	1	**8T-6869**	2	BOLT (M8X1.25X60-MM)	

M - METRIC PART
Y - SEPARATE ILLUSTRATION

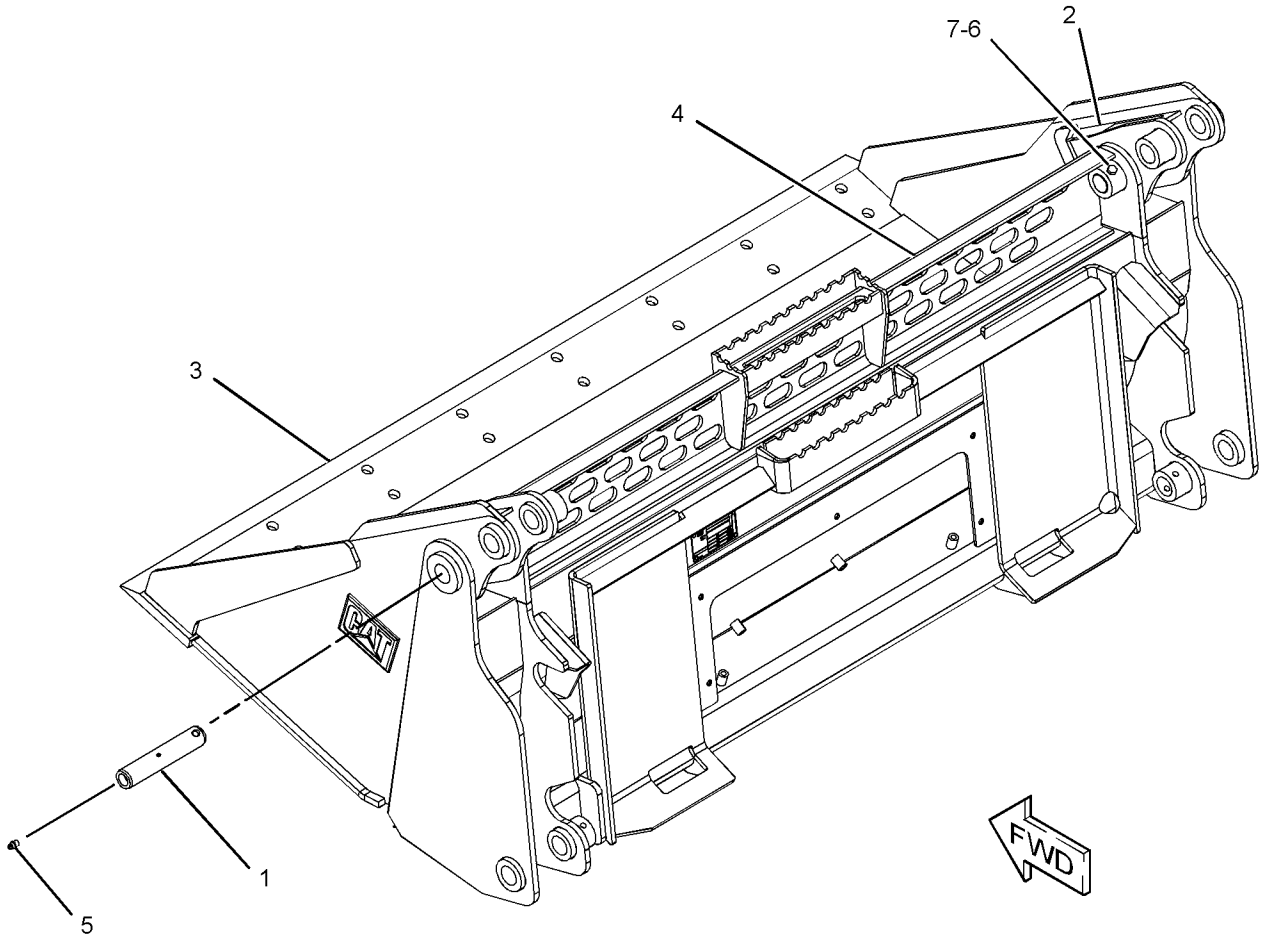

GRAPHIC #1 **<END>** g03359276

426-6495 BUCKET GP-MULTIPURPOSE

PART OF 426-6492 BUCKET AR-MULTIPURPOSE

AN ATTACHMENT

SMCS-6104 **i05281211**

NOTE	REF NO	GRAPHIC REF	PART NUMBER	QTY	PART NAME 1 2 3 4 5 6 (PRODUCT LEVEL)	SEE PAGE
	1	1	**154-5012**	2	PIN	
	2	1	**159-8038**	2	FILM-WARNING (CRUSH HAZARD, STAY BACK)	
Y	3	1	**426-6497**	1	CLAM AS-MULTIPURPOSE BUCKET	325
Y	4	1	*426-6503*	1	BLADE GP-MULTIPURPOSE BUCKET (66-IN)	288
	5	1	**3B-8489**	2	FITTING-GREASE	
M	6	1	**6V-9189**	2	LOCKNUT (M8X1.25-THD)	
M	7	1	**8T-6869**	2	BOLT (M8X1.25X60-MM)	

M - METRIC PART
Y - SEPARATE ILLUSTRATION

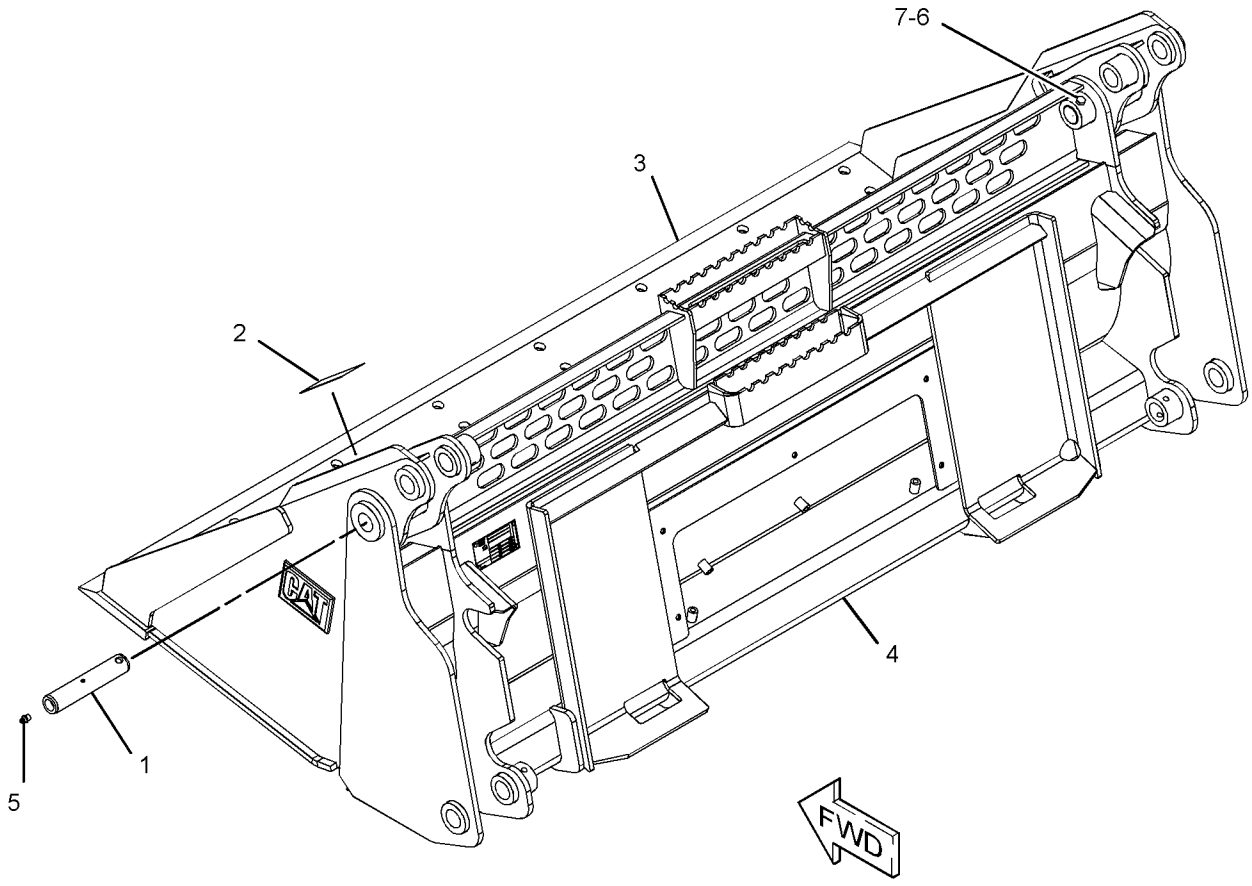

GRAPHIC #1 **<END>** g03359728

426-6538 BUCKET GP-MULTIPURPOSE

PART OF 426-6537 BUCKET AR-MULTIPURPOSE

AN ATTACHMENT

SMCS-6104 **i05281215**

NOTE	REF NO	GRAPHIC REF	PART NUMBER	QTY	PART NAME 1 2 3 4 5 6 (PRODUCT LEVEL)	SEE PAGE
	1	1	**154-5012**	2	PIN	
	2	1	**159-8038**	2	FILM-WARNING (CRUSH HAZARD, STAY BACK)	
Y	3	1	**426-6539**	1	CLAM AS-MULTIPURPOSE BUCKET	326
Y	4	1	*426-6544*	1	BLADE GP-MULTIPURPOSE BUCKET (72-IN)	290
	5	1	**3B-8489**	2	FITTING-GREASE	
M	6	1	**6V-9189**	2	LOCKNUT (M8X1.25-THD)	
M	7	1	**8T-6869**	2	BOLT (M8X1.25X60-MM)	

M - METRIC PART
Y - SEPARATE ILLUSTRATION

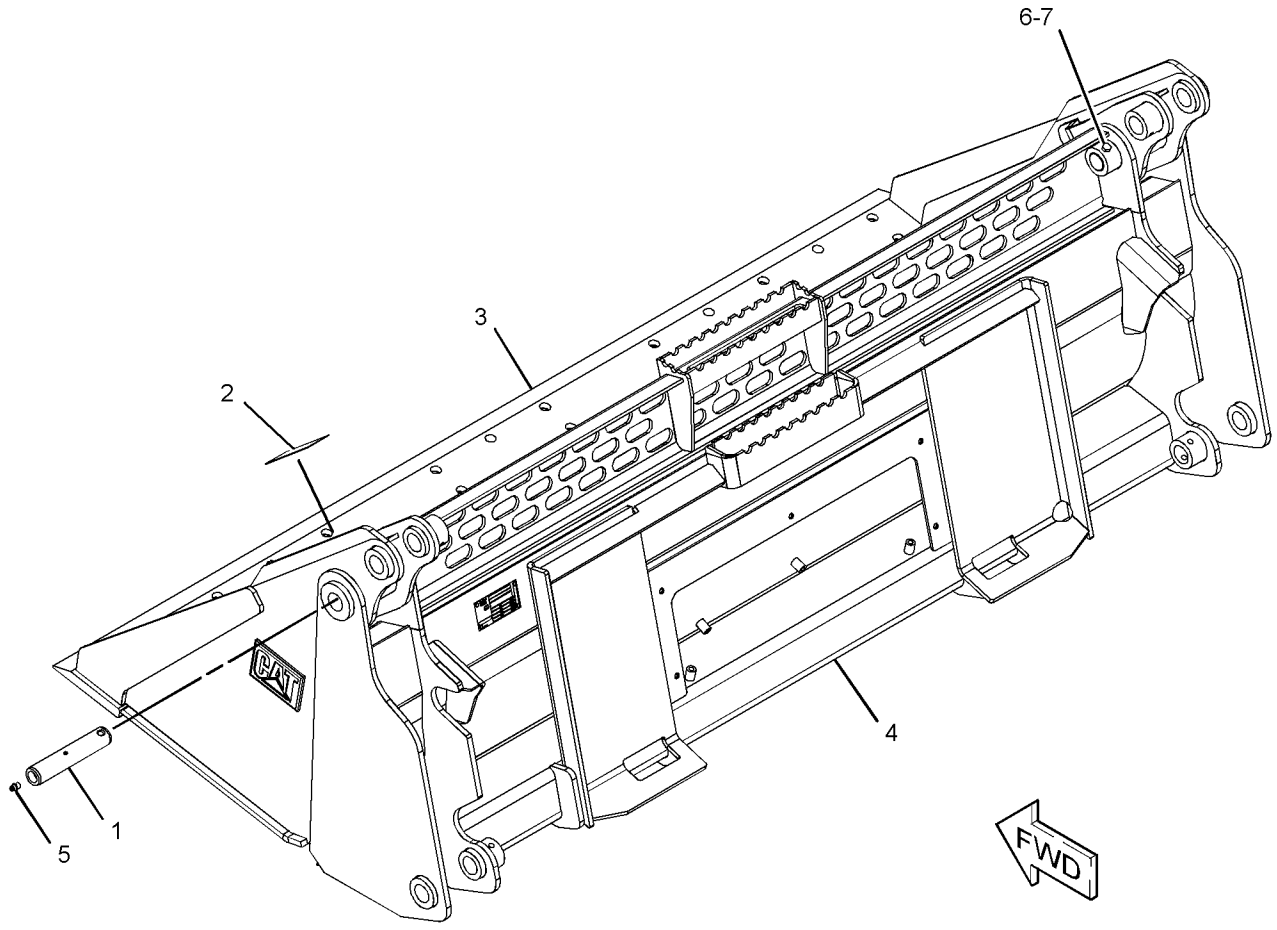

GRAPHIC #1 **<END>** g03359734

426-6550 BUCKET GP-MULTIPURPOSE

PART OF 426-6549 BUCKET AR-MULTIPURPOSE

AN ATTACHMENT

SMCS-6104 **i05281217**

NOTE	REF NO	GRAPHIC REF	PART NUMBER	QTY	PART NAME 1 2 3 4 5 6 (PRODUCT LEVEL)	SEE PAGE
	1	1	**154-5012**	2	PIN	
	2	1	**159-8038**	2	FILM-WARNING (CRUSH HAZARD, STAY BACK)	
Y	3	1	**426-6551**	1	CLAM AS-MULTIPURPOSE BUCKET	327
Y	4	1	*426-6554*	1	BLADE GP-MULTIPURPOSE BUCKET (78-IN)	292
	5	1	**3B-8489**	2	FITTING-GREASE	
M	6	1	**6V-9189**	2	LOCKNUT (M8X1.25-THD)	
M	7	1	**8T-6869**	2	BOLT (M8X1.25X60-MM)	

M - METRIC PART
Y - SEPARATE ILLUSTRATION

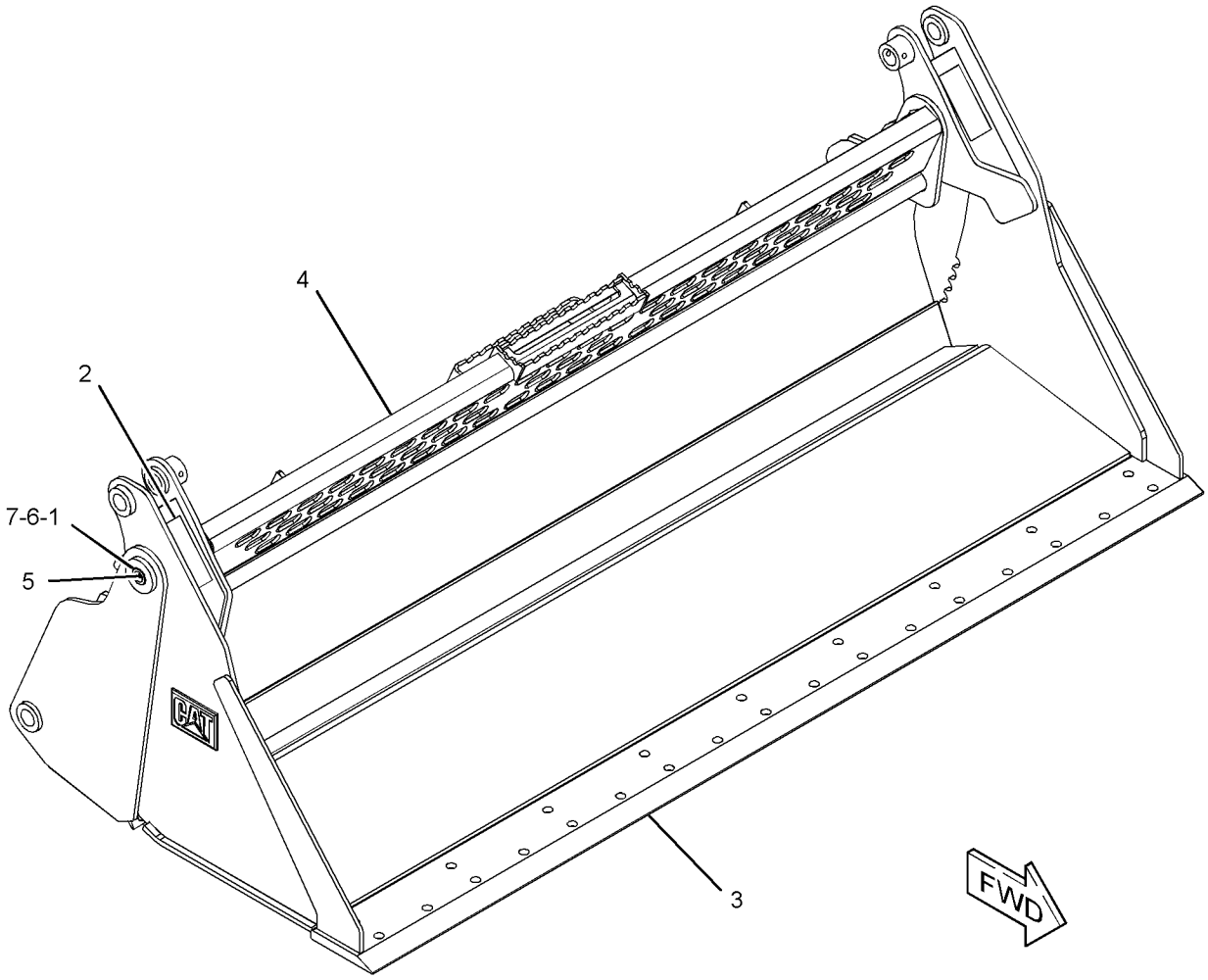

GRAPHIC #1 **<END>** g03360146

426-6560 BUCKET GP-MULTIPURPOSE

PART OF 426-6559 BUCKET AR-MULTIPURPOSE

AN ATTACHMENT

SMCS-6104 **i05278981**

NOTE	REF NO	GRAPHIC REF	PART NUMBER	QTY	PART NAME 1 2 3 4 5 6 (PRODUCT LEVEL)	SEE PAGE
	1	1	**154-5012**	2	PIN	
	2	1	**159-8038**	2	FILM-WARNING (CRUSH HAZARD, STAY BACK)	
Y	3	1	**426-6561**	1	CLAM AS-MULTIPURPOSE BUCKET	328
Y	4	1	*426-6564*	1	BLADE GP-MULTIPURPOSE BUCKET (MULTIPURPOSE BUCKET)	294
	5	1	**3B-8489**	2	FITTING-GREASE	
M	6	1	**6V-9189**	2	LOCKNUT (M8X1.25-THD)	
M	7	1	**8T-6869**	2	BOLT (M8X1.25X60-MM)	

M - METRIC PART
Y - SEPARATE ILLUSTRATION

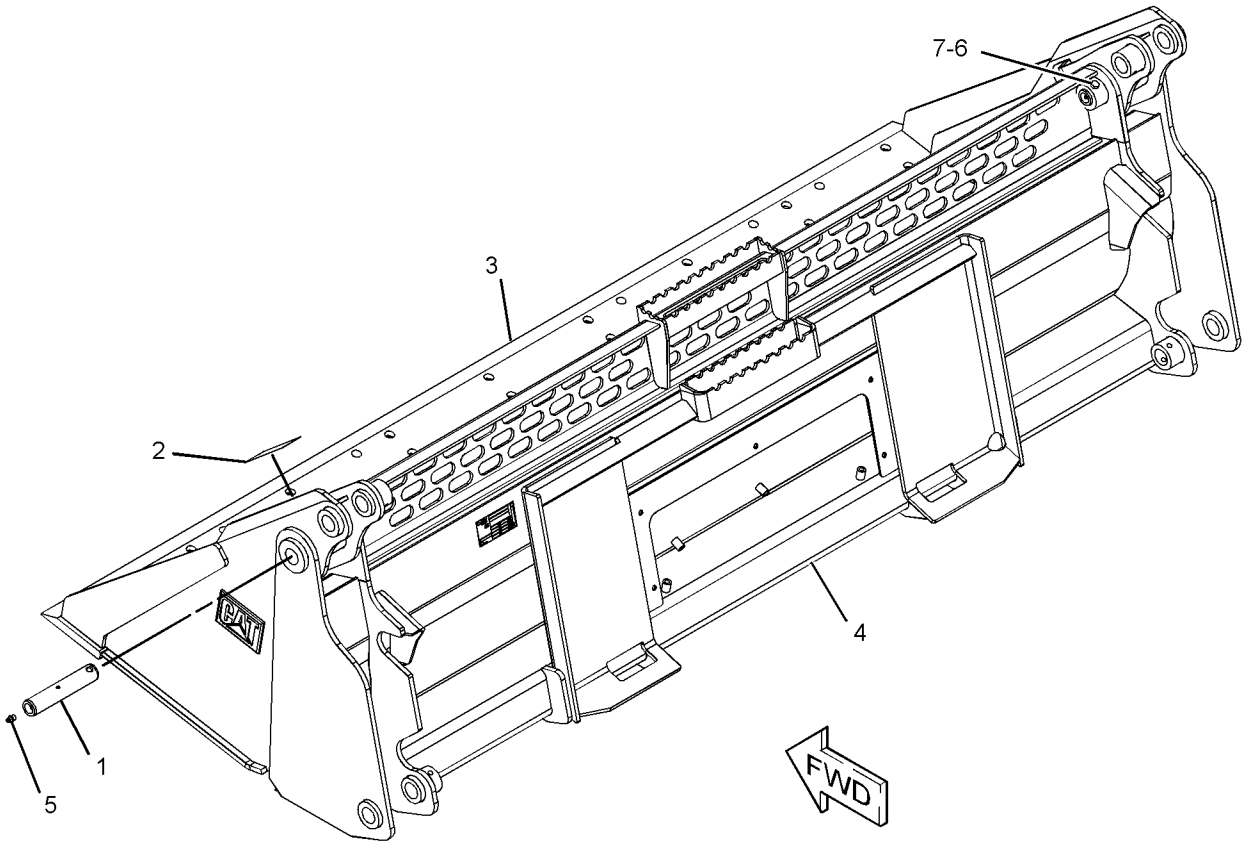

GRAPHIC #1 **<END>** g03359704

426-6934 BUCKET GP-MULTIPURPOSE

60-IN (1524-MM)

PART OF 426-6933 BUCKET AR-MULTIPURPOSE

AN ATTACHMENT

SMCS-6104 **i05281250**

NOTE	REF NO	GRAPHIC REF	PART NUMBER	QTY	PART NAME 1 2 3 4 5 6 (PRODUCT LEVEL)	SEE PAGE
	1	1	**154-5012**	2	PIN	
	2	1	**159-8038**	2	FILM-WARNING (CRUSH HAZARD, STAY BACK)	
Y	3	1	**423-4297**	1	CLAM AS-MULTIPURPOSE BUCKET	324
Y	4	1	*426-6935*	1	BLADE GP-MULTIPURPOSE BUCKET (60-IN)	296
	5	1	**3B-8489**	2	FITTING-GREASE	
M	6	1	**6V-9189**	2	LOCKNUT (M8X1.25-THD)	
M	7	1	**8T-6869**	2	BOLT (M8X1.25X60-MM)	

M - METRIC PART
Y - SEPARATE ILLUSTRATION

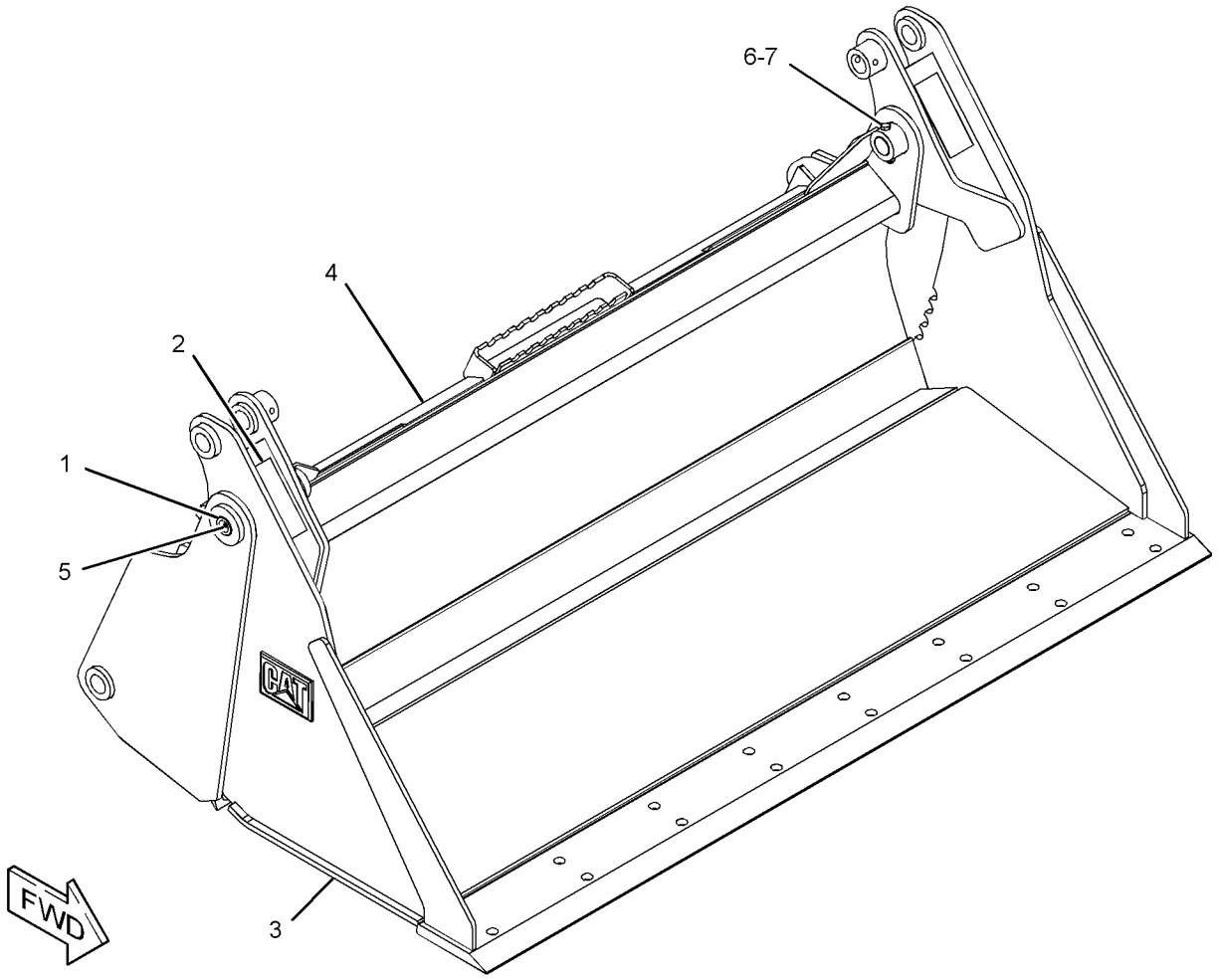

GRAPHIC #1 **<END>** g03358351

426-6941 BUCKET GP-MULTIPURPOSE

PART OF 426-6940 BUCKET AR-MULTIPURPOSE

AN ATTACHMENT

SMCS-6104 **i05281257**

NOTE	REF NO	GRAPHIC REF	PART NUMBER	QTY	PART NAME 1 2 3 4 5 6 (PRODUCT LEVEL)	SEE PAGE
	1	1	**154-5012**	2	PIN	
	2	1	**159-8038**	2	FILM-WARNING (CRUSH HAZARD, STAY BACK)	
Y	3	1	**426-6497**	1	CLAM AS-MULTIPURPOSE BUCKET	325
Y	4	1	*426-6943*	1	BLADE GP-MULTIPURPOSE BUCKET (66-IN)	298
	5	1	**3B-8489**	2	FITTING-GREASE	
M	6	1	**6V-9189**	2	LOCKNUT (M8X1.25-THD)	
M	7	1	**8T-6869**	2	BOLT (M8X1.25X60-MM)	

M - METRIC PART
Y - SEPARATE ILLUSTRATION

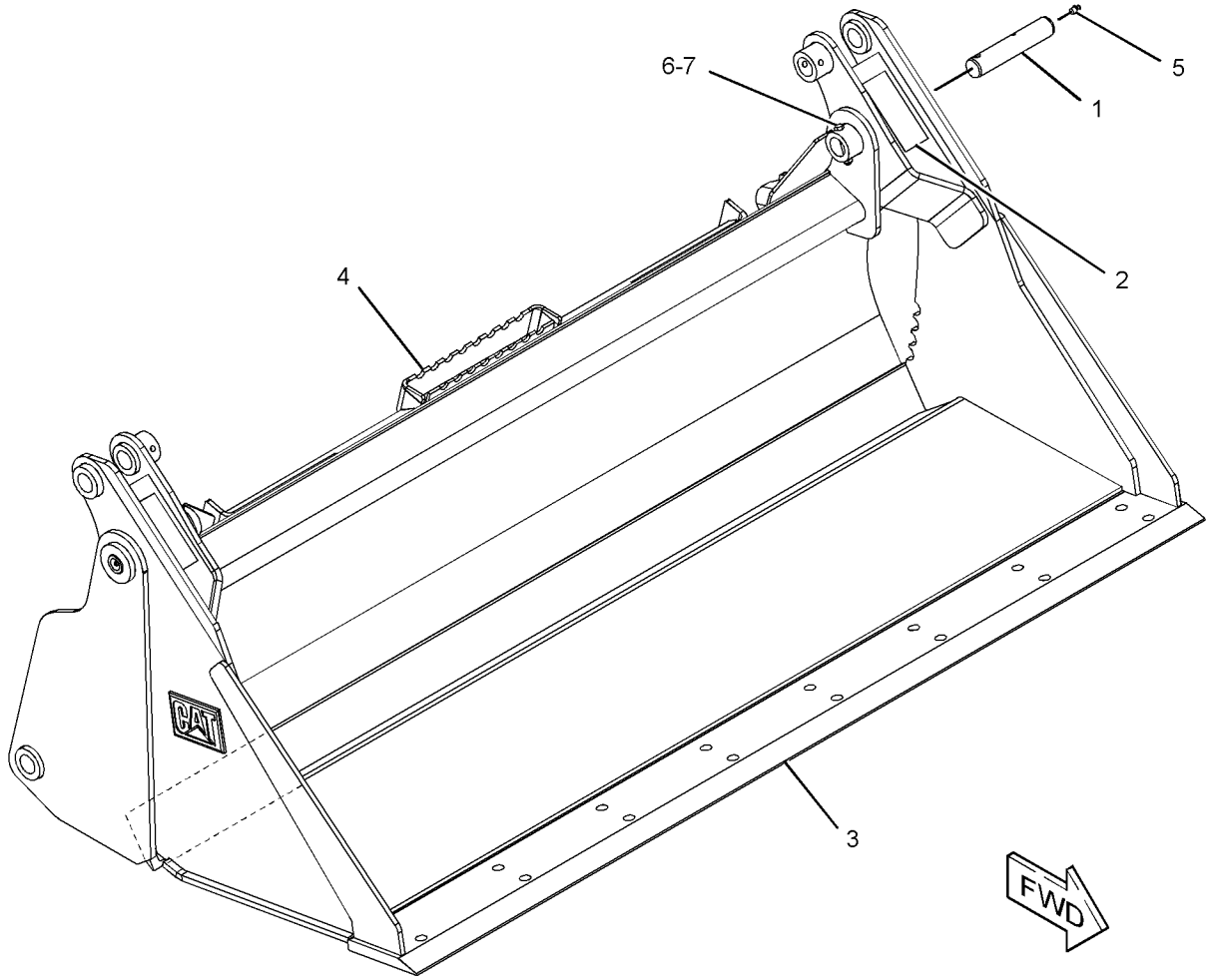

GRAPHIC #1 **<END>** g03363136

426-6951 BUCKET GP-MULTIPURPOSE

PART OF 426-6947 BUCKET AR-MULTIPURPOSE

AN ATTACHMENT

SMCS-6104 **i05281263**

NOTE	REF NO	GRAPHIC REF	PART NUMBER	QTY	PART NAME 1 2 3 4 5 6 (PRODUCT LEVEL)	SEE PAGE
	1	1	**154-5012**	2	PIN	
	2	1	**159-8038**	2	FILM-WARNING (CRUSH HAZARD, STAY BACK)	
Y	3	1	**426-6539**	1	CLAM AS-MULTIPURPOSE BUCKET	326
Y	4	1	*426-6957*	1	BLADE GP-MULTIPURPOSE BUCKET (72-IN)	299
	5	1	**3B-8489**	2	FITTING-GREASE	
M	6	1	**6V-9189**	2	LOCKNUT (M8X1.25-THD)	
M	7	1	**8T-6869**	2	BOLT (M8X1.25X60-MM)	

M - METRIC PART
Y - SEPARATE ILLUSTRATION

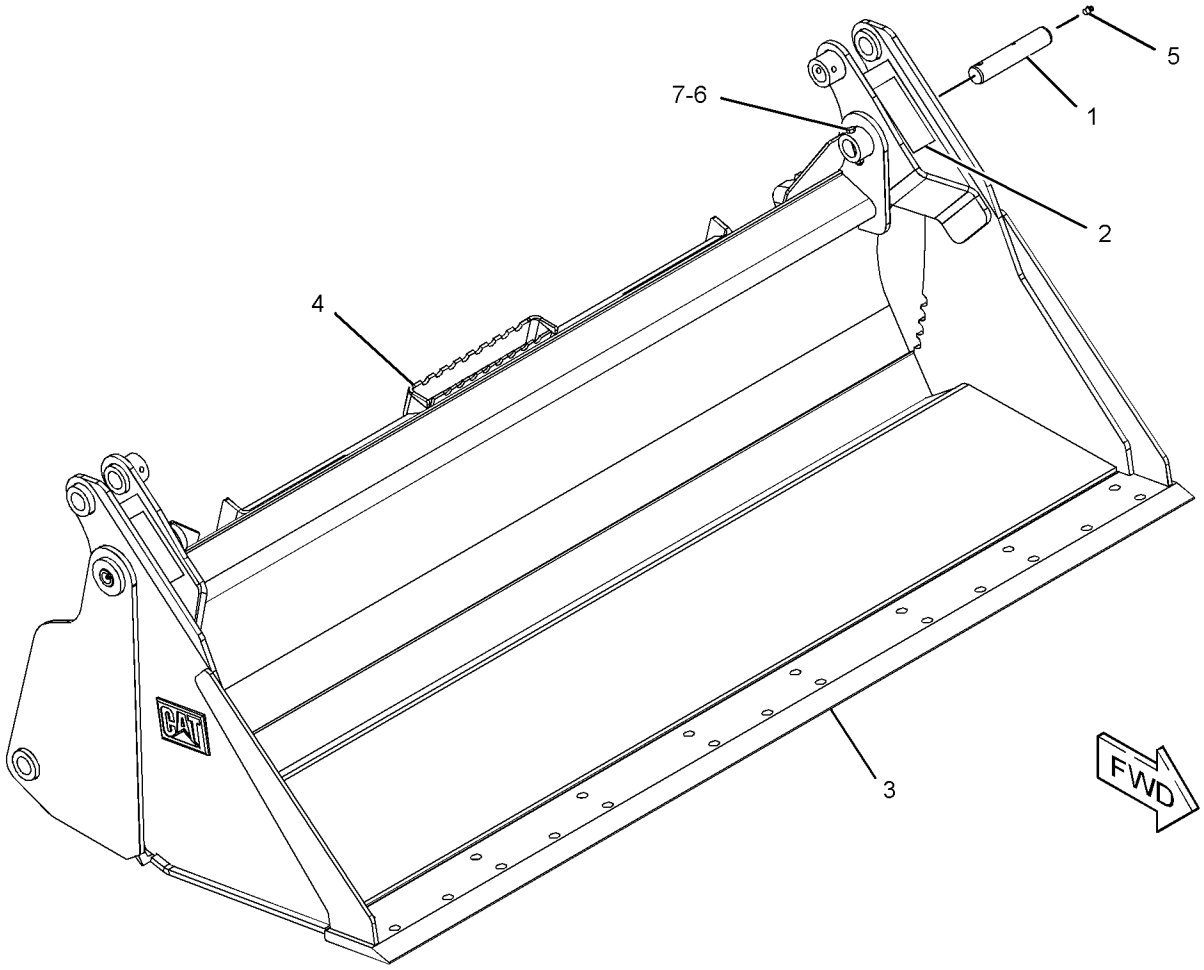

GRAPHIC #1 **<END>** g03359678

426-7102 BUCKET GP-MULTIPURPOSE

PART OF 426-6970 BUCKET AR-MULTIPURPOSE

AN ATTACHMENT

SMCS-6104 **i05281272**

NOTE	REF NO	GRAPHIC REF	PART NUMBER	QTY	PART NAME 1 2 3 4 5 6 (PRODUCT LEVEL)	SEE PAGE
	1	1	**154-5012**	2	PIN	
	2	1	**159-8038**	2	FILM-WARNING (CRUSH HAZARD, STAY BACK)	
Y	3	1	**426-6551**	1	CLAM AS-MULTIPURPOSE BUCKET	327
Y	4	1	*426-6978*	1	BLADE GP-MULTIPURPOSE BUCKET (78-IN)	301
	5	1	**3B-8489**	2	FITTING-GREASE	
M	6	1	**6V-9189**	2	LOCKNUT (M8X1.25-THD)	
M	7	1	**8T-6869**	2	BOLT (M8X1.25X60-MM)	

M - METRIC PART
Y - SEPARATE ILLUSTRATION

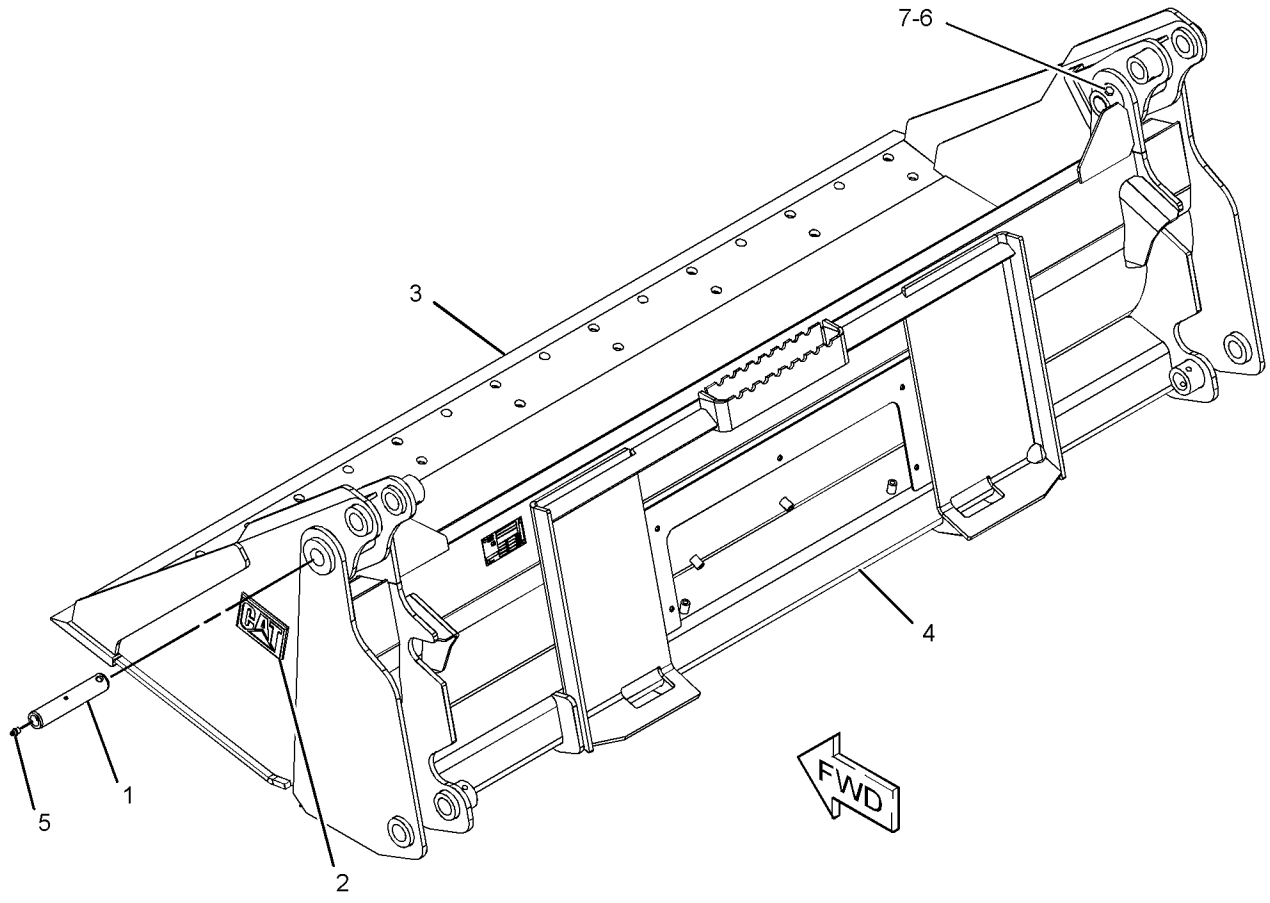

GRAPHIC #1 **<END>** g03358711

423-4297 CLAM AS-MULTIPURPOSE BUCKET

1524-MM (60-IN)

PART OF 423-4294, 426-6934 BUCKET GP-MULTIPURPOSE

AN ATTACHMENT

SMCS-6104 **i05284450**

NOTE	REF NO	GRAPHIC REF	PART NUMBER	QTY	PART NAME 1 2 3 4 5 6 (PRODUCT LEVEL)	SEE PAGE
	1	1	**142-8805**	4	BUSHING	
	2	1	**161-4130**	2	PLATE-IDENTIFICATION (CAT)	
	3	1	**149-5435**	1	EDGE	
	4	1	**159-8038**	2	FILM-WARNING (CRUSH HAZARD, STAY BACK)	

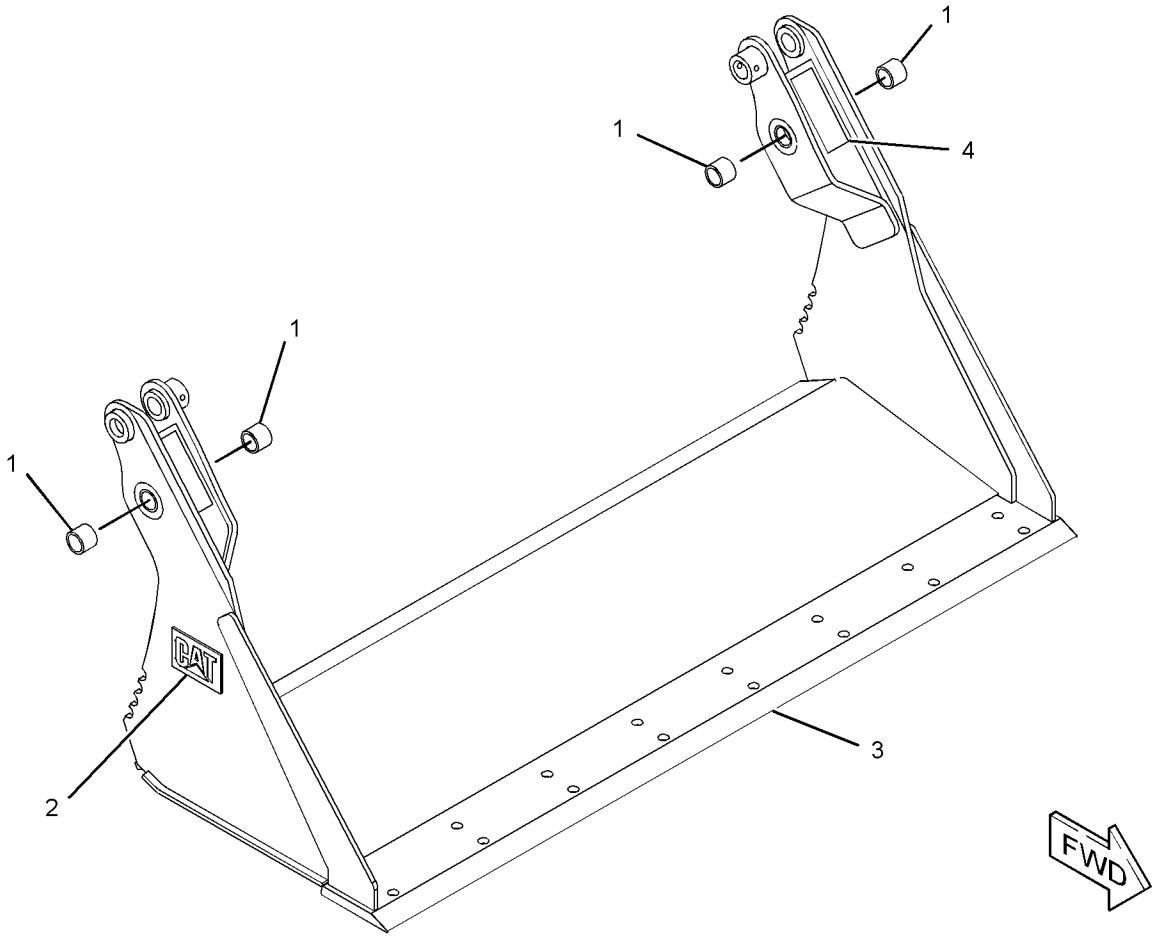

GRAPHIC #1 **<END>** g01945759

426-6497 CLAM AS-MULTIPURPOSE BUCKET

1676.4-MM (66-IN)
PART OF 426-6495, 426-6941 BUCKET GP-MULTIPURPOSE
AN ATTACHMENT

SMCS-6104 **i05284469**

NOTE	REF NO	GRAPHIC REF	PART NUMBER	QTY	PART NAME 1 2 3 4 5 6 (PRODUCT LEVEL)	SEE PAGE
	1	1	**142-8805**	4	BUSHING	
	2	1	**161-4130**	2	PLATE-IDENTIFICATION (CAT)	
	3	1	**149-5435**	1	EDGE	
	4	1	**159-8038**	2	FILM-WARNING (CRUSH HAZARD, STAY BACK)	

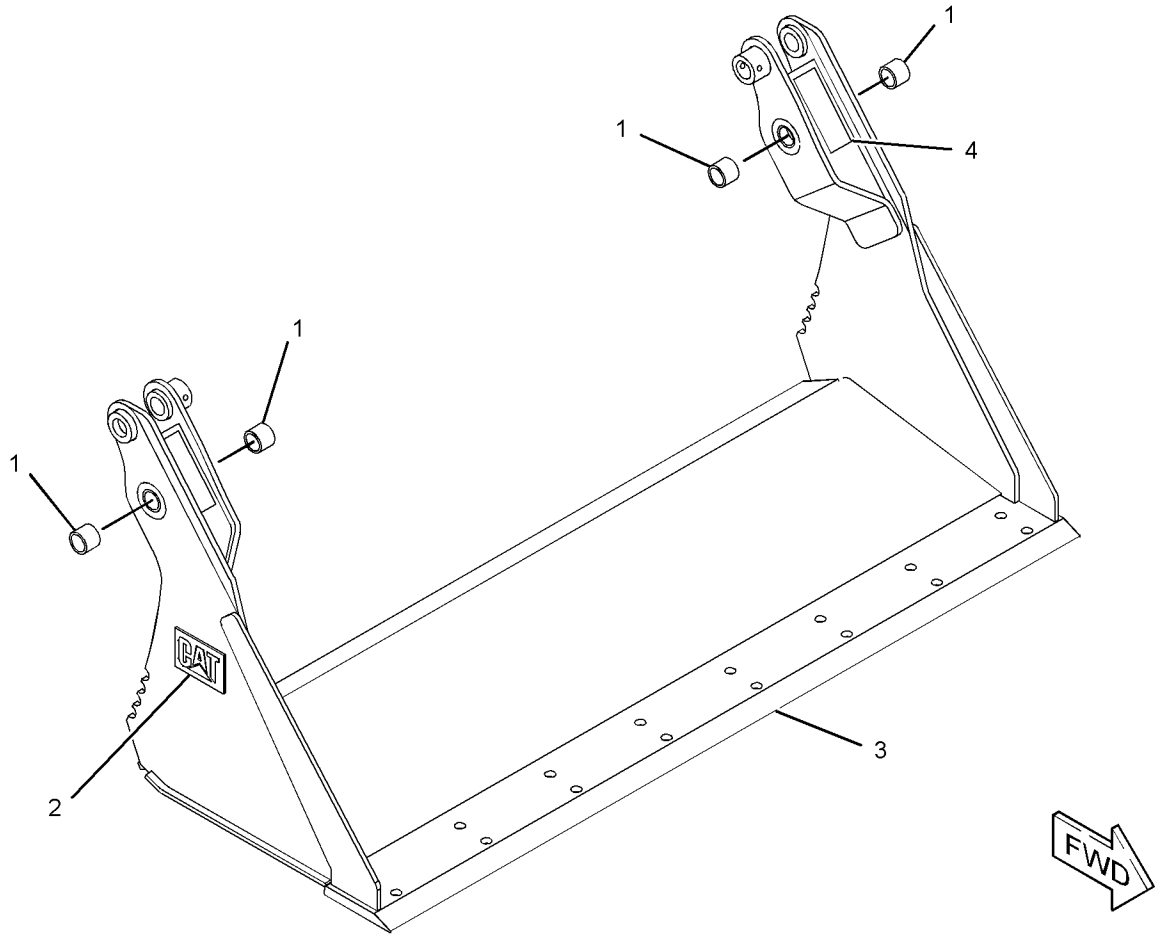

GRAPHIC #1 **<END>** g01945759

426-6539 CLAM AS-MULTIPURPOSE BUCKET

1828.8-MM (72-IN)

PART OF 426-6538, 426-6951 BUCKET GP-MULTIPURPOSE

AN ATTACHMENT

SMCS-6104 **i05288629**

NOTE	REF NO	GRAPHIC REF	PART NUMBER	QTY	PART NAME 1 2 3 4 5 6 (PRODUCT LEVEL)	SEE PAGE
	1	1	**142-8805**	4	BUSHING	
	2	1	**161-4130**	2	PLATE-IDENTIFICATION (CAT)	
	3	1	**149-5437**	1	EDGE	
	4	1	**159-8038**	2	FILM-WARNING (CRUSH HAZARD, STAY BACK)	

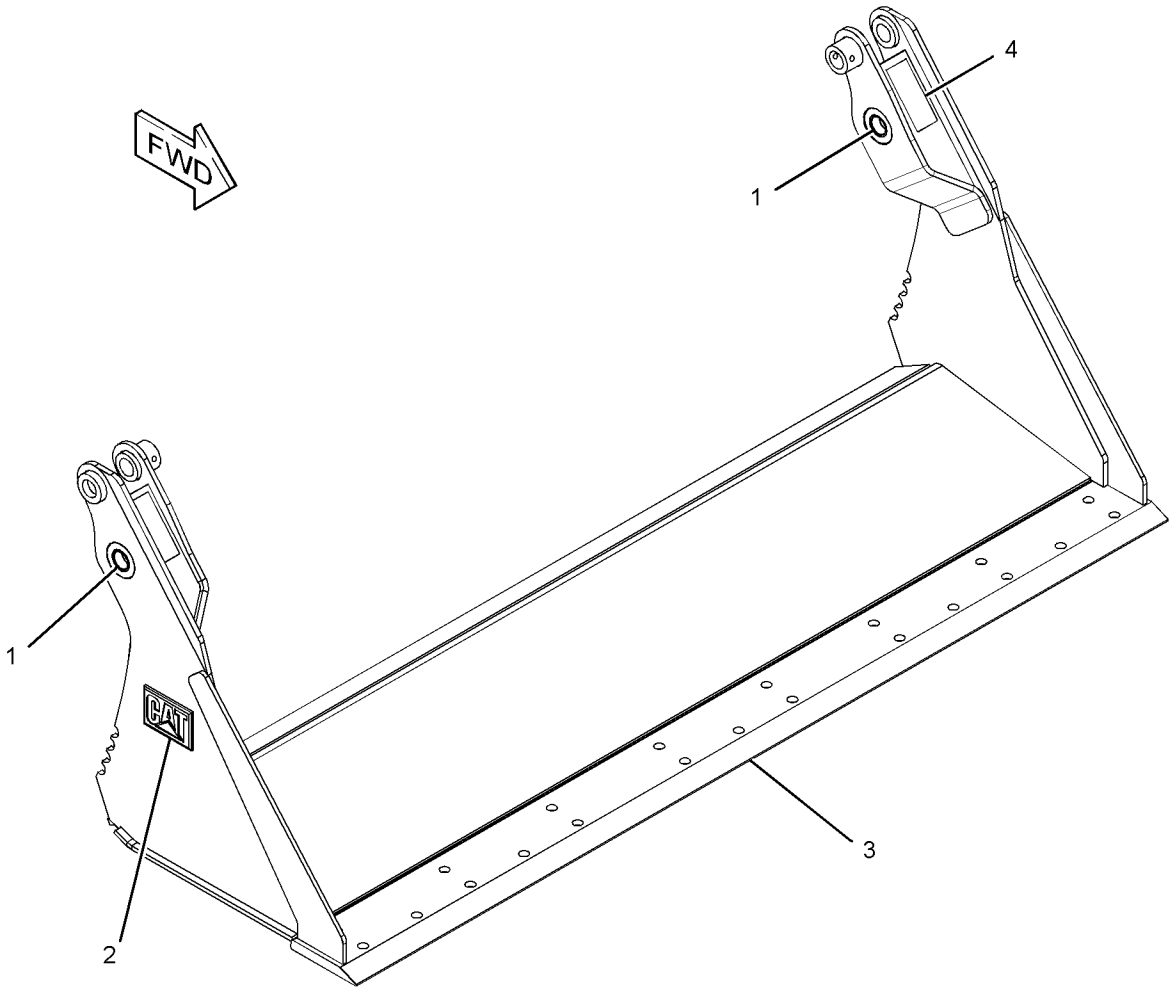

GRAPHIC #1 **<END>** g01945555

426-6551 CLAM AS-MULTIPURPOSE BUCKET

1981.2-MM (78-IN)
PART OF 426-6550, 426-7102 BUCKET GP-MULTIPURPOSE
AN ATTACHMENT

SMCS-6104 **i05284509**

NOTE	REF NO	GRAPHIC REF	PART NUMBER	QTY	PART NAME 1 2 3 4 5 6 (PRODUCT LEVEL)	SEE PAGE
	1	1	**142-8805**	4	BUSHING	
	2	1	**161-4130**	2	PLATE-IDENTIFICATION (CAT)	
	3	1	**199-7722**	1	EDGE (2035-MM)	
	4	1	**199-8317**	1	EDGE	
F			**159-8038**	2	FILM-WARNING (CRUSH HAZARD, STAY BACK)	

F - NOT SHOWN

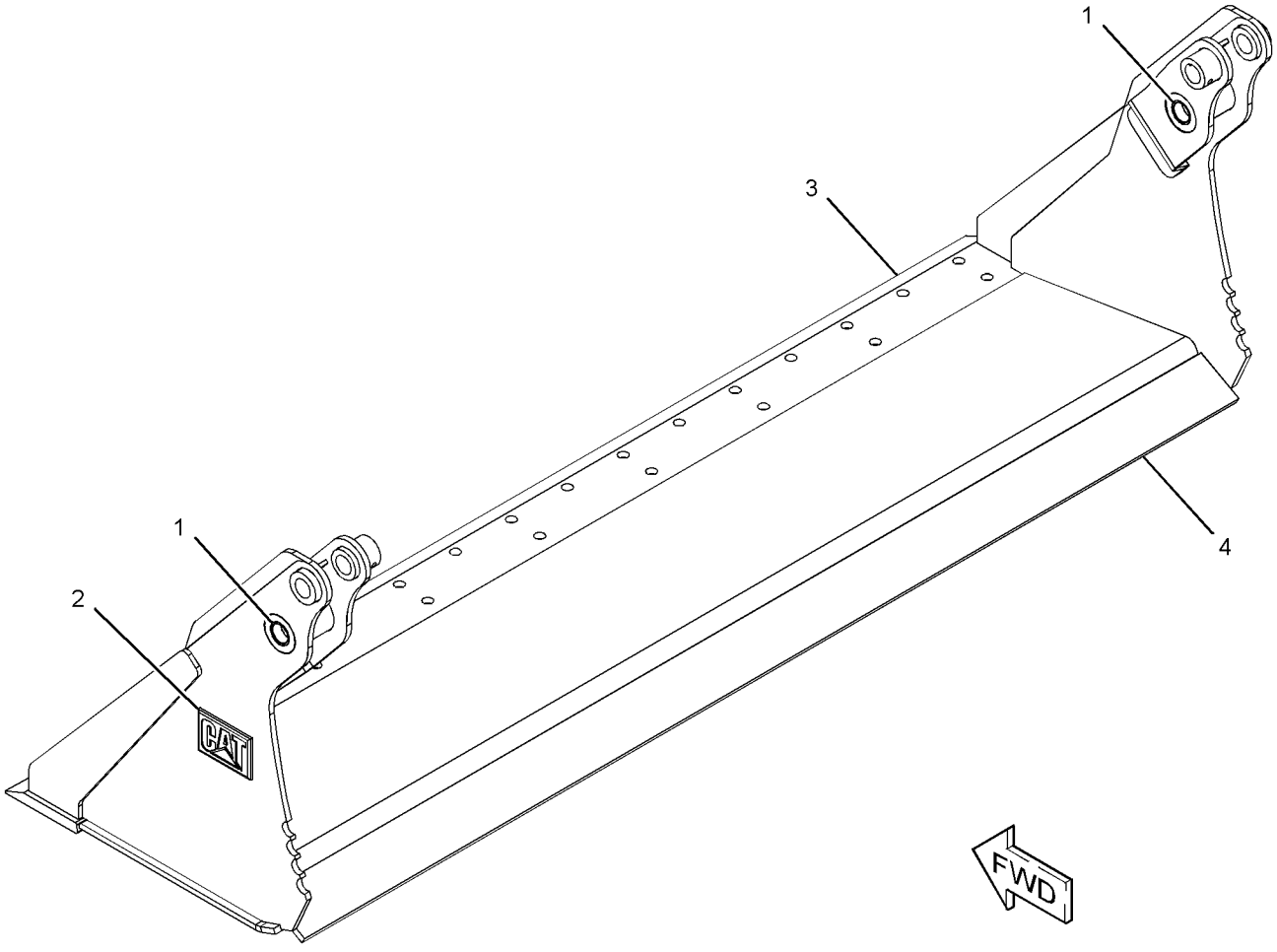

GRAPHIC #1 **<END>** g03360334

426-6561 CLAM AS-MULTIPURPOSE BUCKET

2133.6-MM (84-IN)

PART OF 426-6995 BUCKET AR-MULTIPURPOSE, 426-6560 BUCKET GP-MULTIPURPOSE

AN ATTACHMENT

SMCS-6104 **i05277421**

NOTE	REF NO	GRAPHIC REF	PART NUMBER	QTY	PART NAME 1 2 3 4 5 6 (PRODUCT LEVEL)	SEE PAGE
	1	1	**142-8805**	4	BUSHING	
	2	1	**161-4130**	2	PLATE-IDENTIFICATION (CAT)	
	3	1	**229-3432**	1	EDGE	
F			**159-8038**	2	FILM-WARNING (CRUSH HAZARD, STAY BACK)	

F - NOT SHOWN

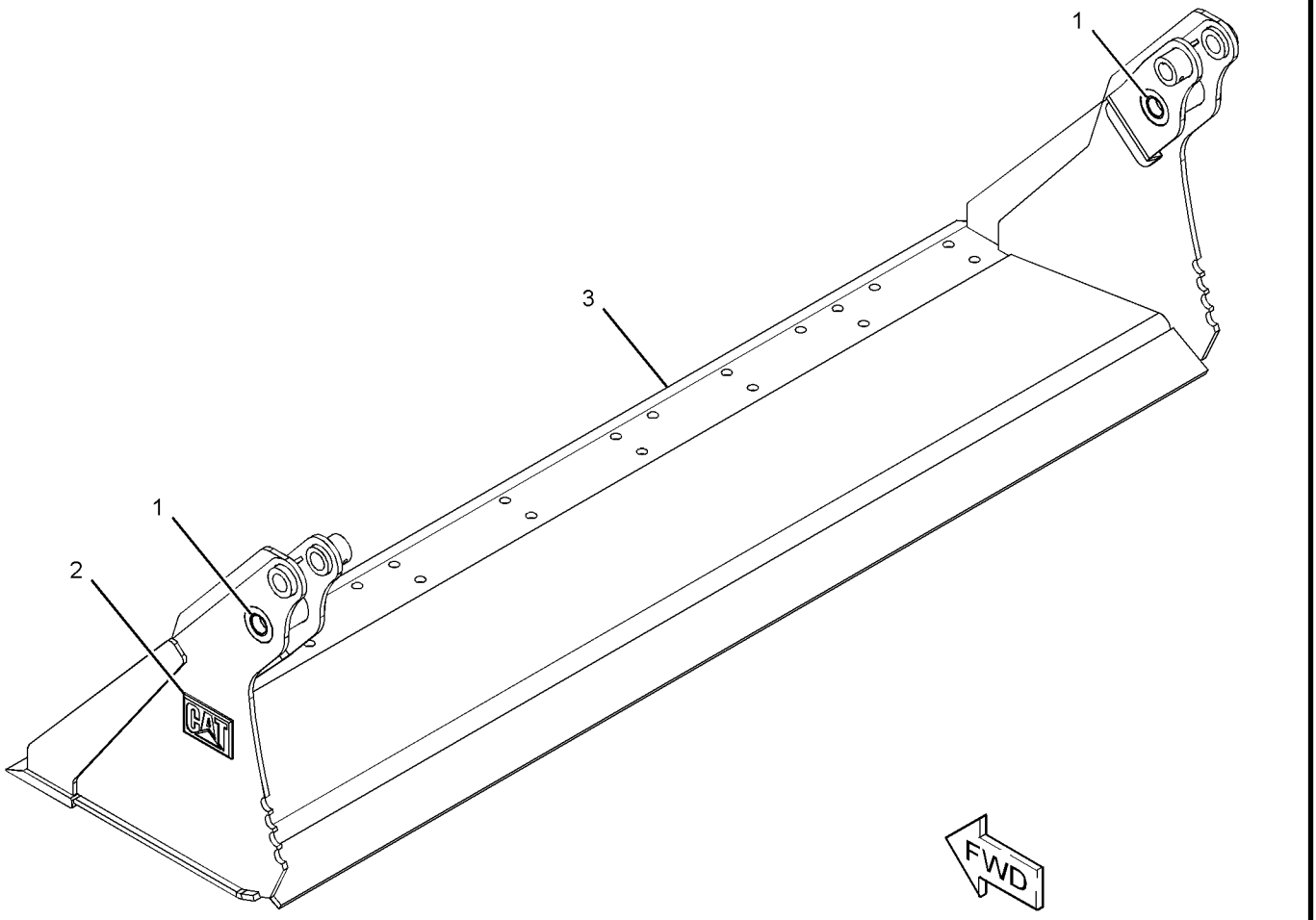

GRAPHIC #1 **<END>** g03360357

345-4744 COUPLER AR-QUICK

AN ATTACHMENT

SMCS-6129 **i05228072**

NOTE	PART NUMBER	QTY	PART NAME 1 2 3 4 5 6 (PRODUCT LEVEL)	SEE PAGE
Y	*345-5001*	1	COUPLER GP-QUICK	331
Y	*361-6378*	1	WIRING GP-QUICK COUPLER	145
M	**8T-4136**	2	BOLT (M10X1.5X25-MM)	
	266-3316	6	BOLT-FLANGE HEAD (M10X1.5X25-MM)	
	345-5112	1	COVER AS-GUARD	
	384-2261	2	PLATE-COVER	
	8T-4121	2	WASHER-HARD (11X21X2.5-MM THK)	

M - METRIC PART
Y - SEPARATE ILLUSTRATION

<END>

345-4910 COUPLER AR-QUICK

AN ATTACHMENT

SMCS-6129 **i05172972**

NOTE	PART NUMBER	QTY	PART NAME 1 2 3 4 5 6 (PRODUCT LEVEL)	SEE PAGE
Y	*345-5000*	1	COUPLER GP-QUICK	330

Y - SEPARATE ILLUSTRATION

<END>

345-5000 COUPLER GP-QUICK

PART OF 345-4910 COUPLER AR-QUICK

AN ATTACHMENT

SMCS-6129 **i05194915**

NOTE	REF NO	GRAPHIC REF	PART NUMBER	QTY	PART NAME 1 2 3 4 5 6 (PRODUCT LEVEL)	SEE PAGE
	1	1	**159-5797**	2	SPRING	
	2	1	**423-3676**	1	COUPLER AS	
Y	3	1	*345-5130*	1	LOCK GP-QUICK COUPLER (LH)	346
Y	4	1	*345-5133*	1	LOCK GP-QUICK COUPLER (RH)	347
	5	1	**8T-4222**	4	WASHER-PLATED (11X32X2.5-MM THK)	
	6	1	**132-7551**	2	SPACER (11X19X6-MM THK)	
	7	1	**5B-0651**	2	FITTING-STRAIGHT	
M	8	1	**6V-7744**	2	LOCKNUT (M10X1.5-THD)	
	9	1	**8T-4121**	4	WASHER-HARD (11X21X2.5-MM THK)	
M	10	1	**8T-4172**	2	BOLT (M10X1.5X80-MM)	

M - METRIC PART
Y - SEPARATE ILLUSTRATION

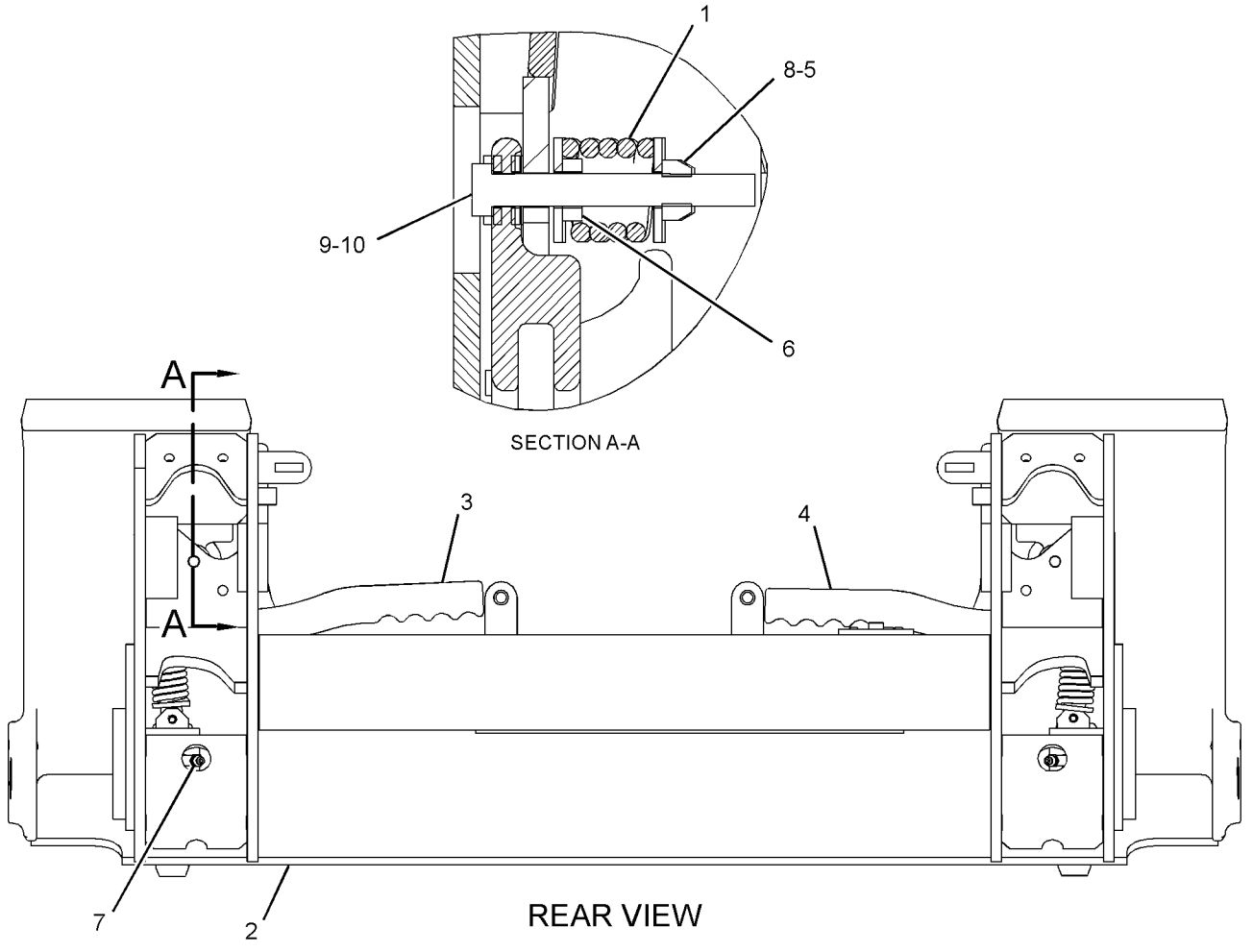

GRAPHIC #1 **<END>** g03329796

345-5001 COUPLER GP-QUICK

PART OF 345-4744 COUPLER AR-QUICK

AN ATTACHMENT

SMCS-6129 **i05265732**

NOTE	REF NO	GRAPHIC REF	PART NUMBER	QTY	PART NAME 1 2 3 4 5 6 (PRODUCT LEVEL)	SEE PAGE
CY	1	1	*388-8209*	1	LINK GP-COUPLER (RH)	343
CY	2	1	*388-8210*	1	LINK GP-COUPLER (LH)	344
	3	1	**423-3676**	1	COUPLER AS	
C	4	1	**132-7551**	4	SPACER (11X19X6-MM THK)	
C	5	1	**3B-4617**	2	PIN-COTTER	
	6	1	**5B-0651**	2	FITTING-STRAIGHT	
CM	7	1	**6V-7744**	2	LOCKNUT (M10X1.5-THD)	
C	8	1	**6W-5752**	2	PIN	
C	9	1	**8T-4121**	2	WASHER-HARD (11X21X2.5-MM THK)	
CM	10	1	**8T-4198**	2	BOLT (M10X1.5X100-MM)	
	11	1	**8T-4223**	2	WASHER-HARD (13.5X25.5X3-MM THK)	

C - CHANGE FROM PREVIOUS TYPE
M - METRIC PART
Y - SEPARATE ILLUSTRATION

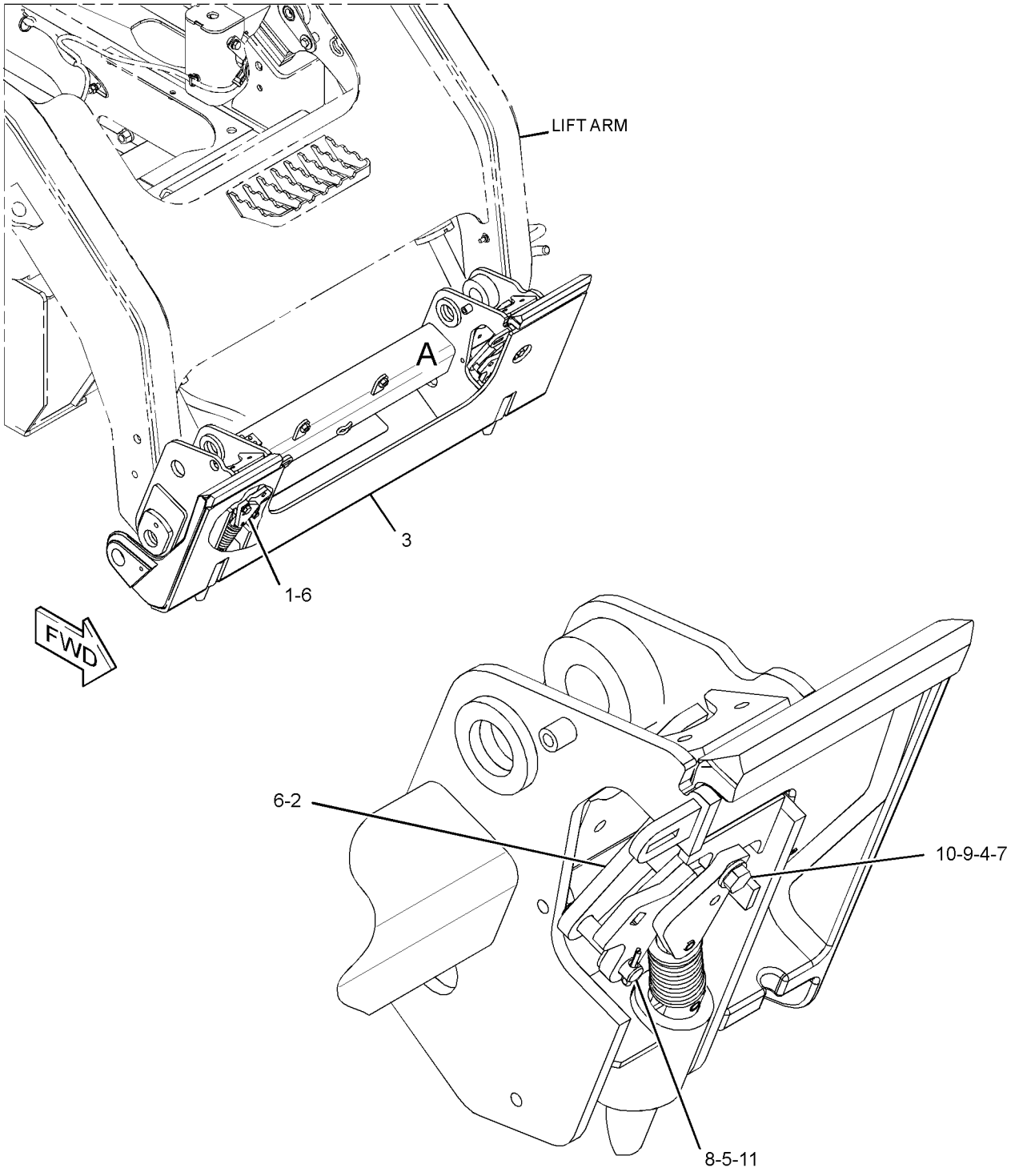

VIEW OF AREA A
(PARTS REMOVED FOR CLARITY)

GRAPHIC #1 **<END>** g03351797

162-5236 COVER GP-LINES

PART OF 423-4291, 426-6492, 426-6537, 426-6549, 426-6559, 426-6933, 426-6940, 426-6947, 426-6970, 426-6992 BUCKET AR-MULTIPURPOSE
AN ATTACHMENT

SMCS- **i04358198**

NOTE	REF NO	GRAPHIC REF	PART NUMBER	QTY	PART NAME 1 2 3 4 5 6 (PRODUCT LEVEL)	SEE PAGE
	1	1	**161-4128**	1	PLATE	
M	2	1	**5C-9553**	5	BOLT (M6X1X16-MM)	
	3	1	**9X-2026**	5	WASHER (6.5X17X1-MM THK)	

M - METRIC PART

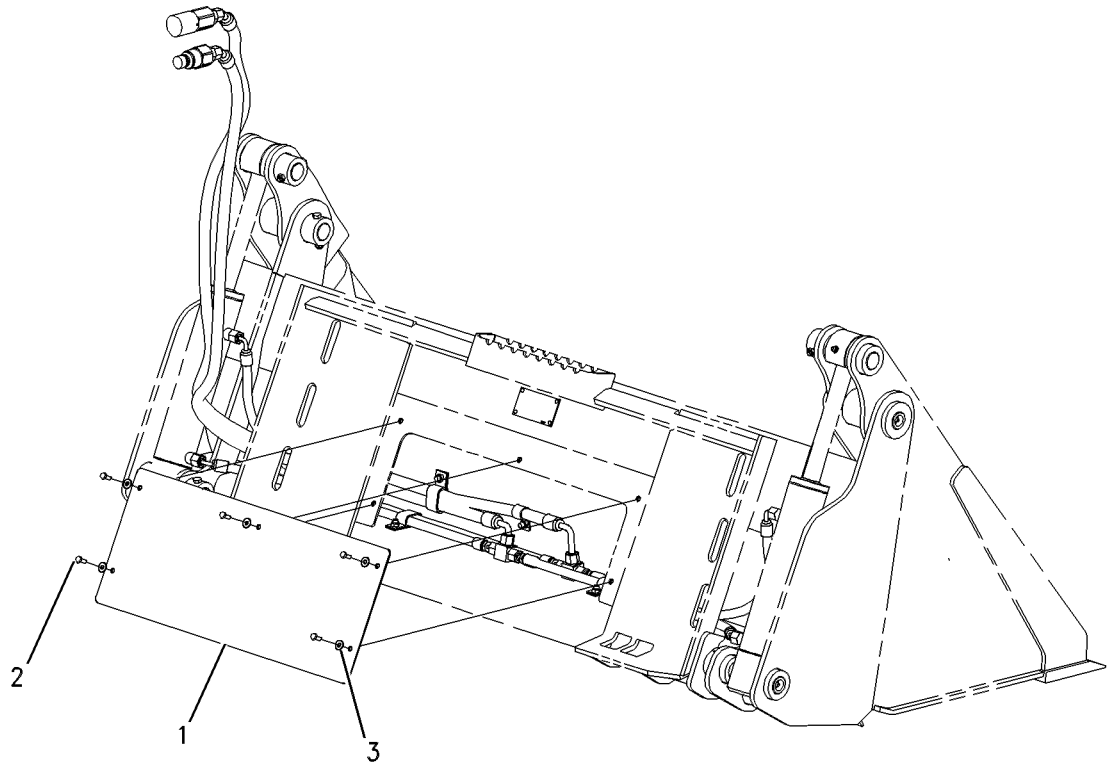

GRAPHIC #1 **<END>** g00560360

222-7545 EDGE GP-BIT & CUTTING

FOR USE WITH 2007-MM (79-IN) BUCKET
PART OF 231-5276 BLADE GP-ANGLING
AN ATTACHMENT

SMCS-6801, 6804 **i04411305**

NOTE	REF NO	GRAPHIC REF	PART NUMBER	QTY	PART NAME 1 2 3 4 5 6 (PRODUCT LEVEL)	SEE PAGE
	1	1	**6Y-5839**	1	BIT-END (RH)	
	2	1	**6Y-5840**	1	BIT-END (LH)	
	3	1	**142-4914**	1	EDGE-CUTTING	
	4	1	**3F-5108**	10	BOLT-PLOW (5/8-11X2.25-IN)	
	5	1	**4F-3658**	4	BOLT-PLOW (5/8-11X3-IN)	
	6	1	**4K-0367**	14	NUT-FULL (5/8-11-THD)	
	7	1	**5P-8247**	14	WASHER-HARD (17X32X3.5-MM THK)	

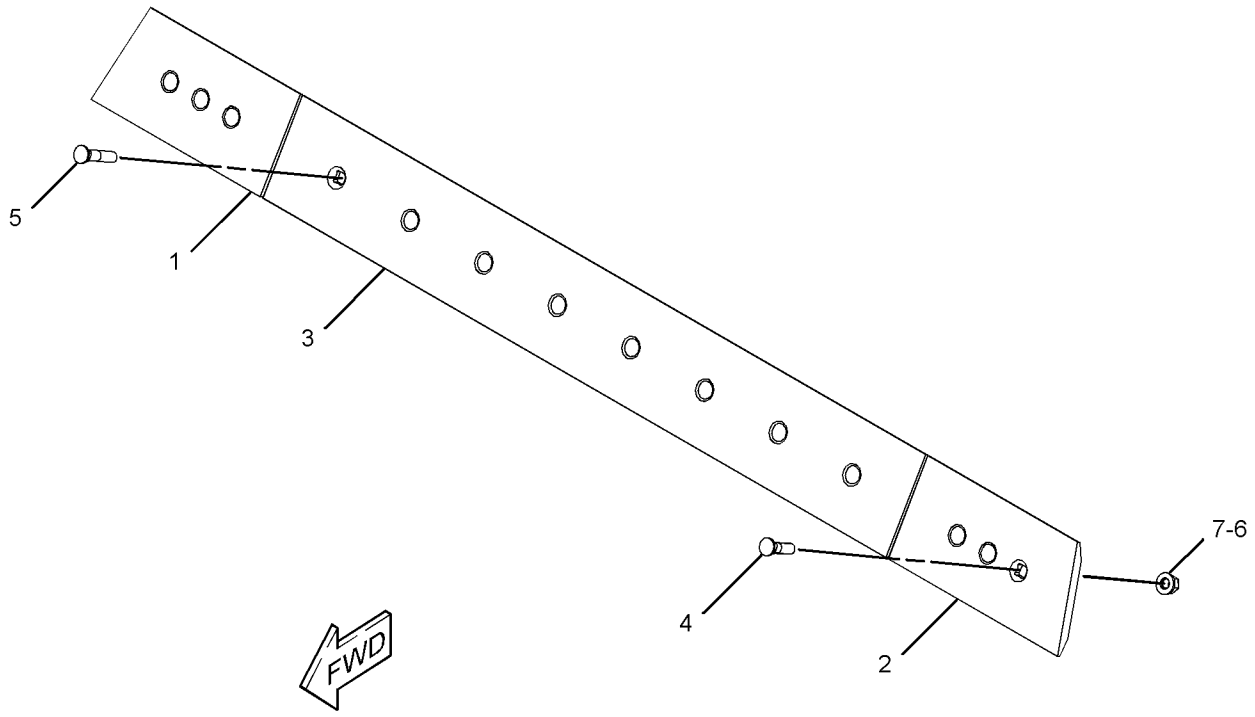

GRAPHIC #1 **<END>** g02615958

222-7546 EDGE GP-BIT & CUTTING

FOR USE WITH 2337-MM (92-IN) BUCKET
PART OF 222-7724 BLADE GP-ANGLING
AN ATTACHMENT

SMCS-6801, 6804

i03647019

NOTE	PART NUMBER	QTY	PART NAME 1 2 3 4 5 6 (PRODUCT LEVEL)	SEE PAGE
	6Y-5839	1	BIT-END (RH)	
	6Y-5840	1	BIT-END (LH)	
	3F-5108	13	BOLT-PLOW (5/8-11X2.25-IN)	
	4F-3658	4	BOLT-PLOW (5/8-11X3-IN)	
	143-3088	1	EDGE-CUTTING	
	4K-0367	17	NUT-FULL (5/8-11-THD)	
	5P-8247	17	WASHER-HARD (17X32X3.5-MM THK)	

<END>

135-9384 EDGE GP-CUTTING

FOR USE WITH 1524-MM (60-IN) BUCKET
PART OF 426-6932, 431-5570 BUCKET AR-MULTIPURPOSE
AN ATTACHMENT

SMCS-6801 **i01372033**

NOTE	REF NO	GRAPHIC REF	PART NUMBER	QTY	PART NAME 1 2 3 4 5 6 (PRODUCT LEVEL)	SEE PAGE
	1	1	**135-9394**	1	EDGE-CUTTING	
M	2	1	**8T-4778**	8	LOCKNUT (M16X2.00 THD)	
M	3	1	**159-2953**	8	SCREW-FLAT HEAD (M16X2.00 THD)	

M - METRIC PART

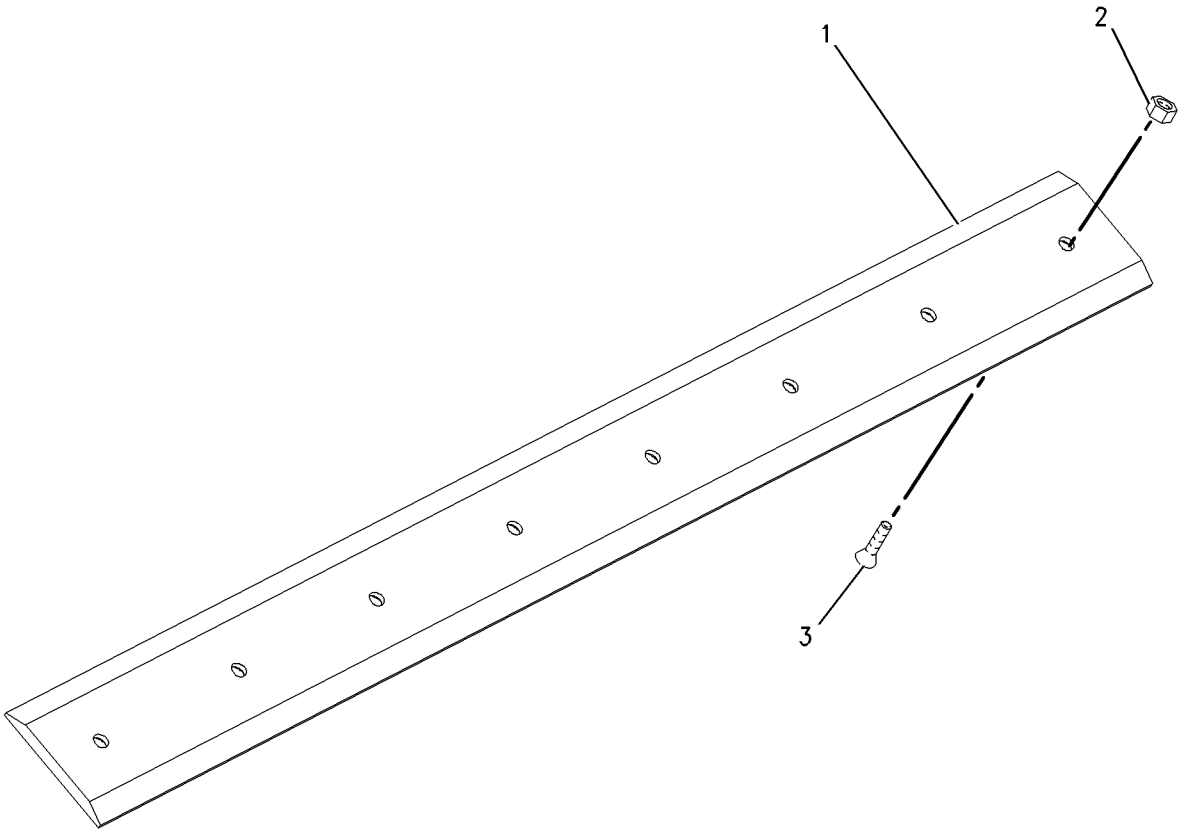

GRAPHIC #1 **<END>** g00724087

135-9385 EDGE GP-CUTTING

FOR USE WITH 1676-MM (66-IN) BUCKET
PART OF 426-6490, 426-6939 BUCKET AR-MULTIPURPOSE
AN ATTACHMENT

SMCS-6801 **i01228508**

NOTE	REF NO	GRAPHIC REF	PART NUMBER	QTY	PART NAME 1 2 3 4 5 6 (PRODUCT LEVEL)	SEE PAGE
	1	1	**135-9395**	1	EDGE-CUTTING	
M	2	1	**8T-4778**	8	LOCKNUT (M16X2.00 THD)	
M	3	1	**159-2953**	8	SCREW-FLAT HEAD (M16X2.00 THD)	

M - METRIC PART

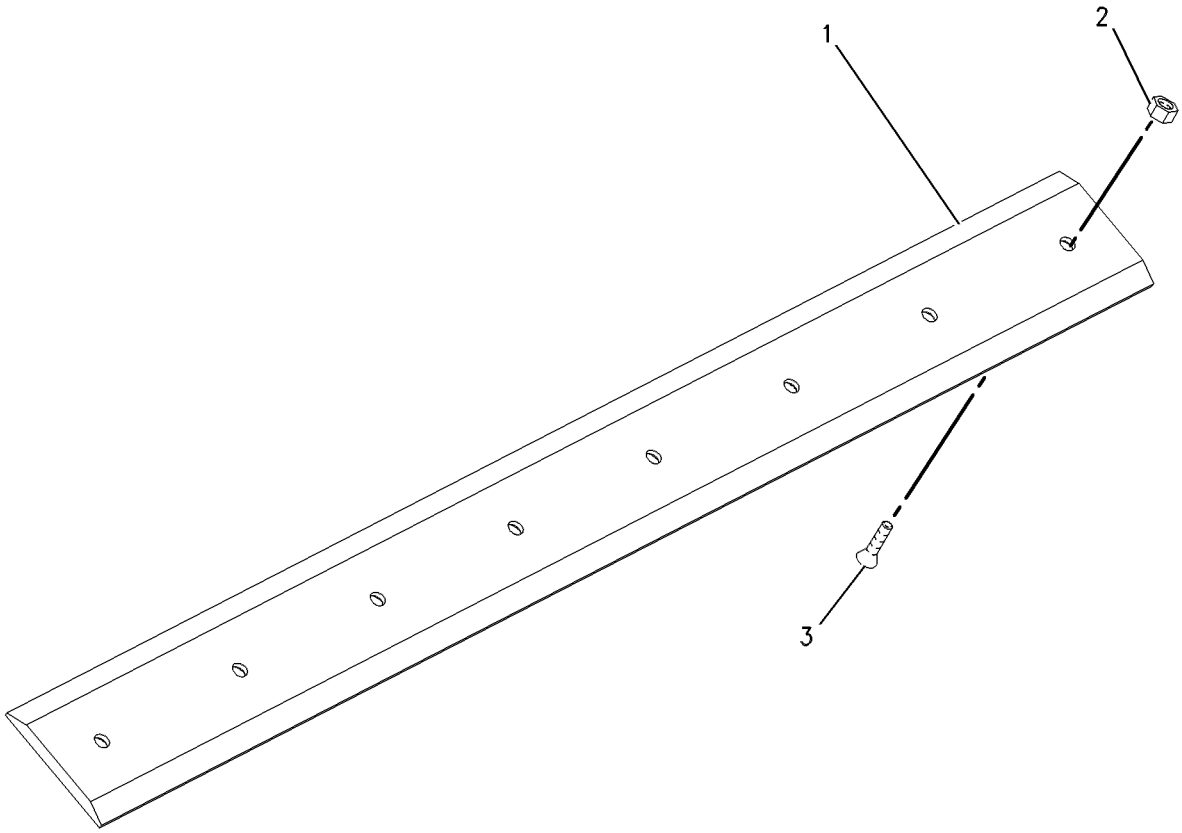

GRAPHIC #1 **<END>** g00657004

135-9386 EDGE GP-CUTTING

FOR USE WITH 1829-MM (72-IN) BUCKET
PART OF 426-6536, 426-6945 BUCKET AR-MULTIPURPOSE
AN ATTACHMENT

SMCS-6801 **i01372498**

NOTE	REF NO	GRAPHIC REF	PART NUMBER	QTY	PART NAME 1 2 3 4 5 6 (PRODUCT LEVEL)	SEE PAGE
	1	1	**135-9396**	1	EDGE-CUTTING	
M	2	1	**8T-4778**	11	LOCKNUT (M16X2.00 THD)	
M	3	1	**159-2953**	11	SCREW-FLAT HEAD (M16X2.00 THD)	

M - METRIC PART

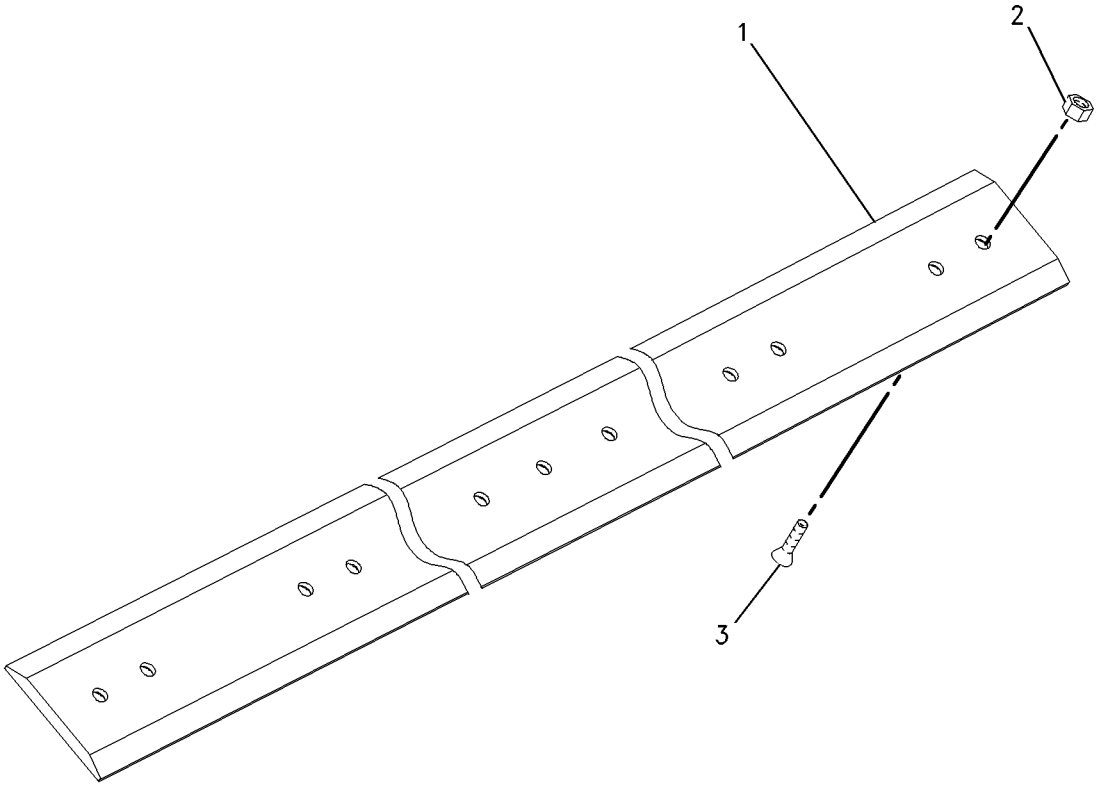

GRAPHIC #1 **<END>** g00724435

135-9387 EDGE GP-CUTTING

FOR USE WITH 1981-MM (78-IN) BUCKET
PART OF 426-6548, 426-6967 BUCKET AR-MULTIPURPOSE
AN ATTACHMENT

SMCS-6801 **i01755490**

NOTE	REF NO	GRAPHIC REF	PART NUMBER	QTY	PART NAME 1 2 3 4 5 6 (PRODUCT LEVEL)	SEE PAGE
	1	1	**135-9397**	1	EDGE-CUTTING	
M	2	1	**8T-4778**	11	LOCKNUT (M16X2 THD)	
M	3	1	**159-2953**	11	SCREW-FLAT HEAD (M16X2.00 THD)	

M - METRIC PART

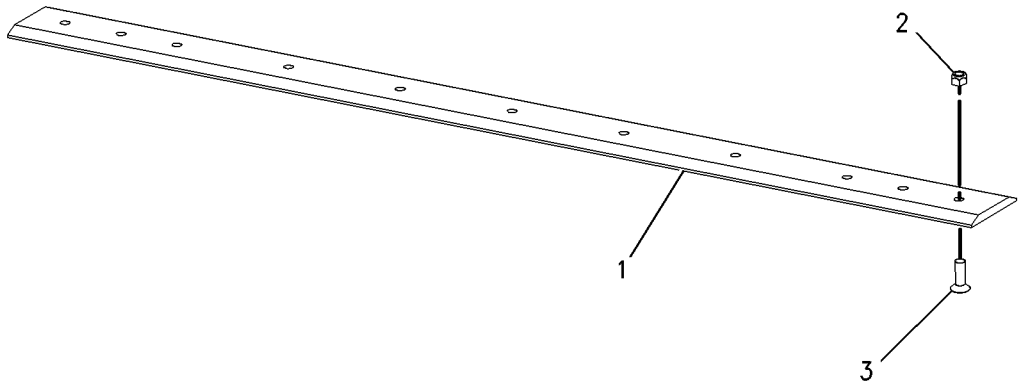

GRAPHIC #1 **<END>** g00898154

195-7124 EDGE GP-CUTTING

FOR USE WITH 2134-MM (84-IN) BUCKET
PART OF 426-6558, 426-6989 BUCKET AR-MULTIPURPOSE
AN ATTACHMENT

SMCS-6801 **i01859534**

NOTE	PART NUMBER	QTY	PART NAME 1 2 3 4 5 6 (PRODUCT LEVEL)	SEE PAGE
	195-5124	1	EDGE-CUTTING	
M	**8T-4778**	11	LOCKNUT (M16X2 THD)	
M	**159-2953**	11	SCREW-FLAT HEAD (M16X2.00 THD)	

M - METRIC PART

<END>

319-9480 KIT-ROADING PLATE & MOUNTING—BUCKET

PART OF 422-3401, 422-3403 CONVERSION AR-ROADING
AN ATTACHMENT

SMCS-7405, 7557 **i03648540**

NOTE	PART NUMBER	QTY	PART NAME 1 2 3 4 5 6 (PRODUCT LEVEL)	SEE PAGE
	319-9481	1	PLATE AS (LH)	
	177-7414	1	FILM-STRIPE (REFLECTIVE, RED, WHITE)	
	177-7415	1	FILM (REFLECTIVE)	
	319-9483	1	PLATE AS	
	319-9482	1	PLATE AS (RH)	
	177-7414	1	FILM-STRIPE (REFLECTIVE, RED, WHITE)	
	177-7415	1	FILM (REFLECTIVE)	
	319-9484	1	PLATE AS	
	319-9490	2	STRAP AS	
M	**8T-4136**	8	BOLT (M10X1.5X25-MM)	
M	**8T-4186**	2	BOLT (M10X1.5X40-MM)	
M	**6V-8949**	8	NUT (M10X1.5-THD)	
	319-9489	2	PLATE	
	039-8557	4	WASHER (13X26X6-MM THK)	
	8T-4121	16	WASHER-HARD (11X21X2.5-MM THK)	

M - METRIC PART

<END>

345-5131 LINK GP-COUPLER–LH

PART OF 345-5130 LOCK GP-QUICK COUPLER
AN ATTACHMENT

SMCS-6129 **i05295535**

NOTE	REF NO	GRAPHIC REF	PART NUMBER	QTY	PART NAME 1 2 3 4 5 6 (PRODUCT LEVEL)	SEE PAGE
	1	1	**192-2645**	1	SPRING	
	2	1	**345-5132**	1	HANDLE	
	3	1	**310-6660**	1	PIN-SPRING	
M	4	1	**315-5493**	2	WASHER-HARD (22.5X35X4.5-MM THK)	
	5	1	**388-7978**	1	PLATE	

M - METRIC PART

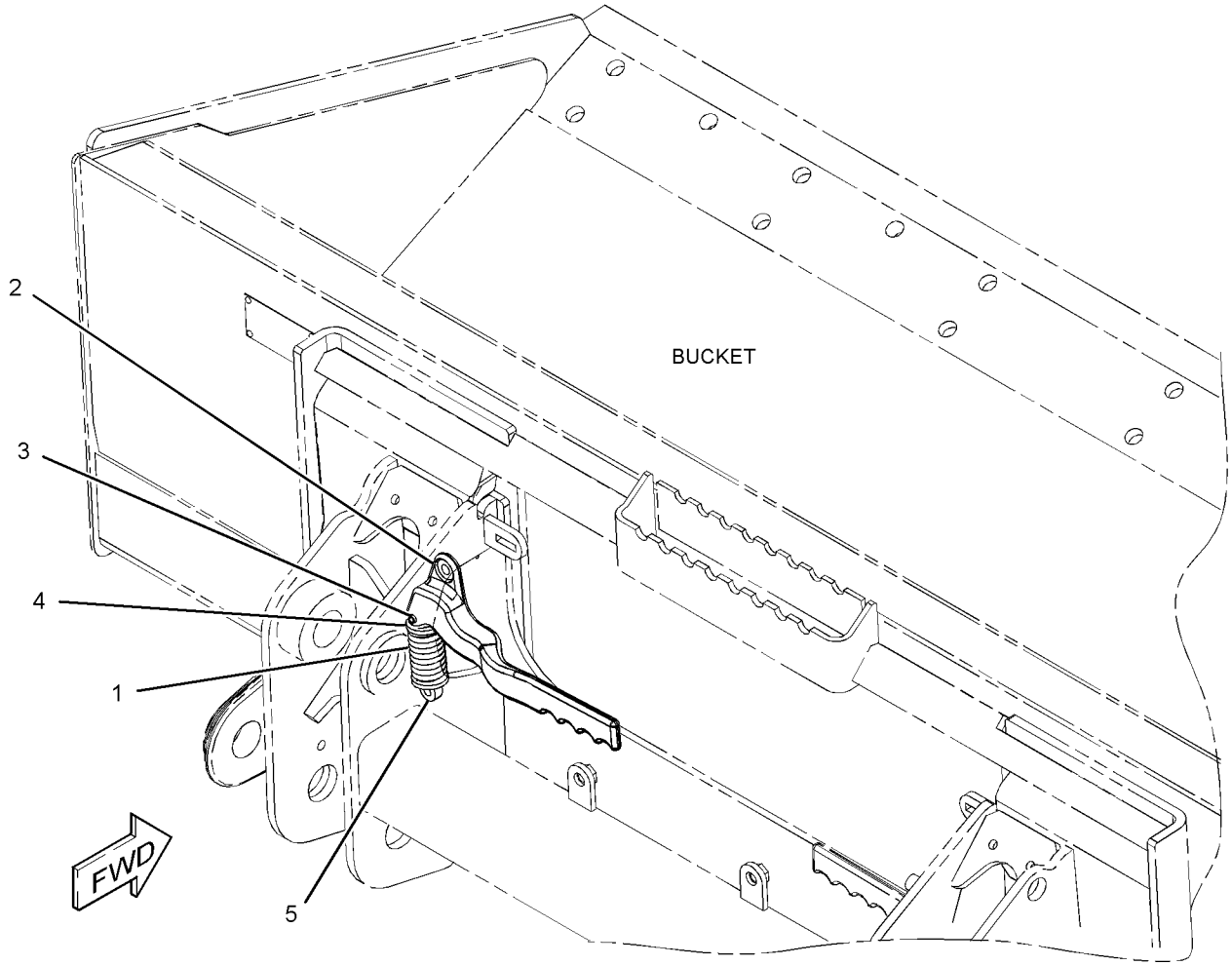

GRAPHIC #1 **<END>** g03364393

345-5134 LINK GP-COUPLER—RH

PART OF 345-5133 LOCK GP-QUICK COUPLER
AN ATTACHMENT

SMCS-6129 **i05295534**

NOTE	REF NO	GRAPHIC REF	PART NUMBER	QTY	PART NAME 1 2 3 4 5 6 (PRODUCT LEVEL)	SEE PAGE
	1	1	**192-2645**	1	SPRING	
	2	1	**310-6660**	1	PIN-SPRING	
M	3	1	**315-5493**	2	WASHER-HARD (22.5X35X4.5-MM THK)	
	4	1	**388-7978**	1	PLATE	
	5	1	**345-5135**	1	HANDLE	

M - METRIC PART

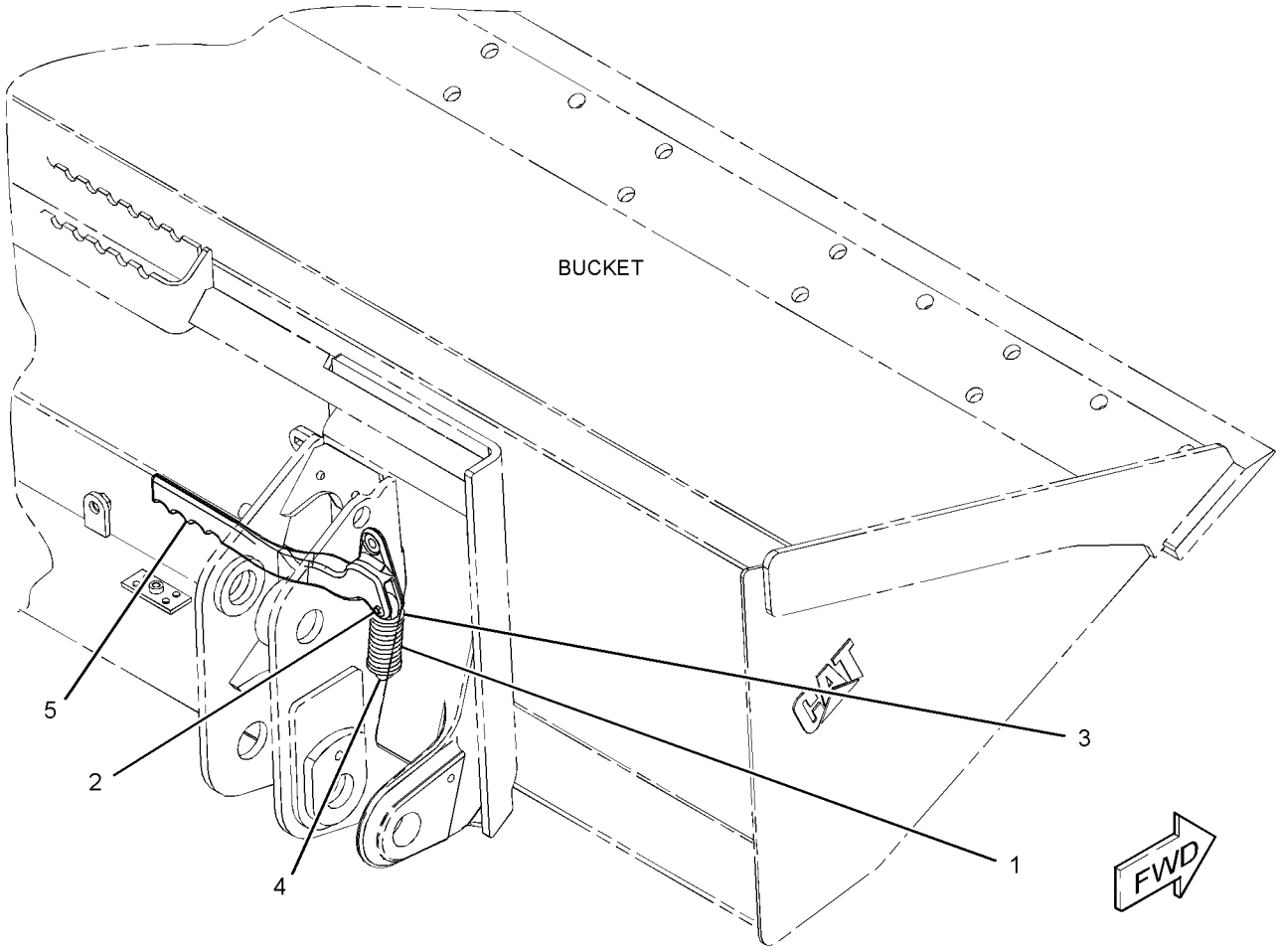

GRAPHIC #1 **<END>** g03364407

388-8209 LINK GP-COUPLER–RH

PART OF 345-5001 COUPLER GP-QUICK
AN ATTACHMENT

SMCS-6129 **i05156473**

NOTE	REF NO	GRAPHIC REF	PART NUMBER	QTY	PART NAME 1 2 3 4 5 6 (PRODUCT LEVEL)	SEE PAGE
	1	1	**192-2645**	1	SPRING	
	2	1	**310-6660**	2	PIN-SPRING	
M	3	1	**315-5493**	2	WASHER-HARD (22.5X35X4.5-MM THK)	
	4	1	**388-7978**	1	PLATE	
	5	1	**388-8174**	1	LINK AS	
	6	1	**424-5546**	1	PIN	

M - METRIC PART

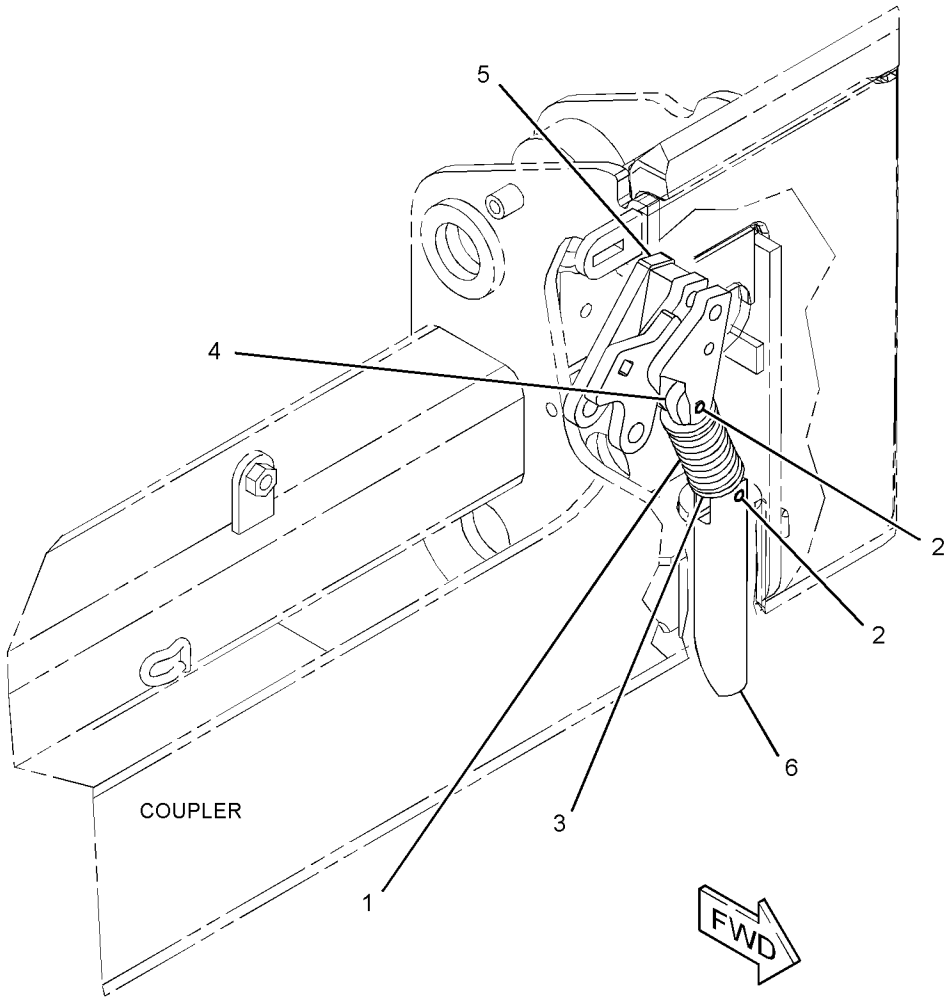

GRAPHIC #1 **<END>** g03324126

388-8210 LINK GP-COUPLER—LH

PART OF 345-5001 COUPLER GP-QUICK
AN ATTACHMENT

SMCS-6129 **i05156472**

NOTE	REF NO	GRAPHIC REF	PART NUMBER	QTY	PART NAME 1 2 3 4 5 6 (PRODUCT LEVEL)	SEE PAGE
	1	1	**192-2645**	1	SPRING	
	2	1	**310-6660**	2	PIN-SPRING	
M	3	1	**315-5493**	2	WASHER-HARD (22.5X35X4.5-MM THK)	
	4	1	**388-7978**	1	PLATE	
	5	1	**388-8173**	1	LINK AS	
	6	1	**424-5546**	1	PIN	

M - METRIC PART

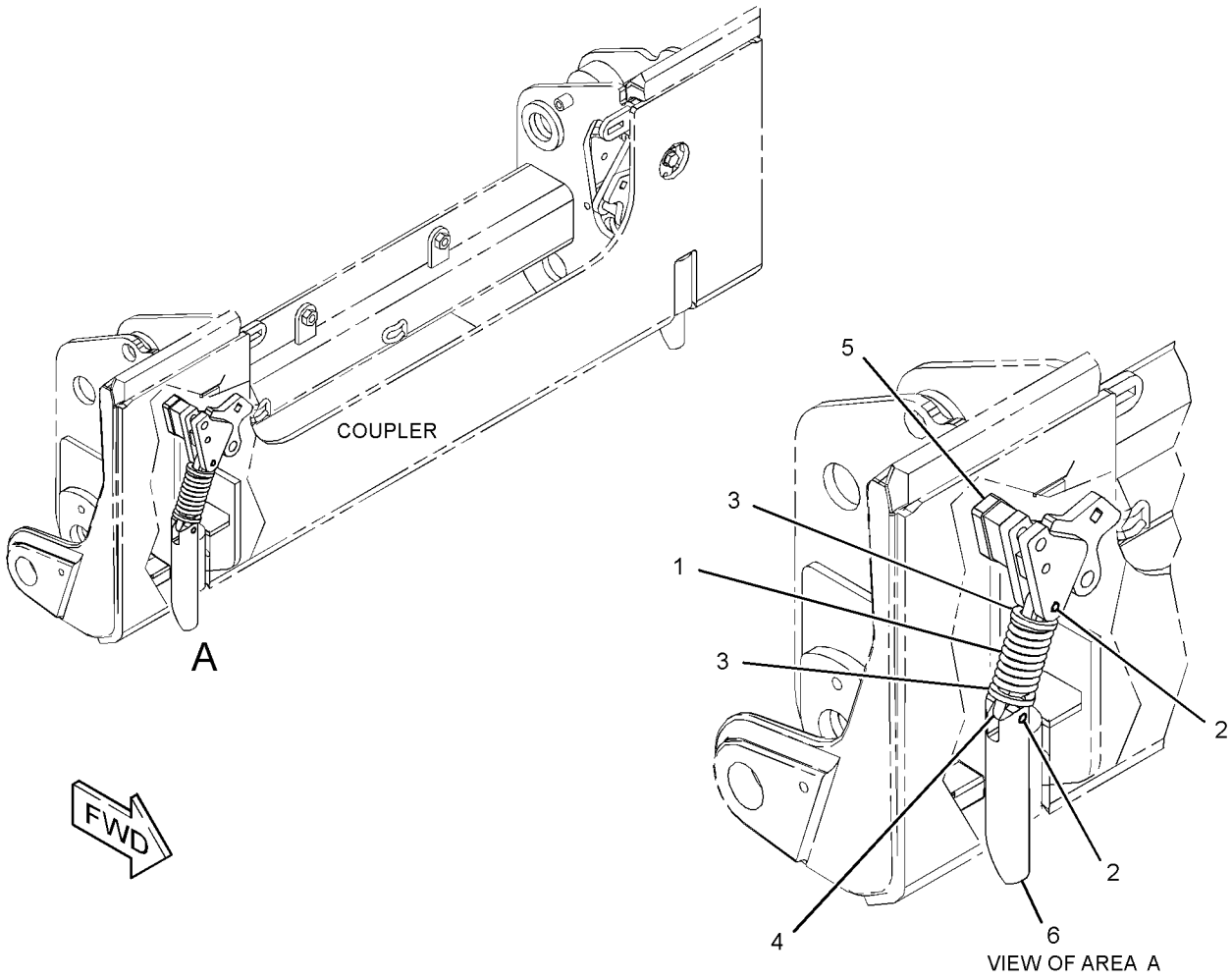

GRAPHIC #1 **<END>** g03324186

175-4238 LOCK GP-QUICK COUPLER–MECHANICAL

PART OF 422-3401, 422-3403 CONVERSION AR-ROADING

AN ATTACHMENT

SMCS-6129 **i01408856**

NOTE	REF NO	GRAPHIC REF	PART NUMBER	QTY	PART NAME 1 2 3 4 5 6 (PRODUCT LEVEL)	SEE PAGE
	1	1	**9R-5301**	1	PIN-COTTER	
	2	1	**178-2247**	1	PIN	
	3	1	**9X-8257**	1	WASHER (17.5X30X3.5-MM THK)	

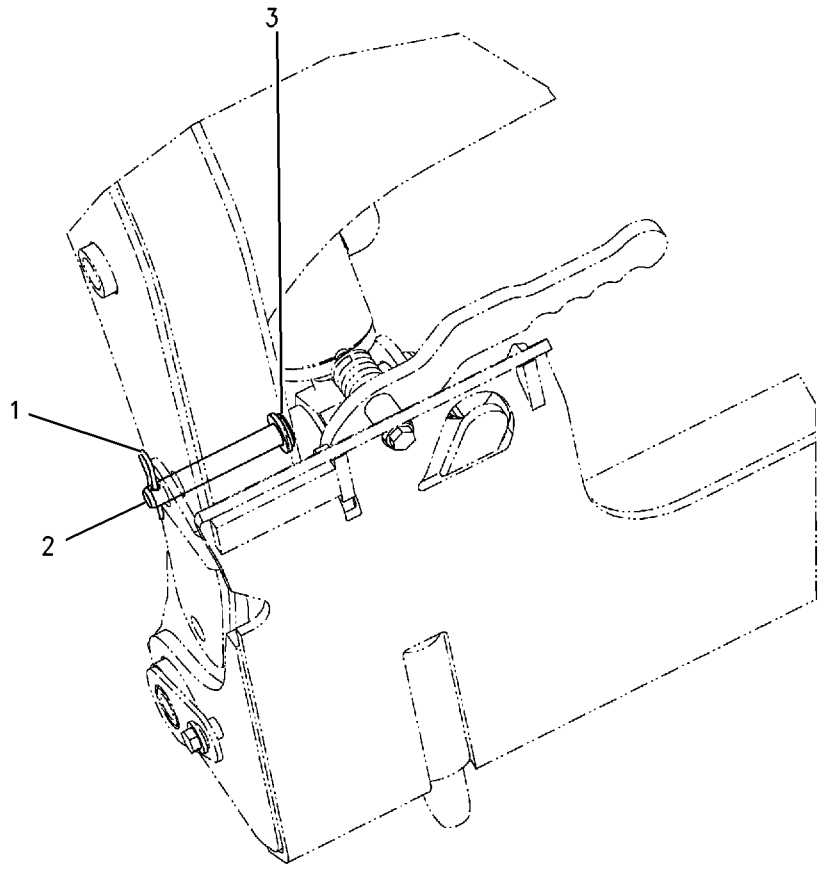

GRAPHIC #1 **<END>** g00741828

345-5130 LOCK GP-QUICK COUPLER–LH

PART OF 345-5000 COUPLER GP-QUICK

AN ATTACHMENT

SMCS-6129 **i05302356**

NOTE	REF NO	GRAPHIC REF	PART NUMBER	QTY	PART NAME 1 2 3 4 5 6 (PRODUCT LEVEL)	SEE PAGE
C	1	1	**424-5546**	1	PIN	
C	2	1	**310-6660**	1	PIN-SPRING	
Y	3	1	*345-5131*	1	LINK GP-COUPLER (LH)	341

C - CHANGE FROM PREVIOUS TYPE
Y - SEPARATE ILLUSTRATION

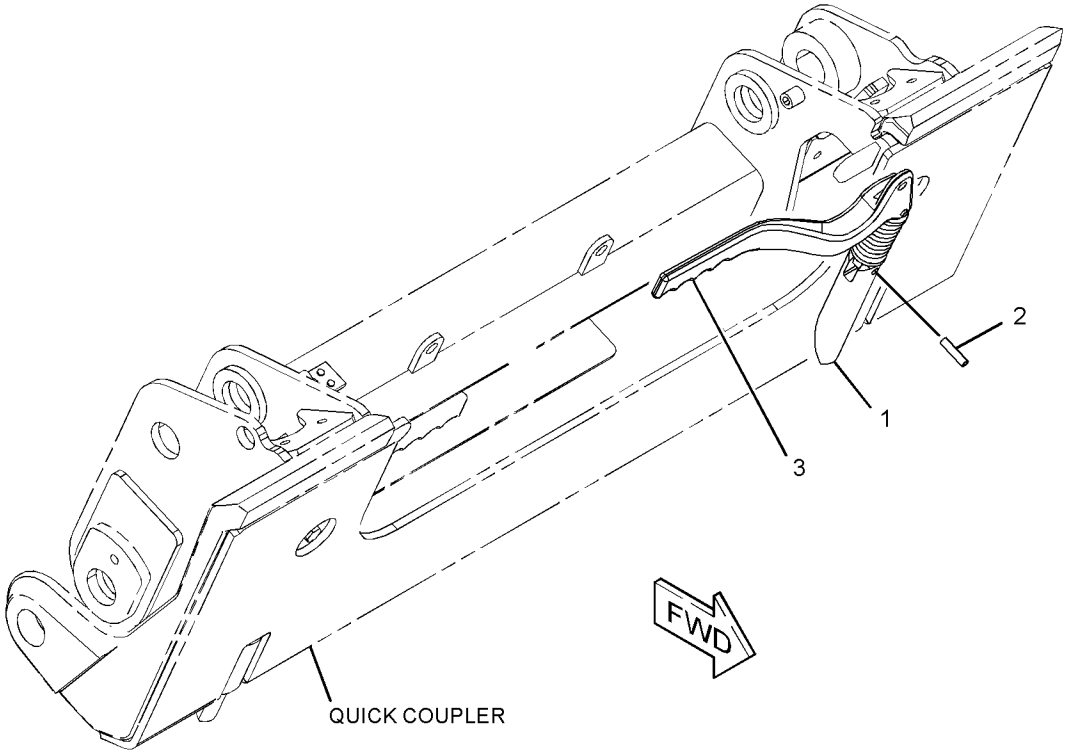

GRAPHIC #1 **<END>** g03369785

345-5133 LOCK GP-QUICK COUPLER–RH

PART OF 345-5000 COUPLER GP-QUICK

AN ATTACHMENT

SMCS-6129 **i04765760**

NOTE	REF NO	GRAPHIC REF	PART NUMBER	QTY	PART NAME 1 2 3 4 5 6 (PRODUCT LEVEL)	SEE PAGE
	1	1	**345-6526**	1	PIN	
	2	1	**303-8767**	1	PIN-SPRING	
Y	3	1	*345-5134*	1	LINK GP-COUPLER (RH)	342

Y - SEPARATE ILLUSTRATION

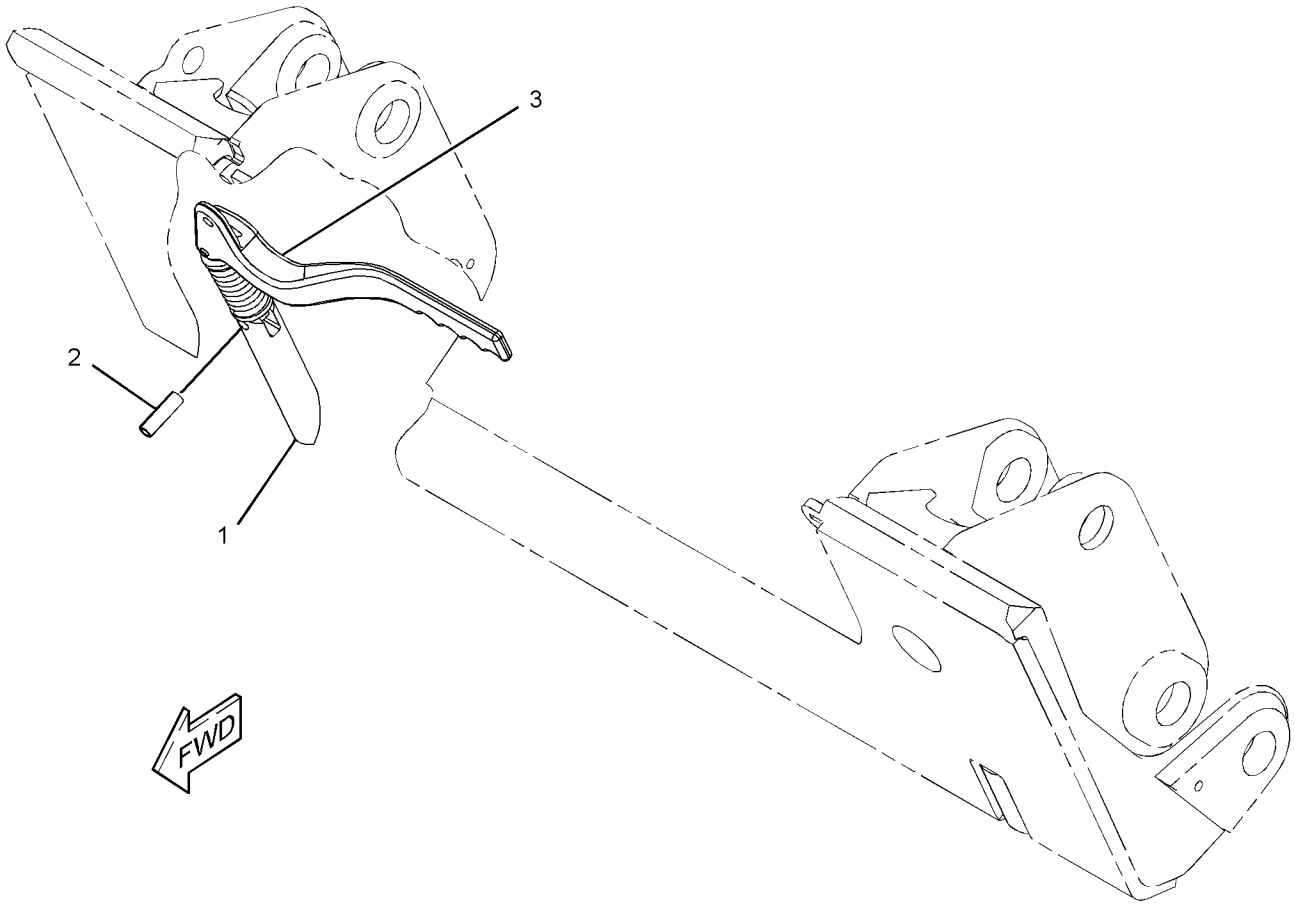

GRAPHIC #1 **<END>** g02882198

141-4999 TOOTH GP-UNI

PART OF 423-4287, 426-6487, 426-6535, 426-6547, 426-6557, 426-6931, 426-6938, 426-6944, 426-6965, 426-6985 BUCKET AR-MULTIPURPOSE

AN ATTACHMENT

SMCS-6822 **i02163942**

NOTE	REF NO	GRAPHIC REF	PART NUMBER	QTY	PART NAME 1 2 3 4 5 6 (PRODUCT LEVEL)	SEE PAGE
	1	1	**132-4720**	1	TOOTH-UNI-SINGLE STRAP	
	2	1	**246-4349**	2	SCREW-FLAT HEAD (M16X2-THD)	
M	3	1	**8T-4778**	2	LOCKNUT (M16X2-THD)	

M - METRIC PART

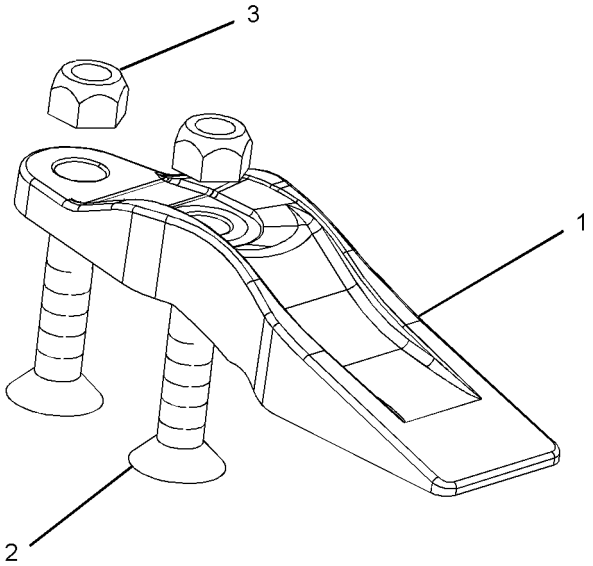

GRAPHIC #1 **<END>** g01097424

345-4960 ACCESSORY GP-CAB

PART OF 345-4915, 345-4919 CAB AR-ENCLOSED ROPS

AN ATTACHMENT

SMCS-7301, 731C **i05295543**

NOTE	REF NO	GRAPHIC REF	PART NUMBER	QTY	PART NAME 1 2 3 4 5 6 (PRODUCT LEVEL)	SEE PAGE
	1	1	**8Y-5947**	9	FASTENER	
	2	1	**258-3727**	3	SCREW-TRUSS HEAD (SPECIAL)	
	3	1	**345-4961**	1	HOLDER-CUP	
	4	1	**345-6021**	1	HEADLINER	
	5	1	**345-6022**	1	COVER (LH)	
	6	1	**345-6023**	1	COVER (RH)	
	7	1	**345-6024**	1	COVER (LH)	
	8	1	**345-6025**	1	COVER (RH)	
	9	1	**418-5771**	1	PLATE	

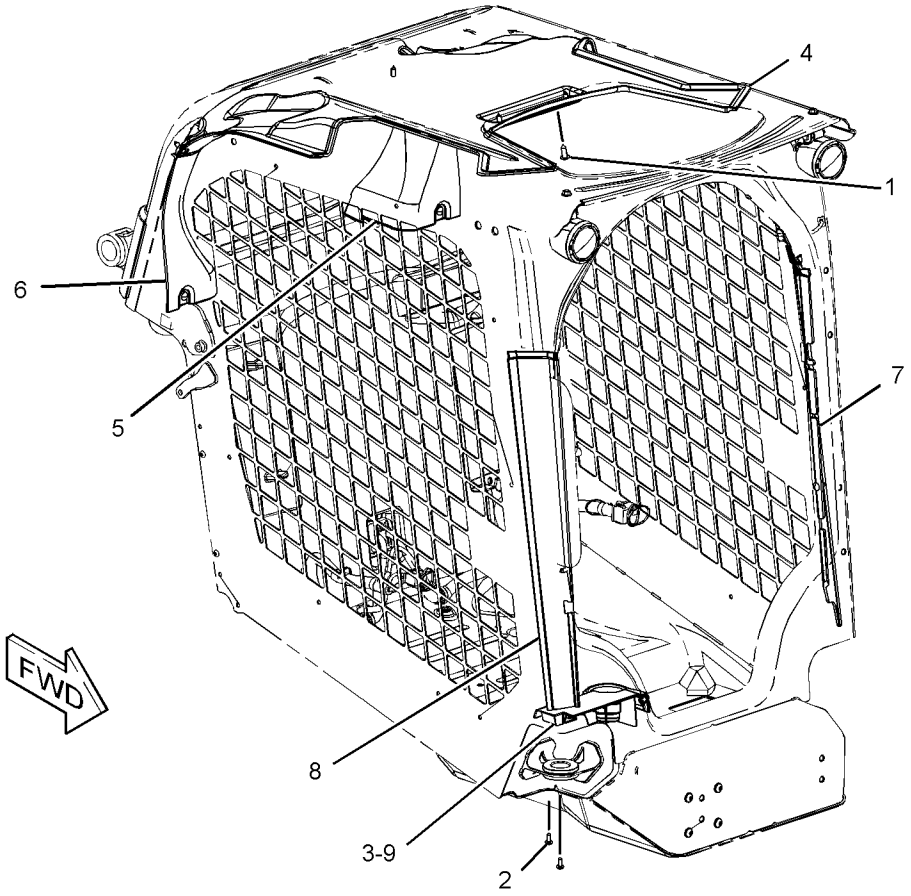

GRAPHIC #1 **<END>** g03369483

345-4962 ACCESSORY GP-CAB

PART OF 345-6157 CAB AR-OPEN ROPS

AN ATTACHMENT

SMCS-7301, 731C **i05231951**

NOTE	REF NO	GRAPHIC REF	PART NUMBER	QTY	PART NAME 1 2 3 4 5 6 (PRODUCT LEVEL)	SEE PAGE
	1	1	**8Y-5947**	7	FASTENER	
	2	1	**258-3727**	3	SCREW-TRUSS HEAD (SPECIAL)	
	3	1	**345-4961**	1	HOLDER-CUP	
	4	1	**345-6021**	1	HEADLINER	
	5	1	**345-6022**	1	COVER (LH)	
	6	1	**345-6023**	1	COVER (RH)	
	7	1	**418-5771**	1	PLATE	

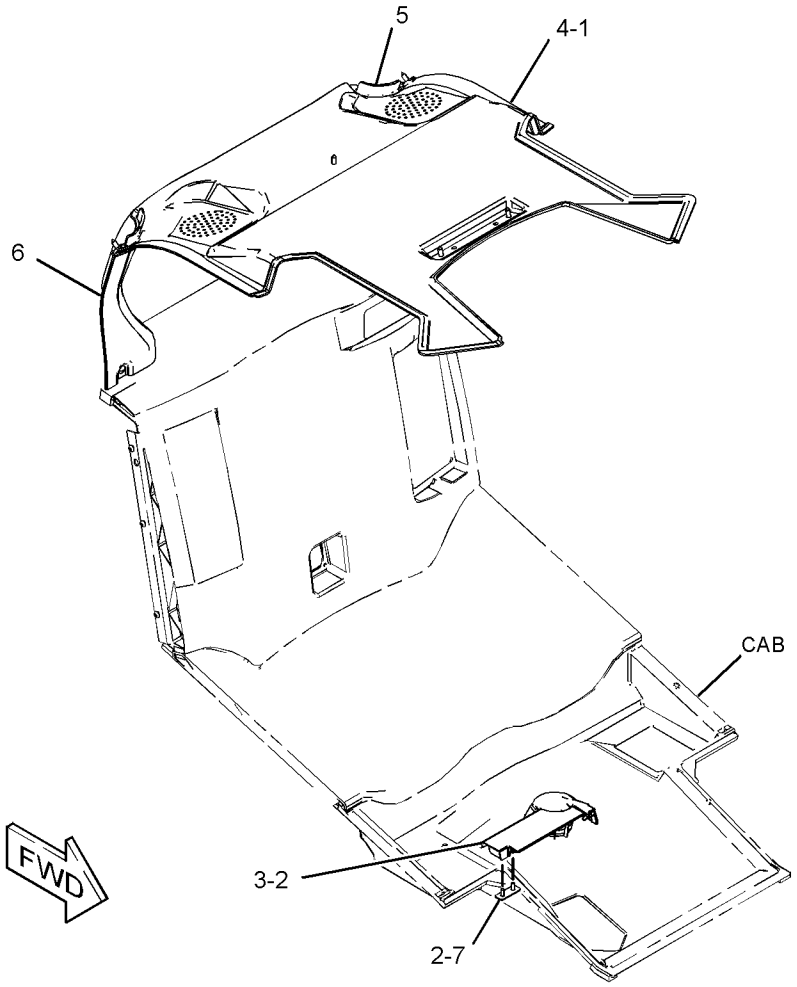

GRAPHIC #1 **<END>** g03370517

186-6190 ACCUMULATOR GP-REFRIGERANT–CHARGED

PART OF 388-8267 KIT-AIR COND & HEATER INSTL, 388-8266 KIT-CAB HEATER & MOUNTING, 345-6530 LINES GP-AIR CONDITIONER
AN ATTACHMENT

SMCS-7320 **i02306357**

NOTE	REF NO	GRAPHIC REF	PART NUMBER	QTY	PART NAME 1 2 3 4 5 6 (PRODUCT LEVEL)	SEE PAGE
					(NO SERVICED PARTS)	

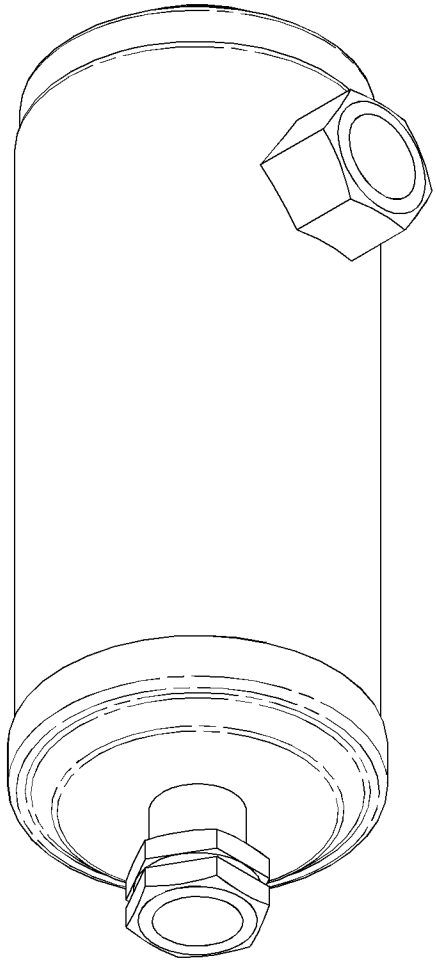

GRAPHIC #1 **<END>** g01155244

345-6190 AIR CONDITIONER & MOUNTING GP

PART OF 345-4921 AIR CONDITIONER AR, 345-4917 HEATER AR-CAB
AN ATTACHMENT

SMCS-7320 **i05352834**

NOTE	REF NO	GRAPHIC REF	PART NUMBER	QTY	PART NAME 1 2 3 4 5 6 (PRODUCT LEVEL)	SEE PAGE
	1	1	**127-4003**	2	GROMMET	
	2	1	**146-6371**	6	LOUVER AS	
	3	1	**258-3795**	4	SEAL	
	4	1	**265-6618**	1	FILTER ELEMENT-CAB AIR (RECIRCULATION)	
	5	1	**265-6619**	1	FILTER ELEMENT-CAB AIR (FRESH AIR)	
	6	1	**345-4526**	1	DUCT AS	
	7	1	**345-4527**	1	SEAL	
	8	1	**345-4528**	1	SEAL	
Y	9	1	**345-4545**	1	BLOWER GP-CAB	359
Y	10	1	**345-4546**	1	HEATER GP-CAB	396
	11	1	**345-4551**	1	SEAL	
	12	1	**345-6078**	2	KNOB AS	
	13	1	**345-6146**	1	COVER-LOUVER	
	14	1	**345-6191**	1	DUCT AS	
	15	1	**345-6192**	1	DUCT AS	
	16	1	**345-6193**	2	BOLT-SPECIAL	
	17	1	**345-6194**	4	SPRING	
	18	1	**345-6196**	2	BOLT-SPECIAL	
	19	1	**345-6197**	4	WASHER-RUBBER	
	20	1	**359-1585**	1	COVER AS	
	21	1	**388-7876**	2	BRACKET AS	
					(EACH INCLUDES)	
M		1	**159-9539**	1	NUT-WELD (M6X1-THD)	
	22	1	**114-6658**	6	WASHER (6.5X17X1-MM THK)	
	23	1	**195-0936**	2	INSERT-THREADED (M6X1-THD)	
M	25	1	**215-6406**	2	SCREW-TRUSS HEAD (M6X1X16-MM)	
	27	1	**5P-4116**	4	WASHER-HARD (8.8X20.5X2-MM THK)	
	28	1	**6V-7699**	2	WASHER-HARD (5.5X13X1.6-MM THK)	
M	30	1	**8T-0289**	2	BOLT (M5X0.8X20-MM)	
M	32	1	**8T-4181**	4	BOLT (M6X1X20-MM)	
M	33	1	**9X-2045**	6	SCREW-TRUSS HEAD (M6X1X20-MM)	

M - METRIC PART
Y - SEPARATE ILLUSTRATION

345-6190 **AIR CONDITIONER & MOUNTING GP (*contd.*)** **i05352834**

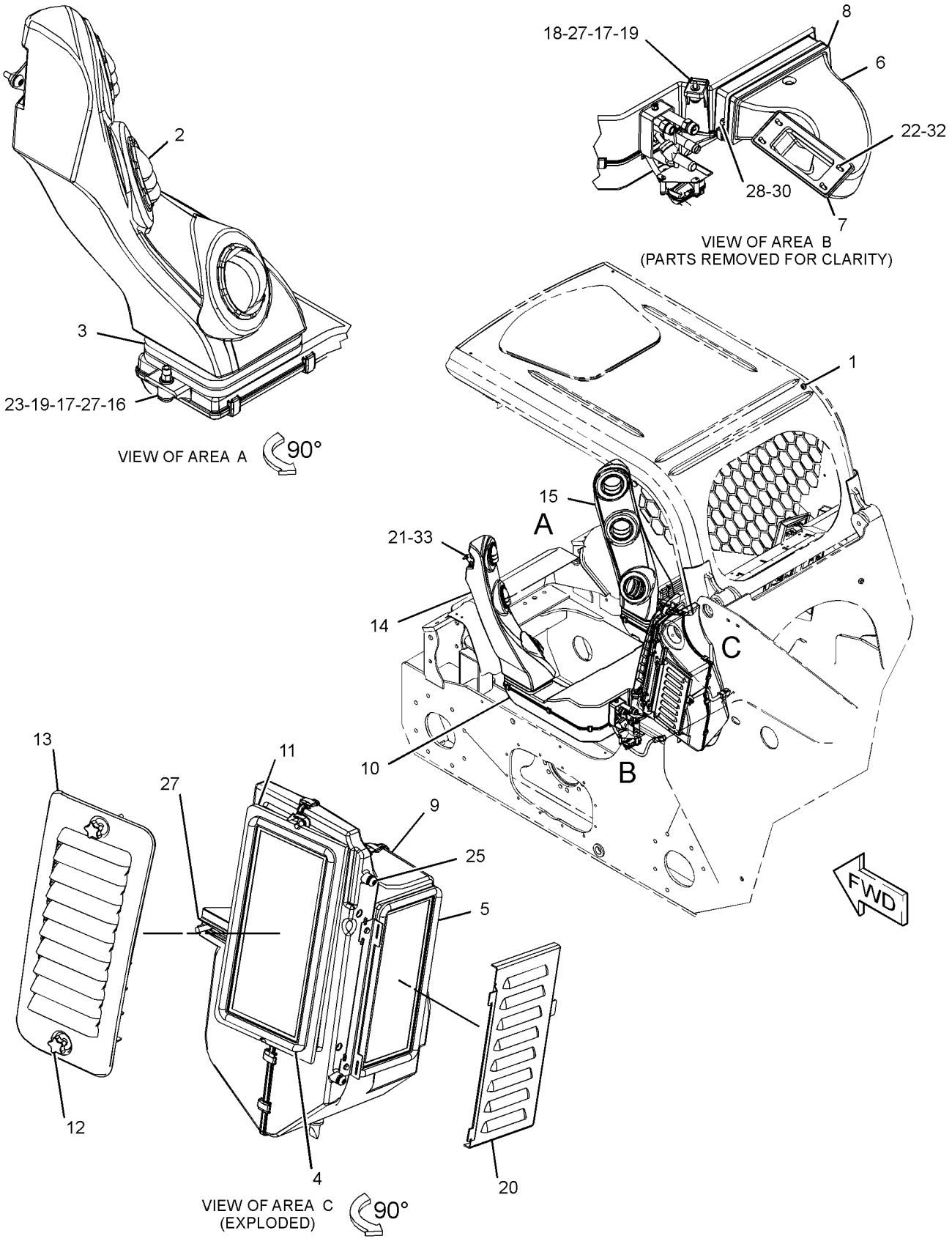

GRAPHIC #1 **<END>** g03390382

345-4921 AIR CONDITIONER AR

PART OF 345-4919 CAB AR-ENCLOSED ROPS

AN ATTACHMENT

SMCS-7320 **i05165030**

NOTE	PART NUMBER	QTY	PART NAME 1 2 3 4 5 6 (PRODUCT LEVEL)	SEE PAGE
Y	*345-6190*	1	AIR CONDITIONER & MOUNTING GP	352
Y	*345-3584*	1	COMPRESSOR GP-REFRIGERANT	363
Y	*345-6141*	1	CONDENSER & MTG GP-REFRIGERANT	364
Y	*345-6530*	1	LINES GP-AIR CONDITIONER	421
Y	*361-6396*	1	WIRING GP-AIR CONDITIONER	136

Y - SEPARATE ILLUSTRATION

<END>

345-6185 ARMREST & MOUNTING GP

PART OF 345-6350, 345-6360 SEAT & ARMREST GP
AN ATTACHMENT

SMCS-7307 **i05296342**

NOTE	REF NO	GRAPHIC REF	PART NUMBER	QTY	PART NAME 1 2 3 4 5 6 (PRODUCT LEVEL)	SEE PAGE
	1	1	**258-4319**	1	ARMREST AS (RH)	
	2	1	**258-4422**	2	WASHER-SPRING	
Y	3	1	**345-6186**	1	MOUNTING GP-ARMREST (RIGHT)	426
Y	4	1	**345-6187**	1	MOUNTING GP-ARMREST (LEFT)	427
	5	1	**378-1007**	1	SWITCH AS-MAGNETIC (LOAD CONTROL)	
		1	**171-0596**	1	RECEPTACLE AS-CONNECTOR	
	6	1	**418-5935**	1	ARMREST AS (LH)	
	7	1	**418-5954**	1	BRACKET	
	8	1	**436-2988**	1	PLATE (MAGNETIC)	
M	9	1	**3T-0851**	1	LOCKNUT (M5X0.8-THD)	
	10	1	**7X-7729**	6	WASHER (11X25X3-MM THK)	
M	11	1	**8T-0267**	2	BOLT-SOCKET HEAD (M6X1X12-MM)	
	12	1	**8T-0328**	1	WASHER-HARD (5.5X10X1-MM THK)	
M	13	1	**8T-3998**	2	BOLT (M4X0.7X12-MM)	
M	14	1	**8T-6685**	2	BOLT (M10X1.5X110-MM)	

M - METRIC PART
Y - SEPARATE ILLUSTRATION

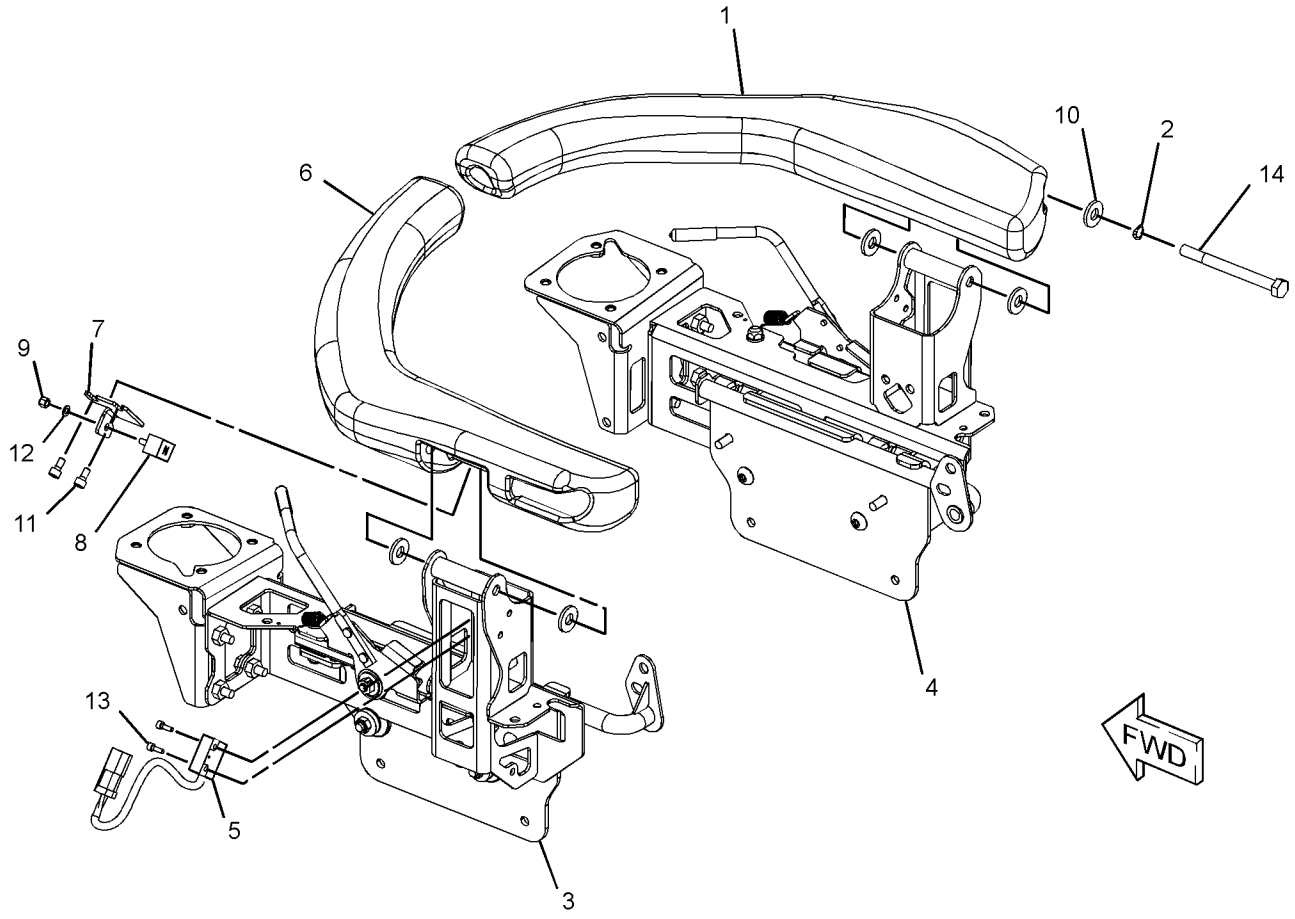

GRAPHIC #1 **<END>** g03370046

345-6188 ARMREST & MOUNTING GP

PART OF 345-6040, 345-6045 SEAT & MOUNTING GP

AN ATTACHMENT

SMCS-7307 **i05296326**

NOTE	REF NO	GRAPHIC REF	PART NUMBER	QTY	PART NAME 1 2 3 4 5 6 (PRODUCT LEVEL)	SEE PAGE
Y	1	1	**345-6184**	1	ARMREST GP (RH)	357
Y	2	1	**418-5933**	1	ARMREST GP (LH)	358
M	3	1	**131-3540**	6	LOCKNUT (M8X1.25-THD)	
	4	1	**7X-0613**	6	WASHER-HARD (8.8X25.5X5-MM THK)	

M - METRIC PART
Y - SEPARATE ILLUSTRATION

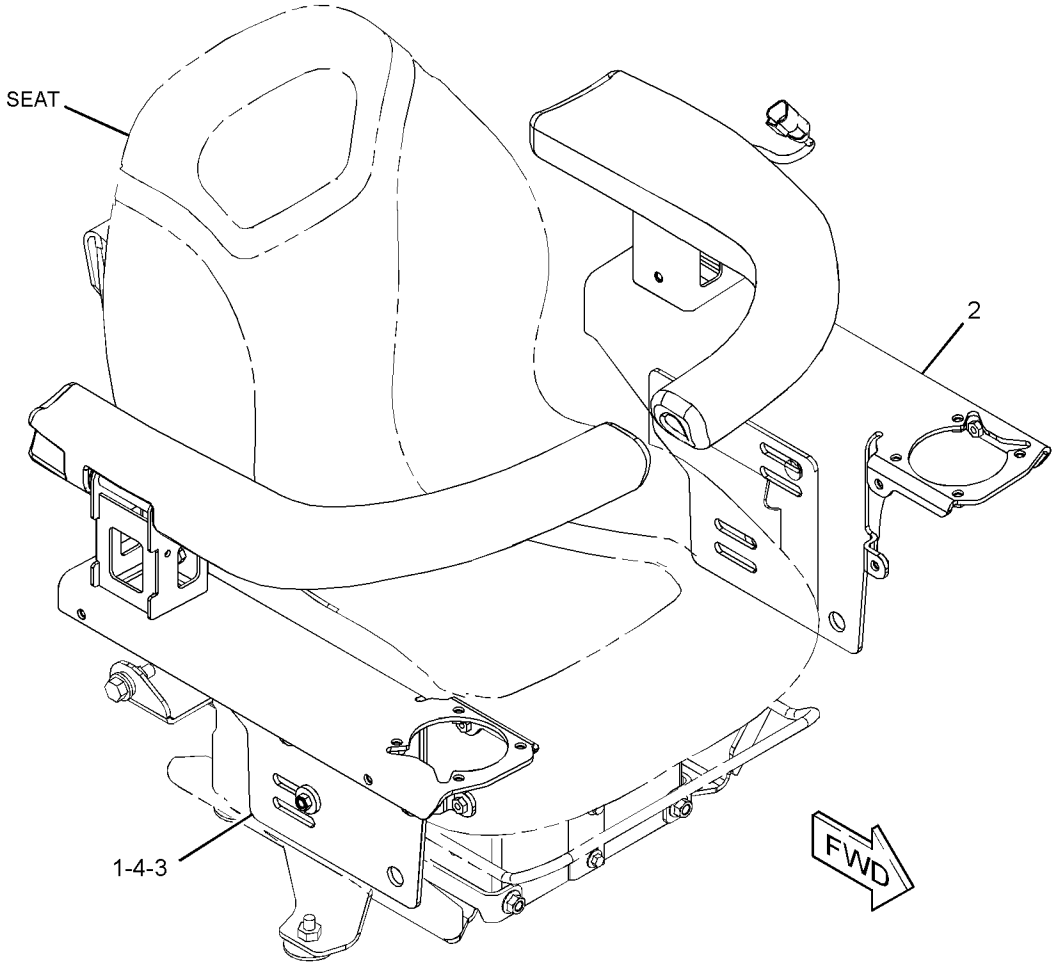

GRAPHIC #1 **<END>** g03369960

345-6184 ARMREST GP–RH

PART OF 345-6188 ARMREST & MOUNTING GP
AN ATTACHMENT

SMCS-7307 **i05296332**

NOTE	REF NO	GRAPHIC REF	PART NUMBER	QTY	PART NAME 1 2 3 4 5 6 (PRODUCT LEVEL)	SEE PAGE
	1	1	**258-4319**	1	ARMREST AS (RH)	
	2	1	**258-4422**	1	WASHER-SPRING	
	3	1	**418-5930**	1	BRACKET AS	
		1	**258-4064**	1	SPACER	
M		1	**159-9539**	12	NUT-WELD (M6X1-THD)	
	4	1	**7X-7729**	3	WASHER (11X25X3-MM THK)	
M	5	1	**8T-6685**	1	BOLT (M10X1.5X110-MM)	

M - METRIC PART

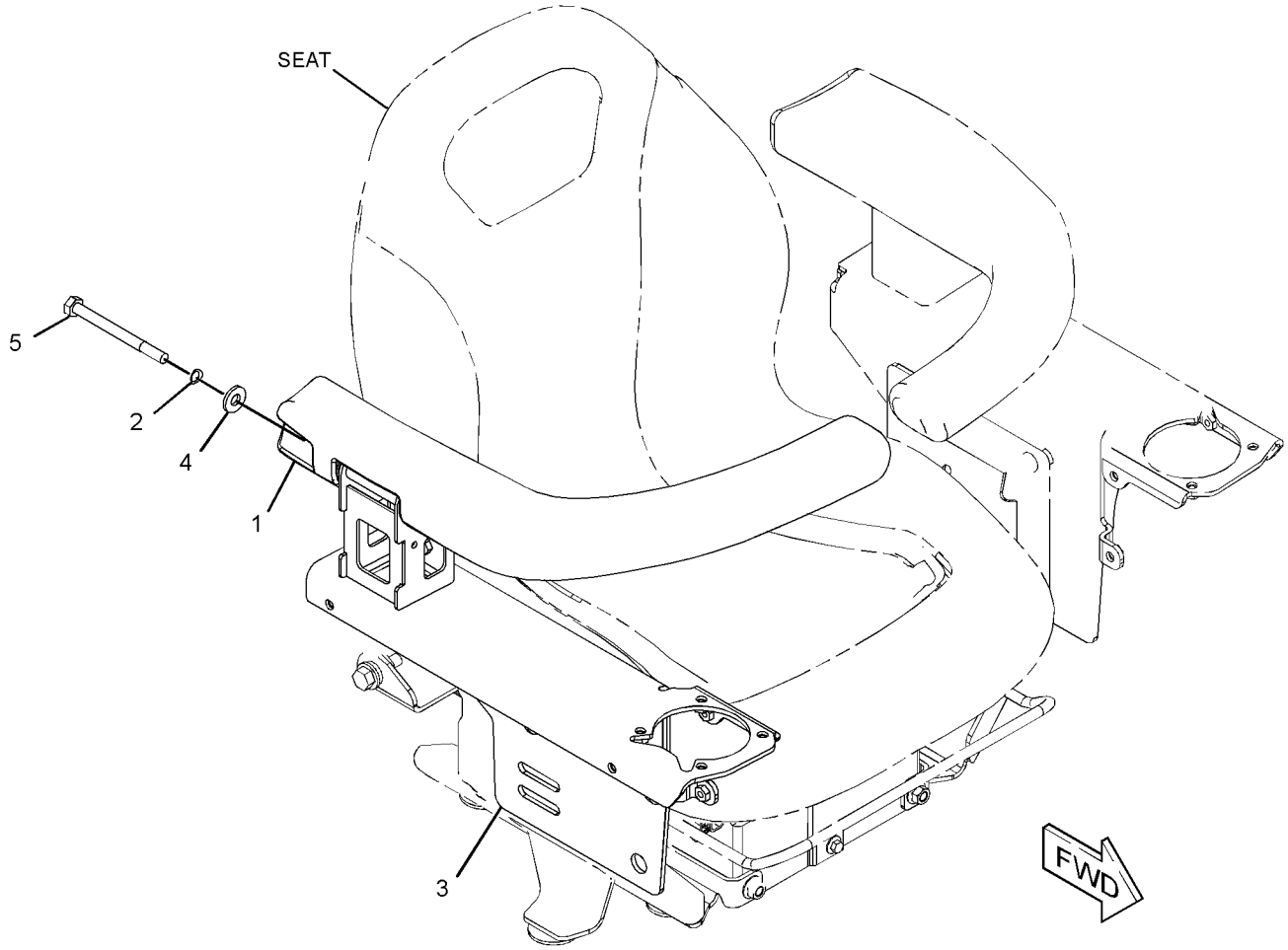

GRAPHIC #1 **<END>** g03369934

OPERATOR STATION

418-5933 ARMREST GP–LH

PART OF 345-6188 ARMREST & MOUNTING GP

AN ATTACHMENT

SMCS-7307 **i05296329**

NOTE	REF NO	GRAPHIC REF	PART NUMBER	QTY	PART NAME 1 2 3 4 5 6 (PRODUCT LEVEL)	SEE PAGE
	1	1	**258-4422**	1	WASHER-SPRING	
	2	1	**378-1007**	1	SWITCH AS-MAGNETIC (LOAD CONTROL)	
		1	**171-0596**	1	RECEPTACLE AS-CONNECTOR	
		1	**3E-3371**	1	WEDGE-RECEPTACLE LOCK (3-PIN)	
	3	1	**418-5934**	1	BRACKET AS	
M		1	**159-9539**	12	NUT-WELD (M6X1-THD)	
		1	**258-4064**	1	SPACER	
	4	1	**418-5935**	1	ARMREST AS (LH)	
M		1	**159-9539**	2	NUT-WELD (M6X1-THD)	
M		1	**159-9541**	1	NUT-WELD (M10X1.5-THD)	
	5	1	**418-5954**	1	BRACKET	
	6	1	**436-2988**	1	PLATE (MAGNETIC)	
M	7	1	**3T-0851**	1	LOCKNUT (M5X0.8-THD)	
	8	1	**7X-7729**	3	WASHER (11X25X3-MM THK)	
M	9	1	**8T-0267**	2	BOLT-SOCKET HEAD (M6X1X12-MM)	
	10	1	**8T-0328**	1	WASHER-HARD (5.5X10X1-MM THK)	
M	11	1	**8T-3998**	2	BOLT (M4X0.7X12-MM)	
M	12	1	**8T-6685**	1	BOLT (M10X1.5X110-MM)	

M - METRIC PART

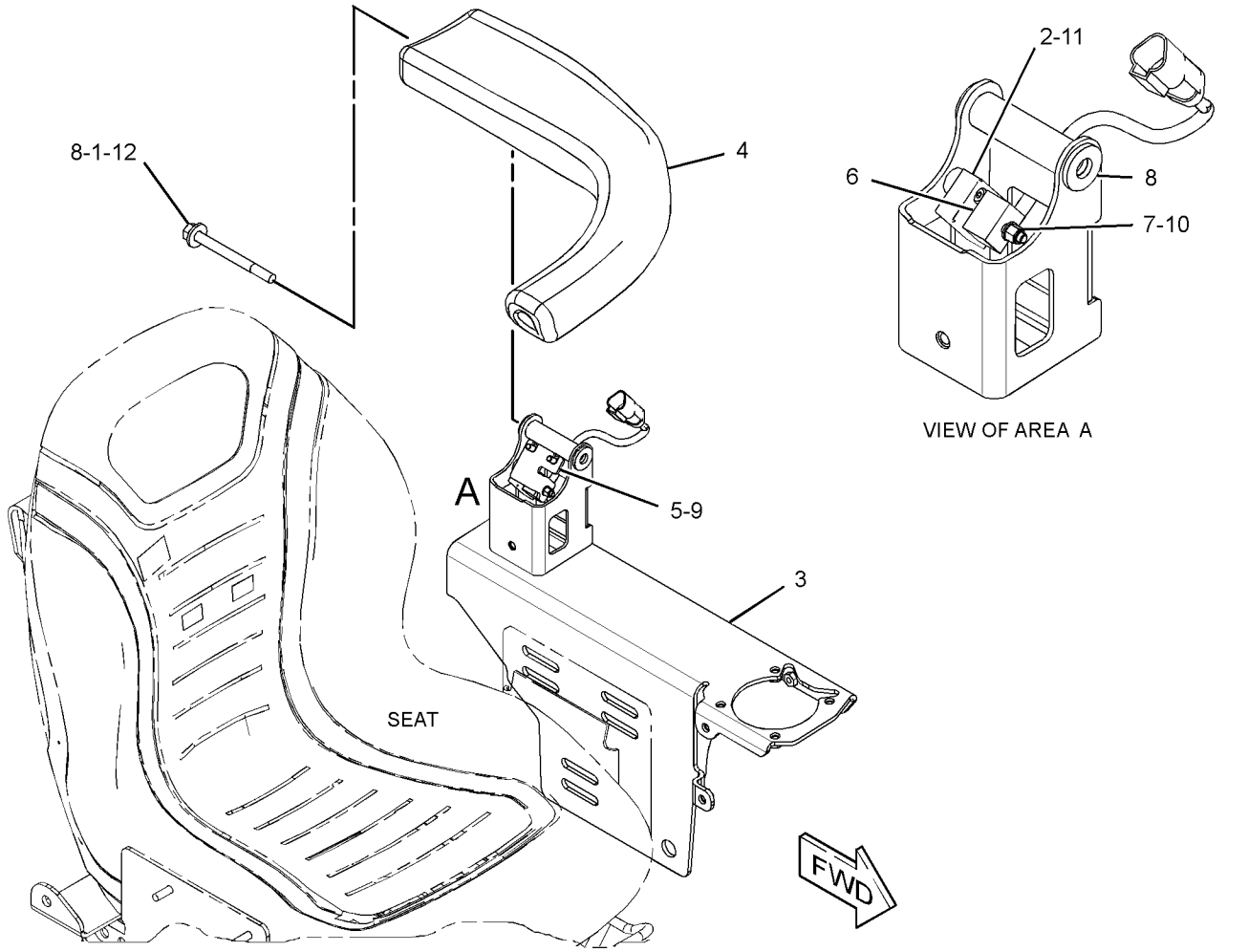

GRAPHIC #1 **<END>** g03364925

345-4545 BLOWER GP-CAB

PART OF 345-6190 AIR CONDITIONER & MOUNTING GP, 388-8267 KIT-AIR COND & HEATER INSTL, 388-8268 KIT-CAB HEATER & MOUNTING
AN ATTACHMENT

SMCS-7316 **i04774711**

NOTE	REF NO	GRAPHIC REF	PART NUMBER	QTY	PART NAME 1 2 3 4 5 6 (PRODUCT LEVEL)	SEE PAGE
D	1	1	**5P-5637**		SEAL (0.14-M EACH)	
D	1A	1	**5P-5637**		SEAL (0.04-M EACH)	
	2	1	**185-4015**	9	CLIP	
	3	1	**283-2458**	4	NUT-SPEED	
	4	1	**345-4549**	1	VALVE	
	5	1	**345-4558**	1	HARNESS AS-MOTOR	
		1	**5W-4957**	1	HOUSING	
		1	**9W-0852**	4	PIN-CONNECTOR (14-GA TO 16-GA)	
		1	**102-8804**	1	KIT-RECEPTACLE (4-PIN)	
					(INCLUDES RECEPTACLE AS & WEDGE)	
		1	**5W-1987**	4	TERMINAL-BLADE (12-GA TO 16-GA)	
	6	1	**345-6082**	1	GASKET	
	7	1	**345-6083**	1	GASKET	
	8	1	**359-1581**	1	CASE	
	9	1	**359-1582**	1	CASE	
	10	1	**359-1583**	1	BLOWER	
	11	1	**359-1584**	1	PLATE	
	12	1	**311-3520**	2	SCREW-HEX HEAD (8-16X0.5-IN)	

D - ORDER BY THE METER

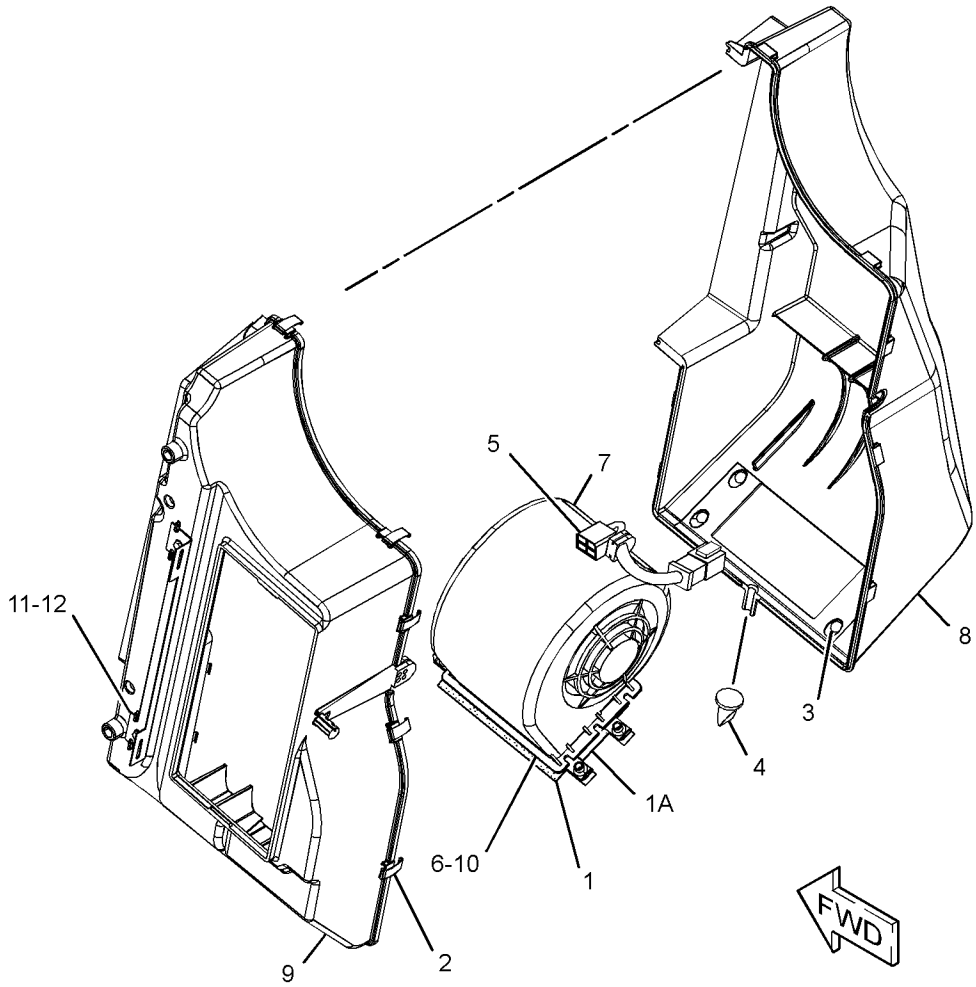

GRAPHIC #1 **<END>** g02885297

OPERATOR STATION

345-5454 CAB AR

PART OF 388-8246, 388-8247 COMMON AR

SMCS-7301, 7325 **i05317032**

NOTE	PART NUMBER	QTY	PART NAME 1 2 3 4 5 6 (PRODUCT LEVEL)	SEE PAGE
Y	*383-6243*	1	COVER GP-FUSE PANEL	93
Y	*394-5387*	1	LIGHTING GP-FLOOD	127
Y	*345-6020*	1	LINER GP-CAB	419
Y	*345-6130*	1	MIRROR & MTG GP-REAR VIEW	200
Y	*378-1025*	1	PANEL GP-INSTRUMENT	430
Y	*345-6010*	1	WINDOW GP-CAB	457
Y	*361-6400*	1	WIRING GP-CAB	138
	345-6200	1	CANOPY AS	

Y - SEPARATE ILLUSTRATION

<END>

345-4915 CAB AR-ENCLOSED ROPS

AN ATTACHMENT

SMCS-7301 **i05153064**

NOTE	PART NUMBER	QTY	PART NAME 1 2 3 4 5 6 (PRODUCT LEVEL)	SEE PAGE
Y	*345-4960*	1	ACCESSORY GP-CAB	349
Y	*345-4917*	1	HEATER AR-CAB	395
Y	*345-6135*	1	PEDAL GP-GOVERNOR	436
Y	*345-6090*	1	WINDOW GP-CAB	458

Y - SEPARATE ILLUSTRATION

<END>

345-4919 CAB AR-ENCLOSED ROPS

AN ATTACHMENT

SMCS-7301 **i05153063**

NOTE	PART NUMBER	QTY	PART NAME 1 2 3 4 5 6 (PRODUCT LEVEL)	SEE PAGE
Y	*345-4960*	1	ACCESSORY GP-CAB	349
Y	*345-4921*	1	AIR CONDITIONER AR	354
Y	*345-6135*	1	PEDAL GP-GOVERNOR	436
Y	*345-6090*	1	WINDOW GP-CAB	458

Y - SEPARATE ILLUSTRATION

<END>

345-6155 CAB AR-OPEN ROPS—STANDARD

AN ATTACHMENT

SMCS-7301, 7325 **i05156412**

NOTE	PART NUMBER	QTY	PART NAME 1 2 3 4 5 6 (PRODUCT LEVEL)	SEE PAGE
Y	*345-6065*	1	COVER GP-CAB	381
Y	*345-6035*	1	HANDHOLD GP	393
Y	*345-6319*	1	SEAT AR-SUSPENSION (MECHANICAL)	448

Y - SEPARATE ILLUSTRATION

<END>

345-6157 CAB AR-OPEN ROPS

AN ATTACHMENT

SMCS-7301, 7325 **i05156410**

NOTE	PART NUMBER	QTY	PART NAME 1 2 3 4 5 6 (PRODUCT LEVEL)	SEE PAGE
Y	*345-4962*	1	ACCESSORY GP-CAB	350
Y	*345-6065*	1	COVER GP-CAB	381
Y	*345-6035*	1	HANDHOLD GP	393
Y	*345-6135*	1	PEDAL GP-GOVERNOR	436

Y - SEPARATE ILLUSTRATION

<END>

345-5703 CABLE GP-CONTROL

PART OF 345-6453, 345-6457 LINES GP-LIFT CYLINDER
AN ATTACHMENT

SMCS-5154 **i04774684**

NOTE	REF NO	GRAPHIC REF	PART NUMBER	QTY	PART NAME 1 2 3 4 5 6 (PRODUCT LEVEL)	SEE PAGE
Y	1	1	**298-7197**	1	HANDLE GP	394
	2	1	**345-5718**	1	CABLE AS	
		1	**8T-4742**	1	END-YOKE ROD	
		1	**8T-4744**	1	PIN AS-SPRING	
	3	1	**9R-5744**	2	WASHER (15.9X28X1-MM THK)	

Y - SEPARATE ILLUSTRATION

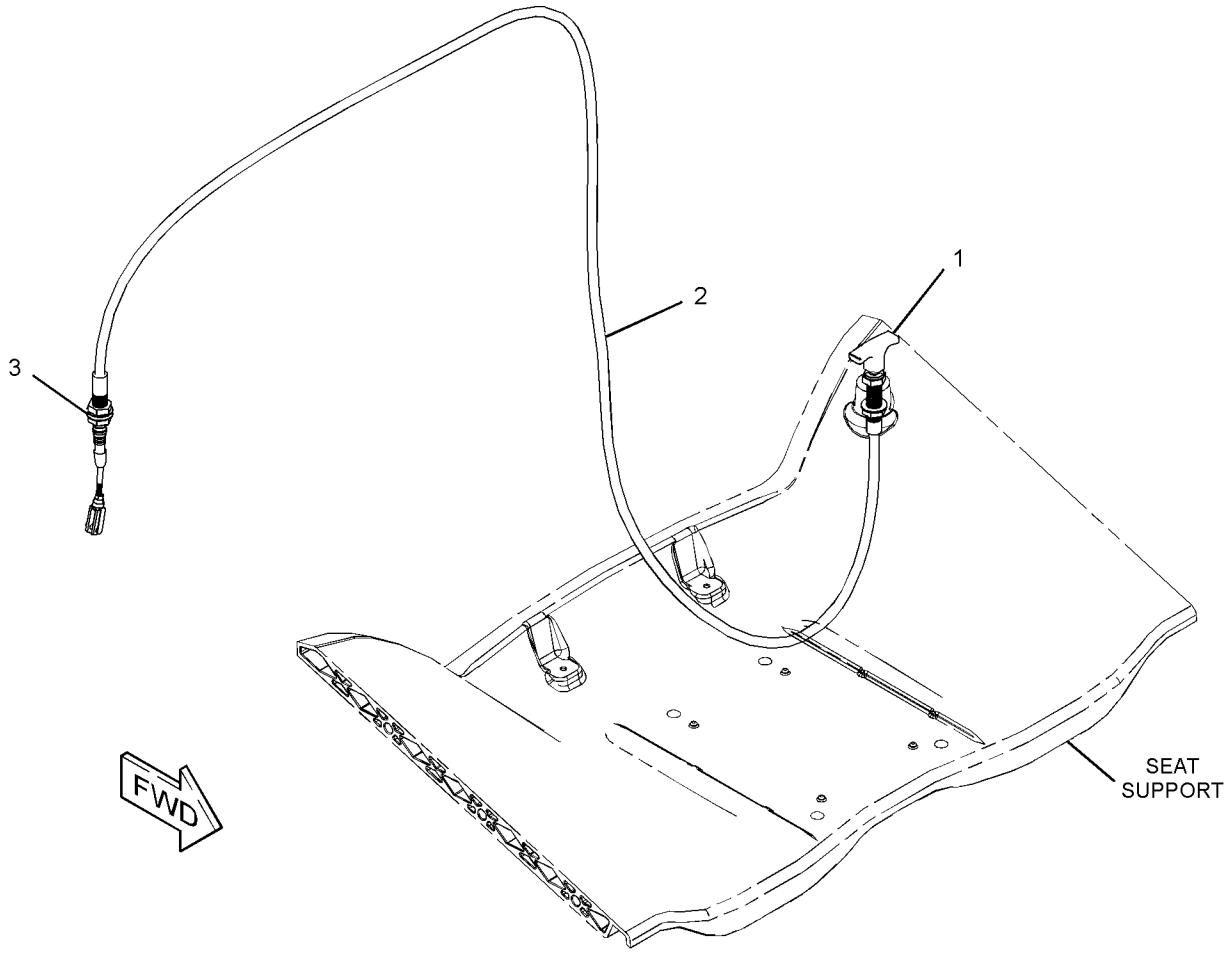

GRAPHIC #1 **<END>** g02878056

345-3584 COMPRESSOR GP-REFRIGERANT

PART OF 345-4921 AIR CONDITIONER AR
AN ATTACHMENT

SMCS-1802 **i05165054**

NOTE	REF NO	GRAPHIC REF	PART NUMBER	QTY	PART NAME 1 2 3 4 5 6 (PRODUCT LEVEL)	SEE PAGE
	1	1	**345-3527**	1	PLATE	
	2	1	**345-4547**	1	COMPRESSOR GP-REFRIGERANT	
M	3	1	**175-7141**	2	NUT-HEX FLANGE (M10X1.5-THD)	
	4	1	**198-8354**	1	V-BELT	
	5	1	**208-9291**	1	BOLT (M10X1.5X20-MM)	
	6	1	**208-9294**	1	BOLT-FLANGE HEAD (M10X1.5X35-MM)	
	7	1	**7X-7729**	1	WASHER (11X25X3-MM THK)	
	8	1	**8T-4121**	1	WASHER-HARD (11X21X2.5-MM THK)	
M	9	1	**8T-6685**	1	BOLT (M10X1.5X110-MM)	

M - METRIC PART

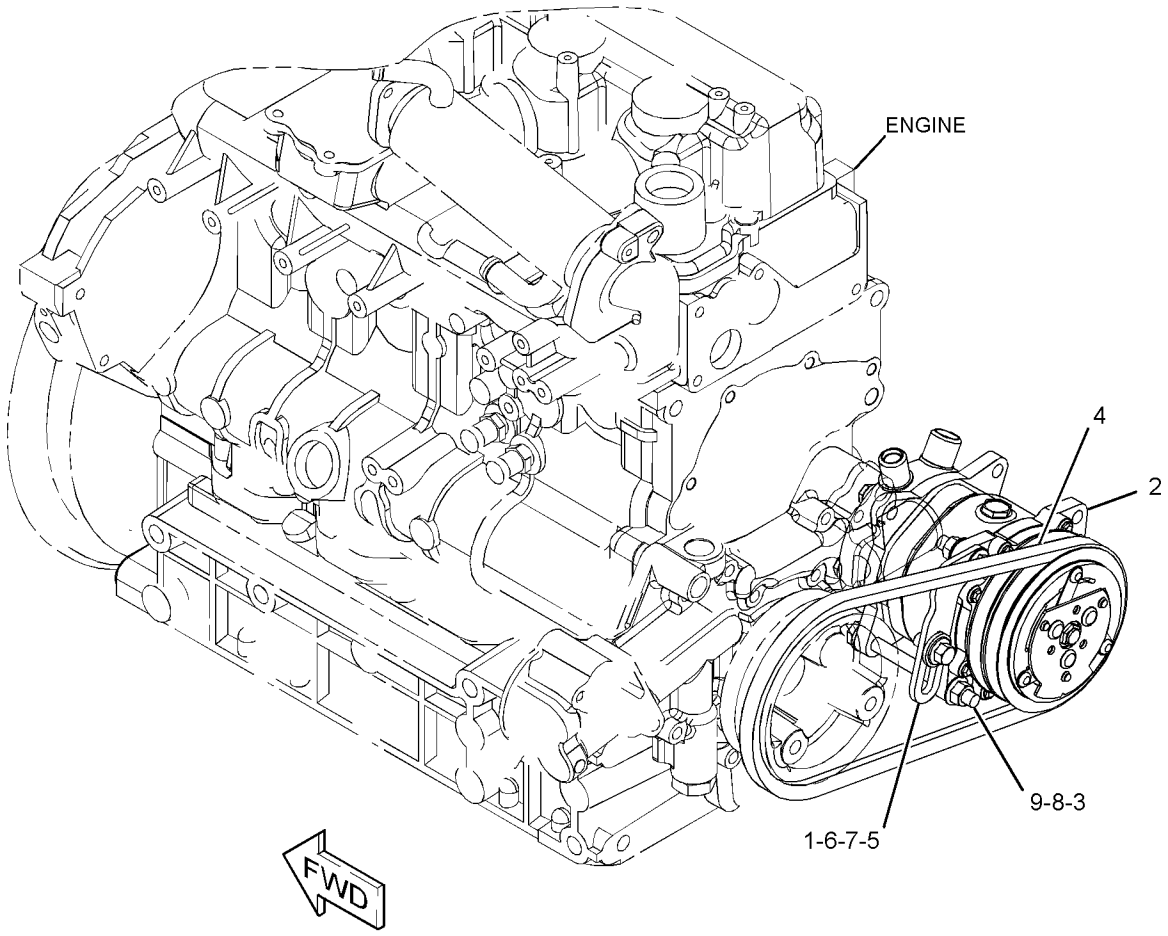

GRAPHIC #1 **<END>** g03325595

345-6141 CONDENSER & MTG GP-REFRIGERANT

PART OF 345-4921 AIR CONDITIONER AR

AN ATTACHMENT

SMCS-1805 **i05165063**

NOTE	REF NO	GRAPHIC REF	PART NUMBER	QTY	PART NAME 1 2 3 4 5 6 (PRODUCT LEVEL)	SEE PAGE
	1	1	**5P-7958**	1	SLEEVE-CABLE SPLICE	
	2	1	**287-7062**	1	FAN AS	
	3	1	**345-4552**	1	LANYARD	
	4	1	**345-6139**	1	COIL AS	
	5	1	**345-6142**	1	SHROUD	
	6	1	**342-9920**	3	BOLT-FLANGE HEAD (M8X1.25X20-MM)	
M	7	1	**5C-7261**	7	NUT (M8X1.25-THD)	
M	8	1	**8T-4189**	4	BOLT (M8X1.25X20-MM)	
M	9	1	**8T-4197**	3	BOLT (M8X1.25X40-MM)	
	10	1	**8T-4224**	10	WASHER-HARD (8.8X16X2-MM THK)	

M - METRIC PART

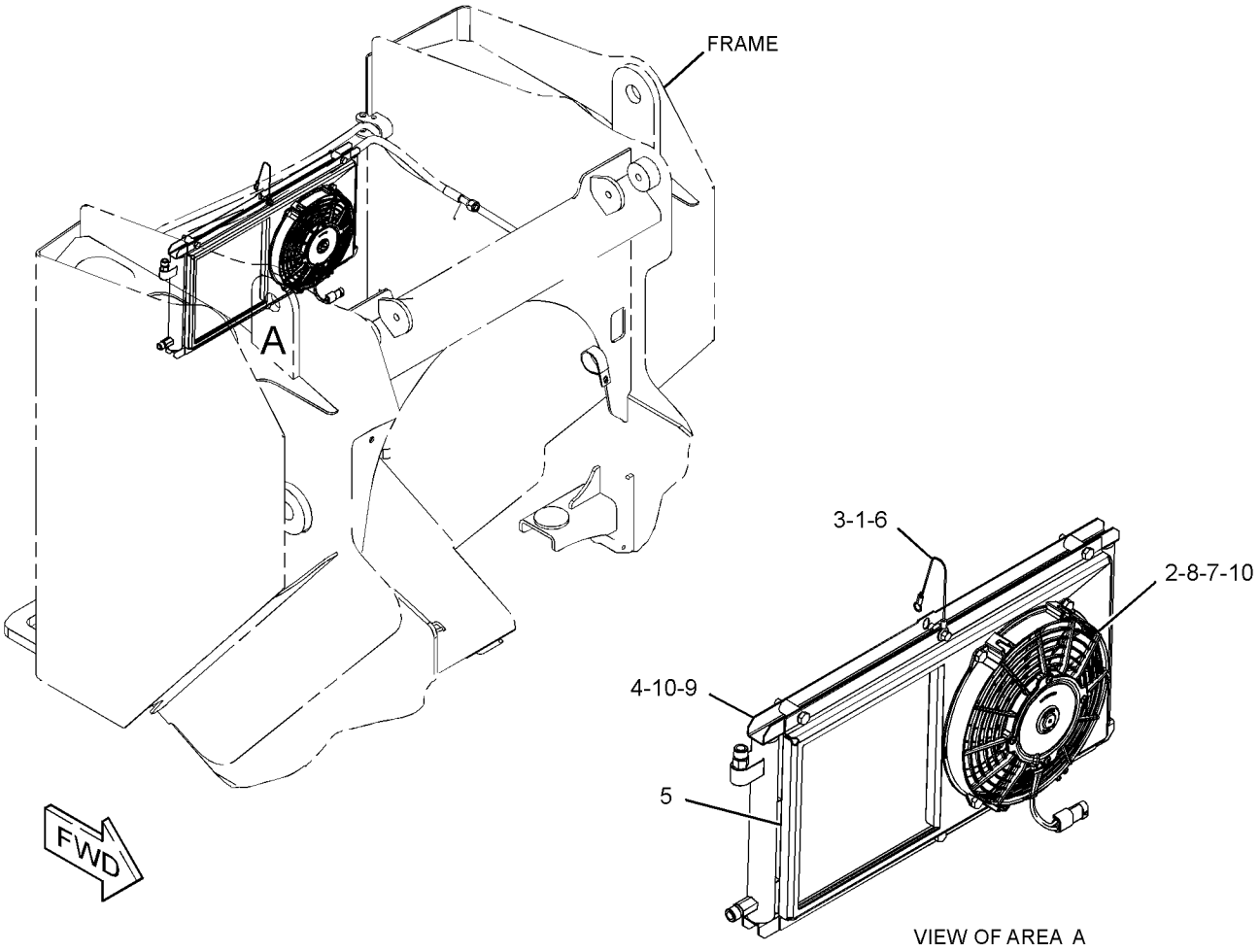

GRAPHIC #1 **<END>** g03331585

258-4299 CONTROL GP-AIR & TEMPERATURE

PART OF 356-6113 CONTROL GP-AIR & TEMPERATURE, 388-8267 KIT-AIR COND & HEATER INSTL, 388-8268 KIT-CAB HEATER & MOUNTING
AN ATTACHMENT

SMCS-7451 **i03604422**

NOTE	REF NO	GRAPHIC REF	PART NUMBER	QTY	PART NAME 1 2 3 4 5 6 (PRODUCT LEVEL)	SEE PAGE
	1	1	**6V-8369**	1	NUT (7/16-28-THD)	
	2	1	**340-8931**	2	KNOB AS	
	3	1	**258-4271**	1	SWITCH AS (TEMPERATURE CONTROL)	
	4	1	**258-4272**	1	SWITCH AS (BLOWER FAN SPEED)	
	5	1	**258-4288**	1	KNOB	
	6	1	**258-4289**	1	STOP	
	7	1	**258-4292**	1	FILM-PANEL (BLOWER, TEMPERATURE CONTROL)	
	8	1	**266-2431**	1	PANEL	
	9	1	**7X-0848**	1	NUT-BULKHEAD (3/8-32-THD)	
	10	1	**9F-5644**	1	LOCKWASHER	

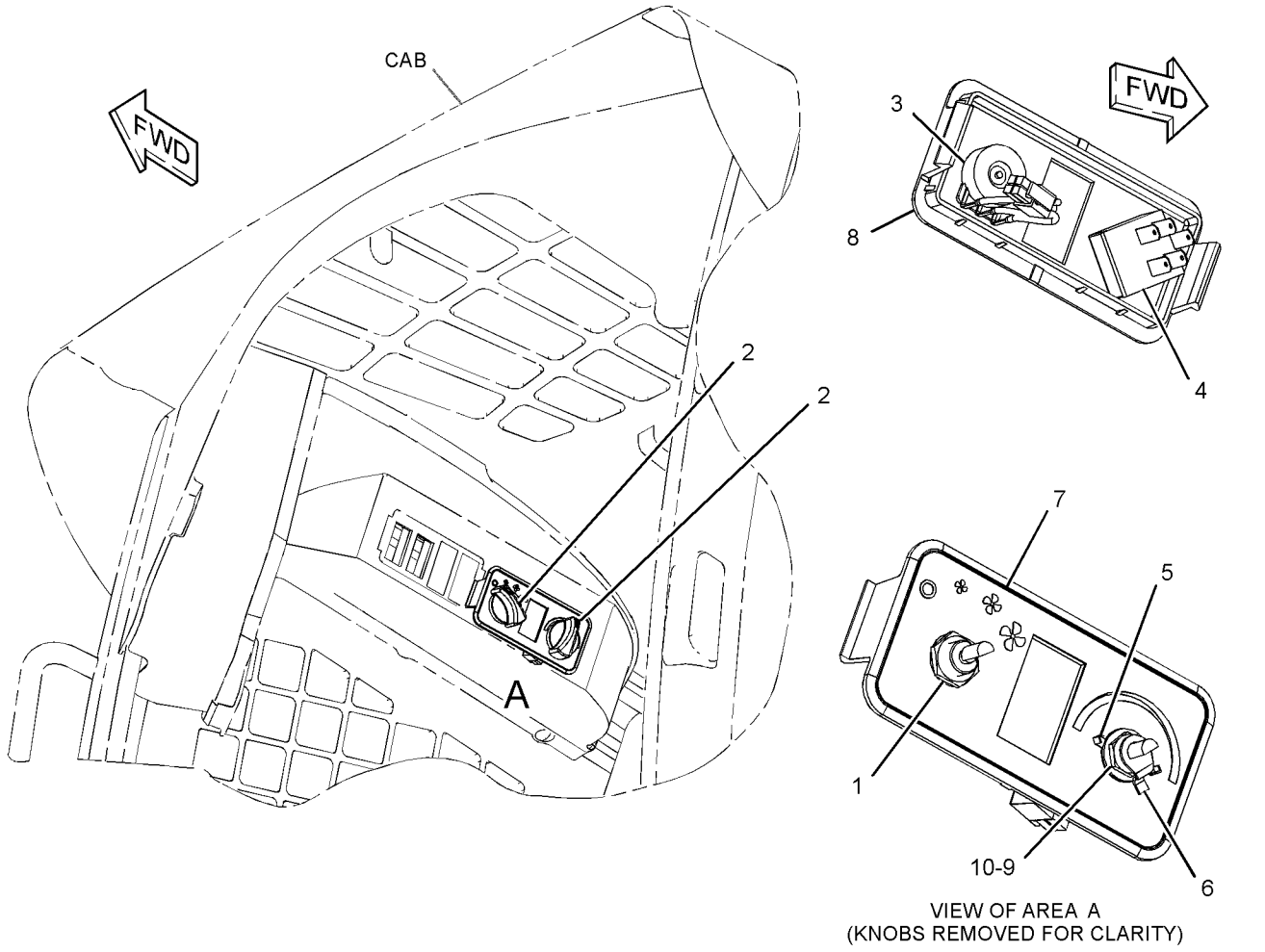

VIEW OF AREA A
(KNOBS REMOVED FOR CLARITY)

GRAPHIC #1 **<END>** g01339840

356-6113 CONTROL GP-AIR & TEMPERATURE

PART OF 361-6396 WIRING GP-AIR CONDITIONER, 361-6384 WIRING GP-HEATER AN ATTACHMENT

SMCS-7451 **i05163081**

NOTE	REF NO	GRAPHIC REF	PART NUMBER	QTY	PART NAME 1 2 3 4 5 6 (PRODUCT LEVEL)	SEE PAGE
Y	1	1	**258-4299**	1	CONTROL GP-AIR & TEMPERATURE	365
Y	2	1	**356-6106**	1	HARNESS AS-HEATER & AIR COND (BLOWER MOTOR)	101

Y - SEPARATE ILLUSTRATION

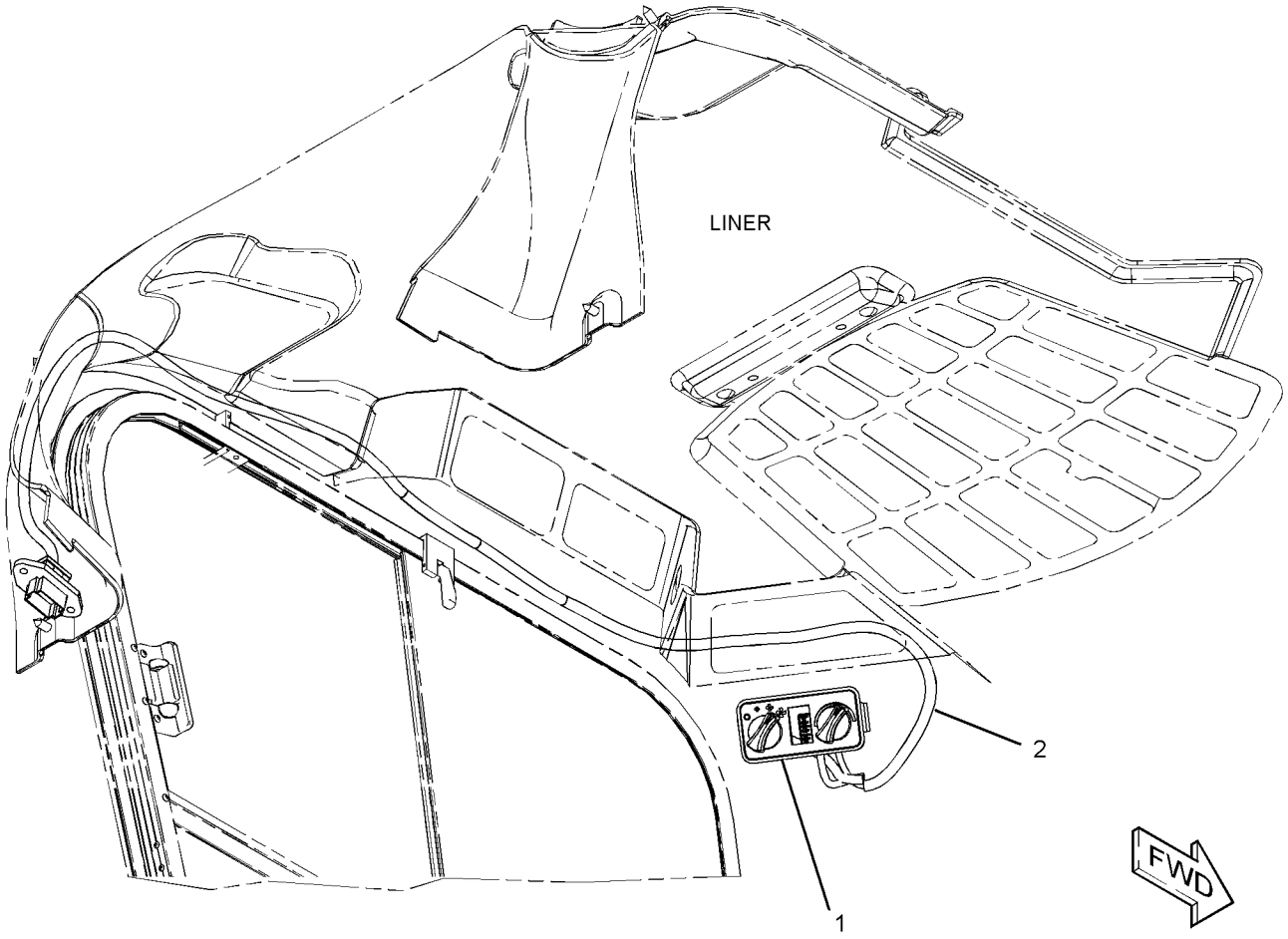

GRAPHIC #1 **<END>** g03318245

345-5919 CONTROL GP-ELECTROHYDRAULIC—ON, OFF AUXILIARY CONTROL AN ATTACHMENT

SMCS-5702, 5705 **i05156414**

NOTE	PART NUMBER	QTY	PART NAME 1 2 3 4 5 6 (PRODUCT LEVEL)	SEE PAGE
Y	*345-6582*	1	CONTROL GP-ELECTROHYDRAULIC (RH)	370
Y	*345-6584*	1	CONTROL GP-ELECTROHYDRAULIC (LH)	372

Y - SEPARATE ILLUSTRATION

<END>

345-5923 CONTROL GP-ELECTROHYDRAULIC AN ATTACHMENT

SMCS-5702, 5705 **i05296324**

NOTE	PART NUMBER	QTY	PART NAME 1 2 3 4 5 6 (PRODUCT LEVEL)	SEE PAGE
Y	*345-6580*	1	CONTROL GP-ELECTROHYDRAULIC (RH)	368
Y	*345-6583*	1	CONTROL GP-ELECTROHYDRAULIC (LH, HIGH FLOW)	371

Y - SEPARATE ILLUSTRATION

<END>

345-6580 CONTROL GP-ELECTROHYDRAULIC

PART OF 387-5383 CONTROL AR-HYDRAULIC, 345-5923 CONTROL GP-ELECTROHYDRAULIC AN ATTACHMENT

SMCS-5702, 5705 **i05166844**

NOTE	REF NO	GRAPHIC REF	PART NUMBER	QTY	PART NAME 1 2 3 4 5 6 (PRODUCT LEVEL)	SEE PAGE
M	1	1	**9X-2546**	4	BOLT (M6X1X20-MM)	
Y	2	1	**379-1612**	1	CONTROL GP-JOYSTICK (RH)	376
	3	1	**3S-2093**	2	STRAP-CABLE	

M - METRIC PART
Y - SEPARATE ILLUSTRATION

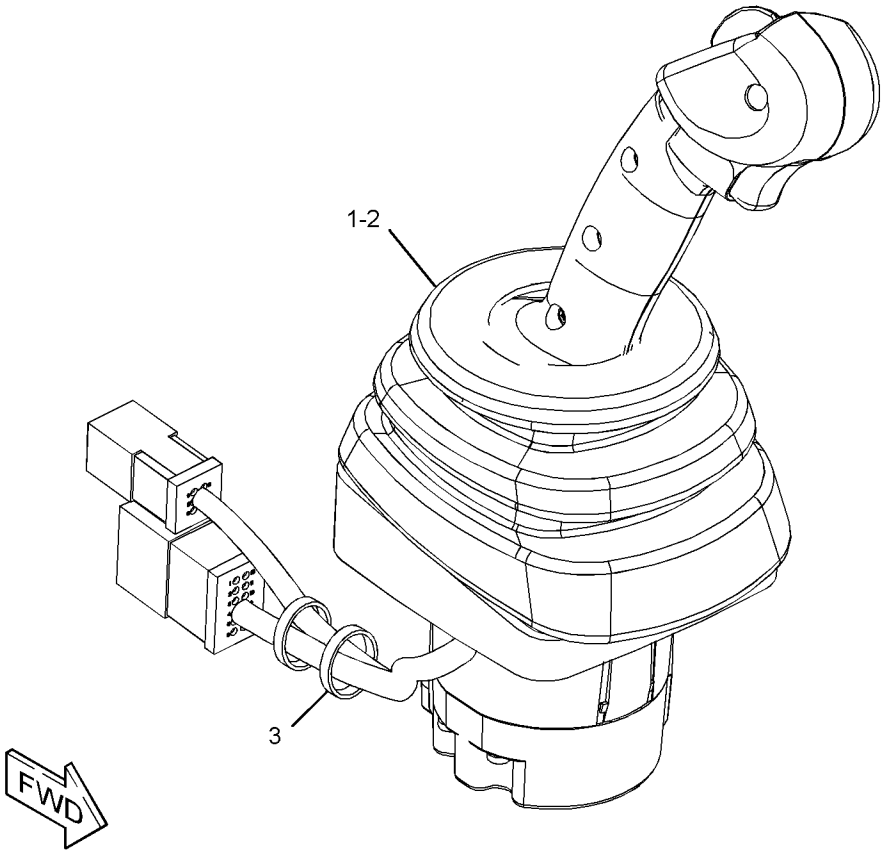

GRAPHIC #1 **<END>** g03325871

345-6581 CONTROL GP-ELECTROHYDRAULIC—RH, HIGH FLOW

PART OF 345-5447 HYDRAULIC AR

AN ATTACHMENT

SMCS-5702, 5705 **i05156699**

NOTE	REF NO	GRAPHIC REF	PART NUMBER	QTY	PART NAME 1 2 3 4 5 6 (PRODUCT LEVEL)	SEE PAGE
M	1	1	**9X-2546**	4	BOLT (M6X1X20-MM)	
Y	2	1	**379-1613**	1	CONTROL GP-JOYSTICK (RH, HIGH FLOW)	377
	3	1	**3S-2093**	2	STRAP-CABLE	

M - METRIC PART
Y - SEPARATE ILLUSTRATION

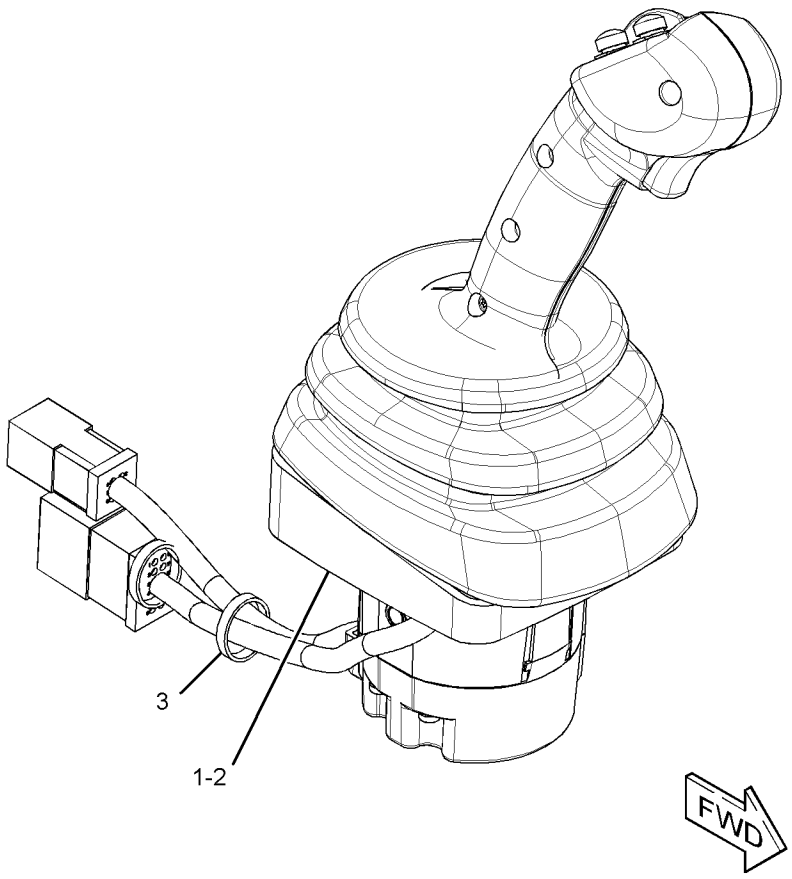

GRAPHIC #1 **<END>** g03319376

345-6582 CONTROL GP-ELECTROHYDRAULIC

PART OF 345-5919 CONTROL GP-ELECTROHYDRAULIC

AN ATTACHMENT

SMCS-5702, 5705 **i05166901**

NOTE	REF NO	GRAPHIC REF	PART NUMBER	QTY	PART NAME 1 2 3 4 5 6 (PRODUCT LEVEL)	SEE PAGE
M	1	1	**9X-2546**	4	BOLT (M6X1X20-MM)	
Y	2	1	**379-1614**	1	CONTROL GP-JOYSTICK (RH)	378
	3	1	**3S-2093**	2	STRAP-CABLE	

M - METRIC PART
Y - SEPARATE ILLUSTRATION

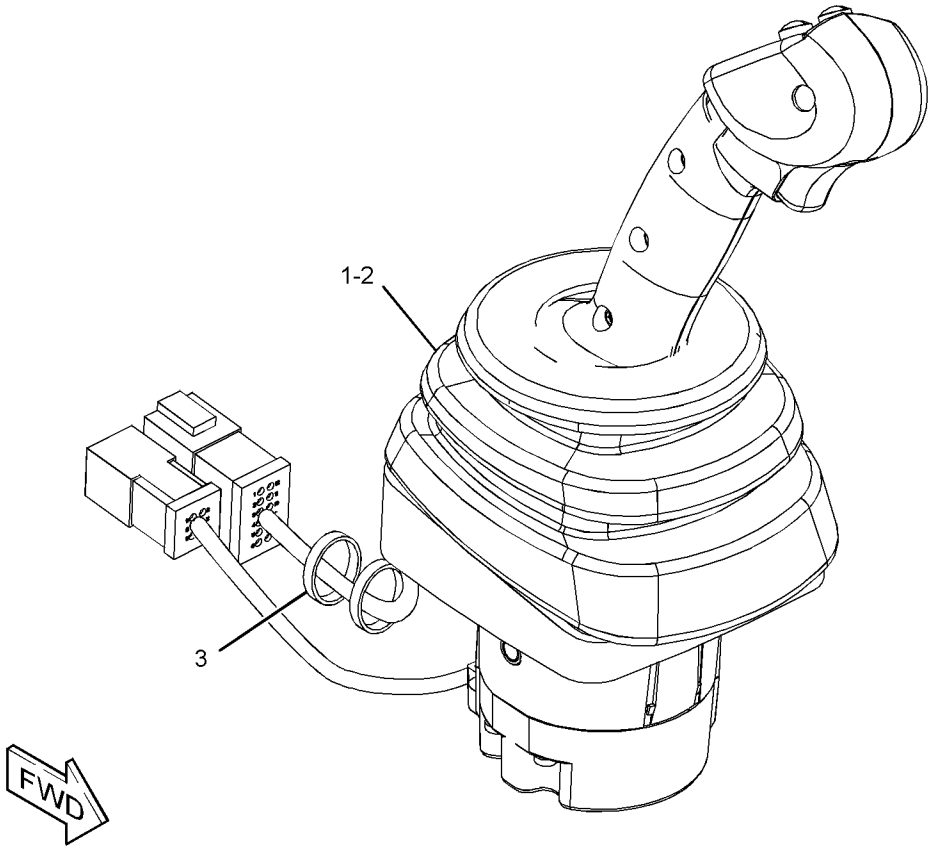

GRAPHIC #1 **<END>** g03325772

345-6583 CONTROL GP-ELECTROHYDRAULIC—LH, HIGH FLOW

PART OF 387-5383 CONTROL AR-HYDRAULIC, 345-5923 CONTROL GP-ELECTROHYDRAULIC, 345-5447 HYDRAULIC AR
AN ATTACHMENT

SMCS-5702, 5705

i05156698

NOTE	REF NO	GRAPHIC REF	PART NUMBER	QTY	PART NAME 1 2 3 4 5 6 (PRODUCT LEVEL)	SEE PAGE
M	1	1	**9X-2546**	4	BOLT (M6X1X20-MM)	
Y	2	1	**379-1615**	1	CONTROL GP-JOYSTICK (LH, HIGH FLOW)	379
	3	1	**3S-2093**	2	STRAP-CABLE	

M - METRIC PART
Y - SEPARATE ILLUSTRATION

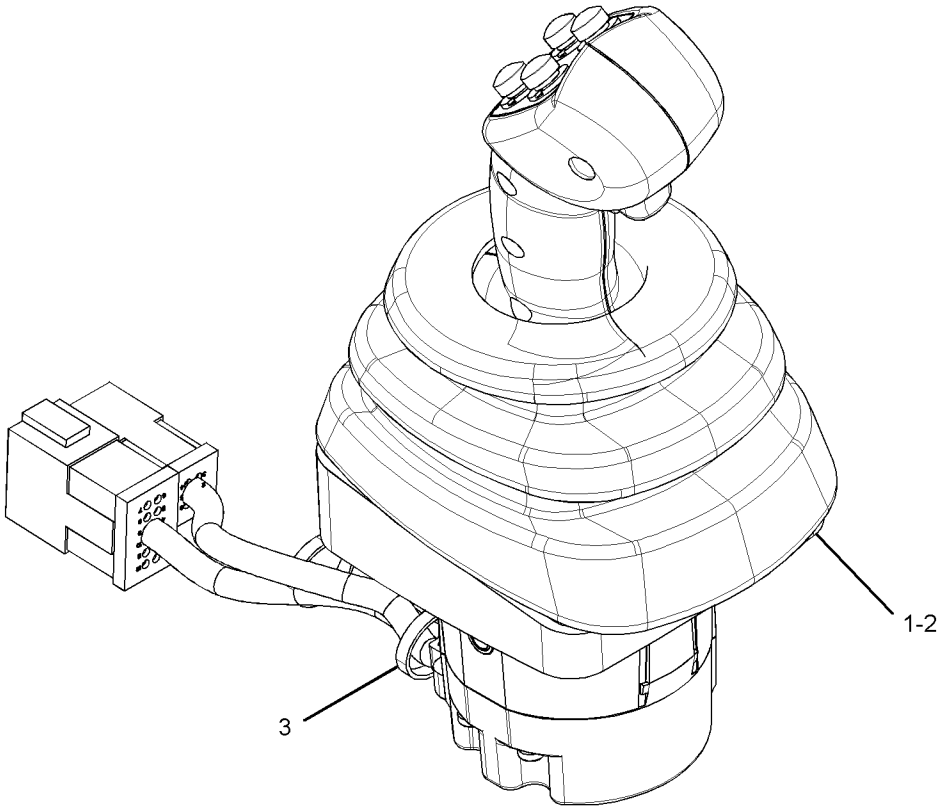

GRAPHIC #1 **<END>** g03319602

345-6584 CONTROL GP-ELECTROHYDRAULIC

PART OF 345-5919 CONTROL GP-ELECTROHYDRAULIC
AN ATTACHMENT

SMCS-5702, 5705 **i05166843**

NOTE	REF NO	GRAPHIC REF	PART NUMBER	QTY	PART NAME 1 2 3 4 5 6 (PRODUCT LEVEL)	SEE PAGE
M	1	1	**9X-2546**	4	BOLT (M6X1X20-MM)	
Y	2	1	**379-1616**	1	CONTROL GP-JOYSTICK (LH)	380
	3	1	**3S-2093**	2	STRAP-CABLE	

M - METRIC PART
Y - SEPARATE ILLUSTRATION

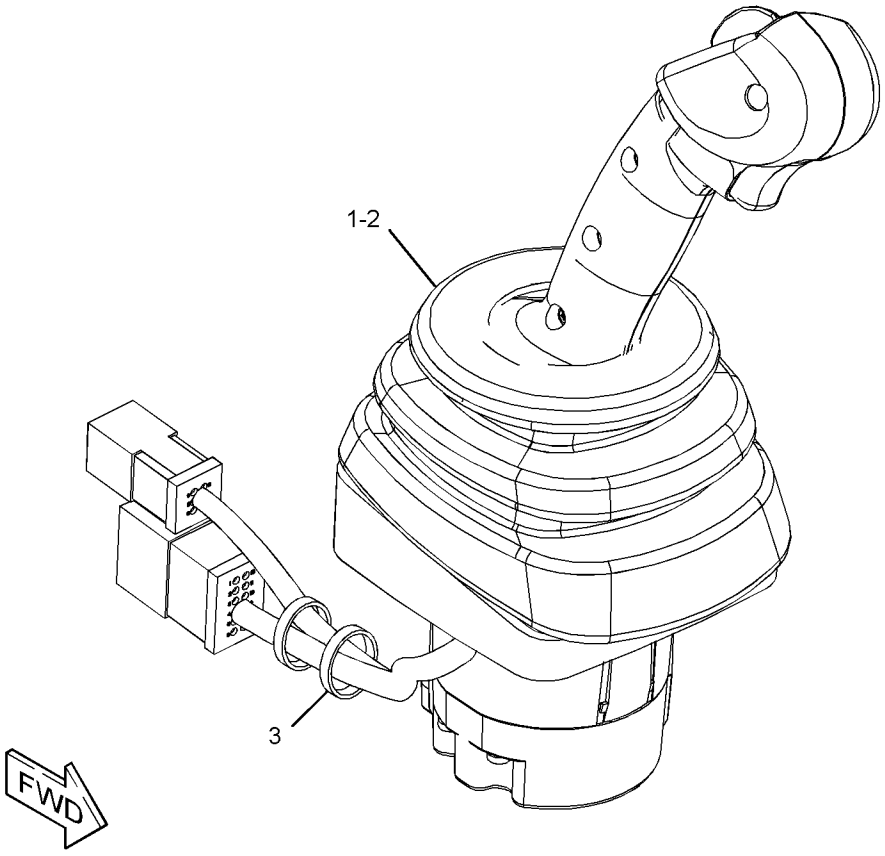

GRAPHIC #1 **<END>** g03325871

269-0259 CONTROL GP-HANDLE

PART OF 379-1614, 379-1616 CONTROL GP-JOYSTICK
AN ATTACHMENT

SMCS-5705 **i05166841**

NOTE	REF NO	GRAPHIC REF	PART NUMBER	QTY	PART NAME 1 2 3 4 5 6 (PRODUCT LEVEL)	SEE PAGE
	1	1	**174-3091**	1	KIT-RECEPTACLE (12-PIN)	
					(INCLUDES RECEPTACLE AS & WEDGE)	
	2	1	**9X-3401**	6	PIN-CONNECTOR (16-GA TO 18-GA)	
	3	1	**8T-8737**	6	PLUG-SEAL	
	4	1	**276-4878**	1	GROMMET	
	5	1	**220-8355**	2	CAP-PUSH BUTTON (BLACK)	

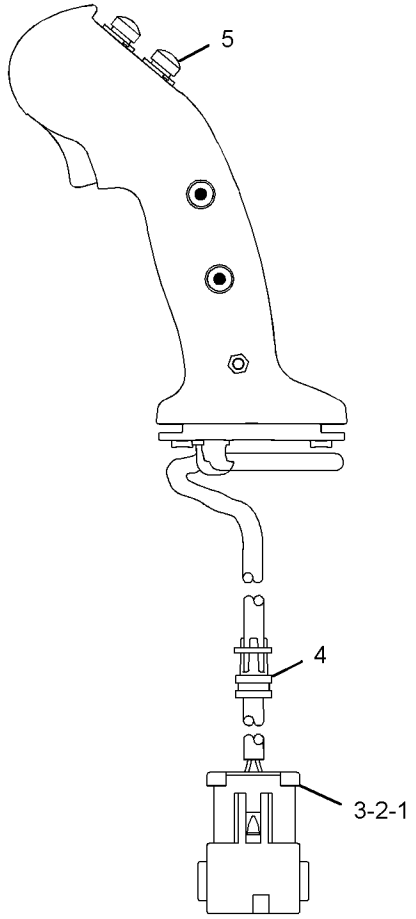

LEFT SIDE VIEW

GRAPHIC #1 **<END>** g03334870

272-1790 CONTROL GP-HANDLE–LH

PART OF 379-1615 CONTROL GP-JOYSTICK

AN ATTACHMENT

SMCS-5705 **i02629793**

NOTE	REF NO	GRAPHIC REF	PART NUMBER	QTY	PART NAME 1 2 3 4 5 6 (PRODUCT LEVEL)	SEE PAGE
	1	1	**174-3091**	1	KIT-RECEPTACLE (12-PIN)	
					(INCLUDES RECEPTACLE AS & WEDGE)	
	2	1	**186-3735**	9	PIN-CONNECTOR (16-GA TO 18-GA)	
	3	1	**8T-8737**	3	PLUG-SEAL	
	4	1	**276-4878**	1	GROMMET	

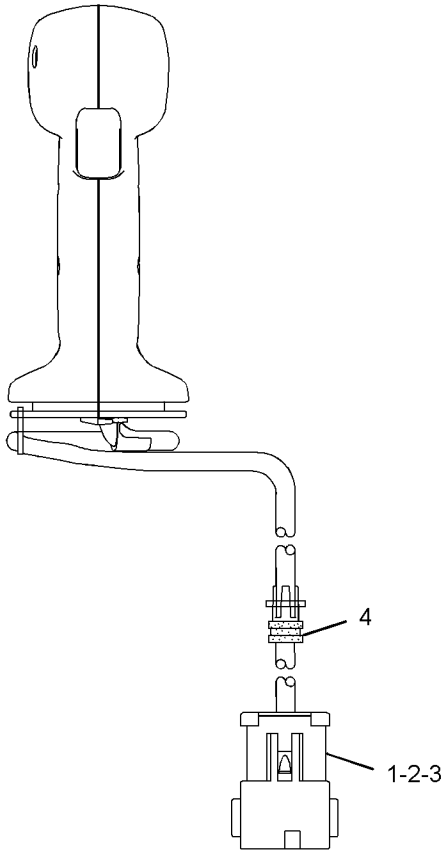

FRONT VIEW

GRAPHIC #1 **<END>** g01322784

273-9104 CONTROL GP-HANDLE

PART OF 379-1613 CONTROL GP-JOYSTICK
AN ATTACHMENT

SMCS-5705 **i05156700**

NOTE	REF NO	GRAPHIC REF	PART NUMBER	QTY	PART NAME 1 2 3 4 5 6 (PRODUCT LEVEL)	SEE PAGE
	1	1	**174-3091**	1	KIT-RECEPTACLE (12-PIN)	
					(INCLUDES RECEPTACLE AS & WEDGE)	
	2	1	**9X-3401**	11	PIN-CONNECTOR (16-GA TO 18-GA)	
	3	1	**8T-8737**	1	PLUG-SEAL	
	4	1	**276-4878**	1	GROMMET	
	5	1	**220-8355**	2	CAP-PUSH BUTTON (BLACK)	

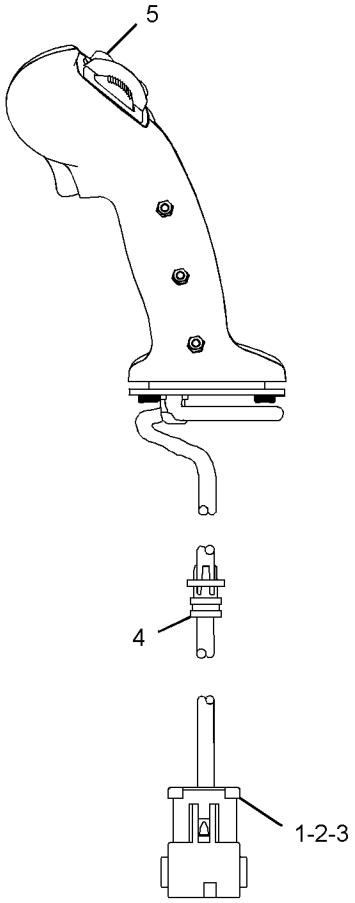

LEFT SIDE VIEW

GRAPHIC #1 **<END>** g03320932

379-1612 CONTROL GP-JOYSTICK

PART OF 345-6580 CONTROL GP-ELECTROHYDRAULIC
AN ATTACHMENT

SMCS-5705 **i05166839**

NOTE	REF NO	GRAPHIC REF	PART NUMBER	QTY	PART NAME 1 2 3 4 5 6 (PRODUCT LEVEL)	SEE PAGE
	1	1	**254-3437**	1	BOOT	
	2	1	**273-9103**	1	CONTROL GP-HANDLE (RH)	
		1	**8T-8737**	5	PLUG-SEAL	
		1	**9X-3401**	7	PIN-CONNECTOR (16-GA TO 18-GA)	
		1	**174-3091**	1	KIT-RECEPTACLE (12-PIN)	
					(INCLUDES RECEPTACLE AS & WEDGE)	
		1	**276-4878**	1	GROMMET	
	3	1	**379-1577**	1	BASE AS-JOYSTICK (RH)	
		1	**8T-8729**	6	PIN-CONNECTOR (16-GA TO 18-GA)	
		1	**151-9275**	1	KIT-RECEPTACLE (6-PIN)	
					(INCLUDES RECEPTACLE AS & WEDGE)	
M	4	1	**213-7489**	3	SCREW (M4X0.7X25-MM)	
M	5	1	**178-9983**	3	LOCKNUT (M4X0.7-THD)	
	6	1	**8T-8729**	13	PIN-CONNECTOR (16-GA TO 18-GA)	
	7	1	**8T-8737**	5	PLUG-SEAL	

M - METRIC PART

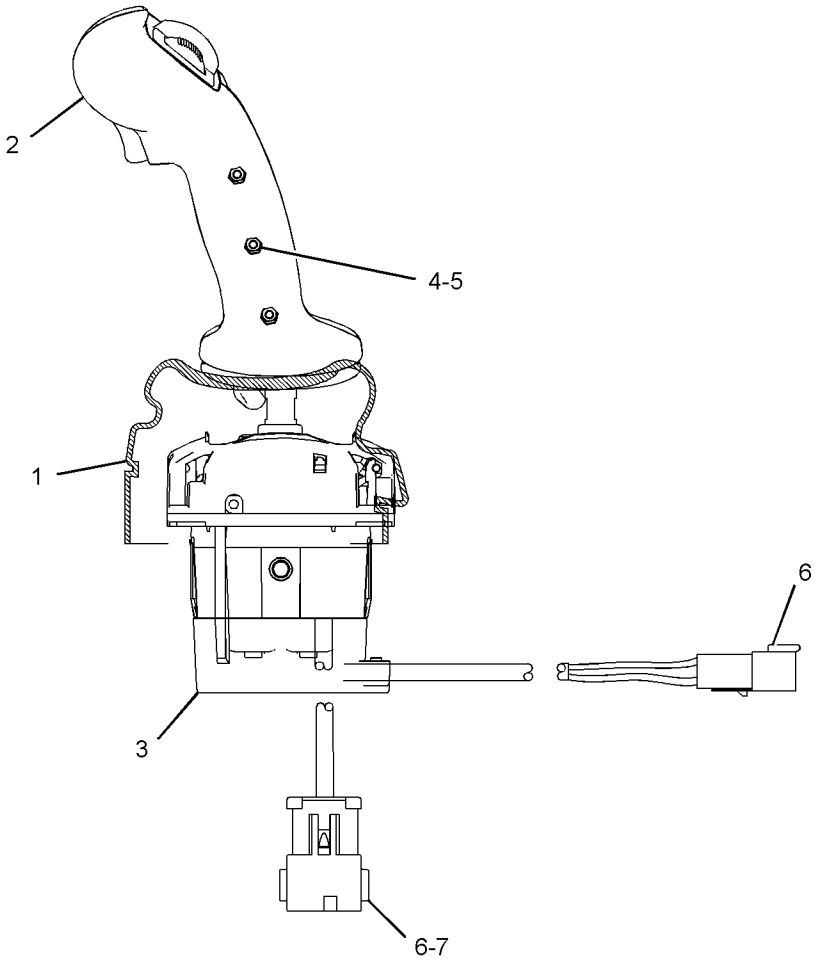

LEFT SIDE VIEW

GRAPHIC #1 **<END>** g03332549

379-1613 CONTROL GP-JOYSTICK—RH, HIGH FLOW

PART OF 345-6581 CONTROL GP-ELECTROHYDRAULIC
AN ATTACHMENT

SMCS-5705 **i05156696**

NOTE	REF NO	GRAPHIC REF	PART NUMBER	QTY	PART NAME 1 2 3 4 5 6 (PRODUCT LEVEL)	SEE PAGE
	1	1	**254-3437**	1	BOOT	
Y	2	1	**273-9104**	1	CONTROL GP-HANDLE (RH)	375
	3	1	**379-1577**	1	BASE AS-JOYSTICK (RH)	
		1	**8T-8729**	6	PIN-CONNECTOR (16-GA TO 18-GA)	
		1	**151-9275**	1	KIT-RECEPTACLE (6-PIN)	
					(INCLUDES RECEPTACLE AS & WEDGE)	
M	4	1	**213-7489**	3	SCREW (M4X0.7X25-MM)	
M	5	1	**178-9983**	3	LOCKNUT (M4X0.7-THD)	
	6	1	**174-3091**	1	KIT-RECEPTACLE (12-PIN)	
					(INCLUDES RECEPTACLE AS & WEDGE)	
	7	1	**220-8355**	2	CAP-PUSH BUTTON (BLACK)	
	8	1	**8T-8729**	11	PIN-CONNECTOR (16-GA TO 18-GA)	
	9	1	**8T-8737**	1	PLUG-SEAL	

M - METRIC PART
Y - SEPARATE ILLUSTRATION

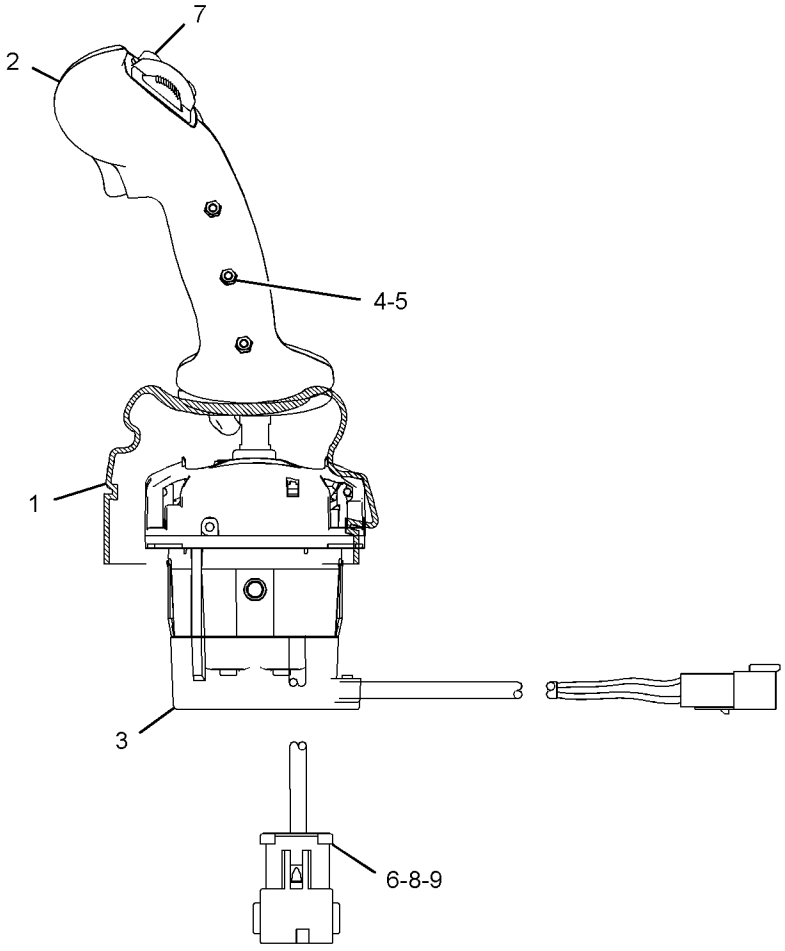

LEFT SIDE VIEW

GRAPHIC #1 **<END>** g03320499

379-1614 CONTROL GP-JOYSTICK

PART OF 345-6582 CONTROL GP-ELECTROHYDRAULIC
AN ATTACHMENT

SMCS-5705 **i05166900**

NOTE	REF NO	GRAPHIC REF	PART NUMBER	QTY	PART NAME 1 2 3 4 5 6 (PRODUCT LEVEL)	SEE PAGE
	1	1	**254-3437**	1	BOOT	
Y	2	1	**269-0259**	1	CONTROL GP-HANDLE	373
	3	1	**379-1577**	1	BASE AS-JOYSTICK (RH)	
		1	**8T-8729**	6	PIN-CONNECTOR (16-GA TO 18-GA)	
		1	**151-9275**	1	KIT-RECEPTACLE (6-PIN)	
					(INCLUDES RECEPTACLE AS & WEDGE)	
M	4	1	**213-7489**	3	SCREW (M4X0.7X25-MM)	
M	5	1	**178-9983**	3	LOCKNUT (M4X0.7-THD)	
	6	1	**8T-8737**	6	PLUG-SEAL	
	7	1	**220-8355**	2	CAP-PUSH BUTTON (BLACK)	
	8	1	**8T-8729**	12	PIN-CONNECTOR (16-GA TO 18-GA)	

M - METRIC PART
Y - SEPARATE ILLUSTRATION

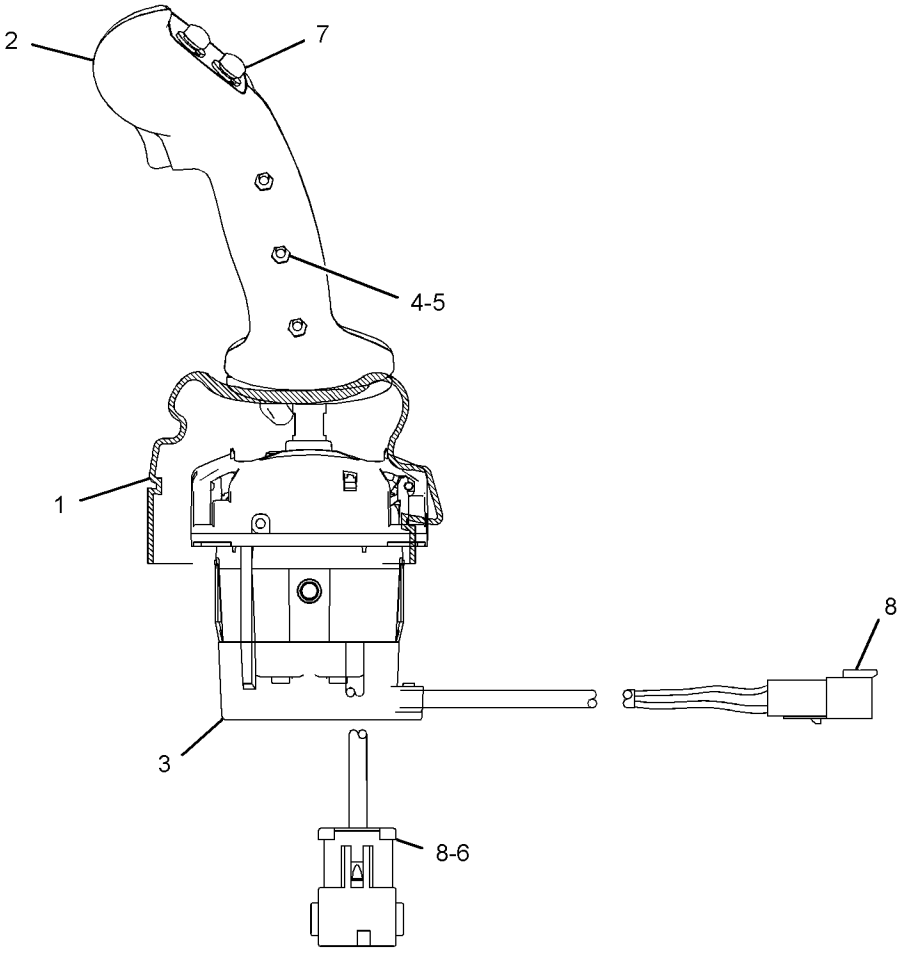

LEFT SIDE VIEW

GRAPHIC #1 **<END>** g03333127

379-1615 CONTROL GP-JOYSTICK—LH, HIGH FLOW

PART OF 345-6583 CONTROL GP-ELECTROHYDRAULIC, 388-8273 KIT-WORK TOOL WIRING AN ATTACHMENT

SMCS-5705 **i05156695**

NOTE	REF NO	GRAPHIC REF	PART NUMBER	QTY	PART NAME 1 2 3 4 5 6 (PRODUCT LEVEL)	SEE PAGE
	1	1	**254-3437**	1	BOOT	
Y	2	1	**272-1790**	1	CONTROL GP-HANDLE (LH)	374
	3	1	**379-1578**	1	BASE AS-JOYSTICK (LH)	
		1	**8T-8729**	6	PIN-CONNECTOR (16-GA TO 18-GA)	
		1	**151-9275**	1	KIT-RECEPTACLE (6-PIN)	
					(INCLUDES RECEPTACLE AS & WEDGE)	
M	4	1	**213-7489**	3	SCREW (M4X0.7X25-MM)	
M	5	1	**178-9983**	3	LOCKNUT (M4X0.7-THD)	
	6	1	**174-3091**	1	KIT-RECEPTACLE (12-PIN)	
					(INCLUDES RECEPTACLE AS & WEDGE)	
	7	1	**220-8355**	4	CAP-PUSH BUTTON (BLACK)	
	8	1	**8T-8729**	9	PIN-CONNECTOR (16-GA TO 18-GA)	
	9	1	**8T-8737**	3	PLUG-SEAL	

M - METRIC PART
Y - SEPARATE ILLUSTRATION

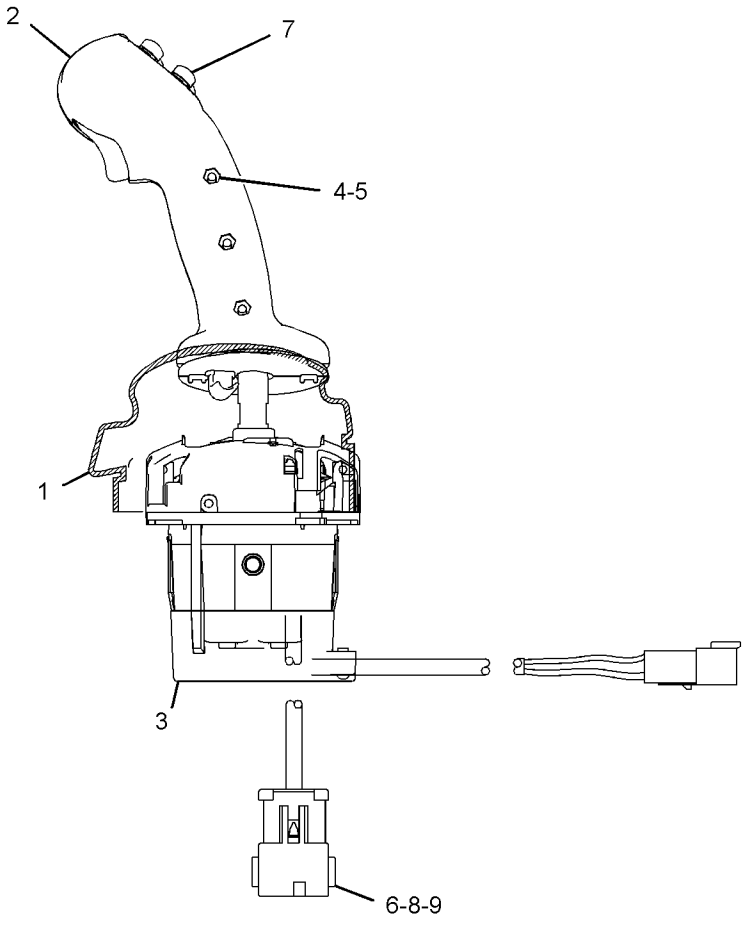

LEFT SIDE VIEW

GRAPHIC #1 **<END>** g03320493

379-1616 CONTROL GP-JOYSTICK

PART OF 345-6584 CONTROL GP-ELECTROHYDRAULIC
AN ATTACHMENT

SMCS-5705 **i05166840**

NOTE	REF NO	GRAPHIC REF	PART NUMBER	QTY	PART NAME 1 2 3 4 5 6 (PRODUCT LEVEL)	SEE PAGE
	1	1	**379-1578**	1	BASE AS-JOYSTICK (LH)	
		1	**8T-8729**	6	PIN-CONNECTOR (16-GA TO 18-GA)	
		1	**151-9275**	1	KIT-RECEPTACLE (6-PIN)	
					(INCLUDES RECEPTACLE AS & WEDGE)	
Y	2	1	**269-0259**	1	CONTROL GP-HANDLE	373
	3	1	**254-3437**	1	BOOT	
M	4	1	**213-7489**	3	SCREW (M4X0.7X25-MM)	
M	5	1	**178-9983**	3	LOCKNUT (M4X0.7-THD)	
	6	1	**8T-8737**	6	PLUG-SEAL	
	7	1	**220-8355**	2	CAP-PUSH BUTTON (BLACK)	
	8	1	**8T-8729**	6	PIN-CONNECTOR (16-GA TO 18-GA)	

M - METRIC PART
Y - SEPARATE ILLUSTRATION

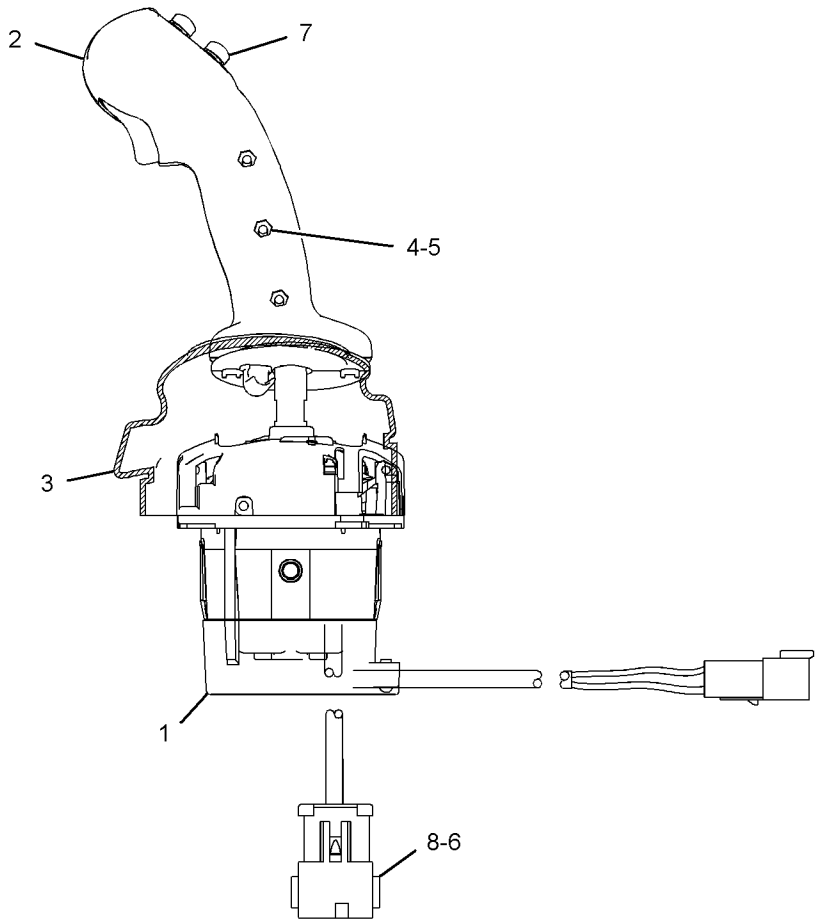

LEFT SIDE VIEW

GRAPHIC #1 **<END>** g03333101

345-6065 COVER GP-CAB

PART OF 345-6155, 345-6157 CAB AR-OPEN ROPS AN ATTACHMENT

SMCS-7301 **i05300956**

NOTE	REF NO	GRAPHIC REF	PART NUMBER	QTY	PART NAME 1 2 3 4 5 6 (PRODUCT LEVEL)	SEE PAGE
	1	1	**258-3727**	2	SCREW-TRUSS HEAD (SPECIAL)	
	2	1	**423-0532**	1	PANEL	
	3	1	*148-8411*	1	PLUG AS	
		1	**3K-0360**	1	SEAL-O-RING	
		1	**9S-4185**	1	PLUG-O-RING	
	4	1	**345-6147**	1	COVER (RECIRCULATION)	
	5	1	**345-6148**	2	COVER-DUCT	
	6	1	**345-6154**	1	COVER-SWITCH	
	7	1	**5P-4116**	2	WASHER-HARD (8.8X20.5X2-MM THK)	
M	8	1	**9X-2045**	2	SCREW-TRUSS HEAD (M6X1X20-MM)	
	9	1	**8T-4205**	2	WASHER-HARD (7.2X14.5X2-MM THK)	
M	10	1	**5C-2890**	2	NUT (M6X1-THD)	

M - METRIC PART

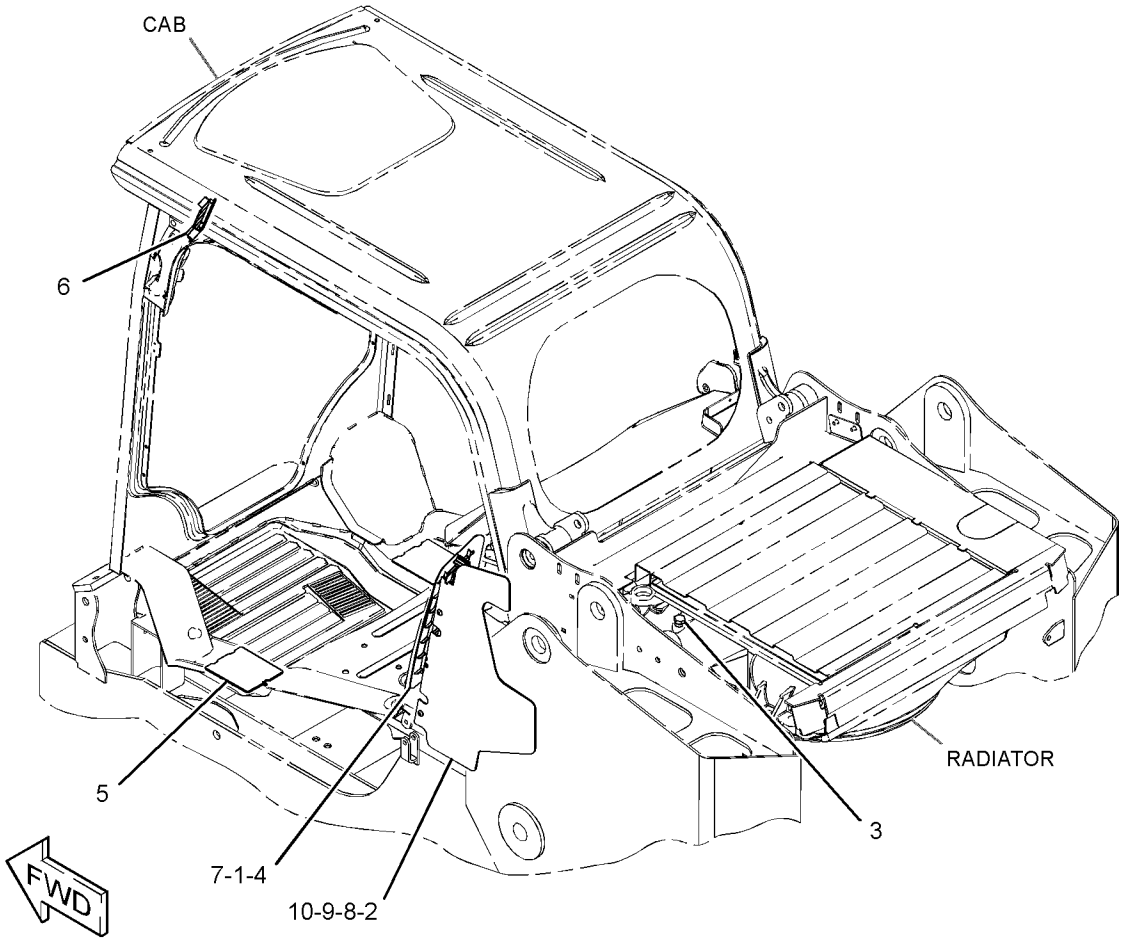

GRAPHIC #1 **<END>** g03368162

345-6056 COVER GP-CONSOLE

PART OF 345-6349, 345-6359 SEAT AR-SUSPENSION

AN ATTACHMENT

SMCS-5258 **i05263303**

NOTE	REF NO	GRAPHIC REF	PART NUMBER	QTY	PART NAME 1 2 3 4 5 6 (PRODUCT LEVEL)	SEE PAGE
	1	1	**172-8591**	10	NUT-SPRING	
	2	1	**206-1667**	4	CLIP	
	3	1	**258-3727**	2	SCREW-TRUSS HEAD (SPECIAL)	
	4	1	**345-6057**	1	COVER-CONSOLE (INSIDE, RH)	
	5	1	**345-6058**	1	COVER-CONSOLE (OUTSIDE, RH)	
	6	1	**345-6059**	1	COVER-CONSOLE (INSIDE, RH)	
	7	1	**345-6060**	1	COVER-CONSOLE (OUTSIDE, RH)	
	8	1	**156-6175**	2	CLIP	
M	9	1	**162-6556**	2	LOCKNUT (M6X1-THD)	
M	10	1	**215-6406**	10	SCREW-TRUSS HEAD (M6X1X16-MM)	
M	11	1	**5C-9553**	2	BOLT (M6X1X16-MM)	
M	12	1	**6V-5683**	2	BOLT (M6X1X16-MM)	
	13	1	**8T-4205**	4	WASHER-HARD (7.2X14.5X2-MM THK)	
	14	1	**9X-8256**	6	WASHER (6.6X12X2-MM THK)	
M	15	1	**5C-2890**	2	NUT (M6X1-THD)	

M - METRIC PART

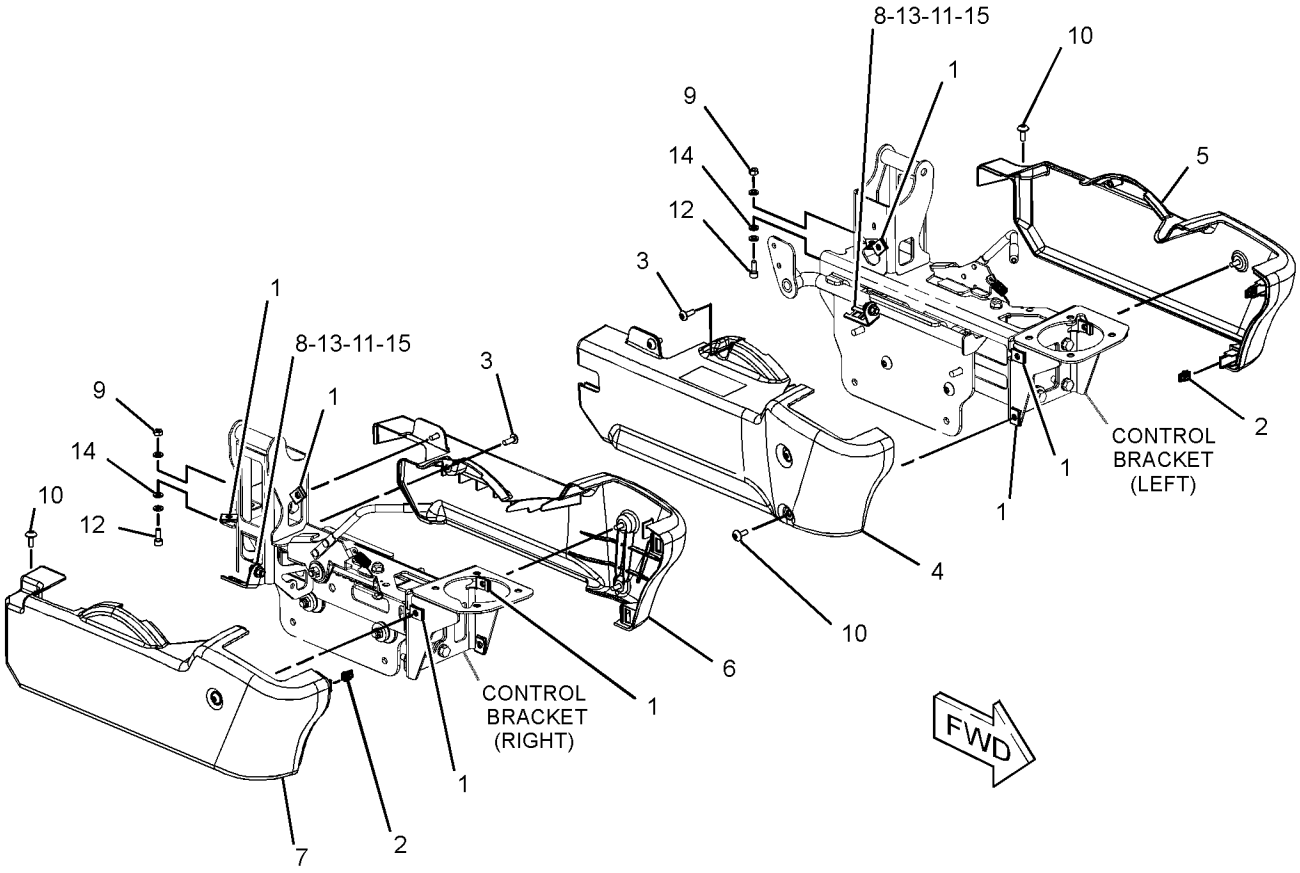

GRAPHIC #1 **<END>** g03350862

345-6061 COVER GP-CONSOLE—RH, LH

PART OF 345-6319, 345-6329 SEAT AR-SUSPENSION
AN ATTACHMENT

SMCS-5258 **i05164980**

NOTE	REF NO	GRAPHIC REF	PART NUMBER	QTY	PART NAME 1 2 3 4 5 6 (PRODUCT LEVEL)	SEE PAGE
	1	1	**206-1667**	4	CLIP	
	2	1	**258-3727**	2	SCREW-TRUSS HEAD (SPECIAL)	
	3	1	**345-6051**	1	COVER-CONSOLE (INNER, LH)	
	4	1	**345-6052**	1	COVER-CONSOLE (OUTER, LH)	
	5	1	**345-6053**	1	COVER-CONSOLE (INNER, RH)	
	6	1	**345-6054**	1	COVER-CONSOLE (OUTER, RH)	
	7	1	**156-6175**	4	CLIP	
M	8	1	**215-6406**	10	SCREW-TRUSS HEAD (M6X1X16-MM)	
M	9	1	**5C-9553**	4	BOLT (M6X1X16-MM)	
	10	1	**8T-4205**	4	WASHER-HARD (7.2X14.5X2-MM THK)	

M - METRIC PART

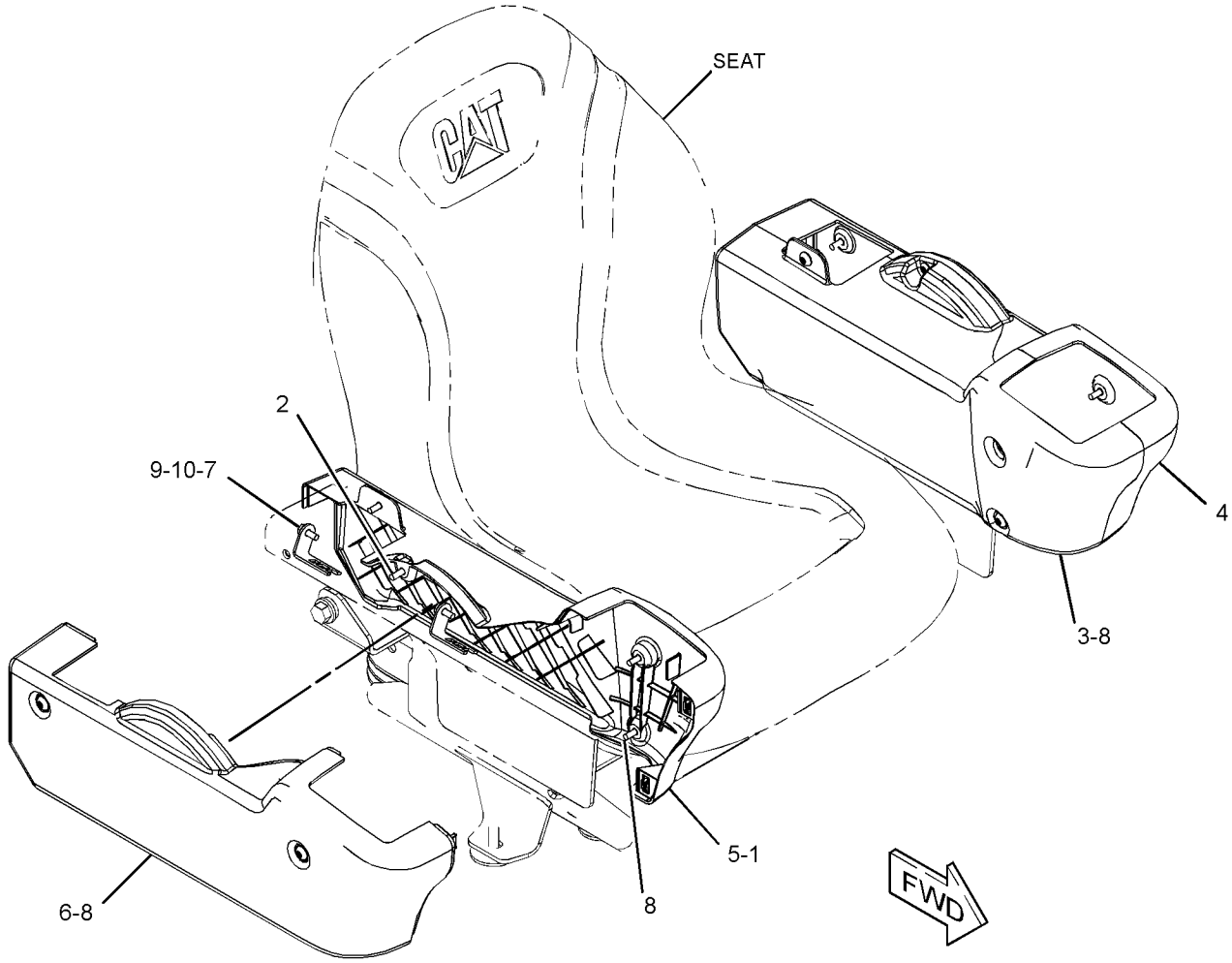

GRAPHIC #1 **<END>** g03325361

345-6235 DOOR GP-CAB—GLASS

PART OF 345-6240 DOOR GP-CAB

AN ATTACHMENT

SMCS-7308 **i05296333**

NOTE	REF NO	GRAPHIC REF	PART NUMBER	QTY	PART NAME 1 2 3 4 5 6 (PRODUCT LEVEL)	SEE PAGE
	1	1	**436-2988**	1	PLATE (MAGNETIC)	
	2	1	**146-6433**	1	BLADE AS-WIPER (500-MM)	
J	3	1	**252-1862**	1	HANDLE AS (PULL)	
	4	1	**253-1817**	1	SPACER (6.5X14.5X12-MM THK)	
	5	1	**258-3280**	1	LATCH AS	
	6	1	**258-3298**	1	GROMMET	
	7	1	**258-3697**	1	WASHER-NYLON (7X20X2-MM THK)	
	8	1	**258-4075**	4	GASKET	
	9	1	**258-4085**	2	BUSHING	
	10	1	**319-0710**	2	FILM-INSTRUCTION (EGRESS SYSTEM, READ OMM)	
	11	1	**345-6230**	1	GLASS	
	12	1	**345-6233**	1	BRACKET	
	13	1	**345-6262**	2	HINGE AS	
	14	1	**418-5900**	1	HANDLE AS	
M		1	**159-9539**	2	NUT-WELD (M6X1-THD)	
M		1	**159-9541**	2	NUT-WELD (M10X1.5-THD)	
	15	1	**345-6282**	1	COVER	
	16	1	**345-6283**	1	GASKET	
	17	1	**345-6284**	1	GASKET	
	18	1	**345-6295**	1	COVER-LATCH	
	19	1	**364-1821**	2	HANDLE AS (LOWER)	
Y	20	1	**379-1084**	1	MOTOR GP-WINDOW WIPER	425
	21	1	**379-6471**	1	ARM GP-WINDOW WIPER (CAB DOOR)	
E		1	**194-5171**		HOSE (50-CM)	
		1	**305-9192**	1	NOZZLE AS-WASHER	
	22	1	**8T-0328**	1	WASHER-HARD (5.5X10X1-MM THK)	
M	24	1	**215-6406**	5	SCREW-TRUSS HEAD (M6X1X16-MM)	
M	25	1	**5C-2890**	1	NUT (M6X1-THD)	
	26	1	**5P-7648**	2	GROMMET	
M	28	1	**6V-7357**	4	BOLT (M6X1X25-MM)	
M	29	1	**8T-2192**	3	BOLT (M6X1X45-MM)	
	30	1	**8T-4205**	3	WASHER-HARD (7.2X14.5X2-MM THK)	
	31	1	**8T-5439**	2	WASHER-HARD (21.5X45X6-MM THK)	
M	32	1	**8T-6974**	1	BOLT (M6X1X80-MM)	
M	33	1	**101-7398**	4	BOLT-SOCKET HEAD (M10X1.5X40-MM)	
	34	1	**9L-9132**	2	WASHER (10.2X25.5X2.5-MM THK)	
M	35	1	**3T-0851**	1	LOCKNUT (M5X0.8-THD)	
M	36	1	**9X-2040**	2	SCREW-TRUSS HEAD (M10X1.5X25-MM)	
E	37	1	**386-6028**		SEAL (326-CM)	
	38	1	**418-5901**	1	BRACKET AS	
M		1	**159-9539**	1	NUT-WELD (M6X1-THD)	
	39	1	**8T-4121**	4	WASHER-HARD (11X21X2.5-MM THK)	

E - ORDER BY THE CENTIMETER
J - REQUIRES CORPORATE KEY
M - METRIC PART
Y - SEPARATE ILLUSTRATION

345-6235 **DOOR GP-CAB (*contd.*)** **i05296333**

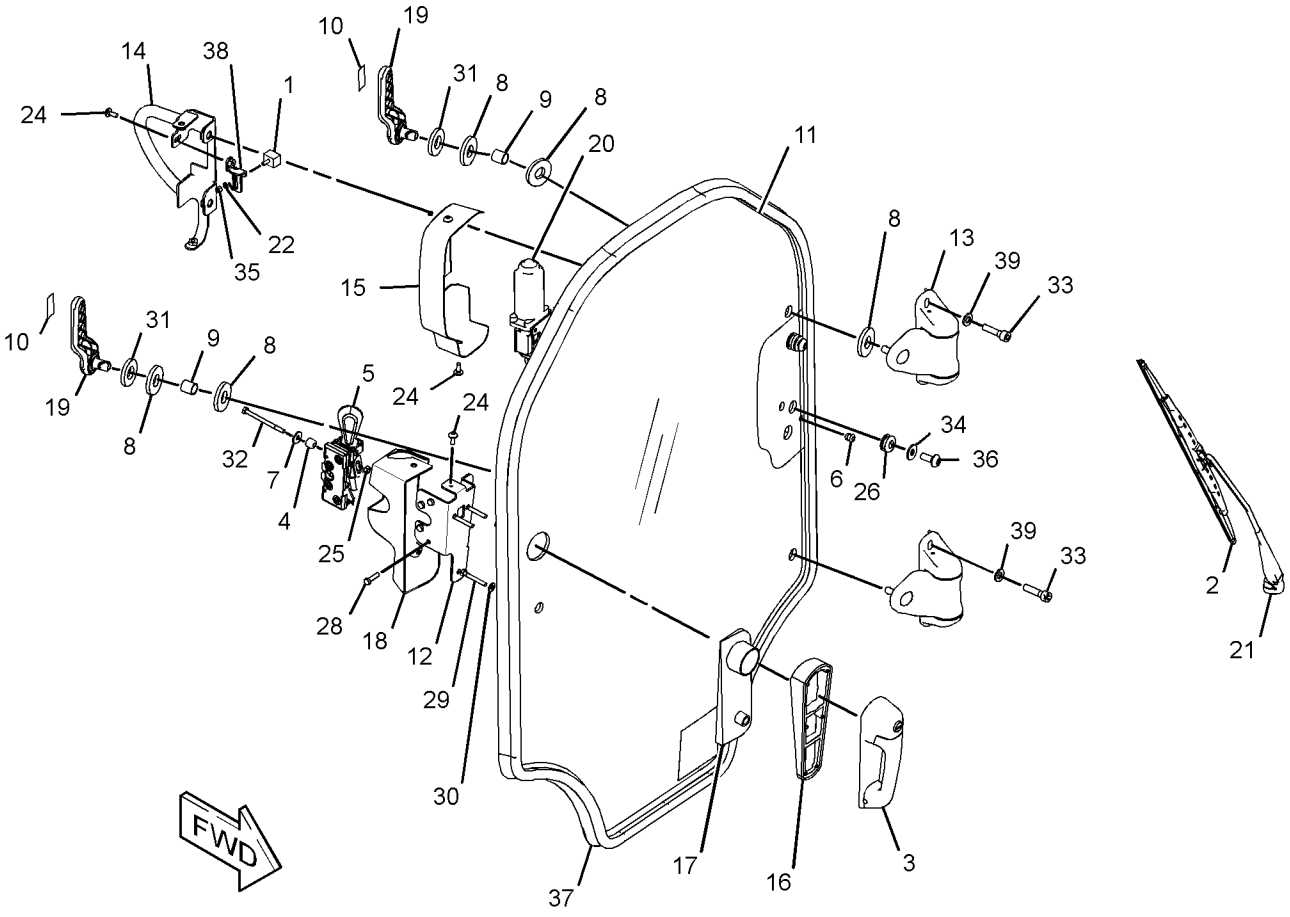

GRAPHIC #1 **<END>** g03370557

345-6240 DOOR GP-CAB—GLASS

FOR USE WITH 345-4919—PAGE: 360, 345-4915—PAGE: 360
CANNOT BE USED WITH 345-6260—PAGE: 390
AN ATTACHMENT

SMCS-7308 **i05228073**

NOTE	REF NO	GRAPHIC REF	PART NUMBER	QTY	PART NAME 1 2 3 4 5 6 (PRODUCT LEVEL)	SEE PAGE
	1	1	**388-8028**	1	SPACER (10X20X6-MM THK)	
	2	1	**8G-1151**	1	CONNECTOR	
	3	1	**418-5945**	2	SPRING AS-GAS (CAB)	
	4	1	**258-3764**	1	STRIKER AS	
	5	1	**258-4141**	3	CLIP	
	6	1	**281-6390**	1	SWITCH AS-ROCKER	
		1	**111-7899**	1	GASKET	
	7	1	**332-0194**	3	STRAP-CABLE	
	8	1	**388-8018**	2	SPACER (12.7X22X19.1MM THK)	
Y	9	1	*345-6235*	1	DOOR GP-CAB (BASIC-GLASS)	384
	10	1	**345-6244**	1	TANK AS-WINDOW WASHER	
		1	**6T-1375**	1	PUMP AS-WASHER	
E		1	**144-0195**		HOSE (45-CM)	
		1	**258-3296**	1	CAP-VENTED (WINDOW WASHER TANK)	
	11	1	**378-1007**	1	SWITCH AS-MAGNETIC (LOAD CONTROL)	
		1	**171-0596**	1	RECEPTACLE AS-CONNECTOR	
Y	12	1	**378-1028**	1	HARNESS AS-CAB (AUXILIARY)	99
Y	13	1	**388-1436**	1	HARNESS AS-CAB (WIPER, WASHER)	99
	14	1	**095-1325**	1	PIN-CLEVIS	
M	15	1	**178-9983**	2	LOCKNUT (M4X0.7-THD)	
M	16	1	**215-6406**	3	SCREW-TRUSS HEAD (M6X1X16-MM)	
	17	1	**3S-2093**	2	STRAP-CABLE	
	18	1	**5P-0372**	4	LOCK PIN	
	19	1	**6L-3966**	3	PIN	
M	20	1	**8C-4982**	2	BOLT-SOCKET HEAD (M4X0.7X20-MM)	
	21	1	**388-8019**	5	WASHER (10.5X20X2-MM THK)	
	22	1	**8T-4223**	1	WASHER-HARD (13.5X25.5X3-MM THK)	
M	23	1	**8T-4244**	1	NUT (M12X1.75-THD)	
E	24	1	**144-0195**		HOSE (44-CM)	
	25	1	**9X-6165**	1	WASHER (6.5X22X2.5-MM THK)	
	26	1	**424-7631**	1	FILM-IDENTIFICATION (ALTERNATE EXIT, READ OMM)	

E - ORDER BY THE CENTIMETER
M - METRIC PART
Y - SEPARATE ILLUSTRATION

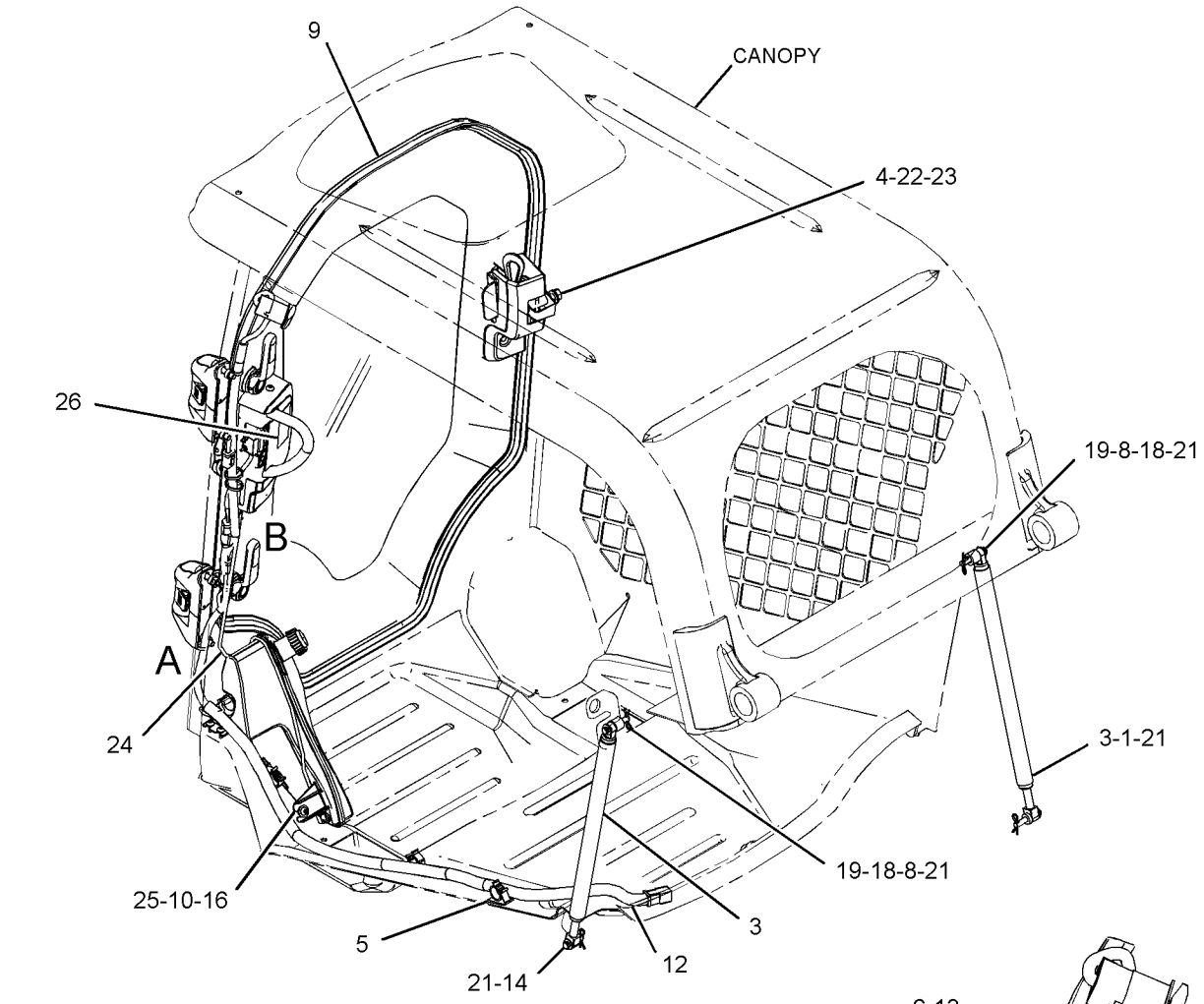

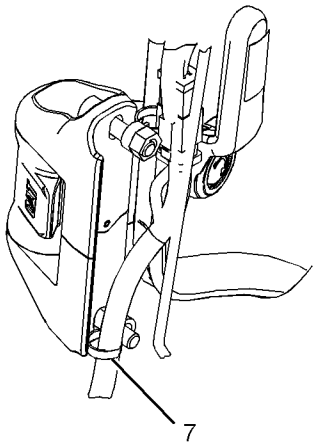

VIEW OF AREA A

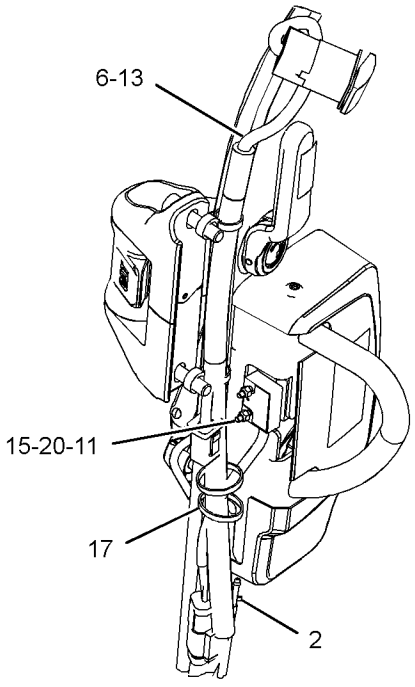

VIEW OF AREA B

GRAPHIC #1

<END>

g03350031

345-6255 DOOR GP-CAB—BASIC-POLY

PART OF 345-6260 DOOR GP-CAB

AN ATTACHMENT

SMCS-7308 **i05296341**

NOTE	REF NO	GRAPHIC REF	PART NUMBER	QTY	PART NAME 1 2 3 4 5 6 (PRODUCT LEVEL)	SEE PAGE
	1	1	**9P-4609**	1	PLATE (MAGNETIC)	
	2	1	**146-6433**	1	BLADE AS-WIPER (500-MM)	
	3	1	**252-1862**	1	HANDLE AS (PULL)	
	4	1	**253-1817**	1	SPACER (6.5X14.5X12-MM THK)	
	5	1	**258-3280**	1	LATCH AS	
	6	1	**258-3298**	1	GROMMET	
	7	1	**258-3697**	1	WASHER-NYLON (7X20X2-MM THK)	
	8	1	**258-4075**	4	GASKET	
	9	1	**258-4085**	2	BUSHING	
	10	1	**319-0710**	2	FILM-INSTRUCTION (EGRESS SYSTEM, READ OMM)	
	11	1	**345-6233**	1	BRACKET	
	12	1	**345-6250**	1	WINDOW	
	13	1	**345-6262**	2	HINGE AS	
	14	1	**418-5895**	1	HANDLE AS-DOOR	
M		1	**159-9539**	2	NUT-WELD (M6X1-THD)	
M		1	**159-9541**	2	NUT-WELD (M10X1.5-THD)	
	15	1	**345-6282**	1	COVER	
	16	1	**345-6283**	1	GASKET	
	17	1	**345-6284**	1	GASKET	
	18	1	**345-6295**	1	COVER-LATCH	
	19	1	**364-1821**	2	HANDLE AS (LOWER)	
Y	20	1	*379-1084*	1	MOTOR GP-WINDOW WIPER	425
	21	1	**379-6471**	1	ARM GP-WINDOW WIPER (CAB DOOR)	
E		1	**194-5171**		HOSE (50-CM)	
		1	**305-9192**	1	NOZZLE AS-WASHER	
	22	1	**096-5962**	2	WASHER-HARD (3.4X7X0.8-MM THK)	
	23	1	**103-6262**	2	SCREW-MACHINE (4-40X0.63-IN)	
M	24	1	**215-6406**	6	SCREW-TRUSS HEAD (M6X1X16-MM)	
M	25	1	**5C-2890**	1	NUT (M6X1-THD)	
	26	1	**5P-7648**	2	GROMMET	
M	27	1	**6V-7357**	4	BOLT (M6X1X25-MM)	
M	28	1	**8T-2192**	3	BOLT (M6X1X45-MM)	
	29	1	**8T-4121**	4	WASHER-HARD (11X21X2.5-MM THK)	
	30	1	**8T-4205**	3	WASHER-HARD (7.2X14.5X2-MM THK)	
	31	1	**8T-5439**	2	WASHER-HARD (21.5X45X6-MM THK)	
M	32	1	**8T-6974**	1	BOLT (M6X1X80-MM)	
M	33	1	**101-7398**	4	BOLT-SOCKET HEAD (M10X1.5X40-MM)	
	34	1	**9L-9132**	2	WASHER (10.2X25.5X2.5-MM THK)	
	35	1	**9N-7446**	2	LOCKNUT (4-40-THD)	
M	36	1	**9X-2040**	2	SCREW-TRUSS HEAD (M10X1.5X25-MM)	
E	37	1	**386-6028**		SEAL (326-CM)	
	38	1	**418-5893**	1	BRACKET	

E - ORDER BY THE CENTIMETER
M - METRIC PART
Y - SEPARATE ILLUSTRATION

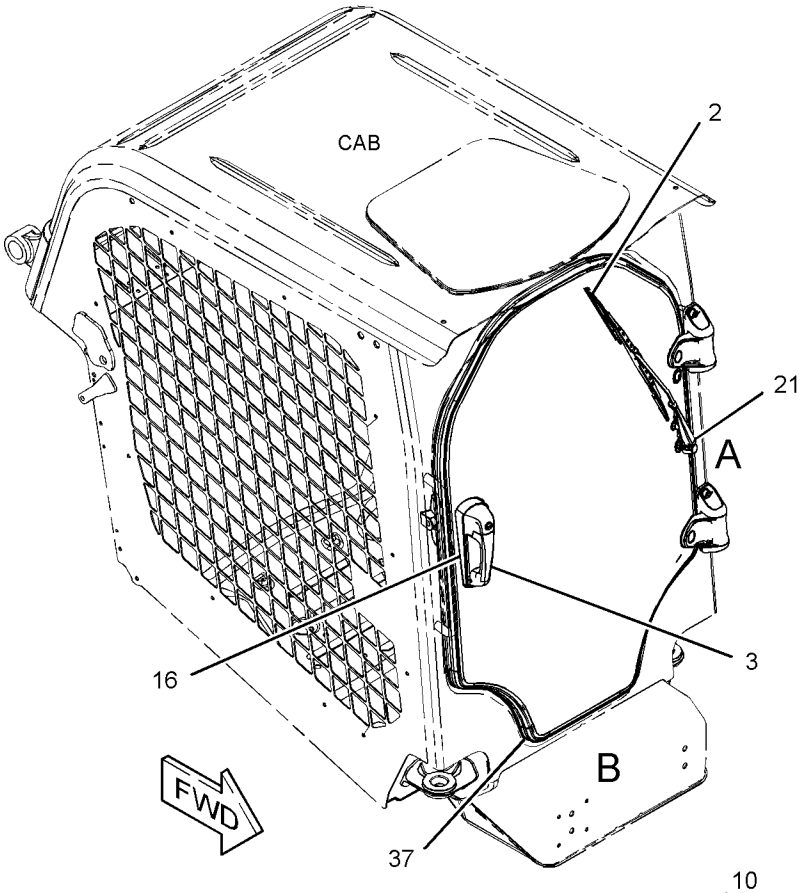

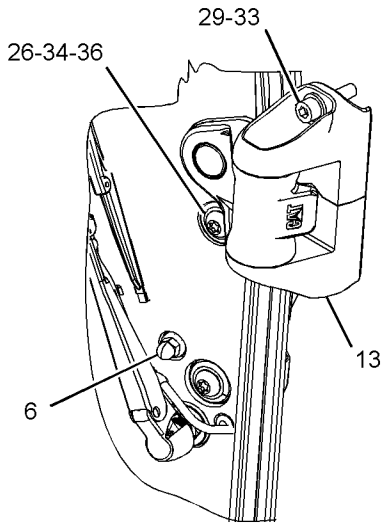

VIEW OF AREA A

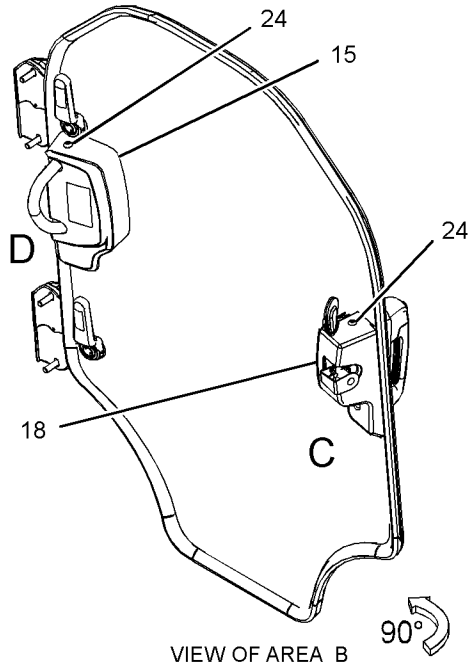

VIEW OF AREA B

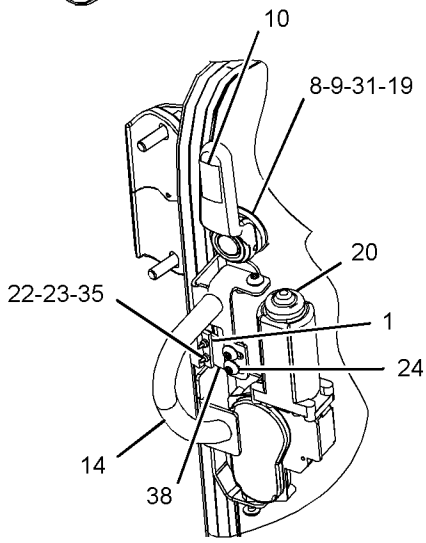

VIEW OF AREA D
(PARTS REMOVED FOR CLARITY)

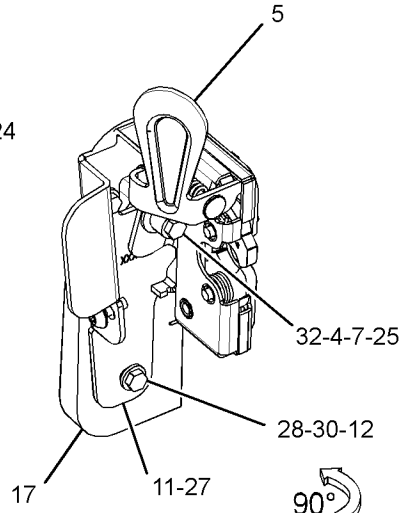

VIEW OF AREA C
(PARTS REMOVED FOR CLARITY)

GRAPHIC #1 **<END>** g03384931

345-6260 DOOR GP-CAB—POLY

FOR USE WITH 345-4919—PAGE: 360, 345-4915—PAGE: 360
CANNOT BE USED WITH 345-6240—PAGE: 386
AN ATTACHMENT

SMCS-7308 **i05228074**

NOTE	REF NO	GRAPHIC REF	PART NUMBER	QTY	PART NAME 1 2 3 4 5 6 (PRODUCT LEVEL)	SEE PAGE
	1	1	**8G-1151**	1	CONNECTOR	
	2	1	**258-3764**	1	STRIKER AS	
	3	1	**258-4141**	3	CLIP	
	4	1	**281-6390**	1	SWITCH AS-ROCKER (FRONT WIPER, WASHER)	
		1	**111-7899**	1	GASKET	
	5	1	**332-0194**	3	STRAP-CABLE	
	6	1	*345-6244*	1	TANK AS-WINDOW WASHER	
		1	**6T-1375**	1	PUMP AS-WASHER	
E		1	**144-0195**		HOSE (39-CM)	
		1	**258-3296**	1	CAP-VENTED (WINDOW WASHER TANK)	
Y	7	1	*345-6255*	1	DOOR GP-CAB (BASIC-POLY)	388
	8	1	**378-1007**	1	SWITCH AS-MAGNETIC (LOAD CONTROL)	
		1	**3E-3371**	1	WEDGE-RECEPTACLE LOCK (3-PIN)	
		1	**171-0596**	1	RECEPTACLE AS-CONNECTOR	
Y	9	1	**378-1028**	1	HARNESS AS-CAB (AUXILIARY)	99
Y	10	1	**388-1436**	1	HARNESS AS-CAB (WIPER, WASHER)	99
	11	1	**388-8018**	2	SPACER (12.7X22X19.1MM THK)	
	12	1	**388-8019**	5	WASHER (10.5X20X2-MM THK)	
	13	1	**388-8028**	1	SPACER (10X20X6-MM THK)	
	14	1	**418-5945**	2	SPRING AS-GAS (DOOR)	
	15	1	**424-7631**	1	FILM-IDENTIFICATION (ALTERNATE EXIT, READ OMM)	
	16	1	**095-1325**	1	PIN-CLEVIS	
M	17	1	**178-9983**	2	LOCKNUT (M4X0.7-THD)	
M	18	1	**215-6406**	3	SCREW-TRUSS HEAD (M6X1X16-MM)	
	19	1	**3S-2093**	2	STRAP-CABLE	
	20	1	**5P-0372**	4	LOCK PIN	
	21	1	**6L-3966**	3	PIN	
M	22	1	**8C-4982**	2	BOLT-SOCKET HEAD (M4X0.7X20-MM)	
	23	1	**8T-4223**	1	WASHER-HARD (13.5X25.5X3-MM THK)	
M	24	1	**8T-4244**	1	NUT (M12X1.75-THD)	
	25	1	**9X-6165**	1	WASHER (6.5X22X2.5-MM THK)	
E	26	1	**144-0195**		HOSE (44-CM)	

E - ORDER BY THE CENTIMETER
M - METRIC PART
Y - SEPARATE ILLUSTRATION

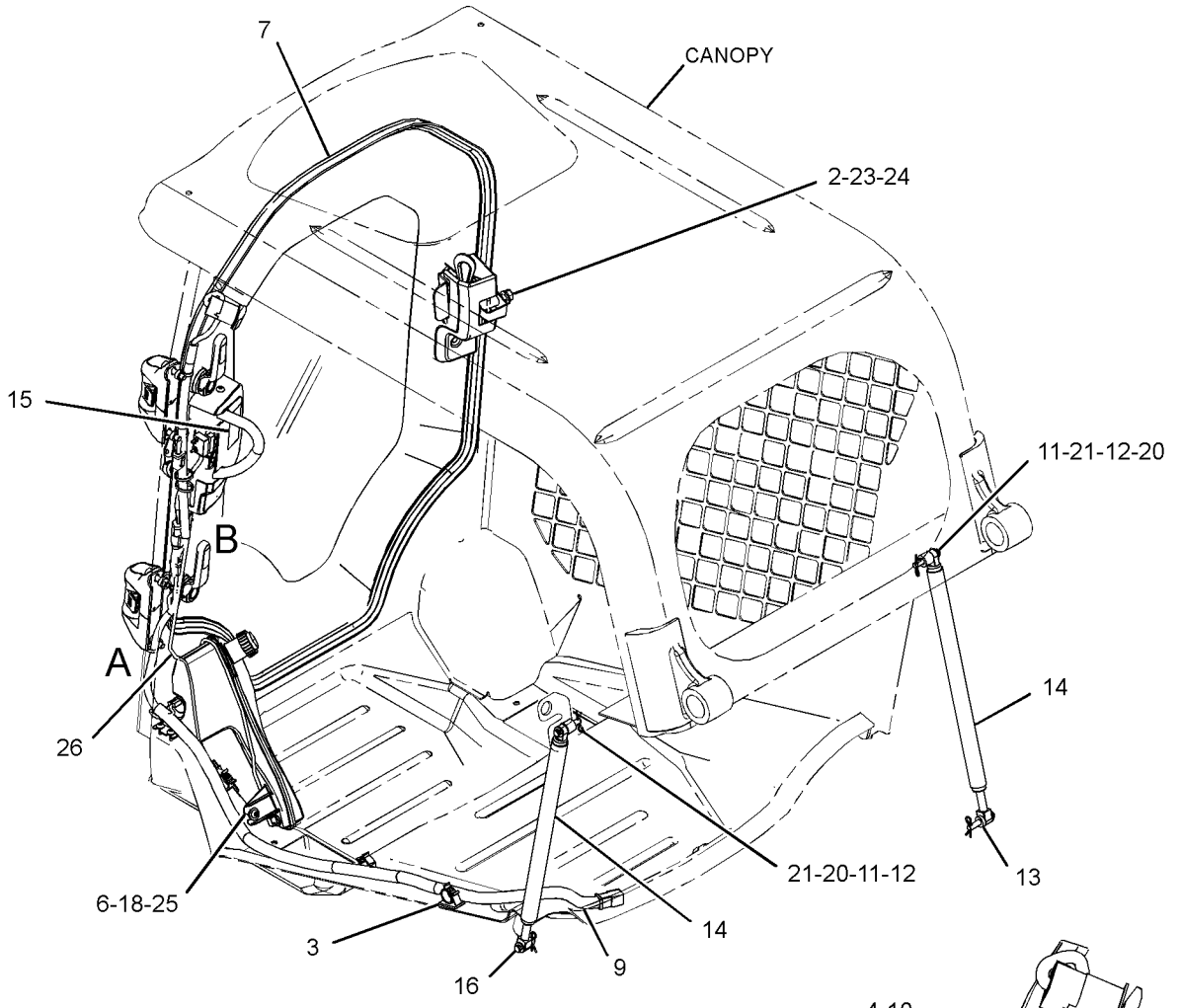

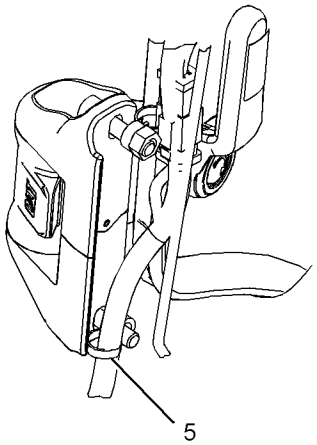

VIEW OF AREA A

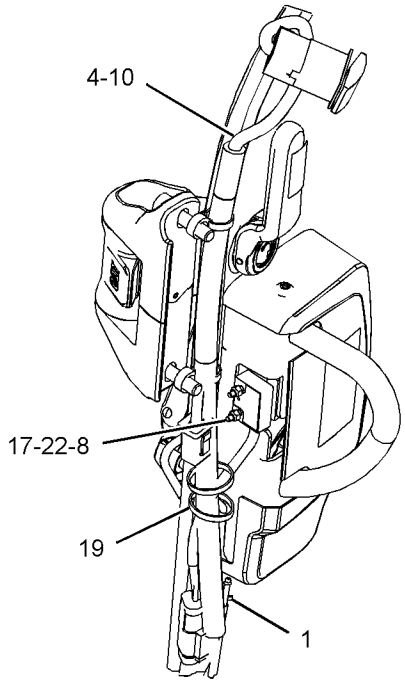

VIEW OF AREA B

GRAPHIC #1

<END>

g03349975

345-6070 GUARD GP-ROPS/FOPS

CANNOT BE USED WITH 417-4606—PAGE: 199

AN ATTACHMENT

SMCS-7323 **i05293739**

NOTE	REF NO	GRAPHIC REF	PART NUMBER	QTY	PART NAME 1 2 3 4 5 6 (PRODUCT LEVEL)	SEE PAGE
	1	1	**345-6071**	1	PLATE AS	
	2	1	**345-6072**	1	FILM-WARNING (FOPS, READ OMM)	
	3	1	**345-6073**	2	PLATE	
	4	1	**3H-7654**	4	WASHER-HARD (13.5X22.5X3-MM THK)	
	5	1	**7D-1649**	2	WASHER-HARD (13.5X32X5-MM THK)	
M	6	1	**7X-2553**	4	BOLT (M16X2X40-MM)	
	7	1	**8T-4122**	4	WASHER-HARD (17X32X3.5-MM THK)	
M	8	1	**8T-4183**	2	BOLT (M12X1.75X40-MM)	
M	9	1	**8T-4244**	2	NUT (M12X1.75-THD)	

M - METRIC PART

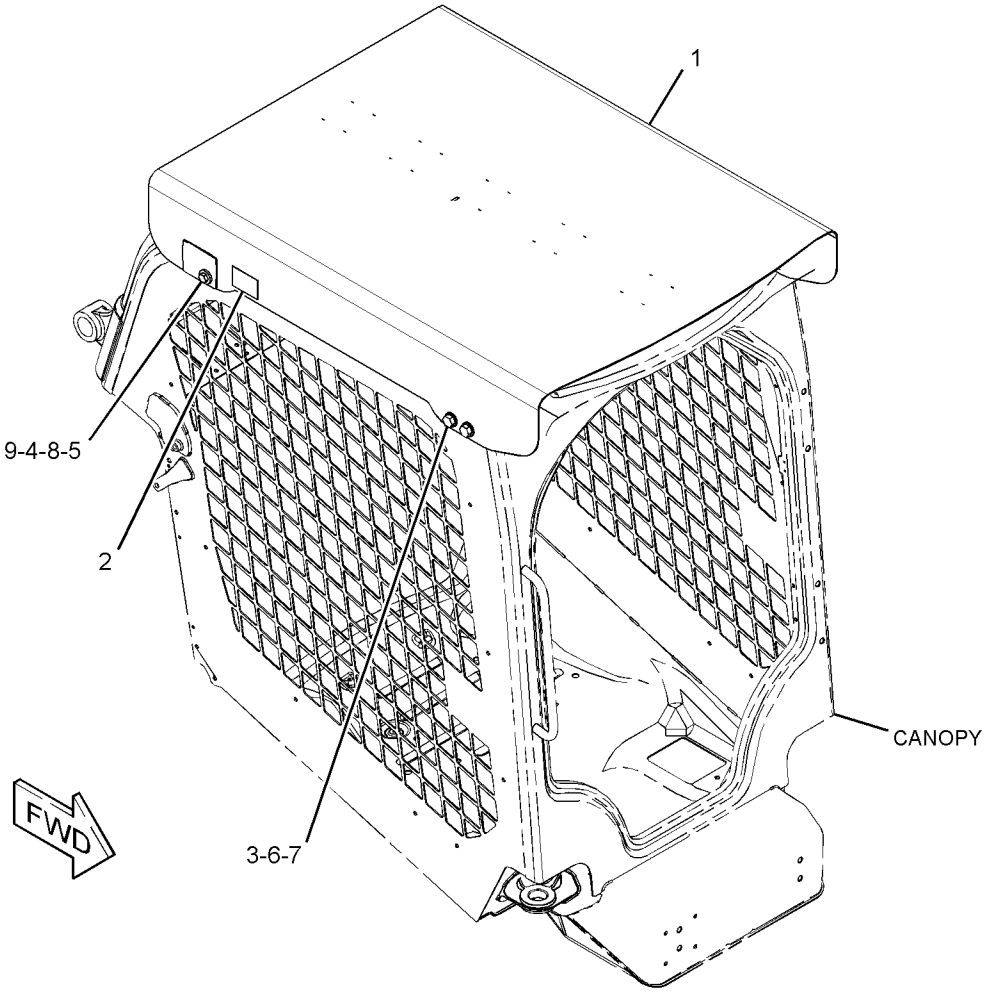

GRAPHIC #1 **<END>** g03363911

OPERATOR STATION

345-6035 HANDHOLD GP

PART OF 345-6155, 345-6157 CAB AR-OPEN ROPS
AN ATTACHMENT

SMCS-7256 **i05296325**

NOTE	REF NO	GRAPHIC REF	PART NUMBER	QTY	PART NAME 1 2 3 4 5 6 (PRODUCT LEVEL)	SEE PAGE
	1	1	**388-8028**	1	SPACER (10X20X6-MM THK)	
	2	1	**153-2682**	1	SPRING AS-GAS (CAB)	
	3	1	**153-2683**	1	SPRING AS-GAS (LOCKING)	
	4	1	**345-6285**	1	HANDHOLD	
	5	1	**437-9853**	1	PIN	
M	6	1	**101-7398**	2	BOLT-SOCKET HEAD (M10X1.5X40-MM)	
	7	1	**8T-4121**	2	WASHER-HARD (11X21X2.5-MM THK)	
	8	1	**5P-0372**	4	LOCK PIN	
	9	1	**6L-3966**	3	PIN	
	10	1	**388-8018**	2	SPACER (12.7X22X19.1MM THK)	
	11	1	**388-8019**	6	WASHER (10.5X20X2-MM THK)	

M - METRIC PART

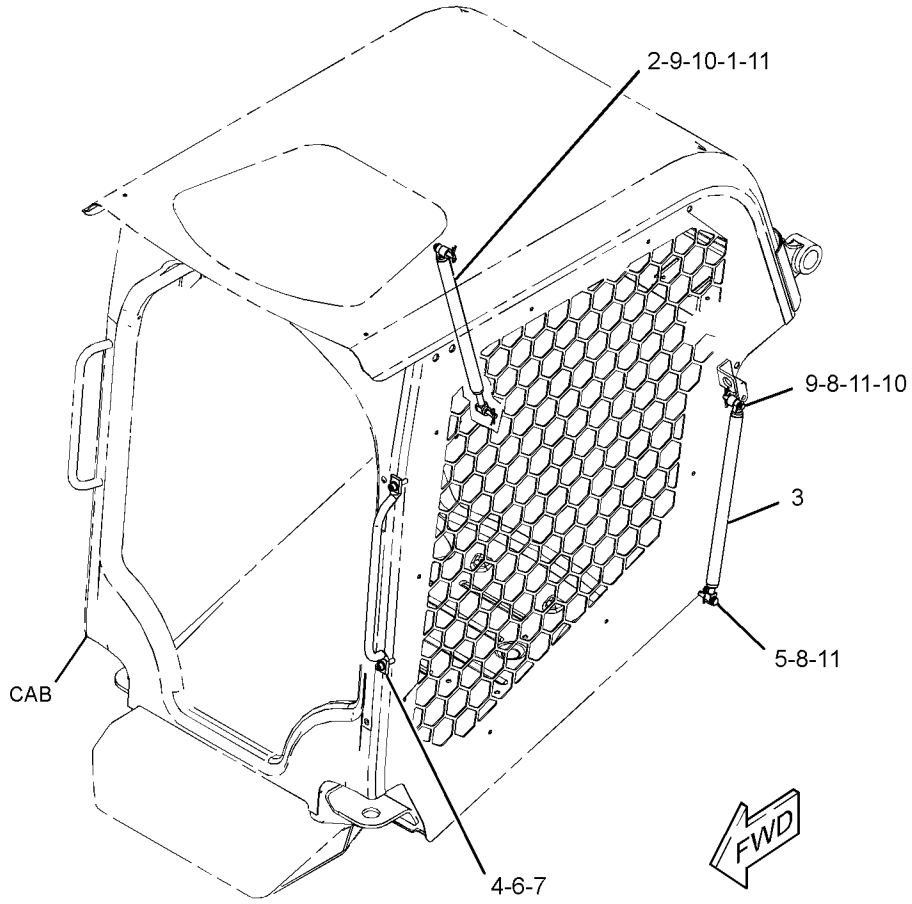

GRAPHIC #1 **<END>** g03369512

298-7197 HANDLE GP

PART OF 345-5703 CABLE GP-CONTROL

AN ATTACHMENT

SMCS-5800 **i03619742**

NOTE	REF NO	GRAPHIC REF	PART NUMBER	QTY	PART NAME 1 2 3 4 5 6 (PRODUCT LEVEL)	SEE PAGE
	1	1	**284-3914**	1	HANDLE	
	2	1	**292-2437**	1	NUT	
	3	1	**292-2438**	1	SEAL	
					PARTS SHOWN IN GRAPHIC(S) WITHOUT A REFERENCE NUMBER ARE NOT SERVICED SEPARATELY	

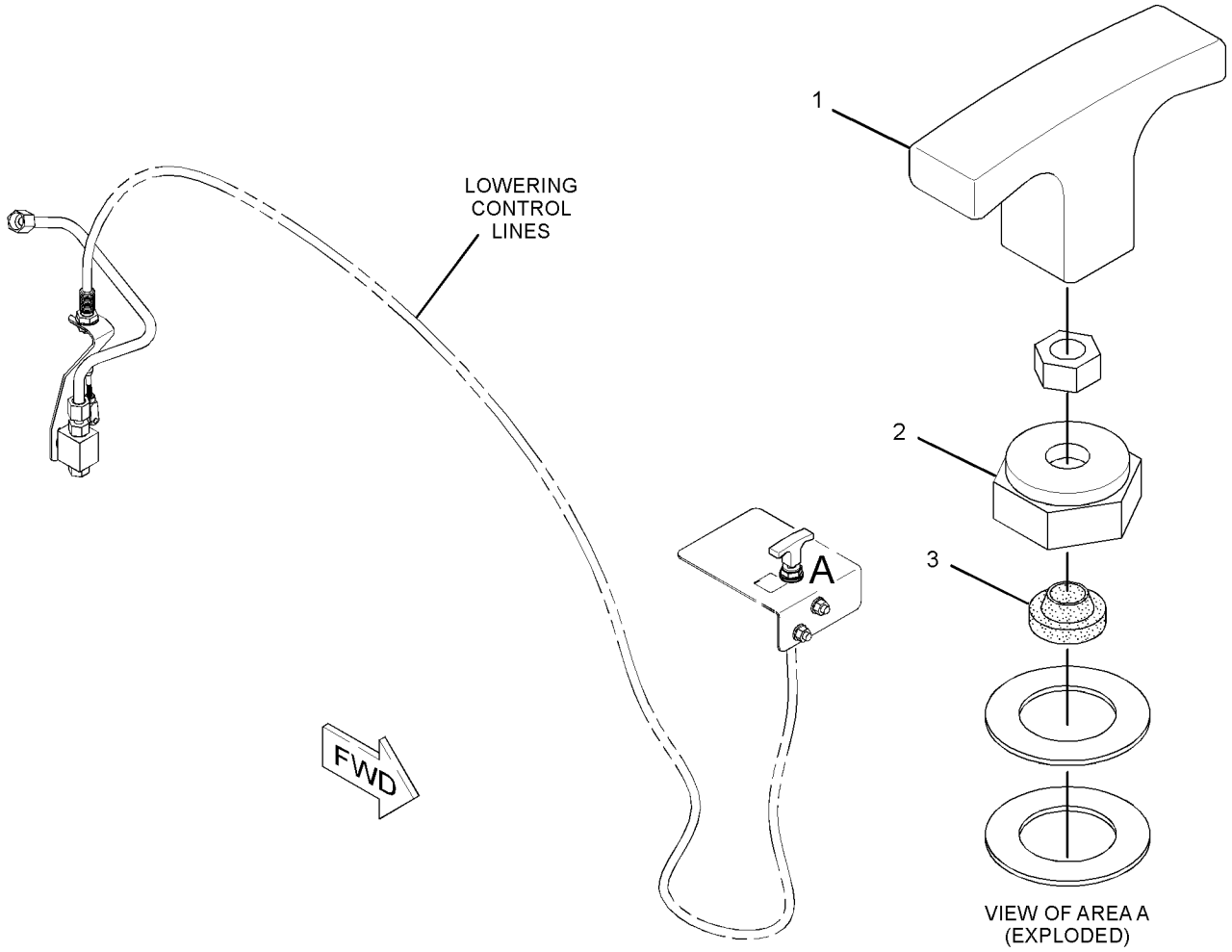

GRAPHIC #1 **<END>** g01943789

345-4917 HEATER AR-CAB

PART OF 345-4915 CAB AR-ENCLOSED ROPS

AN ATTACHMENT

SMCS-7304 **i05163057**

NOTE	PART NUMBER	QTY	PART NAME 1 2 3 4 5 6 (PRODUCT LEVEL)	SEE PAGE
Y	*345-6190*	1	AIR CONDITIONER & MOUNTING GP	352
Y	*345-5883*	1	LINES GP-HEATER	423
Y	*361-6384*	1	WIRING GP-HEATER	142

Y - SEPARATE ILLUSTRATION

<END>

345-4546 HEATER GP-CAB

PART OF 345-6190 AIR CONDITIONER & MOUNTING GP, 388-8267 KIT-AIR COND & HEATER INSTL, 388-8268 KIT-CAB HEATER & MOUNTING
AN ATTACHMENT

SMCS-7304, 7342 **i04775491**

NOTE	REF NO	GRAPHIC REF	PART NUMBER	QTY	PART NAME 1 2 3 4 5 6 (PRODUCT LEVEL)	SEE PAGE
	1	1	**119-9631**	1	SWITCH-TEMPERATURE (HVAC)	
	2	1	**185-4015**	15	CLIP	
	3	1	**208-8469**	1	LOCKNUT (M6X1-THD)	
	4	1	**232-1384**	1	ORIFICE AS-AIR CONDITIONER	
	5	1	**328-3317**	1	VALVE AS-WATER	
		1	**317-0014**	1	SEAL-O-RING	
	6	1	**345-4549**	2	VALVE	
	7	1	**359-1573**	1	CASE	
	8	1	**359-1574**	1	CASE	
	9	1	**359-1575**	1	CORE AS	
	10	1	**359-1577**	1	HARNESS AS-THERMOSTAT	
		1	**8T-8729**	2	PIN-CONNECTOR (16-GA TO 18-GA)	
		1	**102-8802**	1	KIT-RECEPTACLE (2-PIN)	
					(INCLUDES RECEPTACLE AS & WEDGE)	
	11	1	**359-1578**	1	GASKET	
	12	1	**359-1579**	1	CLAMP	
	13	1	**359-1586**	1	GASKET	
	14	1	**311-3520**	5	SCREW-HEX HEAD (8-16X0.5-IN)	
	15	1	**9X-8256**	1	WASHER (6.6X12X2-MM THK)	
D	16	1	**5P-5637**		SEAL (0.16-M EACH)	
D	17	1	**5P-5670**		SEAL (0.25-M)	
D	17A	1	**5P-5670**		SEAL (0.41-M)	

D - ORDER BY THE METER

345-4546 **HEATER GP-CAB (*contd.*)** **i04775491**

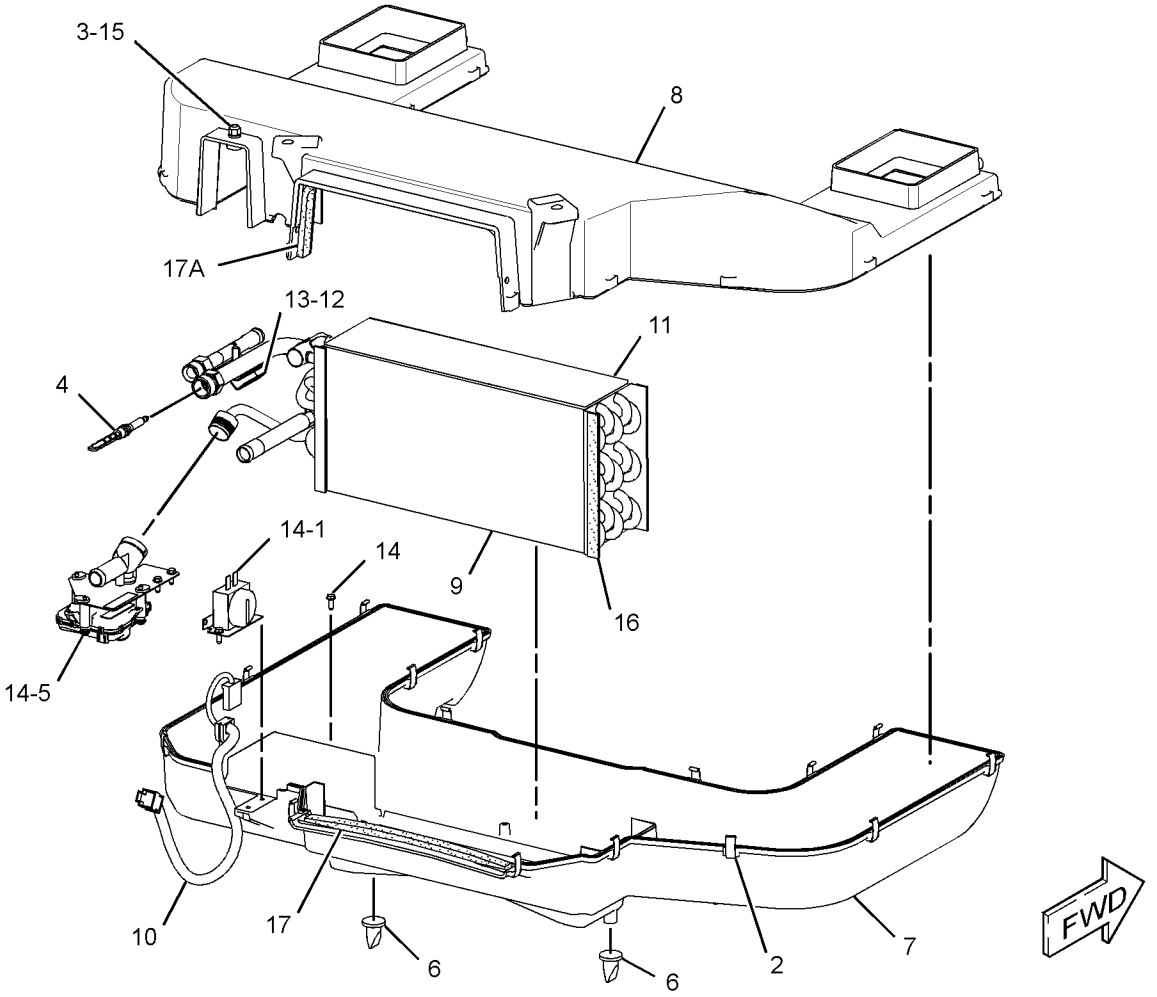

GRAPHIC #1 **<END>** g02894481

OPERATOR STATION

345-6175 INSTALLATION GP-RADIO

AN ATTACHMENT

SMCS-1408, 7338 **i05296330**

NOTE	REF NO	GRAPHIC REF	PART NUMBER	QTY	PART NAME 1 2 3 4 5 6 (PRODUCT LEVEL)	SEE PAGE
	1	1	**8E-1118**	1	ANTENNA AS	
	2	1	**8Y-5947**	1	FASTENER	
	3	1	**9U-8746**	1	CABLE AS-COAXIAL	
	4	1	**168-8772**	2	SPEAKER AS-RADIO	
	5	1	**200-5728**	1	HARNESS AS-RADIO	
		1	**172-8037**	1	CONNECTOR (RADIO)	
		1	**8T-8729**	7	PIN-CONNECTOR (16-GA TO 18-GA)	
		1	**8T-8737**	1	PLUG-SEAL	
		1	**160-3518**	1	KIT-RECEPTACLE (8-PIN)	
					(INCLUDES RECEPTACLE AS & WEDGE)	
		1	**172-8039**	11	TERMINAL (RADIO)	
	6	1	**258-4039**	1	SPACER	
	7	1	**258-4074**	1	BRACKET	
	8	1	**258-4367**	2	BRACKET	
	9	1	**345-6140**	1	COVER	
	10	1	**345-6174**	1	GROMMET	
	11	1	**195-0936**	4	INSERT-THREADED (M6X1-THD)	
M	12	1	**5C-7261**	1	NUT (M8X1.25-THD)	
	13	1	**5P-4116**	1	WASHER-HARD (8.8X20.5X2-MM THK)	
M	14	1	**6V-7357**	4	BOLT (M6X1X25-MM)	
M	15	1	**8T-4142**	8	BOLT-FLANGE HEAD (M5X0.8X12-MM)	
	16	1	**8T-4224**	4	WASHER-HARD (8.8X16X2-MM THK)	

M - METRIC PART

345-6175 **INSTALLATION GP-RADIO (*contd.*)** **i05296330**

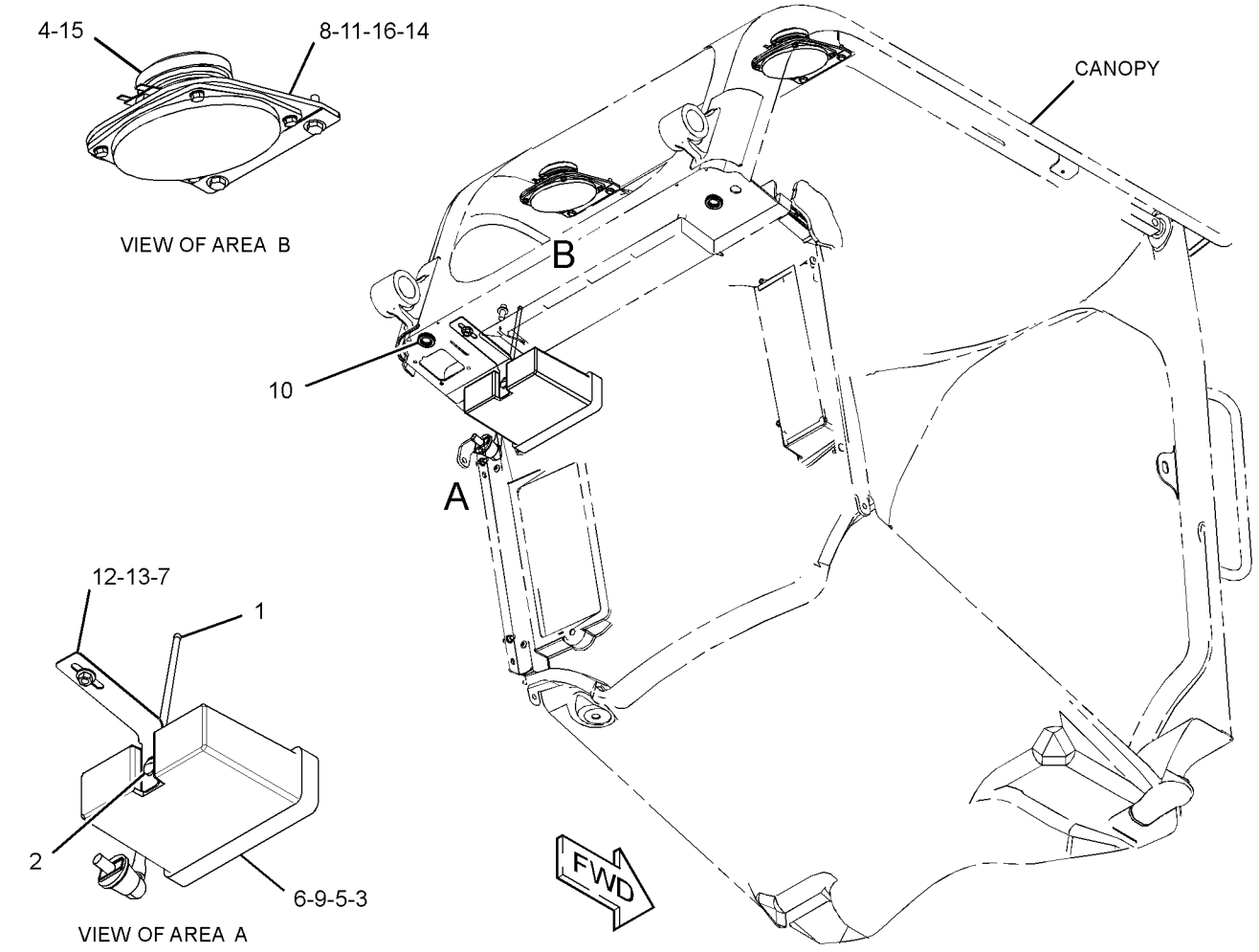

GRAPHIC #1

<END>

g03333950

OPERATOR STATION

388-8267 KIT-COIL–HVAC

AN ATTACHMENT

SMCS-1405, 1802, 1805, 1808, 7174, 7304, 7320, 734D **i05342658**

NOTE	REF NO	GRAPHIC REF	PART NUMBER	QTY	PART NAME 1 2 3 4 5 6 (PRODUCT LEVEL)	SEE PAGE
	1	2	**5P-7958**	1	SLEEVE-CABLE SPLICE	
	2	2	**8T-7912**	1	ADAPTER	
	3	1	**8Y-5947**	6	FASTENER	
	4	1	**127-4003**	2	GROMMET	
	5	2	**146-6371**	6	LOUVER AS	
	6	1	**149-6371**	1	SWITCH AS-PRESSURE (REFRIGERANT, LOW SIDE)	
		1	**102-8802**	1	KIT-RECEPTACLE (2-PIN)	
					(INCLUDES RECEPTACLE AS & WEDGE)	
		1	**8T-8729**	2	PIN-CONNECTOR (16-GA TO 18-GA)	
	7	2	**178-3620**	6	STRAP-DUAL CLAMP	
Y	8	1	**186-6190**	1	ACCUMULATOR GP-REFRIGERANT (CHARGED)	351
	9	1	**198-8354**	1	V-BELT	
	10	1	**206-2423**	2	SADDLE	
	11	1	**236-6923**	1	SWITCH AS-PRESSURE (REFRIGERANT)	
	12	2	**258-3795**	4	SEAL	
Y	13	2	**258-4299**	1	CONTROL GP-AIR & TEMPERATURE	365
	14	1	**265-6618**	1	FILTER ELEMENT-CAB AIR (RECIRCULATION)	
	15	1	**265-6619**	1	FILTER ELEMENT-CAB AIR (FRESH AIR)	
	16	2	**266-0299**	1	SWITCH AS-ROCKER (AIR CONDITIONER)	
		2	**111-7899**	1	GASKET	
	17	1	**345-3527**	1	PLATE	
	18	2	**345-4526**	1	DUCT AS	
	19	1	**345-4527**	1	SEAL	
	20	2	**345-4528**	1	SEAL	
Y	21	1	**345-4545**	1	BLOWER GP-CAB	359
Y	22	2	**345-4546**	1	HEATER GP-CAB	396
	23	2	**345-4547**	1	COMPRESSOR GP-REFRIGERANT	
	24	1	**345-4551**	1	SEAL	
	25	2	**345-4552**	1	LANYARD	
	26	1	**345-5955**	1	PLATE AS	
	27	2	**345-6078**	2	KNOB AS	
G	28	2	**160-2246**		SLEEVE-ABRASION (17-IN)	
	29	1	**345-6081**	1	PLATE-AIR CONDITIONER	
	30	1	**345-6139**	1	COIL AS	
	31	2	**345-6146**	1	COVER-LOUVER	
	32	2	**345-6191**	1	DUCT AS	
	33	2	**345-6192**	1	DUCT AS	
	34	2	**345-6193**	2	BOLT-SPECIAL	
	35	2	**345-6194**	4	SPRING	
	36	2	**345-6196**	2	BOLT-SPECIAL	
	37	2	**345-6197**	4	WASHER-RUBBER	
Y	38	2	**356-6106**	1	HARNESS AS-HEATER & AIR COND (BLOWER MOTOR)	101
	39	1	**359-1585**	1	COVER AS	
Y	40	2	**361-6398**	1	HARNESS AS-HEATER & AIR COND	102
Y	41	1	**378-1024**	1	HARNESS AS-HEATER & AIR COND	102
	42	2	**388-7876**	2	BRACKET AS	
I	43	2	**388-8007**	1	HOSE AS	
I	44	2	**388-8008**	1	HOSE AS	
I	45	2	**388-8009**	1	HOSE AS	
I	46	2	**388-8012**	1	HOSE AS	
	47	2	*392-0808*	2	ELBOW AS	
					(EACH INCLUDES)	
		2	**5P-4906**	1	ELBOW	
		2	**6V-6609**	1	SEAL-O-RING	
	48	2	**422-3408**	1	HOSE AS	
I	49	2	**422-3409**	1	HOSE AS	
I	50	1	**422-3410**	1	HOSE AS	
	51	1	**422-3411**	1	TUBE AS	
	52	1	**422-3412**	1	TUBE AS	
	53	1	**433-9330**	1	FITTING AS-AIR CONDITIONER	

388-8267 **KIT-COIL (*contd.*)** **i05342658**

NOTE	REF NO	GRAPHIC REF	PART NUMBER	QTY	PART NAME 1 2 3 4 5 6 (PRODUCT LEVEL)	SEE PAGE
	54	2	**104-3173**	1	CLIP	
	55	2	**114-6658**	6	WASHER (6.5X17X1-MM THK)	
	56	2	**115-1615**	1	RELAY AS (12-VOLT)	
M	57	1	**131-3540**	3	LOCKNUT (M8X1.25-THD)	
	58	1	**132-5789**	1	CLIP	
	59	1	**162-3148**	3	STUD (M8X1.25X40-MM)	
M	60	1	**175-7141**	2	NUT-HEX FLANGE (M10X1.5-THD)	
	61	1,2	**183-4403**	4	CLIP	
	62	2	**195-0936**	2	INSERT-THREADED (M6X1-THD)	
	63	1	**208-9291**	1	BOLT (M10X1.5X20-MM)	
	64	1	**208-9294**	1	BOLT-FLANGE HEAD (M10X1.5X35-MM)	
M	65	1	**215-6406**	2	SCREW-TRUSS HEAD (M6X1X16-MM)	
	66	2	**266-3314**	2	BOLT-FLANGE HEAD (M6X1X20.5-MM)	
M	67	1,2	**266-3315**	6	BOLT-FLANGE HEAD (M8X1.25X25.5-MM)	
	68	1,2	**342-9920**	4	BOLT-FLANGE HEAD (M8X1.25X20-MM)	
	69	1,2	**373-7621**	8	CLAMP-BAND	
F			**374-7463**	1	CAP-SEAL	
	70	1,2	**3S-2093**	25	STRAP-CABLE	
	71	2	**4D-7733**	1	CLIP	
M	72	2	**5C-7261**	1	NUT (M8X1.25-THD)	
	73	1,2	**5P-4116**	6	WASHER-HARD (8.8X20.5X2-MM THK)	
	74	2	**6D-4246**	1	CLIP	
	75	1	**6V-4356**	1	CLIP (SLOT)	
	76	1	**6V-4357**	1	CLIP (TAB)	
	77	2	**6V-7699**	2	WASHER-HARD (5.5X13X1.6-MM THK)	
	78	1,2	**7D-1553**	2	CLIP	
	79	1,2	**7K-1181**	6	STRAP-CABLE	
	80	1	**7X-7729**	1	WASHER (11X25X3-MM THK)	
M	81	2	**8T-0289**	2	BOLT (M5X0.8X20-MM)	
	82	1	**8T-4121**	3	WASHER-HARD (11X21X2.5-MM THK)	
M	83	1	**8T-4133**	1	NUT (M10X1.5-THD)	
M	84	1	**8T-4139**	1	BOLT (M12X1.75X30-MM)	
M	85	2	**8T-4171**	1	BOLT (M6X1X12-MM)	
M	86	2	**8T-4181**	4	BOLT (M6X1X20-MM)	
M	87	1	**8T-4195**	1	BOLT (M10X1.5X30-MM)	
	88	2	**8T-4205**	1	WASHER-HARD (7.2X14.5X2-MM THK)	
	89	1	**8T-4223**	1	WASHER-HARD (13.5X25.5X3-MM THK)	
	90	1,2	**8T-4224**	10	WASHER-HARD (8.8X16X2-MM THK)	
M	91	1	**8T-6685**	1	BOLT (M10X1.5X110-MM)	
	92	1	**9S-1354**	1	NUT (5/8-18-THD)	
M	93	2	**9X-2045**	6	SCREW-TRUSS HEAD (M6X1X20-MM)	
	94	1	**9X-7378**	2	SEAL-O-RING	
	95	2	**9X-7380**	2	SEAL-O-RING	
	96	2	**9X-7381**	5	SEAL-O-RING	
	97	2	**9X-7382**	2	SEAL-O-RING	
	98	1,2	**9X-7383**	5	SEAL-O-RING	
E	99	1,2	**7Y-5074**		GUARD-HOSE (75-CM)	
E	100	1,2	**5P-0767**		HOSE (624-CM)	

E - ORDER BY THE CENTIMETER
F - NOT SHOWN
G - ORDER BY THE INCH
I - REFER TO HYDRAULIC INFORMATION SYSTEM
M - METRIC PART
Y - SEPARATE ILLUSTRATION

388-8267 **KIT-COIL (*contd.*)** **i05342658**

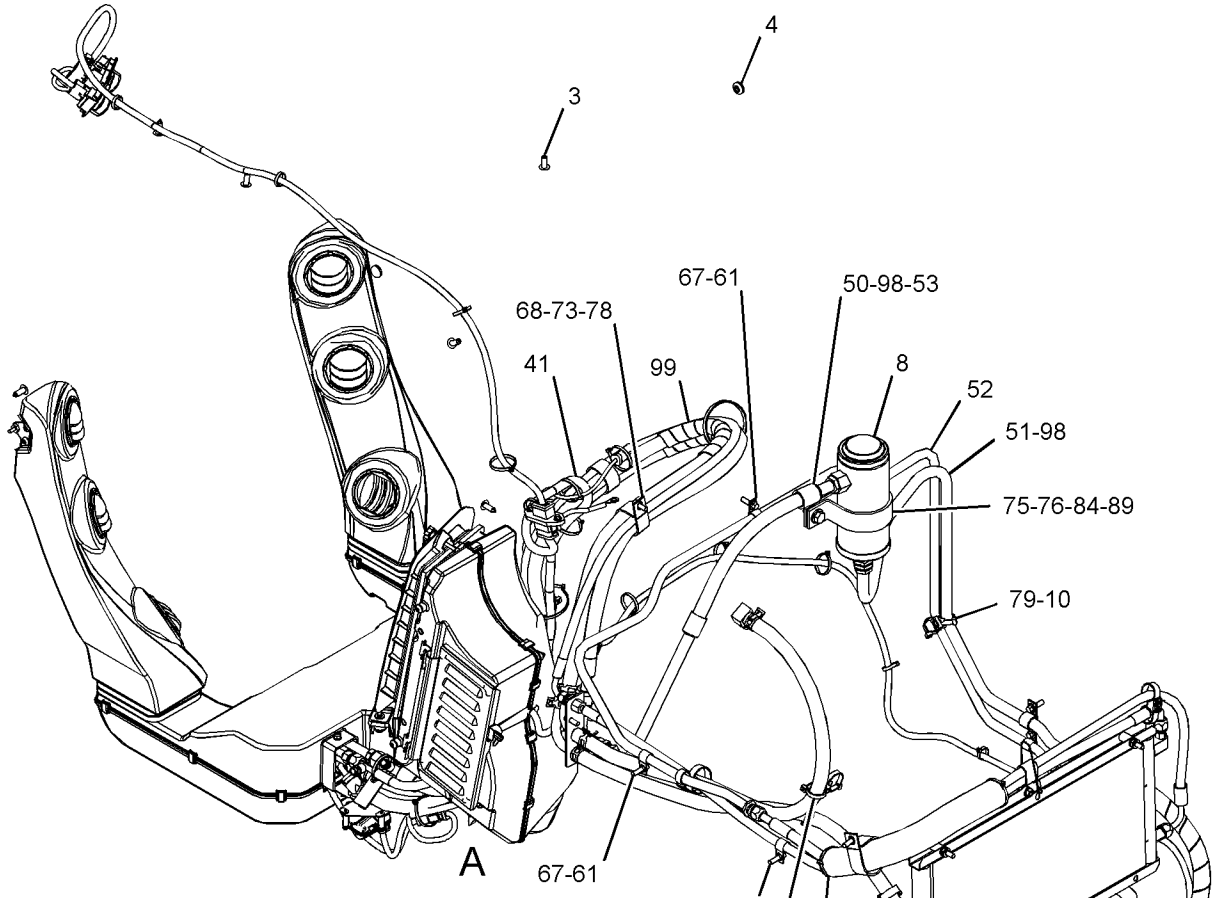

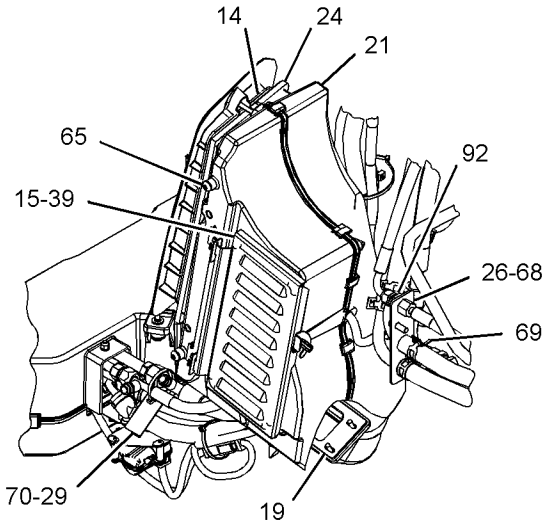

VIEW OF AREA A

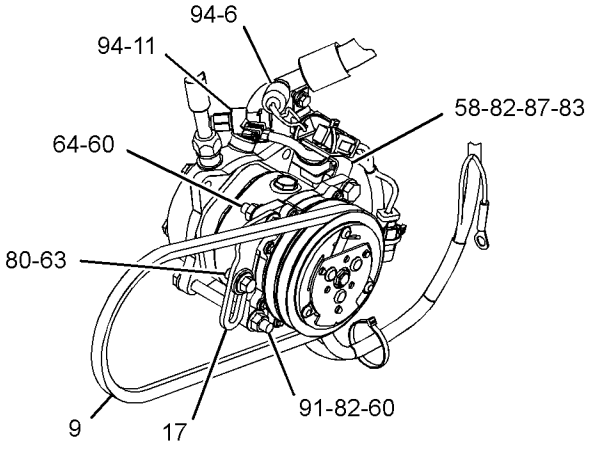

VIEW OF AREA B

GRAPHIC #1 g03389089

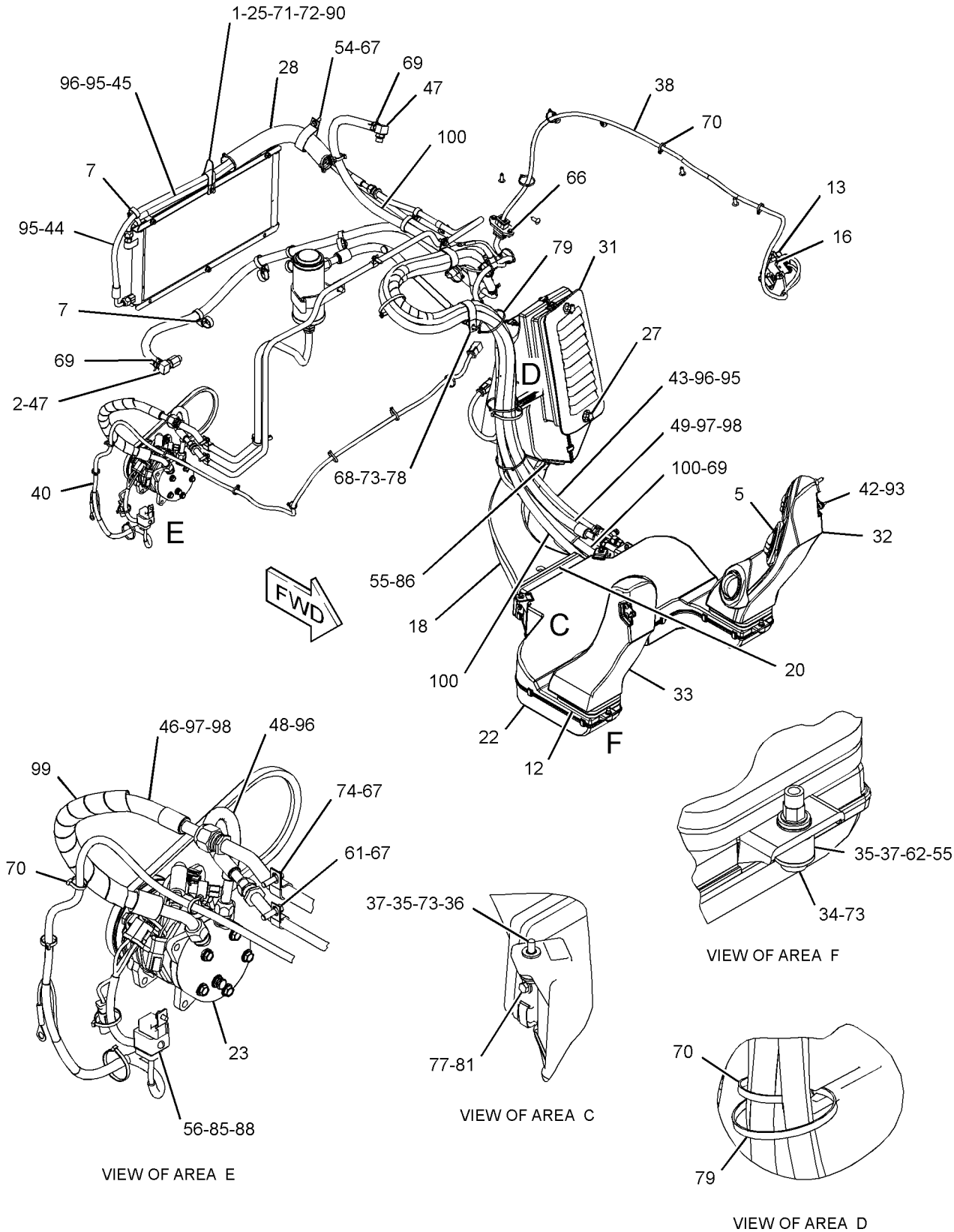

GRAPHIC #2 **<END>** g03389091

388-7849 KIT-AIR CONDITIONER BREATHER

AN ATTACHMENT

SMCS-7320 **i05303621**

NOTE	REF NO	GRAPHIC REF	PART NUMBER	QTY	PART NAME 1 2 3 4 5 6 (PRODUCT LEVEL)	SEE PAGE
	1	1	**172-8591**	3	NUT-SPRING (M6X1-THD)	
	2	1	**348-3485**	1	VALVE-DUST (AIR CLEANER)	
	3	1	**388-7902**	1	TUBE AS	
	4	1	**198-9707**	3	SCREW-TRUSS HEAD (M6X1X35-MM)	
	5	1	**388-7905**	1	HOSE	
	6	1	**388-7907**	1	COVER AS	
		1	**6V-9498**	3	WASHER-HARD (3.2X7X0.5-MM THK)	
	7	1	**9C-5344**	3	SPACER (10.5X20X18-MM THK)	

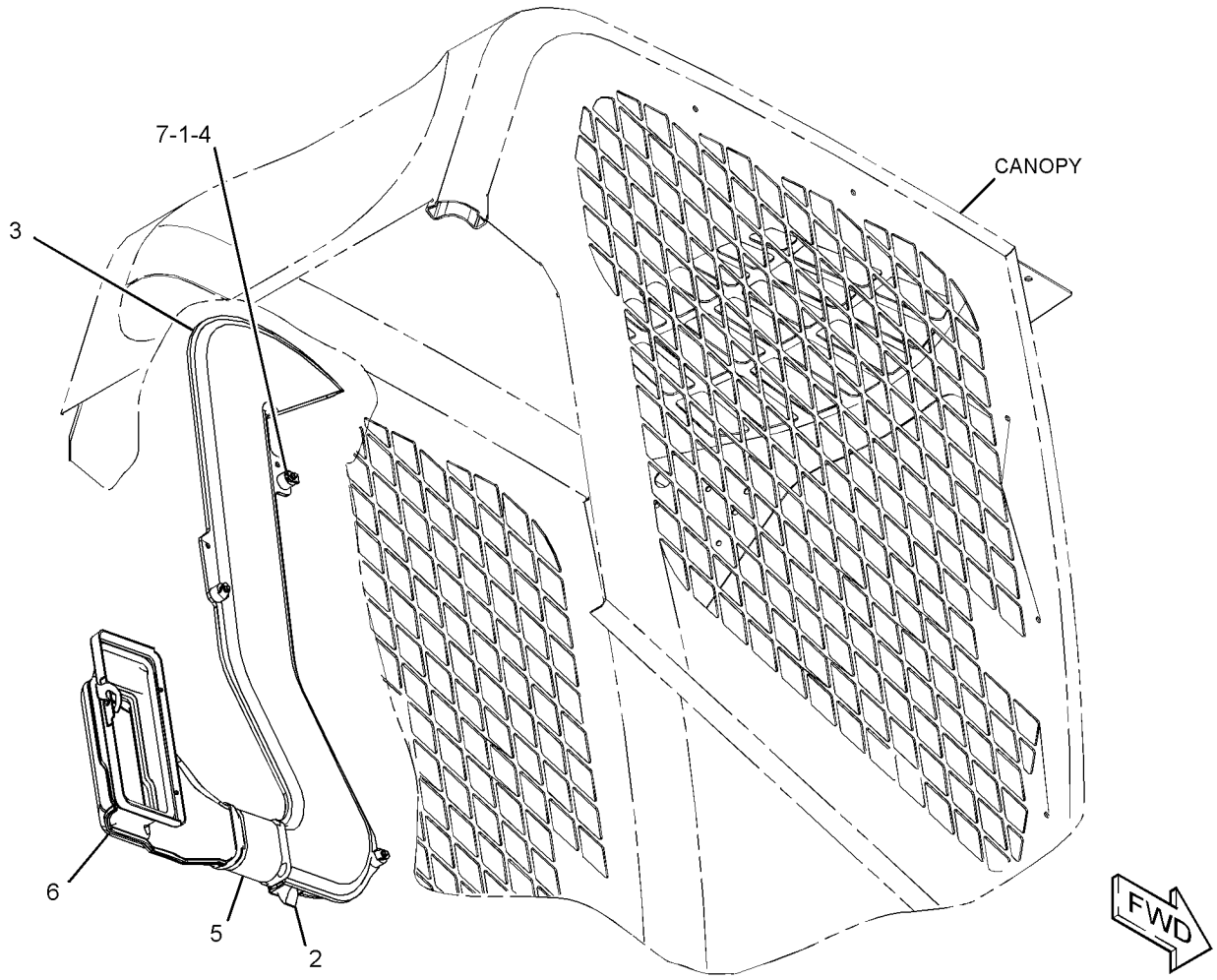

GRAPHIC #1 **<END>** g03378589

388-8276 KIT-CAB DOOR & MOUNTING—GLASS

AN ATTACHMENT

SMCS-7308 **i05327125**

NOTE	REF NO	GRAPHIC REF	PART NUMBER	QTY	PART NAME 1 2 3 4 5 6 (PRODUCT LEVEL)	SEE PAGE
F			**8G-1151**	1	CONNECTOR	
F			**8Y-5947**	2	FASTENER	
F			**146-6433**	1	BLADE AS-WIPER (500-MM)	
FJ			**252-1862**	1	HANDLE AS (PULL)	
F			**253-1817**	1	SPACER (6.5X14.5X12-MM THK)	
F			**258-3280**	1	LATCH AS	
F			**258-3298**	1	GROMMET	
F			**258-3697**	1	WASHER-NYLON (7X20X2-MM THK)	
F			**258-3764**	1	STRIKER AS	
F			**258-4075**	4	GASKET	
F			**258-4085**	2	BUSHING	
F			**258-4141**	3	CLIP	
F			**281-6390**	1	SWITCH AS-ROCKER (WIPER)	
F			**111-7899**	1	GASKET	
F			**319-0710**	2	FILM-INSTRUCTION (EGRESS SYSTEM, READ OMM)	
F			**332-0194**	3	STRAP-CABLE	
F			**345-6024**	1	COVER	
F			**345-6025**	1	COVER	
F			**345-6230**	1	GLASS	
F			**345-6233**	1	BRACKET	
F			**345-6244**	1	TANK AS-WINDOW WASHER	
F			**6T-1375**	1	PUMP AS-WASHER	
EF			**144-0195**		HOSE (45-CM)	
F			**258-3296**	1	CAP-VENTED (WASHER)	
F			**345-6262**	2	HINGE AS	
F			**345-6282**	1	COVER	
F			**345-6283**	1	GASKET	
F			**345-6284**	1	GASKET	
F			**345-6295**	1	COVER-LATCH	
F			**364-1821**	2	HANDLE AS (LOWER)	
F			**378-1007**	1	SWITCH AS-MAGNETIC (LOAD CONTROL)	
F			**3E-3371**	1	WEDGE-RECEPTACLE LOCK (3-PIN)	
F			**171-0596**	1	RECEPTACLE AS-CONNECTOR	
FY			**378-1028**	1	HARNESS AS-CAB (AUXILIARY)	99
FY			*379-1084*	1	MOTOR GP-WINDOW WIPER	425
F			*379-6471*	1	ARM GP-WINDOW WIPER (CAB DOOR)	
EF			**194-5171**		HOSE (50-CM)	
F			**305-9192**	1	NOZZLE AS-WASHER	
FY			**388-1436**	1	HARNESS AS-CAB (WIPER, WASHER)	99
F			**388-8018**	2	SPACER (12.7X22X19.1MM THK)	
F			**388-8019**	6	WASHER (10.5X20X2-MM THK)	
F			**388-8028**	1	SPACER (10X20X6-MM THK)	
F			**418-5900**	1	HANDLE AS	
FM			**159-9539**	2	NUT-WELD (M6X1-THD)	
FM			**159-9541**	2	NUT-WELD (M10X1.5-THD)	
F			**418-5901**	1	BRACKET AS	
FM			**159-9539**	1	NUT-WELD (M6X1-THD)	
F			**418-5945**	2	SPRING AS-GAS (DOOR)	
F			**424-7631**	1	FILM-IDENTIFICATION (ALTERNATE EXIT, READ OMM)	
F			**436-2988**	1	PLATE (MAGNETIC)	
F			**437-9853**	1	PIN	
FM			**101-7398**	4	BOLT-SOCKET HEAD (M10X1.5X40-MM)	
FM			**178-9983**	2	LOCKNUT (M4X0.7-THD)	
FM			**215-6406**	8	SCREW-TRUSS HEAD (M6X1X16-MM)	
F			**3S-2093**	2	STRAP-CABLE	
FM			**3T-0851**	1	LOCKNUT (M5X0.8-THD)	
FM			**5C-2890**	1	NUT (M6X1-THD)	
F			**5P-0372**	4	LOCK PIN	
F			**5P-1076**	1	WASHER-HARD (13.5X30X4-MM THK)	

388-8276 **KIT-CAB DOOR & MOUNTING (*contd.*)** **i05327125**

NOTE	REF NO	GRAPHIC REF	PART NUMBER	QTY	PART NAME 1 2 3 4 5 6 (PRODUCT LEVEL)	SEE PAGE
F			**5P-7648**	2	GROMMET	
F			**6L-3966**	3	PIN	
FM			**6V-7357**	4	BOLT (M6X1X25-MM)	
FM			**8C-4982**	2	BOLT-SOCKET HEAD (M4X0.7X20-MM)	
F			**8T-0328**	1	WASHER-HARD (5.5X10X1-MM THK)	
FM			**8T-2192**	3	BOLT (M6X1X45-MM)	
F			**8T-4121**	4	WASHER-HARD (11X21X2.5-MM THK)	
F			**8T-4205**	3	WASHER-HARD (7.2X14.5X2-MM THK)	
FM			**8T-4244**	1	NUT (M12X1.75-THD)	
F			**8T-5439**	2	WASHER-HARD (21.5X45X6-MM THK)	
FM			**8T-6974**	1	BOLT (M6X1X80-MM)	
F			**9L-9132**	2	WASHER (10.2X25.5X2.5-MM THK)	
FM			**9X-2040**	2	SCREW-TRUSS HEAD (M10X1.5X25-MM)	
F			**9X-6165**	1	WASHER (6.5X22X2.5-MM THK)	
EF			**386-6028**		SEAL (326-CM)	
EF			**144-0195**		HOSE (44-CM)	

E - ORDER BY THE CENTIMETER
F - NOT SHOWN
J - REQUIRES CORPORATE KEY
M - METRIC PART
Y - SEPARATE ILLUSTRATION

NO GRAPHIC AVAILABLE AT TIME OF PUBLICATION

GRAPHIC #1 **<END>** g01269539

388-8281 KIT-CAB DOOR & MOUNTING—POLYCARBONATE

AN ATTACHMENT

SMCS-7308 **i05327124**

NOTE	REF NO	GRAPHIC REF	PART NUMBER	QTY	PART NAME 1 2 3 4 5 6 (PRODUCT LEVEL)	SEE PAGE
F			**8G-1151**	1	CONNECTOR	
F			**8Y-5947**	2	FASTENER	
F			**146-6433**	1	BLADE AS-WIPER (500-MM)	
FJ			**252-1862**	1	HANDLE AS (PULL)	
F			**253-1817**	1	SPACER (6.5X14.5X12-MM THK)	
F			**258-3280**	1	LATCH AS	
F			**258-3298**	1	GROMMET	
F			**258-3697**	1	WASHER-NYLON (7X20X2-MM THK)	
F			**258-3764**	1	STRIKER AS	
F			**258-4075**	4	GASKET	
F			**258-4085**	2	BUSHING	
F			**258-4141**	3	CLIP	
F			**281-6390**	1	SWITCH AS-ROCKER (FRONT WIPER, WASHER)	
F			**111-7899**	1	GASKET	
F			**319-0710**	2	FILM-INSTRUCTION (EGRESS SYSTEM, READ OMM)	
F			**332-0194**	3	STRAP-CABLE	
F			**345-6024**	1	COVER	
F			**345-6025**	1	COVER	
F			**345-6233**	1	BRACKET	
F			**345-6244**	1	TANK AS-WINDOW WASHER	
F			**6T-1375**	1	PUMP AS-WASHER	
EF			**144-0195**		HOSE (45-CM)	
F			**258-3296**	1	CAP-VENTED (WASHER)	
F			**345-6250**	1	WINDOW	
F			**345-6262**	2	HINGE AS	
F			**345-6282**	1	COVER	
F			**345-6283**	1	GASKET	
F			**345-6284**	1	GASKET	
F			**345-6295**	1	COVER-LATCH	
F			**364-1821**	2	HANDLE AS (LOWER)	
F			**378-1007**	1	SWITCH AS-MAGNETIC (LOAD CONTROL)	
F			**3E-3371**	1	WEDGE-RECEPTACLE LOCK (3-PIN)	
F			**171-0596**	1	RECEPTACLE AS-CONNECTOR	
FY			**378-1028**	1	HARNESS AS-CAB (AUXILIARY)	99
FY			*379-1084*	1	MOTOR GP-WINDOW WIPER	425
F			*379-6471*	1	ARM GP-WINDOW WIPER (CAB DOOR)	
EF			**194-5171**		HOSE (50-CM)	
F			**305-9192**	1	NOZZLE AS-WASHER	
FY			**388-1436**	1	HARNESS AS-CAB (WIPER, WASHER)	99
F			**388-8018**	2	SPACER (12.7X22X19.1MM THK)	
F			**388-8019**	6	WASHER (10.5X20X2-MM THK)	
F			**388-8028**	1	SPACER (10X20X6-MM THK)	
F			**418-5900**	1	HANDLE AS	
FM			**159-9539**	2	NUT-WELD (M6X1-THD)	
FM			**159-9541**	2	NUT-WELD (M10X1.5-THD)	
F			**418-5901**	1	BRACKET AS	
FM			**159-9539**	1	NUT-WELD (M6X1-THD)	
F			**418-5945**	2	SPRING AS-GAS (DOOR)	
F			**424-7631**	1	FILM-IDENTIFICATION (ALTERNATE EXIT, READ OMM)	
F			**436-2988**	1	PLATE (MAGNETIC)	
F			**437-9853**	1	PIN	
FM			**101-7398**	4	BOLT-SOCKET HEAD (M10X1.5X40-MM)	
FM			**178-9983**	2	LOCKNUT (M4X0.7-THD)	
FM			**215-6406**	8	SCREW-TRUSS HEAD (M6X1X16-MM)	
F			**3S-2093**	2	STRAP-CABLE	
FM			**3T-0851**	1	LOCKNUT (M5X0.8-THD)	
FM			**5C-2890**	1	NUT (M6X1-THD)	
F			**5P-0372**	4	LOCK PIN	
F			**5P-1076**	1	WASHER-HARD (13.5X30X4-MM THK)	

388-8281 **KIT-CAB DOOR & MOUNTING (*contd.*)** **i05327124**

NOTE	REF NO	GRAPHIC REF	PART NUMBER	QTY	PART NAME 1 2 3 4 5 6 (PRODUCT LEVEL)	SEE PAGE
F			**5P-7648**	2	GROMMET	
F			**6L-3966**	3	PIN	
FM			**6V-7357**	4	BOLT (M6X1X25-MM)	
FM			**8C-4982**	2	BOLT-SOCKET HEAD (M4X0.7X20-MM)	
F			**8T-0328**	1	WASHER-HARD (5.5X10X1-MM THK)	
FM			**8T-2192**	3	BOLT (M6X1X45-MM)	
F			**8T-4121**	4	WASHER-HARD (11X21X2.5-MM THK)	
F			**8T-4205**	3	WASHER-HARD (7.2X14.5X2-MM THK)	
FM			**8T-4244**	1	NUT (M12X1.75-THD)	
F			**8T-5439**	2	WASHER-HARD (21.5X45X6-MM THK)	
FM			**8T-6974**	1	BOLT (M6X1X80-MM)	
F			**9L-9132**	2	WASHER (10.2X25.5X2.5-MM THK)	
FM			**9X-2040**	2	SCREW-TRUSS HEAD (M10X1.5X25-MM)	
F			**9X-6165**	1	WASHER (6.5X22X2.5-MM THK)	
EF			**386-6028**		SEAL (326-CM)	
EF			**144-0195**		HOSE (44-CM)	

E - ORDER BY THE CENTIMETER
F - NOT SHOWN
J - REQUIRES CORPORATE KEY
M - METRIC PART
Y - SEPARATE ILLUSTRATION

NO GRAPHIC AVAILABLE AT TIME OF PUBLICATION

GRAPHIC #1 **<END>** g01269539

388-8266 KIT-COIL—CONVERSION
AN ATTACHMENT

SMCS-7304 **i05342657**

NOTE	REF NO	GRAPHIC REF	PART NUMBER	QTY	PART NAME 1 2 3 4 5 6 (PRODUCT LEVEL)	SEE PAGE
	1	1	**5P-7958**	1	SLEEVE-CABLE SPLICE	
	2	1	**149-6371**	1	SWITCH AS-PRESSURE (REFRIGERANT, LOW SIDE)	
		1	**102-8804**	1	KIT-RECEPTACLE (4-PIN)	
					(INCLUDES RECEPTACLE AS & WEDGE)	
		1	**8T-8729**	2	PIN-CONNECTOR (16-GA TO 18-GA)	
	3	1	**178-3620**	2	STRAP-DUAL CLAMP	
Y	4	1	**186-6190**	1	ACCUMULATOR GP-REFRIGERANT (CHARGED)	351
	5	1	**198-8354**	1	V-BELT	
	6	1	**206-2423**	1	SADDLE	
	7	1	**236-6923**	1	SWITCH AS-PRESSURE (REFRIGERANT)	
	8	1	**266-0299**	1	SWITCH AS-ROCKER (AIR CONDITIONER)	
		1	**111-7899**	1	GASKET	
	9	1	**345-3527**	1	PLATE	
	10	1	**345-4547**	1	COMPRESSOR GP-REFRIGERANT	
	11	1	**345-4552**	1	LANYARD	
G	12	1	*160-2246*		SLEEVE-ABRASION (17-IN)	
	13	1	**345-6081**	1	PLATE-AIR CONDITIONER	
	14	1	**345-6139**	1	COIL AS	
Y	15	1	**361-6398**	1	HARNESS AS-HEATER & AIR COND (REAR)	102
I	16	1	**388-8007**	1	HOSE AS	
I	17	1	**388-8008**	1	HOSE AS	
I	18	1	**388-8009**	1	HOSE AS	
I	19	1	**388-8012**	1	HOSE AS	
	20	1	**422-3408**	1	HOSE AS	
I	21	1	**422-3409**	1	HOSE AS	
I	22	1	**422-3410**	1	HOSE AS	
	23	1	**422-3411**	1	TUBE AS	
	24	1	**422-3412**	1	TUBE AS	
	25	1	**433-9330**	1	FITTING AS-AIR CONDITIONER	
	26	1	**104-3173**	1	CLIP	
	27	1	**115-1615**	1	RELAY AS (12-VOLT)	
M	28	1	**131-3540**	3	LOCKNUT (M8X1.25-THD)	
	29	1	**132-5789**	1	CLIP	
	30	1	**162-3148**	3	STUD (M8X1.25X40-MM)	
M	31	1	**175-7141**	2	NUT-HEX FLANGE (M10X1.5-THD)	
	32	1	**183-4403**	3	CLIP	
	33	1	**208-9291**	1	BOLT (M10X1.5X20-MM)	
	34	1	**208-9294**	1	BOLT-FLANGE HEAD (M10X1.5X35-MM)	
M	35	1	**266-3315**	5	BOLT-FLANGE HEAD (M8X1.25X25.5-MM)	
	36	1	**342-9920**	3	BOLT-FLANGE HEAD (M8X1.25X20-MM)	
	37	1	**3S-2093**	14	STRAP-CABLE	
	38	1	**4D-7733**	1	CLIP	
M	39	1	**5C-7261**	1	NUT (M8X1.25-THD)	
	40	1	**5P-4116**	1	WASHER-HARD (8.8X20.5X2-MM THK)	
	41	1	**6D-4246**	1	CLIP	
	42	1	**6V-4356**	1	CLIP (SLOT)	
	43	1	**6V-4357**	1	CLIP (TAB)	
	44	1	**7D-1553**	2	CLIP	
	45	1	**7K-1181**	4	STRAP-CABLE	
	46	1	**7X-7729**	1	WASHER (11X25X3-MM THK)	
	47	1	**8T-4121**	3	WASHER-HARD (11X21X2.5-MM THK)	
M	48	1	**8T-4133**	1	NUT (M10X1.5-THD)	
M	49	1	**8T-4139**	1	BOLT (M12X1.75X30-MM)	
M	50	1	**8T-4171**	1	BOLT (M6X1X12-MM)	
M	51	1	**8T-4195**	1	BOLT (M10X1.5X30-MM)	
	52	1	**8T-4205**	1	WASHER-HARD (7.2X14.5X2-MM THK)	
	53	1	**8T-4223**	1	WASHER-HARD (13.5X25.5X3-MM THK)	
	54	1	**8T-4224**	10	WASHER-HARD (8.8X16X2-MM THK)	
M	55	1	**8T-6685**	1	BOLT (M10X1.5X110-MM)	

388-8266 **KIT-COIL (*contd.*)** **i05342657**

NOTE	REF NO	GRAPHIC REF	PART NUMBER	QTY	PART NAME 1 2 3 4 5 6 (PRODUCT LEVEL)	SEE PAGE
	56	1	**9S-1354**	1	NUT (5/8-18-THD)	
	57	1	**9X-7378**	2	SEAL-O-RING	
	58	1	**9X-7380**	2	SEAL-O-RING	
	59	1	**9X-7381**	5	SEAL-O-RING	
	60	1	**9X-7382**	2	SEAL-O-RING	
	61	1	**9X-7383**	5	SEAL-O-RING	
E	62	1	**7Y-5074**		GUARD-HOSE (25-CM)	

E - ORDER BY THE CENTIMETER
G - ORDER BY THE INCH
I - REFER TO HYDRAULIC INFORMATION SYSTEM
M - METRIC PART
Y - SEPARATE ILLUSTRATION

388-8266 **KIT-COIL (*contd.*)** **i05342657**

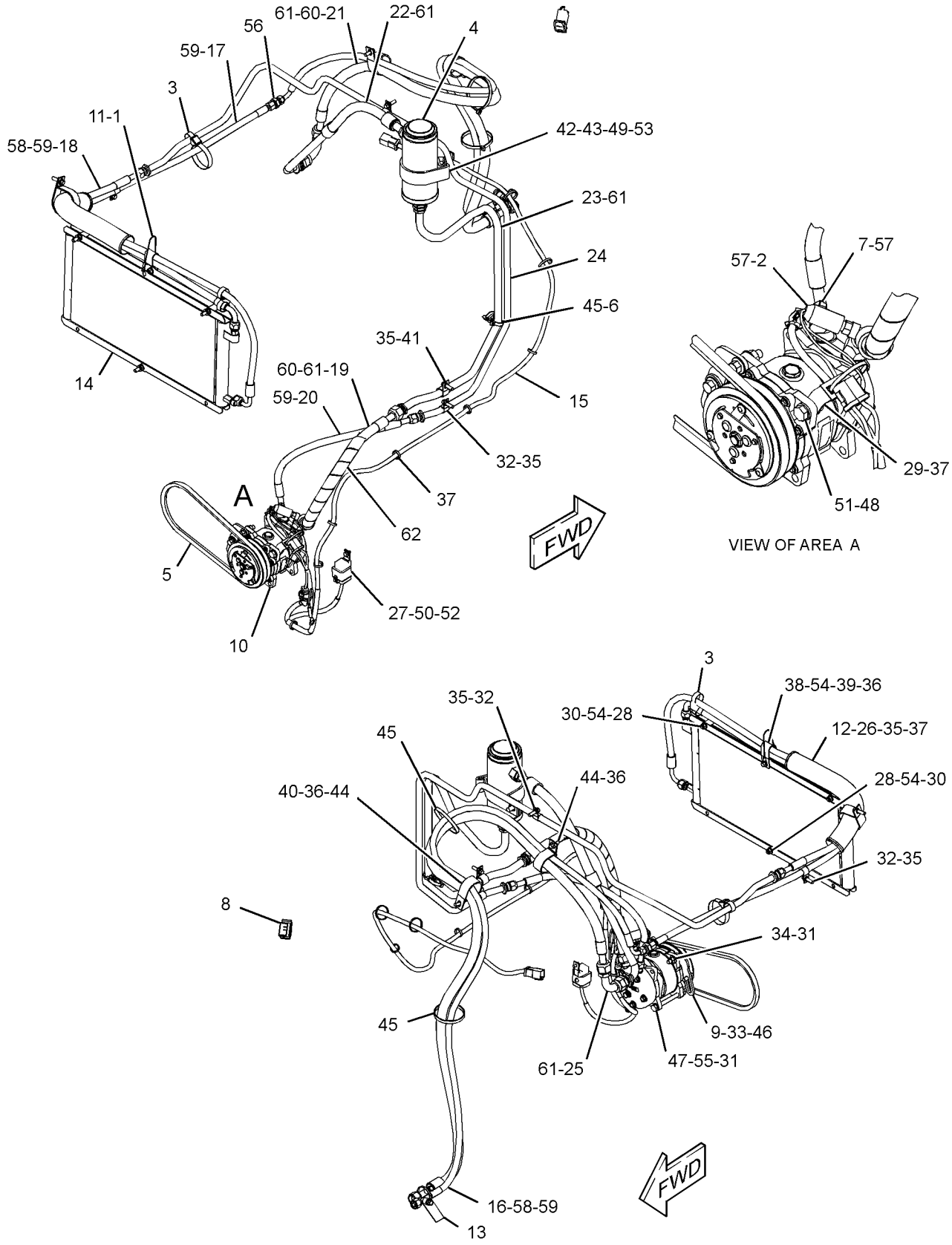

GRAPHIC #1 **<END>** g03388356

OPERATOR STATION

388-8268 KIT-COIL–HEATER

AN ATTACHMENT

SMCS-7304 **i05342660**

NOTE	REF NO	GRAPHIC REF	PART NUMBER	QTY	PART NAME 1 2 3 4 5 6 (PRODUCT LEVEL)	SEE PAGE
	1	1	**8T-7912**	1	ADAPTER	
	2	1	**8Y-5947**	6	FASTENER	
	3	1	**109-2356**	1	PLUG	
	4	1	**127-4003**	2	GROMMET	
	5	1	**146-6371**	6	LOUVER AS	
	6	1	**178-3620**	4	STRAP-DUAL CLAMP	
	7	1	**206-2423**	1	SADDLE	
	8	1	**258-3795**	4	SEAL	
Y	9	1	**258-4299**	1	CONTROL GP-AIR & TEMPERATURE	365
	10	1	**265-6618**	1	FILTER ELEMENT-CAB AIR (RECIRCULATION)	
	11	1	**265-6619**	1	FILTER ELEMENT-CAB AIR (FRESH AIR)	
	12	1	**345-4526**	1	DUCT AS	
	13	1	**345-4527**	1	SEAL	
	14	1	**345-4528**	1	SEAL	
Y	15	1	**345-4545**	1	BLOWER GP-CAB	359
Y	16	1	**345-4546**	1	HEATER GP-CAB	396
	17	1	**345-4551**	1	SEAL	
	18	1	**345-5955**	1	PLATE AS	
	19	1	**345-6078**	2	KNOB AS	
	20	1	**345-6146**	1	COVER-LOUVER	
	21	1	**345-6191**	1	DUCT AS	
	22	1	**345-6192**	1	DUCT AS	
	23	1	**345-6193**	2	BOLT-SPECIAL	
	24	1	**345-6194**	4	SPRING	
	25	1	**345-6196**	2	BOLT-SPECIAL	
	26	1	**345-6197**	4	WASHER-RUBBER	
Y	27	1	**356-6106**	1	HARNESS AS-HEATER & AIR COND (BLOWER MOTOR)	101
	28	1	**359-1585**	1	COVER AS	
	29	1	**374-7463**	1	CAP-SEAL	
Y	30	1	**378-1024**	1	HARNESS AS-HEATER & AIR COND	102
	31	1	**388-7876**	2	BRACKET AS	
	32	1	*392-0808*	2	ELBOW AS	
					(EACH INCLUDES)	
		1	**5P-4906**	1	ELBOW	
		1	**6V-6609**	1	SEAL-O-RING	
	33	1	**114-6658**	6	WASHER (6.5X17X1-MM THK)	
	34	1	**195-0936**	2	INSERT-THREADED (M6X1-THD)	
M	35	1	**215-6406**	2	SCREW-TRUSS HEAD (M6X1X16-MM)	
	36	1	**266-3314**	2	BOLT-FLANGE HEAD (M6X1X20.5-MM)	
M	37	1	**266-3315**	1	BOLT-FLANGE HEAD (M8X1.25X25.5-MM)	
	38	1	**342-9920**	3	BOLT-FLANGE HEAD (M8X1.25X20-MM)	
	39	1	**373-7621**	8	CLAMP-BAND	
	40	1	**3S-2093**	8	STRAP-CABLE	
	41	1	**4P-8134**	1	CLIP	
	42	1	**5P-4116**	4	WASHER-HARD (8.8X20.5X2-MM THK)	
	43	1	**6D-1641**	2	CLIP	
	44	1	**6V-7699**	2	WASHER-HARD (5.5X13X1.6-MM THK)	
	45	1	**7K-1181**	8	STRAP-CABLE	
M	46	1	**8T-0289**	2	BOLT (M5X0.8X20-MM)	
M	47	1	**8T-4181**	4	BOLT (M6X1X20-MM)	
M	48	1	**9X-2045**	6	SCREW-TRUSS HEAD (M6X1X20-MM)	
E	49	1	**7Y-5074**		GUARD-HOSE (50-CM)	
E	50	1	**5P-0767**		HOSE (100-CM)	
E	50A	1	**5P-0767**		HOSE (140-CM)	
E	50B	1	**5P-0767**		HOSE (192-CM EACH)	

E - ORDER BY THE CENTIMETER
M - METRIC PART
Y - SEPARATE ILLUSTRATION

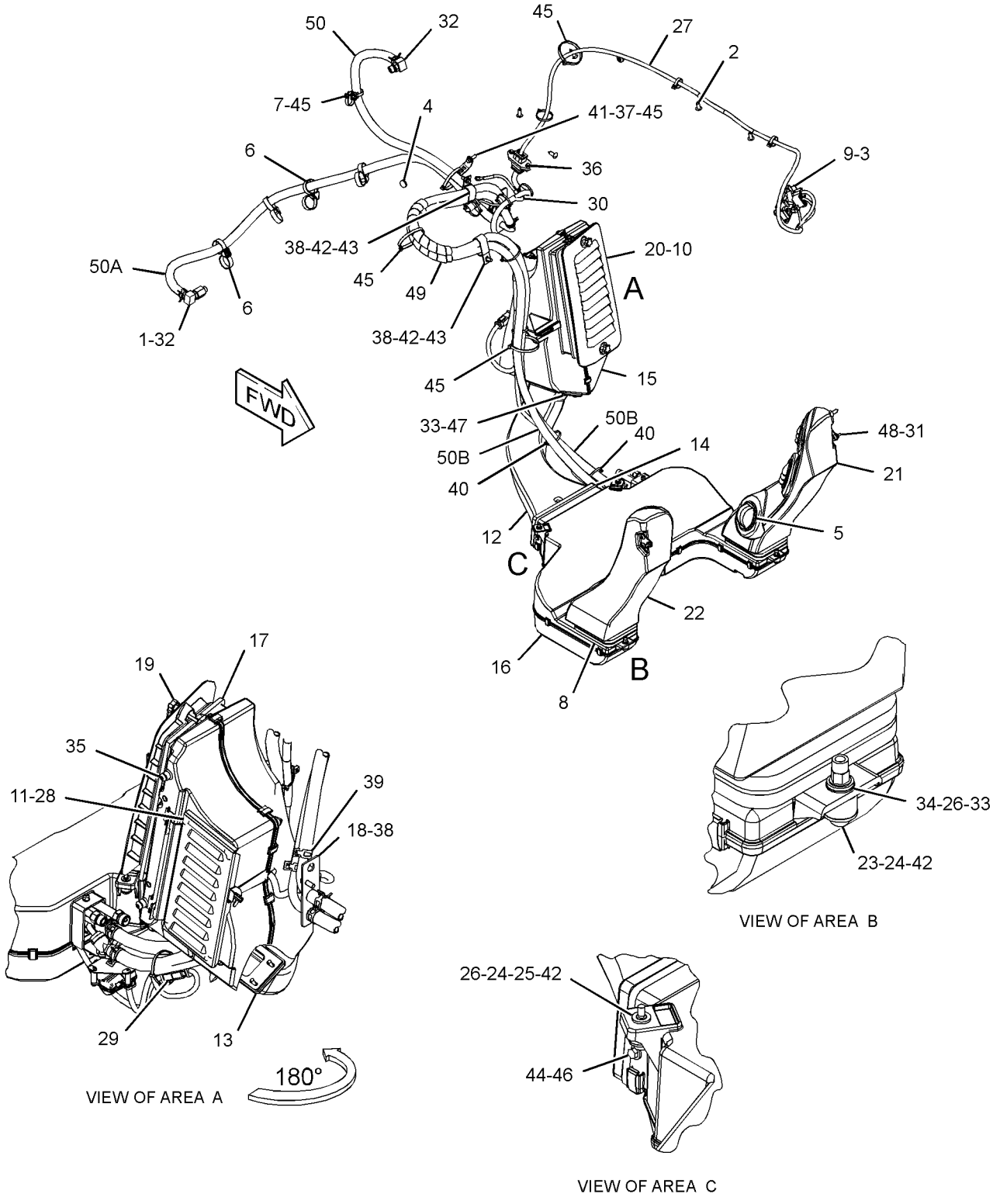

GRAPHIC #1 **<END>** g03386681

OPERATOR STATION

388-8275 KIT-CAB WINDOW

AN ATTACHMENT

SMCS-7310 **i05327126**

NOTE	REF NO	GRAPHIC REF	PART NUMBER	QTY	PART NAME 1 2 3 4 5 6 (PRODUCT LEVEL)	SEE PAGE
	1	1	**270-9442**	18	SCREW-TRUSS HEAD (M6X1X20-MM)	
	2	1	**345-6270**	1	WINDOW AS (LH)	
	3	1	**345-6271**	1	WINDOW AS (LH)	
	4	1	**345-6273**	1	WINDOW AS (LH)	
	5	1	**345-6274**	1	WINDOW AS (RH)	
	6	1	**345-6275**	1	WINDOW AS (RH)	
	7	1	**345-6276**	1	WINDOW AS (RH)	
	8	1	**345-6292**	1	FRAME AS (LH)	
	9	1	**345-6297**	1	FRAME AS (RH)	

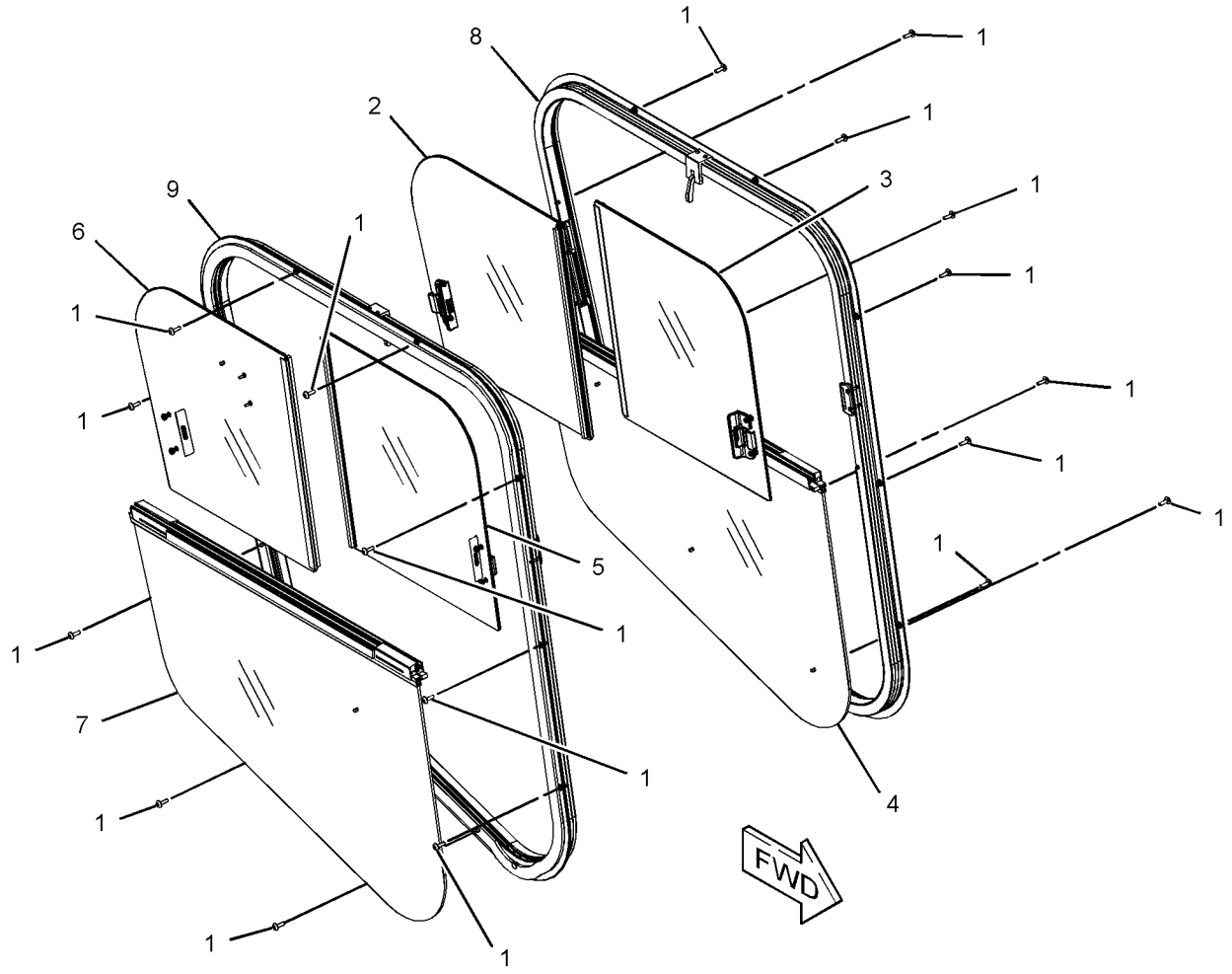

GRAPHIC #1 **<END>** g03384657

388-8274 KIT-INSTRUMENT PANEL—ADVANCED DISPLAY

FOR USE WITH 388-8284—PAGE: 116

AN ATTACHMENT

SMCS-1435, 7450, 7490 **i05327157**

NOTE	REF NO	GRAPHIC REF	PART NUMBER	QTY	PART NAME 1 2 3 4 5 6 (PRODUCT LEVEL)	SEE PAGE
	1	1	**8Y-5947**	2	FASTENER	
	2	1	**378-1006**	1	CONTROL GP-UNPRGMED MONITOR (OPTIONAL)	
	3	1	**383-7619**	1	SOFTWARE GP-MONITOR	
M	4	1	**135-7242**	4	SCREW-SELF-TAPPING (M5X2.3X18.8-MM)	
	5	1	**9X-8256**	4	WASHER (6.6X12X2-MM THK)	

M - METRIC PART

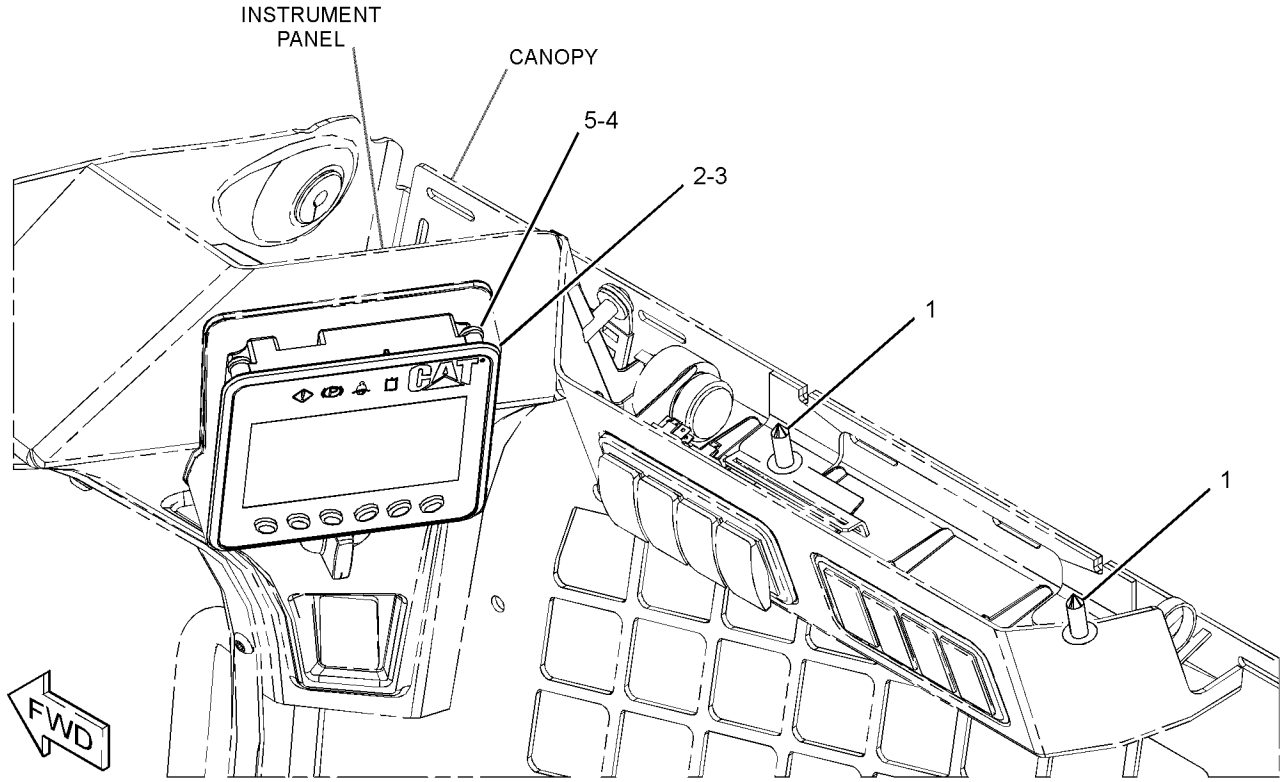

GRAPHIC #1 **<END>** g03384688

388-8285 KIT-PEDAL–THROTTLE

AN ATTACHMENT

SMCS-1269 **i05327131**

NOTE	REF NO	GRAPHIC REF	PART NUMBER	QTY	PART NAME 1 2 3 4 5 6 (PRODUCT LEVEL)	SEE PAGE
	1	1	**8Y-5947**	2	FASTENER	
	2	1	**206-1345**	1	STRAP-CABLE	
	3	1	**345-6024**	1	COVER (LH)	
	4	1	**345-6025**	1	COVER (RH)	
	5	1	**345-6136**	1	PEDAL AS	
Y	6	1	**378-1027**	1	HARNESS AS-WIRING (PEDAL)	112
M	7	1	**127-2170**	4	SCREW-TRUSS HEAD (M8X1.25X20-MM)	
	8	1	**3E-4352**	4	WASHER-HARD (8.8X20.5X2.5-MM THK)	
	9	1	**3S-2093**	2	STRAP-CABLE	

M - METRIC PART
Y - SEPARATE ILLUSTRATION

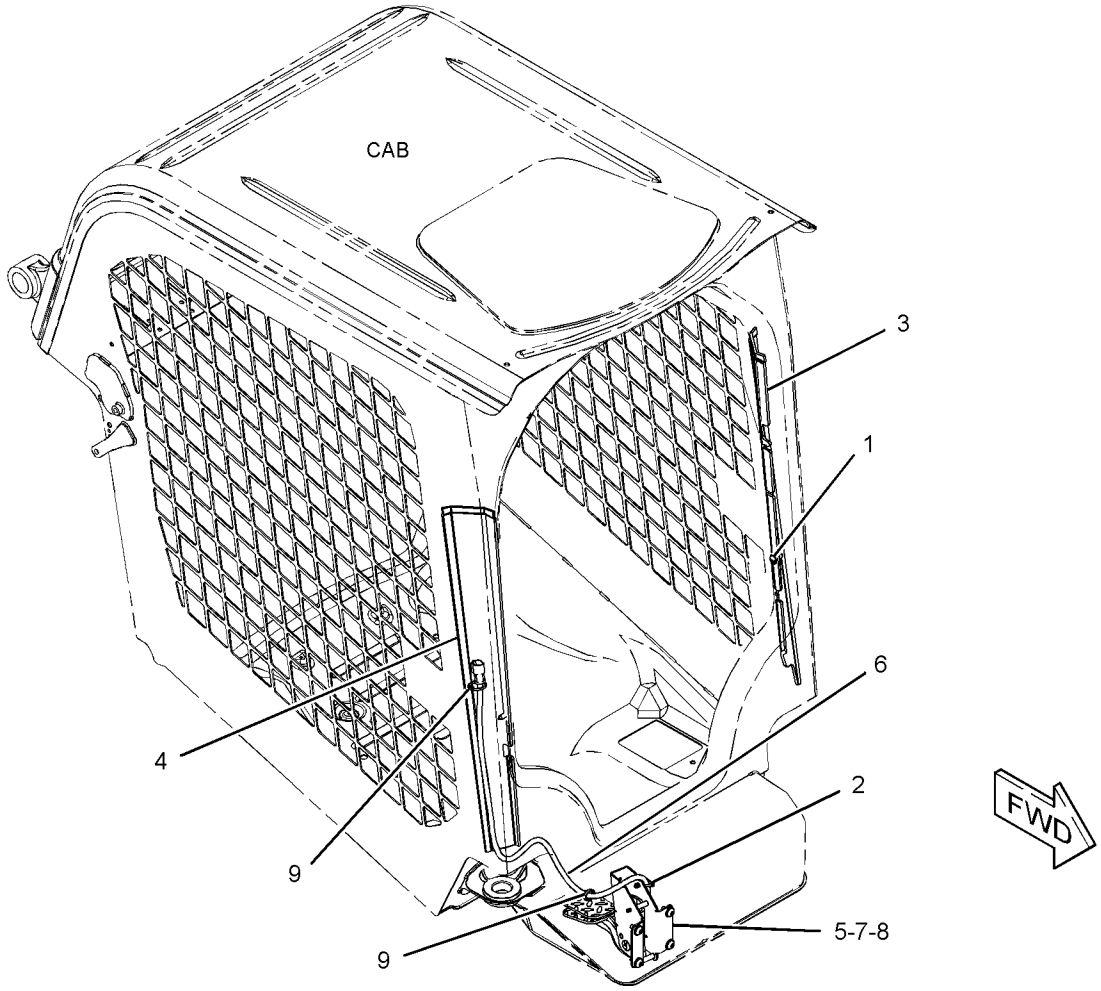

GRAPHIC #1 **<END>** g03384474

388-8283 KIT-RADIO–AM/FM

AN ATTACHMENT

SMCS-7338 **i05327129**

NOTE	REF NO	GRAPHIC REF	PART NUMBER	QTY	PART NAME 1 2 3 4 5 6 (PRODUCT LEVEL)	SEE PAGE
	1	1	**8E-1118**	1	ANTENNA AS	
	2	1	**8Y-5947**	4	FASTENER	
	3	1	**9U-8746**	1	CABLE AS-COAXIAL	
	4	1	**168-8772**	2	SPEAKER AS-RADIO	
Y	5	1	**200-5728**	1	HARNESS AS-RADIO	108
	6	1	**258-4039**	1	SPACER	
	7	1	**258-4074**	1	BRACKET	
	8	1	**258-4367**	2	BRACKET	
	9	1	**345-6140**	1	COVER	
	10	1	**345-6174**	1	GROMMET	
	11	1	**195-0936**	4	INSERT-THREADED (M6X1-THD)	
M	12	1	**5C-7261**	1	NUT (M8X1.25-THD)	
	13	1	**5P-4116**	1	WASHER-HARD (8.8X20.5X2-MM THK)	
M	14	1	**6V-7357**	4	BOLT (M6X1X25-MM)	
M	15	1	**8T-4142**	8	BOLT-FLANGE HEAD (M5X0.8X12-MM)	
	16	1	**8T-4224**	4	WASHER-HARD (8.8X16X2-MM THK)	

M - METRIC PART
Y - SEPARATE ILLUSTRATION

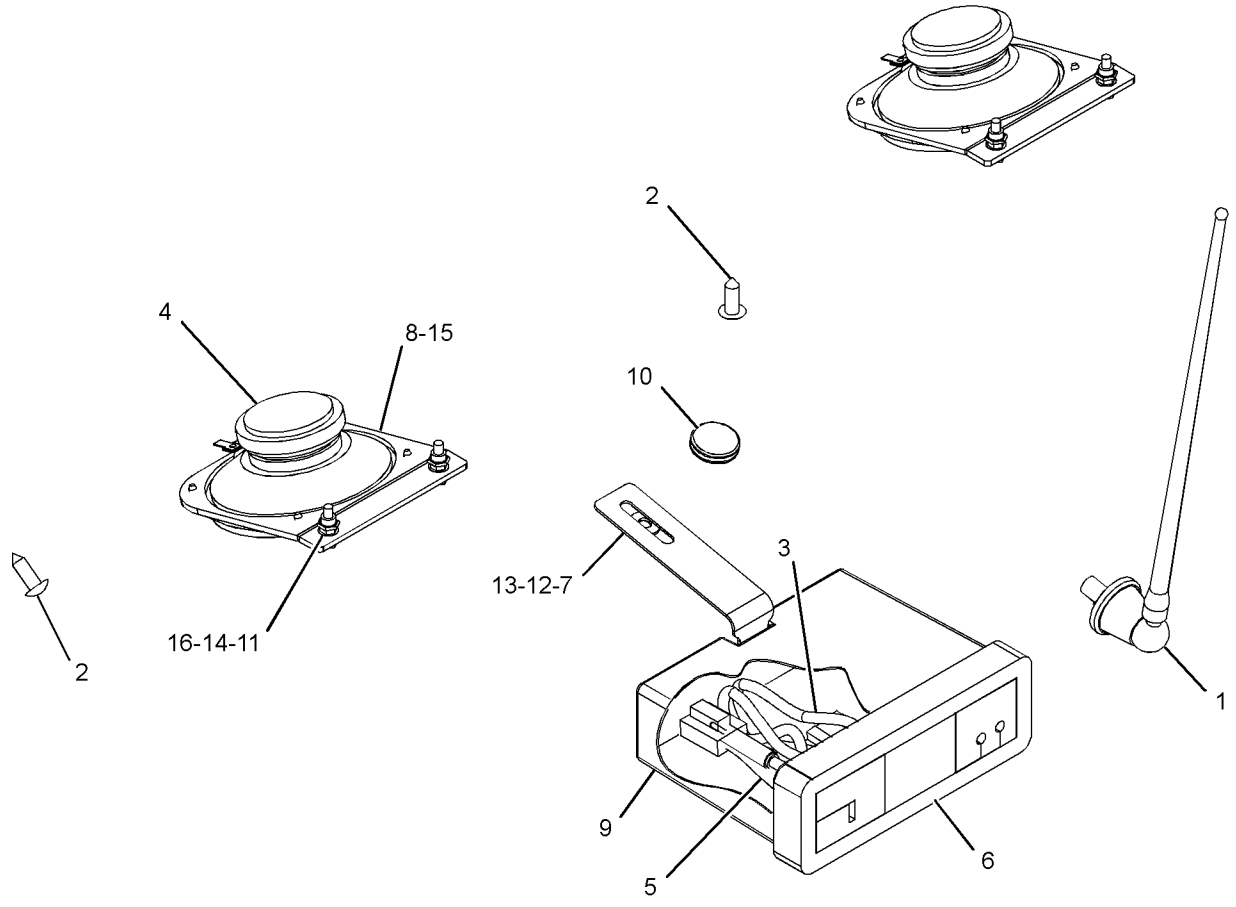

GRAPHIC #1 **<END>** g03384476

OPERATOR STATION

388-8286 KIT-RADIO–AM/FM/WB/CD/XM/USB/BLUETOOTH

AN ATTACHMENT

SMCS-7338 **i05327132**

NOTE	REF NO	GRAPHIC REF	PART NUMBER	QTY	PART NAME 1 2 3 4 5 6 (PRODUCT LEVEL)	SEE PAGE
	1	1	**3S-2093**	12	STRAP-CABLE	
D	2	1	**5P-9909**		SEAL (0.1-M EACH)	
	3	1	**8Y-5947**	6	FASTENER	
	4	1	**345-6145**	1	COVER	
	5	1	**349-8642**	1	MICROPHONE	
	6	1	**353-1634**	1	HARNESS AS-RADIO	
	7	1	**377-7215**	1	RADIO GP (AM/FM/WB/CD/XM/USB/BLUETOOTH)	
	8	1	**9G-1307**	1	GROMMET	

D - ORDER BY THE METER

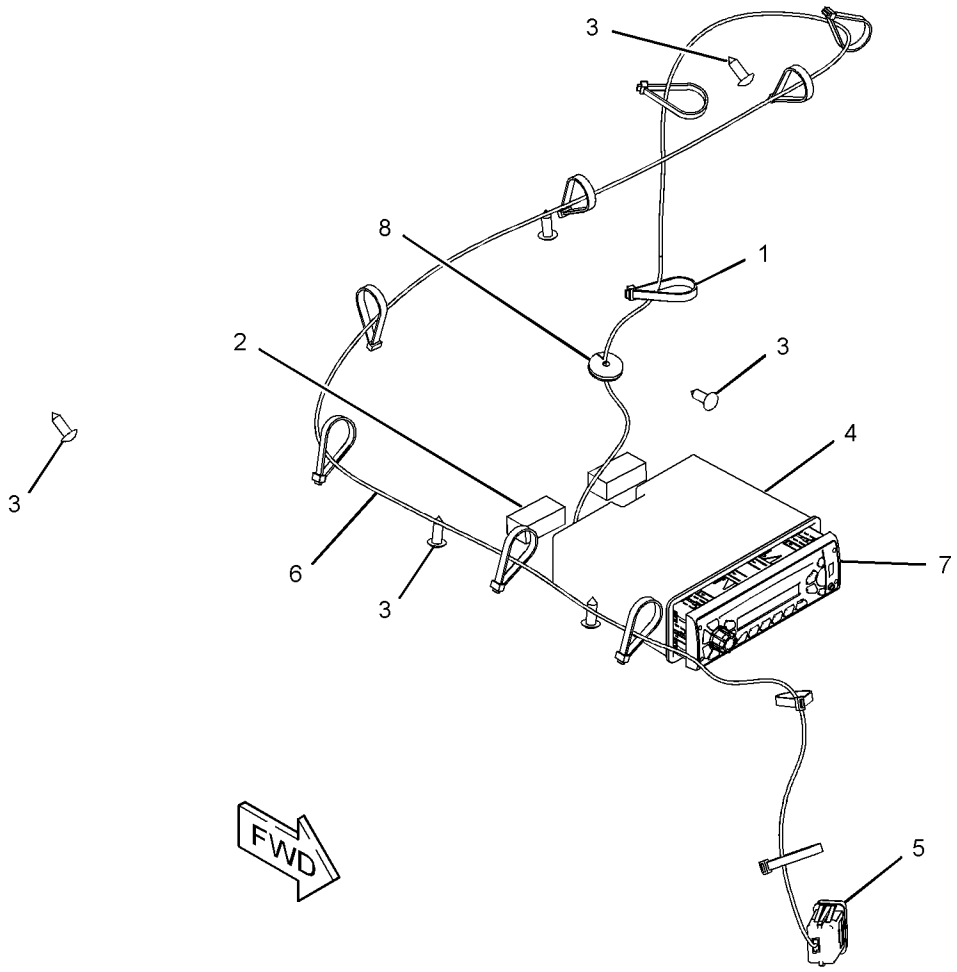

GRAPHIC #1 **<END>** g03384473

345-6020 LINER GP-CAB

PART OF 345-5454 CAB AR

SMCS-7268, 7329 **i05296317**

NOTE	REF NO	GRAPHIC REF	PART NUMBER	QTY	PART NAME 1 2 3 4 5 6 (PRODUCT LEVEL)	SEE PAGE
	1	1	**258-3786**	1	SEAL	
	2	1	**280-6071**	5	CLIP	
	3	1	**327-1067**	1	SEAL	
	4	1	**345-6030**	1	FLOOR MAT	
Y	5	1	*345-6149*	1	LINER GP-CAB	420
M	6	1	**5C-2890**	6	NUT (M6X1-THD)	
	7	1	**8T-4205**	6	WASHER-HARD (7.2X14.5X2-MM THK)	
M	8	1	**9X-2045**	6	SCREW-TRUSS HEAD (M6X1X20-MM)	
D	9	1	**8T-5372**		SEAL (0.4-M EACH)	
D	9A	1	**8T-5372**		SEAL (0.1-M EACH)	
E	10	1	**9X-2092**		TRIM-EDGE (76-CM)	
	11	1	**345-6174**	3	GROMMET	

D - ORDER BY THE METER
E - ORDER BY THE CENTIMETER
M - METRIC PART
Y - SEPARATE ILLUSTRATION

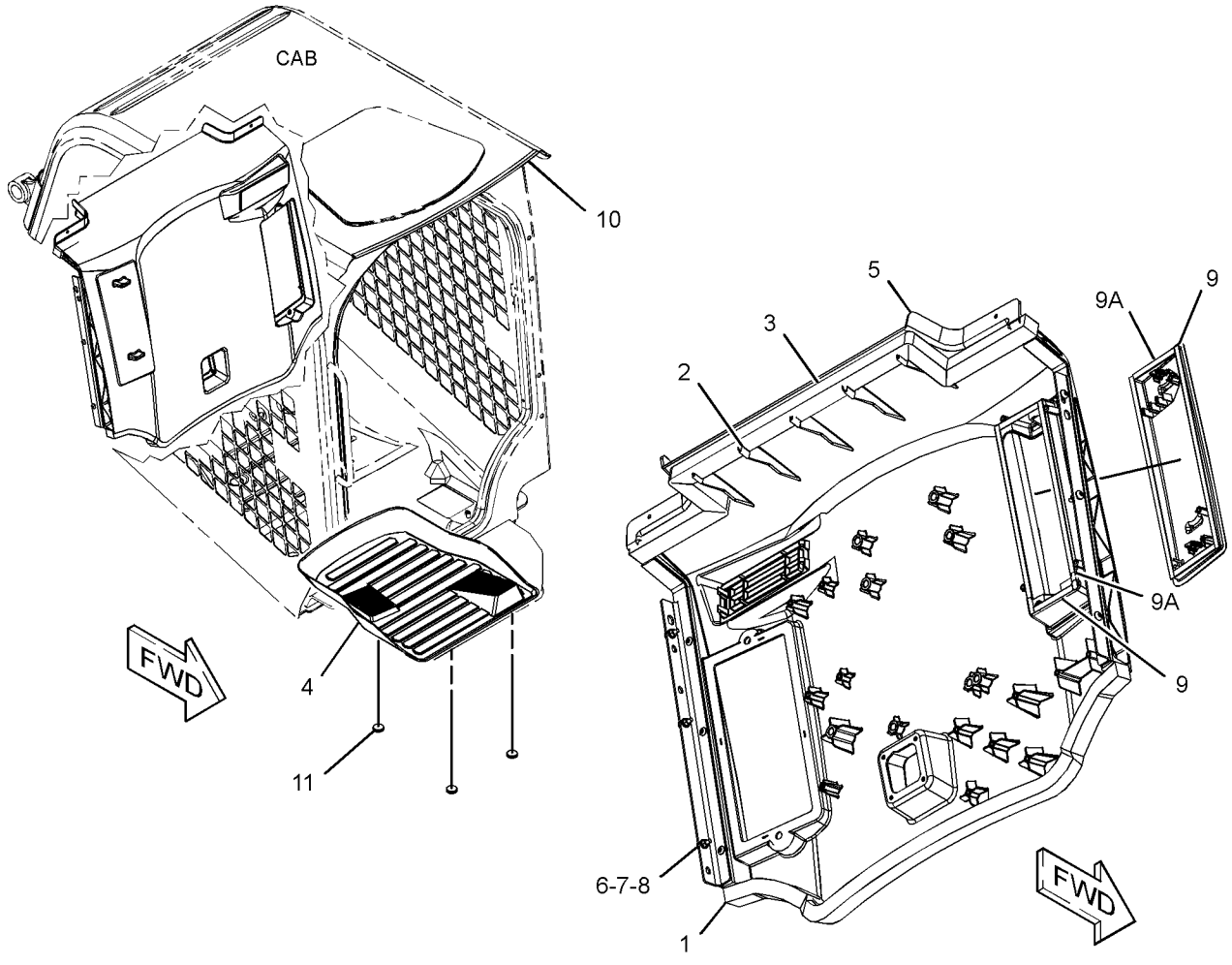

GRAPHIC #1 **<END>** g03367468

345-6149 LINER GP-CAB

PART OF 345-6020 LINER GP-CAB

SMCS-7268, 7329 **i05162975**

NOTE	REF NO	GRAPHIC REF	PART NUMBER	QTY	PART NAME 1 2 3 4 5 6 (PRODUCT LEVEL)	SEE PAGE
	1	1	**258-3727**	6	SCREW-TRUSS HEAD (SPECIAL)	
	2	1	**258-4358**	1	PLATE	
	3	1	**258-4359**	1	PLATE	
	4	1	**345-6143**	1	COVER	
	5	1	**345-6144**	1	COVER AS	
	6	1	**345-6150**	1	LINER AS	
E	7	1	**8C-7524**		SEAL (60.5-CM EACH)	

E - ORDER BY THE CENTIMETER

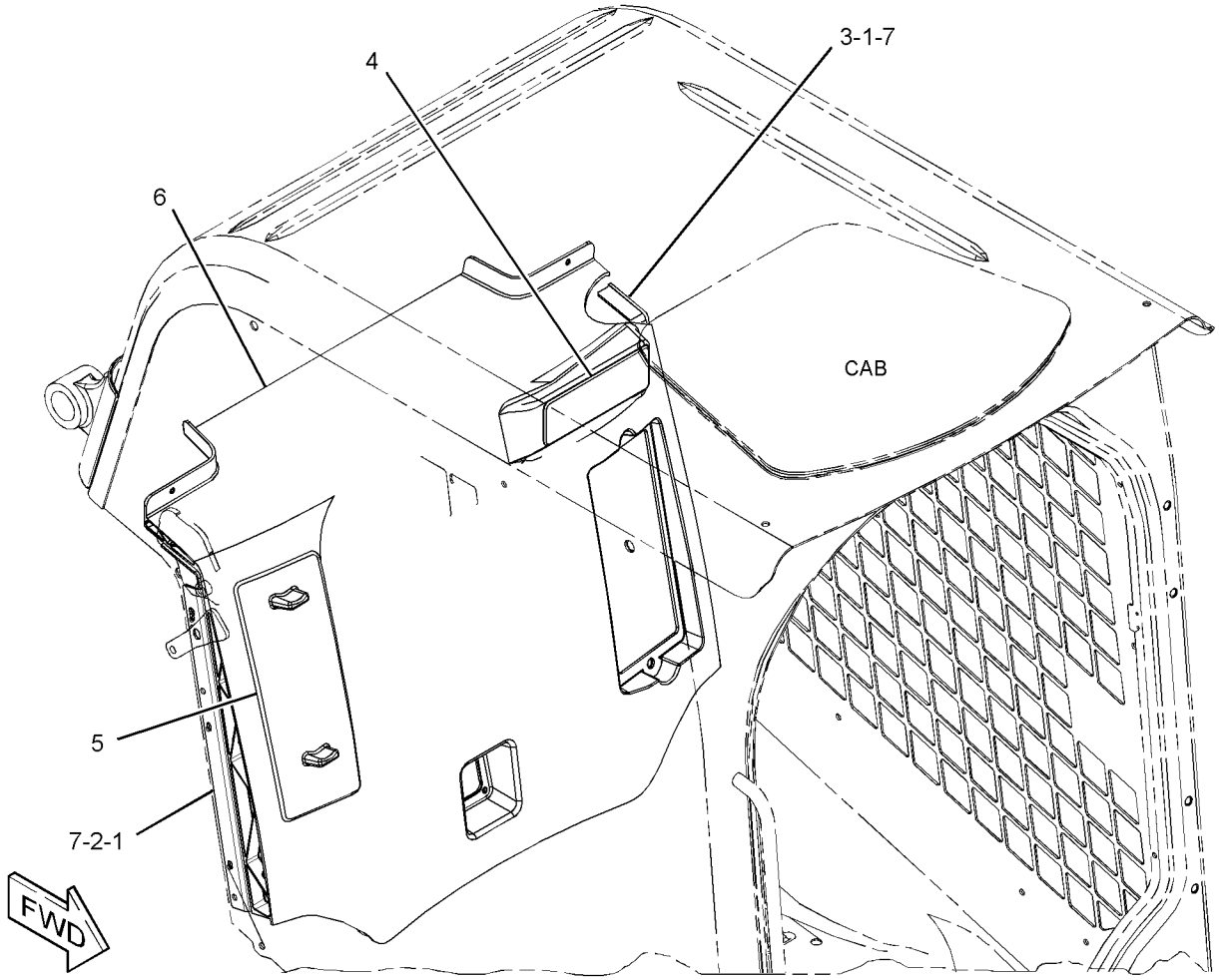

GRAPHIC #1 **<END>** g03319436

OPERATOR STATION

345-6530 LINES GP-AIR CONDITIONER

PART OF 345-4921 AIR CONDITIONER AR
AN ATTACHMENT

SMCS-1808, 7320 **i05295882**

NOTE	REF NO	GRAPHIC REF	PART NUMBER	QTY	PART NAME 1 2 3 4 5 6 (PRODUCT LEVEL)	SEE PAGE
	1	1	**8T-7912**	1	ADAPTER	
	2	1	**149-6371**	1	SWITCH AS-PRESSURE (AIR CONDITIONER)	
		1	**8T-8729**	2	PIN-CONNECTOR (16-GA TO 18-GA)	
		1	**102-8802**	1	KIT-RECEPTACLE (2-PIN)	
					(INCLUDES RECEPTACLE AS & WEDGE)	
	3	1	**178-3620**	6	STRAP-DUAL CLAMP	
Y	4	1	**186-6190**	1	ACCUMULATOR GP-REFRIGERANT (CHARGED)	351
	5	1	**206-2423**	2	SADDLE	
	6	1	**236-6923**	1	SWITCH AS-PRESSURE (REFRIGERANT)	
	7	1	**345-5955**	1	PLATE AS	
G	8	1	**160-2246**		SLEEVE-ABRASION (17-IN)	
	9	1	**345-6081**	1	PLATE-AIR CONDITIONER	
I	10	1	**388-8007**	1	HOSE AS	
I	11	1	**388-8008**	1	HOSE AS	
I	12	1	**388-8009**	1	HOSE AS	
I	13	1	**388-8012**	1	HOSE AS	
	14	1	*392-0808*	2	ELBOW AS	
					(EACH INCLUDES)	
		1	**5P-4906**	1	ELBOW	
		1	**6V-6609**	1	SEAL-O-RING	
	15	1	**422-3408**	1	HOSE AS	
I	16	1	**422-3409**	1	HOSE AS	
I	17	1	**422-3410**	1	HOSE AS	
	18	1	**422-3411**	1	TUBE AS	
	19	1	**422-3412**	1	TUBE AS	
	20	1	**433-9330**	1	FITTING AS-AIR CONDITIONER	
	21	1	**104-3173**	1	CLIP	
	22	1	**183-4403**	4	CLIP	
M	23	1	**266-3315**	6	BOLT-FLANGE HEAD (M8X1.25X25.5-MM)	
	24	1	**342-9920**	3	BOLT-FLANGE HEAD (M8X1.25X20-MM)	
	25	1	**373-7621**	8	CLAMP-BAND	
	26	1	**3S-2093**	3	STRAP-CABLE	
	27	1	**4D-7733**	1	CLIP	
	28	1	**5P-4116**	1	WASHER-HARD (8.8X20.5X2-MM THK)	
	29	1	**6D-4246**	1	CLIP	
	30	1	**6V-4356**	1	CLIP (SLOT)	
	31	1	**6V-4357**	1	CLIP (TAB)	
	32	1	**7D-1553**	2	CLIP	
	33	1	**7K-1181**	6	STRAP-CABLE	
M	34	1	**8T-4139**	1	BOLT (M12X1.75X30-MM)	
	35	1	**8T-4223**	1	WASHER-HARD (13.5X25.5X3-MM THK)	
	36	1	**9S-1354**	1	NUT (5/8-18-THD)	
	37	1	**9X-7378**	2	SEAL-O-RING	
	38	1	**9X-7380**	2	SEAL-O-RING	
	39	1	**9X-7381**	5	SEAL-O-RING	
	40	1	**9X-7382**	2	SEAL-O-RING	
	41	1	**9X-7383**	5	SEAL-O-RING	
E	42	1	**7Y-5074**		GUARD-HOSE (25-CM EACH)	
E	43	1	**5P-0767**		HOSE (192-CM EACH)	
E	43A	1	**5P-0767**		HOSE (140-CM)	
E	43B	1	**5P-0767**		HOSE (100-CM)	

E - ORDER BY THE CENTIMETER
G - ORDER BY THE INCH
I - REFER TO HYDRAULIC INFORMATION SYSTEM
M - METRIC PART
Y - SEPARATE ILLUSTRATION

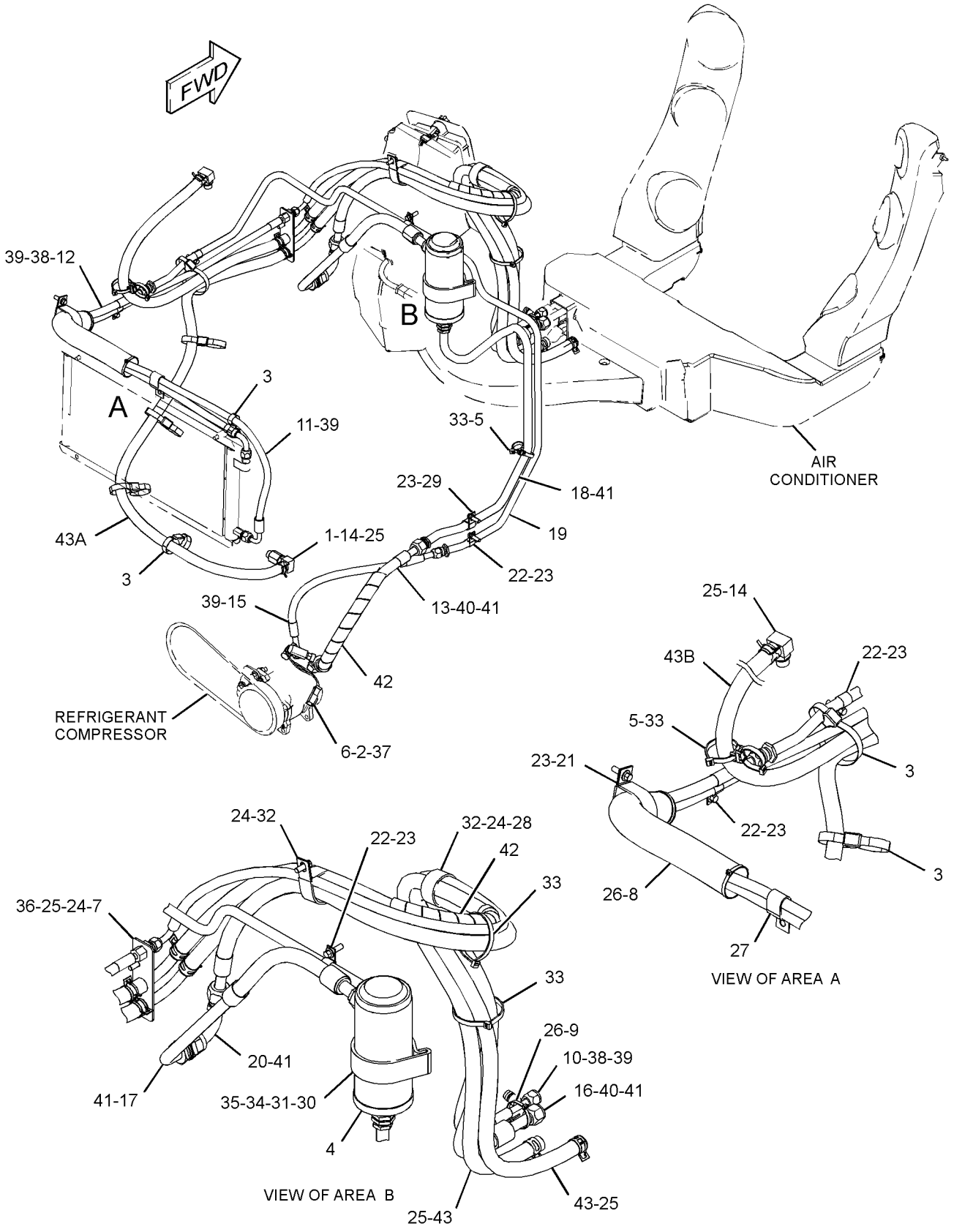

GRAPHIC #1 **<END>** g03385378

345-5883 LINES GP-HEATER

PART OF 345-4917 HEATER AR-CAB

AN ATTACHMENT

SMCS-1812, 7304 **i05295533**

NOTE	REF NO	GRAPHIC REF	PART NUMBER	QTY	PART NAME 1 2 3 4 5 6 (PRODUCT LEVEL)	SEE PAGE
	1	1	**8T-7912**	1	ADAPTER	
	2	1	**178-3620**	4	STRAP-DUAL CLAMP	
	3	1	**206-2423**	1	SADDLE	
	4	1	**345-5955**	1	PLATE AS	
	5	1	**392-0808**	2	ELBOW AS	
					(EACH INCLUDES)	
		1	**5P-4906**	1	ELBOW	
		1	**6V-6609**	1	SEAL-O-RING	
M	6	1	**266-3315**	1	BOLT-FLANGE HEAD (M8X1.25X25.5-MM)	
	7	1	**342-9920**	3	BOLT-FLANGE HEAD (M8X1.25X20-MM)	
	8	1	**373-7621**	8	CLAMP-BAND	
	9	1	**4P-8134**	1	CLIP	
	10	1	**5P-4116**	1	WASHER-HARD (8.8X20.5X2-MM THK)	
	11	1	**6D-1641**	2	CLIP	
	12	1	**7K-1181**	5	STRAP-CABLE	
E	13	1	**7Y-5074**		GUARD-HOSE (25-CM EACH)	
E	14	1	**5P-0767**		HOSE (192-CM EACH)	
E	14A	1	**5P-0767**		HOSE (100-CM)	
E	14B	1	**5P-0767**		HOSE (140-CM)	

E - ORDER BY THE CENTIMETER
M - METRIC PART

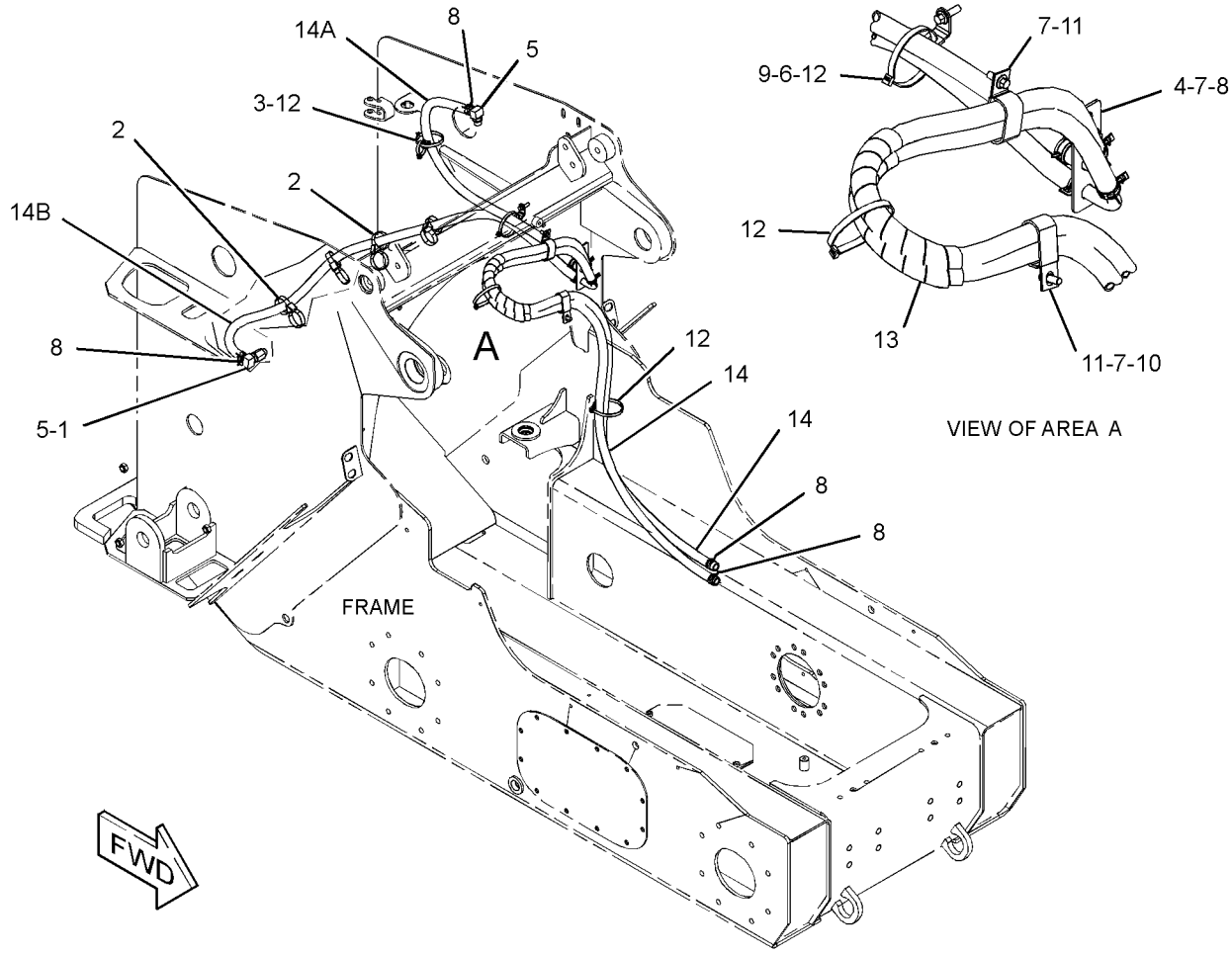

GRAPHIC #1 **<END>** g03364199

OPERATOR STATION

6V-1970 LITERATURE GP

PART OF 388-8246, 388-8247 COMMON AR

SMCS-0374, 0375, 7300 **i02831417**

NOTE	PART NUMBER	QTY	PART NAME 1 2 3 4 5 6 (PRODUCT LEVEL)	SEE PAGE
	5P-8500	2	KEY (LITERATURE COMPARTMENT)	
	5P-7958	1	SLEEVE-CABLE SPLICE	

<END>

379-1084 MOTOR GP-WINDOW WIPER

PART OF 345-6235, 345-6255 DOOR GP-CAB, 388-8276, 388-8281 KIT-CAB DOOR & MOUNTING AN ATTACHMENT

SMCS-7305 **i05166934**

NOTE	REF NO	GRAPHIC REF	PART NUMBER	QTY	PART NAME 1 2 3 4 5 6 (PRODUCT LEVEL)	SEE PAGE
	1	1	**102-8804**	1	KIT-RECEPTACLE (4-PIN)	
					(INCLUDES RECEPTACLE AS & WEDGE)	
	2	1	**263-3823**	1	CAP-WIPER	
	3	1	**3F-9556**	1	LOCKWASHER	
M	4	1	**5C-7261**	1	NUT (M8X1.25-THD)	

M - METRIC PART

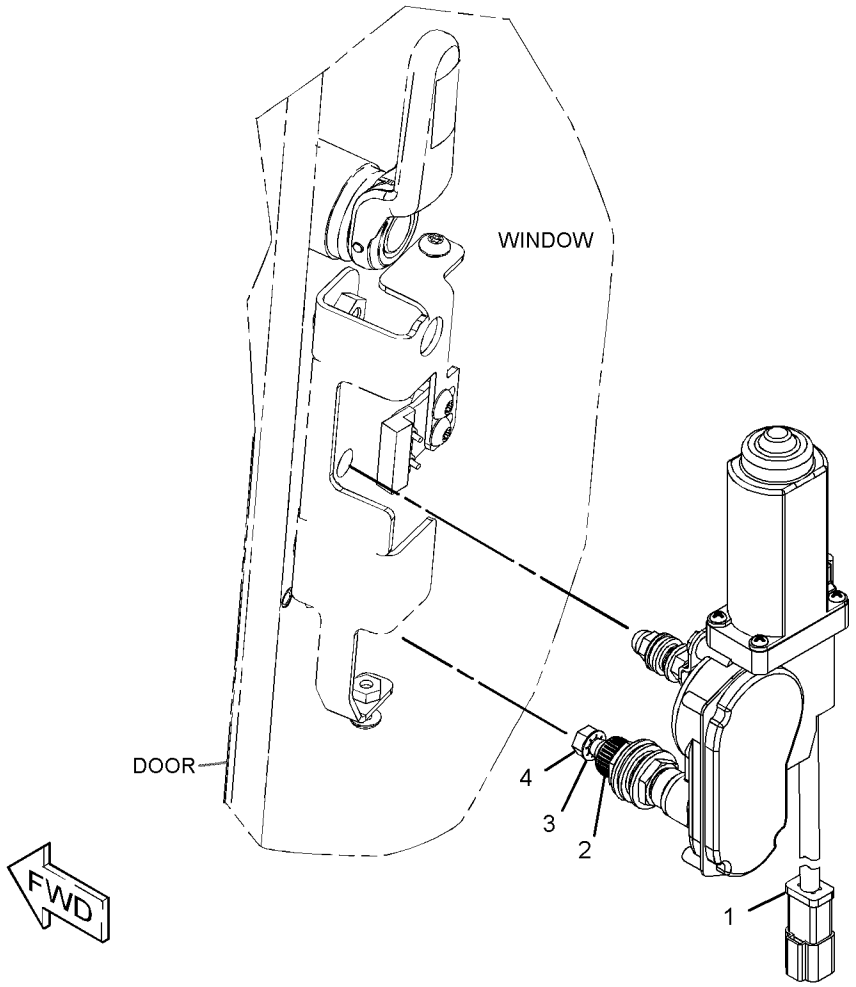

GRAPHIC #1 **<END>** g03333283

345-6186 MOUNTING GP-ARMREST

PART OF 345-6185 ARMREST & MOUNTING GP

AN ATTACHMENT

SMCS-7307 **i05195591**

NOTE	REF NO	GRAPHIC REF	PART NUMBER	QTY	PART NAME 1 2 3 4 5 6 (PRODUCT LEVEL)	SEE PAGE
	1	1	**258-4321**	1	BRACKET AS-MOUNTING (FRONT)	
	2	1	**258-4325**	1	SLIDE AS	
	3	1	**258-4431**	2	BLOCK	
	4	1	**345-6123**	1	SUPPORT AS	
	5	1	**345-6363**	1	BRACKET AS	
		1	**258-4064**	1	SPACER	
M	6	1	**131-3540**	2	LOCKNUT (M8X1.25-THD)	
	7	1	**216-7352**	2	SCREW-TRUSS HEAD (M8X1.25X30-MM)	
M	8	1	**6V-9189**	4	LOCKNUT (M8X1.25-THD)	
	9	1	**7X-0613**	2	WASHER-HARD (8.8X25.5X5-MM THK)	
	10	1	**8T-4224**	8	WASHER-HARD (8.8X16X2-MM THK)	
M	11	1	**8T-4908**	4	BOLT (M8X1.25X25-MM)	

M - METRIC PART

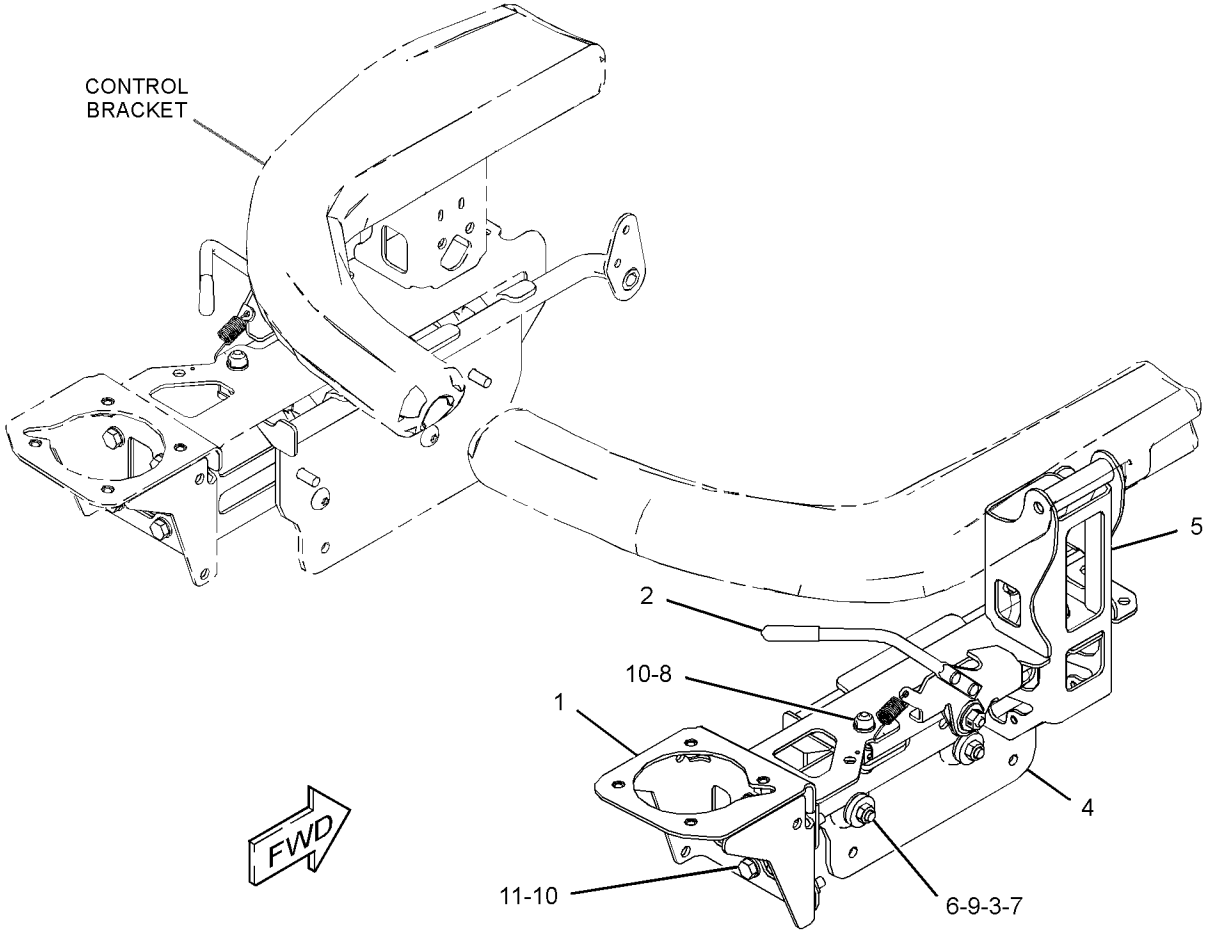

GRAPHIC #1 **<END>** g03331625

345-6187 MOUNTING GP-ARMREST

PART OF 345-6185 ARMREST & MOUNTING GP
AN ATTACHMENT

SMCS-7307 **i05195592**

NOTE	REF NO	GRAPHIC REF	PART NUMBER	QTY	PART NAME 1 2 3 4 5 6 (PRODUCT LEVEL)	SEE PAGE
	1	1	**258-4326**	1	SLIDE AS (LH)	
	2	1	**258-4431**	2	BLOCK	
	3	1	**345-6125**	1	SUPPORT AS	
	4	1	**345-6189**	1	BRACKET AS	
	5	1	**345-6364**	1	BRACKET AS	
		1	**258-4064**	1	SPACER	
M	6	1	**131-3540**	2	LOCKNUT (M8X1.25-THD)	
	7	1	**216-7352**	2	SCREW-TRUSS HEAD (M8X1.25X30-MM)	
M	8	1	**6V-9189**	4	LOCKNUT (M8X1.25-THD)	
	9	1	**7X-0613**	2	WASHER-HARD (8.8X25.5X5-MM THK)	
	10	1	**8T-4224**	8	WASHER-HARD (8.8X16X2-MM THK)	
M	11	1	**8T-4908**	4	BOLT (M8X1.25X25-MM)	

M - METRIC PART

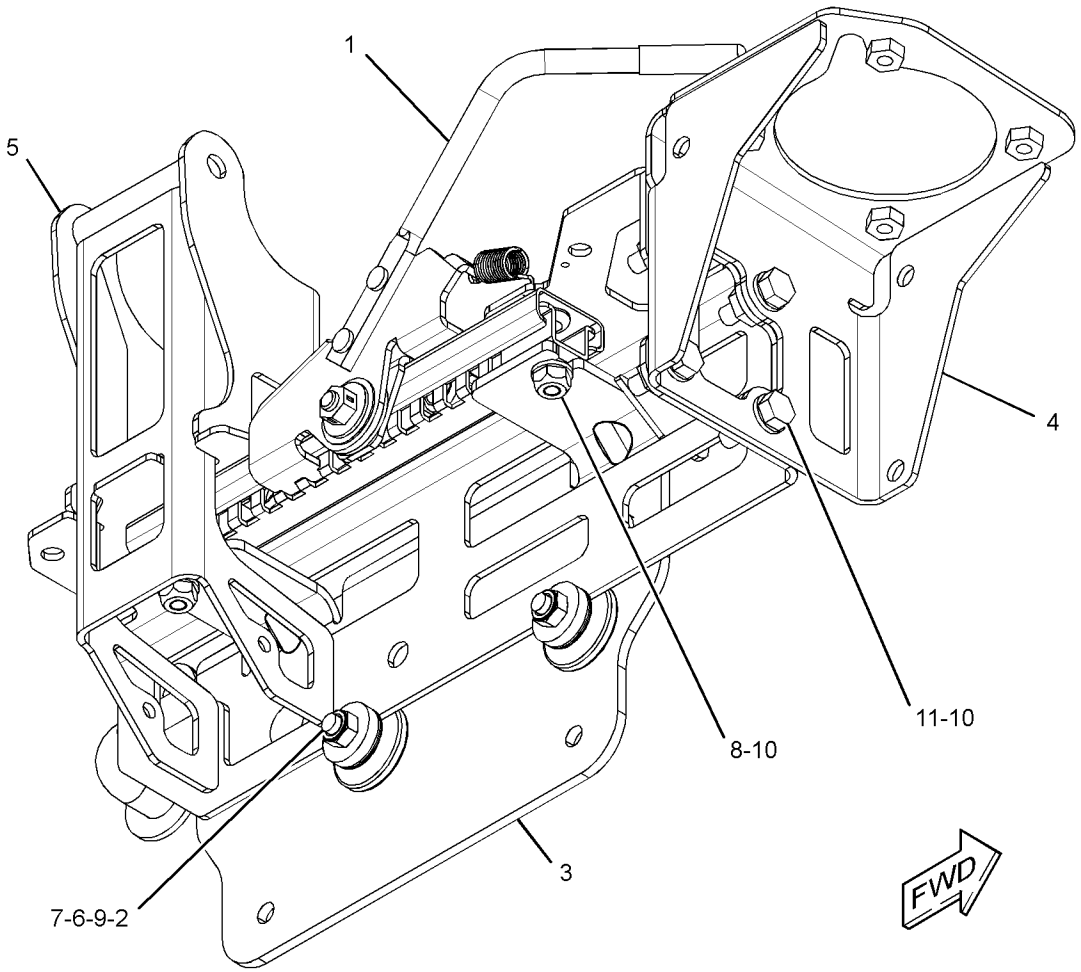

GRAPHIC #1 **<END>** g03331942

345-6220 MOUNTING GP-ROPS

PART OF 345-5247 CHASSIS AR

SMCS-7266, 7325 **i05162973**

NOTE	REF NO	GRAPHIC REF	PART NUMBER	QTY	PART NAME 1 2 3 4 5 6 (PRODUCT LEVEL)	SEE PAGE
	1	1	**117-9501**	2	BOLT-SPECIAL	
	2	1	**258-4416**	1	STEP AS	
	3	1	**305-4335**	2	MOUNT	
	4	1	**305-4337**	4	PAD	
	5	1	**305-4339**	2	MOUNT AS	
	6	1	**345-6224**	1	BRACE	
	7	1	**090-8865**	2	SPACER (17X40X3-MM THK)	
	8	1	**164-1344**	2	WASHER-THRUST (13.6X30X2.1-MM THK)	
	9	1	**165-7095**	4	WASHER (16.5X71.5X3-MM THK)	
M	10	1	**5C-7261**	2	NUT (M8X1.25-THD)	
	11	1	**6V-5839**	4	WASHER (11X21X2.5-MM THK)	
M	12	1	**7X-2556**	2	BOLT (M16X2X100-MM)	
M	13	1	**7Y-9099**	2	SCREW-TRUSS HEAD (M8X1.25X25-MM)	
M	14	1	**8T-0389**	1	LOCKNUT (M10X1.5-THD)	
	15	1	**8T-4122**	4	WASHER-HARD (17X32X3.5-MM THK)	
	16	1	**8T-4223**	1	WASHER-HARD (13.5X25.5X3-MM THK)	
	17	1	**8T-4224**	2	WASHER-HARD (8.8X16X2-MM THK)	
M	18	1	**8T-4778**	4	LOCKNUT (M16X2-THD)	
M	19	1	**9X-2040**	4	SCREW-TRUSS HEAD (M10X1.5X25-MM)	

M - METRIC PART

345-6220 **MOUNTING GP-ROPS (*contd.*)** **i05162973**

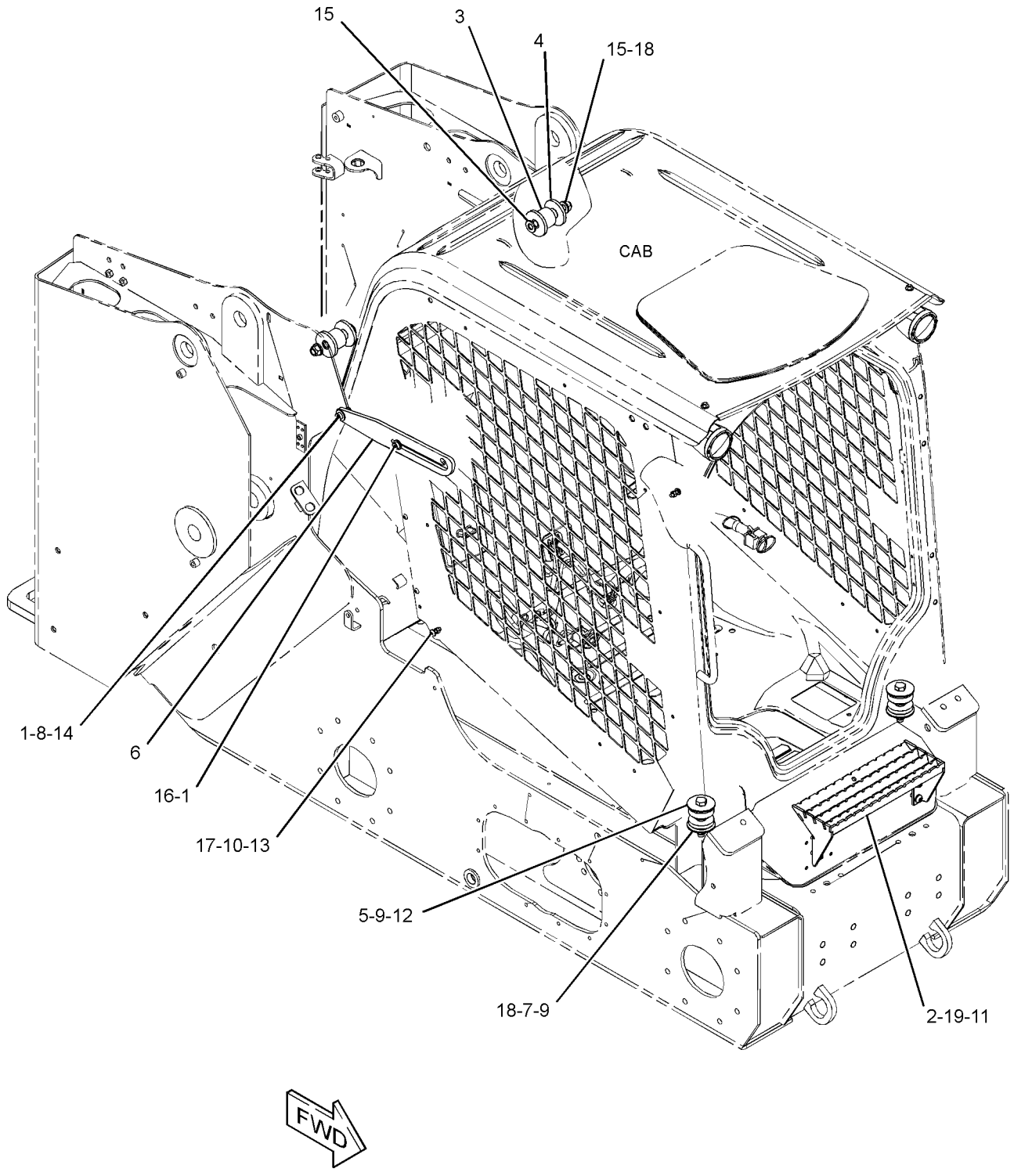

GRAPHIC #1 **<END>** g03319936

378-1025 PANEL GP-INSTRUMENT

PART OF 345-5454 CAB AR

SMCS-7451 **i05177714**

NOTE	REF NO	GRAPHIC REF	PART NUMBER	QTY	PART NAME 1 2 3 4 5 6 (PRODUCT LEVEL)	SEE PAGE
	1	2	**345-4728**	1	FILM-IDENTIFICATION (THROTTLE)	
	2	1	**7K-1181**	7	STRAP-CABLE	
	3	1,2	**8Y-5947**	4	FASTENER	
	4	1	**9R-7941**	1	SOCKET AS	
		1	**9R-7980**	1	COVER	
	5	1	**084-4277**	1	LAMP GP-DOME (12-VOLT) (CAB)	
		1	**210-8754**	1	LAMP (12-VOLT)	
B	6	1,2	**109-2356**	10	PLUG	
	7	2	**110-7887**	1	SWITCH AS-START (KEY)	
		2	**7T-6799**	1	NUT-MOUNTING (1-32-THD)	
		2	**8T-8729**	4	PIN-CONNECTOR (16-GA TO 18-GA)	
		2	**102-8804**	1	KIT-RECEPTACLE (4-PIN)	
					(INCLUDES RECEPTACLE AS & WEDGE)	
	8	1	**165-0312**	1	WIRE AS	
	9	2	**178-7539**	1	RECEPTACLE AS (POWER SUPPLY)	
	10	1	**206-1345**	2	STRAP-CABLE	
	11	2	**232-1792**	1	HORN	
	12	1,2	**258-3727**	8	SCREW-TRUSS HEAD (SPECIAL)	
	13	1,2	**258-4141**	2	CLIP	
	14	2	**258-4178**	1	FLANGE-MOUNTING	
	15	2	**263-5414**	1	SWITCH AS-ROCKER (PARKING BRAKE)	
	16	1	**263-5415**	1	SWITCH AS-ROCKER (OVERRIDE, HYDRAULIC LOCKOUT)	
	17	1	**265-9424**	1	SWITCH AS-ROCKER (WORK LIGHTS, FRONT)	
	18	1	**265-9425**	1	SWITCH AS-ROCKER (WORK LIGHTS, REAR)	
					(EACH SWITCH AS INCLUDES)	
		1	**111-7899**	1	GASKET	
	19	1	**345-6007**	3	COVER-SWITCH	
	20	2	**345-6026**	1	CONSOLE AS (LH)	
	21	2	**345-6027**	1	CONSOLE AS (RH)	
	22	2	**345-6031**	1	COVER	
	23	2	**356-6069**	1	KNOB-CONTROL	
	24	2	**360-7540**	1	SENSOR GP-POSITION (ROTARY)	
B	25	2	**373-4446**	1	PLUG	
B	26	1	**374-7464**	1	CAP-SEAL	
	27	1	**378-1010**	1	SWITCH AS-ROCKER (CONTINUOUS FLOW)	
		1	**111-7899**	1	GASKET	
Y	28	1	**378-1026**	1	HARNESS AS-PANEL	104
	29	2	**110-2028**	4	SCREW-PAN HEAD (10-14X0.75-IN)	
	30	1,2	**156-6175**	2	CLIP	
M	31	2	**263-5928**	2	SCREW-TRUSS HEAD (M5X0.8X25-MM)	
	32	1,2	**2V-8260**	2	GROMMET	
	33	1	**3S-2093**	3	STRAP-CABLE	
	34	1,2	**4P-7581**	2	CLIP	
	35	1,2	**5P-4115**	4	WASHER-HARD (7.2X19X2-MM THK)	
	36	1,2	**8T-4205**	2	WASHER-HARD (7.2X14.5X2-MM THK)	
	37	2	**9X-8256**	4	WASHER (6.6X12X2-MM THK)	

B - USE AS REQUIRED
M - METRIC PART
Y - SEPARATE ILLUSTRATION

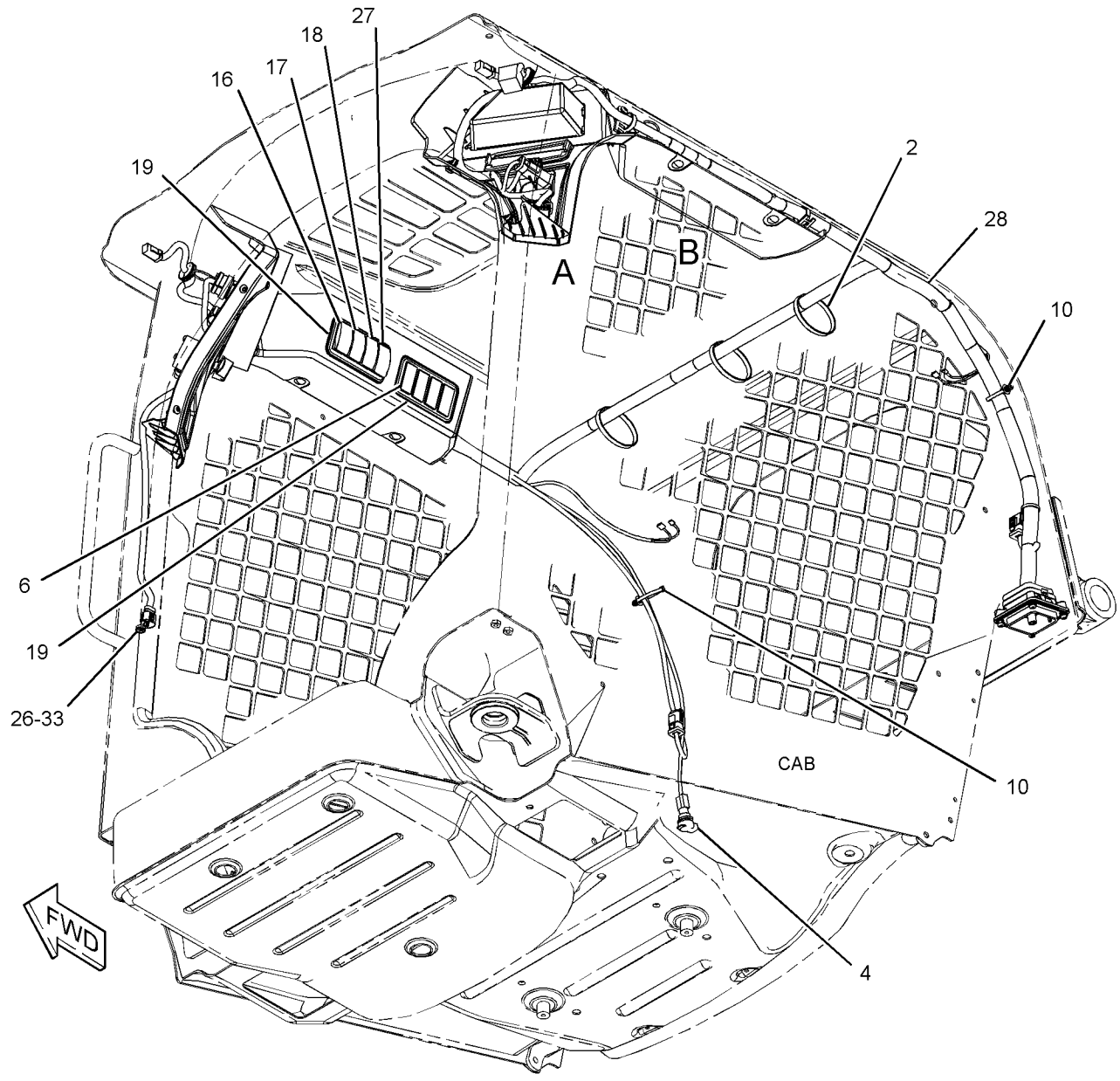

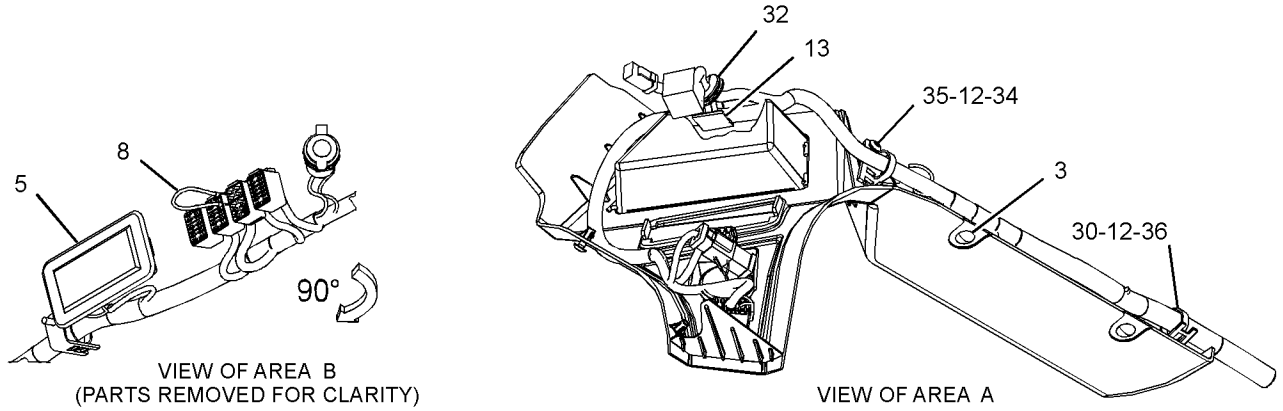

VIEW OF AREA B
(PARTS REMOVED FOR CLARITY)

VIEW OF AREA A

GRAPHIC #1

g03356428

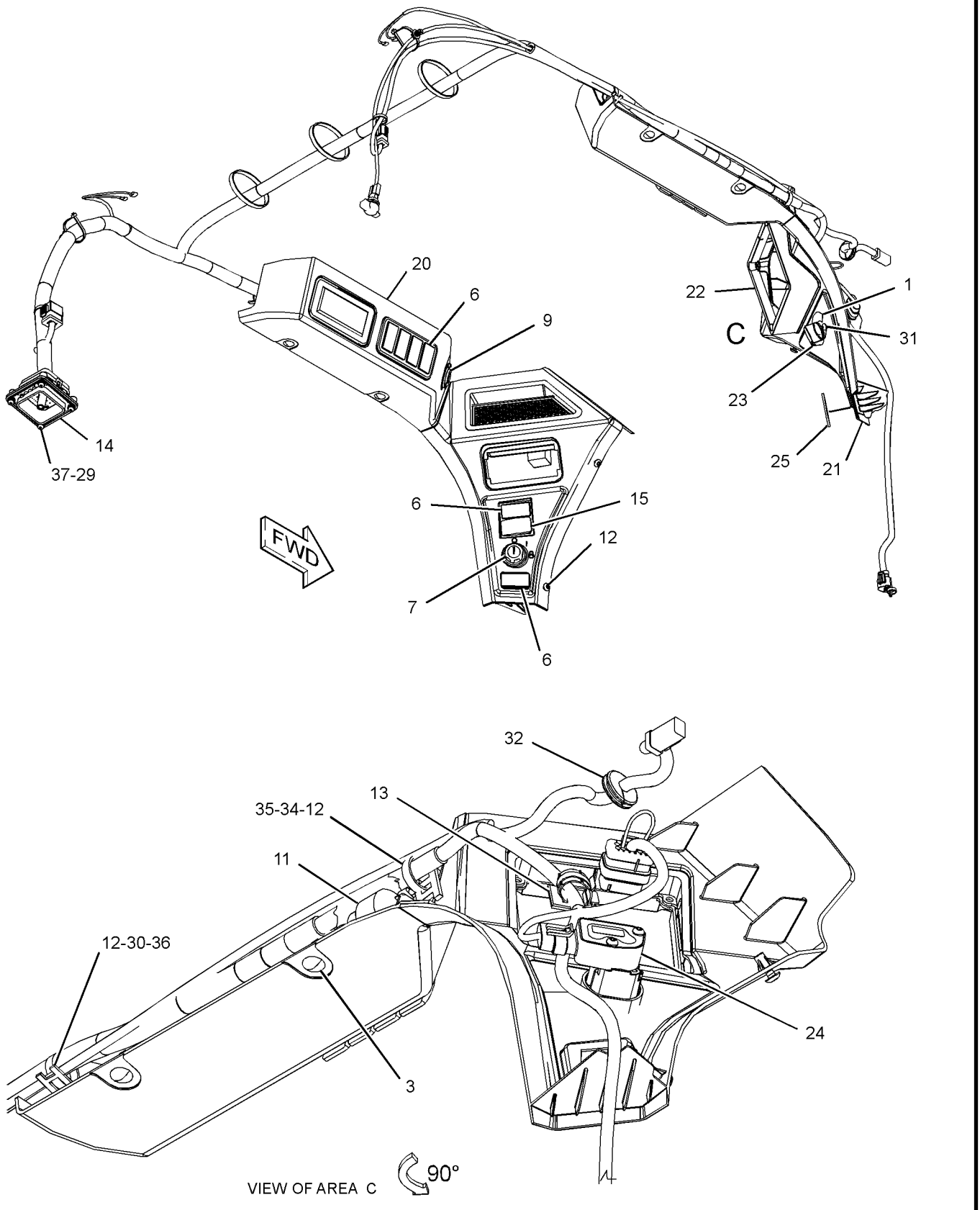

GRAPHIC #2 **<END>** g03350653

378-1033 PANEL GP-INSTRUMENT–BASE DISPLAY

AN ATTACHMENT

SMCS-7451 **i05156566**

NOTE	REF NO	GRAPHIC REF	PART NUMBER	QTY	PART NAME 1 2 3 4 5 6 (PRODUCT LEVEL)	SEE PAGE
	1	1	**345-6174**	1	GROMMET	
Y	2	1	*378-1035*	1	ELECTRONICS GP-MONITOR	94
	3	1	**416-9256**	1	PLATE	
M	4	1	**113-8694**	2	BOLT (M6X1X20-MM)	
M	5	1	**135-7242**	4	SCREW-SELF-TAPPING (M5X2.3X18.8-MM)	
M	6	1	**5C-2890**	2	NUT (M6X1-THD)	
	7	1	**8T-4205**	2	WASHER-HARD (7.2X14.5X2-MM THK)	
	8	1	**9X-8256**	4	WASHER (6.6X12X2-MM THK)	

M - METRIC PART
Y - SEPARATE ILLUSTRATION

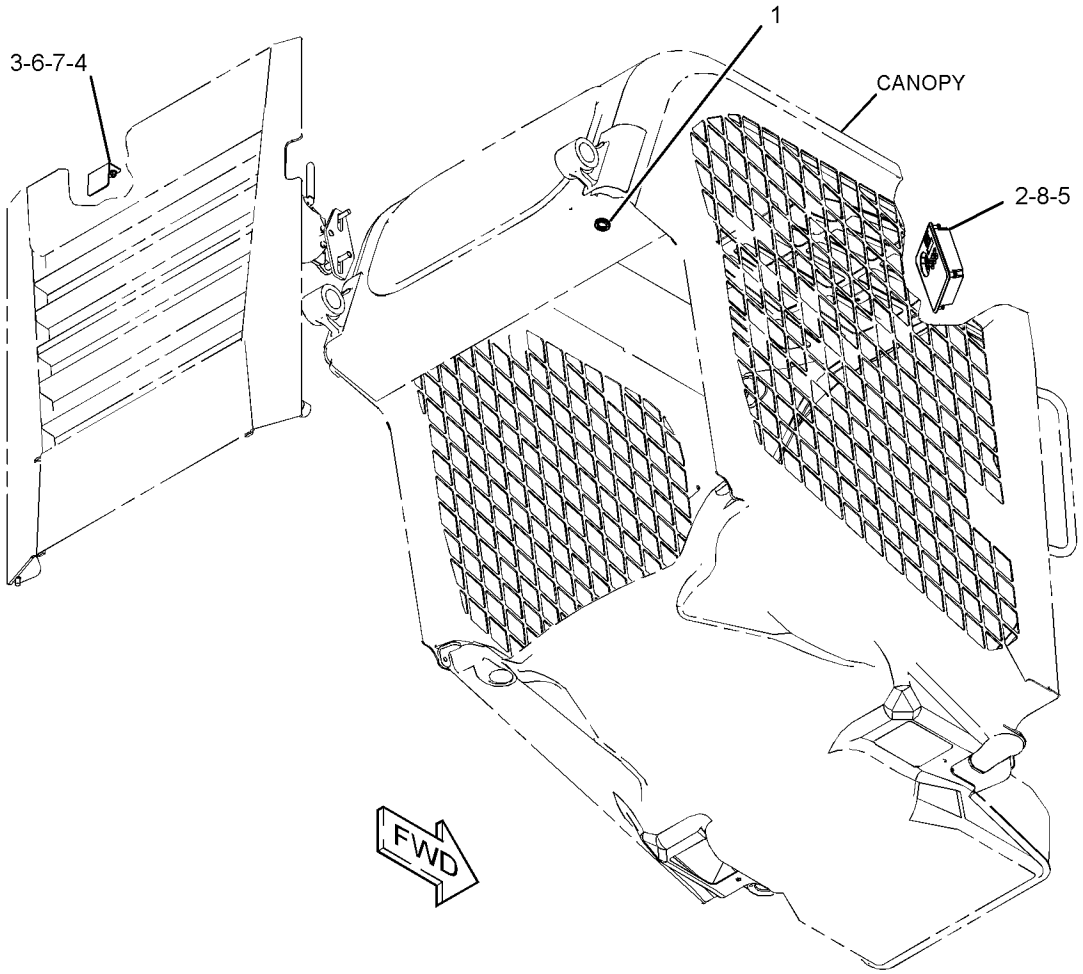

GRAPHIC #1 **<END>** g03335725

378-1034 PANEL GP-INSTRUMENT–ADVANCED DISPLAY
AN ATTACHMENT

SMCS-7451 **i05156567**

NOTE	REF NO	GRAPHIC REF	PART NUMBER	QTY	PART NAME 1 2 3 4 5 6 (PRODUCT LEVEL)	SEE PAGE
	1	1	**345-6174**	1	GROMMET	
Y	2	1	*378-1036*	1	ELECTRONICS GP-MONITOR	94
	3	1	**416-9256**	1	PLATE	
M	4	1	**113-8694**	2	BOLT (M6X1X20-MM)	
M	5	1	**135-7242**	4	SCREW-SELF-TAPPING (M5X2.3X18.8-MM)	
M	6	1	**5C-2890**	2	NUT (M6X1-THD)	
	7	1	**8T-4205**	2	WASHER-HARD (7.2X14.5X2-MM THK)	
	8	1	**9X-8256**	4	WASHER (6.6X12X2-MM THK)	

M - METRIC PART
Y - SEPARATE ILLUSTRATION

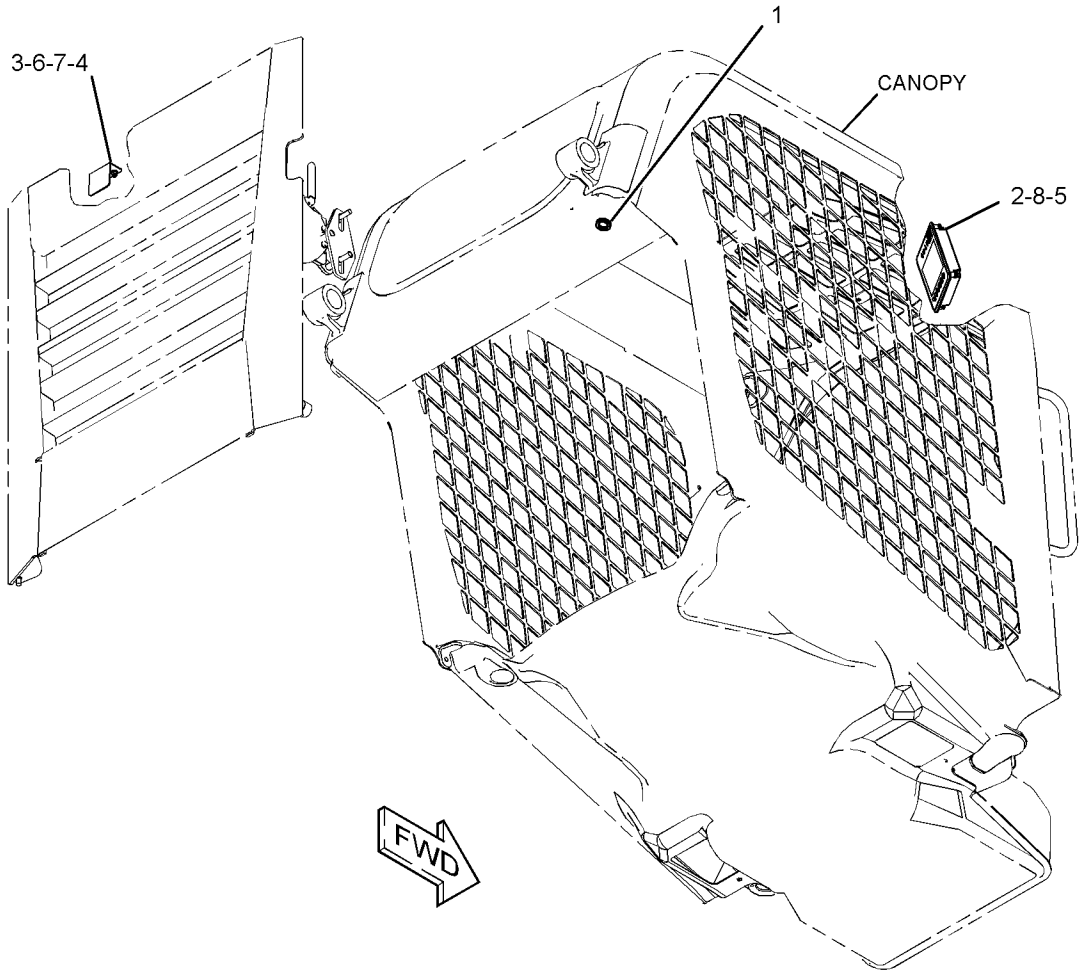

GRAPHIC #1 **<END>** g03335684

416-9265 PANEL GP-INSTRUMENT–RH

AN ATTACHMENT

SMCS-7451 **i05156463**

NOTE	REF NO	GRAPHIC REF	PART NUMBER	QTY	PART NAME 1 2 3 4 5 6 (PRODUCT LEVEL)	SEE PAGE
Y	1	1	*378-1036*	1	ELECTRONICS GP-MONITOR	94
Y	2	1	**396-7209**	1	WIRING GP-CAMERA (REAR VIEW)	140
M	3	1	**135-7242**	4	SCREW-SELF-TAPPING (M5X2.3X18.8-MM)	
	4	1	**9X-8256**	4	WASHER (6.6X12X2-MM THK)	

M - METRIC PART
Y - SEPARATE ILLUSTRATION

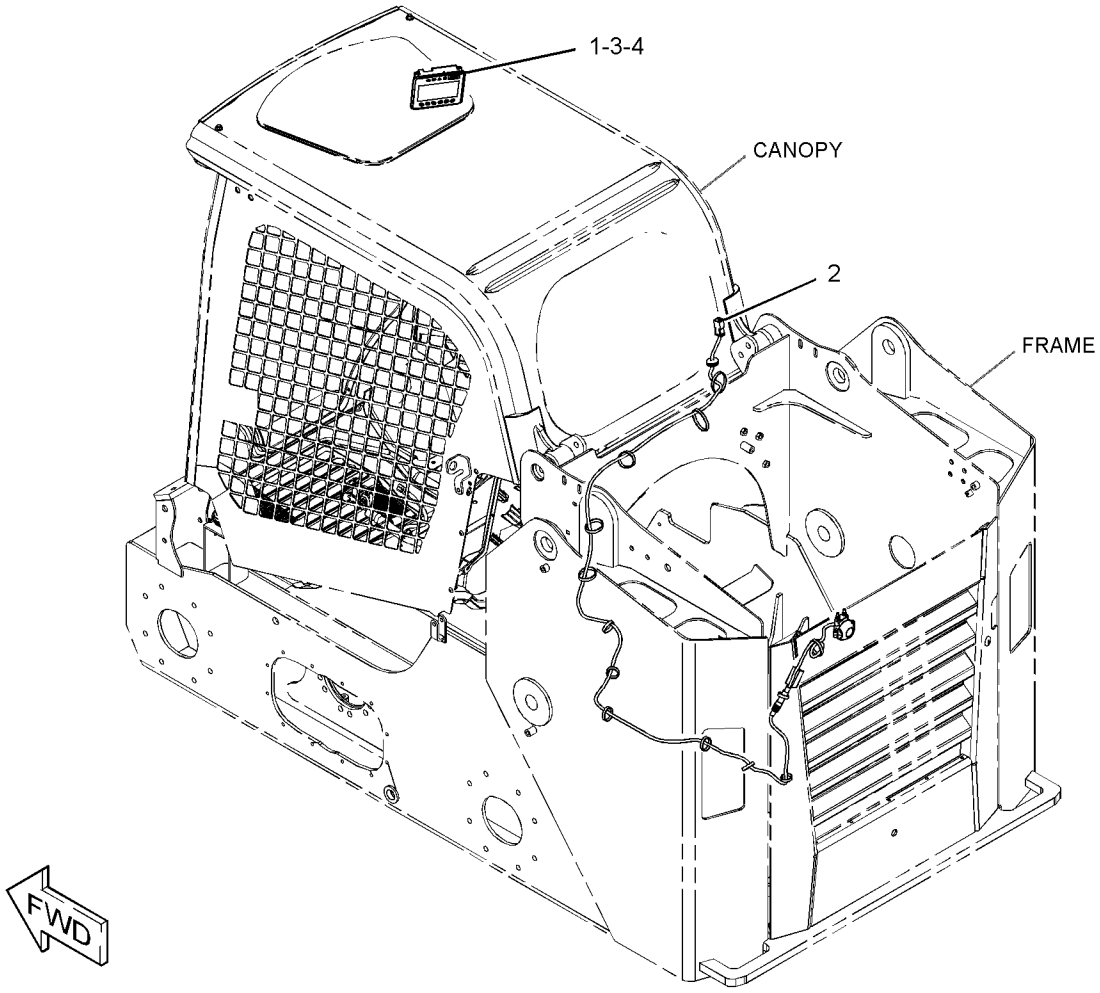

GRAPHIC #1 **<END>** g03323579

345-6135 PEDAL GP-GOVERNOR

PART OF 345-4915, 345-4919 CAB AR-ENCLOSED ROPS, 345-6157 CAB AR-OPEN ROPS AN ATTACHMENT

SMCS-1265, 1276 **i05163106**

NOTE	REF NO	GRAPHIC REF	PART NUMBER	QTY	PART NAME 1 2 3 4 5 6 (PRODUCT LEVEL)	SEE PAGE
	1	1	**206-1345**	1	STRAP-CABLE	
	2	1	**345-6136**	1	PEDAL AS	
	3	1	**378-1027**	1	HARNESS AS-WIRING	
E		1	**289-3195**		CONDUIT (98-CM)	
		1	**8T-8729**	3	PIN-CONNECTOR (16-GA TO 18-GA)	
		1	**102-8803**	1	KIT-RECEPTACLE (3-PIN)	
					(INCLUDES RECEPTACLE AS & WEDGE)	
M	4	1	**127-2170**	4	SCREW-TRUSS HEAD (M8X1.25X20-MM)	
	5	1	**3E-4352**	4	WASHER-HARD (8.8X20.5X2.5-MM THK)	
	6	1	**3S-2093**	1	STRAP-CABLE	

E - ORDER BY THE CENTIMETER
M - METRIC PART

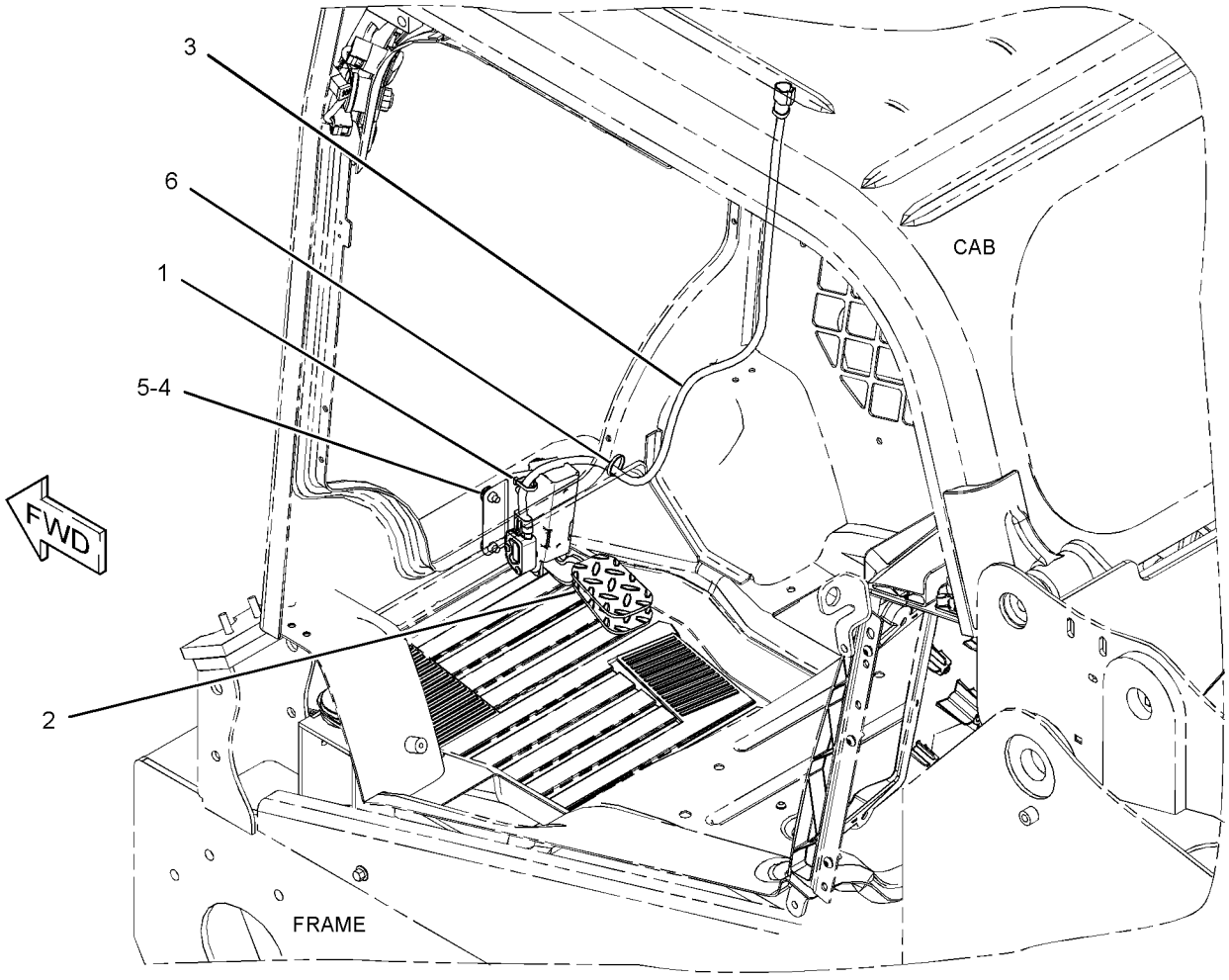

GRAPHIC #1 **<END>** g03318251

345-6180 RADIO GP–AM/FM

AN ATTACHMENT

SMCS-7338, 733C **i05296331**

NOTE	REF NO	GRAPHIC REF	PART NUMBER	QTY	PART NAME 1 2 3 4 5 6 (PRODUCT LEVEL)	SEE PAGE
	1	1	**3S-2093**	1	STRAP-CABLE	
	2	1	**8E-1118**	1	ANTENNA AS	
	3	1	**9U-8746**	1	CABLE AS-COAXIAL	
	4	1	**168-8772**	2	SPEAKER AS-RADIO	
	5	1	**200-5728**	1	HARNESS AS-RADIO (FLANGE)	
		1	**172-8037**	1	CONNECTOR (RADIO)	
		1	**8T-8729**	7	PIN-CONNECTOR (16-GA TO 18-GA)	
		1	**8T-8737**	1	PLUG-SEAL	
		1	**160-3518**	1	KIT-RECEPTACLE (8-PIN)	
					(INCLUDES RECEPTACLE AS & WEDGE)	
		1	**172-8039**	11	TERMINAL (RADIO)	
	6	1	**258-4039**	1	SPACER	
	7	1	**258-4074**	1	BRACKET	
	8	1	**258-4367**	2	BRACKET	
	9	1	**345-6145**	1	COVER	
	11	1	**349-8642**	1	MICROPHONE	
	12	1	**353-1634**	1	HARNESS AS-RADIO (BLUETOOTH)	
	13	1	**377-7215**	1	RADIO GP (AM/FM/WB/CD/XM/USB/BLUETOOTH)	
	14	1	**195-0936**	4	INSERT-THREADED (M6X1-THD)	
M	15	1	**3T-0851**	1	LOCKNUT (M5X0.8-THD)	
M	16	1	**5C-7261**	1	NUT (M8X1.25-THD)	
	17	1	**5P-4116**	1	WASHER-HARD (8.8X20.5X2-MM THK)	
M	18	1	**6V-7357**	4	BOLT (M6X1X25-MM)	
M	19	1	**8T-4142**	8	BOLT-FLANGE HEAD (M5X0.8X12-MM)	
	20	1	**8T-4224**	4	WASHER-HARD (8.8X16X2-MM THK)	
	21	1	**9G-1307**	1	GROMMET	
	22	1	**9X-2026**	1	WASHER (6.5X17X1-MM THK)	

M - METRIC PART

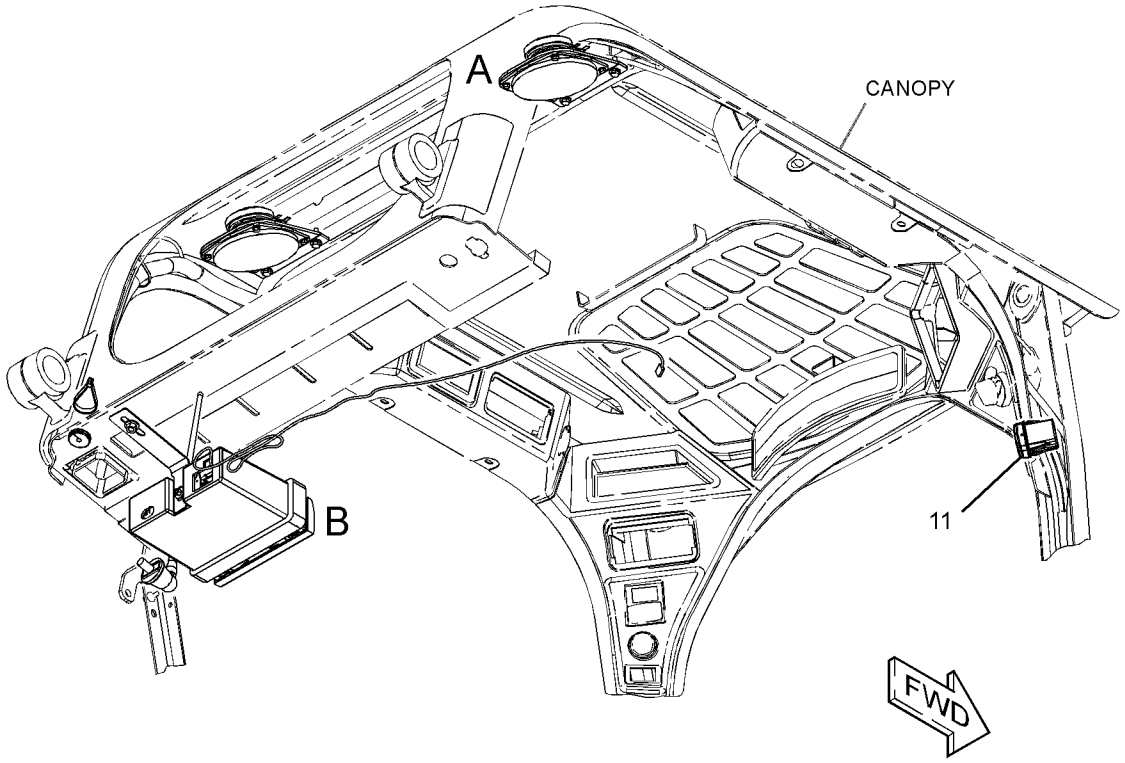

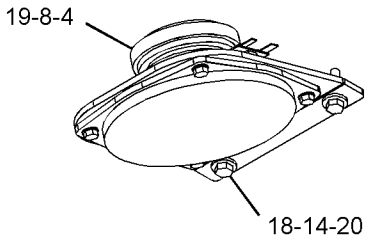

VIEW OF AREA A

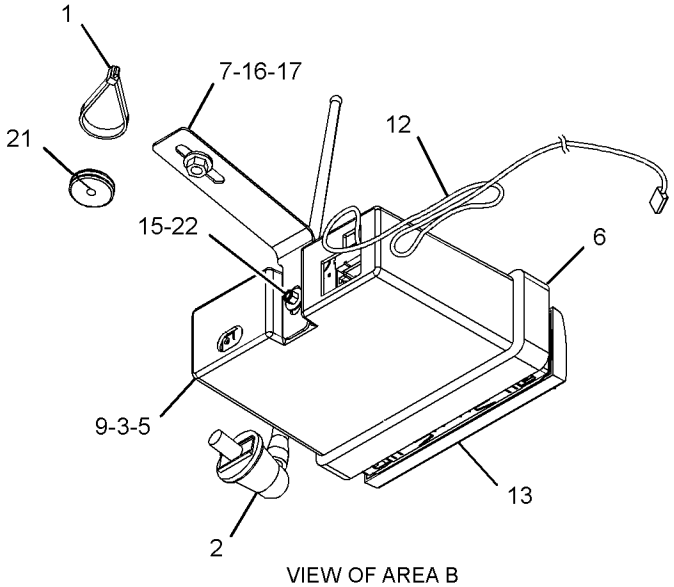

VIEW OF AREA B

GRAPHIC #1 **<END>** g03369857

345-6350 SEAT & ARMREST GP

PART OF 345-6050 SEAT & MOUNTING GP

AN ATTACHMENT

SMCS-7307, 7312 **i05170308**

NOTE	REF NO	GRAPHIC REF	PART NUMBER	QTY	PART NAME 1 2 3 4 5 6 (PRODUCT LEVEL)	SEE PAGE
Y	1	1	**345-6185**	1	ARMREST & MOUNTING GP	355
	2	1	**345-6351**	1	SEAT GP-SUSPENSION	
	3	1	**385-5501**	1	KIT-LITERATURE HOLDER	
		1	**4K-9429**	4	RIVET-POP	
		1	**5P-7957**	1	LANYARD	
		1	**345-4722**	1	HOLDER	
		1	**395-3544**	1	RETAINER	
M	4	1	**6V-9189**	8	LOCKNUT (M8X1.25-THD)	
	5	1	**8T-4205**	2	WASHER-HARD (7.2X14.5X2-MM THK)	
	6	1	**8T-4224**	12	WASHER-HARD (8.8X16X2-MM THK)	
M	7	1	**8T-4908**	4	BOLT (M8X1.25X25-MM)	
M	8	1	**9X-2045**	2	SCREW-TRUSS HEAD (M6X1X20-MM)	

M - METRIC PART
Y - SEPARATE ILLUSTRATION

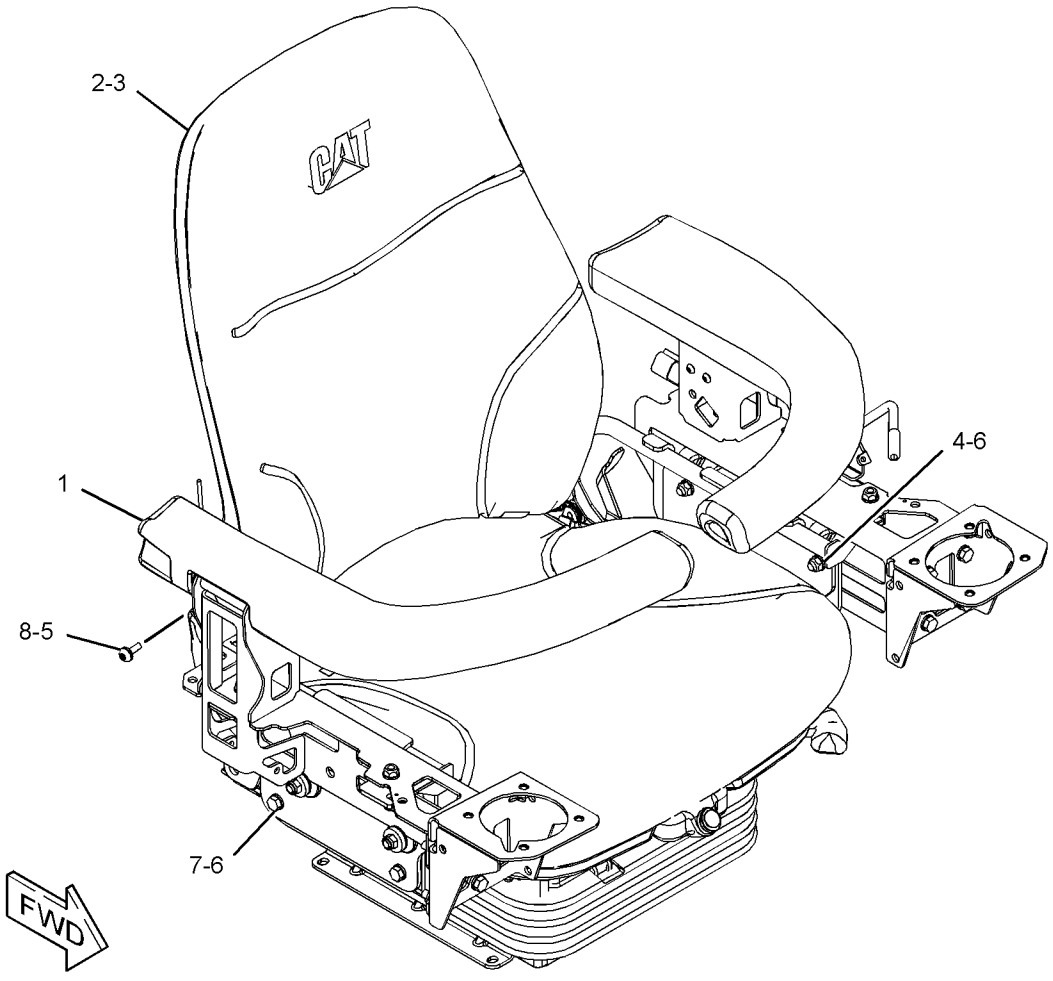

GRAPHIC #1 **<END>** g03326974

345-6360 SEAT & ARMREST GP

PART OF 345-6055 SEAT & MOUNTING GP

AN ATTACHMENT

SMCS-7307, 7312 **i05170303**

NOTE	REF NO	GRAPHIC REF	PART NUMBER	QTY	PART NAME 1 2 3 4 5 6 (PRODUCT LEVEL)	SEE PAGE
Y	1	1	**345-6185**	1	ARMREST & MOUNTING GP	355
Y	2	1	**345-6361**	1	SEAT GP-SUSPENSION (AIR)	451
	3	1	**385-5501**	1	KIT-LITERATURE HOLDER	
		1	**4K-9429**	4	RIVET-POP	
		1	**5P-7957**	1	LANYARD	
		1	**345-4722**	1	HOLDER	
		1	**395-3544**	1	RETAINER	
M	4	1	**6V-9189**	8	LOCKNUT (M8X1.25-THD)	
	5	1	**8T-4205**	2	WASHER-HARD (7.2X14.5X2-MM THK)	
	6	1	**8T-4224**	12	WASHER-HARD (8.8X16X2-MM THK)	
M	7	1	**8T-4908**	4	BOLT (M8X1.25X25-MM)	
M	8	1	**9X-2045**	2	SCREW-TRUSS HEAD (M6X1X20-MM)	

M - METRIC PART
Y - SEPARATE ILLUSTRATION

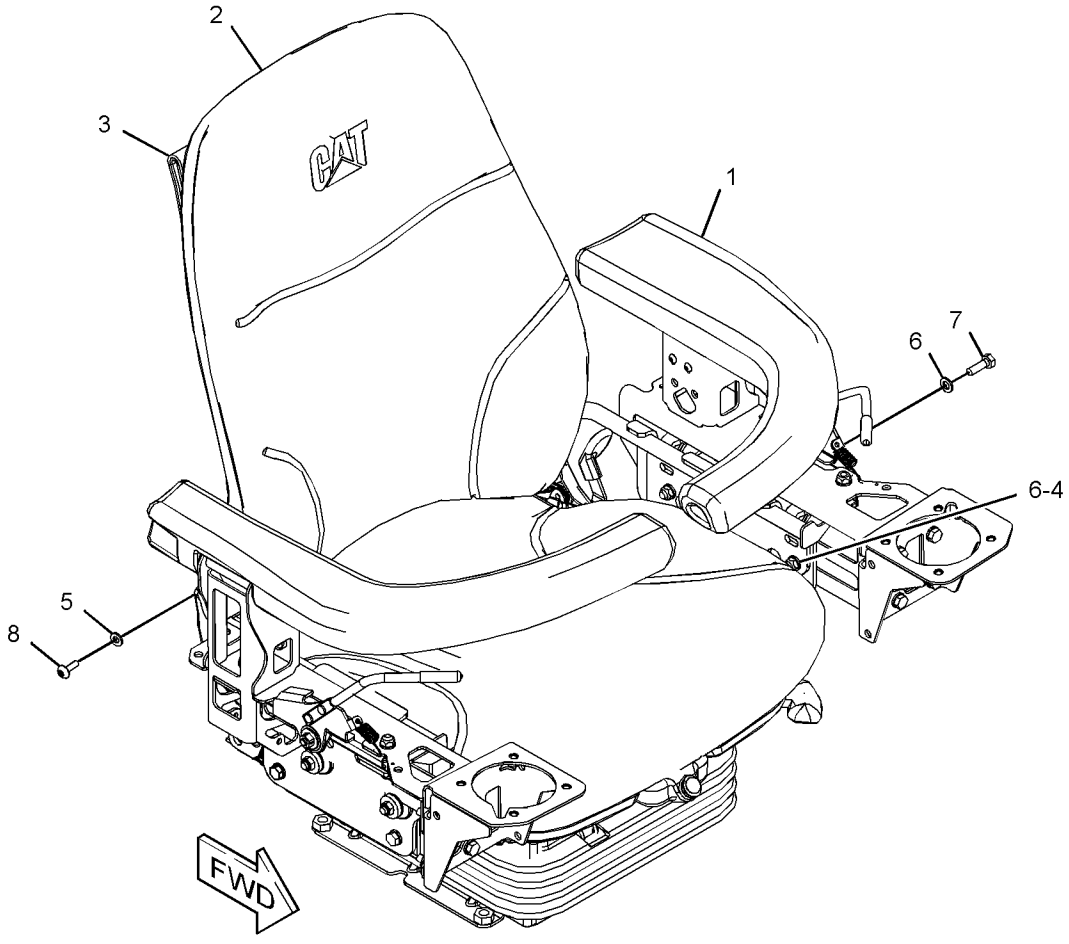

GRAPHIC #1 **<END>** g03332174

345-6040 SEAT & MOUNTING GP–SUSPENSION

PART OF 345-6319 SEAT AR-SUSPENSION

AN ATTACHMENT

SMCS-7312 **i05164964**

NOTE	REF NO	GRAPHIC REF	PART NUMBER	QTY	PART NAME 1 2 3 4 5 6 (PRODUCT LEVEL)	SEE PAGE
	1	1	**5P-7958**	1	SLEEVE-CABLE SPLICE	
Y	2	1	*345-6188*	1	ARMREST & MOUNTING GP	356
Y	3	1	*345-6320*	1	SEAT & MOUNTING GP (SUSPENSION)	445
	4	1	**7X-0507**	2	WASHER-HARD (12X22.5X5-MM THK)	
	5	1	**8S-0934**	2	LOCKNUT-FLANGE (7/16-20-THD)	
	6	1	**8S-4723**	2	BOLT (7/16-20X1.5-IN)	
M	7	1	**8T-0722**	6	BOLT-LOCKING (M10X1.5X30-MM)	
	8	1	**8T-4223**	2	WASHER-HARD (13.5X25.5X3-MM THK)	
	9	1	**8T-4226**	6	WASHER-PLATED (10.5X45X3-MM THK)	

M - METRIC PART
Y - SEPARATE ILLUSTRATION

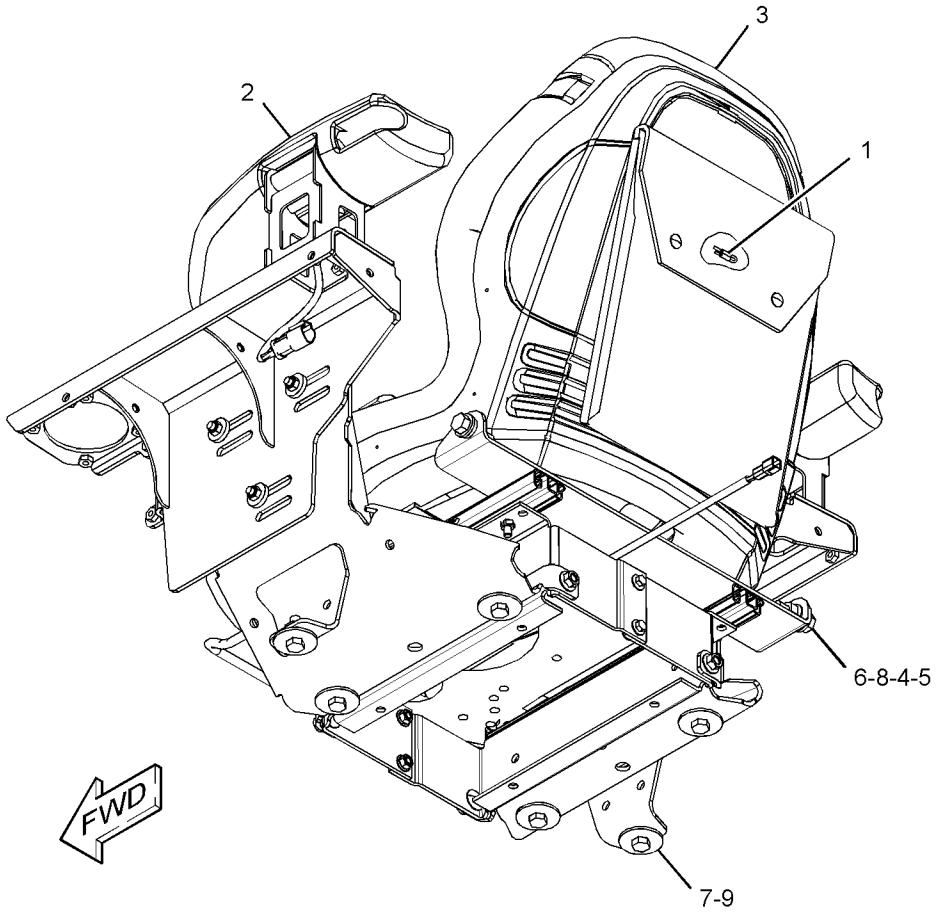

GRAPHIC #1 **<END>** g03332187

345-6045 SEAT & MOUNTING GP

PART OF 345-6329 SEAT AR-SUSPENSION

AN ATTACHMENT

SMCS-7312 **i05170298**

NOTE	REF NO	GRAPHIC REF	PART NUMBER	QTY	PART NAME 1 2 3 4 5 6 (PRODUCT LEVEL)	SEE PAGE
	1	1	**5P-7958**	1	SLEEVE-CABLE SPLICE	
Y	2	1	*345-6188*	1	ARMREST & MOUNTING GP	356
Y	3	1	*345-6330*	1	SEAT & MOUNTING GP (SUSPENSION)	447
	4	1	**7X-0507**	2	WASHER-HARD (12X22.5X5-MM THK)	
	5	1	**8S-0934**	2	LOCKNUT-FLANGE (7/16-20-THD)	
	6	1	**8S-4723**	2	BOLT (7/16-20X1.5-IN)	
M	7	1	**8T-0722**	6	BOLT-LOCKING (M10X1.5X30-MM)	
	8	1	**8T-4223**	2	WASHER-HARD (13.5X25.5X3-MM THK)	
	9	1	**8T-4226**	6	WASHER-PLATED (10.5X45X3-MM THK)	

M - METRIC PART
Y - SEPARATE ILLUSTRATION

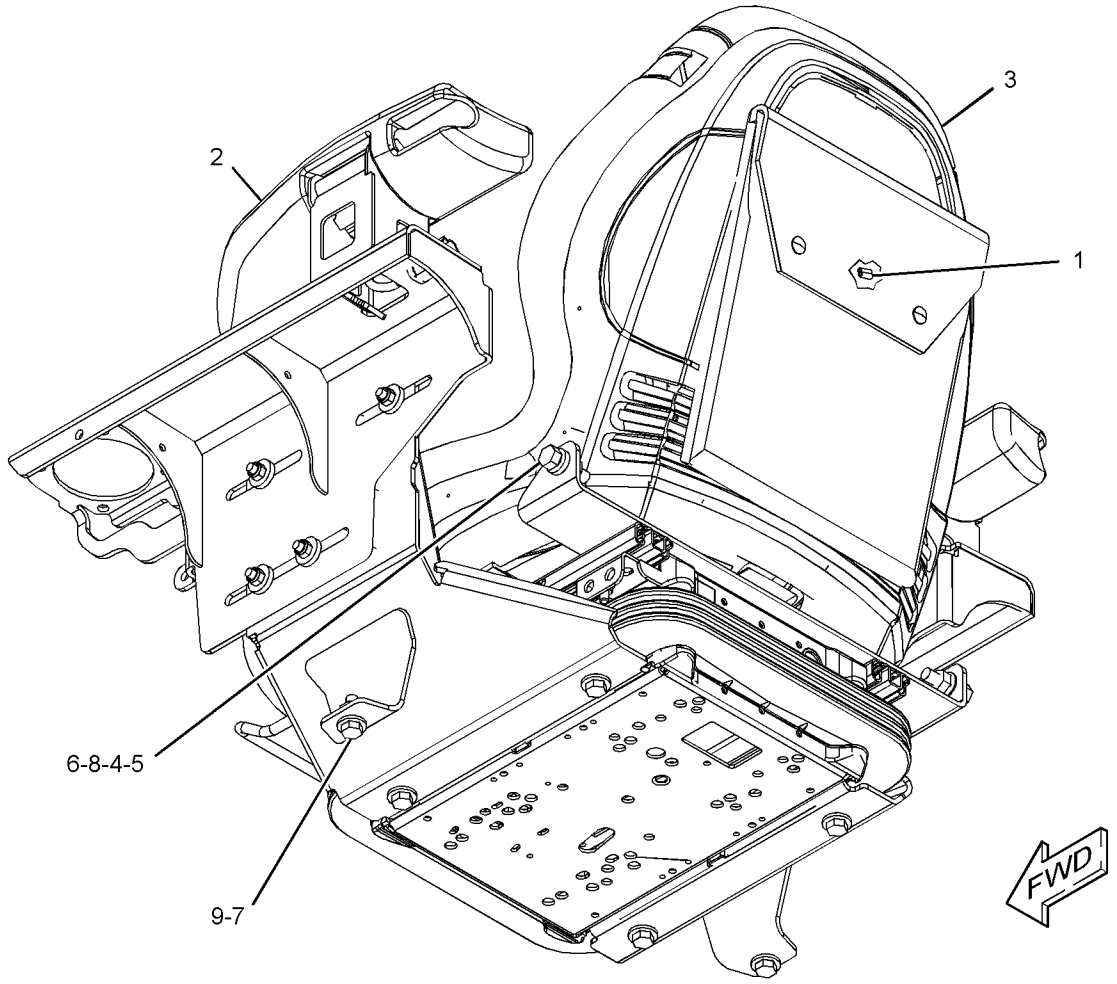

GRAPHIC #1 **<END>** g03331986

345-6050 SEAT & MOUNTING GP–SUSPENSION

PART OF 345-6349 SEAT AR-SUSPENSION

AN ATTACHMENT

SMCS-7312 **i05170304**

NOTE	REF NO	GRAPHIC REF	PART NUMBER	QTY	PART NAME 1 2 3 4 5 6 (PRODUCT LEVEL)	SEE PAGE
	1	1	**5P-7958**	1	SLEEVE-CABLE SPLICE	
	2	1	**127-4003**	2	GROMMET	
Y	3	1	*345-6350*	1	SEAT & ARMREST GP (SUSPENSION)	439
	4	1	**7X-0507**	2	WASHER-HARD (12X22.5X5-MM THK)	
	5	1	**8S-0934**	2	LOCKNUT-FLANGE (7/16-20-THD)	
	6	1	**8S-4723**	2	BOLT (7/16-20X1.5-IN)	
M	7	1	**8T-0722**	4	BOLT-LOCKING (M10X1.5X30-MM)	
	8	1	**8T-4223**	2	WASHER-HARD (13.5X25.5X3-MM THK)	
	9	1	**8T-4226**	4	WASHER-PLATED (10.5X45X3-MM THK)	

M - METRIC PART
Y - SEPARATE ILLUSTRATION

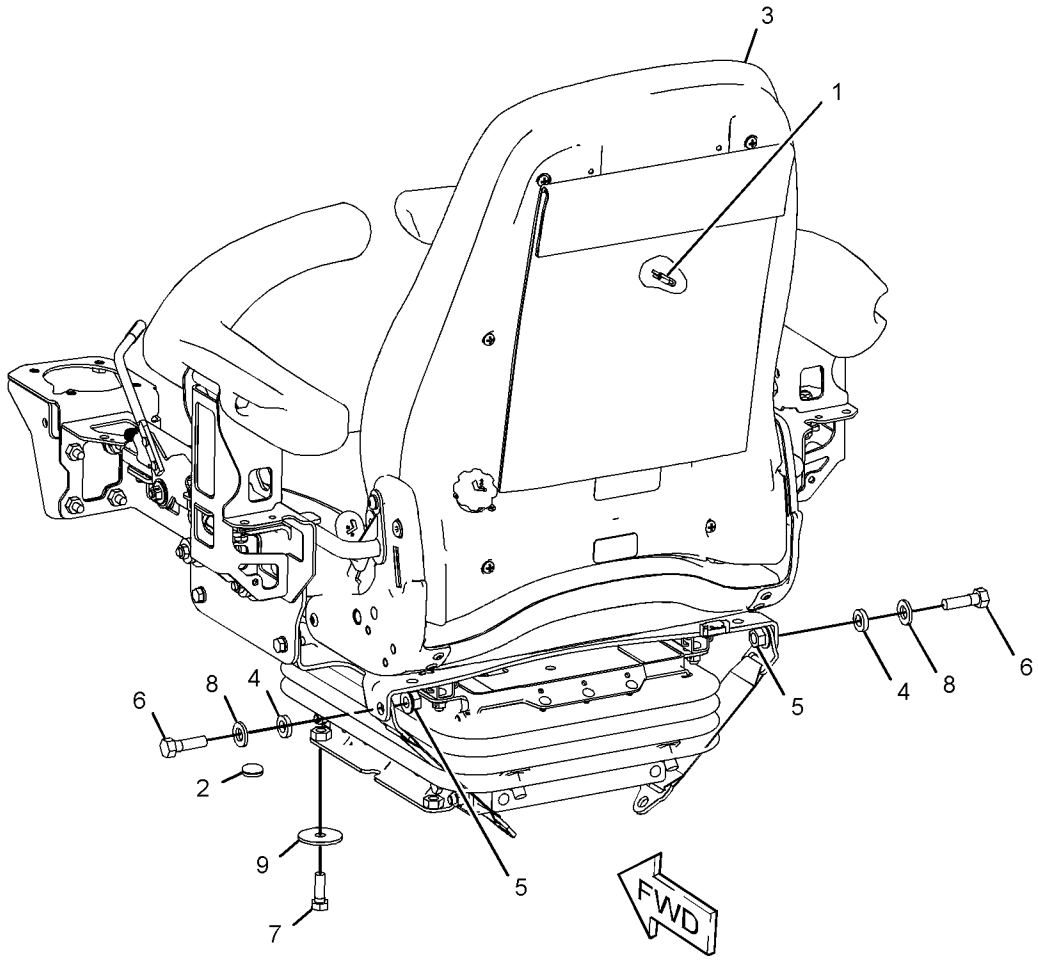

GRAPHIC #1 **<END>** g03332545

345-6055 SEAT & MOUNTING GP–SUSPENSION

PART OF 345-6359 SEAT AR-SUSPENSION

AN ATTACHMENT

SMCS-7312 **i05170302**

NOTE	REF NO	GRAPHIC REF	PART NUMBER	QTY	PART NAME 1 2 3 4 5 6 (PRODUCT LEVEL)	SEE PAGE
	1	1	**5P-7958**	1	SLEEVE-CABLE SPLICE	
	2	1	**127-4003**	2	GROMMET	
Y	3	1	*345-6360*	1	SEAT & ARMREST GP (SUSPENSION)	440
	4	1	**7X-0507**	2	WASHER-HARD (12X22.5X5-MM THK)	
	5	1	**8S-0934**	2	LOCKNUT-FLANGE (7/16-20-THD)	
	6	1	**8S-4723**	2	BOLT (7/16-20X1.5-IN)	
M	7	1	**8T-0722**	4	BOLT-LOCKING (M10X1.5X30-MM)	
	8	1	**8T-4223**	2	WASHER-HARD (13.5X25.5X3-MM THK)	
	9	1	**8T-4226**	4	WASHER-PLATED (10.5X45X3-MM THK)	

M - METRIC PART
Y - SEPARATE ILLUSTRATION

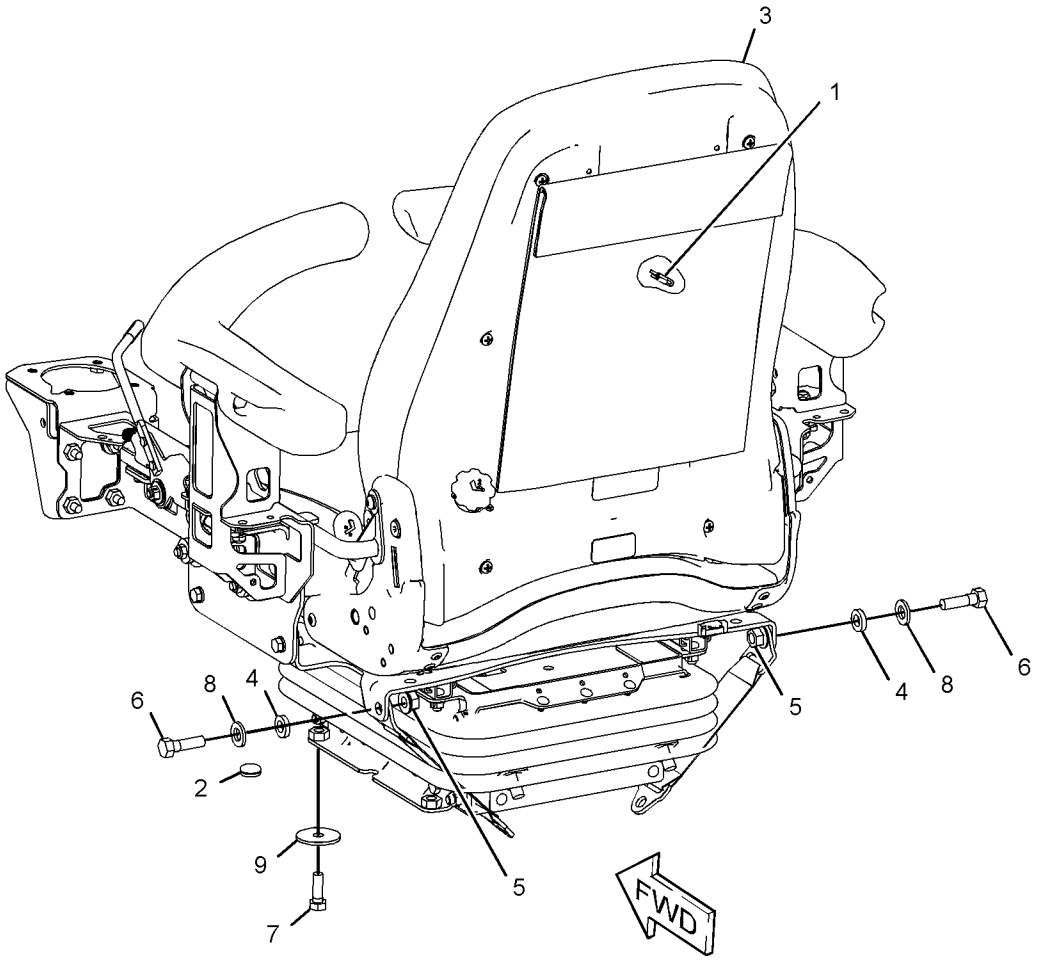

GRAPHIC #1 **<END>** g03332256

345-6320 SEAT & MOUNTING GP—SUSPENSION

PART OF 345-6040 SEAT & MOUNTING GP

AN ATTACHMENT

SMCS-7312 **i05296334**

NOTE	REF NO	GRAPHIC REF	PART NUMBER	QTY	PART NAME 1 2 3 4 5 6 (PRODUCT LEVEL)	SEE PAGE
	1	1	**397-3903**	2	RISER	
	2	1	**397-3897**	1	ADJUSTER	
	3	1	**397-3898**	1	ADJUSTER	
M	4	1	**178-3336**	8	NUT-HEX FLANGE (M8X1.25-THD)	
	5	1	**397-3899**	1	HANDLE (SEAT ADJUSTMENT)	
	6	1	**208-8469**	2	LOCKNUT (M6X1-THD)	
	7	1	**397-3900**	1	BRACKET	
	8	1	**8T-4224**	2	WASHER-HARD (8.8X16X2-MM THK)	
	9	1	**208-9283**	4	BOLT-FLANGE HEAD (M8X1.25X30-MM)	
M	10	1	**8T-4137**	4	BOLT (M10X1.5X20-MM)	
	11	1	**345-6333**	1	BRACKET AS	
	12	1	**345-6334**	1	BRACKET AS	
					(EACH BRACKET AS INCLUDES)	
M		1	**8C-8778**	3	STUD-WELD (M8X1.25X25-MM)	
M		1	**159-9541**	3	NUT-WELD (M10X1.5-THD)	
M	13	1	**175-7141**	4	NUT-HEX FLANGE (M10X1.5-THD)	
	14	1	**345-6331**	1	SEAT AS	
	15	1	**397-3901**	1	WIRE AS	
M	16	1	**174-9194**	4	BOLT (M8X1.25X16-MM)	
	17	1	**419-8939**	1	HOLDER	
	18	1	**433-9721**	1	SWITCH (SEAT BELT)	

M - METRIC PART

345-6320 **SEAT & MOUNTING GP (*contd.*)** **i05296334**

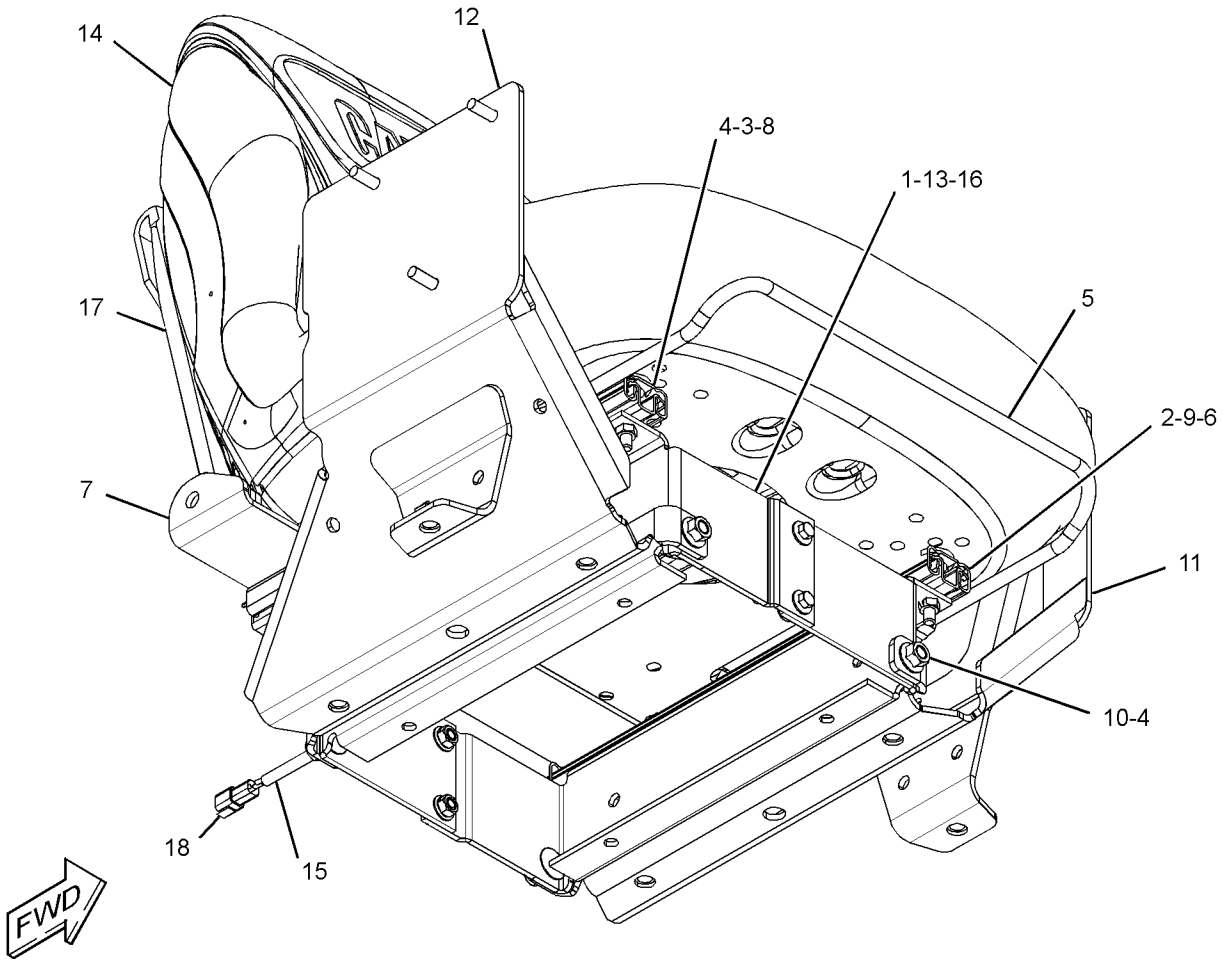

GRAPHIC #1 **<END>** g03369842

345-6330 SEAT & MOUNTING GP–SUSPENSION

PART OF 345-6045 SEAT & MOUNTING GP

AN ATTACHMENT

SMCS-7312 **i05296340**

NOTE	REF NO	GRAPHIC REF	PART NUMBER	QTY	PART NAME 1 2 3 4 5 6 (PRODUCT LEVEL)	SEE PAGE
	1	1	**345-6321**	1	SUSPENSION AS	
	2	1	**397-3897**	1	ADJUSTER	
	3	1	**397-3898**	1	ADJUSTER	
M	4	1	**178-3336**	4	NUT-HEX FLANGE (M8X1.25-THD)	
	5	1	**397-3899**	1	HANDLE (SEAT ADJUSTMENT)	
	6	1	**208-8469**	2	LOCKNUT (M6X1-THD)	
	7	1	**397-3900**	1	BRACKET	
	8	1	**8T-4224**	2	WASHER-HARD (8.8X16X2-MM THK)	
	9	1	**208-9283**	4	BOLT-FLANGE HEAD (M8X1.25X30-MM)	
	10	1	**397-3902**	4	BOLT-CARRIAGE	
	11	1	**345-6333**	1	BRACKET AS	
	12	1	**345-6334**	1	BRACKET AS	
M	13	1	**175-7141**	4	NUT-HEX FLANGE (M10X1.5-THD)	
	14	1	**345-6331**	1	SEAT AS	
	15	1	**397-3901**	1	WIRE AS	
	16	1	**419-8939**	1	HOLDER	
	17	1	**433-9721**	1	SWITCH (12-VOLT) (SEAT BELT)	

M - METRIC PART

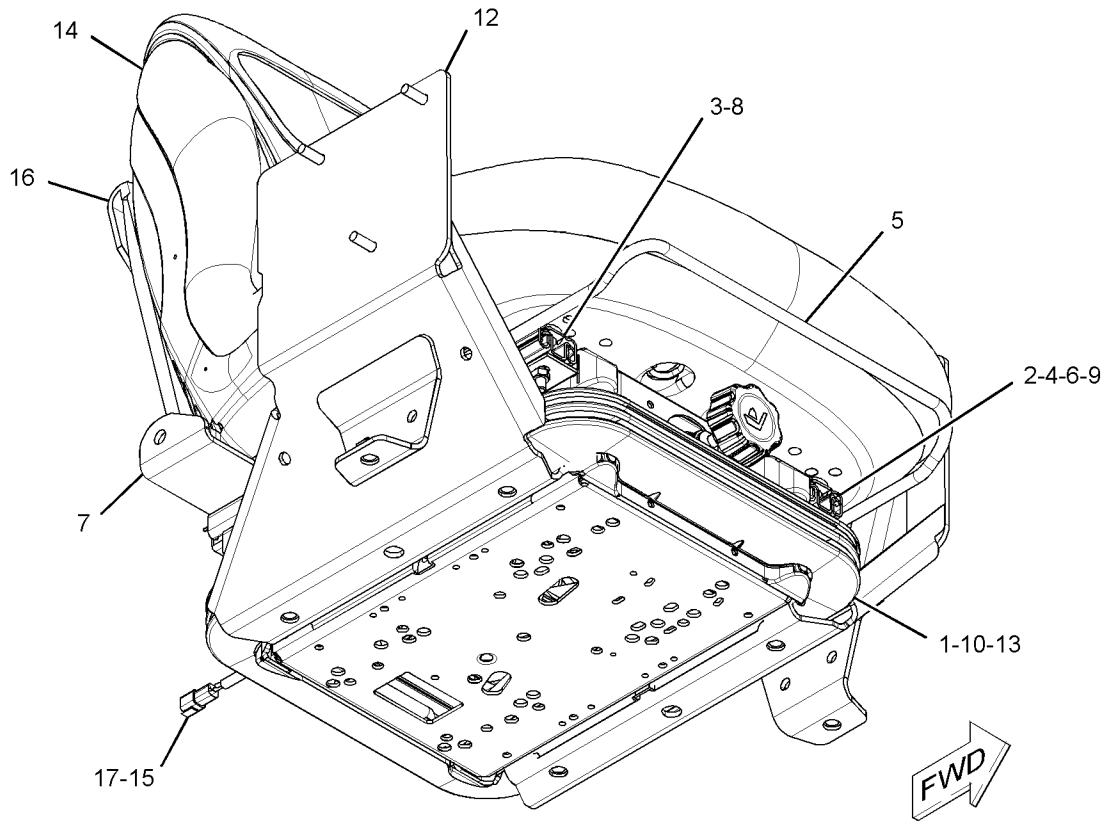

GRAPHIC #1 **<END>** g03385338

345-6319 SEAT AR-SUSPENSION

PART OF 345-6155 CAB AR-OPEN ROPS

AN ATTACHMENT

SMCS-7324 **i05164959**

NOTE	PART NUMBER	QTY	PART NAME 1 2 3 4 5 6 (PRODUCT LEVEL)	SEE PAGE
Y	*345-6061*	1	COVER GP-CONSOLE (RH, LH)	383
Y	*345-6040*	1	SEAT & MOUNTING GP (SUSPENSION)	441

Y - SEPARATE ILLUSTRATION

<END>

345-6329 SEAT AR-SUSPENSION

AN ATTACHMENT

SMCS-7324 **i05156451**

NOTE	PART NUMBER	QTY	PART NAME 1 2 3 4 5 6 (PRODUCT LEVEL)	SEE PAGE
Y	*345-6061*	1	COVER GP-CONSOLE (RH, LH)	383
Y	*345-6045*	1	SEAT & MOUNTING GP (SUSPENSION)	442

Y - SEPARATE ILLUSTRATION

<END>

345-6349 SEAT AR-SUSPENSION

AN ATTACHMENT

SMCS-7324 **i05156454**

NOTE	PART NUMBER	QTY	PART NAME 1 2 3 4 5 6 (PRODUCT LEVEL)	SEE PAGE
Y	*345-6056*	1	COVER GP-CONSOLE	382
Y	*345-6050*	1	SEAT & MOUNTING GP (SUSPENSION)	443

Y - SEPARATE ILLUSTRATION

<END>

345-6359 SEAT AR-SUSPENSION

AN ATTACHMENT

SMCS-7324 **i05156570**

NOTE	PART NUMBER	QTY	PART NAME 1 2 3 4 5 6 (PRODUCT LEVEL)	SEE PAGE
Y	*345-6056*	1	COVER GP-CONSOLE	382
Y	*345-6055*	1	SEAT & MOUNTING GP (SUSPENSION)	444

Y - SEPARATE ILLUSTRATION

<END>

258-4095 SEAT BELT GP–RETRACTABLE

51-MM (2-IN)

AN ATTACHMENT

SMCS-7327 **i03505740**

NOTE	REF NO	GRAPHIC REF	PART NUMBER	QTY	PART NAME 1 2 3 4 5 6 (PRODUCT LEVEL)	SEE PAGE
F			**2D-6412**	2	WASHER (7/16X15/16X1/4-IN THK)	
F			**8S-0934**	2	LOCKNUT-FLANGE (7/16-20-THD)	
F			**8S-4723**	2	BOLT (7/16-20X1.5-IN)	
F			**8T-4223**	2	WASHER-HARD (13.5X25.5X3-MM THK)	

F - NOT SHOWN

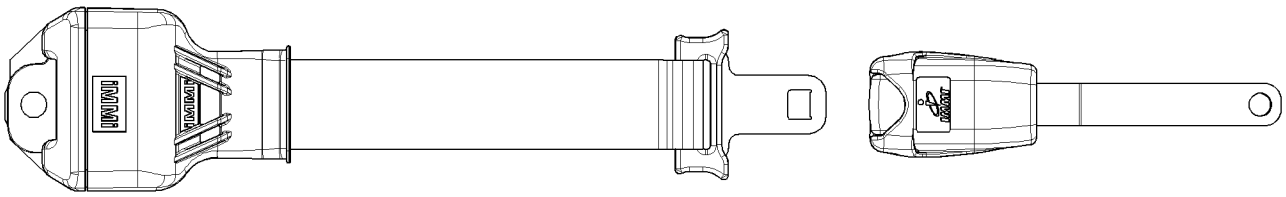

GRAPHIC #1 **<END>** g01345229

258-4096 SEAT BELT GP—RETRACTABLE, 76-MM (3-IN)

AN ATTACHMENT

SMCS-7327 **i05353814**

NOTE	REF NO	GRAPHIC REF	PART NUMBER	QTY	PART NAME 1 2 3 4 5 6 (PRODUCT LEVEL)	SEE PAGE
F			**2D-6412**	2	WASHER (7/16X15/16X1/4-IN THK)	
F			**8S-0934**	2	LOCKNUT-FLANGE (7/16-20-THD)	
F			**8S-4723**	2	BOLT (7/16-20X1.5-IN)	
F			**8T-4223**	2	WASHER-HARD (13.5X25.5X3-MM THK)	

F - NOT SHOWN

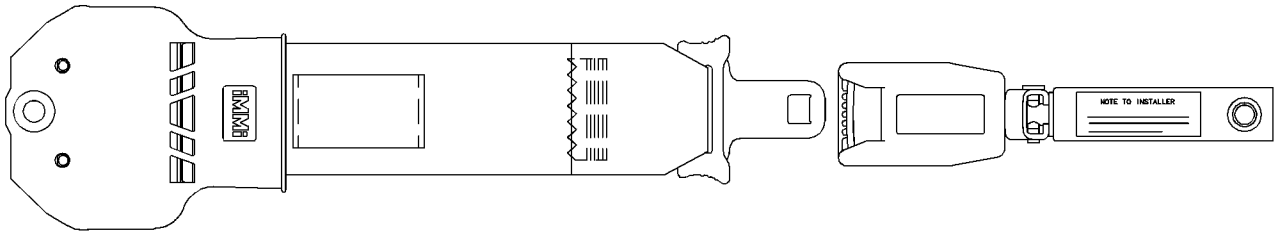

GRAPHIC #1 **<END>** g01196135

345-6361 SEAT GP-SUSPENSION

PART OF 345-6360 SEAT & ARMREST GP

AN ATTACHMENT

SMCS-7312, 7321, 7324 **i05296336**

NOTE	REF NO	GRAPHIC REF	PART NUMBER	QTY	PART NAME 1 2 3 4 5 6 (PRODUCT LEVEL)	SEE PAGE
	1	1	**273-5915**	1	PLATE	
	2	1	**305-7092**	1	SLIDE AS (LATCHING)	
	3	1	**305-7093**	1	SLIDE AS (SLAVE PISTON)	
	4	1	**307-2955**	2	TETHER	
Y	5	1	**432-8929**	1	SUSPENSION GP-SEAT	455
Y	6	1	**432-8930**	1	SEAT GP-SUSPENSION (VINYL)	453
	7	1	**031-4155**	4	LOCKNUT (5/16-18-THD)	
	8	1	**1P-1210**	4	WASHER (0.391X0.812X0.067-IN THK)	
	9	1	**4M-0061**	4	BOLT (5/16-18X0.75-IN)	
M	10	1	**6V-7687**	2	LOCKNUT (M12X1.75-THD)	
M	11	1	**6V-9189**	4	LOCKNUT (M8X1.25-THD)	
	12	1	**7X-0603**	4	WASHER-HARD (9.9X35X2.5-MM THK)	
	13	1	**8L-8413**	6	STRAP-CABLE	
	14	1	**8M-4791**	2	WASHER-HARD (13.5X27X3-MM THK)	
M	15	1	**8T-4139**	2	BOLT (M12X1.75X30-MM)	

M - METRIC PART
Y - SEPARATE ILLUSTRATION

345-6361 **SEAT GP-SUSPENSION (*contd.*)** **i05296336**

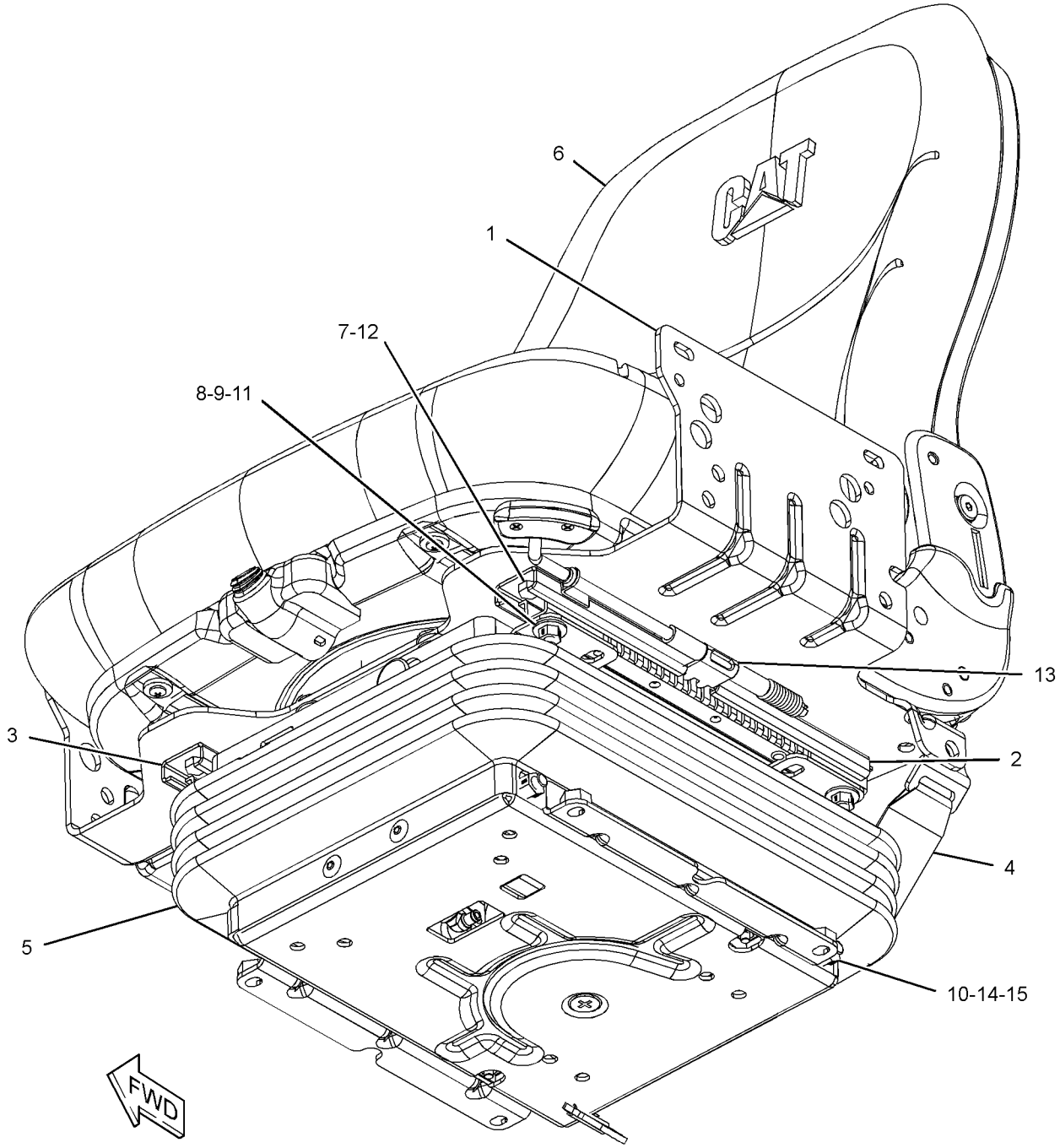

GRAPHIC #1 **<END>** g03384462

432-8930 SEAT GP-SUSPENSION–VINYL

PART OF 345-6361 SEAT GP-SUSPENSION

AN ATTACHMENT

SMCS-7312, 7321, 7324 **i05296337**

NOTE	REF NO	GRAPHIC REF	PART NUMBER	QTY	PART NAME 1 2 3 4 5 6 (PRODUCT LEVEL)	SEE PAGE
	1	1	**3E-4352**	2	WASHER-HARD (8.8X20.5X2.5-MM THK)	
	2	1	**307-2952**	1	PAN AS-SEAT	
		1	**293-2871**	1	SWITCH AS (SEAT)	
		1	**307-2953**	1	SPACER	
		1	**307-2954**	2	SPRING	
	3	1	**319-4168**	6	SCREW-PAN HEAD (1/4-15X0.5-IN)	
	4	1	**385-0229**	2	SCREW-FORMING	
	5	1	**385-5513**	1	PLATE AS-LUMBAR	
	6	1	**390-9315**	1	HARNESS AS-HEATER	
	7	1	**390-9317**	1	CUSHION AS-BACKREST (CLOTH)	
	8	1	**392-9277**	1	SWITCH-ROCKER (HEATED SEAT)	
	9	1	**432-8931**	1	PAN AS	
	10	1	**432-8932**	1	HOUSING-SWITCH	
	11	1	**156-8315**	2	SCREW-PAN HEAD (10-16X0.5-IN)	
	12	1	**432-8933**	1	CUSHION AS-SEAT (CLOTH)	
	13	1	**6C-3679**	2	RIVET-POP	
	14	1	**9X-8918**	2	SCREW-FLAT HEAD (8-32X0.5-IN)	

432-8930 **SEAT GP-SUSPENSION (*contd.*)** **i05296337**

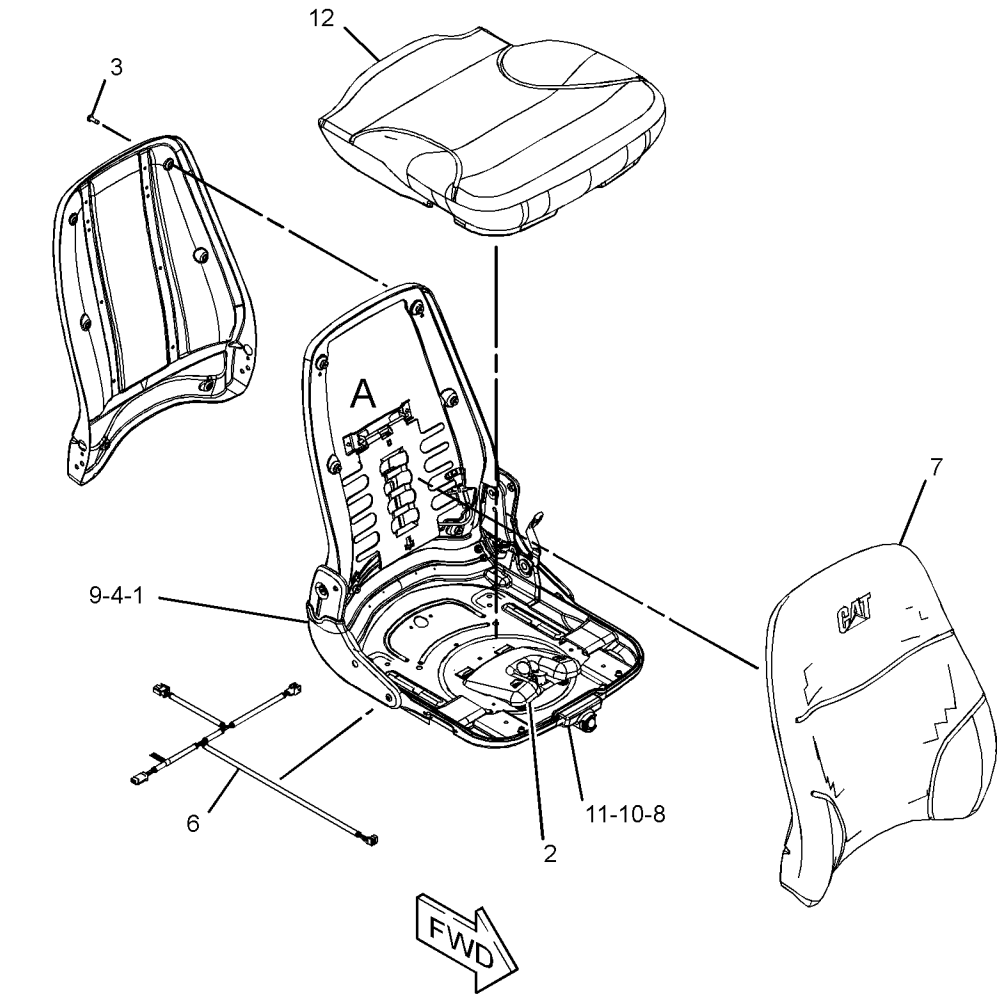

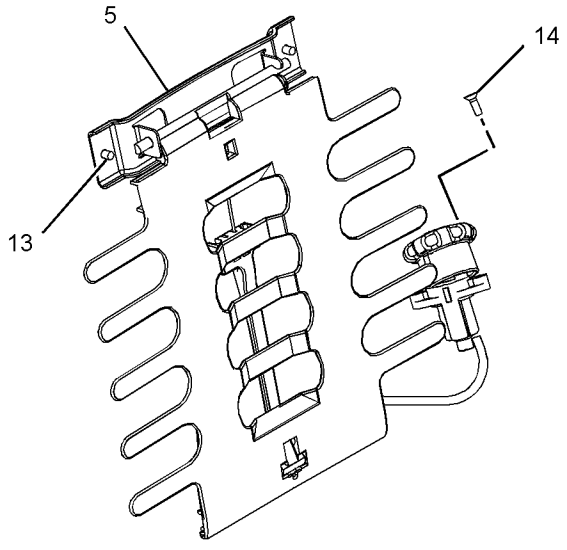

VIEW OF AREA A

GRAPHIC #1 **<END>** g03369975

432-8929 SUSPENSION GP-SEAT—AIR

PART OF 345-6361 SEAT GP-SUSPENSION

AN ATTACHMENT

SMCS-7312, 7324 **i05296335**

NOTE	REF NO	GRAPHIC REF	PART NUMBER	QTY	PART NAME 1 2 3 4 5 6 (PRODUCT LEVEL)	SEE PAGE
L	1	1	**4V-8577**	6	BEARING	
	2	1	**144-4108**	15	FASTENER	
	3	1	**163-1135**	1	SPRING	
	4	1	**163-1146**	2	FASTENER	
	5	1	**166-6781**	2	FASTENER	
S	6	1	**186-5107**	2	SCREW-DRIVE (NO 8-16X1.25-IN)	
	7	1	**304-1021**	2	ROLLER	
	8	1	**304-1022**	2	BLOCK	
	9	1	**304-1023**	2	BUMPER	
	16	1	**304-1034**	2	BRACKET	
	17	1	**304-1035**	2	BUMPER	
	18	1	**304-1036**	1	BOOT	
	21	1	**305-4353**	2	SPACER (6.4X24X6-MM THK)	
S	22	1	**372-2156**	1	COMPRESSOR AS	
S	23	1	**372-2158**	1	BRACKET-MOUNTING	
	24	1	**432-8937**	1	HARNESS AS-WIRING	
	25	1	**031-4155**	2	LOCKNUT (5/16-18-THD)	
	26	1	**108-4311**	1	SCREW-MACHINE (3/8-16X0.75-IN)	
JM	27	1	**129-3178**	1	LOCKNUT (M6X1-THD)	
	28	1	**1B-2705**	2	BOLT-CARRIAGE (5/16-18X0.75-IN)	
LN	29	1	**2K-4973**	5	LOCKNUT (3/8-16-THD)	
J	30	1	**2M-7819**	2	RING-RETAINING	
P	31	1	**3D-9369**	1	RING-RETAINING	
	32	1	**416-6224**	1	WIRE AS	
	33	1	**416-6225**	1	WIRE AS (16-GA, ORANGE)	
N	34	1	**4B-4278**	2	WASHER (10.2X20.5X1.6-MM THK)	
M	35	1	**5C-2890**	2	NUT (M6X1-THD)	
	36	1	**6L-7155**	2	SCREW-MACHINE (1/4-20X0.5-IN)	
	37	1	**6V-7412**	2	SCREW-WASHER HEAD	
J	38	1	**8T-4224**	4	WASHER-HARD (8.8X16X2-MM THK)	
	39	1	**8T-9371**	1	BOLT (3/8-16X0.5-IN)	
					PARTS SHOWN IN GRAPHIC(S) WITHOUT A REFERENCE NUMBER ARE NOT SERVICED SEPARATELY	
					AVAILABLE REPAIR KIT(S):	
J			**304-1052**	1	KIT-SHOCK ABSORBER	
					(ALSO INCLUDES BUSHINGS, SHOCK ABSORBER, BOLT & PIN)	
L			**304-1054**	1	KIT-SHAFT	
					(ALSO INCLUDES SHAFT AS)	
N			**304-1055**	1	KIT-TOGGLE BOLT	
					(ALSO INCLUDES BUSHINGS & BOLTS)	
P			**304-1056**	1	KIT-VALVE	
					(ALSO INCLUDES LOCKWASHER, NUT, VALVE, KNOB AS & FITTING)	
S			**304-1057**	1	KIT-COMPRESSOR	
					(ALSO INCLUDES FITTINGS)	

J - KIT MARKED J SERIVES PART(S)MARKED J
L - KIT MARKED L SERVICES PART(S) MARKED L
M - METRIC PART
N - KIT MARKED N SERVICES PART(S) MARKED N
P - KIT MARKED P SERVICES PART(S) MARKED P
S - KIT MARKED S SERVICES PART(S) MARKED S

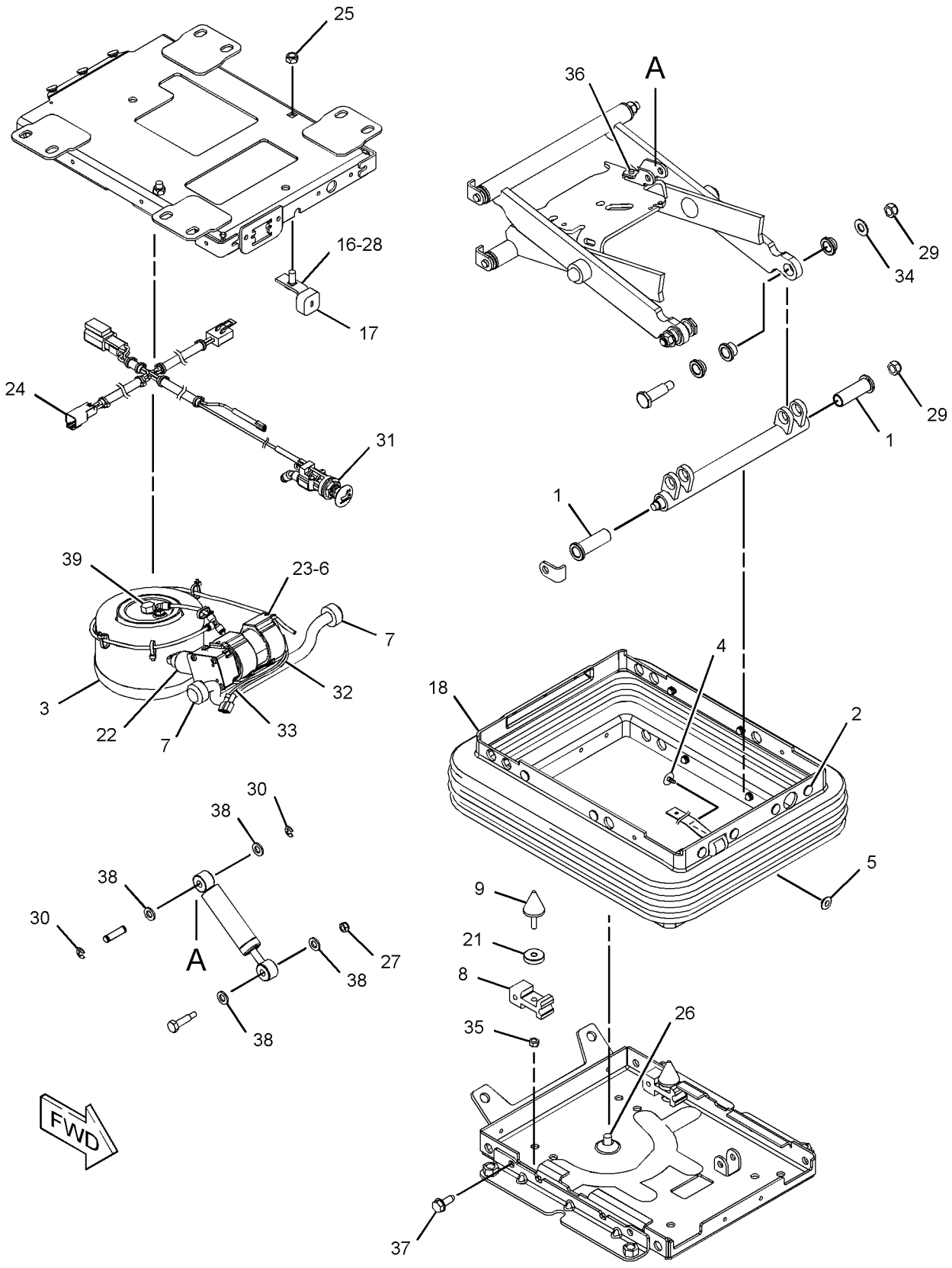

GRAPHIC #1 **<END>** g03370316

345-6010 WINDOW GP-CAB

PART OF 345-5454 CAB AR

SMCS-7310 **i05295447**

NOTE	REF NO	GRAPHIC REF	PART NUMBER	QTY	PART NAME 1 2 3 4 5 6 (PRODUCT LEVEL)	SEE PAGE
	1	1	**5C-8310**	1	BRACKET-RING	
	2	1	**5C-8311**	1	RING	
	3	1	**258-4429**	1	FILM-INSTRUCTION (ALTERNATE EXIT)	
	4	1	**345-6011**	1	GLASS-REAR	
	5	1	**108-0656**		SEAL (192-CM)	
	6	1	**104-5957**		STRIP-LOCKING (186-CM)	

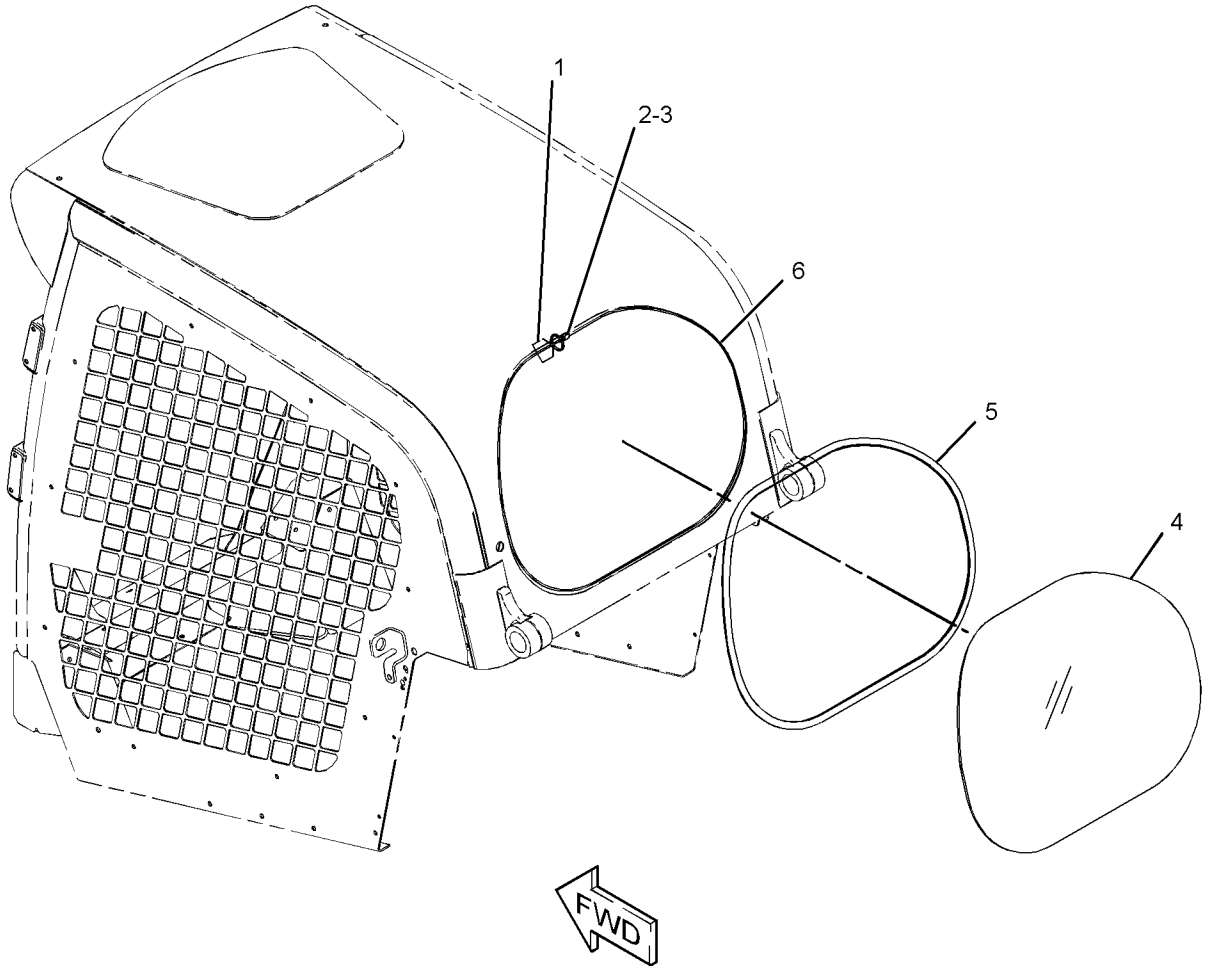

GRAPHIC #1 **<END>** g03364274

345-6090 WINDOW GP-CAB

PART OF 345-4915, 345-4919 CAB AR-ENCLOSED ROPS

AN ATTACHMENT

SMCS-7310 **i05163103**

NOTE	REF NO	GRAPHIC REF	PART NUMBER	QTY	PART NAME 1 2 3 4 5 6 (PRODUCT LEVEL)	SEE PAGE
	1	1	**270-9442**	18	SCREW-TRUSS HEAD (M6X1X20-MM)	
Y	2	1	*345-6290*	1	WINDOW GP-CAB (LH)	459
Y	3	1	*345-6291*	1	WINDOW GP-CAB (RH)	460

Y - SEPARATE ILLUSTRATION

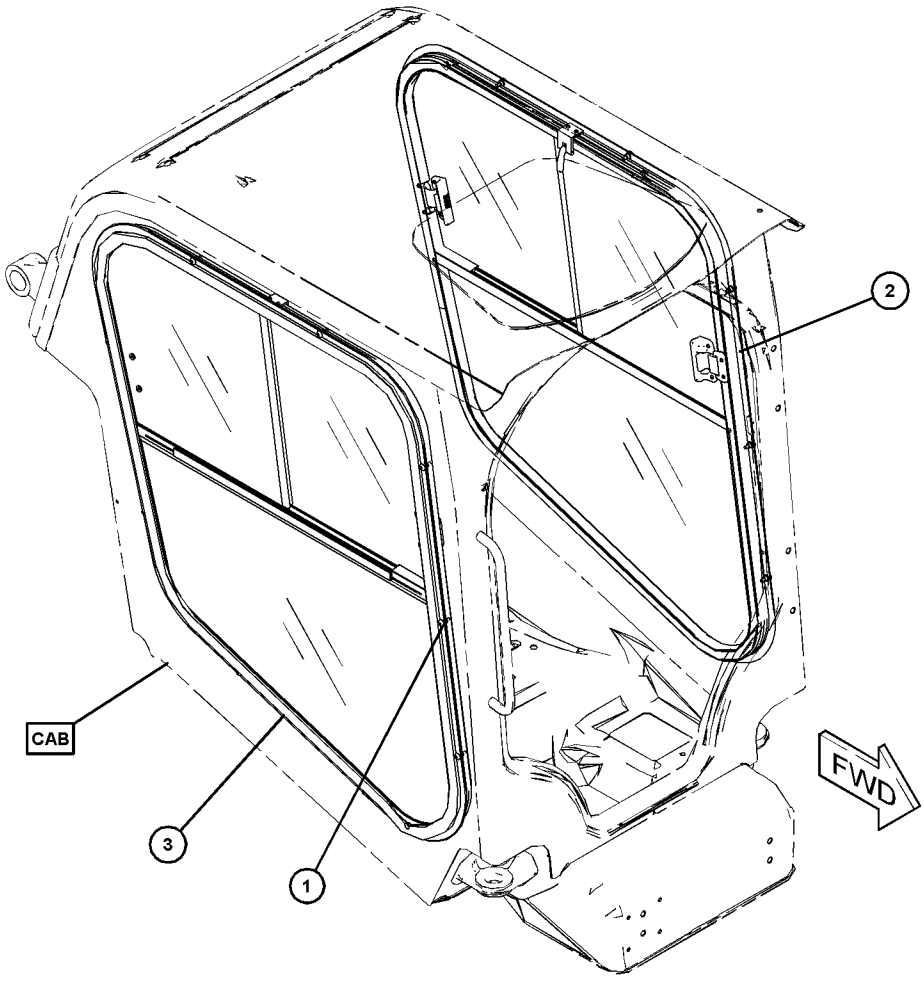

GRAPHIC #1 **<END>** g03318557

345-6290 WINDOW GP-CAB—LH

PART OF 345-6090 WINDOW GP-CAB
AN ATTACHMENT

SMCS-7310 **i05165085**

NOTE	REF NO	GRAPHIC REF	PART NUMBER	QTY	PART NAME 1 2 3 4 5 6 (PRODUCT LEVEL)	SEE PAGE
	1	1	**345-6270**	1	WINDOW AS	
	2	1	**345-6271**	1	WINDOW AS	
	3	1	**345-6273**	1	WINDOW AS	
	4	1	**345-6292**	1	FRAME AS	

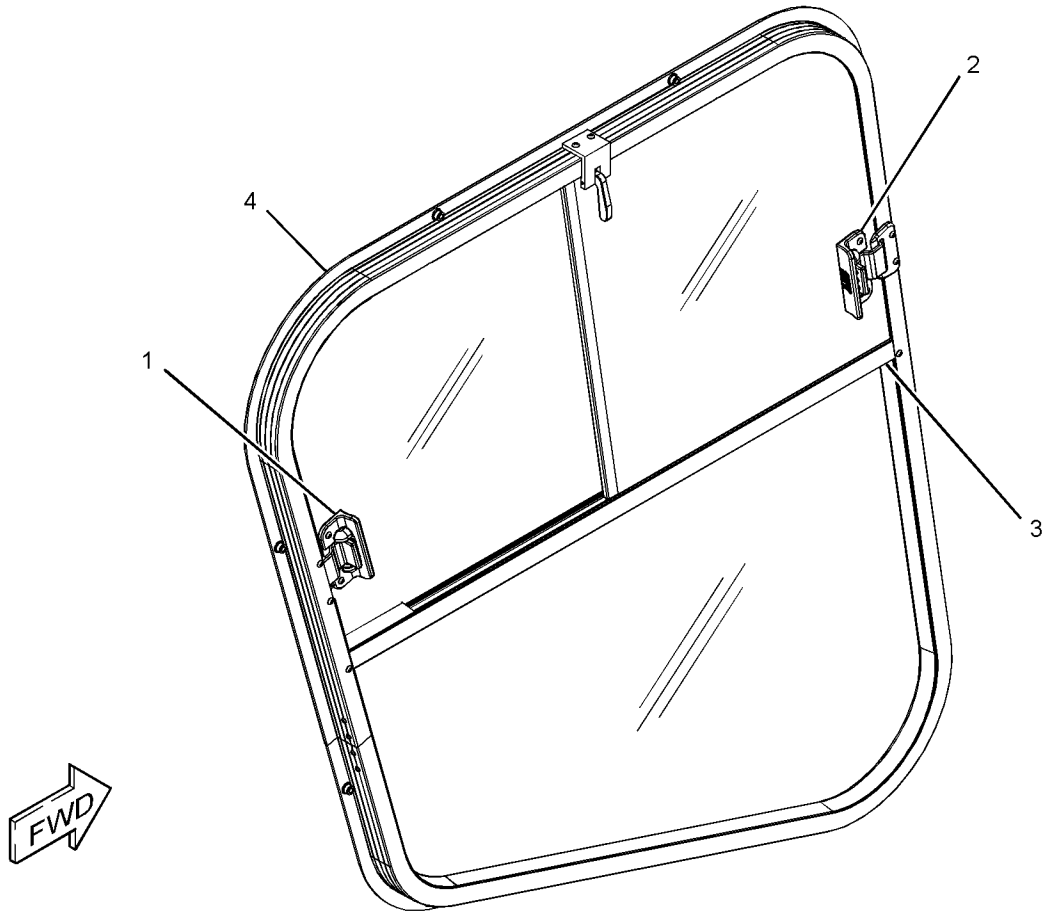

GRAPHIC #1 **<END>** g03333375

345-6291 WINDOW GP-CAB—RH

PART OF 345-6090 WINDOW GP-CAB

AN ATTACHMENT

SMCS-7310 **i05165086**

NOTE	REF NO	GRAPHIC REF	PART NUMBER	QTY	PART NAME 1 2 3 4 5 6 (PRODUCT LEVEL)	SEE PAGE
	1	1	**345-6274**	1	WINDOW AS	
	2	1	**345-6275**	1	WINDOW AS	
	3	1	**345-6276**	1	WINDOW AS	
	4	1	**345-6297**	1	FRAME AS	

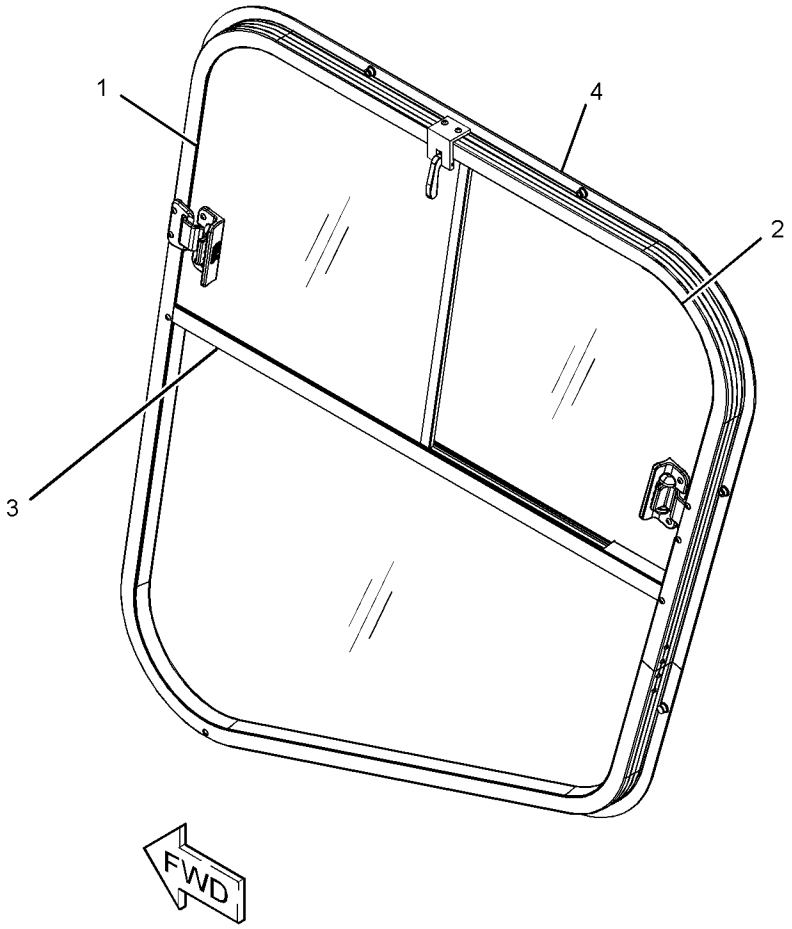

GRAPHIC #1 **<END>** g03326283

345-5249 FILM GP

PART OF 388-8246, 388-8247 COMMON AR

SMCS-7557 **i05166887**

NOTE	REF NO	GRAPHIC REF	PART NUMBER	QTY	PART NAME 1 2 3 4 5 6 (PRODUCT LEVEL)	SEE PAGE
	1	1	**365-8085**	1	FILM-IDENTIFICATION (CAT)	
	2	1	**379-4102**	1	FILM-IDENTIFICATION (CAT)	
	3	1	**388-7269**	1	FILM-IDENTIFICATION (246D CAT)	
	4	1	**388-7270**	1	FILM-IDENTIFICATION (CAT 246D)	

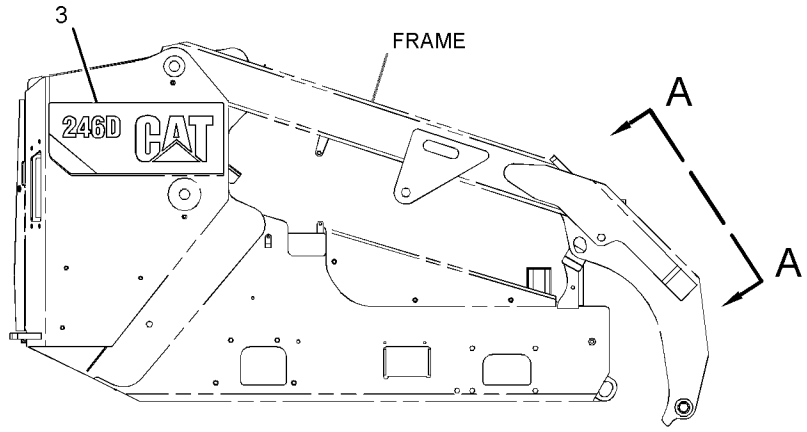

RIGHT SIDE VIEW

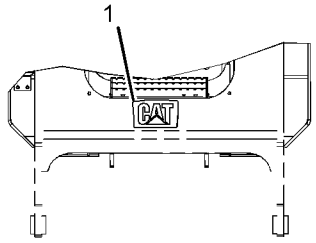

VIEW A-A

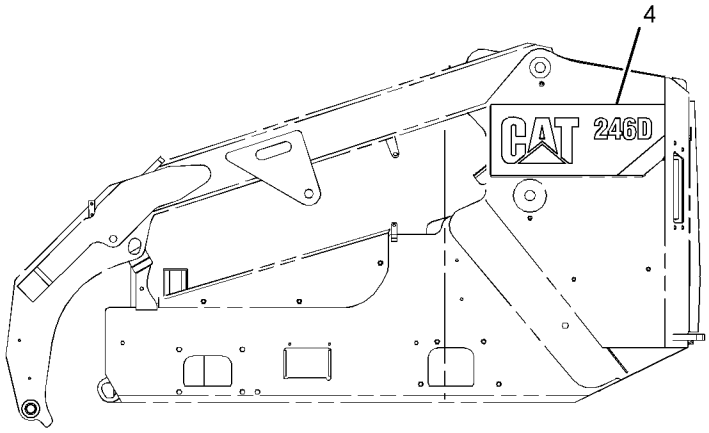

LEFT SIDE VIEW

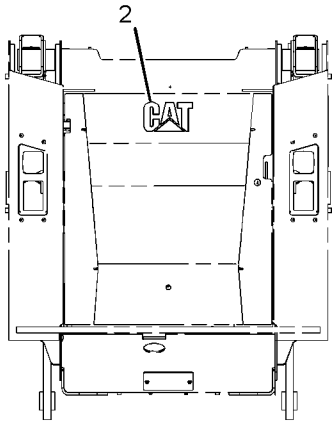

REAR VIEW

GRAPHIC #1 **<END>** g03323677

388-8115 FILM GP

PART OF 345-5447 HYDRAULIC AR
AN ATTACHMENT

SMCS-7557 **i05167531**

NOTE	REF NO	GRAPHIC REF	PART NUMBER	QTY	PART NAME 1 2 3 4 5 6 (PRODUCT LEVEL)	SEE PAGE
	1	1	**379-4101**	2	FILM-IDENTIFICATION (HIGH FLOW XPS)	

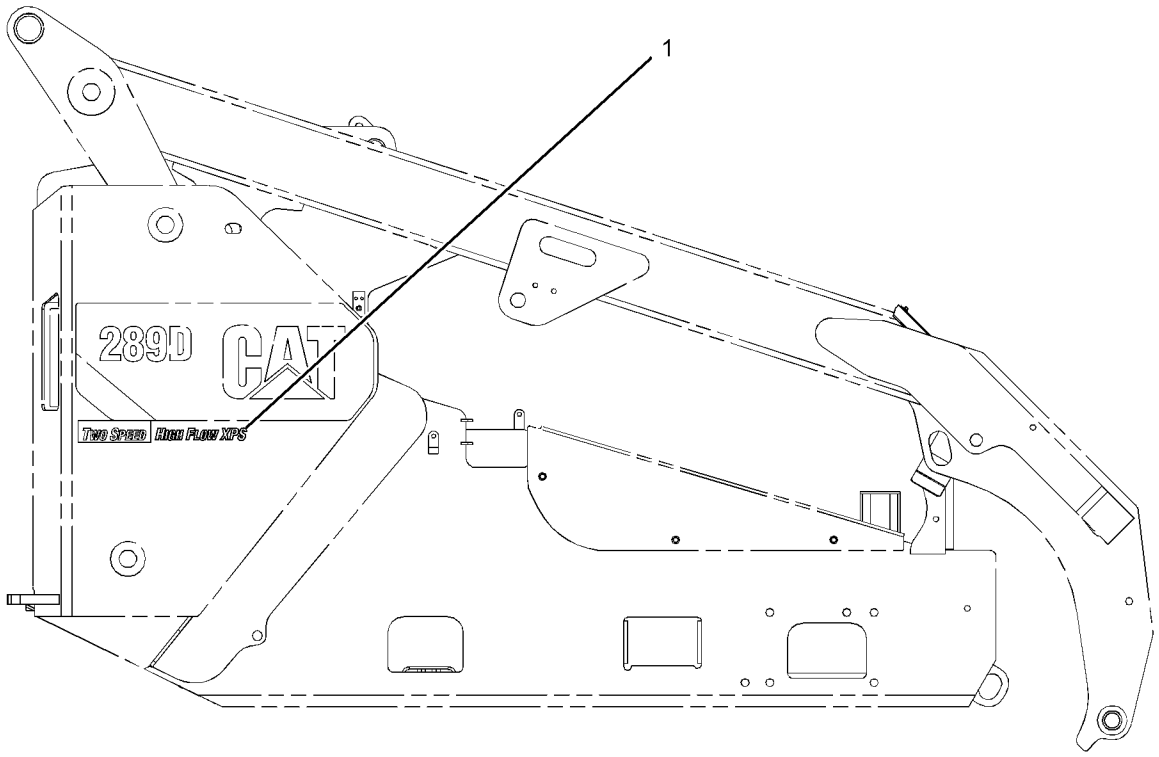

RIGHT SIDE VIEW

GRAPHIC #1 **<END>** g03324100

388-8116 FILM GP–2-SPEED

PART OF 345-4927, 345-4929 MACHINE AR-SPECIAL
AN ATTACHMENT

SMCS-7557 **i05162949**

NOTE	REF NO	GRAPHIC REF	PART NUMBER	QTY	PART NAME 1 2 3 4 5 6 (PRODUCT LEVEL)	SEE PAGE
	1	1	**379-4100**	2	FILM-IDENTIFICATION (TWO SPEED)	

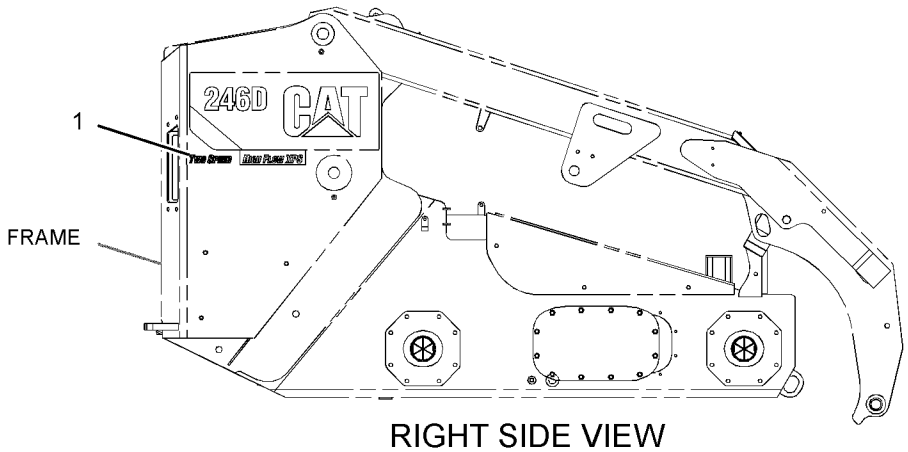

RIGHT SIDE VIEW

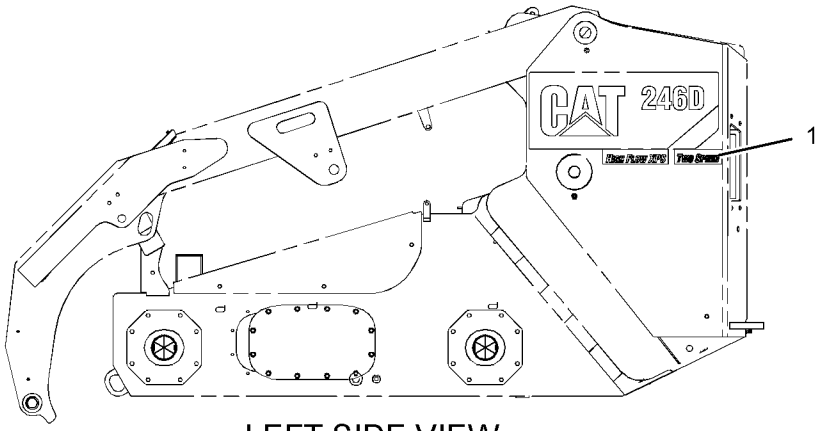

LEFT SIDE VIEW

GRAPHIC #1 **<END>** g03321373

422-3445 FILM GP–RIDE CONTROL ANSI

FOR USE WITH MACHINES EQUIPPED WITH RIDE CONTROL AN ATTACHMENT

SMCS-7557 **i05293720**

NOTE	REF NO	GRAPHIC REF	PART NUMBER	QTY	PART NAME 1 2 3 4 5 6 (PRODUCT LEVEL)	SEE PAGE
	1	1	**239-4990**	1	FILM-WARNING (HIGH PRESSURE CYLINDER)	

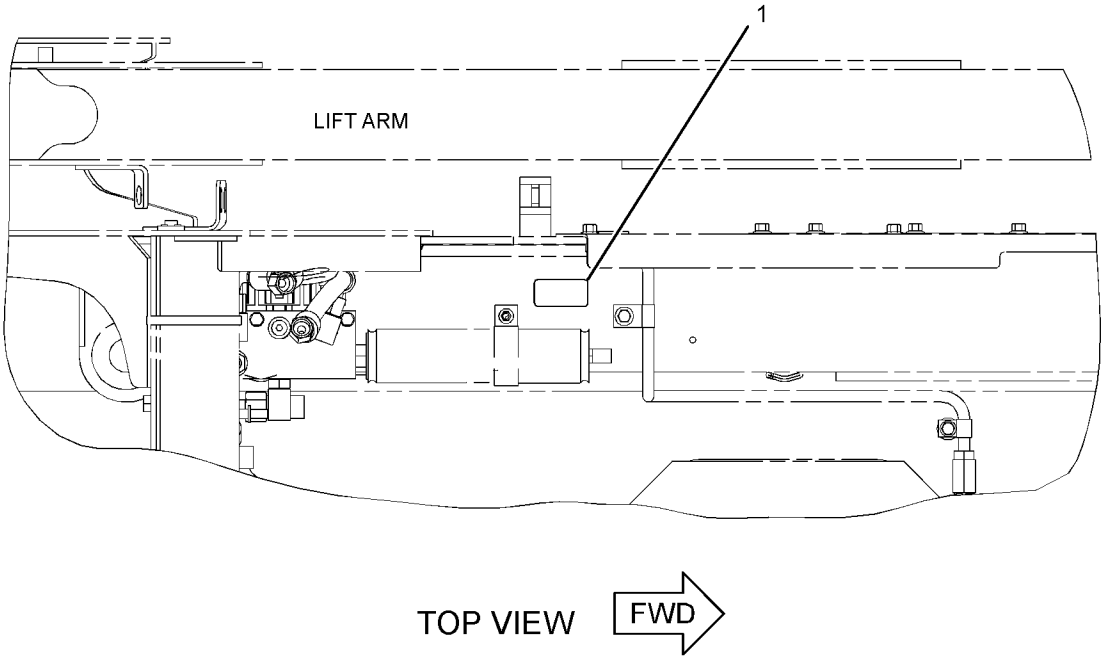

GRAPHIC #1 **<END>** g03364211

422-3446 FILM GP–RIDE CONTROL ISO

FOR USE WITH MACHINES EQUIPPED WITH RIDE CONTROL AN ATTACHMENT

SMCS-7557 **i05293719**

NOTE	REF NO	GRAPHIC REF	PART NUMBER	QTY	PART NAME 1 2 3 4 5 6 (PRODUCT LEVEL)	SEE PAGE
	1	1	**239-4991**	1	FILM-WARNING (HIGH PRESSURE CYLINDER)	

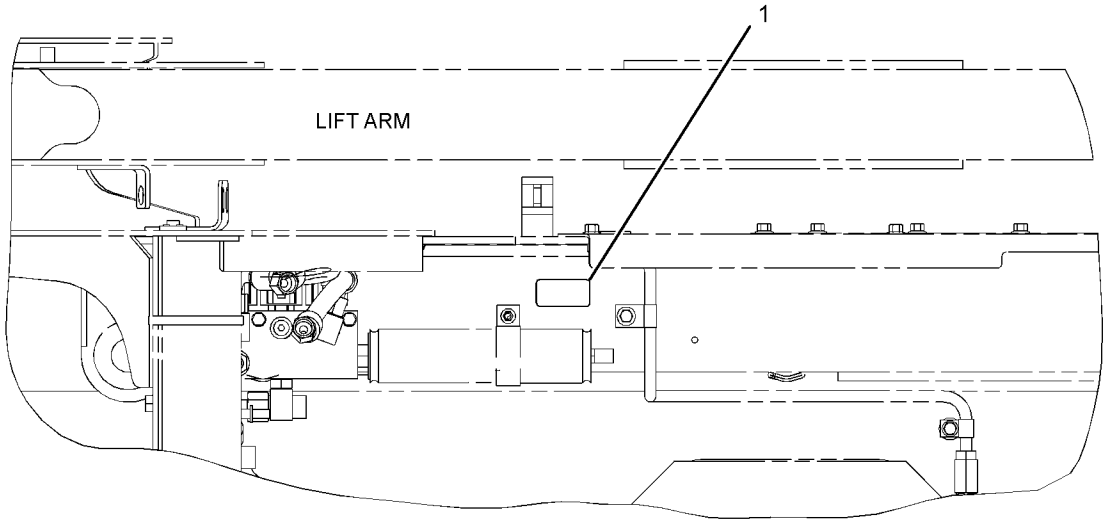

TOP VIEW FWD

GRAPHIC #1 **<END>** g03364211

247-0678 PLATE & FILM GP

PART OF 424-0450, 424-0451 BLADE AR

AN ATTACHMENT

SMCS-7405, 7557 **i02469823**

NOTE	REF NO	GRAPHIC REF	PART NUMBER	QTY	PART NAME 1 2 3 4 5 6 (PRODUCT LEVEL)	SEE PAGE
	1	1	**7X-3229**	4	FILM-IDENTIFICATION (LIFT EYE, TIE-DOWN LOCATION)	
	2	1	**226-1242**	2	FILM-WARNING (CRUSH HAZARD, STAY BACK, U.S.)	
	3	1	**228-3581**	1	FILM-WARNING (DO NOT OPERATE, READ OMM)	
	4	1	**159-8035**	1	FILM-WARNING (CRUSH HAZARD, STAY BACK)	
	5	1	**124-2456**	1	FILM-INSTRUCTION (NO STEP)	

247-0678 **PLATE & FILM GP (*contd.*)** **i02469823**

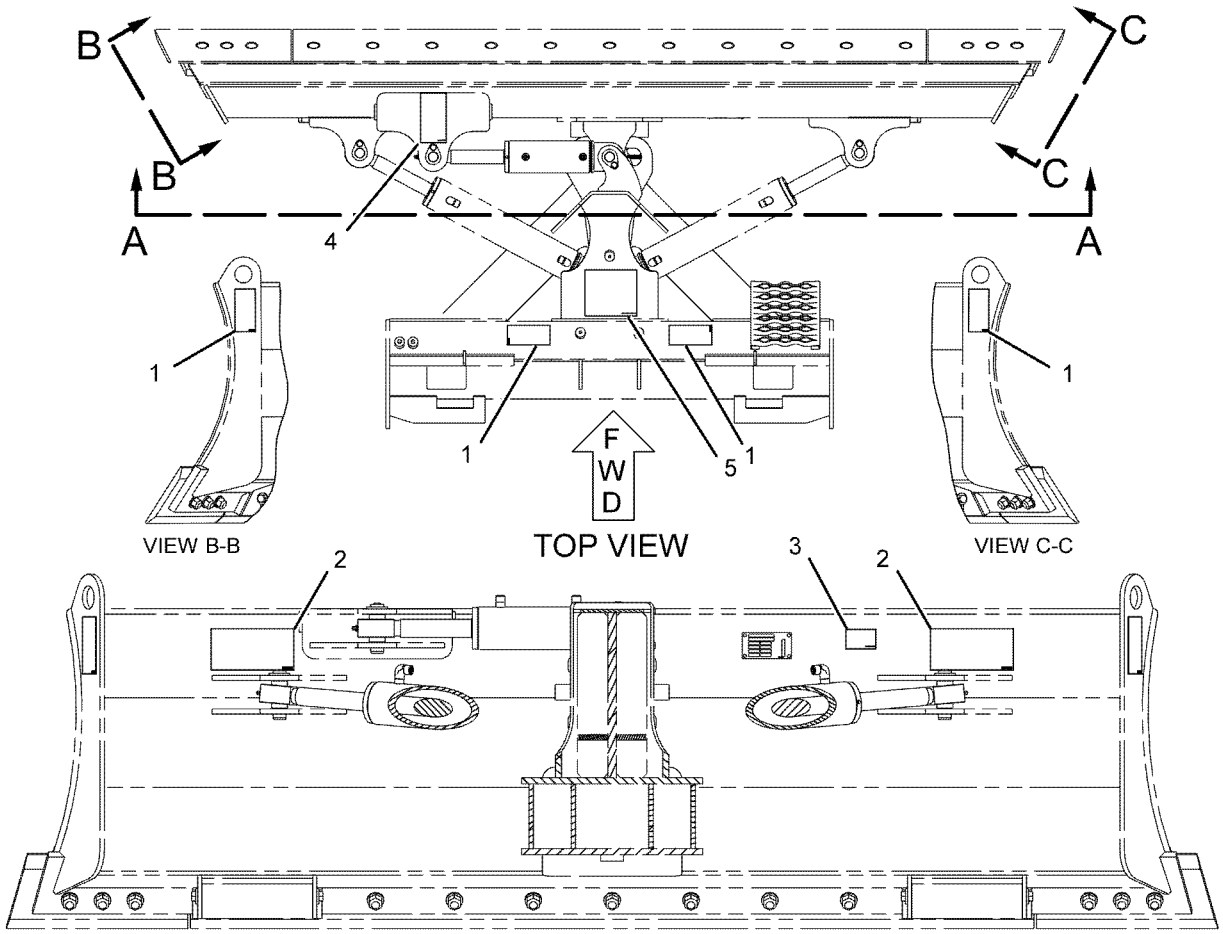

GRAPHIC #1 **<END>** g01120449

388-8146 PLATE & FILM GP

AN ATTACHMENT

SMCS-7405, 7557 **i05301005**

NOTE	REF NO	GRAPHIC REF	PART NUMBER	QTY	PART NAME 1 2 3 4 5 6 (PRODUCT LEVEL)	SEE PAGE
	1	1	**375-0121**	1	FILM-IDENTIFICATION (HYDRAULIC & XMSN OIL FILTER)	
	2	2	**345-4619**	1	FILM-IDENTIFICATION (HYDRAULIC OIL FILL)	
	3	2	**344-5036**	1	FILM-WARNING (DIESEL FUEL)	
	4	1	**239-4990**	1	FILM-WARNING (HIGH PRESSURE CYLINDER)	
	5	2	**295-7337**	1	FILM-WARNING (ARM CRUSHING HAZARD)	
	6	2	**224-8945**	1	FILM-WARNING (DO NOT USE ETHER, U.S.)	
	7	2	**388-8140**	1	FILM-INSTRUCTION (SERVICE CHART, READ OMM)	
	8	1	**418-5763**	1	FILM-INSTRUCTION (OPERATOR CONTROLS, READ OMM)	
	9	1	**285-2177**	1	FILM-INSTRUCTION (OPERATOR CONSOLE)	
	10	2	**235-1365**	1	FILM-WARNING (HOT FLUID UNDER PRESSURE)	
	11	2	**157-2853**	1	FILM-INFORMATION (READ OMM)	
	12	1	**169-2876**	1	FILM-IDENTIFICATION (POWER RECEPTACLE, 12-VOLT)	
	13	1	**219-0302**	1	FILM-WARNING (NO WELD, NO DRILL, READ OMM)	
	14	1	**346-8219**	1	FILM-WARNING (UNIVERSAL WARNING)	
	15	2	**295-7320**	1	FILM-WARNING (CRUSH HAZARD, READ OMM)	
	16	2	**295-7319**	1	FILM-WARNING (CRUSH HAZARD, READ OMM)	
	17	1	**228-2615**	1	FILM-WARNING (UNIVERSAL, U.S.)	
	18	2	**295-7318**	1	FILM-WARNING (FALL/CRUSH HAZARD, NO ACCESS)	
	19	1	**295-7317**	1	FILM-WARNING (CRUSH HAZARD, CAB, READ OMM)	
	20	1	**239-6986**	1	PLATE-SERIAL NUMBER (MACHINE)	
	21	1	**253-9499**	1	FILM-WARNING (JUMP START, READ OMM)	
	22	1	**263-4836**	6	FILM-IDENTIFICATION (TIE-DOWN)	
	23	1	**416-6976**	1	FILM-WARNING (ROPS, FOPS, READ OMM)	
	24	2	**295-2567**	1	FILM-INSTRUCTION (BUCKET LOWER)	
	25	1	**384-2555**	1	FILM-WARNING (CAB SUPPORT)	
	26	2	**302-4389**	1	FILM-WARNING (CRUSH HAZARD, FASTEN SEAT BELT)	
FY			*416-5687*	1	PLATE & FILM GP	471

F - NOT SHOWN
Y - SEPARATE ILLUSTRATION

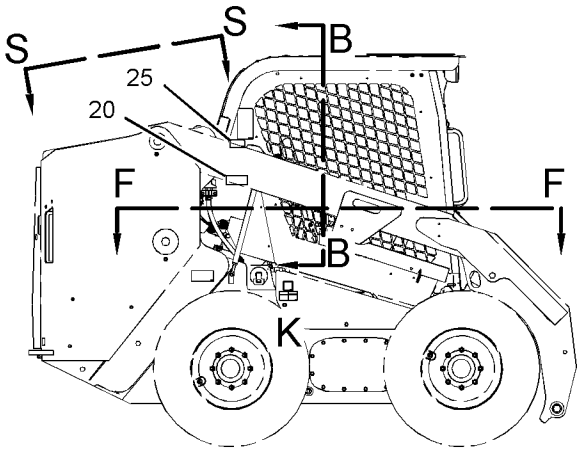

RIGHT SIDE VIEW

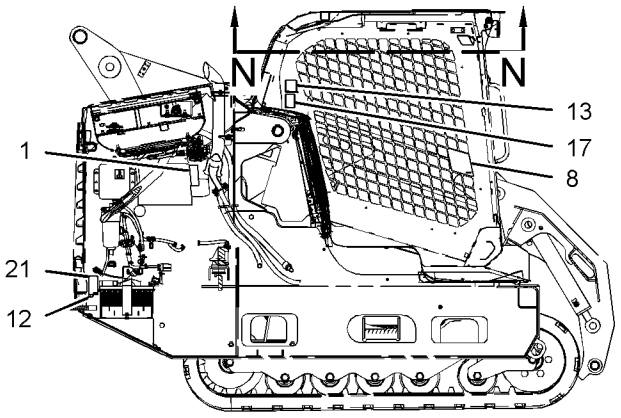

SECTION M-M

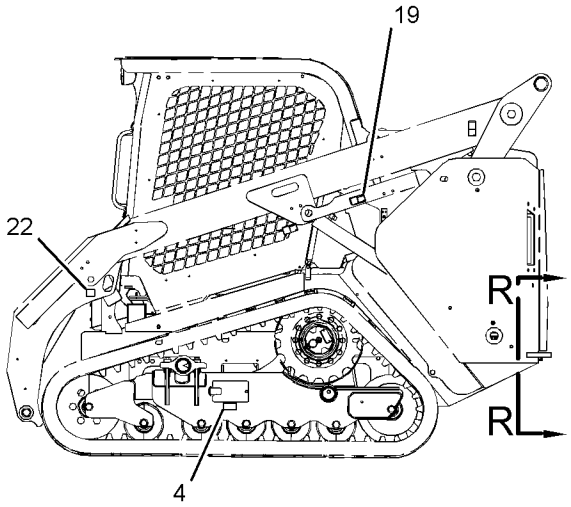

LEFT SIDE VIEW

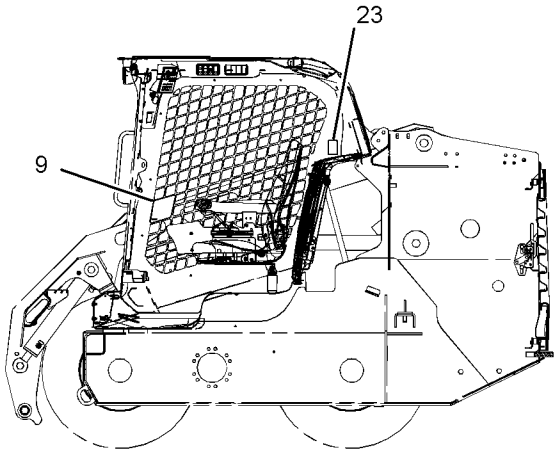

SECTION H-H

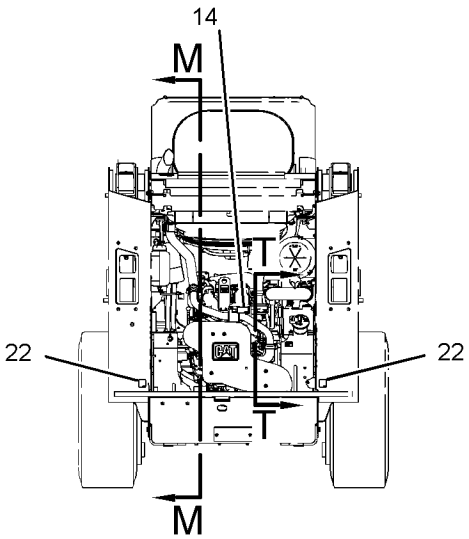

REAR VIEW
(PARTS REMOVED FOR CLARITY)

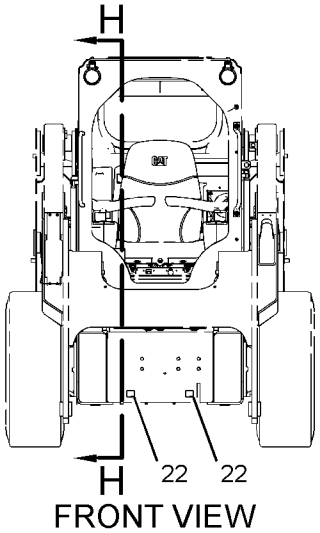

FRONT VIEW

REFER TO ALL ILLUSTRATIONS OF
THIS GROUP FOR AUXILIARY VIEWS

GRAPHIC #1

g03386500

388-8146 **PLATE & FILM GP (*contd.*)** **i05301005**

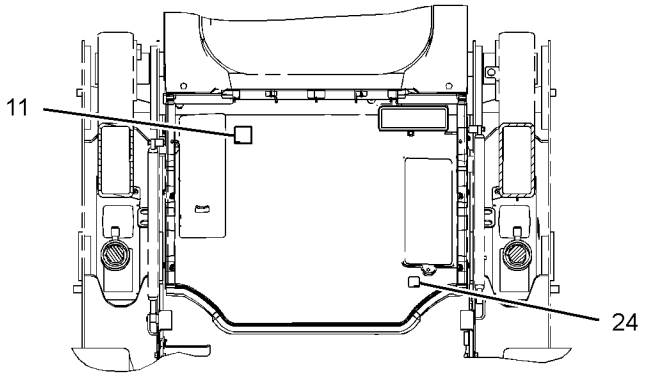

VIEW B-B

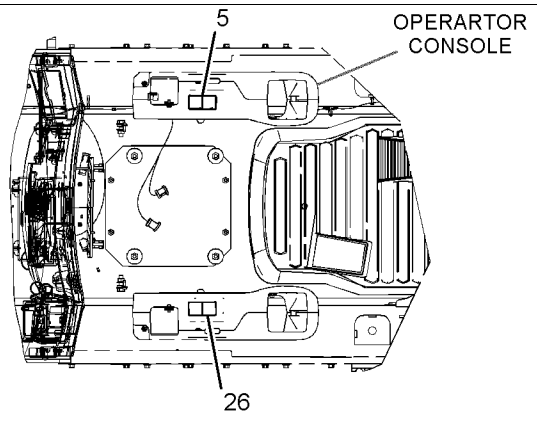

VIEW F-F

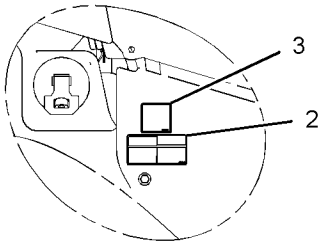

VIEW OF AREA K

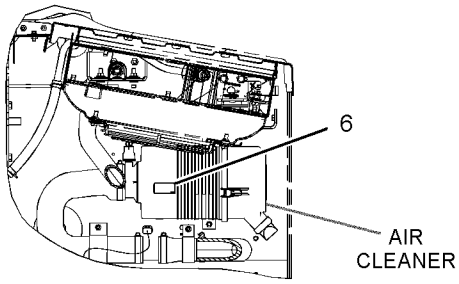

VIEW T-T

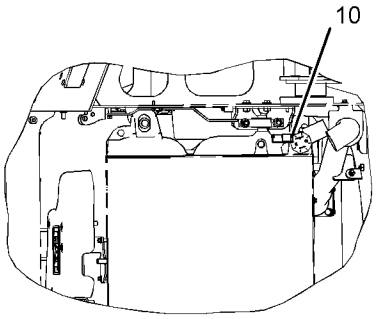

VIEW S-S

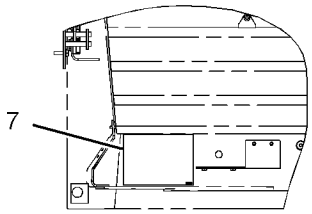

VIEW R-R

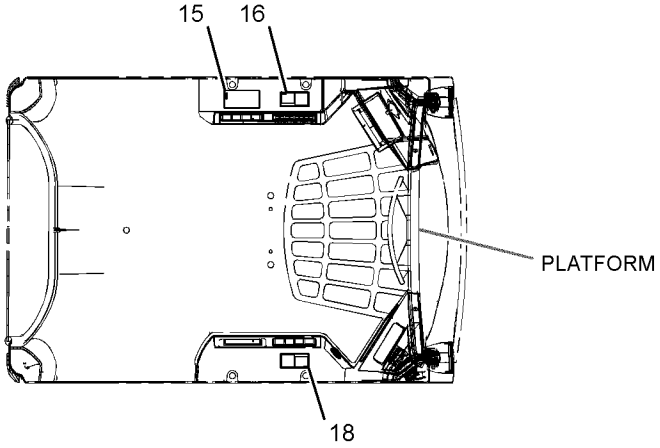

VIEW N-N

GRAPHIC #2 **<END>** g03322906

416-5687 PLATE & FILM GP

PART OF 388-8146 PLATE & FILM GP

AN ATTACHMENT

SMCS-7405, 7557 **i05359233**

NOTE	REF NO	GRAPHIC REF	PART NUMBER	QTY	PART NAME 1 2 3 4 5 6 (PRODUCT LEVEL)	SEE PAGE
	1	2	**385-0414**	1	PLATE-IDENTIFICATION (CAT, C3.3B)	
	2	2	**375-2751**	1	FILM-IDENTIFICATION (ENGINE OIL, READ OMM)	
	3	2	**421-2279**	1	FILM-IDENTIFICATION (BREATHER)	
	4	2	**299-7878**	1	FILM-WARNING (HIGH PRESSURE FUEL LINES)	
	5	1	**349-8603**	1	FILM-INSTRUCTION (FUEL, READ OMM)	

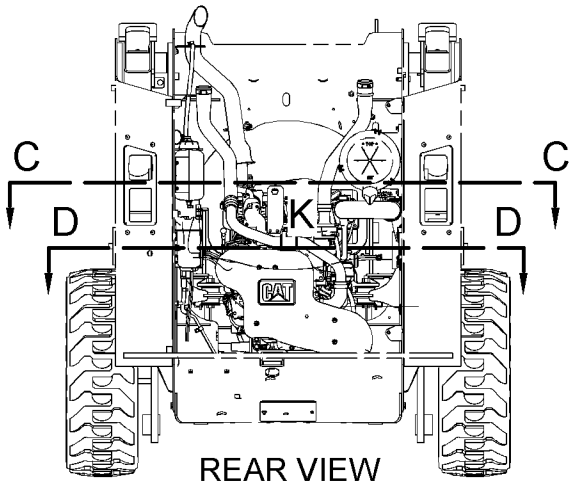

REAR VIEW

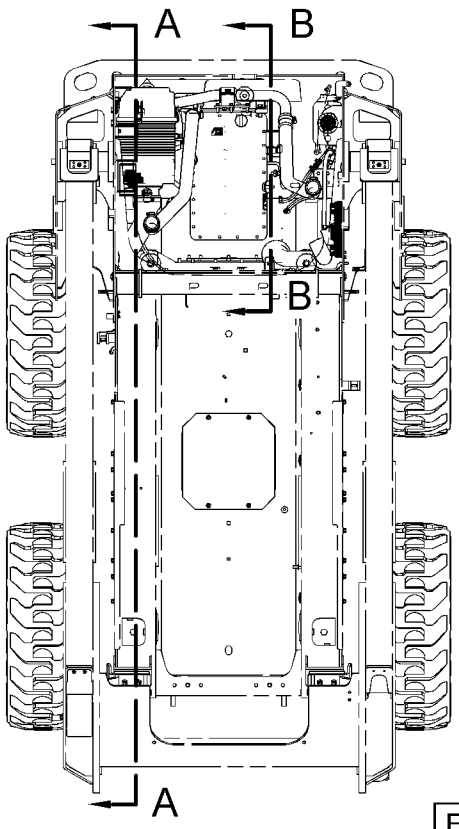

TOP VIEW

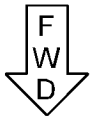

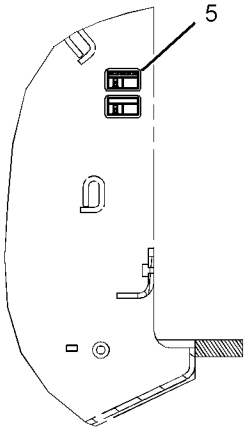

VIEW OF AREA E

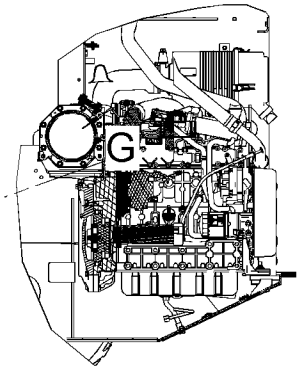

VIEW B-B

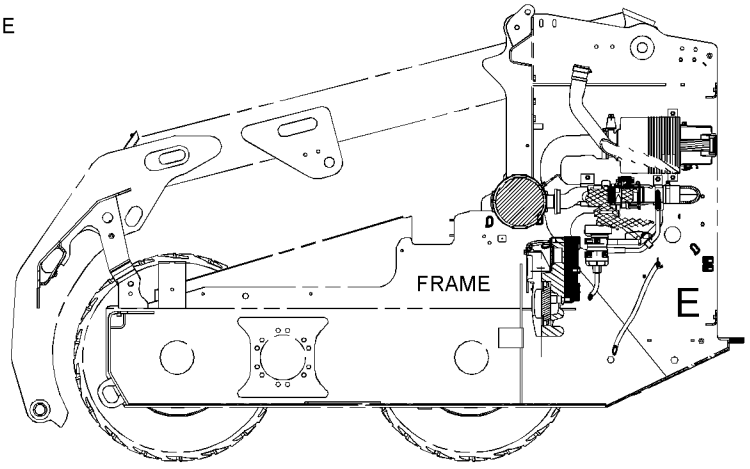

VIEW A-A

REFER TO ALL ILLUSTRATIONS OF
THIS GROUP FOR AUXILIARY VIEWS

GRAPHIC #1

g03394117

416-5687 **PLATE & FILM GP (*contd.*)** **i05359233**

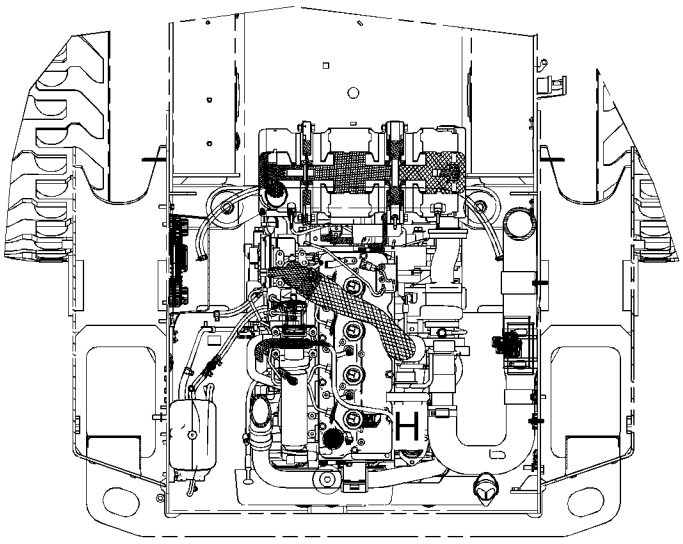

VIEW C-C

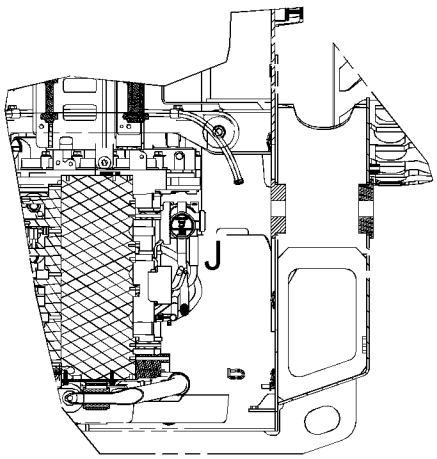

VIEW D-D

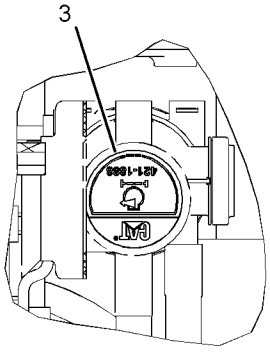

VIEW OF AREA J

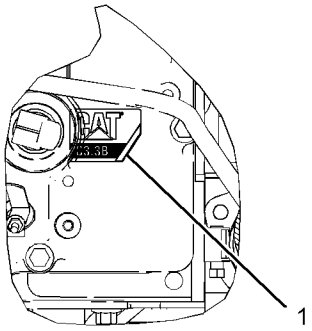

VIEW OF AREA H

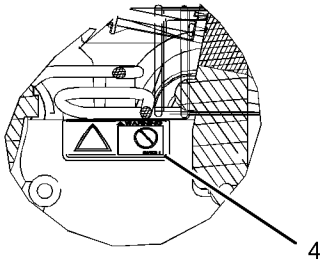

VIEW OF AREA G

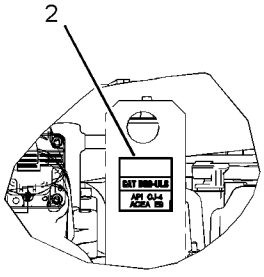

VIEW OF AREA K

GRAPHIC #2 **<END>** g03323710

416-5688 PLATE & FILM GP

S/N: JSL1-UP

PART OF 393-7338 ENGINE AR-COMPLETE, 435-4865, 435-4877 PLATE & FILM GP

ALSO AN ATTACHMENT

SMCS-7405, 7557

i05359232

NOTE	REF NO	GRAPHIC REF	PART NUMBER	QTY	PART NAME 1 2 3 4 5 6 (PRODUCT LEVEL)	SEE PAGE
	1	1	**385-0414**	1	PLATE-IDENTIFICATION (CAT, C3.3B)	
	2	1	**375-2751**	1	FILM-IDENTIFICATION (ENGINE OIL, READ OMM)	
	3	1	**349-8603**	1	FILM-INSTRUCTION (FUEL, READ OMM)	

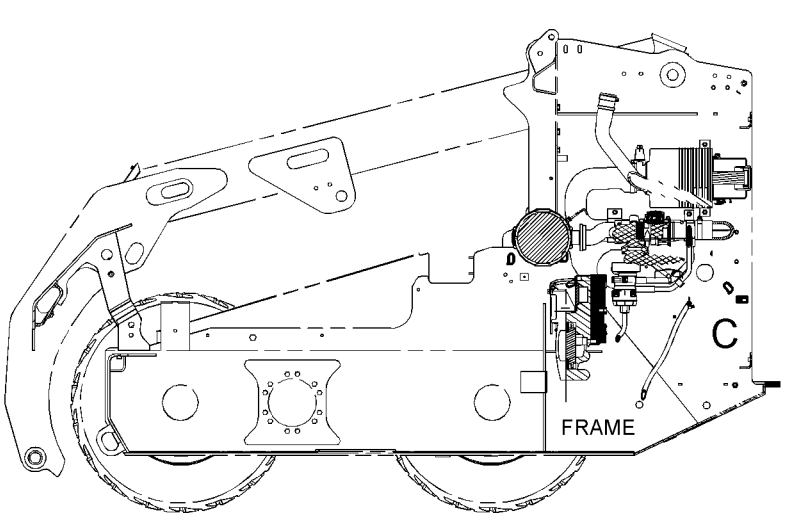

VIEW B-B

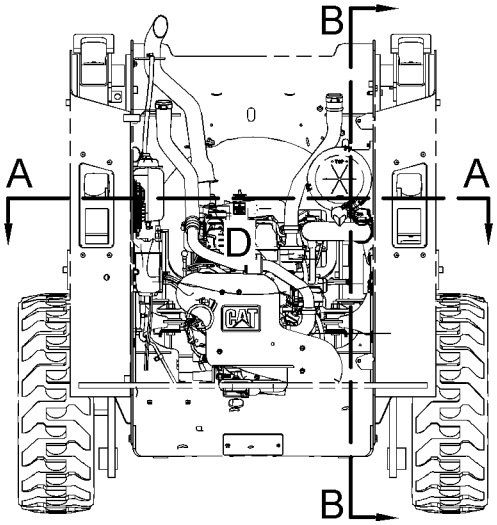

REAR VIEW
(PARTS REMOVED FOR CLARITY)

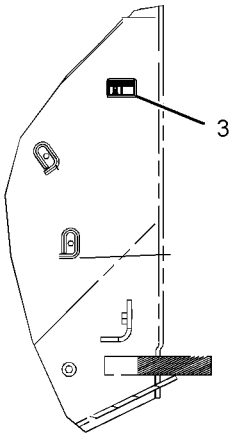

VIEW OF AREA C

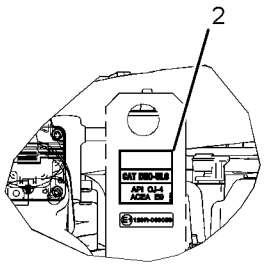

VIEW OF AREA D

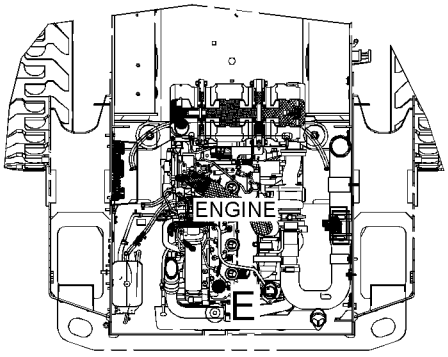

VIEW A-A

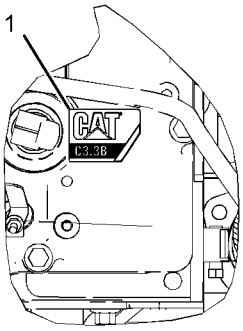

VIEW OF AREA E

GRAPHIC #1

<END>

g03394103

416-5689 PLATE & FILM GP

PART OF 393-7339 ENGINE AR-COMPLETE, 435-4866 PLATE & FILM GP
ALSO AN ATTACHMENT

SMCS-7405, 7557 **i05359231**

NOTE	REF NO	GRAPHIC REF	PART NUMBER	QTY	PART NAME 1 2 3 4 5 6 (PRODUCT LEVEL)	SEE PAGE
	1	1	**385-0414**	1	PLATE-IDENTIFICATION (CAT, C3.3B)	
	2	1	**375-2751**	1	FILM-IDENTIFICATION (ENGINE OIL, READ OMM)	
	3	1	**349-8603**	1	FILM-INSTRUCTION (FUEL, READ OMM)	

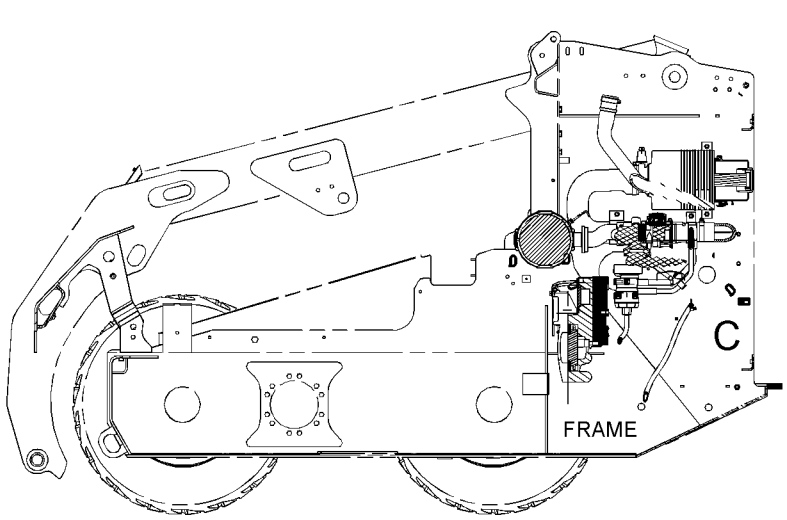

VIEW B-B

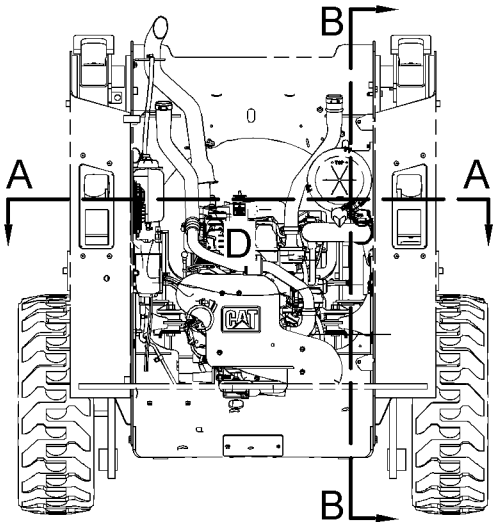

REAR VIEW
(PARTS REMOVED FOR CLARITY)

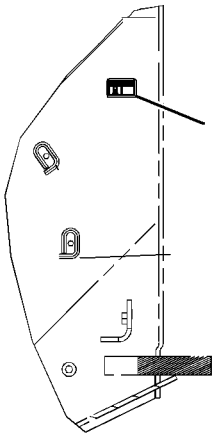

VIEW OF AREA C

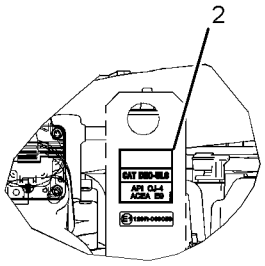

VIEW OF AREA D

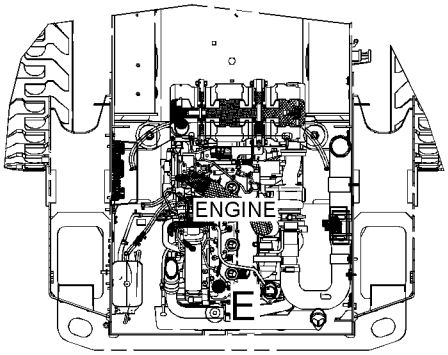

VIEW A-A

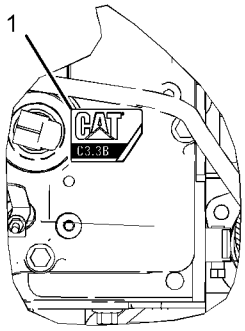

VIEW OF AREA E

GRAPHIC #1

<END>

g03394103

416-5789 PLATE & FILM GP

S/N: JSL1-UP
PART OF 435-4878 PLATE & FILM GP
AN ATTACHMENT

SMCS-7405, 7557

i05351742

NOTE	REF NO	GRAPHIC REF	PART NUMBER	QTY	PART NAME 1 2 3 4 5 6 (PRODUCT LEVEL)	SEE PAGE
	1	1	**385-0414**	1	PLATE-IDENTIFICATION (CAT, C3.3B)	
	2	1	**375-2751**	1	FILM-IDENTIFICATION (ENGINE OIL, READ OMM)	
	3	1	**349-8604**	1	FILM-INFORMATION (FUEL, READ OMM)	

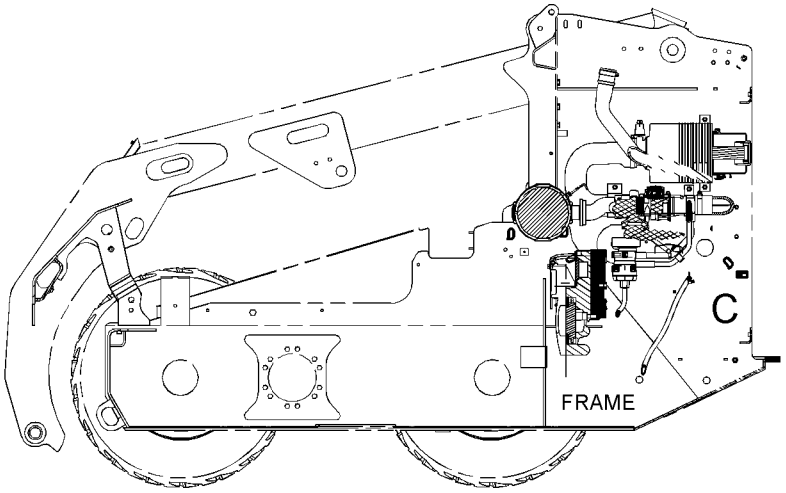

VIEW B-B

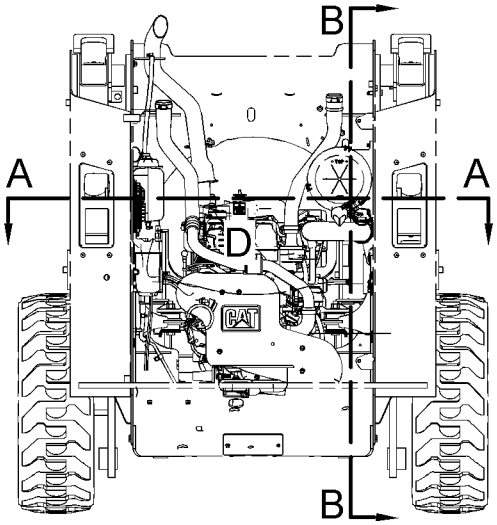

REAR VIEW
(PARTS REMOVED FOR CLARITY)

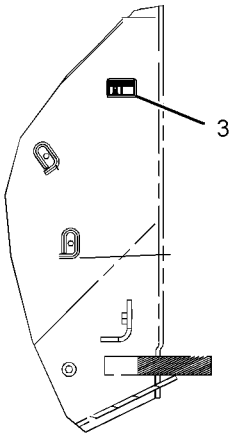

VIEW OF AREA C

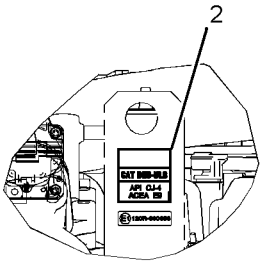

VIEW OF AREA D

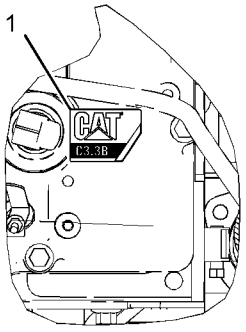

VIEW OF AREA E

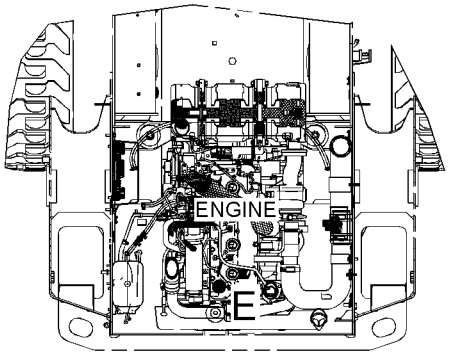

VIEW A-A

GRAPHIC #1

<END>

g03390380

418-9011 PLATE & FILM GP

AN ATTACHMENT

SMCS-7405, 7557 **i05156462**

NOTE	REF NO	GRAPHIC REF	PART NUMBER	QTY	PART NAME 1 2 3 4 5 6 (PRODUCT LEVEL)	SEE PAGE
	1	1	**199-3410**	1	FILM-IDENTIFICATION (SYNTHETIC HYD OIL, READ OMM)	

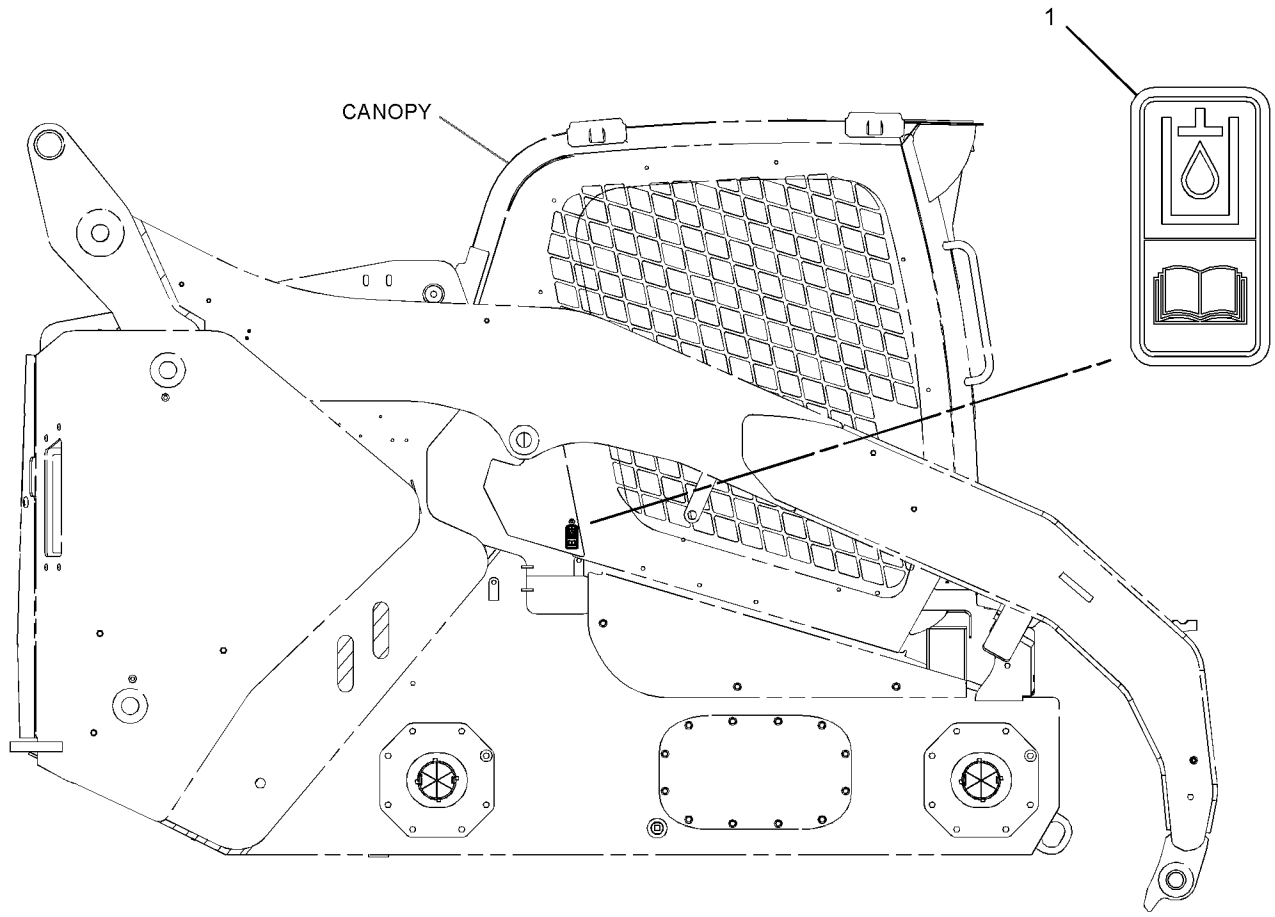

RIGHT SIDE VIEW

GRAPHIC #1 **<END>** g03323634

SERVICE EQUIPMENT AND SUPPLIES

435-4865 PLATE & FILM GP

S/N: JSL1-UP

AN ATTACHMENT

SMCS-7405, 7557 **i05302449**

NOTE	REF NO	GRAPHIC REF	PART NUMBER	QTY	PART NAME 1 2 3 4 5 6 (PRODUCT LEVEL)	SEE PAGE
	1	1	**345-4619**	1	FILM-IDENTIFICATION (HYDRAULIC OIL FILL)	
	2	1	**344-5036**	1	FILM-WARNING (DIESEL FUEL)	
	3	3	**239-4990**	1	FILM-WARNING (HIGH PRESSURE CYLINDER)	
	4	2	**295-7337**	1	FILM-WARNING (ARM CRUSHING HAZARD)	
	5	2	**224-8945**	1	FILM-WARNING (DO NOT USE ETHER, U.S.)	
	6	3	**388-8140**	1	FILM-INSTRUCTION (SERVICE CHART, READ OMM)	
	7	3	**418-5763**	1	FILM-INSTRUCTION (OPERATOR CONTROLS, READ OMM)	
	8	1	**285-2177**	1	FILM-INSTRUCTION (OPERATOR CONSOLE)	
	9	2	**235-1365**	1	FILM-WARNING (HOT FLUID UNDER PRESSURE)	
	10	2	**157-2853**	1	FILM-INFORMATION (READ OMM)	
	11	3	**169-2876**	1	FILM-IDENTIFICATION (POWER RECEPTACLE, 12-VOLT)	
	12	3	**219-0302**	1	FILM-WARNING (NO WELD, NO DRILL, READ OMM)	
	13	3	**295-7320**	1	FILM-WARNING (CRUSH HAZARD, READ OMM)	
	14	3	**295-7319**	1	FILM-WARNING (CRUSH HAZARD, READ OMM)	
	15	3	**228-2615**	1	FILM-WARNING (UNIVERSAL, U.S.)	
	16	3	**295-7318**	1	FILM-WARNING (FALL/CRUSH HAZARD, NO ACCESS)	
	17	3	**295-7317**	1	FILM-WARNING (CRUSH HAZARD, CAB, READ OMM)	
	18	3	**239-6986**	1	PLATE-SERIAL NUMBER (MACHINE)	
	19	3	**253-9499**	1	FILM-WARNING (JUMP START, READ OMM)	
	20	1	**263-4836**	6	FILM-IDENTIFICATION (TIE-DOWN)	
	21	1	**416-6976**	1	FILM-WARNING (ROPS, FOPS, READ OMM)	
	22	2	**295-2567**	1	FILM-INSTRUCTION (BUCKET LOWER)	
	23	2	**384-2555**	1	FILM-WARNING (CAB SUPPORT)	
	24	2	**302-4389**	1	FILM-WARNING (CRUSH HAZARD, FASTEN SEAT BELT)	
	25	1	**346-8219**	1	FILM-WARNING (UNIVERSAL WARNING)	
FY			*416-5688*	1	PLATE & FILM GP	474

F - NOT SHOWN
Y - SEPARATE ILLUSTRATION

435-4865 **PLATE & FILM GP (*contd.*)** **i05302449**

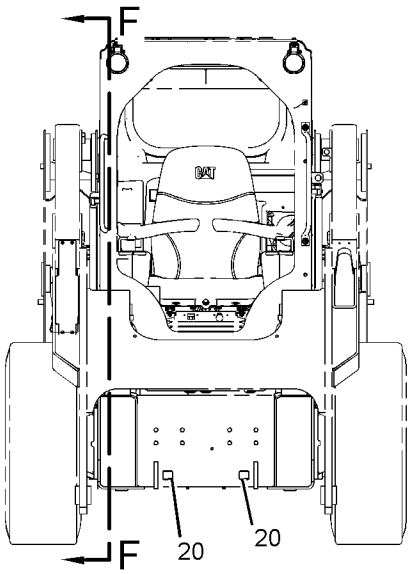

FRONT VIEW

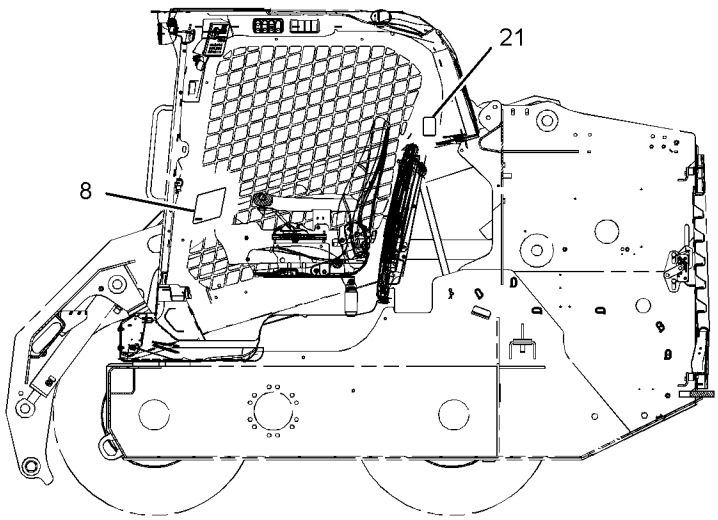

VIEW F-F

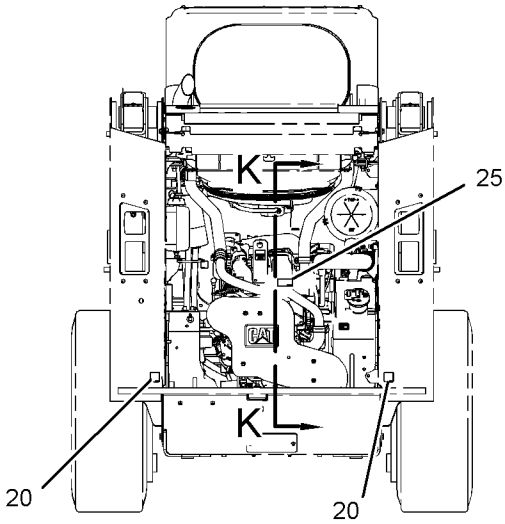

REAR VIEW

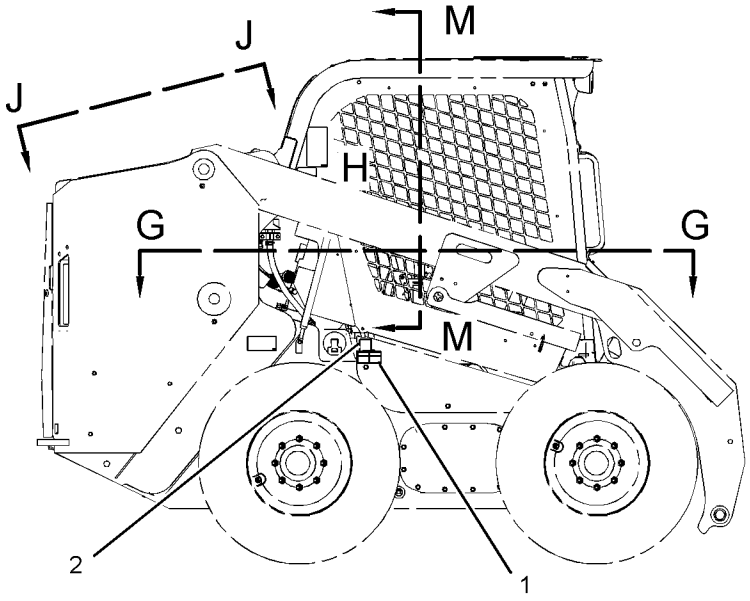

RIGHT SIDE VIEW

REFER TO ALL ILLUSTRATIONS OF
THIS GROUP FOR AUXILIARY VIEWS

GRAPHIC #1

g03371831

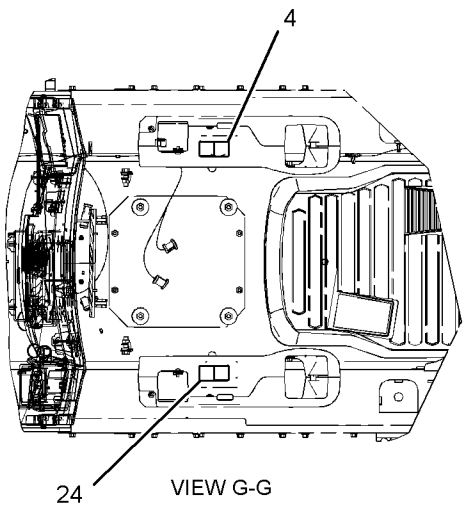

VIEW G-G

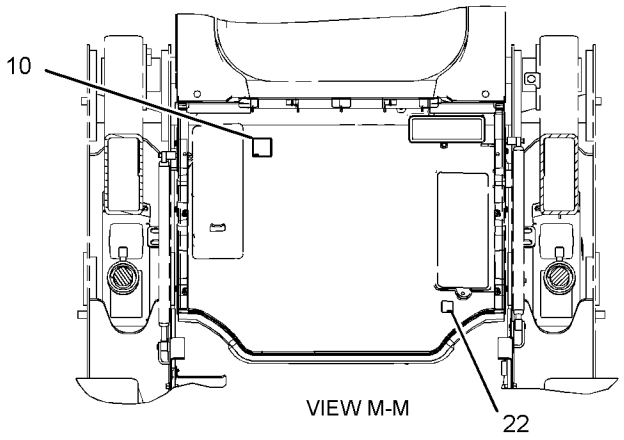

VIEW M-M

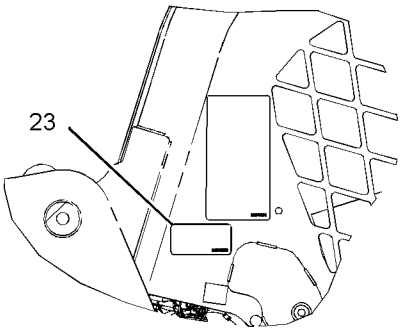

VIEW OF AREA H
(LIFT ARM REMOVED FOR CLARITY)

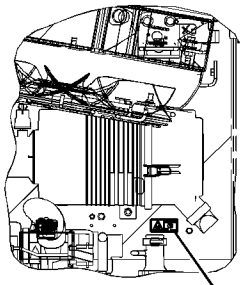

VIEW K-K

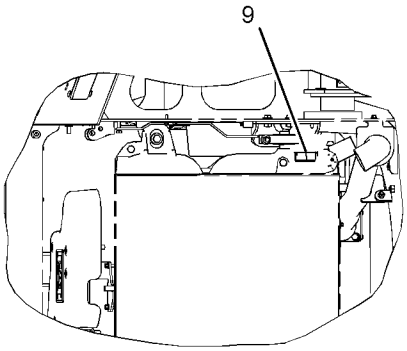

VIEW J-J

GRAPHIC #2 g03371835

435-4865 **PLATE & FILM GP (*contd.*)** **i05302449**

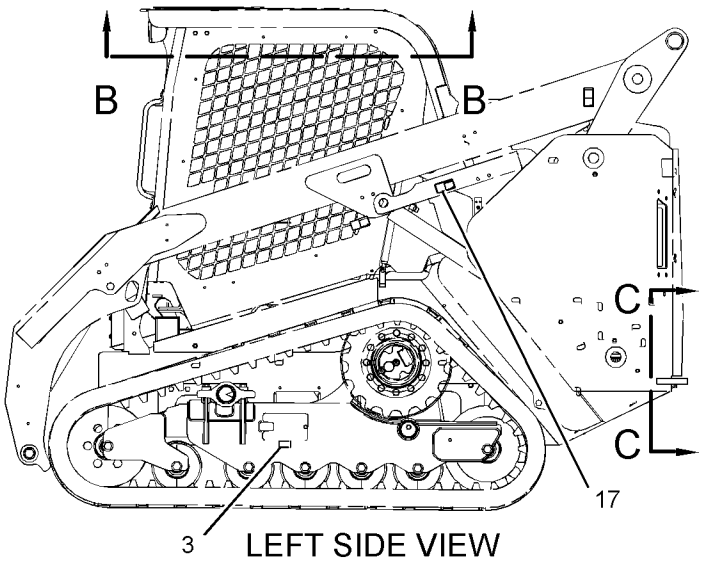

LEFT SIDE VIEW

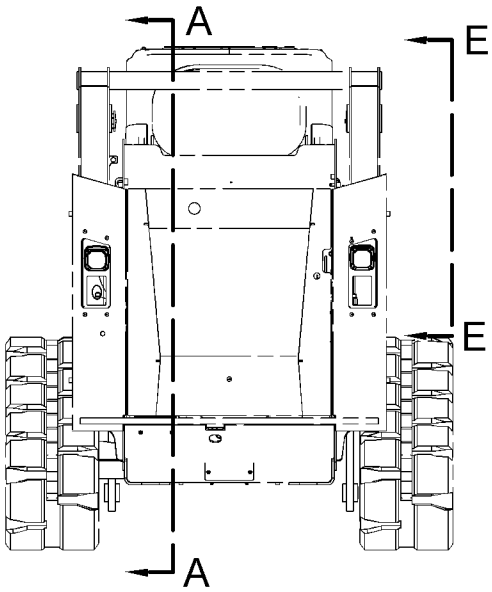

REAR VIEW

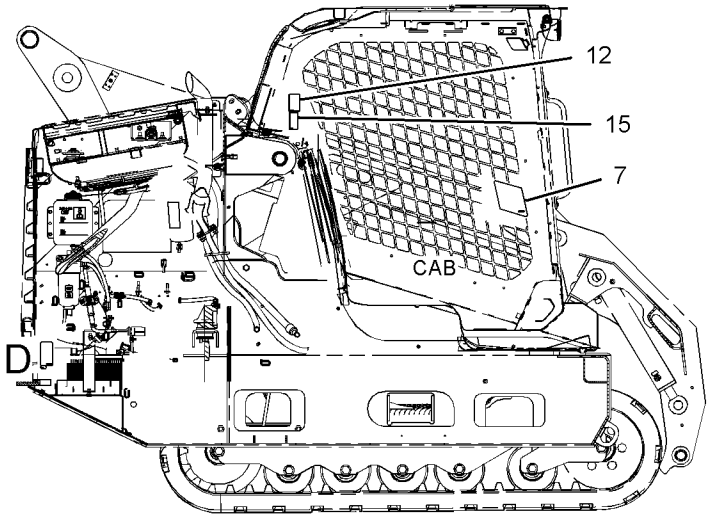

VIEW A-A

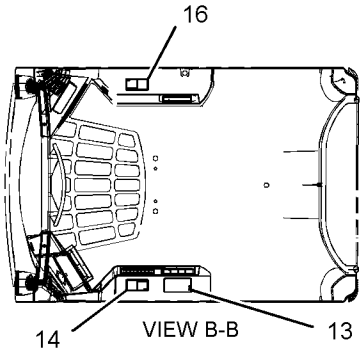

VIEW B-B

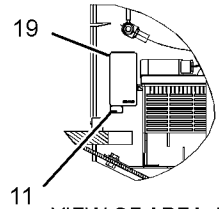

VIEW OF AREA D

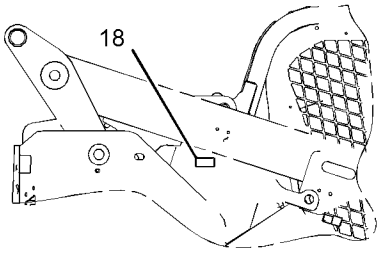

VIEW E-E

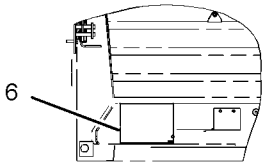

VIEW C-C

GRAPHIC #3 **<END>** g03371840

435-4866 PLATE & FILM GP

S/N: JSL1-UP

AN ATTACHMENT

SMCS-7405, 7557 **i05302433**

NOTE	REF NO	GRAPHIC REF	PART NUMBER	QTY	PART NAME 1 2 3 4 5 6 (PRODUCT LEVEL)	SEE PAGE
	1	1	**345-4619**	1	FILM-IDENTIFICATION (HYDRAULIC OIL FILL)	
	2	1	**344-5036**	1	FILM-WARNING (DIESEL FUEL)	
	3	3	**239-4990**		FILM-WARNING (HIGH PRESSURE CYLINDER)	
	4	2	**295-7337**	1	FILM-WARNING (ARM CRUSHING HAZARD)	
	5	2	**224-8945**	1	FILM-WARNING (DO NOT USE ETHER, U.S.)	
	6	3	**388-8140**	1	FILM-INSTRUCTION (SERVICE CHART, READ OMM)	
	7	3	**418-5763**	1	FILM-INSTRUCTION (OPERATOR CONTROLS, READ OMM)	
	8	1	**346-8219**	1	FILM-WARNING (UNIVERSAL WARNING)	
	9	1	**285-2177**	1	FILM-INSTRUCTION (OPERATOR CONSOLE)	
	10	2	**235-1365**	1	FILM-WARNING (HOT FLUID UNDER PRESSURE)	
	11	2	**302-4389**	1	FILM-WARNING (CRUSH HAZARD, FASTEN SEAT BELT)	
	12	2	**157-2853**	1	FILM-INFORMATION (READ OMM)	
	13	3	**169-2876**	1	FILM-IDENTIFICATION (POWER RECEPTACLE, 12-VOLT)	
	14	3	**219-0302**	1	FILM-WARNING (NO WELD, NO DRILL, READ OMM)	
	15	3	**295-7320**	1	FILM-WARNING (CRUSH HAZARD, READ OMM)	
	16	3	**295-7319**	1	FILM-WARNING (CRUSH HAZARD, READ OMM)	
	17	3	**228-2615**	1	FILM-WARNING (UNIVERSAL, U.S.)	
	18	3	**295-7318**	1	FILM-WARNING (FALL/CRUSH HAZARD, NO ACCESS)	
	19	3	**295-7317**	1	FILM-WARNING (CRUSH HAZARD, CAB, READ OMM)	
	20	3	**239-6986**	1	PLATE-SERIAL NUMBER (MACHINE)	
	21	3	**253-9499**	1	FILM-WARNING (JUMP START, READ OMM)	
	22	1	**263-4836**	4	FILM-IDENTIFICATION (TIE-DOWN)	
	23	1	**416-6976**	1	FILM-WARNING (ROPS, FOPS, READ OMM)	
	24	2	**295-2567**	1	FILM-INSTRUCTION (BUCKET LOWER)	
	25	2	**384-2555**		FILM-WARNING (CAB SUPPORT)	
FY			*416-5689*	1	PLATE & FILM GP	475

F - NOT SHOWN
Y - SEPARATE ILLUSTRATION

435-4866 **PLATE & FILM GP (*contd.*)** **i05302433**

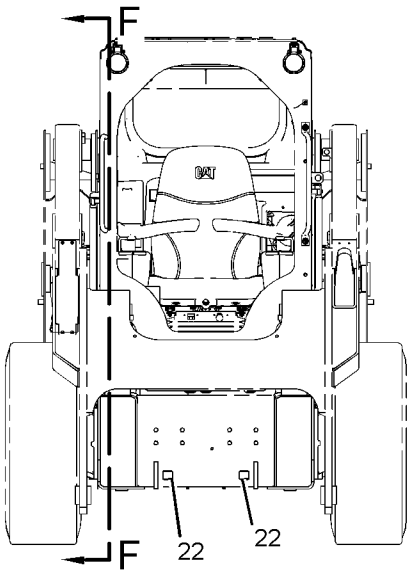

FRONT VIEW

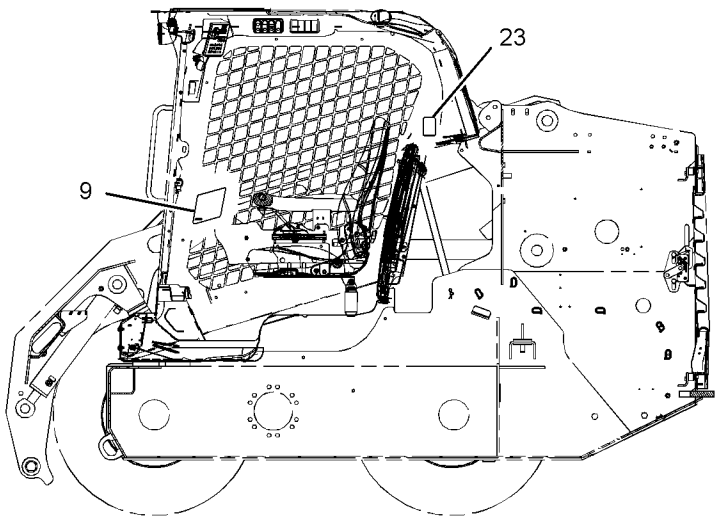

VIEW F-F

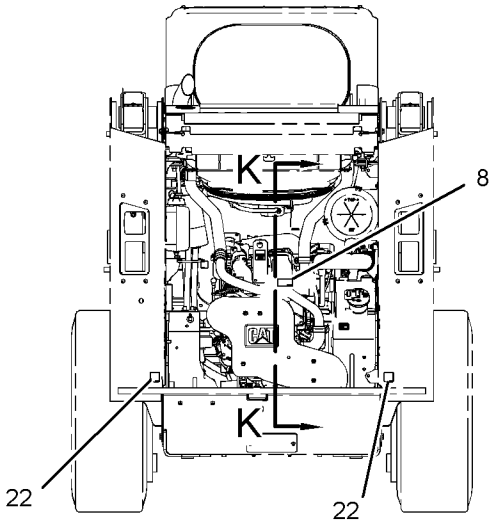

REAR VIEW

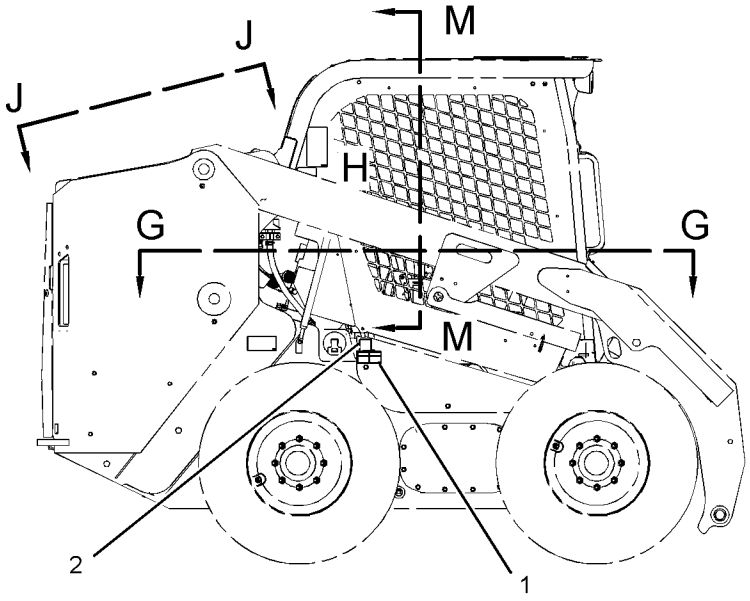

RIGHT SIDE VIEW

REFER TO ALL ILLUSTRATIONS OF
THIS GROUP FOR AUXILIARY VIEWS

GRAPHIC #1

g03371834

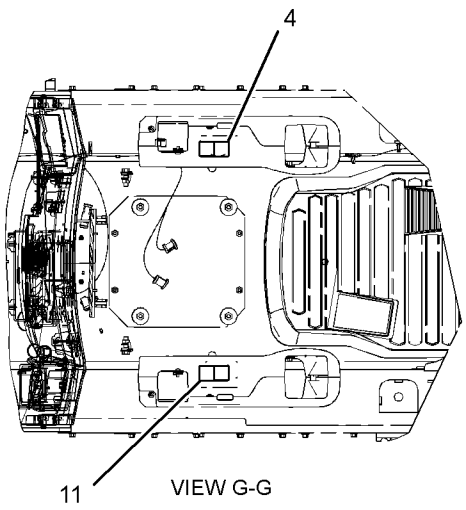

VIEW G-G

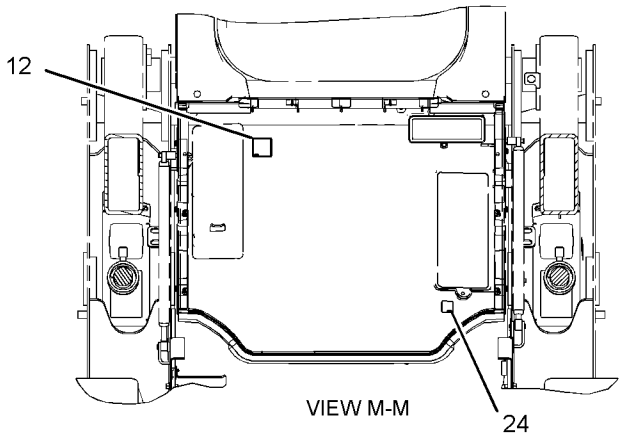

VIEW M-M

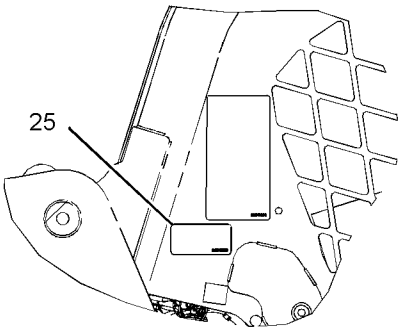

VIEW OF AREA H
(LIFT ARM REMOVED FOR CLARITY)

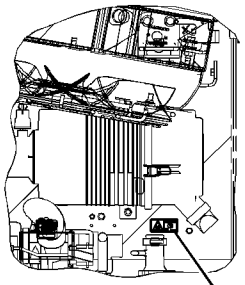

VIEW K-K

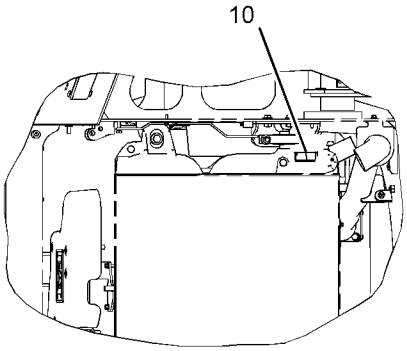

VIEW J-J

GRAPHIC #2 g03371830

435-4866 **PLATE & FILM GP (*contd.*)** **i05302433**

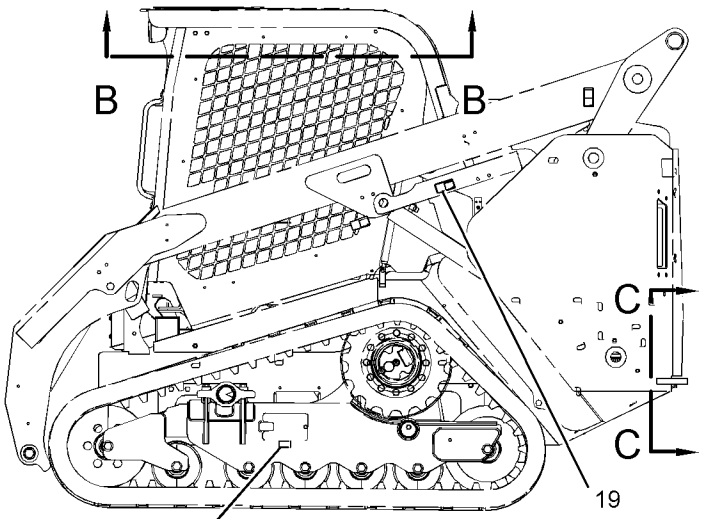

LEFT SIDE VIEW

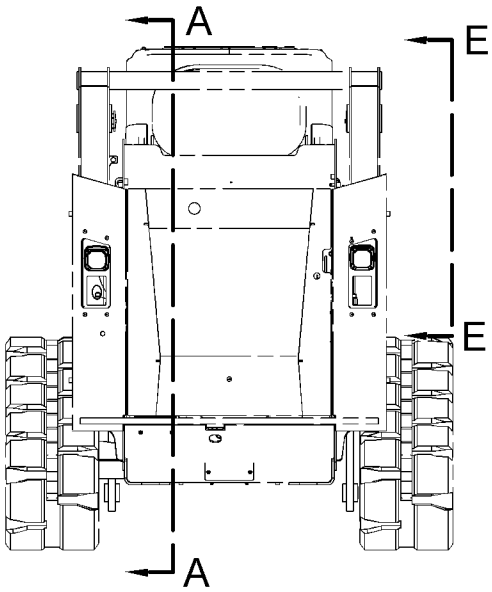

REAR VIEW

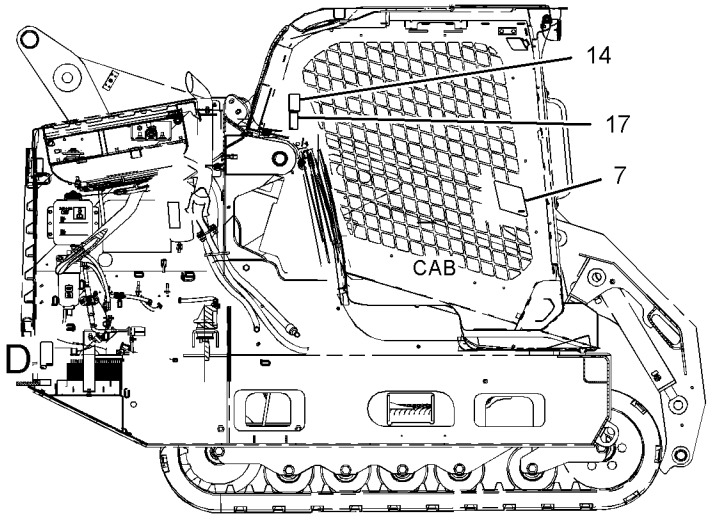

VIEW A-A

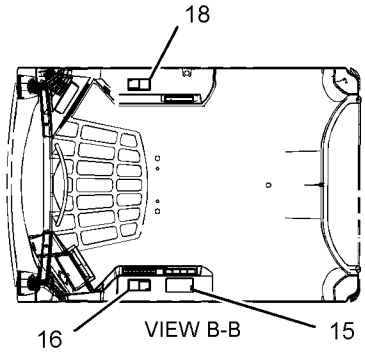

VIEW B-B

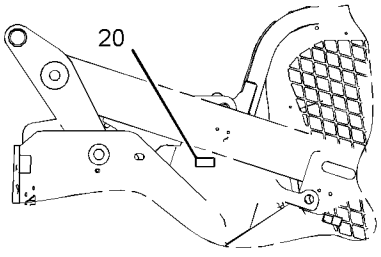

VIEW E-E

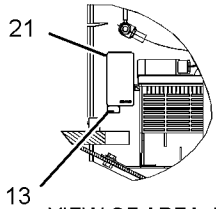

VIEW OF AREA D

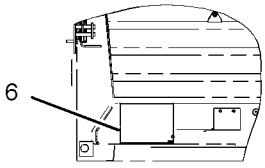

VIEW C-C

GRAPHIC #3 **<END>** g03371839

435-4877 PLATE & FILM GP

S/N: JSL1-UP

AN ATTACHMENT

SMCS-7405, 7557 **i05302450**

NOTE	REF NO	GRAPHIC REF	PART NUMBER	QTY	PART NAME 1 2 3 4 5 6 (PRODUCT LEVEL)	SEE PAGE
	1	2	**388-8140**	1	FILM-INSTRUCTION (SERVICE CHART, READ OMM)	
	2	2	**345-4619**	1	FILM-IDENTIFICATION (HYDRAULIC OIL FILL)	
	3	2	**344-5036**	1	FILM-WARNING (DIESEL FUEL)	
	4	1	**239-4991**	1	FILM-WARNING (HIGH PRESSURE CYLINDER)	
	5	2	**295-7338**	1	FILM-WARNING (CRUSH HAZARD, FASTEN SEAT BELT)	
	6	2	**224-8946**	1	FILM-WARNING (NO ETHER SPRAY/AIR INTK, INTL)	
	7	1	**418-5763**	1	FILM-INSTRUCTION (OPERATOR CONTROLS, READ OMM)	
	8	1	**285-2177**	1	FILM-INSTRUCTION (OPERATOR CONSOLE)	
	9	1	**364-4013**	1	FILM-WARNING (UNIVERSAL, READ OMM)	
	10	2	**235-1368**	1	FILM-WARNING (RADIATOR)	
	11	2	**157-2853**	1	FILM-INFORMATION (READ OMM)	
	12	1	**169-2876**	1	FILM-IDENTIFICATION (POWER RECEPTACLE, 12-VOLT)	
	13	1	**219-0302**	1	FILM-WARNING (NO WELD, NO DRILL, READ OMM)	
	14	2	**295-7330**	1	FILM-WARNING (CRUSH HAZARD, READ OMM)	
	15	2	**295-7329**	1	FILM-WARNING (CRUSH HAZARD, READ OMM)	
	16	1	**228-2616**	1	FILM-WARNING (UNIVERSAL, READ OMM)	
	17	2	**295-7328**	1	FILM-WARNING (FALL/CRUSH HAZARD, NO ACCESS)	
	18	1	**295-7327**	1	FILM-WARNING (CRUSH HAZARD, READ OMM)	
	19	1	**239-6986**	1	PLATE-SERIAL NUMBER (MACHINE)	
	20	1	**253-7817**	1	FILM-WARNING (JUMP START, READ OMM)	
	21	1	**263-4836**	6	FILM-IDENTIFICATION (TIE-DOWN)	
	22	1	**416-6976**	1	FILM-WARNING (ROPS, FOPS, READ OMM)	
	23	2	**295-2567**	1	FILM-INSTRUCTION (BUCKET LOWER)	
	24	1	**384-2556**	2	FILM-WARNING (CRUSH HAZARD, CAB, READ OMM)	
	25	2	**302-4390**	1	FILM-WARNING (CRUSH HAZARD, FASTEN SEAT BELT)	
FY			*416-5688*	1	PLATE & FILM GP	474

F - NOT SHOWN
Y - SEPARATE ILLUSTRATION

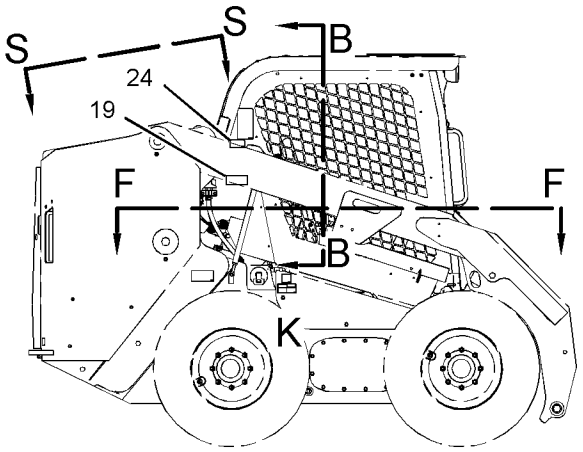

RIGHT SIDE VIEW

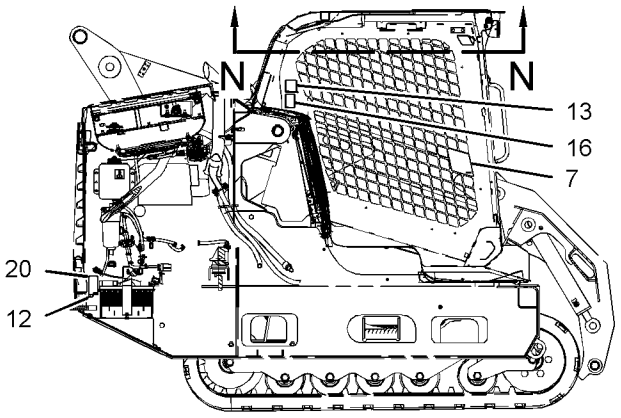

VIEW M

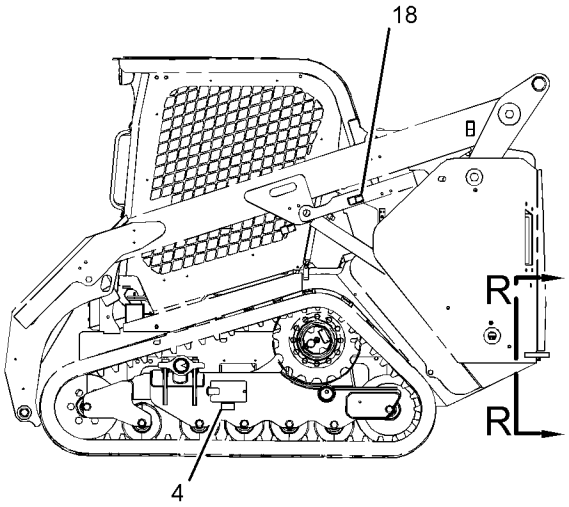

LEFT SIDE VIEW

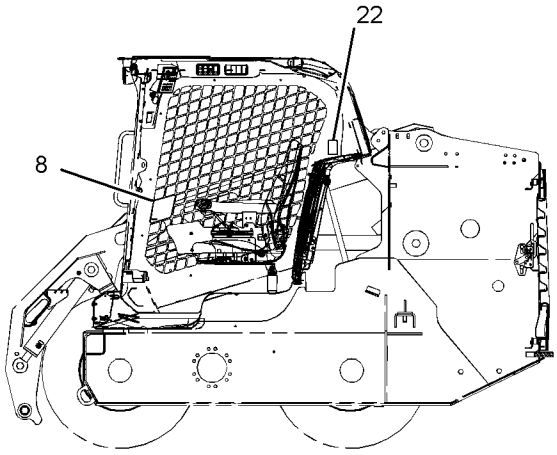

VIEW H

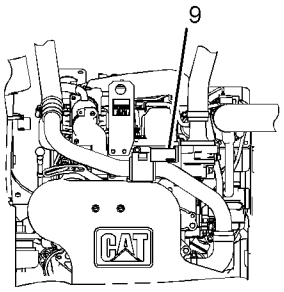

VIEW OF AREA U

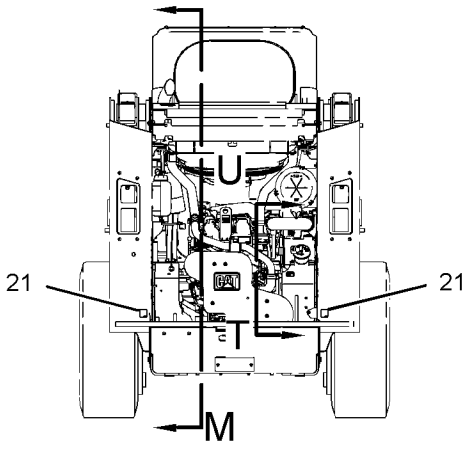

REAR VIEW
(PARTS REMOVED FOR CLARITY)

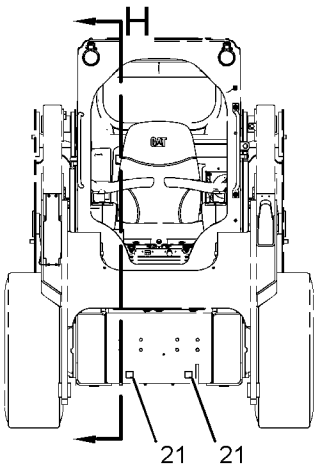

FRONT VIEW

REFER TO ALL ILLUSTRATIONS OF
THIS GROUP FOR AUXILIARY VIEWS

GRAPHIC #1

g03371832

435-4877 **PLATE & FILM GP (*contd.*)** **i05302450**

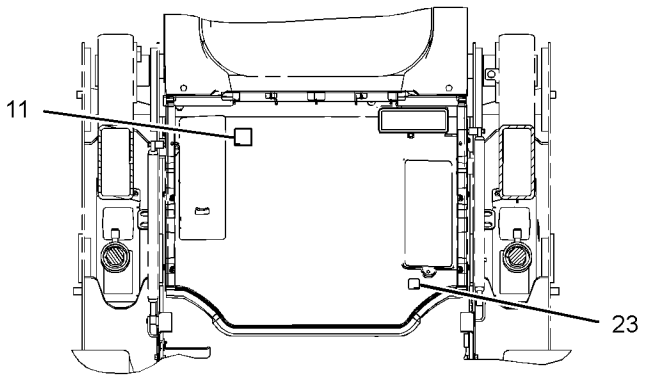

VIEW B-B

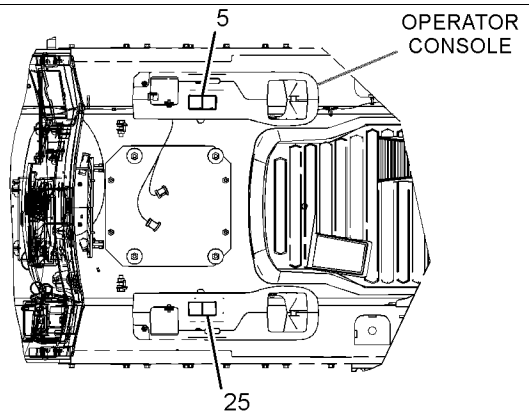

VIEW F-F

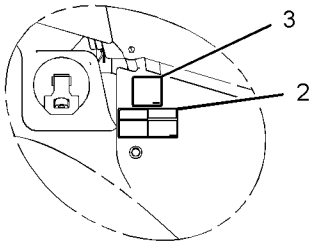

VIEW OF AREA K

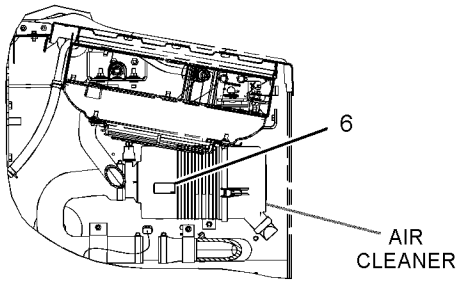

VIEW T

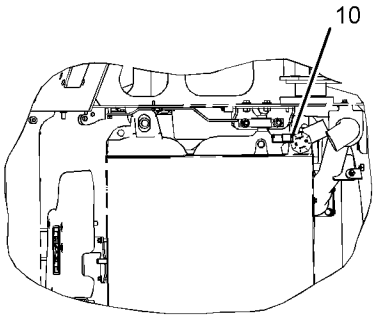

VIEW S-S

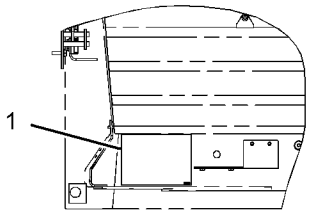

VIEW R-R

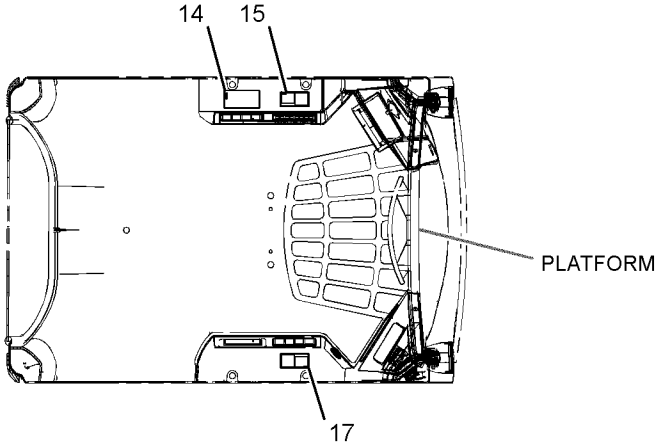

VIEW N-N

GRAPHIC #2 **<END>** g03371833

435-4878 PLATE & FILM GP

S/N: JSL1-UP

AN ATTACHMENT

SMCS-7405, 7557

i05302438

NOTE	REF NO	GRAPHIC REF	PART NUMBER	QTY	PART NAME 1 2 3 4 5 6 (PRODUCT LEVEL)	SEE PAGE
	1	1	**345-4619**	1	FILM-IDENTIFICATION (HYDRAULIC OIL FILL)	
	2	1	**344-5036**	1	FILM-WARNING (DIESEL FUEL)	
	3	2	**239-4991**	1	FILM-WARNING (HIGH PRESSURE CYLINDER)	
	4	1	**295-7338**	1	FILM-WARNING (CRUSH HAZARD, FASTEN SEAT BELT)	
	5	1	**224-8946**	1	FILM-WARNING (NO ETHER SPRAY/AIR INTK, INTL)	
	6	2	**388-8140**	1	FILM-INSTRUCTION (SERVICE CHART, READ OMM)	
	7	2	**418-5763**	1	FILM-INSTRUCTION (OPERATOR CONTROLS, READ OMM)	
	8	1	**285-2177**	1	FILM-INSTRUCTION (OPERATOR CONSOLE)	
	9	1	**235-1368**	1	FILM-WARNING (RADIATOR)	
	10	1	**157-2853**	1	FILM-INFORMATION (READ OMM)	
	11	2	**169-2876**	1	FILM-IDENTIFICATION (POWER RECEPTACLE, 12-VOLT)	
	12	2	**219-0302**	1	FILM-WARNING (NO WELD, NO DRILL, READ OMM)	
	13	2	**295-7330**	1	FILM-WARNING (CRUSH HAZARD, READ OMM)	
	14	2	**295-7329**	1	FILM-WARNING (CRUSH HAZARD, READ OMM)	
	15	2	**228-2616**	1	FILM-WARNING (UNIVERSAL, READ OMM)	
	16	2	**295-7328**	1	FILM-WARNING (FALL/CRUSH HAZARD, NO ACCESS)	
	17	2	**295-7327**	1	FILM-WARNING (CRUSH HAZARD, READ OMM)	
	18	1,2	**239-6986**	1	PLATE-SERIAL NUMBER (MACHINE)	
	19	2	**253-7817**	1	FILM-WARNING (JUMP START, READ OMM)	
	20	1,2	**263-4836**	6	FILM-IDENTIFICATION (TIE-DOWN)	
	21	1	**416-6976**	1	FILM-WARNING (ROPS, FOPS, READ OMM)	
	22	1	**295-2567**	1	FILM-INSTRUCTION (BUCKET LOWER)	
	23	1	**384-2556**	1	FILM-WARNING (CRUSH HAZARD, CAB, READ OMM)	
	24	1	**302-4390**	1	FILM-WARNING (CRUSH HAZARD, FASTEN SEAT BELT)	
	25	1	**364-4013**	1	FILM-WARNING (UNIVERSAL, READ OMM)	
FY			*416-5789*	1	PLATE & FILM GP	476

F - NOT SHOWN
Y - SEPARATE ILLUSTRATION

435-4878 **PLATE & FILM GP (*contd.*)** **i05302438**

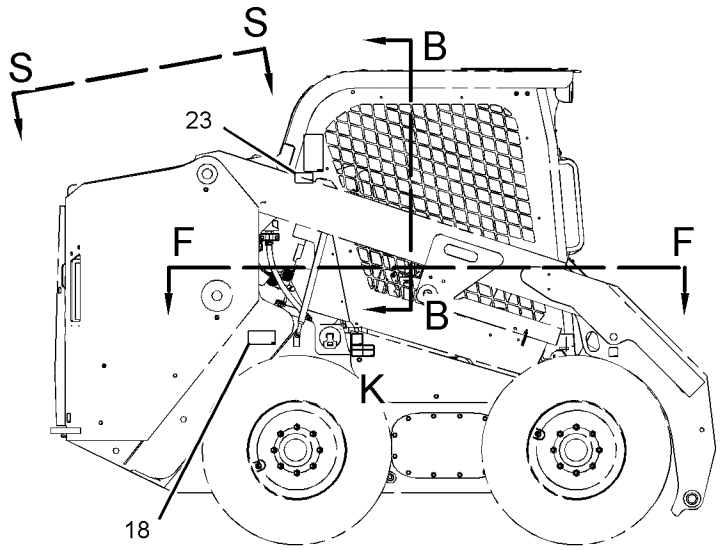

RIGHT SIDE VIEW
(WHEEL MODEL)

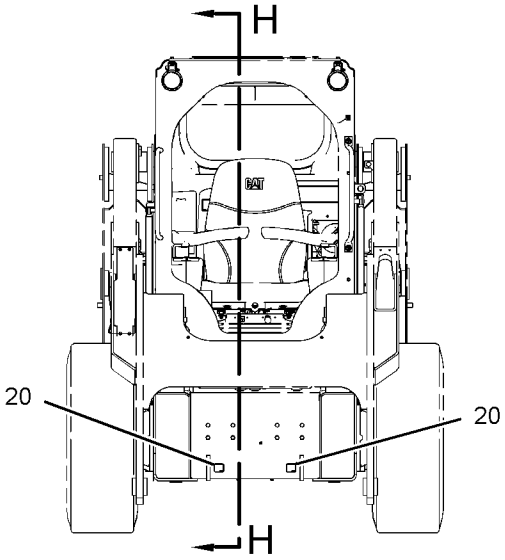

FRONT VIEW
(WHEEL MODEL)

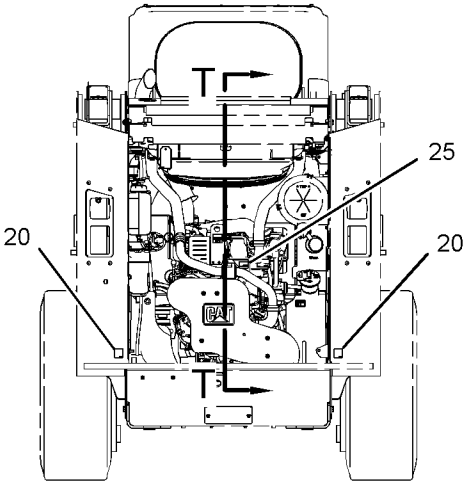

REAR VIEW
(WHEEL MODEL)

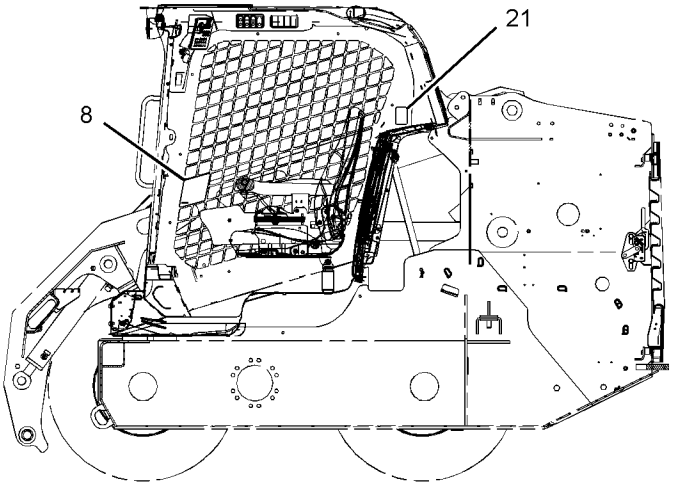

VIEW H-H

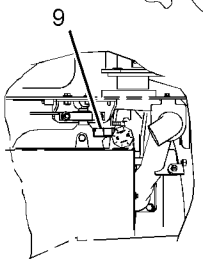

VIEW S-S

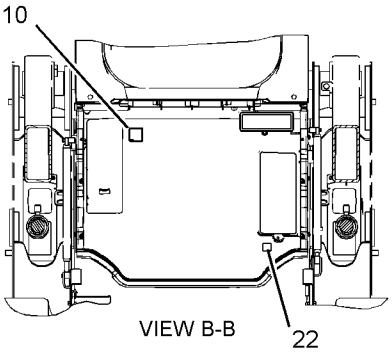

VIEW B-B

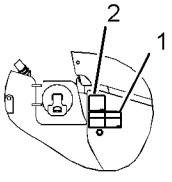

VIEW OF AREA K

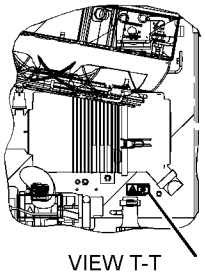

VIEW T-T

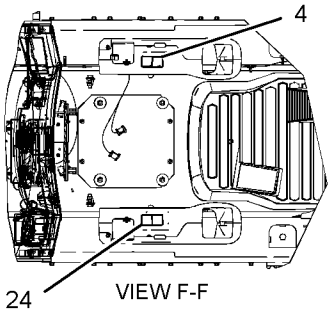

VIEW F-F

GRAPHIC #1 g03386170

435-4878 **PLATE & FILM GP (*contd.*)** **i05302438**

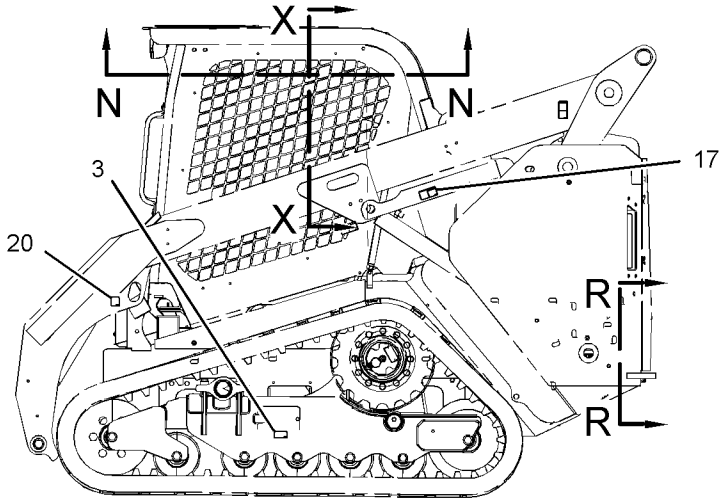

LEFT SIDE VIEW
(TRACK MODEL)

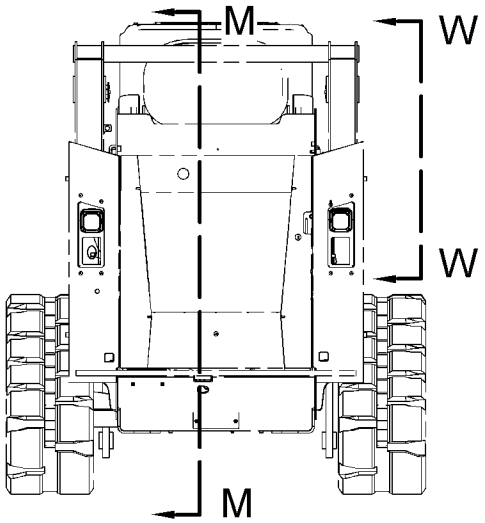

REAR VIEW
(TRACK MODEL)

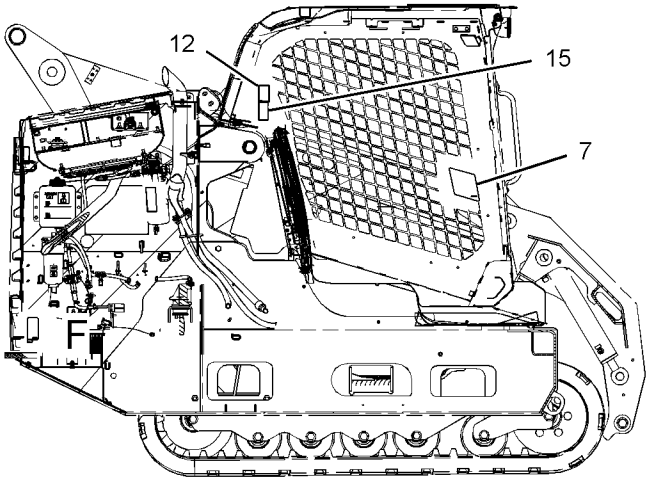

VIEW M-M

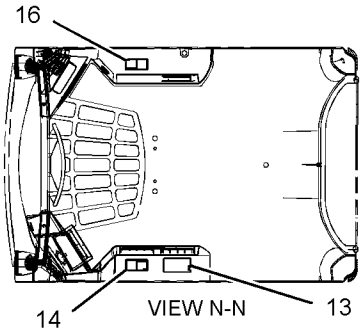

VIEW N-N

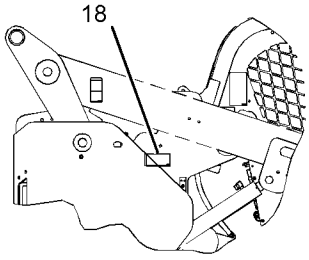

VIEW W-W

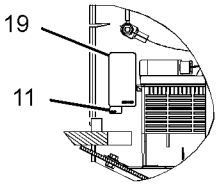

VIEW OF AREA F

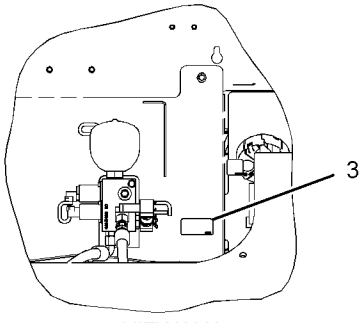

VIEW X-X

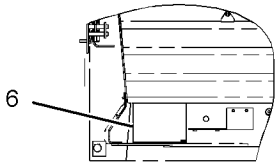

VIEW R-R

GRAPHIC #2 **<END>** g03386175

PART NUMBER INDEX

Part	Page
1	
1A-8912	88
	90
	138
1B-2705	455
1H-3244	97
	131
	132
1H-8134	278
1J-9671	206
	207
1M-6120	88
	90
1P-1210	451
1P-4278	23
	55
	72
1S-0178	107
	111
1S-0994	231
	233
	235
	237
	239
1S-7252	88
	90
2	
2B-0941	53
	54
2D-6412	449
	450
2H-3755	227
	229
2K-4973	455
2L-8050	98
2L-8058	98
2L-8066	105
	108
	113
2L-8067	98
	100
2L-8069	98
	102
	105
2L-8071	106
	108
	113
2L-8077	98
2L-8078	98
2L-8079	98
	100
	106
	112
2M-7819	455
2M-9780	160
	162
	163
	231
	233
	235
	237
	239
	241
	243
	245
	250
	260
	265
2S-4078	257
2V-8260	430
3	
3B-4505	200
3B-4617	223
	331
3B-8489	212
	270
	278
	313
	315
	316
	317
	318
	319
	320
	321
	322
	323
3D-2824	160
	161
	162
	163
	227
	229
	243
	245
	249
	252
	254
	257
	262
3D-9369	455
3E-0105	115
3E-3371	358
	390
	405
	407
3E-3892	43
3E-4091	243
	245
3E-4352	277
	416
	436
	453
3E-6730	215
	217
3E-8020	192
3E-9179	104
3F-5108	334
	335
3F-9556	425
3H-7654	392
3J-1907	118
	147
	149
	160
	162
	213
	215
	217
	220
	227
	229
	241
	250
	252
	254
	257
3J-7354	206
	207
	243
	245
	254
	257
3K-0360	86
	160
	161
	162
	163
	225
	227
	229
	241
	245
	247
	250
	252
	274
	381
3K-2151	215
	217
3K-5178	143
3S-2093	88
	90
	96
	98
	99
	100
	101
	102
	103
	104
	105
	106
	107
	108
	111
	113
	114
	115
	116
	120
	128
	136
	138
	141
	142
	143
	145
	146
	153
	183
	186
	196
	198
	223
	225
	368
	369
	370
	371
	372
	386
	390
	401
	405
	407
	409
	412
	416
	418
	421
	430
	436
	437
3S-8536	278
3S-9182	189
3T-0851	355
	358
	384
	405
	407
	437
3T-0852	186
3T-3349	88
	90
4	
4B-4278	455
4B-4863	118
	143
	149
	198
	201
4D-6466	72
4D-7733	401
	409
	421
4F-3658	334
	335
4J-0527	254
4K-0367	334
	335
4K-4709	189
4K-9429	439
	440
4L-7711	68
4M-0061	451
4P-7581	88
	90
	128
	143
	196
	430
4P-8134	88
	90
	138
	143
	153
	412
	423
4V-0612	229
	262
4V-8577	455
5	
5B-0651	278
	330
	331
5C-2874	143
	145
	223
5C-2890	66
	88
	90
	97
	131
	132
	136
	138
	143
	223
	381

► **PRIMARY REFERENCE**

PART NUMBER INDEX

Part	Page
	382
	384
	388
	405
	407
	419
	433
	434
	455
5C-7261	53
	54
	61
	88
	90
	122
	131
	132
	138
	141
	200
	364
	398
	401
	409
	417
	425
	428
	437
5C-8310	457
5C-8311	457
5C-8312	118
	149
	198
	201
5C-9553	72
	88
	90
	136
	138
	192
	196
	202
	223
	333
	382
	383
5H-3182	278
5H-8848	213
5H-9743	278
5I-4370	160
	163
5K-9090	227
	254
5L-3233	48
	49
5P-0372	386
	390
	393
	405
	407
5P-0743	258
	274
5P-0767	401
	412
	421
	423
5P-0908	215
	217
5P-1046	257
5P-1076	29
	43
	185
	241
	284
	285
	405
	407
5P-1420	55
5P-1442	23
	243
	258
5P-1507	72
5P-3092	157
5P-3454	88
	90
	98
5P-3863	68
5P-4115	43
	72
	88
	90
	138
	430
5P-4116	46
	52
	88
	90
	186
	264
	352
	381
	398
	401
	409
	412
	417
	421
	423
	437
5P-4571	104
	109
	201
5P-4868	53
	54
5P-4906	400
	412
	421
	423
5P-4924	254
	257
5P-5623	143
5P-5637	359
	396
5P-5670	396
5P-7162	138
5P-7483	193
5P-7648	384
	388
	406
	408
5P-7814	68
	84
5P-7957	439
	440
5P-7958	364
	400
	409
	424
	441
	442
	443
	444
5P-8247	334
	335
5P-8309	46
5P-8444	55
5P-8500	424
5P-9615	274
5P-9909	116
	140
	418
5R-5927	43
5W-1987	359
5W-4957	359

6

Part	Page
6C-3679	453
6D-1641	412
	423
6D-4246	249
	401
	409
	421
6D-4247	231
	233
	235
	237
	239
6D-5729	143
6F-4718	165
	166
6K-4148	189
6L-3966	386
	390
	393
	406
	408
6L-7155	455
6N-8863	278
6R-3320	227
	260
6T-1375	386
	390
	405
	407
6V-0467	225
	247
6V-0826	88
	90
6V-0852	161
	163
	255
	258
6V-1970	1
	424
6V-2369	88
	90
6V-2689	100
6V-3251	43
6V-3265	72
6V-3582	61
6V-3965	160
	163
	254
	257
6V-4356	401
	409
	421
6V-4357	401
	409
	421
6V-5048	158
	159
6V-5683	382
6V-5839	428
6V-5845	199
6V-6609	400
	412
	421
	423
6V-7357	192
	384
	388
	398
	406
	408
	417
	437
6V-7412	455
6V-7644	284
	285
6V-7687	451
6V-7688	199
6V-7699	85
	352
	401
	412
6V-7743	192
	222
6V-7744	188
	223
	330
	331
6V-8076	254
	257
6V-8369	365
6V-8397	86
	160
	162
	209
	231
	233
	235
	237
	239
	241
	250
	252
	254
	257
6V-8398	160
	162
	163
	213
	215
	217
	225
	227
	229
	243
	247
	249
	250
	252
	255
	258
	260
	262
	274
6V-8399	265
6V-8624	160
6V-8625	250
	252
6V-8626	243
	245
	260
6V-8632	241
6V-8634	162
6V-8636	160
	162
	241
	254
	257

PART NUMBER INDEX

Part	Page
6V-8637	162
6V-8639	160
	162
	225
	227
	229
	247
	274
6V-8642	241
	243
	245
	260
6V-8713	252
6V-8715	231
	233
	235
	237
	239
6V-8716	160
	162
6V-8724	160
	162
	250
	252
	254
	257
6V-8782	160
	162
6V-8784	249
6V-8788	231
	233
	235
	237
	239
6V-8949	340
6V-8981	227
	229
6V-9004	160
	163
	249
6V-9005	254
6V-9007	243
	245
	249
	252
	257
	262
6V-9008	254
6V-9169	227
	229
	250
	252
	260
	262
6V-9189	222
	270
	313
	315
	316
	317
	318
	319
	320
	321
	322
	323
	426
	427
	439
	440
	451
6V-9200	254
	257
6V-9498	404
6V-9509	243
6V-9672	198
	201
6V-9746	160
	161
	162
	163
	219
	229
	243
	245
	249
	252
	257
	262
6V-9830	243
6V-9836	162
6V-9852	243
	245
	252
	260
6V-9853	252
6V-9873	227
	229
6W-5698	86
6W-5752	223
	331
6Y-5839	334
	335
6Y-5840	334
	335
7	
7D-1553	401
	409
	421
7D-1649	392
7D-8508	210
	211
	212
7E-2700	199
7G-1060	138
7G-5984	241
7G-5985	241
7G-5986	241
7G-7917	97
	106
7J-0204	210
7J-9108	225
	241
	243
	245
	250
	252
	260
	262
	265
7K-1181	55
	88
	90
	116
	117
	118
	120
	128
	138
	140
	143
	145
	147
	149
	153
	154
	160
	162
	196
	221
	223
	225
	243
	245
	247
	250
	252
	255
	258
	280
	281
	401
	409
	412
	421
	423
	430
7M-8485	160
	162
	163
	254
	257
7N-7221	100
	104
7P-1695	88
	90
	117
	120
	138
	141
	154
7R-2750	97
7R-2751	97
	103
7T-0094	97
7T-1099	186
	189
7T-6799	430
7X-0507	441
	442
	443
	444
7X-0510	88
	90
7X-0521	199
7X-0550	184
7X-0603	451
7X-0610	157
7X-0613	61
	356
	426
	427
7X-0632	186
7X-0818	118
	145
	147
	149
	223
7X-0848	365
7X-2534	66
	138
	163
	274
7X-2537	88
	90
	118
	138
7X-2538	225
	247
7X-2553	195
	392
7X-2556	428
7X-2557	203
7X-2559	199
7X-3229	466
7X-7729	43
	189
	278
	355
	357
	358
	363
	401
	409
7X-7920	85
7Y-3995	100
7Y-3996	100
7Y-5074	401
	410
	412
	421
	423
7Y-9099	428
8	
8C-3413	173
8C-3451	243
	245
8C-3681	72
8C-4982	118
	143
	149
	386
	390
	406
	408
8C-6758	250
	252
8C-7524	420
8C-8400	229
	262
8C-8451	115
8C-8478	284
	285
8C-8778	445
8C-8989	163
8C-8992	157
8C-9022	257
8E-1118	398
	417
	437
8E-5702	284
	285
8F-1179	225
	247
8F-7242	88
	90
	138
8G-1151	386
	390
	405
	407
8J-2880	284
	285
8L-8413	451
8M-4791	451
8N-1548	105
8N-1549	97
8Q-6027	210

PART NUMBER INDEX

Part	Page
	211
8R-3857	46
8R-9654	93
8S-0934	441
	442
	443
	444
	449
	450
8S-4723	441
	442
	443
	444
	449
	450
8T-0078	161
8T-0119	225
	247
8T-0197	160
	163
8T-0267	355
	358
8T-0271	269
8T-0289	352
	401
	412
8T-0328	138
	143
	145
	223
	355
	358
	384
	406
	408
8T-0337	250
	252
8T-0389	66
	123
	124
	428
8T-0722	441
	442
	443
	444
8T-1576	250
8T-1905	160
	162
8T-2173	72
8T-2192	384
	388
	406
	408
8T-2225	107
	111
8T-2561	43
8T-3647	222
8T-3991	189
8T-3998	355
	358
8T-4121	52
	59
	72
	117
	120
	136
	143
	151
	188
	189
	223
	227
	229
	243
	245
	249
	269
	329
	330
	331
	340
	363
	384
	388
	393
	401
	406
	408
	409
8T-4122	29
	157
	195
	199
	203
	392
	428
8T-4123	284
	285
8T-4132	29
8T-4133	43
	52
	88
	90
	117
	120
	136
	138
	143
	151
	154
	227
	229
	401
	409
8T-4136	43
	223
	243
	245
	249
	255
	258
	276
	278
	329
	340
8T-4137	72
	445
8T-4139	66
	184
	192
	241
	284
	285
	401
	409
	421
	451
8T-4142	398
	417
	437
8T-4171	118
	136
	143
	149
	223
	401
	409
8T-4172	227
	229
	330
8T-4176	29
8T-4181	188
	352
	401
	412
8T-4183	195
	392
8T-4186	43
	340
8T-4189	66
	88
	90
	231
	233
	235
	237
	239
	264
	364
8T-4190	199
	203
8T-4191	278
8T-4192	255
8T-4195	136
	401
	409
8T-4196	43
	52
	143
	186
	188
	189
	227
	229
8T-4197	364
8T-4198	223
	331
8T-4199	66
8T-4200	88
	90
	141
	209
	264
8T-4205	93
	97
	115
	118
	131
	132
	136
	138
	143
	147
	149
	161
	163
	188
	192
	196
	202
	222
	223
	274
	381
	382
	383
	384
	388
	401
	406
	408
	409
	419
	430
	433
	434
	439
	440
8T-4222	330
8T-4223	66
	191
	192
	195
	223
	255
	271
	272
	331
	386
	390
	401
	409
	421
	428
	441
	442
	443
	444
	449
	450
8T-4224	39
	53
	54
	61
	66
	88
	90
	118
	122
	131
	132
	141
	147
	149
	200
	209
	225
	227
	229
	231
	233
	235
	237
	239
	247
	264
	269
	364
	398
	401
	409
	417
	426
	427
	428
	437
	439
	440
	445
	447
	455
8T-4226	441
	442
	443
	444
8T-4244	43

PART NUMBER INDEX

Part	Page
	66
	386
	390
	392
	406
	408
8T-4648	43
8T-4742	362
8T-4744	362
8T-4778	195
	199
	336
	337
	338
	339
	340
	348
	428
8T-4908	39
	61
	426
	427
	439
	440
8T-4956	66
	271
	272
8T-5001	185
8T-5049	271
	272
8T-5091	186
8T-5372	419
8T-5439	278
	384
	388
	406
	408
8T-6466	195
8T-6684	227
8T-6685	355
	357
	358
	363
	401
	409
8T-6726	53
	54
	61
	192
8T-6869	270
	277
	313
	315
	316
	317
	318
	319
	320
	321
	322
	323
8T-6912	227
	229
	260
	262
8T-6974	161
	384
	388
	406
	408
8T-7547	122
	269
8T-7912	400
	412
	421
	423
8T-7934	276
8T-8729	96
	97
	99
	100
	101
	102
	103
	104
	105
	108
	109
	112
	113
	121
	123
	124
	125
	128
	143
	146
	201
	376
	377
	378
	379
	380
	396
	398
	400
	409
	421
	430
	436
	437
8T-8730	96
	97
	99
	100
	101
	102
	103
	104
	105
	106
	109
	111
	113
	146
	201
8T-8737	96
	97
	99
	100
	101
	102
	103
	104
	105
	106
	108
	110
	111
	112
	113
	115
	123
	124
	125
	373
	374
	375
	376
	377
	378
	379
	380
	398
	437
8T-8799	97
8T-9371	455
8V-5718	118
	145
	149
	223
8Y-5947	116
	349
	350
	398
	400
	405
	407
	412
	415
	416
	417
	418
	430
8Y-8080	118
	147
	149
9	
9C-5344	404
9F-5644	132
	365
9G-1307	115
	116
	140
	418
	437
9L-9132	384
	388
	406
	408
9M-1853	43
9M-8406	72
9N-7446	388
9P-4609	388
9R-1499	128
	196
9R-5301	198
	345
9R-5744	362
9R-7240	85
9R-7941	430
9R-7942	126
9R-7958	126
9R-7980	430
9S-1354	401
	410
	421
9S-4182	158
9S-4185	86
	381
9S-4191	158
	220
9S-8002	159
	173
9S-8004	173
	213
	215
	217
9S-8007	210
9S-8008	173
9T-4884	269
9U-6999	257
9U-8746	398
	417
	437
9W-0607	121
	122
9W-0844	96
	97
	99
	102
	104
	105
	106
	113
9W-0852	96
	97
	99
	101
	102
	103
	104
	105
	112
	359
9W-1441	97
9W-2471	125
9W-3324	123
	124
9W-3326	128
9X-1054	102
	105
9X-1055	105
	108
	113
9X-1056	102
9X-1813	133
	143
9X-2026	333
	437
9X-2040	384
	388
	406
	408
	428
9X-2045	222
	352
	381
	401
	412
	419
	439
	440
9X-2092	419
9X-2098	53
	54
9X-2546	120
	368
	369
	370
	371
	372
9X-3401	85
	96
	97
	99
	100
	102
	104
	105
	110
	111

► **PRIMARY REFERENCE**

PART NUMBER INDEX

Part	Page
	115
	133
	147
	149
	373
	375
	376
9X-3402	97
	104
	110
	111
9X-3962	254
9X-4244	122
9X-6032	269
9X-6165	386
	390
	406
	408
9X-6273	231
	233
	235
	237
	239
9X-6274	231
	233
	235
	237
	239
9X-6611	215
	217
9X-6615	265
9X-7378	401
	410
	421
9X-7380	401
	410
	421
9X-7381	401
	410
	421
9X-7382	401
	410
	421
9X-7383	401
	410
	421
9X-7408	133
9X-8118	126
9X-8139	126
9X-8256	66
	382
	396
	415
	430
	433
	434
	435
9X-8257	198
	345
9X-8918	453

0

Part	Page
027-1287	210
	211
030-1705	88
	90
031-4155	451
	455
033-6033	158
034-4202	257
036-1865	43
038-9317	88
	90
039-8557	340
069-4080	43
084-4277	430
084-4348	128
090-2151	88
	90
090-8865	428
091-2436	99
	101
	103
	104
095-0641	160
	267
095-1325	386
	390
095-1671	158
	159
096-5962	388
097-7234	104

1

Part	Page
100-3253	123
	124
100-3254	123
	124
100-3255	123
	124
100-3866	157
100-5041	102
	105
	108
	113
100-6674	102
101-7398	384
	388
	393
	405
	407
102-8705	118
	149
	223
102-8801	105
	115
102-8802	84
	85
	97
	103
	109
	121
	143
	146
	396
	400
	421
102-8803	102
	108
	112
	113
	436
102-8804	99
	100
	103
	109
	118
	125
	128
	133
	147
	149
	201
	359
	409
	425
	430
102-8805	96
	99
	102
	110
	111
	123
	124
102-8806	100
	103
	112
103-2529	72
103-6262	388
103-8134	101
104-1995	99
	101
	103
104-3173	401
	409
	421
104-5957	457
104-6202	141
105-3478	43
106-8715	229
	262
108-0656	457
108-1304	110
108-4311	455
109-2356	142
	412
	430
109-5811	225
	245
110-0885	188
110-2028	138
	430
110-2570	23
110-6326	48
110-6331	48
	49
110-6349	254
110-7887	430
111-7899	117
	118
	120
	128
	136
	145
	146
	147
	149
	151
	154
	162
	196
	223
	225
	386
	390
	400
	405
	407
	409
	430
112-1817	250
	252
112-9118	147
112-9611	104
112-9717	48
	49
113-8490	97
113-8491	97
113-8492	97
113-8694	143
	433
	434
114-6658	352
	401
	412
115-1615	136
	143
	145
	223
	401
	409
115-2422	88
116-0400	61
116-7471	93
117-9501	428
119-3662	96
	98
	104
	105
	113
119-9631	396
122-3606	53
	54
122-4401	104
122-6870	107
	110
	111
123-1373	88
123-7615	99
	104
123-7971	55
124-2456	466
124-5640	102
125-4791	100
125-4793	100
125-4794	100
125-7874	96
	98
	99
	100
	101
	102
	103
	104
	105
	106
	108
	109
	110
	111
	113
	201
125-7875	98
	99
	101
	102
	103
	104
	106
	108
	109
	111
	113
	146
125-7876	105
126-1767	96
	97
	99
	102
	104

PART NUMBER INDEX

Part	Page
	110
	111
	115
	118
	147
	149
126-1768	97
	104
	110
	111
126-9903	162
127-2170	416
	436
127-4003	352
	400
	412
	443
	444
127-5483	97
128-4123	97
	98
	103
128-4249	105
	106
128-5016	97
	103
128-7714	101
129-3178	66
	455
129-3180	29
130-3279	▶60
	61
131-3201	100
131-3540	356
	401
	409
	426
	427
132-4720	348
132-5166	196
	202
132-5789	128
	136
	141
	196
	401
	409
132-7551	223
	330
	331
132-8502	193
134-2540	100
135-2543	88
	90
135-7242	46
	415
	433
	434
	435
135-7940	274
135-9384	308
	314
	▶336
135-9385	305
	309
	▶337
135-9386	306
	310
	▶338
135-9387	307
	311
	▶339
135-9394	336
135-9395	337
135-9396	338
135-9397	339
136-1955	258
137-6645	274
140-2377	215
	217
140-2392	215
	217
141-4999	305
	306
	307
	308
	309
	310
	311
	▶348
141-5453	88
	90
142-4914	334
142-7493	179
	180
	181
142-8731	176
	177
	178
142-8759	176
	177
	179
142-8805	324
	325
	326
	327
	328
142-8832	188
	278
142-8833	278
142-8928	86
142-8937	274
142-9023	155
142-9029	155
142-9033	157
142-9036	157
142-9091	278
142-9117	104
143-3088	335
144-0195	386
	390
	405
	406
	407
	408
144-4108	455
146-6371	352
	400
	412
146-6433	384
	388
	405
	407
146-9439	117
	120
	128
	138
	146
	151
	153
	154
	225
148-2371	196
	202
148-2372	196
	202
148-6757	260
	262
148-8315	241
	243
	245
	260
148-8318	162
148-8319	231
	233
	235
	237
	239
148-8327	162
148-8336	160
	162
	241
	254
	257
148-8339	160
	162
148-8340	160
	162
	225
	227
	229
	247
	274
148-8341	252
148-8342	241
148-8347	243
	245
	249
	252
	257
	262
148-8355	254
148-8357	254
148-8358	160
148-8361	254
	257
148-8362	227
148-8364	250
	252
148-8375	227
	229
148-8378	160
	162
	250
	252
	254
	257
148-8390	243
	245
	260
148-8392	252
148-8393	243
	245
	252
	260
148-8407	220
148-8411	381
148-8428	160
	162
148-8433	162
149-0686	160
	162
	▶204
149-3488	29
149-5435	324
	325
149-5437	326
149-6371	400
	409
	421
149-9129	225
	247
150-3024	254
	257
150-3036	160
	162
150-3056	231
	233
	235
	237
	239
150-3072	243
150-4043	227
	229
150-8599	176
	177
	178
	179
150-9402	215
	217
151-1975	68
151-9275	376
	377
	378
	379
	380
152-1157	157
152-5878	29
153-2682	393
153-2683	393
153-2994	231
	233
	235
	237
	239
	241
153-2995	241
153-6237	160
	162
	249
153-6241	163
153-6242	160
	163
153-8462	55
153-8463	55
154-5011	▶270
	305
	306
	307
	308
	309
	310
	311
	312
154-5012	270
	313
	315
	316
	317
	318
	319
	320
	321
	322
	323
154-5013	270
154-5020	231
154-5021	231
154-5022	231
154-5037	287
	297
154-5059	289
	298
154-5077	291
	300
154-6583	229

▶ **PRIMARY REFERENCE**

PART NUMBER INDEX

Part	Page
	262
154-9023	243
	245
155-2255	96
	97
	100
	102
155-2260	96
	97
	99
	100
	104
	106
155-2265	97
	104
	105
155-2270	97
	101
	102
	104
	105
	106
	109
	111
	113
	146
155-2271	96
	99
	102
	103
	104
	105
	106
	109
	110
	111
	201
155-2274	96
	97
	103
155-5652	155
155-9010	155
155-9432	155
155-9433	155
156-0283	186
156-1458	112
156-5508	233
156-5509	233
156-5510	233
156-6175	382
	383
	430
156-8315	453
157-2853	468
	478
	482
	486
	489
159-2953	199
	336
	337
	338
	339
	340
159-4535	235
159-4536	235
159-4537	235
159-5772	155
159-5794	43
159-5797	330
159-8035	466
159-8038	315
	316
	317
	318
	319
	320
	321
	322
	323
	324
	325
	326
	327
	328
159-8047	88
	90
159-9495	117
	120
	151
	154
159-9496	117
	120
	151
	154
159-9539	66
	115
	138
	186
	189
	192
	254
	257
	352
	357
	358
	384
	388
	405
	407
159-9540	25
	46
	52
	61
	66
	88
	90
	149
	186
	192
159-9541	43
	186
	227
	358
	384
	388
	405
	407
	445
160-2246	400
	409
	421
160-3518	108
	398
	437
160-8500	188
161-3357	143
161-4128	333
161-4130	324
	325
	326
	327
	328
161-7145	213
161-7146	215
	217
161-8560	250
	252
162-0177	213
	215
	217
162-3148	401
	409
162-5236	305
	306
	307
	308
	309
	310
	311
	312
	►333
162-6556	382
163-1135	455
163-1146	455
163-1386	231
	233
	235
	237
	239
164-1344	428
164-5557	160
	163
164-5562	257
164-5567	160
	163
	254
	257
164-5574	249
164-5606	161
164-9425	143
165-0142	172
165-0312	430
165-4895	125
165-4898	►179
165-4901	►176
	179
165-4902	►176
	179
165-4903	►179
165-4906	►176
	179
165-4907	►176
	179
165-4909	176
165-7095	29
	428
165-8719	66
166-6781	455
167-3692	105
167-3693	97
168-8389	284
	285
	286
	288
	290
	292
	294
	296
	299
	301
	303
168-8772	398
	417
	437
169-0705	96
	97
	104
169-1679	155
169-2876	468
	478
	482
	486
	489
170-5707	195
170-6705	165
	166
171-0596	355
	358
	386
	390
	405
	407
171-5349	133
172-6490	128
172-8037	108
	398
	437
172-8039	108
	398
	437
172-8591	382
	404
173-8919	108
	113
174-3091	373
	374
	375
	376
	377
	379
174-5414	60
174-9194	25
	72
	192
	225
	247
	445
175-4238	182
	►345
175-4239	196
	202
175-4291	122
175-7141	363
	401
	409
	445
	447
176-1477	106
176-1521	106
177-7414	340
177-7415	340
177-9645	100
	107
177-9648	105
	107
	108
	113
178-2247	198
	345
178-2256	►180
178-2270	178
178-3336	445
	447
178-3620	72
	88
	90
	117
	118
	120
	145
	147
	149
	151
	154
	223

► PRIMARY REFERENCE

PART NUMBER INDEX

Part	Page
	225
	243
	245
	250
	252
	400
	409
	412
	421
	423
178-7539	430
178-9983	376
	377
	378
	379
	380
	386
	390
	405
	407
180-3007	53
	54
180-7451	265
183-4403	401
	409
	421
185-1861	106
185-4015	359
	396
185-8666	▶180
185-8667	▶180
185-9928	▶177
	180
185-9929	▶177
	180
185-9930	▶177
	180
185-9931	▶177
	180
185-9933	177
186-3735	374
186-5107	455
186-6190	▶351
	400
	409
	421
188-6210	105
189-3158	98
	102
	109
	113
	146
189-5719	225
	247
190-5386	130
190-7979	186
	227
190-8962	198
	201
192-1329	46
192-2645	223
	341
	342
	343
	344
192-7508	265
194-2903	225
	247
194-5171	384
	388
	405
	407
194-5226	96
	97
	99
	100
	102
	104
	106
	110
	111
194-5227	96
	98
	99
	100
	102
	104
	106
	110
	111
195-0189	▶123
	128
	196
195-0190	▶124
	128
	196
195-0936	352
	398
	401
	412
	417
	437
195-3253	88
	90
195-5124	340
195-7124	308
	311
	▶340
195-9712	198
	201
196-2414	108
	113
197-8940	250
198-8354	363
	400
	409
198-9707	404
199-3410	477
199-5438	▶178
	180
199-5439	▶178
	180
199-5440	178
199-7722	327
199-8309	237
	239
199-8310	237
199-8311	237
	239
199-8316	293
	302
199-8317	327

2

Part	Page
200-0999	157
200-5728	▶108
	398
	417
	437
201-3304	96
202-0313	98
	103
202-0314	98
	103
203-9007	97
204-2281	254
	257
204-6466	98
206-1345	88
	143
	416
	430
	436
206-1667	382
	383
206-2423	55
	400
	409
	412
	421
	423
206-9295	158
208-6176	46
208-8469	396
	445
	447
208-9281	277
208-9283	445
	447
208-9291	363
	401
	409
208-9294	363
	401
	409
210-8754	430
211-0052	105
	106
211-3499	48
	49
211-5358	96
212-4114	265
213-0139	97
	105
	107
	108
	113
213-7489	376
	377
	378
	379
	380
214-7567	68
214-7568	158
	161
	163
	254
	257
215-3273	265
215-3274	265
215-3275	265
215-6406	352
	382
	383
	384
	386
	388
	390
	401
	405
	407
	412
216-7352	426
	427
217-3875	265
219-0302	468
	478
	482
	486
	489
220-8355	373
	375
	377
	378
	379
	380
221-8058	188
222-3963	178
	179
222-7412	▶282
	284
222-7421	282
	283
222-7479	282
	283
222-7545	285
	▶334
222-7546	284
	▶335
222-7724	281
	▶284
222-7725	284
	285
222-7728	282
	283
223-3490	243
224-5132	206
	207
224-5152	206
	207
224-8945	468
	478
	482
224-8946	486
	489
225-3854	97
225-3861	106
226-0294	188
226-1242	466
226-4560	123
	124
226-4561	123
	124
227-7025	265
227-7474	186
227-8807	▶205
228-2615	468
	478
	482
228-2616	486
	489
228-3581	466
228-5856	101
	103
	104
228-6052	123
	124
228-6053	123
	124
228-6054	123
	124
228-6056	123
	124
229-3432	328
229-3469	55
229-8796	39
230-3621	29
230-4009	104
230-4011	97
230-4013	110
	111
230-4596	▶283
	285

▶ **PRIMARY REFERENCE**

PART NUMBER INDEX

Part	Page
230-6368	90
231-0124	241
231-0125	241
231-0126	241
231-0127	241
231-5266	209
231-5271	284
	285
231-5273	▶241
	280
	281
231-5274	▶209
	280
	281
231-5276	280
	▶285
231-5278	▶264
	280
	281
231-5279	264
232-0893	96
232-0895	99
232-1384	396
232-1792	430
232-3121	59
	88
	90
235-1365	468
	478
	482
235-1368	486
	489
236-6923	400
	409
	421
238-0999	209
238-1003	241
238-1004	284
	285
238-1005	284
	285
238-4628	268
	269
239-4990	464
	468
	478
	482
239-4991	465
	486
	489
239-6986	468
	478
	482
	486
	489
239-8534	189
	227
	260
239-9833	145
241-0037	206
	207
241-6215	254
	257
241-6397	29
242-9000	128
243-5601	265
244-1363	265
244-1364	265
244-1365	265
244-1367	284
	285
244-1370	209
246-2622	68
246-4349	348
246-7853	189
247-0678	280
	281
	▶466
247-4818	118
	147
	149
250-1482	274
251-4162	92
252-0346	▶180
252-0347	▶181
252-0377	▶181
252-1862	384
	388
	405
	407
253-1817	384
	388
	405
	407
253-7817	486
	489
253-9499	468
	478
	482
254-3437	376
	377
	378
	379
	380
254-9097	212
258-0930	▶125
	130
258-2577	269
258-2579	220
	▶269
258-2679	278
258-2829	274
258-2857	▶155
	156
258-2858	157
258-2954	155
258-2983	86
258-3184	189
258-3186	189
258-3280	384
	388
	405
	407
258-3296	386
	390
	405
	407
258-3298	384
	388
	405
	407
258-3312	189
258-3447	29
258-3451	278
258-3697	384
	388
	405
	407
258-3727	93
	115
	138
	349
	350
	381
	382
	383
	420
	430
258-3736	1
	▶156
258-3764	386
	390
	405
	407
258-3786	419
258-3795	352
	400
	412
258-3849	183
	198
258-3850	260
258-4039	398
	417
	437
258-4064	357
	358
	426
	427
258-4074	398
	417
	437
258-4075	384
	388
	405
	407
258-4085	384
	388
	405
	407
258-4095	▶449
258-4096	▶450
258-4134	128
258-4135	▶131
	138
258-4141	386
	390
	405
	407
	430
258-4143	138
258-4170	96
	104
258-4172	97
258-4178	138
	430
258-4196	138
258-4271	365
258-4272	365
258-4288	365
258-4289	365
258-4292	365
258-4299	▶365
	366
	400
	412
258-4319	355
	357
258-4321	426
258-4325	426
258-4326	427
258-4358	420
258-4359	420
258-4367	398
	417
	437
258-4416	428
258-4422	355
	357
	358
258-4429	457
258-4431	426
	427
258-9011	264
	▶265
260-9175	162
261-6101	61
	189
262-3764	▶133
	165
	166
262-5689	274
262-9151	96
	100
	104
	107
263-0768	72
263-3823	425
263-4836	468
	478
	482
	486
	489
263-5414	430
263-5415	430
263-5417	118
	147
	149
263-5418	117
	120
	151
	154
263-5419	162
263-5421	128
	196
263-5422	128
263-5928	430
264-4297	274
264-7029	97
264-7030	110
	111
264-7034	104
265-2898	▶178
	180
265-2899	▶178
	180
265-2900	▶179
	181
265-2901	▶179
	181
265-4123	97
265-6618	352
	400
	412
265-6619	352
	400
	412
265-9424	430
265-9425	430
265-9513	145
	223
265-9526	146
	225
265-9543	128
266-0299	136
	400
	409
266-2431	365
266-3314	72
	136
	142
	143
	145
	147
	192
	254
	257

PART NUMBER INDEX

Part	Page
	401
	412
266-3315	2
	47
	55
	72
	85
	88
	90
	143
	186
	189
	198
	201
	225
	227
	229
	243
	245
	247
	254
	257
	260
	262
	274
	401
	409
	412
	421
	423
266-3316	117
	118
	120
	147
	149
	151
	154
	186
	189
	196
	202
	223
	260
	262
	329
266-6140	210
	211
266-8903	265
267-2680	93
	131
	132
267-2701	131
267-5211	131
	132
267-5213	131
	132
268-4071	▶121
	143
269-0259	▶373
	378
	380
269-9404	250
	252
270-0216	250
	252
270-2679	98
270-9442	414
	458
271-9408	250
	252
272-1790	▶374
	379
272-9800	126
273-5915	451
273-9103	376
273-9104	▶375
	377
274-3781	110
274-9872	132
274-9930	209
	▶210
274-9931	209
	▶211
275-0572	222
275-0600	96
	104
276-1786	88
	90
276-4878	373
	374
	375
	376
276-7278	88
	90
277-8862	269
278-1969	▶212
	305
	306
	307
	308
	309
	310
	311
	312
278-1970	212
278-4524	210
278-4525	211
278-4875	210
	211
278-8716	269
278-8736	173
278-8737	173
278-8738	173
278-8739	173
278-8740	173
278-8742	173
278-8743	173
278-8744	173
278-8746	173
278-8747	173
278-8748	173
278-8749	173
278-8750	173
278-8751	173
279-5413	▶231
	305
	309
279-5414	▶233
	306
	309
279-5415	▶235
	306
	310
279-5416	▶237
	307
	311
279-5417	231
	233
	235
	237
	239
279-5418	231
	233
	235
	237
	239
280-6071	419
280-7838	167
	168
	169
280-7840	167
	168
	169
280-7842	167
280-7843	167
280-7848	168
	169
280-7849	168
	169
280-7860	173
280-8911	257
281-6390	386
	390
	405
	407
283-0632	97
283-2458	359
283-4198	97
283-8106	98
284-3914	394
285-2177	468
	478
	482
	486
	489
285-6125	165
	166
287-4159	195
287-4218	189
	195
287-4220	189
287-7062	364
289-3195	112
	436
290-5562	143
	146
	160
	162
	225
292-2437	394
292-2438	394
293-0140	▶239
	308
	312
293-0144	295
	304
293-0152	239
293-2871	453
293-5711	214
	▶215
293-5712	214
	▶217
293-9044	▶109
	198
	201
295-2567	468
	478
	482
	486
	489
295-4464	215
	217
295-4465	215
	217
295-4468	215
	217
295-4471	217
295-4472	215
295-7317	468
	478
	482
295-7318	468
	478
	482
295-7319	468
	478
	482
295-7320	468
	478
	482
295-7327	486
	489
295-7328	486
	489
295-7329	486
	489
295-7330	486
	489
295-7337	468
	478
	482
295-7338	486
	489
296-5140	215
	217
296-5724	249
296-5725	225
	245
298-7197	362
	▶394
299-7878	471

3

Part	Page
300-6036	55
300-9546	143
302-4389	468
	478
	482
302-4390	486
	489
303-8205	260
303-8767	347
304-1021	455
304-1022	455
304-1023	455
304-1034	455
304-1035	455
304-1036	455
304-1052	455
304-1054	455
304-1055	455
304-1056	455
304-1057	455
304-3885	86
304-6756	225
	247
305-4335	428
305-4337	428
305-4339	428
305-4353	455
305-7092	451
305-7093	451
305-9192	384
	388
	405
	407
307-2952	453
307-2953	453
307-2954	453
307-2955	451
309-1325	▶126
	183
	198

PART NUMBER INDEX

Part	Page
310-6660	223
	341
	342
	343
	344
	346
310-8460	▶206
	247
310-8461	▶207
	225
311-3520	359
	396
312-4965	206
313-9053	97
314-7328	100
314-7599	55
315-5493	223
	341
	342
	343
	344
317-0014	396
317-1204	107
	110
	111
	112
	115
319-0710	384
	388
	405
	407
319-4168	453
319-9480	182
	▶340
319-9481	340
319-9482	340
319-9483	340
319-9484	340
319-9489	340
319-9490	340
325-7034	287
325-7044	289
325-7054	291
325-7064	293
325-7074	295
327-1067	419
328-3317	396
329-2591	215
	217
329-3734	98
	104
	105
	107
	111
329-6783	181
329-6784	181
330-9751	254
332-0194	386
	390
	405
	407
335-6983	72
	243
	245
	254
	257
336-6684	▶92
	116
	140
338-2414	213
340-6272	213
340-8931	365
340-9308	213
340-9312	213
341-7625	172
	▶173
341-7635	272
341-7637	173
341-7647	168
	169
341-7658	173
342-9920	46
	52
	186
	189
	192
	364
	401
	409
	412
	421
	423
342-9922	55
	189
	192
343-4072	43
	227
	229
343-4076	188
343-6821	254
	257
344-1678	101
	111
344-1682	97
344-1690	101
344-5036	468
	478
	482
	486
	489
344-6144	113
344-6145	112
344-7391	118
	147
	149
345-3459	6
	7
	▶43
345-3463	43
345-3464	39
345-3465	▶39
	43
345-3466	52
345-3473	43
345-3475	6
	7
	▶52
345-3480	55
345-3495	6
	7
	▶23
345-3498	6
	7
	▶47
345-3499	47
	▶48
345-3514	53
	54
345-3516	72
345-3520	72
	▶84
345-3527	363
	400
	409
345-3537	43
345-3540	46
345-3548	170
345-3556	▶114
345-3557	114
345-3565	29
345-3567	114
345-3576	6
	7
	▶55
345-3577	55
345-3578	55
345-3579	52
	59
345-3584	354
	▶363
345-3588	55
345-3601	170
345-3602	6
	7
	▶170
345-3605	6
	7
	▶29
345-3620	6
	7
	▶25
345-3621	25
345-3623	68
345-3624	68
345-3646	52
345-3753	254
	257
345-4526	352
	400
	412
345-4527	352
	400
	412
345-4528	352
	400
	412
345-4545	352
	▶359
	400
	412
345-4546	352
	▶396
	400
	412
345-4547	363
	400
	409
345-4549	359
	396
345-4551	352
	400
	412
345-4552	364
	400
	409
345-4558	359
345-4571	225
	247
345-4581	274
345-4583	274
345-4585	274
345-4589	274
345-4619	468
	478
	482
	486
	489
345-4623	249
345-4638	160
	162
345-4641	162
345-4642	162
345-4696	250
	252
345-4703	85
345-4708	85
345-4709	141
345-4719	186
345-4722	439
	440
345-4728	430
345-4744	▶329
345-4749	225
	247
345-4755	225
	247
	▶268
345-4761	2
345-4767	254
	257
345-4775	260
	262
345-4791	274
345-4792	254
	257
345-4798	260
	262
345-4807	186
345-4847	162
345-4848	160
345-4849	160
345-4910	▶329
345-4915	▶360
345-4917	360
	▶395
345-4919	▶360
345-4921	▶354
	360
345-4923	▶2
345-4925	2
	▶171
345-4927	▶2
345-4929	▶3
345-4931	2
	3
	▶171
345-4960	▶349
	360
345-4961	349
	350
345-4962	▶350
	361
345-4981	274
345-5000	329
	▶330
345-5001	329
	▶331
345-5010	1
	▶186
345-5011	186
345-5012	186
345-5013	186
345-5014	186
345-5015	186
345-5112	223
	329
345-5130	330
	▶346
345-5131	▶341
	346
345-5132	341
345-5133	330
	▶347
345-5134	▶342
	347
345-5135	342

▶ PRIMARY REFERENCE

PART NUMBER INDEX

Part	Page
345-5141	149
345-5147	185
	191
345-5148	▶185
345-5165	▶219
	227
	229
345-5198	189
345-5199	1
	▶278
345-5219	▶220
345-5225	▶220
345-5234	▶134
345-5247	▶1
345-5248	1
	▶220
345-5249	1
	▶461
345-5286	▶195
345-5447	▶221
345-5454	1
	▶360
345-5496	160
	162
345-5500	1
	▶85
345-5501	85
	▶86
345-5502	86
345-5504	▶222
345-5505	222
345-5506	222
345-5508	222
345-5509	222
345-5603	195
345-5604	188
345-5640	188
345-5645	188
345-5672	195
345-5688	162
345-5703	250
	252
	▶362
345-5715	227
345-5718	362
345-5754	227
	229
	260
	262
345-5773	189
345-5775	1
	▶189
345-5792	278
345-5833	227
	229
345-5864	192
345-5865	192
345-5883	395
	▶423
345-5911	▶182
345-5919	▶367
345-5923	▶367
345-5946	2
	▶243
345-5947	243
	245
345-5948	243
	245
345-5949	243
345-5950	2
	3
	▶245
345-5951	225
	245
345-5952	225
	245
345-5953	220
	▶249
345-5955	400
	412
	421
	423
345-6007	430
345-6010	360
	▶457
345-6011	457
345-6020	360
	▶419
345-6021	349
	350
345-6022	349
	350
345-6023	349
	350
345-6024	349
	405
	407
	416
345-6025	349
	405
	407
	416
345-6026	430
345-6027	430
345-6030	419
345-6031	430
345-6035	360
	361
	▶393
345-6040	▶441
	448
345-6045	▶442
	448
345-6050	▶443
	448
345-6051	383
345-6052	383
345-6053	383
345-6054	383
345-6055	▶444
	448
345-6056	▶382
	448
345-6057	382
345-6058	382
345-6059	382
345-6060	382
345-6061	▶383
	448
345-6065	360
	361
	▶381
345-6070	▶392
345-6071	392
345-6072	392
345-6073	199
	392
345-6078	352
	400
	412
345-6081	400
	409
	421
345-6082	359
345-6083	359
345-6090	360
	▶458
345-6123	426
345-6125	427
345-6130	▶200
	360
345-6131	200
345-6135	360
	361
	▶436
345-6136	416
	436
345-6139	364
	400
	409
345-6140	398
	417
345-6141	354
	▶364
345-6142	364
345-6143	420
345-6144	420
345-6145	418
	437
345-6146	352
	400
	412
345-6147	381
345-6148	381
345-6149	419
	▶420
345-6150	420
345-6154	381
345-6155	▶360
345-6157	▶361
345-6174	398
	417
	419
	433
	434
345-6175	▶398
345-6180	▶437
345-6184	356
	▶357
345-6185	▶355
	439
	440
345-6186	355
	▶426
345-6187	355
	▶427
345-6188	▶356
	441
	442
345-6189	427
345-6190	▶352
	354
	395
345-6191	352
	400
	412
345-6192	352
	400
	412
345-6193	352
	400
	412
345-6194	352
	400
	412
345-6196	352
	400
	412
345-6197	352
	400
	412
345-6200	360
345-6220	1
	▶428
345-6224	428
345-6230	384
	405
345-6233	384
	388
	405
	407
345-6235	▶384
	386
345-6240	▶386
345-6244	386
	390
	405
	407
345-6250	388
	407
345-6255	▶388
	390
345-6260	▶390
345-6262	384
	388
	405
	407
345-6270	414
	459
345-6271	414
	459
345-6273	414
	459
345-6274	414
	460
345-6275	414
	460
345-6276	414
	460
345-6282	384
	388
	405
	407
345-6283	384
	388
	405
	407
345-6284	384
	388
	405
	407
345-6285	393
345-6290	458
	▶459
345-6291	458
	▶460
345-6292	414
	459
345-6295	384
	388
	405
	407
345-6297	414
	460
345-6319	360
	▶448
345-6320	441
	▶445
345-6321	447
345-6329	▶448
345-6330	442
	▶447
345-6331	445
	447
345-6333	445

▶ **PRIMARY REFERENCE**

PART NUMBER INDEX

Part	Page
	447
345-6334	445
	447
345-6349	▶448
345-6350	▶439
	443
345-6351	439
345-6359	▶448
345-6360	▶440
	444
345-6361	440
	▶451
345-6363	426
345-6364	427
345-6403	189
345-6404	189
345-6410	221
	▶254
345-6414	220
	▶257
345-6418	254
345-6419	255
345-6420	255
345-6421	257
345-6427	227
	229
345-6430	250
345-6431	250
345-6443	250
	252
345-6449	254
345-6450	1
	▶188
345-6451	221
	▶260
345-6452	221
	▶227
345-6453	221
	▶250
345-6455	220
	▶262
345-6456	220
	▶229
345-6457	220
	▶252
345-6458	257
345-6459	257
345-6460	257
345-6464	227
345-6465	227
345-6466	227
	229
345-6468	260
345-6469	260
345-6475	252
345-6476	252
345-6479	254
	257
345-6480	250
	252
345-6481	250
	252
345-6484	229
345-6485	229
345-6486	262
345-6487	262
345-6491	250
	252
345-6494	225
	247
345-6496	257
345-6499	2
	3
	▶247
345-6501	▶165
	171
345-6502	▶166
	171
345-6507	195
345-6511	278
345-6519	186
345-6526	347
345-6530	354
	▶421
345-6580	208
	367
	▶368
345-6581	221
	▶369
345-6582	367
	▶370
345-6583	208
	221
	367
	▶371
345-6584	367
	▶372
345-6590	▶160
	171
345-6591	▶162
	171
346-5576	▶158
	243
	245
346-5577	158
346-8219	468
	478
	482
347-4163	254
	257
348-0309	213
348-0310	213
348-0313	213
348-1862	158
	159
348-3485	404
348-7240	123
	124
349-6096	158
	▶159
349-6097	158
349-8603	471
	474
	475
349-8604	476
349-8642	418
	437
350-3842	213
350-5720	141
351-2179	213
351-2184	213
352-1756	159
353-1634	418
	437
356-6067	138
356-6069	430
356-6072	▶110
	147
	149
356-6074	▶128
	182
356-6075	▶103
	128
356-6077	▶103
	128
356-6082	▶130
	182
356-6092	138
356-6095	▶109
	146
	225
356-6096	2
	3
	▶146
356-6106	▶101
	366
	400
	412
356-6107	▶147
	220
356-6111	▶107
	145
356-6113	136
	142
	▶366
356-6115	▶112
	117
	120
	151
	154
356-6119	118
	147
	149
358-4944	284
	285
	286
	288
	290
	292
	294
	296
	299
	301
	303
358-4977	221
	▶272
358-5003	165
	▶167
358-5005	166
	▶168
358-5007	166
	▶169
358-5010	271
	▶273
359-1573	396
359-1574	396
359-1575	396
359-1577	396
359-1578	396
359-1579	396
359-1581	359
359-1582	359
359-1583	359
359-1584	359
359-1585	352
	400
	412
359-1586	396
359-7220	160
359-7222	162
	▶267
359-7229	268
359-7230	268
359-7231	268
360-7527	108
	113
360-7540	430
361-2657	172
361-3532	49
361-6372	▶88
361-6378	▶145
	329
361-6379	▶113
	145
361-6384	▶142
	395
361-6386	▶90
361-6387	88
	90
361-6388	88
	90
361-6389	88
	90
361-6390	1
	▶143
361-6391	▶105
	143
361-6393	▶106
	143
361-6395	▶94
	138
361-6396	▶136
	354
361-6397	▶96
	138
361-6398	▶102
	136
	400
	409
361-6399	▶97
	138
361-6400	▶138
	360
362-0154	170
362-2973	43
362-3212	160
	267
362-3872	66
363-5818	▶68
	72
363-5819	68
363-5823	84
363-8597	128
364-1821	384
	388
	405
	407
364-4013	486
	489
364-6428	43
365-8085	461
366-6036	100
369-3556	94
370-8008	250
	252
371-2751	215
	217
372-2156	455
372-2158	455
373-1587	108
	113
373-1589	108
	113
373-1592	108
	113
373-4446	430
373-6956	277
373-6958	276
373-6967	219
373-6968	219
373-7031	221
	▶276
373-7035	220
	▶277
373-7037	219

PART NUMBER INDEX

Part	Page
373-7039	254
	257
373-7621	254
	257
	274
	401
	412
	421
	423
373-7622	254
	257
373-7623	254
	258
374-7463	105
	106
	142
	143
	401
	412
374-7464	138
	143
	430
374-7465	104
374-7466	138
374-7467	104
	138
	143
374-7468	97
374-8331	97
374-8333	97
374-8372	98
375-0121	468
375-0714	1
	▶214
375-2751	471
	474
	475
	476
375-7845	▶213
	214
376-8659	43
376-8660	43
376-8665	72
376-8669	▶49
	61
376-8670	61
376-8677	43
376-8678	61
377-6954	38
377-6965	38
377-6969	38
377-7215	418
	437
377-9543	260
	262
377-9610	257
378-1005	94
378-1006	94
	415
378-1007	355
	358
	386
	390
	405
	407
378-1010	430
378-1011	143
378-1012	143
378-1013	143
378-1014	105
378-1015	105
378-1020	66
378-1022	6
	7
	▶141
378-1023	▶100
	141
378-1024	▶102
	136
	142
	400
	412
378-1025	360
	▶430
378-1026	▶104
	430
378-1027	▶112
	416
	436
378-1028	▶99
	386
	390
	405
	407
378-1029	▶101
	220
378-1032	88
	90
378-1033	▶433
378-1034	▶434
378-1035	▶94
	433
378-1036	▶94
	434
	435
378-2853	220
	▶271
378-2856	▶172
	220
378-3722	▶113
	280
	281
378-6680	1
	▶6
378-6681	6
	7
	▶72
378-6692	7
	▶53
378-6697	53
	54
378-6751	6
	7
	▶59
378-6752	59
378-6802	66
378-6804	66
378-6805	66
378-6807	66
378-6812	6
	7
	▶66
378-6814	66
379-1084	384
	388
	405
	407
	▶425
379-1577	376
	377
	378
379-1578	379
	380
379-1612	368
	▶376
379-1613	369
	▶377
379-1614	370
	▶378
379-1615	120
	371
	▶379
379-1616	372
	▶380
379-4100	463
379-4101	462
379-4102	461
379-6471	384
	388
	405
	407
380-1714	192
380-1715	192
380-1768	4
	▶5
380-1769	4
	▶6
380-2437	▶115
383-0180	34
383-0187	9
383-0188	50
383-0190	42
	57
	58
383-0195	69
383-0196	135
383-0198	69
	78
	80
383-0199	63
	78
	80
	82
	83
383-0200	95
383-0201	135
383-0202	75
383-0205	34
383-0207	34
	135
383-0213	11
	36
383-0214	69
383-0217	11
	24
	36
	38
383-0219	71
	80
383-0220	13
383-0222	69
383-0227	8
383-0233	40
383-0245	11
383-0252	78
	80
383-0256	69
	74
	78
	80
383-0262	16
	17
383-0279	71
	80
383-0291	27
383-0303	15
	21
	22
383-0308	57
	69
383-0313	30
383-0317	69
383-0319	75
383-0320	75
383-0358	17
	19
	27
383-0383	33
383-0396	50
383-0416	69
383-0474	74
383-0475	74
383-0507	78
	80
383-0519	76
383-0524	10
383-0563	10
383-0574	9
	11
383-0805	100
383-0806	100
383-0808	100
383-6243	▶93
	360
383-6244	93
383-6245	88
	90
383-6246	▶107
	223
383-6247	▶106
	143
383-6639	43
383-6642	43
383-6901	121
383-7615	94
383-7616	94
383-7619	94
	415
383-7620	94
383-7621	94
383-7622	94
384-2261	223
	329
384-2555	468
	478
	482
384-2556	486
	489
385-0229	453
385-0414	471
	474
	475
	476
385-5044	135
385-5360	86
385-5361	86
385-5501	439
	440
385-5513	453
386-2422	46
386-3004	115
386-6028	384
	388
	406
	408
386-7013	72
386-9954	▶132
	138
387-4511	162
387-5383	▶208
387-9068	5
	6
	▶8
387-9070	5
	6
	▶13

▶ **PRIMARY REFERENCE**

PART NUMBER INDEX

Part	Page
387-9078	5
	6
	►75
387-9083	5
	►57
387-9084	5
	6
	►34
387-9087	5
	6
	►30
387-9088	5
	6
	►31
387-9089	5
	6
	►95
387-9091	5
	6
	►42
387-9572	48
	49
387-9779	16
387-9780	8
387-9781	82
	83
387-9783	38
387-9785	8
	30
387-9788	►17
	21
387-9790	21
	22
387-9791	21
	22
387-9792	21
	22
387-9796	26
387-9797	26
387-9798	8
	26
387-9802	9
	63
387-9804	57
387-9805	57
	58
387-9806	57
	58
387-9811	63
387-9813	56
387-9814	56
	63
387-9815	56
387-9817	56
387-9819	50
387-9820	50
	87
387-9821	50
387-9822	50
387-9825	34
387-9826	21
387-9827	21
387-9829	9
	11
387-9830	8
387-9831	8
387-9832	8
387-9833	31
387-9834	31
387-9835	31
387-9836	31
387-9838	31
387-9839	31
387-9840	13
387-9841	13
387-9842	13
387-9843	13
387-9844	13
387-9845	13
387-9846	13
387-9847	8
387-9848	8
387-9849	8
387-9850	8
387-9854	24
387-9855	24
387-9856	36
387-9857	24
387-9858	24
387-9859	24
387-9861	30
387-9864	82
	83
387-9865	63
	82
	83
387-9866	82
	83
387-9868	82
	83
387-9870	63
387-9872	38
387-9873	38
387-9874	74
387-9875	74
387-9878	►77
	78
	80
387-9879	78
	80
387-9880	82
387-9881	82
	83
387-9882	82
	83
387-9884	69
387-9885	69
387-9886	69
387-9887	69
387-9889	76
387-9890	76
387-9894	135
387-9897	87
387-9899	95
387-9900	95
387-9901	95
387-9903	42
387-9904	42
387-9906	40
	41
387-9907	40
	41
388-1436	►99
	386
	390
	405
	407
388-3782	►122
	127
388-5352	192
388-5353	192
388-5551	160
	162
388-6646	25
388-6647	25
388-6648	25
388-6650	61
388-6657	61
388-7269	461
388-7270	461
388-7434	15
	17
	19
388-7435	15
388-7436	30
388-7437	30
388-7440	27
388-7442	27
388-7443	27
388-7444	27
388-7445	27
388-7446	57
388-7447	57
388-7456	63
388-7458	63
388-7461	63
388-7464	50
388-7465	50
388-7466	50
388-7467	50
388-7469	50
388-7471	50
388-7472	50
388-7473	38
	50
388-7474	9
	11
	38
	50
388-7476	50
388-7477	50
388-7479	34
388-7480	34
388-7481	34
388-7482	34
388-7483	34
388-7484	34
388-7485	34
388-7488	10
	12
388-7489	10
388-7490	10
	12
388-7491	10
388-7492	10
	12
388-7493	8
388-7494	8
388-7495	8
388-7496	8
388-7500	31
388-7501	31
388-7502	13
388-7507	8
388-7508	24
388-7509	38
388-7510	►71
	78
	80
388-7511	78
	80
388-7512	78
	80
388-7513	78
	80
388-7514	78
	80
388-7515	78
	80
388-7516	78
	80
388-7517	78
	80
388-7518	78
	80
388-7522	78
	80
388-7524	78
	80
388-7526	69
388-7527	69
388-7528	69
388-7530	69
388-7532	69
388-7533	69
388-7534	69
388-7535	69
388-7536	69
388-7540	69
388-7542	75
388-7543	75
388-7544	75
388-7545	75
388-7547	40
	41
388-7849	►404
388-7874	147
388-7875	►191
388-7876	352
	400
	412
388-7886	147
388-7887	147
388-7902	404
388-7905	404
388-7907	404
388-7909	243
	245
388-7932	►2
388-7936	199
388-7954	254
	257
388-7978	223
	341
	342
	343
	344
388-8007	400
	409
	421
388-8008	400
	409
	421
388-8009	400
	409
	421
388-8011	249
388-8012	400
	409
	421
388-8015	66
388-8016	66
388-8018	386
	390
	393
	405
	407
388-8019	386
	390
	393
	405
	407
388-8028	386
	390
	393
	405

PART NUMBER INDEX

Part	Page
	407
388-8115	221
	▶462
388-8116	2
	3
	▶463
388-8118	189
388-8119	189
388-8120	188
388-8140	468
	478
	482
	486
	489
388-8146	▶468
388-8173	223
	344
388-8174	223
	343
388-8209	331
	▶343
388-8210	331
	▶344
388-8222	196
	202
388-8223	128
	196
388-8224	128
	196
388-8246	▶1
388-8247	▶1
388-8264	▶223
388-8265	▶117
388-8266	▶409
388-8267	▶400
388-8268	▶412
388-8270	▶118
388-8272	▶225
388-8273	▶120
388-8274	▶415
388-8275	▶414
388-8276	▶405
388-8281	▶407
388-8283	▶417
388-8284	▶116
388-8285	▶416
388-8286	▶418
389-0463	115
389-0691	17
	19
389-0692	17
	19
389-0695	17
	19
389-0696	17
	19
389-0697	17
	19
389-0698	17
	19
389-0699	17
389-0700	17
	19
389-0701	17
	19
389-5106	15
	16
389-5111	16
389-5137	19
389-5153	12
389-5154	12
389-5156	36
389-5159	27
389-5160	27
389-5234	76
389-5248	87
389-5256	135
389-5292	38
389-5308	40
	41
389-5353	63
389-5383	50
390-2764	115
390-5018	165
	166
390-9315	453
390-9317	453
391-5623	192
391-7091	88
	90
391-7092	88
	90
391-7093	88
	90
391-8028	46
391-8030	46
391-8031	43
	▶46
392-0808	400
	412
	421
	423
392-4904	115
392-9277	453
393-2878	30
393-2881	9
393-2882	9
393-2885	31
393-2886	31
393-2887	31
393-2889	31
393-2891	31
393-2894	31
393-2895	31
393-2896	31
393-2897	13
393-2898	13
393-2899	13
393-2900	13
393-2901	13
393-2902	13
393-2903	13
393-2904	13
393-2905	31
393-2906	31
393-2907	31
393-2908	31
393-2909	31
393-2910	31
393-2911	13
393-2912	13
393-2913	13
393-2914	13
393-2915	13
393-2916	13
393-2917	71
	80
393-2918	71
	80
393-2919	71
	80
393-2920	78
	80
393-2921	77
	80
393-2922	77
	80
393-2923	69
393-2925	69
393-2926	69
393-2927	69
393-2932	69
393-2933	69
393-2934	69
393-2935	69
393-2936	69
393-2942	76
393-2944	50
393-2946	50
393-2947	50
393-2948	38
393-2950	69
393-2951	69
393-7327	72
393-7328	54
393-7329	53
393-7330	1
	▶7
393-7332	43
393-7333	6
	▶54
393-7338	1
	▶4
393-7339	1
	▶4
393-7569	69
393-7570	33
	63
	69
	78
	80
393-7571	50
393-7572	69
	82
	83
393-7573	28
	37
	50
393-7574	40
	41
	50
	78
	80
	87
393-7575	50
393-7577	15
	21
	22
393-7578	31
393-7579	24
393-7580	82
	83
393-7581	69
393-7582	15
393-7583	24
393-7584	33
393-7585	56
393-7586	63
393-7587	63
393-7588	63
393-7589	74
394-4539	227
	229
394-5387	▶127
	360
395-2971	227
	229
395-3544	439
	440
396-0901	5
	6
	▶87
396-0902	5
	▶50
396-0903	5
	▶9
396-0905	5
	▶36
396-0907	▶69
	82
396-0908	5
	▶21
396-0909	5
	6
	▶26
396-0910	5
	6
	▶28
396-0911	5
	6
	▶74
396-0912	5
	6
	▶38
396-0913	5
	▶40
396-0914	5
	6
	▶56
396-0915	5
	6
	▶135
396-0916	5
	6
	▶76
396-3352	29
	59
396-7201	136
	223
396-7203	143
396-7206	90
396-7207	88
396-7208	117
	120
	151
	154
396-7209	▶140
	435
396-7210	▶100
	116
	140
396-7434	184
396-8293	▶184
396-8363	66
396-8364	100
396-8366	143
397-3897	445
	447
397-3898	445
	447
397-3899	445
	447
397-3900	445
	447
397-3901	445
	447
397-3902	447
397-3903	445
397-8721	162
397-9054	28
397-9055	28
397-9056	9
397-9057	26
	▶27
397-9546	160
397-9547	160

▶ **PRIMARY REFERENCE**

PART NUMBER INDEX

Part	Page
397-9558	220
	▶274
397-9944	24
397-9945	▶78
	83
397-9946	83
397-9948	69
397-9949	69
397-9950	69
397-9952	76
397-9953	87
397-9954	87
397-9955	87
397-9956	87
397-9957	87
397-9958	87
397-9959	87
397-9960	38
397-9961	40
397-9962	40
397-9963	40
	41
397-9964	40
397-9965	40
397-9966	50
397-9967	50
397-9968	33
397-9970	63
397-9971	63
397-9972	63
397-9973	56
397-9974	50
397-9975	50
397-9976	50
397-9977	50
397-9979	63
397-9980	63
397-9981	63
397-9982	56
	63
397-9984	63
397-9985	63
397-9986	63
397-9987	63
397-9988	11
	36
398-0001	254
398-0826	38
398-1476	9
	▶10
398-2306	56
398-5520	15
398-5522	34
398-5550	50
399-5841	115

4

Part	Page
415-2795	▶61
415-2796	46
415-2810	59
415-7162	192
416-0720	▶192
416-0721	192
416-0722	192
416-0723	192
416-0724	192
416-0725	192
416-0726	192
416-0727	192
416-0728	192
416-0729	192
416-0730	192
416-0737	192
416-0738	192
416-0739	192
416-0741	192
416-0742	192
416-0743	192
416-0744	192
416-0745	192
416-0746	192
416-0747	192
416-0748	192
416-0749	192
416-0750	192
416-0751	192
416-0752	192
416-0753	192
416-0754	192
416-0755	192
416-0759	192
416-0760	192
416-0761	192
416-1848	192
416-5687	468
	▶471
416-5688	4
	▶474
	478
	486
416-5689	4
	▶475
	482
416-5690	25
416-5691	25
416-5692	25
416-5789	▶476
	489
416-6224	455
416-6225	455
416-6976	468
	478
	482
	486
	489
416-9256	433
	434
416-9259	118
	149
416-9260	118
	149
416-9264	▶149
	221
416-9265	▶435
416-9266	115
416-9605	189
417-4606	182
	▶199
417-4607	199
418-0931	15
418-0967	50
418-0969	12
418-5763	468
	478
	482
	486
	489
418-5771	349
	350
418-5893	388
418-5895	388
418-5900	384
	405
	407
418-5901	384
	405
	407
418-5930	357
418-5933	356
	▶358
418-5934	358
418-5935	355
	358
418-5945	386
	390
	405
	407
418-5954	355
	358
418-8096	188
418-8763	199
418-9011	▶477
419-0088	145
	223
419-8315	189
419-8939	445
	447
420-8851	5
	6
	▶16
420-8852	6
	▶11
420-8853	6
	▶22
420-8855	6
	▶41
420-8856	6
	▶58
421-1876	11
421-1877	11
	▶12
421-1878	▶80
	82
421-1879	41
421-1880	41
421-1881	▶19
	22
421-1882	58
421-1883	▶15
	16
421-1884	63
421-2279	471
421-4206	▶111
	118
421-4207	▶151
	221
421-4222	▶111
	153
421-4223	▶153
	221
421-4225	▶154
	208
421-6171	231
	233
	235
	237
	239
422-3195	278
422-3212	157
422-3232	198
	201
422-3323	▶196
422-3324	▶198
422-3333	182
	▶201
422-3334	182
	▶202
422-3350	157
422-3366	157
422-3400	182
	▶183
422-3401	▶182
422-3403	▶182
422-3405	▶182
422-3408	400
	409
	421
422-3409	400
	409
	421
422-3410	400
	409
	421
422-3411	400
	409
	421
422-3412	400
	409
	421
422-3445	▶464
422-3446	▶465
422-7656	182
	▶203
423-0532	381
423-1982	245
	255
423-1984	255
423-1985	254
423-3676	330
	331
423-3678	147
423-4287	▶305
423-4291	▶305
	314
423-4294	305
	▶315
423-4297	315
	320
	▶324
423-4298	▶286
	315
423-4300	286
	▶287
424-0450	▶280
424-0451	▶281
424-5546	223
	343
	344
	346
424-7631	386
	390
	405
	407
426-6487	▶305
426-6490	▶305
426-6492	305
	▶306
426-6495	306
	▶316
426-6497	316
	321
	▶325
426-6503	▶288
	316
426-6505	288
	▶289
426-6535	▶306
426-6536	▶306
426-6537	▶306
426-6538	306
	▶317
426-6539	317

PART NUMBER INDEX

Part	Page
	322
	►326
426-6544	►290
	317
426-6545	290
	►291
426-6547	►307
426-6548	►307
426-6549	►307
426-6550	307
	►318
426-6551	318
	323
	►327
426-6554	►292
	318
426-6555	292
	►293
426-6557	►307
426-6558	►308
426-6559	307
	308
	►308
426-6560	308
	►319
426-6561	313
	319
	►328
426-6564	►294
	319
426-6565	294
	►295
426-6931	►308
426-6932	►308
426-6933	308
	►309
426-6934	309
	►320
426-6935	►296
	320
426-6937	296
	►297
426-6938	►309
426-6939	►309
426-6940	►309
426-6941	309
	►321
426-6943	►298
	321
426-6944	►310
426-6945	►310
426-6947	►310
426-6951	310
	►322
426-6957	►299
	322
426-6959	299
	►300
426-6965	►310
426-6967	►311
426-6970	310
	311
	►311
426-6978	►301
	323
426-6981	301
	►302
426-6985	►311
426-6989	►311
426-6992	311
	►312
426-6995	312
	►313
426-7001	►303
	313
426-7003	303
	►304
426-7102	311
	►323
431-5570	►314
432-8929	451
	►455
432-8930	451
	►453
432-8931	453
432-8932	453
432-8933	453
432-8937	455
433-9330	400
	409
	421
433-9721	445
	447
435-4865	►478
435-4866	►482
435-4877	►486
435-4878	►489
435-5221	97
435-8712	►157
	171
435-8725	157
436-0817	24
	38
436-0822	63
436-1607	88
	90
436-1608	118
436-1609	►108
	223
436-2988	355
	358
	384
	405
	407
437-2562	5
	6
	►24
437-2564	33
437-2566	5
	6
	►33
437-3432	37
437-5953	5
	6
	►37
437-5954	6
	►82
437-5955	5
	6
	►63
437-5968	37
437-9853	393
	405
	407
438-1290	5
	►83
438-1313	9
438-5693	9
442-5904	183
	198

► **PRIMARY REFERENCE**

MEMORANDA



©2013 Caterpillar
All Rights Reserved

CAT, CATERPILLAR, their respective logos, “Caterpillar Yellow”, and the POWER EDGE trade dress as well as corporate and product identity used herein, are trademarks of Caterpillar and may not be used without permission.