CATERPILLAR®

SEBP2466-27
March 2001

RUTHZIL TRATOR COMERCIAL DE PEÇAS LTDA 11 97083-6812 ROLANDO

Parts Manual

SIS

See “General Information” for New Parts Manual Features.

24H Motor Grader

7KK1-Up (Machine)
80M1-Up (Engine)
1KY1-Up (Transmission)
4DT1-Up (Torque Converter)

Powered By 3412E Engine

Product and Dealer Information

Note: For product identification plate locations, see the section “Product Identification Information” in the Operation and Maintenance Manual.

Delivery Date: _____

Product Information

Model: _____

Product Identification Number: _____

Engine Serial Number: _____

Transmission Serial Number: _____

Generator Serial Number: _____

Attachment Serial Numbers: _____

Attachment Information: _____

Customer Equipment Number: _____

Dealer Equipment Number: _____

Dealer Information

Name: _____ Branch: _____

Address: _____

_____

_____

	Dealer Contact	Phone Number	Hours
Sales:	_____	_____	_____
Parts:	_____	_____	_____
Service:	_____	_____	_____

Informations produit et concessionnaire

Nota: Voir l'emplacement de la plaque signalétique du produit au chapitre "Informations produit" du guide d'utilisation et d'entretien.

Date de livraison: _____

Informations produit

Modèle: _____

Numéro d'identification produit: _____

Numéro de série du moteur: _____

Numéro de série de la boîte de vitesses: _____

Numéro de série de l'alternateur: _____

Numéros de série d'équipement: _____

Informations sur l'équipement: _____

Numéro matériel client: _____

Numéro matériel concessionnaire: _____

Informations concessionnaire

Nom: _____ Agence: _____

Adresse: _____

_____

_____

	Contact concessionnaire	Numéro de téléphone	Heures
Ventes:			
Pièces:			
Service:			

Información del Producto/Distribuidor

Nota: Para saber la ubicación de las placas de identificación del producto, ver la sección “Información sobre identificación del producto” en el Manual de Operación y Mantenimiento.

Fecha de entrega: _____

Información del producto

Modelo: _____

Número de identificación del producto: _____

Número de serie del motor: _____

Número de serie de la transmisión: _____

Número de serie del generador: _____

Números de serie de los accesorios: _____

Información sobre los accesorios: _____

Número del equipo del cliente: _____

Número del equipo del distribuidor: _____

Información del distribuidor

Nombre: _____ Sucursal: _____

Dirección: _____

_____

_____

	Comunicación con el distribuidor	Número de teléfono	Horas
Ventas:	_____	_____	_____
Piezas:	_____	_____	_____
Servicio:	_____	_____	_____

Informações Sobre Produto e Revendedor

Nota: Para localizações da placa de identificação do produto, consulte a seção, “Informações Sobre Identificação do Produto” no Manual de Operação e Manutenção.

Data de Entrega: _____

Informações Sobre o Produto

Modelo: _____

Número de Identificação do Produto: _____

Número de Série do Motor: _____

Número de Série da Transmissão: _____

Número de Série do Gerador: _____

Números de Série de Acessórios: _____

Informações Sobre Acessórios: _____

Número do Equipamento do Cliente: _____

Número do Equipamento do Revendedor: _____

Informações Sobre o Revendedor

Nome: _____ Filial: _____

Endereço: _____

_____

_____

	Contato do Revendedor	Telefone	Horas
Vendas:	_____	_____	_____
Peças:	_____	_____	_____
Serviço:	_____	_____	_____

Produkt- und Händlerinformation

Anmerkung: Für die Lage der Produkt-Identnummer und Seriennummern siehe Abschnitt “Produkt-Identinformation” im Betriebs- und Wartungshandbuch.

Lieferdatum: _____

Produkt-Identinformation

Modell: _____

Produkt-Identnummer: _____

Seriennummer des Motors: _____

Seriennummer des Getriebes: _____

Seriennummer des Generators: _____

Seriennummern der Arbeitsgeräte: _____

Arbeitsgeräteinformation: _____

Kundennummer: _____

Händlernummer: _____

Händlerinformation

Name: _____ Niederlassung: _____

Adresse: _____

_____

_____

	Kontaktperson beim Händler	Telefon	Dienststunden
Verkauf:	_____	_____	_____
Ersatzteile:	_____	_____	_____
Service:	_____	_____	_____

MEMORANDA

TABLE OF CONTENTS

Name	Page
GENERAL INFORMATION	A23
REPAIR ALTERNATIVES	A42
SUPPLEMENTAL COOLANT ADDITIVES	A47
MAINTENANCE PARTS	A52
INDEX	A81
MACHINE ARRANGEMENT	1
CHASSIS AR	1
COMMON AR-MOTOR GRADER	2
INSTALLATION AR-FIELD	3
ENGINE ARRANGEMENT	4
ENGINE AR	4
INSTALLATION AR-ENGINE	6
BASIC ENGINE	8
BELT TIGHTENER GP	8
CAMSHAFT GP	10
COVER GP-CYLINDER BLOCK	11
COVER GP-FLYWHEEL HOUSING	13
COVER GP-FRONT HOUSING	14
COVER GP-OIL PAN	16
COVER GP-VALVE MECHANISM	18
CRANKSHAFT GP	20
CYLINDER BLOCK AS	26
CYLINDER BLOCK GP	30
CYLINDER HEAD AS	34
CYLINDER HEAD GP	40
DAMPER GP	46
DRIVE GP-FAN	48
FLYWHEEL GP	50
GEAR GP-FRONT	51
GEAR GP-REAR	52
HOUSING GP-FLYWHEEL	55
HOUSING GP-FRONT	56
LIFTING GP-ENGINE	58
PAN GP-OIL	59
PISTON & ROD GP	60
PLUG GP-CYLINDER BLOCK	63
PLUG GP-CYLINDER HEAD	64
PULLEY GP-CRANKSHAFT	65
ROCKER ARM GP	66
SUPPORT GP-ENGINE	67
VALVE MECHANISM GP	69
LUBRICATION SYSTEM	70
FASTENER GP-OIL PUMP MOUNTING	70
FILLER GP-ENGINE OIL	71
FILTER GP-ENGINE OIL	72
FUMES DISPOSAL GP	73
GAUGE GP-OIL LEVEL (DIPSTICK)	75
LINES GP-ENGINE OIL	76
LINES GP-TURBOCHARGER OIL	78
OIL CHANGE GP-HIGH SPEED	80
PRELUBRICATION AR-ENGINE	82
PUMP GP-ENGINE OIL	84
COOLING SYSTEM	85
COOLER GP-ENGINE OIL	85
CORE GP-OIL COOLER	86
FAN GP-BLOWER	88
LINES GP-TORQUE CONV COOLER	90
LINES GP-WATER	92
PUMP GP-WATER	108
RADIATOR & MOUNTING GP	118
RADIATOR GP	120
TANK GP-COOLANT	126
AIR INLET AND EXHAUST SYSTEM	128
AFTERCOOLER GP-WATER	128
AIR CLEANER GP	130
DUST EJECTOR GP	132
EXTENSION GP-EXHAUST	133
LINES GP-AIR	134
MANIFOLD GP-EXHAUST	139
MUFFLER GP	141
SLEEVE-EXHAUST MANIFOLD	142
TURBOCHARGER GP	143
FUEL SYSTEM	145
ADAPTER GP-FAST FILL FUEL	145
DRIVE GP-UNIT INJ HYD PUMP	146
INJECTOR GP-FUEL	158
KIT-SEAL	162
LINES GP-FUEL	163
LINES GP-FUEL FILTER	168
LINES GP-INJECTOR HYD PUMP	172
PUMP & MTG GP-UNIT INJ HYD	174
PUMP GP-FUEL INJECTION	188
PUMP GP-FUEL PRM & PRIM FILTER	192
PUMP GP-UNIT INJECTOR HYD	194
TANK & MTG GP-FUEL	204
TANK GP-FUEL	208
VALVE GP-PRESSURE CONTROL	215
VALVE GP-SOLENOID	218
ELECTRICAL AND STARTING SYSTEM	219
ALARM GP	219
ALTERNATOR GP-CHARGING	220
BATTERY GP	226
CONTROL & MTG GP-ENGINE ELEK	228
CONTROL GP-ENG RATINGS ELEK	229
CONTROL GP-ENGINE ELECTRONIC	235
ELECTRONICS GP-POWER TRAIN	237

TABLE OF CONTENTS

Name	Page
HEATER GP-ENGINE OIL	238
HEATER GP-FUEL	240
HEATER GP-HYDRAULIC OIL	244
HEATER GP-JACKET WATER	245
JUNCTION BLOCK GP	246
LAMP GP-DOME	247
LAMP GP-FLOOD	248
LAMP GP-HEAD	250
LAMP GP-SIGNAL	256
LIGHTING GP-FLOOD & HEAD	258
MAGNETIC PICKUP GP	260
SENSOR GP-FUEL LEVEL	261
SENSOR GP-POSITION	262
SENSOR GP-PRESSURE	268
SENSOR GP-SPEED	280
SENSOR GP-TEMPERATURE	283
STARTING AID GP-ETHER	286
STARTING AR-COLD WEATHER	288
STARTING MOTOR GP-ELECTRIC	298
SWITCH GP-DISCONNECT	308
SWITCH GP-FLOW	309
SWITCH GP-MAGNETIC	311
SWITCH GP-START	316
SWITCH GP-WIPER	317
WIRING GP-CAB	318
WIRING GP-COLD WEATHER	330
WIRING GP-ENGINE	332
WIRING GP-FRONT	336
WIRING GP-PLATFORM	342
WIRING GP-REAR	344
WIRING GP-RELAY PANEL	358
WIRING GP-SHIFT CONSOLE	360
WIRING GP-STEERING CONSOLE	364
WIRING GP-UNIT INJECTOR	368
POWER TRAIN	370
CASE & PARTS GP-PLANETARY	370
CASE AS-TRANSFER	372
CHAIN GP-DRIVE	373
CONTROL GP-DIFFERENTIAL LOCK	374
CONTROL GP-TRANSMISSION HYD	376
COVER GP-SHIPPING	378
DIFFERENTIAL & BEVEL GEAR GP	380
DIFFERENTIAL GP	384
FASTENER GP-TANDEM	388
FILLER GP-POWER TRAIN OIL	390
FILTER GP-OIL	392
FINAL DRIVE GP	394
GEAR & CASE GP-INPUT TRANSFER	402
GEAR & CASE GP-OUTPUT TRANSFER	404
HOUSING GP-REAR AXLE	412
LINES GP-POWER TRAIN OIL	414
MOUNTING GP-REAR AXLE	421
PLANETARY GP-TRANSMISSION	422
POWER TRAIN AR	427
PUMP GP-TRANSMISSION	428
SHAFT GP-DRIVE	430
SUPPORT GP-TRANSMISSION	432
TANDEM & COVER GP	434
TIRE GP	436
TORQUE CONVERTER GP	438
TRANSMISSION AR	451
UNIVERSAL JOINT GP	453
VALVE & MTG GP-DIFF LOCK	455
VALVE GP	456
VALVE GP-MODULATING	457
VALVE GP-RELIEF	460
VALVE GP-SELECTOR	461
VALVE GP-SELECTOR & PRESS CONT	464
VALVE GP-SOLENOID	466
VALVE GP-TRANSMISSION CONTROL	470
WHEEL GP	476
FRAME AND BODY	478
AXLE AR-FRONT	478
AXLE GP-FRONT	480
ENCLOSURE GP-ENGINE	488
FENDER & SUPPORT GP	499
FRAME GP-FRONT	500
FRAME GP-REAR	502
GUARD & SUPPORT GP-RADIATOR	504
HITCH GP-ARTICULATING	506
LINES GP-CENTRAL LUBRICATION	508
LINES GP-GREASE	512
LINK GP-STEERING	522
LINK GP-STEERING FRAME LOCK	523
LUBRICATION AR-AUTOMATIC	524
LUBRICATION AR-CENTRAL	533
LUBRICATION GP-CENTRAL	534
PLATFORM AR	537
PUMP GP-LUBRICATION	538
SHIELD GP-ENGINE COMPARTMENT	542
STEP GP-FRONT	546
STEP GP-REAR	550
VALVE GP-LUBE DISTRIBUTION	551
BRAKING SYSTEM	555
ACCUMULATOR GP	555
BRAKE GP-SERVICE	558
BRAKE GP-SERVICE & PARKING	560
CONTROL GP-PARKING BRAKE	562
CONTROL GP-SERVICE BRAKE	564
FASTENER GP-BRAKE	570
FILTER GP-OIL	571
PUMP & MTG GP-BRAKE & DIF LOCK	572
PUMP GP-ELECTRIC DRIVE	574
PUMP GP-GEAR	577

TABLE OF CONTENTS

Name	Page
SCREEN GP	580
SLACK ADJUSTER GP	581
HYDRAULIC SYSTEM	582
ACCUMULATOR & MTG GP-HYDRAULIC	582
ACCUMULATOR AS	583
CONTROL GP-STEERING	584
CYLINDER & MTG GP-ARTICULATION	586
CYLINDER & MTG GP-BLADE TIP	587
CYLINDER & MTG GP-CSHFT & LIFT	588
CYLINDER & MTG GP-SIDESHIFT	589
CYLINDER & MTG GP-STEERING	590
CYLINDER & MTG GP-WHEEL LEAN	591
CYLINDER GP-ARTICULATION	592
CYLINDER GP-BLADE TIP	594
CYLINDER GP-CENTERSHIFT & LIFT	596
CYLINDER GP-RIPPER LIFT	598
CYLINDER GP-SIDESHIFT	600
CYLINDER GP-STEERING	602
CYLINDER GP-WHEEL LEAN	604
DRIVE & MTG GP-CIRCLE	605
DRIVE GP-CIRCLE	606
HYDRAULIC AR	609
LINES GP-FRONT	610
LINES GP-HYDRAULIC	622
LINES GP-PUMP	640
LINES GP-RIPPER	648
LINES GP-SECONDARY STEERING	654
LINES GP-STEERING	656
MOTOR & MTG GP-CIRCLE DRIVE	662
MOTOR GP-ELEC HYD PUMP	663
MOTOR GP-GEROTOR	664
PUMP & MTG GP-PISTON	666
PUMP GP-GEAR	668
PUMP GP-METERING	672
PUMP GP-PISTON	674
ROTATING GP-PUMP	680
SWASHPLATE GP	682
SWIVEL GP	686
TANK & FILTER GP-HYDRAULIC	688
TANK & MTG GP-HYDRAULIC	690
VALVE & LINKAGE GP	692
VALVE & MTG GP-SOLENOID	696
VALVE GP-BANK 4	698
VALVE GP-BANK 6	702
VALVE GP-CHECK	704
VALVE GP-COMBINATION	705
VALVE GP-CONTROL	710
VALVE GP-PRESS & FLOW CMPNSTR	736
VALVE GP-RELIEF	738
VALVE GP-SHUTTLE	744
VALVE GP-SOLENOID	745
VALVE GP-UNLOADING	747
IMPLEMENTS	748
CIRCLE GP	748
DRAWBAR GP	750
GUARD GP-ROCK	752
MOLDBOARD AS	753
PLATE GP-PUSH	754
WORK TOOLS	755
ADAPTER GP	755
BIT AS	756
EDGE GP-CUTTING	757
EDGE-CUTTING	761
MOUNTING GP-BLADE	767
MOUNTING GP-RIPPER	768
RIPPER AR	770
RIPPER GP	772
TOOTH GP-RIPPER	776
OPERATOR STATION	778
AIR CONDITIONER & MOUNTING GP	778
AIR CONDITIONER GP	780
ARMREST GP	784
CAB AR	787
COMPRESSOR GP-REFRIGERANT	788
CONDENSER & MTG GP-REFRIGERANT	795
CONSOLE GP-OPERATOR	796
CONSOLE GP-TMSN CONTROL	799
CONTROL GP-MONITOR SYS DIMMER	800
DOOR GP-CAB	802
DUCT & CONTROL GP	808
EXTENSION GP-BACKREST	810
FAN GP-DEFROSTER	811
FILTER GP-CAB AIR	814
INSTALLATION GP-RADIO	815
INSULATION GP-WEATHER	816
LINER GP-CAB	818
LINES GP-AIR CONDITIONER	820
LINES GP-CAB AIR	822
LINES GP-HEATER	824
LITERATURE GP	826
MIRROR GP-REAR VIEW	827
MODULE GP-SPEEDOMETER & TACH	829
MOUNTING GP-CAB	830
MOUNTING GP-PLATFORM	832
PAN GP-SEAT	834
PANEL GP-INSTRUMENT	838
PEDAL GP-BRAKE, TMSN & GOV	842
PRESSURIZER GP-CAB	846
ROPS GP	850
SEAT BELT GP	851
SEAT GP	854
SEAT GP-SUSPENSION	859

TABLE OF CONTENTS

Name	Page	Name	Page
SUSPENSION GP-SEAT	862		
WASHER GP-WINDOW	870		
WINDOW GP	872		
WIPER & WASHER GP-WINDOW	874		
SERVICE EQUIPMENT AND SUPPLIES	876		
FILM GP	876		
PLATE & FILM GP	878		
TOOL BOX GP	893		
PART NUMBER INDEX	B1		

TABLE DES MATIÈRES

Désignation	Page
GÉNÉRALITÉS	A26
OPTIONS DE RÉPARATION	A43
ADDITIFS POUR LIQUIDE DE REFROIDISSEMENT	A48
PIÈCES DE RECHANGE	A57
INDEX	A93
VERSION DE MACHINE	1
VERSION DE CHASSIS	1
NIVELEUSE - VERSION DE BASE	2
MONTAGE SUR CHANTIER (VERSION)	3
MOTEUR COMPLET	4
MOTEUR (VERSION)	4
MONTAGE DE MOTEUR (VERSION)	6
MOTEUR STANDARD	8
TENDEUR DE COURROIE (ASS)	8
ARBRE A CAMES (ASS)	10
BLOC-CYLINDRES - COUVERCLE (ASS)	11
COUVERCLE DE CARTER DE VOLANT (ASS)	13
COUVERCLE DE CARTER AV (ASS)	14
COUVERCLE DE CARTER D'HUILE MOTEUR (ASS)	16
CACHE-SOUPAPES (ASS)	18
VILEBREQUIN (ASS)	20
BLOC-CYLINDRES (ENS)	26
BLOC-CYLINDRES (ASS)	30
CULASSE (ENS)	34
CULASSE (ASS)	40
AMORTISSEUR DE VIBRATIONS (ASS)	46
ENTRAÎNEMENT DE VENTILATEUR (ASS)	48
VOLANT MOTEUR (ASS)	50
PIGNONNERIE AV (ASS)	51
PIGNON AR (ASS)	52
CARTER DE VOLANT (ASS)	55
CARTER AV (ASS)	56
OEILLETONS DE LEVAGE MOTEUR (ASS)	58
HUILE MOTEUR - CARTER (ASS)	59
PISTON ET BIELLE (ASS)	60
BOUCHON - BLOC-CYLINDRES	63
BOUCHON - CULASSE (ASS)	64
VILEBREQUIN - POULIE (ASS)	65
AXE DE CULBUTEUR (ASS)	66
SUPPORT DE MOTEUR (ASS)	67
CULBUTERIE (ASS)	69
CIRCUIT DE GRAISSAGE	70
BOULONNERIE DE MONTAGE DE LA POMPE A HUILE (ASS)	70
BOUCHON DE REMPLISSAGE D'HUILE MOTEUR (ASS)	71
FILTRE À HUILE MOTEUR (ASS)	72
DISPOSITIF D'EVACUATION DES VAPEURS DE CARTER	73
JAUGE D'HUILE MOTEUR (BAIONNETTE) (ASS)	75
CANALISATIONS D'HUILE MOTEUR (ASS)	76
CANALISATIONS D'HUILE DE TURBOCOMPRESSEUR (ASS)	78
DISPOSITIF DE VIDANGE RAPIDE D'HUILE (ASS)	80
VERSION DE PRÉGRAISSAGE DE MOTEUR	82
POMPE A HUILE MOTEUR (ASS)	84
CIRCUIT DE REFROIDISSEMENT	85
REFROIDISSEUR D'HUILE MOTEUR (ASS)	85
FAISCEAU DU REFROIDISSEUR D'HUILE (ASS)	86
VENTILATEUR SOUFFLANT (ASS)	88
CANALIS. DE REFROIDISSEMENT DU CONV. DE COUPLE	90
CANALISATIONS D'EAU (ASS)	92
POMPE A EAU (ASS)	108
RADIATEUR ET MONTAGE (ASS)	118
RADIATEUR (ASS)	120
RÉSERVOIR DU LIQUIDE DE REFROIDISSEMENT (ASS)	126
CIRCUIT D'ADMISSION D'AIR ET D'ÉCHAPPEMENT	128
ADMISSION REFROIDIE PAR EAU (ASS)	128
FILTRE A AIR (ASS)	130
ÉJECTEUR AUTOMATIQUE DE POUSSIÈRE (ASS)	132
RALLONGE D'ÉCHAPPEMENT (ASS)	133
CANALISATIONS D'AIR (ASS)	134
COLLECTEUR D'ÉCHAPPEMENT (ASS)	139
SILENCIEUX (ASS)	141
MANCHON-ÉCHAPPEMENT COLLECTEUR	142
TURBOCOMPRESSEUR (ASS)	143

TABLE DES MATIÈRES

Désignation	Page
CIRCUIT DE CARBURANT	145
ADAPTATEUR DE REMPLIS. RAPIDE DE CARBURANT (ASS)	145
ENTRAINEMENT D'INJECTEURS-POMPES HYDRAULIQUES	146
INJECTEUR DE CARBURANT (ASS)	158
KIT DE JOINTS	162
CANALISATIONS DE CARBURANT (ASS)	163
CANALISATIONS DU FILTRE A CARBURANT (ASS)	168
CANALISATIONS - INJECTEURS-POMPES HYDRAULIQUES	172
POMPE D'INJECTEURS-POMPES HYDRAU. ET MONTAGE	174
POMPE D'INJECTION DE CARBURANT (ASS)	188
POMPE D'AMORÇAGE DE CARBURANT ET FILTRE PRINCIPAL	192
INJECTEURS-POMPES HYDRAULIQUES (ENS)	194
RÉSERVOIR DE CARBURANT ET MONTAGE (ASS)	204
RÉSERVOIR DE CARBURANT (ASS)	208
DISTRIBUTEUR DE PRESSION (ASS)	215
SOUPAPE - SOLÉNOÏDE (ASS)	218
CIRCUIT ÉLECTRIQUE ET DE DÉMARRAGE	219
AVERTISSEUR (ASS)	219
ALTERNATEUR DE CHARGE (ASS)	220
BATTERIE (ASS)	226
COMMANDE ET MONTAGE - MOTEUR	228
COMMANDE ÉLECTRIQUE DE RÉGLAGE DU MOTEUR (ASS)	229
COMMANDE ELECTRONIQUE DE MOTEUR (ASS)	235
ÉLECTRONIQUE DE TRANSMISSION (ASS)	237
RÉCHAUFFEUR D'HUILE MOTEUR (ASS)	238
RECHAUFFEUR DE CARBURANT (ASS)	240
RECHAUFFEUR D'HUILE HYDRAULIQUE (ASS)	244
EAU DES CHEMISES - RECHAUFFEUR (ASS)	245
BLOC DE BRANCHEMENT (ASS)	246
PLAFONNIER (ASS)	247
LAMPE - PHARE (ASS)	248
PHARE AV (ASS)	250
LAMPE - CLIGNOTANT DE DIRECTION (ASS)	256
ÉCLAIRAGE - PROJECTEUR ET PHARE AV	258
CAPTEUR MAGNÉTIQUE (ASS)	260
CAPTEUR DE NIVEAU DE CARBURANT (ASS)	261
SONDE - CIRCUIT DE CARBURANT	262
CAPTEUR DE PRESSION (ASS)	268
CAPTEUR DE VITESSE (ASS)	280
CAPTEUR DE TEMPERATURE (ASS)	283
AUXILIAIRE DE DÉMARRAGE À L'ÉTHER	286
DÉMARRAGE PAR TEMPS FROID (VERSION)	288
DÉMARREUR ÉLECTRIQUE (ASS)	298
ROBINET DE BATTERIE (ASS)	308
CONTACTEUR DE DEBIT (ASS)	309
CONTACTEUR MAGNETIQUE (ASS)	311
INTERRUPTEUR DE DÉMARRAGE (ASS)	316
INTERRUPTEUR D'ESSUIE-GLACE (ASS)	317
CABLAGE DE CABINE (ASS)	318
CABLAGE - TEMPS FROID (ASS)	330
CABLAGE DE MOTEUR (ASS)	332
CABLAGE AV (ASS)	336
CABLAGE - PLATE-FORME (ASS)	342
CABLAGE AR (ASS)	344
CABLAGE - PANNEAU DE RELAIS	358
CABLAGE DE LA CONSOLE DE CHANGEMENTS DE VITESSE	360
CABLAGE DE LA CONSOLE DE DIRECTION	364
CABLAGE D'INJECTEUR	368
TRANSMISSION	370
TRAINS PLANÉTAIRES - CARTER ET PIÈCES	370
CARTER - DISTRIBUTION (ENS)	372
ENTRAÎNEMENT DE CHAÎNE (ASS)	373
COMMANDE DE DIFFÉRENTIEL - VERROUILLAGE (ASS)	374
COMMANDE HYDRAULIQUE DE BOÎTE (ASS)	376
COUVERCLES D'EXPEDITION (ASS)	378
COURONNE ET DIFFERENTIEL (ASS)	380
DIFFERENTIEL (ASS)	384
BOULONNERIE DE TANDEM (ASS)	388
GOULOTTE DE REMPLISSAGE D'HUILE DE TRANSMISSION	390
FILTRE A HUILE (ASS)	392
RÉDUCTEURS (ASS)	394
ENGRENAGE DE TRANSFERT D'ENTRÉE ET CARTER (ASS)-	402

TABLE DES MATIÈRES

Désignation	Page
ENGRENAGE DE TRANSFERT ET CARTER	404
CARTER D'ESSIEU AR (ASS)	412
CANALISATIONS D'HUILE DE TRANSMISSION (ASS)	414
MONTAGE D'ESSIEU AR (ASS)	421
BOÎTE PLANÉTAIRE (ASS)	422
TRANSMISSION (VERSION)	427
POMPE DE BOÎTE DE VITESSES (ASS)	428
ARBRE D'ENTRAÎNEMENT (ASS)	430
SUPPORT DE TRANSMISSION (ASS)	432
TANDEM ET CARTER (ASS)	434
PNEUMATIQUE (ASS)	436
CONVERTISSEUR DE COUPLE (ASS)	438
BOÎTE DE VITESSES (VERSION)	451
JOINT UNIVERSEL (ASS)	453
SOUPAPE ET MONTAGE DE VERROUILLAGE DE DIF. (ASS)	455
CLAPET (ASS)	456
SOUPAPE DE MODULATION (ASS)	457
CLAPET DE DECHARGE (ASS)	460
SOUPAPE SÉLECTRICE (ASS)	461
SOUPAPE SELECTRICE ET REGULATRICE DE PRESSION	464
SOUPAPE - SOLÉNOÏDE (ASS)	466
DISTRIBUTEUR DE BOITE (ASS)	470
JANTE (ASS)	476
CHÂSSIS ET BENNE	478
ESSIEU AV (VERSION)	478
ESSIEU AV (ASS)	480
CARENAGE DE MOTEUR (ASS)	488
GARDE-BOUE ET SUPPORT (ASS)	499
CHÂSSIS AV (ASS)	500
BÂTI AR (ASS)	502
PROTÈGE-RADIATEUR ET SUPPORT (ASS)	504
ATTELAGE D'ARTICULATION (ASS)	506
GRAISSAGE CENTRAL - CANALISATIONS (ASS)	508
CANALISATIONS DE GRAISSAGE (ASS)	512
ARTICULATION DE DIRECTION (ASS)	522
LIAISON - VERROUILLAGE DE CHÂSSIS DE DIRECTION (ASS)	523
GRAISSAGE AUTOMATIQUE (VERSION)	524
GRAISSAGE - CENTRAL (ASS)	533
PLATE-FORME (VERSION)	537
POMPE DE GRAISSAGE (ASS)	538
ÉCRAN THERMIQUE DE COMPARTIMENT MOTEUR	542
MARCHEPIED AV (ASS)	546
MARCHEPIED AR	550
SOUPAPE DE DISTRIBUTION DE GRAISSAGE (ASS)	551
CIRCUIT DE FREINAGE	555
ACCUMULATEUR (ASS)	555
FREIN DE MANOEUVRE (ASS)	558
FREIN DE MANOEUVRE ET DE STATIONNEMENT (ASS)	560
COMMANDE DE FREIN DE STATIONNEMENT (ASS)	562
FREIN DE MANOEUVRE - COMMANDE (ASS)	564
BOULONNERIE DE FREIN (ASS)	570
FILTRE A HUILE (ASS)	571
POMPE ET MONTAGE - FREIN ET VERROUILL. DE DIFFÉR.	572
POMPE - ENTRAÎNEMENT ÉLECTRIQUE (ASS)	574
POMPE A ENGRENAGES (ASS)	577
ECRAN (ASS)	580
GROUPE DE RATTRAPAGE DE JEU	581
CIRCUIT HYDRAULIQUE	582
ACCUMULATEUR ET MONTAGE - HYDRAULIQUE (ASS)	582
ACCUMULATEUR (ENS)	583
COMMANDE DE DIRECTION (ASS)	584
VÉRIN D'ARTICULATION ET MONTAGE (ASS)	586
VÉRIN D'INCLINAISON DE LAME ET MONTAGE (ASS)	587
VÉRIN DE DÉPORT DE CERCLE ET DE LEVAGE (ASS)	588
VÉRIN DE DÉPORT DE LAME (ASS)	589
VERIN DE DIRECTION ET MONTAGE (ASS)	590
VÉRIN D'INCLINAISON DE ROUE ET MONTAGE (ASS)	591
VÉRIN D'ARTICULATION (ASS)	592
VÉRIN D'INCIDENCE DE LAME (ASS)	594
VÉRIN DE DÉPORT DE CERCLE ET DE LEVAGE (ASS)	596
VERIN DE LEVAGE DE RIPPER (ASS)	598
VÉRIN DE DÉPORT DE LAME (ASS)	600
VERIN DE DIRECTION (ASS)	602
VÉRIN D'INCLINAISON DE ROUE (ASS)	604
ENTRAÎNEMENT ET MONTAGE - CERCLE (ASS)	605
ENTRAÎNEMENT DE CERCLE (ASS)	606
VERSION HYDRAULIQUE	609
CANALISATIONS AV	610
CANALISATIONS HYDRAULIQUES (ASS)	622
CANALISATIONS DE POMPE (ASS)	640

TABLE DES MATIÈRES

Désignation	Page
CANALISATIONS DU RIPPER (ASS)	648
CANALISATION DE DIRECTION AUXILIAIRE	654
CANALISATIONS DE DIRECTION (ASS)	656
MOTEUR D'ENTRAÎNEMENT DU CERCLE ET MONTAGE (ASS)	662
MOTEUR ELECTRIQUE DE POMPE HYDRAULIQUE (ASS)	663
MOTEUR HYDRAULIQUE (ASS)	664
POMPE ET MONTAGE - PISTON (ASS)	666
POMPE A ENGRENAGES (ASS)	668
POMPE DE REGULARISATION DE DEBIT (ASS)	672
POMPE A PISTONS (ASS)	674
GROUPE DE ROTATION DE POMPE	680
PLATEAU OSCILLANT (ASS)	682
GROUPE D'ORIENTATION	686
RÉSERVOIR HYDRAULIQUE ET FILTRE (ASS)	688
RÉSERVOIR HYDRAULIQUE ET MONTAGE (ASS)	690
SOUPAPE ET TIMONERIE (ASS)	692
SOUPAPE ET MONTAGE - SOLÉNOÏDE	696
DISTRIBUTEUR 4 ÉLÉMENTS (ASS)	698
DISTRIBUTEUR 6 ÉLÉMENTS (ASS)	702
CLAPET DE RETENUE (ENS)	704
SOUPAPE DE COMBINAISON (ASS)	705
DISTRIBUTEUR (ASS)	710
SOUPAPE RÉGULATRICE DE PRESSION ET DÉBIT	736
CLAPET DE DECHARGE (ASS)	738
VANNE PILOTE (ASS)	744
SOUPAPE - SOLÉNOÏDE (ASS)	745
SOUPAPE D'ALLÈGEMENT (ASS)	747
ÉQUIPEMENTS	748
CERCLE (ASS)	748
BARRE D'ATTELAGE (ASS)	750
PARE-PIERRES (ASS)	752
BOUCLIER (ENS)	753
PLAQUE DE POUSSÉE (ASS)	754
OUTILS DE TRAVAIL	755
ADAPTATEUR (ASS)	755
EMBOUT (ENS)	756
LAME DE COUPE (ASS)	757
LAME DE COUPE	761
MONTAGE DE LAME	767
MONTAGE DE RIPPER (ASS)	768
RIPPER (VERSION)	770
RIPPER (ASS)	772
DENT DE RIPPER (ASS)	776
POSTE DE CONDUITE	778
CLIMATISEUR ET MONTAGE (ASS)	778
CLIMATISEUR (ASS)	780
ACCOUDOIR (ASS)	784
CABINE (VERSION)	787
COMPRESSEUR DE REFRIGERANT (ASS)	788
CONDENSATEUR ET MONTAGE (RÉFRIGÉRANT)	795
CONSOLE DE CONDUITE (ASS)	796
CONSOLE DE COMMANDE DE BOÎTE (ASS)	799
COMMANDE D'INVERSION DE LA CENTRALE DE SURVEILLANCE (ASS)	800
PORTIÈRE DE CABINE (ASS)	802
CONDUIT ET COMMANDE (ASS)	808
RALLONGE DU DOSSIER DE SIEGE	810
VENTILATEUR DÉGIVREUR (ASS)	811
FILTRE À AIR DE CABINE (ASS)	814
MONTAGE DE RADIO (ASS)	815
ISOLATION DE CABINE (ASS)	816
CABINE - REVÊTEMENT (ASS)	818
CANALISATIONS DE CLIMATISEUR (ASS)	820
CANALISATIONS D'AIR DE CABINE (ASS)	822
CANALISATIONS DE CHAUFFAGE (ASS)	824
LITTÉRATURE (ASS)	826
RÉTROVISEUR (ASS)	827
MODULE D'INDICATEUR DE VITESSE ET COMPTE-TOURS (ASS)	829
MONTAGE DE CABINE (ASS)	830
MONTAGE DE PLATE-FORME (ASS)	832
SIEGE - COUVERCLE INFERIEUR (ASS)	834
TABLEAU DE BORD (ASS)	838
PÉDALE - FREIN, BOÎTE ET RÉGULATEUR (ASS)	842
SURPRESSEUR (ASS)	846
TOIT ROPS (ASS)	850
CEINTURE DE SECURITE (ASS)	851
SIÈGE (ASS)	854
SIÈGE AVEC SUSPENSION (ASS)	859
LAVE-GLACE - VITRE (ASS)	870
VITRE (ASS)	872
ESSUIE-GLACE ET LAVE-GLACE	874
MATÉRIEL ET FOURNITURES D'ENTRETIEN	876
PLAQUE SIGNALÉTIQUE (ASS)	876
PLAQUES SIGNALETIQUES ET AUTOCOLLANTS (ASS)	878
COFFRE A OUTILS (ASS)	893

TABLE DES MATIÈRES

Désignation	Page	Désignation	Page
INDEX DE NUMÉROS DE PIÈCES	B1		

CONTENIDO

Nombre	Página
INFORMACIÓN GENERAL	A30
ALTERNATIVAS DE REPARACIÓN	A44
ADITIVOS DE REFRIGERANTE SUPLEMENTARIOS	A49
PIEZAS DE MANTENIMIENTO	A63
INDICE	A106
CONFIGURACIÓN DE MÁQUINA	1
CHASIS (CONFIG)	1
CONFIGURACIÓN BÁSICA DE LA MOTONIVELADORA	2
INSTALACIÓN EN EL CAMPO (CONFIG)	3
CONFIGURACIÓN DE MOTOR	4
CONFIGURACIÓN DE MOTORES	4
CONFIGURACIÓN DE INSTALACIÓN DEL MOTOR	6
MOTOR BÁSICO	8
AJUSTADOR DE CORREA (GR)	8
ÁRBOL DE LEVAS (GR)	10
TAPA DEL BLOQUE MOTOR (GR)	11
TAPA DE LA CAJA DE VOLANTE (GR)	13
TAPA DE LA CAJA DELANTERA (GR)	14
TAPA DEL COLECTOR DEL CÁRTER (GR)	16
TAPA DEL MECANISMO DE VÁLVULAS (GR)	18
CIGÜEÑAL (GR)	20
BLOQUE MOTOR (CONJ)	26
BLOQUE MOTOR (GR)	30
CULATA DE CILINDROS (CONJ)	34
CULATA DE CILINDROS (GR)	40
AMORTIGUADOR DE VIBRACIONES (GR)	46
IMPULSOR DE VENTILADOR (GR)	48
VOLANTE (GR)	50
ENGRANAJE DELANTERO (GR)	51
ENGRANAJE TRASERO (GR)	52
VOLANTE - CAJA DE (GR)	55
CAJA DELANTERA (GR)	56
CÁNCAMOS DE LEVANTAMIENTO DEL MOTOR (GR)	58
CÁRTER - COLECTOR DEL (GR)	59
PISTÓN Y BIELA (GR)	60
TAPÓN DEL BLOQUE MOTOR (GR)	63
TAPÓN DE CULATA (GR)	64
CIGÜEÑAL - POLEA DE (GR)	65
BALANCÍN (GR)	66
MOTOR - SOPORTE DEL (GR)	67
MECANISMO DE VÁLVULAS (GR)	69
SISTEMA DE LUBRICACIÓN	70
TORNILLERÍA DE MONT. DE LA BOMBA DE ACEITE (GR)	70
TUBO DE LLENADO DE ACEITE (GR)	71
FILTRO DE ACEITE DEL MOTOR (GR)	72
ESCAPE DE GASES (GR)	73
INDICADOR DEL NIVEL DE ACEITE (VARILLA) (GR)	75
TUBERÍAS DE ACEITE DEL MOTOR (GR)	76
TURBOCOMPRESOR - TUBERÍAS DE ACEITE DEL (GR)	78
CAMBIO RÁPIDO DE ACEITE (GR)	80
PRELUBRICACION DEL MOTOR (CONFIG)	82
BOMBA DE ACEITE DEL MOTOR (GR)	84
SISTEMA DE ENFRIAMIENTO	85
ENFRIADOR DE ACEITE DEL MOTOR (GR)	85
NÚCLEO DEL ENFRIADOR DE ACEITE (GR)	86
SOPLADOR - VENTILADOR (GR)	88
TUBERIAS DEL ENFRIADOR DEL CONVERTIDOR DE PAR	90
TUBERÍAS DEL AGUA (GR)	92
BOMBA DE AGUA (GR)	108
RADIADOR Y MONTAJE (GR)	118
RADIADOR (GR)	120
TANQUE DE REFRIGERANTE (GR)	126
SISTEMA DE ADMISIÓN Y ESCAPE DE AIRE	128
POSENFRIADOR DE AGUA (GR)	128
FILTRO DE AIRE (GR)	130
EXPULSOR DE POLVO (GR)	132
EXTENSIÓN DEL ESCAPE (GR)	133
AIRE - TUBERÍAS DE (GR)	134
MÚLTIPLE DE ESCAPE (GR)	139
SILENCIADOR (GR)	141
MANGUITO - MULTIPLE DE ESCAPE	142
TURBOCOMPRESOR (GR)	143
SISTEMA DE COMBUSTIBLE	145
ADAPTADOR DE LLENADO RÁPIDO DE COMBUSTIBLE (GR)	145
MANDO DE BOMBA HIDRÁULICA INYECTORA (GR)	146
INYECTOR DE COMBUSTIBLE (GR)	158
JUEGO DE SELLOS	162
TUBERÍAS DE COMBUSTIBLE (GR)	163
TUBERÍAS DEL FILTRO DE COMBUSTIBLE	168

CONTENIDO

Nombre	Página
TUBERÍAS DE BOMBA HIDRÁULICA DE INYECCIÓN (GR)	172
BOMBA HIDRÁULICA DEL INYECTOR UNITARIO Y MONTAJE	174
BOMBA DE INYECCIÓN DE COMBUSTIBLE (GR)	188
BOMBA DE CEBADO Y FILTRO PRIMARIO DE COMBUSTIBLE (GR)	192
BOMBA HIDRÁULICA DEL INYECTOR UNITARIO (GR)	194
TANQUE DE COMBUSTIBLE Y GRUPO DE MONTAJE	204
COMBUSTIBLE - TANQUE DE (GR)	208
PRESIÓN - VÁLVULA DE CONTROL DE (GR)	215
VÁLVULA DE SOLENOIDE (GR)	218
SISTEMA ELÉCTRICO Y DE ARRANQUE	219
ALARMA (GR)	219
CARGA - ALTERNADOR DE (GR)	220
BATERÍA (GR)	226
CONTROL ELECTRÓNICO DEL MOTOR Y MONTAJE	228
CONTROL ELECTRÓNICO DE CLASIFICACIÓN DE MOTOR (GR)	229
CONTROL ELECTRÓNICO DEL MOTOR (GR)	235
TREN DE FUERZA-GRUPO ELECTRÓNICO	237
CALENTADOR DE ACEITE DE MOTOR (GR)	238
CALENTADOR DEL COMBUSTIBLE (GR)	240
CALENTADOR DE ACEITE HIDRAULICO (GR)	244
AGUA DE LAS CAMISAS - CALENTADOR DEL (GR)	245
BLOQUE DE EMPALME (GR)	246
LÁMPARA DEL TECHO (GR)	247
REFLECTOR (GR)	248
LÁMPARA DE FARO DELANTERO (GR)	250
LUZ DE SEÑAL DE GIRO (GR)	256
LUCES - REFLECTORES Y LUCES DELANTERAS (GR)	258
DETECTOR MAGNÉTICO (GR)	260
SENSOR DE NIVEL DE COMBUSTIBLE (GR)	261
DETECTOR DE POSICIÓN (SISTEMA DE COMBUST.) (GR)	262
SENSOR DE PRESIÓN (GR)	268
SENSOR DE VELOCIDAD (GR)	280
SENSOR DE TEMPERATURA (GR)	283
AUXILIAR DE ARRANQUE CON ÉTER (GR)	286
ARRANQUE EN TIEMPO FRIO (CONFIG)	288
MOTOR DE ARRANQUE ELÉCTRICO (GR)	298
DISYUNTOR (GR)	308
INTERRUPTOR DE FLUJO (GR)	309
INTERRUPTOR MAGNÉTICO (GR)	311
ARRANQUE - INTERRUPTOR DE (GR)	316
INTERRUPTOR DEL LIMPIADOR (GR)	317
CABLES DE LA CABINA (GR)	318
CABLES PARA TIEMPO FRÍO (GR)	330
CABLES DEL MOTOR (GR)	332
CABLES DELANTEROS (GR)	336
CABLES DE LA PLATAFORMA (GR)	342
CABLES POSTERIORES (GR)	344
CABLES DEL PANEL DE RELES (GR)	358
CABLES DE LA CONSOLA DE CAMBIOS (GR)	360
CABLES DE LA CONSOLA DE DIRECCIÓN (GR)	364
CABLES DE INYECTOR (GR)	368
TREN DE FUERZA	370
CAJA Y PIEZAS DE LOS PLANETARIOS	370
CAJA DE TRANSFERENCIA	372
CADENA DE IMPULSIÓN (GR)	373
CONTROL DE TRABA DEL DIFERENCIAL (GR)	374
CONTROL HIDRÁULICO DE LA TRANSMISIÓN (GR)	376
TAPAS PROTECTORAS DE EMBARQUE (GR)	378
DIFERENCIAL Y CORONA (GR)	380
DIFERENCIAL (GR)	384
TORNILLERÍA DEL TANDEM (GR)	388
TUBO DE LLENADO DE ACEITE DE LA TRANSMISIÓN (GR)	390
FILTRO DE ACEITE (GR)	392
MANDO FINAL (GR)	394
ENGRANAJE Y CAJA DE TRANSFERENCIA DE ENTRADA (GR)	402
CAJA Y ENGRANAJE DE TRANSFERENCIA DE SALIDA (GR)	404
CAJA DEL EJE TRASERO (GR)	412
TUBERÍAS DE ACEITE DEL TREN DE FUERZA (GR)	414
GRUPO DE MONTAJE DEL EJE TRASERO	421
TRANSMISIÓN PLANETARIA (GR)	422
TREN DE FUERZA (CONFIG)	427
BOMBA DE LA TRANSMISIÓN (GR)	428

CONTENIDO

Nombre	Página
EJE DE MANDO (GR)	430
SOPORTE DE LA TRANSMISIÓN (GR)	432
TÁNDEM Y CUBIERTA (GR)	434
NEUMÁTICO (GR)	436
CONVERTIDOR DE PAR (GR)	438
TRANSMISION (CONFIG)	451
JUNTA UNIVERSAL (GR)	453
VÁLVULA DE LA TRABA DEL DIFERENCIAL Y MONTAJE (GR)	455
GRUPO DE VÁLVULAS	456
VÁLVULA DE MODULACIÓN (GR)	457
VÁLVULA DE ALIVIO (GR)	460
VÁLVULA SELECTORA (GR)	461
VÁLVULA SELECTORA Y DE CONTROL DE PRESIÓN (GR)	464
VÁLVULA DE SOLENOIDE (GR)	466
VÁLVULA DE CONTROL DE LA TRANSMISIÓN (GR)	470
RUEDA (GR)	476
BASTIDOR Y CAJA	478
EJE DE DIRECCION (CONFIG)	478
EJE DELANTERO (GR)	480
COMPARTIMIENTO DEL MOTOR (GR)	488
GUARDABARROS Y SOPORTE (GR)	499
BASTIDOR DELANTERO (GR)	500
BASTIDOR TRASERO (GR)	502
PROTECTOR Y SOPORTE DEL RADIADOR (GR)	504
ENGANCHE ARTICULADO (GR)	506
TUBERÍAS DE LUBRICACIÓN CENTRAL (GR)	508
TUBERÍAS DE ENGRASE (GR)	512
TIRANTE DE DIRECCIÓN (GR)	522
TIRANTE DE TRABA DEL BASTIDOR DE DIRECCIÓN (GR)	523
LUBRICACION AUTOMATICA (CONFIG)	524
CENTRAL DE LUBRICACIÓN (CONFIG)	533
CENTRAL DE LUBRICACIÓN (GR)	534
PLATAFORMA (CONFIG)	537
BOMBA DE LUBRICACIÓN (GR)	538
PROTECTOR TÉRMICO DEL COMPARTIMIENTO DEL MOTOR (GR)	542
ESCALÓN DELANTERO (GR)	546
ESCALÓN TRASERO (GR)	550
VÁLVULA DE DISTRIBUCIÓN DE LUBRICACIÓN (GR)	551
SISTEMA DE FRENOS	555
ACUMULADOR (GR)	555
FRENO DE SERVICIO (GR)	558
CONTRAPESO DELANTERO	560
CONTROL DEL FRENO DE ESTACIONAMIENTO	562
FRENO DE SERVICIO - CONTROL (GR)	564
TORNILLERÍA DEL FRENO (FRENO)	570
FILTRO DE ACEITE (GR)	571
FRENO Y BOMBA DE TRABA DEL DIFERENCIAL Y MONTAJE (GR)	572
MANDO ELÉCTRICO - BOMBA DE (GR)	574
BOMBA DE ENGRANAJES (GR)	577
REJILLA (GR)	580
AJUSTADOR DE TENSIÓN (GR)	581
SISTEMA HIDRÁULICO	582
ACUMULADOR HIDRAULICO Y MONTAJE (GR)	582
ACUMULADOR (CONJ)	583
CONTROL DE DIRECCIÓN (GR)	584
CILINDRO DE ARTICULACIÓN Y MONTAJE (GR)	586
CILINDRO DE LA PUNTA DE LA HOJA Y MONTAJE (GR)	587
CILINDRO DE DESPLAZAMIENTO DEL CÍRCULO Y LEVANTAMIENTO	588
CILINDRO DE DESPLAZAMIENTO LATERAL Y MONTAJE (GR)	589
CILINDRO DE DIRECCIÓN Y MONTAJE (GR)	590
CILINDRO DE INCLINACIÓN DE RUEDA Y MONTAJE (GR)	591
ARTICULACIÓN DE CILINDRO (GR)	592
CILINDRO DE INCLINACIÓN DE LA HOJA (GR)	594
CILINDRO DE DESPLAZAMIENTO DEL CÍRCULO Y LEVANTAMIENTO (GR)	596
CILINDRO DE LEVANTAMIENTO DEL DESGARRADOR (GR)	598
CILINDRO DE DESPLAZAMIENTO LATERAL (GR)	600
CILINDRO DE DIRECCIÓN (GR)	602
CILINDRO DE INCLINACIÓN DE LAS RUEDAS (GR)	604
MANDO Y MONTAJE DEL CÍRCULO (GR)	605
MANDO DEL CIRCULO (GR)	606
HIDRÁULICA (CONFIG)	609
TUBERÍAS DELANTERAS (GR)	610
TUBERÍAS HIDRÁULICAS (GR)	622
BOMBA - TUBERÍAS DE (GR)	640
TUBERÍAS DEL DESGARRADOR (GR)	648
TUBERÍAS DE LA DIRECCIÓN SECUNDARIA (GR)	654
TUBERÍAS DE DIRECCIÓN (GR)	656

CONTENIDO

Nombre	Página
MOTOR DEL MANDO DEL CÍIRCULO Y EL MONTAJE (GR)	662
MOTOR ELÉCTRICO DE BOMBA HIDRÁULICA (GR)	663
MOTOR HIDRÁULICO DE ENGRANAJES (GR)	664
BOMBA Y MONTAJE DEL PISTÓN (GR)	666
BOMBA DE ENGRANAJES (GR)	668
DOSIFICACIÓN - BOMBA DE (GR)	672
BOMBA DE PISTONES (GR)	674
GRUPO GIRATORIO DE BOMBA	680
PLATO OSCILANTE (GR)	682
UNIÓN GIRATORIA (GR)	686
TANQUE Y FILTRO HIDRÁULICOS (GR)	688
TANQUE HIDRÁULICO Y MONTAJE (GR)	690
VÁLVULA Y VARILLAJE (GR)	692
VALVULA DE SOLENOIDE Y MONTAJE (GR	696
GRUPO DE 4 VÁLVULAS HIDRÁULICAS	698
VÁLVULAS HIDRÁULICAS - GRUPO DE 6	702
VÁLVULA DE RETENCIÓN (GR)	704
VÁLVULA DE COMBINACIÓN (GR)	705
VÁLVULA DE CONTROL (GR)	710
VÁLVULA COMPENSADORA DE FLUJO Y PRESIÓN (GR)	736
VÁLVULA DE ALIVIO (GR)	738
VÁLVULA DE LANZADERA (GR)	744
VÁLVULA DE SOLENOIDE (GR)	745
VÁLVULA DE DESCARGA (GR)	747
IMPLEMENTOS	748
CÍRCULO (GR)	748
BARRA DE TIRO (GR)	750
PROTECTOR CONTRA ROCAS (GR)	752
VERTEDERA (CONJ)	753
PLANCHA DE EMPUJE (GR)	754
HERRAMIENTAS	755
ADAPTADOR (GR)	755
CANTONERA (CONJ)	756
CUCHILLA (GR)	757
CUCHILLA	761
MONTAJE DE LA HOJA (GR)	767
MONTAJE DEL DESGARRADOR (GR)	768
DESGARRADOR (CONFIG)	770
DESGARRADOR (GR)	772
DIENTE DE DESGARRADOR (GR)	776
PUESTO DEL OPERADOR	778
ACONDICIONADOR DE AIRE Y MONTAJE (GR)	778
ACONDICIONADOR DE AIRE (GR)	780
POSABRAZOS (GR)	784
CABINA (CONFIG)	787
COMPRESOR DE REFRIGERANTE (GR)	788
CONDENSADOR DEL REFRIGERANTE Y MONTAJE (GR)	795
CONSOLA DEL OPERADOR (GR)	796
CONSOLA DEL CONTROL DE LA TRANSMISIÓN (GR)	799
CONTROL ELECTRONICO DEL REDUCTOR DE LA LUZ INTERIOR DEL SISTEMA MONITOR (GR)	800
PUERTA DE CABINA	802
CONDUCTO Y CONTROL (GR)	808
EXTENSIÓN DEL RESPALDO (GR)	810
VENTILADOR DESCONGELADOR (GR)	811
FILTRO DE AIRE DE LA CABINA (GR)	814
INSTALACIÓN DE RADIO (GR)	815
GRUPO DE AISLAMIENTO DE LA CABINA	816
REVESTIMIENTO DE LA CABINA (GR)	818
TUBERÍAS DE ACONDICIONADOR DE AIRE (GR)	820
TUBERÍAS DE AIRE DE LA CABINA (GR)	822
TUBERÍAS DE LA CALEFACCIÓN (GR)	824
PUBLICACIONES (GR)	826
RETROVISOR (GR)	827
MÓDULO DEL TACÓMETRO Y DEL VELOCÍMETRO (GR)	829
GRUPO DE MONTAJE DE LA CABINA	830
MONTAJE DE LA PLATAFORMA (GR)	832
CUBIERTA INFERIOR DEL ASIENTO DEL OPERADOR (GR)	834
TABLERO DE INSTRUMENTOS (GR)	838
PEDAL DEL FRENO, LA TRANSMISIÓN Y EL REGULADOR (GR)	842
PRESURIZADOR (GR)	846
ESTRUCTURA ROPS (GR)	850
CINTURÓN DE SEGURIDAD (GR)	851
ASIENTO (GR)	854
SUSPENSIÓN - ASIENTO CON (GR)	859
ASIENTO CON SUSPENSIÓN (GR)	862
LAVAPARABRISAS DE LA VENTANA (GR)	870
VENTANA (GR)	872
LIMPIA Y LAVAPARABRISAS (GR)	874

CONTENIDO

Nombre	Página	Nombre	Página
EQUIPO Y SUMINISTRO DE SERVICIOS	876		
ETIQUETA DE ADVERTENCIA (GR)	876		
CALCOMANÍAS Y PLACAS DE IDENTIFICACIÓN (GR)	878		
CAJA DE HERRAMIENTAS (GR)	893		
INDICE DE NUMEROS DE PIEZA	B1		

ÍNDICE

Designação	Página
INFORMAÇÃO GERAL	A34
ALTERNATIVAS DE REPARO	A45
ADITIVOS SUPLEMENTARES DO LÍQUIDO ARREFECEDOR	A50
PEÇAS DE MANUTENÇÃO	A70
ÍNDICE	A119
MÁQUINA - ARRANJO	1
CHASSI	1
ARRANJO BÁSICO - MOTONIVELADORA	2
INSTALAÇÃO NO CAMPO	3
MOTOR - ARRANJO	4
MOTOR	4
GRUPO DE INSTALAÇÃO - MOTOR	6
MOTOR BÁSICO	8
AJUSTADOR DE CORREIAS	8
EIXO-COMANDO DE VÁLVULA	10
TAMPA - BLOCO DO MOTOR	11
TAMPA - CAIXA DO VOLANTE	13
TAMPA - CAIXA DIANTEIRA	14
TAMPA - CÁRTER DO ÓLEO	16
TAMPA - MECANISMO DAS VÁLVULAS	18
VIRABREQUIM	20
BLOCO DO MOTOR	26
CABEÇOTE DO MOTOR	34
AMORTECEDOR	46
COMANDO DO VENTILADOR	48
VOLANTE DO MOTOR	50
ENGRENAGENS DE DISTRIBUIÇÃO	51
ENGRENAGENS DE COMANDO TRASEIRO	52
CAIXA DO VOLANTE DO MOTOR	55
CAIXA DIANTEIRA	56
LEVANTAMENTO DO MOTOR	58
CÁRTER DO ÓLEO DO MOTOR	59
PISTÃO E BIELA	60
BUJÃO DO BLOCO DO CILINDRO	63
BUJÃO - CABEÇA DO CILINDRO	64
POLIA DO VIRABREQUIM	65
BALANCIM	66
SUPORTE DO MOTOR	67
MECANISMO DAS VÁLVULAS	69
SISTEMA DE LUBRIFICAÇÃO	70
FIXADORES - BOMBA DE ÓLEO DO MOTOR	70
BOCAL DE ENCHIMENTO DE ÓLEO DO MOTOR	71
FILTRO - ÓLEO DO MOTOR	72
ELIMINAÇÃO DE VAPORES DO CÁRTER	73
INDICADOR - NÍVEL DO ÓLEO (VARETA)	75
TUBOS - ÓLEO DO MOTOR	76
TUBOS - ÓLEO DO TURBOALIMENTADOR	78
ÓLEO - ARRANJO PARA TROCA RÁPIDA	80
PRÊ-LUBRIFICAÇÃO	82
BOMBA DE ÓLEO - MOTOR	84
SISTEMA DE ARREFECIMENTO	85
ARREFECEDOR - ÓLEO DO MOTOR	85
COLMÉIA - ARREFECEDOR DE ÓLEO	86
VENTILADOR DE SOPRO	88
TUBOS - ARREFECEDOR DO CONVERSOR DE TORQUE	90
TUBOS - ÁGUA	92
BOMBA DE ÁGUA	108
RADIADOR E MONTAGEM	118
RADIADOR	120
TANQUE - LÍQUIDO ARREFECEDOR	126
SISTEMA DE ADMISSÃO DE AR E DE ESCAPE	128
PÓS-ARREFECEDOR A ÁGUA	128
PURIFICADOR DE AR	130
EJETOR DE POEIRA	132
EXTENSÃO DO TUBO DE ESCAPE	133
TUBOS - AR	134
COLETOR DE ESCAPE	139
SILENCIADOR	141
LUVA - COLETOR DE ESCAPE	142
TURBOALIMENTADOR	143
SISTEMA DE COMBUSTÍVEL	145
ADAPTADOR - ABASTECIMENTO RÁPIDO DE COMBUSTÍVEL	145
COMANDO DA BOMBA HIDRÁULICA DO INJETOR	146
INJETOR DE COMBUSTÍVEL	158
JOGO DE RETENTOR	162
TUBOS - COMBUSTÍVEL	163
TUBOS - FILTRO DO COMBUSTÍVEL	168
TUBOS - INJETOR DA BOMBA HIDRÁULICA	172
BOMBA HIDRÁULICA E MONTAGEM - UNIDADE INJETORA	174
BOMBA DE INJEÇÃO DO COMBUSTÍVEL	188

ÍNDICE

Designação	Página
BOMBA DE ESCORVA DO COMBUSTÍVEL E DO FILTRO PRIMÁRIO	192
BOMBA HIDRÁULICA - UNIDADE INJETORA	194
TANQUE DE COMBUSTÍVEL E MONTAGEM	204
TANQUE DE COMBUSTÍVEL	208
VÁLVULA DE CONTROLE DE PRESSÃO	215
VÁLVULA SOLENÓIDE	218
SISTEMA ELÉTRICO E DE PARTIDA	219
ALARME	219
ALTERNADOR DE CORRENTE	220
BATERIA	226
CONTROLE ELETRÔNICO E MONTAGEM - MOTOR	228
CONTROLE ELETRÔNICO DO MOTOR - CLASSIFICAÇÃO	229
CONTROLE ELETRÔNICO - MOTOR	235
SISTEMA ELETRÔNICO - TREM DE FORÇA	237
ÓLEO DO MOTOR - AQUECEDOR	238
AQUECEDOR DO COMBUSTÍVEL	240
AQUECEDOR - ÓLEO HIDRÁULICO	244
AQUECEDOR DA ÁGUA DO MOTOR	245
BLOCO DE JUNÇÃO	246
LÂMPADA - TETO	247
LÂMPADA - FAROL	248
FAROL DIANTEIRO	250
LÂMPADA - SINALIZAÇÃO	256
ILUMINAÇÃO - FARÓIS E LUZES DIANTEIRAS	258
SENSOR MAGNÉTICO	260
SENSOR - NÍVEL DE COMBUSTÍVEL	261
EMISSOR - POSIÇÃO	262
SENSOR - PRESSÃO	268
SENSOR DE VELOCIDADE	280
SENSOR - TEMPERATURA	283
AUXILIAR DE PARTIDA A ÉTER	286
PARTIDA EM TEMPO FRIO - ARRANJO	288
MOTOR ELÉTRICO DE PARTIDA	298
CHAVE GERAL	308
INTERRUPTOR - FLUXO	309
INTERRUPTOR - MAGNÉTICO	311
INTERRUPTOR - PARTIDA	316
INTERRUPTOR - LIMPADOR DO PÁRA-BRISA	317
CABOS/FIOS ELÉTRICOS - CABINE	318
CABOS FIOS ELÉTRICOS - TEMPO FRIO	330
CABOS/FIOS ELÉTRICOS - MOTOR	332
CABOS/FIOS ELÉTRICOS - DIANTEIROS	336
CABOS/FIOS ELÉTRICOS - PLATAFORMA	342
CABOS/FIOS ELÉTRICOS - TRASEIROS	344
CABOS/FIOS ELÉTRICOS - PAINEL DE RELÉ	358
CABOS/FIOS ELÉTRICOS - CONSOLE DA TRANSMISSÃO	360
CABOS/FIOS ELÉTRICOS - CONSOLE DA DIREÇÃO	364
CABOS/FIOS ELÉTRICOS - INJETOR	368
TREM DE FORÇA	370
CARCAÇA DAS ENGRENAGENS PLANETÁRIAS E COMPONENTES	370
CAIXA DE TRANSFERÊNCIA	372
CORRENTE - COMANDO	373
CONTROLE DA TRAVA DO DIFERENCIAL	374
CONTROLE HIDRÁULICO DA TRANSMISSÃO	376
TAMPA - EMBARQUE	378
DIFERENCIAL E COROA	380
DIFERENCIAL	384
FIXADORES - TANDEM	388
BOCAL DE ENCHIMENTO DE ÓLEO DO TREM DE FORÇA	390
FILTRO - ÓLEO	392
COMANDO FINAL	394
ENGRENAGEM E CAIXA - TRANSFERÊNCIA DE ENTRADA	402
CAIXA DE ENGRENAGEM DE TRANSFERÊNCIA	404
CAIXA DO EIXO TRASEIRO	412
TUBOS - ÓLEO DA TRANSMISSÃO	414
MONTAGEM DO EIXO TRASEIRO	421
ENGRENAGENS PLANETÁRIAS - TRANSMISSÃO	422
TREM DE FORÇA	427
BOMBA DA TRANSMISSÃO	428
EIXO DE TRANSMISSÃO	430
SUPORTE - TRANSMISSÃO	432
TANDEM E TAMPA	434
PNEU	436
CONVERSOR DE TORQUE	438
TRANSMISSÃO	451
JUNTA UNIVERSAL	453
VÁLVULA E MONTAGEM - TRAVA DO DIFERENCIAL	455
VÁLVULA	456
VÁLVULA DE MODULAÇÃO	457
VÁLVULA DE ALÍVIO	460
VÁLVULA SELETORA	461
VÁLVULA SELETORA E CONTROLE DE PRESSÃO	464

ÍNDICE

Designação	Página
VÁLVULA SOLENÓIDE	466
VÁLVULA DE CONTROLE - TRANSMISSÃO	470
RODA	476
CHASSI E CARROCERIA	478
EIXO DIANTEIRO	478
COBERTURA DO MOTOR	488
PÁRA-LAMA E SUPORTE	499
CHASSI DIANTEIRO	500
CHASSI TRASEIRO	502
PROTETOR E SUPORTE DO RADIADOR	504
ENGATE - ARTICULAÇÃO	506
TUBOS - LUBRIFICAÇÃO CENTRAL	508
TUBOS - GRAXA	512
ELO - DIREÇÃO	522
ELO - TRAVA DA ARMAÇÃO DA DIREÇÃO	523
LUBRIFICAÇÃO - AUTOMÁTICA	524
LUBRIFICAÇÃO CENTRAL	533
LUBRIFICAÇÃO - CENTRAL	534
PISO	537
BOMBA DE LUBRIFICAÇÃO	538
BLINDAGEM DO COMPARTIMENTO DO MOTOR	542
DEGRAU DIANTEIRO	546
DEGRAU TRASEIRO	550
VÁLVULA DE LUBRIFICAÇÃO - DISTRIBUIÇÃO	551
SISTEMA DE FREIO	555
ACUMULADOR	555
FREIO DE SERVIÇO	558
FREIO DE SERVIÇO E DE ESTACIONAMENTO	560
CONTROLE DO FREIO DE ESTACIONAMENTO	562
CONTROLE DO FREIO DE SERVIÇO	564
FIXADORES - FREIO	570
FILTRO - ÓLEO	571
BOMBA DA TRAVA DOS FREIOS E DO DIFERENCIAL E MONTAGEM	572
BOMBA DE COMANDO ELÉTRICO	574
BOMBA DE ENGRENAGENS	577
TELA FILTRANTE	580
AJUSTADOR DE FOLGA	581
SISTEMA HIDRÁULICO	582
ACUMULADOR HIDRÁULICO E MONTAGEM	582
ACUMULADOR	583
CONTROLE DE DIREÇÃO	584
CILINDRO E MONTAGEM - ARTICULAÇÃO	586
CILINDRO E MONTAGEM - TOMBAMENTO DA LÂMINA	587
CILINDRO DE LEVANTAMENTO E DESLOCAMENTO LATERAL E MONTAGEM	588
CILINDRO E MONTAGEM - DESLOCAMENTO DA LÂMINA	589
CILINDRO DE DIREÇÃO E MONTAGEM	590
CILINDRO E MONTAGEM - INCLINAÇÃO DAS RODAS	591
CILINDRO DE ARTICULAÇÃO	592
CILINDRO DE TOMBAMENTO DA LÂMINA	594
CILINDRO DE LEVANTAMENTO E DESLOCAMENTO LATERAL	596
CILINDRO DE LEVANTAMENTO DO RIPER	598
CILINDRO DE DESLIZAMENTO LONGITUDINAL	600
CILINDRO DA DIREÇÃO	602
CILINDRO DE INCLINAÇÃO LATERAL DAS RODAS	604
COMANDO DO CÍRCULO E MONTAGEM	605
MOTOR DE REVERSÃO DO CÍRCULO	606
COMANDO HIDRÁULICO	609
TUBOS - DIANTEIROS	610
TUBOS - ÓLEO HIDRÁULICO	622
TUBOS - BOMBA	640
TUBOS - RIPER	648
TUBOS - DIREÇÃO SECUNDÁRIA	654
TUBOS - DIREÇÃO	656
MOTOR DO COMANDO DO CÍRCULO E MONTAGEM	662
MOTOR ELÉTRICO DA BOMBA HIDRÁULICA	663
MOTOR HIDRÁULICO DO GEROTOR	664
BOMBA E MONTAGEM - PISTÃO	666
BOMBA DE ENGRENAGENS	668
BOMBA REGULADORA	672
BOMBA DE PISTÃO	674
GRUPO ROTATIVO DA BOMBA	680
PLACA BASCULANTE	682
ARTICULAÇÃO GIRATÓRIA	686
TANQUE HIDRÁULICO E FILTRO	688
TANQUE DE ÓLEO HIDRÁULICO E MONTAGEM	690
VÁLVULA E ARTICULAÇÕES	692
VALVULA DO SOLENOIDE E MONTAGE	696
GRUPO DE VÁLVULAS DE CONTROLE - QUÁDRUPLO	698
GRUPO DE VÁLVULAS DE CONTROLE - SEIS	702

ÍNDICE

Designação	Página
VÁLVULA DE RETENÇÃO	704
VÁLVULA COMBINADA	705
VÁLVULA DE CONTROLE	710
VÁLVULA DE CONTROLE - PRESSÃO E COMPENSAÇÃO DE FLUXO	736
VÁLVULA DE ALÍVIO	738
VÁLVULA DE SEPARAÇÃO	744
VÁLVULA SOLENÓIDE	745
VÁLVULA - DESCARGA	747
ACESSÓRIOS	748
CÍRCULO	748
BARRA DE TRAÇÃO	750
PROTETOR - ROCHA	752
ARMAÇÃO DA LÂMINA	753
CHAPA DE EMPUXO	754
FERRAMENTAS DE TRABALHO	755
ADAPTADOR	755
CANTO DE LÂMINA	756
BORDA CORTANTE	757
MONTAGEM DA LÂMINA	767
MONTAGEM - RIPER	768
RIPER	770
DENTE DO RÍPER	776
ESTAÇÃO DO OPERADOR	778
CONDICIONADOR DE AR E MONTAGEM	778
CONDICIONADOR DE AR	780
BRAÇO DO ASSENTO	784
CABINE	787
COMPRESSOR DE REFRIGERANTE	788
CONDENSADOR DO REFRIGERANTE E MONTAGEM	795
CONSOLE DO OPERADOR	796
CONSOLE DE CONTROLE DA TRANSMISSÃO	799
CONTROLE - REDUTOR DE LUMINOSIDADE DO SIST. DE MONITORIZAÇÃO	800
PORTA DA CABINE	802
DUCTO E CONTROLE	808
EXTENSÃO - ENCOSTO	810
DESCONGELADOR	811
FILTRO - AR DA CABINE	814
INSTALAÇÃO DO RÁDIO	815
ISOLADOR - TEMPO	816
REVESTIMENTO DA CABINE	818
TUBOS - AR CONDICIONADO	820
TUBOS - AR DA CABINE	822
TUBOS - AQUECEDOR	824
PUBLICAÇÃO	826
ESPELHO RETROVISOR	827
MÓDULO - VELOCÍMETRO E TACÔMETRO	829
MONTAGEM - CABINE	830
MONTAGEM - PLATAFORMA	832
ASSENTO - FUNDO	834
PAINEL DE INSTRUMENTOS	838
PEDAL - FREIO, TRANSMISSÃO E GOVERNADOR	842
PRESSURIZADOR	846
ESTRUTURA ROPS	850
CINTO DE SEGURANÇA	851
ASSENTO	854
ASSENTO COM SUSPENSÃO	859
SUSPENSÃO - ASSENTO	862
LAVADOR DO VIDRO	870
VIDRO	872
LIMPADOR E LAVADOR - JANELA	874
EQUIPAMENTOS DE SERVIÇO E SUPRIMENTOS	876
DECALQUE	876
PLACA E DECALQUE	878
CAIXA DE FERRAMENTAS	893
ÍNDICE DE NÚMERO DE PEÇA	B1

INHALTSVERZEICHNIS

Bezeichnung	Seite
ALLGEMEINE HINWEISE	A38
REPARATURALTERNATIVEN	A46
KÜHLMITTELZUSATZ	A51
WARTUNGSTEILE	A76
STICHWORTVERZEICHNIS	A132
MASCHINE	1
FAHRWERK	1
BASISAUSFÜHRUNG	2
FELD-EINBAUSATZ	3
MOTOR	4
MOTORAUSFÜHRUNG	4
MOTOR-EINBAUSATZ	6
MOTOR - GRUNDAUSFÜHRUNG	8
RIEMENSPANNER	8
NOCKENWELLE	10
MOTORBLOCKDECKEL	11
SCHWUNGRADGEHÄUSEDECKEL	13
STIRNRADGEHÄUSEDECKEL	14
ÖLWANNENDECKEL	16
VENTILDECKEL	18
KURBELWELLE	20
MOTORBLOCK	26
ZYLINDERKOPF	34
DÄMPFER	46
LÜFTERANTRIEB	48
SCHWUNGRAD	50
STIRNRAD	51
ZAHNRADVORGELEGE	52
SCHWUNGRADGEHÄUSE	55
STIRNRADGEHÄUSE	56
MOTORHUBÖSE	58
ÖLWANNE	59
PLEUELSTANGE UND KOLBEN	60
ZYLINDERBLOCKSCHRAUBE	63
ZYLINDERKOPFSTOPFEN	64
KURBELWELLEN-RIEMENSCHEIBE	65
VENTILKIPPHEBEL	66
MOTORAUFHÄNGUNG	67
VENTILSTEUERUNG	69
SCHMIERSYSTEM	70
ÖLPUMPEN-BEFESTIGUNGSTEILE	70
MOTORÖLEINFÜLLSTUTZEN	71
ÖLFILTER	72
ENTDUNSTER	73
ÖLMESSSTAB	75
MOTORÖLLEITUNGEN	76
TURBOLADERÖLLEITUNGEN	78
ÖLSCHNELLWECHSELANSCHLUSS	80
MOTORVORSCHMIERUNG	82
SCHMIERPUMPE	84
KÜHLSYSTEM	85
MOTORÖLKÜHLER	85
ÖLKÜHLERBLOCK	86
DRUCKLÜFTER	88
DREHMOMENTWANDLER-KÜHLERLEITUNGEN	90
KÜHLWASSERLEITUNGEN	92
KÜHLWASSERPUMPE	108
KÜHLER U. BEFESTIGUNG	118
KÜHLER	120
KÜHLMITTELBEHÄLTER	126
LUFTANSAUG- UND ABGASSYSTEM	128
LADELUFTKÜHLER, WASSERGEKÜHLT	128
LUFTREINIGER	130
STAUBAUSWERFER	132
AUSPUFFROHRVERLÄNGERUNG	133
DRUCKLUFTLEITUNGEN	134
AUSPUFFKRÜMMER	139
SCHALLDÄMPFER	141
ABGASKRÜMMERMANSCHETTE	142
TURBOLADER	143
KRAFTSTOFFSYSTEM	145
SCHNELLBETANKUNGSANSCHLUSS	145
HYDRAULIKPUMPENANTRIEB	146
KRAFTSTOFFEINSPRITZDÜSE	158
DICHTUNGSSATZ	162
KRAFTSTOFFLEITUNGEN	163
KRAFTSTOFFILTERLEITUNGEN	168
EINSPRITZLEITUNGEN - HYDRAULIKPUMPE	172
PUMPE UND BEFESTIGUNGSTEILE	174
KRAFTSTOFFEINSPRITZPUMPE	188
KRAFTSTOFFENTLÜFTUNGSPUMPE UND -HAUPTFILTER	192
PUMPENDÜSE, HYDRAULISCH	194
KRAFTSTOFFTANK U. BEFESTIGUNG	204
KRAFTSTOFFTANK	208
DRUCKSTEUERVENTIL	215
MAGNETVENTIL	218
ELEKTRISCHE ANLAGE UND STARTSYSTEM	219
WARNVORRICHTUNG	219
DREHSTROMGENERATOR	220
BATTERIE	226

INHALTSVERZEICHNIS

Bezeichnung	Seite
STEUERUNGSEINHEIT, ELEKTRON. FÜR MOTOR UND BEFEST.	228
MOTORNENNLEISTUNGSSTEUERUNG, ELEKTRON.	229
MOTORSTEUERUNG, ELEKTRON.	235
KRAFTÜBERTRAGUNGSELEKTRONIK	237
MOTORÖL-VORWÄRMGERÄT	238
KRAFTSTOFFHEIZUNG	240
HYDAULIKÖLHEIZUNG	244
UMLAUFKÜHLWASSERHEIZUNG	245
KLEMMLEISTE	246
FAHRERHAUSBELEUCHTUNG	247
ARBEITSLEUCHTEN	248
FRONTSCHEINWERFER	250
BLINKLEUCHTE	256
ARBEITS- U. FRONTSCHEINWERFER	258
AUSSCHALTER, MAGN.	260
KRAFTSTOFFSTANDSENSOR	261
STELLUNGSSENSOR	262
DRUCKSENSOR	268
DREHZAHLSENSOR	280
TEMPERATURSENSOR	283
ÄTHERSTARTHILFE	286
KALTWETTERSTARTANLAGE	288
STARTERMOTOR	298
TRENNSCHALTER	308
STRÖMUNGSSCHALTER	309
MAGNETSCHALTER	311
STARTSCHALTER	316
SCHEIBENWISCHERSCHALTER	317
FAHRERHAUSVERDRAHTUNG	318
KALTWETTERVERDRAHTUNG	330
MOTORVERDRAHTUNG	332
VERDRAHTUNG, VORNE	336
FAHRERPLATTFORMVERDRAHTUNG	342
VERDRAHTUNG, HINTEN	344
RELAISTAFELVERDRAHTUNG	358
SCHALTKONSOLENVERDRAHTUNG	360
LENKKONSOLENVERDRAHTUNG	364
VERDRAHTUNG (EINSPRITZEINHEIT)	368
KRAFTÜBERTRAGUNG	370
PLANETENANTRIEBSGEHÄUSE U. TEILE	370
VERTEILERGEHÄUSE	372
ANTRIEBSKETTE	373
DIFFERENTIALSPERRENGESTÄNGE	374
GETRIEBEHYDRAULIK	376
VERSANDDECKEL	378
DIFFERENTIAL UND TELLERRAD	380
DIFFERENTIAL	384
TANDEMANTRIEBSHALTETEILE	388
GETRIEBEÖLFÜLLSTUTZEN	390
ÖLFILTER	392
SEITENANTRIEB	394
VERTEILERGETRIEBEANTRIEB U. GEHÄUSE	402
GETRIEBE U. GEHÄUSE (AUSGANGSÜBERTRAGUNG)	404
HINTERACHSENGEHÄUSE	412
ÖLLEITUNGEN - KRAFTÜBERTRAGUNG	414
HINTERACHSAUFHÄNGUNG	421
PLANETENGETRIEBE	422
KRAFTÜBERTRAGUNG	427
GETRIEBEPUMPE	428
ANTRIEBSWELLE	430
GETRIEBEAUFHÄNGUNG	432
TANDEMGEHÄUSE UND DECKEL	434
REIFEN	436
DREHMOMENTWANDLER	438
GETRIEBE	451
KREUZGELENK	453
DIFFERENTIALSPERRE - VENTIL UND BEFESTIGUNGSTEILE	455
VENTIL	456
MODULATORVENTIL	457
ÜBERDRUCKVENTIL	460
SCHALTVENTIL	461
VENTIL - SCHALT- UND DRUCKSTEUERUNG	464
MAGNETVENTIL	466
GETRIEBESTEUERVENTIL	470
RADSATZ	476
RAHMEN UND AUFBAU	478
VORDERACHSE	478
MOTORVERKLEIDUNG	488
SCHUTZBLECHE UND AUFHÄNGUNG	499
VORDERRAHMEN	500
RAHMEN, HINTEN	502
VERKLEIDUNG UND BEFESTIGUNG - KÜHLER	504
KNICKGELENK-ANHÄNGUNG	506
SCHMIERLEITUNGEN	508
LENKGESTÄNGE	522
KNICKGELENKSPERRE	523
SCHMIERSYSTEM, AUTOM.	524
ZENTRALSCHMIERANLAGE	533
FAHRERPLATTFORM	537
SCHMIERPUMPE	538
MOTORRAUM-SCHUTZVERKLEIDUNG	542
STEIGLEITER, VORNE	546

INHALTSVERZEICHNIS

Bezeichnung	Seite
STEIGLEITER, HINTEN	550
SCHMIERÖLVERTEILERVENTIL	551
BREMSSYSTEM	555
DRUCKSPEICHER	555
BETRIEBSBREMSE	558
BETRIEBS- UND FESTSTELLBREMSE	560
FESTSTELLBREMSGESTÄNGE	562
BREMSGESTÄNGE	564
BREMSEN-HALTETEILE	570
ÖLFILTER	571
BREMS- U. DIFFERENTIALSPERRPUMPE U. BEFESTIGUNGSTEILE	572
PUMPENANTRIEB ELEKTR.	574
ZAHNRADPUMPE	577
SIEB	580
NACHSTELLVORRICHTUNG	581
HYDRAULIKSYSTEM	582
HYDRAULIKDRUCKSPEICHER U. BEFESTIGUNG	582
DRUCKSPEICHER	583
LENKBETÄTIGUNG	584
GELENKZYLINDER UND BEFESTIGUNGSTEILE	586
SCHARKIPPZYLINDER UND BEFESTIGUNGSTEILE	587
SCHARSCHWENK- U. HUBZYLINDER U. BEFESTIGUNGSTEILE	588
SEITENSCHIEBERZYLINDER UND BEFESTIGUNGSTEILE	589
LENKZYLINDER UND AUFHÄNGUNG	590
RADSTURZZYLINDER UND BEFESTIGUNGSTEILE	591
KNICKLENKZYLINDER	592
SCHARNEIGEZYLINDER	594
SCHARSCHWENK- UND HUBZYLINDER	596
AUFREISSERHUBZYLINDER	598
SEITENSCHUBZYLINDER	600
LENKZYLINDER	602
RADSTURZZYLINDER	604
SCHARDREHWERKBEFESTIGUNG	605
SCHARDREHWERK	606
HYDRAULIKSYSTEM	609
LEITUNGEN, VORNE	610
HYDRAULIKLEITUNGEN	622
HYDRAULIKPUMPE UND LEITUNGEN	640
AUFREISSERLEITUNGEN	648
NOTLENKUNGSLEITUNGEN	654
LENKÖLLEITUNGEN	656
DREHKRANZMOTOR U. BEFESTIGUNGSTEILE	662
HYDRAULIKPUMPENMOTOR, ELEKTR.	663
ZAHNRADANTRIEB	664
KOLBENPUMPE UND BEFESTIGUNG	666
ZAHNRADPUMPE	668
ZUMESSPUMPE	672
KOLBENPUMPE	674
KOLBENPUMPENUMLAUFSATZ	680
SCHWENKSCHEIBE	682
SCHWENKBLOCK	686
HYDRAULIKTANK UND SCHMIERFILTER	688
HYDRAULIKTANK UND BEFESTIGUNGSTEILE	690
VENTIL UND GESTÄNGE	692
SOLENOIDVENTIL U. BEFESTIGUNGSTEILE	696
VENTILSATZ (4-VENTIL)	698
VENTILSATZ (6-VENTIL)	702
SPERRVENTIL	704
SAMMELVENTIL	705
STEUERVENTIL	710
DRUCK- U. STROMAUSGLEICHSVENTIL	736
ÜBERDRUCKVENTIL	738
PENDELVENTIL	744
MAGNETVENTIL	745
ENTLASTUNGSVENTIL	747
ARBEITSGERÄTE	748
SCHARDREHWERK	748
ZUGHAKEN	750
STEINSCHUTZ	752
ABSTEIFSCHILD	753
SCHUBPLATTE	754
ARBEITSGERÄTE	755
ANSCHLUSS	755
ECKMESSER	756
SCHNEIDMESSER	757
SCHARBEFESTIGUNGSTEILE	767
AUFREISSERBEFESTIGUNG	768
AUFREISSER	770
AUFREISSERZAHN	776
FAHRERHAUS	778
KLIMAANLAGE UND AUFHÄNGUNG	778
KLIMAANLAGE	780
ARMLEHNE	784
FAHRERHAUS	787
KÄLTEMITTELKOMPRESSOR	788
KÄLTEMITTELKONDENSATOR U. BEFESTIGUNGSTEILE	795
STEUERKONSOLE	796
GETRIEBESTEUERKONSOLE	799

INHALTSVERZEICHNIS

Bezeichnung	Seite
ÜBERWACHUNGSSYSTEMDIMMER - STEUERUNG	800
FAHRERHAUSTÜR	802
LUFTKANAL UND REGULIERUNG	808
RÜCKLEHNENVERLÄNGERUNG	810
ENTFROSTERGEBLÄSE	811
FAHRERHAUSLUFTFILTER	814
RADIOEINBAUSATZ	815
WÄRMEISOLIERUNG	816
FAHRERHAUSAUSKLEIDUNG	818
KLIMAANLAGENLEITUNGEN	820
FAHRERHAUS - LUFTDRUCKLEITUNGEN	822
HEIZUNGSLEITUNGEN	824
DOKUMENTATION	826
RÜCKSPIEGEL	827
GESCHWINDIGKEITS- U. DREHZAHLMESSERMODUL	829
FAHRERHAUSANBAUSATZ	830
PLATTFORM-ANBAUSATZ	832
FAHRERSITZVERKLEIDUNG	834
INSTRUMENTENTAFEL	838
BREMS-, KUPPLUNGS- U. GASPEDAL	842
FAHRERHAUSBELÜFTUNG	846
ÜBERROLLSCHUTZ	850
SICHERHEITSGURT	851
FAHRERSITZ	854
SCHWINGSITZ	859
FAHRERSITZFEDERUNG	862
SCHEIBENWASCHANLAGE	870
FAHRERHAUSFENSTER	872
SCHEIBENWISCHER UND -WASCHANLAGE	874
WARTUNGSAUSRÜSTUNG	876
AUFKLEBER	876
SCHILD UND AUFKLEBER	878
WERKZEUGKASTEN	893
ERSATZTEILNUMMERNINDEX	B1

1. MACHINE IDENTIFICATION

Caterpillar machines are identified by Product Identification Numbers (PIN). Some components included in a machine may be identified by Serial Numbers (S/N). Typical components that will be serialized include engines, transmissions, bulldozers, and rippers. The machine and engine are further identified by arrangement numbers and in some cases modification numbers. These numbers are shown on the product identification plate(s) and on the master plate in the operator's compartment.

Caterpillar dealers need all of these numbers to determine accurate parts identification.

SIS ***New Feature***

Effective First Quarter 2001 the Caterpillar Product Identification Number (PIN) will change from 8 to 17 characters. In an effort to provide uniform equipment identification, Caterpillar and other construction equipment manufacturers are moving to comply with the latest version of the product identification numbering standard. Non-road machine PINs are defined by ISO 10261. The new PIN format will apply to all Caterpillar machines and generator sets. The PIN plates and frame marking will display the 17 character PIN. The new format will look like the following:

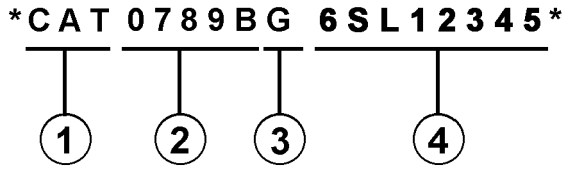

Where:

1. Caterpillar's World Manufacturing Code (characters 1-3)

2. Machine Descriptor (characters 4-8)

3. Check Character (character 9)

4. Machine Indicator Section (MIS) or Product Sequence Number (characters 10-17). These were previously referred to as the Serial Number.

Machines and generator sets produced before First Quarter 2001 will maintain their 8 character PIN format.

Components such as engines, transmissions, axles, etc. and work tools will continue to use an 8 character Serial Number (S/N).

2. ORDERING PARTS

⚠ WARNING

When replacement parts are required for this product Caterpillar recommends using Caterpillar replacement parts or parts with equivalent specifications including, but not limited to, physical dimensions, type, strength and material.

Failure to heed this warning can lead to premature failures, product damage, personal injury or death.

Quality Caterpillar replacement parts are available from Caterpillar dealers throughout the world. Their parts inventories are up to date and include all parts normally required to protect your investment in Caterpillar machines. Dealers may offer repair kits or remanufactured parts to allow selection of the most effective repair alternative for a particular situation. When ordering parts, your order should specify the quantity, part number, part name, and the serial number/product identification number of the machine for which the parts are needed.

3. PARTS MANUAL ORGANIZATION

Product information in this manual is presented as "information elements" that represent all of the components for the specific model. Engine Arrangement and Seat Group are examples of information elements. The information elements are organized alphabetically by part name and secondarily by part number within each major section of the manual.

4. TABLE OF CONTENTS

SIS ***New Feature***

A table of contents (TOC) is found at the beginning of the manual. The TOC lists each section of the manual with a complete list of all information elements organized as they appear in the manual. Page numbers are provided for quick reference to detailed parts identification illustrations and serviceable consist lists.

5. MAINTENANCE PARTS INDEX

The Maintenance Parts Index, located near the beginning of the manual, references most frequently used maintenance part numbers, providing description, quantity, usage and page number. This information is organized alphabetically by part description.

6. INDEX

The index located near the front of the manual is an alphabetical listing of all information elements included in the manual. Page numbers are provided for quick reference to detailed parts identification illustrations and serviceable consist lists.

7. PART NUMBER INDEX

A numerical index listing all part numbers and the corresponding page number(s) appears at the back of the manual.

8. CAPTIONS

Captions located at the top of each page of an information element identify the part number and part name along with additional descriptive information. PIN and S/N information found in each caption should be used to select correct information for a specific machine. Field replacement options, identification of optional attachment components, and where used ("part of") information is also provided.

SIS ***New Feature***

The first line of a caption is shown in larger type font to indicate the beginning of an information element. Captions for additional pages that may be required to illustrate an information element will be shown in standard type font and will include the term *(contd.)* .

9. NON-SERVICED PARTS

SIS ***New Feature***

In some instances it is necessary to display non-serviced parts that are a link to a lower level serviceable consist lists. These non-serviced part numbers are shown in *italic* type indicating that they are not available.

10. PARTS LIST REFERENCE NUMBERS

SIS ***New Feature***

Numbers shown in the Ref No column correspond to numbers used in the associated graphic(s). An alphabetic suffix may be added to a reference number to identify lower level consist items. Numbers shown in the Graphic Ref column refer to the graphic number identifier displayed in the lower left corner of each illustration. The Graphic Ref number may be used in combination with the item Ref No to determine the correct part number. There may be intentional omission of a Ref No in a consist list as information is updated to reflect the latest serviceable part numbers.

11. INDENTED PART NAMES

When a part name is indented in a parts list, it is part of (included in) the group or assembly under which it is indented.

12. ILLUSTRATION REFERENCE LETTERS

When necessary, illustrations contain reference letters (A, B, C etc.) that are intended to track lines and harnesses from one point to another. They are also used to show where to reconnect illustrations that have been separated.

13. ABBREVIATIONS AND SYMBOLS

O.D. – Outside Diameter
I.D. – Inside Diameter
A – Not Part Of This Group
B – Use As Required
C – Change From Previous Type
D – Order By The Meter
E – Order By The Centimeter
F – Not Shown
G – Order By The Inch
I – See Hose Fabrication Guide
M – Metric Part
R – Remfg Part May Be Available
Y – Separate Illustration
Z – Not Serviced Separately

NOTE:

Continuing improvement and advancement of product design may cause changes to your machine which may not be included in this publication. Whenever a question arises regarding your Caterpillar product or this publication, please consult your Caterpillar dealer for the latest available information.

FRAME AND BODY

8E-3299 PLATFORM GP-CAB

PIN 3SK1-09999

SMCS-7253 100090751

NOTE	REF NO	GRAPHIC REF	PART NUMBER	QTY	PART NAME (1 2 3 4 5 6 PRODUCT LEVEL)	SEE PAGE
	1	1	3T-3953	1	PLATE AS	
	2	1	5B-2992	25	BOLT (3/8-16X.750IN)	
	3	1	6P-1075	41	WASHER-HARD (3MM THK)	
	4	1	8P-1444	2	SUPPORT AS-FOOT	
	5	1	9P-2229	19	BOLT (1/2-13X1IN)	
		1	9P-[illegible]4	19	WASHER-HARD (4MM THK)	
	6	1	8E-8136	1	COVER AS-LH	
		1	9F-2979	6	NUT-WELD (3/8-16 THD)	
		1	1P-8188	1	CLIP	
	7	1	7B-3411	4	COVER	
	8	1	6J-0488	18	SCREW-HEAD (3/8-16X.875IN)	
	9	1	[illegible]-4474	1	COVER	
		1	8E-8[illegible]7		GASKET	
	10	1	8E-3248	1	[illegible]	
		1	8E-3250	1	GASKET	
	11	1	3T-3935	1	HANDHOLD	
	12	1	8E-8878	1	COVER AS	
		1	9F-2979	8	NUT-WELD (3/8-16 THD)	
		1	8E-8078	1	GASKET	
	13	1	7T-0131	1	FLOORPLATE AS	
		1	1F-0748	4	NUT-WELD (1/2-13 THD)	
	14	1	7Y-8087	1	PLUG-BUTTON	
	15	1	7T-0136	1	PLATE AS	
		1	9F-2978	6	NUT-WELD (3/8-16 THD)	
	16	1	7T-8086	1	COVER	
		1	7T-0779	1	GASKET	
	17	1	3T-3981	1	PLATE AS	
	18	1	6T-9364	4	BOLT (1/4-20X.625IN)	
M		1	6T-4205	4	WASHER-HARD (2MM THK)	
	19	1	6L-8484	1	FLOOR MAT	
	20	1	9E-8946	1	MODULE AS-OPERATOR	
	21	1	3T-3934	1	HANDHOLD	
	22	1	9P-8571	2	PLUG	
	23	2	6T-9364	4	BOLT (1/4-20X.625IN)	
M		2	6T-4205	4	WASHER-HARD (2MM THK)	
	24	2	5B-3062	17	BOLT (3/8-16X.750IN)	
	25	2	6F-1075	21	WASHER-HARD (3MM THK)	
	26	2	7T-0135	1	SEAL	
	27	2	7X-0378	2	BOLT (3/4-10X5IN)	
		2	7X-0682	2	WASHER-HARD (5MM THK)	
	28	2	3T-3482	2	PLATE	
	29	2	3T-8280	1	PLATE AS	
		2	7B-4038	8	SPACER	
	30	2	3T-8281	1	SEAL	
	31	2	7B-8017	1	GASKET	
	32	2	7B-8018	1	COVER AS	
		2	2R-2276	2	WASHER	
		2	6P-8028	2	SCREW-KNURLED	
	33	2	9W-3429	1	COVER	
	34	2	8E-8697	1	COVER	
	35	2	9D-3031	8	SCREW-SOCKET HEAD	
	36	2	9W-3142	8	MOUNTING	
	37	2	9W-9027	2	PLATE	
	38	2	7X-0390	2	BOLT (7/8-9X5IN)	
		2	7X-0672	2	WASHER-HARD	
	39	2	4L-8454	4	BOLT (3/8-16X1.0IN)	
	40	2	3T-4788	1	COVER	

12 FRAME AND BODY 1 of 4 SELP4570-01

FRAME AND BODY

8E-3299 PLATFORM GP-CAB (contd.)

100090751

NOTE	REF NO	GRAPHIC REF	PART NUMBER	QTY	PART NAME (1 2 3 4 5 6 PRODUCT LEVEL)	SEE PAGE
	41	2	8E-3515	1	COVER	
	42	2	7T-0134	1	PLATE	
	43	2	7T-0139	1	GASKET	
	44	2	7B-8724	1	GASKET	
	45	2	7B-8723	1	COVER	
	46	2	6Y-1969	2	PLUG-BUTTON	

M-METRIC PART

SELP4570-01 2 of 4 FRAME AND BODY 13

FRAME AND BODY

8E-3299 PLATFORM GP-CAB (contd.)

100090751

TOP VIEW

GRAPHIC #1 g00036729

14 FRAME AND BODY 3 of 4 SELP4570-01

FRAME AND BODY

8E-3299 PLATFORM GP-CAB (contd.)

100090751

SECTION A-A VIEW D-D SECTION G-G

SECTION B-B VIEW E-E SECTION H-H

SECTION C-C SECTION F-F SECTION J-J

GRAPHIC #2 g00105874

SELP4570-01 4 of 4 FRAME AND BODY 15

1. IDENTIFICATION DE LA MACHINE

Toutes les machines Caterpillar portent un numéro d'identification (PIN). Certains composants des machines peuvent porter des numéros de série (S/N). En général, parmi les composants qui portent des numéros de série il y a les moteurs, les transmissions, les bulldozers et les rippers. En plus, la machine et le moteur peuvent recevoir des numéros de version, et dans certains cas, de modification. Ces numéros figurent sur les plaques de numéro de série et sur la plaque signalétique principale qui se trouve dans le poste de conduite.

Les concessionnaires Caterpillar doivent connaître tous ces numéros pour identifier correctement les pièces.

SIS ***Nouvelle Caractéristique***

À partir du premier trimestre 2001, le numéro d'identification produit (PIN) Caterpillar passe de 8 à 17 caractères. Afin de permettre une identification uniforme des matériels, Caterpillar et d'autres constructeurs de machines de travaux publics s'efforcent de se conformer à la norme la plus récente portant sur les numéros d'identification des produits. Les numéros d'identification (PIN) de machines de chantier sont définis par la norme ISO 10261. Le nouveau format du numéro d'identification est valable pour toutes les machines et tous les groupes électrogènes Caterpillar. Le numéro d'identification produit (PIN) figurant sur la plaque et sur le châssis se composera de 17 caractères. Le nouveau format ressemblera à ceci:

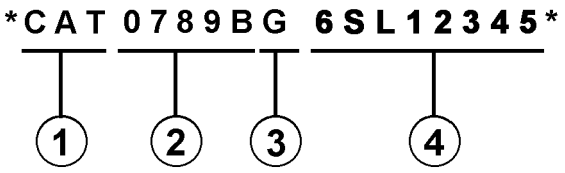

Il se décomposera de la façon suivante:

1. Code international de fabrication de Caterpillar (caractères 1 à 3)

2. Descriptif de la machine (caractères 4 à 8)

3. Contrôle (caractère 9)

4. Indicateur machine (MIS) ou numéro de séquence produit (caractères 10 à 17). Ceux-ci étaient auparavant désignés sous le terme de numéro de série.

Les machines et les groupes électrogènes construits avant le premier trimestre 2001 garderont le format à 8 caractères du numéro d'identification produit (PIN).

Les organes tels que les moteurs, les boîtes de vitesses, les essieux, etc., continueront d'être désignés par un numéro de série (S/N) à 8 caractères.

2. COMMANDE DE PIÈCES

⚠ DANGER

Lorsqu'il faut remplacer des pièces de rechange pour ce produit Caterpillar recommande d'utiliser les pièces de rechange Caterpillar ou les pièces qui ont des spécifications équivalentes dont les dimensions physiques, le type, la force et le matériau. Ces équivalences ne se limitent pas à l'énoncé précédent.

L'inobservation de cette mise en garde peut entraîner des défaillances prématurées, des dommages au produit, des blessures ou même la mort.

Les concessionnaires Caterpillar fournissent dans le monde entier des pièces de rechange de qualité Caterpillar. Leurs stocks de pièces sont constamment réapprovisionnés et comptent toutes les pièces nécessaires pour assurer la bonne marche de vos machines Caterpillar. Certains concessionnaires proposent également des kits de réparation ou des pièces rénovées, ce qui permet de choisir la solution la plus économique dans une situation donnée. Lors des commandes de pièces, mentionner la quantité, le numéro et la désignation des pièces ainsi que le numéro de série ou le numéro d'identification (PIN) de la machine pour laquelle ces pièces sont requises.

3. ORGANISATION DU CATALOGUE DE PIÈCES

Les renseignements sur les produits sont présentés sous forme de "Information element" (élément d'information) représentant tous les composants d'un modèle donné. "Engine Arrangement" (version de moteur) et "Seat Group" (assemblage de siège)" sont des exemples d'éléments d'information. Les éléments d'information sont classés par ordre alphabétique par la désignation standard des pièces et par numéros de pièces dans chaque partie importante du manuel.

4. TABLE DES MATIÈRES

Nouvelle Caractéristique

La table des matières se trouve au début du manuel. La table des matières fournit la liste de tous les chapitres du manuel avec une liste complète de tous les éléments d'information classés par ordre d'apparition dans le manuel. Les numéros de page sont fournis afin que l'utilisateur puisse trouver rapidement les illustrations détaillées concernant l'identification des pièces et les listes des pièces d'entretien.

5. INDEX DES PIÈCES D'ENTRETIEN

La rubrique "Index des pièces d'entretien" qui se trouve au début du manuel renvoie aux pièces d'entretien les plus fréquemment utilisées en précisant la désignation, la quantité, là où la pièce est utilisée et le numéro de page. Ces pièces sont classés par ordre alphabétique.

6. INDEX

L'index qui se trouve vers le début du manuel est une liste alphabétique de tous les éléments d'information du manuel. Les numéros de page sont fournis afin que l'utilisateur puisse trouver rapidement les illustrations détaillées concernant l'identification des pièces et les listes des pièces d'entretien.

7. INDEX DES NUMÉROS DE PIÈCES

Une liste numérique de tous les numéros de pièces et des pages correspondantes se trouve à la fin du manuel.

8. LÉGENDES

Les légendes qui se trouvent en haut de chaque page de chaque élément d'information fournissent le numéro de pièce, la désignation ainsi que des renseignements supplémentaires sur les pièces. Les renseignements concernant les numéros de série (S/N) qui se trouvent dans chaque légende doivent être utilisés pour sélectionner les informations correctes pour un moteur donné. Les informations concernant les options de remplacement sur le chantier, l'identification des composants des équipements offerts en option et les lieux d'application sont aussi fournies.

Nouvelle Caractéristique

Les lettres de la première ligne d'une légende sont présentées en police plus grande afin d'indiquer le début d'une unité d'information. Les légendes qui pourraient être requises pour des pages supplémentaires afin d'illustrer une unité d'information seront présentées en police standard et comprendront le terme (à suivre).

9. PIÈCES NON FOURNIES

Nouvelle Caractéristique

Dans certains cas, il est nécessaire d'indiquer les pièces non fournies qui sont en aval de la liste des pièces d'entretien. Les numéros des pièces non fournies dans la liste des pièces et les légendes seront en italique pour signaler qu'ils ne sont pas disponibles.

10. NUMÉROS DE RÉFÉRENCE DE LA LISTE DES PIÈCES

Nouvelle Caractéristique

Les numéros indiqués dans la colonne des numéros de références correspondent aux numéros utilisés dans les illustrations auxquelles ils sont associés. Un suffixe alphabétique peut être ajouté à un numéro de référence pour identifier la liste des articles en aval. Les numéros indiqués dans la colonne de référence de l'illustration renvoient à l'identification du numéro affiché dans le coin inférieur gauche de chaque illustration. Le numéro de référence de l'illustration pourrait être utilisé avec le numéro de référence de l'article pour déterminer le numéro de pièce correct. Il peut y avoir une omission intentionnelle d'un numéro de référence dans une liste de pièces suite à la mise à jour des informations en vue de refléter les numéros de pièces les plus récentes.

11. DÉSIGNATIONS DE PIÈCES EN RETRAIT

Lorsqu'une désignation de pièce est en retrait, cela veut dire que l'article en regard fait partie de l'ensemble sous lequel il figure.

12. LETTRES DE RÉFÉRENCE DES ILLUSTRATIONS

Quand cela est nécessaire, les illustrations comportent des lettres de référence (A, B, C, etc.) pour montrer le trajet des canalisations et faisceaux de câbles d'un point à l'autre. Elles sont utilisées également pour indiquer où relier les illustrations séparées auparavant.

13. ABRÉVIATIONS ET SYMBOLES

O.D. – Diamètre extérieur
I.D. – Diamètre intérieur
A – Ne fait pas partie de ce groupe
B – Utiliser selon besoin
C – Modification
D – Commander par mètre
E – Commander par centimètre
F – Non représenté
G – Commander par pouce
I – Voir "Hose Fabrication Guide"
M – Pièce métrique
R – Pièce rénovée éventuellement disponible
Y – Illustration séparée
Z – Non fourni séparément

NOTA:

En raison du progrès technique et des améliorations continuelles apportées au matériel, votre machine comporte peut-être des modifications qui n'apparaissent pas dans la présente publication. En cas de doute sur un détail de votre machine Caterpillar ou sur le texte de la présente publication, adressez-vous à votre concessionnaire Caterpillar.

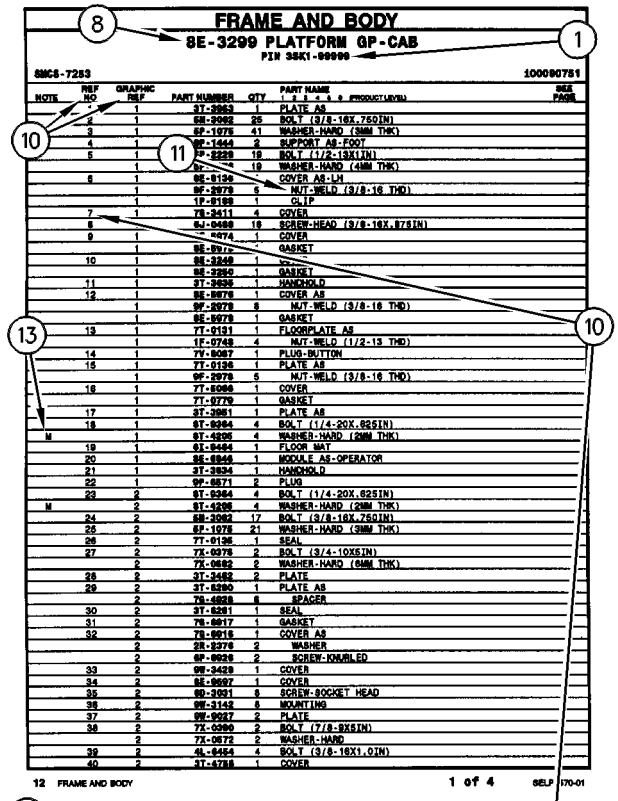

FRAME AND BODY

8E-3299 PLATFORM GP-CAB

PIN 38K1-09999

SMCS-7253 100090751

NOTE	REF NO	GRAPHIC REF	PART NUMBER	QTY	PART NAME (1 2 3 4 5 6 PRODUCT LEVEL)	SEE PAGE
	1	1	3T-2953	1	PLATE AS	
	2	1	5B-2992	25	BOLT (3/8-16X.750IN)	
	3	1	6P-1075	41	WASHER-HARD (3MM THK)	
	4	1	9P-1444	2	SUPPORT AS-FOOT	
	5	1	9P-2229	19	BOLT (1/2-13X1IN)	
		1	6P-[illegible]4	19	WASHER-HARD (4MM THK)	
	6	1	9E-9136	1	COVER AS-LH	
		1	9F-2979	6	NUT-WELD (3/8-16 THD)	
		1	1P-0188	1	CLIP	
	7	1	7S-3411	4	COVER	
	8	1	6J-0488	18	SCREW-HEAD (3/8-16X.875IN)	
	9	1	[illegible]-4474	1	COVER	
		1	9E-9[illegible]		GASKET	
	10	1	9E-3249	1	[illegible]	
		1	9E-3250	1	GASKET	
	11	1	3T-3835	1	HANDHOLD	
	12	1	9E-9078	1	COVER AS	
		1	9F-2979	8	NUT-WELD (3/8-16 THD)	
		1	9E-9079	1	GASKET	
	13	1	7T-0131	1	FLOORPLATE AS	
		1	1F-0748	4	NUT-WELD (1/2-13 THD)	
	14	1	7Y-9087	1	PLUG-BUTTON	
	15	1	7T-0136	1	PLATE AS	
		1	9F-2978	6	NUT-WELD (3/8-16 THD)	
	16	1	7T-9086	1	COVER	
		1	7T-9779	1	GASKET	
	17	1	3T-3981	1	PLATE AS	
	18	1	6T-9364	4	BOLT (1/4-20X.625IN)	
M		1	6T-4205	4	WASHER-HARD (2MM THK)	
	19	1	6L-9484	1	FLOOR MAT	
	20	1	9E-9946	1	MODULE AS-OPERATOR	
	21	1	3T-3834	1	HANDHOLD	
	22	1	9P-8571	2	PLUG	
	23	2	6T-9364	4	BOLT (1/4-20X.625IN)	
M		2	6T-4205	4	WASHER-HARD (2MM THK)	
	24	2	5B-3062	17	BOLT (3/8-16X.750IN)	
	26	2	6F-1075	21	WASHER-HARD (3MM THK)	
	26	2	7T-0135	1	SEAL	
	27	2	7X-0378	2	BOLT (3/4-10X5IN)	
		2	7X-0682	2	WASHER-HARD (6MM THK)	
	28	2	3T-3482	2	PLATE	
	29	2	3T-5290	1	PLATE AS	
		2	7S-0038	8	SPACER	
	30	2	3T-5281	1	SEAL	
	31	2	7S-9017	1	GASKET	
	32	2	7S-9016	1	COVER AS	
		2	2R-2276	2	WASHER	
		2	6P-9028	2	SCREW-KNURLED	
	33	2	9W-3429	1	COVER	
	34	2	9E-9097	1	COVER	
	35	2	9D-3031	8	SCREW-SOCKET HEAD	
	36	2	9W-3142	8	MOUNTING	
	37	2	9W-9027	2	PLATE	
	38	2	7X-0390	2	BOLT (7/8-9X5IN)	
		2	7X-0672	2	WASHER-HARD	
	39	2	4L-9454	4	BOLT (3/8-16X1.0IN)	
	40	2	3T-4788	1	COVER	

12 FRAME AND BODY 1 of 4 SELP4570-01

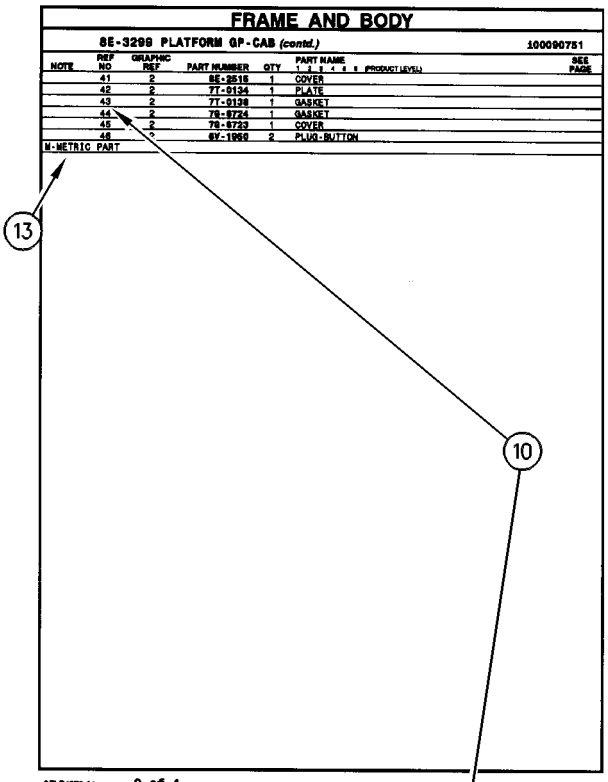

FRAME AND BODY

8E-3299 PLATFORM GP-CAB (contd.) 100090751

NOTE	REF NO	GRAPHIC REF	PART NUMBER	QTY	PART NAME (1 2 3 4 5 6 PRODUCT LEVEL)	SEE PAGE
	41	2	9E-3515	1	COVER	
	42	2	7T-0134	1	PLATE	
	43	2	7T-0139	1	GASKET	
	44	2	7S-9724	1	GASKET	
	45	2	7S-9723	1	COVER	
	46	2	6Y-1969	2	PLUG-BUTTON	

M-METRIC PART

SELP4570-01 2 of 4 FRAME AND BODY 13

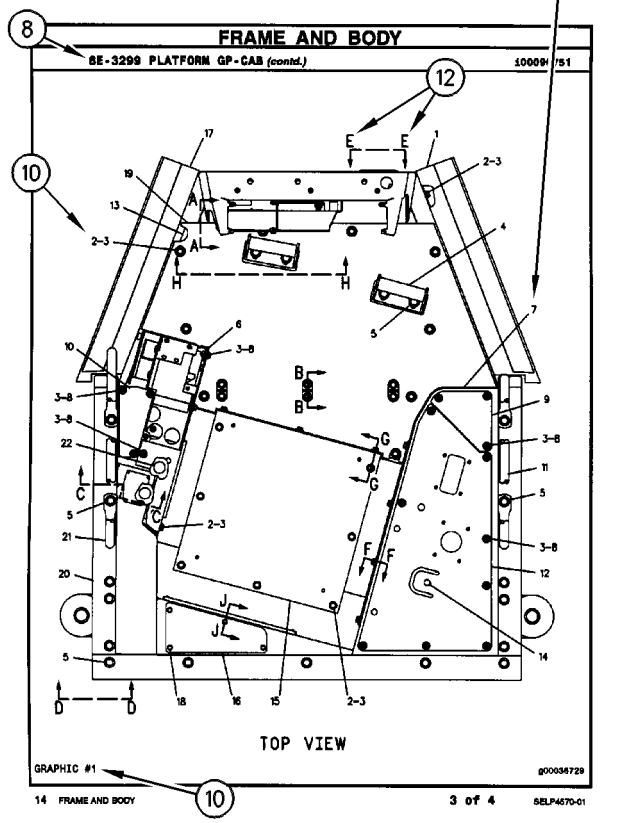

FRAME AND BODY

8E-3299 PLATFORM GP-CAB (contd.) 100090751

TOP VIEW

GRAPHIC #1 g00036729

14 FRAME AND BODY 3 of 4 SELP4570-01

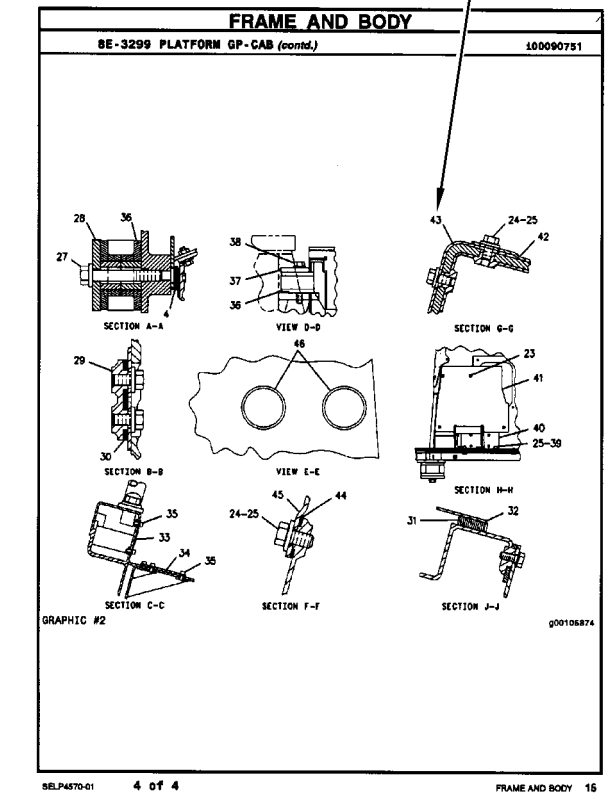

FRAME AND BODY

8E-3299 PLATFORM GP-CAB (contd.) 100090751

SECTION A-A VIEW D-D SECTION G-G

SECTION B-B VIEW E-E SECTION H-H

SECTION C-C SECTION F-F SECTION J-J

GRAPHIC #2 g00105874

SELP4570-01 4 of 4 FRAME AND BODY 15

1. MÁQUINAS

Las máquinas Caterpillar se identifican con Números de Identificación del Producto (PIN). Algunos componentes incluídos en la máquina pueden estar identificados con Números de Serie (N/S). Los componentes que tienen típicamente esta identificación incluyen motores, transmisiones, hojas topadoras y desgarradores. La máquina y el motor se identifican además con Números de Configuración y en algunos casos, Números de Modificación. Estos números están en las placas de identificación del producto o en la placa principal en la cabina del operador.

Los distribuidores Caterpillar necesitan estos números para identificar con exactitud los números de piezas de repuesto.

SIS ***Nueva Característica***

A partir del primer trimestre del 2001, el Número de Identificación de Producto (PIN) de Caterpillar cambiará de 8 a 17 caracteres. Para hacer más uniforme el método de identificación de equipos, Caterpillar y otros fabricantes de equipo de construcción han tomado medidas para cumplir con la versión más reciente de la norma de numeración de identificación de productos. Los Números de Identificación de Producto para máquinas que no se operan en carreteras son definidos por la norma ISO 10261. El nuevo formato PIN corresponderá a todas las máquinas y grupos electrógenos Caterpillar. Las placas y los caracteres PIN estampados en el bastidor mostrarán el PIN de 17 caracteres. El nuevo formato tendrá la apariencia siguiente:

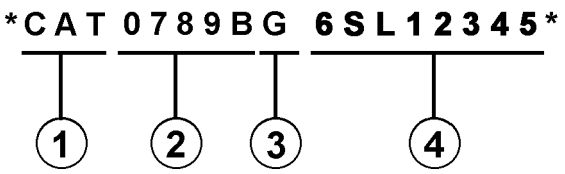

Significado de los caracteres:

1. Código de Fabricación Mundial de Caterpillar (caracteres 1-3)

2. Sección Descriptor de la Máquina (caracteres 4-8)

3. Carácter de Verificación (carácter 9)

4. Sección Indicador de la Máquina (MIS) o Número de Secuencia de Producto (caracteres 10-17). Anteriormente, estos caracteres constituían el Número de Serie.

Las máquinas y grupos electrógenos producidos antes del primer semestre del 2001 mantendrán su formato PIN de 8 caracteres.

Los componentes como motores, transmisiones, ejes, herramientas de trabajo, etc., continuarán usando un Número de Serie (S/N) de 8 caracteres.

2. COMO PEDIR REPUESTOS

⚠ ADVERTENCIA

Cuando se necesiten piezas de repuesto para este producto, Caterpillar recomienda usar piezas de repuesto Caterpillar o piezas que tengan especificaciones equivalentes incluyendo, pero sin estar limitadas a, dimensiones físicas, tipo, fortaleza y material.

El no hacer caso de esta advertencia puede llevar a fallas prematuras, daños al producto y lesiones graves o mortales.

Las piezas de repuesto Caterpillar de calidad están a la disposición de los distribuidores Caterpillar en todo el mundo. Sus existencias actualizadas incluyen todas las piezas normalmente requeridas para proteger su inversión en máquinas Caterpillar. Los distribuidores pueden tener juegos de reparación o piezas remanufacturadas para permitir la selección de la mejor alternativa de reparación en un caso en particular. Al pedir piezas de repuesto, especifique en su pedido la cantidad, el número de pieza, el nombre de la pieza y el número de serie/número de identificación del producto, de la máquina para la cual se necesitan estas piezas.

3. ORGANIZACION DEL MANUAL DE PIEZAS

La información sobre el producto, se presenta en este manual, como "elementos de información" que representan todos los componentes de un modelo específico. Las configuraciones de motores y los grupos de asientos son ejemplos de elementos de información. Los elementos de información están organizados primeramente por nombres de piezas en orden alfabético y en segundo lugar, por el número de pieza dentro de cada sección principal del manual.

4. CONTENIDO

SIS *Nueva Característica*

La página de Contenido se encuentra al principio del manual. El Contenido indica cada sección del manual con una lista completa de todos los elementos de información organizados en el orden que aparecen en el manual. Los números de página proporcionan una referencia rápida a las ilustraciones detalladas de identificación de piezas y a las listas de componentes de repuesto de dichas piezas.

5. ÍNDICE DE PIEZAS DE MANTENIMIENTO

Al principio de este catálogo se encuentra un índice de los números de piezas utilizadas más frecuentemente para el mantenimiento, que incluye descripción, cantidad necesaria, lugar de utilización y número de página. Esta información está organizada alfabéticamente, por descripción de la pieza.

6. ÍNDICE

El Índice, ubicado cerca del principio del manual, es una lista en orden alfabético de todos los elementos de información incluídos en el manual. Los números de página proporcionan una referencia rápida a las ilustraciones detalladas de identificación de piezas y a las listas de componentes de repuesto de dichas piezas.

7. INDICE NUMÉRICO DE PIEZAS

Un índice numérico de piezas con el correspondiente número de página aparece al final de este catálogo.

8. TÍTULOS

Los títulos ubicados en la parte superior de cada página de elementos de información identifican el número y el nombre de la pieza junto con información descriptiva adicional para ayudar al usuario a determinar las piezas necesarias para una máquina en particular. También se suministra información sobre las opciones de reparación en el campo, la identificación de componentes de accesorios optativos y el lugar de ubicación de la pieza ("es parte de").

SIS *Nueva Característica*

La primera línea del título se muestra con un tipo de letra más grande para indicar el comienzo de un elemento de información. Si se requieren páginas adicionales para ilustrar un elemento de información, los títulos se muestran con un tipo de letra normal y la continuación se indica entre paréntesis.

9. PIEZAS QUE NO SE SUMINISTRAN COMO REPUESTO

SIS *Nueva Característica*

En algunos casos es necesario indicar piezas que no se suministran como repuesto pero que pueden estar conectadas a listas de componentes de otras piezas de repuesto. En tal caso, dichas piezas se muestran en cursiva para indicar que no son piezas disponibles.

10. NÚMEROS DE REFERENCIA

SIS *Nueva Característica*

Los números en la columna de No. de Referencia corresponden a los números indicados en la ilustración que pertenece a ese número de pieza. Los números que tienen un sufijo alfabético identifican artículos de las listas de componentes de piezas. Los números en la columna de Referencia de la ilustración se identifican en la esquina inferior izquierda de cada ilustración. Para determinar el número de pieza correcto se puede utilizar tanto el No. de Referencia de la ilustración como el No. de Referencia del artículo. A medida que se actualiza la información para indicar los más recientes números de piezas de repuesto, puede omitirse intencionalmente un No. de Referencia en una lista de componentes de piezas.

11. NOMBRES DE PIEZA SANGRADOS

Cuando el nombre de una pieza está sangrado en una lista, significa que esta pieza forma parte del grupo o conjunto del renglón inmediatamente superior.

12. LETRAS DE REFERENCIA DE ILUSTRACIONES

Las ilustraciones contienen algunas veces letras de referencia (A, B, C etc.) cuyo propósito es seguir el trayecto de líneas y mazos de cables de un punto a otro. También se utilizan para mostrar dónde volver a unir ilustraciones que se habían separado.

13. ABREVIATURAS Y SIMBOLOS

O.D. – Diámetro exterior
I.D. – Diámetro interior
A – No es pieza de este grupo
B – Utilizado según la demanda
C – Indica cambio
D – Se pide por metro
E – Se pide por centímetro
F – No se muestra
G – Se pide por pulgada
I – Ver "Hose Fabrication Guide"
M – Pieza métrica
R – Puede estar disponible como pieza remanufacturada
Y – Ilustración separada
Z – No se suministra por separado

NOTA:

Las contínuas mejoras y adelantos en diseño podrían originar cambios a su máquina que no se incluyen en esta publicación. Cuando tenga alguna pregunta acerca de su producto Caterpillar o de esta publicación, consulte al distribuidor Caterpillar para obtener la información más reciente.

FRAME AND BODY

8E-3299 PLATFORM GP-CAB

PIN 38K1-09999

SMCS-7253 100090751

NOTE	REF NO	GRAPHIC REF	PART NUMBER	QTY	PART NAME (1 2 3 4 5 6 PRODUCT LEVEL)	SEE PAGE
	1	1	3T-3953	1	PLATE AS	
	2	1	5B-2992	25	BOLT (3/8-16X.750IN)	
	3	1	6P-1075	41	WASHER-HARD (3MM THK)	
	4	1	9P-1444	2	SUPPORT AS-FOOT	
	5	1	9P-2229	19	BOLT (1/2-13X1IN)	
		1	6P-[illegible]4	19	WASHER-HARD (4MM THK)	
	6	1	9E-9136		COVER AS-LH	
		1	9F-2979	6	NUT-WELD (3/8-16 THD)	
		1	1P-0188	1	CLIP	
	7	1	7S-3411	4	COVER	
	8	1	6J-0488	18	SCREW-HEAD (3/8-16X.875IN)	
	9	1	[illegible]-4474	1	COVER	
		1	9E-9[illegible]		GASKET	
	10	1	9E-3249	1	[illegible]	
		1	9E-3250	1	GASKET	
	11	1	3T-3935	1	HANDHOLD	
	12	1	9E-9078	1	COVER AS	
		1	9F-2979	8	NUT-WELD (3/8-16 THD)	
		1	9E-9079	1	GASKET	
	13	1	7T-0131	1	FLOORPLATE AS	
		1	1F-0748	4	NUT-WELD (1/2-13 THD)	
	14	1	7Y-9087	1	PLUG-BUTTON	
	15	1	7T-0136	1	PLATE AS	
		1	9F-2978	6	NUT-WELD (3/8-16 THD)	
	16	1	7T-9096	1	COVER	
		1	7T-9779	1	GASKET	
	17	1	3T-3981	1	PLATE AS	
	18	1	6T-9364	4	BOLT (1/4-20X.625IN)	
M		1	6T-4205	4	WASHER-HARD (2MM THK)	
	19	1	6L-9484	1	FLOOR MAT	
	20	1	9E-9946	1	MODULE AS-OPERATOR	
	21	1	3T-3934	1	HANDHOLD	
	22	1	9P-8571	2	PLUG	
	23	2	6T-9364	4	BOLT (1/4-20X.625IN)	
M		2	6T-4205	4	WASHER-HARD (2MM THK)	
	24	2	5B-3062	17	BOLT (3/8-16X.750IN)	
	26	2	6P-1075	21	WASHER-HARD (3MM THK)	
	26	2	7T-9125	1	SEAL	
	27	2	7X-9378	2	BOLT (3/4-10X5IN)	
		2	7X-0662	2	WASHER-HARD (5MM THK)	
	28	2	3T-3482	2	PLATE	
	29	2	3T-5290	1	PLATE AS	
		2	7S-0038	8	SPACER	
	30	2	3T-5281	1	SEAL	
	31	2	7S-9017	1	GASKET	
	32	2	7S-9016	1	COVER AS	
		2	2R-2276	2	WASHER	
		2	6P-9028	2	SCREW-KNURLED	
	33	2	9W-3429	1	COVER	
	34	2	9E-9697	1	COVER	
	35	2	9D-3031	8	SCREW-SOCKET HEAD	
	36	2	9W-3142	8	MOUNTING	
	37	2	9W-9027	2	PLATE	
	38	2	7X-0390	2	BOLT (7/8-9X5IN)	
		2	7X-0672	2	WASHER-HARD	
	39	2	4L-9454	4	BOLT (3/8-16X1.0IN)	
	40	2	3T-4788	1	COVER	

FRAME AND BODY

8E-3299 PLATFORM GP-CAB (contd.)

100090751

NOTE	REF NO	GRAPHIC REF	PART NUMBER	QTY	PART NAME (1 2 3 4 5 6 PRODUCT LEVEL)	SEE PAGE
	41	2	8E-3515	1	COVER	
	42	2	7T-0134	1	PLATE	
	43	2	7T-0139	1	GASKET	
	44	2	7S-9724	1	GASKET	
	45	2	7S-9723	1	COVER	
	46	2	6V-1969	2	PLUG-BUTTON	

M-METRIC PART

FRAME AND BODY

8E-3299 PLATFORM GP-CAB (contd.)

100090751

TOP VIEW

GRAPHIC #1 g00036729

FRAME AND BODY

8E-3299 PLATFORM GP-CAB (contd.)

100090751

SECTION A-A VIEW D-D SECTION G-G

SECTION B-B VIEW E-E SECTION H-H

SECTION C-C SECTION F-F SECTION J-J

GRAPHIC #2 g00105874

INFORMAÇÃO GERAL

1. IDENTIFICAÇÃO DA MÁQUINA

As máquinas Caterpillar são identificadas pelos Números de Informação do Produto (PIN). Alguns componentes incluídos numa máquina podem ser identificados por Números de Série (S/N). Componentes típicos que serão enumerados com números de série incluem motores, transmissões, lâminas e ríperes. Além do número de série, a máquina e o motor são ainda identificados por números de arranjo e, em alguns casos, números de modificações. Tais números encontram-se na(s) placa(s) de identificação do produto e na placa mestre no compartimento do operador.

SIS ***Novidades***

A partir do primeiro trimestre de 2001 o Número de Identificação de Produto da Caterpillar (PIN) vai mudar de 8 para 17 caracteres. Esforçando-se para fornecer uma identificação uniforme de equipamentos, a Caterpillar e outros fabricantes de equipamento de construção estão mudando para atender a versão mais atualizada do padrão de identificação de produtos. Os números de PIN para produtos de aplicações não rodoviárias são definidos pela ISO 10261. O novo formato de número PIN será adotado em todas as máquinas e grupos geradores Caterpillar. As placas e as marcações do chassi mostrarão os 17 dígitos de PIN. O novo formato terá a seguinte disposição:

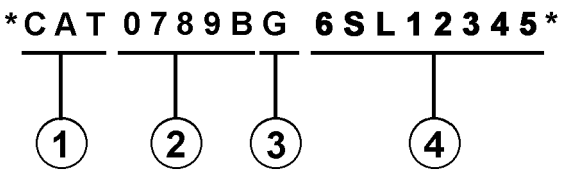

Onde:

1. Código de Fabricação Mundial da Caterpillar (dígitos 1-3)

2. Descrição da Máquina (dígitos 4-8)

3. Dígito de Verificação (dígito 9)

4. Seção de Indicador da Máquina (MIS) ou Número de Seqüência de Produto (dígitos 10-17). Estes eram anteriormente chamados de Número de Série.

Máquinas e grupos geradores produzidos antes do primeiro trimestre de 2001 manterão o formato de 8 caracteres de PIN.

Componentes como motores, transmissões, eixos, ferramentas de trabalho, etc. continuarão a usar Número de Série (S/N) com oito caracteres.

2. COMO OBTER PEÇAS

⚠ CUIDADO

Quando peças de substituição são exigidas para este produto, a Caterpillar recomenda a utilização de peças de substituição Caterpillar ou peças com as especificações equivalentes incluindo, mas não limitadas, à dimensões físicas, tipos, resistência e materiais.

A inobservância desta advertência poderá resultar em falhas prematuras, danos ao produto, ferimentos ou morte.

As Peças de Reposição de Qualidade Caterpillar encontram-se disponíveis nos revendedores Caterpillar no mundo inteiro. Seus estoques de peças são atualizados e incluem todas as peças normalmente necessárias para proteger seu investimento em máquinas Caterpillar. Alguns revendedores podem oferecer jogos de reparo ou peças de troca/remanufaturadas disponíveis como uma opção da alternativa de reparo mais eficaz para uma situação específica. Ao encomendar peças, seu pedido deve especificar a quantidade, o número e o nome da peça e o número de série/número de identificação do produto referentes à máquina para a qual as peças se destinam.

3. ORGANIZAÇÃO DO MANUAL DE PEÇAS

A informação do produto neste manual é apresentada em forma de "elementos de informação" que representam todos os componentes para o modelo específico. Arranjo de Motor e Grupo de Assento são exemplos de elementos de informação. Os elementos de informação são organizados em ordem alfabética por nome de peça ou secundariamente, por número de peça incluído em cada seção principal do manual.

4. LISTA DE CONTEÚDOS

SIS ***Novidades***

A Lista de Conteúdos (TOC) se encontra no princípio do manual. A Lista de Conteúdos (TOC) relaciona em cada seção do manual uma lista completa com todos os elementos de informação organizados conforme aparecem no manual. Números de página são fornecidos para que se tenha referência rápida de ilustrações de peças detalhadas e listas de conteúdos que podem receber serviço de manutenção.

5. ÍNDICE DE PEÇAS DE MANUTENÇÃO

O Índice de Peças de Manutenção, localizado perto do princípio do manual, faz referência aos números de peça de manutenção usados com maior frequência, fornecendo uma descrição, a quantidade, o uso e o número de página. Esta informação é organizada com a descrição da peça em ordem alfabética.

6. ÍNDICE

O Índice localizado perto do princípio do manual, consiste de uma lista em ordem alfabética de todos os elementos de informação incluídos no manual. Números de página são fornecidos para que se tenha referência rápida de ilustrações de peças detalhadas e listas de conteúdos que podem receber serviço de manutenção.

7. ÍNDICE DE NÚMERO DE PEÇA

Um índice numérico relacionando todos os números de peça e a(s) página(s) correspondentes, aparece no final do manual.

8. LEGENDAS

As legendas localizadas na parte de cima de cada página de um elemento de informação identifica o número de peça e o nome da peça, juntamente com informação descritiva adicional. Informações sobre o Número de Informação do Produto (PIN) e o Número de Série (S/N) encontradas em cada legenda devem ser usadas para selecionar a informação correta sobre uma máquina específica. Opções de substituição no campo, identificação de componentes de acessórios opcionais e informações sobre onde são utilizados ("parte de") são também fornecidas.

SIS ***Novidades***

A primeira linha de uma legenda é indicada em tipo maior para indicar o princípio de um elemento de informação. Legendas para páginas adicionais que podem ser necessárias para ilustrar um elemento de informação serão apresentadas em tipo padrão e incluirão o termo *(continua)* .

9. NÃO DISPONÍVEL SEPARADAMENTE

SIS ***Novidades***

Em alguns casos, é necessário mostrar peças não disponíveis separadamente que têm uma ligação com listas de conteúdos de nível inferior que podem receber serviço de manutenção. Os números de peça destes componentes não disponíveis aparecerão em *itálico* , a fim de indicar que não estão disponíveis.

10. NÙMEROS DE REFERÊNCIA À LISTA DE PEÇAS

SIS ***Novidades***

Os números indicados na coluna Ref No (No. de Referência) correspondem-se aos números usados no(s) gráfico(s) correspondente(s). Um sufixo com letras pode ser acrescentado a um número de referência para identificar itens de conteúdo de nível inferior. Os números indicados na coluna Graphic Ref (Referência de Gráfico) referem-se ao identificador de número de gráfico presente no canto esquerdo inferior de cada ilustração. O número de Referência de Gráfico pode ser usado em combinação com o item Ref No para determinar-se o número de peça correto. Poderá haver omissão intencional de um número de referência (Ref No) de uma lista de conteúdos uma vez que as informações são atualizadas para refletir os números de peça mais recentes que podem receber serviço de manutenção.

11. NOMES DE PEÇAS DESALINHADOS

Quando um nome de peça encontra-se desalinhado numa lista de peças, significa que tal item faz parte do (está incluído no) grupo ou conjunto sob o qual está relacionado.

12. LETRAS DE REFERÊNCIA NAS ILUSTRAÇÕES

Quando necessário, as ilustrações contêm letras de referência (A, B, C, etc.) que são utilizadas para seguir tubulações e cabos elétricos de um ponto a outro. Também foram utilizadas para indicar onde se pode reconectar as ilustrações que foram separadas.

13. ABREVIAÇÕES E SÍMBOLOS

O.D. – "Outside Diameter" (Diâmetro Externo)
I.D. – "Inside Diameter" (Diâmetro Interno)
A – Não faz parte deste grupo
B – Use conforme necessário
C – Indica modificação
D – Vendido por metro
E – Vendido por centímetro
F – Não ilustrado
G – Vendido por polegada
I – Consulte o seu revendedor quanto a mangueira
M – Peça métrica
R – Peça remanufaturada pode estar disponível; consulte o seu revendedor Cat
Y – Ilustração separada
Z – Não disponível separadamente

NOTA:

Os contínuos aperfeiçoamentos e avanços no projeto do produto podem ocasionar modificações em sua máquina que talvez ainda não estejam incluídas nesta publicação. Sempre que surgirem dúvidas quanto a um produto Caterpillar ou quanto à presente publicação, consulte o seu revendedor Caterpillar para obter as informações mais recentes disponíveis.

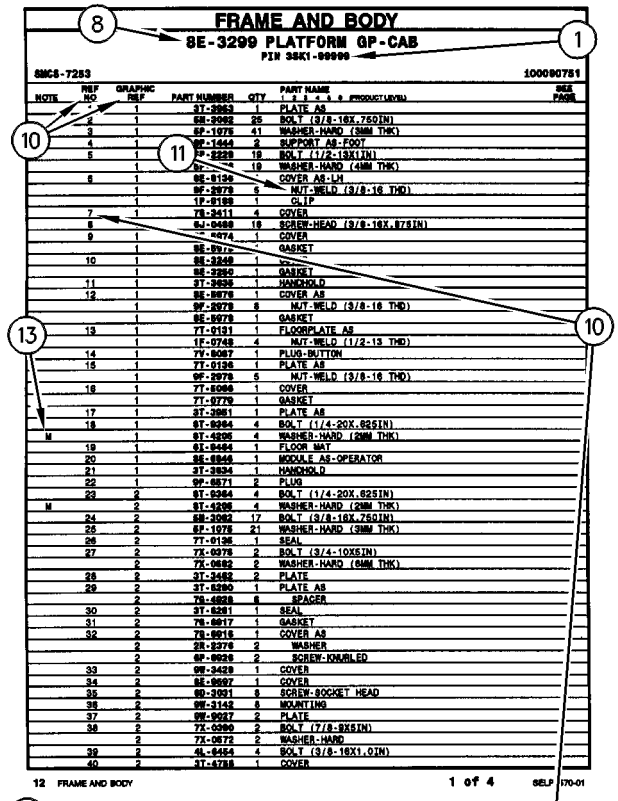

FRAME AND BODY

8E-3299 PLATFORM GP-CAB

PIN 38K1-09999

SMCS-7253 100090751

NOTE	REF NO	GRAPHIC REF	PART NUMBER	QTY	PART NAME (1 2 3 4 5 6 PRODUCT LEVEL)	SEE PAGE
	1	1	3T-3953	1	PLATE AS	
	2	1	5B-2992	25	BOLT (3/8-16X.750IN)	
	3	1	5P-1075	41	WASHER-HARD (3MM THK)	
	4	1	9P-1444	2	SUPPORT AS-FOOT	
	5	1	9P-2229	19	BOLT (1/2-13X1IN)	
		1	5P-[illegible]4	19	WASHER-HARD (4MM THK)	
	6	1	9E-9136	1	COVER AS-LH	
		1	9F-2979	6	NUT-WELD (3/8-16 THD)	
		1	1P-0188	1	CLIP	
	7	1	7S-3411	4	COVER	
	8	1	6J-0488	18	SCREW-HEAD (3/8-16X.875IN)	
	9	1	[illegible]-4474	1	COVER	
		1	9E-9[illegible]7		GASKET	
	10	1	9E-3249	1	[illegible]	
		1	9E-3250	1	GASKET	
	11	1	3T-3935	1	HANDHOLD	
	12	1	9E-9078	1	COVER AS	
		1	9F-2979	8	NUT-WELD (3/8-16 THD)	
		1	9E-9079	1	GASKET	
	13	1	7T-0131	1	FLOORPLATE AS	
		1	1F-0748	4	NUT-WELD (1/2-13 THD)	
	14	1	7Y-9087	1	PLUG-BUTTON	
	15	1	7T-0136	1	PLATE AS	
		1	9F-2978	5	NUT-WELD (3/8-16 THD)	
	16	1	7T-9096	1	COVER	
		1	7T-9779	1	GASKET	
	17	1	3T-3981	1	PLATE AS	
	18	1	6T-9364	4	BOLT (1/4-20X.625IN)	
M		1	6T-4205	4	WASHER-HARD (2MM THK)	
	19	1	6L-9484	1	FLOOR MAT	
	20	1	9E-9946	1	MODULE AS-OPERATOR	
	21	1	3T-3934	1	HANDHOLD	
	22	1	9P-8571	2	PLUG	
	23	2	6T-9364	4	BOLT (1/4-20X.625IN)	
M		2	6T-4205	4	WASHER-HARD (2MM THK)	
	24	2	5B-3062	17	BOLT (3/8-16X.750IN)	
	26	2	5P-1075	21	WASHER-HARD (3MM THK)	
	26	2	7T-0135	1	SEAL	
	27	2	7X-0378	2	BOLT (3/4-10X5IN)	
		2	7X-0682	2	WASHER-HARD (6MM THK)	
	28	2	3T-3482	2	PLATE	
	29	2	3T-5290	1	PLATE AS	
		2	7S-0038	8	SPACER	
	30	2	3T-5281	1	SEAL	
	31	2	7S-9017	1	GASKET	
	32	2	7S-9016	1	COVER AS	
		2	2R-2276	2	WASHER	
		2	6P-9028	2	SCREW-KNURLED	
	33	2	9W-3429	1	COVER	
	34	2	9E-9097	1	COVER	
	35	2	9D-3031	8	SCREW-SOCKET HEAD	
	36	2	9W-3142	8	MOUNTING	
	37	2	9W-9027	2	PLATE	
	38	2	7X-0390	2	BOLT (7/8-9X5IN)	
		2	7X-0672	2	WASHER-HARD	
	39	2	4L-9454	4	BOLT (3/8-16X1.0IN)	
	40	2	3T-4788	1	COVER	

12 FRAME AND BODY 1 of 4 SELP4570-01

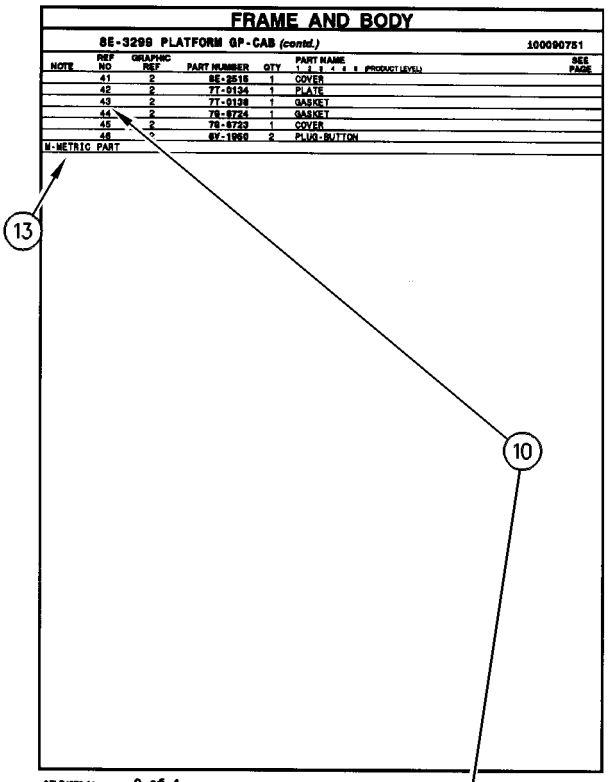

FRAME AND BODY

8E-3299 PLATFORM GP-CAB (contd.) 100090751

NOTE	REF NO	GRAPHIC REF	PART NUMBER	QTY	PART NAME (1 2 3 4 5 6 PRODUCT LEVEL)	SEE PAGE
	41	2	9E-3515	1	COVER	
	42	2	7T-0134	1	PLATE	
	43	2	7T-0139	1	GASKET	
	44	2	7S-9724	1	GASKET	
	45	2	7S-9723	1	COVER	
	46	2	6V-1969	2	PLUG-BUTTON	

M-METRIC PART

SELP4570-01 2 of 4 FRAME AND BODY 13

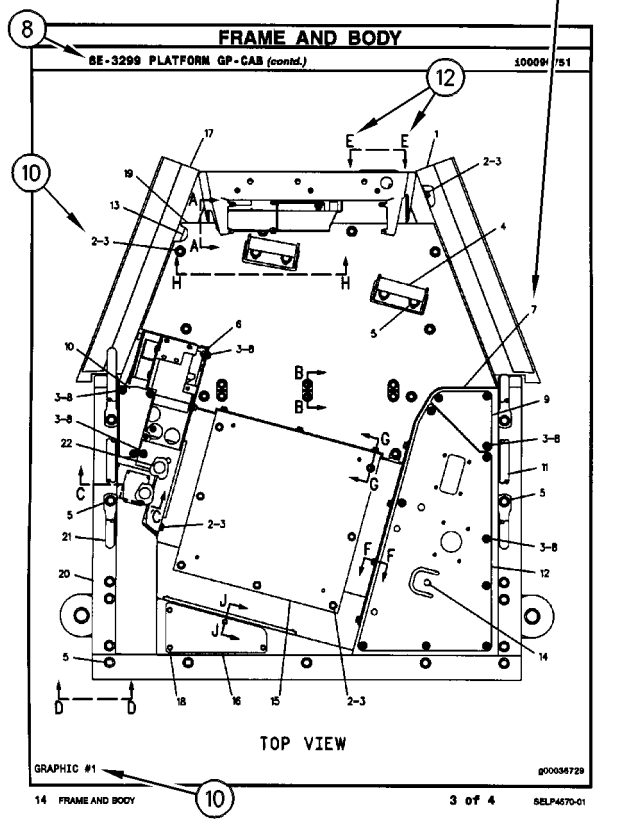

FRAME AND BODY

8E-3299 PLATFORM GP-CAB (contd.) 100090751

TOP VIEW

GRAPHIC #1 g00036729

14 FRAME AND BODY 3 of 4 SELP4570-01

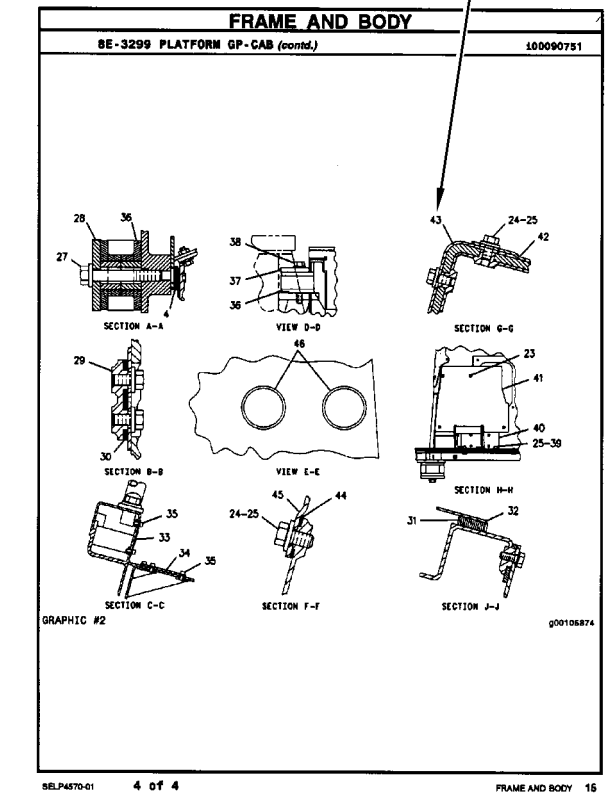

FRAME AND BODY

8E-3299 PLATFORM GP-CAB (contd.) 100090751

SECTION A-A VIEW D-D SECTION G-G

SECTION B-B VIEW E-E SECTION H-H

SECTION C-C SECTION F-F SECTION J-J

GRAPHIC #2 g00105874

SELP4570-01 4 of 4 FRAME AND BODY 15

ALLGEMEINE HINWEISE

1. MASCHINENKENNZEICHNUNG

Caterpillar-Maschinen sind mit PRODUCT IDENTIFICATION NUMBERS (PIN) (Produkt-Identnummern) gekennzeichnet. Einige Baugruppen, z.B. Motoren, Getriebe, Planierschilde und Aufreißer, sind mit SERIAL NUMBERS (S/N) (Seriennummern) gekennzeichnet. An der Maschine und am Motor befinden sich außerdem ARRANGEMENT NUMBERS (Ausrüstungsnummern) sowie in einigen Fällen MODIFICATION NUMBERS (Änderungsnummern). Sie befinden sich auf den PIN-Schildern und auf dem Typenschild im Fahrerhaus.

Bei Ersatzteilbestellungen müssen dem Händler alle diese Nummern zur Verfügung gestellt werden.

SIS ***Neu im Parts Manual***

Vom ersten Quartal 2001 ab wird die Caterpillar Produkt-Identnummer (PIN) von 8 auf 17 Zeichen geändert. Um zur Standardisierung der Produkt-Identnummer beizutragen, sind Caterpillar und andere Baumaschinenhersteller bestrebt, die aktuellste Norm zur Produkt-Identnummerierung einzuführen. Produkt-Identnummern für Baumaschinen sind durch ISO 10261 definiert. Das neue Format der Produkt-Identnummern gilt für alle Caterpillar-Maschinen und -Stromaggregate. Die Produkt-Identschilder und -Identrahmenmarkierung enthalten die aus 17 Zeichen bestehende Identnummer. Das neue Format hat folgende Abschnitte:

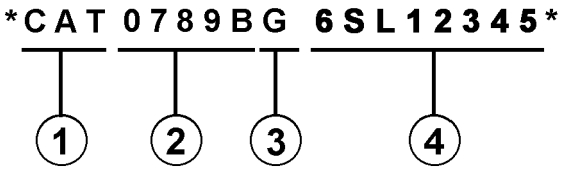

Abschnitte:

1. Caterpillars weltweiter Herstellungscode (Zeichen 1-3)

2. Modell (Zeichen 4-8)

3. Kontrollzeichen (Zeichen 9)

4. Maschinenspezifische Kennung (MIS) oder Produktsequenznummer (Zeichen 10-17). Diese wurde früher als Seriennummer bezeichnet.

Für vor dem ersten Quartal 2001 hergestellte Maschinen und Stromaggregate wird das aus 8 Zeichen bestehende PIN-Format beibehalten.

Bauteile wie z.B. Motoren, Getriebe, Achsen sowie Arbeitsgeräte werden weiterhin eine aus 8 Zeichen bestehende Seriennummer (S/N) aufweisen.

2. BESTELLEN VON ERSATZTEILEN

⚠ WARNUNG

Wenn für diese Maschine Ersatzteile benötigt werden, empfiehlt Caterpillar, ausschließlich Caterpillar-Ersatzteile oder solche zu verwenden, die die gleichen technischen Merkmale hinsichtlich Typ, Festigkeit, Werkzeugeigenschaften und die gleichen Maße aufweisen.

Bei Nichtbeachtung dieser Warnung besteht Verletzungs- oder sogar Lebensgefahr! Ferner kann Nichtbeachtung vorzeitige Ausfälle der Teile und Beschädigung der Maschine zur Folge haben.

Original Caterpillar-Ersatzteile können weltweit bei jedem Caterpillar-Händlern bestellt werden. Die umfangreichen Händlerlager enthalten normalerweise alle Teile, die Sie für Ihre Caterpillar-Maschine benötigen. Einige Händler bieten Reparatursätze, Austausch- oder werküberholte Teile an, so daß Sie eine Auswahl unter verschiedenen Reparaturmöglichkeiten treffen können. Ihre Bestellung muß folgende Angaben enthalten: Anzahl der benötigten Teile, Bestellnummer, Bezeichnung des Teils, Serien-Nr./Produkt-Ident-Nr., Ausrüstungs-Nr. und Änderungs-Nr. der Maschine, für die diese Teile benötigt werden.

3. AUFBAU DES PARTS MANUAL

Die Produktinformationen für alle Komponenten eines bestimmten Modells sind in INFORMATION ELEMENTS (Informationseinheiten) gegliedert. ENGINE ARRANGEMENT (Motorausführung) und SEAT GROUP (Fahrersitz) sind Beispiele für solche Informationseinheiten. Sie sind innerhalb jeder Gruppe alphabetisch, entsprechend der Ersatzteilbezeichnung, und zusätzlich numerisch, entsprechend der Ersatzteilnummer, geordnet.

4. INHALTSVERZEICHNIS

SIS *Neu im Parts Manual*

Das Inhaltsverzeichnis befindet sich am Anfang des Buches. Im Inhaltsverzeichnis werden die einzelnen Abschnitte des Buches aufgeführt. Die Abschnitte enthalten eine vollständige Aufstellung aller Informationseinheiten. Diese sind entsprechend ihrem Erscheinen im Buch geordnet. Das Inhaltsverzeichnis enthält Seitenangaben für Schnellverweise auf detaillierte Abbildungen und Teillisten.

5. INDEX FÜR WARTUNGSTEILE

Der Index für Wartungsteile vorn im Buch enthält die Bestellnummern, Seitenangaben, Mengenangaben und Informationen über den Einsatzbereich für die am häufigsten benötigten Ersatzteile. Die Angaben sind alphabetisch entsprechend der Teilebezeichnung geordnet.

6. INDEX

Der Index vorn im Buch enthält eine alphabetische Liste aller Informationseinheiten. Er enthält Seitenangaben für Schnellverweise auf detaillierte Abbildungen und Teillisten.

7. INDEX FÜR BESTELLNUMMERN

Hinten im Buch befindet sich ein numerischer Index, mit allen Bestellnummern und dem Hinweis auf die Seite, auf der sich die betreffende Abbildung befindet.

8. ÜBERSCHRIFTEN

Die Überschriften, die sich oben auf den Seiten der Informationseinheiten befinden, enthalten Bestellnummern, Ersatzteilbezeichnungen und zusätzliche beschreibende Informationen. Produkt-Ident- und Seriennummern in den Überschriften sollten zur Auswahl der richtigen Informationen für die betreffende Maschine verwendet werden. Die Überschriften enthalten außerdem Informationen über möglichen Außendienstersatz, mögliche Baugerätekomponenten und die Baugruppe, zu der das Teil gehört.

SIS *Neu im Parts Manual*

Die erste Zeile einer Überschrift erscheint in einer größeren Schriftart, um den Anfang einer Informationseinheit zu kennzeichnen. Überschriften für zusätzliche Seiten, die zur Erläuterung einer Informationseinheit notwendig sind, erscheinen in normaler Schriftart und enthalten den Begriff "(contd.)".

9. NICHT EINZELN LIEFERBARE TEILE

SIS *Neu im Parts Manual*

In einigen Fällen ist es notwendig nicht lieferbare Teile, die selbst mit einer eigenen Teilliste im Buch vertreten sind, aufzuführen. Die Bestellnummern dieser nicht einzeln lieferbaren Teile erscheinen kursiv, wodurch angezeigt wird, daß sie nur in Verbindung mit anderen Teilen lieferbar sind.

10. REFERENZNUMMER FÜR ERSATZTEILE

SIS *Neu im Parts Manual*

Die Zahlen, die in der Spalte "Ref No" aufgeführt sind, stimmen mit den Zahlen in den beigefügten Abbildungen überein. Ein Buchstaben-Suffix kann zu einer Referenznummer hinzugefügt werden, um zu kennzeichnen, daß das Teil mit einer eigenen Teilliste im Buch aufgeführt ist. Die in der Spalte "Graphic Ref" angeführten Zahlen verweisen auf die Identifikationsnummer der Abbildung, die sich in der linken unteren Ecke der Abbildung befindet. Diese Nummer kann zusammen mit der Referenznummer des Teils angegeben werden, um die richtige Ersatzteilnummer zu ermitteln. Referenznummern können absichtlich weggelassen werden, da die Nummern der lieferbaren Ersatzteile ständig aktualisiert werden.

11. EINGERÜCKTE BEZEICHNUNGEN

Wenn eine Bezeichnung eingerückt ist, wird dadurch angezeigt, daß das Teil zu einer Baugruppe gehört, unter deren Bezeichnung es eingerückt ist.

12. REFERENZBUCHSTABEN

Falls erforderlich sind in den Abbildungen Referenzbuchstaben enthalten (z.B. A, B, C, usw.), die Leitungen und Kabelbäume von einem Punkt zum anderen verfolgen. Außerdem geben sie die Stelle an, an der getrennte Abbildungen fortgesetzt werden.

13. ABKÜRZUNGEN UND SYMBOLE

O.D. – Außendurchmesser
I.D. – Innendurchmesser
A – kein Teil dieser Gruppe
B – nach Bedarf verwenden
C – Hinweis auf eine Änderung
D – in Meter-Länge bestellen
E – in Zentimeter-Länge bestellen
F – nicht gezeigt
G – in Zoll-Länge bestellen
I – siehe "Hose Fabrication Guide"
M – metrisches Teil
R – werküberholtes Teil unter Umständen lieferbar
Y – separate Abbildung
Z – nicht einzeln lieferbar

ANMERKUNG:

Ständig vorgenommene Verbesserungen und Weiterentwicklungen an Ihrer Maschine können Änderungen verursachen, die in der vorliegenden Ausgabe noch nicht berücksichtigt sind. Fragen zu Ihrer Caterpillar-Maschine oder diesem Ersatzteilbuch beantwortet Ihr Caterpillar-Händler.

ALLGEMEINE HINWEISE

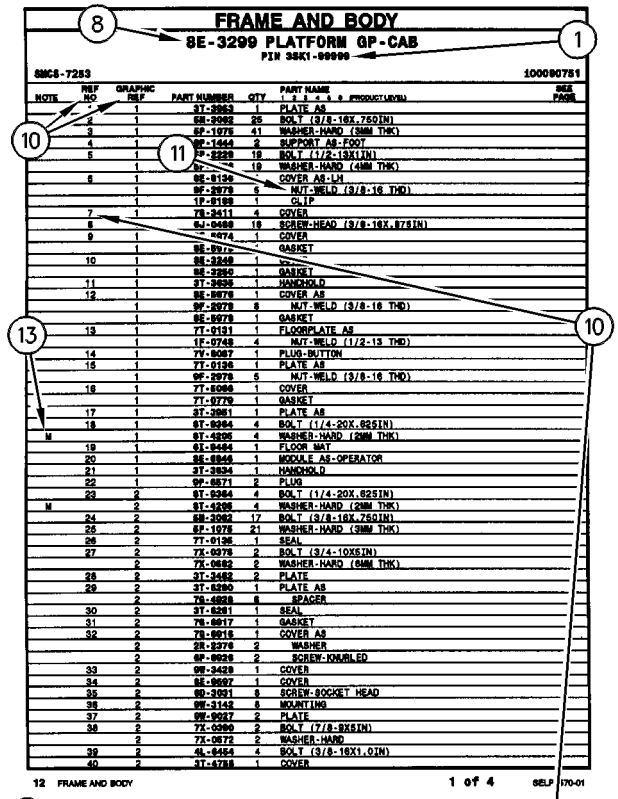

NOTE	REF NO	GRAPHIC REF	PART NUMBER	QTY	PART NAME (1 2 3 4 5 6 PRODUCT LEVEL)	SEE PAGE
	1	1	3T-2953	1	PLATE AS	
	2	1	5B-2992	25	BOLT (3/8-16X.750IN)	
	3	1	5P-1075	41	WASHER-HARD (3MM THK)	
	4	1	9P-1444	2	SUPPORT AS-FOOT	
	5	1	9P-2229	19	BOLT (1/2-13X1IN)	
		1	5P-[illegible]4	19	WASHER-HARD (4MM THK)	
	6	1	9E-9136	1	COVER AS-LH	
		1	9F-2979	6	NUT-WELD (3/8-16 THD)	
		1	1P-0188	1	CLIP	
	7	1	7S-3411	4	COVER	
	8	1	6J-0488	18	SCREW-HEAD (3/8-16X.875IN)	
	9	1	[illegible]-4474	1	COVER	
		1	9E-9[illegible]		GASKET	
	10	1	9E-3249	1	[illegible]	
		1	9E-3250	1	GASKET	
	11	1	3T-3635	1	HANDHOLD	
	12	1	9E-9078	1	COVER AS	
		1	9F-2979	8	NUT-WELD (3/8-16 THD)	
		1	9E-9079	1	GASKET	
	13	1	7T-0131	1	FLOORPLATE AS	
		1	1F-0748	4	NUT-WELD (1/2-13 THD)	
	14	1	7Y-9087	1	PLUG-BUTTON	
	15	1	7T-0136	1	PLATE AS	
		1	9F-2979	6	NUT-WELD (3/8-16 THD)	
	16	1	7T-9096	1	COVER	
		1	7T-9779	1	GASKET	
	17	1	3T-3981	1	PLATE AS	
	18	1	6T-9364	4	BOLT (1/4-20X.625IN)	
M		1	6T-4205	4	WASHER-HARD (2MM THK)	
	19	1	6L-9484	1	FLOOR MAT	
	20	1	9E-9946	1	MODULE AS-OPERATOR	
	21	1	3T-3934	1	HANDHOLD	
	22	1	9P-8571	2	PLUG	
	23	2	6T-9364	4	BOLT (1/4-20X.625IN)	
M		2	6T-4205	4	WASHER-HARD (2MM THK)	
	24	2	5B-3062	17	BOLT (3/8-16X.750IN)	
	25	2	5P-1075	21	WASHER-HARD (3MM THK)	
	26	2	7T-9135	1	SEAL	
	27	2	7X-9378	2	BOLT (3/4-10X5IN)	
		2	7X-0682	2	WASHER-HARD (6MM THK)	
	28	2	3T-3482	2	PLATE	
	29	2	3T-5290	1	PLATE AS	
		2	7S-0028	8	SPACER	
	30	2	3T-5281	1	SEAL	
	31	2	7S-9017	1	GASKET	
	32	2	7S-9016	1	COVER AS	
		2	2R-2276	2	WASHER	
		2	6P-9028	2	SCREW-KNURLED	
	33	2	9W-3429	1	COVER	
	34	2	9E-9697	1	COVER	
	35	2	9D-3031	8	SCREW-SOCKET HEAD	
	36	2	9W-3142	8	MOUNTING	
	37	2	9W-9027	2	PLATE	
	38	2	7X-0390	2	BOLT (7/8-9X5IN)	
		2	7X-0672	2	WASHER-HARD	
	39	2	4L-9454	4	BOLT (3/8-16X1.0IN)	
	40	2	3T-4788	1	COVER	

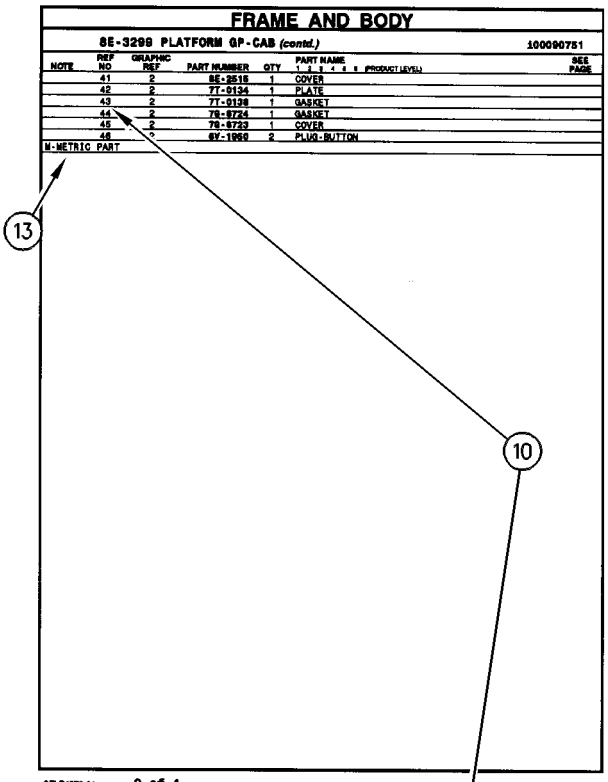

NOTE	REF NO	GRAPHIC REF	PART NUMBER	QTY	PART NAME (1 2 3 4 5 6 PRODUCT LEVEL)	SEE PAGE
	41	2	8E-3515	1	COVER	
	42	2	7T-0134	1	PLATE	
	43	2	7T-0139	1	GASKET	
	44	2	7S-9724	1	GASKET	
	45	2	7S-9723	1	COVER	
	46	2	6V-1969	2	PLUG-BUTTON	

M-METRIC PART

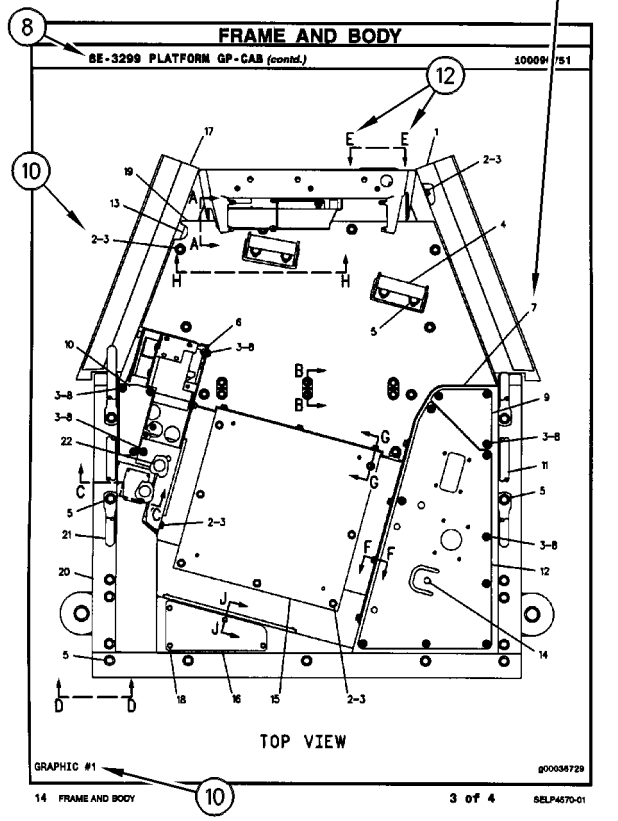

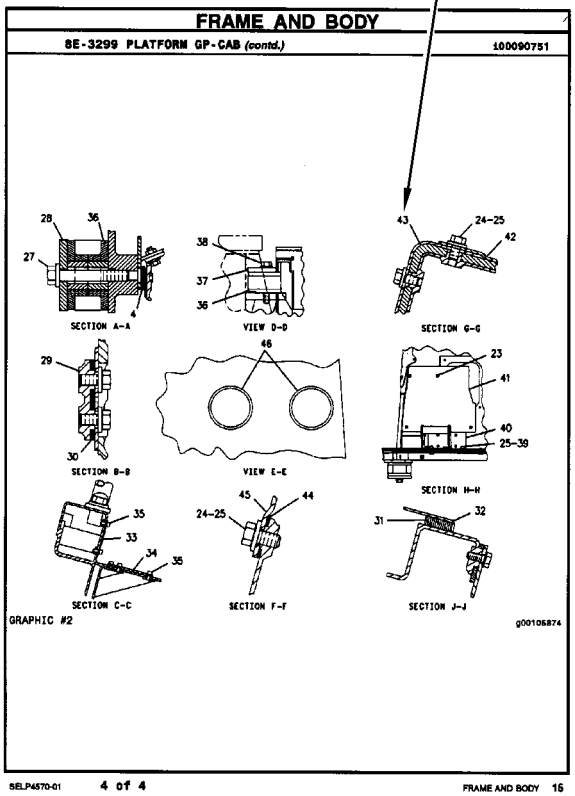

REMANUFACTURED COMPONENTS

As an option when making repairs consider Caterpillar Remanufactured Components. Components that are available through the Caterpillar Remanufactured Program are identified three ways in the parts book:

- with the letter R in the note field of the parts list
- with an R* at the beginning of the first line of the caption
- with an *R at the end of the first line of the caption

Typical components included in the Remanufacturing Program include:

ALTERNATORS
CONNECTING RODS
CRANKSHAFTS - UNDERSIZE
CRANKSHAFTS - UPGRADE TO NEW
CYLINDER HEADS
ELECTRONIC CONTROL MODULES (ECM)
ELECTRONIC SENSORS
FUEL INJECTORS
FUEL NOZZLES
FUEL PUMPS
GOVERNORS
OIL PUMPS
PISTONS
SHORT BLOCKS
STARTERS
TURBOCHARGERS - COMPLETE
TURBOCHARGER CARTRIDGES
WATER PUMPS

Caterpillar Remanufactured engines for many engine arrangements are also available.

COMPOSANTS RÉNOVÉS

Comme option de réparation, considérer les composants rénovés Caterpillar. Les composants disponibles dans le cadre du programme Caterpillar de composants rénovés sont identifiés de trois façons dans le catalogue de pièces:

- avec la lettre "R" dans l'espace note de la liste des pièces
- avec R* au début de la première ligne des légendes
- avec *R à la fin de la première ligne des légendes

Les composants suivants figurent parmi les composants typiques du programme de rénovation:

ALTERNATEURS
BIELLES
VILEBREQUINS - SOUS-DIMENSIONNÉS
VILEBREQUINS - REMIS À NEUF
CULASSES
MODULES DE COMMANDE ÉLECTRONIQUE (ECM)
CAPTEURS ÉLECTRONIQUES
INJECTEURS
TÊTES D'INJECTEURS
POMPES À CARBURANT
RÉGULATEURS
POMPES À HUILE
PISTONS
BLOCS EMBIELLÉS
DÉMARREURS
TURBOCOMPRESSEURS - COMPLETS
CARTOUCHES DE TURBOCOMPRESSEUR
POMPES À EAU

Des moteurs rénovés sont aussi disponibles pour plusieurs versions de moteur.

ALTERNATIVAS DE REPARACIÓN

COMPONENTES REMANUFACTURADOS

Al hacer reparaciones, tenga en cuenta la opción de Componentes Remanufacturados Caterpillar. Los componentes que están disponibles por medio del programa de Productos Remanufacturados Caterpillar se identifican de tres maneras en el manual de piezas:

- con la letra R en el espacio de Nota de la lista de piezas
- con una R* al comienzo de la primera línea de la leyenda
- con una *R al final de la primera línea de la leyenda

Los componentes que se incluyen típicamente en el Programa de Productos Remanufacturados son:

ALTERNADORES
BIELAS
CIGÜEÑALES - BAJOMEDIDA
CIGÜEÑALES - REMANUFACTURADOS A NUEVO
CULATAS
MÓDULOS DE CONTROL ELECTRÓNICO (ECM)
SENSORES ELECTRONICOS
INYECTORES
BOQUILLAS
BOMBAS DE COMBUSTIBLE
REGULADORES
BOMBAS DE ACEITE
PISTONES
MONOBLOQUES
MOTORES DE ARRANQUE
TURBOCOMPRESORES - COMPLETOS
NÚCLEOS DE TURBOCOMPRESOR
BOMBAS DE AGUA

También hay disponibles motores Remanufacturados Caterpillar para muchas de las configuraciones de motores.

COMPONENTES REMANUFATURADOS

Considere o uso de Componentes Remanufaturados Caterpillar ao efetuar reparos. Os componentes disponíveis através do Programa de Remanufatura Caterpillar são identificados de três formas no manual de peças:

- com um R na área da nota da lista de peças
- com um R* no princípio da primeira linha da legenda
- com um *R no final da primeira linha da legenda

Os componentes típicos que constam no Programa de Remanufatura incluem:

ALTERNADORES
BIELAS
VIRABREQUINS - SUBMEDIDAS
VIRABREQUINS - ATUALIZAÇÃO
CABEÇOTES
MÓDULOS DE CONTROLE ELETRÔNICO (ECM)
SENSORES ELETRÔNICOS
INJETORES DE COMBUSTÍVEL
BICOS DE ABASTECIMENTO DE COMBUSTÍVEL
BOMBAS DE COMBUSTÍVEL
GOVERNADORES
BOMBAS DE ÓLEO
PISTÕES
BLOCOS BÁSICOS DO MOTOR
MOTORES DE PARTIDA
TURBOALIMENTADORES - COMPLETOS
CARTUCHOS DE TURBOALIMENTADORES
BOMBAS D'ÁGUA

Motores Remanufaturados Caterpillar também encontram-se disponíveis para diversos arranjos de motor.

REPARATURALTERNATIVEN

WERKÜBERHOLTE AT-PRODUKTE

Bei Reparaturen sollten werküberholte AT-Produkte von Caterpillar in Betracht gezogen werden. Die durch das AT-Programm von Caterpillar erhältlichen Teile sind im Parts Book auf drei verschiedene Arten gekennzeichnet:

- mit dem Buchstaben R in der Spalte NOTE der Ersatzteilliste
- mit einem R* am Anfang der ersten Zeile der Überschrift
- mit einem *R am Ende der ersten Zeile der Überschrift

Das AT-Programm umfaßt u.a. folgende Produkte:

DREHSTROMGENERATOREN
PLEUELSTANGEN
KURBELWELLEN - MIT UNTERMASS
KURBELWELLEN - MIT ORIGINALMASS
ZYLINDERKÖPFE
ELEKTRONISCHE STEUEREINHEITEN (EMC)
ELEKTRONISCHE SENSOREN
PUMPENDÜSEN
EINSPRITZDÜSEN
KRAFTSTOFFPUMPEN
DREHZAHLREGLER
ÖLPUMPEN
KOLBEN
TEILMOTOREN
ANLASSER
TURBOLADER - KOMPLETT
TURBOLADERLAUFZEUGE
KÜHLWASSERPUMPEN

Viele Motoren können durch werküberholte AT-Motoren von Caterpillar ersetzt werden.

SUPPLEMENTAL COOLANT ADDITIVES

CUSTOMER BENEFITS:

Protects against cavitation, foam, erosion, corrosion, and scale buildup in cooling systems.

- Provides measured coolant conditioner.

DESCRIPTION:

Additives deplete from the coolant with normal operation. For this reason, Supplemental Coolant Additives (SCA) must be added to all heavy duty coolants at regular intervals. In addition, when not using a fully formulated, pre-charged antifreeze, like Caterpillar's DEAC, an initial charge of SCA must be added to the cooling system. The amount of SCA added to the system is dependent on the capacity of the system.

The SCA for initial fill is provided as a liquid. SCA's for maintenance intervals are available in liquid form and as a spin-on element. (No Spin-on available for 3600 Family of Engines)

NOTE:

The amount of SCA added at initial fill is not the same as the amount added at maintenance intervals.

The coolant additive elements can be used with any ethylene or propylene glycol type antifreeze which meets ASTM D4985 or ASTM D5345 Specifications.

NOTE:

For use with standard heavy duty coolant only, not for use with Extended Life Coolant.

PARTS NEEDED:

Cooling System Capacity		Liquid SCA at Initial Fill	Liquid SCA at Maintenance*	Spin-on SCA Maintenance Element*
Liters	Gallons			
22-30	(6-8)	3P-2044 (1)	6V-3542 (1)	111-2370 (1)
30-38	(8-10)	3P-2044 (1) 6V-3542 (1)	111-2372 (1)	111-2369 (1)
38-49	(10-13)	3P-2044 (1) 8T-1589 (1)	111-2372 (1)	111-2369 (1)
49-64	(13-17)	3P-2044 (2)	8T-1589 (1)	9N-3368 (1)
64-83	(17-22)	3P-2044 (2) 8T-1589 (1)	111-2372 (1) 6V-3542 (1)	111-2371 (1)
83-114	(22-30)	3P-2044 (3) 8T-1589 (1)	3P-2044 (1)	9N-3718 (1)
114-163	(30-43)	3P-2044 (5)	3P-2044 (1) 6V-3542 (1)	111-2371 (2)
163-242	(43-64)	3P-2044 (8)	3P-2044 (2)	9N-3718 (2)

** Normal maintenance period is 250 hrs. See your Operation and Maintenance Manual for complete coolant maintenance instructions.*

( ) Indicates quantity required.

ADDITIFS POUR LIQUIDE DE REFROIDISSEMENT

AVANTAGES POUR LE CLIENT

L'additif protège contre la cavitation, la mousse, l'érosion, la corrosion et l'accumulation de dépôts dans le circuit de refroidissement.

- L'additif complémentaire fournit une quantité mesurée d'additif.

DESCRIPTION:

Les additifs s'épuisent pendant l'utilisation du moteur. C'est pourquoi l'on doit ajouter de l'additif au liquide de refroidissement/antigel pour moteurs diesel à intervalles réguliers. En plus, si l'on n'utilise pas de l'antigel entièrement formulé et pré-chargé comme le liquide de refroidissement/antigel Caterpillar pour moteurs diesel, une quantité initiale d'additif doit être ajoutée au circuit de refroidissement. La quantité d'additif à ajouter au circuit dépend de la contenance du circuit.

L'additif pour le remplissage initial est fourni sous forme liquide. L'additif pour l'entretien ultérieur est disponible sous forme liquide et sous forme d'élément à visser. (Il n'y a pas d'élément à visser pour les moteurs de la famille 3600).

NOTA:

La quantité d'additif à ajouter au remplissage initial diffère de la quantité à ajouter aux intervalles d'entretien.

Les éléments d'additif peuvent être utilisés avec tout antigel de type éthylène ou propylène-glycol conforme à la norme ASTM D4985 ou ASTM D5345.

NOTA:

A utiliser uniquement avec du liquide de refroidissement pour moteurs diesel et non avec le liquide de refroidissement longue durée.

PIÈCES NÉCESSAIRES:

Contenance du circuit de refroidissement		Additif liquide au remplissage initial	Additif liquide aux intervalles d'entretien*	Elément d'additif à visser aux intervalles d'entretien*
Litres	Gallons U.S.			
22-30	(6-8)	3P-2044 (1)	6V-3542 (1)	111-2370 (1)
30-38	(8-10)	3P-2044 (1) 6V-3542 (1)	111-2372 (1)	111-2369 (1)
38-49	(10-13)	3P-2044 (1) 8T-1589 (1)	111-2372 (1)	111-2369 (1)
49-64	(13-17)	3P-2044 (2)	8T-1589 (1)	9N-3368 (1)
64-83	(17-22)	3P-2044 (2) 8T-1589 (1)	111-2372 (1) 6V-3542 (1)	111-2371 (1)
83-114	(22-30)	3P-2044 (3) 8T-1589 (1)	3P-2044 (1)	9N-3718 (1)
114-163	(30-43)	3P-2044 (5)	3P-2044 (1) 6V-3542 (1)	111-2371 (2)
163-242	(43-64)	3P-2044 (8)	3P-2044 (2)	9N-3718 (2)

** L'intervalle d'entretien normal est de 250 heures-service. Voir le Guide d'utilisation et d'entretien pour de plus amples renseignements concernant l'entretien du circuit de refroidissement.*

( ) Indique la quantité exigée.

ADITIVOS DE REFRIGERANTE SUPLEMENTARIOS

VENTAJAS PARA EL USUARIO:

Protegen contra la cavitación, la formación de espuma, la corrosión y la acumulación de escamas en los sistemas de enfriamiento.

- Suministra un acondicionador dosificado de refrigerante.

DESCRIPCIÓN:

Los aditivos en el refrigerante se agotan con la operación normal. Por esta razón, se debe agregar Aditivo de refrigerante suplementario (SCA) a todos los refrigerantes para servicio pesado, a intervalos regulares. Además, cuando no se usa un anticongelante de precarga completo, tal como el DEAC de Caterpillar, es necesario agregar una cantidad de aditivo de refrigerante suplementario inicial al sistema de enfriamiento. La cantidad de aditivo que se debe agregar depende de la capacidad del sistema.

El SCA de llenado inicial es líquido. El que se usa para el mantenimiento está disponible tanto en líquido como en un elemento enroscable. (No hay elemento enroscable disponible para la Familia de Motores 3600).

NOTA:

La cantidad de aditivo de llenado inicial no es la misma que se agrega en los intervalos de mantenimiento.

Los elementos de aditivo de refrigerante se pueden usar con cualquier anticongelante de tipo glicol etilénico o propílico que esté de acuerdo con las especificaciones de las normas ASTM D4985 o ASTM D5345.

NOTA:

Se debe utilizar únicamente con refrigerante estándar para servicio pesado; no se debe usar con Refrigerante de Larga Duración.

PIEZAS NECESARIAS:

Capacidad del Sistema de Enfriamiento		SCA líquido de llenado inicial	SCA líquido de mantenimiento*	Elemento de mantenimiento enroscable*
litros	gal EE.UU.			
22-30	6-8	3P-2044 (1)	6V-3542 (1)	111-2370 (1)
30-38	8-10	3P-2044 (1) 6V-3542 (1)	111-2372 (1)	111-2369 (1)
38-49	10-13	3P-2044 (1) 8T-1589 (1)	111-2372 (1)	111-2369 (1)
49-64	13-17	3P-2044 (2)	8T-1589 (1)	9N-3368 (1)
64-83	17-22	3P-2044 (2) 8T-1589 (1)	111-2372 (1) 6V-3542 (1)	111-2371 (1)
83-114	22-30	3P-2044 (3) 8T-1589 (1)	3P-2044 (1)	9N-3718 (1)
114-163	30-43	3P-2044 (5)	3P-2044 (1) 6V-3542 (1)	111-2371 (2)
163-242	43-64	3P-2044 (8)	3P-2044 (2)	9N-3718 (2)

** El período normal de mantenimiento es de 250 horas. Para ver las instrucciones completas sobre el mantenimiento del refrigerante, consulte el Manual de Operación y Mantenimiento.*

( ) Indica la cantidad necesaria.

ADITIVOS SUPLEMENTARES DO LÍQUIDO ARREFECEDOR

BENEFÍCIOS PARA O CLIENTE:

Protege contra cavitação, espuma, erosão, corrosão e acúmulo de crostas nos sistemas de arrefecimento.

- Fornece uma quantidade pré-determinada de condicionador de arrefecimento.

DESCRIÇÃO:

Com a operação normal, os aditivos se esgotam do líquido arrefecedor. Por isso, Aditivos Suplementares do Líquido Arrefecedor (SCA) devem ser acrescentados a todos os líquidos arrefecedores para serviço pesado em intervalos regulares. Além disso, quando um anticongelante pré-carregado, totalmente formulado não for usado, como o DEAC Caterpillar, uma carga inicial de SCA deve ser acrescentada ao sistema de arrefecimento. A quantidade de SCA acrescentada ao sistema depende da capacidade do sistema.

O SCA para abastecimento inicial é fornecido em forma de líquido. Os aditivos suplementares (SCA) para intervalos de manutenção estão à disposição em forma líquida e como um elemento com roscas. (Exceto os Motores da Família 3600)

NOTA:

A quantidade de SCA adicionada no abastecimento inicial não é a mesma que a acrescentada nos intervalos de manutenção.

Os elementos do aditivo do líquido arrefecedor podem ser usados com qualquer tipo de anticongelante etileno ou propileno que satisfaz as Especificações ASTM D4985 ou ASTM D5345.

NOTA:

Para uso apenas com líquido arrefecedor para serviço pesado padrão, não deve ser usado com Líquido Arrefecedor de Vida Longa.

PEÇAS NECESSÁRIAS:

Capacidade do Sistema de Arrefecimento		Líquido SCA Durante Abastecimento Inicial	Líquido SCA Durante Manutenção*	Elemento de Manutenção de SCA com Roscas*
Litros	Galões			
22-30	6-8	3P-2044 (1)	6V-3542 (1)	111-2370 (1)
30-38	8-10	3P-2044 (1) 6V-3542 (1)	111-2372 (1)	111-2369 (1)
38-49	10-13	3P-2044 (1) 8T-1589 (1)	111-2372 (1)	111-2369 (1)
49-64	13-17	3P-2044 (2)	8T-1589 (1)	9N-3368 (1)
64-83	17-22	3P-2044 (2) 8T-1589 (1)	111-2372 (1) 6V-3542 (1)	111-2371 (1)
83-114	22-30	3P-2044 (3) 8T-1589 (1)	3P-2044 (1)	9N-3718 (1)
114-163	30-43	3P-2044 (5)	3P-2044 (1) 6V-3542 (1)	111-2371 (2)
163-242	43-64	3P-2044 (8)	3P-2044 (2)	9N-3718 (2)

** O período normal de manutenção é de 250 horas. Consulte o Manual de Operação e Manutenção para obter instruções completas quanto à manutenção do líquido arrefecedor.*

( ) Indica a quantidade exigida.

KÜHLMITTELZUSATZ

VORTEILE FÜR DEN KUNDEN:

Schutz gegen Kavitation, Schaumbildung, Erosion, Korrosion und Kesselsteinbildung in Kühlsystemen.

- Richtig dosierter Kühlmittelzusatz

BESCHREIBUNG:

Additive erschöpfen sich während des Motorbetriebs. Deshalb muß allen HD-Kühlmitteln regelmäßig Kühlmittelzusatz beigefügt werden. Wenn bei Erstfüllung kein vollwertiges Fertigkühlmittel, wie das Frostschutz- und Kühlmittel für Dieselmotoren von Caterpiller (DEAC), verwendet wird, muß bei Erstfüllung Kühlmittelzusatz beigefügt werden. Wieviel Kühlmittelzusatz beigefügt werden muß, hängt vom Inhalt des Kühlsystems ab.

Für Erstfüllung ist Kühlmittelzusatz nur in flüssiger Form erhältlich. Für Wartungsintervalle ist Kühlmittelzusatz in flüssiger Form und als Zusatzelement erhältlich. (Für die Motorbaureihe 3600 sind keine Zusatzelemente erhältlich.)

ANMERKUNG:

Die Kühlmittelmenge bei Erstfüllung ist nicht die gleiche Menge, die bei Wartungsintervallen beigefügt werden muß.

Die Kühlmittelzusatzelemente können mit allen Frostschutzmitteln auf Ethylen- oder Propylenglykolbasis verwendet werden, die den Standards nach ASTM D4985 oder ASTM D5345 entsprechen.

ANMERKUNG:

Den Kühlmittelzusatz nicht mit Langzeitkühlmittel (ELC) von Caterpillar verwenden. Der Kühlmittelzusatz ist nur für HD-Kühlmittel bestimmt.

TEILEBEZEICHNUNG:

Kühlsysteminhalt		Kühlmittelzusatz bei Erstfüllung	Flüssiger Kühlmittelzusatz bei Wartung*	Kühlmittelzusatzelement bei Wartung*
Liter	US-Gall.			
22-30	(6-8)	3P-2044 (1)	6V-3542 (1)	111-2370 (1)
30-38	(8-10)	3P-2044 (1) 6V-3542 (1)	111-2372 (1)	111-2369 (1)
38-49	(10-13)	3P-2044 (1) 8T-1589 (1)	111-2372 (1)	111-2369 (1)
49-64	(13-17)	3P-2044 (2)	8T-1589 (1)	9N-3368 (1)
64-83	(17-22)	3P-2044 (2) 8T-1589 (1)	111-2372 (1) 6V-3542 (1)	111-2371 (1)
83-114	(22-30)	3P-2044 (3) 8T-1589 (1)	3P-2044 (1)	9N-3718 (1)
114-163	(30-43)	3P-2044 (5)	3P-2044 (1) 6V-3542 (1)	111-2371 (2)
163-242	(43-64)	3P-2044 (8)	3P-2044 (2)	9N-3718 (2)

** Der normale Wartungsintervall beträgt 250 Betriebsstunden. Für vollständige Anweisungen zur Wartung des Kühlsystems, siehe Betriebs- und Wartungshandbuch.*

( ) Erforderliche Anzahl

MAINTENANCE PARTS

DESCRIPTION	PART NUMBER	QTY	WHERE USED	PAGE
AIR INLET AND EXHAUST SYSTEM				
ELEMENT AS-PRIMARY	106-3969	1	AIR CLEANER GP	131
ELEMENT AS-SECONDARY	106-3973	1	AIR CLEANER GP	131
ELEMENT-FILTER	7M-1674	1	LINES GP-AIR	134
INDICATOR-AIR FILTER SERVICE	8N-2694	1	LINES GP-AIR	134
BASIC ENGINE				
BREATHER AS	4N-4668	3	COVER GP-VALVE MECHANISM	18
CAP AS (1-3/16-12 THD)	6V-9832	1	COVER GP-OIL PAN	16
PLUG-PIPE (1/8-27 NPTF)	8T-6757	6	CRANKSHAFT GP	24
V-BELT SET	6N-7575	1	DRIVE GP-FAN	48
BRAKING SYSTEM				
CAP-DUST	6V-0852	2	CONTROL GP-SERVICE BRAKE	564
		3	CONTROL GP-SERVICE BRAKE	565
	8C-3451	1	CONTROL GP-SERVICE BRAKE	566
SEAL-O-RING (94.84MM ID)	1H-8128	2	ACCUMULATOR GP	555
COOLING SYSTEM				
CAP AS-RADIATOR	031-1119	1	TANK GP-COOLANT	126
FILTER (WATER PUMP)	111-2721	1	PUMP GP-WATER	112
		1	PUMP GP-WATER	114
		1	PUMP GP-WATER	116
HOSE	106-4572	10	RADIATOR GP	120
HOSE (63.5MM ID) (12.7CM)	5P-1262		LINES GP-WATER	106
HOSE (6.35MM ID) (266CM)	5P-1465		RADIATOR GP	122
PLUG-DRAIN	6N-9590	1	LINES GP-WATER	106
REGULATOR-WATER TEMPERATURE (92 DEG C.)	4W-4794	2	LINES GP-WATER	94
		2	LINES GP-WATER	98
		2	LINES GP-WATER	102
ELECTRICAL AND STARTING SYSTEM				
BATTERY (12 VOLT)(DRY)	9X-9730	2	BATTERY GP	227
		2	STARTING AR-COLD WEATHER	296
BELT	129-3574	1	ALTERNATOR GP-CHARGING	222
BLOCK-FUSE	5N-5536	4	WIRING GP-COLD WEATHER	330
BRUSH AS (STARTING MOTOR)	3T-9524	6	STARTING MOTOR GP-ELECTRIC	298
CAP AS	7E-6508	2	WIRING GP-UNIT INJECTOR	368
CAP-FUSE HOLDER	7N-2867	1	WIRING GP-CAB	318
		1	WIRING GP-CAB	322
		1	WIRING GP-CAB	326
CIRCUIT BREAKER AS (105 AMP) (ALTERNATOR)	3E-7294	1	WIRING GP-RELAY PANEL	358
CIRCUIT BREAKER AS (15 AMP)	3T-2662	1	WIRING GP-SHIFT CONSOLE	360
CIRCUIT BREAKER AS (15 AMP) (ENGINE ECM)	6T-3643	1	WIRING GP-RELAY PANEL	358
CIRCUIT BREAKER AS (15 AMP) (TAIL LIGHTS/HIGH BEAM)	6N-8589	1	WIRING GP-STEERING CONSOLE	364
CIRCUIT BREAKER AS (15 AMP) (TRANSMISSION)	3T-2662	1	WIRING GP-STEERING CONSOLE	364
	6N-8589	1	WIRING GP-STEERING CONSOLE	366
CIRCUIT BREAKER AS (30 AMP) (BRAKE RETRACT)	6N-9349	1	WIRING GP-RELAY PANEL	358

MAINTENANCE PARTS

DESCRIPTION	PART NUMBER	QTY	WHERE USED	PAGE
CIRCUIT BREAKER AS (80 AMP) (MAIN)	9S-4693	2	WIRING GP-RELAY PANEL	358
CYLINDER AS (ETHER)	7N-0296	1	STARTING AID GP-ETHER	286
ELEMENT AS-JACKET WATER HEATER (240V/1500W)	6T-3764	2	HEATER GP-JACKET WATER	245
ELEMENT AS (240V/600W)	9X-9753	1	HEATER GP-ENGINE OIL	238
FLASHER AS-ELECTRONIC	108-0358	1	WIRING GP-STEERING CONSOLE	366
FUSE (10 AMP)	3K-8782	6	WIRING GP-CAB	318
		6	WIRING GP-CAB	322
		6	WIRING GP-CAB	326
		14	WIRING GP-STEERING CONSOLE	364
		13	WIRING GP-STEERING CONSOLE	366
FUSE (15 AMP)	8M-8948	4	WIRING GP-STEERING CONSOLE	364
		4	WIRING GP-STEERING CONSOLE	366
FUSE (20 AMP)	122-2271	2	WIRING GP-COLD WEATHER	330
FUSE (25 AMP)	123-4106	2	WIRING GP-COLD WEATHER	330
KEY (BATTERY DISCONNECT)	8H-5306	1	SWITCH GP-DISCONNECT	308
LAMP	9X-3463	1	LAMP GP-HEAD	251
LAMP-DIODE (LED)	165-5674	1	WIRING GP-STEERING CONSOLE	364
LAMP-DIODE (LED) (DIFF BRK PRESS INDICATOR)	165-5674	1	WIRING GP-STEERING CONSOLE	366
LAMP-MINIATURE (24 VOLT)	3E-8825	1	WIRING GP-SHIFT CONSOLE	360
		1	WIRING GP-SHIFT CONSOLE	361
LAMP-MINIATURE (28 VOLT)	7N-5876	2	WIRING GP-SHIFT CONSOLE	360
LAMP (24 VOLT)	3E-8825	1	WIRING GP-CAB	319
		1	WIRING GP-CAB	323
		1	WIRING GP-CAB	327
		1	WIRING GP-STEERING CONSOLE	364
	9X-4493	1	LAMP GP-SIGNAL	256
		1	LAMP GP-SIGNAL	257
LAMP (24 VOLT) (CRUISE ON/OFF INDICATOR)	3E-8825	2	WIRING GP-STEERING CONSOLE	366
LAMP (24 VOLT) (CRUISE SET/RESUME INDICATOR)	3E-8825	2	WIRING GP-STEERING CONSOLE	366
LAMP (24 VOLT) (DIFFERENTIAL UNLOCK INDICATOR)	3E-8825	2	WIRING GP-STEERING CONSOLE	366
LAMP (24 VOLTS)(65 WATTS)	9X-3463	1	LAMP GP-HEAD	250
		1	LAMP GP-HEAD	252
LAMP (24 VOLT)(65 WATT)	9X-3463	1	LAMP GP-FLOOD	248
		1	LAMP GP-FLOOD	249
LAMP (24 VOLT)(65 WATT) (HEAD)	9X-3463	1	LAMP GP-HEAD	254
		1	LAMP GP-HEAD	255
LAMP (24 VOLT)(65 WATT) (LOW BEAM)(HEAD)	9X-3463	1	LAMP GP-HEAD	253
LAMP (28 VOLT) (DOME)	7N-9943	1	LAMP GP-DOME	247
LENS-AMBER	9X-3066	1	LAMP GP-SIGNAL	256
LENS AS-FLOOD	107-5853	1	LAMP GP-FLOOD	248
		1	LAMP GP-FLOOD	249
LENS AS (HEAD)	9X-7797	1	LAMP GP-HEAD	254
LENS AS-HEADLAMP	162-2077	1	LAMP GP-HEAD	255
LENS AS-HEADLIGHT	9X-7798	1	LAMP GP-HEAD	253
LENS-DOME LAMP	7T-0020	1	LAMP GP-DOME	247
LENS-RED	9X-3064	1	LAMP GP-SIGNAL	257
SPRING-BRUSH	3T-9494	6	STARTING MOTOR GP-ELECTRIC	299

MAINTENANCE PARTS

DESCRIPTION	PART NUMBER	QTY	WHERE USED	PAGE
FRAME AND BODY				
CAP AS-RADIATOR	031-1119	1	ENCLOSURE GP-ENGINE	496
CAP-PROTECTION	5T-5012	55	LUBRICATION AR-AUTOMATIC	524
FITTING-GREASE (AUTOMATIC LUBRICATION)	3B-8489	53	LUBRICATION AR-AUTOMATIC	528
FITTING-GREASE (1/8-27 THD)	3B-8489	21	LUBRICATION AR-AUTOMATIC	524
		2	LUBRICATION GP-CENTRAL	535
		10	LUBRICATION GP-CENTRAL	536
KEY	5P-8500	1	ENCLOSURE GP-ENGINE	489
		1	ENCLOSURE GP-ENGINE	493
PADLOCK GP	5P-8502	10	ENCLOSURE GP-ENGINE	489
		10	ENCLOSURE GP-ENGINE	493
SLEEVE	8Y-6364	1	ENCLOSURE GP-ENGINE	489
		1	ENCLOSURE GP-ENGINE	493
FUEL SYSTEM				
CAP AS-FUEL TANK FILLER	101-8909	1	TANK GP-FUEL	208
		1	TANK GP-FUEL	212
COVER-DUST	9D-0630	1	TANK GP-FUEL	208
ELEMENT-FILTER	129-0373	1	PUMP GP-FUEL PRM & PRIM FILTER	193
FILTER	125-5835	1	DRIVE GP-UNIT INJ HYD PUMP	154
		1	DRIVE GP-UNIT INJ HYD PUMP	156
FILTER AS-FUEL	1R-0749	2	LINES GP-FUEL FILTER	168
FILTER AS-WATER SEP & FUEL	129-0372	1	PUMP GP-FUEL PRM & PRIM FILTER	193
FILTER (UNIT INJECTOR HYDRAULIC PUMP)	125-5835	1	DRIVE GP-UNIT INJ HYD PUMP	146
GASKET (FUEL PRIMING PUMP)	1P-0436	1	PUMP GP-FUEL PRM & PRIM FILTER	193
KEY	5P-8500	1	TANK GP-FUEL	208
		1	TANK GP-FUEL	212
PADLOCK GP	5P-8502	3	TANK GP-FUEL	208
		3	TANK GP-FUEL	212
SEAL-O-RING (110.49MM ID)	9X-8600	1	TANK GP-FUEL	208
		1	TANK GP-FUEL	212
STRAINER-FUEL TANK	9P-7121	1	TANK GP-FUEL	208
		1	TANK GP-FUEL	212
HYDRAULIC SYSTEM				
CAP-DUST	6V-0852	2	LINES GP-PUMP	641
		1	VALVE GP-COMBINATION	706
		1	VALVE GP-COMBINATION	708
	8C-3451	1	LINES GP-PUMP	640
CAP-FILLER	4J-3754	1	TANK & FILTER GP-HYDRAULIC	688
COVER-HYDRAULIC CAP	5D-1902	1	TANK & FILTER GP-HYDRAULIC	688
ELEMENT AS-HYD REVERSE FLOW	1R-0722	2	TANK & FILTER GP-HYDRAULIC	688
PLUG-O-RING (7/16-20 THD)	9S-4190	1	PUMP GP-PISTON	678
SEAL-O-RING (94.84MM ID)	1H-8128	2	ACCUMULATOR AS	583
STRAINER AS	3D-6678	1	TANK & FILTER GP-HYDRAULIC	688
IMPLEMENTS				
FITTING-GREASE	3B-8489	2	CIRCLE GP	748

MAINTENANCE PARTS

DESCRIPTION	PART NUMBER	QTY	WHERE USED	PAGE
LUBRICATION SYSTEM				
CAP AS	9S-9272	1	OIL CHANGE GP-HIGH SPEED	80
CAP AS-FILLER	6N-2206	1	FILLER GP-ENGINE OIL	71
CAP-DUST	8C-3445	1	FILTER GP-ENGINE OIL	72
FILTER AS-ENGINE OIL	1R-0716	2	FILTER GP-ENGINE OIL	72
SEAL-O-RING (19.18MM ID)	2M-9780	1	PRELUBRICATION AR-ENGINE	82
OPERATOR STATION				
BLADE AS-WIPER	6V-5851	1	WIPER & WASHER GP-WINDOW	874
CAP-VENTED	8E-8292	1	WASHER GP-WINDOW	870
ELEMENT (CAB AIR)	078-0070	1	PRESSURIZER GP-CAB	846
FILTER-AIR	7T-7358	1	DUCT & CONTROL GP	808
FILTER ELEMENT-PRIMARY AIR	154-7108	1	FILTER GP-CAB AIR	814
KEY (MASTER)	5P-8500	2	LITERATURE GP	826
LAMP (24 VOLT)	7N-5876	4	PANEL GP-INSTRUMENT	838
	115-1748	4	PANEL GP-INSTRUMENT	838
LAMP (28 VOLT)	7N-1996	1	PANEL GP-INSTRUMENT	838
LENS-RED	6T-7058	1	PANEL GP-INSTRUMENT	838
SEAT BELT GP (RETRACTABLE)	8Y-3792	1	SEAT GP	856
	122-4617	1	SEAT GP	857
	156-1148	1	SEAT GP	858
V-BELT	9L-1130	1	COMPRESSOR GP-REFRIGERANT	790
		1	COMPRESSOR GP-REFRIGERANT	792
POWER TRAIN				
BREATHER	4H-6112	1	HOUSING GP-REAR AXLE	412
		1	TANDEM & COVER GP	434
	9G-5127	1	FILLER GP-POWER TRAIN OIL	390
CAP AS-OIL FILLER	7S-1803	1	FILLER GP-POWER TRAIN OIL	390
CAP-DUST	6V-0852	2	CASE & PARTS GP-PLANETARY	370
		1	CONTROL GP-DIFFERENTIAL LOCK	374
		3	LINES GP-POWER TRAIN OIL	414
		3	LINES GP-POWER TRAIN OIL	418
	8C-3451	1	CONTROL GP-DIFFERENTIAL LOCK	374
		1	LINES GP-POWER TRAIN OIL	418
CAP-VALVE (STEM)	9K-7951	1	WHEEL GP	476
		1	WHEEL GP	477
FILTER AS-OIL (PILOT)	4I-3950	1	FILTER GP-OIL	393
FILTER ELEMENT AS-OIL (CLEANOUT/HIGH EFFICIENCY)	132-8876	1	FILTER GP-OIL	392
FILTER ELEMENT AS-OIL (DISPOSABLE)	1R-0741	1	FILTER GP-OIL	392
FILTER ELEMENT AS-OIL (FIRE RESISTANT FLUIDS)	4T-3132	1	FILTER GP-OIL	392
PLUG	129-0988	1	GEAR & CASE GP-OUTPUT TRANSFER	408
SCREEN-SUCTION	4S-8598	1	GEAR & CASE GP-OUTPUT TRANSFER	405
		1	GEAR & CASE GP-OUTPUT TRANSFER	409
SEAL-O-RING (81.92MM ID)	4L-9564	1	GEAR & CASE GP-OUTPUT TRANSFER	404

MAINTENANCE PARTS

DESCRIPTION	PART NUMBER	QTY	WHERE USED	PAGE
SERVICE EQUIPMENT AND SUPPLIES				
KEY	5P-8500	1	TOOL BOX GP	893
PADLOCK GP	5P-8502	1	TOOL BOX GP	893
WORK TOOLS				
FITTING-GREASE (1/8-27 THD)	3B-8489	4	RIPPER GP	772
		4	RIPPER GP	774

PIÈCES DE RECHANGE

DESCRIPTION	NUMÉRO DE PIECÈS	QTÉ	DOMAINE D'APPLICATION	PAGE
CHÂSSIS ET BENNE				
BOUCHON DE RADIATEUR (ENS)	031-1119	1	CARENAGE DE MOTEUR (ASS)	496
CADENAS (ASS)	5P-8502	10	CARENAGE DE MOTEUR (ASS)	489
		10	CARENAGE DE MOTEUR (ASS)	493
CHAPEAU - PROTECTION	5T-5012	55	GRAISSAGE AUTOMATIQUE (VERSION)	524
CLÉ	5P-8500	1	CARENAGE DE MOTEUR (ASS)	489
		1	CARENAGE DE MOTEUR (ASS)	493
GRAISSEUR (FILET 1/8-27)	3B-8489	2	GRAISSAGE - CENTRAL (ASS)	535
		10	GRAISSAGE - CENTRAL (ASS)	536
		21	GRAISSAGE AUTOMATIQUE (VERSION)	524
GRAISSEUR (GRAISSAGE AUTOMATIQUE)	3B-8489	53	GRAISSAGE AUTOMATIQUE (VERSION)	528
MANCHON	8Y-6364	1	CARENAGE DE MOTEUR (ASS)	489
		1	CARENAGE DE MOTEUR (ASS)	493
CIRCUIT D'ADMISSION D'AIR ET D'ÉCHAPPEMENT				
ÉLÉMENT DE FILTRE	7M-1674	1	CANALISATIONS D'AIR (ASS)	134
ÉLÉMENT PRINCIPAL (ENS)	106-3969	1	FILTRE A AIR (ASS)	131
ÉLÉMENT SECONDAIRE (ENS)	106-3973	1	FILTRE A AIR (ASS)	131
INDICATEUR DE COLMATAGE DE FILTRE A AIR	8N-2694	1	CANALISATIONS D'AIR (ASS)	134
CIRCUIT DE CARBURANT				
BOUCHON DE REMPLISSAGE DU RÉSERVOIR DE CARBURANT	101-8909	1	RÉSERVOIR DE CARBURANT (ASS)	208
		1	RÉSERVOIR DE CARBURANT (ASS)	212
CADENAS (ASS)	5P-8502	3	RÉSERVOIR DE CARBURANT (ASS)	208
		3	RÉSERVOIR DE CARBURANT (ASS)	212
CLÉ	5P-8500	1	RÉSERVOIR DE CARBURANT (ASS)	208
		1	RÉSERVOIR DE CARBURANT (ASS)	212
COUVERCLE ANTI-POUSSIÈRE	9D-0630	1	RÉSERVOIR DE CARBURANT (ASS)	208
ÉLÉMENT DE FILTRE	129-0373	1	POMPE D'AMORÇAGE DE CARBURANT ET FILTRE PRINCIPAL	193
FILTRE	125-5835	1	ENTRAINEMENT D'INJECTEURS-POMPES HYDRAULIQUES	154
		1	ENTRAINEMENT D'INJECTEURS-POMPES HYDRAULIQUES	156
FILTRE - SÉPARATEUR D'EAU ET DE CARBURANT (ENS)	129-0372	1	POMPE D'AMORÇAGE DE CARBURANT ET FILTRE PRINCIPAL	193
FILTRE A CARBURANT (ENS)	1R-0749	2	CANALISATIONS DU FILTRE A CARBURANT (ASS)	168
FILTRE (INJECTEUR DE POMPE HYDRAULIQUE)	125-5835	1	ENTRAINEMENT D'INJECTEURS-POMPES HYDRAULIQUES	146
JOINT PLAT (POMPE D'AMORÇAGE DE CARBURANT)	1P-0436	1	POMPE D'AMORÇAGE DE CARBURANT ET FILTRE PRINCIPAL	193
JOINT TORIQUE (DIA INT 110,49MM)	9X-8600	1	RÉSERVOIR DE CARBURANT (ASS)	208
		1	RÉSERVOIR DE CARBURANT (ASS)	212
TAMIS DE RÉSERVOIR DE CARBURANT	9P-7121	1	RÉSERVOIR DE CARBURANT (ASS)	208
		1	RÉSERVOIR DE CARBURANT (ASS)	212

PIÈCES DE RECHANGE

DESCRIPTION	NUMÉRO DE PIECÈS	QTÉ	DOMAINE D'APPLICATION	PAGE
CIRCUIT DE FREINAGE				
JOINT TORIQUE (DIA INT 94,84MM)	1H-8128	2	ACCUMULATEUR (ASS)	555
PARE-POUSSIERE	6V-0852	2	FREIN DE MANOEUVRE - COMMANDE (ASS)	564
		3	FREIN DE MANOEUVRE - COMMANDE (ASS)	565
	8C-3451	1	FREIN DE MANOEUVRE - COMMANDE (ASS)	566
CIRCUIT DE GRAISSAGE				
BOUCHON DE GOULOTTE DE REMPLISSAGE (ENS)	6N-2206	1	BOUCHON DE REMPLISSAGE D'HUILE MOTEUR (ASS)	71
CHAPEAU (ENS)	9S-9272	1	DISPOSITIF DE VIDANGE RAPIDE D'HUILE (ASS)	80
FILTRE A HUILE MOTEUR (ENS)	1R-0716	2	FILTRE À HUILE MOTEUR (ASS)	72
JOINT TORIQUE (DIA INT 19,18MM)	2M-9780	1	VERSION DE PRÉGRAISSAGE DE MOTEUR	82
PARE-POUSSIERE	8C-3445	1	FILTRE À HUILE MOTEUR (ASS)	72
CIRCUIT DE REFROIDISSEMENT				
BOUCHON DE RADIATEUR (ENS)	031-1119	1	RÉSERVOIR DU LIQUIDE DE REFROIDISSEMENT (ASS)	126
BOUCHON DE VIDANGE	6N-9590	1	CANALISATIONS D'EAU (ASS)	106
FILTRE (POMPE À EAU)	111-2721	1	POMPE A EAU (ASS)	112
		1	POMPE A EAU (ASS)	114
		1	POMPE A EAU (ASS)	116
FLEXIBLE	106-4572	10	RADIATEUR (ASS)	120
FLEXIBLE (DIA INT 63,5MM) (12,7CM)	5P-1262		CANALISATIONS D'EAU (ASS)	106
FLEXIBLE (DIA INT 6,35MM) (266CM)	5P-1465		RADIATEUR (ASS)	122
THERMOSTAT-TEMPÉRATURE D'EAU (92 DEGRÉS C)	4W-4794	2	CANALISATIONS D'EAU (ASS)	94
		2	CANALISATIONS D'EAU (ASS)	98
		2	CANALISATIONS D'EAU (ASS)	102
CIRCUIT ÉLECTRIQUE ET DE DÉMARRAGE				
AMPOULE	9X-3463	1	PHARE AV (ASS)	251
AMPOULE (24 VOLTS)	3E-8825	1	CABLAGE DE CABINE (ASS)	319
		1	CABLAGE DE CABINE (ASS)	323
		1	CABLAGE DE CABINE (ASS)	327
		2	CABLAGE DE LA CONSOLE DE DIRECTION	364
	9X-4493	1	LAMPE - CLIGNOTANT DE DIRECTION (ASS)	256
		1	LAMPE - CLIGNOTANT DE DIRECTION (ASS)	257
AMPOULE (24 VOLTS) (INDICATEUR DE DÉBLOCAGE DE DIFFÉRENTIEL)	3E-8825	2	CABLAGE DE LA CONSOLE DE DIRECTION	366
AMPOULE (24 VOLTS) (INDICATEUR DE RÉARMEMENT/ REPRISE DE RÉGULATEUR)	3E-8825	2	CABLAGE DE LA CONSOLE DE DIRECTION	366
AMPOULE (24 VOLTS) (INDICATEUR DE RÉGULATEUR MARCHE/ARRÊT)	3E-8825	2	CABLAGE DE LA CONSOLE DE DIRECTION	366
AMPOULE (24 VOLTS) (65 WATTS)	9X-3463	1	PHARE AV (ASS)	250
		1	PHARE AV (ASS)	252

PIÈCES DE RECHANGE

DESCRIPTION	NUMÉRO DE PIECÈS	QTÉ	DOMAINE D'APPLICATION	PAGE
AMPOULE (24 VOLTS)(65 WATTS)	9X-3463	1	LAMPE - PHARE (ASS)	248
		1	LAMPE - PHARE (ASS)	249
AMPOULE (24 VOLTS)(65 WATTS) (CODE)(PHARE)	9X-3463	1	PHARE AV (ASS)	253
AMPOULE (24 VOLTS)(65 WATTS) (TÊTE)	9X-3463	1	PHARE AV (ASS)	254
		1	PHARE AV (ASS)	255
AMPOULE (28 VOLTS) (PLAFONNIER)	7N-9943	1	PLAFONNIER (ASS)	247
BATTERIE (12 V (A SEC))	9X-9730	2	BATTERIE (ASS)	227
		2	DÉMARRAGE PAR TEMPS FROID (VERSION)	296
BLOC - FUSIBLE	5N-5536	4	CABLAGE - TEMPS FROID (ASS)	330
BROSSE (ENS) (DÉMARREUR)	3T-9524	6	DÉMARREUR ÉLECTRIQUE (ASS)	298
CHAPEAU (ENS)	7E-6508	2	CABLAGE D'INJECTEUR	368
CHAPEAU (PORTE-FUSIBLES)	7N-2867	1	CABLAGE DE CABINE (ASS)	318
		1	CABLAGE DE CABINE (ASS)	322
		1	CABLAGE DE CABINE (ASS)	326
CLÉ (COUPE-BATTERIE)	8H-5306	1	ROBINET DE BATTERIE (ASS)	308
CLIGNOTANT ÉLECTRONIQUE (ENS)	108-0358	1	CABLAGE DE LA CONSOLE DE DIRECTION	366
COURROIE	129-3574	1	ALTERNATEUR DE CHARGE (ASS)	222
DISJONCTEUR (ENS) (105A) (ALTERNATEUR)	3E-7294	1	CABLAGE - PANNEAU DE RELAIS	358
DISJONCTEUR (ENS) (15A)	3T-2662	1	CABLAGE DE LA CONSOLE DE CHANGEMENTS DE VITESSE	360
DISJONCTEUR (ENS) (15A) (BOîTE DE VITESSES)	3T-2662	1	CABLAGE DE LA CONSOLE DE DIRECTION	364
	6N-8589	1	CABLAGE DE LA CONSOLE DE DIRECTION	366
DISJONCTEUR (ENS) (15A) (FEUX ARRIÈRE/FEUX DE ROUTE)	6N-8589	1	CABLAGE DE LA CONSOLE DE DIRECTION	364
DISJONCTEUR (ENS) (15A) (MODULE DE COMMANDE MOTEUR)	6T-3643	1	CABLAGE - PANNEAU DE RELAIS	358
DISJONCTEUR (ENS) (30A) (DÉBLOCAGE DU FREIN)	6N-9349	1	CABLAGE - PANNEAU DE RELAIS	358
DISJONCTEUR (ENS) (80 A) (PRINCIPAL)	9S-4693	2	CABLAGE - PANNEAU DE RELAIS	358
ÉLÉMENT DU RÉCHAUFFEUR D'EAU DES CHEMISES (ENS) (240V/1500W)	6T-3764	2	EAU DES CHEMISES - RECHAUFFEUR (ASS)	245
ELEMENT (ENS) (240V/600W)	9X-9753	1	RÉCHAUFFEUR D'HUILE MOTEUR (ASS)	238
FUSIBLE (10A)	3K-8782	6	CABLAGE DE CABINE (ASS)	318
		6	CABLAGE DE CABINE (ASS)	322
		6	CABLAGE DE CABINE (ASS)	326
		14	CABLAGE DE LA CONSOLE DE DIRECTION	364
		13	CABLAGE DE LA CONSOLE DE DIRECTION	366
FUSIBLE (15A)	8M-8948	4	CABLAGE DE LA CONSOLE DE DIRECTION	364
		4	CABLAGE DE LA CONSOLE DE DIRECTION	366
FUSIBLE (20 A)	122-2271	2	CABLAGE - TEMPS FROID (ASS)	330
FUSIBLE (25 A)	123-4106	2	CABLAGE - TEMPS FROID (ASS)	330

PIÈCES DE RECHANGE

DESCRIPTION	NUMÉRO DE PIECÈS	QTÉ	DOMAINE D'APPLICATION	PAGE
LAMPE (AMPOULE MINIATURE) (24 VOLTS)	3E-8825	1	CABLAGE DE LA CONSOLE DE CHANGEMENTS DE VITESSE	360
		1	CABLAGE DE LA CONSOLE DE CHANGEMENTS DE VITESSE	361
LAMPE (AMPOULE MINIATURE) (28 VOLTS)	7N-5876	2	CABLAGE DE LA CONSOLE DE CHANGEMENTS DE VITESSE	360
LAMPE-DIODE (LED)	165-5674	1	CABLAGE DE LA CONSOLE DE DIRECTION	364
LAMPE-DIODE (LED) (MANOMÈTRE DE FREIN DE DIFÉRENTIEL)	165-5674	1	CABLAGE DE LA CONSOLE DE DIRECTION	366
LENTILLE DE PLAFONNIER	7T-0020	1	PLAFONNIER (ASS)	247
LENTILLE DE PROJECTEUR (ENS)	107-5853	1	LAMPE - PHARE (ASS)	248
		1	LAMPE - PHARE (ASS)	249
LENTILLE (ENS)-PHARE AV	162-2077	1	PHARE AV (ASS)	255
LENTILLE (ENS) (TÊTE)	9X-7797	1	PHARE AV (ASS)	254
LENTILLE ORANGE	9X-3066	1	LAMPE - CLIGNOTANT DE DIRECTION (ASS)	256
LENTILLE-PHARE AVANT (ENS)	9X-7798	1	PHARE AV (ASS)	253
LENTILLE ROUGE	9X-3064	1	LAMPE - CLIGNOTANT DE DIRECTION (ASS)	257
RESSORT DE BALAI	3T-9494	1	DÉMARREUR ÉLECTRIQUE (ASS)	299
VERIN (ENS) (ÉTHER)	7N-0296	1	AUXILIAIRE DE DÉMARRAGE À L'ÉTHER	286
CIRCUIT HYDRAULIQUE				
BOUCHON DE GOULOTTE DE REMPLISSAGE	4J-3754	1	RÉSERVOIR HYDRAULIQUE ET FILTRE (ASS)	688
BOUCHON-JOINT TORIQUE (FILET 7/16-20)	9S-4190	1	POMPE A PISTONS (ASS)	678
COUVERCLE - BOUCHON DU RÉSERVOIR HYDRAULIQUE	5D-1902	1	RÉSERVOIR HYDRAULIQUE ET FILTRE (ASS)	688
CREPINE (ENS)	3D-6678	1	RÉSERVOIR HYDRAULIQUE ET FILTRE (ASS)	688
ELEMENT - DEBIT INVERSE HYDRAULIQUE (ENS)	1R-0722	2	RÉSERVOIR HYDRAULIQUE ET FILTRE (ASS)	688
JOINT TORIQUE (DIA INT 94,84MM)	1H-8128	2	ACCUMULATEUR (ENS)	583
PARE-POUSSIERE	6V-0852	2	CANALISATIONS DE POMPE (ASS)	641
		1	SOUPAPE DE COMBINAISON (ASS)	706
		1	SOUPAPE DE COMBINAISON (ASS)	708
	8C-3451	1	CANALISATIONS DE POMPE (ASS)	640
ÉQUIPEMENTS				
GRAISSEUR	3B-8489	2	CERCLE (ASS)	748
MATÉRIEL ET FOURNITURES D'ENTRETIEN				
CADENAS (ASS)	5P-8502	1	COFFRE A OUTILS (ASS)	893
CLÉ	5P-8500	1	COFFRE A OUTILS (ASS)	893

PIÈCES DE RECHANGE

DESCRIPTION	NUMÉRO DE PIECÈS	QTÉ	DOMAINE D'APPLICATION	PAGE
MOTEUR STANDARD				
BOUCHON FILETÉ (RACCORD AU PAS DU GAZ DE 1/8 - 27)	8T-6757	6	VILEBREQUIN (ASS)	24
CHAPEAU (ENS) (FILET 1-3/16-12)	6V-9832	1	COUVERCLE DE CARTER D'HUILE MOTEUR (ASS)	16
JEU DE COURROIES TRAPEZOIDALES	6N-7575	1	ENTRAÎNEMENT DE VENTILATEUR (ASS)	48
RENIFLARD (ENS)	4N-4668	3	CACHE-SOUPAPES (ASS)	18
OUTILS DE TRAVAIL				
GRAISSEUR (FILET 1/8-27)	3B-8489	4	RIPPER (ASS)	772
		4	RIPPER (ASS)	774
POSTE DE CONDUITE				
AMPOULE (24 VOLTS)	7N-5876	4	TABLEAU DE BORD (ASS)	838
	115-1748	4	TABLEAU DE BORD (ASS)	838
AMPOULE (28 VOLTS)	7N-1996	1	TABLEAU DE BORD (ASS)	838
BALAI D'ESSUIE-GLACE (ENS)	6V-5851	1	ESSUIE-GLACE ET LAVE-GLACE	874
BOUCHON À ÉVENT	8E-8292	1	LAVE-GLACE - VITRE (ASS)	870
CEINTURE DE SECURITE (ASS) (RÉTRACTABLE)	8Y-3792	1	SIÈGE (ASS)	856
	122-4617	1	SIÈGE (ASS)	857
	156-1148	1	SIÈGE (ASS)	858
CLÉ (PASSE-PARTOUT)	5P-8500	2	LITTÉRATURE (ASS)	826
COURROIE TRAPEZOIDALE	9L-1130	1	COMPRESSEUR DE REFRIGERANT (ASS)	790
		1	COMPRESSEUR DE REFRIGERANT (ASS)	792
ÉLÉMENT (AÉRATION DE LA CABINE)	078-0070	1	SURPRESSEUR (ASS)	846
ÉLÉMENT DE FILTRE À AIR PRINCIPAL	154-7108	1	FILTRE À AIR DE CABINE (ASS)	814
FILTRE À AIR	7T-7358	1	CONDUIT ET COMMANDE (ASS)	808
LENTILLE ROUGE	6T-7058	1	TABLEAU DE BORD (ASS)	838

PIÈCES DE RECHANGE

DESCRIPTION	NUMÉRO DE PIECÈS	QTÉ	DOMAINE D'APPLICATION	PAGE
TRANSMISSION				
BOUCHON DE GOULOTTE DE REMPLISSAGE D'HUILE MOTEUR	7S-1803	1	GOULOTTE DE REMPLISSAGE D'HUILE DE TRANSMISSION	390
BOUCHON FILETÉ	129-0988	1	ENGRENAGE DE TRANSFERT ET CARTER	408
CHAPEAU DE VALVE (TIGE)	9K-7951	1	JANTE (ASS)	476
		1	JANTE (ASS)	477
ÉLÉMENT DE FILTRE À HUILE (ENS) (JETABLE)	1R-0741	1	FILTRE A HUILE (ASS)	392
ÉLÉMENT DE FILTRE À HUILE (ENS) (LIQUIDES RÉSISTANTS AU FEU)	4T-3132	1	FILTRE A HUILE (ASS)	392
ÉLÉMENT DE FILTRE À HUILE (ENS) (NETTOYAGE/GRANDE EFFICACITÉ)	132-8876	1	FILTRE A HUILE (ASS)	392
FILTRE À HUILE (ENS) (PILOTE)	4I-3950	1	FILTRE A HUILE (ASS)	393
JOINT TORIQUE (DIA INT 81,92MM)	4L-9564	1	ENGRENAGE DE TRANSFERT ET CARTER	404
PARE-POUSSIERE	6V-0852	3	CANALISATIONS D'HUILE DE TRANSMISSION (ASS)	414
		3	CANALISATIONS D'HUILE DE TRANSMISSION (ASS)	418
		1	COMMANDE DE DIFFÉRENTIEL - VERROUILLAGE (ASS)	374
		2	TRAINS PLANÉTAIRES - CARTER ET PIÈCES	370
	8C-3451	1	CANALISATIONS D'HUILE DE TRANSMISSION (ASS)	418
		1	COMMANDE DE DIFFÉRENTIEL - VERROUILLAGE (ASS)	374
RENIFLARD	4H-6112	1	CARTER D'ESSIEU AR (ASS)	412
		1	TANDEM ET CARTER (ASS)	434
	9G-5127	1	GOULOTTE DE REMPLISSAGE D'HUILE DE TRANSMISSION	390
TAMIS D'ASPIRATION	4S-8598	1	ENGRENAGE DE TRANSFERT ET CARTER	405
		1	ENGRENAGE DE TRANSFERT ET CARTER	409

PIEZAS DE MANTENIMIENTO

DESCRIPCION	NUMERO DE PIEZA	CANT	SE UTILIZA EN	PAGINA
BASTIDOR Y CAJA				
CANDADO (GR)	5P-8502	10	COMPARTIMIENTO DEL MOTOR (GR)	489
		10	COMPARTIMIENTO DEL MOTOR (GR)	493
CONEXIÓN DE ENGRASE (LUBRICACION AUTOMATICA)	3B-8489	53	LUBRICACION AUTOMATICA (CONFIG)	528
CONEXIÓN DE ENGRASE (ROSCA DE 1/8-27)	3B-8489	2	CENTRAL DE LUBRICACIÓN (GR)	535
		10	CENTRAL DE LUBRICACIÓN (GR)	536
		21	LUBRICACION AUTOMATICA (CONFIG)	524
LLAVE	5P-8500	1	COMPARTIMIENTO DEL MOTOR (GR)	489
		1	COMPARTIMIENTO DEL MOTOR (GR)	493
MANGUITO	5T-5012	55	LUBRICACION AUTOMATICA (CONFIG)	524
	8Y-6364	1	COMPARTIMIENTO DEL MOTOR (GR)	489
		1	COMPARTIMIENTO DEL MOTOR (GR)	493
TAPA DE RADIADOR (CONJ)	031-1119	1	COMPARTIMIENTO DEL MOTOR (GR)	496
EQUIPO Y SUMINISTRO DE SERVICIOS				
CANDADO (GR)	5P-8502	1	CAJA DE HERRAMIENTAS (GR)	893
LLAVE	5P-8500	1	CAJA DE HERRAMIENTAS (GR)	893
HERRAMIENTAS				
CONEXIÓN DE ENGRASE (ROSCA DE 1/8-27)	3B-8489	4	DESGARRADOR (GR)	772
		4	DESGARRADOR (GR)	774
IMPLEMENTOS				
CONEXIÓN DE ENGRASE	3B-8489	2	CÍRCULO (GR)	748
MOTOR BÁSICO				
JUEGO DE CORREAS TRAPEZOIDALES	6N-7575	1	IMPULSOR DE VENTILADOR (GR)	48
RESPIRADERO (CONJ)	4N-4668	3	TAPA DEL MECANISMO DE VÁLVULAS (GR)	18
TAPÓN (CONJ) (ROSCA 1-3/16-12)	6V-9832	1	TAPA DEL COLECTOR DEL CÁRTER (GR)	16
TAPON DE TUBO (ROSCA 1/8-27 NPTF)	8T-6757	6	CIGÜEÑAL (GR)	24

PIEZAS DE MANTENIMIENTO

DESCRIPCION	NUMERO DE PIEZA	CANT	SE UTILIZA EN	PAGINA
PUESTO DEL OPERADOR				
CINTURÓN DE SEGURIDAD (GR) (RETRACTIL)	8Y-3792	1	ASIENTO (GR)	856
	122-4617	1	ASIENTO (GR)	857
	156-1148	1	ASIENTO (GR)	858
CORREA TRAPEZOIDAL	9L-1130	1	COMPRESOR DE REFRIGERANTE (GR)	790
		1	COMPRESOR DE REFRIGERANTE (GR)	792
ELEMENTO (AIRE DE LA CABINA)	078-0070	1	PRESURIZADOR (GR)	846
ELEMENTO PRIMARIO DEL FILTRO DE AIRE	154-7108	1	FILTRO DE AIRE DE LA CABINA (GR)	814
FILTRO DE AIRE	7T-7358	1	CONDUCTO Y CONTROL (GR)	808
HOJA DE LIMPIAPARABRISAS (CONJ)	6V-5851	1	LIMPIA Y LAVAPARABRISAS (GR)	874
LÁMPARA (24 VOLTIOS)	7N-5876	4	TABLERO DE INSTRUMENTOS (GR)	838
	115-1748	4	TABLERO DE INSTRUMENTOS (GR)	838
LÁMPARA (28 VOLTIOS)	7N-1996	1	TABLERO DE INSTRUMENTOS (GR)	838
LENTE-ROJO	6T-7058	1	TABLERO DE INSTRUMENTOS (GR)	838
LLAVE (MAESTRA)	5P-8500	2	PUBLICACIONES (GR)	826
TAPA CON RESPIRADERO	8E-8292	1	LAVAPARABRISAS DE LA VENTANA (GR)	870
SISTEMA DE ADMISIÓN Y ESCAPE DE AIRE				
ELEMENTO DE FILTRO	7M-1674	1	AIRE - TUBERÍAS DE (GR)	134
ELEMENTO PRIMARIO (CONJ)	106-3969	1	FILTRO DE AIRE (GR)	131
ELEMENTO SECUNDARIO (CONJ)	106-3973	1	FILTRO DE AIRE (GR)	131
INDICADOR DE SERVICIO DEL FILTRO DE AIRE	8N-2694	1	AIRE - TUBERÍAS DE (GR)	134

PIEZAS DE MANTENIMIENTO

DESCRIPCION	NUMERO DE PIEZA	CANT	SE UTILIZA EN	PAGINA
SISTEMA DE COMBUSTIBLE				
CANDADO (GR)	5P-8502	3	COMBUSTIBLE - TANQUE DE (GR)	208
		3	COMBUSTIBLE - TANQUE DE (GR)	212
COLADOR DEL TANQUE DE COMBUSTIBLE	9P-7121	1	COMBUSTIBLE - TANQUE DE (GR)	208
		1	COMBUSTIBLE - TANQUE DE (GR)	212
ELEMENTO DE FILTRO	129-0373	1	BOMBA DE CEBADO Y FILTRO PRIMARIO DE COMBUSTIBLE (GR)	193
EMPAQUETADURA (BOMBA DE CEBADO DE COMBUSTIBLE)	1P-0436	1	BOMBA DE CEBADO Y FILTRO PRIMARIO DE COMBUSTIBLE (GR)	193
FILTRO	125-5835	1	MANDO DE BOMBA HIDRÁULICA INYECTORA (GR)	154
		1	MANDO DE BOMBA HIDRÁULICA INYECTORA (GR)	156
FILTRO (BOMBA HIDRAULICA DE LA UNIDAD DEL INYECTOR)	125-5835	1	MANDO DE BOMBA HIDRÁULICA INYECTORA (GR)	146
FILTRO DE COMBUSTIBLE (CONJ)	1R-0749	2	TUBERÍAS DEL FILTRO DE COMBUSTIBLE	168
FILTRO DE COMBUSTIBLE Y SEPARADOR DE AGUA (CONJ)	129-0372	1	BOMBA DE CEBADO Y FILTRO PRIMARIO DE COMBUSTIBLE (GR)	193
LLAVE	5P-8500	1	COMBUSTIBLE - TANQUE DE (GR)	208
		1	COMBUSTIBLE - TANQUE DE (GR)	212
SELLO ANULAR (DI DE 110,49 MM)	9X-8600	1	COMBUSTIBLE - TANQUE DE (GR)	208
		1	COMBUSTIBLE - TANQUE DE (GR)	212
TAPA CONTRA EL POLVO	9D-0630	1	COMBUSTIBLE - TANQUE DE (GR)	208
TAPA DEL TUBO DE LLENADO DEL TANQUE DE COMBUSTIBLE (CONJ)	101-8909	1	COMBUSTIBLE - TANQUE DE (GR)	208
		1	COMBUSTIBLE - TANQUE DE (GR)	212
SISTEMA DE ENFRIAMIENTO				
FILTRO (BOMBA DE AGUA)	111-2721	1	BOMBA DE AGUA (GR)	112
		1	BOMBA DE AGUA (GR)	114
		1	BOMBA DE AGUA (GR)	116
MANGUERA	106-4572	10	RADIADOR (GR)	120
MANGUERA (63,5MM DIAMETRO INTERIOR) (12,7CM)	5P-1262		TUBERÍAS DEL AGUA (GR)	106
MANGUERA (6,35MM DIAMETRO INTERIOR) (266CM)	5P-1465		RADIADOR (GR)	122
REGULADOR DE TEMPERATURA DEL AGUA (92 GR C)	4W-4794	2	TUBERÍAS DEL AGUA (GR)	94
		2	TUBERÍAS DEL AGUA (GR)	98
		2	TUBERÍAS DEL AGUA (GR)	102
TAPA DE RADIADOR (CONJ)	031-1119	1	TANQUE DE REFRIGERANTE (GR)	126
TAPÓN DE DRENAJE	6N-9590	1	TUBERÍAS DEL AGUA (GR)	106

PIEZAS DE MANTENIMIENTO

DESCRIPCION	NUMERO DE PIEZA	CANT	SE UTILIZA EN	PAGINA
SISTEMA DE FRENOS				
SELLO ANULAR (94,84 MM DIAMETRO INTERIOR)	1H-8128	2	ACUMULADOR (GR)	555
TAPA CONTRA EL POLVO	6V-0852	2	FRENO DE SERVICIO - CONTROL (GR)	564
		3	FRENO DE SERVICIO - CONTROL (GR)	565
	8C-3451	1	FRENO DE SERVICIO - CONTROL (GR)	566
SISTEMA DE LUBRICACIÓN				
FILTRO DE ACEITE DEL MOTOR (CONJ)	1R-0716	2	FILTRO DE ACEITE DEL MOTOR (GR)	72
SELLO ANULAR (19,18 MM DIAMETRO INTERIOR)	2M-9780	1	PRELUBRICACION DEL MOTOR (CONFIG)	82
TAPA CONTRA EL POLVO	8C-3445	1	FILTRO DE ACEITE DEL MOTOR (GR)	72
TAPA DE LLENADO (CONJ)	6N-2206	1	TUBO DE LLENADO DE ACEITE (GR)	71
TAPÓN (CONJ)	9S-9272	1	CAMBIO RÁPIDO DE ACEITE (GR)	80
SISTEMA ELÉCTRICO Y DE ARRANQUE				
BATERÍA (12 V (SECA))	9X-9730	2	ARRANQUE EN TIEMPO FRIO (CONFIG)	296
		2	BATERÍA (GR)	227
BLOQUE DE FUSIBLES	5N-5536	4	CABLES PARA TIEMPO FRÍO (GR)	330
CILINDRO (CONJ) (ETER)	7N-0296	1	AUXILIAR DE ARRANQUE CON ÉTER (GR)	286
CORREA	129-3574	1	CARGA - ALTERNADOR DE (GR)	222
DESTELLADOR ELECTRONICO (CONJ)	108-0358	1	CABLES DE LA CONSOLA DE DIRECCIÓN (GR)	366
DISYUNTOR (CONJ) (105 AMP) (ALTERNADOR)	3E-7294	1	CABLES DEL PANEL DE RELES (GR)	358
DISYUNTOR (CONJ) (15 A)	3T-2662	1	CABLES DE LA CONSOLA DE CAMBIOS (GR)	360
DISYUNTOR (CONJ) (15 A) (ECM (MÓDULO DE CONTROL ELECTRÓNICO) DEL MOTOR)	6T-3643	1	CABLES DEL PANEL DE RELES (GR)	358
DISYUNTOR (CONJ) (15 A) (LUCES TRASERAS/LUZ ALTA)	6N-8589	1	CABLES DE LA CONSOLA DE DIRECCIÓN (GR)	364
DISYUNTOR (CONJ) (15 A) (TRANSMISION)	3T-2662	1	CABLES DE LA CONSOLA DE DIRECCIÓN (GR)	364
	6N-8589	1	CABLES DE LA CONSOLA DE DIRECCIÓN (GR)	366
DISYUNTOR (CONJ) (30 A) (RETRACCIÓN DEL FRENO)	6N-9349	1	CABLES DEL PANEL DE RELES (GR)	358
DISYUNTOR (CONJ) (80 AMP) (PRINCIPAL)	9S-4693	2	CABLES DEL PANEL DE RELES (GR)	358
ELEMENTO (CONJ) (240 VOLTIOS/600 VATIOS)	9X-9753	1	CALENTADOR DE ACEITE DE MOTOR (GR)	238
ELEMENTO DEL CALENTADOR DEL AGUA DE LAS CAMISAS (240 VOLTIOS/1500 VATIOS)	6T-3764	2	AGUA DE LAS CAMISAS - CALENTADOR DEL (GR)	245
ESCOBILLA (CONJ) (MOTOR DE ARRANQUE)	3T-9524	6	MOTOR DE ARRANQUE ELÉCTRICO (GR)	298
FUSIBLE (10 A)	3K-8782	6	CABLES DE LA CABINA (GR)	318
		6	CABLES DE LA CABINA (GR)	322

PIEZAS DE MANTENIMIENTO

DESCRIPCION	NUMERO DE PIEZA	CANT	SE UTILIZA EN	PAGINA
		6	CABLES DE LA CABINA (GR)	326
		14	CABLES DE LA CONSOLA DE DIRECCIÓN (GR)	364
		13	CABLES DE LA CONSOLA DE DIRECCIÓN (GR)	366
FUSIBLE (15 A)	8M-8948	4	CABLES DE LA CONSOLA DE DIRECCIÓN (GR)	364
		4	CABLES DE LA CONSOLA DE DIRECCIÓN (GR)	366
FUSIBLE (20 A)	122-2271	2	CABLES PARA TIEMPO FRÍO (GR)	330
FUSIBLE (25 AMP)	123-4106	2	CABLES PARA TIEMPO FRÍO (GR)	330
LÁMPARA	9X-3463	1	LÁMPARA DE FARO DELANTERO (GR)	251
LAMPARA DE DIODO (LED)	165-5674	1	CABLES DE LA CONSOLA DE DIRECCIÓN (GR)	364
LAMPARA DE DIODO (LED) (INDICADOR DE PRESION DE FRENO DE DIFERENCIAL)	165-5674	1	CABLES DE LA CONSOLA DE DIRECCIÓN (GR)	366
LÁMPARA MINIATURA (24 VOLTIOS)	3E-8825	1	CABLES DE LA CONSOLA DE CAMBIOS (GR)	360
		1	CABLES DE LA CONSOLA DE CAMBIOS (GR)	361
LÁMPARA MINIATURA (28 VOLTIOS)	7N-5876	2	CABLES DE LA CONSOLA DE CAMBIOS (GR)	360
LÁMPARA (24 VOLTIOS)	3E-8825	1	CABLES DE LA CABINA (GR)	319
		1	CABLES DE LA CABINA (GR)	323
		1	CABLES DE LA CABINA (GR)	327
		1	CABLES DE LA CONSOLA DE DIRECCIÓN (GR)	364
	9X-4493	1	LUZ DE SEÑAL DE GIRO (GR)	256
		1	LUZ DE SEÑAL DE GIRO (GR)	257
LÁMPARA (24 VOLTIOS) (INDICADOR DE ACTIVACION/DESACTIVACION DE CRUCERO)	3E-8825	2	CABLES DE LA CONSOLA DE DIRECCIÓN (GR)	366
LÁMPARA (24 VOLTIOS) (INDICADOR DE AJUSTE/REANUDAR DE CRUCERO)	3E-8825	2	CABLES DE LA CONSOLA DE DIRECCIÓN (GR)	366
LÁMPARA (24 VOLTIOS) (INDICADOR DE DESTRABA DE DIFERENCIAL)	3E-8825	2	CABLES DE LA CONSOLA DE DIRECCIÓN (GR)	366
LÁMPARA (24 VOLTIOS)(65 VATIOS)	9X-3463	1	REFLECTOR (GR)	248
		1	REFLECTOR (GR)	249
LÁMPARA ((24 VOLTIOS)(65 VATIOS))	9X-3463	1	LÁMPARA DE FARO DELANTERO (GR)	250
		1	LÁMPARA DE FARO DELANTERO (GR)	252
LÁMPARA (24 VOLTIOS)(65 VATIOS) (DELANTERA)	9X-3463	1	LÁMPARA DE FARO DELANTERO (GR)	254
		1	LÁMPARA DE FARO DELANTERO (GR)	255
LÁMPARA (24 VOLTIOS)(65 VATIOS) (LUZ BAJA)(DELANTERA)	9X-3463	1	LÁMPARA DE FARO DELANTERO (GR)	253
LÁMPARA (28 VOLTIOS) (CÚPULA)	7N-9943	1	LÁMPARA DEL TECHO (GR)	247
LENTE AMBAR	9X-3066	1	LUZ DE SEÑAL DE GIRO (GR)	256
LENTE DE FARO (CONJ)	162-2077	1	LÁMPARA DE FARO DELANTERO (GR)	255
LENTE DE FARO DELANTERO (CONJ)	9X-7798	1	LÁMPARA DE FARO DELANTERO (GR)	253
LENTE DE LAMPARA DEL TECHO	7T-0020	1	LÁMPARA DEL TECHO (GR)	247
LENTE-ROJO	9X-3064	1	LUZ DE SEÑAL DE GIRO (GR)	257
LLAVE (DESCONECTAR BATERIA)	8H-5306	1	DISYUNTOR (GR)	308

PIEZAS DE MANTENIMIENTO

DESCRIPCION	NUMERO DE PIEZA	CANT	SE UTILIZA EN	PAGINA
RESORTE DE ESCOBILLA	3T-9494	1	MOTOR DE ARRANQUE ELÉCTRICO (GR)	299
TAPA DE PORTAFUSIBLES	7N-2867	1	CABLES DE LA CABINA (GR)	318
		1	CABLES DE LA CABINA (GR)	322
		1	CABLES DE LA CABINA (GR)	326
TAPÓN (CONJ)	7E-6508	2	CABLES DE INYECTOR (GR)	368
VIDRIO (CONJ) (DELANTERA)	9X-7797	1	LÁMPARA DE FARO DELANTERO (GR)	254
VIDRIO DE LOS FAROLES (CONJ)	107-5853	1	REFLECTOR (GR)	248
		1	REFLECTOR (GR)	249
SISTEMA HIDRÁULICO				
COLADOR (CONJ)	3D-6678	1	TANQUE Y FILTRO HIDRÁULICOS (GR)	688
ELEMENTO PARA FLUJO HIDRÁULICO INVERSO (CONJ)	1R-0722	2	TANQUE Y FILTRO HIDRÁULICOS (GR)	688
SELLO ANULAR (94,84 MM DIAMETRO INTERIOR)	1H-8128	2	ACUMULADOR (CONJ)	583
TAPA CONTRA EL POLVO	6V-0852	2	BOMBA - TUBERÍAS DE (GR)	641
		1	VÁLVULA DE COMBINACIÓN (GR)	706
		1	VÁLVULA DE COMBINACIÓN (GR)	708
	8C-3451	1	BOMBA - TUBERÍAS DE (GR)	640
TAPA DEL TUBO DE LLENADO	4J-3754	1	TANQUE Y FILTRO HIDRÁULICOS (GR)	688
TAPA PROTECTORA DEL TANQUE HIDRÁULICO	5D-1902	1	TANQUE Y FILTRO HIDRÁULICOS (GR)	688
TAPÓN (ROSCA 7/16-20)	9S-4190	1	BOMBA DE PISTONES (GR)	678

PIEZAS DE MANTENIMIENTO

DESCRIPCION	NUMERO DE PIEZA	CANT	SE UTILIZA EN	PAGINA
TREN DE FUERZA				
ELEMENTO DE FILTRO DE ACEITE (CONJ) (DESECHABLE)	1R-0741	1	FILTRO DE ACEITE (GR)	392
ELEMENTO DE FILTRO DE ACEITE (CONJ) (FLUÍDOS RESISTENTES AL FUEGO)	4T-3132	1	FILTRO DE ACEITE (GR)	392
ELEMENTO DE FILTRO DE ACEITE (CONJ) (LIMPIAR/ALTA EFICIENCIA)	132-8876	1	FILTRO DE ACEITE (GR)	392
FILTRO DE ACEITE (CONJ) (PILOTO)	4I-3950	1	FILTRO DE ACEITE (GR)	393
REJILLA DE SUCCIÓN	4S-8598	1	CAJA Y ENGRANAJE DE TRANSFERENCIA DE SALIDA (GR)	405
		1	CAJA Y ENGRANAJE DE TRANSFERENCIA DE SALIDA (GR)	409
RESPIRADERO	4H-6112	1	CAJA DEL EJE TRASERO (GR)	412
		1	TÁNDEM Y CUBIERTA (GR)	434
	9G-5127	1	TUBO DE LLENADO DE ACEITE DE LA TRANSMISIÓN (GR)	390
SELLO ANULAR (81,92MM DI)	4L-9564	1	CAJA Y ENGRANAJE DE TRANSFERENCIA DE SALIDA (GR)	404
TAPA CONTRA EL POLVO	6V-0852	2	CAJA Y PIEZAS DE LOS PLANETARIOS	370
		1	CONTROL DE TRABA DEL DIFERENCIAL (GR)	374
		3	TUBERÍAS DE ACEITE DEL TREN DE FUERZA (GR)	414
		3	TUBERÍAS DE ACEITE DEL TREN DE FUERZA (GR)	418
	8C-3451	1	CONTROL DE TRABA DEL DIFERENCIAL (GR)	374
		1	TUBERÍAS DE ACEITE DEL TREN DE FUERZA (GR)	418
TAPA DEL TUBO DE LLENADO DE ACEITE (CONJ)	7S-1803	1	TUBO DE LLENADO DE ACEITE DE LA TRANSMISIÓN (GR)	390
TAPA (VASTAGO)	9K-7951	1	RUEDA (GR)	476
		1	RUEDA (GR)	477
TAPÓN	129-0988	1	CAJA Y ENGRANAJE DE TRANSFERENCIA DE SALIDA (GR)	408

PEÇAS DE MANUTENÇÃO

DESCRIÇÃO	NÚMERO DE PEÇA	QUANT	UTILIZADA EM	PÁGINA
ACESSÓRIOS				
GRAXEIRA	3B-8489	2	CÍRCULO	748
CHASSI E CARROCERIA				
CADEADO	5P-8502	10	COBERTURA DO MOTOR	489
		10	COBERTURA DO MOTOR	493
CHAVE	5P-8500	1	COBERTURA DO MOTOR	489
		1	COBERTURA DO MOTOR	493
GRAXEIRA (LUBRIFICAÇÃO AUTOMÁTICA)	3B-8489	53	LUBRIFICAÇÃO - AUTOMÁTICA	528
GRAXEIRA (ROSCA 1/8-27 POL)	3B-8489	21	LUBRIFICAÇÃO - AUTOMÁTICA	524
		2	LUBRIFICAÇÃO - CENTRAL	535
		10	LUBRIFICAÇÃO - CENTRAL	536
LUVA	8Y-6364	1	COBERTURA DO MOTOR	489
		1	COBERTURA DO MOTOR	493
TAMPA - RADIADOR	031-1119	1	COBERTURA DO MOTOR	496
TAMPA PROTETORA	5T-5012	55	LUBRIFICAÇÃO - AUTOMÁTICA	524
EQUIPAMENTOS DE SERVIÇO E SUPRIMENTOS				
CADEADO	5P-8502	1	CAIXA DE FERRAMENTAS	893
CHAVE	5P-8500	1	CAIXA DE FERRAMENTAS	893
ESTAÇÃO DO OPERADOR				
CHAVE (MESTRE)	5P-8500	2	PUBLICAÇÃO	826
CINTO DE SEGURANÇA (RETRÁTIL)	8Y-3792	1	ASSENTO	856
	122-4617	1	ASSENTO	857
	156-1148	1	ASSENTO	858
CORREIA EM V	9L-1130	1	COMPRESSOR DE REFRIGERANTE	790
		1	COMPRESSOR DE REFRIGERANTE	792
ELEMENTO (AR DA CABINE)	078-0070	1	PRESSURIZADOR	846
ELEMENTO FILTRANTE PRIMÁRIO - AR	154-7108	1	FILTRO - AR DA CABINE	814
FILTRO - AR	7T-7358	1	DUCTO E CONTROLE	808
LÂMINA DO LIMPADOR DE PÁRA-BRISA	6V-5851	1	LIMPADOR E LAVADOR - JANELA	874
LÂMPADA (24 V)	7N-5876	4	PAINEL DE INSTRUMENTOS	838
	115-1748	4	PAINEL DE INSTRUMENTOS	838
LÂMPADA (28 V)	7N-1996	1	PAINEL DE INSTRUMENTOS	838
LENTE VERMELHA	6T-7058	1	PAINEL DE INSTRUMENTOS	838
TAMPA COM RESPIRO	8E-8292	1	LAVADOR DO VIDRO	870
FERRAMENTAS DE TRABALHO				
GRAXEIRA (ROSCA 1/8-27 POL)	3B-8489	4	RIPER	772
		4	RIPER	774
MOTOR BÁSICO				
BUJÃO - CANO/TUBO (ROSCA DE 1/8-27 DO PADRÃO AMERICANO NPTF)	8T-6757	6	VIRABREQUIM	24
JOGO DE CORREIAS EM V	6N-7575	1	COMANDO DO VENTILADOR	48
RESPIRO	4N-4668	3	TAMPA - MECANISMO DAS VÁLVULAS	18
TAMPA (ROSCA DE 1-3/16-12)	6V-9832	1	TAMPA - CÁRTER DO ÓLEO	16

PEÇAS DE MANUTENÇÃO

DESCRIÇÃO	NÚMERO DE PEÇA	QUANT	UTILIZADA EM	PÁGINA
SISTEMA DE ADMISSÃO DE AR E DE ESCAPE				
ELEMENTO - FILTRANTE	7M-1674	1	TUBOS - AR	134
ELEMENTO - PRIMÁRIO	106-3969	1	PURIFICADOR DE AR	131
ELEMENTO - SECUNDÁRIO	106-3973	1	PURIFICADOR DE AR	131
INDICADOR - LIMPEZA DO FILTRO DE AR	8N-2694	1	TUBOS - AR	134
SISTEMA DE ARREFECIMENTO				
BUJÃO DO DRENO	6N-9590	1	TUBOS - ÁGUA	106
FILTRO (BOMBA D'ÁGUA)	111-2721	1	BOMBA DE ÁGUA	112
		1	BOMBA DE ÁGUA	114
		1	BOMBA DE ÁGUA	116
MANGUEIRA	106-4572	10	RADIADOR	120
MANGUEIRA (DIÂMETRO INTERNO DE 63,5MM) (12,7 CM)	5P-1262		TUBOS - ÁGUA	106
MANGUEIRA (6,35MM DE DIÂMETRO INTERNO) (266CM)	5P-1465		RADIADOR	122
REGULADOR DE TEMPERATURA DA ÁGUA (92 GRAUS CENTÍGRADOS)	4W-4794	2	TUBOS - ÁGUA	94
		2	TUBOS - ÁGUA	98
		2	TUBOS - ÁGUA	102
TAMPA - RADIADOR	031-1119	1	TANQUE - LÍQUIDO ARREFECEDOR	126

PEÇAS DE MANUTENÇÃO

DESCRIÇÃO	NÚMERO DE PEÇA	QUANT	UTILIZADA EM	PÁGINA
SISTEMA DE COMBUSTÍVEL				
CADEADO	5P-8502	3	TANQUE DE COMBUSTÍVEL	208
		3	TANQUE DE COMBUSTÍVEL	212
CHAVE	5P-8500	1	TANQUE DE COMBUSTÍVEL	208
		1	TANQUE DE COMBUSTÍVEL	212
ELEMENTO - FILTRANTE	129-0373	1	BOMBA DE ESCORVA DO COMBUSTÍVEL E DO FILTRO PRIMÁRIO	193
FILTRO	125-5835	1	COMANDO DA BOMBA HIDRÁULICA DO INJETOR	154
		1	COMANDO DA BOMBA HIDRÁULICA DO INJETOR	156
FILTRO - COMBUSTÍVEL	1R-0749	2	TUBOS - FILTRO DO COMBUSTÍVEL	168
FILTRO - SEPARADOR DE ÁGUA E COMBUSTÍVEL	129-0372	1	BOMBA DE ESCORVA DO COMBUSTÍVEL E DO FILTRO PRIMÁRIO	193
FILTRO (BOMBA HIDRÁULICA DA UNIDADE INJETORA)	125-5835	1	COMANDO DA BOMBA HIDRÁULICA DO INJETOR	146
JUNTA (BOMBA DE ESCORVA DE COMBUSTÍVEL)	1P-0436	1	BOMBA DE ESCORVA DO COMBUSTÍVEL E DO FILTRO PRIMÁRIO	193
PENEIRA DO TANQUE DE COMBUSTÍVEL	9P-7121	1	TANQUE DE COMBUSTÍVEL	208
		1	TANQUE DE COMBUSTÍVEL	212
PROTETOR CONTRA POEIRA	9D-0630	1	TANQUE DE COMBUSTÍVEL	208
RETENTOR DE ANEL-O (DIÂMETRO INTERNO DE 110,49 MM)	9X-8600	1	TANQUE DE COMBUSTÍVEL	208
		1	TANQUE DE COMBUSTÍVEL	212
TAMPA DO BOCAL DE ENCHIMENTO DO TANQUE DE COMBUSTÍVEL	101-8909	1	TANQUE DE COMBUSTÍVEL	208
		1	TANQUE DE COMBUSTÍVEL	212
SISTEMA DE FREIO				
RETENTOR DE ANEL-O (94,84MM DE DIÂMETRO INTERNO)	1H-8128	2	ACUMULADOR	555
TAMPA CONTRA POEIRA	6V-0852	2	CONTROLE DO FREIO DE SERVIÇO	564
		3	CONTROLE DO FREIO DE SERVIÇO	565
	8C-3451	1	CONTROLE DO FREIO DE SERVIÇO	566
SISTEMA DE LUBRIFICAÇÃO				
FILTRO - ÓLEO DO MOTOR	1R-0716	2	FILTRO - ÓLEO DO MOTOR	72
RETENTOR DE ANEL-O (19,18MM ID)	2M-9780	1	PRÊ-LUBRIFICAÇÃO	82
TAMPA	9S-9272	1	ÓLEO - ARRANJO PARA TROCA RÁPIDA	80
TAMPA - BOCAL DE ENCHIMENTO	6N-2206	1	BOCAL DE ENCHIMENTO DE ÓLEO DO MOTOR	71
TAMPA CONTRA POEIRA	8C-3445	1	FILTRO - ÓLEO DO MOTOR	72
SISTEMA ELÉTRICO E DE PARTIDA				
BATERIA (12 V)(SECO)	9X-9730	2	BATERIA	227
		2	PARTIDA EM TEMPO FRIO - ARRANJO	296
BLOCO DE FUSÍVEIS	5N-5536	4	CABOS FIOS ELÉTRICOS - TEMPO FRIO	330
CHAVE (DESCONECTAR A BATERIA)	8H-5306	1	CHAVE GERAL	308

PEÇAS DE MANUTENÇÃO

DESCRIÇÃO	NÚMERO DE PEÇA	QUANT	UTILIZADA EM	PÁGINA
CILINDRO (ÉTER)	7N-0296	1	AUXILIAR DE PARTIDA A ÉTER	286
CORREIA	129-3574	1	ALTERNADOR DE CORRENTE	222
DISJUNTOR AUTOMÁTICO DE CIRCUITO (105 A) (ALTERNADOR)	3E-7294	1	CABOS/FIOS ELÉTRICOS - PAINEL DE RELÉ	358
DISJUNTOR AUTOMÁTICO DE CIRCUITO (15 A)	3T-2662	1	CABOS/FIOS ELÉTRICOS - CONSOLE DA TRANSMISSÃO	360
DISJUNTOR AUTOMÁTICO DE CIRCUITO (15 A) (ECM DO MOTOR)	6T-3643	1	CABOS/FIOS ELÉTRICOS - PAINEL DE RELÉ	358
DISJUNTOR AUTOMÁTICO DE CIRCUITO (15 A) (LUZ TRASEIRA - LUZ ALTA)	6N-8589	1	CABOS/FIOS ELÉTRICOS - CONSOLE DA DIREÇÃO	364
DISJUNTOR AUTOMÁTICO DE CIRCUITO (15 A) (TRANSMISSÃO)	3T-2662	1	CABOS/FIOS ELÉTRICOS - CONSOLE DA DIREÇÃO	364
	6N-8589	1	CABOS/FIOS ELÉTRICOS - CONSOLE DA DIREÇÃO	366
DISJUNTOR AUTOMÁTICO DE CIRCUITO (30 A) (RETRAÇÃO DO FREIO)	6N-9349	1	CABOS/FIOS ELÉTRICOS - PAINEL DE RELÉ	358
DISJUNTOR AUTOMÁTICO DE CIRCUITO (80 A) (PRINCIPAL)	9S-4693	2	CABOS/FIOS ELÉTRICOS - PAINEL DE RELÉ	358
ELEMENTO - AQUECEDOR DE ÁGUA DA CAMISA (240V/1500W)	6T-3764	2	AQUECEDOR DA ÁGUA DO MOTOR	245
ELEMENTO (240V/600W)	9X-9753	1	ÓLEO DO MOTOR - AQUECEDOR	238
ESCOVA (MOTOR DE PARTIDA)	3T-9524	6	MOTOR ELÉTRICO DE PARTIDA	298
FUSÍVEL (10 A)	3K-8782	6	CABOS/FIOS ELÉTRICOS - CABINE	318
		6	CABOS/FIOS ELÉTRICOS - CABINE	322
		6	CABOS/FIOS ELÉTRICOS - CABINE	326
		14	CABOS/FIOS ELÉTRICOS - CONSOLE DA DIREÇÃO	364
		13	CABOS/FIOS ELÉTRICOS - CONSOLE DA DIREÇÃO	366
FUSÍVEL (15 A)	8M-8948	4	CABOS/FIOS ELÉTRICOS - CONSOLE DA DIREÇÃO	364
		4	CABOS/FIOS ELÉTRICOS - CONSOLE DA DIREÇÃO	366
FUSÍVEL (20 A)	122-2271	2	CABOS FIOS ELÉTRICOS - TEMPO FRIO	330
FUSÍVEL (25 A)	123-4106	2	CABOS FIOS ELÉTRICOS - TEMPO FRIO	330
LÂMPADA	9X-3463	1	FAROL DIANTEIRO	251
LÂMPADA - DIODO (VISOR LED)	165-5674	1	CABOS/FIOS ELÉTRICOS - CONSOLE DA DIREÇÃO	364
LÂMPADA - DIODO (VISOR LED) (INDICADOR DE PRESSÃO DO FREIO DO DIFERENCIAL)	165-5674	1	CABOS/FIOS ELÉTRICOS - CONSOLE DA DIREÇÃO	366
LÂMPADA - MINIATURA (24 V)	3E-8825	1	CABOS/FIOS ELÉTRICOS - CONSOLE DA TRANSMISSÃO	360
		1	CABOS/FIOS ELÉTRICOS - CONSOLE DA TRANSMISSÃO	361
LÂMPADA - MINIATURA (28 V)	7N-5876	2	CABOS/FIOS ELÉTRICOS - CONSOLE DA TRANSMISSÃO	360
LÂMPADA (24 V)	3E-8825	1	CABOS/FIOS ELÉTRICOS - CABINE	319
		1	CABOS/FIOS ELÉTRICOS - CABINE	323
		1	CABOS/FIOS ELÉTRICOS - CABINE	327

PEÇAS DE MANUTENÇÃO

DESCRIÇÃO	NÚMERO DE PEÇA	QUANT	UTILIZADA EM	PÁGINA
		1	CABOS/FIOS ELÉTRICOS - CONSOLE DA DIREÇÃO	364
	9X-4493	1	LÂMPADA - SINALIZAÇÃO	256
		1	LÂMPADA - SINALIZAÇÃO	257
LÂMPADA (24 V) (INDICADOR DE AJUSTE - RETOMADA DO PILOTO AUTOMÁTICO)	3E-8825	2	CABOS/FIOS ELÉTRICOS - CONSOLE DA DIREÇÃO	366
LÂMPADA (24 V) (INDICADOR DE LIGAR - DESLIGAR PILOTO AUTOMÁTICO)	3E-8825	2	CABOS/FIOS ELÉTRICOS - CONSOLE DA DIREÇÃO	366
LÂMPADA (24 V) (INDICADOR DO DESTRAVAMENTO DO DIFERENCIAL)	3E-8825	2	CABOS/FIOS ELÉTRICOS - CONSOLE DA DIREÇÃO	366
LÂMPADA (24 VOLTS)(65 WATTS)	9X-3463	1	FAROL DIANTEIRO	250
		1	FAROL DIANTEIRO	252
		1	LÂMPADA - FAROL	248
		1	LÂMPADA - FAROL	249
LÂMPADA (24 VOLTS)(65 WATTS) (CABEÇA)	9X-3463	1	FAROL DIANTEIRO	254
		1	FAROL DIANTEIRO	255
LÂMPADA (24 VOLTS)(65 WATTS) (FACHO BAIXO)(DIANTEIRO)	9X-3463	1	FAROL DIANTEIRO	253
LÂMPADA (28 V) (TETO)	7N-9943	1	LÂMPADA - TETO	247
LENTE - FAROL DIANTEIRO	162-2077	1	FAROL DIANTEIRO	255
LENTE ÂMBAR	9X-3066	1	LÂMPADA - SINALIZAÇÃO	256
LENTE (CABEÇA)	9X-7797	1	FAROL DIANTEIRO	254
LENTE DA LÂMPADO DO TETO	7T-0020	1	LÂMPADA - TETO	247
LENTE VERMELHA	9X-3064	1	LÂMPADA - SINALIZAÇÃO	257
LENTES - FARÓIS	9X-7798	1	FAROL DIANTEIRO	253
LENTES - FAROL	107-5853	1	LÂMPADA - FAROL	248
		1	LÂMPADA - FAROL	249
MOLA - ESCOVA	3T-9494	1	MOTOR ELÉTRICO DE PARTIDA	299
PISCA-PISCA ELETRÔNICO	108-0358	1	CABOS/FIOS ELÉTRICOS - CONSOLE DA DIREÇÃO	366
TAMPA	7E-6508	2	CABOS/FIOS ELÉTRICOS - INJETOR	368
TAMPA - PORTA-FUSÍVEL	7N-2867	1	CABOS/FIOS ELÉTRICOS - CABINE	318
		1	CABOS/FIOS ELÉTRICOS - CABINE	322
		1	CABOS/FIOS ELÉTRICOS - CABINE	326
SISTEMA HIDRÁULICO				
BUJÃO - ANEL O (7/16-20 THD)	9S-4190	1	BOMBA DE PISTÃO	678
ELEMENTO - FLUXO HIDRÁULICO INVERSO	1R-0722	2	TANQUE HIDRÁULICO E FILTRO	688
RETENTOR DE ANEL-O (94,84MM DE DIÂMETRO INTERNO)	1H-8128	2	ACUMULADOR	583
TAMPA - BOCAL DE ENCHIMENTO	4J-3754	1	TANQUE HIDRÁULICO E FILTRO	688
TAMPA CONTRA POEIRA	6V-0852	2	TUBOS - BOMBA	641
		1	VÁLVULA COMBINADA	706
		1	VÁLVULA COMBINADA	708
	8C-3451	1	TUBOS - BOMBA	640
TAMPA DO RESERVATÓRIO HIDRÁULICO	5D-1902	1	TANQUE HIDRÁULICO E FILTRO	688
TELA FILTRANTE	3D-6678	1	TANQUE HIDRÁULICO E FILTRO	688

PEÇAS DE MANUTENÇÃO

DESCRIÇÃO	NÚMERO DE PEÇA	QUANT	UTILIZADA EM	PÁGINA
TREM DE FORÇA				
BUJÃO	129-0988	1	CAIXA DE ENGRENAGEM DE TRANSFERÊNCIA	408
ELEMENTO FILTRANTE - ÓLEO (DESCARTÁVEL)	1R-0741	1	FILTRO - ÓLEO	392
ELEMENTO FILTRANTE - ÓLEO (FLUIDOS RESISTENTES A FOGO)	4T-3132	1	FILTRO - ÓLEO	392
ELEMENTO FILTRANTE - ÓLEO (LIMPAR/ALTA EFICIÊNCIA)	132-8876	1	FILTRO - ÓLEO	392
FILTRO - ÓLEO (PILOTO)	4I-3950	1	FILTRO - ÓLEO	393
RESPIRO	4H-6112	1	CAIXA DO EIXO TRASEIRO	412
		1	TANDEM E TAMPA	434
	9G-5127	1	BOCAL DE ENCHIMENTO DE ÓLEO DO TREM DE FORÇA	390
RETENTOR DE ANEL-O (DIÂMETRO INTERNO DE 81,92MM)	4L-9564	1	CAIXA DE ENGRENAGEM DE TRANSFERÊNCIA	404
TAMPA - BOCAL DE ENCHIMENTO DE ÓLEO	7S-1803	1	BOCAL DE ENCHIMENTO DE ÓLEO DO TREM DE FORÇA	390
TAMPA CONTRA POEIRA	6V-0852	2	CARCAÇA DAS ENGRENAGENS PLANETÁRIAS E COMPONENTES	370
		1	CONTROLE DA TRAVA DO DIFERENCIAL	374
		3	TUBOS - ÓLEO DA TRANSMISSÃO	414
		3	TUBOS - ÓLEO DA TRANSMISSÃO	418
	8C-3451	1	CONTROLE DA TRAVA DO DIFERENCIAL	374
		1	TUBOS - ÓLEO DA TRANSMISSÃO	418
TAMPA DA VÁLVULA (HASTE)	9K-7951	1	RODA	476
		1	RODA	477
TELA DE SUCÇÃO	4S-8598	1	CAIXA DE ENGRENAGEM DE TRANSFERÊNCIA	405
		1	CAIXA DE ENGRENAGEM DE TRANSFERÊNCIA	409

WARTUNGSTEILE

BESCHREIBUNG	ERSATZTEIL-NUMMER	MENGE	VERWENDET IN	SEITE
ARBEITSGERÄTE				
SCHMIERNIPPEL	3B-8489	2	SCHARDREHWERK	748
SCHMIERNIPPEL (1/8-27-GEWINDE)	3B-8489	4	AUFREISSER	772
		4	AUFREISSER	774
BREMSSYSTEM				
O-RING-DICHTUNG (94,84 MM ID)	1H-8128	2	DRUCKSPEICHER	555
STAUBKAPPE	6V-0852	2	BREMSGESTÄNGE	564
		3	BREMSGESTÄNGE	565
	8C-3451	1	BREMSGESTÄNGE	566
ELEKTRISCHE ANLAGE UND STARTSYSTEM				
ABDECKGLAS (FRONTSCHEINWERFER)	9X-7797	1	FRONTSCHEINWERFER	254
ABDECKGLAS (GELB)	9X-3066	1	BLINKLEUCHTE	256
ARBEITSLEUCHTENLINSE	107-5853	1	ARBEITSLEUCHTEN	248
		1	ARBEITSLEUCHTEN	249
BATTERIE (12 V)	9X-9730	2	BATTERIE	227
		2	KALTWETTERSTARTANLAGE	296
BÜRSTENFEDER	3T-9494	1	STARTERMOTOR	299
BÜRSTENSATZ (STARTERMOTOR)	3T-9524	6	STARTERMOTOR	298
DIODENLEUCHTE (LED)	165-5674	1	LENKKONSOLENVERDRAHTUNG	364
DIODENLEUCHTE (LED) (DIFFERENZIALBREMSDRUCKANZEIGE)	165-5674	1	LENKKONSOLENVERDRAHTUNG	366
ELEKTRON. BLINKER	108-0358	1	LENKKONSOLENVERDRAHTUNG	366
ELEMENT (240 V / 600 W)	9X-9753	1	MOTORÖL-VORWÄRMGERÄT	238
FAHRERHAUSLEUCHTENLINSE	7T-0020	1	FAHRERHAUSBELEUCHTUNG	247
FAHRSCHEINWERFER-ABDECKGLAS	9X-7798	1	FRONTSCHEINWERFER	253
HAUPTSCHEINWERFERLINSE	162-2077	1	FRONTSCHEINWERFER	255
KAPPE	7E-6508	2	VERDRAHTUNG (EINSPRITZEINHEIT)	368
KEILRIEMEN	129-3574	1	DREHSTROMGENERATOR	222
LEUCHTE	9X-3463	1	FRONTSCHEINWERFER	251
LEUCHTE (24 V)	3E-8825	1	FAHRERHAUSVERDRAHTUNG	319
		1	FAHRERHAUSVERDRAHTUNG	323
		1	FAHRERHAUSVERDRAHTUNG	327
		2	LENKKONSOLENVERDRAHTUNG	364
	9X-4493	1	BLINKLEUCHTE	256
		1	BLINKLEUCHTE	257
LEUCHTE (24 V) (DIFFERENZIALFREIGABEANZEIGE)	3E-8825	2	LENKKONSOLENVERDRAHTUNG	366
LEUCHTE (24 V) (FAHRTREGLER EIN/AUS - ANZEIGE)	3E-8825	2	LENKKONSOLENVERDRAHTUNG	366
LEUCHTE (24 V) (FARTREGLER AKTIVIEREN/WIEDERAUFNEHMEN - ANZEIGE)	3E-8825	2	LENKKONSOLENVERDRAHTUNG	366
LEUCHTE (24 V)(65 W)	9X-3463	1	ARBEITSLEUCHTEN	248
		1	ARBEITSLEUCHTEN	249
		1	FRONTSCHEINWERFER	250
		1	FRONTSCHEINWERFER	252
LEUCHTE (24 V)(65 W) (ABBLENDLICHT)(FRONTSCHEINWERFER)	9X-3463	1	FRONTSCHEINWERFER	253
LEUCHTE (24 V)(65 W) (FRONTSCHEINWERFER)	9X-3463	1	FRONTSCHEINWERFER	254
		1	FRONTSCHEINWERFER	255

WARTUNGSTEILE

BESCHREIBUNG	ERSATZTEIL-NUMMER	MENGE	VERWENDET IN	SEITE
LEUCHTE (28 V) (FAHRERHAUSDACH)	7N-9943	1	FAHRERHAUSBELEUCHTUNG	247
LINSE - ROT	9X-3064	1	BLINKLEUCHTE	257
MINIATURLEUCHTE (24 V)	3E-8825	1	SCHALTKONSOLENVERDRAHTUNG	360
		1	SCHALTKONSOLENVERDRAHTUNG	361
MINIATURLEUCHTE (28 V)	7N-5876	2	SCHALTKONSOLENVERDRAHTUNG	360
SCHLÜSSEL (HAUPTSCHALTER)	8H-5306	1	TRENNSCHALTER	308
SICHERUNG (10 A)	3K-8782	6	FAHRERHAUSVERDRAHTUNG	318
		6	FAHRERHAUSVERDRAHTUNG	322
		6	FAHRERHAUSVERDRAHTUNG	326
		14	LENKKONSOLENVERDRAHTUNG	364
		13	LENKKONSOLENVERDRAHTUNG	366
SICHERUNG (15 A)	8M-8948	4	LENKKONSOLENVERDRAHTUNG	364
		4	LENKKONSOLENVERDRAHTUNG	366
SICHERUNG (20 A)	122-2271	2	KALTWETTERVERDRAHTUNG	330
SICHERUNG (25 A)	123-4106	2	KALTWETTERVERDRAHTUNG	330
SICHERUNGSBLOCK	5N-5536	4	KALTWETTERVERDRAHTUNG	330
SICHERUNGSHALTERKAPPE	7N-2867	1	FAHRERHAUSVERDRAHTUNG	318
		1	FAHRERHAUSVERDRAHTUNG	322
		1	FAHRERHAUSVERDRAHTUNG	326
UMLAUFKÜHLWASSERHEIZUNGS-ELEMENT (240 V/1500 W)	6T-3764	2	UMLAUFKÜHLWASSERHEIZUNG	245
UNTERBRECHER (105 A) (DREHSTROMGENERATOR)	3E-7294	1	RELAISTAFELVERDRAHTUNG	358
UNTERBRECHER (15 A)	3T-2662	1	SCHALTKONSOLENVERDRAHTUNG	360
UNTERBRECHER (15 A) (ELEKTRON. STEUERMODUL DES MOTORS)	6T-3643	1	RELAISTAFELVERDRAHTUNG	358
UNTERBRECHER (15 A) (GETRIEBE)	3T-2662	1	LENKKONSOLENVERDRAHTUNG	364
	6N-8589	1	LENKKONSOLENVERDRAHTUNG	366
UNTERBRECHER (15 A) (HECKLEUCHTEN/FERNLICHT)	6N-8589	1	LENKKONSOLENVERDRAHTUNG	364
UNTERBRECHER (30 A) (BREMSE)	6N-9349	1	RELAISTAFELVERDRAHTUNG	358
UNTERBRECHER (80 A) (HAUPTUNTERBRECHER)	9S-4693	2	RELAISTAFELVERDRAHTUNG	358
ZYLINDER (ÄTHER)	7N-0296	1	ÄTHERSTARTHILFE	286
FAHRERHAUS				
ELEMENT (FAHRERHAUSLUFT)	078-0070	1	FAHRERHAUSBELÜFTUNG	846
HAUPTLUFTFILTER	154-7108	1	FAHRERHAUSLUFTFILTER	814
KAPPE MIT ENTLÜFTER	8E-8292	1	SCHEIBENWASCHANLAGE	870
KEILRIEMEN	9L-1130	1	KÄLTEMITTELKOMPRESSOR	790
		1	KÄLTEMITTELKOMPRESSOR	792
LEUCHTE (24 V)	7N-5876	4	INSTRUMENTENTAFEL	838
	115-1748	4	INSTRUMENTENTAFEL	838
LEUCHTE (28 V)	7N-1996	1	INSTRUMENTENTAFEL	838
LINSE - ROT	6T-7058	1	INSTRUMENTENTAFEL	838
LUFTFILTER	7T-7358	1	LUFTKANAL UND REGULIERUNG	808
SCHEIBENWISCHERBLATT	6V-5851	1	SCHEIBENWISCHER UND -WASCHANLAGE	874
SCHLÜSSEL (HAUPTSCHLÜSSEL)	5P-8500	2	DOKUMENTATION	826
SICHERHEITSGURT ((AUTOMATIKSICHERHEITSGURT))	8Y-3792	1	FAHRERSITZ	856
	122-4617	1	FAHRERSITZ	857
	156-1148	1	FAHRERSITZ	858

WARTUNGSTEILE

BESCHREIBUNG	ERSATZTEIL-NUMMER	MENGE	VERWENDET IN	SEITE
HYDRAULIKSYSTEM				
EINFÜLLSTUTZENKAPPE	4J-3754	1	HYDRAULIKTANK UND SCHMIERFILTER	688
FILTERSIEB	3D-6678	1	HYDRAULIKTANK UND SCHMIERFILTER	688
HYDRAULIKTANKKAPPENDECKEL	5D-1902	1	HYDRAULIKTANK UND SCHMIERFILTER	688
O-RING-DICHTUNG (94,84 MM ID)	1H-8128	2	DRUCKSPEICHER	583
O-RING-STOPFEN (7/16-20 GEWINDE)	9S-4190	1	KOLBENPUMPE	678
RÜCKLAUFELEMENT (HYDRAULIK)	1R-0722	2	HYDRAULIKTANK UND SCHMIERFILTER	688
STAUBKAPPE	6V-0852	2	HYDRAULIKPUMPE UND LEITUNGEN	641
		1	SAMMELVENTIL	706
		1	SAMMELVENTIL	708
	8C-3451	1	HYDRAULIKPUMPE UND LEITUNGEN	640
KRAFTSTOFFSYSTEM				
DICHTUNG (KRAFTSTOFFENTLÜFTUNGSPUMPE)	1P-0436	1	KRAFTSTOFFENTLÜFTUNGSPUMPE UND -HAUPTFILTER	193
FILTER	125-5835	1	HYDRAULIKPUMPENANTRIEB	154
		1	HYDRAULIKPUMPENANTRIEB	156
	129-0373	1	KRAFTSTOFFENTLÜFTUNGSPUMPE UND -HAUPTFILTER	193
FILTER (HYDRAULISCHE PUMPENDÜSE)	125-5835	1	HYDRAULIKPUMPENANTRIEB	146
KRAFTSTOFFILTER	1R-0749	2	KRAFTSTOFFILTERLEITUNGEN	168
KRAFTSTOFFKAPPE	101-8909	1	KRAFTSTOFFTANK	208
		1	KRAFTSTOFFTANK	212
KRAFTSTOFFTANK-SIEBEINSATZ	9P-7121	1	KRAFTSTOFFTANK	208
		1	KRAFTSTOFFTANK	212
O-RING-DICHTUNG (110,49 MM INNENDURCHMESSER)	9X-8600	1	KRAFTSTOFFTANK	208
		1	KRAFTSTOFFTANK	212
SCHLÜSSEL	5P-8500	1	KRAFTSTOFFTANK	208
		1	KRAFTSTOFFTANK	212
STAUBDECKEL	9D-0630	1	KRAFTSTOFFTANK	208
VORHÄNGESCHLOSS	5P-8502	3	KRAFTSTOFFTANK	208
		3	KRAFTSTOFFTANK	212
WASSERABSCHEIDER UND KRAFTSTOFFILTER	129-0372	1	KRAFTSTOFFENTLÜFTUNGSPUMPE UND -HAUPTFILTER	193

WARTUNGSTEILE

BESCHREIBUNG	ERSATZTEIL-NUMMER	MENGE	VERWENDET IN	SEITE
KRAFTÜBERTRAGUNG				
ANSAUGSIEB	4S-8598	1	GETRIEBE U. GEHÄUSE (AUSGANGSÜBERTRAGUNG)	405
		1	GETRIEBE U. GEHÄUSE (AUSGANGSÜBERTRAGUNG)	409
ENTLÜFTER	4H-6112	1	HINTERACHSENGEHÄUSE	412
		1	TANDEMGEHÄUSE UND DECKEL	434
	9G-5127	1	GETRIEBEÖLFÜLLSTUTZEN	390
O-RING-DICHTUNG (81,92 MM ID)	4L-9564	1	GETRIEBE U. GEHÄUSE (AUSGANGSÜBERTRAGUNG)	404
ÖLEINFÜLLSTUTZEN	7S-1803	1	GETRIEBEÖLFÜLLSTUTZEN	390
ÖLFILTER (VORSTEUERUNG)	4I-3950	1	ÖLFILTER	393
ÖLFILTERELEMENT (NICHT WIEDERVERWENDBAR)	1R-0741	1	ÖLFILTER	392
ÖLFILTERELEMENT (NICHTBRENNBARE FLÜSSIGKEIT)	4T-3132	1	ÖLFILTER	392
ÖLFILTERELEMENT (REINIGUNG/HOCHLEISTUNG)	132-8876	1	ÖLFILTER	392
SCHRAUBE	129-0988	1	GETRIEBE U. GEHÄUSE (AUSGANGSÜBERTRAGUNG)	408
STAUBKAPPE	6V-0852	1	DIFFERENTIALSPERRENGESTÄNGE	374
		3	ÖLLEITUNGEN - KRAFTÜBERTRAGUNG	414
		3	ÖLLEITUNGEN - KRAFTÜBERTRAGUNG	418
		2	PLANETENANTRIEBSGEHÄUSE U. TEILE	370
	8C-3451	1	DIFFERENTIALSPERRENGESTÄNGE	374
		1	ÖLLEITUNGEN - KRAFTÜBERTRAGUNG	418
VENTILKAPPE (SCHAFT)	9K-7951	1	RADSATZ	476
		1	RADSATZ	477
KÜHLSYSTEM				
ABLASSSTOPFEN	6N-9590	1	KÜHLWASSERLEITUNGEN	106
FILTER (WASSERPUMPE)	111-2721	1	KÜHLWASSERPUMPE	112
		1	KÜHLWASSERPUMPE	114
		1	KÜHLWASSERPUMPE	116
KÜHLERKAPPE	031-1119	1	KÜHLMITTELBEHÄLTER	126
SCHLAUCHLEITUNG	106-4572	10	KÜHLER	120
SCHLAUCHLEITUNG (63,5MM ID) (12,7 CM)	5P-1262		KÜHLWASSERLEITUNGEN	106
SCHLAUCHLEITUNG (6,35MM ID) (266 CM)	5P-1465		KÜHLER	122
WASSERTEMPERATURREGLER (92 GRAD CELSIUS)	4W-4794	2	KÜHLWASSERLEITUNGEN	94
		2	KÜHLWASSERLEITUNGEN	98
		2	KÜHLWASSERLEITUNGEN	102
LUFTANSAUG- UND ABGASSYSTEM				
FILTER	7M-1674	1	DRUCKLUFTLEITUNGEN	134
HAUPTFILTER	106-3969	1	LUFTREINIGER	131
LUFTFILTER-WARTUNGSANZEIGE	8N-2694	1	DRUCKLUFTLEITUNGEN	134
SICHERHEITSFILTER	106-3973	1	LUFTREINIGER	131

WARTUNGSTEILE

BESCHREIBUNG	ERSATZTEIL-NUMMER	MENGE	VERWENDET IN	SEITE
MOTOR - GRUNDAUSFÜHRUNG				
ENTLÜFTER	4N-4668	3	VENTILDECKEL	18
KAPPE (1-3/16-12-GEWINDE)	6V-9832	1	ÖLWANNENDECKEL	16
KEILRIEMENSATZ	6N-7575	1	LÜFTERANTRIEB	48
ROHRSTOPFEN (1/8-27 GEWINDE)	8T-6757	6	KURBELWELLE	24
RAHMEN UND AUFBAU				
BUCHSE	8Y-6364	1	MOTORVERKLEIDUNG	489
		1	MOTORVERKLEIDUNG	493
KÜHLERKAPPE	031-1119	1	MOTORVERKLEIDUNG	496
SCHLÜSSEL	5P-8500	1	MOTORVERKLEIDUNG	489
		1	MOTORVERKLEIDUNG	493
SCHMIERNIPPEL (AUTOMATIKSCHMIERUNG)	3B-8489	53	SCHMIERSYSTEM, AUTOM.	528
SCHMIERNIPPEL (1/8-27-GEWINDE)	3B-8489	2	ZENTRALSCHMIERANLAGE	535
		10	ZENTRALSCHMIERANLAGE	536
		21	SCHMIERSYSTEM, AUTOM.	524
SCHUTZKAPPE	5T-5012	55	SCHMIERSYSTEM, AUTOM.	524
VORHÄNGESCHLOSS	5P-8502	10	MOTORVERKLEIDUNG	489
		10	MOTORVERKLEIDUNG	493
SCHMIERSYSTEM				
EINFÜLLKAPPE	6N-2206	1	MOTORÖLEINFÜLLSTUTZEN	71
KAPPE	9S-9272	1	ÖLSCHNELLWECHSELANSCHLUSS	80
O-RING-DICHTUNG (19,18 MM ID)	2M-9780	1	MOTORVORSCHMIERUNG	82
ÖLFILTER	1R-0716	2	ÖLFILTER	72
STAUBKAPPE	8C-3445	1	ÖLFILTER	72
WARTUNGSAUSRÜSTUNG				
SCHLÜSSEL	5P-8500	1	WERKZEUGKASTEN	893
VORHÄNGESCHLOSS	5P-8502	1	WERKZEUGKASTEN	893

INDEX

Name	Page
A	
ACCUMULATOR & MTG GP-HYDRAULIC	582
ACCUMULATOR AS	583
ACCUMULATOR GP	555
	556
	557
ADAPTER GP–(24H)	755
ADAPTER GP-FAST FILL FUEL	145
AFTERCOOLER GP-WATER	128
AIR CLEANER GP	130
	131
AIR CONDITIONER & MOUNTING GP	778
AIR CONDITIONER GP	780
ALARM AS-BACKUP	122
	356
ALARM GP	219
ALTERNATOR GP-CHARGING	220
	222
	224
ANTENNA AS	815
ARMREST GP	785
	856
ARMREST GP–LH	786
ARMREST GP–RH	784
ARMREST GP (LH)	857
	858
ARMREST GP (RH)	857
	858
ASHTRAY	799
AXLE AR-FRONT	478
AXLE GP-FRONT	480
	484
B	
BATTERY GP	226
	227
BATTERY (12 VOLT)(DRY)	227
	296
BELT	222
BELT TIGHTENER GP	8
BIT AS	756
BLADE AS-WIPER	874
BLOCK-FUSE	330
BRAKE GP-SERVICE	558
BRAKE GP-SERVICE & PARKING	560
BREATHER	390
	412
	434
BREATHER AS	18
BRUSH AS (STARTING MOTOR)	298
C	
CAB AR	787
CAMSHAFT GP	10
CAP AS	80
	368
CAP AS-FILLER	71
CAP AS-FUEL TANK FILLER	208
	212
CAP AS-OIL FILLER	390
CAP AS-RADIATOR	126
	496
CAP AS (1-3/16-12 THD)	16
CAP-DUST	72
	370
	374
	414
	418
	564
	565
	566
	640
	641
	706
	708
CAP-FILLER	688
CAP-FUSE HOLDER	318
	322
	326
CAP-PROTECTION	524
CAP-VALVE (STEM)	476
	477
CAP-VENTED	870
CASE & PARTS GP-PLANETARY	370
CASE AS-TRANSFER	372
CHAIN GP-DRIVE	373
CHASSIS AR	1
CIRCLE GP	748
CIRCUIT BREAKER AS (105 AMP) (ALTERNATOR)	358
CIRCUIT BREAKER AS (15 AMP)	360
CIRCUIT BREAKER AS (15 AMP) (ENGINE ECM)	358
CIRCUIT BREAKER AS (15 AMP) (HEAD/TAIL LIGHTS)	366
CIRCUIT BREAKER AS (15 AMP) (TAIL LIGHTS/HIGH BEAM)	364
CIRCUIT BREAKER AS (15 AMP) (TRANSMISSION)	364
	366
CIRCUIT BREAKER AS (30 AMP) (BRAKE RETRACT)	358
CIRCUIT BREAKER AS (80 AMP) (MAIN)	358
CLAMP-BOOT	298
COMMON AR-MOTOR GRADER	2

INDEX

Name	Page
COMPRESSOR GP-REFRIGERANT	788, 789, 790, 792, 794
CONDENSER & MTG GP-REFRIGERANT	795
CONSOLE GP-OPERATOR	796
CONSOLE GP-TMSN CONTROL	799
CONTROL & MTG GP-ENGINE ELEK	228
CONTROL GP-DIFFERENTIAL LOCK	374
CONTROL GP-ELECTRONIC (AUTO LUBE TIMER)	529
CONTROL GP-ENG RATINGS ELEK	229, 230, 231, 232, 233, 234
CONTROL GP-ENGINE ELECTRONIC	235, 236
CONTROL GP-MONITOR SYS DIMMER	800
CONTROL GP-PARKING BRAKE	562
CONTROL GP-SERVICE BRAKE	564
CONTROL GP-STEERING	584
CONTROL GP-TRANSMISSION HYD	376, 377
COOLANT HEATER LINES	824
COOLER GP-ENGINE OIL	85
CORE AS-OIL COOLER	85
CORE GP-OIL COOLER	86, 87
COVER-DUST	208
COVER GP-CYLINDER BLOCK	11, 12
COVER GP-FLYWHEEL HOUSING	13
COVER GP-FRONT HOUSING	14
COVER GP-OIL PAN	16
COVER GP-SHIPPING	378
COVER GP-VALVE MECHANISM	18
COVER-HYDRAULIC CAP	688
CRANKSHAFT GP	20, 22, 24
CYLINDER & MTG GP-ARTICULATION	586
CYLINDER & MTG GP-BLADE TIP	587
CYLINDER & MTG GP-CSHFT & LIFT	588
CYLINDER & MTG GP-SIDESHIFT	589
CYLINDER & MTG GP-STEERING	590
CYLINDER & MTG GP-WHEEL LEAN	591
CYLINDER AS (ETHER)	286
CYLINDER BLOCK AS	26, 28
CYLINDER BLOCK GP	30, 32, 33
CYLINDER GP-ARTICULATION	592
CYLINDER GP-BLADE TIP	594
CYLINDER GP-CENTERSHIFT & LIFT	596
CYLINDER GP-RIPPER LIFT	598
CYLINDER GP-SIDESHIFT	600
CYLINDER GP-STEERING	602
CYLINDER GP-WHEEL LEAN	604
CYLINDER HEAD AS	34, 35, 36, 37, 38
CYLINDER HEAD GP	40, 42, 44, 45

D

DAMPER GP	46
DIFFERENTIAL & BEVEL GEAR GP	380, 382
DIFFERENTIAL GP	384, 386
DOOR GP-CAB	806
DOOR GP-CAB–LH	804
DOOR GP-CAB–RH	802
DRAWBAR GP	750
DRIVE & MTG GP-CIRCLE	605
DRIVE GP-CIRCLE	606
DRIVE GP-FAN	48
DRIVE GP-UNIT INJ HYD PUMP	146, 148, 149, 150, 151, 152, 154, 156
DUCT & CONTROL GP	808
DUST EJECTOR GP	132

E

EDGE-CUTTING	761, 762, 763, 764, 765, 766
EDGE GP-CUTTING	757, 758, 759, 760
ELECTRONICS GP-POWER TRAIN	237

INDEX

Name	Page
ELEMENT AS-HYD REVERSE FLOW	688
ELEMENT AS-JACKET WATER HEATER (240V/1500W)	245
ELEMENT AS-PRIMARY	131
ELEMENT AS-SECONDARY	131
ELEMENT AS (240V/600W)	238
	239
	244
ELEMENT (CAB AIR)	846
ELEMENT-FILTER	134
	193
ENCLOSURE GP-ENGINE	488
	492
	496
	498
ENGINE AR	4
EXTENSION GP-BACKREST	810
EXTENSION GP-EXHAUST	133
FAN-ALTERNATOR	220
FAN GP-BLOWER	88
FAN GP-DEFROSTER	811
FAN GP-DEFROSTER–FRONT	812
	813
FASTENER GP-BRAKE	570
FASTENER GP-CYLINDER HEAD	42
FASTENER GP-OIL PUMP MOUNTING	70
FASTENER GP-TANDEM	388
FENDER & SUPPORT GP	499
FILLER GP-ENGINE OIL	71
FILLER GP-POWER TRAIN OIL	390
FILM GP	876
FILM-IDENTIFICATION	781
FILM-INSTRUCTION (DO NOT DRILL/WELD ROPS)	879
FILM-INSTRUCTION (SEAT ADJUSTMENT)	866
FILM-WARNING (FUEL INJECTOR)	879
FILM-WARNING (HIGH PRESSURE CYLINDER)	879
FILM-WARNING (JUMPER CABLE)	879
FILTER	154
	156
FILTER-AIR	808
FILTER AS-ENGINE OIL	72
FILTER AS-FUEL	168
FILTER AS-OIL (PILOT)	393
FILTER AS-WATER SEP & FUEL	193
FILTER ELEMENT AS-OIL (CLEANOUT/HIGH EFFICIENCY)	392
FILTER ELEMENT AS-OIL (DISPOSABLE)	392
FILTER ELEMENT AS-OIL (FIRE RESISTANT FLUIDS)	392
FILTER ELEMENT-PRIMARY AIR	814
FILTER GP-CAB AIR	814
FILTER GP-ENGINE OIL	72
FILTER GP-OIL	374
	392
	393
	571
FILTER (UNIT INJECTOR HYDRAULIC PUMP)	146
FILTER (WATER PUMP)	112
	114
	116
FINAL DRIVE GP	394
	396
	398
	400
FITTING-GREASE	748
FITTING-GREASE (AUTOMATIC LUBRICATION)	528
FITTING-GREASE (1/8-27 THD)	524
	535
	536
	772
	774
FLASHER AS-ELECTRONIC	366
FLYWHEEL GP	50
FRAME GP-FRONT	500
	501
FRAME GP-REAR	502
	503
FUMES DISPOSAL GP	73
	74
FUSE (10 AMP)	318
	322
	326
	364
	366
FUSE (15 AMP)	364
	366
FUSE (20 AMP)	330
FUSE (25 AMP)	330
GASKET (FUEL PRIMING PUMP)	193
GAUGE GP-OIL LEVEL (DIPSTICK)	75
GEAR & CASE GP-INPUT TRANSFER	402
GEAR & CASE GP-OUTPUT TRANSFER	404
	408
GEAR GP-FRONT–TIMING	51
GEAR GP-REAR	52
GLASS-SIGHT	688
GUARD & SUPPORT GP-RADIATOR	504
GUARD GP-ROCK	752

F

G

INDEX

Name	Page
H	
HEATER GP-ENGINE OIL	238
	239
HEATER GP-FUEL	240
	242
HEATER GP-HYDRAULIC OIL	244
HEATER GP-JACKET WATER	245
HITCH GP-ARTICULATING	506
HOLDER AS-FUSE	318
	322
HORN AS (24 VOLT)(HIGH TONE) (RH)	336
	340
HORN AS (24 VOLT)(LOW TONE) (LH)	336
	340
HOSE	120
HOSE (63.5MM ID) (12.7CM)	106
HOSE (6.35MM ID) (266CM)	122
HOUSING GP-FLYWHEEL	55
HOUSING GP-FRONT	56
	57
HOUSING GP-REAR AXLE	412
HYDRAULIC AR	609
I	
INDICATOR-AIR FILTER SERVICE	134
INJECTOR GP-FUEL	158
	159
	160
	161
	188
INJECTOR GP-GREASE	551
	552
	553
	554
INSERT-INLET VALVE (INTAKE)	36
INSERT-VALVE SEAT (EXHAUST)	35
	36
INSERT-VALVE SEAT (INTAKE)	35
INSTALLATION AR-ENGINE	6
INSTALLATION AR-FIELD	3
INSTALLATION GP-RADIO	815
INSULATION GP-WEATHER	816
J	
JUNCTION BLOCK AS	246
JUNCTION BLOCK GP	246
K	
KEY	208
	212
	489
	493
	893
KEY (BATTERY DISCONNECT)	308
KEY (MASTER)	826
KIT-ADJUSTER (ARMREST)	785
KIT-ADJUSTER (PAN BOTTOM)	834
KIT-AIR SPRING	862
KIT-ALTERNATOR TERMINAL	220
KIT-BACK TILT	834
KIT-BEARING (STANDARD)	60
KIT-BEARING (YOKE)	198
	200
	202
KIT-BEARING (1.27MM US)	60
KIT-BEARING (.635MM US)	60
KIT-BIAS PISTON	676
	678
KIT-BLADDER	642
KIT-BRUSH (INCLUDES PLUG AND BRUSH AS)	780
KIT-COMPENSATOR	200
	202
KIT-COMPRESSOR	862
KIT-CONNECTING PLUG (2 PIN)	315
	318
	322
	332
	334
	356
	468
KIT-CONNECTING PLUG (2 PIN) (LUBRICATION PUMP)	540
KIT-CONNECTING PLUG (2 PIN) (PRESSURIZER/AUTOLUBE TIMER)	342
KIT-CONNECTING PLUG (2 PIN) (RH/LH TURN LAMP)	356
KIT-CONNECTING PLUG (2 PIN) (TMSN OUTPUT SPEED SENSOR)	350
KIT-CONNECTING PLUG (2 PIN) (TURN SIGNALS,BEACON)	326
KIT-CONNECTING PLUG (3 PIN)	40
	268
	269
	270
	272
	273
	274
	275
	276
	277
	278
	279
	282
	318
	322

INDEX

Name	Page
	332
	334
	350
KIT-CONNECTING PLUG (3 PIN) (DOME LAMP)	318
	322
	326
KIT-CONNECTING PLUG (3 PIN) (PARK BRAKE SWITCH)	342
KIT-CONNECTING PLUG (3 PIN) (RH/LH STOP LAMP)	356
KIT-CONNECTING PLUG (3 PIN) (THROTTLE/BRK/NEUTRALIZER SNSR)	366
KIT-CONNECTING PLUG (4 PIN)	334
	350
KIT-CONNECTING PLUG (4 PIN) (LH BLADE FLOODLAMP)	336
	340
KIT-CONNECTING PLUG (6 PIN)	318
	322
KIT-CONNECTING PLUG (6 PIN) (SPEAKERS,CONVERTER,WIPERS)	326
KIT-CONNECTING PLUG (6 PINS)	342
KIT-CONNECTING PLUG (8 PIN)	318
	322
	326
	350
KIT-CONNECTING PLUG (8 PIN) (ENTERTAINMENT RADIO)	326
KIT-CONTROL PISTON	676
KIT-CUSHION (ARMREST)	785
KIT-CUSHION (CLOTH BACKREST)	810
KIT-FASTENER	862
KIT-FASTENER (SEAT SUSPENSION)	866
KIT-FUEL FILTER & WATER SEP	193
KIT-FUEL INJECTION PUMP (REBUILD)	198
	200
KIT-GASKET	574
	848
KIT-GASKET (SINGLE CYLINDER LINER)	5
KIT-HOUSING	862
KIT-INJECTOR (GREASE)	551
	552
	553
	554
KIT-PISTON (BRAKE SLACK ADJUSTER)	581
KIT-PLUG	198
	200
	202
KIT-PUMP	538
KIT-PUMP REBUILD (WATER)	116
KIT-RECEPTACLE	168
	286
KIT-RECEPTACLE (2 PIN)	122
	219
	255
	256
	260
	280
	310
	332
	334
	336
	340
	344
	356
	458
	459
	788
	838
	846
	862
KIT-RECEPTACLE (2 PIN) (AUTO LUB TIMER/SOLENOID)	336
	340
KIT-RECEPTACLE (2 PIN) (INCLUDES RECEPTACLE AS & WEDGE)	281
KIT-RECEPTACLE (2 PIN) (SHIFT SOLENOIDS)	474
KIT-RECEPTACLE (2 PIN) (TRANSMISSION SHIFT SOLENOIDS)	470
KIT-RECEPTACLE (2 PIN) (2 PIN)	780
KIT-RECEPTACLE (3 PIN)	247
	257
	262
	263
	266
	267
	284
	318
	322
	332
	334
	336
	340
KIT-RECEPTACLE (4 PIN)	261
KIT-RECEPTACLE (6 PIN)	829
	838
	874
KIT-RECEPTACLE (6 PIN) (HORN RELAY)	336
	340
KIT-RECEPTACLE (6 PIN) (RADIO)	318
	322
	326
KIT-RECEPTACLE (8 PIN)	317
	356
KIT-RELAY TERMINAL	220
KIT-RELIEF VALVE	574
KIT-REPAIR	538
	566

INDEX

Name	Page
KIT-ROLLER	862
	866
KIT-SEAL	162
	194
	195
	196
	466
	745
	746
KIT-SEAL (ARTICULATION CYLINDER)	592
KIT-SEAL (FUEL SOLENOID VALVE)	218
KIT-SEAL (INCLUDES SEALS & RINGS)	747
KIT-SEAL (UNIT INJECTOR HYDRAULIC)	197
	198
	200
	202
KIT-SEAT CUSHION (CLOTH)	854
KIT-SEAT KNOB	854
KIT-SEAT TILT	834
KIT-SHAFT SHIM (17 SHIMS)	676
KIT-SLIDER BLOCK	854
	859
	860
KIT-TERMINAL (STARTING MOTOR)	299
	303
KIT-TETHER	862
	866
KIT-TILT PAN	854
KIT-UNIT INJ HYD PUMP COMP	198
KIT-VENT	208
	212
KIT-WATER PUMP REBUILD	112
	114
KIT-WIRING HARNESS	862
	866
KNOB-WIPER SWITCH	318
	322
	326

L

Name	Page
LAMP	251
LAMP-DIODE (LED)	364
LAMP-DIODE (LED) (DIFF BRK PRESS INDICATOR)	366
LAMP GP-DOME	247
LAMP GP-FLOOD	248
	249
LAMP GP-HEAD	250
	251
	252
	255
LAMP GP-HEAD–HIGH BEAM	254
LAMP GP-HEAD–LOW BEAM	253
LAMP GP-SIGNAL–STOP/TAIL	257
LAMP GP-SIGNAL–TURN	256
LAMP-MINIATURE (24 VOLT)	360
	361
LAMP-MINIATURE (28 VOLT)	360
LAMP (24 VOLT)	256
	257
	319
	323
	327
	364
	838
LAMP (24 VOLT) (CRUISE ON/OFF INDICATOR)	366
LAMP (24 VOLT) (CRUISE SET/RESUME INDICATOR)	366
LAMP (24 VOLT) (DIFFERENTIAL UNLOCK INDICATOR)	366
LAMP (24 VOLTS)(65 WATTS)	250
	252
LAMP (24 VOLT)(65 WATT)	248
	249
LAMP (24 VOLT)(65 WATT) (HEAD)	254
	255
LAMP (24 VOLT)(65 WATT) (LOW BEAM)(HEAD)	253
LAMP (28 VOLT)	838
LAMP (28 VOLT) (DOME)	247
LENS-AMBER	256
LENS AS-FLOOD	248
	249
LENS AS (HEAD)	254
LENS AS-HEADLAMP	255
LENS AS-HEADLIGHT	253
LENS-DOME LAMP	247
LENS-RED	257
	838
LIFTING GP-ENGINE	58
LIGHTER AS-CIGAR	360
LIGHTING GP-FLOOD & HEAD	258
LINER GP-CAB	818
LINES GP-AIR	134
	136
	138
LINES GP-AIR CONDITIONER	820
LINES GP-CAB AIR	822
LINES GP-CENTRAL LUBRICATION	508
LINES GP-ENGINE OIL	76
LINES GP-FRONT	610
	614
	618
LINES GP-FUEL	163
	164
LINES GP-FUEL FILTER	168
LINES GP-GREASE	512
	514

INDEX

Name	Page
	518
LINES GP-GREASE–FRONT AXLE	520
LINES GP-HEATER	824
LINES GP-HYDRAULIC	622
	626
	630
	632
	636
LINES GP-INJECTOR HYD PUMP	172
LINES GP-POWER TRAIN OIL	414
	418
LINES GP-PUMP	640
LINES GP-RIPPER	648
	650
	652
LINES GP-SECONDARY STEERING	654
LINES GP-STEERING	656
	658
	661
LINES GP-TORQUE CONV COOLER	90
LINES GP-TURBOCHARGER OIL	78
LINES GP-WATER	92
	94
	96
	98
	102
	106
LINK GP-STEERING	522
LINK GP-STEERING FRAME LOCK	523
LITERATURE GP	826
LUBRICATION AR-AUTOMATIC	524
	528
LUBRICATION AR-CENTRAL	533
LUBRICATION GP-CENTRAL	534
	535
	536

M

MAGNETIC PICKUP GP	260
MANIFOLD GP-EXHAUST	139
	140
MIRROR GP-REAR VIEW	827
	828
MODULE GP-SPEEDOMETER & TACH	829
MOLDBOARD AS	753
MOTOR & MTG GP-CIRCLE DRIVE	662
MOTOR AS (PARK BRAKE RELEASE)	574
MOTOR-BLOWER	848
MOTOR GP-ELEC HYD PUMP	663
MOTOR GP-GEROTOR	664
MOUNTING GP-BLADE	767
MOUNTING GP-CAB	830
MOUNTING GP-PLATFORM	832
MOUNTING GP-REAR AXLE	421
MOUNTING GP-RIPPER	768
MUFFLER GP	141

O

OIL CHANGE GP-HIGH SPEED	80

P

PADLOCK GP	208
	212
	489
	493
	893
PAN GP-OIL	59
PAN GP-SEAT–BACK	836
PAN GP-SEAT–BOTTOM	834
PAN GP-SEAT (BACK)	854
PAN GP-SEAT (BOTTOM)	854
PANEL GP-INSTRUMENT	838
PEDAL GP-BRAKE, TMSN & GOV	842
	844
PISTON & ROD GP	60
	62
PLANETARY GP-TRANSMISSION	422
PLATE & FILM GP	878
	879
	880
	881
	882
	883
	884
	885
	886
	887
	888
	889
	890
	891
	892
PLATE GP-PUSH	754
PLATE-HYDRAULIC ACCUMULATOR	557
	879
PLATE-MAIN FRAME (DO NOT DRILL OR WELD)	879
PLATE-SERVICE INFORMATION	878
PLATE-WARNING (HIGH PRESSURE CYLINDER)	557
	879
PLATE-WARNING (NO CLEARANCE)	879
PLATFORM AR	537
PLUG	408
PLUG-DRAIN	106
PLUG GP-CYLINDER BLOCK	63
PLUG GP-CYLINDER HEAD	64

INDEX

Name	Page
PLUG-O-RING (7/16-20 THD)	678
PLUG-PIPE (1/8-27 NPTF)	24
POWER TRAIN AR	427
PRELUBRICATION AR-ENGINE	82
PRESSURIZER GP-CAB	846
	848
PULLEY GP-CRANKSHAFT–HIGH AMBIENT	65
PUMP & MTG GP-BRAKE & DIF LOCK	572
PUMP & MTG GP-PISTON	666
PUMP & MTG GP-UNIT INJ HYD	174
	176
	178
	180
	182
	184
	186
PUMP-ELECTRIC HYDRAULIC	663
PUMP GP-ELECTRIC DRIVE	566
	574
	576
PUMP GP-ENGINE OIL	84
PUMP GP-FUEL INJECTION	188
	189
	190
	191
PUMP GP-FUEL PRM & PRIM FILTER	192
	193
PUMP GP-FUEL TRANSFER	194
	195
	196
	197
	198
	200
	202
PUMP GP-GEAR	577
	578
	668
	670
PUMP GP-LUBRICATION	538
	540
PUMP GP-METERING	672
PUMP GP-PISTON	674
	676
	678
PUMP GP-TRANSMISSION	428
	429
PUMP GP-UNIT INJECTOR HYD	194
	195
	196
	197
	198
	200
	202
PUMP GP-WATER	108
	109
	110
	112
	114
	116

R

Name	Page
RADIATOR & MOUNTING GP	118
RADIATOR GP	120
	122
	124
REGULATOR-WATER TEMPERATURE (92 DEG C.)	94
	98
	102
RELAY AS (24 VOLT)	360
RELAY AS (24 VOLT) (BRAKE LAMP)	358
RELAY AS (24 VOLT) (HORN)	364
RELAY AS (24 VOLT) (PRELUBE)	358
RELAY AS (24 VOLT) (START AID)	358
RING-RETAINING	344
RIPPER AR	770
RIPPER GP	772
	774
ROCKER ARM GP	66
ROPS GP	850
ROTATING GP-PUMP	680
	681

S

Name	Page
SCREEN GP	580
SCREEN-SUCTION	405
	409
SCREW-DRIVE (NO 4X3/16 IN)	409
SEAL GP	112
	114
SEAL GP-CRANKSHAFT	20
	22
	24
SEAL-O-RING (110.49MM ID)	208
	212
SEAL-O-RING (19.18MM ID)	82
SEAL-O-RING (81.92MM ID)	404
SEAL-O-RING (94.84MM ID)	555
	583
SEALANT	40
SEALANT-GASKET	42
SEAT BELT GP	851
	853
SEAT BELT GP–RETRACTABLE	852
SEAT BELT GP (RETRACTABLE)	856
	857
	858
SEAT GP–CLOTH	854

INDEX

Name	Page
	856
	857
	858
SEAT GP-SUSPENSION	859
	860
SENSOR GP-FUEL LEVEL	261
SENSOR GP-POSITION	262
	263
	264
	266
	267
SENSOR GP-POSITION (BRAKE)	844
SENSOR GP-POSITION (NEUTRALIZER)	844
SENSOR GP-POSITION (THROTTLE)	842
SENSOR GP-PRESSURE	268
	269
	270
	272
	273
	274
	275
	276
	277
	278
SENSOR GP-PRESSURE– LOCK UP CLUTCH	271
SENSOR GP-PRESSURE– OIL FILTERED/OIL UNFILTERED	279
SENSOR GP-PRESSURE (ATMOSPHERIC)	148
	149
SENSOR GP-PRESSURE (ENGINE OIL)	174
	176
	178
	180
	182
	184
	186
SENSOR GP-PRESSURE (INJECTION ACTUATION OIL)	40
	42
SENSOR GP-PRESSURE (TURBO OUTLET)	40
	42
SENSOR GP-ROTARY POSITION	264
SENSOR GP-SPEED	260
	280
	281
SENSOR GP-SPEED– ENGINE SPEED/TIMING	282
SENSOR GP-SPEED (ENGINE SPEED/TIMING)	56
	57
SENSOR GP-SPEED (TRANSMISSION)	350
SENSOR GP-TEMPERATURE	94
	98
	102
	168
	283
	284
SENSOR GP-TEMPERATURE (ENGINE OIL)	174
	176
	178
	180
	182
	184
	186
SENSOR GP-TEMPERATURE (TORQUE CONVERTER)	332
SHAFT GP-DRIVE	430
	431
SHIELD GP-ENGINE COMPARTMENT	542
SLACK ADJUSTER GP	565
	581
SLEEVE	489
	493
SLEEVE-BOTTOM LINER	26
	28
SLEEVE-EXHAUST MANIFOLD	142
SLEEVE-LIFTER BORE	26
	28
SOFTWARE GP-POWER TRAIN	237
SOLENOID AS (STARTING MOTOR 24 VOLT)	303
SPEAKER AS-RADIO	818
SPIDER & BEARING GP	453
SPRING-BRUSH	299
STARTING AID GP-ETHER	286
STARTING AR-COLD WEATHER	288
	292
	294
	296
STARTING MOTOR GP-ELECTRIC	298
	302
	305
	306
	307
STARTING MOTOR GP-ELECTRIC (24V)(RH MOUNTED)(COLD WEATHER)	305
STEP GP-FRONT	546
	548
STEP GP-REAR	550
STRAINER AS	688
STRAINER-FUEL TANK	208
	212
SUPPORT GP-ENGINE	67
	68
SUPPORT GP-TRANSMISSION	432
SUSPENSION GP-SEAT	862
SUSPENSION GP-SEAT–AIR	866
SWASHPLATE GP	682
	683
	684

INDEX

Name	Page
	685
SWITCH AS	360
SWITCH AS (BEACON)	319
	323
	327
SWITCH AS (CRUISE ON/OFF)	364
	366
SWITCH AS (CRUISE SET/RESUME)	364
SWITCH AS (CUSHION BLADE)	364
SWITCH AS (DIFFERENTIAL UNLOCK)	364
	366
SWITCH AS-MAGNETIC	288
SWITCH AS (ON/OFF) (FRONT DEFROSTER FAN)	319
	323
	327
SWITCH AS (ON/OFF) (REAR DEFROSTER FAN)	319
	323
	327
SWITCH AS-PRESSURE (BRAKE OIL)	336
	340
SWITCH AS-PRESSURE (HIGH/LOW)(A/C)	332
SWITCH AS-PRESSURE (PARK BRAKE)	336
	340
SWITCH AS-PRESSURE (PRIMARY STEERING)	345
	351
SWITCH AS-PUSH BUTTON	838
SWITCH AS-ROCKER (RUNNING LAMP)	360
SWITCH AS-ROTARY (BLOWER)	360
SWITCH AS-ROTARY (HIGH BEAM)	364
	366
SWITCH AS-ROTARY (REAR WIPER)	318
	322
SWITCH AS-ROTARY (WIPER/WASHER)(REAR)	326
SWITCH AS-TEMPERATURE (HYDRAULIC OIL)	345
	351
SWITCH AS-THERMOSTAT	780
SWITCH AS-TURN SIG & WARNING	364
	366
SWITCH GP-DISCONNECT–BATTERY	308
SWITCH GP-DISCONNECT (BATTERY)	344
	350
SWITCH GP-FLOW	5
SWITCH GP-FLOW–COOLANT	309
	310
SWITCH GP-FLOW (COOLANT)	309
SWITCH GP-MAGNETIC	311
	312
	313
	314
	315
SWITCH GP-MAGNETIC (BRAKE RETRACT RELAY)	358
SWITCH GP-MAGNETIC (MAIN RELAY)	358
SWITCH GP-MAGNETIC (PRELUBE)	82
SWITCH GP-MAGNETIC (START RELAY 1)	358
SWITCH GP-MAGNETIC (START RELAY 2)	358
SWITCH GP-MAGNETIC (24-32V) (SUPPLEMNTAL STER/PRELUBE RELAY)	311
SWITCH GP-START	316
	360
SWITCH GP-WIPER	317
	318
	322
SWITCH GP-WIPER (24 VOLT) (FRONT WIPER)	318
	322
	326
SWITCH-TEMPERATURE	238
	244
SWITCH-TEMPERATURE (OIL)	239
SWITCH-TOGGLE (1 POLE) (GROUND LEVEL SHUTOFF)	336
	340
SWIVEL GP	686
	687

T

Name	Page
TANDEM & COVER GP	434
TANK & FILTER GP-HYDRAULIC	688
TANK & MTG GP-FUEL	204
	206
TANK & MTG GP-HYDRAULIC	690
TANK GP-COOLANT	126
TANK GP-FUEL	208
	212
TIRE GP	436
TOOL BOX GP	893
TOOTH GP-RIPPER	776
	777
TORQUE CONVERTER GP	438
	442
	446
	449
	450
TRANSMISSION AR	451
	452
TURBOCHARGER GP	143
	144

U

Name	Page
UNIVERSAL JOINT GP	453
	454

INDEX

Name	Page
V	
V-BELT	790, 792
V-BELT SET	48
VALVE	688
VALVE & LINKAGE GP	692, 694
VALVE & MTG GP-DIFF LOCK	455
VALVE & MTG GP-SOLENOID	696, 697
VALVE AS	555, 583
VALVE AS-AIR CONDITIONER	820
VALVE AS-FLUID SAMPLING	566
VALVE AS-FLUID SAMPLING (POWER TRAIN OIL)	418
VALVE AS-FLUID SAMPLING (STEERING OIL)	640
VALVE-EXHAUST	45
VALVE-FLUID SAMPLING	72, 374, 414
VALVE GP	456
VALVE GP-BANK 4	698
VALVE GP-BANK 4–RH	700
VALVE GP-BANK 6	702
VALVE GP-CHECK	704
VALVE GP-CHECK (BRAKE PUMP)	566
VALVE GP-CHECK (ELECTRIC DRIVE)	640
VALVE GP-CHECK (SERVICE BRAKE)	565
VALVE GP-COMBINATION	705, 706, 708
VALVE GP-CONTROL	710, 712, 714, 716, 718, 720, 722, 724, 726, 728, 730, 732, 734
VALVE GP-DIVERTER	747
VALVE GP-LUBE DISTRIBUTION	524, 528
VALVE GP-LUBE DISTRIBUTION–AUTOLUBE MANIFOLD	554
VALVE GP-LUBE DISTRIBUTION–3 INJECTOR	551
VALVE GP-LUBE DISTRIBUTION–4 INJECTOR	553
VALVE GP-LUBE DISTRIBUTION–5 INJECTOR	552
VALVE GP-MODULATING	457, 458, 459
VALVE GP-MODULATING (TC LOCKUP CLUTCH)	458, 459
VALVE GP-PRESS & FLOW CMPNSTR	736
VALVE GP-PRESSURE CONTROL	215, 216, 217
VALVE GP-RELIEF	90, 706, 708, 738, 739, 740, 741, 742, 743
VALVE GP-RELIEF–TORQUE CONVERTER OUTLET	460
VALVE GP-SELECTOR	461, 462
VALVE GP-SELECTOR & PRESS CONT	464
VALVE GP-SHUTTLE	744
VALVE GP-SOLENOID	194, 218, 466, 467, 468, 745, 746
VALVE GP-SOLENOID (PRESSURE CONTROL)	195, 196, 197, 198, 200, 202
VALVE GP-TRANSMISSION CONTROL	470, 472, 474
VALVE GP-UNLOADING	747
VALVE-INLET	45
VALVE MECHANISM GP	69
W	
WASHER GP-WINDOW	870
WHEEL GP	476, 477

INDEX

Name	Page	Name	Page
WINDOW GP	872		
WIPER & WASHER GP-WINDOW	874		
WIRING GP-CAB	318		
	322		
	326		
WIRING GP-COLD WEATHER	330		
WIRING GP-ENGINE	332		
	334		
WIRING GP-FRONT	336		
	340		
WIRING GP-PLATFORM	342		
WIRING GP-REAR	344		
	350		
	356		
WIRING GP-RELAY PANEL	358		
WIRING GP-SHIFT CONSOLE	360		
WIRING GP-STEERING CONSOLE	364		
	366		
WIRING GP-UNIT INJECTOR	368		

INDEX

Désignation	Page

A

ACCOUDOIR (ASS) 784, 785, 856
ACCOUDOIR (ASS) 786
ACCOUDOIR (ASS) (DROITE) 857, 858
ACCOUDOIR (ASS) (GAUCHE) 857, 858
ACCUMULATEUR (ASS) 556, 557
ACCUMULATEUR (ASS) 555
ACCUMULATEUR (ENS) 583
ACCUMULATEUR ET MONTAGE - HYDRAULIQUE (ASS) 582
ADAPTATEUR (ASS) 755
ADAPTATEUR DE REMPLIS. RAPIDE DE CARBURANT (ASS) 145
ADMISSION REFROIDIE PAR EAU (ASS) 128
ALLUME-CIGARE (ENS) 360
ALTERNATEUR DE CHARGE (ASS) 222, 224
ALTERNATEUR DE CHARGE (ASS) 220
ALTERNATEUR-VENTILATEUR 220
AMORTISSEUR DE VIBRATIONS (ASS) 46
AMPOULE 251
AMPOULE (24 VOLTS) 256, 257, 319, 323, 327, 364, 838
AMPOULE (24 VOLTS) (INDICATEUR DE DÉBLOCAGE DE DIFFÉRENTIEL) 366
AMPOULE (24 VOLTS) (INDICATEUR DE RÉARMEMENT/ REPRISE DE RÉGULATEUR) 366
AMPOULE (24 VOLTS) (INDICATEUR DE RÉGULATEUR MARCHE/ARRÊT) 366
AMPOULE (24 VOLTS) (65 WATTS) 250, 252
AMPOULE (24 VOLTS)(65 WATTS) 248, 249
AMPOULE (24 VOLTS)(65 WATTS) (CODE)(PHARE) 253
AMPOULE (24 VOLTS)(65 WATTS) (TÊTE) 254, 255
AMPOULE (28 VOLTS) 838
AMPOULE (28 VOLTS) (PLAFONNIER) 247
ANNEAU 344
ANTENNE (ASS) 815
ARBRE A CAMES (ASS) 10
ARBRE D'ENTRAÎNEMENT (ASS) 430, 431
ARTICULATION DE DIRECTION (ASS) 522
ATTELAGE D'ARTICULATION (ASS) 506
AUTOCOLLANT DE MISE EN GARDE (CÂBLES VOLANTS) 879
AUTOCOLLANT DE MISE EN GARDE (INJECTEUR DE CARBURANT) 879
AUTOCOLLANT DE MISE EN GARDE (VÉRIN HAUTE PRESSION) 879
AUTOCOLLANT D'IDENTIFICATION 781
AUXILIAIRE DE DÉMARRAGE À L'ÉTHER 286
AVERTISSEUR (ASS) 219
AVERTISSEUR DE RECUL (ENS) 122
AVERTISSEUR DE RECUL (ENS) 356
AXE DE CULBUTEUR (ASS) 66

B

BALAI D'ESSUIE-GLACE (ENS) 874
BARRE D'ATTELAGE (ASS) 750
BÂTI AR (ASS) 502, 503
BATTERIE (ASS) 226, 227
BATTERIE (12 V (A SEC)) 227, 296
BLOC - FUSIBLE 330
BLOC-CYLINDRES - COUVERCLE (ASS) 11, 12
BLOC-CYLINDRES (ASS) 30, 32, 33
BLOC-CYLINDRES (ENS) 26, 28
BLOC DE BRANCHEMENT (ASS) 246
BLOC DE BRANCHEMENT (ENS) 246
BOÎTE DE VITESSES (VERSION) 451, 452
BOÎTE PLANÉTAIRE (ASS) 422
BOUCHON - BLOC-CYLINDRES 63
BOUCHON - CULASSE (ASS) 64
BOUCHON À ÉVENT 870
BOUCHON DE GOULOTTE DE REMPLISSAGE 688
BOUCHON DE GOULOTTE DE REMPLISSAGE D'HUILE MOTEUR 390
BOUCHON DE GOULOTTE DE REMPLISSAGE (ENS) 71
BOUCHON DE RADIATEUR (ENS) 496
BOUCHON DE RADIATEUR (ENS) 126
BOUCHON DE REMPLISSAGE D'HUILE MOTEUR (ASS) 71
BOUCHON DE REMPLISSAGE DU RÉSERVOIR DE CARBURANT 208, 212

INDEX

Désignation	Page
BOUCHON DE VIDANGE	106
BOUCHON FILETÉ	408
BOUCHON FILETÉ (RACCORD AU PAS DU GAZ DE 1/8 - 27)	24
BOUCHON-JOINT TORIQUE (FILET 7/16-20)	678
BOUCLIER (ENS)	753
BOULONNERIE DE FREIN (ASS)	570
BOULONNERIE DE LA CULASSE (ASS)	42
BOULONNERIE DE MONTAGE DE LA POMPE A HUILE (ASS)	70
BOULONNERIE DE TANDEM (ASS)	388
BOUTON DE CONTACTEUR D'ESSUIE-GLACE	318
	322
BOUTON DE CONTACTEUR D'ESSUIE-GLACE	326
BROSSE (ENS) (DÉMARREUR)	298

C

CABINE - REVÊTEMENT (ASS)	818
CABINE (VERSION)	787
CABLAGE - PANNEAU DE RELAIS	358
CABLAGE - PLATE-FORME (ASS)	342
CABLAGE - TEMPS FROID (ASS)	330
CABLAGE AR (ASS)	344
	350
	356
CABLAGE AV (ASS)	336
	340
CABLAGE DE CABINE (ASS)	318
	322
	326
CABLAGE DE LA CONSOLE DE CHANGEMENTS DE VITESSE	360
CABLAGE DE LA CONSOLE DE DIRECTION	364
	366
CABLAGE DE MOTEUR (ASS)	334
CABLAGE DE MOTEUR (ASS)	332
CABLAGE D'INJECTEUR	368
CACHE-SOUPAPES (ASS)	18
CADENAS (ASS)	208
	212
	489
	493
	893
CANALIS. DE REFROIDISSEMENT DU CONV. DE COUPLE	90
CANALISATION DE DIRECTION AUXILIAIRE	654
CANALISATIONS - INJECTEURS-POMPES HYDRAULIQUES	172
CANALISATIONS AV	610
	614
	618
CANALISATIONS D'AIR (ASS)	134
	136
	138
CANALISATIONS D'AIR DE CABINE (ASS)	822
CANALISATIONS DE CARBURANT (ASS)	163
	164
CANALISATIONS DE CHAUFFAGE (ASS)	824
CANALISATIONS DE CLIMATISEUR (ASS)	820
CANALISATIONS DE DIRECTION (ASS)	656
	658
	661
CANALISATIONS DE GRAISSAGE (ASS)	512
	514
	518
	520
CANALISATIONS DE POMPE (ASS)	640
CANALISATIONS DE RÉCHAUFFEUR DE LIQUIDE DE REFROIDISSEMENT	824
CANALISATIONS D'EAU (ASS)	92
	94
	96
	98
	102
	106
CANALISATIONS D'HUILE DE TRANSMISSION (ASS)	414
CANALISATIONS D'HUILE DE TRANSMISSION (ASS)	418
CANALISATIONS D'HUILE DE TURBOCOMPRESSEUR (ASS)	78
CANALISATIONS D'HUILE MOTEUR (ASS)	76
CANALISATIONS DU FILTRE A CARBURANT (ASS)	168
CANALISATIONS DU RIPPER (ASS)	648
	650
	652
CANALISATIONS HYDRAULIQUES (ASS)	622
	626
	630
	632
	636
CAPTEUR - POSITION DE ROTATION (ASS)	264
CAPTEUR DE NIVEAU DE CARBURANT (ASS)	261
CAPTEUR DE PRESSION (ASS)	269
	270
	271
	272
	273
	274
	275
	276
	277
	278
	279
CAPTEUR DE PRESSION (ASS)	268

INDEX

Désignation	Page
CAPTEUR DE PRESSION (ASS) (ATMOSPHÉRIQUE)	148 149
CAPTEUR DE PRESSION (ASS) (HUILE DE COMMANDE D'INJECTION)	40 42
CAPTEUR DE PRESSION (ASS) (HUILE MOTEUR)	174 176 178 180 182 184 186
CAPTEUR DE PRESSION (ASS) (SORTIE DE TURBOCOMPRESSEUR)	40 42
CAPTEUR DE TEMPERATURE (ASS)	283 284
CAPTEUR DE TEMPERATURE (ASS)	94 98 102 168
CAPTEUR DE TEMPERATURE (ASS) (CONVERTISSEUR DE COUPLE)	332
CAPTEUR DE TEMPERATURE (ASS) (HUILE MOTEUR)	174 176 178 180 182 184 186
CAPTEUR DE VITESSE (ASS)	260 280 281 282
CAPTEUR DE VITESSE (ASS) (BOÎTE DE VITESSES)	350
CAPTEUR DE VITESSE (ASS) (RÉGIME MOTEUR/SYNCHRONISATION)	56 57
CAPTEUR MAGNÉTIQUE (ASS)	260
CARENAGE DE MOTEUR (ASS)	498
CARENAGE DE MOTEUR (ASS)	488 492 496
CARTER - DISTRIBUTION (ENS)	372
CARTER AV (ASS)	56 57
CARTER DE VOLANT (ASS)	55
CARTER D'ESSIEU AR (ASS)	412
CEINTURE DE SECURITE (ASS)	851 852 853
CEINTURE DE SECURITE (ASS) (RÉTRACTABLE)	856 857 858
CENDRIER	799
CERCLE (ASS)	748
CHAPEAU - PROTECTION	524
CHAPEAU DE VALVE (TIGE)	476 477
CHAPEAU (ENS)	80 368
CHAPEAU (ENS) (FILET 1-3/16-12)	16
CHAPEAU (PORTE-FUSIBLES)	318 322
CHAPEAU (PORTE-FUSIBLES)	326
CHÂSSIS AV (ASS)	500 501
CHEMISE INFERIEURE	26 28
CLAPET	688
CLAPET (ASS)	456
CLAPET DE DECHARGE (ASS)	90 460 738 739 740 741 742 743
CLAPET DE DECHARGE (ASS)	706 708
CLAPET DE RETENUE (ENS)	704
CLAPET DE RETENUE (ENS) (FREIN DE MANOEUVRE)	565
CLAPET DE RETENUE (ENS) (POMPE DE FREIN)	566
CLAPET DE RETENUE (ENS) (TRANSLATION ÉLECTRIQUE)	640
CLAPET (ENS)	555 583
CLÉ	208 212 489 493 893
CLÉ (COUPE-BATTERIE)	308
CLÉ (PASSE-PARTOUT)	826
CLIGNOTANT ÉLECTRONIQUE (ENS)	366
CLIMATISEUR (ASS)	780
CLIMATISEUR ET MONTAGE (ASS)	778
COFFRE A OUTILS (ASS)	893
COLLECTEUR D'ÉCHAPPEMENT (ASS)	139 140
COLLIER-GAINE	298

INDEX

Désignation	Page
COMMANDE DE DIFFÉRENTIEL - VERROUILLAGE (ASS)	374
COMMANDE DE DIRECTION (ASS)	584
COMMANDE DE FREIN DE STATIONNEMENT (ASS)	562
COMMANDE D'INVERSION DE LA CENTRALE DE SURVEILLANCE (ASS)	800
COMMANDE ÉLECTRIQUE DE RÉGLAGE DU MOTEUR (ASS)	229
	230
	231
	232
	233
	234
COMMANDE ELECTRONIQUE DE BOITE (ASS) (MINUTERIE D'AUTO-GRAISSAGE)	529
COMMANDE ELECTRONIQUE DE MOTEUR (ASS)	235
	236
COMMANDE ET MONTAGE - MOTEUR	228
COMMANDE HYDRAULIQUE DE BOÎTE (ASS)	376
	377
COMPRESSEUR DE REFRIGERANT (ASS)	789
	790
	792
	794
COMPRESSEUR DE REFRIGERANT (ASS)	788
CONDENSATEUR ET MONTAGE (RÉFRIGÉRANT)	795
CONDUIT ET COMMANDE (ASS)	808
CONSOLE DE COMMANDE DE BOÎTE (ASS)	799
CONSOLE DE CONDUITE (ASS)	796
CONTACTEUR DE CLIGNOTANT DE DIRECTION ET AVERTISS.	364
	366
CONTACTEUR DE DEBIT (ASS)	5
CONTACTEUR DE DEBIT (ASS)	309
	310
CONTACTEUR DE DEBIT (ASS) (LIQUIDE DE REFROIDISSEMENT)	309
CONTACTEUR (ENS)	360
CONTACTEUR (ENS) (DÉBLOCAGE DE DIFFÉRENTIEL)	364
	366
CONTACTEUR (ENS) (GYROPHARE)	319
	323
	327
CONTACTEUR (ENS) (LAME AMORTISSEUR)	364
CONTACTEUR (ENS) (MARCHE/ARRÊT) (VENTILATEUR DÉGIVREUR AR)	319
	323
	327
CONTACTEUR (ENS) (MARCHE/ARRÊT) (VENTILATEUR DÉGIVREUR AV)	319
	323
	327
CONTACTEUR (ENS) (RÉGULATEUR MARCHE/ARRÊT)	364
	366
CONTACTEUR (ENS) (RÉGULATEUR RÉARMEMENT/REPRISE)	364
CONTACTEUR MAGNETIQUE (ASS)	312
	313
	314
	315
CONTACTEUR MAGNETIQUE (ASS)	311
CONTACTEUR MAGNETIQUE (ASS) (DÉMARRER RELAIS 1)	358
CONTACTEUR MAGNETIQUE (ASS) (DÉMARRER RELAIS 2)	358
CONTACTEUR MAGNETIQUE (ASS) (PRÉGRAISSAGE)	82
CONTACTEUR MAGNETIQUE (ASS) (RELAIS DE RAPPEL DE FREIN)	358
CONTACTEUR MAGNETIQUE (ASS) (RELAIS PRINCIPAL)	358
CONTACTEUR MAGNETIQUE (ASS) (24-32V) (RELAIS DE DIRECTION AUXILIAIRE/PRÉGRAISSAGE)	311
CONTACTEUR MAGNETIQUE (ENS)	288
CONVERTISSEUR DE COUPLE (ASS)	438
	442
	446
	449
	450
COURONNE ET DIFFERENTIEL (ASS)	380
	382
COURROIE	222
COURROIE TRAPEZOIDALE	790
	792
COUVERCLE - BOUCHON DU RÉSERVOIR HYDRAULIQUE	688
COUVERCLE ANTI-POUSSIÈRE	208
COUVERCLE DE CARTER AV (ASS)	14
COUVERCLE DE CARTER DE VOLANT (ASS)	13
COUVERCLE DE CARTER D'HUILE MOTEUR (ASS)	16
COUVERCLES D'EXPEDITION (ASS)	378
CREPINE (ENS)	688
CROISILLON ET ROULEMENT	453
CULASSE (ASS)	40
	42
	44
	45
CULASSE (ENS)	34
	35

INDEX

Désignation	Page
	36
	37
	38
CULBUTERIE (ASS)	69

D

DÉMARRAGE PAR TEMPS FROID (VERSION)	288
DÉMARRAGE PAR TEMPS FROID (VERSION)	292
	294
	296
DÉMARREUR ÉLECTRIQUE (ASS)	302
	305
DÉMARREUR ÉLECTRIQUE (ASS)	298
DÉMARREUR ÉLECTRIQUE (ASS)	306
	307
DÉMARREUR ÉLECTRIQUE (ASS) (24V)(MONTÉ À DROITE)(TEMPS FROID)	305
DENT DE RIPPER (ASS)	776
	777
DIFFERENTIEL (ASS)	384
	386
DISJONCTEUR (ENS) (105A) (ALTERNATEUR)	358
DISJONCTEUR (ENS) (15A)	360
DISJONCTEUR (ENS) (15A) (BOÎTE DE VITESSES)	364
	366
DISJONCTEUR (ENS) (15A) (FEUX ARRIÈRE/FEUX DE ROUTE)	364
DISJONCTEUR (ENS) (15A) (MODULE DE COMMANDE MOTEUR)	358
DISJONCTEUR (ENS) (15A) (PHARES AVANT/FEUX ARRIÈRE)	366
DISJONCTEUR (ENS) (30A) (DÉBLOCAGE DU FREIN)	358
DISJONCTEUR (ENS) (80 A) (PRINCIPAL)	358
DISPOSITIF DE VIDANGE RAPIDE D'HUILE (ASS)	80
DISPOSITIF D'EVACUATION DES VAPEURS DE CARTER	73
	74
DISTRIBUTEUR (ASS)	710
	712
	714
	716
	718
	720
	722
	724
	726
	728
	730
	732
	734
DISTRIBUTEUR DE BOITE (ASS)	470
DISTRIBUTEUR DE BOITE (ASS)	472
	474
DISTRIBUTEUR DE PRESSION (ASS)	215
	216
	217
DISTRIBUTEUR 4 ÉLÉMENTS (ASS)	698
	700
DISTRIBUTEUR 6 ÉLÉMENTS (ASS)	702

E

EAU DES CHEMISES - RECHAUFFEUR (ASS)	245
ÉCLAIRAGE - PROJECTEUR ET PHARE AV	258
ECRAN (ASS)	580
ÉCRAN THERMIQUE DE COMPARTIMENT MOTEUR	542
ÉJECTEUR AUTOMATIQUE DE POUSSIÈRE (ASS)	132
ÉLECTRONIQUE DE TRANSMISSION (ASS)	237
ELEMENT - DEBIT INVERSE HYDRAULIQUE (ENS)	688
ÉLÉMENT (AÉRATION DE LA CABINE)	846
ÉLÉMENT DE FILTRE	134
	193
ÉLÉMENT DE FILTRE À AIR PRINCIPAL	814
ÉLÉMENT DE FILTRE À HUILE (ENS) (JETABLE)	392
ÉLÉMENT DE FILTRE À HUILE (ENS) (LIQUIDES RÉSISTANTS AU FEU)	392
ÉLÉMENT DE FILTRE À HUILE (ENS) (NETTOYAGE/GRANDE EFFICACITÉ)	392
ÉLÉMENT DU RÉCHAUFFEUR D'EAU DES CHEMISES (ENS) (240V/1500W)	245
ELEMENT (ENS) (240V/600W)	238
	239
	244
ÉLÉMENT PRINCIPAL (ENS)	131
ÉLÉMENT SECONDAIRE (ENS)	131
EMBOUT (ENS)	756
ENGRENAGE DE TRANSFERT D'ENTRÉE ET CARTER (ASS)-	402
ENGRENAGE DE TRANSFERT ET CARTER	404
	408
ENTRAÎNEMENT DE CERCLE (ASS)	606
ENTRAÎNEMENT DE CHAÎNE (ASS)	373
ENTRAÎNEMENT DE VENTILATEUR (ASS)	48
ENTRAINEMENT D'INJECTEURS-POMPES HYDRAULIQUES	146
	148
	149
	150

INDEX

Désignation	Page
	151
	152
	154
	156
ENTRAÎNEMENT ET MONTAGE - CERCLE (ASS)	605
ESSIEU AV (ASS)	480
	484
ESSIEU AV (VERSION)	478
ESSUIE-GLACE ET LAVE-GLACE	874

F

FAISCEAU DU REFROIDISSEUR D'HUILE (ASS)	86
	87
FAISCEAU DU REFROIDISSEUR D'HUILE (ENS)	85
FILTRE	154
	156
FILTRE - SÉPARATEUR D'EAU ET DE CARBURANT (ENS)	193
FILTRE À AIR	808
FILTRE A AIR (ASS)	130
	131
FILTRE À AIR DE CABINE (ASS)	814
FILTRE A CARBURANT (ENS)	168
FILTRE A HUILE (ASS)	374
	392
	393
	571
FILTRE À HUILE (ENS) (PILOTE)	393
FILTRE À HUILE MOTEUR (ASS)	72
FILTRE A HUILE MOTEUR (ENS)	72
FILTRE (INJECTEUR DE POMPE HYDRAULIQUE)	146
FILTRE (POMPE À EAU)	112
	114
	116
FLEXIBLE	120
FLEXIBLE (DIA INT 63,5MM) (12,7CM)	106
FLEXIBLE (DIA INT 6,35MM) (266CM)	122
FREIN DE MANOEUVRE - COMMANDE (ASS)	564
FREIN DE MANOEUVRE (ASS)	558
FREIN DE MANOEUVRE ET DE STATIONNEMENT (ASS)	560
FUSIBLE (10A)	318
	322
	326
	364
	366
FUSIBLE (15A)	364
	366
FUSIBLE (20 A)	330
FUSIBLE (25 A)	330

G

GARDE-BOUE ET SUPPORT (ASS)	499
GOULOTTE DE REMPLISSAGE D'HUILE DE TRANSMISSION	390
GRAISSAGE - CENTRAL (ASS)	533
	534
	535
GRAISSAGE - CENTRAL (ASS)	536
GRAISSAGE AUTOMATIQUE (VERSION)	524
	528
GRAISSAGE CENTRAL - CANALISATIONS (ASS)	508
GRAISSEUR	748
GRAISSEUR (FILET 1/8-27)	524
	535
	536
	772
	774
GRAISSEUR (GRAISSAGE AUTOMATIQUE)	528
GROUPE DE RATTRAPAGE DE JEU	565
	581
GROUPE DE ROTATION DE POMPE	680
	681
GROUPE D'ORIENTATION	686
	687

H

HAUT-PARLEUR - RADIO (ENS)	818
HUILE MOTEUR - CARTER (ASS)	59

I

INDICATEUR DE COLMATAGE DE FILTRE A AIR	134
INJECTEUR -GRAISSE (ASS)	551
	552
	553
	554
INJECTEUR DE CARBURANT (ASS)	158
	159
	160
	161
	188
INJECTEURS-POMPES HYDRAULIQUES (ENS)	194
	198
	200
	202
INJECTEURS-POMPES HYDRAULIQUES (ENS)	194
	195

INDEX

Désignation	Page
	196
	197
INTERRUPTEUR - BOUTON-POUSSOIR (ENS)	838
INTERRUPTEUR A BASCULE (1 PÔLE) (ARRÊT DEPUIS LE SOL)	336
	340
INTERRUPTEUR BALANCIER (ENS) (FEU DE ROUTE)	360
INTERRUPTEUR DE DÉMARRAGE (ASS)	360
INTERRUPTEUR DE DÉMARRAGE (ASS)	316
INTERRUPTEUR DE THERMOSTAT (ENS)	780
INTERRUPTEUR D'ESSUIE-GLACE (ASS)	318
	322
INTERRUPTEUR D'ESSUIE-GLACE (ASS)	317
INTERRUPTEUR D'ESSUIE-GLACE (ASS) (24 VOLTS) (ESSUIE-GLACE AVANT)	318
	322
	326
INTERRUPTEUR ROTATIF (ENS) (ESSUIE-GLACE ARRIÈRE)	318
	322
INTERRUPTEUR ROTATIF (ENS) (ESSUIE-GLACE/LAVE-GLACE)- (ARRIÈRE)	326
INTERRUPTEUR ROTATIF (ENS) (FEUX DE ROUTE)	364
	366
INTERRUPTEUR ROTATIF (ENS) (SOUFFLANT)	360
ISOLATION DE CABINE (ASS)	816

J

JANTE (ASS)	476
	477
JAUGE D'HUILE MOTEUR (BAIONNETTE) (ASS)	75
JEU DE COURROIES TRAPEZOIDALES	48
JOINT (ASS)	112
	114
JOINT DE VILEBREQUIN (ASS)	24
JOINT DE VILEBREQUIN (ASS)	20
	22
JOINT-PÂTE	42
JOINT PLAT (POMPE D'AMORÇAGE DE CARBURANT)	193
JOINT TORIQUE (DIA INT 110,49MM)	208
	212
JOINT TORIQUE (DIA INT 19,18MM)	82
JOINT TORIQUE (DIA INT 81,92MM)	404
JOINT TORIQUE (DIA INT 94,84MM)	555
	583
JOINT UNIVERSEL (ASS)	453
	454

K

KIT - COUSSIN (ACCOUDOIR)	785
KIT - COUSSIN (DOSSIER EN TOILE)	810
KIT - VÉSICULE	642
KIT D'ATTACHE	862
	866
KIT DE BALAIS (COMPREND PRISE ET BALAI (ENS))	780
KIT DE BLOC COULISSANT	854
	859
	860
KIT DE BORNE D'ALTERNATEUR	220
KIT DE BORNE DE RELAIS	220
KIT DE BORNE (DÉMARREUR)	299
	303
KIT DE BOUCHON	198
	200
	202
KIT DE BOUGIE (2 BROCHES)	315
	318
	322
	332
	334
	356
	468
KIT DE BOUGIE (2 BROCHES) (CAPTEUR DE VITESSE DE SORTIE DE BOÎTE)	350
KIT DE BOUGIE (2 BROCHES) (CLIGNOTANT DROIT/GAUCHE)	356
KIT DE BOUGIE (2 BROCHES) (CLIGNOTANTS, GYROPHARE)	326
KIT DE BOUGIE (2 BROCHES) (MINUTERIE DE SUPPRESSEUR/AUTOGRAISSAGE)	342
KIT DE BOUGIE (2 BROCHES) (POMPE DE GRAISSAGE)	540
KIT DE BOUGIE (3 BROCHES)	40
	268
	269
	270
	272
	273
	274
	275
	276
	277
	278
	279
	282
	318
	322
	332
	334
	350

INDEX

Désignation	Page
KIT DE BOUGIE (3 BROCHES) (CAPTEUR DE PAPILLON DES GAZ/FREIN/NEUTRALISATEUR)	366
KIT DE BOUGIE (3 BROCHES) (CONTACTEUR DE FREIN DE STATIONNEMENT)	342
KIT DE BOUGIE (3 BROCHES) (FEUX DE STOP DROIT/GAUCHE)	356
KIT DE BOUGIE (3 BROCHES) (PLAFONNIER)	318 322 326
KIT DE BOUGIE (4 BROCHES)	334 350
KIT DE BOUGIE (4 BROCHES) (PROJECTEUR DE LAME GAUCHE)	336 340
KIT DE BOUGIE (6 BROCHES)	318 322 342
KIT DE BOUGIE (6 BROCHES) (HAUT-PARLEURS, CONVERTISSEUR, ESSUIE-GLACE)	326
KIT DE BOUGIE (8 BROCHES)	318 322 326 350
KIT DE BOUGIE (8 BROCHES) (RADIO)	326
KIT DE BOULONNERIE	862
KIT DE BOULONNERIE (SUSPENSION DU SIÈGE)	866
KIT DE BOUTON DE SIEGE	854
KIT DE CALE D'ÉPAISSEUR D'ARBRE (17 CALES)	676
KIT DE CARTER	862
KIT DE CLAPET DE DECHARGE	574
KIT DE COMPENSATEUR	200 202
KIT DE COMPENSATEUR DE POMPE HYDRAULIQUE D'INJECTEUR INDIVIDUEL	198
KIT DE COMPRESSEUR	862
KIT DE COUSSIN DE SIEGE (EN TOILE)	854
KIT DE COUSSINET (ÉTRIER)	198 200 202
KIT DE COUSSINET (STANDARD)	60
KIT DE COUSSINET (0,635 MM SOUS-DIMENSIONNÉ)	60
KIT DE COUSSINET (1,27 MM SOUS-DIMENSIONNÉ)	60
KIT DE FAISCEAU DE CABLAGE	862 866
KIT DE FILTRE DE SÉPARATEUR D'EAU ET DE CARBURANT	193
KIT DE JOINTS	162
KIT DE JOINTS (COMPREND JOINTS ET SEGMENTS)	747
KIT DE JOINTS (ÉLECTROVANNE DE CARBURANT)	218
KIT DE JOINTS (INJECTEUR HYDRAULIQUE)	197 198 200 202
KIT DE JOINTS (VÉRIN D'ARTICULATION)	592
KIT DE LA POMPE D'INJECTION DE CARBURANT (RÉNOVATION)	198 200
KIT DE MISE AU POINT DE LA POMPE À EAU	112 114
KIT DE PANNEAU DU DOSSIER DU SIEGE	854
KIT DE PISTON DE COMMANDE	676
KIT DE PISTON (DISPOSITIF DE RATTRAPAGE DE JEU DE FREIN)	581
KIT DE PISTON EXCENTRIQUE	676 678
KIT DE POMPE	538
KIT DE PRISE FEMELLE	168 286
KIT DE PRISE FEMELLE (2 BROCHES)	122 219 255 256 260 280 310 332 334 336 340 344 356 458 459 788 838 846 862
KIT DE PRISE FEMELLE (2 BROCHES) (COMPREND PRISE ET COIN)	281
KIT DE PRISE FEMELLE (2 BROCHES) (MINUTERIE/SOLÉNOÏDE D'AUTO-GRAISSAGE)	336

INDEX

Désignation	Page
	340
KIT DE PRISE FEMELLE (2 BROCHES) (SOLÉNOÏDES SÉLECTEURS)	474
KIT DE PRISE FEMELLE (2 BROCHES) (SOLÉNOÏDES SÉLECTEURS DE BOÎTE DE VITESSES)	470
KIT DE PRISE FEMELLE (2 BROCHES) (2 BROCHES)	780
KIT DE PRISE FEMELLE (3 BROCHES)	247
	257
	262
	263
	266
	267
	284
	318
	322
	332
	334
	336
	340
KIT DE PRISE FEMELLE (4 BROCHES)	261
KIT DE PRISE FEMELLE (6 BROCHES)	829
	838
	874
KIT DE PRISE FEMELLE (6 BROCHES) (RADIO)	318
	322
	326
KIT DE PRISE FEMELLE (6 BROCHES) (RELAIS DE KLAXON)	336
	340
KIT DE PRISE FEMELLE (8 BROCHES)	317
	356
KIT DE REDRESSEMENT	834
KIT DE REGLAGE (ACCOUDOIR)	785
KIT DE REGLAGE (BAS DE CUVETTE)	834
KIT DE REGLAGE DE SIEGE - INCLINAISON	834
KIT DE RENIFLARD	208
	212
KIT DE RÉNOVATION DE LA POMPE À EAU (EAU)	116
KIT DE RÉPARATION	538
	566
KIT DE RESSORT PNEUMATIQUE	862
KIT DE ROULEAU	862
	866
KIT D'INJECTEUR (GRAISSE)	551
	552
	553
	554
KIT (JOINT CHASSIS PORTEUR)	574
	848
KIT (JOINT CHASSIS PORTEUR) (CHEMISE DE CYLINDRE UNIQUE)	5
KLAXON (ENS) (24 VOLTS)(TON FAIBLE) (GAUCHE)	336
	340
KLAXON (ENS) (24 VOLTS)(TON FORT) (DROITE)	336
	340

L

LAME DE COUPE	761
	762
	763
	764
	765
	766
LAME DE COUPE (ASS)	757
	758
	759
	760
LAMPE - CLIGNOTANT DE DIRECTION (ASS)	256
	257
LAMPE - PHARE (ASS)	248
LAMPE - PHARE (ASS)	249
LAMPE (AMPOULE MINIATURE) (24 VOLTS)	360
	361
LAMPE (AMPOULE MINIATURE) (28 VOLTS)	360
LAMPE-DIODE (LED)	364
LAMPE-DIODE (LED) (MANOMÈTRE DE FREIN DE DIFÉRENTIEL)	366
LAVE-GLACE - VITRE (ASS)	870
LENTILLE DE PLAFONNIER	247
LENTILLE DE PROJECTEUR (ENS)	248
	249
LENTILLE (ENS)-PHARE AV	255
LENTILLE (ENS) (TÊTE)	254
LENTILLE ORANGE	256
LENTILLE-PHARE AVANT (ENS)	253
LENTILLE ROUGE	257
	838
LIAISON - VERROUILLAGE DE CHÂSSIS DE DIRECTION (ASS)	523
LITTÉRATURE (ASS)	826
LOGICIEL - TRANSMISSION (ASS)	237

M

MANCHON	489
	493
MANCHON-ÉCHAPPEMENT COLLECTEUR	142
MANCHON POUR L'ALESAGE DE POUSSOIR	26
	28
MANOCONTACT (ENS) (DIRECTION PRINCIPALE)	345

INDEX

Désignation	Page
	351
MANOCONTACT (ENS) (FREIN DE STATIONNEMENT)	336
	340
MANOCONTACT (ENS) (HAUTE/BASSE)(CLIMATISEUR)	332
MANOCONTACT (ENS) (HUILE DE FREIN)	336
	340
MARCHEPIED AR	550
MARCHEPIED AV (ASS)	546
	548
MODULE D'INDICATEUR DE VITESSE ET COMPTE-TOURS (ASS)	829
MONTAGE DE CABINE (ASS)	830
MONTAGE DE LAME	767
MONTAGE DE MOTEUR (VERSION)	6
MONTAGE DE PLATE-FORME (ASS)	832
MONTAGE DE RADIO (ASS)	815
MONTAGE DE RIPPER (ASS)	768
MONTAGE D'ESSIEU AR (ASS)	421
MONTAGE SUR CHANTIER (VERSION)	3
MOTEUR D'ENTRAÎNEMENT DU CERCLE ET MONTAGE (ASS)	662
MOTEUR ELECTRIQUE DE POMPE HYDRAULIQUE (ASS)	663
MOTEUR (ENS) (DESSERRAGE DE FREIN DE STATIONNEMENT)	574
MOTEUR HYDRAULIQUE (ASS)	664
MOTEUR (VERSION)	4

N

NIVELEUSE - VERSION DE BASE	2

O

OEILLETONS DE LEVAGE MOTEUR (ASS)	58

P

PARE-PIERRES (ASS)	752
PARE-POUSSIERE	72
	370
	374
	414
	418
	564
	565
	566
	640
	641
	706
	708
PÉDALE - FREIN, BOÎTE ET RÉGULATEUR (ASS)	842
PÉDALE - FREIN, BOÎTE ET RÉGULATEUR (ASS)	844
PHARE AV (ASS)	250
	251
	252
	253
	254
	255
PIGNON AR (ASS)	52
PIGNONNERIE AV (ASS)	51
PISTON ET BIELLE (ASS)	62
PISTON ET BIELLE (ASS)	60
PLAFONNIER (ASS)	247
PLAQUE - AVERTISSEMENT (PAS DE DÉGAGEMENT)	879
PLAQUE - AVERTISSEMENT (VÉRIN HAUTE PRESSION)	557
	879
PLAQUE-ACCUMULATEUR HYDRAULIQUE	557
	879
PLAQUE-CHASSIS PRINCIPAL (NE PAS PERCER NI SOUDER)	879
PLAQUE DE POUSSÉE (ASS)	754
PLAQUE-INFORMATION TECHNIQUE	878
PLAQUE SIGNALÉTIQUE (ASS)	876
PLAQUES SIGNALETIQUES ET AUTOCOLLANTS (ASS)	878
	879
PLAQUES SIGNALETIQUES ET AUTOCOLLANTS (ASS)	880
	881
	882
	883
	884
	885
	886
	887
	888
	889
	890
	891
	892
PLATE-FORME (VERSION)	537
PLATEAU OSCILLANT (ASS)	682
	683
	684
	685
PNEUMATIQUE (ASS)	436
POMPE - ENTRAÎNEMENT ÉLECTRIQUE (ASS)	566
	576
POMPE - ENTRAÎNEMENT ÉLECTRIQUE (ASS)	574
POMPE A EAU (ASS)	108
	109

INDEX

Désignation	Page
	110
	112
	114
	116
POMPE A ENGRENAGES (ASS)	577
	578
	668
	670
POMPE A HUILE MOTEUR (ASS)	84
POMPE A PISTONS (ASS)	674
	676
	678
POMPE D'ALIMENTATION EN CARBURANT (ASS)	194
	195
	196
	197
	198
	200
	202
POMPE D'AMORÇAGE DE CARBURANT ET FILTRE PRINCIPAL	192
	193
POMPE DE BOÎTE DE VITESSES (ASS)	428
	429
POMPE DE GRAISSAGE (ASS)	538
	540
POMPE DE REGULARISATION DE DEBIT (ASS)	672
POMPE D'INJECTEURS-POMPES HYDRAU. ET MONTAGE	174
	176
	178
	180
	182
	184
	186
POMPE D'INJECTION DE CARBURANT (ASS)	188
	189
	190
	191
POMPE ÉLECTRO-HYDRAULIQUE	663
POMPE ET MONTAGE - FREIN ET VERROUILL. DE DIFFÉR.	572
POMPE ET MONTAGE - PISTON (ASS)	666
PORTE-FUSIBLES (ENS)	318
	322
PORTIÈRE DE CABINE (ASS)	802
	804
	806
PRODUIT D'ETANCHEITE	40
PROTÈGE-RADIATEUR ET SUPPORT (ASS)	504

R

RADIATEUR (ASS)	120
	122
RADIATEUR (ASS)	124
RADIATEUR ET MONTAGE (ASS)	118
RALLONGE D'ÉCHAPPEMENT (ASS)	133
RALLONGE DU DOSSIER DE SIEGE	810
RECHAUFFEUR DE CARBURANT (ASS)	240
	242
RECHAUFFEUR D'HUILE HYDRAULIQUE (ASS)	244
RÉCHAUFFEUR D'HUILE MOTEUR (ASS)	239
RÉCHAUFFEUR D'HUILE MOTEUR (ASS)	238
RÉDUCTEURS (ASS)	394
	396
	398
	400
REFROIDISSEUR D'HUILE MOTEUR (ASS)	85
REGARD DE NIVEAU	688
RELAIS (ENS) (24 VOLTS)	360
RELAIS (ENS) (24 VOLTS) (AUXILIAIRE DE DÉMARRAGE)	358
RELAIS (ENS) (24 VOLTS) (KLAXON)	364
RELAIS (ENS) (24 VOLTS) (PRÉGRAISSAGE)	358
RELAIS (ENS) (24 VOLTS) (TÉMOIN DE FREIN)	358
RENIFLARD	390
	412
	434
RENIFLARD (ENS)	18
RÉSERVOIR DE CARBURANT (ASS)	208
	212
RÉSERVOIR DE CARBURANT ET MONTAGE (ASS)	204
	206
RÉSERVOIR DU LIQUIDE DE REFROIDISSEMENT (ASS)	126
RÉSERVOIR HYDRAULIQUE ET FILTRE (ASS)	688
RÉSERVOIR HYDRAULIQUE ET MONTAGE (ASS)	690
RESSORT DE BALAI	299
RÉTROVISEUR (ASS)	827
	828
RIPPER (ASS)	772
	774
RIPPER (VERSION)	770
RIVET TARAUDEUR (NO 4X3/16 POUCES)	409
ROBINET DE BATTERIE (ASS)	308
ROBINET DE BATTERIE (ASS) (BATTERIE)	344
	350
ROBINET-ÉCHANTILLON DE LIQUIDE (ENS)	566
ROBINET-ÉCHANTILLON DE LIQUIDE (ENS) (HUILE DE DIRECTION)	640

INDEX

Désignation	Page
ROBINET-ÉCHANTILLON DE LIQUIDE (ENS) (HUILE DE TRANSMISSION)	418
ROBINET-PRÉLÈVEMENT D'ÉCHANTILLON DE LIQUIDE	72 414
ROBINET-PRÉLÈVEMENT D'ÉCHANTILLON DE LIQUIDE	374
ROTATION DE LA ROUE DU VENTILATEUR SOUFFLANT (NE PAS PERCER/SOUDER LE CADRE ROPS)	879
ROTATION DE LA ROUE DU VENTILATEUR SOUFFLANT (RÉGLAGE DU SIÈGE)	866
S	
SIEGE - COUVERCLE INFERIEUR (ASS)	834
SIEGE - COUVERCLE INFERIEUR (ASS)	836
SIEGE - COUVERCLE INFERIEUR (ASS) (ARRIÈRE)	854
SIEGE - COUVERCLE INFERIEUR (ASS) (FOND)	854
SIÈGE (ASS)	854 856 857 858
SIÈGE AVEC SUSPENSION (ASS)	866
SIÈGE AVEC SUSPENSION (ASS)	859 860 862
SIEGE RAPPORTE DE SOUPAPE D'ADMISSION (ADMISSION)	36
SIEGE RAPPORTE (SOUPAPE) (ADMISSION)	35
SIEGE RAPPORTE (SOUPAPE) (ÉCHAPPEMENT)	35 36
SILENCIEUX (ASS)	141
SOLÉNOÏDE (ENS) (DÉMARREUR 24 VOLTS)	303
SONDE - CIRCUIT DE CARBURANT	262 263 264 266 267
SONDE - CIRCUIT DE CARBURANT (ACCÉLÉRATEUR)	842
SONDE - CIRCUIT DE CARBURANT (FREIN)	844
SONDE - CIRCUIT DE CARBURANT (NEUTRALISATION)	844
SOUFFLANTE DE MOTEUR	848
SOUPAPE - CLIMATISEUR (ENS)	820
SOUPAPE - SOLÉNOÏDE (ASS)	194 218 466 467 468
SOUPAPE - SOLÉNOÏDE (ASS)	745 746
SOUPAPE - SOLÉNOÏDE (ASS) (COMMANDE DE PRESSION)	195 196 197 198 200 202
SOUPAPE D'ADMISSION	45
SOUPAPE D'ALLÈGEMENT (ASS)	747
SOUPAPE DE COMBINAISON (ASS)	705 706 708
SOUPAPE DE DERIVATION (ASS)	747
SOUPAPE DE DISTRIBUTION DE GRAISSAGE (ASS)	524 528 552 553 554
SOUPAPE DE DISTRIBUTION DE GRAISSAGE (ASS)	551
SOUPAPE DE MODULATION (ASS)	457 458
SOUPAPE DE MODULATION (ASS)	459
SOUPAPE DE MODULATION (ASS) (EMBRAYAGE DE VERROUILLAGE DE CONVERTISSEUR DE COUPLE)	458 459
SOUPAPE D'ÉCHAPPEMENT	45
SOUPAPE ET MONTAGE - SOLÉNOÏDE	696 697
SOUPAPE ET MONTAGE DE VERROUILLAGE DE DIF. (ASS)	455
SOUPAPE ET TIMONERIE (ASS)	692 694
SOUPAPE RÉGULATRICE DE PRESSION ET DÉBIT	736
SOUPAPE SÉLECTRICE (ASS)	461 462
SOUPAPE SELECTRICE ET REGULATRICE DE PRESSION	464
SUPPORT DE MOTEUR (ASS)	67 68
SUPPORT DE TRANSMISSION (ASS)	432
SURPRESSEUR (ASS)	846 848
T	
TABLEAU DE BORD (ASS)	838
TAMIS D'ASPIRATION	405 409

INDEX

Désignation	Page
TAMIS DE RÉSERVOIR DE CARBURANT	208, 212
TANDEM ET CARTER (ASS)	434
TENDEUR DE COURROIE (ASS)	8
THERMOCONTACT	238, 244
THERMOCONTACT (ENS) (HUILE HYDRAULIQUE)	345, 351
THERMOCONTACT (HUILE)	239
THERMOSTAT-TEMPÉRATURE D'EAU (92 DEGRÉS C)	94, 98, 102
TOIT ROPS (ASS)	850
TRAINS PLANÉTAIRES - CARTER ET PIÈCES	370
TRANSMISSION (VERSION)	427
TURBOCOMPRESSEUR (ASS)	143, 144
VOLANT MOTEUR (ASS)	50

V

Désignation	Page
VANNE PILOTE (ASS)	744
VENTILATEUR DÉGIVREUR (ASS)	811, 812, 813
VENTILATEUR SOUFFLANT (ASS)	88
VÉRIN D'ARTICULATION (ASS)	592
VÉRIN D'ARTICULATION ET MONTAGE (ASS)	586
VÉRIN DE DÉPORT DE CERCLE ET DE LEVAGE (ASS)	596
VÉRIN DE DÉPORT DE CERCLE ET DE LEVAGE (ASS)	588
VÉRIN DE DÉPORT DE LAME (ASS)	589, 600
VERIN DE DIRECTION (ASS)	602
VERIN DE DIRECTION ET MONTAGE (ASS)	590
VERIN DE LEVAGE DE RIPPER (ASS)	598
VÉRIN D'INCIDENCE DE LAME (ASS)	594
VÉRIN D'INCLINAISON DE LAME ET MONTAGE (ASS)	587
VÉRIN D'INCLINAISON DE ROUE (ASS)	604
VÉRIN D'INCLINAISON DE ROUE ET MONTAGE (ASS)	591
VERIN (ENS) (ÉTHER)	286
VERSION DE CHASSIS	1
VERSION DE PRÉGRAISSAGE DE MOTEUR	82
VERSION HYDRAULIQUE	609
VILEBREQUIN - POULIE (ASS)	65
VILEBREQUIN (ASS)	20, 22, 24
VITRE (ASS)	872

INDICE

Nombre	Página

A

ABRAZADERA DE FUNDA 298
ACONDICIONADOR DE AIRE (GR) 780
ACONDICIONADOR DE AIRE Y MONTAJE (GR) 778
ACUMULADOR (CONJ) 583
ACUMULADOR (GR) 555, 556, 557
ACUMULADOR HIDRAULICO Y MONTAJE (GR) 582
ADAPTADOR DE LLENADO RÁPIDO DE COMBUSTIBLE (GR) 145
ADAPTADOR (GR) 755
AGUA DE LAS CAMISAS - CALENTADOR DEL (GR) 245
AIRE - TUBERÍAS DE (GR) 134, 136, 138
AJUSTADOR DE CORREA (GR) 8
AJUSTADOR DE TENSIÓN (GR) 581
AJUSTADOR DE TENSIÓN (GR) 565
ALARMA DE RETROCESO (CONJ) 356
ALARMA DE RETROCESO (CONJ) 122
ALARMA (GR) 219
ALTAVOZ DE LA RADIO (CONJ) 818
AMORTIGUADOR DE VIBRACIONES (GR) 46
ANILLO RETEN 344
ANTENA (CONJ) 815
ÁRBOL DE LEVAS (GR) 10
ARRANQUE - INTERRUPTOR DE (GR) 360
ARRANQUE - INTERRUPTOR DE (GR) 316
ARRANQUE EN TIEMPO FRIO (CONFIG) 288
ARRANQUE EN TIEMPO FRIO (CONFIG) 292, 294, 296
ARTICULACIÓN DE CILINDRO (GR) 592
ASIENTO CON SUSPENSIÓN (GR) 862, 866
ASIENTO DE VÁLVULA-CASQUILLO (ADMISION) 35
ASIENTO DE VÁLVULA-CASQUILLO (ESCAPE) 35, 36
ASIENTO (GR) 854, 856, 857, 858
AUXILIAR DE ARRANQUE CON ÉTER (GR) 286

B

BALANCÍN (GR) 66
BARRA DE TIRO (GR) 750
BASTIDOR DELANTERO (GR) 500, 501
BASTIDOR TRASERO (GR) 502, 503
BATERÍA (GR) 226, 227
BATERÍA (12 V (SECA)) 227, 296
BLOQUE DE EMPALME (CONJ) 246
BLOQUE DE EMPALME (GR) 246
BLOQUE DE FUSIBLES 330
BLOQUE DESLIZANTE-JUEGO 854, 859, 860
BLOQUE MOTOR (CONJ) 28
BLOQUE MOTOR (CONJ) 26
BLOQUE MOTOR (GR) 30, 32, 33
BOCINA (CONJ) (24 VOLTIOS)(TONO ALTO) (LADO DERECHO) 336, 340
BOCINA (CONJ) (24 VOLTIOS)(TONO BAJO) (LADO IZQUIERDO) 336, 340
BOMBA - TUBERÍAS DE (GR) 640
BOMBA DE ACEITE DEL MOTOR (GR) 84
BOMBA DE AGUA (GR) 108, 109, 110, 112, 114, 116
BOMBA DE CEBADO Y FILTRO PRIMARIO DE COMBUSTIBLE (GR) 192, 193
BOMBA DE ENGRANAJES (GR) 577, 578, 668, 670
BOMBA DE INYECCIÓN DE COMBUSTIBLE (GR) 188, 189, 190, 191
BOMBA DE LA TRANSMISIÓN (GR) 428, 429
BOMBA DE LUBRICACIÓN (GR) 538, 540
BOMBA DE PISTONES (GR) 674, 676, 678
BOMBA DE TRANSFERENCIA DE COMBUSTIBLE (GR) 194, 195

INDICE

Nombre	Página
	196
	197
	198
	200
	202
BOMBA HIDRÁULICA DEL INYECTOR UNITARIO (GR)	194
	198
	200
BOMBA HIDRÁULICA DEL INYECTOR UNITARIO (GR)	202
BOMBA HIDRÁULICA DEL INYECTOR UNITARIO (GR)	194
	195
	196
	197
BOMBA HIDRÁULICA DEL INYECTOR UNITARIO Y MONTAJE	174
	176
	178
	180
	182
	184
	186
BOMBA HIDRÁULICA ELÉCTRICA	663
BOMBA Y MONTAJE DEL PISTÓN (GR)	666

C

CABINA (CONFIG)	787
CABLES DE INYECTOR (GR)	368
CABLES DE LA CABINA (GR)	318
	322
	326
CABLES DE LA CONSOLA DE CAMBIOS (GR)	360
CABLES DE LA CONSOLA DE DIRECCIÓN (GR)	364
	366
CABLES DE LA PLATAFORMA (GR)	342
CABLES DEL MOTOR (GR)	334
CABLES DEL MOTOR (GR)	332
CABLES DEL PANEL DE RELES (GR)	358
CABLES DELANTEROS (GR)	336
	340
CABLES PARA TIEMPO FRÍO (GR)	330
CABLES POSTERIORES (GR)	344
CABLES POSTERIORES (GR)	350
	356
CADENA DE IMPULSIÓN (GR)	373
CAJA DE HERRAMIENTAS (GR)	893
CAJA DE TRANSFERENCIA	372
CAJA DEL EJE TRASERO (GR)	412
CAJA DELANTERA (GR)	57
CAJA DELANTERA (GR)	56
CAJA Y ENGRANAJE DE TRANSFERENCIA DE SALIDA (GR)	404
CAJA Y ENGRANAJE DE TRANSFERENCIA DE SALIDA (GR)	408
CAJA Y PIEZAS DE LOS PLANETARIOS	370
CALCOMANÍA DE ADVERTENCIA (ASIENTO AJUSTABLE)	866
CALCOMANÍA DE ADVERTENCIA (CABLES AUXILIARES DE ARRANQUE)	879
CALCOMANÍA DE ADVERTENCIA (CILINDRO PARA ALTA PRESION)	879
CALCOMANÍA DE ADVERTENCIA (INYECTOR DE COMBUSTIBLE)	879
CALCOMANÍA DE ADVERTENCIA (NO TALADRE/SUELDE ROPS)	879
CALCOMANÍA DE IDENTIFICACIÓN	781
CALCOMANÍAS Y PLACAS DE IDENTIFICACIÓN (GR)	878
	879
CALCOMANÍAS Y PLACAS DE IDENTIFICACIÓN (GR)	880
	881
	882
	883
	884
	885
	886
	887
	888
	889
	890
	891
	892
CALENTADOR DE ACEITE DE MOTOR (GR)	238
	239
CALENTADOR DE ACEITE HIDRAULICO (GR)	244
CALENTADOR DEL COMBUSTIBLE (GR)	240
	242
CAMBIO RÁPIDO DE ACEITE (GR)	80
CAMISA INFERIOR	26
	28
CÁNCAMOS DE LEVANTAMIENTO DEL MOTOR (GR)	58
CANDADO (GR)	208
	212
	489
	493
	893
CANTONERA (CONJ)	756
CARGA - ALTERNADOR DE (GR)	222
	224
CARGA - ALTERNADOR DE (GR)	220
CÁRTER - COLECTOR DEL (GR)	59
CENICERO	799

INDICE

Nombre	Página
CENTRAL DE LUBRICACIÓN (CONFIG)	533
CENTRAL DE LUBRICACIÓN (GR)	534
	535
	536
CHASIS (CONFIG)	1
CIGÜEÑAL - POLEA DE (GR)	65
CIGÜEÑAL (GR)	22
	24
CIGÜEÑAL (GR)	20
CILINDRO (CONJ) (ETER)	286
CILINDRO DE ARTICULACIÓN Y MONTAJE (GR)	586
CILINDRO DE DESPLAZAMIENTO DEL CÍRCULO Y LEVANTAMIENTO	588
CILINDRO DE DESPLAZAMIENTO DEL CÍRCULO Y LEVANTAMIENTO (GR)	596
CILINDRO DE DESPLAZAMIENTO LATERAL (GR)	600
CILINDRO DE DESPLAZAMIENTO LATERAL Y MONTAJE (GR)	589
CILINDRO DE DIRECCIÓN (GR)	602
CILINDRO DE DIRECCIÓN Y MONTAJE (GR)	590
CILINDRO DE INCLINACIÓN DE LA HOJA (GR)	594
CILINDRO DE INCLINACIÓN DE LAS RUEDAS (GR)	604
CILINDRO DE INCLINACIÓN DE RUEDA Y MONTAJE (GR)	591
CILINDRO DE LA PUNTA DE LA HOJA Y MONTAJE (GR)	587
CILINDRO DE LEVANTAMIENTO DEL DESGARRADOR (GR)	598
CINTURÓN DE SEGURIDAD (GR)	851
	852
	853
CINTURÓN DE SEGURIDAD (GR) (RETRACTIL)	856
	857
	858
CÍRCULO (GR)	748
COLADOR (CONJ)	688
COLADOR DEL TANQUE DE COMBUSTIBLE	208
	212
COMBUSTIBLE - TANQUE DE (GR)	208
	212
COMPARTIMIENTO DEL MOTOR (GR)	488
	492
	496
	498
COMPRESOR DE REFRIGERANTE (GR)	788
	789
	790
	792
	794
CONDENSADOR DEL REFRIGERANTE Y MONTAJE (GR)	795
CONDUCTO Y CONTROL (GR)	808
CONEXIÓN DE ENGRASE	748
CONEXIÓN DE ENGRASE (LUBRICACION AUTOMATICA)	528
CONEXIÓN DE ENGRASE (ROSCA DE 1/8-27)	524
	535
	536
	772
	774
CONFIGURACIÓN BÁSICA DE LA MOTONIVELADORA	2
CONFIGURACIÓN DE INSTALACIÓN DEL MOTOR	6
CONFIGURACIÓN DE MOTORES	4
CONJUNTO DE VÁLVULA DEL ACONDICIONADOR DE AIRE	820
CONSOLA DEL CONTROL DE LA TRANSMISIÓN (GR)	799
CONSOLA DEL OPERADOR (GR)	796
CONTRAPESO DELANTERO	560
CONTROL DE DIRECCIÓN (GR)	584
CONTROL DE TRABA DEL DIFERENCIAL (GR)	374
CONTROL DEL FRENO DE ESTACIONAMIENTO	562
CONTROL ELECTRÓNICO DE CLASIFICACIÓN DE MOTOR (GR)	229
	230
	231
	232
	233
	234
CONTROL ELECTRÓNICO DEL MOTOR (GR)	235
	236
CONTROL ELECTRÓNICO DEL MOTOR Y MONTAJE	228
CONTROL ELECTRONICO DEL REDUCTOR DE LA LUZ INTERIOR DEL SISTEMA MONITOR (GR)	800
CONTROL ELECTRÓNICO (GR) (SINCRONIZADOR DE LUBRIC. AUTOMATICA)	529
CONTROL HIDRÁULICO DE LA TRANSMISIÓN (GR)	376
	377
CONVERTIDOR DE PAR (GR)	438
	442
	446
	449
	450
CORREA	222

INDICE

Nombre	Página
CORREA TRAPEZOIDAL	790, 792
CRUCETA Y COJINETE (GR)	453
CUBIERTA INFERIOR DEL ASIENTO DEL OPERADOR (GR)	836
CUBIERTA INFERIOR DEL ASIENTO DEL OPERADOR (GR)	834
CUBIERTA INFERIOR DEL ASIENTO DEL OPERADOR (GR) (PARTE INFERIOR)	854
CUBIERTA INFERIOR DEL ASIENTO DEL OPERADOR (GR) (PARTE TRASERA)	854
CUCHILLA	761, 762, 763, 764, 765, 766
CUCHILLA (GR)	757, 758, 759, 760
CULATA DE CILINDROS - TORNILLERÍA DE LA (GR)	42
CULATA DE CILINDROS (CONJ)	34, 35, 36, 37, 38
CULATA DE CILINDROS (GR)	40, 42, 44, 45
DESGARRADOR (CONFIG)	770
DESGARRADOR (GR)	772, 774
DESTELLADOR ELECTRONICO (CONJ)	366
DETECTOR DE POSICIÓN (SISTEMA DE COMBUST.) (GR)	266
DETECTOR DE POSICIÓN (SISTEMA DE COMBUST.) (GR)	262, 263, 264, 267
DETECTOR DE POSICIÓN (SISTEMA DE COMBUST.) (GR) (ACELERACIÓN)	842
DETECTOR DE POSICIÓN (SISTEMA DE COMBUST.) (GR) (FRENO)	844
DETECTOR DE POSICIÓN (SISTEMA DE COMBUST.) (GR) (NEUTRALIZADOR)	844
DETECTOR MAGNÉTICO (GR)	260
DIENTE DE DESGARRADOR (GR)	776, 777
DIFERENCIAL (GR)	384, 386
DIFERENCIAL Y CORONA (GR)	380, 382
DISYUNTOR (CONJ) (105 AMP) (ALTERNADOR)	358
DISYUNTOR (CONJ) (15 A)	360
DISYUNTOR (CONJ) (15 A) (ECM (MÓDULO DE CONTROL ELECTRÓNICO) DEL MOTOR)	358
DISYUNTOR (CONJ) (15 A) (LUCES DELANTERAS/TRASERAS)	366
DISYUNTOR (CONJ) (15 A) (LUCES TRASERAS/LUZ ALTA)	364
DISYUNTOR (CONJ) (15 A) (TRANSMISION)	364, 366
DISYUNTOR (CONJ) (30 A) (RETRACCIÓN DEL FRENO)	358
DISYUNTOR (CONJ) (80 AMP) (PRINCIPAL)	358
DISYUNTOR (GR)	308
DISYUNTOR (GR) (BATERIA)	344
DISYUNTOR (GR) (BATERÍA)	350
DOSIFICACIÓN - BOMBA DE (GR)	672
EJE DE DIRECCION (CONFIG)	478
EJE DE MANDO (GR)	430, 431
EJE DELANTERO (GR)	480, 484
ELEMENTO (AIRE DE LA CABINA)	846
ELEMENTO (CONJ) (240 VOLTIOS/600 VATIOS)	238, 239, 244
ELEMENTO DE FILTRO	134, 193
ELEMENTO DE FILTRO DE ACEITE (CONJ) (DESECHABLE)	392
ELEMENTO DE FILTRO DE ACEITE (CONJ) (FLUÍDOS RESISTENTES AL FUEGO)	392
ELEMENTO DE FILTRO DE ACEITE (CONJ) (LIMPIAR/ALTA EFICIENCIA)	392
ELEMENTO DEL CALENTADOR DEL AGUA DE LAS CAMISAS (240 VOLTIOS/1500 VATIOS)	245
ELEMENTO PARA FLUJO HIDRÁULICO INVERSO (CONJ)	688
ELEMENTO PRIMARIO (CONJ)	131
ELEMENTO PRIMARIO DEL FILTRO DE AIRE	814
ELEMENTO SECUNDARIO (CONJ)	131
EMPAQUETADURA (BOMBA DE CEBADO DE COMBUSTIBLE)	193
ENCENDEDOR DE CIGARRILLOS (CONJ)	360

D

E

INDICE

Nombre	Página
ENFRIADOR DE ACEITE DEL MOTOR (GR)	85
ENGANCHE ARTICULADO (GR)	506
ENGRANAJE DELANTERO (GR)	51
ENGRANAJE TRASERO (GR)	52
ENGRANAJE Y CAJA DE TRANSFERENCIA DE ENTRADA (GR)	402
ESCALÓN DELANTERO (GR)	546
	548
ESCALÓN TRASERO (GR)	550
ESCAPE DE GASES (GR)	73
	74
ESCOBILLA (CONJ) (MOTOR DE ARRANQUE)	298
ESTRUCTURA ROPS (GR)	850
ETIQUETA DE ADVERTENCIA (GR)	876
EXPULSOR DE POLVO (GR)	132
EXTENSIÓN DEL ESCAPE (GR)	133
EXTENSIÓN DEL RESPALDO (GR)	810

F

FILTRO	154
	156
FILTRO (BOMBA DE AGUA)	112
	114
	116
FILTRO (BOMBA HIDRAULICA DE LA UNIDAD DEL INYECTOR)	146
FILTRO DE ACEITE (CONJ) (PILOTO)	393
FILTRO DE ACEITE DEL MOTOR (CONJ)	72
FILTRO DE ACEITE DEL MOTOR (GR)	72
FILTRO DE ACEITE (GR)	374
	392
	393
	571
FILTRO DE AIRE	808
FILTRO DE AIRE DE LA CABINA (GR)	814
FILTRO DE AIRE (GR)	130
	131
FILTRO DE COMBUSTIBLE (CONJ)	168
FILTRO DE COMBUSTIBLE Y SEPARADOR DE AGUA (CONJ)	193
FRENO DE SERVICIO - CONTROL (GR)	564
FRENO DE SERVICIO (GR)	558
FRENO Y BOMBA DE TRABA DEL DIFERENCIAL Y MONTAJE (GR)	572
FUSIBLE (10 A)	318
	322
	326
	364
	366
FUSIBLE (15 A)	364
	366
FUSIBLE (20 A)	330
FUSIBLE (25 AMP)	330

G

GRUPO DE AISLAMIENTO DE LA CABINA	816
GRUPO DE MONTAJE DE LA CABINA	830
GRUPO DE MONTAJE DEL EJE TRASERO	421
GRUPO DE SELLO	112
	114
GRUPO DE VÁLVULAS	456
GRUPO DE 4 VÁLVULAS HIDRÁULICAS	698
	700
GRUPO GIRATORIO DE BOMBA	680
	681
GUARDABARROS Y SOPORTE (GR)	499

H

HIDRÁULICA (CONFIG)	609
HOJA DE LIMPIAPARABRISAS (CONJ)	874

I

IMPULSOR DE VENTILADOR (GR)	48
INDICADOR DE SERVICIO DEL FILTRO DE AIRE	134
INDICADOR DEL NIVEL DE ACEITE (VARILLA) (GR)	75
INSERTO DE VÁLVULA DE ADMISIÓN (ADMISION)	36
INSTALACIÓN DE RADIO (GR)	815
INSTALACIÓN EN EL CAMPO (CONFIG)	3
INTERRUPTOR (CONJ)	360
INTERRUPTOR (CONJ) (ACTIVACION/DESACTIVACION DE CRUCERO)	364
	366
INTERRUPTOR (CONJ) (AJUSTE/REANUDAR DE VELOCIDAD DE CRUCERO)	364
INTERRUPTOR (CONJ) (BALIZA)	319
	323
	327
INTERRUPTOR (CONJ) (DESTRABA DE DIFERENCIAL)	364
	366
INTERRUPTOR (CONJ) (ENCENDIDO/APAGADO) (VENTILADOR DEL DESCONGELADOR DELANTERO)	319
	323
	327
INTERRUPTOR (CONJ) (ENCENDIDO/APAGADO) (VENTILADOR DEL DESCONGELADOR TRASERO)	319
	323
	327
INTERRUPTOR (CONJ) (HOJA AMORTIGUADORA)	364

INDICE

Nombre	Página
INTERRUPTOR DE FLUJO (GR)	309
INTERRUPTOR DE FLUJO (GR)	5
INTERRUPTOR DE FLUJO (GR)	310
INTERRUPTOR DE FLUJO (GR) (REFRIGERANTE)	309
INTERRUPTOR DE PRESIÓN (CONJ) (ACEITE DEL FRENO)	336 340
INTERRUPTOR DE PRESIÓN (CONJ) (ALTA/BAJA)(ACOND. DE AIRE)	332
INTERRUPTOR DE PRESIÓN (CONJ) (DIRECCION PRINCIPAL)	345 351
INTERRUPTOR DE PRESIÓN (CONJ) (FRENO DE ESTACIONAMIENTO)	336 340
INTERRUPTOR DE SEÑAL DE GIRO Y ADVERTENCIA (CONJ)	364 366
INTERRUPTOR DE TEMPERATURA	238 244
INTERRUPTOR DE TEMPERATURA (ACEITE)	239
INTERRUPTOR DE TEMPERATURA (CONJ) (ACEITE HIDRÁULICO)	345 351
INTERRUPTOR DE VOLQUETE (CONJ) (LÁMPARA DE FUNCIONAMIENTO)	360
INTERRUPTOR DE VOLQUETE (1 POLO) (DESCONEXIÓN EN LA PLANTA BAJA)	336 340
INTERRUPTOR DEL LIMPIADOR (GR)	318 322
INTERRUPTOR DEL LIMPIADOR (GR)	317
INTERRUPTOR DEL LIMPIADOR (GR) (24 VOLTIOS) (LIMPIAPARABRISAS DELANTERO)	318 322 326
INTERRUPTOR DEL TERMOSTATO (CONJ)	780
INTERRUPTOR MAGNÉTICO (CONJ)	288
INTERRUPTOR MAGNÉTICO (GR)	312 313 314 315
INTERRUPTOR MAGNÉTICO (GR)	311
INTERRUPTOR MAGNÉTICO (GR) (PRELUBRICACIÓN)	82
INTERRUPTOR MAGNÉTICO (GR) (RELE DE ARRANQUE 1)	358
INTERRUPTOR MAGNÉTICO (GR) (RELE DE ARRANQUE 2)	358
INTERRUPTOR MAGNÉTICO (GR) (RELE DE RETRACCION DE FRENO)	358
INTERRUPTOR MAGNÉTICO (GR) (RELE PRINCIPAL)	358
INTERRUPTOR MAGNÉTICO (GR) (24-32V) (DIRECCION SUPLEMENTARIA/RELE DE PRELUB.)	311
INTERRUPTOR PULSADOR (CONJ)	838
INTERRUPTOR ROTATIVO (CONJ) (LIIMPIA/LAVAPARABRISAS)(TRASERO)	326
INTERRUPTOR ROTATIVO (CONJ) (LIMPIAPARABRISAS TRASERO)	318 322
INTERRUPTOR ROTATIVO (CONJ) (VENTILADOR SOPLADOR)	360
INTERRUPTOR ROTATIVO (CONJ) (VIGA ALTA)	364 366
INYECTOR DE COMBUSTIBLE (GR)	158 159 160 161 188
INYECTOR DE GRASA	551 552 553 554

J

JUEGO - BOMBA DE INYECCCION DE COMBUSTIBLE (RECONSTRUCCION)	198 200
JUEGO DE AJUSTE DEL ASIENTO (PARTE INFERIOR)	834
JUEGO DE AJUSTE DEL ASIENTO (POSABRAZO)	785
JUEGO DE AMORTIGUADOR (POSABRAZO)	785
JUEGO DE AMORTIGUADOR (RESPALDO DE TELA)	810
JUEGO DE ATADURA	862 866
JUEGO DE BOMBA	538
JUEGO DE BOTÓN DEL ASIENTO	854
JUEGO DE CAJA	862
JUEGO DE CALCE DE EJE (17 CALCES)	676
JUEGO DE CÁMARA DEL ACUMULADOR	642
JUEGO DE COJÍN DEL ASIENTO (TELA)	854
JUEGO DE COJINETES (ESTANDAR)	60
JUEGO DE COJINETES (HORQUILLA)	198 200 202
JUEGO DE COJINETES (0,635 MM BAJOMEDIDA)	60
JUEGO DE COJINETES (1,27 MM BAJOMEDIDA)	60
JUEGO DE COMPENSADOR	200

INDICE

Nombre	Página
	202
JUEGO DE COMPENSADOR DE BOMBA HIDRAULICA INJECTORA	198
JUEGO DE COMPRESOR	862
JUEGO DE CONTROL DE PISTÓN	676
JUEGO DE CORREAS TRAPEZOIDALES	48
JUEGO DE EMPAQUETADURA	574
	848
JUEGO DE EMPAQUETADURA (UNA SOLA CAMISA DE CILINDRO)	5
JUEGO DE ENCHUFE (2 CLAVIJAS)	315
	318
	322
	332
	334
	356
	468
JUEGO DE ENCHUFE (2 CLAVIJAS) (BOMBA DE LUBRICACION)	540
JUEGO DE ENCHUFE (2 CLAVIJAS) (LAMPARA DE GIRO DE LADO DER./IZQ.)	356
JUEGO DE ENCHUFE (2 CLAVIJAS) (PRESURIZADOR/SINCRONIZADOR DE AUTOLUB.)	342
JUEGO DE ENCHUFE (2 CLAVIJAS) (SEÑALES DE GIRO, BALIZA)	326
JUEGO DE ENCHUFE (2 CLAVIJAS) (SENSOR DE VELOCIDAD DE SALIDA DE TRANSM.)	350
JUEGO DE ENCHUFE (3 CLAVIJAS)	40
	268
	269
	270
	272
	273
	274
	275
	276
	277
	278
	279
	282
	318
	322
	332
	334
	350
JUEGO DE ENCHUFE (3 CLAVIJAS) (ACELERADOR/FRENO/SENSOR NEUTRALIZADOR)	366
JUEGO DE ENCHUFE (3 CLAVIJAS) (INTERRUPTOR DEL FRENO DE ESTACIONAMIENTO)	342
JUEGO DE ENCHUFE (3 CLAVIJAS) (LAMPARA DE PARADA DE LADO DER./IZQ.)	356
JUEGO DE ENCHUFE (3 CLAVIJAS) (LÁMPARA DEL TECHO)	318
	322
	326
JUEGO DE ENCHUFE (4 PASADORES)	334
	350
JUEGO DE ENCHUFE (4 PASADORES) (REFLECTOR DE HOJA DE LADO IZQ.)	336
	340
JUEGO DE ENCHUFE (6 PASADORES)	318
	322
	342
JUEGO DE ENCHUFE (6 PASADORES) (ALTAVOCES, CONVERTIDOR, LIMPIADORES)	326
JUEGO DE ENCHUFE (8 PASADORES)	318
	322
	326
	350
JUEGO DE ENCHUFE (8 PASADORES) (RADIO PARA ENTRETENIMIENTO)	326
JUEGO DE ESCOBILLAS (INCLUYE TAPON Y CONJUNTO DE ESCOBIILLA)	780
JUEGO DE FILTRO DE COMBUSTIBLE Y SEPARADOR DE AGUA	193
JUEGO DE INCLINACIÓN DE ASIENTO	834
JUEGO DE INCLINACIÓN TRASERA	834
JUEGO DE INYECTOR (GRASA)	551
	552
	553
	554
JUEGO DE MAZO DE CABLES	862
	866
JUEGO DE PANEL DEL RESPALDO DEL ASIENTO	854
JUEGO DE PISTÓN	676
	678
JUEGO DE PISTÓN (AJUSTADOR DE JUEGO DE HOJA)	581
JUEGO DE RECEPTÁCULO	168
	286
JUEGO DE RECEPTÁCULO (2 CLAVIJAS)	122
	219
	255
	256
	260
	280
	310
	332
	334
	336
	340
	344
	356
	458

INDICE

Nombre	Página
	459
	788
	838
	846
	862
JUEGO DE RECEPTÁCULO (2 CLAVIJAS) (INCLUYE CONJUNTO DE RECEPTÁCULO Y CUÑA)	281
JUEGO DE RECEPTÁCULO (2 CLAVIJAS) (SINCRONIZADOR DE LUB. AUTOMATICA/SOLENOIDE)	336
	340
JUEGO DE RECEPTÁCULO (2 CLAVIJAS) (SOLENOIDES DE CAMBIO)	474
JUEGO DE RECEPTÁCULO (2 CLAVIJAS) (SOLENOIDES DE CAMBIO DE TRANSMISION)	470
JUEGO DE RECEPTÁCULO (2 CLAVIJAS) (2 PASADORES)	780
JUEGO DE RECEPTÁCULO (3 CLAVIJAS)	247
	257
	262
	263
	266
	267
	284
	318
	322
	332
	334
	336
	340
JUEGO DE RECEPTÁCULO (4 PASADORES)	261
JUEGO DE RECEPTÁCULO (6 PASADORES)	829
	838
	874
JUEGO DE RECEPTÁCULO (6 PASADORES) (RADIO)	318
	322
	326
JUEGO DE RECEPTÁCULO (6 PASADORES) (RELE DE BOCINA)	336
	340
JUEGO DE RECEPTÁCULO (8 PASADORES)	317
	356
JUEGO DE RECONSTRUCCIÓN DE LA BOMBA (AGUA)	116
JUEGO DE RECONSTRUCCIÓN DE LA BOMBA DE AGUA	112
	114
JUEGO DE REPARACIÓN (TUBERÍAS DEL FRENO)	538
JUEGO DE REPARACIÓN (TUBERÍAS DEL FRENO)	566
JUEGO DE RESORTES (AIRE)	862
JUEGO DE RESPIRADERO	208
	212
JUEGO DE RODILLO	862
	866
JUEGO DE SELLOS	162
	194
	195
	196
	466
	745
	746
JUEGO DE SELLOS (CILINDRO DE ARTICULACION)	592
JUEGO DE SELLOS (INCLUYE SELLOS Y ANILLOS)	747
JUEGO DE SELLOS (UNIDAD INYECTORA HIDRAULICA)	197
	198
	200
	202
JUEGO DE SELLOS (VÁLVULA SOLENOIDE DE COMBUSTIBLE)	218
JUEGO DE TAPÓN	198
	200
	202
JUEGO DE TERMINAL DE ALTERNADOR	220
JUEGO DE TERMINAL DE RELÉ	220
JUEGO DE TERMINAL (MOTOR DE ARRANQUE)	299
	303
JUEGO DE TORNILLERÍA	862
JUEGO DE TORNILLERÍA (SUSPENSION DE ASIENTO)	866
JUEGO DE VÁLVULA DE ALIVIO	574
JUNTA UNIVERSAL (GR)	453
	454

L

LÁMPARA	251
LAMPARA DE DIODO (LED)	364
LAMPARA DE DIODO (LED) (INDICADOR DE PRESION DE FRENO DE DIFERENCIAL)	366
LÁMPARA DE FARO DELANTERO (GR)	250
	251
	252
	253
	254
	255
LÁMPARA DEL TECHO (GR)	247
LÁMPARA MINIATURA (24 VOLTIOS)	360
	361
LÁMPARA MINIATURA (28 VOLTIOS)	360
LÁMPARA (24 VOLTIOS)	256
	257

INDICE

Nombre	Página
	319
	323
	327
	364
	838
LÁMPARA (24 VOLTIOS) (INDICADOR DE ACTIVACION/DESACTIVACION DE CRUCERO)	366
LÁMPARA (24 VOLTIOS) (INDICADOR DE AJUSTE/REANUDAR DE CRUCERO)	366
LÁMPARA (24 VOLTIOS) (INDICADOR DE DESTRABA DE DIFERENCIAL)	366
LÁMPARA (24 VOLTIOS)(65 VATIOS)	248
	249
LÁMPARA ((24 VOLTIOS)(65 VATIOS))	250
	252
LÁMPARA (24 VOLTIOS)(65 VATIOS) (DELANTERA)	254
	255
LÁMPARA (24 VOLTIOS)(65 VATIOS) (LUZ BAJA)(DELANTERA)	253
LÁMPARA (28 VOLTIOS)	838
LÁMPARA (28 VOLTIOS) (CÚPULA)	247
LAVAPARABRISAS DE LA VENTANA (GR)	870
LENTE AMBAR	256
LENTE DE FARO (CONJ)	255
LENTE DE FARO DELANTERO (CONJ)	253
LENTE DE LAMPARA DEL TECHO	247
LENTE-ROJO	257
	838
LIMPIA Y LAVAPARABRISAS (GR)	874
LLAVE	208
	212
	489
	493
	893
LLAVE (DESCONECTAR BATERIA)	308
LLAVE (MAESTRA)	826
LUBRICACION AUTOMATICA (CONFIG)	524
	528
LUCES - REFLECTORES Y LUCES DELANTERAS (GR)	258
LUZ DE SEÑAL DE GIRO (GR)	256
	257

M

Nombre	Página
MANDO DE BOMBA HIDRÁULICA INYECTORA (GR)	149
	150
	151
	152
	154
	156
MANDO DE BOMBA HIDRÁULICA INYECTORA (GR)	146
	148
MANDO DEL CIRCULO (GR)	606
MANDO ELÉCTRICO - BOMBA DE (GR)	566
	574
	576
MANDO FINAL (GR)	394
	396
	398
	400
MANDO Y MONTAJE DEL CÍRCULO (GR)	605
MANGUERA	120
MANGUERA (63,5MM DIAMETRO INTERIOR) (12,7CM)	106
MANGUERA (6,35MM DIAMETRO INTERIOR) (266CM)	122
MANGUITO	489
	493
	524
MANGUITO - MULTIPLE DE ESCAPE	142
MANGUITO PARA CALIBRE DE LEVANTAVÁLVULAS	26
	28
MECANISMO DE VÁLVULAS (GR)	69
MIRILLA INDICADORA	688
MÓDULO DEL TACÓMETRO Y DEL VELOCÍMETRO (GR)	829
MONTAJE DE LA HOJA (GR)	767
MONTAJE DE LA PLATAFORMA (GR)	832
MONTAJE DEL DESGARRADOR (GR)	768
MOTOR - SOPORTE DEL (GR)	67
	68
MOTOR (CONJ) (DESCONEXION DEL FRENO DE ESTACIONAMIENTO)	574
MOTOR DE ARRANQUE ELÉCTRICO (GR)	298
	306
	307
MOTOR DE ARRANQUE ELÉCTRICO (GR)	302
	305
MOTOR DE ARRANQUE ELÉCTRICO (GR) (24V)(MONTADO EN EL LADO DERECHO)(TIEMPO FRIO)	305
MOTOR DE SOPLADOR	848
MOTOR DEL MANDO DEL CÍIRCULO Y EL MONTAJE (GR)	662
MOTOR ELÉCTRICO DE BOMBA HIDRÁULICA (GR)	663
MOTOR HIDRÁULICO DE ENGRANAJES (GR)	664
MÚLTIPLE DE ESCAPE (GR)	139
	140

INDICE

Nombre	Página

N

NEUMÁTICO (GR) 436
NÚCLEO DEL ENFRIADOR DE ACEITE (CONJ) 85
NÚCLEO DEL ENFRIADOR DE ACEITE (GR) . . . 86
87

P

PEDAL DEL FRENO, LA TRANSMISIÓN Y EL REGULADOR (GR) 844
PEDAL DEL FRENO, LA TRANSMISIÓN Y EL REGULADOR (GR) 842
PERILLA DE INTERRUPTOR DE LIMPIAPARABRISAS 318
322
326
PISTÓN Y BIELA (GR) 60
PISTÓN Y BIELA (GR) 62
PLACA DE ADVERTENCIA (CILINDRO PARA ALTA PRESION) 557
879
PLACA DE ADVERTENCIA (NO ESPACIO LIBRE) 879
PLACA DE BASTIDOR PRINCIPAL (NO TALADRE NI SUELDE) 879
PLACA-INFORMACION DE SERVICIO 878
PLANCHA DE ACUMULADOR HIDRAULICO . . . 557
879
PLANCHA DE EMPUJE (GR) 754
PLATAFORMA (CONFIG) 537
PLATO OSCILANTE (GR) 682
683
684
685
PORTAFUSIBLE (CONJ) 318
322
POSABRAZOS (GR) 784
785
786
856
POSABRAZOS (GR) (LADO DERECHO) 857
858
POSABRAZOS (GR) (LADO IZQUIERDO) 857
858
POSENFRIADOR DE AGUA (GR) 128
PRELUBRICACION DEL MOTOR (CONFIG) 82
PRESIÓN - VÁLVULA DE CONTROL DE (GR) . . . 215
216
217
PRESURIZADOR (GR) 846
848
PROTECTOR CONTRA ROCAS (GR) 752
PROTECTOR TÉRMICO DEL COMPARTIMIENTO DEL MOTOR (GR) 542
PROTECTOR Y SOPORTE DEL RADIADOR (GR) 504
PUBLICACIONES (GR) 826
PUERTA DE CABINA 802
804
806

R

RADIADOR (GR) 120
122
RADIADOR (GR) 124
RADIADOR Y MONTAJE (GR) 118
REFLECTOR (GR) 248
249
REGULADOR DE TEMPERATURA DEL AGUA (92 GR C) 94
98
102
REJILLA DE SUCCIÓN 405
409
REJILLA (GR) 580
RELÉ (CONJ) (24 VOLTIOS) 360
RELÉ (CONJ) (24 VOLTIOS) (AUXILIAR DE ARRANQUE) 358
RELÉ (CONJ) (24 VOLTIOS) (BOCINA) 364
RELÉ (CONJ) (24 VOLTIOS) (LAMPARA DE FRENO) 358
RELÉ (CONJ) (24 VOLTIOS) (PRELUBRICACIÓN) 358
RESORTE DE ESCOBILLA 299
RESPIRADERO 390
412
434
RESPIRADERO (CONJ) 18
RETROVISOR (GR) 827
828
REVESTIMIENTO DE LA CABINA (GR) 818
RUEDA (GR) 476
RUEDA (GR) 477

S

SELLANTE 40
SELLANTE DE EMPAQUETADURA 42
SELLO ANULAR (DI DE 110,49 MM) 208
212
SELLO ANULAR (19,18 MM DIAMETRO INTERIOR) 82
SELLO ANULAR (81,92MM DI) 404
SELLO ANULAR (94,84 MM DIAMETRO INTERIOR) 555

INDICE

Nombre	Página
	583
SELLO DE CIGÜEÑAL (GR)	20
	22
	24
SENSOR DE NIVEL DE COMBUSTIBLE (GR)	261
SENSOR DE POSICIÓN ROTATIVA (GR)	264
SENSOR DE PRESIÓN (GR)	268
SENSOR DE PRESIÓN (GR)	269
	270
	271
	272
	273
	274
	275
	276
	277
	278
	279
SENSOR DE PRESIÓN (GR) (ACEITE DE ACCIONAMIENTO DE INYECCION)	40
	42
SENSOR DE PRESIÓN (GR) (ACEITE DEL MOTOR)	174
	176
	178
	180
	182
	184
	186
SENSOR DE PRESIÓN (GR) (ATMOSFERICA)	148
	149
SENSOR DE PRESIÓN (GR) (SALIDA DE TURBOCOMPRESOR)	40
	42
SENSOR DE TEMPERATURA (GR)	94
	98
	102
	168
	283
	284
SENSOR DE TEMPERATURA (GR) (ACEITE DEL MOTOR)	174
	176
	178
	180
	182
	184
	186
SENSOR DE TEMPERATURA (GR) (CONVERTIDOR DE PAR)	332
SENSOR DE VELOCIDAD (GR)	280
	281
	282
SENSOR DE VELOCIDAD (GR)	260
SENSOR DE VELOCIDAD (GR) (TOMA DE TIEMPO DE LA VELOCIDAD DEL MOTOR)	56
	57
SENSOR DE VELOCIDAD (GR) (TRANSMISION)	350
SILENCIADOR (GR)	141
SOFTWARE DEL TREN DE FUERZA (GR)	237
SOLENOIDE (CONJ) (MOTOR DE ARRANQUE 24 VOLTIOS)	303
SOPLADOR - VENTILADOR (GR)	88
SOPORTE DE LA TRANSMISIÓN (GR)	432
SUSPENSIÓN - ASIENTO CON (GR)	859
	860

T

TABLERO DE INSTRUMENTOS (GR)	838
TÁNDEM Y CUBIERTA (GR)	434
TANQUE DE COMBUSTIBLE Y GRUPO DE MONTAJE	204
	206
TANQUE DE REFRIGERANTE (GR)	126
TANQUE HIDRÁULICO Y MONTAJE (GR)	690
TANQUE Y FILTRO HIDRÁULICOS (GR)	688
TAPA CON RESPIRADERO	870
TAPA CONTRA EL POLVO	72
	208
	370
	374
	414
	418
	564
	565
	566
	640
	641
	706
	708
TAPA DE LA CAJA DE VOLANTE (GR)	13
TAPA DE LA CAJA DELANTERA (GR)	14
TAPA DE LLENADO (CONJ)	71
TAPA DE PORTAFUSIBLES	318
	322
	326
TAPA DE RADIADOR (CONJ)	126
	496
TAPA DEL BLOQUE MOTOR (GR)	11
	12
TAPA DEL COLECTOR DEL CÁRTER (GR)	16
TAPA DEL MECANISMO DE VÁLVULAS (GR)	18
TAPA DEL TUBO DE LLENADO	688
TAPA DEL TUBO DE LLENADO DE ACEITE (CONJ)	390
TAPA DEL TUBO DE LLENADO DEL TANQUE DE COMBUSTIBLE (CONJ)	208

INDICE

Nombre	Página
	212
TAPA PROTECTORA DEL TANQUE HIDRÁULICO	688
TAPA (VASTAGO)	476
	477
TAPAS PROTECTORAS DE EMBARQUE (GR)	378
TAPÓN	408
TAPÓN (CONJ)	80
	368
TAPÓN (CONJ) (ROSCA 1-3/16-12)	16
TAPÓN DE CULATA (GR)	64
TAPÓN DE DRENAJE	106
TAPON DE TUBO (ROSCA 1/8-27 NPTF)	24
TAPÓN DEL BLOQUE MOTOR (GR)	63
TAPÓN (ROSCA 7/16-20)	678
TIRANTE DE DIRECCIÓN (GR)	522
TIRANTE DE TRABA DEL BASTIDOR DE DIRECCIÓN (GR)	523
TORNILLERÍA DE MONT. DE LA BOMBA DE ACEITE (GR)	70
TORNILLERÍA DEL FRENO (FRENO)	570
TORNILLERÍA DEL TANDEM (GR)	388
TORNILLO DE MANDO (NO. 4X3/16 PULG.)	409
TRANSMISION (CONFIG)	451
	452
TRANSMISIÓN PLANETARIA (GR)	422
TREN DE FUERZA (CONFIG)	427
TREN DE FUERZA-GRUPO ELECTRÓNICO	237
TUBERÍAS DE ACEITE DEL MOTOR (GR)	76
TUBERÍAS DE ACEITE DEL TREN DE FUERZA (GR)	414
	418
TUBERÍAS DE ACONDICIONADOR DE AIRE (GR)	820
TUBERÍAS DE AIRE DE LA CABINA (GR)	822
TUBERÍAS DE BOMBA HIDRÁULICA DE INYECCIÓN (GR)	172
TUBERIAS DE CALEFACCION	824
TUBERÍAS DE COMBUSTIBLE (GR)	163
	164
TUBERÍAS DE DIRECCIÓN (GR)	656
	658
	661
TUBERÍAS DE ENGRASE (GR)	512
	514
	518
	520
TUBERÍAS DE LA CALEFACCIÓN (GR)	824
TUBERÍAS DE LA DIRECCIÓN SECUNDARIA (GR)	654
TUBERÍAS DE LUBRICACIÓN CENTRAL (GR)	508
TUBERÍAS DEL AGUA (GR)	92
	94
	96
	98
	102
	106
TUBERÍAS DEL DESGARRADOR (GR)	648
	650
	652
TUBERIAS DEL ENFRIADOR DEL CONVERTIDOR DE PAR	90
TUBERÍAS DEL FILTRO DE COMBUSTIBLE	168
TUBERÍAS DELANTERAS (GR)	610
	614
	618
TUBERÍAS HIDRÁULICAS (GR)	622
	626
	630
	632
	636
TUBO DE LLENADO DE ACEITE DE LA TRANSMISIÓN (GR)	390
TUBO DE LLENADO DE ACEITE (GR)	71
TURBOCOMPRESOR - TUBERÍAS DE ACEITE DEL (GR)	78
TURBOCOMPRESOR (GR)	143
	144
U	
UNIÓN GIRATORIA (GR)	686
	687
V	
VÁLVULA	688
VÁLVULA COMPENSADORA DE FLUJO Y PRESIÓN (GR)	736
VÁLVULA (CONJ)	555
	583
VÁLVULA DE ALIVIO (GR)	90
	706
	708
	738
	739
	740
	741
	742
	743
VÁLVULA DE ALIVIO (GR)	460
VÁLVULA DE COMBINACIÓN (GR)	705
	706
VÁLVULA DE COMBINACIÓN (GR)	708
VÁLVULA DE CONTROL DE LA TRANSMISIÓN (GR)	470
VÁLVULA DE CONTROL DE LA TRANSMISIÓN (GR)	472

INDICE

Nombre	Página
	474
VÁLVULA DE CONTROL (GR)	710
	712
	714
	716
	718
	720
	722
	724
	726
	728
	730
	732
	734
VÁLVULA DE DERIVACIÓN (GR)	747
VÁLVULA DE DESCARGA (GR)	747
VÁLVULA DE DISTRIBUCIÓN DE LUBRICACIÓN (GR)	552
	553
	554
VÁLVULA DE DISTRIBUCIÓN DE LUBRICACIÓN (GR)	528
	551
VÁLVULA DE DISTRIBUCIÓN DE LUBRICACIÓN (GR)	524
VÁLVULA DE ENTRADA	45
VÁLVULA DE ESCAPE	45
VÁLVULA DE LA TRABA DEL DIFERENCIAL Y MONTAJE (GR)	455
VÁLVULA DE LANZADERA (GR)	744
VÁLVULA DE MODULACIÓN (GR)	457
	458
VÁLVULA DE MODULACIÓN (GR)	459
VÁLVULA DE MODULACIÓN (GR) (EMBRAGUE DE TRABA DE CONVERTIDOR DE PAR)	458
	459
VALVULA DE MUESTRA DE FLUIDO (CONJ)	566
VALVULA DE MUESTRA DE FLUIDO (CONJ) (ACEITE DE LA DIRECCIÓN)	640
VALVULA DE MUESTRA DE FLUIDO (CONJ) (ACEITE DEL TREN DE FUERZA)	418
VÁLVULA DE MUESTREO	72
	374
	414
VÁLVULA DE RETENCIÓN (GR)	704
VÁLVULA DE RETENCIÓN (GR) (BOMBA DE FRENO)	566
VÁLVULA DE RETENCIÓN (GR) (FRENO DE SERVICIO)	565
VÁLVULA DE RETENCIÓN (GR) (MANDO ELECTRICO)	640
VÁLVULA DE SOLENOIDE (GR)	194
	218
	466
	467
	468
	745
	746
VÁLVULA DE SOLENOIDE (GR) (CONTROL DE PRESION)	195
	196
	197
	198
	200
	202
VALVULA DE SOLENOIDE Y MONTAJE (GR	696
	697
VÁLVULA SELECTORA (GR)	461
	462
VÁLVULA SELECTORA Y DE CONTROL DE PRESIÓN (GR)	464
VÁLVULA Y VARILLAJE (GR)	692
	694
VÁLVULAS HIDRÁULICAS - GRUPO DE 6	702
VENTANA (GR)	872
VENTILADOR DE ALTERNADOR	220
VENTILADOR DESCONGELADOR (GR)	811
	812
	813
VERTEDERA (CONJ)	753
VIDRIO (CONJ) (DELANTERA)	254
VIDRIO DE LOS FAROLES (CONJ)	248
VIDRIO DE LOS FAROLES (CONJ)	249
VOLANTE - CAJA DE (GR)	55
VOLANTE (GR)	50

ÍNDICE

Designação	Página
A	
ABRAÇADEIRA DO PROTETOR	298
ACENDEDOR DE CIGARROS	360
ACUMULADOR	555
	556
	557
	583
ACUMULADOR HIDRÁULICO E MONTAGEM	582
ADAPTADOR	755
ADAPTADOR - ABASTECIMENTO RÁPIDO DE COMBUSTÍVEL	145
AJUSTADOR DE CORREIAS	8
AJUSTADOR DE FOLGA	565
	581
ALARME	219
ALARME DE MARCHA À RÉ	122
	356
ALTERNADOR DE CORRENTE	220
	222
	224
ALTO-FALANTE DO RÁDIO	818
AMORTECEDOR	46
ANEL RETENTOR	344
ANTENA	815
AQUECEDOR - ÓLEO HIDRÁULICO	244
AQUECEDOR DA ÁGUA DO MOTOR	245
AQUECEDOR DO COMBUSTÍVEL	240
	242
ARMAÇÃO DA LÂMINA	753
ARRANJO BÁSICO - MOTONIVELADORA	2
ARREFECEDOR - ÓLEO DO MOTOR	85
ARTICULAÇÃO GIRATÓRIA	686
	687
ASSENTO	854
	856
	857
	858
ASSENTO - FUNDO	834
	836
ASSENTO - FUNDO (INFERIOR)	854
ASSENTO - FUNDO (PARTE TRASEIRA)	854
ASSENTO COM SUSPENSÃO	859
	860
AUXILIAR DE PARTIDA A ÉTER	286
B	
BALANCIM	66
BARRA DE TRAÇÃO	750
BATERIA	226
	227
BATERIA (12 V)(SECO)	227
	296
BLINDAGEM DO COMPARTIMENTO DO MOTOR	542
BLOCO DE FUSÍVEIS	330
BLOCO DE JUNÇÃO	246
BLOCO DO MOTOR	26
	28
	30
	32
	33
BOCAL DE ENCHIMENTO DE ÓLEO DO MOTOR	71
BOCAL DE ENCHIMENTO DE ÓLEO DO TREM DE FORÇA	390
BOMBA DA TRANSMISSÃO	428
	429
BOMBA DA TRAVA DOS FREIOS E DO DIFERENCIAL E MONTAGEM	572
BOMBA DE ÁGUA	108
	109
	110
	112
	114
	116
BOMBA DE COMANDO ELÉTRICO	566
	574
	576
BOMBA DE ENGRENAGENS	577
	578
	668
	670
BOMBA DE ESCORVA DO COMBUSTÍVEL E DO FILTRO PRIMÁRIO	192
	193
BOMBA DE INJEÇÃO DO COMBUSTÍVEL	188
	189
	190
	191
BOMBA DE LUBRIFICAÇÃO	538
	540
BOMBA DE ÓLEO - MOTOR	84
BOMBA DE PISTÃO	674
	676
	678
BOMBA DE TRANSFERÊNCIA DO COMBUSTÍVEL	194
	195
	196
	197
	198
	200
	202
BOMBA E MONTAGEM - PISTÃO	666
BOMBA ELETROHIDRÁULICA	663
BOMBA HIDRÁULICA - UNIDADE INJETORA	194
	195

ÍNDICE

Designação	Página
	196
	197
	198
	200
	202
BOMBA HIDRÁULICA E MONTAGEM - UNIDADE INJETORA	174
	176
	178
	180
	182
	184
	186
BOMBA REGULADORA	672
BORDA CORTANTE	757
	758
	759
	760
	761
	762
	763
	764
	765
	766
BOTÃO - INTERRUPTOR DO LIMPADOR	318
	322
	326
BRAÇO DO ASSENTO	784
	785
	786
	856
BRAÇO DO ASSENTO (DIREITO)	857
	858
BRAÇO DO ASSENTO (ESQUERDO)	857
	858
BUJÃO	408
BUJÃO - ANEL O (7/16-20 THD)	678
BUJÃO - CABEÇA DO CILINDRO	64
BUJÃO - CANO/TUBO (ROSCA DE 1/8-27 DO PADRÃO AMERICANO NPTF)	24
BUJÃO DO BLOCO DO CILINDRO	63
BUJÃO DO DRENO	106
BUZINA (24 VOLTS - ALTA TONALIDADE) (DIREITO)	336
	340
BUZINA (24 VOLTS)(TONALIDADE BAIXA) (ESQUERDO)	336
	340

C

CABEÇOTE DO MOTOR	34
	35
	36
	37
	38
	40
	42
	44
	45
CABINE	787
CABOS FIOS ELÉTRICOS - TEMPO FRIO	330
CABOS/FIOS ELÉTRICOS - CABINE	318
	322
	326
CABOS/FIOS ELÉTRICOS - CONSOLE DA DIREÇÃO	364
	366
CABOS/FIOS ELÉTRICOS - CONSOLE DA TRANSMISSÃO	360
CABOS/FIOS ELÉTRICOS - DIANTEIROS	336
	340
CABOS/FIOS ELÉTRICOS - INJETOR	368
CABOS/FIOS ELÉTRICOS - MOTOR	332
	334
CABOS/FIOS ELÉTRICOS - PAINEL DE RELÉ	358
CABOS/FIOS ELÉTRICOS - PLATAFORMA	342
CABOS/FIOS ELÉTRICOS - TRASEIROS	344
	350
	356
CADEADO	208
	212
	489
	493
	893
CAIXA DE ENGRENAGEM DE TRANSFERÊNCIA	404
	408
CAIXA DE FERRAMENTAS	893
CAIXA DE TRANSFERÊNCIA	372
CAIXA DIANTEIRA	56
	57
CAIXA DO EIXO TRASEIRO	412
CAIXA DO VOLANTE DO MOTOR	55
CANTO DE LÂMINA	756
CARCAÇA DAS ENGRENAGENS PLANETÁRIAS E COMPONENTES	370
CÁRTER DO ÓLEO DO MOTOR	59
CHAPA DE EMPUXO	754
CHASSI	1
CHASSI DIANTEIRO	500
	501
CHASSI TRASEIRO	502
	503
CHAVE	208
	212
	489
	493
	893

ÍNDICE

Designação	Página
CHAVE DE FENDA (NO. 4X3/16 POL)	409
CHAVE (DESCONECTAR A BATERIA)	308
CHAVE GERAL	308
CHAVE GERAL (BATERIA)	344
	350
CHAVE (MESTRE)	826
CILINDRO DA DIREÇÃO	602
CILINDRO DE ARTICULAÇÃO	592
CILINDRO DE DESLIZAMENTO LONGITUDINAL	600
CILINDRO DE DIREÇÃO E MONTAGEM	590
CILINDRO DE INCLINAÇÃO LATERAL DAS RODAS	604
CILINDRO DE LEVANTAMENTO DO RIPER	598
CILINDRO DE LEVANTAMENTO E DESLOCAMENTO LATERAL	596
CILINDRO DE LEVANTAMENTO E DESLOCAMENTO LATERAL E MONTAGEM	588
CILINDRO DE TOMBAMENTO DA LÂMINA	594
CILINDRO E MONTAGEM - ARTICULAÇÃO	586
CILINDRO E MONTAGEM - DESLOCAMENTO DA LÂMINA	589
CILINDRO E MONTAGEM - INCLINAÇÃO DAS RODAS	591
CILINDRO E MONTAGEM - TOMBAMENTO DA LÂMINA	587
CILINDRO (ÉTER)	286
CINTO DE SEGURANÇA	851
	852
	853
CINTO DE SEGURANÇA (RETRÁTIL)	856
	857
	858
CINZEIRO	799
CÍRCULO	748
COBERTURA DO MOTOR	488
	492
	496
	498
COLETOR DE ESCAPE	139
	140
COLMÉIA - ARREFECEDOR DE ÓLEO	85
	86
	87
COMANDO DA BOMBA HIDRÁULICA DO INJETOR	146
	148
	149
	150
	151
	152
	154
	156
COMANDO DO CÍRCULO E MONTAGEM	605
COMANDO DO VENTILADOR	48
COMANDO FINAL	394
	396
	398
	400
COMANDO HIDRÁULICO	609
COMPRESSOR DE REFRIGERANTE	788
	789
	790
	792
	794
CONDENSADOR DO REFRIGERANTE E MONTAGEM	795
CONDICIONADOR DE AR	780
CONDICIONADOR DE AR E MONTAGEM	778
CONSOLE DE CONTROLE DA TRANSMISSÃO	799
CONSOLE DO OPERADOR	796
CONTROLE - REDUTOR DE LUMINOSIDADE DO SIST. DE MONITORIZAÇÃO	800
CONTROLE DA TRAVA DO DIFERENCIAL	374
CONTROLE DE DIREÇÃO	584
CONTROLE DO FREIO DE ESTACIONAMENTO	562
CONTROLE DO FREIO DE SERVIÇO	564
CONTROLE ELETRÔNICO - MOTOR	235
	236
CONTROLE ELETRÔNICO DO MOTOR - CLASSIFICAÇÃO	229
	230
	231
	232
	233
	234
CONTROLE ELETRÔNICO E MONTAGEM - MOTOR	228
CONTROLE ELETRÔNICO (SINCRONIZADOR DE LUBRIFICAÇÃO AUTOMÁTICA)	529
CONTROLE HIDRÁULICO DA TRANSMISSÃO	376
	377
CONVERSOR DE TORQUE	438
	442
	446
	449
	450
CORREIA	222
CORREIA EM V	790
	792
CORRENTE - COMANDO	373
CRUZETA E MANCAL	453

D

DECALQUE	876

ÍNDICE

Designação	Página
DECALQUE - ADVERTÊNCIA (CABO AUXILIAR DE PARTIDA)	879
DECALQUE - ADVERTÊNCIA (CILINDRO DE ALTA PRESSÃO)	879
DECALQUE - ADVERTÊNCIA (INJETOR DE COMBUSTÍVEL)	879
DECALQUE - IDENTIFICAÇÃO	781
DECALQUE - INSTRUÇÃO (AJUSTE DO ASSENTO)	866
DECALQUE - INSTRUÇÃO (NÃO FURE OU SOLDE A ESTRUTURA ROPS)	879
DEGRAU DIANTEIRO	546
	548
DEGRAU TRASEIRO	550
DENTE DO RÍPER	776
	777
DESCONGELADOR	811
	812
	813
DIFERENCIAL	384
	386
DIFERENCIAL E COROA	380
	382
DISJUNTOR AUTOMÁTICO DE CIRCUITO (105 A) (ALTERNADOR)	358
DISJUNTOR AUTOMÁTICO DE CIRCUITO (15 A)	360
DISJUNTOR AUTOMÁTICO DE CIRCUITO (15 A) (ECM DO MOTOR)	358
DISJUNTOR AUTOMÁTICO DE CIRCUITO (15 A) (FARÓIS DIANTEIROS/TRASEIROS)	366
DISJUNTOR AUTOMÁTICO DE CIRCUITO (15 A) (LUZ TRASEIRA - LUZ ALTA)	364
DISJUNTOR AUTOMÁTICO DE CIRCUITO (15 A) (TRANSMISSÃO)	364
	366
DISJUNTOR AUTOMÁTICO DE CIRCUITO (30 A) (RETRAÇÃO DO FREIO)	358
DISJUNTOR AUTOMÁTICO DE CIRCUITO (80 A) (PRINCIPAL)	358
DUCTO E CONTROLE	808

E

EIXO-COMANDO DE VÁLVULA	10
EIXO DE TRANSMISSÃO	430
	431
EIXO DIANTEIRO	478
	480
	484
EJETOR DE POEIRA	132
ELEMENTO - AQUECEDOR DE ÁGUA DA CAMISA (240V/1500W)	245
ELEMENTO - FILTRANTE	134
	193
ELEMENTO - FLUXO HIDRÁULICO INVERSO	688
ELEMENTO - PRIMÁRIO	131
ELEMENTO - SECUNDÁRIO	131
ELEMENTO (AR DA CABINE)	846
ELEMENTO FILTRANTE - ÓLEO (DESCARTÁVEL)	392
ELEMENTO FILTRANTE - ÓLEO (FLUIDOS RESISTENTES A FOGO)	392
ELEMENTO FILTRANTE - ÓLEO (LIMPAR/ALTA EFICIÊNCIA)	392
ELEMENTO FILTRANTE PRIMÁRIO - AR	814
ELEMENTO (240V/600W)	238
	239
	244
ELIMINAÇÃO DE VAPORES DO CÁRTER	73
	74
ELO - DIREÇÃO	522
ELO - TRAVA DA ARMAÇÃO DA DIREÇÃO	523
EMISSOR - POSIÇÃO	262
	263
	264
	266
	267
EMISSOR - POSIÇÃO (ACELERADOR)	842
EMISSOR - POSIÇÃO (FREIO)	844
EMISSOR - POSIÇÃO (NEUTRALIZADOR)	844
ENGATE - ARTICULAÇÃO	506
ENGRENAGEM E CAIXA - TRANSFERÊNCIA DE ENTRADA	402
ENGRENAGENS DE COMANDO TRASEIRO	52
ENGRENAGENS DE DISTRIBUIÇÃO	51
ENGRENAGENS PLANETÁRIAS - TRANSMISSÃO	422
ESCOVA (MOTOR DE PARTIDA)	298
ESPELHO RETROVISOR	827
	828
ESTRUTURA ROPS	850
EXTENSÃO - ENCOSTO	810
EXTENSÃO DO TUBO DE ESCAPE	133

F

FAROL DIANTEIRO	250
	251
	252
	253
	254
	255
FILTRO	154
	156
FILTRO - AR	808
FILTRO - AR DA CABINE	814
FILTRO - COMBUSTÍVEL	168
FILTRO - ÓLEO	374
	392

ÍNDICE

Designação	Página
	393
	571
FILTRO - ÓLEO DO MOTOR	72
FILTRO - ÓLEO (PILOTO)	393
FILTRO - SEPARADOR DE ÁGUA E COMBUSTÍVEL	193
FILTRO (BOMBA D'ÁGUA)	112
	114
	116
FILTRO (BOMBA HIDRÁULICA DA UNIDADE INJETORA)	146
FIXADORES - BOMBA DE ÓLEO DO MOTOR	70
FIXADORES - CABEÇOTE DO MOTOR	42
FIXADORES - FREIO	570
FIXADORES - TANDEM	388
FREIO DE SERVIÇO	558
FREIO DE SERVIÇO E DE ESTACIONAMENTO	560
FUSÍVEL (10 A)	318
	322
	326
	364
	366
FUSÍVEL (15 A)	364
	366
FUSÍVEL (20 A)	330
FUSÍVEL (25 A)	330

G

GRAXEIRA	748
GRAXEIRA (LUBRIFICAÇÃO AUTOMÁTICA)	528
GRAXEIRA (ROSCA 1/8-27 POL)	524
	535
	536
	772
	774
GRUPO DE INSTALAÇÃO - MOTOR	6
GRUPO DE VÁLVULAS DE CONTROLE - QUÁDRUPLO	698
	700
GRUPO DE VÁLVULAS DE CONTROLE - SEIS	702
GRUPO ROTATIVO DA BOMBA	680
	681

I

ILUMINAÇÃO - FARÓIS E LUZES DIANTEIRAS	258
INDICADOR - LIMPEZA DO FILTRO DE AR	134
INDICADOR - NÍVEL DO ÓLEO (VARETA)	75
INDICADOR VISUAL	688
INJETOR DE COMBUSTÍVEL	158
	159
	160
	161
	188
INJETOR DE GRAXA	551
	552
	553
	554
INSERTO - SEDE DE VÁLVULA (ADMISSÃO)	35
INSERTO - SEDE DE VÁLVULA (ESCAPE)	35
	36
INSERTO - VÁLVULA DE ENTRADA (ADMISSÃO)	36
INSTALAÇÃO DO RÁDIO	815
INSTALAÇÃO NO CAMPO	3
INTERRUPTOR	360
INTERRUPTOR - BALANCIM (LUZ DE OPERAÇÃO)	360
INTERRUPTOR - BALANCIM (1 POLO) (PARADA - NÍVEL TÉRREO)	336
	340
INTERRUPTOR - BOTÃO	838
INTERRUPTOR - FLUXO	5
	309
	310
INTERRUPTOR - FLUXO (LÍQUIDO ARREFECEDOR)	309
INTERRUPTOR - LIMPADOR DO PÁRA-BRISA	317
	318
	322
INTERRUPTOR - LIMPADOR DO PÁRA-BRISA (24 V) (LIMPADOR DIANTEIRO)	318
	322
	326
INTERRUPTOR - MAGNÉTICO	288
	311
	312
	313
	314
	315
INTERRUPTOR - MAGNÉTICO (PRÉ-LUBRIFICAÇÃO)	82
INTERRUPTOR - MAGNÉTICO (RELÉ DE PARTIDA NÚMERO 1)	358
INTERRUPTOR - MAGNÉTICO (RELÉ DE PARTIDA NÚMERO 2)	358
INTERRUPTOR - MAGNÉTICO (RELÉ DE RETRAÇÃO DO FREIO)	358
INTERRUPTOR - MAGNÉTICO (RELÉ PRINCIPAL)	358
INTERRUPTOR - MAGNÉTICO (24-32V) (DIREÇÃO SUPLEMENTAR/RELÉ DE PRELUB.)	311
INTERRUPTOR - PARTIDA	316
	360

ÍNDICE

Designação	Página
INTERRUPTOR - PRESSÃO (ALTO/BAIXO)(COND. DE AR)	332
INTERRUPTOR - PRESSÃO (DIREÇÃO PRIMÁRIA)	345 351
INTERRUPTOR - PRESSÃO (FREIO DE ESTACIONAMENTO)	336 340
INTERRUPTOR - PRESSÃO (ÓLEO DO FREIO)	336 340
INTERRUPTOR - ROTATIVO (LIMPADOR TRASEIRO)	318 322
INTERRUPTOR - ROTATIVO (LIMPADOR/LAVADOR TRASEIRO)	326
INTERRUPTOR - ROTATIVO (LUZ ALTA)	364 366
INTERRUPTOR - ROTATIVO (VENTILADOR)	360
INTERRUPTOR - SINALIZAÇÃO DE DIREÇÃO / LUZ DE ALERTA	364 366
INTERRUPTOR - TEMPERATURA	238 244
INTERRUPTOR - TEMPERATURA (ÓLEO)	239
INTERRUPTOR - TEMPERATURA (ÓLEO HIDRÁULICO)	345 351
INTERRUPTOR - TERMOSTATO	780
INTERRUPTOR (AJUSTAR - RETOMAR PILOTO AUTOMÁTICO)	364
INTERRUPTOR (DESTRAVAR DIFERENCIAL)	364 366
INTERRUPTOR (LÂMINA)	364
INTERRUPTOR (LIGA/DESLIGA) (DESCONGELADOR DIANTEIRO)	319 323 327
INTERRUPTOR (LIGA/DESLIGA) (DESCONGELADOR TRASEIRO)	319 323 327
INTERRUPTOR (LIGAR - DESLIGAR PILOTO AUTOMÁTICO)	364 366
INTERRUPTOR (PISCA-PISCA)	319 323 327
ISOLADOR - TEMPO	816

J

Designação	Página
JOGO - ACUMULADOR	642
JOGO - COMPENSADOR	200 202
JOGO - COMPONENTE DA BOMBA HIDRÁULICA DA UNIDADE INJETORA	198
JOGO DE ACONDICIONAMENTO - BOMBA DE ÁGUA	112 114
JOGO DE ACONDICIONAMENTO DA BOMBA D'ÁGUA (ÁGUA)	116
JOGO DE AJUSTADOR (ENCOSTO DO BRAÇO)	785
JOGO DE AJUSTADOR (PARTE INFERIOR)	834
JOGO DE ALMOFADA DO ASSENTO (TECIDO)	854
JOGO DE ALMOFADA (ENCOSTO DE TECIDO)	810
JOGO DE ALMOFADA (ENCOSTO DO BRAÇO)	785
JOGO DE BLOCO DESLIZADOR	854 859 860
JOGO DE BOMBA	538
JOGO DE BOMBA INJETORA DE COMBUSTÍVEL (RECONDICIONAR)	198 200
JOGO DE BUJÃO	198 200 202
JOGO DE CAIXA	862
JOGO DE CALÇO (17 CALÇOS)	676
JOGO DE CÁRTER DE INCLINAÇÃO	854
JOGO DE CHICOTE	862 866
JOGO DE COMPRESSOR	862
JOGO DE CORDÃO	862 866
JOGO DE CORREIAS EM V	48
JOGO DE ESCOVA (INCLUI BUJÃO E CONJUNTO DA ESCOVA)	780
JOGO DE FILTRO DE COMBUSTÍVEL E SEPARADOR DE ÁGUA	193
JOGO DE FIXADORES	862
JOGO DE FIXADORES (SUSPENSÃO DO ASSENTO)	866
JOGO DE INCLINAÇÃO DO ASSENTO	834
JOGO DE INCLINAÇÃO TRASEIRA	834
JOGO DE INJETOR (GRAXA)	551 552 553 554
JOGO DE JUNTAS	574 848
JOGO DE JUNTAS (CAMISA DO CILINDRO SIMPLES)	5
JOGO DE MAÇANETA DO ASSENTO	854
JOGO DE MANCAL (GARFO)	198

ÍNDICE

Designação	Página
	200
	202
JOGO DE MANCAL (PADRÃO)	60
JOGO DE MANCAL (SUBMEDIDA DE 0,635 MM)	60
JOGO DE MANCAL (SUBMEDIDA DE 1,27 MM)	60
JOGO DE MOLA PNEUMÁTICA DO ASSENTO	862
JOGO DE PISTÃO	676
	678
JOGO DE PISTÃO (AJUSTADOR DE FOLGA DO FREIO)	581
JOGO DE PISTÃO DE CONTROLE	676
JOGO DE RECEPTÁCULO	168
	286
JOGO DE RECEPTÁCULO (2 PINOS)	122
	219
	255
	256
	260
	280
	310
	332
	334
	336
	340
	344
	356
	458
	459
	788
	838
	846
	862
JOGO DE RECEPTÁCULO (2 PINOS) (INCLUI RECEPTÁCULO E CALÇO)	281
JOGO DE RECEPTÁCULO (2 PINOS) (SINCRONIZADOR DE LUB. AUTOM./SOLENÓIDE)	336
	340
JOGO DE RECEPTÁCULO (2 PINOS) (SOLENOIDES DE MUDANÇA)	474
JOGO DE RECEPTÁCULO (2 PINOS) (SOLENOIDES DE MUDANÇA DE TRANSMISSÃO)	470
JOGO DE RECEPTÁCULO (2 PINOS) (2 PINOS)	780
JOGO DE RECEPTÁCULO (3 PINOS)	247
	257
	262
	263
	266
	267
	284
	318
	322
	332
	334
	336
	340
JOGO DE RECEPTÁCULO (4 PINOS)	261
JOGO DE RECEPTÁCULO (6 PINOS)	829
	838
	874
JOGO DE RECEPTÁCULO (6 PINOS) (RADIO)	318
	322
	326
JOGO DE RECEPTÁCULO (6 PINOS) (RELÉ DA BUZINA)	336
	340
JOGO DE RECEPTÁCULO (8 PINOS)	317
	356
JOGO DE REPARO	538
	566
JOGO DE RESPIRO	208
	212
JOGO DE RETENTOR	162
	194
	195
	196
	466
	745
	746
JOGO DE RETENTOR (CILINDRO DE ARTICULAÇÃO)	592
JOGO DE RETENTOR (INCLUI RETENTORES E ANÉIS)	747
JOGO DE RETENTOR (UNIDADE INJETORA HIDRÁULICA)	197
	198
	200
	202
JOGO DE RETENTOR (VÁLVULA SOLENÓIDE DE COMBUSTÍVEL)	218
JOGO DE ROLO	862
	866
JOGO DE TERMINAL ALTERNADOR	220
JOGO DE TERMINAL (MOTOR DE PARTIDA)	299
	303
JOGO DE TERMINAL RELÉ	220
JOGO DE TOMADA DE CONEXÃO (2 PINOS)	315
	318
	322
	332
	334
	356
	468

ÍNDICE

Designação	Página
JOGO DE TOMADA DE CONEXÃO (2 PINOS) (BOMBA DE LUBRIFICAÇÃO)	540
JOGO DE TOMADA DE CONEXÃO (2 PINOS) (LÂMPADA DE CURVA DE LADO DIR./ESQ)	356
JOGO DE TOMADA DE CONEXÃO (2 PINOS) (PRESSURIZADOR/SINCRONIZADOR DE LUB. AUTOMÁTICA)	342
JOGO DE TOMADA DE CONEXÃO (2 PINOS) (SENSOR DE VELOCIDADE DE SAÍDA DE TRANSM.)	350
JOGO DE TOMADA DE CONEXÃO (2 PINOS) (SETAS DE DIREÇÃO - LUZ GIRATÓRIA DE ADVERTÊNCIA)	326
JOGO DE TOMADA DE CONEXÃO (3 PINOS)	40 268 269 270 272 273 274 275 276 277 278 279 282 318 322 332 334 350
JOGO DE TOMADA DE CONEXÃO (3 PINOS) (INTERRUPTOR DO FREIO DE ESTACIONAMENTO)	342
JOGO DE TOMADA DE CONEXÃO (3 PINOS) (LÂMPADA DE PARADA DE LADO DER./ESQ.)	356
JOGO DE TOMADA DE CONEXÃO (3 PINOS) (LUZ DE TETO)	318 322 326
JOGO DE TOMADA DE CONEXÃO (3 PINOS) (SENSOR DO ACELERADOR - FREIO - NEUTRALIZADOR)	366
JOGO DE TOMADA DE CONEXÃO (4 PINOS)	334 350
JOGO DE TOMADA DE CONEXÃO (4 PINOS) (FAROL DA LÂMINA DE LADO ESQUERDO)	336 340
JOGO DE TOMADA DE CONEXÃO (6 PINOS)	318 322 342
JOGO DE TOMADA DE CONEXÃO (6 PINOS) (ALTO FALANTES, CONVERSOR, LIMPADORES)	326
JOGO DE TOMADA DE CONEXÃO (8 PINOS)	318 322 326 350
JOGO DE TOMADA DE CONEXÃO (8 PINOS) (RÁDIO)	326
JOGO DE VÁLVULA DE ALÍVIO	574
JUNTA (BOMBA DE ESCORVA DE COMBUSTÍVEL)	193
JUNTA UNIVERSAL	453 454

L

LÂMINA DO LIMPADOR DE PÁRA-BRISA	874
LÂMPADA	251
LÂMPADA - DIODO (VISOR LED)	364
LÂMPADA - DIODO (VISOR LED) (INDICADOR DE PRESSÃO DO FREIO DO DIFERENCIAL)	366
LÂMPADA - FAROL	248 249
LÂMPADA - MINIATURA (24 V)	360 361
LÂMPADA - MINIATURA (28 V)	360
LÂMPADA - SINALIZAÇÃO	256 257
LÂMPADA - TETO	247
LÂMPADA (24 V)	256 257 319 323 327 364 838
LÂMPADA (24 V) (INDICADOR DE AJUSTE - RETOMADA DO PILOTO AUTOMÁTICO)	366
LÂMPADA (24 V) (INDICADOR DE LIGAR - DESLIGAR PILOTO AUTOMÁTICO)	366
LÂMPADA (24 V) (INDICADOR DO DESTRAVAMENTO DO DIFERENCIAL)	366
LÂMPADA (24 VOLTS)(65 WATTS)	248 249 250 252
LÂMPADA (24 VOLTS)(65 WATTS) (CABEÇA)	254 255
LÂMPADA (24 VOLTS)(65 WATTS) (FACHO BAIXO)(DIANTEIRO)	253
LÂMPADA (28 V)	838
LÂMPADA (28 V) (TETO)	247
LAVADOR DO VIDRO	870

ÍNDICE

Designação	Página
LENTE - FAROL DIANTEIRO	255
LENTE ÂMBAR	256
LENTE (CABEÇA)	254
LENTE DA LÂMPADO DO TETO	247
LENTE VERMELHA	257
	838
LENTES - FARÓIS	253
LENTES - FAROL	248
	249
LEVANTAMENTO DO MOTOR	58
LIMPADOR E LAVADOR - JANELA	874
LUBRIFICAÇÃO - AUTOMÁTICA	524
	528
LUBRIFICAÇÃO - CENTRAL	534
	535
	536
LUBRIFICAÇÃO CENTRAL	533
LUVA	489
	493
LUVA - COLETOR DE ESCAPE	142
LUVA - REVESTIMENTO INFERIOR	26
	28
LUVA DO TUCHO	26
	28

M

MANGUEIRA	120
MANGUEIRA (DIÂMETRO INTERNO DE 63,5MM) (12,7 CM)	106
MANGUEIRA (6,35MM DE DIÂMETRO INTERNO) (266CM)	122
MECANISMO DAS VÁLVULAS	69
MÓDULO - VELOCÍMETRO E TACÔMETRO	829
MOLA - ESCOVA	299
MONTAGEM - CABINE	830
MONTAGEM - PLATAFORMA	832
MONTAGEM - RIPER	768
MONTAGEM DA LÂMINA	767
MONTAGEM DO EIXO TRASEIRO	421
MOTOR	4
MOTOR DE REVERSÃO DO CÍRCULO	606
MOTOR (DESENGATE DO FREIO DE ESTACIONAMENTO)	574
MOTOR DO COMANDO DO CÍRCULO E MONTAGEM	662
MOTOR ELÉTRICO DA BOMBA HIDRÁULICA	663
MOTOR ELÉTRICO DE PARTIDA	298
	302
	305
	306
	307
MOTOR ELÉTRICO DE PARTIDA (24V)(MONTADO - LADO DIREITO)(TEMPO FRIO)	305
MOTOR HIDRÁULICO DO GEROTOR	664
MOTOR-SOPRADOR	848

O

ÓLEO - ARRANJO PARA TROCA RÁPIDA	80
ÓLEO DO MOTOR - AQUECEDOR	238
	239

P

PACA - INFORMAÇÃO DE SERVIÇOS	878
PAINEL DE INSTRUMENTOS	838
PÁRA-LAMA E SUPORTE	499
PARTIDA EM TEMPO FRIO - ARRANJO	288
	292
	294
	296
PEDAL - FREIO, TRANSMISSÃO E GOVERNADOR	842
	844
PENEIRA DO TANQUE DE COMBUSTÍVEL	208
	212
PISCA-PISCA ELETRÔNICO	366
PISO	537
PISTÃO E BIELA	60
	62
PLACA-ACUMULADOR HIDRÁULICO	557
	879
PLACA BASCULANTE	682
	683
	684
	685
PLACA-CHASSI (NÃO FURAR OU SOLDAR)	879
PLACA DE ADVERTÊNCIA (CILINDRO DE ALTA PRESSÃO)	557
	879
PLACA DE ADVERTÊNCIA (SEM ESPAÇO LIVRE)	879
PLACA E DECALQUE	878
	879
	880
	881
	882
	883
	884
	885
	886
	887
	888
	889
	890

ÍNDICE

Designação	Página
	891
	892
PNEU	436
POLIA DO VIRABREQUIM	65
PORTA DA CABINE	802
	804
	806
PORTA FUSÍVEIS	318
	322
PÓS-ARREFECEDOR A ÁGUA	128
PRÊ-LUBRIFICAÇÃO	82
PRESSURIZADOR	846
	848
PROTETOR - ROCHA	752
PROTETOR CONTRA POEIRA	208
PROTETOR E SUPORTE DO RADIADOR	504
PUBLICAÇÃO	826
PURIFICADOR DE AR	130
	131

R

RADIADOR	120
	122
	124
RADIADOR E MONTAGEM	118
REGULADOR DE TEMPERATURA DA ÁGUA (92 GRAUS CENTÍGRADOS)	94
	98
	102
RELÉ (CONJ) (24 V)	360
RELÉ (CONJ) (24 V) (AUXILIAR DE PARTIDA)	358
RELÉ (CONJ) (24 V) (BUZINA)	364
RELÉ (CONJ) (24 V) (LÂMPADA DO FREIO)	358
RELÉ (CONJ) (24 V) (PRÉ-LUBRIFICAÇÃO)	358
RESPIRO	18
	390
	412
	434
RETENTOR DE ANEL-O (DIÂMETRO INTERNO DE 110,49 MM)	208
	212
RETENTOR DE ANEL-O (DIÂMETRO INTERNO DE 81,92MM)	404
RETENTOR DE ANEL-O (19,18MM ID)	82
RETENTOR DE ANEL-O (94,84MM DE DIÂMETRO INTERNO)	555
	583
RETENTOR DO VIRABREQUIM	20
	22
	24
REVESTIMENTO DA CABINE	818
RIPER	770
	772
	774
RODA	476
	477

S

SENSOR - NÍVEL DE COMBUSTÍVEL	261
SENSOR - POSIÇÃO GIRATÓRIA	264
SENSOR - PRESSÃO	268
	269
	270
	271
	272
	273
	274
	275
	276
	277
	278
	279
SENSOR - PRESSÃO (ATMOSFÉRICA)	148
	149
SENSOR - PRESSÃO (ÓLEO DE ACIONAMENTO DO INJETOR)	40
	42
SENSOR - PRESSÃO (ÓLEO DO MOTOR)	174
	176
	178
	180
	182
	184
	186
SENSOR - PRESSÃO (SAÍDA DO TURBOALIMENTADOR)	40
	42
SENSOR - TEMPERATURA	94
	98
	102
	168
	283
	284
SENSOR - TEMPERATURA (CONVERSOR DE TORQUE)	332
SENSOR - TEMPERATURA (ÓLEO DO MOTOR)	174
	176
	178
	180
	182
	184
	186
SENSOR DE VELOCIDADE	260
	280
	281
	282

ÍNDICE

Designação	Página
SENSOR DE VELOCIDADE (ROTAÇÃO/REGULAGEM DO MOTOR)	56, 57
SENSOR DE VELOCIDADE (TRANSMISSÃO)	350
SENSOR MAGNÉTICO	260
SILENCIADOR	141
SISTEMA ELETRÔNICO - TREM DE FORÇA	237
SOFTWARE - TREM DE FORÇA	237
SOLENÓIDE (MOTOR DE PARTIDA DE 24 VOLTS)	303
SUPORTE - TRANSMISSÃO	432
SUPORTE DO MOTOR	67, 68
SUSPENSÃO - ASSENTO	862, 866

T

Designação	Página
TAMPA	80, 368
TAMPA - BLOCO DO MOTOR	11, 12
TAMPA - BOCAL DE ENCHIMENTO	71, 688
TAMPA - BOCAL DE ENCHIMENTO DE ÓLEO	390
TAMPA - CAIXA DIANTEIRA	14
TAMPA - CAIXA DO VOLANTE	13
TAMPA - CÁRTER DO ÓLEO	16
TAMPA - EMBARQUE	378
TAMPA - MECANISMO DAS VÁLVULAS	18
TAMPA - PORTA-FUSÍVEL	318, 322, 326
TAMPA - RADIADOR	126, 496
TAMPA COM RESPIRO	870
TAMPA CONTRA POEIRA	72, 370, 374, 414, 418, 564, 565, 566, 640, 641, 706, 708
TAMPA DA VÁLVULA (HASTE)	476, 477
TAMPA DO BOCAL DE ENCHIMENTO DO TANQUE DE COMBUSTÍVEL	208, 212
TAMPA DO RESERVATÓRIO HIDRÁULICO	688
TAMPA PROTETORA	524
TAMPA (ROSCA DE 1-3/16-12)	16
TANDEM E TAMPA	434
TANQUE - LÍQUIDO ARREFECEDOR	126
TANQUE DE COMBUSTÍVEL	208, 212
TANQUE DE COMBUSTÍVEL E MONTAGEM	204, 206
TANQUE DE ÓLEO HIDRÁULICO E MONTAGEM	690
TANQUE HIDRÁULICO E FILTRO	688
TELA DE SUCÇÃO	405, 409
TELA FILTRANTE	580, 688
TRANSMISSÃO	451, 452
TREM DE FORÇA	427
TUBOS - ÁGUA	92, 94, 96, 98, 102, 106
TUBOS - AQUECEDOR	824
TUBOS - AR	134, 136, 138
TUBOS - AR CONDICIONADO	820
TUBOS - AR DA CABINE	822
TUBOS - ARREFECEDOR DO CONVERSOR DE TORQUE	90
TUBOS - BOMBA	640
TUBOS - COMBUSTÍVEL	163, 164
TUBOS - DIANTEIROS	610, 614, 618
TUBOS - DIREÇÃO	656, 658, 661
TUBOS - DIREÇÃO SECUNDÁRIA	654
TUBOS - FILTRO DO COMBUSTÍVEL	168
TUBOS - GRAXA	512, 514, 518, 520
TUBOS - INJETOR DA BOMBA HIDRÁULICA	172
TUBOS - LUBRIFICAÇÃO CENTRAL	508
TUBOS - ÓLEO DA TRANSMISSÃO	414, 418
TUBOS - ÓLEO DO MOTOR	76
TUBOS - ÓLEO DO TURBOALIMENTADOR	78
TUBOS - ÓLEO HIDRÁULICO	622, 626, 630

ÍNDICE

Designação	Página
	632
	636
TUBOS - RIPER	648
	650
	652
TUBOS DO AQUECEDOR	824
TURBOALIMENTADOR	143
	144

V

VÁLVULA	456
	555
	583
	688
VÁLVULA - AMOSTRA DE FLUIDOS	566
VÁLVULA - AMOSTRA DE FLUIDOS (ÓLEO DA DIREÇÃO)	640
VÁLVULA - AMOSTRA DE FLUIDOS (ÓLEO DO TREM DE FORÇA)	418
VÁLVULA - CONDICIONADOR DE AR	820
VÁLVULA - DESCARGA	747
VÁLVULA - OBTENÇÃO DE AMOSTRAS DE FLUIDOS	72
	374
	414
VÁLVULA COMBINADA	705
	706
	708
VÁLVULA DE ADMISSÃO	45
VÁLVULA DE ALÍVIO	90
	460
	706
	708
	738
	739
	740
	741
	742
	743
VÁLVULA DE CONTROLE	710
	712
	714
	716
	718
	720
	722
	724
	726
	728
	730
	732
	734
VÁLVULA DE CONTROLE - PRESSÃO E COMPENSAÇÃO DE FLUXO	736
VÁLVULA DE CONTROLE - TRANSMISSÃO	470
	472
	474
VÁLVULA DE CONTROLE DE PRESSÃO	215
	216
	217
VÁLVULA DE ESCAPE	45
VÁLVULA DE LUBRIFICAÇÃO - DISTRIBUIÇÃO	524
	528
	551
	552
	553
	554
VÁLVULA DE MODULAÇÃO	457
	458
	459
VÁLVULA DE MODULAÇÃO (EMBREAGEM DE TRAVAMENTO DO CONVERSOR DE TORQUE)	458
	459
VÁLVULA DE RETENÇÃO	704
VÁLVULA DE RETENÇÃO (BOMBA DO FREIO)	566
VÁLVULA DE RETENÇÃO (COMANDO ELÉTRICO)	640
VÁLVULA DE RETENÇÃO (FREIO DE SERVIÇO)	565
VÁLVULA DE SEPARAÇÃO	744
VÁLVULA DESVIADORA	747
VALVULA DO SOLENOIDE E MONTAGE	696
	697
VÁLVULA E ARTICULAÇÕES	692
	694
VÁLVULA E MONTAGEM - TRAVA DO DIFERENCIAL	455
VÁLVULA SELETORA	461
	462
VÁLVULA SELETORA E CONTROLE DE PRESSÃO	464
VÁLVULA SOLENÓIDE	194
	218
	466
	467
	468
	745
	746
VÁLVULA SOLENÓIDE (CONTROLE DE PRESSÃO)	195
	196
	197
	198
	200
	202
VEDADOR	112

ÍNDICE

Designação	Página	Designação	Página
	114		
VEDADOR ADESIVO ISOLANTE	40		
VEDADOR DE JUNTA	42		
VENTILADOR - ALTERNADOR	220		
VENTILADOR DE SOPRO	88		
VIDRO	872		
VIRABREQUIM	20		
	22		
	24		
VOLANTE DO MOTOR	50		

STICHWORTVERZEICHNIS

Bezeichnung	Seite

A

ABDECKGLAS (FRONTSCHEINWERFER)	254
ABDECKGLAS (GELB)	256
ABGASKRÜMMERMANSCHETTE	142
ABLASSSTOPFEN	106
ABSTEIFSCHILD	753
ANSAUGSIEB	405
	409
ANSCHLUSS	755
ANSCHLUSSKLEMMENSATZ (STARTERMOTOR)	299
	303
ANTENNE	815
ANTRIEBSKETTE	373
ANTRIEBSWELLE	430
	431
ANZUGSLEINE	862
	866
ARBEITS- U. FRONTSCHEINWERFER	258
ARBEITSLEUCHTEN	248
	249
ARBEITSLEUCHTENLINSE	248
	249
ARMLEHNE	784
	785
	786
	856
ARMLEHNE (LINKS)	857
	858
ARMLEHNE (RECHTS)	857
	858
ASCHENBECHER	799
ÄTHERSTARTHILFE	286
AUFKLEBER	876
AUFREISSER	770
	772
	774
AUFREISSERBEFESTIGUNG	768
AUFREISSERHUBZYLINDER	598
AUFREISSERLEITUNGEN	648
	650
	652
AUFREISSERZAHN	776
	777
AUSGLEICHER-EINBAUSATZ	200
	202
AUSLASSVENTIL	45
AUSPUFFKRÜMMER	139
	140
AUSPUFFROHRVERLÄNGERUNG	133
AUSSCHALTER, MAGN.	260

B

BASISAUSFÜHRUNG	2
BATTERIE	226
	227
BATTERIE (12 V)	227
	296
BETRIEBS- UND FESTSTELLBREMSE	560
BETRIEBSBREMSE	558
BLINKLEUCHTE	256
	257
BREMS-, KUPPLUNGS- U. GASPEDAL	842
	844
BREMS- U. DIFFERENTIALSPERRPUMPE U. BEFESTIGUNGSTEILE	572
BREMSEN-HALTETEILE	570
BREMSGESTÄNGE	564
BUCHSE	489
	493
BUCHSENLAUFFLÄCHE, UNTEN	26
	28
BÜRSTEN-EINBAUSATZ (EINSCHL. STOPFEN U. BÜRSTENSATZ)	780
BÜRSTENFEDER	299
BÜRSTENSATZ (STARTERMOTOR)	298

D

DÄMPFER	46
DICHTMITTEL	40
DICHTUNG	112
	114
DICHTUNG (KRAFTSTOFFENTLÜFTUNGS-PUMPE)	193
DICHTUNGS-ABDICHTMITTEL	42
DICHTUNGSSATZ	162
	194
	195
	196
	466
	574
	745
	746
	848
DICHTUNGSSATZ (EINSCHL. DICHTUNGEN UND RINGE)	747
DICHTUNGSSATZ (EINZELZYLINDERLAUFBUCHSE)	5
DICHTUNGSSATZ (HYDRAULISCHE PUMPENDÜSE)	197
	200
DICHTUNGSSATZ (HYDRAULISCHE PUMPENDÜSE)	198
	202

STICHWORTVERZEICHNIS

Bezeichnung	Seite
DICHTUNGSSATZ (KNICKGELENKZYLINDER)	592
DICHTUNGSSATZ (KRAFTSTOFFSOLENOIDVENTIL)	218
DIFFERENTIAL	384 386
DIFFERENTIAL UND TELLERRAD	380 382
DIFFERENTIALSPERRE - VENTIL UND BEFESTIGUNGSTEILE	455
DIFFERENTIALSPERRENGESTÄNGE	374
DIODENLEUCHTE (LED)	364
DIODENLEUCHTE (LED) (DIFFERENZIALBREMSDRUCKANZEIGE)	366
DOKUMENTATION	826
DREHKNOPFSCHALTER (FERNLICHT)	364 366
DREHKNOPFSCHALTER (HINTERER SCHEIBENWISCHER)	318 322
DREHKNOPFSCHALTER (LÜFTER)	360
DREHKNOPFSCHALTER (WISCHER/WASCHER)(HECK)	326
DREHKRANZMOTOR U. BEFESTIGUNGSTEILE	662
DREHMOMENTWANDLER	438 442 446 449 450
DREHMOMENTWANDLER-KÜHLERLEITUNGEN	90
DREHSTELLUNGSSENSOR	264
DREHSTROMGENERATOR	220 222 224
DREHSTROMGENERATOR - ANSCHLUSSKLEMMENSATZ	220
DREHSTROMGENERATOR-VENTILATOR	220
DREHZAHLSENSOR	260 280 281 282
DREHZAHLSENSOR (GETRIEBE)	350
DREHZAHLSENSOR (MOTORDREHZAHL - EINSPRITZZEITPUNKT)	56 57
DRUCK- U. STROMAUSGLEICHSVENTIL	736
DRUCKKNOPFSCHALTER	838
DRUCKLÜFTER	88
DRUCKLUFTLEITUNGEN	134 136 138
DRUCKSCHALTER (BREMSÖL)	336 340
DRUCKSCHALTER (FESTSTELLBREMSE)	336 340
DRUCKSCHALTER (HAUPTLENKUNG)	345 351
DRUCKSCHALTER (HOCH-NIEDRIG) (KLIMAANALGE)	332
DRUCKSENSOR	268 269 270 271 272 273 274 275 276 277 278 279
DRUCKSENSOR (ATMOSPHÄRISCH)	148 149
DRUCKSENSOR (EINSPRITZUNGSAUSLÖSEÖL)	40 42
DRUCKSENSOR (MOTORÖL)	174 176 178 180 182 184 186
DRUCKSENSOR (TURBOLADERAUSLASS)	40 42
DRUCKSPEICHER	555 556 557 583
DRUCKSPEICHERBLASE-EINBAUSATZ	642
DRUCKSTEUERVENTIL	215 216 217

E

Bezeichnung	Seite
ECKMESSER	756
EINBAUSATZ - KRAFTSTOFFILTER UND WASSERABSCHEIDER	193
EINFÜLLKAPPE	71
EINFÜLLSTUTZENKAPPE	688
EINLASSVENTIL	45
EINLASSVENTILEINSATZ (EINLASS)	36
EINSPRITZDÜSENSATZ (FETT)	551 552 553 554

STICHWORTVERZEICHNIS

Bezeichnung	Seite
EINSPRITZLEITUNGEN - HYDRAULIKPUMPE	172
EINSTELLER-EINBAUSATZ (ARMLEHNE)	785
EINSTELLER-EINBAUSATZ (SITZSCHALE, UNTEN)	834
ELEKTRISCHE HYDRAULIKPUMPE	663
ELEKTRON. BLINKER	366
ELEMENT (FAHRERHAUSLUFT)	846
ELEMENT (240 V / 600 W)	238
ELEMENT (240 V / 600 W)	239
	244
ENTDUNSTER	73
	74
ENTFROSTERGEBLÄSE	811
	812
	813
ENTLASTUNGSVENTIL	747
ENTLÜFTER	18
	390
	412
	434
ENTLÜFTUNGSSATZ	208
	212
FAHRERHAUS	787
FAHRERHAUS - LUFTDRUCKLEITUNGEN	822
FAHRERHAUSANBAUSATZ	830
FAHRERHAUSAUSKLEIDUNG	818
FAHRERHAUSBELEUCHTUNG	247
FAHRERHAUSBELÜFTUNG	846
	848
FAHRERHAUSFENSTER	872
FAHRERHAUSLEUCHTENLINSE	247
FAHRERHAUSLUFTFILTER	814
FAHRERHAUSTÜR	802
	804
	806
FAHRERHAUSVERDRAHTUNG	318
	322
	326
FAHRERPLATTFORM	537
FAHRERPLATTFORMVERDRAHTUNG	342
FAHRERSITZ	854
	856
	857
	858
FAHRERSITZ, KIPPVORRICHTUNG	834
FAHRERSITZFEDERUNG	862
	866
FAHRERSITZVERKLEIDUNG	834
	836
FAHRERSITZVERKLEIDUNG (SITZLEHNE)	854
FAHRERSITZVERKLEIDUNG (UNTERE SCHALE FÜR SITZ)	854
FAHRSCHEINWERFER-ABDECKGLAS	253
FAHRWERK	1
FELD-EINBAUSATZ	3
FESTSTELLBREMSGESTÄNGE	562
FETTEINSPRITZUNG	551
	552
	553
	554
FILTER	134
	154
	156
	193
FILTER (HYDRAULISCHE PUMPENDÜSE)	146
FILTER (WASSERPUMPE)	112
	114
	116
FILTERSIEB	688
FLÜSSIGKEITSPROBEENTNAHMEVENTIL	72
	374
	414
FRONTSCHEINWERFER	250
	251
	252
	253
	254
	255
GEHÄUSE-EINBAUSATZ	862
GELÄSEMOTOR	848
GELENKZYLINDER UND BEFESTIGUNGSTEILE	586
GESCHWINDIGKEITS- U. DREHZAHLMESSER-MODUL	829
GETRIEBE	451
	452
GETRIEBE U. GEHÄUSE (AUSGANGSÜBERTRAGUNG)	404
GETRIEBE U. GEHÄUSE (AUSGANGSÜBERTRAGUNG)	408
GETRIEBEAUFHÄNGUNG	432
GETRIEBEHYDRAULIK	376
	377
GETRIEBEÖLFÜLLSTUTZEN	390
GETRIEBEPUMPE	428
	429
GETRIEBESTEUERKONSOLE	799
GETRIEBESTEUERVENTIL	470
	472
	474
GLEITSCHIENENBLOCK-EINBAUSATZ	854
	859

F

G

STICHWORTVERZEICHNIS

Bezeichnung	Seite
	860
H	
HALTERING	344
HALTETEILESATZ	862
HALTETEILESATZ (SITZFEDERUNG)	866
HAUPTFILTER	131
HAUPTLUFTFILTER	814
HAUPTSCHEINWERFERLINSE	255
HEIZUNGSLEITUNGEN	824
HINTERACHSAUFHÄNGUNG	421
HINTERACHSENGEHÄUSE	412
HYDAULIKÖLHEIZUNG	244
HYDRAULIKDRUCKSPEICHER U. BEFESTIGUNG	582
HYDRAULIKLEITUNGEN	622
	626
	630
	632
	636
HYDRAULIKPUMPE UND LEITUNGEN	640
HYDRAULIKPUMPENANTRIEB	146
	148
	149
	150
	151
	152
	154
	156
HYDRAULIKPUMPENMOTOR, ELEKTR.	663
HYDRAULIKSYSTEM	609
HYDRAULIKTANK UND BEFESTIGUNGSTEILE	690
HYDRAULIKTANK UND SCHMIERFILTER	688
HYDRAULIKTANKKAPPENDECKEL	688
I	
IDENTIFIZIERUNGS-AUFKLEBER	781
INSTRUKTIONS-AUFKLEBER (AM ÜBERROLLSCHUTZ NICHT BOHREN/ SCHWEISSEN)	879
INSTRUKTIONS-AUFKLEBER (FÜR SITZVERSTELLUNG)	866
INSTRUMENTENTAFEL	838
K	
KÄLTEMITTELKOMPRESSOR	788
	789
	790
	792
	794
KÄLTEMITTELKONDENSATOR U. BEFESTIGUNGSTEILE	795
KALTWETTERSTARTANLAGE	288
	292
	294
	296
KALTWETTERVERDRAHTUNG	330
KAPPE	80
	368
KAPPE MIT ENTLÜFTER	870
KAPPE (1-3/16-12-GEWINDE)	16
KEILRIEMEN	222
	790
	792
KEILRIEMENSATZ	48
KIPPSCHALTER (FAHRLEUCHTE)	360
KIPPSCHALTER (1POLIG) (ABSTELLSCHALTER - VOM BODEN ERREICHBAR)	336
	340
KIPPVORRICHTUNG NACH HINTEN, REPARATURSATZ	834
KIPPWANNENSATZ	854
KLEMMLEISTE	246
KLIMAANLAGE	780
KLIMAANLAGE UND AUFHÄNGUNG	778
KLIMAANLAGENLEITUNGEN	820
KLIMAANLAGENVENTIL	820
KNICKGELENK-ANHÄNGUNG	506
KNICKGELENKSPERRE	523
KNICKLENKZYLINDER	592
KOLBENPUMPE	674
	676
	678
KOLBENPUMPE UND BEFESTIGUNG	666
KOLBENPUMPENUMLAUFSATZ	680
	681
KOLBENSATZ (BREMSNACHSTELLER)	581
KOMPRESSORSATZ	862
KRAFTSTOFFEINSPRITZDÜSE	158
	159
	160
	161
	188
KRAFTSTOFFEINSPRITZPUMPE	188
	189
	190
	191
KRAFTSTOFFEINSPRITZPUMPE - EINBAUSATZ (ZUR ÜBERHOLUNG)	198
	200
KRAFTSTOFFENTLÜFTUNGSPUMPE UND -HAUPTFILTER	192
	193
KRAFTSTOFFHEIZUNG	240
	242

STICHWORTVERZEICHNIS

Bezeichnung	Seite
KRAFTSTOFFILTER	168
KRAFTSTOFFILTERLEITUNGEN	168
KRAFTSTOFFKAPPE	208
	212
KRAFTSTOFFLEITUNGEN	163
	164
KRAFTSTOFFÖRDERPUMPE	194
	195
	196
	197
	198
	200
	202
KRAFTSTOFFSTANDSENSOR	261
KRAFTSTOFFTANK	208
	212
KRAFTSTOFFTANK-SIEBEINSATZ	208
	212
KRAFTSTOFFTANK U. BEFESTIGUNG	204
	206
KRAFTÜBERTRAGUNG	427
KRAFTÜBERTRAGUNGSELEKTRONIK	237
KREUZGELENK	453
	454
KREUZGELENK UND LAGER	453
KÜHLER	120
	122
	124
KÜHLER U. BEFESTIGUNG	118
KÜHLERKAPPE	126
	496
KÜHLMITTELBEHÄLTER	126
KÜHLWASSERLEITUNGEN	92
	94
	96
	98
	102
	106
KÜHLWASSERPUMPE	108
	109
	110
	112
	114
	116
KÜHLWASSERPUMPEN-REGENERIERSATZ	112
	114
KÜHLWASSERPUMPEN-REGENERIERSATZ (WASSER)	116
KURBELWELLE	20
	22
	24
KURBELWELLEN-RIEMENSCHEIBE	65
KURBELWELLENDICHTUNG	20
	22
	24

L

Bezeichnung	Seite
LADELUFTKÜHLER, WASSERGEKÜHLT	128
LAGERSATZ (JOCH)	198
	200
	202
LAGERSATZ (STANDARD)	60
LAGERSATZ (0,635 MM UNTERGRÖSSE)	60
LAGERSATZ (1,27 MM UNTERGRÖSSE)	60
LAUTSPRECHER (RADIO)	818
LEITUNGEN, VORNE	610
	614
	618
LENKBETÄTIGUNG	584
LENKGESTÄNGE	522
LENKKONSOLENVERDRAHTUNG	364
	366
LENKÖLLEITUNGEN	656
	658
	661
LENKZYLINDER	602
LENKZYLINDER UND AUFHÄNGUNG	590
LEUCHTE	251
LEUCHTE (24 V)	256
	257
	319
	323
	327
	364
	838
LEUCHTE (24 V) (DIFFERENZIALFREIGABEANZEIGE)	366
LEUCHTE (24 V) (FAHRTREGLER EIN/AUS - ANZEIGE)	366
LEUCHTE (24 V) (FARTREGLER AKTIVIEREN/WIEDERAUFNEHMEN - ANZEIGE)	366
LEUCHTE (24 V)(65 W)	248
	249
	250
	252
LEUCHTE (24 V)(65 W) (ABBLENDLICHT) (FRONTSCHEINWERFER)	253
LEUCHTE (24 V)(65 W) (FRONTSCHEINWERFER)	254
	255
LEUCHTE (28 V)	838
LEUCHTE (28 V) (FAHRERHAUSDACH)	247
LINSE - ROT	257
	838
LÜFTERANTRIEB	48
LUFTFEDER-EINBAUSATZ	862
LUFTFILTER	808
LUFTFILTER-WARTUNGSANZEIGE	134
LUFTKANAL UND REGULIERUNG	808

STICHWORTVERZEICHNIS

Bezeichnung	Seite
LUFTREINIGER	130, 131

M

Bezeichnung	Seite
MAGNETSCHALTER	288, 311, 312, 313, 314, 315
MAGNETSCHALTER (BREMSEINZIEHRELAIS)	358
MAGNETSCHALTER (HAUPTRELAIS)	358
MAGNETSCHALTER (STARTRELAIS 1)	358
MAGNETSCHALTER (STRATRELAIS 2)	358
MAGNETSCHALTER (VORSCHMIERANLAGE)	82
MAGNETSCHALTER (24-32 V) (NOTLENKUNGS-/VORSCHMIERRELAIS)	311
MAGNETSPULE (STARTERMOTOR 24 V)	303
MAGNETVENTIL	194, 218, 466, 467, 468, 745, 746
MAGNETVENTIL (DRUCKBEGRENZUNG)	195, 196, 197, 198, 200, 202
MANSCHETTENKLEMME	298
METALLSCHRAUBE (NR. 4X3/16)	409
MINIATURLEUCHTE (24 V)	360, 361
MINIATURLEUCHTE (28 V)	360
MODULATORVENTIL	457, 458, 459
MODULATORVENTIL (DREHMOMENTWANDLER-SPERRENKUPPLUNG)	458, 459
MOTOR-EINBAUSATZ	6
MOTOR (FESTSTELLBREMSFREIGABE)	574
MOTORAUFHÄNGUNG	67, 68
MOTORAUSFÜHRUNG	4
MOTORBLOCK	26, 28, 30, 32, 33
MOTORBLOCKDECKEL	11, 12
MOTORHUBÖSE	58
MOTORNENNLEISTUNGSSTEUERUNG, ELEKTRON.	229, 230, 231, 232, 233, 234
MOTORÖL-VORWÄRMGERÄT	238, 239
MOTORÖLEINFÜLLSTUTZEN	71
MOTORÖLKÜHLER	85
MOTORÖLLEITUNGEN	76
MOTORRAUM-SCHUTZVERKLEIDUNG	542
MOTORSTEUERUNG, ELEKTRON.	235, 236
MOTORVERDRAHTUNG	332, 334
MOTORVERKLEIDUNG	488, 492, 496, 498
MOTORVORSCHMIERUNG	82

N

Bezeichnung	Seite
NACHSTELLVORRICHTUNG	565, 581
NOCKENWELLE	10
NOTLENKUNGSLEITUNGEN	654

O

Bezeichnung	Seite
O-RING-DICHTUNG (110,49 MM INNENDURCHMESSER)	208, 212
O-RING-DICHTUNG (19,18 MM ID)	82
O-RING-DICHTUNG (81,92 MM ID)	404
O-RING-DICHTUNG (94,84 MM ID)	583
O-RING-DICHTUNG (94,84 MM ID)	555
O-RING-STOPFEN (7/16-20 GEWINDE)	678
ÖLEINFÜLLSTUTZEN	390
ÖLFILTER	72, 374, 392, 393, 571
ÖLFILTER (VORSTEUERUNG)	393
ÖLFILTERELEMENT (NICHT WIEDERVERWENDBAR)	392
ÖLFILTERELEMENT (NICHTBRENNBARE FLÜSSIGKEIT)	392

STICHWORTVERZEICHNIS

Bezeichnung	Seite
ÖLFILTERELEMENT (REINIGUNG/ HOCHLEISTUNG)	392
ÖLKÜHLERBLOCK	85 86 87
ÖLLEITUNGEN - KRAFTÜBERTRAGUNG	414 418
ÖLMESSSTAB	75
ÖLPUMPEN-BEFESTIGUNGSTEILE	70
ÖLSCHNELLWECHSELANSCHLUSS	80
ÖLWANNE	59
ÖLWANNENDECKEL	16

P

PENDELVENTIL	744
PLANETENANTRIEBSGEHÄUSE U. TEILE	370
PLANETENGETRIEBE	422
PLATTFORM-ANBAUSATZ	832
PLEUELSTANGE UND KOLBEN	60 62
POLSTEREINBAUSATZ (ARMLEHNE)	785
POLSTEREINBAUSATZ (TEXTILRÜCKENLEHNE)	810
PROBEENTNAHMEVENTIL F. WARTUNGSFL.	566
PROBEENTNAHMEVENTIL F. WARTUNGSFL. (KRAFTÜBERTRAGUNGSÖL)	418
PROBEENTNAHMEVENTIL F. WARTUNGSFL. (LENKUNGSÖL)	640
PUMPE UND BEFESTIGUNGSTEILE	174 176 178 180 182 184 186
PUMPEN-EINBAUSATZ	538
PUMPENANTRIEB ELEKTR.	566 574 576
PUMPENDÜSE, HYDRAULISCH	194 195 196 197 198 200 202
PUMPENDÜSE, HYDRAULISCH	194
PUMPENDÜSEN-HYDRAULIKPUMPE - KOMPENSATORSATZ	198

R

RADIOEINBAUSATZ	815
RADSATZ	476 477
RADSTURZZYLINDER	604
RADSTURZZYLINDER UND BEFESTIGUNGSTEILE	591
RAHMEN, HINTEN	502 503
REIFEN	436
RELAIS (24 V)	360
RELAIS (24 V) (BREMSLEUCHTE)	358
RELAIS (24 V) (HUPE)	364
RELAIS (24 V) (STARTHILFE)	358
RELAIS (24 V) (VORSCHMIERANLAGE)	358
RELAISANSCHLUSSKLEMMENSATZ	220
RELAISTAFELVERDRAHTUNG	358
REPARATURSATZ	538 566
RICHTUNGSBLINKER- UND WARNSCHALTER	364 366
RIEMENSPANNER	8
ROHRSTOPFEN (1/8-27 GEWINDE)	24
ROLLENSATZ	862 866
RÜCKFAHRWARNHORN	122 356
RÜCKLAUFELEMENT (HYDRAULIK)	688
RÜCKLEHNENVERLÄNGERUNG	810
RÜCKSPIEGEL	827 828

S

SAMMELVENTIL	705 706 708
SCHALLDÄMPFER	141
SCHALTER	360
SCHALTER (DIFFERENZIALFREIGABE)	364 366
SCHALTER (EIN/AUS) (HINTERES DEFROSTERGEBLÄSE)	319 323 327
SCHALTER (EIN/AUS) (VORDERES DEFROSTERGEBLÄSE)	319 323 327
SCHALTER (FAHRTREGELER EIN/AUS)	366
SCHALTER (FAHRTREGELER EIN/AUS)	364
SCHALTER (FARTREGLER AKTIVIEREN/ WIEDERAUFNEHMEN)	364
SCHALTER (RUNDUMWARNLEUCHTE)	319 323 327

STICHWORTVERZEICHNIS

Bezeichnung	Seite
SCHALTER (SCHARDÄMPFUNG)	364
SCHALTKONSOLENVERDRAHTUNG	360
SCHALTVENTIL	461
	462
SCHARBEFESTIGUNGSTEILE	767
SCHARDREHWERK	606
	748
SCHARDREHWERKBEFESTIGUNG	605
SCHARKIPPZYLINDER UND BEFESTIGUNGS-TEILE	587
SCHARNEIGEZYLINDER	594
SCHARSCHWENK- U. HUBZYLINDER U. BEFESTIGUNGSTEILE	588
SCHARSCHWENK- UND HUBZYLINDER	596
SCHAUGLAS	688
SCHEIBENWASCHANLAGE	870
SCHEIBENWISCHER UND -WASCHANLAGE	874
SCHEIBENWISCHERBLATT	874
SCHEIBENWISCHERSCHALTER	317
	318
	322
SCHEIBENWISCHERSCHALTER (24 V) (VORDERER SCHEIBENWISCHER)	322
	326
SCHEIBENWISCHERSCHALTER (24 V) (VORDERER SCHEIBENWISCHER)	318
SCHILD - HAUPTRAHMEN (NICHT BOHREN ODER SCHWEISSEN)	879
SCHILD - HYDRAULISCHER DRUCKSPEI-CHER	557
	879
SCHILD-SERVICEINFORMATIONEN	878
SCHILD UND AUFKLEBER	878
	879
	880
	881
	882
	883
	884
	885
	886
	887
	888
	889
	890
	891
	892
SCHLAUCHLEITUNG	120
SCHLAUCHLEITUNG (63,5MM ID) (12,7 CM)	106
SCHLAUCHLEITUNG (6,35MM ID) (266 CM)	122
SCHLÜSSEL	208
	212
	489
	493
	893
SCHLÜSSEL (HAUPTSCHALTER)	308
SCHLÜSSEL (HAUPTSCHLÜSSEL)	826
SCHMIERLEITUNGEN	508
	512
	514
	518
	520
SCHMIERNIPPEL	748
SCHMIERNIPPEL (AUTOMATIKSCHMIE-RUNG)	528
SCHMIERNIPPEL (1/8-27-GEWINDE)	535
	536
	772
	774
SCHMIERNIPPEL (1/8-27-GEWINDE)	524
SCHMIERÖLVERTEILERVENTIL	524
	528
	551
	552
	553
	554
SCHMIERPUMPE	84
	538
	540
SCHMIERSYSTEM, AUTOM.	524
	528
SCHNEIDMESSER	757
	758
	759
	760
	761
	762
	763
	764
	765
	766
SCHNELLBETANKUNGSANSCHLUSS	145
SCHRÄGKOLBEN-EINBAUSATZ	676
	678
SCHRAUBE	408
SCHUBPLATTE	754
SCHUTZBLECHE UND AUFHÄNGUNG	499
SCHUTZKAPPE	524
SCHWENKBLOCK	686
	687
SCHWENKSCHEIBE	682
	683
	684
	685
SCHWINGSITZ	859
	860
SCHWUNGRAD	50
SCHWUNGRADGEHÄUSE	55
SCHWUNGRADGEHÄUSEDECKEL	13
SEITENANTRIEB	394

STICHWORTVERZEICHNIS

Bezeichnung	Seite
	396
	398
	400
SEITENSCHIEBERZYLINDER UND BEFESTIGUNGSTEILE	589
SEITENSCHUBZYLINDER	600
SENSORANSCHLUSSSATZ (2POLIG)	318
	322
	332
	334
	356
	468
SENSORANSCHLUSSSATZ (2POLIG)	315
SENSORANSCHLUSSSATZ (2POLIG) (DRUCKERZEUGR/ZEITGEBER FÜR AUTOMATIKSCHMIERUNG)	342
SENSORANSCHLUSSSATZ (2POLIG) (GETRIEBEAUSGANGDREHZAHLSENSOR)	350
SENSORANSCHLUSSSATZ (2POLIG) (RICHTUNGSBLINKER, RUNDUM-KENNLEUCHTE)	326
SENSORANSCHLUSSSATZ (2POLIG) (RICHTUNGSBLINKERLEUCHTE, RECHTS/LINKS)	356
SENSORANSCHLUSSSATZ (2POLIG) (SCHMIERUNGSPUMPE)	540
SENSORANSCHLUSSSATZ (3POLIG)	40
	268
	269
	270
	272
	273
	274
	275
	276
	277
	278
	279
	282
	318
	322
	332
	334
	350
SENSORANSCHLUSSSATZ (3POLIG) (BREMSLEUCHTE, RECHTS/LINKS)	356
SENSORANSCHLUSSSATZ (3POLIG) (FAHRERHAUSBELEUCHTUNG)	318
	322
	326
SENSORANSCHLUSSSATZ (3POLIG) (FESTSTELLBREMSSCHALTER)	342
SENSORANSCHLUSSSATZ (3POLIG) (GASREGELUNG/BREMSE/NEUTRALISIER-SENSOR)	366
SENSORANSCHLUSSSATZ (4 POLIG)	334
SENSORANSCHLUSSSATZ (4 POLIG)	350
SENSORANSCHLUSSSATZ (4 POLIG) (ARBEITSCHEINWERFER, LINKE SCHAR)	336
	340
SENSORANSCHLUSSSATZ (6POLIG)	318
	322
	342
SENSORANSCHLUSSSATZ (6POLIG) (LAUTSPRECHER, UMFORMER, WISCHER)	326
SENSORANSCHLUSSSATZ (8POLIG)	318
	322
	326
	350
SENSORANSCHLUSSSATZ (8POLIG) (RADIO (UNTERHALTUNG))	326
SICHERHEITSFILTER	131
SICHERHEITSGURT	851
	852
	853
SICHERHEITSGURT ((AUTOMATIKSICHERHEITSGURT))	856
SICHERHEITSGURT ((AUTOMATIKSICHERHEITSGURT))	857
	858
SICHERUNG (10 A)	318
	322
	326
	364
	366
SICHERUNG (15 A)	364
	366
SICHERUNG (20 A)	330
SICHERUNG (25 A)	330
SICHERUNGSBLOCK	330
SICHERUNGSHALTER	318
	322
SICHERUNGSHALTERKAPPE	318
	322
	326
SIEB	580
SITZHEBEL-EINBAUSATZ	854
SITZKISSENEINBAUSATZ (STOFF)	854
SOFTWARE - KRAFTÜBERTRAGUNG	237
SOLENOIDVENTIL U. BEFESTIGUNGSTEILE	696
	697
SPERRVENTIL	704
SPERRVENTIL (BETRIEBSBREMSE)	565
SPERRVENTIL (BREMSPUMPE)	566
SPERRVENTIL (ELEKTROANTRIEB)	640
STARTERMOTOR	298
	302
	305

STICHWORTVERZEICHNIS

Bezeichnung	Seite
	306
	307
STARTERMOTOR (24 V)(RECHTS BEFESTIGT) (FÜR TIEFE UMGEBUNGSTEMPERATUREN)	305
STARTSCHALTER	316
	360
STAUBAUSWERFER	132
STAUBDECKEL	208
STAUBKAPPE	72
	370
	374
	414
	418
	564
	565
	566
	640
	641
	706
	708
STECKDOSEN - EINBAUSATZ	168
	286
STECKDOSEN - EINBAUSATZ (2POLIG)	219
	255
	256
	260
	280
	310
	332
	334
	458
	459
	788
	838
	846
	862
STECKDOSEN - EINBAUSATZ (2POLIG)	122
	344
	356
STECKDOSEN - EINBAUSATZ (2POLIG)	336
	340
STECKDOSEN - EINBAUSATZ (2POLIG) (AUTOMATIKSCHMIERUNGSZEITGEBER/ SOLENOID)	336
	340
STECKDOSEN - EINBAUSATZ (2POLIG) (EINSCHL. STECKDOSE UND KEIL)	281
STECKDOSEN - EINBAUSATZ (2POLIG) (GETRIEBESCHALTSOLENOIDE)	470
STECKDOSEN - EINBAUSATZ (2POLIG) (SCHALTSOLENOIDE)	474
STECKDOSEN - EINBAUSATZ (2POLIG) (2POLIG)	780
STECKDOSEN - EINBAUSATZ (3POLIG)	247
	257
	262
	263
	266
	267
	284
	332
	334
STECKDOSEN - EINBAUSATZ (3POLIG)	318
	322
STECKDOSEN - EINBAUSATZ (3POLIG)	336
	340
STECKDOSEN - EINBAUSATZ (4 POLIG)	261
STECKDOSEN - EINBAUSATZ (6POLIG)	829
	838
	874
STECKDOSEN - EINBAUSATZ (6POLIG) (RADIO)	318
	322
	326
STECKDOSEN - EINBAUSATZ (6POLIG) (WARNHORNRELAIS)	336
	340
STECKDOSEN - EINBAUSATZ (8POLIG)	317
STECKDOSEN - EINBAUSATZ (8POLIG)	356
STEIGLEITER, HINTEN	550
STEIGLEITER, VORNE	546
	548
STEINSCHUTZ	752
STELLUNGSSENSOR	262
	263
	264
	266
	267
STELLUNGSSENSOR (AUSSCHALTER)	844
STELLUNGSSENSOR (BREMSE)	844
STELLUNGSSENSOR (GASSTEUERUNG)	842
STEUERKOLBENSATZ	676
STEUERKONSOLE	796
STEUERUNG, ELEKTRON. (ZEITGEBER AUTOMATISCHE SCHMIERUNG)	529
STEUERUNGSEINHEIT, ELEKTRON. FÜR MOTOR UND BEFEST.	228
STEUERVENTIL	710
	712
	714
	716
	718
	720
	722
	724
	726
	728
	730
	732

STICHWORTVERZEICHNIS

Bezeichnung	Seite
	734
STIRNRAD	51
STIRNRADGEHÄUSE	56
	57
STIRNRADGEHÄUSEDECKEL	14
STOPFENSATZ	198
	200
	202
STÖSSELLAUFFLÄCHE	26
	28
STRÖMUNGSSCHALTER	5
	309
	310
STRÖMUNGSSCHALTER (KÜHLMITTEL)	309

T

TANDEMANTRIEBSHALTETEILE	388
TANDEMGEHÄUSE UND DECKEL	434
TEMPERATURSCHALTER	238
	244
TEMPERATURSCHALTER (HYDRAULIKÖL)	345
	351
TEMPERATURSCHALTER (ÖL)	239
TEMPERATURSENSOR	94
	98
	102
	168
	283
	284
TEMPERATURSENSOR (DREHMOMENTWANDLER)	332
TEMPERATURSENSOR (MOTORÖL)	174
	176
	178
	180
	182
	184
	186
THERMOSTATSCHALTER	780
TRENNSCHALTER	308
TRENNSCHALTER (BATTERIE)	344
	350
TURBOLADER	143
	144
TURBOLADERÖLLEITUNGEN	78

U

ÜBERDRUCKVENTIL	90
	460
	706
	708
	738
	739
	740
	741
	742
	743
ÜBERDRUCKVENTIL-EINBAUSATZ	574
ÜBERROLLSCHUTZ	850
ÜBERWACHUNGSSYSTEMDIMMER - STEUERUNG	800
UMLAUFKÜHLWASSERHEIZUNG	245
UMLAUFKÜHLWASSERHEIZUNGS-ELEMENT (240 V/1500 W)	245
UMLEITVENTIL	747
UNTERBRECHER (105 A) (DREHSTROMGENERATOR)	358
UNTERBRECHER (15 A)	360
UNTERBRECHER (15 A) (ELEKTRON. STEUERMODUL DES MOTORS)	358
UNTERBRECHER (15 A) (FRONTSCHEINWERFER/HECKLEUCHTE)	366
UNTERBRECHER (15 A) (GETRIEBE)	366
UNTERBRECHER (15 A) (GETRIEBE)	364
UNTERBRECHER (15 A) (HECKLEUCHTEN/ FERNLICHT)	364
UNTERBRECHER (30 A) (BREMSE)	358
UNTERBRECHER (80 A) (HAUPTUNTERBRECHER)	358

V

VENTIL	456
	555
	583
	688
VENTIL - SCHALT- UND DRUCKSTEUERUNG	464
VENTIL UND GESTÄNGE	692
	694
VENTILDECKEL	18
VENTILKAPPE (SCHAFT)	476
	477
VENTILKIPPHEBEL	66
VENTILSATZ (4-VENTIL)	698
	700
VENTILSATZ (6-VENTIL)	702
VENTILSITZEINSATZ (AUSLASS)	36
VENTILSITZEINSATZ (AUSLASS)	35
VENTILSITZEINSATZ (EINLASS)	35
VENTILSTEUERUNG	69
VERDRAHTUNG (EINSPRITZEINHEIT)	368
VERDRAHTUNG, HINTEN	344
	350
	356
VERDRAHTUNG, VORNE	336
	340
VERDRAHTUNGSSATZ	862

STICHWORTVERZEICHNIS

Bezeichnung	Seite
	866
VERKLEIDUNG UND BEFESTIGUNG - KÜHLER	504
VERSANDDECKEL	378
VERTEILERBLOCK	246
VERTEILERGEHÄUSE	372
VERTEILERGETRIEBEANTRIEB U. GEHÄUSE	402
VORDERACHSE	478
	480
	484
VORDERRAHMEN	500
	501
VORHÄNGESCHLOSS	208
	212
	489
	493
	893

W

WÄRMEISOLIERUNG	816
WARNAUFKLEBER (HOCHDRUCKZYLINDER)	879
WARNAUFKLEBER (KRAFTSTOFFEINSPRITZDÜSE)	879
WARNAUFKLEBER (ÜBERBRÜCKUNGSKABEL)	879
WARNHORN (24 VOLT)(HOCHTON) (RECHTS)	336
	340
WARNHORN (24V)(NIEDERTON) (LINKS)	336
	340
WARNSCHILD (HOCHDRUCKZYLINDER)	557
	879
WARNSCHILD (QUETSCHGEFAHR)	879
WARNVORRICHTUNG	219
WASSERABSCHEIDER UND KRAFTSTOFFILTER	193
WASSERTEMPERATURREGLER (92 GRAD CELSIUS)	94
	98
	102
WELLENSCHEIBEN-EINBAUSATZ (17 BEILEGSCHEIBEN)	676
WERKZEUGKASTEN	893
WISCHERSCHALTER	318
	322
	326

Z

ZAHNRADANTRIEB	664
ZAHNRADPUMPE	577
	578
	668
	670
ZAHNRADVORGELEGE	52
ZENTRALSCHMIERANLAGE	533
	534
	535
	536
ZIGARETTENANZÜNDER	360
ZUGHAKEN	750
ZUMESSPUMPE	672
ZYLINDER (ÄTHER)	286
ZYLINDERBLOCKSCHRAUBE	63
ZYLINDERKOPF	34
	35
	36
	37
	38
	40
	42
	44
	45
ZYLINDERKOPF-HALTETEILE	42
ZYLINDERKOPFSTOPFEN	64

MEMORANDA

MACHINE ARRANGEMENT

8X-8402 CHASSIS AR

S/N: 7KK1-UP

PART OF 8X-8400 COMMON AR-MOTOR GRADER

i01457139

NOTE	PART NUMBER	QTY	PART NAME 1 2 3 4 5 6 (PRODUCT LEVEL)	SEE PAGE
Y	**8X-8974**	1	AXLE GP-FRONT	480
			S/N: 7KK1-93	
Y	*191-1933*	1	AXLE AR-FRONT	478
			S/N: 7KK94-UP	
Y	*138-7427*	1	CIRCLE GP	748
Y	*8X-8985*	1	DRAWBAR GP	750
Y	*8X-8986*	2	DRIVE & MTG GP-CIRCLE	605
Y	*8X-8991*	1	ENCLOSURE GP-ENGINE	488
			S/N: 7KK1-87	
Y	*187-1984*	1	ENCLOSURE GP-ENGINE	496
			S/N: 7KK82-87	
Y	**190-5567**	1	ENCLOSURE GP-ENGINE	498
			S/N: 7KK88-UP	
Y	**123-0200**	1	ENGINE AR	4
Y	*8X-8988*	1	FRAME GP-FRONT	500
Y	*8X-8989*	1	FRAME GP-REAR	502
Y	*8X-9002*	1	GUARD & SUPPORT GP-RADIATOR	504
			S/N: 7KK1-81	
Y	*8X-9238*	1	HITCH GP-ARTICULATING	506
Y	*8X-8404*	1	HYDRAULIC AR	609
Y	*6I-0673*	1	INSTALLATION AR-ENGINE	6
Y	*8X-8993*	1	LINES GP-AIR CONDITIONER	820
Y	*190-5108*	1	LINES GP-WATER	106
			S/N: 7KK88-UP	
Y	*8X-8995*	1	LINES GP-FUEL	163
Y	*129-8537*	1	LINES GP-GREASE	512
Y	*129-8538*	1	LINES GP-GREASE	514
			S/N: 7KK1-64	
Y	*155-8345*	1	LINES GP-CENTRAL LUBRICATION	508
			S/N: 7KK65-UP	
Y	*129-8539*	1	LINES GP-GREASE	518
Y	*8X-8997*	1	LINES GP-HEATER	824
Y	*134-2573*	1	LINK GP-STEERING FRAME LOCK	523
Y	*8X-8994*	1	MOUNTING GP-PLATFORM	832
Y	*3E-4456*	1	PLATE & FILM GP	878
Y	*8X-9003*	1	PLATFORM AR	537
			S/N: 7KK1-81	
Y	*8X-8405*	1	POWER TRAIN AR	427
Y	*187-5267*	1	RADIATOR GP	122
			S/N: 7KK82-87	
Y	*190-5568*	1	RADIATOR & MOUNTING GP	118
			S/N: 7KK88-UP	
Y	*152-2679*	1	SHIELD GP-ENGINE COMPARTMENT	542
Y	*8X-9000*	1	STEP GP-FRONT	546
Y	*8X-9006*	1	STEP GP-REAR	550
Y	*118-2252*	1	TANK & MTG GP-FUEL	204
Y	*8X-9237*	1	TOOL BOX GP	893
			S/N: 7KK1-66	
Y	*125-5768*	1	WASHER GP-WINDOW	870
Y	*8X-9009*	1	WIRING GP-FRONT	336
Y	*8X-9010*	1	WIRING GP-REAR	344

Y-SEPARATE ILLUSTRATION

MACHINE ARRANGEMENT

8X-8400 COMMON AR-MOTOR GRADER

S/N: 7KK1-UP

SMCS-7000 **i00107586**

NOTE	PART NUMBER	QTY	PART NAME 1 2 3 4 5 6 (PRODUCT LEVEL)	SEE PAGE
Y	*8X-8401*	1	CAB AR	787
Y	*8X-8402*	1	CHASSIS AR	1
Y	*8X-8403*	1	INSTALLATION AR-FIELD	3
Y	*8E-9638*	1	RIPPER AR	770

Y-SEPARATE ILLUSTRATION

MACHINE ARRANGEMENT

8X-8403 INSTALLATION AR-FIELD

S/N: 7KK1-UP

PART OF 8X-8400 COMMON AR-MOTOR GRADER

i01057603

NOTE	PART NUMBER	QTY	PART NAME 1 2 3 4 5 6 (PRODUCT LEVEL)	SEE PAGE
Y	*4W-0235*	1	EXTENSION GP-EXHAUST	133
	8X-9053	1	FASTENER GP-RIPPER	
M	**125-2117**	28	BOLT-SOCKET HEAD (M24X3X70MM)	
	6V-8237	28	WASHER (4.0MM THK)	
	2P-2508	1	HOOD AS-PRECLEANER	
Y	*8X-9051*	1	LIGHTING GP-FLOOD & HEAD	258
Y	*8X-8962*	1	LINES GP-CAB AIR	822
			S/N: 7KK1-66	
Y	*154-7119*	1	LINES GP-AIR	138
			S/N: 7KK67-UP	
Y	*138-0727*	1	MIRROR GP-REAR VIEW	828
Y	**140-8440**	1	MOLDBOARD AS	753
Y	*140-8451*	1	MOUNTING GP-BLADE	767
	8X-9054	1	MOUNTING GP-WHEEL	
M	**7X-0851**	120	NUT (M24X3.00 THD)	
	6V-8237	120	WASHER (4.0MM THK)	
Y	*8X-9069*	1	WHEEL GP	476

M-METRIC PART
Y-SEPARATE ILLUSTRATION

ENGINE ARRANGEMENT

123-0200 ENGINE AR

S/N: 80M1-UP

PART OF 8X-8402 CHASSIS AR

SMCS-1000 **i01439059**

NOTE	PART NUMBER	QTY	PART NAME 1 2 3 4 5 6 (PRODUCT LEVEL)	SEE PAGE
Y	*128-2313*	1	AFTERCOOLER GP-WATER	128
Y	*125-4392*	1	ALTERNATOR GP-CHARGING	222
Y	*7E-9666*	1	BELT TIGHTENER GP	8
Y	*108-1553*	1	CAMSHAFT GP	10
Y	*126-7653*	1	COMPRESSOR GP-REFRIGERANT	790
Y	*126-1455*	1	CONTROL & MTG GP-ENGINE ELEK	228
	177-5385	1	CONTROL GP-ENG RATINGS ELEK	
Y	**4N-2388**	1	COOLER GP-ENGINE OIL	85
			S/N: 80M1-480	
YR	*4W-0413*	1	CORE GP-OIL COOLER	86
			S/N: 80M1-480	
Y	*2W-9319*	1	COVER GP-CYLINDER BLOCK	11
			S/N: 80M1-255	
Y	**130-0992**	1	COVER GP-CYLINDER BLOCK	12
			S/N: 80M256-UP	
Y	*4N-6876*	1	COVER GP-FLYWHEEL HOUSING	13
Y	*129-8349*	1	COVER GP-FRONT HOUSING	14
Y	*130-5754*	1	COVER GP-OIL PAN	16
Y	*130-5753*	1	COVER GP-VALVE MECHANISM	18
Y	*4N-0922*	1	CRANKSHAFT GP	20
			S/N: 80M1-3742	
Y	*190-7653*	1	CRANKSHAFT GP	24
			S/N: 80M3743-UP	
YR	*109-9010*	1	CYLINDER BLOCK GP	30
Y	*108-1552*	1	CYLINDER HEAD GP	40
Y	*6N-2229*	1	DAMPER GP	46
Y	*7E-9665*	1	DRIVE GP-FAN	48
Y	*125-3431*	1	DRIVE GP-UNIT INJ HYD PUMP	148
Y	*119-8583*	1	FASTENER GP-OIL PUMP MOUNTING	70
Y	*130-5759*	1	FILLER GP-ENGINE OIL	71
Y	*131-6206*	1	FILTER GP-ENGINE OIL	72
Y	*9Y-1569*	1	FLYWHEEL GP	50
Y	*130-5756*	1	GAUGE GP-OIL LEVEL (DIPSTICK)	75
Y	*126-7282*	1	GEAR GP-FRONT	51
Y	*6I-1419*	1	GEAR GP-REAR	52
Y	*130-0926*	1	HOUSING GP-FLYWHEEL	55
Y	*126-7280*	1	HOUSING GP-FRONT	56
			S/N: 80M1-677	
Y	*137-8142*	1	HOUSING GP-FRONT	57
			S/N: 80M678-UP	
Y	*124-4461*	1	LIFTING GP-ENGINE	58
Y	*130-1133*	1	LINES GP-AIR	136
Y	*130-5475*	1	LINES GP-ENGINE OIL	76
Y	*130-5764*	1	LINES GP-FUEL FILTER	168
Y	*121-4034*	1	LINES GP-INJECTOR HYD PUMP	172
Y	*130-5763*	1	LINES GP-TURBOCHARGER OIL	78
Y	*130-5760*	1	LINES GP-WATER	94
			S/N: 80M1-480	
Y	*134-9932*	1	LINES GP-WATER	98
			S/N: 80M481-UP	
Y	*130-5761*	1	LINES GP-WATER	96
Y	*113-5276*	1	MAGNETIC PICKUP GP	260
Y	*127-5134*	1	MANIFOLD GP-EXHAUST	139
			S/N: 80M1-3508	
Y	*179-7024*	1	MANIFOLD GP-EXHAUST	140
			S/N: 80M3509-UP	

123-0200 ENGINE AR *(contd.)* i01439059

NOTE	PART NUMBER	QTY	PART NAME 1 2 3 4 5 6 (PRODUCT LEVEL)	SEE PAGE
Y	*128-2981*	1	OIL CHANGE GP-HIGH SPEED	80
Y	*131-6205*	1	PAN GP-OIL	59
Y	*109-2823*	12	PISTON & ROD GP	60
			S/N: 80M1-3973	
Y	*192-8808*	12	PISTON & ROD GP	62
			S/N: 80M3974-UP	
Y	*127-3512*	1	PLUG GP-CYLINDER BLOCK	63
Y	*124-4456*	1	PLUG GP-CYLINDER HEAD	64
Y	*6I-3815*	1	PULLEY GP-CRANKSHAFT	65
Y	*126-7292*	1	PUMP & MTG GP-UNIT INJ HYD	174
YR	**116-1980**	1	PUMP GP-ENGINE OIL	84
Y	*108-7090*	12	PUMP GP-FUEL INJECTION	188
Y	*4N-5837*	1	PUMP GP-WATER	108
Y	*105-4729*	1	STARTING MOTOR GP-ELECTRIC	306
			S/N: 80M1-1692, 2157-UP	
Y	*6I-1387*	1	SUPPORT GP-ENGINE	67
Y	*100-4417*	1	SWITCH GP-FLOW	309
Y	*130-6228*	1	TURBOCHARGER GP	143
Y	*108-1874*	1	VALVE MECHANISM GP	69
Y	*118-9692*	1	WIRING GP-ENGINE	334
Y	*109-0401*	6	WIRING GP-UNIT INJECTOR	368
			AVAILABLE GASKET KIT(S):	
	141-0875		KIT-GASKET (AFTERCOOLER & LINES)	
	135-2707		KIT-GASKET (BRAKE OIL COOLER LINES)	
	141-0876		KIT-GASKET (CENTRAL & LOWER STRUCTURE)	
	141-0878		KIT-GASKET (FRONT STRUCTURE)	
	141-0877		KIT-GASKET (FUEL SYSTEM)	
	152-4055		KIT-GASKET (MULTIPLE CYLINDER HEAD)	
	141-0880		KIT-GASKET (OIL COOLER & LINES)	
	141-0881		KIT-GASKET (REAR STRUCTURE)	
	141-0882		KIT-GASKET (SINGLE CYLINDER HEAD)	
	160-9874		KIT-GASKET (SINGLE CYLINDER LINER)	
	141-0883		KIT-GASKET (TURBOCHARGER)	
	141-0884		KIT-GASKET (WATER LINES)	
	140-2749		KIT-GASKET (WATER PUMP)	

R-REMFG PART MAY BE AVAILABLE
Y-SEPARATE ILLUSTRATION

ENGINE ARRANGEMENT

6I-0673 INSTALLATION AR-ENGINE

S/N: 7KK1-UP

PART OF 8X-8402 CHASSIS AR

SMCS-1000 **i01502135**

NOTE	PART NUMBER	QTY	PART NAME 1 2 3 4 5 6 (PRODUCT LEVEL)	SEE PAGE
Y	*7C-1909*	1	AIR CLEANER GP	130
Y	*6I-4720*	1	CONDENSER & MTG GP-REFRIGERANT	795
Y	*6I-0672*	1	DUST EJECTOR GP	132
Y	*7E-9344*	1	FAN GP-BLOWER	88
Y	*117-3147*	1	FUMES DISPOSAL GP	73
			S/N: 7KK1-39	
Y	*140-3144*	1	FUMES DISPOSAL GP	74
			S/N: 7KK40-UP	
I	*8D-5529*	1	HOSE AS-OIL DRAIN EXTENSION	
Y	*7E-9345*	1	LINES GP-AIR	134
Y	*128-0737*	1	LINES GP-WATER	92
Y	*125-4393*	1	MUFFLER GP	141
Y	*128-0739*	1	PUMP GP-FUEL PRM & PRIM FILTER	192
Y	*8X-9035*	1	STARTING AID GP-ETHER	286
Y	*8X-9089*	1	SUPPORT GP-ENGINE	68
Y	*8X-9038*	1	WIRING GP-ENGINE	332

I-SEE HOSE FABRICATION GUIDE
Y-SEPARATE ILLUSTRATION

MEMORANDA

BASIC ENGINE

7E-9666 BELT TIGHTENER GP

S/N: 80M1-UP

PART OF 123-0200 ENGINE AR

SMCS-1358 **i00646159**

NOTE	REF NO	GRAPHIC REF	PART NUMBER	QTY	PART NAME 1 2 3 4 5 6 (PRODUCT LEVEL)	SEE PAGE
B	1	1	**1S-8687**	1	SPACER	
	2	1	**2M-2742**	1	PLATE-RETAINER	
	3	1	**2S-6150**	1	COVER-PULLEY	
	4	1	**2S-6151**	1	GASKET	
	5	1	**3B-4617**	2	COTTER	
	6	1	**5M-9735**	1	SEAL-LIP	
	7	1	**6B-1124**	2	BALL BEARING	
	8	1	**6N-1186**	1	PULLEY	
	9	1	**6S-6308**	2	PIN	
	10	1	**8B-2327**	1	RING-RETAINER	
	11	1	**8N-5579**	1	RETAINER	
	12	1	**135-7876**	1	SPRING AS	
	13	1	**8N-6097**	1	ARM AS-TIGHTENER	
		1	**4S-5367**	1	BUSHING AS	
		1	**2S-9006**	1	SHAFT-PULLEY	
BE	14	1	**7I-1334**	1	HOSE	
	15	1	**0S-0509**	1	BOLT (3/8-16X.75IN)	
	16	1	**0S-1594**	1	BOLT (3/8-16X1IN)	
	17	1	**0S-1618**	4	BOLT (5/16X18X1IN)	
	18	1	**1F-7958**	1	NUT-FULL (1/2-13 THD)	
	19	1	**2S-6160**	1	WASHER-HARD (5MM THK)	
	20	1	**5M-2894**	2	WASHER (2.5MM THK)	
	21	1	**5P-8245**	1	WASHER (3MM THK)	

B-USE AS REQUIRED
E-ORDER BY THE CENTIMETER

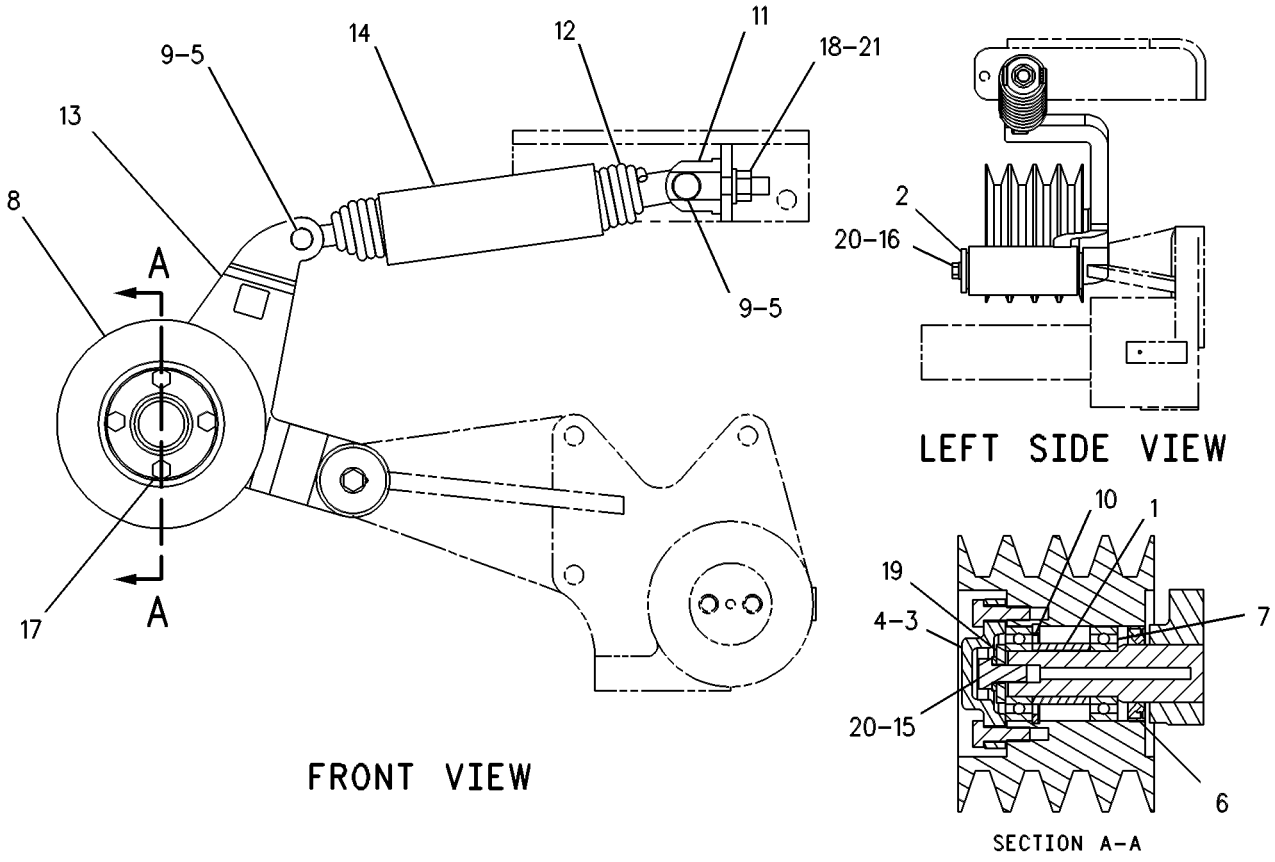

GRAPHIC #1

g00286734

108-1553 CAMSHAFT GP

S/N: 80M1-UP

PART OF 123-0200 ENGINE AR

SMCS-1210, 1211, 1212 **i00094924**

NOTE	REF NO	GRAPHIC REF	PART NUMBER	QTY	PART NAME 1 2 3 4 5 6 (PRODUCT LEVEL)	SEE PAGE
	1	1	**4N-0342**	1	PLATE-CAMSHAFT THRUST	
	2	1	**0S-0509**	2	BOLT (3/8-16X.75IN)	
	3	1	**108-6278**	1	CAMSHAFT AS	
	4	1	**101-3374**	1	GEAR-CAMSHAFT DRIVE (86 TEETH)	
	5	1	**1B-8705**	1	KEY-WOODRUFF	

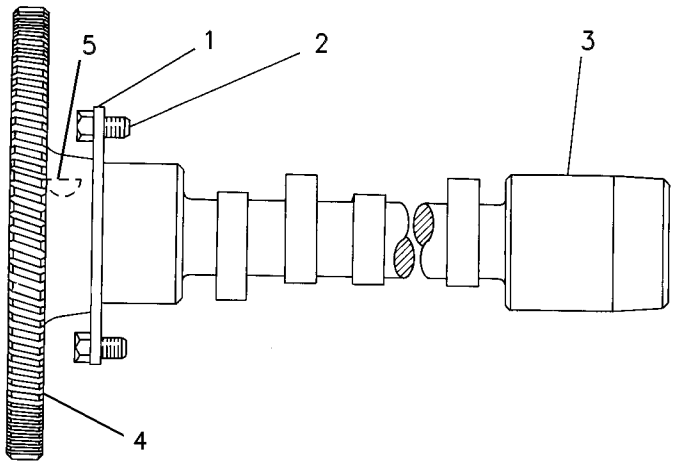

GRAPHIC #1 g00086422

BASIC ENGINE

2W-9319 COVER GP-CYLINDER BLOCK

S/N: 80M1-255

PART OF 123-0200 ENGINE AR

SMCS-1201 **i00786940**

NOTE	REF NO	GRAPHIC REF	PART NUMBER	QTY	PART NAME 1 2 3 4 5 6 (PRODUCT LEVEL)	SEE PAGE
	1	1	**0S-1594**	9	BOLT (3/8-16X1IN)	
	2	1	**5M-2894**	11	WASHER (2.5MM THK)	
	3	1	**0L-1351**	2	BOLT (3/8-16X.875IN)	
	4	1	**2P-2772**	1	COVER	
	5	1	**4N-0933**	1	GASKET	
	6	1	**4N-1683**	1	COVER	
	7	1	**4N-1684**	1	GASKET	
	8	1	**4N-1682**	1	COVER	
	9	1	**4N-0864**	1	GASKET	

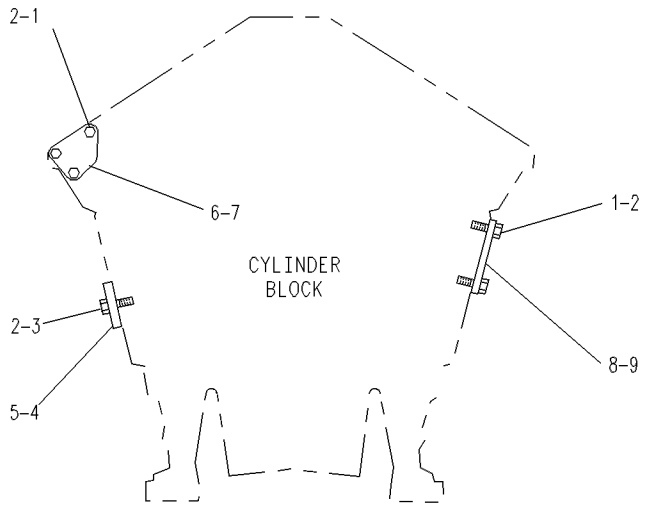

GRAPHIC #1 g00364374

130-0992 COVER GP-CYLINDER BLOCK

S/N: 80M256-UP

PART OF 123-0200 ENGINE AR

SMCS-1201 **i00543387**

NOTE	REF NO	GRAPHIC REF	PART NUMBER	QTY	PART NAME 1 2 3 4 5 6 (PRODUCT LEVEL)	SEE PAGE
	1	1	**0S-1594**	9	BOLT (3/8-16X1IN)	
	2	1	**5M-2894**	11	WASHER (2.5MM THK)	
	3	1	**4N-1682**	1	COVER	
	4	1	**4N-0864**	1	GASKET	
	5	1	**4N-1683**	1	COVER	
	6	1	**4N-1684**	1	GASKET	
	7	1	**4N-0933**	1	GASKET	
	8	1	**0L-1351**	2	BOLT (3/8-16X.875IN)	
	9	1	**2P-2772**	1	COVER	

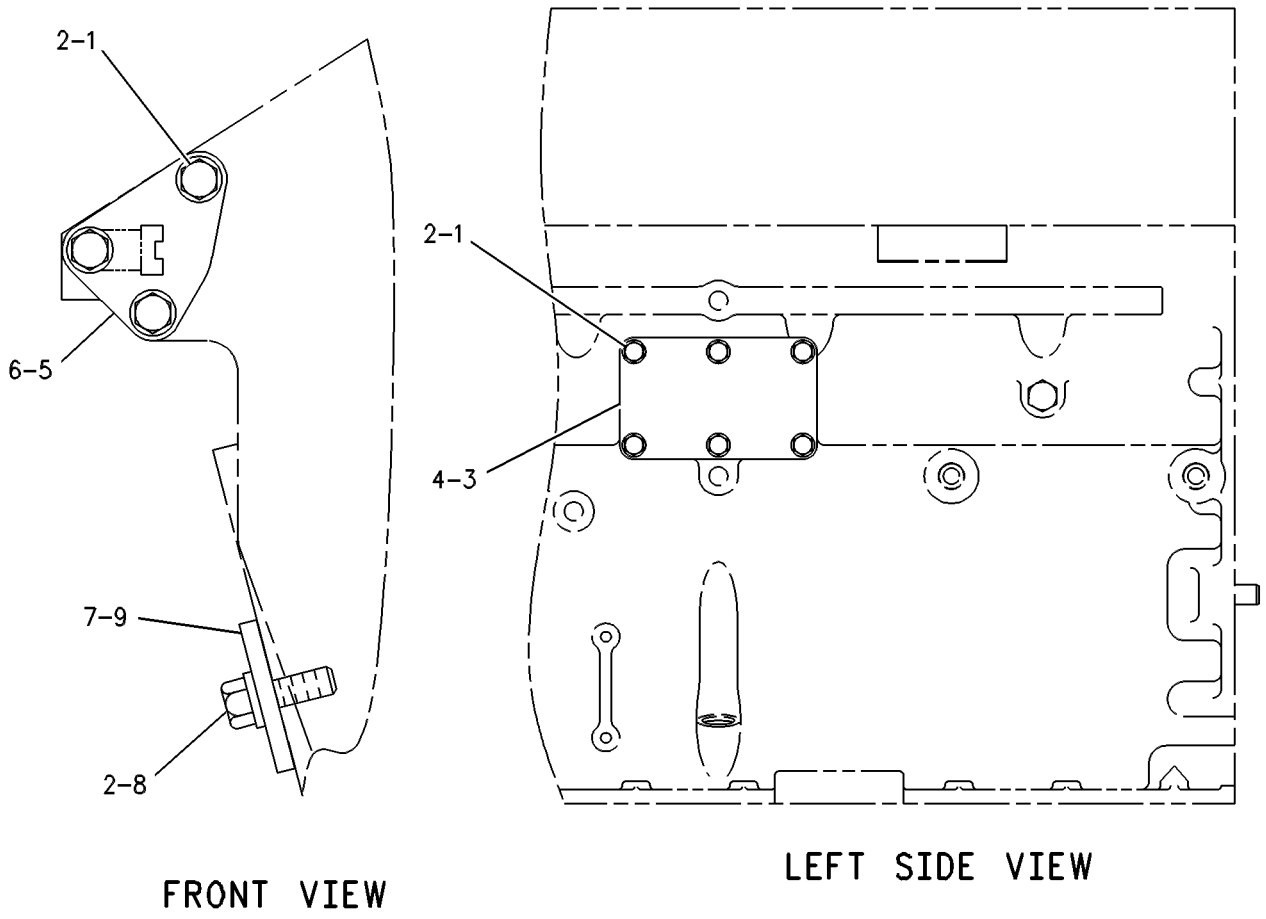

GRAPHIC #1 g00268747

BASIC ENGINE

4N-6876 COVER GP-FLYWHEEL HOUSING

S/N: 80M1-UP

PART OF 123-0200 ENGINE AR

SMCS-1157 **i01446334**

NOTE	REF NO	GRAPHIC REF	PART NUMBER	QTY	PART NAME 1 2 3 4 5 6 (PRODUCT LEVEL)	SEE PAGE
	1	1	**4N-1114**	1	COVER	
		1	**9Y-6089**	1	GASKET	
	2	1	**0S-1566**	3	BOLT (5/8-11X1.5 IN)	
		1	**5P-8247**	3	WASHER-HARD (17X32X3.5MM THK)	

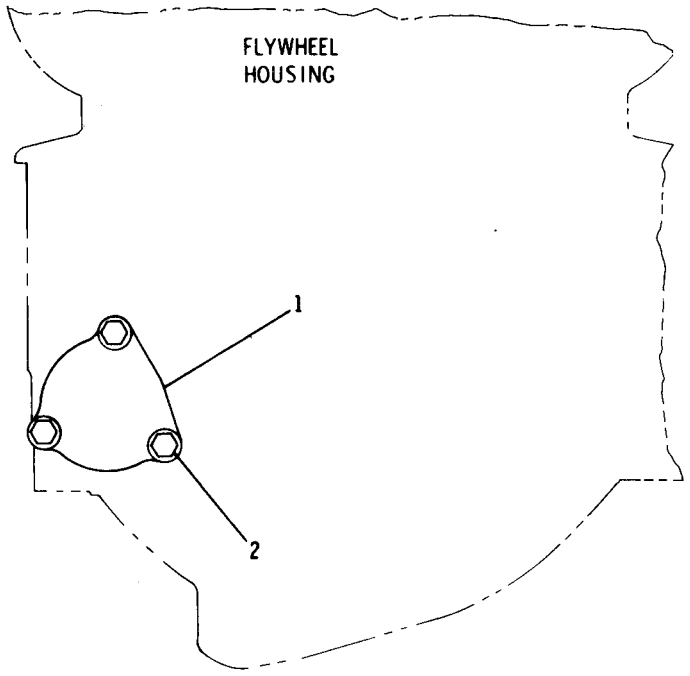

GRAPHIC #1 g00082168

BASIC ENGINE

129-8349 COVER GP-FRONT HOUSING

S/N: 8OM1-UP

PART OF 123-0200 ENGINE AR

SMCS-1151, 1166 **i00863629**

NOTE	REF NO	GRAPHIC REF	PART NUMBER	QTY	PART NAME 1 2 3 4 5 6 (PRODUCT LEVEL)	SEE PAGE
	1	1	**9Y-3488**	1	BRACKET-COMPRESSOR	
	2	1	**9N-5576**	1	COVER-FUEL PUMP GEAR	
	3	1	**6N-2509**	1	COVER	
	4	1	**6N-2508**	1	GASKET	
	5	1	**2M-2488**	1	STUD-TAPERLOCK	
	6	1	**9X-7371**	1	SEAL-O-RING (126.59MM ID)	
	7	1	**116-5821**	1	SUPPORT-HOUSING (RH)	
	8	1	**116-6264**	1	SUPPORT-HOUSING (LH)	
	9	1	**3S-1307**	4	BOLT-12 POINT HEAD (3/8-16 X 2IN)	
	10	1	**036-7222**	1	STUD-MANIFOLD	
	11	1	**0T-0055**	6	BOLT (3/8-16X4.25IN)	
	12	1	**0S-1594**	3	BOLT (3/8-16X1IN)	
	13	1	**5M-2894**	4	WASHER (2.5MM THK)	
	14	1	**9S-8752**	7	NUT-FULL (3/8-16 THD)	
	15	1	**3K-3256**	1	STUD (3/8IN NC X 1-11/16)	
	16	1	**2P-1974**	3	STUD-TAPERLOCK (3/8IN NC X 4-7/32)	
	17	1	**4F-0411**	4	BOLT (3/8-16X6.5IN)	
	18	1	**129-8350**	1	PLATE	
B	19	1	**1U-8846**		GASKET-LIQUID	

B-USE AS REQUIRED

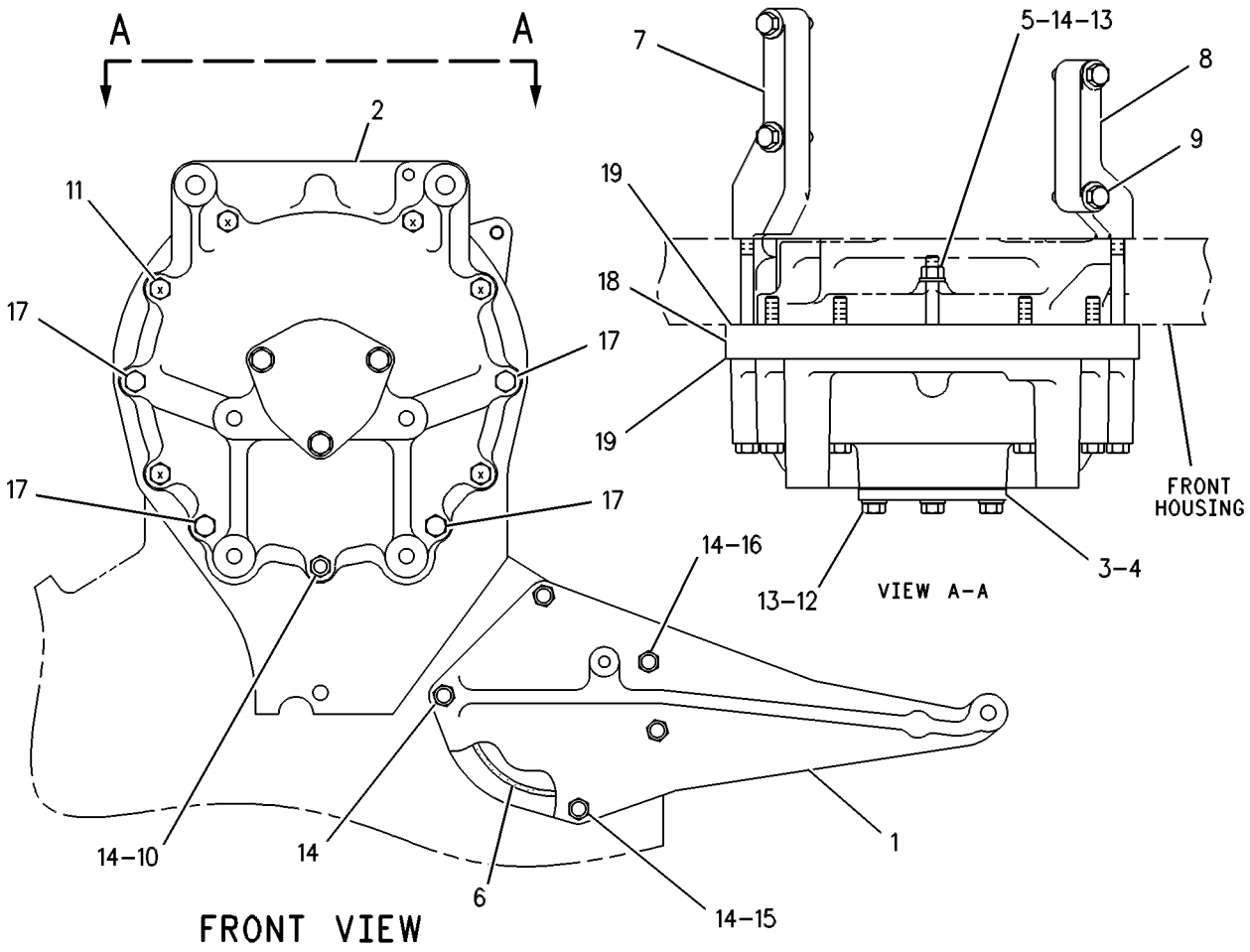

GRAPHIC #1 g00086622

130-5754 COVER GP-OIL PAN

S/N: 8OM1-UP

PART OF 123-0200 ENGINE AR

SMCS-1302 **i01212372**

NOTE	REF NO	GRAPHIC REF	PART NUMBER	QTY	PART NAME 1 2 3 4 5 6 (PRODUCT LEVEL)	SEE PAGE
	1	1	**4N-9968**	1	PLUG	
	2	1	**4P-0519**	1	ADAPTER AS-DRAIN	
		1	**109-5839**	1	PLUG-OIL DRAIN	
	3	1	**4P-9853**	1	BLOCK	
	4	1	**8C-6874**	1	CONNECTOR	
	5	1	**006-5707**	1	ELBOW (90 DEGREE)	
	6	1	**005-8615**	1	NIPPLE-PIPE	
	7	1	**0S-1588**	5	BOLT (3/8-16X1.25IN)	
	8	1	**109-0072**	1	SEAL-O-RING (40.64MM ID)	
	9	1	**4N-0794**	2	COVER	
	10	1	**4P-3117**	1	VALVE	
	11	1	**5M-2894**	5	WASHER (2.5MM THK)	
	12	1	**5P-8068**	1	SEAL-O-RING (37.47MM ID)	
	13	1	**6V-3830**	1	SEAL-O-RING (34.29MM ID)	
	14	1	**6V-9746**	1	SEAL-O-RING (18.94MM ID)	
	15	1	**6V-9832**	1	CAP AS (1-3/16-12 THD)	
	16	1	**7C-0307**	2	GASKET	
	17	1	**8L-2786**	1	SEAL-O-RING (16.36MM ID)	
	18	1	**9S-4185**	1	PLUG-O-RING (3/4-16 THD)	
	19	1	**9X-8876**	2	BOLT (1/2-13X4.75 IN)	
	20	1	**6B-9081**	1	BUSHING-REDUCING	

130-5754 **COVER GP-OIL PAN** *(contd.)* **i01212372**

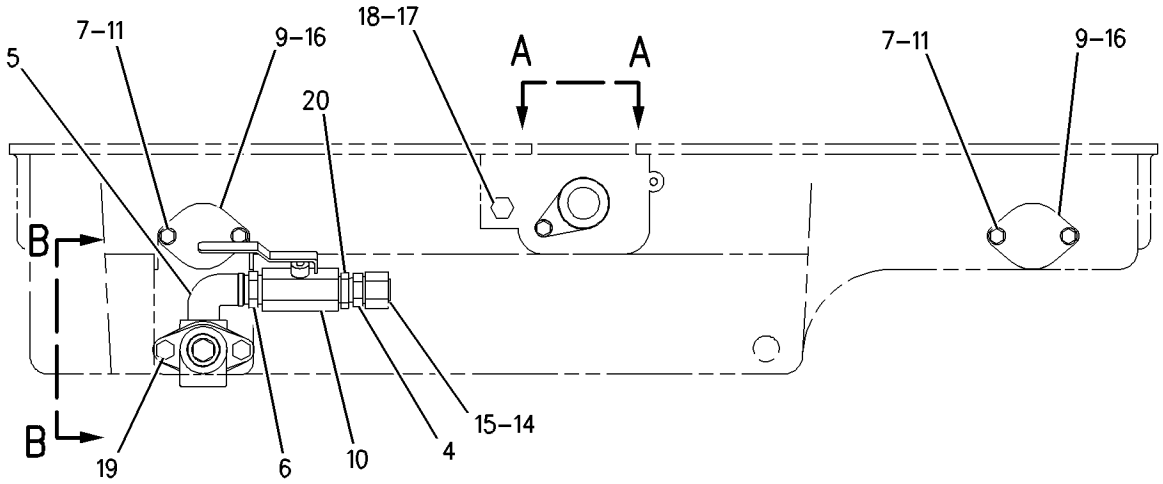

LEFT SIDE VIEW

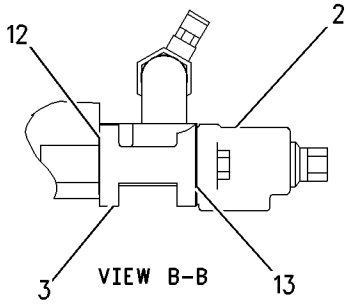

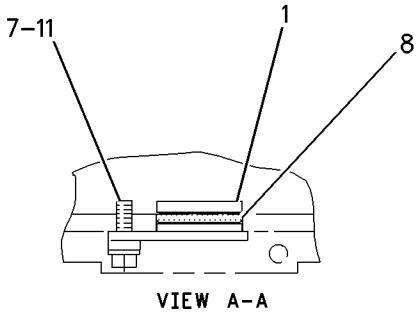

GRAPHIC #1 g00647952

130-5753 COVER GP-VALVE MECHANISM

S/N: 80M1-UP

PART OF 123-0200 ENGINE AR

SMCS-1107, 1120 **i00568084**

NOTE	REF NO	GRAPHIC REF	PART NUMBER	QTY	PART NAME 1 2 3 4 5 6 (PRODUCT LEVEL)	SEE PAGE
	1	1	**114-8684**	2	COVER-VALVE MECHANISM	
	2	1	**119-9015**	4	COVER AS-VALVE	
					(EACH INCLUDES)	
		1	**6V-5100**	1	SEAL-O-RING (53.64MM ID)	
		1	**7C-6514**	1	ADAPTER	
	3	1	**1B-2790**	65	BOLT (5/16-18X1.375IN)	
	4	1	**9M-1974**	66	WASHER-HARD (2MM THK)	
	5	1	**106-9488**	6	BASE-VALVE COVER	
	6	1	**108-3956**	12	SEAL-DIAMOND	
	7	1	**4N-4668**	3	BREATHER AS	
	8	1	**6V-3831**	3	SEAL-O-RING (53.34MM ID)	
	9	1	**2N-8109**	3	CLAMP	
	10	1	**1A-9579**	1	BOLT (5/16-18X1.5IN)	

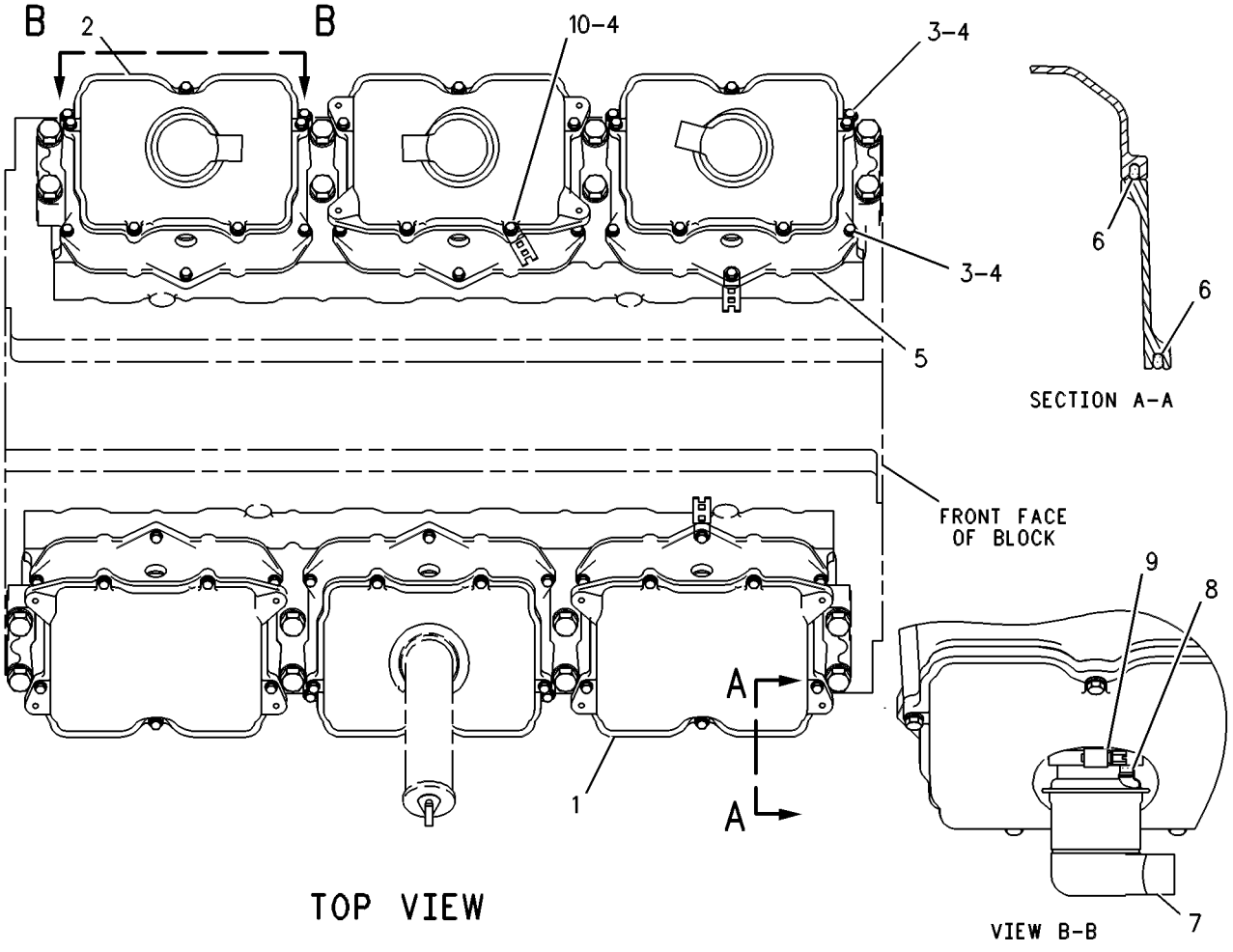

GRAPHIC #1 g00279109

MEMORANDA

BASIC ENGINE

4N-0922 CRANKSHAFT GP

S/N: 80M1-2866

PART OF 123-0200 ENGINE AR

SMCS-1202, 1203, 1204, 1232 **i01481832**

NOTE	REF NO	GRAPHIC REF	PART NUMBER	QTY	PART NAME 1 2 3 4 5 6 (PRODUCT LEVEL)	SEE PAGE
CR	1	1	**2W-4088**	1	CRANKSHAFT AS	
	2	1	**4N-0684**	1	DOWEL	
	3	1	**114-0966**	1	GEAR-CRANKSHAFT (99 TEETH)	
	4	1	**8T-6757**	6	PLUG-PIPE	
	5	1	**7S-5005**	1	DOWEL	
	6	1	**7E-9262**	2	PLATE-THRUST	
	7	1	**2W-1733**	1	SEAL GP-CRANKSHAFT	
	8	1	**4W-5492**	7	BEARING-MAIN (STANDARD)	
AC		1	**4W-5698**	7	BEARING-MAIN (.025IN US)	
AC		1	**4W-5699**	7	BEARING-MAIN (.050IN US)	
AC		1	**4W-5700**	7	BEARING-MAIN (.025IN OS)	
AC		1	**4W-5701**	7	BEARING-MAIN (.025IN OS/.025IN US)	
	9	1	**2W-1734**	1	SEAL GP-CRANKSHAFT	
					AVAILABLE REPAIR KIT(S):	
A			**196-9523**		KIT-BEARING (STANDARD)	
					(INCLUDES A COMPLETE SET OF MAIN BEARINGS AND THRUST PLATES)	

A-NOT PART OF THIS GROUP
C-CHANGE FROM PREVIOUS TYPE
R-REMFG PART MAY BE AVAILABLE

4N-0922 **CRANKSHAFT GP** ***(contd.)*** **i01481832**

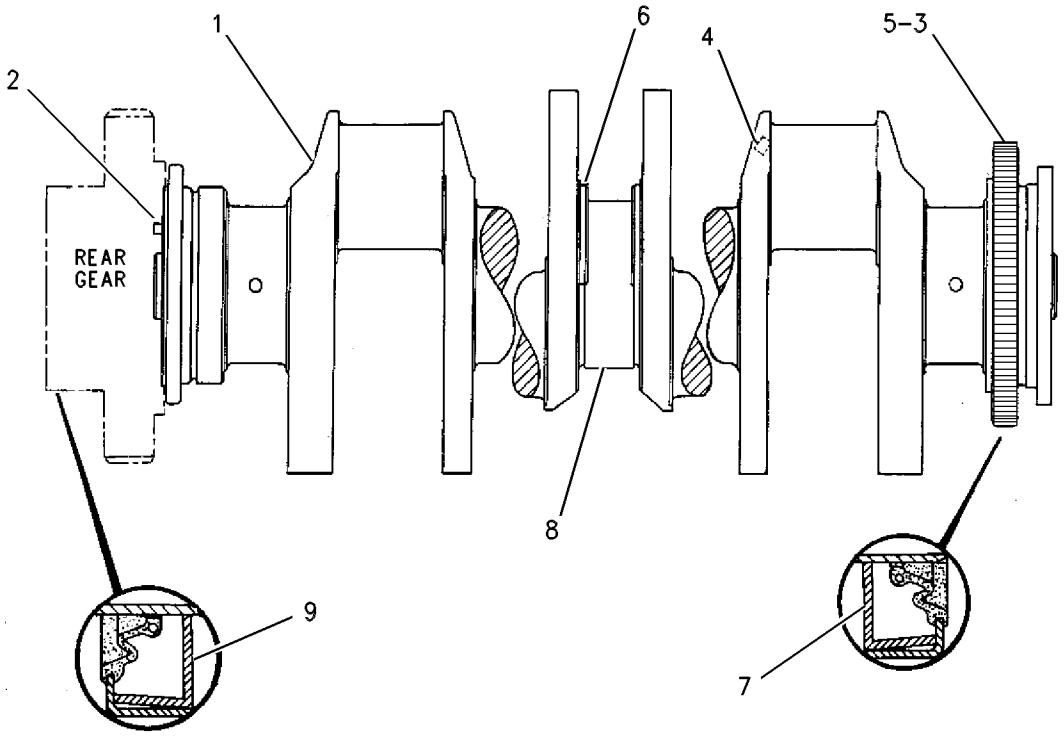

GRAPHIC #1 g00506244

BASIC ENGINE

4N-0922 CRANKSHAFT GP

S/N: 80M2867-UP

PART OF 123-0200 ENGINE AR

SMCS-1202, 1203, 1204, 1232 **i01481886**

NOTE	REF NO	GRAPHIC REF	PART NUMBER	QTY	PART NAME 1 2 3 4 5 6 (PRODUCT LEVEL)	SEE PAGE
CR	1	1	**151-2941**	1	CRANKSHAFT AS	
	2	1	**4N-0684**	1	DOWEL	
	3	1	**151-2940**	1	GEAR-CRANKSHAFT (99 TEETH)	
	4	1	**8T-6757**	6	PLUG-PIPE	
	5	1	**7S-5005**	1	DOWEL	
	6	1	**7E-9262**	2	PLATE-THRUST	
	7	1	**2W-1733**	1	SEAL GP-CRANKSHAFT	
	8	1	**4W-5492**	7	BEARING-MAIN (STANDARD)	
A		1	**4W-5698**	7	BEARING-MAIN (.025IN US)	
A		1	**4W-5699**	7	BEARING-MAIN (.050IN US)	
A		1	**4W-5700**	7	BEARING-MAIN (.025IN OS)	
A		1	**4W-5701**	7	BEARING-MAIN (.025IN OS/.025IN US)	
	9	1	**2W-1734**	1	SEAL GP-CRANKSHAFT	
					AVAILABLE REPAIR KIT(S):	
A			**196-9523**		KIT-BEARING (STANDARD)	
					(INCLUDES A COMPLETE SET OF MAIN BEARINGS AND THRUST PLATES)	

A-NOT PART OF THIS GROUP
C-CHANGE FROM PREVIOUS TYPE
R-REMFG PART MAY BE AVAILABLE

4N-0922 **CRANKSHAFT GP** ***(contd.)*** **i01481886**

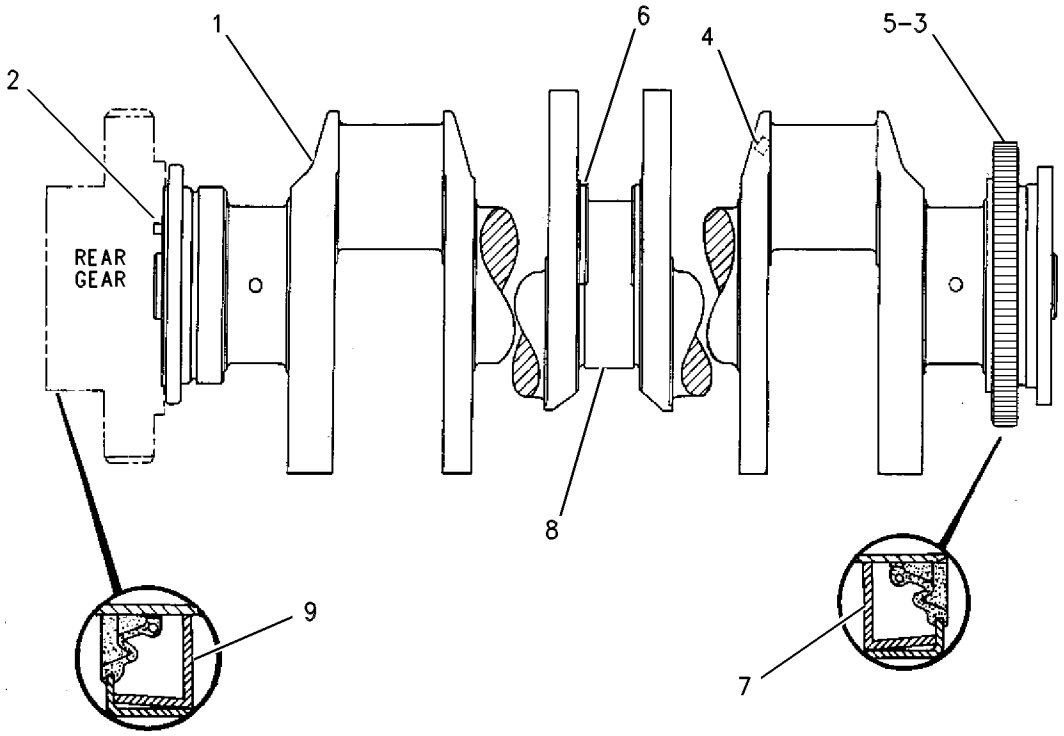

GRAPHIC #1 g00506244

BASIC ENGINE

190-7653 CRANKSHAFT GP

S/N: 80M3743-UP

PART OF 123-0200 ENGINE AR

SMCS-1202, 1203, 1204, 1232 **i01362520**

NOTE	REF NO	GRAPHIC REF	PART NUMBER	QTY	PART NAME 1 2 3 4 5 6 (PRODUCT LEVEL)	SEE PAGE
	1	1	**151-2941**	1	CRANKSHAFT AS	
	1A	1	**151-2940**	1	GEAR-CRANKSHAFT (99 TEETH)	
	1B	1	**7S-5005**	1	DOWEL	
	1C	1	**4N-0684**	1	DOWEL	
	1D	1	**8T-6757**	6	PLUG-PIPE (1/8-27 NPTF)	
	2	1	**4W-5492**	7	BEARING-MAIN	
	3	1	**7E-9262**	2	PLATE-THRUST	
	4	1	**187-8953**	1	SEAL GP-CRANKSHAFT	
	5	1	**2W-1734**	1	SEAL GP-CRANKSHAFT	

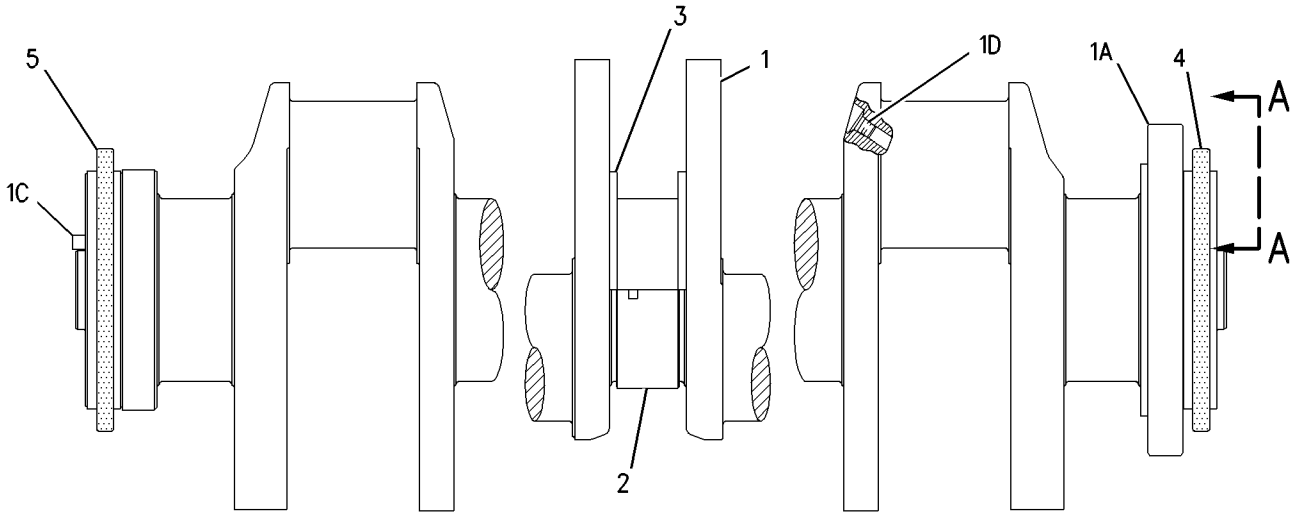

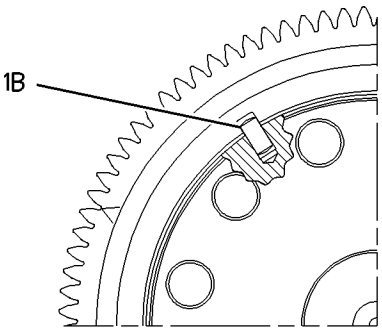

VIEW A-A

GRAPHIC #1 g00725011

MEMORANDA

117-9512 CYLINDER BLOCK AS

S/N: 8OM1-UP

PART OF 109-9010 CYLINDER BLOCK GP

FIELD REPLACEMENT ORDER 126-1373—PAGE 33, 12-111-8606 BOLT-OIL JET, 12-168-4538 TUBE AS-OIL JET, 12-7W-4990 TUBE AS-OIL JET

SMCS-1201, 1211, 1216, 1217, 1221, 1222, 1223, 1331 **i01387649**

NOTE	REF NO	GRAPHIC REF	PART NUMBER	QTY	PART NAME 1 2 3 4 5 6 (PRODUCT LEVEL)	SEE PAGE
	1	1	**110-2220**	12	SEAL-LINER (141MM ID)	
	2	1	**142-7072**	12	SEAL-LINER (140.20MM ID)	
	3	1	**142-6217**	12	SEAL-LINER (140.20MM ID)	
	4	1	**2W-6000**	12	LINER-CYLINDER	
	5	1	**9L-5854**	12	BAND-FILLER (5.125MM ID)	
	6	1	**3P-1323**	14	BOLT (BEARING CAP)	
		1	**9H-1031**	14	WASHER-HARD (6.0MM THK)	
	7	1	**4N-0614**	7	CAP-CRANKSHAFT BEARING	
	8	1	**4N-6658**	2	BEARING-SLEEVE	
	9	1	**7W-6492**	2	PLUG-PIPE (1/2-14 NPTF THD)	
	10	1	**4N-0685**	5	BEARING-SLEEVE	
AFJT		1	**4W-4588**		SLEEVE-LIFTER BORE	
AFLT		1	**4W-6061**		SLEEVE-BOTTOM LINER	
AFJT		1	**2W-3815**		INSERT-SEAT (1.59MM THK)	
AFJT		1	**5N-0093**		INSERT-SEAT (2.7MM THK)	
AFJT		1	**9Y-3368**		INSERT-LINER SEAT (.834MM THK)	

A-NOT PART OF THIS GROUP
F-NOT SHOWN
J-FOR SALVAGE OF DAMAGED LIFTER BORES IN CYLINDER BLOCK
L-FOR SALVAGE OF THE BOTTOM LINER O-RING BORE
T-QTY TO BE DETERMINED BY USER

117-9512 **CYLINDER BLOCK AS** ***(contd.)*** **i01387649**

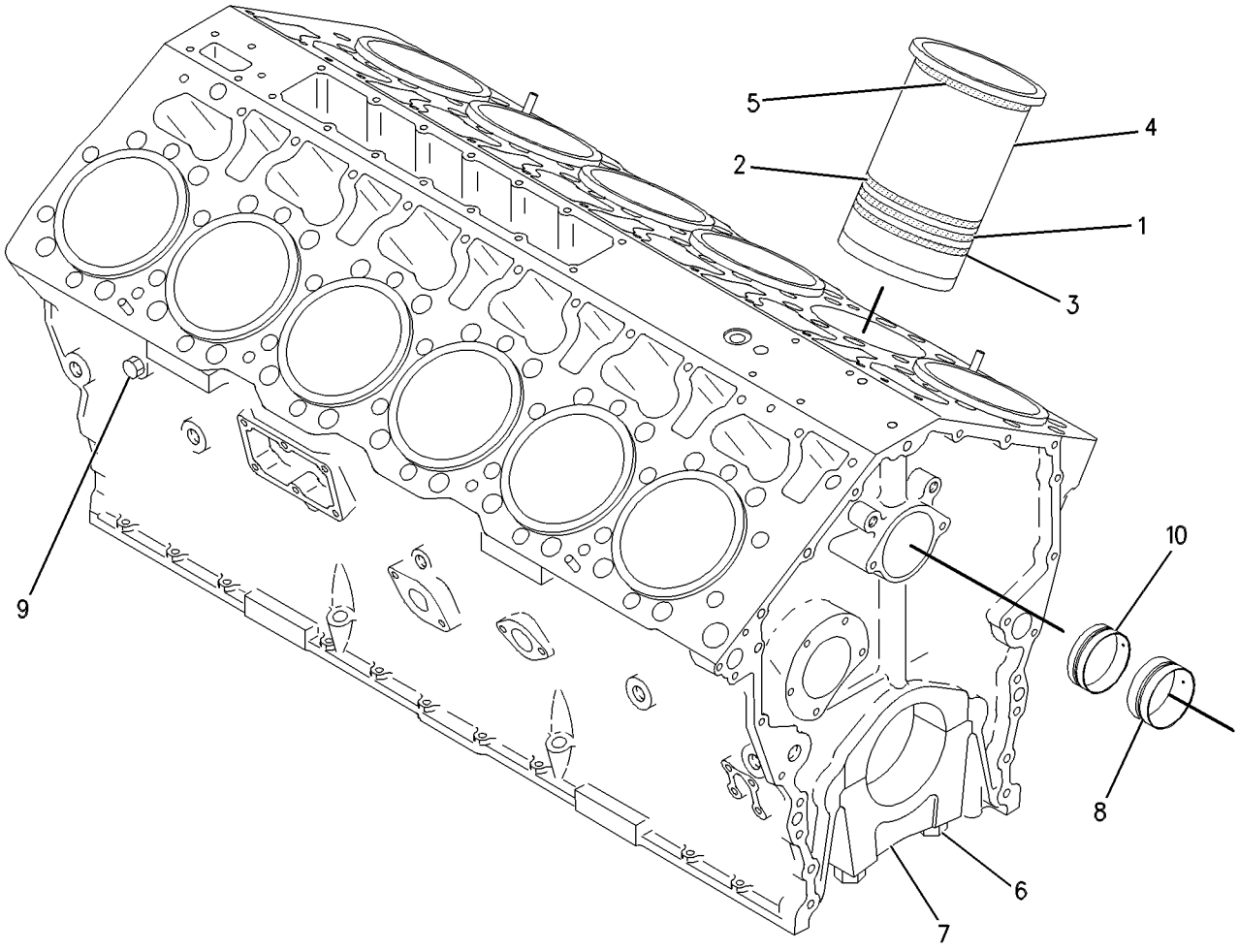

GRAPHIC #1 g00509613

126-1372 CYLINDER BLOCK AS

S/N: 8OM1-UP

PART OF 126-1373 CYLINDER BLOCK GP

SMCS-1201, 1211, 1216, 1217, 1221, 1222, 1223, 1331 **i01035252**

NOTE	REF NO	GRAPHIC REF	PART NUMBER	QTY	PART NAME 1 2 3 4 5 6 (PRODUCT LEVEL)	SEE PAGE
	1	1	**3P-1323**	14	BOLT	
		1	**9H-1031**	14	WASHER-HARD (6.0MM THK)	
	2	1	**4N-5858**	7	CAP	
	3	1	**4N-6658**	2	BEARING-SLEEVE (1.30IN. WIDTH)	
	4	1	**4N-0685**	5	BEARING-SLEEVE (1.00IN. WIDTH)	
AFJN		1	**4W-4588**		SLEEVE-LIFTER BORE	
AFLN		1	**4W-6061**		SLEEVE-BOTTOM LINER	
AFJN		1	**2W-3815**		INSERT-SEAT (1.59MM THK)	
AFJN		1	**5N-0093**		INSERT-SEAT (2.7MM THK)	
AFJN		1	**9Y-3368**		INSERT-LINER SEAT (.834MM THK)	

A-NOT PART OF THIS GROUP
F-NOT SHOWN
J-FOR SALVAGE OF DAMAGED LIFTER BORES IN CYLINDER BLOCK
L-FOR SALVAGE OF THE BOTTOM LINER O-RING BORE
N-QUANTITY TO BE DETERMINED BY USER

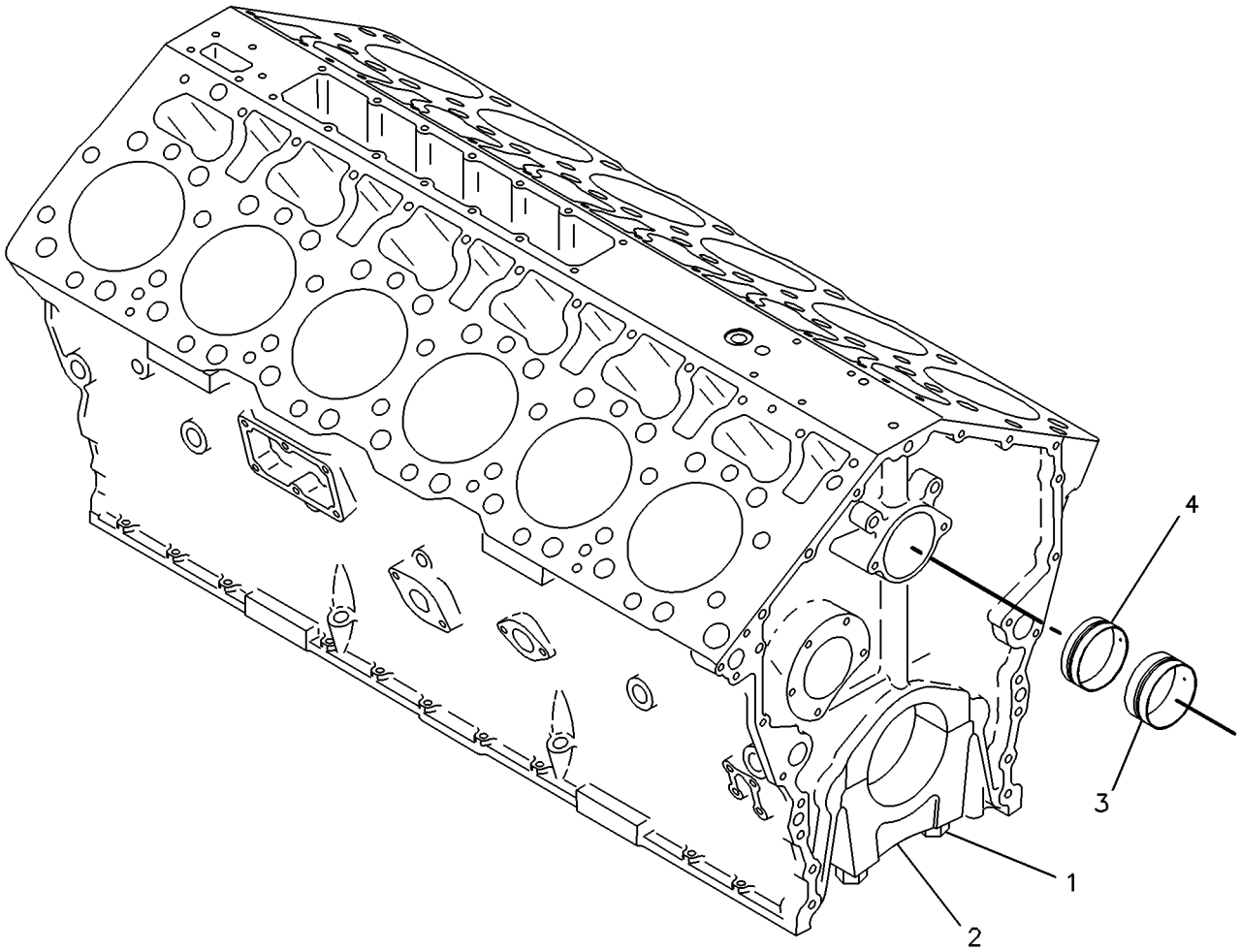

GRAPHIC #1 g00083056

MEMORANDA

BASIC ENGINE

109-9010 CYLINDER BLOCK GP*R

S/N: 80M1-UP

PART OF 123-0200 ENGINE AR

SMCS-1201 **i01113363**

NOTE	REF NO	GRAPHIC REF	PART NUMBER	QTY	PART NAME 1 2 3 4 5 6 (PRODUCT LEVEL)	SEE PAGE
	2	1	**4N-1650**	4	DOWEL	
	3	1	**8T-6763**	4	PLUG-PIPE (1/4-18 NPTF THD)	
Y	4	1	*117-9512*	1	CYLINDER BLOCK AS	26
	5	1	**8T-6757**	5	PLUG-PIPE (1/8-27 NPTF)	
	6	1	**6N-9135**	2	GASKET-PLATE	
	7	1	**6I-4611**	2	PLATE-SPACER	
	8	1	**7C-9614**	3	PLUG-TAPERLOCK (1.63IN X 12 THD)	
	9	1	**4N-0683**	4	DOWEL	
	10	1	**101-8917**	26	STUD-TAPERLOCK	
	11	1	**3B-0645**	1	PLUG-CUP (32.08MM AVG OD)	
	12	1	**6L-4428**	3	STUD-TAPERLOCK	
	14	1	**5P-8356**	4	SEAL-O-RING (21.89MM ID)	
	15	1	**3S-6605**	2	PLUG-CUP	
	16	1	**7C-7407**	1	STUD	
AFLN		1	**101-0523**		INSERT-LINER SEAT (5.21MM THK)	

A-NOT PART OF THIS GROUP
F-NOT SHOWN
L-QUANTITY TO BE DETERMINED BY USER
N-FOR SALVAGE OF THE DAMAGED LIFTER BORES IN CYLINDER BLOCK
Y-SEPARATE ILLUSTRATION

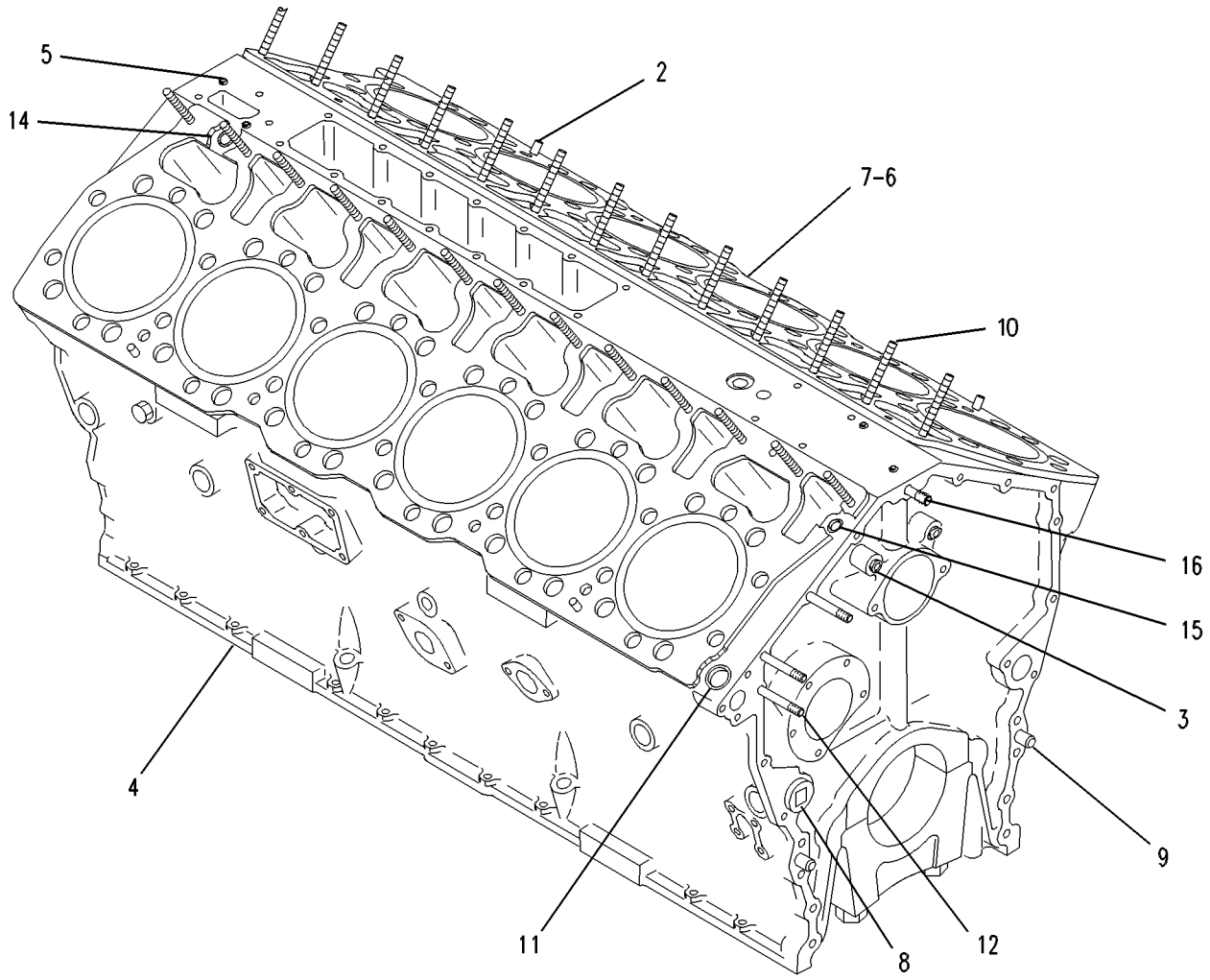

GRAPHIC #1 g00588493

BASIC ENGINE

117-9514 CYLINDER BLOCK GP

S/N: 8OM1-UP

SMCS-1201 **i00124047**

NOTE	REF NO	GRAPHIC REF	PART NUMBER	QTY	PART NAME 1 2 3 4 5 6 (PRODUCT LEVEL)	SEE PAGE
	1	1	**7W-6534**	4	PLUG-PIPE (3/8-18 NPTF THD)	
	2	1	**9S-4190**	8	PLUG-O-RING (7/16-20 THD)	
		1	**114-4427**	8	SEAL-O-RING (19.18MM ID)	
	3	1	**8T-6757**	6	PLUG-PIPE (1/8-27 NPTF THD)	
	4	1	**7W-6492**	2	PLUG-PIPE (1/2-14'NPTF'THD)	
	5	1	**4N-6658**	2	BEARING-SLEEVE (1.30IN. WIDTH)	
	6	1	**3S-6605**	2	PLUG-CUP	
	7	1	**4N-0685**	5	BEARING-SLEEVE (1.00IN. WIDTH)	
	8	1	**3B-0645**	1	PLUG-CUP	
	9	1	**111-8606**	12	BOLT-OIL JET	
	10	1	**7W-4990**	12	TUBE AS-OIL JET	
	11	1	**7C-9614**	3	PLUG-TAPERLOCK (1.63IN-12 THD)	
	12	1	**8T-6763**	4	PLUG	
	13	1	**4N-0614**	7	CAP-CRANKSHAFT BEARING	
	14	1	**3P-1323**	14	BOLT-BEARING CAP	
		1	**9H-1031**	14	WASHER-HARD (6.0MM THK)	

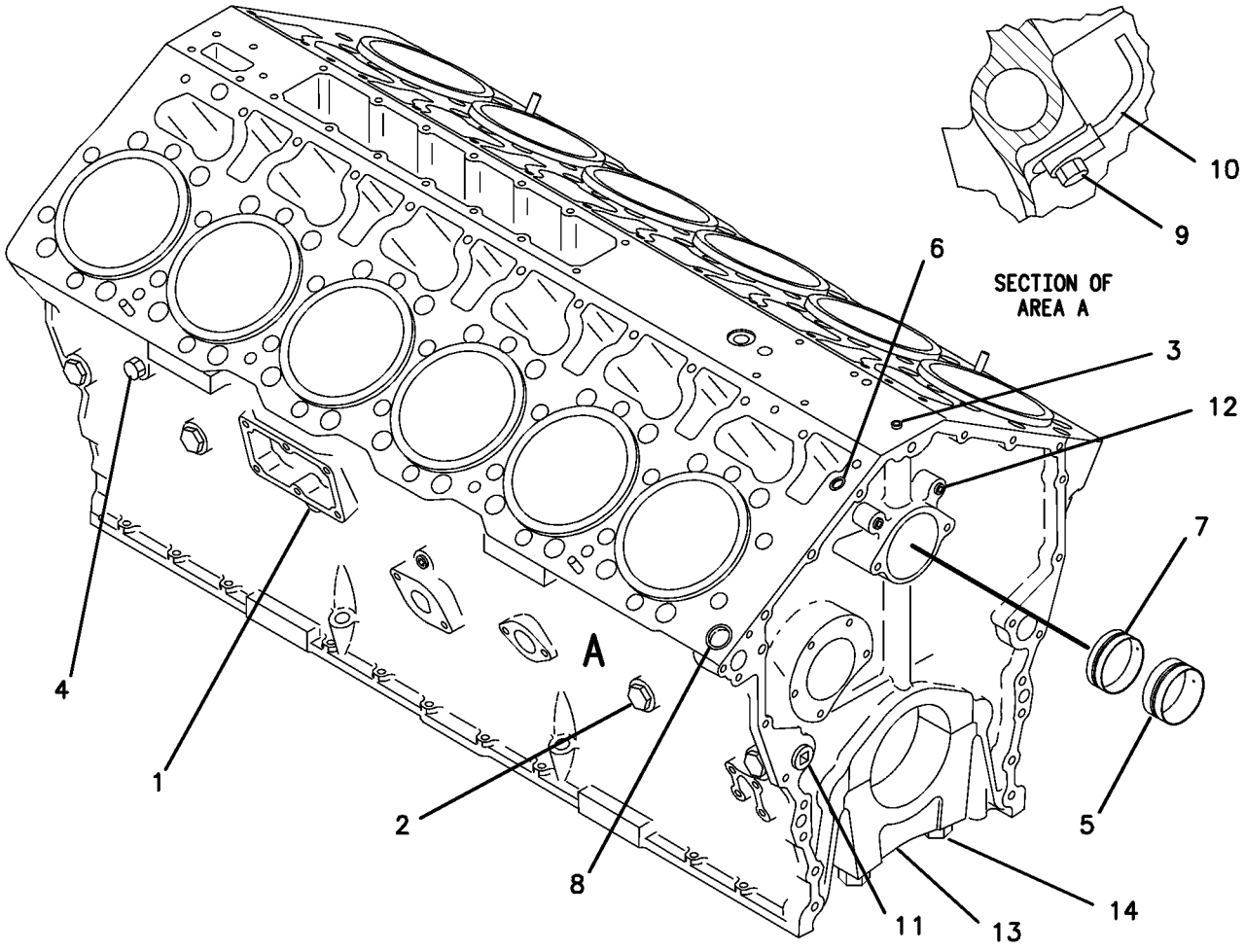

GRAPHIC #1 g00099286

BASIC ENGINE

126-1373 CYLINDER BLOCK GP

S/N: 8OM1-UP

FIELD REPLACEMENT FOR 117-9512—PAGE 26

SMCS-1201 **i01035277**

NOTE	REF NO	GRAPHIC REF	PART NUMBER	QTY	PART NAME 1 2 3 4 5 6 (PRODUCT LEVEL)	SEE PAGE
	1	1	**7W-6534**	4	PLUG-PIPE (3/8-18 NPTF THD)	
	2	1	**9S-4190**	8	PLUG-O-RING (7/16-20 THD)	
		1	**114-4427**	8	SEAL-O-RING (19.18MM ID)	
	3	1	**8T-6757**	6	PLUG-PIPE (1/8-27 NPTF)	
	4	1	**7W-6492**	2	PLUG-PIPE (1/2-14 NPTF THD)	
Y	5	1	**126-1372**	1	CYLINDER BLOCK AS	28
	6	1	**3S-6605**	2	PLUG-CUP	
	7	1	**8T-6763**	4	PLUG-PIPE (1/4-18 NPTF THD)	
	8	1	**3B-0645**	1	PLUG-CUP (32.08MM AVG OD)	
	9	1	**7C-9614**	3	PLUG-TAPERLOCK (1.63IN-12 THD)	

Y-SEPARATE ILLUSTRATION

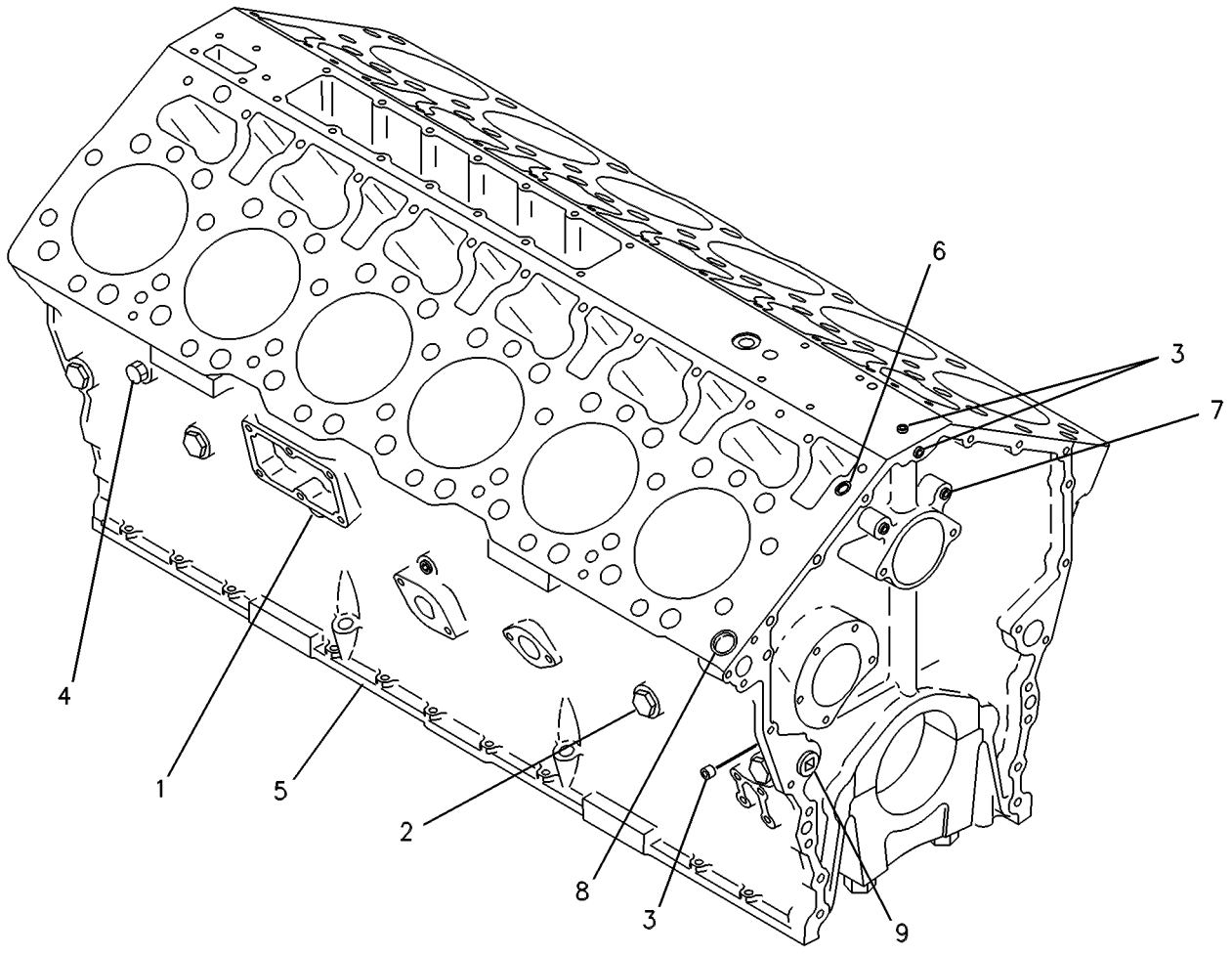

GRAPHIC #1 g00086832

7W-2243 CYLINDER HEAD AS*R

S/N: 80M1-1099

FIELD REPLACEMENT FOR 105-3800—PAGE 35

FIELD INSTALLATION

SMCS-1100, 1101, 1103, 1104, 1105, 1106, 1108, 1109, 1115, 1121, 1124, 1125

i01452565

NOTE	REF NO	GRAPHIC REF	PART NUMBER	QTY	PART NAME 1 2 3 4 5 6 (PRODUCT LEVEL)	SEE PAGE
CY	1	1	*105-3800*	1	CYLINDER HEAD AS	35
	2	1	**173-7188**	24	GUIDE-VALVE	
	3	1	**2N-5775**	12	DOWEL	

C-CHANGE FROM PREVIOUS TYPE
Y-SEPARATE ILLUSTRATION

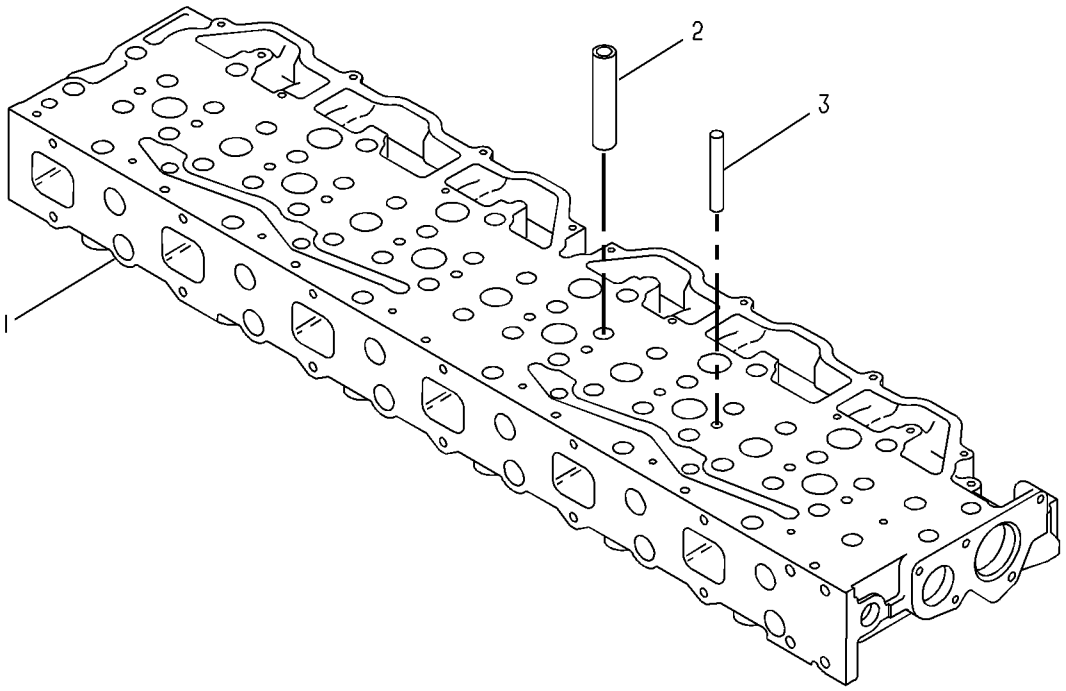

GRAPHIC #1

g00081812

105-3800 CYLINDER HEAD AS

S/N: 80M1-1099

PART OF 7W-2243 CYLINDER HEAD AS, 108-1887 CYLINDER HEAD GP

FIELD REPLACEMENT ORDER 7W-2243—PAGE 34

SMCS-1100, 1101, 1103, 1104, 1105, 1106, 1108, 1109, 1115, 1121, 1124, 1125

i01282350

NOTE	REF NO	GRAPHIC REF	PART NUMBER	QTY	PART NAME 1 2 3 4 5 6 (PRODUCT LEVEL)	SEE PAGE
	1	1	**3B-0645**	10	PLUG-CUP (32.08MM AVG OD)	
	2	1	**4N-5893**	12	INSERT-VALVE SEAT (INTAKE)	
	3	1	**1W-5283**	12	INSERT-VALVE SEAT (EXHAUST)	
	4	1	**3B-0623**	12	PLUG-CUP (25.73MM OD)	

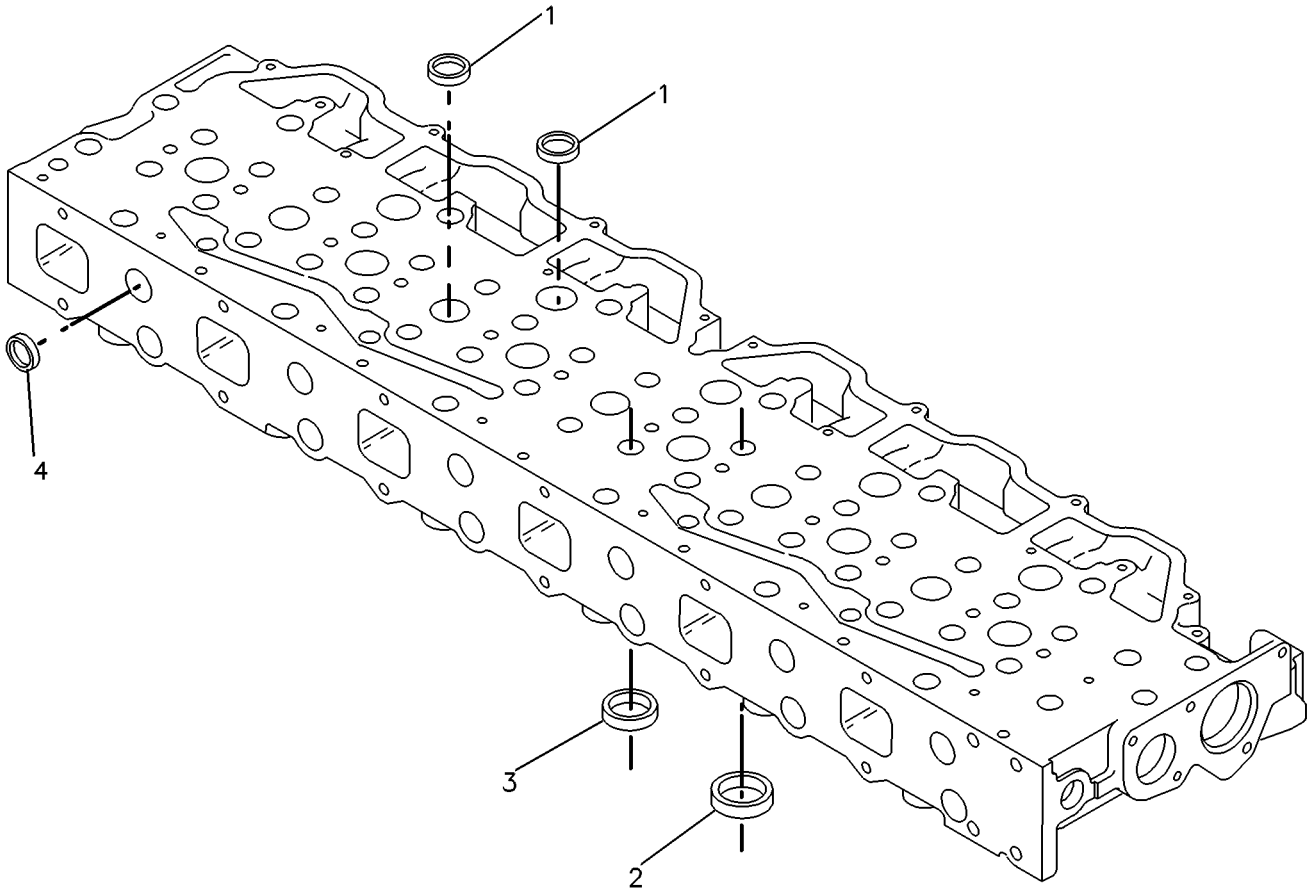

GRAPHIC #1

g00082752

143-3615 CYLINDER HEAD AS

S/N: 80M1100-UP

PART OF 143-3616, 192-1322 CYLINDER HEAD AS, 108-1887 CYLINDER HEAD GP

FIELD REPLACEMENT ORDER 192-1322—PAGE 38

SMCS-1100, 1101, 1103, 1104, 1105, 1106, 1108, 1109, 1115, 1121, 1124, 1125

i00553787

NOTE	REF NO	GRAPHIC REF	PART NUMBER	QTY	PART NAME 1 2 3 4 5 6 (PRODUCT LEVEL)	SEE PAGE
	1	1	**3B-0645**	10	PLUG-CUP (32.08MM AVG OD)	
	2	1	**4N-5893**	12	INSERT-INLET VALVE (INTAKE)	
	3	1	**1W-5283**	12	INSERT-VALVE SEAT (EXHAUST)	
	4	1	**3B-0623**	12	PLUG-CUP (25.73MM AVG OD)	

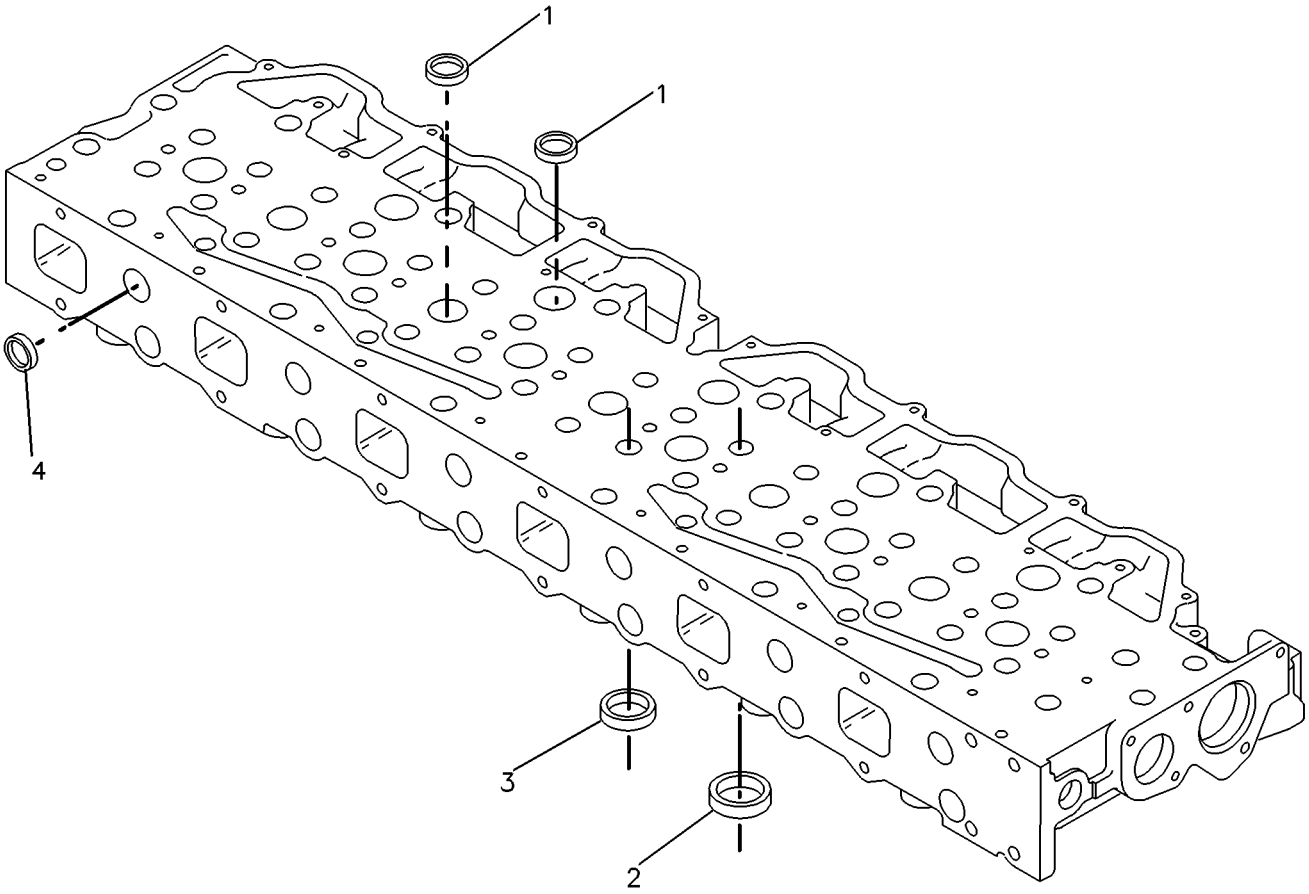

GRAPHIC #1

g00082752

BASIC ENGINE

143-3616 CYLINDER HEAD AS*R

S/N: 80M1100-UP

FIELD REPLACEMENT FOR 143-3615—PAGE 36

SMCS-1100, 1101, 1103, 1104, 1105, 1106, 1108, 1109, 1115, 1121, 1124, 1125

i01460521

NOTE	REF NO	GRAPHIC REF	PART NUMBER	QTY	PART NAME 1 2 3 4 5 6 (PRODUCT LEVEL)	SEE PAGE
Y	1	1	*143-3615*	1	CYLINDER HEAD AS	36
	2	1	**173-7188**	24	GUIDE-VALVE	
	3	1	**102-7494**	2	DOWEL	

Y-SEPARATE ILLUSTRATION

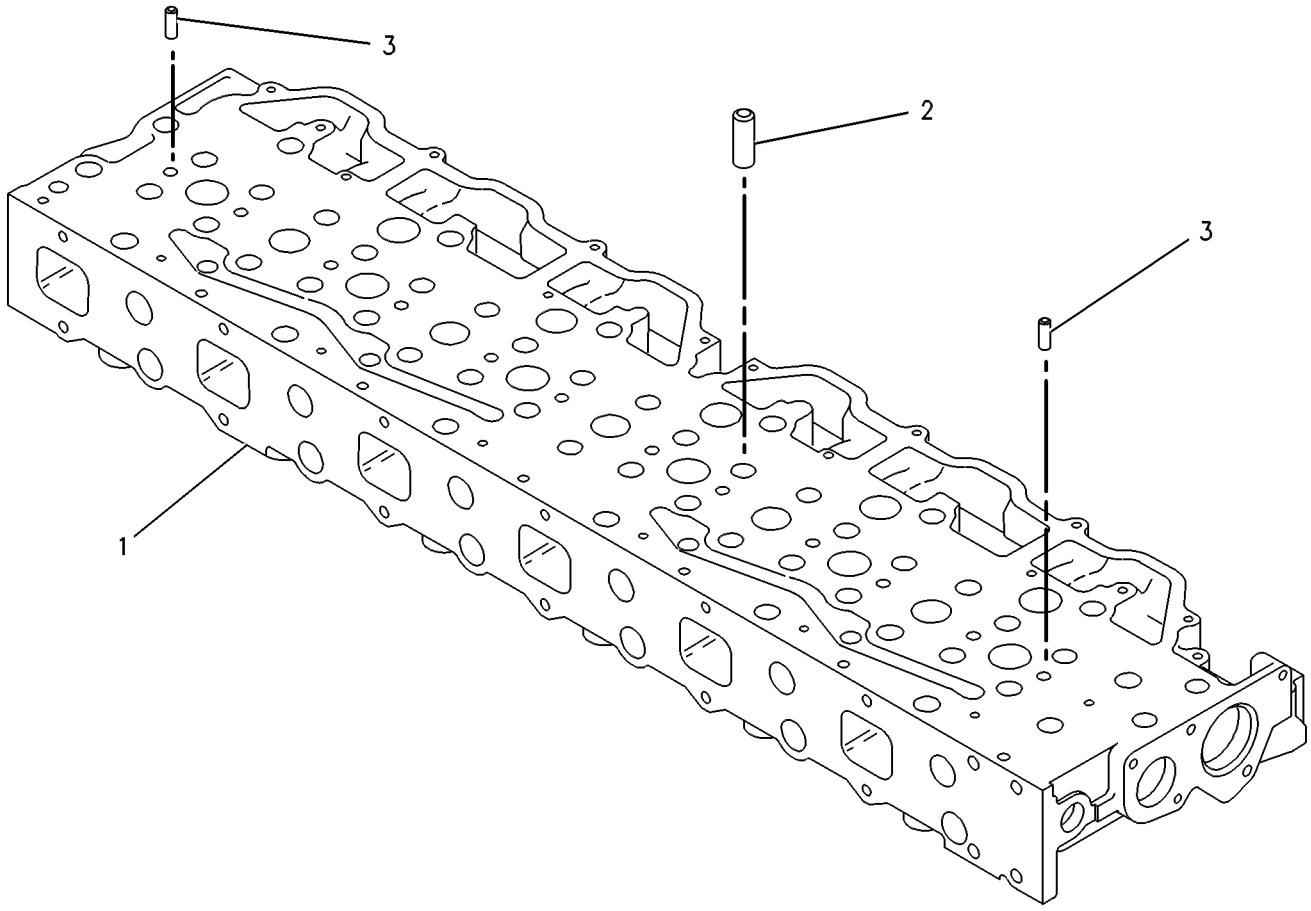

GRAPHIC #1

g00763313

192-1322 CYLINDER HEAD AS*R

S/N: 80M1100-UP

FIELD REPLACEMENT FOR 143-3615—PAGE 36

SMCS-1100, 1101, 1103, 1104, 1105, 1106, 1108, 1109, 1115, 1121, 1124, 1125

i01438311

NOTE	REF NO	GRAPHIC REF	PART NUMBER	QTY	PART NAME 1 2 3 4 5 6 (PRODUCT LEVEL)	SEE PAGE
Y	1	1	*143-3615*	1	CYLINDER HEAD AS	36
	2	1	**173-7188**	24	GUIDE-VALVE	
	3	1	**102-7494**	2	DOWEL	

Y-SEPARATE ILLUSTRATION

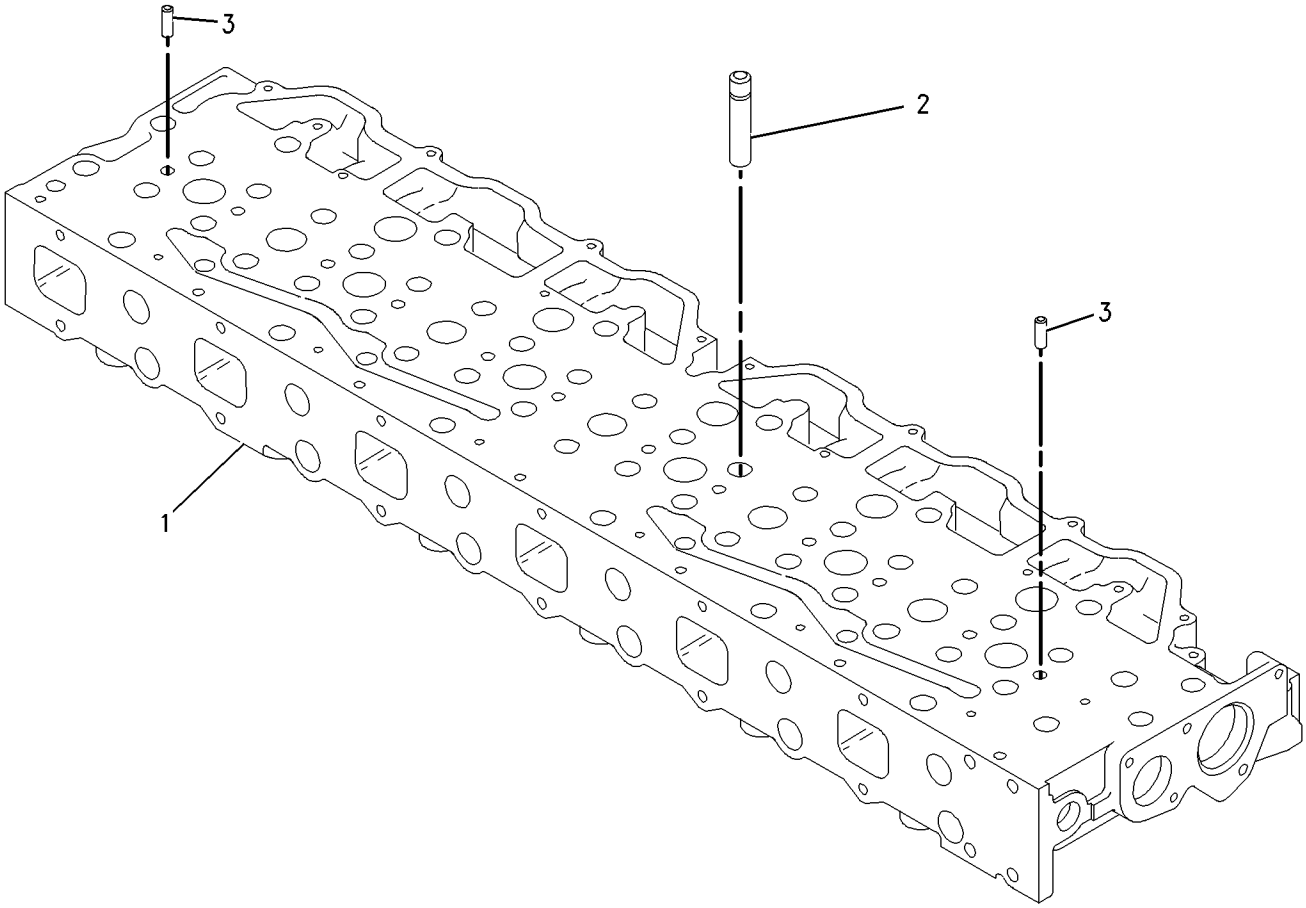

GRAPHIC #1

g00757595

MEMORANDA

BASIC ENGINE

108-1552 CYLINDER HEAD GP

S/N: 80M1-485

PART OF 123-0200 ENGINE AR

SMCS-1100, 1103, 1104, 1105, 1106, 1108, 1109, 1115, 1121, 1124, 1125 **i01258795**

NOTE	REF NO	GRAPHIC REF	PART NUMBER	QTY	PART NAME 1 2 3 4 5 6 (PRODUCT LEVEL)	SEE PAGE
YR	1	1	*108-1887*	2	CYLINDER HEAD GP	44
	2	1	**123-4731**	2	MANIFOLD (HEUI FLUID)	
	3	1	**106-1792**	24	STUD-TAPERLOCK (3/8-16X3.93IN)	
	4	1	**1D-4541**	12	BOLT (5/16-18X3IN)	
	5	1	**5P-7684**	4	PLUG (1 7/8-12 THD)	
	6	1	**108-5806**	4	SEAL-O-RING (43.69MM ID)	
	7	1	**8T-6764**	1	PLUG-PIPE (1/8-27 NPTF THD)	
	8	1	**5M-2894**	6	WASHER (2.5MM THK)	
	9	1	**9S-8752**	26	NUT (3/8-16 THD)	
	10	1	**108-5803**	2	SEAL-O-RING (7.65MM ID)	
	11	1	**9S-8006**	2	PLUG-O-RING (7/8-14 THD)	
	12	1	**1N-5999**	1	PLUG (3/8-24 THD)	
Y	13	1	*6V-2485*	1	SENSOR GP-PRESSURE (INJECTION ACTUATION OIL)	268
	14	1	**110-1627**	2	PLATE	
	15	1	**7W-3447**	20	SPACER (10.2MM THK)	
	16	1	**103-6091**	1	SENSOR GP-PRESSURE (TURBO OUTLET)	
		1	**3E-3368**	1	WEDGE-PLUG LOCK	
		1	**8T-8730**	3	SOCKET-CONNECTOR	
E		1	**9X-1813**		SLEEVE (34CM)	
		1	**102-8808**	1	KIT-CONNECTING PLUG (3 PIN)	
		1	**102-8813**	1	SEAL-INTERFACE	
	17	1	**9X-0263**	1	ADAPTER	
	18	1	**6V-5048**	1	SEAL-O-RING (8.92MM ID)	
	19	1	**9S-8004**	4	PLUG-O-RING (9/16-18 THD)	
	20	1	**6V-5049**	4	SEAL-O-RING (11.89MM ID)	
	21	1	**2K-2813**	40	BOLT (3/4-16X10IN)	
		1	**5H-1504**	40	WASHER-HARD (5MM THK)	
	22	1	**061-8561**	12	SEAL-O-RING (40.87MM ID)	
	23	1	**6V-5266**	12	SEAL-O-RING (36.09MM ID)	
	24	1	**107-9570**	24	SEAL-O-RING (36.17MM ID)	
	25	1	**108-0219**	12	SLEEVE	
	26	1	**7E-7312**	2	GASKET-CYLINDER HEAD	
	27	1	**2N-7174**	12	GASKET-ADAPTER	
	28	1	**3E-6772**	48	SEAL-WATER	
B	29	1	**1U-8846**		SEALANT	
	30	1	**033-6027**	2	SEAL-O-RING (19.18MM ID)	

B-USE AS REQUIRED
E-ORDER BY THE CENTIMETER
R-REMFG PART MAY BE AVAILABLE
Y-SEPARATE ILLUSTRATION

108-1552 **CYLINDER HEAD GP** ***(contd.)*** **i01258795**

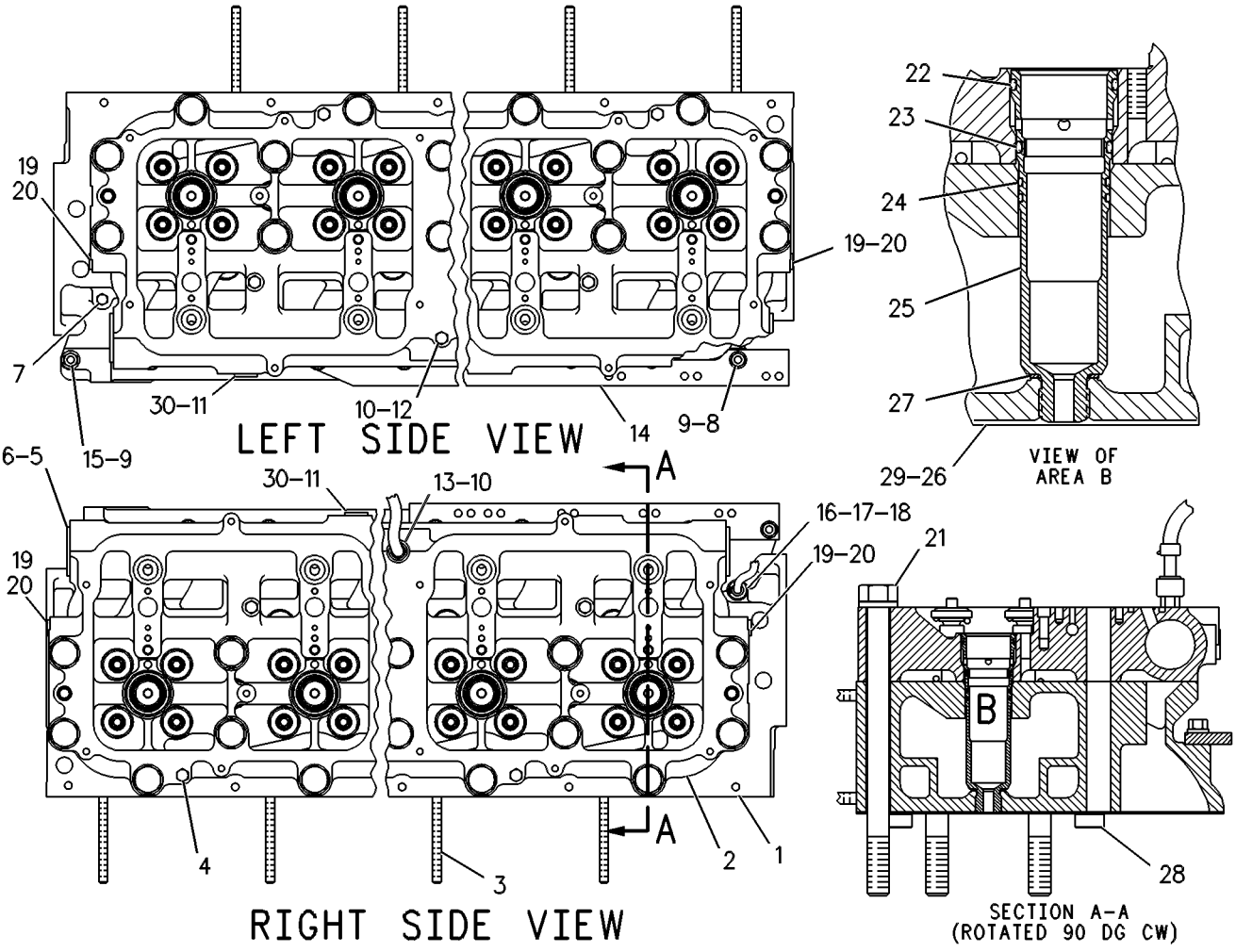

GRAPHIC #1 g00086512

BASIC ENGINE

108-1552 CYLINDER HEAD GP

S/N: 80M486-UP

PART OF 123-0200 ENGINE AR

SMCS-1100, 1103, 1104, 1105, 1106, 1108, 1109, 1115, 1121, 1124, 1125 **i01460326**

NOTE	REF NO	GRAPHIC REF	PART NUMBER	QTY	PART NAME 1 2 3 4 5 6 (PRODUCT LEVEL)	SEE PAGE
YR	1	1	*108-1887*	2	CYLINDER HEAD GP	44
	2	1	**141-6607**	2	MANIFOLD (HEUI FLUID)	
	3	1	**106-1792**	24	STUD-TAPERLOCK (3/8-16X3.93IN)	
	4	1	**1D-4541**	12	BOLT (5/16-18X3 IN)	
	5	1	**5P-7684**	4	PLUG	
	6	1	**108-5806**	4	SEAL-O-RING	
	7	1	**8T-6764**	1	PLUG-PIPE	
	8	1	**5M-2894**	6	WASHER-HARD (10.2X18.5X2.5MM THK)	
	9	1	**9S-8752**	26	NUT-FULL (3/8-16 THD)	
	10	1	**108-5803**	2	SEAL-O-RING	
	11	1	**9S-8006**	2	PLUG	
	12	1	**1N-5999**	1	PLUG	
CY	13	1	**167-1709**	1	SENSOR GP-PRESSURE (INJECTION ACTUATION OIL)	276
	14	1	**110-1627**	2	PLATE	
	15	1	**7W-3447**	20	SPACER (10.2X19.05X10.2MM THK)	
Y	16	1	**161-9929**	1	SENSOR GP-PRESSURE (TURBO OUTLET)	274
	17	1	**9X-0263**	1	ADAPTER	
	18	1	**6V-5048**	1	SEAL-O-RING	
	19	1	**9S-8004**	4	PLUG-HEX	
	20	1	**6V-5049**	4	SEAL-O-RING	
	21	1	**107-7322**	40	FASTENER GP-CYLINDER HEAD	
					(EACH INCLUDES)	
		1	**2K-2813**	1	BOLT (3/4-16X10IN)	
		1	**5H-1504**	1	WASHER-HARD (20X33.5X5MM THK)	
	22	1	**061-8561**	12	SEAL-O-RING	
	23	1	**6V-5266**	12	SEAL-O-RING	
	24	1	**107-9570**	24	SEAL-O-RING	
	25	1	**108-0219**	12	SLEEVE	
	26	1	**7E-7312**	2	GASKET-CYLINDER HEAD	
	27	1	**2N-7174**	12	GASKET-ADAPTER	
	28	1	**3E-6772**	48	SEAL-WATER	
B	29	1	**1U-8846**		SEALANT-GASKET	
	30	1	**033-6027**	2	SEAL-O-RING	

B-USE AS REQUIRED
C-CHANGE FROM PREVIOUS TYPE
R-REMFG PART MAY BE AVAILABLE
Y-SEPARATE ILLUSTRATION

108-1552 **CYLINDER HEAD GP** ***(contd.)*** **i01460326**

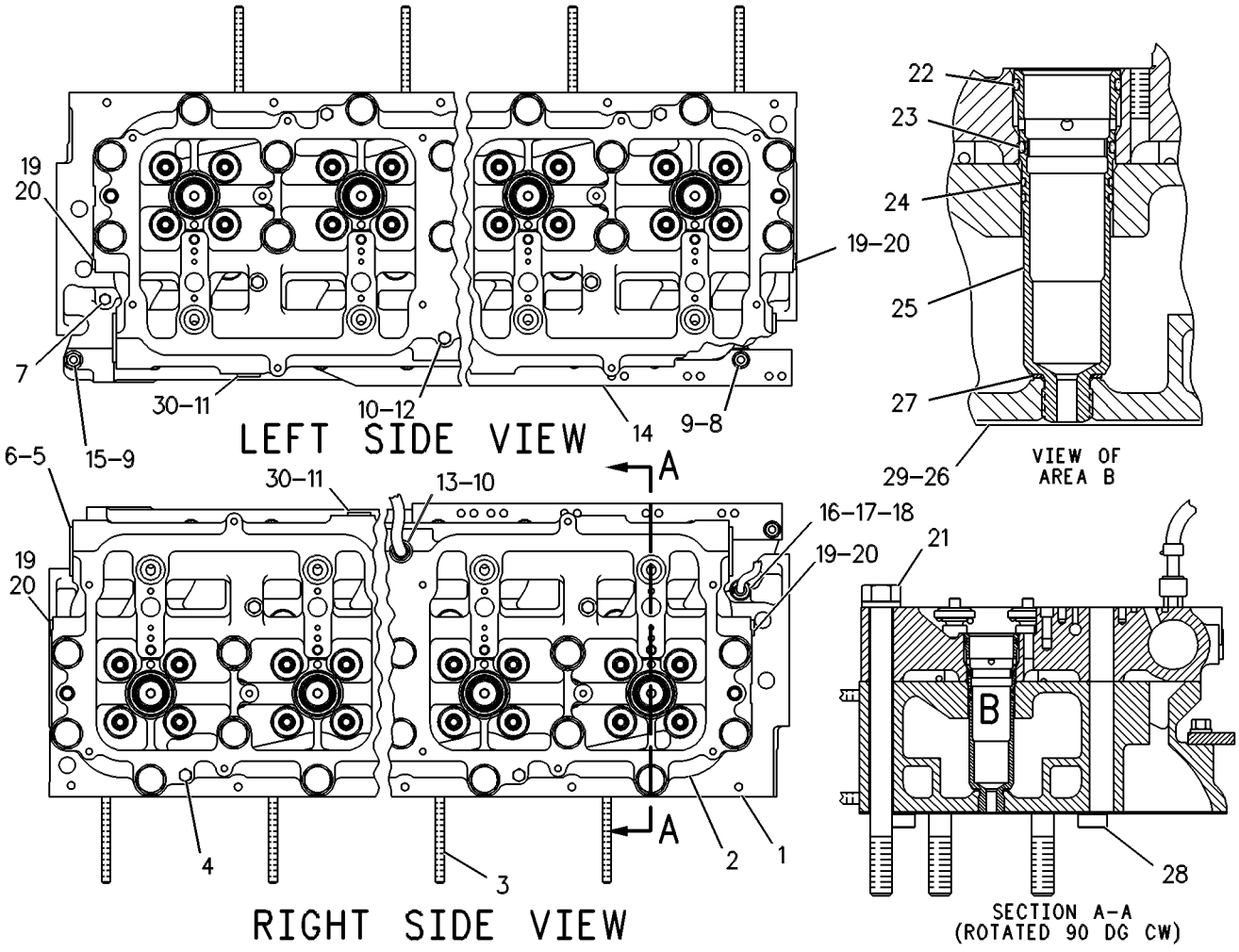

GRAPHIC #1 g00086512

108-1887 CYLINDER HEAD GP*R

S/N: 80M1-1099

PART OF 108-1552 CYLINDER HEAD GP

SMCS-1100, 1103, 1104, 1105, 1106, 1108, 1109, 1115, 1121, 1124, 1125

i00548595

NOTE	REF NO	GRAPHIC REF	PART NUMBER	QTY	PART NAME 1 2 3 4 5 6 (PRODUCT LEVEL)	SEE PAGE
Y	1	1	*105-3800*	1	CYLINDER HEAD AS	35
	2	1	**122-0322**	12	VALVE-INLET	
	3	1	**102-7494**	2	DOWEL	
	4	1	**2A-4429**	48	LOCK-RETAINER	
	5	1	**137-6500**	24	ROTOCOIL AS	
					(EACH INCLUDES)	
		1	**137-6501**	1	SHIELD-OIL	
	6	1	**4N-5906**	24	SPRING-VALVE	
	7	1	**122-0321**	12	VALVE-EXHAUST	
	8	1	**4N-2803**	24	GUIDE-VALVE	

Y-SEPARATE ILLUSTRATION

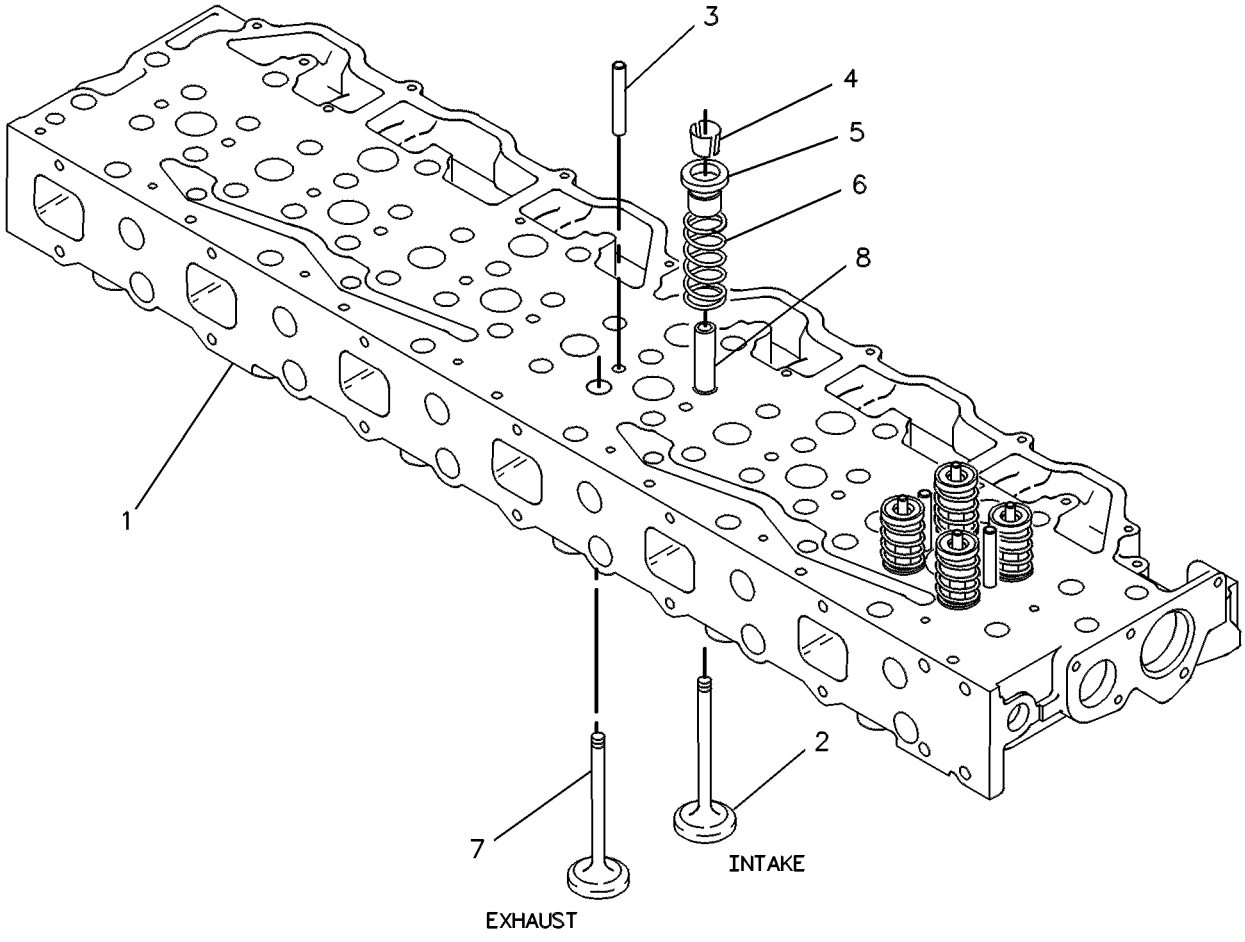

GRAPHIC #1

g00082776

108-1887 CYLINDER HEAD GP*R

S/N: 80M1100-UP

PART OF 108-1552 CYLINDER HEAD GP

SMCS-1100, 1103, 1104, 1105, 1106, 1108, 1109, 1115, 1121, 1124, 1125

i01454752

NOTE	REF NO	GRAPHIC REF	PART NUMBER	QTY	PART NAME 1 2 3 4 5 6 (PRODUCT LEVEL)	SEE PAGE
YC	1	1	*143-3615*	1	CYLINDER HEAD AS	36
	2	1	**122-0322**	12	VALVE-INLET	
	3	1	**102-7494**	2	DOWEL	
	4	1	**2A-4429**	48	LOCK-RETAINER	
	5	1	**137-6500**	24	ROTOCOIL AS	
					(EACH INCLUDES)	
		1	**137-6501**	1	SHIELD-OIL	
	6	1	**173-7188**	24	GUIDE-VALVE	
	7	1	**122-0321**	12	VALVE-EXHAUST	
	8	1	**4N-2803**	24	GUIDE-VALVE	

C-CHANGE FROM PREVIOUS TYPE
Y-SEPARATE ILLUSTRATION

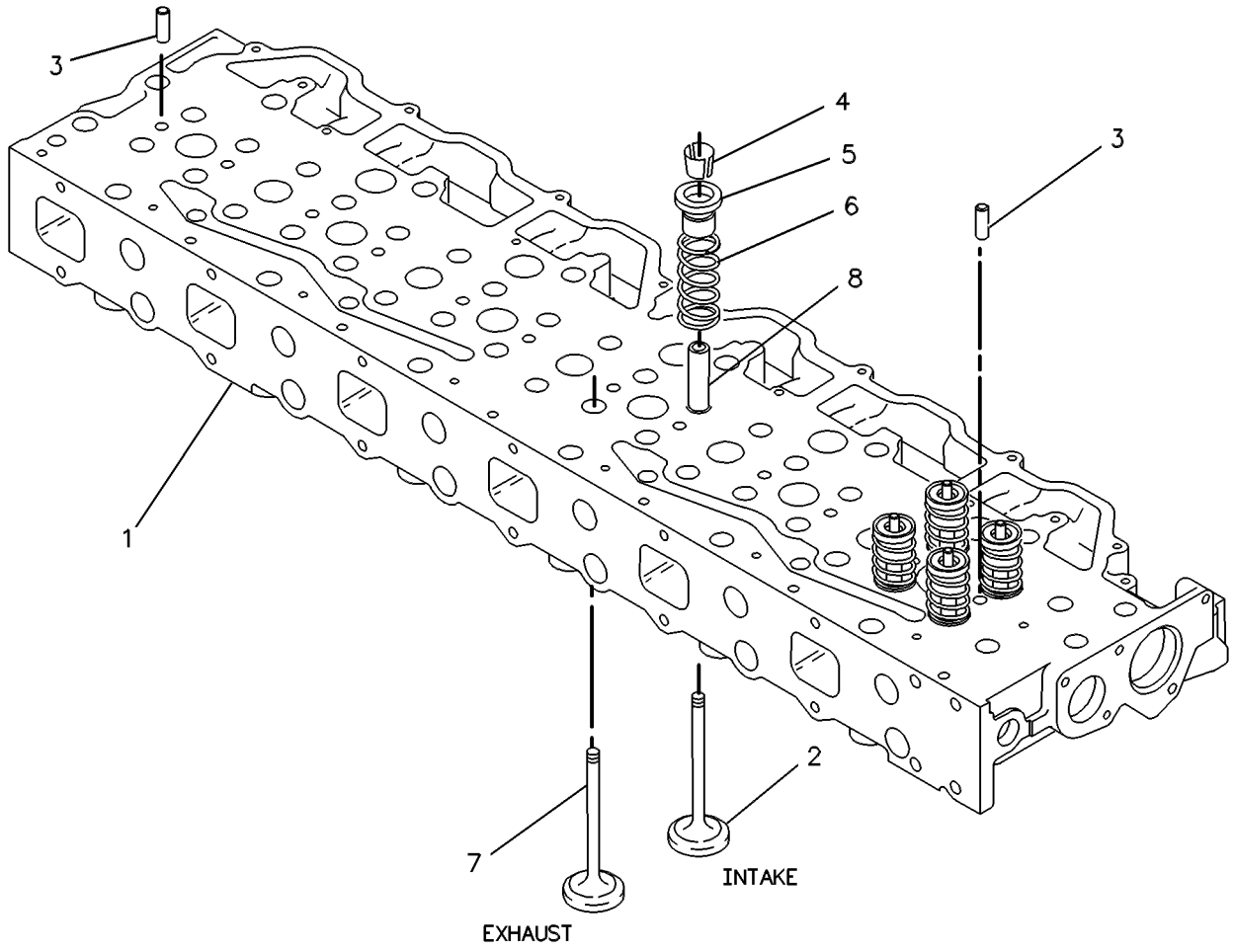

GRAPHIC #1

g00278854

6N-2229 DAMPER GP

S/N: 80M1-UP

PART OF 123-0200 ENGINE AR

SMCS-1205 **i01263332**

NOTE	REF NO	GRAPHIC REF	PART NUMBER	QTY	PART NAME 1 2 3 4 5 6 (PRODUCT LEVEL)	SEE PAGE
	1	1	**6N-6037**	1	ADAPTER-DAMPER	
	2	1	**2D-6374**	8	BOLT (5/8-18X6.75IN)	
	3	1	**0S-1585**	12	BOLT (1/2-13X1.50IN)	
	4	1	**6N-7654**	1	SPACER	
	5	1	**167-8132**	1	DAMPER AS	

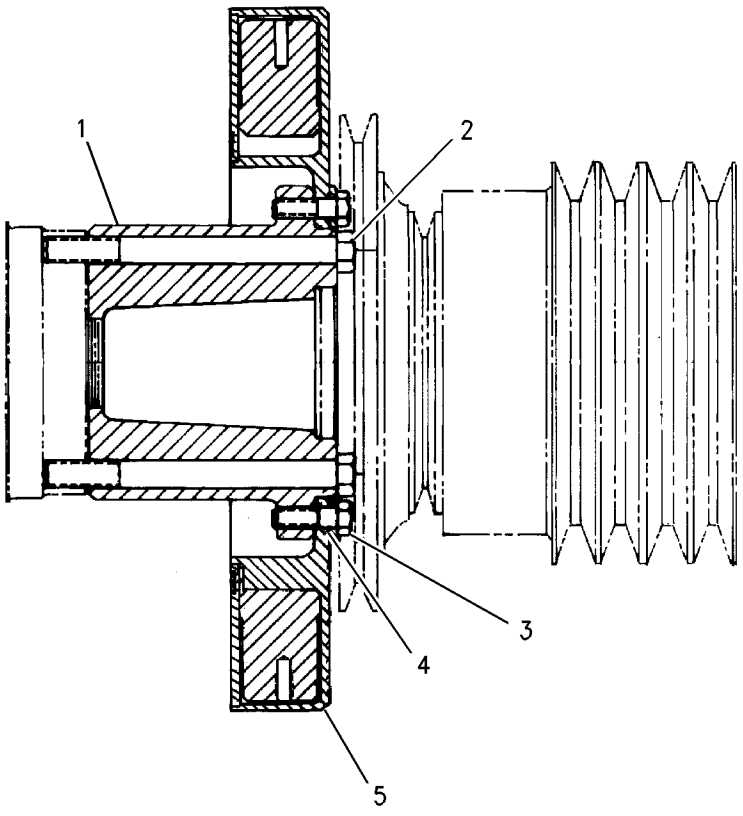

GRAPHIC #1 g00672248

MEMORANDA

BASIC ENGINE

7E-9665 DRIVE GP-FAN

S/N: 8OM1-UP

PART OF 123-0200 ENGINE AR

SMCS-1359 **i00793156**

NOTE	REF NO	GRAPHIC REF	PART NUMBER	QTY	PART NAME 1 2 3 4 5 6 (PRODUCT LEVEL)	SEE PAGE
	1	1	**2N-9827**	1	SLEEVE	
	2	1	**1A-1460**	4	BOLT (1/2-13X2IN)	
	3	1	**5P-8245**	5	WASHER (3MM THK)	
	4	1	**7W-1668**	1	SPACER	
	5	1	**5M-6214**	1	PLUG-PIPE (1/8-27 THD)	
	6	1	**1F-2771**	2	BALL BEARING	
	7	1	**7W-3215**	1	WASHER	
	8	1	**125-2487**	1	ADAPTER-FAN	
	9	1	**031-0223**	2	BOLT-LOCKING	
	10	1	**7D-7111**	1	SEAL-O-RING	
	11	1	**1A-2029**	14	BOLT (3/8-16X1.125IN)	
	12	1	**6N-1903**	1	HUB-FAN PULLEY	
	13	1	**6N-7346**	1	PULLEY-FAN DRIVE	
	14	1	**6N-7575**	1	V-BELT SET	
					(INCLUDES 4 BELTS)	
	15	1	**8C-5222**	1	SEAL-LIP	
	16	1	**6N-7567**	1	BLOCK-FAN SUPPORT	
	17	1	**1A-0168**	1	BOLT (1/2-13X7.5IN)	
	18	1	**7W-3279**	1	BRACKET AS	
		1	**5B-5821**	1	DOWEL	
	19	1	**4N-0955**	1	DOWEL	
	20	1	**7W-3267**	1	SHAFT-FAN	
	21	1	**1S-9209**	1	SHAFT-TIGHTENER	

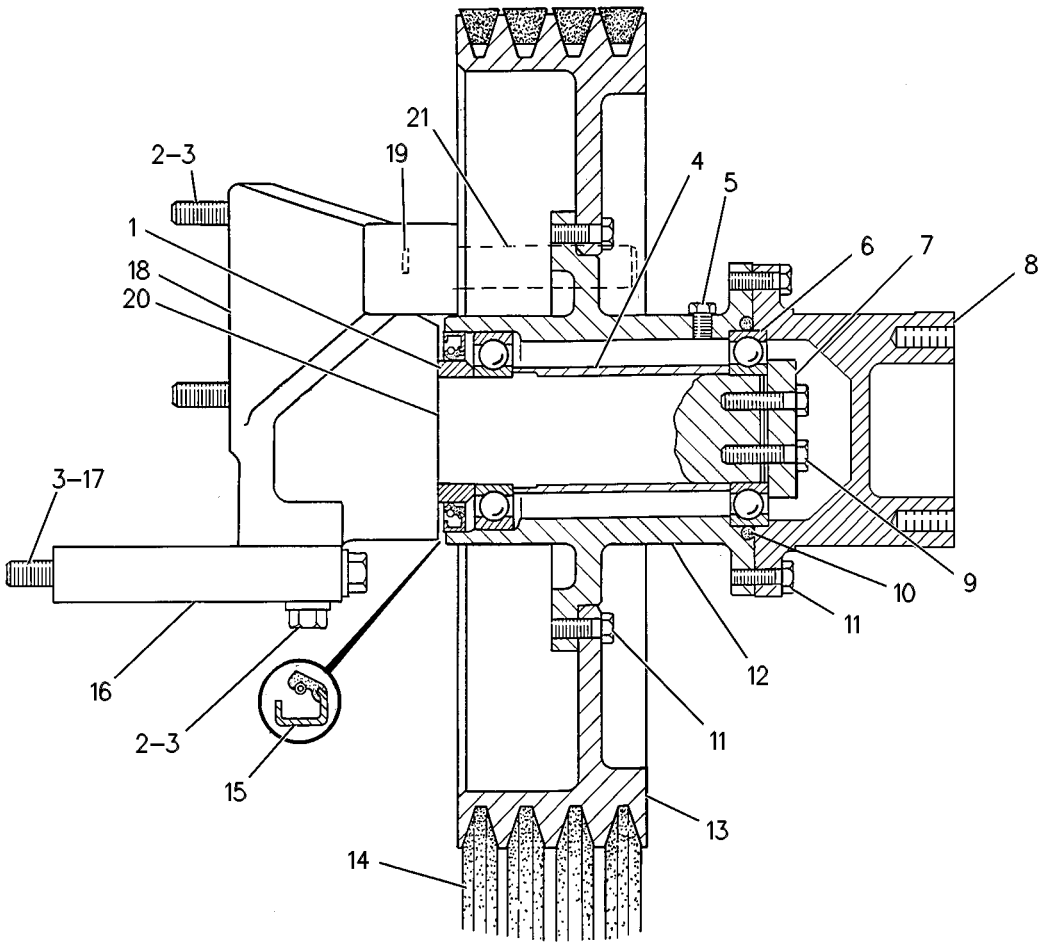

GRAPHIC #1 g00086618

9Y-1569 FLYWHEEL GP

S/N: 80M1-UP

PART OF 123-0200 ENGINE AR

SMCS-1156, 1158 **i00107610**

NOTE	REF NO	GRAPHIC REF	PART NUMBER	QTY	PART NAME 1 2 3 4 5 6 (PRODUCT LEVEL)	SEE PAGE
	1	1	**6F-7024**	12	BOLT (5/8-18X5IN)	
		1	**4D-3704**	12	WASHER-HARD (5MM THK)	
C	2	1	**8N-8666**	1	FLYWHEEL AS	
	3	1	**4N-2514**	1	GEAR (113 TEETH)	

C-CHANGE FROM PREVIOUS TYPE

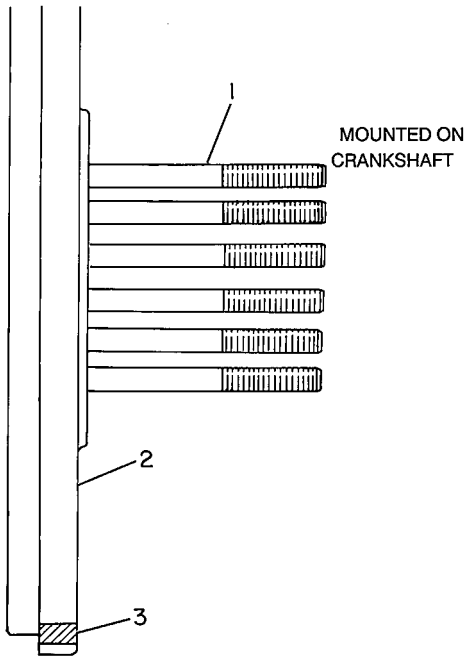

GRAPHIC #1 g00081664

126-7282 GEAR GP-FRONT—TIMING

S/N: 8OM1-UP

PART OF 123-0200 ENGINE AR

SMCS-1204, 1206, 1212, 1288, 1313 **i01091365**

NOTE	REF NO	GRAPHIC REF	PART NUMBER	QTY	PART NAME 1 2 3 4 5 6 (PRODUCT LEVEL)	SEE PAGE
	1	1	**124-7609**	1	GEAR-PUMP IDLER (86 TEETH)	
	2	1	**101-6713**	1	PLATE-RETAINING	
	3	1	**5P-5855**	4	BOLT-12 POINT HEAD	
	4	1	**112-9217**	1	PLATE-THRUST	
	5	1	**2B-2695**	4	BOLT (5/16-18X.875IN)	
	6	1	**151-2946**	1	GEAR AS-IDLER (99 TEETH)	
		1	**131-7123**	1	BEARING-SLEEVE	
	7	1	**1B-8705**	1	KEY-WOODRUFF	
	8	1	**117-9712**	1	SHAFT-DRIVE IDLER	
	9	1	**3G-2292**	5	BOLT-LOCKING	
	10	1	**109-3416**	1	GEAR-OIL PUMP (85 TEETH)	
	11	1	**0S-1571**	1	BOLT (3/8-16X1.75IN)	
	12	1	**1P-7346**	1	WASHER (6.0MM THK)	
	13	1	**7N-2443**	1	WASHER-THRUST	

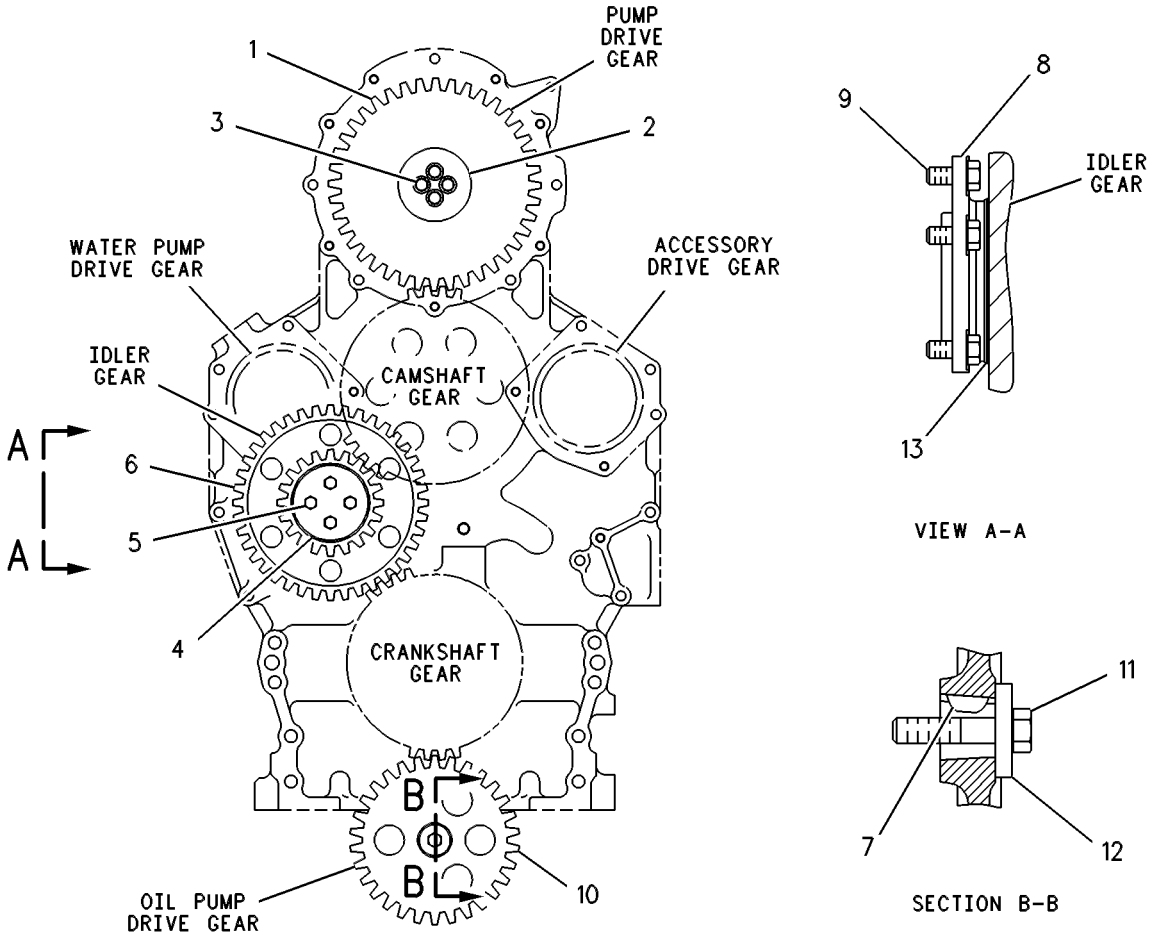

GRAPHIC #1 g00086588

BASIC ENGINE

6I-1419 GEAR GP-REAR

S/N: 80M1-UP

PART OF 123-0200 ENGINE AR

SMCS-1204, 1206, 3108 **i01005799**

NOTE	REF NO	GRAPHIC REF	PART NUMBER	QTY	PART NAME 1 2 3 4 5 6 (PRODUCT LEVEL)	SEE PAGE
	1	1	**9Y-9929**	2	ADAPTER AS	
		1	**1T-0550**	2	PIN-SPRING	
		1	**8N-0634**	1	ADAPTER-HYDRAULIC PUMP	
	2	1	**1A-2029**	9	BOLT (3/8-16X1.125IN)	
	3	1	**7N-5659**	1	TUBE AS	
	4	1	**9S-8752**	2	NUT-FULL (3/8-16 THD)	
	5	1	**4M-5317**	1	BUSHING-TERMINAL	
	6	1	**4N-1235**	2	SHAFT-IDLER GEAR	
	7	1	**2W-7675**	1	GEAR-CRANKSHAFT (64 TEETH)	
	8	1	**4N-0684**	1	DOWEL	
	9	1	**2W-7615**	2	GEAR-IDLER (64 TEETH)	
	10	1	**030-8194**	1	CONNECTOR-FLARED	
		1	**6V-4589**	1	SEAL-O-RING (19.18MM ID)	
	11	1	**3L-2875**	1	CLIP (6.35MM ID)	
	12	1	**8N-7806**	1	HOSE AS (32.5CM)	
	13	1	**032-1267**	1	CONNECTOR-FLARED	
	14	1	**9F-7882**	1	PIN-SPRING	
	15	1	**2N-1287**	1	ELBOW-FLARED	
	16	1	**0S-1588**	1	BOLT (3/8X1.25)	
	17	1	**5M-2894**	3	WASHER (2.5MM THK)	
	18	1	**5P-4479**	1	ELBOW	
	19	2	**5F-7404**	1	LOCKNUT-BEARING	
	20	2	**5F-7403**	1	LOCK-NUT	
	21	2	**5P-1370**	2	BEARING AS-ROLLER	
	22	2	**5P-8429**	2	SEAL-O-RING	
	23	2	**4N-7183**	2	RING-RETAINER	
	24	2	**1T-0720**	12	BOLT-12 POINT HEAD (3/8-16X1.25IN)	
	25	2	**2W-7609**	1	GEAR (64 TEETH) (PUMP DRIVE-L.H.)	
	26	2	**1A-2029**	4	BOLT (3/8-16X1.125IN)	
	27	2	**5M-2894**	4	WASHER (2.5MM THK)	
	28	2	**4N-1232**	1	WASHER-RETAINER	
	29	2	**2W-7610**	1	GEAR (64 TEETH) (PUMP DRIVE-R.H.)	
	30	2	**2W-8038**	1	GEAR-CAMSHAFT (44 TEETH)	
	31	2	**1B-9575**	4	BOLT (5/16-18X1.75IN)	
	32	2	**4N-0848**	1	SLEEVE-WEAR	
	33	2	**5K-9065**	2	RING-RETAINING (5.4MM OD)	
	34	2	**6V-3319**	1	SEAL-O-RING (158.34MM ID)	
	35	2	**6V-7423**	2	BEARING AS-ROLLER	
	36	2	**1D-4566**	8	BOLT (1/2-13X3.5IN)	
	37	2	**2D-6398**	1	RING-RETAINING	
	38	2	**7N-1565**	1	ADAPTER	
	39	2	**7N-1564**	1	WASHER-THRUST	
	40	2	**0L-1351**	2	BOLT (3/8X.875IN)	
	41	2	**4N-1186**	2	BEARING-SLEEVE	
	42	2	**9X-7371**	1	SEAL-O-RING (126.59MM ID)	
	43	2	**8N-0935**	1	GEAR (22 TEETH)	

6I-1419 **GEAR GP-REAR** *(contd.)* **i01005799**

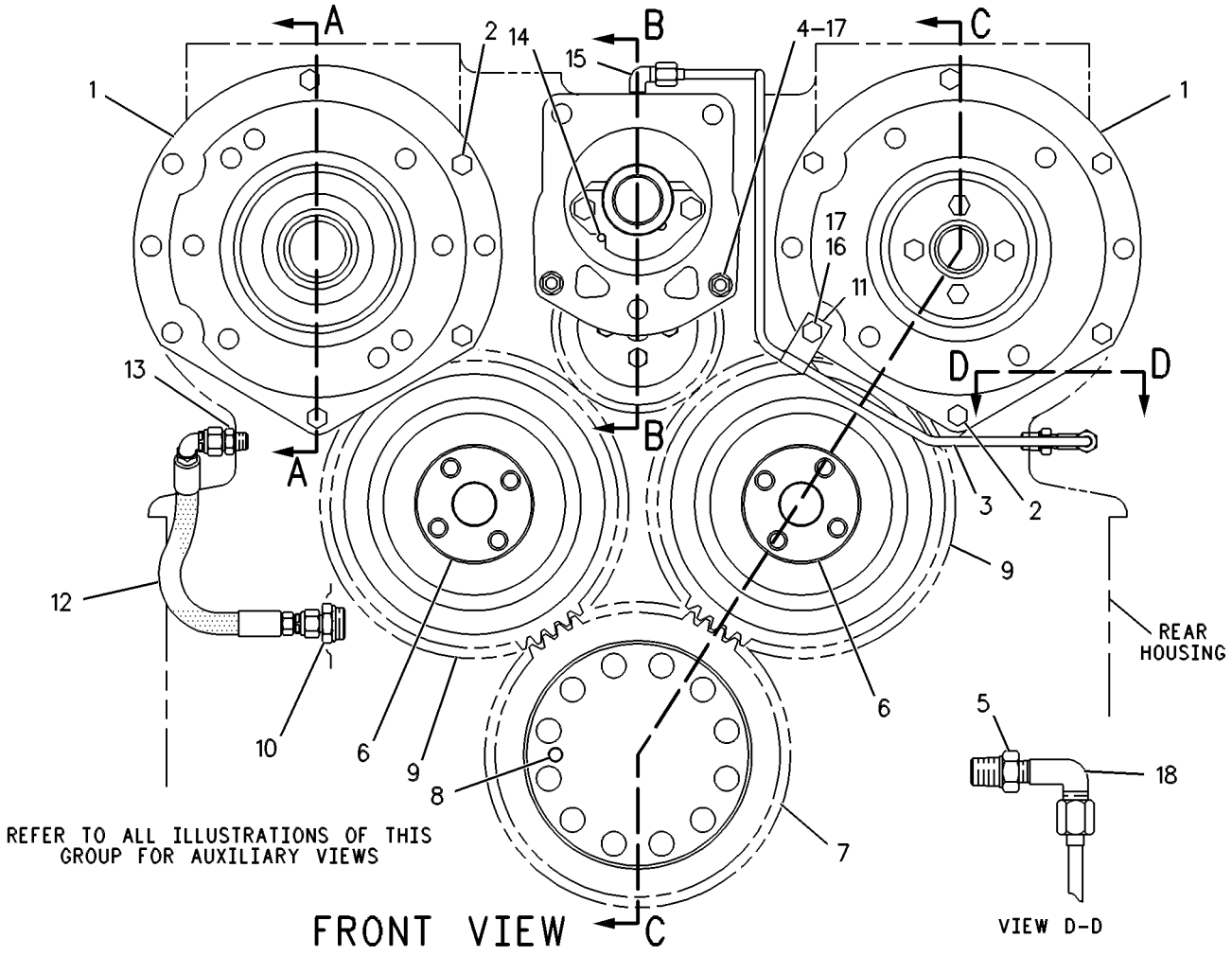

GRAPHIC #1 g00086608

6I-1419 GEAR GP-REAR *(contd.)* i01005799

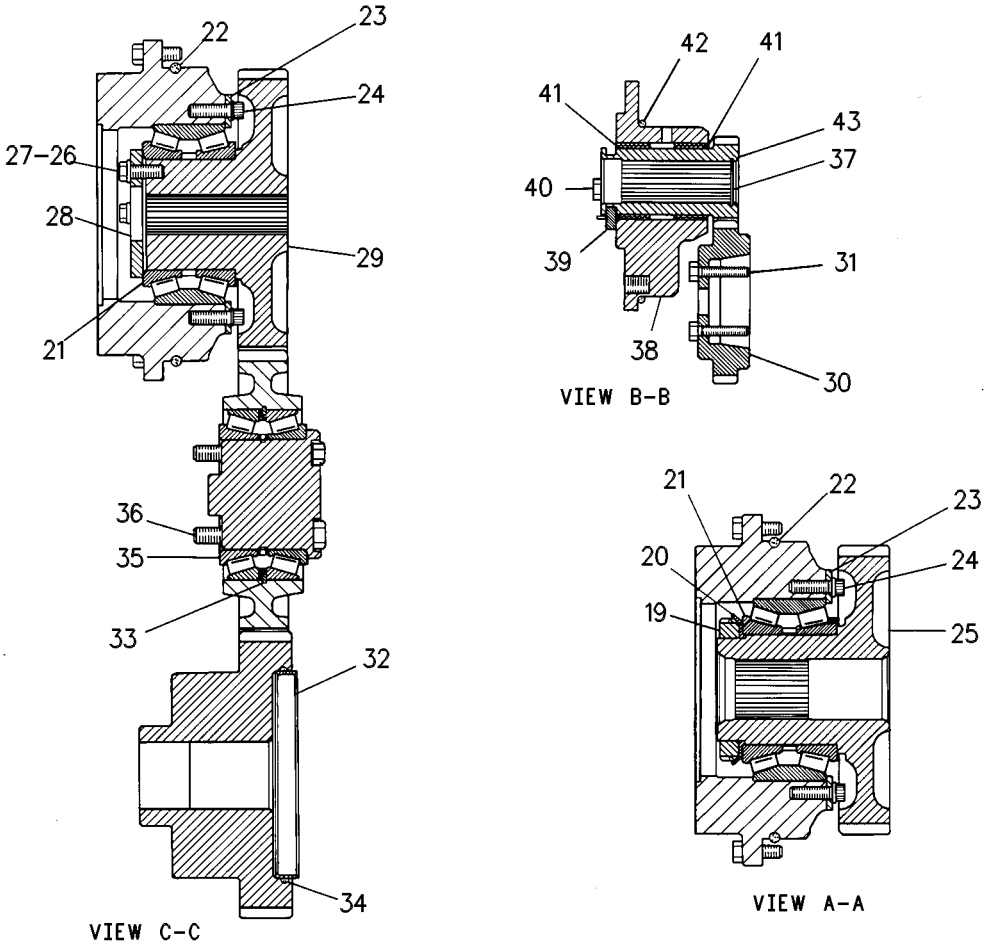

GRAPHIC #2 g00341777

BASIC ENGINE

130-0926 HOUSING GP-FLYWHEEL

S/N: 80M1-UP

PART OF 123-0200 ENGINE AR

SMCS-1157 **i01200441**

NOTE	REF NO	GRAPHIC REF	PART NUMBER	QTY	PART NAME 1 2 3 4 5 6 (PRODUCT LEVEL)	SEE PAGE
	1	1	**105-6138**	1	HOUSING AS-FLYWHEEL	
		1	**1W-3136**	1	BAFFLE	
	2	1	**0S-1619**	4	BOLT (3/8-16X3.0IN)	
	3	1	**2H-6488**	8	BOLT (1/2-13X5IN)	
	4	1	**161-7293**	1	GASKET-CYLINDER	
	5	1	**9M-4225**	2	BOLT (3/8 NC X 4 3/8)	
	6	1	**1A-5964**	2	BOLT (3/8-16X4.5IN)	
	7	1	**2P-2772**	2	COVER	
	8	1	**4N-0933**	2	GASKET	
	9	1	**1A-2029**	2	BOLT (3/8-16X1.125IN)	
	10	1	**5M-2894**	16	WASHER (2.5MM THK)	
	11	1	**8T-6765**	4	PLUG-PIPE (1/4-18 NPTF THD)	
	12	1	**5P-8245**	8	WASHER-HARD (3MM THK)	
	13	1	**0S-1588**	6	BOLT (3/8-16X1.25IN)	
	14	1	**3S-0036**	2	PLUG-CORE	
	15	1	**3D-2871**	2	STUD	
	16	1	**8T-6761**	1	PLUG-PIPE (1-11-1/2 NPTF THD)	
	17	1	**0L-1352**	1	BOLT (3/8-16X3.25IN)	
	18	1	**8M-9124**	1	WASHER (8MM THK)	

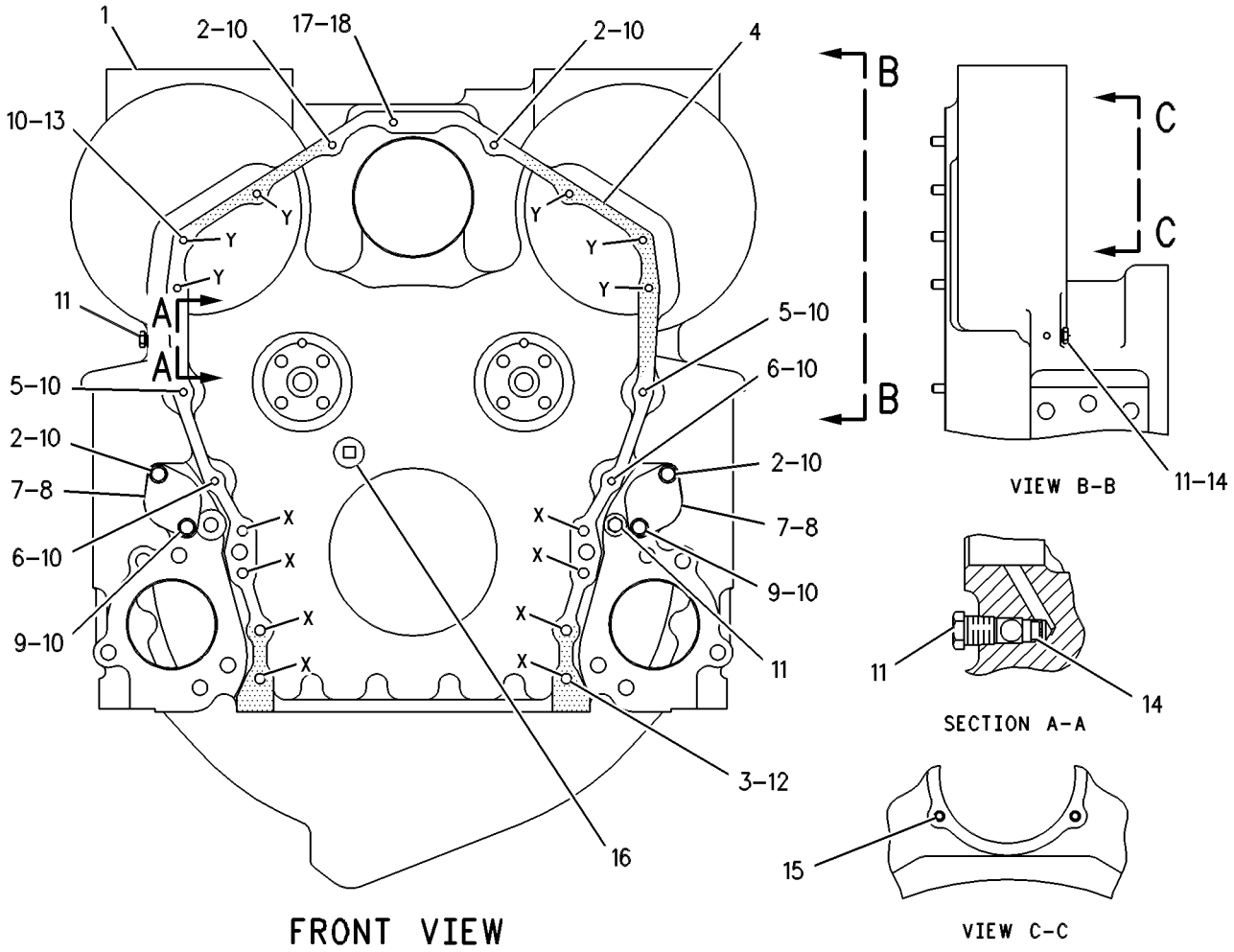

GRAPHIC #1 g00086658

126-7280 HOUSING GP-FRONT

S/N: 80M1-677

PART OF 123-0200 ENGINE AR

SMCS-1151, 1162, 1166 **i01447252**

NOTE	REF NO	GRAPHIC REF	PART NUMBER	QTY	PART NAME 1 2 3 4 5 6 (PRODUCT LEVEL)	SEE PAGE
	1	1	**166-9145**	1	GASKET-CYLINDER BLOCK	
	2	1	**172-9313**	1	HOUSING-TIMING GEAR	
	3	1	**3K-3256**	2	STUD	
	4	1	**2K-4973**	1	LOCKNUT	
	5	1	**0L-1352**	2	BOLT (3/8-16X3.25 IN)	
	6	1	**5M-2894**	6	WASHER-HARD (10.2X18.5X2.5MM THK)	
	7	1	**0T-0573**	3	BOLT (3/8-16X2.75 IN)	
Y	8	1	**129-6628**	2	SENSOR GP-SPEED (ENGINE SPEED/TIMING)	282

Y-SEPARATE ILLUSTRATION

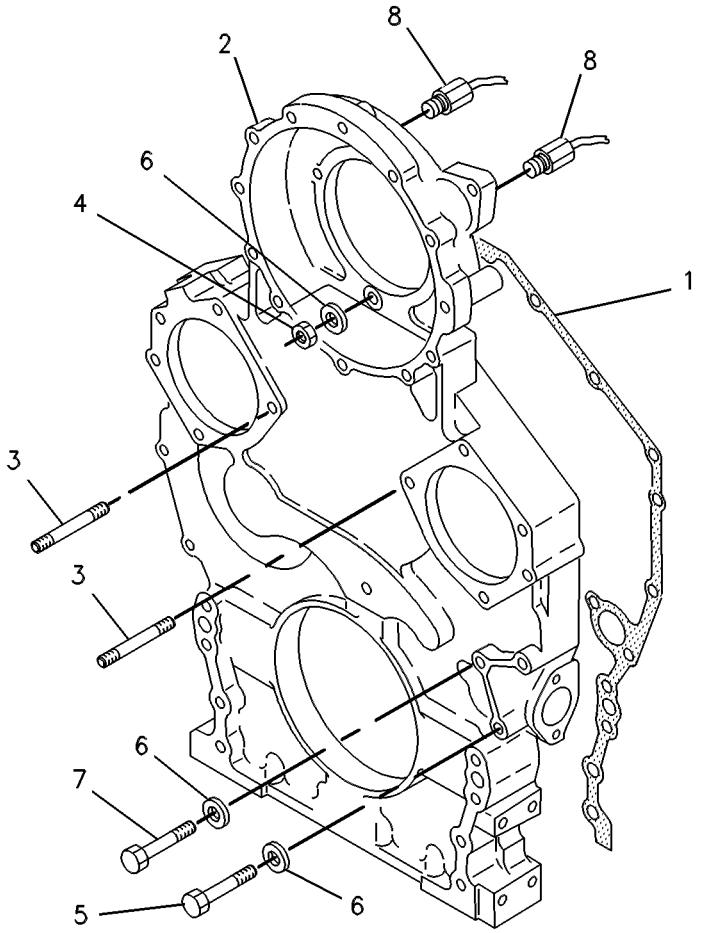

GRAPHIC #1 g00086586

BASIC ENGINE

137-8142 HOUSING GP-FRONT

S/N: 80M678-UP

PART OF 123-0200 ENGINE AR

SMCS-1151, 1162, 1166 **i01277643**

NOTE	REF NO	GRAPHIC REF	PART NUMBER	QTY	PART NAME 1 2 3 4 5 6 (PRODUCT LEVEL)	SEE PAGE
	1	1	**172-9313**	1	HOUSING-TIMING GEAR	
	2	1	**166-9145**	1	GASKET-CYLINDER BLOCK	
Y	3	1	*129-6628*	2	SENSOR GP-SPEED (ENGINE SPEED/TIMING)	282
	4	1	**0T-0573**	3	BOLT (3/8-16X2.75IN)	
	5	1	**5M-2894**	4	WASHER (2.5MM THK)	
	6	1	**3K-3256**	2	STUD (3/8IN NC X 1-11/16)	
	7	1	**2K-4973**	1	LOCKNUT (3/8-16 THD)	

Y-SEPARATE ILLUSTRATION

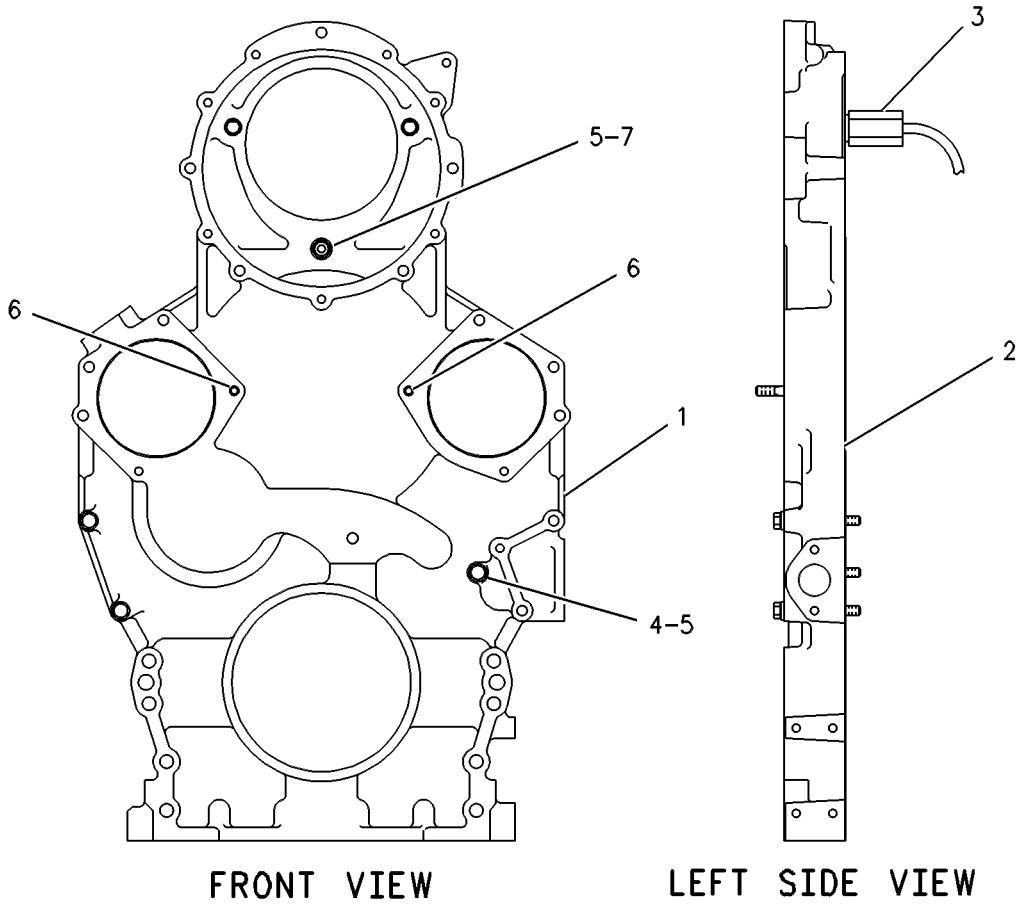

GRAPHIC #1 g00269282

BASIC ENGINE

124-4461 LIFTING GP-ENGINE

S/N: 80M1-UP

PART OF 123-0200 ENGINE AR

SMCS-1122 **i01390310**

NOTE	REF NO	GRAPHIC REF	PART NUMBER	QTY	PART NAME 1 2 3 4 5 6 (PRODUCT LEVEL)	SEE PAGE
	1	1	**5P-8245**	8	WASHER-HARD (13.5X25.5X3MM THK)	
	2	1	**118-8475**	1	BRACKET-LIFTING (RIGHT)	
	3	1	**7B-3235**	8	BOLT (1/2-13X1.375 IN)	
	4	1	**118-9115**	1	BRACKET-LIFTING (LEFT)	

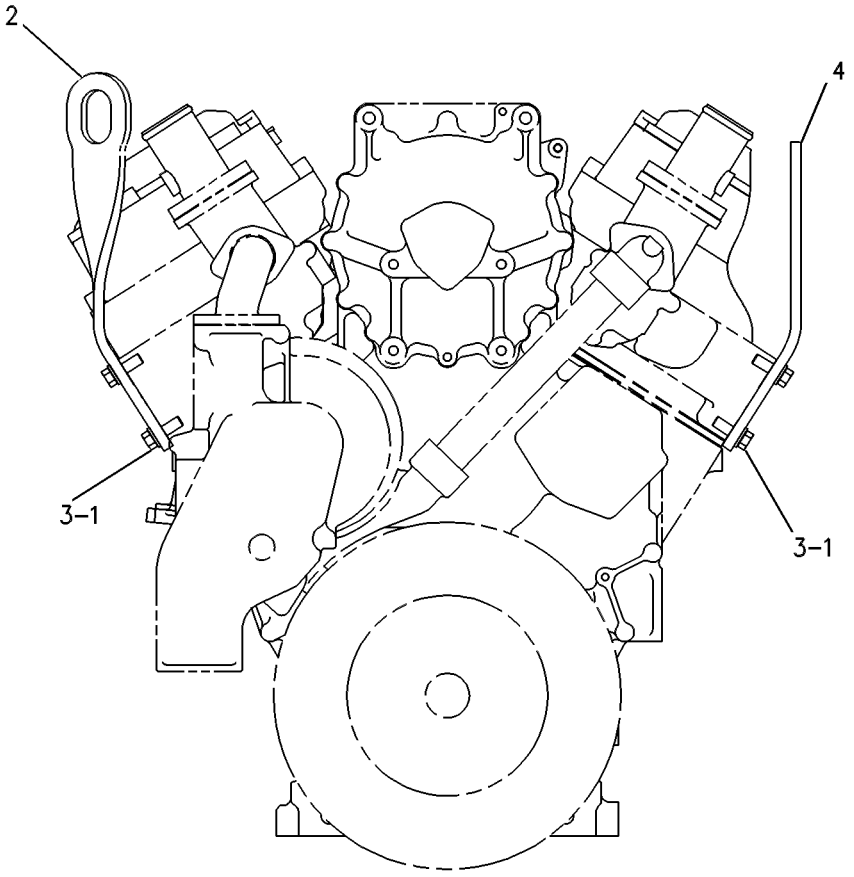

FRONT VIEW

GRAPHIC #1 g00086666

BASIC ENGINE

131-6205 PAN GP-OIL

S/N: 80M1-UP

PART OF 123-0200 ENGINE AR

SMCS-1302 **i01500572**

NOTE	REF NO	GRAPHIC REF	PART NUMBER	QTY	PART NAME 1 2 3 4 5 6 (PRODUCT LEVEL)	SEE PAGE
	1	1	**9Y-9635**	1	PAN-OIL	
	2	1	**2P-3203**	40	BOLT-WASHER HEAD (3/8-16X1.25 IN)	
	3	1	**4N-1151**	1	GASKET	
	4	1	**8T-6761**	2	PLUG-PIPE	

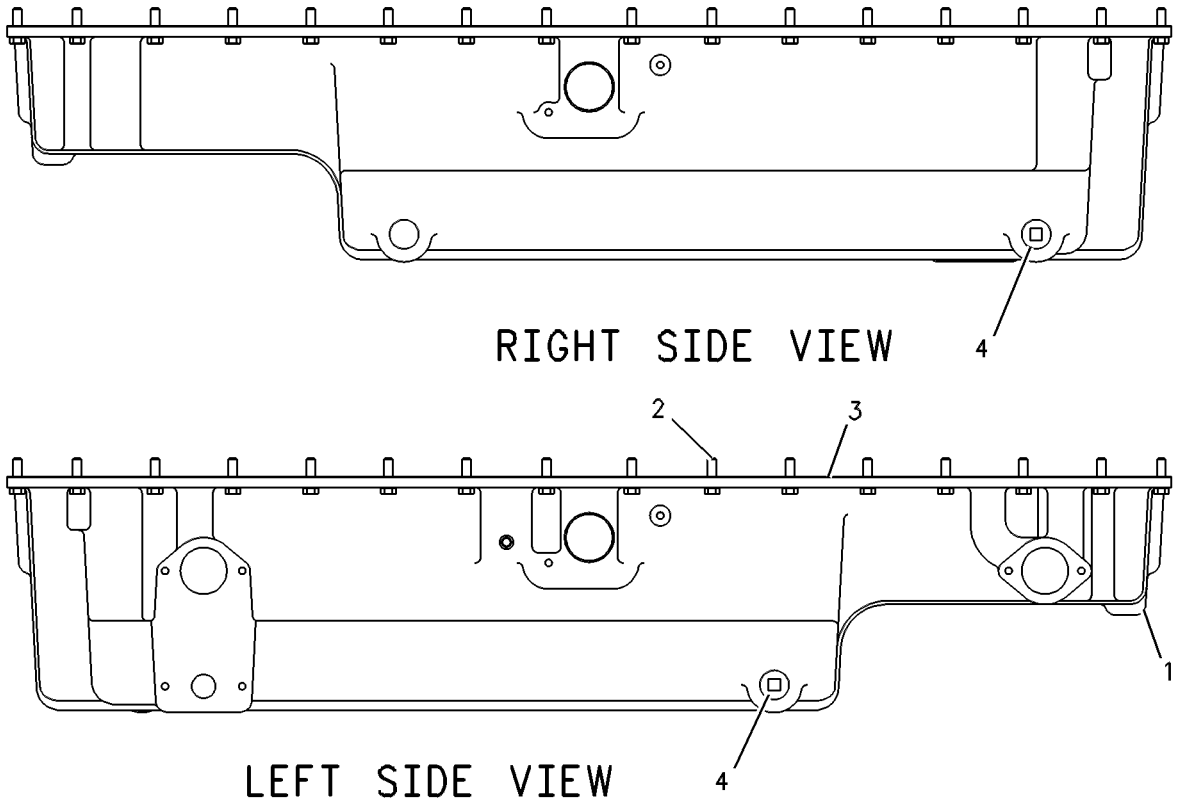

GRAPHIC #1 g00255491

109-2823 PISTON & ROD GP

S/N: 80M1-3973
15.5:1 RATIO
PART OF 123-0200 ENGINE AR

SMCS-1214, 1215, 1218, 1219, 1225 **i01277361**

NOTE	REF NO	GRAPHIC REF	PART NUMBER	QTY	PART NAME 1 2 3 4 5 6 (PRODUCT LEVEL)	SEE PAGE
	1	1	**172-3280**	1	BODY AS-PISTON	
	2	1	**8N-1608**	1	PIN-PISTON	
	3	1	**7E-5665**	2	RETAINER-PIN	
	4	1	**160-8178**	1	ROD AS-CONNECTING	
		1	**4P-8495**	1	BEARING-SLEEVE	
	4A	1	**6N-8942**	2	BOLT-CONNECTING ROD	
	4B	1	**8L-3441**	2	NUT (9/16-18 THD)	
H	5	1	**9Y-9497**	1	BEARING-CONNECTING ROD (STANDARD)	
AJ		1	**4W-5702**	1	BEARING-CONNECTING ROD (.635MM US)	
AL		1	**4W-5703**	1	BEARING-CONNECTING ROD (1.27MM US)	
	6	1	**1W-9460**	1	RING-PISTON (TOP)	
	7	1	**2P-2817**	1	RING-PISTON (INTERMEDIATE)	
	8	1	**7N-7078**	1	RING-OIL	
	9	1	**150-1156**	1	BOLT-OIL JET	
	10	1	**168-4538**	1	TUBE AS-OIL JET	
					AVAILABLE REPAIR KIT(S):	
AH			**9Y-6188**		KIT-BEARING (STANDARD)	
AJ			**9Y-6189**		KIT-BEARING (.635MM US)	
AL			**9Y-6190**		KIT-BEARING (1.27MM US)	

A-NOT PART OF THIS GROUP
H-KIT INCLUDES SIX STANDARD BEARINGS MARKED H
J-KIT INCLUDES SIX .635MM US BEARINGS MARKED J
L-KIT INCLUDES SIX 1.27MM US BEARINGS MARKED L

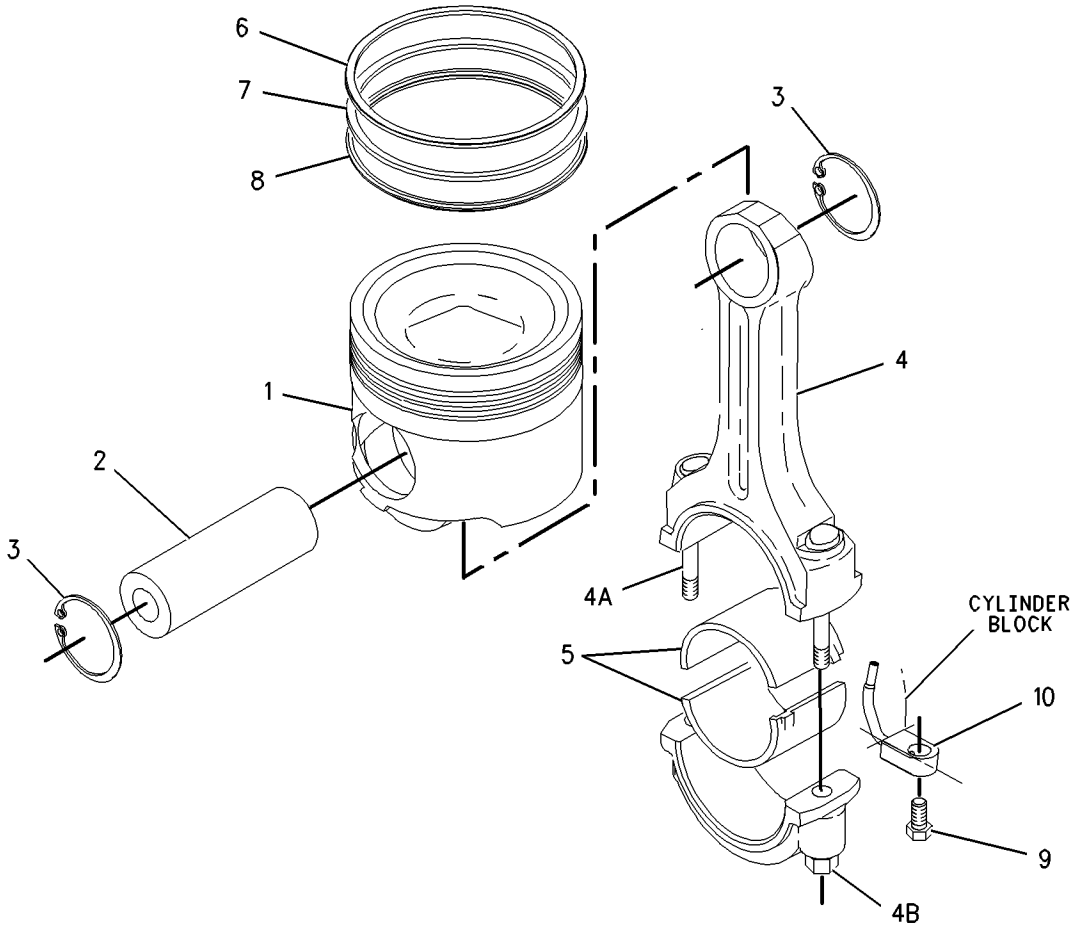

GRAPHIC #1 g00677624

BASIC ENGINE

192-8808 PISTON & ROD GP

S/N: 80M3974-UP

PART OF 123-0200 ENGINE AR

SMCS-1214, 1215, 1218, 1219, 1225 **i01404352**

NOTE	REF NO	GRAPHIC REF	PART NUMBER	QTY	PART NAME 1 2 3 4 5 6 (PRODUCT LEVEL)	SEE PAGE
	1	1	**192-2208**	1	BODY AS-PISTON	
	2	1	**173-0148**	1	PIN-PISTON	
	3	1	**7E-5665**	2	RETAINER-PIN	
	4	1	**160-8178**	1	ROD AS-CONNECTING	
	4A	1	**4P-8495**	1	BEARING-SLEEVE	
	4B	1	**8L-3441**	2	NUT (9/16-18 THD)	
	4C	1	**6N-8942**	2	BOLT-CONNECTING ROD	
	5	1	**9Y-9497**	1	BEARING-CONNECTING ROD (STANDARD)	
A		1	**4W-5702**	1	BEARING-CONNECTING ROD (.635MM US)	
A		1	**4W-5703**	1	BEARING-CONNECTING ROD (1.27MM US)	
	6	1	**177-7496**	1	RING-PISTON (TOP)	
	7	1	**192-8807**	1	RING-INTERMEDIATE	
	8	1	**187-1507**	1	RING-PISTON (OIL CONTROL)	
	9	1	**173-0147**	1	TUBE AS-OIL JET	
	10	1	**150-1156**	1	BOLT-OIL JET	

A-NOT PART OF THIS GROUP

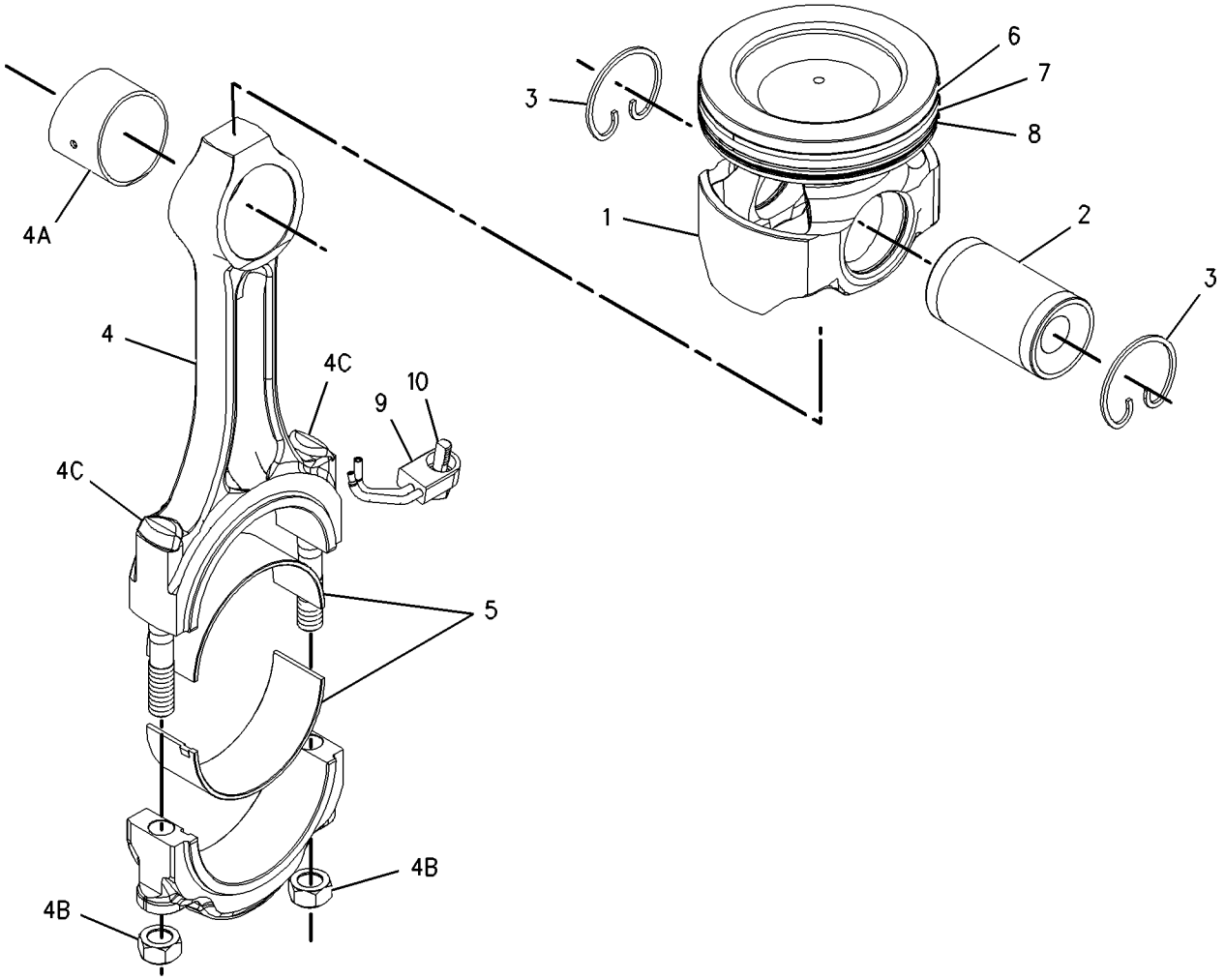

GRAPHIC #1 g00746941

127-3512 PLUG GP-CYLINDER BLOCK

S/N: 8OM1-UP

PART OF 123-0200 ENGINE AR

SMCS-1201 **i00117132**

NOTE	REF NO	GRAPHIC REF	PART NUMBER	QTY	PART NAME 1 2 3 4 5 6 (PRODUCT LEVEL)	SEE PAGE
	1	1	**9S-4190**	6	PLUG-O-RING (7/16-20 THD)	
	2	1	**6V-4589**	6	SEAL-O-RING (19.18MM ID)	
	3	1	**7W-6534**	4	PLUG-PIPE (3/8-18 NPTF THD)	
	4	1	**8T-6757**	1	PLUG-PIPE (1/8-27 NPTF THD)	

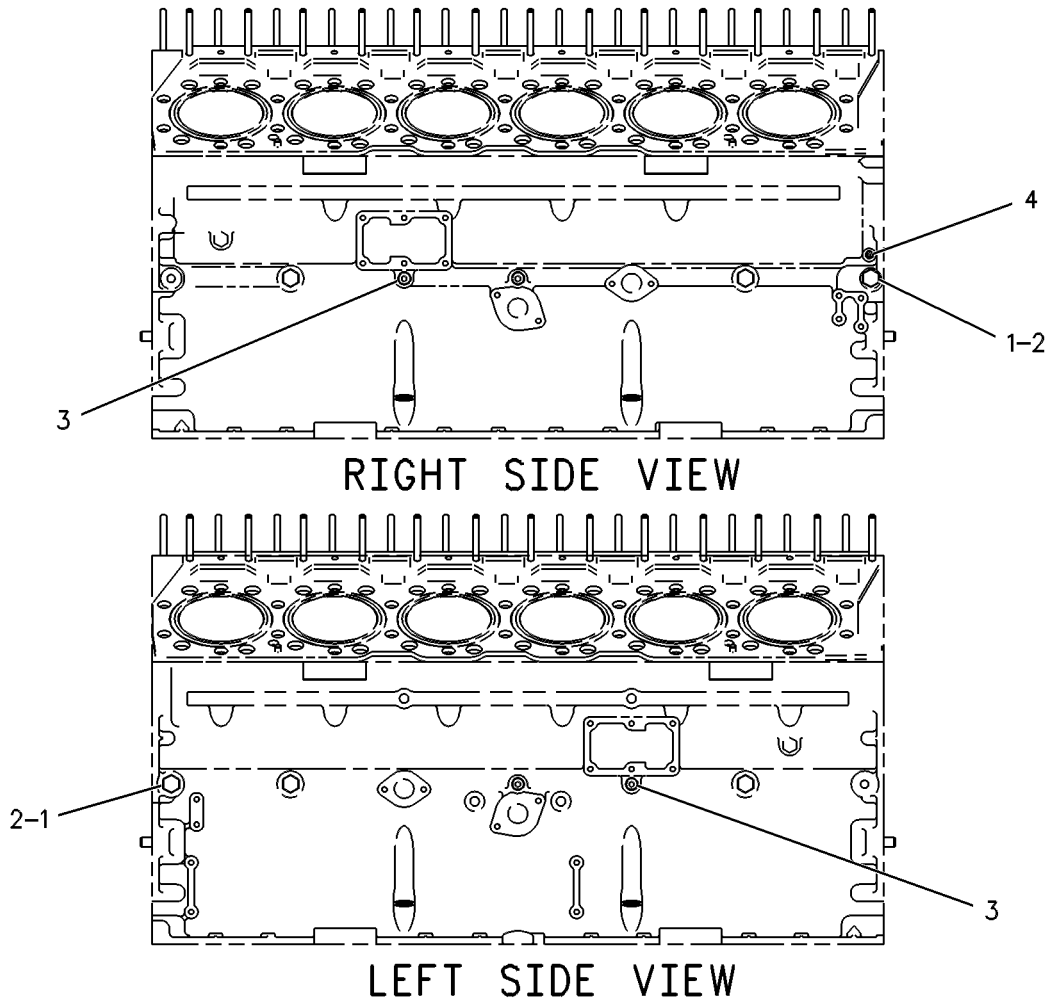

GRAPHIC #1 g00086446

124-4456 PLUG GP-CYLINDER HEAD

S/N: 80M1-UP

PART OF 123-0200 ENGINE AR

SMCS-1100 **i01446352**

NOTE	REF NO	GRAPHIC REF	PART NUMBER	QTY	PART NAME 1 2 3 4 5 6 (PRODUCT LEVEL)	SEE PAGE
	1	1	**8T-6762**	6	PLUG-PIPE	
	2	1	**7X-7731**	2	PLUG-PIPE	
	3	1	**5P-0063**	3	PLUG-CUP (1.764 IN OD)	
	4	1	**4N-0932**	2	PLUG-CUP (57.53MM AVG OD)	

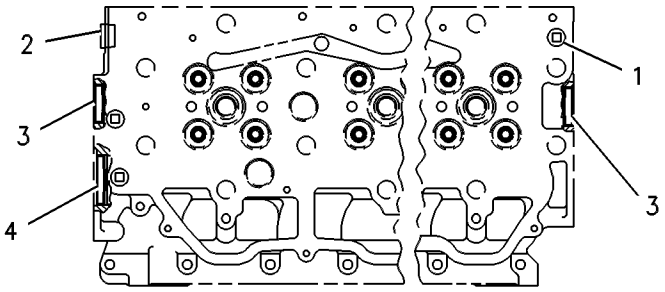

LEFT SIDE HEAD

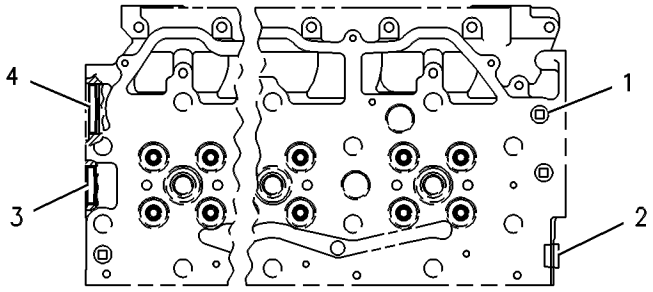

RIGHT SIDE HEAD

GRAPHIC #1 g00086474

6I-3815 PULLEY GP-CRANKSHAFT—HIGH AMBIENT

S/N: 8OM1-UP

PART OF 123-0200 ENGINE AR

SMCS-1205 **i01434484**

NOTE	REF NO	GRAPHIC REF	PART NUMBER	QTY	PART NAME 1 2 3 4 5 6 (PRODUCT LEVEL)	SEE PAGE
	1	1	**7X-0331**	4	BOLT (1/2-13X4.25 IN)	
	2	1	**126-6908**	4	PULLEY-CRANKSHAFT	
	3	1	**6I-3814**	1	PULLEY-CRANKSHAFT (257.8MM OD)	
	4	1	**5P-1076**	4	WASHER-HARD (13.5X30X4MM THK)	

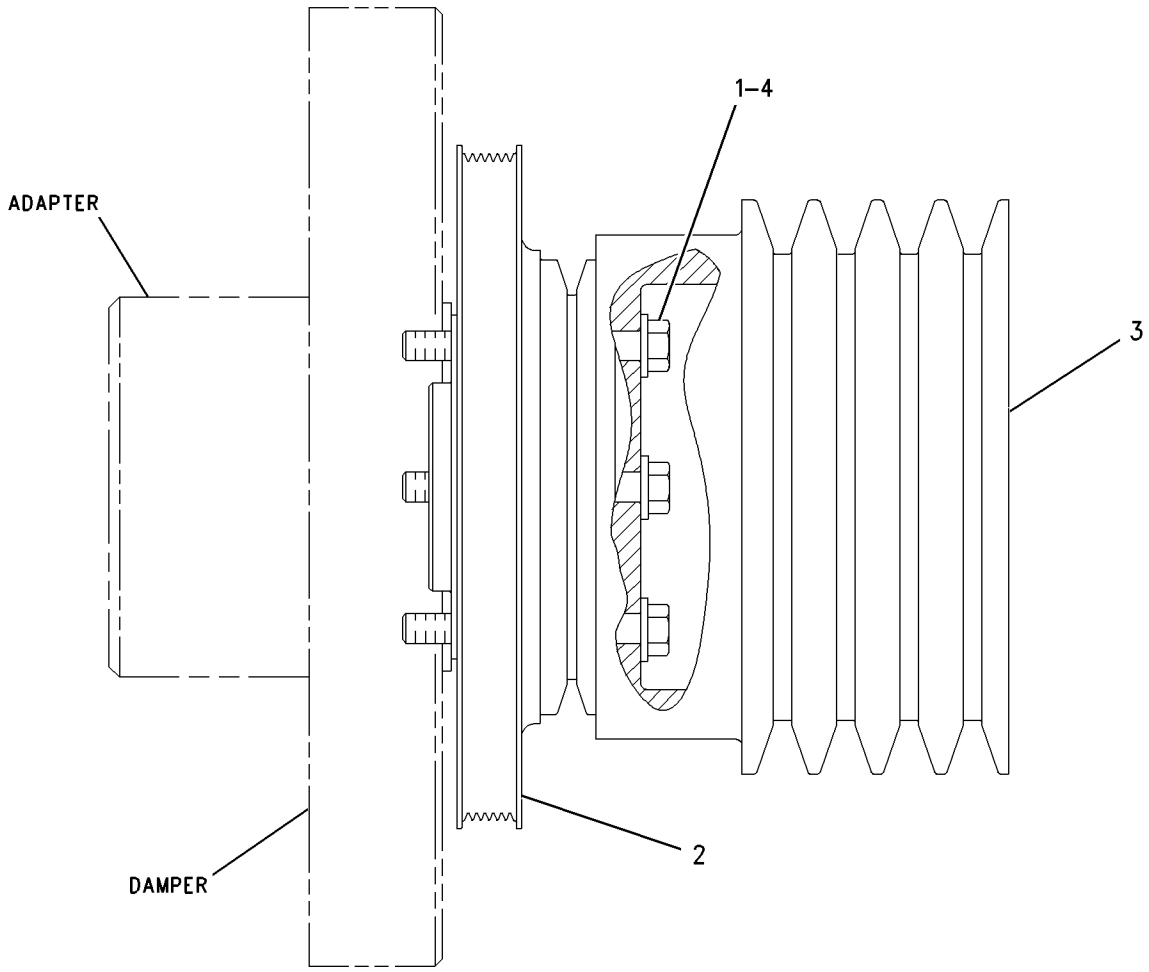

GRAPHIC #1 g00751793

107-1954 ROCKER ARM GP

S/N: 80M1-UP

PART OF 108-1874 VALVE MECHANISM GP

SMCS-1102, 1123 **i01390323**

NOTE	REF NO	GRAPHIC REF	PART NUMBER	QTY	PART NAME 1 2 3 4 5 6 (PRODUCT LEVEL)	SEE PAGE
	1	1	**134-2263**	2	RING-RETAINING	
	2	1	**2N-7228**	2	WASHER (1X1.5X.03 IN THK)	
	3	1	**4N-5614**	2	ROCKER ARM AS	
	4	1	**108-5603**	2	SCREW-ROCKER ADJUSTMENT	
	5	1	**9L-7712**	2	NUT (3/8-24 THD)	
	6	1	**122-0163**	1	BRACKET-SHAFT	
	7	1	**6V-3536**	2	DOWEL	
	8	1	**135-3225**	1	SHAFT AS	

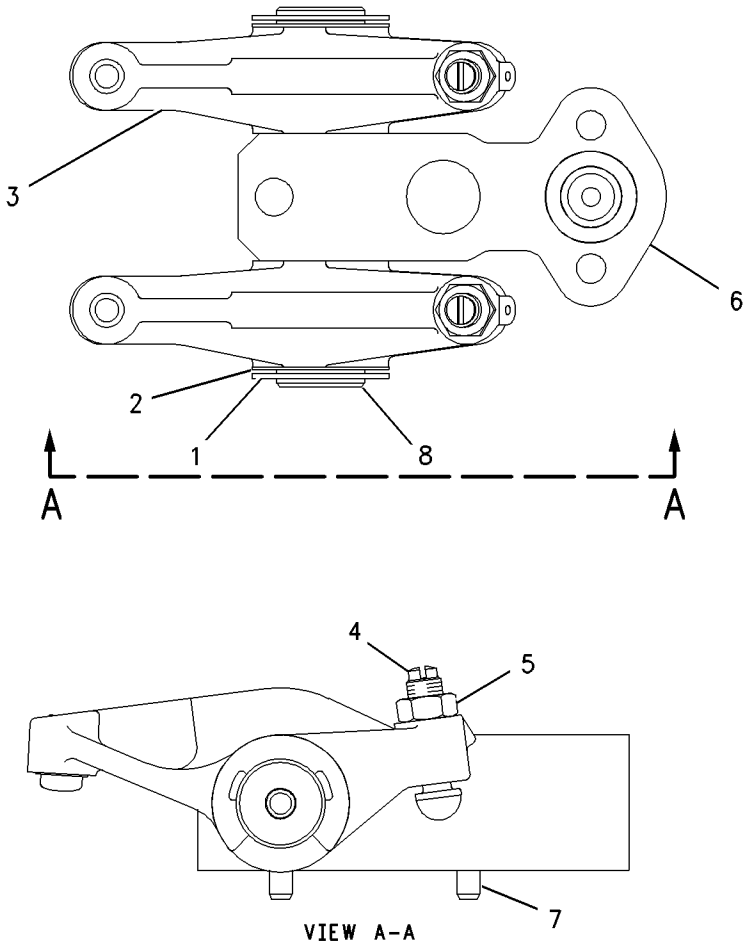

GRAPHIC #1 g00678432

6I-1387 SUPPORT GP-ENGINE

S/N: 8OM1-UP

PART OF 123-0200 ENGINE AR

SMCS-1152, 1153, 1154 **i00107508**

NOTE	REF NO	GRAPHIC REF	PART NUMBER	QTY	PART NAME 1 2 3 4 5 6 (PRODUCT LEVEL)	SEE PAGE
	1	1	**9Y-7770**	1	SUPPORT-ENGINE	
		1	**4N-0683**	2	DOWEL	
	2	1	**8F-8804**	2	BOLT (1/2-13X5.75IN)	
	3	1	**5P-8245**	8	WASHER (3MM THK)	
	4	1	**9X-8878**	6	BOLT	
	5	1	**6N-9365**	1	BRACKET	

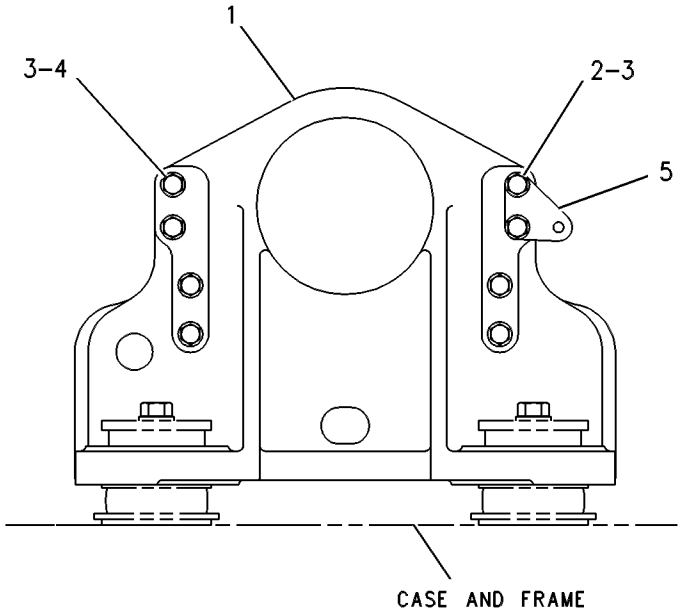

GRAPHIC #1 g00086602

BASIC ENGINE

8X-9089 SUPPORT GP-ENGINE

S/N: 7KK1-UP

PART OF 6I-0673 INSTALLATION AR-ENGINE

SMCS-1152, 1153, 1154 **i00107604**

NOTE	REF NO	GRAPHIC REF	PART NUMBER	QTY	PART NAME 1 2 3 4 5 6 (PRODUCT LEVEL)	SEE PAGE
	1	1	**8X-9160**	2	SUPPORT AS	
					(EACH INCLUDES)	
		1	**8X-9161**	1	PLATE	
	2	1	**2A-1538**	12	BOLT (3/4-10X2.25IN)	
	3	1	**5P-8248**	12	WASHER-HARD (3.5MM THK)	
	4	1	**6Y-9980**	4	MOUNT AS	
	5	1	**9W-7385**	4	SLEEVE	
	6	1	**9W-7388**	4	WASHER (12.0MM THK)	
M	7	1	**8T-0670**	4	BOLT (M24X3.0X140MM)	
	8	1	**6V-8237**	4	WASHER (4MM THK)	

M-METRIC PART

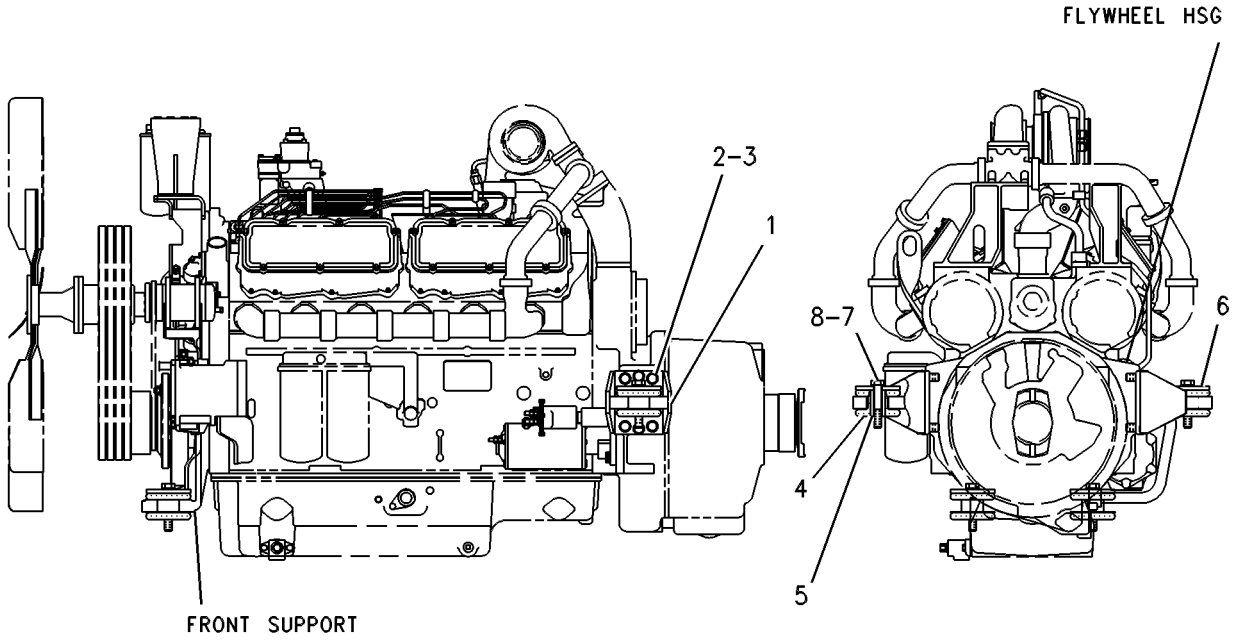

GRAPHIC #1 g00086644

BASIC ENGINE

108-1874 VALVE MECHANISM GP

S/N: 8OM1-UP

PART OF 123-0200 ENGINE AR

SMCS-1102, 1121, 1123, 1208, 1209 **i00105179**

NOTE	REF NO	GRAPHIC REF	PART NUMBER	QTY	PART NAME 1 2 3 4 5 6 (PRODUCT LEVEL)	SEE PAGE
Y	1	1	*107-1954*	12	ROCKER ARM GP	66
	2	1	**100-6889**	24	BRIDGE-VALVE	
	3	1	**2P-9845**	12	BOLT (3/4-16X11.5IN)	
		1	**5H-1504**	12	WASHER-HARD (5MM THK)	
	4	1	**4W-5998**	24	PUSHROD AS	
	5	1	**6N-6872**	24	SPRING-GUIDE	
	6	1	**101-7788**	24	LIFTER AS-VALVE	
	7	1	**5M-2894**	12	WASHER (2.5MM THK)	
	8	1	**0L-1143**	12	BOLT (3/8-16X2.5IN)	
	9	1	**116-7220**	12	SEAL-RECTANGULAR	

Y-SEPARATE ILLUSTRATION

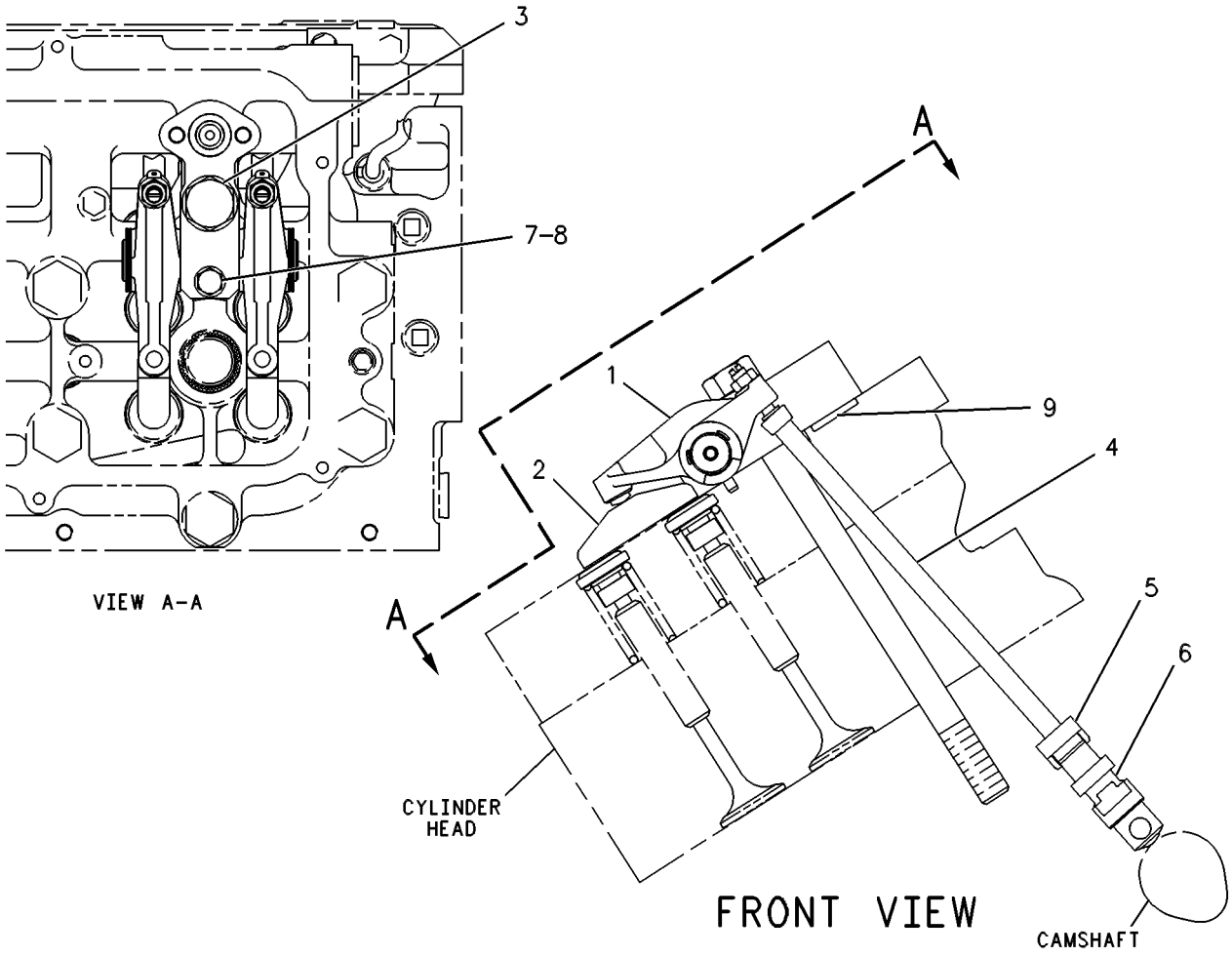

GRAPHIC #1 g00086438

119-8583 FASTENER GP-OIL PUMP MOUNTING

S/N: 80M1-UP

PART OF 123-0200 ENGINE AR

SMCS-1304 **i00105303**

NOTE	REF NO	GRAPHIC REF	PART NUMBER	QTY	PART NAME 1 2 3 4 5 6 (PRODUCT LEVEL)	SEE PAGE
	1	1	**0L-1143**	1	BOLT (3/8-16X2.5IN)	
	2	1	**5M-2894**	3	WASHER (2.5MM THK)	
	3	1	**0S-1619**	2	BOLT (3/8-16X3IN)	

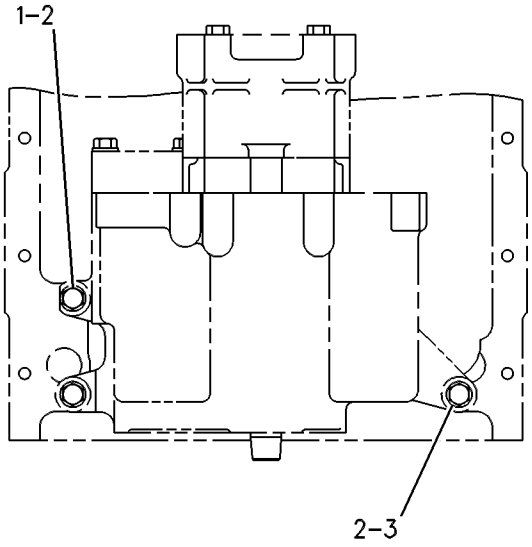

GRAPHIC #1 g00086534

LUBRICATION SYSTEM

130-5759 FILLER GP-ENGINE OIL

S/N: 80M1-UP

PART OF 123-0200 ENGINE AR

SMCS-1316 **i00771380**

NOTE	REF NO	GRAPHIC REF	PART NUMBER	QTY	PART NAME 1 2 3 4 5 6 (PRODUCT LEVEL)	SEE PAGE
	1	1	**6I-1426**	1	TUBE AS	
	2	1	**2N-8109**	1	CLAMP	
	3	1	**6V-3831**	1	SEAL-O-RING (53.34MM ID)	
	4	1	**3F-6156**	1	HOOK	
	5	1	**6N-2206**	1	CAP AS-FILLER	

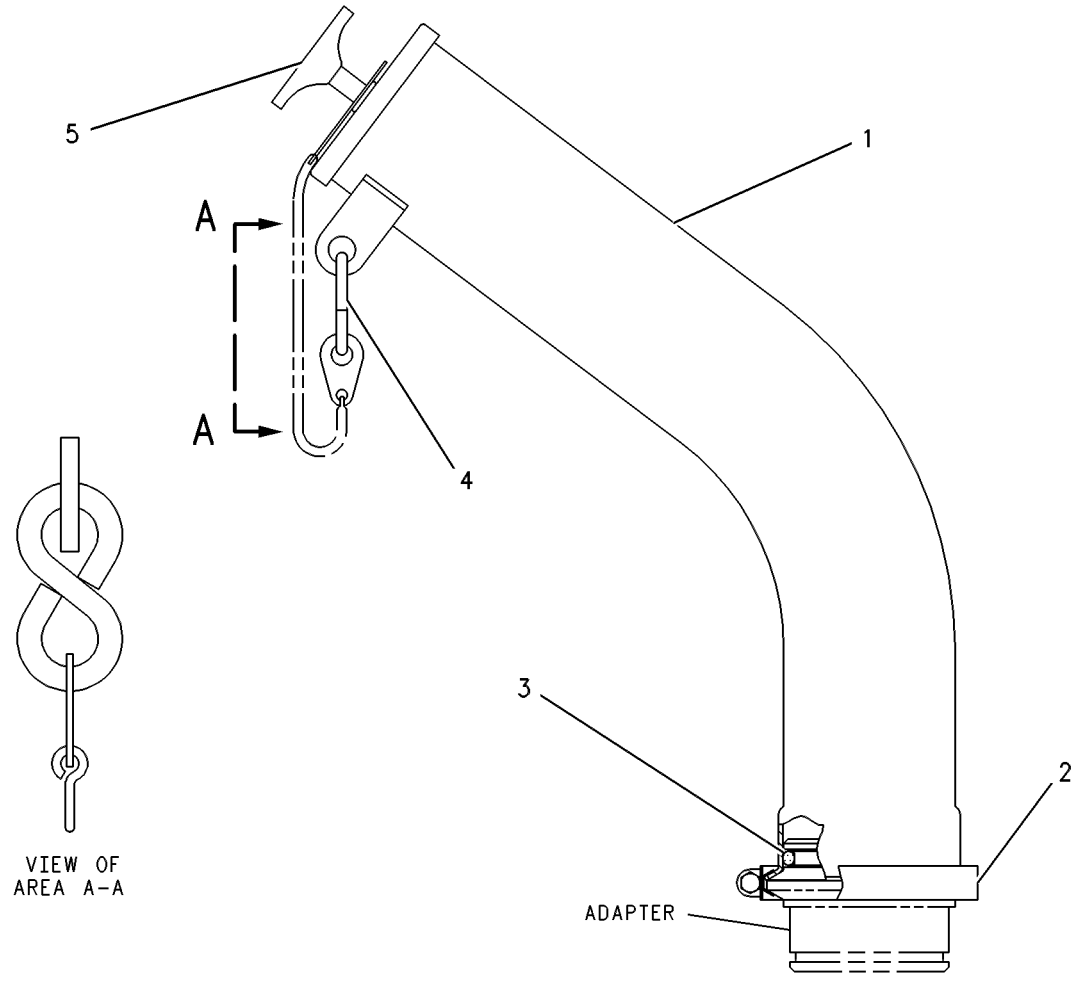

GRAPHIC #1 g00086634

131-6206 FILTER GP-ENGINE OIL

S/N: 80M1-UP

PART OF 123-0200 ENGINE AR

SMCS-1308 **i00698277**

NOTE	REF NO	GRAPHIC REF	PART NUMBER	QTY	PART NAME 1 2 3 4 5 6 (PRODUCT LEVEL)	SEE PAGE
	1	1	**9Y-2764**	1	BASE AS-OIL FILTER	
		1	**2M-9780**	1	SEAL-O-RING (19.18MM ID)	
		1	**2W-8225**	2	STUD-TAPERLOCK	
		1	**7M-8485**	2	SEAL-O-RING (29.74MM ID)	
		1	**9S-4190**	1	PLUG-O-RING (7/16-20 THD)	
		1	**9S-9334**	2	PLUG (1 5/16-12 THD)	
	2	1	**6V-5048**	1	SEAL-O-RING (8.92MM ID)	
	3	1	**8C-3446**	1	VALVE-FLUID SAMPLING	
	4	1	**8C-3445**	1	CAP-DUST	
	5	1	**4B-4161**	5	SCREW-DRIVE (NO.6X3/8)	
	6	1	**061-8561**	2	SEAL-O-RING (40.87MM ID)	
	7	1	**0L-2070**	5	BOLT (3/8-16X2.25IN)	
	8	1	**1R-0716**	2	FILTER AS-ENGINE OIL	
	9	1	**2W-0219**	1	SHIELD	

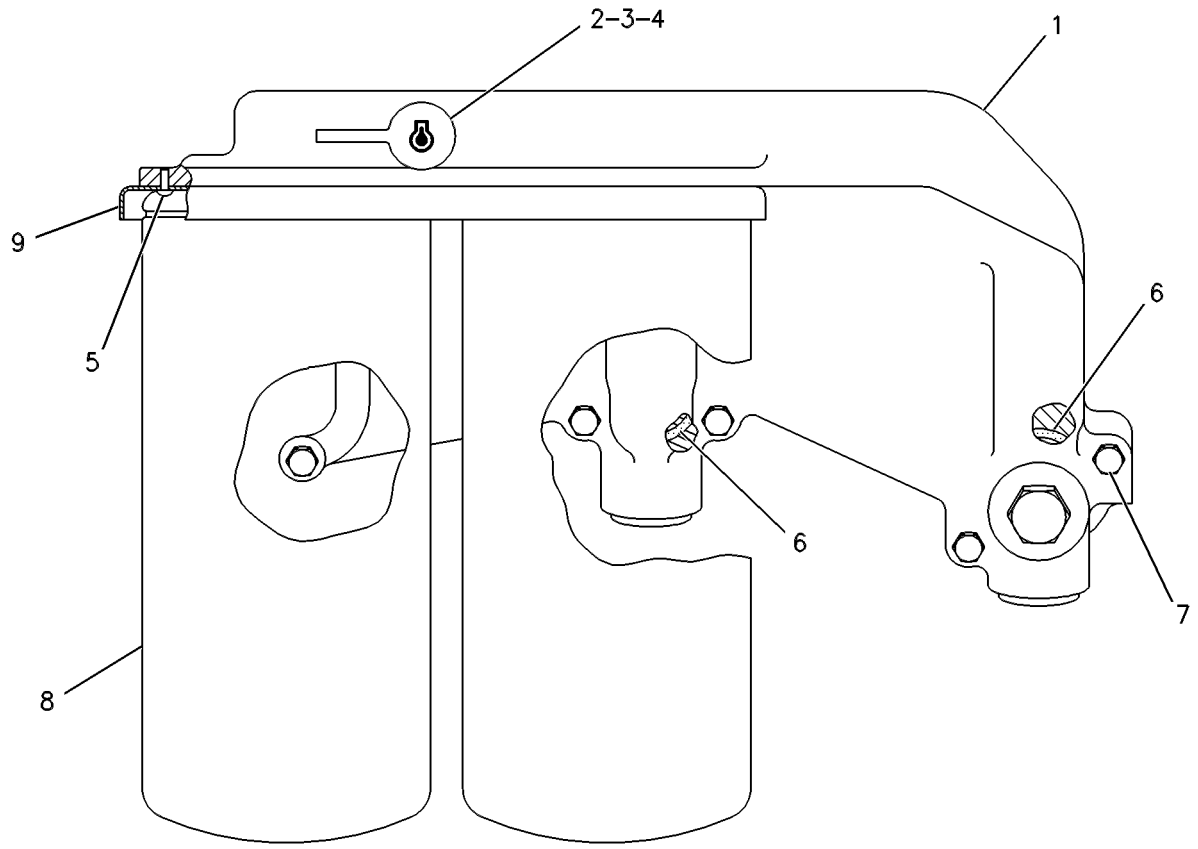

GRAPHIC #1 g00255489

117-3147 FUMES DISPOSAL GP

S/N: 7KK1-39

PART OF 6I-0673 INSTALLATION AR-ENGINE

SMCS-1317 **i00107395**

NOTE	REF NO	GRAPHIC REF	PART NUMBER	QTY	PART NAME 1 2 3 4 5 6 (PRODUCT LEVEL)	SEE PAGE
	1	1	**9M-2904**	4	CLAMP-HOSE	
	2	1	**4N-5962**	2	HOSE	
	3	1	**132-1114**	1	TUBE	
	4	1	**132-1113**	1	TUBE	
	5	1	**117-3148**	1	BRACKET	
	6	1	**8C-3121**	2	BOLT (5/16-18X1.50IN)	
	7	1	**8T-4224**	2	WASHER-HARD (2MM THK)	
	8	1	**2S-2053**	4	CLIP (34.92MM ID)	
	9	1	**5S-7379**	4	BOLT (3/8-16X.875IN)	
	10	1	**6V-8801**	2	NUT (3/8-16 THD)	
	11	1	**8T-4896**	8	WASHER-HARD (2.5MM THK)	
	12	1	**1W-5278**	1	BRACKET AS	
		1	**1F-0750**	2	NUT-WELD (3/8-16 THD)	
	13	1	**4L-9337**	2	BOLT (3/8-16X1.50IN)	

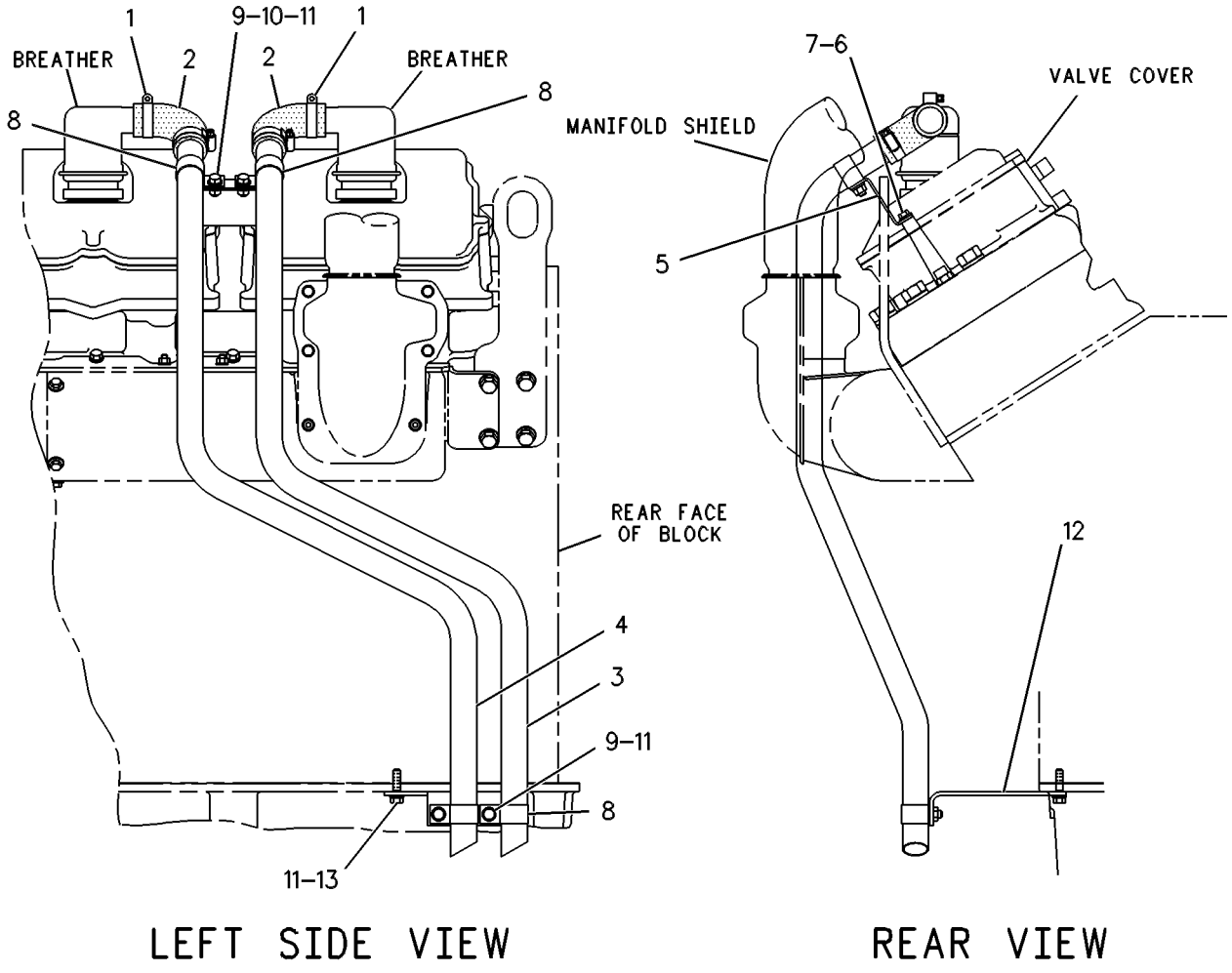

GRAPHIC #1 g00087170

LUBRICATION SYSTEM

140-3144 FUMES DISPOSAL GP

S/N: 7KK40-UP

PART OF 6I-0673 INSTALLATION AR-ENGINE

SMCS-1317 **i00664652**

NOTE	REF NO	GRAPHIC REF	PART NUMBER	QTY	PART NAME 1 2 3 4 5 6 (PRODUCT LEVEL)	SEE PAGE
	1	1	**9M-2904**	6	CLAMP-HOSE	
	2	1	*124-3069*	2	HOSE	
	3	1	**140-3141**	1	BRACKET AS	
		1	**1F-0750**	1	NUT-WELD (3/8-16 THD)	
	4	1	**140-3142**	1	BRACKET AS	
		1	**1F-0750**	1	NUT-WELD (3/8-16 THD)	
	5	1	**140-3143**	1	TUBE AS	
	6	1	**2S-7010**	2	CLIP	
	7	1	**4L-9337**	2	BOLT (3/8-16X1.50IN)	
	8	1	**5M-3062**	2	BOLT (3/8-16X.750IN)	
	9	1	**8C-3121**	2	BOLT (5/16-18X1.50IN)	
	10	1	**8T-4224**	2	WASHER-HARD (2MM THK)	
	11	1	**8T-4896**	4	WASHER-HARD (2.5MM THK)	
E	12	1	**5P-1255**		HOSE (46CM)	

E-ORDER BY THE CENTIMETER

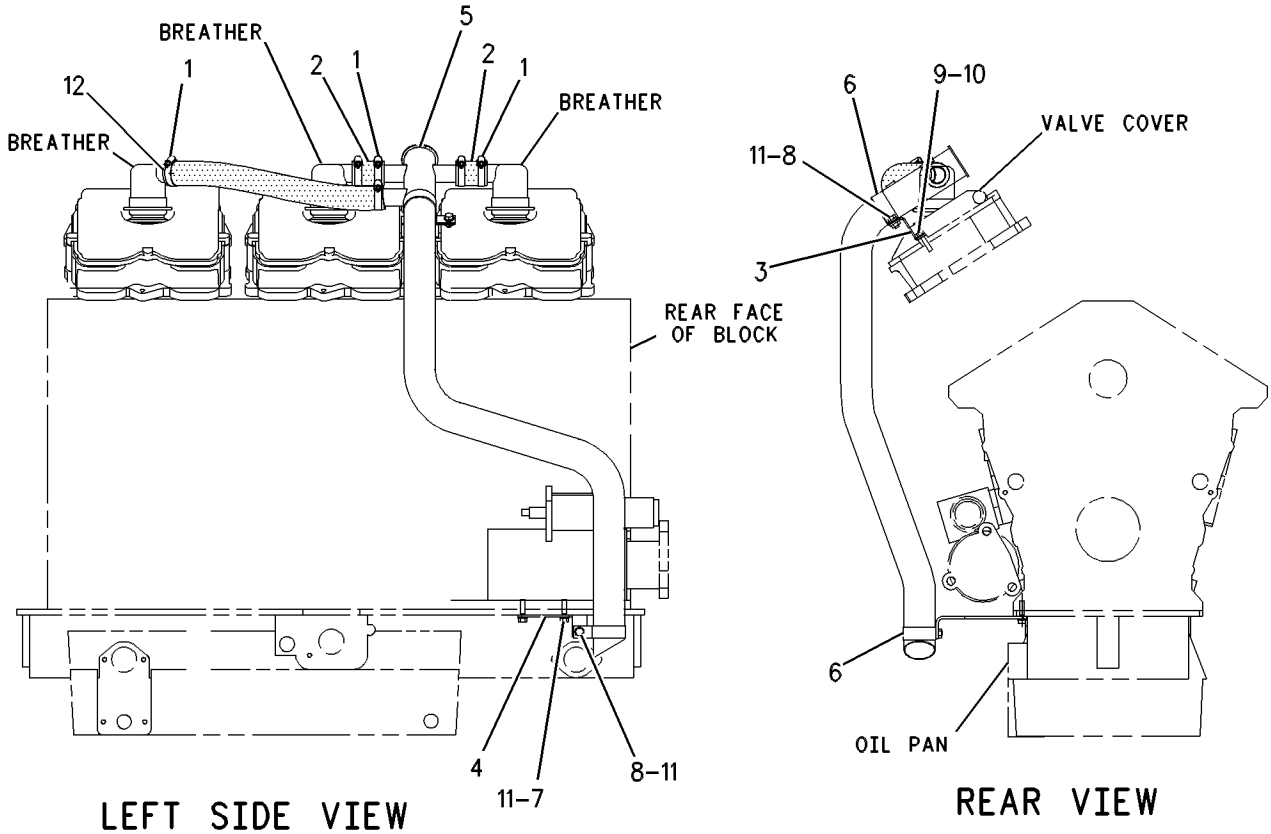

GRAPHIC #1 g00294886

130-5756 GAUGE GP-OIL LEVEL (DIPSTICK)

S/N: 8OM1-UP

PART OF 123-0200 ENGINE AR

SMCS-1326 **i01193141**

NOTE	REF NO	GRAPHIC REF	PART NUMBER	QTY	PART NAME 1 2 3 4 5 6 (PRODUCT LEVEL)	SEE PAGE
	1	1	**165-6170**	3	PLUG	
					(USE TO PLUG OPTIONAL DIPSTICK LOCATIONS)	
	2	1	**5M-2894**	2	WASHER (2.5MM THK)	
	3	1	**9S-8752**	1	NUT (3/8-16 THD)	
	4	1	**0L-1351**	1	BOLT (3/8-16X.875IN)	
	5	1	**5P-9299**	1	CLIP (12.7MM ID)	
	6	1	**118-5068**	1	SEAL-O-RING (15.54MM ID)	
	7	1	**133-3524**	1	GUIDE AS	
	8	1	**130-5758**	1	GAUGE AS-OIL LEVEL (DIPSTICK)	
	9	1	**2W-0534**	1	BRACKET	

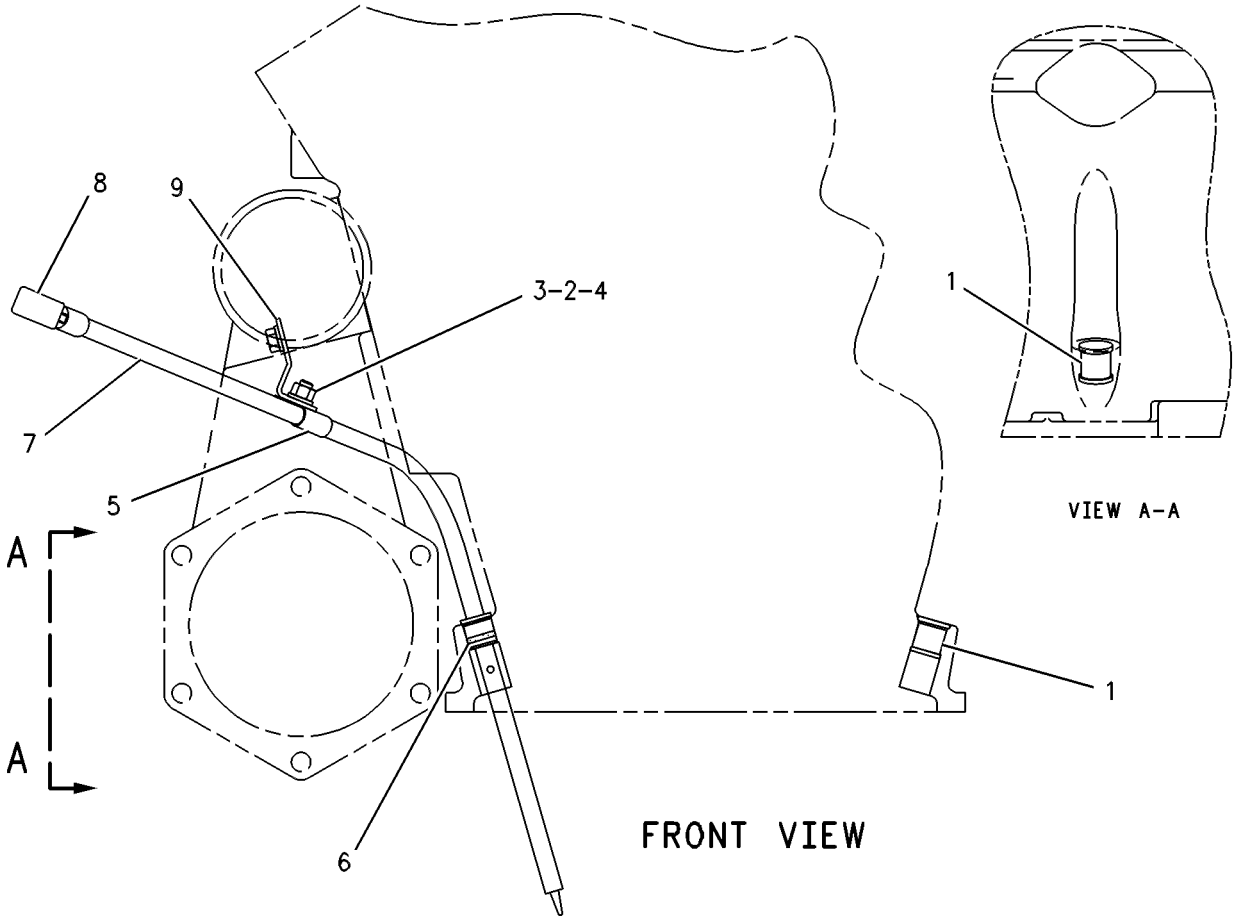

GRAPHIC #1 g00086626

LUBRICATION SYSTEM

130-5475 LINES GP-ENGINE OIL

S/N: 80M1-UP

PART OF 123-0200 ENGINE AR

SMCS-1307 **i00107404**

NOTE	REF NO	GRAPHIC REF	PART NUMBER	QTY	PART NAME 1 2 3 4 5 6 (PRODUCT LEVEL)	SEE PAGE
	1	1	**9L-6842**	1	TUBE AS	
	2	1	**6V-3830**	2	SEAL-O-RING (34.29MM ID)	
	3	1	**116-2698**	1	TUBE AS	
	4	1	**109-0078**	4	SEAL-O-RING (33.47MM ID)	
	5	1	**109-0072**	1	SEAL-O-RING (40.64MM ID)	
	6	1	**1W-4755**	1	ADAPTER	
	7	1	**0S-1590**	1	BOLT (3/8-16X2IN)	
	8	1	**8N-6739**	1	RING-RETAINING	
	9	1	**3H-9269**	1	SPACER	
	10	1	**0L-2070**	5	BOLT (3/8-16X2.25IN)	
	11	1	**5M-2894**	11	WASHER (2.5MM THK)	
	12	1	**0S-1594**	7	BOLT (3/8-16X1IN)	
	13	1	**6N-0448**	1	BODY-VALVE & INLET	
	14	1	**109-0076**	4	SEAL-O-RING (50.17MM ID)	
	15	1	**2P-3760**	1	GASKET	
	16	1	**4N-0933**	1	GASKET	
	17	1	**1A-2029**	4	BOLT (3/8-16X1.125IN)	
	18	1	**9Y-1650**	1	TUBE AS-OIL	
	19	1	**6N-0624**	1	TUBE AS-OUTLET	
	20	1	**6N-0452**	1	ELBOW-COOLER OUTLET	
	21	1	**2P-3761**	1	COVER	
	22	1	**4N-8150**	1	SPRING	
	23	1	**9M-0853**	1	PLUNGER-RELIEF VALVE	
	24	1	**0S-1591**	1	BOLT (3/8-16X1.5IN)	
	25	1	**0S-1571**	1	BOLT (3/8-16X1.75IN)	
	26	1	**129-5225**	1	SUPPORT-SUCTION BELL	
	27	1	**0L-1351**	3	BOLT (3/8-16X.875IN)	
	28	1	**8N-6740**	2	RETAINER	
	29	1	**8N-2104**	1	BELL AS-SUCTION	
		1	**9F-2978**	2	NUT-WELD (3/8-16 THD)	
	30	1	**4N-0913**	1	SCREEN AS-BELL	
	31	1	**4N-0914**	1	CLIP (SUCTION SCREEN)	
	32	1	**8M-9024**	1	WASHER-HARD (5MM THK)	
	33	1	**116-0765**	1	TUBE AS-OIL PUMP	
	34	1	**9S-4182**	1	PLUG (7/16-20 THD)	
	35	1	**6V-5048**	1	SEAL-O-RING (8.92MM ID)	

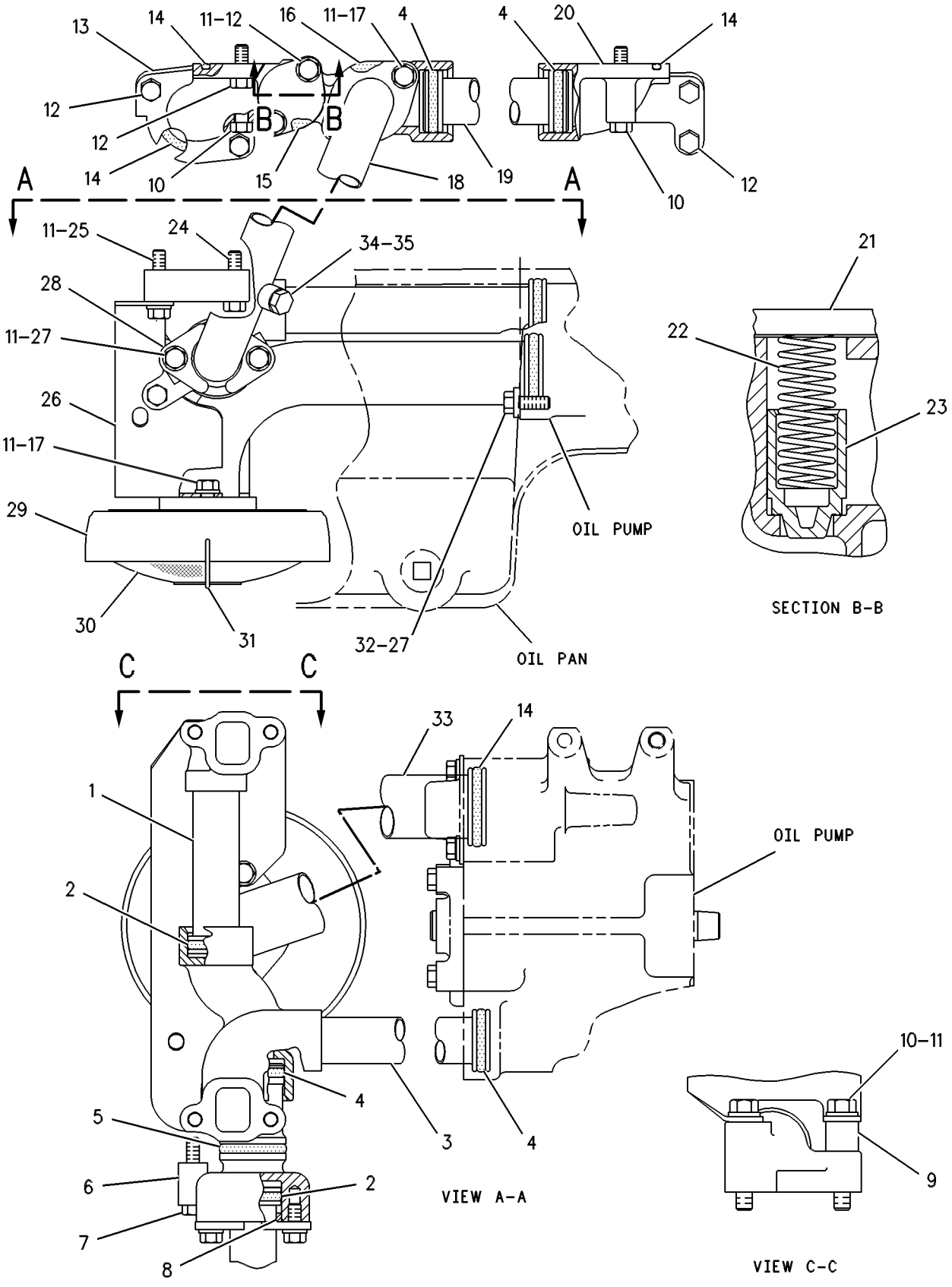

GRAPHIC #1

g00086624

LUBRICATION SYSTEM

130-5763 LINES GP-TURBOCHARGER OIL

S/N: 80M1-UP

PART OF 123-0200 ENGINE AR

SMCS-1052, 1307 **i00553690**

NOTE	REF NO	GRAPHIC REF	PART NUMBER	QTY	PART NAME 1 2 3 4 5 6 (PRODUCT LEVEL)	SEE PAGE
	1	1	**1A-2029**	4	BOLT (3/8-16X1.125IN)	
	2	1	**114-4427**	1	SEAL-O-RING (19.18MM ID)	
	3	1	**6V-9003**	1	ELBOW-45 DEGREE	
	4	1	**8L-2746**	2	SEAL-O-RING (15.6MM ID)	
	5	1	**128-6612**	1	TUBE AS-OIL SUPPLY	
	6	1	**6J-2245**	1	SEAL-O-RING (17.12MM ID)	
	7	1	**130-7291**	1	TUBE AS-OIL SUPPLY	
	8	1	**0L-1351**	3	BOLT (3/8-16X.875IN)	
	9	1	**0S-1571**	2	BOLT (3/8-16X1.75IN)	
	10	1	**4P-0692**	4	CLAMP AS	
					(EACH INCLUDES)	
		1	**108-1434**	1	GROMMET	
	11	1	**5P-7530**	1	SEAL-O-RING (28.24MM ID)	
	12	1	**0L-2070**	1	BOLT (3/8-16X2.25IN)	
	13	1	**9X-6458**	4	WASHER-HARD (3MM THK)	
	14	1	**130-7292**	1	TUBE AS-OIL DRAIN	
	15	1	**114-2687**	1	SEAL-O-RING (23.16MM ID)	
	16	1	**5M-2894**	4	WASHER (2.5MM THK)	
	17	1	**4W-2109**	2	RETAINER	
	18	1	**4W-1890**	1	FLANGE-DRAIN	
	19	1	**4N-6672**	1	GASKET	
	20	1	**4W-2110**	1	RING-RETAINER	
	21	1	**4S-6466**	1	SUPPORT-TUBE	
	22	1	**0L-1143**	1	BOLT (3/8-16X2.5IN)	
	23	1	**9S-8752**	1	NUT-FULL (3/8-16 THD)	

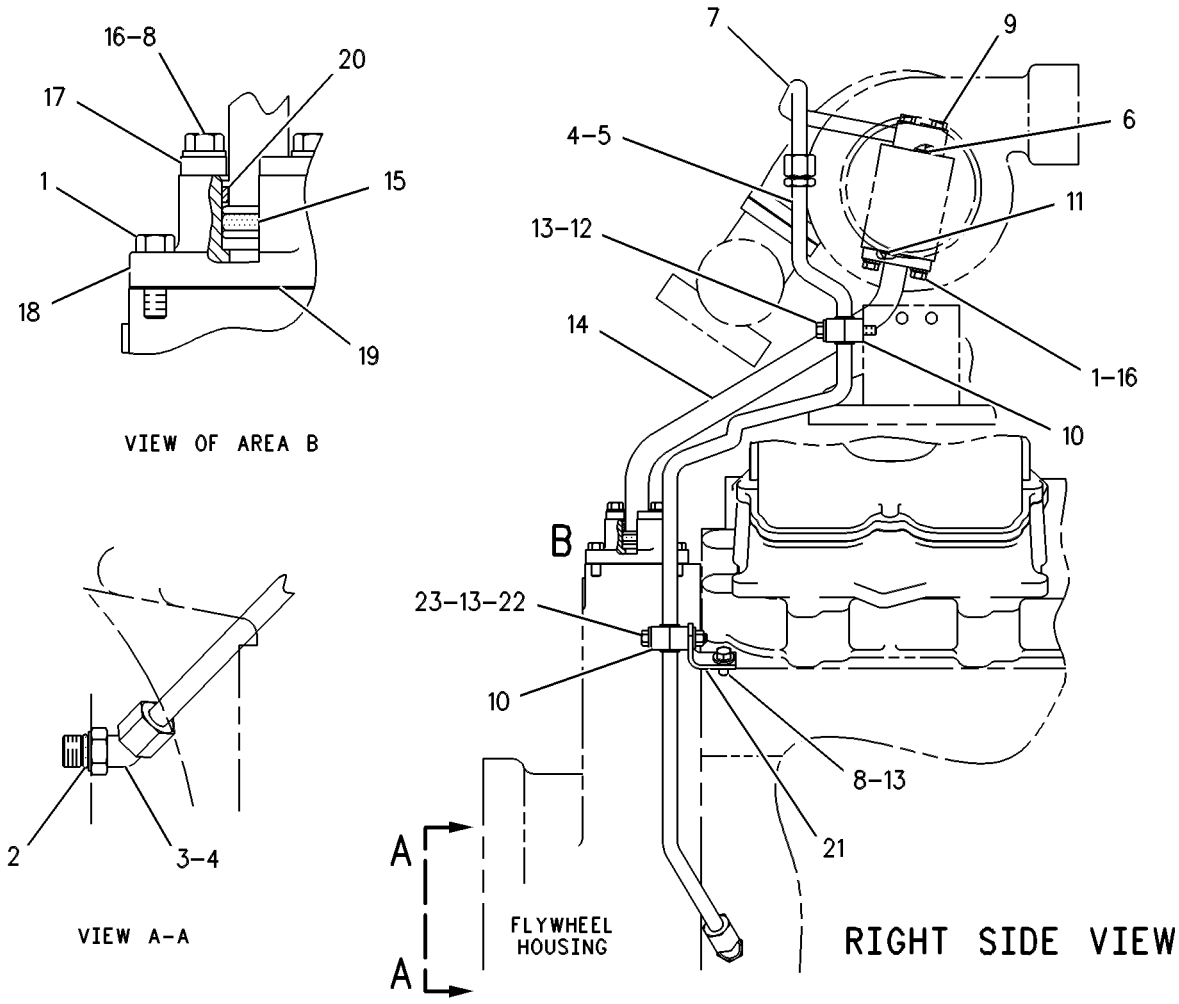

GRAPHIC #1

g00086638

LUBRICATION SYSTEM

128-2981 OIL CHANGE GP-HIGH SPEED

S/N: 80M1-UP

PART OF 123-0200 ENGINE AR

SMCS-1325 **i00553437**

NOTE	REF NO	GRAPHIC REF	PART NUMBER	QTY	PART NAME 1 2 3 4 5 6 (PRODUCT LEVEL)	SEE PAGE
	1	1	**1P-7919**	1	COUPLER-MALE	
	2	1	**6K-8420**	1	LOCKNUT (1-1/16-12 THD)	
	3	1	**9S-9272**	1	CAP AS	
I	4	1	**9W-3258**	1	HOSE AS	
	5	1	**2P-8511**	1	ELBOW-FLARED	

I-SEE HOSE FABRICATION GUIDE

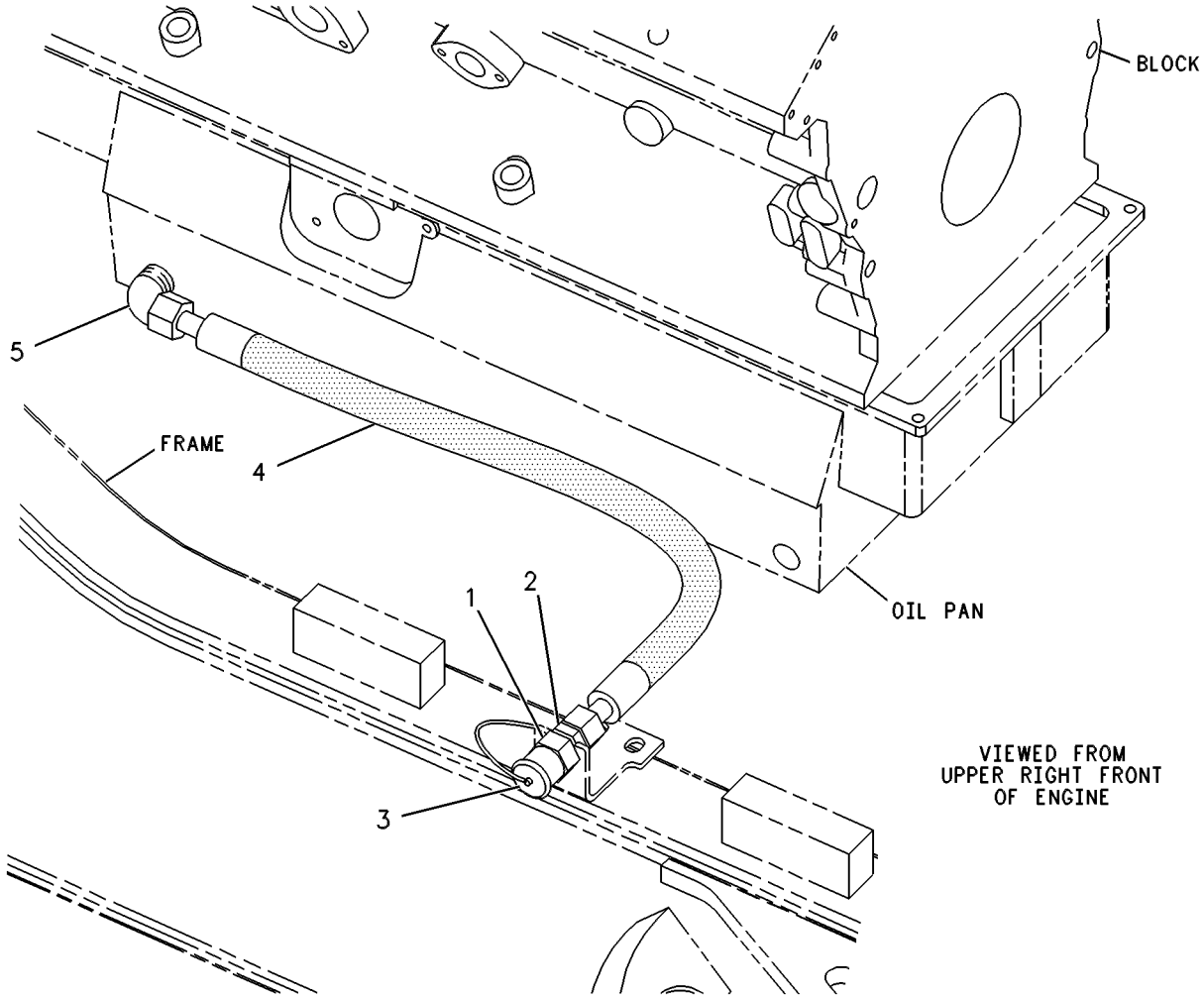

GRAPHIC #1 g00086916

MEMORANDA

LUBRICATION SYSTEM

156-4301 PRELUBRICATION AR-ENGINE

S/N: 7KK1-UP
AN ATTACHMENT

SMCS-1319, 1469 **i01113911**

NOTE	REF NO	GRAPHIC REF	PART NUMBER	QTY	PART NAME 1 2 3 4 5 6 (PRODUCT LEVEL)	SEE PAGE
	1	1	**7K-1181**	4	STRAP-CABLE (4.00IN DIA)	
	2	1	**123-5150**	1	VALVE-CHECK	
	3	1	**152-2691**	1	HARNESS AS	
	4	1	**152-7504**	1	CABLE AS	
		1	**1S-7251**	1	TERMINAL (FOR 1/2IN BOLT)	
		1	**1S-7252**	1	TERMINAL (FOR 3/8IN BOLT)	
BE		1	**5P-0747**		CABLE (00GA)	
I	5	1	**156-4302**	1	HOSE AS	
I	6	1	**156-4303**	1	HOSE AS	
Y	7	1	**123-8915**	1	PUMP GP-ELECTRIC DRIVE	576
	8	1	**2M-9780**	1	SEAL-O-RING (19.18MM ID)	
Y	9	1	**3E-0154**	1	SWITCH GP-MAGNETIC (PRELUBE)	311
	10	1	**3K-0360**	2	SEAL-O-RING (16.36MM ID)	
	11	1	**4M-5281**	4	BOLT (1/4-20X.750IN)	
	12	1	**6V-8629**	1	ELBOW-FACE SEAL (7/8-14 THD)	
	13	1	**6V-9746**	3	SEAL-O-RING (18.94MM ID)	
	14	1	**6V-9874**	1	CONNECTOR	
	15	1	**7J-9108**	1	SEAL-O-RING (15.72MM ID)	
	16	1	**8T-4121**	4	WASHER (2.5MM THK)	
M	17	1	**8T-4137**	4	BOLT (M10X1.50X20MM)	
M	18	1	**8T-4189**	1	BOLT (M8X1.25X20MM)	
M	19	1	**8T-4192**	1	BOLT (M12X1.75X25MM)	
	20	1	**8T-4205**	4	WASHER-HARD (2MM THK)	
	21	1	**8T-4223**	1	WASHER-HARD (3MM THK)	
	22	1	**8T-4224**	1	WASHER-HARD (2MM THK)	
	23	1	**9M-8406**	1	CLIP (15.8MM ID)	

B-USE AS REQUIRED
E-ORDER BY THE CENTIMETER
I-SEE HOSE FABRICATION GUIDE
M-METRIC PART
Y-SEPARATE ILLUSTRATION

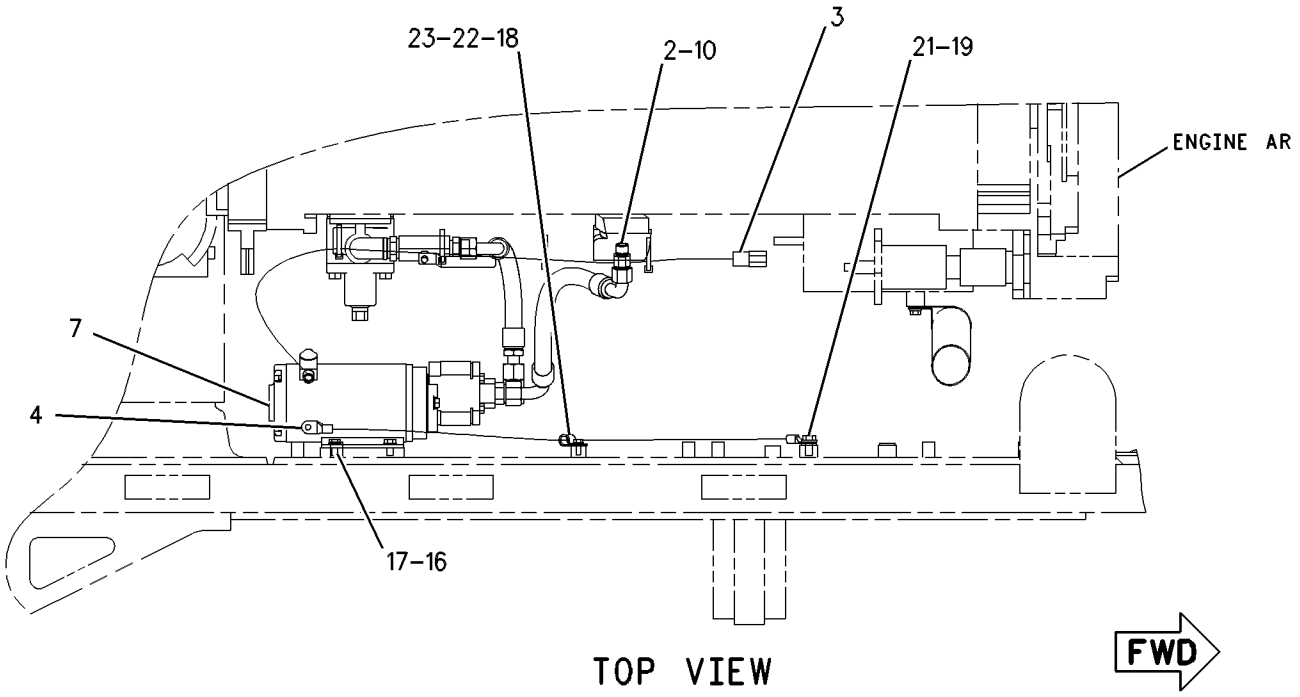

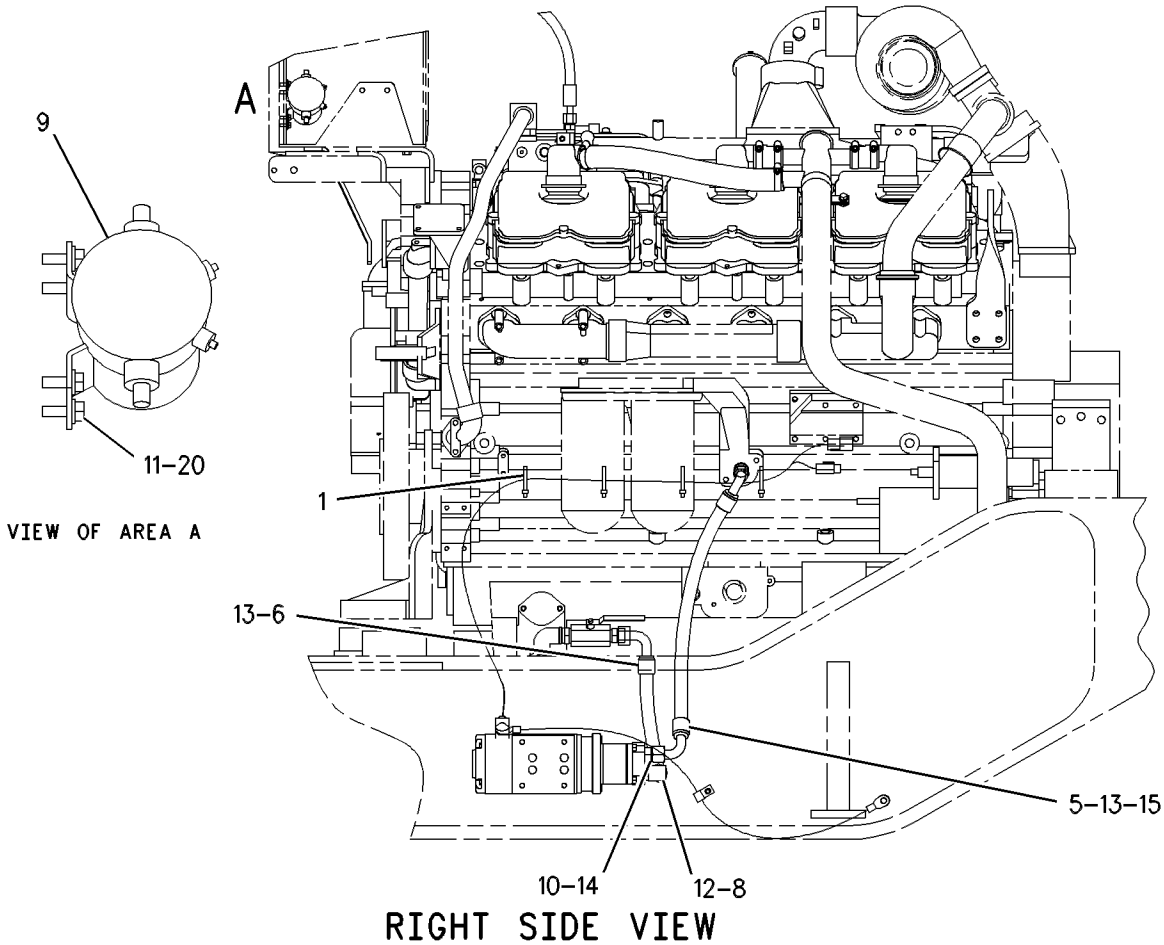

GRAPHIC #1

g00592358

LUBRICATION SYSTEM

116-1980 PUMP GP-ENGINE OIL

S/N: 80M1-UP

PART OF 123-0200 ENGINE AR

SMCS-1304, 1315 **i00107415**

NOTE	REF NO	GRAPHIC REF	PART NUMBER	QTY	PART NAME 1 2 3 4 5 6 (PRODUCT LEVEL)	SEE PAGE
	1	1	**116-1979**	1	BODY AS-OIL PUMP	
		1	**7N-2156**	2	BEARING-SLEEVE (27.013MM OD)	
		1	**8M-8489**	2	DOWEL (12.54MM DIA)	
	2	1	**105-1482**	1	SHAFT AS-PUMP DRIVE	
	3	1	**107-7373**	1	SHAFT AS-IDLER	
	4	1	**127-6356**	1	COVER AS-PUMP	
		1	**8S-6511**	2	BEARING-SLEEVE (.8775IN ID)	
	5	1	**2P-3205**	4	BOLT-WASHER HEAD	
	6	1	**7C-1512**	1	PLUNGER-RELIEF	
	7	1	**7C-1511**	1	RING-PLUNGER	
	8	1	**2S-2760**	1	SPRING	
	9	1	**1M-0644**	2	BOLT (3/8-16X2-1/4 IN)	
	10	1	**122-9943**	1	RETAINER	
	11	1	**5M-2894**	2	WASHER (2.5MM THK)	

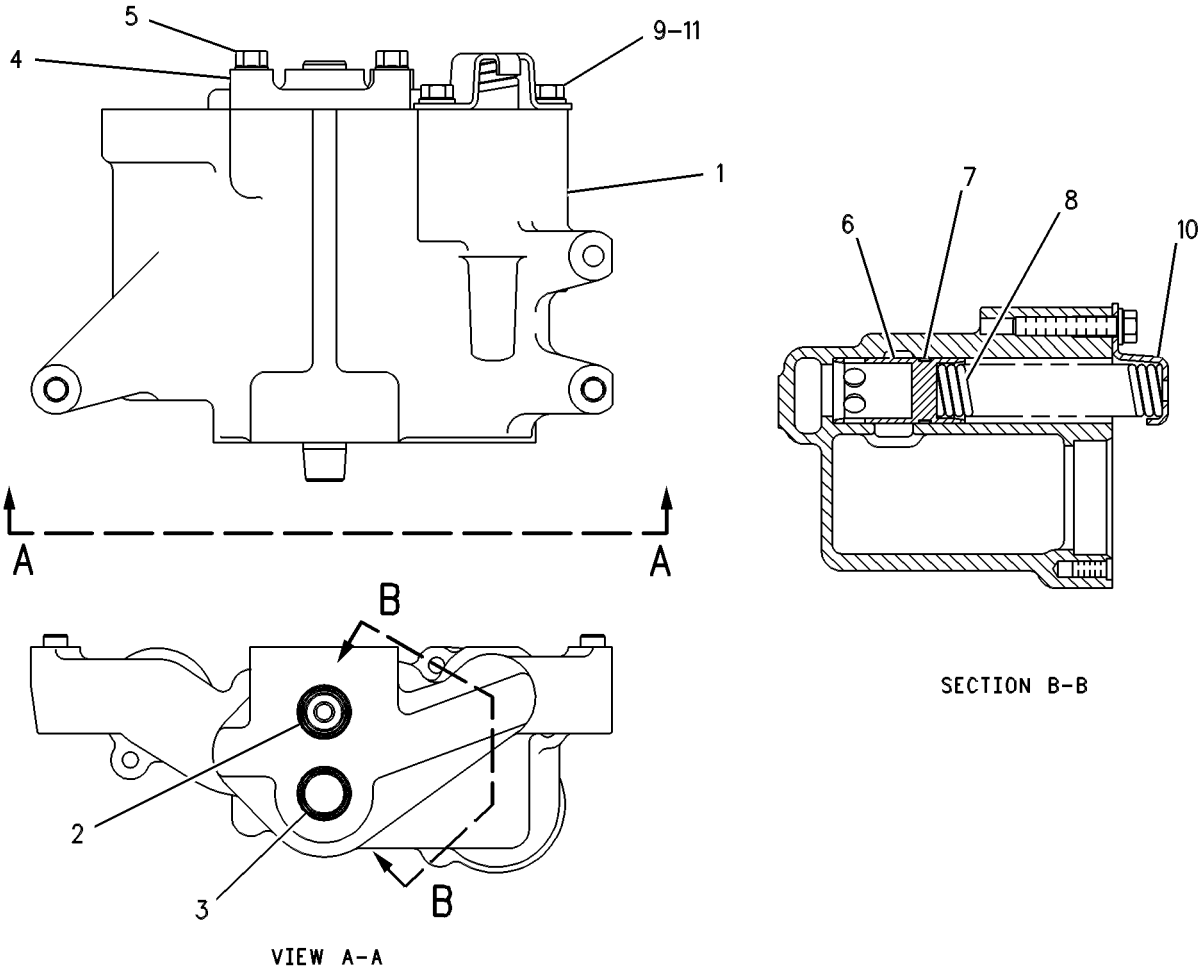

GRAPHIC #1 g00086528

4N-2388 COOLER GP-ENGINE OIL

S/N: 80M1-480

PART OF 123-0200 ENGINE AR

SMCS-1378 **i01361901**

NOTE	REF NO	GRAPHIC REF	PART NUMBER	QTY	PART NAME 1 2 3 4 5 6 (PRODUCT LEVEL)	SEE PAGE
CR	1	1	**7C-0145**	1	CORE AS-OIL COOLER	
	2	1	**109-0077**	2	SEAL-O-RING (100.97MM ID)	

C-CHANGE FROM PREVIOUS TYPE
R-REMFG PART MAY BE AVAILABLE

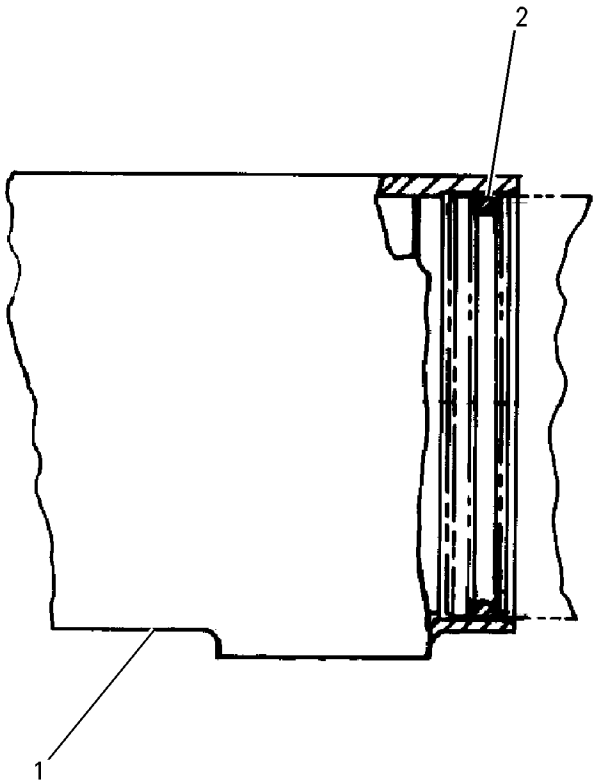

GRAPHIC #1 g00718741

4W-0413 CORE GP-OIL COOLER*R

S/N: 80M1-UP

PART OF 123-0200 ENGINE AR, 134-9932 LINES GP-WATER

SMCS-1365, 1374, 1375, 1378, 1379 **i01251370**

NOTE	REF NO	GRAPHIC REF	PART NUMBER	QTY	PART NAME 1 2 3 4 5 6 (PRODUCT LEVEL)	SEE PAGE
	1	1	**5M-6214**	1	PLUG-PIPE (1/8-27 THD)	

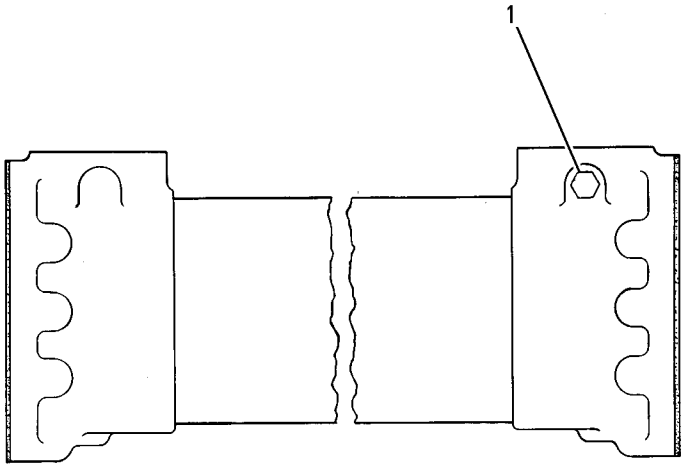

GRAPHIC #1 g00666718

141-4109 CORE GP-OIL COOLER*R

S/N: 80M481-UP

PART OF 134-9932 LINES GP-WATER

SMCS-1365, 1374, 1375, 1378, 1379 **i00846109**

NOTE	REF NO	GRAPHIC REF	PART NUMBER	QTY	PART NAME 1 2 3 4 5 6 (PRODUCT LEVEL)	SEE PAGE
	1	1	**8T-6764**	2	PLUG-PIPE (1/8-27 NPTF THD)	

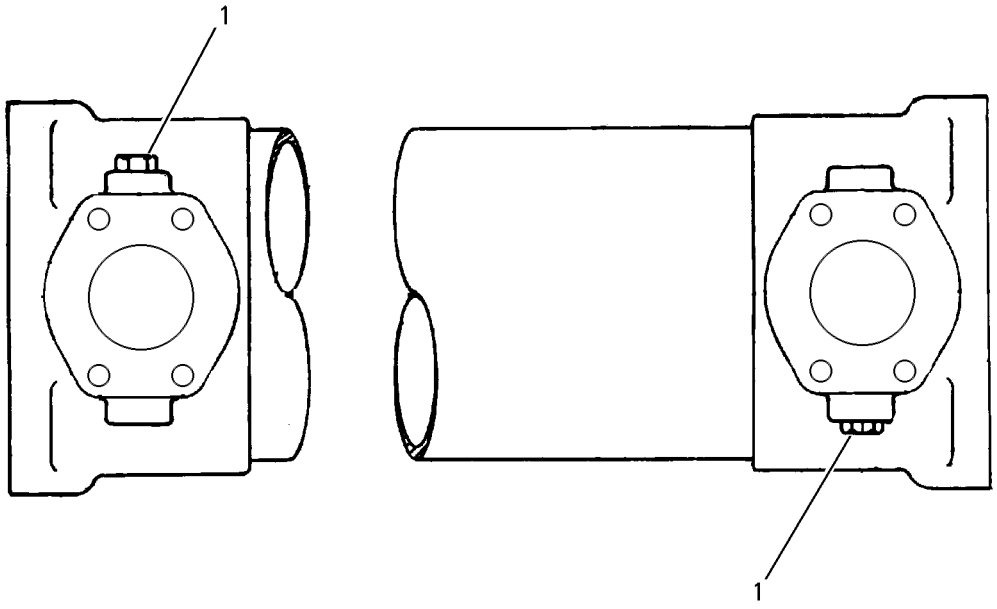

GRAPHIC #1 g00115191

COOLING SYSTEM

7E-9344 FAN GP-BLOWER

S/N: 7KK1-UP

PART OF 6I-0673 INSTALLATION AR-ENGINE

SMCS-1356 **i00543505**

NOTE	REF NO	GRAPHIC REF	PART NUMBER	QTY	PART NAME 1 2 3 4 5 6 (PRODUCT LEVEL)	SEE PAGE
	1	1	**7N-2851**	1	PLATE	
	2	1	**101-0681**	1	SPIDER AS	
	3	1	**107-0568**	2	BRACKET	
	4	1	**107-0572**	1	GUARD AS	
		1	**9F-2978**	2	NUT-WELD (3/8-16 THD)	
	5	1	**134-3500**	2	GUARD AS-FAN	
		1	**1F-0750**	2	NUT-WELD (3/8-16 THD)	
	6	1	**4L-6454**	6	BOLT (3/8-16X1.0IN)	
	7	1	**4L-9337**	8	BOLT (3/8-16X1.50IN)	
	8	1	**5P-1075**	18	WASHER-HARD (3MM THK)	
	9	1	**6V-8801**	2	NUT (3/8-16 THD)	
	10	1	**8C-4436**	6	BOLT (1/2-13X1.375IN)	
	11	1	**8T-4223**	6	WASHER-HARD (3MM THK)	
	12	1	**8T-4896**	8	WASHER-HARD (2.5MM THK)	
	13	1	**9B-7237**	10	BOLT (3/8-16X1.25IN)	

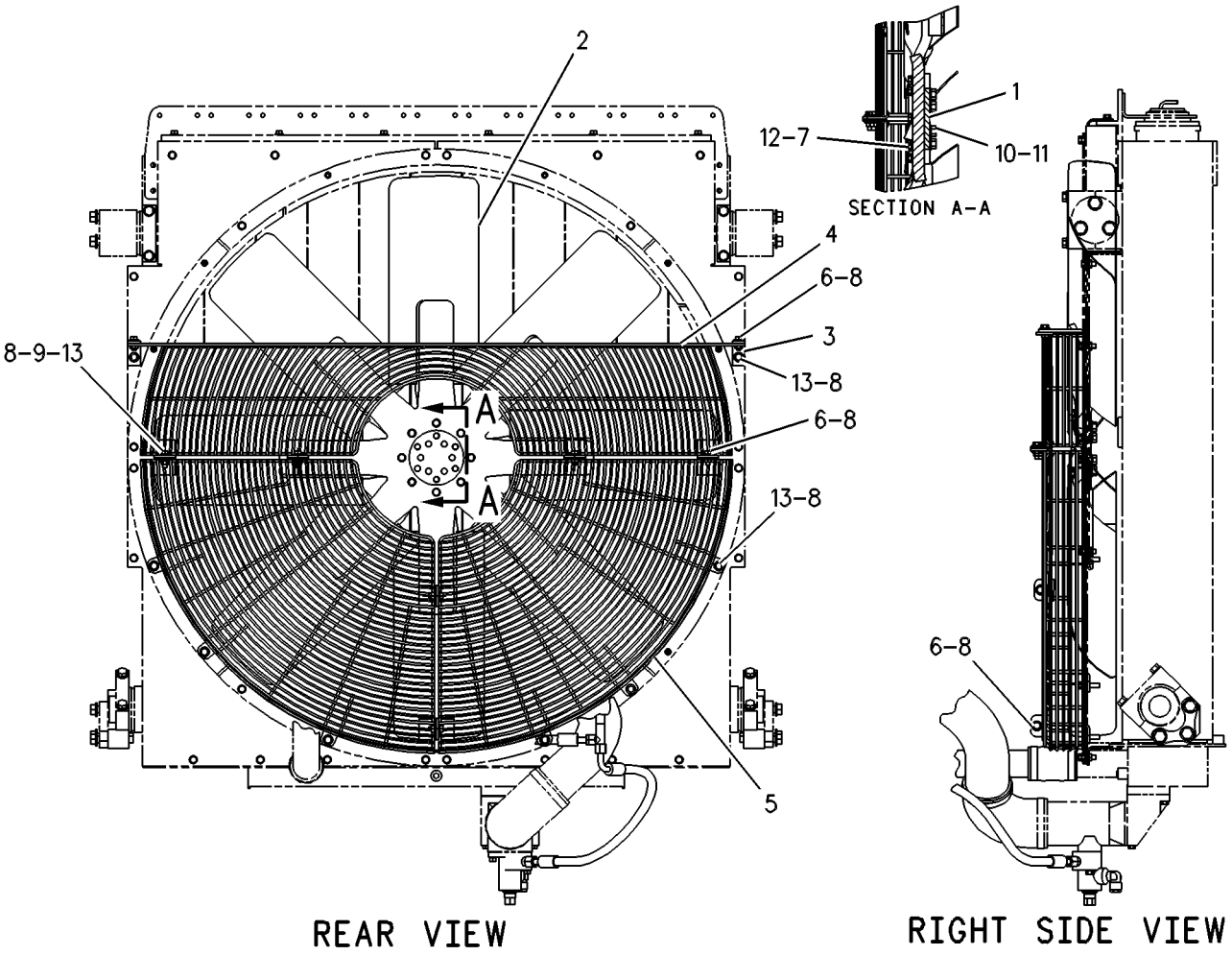

GRAPHIC #1

g00268662

MEMORANDA

COOLING SYSTEM

8X-9030 LINES GP-TORQUE CONV COOLER

S/N: 7KK1-UP

PART OF 8X-8404 HYDRAULIC AR

SMCS-1375, 1376, 3103 **i01358301**

NOTE	REF NO	GRAPHIC REF	PART NUMBER	QTY	PART NAME 1 2 3 4 5 6 (PRODUCT LEVEL)	SEE PAGE
	1	1	**117-4844**	1	TUBE AS	
	2	1	**121-4075**	1	TUBE AS	
M	3	1	**8T-4244**	1	NUT (M12X1.75 THD)	
I	4	1	**121-4077**	1	HOSE AS	
	5	1	**1P-3705**	1	SEAL-RECTANGULAR	
	6	1	**1P-4578**	2	FLANGE-HALF	
	7	1	**1P-4579**	2	FLANGE-HALF	
	8	1	**1P-5762**	2	FLANGE-HALF	
	9	1	**5P-7468**	2	CLIP (SLOT)	
		1	**5P-7469**	2	CLIP (TAB)	
		1	**5P-8444**	2	GROMMET	
	10	1	**3P-9847**	1	CLIP	
	11	1	**4J-0522**	1	SEAL-O-RING (37.69MM ID)	
	12	1	**4J-0524**	1	SEAL-O-RING (47.22MM ID)	
	13	1	**4J-0527**	2	SEAL-O-RING (56.74MM ID)	
	14	1	**4L-6454**	1	BOLT (3/8-16X1 IN)	
	15	1	**8T-8919**	4	BOLT (1/2-13X1.75 IN)	
	16	1	**5P-2566**	8	BOLT (1/2-13X1.5 IN)	
M	17	1	**8T-4956**	1	BOLT (M12X1.75X35MM)	
	18	1	**6V-4365**	1	SEAL-O-RING (9.19MM ID)	
	19	1	**6V-8801**	1	NUT (3/8-16 THD)	
	20	1	**7D-1553**	1	CLIP	
	21	1	**7X-0290**	3	BOLT (3/8-16X3.50 IN)	
	22	1	**8J-4351**	1	SEAL-O-RING (44.04MM ID)	
Y	23	1	**8P-1471**	1	VALVE GP-RELIEF	460
	24	1	**8T-4223**	18	WASHER-HARD (13.5X25.5X3MM THK)	
	25	1	**8T-4835**	4	BOLT (1/2-13X2.0 IN)	
	26	1	**8T-4896**	5	WASHER-HARD (10.2X18.5X2.5MM THK)	
	27	1	**8T-5360**	4	WASHER (12X22.5X2.5MM THK)	
	28	1	**8T-8916**	4	BOLT (7/16-14X1.5 IN)	

I-SEE HOSE FABRICATION GUIDE
M-METRIC PART
Y-SEPARATE ILLUSTRATION

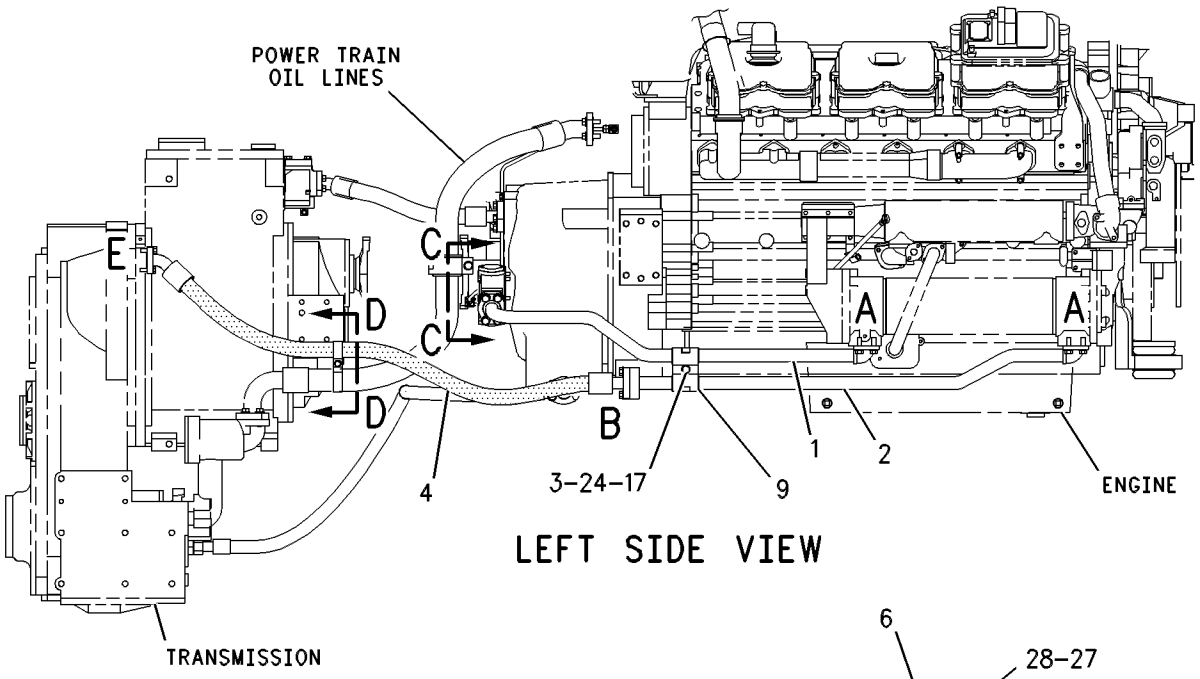

LEFT SIDE VIEW

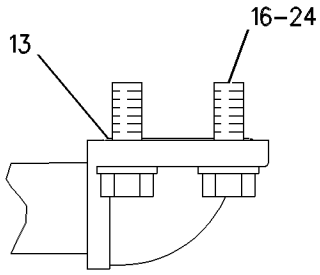

VIEW OF AREAS MARKED A
(TYPICAL INSTALLATION)

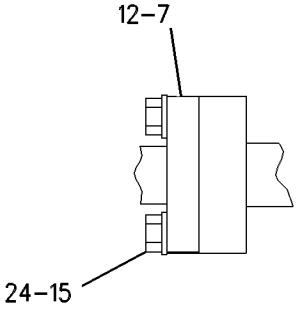

VIEW OF AREA B

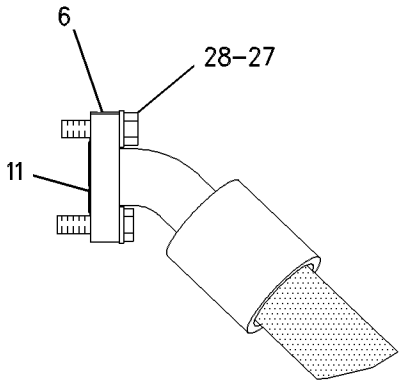

VIEW OF AREA E

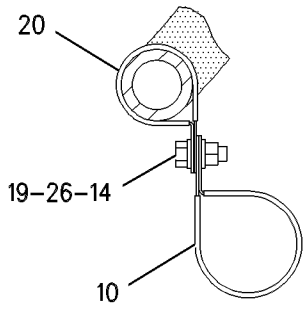

VIEW D-D

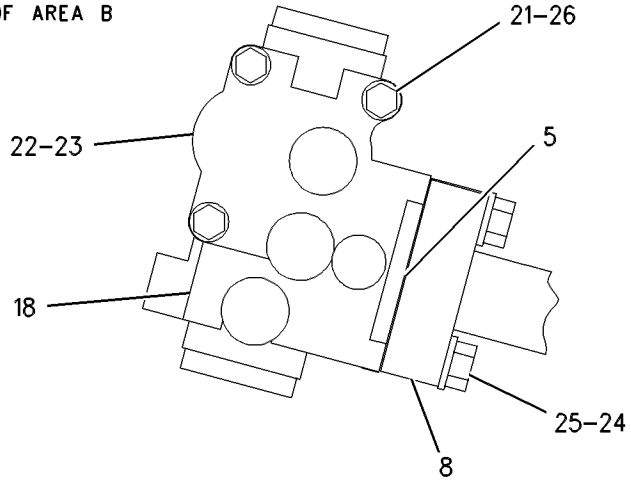

VIEW C-C

GRAPHIC #1

g00528238

COOLING SYSTEM

128-0737 LINES GP-WATER

S/N: 7KK1-UP

PART OF 6I-0673 INSTALLATION AR-ENGINE

SMCS-1355, 1380, 1393 **i00543290**

NOTE	REF NO	GRAPHIC REF	PART NUMBER	QTY	PART NAME 1 2 3 4 5 6 (PRODUCT LEVEL)	SEE PAGE
	1	1	**1S-8976**	2	GASKET	
	2	1	**2M-1395**	2	GASKET	
	3	1	**8M-2773**	1	CLIP (17.46MM ID)	
	4	1	**109-0076**	2	SEAL-O-RING (50.17MM ID)	
	5	1	**127-4278**	2	ELBOW	
	6	1	**127-4279**	1	ELBOW	
	7	1	**127-4280**	1	HOUSING-WATER	
	8	1	**128-3809**	1	TUBE	
	9	1	**5S-7382**	1	BOLT (3/8-16X1.375IN)	
	10	1	**8T-2502**	10	BOLT (3/8-16X1.13IN)	
	11	1	**8T-4896**	1	WASHER-HARD (2.5MM THK)	

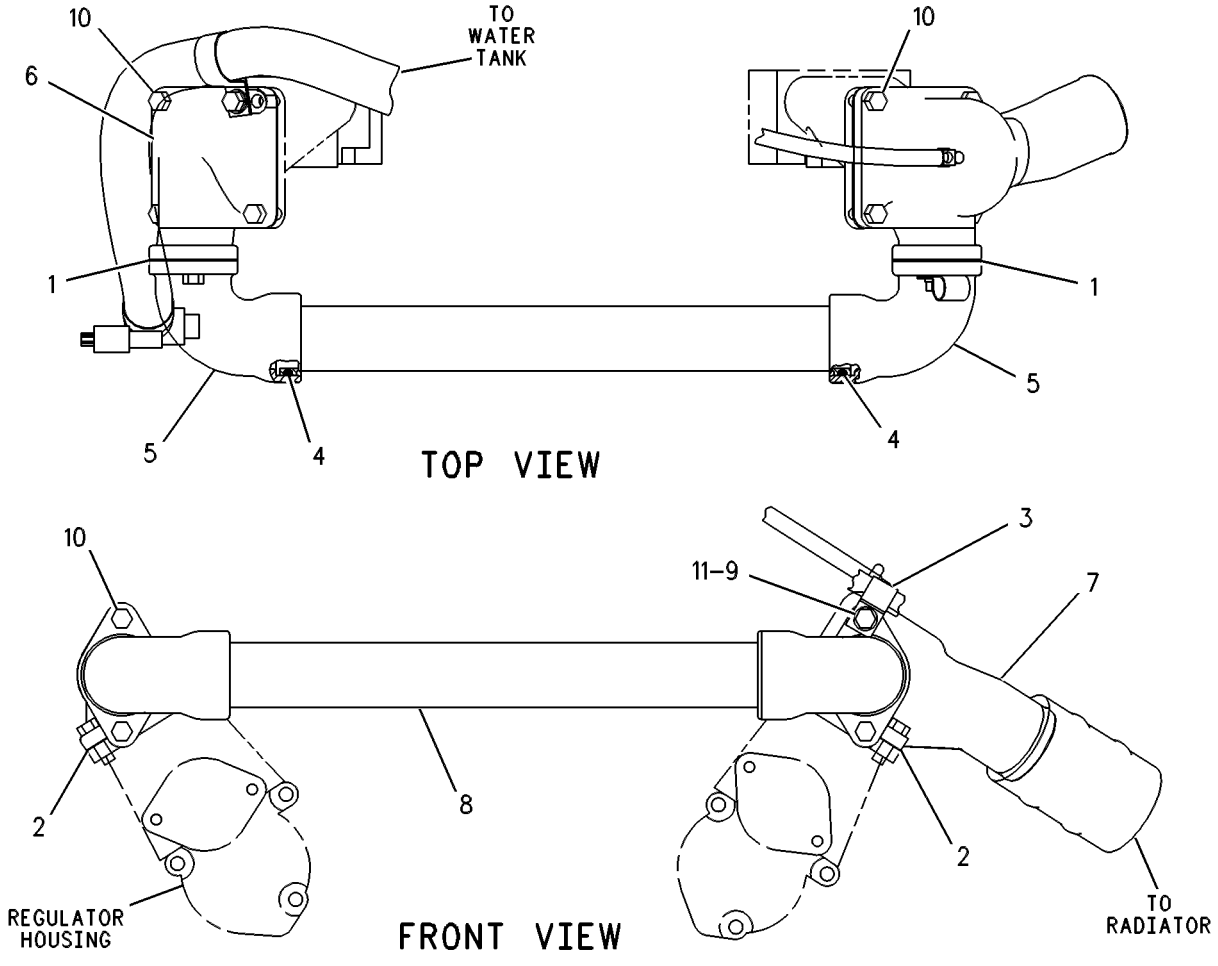

GRAPHIC #1 g00268197

MEMORANDA

COOLING SYSTEM

130-5760 LINES GP-WATER

S/N: 80M1-480

PART OF 123-0200 ENGINE AR

SMCS-1355, 1380, 1393 **i00546212**

NOTE	REF NO	GRAPHIC REF	PART NUMBER	QTY	PART NAME 1 2 3 4 5 6 (PRODUCT LEVEL)	SEE PAGE
	1	1	**4W-4794**	2	REGULATOR-WATER TEMPERATURE (92 DEG C.)	
	2	1	**7C-0307**	4	GASKET	
	3	1	**109-0073**	1	SEAL-O-RING (43.82MM ID)	
	4	1	**4N-1799**	1	FLANGE	
	5	1	**0S-1619**	12	BOLT (3/8-16X3IN)	
	6	1	**4N-0864**	1	GASKET	
	7	1	**8T-6761**	1	PLUG-PIPE (1-11-1/2 NPTF THD)	
	8	1	**6N-1410**	1	ELBOW-OUTLET	
	9	1	**9S-1366**	3	BOLT (1/2-13X2.5IN)	
	10	1	**7S-8767**	2	GASKET	
	11	1	**3B-1915**	5	BOLT (3/8-16X1.375IN)	
	12	1	**4N-8452**	1	SUPPORT	
	13	1	**1A-2029**	6	BOLT (3/8-16X1.125IN)	
	14	1	**6N-0008**	1	ADAPTER	
	15	1	**109-0074**	1	SEAL-O-RING (91.44MM ID)	
	16	1	**6N-7145**	1	BONNET-COOLER INLET	
	17	1	**0S-1588**	6	BOLT (3/8-16X1.25IN)	
	18	1	**4N-2380**	1	SPACER-OIL COOLER	
	19	1	**4N-2199**	2	GASKET	
	20	1	**4N-2198**	1	FLANGE	
	21	1	**109-0075**	1	SEAL-O-RING (69.22MM ID)	
	22	1	**7C-1933**	1	BONNET	
	23	1	**0S-1587**	5	BOLT (1/2-13X1.75IN)	
	24	1	**1B-2886**	4	BOLT (1/2-13X3.75IN)	
	25	1	**4N-1946**	1	GASKET	
	26	1	**7X-7731**	3	PLUG-PIPE (3/4-14 NPTF THD)	
	27	1	**4P-3864**	1	COVER-WATER PUMP	
	28	1	**0S-1594**	7	BOLT (3/8-16X1IN)	
	29	1	**6N-5534**	1	ELBOW-BYPASS	
	30	1	**4N-1156**	2	GASKET-REGULATOR COVER	
	31	1	**1N-4929**	2	COVER AS-REGULATOR	
					(EACH INCLUDES)	
	32	1	**3S-9643**	4	SEAL-LIP	
	33	1	**4M-1336**	1	FERRULE	
	34	1	**2W-7434**	1	BONNET-OIL COOLER	
	35	1	**7W-6534**	4	PLUG-PIPE (3/8-18 NPTF THD)	
	36	1	**0L-1143**	1	BOLT (3/8-16X2.5IN)	
	37	1	**109-0072**	2	SEAL-O-RING (40.64MM ID)	
	38	1	**9X-6458**	2	WASHER-HARD (3MM THK)	
	39	1	**8T-6764**	3	PLUG-PIPE (1/8-27 NPTF THD)	
	40	1	**0L-1352**	1	BOLT (3/8-16X3.25IN)	
	41	1	**5B-9603**	1	BOLT (3/8-16X5IN)	
	42	1	**109-0076**	1	SEAL-O-RING (50.17MM ID)	
	43	1	**6N-1411**	1	ELBOW-OUTLET	
	44	1	**8T-6762**	2	PLUG-PIPE	
	45	1	**5M-2894**	4	WASHER (2.5MM THK)	
	46	1	**6N-5267**	1	TUBE AS	
	47	1	**4N-0794**	1	COVER	
	48	1	**118-7214**	1	SEAL-O-RING (37.69MM ID)	
	49	1	**123-2923**	1	ADAPTER	
	50	1	**102-2240**	1	SENSOR GP-TEMPERATURE	
	51	1	**112-5282**	1	SEAL-O-RING (16.36MM ID)	
	52	1	**0S-1591**	1	BOLT (3/8-16X1.5IN)	

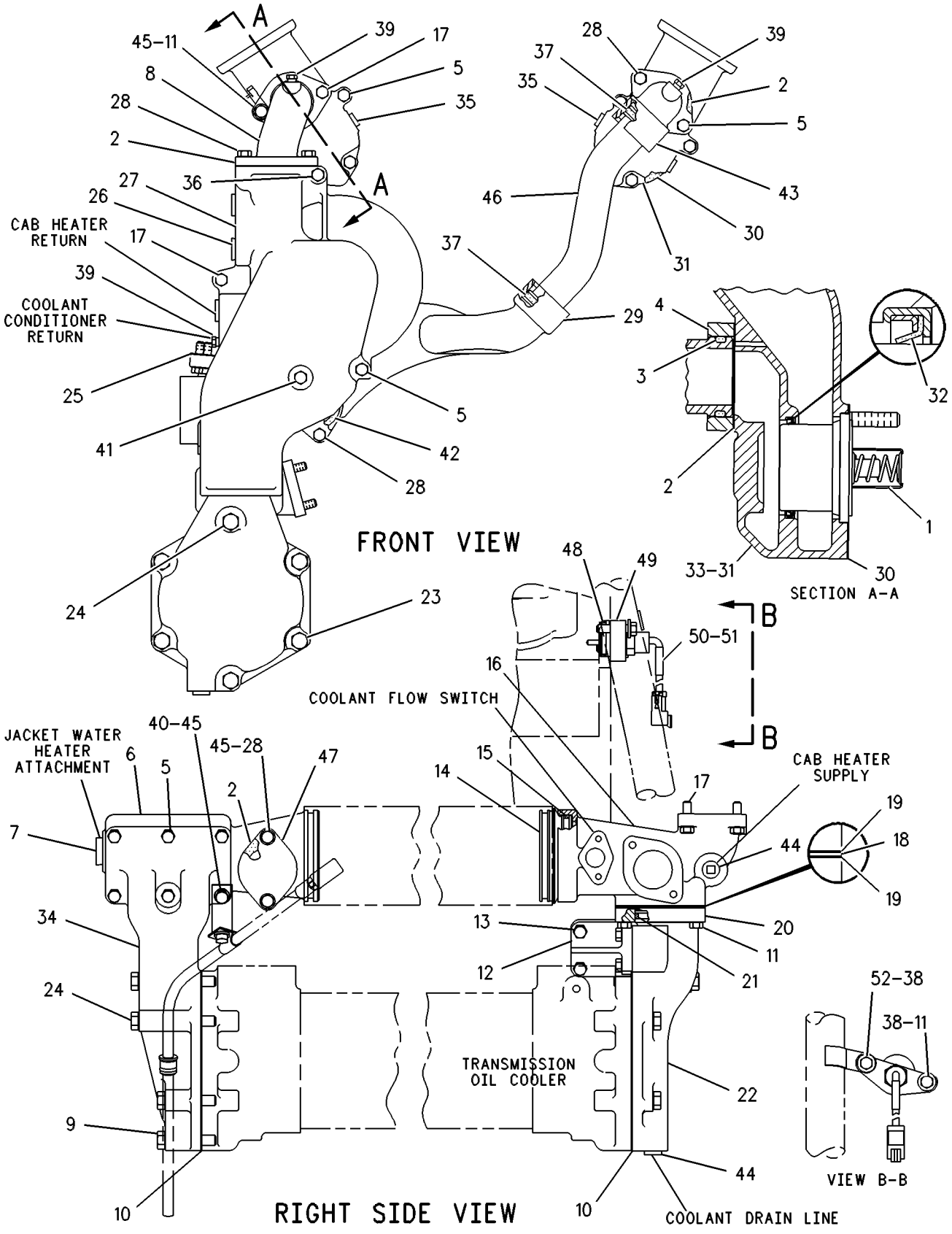

GRAPHIC #1 g00268460

COOLING SYSTEM

130-5761 LINES GP-WATER

S/N: 80M1-UP

PART OF 123-0200 ENGINE AR

SMCS-1355, 1380, 1393 **i00107487**

NOTE	REF NO	GRAPHIC REF	PART NUMBER	QTY	PART NAME 1 2 3 4 5 6 (PRODUCT LEVEL)	SEE PAGE
	1	1	**108-3251**	1	TUBE AS	
	2	1	**109-0073**	2	SEAL-O-RING (43.82MM ID)	
	3	1	**0S-1571**	4	BOLT (3/8-16X1.75IN)	
	4	1	**112-3258**	4	SEAL-O-RING (46.99MM ID)	
	5	1	**4N-4307**	1	GASKET	
	6	1	**0T-0573**	1	BOLT (3/8-16X2.75IN)	
	7	1	**6N-3026**	1	ELBOW	
	8	1	**8T-6767**	3	PLUG-PIPE (3/8-18 NPTF THD)	
	9	1	**7C-0307**	1	GASKET	
	10	1	**5M-2894**	1	WASHER (2.5MM THK)	
	11	1	**8N-2282**	1	ELBOW	
	12	1	**109-8217**	1	ELBOW	
	13	1	**0T-0065**	1	BOLT (3/8-16X3.5IN)	
	14	1	**0S-1619**	1	BOLT (3/8-16X3IN)	
	15	1	**8N-2306**	1	COUPLING	
	16	1	**8N-2113**	1	CONNECTOR	
	17	1	**0S-1588**	1	BOLT (3/8-16X1.25IN)	
	18	1	**8E-5170**	1	SLEEVE	
	19	1	**0L-1352**	1	BOLT (3/8-16X3.25IN)	
	20	1	**9X-6458**	1	WASHER-HARD (3MM THK)	

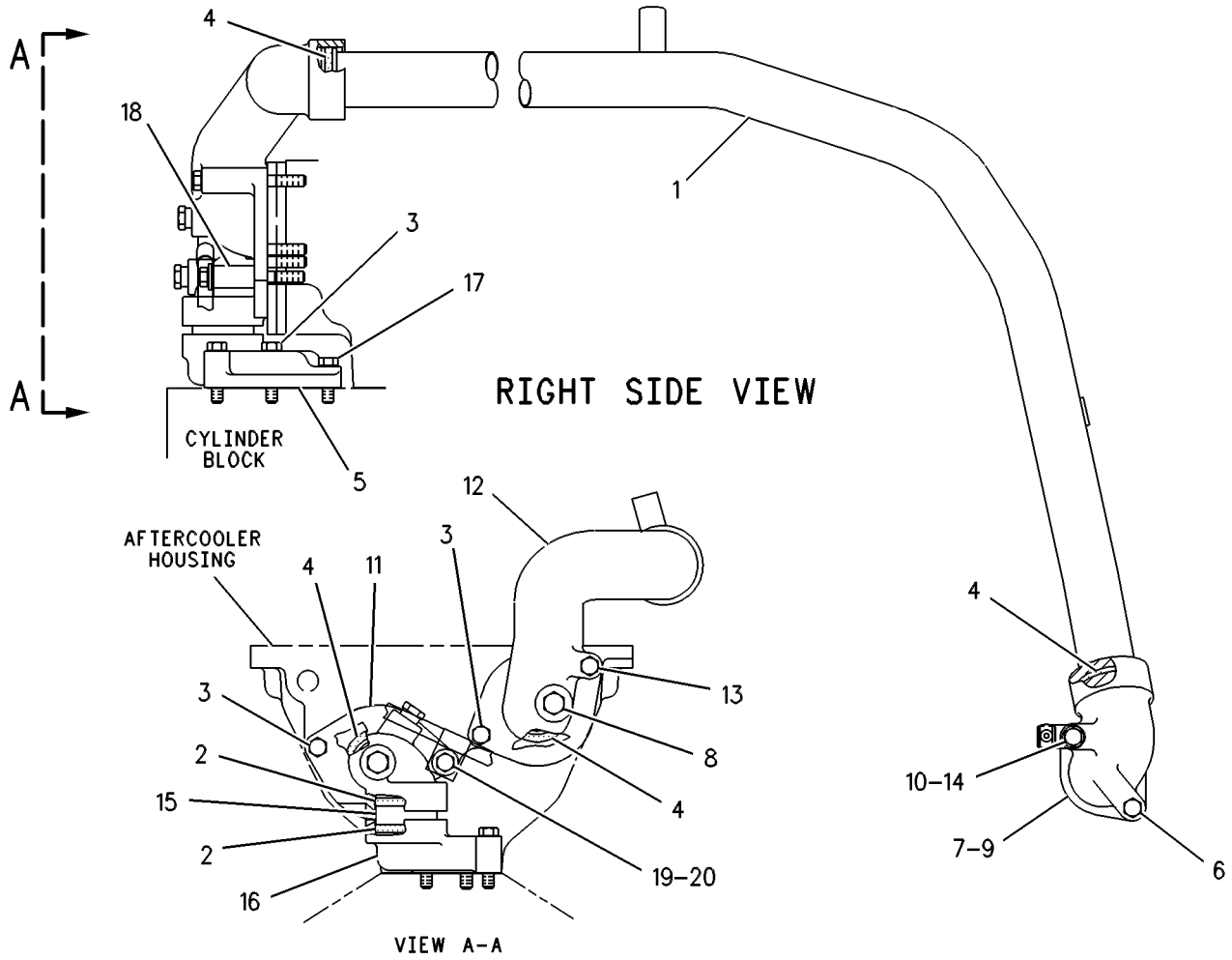

GRAPHIC #1

g00086636

COOLING SYSTEM

134-9932 LINES GP-WATER

S/N: 80M481-UP
PART OF 123-0200 ENGINE AR
TYPE 1

SMCS-1355, 1380, 1393 **i00546438**

NOTE	REF NO	GRAPHIC REF	PART NUMBER	QTY	PART NAME 1 2 3 4 5 6 (PRODUCT LEVEL)	SEE PAGE
	1	1	**4W-4794**	2	REGULATOR-WATER TEMPERATURE (92 DEG C.)	
	2	1	**7C-0307**	4	GASKET	
	3	1	**109-0073**	1	SEAL-O-RING (43.82MM ID)	
	4	1	**4N-1799**	1	FLANGE	
	5	1	**0S-1619**	12	BOLT (3/8-16X3IN)	
	6	1	**4N-0864**	1	GASKET	
	7	1	**8T-6761**	1	PLUG-PIPE (1-11-1/2 NPTF THD)	
	8	1	**6N-1410**	1	ELBOW-OUTLET	
	9	1	**9S-1366**	3	BOLT (1/2-13X2.5IN)	
	10	1	**7S-8767**	2	GASKET	
	11	1	**3B-1915**	5	BOLT (3/8-16X1.375IN)	
	12	1	**4N-8452**	1	SUPPORT	
	13	1	**1A-2029**	6	BOLT (3/8-16X1.125IN)	
	14	1	**6N-0008**	1	ADAPTER	
	15	1	**109-0074**	1	SEAL-O-RING (91.44MM ID)	
	16	1	**6N-7145**	1	BONNET-COOLER INLET	
	17	1	**0S-1588**	6	BOLT (3/8-16X1.25IN)	
	18	1	**4N-2380**	1	SPACER-OIL COOLER	
	19	1	**4N-2199**	2	GASKET	
	20	1	**4N-2198**	1	FLANGE	
	21	1	**109-0075**	1	SEAL-O-RING (69.22MM ID)	
	22	1	**7C-1933**	1	BONNET	
	23	1	**0S-1587**	5	BOLT (1/2-13X1.75IN)	
	24	1	**1B-2886**	4	BOLT (1/2-13X3.75IN)	
	25	1	**4N-1946**	1	GASKET	
	26	1	**7X-7731**	3	PLUG-PIPE (3/4-14 NPTF THD)	
	27	1	**4P-3864**	1	COVER-WATER PUMP	
	28	1	**0S-1594**	7	BOLT (3/8-16X1IN)	
	29	1	**6N-5534**	1	ELBOW-BYPASS	
	30	1	**4N-1156**	2	GASKET-REGULATOR COVER	
	31	1	**1N-4929**	2	COVER AS-REGULATOR	
		1	**3S-9643**	1	SEAL-LIP	
		1	**4M-1336**	1	FERRULE	
	32	1	**5M-2894**	4	WASHER (2.5MM THK)	
	33	1	**6N-5267**	1	TUBE AS	
	34	1	**2W-7434**	1	BONNET-OIL COOLER	
	35	1	**7W-6534**	4	PLUG-PIPE (3/8-18 NPTF THD)	
	36	1	**0L-1143**	1	BOLT (3/8-16X2.5IN)	
	37	1	**109-0072**	2	SEAL-O-RING (40.64MM ID)	
	38	1	**4N-0794**	1	COVER	
	39	1	**8T-6764**	3	PLUG-PIPE (1/8-27 NPTF THD)	
	40	1	**0L-1352**	1	BOLT (3/8-16X3.25IN)	
	41	1	**5B-9603**	1	BOLT (3/8-16X5IN)	
	42	1	**109-0076**	1	SEAL-O-RING (50.17MM ID)	
	43	1	**6N-1411**	1	ELBOW-OUTLET	
	44	1	**8T-6762**	2	PLUG-PIPE	
	45	1	**118-7214**	1	SEAL-O-RING (37.69MM ID)	
	46	1	**123-2923**	1	ADAPTER	
	47	1	**102-2240**	1	SENSOR GP-TEMPERATURE	
	48	1	**112-5282**	1	SEAL-O-RING (16.36MM ID)	
	49	1	**0S-1591**	1	BOLT (3/8-16X1.5IN)	
	50	1	**9X-6458**	2	WASHER-HARD (3MM THK)	
YR	51	1	*4W-0413*	1	CORE GP-OIL COOLER	86
	52	1	**109-0077**	2	SEAL-O-RING (100.97MM ID)	
R	53	1	**7C-0145**	1	CORE AS-OIL COOLER	

R-REMFG PART MAY BE AVAILABLE
Y-SEPARATE ILLUSTRATION

134-9932 **LINES GP-WATER** *(contd.)* **i00546438**

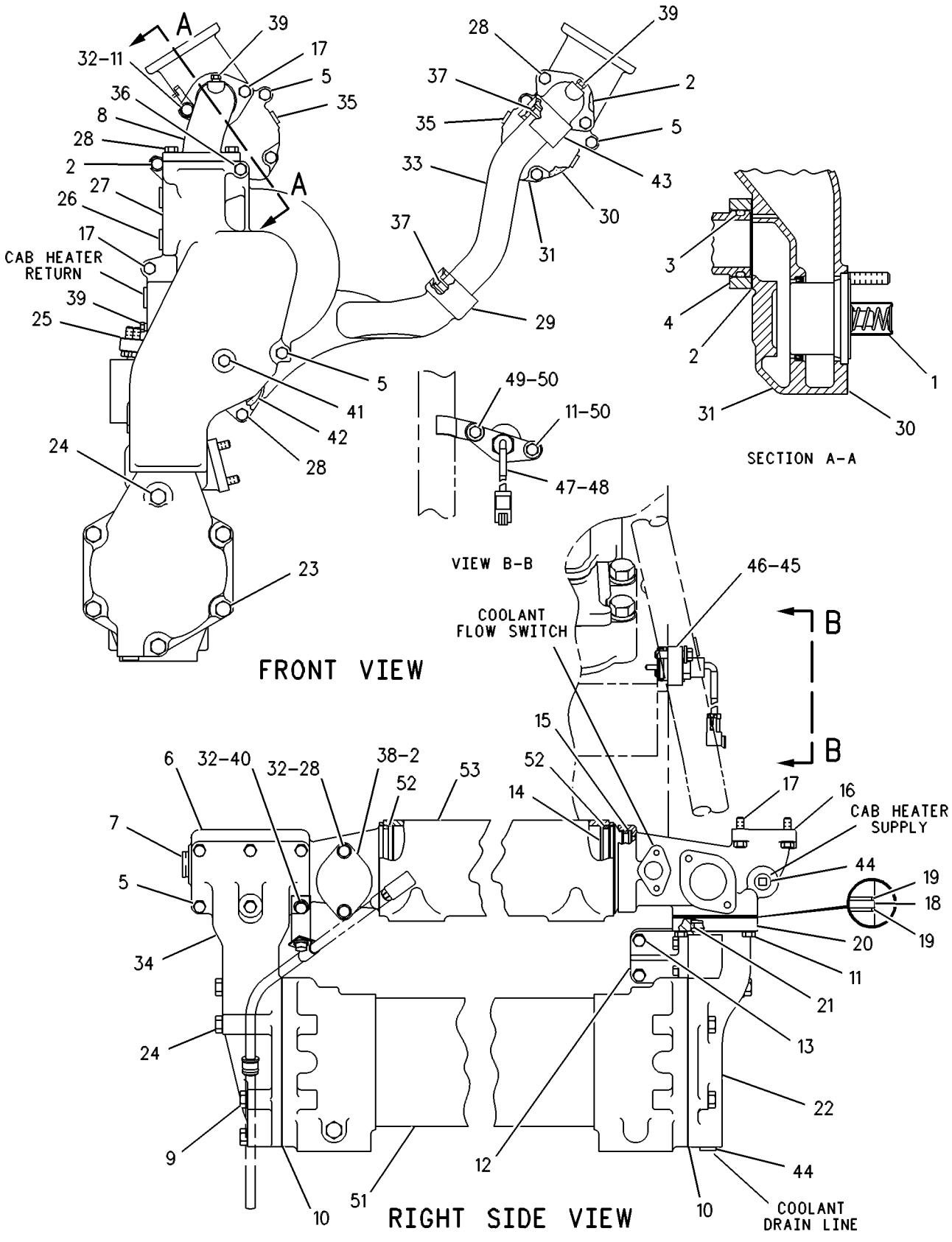

GRAPHIC #1 g00269130

MEMORANDA

COOLING SYSTEM

134-9932 LINES GP-WATER

S/N: 80M481-UP
PART OF 123-0200 ENGINE AR
TYPE 2

SMCS-1355, 1380, 1393 **i00546555**

NOTE	REF NO	GRAPHIC REF	PART NUMBER	QTY	PART NAME 1 2 3 4 5 6 (PRODUCT LEVEL)	SEE PAGE
	1	1	**4W-4794**	2	REGULATOR-WATER TEMPERATURE (92 DEG C.)	
	2	1	**7C-0307**	4	GASKET	
	3	1	**109-0073**	1	SEAL-O-RING (43.82MM ID)	
	4	1	**4N-1799**	1	FLANGE	
	5	1	**0S-1619**	12	BOLT (3/8-16X3IN)	
	6	1	**4N-0864**	1	GASKET	
	7	1	**8T-6761**	1	PLUG-PIPE (1-11-1/2 NPTF THD)	
	8	1	**6N-1410**	1	ELBOW-OUTLET	
	9	1	**9S-1366**	3	BOLT (1/2-13X2.5IN)	
	10	1	**7S-8767**	2	GASKET	
	11	1	**3B-1915**	5	BOLT (3/8-16X1.375IN)	
	12	1	**4N-8452**	1	SUPPORT	
	13	1	**1A-2029**	6	BOLT (3/8-16X1.125IN)	
	14	1	**6N-0008**	1	ADAPTER	
	15	1	**109-0074**	1	SEAL-O-RING (91.44MM ID)	
	16	1	**6N-7145**	1	BONNET-COOLER INLET	
	17	1	**0S-1588**	6	BOLT (3/8-16X1.25IN)	
	18	1	**4N-2380**	1	SPACER-OIL COOLER	
	19	1	**4N-2199**	2	GASKET	
	20	1	**4N-2198**	1	FLANGE	
	21	1	**109-0075**	1	SEAL-O-RING (69.22MM ID)	
	22	1	**7C-1933**	1	BONNET	
	23	1	**0S-1587**	5	BOLT (1/2-13X1.75IN)	
	24	1	**1B-2886**	4	BOLT (1/2-13X3.75IN)	
	25	1	**4N-1946**	1	GASKET	
	26	1	**7X-7731**	3	PLUG-PIPE (3/4-14 NPTF THD)	
	27	1	**4P-3864**	1	COVER-WATER PUMP	
	28	1	**0S-1594**	7	BOLT (3/8-16X1IN)	
	29	1	**6N-5534**	1	ELBOW-BYPASS	
	30	1	**4N-1156**	2	GASKET-REGULATOR COVER	
	31	1	**1N-4929**	2	COVER AS-REGULATOR	
		1	**3S-9643**	1	SEAL-LIP	
		1	**4M-1336**	1	FERRULE	
	32	1	**5M-2894**	4	WASHER (2.5MM THK)	
	33	1	**6N-5267**	1	TUBE AS	
	34	1	**2W-7434**	1	BONNET-OIL COOLER	
	35	1	**7W-6534**	4	PLUG-PIPE (3/8-18 NPTF THD)	
	36	1	**0L-1143**	1	BOLT (3/8-16X2.5IN)	
	37	1	**109-0072**	2	SEAL-O-RING (40.64MM ID)	
	38	1	**4N-0794**	1	COVER	
	39	1	**8T-6764**	3	PLUG-PIPE (1/8-27 NPTF THD)	
	40	1	**0L-1352**	1	BOLT (3/8-16X3.25IN)	
	41	1	**5B-9603**	1	BOLT (3/8-16X5IN)	
	42	1	**109-0076**	1	SEAL-O-RING (50.17MM ID)	
	43	1	**6N-1411**	1	ELBOW-OUTLET	
	44	1	**8T-6762**	2	PLUG-PIPE	
	45	1	**118-7214**	1	SEAL-O-RING (37.69MM ID)	
	46	1	**123-2923**	1	ADAPTER	
	47	1	**102-2240**	1	SENSOR GP-TEMPERATURE	
	48	1	**112-5282**	1	SEAL-O-RING (16.36MM ID)	
	49	1	**0S-1591**	1	BOLT (3/8-16X1.5IN)	
	50	1	**9X-6458**	2	WASHER-HARD (3MM THK)	
CY	51	1	**141-4109**	1	CORE AS-OIL COOLER	87
	52	1	**109-0077**	2	SEAL-O-RING (100.97MM ID)	
R	53	1	**7C-0145**	1	CORE AS-OIL COOLER	

C-CHANGE FROM PREVIOUS TYPE
R-REMFG PART MAY BE AVAILABLE
Y-SEPARATE ILLUSTRATION

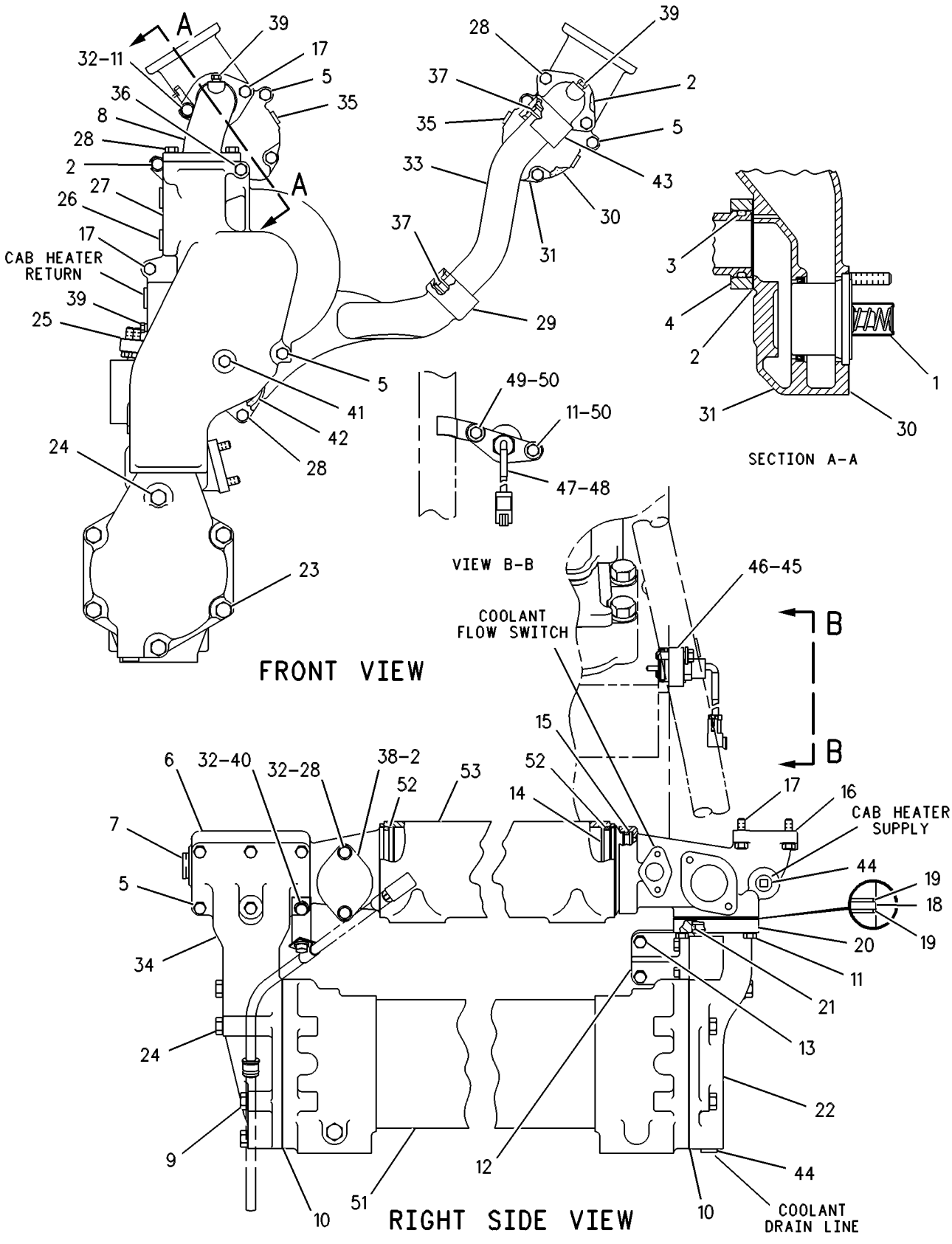

GRAPHIC #1 g00269130

MEMORANDA

COOLING SYSTEM

190-5108 LINES GP-WATER

S/N: 7KK88-UP

PART OF 8X-8402 CHASSIS AR

SMCS-1355, 1380, 1393 **i01513269**

NOTE	REF NO	GRAPHIC REF	PART NUMBER	QTY	PART NAME 1 2 3 4 5 6 (PRODUCT LEVEL)	SEE PAGE
	1	1	**1P-4278**	5	CLAMP-HOSE	
E	2	1	**5P-1262**		HOSE (63.5MM ID) (12.7CM)	
E	3	1	**5P-1268**		HOSE (101.6MM ID) (127CM)	
	4	1	**6N-8400**	1	HOSE-ELBOW	
	5	1	**6N-9590**	1	PLUG-DRAIN	
	6	1	**7N-4932**	1	GASKET	
	7	1	**7W-5990**	1	ELBOW	
	8	1	**8T-4986**	4	CLAMP-HOSE	
	9	1	**8T-6675**	3	CLAMP-HOSE	
	10	1	**9M-2793**	1	ADAPTER-PLUG	
I	11	1	**100-6621**	1	HOSE AS	
	12	1	**109-6550**	1	TEE	
I	13	1	**112-3830**	1	HOSE AS	
	14	1	**128-2977**	1	TUBE	
	15	1	**128-2978**	1	TUBE	
	16	1	**002-6453**	1	ELBOW-PIPE	
	17	1	**090-9013**	1	PLUG-PIPE	
	18	1	**3P-9847**	1	CLIP	
	19	1	**3S-8664**	3	CLIP	
	20	1	**4D-9517**	3	CLIP	
	21	1	**4L-6454**	1	BOLT (3/8-16X1 IN)	
	22	1	**4L-6459**	1	BOLT (3/8-16X2.5 IN)	
	23	1	**6V-9837**	1	TEE-SWIVEL	
	24	1	**7X-0295**	2	BOLT (3/8-16X5.25IN)	
	25	1	**8C-6871**	1	CONNECTOR	
	26	1	**8C-6872**	2	CONNECTOR	
	27	1	**8F-1846**	1	GASKET	
	28	1	**8T-2502**	2	BOLT (3/8-16X1.125 IN)	
	29	1	**8T-4896**	4	WASHER-HARD (10.2X18.5X2.5MM THK)	
	30	1	**8T-9377**	1	BOLT (3/8-16X2.25 IN)	
	31	1	**9B-7237**	1	BOLT (3/8-16X1.25 IN)	
	32	1	**9X-7408**	5	SEAL-O-RING	
E	33A	1	**5P-1465**		HOSE (106CM)	
E	33B	1	**5P-1465**		HOSE (94CM)	
E	33C	1	**5P-1465**		HOSE (68CM)	

E-ORDER BY THE CENTIMETER
I-SEE HOSE FABRICATION GUIDE

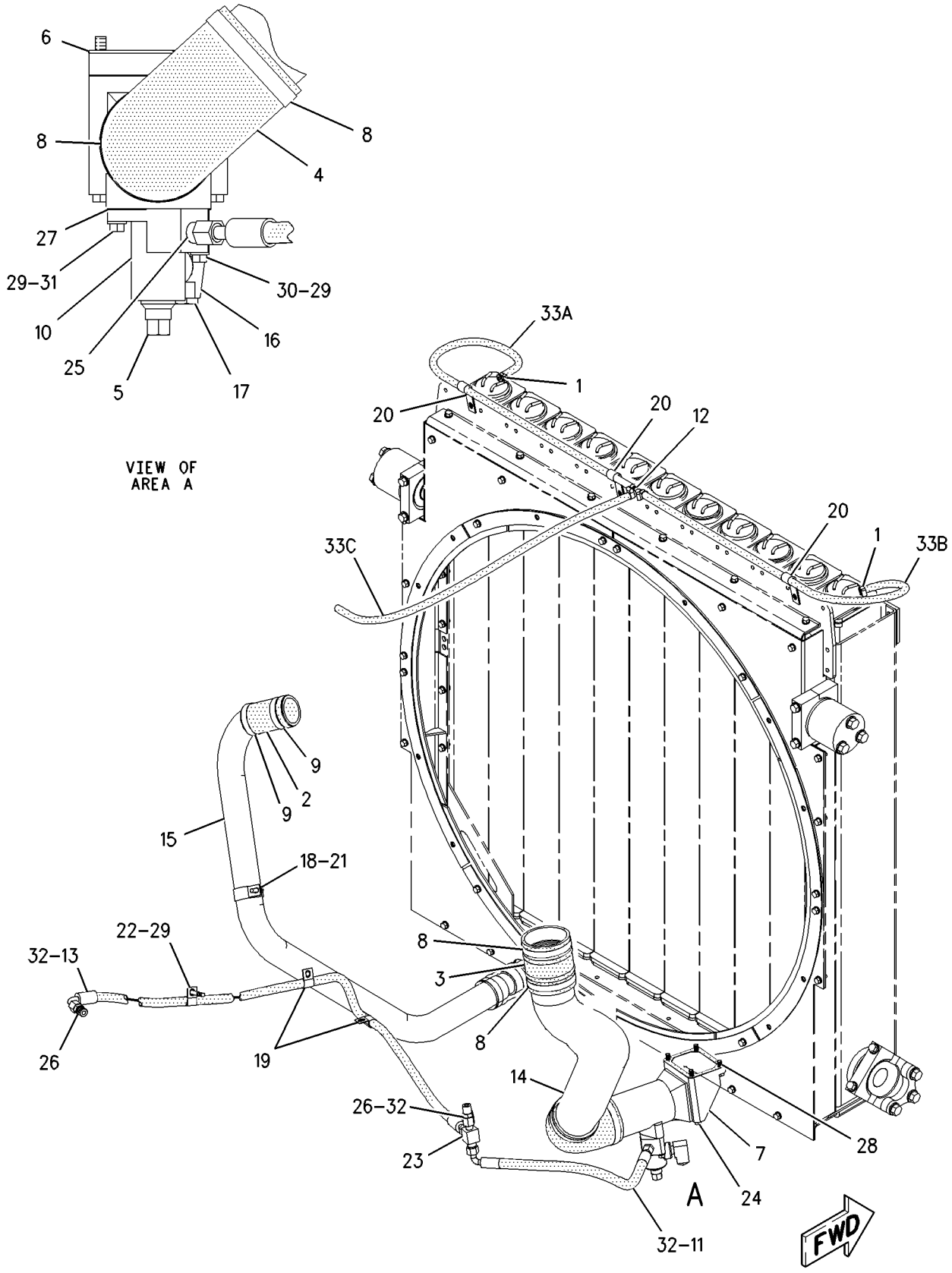

GRAPHIC #1

g00785955

4N-5837 PUMP GP-WATER

S/N: 80M1-398

PART OF 123-0200 ENGINE AR

SMCS-1361, 1364, 1373, 1384, 1389 **i01321272**

NOTE	REF NO	GRAPHIC REF	PART NUMBER	QTY	PART NAME 1 2 3 4 5 6 (PRODUCT LEVEL)	SEE PAGE
CY	1	1	*105-0196*	1	PUMP GP-WATER	112
C	2	1	**112-1579**	1	SEAL-O-RING (158.12MM ID)	
C	3	1	**101-2749**	1	ADAPTER-INLET	
C	4	1	**9X-7371**	1	SEAL-O-RING (126.59MM ID)	
C	5	1	**112-1580**	1	SEAL-O-RING (113.66MM ID)	
C	6	1	**9S-8752**	4	NUT-FULL (3/8-16 THD)	
	7	1	**0S-1594**	1	BOLT (3/8-16X1 IN)	

C-CHANGE FROM PREVIOUS TYPE
Y-SEPARATE ILLUSTRATION

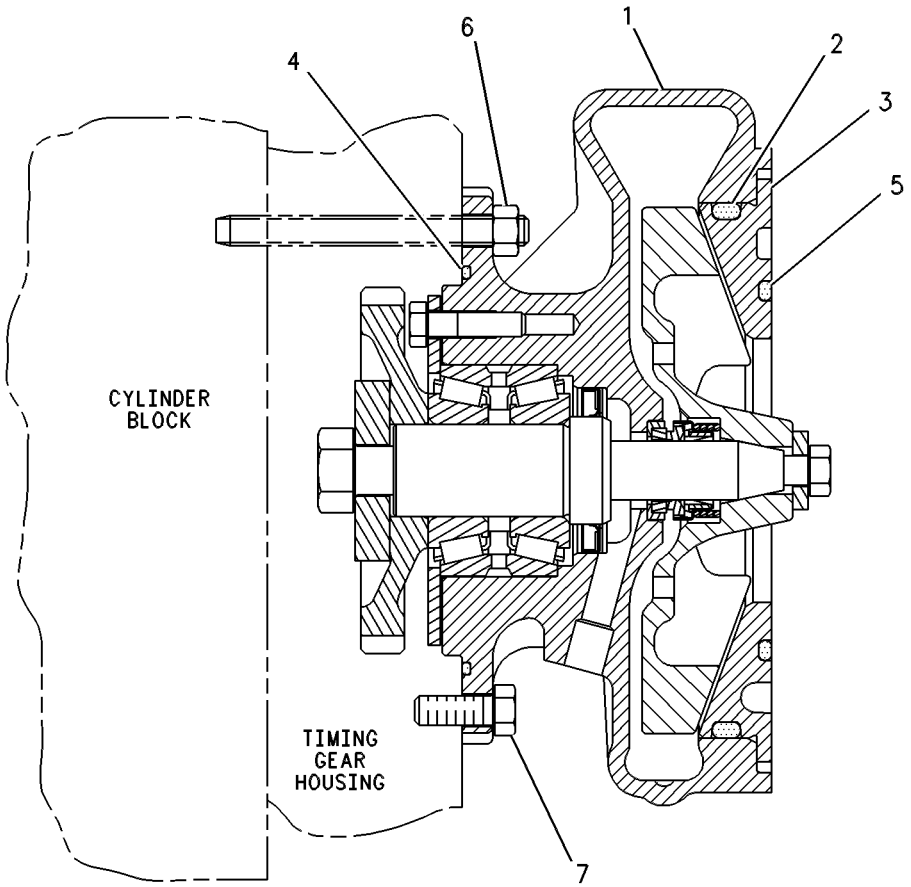

GRAPHIC #1 g00087114

COOLING SYSTEM

4N-5837 PUMP GP-WATER

S/N: 80M399-1090

PART OF 123-0200 ENGINE AR

SMCS-1361, 1364, 1373, 1384, 1389 **i01321273**

NOTE	REF NO	GRAPHIC REF	PART NUMBER	QTY	PART NAME 1 2 3 4 5 6 (PRODUCT LEVEL)	SEE PAGE
CY	1	1	*134-1487*	1	PUMP GP-WATER	114
	2	1	**112-1579**	1	SEAL-O-RING (158.12MM ID)	
	3	1	**101-2749**	1	ADAPTER-INLET	
	4	1	**9X-7371**	1	SEAL-O-RING (126.59MM ID)	
	5	1	**112-1580**	1	SEAL-O-RING (113.66MM ID)	
	6	1	**9S-8752**	4	NUT-FULL (3/8-16 THD)	
	7	1	**0S-1594**	1	BOLT (3/8-16X1 IN)	

C-CHANGE FROM PREVIOUS TYPE
Y-SEPARATE ILLUSTRATION

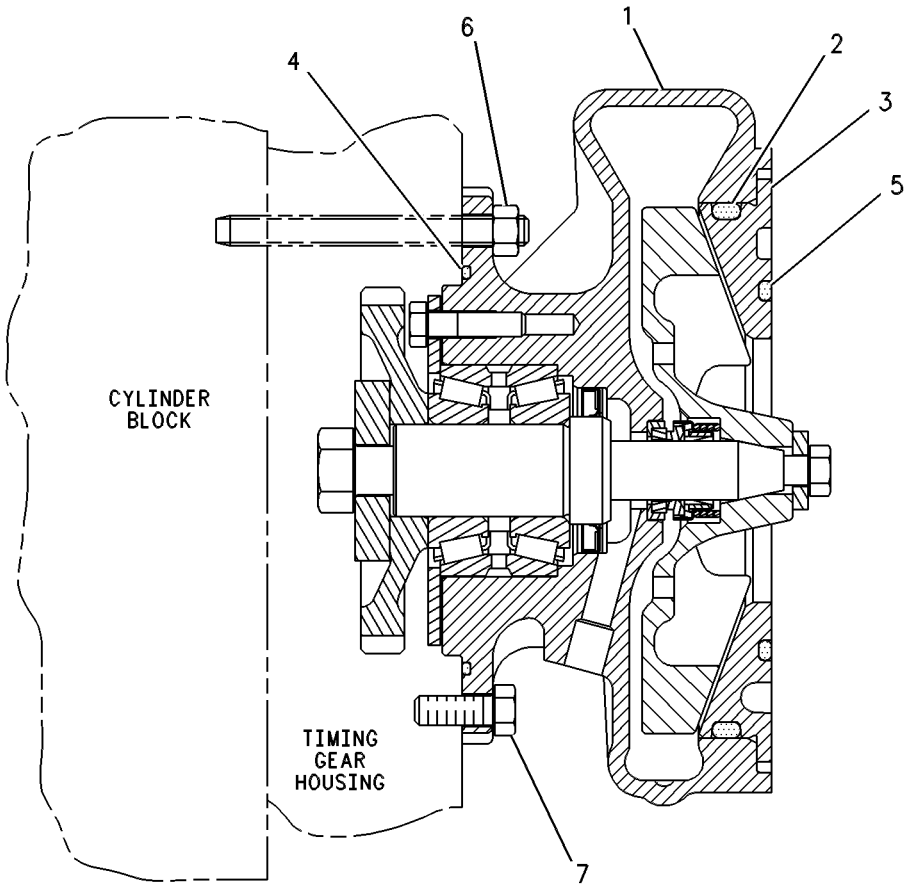

GRAPHIC #1 g00087114

COOLING SYSTEM

4N-5837 PUMP GP-WATER

S/N: 80M1091-UP

PART OF 123-0200 ENGINE AR

SMCS-1361, 1364, 1373, 1384, 1389 **i01321275**

NOTE	REF NO	GRAPHIC REF	PART NUMBER	QTY	PART NAME 1 2 3 4 5 6 (PRODUCT LEVEL)	SEE PAGE
CYR	1	1	**137-1339**	1	PUMP GP-WATER	116
	2	1	**112-1579**	1	SEAL-O-RING (158.12MM ID)	
	3	1	**101-2749**	1	ADAPTER-INLET	
	4	1	**9X-7371**	1	SEAL-O-RING (126.59MM ID)	
	5	1	**112-1580**	1	SEAL-O-RING (113.66MM ID)	
	6	1	**9S-8752**	4	NUT-FULL (3/8-16 THD)	
	7	1	**0S-1594**	1	BOLT (3/8-16X1 IN)	

C-CHANGE FROM PREVIOUS TYPE
R-REMFG PART MAY BE AVAILABLE
Y-SEPARATE ILLUSTRATION

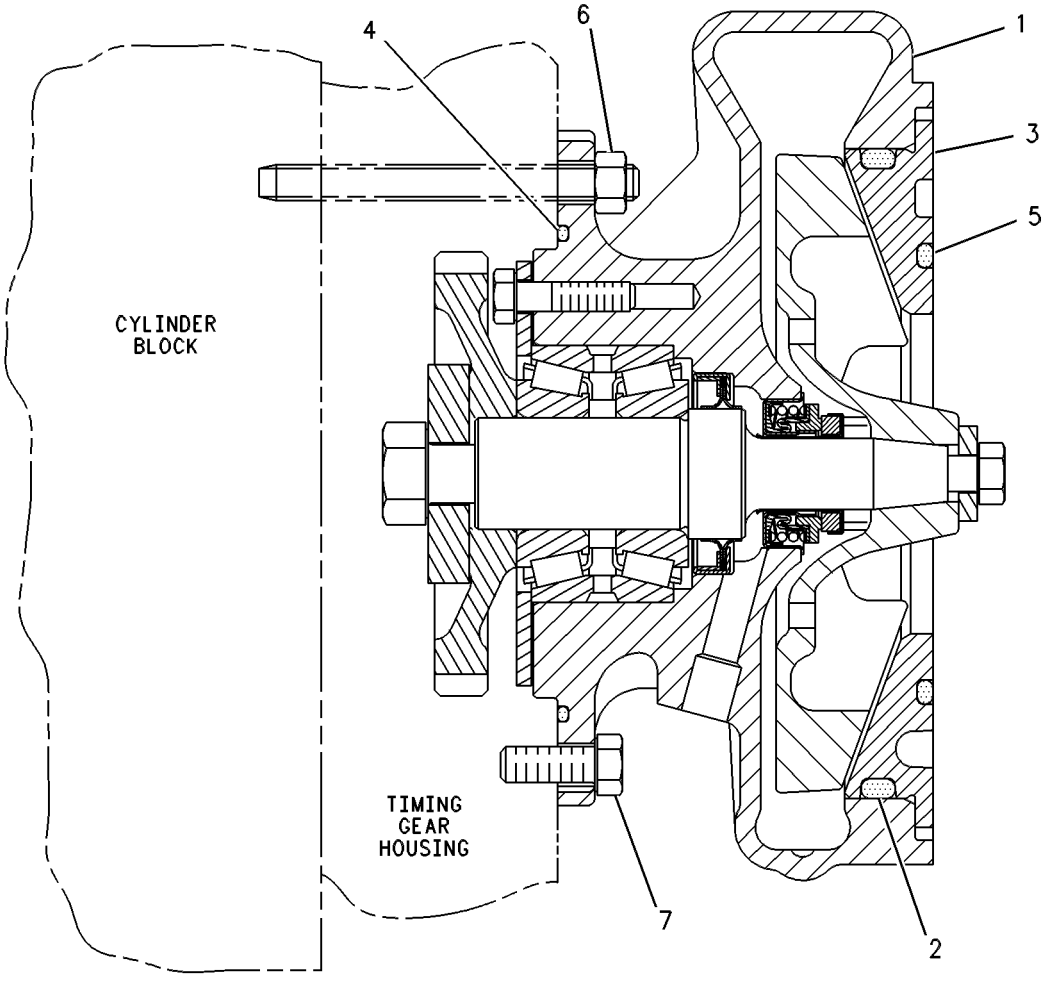

GRAPHIC #1 g00277057

MEMORANDA

COOLING SYSTEM

105-0196 PUMP GP-WATER*R

S/N: 80M1-398

PART OF 4N-5837 PUMP GP-WATER

SMCS-1361, 1364, 1373, 1384, 1389 **i01509253**

NOTE	REF NO	GRAPHIC REF	PART NUMBER	QTY	PART NAME 1 2 3 4 5 6 (PRODUCT LEVEL)	SEE PAGE
	1	1	**7C-1068**	1	IMPELLER-PUMP	
J	2	1	**131-3815**	1	SEAL GP	
J	3	1	**9M-6527**	1	WASHER-HARD (10.2X25.5X5MM THK)	
J	4	1	**0S-1591**	1	BOLT (3/8-16X1.5 IN)	
J	5	1	**123-6666**	1	SHAFT-WATER PUMP	
J	6	1	**8C-3100**	1	SEAL-LIP	
	7	1	**1B-7182**	4	BOLT (5/16-18X1.25 IN)	
	8	1	**4N-1948**	1	GEAR (43 TEETH)	
	9	1	**1A-1135**	1	BOLT (5/8-11X2 IN)	
J	10	1	**108-7930**	1	BEARING AS-ROLLER	
	11	1	**105-3785**	1	RETAINER	
J	12	1	**5S-0581**	1	WASHER-HARD (17X38X8MM THK)	
	13	1	**105-3790**	1	HOUSING AS-PUMP	
	14	1	**8T-6764**	1	PLUG-PIPE	
	15	1	**4M-1336**	1	FERRULE	
	16	1	**5H-8985**	1	PIN-SPRING	
J	17	1	**111-2721**	1	FILTER (WATER PUMP)	
					AVAILABLE REPAIR KIT(S):	
AJ			**129-3069**	1	KIT-WATER PUMP REBUILD	

A-NOT PART OF THIS GROUP
J-KIT MARKED J INCLUDES PARTS MARKED J

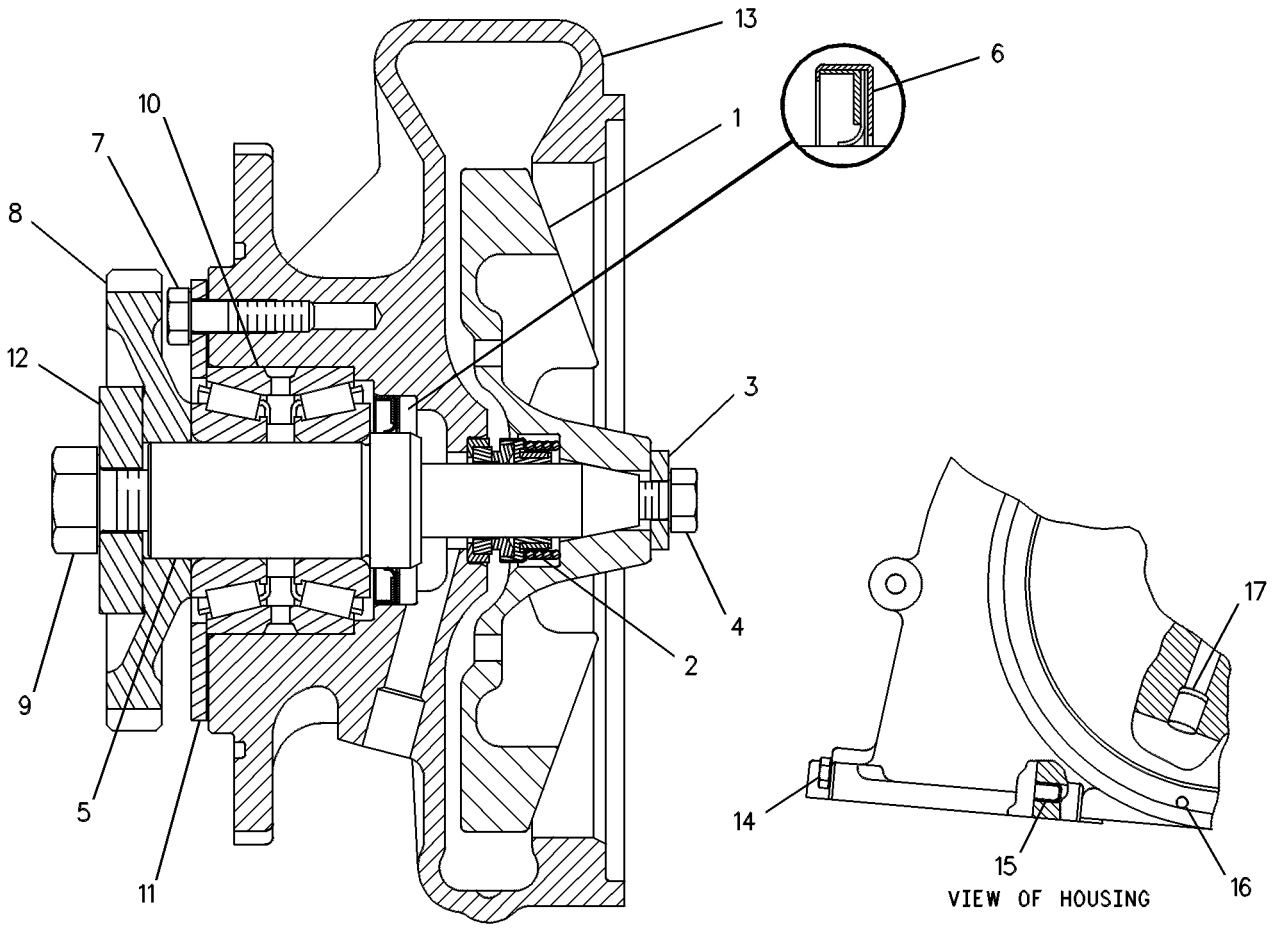

GRAPHIC #1 g00084490

134-1487 PUMP GP-WATER

S/N: 80M399-1090

PART OF 4N-5837 PUMP GP-WATER

SMCS-1361, 1364, 1373, 1384, 1389 **i01509264**

NOTE	REF NO	GRAPHIC REF	PART NUMBER	QTY	PART NAME 1 2 3 4 5 6 (PRODUCT LEVEL)	SEE PAGE
	1	1	**7C-1068**	1	IMPELLER-PUMP	
	2	1	**131-3815**	1	SEAL GP	
J	3	1	**9M-6527**	1	WASHER-HARD (10.2X25.5X5MM THK)	
J	4	1	**0S-1591**	1	BOLT (3/8-16X1.5 IN)	
J	5	1	**135-4928**	1	SHAFT-WATER PUMP	
	6	1	**8C-3100**	1	SEAL-LIP	
	7	1	**1B-7182**	4	BOLT (5/16-18X1.25 IN)	
	8	1	**4N-1948**	1	GEAR (43 TEETH)	
J	9	1	**1A-1135**	1	BOLT (5/8-11X2 IN)	
J	10	1	**108-7930**	1	BEARING AS-ROLLER	
J	11	1	**105-3785**	1	RETAINER	
J	12	1	**5S-0581**	1	WASHER-HARD (17X38X8MM THK)	
	13	1	**105-3790**	1	HOUSING AS-PUMP	
	14	1	**8T-6764**	1	PLUG-PIPE	
	15	1	**4M-1336**	1	FERRULE	
	16	1	**5H-8985**	1	PIN-SPRING	
J	17	1	**111-2721**	1	FILTER (WATER PUMP)	
					AVAILABLE REPAIR KIT(S):	
AJ			**127-9885**	1	KIT-WATER PUMP REBUILD	

A-NOT PART OF THIS GROUP
J-KIT MARKED J INCLUDES PARTS MARKED J

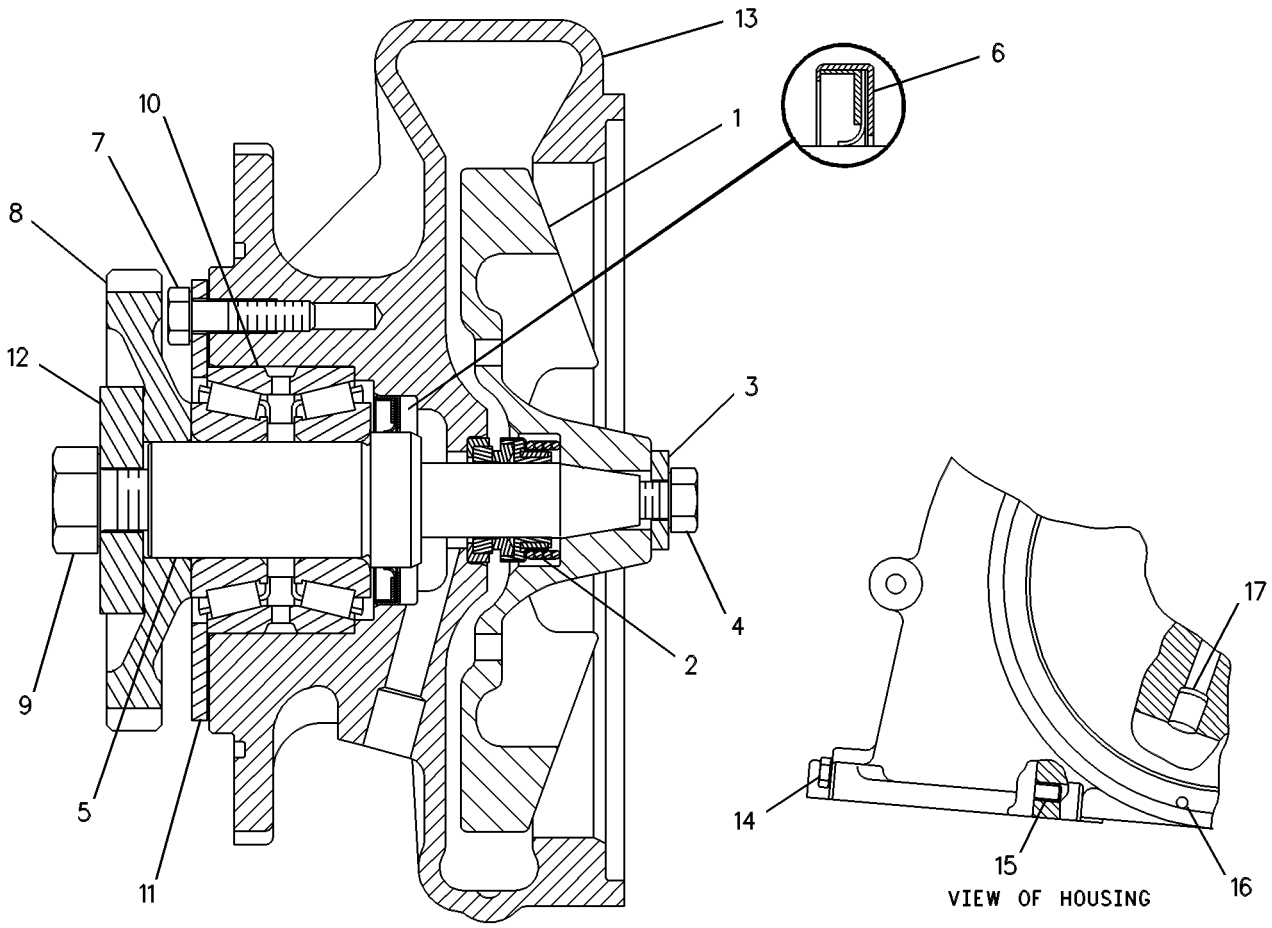

GRAPHIC #1 g00088372

COOLING SYSTEM

137-1339 PUMP GP-WATER*R

S/N: 80M1091-UP

PART OF 4N-5837 PUMP GP-WATER

SMCS-1361, 1364, 1373, 1384, 1389 **i01509276**

NOTE	REF NO	GRAPHIC REF	PART NUMBER	QTY	PART NAME 1 2 3 4 5 6 (PRODUCT LEVEL)	SEE PAGE
	1	1	**137-1344**	1	HOUSING AS-PUMP	
J	2	1	**111-2721**	1	FILTER (WATER PUMP)	
		1	**4M-1336**	1	FERRULE	
		1	**5H-8985**	1	PIN-SPRING	
		1	**8T-6764**	1	PLUG-PIPE	
J	3	1	**128-0317**	1	SEAL GP	
J	4	1	**9M-6527**	1	WASHER-HARD (10.2X25.5X5MM THK)	
J	5	1	**0S-1591**	1	BOLT (3/8-16X1.5 IN)	
J	6	1	**108-7930**	1	BEARING AS-ROLLER	
J	7	1	**153-1256**	1	SEAL-LIP TYPE	
	8	1	**1B-7182**	4	BOLT (5/16-18X1.25 IN)	
	9	1	**4N-1948**	1	GEAR (43 TEETH)	
	10	1	**1A-1135**	1	BOLT (5/8-11X2 IN)	
J	11	1	**135-4928**	1	SHAFT-WATER PUMP	
J	12	1	**136-1107**	1	RETAINER	
J	13	1	**5S-0581**	1	WASHER-HARD (17X38X8MM THK)	
	14	1	**137-1970**	1	IMPELLER-PUMP	
					AVAILABLE REPAIR KIT(S):	
AJ			**138-6744**	1	KIT-PUMP REBUILD (WATER)	

A-NOT PART OF THIS GROUP
J-KIT(S) MARKED J INCLUDES PART(S) MARKED J

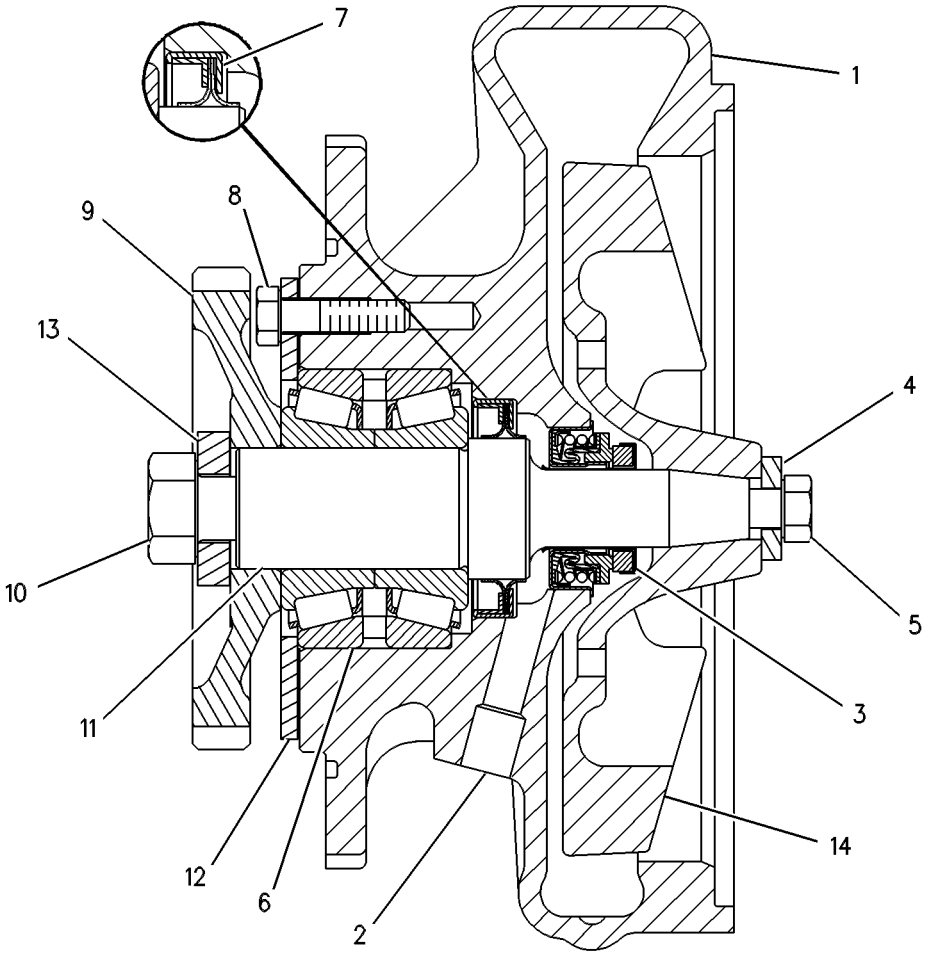

GRAPHIC #1 g00277052

COOLING SYSTEM

190-5568 RADIATOR & MOUNTING GP

S/N: 7KK88-UP

PART OF 8X-8402 CHASSIS AR

SMCS-1353 **i01457042**

NOTE	REF NO	GRAPHIC REF	PART NUMBER	QTY	PART NAME 1 2 3 4 5 6 (PRODUCT LEVEL)	SEE PAGE
Y	1	1	*8X-9002*	1	GUARD & SUPPORT GP-RADIATOR	504
Y	2	1	*190-5579*	1	WIRING GP-REAR	356
Y	3	1	*190-5581*	1	RADIATOR GP	124

Y-SEPARATE ILLUSTRATION

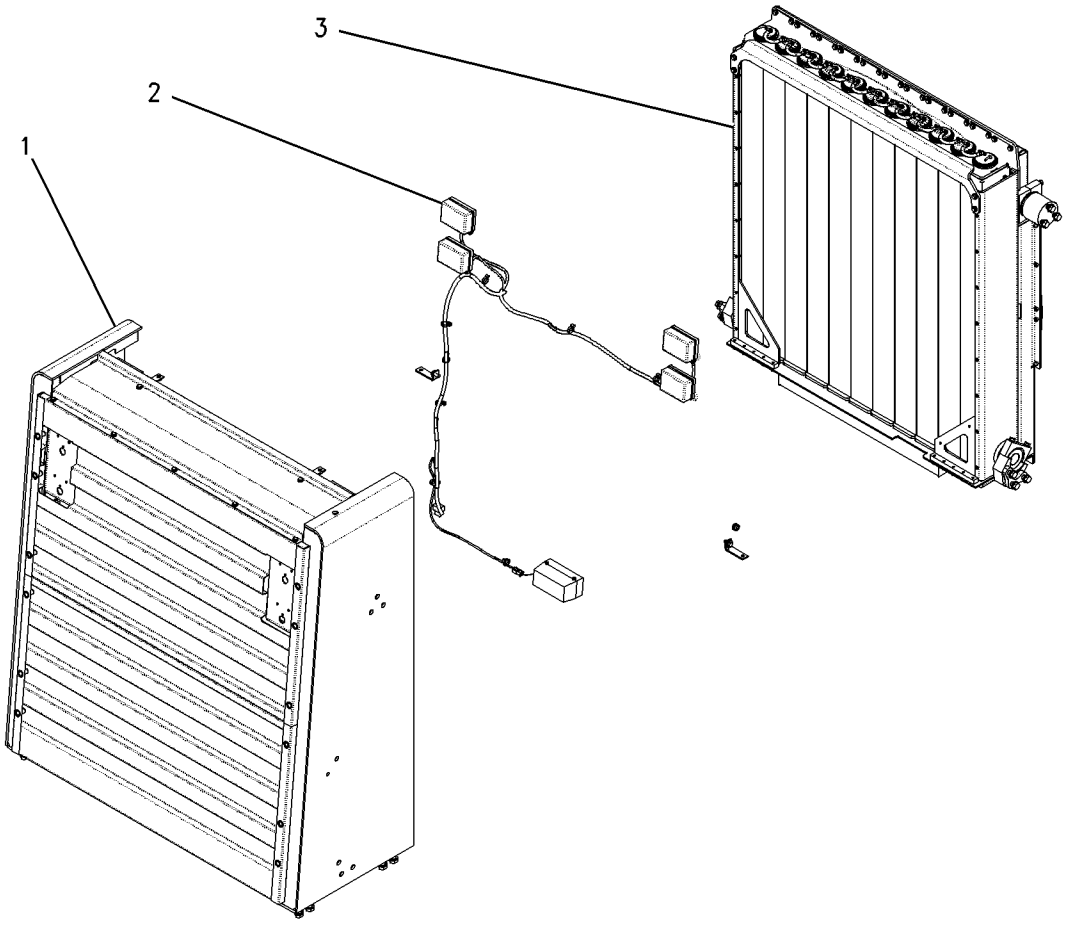

GRAPHIC #1 g00764235

MEMORANDA

COOLING SYSTEM

128-1478 RADIATOR GP

S/N: 7KK82-UP

PART OF 187-5267, 190-5581 RADIATOR GP

SMCS-1353, 1377, 1382 **i01267676**

NOTE	REF NO	GRAPHIC REF	PART NUMBER	QTY	PART NAME 1 2 3 4 5 6 (PRODUCT LEVEL)	SEE PAGE
	1	1	**128-1634**	1	TANK AS	
		1	**1F-0750**	4	NUT-WELD (3/8-16 THD)	
E		1	**125-6743**		SEAL-RUBBER (127CM)	
	2	1	**4L-6454**	14	BOLT (3/8-16X1 IN)	
	4	1	**175-7783**	1	CHANNEL AS	
		1	**1F-0750**	23	NUT-WELD (3/8-16 THD)	
	5	1	**175-7784**	1	CHANNEL AS	
		1	**1F-0750**	23	NUT-WELD (3/8-16 THD)	
	6	1	**6I-2431**	11	SEAL	
	7	1	**124-6864**	1	PLATE AS	
		1	**1F-0750**	28	NUT-WELD (3/8-16 THD)	
	8	1	**6I-2435**	11	SPACER	
	9	1	**146-6204**	11	RETAINER	
	10	1	**119-4774**	11	CORE AS-RADIATOR	
	11	1	**137-4707**	1	PLATE	
	12	1	**106-4572**	10	HOSE	
	13	1	**1P-4278**	20	CLAMP (HOSE)	
	14	1	**8T-2502**	40	BOLT (3/8-16X1.125 IN)	
	15	1	**5P-1075**	54	WASHER-HARD (3MM THK)	
	16	1	**128-1633**	1	ANGLE AS	
		1	**1F-0750**	8	NUT-WELD (3/8-16 THD)	

E-ORDER BY THE CENTIMETER

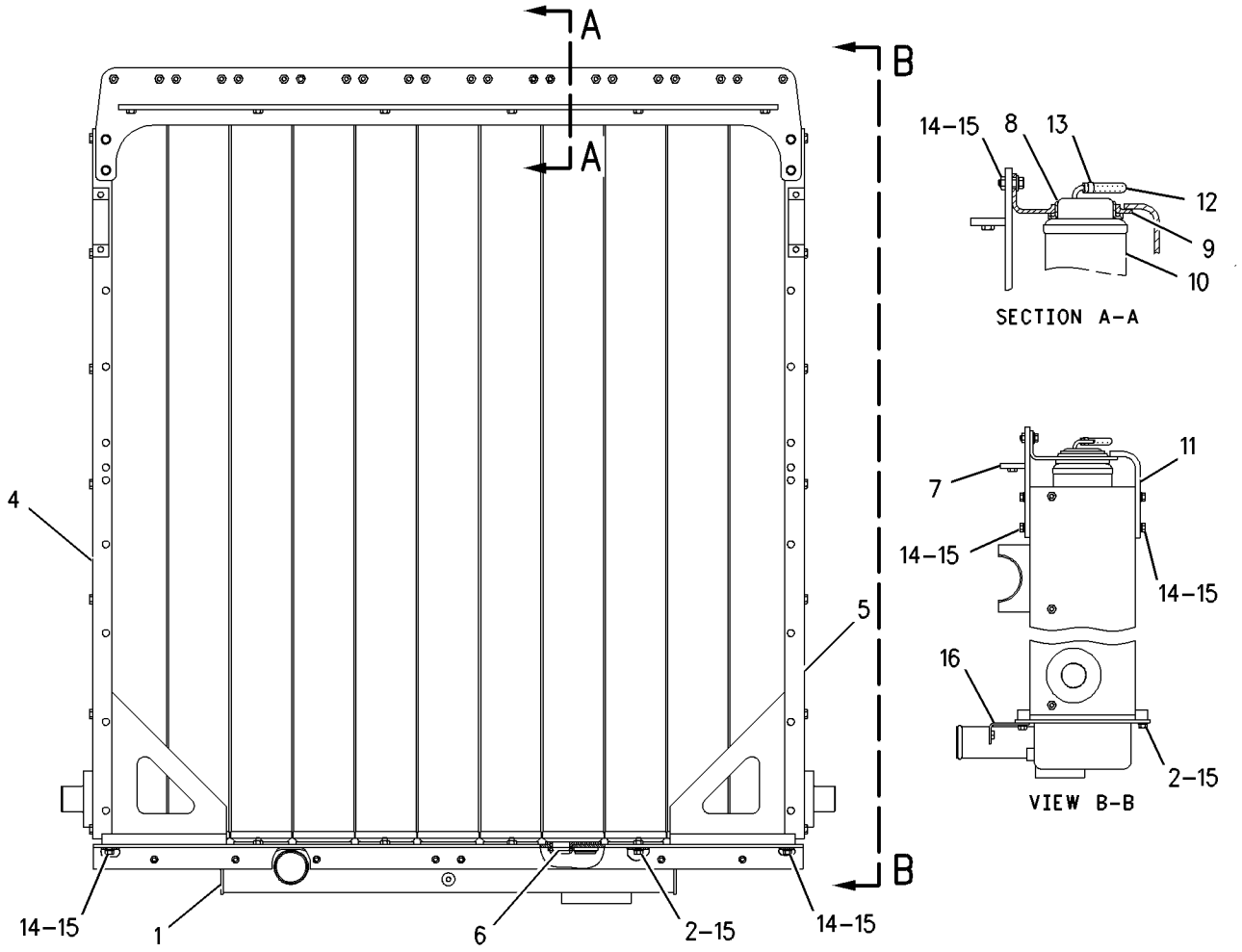

GRAPHIC #1

g00673495

COOLING SYSTEM

187-5267 RADIATOR GP

S/N: 7KK82-87

PART OF 8X-8402 CHASSIS AR

SMCS-1353, 1377, 1382 **i01415633**

NOTE	PART NUMBER	QTY	PART NAME 1 2 3 4 5 6 (PRODUCT LEVEL)	SEE PAGE
	123-6449	1	ALARM AS-BACKUP	
	102-8802	1	KIT-RECEPTACLE (2 PIN)	
			(INCLUDES RECEPTACLE AS & WEDGE)	
	3E-3365	1	WEDGE-RECEPTACLE LOCK (2 PIN)	
BD	**5P-5677**		WIRE (18 GA)	
	186-3735	2	PIN-CONNECTOR	
E	**9X-1813**		SLEEVE (28CM)	
	128-1630	1	ANGLE AS	
	1F-0750	6	NUT-WELD (3/8-16 THD)	
	9Y-7769	4	BAFFLE AS-FAN	
			(EACH INCLUDES)	
	5B-9627	6	WASHER (19X10.3X5MM THK)	
	4L-6454	32	BOLT (3/8-16X1 IN)	
	5S-7379	14	BOLT (3/8-16X0.875 IN)	
	7X-0350	6	BOLT (5/8-11X3.50 IN)	
M	**7X-7888**	2	BOLT (M6X1X90MM)	
M	**8T-4192**	2	BOLT (M12X1.75X25MM)	
	8T-6871	6	BOLT (5/8-11X2.50 IN)	
	8T-8920	8	BOLT (1/2-13X3.25 IN)	
	9X-9365	2	BRACKET-LAMP	
	7N-1639	4	CAP	
	1P-4278	5	CLAMP-HOSE	
	8T-6675	2	CLAMP-HOSE	
	4D-9517	3	CLIP	
	1K-9007	2	GROMMET	
Y	*8X-9002*	1	GUARD & SUPPORT GP-RADIATOR	504
	122-1165	1	HARNESS AS	
BE	**5P-1262**		HOSE	
E	**5P-1465**		HOSE (6.35MM ID) (266CM)	
Y	**3E-6466**	2	LAMP GP-SIGNAL	256
Y	**130-3453**	2	LAMP GP-SIGNAL	257
	8N-7257	4	MOUNT AS	
M	**5C-2890**	12	NUT (M6X1 THD)	
	128-1562	1	PLATE AS	
	1F-0750	5	NUT-WELD (3/8-16 THD)	
	128-1563	1	PLATE AS	
	1F-0750	5	NUT-WELD (3/8-16 THD)	
	8T-6764	1	PLUG-PIPE	
Y	*128-1478*	1	RADIATOR GP	120
	7W-5532	2	SHAFT	
	128-1567	1	SHIELD AS	
	1F-0750	4	NUT-WELD (3/8-16 THD)	
	128-1617	1	SHIELD AS	
	1F-0750	4	NUT-WELD (3/8-16 THD)	
	128-1618	1	SHIELD AS	
	1F-0750	4	NUT-WELD (3/8-16 THD)	
	128-1621	1	SHIELD AS	
	1F-0750	4	NUT-WELD (3/8-16 THD)	
	7W-7233	2	SPACER	
	3S-2093	14	STRAP-CABLE	
	7W-5775	4	STRIP	
	7N-3864	2	SUPPORT	
	109-6550	1	TEE	
	9X-8256	14	WASHER (6.6X12X2MM THK)	
	5P-1076	2	WASHER-HARD (13.5X30X4MM THK)	
	8T-4122	12	WASHER-HARD (17X32X3.5MM THK)	

187-5267 **RADIATOR GP** *(contd.)* **i01415633**

NOTE	PART NUMBER	QTY	PART NAME 1 2 3 4 5 6 (PRODUCT LEVEL)	SEE PAGE
	8T-4223	8	WASHER-HARD (13.5X25.5X3MM THK)	
	8T-4896	46	WASHER-HARD (10.2X18.5X2.5MM THK)	

B-USE AS REQUIRED
D-ORDER BY THE METER
E-ORDER BY THE CENTIMETER
M-METRIC PART
Y-SEPARATE ILLUSTRATION

COOLING SYSTEM

190-5581 RADIATOR GP

S/N: 7KK88-UP

PART OF 190-5568 RADIATOR & MOUNTING GP

SMCS-1353, 1377, 1382 **i01457128**

NOTE	REF NO	GRAPHIC REF	PART NUMBER	QTY	PART NAME 1 2 3 4 5 6 (PRODUCT LEVEL)	SEE PAGE
BE	1	1	**5P-1262**		HOSE (63.5MM ID)	
	2	1	**7N-1639**	4	CAP	
	3	1	**7N-3864**	2	SUPPORT	
	4	1	**7W-5532**	2	SHAFT	
	5	1	**7W-5775**	4	STRIP	
	6	1	**7W-7233**	2	MOUNT-RADIATOR	
	7	1	**8N-7257**	4	MOUNT AS	
	8	1	**8T-6675**	2	CLAMP-HOSE	
	9	1	**9Y-7769**	4	BAFFLE AS-FAN	
					(EACH INCLUDES)	
		1	**5B-9627**	6	WASHER (19X10.3X5MM THK)	
Y	10	1	*128-1478*	1	RADIATOR GP	120
	11	1	**128-1562**	1	PLATE AS	
		1	**1F-0750**	5	NUT-WELD (3/8-16 THD)	
	12	1	**128-1563**	1	PLATE AS	
		1	**1F-0750**	5	NUT-WELD (3/8-16 THD)	
	13	1	**128-1567**	1	SHIELD AS	
		1	**1F-0750**	4	NUT-WELD (3/8-16 THD)	
	14	1	**128-1617**	1	SHIELD AS	
		1	**1F-0750**	4	NUT-WELD (3/8-16 THD)	
	15	1	**128-1618**	1	SHIELD AS	
		1	**1F-0750**	4	NUT-WELD (3/8-16 THD)	
	16	1	**128-1621**	1	SHIELD AS	
		1	**1F-0750**	4	NUT-WELD (3/8-16 THD)	
	17	1	**128-1630**	1	ANGLE AS	
		1	**1F-0750**	6	NUT-WELD (3/8-16 THD)	
	18	1	**4L-6454**	32	BOLT (3/8-16X1 IN)	
	19	1	**5S-7379**	14	BOLT (3/8-16X0.875 IN)	
	20	1	**7X-0350**	6	BOLT (5/8-11X3.50 IN)	
	21	1	**8T-4122**	12	WASHER-HARD (17X32X3.5MM THK)	
	22	1	**8T-4223**	8	WASHER-HARD (13.5X25.5X3MM THK)	
	23	1	**8T-4896**	46	WASHER-HARD (10.2X18.5X2.5MM THK)	
	24	1	**8T-6764**	1	PLUG-PIPE	
	25	1	**8T-6871**	6	BOLT (5/8-11X2.50 IN)	
	26	1	**8T-8920**	8	BOLT (1/2-13X3.25 IN)	

B-USE AS REQUIRED
E-ORDER BY THE CENTIMETER
Y-SEPARATE ILLUSTRATION

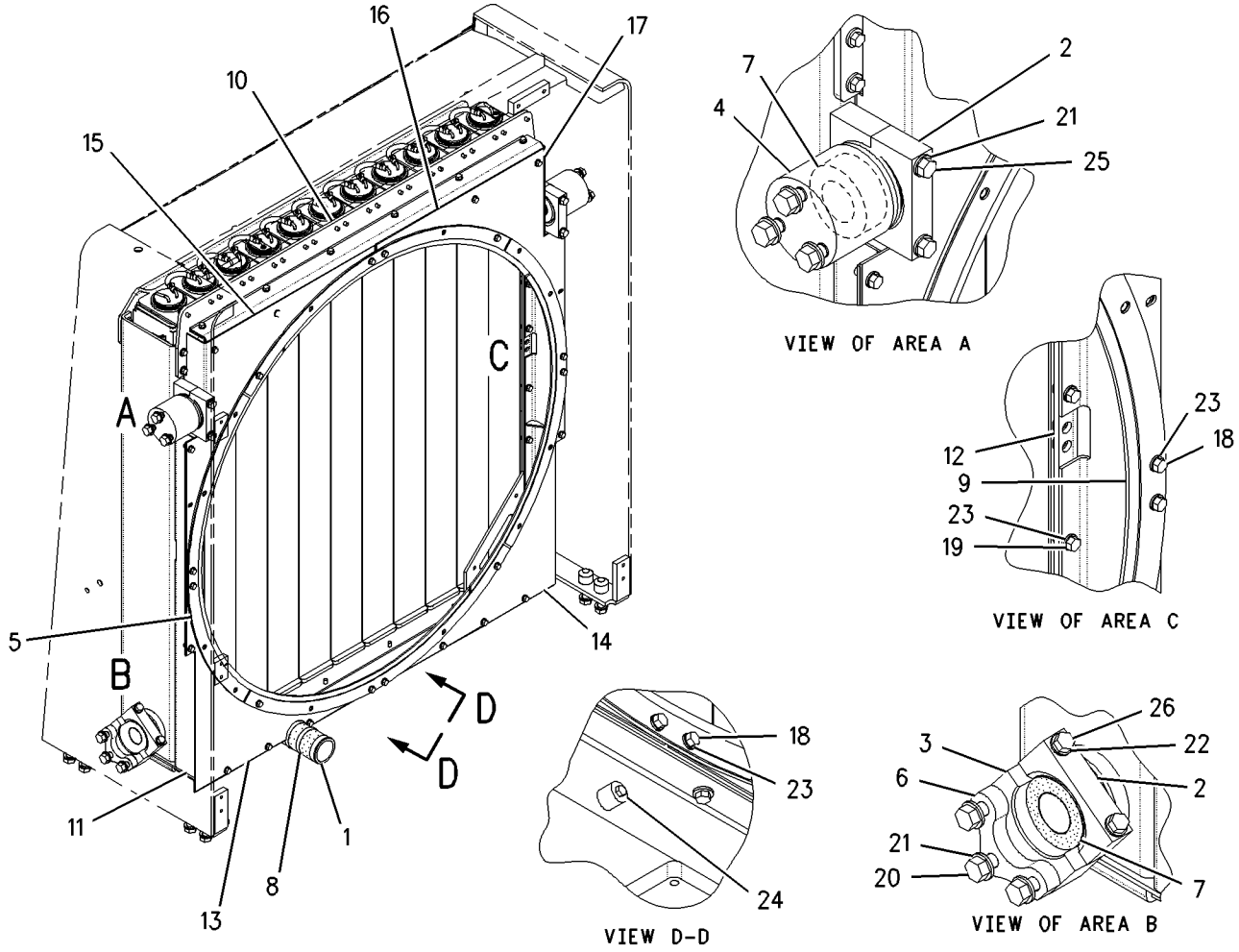

GRAPHIC #1 g00765030

COOLING SYSTEM

190-5110 TANK GP-COOLANT

S/N: 7KK88-UP

PART OF 190-5567 ENCLOSURE GP-ENGINE

SMCS-1377 **i01456685**

NOTE	REF NO	GRAPHIC REF	PART NUMBER	QTY	PART NAME 1 2 3 4 5 6 (PRODUCT LEVEL)	SEE PAGE
	1	1	**1P-4278**	4	CLAMP-HOSE	
	2	1	**5P-4536**	1	ELBOW	
	3	1	**6K-0806**	4	STRAP-CABLE	
	4	1	**7W-1890**	1	ELBOW	
	5	1	**7X-7958**	2	CLAMP-HOSE	
	6	1	**9Y-9236**	1	BODY AS-GAUGE	
	7	1	**031-1119**	1	CAP AS-RADIATOR	
	8	1	**102-7886**	1	SLEEVE	
	9	1	**125-5458**	1	TANK AS	
		1	**6B-8692**	1	BOSS	
		1	**8N-8846**	1	NECK-FILLER	
	10	1	**5P-1076**	4	WASHER-HARD (13.5X30X4MM THK)	
	11	1	**5P-2566**	4	BOLT (1/2-13X1.5 IN)	
	12	1	**7D-7233**	1	CLIP (SLOT)	
	13	1	**7M-8485**	1	SEAL-O-RING	
	14	1	**7X-0292**	1	BOLT (3/8-16X4.50 IN)	
	15	1	**8T-4896**	1	WASHER-HARD (10.2X18.5X2.5MM THK)	
	16	1	**8T-6767**	2	PLUG-PIPE	
E	17	1	**5P-1251**		HOSE (25.4MM ID) (105CM)	
E	18	1	**5P-1465**	1	HOSE (225CM)	
E	18A	1	**5P-1465**	1	HOSE (72CM)	

E-ORDER BY THE CENTIMETER

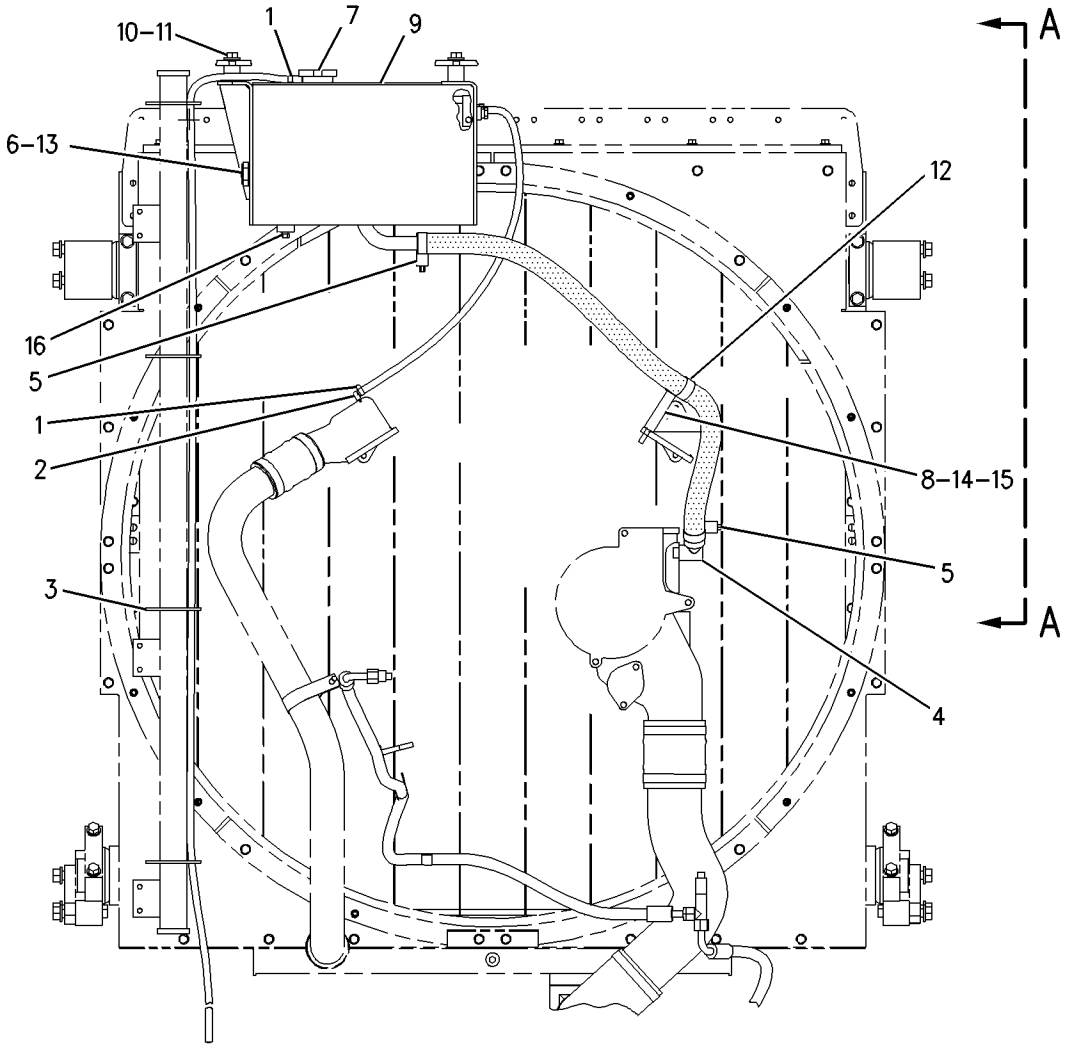

FRONT VIEW

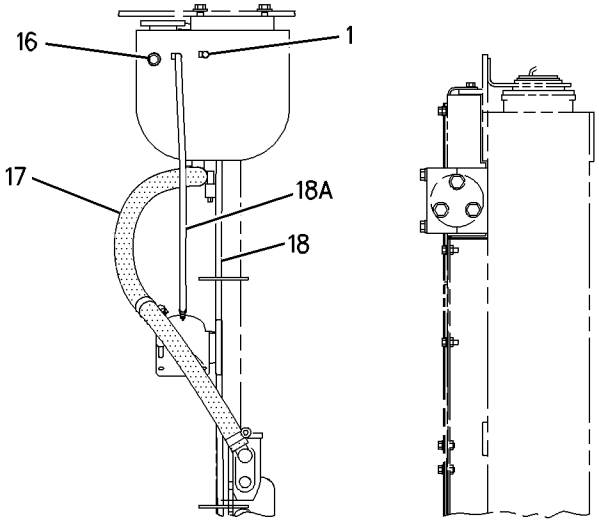

VIEW A–A

GRAPHIC #1 g00762090

AIR INLET AND EXHAUST SYSTEM

128-2313 AFTERCOOLER GP-WATER

S/N: 80M1-UP

PART OF 123-0200 ENGINE AR

SMCS-1063, 1064, 1079 **i00107767**

NOTE	REF NO	GRAPHIC REF	PART NUMBER	QTY	PART NAME 1 2 3 4 5 6 (PRODUCT LEVEL)	SEE PAGE
	1	1	**1D-4706**	2	BOLT (3/8-16X6IN)	
					(LOCATION Z)	
	2	1	**0S-1590**	4	BOLT (3/8-16X2IN)	
					(LOCATION Y)	
	3	1	**1W-5381**	1	COVER-AFTERCOOLER	
	4	1	**7C-3386**	1	CORE AS-AFTERCOOLER	
	5	1	**2W-6687**	2	ADAPTER-AFTERCOOLER	
	6	1	**8N-2299**	2	ADAPTER-AFTERCOOLER	
	7	1	**109-0079**	2	SEAL-O-RING (78.74MM ID)	
	8	1	**109-0073**	4	SEAL-O-RING (43.82MM ID)	
	9	1	**4N-2564**	1	GASKET-AFTERCOOLER	
	10	1	**0T-0573**	14	BOLT (3/8-16X2.75IN)	
	11	1	**5M-2894**	37	WASHER (2.5MM THK)	
	12	1	**7W-6492**	3	PLUG-PIPE (1/2-14'NPTF'THD)	
	13	1	**8N-2705**	1	HOUSING-AFTERCOOLER	
	14	1	**1B-7182**	7	BOLT (5/16-18X1.25IN)	
	15	1	**9M-1974**	8	WASHER-HARD (2MM THK)	
	16	1	**0S-1617**	1	BOLT (5/16-18X.75IN)	
	17	1	**4N-8628**	1	GASKET	
	18	1	**0S-1571**	17	BOLT (3/8-16X1.75IN)	
					(LOCATION X)	

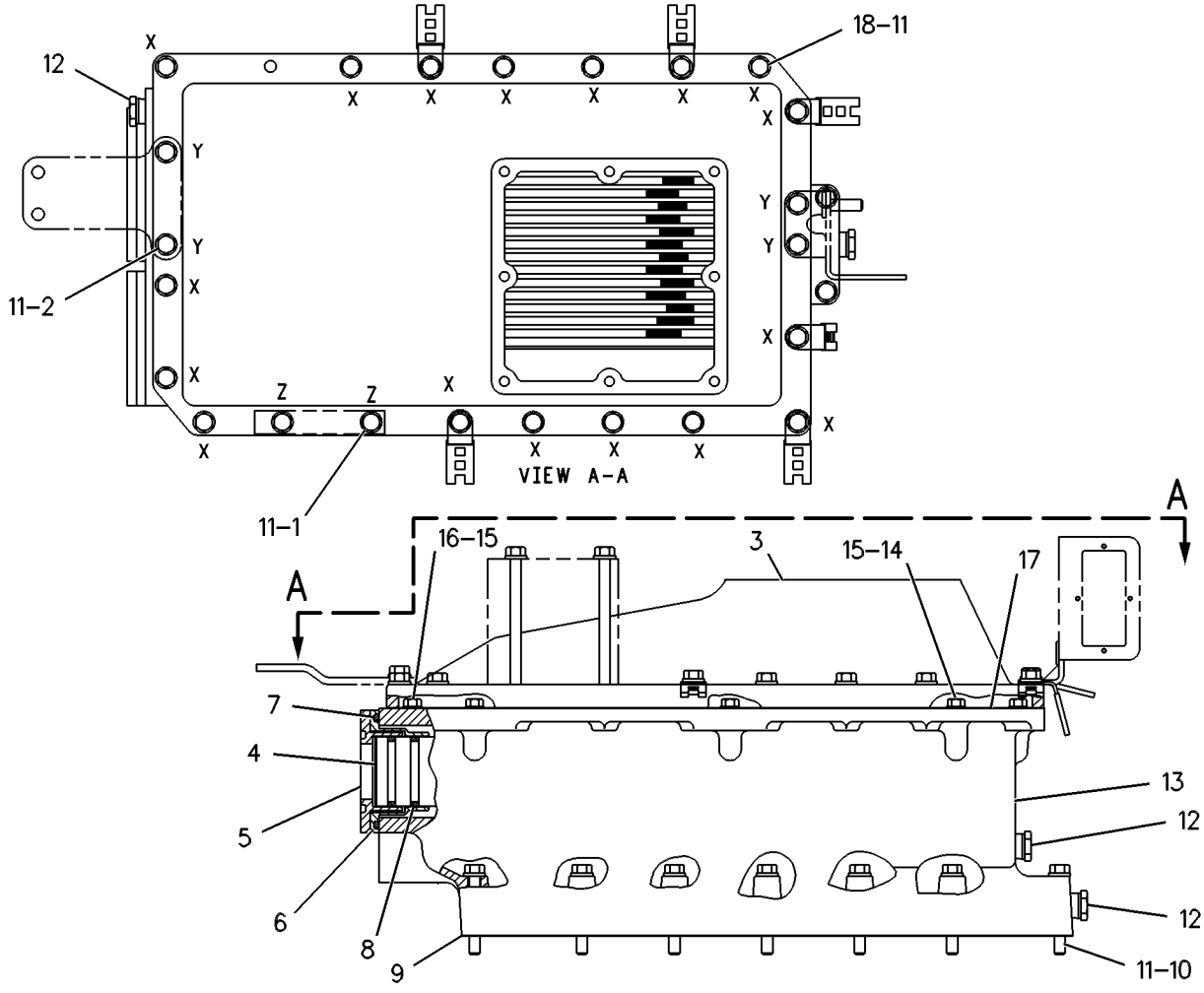

GRAPHIC #1

g00086490

AIR INLET AND EXHAUST SYSTEM

7C-1909 AIR CLEANER GP

S/N: 7KK1-UP

PART OF 6I-0673 INSTALLATION AR-ENGINE

SMCS-1051, 1054, 1055, 7452 **i00111453**

NOTE	PART NUMBER	QTY	PART NAME 1 2 3 4 5 6 (PRODUCT LEVEL)	SEE PAGE
Y	**125-3960**	1	AIR CLEANER GP	131
	8S-6822	1	BODY AS	
	8S-6824	1	CLAMP AS	
	7C-9770	1	GASKET	
	2K-4973	10	LOCKNUT (3/8-16 THD)	
	1M-3419	1	SEAL-O-RING	
	5M-6687	10	STUD-TAPERLOCK	
	5P-1075	10	WASHER-HARD (3MM THK)	

Y-SEPARATE ILLUSTRATION

AIR INLET AND EXHAUST SYSTEM

125-3960 AIR CLEANER GP

S/N: 7KK1-UP

PART OF 7C-1909 AIR CLEANER GP

SMCS-1051, 1054, 1055, 7452 **i00552931**

NOTE	REF NO	GRAPHIC REF	PART NUMBER	QTY	PART NAME 1 2 3 4 5 6 (PRODUCT LEVEL)	SEE PAGE
	1	1	**106-3969**	1	ELEMENT AS-PRIMARY	
	2	1	**106-3973**	1	ELEMENT AS-SECONDARY	
	3	1	**128-0087**	1	COVER AS-AIR CLEANER	
B		1	**7X-2634**		SEAL	
	4	1	**9M-3695**	2	ROD AS	

B-USE AS REQUIRED

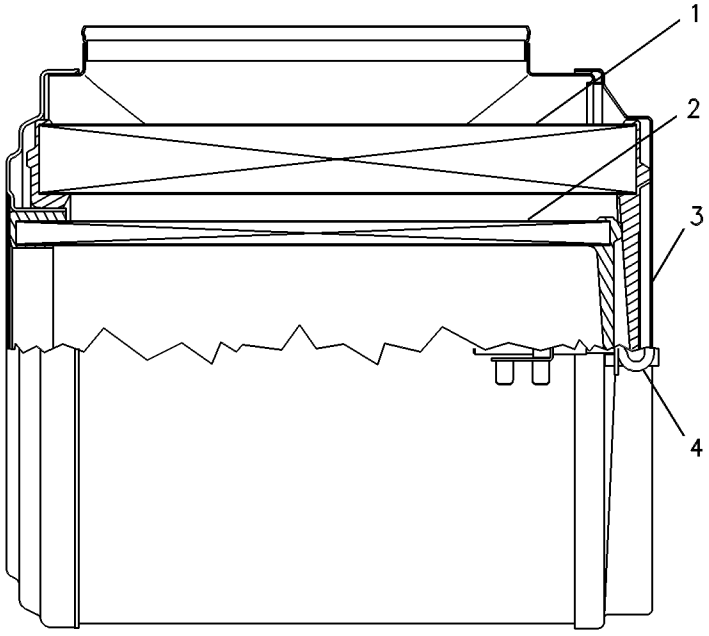

GRAPHIC #1 g00086118

AIR INLET AND EXHAUST SYSTEM

6I-0672 DUST EJECTOR GP

S/N: 7KK1-UP

PART OF 6I-0673 INSTALLATION AR-ENGINE

SMCS-1068 **i00111398**

NOTE	PART NUMBER	QTY	PART NAME 1 2 3 4 5 6 (PRODUCT LEVEL)	SEE PAGE
	4L-9337	2	BOLT (3/8-16X1.50IN)	
	5P-4868	4	CLAMP	
	3R-1317	2	HOSE	
	6V-8801	2	NUT (3/8-16 THD)	
	126-5397	1	TUBE	
	2W-9638	1	TUBE AS	
	8T-4896	4	WASHER-HARD (2.5MM THK)	

AIR INLET AND EXHAUST SYSTEM

4W-0235 EXTENSION GP-EXHAUST

S/N: 7KK1-UP

PART OF 8X-8403 INSTALLATION AR-FIELD

SMCS-1061 **i00111365**

NOTE	REF NO	GRAPHIC REF	PART NUMBER	QTY	PART NAME 1 2 3 4 5 6 (PRODUCT LEVEL)	SEE PAGE
	1	1	**2W-9637**	1	EJECTOR AS-EXHAUST	
	2	1	**5S-7383**	1	BOLT (3/8-16X1.75IN)	
	3	1	**2K-4973**	1	LOCKNUT (3/8-16 THD)	
	4	1	**2P-7418**	1	CLAMP	

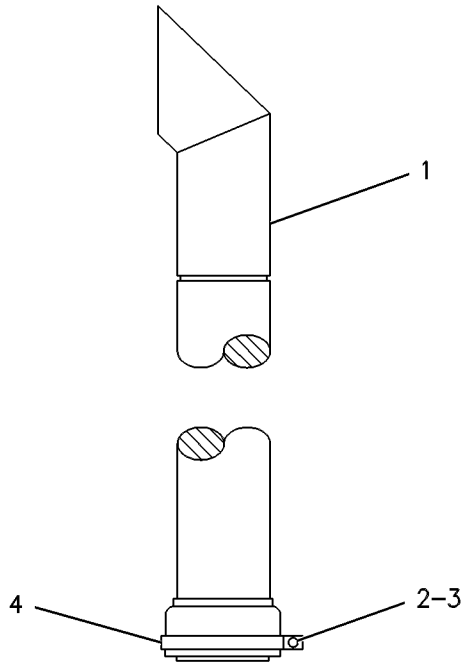

GRAPHIC #1 g00086250

AIR INLET AND EXHAUST SYSTEM

7E-9345 LINES GP-AIR

S/N: 7KK1-UP

PART OF 6I-0673 INSTALLATION AR-ENGINE

SMCS-1071 **i00543522**

NOTE	REF NO	GRAPHIC REF	PART NUMBER	QTY	PART NAME 1 2 3 4 5 6 (PRODUCT LEVEL)	SEE PAGE
	1	1	**1W-6694**	1	CLAMP	
	2	1	**1W-7384**	1	COUPLING	
	3	1	**1Y-1965**	1	PLATE-SPACER	
	4	1	**2M-5173**	4	SEAL-O-RING	
	5	1	**3B-6552**	1	ELBOW	
	6	1	**4P-5969**	1	SUPPORT AS	
		1	**7M-1674**	1	ELEMENT-FILTER	
	7	1	**5K-5068**	1	NIPPLE	
	8	1	**7C-8859**	1	PIPE AS-TURBOCHARGER	
	9	1	**7X-0578**	2	WASHER-HARD (2.5MM THK)	
	10	1	**8E-6303**	1	CLIP (TAB)	
	11	1	**8E-6304**	1	CLIP (SLOT)	
	12	1	**8N-2694**	1	INDICATOR-AIR FILTER SERVICE	
	13	1	**9M-1869**	1	PIPE-AIR TRANSFER	
	14	1	**127-2397**	1	PLATE	
	15	1	**5S-7383**	3	BOLT (3/8-16X1.75IN)	
	16	1	**6V-8801**	3	NUT (3/8-16 THD)	
	17	1	**8T-2501**	2	BOLT (3/8-16X2IN)	
	18	1	**8T-4896**	2	WASHER-HARD (2.5MM THK)	
	19	1	**9B-7237**	2	BOLT (3/8-16X1.25IN)	

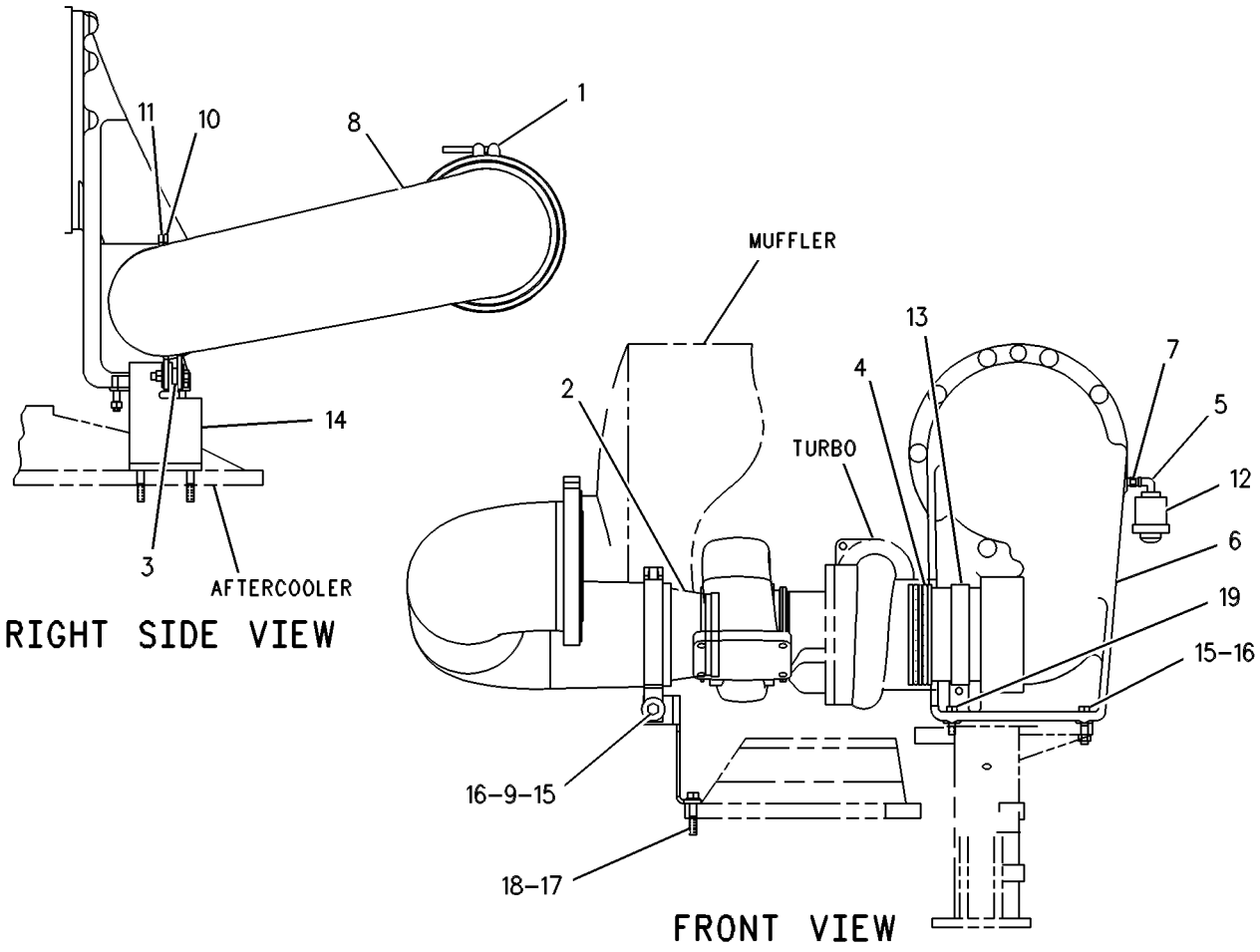

GRAPHIC #1 g00268004

AIR INLET AND EXHAUST SYSTEM

130-1133 LINES GP-AIR

S/N: 80M1-UP

PART OF 123-0200 ENGINE AR

SMCS-1071 **i01462176**

NOTE	REF NO	GRAPHIC REF	PART NUMBER	QTY	PART NAME 1 2 3 4 5 6 (PRODUCT LEVEL)	SEE PAGE
	1	1	**7E-3205**	1	MANIFOLD-INLET	
	2	1	**5B-7890**	2	PLUG-PIPE (1/4-18 NPTF)	
	3	1	**8N-0879**	4	CLAMP	
	4	1	**7W-1096**	1	SUPPORT-TURBOCHARGER	
	5	1	**122-9286**	1	TUBE AS-EXHAUST	
	6	1	**194-4773**	1	TUBE AS-EXHAUST	
	7	1	**174-3998**	1	SUPPORT-AIR CLEANER	
	8	1	**8B-7430**	8	SPACER (.530 IN THK)	
	9	1	**0S-1591**	2	BOLT (3/8-16X1.5 IN)	
	10	1	**5M-2894**	12	WASHER-HARD (10.2X18.5X2.5MM THK)	
	11	1	**174-0677**	1	BRACKET	
	12	1	**8N-2574**	1	BRACKET	
	13	1	**0S-1594**	2	BOLT (3/8-16X1 IN)	
	14	1	**129-9417**	1	GASKET	
	15	1	**1W-5380**	1	ADAPTER	
	16	1	**7W-5919**	1	ELBOW-OUTLET	
	17	1	**4L-8337**	2	SEAL-O-RING	
	18	1	**7W-1944**	1	RETAINER	
	19	1	**0S-0509**	2	BOLT (3/8-16X0.75 IN)	
	20	1	**5S-1188**	2	SEAL-O-RING	
	21	1	**5P-2755**	4	BOLT-HIGH TEMPERATURE (3/8-16X69.85MM)	
	22	1	**8T-6765**	2	PLUG-PIPE	
	23	1	**3B-1915**	8	BOLT (3/8-16X1.37 IN)	
	24	1	**0S-1590**	2	BOLT (3/8-16X2 IN)	
	29	1	**6I-2188**	1	PLATE	
	30	1	**7W-3145**	1	PLATE	
	32	1	**7X-0288**	2	BOLT (3/8-16X1.625 IN)	
	34	1	**4L-9337**	2	BOLT (3/8-16X1.5 IN)	

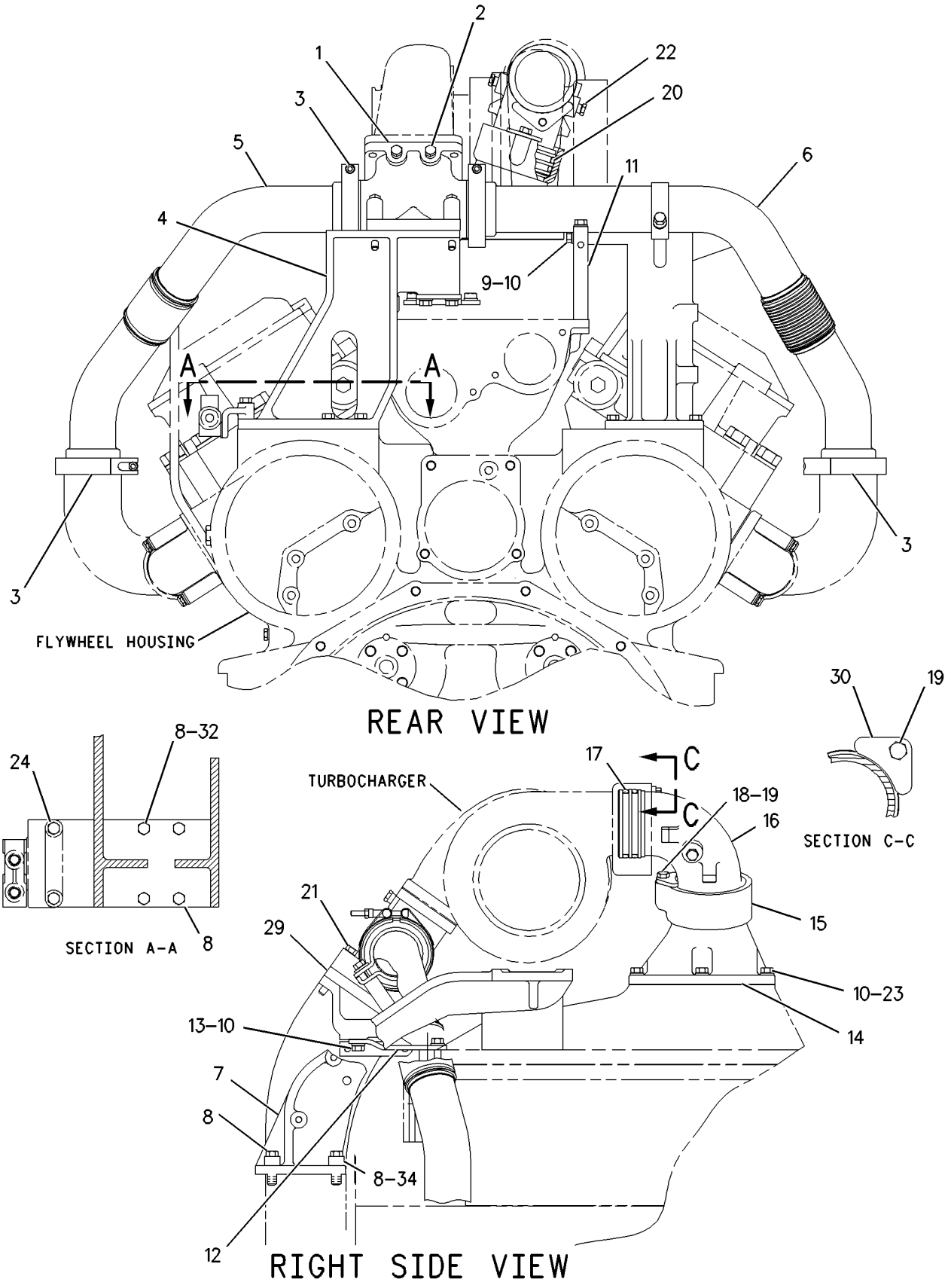

GRAPHIC #1

g00764457

AIR INLET AND EXHAUST SYSTEM

154-7119 LINES GP-AIR

S/N: 7KK67-UP

PART OF 8X-8403 INSTALLATION AR-FIELD

SMCS-1071 **i01057605**

NOTE	REF NO	GRAPHIC REF	PART NUMBER	QTY	PART NAME 1 2 3 4 5 6 (PRODUCT LEVEL)	SEE PAGE
	1	1	**6B-3771**	1	CLAMP	
	2	1	**6V-3582**	2	CLAMP-HOSE	
	3	1	**077-9549**	1	CAP	
	4	1	**127-1664**	1	CLAMP	
	5	1	**154-7105**	1	ELBOW	
	6	1	**154-7106**	1	TUBE	
Y	7	1	**154-7111**	1	PRESSURIZER GP-CAB	848
M	8	1	**6V-5219**	1	BOLT (M8X1.25X40MM)	
M	9	1	**8T-4200**	2	BOLT (M8X1.25X16MM)	
	10	1	**8T-4224**	7	WASHER-HARD (2MM THK)	
M	11	1	**8T-7547**	4	BOLT (M8X1.25X30MM)	

M-METRIC PART
Y-SEPARATE ILLUSTRATION

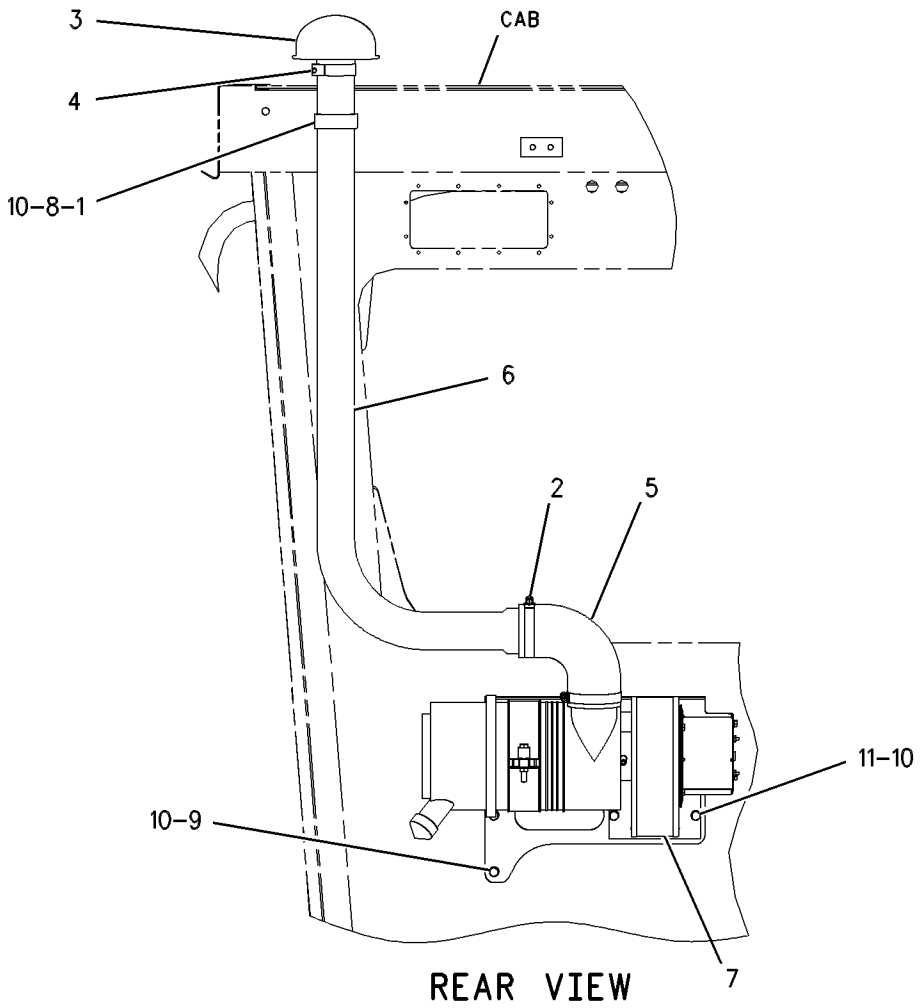

GRAPHIC #1 g00573010

AIR INLET AND EXHAUST SYSTEM

127-5134 MANIFOLD GP-EXHAUST

S/N: 80M1-3508

PART OF 123-0200 ENGINE AR

SMCS-1059 **i00107737**

NOTE	REF NO	GRAPHIC REF	PART NUMBER	QTY	PART NAME 1 2 3 4 5 6 (PRODUCT LEVEL)	SEE PAGE
	1	1	**112-7751**	1	MANIFOLD-EXHAUST (REAR-RH)	
	2	1	**107-8106**	2	MANIFOLD-EXHAUST (END)	
	3	1	**108-3612**	24	SPACER (53MM THK)	
	4	1	**5M-2894**	24	WASHER (2.5MM THK)	
	5	1	**2N-2766**	24	LOCKNUT (3/8-16 NPTF THD)	
	6	1	**112-7750**	1	MANIFOLD-EXHAUST (REAR-LH)	
	7	1	**107-8107**	2	MANIFOLD-EXHAUST (MIDDLE)	
	8	1	**129-9452**	12	GASKET-EXHAUST MANIFOLD	

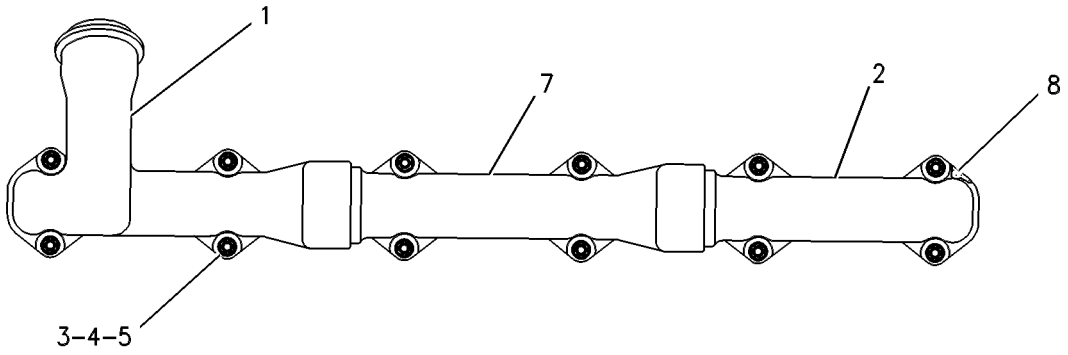

RIGHT SIDE VIEW

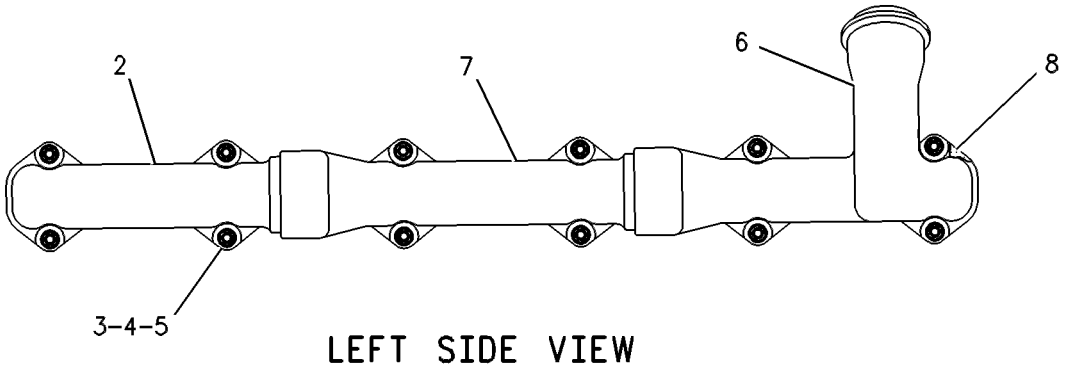

LEFT SIDE VIEW

GRAPHIC #1 g00086486

AIR INLET AND EXHAUST SYSTEM

179-7024 MANIFOLD GP-EXHAUST

S/N: 80M3509-UP

PART OF 123-0200 ENGINE AR

SMCS-1059 **i01291150**

NOTE	REF NO	GRAPHIC REF	PART NUMBER	QTY	PART NAME 1 2 3 4 5 6 (PRODUCT LEVEL)	SEE PAGE
	1	1	**100-7401**	8	SEAL AS-EXHAUST	
	2	1	**108-3612**	24	SPACER (53MM THK)	
	3	1	**112-7750**	1	MANIFOLD-EXHAUST (REAR-LH)	
	4	1	**112-7751**	1	MANIFOLD-EXHAUST (REAR-RH)	
	5	1	**129-9452**	12	GASKET-EXHAUST MANIFOLD	
	6	1	**163-3103**	2	MANIFOLD-EXHAUST	
	7	1	**163-3104**	2	MANIFOLD-EXHAUST	
	8	1	**2N-2766**	24	LOCKNUT (3/8-16 THD)	
	9	1	**5M-2894**	24	WASHER (2.5MM THK)	

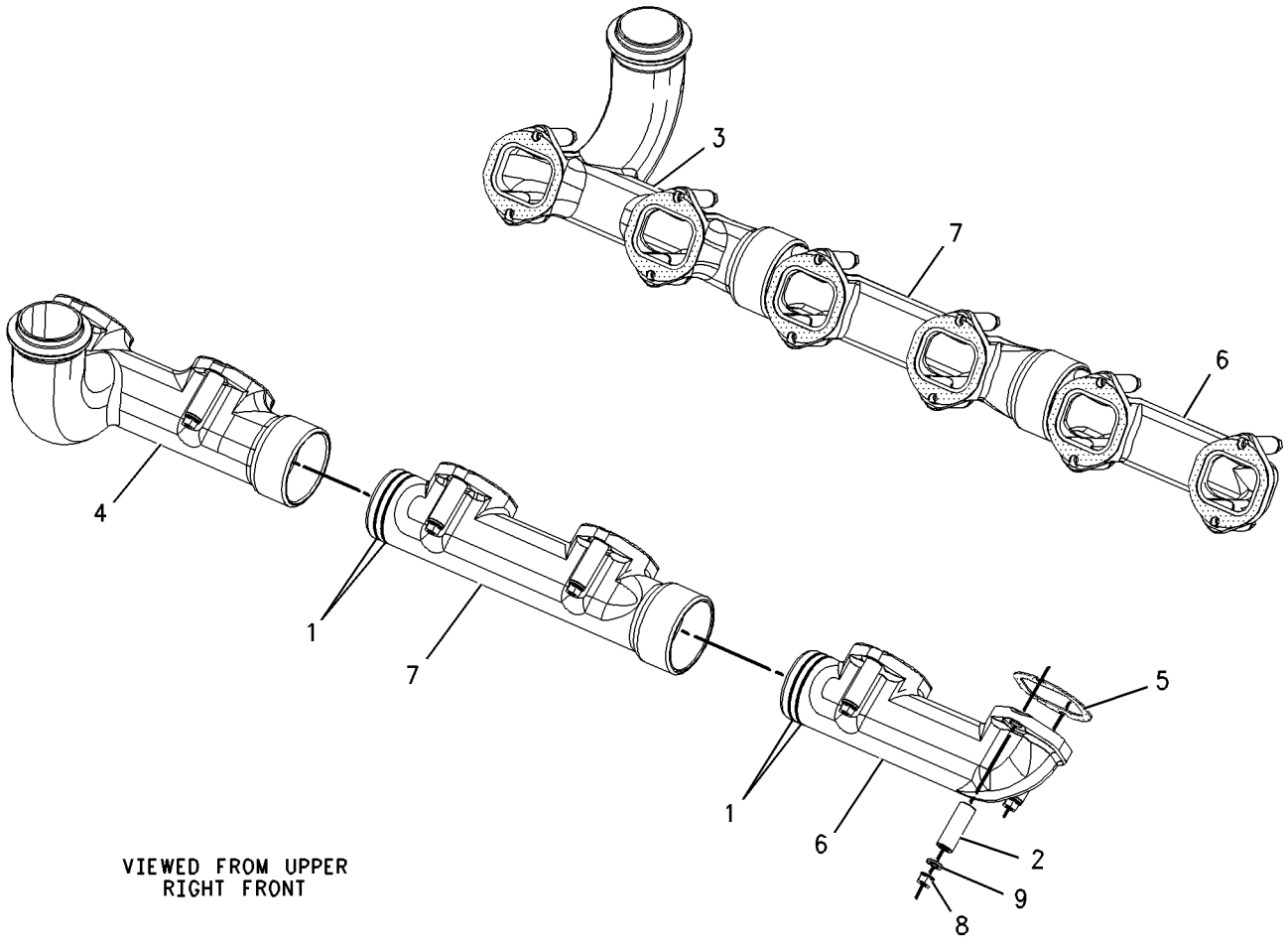

GRAPHIC #1 g00686298

AIR INLET AND EXHAUST SYSTEM

125-4393 MUFFLER GP

S/N: 7KK1-UP

PART OF 6I-0673 INSTALLATION AR-ENGINE

SMCS-1062 **i01492810**

NOTE	REF NO	GRAPHIC REF	PART NUMBER	QTY	PART NAME 1 2 3 4 5 6 (PRODUCT LEVEL)	SEE PAGE
	1	1	**2W-9626**	1	MUFFLER AS	
	2	1	**198-7707**	1	SUPPORT AS	
		1	**1F-0750**	3	NUT-WELD (3/8-16 THD)	
	3	1	**198-7708**	1	SUPPORT AS	
		1	**1F-0750**	3	NUT-WELD (3/8-16 THD)	
	4	1	**6I-2942**	1	BRACKET	
	5	1	**6I-2969**	1	PLATE	
	6	1	**161-3528**	2	BRACKET AS	
	7	1	**7C-7047**	1	BRACKET AS	
	8	1	**2K-4973**	4	LOCKNUT (3/8-16 THD)	
	10	1	**4L-9337**	9	BOLT (3/8-16X1.5 IN)	
	11	1	**5P-1075**	24	WASHER-HARD (10.2X22.5X3MM THK)	
	12	1	**6V-8801**	8	NUT (3/8-16 THD)	
	13	1	**7X-0291**	4	BOLT (3/8-16X3.75 IN)	
	14	1	**8T-4896**	4	WASHER-HARD (10.2X18.5X2.5MM THK)	
	15	1	**9B-7237**	3	BOLT (3/8-16X1.25 IN)	
	17	1	**7X-0289**	4	BOLT (3/8-16X1.875 IN)	

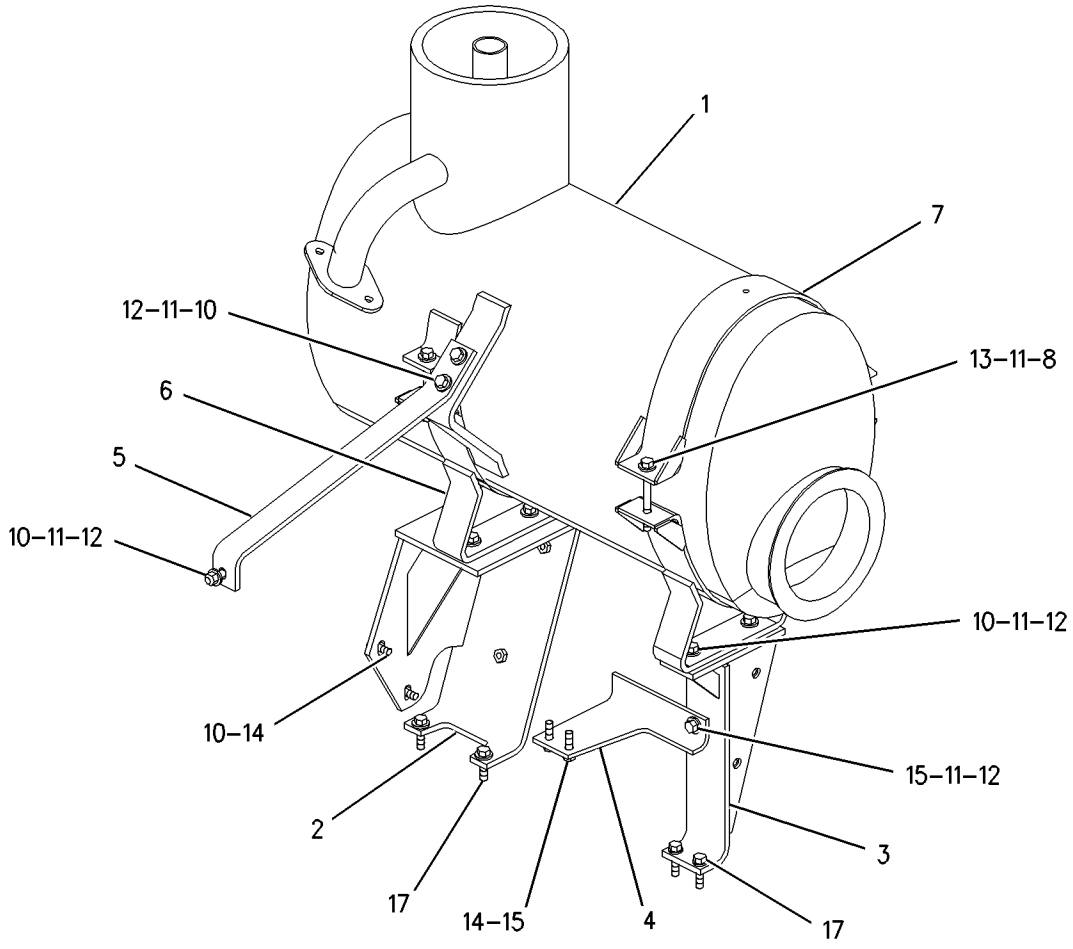

GRAPHIC #1 g00777857

AIR INLET AND EXHAUST SYSTEM

169-1918 SLEEVE-EXHAUST MANIFOLD

S/N: 7KK1-UP

PROVIDED FOR RETROFITTING BELLOWS TO SALVAGEABLE SLIP-JOINT MANIFOLD

FIELD INSTALLATION

SMCS-1059 **i01141443**

NOTE	REF NO	GRAPHIC REF	PART NUMBER	QTY	PART NAME 1 2 3 4 5 6 (PRODUCT LEVEL)	SEE PAGE
					(NO SERVICED PARTS)	

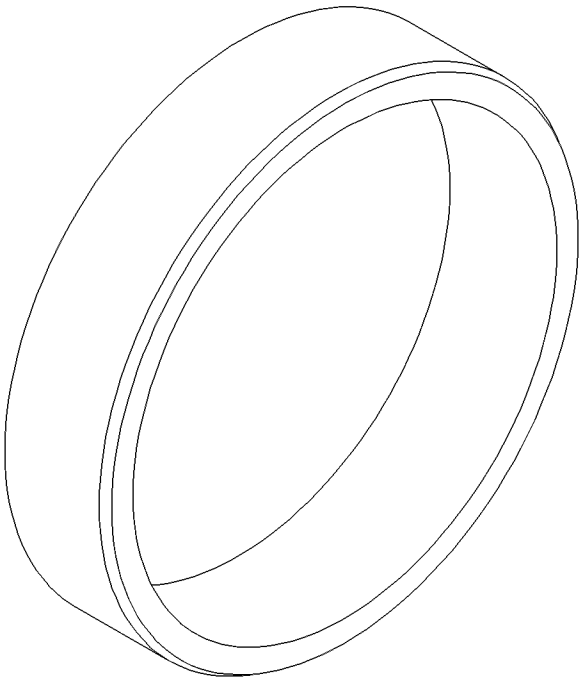

GRAPHIC #1 g00606261

AIR INLET AND EXHAUST SYSTEM

130-6228 TURBOCHARGER GP

S/N: 8OM1-UP

PART OF 123-0200 ENGINE AR

SMCS-1052, 1053, 1056, 1060, 1065, 1066, 1077 **i00584113**

NOTE	REF NO	GRAPHIC REF	PART NUMBER	QTY	PART NAME 1 2 3 4 5 6 (PRODUCT LEVEL)	SEE PAGE
Y	1	1	**130-6270**	1	TURBOCHARGER GP	144
	2	1	**2N-2765**	4	BOLT-HIGH TEMPERATURE	
	3	1	**7M-7273**	1	GASKET-TURBOCHARGER	
	4	1	**2N-2766**	4	LOCKNUT (3/8-16 NPTF THD)	

Y-SEPARATE ILLUSTRATION

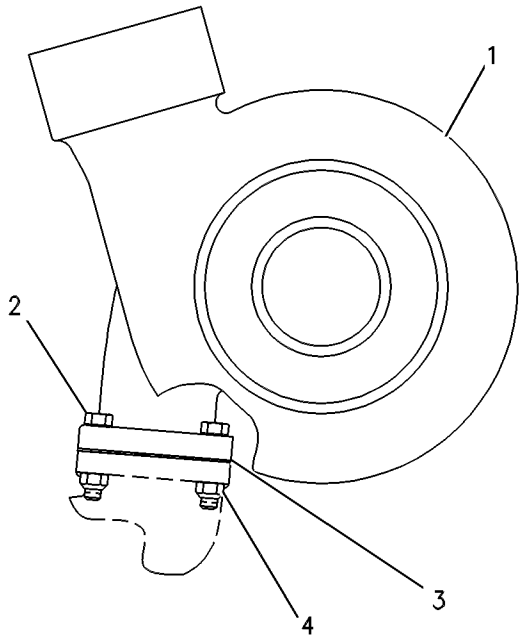

GRAPHIC #1 g00268401

AIR INLET AND EXHAUST SYSTEM

130-6270 TURBOCHARGER GP

S/N: 80M1-UP

PART OF 130-6228 TURBOCHARGER GP

SMCS-1052, 1053, 1056, 1060, 1065, 1066, 1077 **i00553702**

NOTE	REF NO	GRAPHIC REF	PART NUMBER	QTY	PART NAME 1 2 3 4 5 6 (PRODUCT LEVEL)	SEE PAGE
	1	1	**127-6467**	1	COVER-COMPRESSOR	
	2	1	**135-4486**	1	CARTRIDGE GP-TURBOCHARGER	
	3	1	**1W-4795**	1	PLATE-IDENTIFICATION	
		1	**2F-0808**	2	SCREW	
	4	1	**2W-5698**	1	HOUSING-TURBINE	
	5	1	**9N-2038**	1	CLAMP AS	
	6	1	**1N-3279**	1	CLAMP AS	

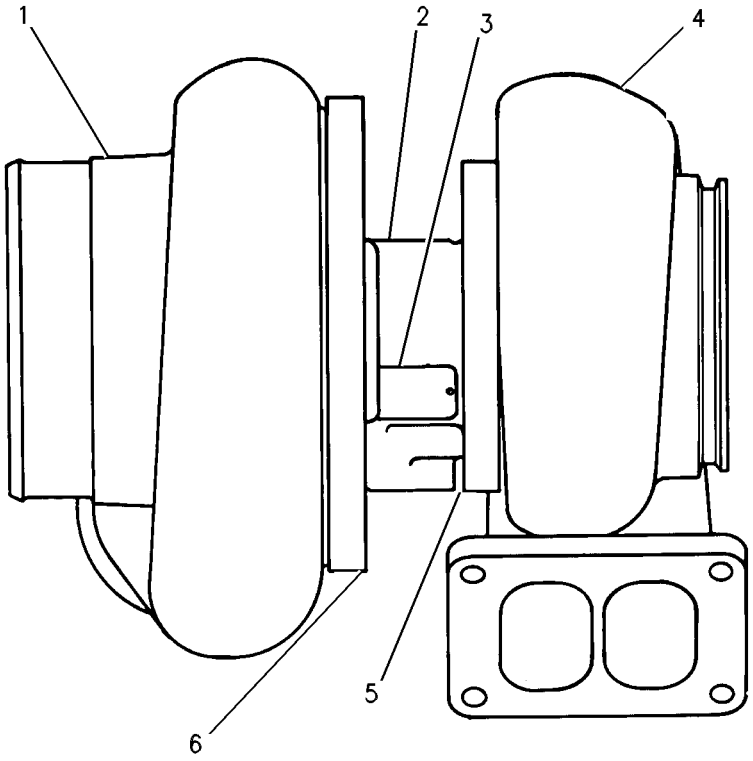

GRAPHIC #1 g00086816

2G-9000 ADAPTER GP-FAST FILL FUEL

S/N: 7KK1-UP

PART OF 118-2252 TANK & MTG GP-FUEL, 8X-9005 TANK GP-FUEL

SMCS-1710 **i01395752**

NOTE	REF NO	GRAPHIC REF	PART NUMBER	QTY	PART NAME 1 2 3 4 5 6 (PRODUCT LEVEL)	SEE PAGE
Z	1	1		1	PLUNGER	
Z	2	1		1	RING-RETAINING	
Z	3	1		1	SPRING	

Z-NOT SERVICED SEPARATELY

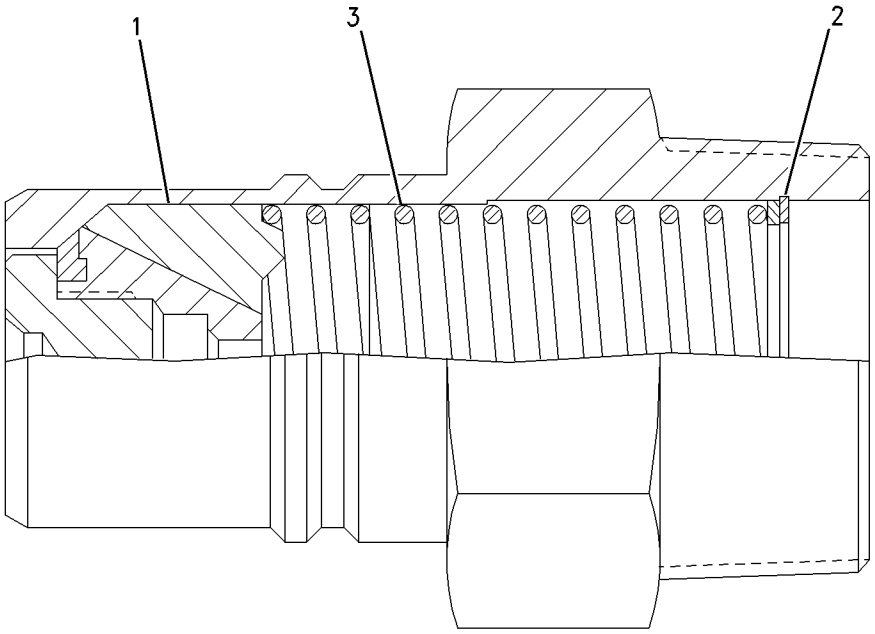

GRAPHIC #1 g00735689

125-3430 DRIVE GP-UNIT INJ HYD PUMP

S/N: 8OM1-UP

PART OF 125-3431 DRIVE GP-UNIT INJ HYD PUMP

SMCS-1714 **i01035025**

NOTE	REF NO	GRAPHIC REF	PART NUMBER	QTY	PART NAME 1 2 3 4 5 6 (PRODUCT LEVEL)	SEE PAGE
	1	1	**125-3688**	1	SHAFT AS	
		1	**3S-6605**	1	PLUG-CUP	
	2	1	**150-2392**	1	PLATE-THRUST	
	3	1	**106-3027**	1	GASKET	
	4	1	**125-2730**	1	HOUSING AS	
		1	**2H-1190**	2	DOWEL (16.0X6.2MM OD)	
		1	**124-9336**	1	BEARING-SLEEVE (94.76MM OD)	
		1	**124-9337**	1	BEARING-SLEEVE (94.76MM OD)	
	5	1	**125-3429**	1	HOUSING AS	
		1	**2A-3746**	1	PLUG-CUP	
		1	**9M-7129**	1	BEARING-SLEEVE (28.69MM OD)	
		1	**124-9337**	1	BEARING-SLEEVE (94.76MM OD)	
		1	**125-1173**	1	HOUSING-PUMP DRIVE	
	6	1	**0S-1617**	2	BOLT (5/16-18X.75IN)	
	7	1	**125-5835**	1	FILTER (UNIT INJECTOR HYDRAULIC PUMP)	
	8	1	**1B-9575**	4	BOLT (5/16-18X1.75IN)	
	9	1	**0S-1618**	2	BOLT (5/16-18X1.0IN)	
	10	1	**9N-0869**	2	WASHER (2MM THK)	
	11	1	**9S-8004**	1	PLUG-O-RING (9/16-18 THD)	
	12	1	**6V-5049**	1	SEAL-O-RING (11.89MM ID)	
	13	1	**1D-4541**	2	BOLT (5/16-18X3IN)	
	14	1	**8M-6802**	3	SCREW-HEX SOCKET	
	15	1	**124-6641**	1	GEAR (18 TEETH)	
	16	1	**124-6640**	1	PLATE	

125-3430 **DRIVE GP-UNIT INJ HYD PUMP** ***(contd.)*** **i01035025**

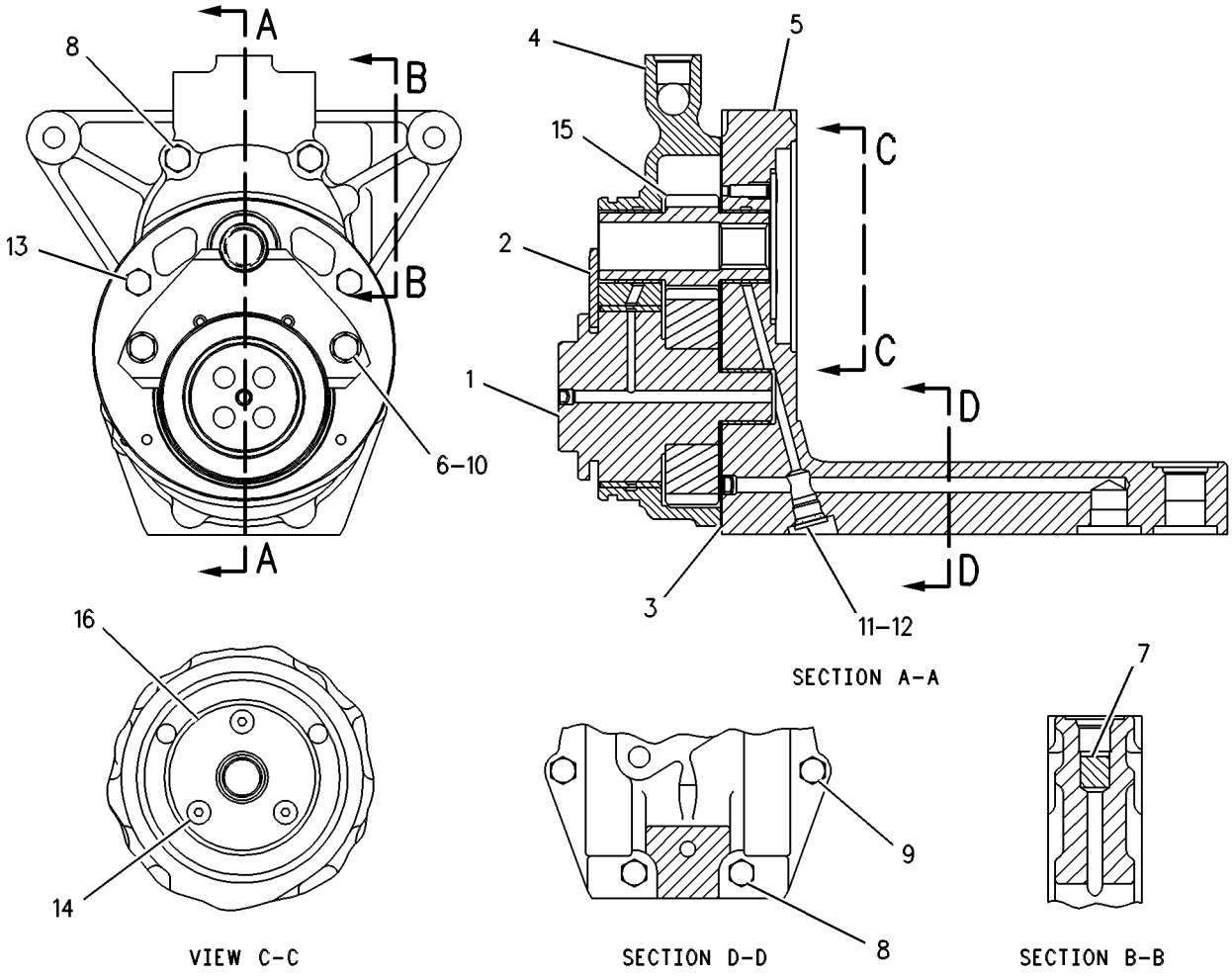

GRAPHIC #1 g00086480

125-3431 DRIVE GP-UNIT INJ HYD PUMP

S/N: 80M1-2638
12 CYL HEUI
PART OF 123-0200 ENGINE AR

SMCS-1714 **i01117093**

NOTE	REF NO	GRAPHIC REF	PART NUMBER	QTY	PART NAME 1 2 3 4 5 6 (PRODUCT LEVEL)	SEE PAGE
Y	1	1	*125-3430*	1	DRIVE GP-UNIT INJ HYD PUMP	146
	2	1	**6V-3549**	1	SEAL-O-RING (145.64MM ID)	
	3	1	**5P-0076**	4	BOLT-12 POINT HEAD (3/8-16X1.50IN)	
Y	4	1	**103-6093**	1	SENSOR GP-PRESSURE (ATMOSPHERIC)	270
	5	1	**9X-0261**	1	ADAPTER (19.05MM HEX)	
	6	1	**6V-5048**	1	SEAL-O-RING (8.92MM ID)	
	7	1	**6V-5049**	1	SEAL-O-RING (11.89MM ID)	
	8	1	**118-6335**	1	PIN	
	9	1	**6V-4589**	1	SEAL-O-RING (19.18MM ID)	
	10	1	**5P-9890**	2	SEAL-O-RING (23.16MM ID)	

Y-SEPARATE ILLUSTRATION

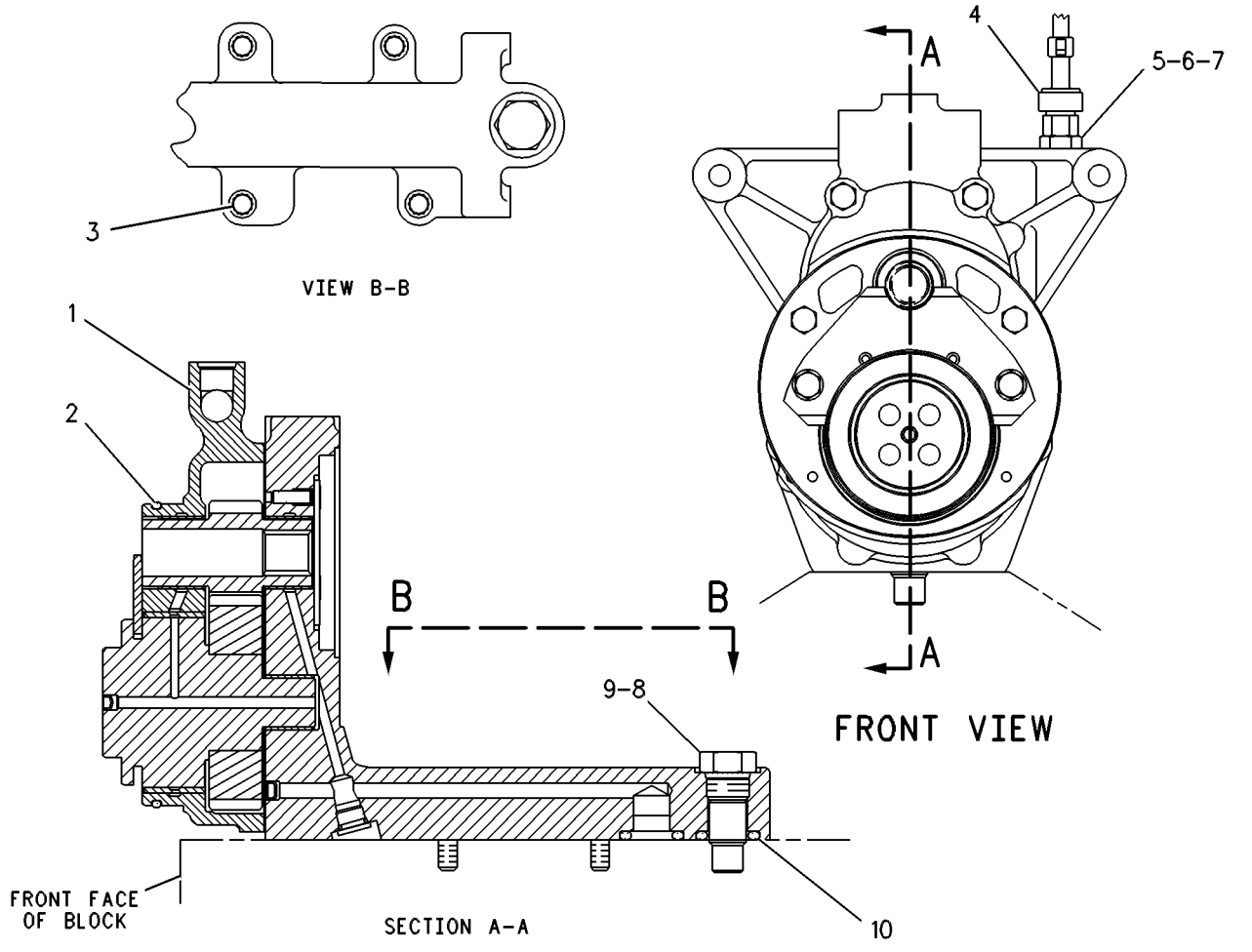

GRAPHIC #1 g00086464

125-3431 DRIVE GP-UNIT INJ HYD PUMP

S/N: 80M2639-2705
12 CYL HEUI
PART OF 123-0200 ENGINE AR

SMCS-1714 **i01400812**

NOTE	REF NO	GRAPHIC REF	PART NUMBER	QTY	PART NAME 1 2 3 4 5 6 (PRODUCT LEVEL)	SEE PAGE
CY	1	1	**162-0149**	1	DRIVE GP-UNIT INJ HYD PUMP	154
	2	1	**6V-3549**	1	SEAL-O-RING (145.64MM ID)	
	3	1	**5P-0076**	4	BOLT-12 POINT HEAD (3/8-16X1.50IN)	
Y	4	1	**103-6093**	1	SENSOR GP-PRESSURE (ATMOSPHERIC)	270
	5	1	**9X-0261**	1	ADAPTER	
	6	1	**6V-5048**	1	SEAL-O-RING (8.92MM ID)	
	7	1	**6V-5049**	1	SEAL-O-RING (11.89MM ID)	
	8	1	**118-6335**	1	PIN	
	9	1	**6V-4589**	1	SEAL-O-RING (19.18MM ID)	
	10	1	**5P-9890**	2	SEAL-O-RING (23.16MM ID)	

C-CHANGE FROM PREVIOUS TYPE
Y-SEPARATE ILLUSTRATION

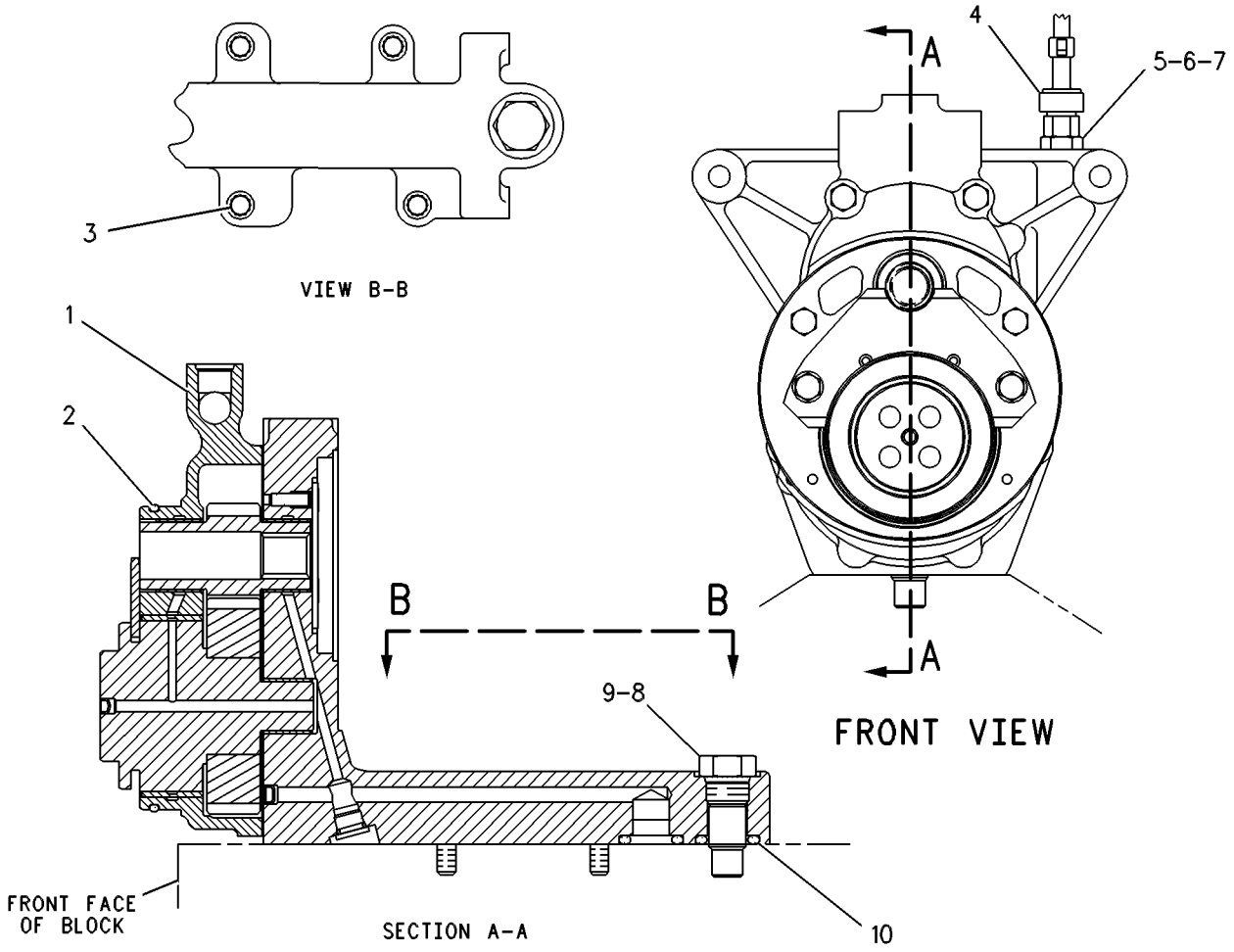

GRAPHIC #1 g00086464

125-3431 DRIVE GP-UNIT INJ HYD PUMP

S/N: 80M2706-3037
12 CYL HEUI
PART OF 123-0200 ENGINE AR

SMCS-1714 **i01515490**

NOTE	REF NO	GRAPHIC REF	PART NUMBER	QTY	PART NAME 1 2 3 4 5 6 (PRODUCT LEVEL)	SEE PAGE
Y	1	1	**162-0149**	1	DRIVE GP-UNIT INJ HYD PUMP	154
	2	1	**6V-3549**	1	SEAL-O-RING	
	3	1	**5P-0076**	4	BOLT-12 POINT HEAD (3/8-16X1.50 IN)	
CY	4	1	**161-9926**	1	SENSOR GP-PRESSURE (ATMOSPHERIC)	273
	5	1	**5M-2894**	4	WASHER-HARD (10.2X18.5X2.5MM THK)	
	7	1	**6V-5049**	1	SEAL-O-RING	
	8	1	**118-6335**	1	PIN	
	9	1	**6V-4589**	1	SEAL-O-RING	
	10	1	**5P-9890**	2	SEAL-O-RING	
	11	1	**9X-0261**	1	ADAPTER	
	12	1	**6V-5048**	1	SEAL-O-RING	

C-CHANGE FROM PREVIOUS TYPE
Y-SEPARATE ILLUSTRATION

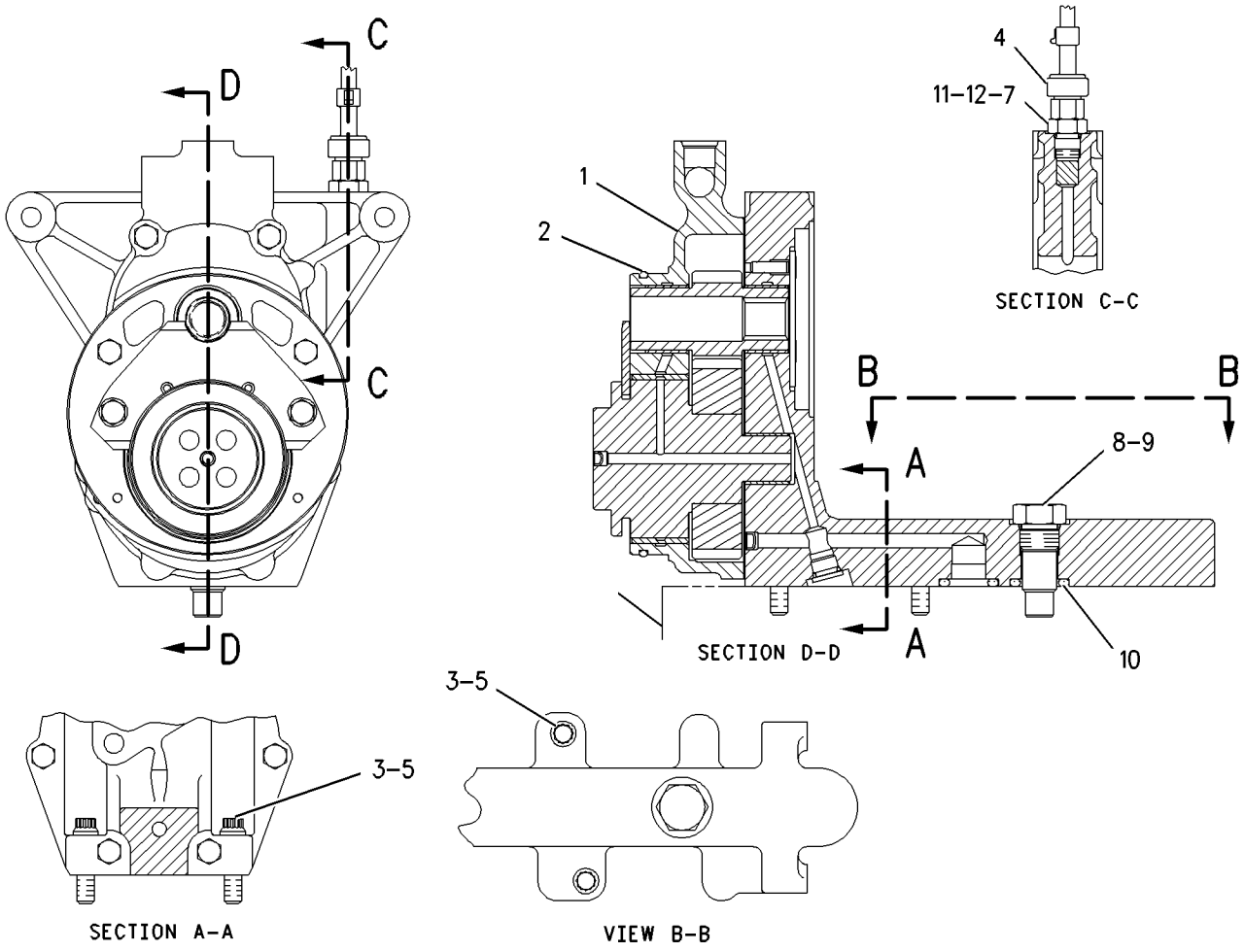

GRAPHIC #1 g00655963

125-3431 DRIVE GP-UNIT INJ HYD PUMP

S/N: 80M3038-3601
12 CYL HEUI
PART OF 123-0200 ENGINE AR

SMCS-1714 **i01350449**

NOTE	REF NO	GRAPHIC REF	PART NUMBER	QTY	PART NAME 1 2 3 4 5 6 (PRODUCT LEVEL)	SEE PAGE
Y	1	1	**162-0149**	1	DRIVE GP-UNIT INJ HYD PUMP	154
	2	1	**6V-3549**	1	SEAL-O-RING (145.64MM ID)	
	3	1	**5P-0076**	4	BOLT-12 POINT HEAD (3/8-16X1.50IN)	
CY	4	1	**161-9925**	1	SENSOR GP-PRESSURE (INJECTION ACTUATION)	272
	5	1	**5M-2894**	4	WASHER-HARD (2.5MM THK)	
	7	1	**6V-5049**	1	SEAL-O-RING (11.89MM ID)	
	8	1	**118-6335**	1	PIN	
	9	1	**6V-4589**	1	SEAL-O-RING (19.18MM ID)	
	10	1	**5P-9890**	2	SEAL-O-RING (23.16MM ID)	

C-CHANGE FROM PREVIOUS TYPE
Y-SEPARATE ILLUSTRATION

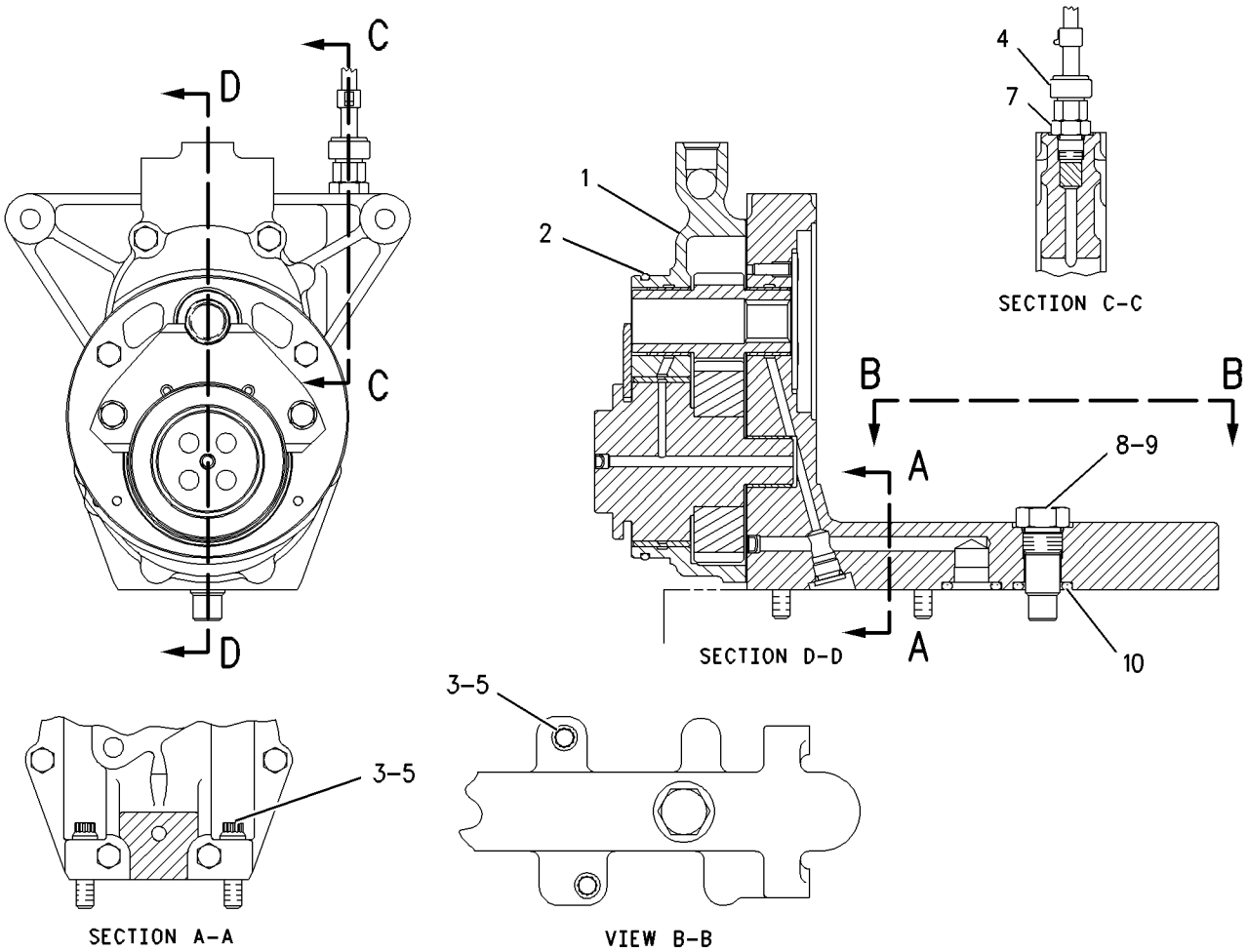

GRAPHIC #1 g00656070

125-3431 DRIVE GP-UNIT INJ HYD PUMP

S/N: 80M3602-UP
12 CYL HEUI
PART OF 123-0200 ENGINE AR

SMCS-1714 **i01446511**

NOTE	REF NO	GRAPHIC REF	PART NUMBER	QTY	PART NAME 1 2 3 4 5 6 (PRODUCT LEVEL)	SEE PAGE
CY	1	1	**180-6644**	1	DRIVE GP-UNIT INJ HYD PUMP	156
	2	1	**6V-3549**	1	SEAL-O-RING (145.64MM ID)	
	3	1	**5P-0076**	4	BOLT-12 POINT HEAD (3/8-16X1.50 IN)	
Y	4	1	**161-9925**	1	SENSOR GP-PRESSURE (INJECTION ACTUATION)	272
	5	1	**5M-2894**	4	WASHER-HARD (10.2X18.5X2.5MM THK)	
	7	1	**6V-5049**	1	SEAL-O-RING (11.89MM ID)	
	8	1	**118-6335**	1	PIN	
	9	1	**6V-4589**	1	SEAL-O-RING (19.18MM ID)	
	10	1	**5P-9890**	2	SEAL-O-RING (23.16MM ID)	

C-CHANGE FROM PREVIOUS TYPE
Y-SEPARATE ILLUSTRATION

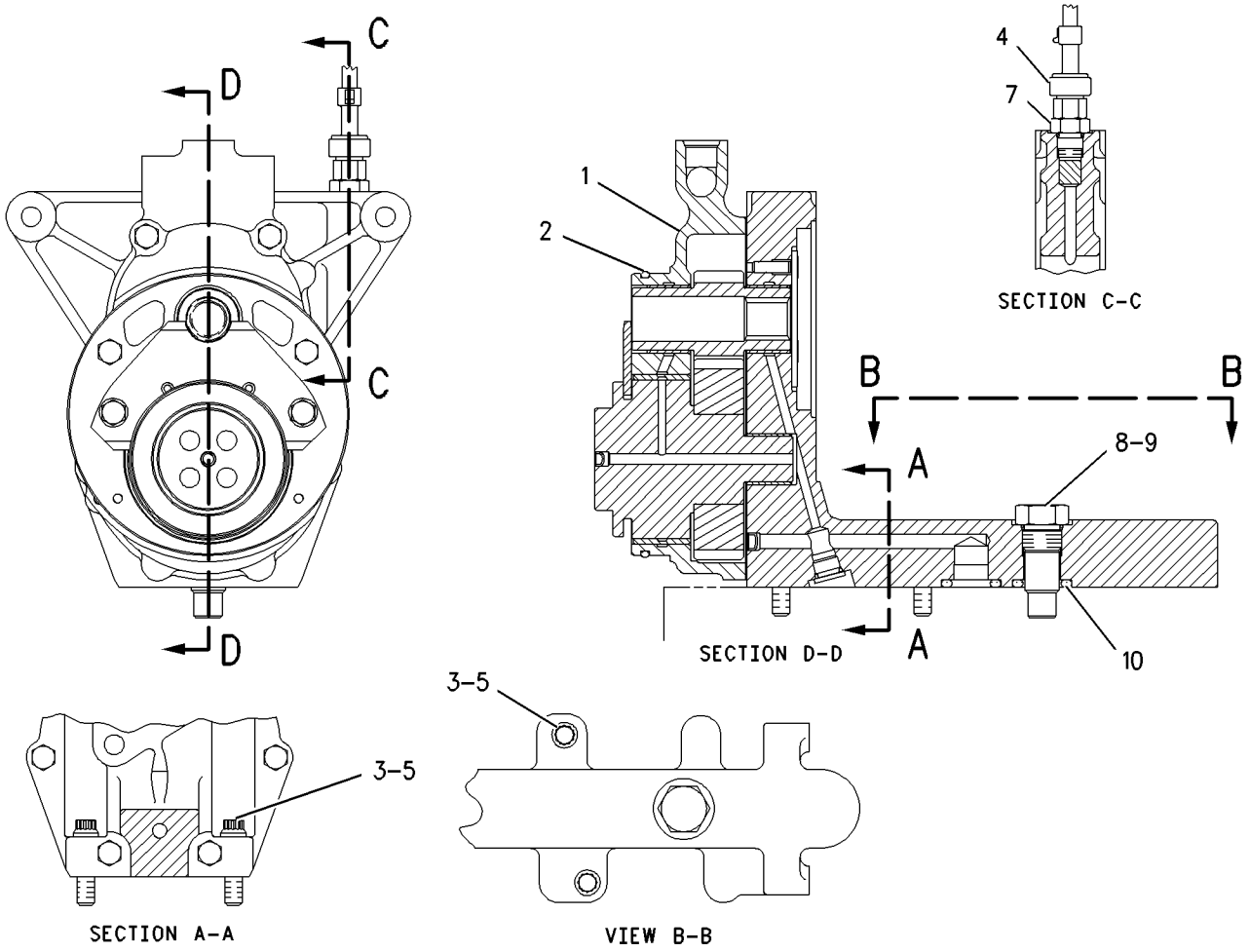

GRAPHIC #1 g00656070

MEMORANDA

162-0149 DRIVE GP-UNIT INJ HYD PUMP

S/N: 80M2639-3601

PART OF 125-3431 DRIVE GP-UNIT INJ HYD PUMP

SMCS-1714 **i01229045**

NOTE	REF NO	GRAPHIC REF	PART NUMBER	QTY	PART NAME 1 2 3 4 5 6 (PRODUCT LEVEL)	SEE PAGE
	1	1	**162-0153**	1	SHAFT AS	
		1	**3S-6605**	1	PLUG-CUP	
	2	1	**150-2392**	1	PLATE-THRUST	
	3	1	**106-3027**	1	GASKET	
	4	1	**162-0158**	1	HOUSING AS	
		1	**2H-1190**	2	DOWEL (16.0X6.2MM OD)	
		1	**162-0151**	1	BEARING-SLEEVE	
		1	**162-0152**	1	BEARING-SLEEVE	
	5	1	**162-0160**	1	HOUSING AS	
		1	**2A-3746**	1	PLUG-CUP	
		1	**162-0150**	1	BEARING-SLEEVE	
		1	**162-0151**	1	BEARING-SLEEVE	
		1	**162-0156**	1	HOUSING-PUMP DRIVE	
	6	1	**0S-1617**	2	BOLT (5/16-18X.75IN)	
	7	1	**125-5835**	1	FILTER	
	8	1	**1B-9575**	4	BOLT (5/16-18X1.75IN)	
	9	1	**0S-1618**	2	BOLT (5/16-18X1.0IN)	
	10	1	**9N-0869**	2	WASHER-HARD (2MM THK)	
	11	1	**9S-8004**	1	PLUG-O-RING (9/16-18 THD)	
	12	1	**6V-5049**	1	SEAL-O-RING (11.89MM ID)	
	13	1	**1D-4541**	2	BOLT (5/16-18X3IN)	
	14	1	**8M-6802**	3	SCREW-HEX SOCKET	
	15	1	**162-0155**	1	GEAR-PUMP DRIVE (18 TEETH)	
	16	1	**124-6640**	1	PLATE	

162-0149 DRIVE GP-UNIT INJ HYD PUMP *(contd.)* i01229045

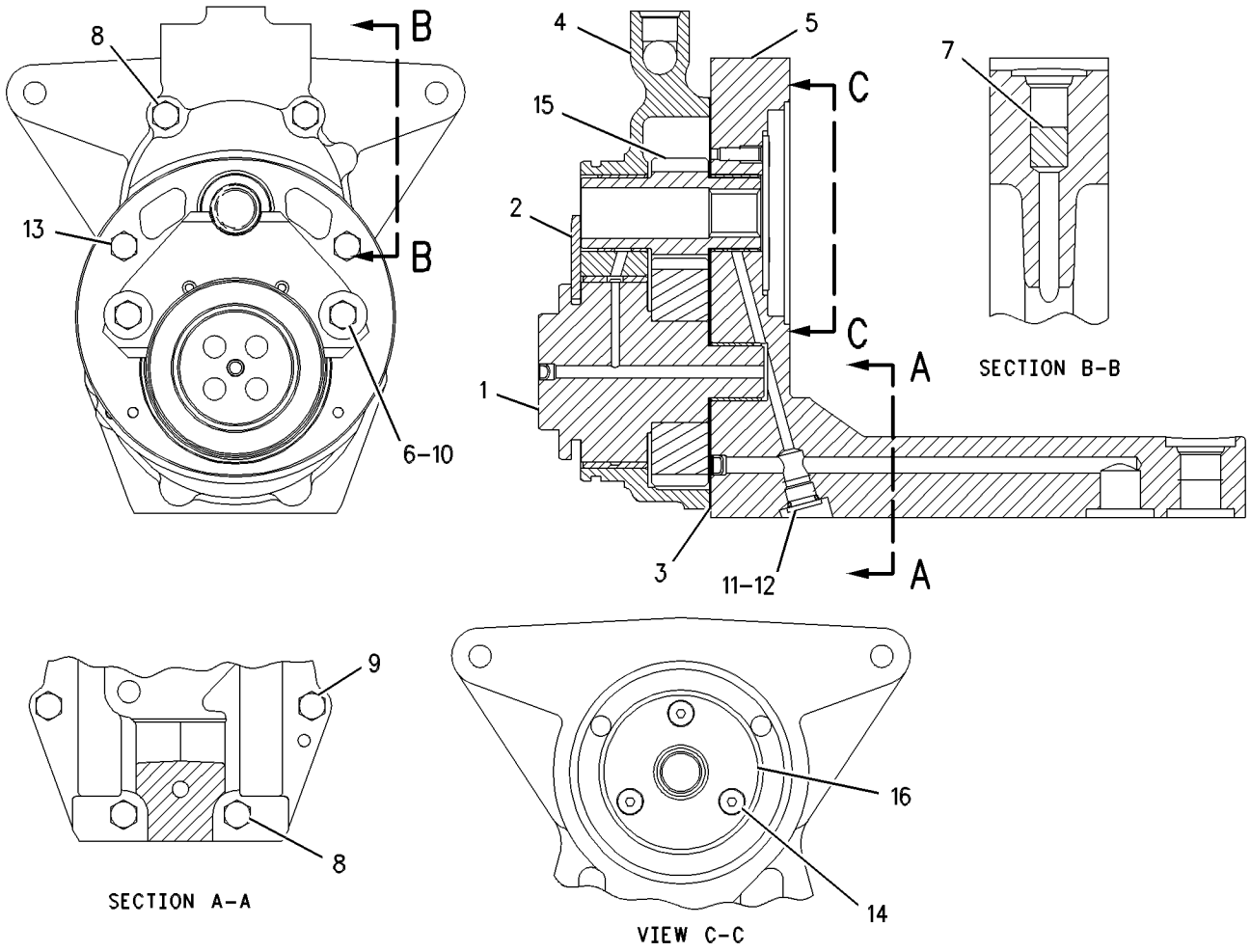

GRAPHIC #1 g00539583

180-6644 DRIVE GP-UNIT INJ HYD PUMP

S/N: 80M3602-UP

PART OF 125-3431 DRIVE GP-UNIT INJ HYD PUMP

SMCS-1714 **i01324370**

NOTE	REF NO	GRAPHIC REF	PART NUMBER	QTY	PART NAME 1 2 3 4 5 6 (PRODUCT LEVEL)	SEE PAGE
	1	1	**180-6645**	1	SHAFT AS	
	1A	1	**3S-6605**	1	PLUG-CUP	
	2	1	**150-2392**	1	PLATE-THRUST	
	3	1	**180-6646**	1	GASKET	
	4	1	**180-6647**	1	HOUSING AS	
	4A	1	**2H-1190**	2	DOWEL (16.0X6.2MM OD)	
	4B	1	**162-0151**	1	BEARING-SLEEVE	
	4C	1	**162-0152**	1	BEARING-SLEEVE	
	5	1	**162-0160**	1	HOUSING AS	
	5A	1	**2A-3746**	1	PLUG-CUP	
	5B	1	**162-0150**	1	BEARING-SLEEVE	
	5C	1	**162-0151**	1	BEARING-SLEEVE	
	6	1	**125-5835**	1	FILTER	
	7	1	**1B-9575**	4	BOLT (5/16-18X1.75IN)	
	8	1	**0S-1618**	2	BOLT (5/16-18X1.0 IN)	
	9	1	**9N-0869**	2	WASHER-HARD (2MM THK)	
	10	1	**9S-8004**	1	PLUG-O-RING (9/16-18 THD)	
	11	1	**6V-5049**	1	SEAL-O-RING (11.89MM ID)	
	12	1	**1D-4541**	2	BOLT (5/16-18X3IN)	
	13	1	**8M-6802**	3	SCREW-HEX SOCKET	
	14	1	**155-6637**	1	GEAR-OIL DRIVE (13 TEETH)	
	15	1	**124-6640**	1	PLATE	
	16	1	**031-2701**	2	BOLT-LOCKING (5/16-18X1.25IN)	

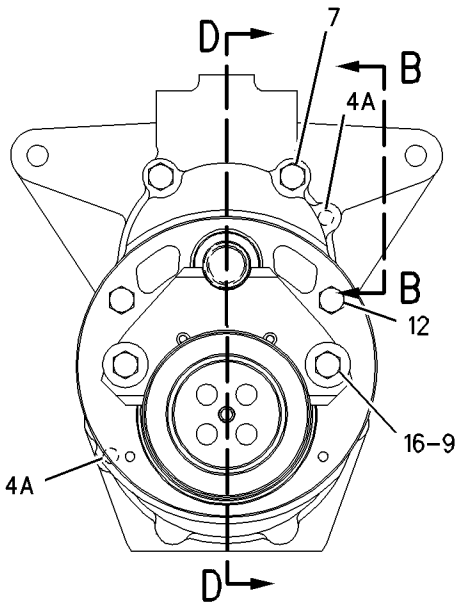

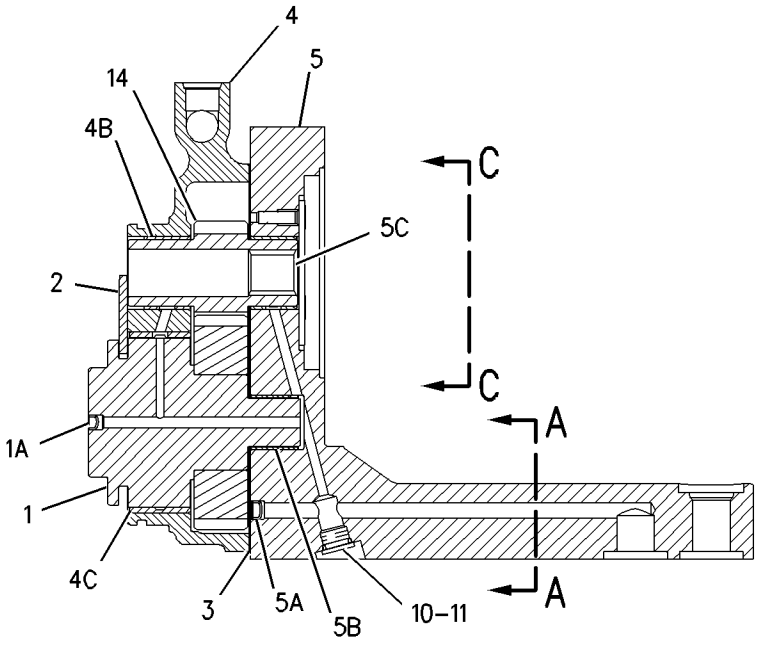

SECTION D-D

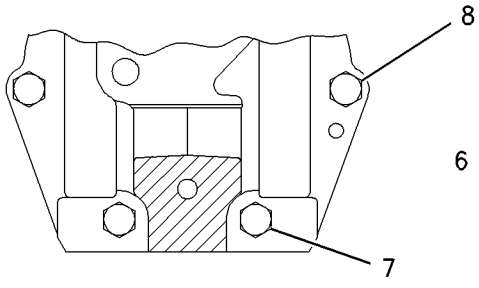

SECTION A-A

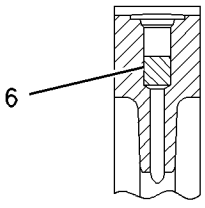

SECTION B-B

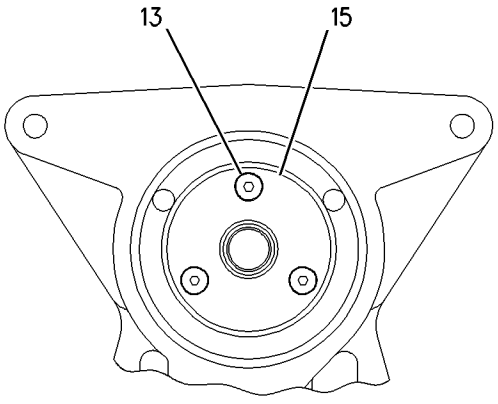

VIEW C-C

GRAPHIC #1 g00702509

111-7916 INJECTOR GP-FUEL

S/N: 80M1-1047

PART OF 108-7090 PUMP GP-FUEL INJECTION

SMCS-1290, 1713 **i00107664**

NOTE	REF NO	GRAPHIC REF	PART NUMBER	QTY	PART NAME 1 2 3 4 5 6 (PRODUCT LEVEL)	SEE PAGE
	1	1	**6L-1596**	2	BOLT	
	2	1	**115-3598**	1	ADAPTER-INJECTION	
	3	1	**116-7222**	1	SEAL-RECTANGULAR	
	4	1	**131-3098**	1	INJECTOR GP-FUEL	

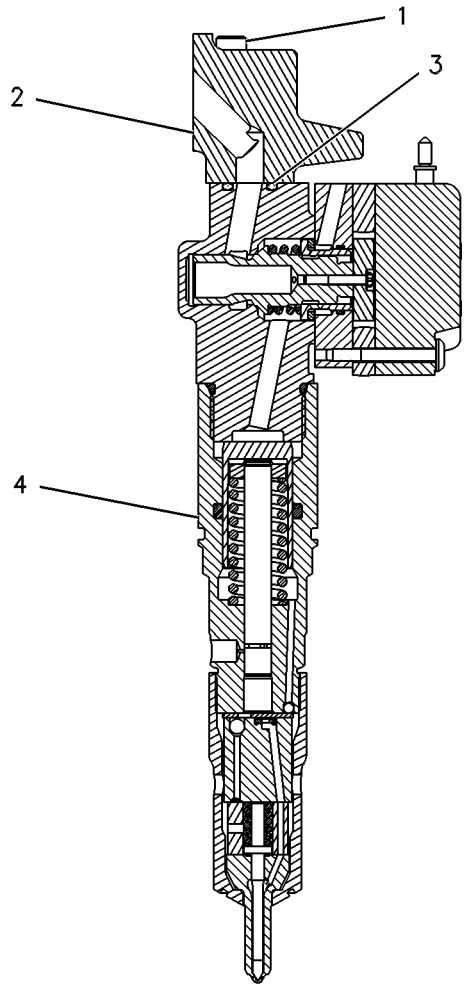

GRAPHIC #1 g00087144

138-8756 INJECTOR GP-FUEL

S/N: 8OM1048-2331

PART OF 108-7090 PUMP GP-FUEL INJECTION

SMCS-1290, 1713 **i00553732**

NOTE	REF NO	GRAPHIC REF	PART NUMBER	QTY	PART NAME 1 2 3 4 5 6 (PRODUCT LEVEL)	SEE PAGE
	1	1	**136-1869**	2	BOLT-SOCKET HEAD	
	2	1	**115-3598**	1	ADAPTER-INJECTION	
	3	1	**116-7222**	1	SEAL-RECTANGULAR	
	4	1	**138-8754**	1	INJECTOR GP-FUEL	

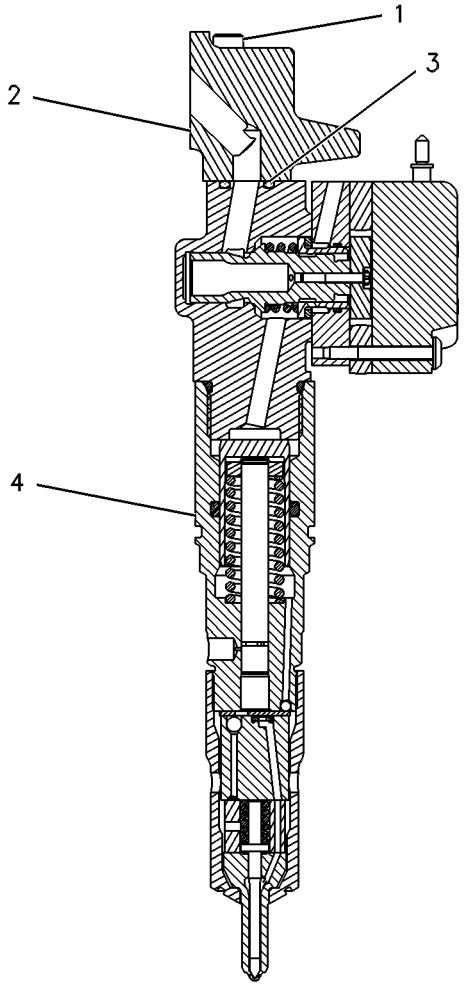

GRAPHIC #1 g00087144

FUEL SYSTEM

159-0836 INJECTOR GP-FUEL

S/N: 80M2332-2882

PART OF 108-7090 PUMP GP-FUEL INJECTION

SMCS-1290, 1713 **i00945331**

NOTE	REF NO	GRAPHIC REF	PART NUMBER	QTY	PART NAME 1 2 3 4 5 6 (PRODUCT LEVEL)	SEE PAGE
	1	1	**115-3598**	1	ADAPTER-INJECTION	
	2	1	**116-7222**	1	SEAL-RECTANGULAR	
	3	1	**136-1869**	2	BOLT-SOCKET HEAD	
R	4	1	**159-0835**	1	INJECTOR GP-FUEL	

R-REMFG PART MAY BE AVAILABLE

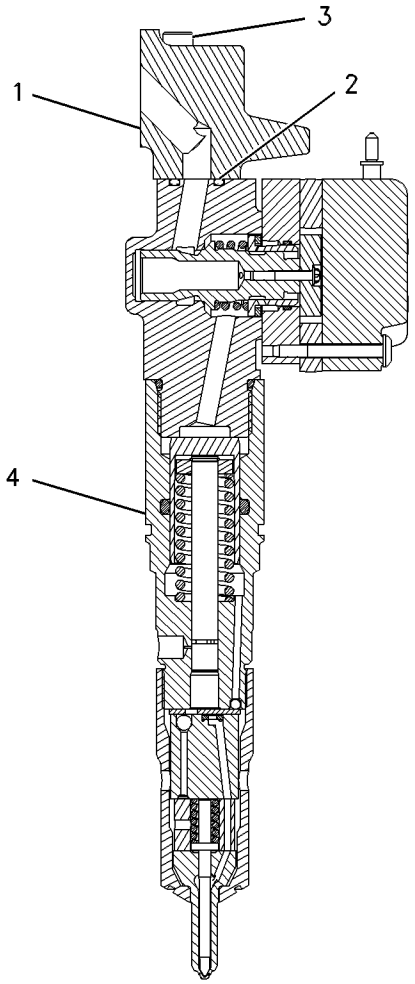

GRAPHIC #1 g00469805

174-7527 INJECTOR GP-FUEL

S/N: 8OM2883-UP

PART OF 108-7090 PUMP GP-FUEL INJECTION

SMCS-1290, 1713 **i01110682**

NOTE	REF NO	GRAPHIC REF	PART NUMBER	QTY	PART NAME 1 2 3 4 5 6 (PRODUCT LEVEL)	SEE PAGE
	1	1	**115-3598**	1	ADAPTER-INJECTION	
	2	1	**116-7222**	1	SEAL-RECTANGULAR	
	3	1	**136-1869**	2	BOLT-SOCKET HEAD	
	4	1	**174-7526**	1	INJECTOR GP-FUEL	

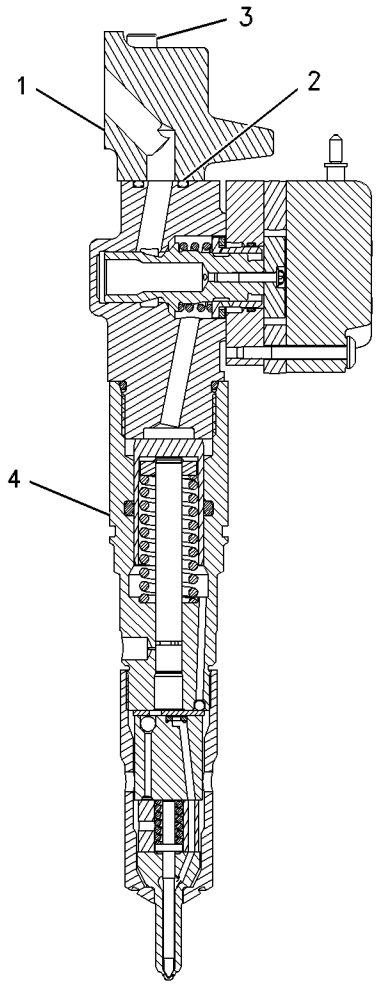

GRAPHIC #1 g00586359

FUEL SYSTEM

138-6256 KIT-SEAL

S/N: 80M596-UP

PART OF 134-9405, 144-0835, 169-1034, 201-4201 PUMP GP-UNIT INJECTOR HYD

SMCS-1714 **i01229048**

NOTE	REF NO	GRAPHIC REF	PART NUMBER	QTY	PART NAME 1 2 3 4 5 6 (PRODUCT LEVEL)	SEE PAGE
	1	1	**109-9685**	4	SEAL-O-RING (6.07MM ID)	
	2	1	**033-5853**	3	SEAL-O-RING (8.92MM ID)	
	3	1	**109-3206**	1	SEAL-O-RING (10.52MM ID)	
	4	1	**033-6042**	4	SEAL-O-RING (11.89MM ID)	
	5	1	**108-5803**	1	SEAL-O-RING (7.65MM ID)	
	6	1	**6V-5142**	2	SEAL-O-RING (15.6MM ID)	
	7	1	**9X-7680**	6	SEAL-O-RING (7.65MM ID)	
	8	1	**033-6027**	2	SEAL-O-RING (19.18MM ID)	
	9	1	**033-6039**	1	SEAL-O-RING (9.25MM ID)	
	10	1	**133-1705**	1	GASKET-HOUSING	
	11	1	**6V-8676**	1	SEAL-O-RING (48.90MM ID)	
	12	1	**135-2655**	2	SEAL-O-RING (55.24MM ID)	
	13	1	**135-2652**	1	SEAL-O-RING (17.17MM ID)	

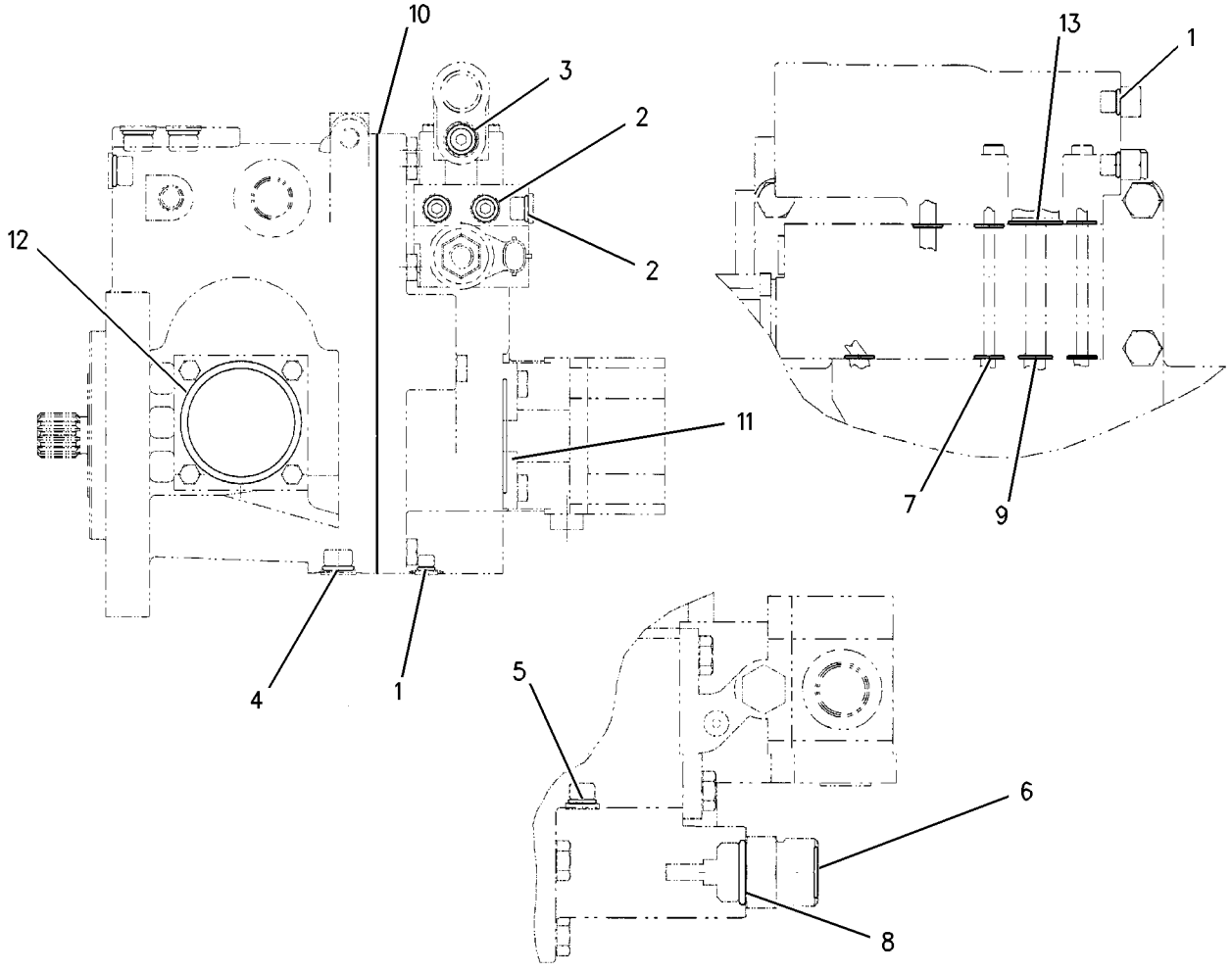

GRAPHIC #1 g00642811

FUEL SYSTEM

8X-8995 LINES GP-FUEL

S/N: 7KK1-39

PART OF 8X-8402 CHASSIS AR

SMCS-1274 **i00568228**

NOTE	PART NUMBER	QTY	PART NAME 1 2 3 4 5 6 (PRODUCT LEVEL)	SEE PAGE
	8C-6870	2	ADAPTER	
M	**8T-4136**	1	BOLT (M10X1.50X25MM)	
M	**8T-4186**	2	BOLT (M10X1.50X40MM)	
	5P-7462	3	CLIP (SLOT)	
	5P-7463	3	CLIP (TAB)	
	6D-4246	3	CLIP (19.05MM ID)	
	8M-2773	3	CLIP (17.46MM ID)	
	8C-6872	2	CONNECTOR	
	8T-0075	2	CONNECTOR	
	8T-1686	1	ELBOW-90 DEGREE	
	6V-9850	1	ELBOW-SWIVEL (11/16-16 THD)	
	8T-0249	1	ELBOW-SWIVEL	
	6V-0683	3	GROMMET	
I	**130-1979**	1	HOSE AS	
I	**130-1980**	1	HOSE AS	
I	**130-1981**	1	HOSE AS	
I	**130-1982**	1	HOSE AS	
M	**8T-4133**	2	NUT (M10X1.50 THD)	
	6V-9169	1	NUT-BULKHEAD (13/16-16 THD)	
	6V-8397	5	SEAL-O-RING (9.27MM ID)	
	6V-8398	5	SEAL-O-RING (12.47MM ID)	
	6V-8995	1	UNION-BULKHEAD	
	116-3912	2	VALVE AS	
	8T-4121	5	WASHER (2.5MM THK)	
	8T-4123	1	WASHER-PLATED (3.5MM THK)	

I-SEE HOSE FABRICATION GUIDE
M-METRIC PART

FUEL SYSTEM

8X-8995 LINES GP-FUEL

S/N: 7KK40-UP

PART OF 8X-8402 CHASSIS AR

SMCS-1274 **i00653073**

NOTE	REF NO	GRAPHIC REF	PART NUMBER	QTY	PART NAME 1 2 3 4 5 6 (PRODUCT LEVEL)	SEE PAGE
DC	1	2	**5P-5991**		HOSE (.1M)	
	2	1,2	**8C-6870**	2	ADAPTER	
	3	2	**8C-6872**	2	CONNECTOR	
	4	2	**8T-0249**	1	ELBOW-SWIVEL	
C	5	2	**030-9615**	2	SCREW-NYLOK	
I	6	1	**130-1979**	1	HOSE AS	
I	7	2	**130-1980**	1	HOSE AS	
I	8	2	**130-1981**	1	HOSE AS	
I	9	1	**130-1982**	1	HOSE AS	
C	10	2	**145-6050**	2	VALVE-BALL	
C	11	2	**3J-1907**	2	SEAL-O-RING (11.89MM ID)	
C	12	2	**3K-0360**	2	SEAL-O-RING (16.36MM ID)	
C	13	1	**5P-7462**	1	CLIP (SLOT)	
C	14	1	**5P-7463**	1	CLIP (TAB)	
	15	1	**6D-4246**	3	CLIP (19.05MM ID)	
C	16	1	**6V-0683**	1	GROMMET	
	17	1,2	**6V-8397**	5	SEAL-O-RING (9.27MM ID)	
	18	1,2	**6V-8398**	5	SEAL-O-RING (12.47MM ID)	
	19	1,2	**6V-8995**	1	UNION-BULKHEAD	
	20	2	**6V-9169**	1	NUT-BULKHEAD (13/16-16 THD)	
	21	2	**6V-9850**	1	ELBOW-SWIVEL (11/16-16 THD)	
	22	2	**8T-0075**	2	CONNECTOR	
	23	2	**8T-1686**	1	ELBOW-90 DEGREE	
	24	2	**8T-4123**	1	WASHER-PLATED (3.5MM THK)	
C	25	1	**8T-6756**	3	ELBOW	
C	26	2	**9M-8406**	2	CLIP (15.8MM ID)	

C-CHANGE FROM PREVIOUS TYPE
D-ORDER BY THE METER
I-SEE HOSE FABRICATION GUIDE

8X-8995 **LINES GP-FUEL** ***(contd.)*** **i00653073**

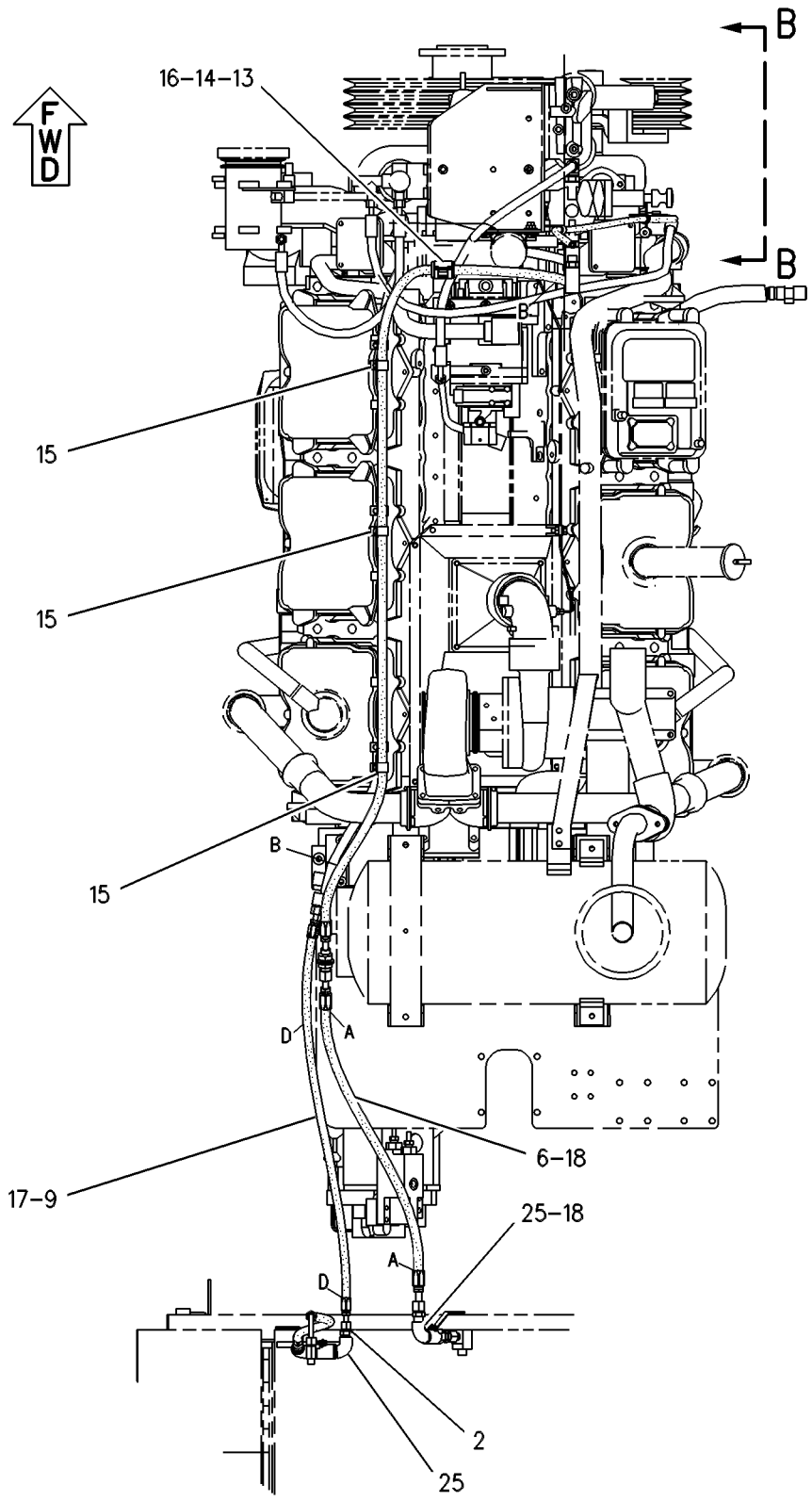

TOP VIEW

REFER TO ALL ILLUSTRATIONS OF THIS GROUP FOR AUXILIARY VIEWS

GRAPHIC #1

g00283870

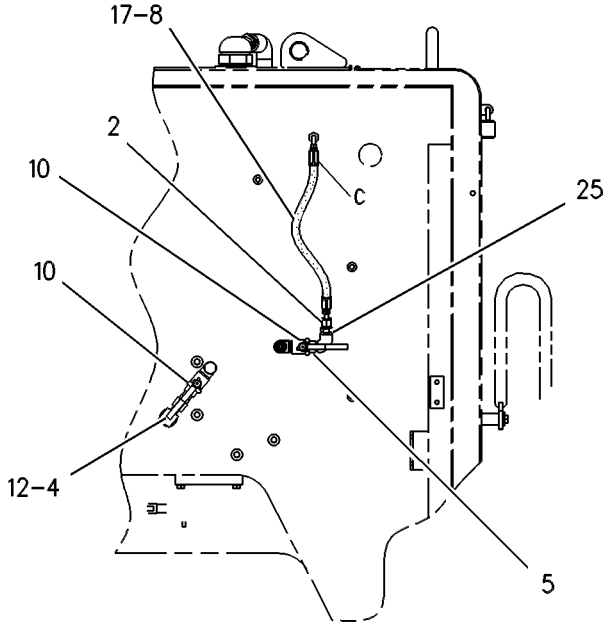

SECTION A-A

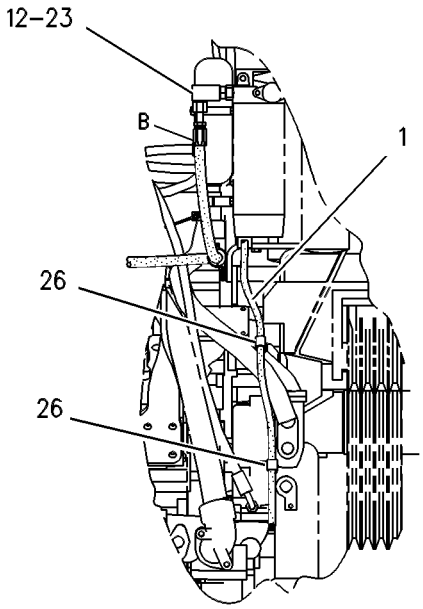

VIEW B-B

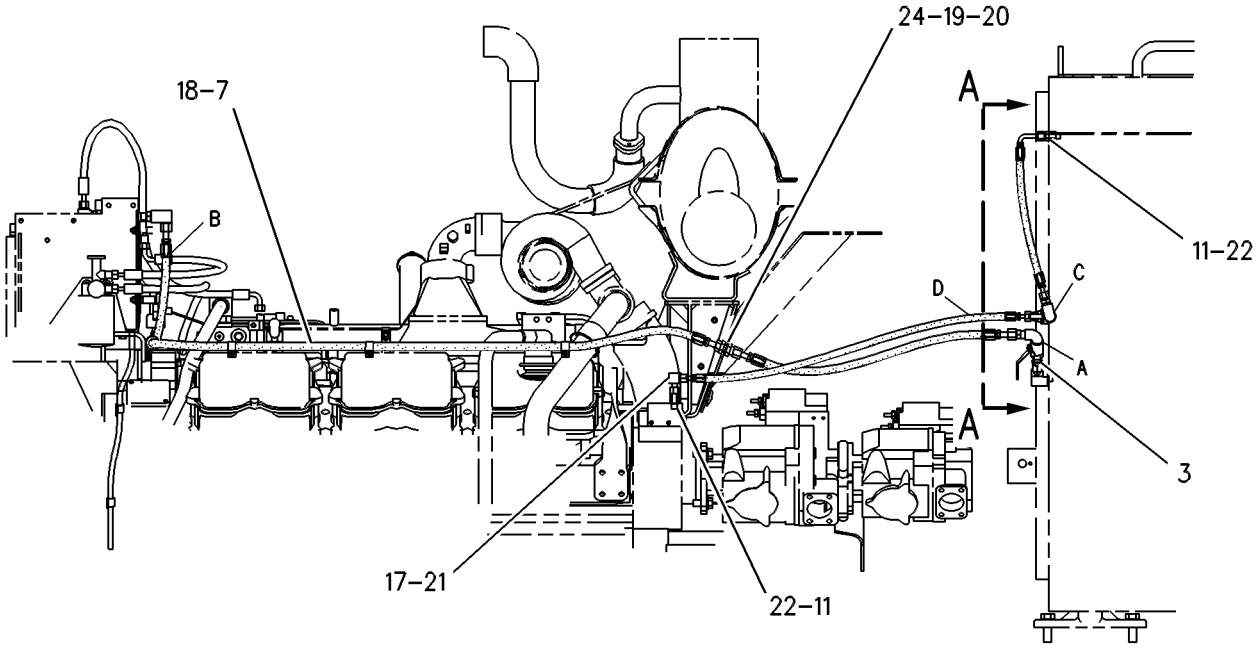

LEFT SIDE VIEW

GRAPHIC #2 g00288592

MEMORANDA

130-5764 LINES GP-FUEL FILTER

S/N: 8OM1-UP

PART OF 123-0200 ENGINE AR

SMCS-1261, 1274 **i00546261**

NOTE	REF NO	GRAPHIC REF	PART NUMBER	QTY	PART NAME 1 2 3 4 5 6 (PRODUCT LEVEL)	SEE PAGE
	1	1	**121-6766**	1	TUBE AS	
I	2	1	**125-6796**	1	HOSE AS	
	3	1	**128-6611**	1	TUBE AS	
I	4	1	**8W-6049**	1	HOSE AS	
	5	1	**4B-0418**	2	CLIP (12.7MM ID)	
I	6	1	**125-6797**	1	HOSE AS	
	7	1	**6S-9720**	1	BRACKET	
	8	1	**1F-7958**	2	NUT-FULL (1/2-13 THD)	
	9	1	**5P-8245**	4	WASHER (3MM THK)	
	10	1	**9X-8879**	2	BOLT	
	11	1	**6V-8636**	3	CONNECTOR	
	12	1	**6V-5049**	17	SEAL-O-RING (11.89MM ID)	
	13	1	**8L-2779**	8	SEAL-O-RING (9.25MM ID)	
	14	1	**9S-8004**	4	PLUG-O-RING (9/16-18 THD)	
	15	1	**1R-0749**	2	FILTER AS-FUEL	
	16	1	**0S-0509**	1	BOLT (3/8-16X.75IN)	
	17	1	**6N-4414**	1	COVER-FILTER BASE	
	18	1	**7B-2742**	1	BOLT (1/4-20X1.25IN)	
	19	1	**5P-0537**	1	WASHER (2MM THK)	
	20	1	**1B-2790**	1	BOLT (5/16-18X1.375IN)	
	21	1	**9M-1974**	3	WASHER-HARD (2MM THK)	
	22	1	**9S-4191**	4	PLUG-O-RING (9/16-18 THD)	
	23	1	**0S-1571**	3	BOLT (3/8-16X1.75IN)	
	24	1	**1P-0436**	1	GASKET	
	25	1	**130-5787**	1	BRACE	
	26	1	**0S-1588**	6	BOLT (3/8-16X1.25IN)	
	27	1	**9S-8752**	8	NUT-FULL (3/8-16 THD)	
	28	1	**5M-2894**	13	WASHER (2.5MM THK)	
	29	1	**102-2240**	1	SENSOR GP-TEMPERATURE	
		1	**102-8803**	1	KIT-RECEPTACLE	
		1	**3E-3371**	1	WEDGE-RECEPTACLE LOCK	
		1	**8T-8729**	3	PIN-CONNECTOR	
B		1	**9X-1813**		SLEEVE	
	30	1	**8L-2786**	3	SEAL-O-RING (16.36MM ID)	
	31	1	**6V-8634**	1	CONNECTOR-SEAL	
	32	1	**098-5687**	1	TEE	
	33	1	**8M-2773**	2	CLIP (17.46MM ID)	
	34	1	**9S-1366**	1	BOLT (1/2-13X2.5IN)	
	35	1	**0S-1594**	1	BOLT (3/8-16X1IN)	
	36	1	**9X-6458**	7	WASHER-HARD (3MM THK)	
	37	1	**6V-9873**	2	CONNECTOR	
	38	1	**0L-1351**	1	BOLT (3/8-16X.875IN)	
	39	1	**033-6033**	4	SEAL-O-RING (12.42MM ID)	
	40	1	**1B-9575**	2	BOLT (5/16-18X1.75IN)	
Y	41	1	**102-7535**	1	VALVE GP-PRESSURE CONTROL	215
	42	1	**116-5819**	1	BRACKET	
	43	1	**8T-6876**	2	ELBOW-ORFS (9/16-18 THD)	
	44	1	**123-0555**	1	MANIFOLD	
	45	1	**6V-8724**	1	ELBOW (9/16-18 THD)	
	46	1	**8T-1905**	2	ELBOW-90 DEGREE (11/16-18 THD)	
	47	1	**7D-1649**	1	WASHER (5.0MM THK)	
	48	1	**6V-5048**	1	SEAL-O-RING (8.92MM ID)	
	49	1	**9S-4182**	1	PLUG (7/16-20 THD)	
I	50	1	**130-5880**	1	HOSE AS	
I	51	1	**120-6086**	1	HOSE AS	
	52	1	**6N-2946**	1	BASE AS-FUEL FILTER	

130-5764 LINES GP-FUEL FILTER *(contd.)* i00546261

NOTE	REF NO	GRAPHIC REF	PART NUMBER	QTY	PART NAME 1 2 3 4 5 6 (PRODUCT LEVEL)	SEE PAGE
	53	1	**130-5203**	1	BRACKET AS-FILTER	
	54	1	**6I-1447**	1	BRACKET AS	
	55	1	**6I-1446**	1	BRACKET AS	

B-USE AS REQUIRED
I-SEE HOSE FABRICATION GUIDE
Y-SEPARATE ILLUSTRATION

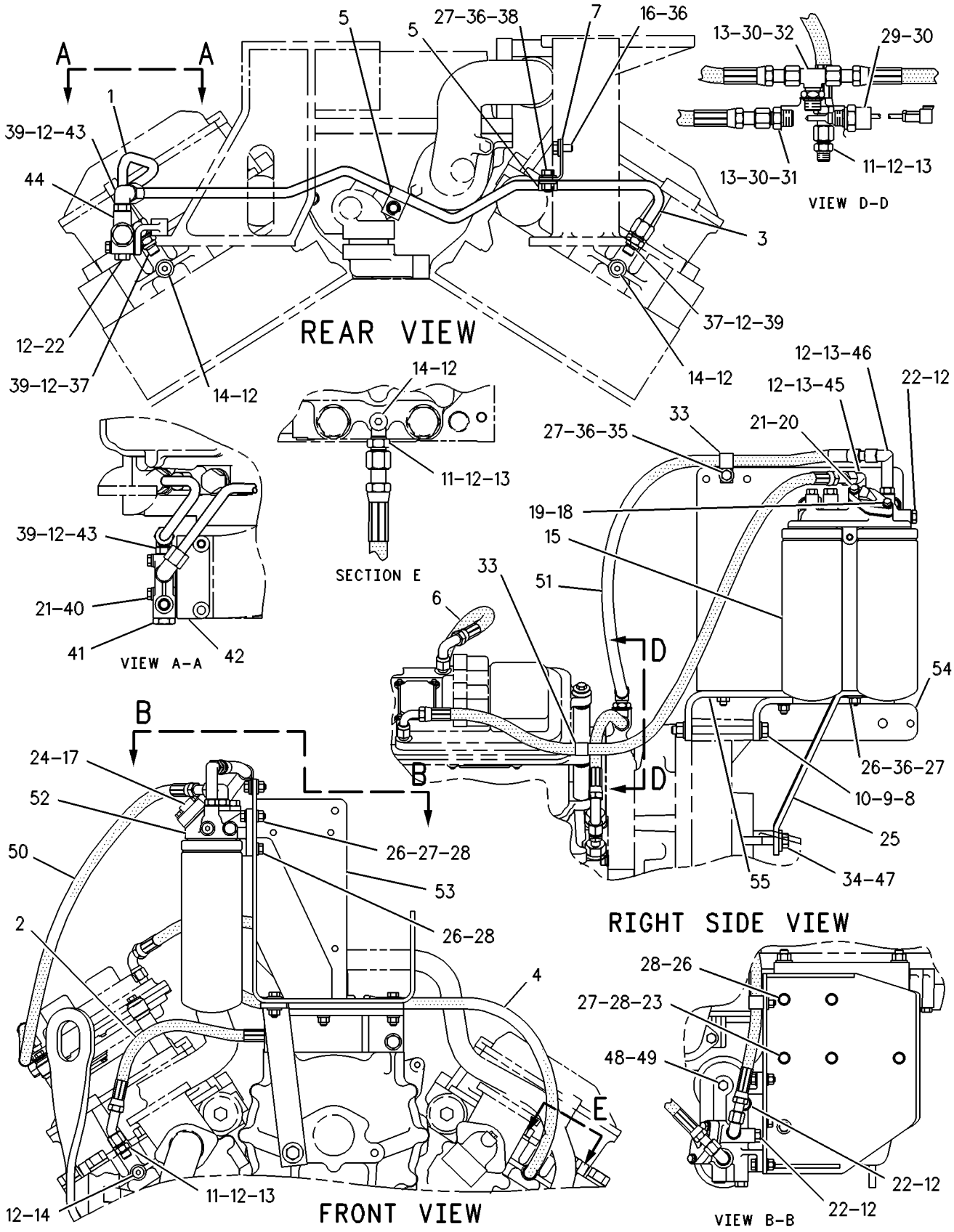

GRAPHIC #1

g00268230

MEMORANDA

121-4034 LINES GP-INJECTOR HYD PUMP

S/N: 8OM1-UP

PART OF 123-0200 ENGINE AR

SMCS-1714 **i01490358**

NOTE	REF NO	GRAPHIC REF	PART NUMBER	QTY	PART NAME 1 2 3 4 5 6 (PRODUCT LEVEL)	SEE PAGE
	1	1	**107-3202**	1	TUBE AS	
	2	1	**117-9650**	1	TUBE AS	
	3	1	**0S-1588**	1	BOLT (3/8-16X1.25 IN)	
	4	1	**0L-1143**	2	BOLT (3/8-16X2.50 IN)	
	5	1	**9L-9132**	1	WASHER (10.2X25.5X2.5MM THK)	
	6	1	**4N-0933**	1	GASKET	
	7	1	**6V-9009**	1	ELBOW	
	8	1	**5P-7815**	1	SEAL-O-RING	
	9	1	**9X-7734**	1	SEAL-O-RING	
	10	1	**6V-8626**	1	ELBOW	
	11	1	**152-2939**	2	SEAL-O-RING	
	12	1	**152-2938**	4	SEAL-O-RING	
	13	1	**6V-5134**	1	SEAL-O-RING	
I	14	1	**162-2501**	1	HOSE AS	
	15	1	**6V-9003**	1	ELBOW	
	16	1	**113-1921**	1	ELBOW	
	17	1	**8S-0023**	1	CLIP (SLOT)	
	18	1	**8S-0024**	1	CLIP (TAB)	
B	19	1	**3K-1470**	1	SPACER	

B-USE AS REQUIRED
I-SEE HOSE FABRICATION GUIDE

121-4034 **LINES GP-INJECTOR HYD PUMP** ***(contd.)*** **i01490358**

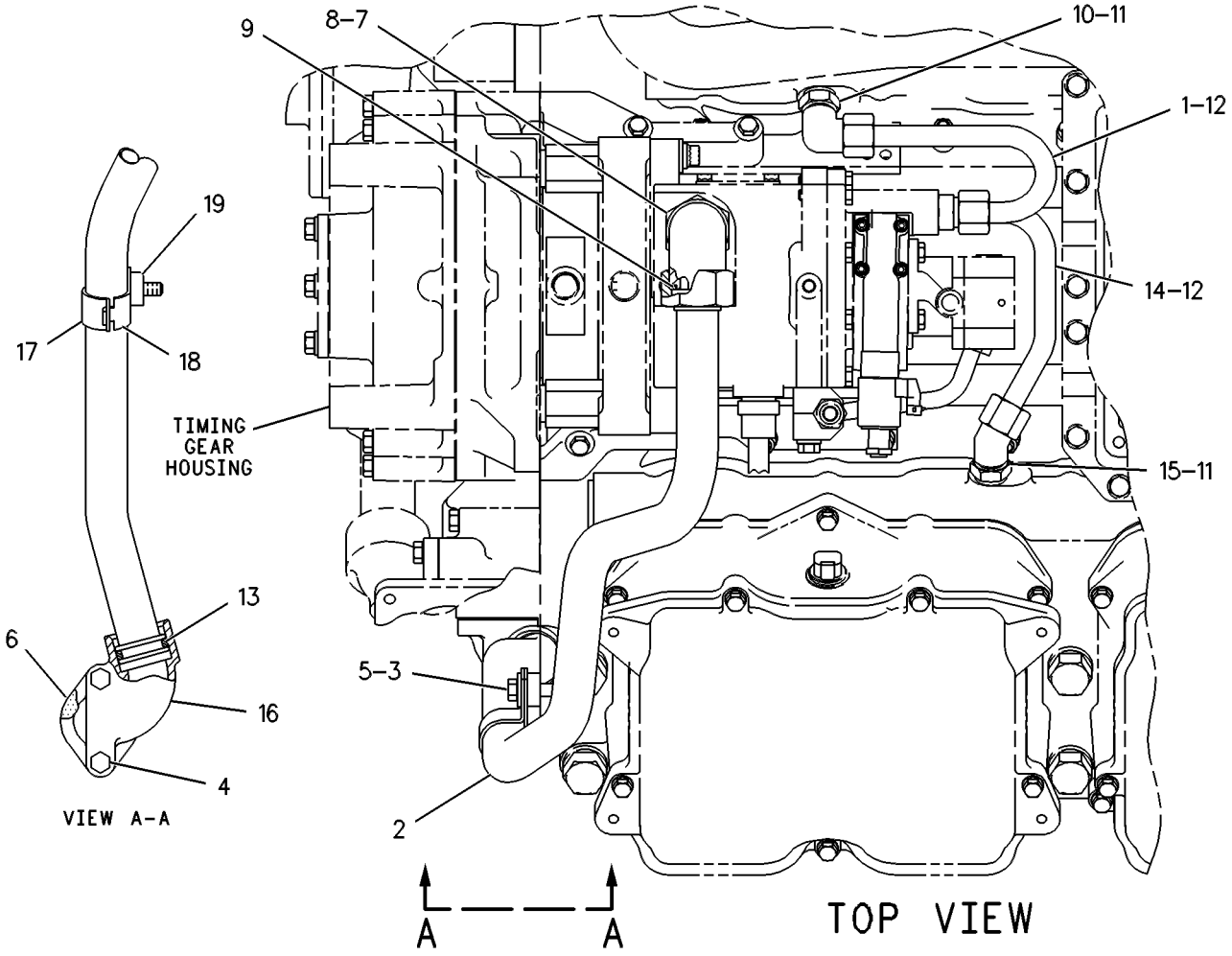

GRAPHIC #1

g00086476

126-7292 PUMP & MTG GP-UNIT INJ HYD

S/N: 80M1-153

PART OF 123-0200 ENGINE AR

SMCS-1714 **i01047654**

NOTE	REF NO	GRAPHIC REF	PART NUMBER	QTY	PART NAME 1 2 3 4 5 6 (PRODUCT LEVEL)	SEE PAGE
	1	1	**5P-5855**	3	BOLT-12 POINT HEAD	
	2	1	**5P-8245**	3	WASHER (3MM THK)	
Y	3	1	*125-3225*	1	PUMP GP-UNIT INJECTOR HYD	194
	4	1	**0S-1617**	4	BOLT (5/16-18X.75IN)	
	5	1	**9M-1974**	4	WASHER-HARD (2MM THK)	
	6	1	**118-8157**	1	SUPPORT-PUMP	
	7	1	**6V-1197**	1	SEAL-O-RING (98.02MM ID)	
Y	8	1	**103-6092**	1	SENSOR GP-PRESSURE (ENGINE OIL)	269
	9	1	**9X-0262**	1	ADAPTER	
	10	1	**6V-5048**	2	SEAL-O-RING (8.92MM ID)	
Y	11	1	**106-0735**	1	SENSOR GP-TEMPERATURE (ENGINE OIL)	284
	12	1	**8L-2786**	2	SEAL-O-RING (16.36MM ID)	
	13	1	**4P-0707**	2	CLAMP AS	
	14	1	**0L-2070**	1	BOLT (3/8-16X2.25IN)	
	15	1	**5M-2894**	1	WASHER (2.5MM THK)	
	16	1	**8T-1686**	1	ELBOW-90 DEGREE	
	17	1	**033-6033**	1	SEAL-O-RING (12.42MM ID)	
	18	1	**127-1969**	1	TUBE AS	

Y-SEPARATE ILLUSTRATION

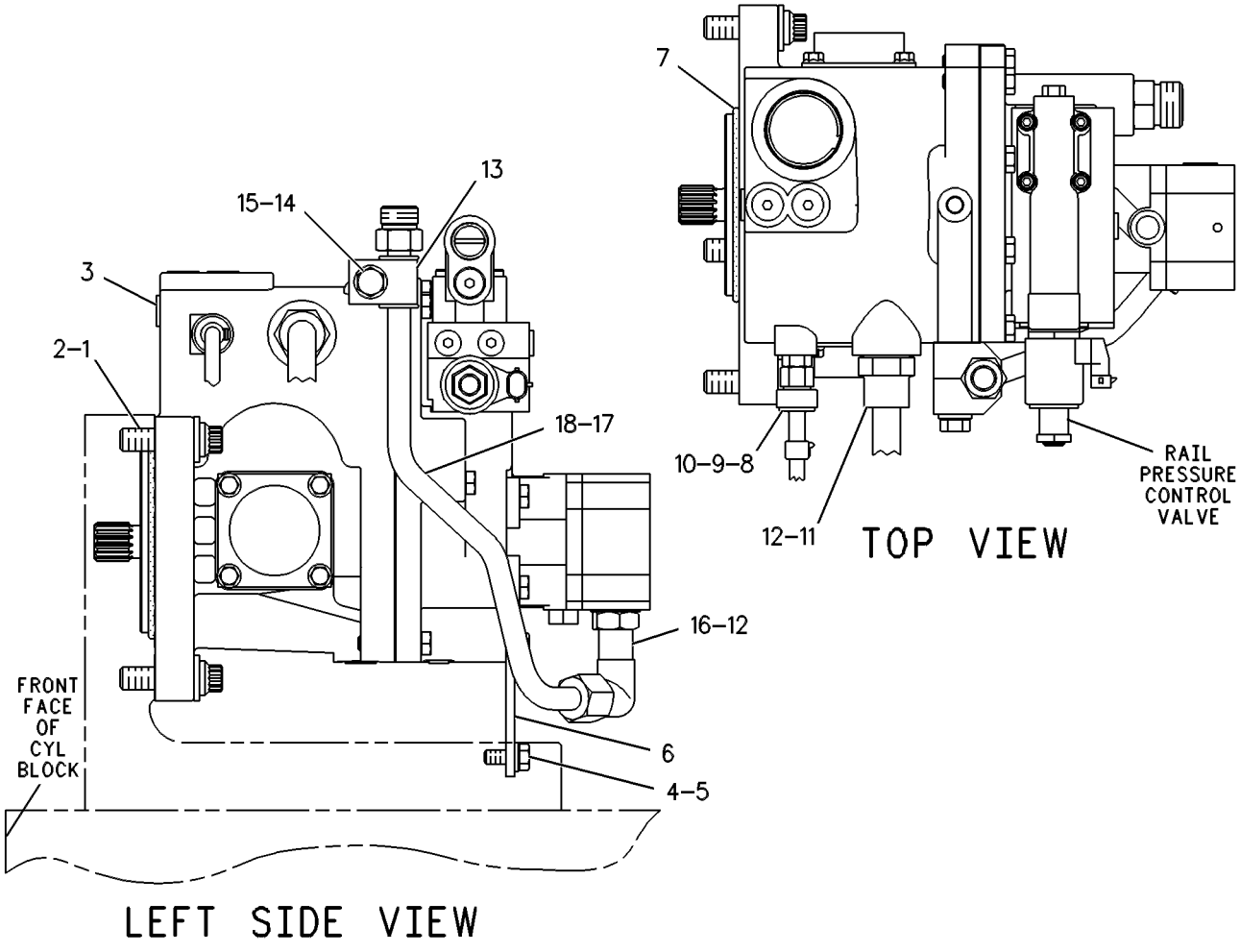

GRAPHIC #1 g00086494

MEMORANDA

126-7292 PUMP & MTG GP-UNIT INJ HYD

S/N: 80M154-186

PART OF 123-0200 ENGINE AR

SMCS-1714 **i01486587**

NOTE	REF NO	GRAPHIC REF	PART NUMBER	QTY	PART NAME 1 2 3 4 5 6 (PRODUCT LEVEL)	SEE PAGE
	1	1	**5P-5855**	3	BOLT-12 POINT HEAD (1/2-13X1.75 IN)	
	2	1	**5P-8245**	3	WASHER-HARD (13.5X25.5X3MM THK)	
YC	3	1	*133-1708*	1	PUMP GP-UNIT INJECTOR HYD	195
	4	1	**0S-1617**	4	BOLT (5/16-18X0.75 IN)	
	5	1	**9M-1974**	4	WASHER-HARD (8.8X16X2MM THK)	
	6	1	**118-8157**	1	SUPPORT-PUMP	
	7	1	**6V-1197**	1	SEAL-O-RING	
Y	8	1	**103-6092**	1	SENSOR GP-PRESSURE (ENGINE OIL)	269
	9	1	**9X-0262**	1	ADAPTER	
	10	1	**6V-5048**	2	SEAL-O-RING	
Y	11	1	**106-0735**	1	SENSOR GP-TEMPERATURE (ENGINE OIL)	284
	12	1	**8L-2786**	2	SEAL-O-RING	
	13	1	**4P-0707**	2	CLAMP AS	
	14	1	**0L-2070**	1	BOLT (3/8-16X2.25 IN)	
	15	1	**5M-2894**	1	WASHER-HARD (10.2X18.5X2.5MM THK)	
	16	1	**8T-1686**	1	ELBOW	
	17	1	**033-6033**	1	SEAL-O-RING	
	18	1	**127-1969**	1	TUBE AS	

C-CHANGE FROM PREVIOUS TYPE
Y-SEPARATE ILLUSTRATION

126-7292 **PUMP & MTG GP-UNIT INJ HYD** ***(contd.)*** **i01486587**

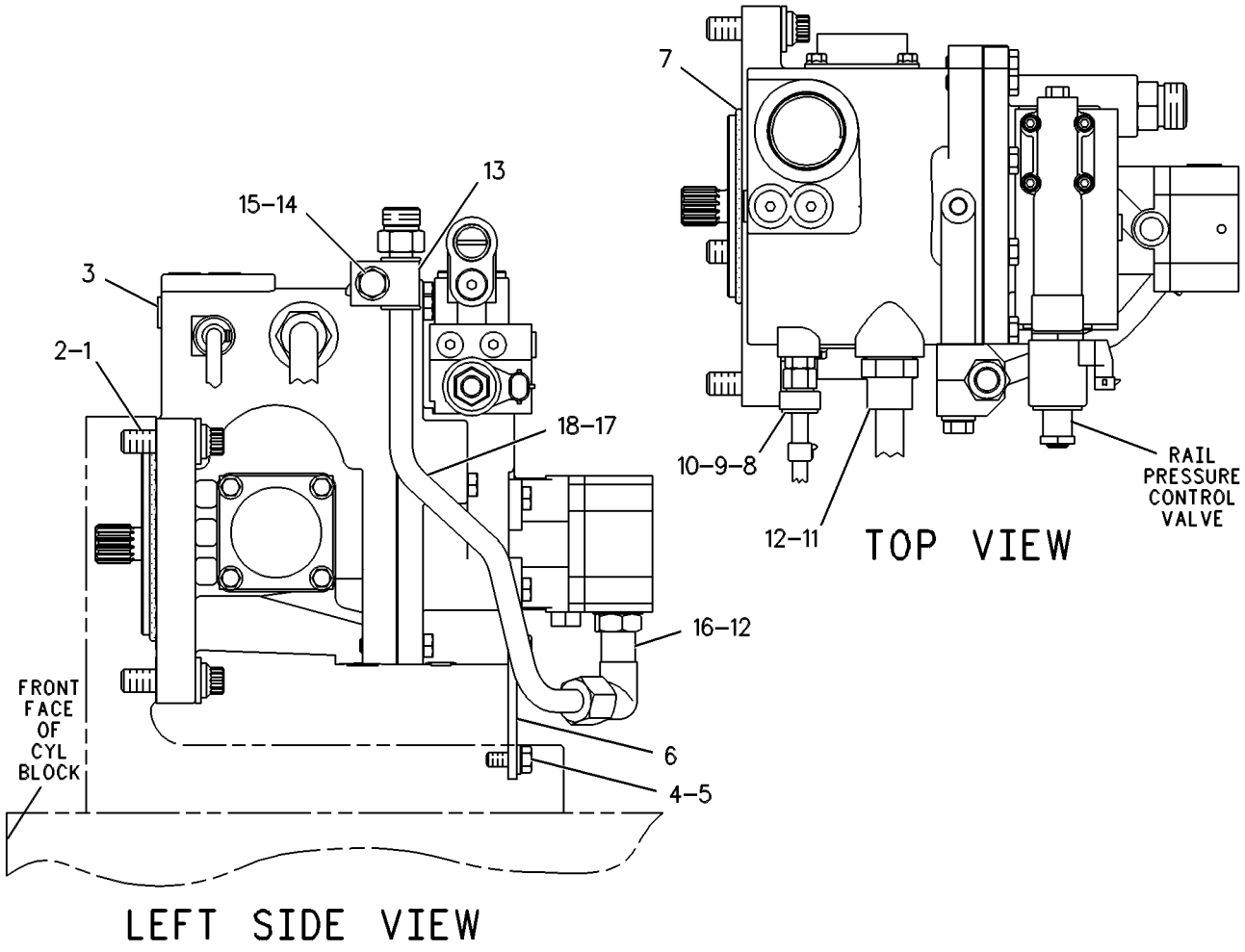

GRAPHIC #1 g00086494

126-7292 PUMP & MTG GP-UNIT INJ HYD

S/N: 80M187-595

PART OF 123-0200 ENGINE AR

SMCS-1714 **i01486586**

NOTE	REF NO	GRAPHIC REF	PART NUMBER	QTY	PART NAME 1 2 3 4 5 6 (PRODUCT LEVEL)	SEE PAGE
	1	1	**5P-5855**	3	BOLT-12 POINT HEAD (1/2-13X1.75 IN)	
	2	1	**5P-8245**	3	WASHER-HARD (13.5X25.5X3MM THK)	
CY	3	1	*134-1598*	1	PUMP GP-UNIT INJECTOR HYD	196
	4	1	**0S-1617**	4	BOLT (5/16-18X0.75 IN)	
	5	1	**9M-1974**	4	WASHER-HARD (8.8X16X2MM THK)	
	6	1	**118-8157**	1	SUPPORT-PUMP	
	7	1	**6V-1197**	1	SEAL-O-RING	
Y	8	1	**103-6092**	1	SENSOR GP-PRESSURE (ENGINE OIL)	269
	9	1	**9X-0262**	1	ADAPTER	
	10	1	**6V-5048**	2	SEAL-O-RING	
Y	11	1	**106-0735**	1	SENSOR GP-TEMPERATURE (ENGINE OIL)	284
	12	1	**8L-2786**	2	SEAL-O-RING	
	13	1	**4P-0707**	2	CLAMP AS	
	14	1	**0L-2070**	1	BOLT (3/8-16X2.25 IN)	
	15	1	**5M-2894**	1	WASHER-HARD (10.2X18.5X2.5MM THK)	
	16	1	**8T-1686**	1	ELBOW	
	17	1	**033-6033**	1	SEAL-O-RING	
	18	1	**127-1969**	1	TUBE AS	

C-CHANGE FROM PREVIOUS TYPE
Y-SEPARATE ILLUSTRATION

126-7292 **PUMP & MTG GP-UNIT INJ HYD** ***(contd.)*** **i01486586**

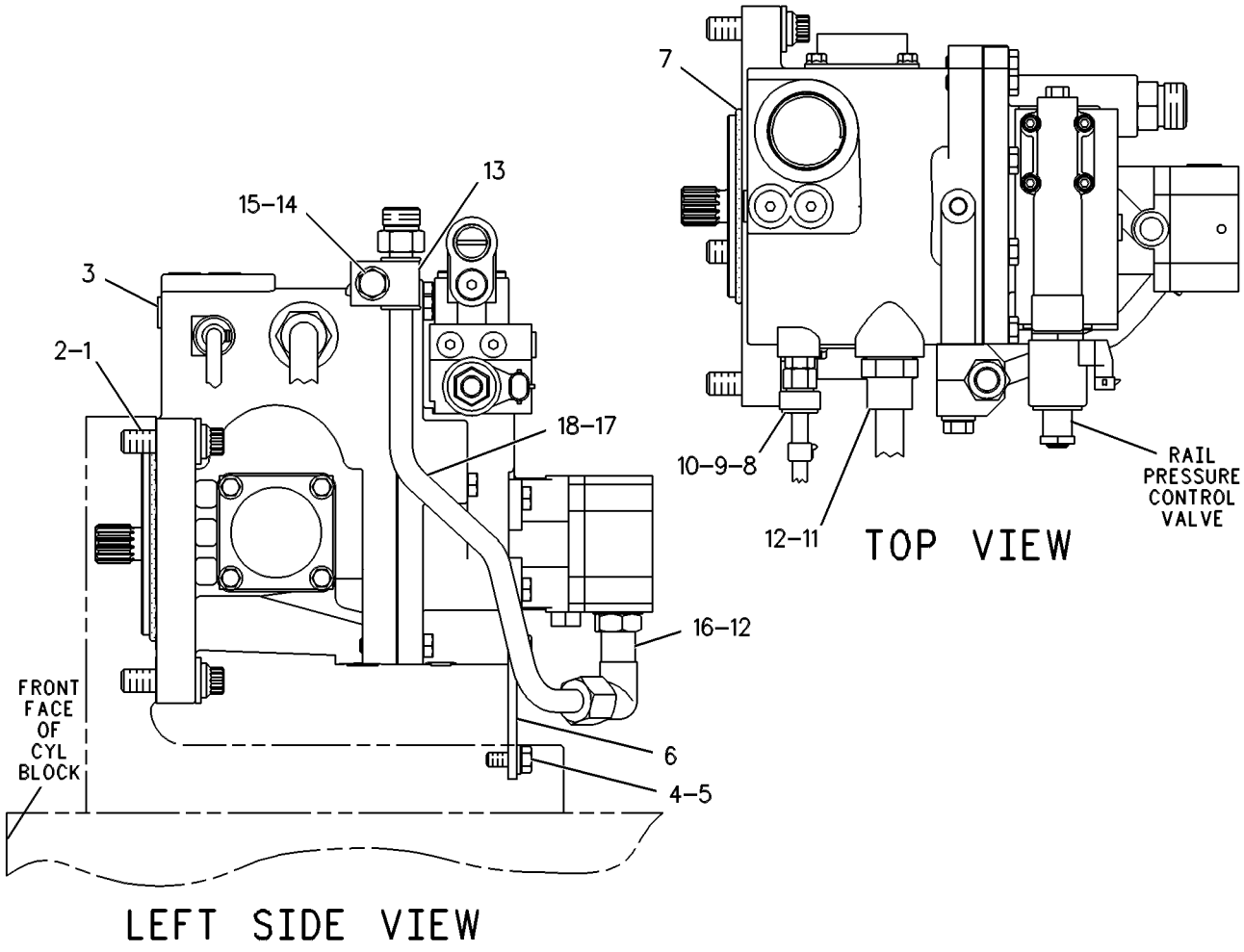

GRAPHIC #1 g00086494

126-7292 PUMP & MTG GP-UNIT INJ HYD

S/N: 80M596-1003

PART OF 123-0200 ENGINE AR

SMCS-1714 **i01278408**

NOTE	REF NO	GRAPHIC REF	PART NUMBER	QTY	PART NAME 1 2 3 4 5 6 (PRODUCT LEVEL)	SEE PAGE
	1	1	**5P-5855**	3	BOLT-12 POINT HEAD (1/2-13X1.75 IN)	
	2	1	**5P-8245**	3	WASHER-HARD (3MM THK)	
CY	3	1	*134-9405*	1	PUMP GP-UNIT INJECTOR HYD	197
	4	1	**0S-1617**	4	BOLT (5/16-18X.75IN)	
	5	1	**9M-1974**	4	WASHER-HARD (2MM THK)	
	6	1	**118-8157**	1	SUPPORT-PUMP	
	7	1	**6V-1197**	1	SEAL-O-RING (98.02MM ID)	
Y	8	1	**103-6092**	1	SENSOR GP-PRESSURE (ENGINE OIL)	269
	9	1	**9X-0262**	1	ADAPTER	
	10	1	**6V-5048**	2	SEAL-O-RING (8.92MM ID)	
Y	11	1	**106-0735**	1	SENSOR GP-TEMPERATURE (ENGINE OIL)	284
	12	1	**8L-2786**	2	SEAL-O-RING (16.36MM ID)	
	13	1	**4P-0707**	2	CLAMP AS	
	14	1	**0L-2070**	1	BOLT (3/8-16X2.25IN)	
	15	1	**5M-2894**	1	WASHER (2.5MM THK)	
	16	1	**8T-1686**	1	ELBOW-90 DEGREE (3/4-16 THD)	
	17	1	**033-6033**	1	SEAL-O-RING (12.42MM ID)	
	18	1	**127-1969**	1	TUBE AS	

C-CHANGE FROM PREVIOUS TYPE
Y-SEPARATE ILLUSTRATION

126-7292 **PUMP & MTG GP-UNIT INJ HYD** ***(contd.)*** **i01278408**

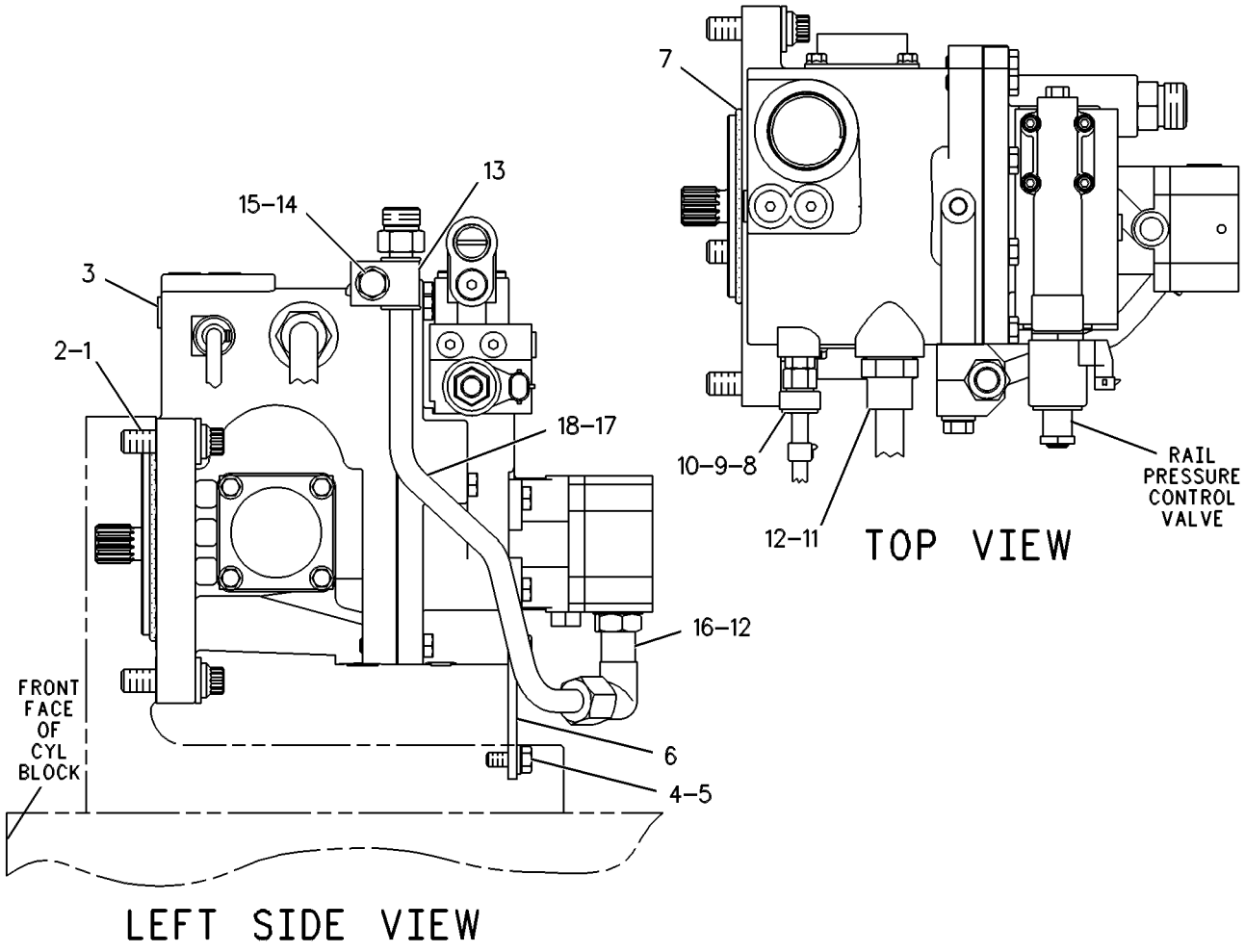

GRAPHIC #1 g00086494

126-7292 PUMP & MTG GP-UNIT INJ HYD

S/N: 80M1004-2693

PART OF 123-0200 ENGINE AR

SMCS-1714 **i01048671**

NOTE	REF NO	GRAPHIC REF	PART NUMBER	QTY	PART NAME 1 2 3 4 5 6 (PRODUCT LEVEL)	SEE PAGE
	1	1	**5P-5855**	3	BOLT-12 POINT HEAD	
	2	1	**5P-8245**	3	WASHER (3MM THK)	
CY	3	1	**144-0835**	1	PUMP GP-UNIT INJECTOR HYD	198
	4	1	**0S-1617**	4	BOLT (5/16-18X.75IN)	
	5	1	**9M-1974**	4	WASHER-HARD (2MM THK)	
	6	1	**118-8157**	1	SUPPORT-PUMP	
	7	1	**6V-1197**	1	SEAL-O-RING (98.02MM ID)	
Y	8	1	**103-6092**	1	SENSOR GP-PRESSURE (ENGINE OIL)	269
	9	1	**9X-0262**	1	ADAPTER	
	10	1	**6V-5048**	2	SEAL-O-RING (8.92MM ID)	
Y	11	1	**106-0735**	1	SENSOR GP-TEMPERATURE (ENGINE OIL)	284
	12	1	**8L-2786**	2	SEAL-O-RING (16.36MM ID)	
	13	1	**4P-0707**	2	CLAMP AS	
	14	1	**0L-2070**	1	BOLT (3/8-16X2.25IN)	
	15	1	**5M-2894**	1	WASHER (2.5MM THK)	
	16	1	**8T-1686**	1	ELBOW-90 DEGREE	
	17	1	**033-6033**	1	SEAL-O-RING (12.42MM ID)	
	18	1	**127-1969**	1	TUBE AS	

C-CHANGE FROM PREVIOUS TYPE
Y-SEPARATE ILLUSTRATION

126-7292 **PUMP & MTG GP-UNIT INJ HYD** ***(contd.)*** **i01048671**

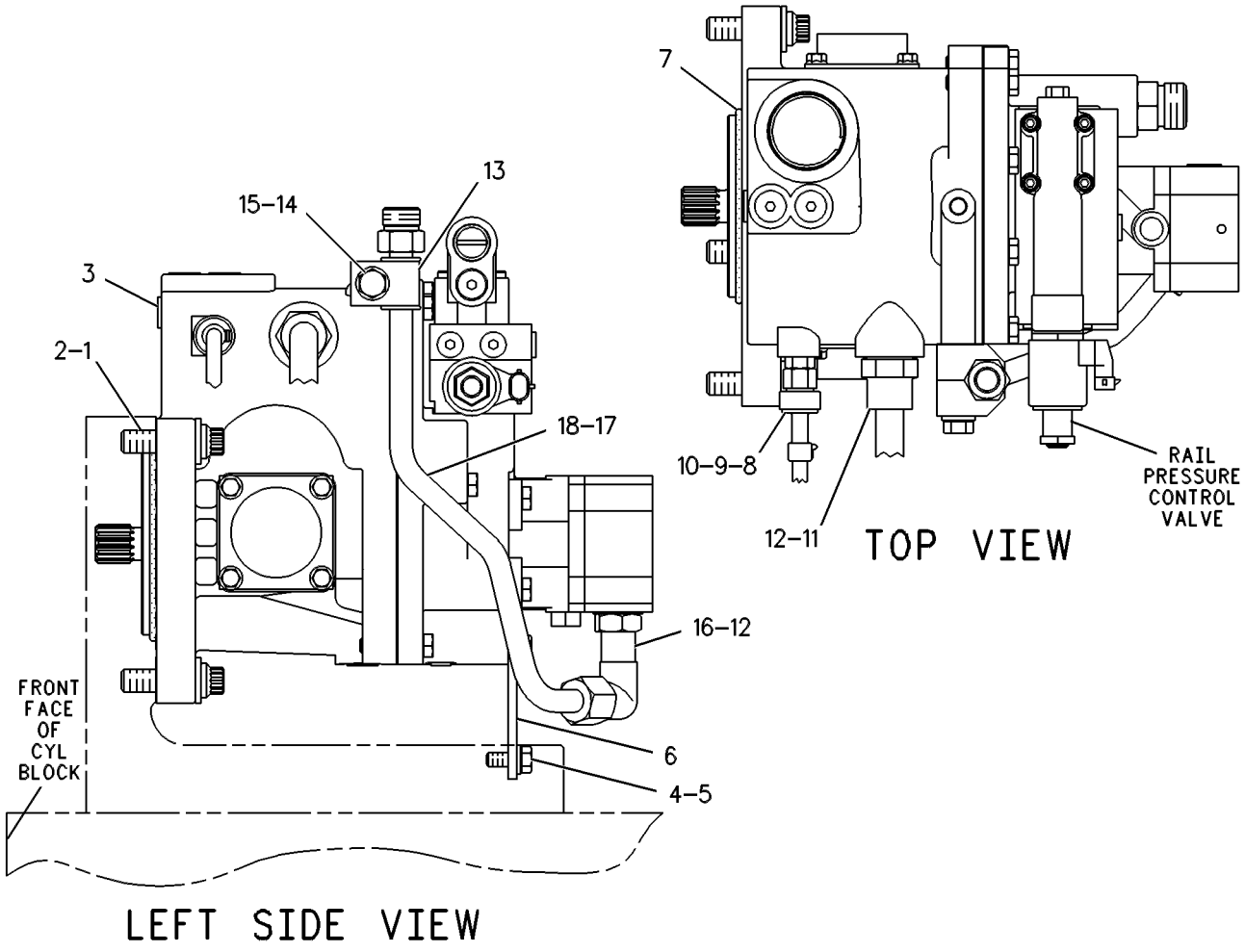

GRAPHIC #1 g00086494

126-7292 PUMP & MTG GP-UNIT INJ HYD

S/N: 80M2694-2772

PART OF 123-0200 ENGINE AR

SMCS-1714 **i01278411**

NOTE	REF NO	GRAPHIC REF	PART NUMBER	QTY	PART NAME 1 2 3 4 5 6 (PRODUCT LEVEL)	SEE PAGE
	1	1	**5P-5855**	3	BOLT-12 POINT HEAD (1/2-13X1.75 IN)	
	2	1	**5P-8245**	3	WASHER-HARD (3MM THK)	
CY	3	1	**169-1034**	1	PUMP GP-UNIT INJECTOR HYD	200
	4	1	**0S-1617**	4	BOLT (5/16-18X.75IN)	
	5	1	**9M-1974**	4	WASHER-HARD (2MM THK)	
	6	1	**118-8157**	1	SUPPORT-PUMP	
	7	1	**6V-1197**	1	SEAL-O-RING (98.02MM ID)	
Y	8	1	**103-6092**	1	SENSOR GP-PRESSURE (ENGINE OIL)	269
	9	1	**9X-0262**	1	ADAPTER	
	10	1	**6V-5048**	2	SEAL-O-RING (8.92MM ID)	
Y	11	1	**106-0735**	1	SENSOR GP-TEMPERATURE (ENGINE OIL)	284
	12	1	**8L-2786**	2	SEAL-O-RING (16.36MM ID)	
	13	1	**4P-0707**	2	CLAMP AS	
	14	1	**0L-2070**	1	BOLT (3/8-16X2.25IN)	
	15	1	**5M-2894**	1	WASHER (2.5MM THK)	
	16	1	**8T-1686**	1	ELBOW-90 DEGREE (3/4-16 THD)	
	17	1	**033-6033**	1	SEAL-O-RING (12.42MM ID)	
	18	1	**127-1969**	1	TUBE AS	

C-CHANGE FROM PREVIOUS TYPE
Y-SEPARATE ILLUSTRATION

126-7292 **PUMP & MTG GP-UNIT INJ HYD** ***(contd.)*** **i01278411**

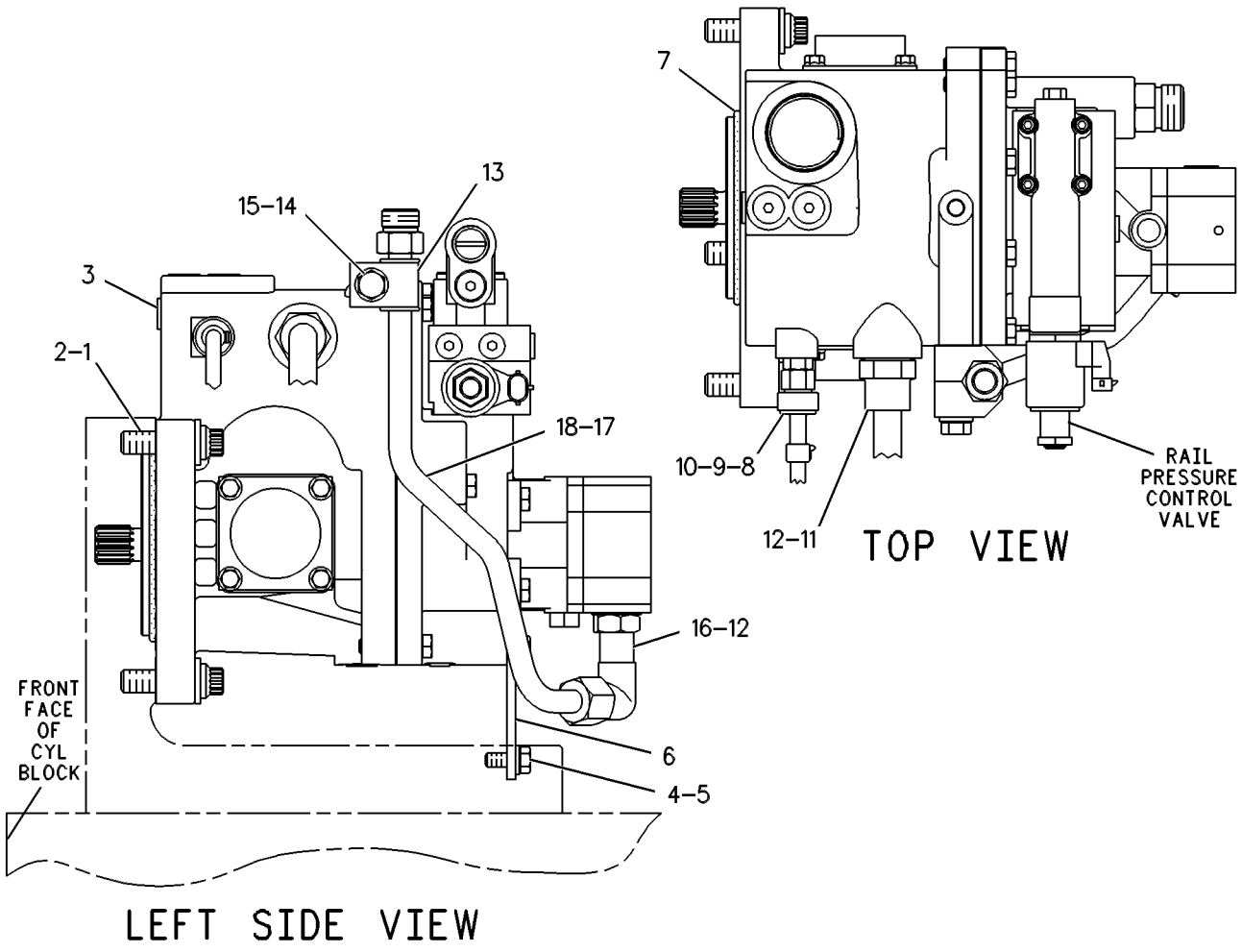

GRAPHIC #1 g00086494

126-7292 PUMP & MTG GP-UNIT INJ HYD

S/N: 80M2773-UP

PART OF 123-0200 ENGINE AR

SMCS-1714 **i01492569**

NOTE	REF NO	GRAPHIC REF	PART NUMBER	QTY	PART NAME 1 2 3 4 5 6 (PRODUCT LEVEL)	SEE PAGE
	1	1	**5P-5855**	3	BOLT-12 POINT HEAD (1/2-13X1.75 IN)	
	2	1	**5P-8245**	3	WASHER-HARD (13.5X25.5X3MM THK)	
CY	3	1	**201-4201**	1	PUMP GP-UNIT INJECTOR HYD	202
	4	1	**0S-1617**	4	BOLT (5/16-18X0.75 IN)	
	5	1	**9M-1974**	4	WASHER-HARD (8.8X16X2MM THK)	
	6	1	**118-8157**	1	SUPPORT-PUMP	
	7	1	**6V-1197**	1	SEAL-O-RING	
CY	8	1	**161-9931**	1	SENSOR GP-PRESSURE (ENGINE OIL)	275
	9	1	**9X-0262**	1	ADAPTER	
	10	1	**6V-5048**	2	SEAL-O-RING	
Y	11	1	**106-0735**	1	SENSOR GP-TEMPERATURE (ENGINE OIL)	284
	12	1	**8L-2786**	2	SEAL-O-RING	
	13	1	**4P-0707**	2	CLAMP AS	
	14	1	**0L-2070**	1	BOLT (3/8-16X2.25 IN)	
	15	1	**5M-2894**	1	WASHER-HARD (10.2X18.5X2.5MM THK)	
	16	1	**8T-1686**	1	ELBOW	
	17	1	**033-6033**	1	SEAL-O-RING	
	18	1	**127-1969**	1	TUBE AS	

C-CHANGE FROM PREVIOUS TYPE
Y-SEPARATE ILLUSTRATION

126-7292 **PUMP & MTG GP-UNIT INJ HYD** ***(contd.)*** **i01492569**

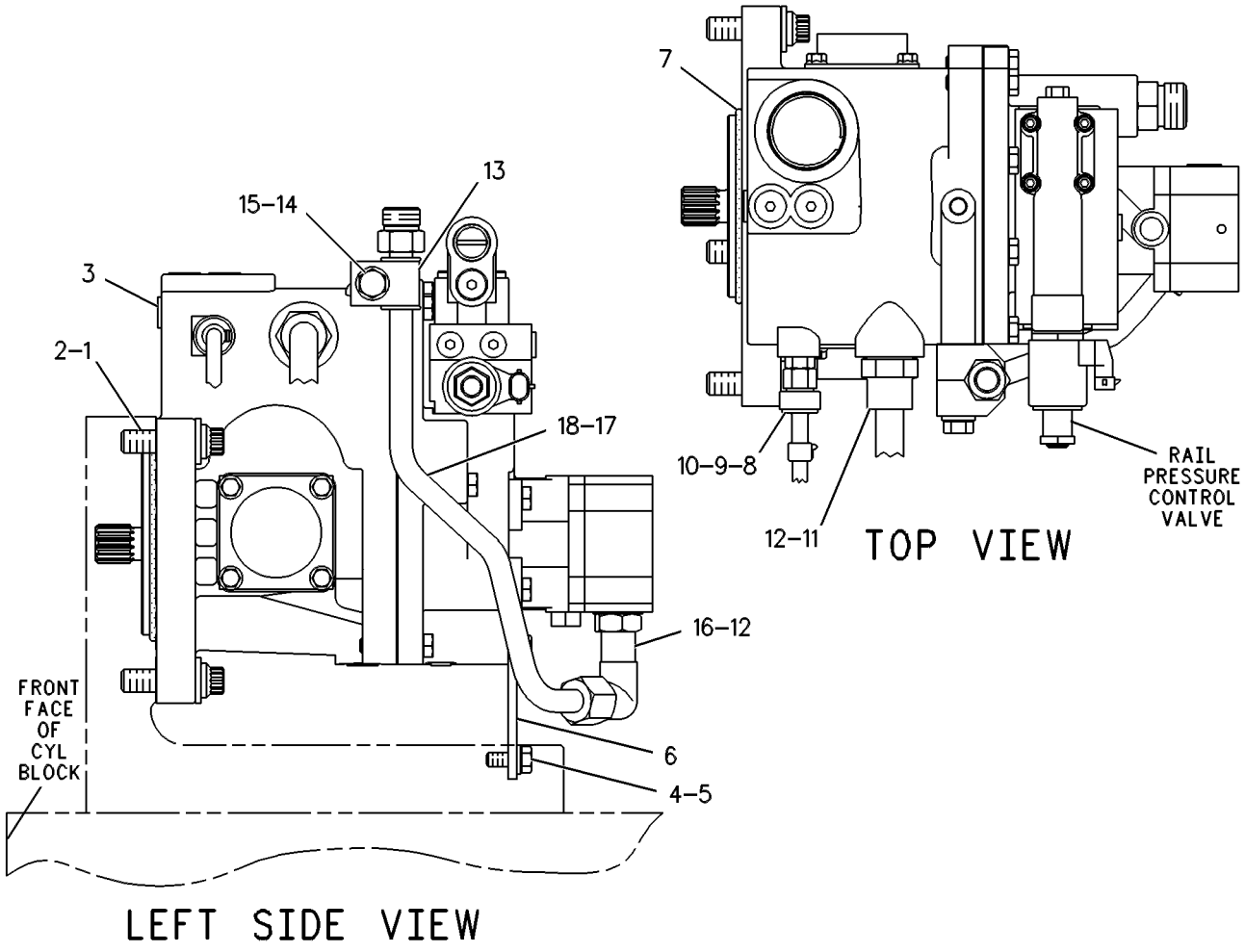

GRAPHIC #1 g00086494

108-7090 PUMP GP-FUEL INJECTION

S/N: 80M1-1047

PART OF 123-0200 ENGINE AR

SMCS-1251, 1253, 1272, 1281, 1290, 1292, 1299 **i00856743**

NOTE	REF NO	GRAPHIC REF	PART NUMBER	QTY	PART NAME 1 2 3 4 5 6 (PRODUCT LEVEL)	SEE PAGE
	1	1	**2P-3206**	4	BOLT-WASHER HEAD	
	2	1	**1A-5964**	1	BOLT (3/8-16X4.5IN)	
	3	1	**119-1708**	1	ELBOW-INJECTOR	
Y	4	1	*111-7916*	1	INJECTOR GP-FUEL	158
	5	1	**107-9326**	1	CLAMP-INJECTOR	
	6	1	**3E-6747**	1	SEAL-O-RING (32.99MM ID)	
	7	1	**9X-7681**	1	SEAL-O-RING (18.77MM ID)	
	8	1	**116-7221**	2	SEAL-RECTANGULAR	

Y-SEPARATE ILLUSTRATION

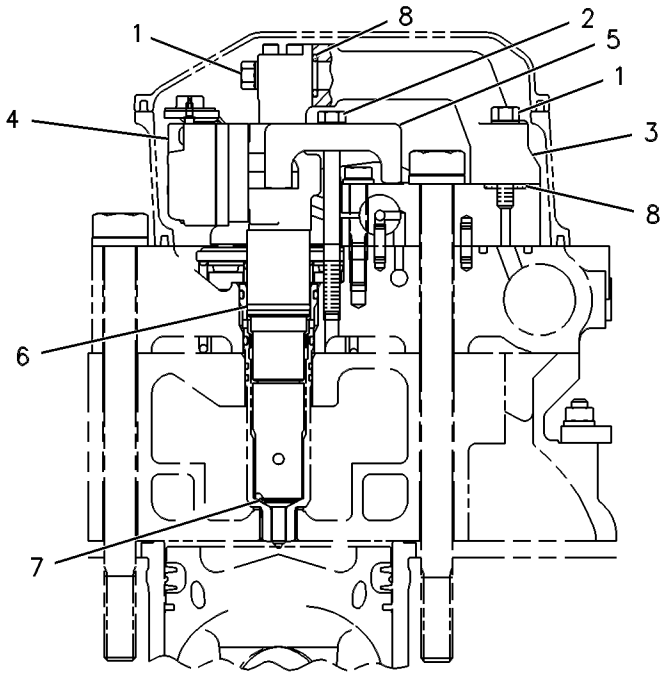

FRONT VIEW

GRAPHIC #1 g00086488

108-7090 PUMP GP-FUEL INJECTION

S/N: 80M1048-3809

PART OF 123-0200 ENGINE AR

SMCS-1251, 1253, 1272, 1281, 1290, 1292, 1299 **i00856736**

NOTE	REF NO	GRAPHIC REF	PART NUMBER	QTY	PART NAME 1 2 3 4 5 6 (PRODUCT LEVEL)	SEE PAGE
	1	1	**2P-3206**	4	BOLT-WASHER HEAD	
	2	1	**1A-5964**	1	BOLT (3/8-16X4.5IN)	
	3	1	**119-1708**	1	ELBOW-INJECTOR	
YC	4	1	*138-8756*	1	INJECTOR GP-FUEL	159
	5	1	**107-9326**	1	CLAMP-INJECTOR	
	6	1	**3E-6747**	1	SEAL-O-RING (32.99MM ID)	
	7	1	**9X-7681**	1	SEAL-O-RING (18.77MM ID)	
	8	1	**116-7221**	2	SEAL-RECTANGULAR	

C-CHANGE FROM PREVIOUS TYPE
Y-SEPARATE ILLUSTRATION

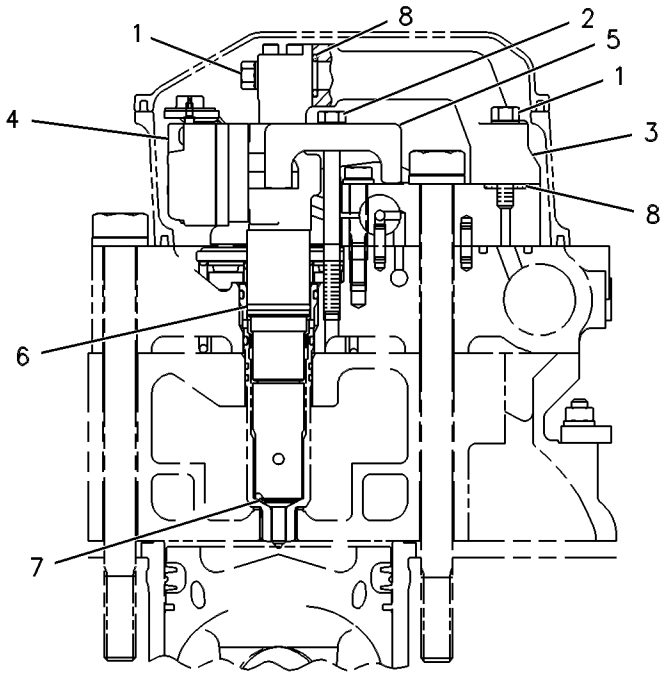

FRONT VIEW

GRAPHIC #1 g00086488

108-7090 PUMP GP-FUEL INJECTION

S/N: 80M2332-2882

PART OF 123-0200 ENGINE AR

SMCS-1251, 1253, 1272, 1281, 1290, 1292, 1299 **i01354512**

NOTE	REF NO	GRAPHIC REF	PART NUMBER	QTY	PART NAME 1 2 3 4 5 6 (PRODUCT LEVEL)	SEE PAGE
	1	1	**2P-3206**	4	BOLT-WASHER HEAD	
	2	1	**1A-5964**	1	BOLT (3/8-16X4.5IN)	
	3	1	**119-1708**	1	ELBOW-INJECTOR	
CY	4	1	*159-0836*	1	INJECTOR GP-FUEL	160
	5	1	**107-9326**	1	CLAMP-INJECTOR	
	6	1	**3E-6747**	1	SEAL-O-RING (32.99MM ID)	
	7	1	**9X-7681**	1	SEAL-O-RING (18.77MM ID)	
	8	1	**116-7221**	2	SEAL-RECTANGULAR	

C-CHANGE FROM PREVIOUS TYPE
Y-SEPARATE ILLUSTRATION

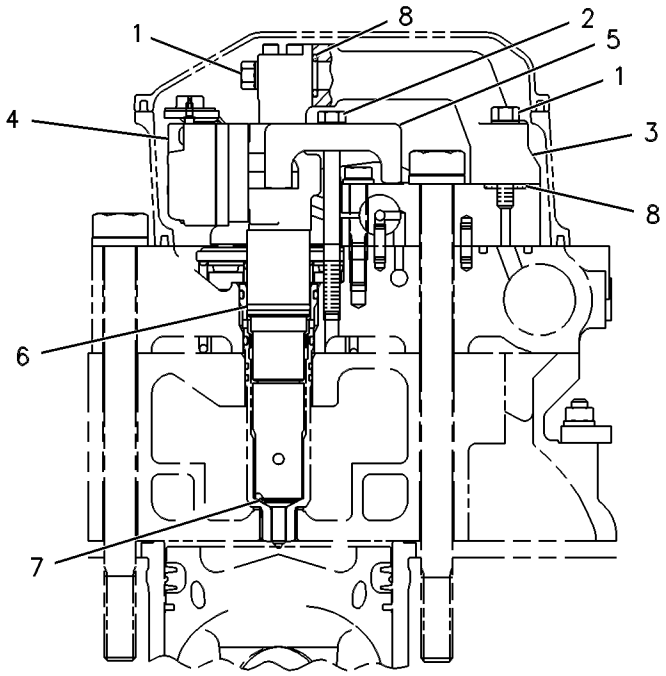

FRONT VIEW

GRAPHIC #1 g00086488

FUEL SYSTEM

108-7090 PUMP GP-FUEL INJECTION

S/N: 80M2883-UP

PART OF 123-0200 ENGINE AR

SMCS-1251, 1253, 1272, 1281, 1290, 1292, 1299 **i01110578**

NOTE	REF NO	GRAPHIC REF	PART NUMBER	QTY	PART NAME 1 2 3 4 5 6 (PRODUCT LEVEL)	SEE PAGE
	1	1	**2P-3206**	4	BOLT-WASHER HEAD	
	2	1	**1A-5964**	1	BOLT (3/8-16X4.5IN)	
	3	1	**119-1708**	1	ELBOW-INJECTOR	
CY	4	1	*174-7527*	1	INJECTOR GP-FUEL	161
	5	1	**107-9326**	1	CLAMP-INJECTOR	
	6	1	**3E-6747**	1	SEAL-O-RING (32.99MM ID)	
	7	1	**9X-7681**	1	SEAL-O-RING (18.77MM ID)	
	8	1	**116-7221**	2	SEAL-RECTANGULAR	

C-CHANGE FROM PREVIOUS TYPE
Y-SEPARATE ILLUSTRATION

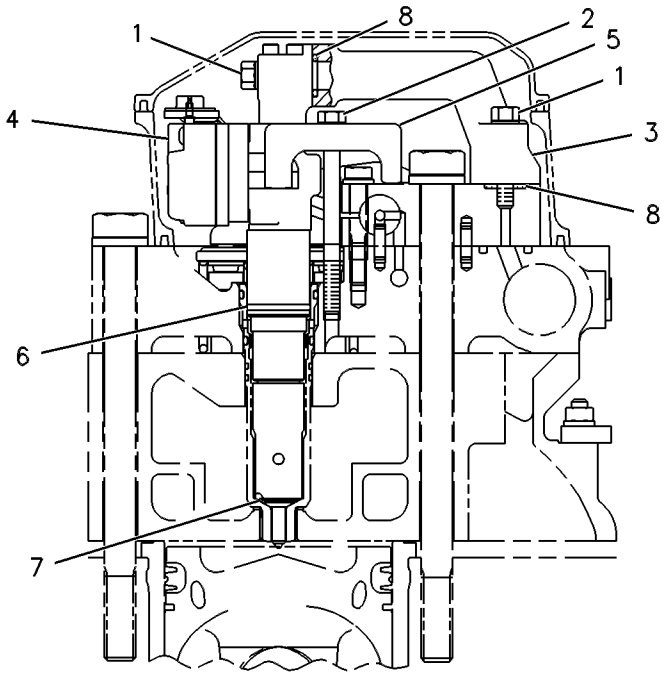

FRONT VIEW

GRAPHIC #1 g00086488

128-0739 PUMP GP-FUEL PRM & PRIM FILTER

S/N: 7KK1-UP

PART OF 6I-0673 INSTALLATION AR-ENGINE

SMCS-1258, 1260, 1261 **i00568077**

NOTE	REF NO	GRAPHIC REF	PART NUMBER	QTY	PART NAME 1 2 3 4 5 6 (PRODUCT LEVEL)	SEE PAGE
	1	1	**6V-4589**	1	SEAL-O-RING (19.18MM ID)	
BI	2	1	**117-1601**	1	HOSE AS	
Y	3	1	*129-4832*	1	PUMP GP-FUEL PRM & PRIM FILTER	193
	4	1	**033-6033**	2	SEAL-O-RING (12.42MM ID)	
	5	1	**4L-9337**	2	BOLT (3/8-16X1.50IN)	
	6	1	**6V-8721**	1	ELBOW-90 DEGREE (7/8-14 THD)	
	7	1	**6V-8801**	2	NUT (3/8-16 THD)	
	8	1	**8T-4896**	4	WASHER-HARD (2.5MM THK)	

B-USE AS REQUIRED
I-SEE HOSE FABRICATION GUIDE
Y-SEPARATE ILLUSTRATION

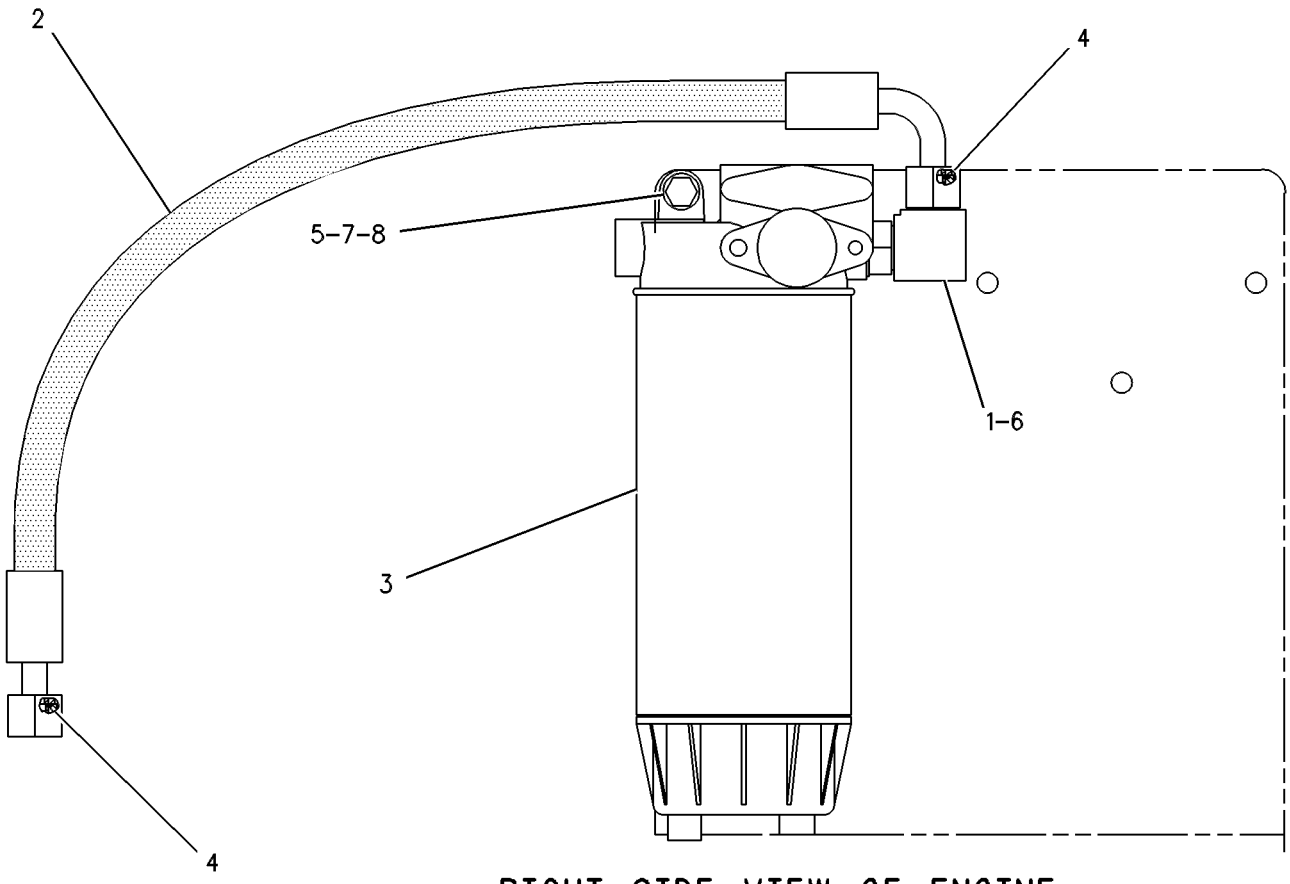

RIGHT SIDE VIEW OF ENGINE

GRAPHIC #1 g00279231

129-4832 PUMP GP-FUEL PRM & PRIM FILTER

S/N: 7KK1-UP

PART OF 128-0739 PUMP GP-FUEL PRM & PRIM FILTER

SMCS-1258, 1260, 1261 **i01400911**

NOTE	REF NO	GRAPHIC REF	PART NUMBER	QTY	PART NAME 1 2 3 4 5 6 (PRODUCT LEVEL)	SEE PAGE
	1	1	**128-8557**	1	BASE AS-FILTER	
		1	**7E-5346**	1	VALVE AS	
		1	**9S-4167**	1	STUD-HOLLOW	
	2	1	**129-0372**	1	FILTER AS-WATER SEP & FUEL	
		1	**141-0284**	1	KIT-FUEL FILTER & WATER SEP	
		1	**129-0373**	1	ELEMENT-FILTER	
		1	**129-0375**	1	BOWL AS-WATER COLLECTION	
	3	1	**105-2508**	1	PUMP AS-FUEL PRIMING	
		1	**7E-5346**	2	VALVE AS	
		1	**7F-8607**	1	SEAL-O-RING (18.72MM ID)	
	4	1	**1P-0436**	1	GASKET (FUEL PRIMING PUMP)	
	5	1	**7B-2742**	1	BOLT (1/4-20X1.25 IN)	
	6	1	**5P-0537**	1	WASHER-HARD (7.2X14.5X2MM THK)	
	7	1	**1B-7182**	1	BOLT (5/16-18X1.25IN)	
	8	1	**9M-1974**	1	WASHER-HARD (8.8X16X2MM THK)	
	9	1	**9S-8002**	4	PLUG-O-RING	
	10	1	**6V-5048**	4	SEAL-O-RING (8.92MM ID)	

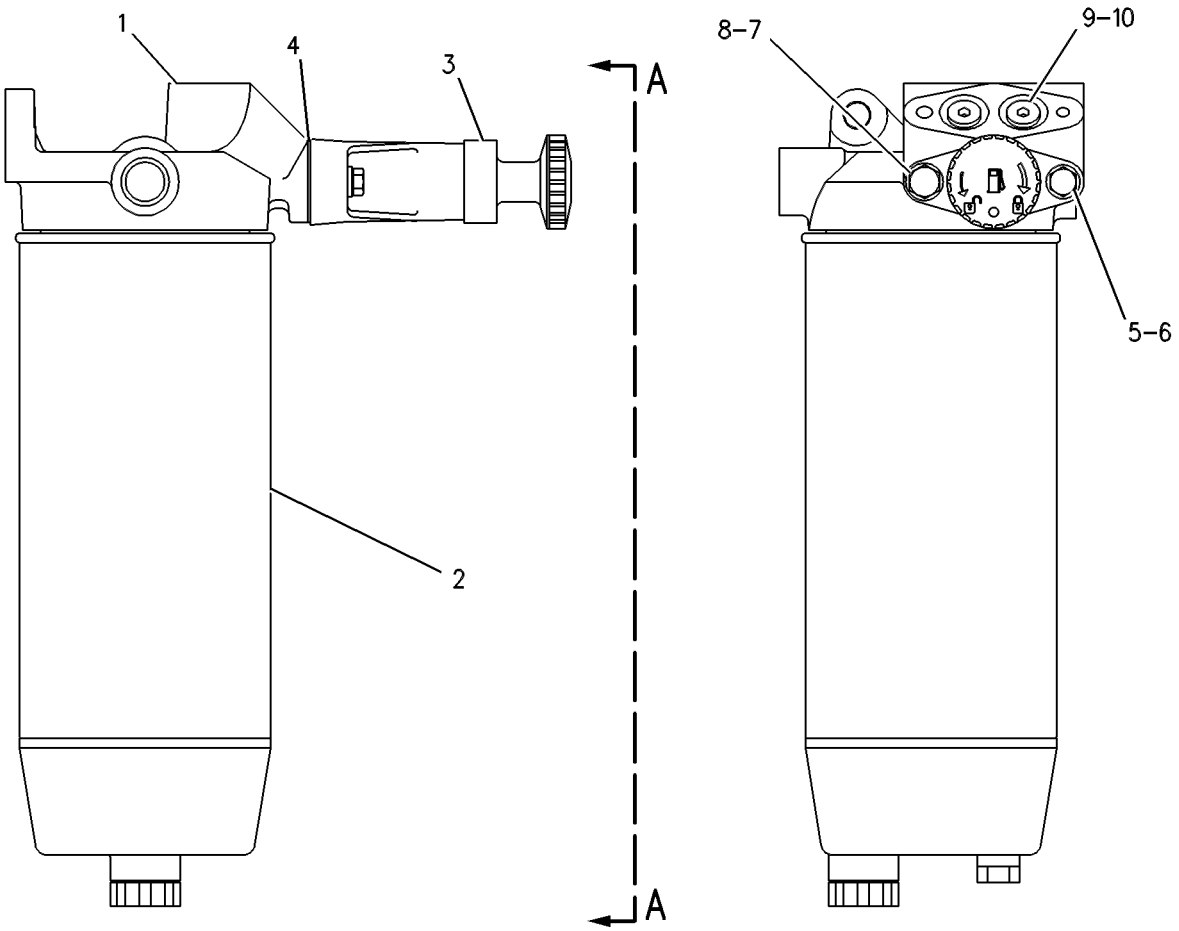

VIEW A-A

GRAPHIC #1 g00086650

125-3225 PUMP GP-UNIT INJECTOR HYD

S/N: 80M1-153

PART OF 126-7292 PUMP & MTG GP-UNIT INJ HYD

SMCS-1714 **i01400912**

NOTE	REF NO	GRAPHIC REF	PART NUMBER	QTY	PART NAME 1 2 3 4 5 6 (PRODUCT LEVEL)	SEE PAGE
Y	1	1	**107-0677**	1	VALVE GP-SOLENOID	218
	2	1	**111-8863**	1	PUMP GP-FUEL TRANSFER	
	3	1	**130-4607**	1	PUMP GP-UNIT INJECTOR HYD	
	4	1	**0S-1617**	4	BOLT (5/16-18X.75 IN)	
	5	1	**9S-8001**	2	PLUG-O-RING	
	6	1	**9S-8004**	4	PLUG-O-RING	
	7	1	**9S-8002**	3	PLUG-O-RING	
	8	1	**9S-8003**	1	PLUG-O-RING	
	9	1	**9S-4180**	2	PLUG-O-RING	
	10	1	**9S-8007**	1	PLUG-O-RING	
	11	1	**6V-8676**	1	SEAL-O-RING (48.90MM ID)	
F			**117-1620**	1	COUPLING	
F			**126-7234**	1	GASKET-HOUSING	
					AVAILABLE REPAIR KIT(S):	
			126-7235	1	KIT-SEAL	
					(INCLUDES SEAL-O-RING & GASKETS)	

F-NOT SHOWN
Y-SEPARATE ILLUSTRATION

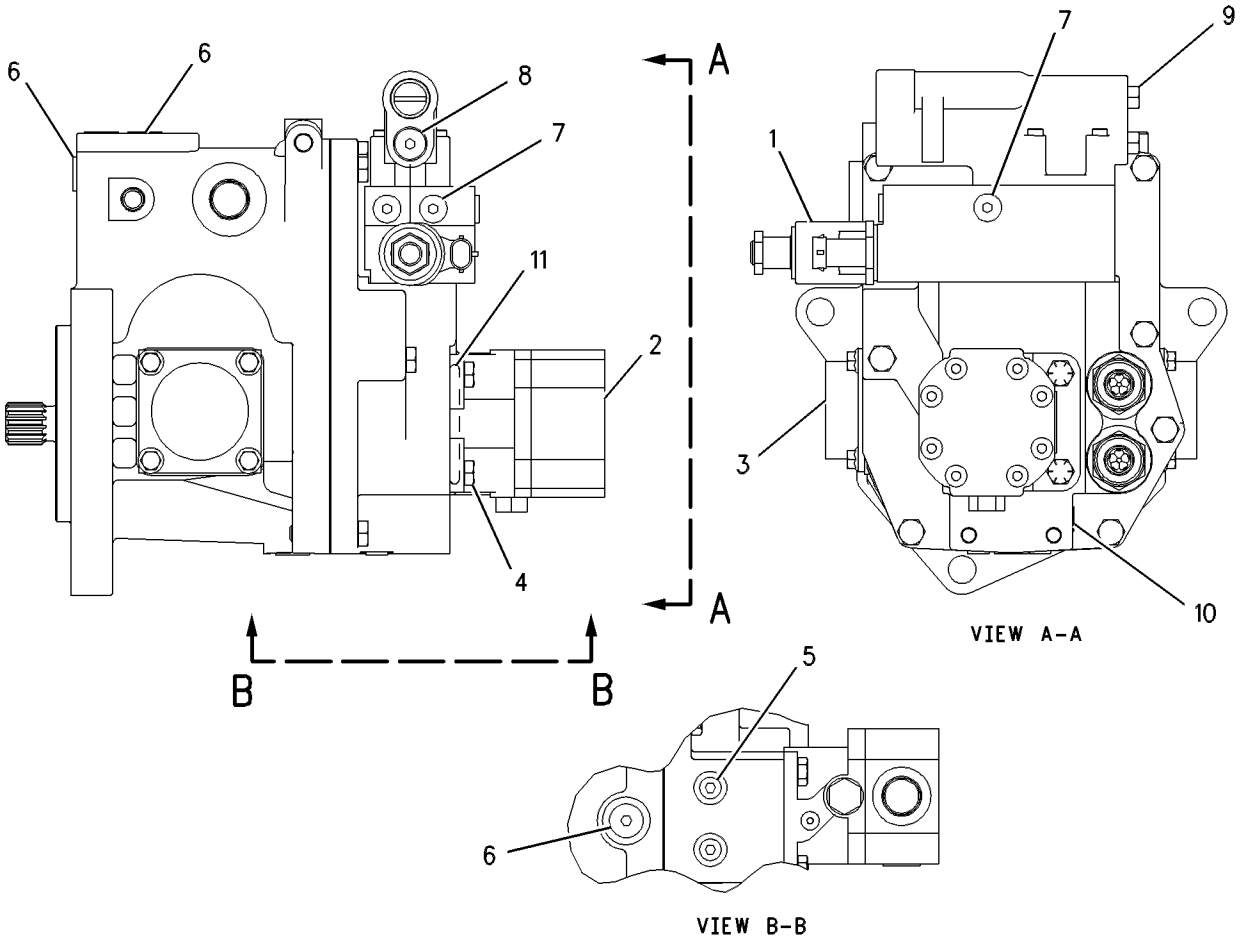

GRAPHIC #1 g00614485

133-1708 PUMP GP-UNIT INJECTOR HYD

S/N: 80M154-186

PART OF 126-7292 PUMP & MTG GP-UNIT INJ HYD

SMCS-1714 **i01500333**

NOTE	REF NO	GRAPHIC REF	PART NUMBER	QTY	PART NAME 1 2 3 4 5 6 (PRODUCT LEVEL)	SEE PAGE
Y	1	1	**107-0677**	1	VALVE GP-SOLENOID (PRESSURE CONTROL)	218
	2	1	**111-8863**	1	PUMP GP-FUEL TRANSFER	
	3	1	**133-1707**	1	PUMP GP-UNIT INJECTOR HYD	
	4	1	**0S-1617**	4	BOLT (5/16-18X0.75 IN)	
	5	1	**9S-8001**	2	PLUG	
	6	1	**9S-8004**	4	PLUG	
	7	1	**9S-8002**	3	PLUG-O-RING	
	8	1	**9S-8003**	1	PLUG-O-RING	
	9	1	**9S-4180**	2	PLUG-O-RING	
	10	1	**9S-8007**	1	PLUG-O-RING	
	11	1	**6V-8676**	1	SEAL-O-RING	
F			**117-1620**	1	COUPLING	
					AVAILABLE REPAIR KIT(S):	
			133-1706	1	KIT-SEAL	
					(INCLUDES SEAL-O-RINGS & GASKETS)	

F-NOT SHOWN
Y-SEPARATE ILLUSTRATION

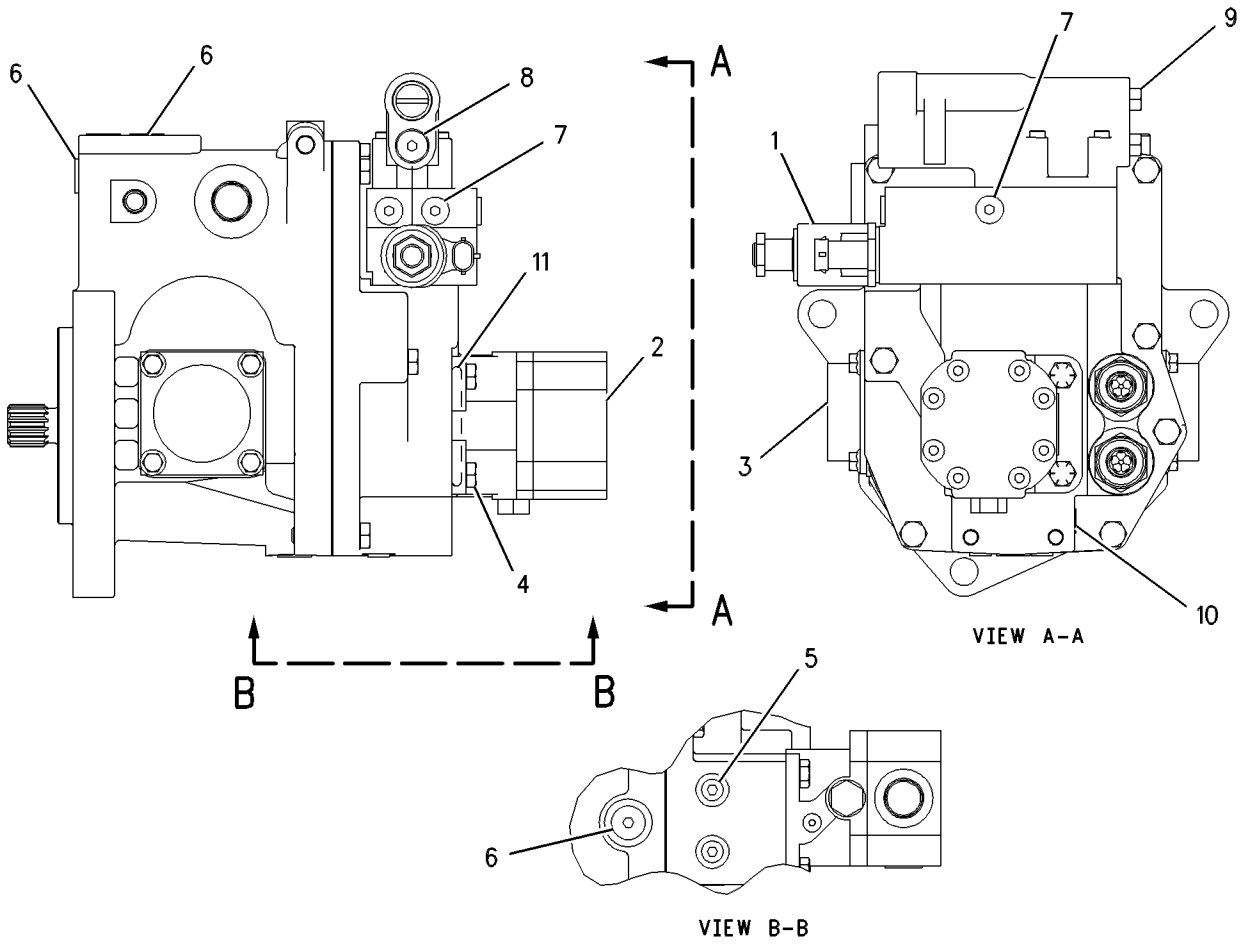

GRAPHIC #1 g00614542

134-1598 PUMP GP-UNIT INJECTOR HYD

S/N: 80M187-595

PART OF 126-7292 PUMP & MTG GP-UNIT INJ HYD

SMCS-1714 **i01500336**

NOTE	REF NO	GRAPHIC REF	PART NUMBER	QTY	PART NAME 1 2 3 4 5 6 (PRODUCT LEVEL)	SEE PAGE
Y	1	1	**107-0677**	1	VALVE GP-SOLENOID (PRESSURE CONTROL)	218
	2	1	**111-8863**	1	PUMP GP-FUEL TRANSFER	
	3	1	**134-1599**	1	PUMP GP-UNIT INJECTOR HYD	
	4	1	**0S-1617**	4	BOLT (5/16-18X0.75 IN)	
	5	1	**9S-8001**	2	PLUG	
	6	1	**9S-8004**	4	PLUG	
	7	1	**9S-8002**	3	PLUG-O-RING	
	8	1	**9S-8003**	1	PLUG-O-RING	
	9	1	**9S-4180**	2	PLUG-O-RING	
	10	1	**9S-8007**	1	PLUG-O-RING	
	11	1	**6V-8676**	1	SEAL-O-RING	
F			**117-1620**	1	COUPLING	
					AVAILABLE REPAIR KIT(S):	
			133-1706	1	KIT-SEAL	
					(INCLUDES SEAL-O-RINGS & GASKETS)	

F-NOT SHOWN
Y-SEPARATE ILLUSTRATION

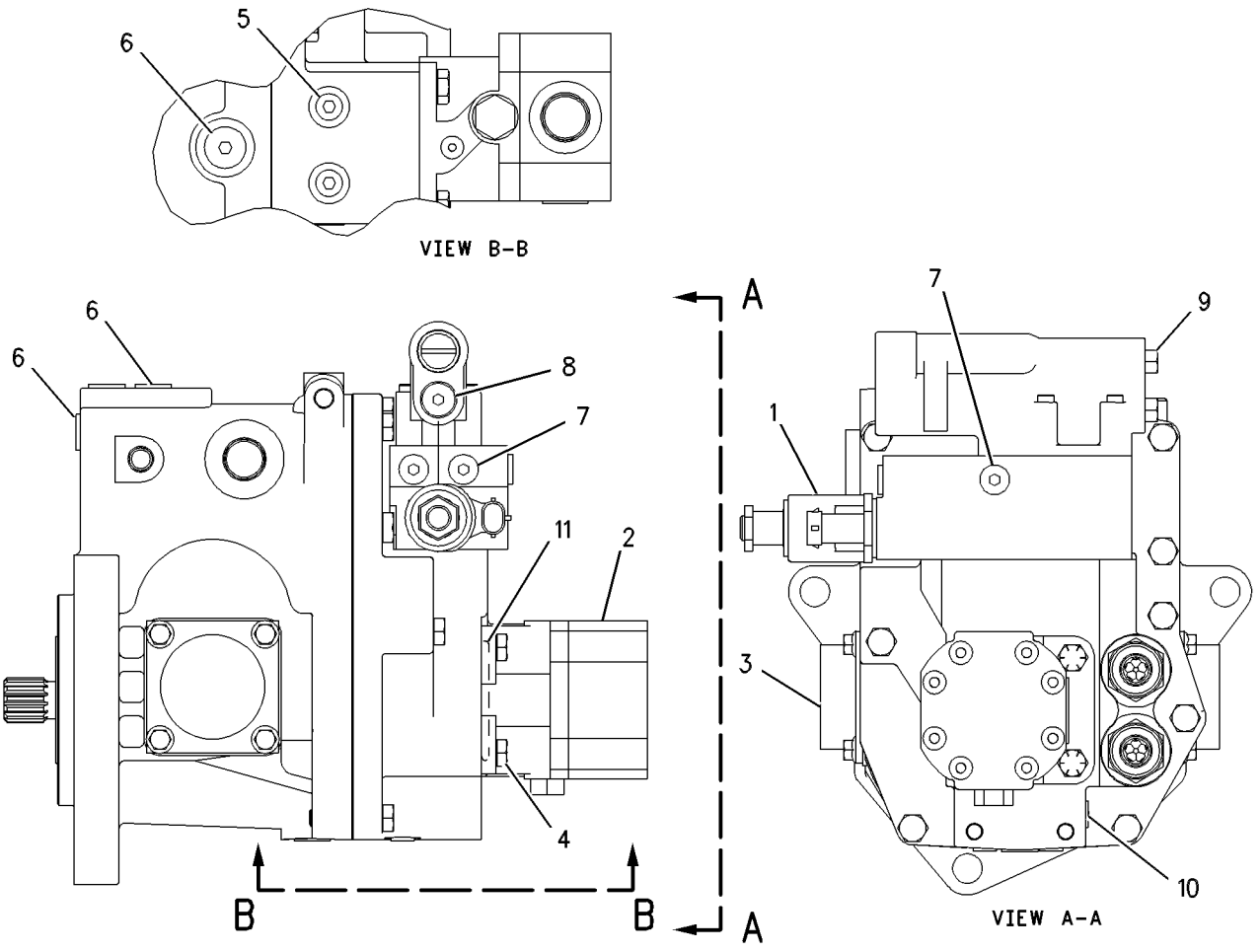

GRAPHIC #1 g00547751

134-9405 PUMP GP-UNIT INJECTOR HYD

S/N: 80M596-1003

PART OF 126-7292 PUMP & MTG GP-UNIT INJ HYD

SMCS-1714 **i01278442**

NOTE	REF NO	GRAPHIC REF	PART NUMBER	QTY	PART NAME 1 2 3 4 5 6 (PRODUCT LEVEL)	SEE PAGE
Y	1	1	**107-0677**	1	VALVE GP-SOLENOID (PRESSURE CONTROL)	218
	2	1	**111-8863**	1	PUMP GP-FUEL TRANSFER	
	3	1	**134-9404**	1	PUMP GP-UNIT INJECTOR HYD	
	4	1	**0S-1617**	4	BOLT (5/16-18X.75IN)	
	5	1	**9S-8001**	2	PLUG-O-RING (5/16-24 THD)	
	6	1	**9S-8004**	4	PLUG-O-RING (9/16-18 THD)	
	7	1	**9S-8002**	3	PLUG-O-RING (7/16-20 THD)	
	8	1	**9S-8003**	1	PLUG-O-RING (1/2-20 THD)	
	9	1	**9S-4180**	2	PLUG-O-RING (5/16-24 THD)	
	10	1	**9S-8007**	1	PLUG-O-RING (3/8-24 THD)	
	11	1	**138-4309**	2	FITTING	
	12	1	**138-4311**	2	SPRING	
	13	1	**138-4313**	2	VALVE	
F			**117-1620**	1	COUPLING	
					AVAILABLE REPAIR KIT(S):	
Y			**138-6256**	1	KIT-SEAL (UNIT INJECTOR HYDRAULIC)	162

F-NOT SHOWN
Y-SEPARATE ILLUSTRATION

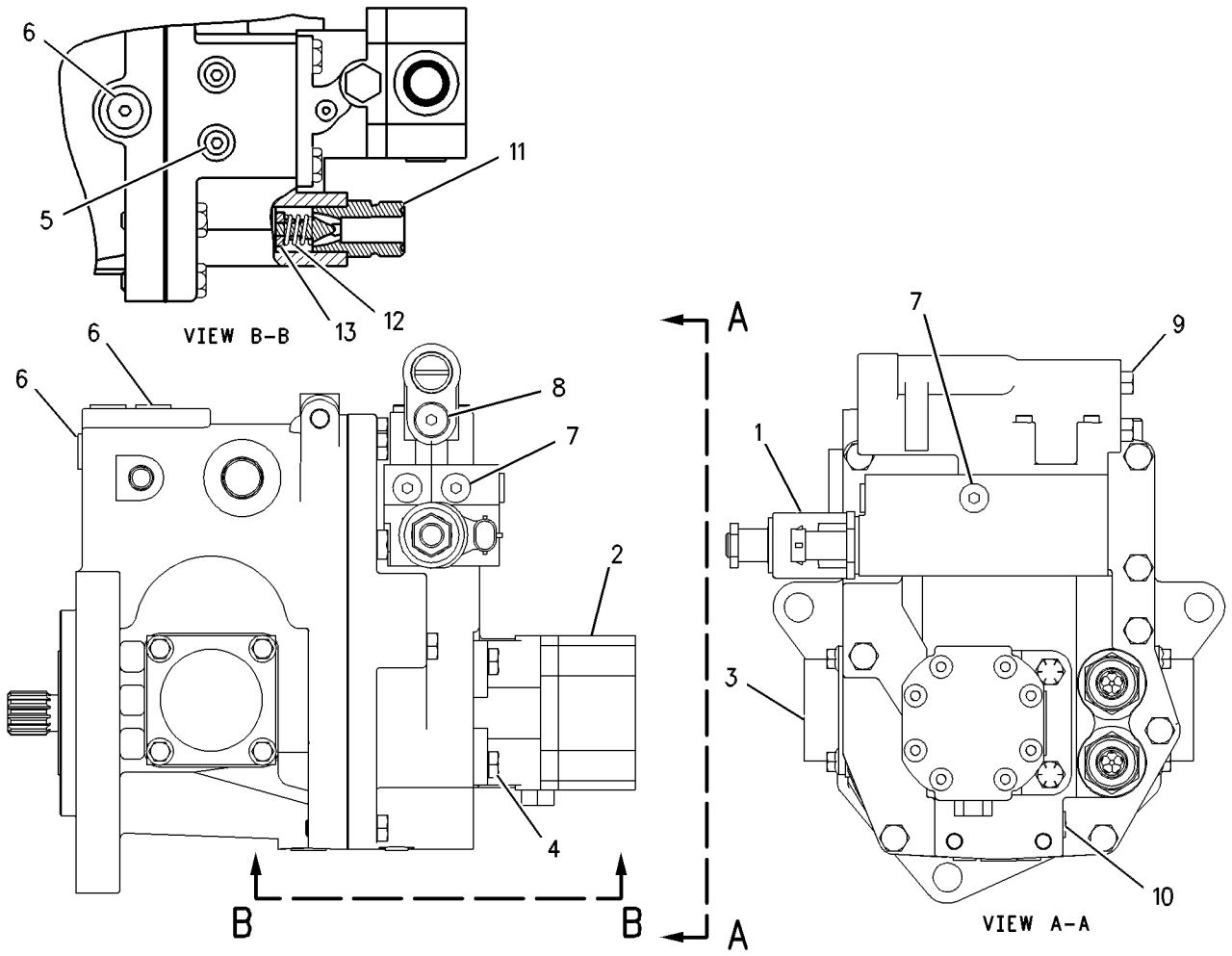

GRAPHIC #1 g00400910

144-0835 PUMP GP-UNIT INJECTOR HYD

S/N: 80M1004-2693

PART OF 126-7292 PUMP & MTG GP-UNIT INJ HYD

SMCS-1714 **i01357466**

NOTE	REF NO	GRAPHIC REF	PART NUMBER	QTY	PART NAME 1 2 3 4 5 6 (PRODUCT LEVEL)	SEE PAGE
Y	1	1	**107-0677**	1	VALVE GP-SOLENOID (PRESSURE CONTROL)	218
B	2	1	**161-8627**	1	KIT-PLUG	
					(INCLUDES PLUGS & SEALS)	
					(SELECT APPROPRIATE PLUG FROM KIT)	
	3	1	**9S-4180**	2	PLUG-O-RING (5/16-24 THD)	
	4	1	**9S-8001**	2	PLUG-O-RING (5/16-24 THD)	
	5	1	**9S-8002**	3	PLUG-O-RING (7/16-20 THD)	
	6	1	**9S-8004**	4	PLUG-O-RING (9/16-18 THD)	
	7	1	**9S-8007**	1	PLUG-O-RING (3/8-24 THD)	
	8	1	**138-4309**	2	FITTING	
	9	1	**138-4311**	2	SPRING	
	10	1	**138-4313**	2	VALVE	
J	11	1	**144-0837**	1	PUMP GP-UNIT INJECTOR HYD	
	12	1	**149-1950**	1	PUMP GP-FUEL TRANSFER	
	13	1	**0S-1617**	4	BOLT (5/16-18X.75 IN)	
F			**117-1620**	1	COUPLING (FUEL TRANSFER)	
F			**154-6734**	1	BEARING (REAR)	
F			**6V-8676**	1	SEAL-O-RING (48.90MM ID) (FUEL TRANSFER)	
F			**9X-7680**	3	SEAL-O-RING (7.65MM ID) (COMPENSATOR TO ADAPTER)	
F			**135-2652**	1	SEAL-O-RING (17.17MM ID) (COMPENSATOR TO ADAPTER)	
F			**164-0759**	4	BOLT-SOCKET HEAD (COMPENSATOR)	
F			**165-6881**	1	SEAL-LIP TYPE	
F			**174-8943**	1	SLEEVE (COMPENSATOR)	
					AVAILABLE REPAIR KIT(S):	
			154-6735	1	KIT-BEARING (YOKE)	
					(INCLUDES A SET OF TWO YOKE BEARINGS)	
J			**154-6732**	1	KIT-FUEL INJECTION PUMP (REBUILD)	
					(INCLUDES YOKE, SHAFT, CONTROL PISTON, SEAL KIT & FRONT BEARING)	
Y			**138-6256**	1	KIT-SEAL (UNIT INJECTOR HYDRAULIC)	162
			166-5985	1	KIT-UNIT INJ HYD PUMP COMP	
					(INCLUDES COMPENSATOR SUB ASSEMBLY, SEAL-O-RINGS, SLEEVE, WIRE SEAL, LOCK WIRE, AND COMPENSATOR PLUGS)	

B-USE AS REQUIRED
F-NOT SHOWN
J-KIT MARKED J AVAILABLE FOR PART MARKED J
Y-SEPARATE ILLUSTRATION

144-0835 PUMP GP-UNIT INJECTOR HYD *(contd.)* i01357466

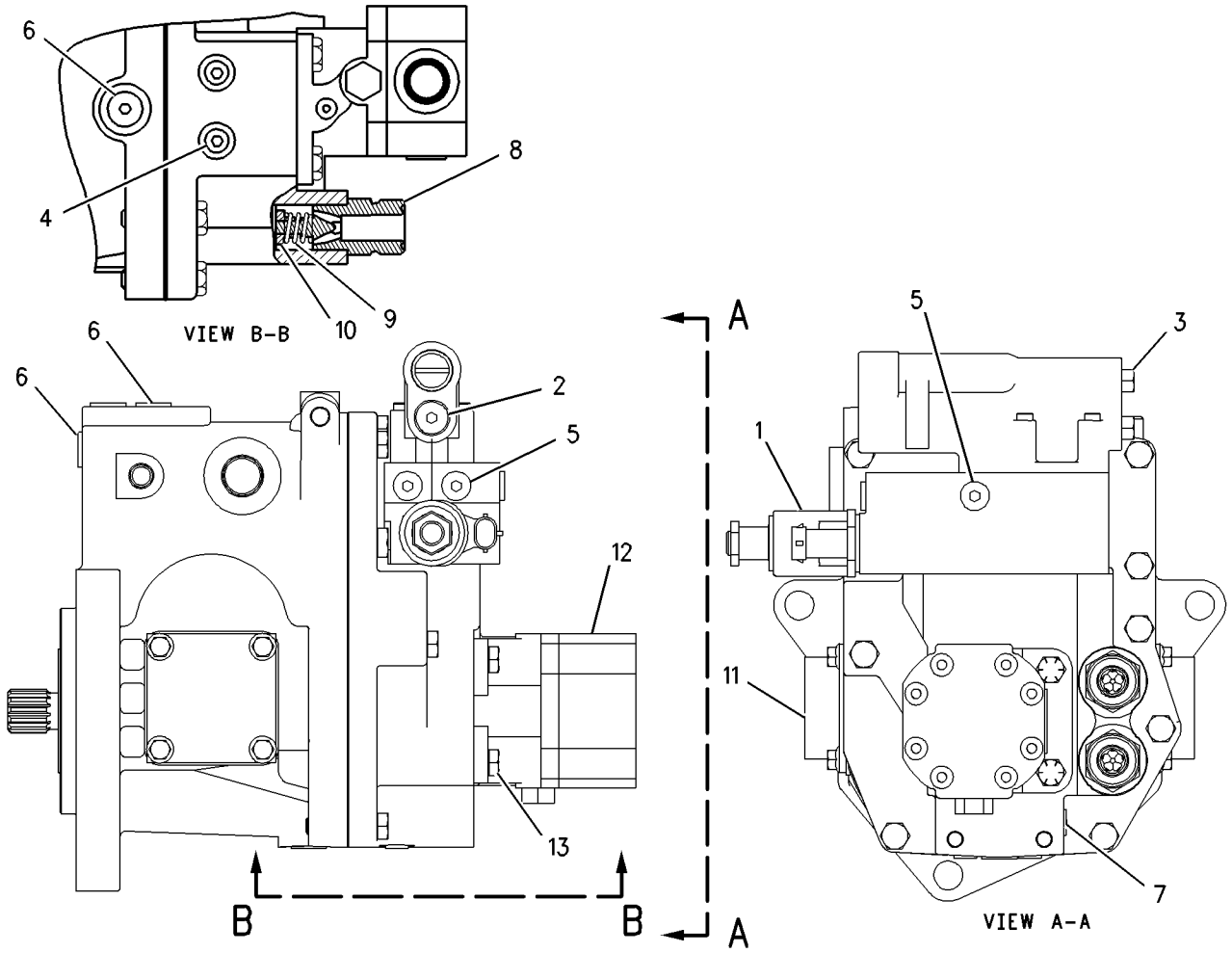

GRAPHIC #1 g00633271

169-1034 PUMP GP-UNIT INJECTOR HYD

S/N: 80M2694-2772

PART OF 126-7292 PUMP & MTG GP-UNIT INJ HYD

SMCS-1714 **i01511809**

NOTE	REF NO	GRAPHIC REF	PART NUMBER	QTY	PART NAME 1 2 3 4 5 6 (PRODUCT LEVEL)	SEE PAGE
Y	1	1	**107-0677**	1	VALVE GP-SOLENOID (PRESSURE CONTROL)	218
B	2	1	**161-8627**	1	KIT-PLUG	
					(INCLUDES PLUGS & SEALS)	
					(SELECT APPROPRIATE PLUG FROM KIT)	
	3	1	**149-1950**	1	PUMP GP-FUEL TRANSFER	
	4	1	**169-1035**	1	PUMP GP-UNIT INJECTOR HYD	
	5	1	**0S-1617**	4	BOLT (5/16-18X0.75 IN)	
	6	1	**9S-8001**	2	PLUG	
	7	1	**9S-8004**	4	PLUG	
	8	1	**9S-8002**	3	PLUG-O-RING	
	9	1	**9S-4180**	2	PLUG-O-RING	
	10	1	**9S-8007**	1	PLUG-O-RING	
	11	1	**138-4309**	2	FITTING	
	12	1	**138-4311**	2	SPRING	
	13	1	**138-4313**	2	VALVE	
	14	1	**164-0759**	4	BOLT-SOCKET HEAD	
F			**117-1620**	1	COUPLING (FUEL TRANSFER)	
F			**154-6734**	1	BEARING (REAR)	
F			**154-6735**	2	KIT-BEARING (YOKE)	
					(EACH INCLUDES A SET OF TWO YOKE BEARINGS)	
					AVAILABLE REPAIR KIT(S):	
Y			**138-6256**	1	KIT-SEAL (UNIT INJECTOR HYDRAULIC)	162
			154-6732	1	KIT-FUEL INJECTION PUMP (REBUILD)	
					(INCLUDES YOKE, SHAFT, PISTON-CONTROL, SEAL KIT, & BEARING FRONT)	
			166-5985	1	KIT-COMPENSATOR	
					(INCLUDES SEAL O-RING, SLEEVE, WIRE SEAL, LOCK WIRE & PLUGS)	

B-USE AS REQUIRED
F-NOT SHOWN
Y-SEPARATE ILLUSTRATION

169-1034 PUMP GP-UNIT INJECTOR HYD *(contd.)* i01511809

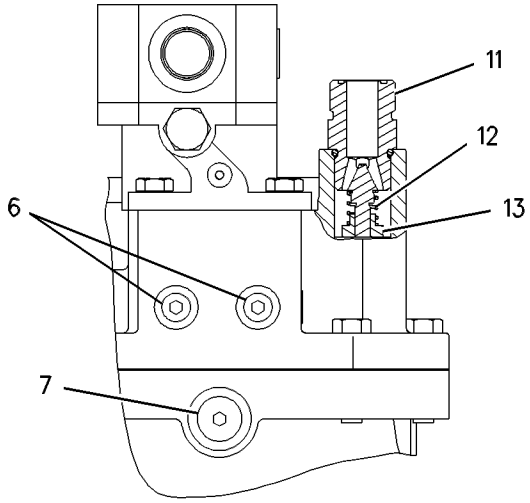

VIEW B-B

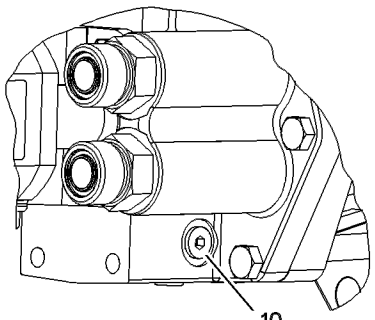

VIEW A-A

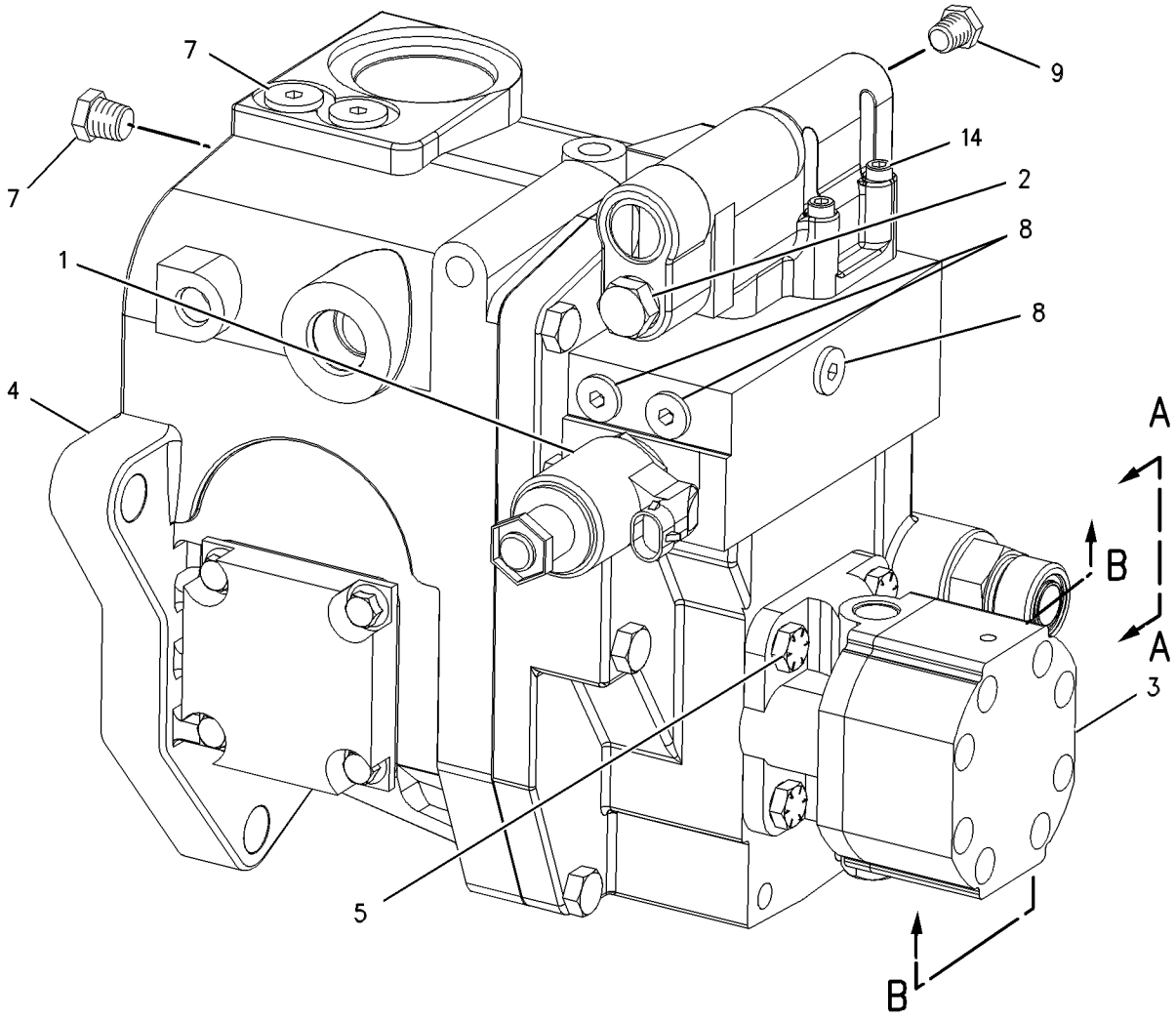

GRAPHIC #1 g00552592

201-4201 PUMP GP-UNIT INJECTOR HYD

S/N: 80M2773-UP

PART OF 126-7292 PUMP & MTG GP-UNIT INJ HYD

SMCS-1714 **i01483301**

NOTE	REF NO	GRAPHIC REF	PART NUMBER	QTY	PART NAME 1 2 3 4 5 6 (PRODUCT LEVEL)	SEE PAGE
Y	1	1	**107-0677**	1	VALVE GP-SOLENOID (PRESSURE CONTROL)	218
B	2	1	**161-8627**	1	KIT-PLUG	
					(INCLUDES PLUGS & SEALS)	
					(SELECT APPROPRIATE PLUG FROM KIT)	
	3	1	**9S-4180**	2	PLUG-O-RING	
	4	1	**9S-8001**	2	PLUG	
	5	1	**9S-8002**	3	PLUG-O-RING	
	6	1	**9S-8004**	3	PLUG	
	7	1	**9S-8007**	1	PLUG-O-RING	
	8	1	**138-4309**	2	FITTING	
	9	1	**138-4311**	2	SPRING	
	10	1	**138-4313**	2	VALVE	
	11	1	**149-1950**	1	PUMP GP-FUEL TRANSFER	
	12	1	**164-0759**	4	BOLT-SOCKET HEAD (COMPENSATOR)	
	13	1	**201-4155**	1	SEAL-LIP TYPE	
	14	1	**201-4202**	1	HOUSING GP-FUEL PUMP	
	15	1	**0S-1617**	4	BOLT (5/16-18X0.75 IN)	
F			**117-1620**	1	COUPLING (FUEL TRANSFER)	
F			**154-6734**	1	BEARING (REAR)	
F			**6V-8676**	1	SEAL-O-RING (FUEL TRANSFER)	
F			**9X-7680**	3	SEAL-O-RING (COMPENSATOR TO ADAPTER)	
F			**135-2652**	1	SEAL-O-RING (COMPENSATOR TO ADAPTER)	
F			**174-8943**	1	SLEEVE (COMPENSATOR)	
					AVAILABLE REPAIR KIT(S):	
			154-6735	1	KIT-BEARING (YOKE)	
					(INCLUDES A SET OF TWO YOKE BEARINGS)	
			201-4203	1	KIT-PUMP (REBUILD)	
					(INCLUDES YOKE, SHAFT, CONTROL PISTON, SEAL KIT & FRONT BEARING)	
Y			**138-6256**	1	KIT-SEAL (UNIT INJECTOR HYDRAULIC)	162
			166-5985	1	KIT-COMPENSATOR	
					(INCLUDES COMPENSATOR SUB ASSEMBLY, SEAL-O-RINGS, SLEEVE, WIRE SEAL, LOCK WIRE, AND COMPENSATOR PLUGS)	

B-USE AS REQUIRED
F-NOT SHOWN
Y-SEPARATE ILLUSTRATION

201-4201 **PUMP GP-UNIT INJECTOR HYD** ***(contd.)*** **i01483301**

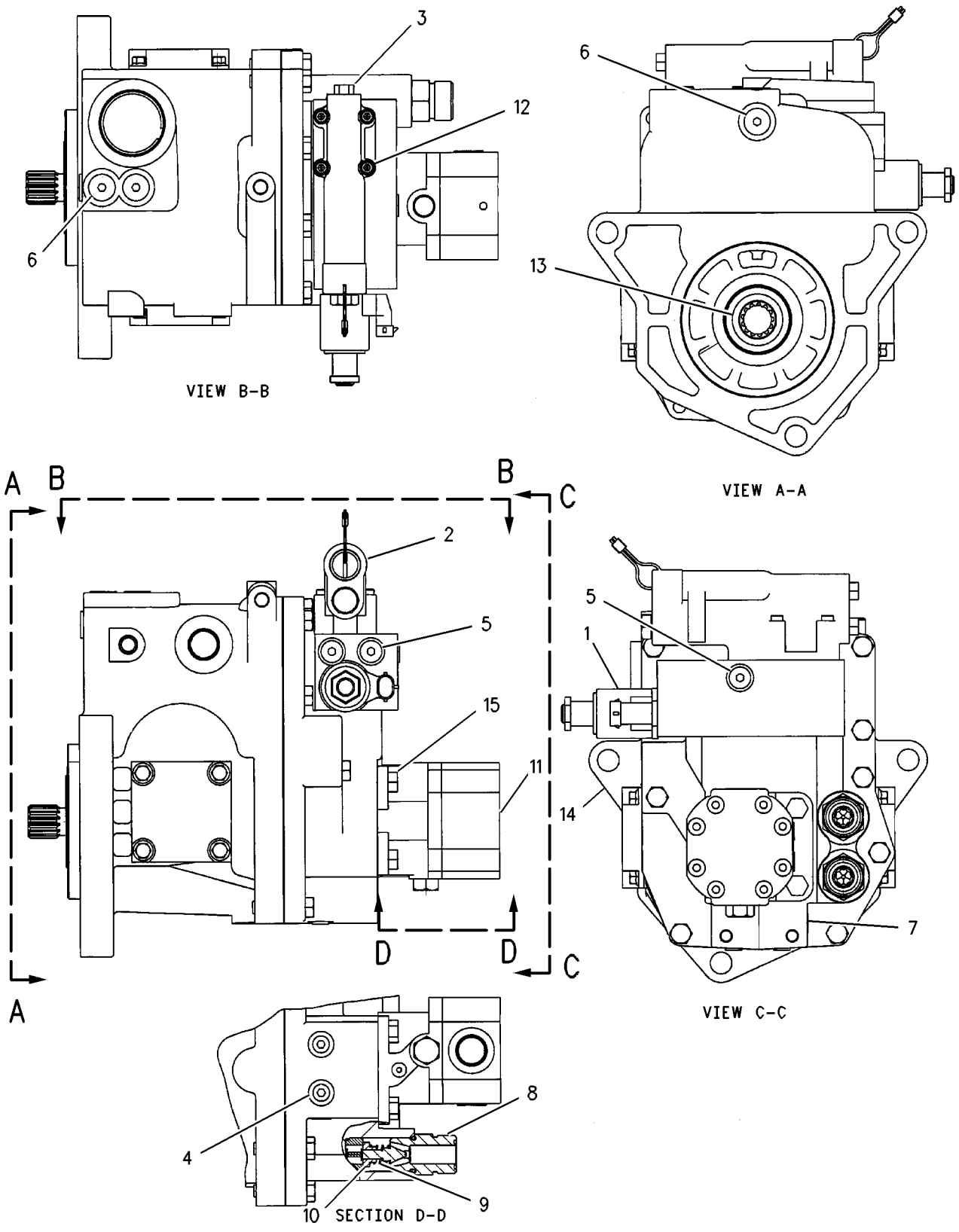

GRAPHIC #1 g00772392

118-2252 TANK & MTG GP-FUEL

S/N: 7KK1-39

PART OF 8X-8402 CHASSIS AR

SMCS-1273 **i00107665**

NOTE	REF NO	GRAPHIC REF	PART NUMBER	QTY	PART NAME 1 2 3 4 5 6 (PRODUCT LEVEL)	SEE PAGE
Y	1	1	*8X-9005*	1	TANK GP-FUEL	208
	2	1	**117-2233**	2	HANDHOLD	
M	3	1	**8T-4139**	4	BOLT (M12X1.75X30MM)	
	4	1	**5P-1076**	4	WASHER-HARD (4MM THK)	
	5	1	**117-2234**	2	HANDHOLD	
	6	1	**117-2231**	4	BRACKET AS	
					(EACH INCLUDES)	
		1	**4E-1063**	1	MOUNT-RUBBER	
M	7	1	**7X-2476**	4	BOLT (M24X3X220MM)	
M	8	1	**6V-7676**	4	NUT (M24X3.0THD)	
	9	1	**8T-4167**	8	WASHER (4MM THK)	
M	10	1	**7X-2563**	8	BOLT (M20X2.5X60MM)	
	11	1	**8T-4123**	8	WASHER-PLATED (3.5MM THK)	
M	12	1	**8T-4137**	4	BOLT (M10X1.50X20MM)	
	13	1	**8T-4121**	4	WASHER (2.5MM THK)	

M-METRIC PART
Y-SEPARATE ILLUSTRATION

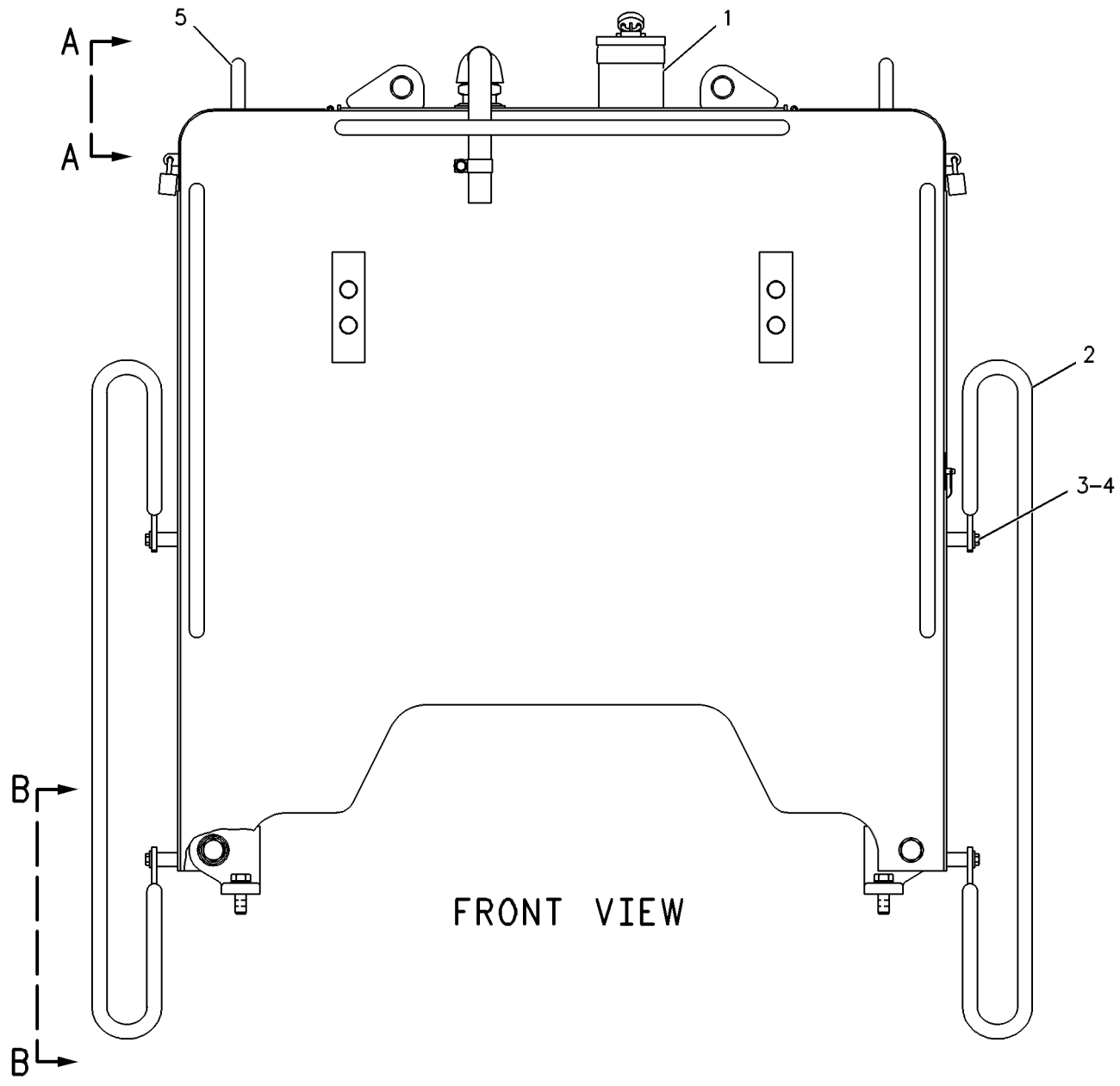

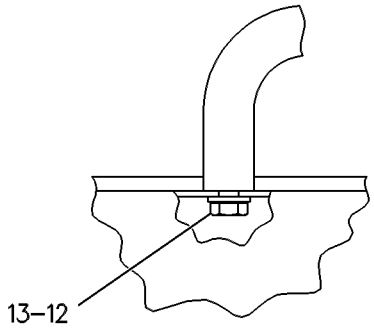

VIEW A-A

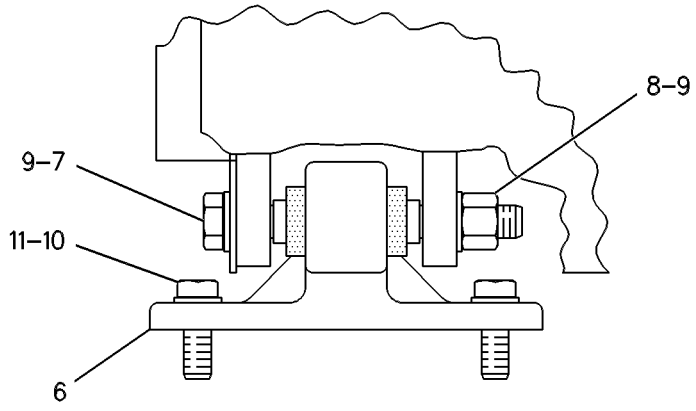

VIEW B-B

GRAPHIC #1 g00086504

FUEL SYSTEM

118-2252 TANK & MTG GP-FUEL

S/N: 7KK40-UP

PART OF 8X-8402 CHASSIS AR

SMCS-1273 **i00591530**

NOTE	REF NO	GRAPHIC REF	PART NUMBER	QTY	PART NAME 1 2 3 4 5 6 (PRODUCT LEVEL)	SEE PAGE
Y	1	1	*8X-9005*	1	TANK GP-FUEL	208
	2	1	**117-2233**	2	HANDHOLD	
M	3	1	**8T-4139**	4	BOLT (M12X1.75X30MM)	
	4	1	**5P-1076**	4	WASHER-HARD (4MM THK)	
	5	1	**117-2234**	2	HANDHOLD	
	6	1	**117-2231**	4	BRACKET AS	
					(EACH INCLS)	
		1	**4E-1063**	1	MOUNT-RUBBER	
M	7	1	**7X-2476**	4	BOLT (M24X3X220MM)	
M	8	1	**6V-7676**	4	NUT (M24X3.0THD)	
	9	1	**8T-4167**	8	WASHER (4.0MM THK)	
M	10	1	**7X-2563**	8	BOLT (M20X2.5X60MM)	
	11	1	**8T-4123**	8	WASHER-PLATED (3.5MM THK)	
M	12	1	**8T-4137**	4	BOLT (M10X1.50X20MM)	
	13	1	**8T-4121**	4	WASHER (2.5MM THK)	
CY	14	1	**2G-9000**	1	ADAPTER GP-FAST FILL FUEL	145
C	15	1	**9D-0630**	1	COVER-DUST	
C	16	1	**138-0736**	1	TUBE AS	
C	17	1	**1P-3707**	1	SEAL-RECTANGULAR (54.2MM ID)	
C	18	1	**4D-5980**	1	GROMMET	
C	19	1	**8T-4223**	4	WASHER-HARD (3MM THK)	
CM	20	1	**8T-4910**	4	BOLT (M12X1.75X60MM)	

C-CHANGE FROM PREVIOUS TYPE
M-METRIC PART
Y-SEPARATE ILLUSTRATION

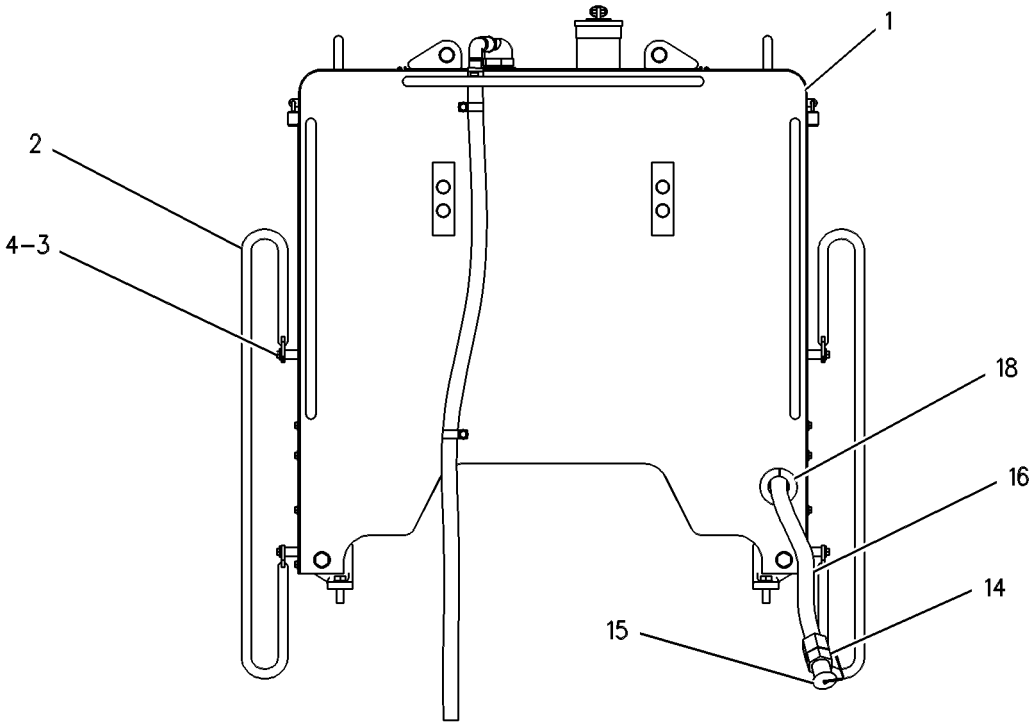

FRONT VIEW

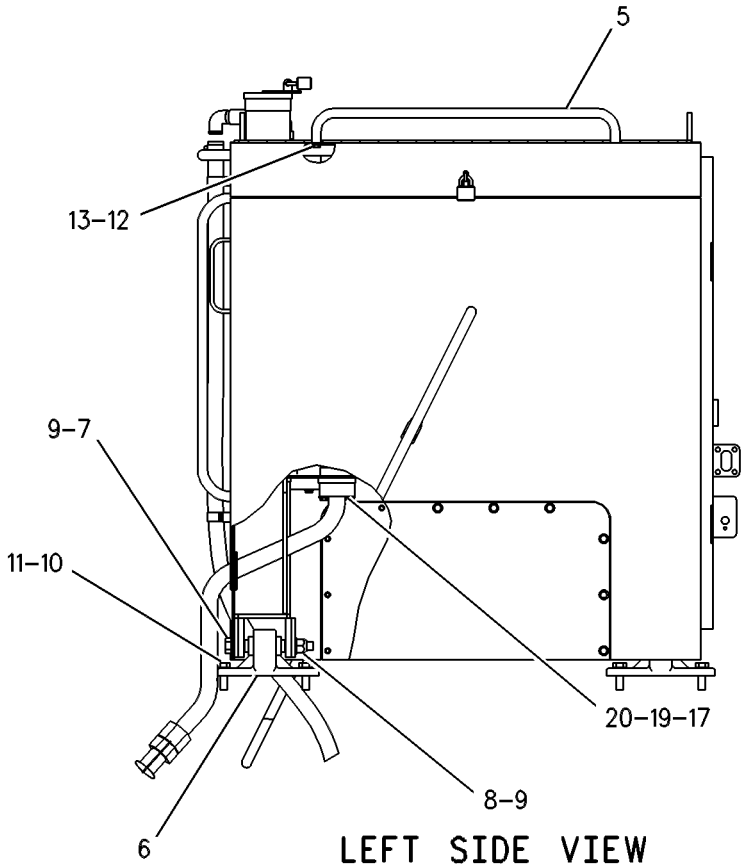

LEFT SIDE VIEW

GRAPHIC #1

g00278127

FUEL SYSTEM

8X-9005 TANK GP-FUEL

S/N: 7KK1-39

PART OF 118-2252 TANK & MTG GP-FUEL

SMCS-1273 **i01016123**

NOTE	REF NO	GRAPHIC REF	PART NUMBER	QTY	PART NAME 1 2 3 4 5 6 (PRODUCT LEVEL)	SEE PAGE
	1	1	**117-2200**	1	TANK AS	
Y	2	1	**2G-9000**	1	ADAPTER GP-FAST FILL FUEL	145
	3	1	**9D-0630**	1	COVER-DUST	
	4	1	**1H-8306**	1	SCREW (1/2-20X1.625IN)	
	5	1	**3B-0551**	1	PLUG-PIPE (1-11 1/2 NPTF)	
Y	6	2	**124-9325**	1	SENSOR GP-FUEL LEVEL (ULTRASONIC)	261
	7	2	**3E-7753**	1	FLOAT AS	
	8	2	**6V-5051**	1	SEAL-O-RING (75.57MM ID)	
	9	1	**101-8909**	1	CAP AS-FUEL TANK FILLER	
		1	**9X-8600**	1	SEAL-O-RING (110.49MM ID)	
	10	1	**117-2227**	1	DOOR AS	
	11	1,2	**8T-4121**	16	WASHER (2.5MM THK)	
M	12	2	**8T-4185**	4	BOLT (M10X1.5X50MM)	
	13	1	**7K-1181**	2	STRAP-CABLE (4.00IN DIA)	
M	14	1,2	**8T-4137**	12	BOLT (M10X1.50X20MM)	
	15	2	**9S-4185**	1	PLUG-O-RING (3/4-16 THD)	
	16	2	**3K-0360**	1	SEAL-O-RING (16.36MM ID)	
	17	2	**8W-5658**	1	HOSE	
	18	2	**9M-2904**	1	CLAMP-HOSE	
	19	2	**7D-7233**	2	CLIP (38.1MM ID)	
	20	2	**9S-4191**	1	PLUG-O-RING (9/16-18 THD)	
	21	2	**3J-1907**	1	SEAL-O-RING (11.89MM ID)	
J	22	2	**5V-6106**	1	VENT AS	
	23	1	**9P-7121**	1	STRAINER-FUEL TANK	
	24	1	**5P-8502**	3	PADLOCK GP	
					(EACH INCLUDES)	
A		1	**5P-8500**	1	KEY	
A		1	**8Y-6364**	1	SLEEVE	
	25	1	**129-5453**	1	DOOR AS	
	26	2	**006-5707**	1	ELBOW (90 DEGREE)	
	27	2	**9F-0440**	1	PIPE	
	28	2	**3B-6491**	1	COUPLING-PIPE	
					AVAILABLE REPAIR KIT(S):	
J			**5T-8645**	1	KIT-VENT	
					(INCLUDES BALL CAGE, CLAMP, SEALS, O-RINGS, SCREEN, ROLL PINS, HOLLOW BALLS, COVER, & SOLID BALL)	

A-NOT PART OF THIS GROUP
J-PART(S) MARKED J INCLUDES KIT(S) MARKED J
M-METRIC PART
Y-SEPARATE ILLUSTRATION

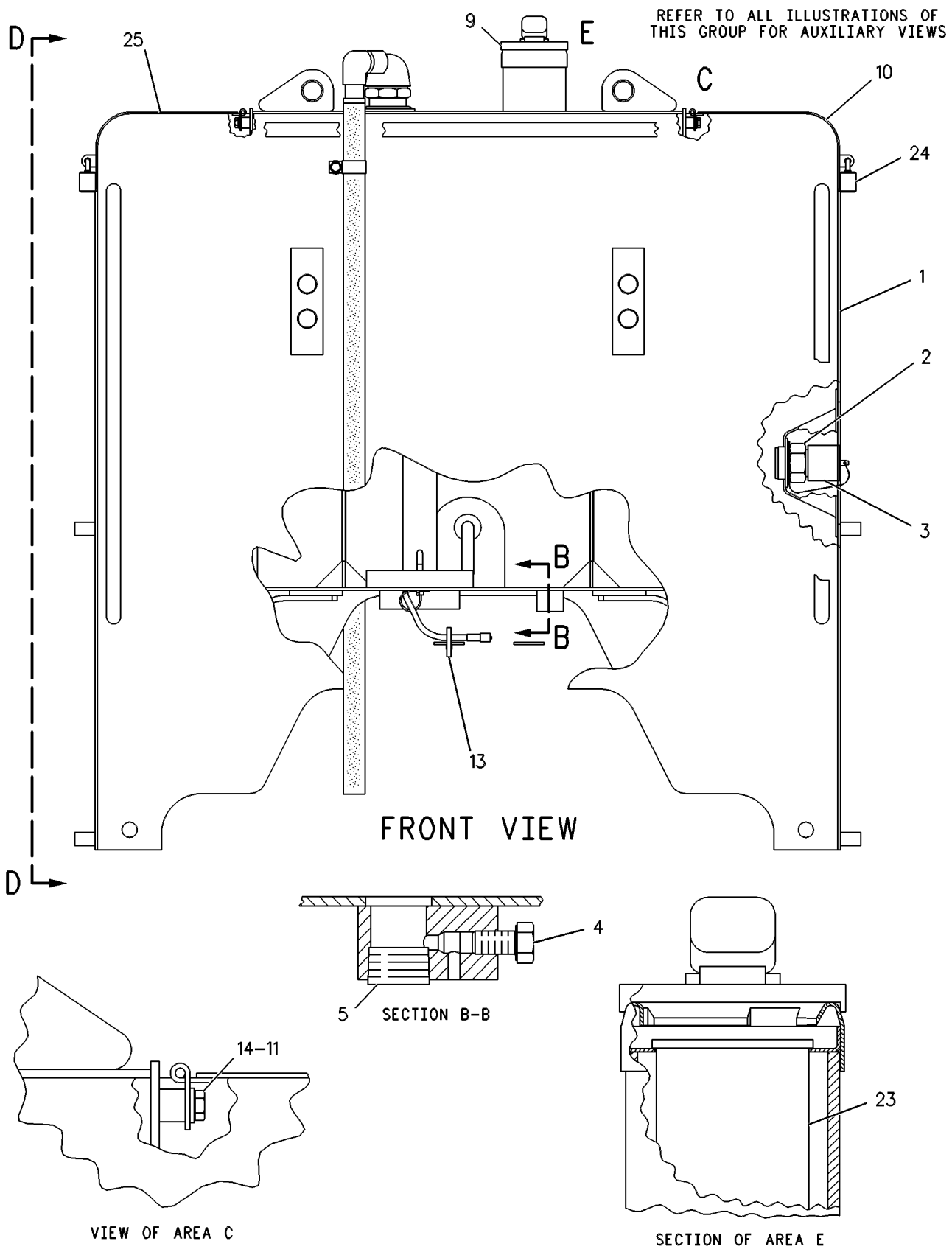

GRAPHIC #1 g00089146

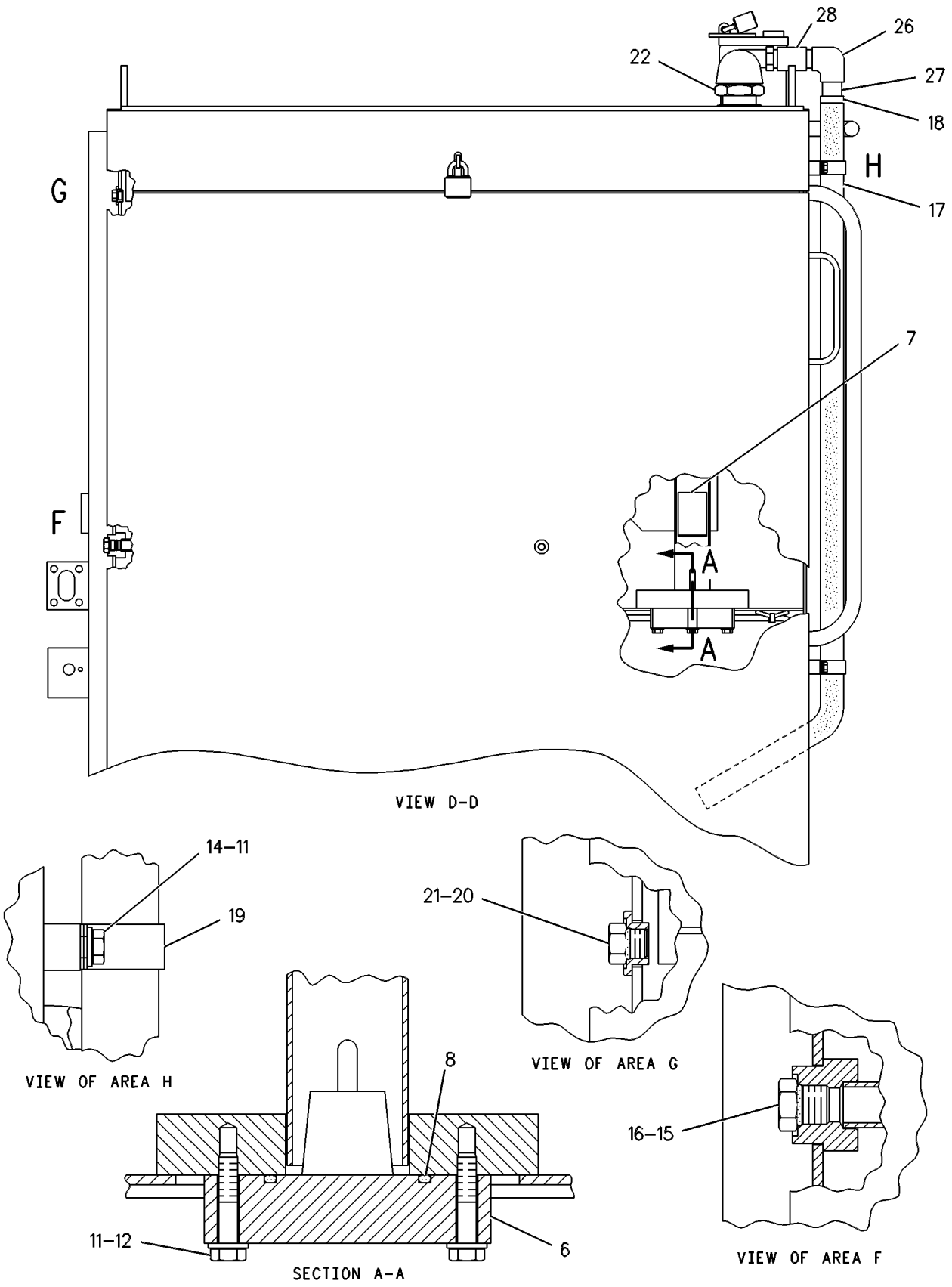

GRAPHIC #2 g00089148

MEMORANDA

FUEL SYSTEM

8X-9005 TANK GP-FUEL

S/N: 7KK40-UP

PART OF 118-2252 TANK & MTG GP-FUEL

SMCS-1273 **i00889124**

NOTE	REF NO	GRAPHIC REF	PART NUMBER	QTY	PART NAME 1 2 3 4 5 6 (PRODUCT LEVEL)	SEE PAGE
	1	1	**117-2200**	1	TANK AS	
C	2	2	**7X-7729**	20	WASHER (3MM THK)	
C	3	2	**138-0740**	2	SHEET	
	4	1	**1H-8306**	1	SCREW (1/2-20X1.625IN)	
	5	1	**3B-0551**	1	PLUG-PIPE (1-11 1/2 NPTF THD)	
Y	6	2	**124-9325**	1	SENSOR GP-FUEL LEVEL (ULTRASONIC)	261
	7	2	**3E-7753**	1	FLOAT AS	
	8	2	**6V-5051**	1	SEAL-O-RING (75.57MM ID)	
	9	1	**101-8909**	1	CAP AS-FUEL TANK FILLER	
		1	**9X-8600**	1	SEAL-O-RING (110.49MM ID)	
	10	1	**117-2227**	1	DOOR AS	
	11	1,2	**8T-4121**	16	WASHER (2.5MM THK)	
M	12	2	**8T-4185**	4	BOLT (M10X1.50X50MM)	
	13	1	**7K-1181**	2	STRAP-CABLE (4.00IN DIA)	
CM	14	1,2	**8T-4137**	32	BOLT (M10X1.50X20MM)	
	15	2	**9S-4185**	1	PLUG-O-RING (3/4-16 THD)	
	16	2	**3K-0360**	1	SEAL-O-RING (16.36MM ID)	
	17	1	**8W-5658**	1	HOSE	
	18	2	**9M-2904**	1	CLAMP-HOSE	
	19	2	**7D-7233**	2	CLIP (38.1MM ID)	
	20	2	**9S-4191**	1	PLUG-O-RING (9/16-18 THD)	
	21	2	**3J-1907**	1	SEAL-O-RING (11.89MM ID)	
J	22	2	**5V-6106**	1	VENT AS	
	23	1	**9P-7121**	1	STRAINER-FUEL TANK	
	24	1,2	**5P-8502**	3	PADLOCK GP	
					(EACH INCLUDES)	
A		1,2	**5P-8500**	1	KEY	
A		1,2	**8Y-6364**	1	SLEEVE	
	25	2	**129-5453**	1	DOOR AS	
	26	2	**006-5707**	1	ELBOW (90 DEGREE)	
	27	2	**9F-0440**	1	PIPE	
	28	2	**3B-6491**	1	COUPLING-PIPE	
					AVAILABLE REPAIR KIT(S):	
J			**5T-8645**	1	KIT-VENT	
					(INCLS BALL CAGE, CLAMP, SEALS, O-RINGS, SCREEN, ROLL PINS, HOLLOW BALLS, COVER, & SOLID BALL)	

A-NOT PART OF THIS GROUP
C-CHANGE FROM PREVIOUS TYPE
J-REPAIR KIT MARKED J AVAILABLE FOR PART MARKED J
M-METRIC PART
Y-SEPARATE ILLUSTRATION

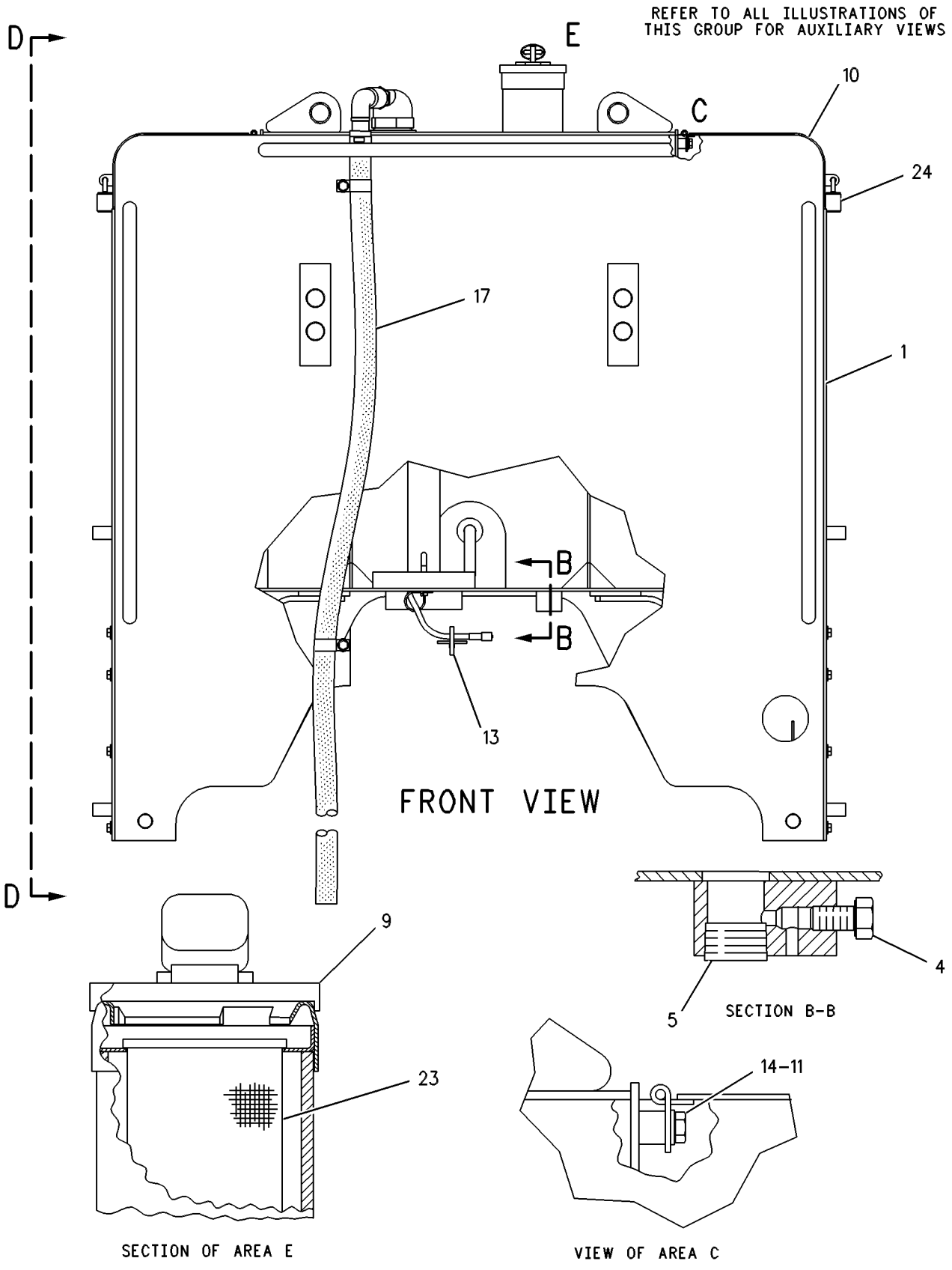

GRAPHIC #1 g00279075

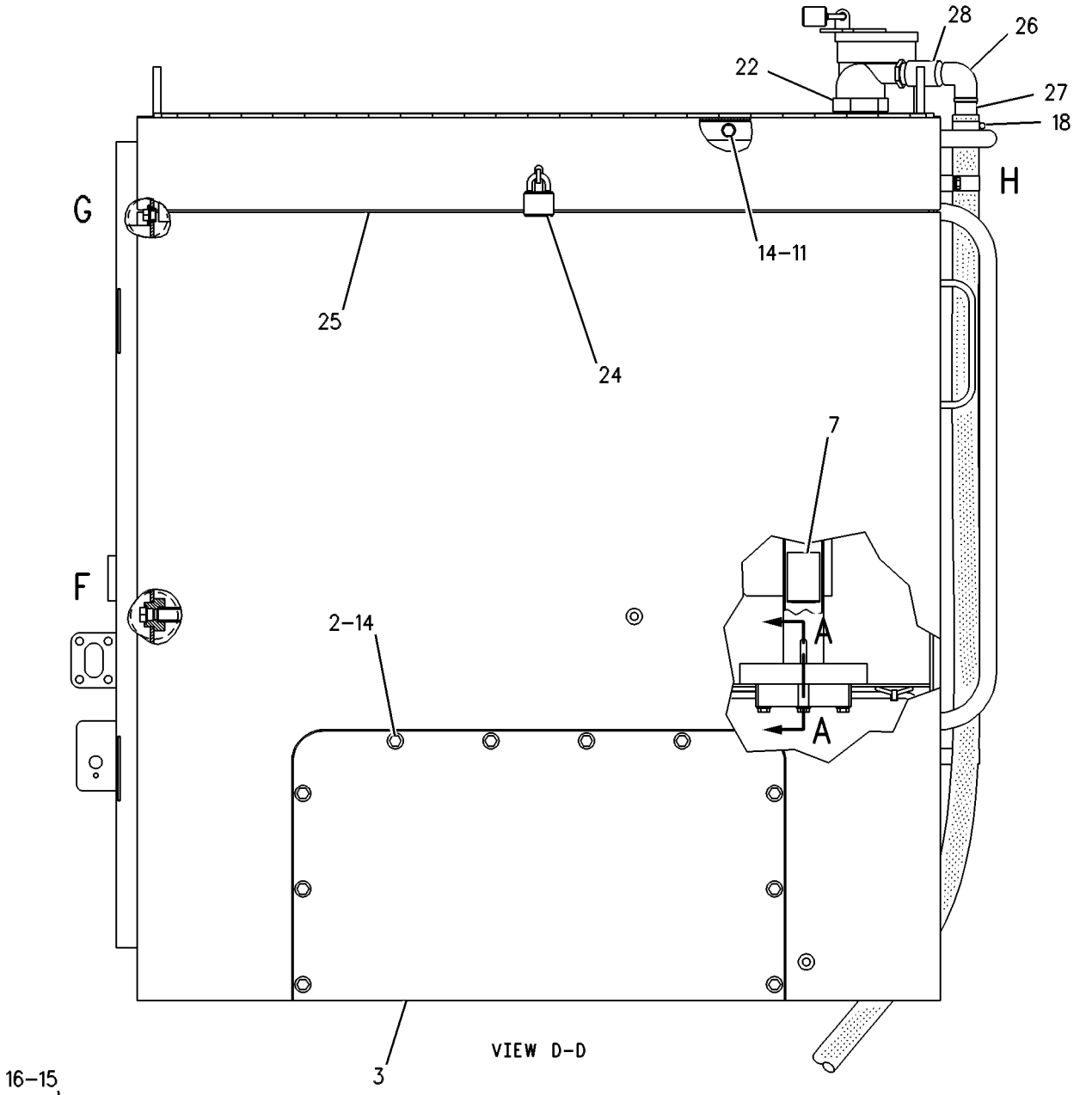

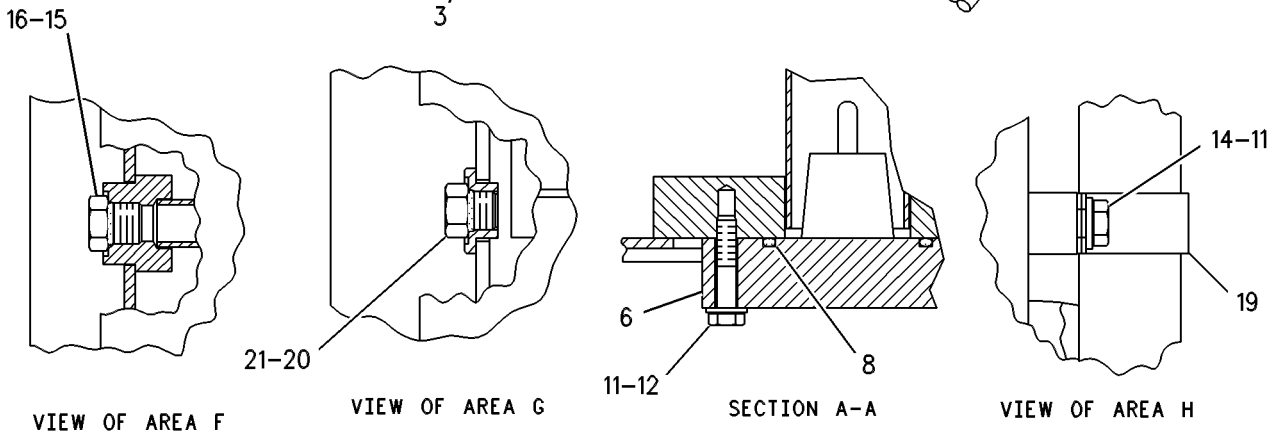

GRAPHIC #2 g00279076

102-7535 VALVE GP-PRESSURE CONTROL

S/N: 8OM1-UP

PART OF 130-5764 LINES GP-FUEL FILTER

SMCS-1715 **i01022640**

NOTE	REF NO	GRAPHIC REF	PART NUMBER	QTY	PART NAME 1 2 3 4 5 6 (PRODUCT LEVEL)	SEE PAGE
	1	1	**033-6033**	1	SEAL-O-RING (12.42MM ID)	
	2	1	**6V-6923**	1	RING-BACKUP (13.16MM ID)	
	3	1	**6V-4589**	1	SEAL-O-RING (19.18MM ID)	

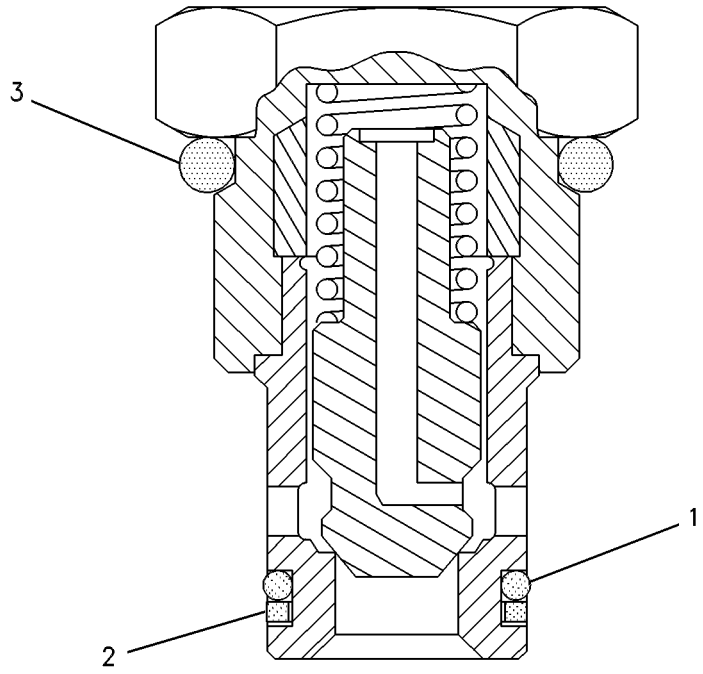

GRAPHIC #1 g00278840

154-6503 VALVE GP-PRESSURE CONTROL

S/N: 7KK1-UP
PART OF 131-9276 LUBRICATION AR-AUTOMATIC
AN ATTACHMENT

SMCS-1715 **i00707409**

NOTE	REF NO	GRAPHIC REF	PART NUMBER	QTY	PART NAME 1 2 3 4 5 6 (PRODUCT LEVEL)	SEE PAGE
Y	1	1	**154-6506**	1	VALVE GP-PRESSURE CONTROL	217
	2	1	**3J-7354**	2	SEAL-O-RING (8.92MM ID)	
	3	1	**9S-8002**	2	PLUG-O-RING (7/16-20 THD)	

Y-SEPARATE ILLUSTRATION

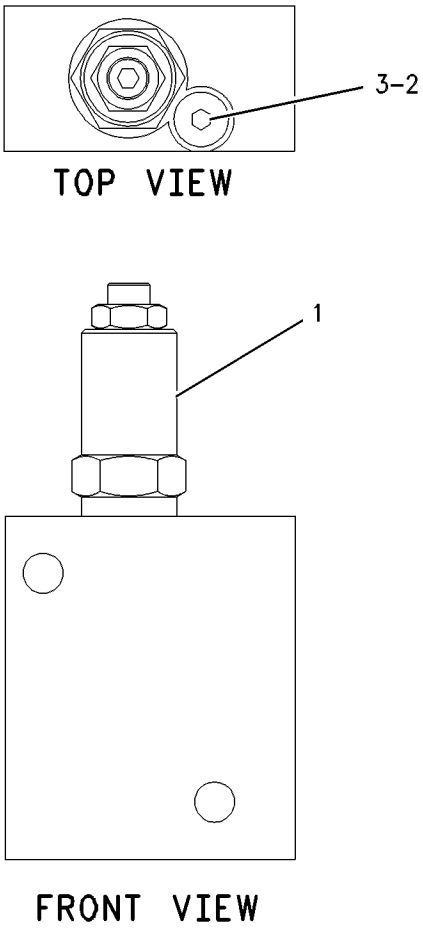

GRAPHIC #1 g00342092

154-6506 VALVE GP-PRESSURE CONTROL

S/N: 7KK1-UP
PART OF 154-6503 VALVE GP-PRESSURE CONTROL
AN ATTACHMENT

SMCS-1715 **i00707454**

NOTE	REF NO	GRAPHIC REF	PART NUMBER	QTY	PART NAME 1 2 3 4 5 6 (PRODUCT LEVEL)	SEE PAGE
J	1	1	**2M-9780**	1	SEAL-O-RING (19.18MM ID)	
J	2	1	**5P-2199**	1	RING-BACKUP	
J	3	1	**6E-0410**	1	SEAL-O-RING	
J	4	1	**6V-3505**	1	RING-BACKUP	
J	5	1	**8C-3132**	1	SEAL-O-RING (14MM ID)	
					AVAILABLE REPAIR KIT(S):	
J			**6E-4287**	1	KIT-SEAL	

J-REPAIR KIT MARKED J INCLUDES PARTS MARKED J

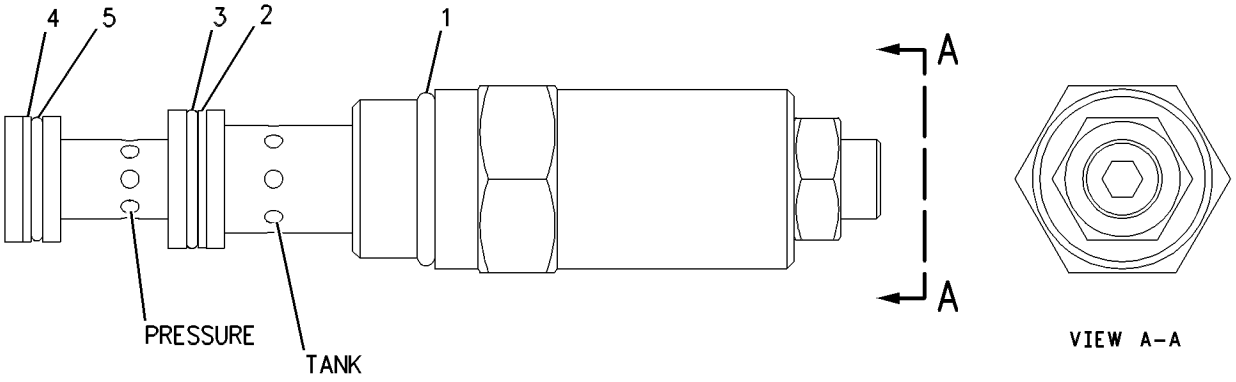

GRAPHIC #1 g00341588

107-0677 VALVE GP-SOLENOID

S/N: 8OM1-UP
PRESSURE CONTROL
PART OF 125-3225, 133-1708, 134-1598, 134-9405, 144-0835, 169-1034, 201-4201
PUMP GP-UNIT INJECTOR HYD

SMCS-1259, 1909 **i01518038**

NOTE	REF NO	GRAPHIC REF	PART NUMBER	QTY	PART NAME 1 2 3 4 5 6 (PRODUCT LEVEL)	SEE PAGE
J	1	1	**033-6039**	1	SEAL-O-RING	
J	2	1	**123-3132**	1	RING-BACKUP	
J	3	1	**9X-5535**	1	SPACER	
J	4	1	**8C-6711**	1	NUT-RETAINER	
J	5	1	**033-6028**	1	SEAL-O-RING	
					AVAILABLE REPAIR KIT(S):	
J			**9X-1484**	1	KIT-SEAL (FUEL SOLENOID VALVE)	

J-KIT MARKED J SERVICES PARTS MARKED J

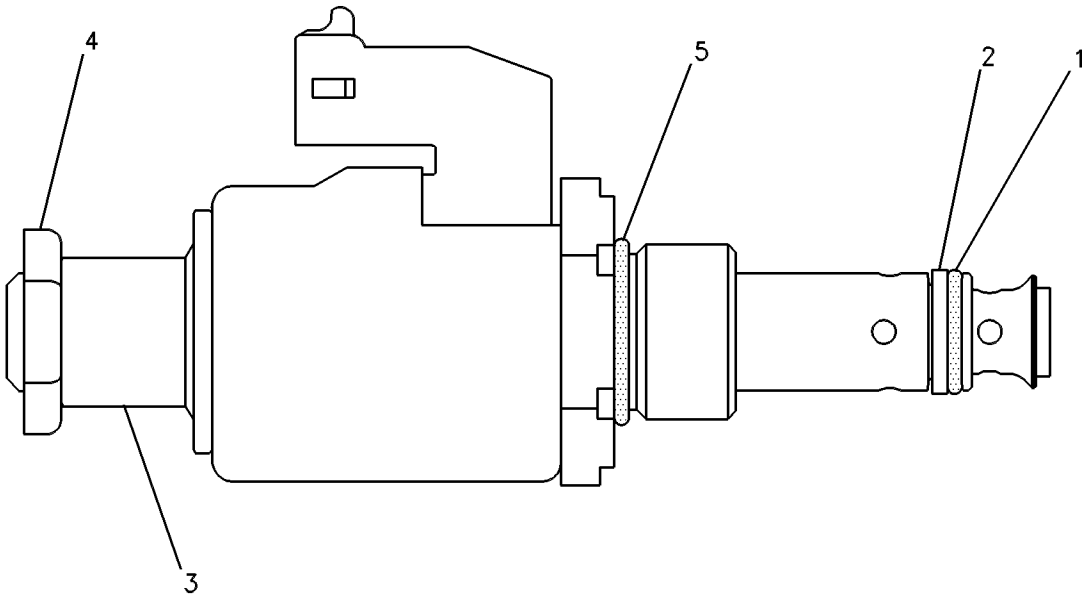

GRAPHIC #1 g00452590

3E-6328 ALARM GP

S/N: 7KK1-UP
24 VOLT
PART OF 8X-9007 WIRING GP-SHIFT CONSOLE

SMCS-7406, 7407 **i01473874**

NOTE	REF NO	GRAPHIC REF	PART NUMBER	QTY	PART NAME 1 2 3 4 5 6 (PRODUCT LEVEL)	SEE PAGE
	1	1	**102-8802**	1	KIT-RECEPTACLE (2 PIN)	
					(INCLUDES RECEPTACLE AS & WEDGE)	
	2	1	**186-3735**	2	PIN-CONNECTOR	
	3	1	**3E-3365**	1	WEDGE-RECEPTACLE LOCK (2 PIN)	

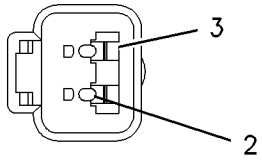

VIEW A–A

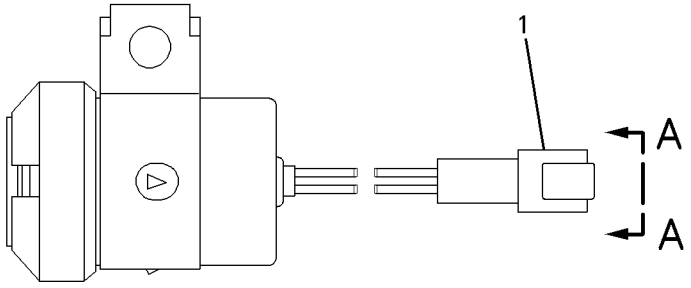

GRAPHIC #1 g00667776

9X-7803 ALTERNATOR GP-CHARGING*R

S/N: 80M1-UP
24 VOLT, 100 AMP
PART OF 125-4392 ALTERNATOR GP-CHARGING

SMCS-1405 **i01444430**

NOTE	REF NO	GRAPHIC REF	PART NUMBER	QTY	PART NAME 1 2 3 4 5 6 (PRODUCT LEVEL)	SEE PAGE
	1	1	**8T-4205**	2	WASHER-HARD (7.2X14.5X2MM THK)	
	2	1	**9X-2500**	4	SCREW-HEX FLANGE (10-24 X 38.1MM)	
	3	1	**6V-8187**	1	NUT (1/4-28 THD)	
	4	1	**5S-7349**	1	BOLT (1/4-20X0.5 IN)	
	5	1	**9L-6770**	1	CAP	
	6	1	**9N-0943**	1	PLUG-BEARING WELL	
	7	1	**5P-3418**	1	BEARING-ROLLER	
	8	1	**5P-3419**	1	RACE-BEARING INNER	
	9	1	**9L-6776**	1	RECTIFIER AS	
	10	1	**6N-1944**	1	DIODE AS	
	11	1	**3T-6354**	1	REGULATOR AS (24 VOLT) (ALTERNATOR)	
	12	1	**105-3763**	1	CAPACITOR AS-ALTERNATOR	
	13	1	**5P-7807**	1	BALL BEARING	
	14	1	**100-6531**	1	FAN-ALTERNATOR	
	15	1	**2K-4821**	1	LOCKNUT	
	16	1	**9S-2009**	4	SCREW-HEAD (10-24 X 3.625 IN)	
	17	1	**6N-1872**	2	SCREW AS (8-32 X 1.25 IN)	
	18	1	**7N-9023**	1	SCREW AS (8-32 X 26.9MM)	
	19	1	**106-7689**	1	CONNECTOR-ALTERNATOR	
	20	1	**106-7690**	1	CONNECTOR-ALTERNATOR	
	21	1	**9S-2544**	2	SCREW-HEX HEAD (8-32 X 11.13MM)	
	22	1	**100-6532**	1	COLLAR-ALTERNATOR	
	23	1	**2L-8075**	3	TERMINAL (14-16 GA)	
	24	1	**7N-9021**	2	SCREW AS	
	25	1	**9S-2302**	1	ROTOR AS	
	26	1	**9N-0942**	1	PLATE-COVER	
	27	1	**9N-3388**	5	LOCKSCREW	
	28	1	**106-7687**	1	HOUSING AS-ALTERNATOR	
	29	1	**2P-5616**	1	FRAME-DRIVE END	
	30	1	**8T-9762**	1	STATOR AS	
	31	1	**106-7688**	1	COIL AS-ALTERNATOR	
	32	1	**9S-2390**	1	RETAINER	
	33	1	**030-9612**	4	SCREW-FORMING	
	34	1	**7F-7621**	1	WASHER (0.635X1.25X0.09 IN THK)	
	35	1	**8T-0328**	2	WASHER-HARD (5.5X10X1MM THK)	
	36	1	**1H-3244**	2	LOCKWASHER	
	37	1	**9B-7233**	2	LOCKWASHER	
					AVAILABLE REPAIR KIT(S):	
			9S-2013	1	KIT-RELAY TERMINAL	
					(INCLUDES BUSHING, WASHERS, NUT AS, & STUD)	
			105-3764	1	KIT-ALTERNATOR TERMINAL	
					(INCLUDES TERMINAL AS, INSULATOR, BUSHING, WASHER, NUTS & LOCKWASHERS)	

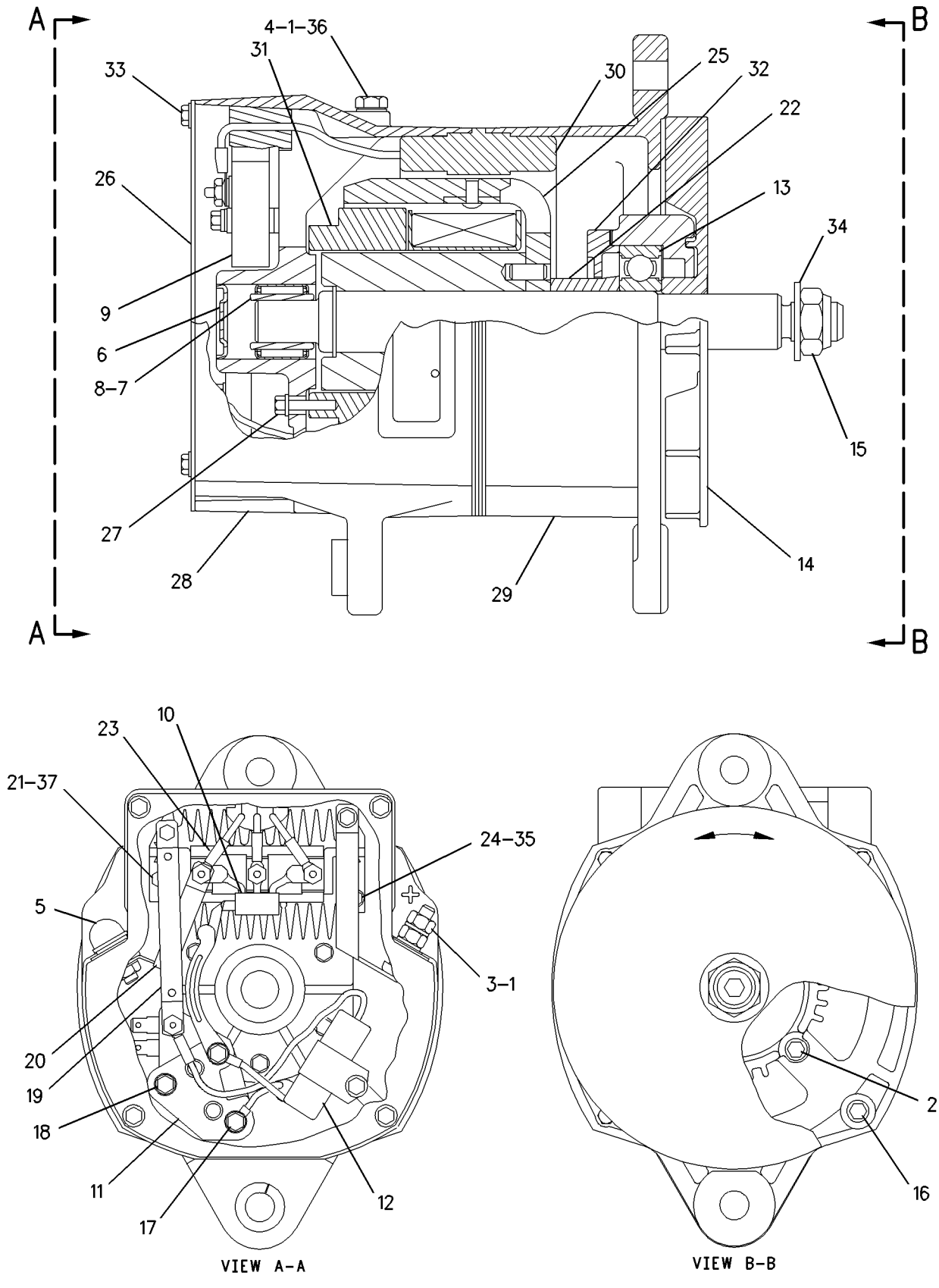

GRAPHIC #1

g00741720

125-4392 ALTERNATOR GP-CHARGING

S/N: 80M1-3053

PART OF 123-0200 ENGINE AR

SMCS-1405 **i00692893**

NOTE	REF NO	GRAPHIC REF	PART NUMBER	QTY	PART NAME 1 2 3 4 5 6 (PRODUCT LEVEL)	SEE PAGE
	1	1	**1H-2415**	1	BOLT	
	2	1	**1S-4589**	1	ROD	
	3	1	**4N-6413**	1	SUPPORT-ALTERNATOR	
	4	1	**4P-8769**	1	BRACKET	
	5	1	**6N-9364**	1	BRACKET	
	6	1	**8S-5383**	1	BLOCK	
YR	7	1	**9X-7803**	1	ALTERNATOR GP-CHARGING	220
	8	1	**100-4019**	1	PULLEY-ALTERNATOR	
	9	1	**115-0635**	1	GUARD-ALTERNATOR	
	10	1	**129-3574**	1	BELT	
	11	1	**129-4877**	1	BRACKET AS	
		1	**1F-0750**	1	NUT-WELD (3/8-16 THD)	
	12	1	**0S-1566**	1	BOLT (5/8-11X1.5IN)	
	13	1	**0S-1571**	1	BOLT (3/8-16X1.75IN)	
	14	1	**0S-1585**	1	BOLT (1/2-13X1.50IN)	
	15	1	**0S-1595**	1	BOLT (1/2-13X1.25IN)	
	16	1	**1A-1460**	1	BOLT (1/2-13X2IN)	
	17	1	**1F-7958**	1	NUT-FULL (1/2-13 THD)	
	18	1	**3B-1915**	3	BOLT (3/8-16X1.375IN)	
	19	1	**4K-0367**	2	NUT (5/8-11 THD)	
	20	1	**5B-9603**	1	BOLT (3/8-16X5IN)	
	21	1	**5M-2894**	3	WASHER (2.5MM THK)	
	22	1	**5P-8245**	3	WASHER (3MM THK)	
	23	1	**5P-8247**	2	WASHER-HARD (3.5MM THK)	
	24	1	**8S-9191**	1	BOLT (3/8-16X4IN)	
	25	1	**9X-8880**	1	BOLT (5/8-11X2IN)	

R-REMFG PART MAY BE AVAILABLE
Y-SEPARATE ILLUSTRATION

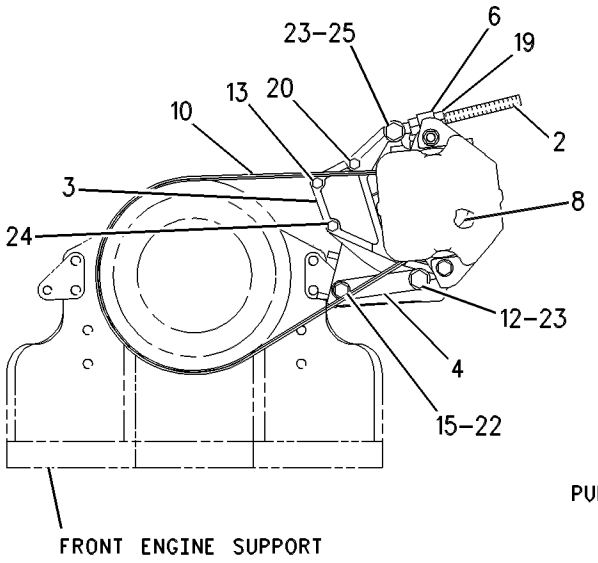

FRONT VIEW

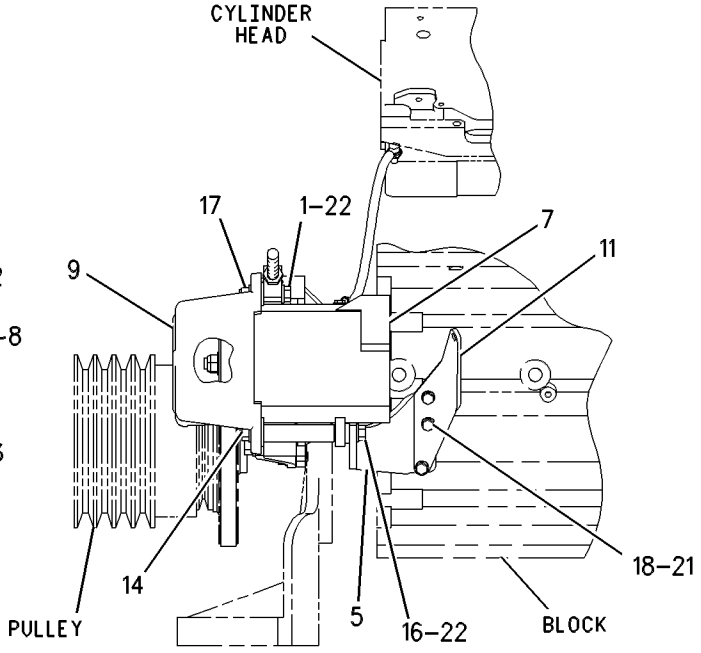

LEFT SIDE VIEW

GRAPHIC #1 g00300248

ELECTRICAL AND STARTING SYSTEM

125-4392 ALTERNATOR GP-CHARGING

S/N: 80M3054-UP

PART OF 123-0200 ENGINE AR

SMCS-1405 **i01151873**

NOTE	REF NO	GRAPHIC REF	PART NUMBER	QTY	PART NAME 1 2 3 4 5 6 (PRODUCT LEVEL)	SEE PAGE
	1	1	**1H-2415**	1	BOLT	
	2	1	**1S-4589**	1	ROD	
	3	1	**4N-6413**	1	SUPPORT-ALTERNATOR	
	4	1	**4P-8769**	1	BRACKET	
	5	1	**6N-9364**	1	BRACKET	
	6	1	**8S-5383**	1	BLOCK	
YR	7	1	**9X-7803**	1	ALTERNATOR GP-CHARGING	220
	8	1	**101-4910**	1	BELT	
	9	1	**115-0635**	1	GUARD-ALTERNATOR	
	10	1	**129-4877**	1	BRACKET AS	
		1	**1F-0750**	1	NUT-WELD (3/8-16 THD)	
	11	1	**173-4652**	1	PULLEY-ALTERNATOR	
	12	1	**0S-1566**	1	BOLT (5/8-11X1.5IN)	
	13	1	**0S-1571**	1	BOLT (3/8-16X1.75IN)	
	14	1	**0S-1585**	1	BOLT (1/2-13X1.50IN)	
	15	1	**0S-1595**	1	BOLT (1/2-13X1.25IN)	
	16	1	**1A-1460**	1	BOLT (1/2-13X2IN)	
	17	1	**1F-7958**	1	NUT-FULL (1/2-13 THD)	
	18	1	**3B-1915**	3	BOLT (3/8-16X1.375IN)	
	19	1	**4K-0367**	2	NUT (5/8-11 THD)	
	20	1	**5B-9603**	1	BOLT (3/8-16X5IN)	
	21	1	**5M-2894**	3	WASHER (2.5MM THK)	
	22	1	**5P-8245**	3	WASHER-HARD (3MM THK)	
	23	1	**5P-8247**	2	WASHER-HARD (3.5MM THK)	
	24	1	**8S-9191**	1	BOLT (3/8-16X4IN)	
	25	1	**9X-8880**	1	BOLT (5/8-11X2IN)	

R-REMFG PART MAY BE AVAILABLE
Y-SEPARATE ILLUSTRATION

125-4392 **ALTERNATOR GP-CHARGING** ***(contd.)*** **i01151873**

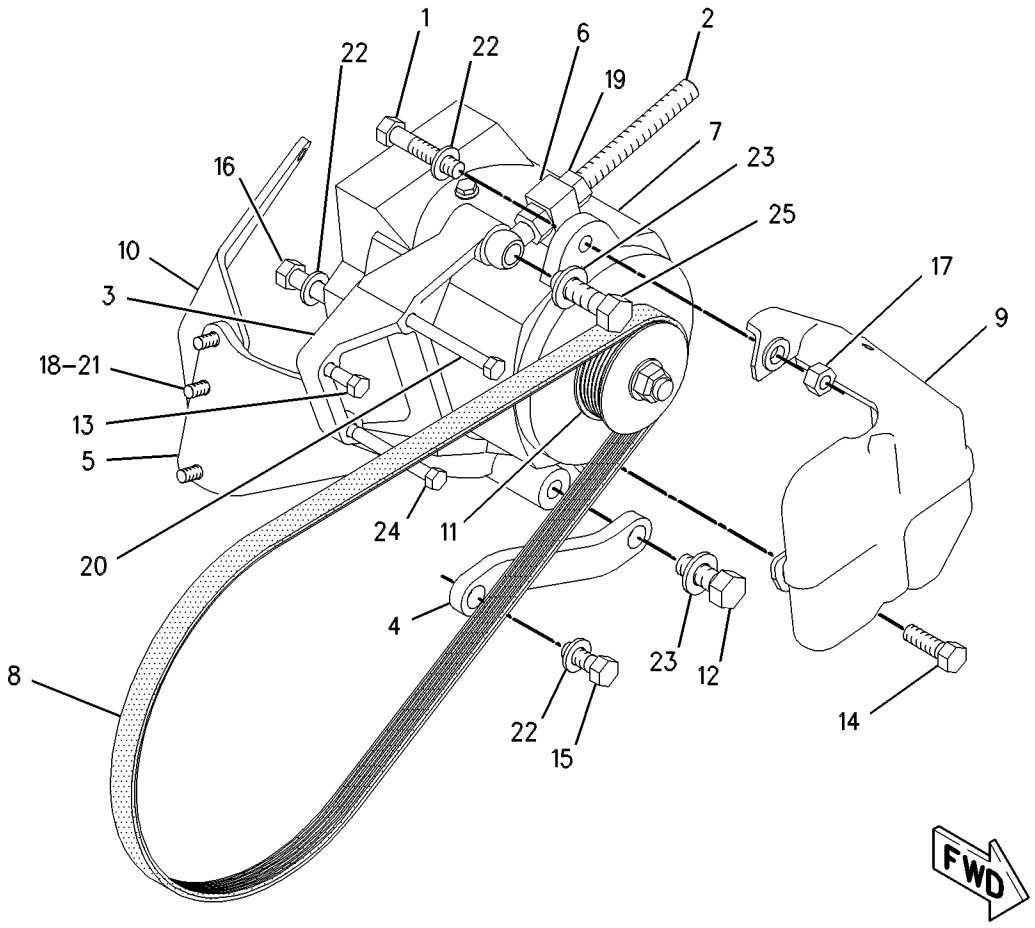

GRAPHIC #1 g00615133

ELECTRICAL AND STARTING SYSTEM

159-4564 BATTERY GP

S/N: 7KK1-UP
AN ATTACHMENT

SMCS-1401 **i00915525**

NOTE	REF NO	GRAPHIC REF	PART NUMBER	QTY	PART NAME 1 2 3 4 5 6 (PRODUCT LEVEL)	SEE PAGE
	1	1	**9G-0549**	1	CABLE AS	
	2	1	**5P-0747**	20	CABLE (00GA)	
	3	1	**8C-5917**	1	TERMINAL AS (POS)	
	4	1	**1M-6119**	2	BOLT-BATTERY TERMINAL (5/16-18X1.375IN)	
	5	1	**1M-6120**	2	NUT-BATTERY TERMINAL (5/16-18 THD)	
	6	1	**9G-0003**	1	COVER (BLACK)	
		1	**8L-8413**	1	STRAP-CABLE (1.12IN DIA)	
	7	1	**9G-0004**	1	COVER (RED)	
		1	**8L-8413**	1	STRAP-CABLE (1.12IN DIA)	
	8	1	**8T-9757**	1	TERMINAL AS (NEG)	
	9	1	**9X-9731**	2	BATTERY (12 VOLT)(DRY)	
		1	**7N-0060**	6	VENT AS	

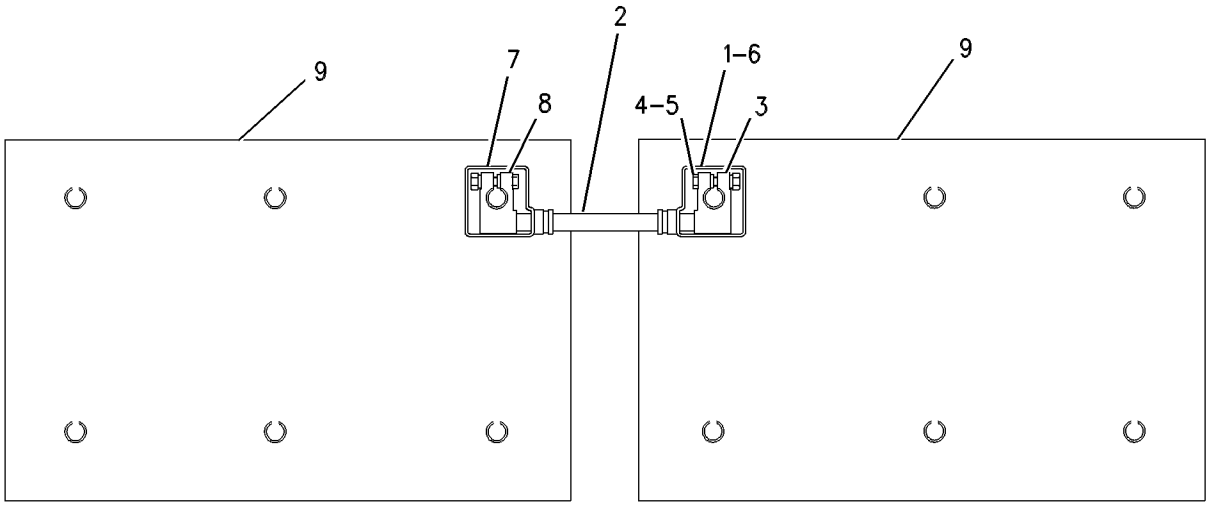

GRAPHIC #1 g00476306

159-4565 BATTERY GP

S/N: 7KK1-UP
AN ATTACHMENT

SMCS-1401 **i01016134**

NOTE	REF NO	GRAPHIC REF	PART NUMBER	QTY	PART NAME 1 2 3 4 5 6 (PRODUCT LEVEL)	SEE PAGE
	1	1	**9G-0549**	1	CABLE AS	
E		1	**5P-0747**		CABLE (00GA) (20CM)	
	2	1	**8T-9757**	1	TERMINAL AS (NEG)	
	3	1	**8C-5917**	1	TERMINAL AS (POS)	
	4	1	**1M-6119**	2	BOLT (5/16-18X1.375IN)	
	5	1	**1M-6120**	2	NUT-BATTERY TERMINAL (5/16-18 THD)	
	6	1	**9G-0003**	1	COVER (BLACK)	
		1	**8L-8413**	1	STRAP-CABLE (1.12IN DIA)	
	7	1	**9G-0004**	1	COVER (RED)	
		1	**8L-8413**	1	STRAP-CABLE (1.12IN DIA)	
	8	1	**9X-9730**	2	BATTERY (12 VOLT)(DRY)	
					(EACH INCLUDES)	
		1	**7N-0060**	6	VENT AS	

E-ORDER BY THE CENTIMETER

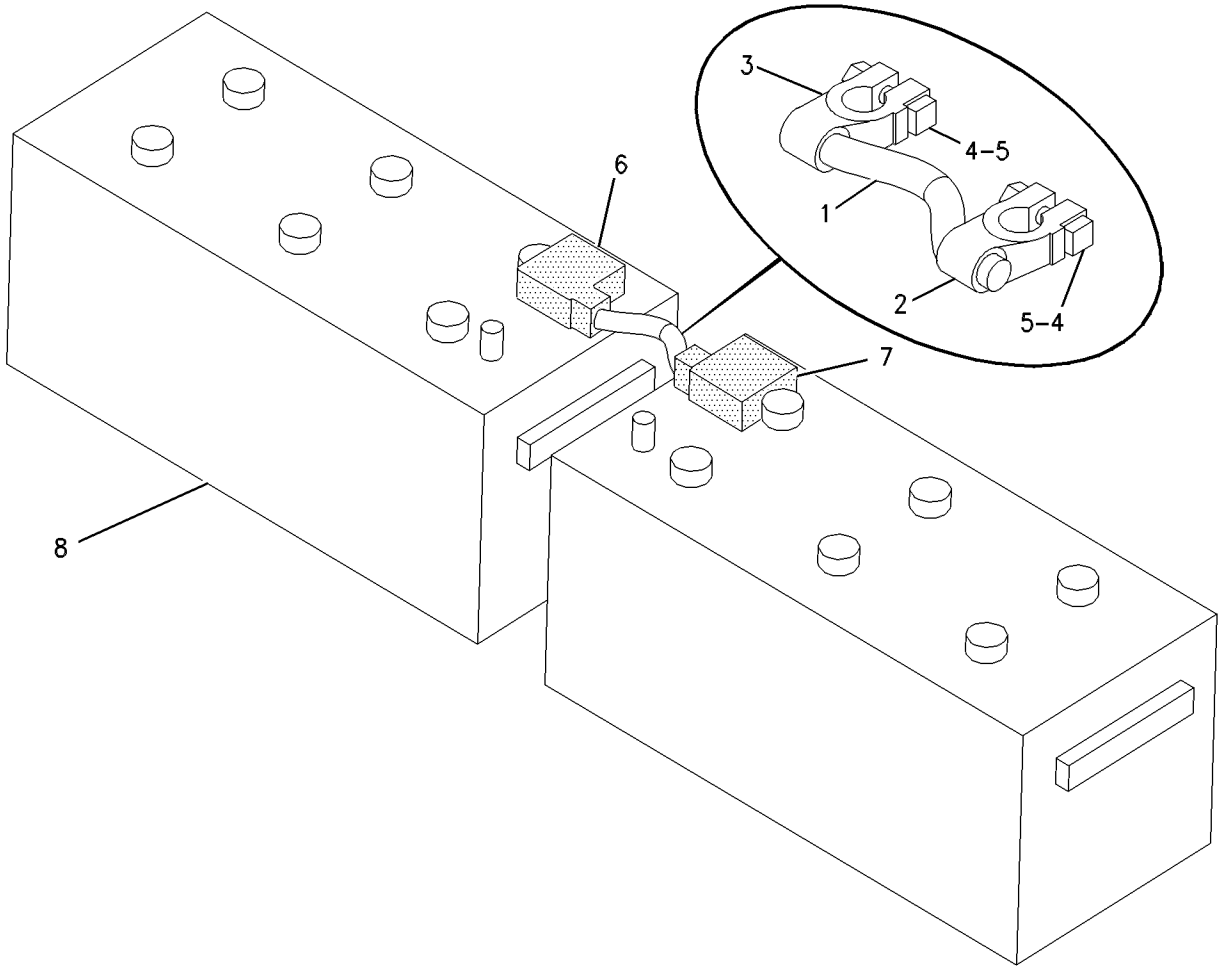

GRAPHIC #1 g00516696

126-1455 CONTROL & MTG GP-ENGINE ELEK

S/N: 8OM1-UP

PART OF 123-0200 ENGINE AR

SMCS-1901 **i01207617**

NOTE	REF NO	GRAPHIC REF	PART NUMBER	QTY	PART NAME 1 2 3 4 5 6 (PRODUCT LEVEL)	SEE PAGE
Y	1	1	*105-6122*	1	CONTROL GP-ENGINE ELECTRONIC	235
	2	1	**115-6469**	4	SPACER	
	3	1	**8H-8769**	2	BOLT (5/16-18X4.25IN)	
	4	1	**9M-1974**	1	WASHER-HARD (2MM THK)	
	5	1	**9N-0869**	5	WASHER-HARD (2MM THK)	
	6	1	**8T-9655**	8	MOUNT	
	7	1	**3H-5932**	1	BOLT (5/16-18X4.5IN)	
	8	1	**8M-1865**	1	BOLT (5/16-18X5.75IN)	
	9	1	**4E-0724**	1	SPACER	

Y-SEPARATE ILLUSTRATION

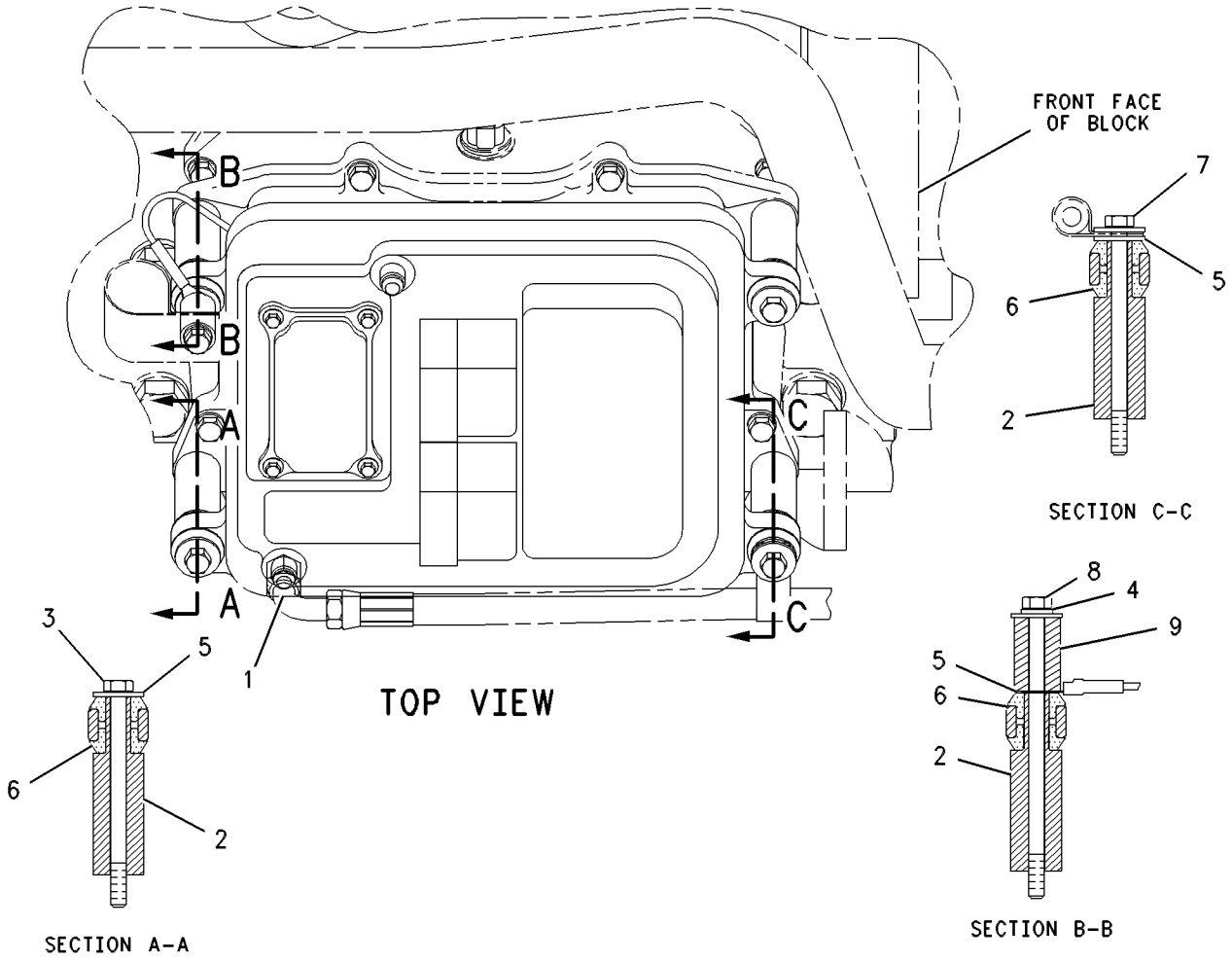

GRAPHIC #1 g00646067

ELECTRICAL AND STARTING SYSTEM

129-9428 CONTROL GP-ENG RATINGS ELEK

S/N: 80M1-471

PART OF 123-0200 ENGINE AR

FIELD REPLACEMENT ORDER 133-1461—PAGE 230

SMCS-1902, 7620 **i00698270**

NOTE	PART NUMBER	QTY	PART NAME 1 2 3 4 5 6 (PRODUCT LEVEL)	SEE PAGE
			(INDIVIDUAL PARTS ARE NOT SERVICED SEPARATELY)	

133-1461 CONTROL GP-ENG RATINGS ELEK

S/N: 8OM1-UP

FIELD REPLACEMENT FOR 129-9428—PAGE 229

FIELD INSTALLATION

SMCS-1902, 7620 **i00698279**

NOTE	REF NO	GRAPHIC REF	PART NUMBER	QTY	PART NAME 1 2 3 4 5 6 (PRODUCT LEVEL)	SEE PAGE
	1	1	**3E-9199**	1	LABEL-MARKING	

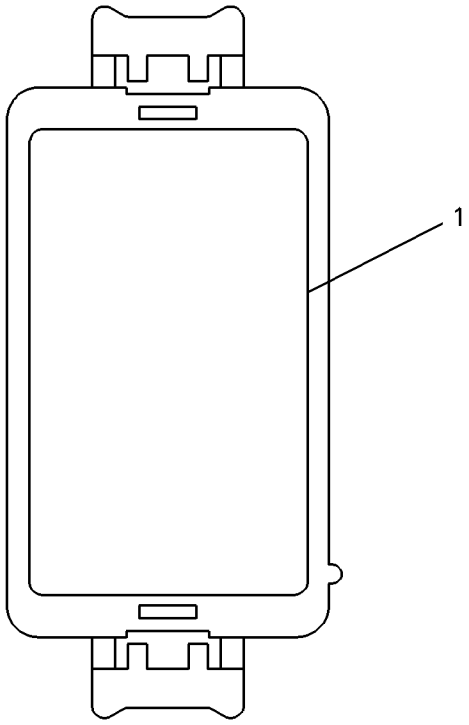

GRAPHIC #1 g00083354

135-3749 CONTROL GP-ENG RATINGS ELEK

S/N: 80M472-UP

FIELD REPLACEMENT FOR 136-6051—PAGE 232

FIELD INSTALLATION

SMCS-1902, 7620 **i00698282**

NOTE	REF NO	GRAPHIC REF	PART NUMBER	QTY	PART NAME 1 2 3 4 5 6 (PRODUCT LEVEL)	SEE PAGE
	1	1	**3E-9199**	1	LABEL-MARKING	

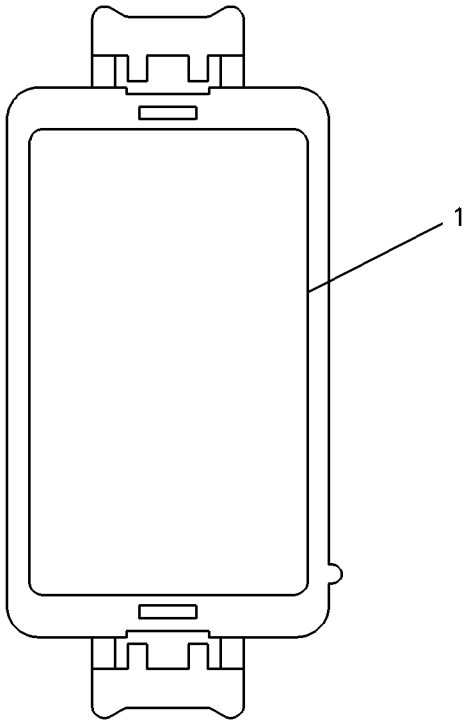

GRAPHIC #1 g00083354

136-6051 CONTROL GP-ENG RATINGS ELEK

S/N: 80M472-UP
PART OF 123-0200 ENGINE AR
TYPE 1

SMCS-1902, 7620 **i01062333**

NOTE	REF NO	GRAPHIC REF	PART NUMBER	QTY	PART NAME 1 2 3 4 5 6 (PRODUCT LEVEL)	SEE PAGE
					(NO SERVICED PARTS)	

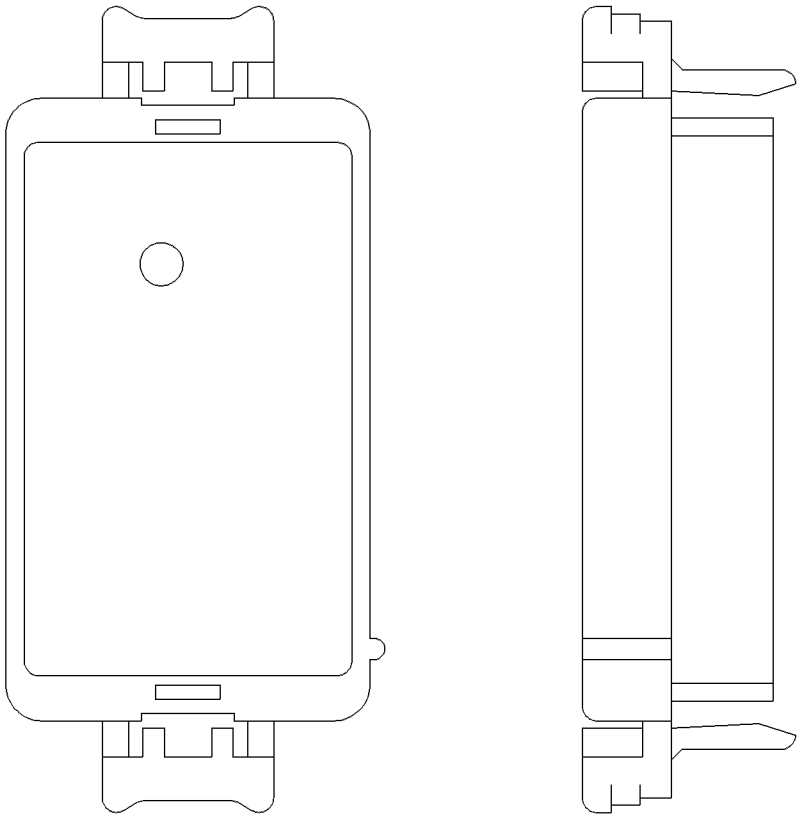

GRAPHIC #1 g00553846

ELECTRICAL AND STARTING SYSTEM

136-6051 CONTROL GP-ENG RATINGS ELEK

S/N: 80M472-UP

PART OF 123-0200 ENGINE AR

TYPE 2

SMCS-1902, 7620 **i00698288**

NOTE	PART NUMBER	QTY	PART NAME 1 2 3 4 5 6 (PRODUCT LEVEL)	SEE PAGE
			(INDIVIDUAL PARTS ARE NOT SERVICED SEPARATELY)	

ELECTRICAL AND STARTING SYSTEM

151-7090 CONTROL GP-ENG RATINGS ELEK

S/N: 7KK1-UP; 8OM1-UP
FIELD INSTALLATION

SMCS-1902, 7620 **i01066844**

NOTE	PART NUMBER	QTY	PART NAME 1 2 3 4 5 6 (PRODUCT LEVEL)	SEE PAGE
			(NO SERVICED PARTS)	

105-6122 CONTROL GP-ENGINE ELECTRONIC

S/N: 8OM1-UP
ADEM-II
PART OF 126-1455 CONTROL & MTG GP-ENGINE ELEK

SMCS-1901 **i01281563**

NOTE	REF NO	GRAPHIC REF	PART NUMBER	QTY	PART NAME 1 2 3 4 5 6 (PRODUCT LEVEL)	SEE PAGE
Y	1	1	**172-0802**	1	CONTROL GP-ENGINE ELECTRONIC (ADEM-II)	236

Y-SEPARATE ILLUSTRATION

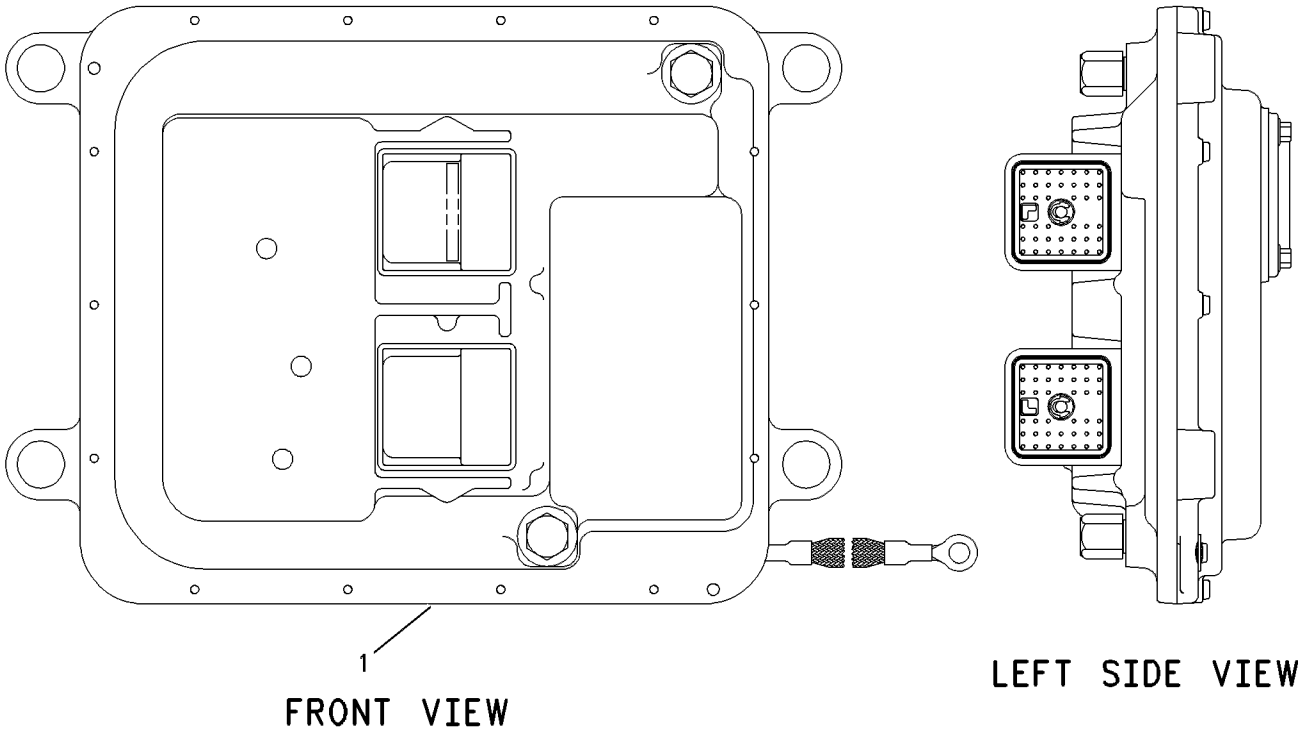

GRAPHIC #1 g00592489

172-0802 CONTROL GP-ENGINE ELECTRONIC

S/N: 80M1-UP
ADEM-II
PART OF 105-6122 CONTROL GP-ENGINE ELECTRONIC

SMCS-1901 **i01446632**

NOTE	REF NO	GRAPHIC REF	PART NUMBER	QTY	PART NAME 1 2 3 4 5 6 (PRODUCT LEVEL)	SEE PAGE
	2	1	**111-8411**	1	COVER	
	3	1	**6V-1179**	1	SEAL-O-RING (76.62MM ID)	
M	4	1	**3E-6900**	4	BOLT	
	5	1	**7X-6315**	1	STRAP-GROUNDING	
	6	1	**126-7574**	1	SCREW-PAN HEAD	

M-METRIC PART

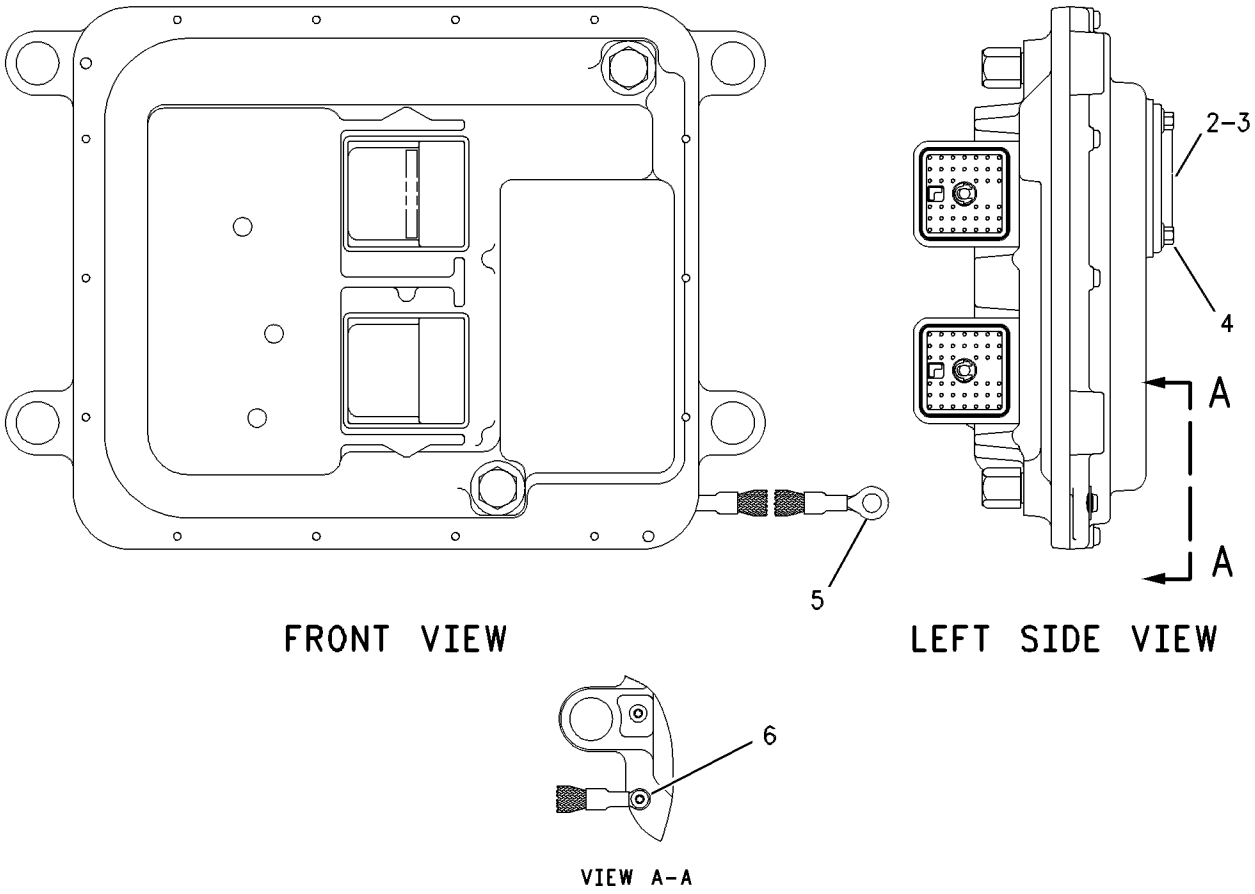

GRAPHIC #1 g00595635

186-5235 ELECTRONICS GP-POWER TRAIN

S/N: 7KK1-UP

PART OF 8X-8972 WIRING GP-CAB

SMCS-4808, 7610, 7620 **i01424942**

NOTE	PART NUMBER	QTY	PART NAME 1 2 3 4 5 6 (PRODUCT LEVEL)	SEE PAGE
	183-4019	1	SERVICE GP-POWER TRAIN (MOTOR GRADER)	
			(OPTIONAL SERVICE REPLACEMENT)	

130-3601 HEATER GP-ENGINE OIL

S/N: 7KK1-UP
PART OF 8X-9065 STARTING AR-COLD WEATHER
AN ATTACHMENT

SMCS-1333 **i01374200**

NOTE	REF NO	GRAPHIC REF	PART NUMBER	QTY	PART NAME 1 2 3 4 5 6 (PRODUCT LEVEL)	SEE PAGE
	1	1	**7C-9009**	1	HOUSING-THERMOSTAT	
	2	1	**9W-3797**	1	SWITCH-TEMPERATURE	
	3	1	**9X-9752**	1	HOUSING AS (OIL HEATER)	
	4	1	**9X-9753**	1	ELEMENT AS (240V/600W)	
	5	1	**061-9593**	1	BUSHING-REDUCER (1/2-14 NPTF)	

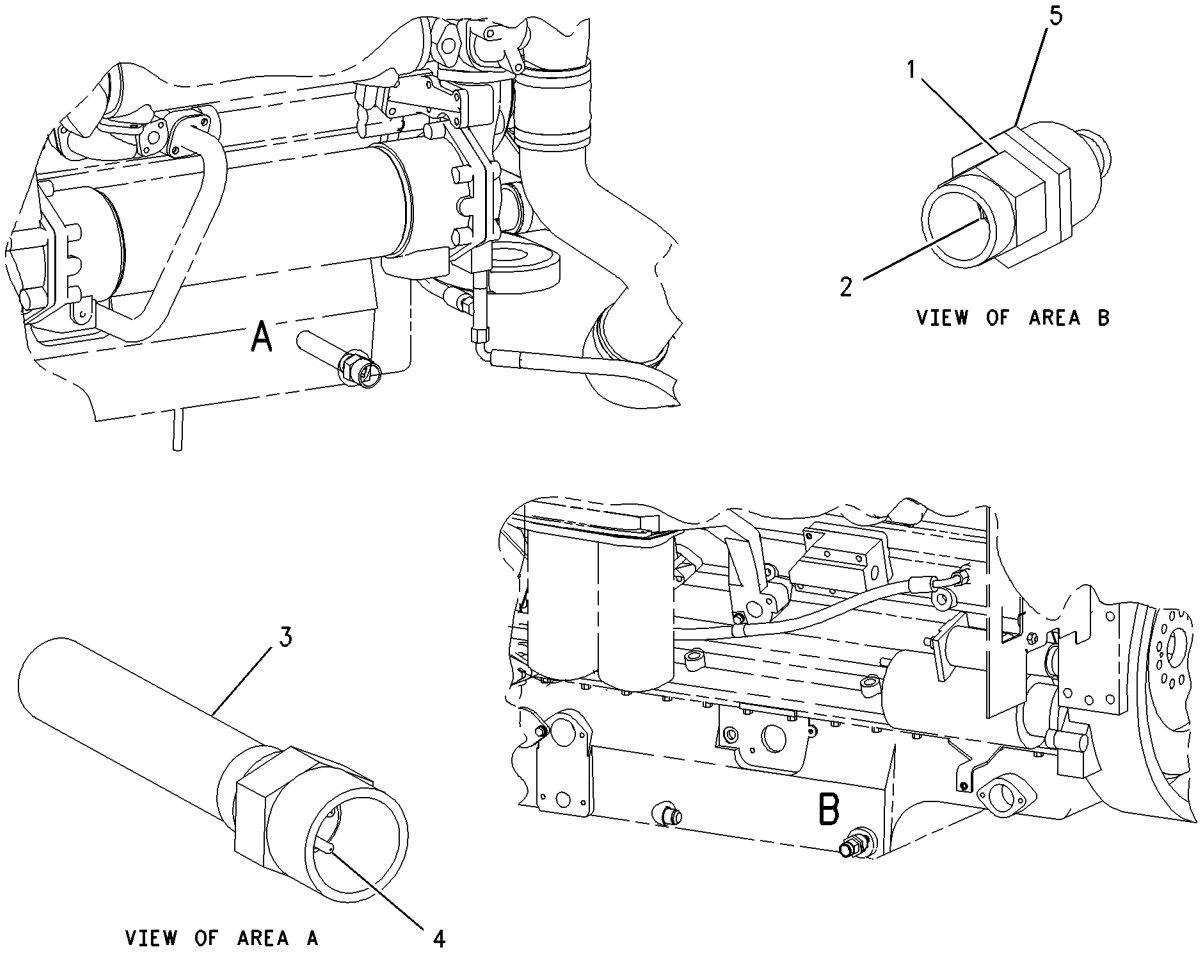

GRAPHIC #1 g00729217

130-3603 HEATER GP-ENGINE OIL

S/N: 7KK1-UP
PART OF 8X-9065 STARTING AR-COLD WEATHER
AN ATTACHMENT

SMCS-1333 **i01374259**

NOTE	REF NO	GRAPHIC REF	PART NUMBER	QTY	PART NAME 1 2 3 4 5 6 (PRODUCT LEVEL)	SEE PAGE
	1	1	**7E-3696**	1	HOUSING	
	2	1	**9W-3797**	1	SWITCH-TEMPERATURE (OIL)	
	3	1	**9X-9753**	1	ELEMENT AS (240V/600W)	
	4	1	**9X-9755**	1	HOUSING AS	
		1	**5P-7701**	1	SEAL-O-RING (29.74MM ID)	

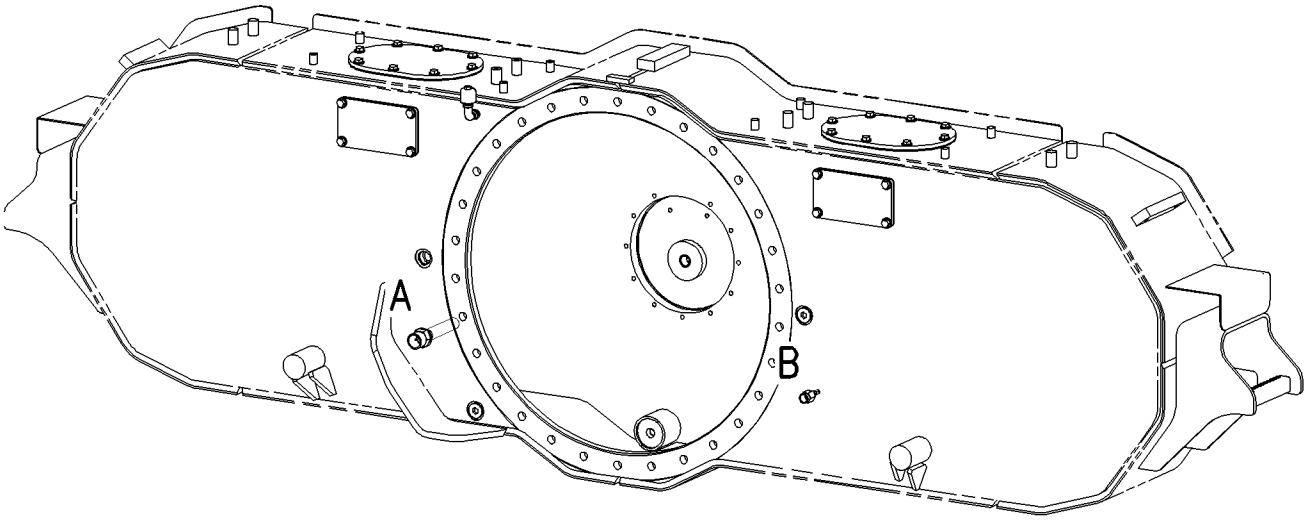

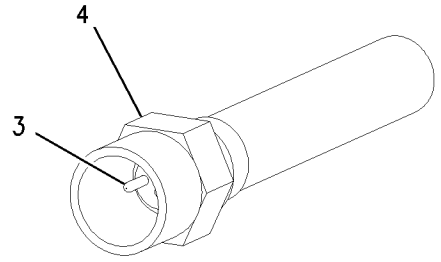

VIEW OF AREA A

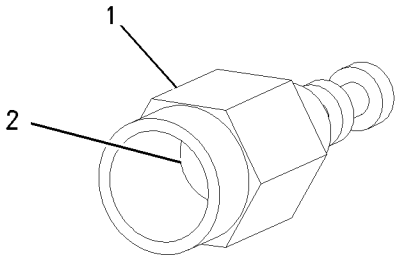

VIEW OF AREA B

GRAPHIC #1 g00729195

129-8529 HEATER GP-FUEL

S/N: 7KK1-39
PART OF 8X-9065 STARTING AR-COLD WEATHER
AN ATTACHMENT

SMCS-1296 **i00107772**

NOTE	PART NUMBER	QTY	PART NAME 1 2 3 4 5 6 (PRODUCT LEVEL)	SEE PAGE
	8C-6870	1	ADAPTER	
M	**8T-4186**	4	BOLT (M10X1.50X40MM)	
	061-9593	4	BUSHING-REDUCER	
	8C-6872	1	CONNECTOR	
	9X-3882	1	COUPLING (STRAIGHT)	
	9X-3894	1	COUPLING (90 DEGREE)	
	006-5707	2	ELBOW (90 DEGREE)	
	6V-8625	1	ELBOW-90 DEGREE (3/4-16 THD)	
	6V-9850	1	ELBOW-SWIVEL (11/16-16 THD)	
	7W-5300	1	HEATER-FUEL	
G	**9X-2374**		HOSE (27.56 IN)	
	002-6454	2	NIPPLE	
	3K-0360	1	SEAL-O-RING (16.36MM ID)	
	6V-8397	2	SEAL-O-RING (9.27MM ID)	
	6V-8398	2	SEAL-O-RING (12.47MM ID)	
	8T-4121	4	WASHER (2.5MM THK)	

G-ORDER BY THE INCH
M-METRIC PART

MEMORANDA

129-8529 HEATER GP-FUEL

S/N: 7KK40-UP
PART OF 8X-9065 STARTING AR-COLD WEATHER
AN ATTACHMENT

SMCS-1296 **i00823294**

NOTE	REF NO	GRAPHIC REF	PART NUMBER	QTY	PART NAME 1 2 3 4 5 6 (PRODUCT LEVEL)	SEE PAGE
C	1	1	**006-5707**	4	ELBOW (90 DEGREE)	
	2	1	**7W-5300**	1	HEATER-FUEL	
	3	1	**8C-6872**	1	CONNECTOR	
	4	1	**002-6454**	2	NIPPLE	
CI	5	1	**145-6975**	1	HOSE AS	
	6	1	**061-9593**	4	BUSHING-REDUCER	
	7	1	**6V-8398**	2	SEAL-O-RING (12.47MM ID)	
C	8	1	**6V-8731**	1	UNION-FACE SEAL	
CM	9	1	**8T-4184**	4	BOLT (M12X1.75X45MM)	
C	10	1	**8T-4223**	4	WASHER-HARD (3MM THK)	

C-CHANGE FROM PREVIOUS TYPE
I-SEE HOSE FABRICATION GUIDE
M-METRIC PART

129-8529 **HEATER GP-FUEL** ***(contd.)*** **i00823294**

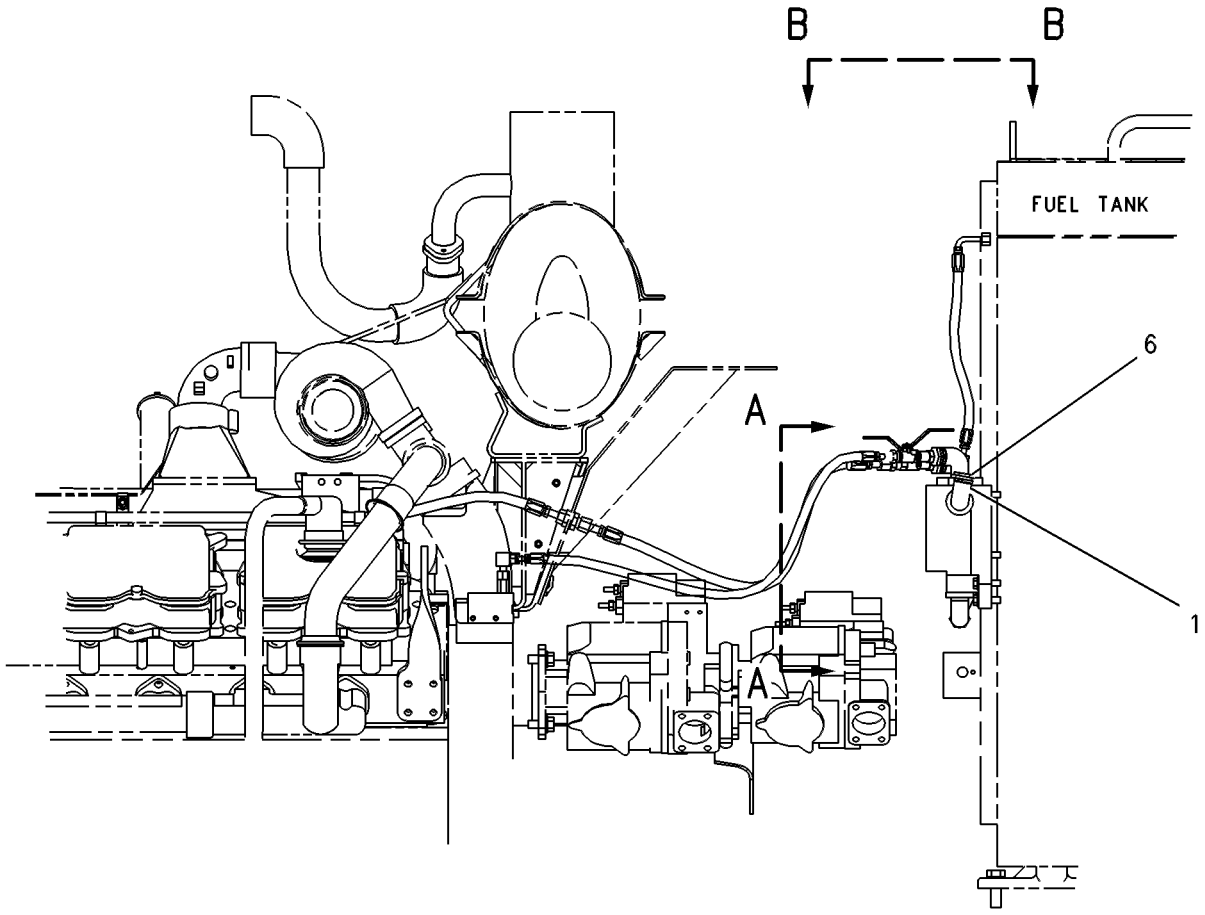

RIGHT SIDE VIEW

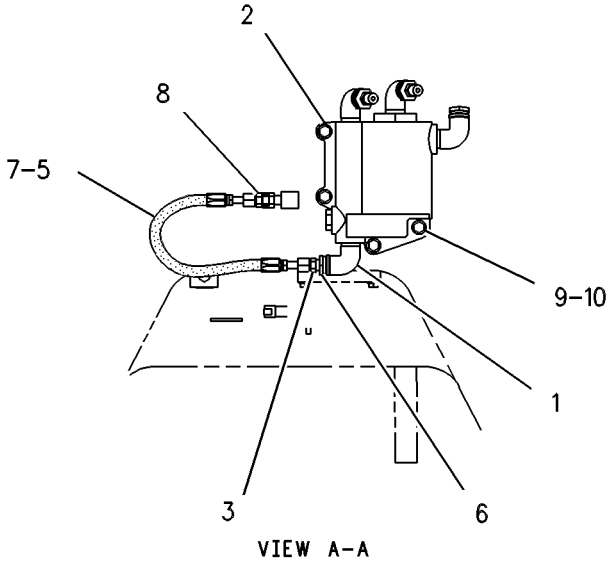

VIEW A-A

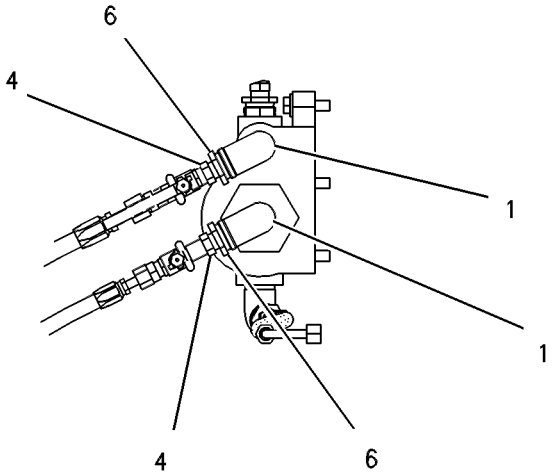

VIEW B-B

GRAPHIC #1 g00283868

129-8528 HEATER GP-HYDRAULIC OIL

S/N: 7KK1-UP
PART OF 8X-9065 STARTING AR-COLD WEATHER
AN ATTACHMENT

SMCS-5096 **i01394251**

NOTE	REF NO	GRAPHIC REF	PART NUMBER	QTY	PART NAME 1 2 3 4 5 6 (PRODUCT LEVEL)	SEE PAGE
	1	1	**9W-3797**	1	SWITCH-TEMPERATURE	
	2	1	**9X-9751**	1	HOUSING AS	
	3	1	**9X-9752**	1	HOUSING AS	
	4	1	**9X-9753**	1	ELEMENT AS (240V/600W)	

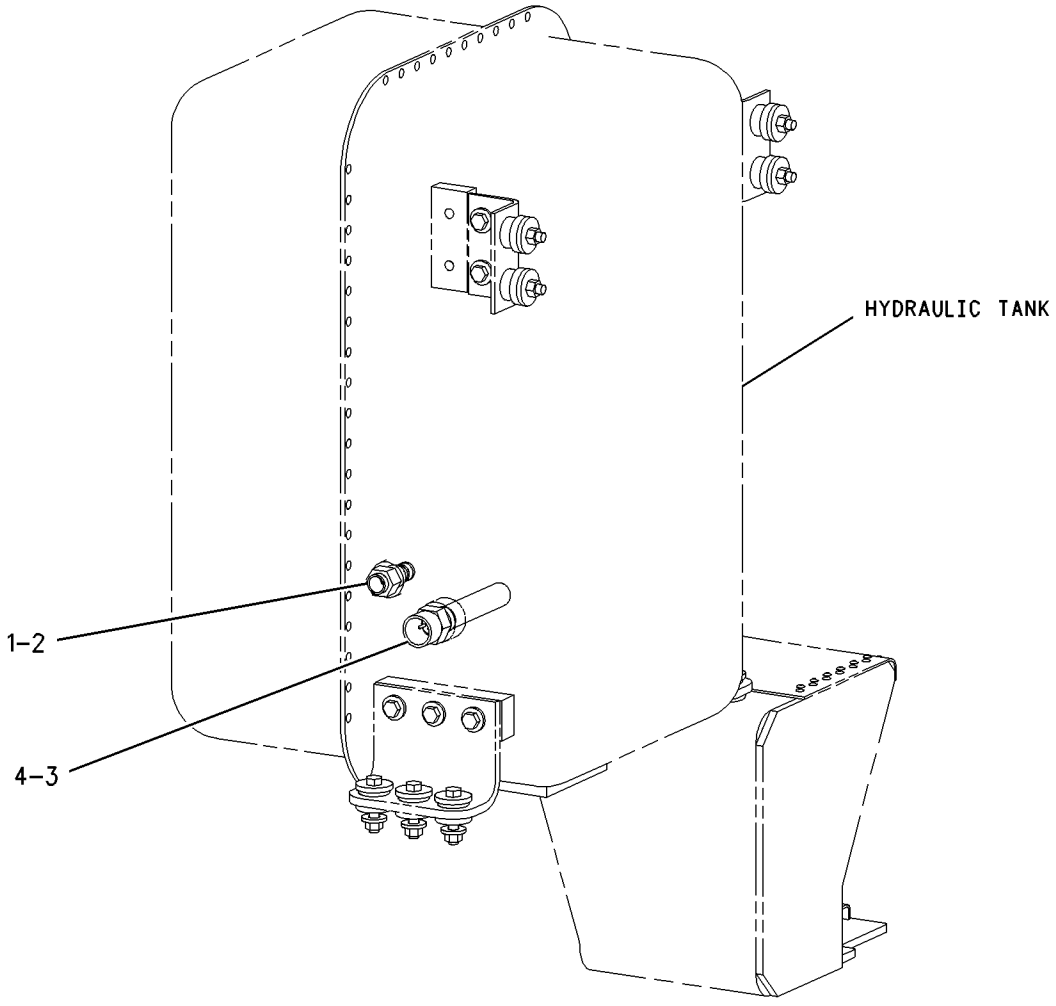

GRAPHIC #1 g00734930

130-3602 HEATER GP-JACKET WATER

S/N: 7KK1-UP
PART OF 8X-9065 STARTING AR-COLD WEATHER
AN ATTACHMENT

SMCS-1383 **i01374253**

NOTE	REF NO	GRAPHIC REF	PART NUMBER	QTY	PART NAME 1 2 3 4 5 6 (PRODUCT LEVEL)	SEE PAGE
	1	1	**4N-0864**	1	GASKET	
	2	1	**6T-3764**	2	ELEMENT AS-JACKET WATER HEATER (240V/1500W)	
	3	1	**7N-0210**	1	ADAPTER-HEATER	
	4	1	**4L-6454**	1	BOLT (3/8-16X1 IN)	
	5	1	**8T-4896**	6	WASHER-HARD (10.2X18.5X2.5MM THK)	
	6	1	**8T-7008**	5	BOLT (3/8-16X3 IN)	

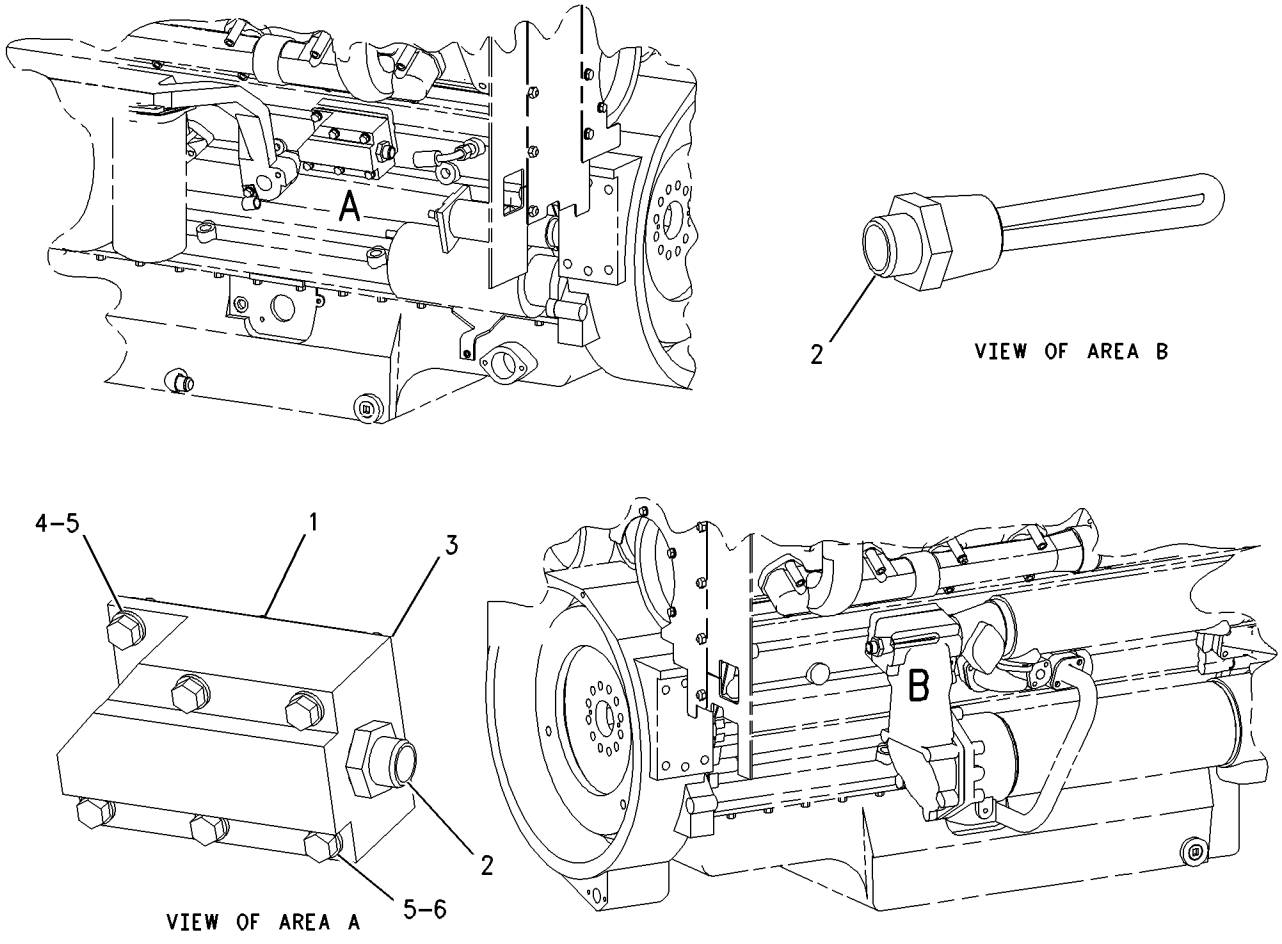

GRAPHIC #1 g00729271

9W-0742 JUNCTION BLOCK GP

S/N: 7KK1-UP

PART OF 8X-9010 WIRING GP-REAR

SMCS-1408 **i01217383**

NOTE	REF NO	GRAPHIC REF	PART NUMBER	QTY	PART NAME 1 2 3 4 5 6 (PRODUCT LEVEL)	SEE PAGE
	1	1	**8C-6358**	1	JUNCTION BLOCK AS	
	1A	1	**8T-3519**	3	BOLT-BRONZE	
BD	2	1	**6V-2722**		TUBE-SHRINKABLE	
	3	1	**7F-0560**	6	WASHER (2.57MM THK)	
	4	1	**8T-3518**	6	NUT-FULL	

B-USE AS REQUIRED
D-ORDER BY THE METER

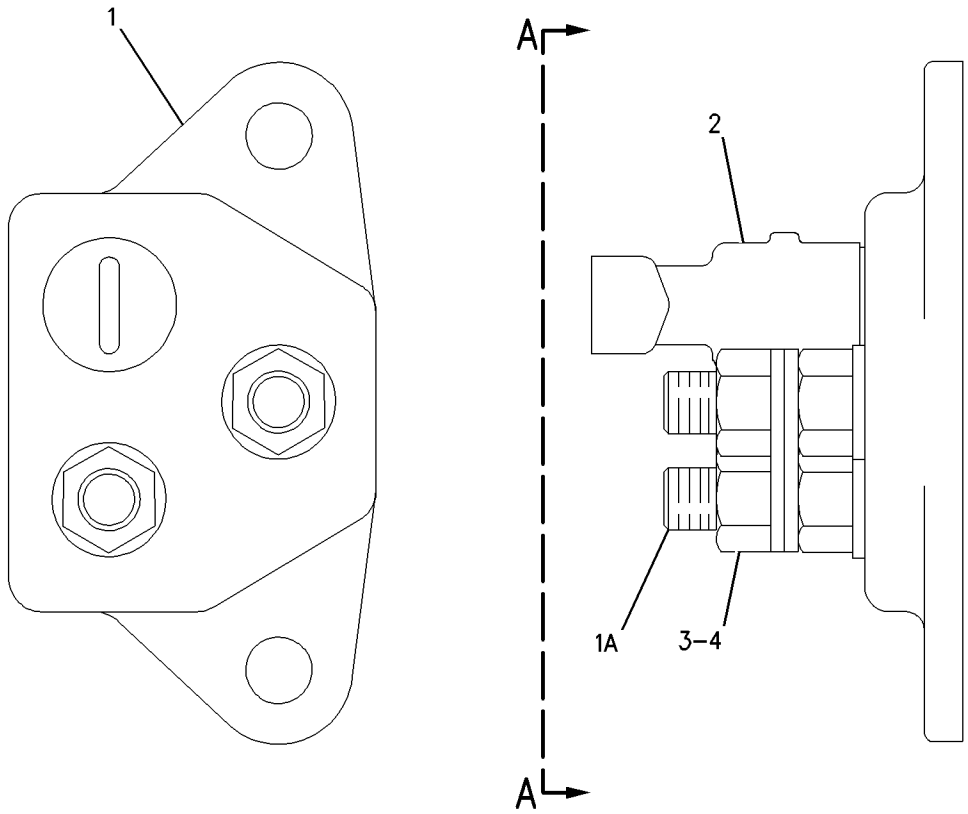

VIEW A-A

GRAPHIC #1 g00650721

3E-6389 LAMP GP-DOME

S/N: 7KK1-UP
24 VOLT. WITH SWITCH
PART OF 8X-8965 LINER GP-CAB

SMCS-1433 **i01446288**

NOTE	REF NO	GRAPHIC REF	PART NUMBER	QTY	PART NAME 1 2 3 4 5 6 (PRODUCT LEVEL)	SEE PAGE
	1	1	**7N-9943**	1	LAMP (28 VOLT) (DOME)	
	2	1	**102-8803**	1	KIT-RECEPTACLE (3 PIN)	
					(INCLUDES RECEPTACLE AS & WEDGE)	
	3	1	**3E-3371**	1	WEDGE-RECEPTACLE LOCK (3 PIN)	
	4	1	**8T-8729**	3	PIN-CONNECTOR	
	5	1	**7T-0020**	1	LENS-DOME LAMP	

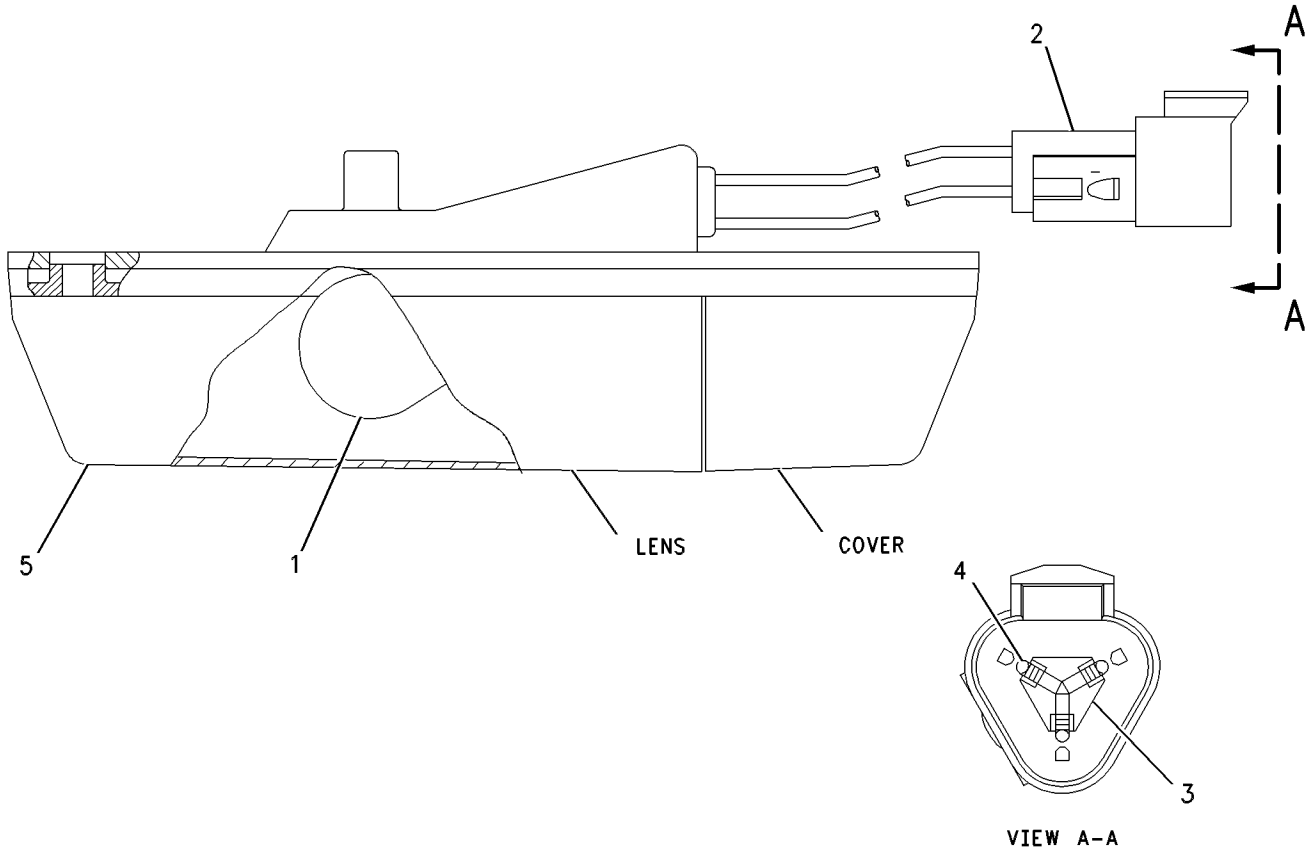

GRAPHIC #1 g00647928

106-8964 LAMP GP-FLOOD

S/N: 7KK1-UP
24 VOLT. SUSPENDED
PART OF 8X-9051 LIGHTING GP-FLOOD & HEAD
FIELD REPLACEMENT ORDER 1-155-2270 KIT-CONNECTING PLUG, 1-165-0699 KIT-MOUNTING BRACKET, 2-8T-8730 SOCKET-CONNECTOR

SMCS-1434 **i01325314**

NOTE	REF NO	GRAPHIC REF	PART NUMBER	QTY	PART NAME 1 2 3 4 5 6 (PRODUCT LEVEL)	SEE PAGE
	1	1	**107-5851**	4	SCREW	
	2	1	**107-5853**	1	LENS AS-FLOOD	
		1	**107-5852**	1	SEAL	
M	3	1	**8T-0337**	2	SCREW-MACHINE (M4X0.7X12MM)	
	4	1	**107-5854**	1	BODY AS-LAMP	
	5	1	**9X-3463**	1	LAMP (24 VOLT)(65 WATT)	

M-METRIC PART

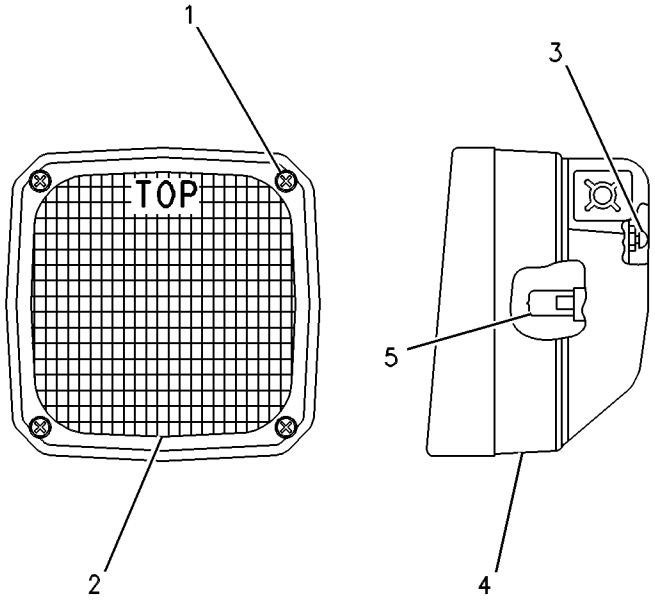

GRAPHIC #1 g00273968

107-6689 LAMP GP-FLOOD

S/N: 7KK1-UP
24 VOLT. VERTICAL
PART OF 8X-9051 LIGHTING GP-FLOOD & HEAD

SMCS-1434 **i01314317**

NOTE	REF NO	GRAPHIC REF	PART NUMBER	QTY	PART NAME 1 2 3 4 5 6 (PRODUCT LEVEL)	SEE PAGE
	1	1	**107-5851**	4	SCREW	
	2	1	**107-5853**	1	LENS AS-FLOOD	
		1	**107-5852**	1	SEAL	
	3	1	**107-5854**	1	BODY AS-LAMP	
M		1	**8T-0337**	2	SCREW-MACHINE (M4X0.7X12MM)	
	4	1	**9X-3463**	1	LAMP (24 VOLT)(65 WATT)	

M-METRIC PART

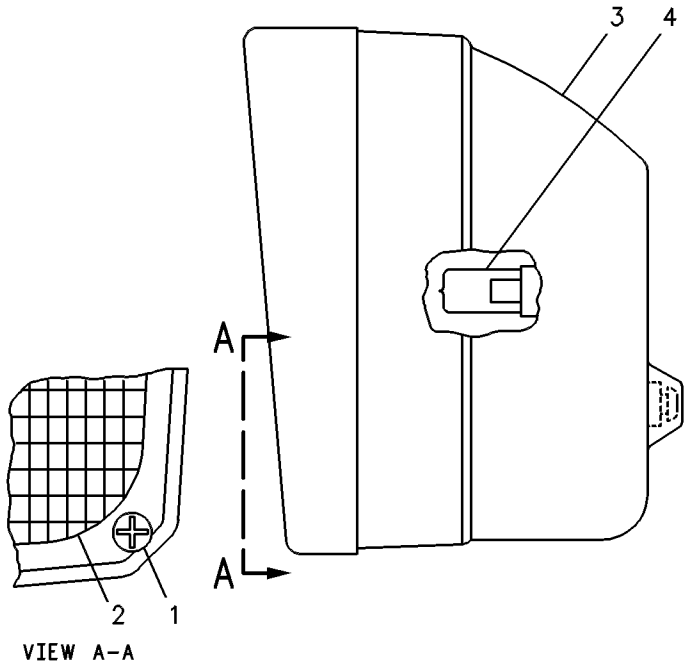

GRAPHIC #1 g00084818

9X-6874 LAMP GP-HEAD

S/N: 7KK1-UP
24 VOLT. SUSPENDED-LOW
PART OF 8X-9051 LIGHTING GP-FLOOD & HEAD
FIELD REPLACEMENT ORDER 9X-7169—PAGE 253, 171-2066—PAGE 255, 2-8T-8730 SOCKET-CONNECTOR, 1-155-2270 KIT-CONNECTING PLUG, 1-165-0699 KIT-MOUNTING BRACKET

SMCS-1429 **i01207858**

NOTE	REF NO	GRAPHIC REF	PART NUMBER	QTY	PART NAME 1 2 3 4 5 6 (PRODUCT LEVEL)	SEE PAGE
	1	1	**9X-4244**	4	SCREW	
	2	1	**9X-7798**	1	LENS AS-HEADLIGHT	
		1	**9X-4243**	1	SEAL	
	3	1	**9X-3455**	1	BODY AS-LAMP	
	4	1	**9X-3463**	1	LAMP (24 VOLTS)(65 WATTS)	
M	5	1	**8T-0337**	2	SCREW-MACHINE (M4X0.7X12MM)	

M-METRIC PART

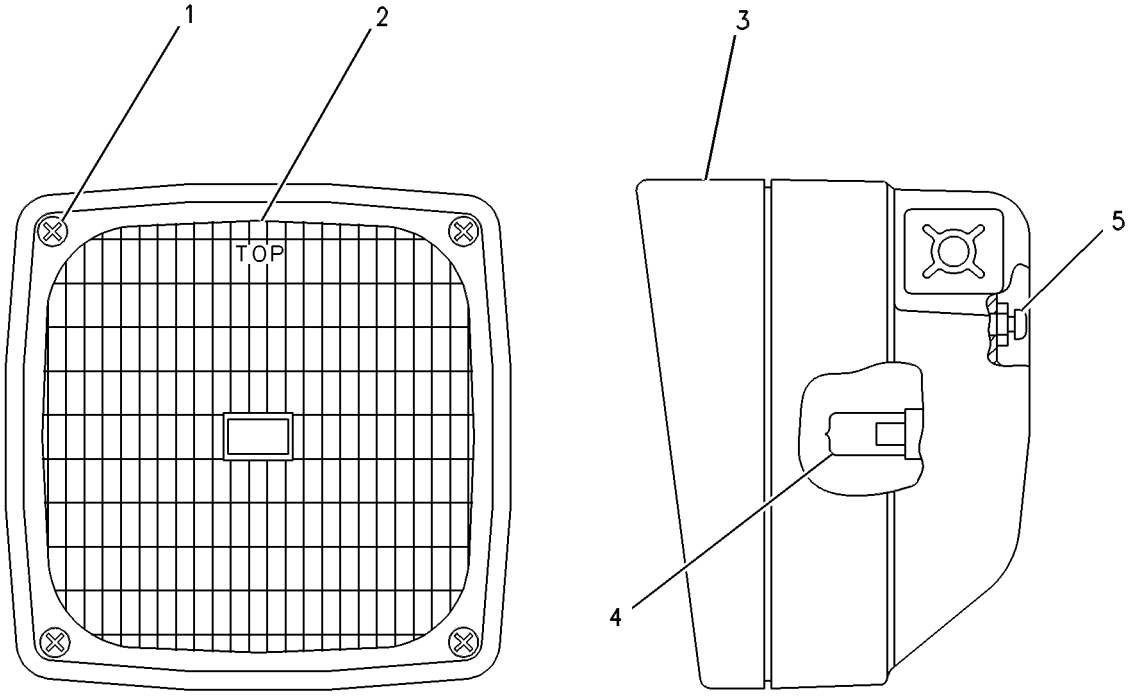

FRONT VIEW LEFT SIDE VIEW

GRAPHIC #1 g00088858

9X-7164 LAMP GP-HEAD

S/N: 7KK1-UP
24 VOLT. SUSPENDED-HIGH
PART OF 8X-9051 LIGHTING GP-FLOOD & HEAD
FIELD REPLACEMENT ORDER 9X-7170—PAGE 254, 8T-4121 WASHER, 8T-4133 NUT

SMCS-1429 **i00108322**

NOTE	REF NO	GRAPHIC REF	PART NUMBER	QTY	PART NAME 1 2 3 4 5 6 (PRODUCT LEVEL)	SEE PAGE
	1	1	**9X-4244**	4	SCREW	
	2	1	**9X-7797**	1	LENS AS	
		1	**9X-4243**	1	SEAL	
M	3	1	**8T-0337**	2	SCREW-MACHINE	
	4	1	**9X-3455**	1	BODY AS	
	5	1	**9X-3463**	1	LAMP	

M-METRIC PART

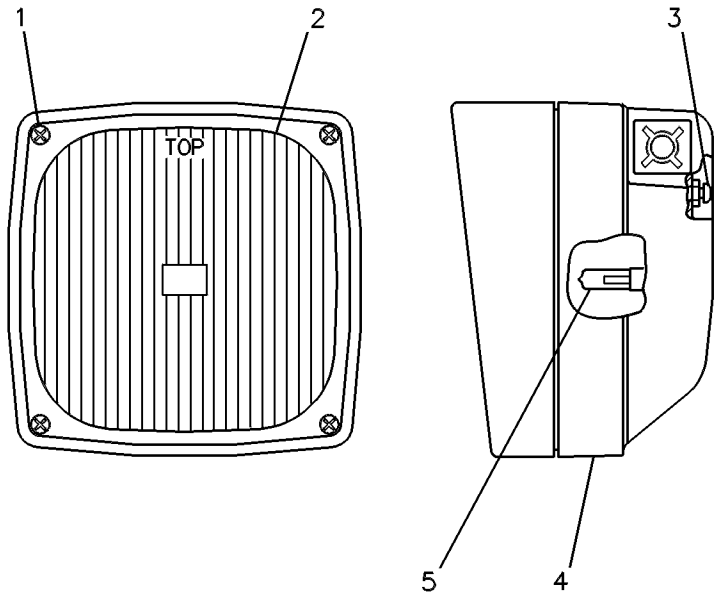

GRAPHIC #1 g00084860

9X-7165 LAMP GP-HEAD

S/N: 7KK1-UP
24 VOLT. VERTICAL,LOW
PART OF 8X-9051 LIGHTING GP-FLOOD & HEAD
FIELD REPLACEMENT ORDER 9X-7169—PAGE 253, 8T-4121 WASHER, 8T-4133 NUT

SMCS-1429 **i01197462**

NOTE	REF NO	GRAPHIC REF	PART NUMBER	QTY	PART NAME 1 2 3 4 5 6 (PRODUCT LEVEL)	SEE PAGE
	1	1	**9X-4244**	4	SCREW	
	2	1	**9X-7798**	1	LENS AS-HEADLIGHT	
		1	**9X-4243**	1	SEAL	
M	3	1	**8T-0337**	2	SCREW-MACHINE (M4X0.7X12MM)	
	4	1	**9X-3455**	1	BODY AS-LAMP	
	5	1	**9X-3463**	1	LAMP (24 VOLTS)(65 WATTS)	

M-METRIC PART

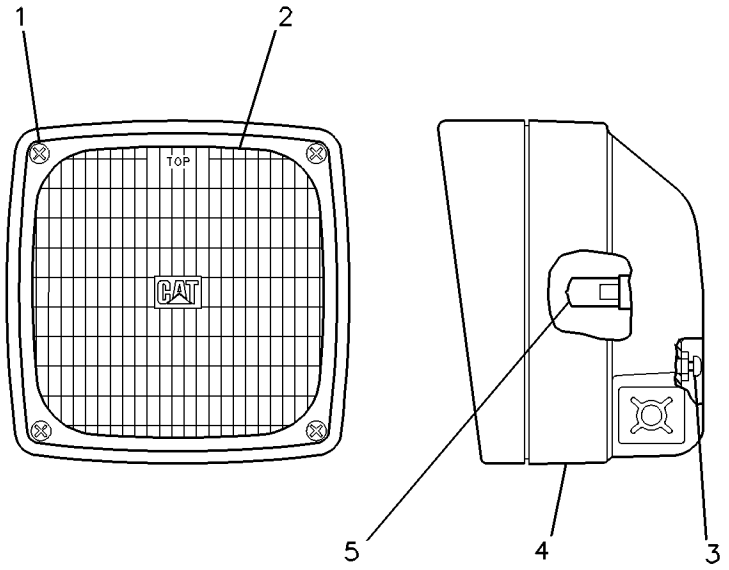

GRAPHIC #1 g00082780

9X-7169 LAMP GP-HEAD—LOW BEAM

S/N: 7KK1-UP
24 VOLT. VERTICAL
FIELD REPLACEMENT ORDER 1-165-0699 KIT-MOUNTING BRACKET, 1-155-2270 KIT-CONNECTING PLUG, 2-8T-8730 SOCKET-CONNECTOR. FIELD REPLACEMENT FOR 9X-6874—PAGE 250: FOR 9X-7165—PAGE 252
FIELD INSTALLATION

SMCS-1429 **i01455867**

NOTE	REF NO	GRAPHIC REF	PART NUMBER	QTY	PART NAME 1 2 3 4 5 6 (PRODUCT LEVEL)	SEE PAGE
	1	1	**9X-4244**	4	SCREW	
	2	1	**9X-7798**	1	LENS AS-HEADLIGHT	
		1	**9X-4243**	1	SEAL	
M	3	1	**8T-0337**	2	SCREW-MACHINE (M4X0.7X12MM)	
	4	1	**9X-3455**	1	BODY AS-LAMP	
		1	**8T-4121**	1	WASHER-HARD (11X21X2.5MM THK)	
M		1	**8T-4133**	1	NUT (M10X1.5 THD)	
	5	1	**9X-3463**	1	LAMP (24 VOLT)(65 WATT) (LOW BEAM)(HEAD)	

M-METRIC PART

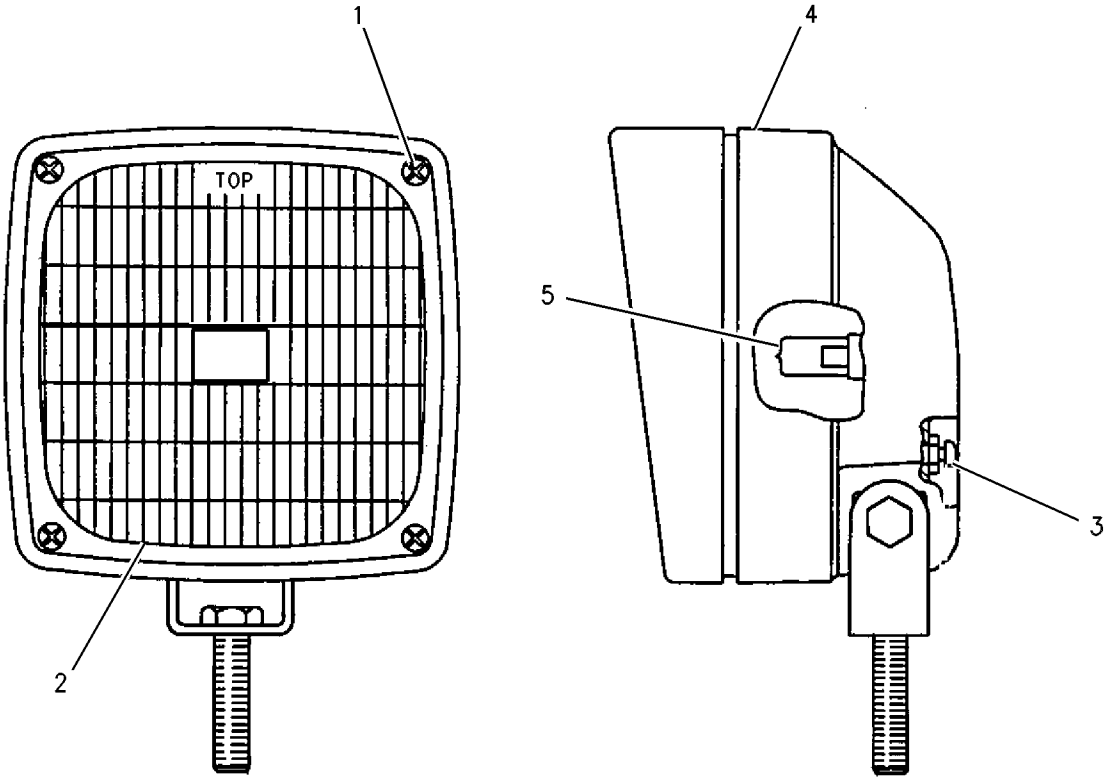

GRAPHIC #1 g00484295

9X-7170 LAMP GP-HEAD–HIGH BEAM

S/N: 7KK1-UP
24 VOLT. VERTICAL
FIELD REPLACEMENT ORDER 1-165-0699 KIT-MOUNTING BRACKET, 1-155-2270 KIT-CONNECTING PLUG, 2-8T-8730 SOCKET-CONNECTOR. FIELD REPLACEMENT FOR 9X-7164–PAGE 251
FIELD INSTALLATION

SMCS-1429 **i01455876**

NOTE	REF NO	GRAPHIC REF	PART NUMBER	QTY	PART NAME 1 2 3 4 5 6 (PRODUCT LEVEL)	SEE PAGE
	1	1	**9X-4244**	4	SCREW	
	2	1	**9X-7797**	1	LENS AS (HEAD)	
		1	**9X-4243**	1	SEAL	
M	3	1	**8T-0337**	2	SCREW-MACHINE (M4X0.7X12MM)	
	4	1	**9X-3455**	1	BODY AS-LAMP	
		1	**8T-4121**	1	WASHER-HARD (11X21X2.5MM THK)	
M		1	**8T-4133**	1	NUT (M10X1.5 THD)	
	5	1	**9X-3463**	1	LAMP (24 VOLT)(65 WATT) (HEAD)	

M-METRIC PART

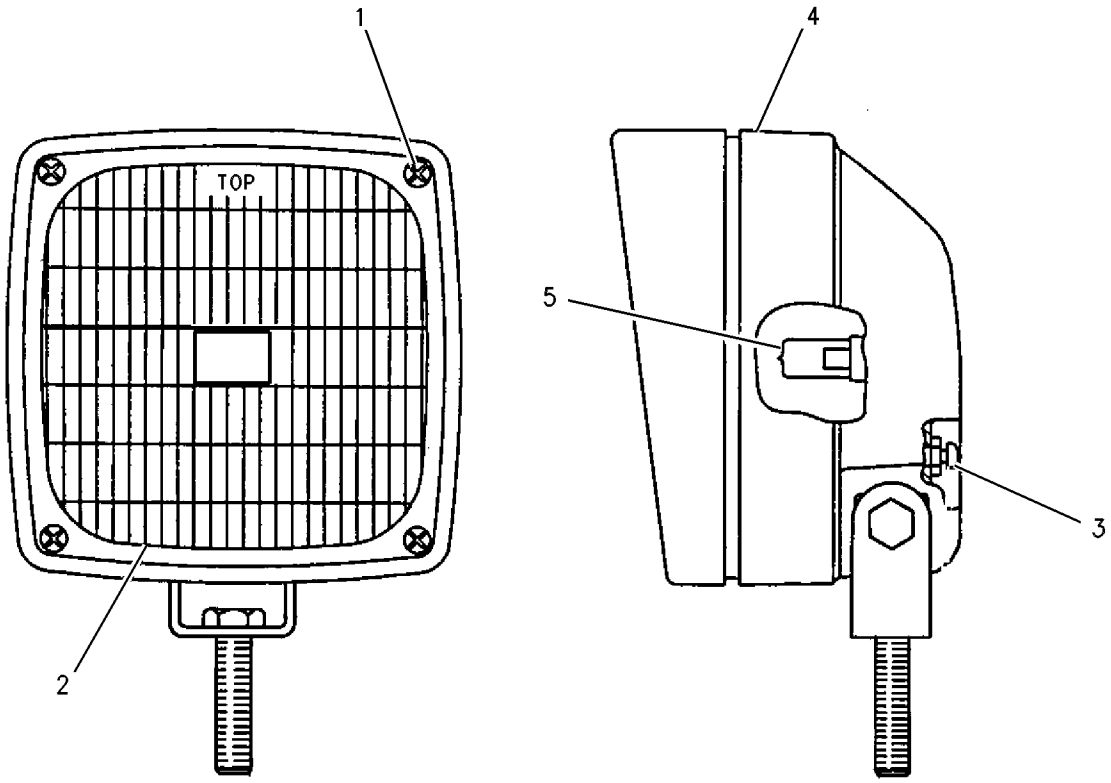

GRAPHIC #1 g00484326

171-2066 LAMP GP-HEAD

S/N: 7KK1-UP
24 VOLT. SUSPENDED, LOW

SMCS-1429 **i01391153**

NOTE	REF NO	GRAPHIC REF	PART NUMBER	QTY	PART NAME 1 2 3 4 5 6 (PRODUCT LEVEL)	SEE PAGE
	1	1	**9X-3463**	1	LAMP (24 VOLT)(65 WATT) (HEAD)	
	2	1	**162-5372**	1	BODY AS-LAMP	
	3	1	**162-2077**	1	LENS AS-HEADLAMP	
	4	1	**158-0252**	1	BEZEL	
	5	1	**188-8849**	2	CLAMP	
	6	1	**186-3735**	2	PIN-CONNECTOR	
	7	1	**3E-3365**	1	WEDGE-RECEPTACLE LOCK (2 PIN)	
	8	1	**102-8802**	1	KIT-RECEPTACLE (2 PIN)	
					(INCLUDES RECEPTACLE & WEDGE)	

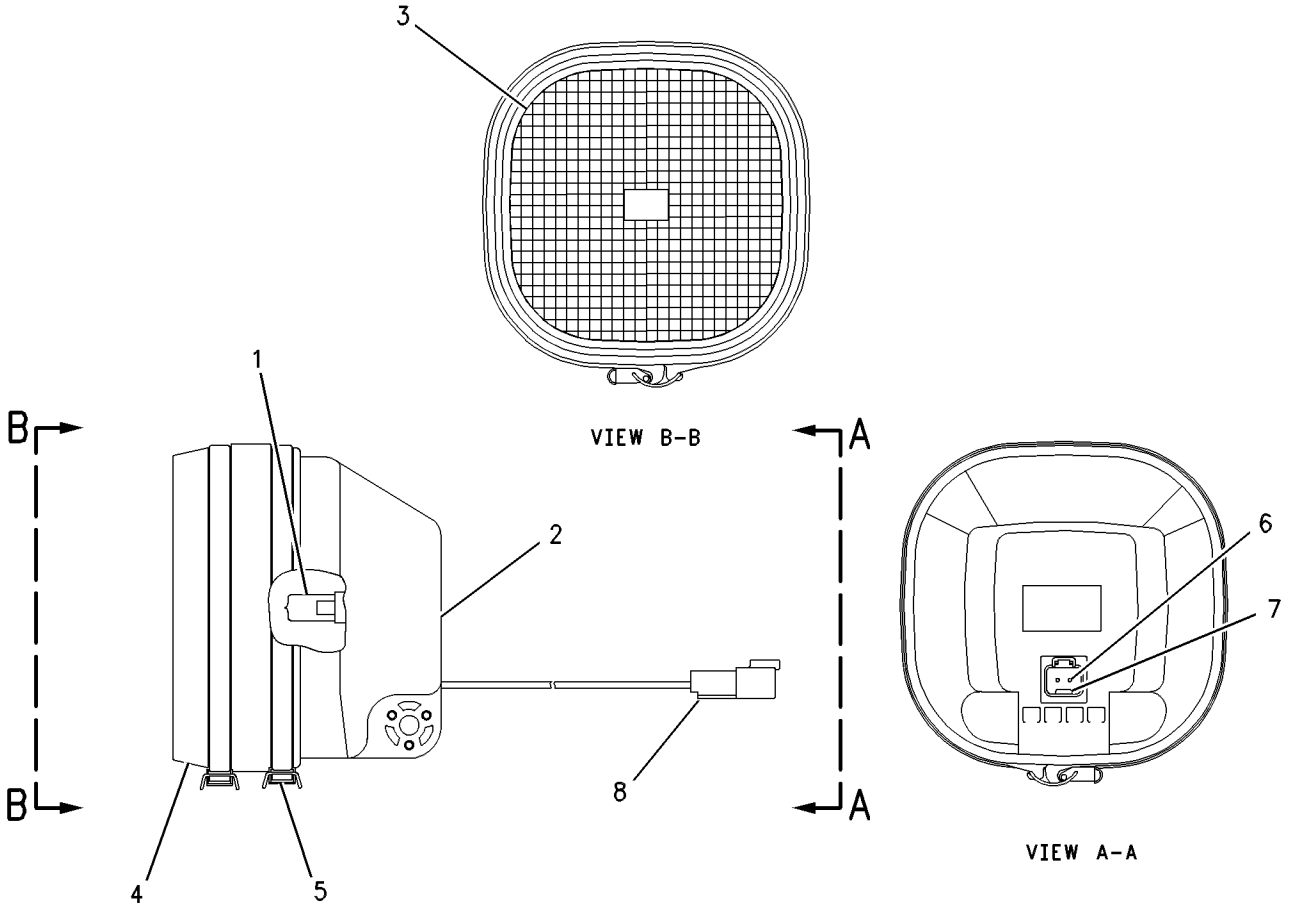

GRAPHIC #1 g00619327

3E-6466 LAMP GP-SIGNAL–TURN

S/N: 7KK1-UP
24 VOLT
PART OF 187-5267 RADIATOR GP, 8X-8972 WIRING GP-CAB, 190-5579, 8X-9010 WIRING GP-REAR

SMCS-1430 **i01379053**

NOTE	REF NO	GRAPHIC REF	PART NUMBER	QTY	PART NAME 1 2 3 4 5 6 (PRODUCT LEVEL)	SEE PAGE
	1	1	**9X-3066**	1	LENS-AMBER	
	2	1	**9X-4493**	1	LAMP (24 VOLT)	
	3	1	**102-8802**	1	KIT-RECEPTACLE (2 PIN)	
					(INCLUDES RECEPTACLE AS AND WEDGE)	
	4	1	**8T-8729**	2	PIN-CONNECTOR	

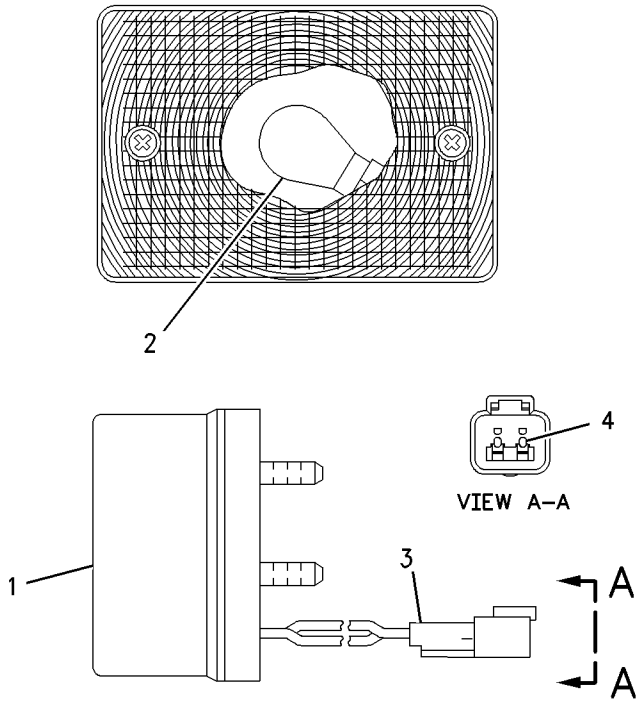

GRAPHIC #1 g00728141

130-3453 LAMP GP-SIGNAL–STOP/TAIL

S/N: 7KK1-UP
24 VOLT
PART OF 187-5267 RADIATOR GP, 190-5579, 8X-9010 WIRING GP-REAR

SMCS-1430 **i01445613**

NOTE	REF NO	GRAPHIC REF	PART NUMBER	QTY	PART NAME 1 2 3 4 5 6 (PRODUCT LEVEL)	SEE PAGE
	1	1	**9X-3064**	1	LENS-RED	
	2	1	**9X-4493**	1	LAMP (24 VOLT)	
	3	1	**102-8803**	1	KIT-RECEPTACLE (3 PIN)	
					(INCLUDES RECEPTACLE AS AND WEDGE)	
	4	1	**3E-3371**	1	WEDGE-RECEPTACLE LOCK (3 PIN)	
	5	1	**8T-8729**	3	PIN-CONNECTOR	

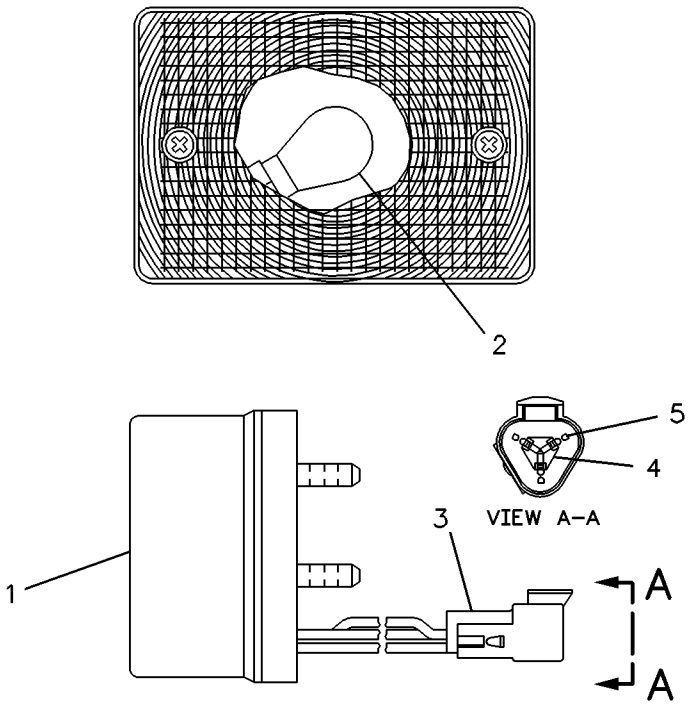

GRAPHIC #1 g00083144

8X-9051 LIGHTING GP-FLOOD & HEAD

S/N: 7KK1-UP

14 LAMP

PART OF 8X-8403 INSTALLATION AR-FIELD

SMCS-1429 **i00617590**

NOTE	REF NO	GRAPHIC REF	PART NUMBER	QTY	PART NAME 1 2 3 4 5 6 (PRODUCT LEVEL)	SEE PAGE
Y	1	1	*9X-6874*	2	LAMP GP-HEAD	250
Y	2	1	*9X-7164*	2	LAMP GP-HEAD	251
	3	1	**9X-9365**	2	BRACKET-LAMP	
	4	1	**103-1057**	6	BRACKET AS	
					(EACH INCLUDES)	
M	5	1	**8T-3490**	1	NUT-WELD (M10X1.5 THD)	
	6	1	**130-6469**	8	BRACKET AS	
					(EACH INCLUDES)	
M	7	1	**8T-3490**	1	NUT-WELD (M10X1.5 THD)	
Y	8	1	*9X-7165*	2	LAMP GP-HEAD	252
M	9	1	**5C-7261**	4	NUT (M8X1.25 THD)	
M	10	1	**6V-9189**	11	LOCKNUT (M8X1.25 THD)	
	11	1	**8T-4121**	16	WASHER (2.5MM THK)	
Y	12	1	*106-8964*	2	LAMP GP-FLOOD	248
M	13	1	**8T-4137**	14	BOLT (M10X1.50X20MM)	
Y	14	1	*107-6689*	6	LAMP GP-FLOOD	249
M	15	1	**8T-4195**	2	BOLT (M10X1.50X30MM)	
	16	1	**8T-4224**	20	WASHER-HARD (2MM THK)	
M	17	1	**8T-6869**	8	BOLT (M8X1.25X60MM)	
M	18	1	**8T-6912**	6	BOLT (M8X1.50X50MM)	

M-METRIC PART
Y-SEPARATE ILLUSTRATION

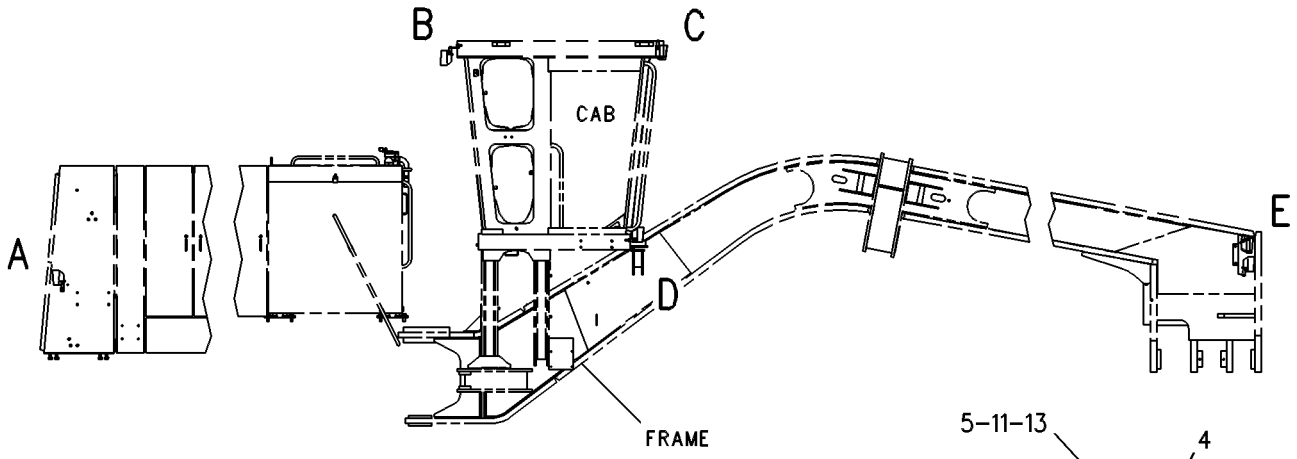

RIGHT SIDE VIEW

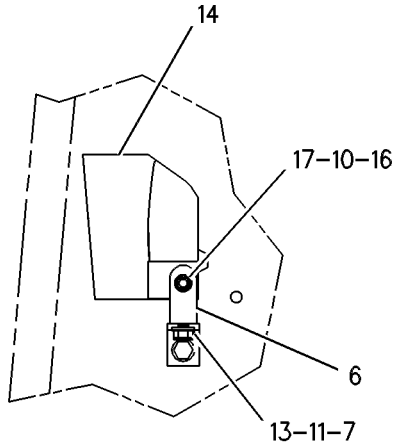

VIEW OF AREA A

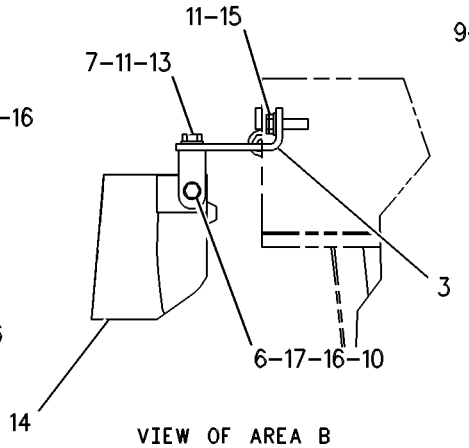

VIEW OF AREA B

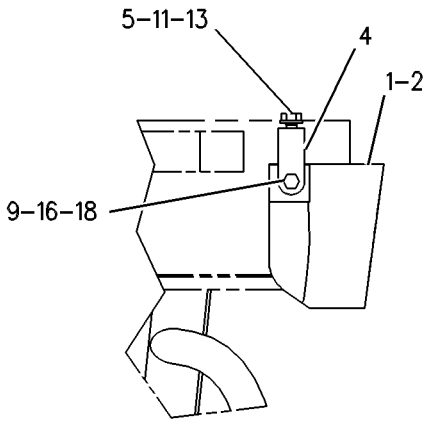

VIEW OF AREA C

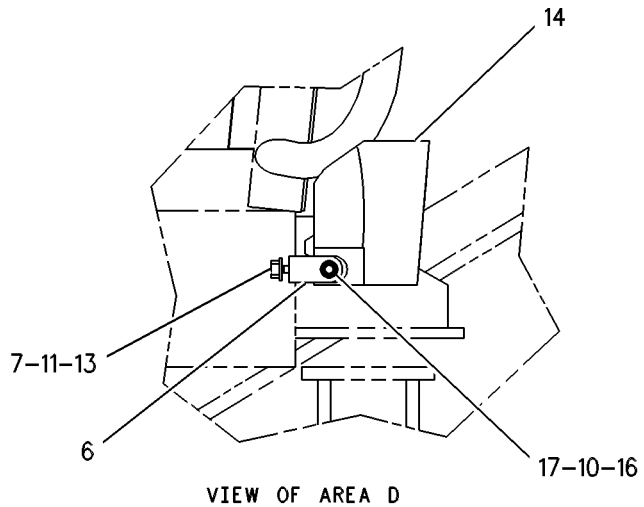

VIEW OF AREA D

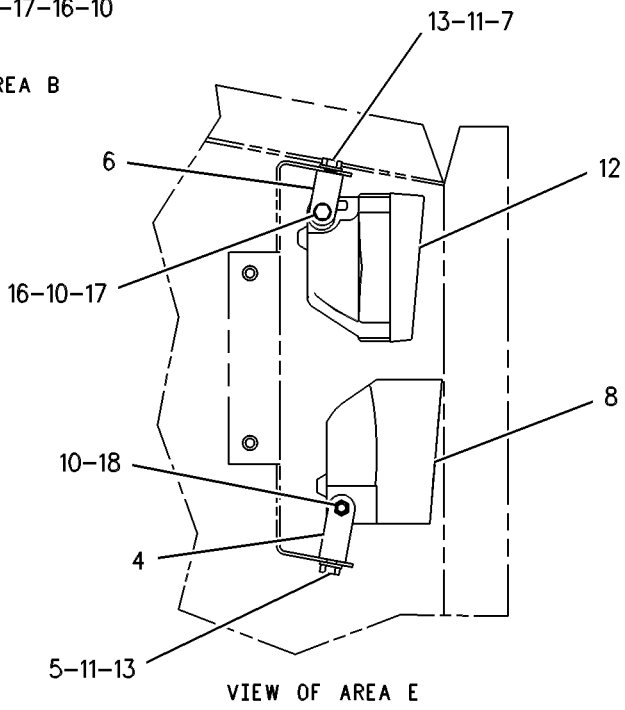

VIEW OF AREA E

GRAPHIC #1 g00273027

113-5276 MAGNETIC PICKUP GP

S/N: 80M1-UP

PART OF 123-0200 ENGINE AR

SMCS-1408, 1428 **i01354552**

NOTE	REF NO	GRAPHIC REF	PART NUMBER	QTY	PART NAME 1 2 3 4 5 6 (PRODUCT LEVEL)	SEE PAGE
	1	1	**6V-2455**	1	SENSOR GP-SPEED	
		1	**3E-3365**	1	WEDGE-RECEPTACLE LOCK (2 PIN)	
		1	**8T-8729**	2	PIN-CONNECTOR	
E		1	**9X-1386**		SLEEVE (14 CM)	
		1	**102-8802**	1	KIT-RECEPTACLE (2 PIN)	
					(INCLUDES RECEPTACLE AS & WEDGE)	
	2	1	**1V-6341**	1	SEAL	
	3	1	**6B-6683**	1	NUT (5/8-18 THD)	

E-ORDER BY THE CENTIMETER

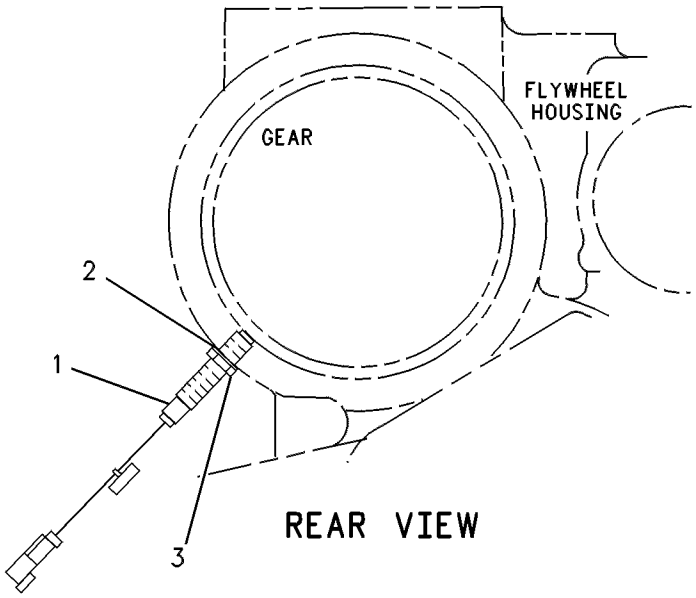

GRAPHIC #1 g00084866

124-9325 SENSOR GP-FUEL LEVEL

S/N: 7KK1-UP
ULTRASONIC
PART OF 8X-9005 TANK GP-FUEL

SMCS-1273 **i01333053**

NOTE	REF NO	GRAPHIC REF	PART NUMBER	QTY	PART NAME 1 2 3 4 5 6 (PRODUCT LEVEL)	SEE PAGE
	1	1	**102-8804**	1	KIT-RECEPTACLE (4 PIN)	
					(INCLUDES RECEPTACLE AS & WEDGE)	
	2	1	**3E-3377**	1	WEDGE-RECEPTACLE LOCK	
	3	1	**8T-8729**	4	PIN-CONNECTOR	
E	4	1	**9X-1813**		SLEEVE (34CM)	

E-ORDER BY THE CENTIMETER

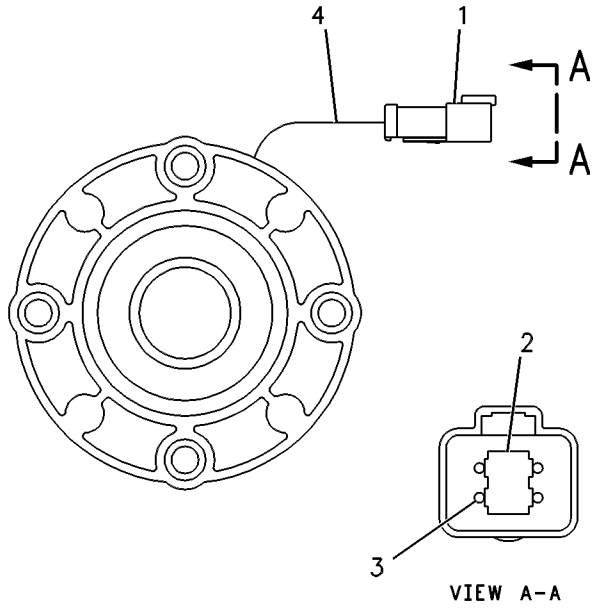

GRAPHIC #1 g00085712

3E-7700 SENSOR GP-POSITION

S/N: 7KK1-UP
PROVIDES PEDAL MOUNTED THROTTLE
PART OF 8X-8982 PEDAL GP-BRAKE, TMSN & GOV
FIELD REPLACEMENT ORDER 176-1602–PAGE 267

SMCS-1408, 1905 **i01326931**

NOTE	REF NO	GRAPHIC REF	PART NUMBER	QTY	PART NAME 1 2 3 4 5 6 (PRODUCT LEVEL)	SEE PAGE
Z	1	1			CONTROL AS-ELECTRONIC	
	2	1	**102-8803**	1	KIT-RECEPTACLE (3 PIN)	
					(INCLUDES RECEPTACLE AS & WEDGE)	
	3	1	**8T-8729**	3	PIN-CONNECTOR	

Z-NOT SERVICED SEPARATELY

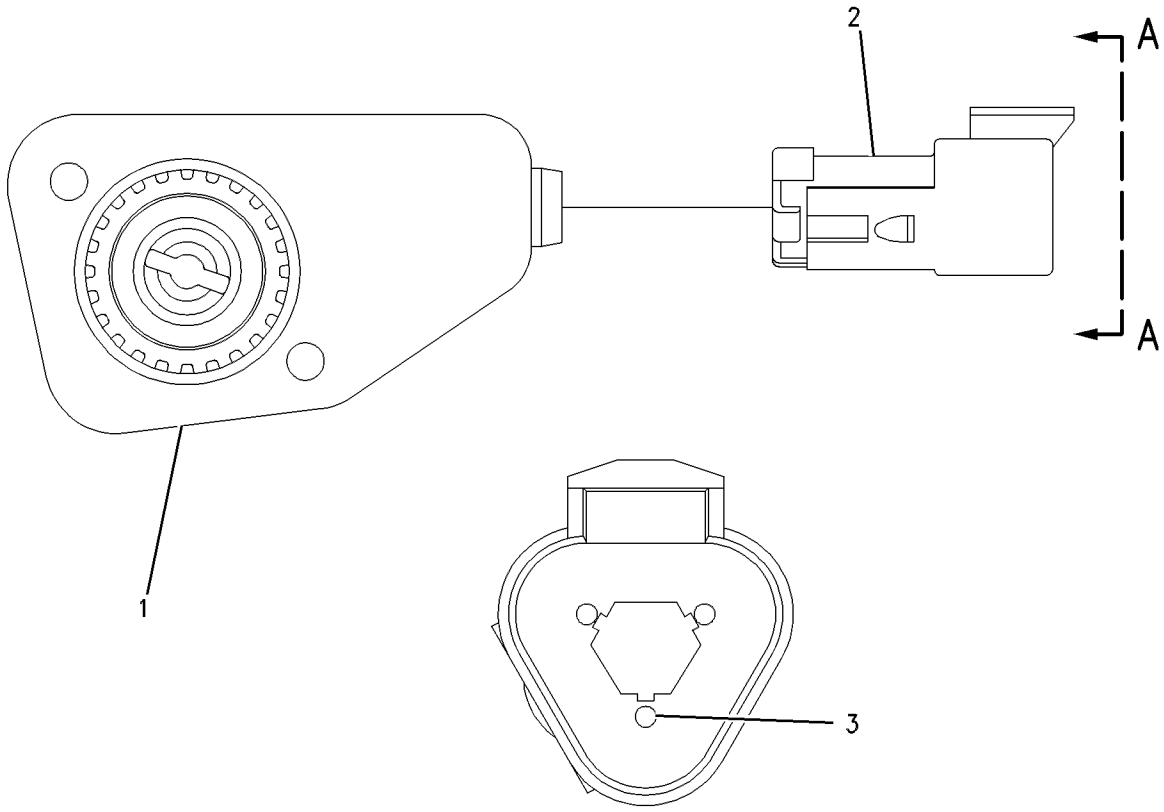

VIEW A-A

GRAPHIC #1 g00563737

9X-5592 SENSOR GP-POSITION

S/N: 7KK1-UP

PART OF 127-9186 SENSOR GP-POSITION

SMCS-1408, 1905 **i01346169**

NOTE	REF NO	GRAPHIC REF	PART NUMBER	QTY	PART NAME 1 2 3 4 5 6 (PRODUCT LEVEL)	SEE PAGE
	1	1	**102-8803**	1	KIT-RECEPTACLE (3 PIN)	
					(INCLUDES RECEPTACLE AS & WEDGE)	
	2	1	**8T-8729**	3	PIN-CONNECTOR	

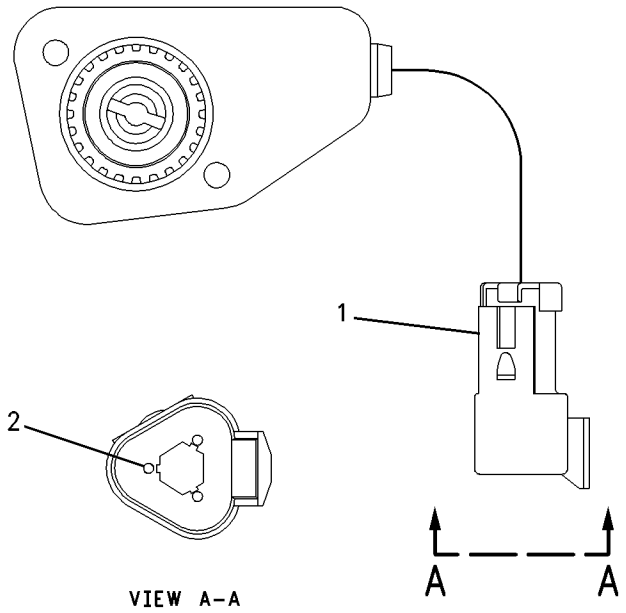

GRAPHIC #1 g00711014

127-9186 SENSOR GP-POSITION

S/N: 7KK1-UP

PART OF 8X-9010 WIRING GP-REAR

SMCS-1408, 1905 **i00567249**

NOTE	REF NO	GRAPHIC REF	PART NUMBER	QTY	PART NAME 1 2 3 4 5 6 (PRODUCT LEVEL)	SEE PAGE
	1	1	**109-7082**	1	SHAFT	
	2	1	**109-7081**	1	LEVER	
	3	1	**1B-8701**	1	KEY-WOODRUFF	
	4	1	**2H-3429**	1	RING-RETAINING	
	5	1	**2L-6726**	2	RING-RETAINING	
Y	6	1	*9X-5592*	1	SENSOR GP-ROTARY POSITION	263
	7	1	**4B-4274**	2	WASHER (1.2MM THK)	
	8	1	**4E-2250**	1	HOUSING	
	9	1	**4J-9448**	3	LUG	
	10	1	**6D-3025**	2	BALL BEARING	
M	11	1	**6V-2313**	2	BOLT (M50.8X30MM)	
M	12	1	**7X-2535**	3	BOLT (M6X1.00X60MM)	
	13	1	**8C-5607**	6	MOUNT	
	14	1	**8T-4121**	4	WASHER (2.5MM THK)	
M	15	1	**8T-4133**	2	NUT (M10X1.50 THD)	
M	16	1	**8T-4195**	3	BOLT (M10X1.50X30MM)	
	17	1	**8T-6431**	2	ROD END	
	18	1	**9R-4764**	1	ROD	
	19	1	**9X-6165**	3	WASHER (2.5MM THK)	
	20	1	**8C-5608**	3	SPACER (25.4MM THK)	

M-METRIC PART
Y-SEPARATE ILLUSTRATION

127-9186 **SENSOR GP-POSITION** ***(contd.)*** **i00567249**

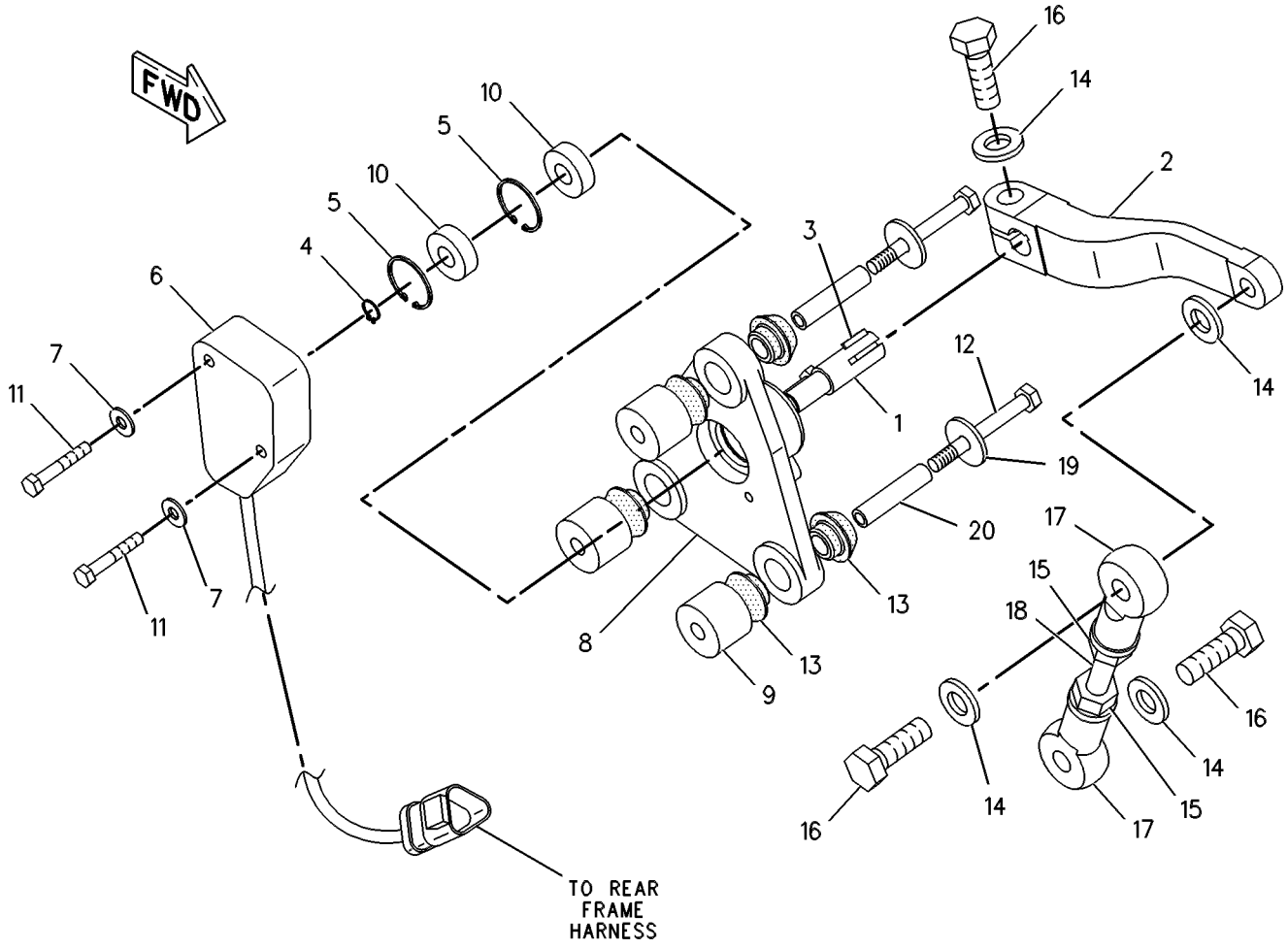

GRAPHIC #1 g00276657

147-1680 SENSOR GP-POSITION

S/N: 7KK1-UP

ROTARY

PART OF 8X-8982 PEDAL GP-BRAKE, TMSN & GOV, 8X-9010 WIRING GP-REAR

SMCS-1408, 1905 **i01346290**

NOTE	REF NO	GRAPHIC REF	PART NUMBER	QTY	PART NAME 1 2 3 4 5 6 (PRODUCT LEVEL)	SEE PAGE
	1	1	**102-8803**	1	KIT-RECEPTACLE (3 PIN)	
					(INCLUDES RECEPTACLE AS & WEDGE)	
	2	1	**8T-8729**	3	PIN-CONNECTOR	

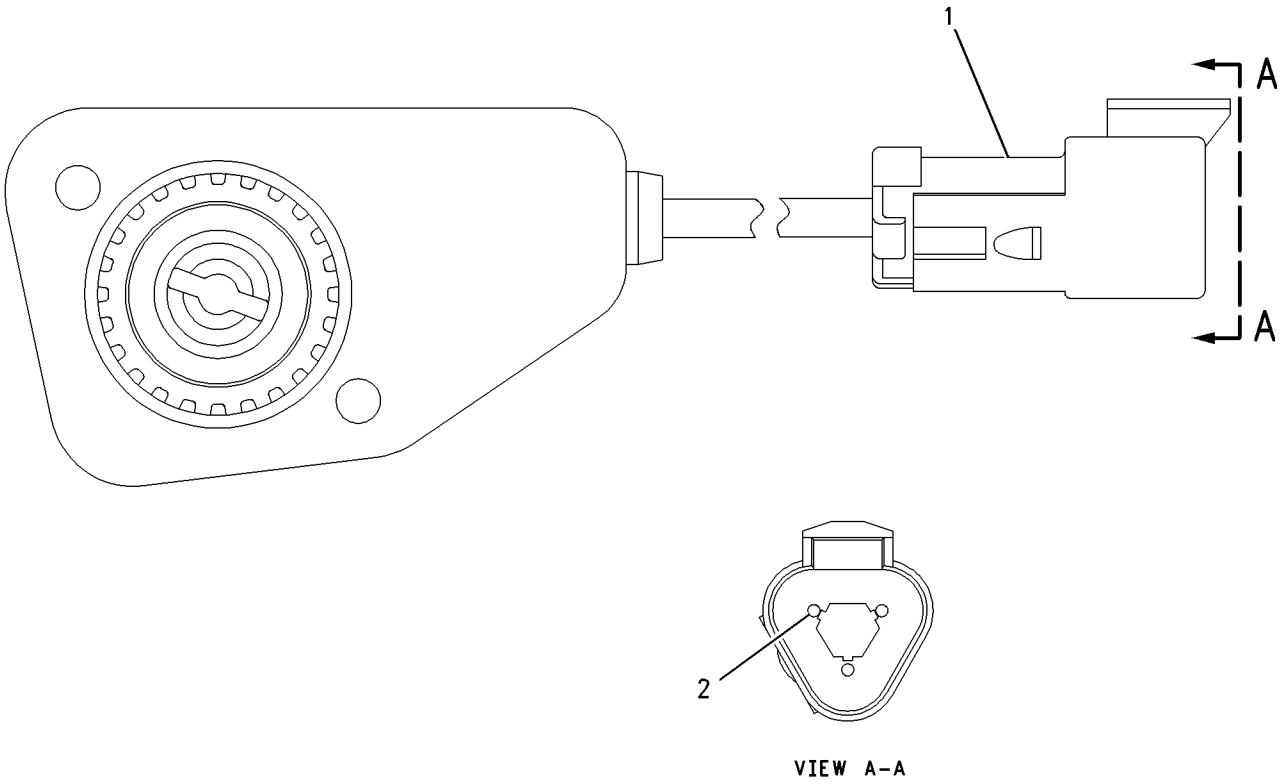

VIEW A-A

GRAPHIC #1 g00711081

176-1602 SENSOR GP-POSITION

S/N: 7KK1-UP
ROTARY, PROVIDES PEDAL MOUNTED CONTROL
PART OF 8X-8982 PEDAL GP-BRAKE, TMSN & GOV
FIELD REPLACEMENT FOR 3E-7700—PAGE 262

SMCS-1408, 1905 **i01380708**

NOTE	REF NO	GRAPHIC REF	PART NUMBER	QTY	PART NAME 1 2 3 4 5 6 (PRODUCT LEVEL)	SEE PAGE
	1	1	**102-8803**	1	KIT-RECEPTACLE (3 PIN)	
					(INCLUDES RECEPTACLE AS AND WEDGE)	
	2	1	**3E-3371**	1	WEDGE-RECEPTACLE LOCK	
	3	1	**8T-8729**	3	PIN-CONNECTOR	

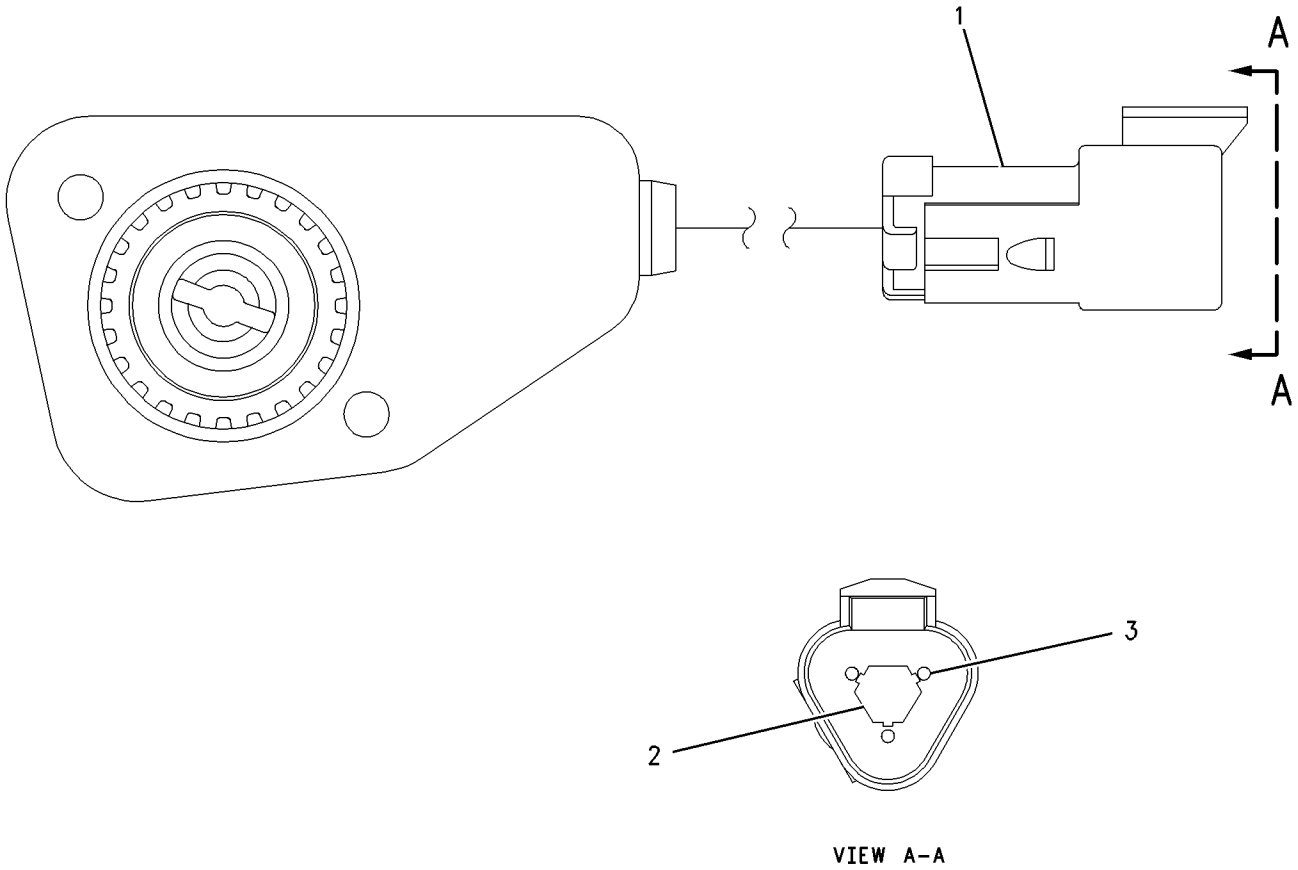

VIEW A-A

GRAPHIC #1 g00729116

6V-2485 SENSOR GP-PRESSURE

S/N: 80M1-485

PART OF 108-1552 CYLINDER HEAD GP

SMCS-4351, 4352 **i01354784**

NOTE	REF NO	GRAPHIC REF	PART NUMBER	QTY	PART NAME 1 2 3 4 5 6 (PRODUCT LEVEL)	SEE PAGE
E	1	1	**9X-1813**		SLEEVE (31CM)	
	2	1	**102-8808**	1	KIT-CONNECTING PLUG (3 PIN)	
					(INCLUDES PLUG AS & WEDGE)	
	3	1	**3E-3368**	1	WEDGE-PLUG LOCK	
	4	1	**8T-8730**	3	SOCKET-CONNECTOR	
	5	1	**102-8813**	1	SEAL-INTERFACE	

E-ORDER BY THE CENTIMETER

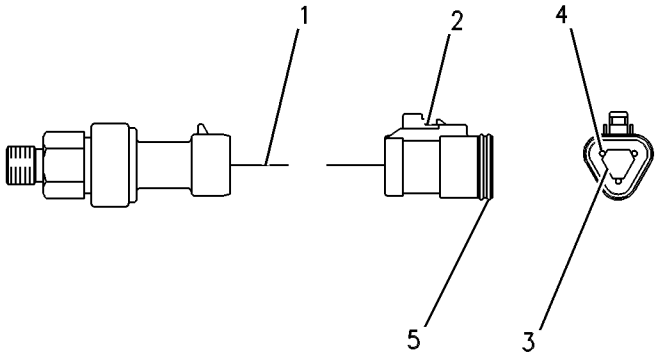

GRAPHIC #1 g00086496

103-6092 SENSOR GP-PRESSURE

S/N: 80M1-2772

PART OF 126-7292 PUMP & MTG GP-UNIT INJ HYD

SMCS-4351, 4352 **i01335681**

NOTE	REF NO	GRAPHIC REF	PART NUMBER	QTY	PART NAME 1 2 3 4 5 6 (PRODUCT LEVEL)	SEE PAGE
E	1	1	**9X-1813**		SLEEVE (34CM)	
	2	1	**102-8808**	1	KIT-CONNECTING PLUG (3 PIN)	
					(INCLUDES PLUG AS AND WEDGE)	
		1	**102-8813**	1	SEAL-INTERFACE	
	3	1	**8T-8730**	3	SOCKET-CONNECTOR	
	4	1	**3E-3368**	1	WEDGE-PLUG LOCK	

E-ORDER BY THE CENTIMETER

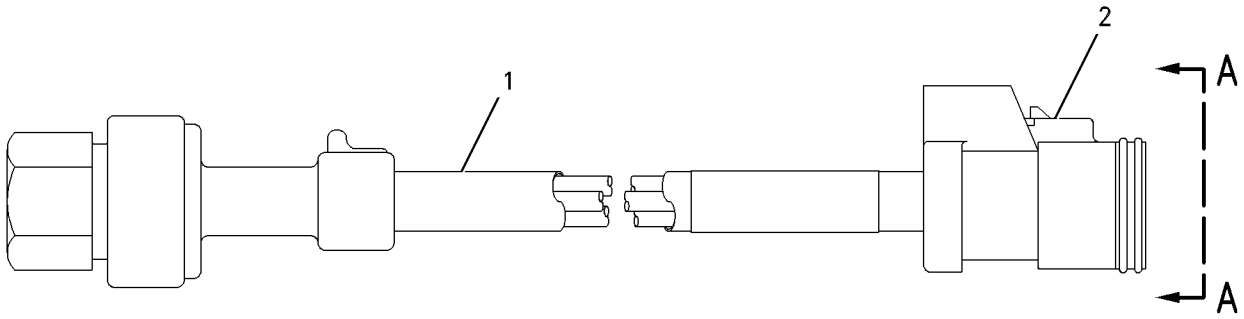

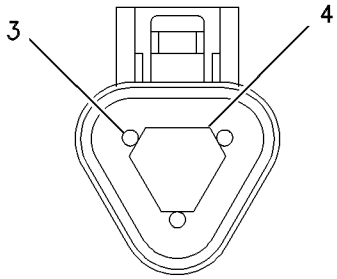

VIEW A-A

GRAPHIC #1 g00625717

103-6093 SENSOR GP-PRESSURE

S/N: 80M1-2705

PART OF 125-3431 DRIVE GP-UNIT INJ HYD PUMP

FIELD REPLACEMENT ORDER 161-9926—PAGE 273

SMCS-4351, 4352 **i01335682**

NOTE	REF NO	GRAPHIC REF	PART NUMBER	QTY	PART NAME 1 2 3 4 5 6 (PRODUCT LEVEL)	SEE PAGE
E	1	1	**9X-1813**		SLEEVE (34CM)	
	2	1	**155-2260**	1	KIT-CONNECTING PLUG (3 PIN)	
					(INCLUDES PLUG AS & WEDGE)	
	3	1	**8T-8730**	3	SOCKET-CONNECTOR	
BE	4	1	**150-7989**		TUBE	

B-USE AS REQUIRED
E-ORDER BY THE CENTIMETER

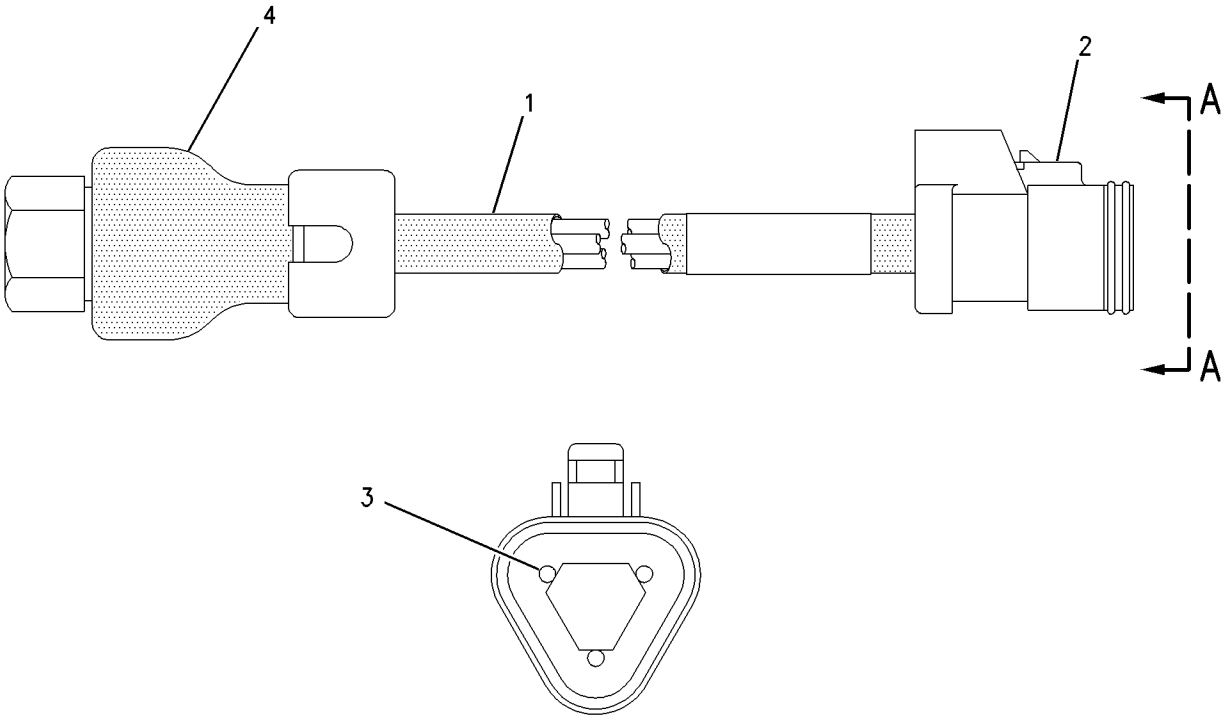

VIEW A-A

GRAPHIC #1 g00629905

153-3962 SENSOR GP-PRESSURE–LOCK UP CLUTCH

S/N: 7KK1-UP

PART OF 8X-9038 WIRING GP-ENGINE

SMCS-4351, 4352 **i01380919**

NOTE	REF NO	GRAPHIC REF	PART NUMBER	QTY	PART NAME 1 2 3 4 5 6 (PRODUCT LEVEL)	SEE PAGE
	1	1	**8T-8730**	3	SOCKET-CONNECTOR	
BE	2	1	**9X-1813**		SLEEVE	
	3	1	**8T-8731**	1	PLUG-CONNECTOR	

B-USE AS REQUIRED
E-ORDER BY THE CENTIMETER

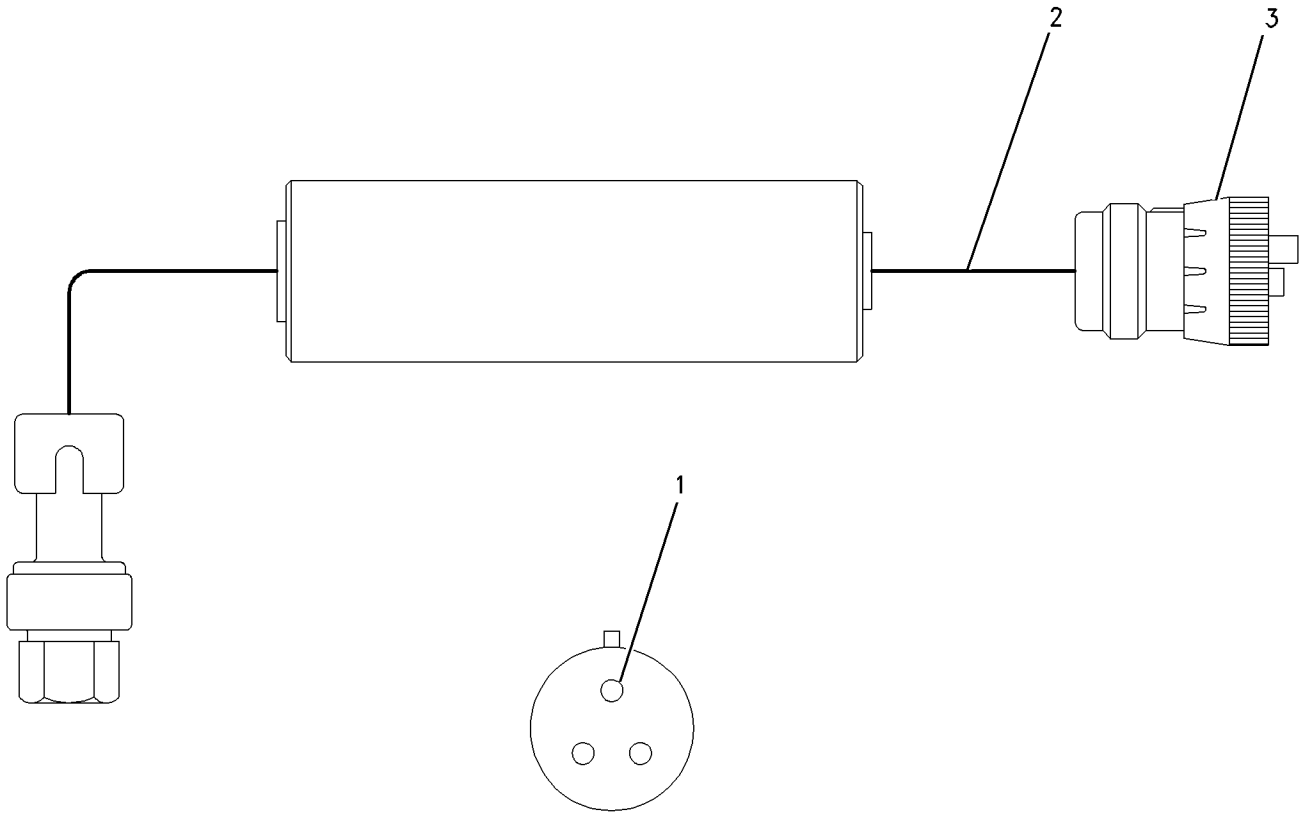

GRAPHIC #1 g00730905

161-9925 SENSOR GP-PRESSURE

S/N: 80M3038-UP

PART OF 125-3431 DRIVE GP-UNIT INJ HYD PUMP

FIELD REPLACEMENT ORDER 194-6722–PAGE 277

SMCS-4351, 4352 **i01500311**

NOTE	REF NO	GRAPHIC REF	PART NUMBER	QTY	PART NAME 1 2 3 4 5 6 (PRODUCT LEVEL)	SEE PAGE
E	1	1	**9X-1813**		SLEEVE (34CM)	
	2	1	**155-2260**	1	KIT-CONNECTING PLUG (3 PIN)	
					(INCLUDES PLUG AS AND WEDGE)	
	3	1	**102-8813**	1	SEAL-INTERFACE	
	4	1	**3E-3368**	1	WEDGE-PLUG LOCK	
	5	1	**8T-8730**	3	SOCKET-CONNECTOR	

E-ORDER BY THE CENTIMETER

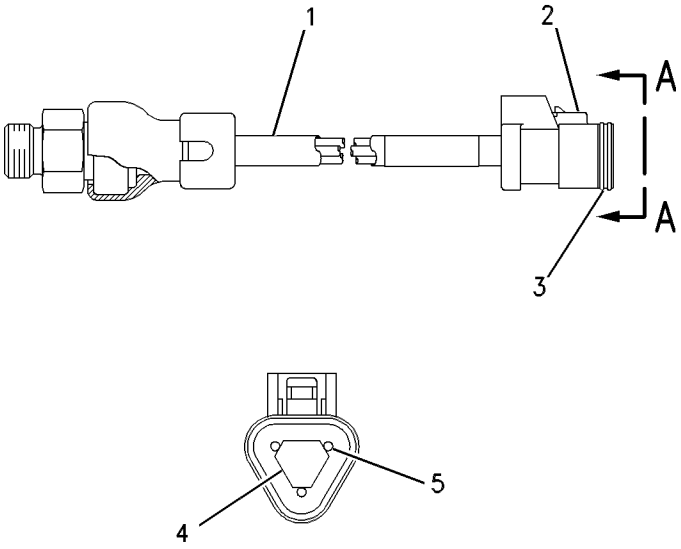

VIEW A-A

GRAPHIC #1 g00545805

161-9926 SENSOR GP-PRESSURE

S/N: 80M2706-3037

PART OF 125-3431 DRIVE GP-UNIT INJ HYD PUMP

FIELD REPLACEMENT FOR 103-6093—PAGE 270

SMCS-4351, 4352 **i01365690**

NOTE	REF NO	GRAPHIC REF	PART NUMBER	QTY	PART NAME 1 2 3 4 5 6 (PRODUCT LEVEL)	SEE PAGE
E	1	1	**9X-1813**		SLEEVE (34CM)	
	2	1	**155-2260**	1	KIT-CONNECTING PLUG (3 PIN)	
					(INCLUDES PLUG AS & WEDGE)	
	3	1	**9X-3402**	1	SOCKET-CONNECTOR	
					(FOR 16-18 GA WIRE)	
					—OR—	
		1	**126-1768**	1	SOCKET-CONNECTOR	
					(FOR 14 GA WIRE)	
	4	1	**3E-3368**	1	WEDGE-PLUG LOCK	

E-ORDER BY THE CENTIMETER

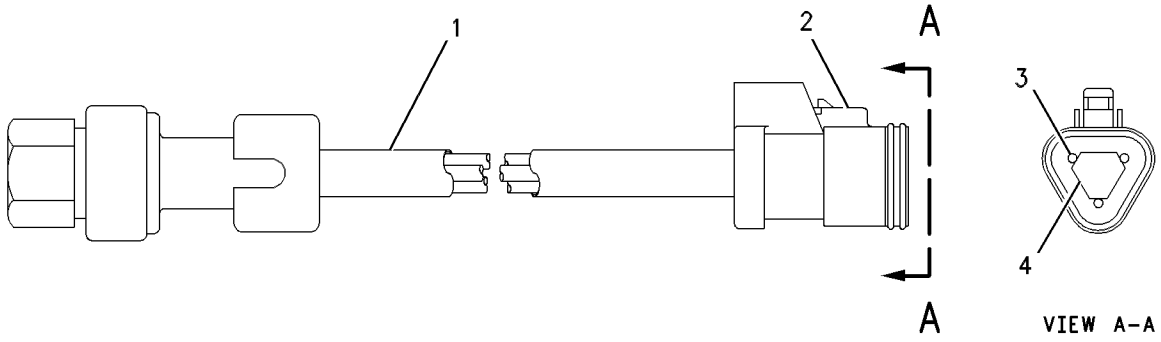

GRAPHIC #1 g00513129

161-9929 SENSOR GP-PRESSURE

S/N: 80M1-UP

PART OF 108-1552 CYLINDER HEAD GP

FIELD REPLACEMENT ORDER 194-6724—PAGE 278

SMCS-4351, 4352 **i01447612**

NOTE	REF NO	GRAPHIC REF	PART NUMBER	QTY	PART NAME 1 2 3 4 5 6 (PRODUCT LEVEL)	SEE PAGE
E	1	1	**138-3094**		SLEEVE (34CM)	
	2	1	**155-2260**	1	KIT-CONNECTING PLUG (3 PIN)	
					(INCLUDES PLUG AS AND WEDGE)	
	3	1	**8T-8730**	3	SOCKET-CONNECTOR	
	4	1	**3E-3368**	1	WEDGE-PLUG LOCK	

E-ORDER BY THE CENTIMETER

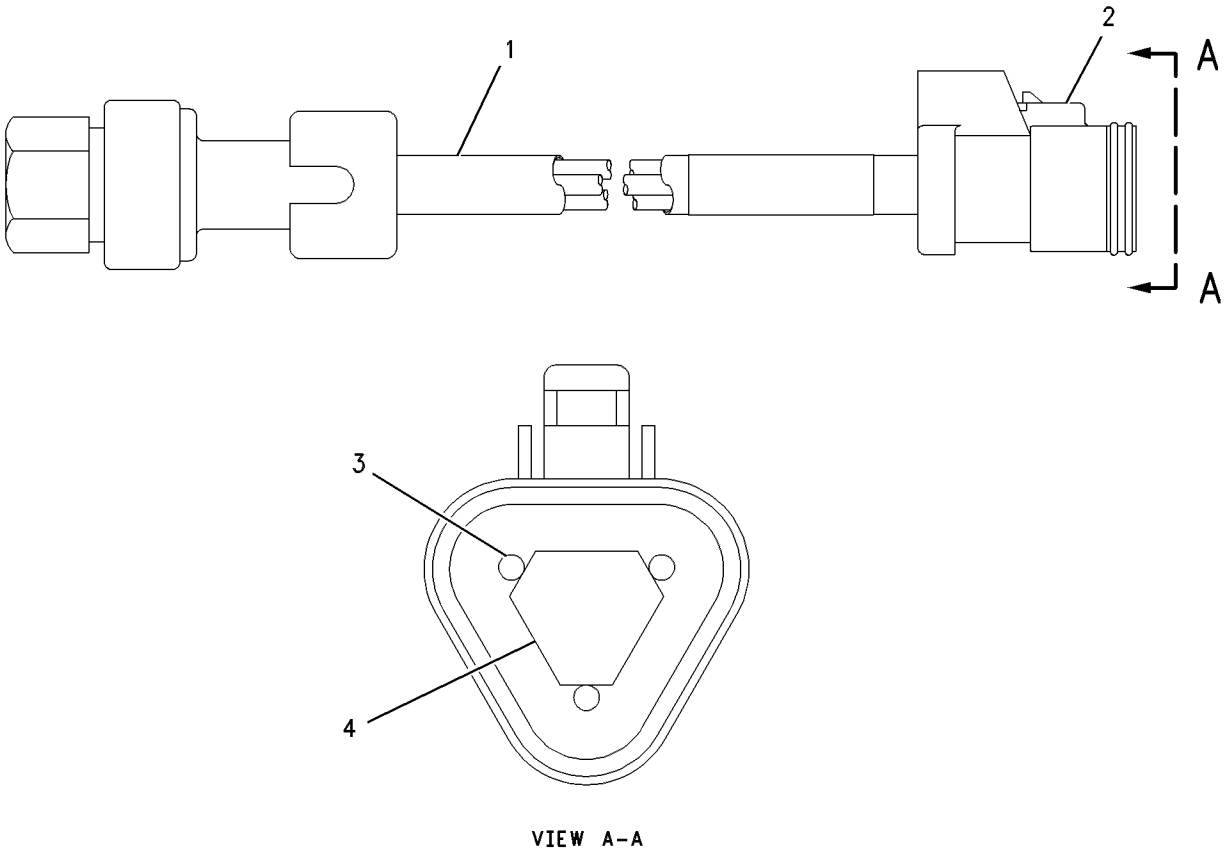

VIEW A-A

GRAPHIC #1 g00468388

161-9931 SENSOR GP-PRESSURE

S/N: 80M2773-UP

PART OF 126-7292 PUMP & MTG GP-UNIT INJ HYD

FIELD REPLACEMENT ORDER 194-6725—PAGE 279

SMCS-4351, 4352 **i01500308**

NOTE	REF NO	GRAPHIC REF	PART NUMBER	QTY	PART NAME 1 2 3 4 5 6 (PRODUCT LEVEL)	SEE PAGE
E	1	1	**9X-1813**		SLEEVE (34CM)	
	2	1	**155-2260**	1	KIT-CONNECTING PLUG (3 PIN)	
					(INCLUDES PLUG AS & WEDGE)	
	3	1	**102-8813**	1	SEAL-INTERFACE	
	4	1	**8T-8730**	3	SOCKET-CONNECTOR	
	5	1	**3E-3368**	1	WEDGE-PLUG LOCK	

E-ORDER BY THE CENTIMETER

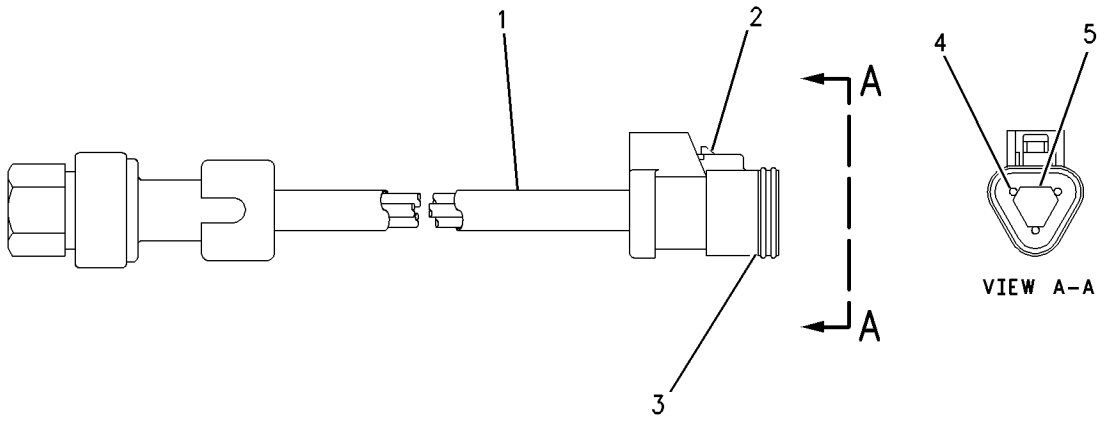

GRAPHIC #1 g00715453

167-1709 SENSOR GP-PRESSURE

S/N: 80M486-UP

PART OF 108-1552 CYLINDER HEAD GP

SMCS-4351, 4352 **i01382140**

NOTE	REF NO	GRAPHIC REF	PART NUMBER	QTY	PART NAME 1 2 3 4 5 6 (PRODUCT LEVEL)	SEE PAGE
BE	1	1	**9X-1813**		SLEEVE	
	2	1	**155-2260**	1	KIT-CONNECTING PLUG (3 PIN)	
					(INCLUDES PLUG AS AND WEDGE)	
	3	1	**9X-3402**	3	SOCKET-CONNECTOR	
	4	1	**3E-3368**	1	WEDGE-PLUG LOCK	

B-USE AS REQUIRED
E-ORDER BY THE CENTIMETER

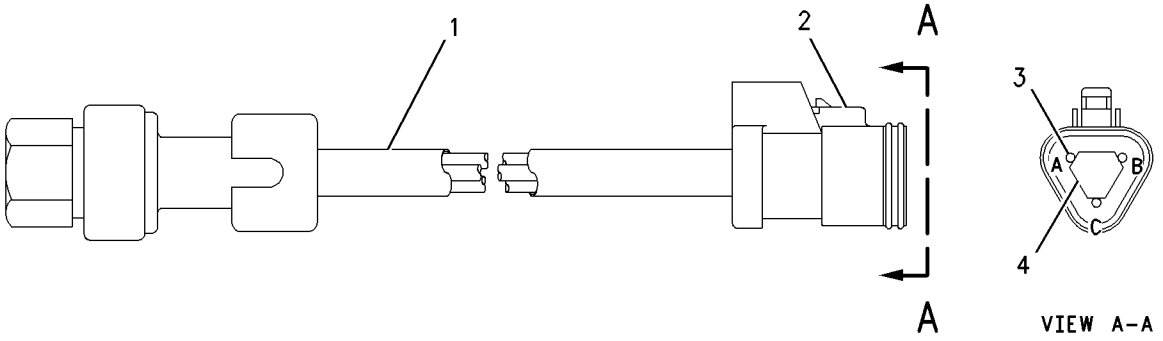

GRAPHIC #1 g00709976

194-6722 SENSOR GP-PRESSURE

S/N: 80M3038-UP

FIELD REPLACEMENT FOR 161-9925—PAGE 272

SMCS-4351, 4352 **i01458311**

NOTE	REF NO	GRAPHIC REF	PART NUMBER	QTY	PART NAME 1 2 3 4 5 6 (PRODUCT LEVEL)	SEE PAGE
B	1	1	**9X-1813**		SLEEVE	
	2	1	**155-2260**	1	KIT-CONNECTING PLUG (3 PIN)	
					(INCLUDES PLUG AS AND WEDGE)	
	3	1	**180-9340**	3	SOCKET-CONNECTOR	
	4	1	**3E-3368**	1	WEDGE-PLUG LOCK	
	5	1	**102-8813**	1	SEAL-INTERFACE	

B-USE AS REQUIRED

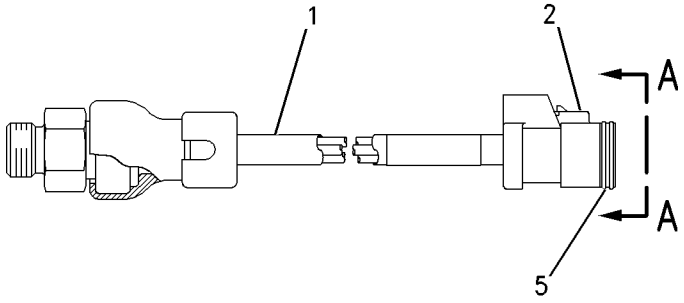

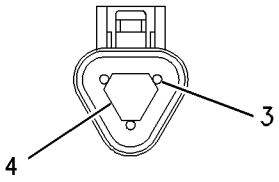

VIEW A-A

GRAPHIC #1 g00755959

194-6724 SENSOR GP-PRESSURE

S/N: 80M1-UP

FIELD REPLACEMENT FOR 161-9929—PAGE 274

SMCS-4351, 4352 **i01447698**

NOTE	REF NO	GRAPHIC REF	PART NUMBER	QTY	PART NAME 1 2 3 4 5 6 (PRODUCT LEVEL)	SEE PAGE
E	1	1	**138-3094**		SLEEVE (34CM)	
	2	1	**155-2260**	1	KIT-CONNECTING PLUG (3 PIN)	
					(INCLUDES PLUG AS AND WEDGE)	
	3	1	**180-9340**	3	SOCKET-CONNECTOR	
	4	1	**3E-3368**	1	WEDGE-PLUG LOCK	

E-ORDER BY THE CENTIMETER

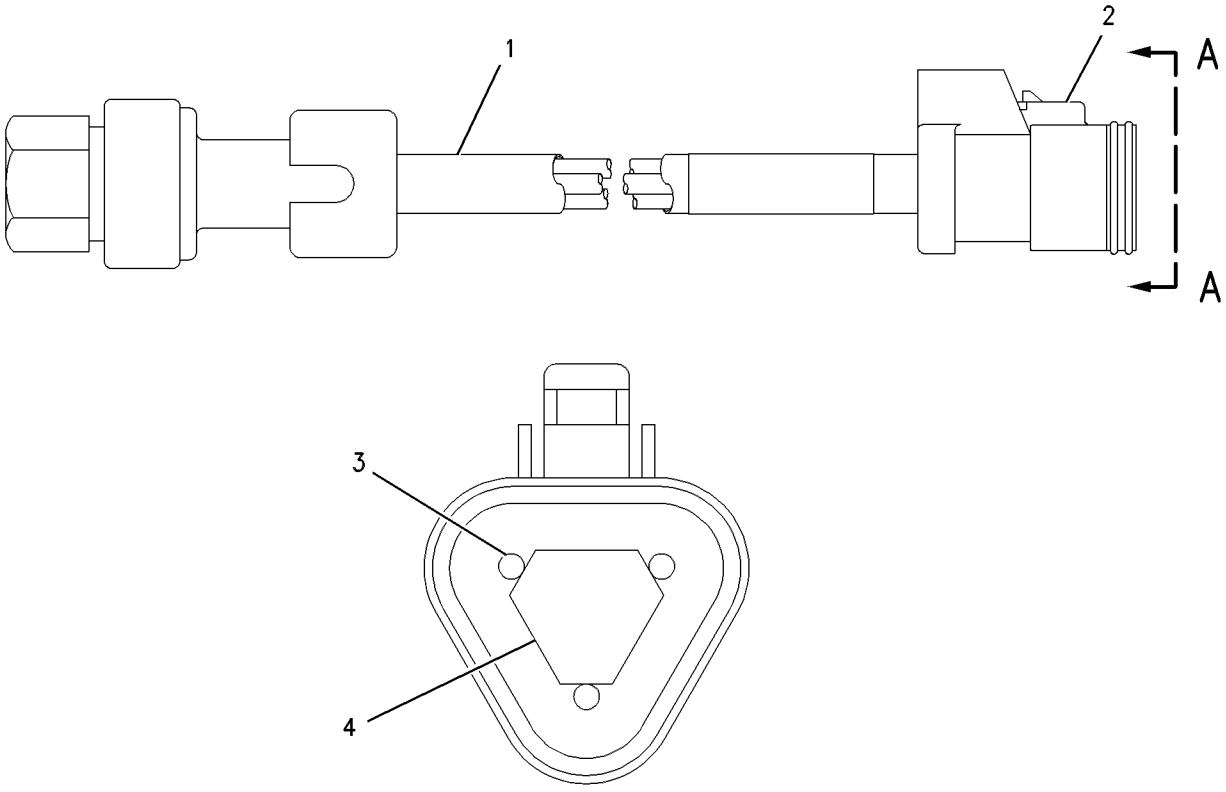

VIEW A-A

GRAPHIC #1 g00468388

194-6725 SENSOR GP-PRESSURE—OIL FILTERED/OIL UNFILTERED

S/N: 80M2773-UP

FIELD REPLACEMENT FOR 161-9931—PAGE 275

SMCS-4351, 4352 **i01458333**

NOTE	REF NO	GRAPHIC REF	PART NUMBER	QTY	PART NAME 1 2 3 4 5 6 (PRODUCT LEVEL)	SEE PAGE
B	1	1	**9X-1813**		SLEEVE	
	2	1	**155-2260**	1	KIT-CONNECTING PLUG (3 PIN)	
					(INCLUDES PLUG AS & WEDGE)	
	3	1	**102-8813**	1	SEAL-INTERFACE	
	4	1	**180-9340**	3	SOCKET-CONNECTOR	
	5	1	**3E-3368**	1	WEDGE-PLUG LOCK	

B-USE AS REQUIRED

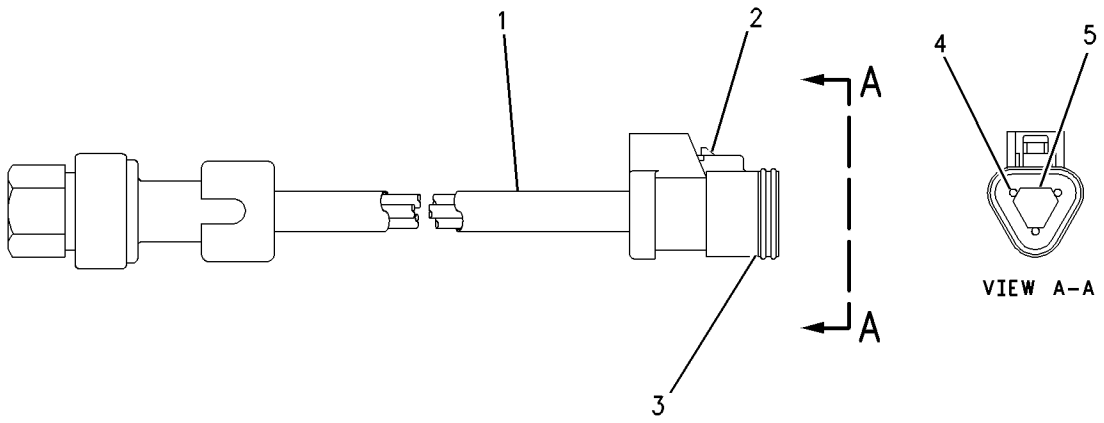

GRAPHIC #1 g00715453

122-8862 SENSOR GP-SPEED

S/N: 7KK1-UP
(MAGNETIC)(HIGH OUTPUT)
PART OF 8X-9010 WIRING GP-REAR

SMCS-4803, 7493 **i01488758**

NOTE	REF NO	GRAPHIC REF	PART NUMBER	QTY	PART NAME 1 2 3 4 5 6 (PRODUCT LEVEL)	SEE PAGE
BE	1	1	**9X-1813**		SLEEVE	
	2	1	**102-8802**	1	KIT-RECEPTACLE (2 PIN)	
					(INCLUDES RECEPTACLE AS & WEDGE)	
	3	1	**8T-8729**	2	PIN-CONNECTOR	
	4	1	**3E-3365**	1	WEDGE-RECEPTACLE LOCK (2 PIN)	
	5	1	**171-5349**	1	STRAP-MARKER	

B-USE AS REQUIRED
E-ORDER BY THE CENTIMETER

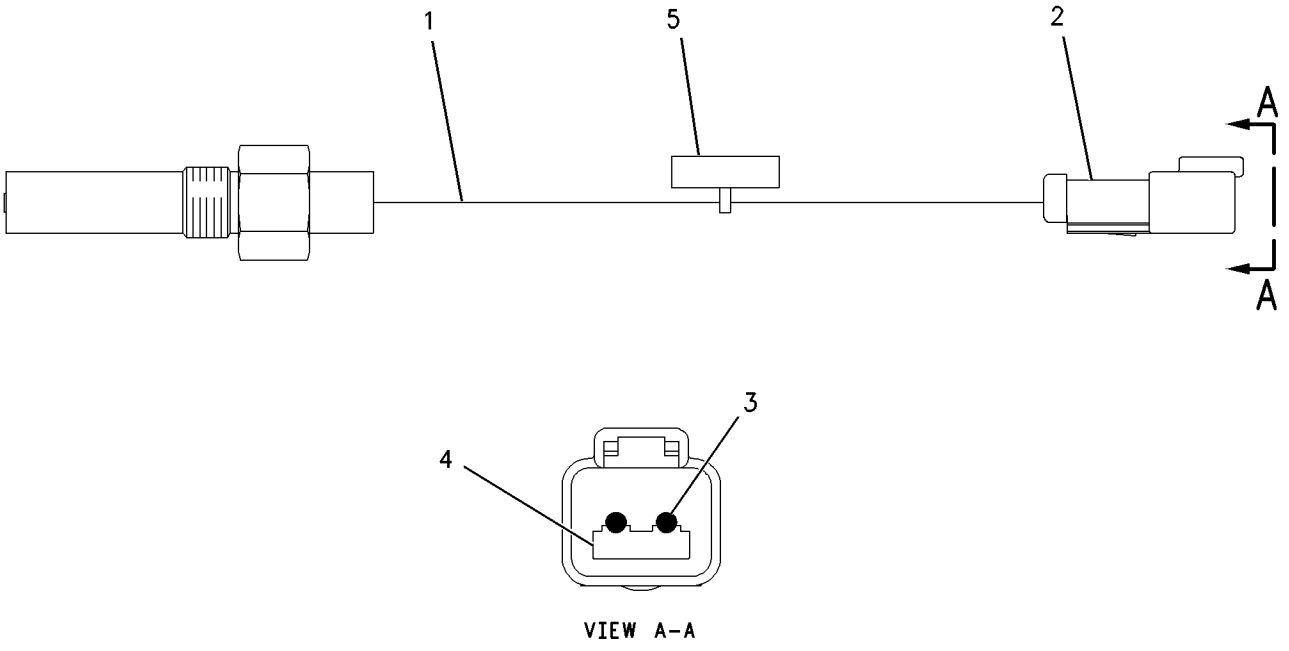

GRAPHIC #1 g00773592

122-8863 SENSOR GP-SPEED

S/N: 7KK1-UP

PART OF 8X-9038 WIRING GP-ENGINE

SMCS-4803, 7493 **i01499903**

NOTE	REF NO	GRAPHIC REF	PART NUMBER	QTY	PART NAME 1 2 3 4 5 6 (PRODUCT LEVEL)	SEE PAGE
	1	1	**171-5349**	1	STRAP-MARKER	
	2	1	**102-8802**	1	KIT-RECEPTACLE (2 PIN) (INCLUDES RECEPTACLE AS & WEDGE)	
	3	1	**186-3735**	2	PIN-CONNECTOR	
	4	1	**3E-3365**	1	WEDGE-RECEPTACLE LOCK (2 PIN)	
BE	5	1	**9X-1386**		SLEEVE	

B-USE AS REQUIRED
E-ORDER BY THE CENTIMETER

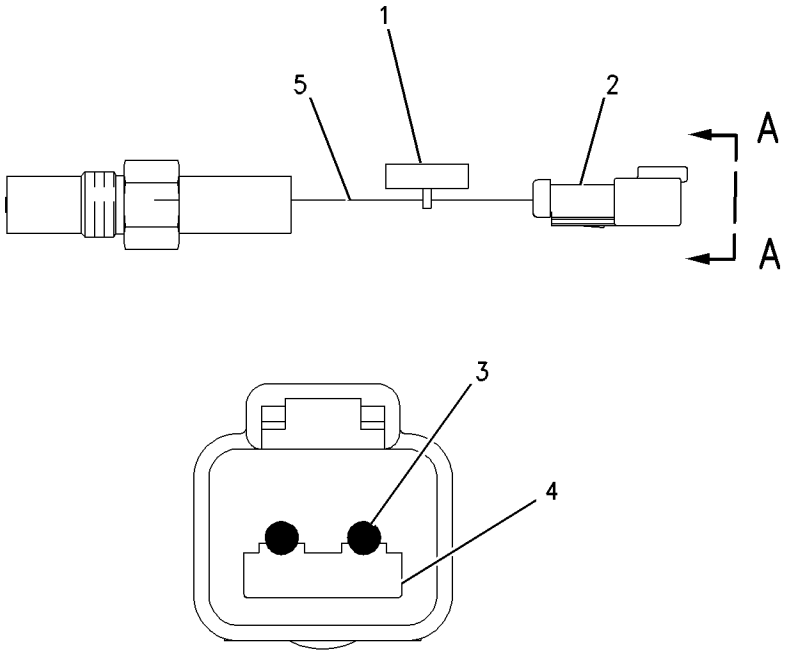

VIEW A-A

GRAPHIC #1 g00778343

129-6628 SENSOR GP-SPEED–ENGINE SPEED/TIMING

S/N: 80M1-UP

PART OF 126-7280, 137-8142 HOUSING GP-FRONT

SMCS-4803, 7493 **i01352955**

NOTE	REF NO	GRAPHIC REF	PART NUMBER	QTY	PART NAME 1 2 3 4 5 6 (PRODUCT LEVEL)	SEE PAGE
E	1	1	**9X-1813**		SLEEVE (31CM)	
	2	1	**155-2260**	1	KIT-CONNECTING PLUG (3 PIN)	
					(INCLUDES PLUG AS. & WEDGE)	
	3	1	**102-8813**	1	SEAL-INTERFACE	
	4	1	**3E-3368**	1	WEDGE-PLUG LOCK	
	5	1	**8T-8730**	3	SOCKET-CONNECTOR	
	6	1	**8L-2786**	1	SEAL-O-RING (16.36MM ID)	

E-ORDER BY THE CENTIMETER

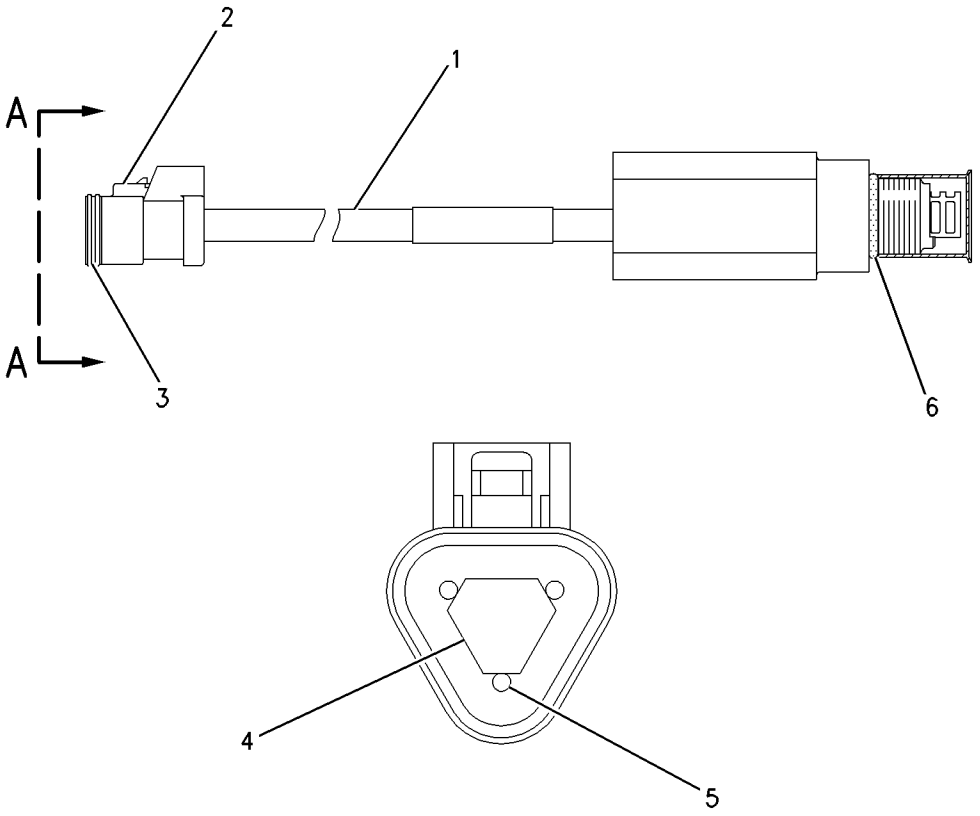

VIEW A–A

GRAPHIC #1 g00714038

100-3055 SENSOR GP-TEMPERATURE

S/N: 7KK1-UP
8 VOLT. PULSE WIDTH MODULATION
PART OF 8X-9038 WIRING GP-ENGINE

SMCS-1330 **i01372337**

NOTE	REF NO	GRAPHIC REF	PART NUMBER	QTY	PART NAME 1 2 3 4 5 6 (PRODUCT LEVEL)	SEE PAGE
Z	1	1		1	CONTROL AS-ELECTRONIC	
	2	1	**8T-8729**	3	PIN-CONNECTOR	
	3	1	**8T-8732**	1	RECEPTACLE-CONNECTOR	
E	4	1	**9X-1813**		SLEEVE (33CM)	

E-ORDER BY THE CENTIMETER
Z-NOT SERVICED SEPARATELY

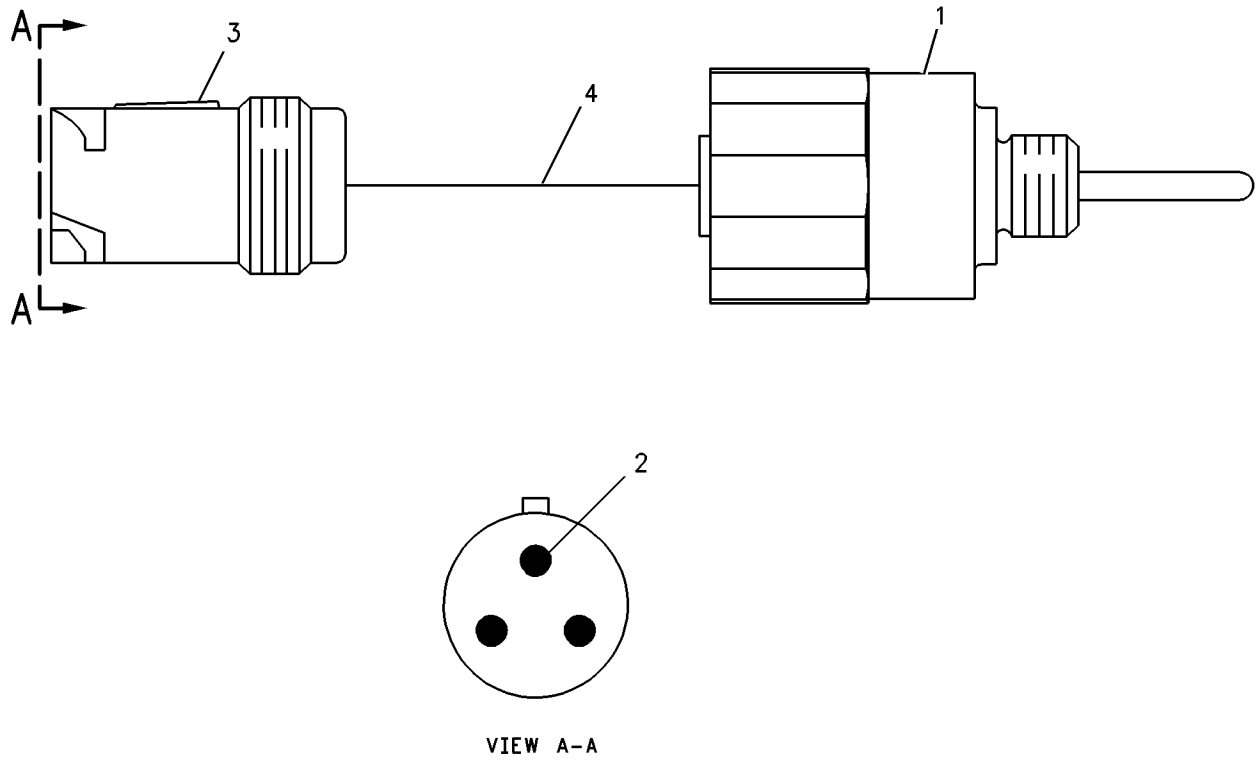

GRAPHIC #1 g00681631

106-0735 SENSOR GP-TEMPERATURE

S/N: 80M1-UP

PART OF 126-7292 PUMP & MTG GP-UNIT INJ HYD

SMCS-1330 **i01354740**

NOTE	REF NO	GRAPHIC REF	PART NUMBER	QTY	PART NAME 1 2 3 4 5 6 (PRODUCT LEVEL)	SEE PAGE
BE	1	1	**9X-1813**		SLEEVE	
	2	1	**102-8803**	1	KIT-RECEPTACLE (3 PIN)	
					(INCLUDES RECEPTACLE AS AND WEDGE)	
	3	1	**186-3735**	3	PIN-CONNECTOR	
	4	1	**3E-3371**	1	WEDGE-RECEPTACLE LOCK	

B-USE AS REQUIRED
E-ORDER BY THE CENTIMETER

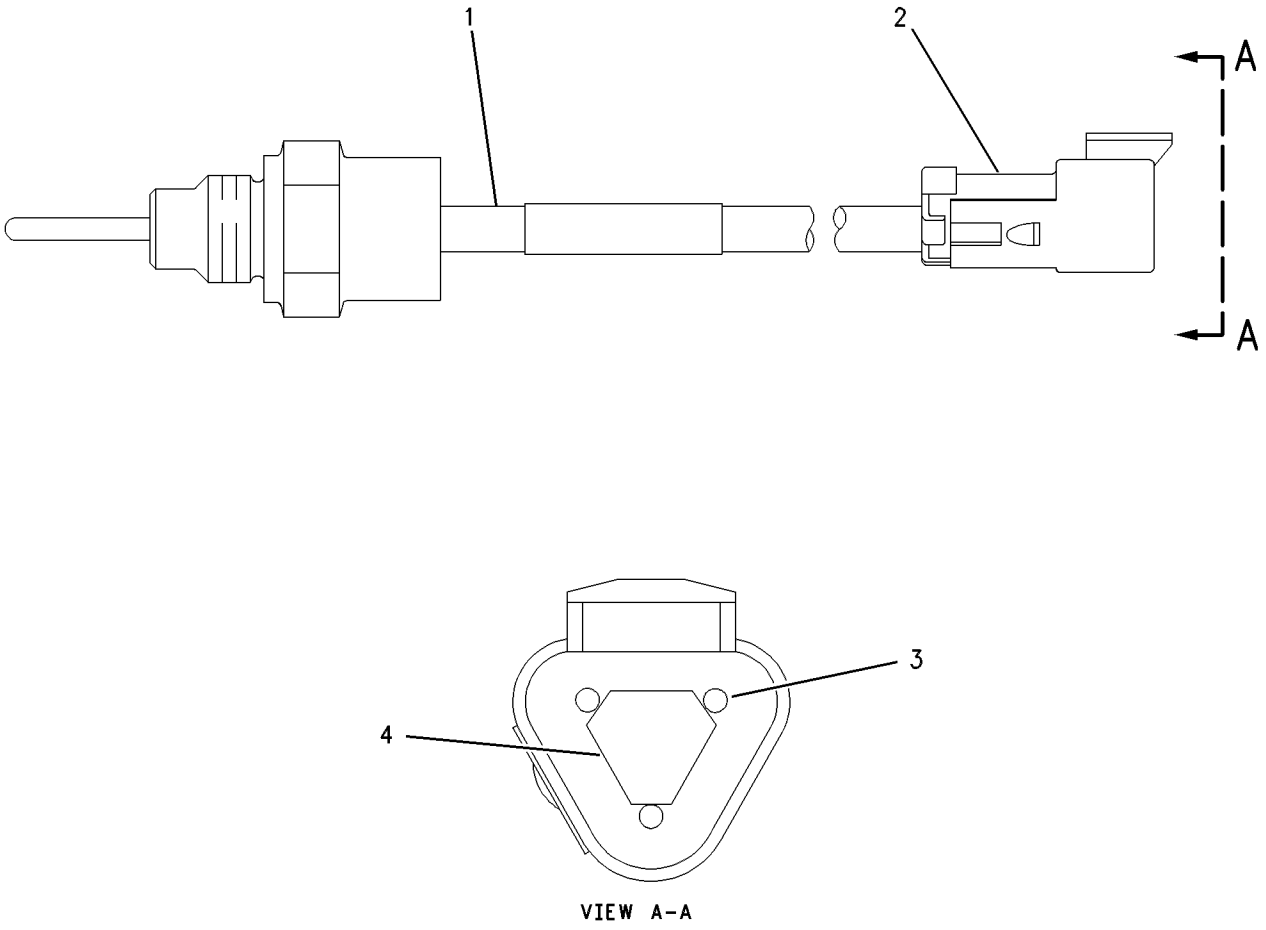

GRAPHIC #1 g00383277

MEMORANDA

8X-9035 STARTING AID GP-ETHER

S/N: 7KK1-UP

PART OF 6I-0673 INSTALLATION AR-ENGINE

SMCS-1456 **i00556281**

NOTE	REF NO	GRAPHIC REF	PART NUMBER	QTY	PART NAME 1 2 3 4 5 6 (PRODUCT LEVEL)	SEE PAGE
	1	1	**3E-6333**	1	VALVE AS	
		1	**3E-3365**	1	WEDGE	
		1	**7N-9801**	1	GASKET	
		1	**8T-8729**	2	PIN-CONNECTOR	
		1	**102-8802**	1	KIT-RECEPTACLE	
	2	1	**4M-8973**	1	ELBOW	
	3	1	**5P-6313**	1	NUT-FLARELESS	
	4	1	**5P-6314**	1	SLEEVE-FLARELESS	
	5	1	**5P-7907**	1	CONNECTOR	
	6	1	**6N-7672**	1	ATOMIZER AS	
	7	1	**7N-0296**	1	CYLINDER AS (ETHER)	
		1	*7N-9801*	1	GASKET	
	8	1	**7N-2059**	1	CLAMP AS-CYLINDER	
	9	1	**8X-4814**	1	BRACKET	
	10	1	**8T-4896**	2	WASHER-HARD (2.5MM THK)	
	11	1	**128-6900**	1	TUBE	
	12	1	**8T-4224**	8	WASHER-HARD (2MM THK)	
	13	1	**4L-6454**	1	BOLT (3/8-16X1.0IN)	
	14	1	**4M-6425**	4	BOLT (5/16-18X1IN)	
	15	1	**6V-2686**	1	CLIP (3.18MM ID) (SLOT)	
	16	1	**6V-8189**	4	NUT (5/16-18 THD)	
	17	1	**6V-8801**	1	NUT (3/8-16 THD)	

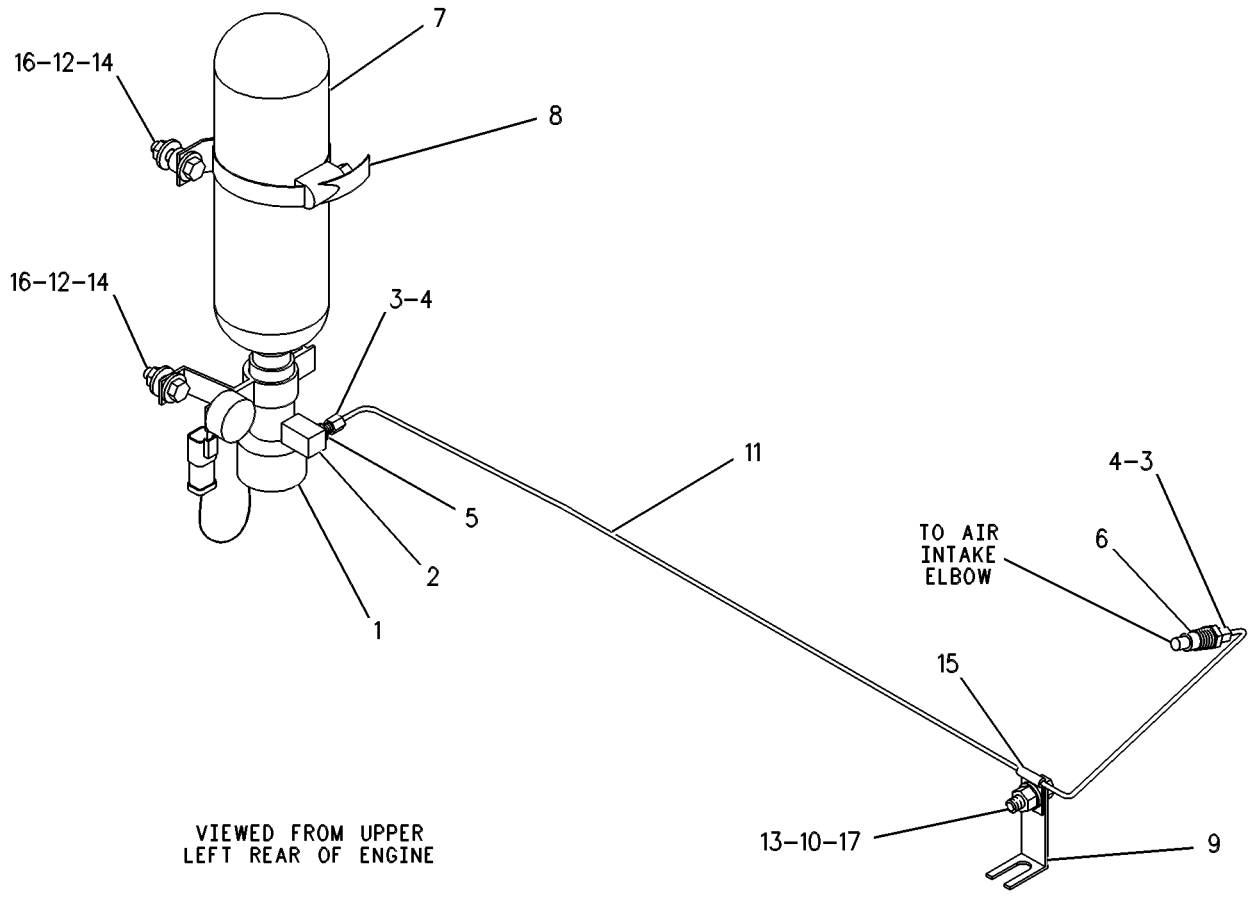

GRAPHIC #1

g00269855

ELECTRICAL AND STARTING SYSTEM

8X-9037 STARTING AR-COLD WEATHER

S/N: 7KK1-39
WET BATTERY
AN ATTACHMENT

SMCS-1450 **i01014062**

NOTE	REF NO	GRAPHIC REF	PART NUMBER	QTY	PART NAME 1 2 3 4 5 6 (PRODUCT LEVEL)	SEE PAGE
	1	1	**108-3401**	1	CABLE AS	
		1	**1S-4915**	2	LINER-CONDUIT	
		1	**1S-7251**	1	TERMINAL (FOR 1/2IN BOLT)	
E		1	**5P-0695**		CONDUIT (146 CM)	
BE		1	**5P-0761**		CABLE (00GA)	
		1	**8L-8413**	1	STRAP-CABLE (1.12IN DIA)	
		1	**8N-1725**	1	COVER (RED)(BATTERY)	
BE		1	**8T-2225**		TUBE	
		1	**3S-6049**	1	TERMINAL AS-POSITIVE	
		1	**1M-6119**	1	BOLT-BATTERY TERMINAL (5/16-18X1.375IN)	
		1	**1M-6120**	1	NUT-BATTERY TERMINAL (5/16-18 THD)	
	2	1	**125-1302**	1	SWITCH AS-MAGNETIC	
	3	1	**1S-1014**	1	GROMMET	
	4	1	**5P-1076**	1	WASHER-HARD (4MM THK)	
	5	1	**6C-7783**	1	CABLE AS	
		1	**1S-7252**	1	TERMINAL (FOR 3/8IN BOLT)	
		1	**3S-6050**	1	TERMINAL AS-NEGATIVE	
		1	**1M-6119**	1	BOLT-BATTERY TERMINAL (5/16-18X1.375IN)	
		1	**1M-6120**	1	NUT-BATTERY TERMINAL (5/16-18 THD)	
BE		1	**5P-0747**		CABLE (00GA)	
		1	**7N-5274**	1	COVER (BLACK)(BATTERY)	
		1	**9G-8909**	1	COVER (BLACK)(RING)	
	6	1	**6D-4244**	7	CLIP (22.22MM ID)	
M	7	1	**6V-7744**	4	LOCKNUT (M10X1.50 THD)	
Y	8	1	*7N-1059*	1	STARTING MOTOR GP-ELECTRIC	305
	9	1	**7T-9983**	1	CABLE AS	
		1	**1S-4915**	2	LINER-CONDUIT	
		1	**1S-7251**	2	TERMINAL (FOR 1/2IN BOLT)	
E		1	**5P-0695**		CONDUIT (201 CM)	
E		1	**5P-0761**		CABLE (00GA)	
		1	**8N-0869**	2	COVER (RED)	
BE		1	**8T-2225**		TUBE	
	10	1	**7Y-3883**	1	CABLE AS	
		1	**1S-7251**	2	TERMINAL (FOR 1/2IN BOLT)	
BE		1	**5P-0747**		CABLE (00GA)	
	11	1	**8T-4121**	8	WASHER (2.5MM THK)	
M	12	1	**8T-4133**	4	NUT (M10X1.50 THD)	
M	13	1	**8T-4136**	2	BOLT (M10X1.50X25MM)	
M	14	1	**8T-4171**	1	BOLT (M6X1.0X12MM)	
M	15	1	**8T-4192**	1	BOLT (M12X1.75X25MM)	
	16	1	**8W-6445**	2	HOLD-DOWN AS-BATTERY	
	17	1	**9G-0549**	1	CABLE AS	
		1	**1M-6119**	2	BOLT-BATTERY TERMINAL (5/16-18X1.375IN)	
		1	**1M-6120**	2	NUT-BATTERY TERMINAL (5/16-18 THD)	
BE		1	**5P-0747**		CABLE (00GA)	
		1	**8C-5917**	1	TERMINAL AS (POS)	
		1	**8T-9757**	1	TERMINAL AS (NEG)	
		1	**9G-0003**	1	COVER (BLACK)	
		1	**9G-0004**	1	COVER (RED)	
	18	1	**9G-8909**	2	COVER (BLACK)(RING)	
	19	1	**9M-8406**	3	CLIP (15.8MM ID)	
	20	1	**9R-6414**	4	ROD	
	21	1	**9X-8256**	1	WASHER (2MM THK)	
	22	1	**9X-9731**	2	BATTERY (12 VOLT)(DRY)	
M	23	1	**8T-4195**	2	BOLT (M10X1.50X30MM)	

B-USE AS REQUIRED
E-ORDER BY THE CENTIMETER
M-METRIC PART
Y-SEPARATE ILLUSTRATION

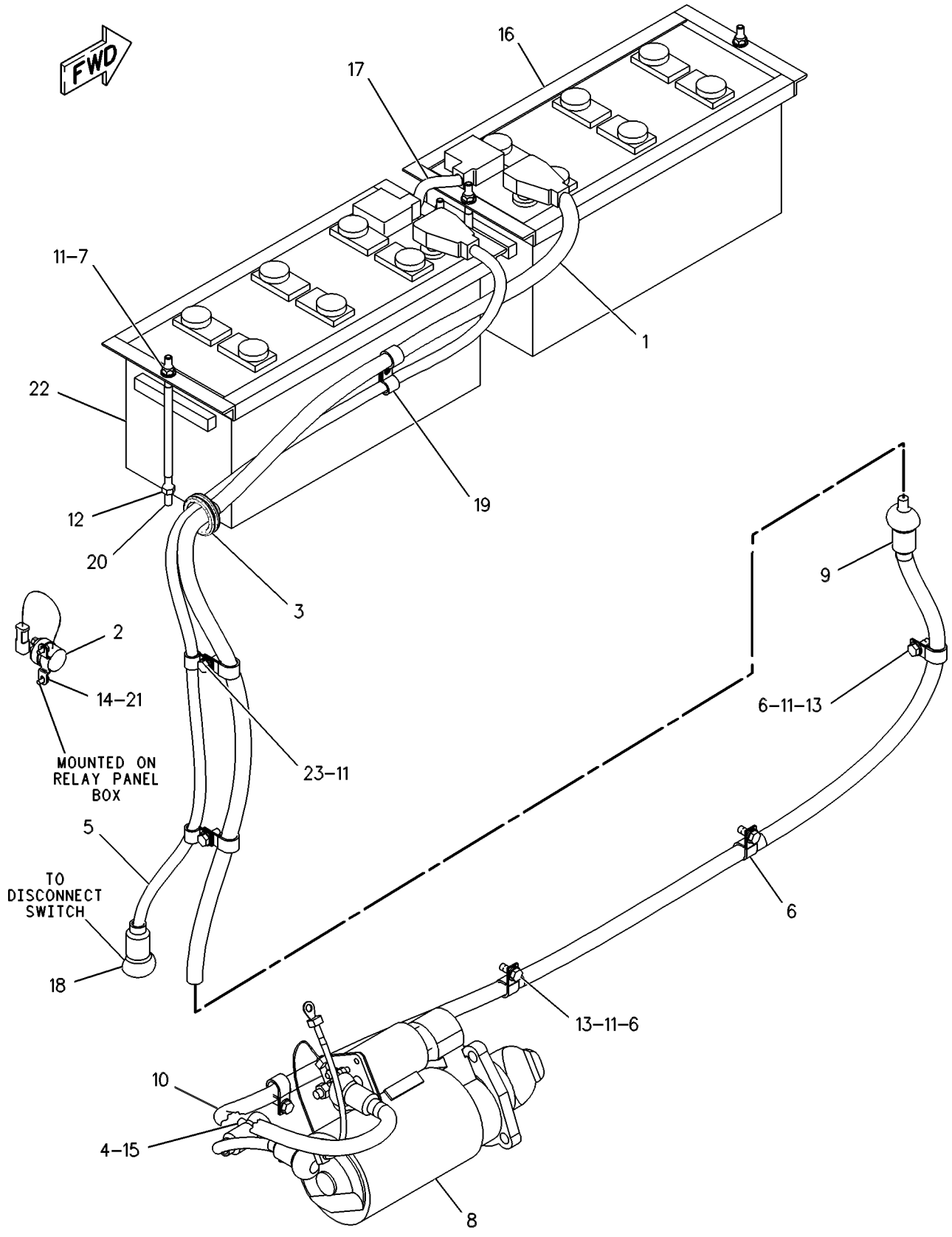

GRAPHIC #1 g00088382

MEMORANDA

ELECTRICAL AND STARTING SYSTEM

8X-9037 STARTING AR-COLD WEATHER

S/N: 7KK40-UP
WET BATTERY
AN ATTACHMENT

SMCS-1450 **i01014061**

NOTE	REF NO	GRAPHIC REF	PART NUMBER	QTY	PART NAME 1 2 3 4 5 6 (PRODUCT LEVEL)	SEE PAGE
	1	1	**108-3401**	1	CABLE AS	
		1	**1S-4915**	2	LINER-CONDUIT	
		1	**1S-7251**	1	TERMINAL (FOR 1/2IN BOLT)	
E		1	**5P-0695**		CONDUIT (146 CM)	
BE		1	**5P-0761**		CABLE (00GA)	
		1	**8L-8413**	1	STRAP-CABLE (1.12IN DIA)	
		1	**8N-1725**	1	COVER (RED)(BATTERY)	
BE		1	**8T-2225**		TUBE	
		1	**3S-6049**	1	TERMINAL AS-POSITIVE	
		1	**1M-6119**	1	BOLT-BATTERY TERMINAL (5/16-18X1.375IN)	
		1	**1M-6120**	1	NUT-BATTERY TERMINAL (5/16-18 THD)	
	3	1	**1S-1014**	1	GROMMET	
	4	1	**5P-1076**	1	WASHER-HARD (4MM THK)	
	5	1	**6C-7783**	1	CABLE AS	
		1	**1S-7252**	1	TERMINAL (FOR 3/8IN BOLT)	
		1	**3S-6050**	1	TERMINAL AS-NEGATIVE	
		1	**1M-6119**	1	BOLT-BATTERY TERMINAL (5/16-18X1.375IN)	
		1	**1M-6120**	1	NUT-BATTERY TERMINAL (5/16-18 THD)	
BE		1	**5P-0747**		CABLE (00GA)	
		1	**7N-5274**	1	COVER (BLACK)(BATTERY)	
		1	**9G-8909**	1	COVER (BLACK)(RING)	
	6	1	**6D-4244**	7	CLIP (22.22MM ID)	
M	7	1	**6V-7744**	4	LOCKNUT (M10X1.50 THD)	
Y	8	1	*7N-1059*	1	STARTING MOTOR GP-ELECTRIC	305
	9	1	**7T-9983**	1	CABLE AS	
		1	**1S-4915**	2	LINER-CONDUIT	
		1	**1S-7251**	2	TERMINAL (FOR 1/2IN BOLT)	
E		1	**5P-0695**		CONDUIT (201 CM)	
E		1	**5P-0761**		CABLE (00GA)	
		1	**8N-0869**	2	COVER (RED)	
BE		1	**8T-2225**		TUBE	
C	10	1	**7Y-5548**	1	CABLE AS (BLACK)(00 GA)	
BE		1	**5P-0747**		CABLE (00GA)	
		1	**1S-7251**	2	TERMINAL (FOR 1/2IN BOLT)	
C	11	1	**8T-4121**	6	WASHER (2.5MM THK)	
M	12	1	**8T-4133**	4	NUT (M10X1.50 THD)	
M	13	1	**8T-4136**	2	BOLT (M10X1.50X25MM)	
M	15	1	**8T-4192**	1	BOLT (M12X1.75X25MM)	
	16	1	**8W-6445**	2	HOLD-DOWN AS-BATTERY	
	17	1	**9G-0549**	1	CABLE AS	
		1	**1M-6119**	2	BOLT-BATTERY TERMINAL (5/16-18X1.375IN)	
		1	**1M-6120**	2	NUT-BATTERY TERMINAL (5/16-18 THD)	
BE		1	**5P-0747**		CABLE (00GA)	
		1	**8C-5917**	1	TERMINAL AS (POS)	
		1	**8T-9757**	1	TERMINAL AS (NEG)	
		1	**9G-0003**	1	COVER (BLACK)	
		1	**9G-0004**	1	COVER (RED)	
	19	1	**9M-8406**	3	CLIP (15.8MM ID)	
	20	1	**9R-6414**	4	ROD	
	22	1	**9X-9731**	2	BATTERY (12 VOLT)(DRY)	
M	23	1	**8T-4195**	2	BOLT (M10X1.50X30MM)	

B-USE AS REQUIRED
C-CHANGE FROM PREVIOUS TYPE
E-ORDER BY THE CENTIMETER
M-METRIC PART
Y-SEPARATE ILLUSTRATION

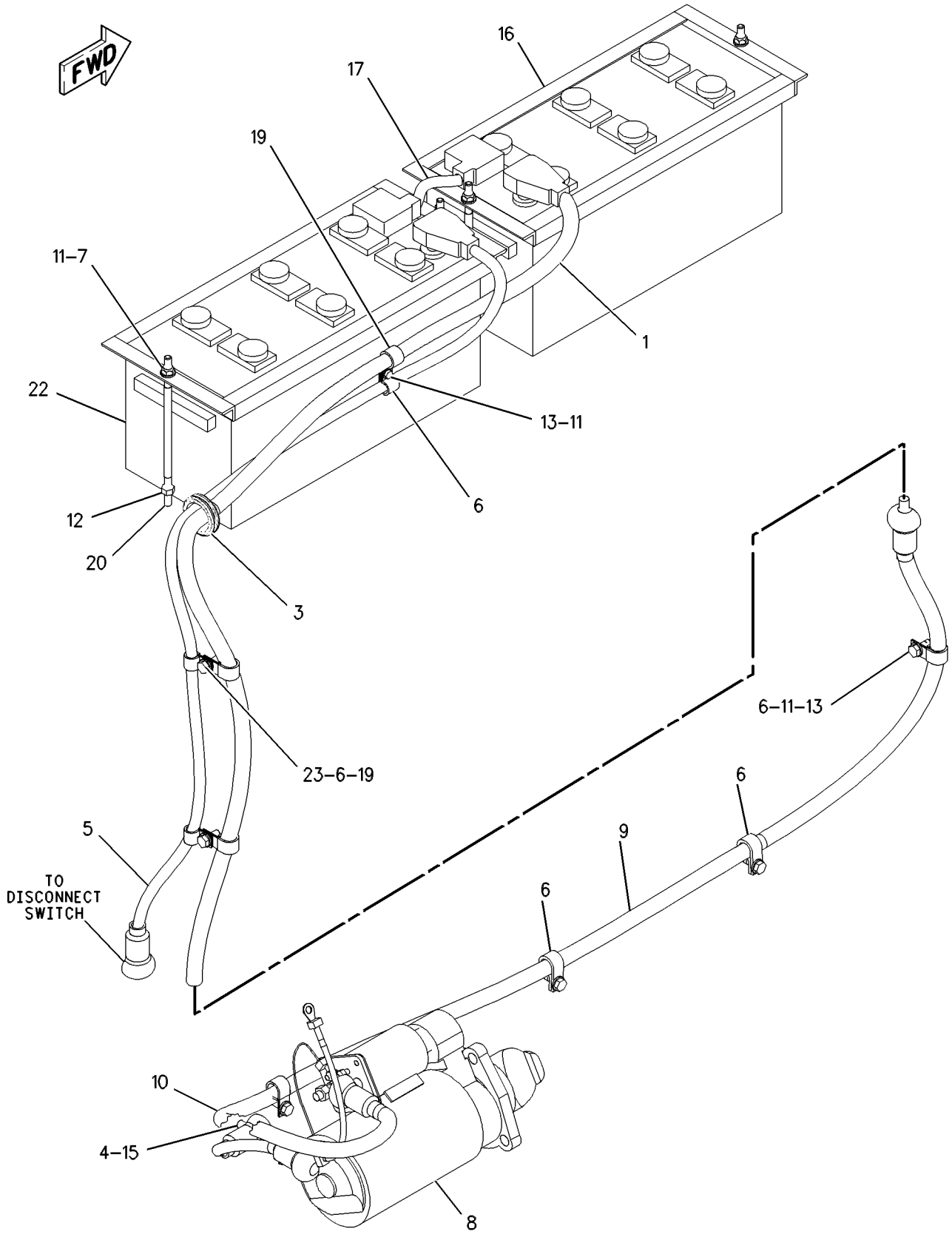

GRAPHIC #1

g00292033

ELECTRICAL AND STARTING SYSTEM

8X-9065 STARTING AR-COLD WEATHER

S/N: 7KK1-UP

AN ATTACHMENT

SMCS-1450 **i00584115**

NOTE	PART NUMBER	QTY	PART NAME 1 2 3 4 5 6 (PRODUCT LEVEL)	SEE PAGE
Y	*129-8529*	1	HEATER GP-FUEL	240
Y	*130-3602*	1	HEATER GP-JACKET WATER	245
Y	*129-8528*	1	HEATER GP-HYDRAULIC OIL (HYD TANK)	244
Y	*130-3601*	1	HEATER GP-ENGINE OIL (ENGINE)	238
Y	*130-3603*	1	HEATER GP-ENGINE OIL (TANDEM)	239
Y	*130-3604*	1	WIRING GP-COLD WEATHER	330

Y-SEPARATE ILLUSTRATION

MEMORANDA

ELECTRICAL AND STARTING SYSTEM

159-4566 STARTING AR-COLD WEATHER

S/N: 7KK1-UP
DRY BATTERY
FOR USE WITH 159-4565—PAGE 227. CANNOT BE USED WITH 8X-9037—PAGE 288
AN ATTACHMENT

SMCS-1450 **i01014060**

NOTE	REF NO	GRAPHIC REF	PART NUMBER	QTY	PART NAME 1 2 3 4 5 6 (PRODUCT LEVEL)	SEE PAGE
	1	1	**7T-9983**	1	CABLE AS	
E		1	**5P-0695**		CONDUIT (201CM)	
E		1	**5P-0761**		CABLE (00GA) (225CM)	
E		1	**8T-2225**		TUBE (16CM)	
		1	**1S-4915**	2	LINER-CONDUIT	
	1A	1	**1S-7251**	2	TERMINAL (FOR 1/2IN BOLT)	
	1B	1	**8N-0869**	2	COVER (RED)	
	2	1	**7Y-5548**	1	CABLE AS (BLACK)(00 GA)	
		1	**1S-7251**	2	TERMINAL (FOR 1/2IN BOLT)	
E		1	**5P-0747**		CABLE (00GA) (52CM)	
	3	1	**108-3401**	1	CABLE AS	
E		1	**5P-0695**		CONDUIT (146CM)	
E		1	**5P-0761**		CABLE (00GA) (170CM)	
E		1	**8T-2225**		TUBE (14CM)	
		1	**1S-4915**	2	LINER-CONDUIT	
	3A	1	**1S-7251**	1	TERMINAL (FOR 1/2IN BOLT)	
	3B	1	**8L-8413**	1	STRAP-CABLE (1.12IN DIA)	
	3C	1	**8N-1725**	1	COVER (RED)(BATTERY)	
	3D	1	**1M-6119**	1	BOLT-BATTERY TERMINAL (5/16-18X1.375IN)	
	3E	1	**1M-6120**	1	NUT-BATTERY TERMINAL (5/16-18 THD)	
	4	1	**1S-1014**	1	GROMMET	
	5	1	**5P-1076**	1	WASHER-HARD (4MM THK)	
	6	1	**6C-7783**	1	CABLE AS	
E		1	**5P-0747**		CABLE (00GA) (165CM)	
	6A	1	**3S-6050**	1	TERMINAL AS-NEGATIVE	
	6B	1	**1M-6119**	1	BOLT-BATTERY TERMINAL (5/16-18X1.375IN)	
	6C	1	**1M-6120**	1	NUT-BATTERY TERMINAL (5/16-18 THD)	
	6D	1	**1S-7252**	1	TERMINAL (FOR 3/8IN BOLT)	
	6E	1	**7N-5274**	1	COVER (BLACK)(BATTERY)	
	6F	1	**9G-8909**	1	COVER (BLACK)(RING)	
	7	1	**6D-4244**	7	CLIP (22.22MM ID)	
M	8	1	**6V-7744**	4	LOCKNUT (M10X1.50 THD)	
Y	9	1	*7N-1059*	1	STARTING MOTOR GP-ELECTRIC	305
	10	1	**8T-4121**	6	WASHER (2.5MM THK)	
M	11	1	**8T-4133**	4	NUT (M10X1.50 THD)	
M	12	1	**8T-4136**	2	BOLT (M10X1.50X25MM)	
M	13	1	**8T-4192**	1	BOLT (M12X1.75X25MM)	
M	14	1	**8T-4195**	2	BOLT (M10X1.50X30MM)	
	15	1	**8W-6445**	2	HOLD-DOWN AS-BATTERY	
	16	1	**9G-0549**	1	CABLE AS	
E		1	**5P-0747**		CABLE (00GA) (20CM)	
	16A	1	**8C-5917**	1	TERMINAL AS (POS)	
	16B	1	**1M-6119**	2	BOLT-BATTERY TERMINAL (5/16-18X1.375IN)	
	16C	1	**1M-6120**	2	NUT-BATTERY TERMINAL (5/16-18 THD)	
	16D	1	**8T-9757**	1	TERMINAL AS (NEG)	
	16E	1	**9G-0003**	1	COVER (BLACK)	
	16F	1	**9G-0004**	1	COVER (RED)	
	17	1	**9M-8406**	3	CLIP (15.8MM ID)	
	18	1	**9R-6414**	4	ROD	
	19	1	**9X-9730**	2	BATTERY (12 VOLT)(DRY)	

E-ORDER BY THE CENTIMETER
M-METRIC PART
Y-SEPARATE ILLUSTRATION

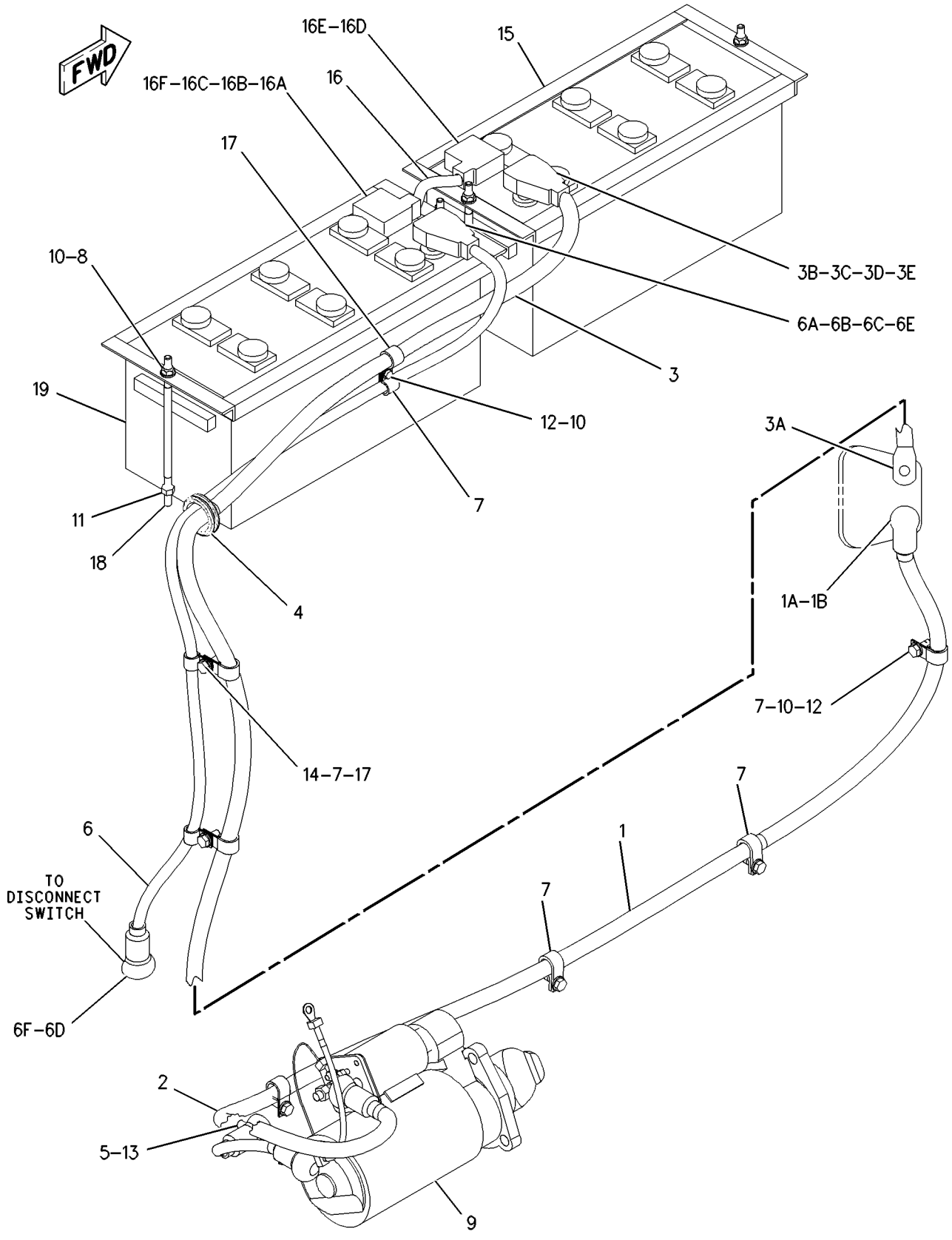

GRAPHIC #1

g00517454

ELECTRICAL AND STARTING SYSTEM

6V-0885 STARTING MOTOR GP-ELECTRIC

S/N: 7KK1-UP
24 VOLT
PART OF 7N-1059 STARTING MOTOR GP-ELECTRIC
FIELD REPLACEMENT ORDER 6V-0890—PAGE 302
AN ATTACHMENT

SMCS-1453, 1454, 1465, 1467 **i01444522**

NOTE	REF NO	GRAPHIC REF	PART NUMBER	QTY	PART NAME 1 2 3 4 5 6 (PRODUCT LEVEL)	SEE PAGE
	1	1	**7M-0326**	1	CONNECTOR	
	2	1	**9H-3757**	2	WASHER (.516X1X.094 IN THK)	
	3	1	**1S-7446**	3	SCREW-MACHINE (8-32X0.437 THD)	
	4	1	**8C-9660**	3	WASHER (4.6X7.9X.8MM THK)	
C	5	1	**9S-2544**	9	SCREW-HEX HEAD (8-32 X 11.13MM)	
	6	1	**7M-0327**	1	WASHER-THRUST (17.40X25.4X1.6MM THK)	
	7	1	**3T-3418**	1	FRAME AS-END	
		1	**9G-4101**	1	BUSHING-END	
		1	**3T-3423**	1	CUP	
	7A	1	**3T-3424**	1	PLUG-FELT	
C	8	1	**125-6533**	1	SOLENOID AS	
	9	1	**7F-3491**	2	WASHER (.516X1X.094 IN THK)	
	10	1	**3T-3422**	1	WIRE AS	
	11	1	**2J-8163**	2	SEAL-O-RING (117.07MM ID)	
	12	1	**7X-3373**	1	BOLT (5/16-18X.88 IN)	
B	13	1	**3T-3434**	6	PLUG	
	14	1	**5J-5314**	5	BOLT (5/16-18X1.5 IN)	
	15	1	**3L-3380**	1	BUSHING-TERMINAL	
	16	1	**036-9821**	1	WASHER	
	17	1	**4M-1828**	1	RETAINER-SPRING	
	18	1	**4M-1829**	1	BOOT-RUBBER	
	19	1	**9M-7606**	1	PLUNGER AS	
	20	1	**9M-7609**	1	SPRING	
	21	1	**4M-1827**	1	RETAINER-SPRING	
	22	1	**8C-3089**	1	SEAL-O-RING (82.22MM ID)	
	23	1	**4M-1853**	1	LEVER AS-SHIFT	
	24	1	**5M-3034**	1	LOCKNUT	
	25	1	**7L-2894**	4	GASKET	
	26	1	**4M-1831**	4	PLUG-LEVER HOUSING	
	27	1	**4M-1854**	1	SHAFT-LEVER	
	28	1	**1H-1023**	1	SEAL-O-RING (9.25MM ID)	
	29	1	**2D-6392**	1	SEAL-O-RING (6.07MM ID)	
	30	1	**7T-3974**	1	HOUSING AS-DRIVE	
	31	1	**6N-3826**	1	DRIVE AS-MOTOR	
	32	1	**2H-3429**	2	RING-RETAINING	
	33	1	**6V-1322**	4	BOLT (1/4-20X.375 IN)	
	34	1	**8T-4205**	4	WASHER-HARD (7.2X14.5X2MM THK)	
	35	1	**6N-3279**	1	INSULATOR	
	36	1	**036-9823**	13	BOLT	
	37	1	**1M-9971**	1	SPACER	
	38	1	**1H-2629**	3	STRIP-INSULATION	
	39	1	**7M-0324**	1	COIL AS-FIELD	
	40	1	**3F-0379**	12	SCREW-POLE SHOE	
	41	1	**7F-3488**	6	SHOE-POLE	
	42	1	**7M-8651**	1	ARMATURE AS	
	43	1	**7M-0325**	1	INSULATOR-COIL	
	44	1	**3T-9524**	6	BRUSH AS (STARTING MOTOR)	
	45	1	**3E-7771**	1	HOUSING AS	
C	46	1	**125-6537**	1	INSULATOR	
	47	1	**3R-8801**	1	CLAMP-BOOT	
	48	1	**8F-1434**	2	LOCKWASHER	
	49	1	**6V-8188**	6	NUT (1/2-13 THD)	
	50	1	**7X-0562**	6	WASHER-HARD (13.5X19X0.8MM THK)	

6V-0885 **STARTING MOTOR GP-ELECTRIC** *(contd.)* **i01444522**

NOTE	REF NO	GRAPHIC REF	PART NUMBER	QTY	PART NAME 1 2 3 4 5 6 (PRODUCT LEVEL)	SEE PAGE
	51	1	**4B-2049**	6	NUT (10-32 THD)	
	52	1	**8T-0328**	10	WASHER-HARD (5.5X10X1MM THK)	
	53	1	**3T-9494**	6	SPRING-BRUSH	
	54	1	**3N-3763**	1	KIT-TERMINAL (STARTING MOTOR)	
					(INCLUDES INSULATOR, BUSHINGS, & WASHER)	
	58	1	**1M-9968**	1	BUSHING	
	59	1	**2F-6678**	1	SEAL-LIP	
	60	1	**4L-2729**	1	WASHER (.844X1.9X.188 IN THK)	
	61	1	**4M-1896**	1	BUSHING-TERMINAL	
	62	1	**045-4065**	4	SCREW-MACHINE (10-32X.75 IN)	
C	63	1	**6V-8373**	3	SCREW-MACHINE (6-32X.187 IN)	
C	64	1	**9G-6770**	1	CONTACT AS	
C	65	1	**6T-1120**	1	BUSHING-TERMINAL	
C	66	1	**4M-1815**	1	SPRING-CONTACT	
C	67	1	**125-6535**	1	COVER-STARTING MOTOR	
C	68	1	**7T-9123**	1	GASKET-PLATE	
C	69	1	**125-6536**	1	TERMINAL AS	
	70	1	**3T-9525**	1	PLATE AS-BRUSH	
	71	1	**9F-5599**	12	LOCKWASHER	
	72	1	**6T-0371**	1	INSULATOR	
	73	1	**6T-0363**	6	HOLDER AS-BRUSH	
					(EACH INCLUDES)	
	74	1	**3T-9494**	1	SPRING-BRUSH	
	75	1	**3T-4709**	3	PLATE	
	76	1	**3T-4710**	3	PLATE	
	77	1	**2L-6679**	3	PLATE-INSULATOR	
	78	1	**7F-3525**	6	WASHER-BUSHING	
	79	1	**5P-6298**	12	SCREW-MACHINE (10-32X0.5 IN)	
	80	1	**3T-3423**	3	CUP	
	81	1	**3T-3424**	3	PLUG-FELT	
C	82	1	**9G-4101**	1	BUSHING-END	

B-USE AS REQUIRED
C-CHANGE FROM PREVIOUS TYPE

6V-0885 **STARTING MOTOR GP-ELECTRIC** *(contd.)* **i01444522**

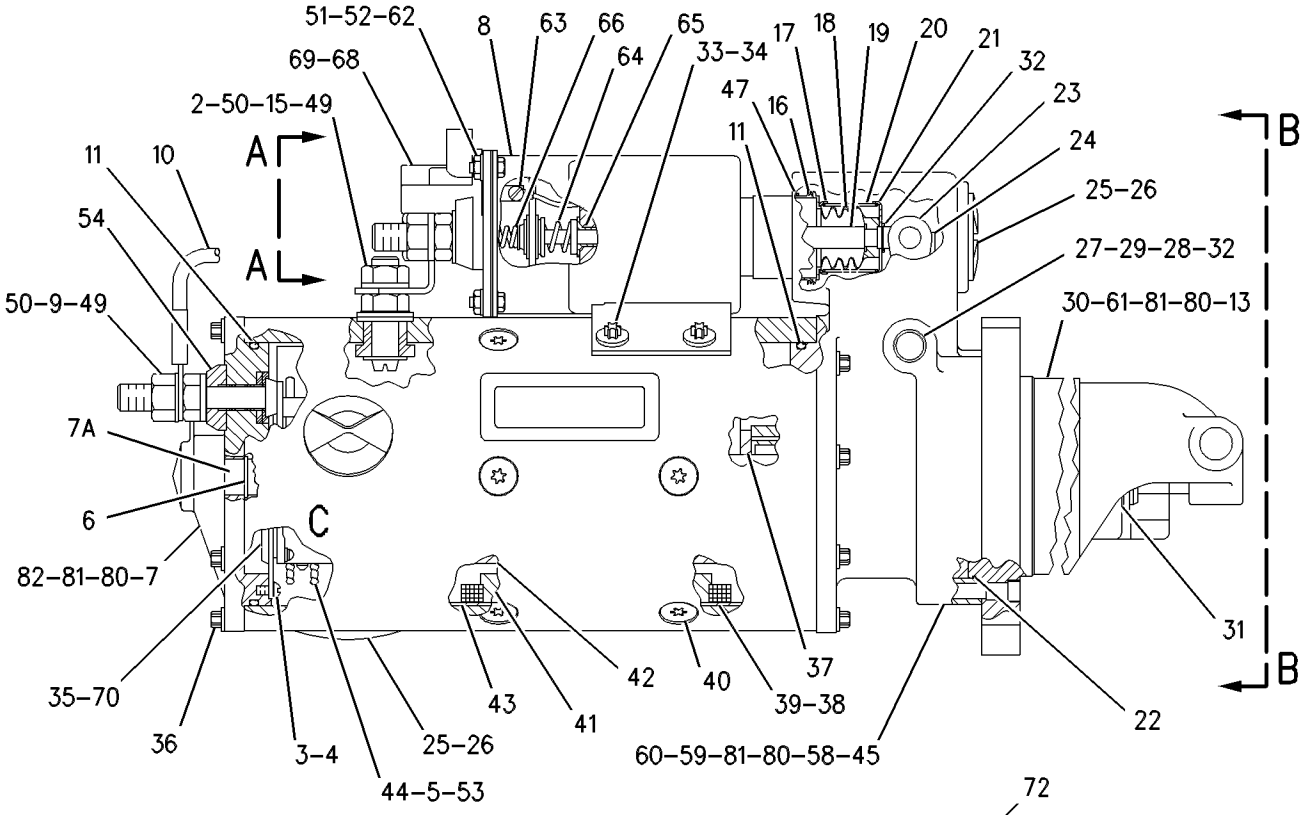

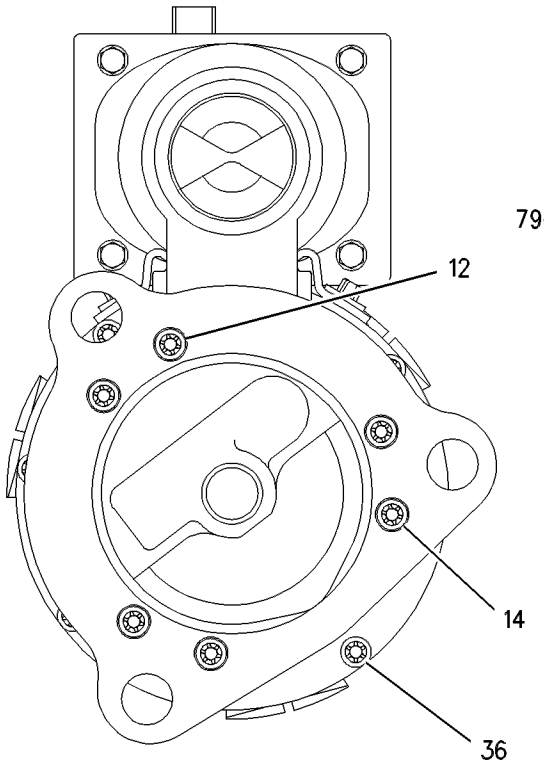

VIEW B-B

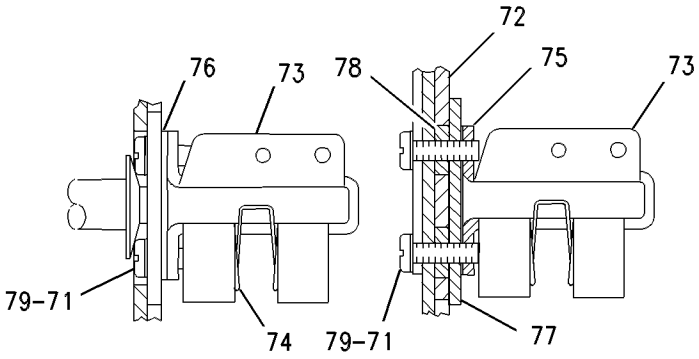

VIEW OF AREA C

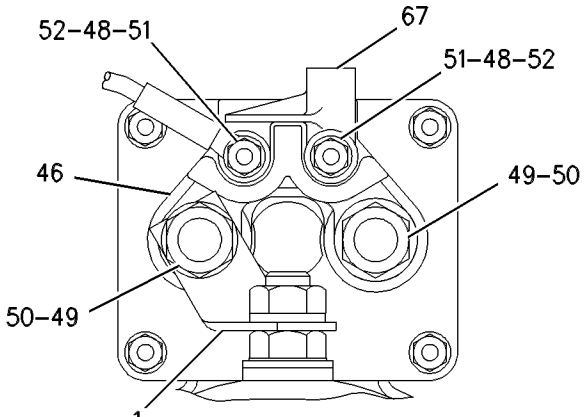

VIEW A-A

GRAPHIC #1

g00535285

MEMORANDA

ELECTRICAL AND STARTING SYSTEM

6V-0890 STARTING MOTOR GP-ELECTRIC*R

S/N: 7KK1-UP; 8OM1-1692
24 VOLT
PART OF 105-4729 STARTING MOTOR GP-ELECTRIC
FIELD REPLACEMENT FOR 6V-0885—PAGE 298
ALSO AN ATTACHMENT AND FIELD INSTALLATION

SMCS-1453, 1454, 1465, 1467 **i01508566**

NOTE	REF NO	GRAPHIC REF	PART NUMBER	QTY	PART NAME 1 2 3 4 5 6 (PRODUCT LEVEL)	SEE PAGE
	1	1	**7M-0326**	1	CONNECTOR	
	2	1	**9H-3757**	2	WASHER (0.516X1X0.094 IN THK)	
	3	1	**1S-7446**	3	SCREW-MACHINE (8-32X0.437 THD)	
	4	1	**8C-9660**	3	WASHER (4.6X7.9X0.8MM THK)	
	5	1	**9S-2544**	9	SCREW-HEX HEAD (8-32X11.13MM)	
	6	1	**7M-0327**	1	WASHER-THRUST (17.40X25.4X1.6MM THK)	
	7	1	**3T-3418**	1	FRAME AS-END	
		1	**3T-3423**	1	CUP	
		1	**9G-4101**	1	BUSHING-END	
		1	**3T-3424**	1	PLUG-FELT	
	8	1	**3T-9525**	1	PLATE AS-BRUSH	
		1	**6T-0371**	1	INSULATOR	
		1	**5P-6298**	12	SCREW-MACHINE (10-32X0.5 IN)	
		1	**9F-5599**	12	LOCKWASHER	
		1	**7F-3525**	6	WASHER-BUSHING	
		1	**6T-0363**	6	HOLDER AS-BRUSH	
					(EACH INCLUDES)	
		1	**3T-9494**	1	SPRING-BRUSH	
	9	1	**7F-3491**	2	WASHER (0.516X1X0.094 IN THK)	
	10	1	**3T-3422**	1	WIRE AS	
	11	1	**2J-8163**	2	SEAL-O-RING	
	12	1	**7X-3373**	1	BOLT (5/16-18X0.88 IN)	
	13	1	**3T-3434**	6	PLUG	
	14	1	**5J-5314**	5	BOLT (5/16-18X1.5 IN)	
	15	1	**3L-3380**	1	BUSHING-TERMINAL	
	16	1	**036-9821**	1	WASHER	
	17	1	**4M-1828**	1	RETAINER-SPRING	
	18	1	**4M-1829**	1	BOOT-RUBBER	
	19	1	**9M-7606**	1	PLUNGER AS	
	20	1	**9M-7609**	1	SPRING	
	21	1	**4M-1827**	1	RETAINER-SPRING	
	22	1	**8C-3089**	1	SEAL-O-RING	
	23	1	**4M-1853**	1	LEVER AS-SHIFT	
	24	1	**5M-3034**	1	LOCKNUT	
	25	1	**7L-2894**	4	GASKET	
	26	1	**4M-1831**	4	PLUG-LEVER HOUSING	
	27	1	**4M-1854**	1	SHAFT-LEVER	
	28	1	**1H-1023**	1	SEAL-O-RING	
	29	1	**2D-6392**	1	SEAL-O-RING	
	30	1	**7T-3974**	1	HOUSING AS-DRIVE	
	31	1	**6N-3826**	1	DRIVE AS-MOTOR	
	32	1	**2H-3429**	2	RING-RETAINING	
	33	1	**6V-1322**	4	BOLT (1/4-20X0.375 IN)	
	34	1	**8T-4205**	4	WASHER-HARD (7.2X14.5X2MM THK)	
	35	1	**6N-3279**	1	INSULATOR	
	36	1	**036-9823**	13	BOLT	
	37	1	**1M-9971**	1	SPACER	
	38	1	**1H-2629**	3	STRIP-INSULATION	
	39	1	**7M-0324**	1	COIL AS-FIELD	
	40	1	**3F-0379**	12	SCREW-POLE SHOE	
	41	1	**7F-3488**	6	SHOE-POLE	
	42	1	**7M-8651**	1	ARMATURE AS	
	43	1	**7M-0325**	1	INSULATOR-COIL	

6V-0890 **STARTING MOTOR GP-ELECTRIC** *(contd.)* **i01508566**

NOTE	REF NO	GRAPHIC REF	PART NUMBER	QTY	PART NAME 1 2 3 4 5 6 (PRODUCT LEVEL)	SEE PAGE
	44	1	**3T-9524**	6	BRUSH AS (STARTING MOTOR)	
	45	1	**125-6537**	1	INSULATOR	
	46	1	**8F-1434**	2	LOCKWASHER	
	47	1	**6V-8188**	6	NUT (1/2-13 THD)	
	48	1	**7X-0562**	6	WASHER-HARD (13.5X19X0.8MM THK)	
	49	1	**4B-2049**	6	NUT (10-32 THD)	
	50	1	**8T-0328**	10	WASHER-HARD (5.5X10X1MM THK)	
	51	1	**3T-9494**	6	SPRING-BRUSH	
	52	1	**3E-7771**	1	HOUSING AS	
	53	1	**9G-4101**	1	BUSHING-END	
	54	1	**3T-3424**	3	PLUG-FELT	
	55	1	**3T-3423**	3	CUP	
	56	1	**1M-9968**	1	BUSHING	
	57	1	**2F-6678**	1	SEAL-LIP	
	58	1	**4L-2729**	1	WASHER (0.844X1.9X0.188 IN THK)	
	59	1	**4M-1896**	1	BUSHING-TERMINAL	
	60	1	**045-4065**	4	SCREW-MACHINE (10-32X0.75 IN)	
	61	1	**6V-8373**	3	SCREW-MACHINE (6-32X0.187 IN)	
	62	1	**9G-6770**	1	CONTACT AS	
	63	1	**6T-1120**	1	BUSHING-TERMINAL	
	64	1	**4M-1815**	1	SPRING-CONTACT	
	65	1	**125-6535**	1	COVER-STARTING MOTOR	
	66	1	**7T-9123**	1	GASKET-PLATE	
	67	1	**125-6533**	1	SOLENOID AS (STARTING MOTOR 24 VOLT)	
		1	**3R-8801**	1	CLAMP-BOOT	
	68	1	**125-6536**	1	TERMINAL AS	
					AVAILABLE REPAIR KIT(S):	
			3N-3763	1	KIT-TERMINAL (STARTING MOTOR)	
					(INCLUDES INSULATOR, BUSHINGS & WASHER)	

6V-0890 **STARTING MOTOR GP-ELECTRIC** *(contd.)* **i01508566**

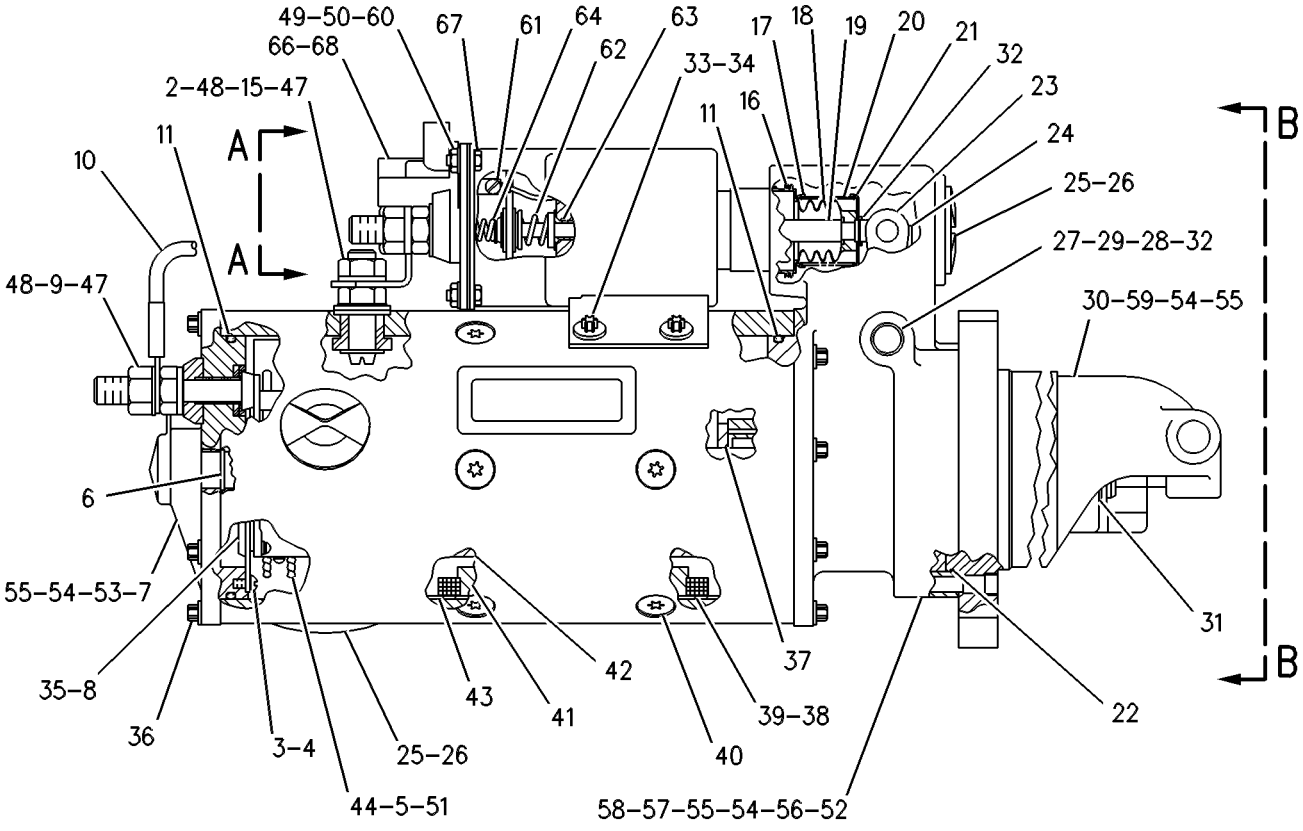

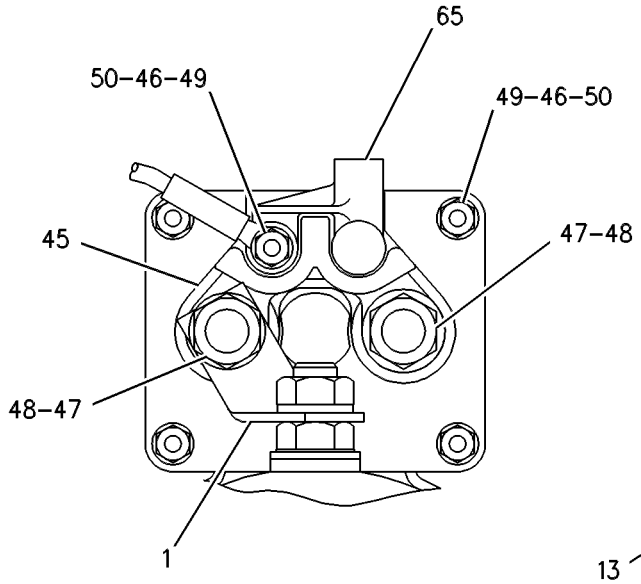

VIEW A-A

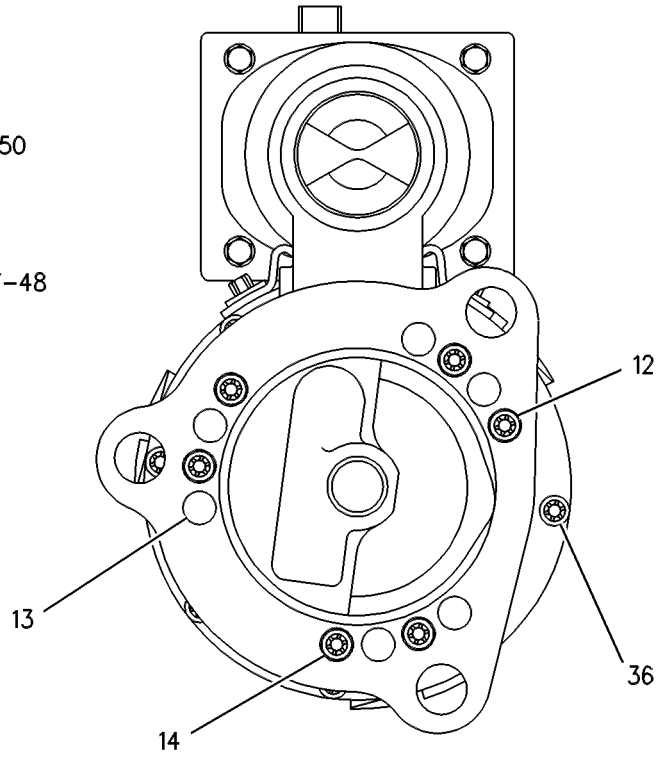

VIEW B-B

GRAPHIC #1 g00066598

7N-1059 STARTING MOTOR GP-ELECTRIC

S/N: 7KK1-UP
24 VOLT. RH MOUNTED
PART OF 159-4566, 8X-9037 STARTING AR-COLD WEATHER
AN ATTACHMENT

SMCS-1453, 1454, 1465, 1467 **i01500516**

NOTE	REF NO	GRAPHIC REF	PART NUMBER	QTY	PART NAME 1 2 3 4 5 6 (PRODUCT LEVEL)	SEE PAGE
	1	1	**8S-2332**	3	BOLT-12 POINT HEAD (5/8-11X1.75 IN)	
	2	1	**4H-7869**	1	GASKET	
CY	3	1	*6V-0885*	1	STARTING MOTOR GP-ELECTRIC (24V) (RH MOUNTED) (COLD WEATHER)	298
	4	1	**105-4728**	1	WIRE AS	

C-CHANGE FROM PREVIOUS TYPE
Y-SEPARATE ILLUSTRATION

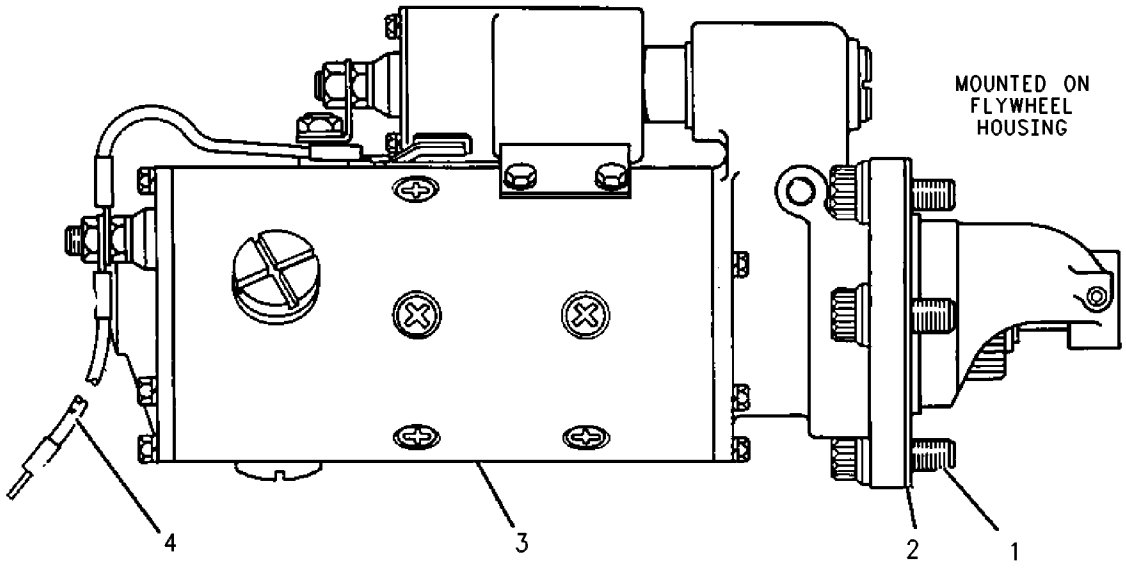

GRAPHIC #1 g00535151

105-4729 STARTING MOTOR GP-ELECTRIC

S/N: 80M1-1692
24 VOLT
PART OF 123-0200 ENGINE AR, 152-2671 STARTING MOTOR GP-ELECTRIC
ALSO AN ATTACHMENT

SMCS-1453, 1454, 1465, 1467 **i01227718**

NOTE	REF NO	GRAPHIC REF	PART NUMBER	QTY	PART NAME 1 2 3 4 5 6 (PRODUCT LEVEL)	SEE PAGE
	1	1	**8S-2332**	3	BOLT-12 POINT HEAD (5/8-11X1.75IN)	
	2	1	**4N-1059**	1	GASKET	
YR	3	1	**6V-0890**	1	STARTING MOTOR GP-ELECTRIC	302
	4	1	**105-4728**	1	WIRE AS	

R-REMFG PART MAY BE AVAILABLE
Y-SEPARATE ILLUSTRATION

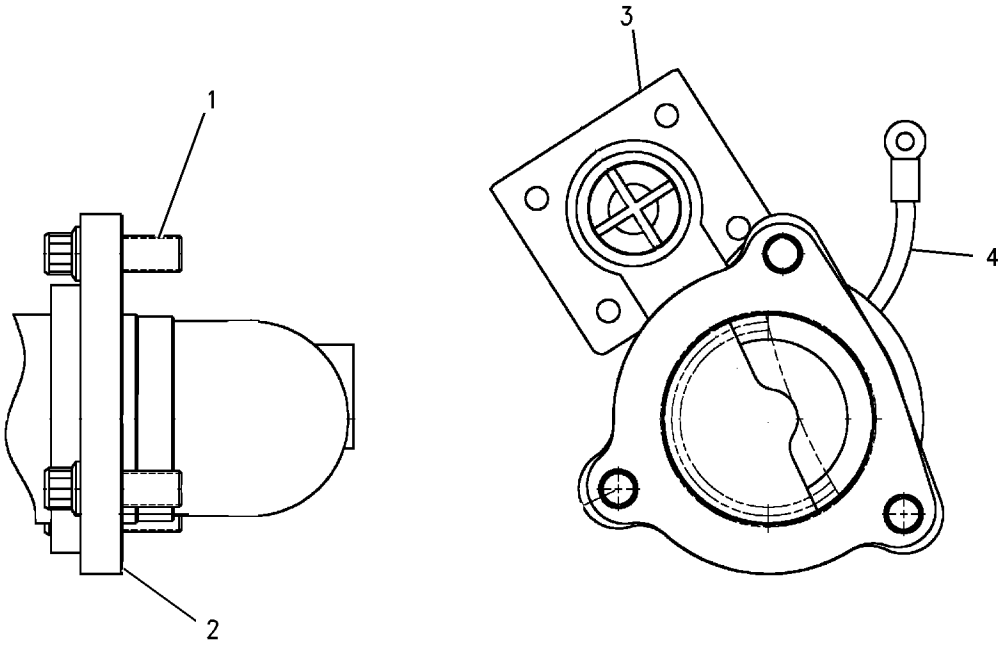

GRAPHIC #1 g00658745

152-2671 STARTING MOTOR GP-ELECTRIC

S/N: 8OM1-UP
AN ATTACHMENT

SMCS-1453, 1454, 1465, 1467 **i01058251**

NOTE	PART NUMBER	QTY	PART NAME 1 2 3 4 5 6 (PRODUCT LEVEL)	SEE PAGE
Y	*105-4729*	1	STARTING MOTOR GP-ELECTRIC	306

Y-SEPARATE ILLUSTRATION

7N-0718 SWITCH GP-DISCONNECT–BATTERY

S/N: 7KK1-UP

PART OF 8X-9010 WIRING GP-REAR

SMCS-1411 **i01449530**

NOTE	REF NO	GRAPHIC REF	PART NUMBER	QTY	PART NAME 1 2 3 4 5 6 (PRODUCT LEVEL)	SEE PAGE
	1	1	**8H-5306**	1	KEY (BATTERY DISCONNECT)	
	2	1	**8H-5303**	1	NUT (3/4-16-2A THD)	
	3	1	**2H-3922**	2	LOCKWASHER	
	4	1	**9F-5644**	2	LOCKWASHER	
	5	1	**6F-7045**	2	NUT-FULL (3/8X24 THD)	

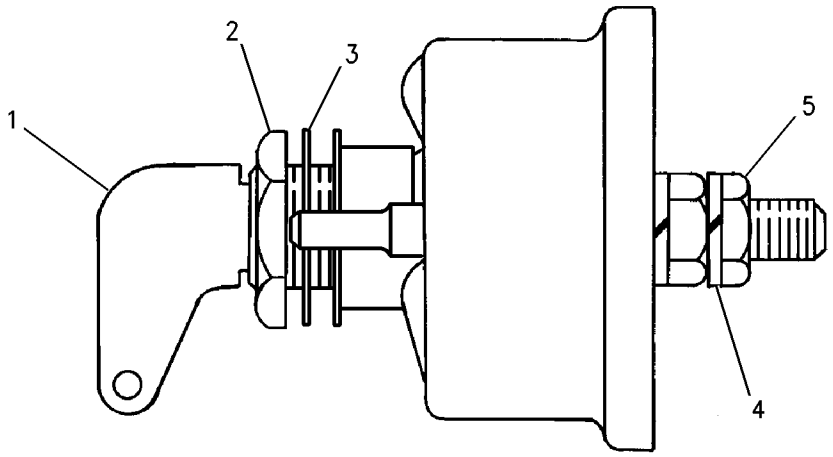

GRAPHIC #1 g00715584

100-4417 SWITCH GP-FLOW–COOLANT

S/N: 8OM1-UP

PART OF 123-0200 ENGINE AR

SMCS-1435 **i01446646**

NOTE	REF NO	GRAPHIC REF	PART NUMBER	QTY	PART NAME 1 2 3 4 5 6 (PRODUCT LEVEL)	SEE PAGE
Y	1	1	**171-8708**	1	SWITCH GP-FLOW (COOLANT)	310
	2	1	**2B-2695**	2	BOLT (5/16-18X0.875 IN)	
	3	1	**9M-1974**	2	WASHER-HARD (8.8X16X2MM THK)	
	4	1	**4N-3841**	1	GASKET	

Y-SEPARATE ILLUSTRATION

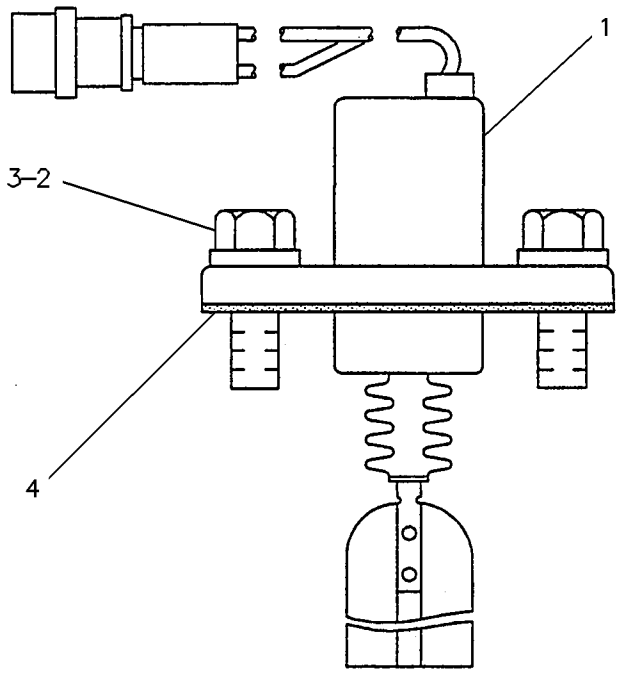

GRAPHIC #1 g00083292

171-8708 SWITCH GP-FLOW–COOLANT

S/N: 80M1-UP

PART OF 100-4417 SWITCH GP-FLOW

SMCS-1435 **i01487725**

NOTE	REF NO	GRAPHIC REF	PART NUMBER	QTY	PART NAME 1 2 3 4 5 6 (PRODUCT LEVEL)	SEE PAGE
	1	1	**102-8802**	1	KIT-RECEPTACLE (2 PIN)	
					(INCLUDES RECEPTACLE AS & WEDGE)	
	2	1	**186-3735**	2	PIN-CONNECTOR	
	3	1	**3E-3365**	1	WEDGE-RECEPTACLE LOCK (2 PIN)	

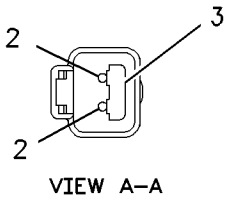

VIEW A–A

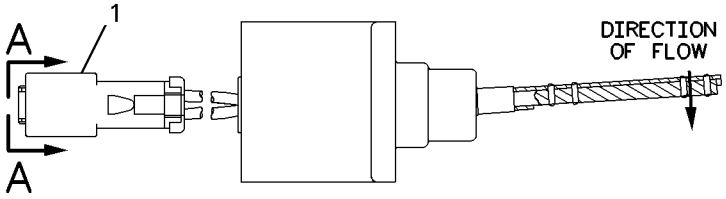

GRAPHIC #1 g00773121

3E-0154 SWITCH GP-MAGNETIC

S/N: 7KK1-UP
24-32 VOLT
PART OF 156-4301 PRELUBRICATION AR-ENGINE
AN ATTACHMENT
TYPE 1

SMCS-7499 **i01515041**

NOTE	REF NO	GRAPHIC REF	PART NUMBER	QTY	PART NAME 1 2 3 4 5 6 (PRODUCT LEVEL)	SEE PAGE
Y	1	1	*142-3984*	1	SWITCH GP-MAGNETIC (24-32V) (SUPPLEMNTAL STER/PRELUBE RELAY)	313
					—OR—	
Y		1	*142-3985*	1	SWITCH GP-MAGNETIC (24-32V) (SUPPLEMNTAL STER/PRELUBE RELAY)	314

Y-SEPARATE ILLUSTRATION

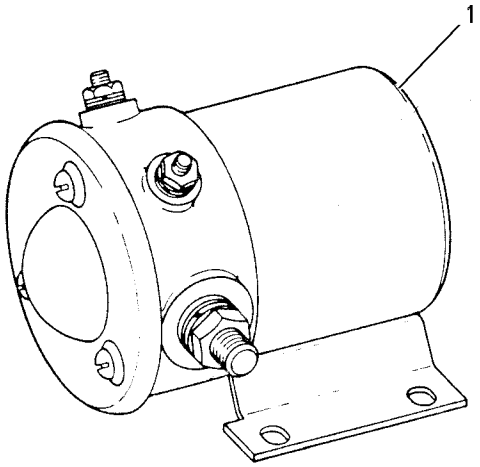

GRAPHIC #1 g00287482

3E-0154 SWITCH GP-MAGNETIC

S/N: 7KK1-UP
24-32 VOLT
PART OF 156-4301 PRELUBRICATION AR-ENGINE
AN ATTACHMENT
TYPE 2

SMCS-7499 **i01375674**

NOTE	REF NO	GRAPHIC REF	PART NUMBER	QTY	PART NAME 1 2 3 4 5 6 (PRODUCT LEVEL)	SEE PAGE
	1	1	**7X-0620**	2	WASHER-HARD (5.5X13X1.6MM THK)	
	2	1	**8F-1434**	2	LOCKWASHER (0.51MM THK)	
	3	1	**6V-8378**	2	NUT (10-32 THD)	
	4	1	**6V-8801**	2	NUT (3/8-16 THD)	
	5	1	**7X-0608**	2	WASHER-HARD (2.0MM THK)	
	6	1	**4D-1326**	2	LOCKWASHER (3/8IN)	

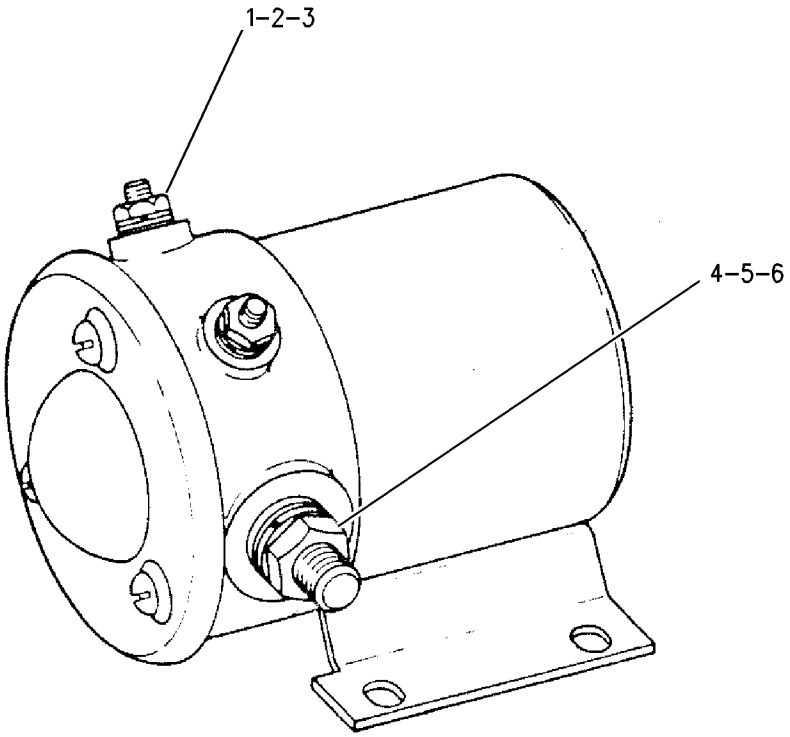

GRAPHIC #1 g00726410

142-3984 SWITCH GP-MAGNETIC

S/N: 7KK1-UP
24-32 VOLT
PART OF 3E-0154 SWITCH GP-MAGNETIC
AN ATTACHMENT

SMCS-7499 **i01194951**

NOTE	REF NO	GRAPHIC REF	PART NUMBER	QTY	PART NAME 1 2 3 4 5 6 (PRODUCT LEVEL)	SEE PAGE
	1	1	**8F-1434**	2	LOCKWASHER (0.51MM THK)	
	2	1	**6V-8378**	2	NUT (10-32 THD)	
	3	1	**7X-0620**	2	WASHER-HARD (1.6MM THK)	
	4	1	**4D-1326**	2	LOCKWASHER (3/8IN)	
	5	1	**1B-2578**	2	NUT (3/8-16 THD)	
	6	1	**4L-6499**	2	WASHER	

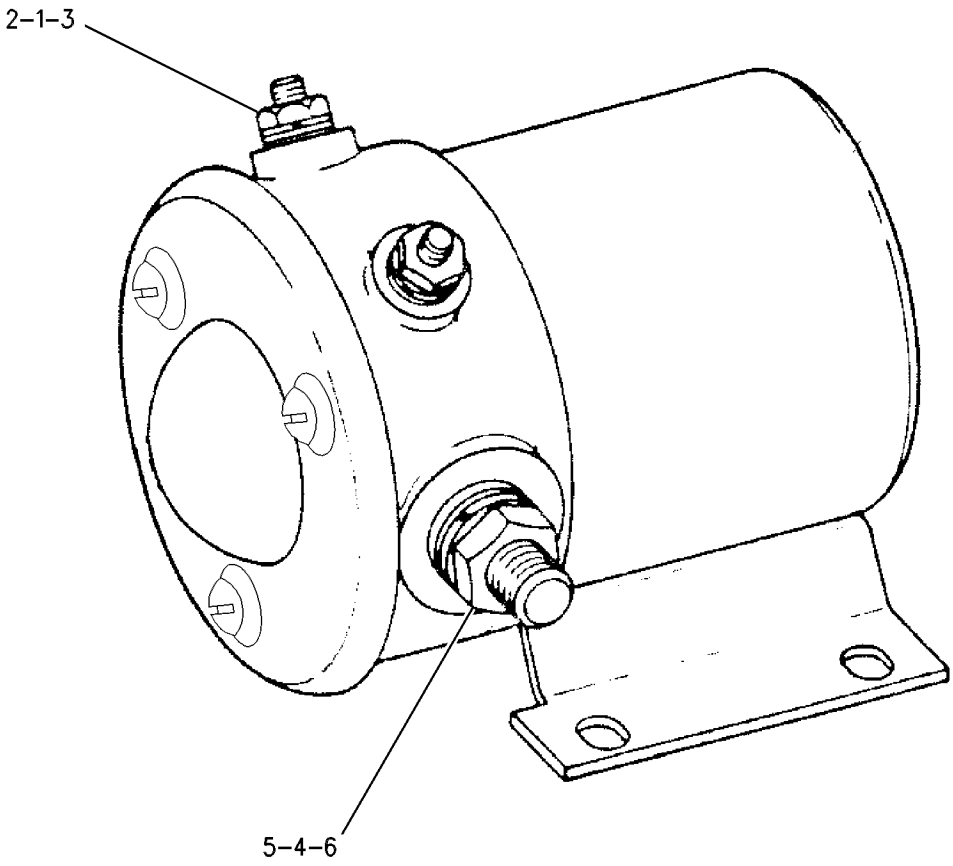

GRAPHIC #1 g00639786

142-3985 SWITCH GP-MAGNETIC

S/N: 7KK1-UP
24-32 VOLT
PART OF 3E-0154 SWITCH GP-MAGNETIC
AN ATTACHMENT

SMCS-7499 **i01053524**

NOTE	REF NO	GRAPHIC REF	PART NUMBER	QTY	PART NAME 1 2 3 4 5 6 (PRODUCT LEVEL)	SEE PAGE
	1	1	**8F-1434**	2	LOCKWASHER (0.51MM THK)	
	2	1	**6V-8378**	2	NUT (10-32 THD)	
	3	1	**7X-0620**	2	WASHER-HARD (1.6MM THK)	
	4	1	**9F-5644**	2	LOCKWASHER (9.93MM ID)	
	5	1	**1B-2578**	2	NUT (3/8-16 THD)	

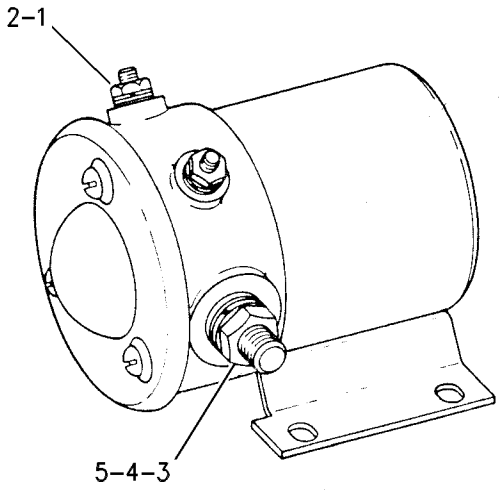

GRAPHIC #1 g00287483

167-0138 SWITCH GP-MAGNETIC

S/N: 7KK1-UP

PART OF 158-8772 WIRING GP-RELAY PANEL

SMCS-7499 **i01406953**

NOTE	REF NO	GRAPHIC REF	PART NUMBER	QTY	PART NAME 1 2 3 4 5 6 (PRODUCT LEVEL)	SEE PAGE
	1	1	**4F-2294**	2	NUT-JAM (5/16-24 THD)	
	2	1	**6V-8186**	2	NUT-FULL (5/16-24 THD)	
	3	1	**155-2270**	1	KIT-CONNECTING PLUG (2 PIN)	
					(INCLUDES PLUG AS AND WEDGE)	
	4	1	**8T-8730**	2	SOCKET-CONNECTOR	
	5	1	**102-8812**	1	SEAL-INTERFACE	

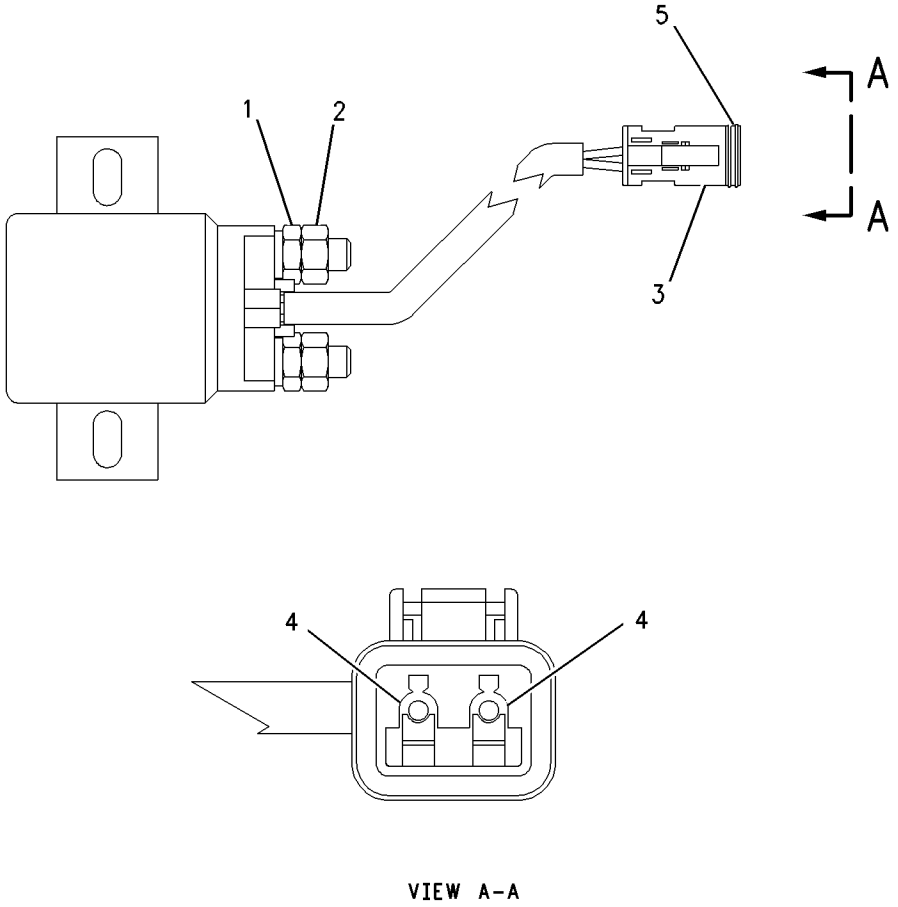

VIEW A-A

GRAPHIC #1 g00725773

9G-7641 SWITCH GP-START

S/N: 7KK1-UP

PART OF 8X-9007 WIRING GP-SHIFT CONSOLE

SMCS-1416 **i01449535**

NOTE	REF NO	GRAPHIC REF	PART NUMBER	QTY	PART NAME 1 2 3 4 5 6 (PRODUCT LEVEL)	SEE PAGE
	1	1	**6V-8362**	4	SCREW-MACHINE (8-32X0.31 IN)	
	2	1	**9B-7233**	4	LOCKWASHER	
	3	1	**7T-6799**	1	NUT-MOUNTING	

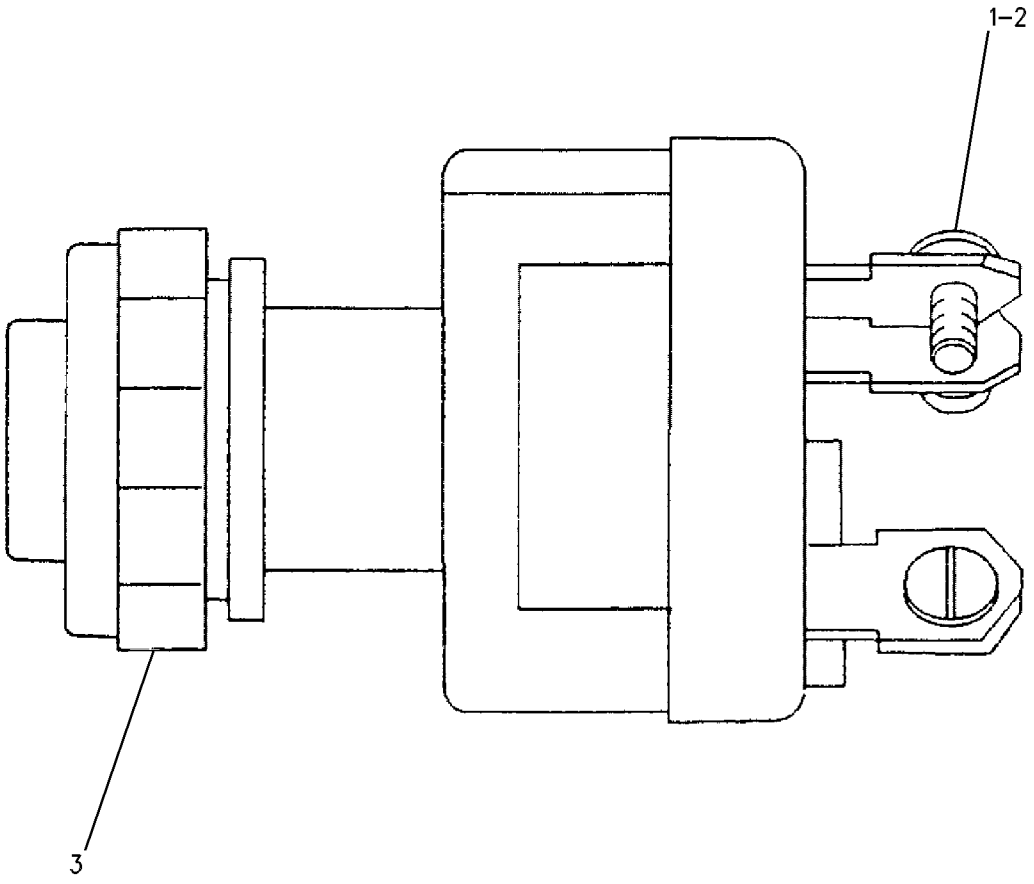

GRAPHIC #1 g00606018

3E-0155 SWITCH GP-WIPER

S/N: 7KK1-UP
24 VOLT. INTERMITTENT
PART OF 8X-8972 WIRING GP-CAB

SMCS-7305, 7332 **i01303559**

NOTE	REF NO	GRAPHIC REF	PART NUMBER	QTY	PART NAME 1 2 3 4 5 6 (PRODUCT LEVEL)	SEE PAGE
C	1	1	**102-8806**	1	KIT-RECEPTACLE (8 PIN)	
					(INCLUDES RECEPTACLE AS AND WEDGE)	
	2	1	**7T-9302**	1	KNOB-WIPER SWITCH	
		1	**014-0816**	1	SETSCREW	
	3	1	**8T-8737**	1	PLUG-SEAL	
	4	1	**3E-3389**	1	WEDGE-RECEPTACLE LOCK	
C	5	1	**8T-8729**	3	PIN-CONNECTOR	
	6	1	**6V-8369**	1	NUT (7/16-28 THD)	
	7	1	**2H-3920**	1	LOCKWASHER (11.38MM ID)	
C	8	1	**9W-0852**	4	PIN-CONNECTOR	

C-CHANGE FROM PREVIOUS TYPE

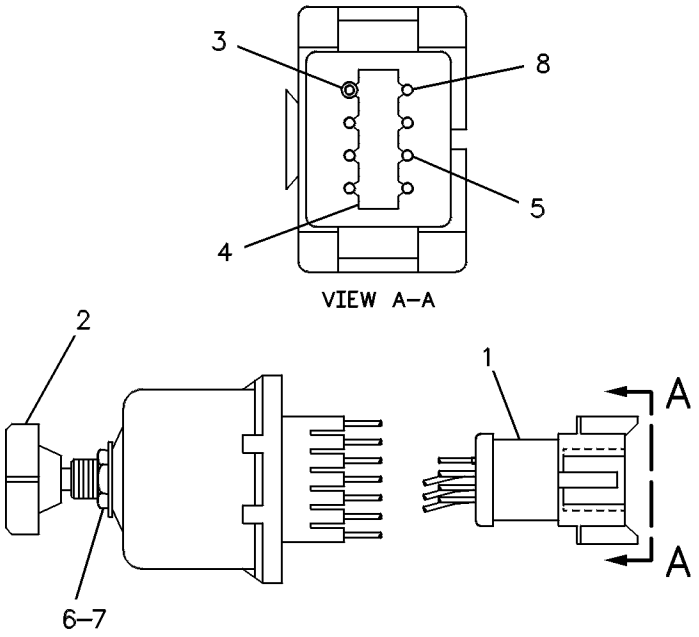

GRAPHIC #1 g00120668

8X-8972 WIRING GP-CAB

S/N: 7KK1-UP
PART OF 8X-8401 CAB AR
TYPE 1

SMCS-1408 **i01369389**

NOTE	REF NO	GRAPHIC REF	PART NUMBER	QTY	PART NAME 1 2 3 4 5 6 (PRODUCT LEVEL)	SEE PAGE
Y	1	1	**3E-0155**	1	SWITCH GP-WIPER (24 VOLT) (FRONT WIPER)	317
	2	1	**3V-4694**	2	PLUG-BUTTON	
	3	1	**117-2101**	1	COVER	
	4	1	**117-2102**	1	PANEL	
	5	1	**117-2104**	1	COVER	
	6	1	**117-2146**	1	PLATE AS	
M		1	**8T-3612**	4	NUT-WELD (M8X1.25 THD)	
	7	1	**125-6894**	1	COVER	
	8	1	**129-1670**	1	HARNESS AS-RADIO	
		1	**155-2260**	1	KIT-CONNECTING PLUG (3 PIN) (DOME LAMP)	
					(INCLUDES PLUG AS & WEDGE)	
		1	**102-8805**	1	KIT-RECEPTACLE (6 PIN) (RADIO)	
					(INCLUDES RECEPTACLE AS & WEDGE)	
	9	1	**137-5226**	1	HARNESS AS-OPERATOR CONTROLS	
		1	**155-2265**	1	KIT-CONNECTING PLUG (8 PIN)	
					(INCLUDES PLUG AS & WEDGE)	
		1	**9X-1339**	1	RECEPTACLE AS (40 PIN)	
	10	1	**137-5227**	1	HARNESS AS-CAB	
		1	**155-2270**	3	KIT-CONNECTING PLUG (2 PIN)	
					(EACH INCLUDES PLUG AS & WEDGE)	
		1	**155-2260**	1	KIT-CONNECTING PLUG (3 PIN)	
					(INCLUDES PLUG AS & WEDGE)	
		1	**102-8803**	1	KIT-RECEPTACLE (3 PIN)	
					(INCLUDES RECEPTACLE AS & WEDGE)	
		1	**155-2274**	4	KIT-CONNECTING PLUG (6 PIN)	
					(EACH INCLUDES PLUG AS & WEDGE)	
		1	**155-2265**	1	KIT-CONNECTING PLUG (8 PIN)	
					(INCLUDES PLUG AS & WEDGE)	
		1	**9X-0141**	1	PLUG AS-CONNECTOR (40 PIN)	
		1	**9X-0146**	1	RECEPTACLE AS (24 PIN)	
	11	1	**152-2675**	1	BRACKET	
	12	1	*161-2020*	1	CONTROL GP-POWER TRAIN	
		1	**161-2019**	1	SOFTWARE GP-POWER TRAIN	
	13	1	**119-1733**	1	CONVERTER-POWER (24 VOLT TO 12 VOLT) (5 AMP)	
	14	1	**119-4436**	1	SWITCH AS-ROTARY (REAR WIPER)	
		1	**7T-9303**	1	SWITCH GP-WIPER	
		1	**2H-3920**	1	LOCKWASHER	
		1	**6V-8369**	1	NUT (7/16-28 THD)	
		1	**110-7885**	1	KNOB-WIPER SWITCH	
Y	15	1	**3E-6466**	2	LAMP GP-SIGNAL	256
	16	1	**3E-8646**	1	CONVERTER-POWER (24 VOLT TO 12 VOLT)(25 AMP)	
	17	1	**3K-8782**	6	FUSE (10 AMP)	
	18	1	**4K-5122**	6	HOLDER AS-FUSE	
					(EACH INCLUDES)	
		1	**7N-2867**	1	CAP-FUSE HOLDER	
M	19	1	**5C-2890**	6	NUT (M6X1 THD)	
	20	1	**5P-8439**	4	GROMMET	
M	21	1	**6V-5219**	4	BOLT (M8X1.25X40MM)	
	22	1	**6V-8928**	1	HOOK-COAT	
	23	1	**6Y-6584**	1	STRAP AS-GROUND	
	24	1	**8M-2772**	3	CLIP	
	25	1	**8T-4121**	9	WASHER-HARD (11X21X2.5MM THK)	
M	26	1	**8T-4136**	3	BOLT (M10X1.5X25MM)	
M	27	1	**8T-4137**	6	BOLT (M10X1.5X20MM)	
M	28	1	**8T-4179**	2	BOLT (M12X1.75X20MM)	

8X-8972 **WIRING GP-CAB** ***(contd.)*** **i01369389**

NOTE	REF NO	GRAPHIC REF	PART NUMBER	QTY	PART NAME 1 2 3 4 5 6 (PRODUCT LEVEL)	SEE PAGE
	29	1	**8T-4223**	2	WASHER-HARD (13.5X25.5X3MM THK)	
	30	1	**8T-9655**	8	MOUNT (ISOLATION)	
	31	1	**9N-0869**	4	WASHER-HARD (8.8X25.5X2MM THK)	
M	32	1	**9X-1046**	10	SCREW (M4X0.7X18MM)	
M	33	1	**9X-2043**	12	SCREW-TRUSS HEAD (M6X1X14MM)	
M	34	1	**9X-2045**	1	SCREW-TRUSS HEAD (M6X1X20MM)	
	35	1	**9X-8256**	6	WASHER (6.6X12X2MM THK)	
	36A	1	**3E-9330**	1	SWITCH AS (ON/OFF) (REAR DEFROSTER FAN)	
		1	**3E-8821**	1	ACTUATOR-ROCKER	
		1	**3E-8825**	1	LAMP (24 VOLT)	
	36B	1	**3E-9330**	1	SWITCH AS (ON/OFF) (FRONT DEFROSTER FAN)	
		1	**3E-8821**	1	ACTUATOR-ROCKER	
		1	**3E-8825**	1	LAMP (24 VOLT)	
	37	1	**102-9862**	1	SWITCH AS (BEACON)	
		1	**3E-8822**	1	ACTUATOR-ROCKER	
B	38	1	**3S-2093**	10	STRAP-CABLE	
	39	1	**8E-1123**	10	CLIP	
	40	1	**154-7096**	10	CLIP	

B-USE AS REQUIRED
M-METRIC PART
Y-SEPARATE ILLUSTRATION

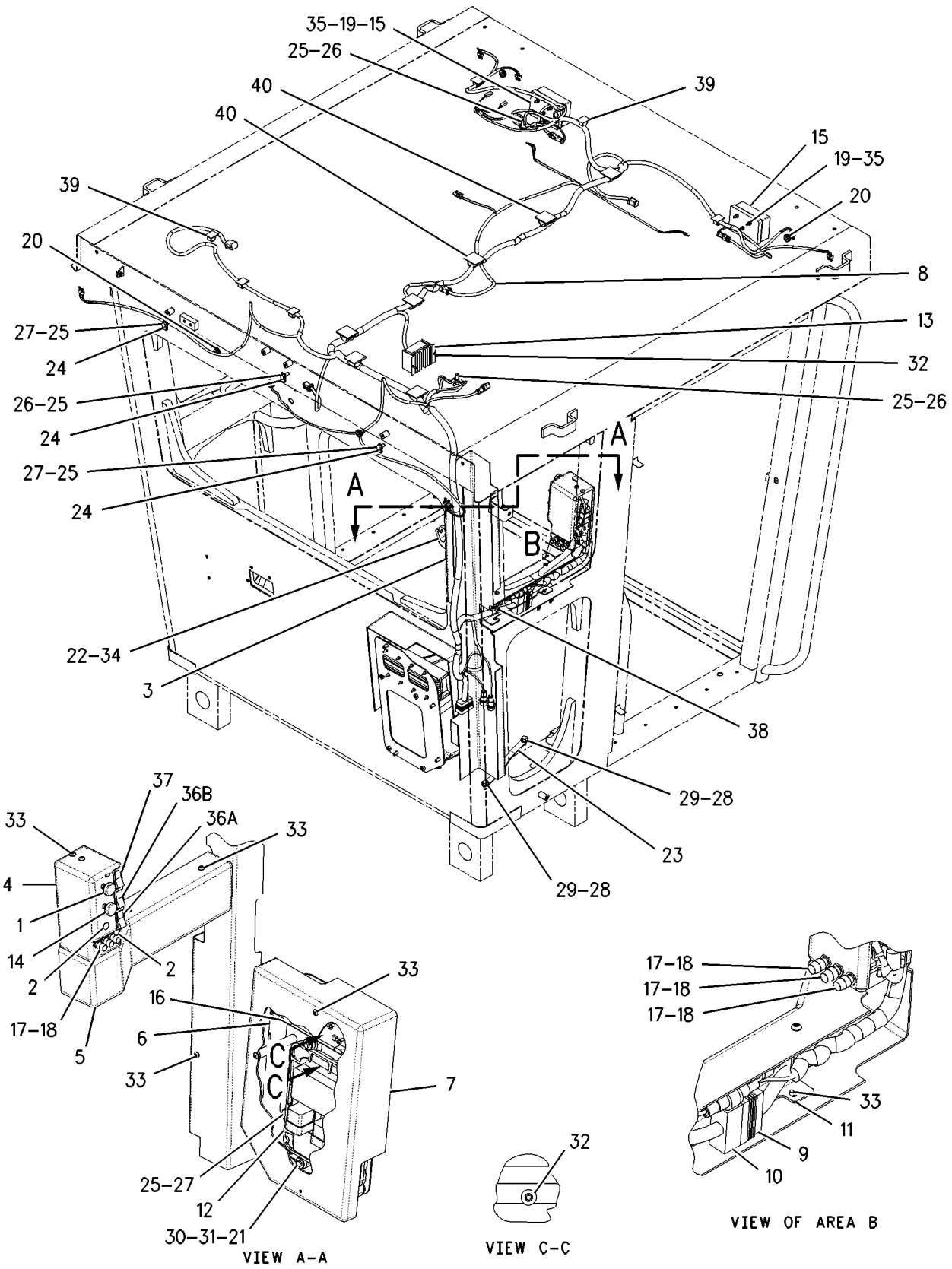

GRAPHIC #1 g00725632

MEMORANDA

8X-8972 WIRING GP-CAB

S/N: 7KK1-UP
PART OF 8X-8401 CAB AR
TYPE 2

SMCS-1408 **i01369392**

NOTE	REF NO	GRAPHIC REF	PART NUMBER	QTY	PART NAME 1 2 3 4 5 6 (PRODUCT LEVEL)	SEE PAGE
Y	1	1	**3E-0155**	1	SWITCH GP-WIPER (24 VOLT) (FRONT WIPER)	317
	2	1	**3V-4694**	2	PLUG-BUTTON	
	3	1	**117-2101**	1	COVER	
	4	1	**117-2102**	1	PANEL	
	5	1	**117-2104**	1	COVER	
	6	1	**117-2146**	1	PLATE AS	
M		1	**8T-3612**	4	NUT-WELD (M8X1.25 THD)	
	7	1	**125-6894**	1	COVER	
	8	1	**129-1670**	1	HARNESS AS-RADIO	
		1	**155-2260**	1	KIT-CONNECTING PLUG (3 PIN) (DOME LAMP)	
					(INCLUDES PLUG AS & WEDGE)	
		1	**102-8805**	1	KIT-RECEPTACLE (6 PIN) (RADIO)	
					(INCLUDES RECEPTACLE AS & WEDGE)	
	9	1	**137-5226**	1	HARNESS AS-OPERATOR CONTROLS	
		1	**155-2265**	1	KIT-CONNECTING PLUG (8 PIN)	
					(INCLUDES PLUG AS & WEDGE)	
		1	**9X-1339**	1	RECEPTACLE AS (40 PIN)	
	10	1	**137-5227**	1	HARNESS AS-CAB	
		1	**155-2270**	3	KIT-CONNECTING PLUG (2 PIN)	
					(EACH INCLUDES PLUG AS & WEDGE)	
		1	**155-2260**	1	KIT-CONNECTING PLUG (3 PIN)	
					(INCLUDES PLUG AS & WEDGE)	
		1	**102-8803**	1	KIT-RECEPTACLE (3 PIN)	
					(INCLUDES RECEPTACLE AS & WEDGE)	
		1	**155-2274**	4	KIT-CONNECTING PLUG (6 PIN)	
					(EACH INCLUDES PLUG AS & WEDGE)	
		1	**155-2265**	1	KIT-CONNECTING PLUG (8 PIN)	
					(INCLUDES PLUG AS & WEDGE)	
		1	**9X-0141**	1	PLUG AS-CONNECTOR (40 PIN)	
		1	**9X-0146**	1	RECEPTACLE AS (24 PIN)	
	11	1	**152-2675**	1	BRACKET	
Y	12	1	*186-5235*	1	ELECTRONICS GP-POWER TRAIN (MOTOR GRADER)	237
	13	1	**119-1733**	1	CONVERTER-POWER (24 VOLT TO 12 VOLT) (5 AMP)	
	14	1	**119-4436**	1	SWITCH AS-ROTARY (REAR WIPER)	
		1	**7T-9303**	1	SWITCH GP-WIPER	
		1	**2H-3920**	1	LOCKWASHER	
		1	**6V-8369**	1	NUT (7/16-28 THD)	
		1	**110-7885**	1	KNOB-WIPER SWITCH	
Y	15	1	**3E-6466**	2	LAMP GP-SIGNAL	256
	16	1	**3E-8646**	1	CONVERTER-POWER (24 VOLT TO 12 VOLT)(25 AMP)	
	17	1	**3K-8782**	6	FUSE (10 AMP)	
	18	1	**4K-5122**	6	HOLDER AS-FUSE	
					(EACH INCLUDES)	
		1	**7N-2867**	1	CAP-FUSE HOLDER	
M	19	1	**5C-2890**	6	NUT (M6X1 THD)	
	20	1	**5P-8439**	4	GROMMET	
M	21	1	**6V-5219**	4	BOLT (M8X1.25X40MM)	
	22	1	**6V-8928**	1	HOOK-COAT	
	23	1	**6Y-6584**	1	STRAP AS-GROUND	
	24	1	**8M-2772**	3	CLIP	
	25	1	**8T-4121**	9	WASHER-HARD (11X21X2.5MM THK)	
M	26	1	**8T-4136**	3	BOLT (M10X1.5X25MM)	
M	27	1	**8T-4137**	6	BOLT (M10X1.5X20MM)	
M	28	1	**8T-4179**	2	BOLT (M12X1.75X20MM)	
	29	1	**8T-4223**	2	WASHER-HARD (13.5X25.5X3MM THK)	

8X-8972 **WIRING GP-CAB** ***(contd.)*** **i01369392**

NOTE	REF NO	GRAPHIC REF	PART NUMBER	QTY	PART NAME 1 2 3 4 5 6 (PRODUCT LEVEL)	SEE PAGE
	30	1	**8T-9655**	8	MOUNT (ISOLATION)	
	31	1	**9N-0869**	4	WASHER-HARD (8.8X25.5X2MM THK)	
M	32	1	**9X-1046**	10	SCREW (M4X0.7X18MM)	
M	33	1	**9X-2043**	12	SCREW-TRUSS HEAD (M6X1X14MM)	
M	34	1	**9X-2045**	1	SCREW-TRUSS HEAD (M6X1X20MM)	
	35	1	**9X-8256**	6	WASHER (6.6X12X2MM THK)	
	36A	1	**3E-9330**	1	SWITCH AS (ON/OFF) (REAR DEFROSTER FAN)	
		1	**3E-8821**	1	ACTUATOR-ROCKER	
		1	**3E-8825**	1	LAMP (24 VOLT)	
	36B	1	**3E-9330**	1	SWITCH AS (ON/OFF) (FRONT DEFROSTER FAN)	
		1	**3E-8821**	1	ACTUATOR-ROCKER	
		1	**3E-8825**	1	LAMP (24 VOLT)	
	37	1	**102-9862**	1	SWITCH AS (BEACON)	
		1	**3E-8822**	1	ACTUATOR-ROCKER	
B	38	1	**3S-2093**	10	STRAP-CABLE	
	39	1	**8E-1123**	10	CLIP	
	40	1	**154-7096**	10	CLIP	

B-USE AS REQUIRED
M-METRIC PART
Y-SEPARATE ILLUSTRATION

8X-8972 **WIRING GP-CAB** ***(contd.)*** **i01369392**

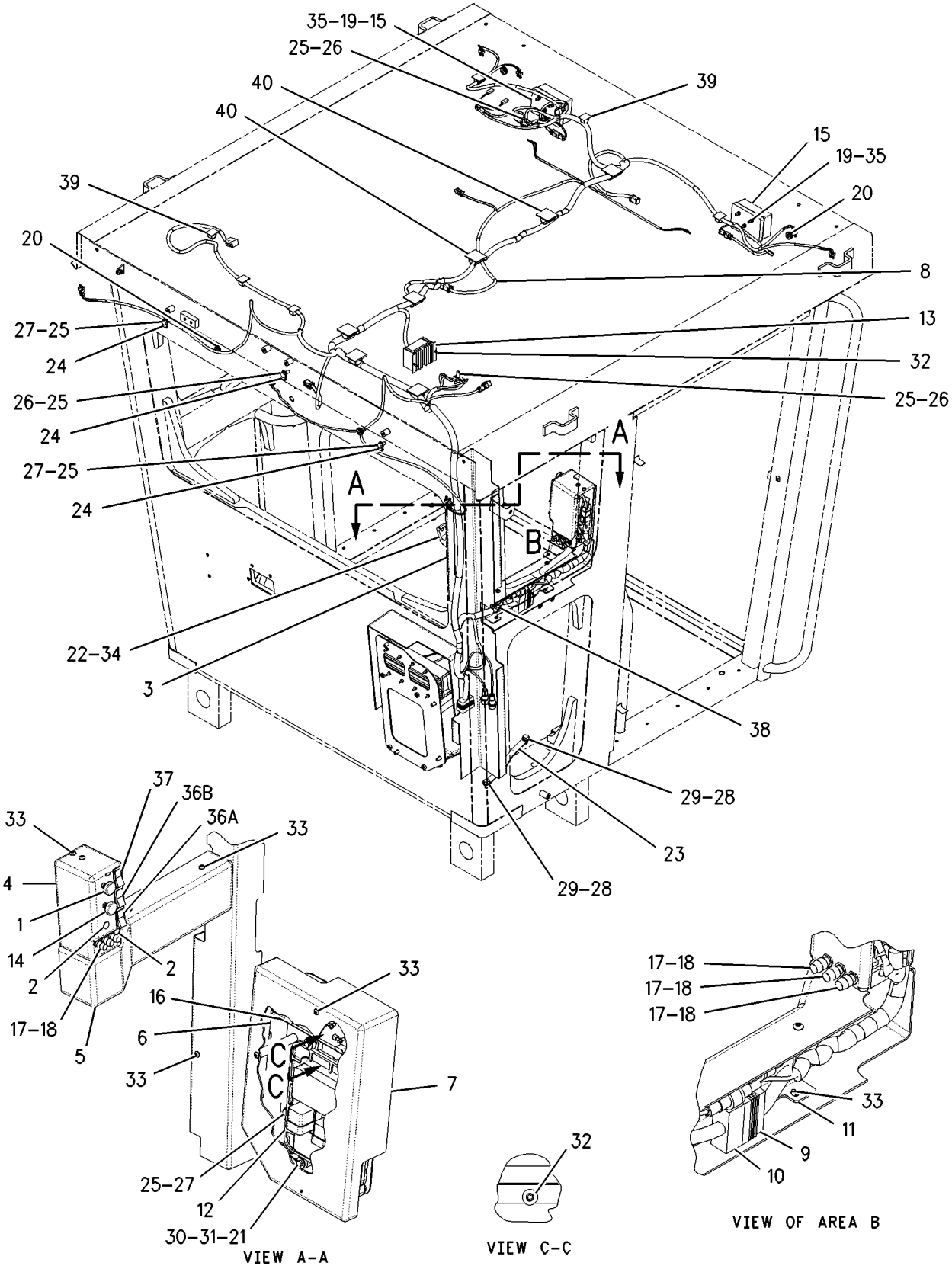

GRAPHIC #1 g00725632

MEMORANDA

8X-8972 WIRING GP-CAB

S/N: 7KK1-UP
PART OF 8X-8401 CAB AR
TYPE 3

SMCS-1408 **i01497956**

NOTE	REF NO	GRAPHIC REF	PART NUMBER	QTY	PART NAME 1 2 3 4 5 6 (PRODUCT LEVEL)	SEE PAGE
Y	1	1	**3E-0155**	1	SWITCH GP-WIPER (24 VOLT) (FRONT WIPER)	317
	2	1	**3V-4694**	2	PLUG-BUTTON	
	3	1	**117-2101**	1	COVER	
	4	1	**117-2102**	1	PANEL	
	5	1	**117-2104**	1	COVER	
	6	1	**117-2146**	1	PLATE AS	
M		1	**8T-3612**	4	NUT-WELD (M8X1.25 THD)	
	7	1	**125-6894**	1	COVER	
	8	1	**129-1670**	1	HARNESS AS-RADIO	
		1	**155-2260**	1	KIT-CONNECTING PLUG (3 PIN) (DOME LAMP)	
					(INCLUDES PLUG AS & WEDGE)	
		1	**102-8805**	1	KIT-RECEPTACLE (6 PIN) (RADIO)	
					(INCLUDES RECEPTACLE AS & WEDGE)	
	9	1	**137-5226**	1	HARNESS AS-OPERATOR CONTROLS	
		1	**155-2265**	1	KIT-CONNECTING PLUG (8 PIN)	
					(INCLUDES PLUG AS & WEDGE)	
		1	**9X-1339**	1	RECEPTACLE AS (40 PIN)	
	10	1	**197-4927**	1	HARNESS AS-CAB	
		1	**155-2270**	3	KIT-CONNECTING PLUG (2 PIN) (TURN SIGNALS,BEACON)	
					(INCLUDES PLUG AS & WEDGE)	
		1	**155-2274**	4	KIT-CONNECTING PLUG (6 PIN) (SPEAKERS,CONVERTER,WIPERS)	
					(INCLUDES PLUG AS & WEDGE)	
		1	**155-2265**	1	KIT-CONNECTING PLUG (8 PIN) (ENTERTAINMENT RADIO)	
					(INCLUDES PLUG AS & WEDGE)	
		1	**9X-0141**	13	PLUG AS-CONNECTOR (40 PIN)	
		1	**9X-0146**	1	RECEPTACLE AS (24 PIN)	
	11	1	**152-2675**	1	BRACKET	
Y	12	1	*186-5235*	1	ELECTRONICS GP-POWER TRAIN (MOTOR GRADER)	237
	13	1	**119-1733**	1	CONVERTER-POWER (24 VOLT TO 12 VOLT) (5 AMP)	
	14	1	**119-4436**	1	SWITCH AS-ROTARY (WIPER/WASHER)(REAR)	
		1	**7T-9303**	1	SWITCH AS-WIPER	
		1	**2H-3920**	1	LOCKWASHER	
		1	**6V-8369**	1	NUT (7/16-28 THD)	
		1	**110-7885**	1	KNOB-WIPER SWITCH	
Y	15	1	**3E-6466**	2	LAMP GP-SIGNAL	256
	16	1	**3E-8646**	1	CONVERTER-POWER (24 VOLT TO 12 VOLT)(25 AMP)	
	17	1	**3K-8782**	6	FUSE (10 AMP)	
	18	1	**4K-5122**	6	HOLDER AS-FUSE	
					(EACH INCLUDES)	
		1	**7N-2867**	1	CAP-FUSE HOLDER	
M	19	1	**5C-2890**	6	NUT (M6X1 THD)	
	20	1	**5P-8439**	4	GROMMET	
M	21	1	**6V-5219**	4	BOLT (M8X1.25X40MM)	
	22	1	**6V-8928**	1	HOOK-COAT	
	23	1	**6Y-6584**	1	STRAP AS-GROUND	
	24	1	**8M-2772**	3	CLIP	
	25	1	**8T-4121**	7	WASHER-HARD (11X21X2.5MM THK)	
M	26	1	**8T-4136**	1	BOLT (M10X1.5X25MM)	
M	27	1	**8T-4137**	6	BOLT (M10X1.5X20MM)	
M	28	1	**8T-4179**	4	BOLT (M12X1.75X20MM)	
	29	1	**8T-4223**	4	WASHER-HARD (13.5X25.5X3MM THK)	
	30	1	**8T-9655**	8	MOUNT (ISOLATION)	

8X-8972 **WIRING GP-CAB** ***(contd.)*** **i01497956**

NOTE	REF NO	GRAPHIC REF	PART NUMBER	QTY	PART NAME 1 2 3 4 5 6 (PRODUCT LEVEL)	SEE PAGE
	31	1	**9N-0869**	4	WASHER-HARD (8.8X25.5X2MM THK)	
M	32	1	**9X-1046**	10	SCREW (M4X0.7X18MM)	
M	33	1	**9X-2043**	12	SCREW-TRUSS HEAD (M6X1X14MM)	
M	34	1	**9X-2045**	1	SCREW-TRUSS HEAD (M6X1X20MM)	
	35	1	**9X-8256**	6	WASHER (6.6X12X2MM THK)	
	36A	1	**3E-9330**	1	SWITCH AS (ON/OFF) (REAR DEFROSTER FAN)	
		1	**3E-8821**	1	ACTUATOR-ROCKER	
		1	**3E-8825**	1	LAMP (24 VOLT)	
	36B	1	**3E-9330**	1	SWITCH AS (ON/OFF) (FRONT DEFROSTER FAN)	
		1	**3E-8821**	1	ACTUATOR-ROCKER	
		1	**3E-8825**	1	LAMP (24 VOLT)	
	37	1	**102-9862**	1	SWITCH AS (BEACON)	
		1	**3E-8822**	1	ACTUATOR-ROCKER	
B	38	1	**3S-2093**	10	STRAP-CABLE	
	39	1	**8E-1123**	10	CLIP	
	40	1	**154-7096**	10	CLIP	

B-USE AS REQUIRED
M-METRIC PART
Y-SEPARATE ILLUSTRATION

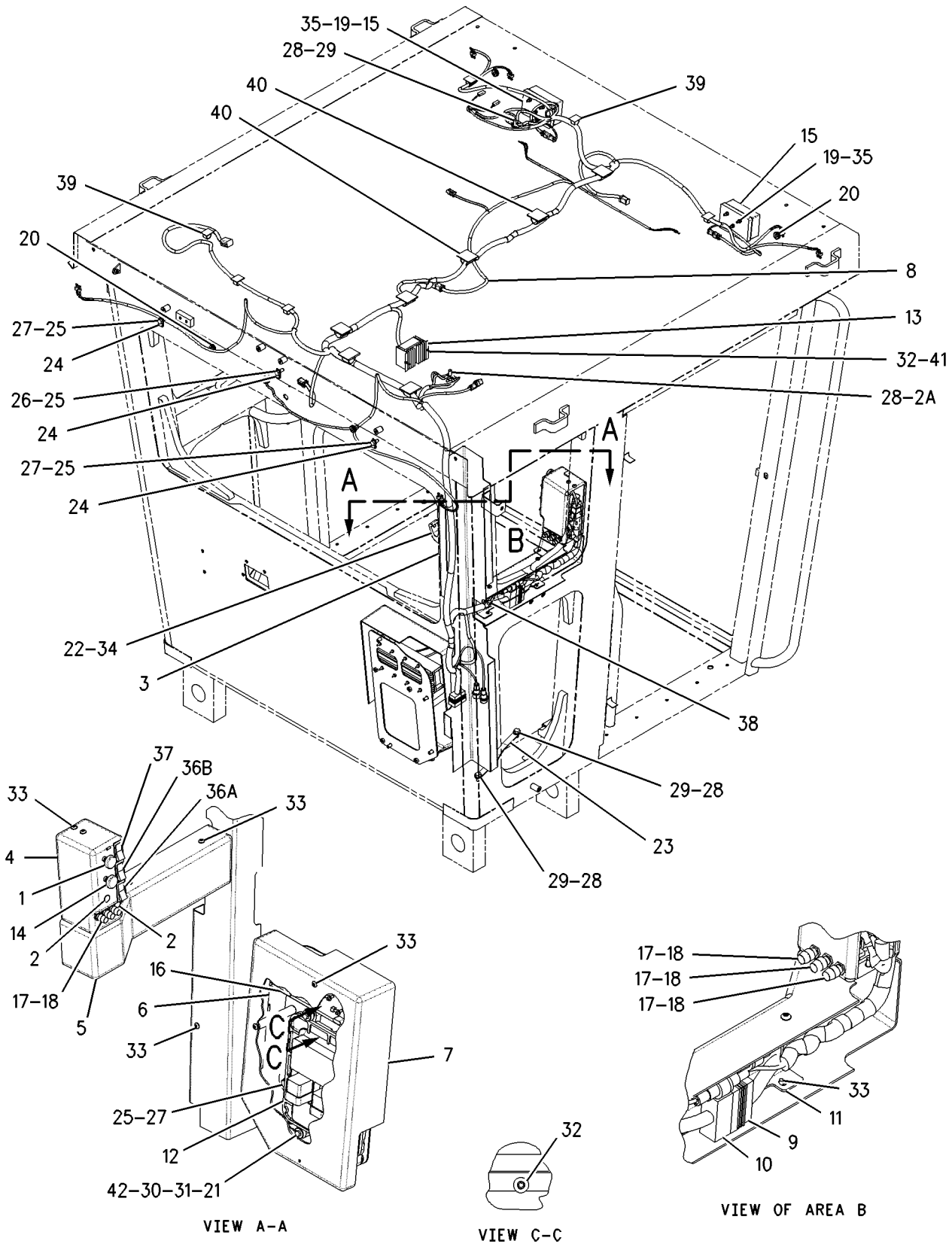

GRAPHIC #1 g00779000

MEMORANDA

ELECTRICAL AND STARTING SYSTEM

130-3604 WIRING GP-COLD WEATHER

S/N: 7KK1-UP
PART OF 8X-9065 STARTING AR-COLD WEATHER
AN ATTACHMENT

SMCS-1408 **i01373626**

NOTE	REF NO	GRAPHIC REF	PART NUMBER	QTY	PART NAME 1 2 3 4 5 6 (PRODUCT LEVEL)	SEE PAGE
	2	1	**2V-8652**	6	SPACER (6.75X10.32X10MM THK)	
	3	1	**4K-6498**	1	BLOCK-TERMINAL	
	4	1	**5H-4871**	2	PLUG-BUTTON	
	5	1	**5N-5536**	4	BLOCK-FUSE	
	6	1	**6Y-6815**	8	GASKET AS (CONNECTOR)	
	7	1	**7X-6412**	1	RECEPTACLE AS	
		1	**9X-0259**	1	GASKET	
		1	**7X-3349**	4	SCREW-HEX HEAD (M12-24X19.5MM)	
	8	1	**7X-6414**	1	BOX	
	9	1	**8L-7593**	1	BUSHING-TERMINAL	
	10	1	**8X-5804**	1	STRAP AS-GROUND	
	11	1	**8X-6058**	1	WIRE AS	
	12	1	**8X-6634**	1	WIRE AS	
	13	1	**8X-6635**	1	WIRE AS	
	14	1	**8X-6643**	1	PANEL	
	15	1	**8X-7174**	1	PLATE	
	16	1	**9X-0259**	1	GASKET	
	17	1	**9X-8194**	2	JUMPER-STRIP	
	18	1	**109-9913**	1	BOX AS	
		1	**8X-4711**	2	BOSS AS (M12X1.75X20.0MM)	
	19	1	**138-3051**	1	WIRE AS	
	20	1	**138-3053**	1	HARNESS AS-THERMOSTAT (JACKET WATER HEATER)	
	21	1	**138-3055**	1	HARNESS AS-THERMOSTAT (ENGINE AIR)	
	22	1	**138-3057**	1	WIRE AS	
	23	1	**138-3059**	1	WIRE AS	
	24	1	**138-3061**	1	HARNESS AS-THERMOSTAT (TANDEM HOUSING)	
	25	1	**138-3063**	1	HARNESS AS-THERMOSTAT (HYDRAULIC TANK)	
	26	1	**138-3065**	1	WIRE AS	
	27	1	**138-3067**	1	WIRE AS	
	28	1	**122-2271**	2	FUSE (20 AMP)	
	29	1	**123-4106**	2	FUSE (25 AMP)	
	30	1	**1S-0994**	4	CLIP (20.64MM ID)	
	31	1	**4B-2051**	4	NUT (M12-24 THD)	
	32	1	**4B-4863**	6	WASHER (4.7X11X1.2MM THK)	
	33	1	**4D-7388**	3	CLIP (34.92MM ID)	
M	34	1	**5C-2874**	20	NUT (M5X.8 THD)	
M	35	1	**5C-7261**	2	NUT (M8X1.25 THD)	
	36	1	**6V-7978**	6	SCREW-MACHINE (10-32X0.375IN)	
	37	1	**7S-1912**	15	CLIP	
	38	1	**7X-0620**	4	WASHER-HARD (5.5X13X1.6MM THK)	
	39	1	**7X-3349**	4	SCREW-HEX HEAD (M12-24X19.5MM)	
	40	1	**8C-7507**	20	LOCKWASHER	
M	41	1	**8T-0289**	4	BOLT (M5X0.8X20MM)	
	42	1	**8T-4121**	5	WASHER-HARD (11X21X2.5MM THK)	
M	43	1	**8T-4136**	5	BOLT (M10X1.5X25MM)	
M	44	1	**8T-4189**	4	BOLT (M8X1.25X20MM)	
M	45	1	**8T-4192**	3	BOLT (M12X1.75X25MM)	
M	46	1	**8T-4195**	3	BOLT (M10X1.5X30MM)	
	47	1	**8T-4223**	3	WASHER-HARD (13.5X25.5X3MM THK)	
	48	1	**8T-4224**	8	WASHER-HARD (8.8X16X2MM THK)	
M	49	1	**8T-4908**	2	BOLT (M8X1.25X25MM)	
M	50	1	**8T-6693**	16	SCREW-MACHINE (M5X0.8X16MM)	
	51	1	**9F-9327**	4	SCREW-MACHINE (10-32X.375IN)	

M-METRIC PART

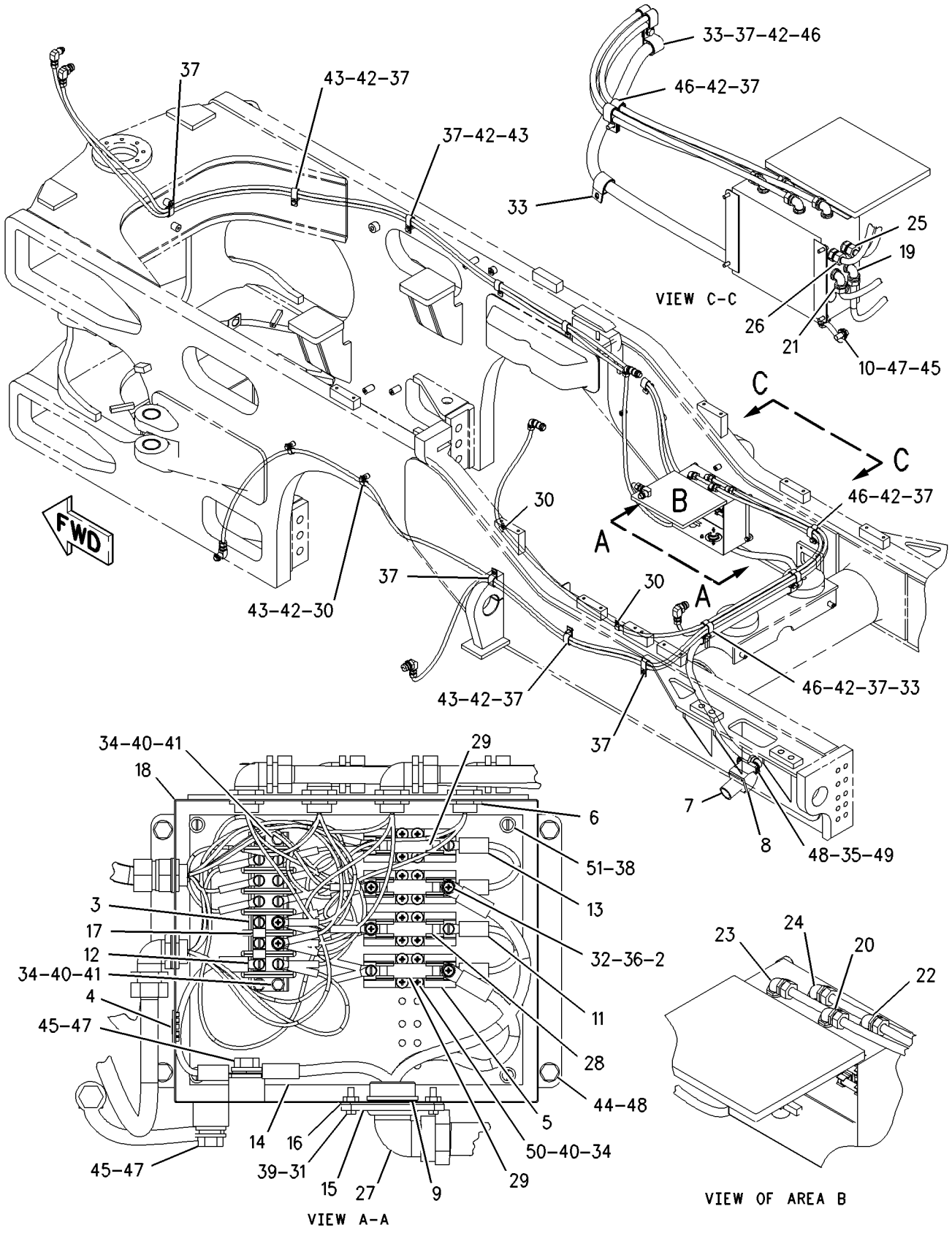

GRAPHIC #1 g00726096

ELECTRICAL AND STARTING SYSTEM

8X-9038 WIRING GP-ENGINE

S/N: 7KK1-93

PART OF 6I-0673 INSTALLATION AR-ENGINE

SMCS-1403, 1408 **i01498781**

NOTE	REF NO	GRAPHIC REF	PART NUMBER	QTY	PART NAME 1 2 3 4 5 6 (PRODUCT LEVEL)	SEE PAGE
	1	1	**3E-7842**	2	RESISTOR AS-CONNECTOR	
		1	**102-8802**	1	KIT-RECEPTACLE (2 PIN)	
					(INCLUDES RECEPTACLE AS & WEDGE)	
		1	**3E-3365**	1	WEDGE-RECEPTACLE LOCK (2 PIN)	
		1	**8T-8729**	2	PIN-CONNECTOR	
	2	1	**3S-2093**	18	STRAP-CABLE	
	3	1	**9G-9150**	3	CLIP	
	4	1	**9U-2277**	3	CLIP AS	
	5	1	**9X-3495**	2	CLIP AS	
	6	1	**106-8704**	1	SUPPRESSOR AS-ARC	
		1	**102-8802**	1	KIT-RECEPTACLE (2 PIN)	
					(INCLUDES RECEPTACLE AS & WEDGE)	
		1	**3E-3365**	1	WEDGE-RECEPTACLE LOCK (2 PIN)	
		1	**8T-8729**	2	PIN-CONNECTOR	
	7	1	**155-3625**	1	HARNESS AS	
		1	**102-8807**	10	KIT-CONNECTING PLUG (2 PIN)	
					(INCLUDES PLUG AS & WEDGE)	
		1	**102-8802**	2	KIT-RECEPTACLE (2 PIN)	
					(INCLUDES RECEPTACLE AS & WEDGE)	
		1	**102-8808**	1	KIT-CONNECTING PLUG (3 PIN)	
					(INCLUDES PLUG AS & WEDGE)	
		1	**102-8803**	1	KIT-RECEPTACLE (3 PIN)	
					(INCLUDES RECEPTACLE AS & WEDGE)	
Y	8	1	**100-3055**	1	SENSOR GP-TEMPERATURE (TORQUE CONVERTER)	283
	9	1	**114-5333**	1	SWITCH AS-PRESSURE (HIGH/LOW)(A/C)	
		1	**102-8802**	1	KIT-RECEPTACLE (2 PIN)	
					(INCLUDES RECEPTACLE AS & WEDGE)	
		1	**3E-3365**	1	WEDGE-RECEPTACLE LOCK (2 PIN)	
		1	**8T-8729**	2	PIN-CONNECTOR	
Y	10	1	**122-8863**	1	SENSOR GP-SPEED (TORQUE CONVERTER)	281
	11	1	**3J-1907**	2	SEAL-O-RING	
	12	1	**3P-2404**	4	CLIP	
	13	1	**4P-7581**	1	CLIP	
	14	1	**4P-8134**	2	CLIP	
	15	1	**5K-3294**	3	CLIP	
	16	1	**5P-8245**	2	WASHER-HARD (13.5X25.5X3MM THK)	
	17	1	**6D-4244**	2	CLIP	
	18	1	**6V-2383**	1	CLIP	
	19	1	**5N-2840**	1	CLIP	
	20	1	**8T-9383**	2	BOLT (1/2-13X0.75 IN)	
	21	1	**9X-7378**	1	SEAL-O-RING	
	22	1	**9X-8250**	2	CLIP	
	23	1	**9X-0261**	1	ADAPTER	
	24	1	**8T-0119**	1	ELBOW	
	25	1	**5P-6944**	1	ADAPTER-STRAIGHT THREAD	
	26	1	**3K-0360**	2	SEAL-O-RING	
	27	1	**3J-7354**	1	SEAL-O-RING	
Y	28	1	**153-3962**	1	SENSOR GP-PRESSURE (LOCK UP CLUTCH)	271
	29	1	**4S-4455**	1	CLIP	

Y-SEPARATE ILLUSTRATION

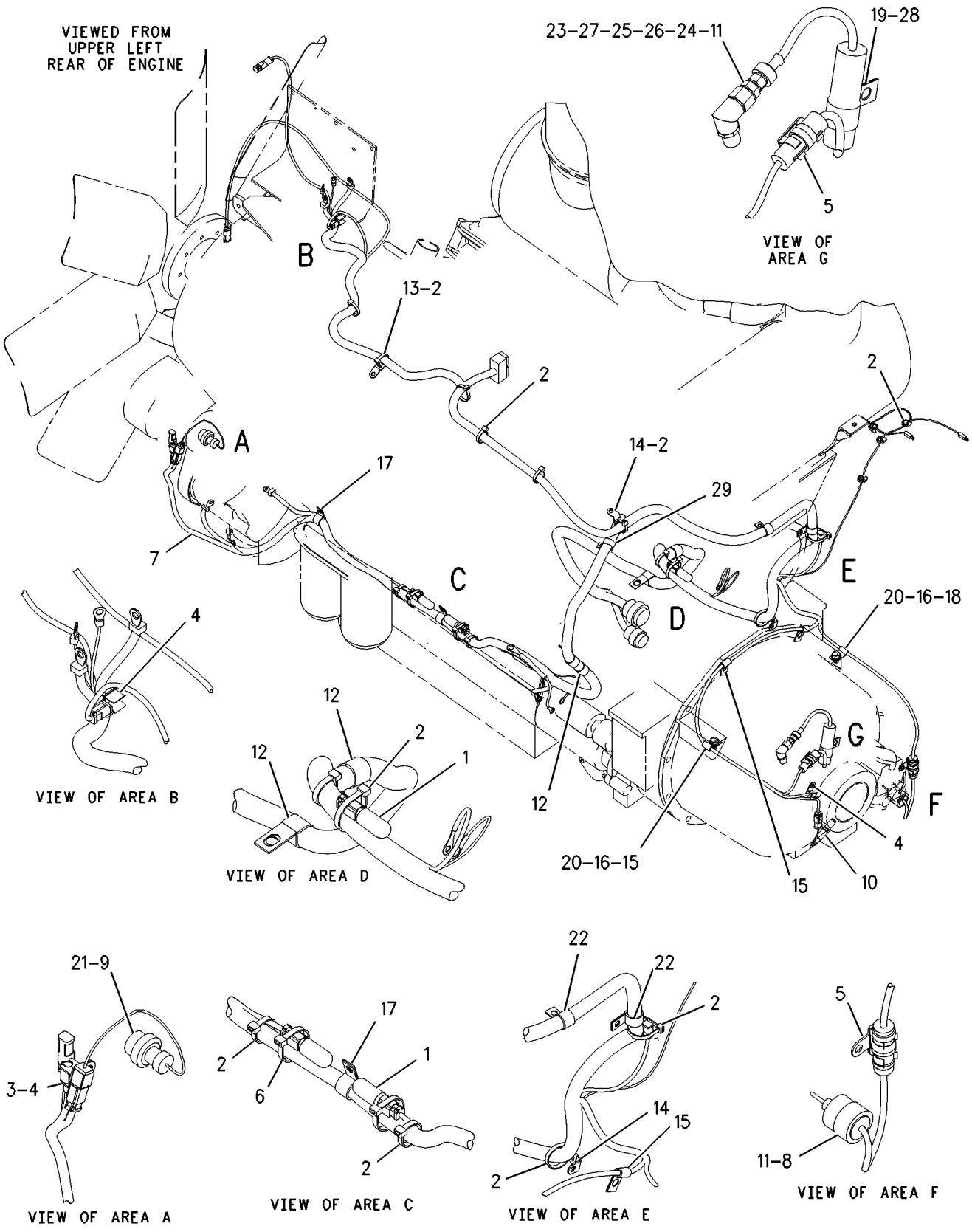

GRAPHIC #1 g00778364

118-9692 WIRING GP-ENGINE

S/N: 80M1-UP

PART OF 123-0200 ENGINE AR

SMCS-1403, 1408 **i01448926**

NOTE	REF NO	GRAPHIC REF	PART NUMBER	QTY	PART NAME 1 2 3 4 5 6 (PRODUCT LEVEL)	SEE PAGE
	1	1	**111-3247**	1	HARNESS AS-ENGINE	
		1	**8T-8737**	7	PLUG-SEAL	
		1	**101-0205**	1	PLUG AS-CONNECTOR	
		1	**110-6844**	1	SEAL	
		1	**101-0204**	1	PLUG AS-CONNECTOR (40 PIN)	
		1	**110-6844**	1	SEAL	
		1	**155-2271**	6	KIT-CONNECTING PLUG (4 PIN)	
		1	**155-2260**	3	KIT-CONNECTING PLUG (3 PIN)	
		1	**155-2270**	3	KIT-CONNECTING PLUG (2 PIN)	
					(EACH KIT-CONNECTING PLUG INCLUDES PLUG AS & WEDGE)	
		1	**9X-1343**	1	RECEPTACLE AS (40 PIN)	
		1	**102-8803**	6	KIT-RECEPTACLE (3 PIN)	
		1	**102-8802**	1	KIT-RECEPTACLE (2 PIN)	
					(EACH KIT-RECEPTACLE INCLUDES RECEPTACLE AS & WEDGE)	
	2	1	**110-8213**	1	BRACKET AS	
		1	**4M-0200**	1	STUD-WELD	
	3	1	**9X-6258**	4	SCREW-MACHINE (6-32X.50 IN)	
	4	1	**4B-5324**	4	WASHER (3.9X9.6X1.2MM THK)	
	5	1	**4P-7581**	8	CLIP	
	6	1	**3S-2093**	20	STRAP-CABLE	
	7	1	**121-0596**	1	WIRE AS	
	8	1	**130-5300**	1	CLIP	
	9	1	**4P-8134**	4	CLIP (FLAT)	
	10	1	**0S-1594**	1	BOLT (3/8-16X1 IN)	
	11	1	**5M-2894**	2	WASHER-HARD (10.2X18.5X2.5MM THK)	
	12	1	**6V-8801**	2	NUT (3/8-16 THD)	
	13	1	**8T-4896**	3	WASHER-HARD (10.2X18.5X2.5MM THK)	
	14	1	**0S-0509**	1	BOLT (3/8-16X0.75 IN)	
	15	1	**4D-7388**	1	CLIP	
	16	1	**0S-1620**	1	BOLT (1/2-13X0.75 IN)	
	17	1	**5P-8245**	1	WASHER-HARD (13.5X25.5X3MM THK)	
	18	1	**8M-2772**	1	CLIP	
	19	1	**4P-7429**	1	CLIP	

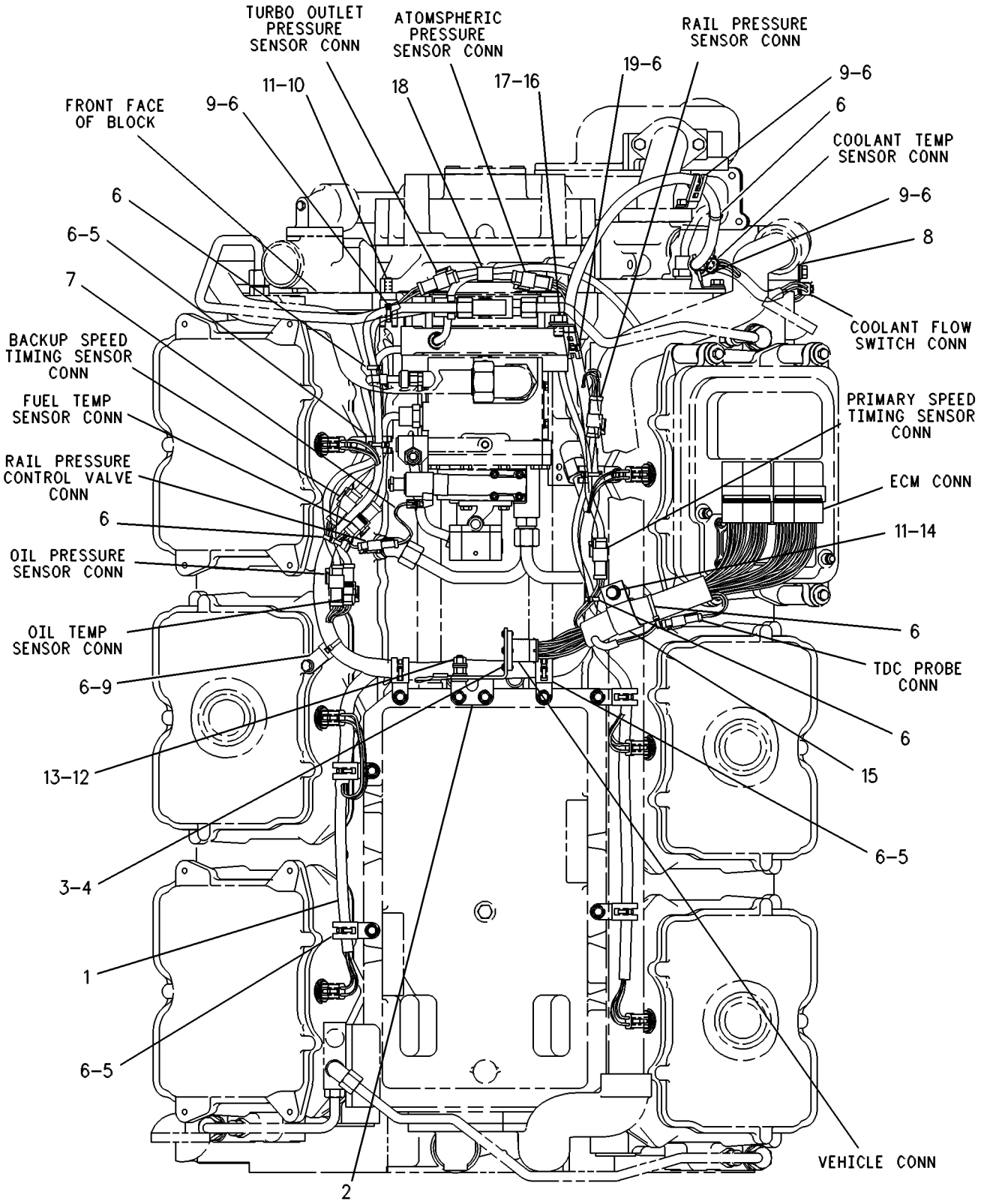

TOP VIEW

GRAPHIC #1 g00122724

8X-9009 WIRING GP-FRONT

S/N: 7KK1-94

PART OF 8X-8402 CHASSIS AR

SMCS-1408 **i01467327**

NOTE	REF NO	GRAPHIC REF	PART NUMBER	QTY	PART NAME 1 2 3 4 5 6 (PRODUCT LEVEL)	SEE PAGE
J	1	1	**3E-7689**	1	SWITCH AS-PRESSURE (PARK BRAKE)	
		1	**3E-3371**	1	WEDGE-RECEPTACLE LOCK (3 PIN)	
		1	**8T-8729**	3	PIN-CONNECTOR	
	2	1	**7K-1181**	2	STRAP-CABLE	
	3	1	**3T-3045**	1	CLIP AS	
	4	1	**6Y-6584**	1	STRAP AS-GROUND	
	5	1	**8X-5804**	1	STRAP AS-GROUND	
	6	1	**9G-9150**	2	CLIP	
L	7	1	**106-8704**	1	SUPPRESSOR AS-ARC	
		1	**3E-3365**	1	WEDGE-RECEPTACLE LOCK (2 PIN)	
		1	**8T-8729**	2	PIN-CONNECTOR	
	8	1	**160-6244**	1	HARNESS AS-FRONT LIGHTING	
		1	**102-8802**	2	KIT-RECEPTACLE (2 PIN) (AUTO LUB TIMER/SOLENOID)	
					(INCLUDES RECEPTACLE AS & WEDGE)	
		1	**102-8809**	1	KIT-CONNECTING PLUG (4 PIN) (LH BLADE FLOODLAMP)	
					(INCLUDES PLUG AS & WEDGE)	
		1	**102-8805**	1	KIT-RECEPTACLE (6 PIN) (HORN RELAY)	
					(INCLUDES RECEPTACLE AS & WEDGE)	
	9	1	**130-0062**	1	PLATE AS	
	10	1	**033-8248**	7	CLIP	
	11	1	**109-0361**	1	FILM-INSTRUCTION (ENGINE SHUTDOWN)	
	12	1	**3E-5169**	1	GUARD-SWITCH (RED)	
	13	1	**3J-1907**	1	SEAL-O-RING	
	14	1	**3K-0360**	1	SEAL-O-RING	
	15	1	**4D-1836**	1	SWITCH-TOGGLE (1 POLE) (GROUND LEVEL SHUTOFF)	
	16	1	**5P-1076**	1	WASHER-HARD (13.5X30X4MM THK)	
	17	1	**5P-9085**	4	CLIP	
	18	1	**7G-7053**	4	GROMMET	
	19	1	**7T-0969**	1	HORN AS (24 VOLT)(LOW TONE) (LH)	
M		1	**8C-7581**	2	SCREW-MACHINE (M4X0.7X8MM)	
		1	**9B-7233**	2	LOCKWASHER	
	20	1	**7T-0970**	1	HORN AS (24 VOLT)(HIGH TONE) (RH)	
M		1	**8C-7581**	2	SCREW-MACHINE (M4X0.7X8MM)	
		1	**9B-7233**	2	LOCKWASHER	
	21	1	**7X-6212**	1	SWITCH AS-PRESSURE (BRAKE OIL)	
		1	**7N-7779**	1	SOCKET-CONNECTOR	
		1	**7N-7780**	2	PIN-CONNECTOR (BLADE)	
		1	**7N-7781**	1	HOUSING-RECEPTACLE	
	22	1	**8T-4121**	28	WASHER-HARD (11X21X2.5MM THK)	
M	23	1	**8T-4133**	2	NUT (M10X1.5 THD)	
M	24	1	**8T-4136**	4	BOLT (M10X1.5X25MM)	
M	25	1	**8T-4137**	20	BOLT (M10X1.5X20MM)	
M	26	1	**8T-4179**	5	BOLT (M12X1.75X20MM)	
	27	1	**8T-4223**	4	WASHER-HARD (13.5X25.5X3MM THK)	
M	28	1	**8T-6466**	2	BOLT (M10X1.50X60MM)	
	29	1	**9M-8406**	7	CLIP	
	30	1	**8M-2770**	9	CLIP	
					AVAILABLE REPAIR KIT(S):	
J			**102-8803**	1	KIT-RECEPTACLE (3 PIN)	
					(INCLUDES WEDGE & RECEPTACLE AS)	
L			**102-8802**	1	KIT-RECEPTACLE (2 PIN)	
					(INCLUDES WEDGE & RECEPTACLE AS)	

8X-9009 **WIRING GP-FRONT** ***(contd.)*** **i01467327**

J-PART(S) MARKED J INCLUDES KIT(S) MARKED J
L-PART(S) MARKED L INCLUDES KIT(S) MARKED L
M-METRIC PART

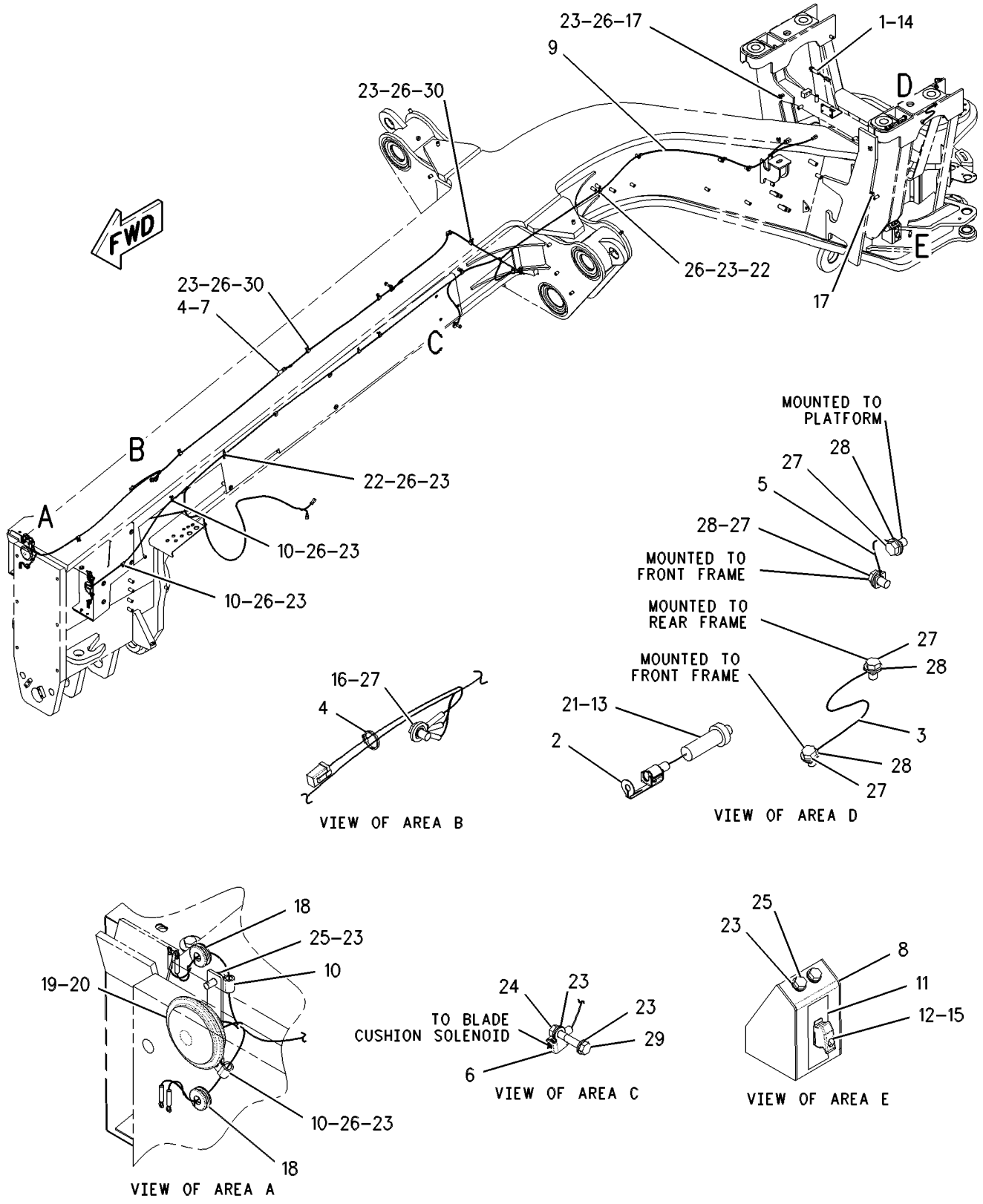

GRAPHIC #1 g00592614

MEMORANDA

ELECTRICAL AND STARTING SYSTEM

8X-9009 WIRING GP-FRONT

S/N: 7KK95-UP

PART OF 8X-8402 CHASSIS AR

SMCS-1408 **i01497323**

NOTE	REF NO	GRAPHIC REF	PART NUMBER	QTY	PART NAME 1 2 3 4 5 6 (PRODUCT LEVEL)	SEE PAGE
J	1	1	**3E-7689**	1	SWITCH AS-PRESSURE (PARK BRAKE)	
		1	**3E-3371**	1	WEDGE-RECEPTACLE LOCK (3 PIN)	
		1	**8T-8729**	3	PIN-CONNECTOR	
	2	1	**7K-1181**	1	STRAP-CABLE	
	3	1	**3T-3045**	1	CLIP AS	
	4	1	**6Y-6584**	1	STRAP AS-GROUND	
	5	1	**8X-5804**	1	STRAP AS-GROUND	
	8	1	**160-6244**	1	HARNESS AS-FRONT LIGHTING	
		1	**102-8802**	2	KIT-RECEPTACLE (2 PIN) (AUTO LUB TIMER/SOLENOID)	
					(INCLUDES RECEPTACLE AS & WEDGE)	
		1	**102-8809**	1	KIT-CONNECTING PLUG (4 PIN) (LH BLADE FLOODLAMP)	
					(INCLUDES PLUG AS & WEDGE)	
		1	**102-8805**	1	KIT-RECEPTACLE (6 PIN) (HORN RELAY)	
					(INCLUDES RECEPTACLE AS & WEDGE)	
	9	1	**130-0062**	1	PLATE AS	
	10	1	**033-8248**	7	CLIP	
	11	1	**109-0361**	1	FILM-INSTRUCTION (ENGINE SHUTDOWN)	
	12	1	**3E-5169**	1	GUARD-SWITCH (RED)	
	13	1	**3J-1907**	1	SEAL-O-RING	
	14	1	**3K-0360**	1	SEAL-O-RING	
	15	1	**4D-1836**	1	SWITCH-TOGGLE (1 POLE) (GROUND LEVEL SHUTOFF)	
	16	1	**5P-1076**	1	WASHER-HARD (13.5X30X4MM THK)	
	17	1	**5P-9085**	4	CLIP	
	18	1	**7G-7053**	4	GROMMET	
	19	1	**7T-0969**	1	HORN AS (24 VOLT)(LOW TONE) (LH)	
M		1	**8C-7581**	2	SCREW-MACHINE (M4X0.7X8MM)	
		1	**9B-7233**	2	LOCKWASHER	
	20	1	**7T-0970**	1	HORN AS (24 VOLT)(HIGH TONE) (RH)	
M		1	**8C-7581**	2	SCREW-MACHINE (M4X0.7X8MM)	
		1	**9B-7233**	2	LOCKWASHER	
	21	1	**7X-6212**	1	SWITCH AS-PRESSURE (BRAKE OIL)	
		1	**7N-7779**	1	SOCKET-CONNECTOR	
		1	**7N-7780**	2	PIN-CONNECTOR (BLADE)	
		1	**7N-7781**	1	HOUSING-RECEPTACLE	
	22	1	**8T-4121**	24	WASHER-HARD (11X21X2.5MM THK)	
M	24	1	**8T-4136**	4	BOLT (M10X1.5X25MM)	
M	25	1	**8T-4137**	20	BOLT (M10X1.5X20MM)	
M	26	1	**8T-4179**	5	BOLT (M12X1.75X20MM)	
	27	1	**8T-4223**	4	WASHER-HARD (13.5X25.5X3MM THK)	
	29	1	**9M-8406**	7	CLIP	
	30	1	**8M-2770**	9	CLIP	
					AVAILABLE REPAIR KIT(S):	
J			**102-8803**	1	KIT-RECEPTACLE (3 PIN)	
					(INCLUDES WEDGE & RECEPTACLE AS)	
L			**102-8802**	1	KIT-RECEPTACLE (2 PIN)	
					(INCLUDES WEDGE & RECEPTACLE AS)	

J-PART(S) MARKED J INCLUDES KIT(S) MARKED J
L-PART(S) MARKED L INCLUDES KIT(S) MARKED L
M-METRIC PART

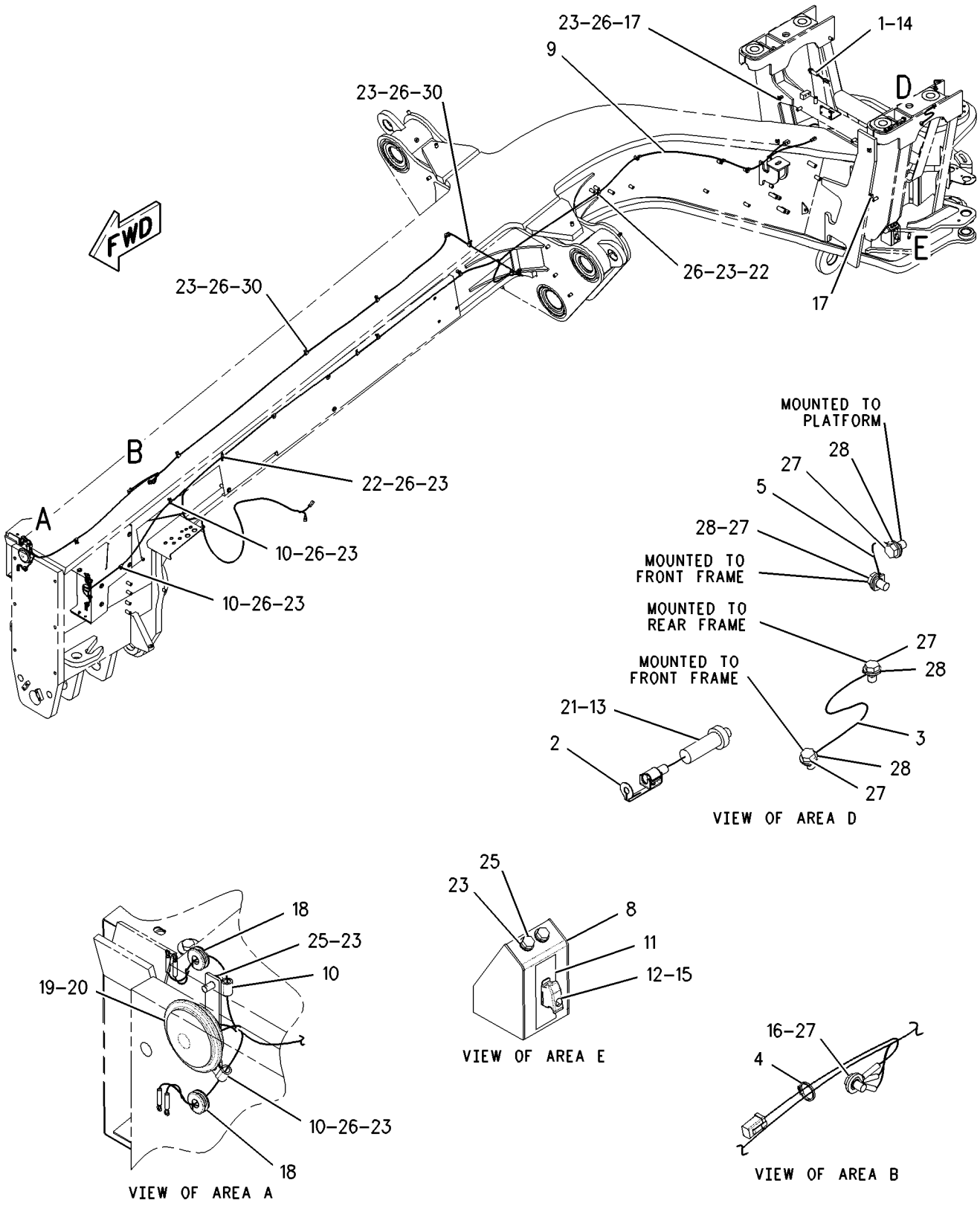

GRAPHIC #1

g00784098

128-5218 WIRING GP-PLATFORM

S/N: 7KK1-81

PART OF 8X-9003 PLATFORM AR

SMCS-1408 **i01469309**

NOTE	REF NO	GRAPHIC REF	PART NUMBER	QTY	PART NAME 1 2 3 4 5 6 (PRODUCT LEVEL)	SEE PAGE
	1	1	**122-1163**	1	HARNESS AS-PLATFORM	
		1	**102-8808**	1	KIT-CONNECTING PLUG (3 PIN) (PARK BRAKE SWITCH)	
					(INCLUDES PLUG AS & WEDGE)	
		1	**102-8807**	2	KIT-CONNECTING PLUG (2 PIN) (PRESSURIZER/AUTOLUBE TIMER)	
					(EACH INCLUDES PLUG AS & WEDGE)	
		1	**102-8810**	1	KIT-CONNECTING PLUG (6 PINS)	
					(INCLUDES PLUG AS & WEDGE)	
		1	**3T-3410**	1	RECEPTACLE AS (37 PIN)	
		1	**7X-6222**	1	PLUG AS-CONNECTOR (24 PIN)	
		1	**8N-1517**	1	RECEPTACLE AS (25 PIN)	
		1	**9X-0141**	1	PLUG AS-CONNECTOR (40 PIN)	
		1	**9X-7144**	1	PLUG AS-CONNECTOR (24 PIN)	
		1	**9X-7147**	1	PLUG AS-CONNECTOR (40 PIN)	
	2	1	**3S-2093**	10	STRAP-CABLE	
	3	1	**5P-9297**	2	CLIP	
	4	1	**7D-7233**	4	CLIP	
	5	1	**8T-4121**	4	WASHER-HARD (11X21X2.5MM THK)	
M	6	1	**8T-4179**	2	BOLT (M12X1.75X20MM)	
M	7	1	**8T-4195**	4	BOLT (M10X1.5X30MM)	
	8	1	**8T-4223**	2	WASHER-HARD (13.5X25.5X3MM THK)	
BE	9	1	**7X-7877**		STRIP-EDGING	
M	10	1	**8T-4137**	1	BOLT (M10X1.5X20MM)	

B-USE AS REQUIRED
E-ORDER BY THE CENTIMETER
M-METRIC PART

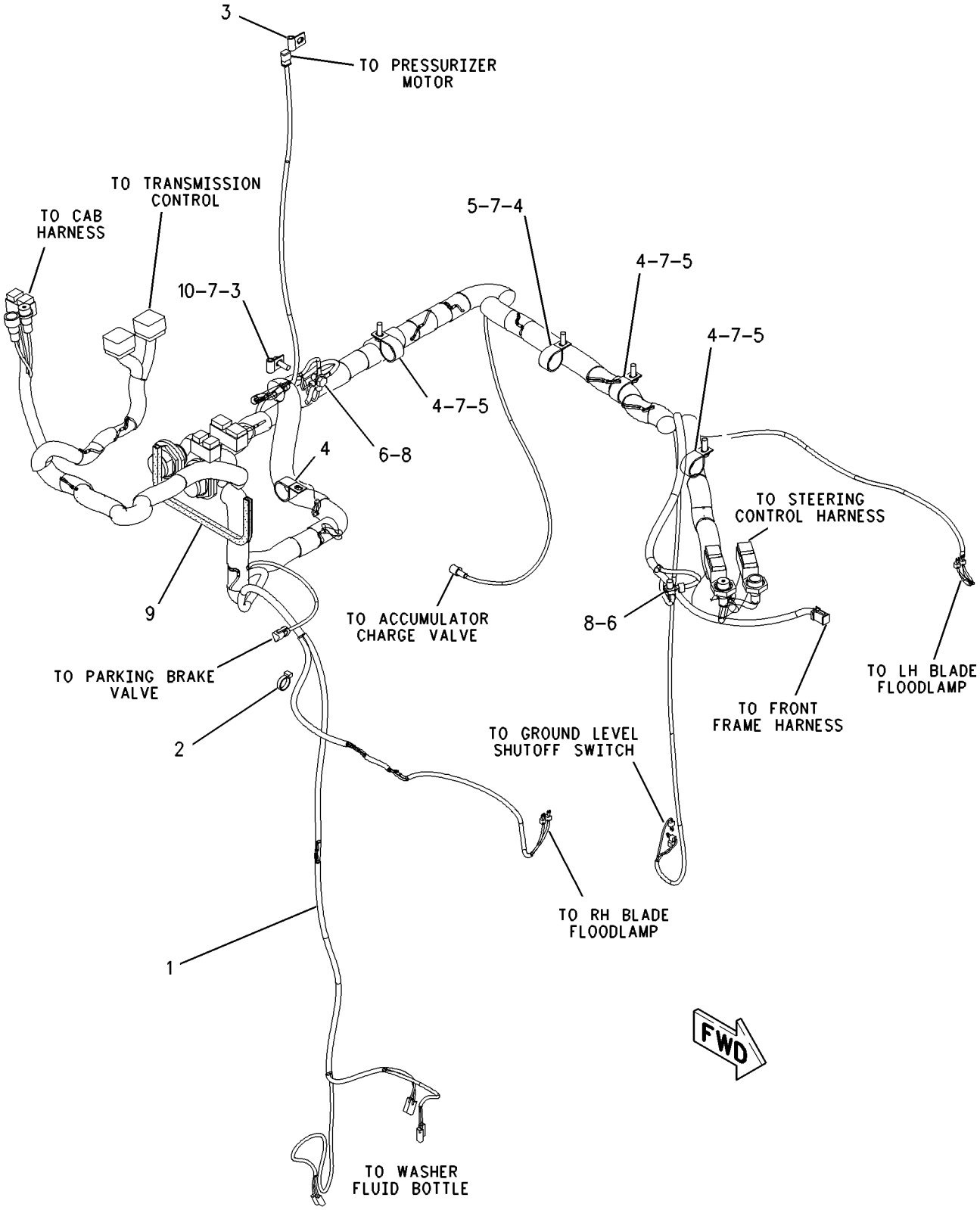

GRAPHIC #1 g00784956

8X-9010 WIRING GP-REAR

S/N: 7KK1-87

PART OF 8X-8402 CHASSIS AR

SMCS-1408 **i01064353**

NOTE	REF NO	GRAPHIC REF	PART NUMBER	QTY	PART NAME 1 2 3 4 5 6 (PRODUCT LEVEL)	SEE PAGE
Y	1	2	**3E-6466**	2	LAMP GP-SIGNAL	256
Y	2	1	**7N-0718**	1	SWITCH GP-DISCONNECT (BATTERY)	308
	3	1	**9G-2758**	1	SWITCH-LOCKOUT	
	4	1	**9G-9150**	1	CLIP (10.2MM ID)	
	5	2	**9X-9365**	2	BRACKET-LAMP (RIPPER)	
	6	1	**108-3401**	1	CABLE AS	
E		1	**5P-0761**		CABLE (00GA)	
BE		1	**5P-0695**		CONDUIT	
		1	**8N-1725**	1	COVER (RED)(BATTERY)	
		1	**1S-4915**	2	LINER-CONDUIT	
		1	**8L-8413**	1	STRAP-CABLE (1.12IN DIA)	
		1	**1S-7251**	1	TERMINAL (FOR 1/2IN BOLT)	
BE		1	**8T-2225**		TUBE	
		1	**1M-6119**	1	BOLT (5/16-18X1.375IN)	
		1	**1M-6120**	1	NUT-BATTERY TERMINAL (5/16-18 THD)	
	7	2	**109-7082**	1	SHAFT	
	8	2	**122-1165**	1	HARNESS AS (RADIATOR GRILL)	
	9	1	**122-1175**	1	HARNESS AS (TRANSMISSION)	
Y	10	2	*127-9186*	1	SENSOR GP-POSITION (RIPPER)	264
	11	2	**131-4798**	3	SPACER (27.0MM THK)	
Y	12	1	*158-8772*	1	WIRING GP-RELAY PANEL	358
	13	1	**164-6086**	1	HARNESS AS (REAR FRAME)	
	14	1	**108-3206**	1	RECEPTACLE AS (AUXILLARY START)	
E		1	**5P-0747**		CABLE (00GA) (70CM)	
E		1	**5P-0761**		CABLE (00GA) (50CM)	
BE		1	**5P-0695**		CONDUIT	
		1	**8N-0869**	1	COVER (RED)	
		1	**1S-4915**	2	LINER-CONDUIT	
		1	**1S-7251**	2	TERMINAL (FOR 1/2IN BOLT)	
BE		1	**8T-2225**		TUBE	
BD		1	**6V-2722**		TUBE-SHRINKABLE	
	15	2	**109-7081**	1	LEVER (ARTICULATION SENSOR)	
	16	2	**115-3069**	2	CLIP AS-CONNECTOR	
	17	1	**121-0703**	1	CABLE AS	
E		1	**5P-0747**		CABLE (00GA) (258CM)	
		1	**7N-5274**	1	COVER (BLACK)(BATTERY)	
		1	**6T-0465**	1	COVER-TERMINAL (BLACK)	
		1	**1S-7251**	1	TERMINAL (FOR 1/2IN BOLT)	
		1	**1M-6119**	1	BOLT (5/16-18X1.375IN)	
		1	**1M-6120**	1	NUT-BATTERY TERMINAL (5/16-18 THD)	
Y	18	1	**122-8862**	1	SENSOR GP-SPEED (TRANSMISSION)	280
	19	2	**123-6449**	1	ALARM AS-BACKUP	
J		2	**102-8802**	1	KIT-RECEPTACLE (2 PIN)	
					(INCLUDES RECEPTACLE AS & PART MARKED J)	
		2	**8T-8729**	2	PIN-CONNECTOR	
J		2	**3E-3365**	1	WEDGE-RECEPTACLE LOCK	
BD		2	**5P-5677**		WIRE (18 GA)	
Y	20	2	**130-3453**	2	LAMP GP-SIGNAL	257
	21	2	**1B-8701**	1	KEY-WOODRUFF	
	22	2	**1K-9007**	2	GROMMET	
	23	1	**1S-0996**	1	CLIP (20.64MM ID)	
	24	1	**1S-1014**	1	GROMMET	
	25	2	**2H-3429**	1	RING-RETAINING	
	26	2	**2L-6726**	2	RING-RETAINING	
	27	1	**3K-0360**	2	SEAL-O-RING (16.36MM ID)	
B	28	1,2	**3S-2093**	17	STRAP-CABLE	

8X-9010 **WIRING GP-REAR** ***(contd.)*** **i01064353**

NOTE	REF NO	GRAPHIC REF	PART NUMBER	QTY	PART NAME 1 2 3 4 5 6 (PRODUCT LEVEL)	SEE PAGE
	29	2	**4B-4274**	2	WASHER (1.2MM THK)	
	30	1,2	**4D-7388**	4	CLIP (34.92MM ID)	
	31	2	**4E-2250**	1	HOUSING	
	32	1,2	**4S-4455**	2	CLIP (31.75MM ID)	
M	33	2	**5C-2890**	12	NUT (M6X1.00 THD)	
	34	1,2	**5P-1076**	5	WASHER-HARD (4MM THK)	
	35	1	**5P-7468**	2	CLIP (SLOT)	
	36	1	**5P-7469**	2	CLIP (TAB)	
	37	2	**5P-9085**	1	CLIP (7.94MM ID)	
	38	1,2	**5P-9297**	11	CLIP (9.52MM ID)	
	39	2	**6D-3025**	2	BALL BEARING	
	40	1	**6D-4244**	13	CLIP (22.22MM ID)	
M	41	2	**6V-2313**	2	BOLT (M5X0.8X30MM)	
M	42	1	**6V-7744**	4	LOCKNUT (M10X1.50 THD)	
	43	1	**7D-7233**	2	CLIP (SLOT)	
	44	1	**7N-3718**	2	CLIP (9.52MM ID)	
	45	1	**7T-9983**	2	CABLE AS	
					(EACH INCLUDES)	
E		1	**5P-0761**		CABLE (00GA)	
BE		1	**5P-0695**		CONDUIT	
		1	**8N-0869**	2	COVER (RED)	
		1	**1S-4915**	2	LINER-CONDUIT	
		1	**1S-7251**	2	TERMINAL (FOR 1/2IN BOLT)	
BE		1	**8T-2225**		TUBE	
	46	1	**7X-7729**	4	WASHER (3MM THK)	
M	47	2	**7X-7888**	2	BOLT (M6X1X90MM THD)	
	48	1	**7Y-5548**	2	CABLE AS (BLACK)(00 GA)	
					(EACH INCLUDES)	
E		1	**5P-0747**		CABLE (00GA) (52CM)	
		1	**1S-7251**	2	TERMINAL (FOR 1/2IN BOLT)	
	49	2	**8C-5607**	6	MOUNT	
	50	2	**8C-5608**	3	SPACER (25.4MM THK)	
	51	1	**8M-2770**	1	CLIP (12.7MM ID)	
	52	1	**8M-2772**	1	CLIP (6.35MM ID)	
	53	2	**8M-2773**	2	CLIP (17.46MM ID)	
	54	1	**8N-2248**	1	SWITCH AS-TEMPERATURE (HYDRAULIC OIL)	
		1	**9B-7233**	2	LOCKWASHER (NO.8)	
		1	**6V-8376**	2	SCREW-MACHINE (8-32X.25IN)	
	55	1	**8S-2634**	1	COVER AS	
		1	**2P-2975**	2	SEAL-O-RING (17.17MM ID)	
M	56	2	**8T-3844**	3	BOLT (M6X1.0X70MM)	
	57	1,2	**8T-4121**	40	WASHER (2.5MM THK)	
M	58	1,2	**8T-4133**	10	NUT (M10X1.50 THD)	
M	59	1,2	**8T-4136**	29	BOLT (M10X1.50X25MM)	
M	60	1,2	**8T-4137**	4	BOLT (M10X1.50X20MM)	
M	61	1	**8T-4179**	1	BOLT (M12X1.75X20MM)	
M	62	1	**8T-4186**	4	BOLT (M10X1.50X40MM)	
M	63	1,2	**8T-4192**	4	BOLT (M12X1.75X25MM)	
M	64	2	**8T-4195**	3	BOLT (M10X1.50X30MM)	
	65	2	**8T-6431**	2	ROD END	
	66	1	**8T-8640**	1	SWITCH AS-PRESSURE (PRIMARY STEERING)	
		1	**7N-7781**	1	HOUSING-RECEPTACLE	
		1	**7N-7780**	2	PIN-CONNECTOR (BLADE)	
		1	**7N-7779**	1	SOCKET	
	67	1	**8W-6445**	2	HOLD-DOWN AS-BATTERY	
	68	1,2	**9M-8406**	6	CLIP (15.8MM ID)	
	69	2	**9R-4764**	1	ROD	
	70	1	**9R-6414**	4	ROD	
Y	71	1	*9W-0742*	2	JUNCTION BLOCK GP	246

8X-9010 **WIRING GP-REAR** ***(contd.)*** **i01064353**

NOTE	REF NO	GRAPHIC REF	PART NUMBER	QTY	PART NAME 1 2 3 4 5 6 (PRODUCT LEVEL)	SEE PAGE
Y	72	2	**147-1680**	1	SENSOR GP-POSITION (ARTICULATION)	266
	73	2	**9X-6165**	3	WASHER (2.5MM THK)	
	74	2	**9X-8256**	14	WASHER (2MM THK)	
	75	1	**7X-7877**	13	STRIP-EDGING	

B-USE AS REQUIRED
D-ORDER BY THE METER
E-ORDER BY THE CENTIMETER
J-KIT MARKED J INCLUDES PART MARKED J
M-METRIC PART
Y-SEPARATE ILLUSTRATION

8X-9010 **WIRING GP-REAR** ***(contd.)*** **i01064353**

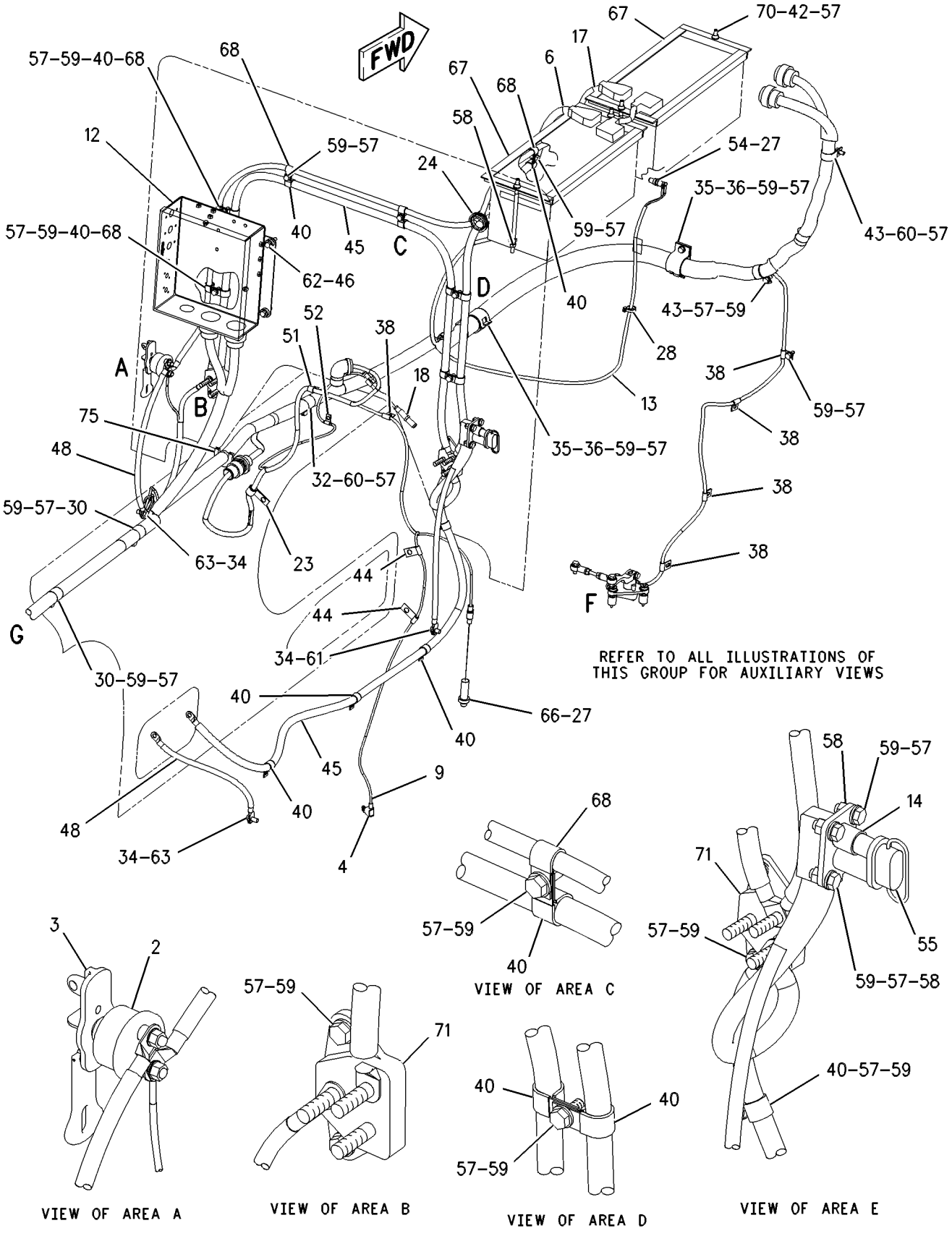

GRAPHIC #1 g00609478

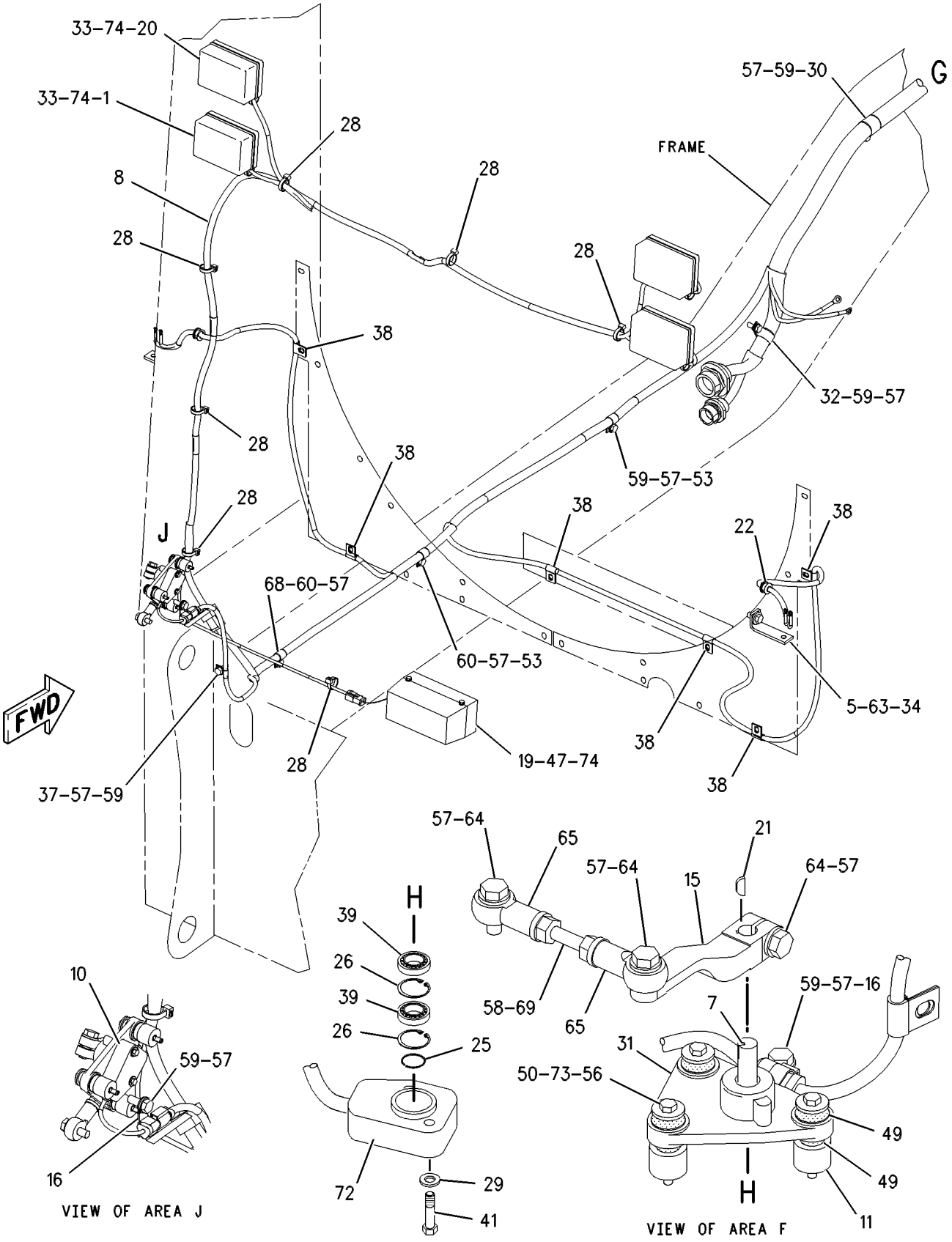

GRAPHIC #2 g00609480

MEMORANDA

ELECTRICAL AND STARTING SYSTEM

8X-9010 WIRING GP-REAR

S/N: 7KK88-UP

PART OF 8X-8402 CHASSIS AR

SMCS-1408 **i01518141**

NOTE	REF NO	GRAPHIC REF	PART NUMBER	QTY	PART NAME 1 2 3 4 5 6 (PRODUCT LEVEL)	SEE PAGE
Y	2	1	**7N-0718**	1	SWITCH GP-DISCONNECT (BATTERY)	308
	3	1	**9G-2758**	1	SWITCH-LOCKOUT	
	4	1	**9G-9150**	1	CLIP	
	6	1	**108-3401**	1	CABLE AS	
E		1	**5P-0761**		CABLE (00GA)(RED)	
BE		1	**5P-0695**		CONDUIT	
		1	**8N-1725**	1	COVER-TERMINAL (RED)	
		1	**1S-4915**	2	LINER-CONDUIT	
		1	**8L-8413**	1	STRAP-CABLE	
		1	**1S-7251**	1	TERMINAL-RING (FOR 1/2 IN BOLT)	
BE		1	**8T-2225**		TUBE-SHRINKABLE	
	7	2	**109-7082**	1	SHAFT	
	9	1	**122-1175**	1	HARNESS AS-TRANSMISSION	
		1	**155-2270**		KIT-CONNECTING PLUG (2 PIN) (TMSN OUTPUT SPEED SENSOR)	
Y	10	2	*127-9186*	1	SENSOR GP-POSITION (RIPPER)	264
	11	2	**131-4798**	3	SPACER (6.6X25X27MM THK)	
Y	12	1	*158-8772*	1	WIRING GP-RELAY PANEL	358
	13	1	**164-6086**	1	HARNESS AS-REAR	
		1	**8N-1515**	1	RECEPTACLE AS	
		1	**8N-1518**	1	PLUG AS-CONNECTOR (25 PIN)	
		1	**8N-1528**	1	RECEPTACLE AS (14 PIN)	
		1	**155-2260**	2	KIT-CONNECTING PLUG (3 PIN)	
					(EACH INCLUDES PLUG AS & WEDGE)	
		1	**102-8809**	1	KIT-CONNECTING PLUG (4 PIN)	
					(INCLUDES PLUG AS & WEDGE)	
		1	**102-8809**	1	KIT-CONNECTING PLUG (4 PIN)	
					(INCLUDES PLUG AS & WEDGE)	
		1	**155-2265**	1	KIT-CONNECTING PLUG (8 PIN)	
					(INCLUDES PLUG AS & WEDGE)	
		1	**3T-3043**	1	RECEPTACLE AS (25 PIN)	
		1	**3T-3044**	1	PLUG AS-CONNECTOR (25 PIN)	
		1	**3T-3412**	1	PLUG AS-CONNECTOR (1)	
	14	1	**108-3206**	1	RECEPTACLE AS (AUXILLARY START)	
E		1	**5P-0747**		CABLE (00GA)(BLACK) (70CM)	
E		1	**5P-0761**		CABLE (00GA)(RED) (50CM)	
BE		1	**5P-0695**		CONDUIT	
		1	**8N-0869**	1	COVER-TERMINAL (RED)	
		1	**1S-4915**	2	LINER-CONDUIT	
		1	**1S-7251**	2	TERMINAL-RING (FOR 1/2 IN BOLT)	
BE		1	**8T-2225**		TUBE-SHRINKABLE	
BD		1	**6V-2722**		TUBE-SHRINKABLE	
	15	2	**109-7081**	1	LEVER (ARTICULATION SENSOR)	
	16	2	**115-3069**	2	CLIP AS-CONNECTOR	
	17	1	**121-0703**	1	CABLE AS	
E		1	**5P-0747**		CABLE (00GA)(BLACK) (258CM)	
		1	**7N-5274**	1	COVER-TERMINAL (BLACK)	
		1	**6T-0465**	1	COVER-TERMINAL (BLACK)	
		1	**1S-7251**	1	TERMINAL-RING (FOR 1/2 IN BOLT)	
		1	**1M-6119**	1	BOLT-BATTERY TERMINAL (5/16-18X1.375 IN)	
		1	**1M-6120**	1	NUT-BATTERY TERMINAL (5/16-18 THD)	
Y	18	1	**122-8862**	1	SENSOR GP-SPEED (TRANSMISSION)	280
	21	2	**1B-8701**	1	KEY-WOODRUFF	
	23	1	**1S-0996**	1	CLIP	
	24	1	**1S-1014**	1	GROMMET	
	25	2	**2H-3429**	1	RING-RETAINING	

8X-9010 **WIRING GP-REAR** ***(contd.)*** **i01518141**

NOTE	REF NO	GRAPHIC REF	PART NUMBER	QTY	PART NAME 1 2 3 4 5 6 (PRODUCT LEVEL)	SEE PAGE
	26	2	**2L-6726**	2	RING-RETAINING	
	27	1	**3K-0360**	2	SEAL-O-RING	
BC	28	1	**3S-2093**	3	STRAP-CABLE	
	29	2	**4B-4274**	2	WASHER (5.5X13X1.2MM THK)	
	30	1,2	**4D-7388**	4	CLIP	
	31	2	**4E-2250**	1	HOUSING	
	32	1,2	**4S-4455**	2	CLIP	
C	34	1	**5P-1076**	3	WASHER-HARD (13.5X30X4MM THK)	
	35	1	**5P-7468**	2	CLIP (SLOT)	
	36	1	**5P-7469**	2	CLIP (TAB)	
	37	2	**5P-9085**	1	CLIP	
	38	1,2	**5P-9297**	11	CLIP	
	39	2	**6D-3025**	2	BALL BEARING	
	40	1	**6D-4244**	13	CLIP	
M	41	2	**6V-2313**	2	BOLT (M5X0.8X30MM)	
M	42	1	**6V-7744**	4	LOCKNUT (M10X1.5 THD)	
	43	1	**7D-7233**	2	CLIP	
	44	1	**7N-3718**	2	CLIP	
	45	1	**7T-9983**	2	CABLE AS	
					(EACH INCLUDES)	
E		1	**5P-0761**		CABLE (00GA)(RED)	
BE		1	**5P-0695**		CONDUIT	
		1	**8N-0869**	2	COVER-TERMINAL (RED)	
		1	**1S-4915**	2	LINER-CONDUIT	
		1	**1S-7251**	2	TERMINAL-RING (FOR 1/2 IN BOLT)	
BE		1	**8T-2225**		TUBE-SHRINKABLE	
	46	1	**7X-7729**	4	WASHER (11X25X3MM THK)	
	48	1	**7Y-5548**	2	CABLE AS (BLACK)(00 GA)	
					(EACH INCLUDES)	
E		1	**5P-0747**		CABLE (00GA)(BLACK) (52CM)	
		1	**1S-7251**	2	TERMINAL-RING (FOR 1/2 IN BOLT)	
	49	2	**8C-5607**	6	MOUNT (ISOLATION)	
	50	2	**8C-5608**	3	SPACER (6.5X9.5X25.4MM THK)	
	51	1	**8M-2770**	1	CLIP	
	52	1	**8M-2772**	1	CLIP	
	53	2	**8M-2773**	2	CLIP	
	54	1	**8N-2248**	1	SWITCH AS-TEMPERATURE (HYDRAULIC OIL)	
		1	**9B-7233**	2	LOCKWASHER	
		1	**6V-8376**	2	SCREW-MACHINE (8-32X0.25 IN)	
	55	1	**8S-2634**	1	COVER AS	
		1	**2P-2975**	2	SEAL-O-RING	
M	56	2	**8T-3844**	3	BOLT (M6X1X70MM)	
	57	1,2	**8T-4121**	40	WASHER-HARD (11X21X2.5MM THK)	
M	58	1,2	**8T-4133**	10	NUT (M10X1.5 THD)	
M	59	1,2	**8T-4136**	29	BOLT (M10X1.5X25MM)	
M	60	1,2	**8T-4137**	4	BOLT (M10X1.5X20MM)	
M	61	1	**8T-4179**	1	BOLT (M12X1.75X20MM)	
M	62	1	**8T-4186**	4	BOLT (M10X1.5X40MM)	
M	63	1	**8T-4192**	2	BOLT (M12X1.75X25MM)	
M	64	2	**8T-4195**	3	BOLT (M10X1.5X30MM)	
	65	2	**8T-6431**	2	ROD END (M10X1.50 THD)	
	66	1	**8T-8640**	1	SWITCH AS-PRESSURE (PRIMARY STEERING)	
		1	**7N-7781**	1	HOUSING-RECEPTACLE	
		1	**7N-7780**	2	PIN-CONNECTOR (BLADE)	
		1	**7N-7779**	1	SOCKET-CONNECTOR	
	67	1	**8W-6445**	2	HOLD-DOWN AS-BATTERY	
	68	1,2	**9M-8406**	6	CLIP	
	69	2	**9R-4764**	1	ROD	
	70	1	**9R-6414**	4	ROD	

8X-9010 **WIRING GP-REAR** ***(contd.)*** **i01518141**

NOTE	REF NO	GRAPHIC REF	PART NUMBER	QTY	PART NAME 1 2 3 4 5 6 (PRODUCT LEVEL)	SEE PAGE
Y	71	1	*9W-0742*	2	JUNCTION BLOCK GP	246
Y	72	2	**147-1680**	1	SENSOR GP-POSITION (ARTICULATION)	266
	73	2	**9X-6165**	3	WASHER (6.5X22X2.5MM THK)	
	75	1	**7X-7877**	13	STRIP-EDGING	

B-USE AS REQUIRED
C-CHANGE FROM PREVIOUS TYPE
D-ORDER BY THE METER
E-ORDER BY THE CENTIMETER
M-METRIC PART
Y-SEPARATE ILLUSTRATION

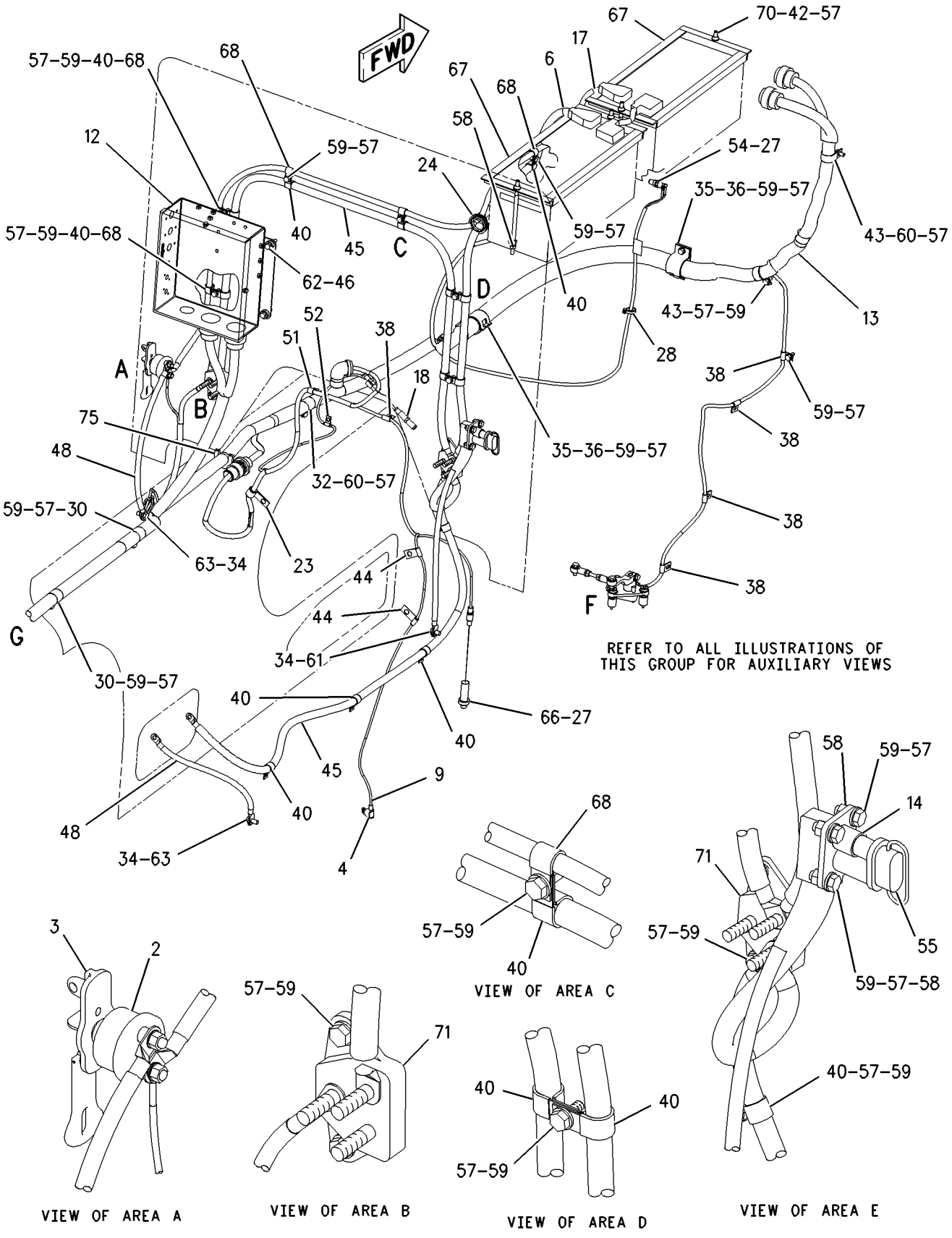

GRAPHIC #1 g00762881

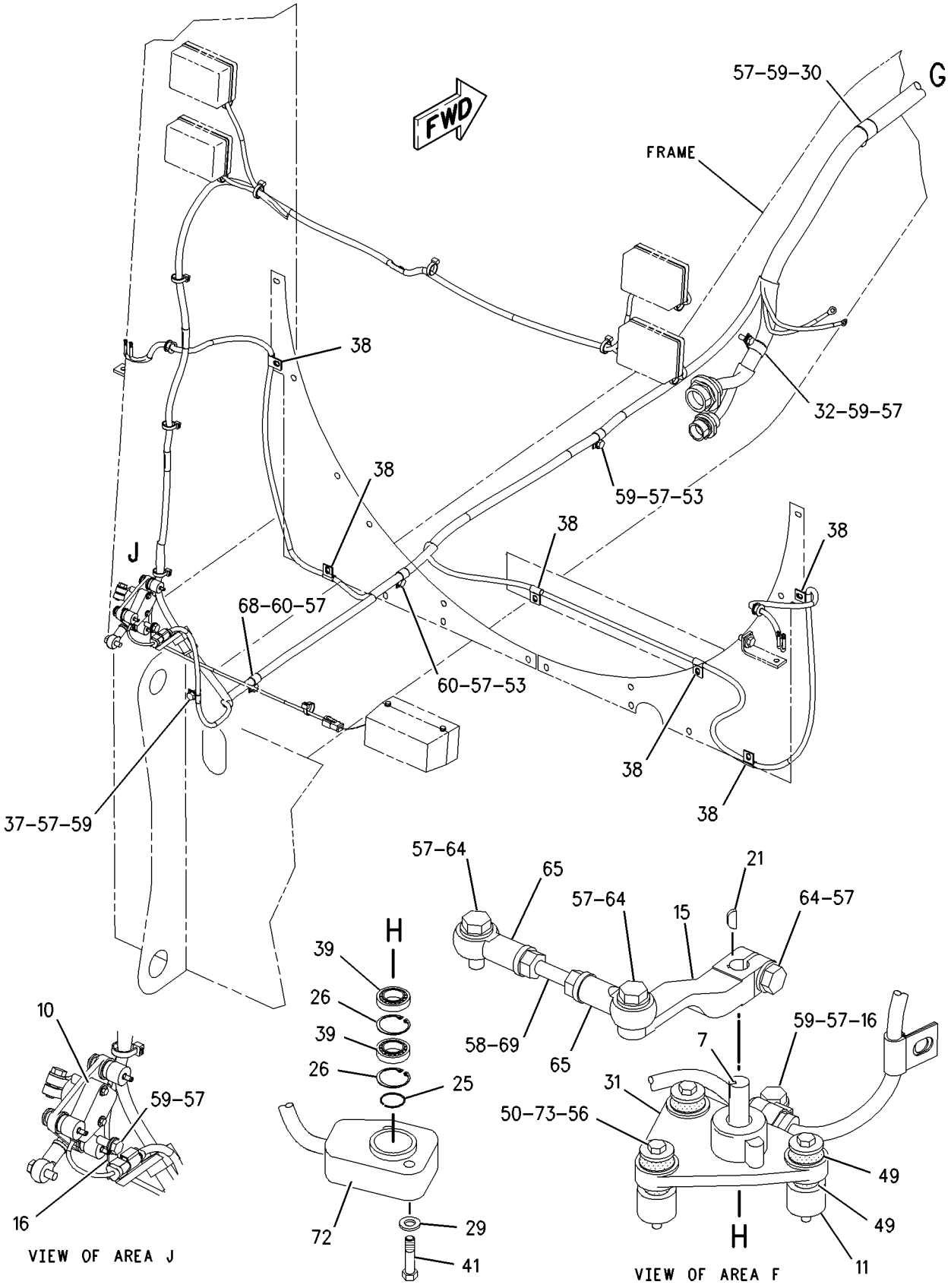

GRAPHIC #2 g00762888

MEMORANDA

190-5579 WIRING GP-REAR

S/N: 7KK88-UP

PART OF 190-5568 RADIATOR & MOUNTING GP

SMCS-1408 **i01457056**

NOTE	REF NO	GRAPHIC REF	PART NUMBER	QTY	PART NAME 1 2 3 4 5 6 (PRODUCT LEVEL)	SEE PAGE
Y	1	1	**3E-6466**	2	LAMP GP-SIGNAL	256
	2	1	**9X-9365**	2	BRACKET-LAMP	
	3	1	**122-1165**	1	HARNESS AS-REAR LIGHTING	
		1	**155-2270**	2	KIT-CONNECTING PLUG (2 PIN) (RH/LH TURN LAMP)	
					(INCLUDES PLUG AS & WEDGE)	
		1	**155-2270**	1	KIT-CONNECTING PLUG (2 PIN)	
					(INCLUDES PLUG AS & WEDGE)	
		1	**155-2260**	2	KIT-CONNECTING PLUG (3 PIN) (RH/LH STOP LAMP)	
					(INCLUDES PLUG AS & WEDGE)	
		1	**102-8806**	1	KIT-RECEPTACLE (8 PIN)	
					(INCLUDES RECEPTACLE AS & WEDGE)	
	4	1	**123-6449**	1	ALARM AS-BACKUP	
		1	**3E-3365**	1	WEDGE-RECEPTACLE LOCK (2 PIN)	
		1	*186-3733*	1	PIN-CONNECTOR	
		1	**9X-1813**	28	SLEEVE	
Y	5	1	**130-3453**	2	LAMP GP-SIGNAL	257
	6	1	**1K-9007**	2	GROMMET	
	7	1	**3S-2093**	14	STRAP-CABLE	
M	8	1	**5C-2890**	12	NUT (M6X1 THD)	
	9	1	**5P-1076**	2	WASHER-HARD (13.5X30X4MM THK)	
M	10	1	**7X-7888**	2	BOLT (M6X1X90MM)	
M	11	1	**8T-4192**	2	BOLT (M12X1.75X25MM)	
	12	1	**9X-8256**	14	WASHER (6.6X12X2MM THK)	
					AVAILABLE REPLACEMENT PART(S):	
			102-8802	1	KIT-RECEPTACLE (2 PIN)	
					(INCLUDES RECEPTACLE AS & WEDGE)	

M-METRIC PART
Y-SEPARATE ILLUSTRATION

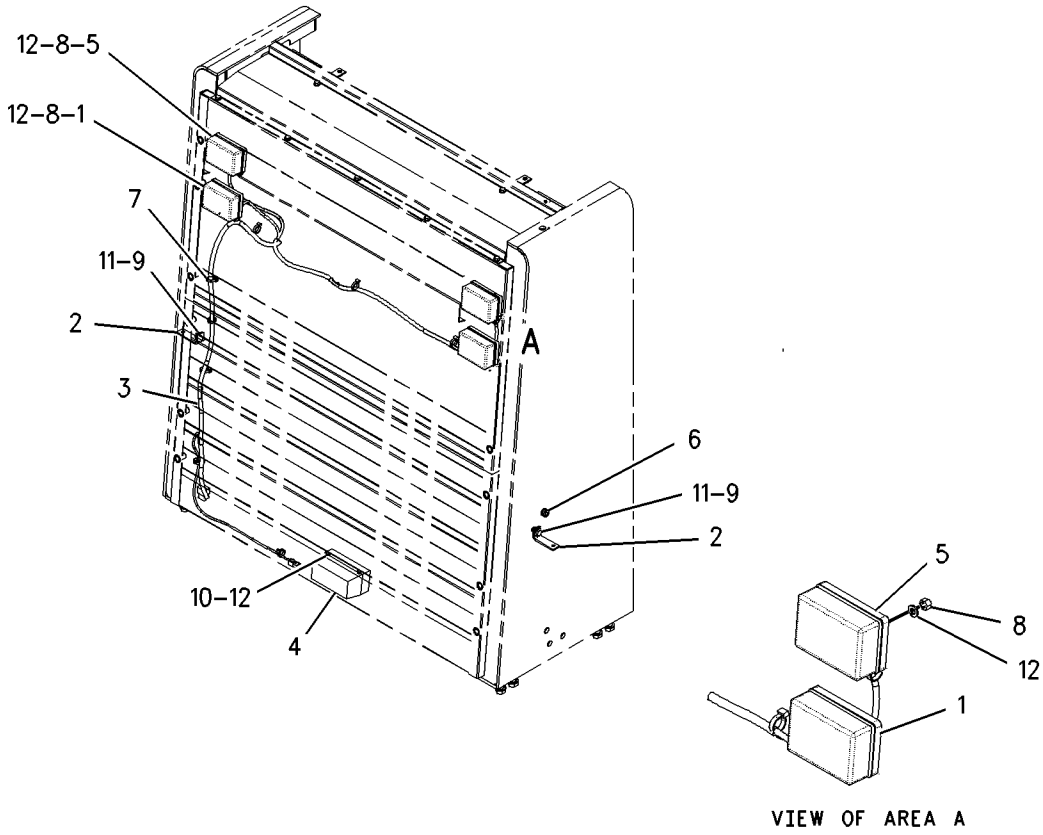

GRAPHIC #1

g00764274

158-8772 WIRING GP-RELAY PANEL

S/N: 7KK1-UP

PART OF 8X-9010 WIRING GP-REAR

SMCS-1408, 1422 **i01218545**

NOTE	REF NO	GRAPHIC REF	PART NUMBER	QTY	PART NAME 1 2 3 4 5 6 (PRODUCT LEVEL)	SEE PAGE
	2	1	**6K-9591**	2	PLUG-BUTTON	
	3	1	**7V-9275**	1	STRAP	
	4	1	**158-8773**	1	HARNESS AS	
	5	1	**159-0264**	1	COVER-PANEL	
	6	1	**159-0266**	1	PANEL AS-RELAY	
M		1	**6V-9632**	13	NUT-WELD (M6X1 THD)	
		1	**7T-1099**	2	LINK	
		1	**128-2477**	4	SPACER	
	7	1	**159-3239**	1	FILM-IDENTIFICATION (ELECTRICAL)	
Y	8	1	**167-0138**	1	SWITCH GP-MAGNETIC (MAIN RELAY)	315
	11	1	**3E-7294**	1	CIRCUIT BREAKER AS (105 AMP) (ALTERNATOR)	
		1	**1H-3244**	2	LOCKWASHER (NO.14)	
		1	**6V-8187**	2	NUT (1/4-28 THD)	
		1	**8T-4205**	2	WASHER-HARD (2MM THK)	
	12	1	**5L-4507**	6	SCREW-MACHINE (10-32X.875IN)	
	13	1	**5M-6668**	4	SCREW-MACHINE (8-32X.75IN)	
	14	1	**6N-9349**	1	CIRCUIT BREAKER AS (30 AMP) (BRAKE RETRACT)	
		1	**6V-8376**	2	SCREW-MACHINE (8-32X.25IN)	
		1	**9B-7233**	2	LOCKWASHER (NO.8)	
	15	1	**6T-3643**	1	CIRCUIT BREAKER AS (15 AMP) (ENGINE ECM)	
		1	**6V-8376**	2	SCREW-MACHINE (8-32X.25IN)	
		1	**9B-7233**	2	LOCKWASHER (NO.8)	
M	16	1	**8T-4171**	13	BOLT (M6X1.0X12MM)	
	17	1	**8T-4205**	3	WASHER-HARD (2MM THK)	
	18	1	**9G-4360**	1	CAP-CONNECTOR	
	19	1	**9S-4693**	2	CIRCUIT BREAKER AS (80 AMP) (MAIN)	
		1	**1H-3244**	2	LOCKWASHER (NO.14)	
		1	**6V-8187**	2	NUT (1/4-28 THD)	
		1	**8T-4205**	2	WASHER-HARD (2MM THK)	
	20	1	**9X-8256**	10	WASHER (2MM THK)	
	21	1	**3E-5239**	1	RELAY AS (24 VOLT) (START AID)	
	22	1	**3E-5239**	1	RELAY AS (24 VOLT) (PRELUBE)	
	23	1	**3E-5239**	1	RELAY AS (24 VOLT) (BRAKE LAMP)	
	24	1	**125-1302**	1	SWITCH GP-MAGNETIC (BRAKE RETRACT RELAY)	
	25	1	**125-1302**	1	SWITCH GP-MAGNETIC (START RELAY 2)	
	26	1	**125-1302**	1	SWITCH GP-MAGNETIC (START RELAY 1)	

M-METRIC PART
Y-SEPARATE ILLUSTRATION

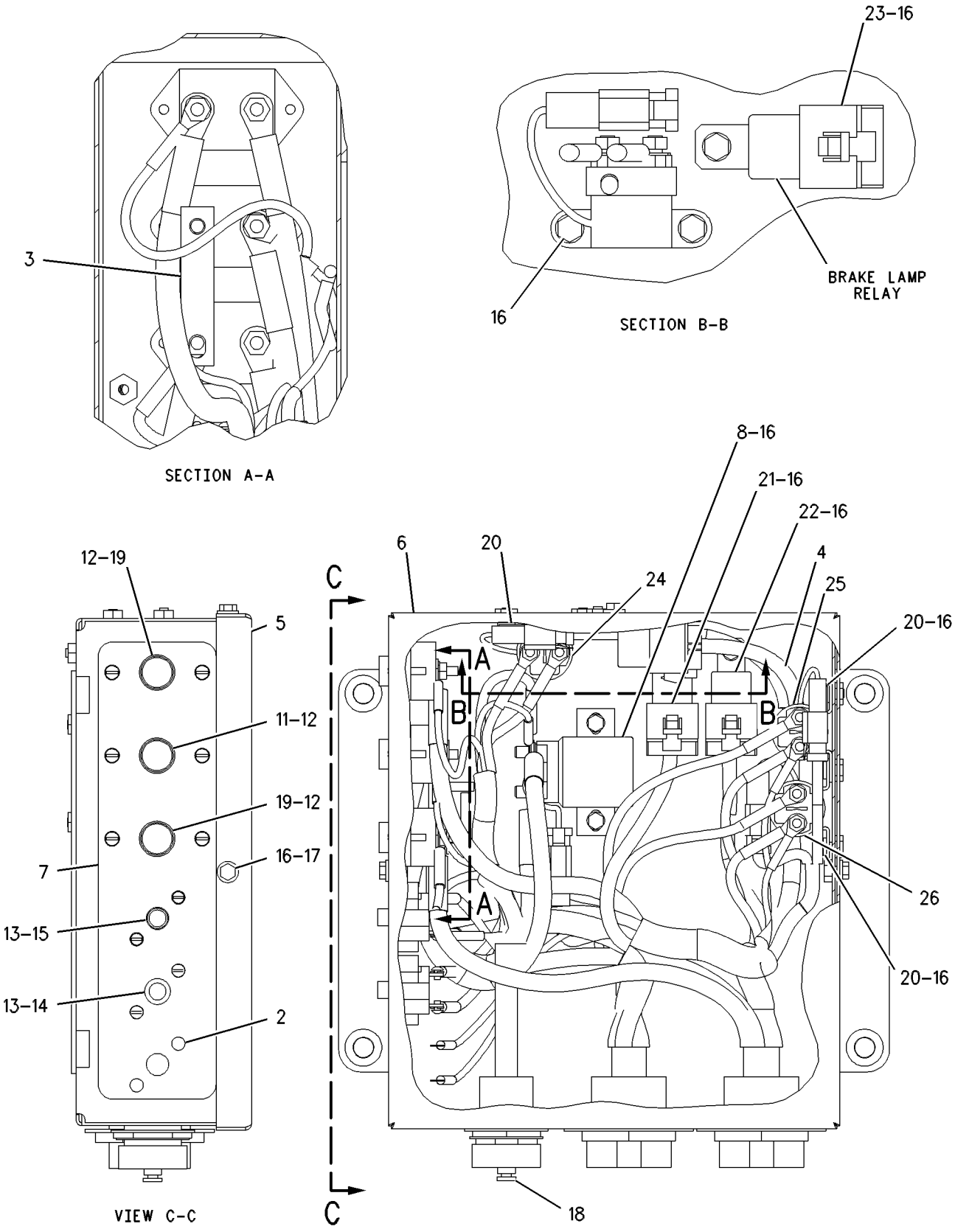

GRAPHIC #1 g00598527

8X-9007 WIRING GP-SHIFT CONSOLE

S/N: 7KK1-81

PART OF 8X-9003 PLATFORM AR

SMCS-1408, 1435 **i00646991**

NOTE	REF NO	GRAPHIC REF	PART NUMBER	QTY	PART NAME 1 2 3 4 5 6 (PRODUCT LEVEL)	SEE PAGE
	1	1	**2V-0099**	1	KNOB	
Y	2	1	**3E-6328**	1	ALARM GP	219
	3	1	**3E-7181**	1	SWITCH AS-ROCKER (RUNNING LAMP)	
		1	**3E-8769**	1	SWITCH AS	
		1	**3E-8781**	1	ACTUATOR-ROCKER	
		1	**3E-8825**	1	LAMP-MINIATURE (24 VOLT)	
	4	1	**3T-3123**	1	RESISTOR AS	
		1	**3T-3272**	1	CLIP	
BD		1	**5P-6008**		TUBE	
		1	**3T-3270**	1	WIRE AS	
		1	**3T-3158**	2	SOCKET-LAMP	
	5	1	**6P-3236**	1	SWITCH AS-ROTARY (BLOWER)	
		1	**9B-7233**	5	LOCKWASHER (NO.8)	
		1	**6V-8362**	5	SCREW-MACHINE (8-32X7.94MM)	
M	6	1	**6V-9505**	8	SCREW-MACHINE (M6X1X20MM)	
	7	1	**8C-6354**	1	CAP-RECEPTACLE	
Y	8	1	**9G-7641**	1	SWITCH GP-START	316
	9	1	**9W-0335**	1	LIGHTER AS-CIGAR	
	10	1	**7N-5876**	2	LAMP-MINIATURE (28 VOLT)	
	11	1	**122-1168**	1	HARNESS AS	
	12	1	**123-5843**	1	SWITCH AS-ROCKER (START AID)	
		1	**3E-8825**	1	LAMP-MINIATURE (24 VOLT)	
		1	**108-8162**	1	SWITCH AS	
		1	**123-5842**	1	ACTUATOR-ROCKER	
	13	1	**123-5844**	1	SWITCH AS-ROCKER (PANEL LAMP DIMMER)	
		1	**3E-8770**	1	SWITCH AS	
		1	**3E-8783**	1	ACTUATOR-ROCKER	
		1	**3E-8825**	1	LAMP-MINIATURE (24 VOLT)	
	14	1	**123-5847**	1	SWITCH AS-ROCKER (TANDEM FLOODLAMP)	
		1	**3E-8766**	1	SWITCH AS	
		1	**3E-8782**	1	ACTUATOR-ROCKER	
		1	**3E-8825**	1	LAMP-MINIATURE (24 VOLT)	
	15	1	**123-5847**	1	SWITCH AS-ROCKER (BLADE FLOODLAMP)	
		1	**3E-8766**	1	SWITCH AS	
		1	**3E-8782**	1	ACTUATOR-ROCKER	
		1	**3E-8825**	1	LAMP-MINIATURE (24 VOLT)	
	16	1	**123-5847**	1	SWITCH AS-ROCKER (LIGHTBAR FLOODLAMP)	
		1	**3E-8766**	1	SWITCH AS	
		1	**3E-8782**	1	ACTUATOR-ROCKER	
		1	**3E-8825**	1	LAMP-MINIATURE (24 VOLT)	
	17	1	**123-5847**	1	SWITCH AS-ROCKER (RIPPER FLOODLAMP)	
		1	**3E-8766**	1	SWITCH AS	
		1	**3E-8782**	1	ACTUATOR-ROCKER	
		1	**3E-8825**	1	LAMP-MINIATURE (24 VOLT)	
	18	1	**3E-5239**	2	RELAY AS (24 VOLT)	
	19	1	**3T-2662**	1	CIRCUIT BREAKER AS (15 AMP)	
		1	**9B-7233**	2	LOCKWASHER (NO.8)	
		1	**6V-8376**	2	SCREW-MACHINE (8-32X.25IN)	
	20	1	**4B-4863**	2	WASHER (1.2MM THK)	
	21	1	**5M-6668**	2	SCREW-MACHINE (8-32X.75IN)	
M	22	1	**8T-4137**	2	BOLT (M10X1.50X20MM)	
	23	1	**5P-4115**	2	WASHER (2MM THK)	
	24	1	**8T-4121**	2	WASHER (2.5MM THK)	
M	25	1	**9X-2043**	2	SCREW-TRUSS HEAD (M6X1X14MM)	
M	26	1	**9X-1046**	8	SCREW (M4X0.7X18MM)	
	27	1	**123-5852**	1	SWITCH AS-ROCKER (BRAKE RETRACT)	

8X-9007 **WIRING GP-SHIFT CONSOLE** ***(contd.)*** **i00646991**

NOTE	REF NO	GRAPHIC REF	PART NUMBER	QTY	PART NAME 1 2 3 4 5 6 (PRODUCT LEVEL)	SEE PAGE
		1	**3E-8825**	1	LAMP-MINIATURE (24 VOLT)	
		1	**123-5850**	1	SWITCH AS	
		1	**123-5851**	1	ACTUATOR-ROCKER	
	28	1	**2P-4339**	1	NUT-JAM (7/16-20 THD)	
M	29	1	**3C-6969**	4	NUT (M3X0.5 THD)	

B-USE AS REQUIRED
D-ORDER BY THE METER
M-METRIC PART
Y-SEPARATE ILLUSTRATION

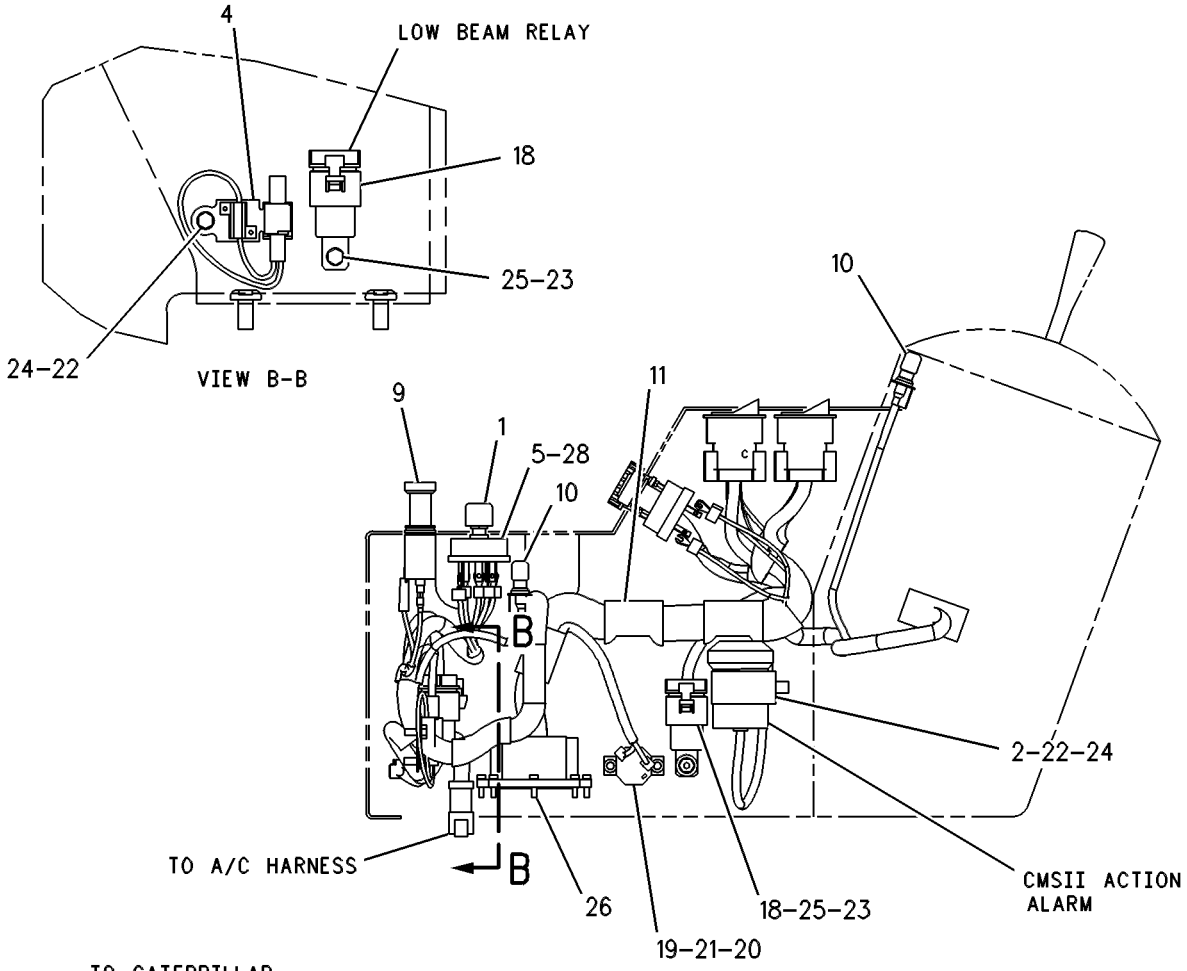

LEFT SIDE VIEW

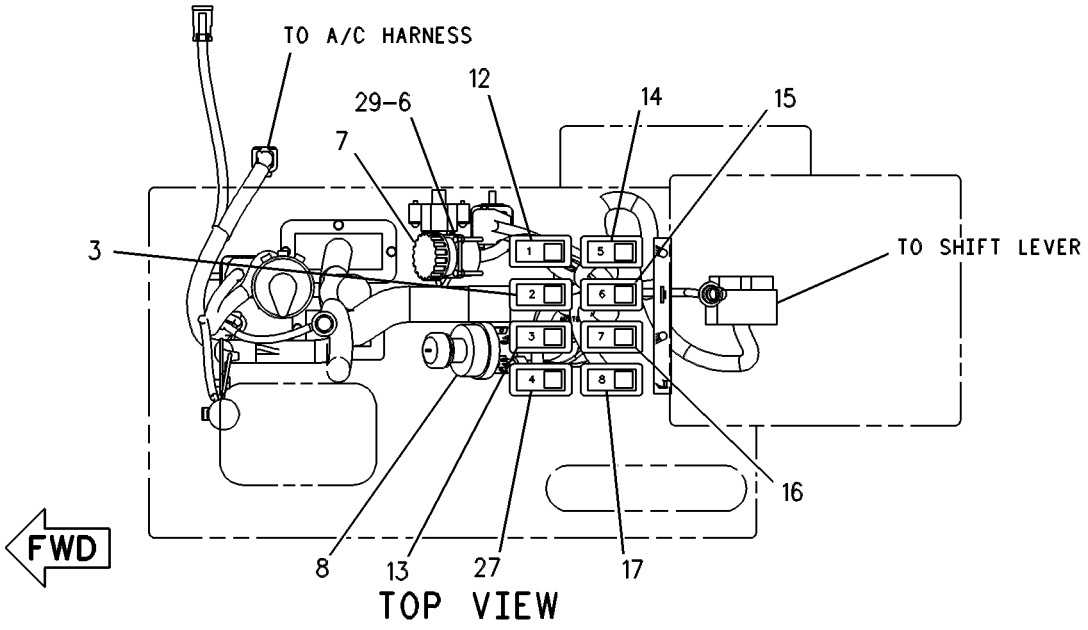

TOP VIEW

GRAPHIC #1 g00283930

MEMORANDA

ELECTRICAL AND STARTING SYSTEM

8X-9008 WIRING GP-STEERING CONSOLE

S/N: 7KK1-94

PART OF 8X-9003 PLATFORM AR

SMCS-1408, 4334 **i01242168**

NOTE	REF NO	GRAPHIC REF	PART NUMBER	QTY	PART NAME 1 2 3 4 5 6 (PRODUCT LEVEL)	SEE PAGE
	1	1	**5L-7200**	2	SCREW (8-32X.375IN)	
	2	1	**8X-5153**	1	FILM-FACE	
	3	1	**8X-5154**	1	FILM-FACE	
	4	1	**8X-6296**	2	LEVER	
	5	1	**9G-0747**	2	BLOCK AS-FUSE	
					(EACH INCLUDES)	
		1	**4B-5324**	9	WASHER (1.2MM THK)	
		1	**6V-8373**	9	SCREW-MACHINE (6-32X.187IN)	
		1	**6V-8376**	1	SCREW-MACHINE (8-32X.25IN)	
		1	**8C-9660**	1	WASHER (0.8MM THK)	
	6	1	**9G-2264**	1	CLIP-CONNECTOR	
	7	1	**9G-5589**	1	SWITCH AS-TURN SIG & WARNING	
		1	**5L-7200**	1	SCREW (8-32X.375IN)	
		1	**9B-7233**	1	LOCKWASHER (NO.8)	
	8	1	**9X-6258**	4	SCREW-MACHINE (6-32X.50IN)	
	9	1	**103-5678**	1	SWITCH AS-ROTARY (HIGH BEAM)	
		1	**5L-7200**	1	SCREW (8-32X.375IN)	
		1	**9B-7233**	1	LOCKWASHER (NO.8)	
	10	1	**108-0358**	1	FLASHER AS-ELECTRONIC	
	11	1	**122-1170**	1	HARNESS AS	
M	12	1	**9X-2043**	2	SCREW-TRUSS HEAD (M6X1X14MM)	
M	13	1	**9X-1046**	6	SCREW (M4X0.7X18MM)	
M	14	1	**8T-9405**	8	BOLT-SOCKET HEAD (M4X0.7X16MM)	
	15	1	**177-9526**	1	INDICATOR AS (DIFFERENTIAL BRAKE PRESSURE)	
		1	**165-5674**	1	LAMP-DIODE (LED)	
	16	1	**3E-8857**	1	SWITCH AS (DIFFERENTIAL UNLOCK)	
		1	**103-1032**	1	ACTUATOR-ROCKER (1.75 DIA)	
		1	**3E-8825**	2	LAMP (24 VOLT)	
	17	1	**3E-8766**	1	SWITCH AS (CUSHION BLADE)	
		1	**3E-8812**	1	ACTUATOR-ROCKER	
		1	**3E-8825**	1	LAMP (24 VOLT)	
	18	1	**3E-8857**	1	SWITCH AS (CRUISE ON/OFF)	
		1	**3E-8825**	2	LAMP (24 VOLT)	
		1	**123-5853**	1	ACTUATOR-ROCKER	
	19	1	**3E-8775**	1	SWITCH AS (CRUISE SET/RESUME)	
		1	**3E-8825**	2	LAMP (24 VOLT)	
		1	**123-5855**	1	ACTUATOR-ROCKER	
	20	1	**3E-5239**	1	RELAY AS (24 VOLT) (HORN)	
	21	1	**3K-8782**	14	FUSE (10 AMP)	
	22	1	**3S-2093**	5	STRAP-CABLE	
	23	1	**3T-2662**	1	CIRCUIT BREAKER AS (15 AMP) (TRANSMISSION)	
		1	**6V-8376**	2	SCREW-MACHINE (8-32X.25IN)	
		1	**9B-7233**	2	LOCKWASHER (NO.8)	
	24	1	**4B-4863**	4	WASHER (1.2MM THK)	
M	25	1	**5C-8312**	6	NUT (M4X0.7 THD)	
	26	1	**5M-6668**	4	SCREW-MACHINE (8-32X.75IN)	
	27	1	**6J-0488**	1	SCREW-HEAD (3/8-16X.875IN)	
	28	1	**6N-8589**	1	CIRCUIT BREAKER AS (15 AMP) (TAIL LIGHTS/HIGH BEAM)	
		1	**6V-8376**	2	SCREW-MACHINE (8-32X.25IN)	
		1	**9B-7233**	2	LOCKWASHER (NO.8)	
	29	1	**6V-8801**	1	NUT (3/8-16 THD)	
	30	1	**8C-9660**	2	WASHER (0.8MM THK)	
	31	1	**8M-8948**	4	FUSE (15 AMP)	
	32	1	**8T-4896**	1	WASHER-HARD (2.5MM THK)	

M-METRIC PART

8X-9008 **WIRING GP-STEERING CONSOLE** *(contd.)* **i01242168**

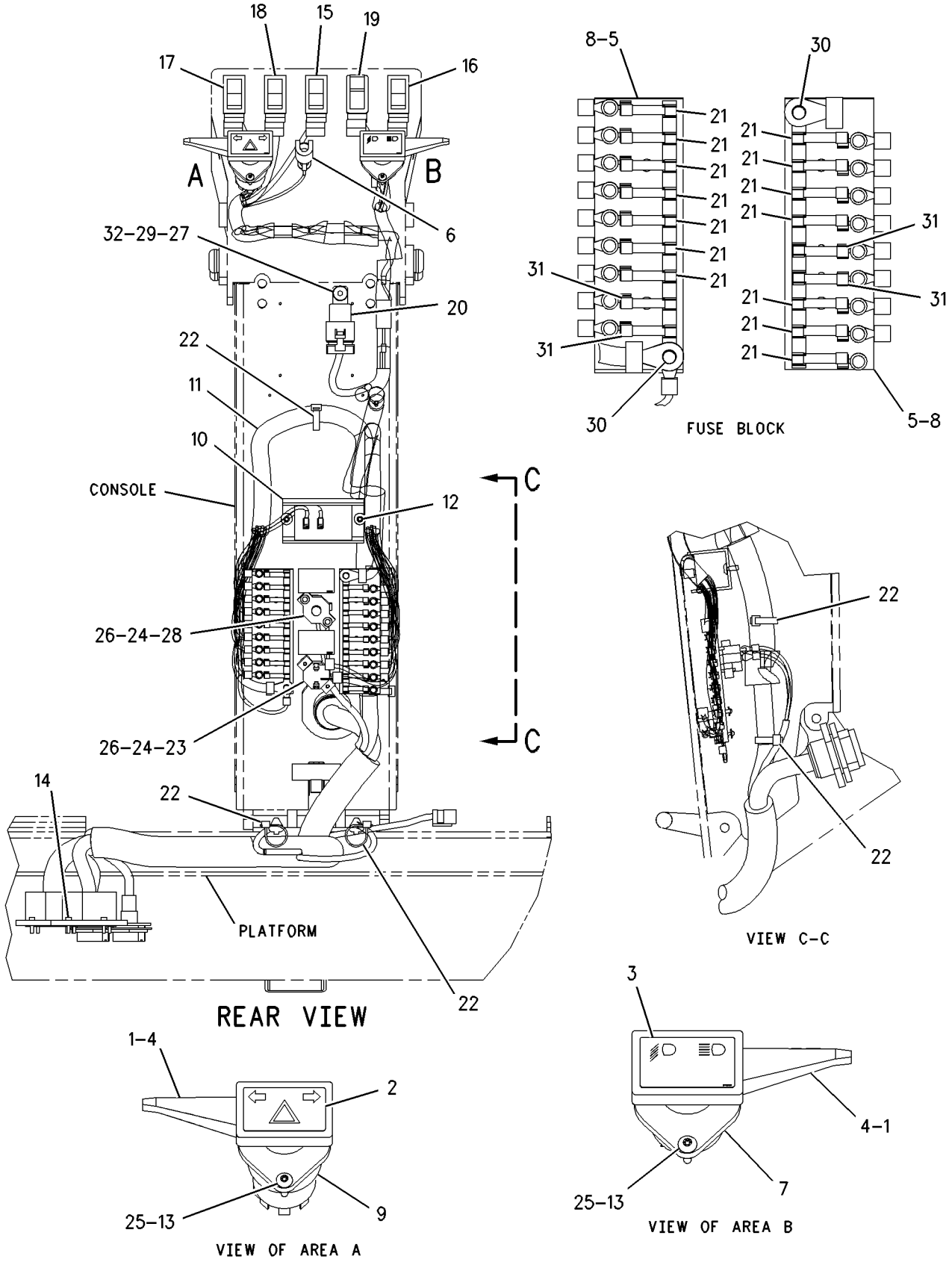

GRAPHIC #1 g00660091

ELECTRICAL AND STARTING SYSTEM

8X-9008 WIRING GP-STEERING CONSOLE

S/N: 7KK95-UP

PART OF 8X-9003 PLATFORM AR

SMCS-1408, 4334 **i01497367**

NOTE	REF NO	GRAPHIC REF	PART NUMBER	QTY	PART NAME 1 2 3 4 5 6 (PRODUCT LEVEL)	SEE PAGE
	1	1	*3E-0109*	1	PLUG-ROCKER SWITCH	
	2	1	**8X-5153**	1	FILM-FACE (TURN SIGNAL/HAZARD)	
	3	1	**8X-5154**	1	FILM-FACE (HEADLIGHTS HIGH/LOW BEAM)	
	4	1	**8X-6296**	2	LEVER (HIGH BEAM/TURN SIGNAL)	
	5	1	**9G-0747**	2	BLOCK AS-FUSE	
					(EACH INCLUDES)	
		1	**4B-5324**	9	WASHER (3.9X9.6X1.2MM THK)	
		1	**6V-8373**	9	SCREW-MACHINE (6-32X0.187 IN)	
		1	**6V-8376**	1	SCREW-MACHINE (8-32X0.25 IN)	
		1	**8C-9660**	1	WASHER (4.6X7.9X0.8MM THK)	
	6	1	**9G-2264**	1	CLIP-CONNECTOR	
	7	1	**9G-5589**	1	SWITCH AS-TURN SIG & WARNING	
		1	**5L-7200**	1	SCREW (8-32X0.375 IN)	
		1	**9B-7233**	1	LOCKWASHER	
	8	1	**9X-6258**	4	SCREW-MACHINE (6-32X.50 IN)	
	9	1	**098-8968**	2	WASHER (5X16X1.2MM THK)	
	10	1	**103-5678**	1	SWITCH AS-ROTARY (HIGH BEAM)	
		1	**5L-7200**	1	SCREW (8-32X0.375 IN)	
		1	**9B-7233**	1	LOCKWASHER	
	11	1	**108-0358**	1	FLASHER AS-ELECTRONIC	
	12	1	**122-1170**	1	HARNESS AS-CAB	
		1	**102-8808**	3	KIT-CONNECTING PLUG (3 PIN) (THROTTLE/BRK/NEUTRALIZER SNSR)	
		1	**8N-1513**	1	RECEPTACLE AS (OPERATOR MONITOR)	
		1	**9X-1343**	1	RECEPTACLE AS (40 PIN) (MAIN DISPLAY MODULE)	
		1	**9X-7148**	1	RECEPTACLE AS (40 PIN) (FORWARD HORN)	
	16	1	**177-9526**	1	INDICATOR AS (DIFFERENTIAL BRAKE PRESSURE)	
		1	**165-5674**	1	LAMP-DIODE (LED) (DIFF BRK PRESS INDICATOR)	
	17	1	**3E-8857**	1	SWITCH AS (DIFFERENTIAL UNLOCK)	
		1	**103-1032**	1	ACTUATOR-ROCKER (1.75 DIA)	
		1	**3E-8825**	2	LAMP (24 VOLT) (DIFFERENTIAL UNLOCK INDICATOR)	
	18	1	**3E-8857**	1	SWITCH AS (CRUISE ON/OFF)	
		1	**3E-8825**	2	LAMP (24 VOLT) (CRUISE ON/OFF INDICATOR)	
		1	**123-5853**	1	ACTUATOR-ROCKER	
	19	1	**3E-8775**	1	SWITCH AS (CRUISE SET/RESUME)	
		1	**3E-8825**	2	LAMP (24 VOLT) (CRUISE SET/RESUME INDICATOR)	
		1	**123-5855**	1	ACTUATOR-ROCKER	
	20	1	**3E-5239**	1	RELAY AS (24 VOLT) (HORN)	
	21	1	**3K-8782**	13	FUSE (10 AMP)	
	22	1	**3S-2093**	5	STRAP-CABLE	
	23	1	**3T-2662**	1	CIRCUIT BREAKER AS (15 AMP) (HEAD/TAIL LIGHTS)	
		1	**6V-8376**	2	SCREW-MACHINE (8-32X0.25 IN)	
		1	**9B-7233**	2	LOCKWASHER	
	24	1	**4B-4863**	4	WASHER (4.7X11X1.2MM THK)	
M	25	1	**5C-2890**	1	NUT (M6X1 THD)	
M	26	1	**5C-8312**	6	NUT (M4X0.7 THD)	
	27	1	**5M-6668**	4	SCREW-MACHINE (8-32X.75IN)	
	28	1	**5P-4115**	1	WASHER-HARD (7.2X19X2MM THK)	
	29	1	**6N-8589**	1	CIRCUIT BREAKER AS (15 AMP) (TRANSMISSION)	
		1	**6V-8376**	2	SCREW-MACHINE (8-32X0.25 IN)	
		1	**9B-7233**	2	LOCKWASHER	
	30	1	**6V-8362**	2	SCREW-MACHINE (8-32X0.31 IN)	
	31	1	**8M-8948**	4	FUSE (15 AMP)	
M	32	1	**8T-9405**	8	BOLT-SOCKET HEAD (M4X0.7X16MM)	
M	33	1	**9X-1046**	6	SCREW (M4X0.7X18MM)	
M	34	1	**9X-2043**	3	SCREW-TRUSS HEAD (M6X1X14MM)	

M-METRIC PART

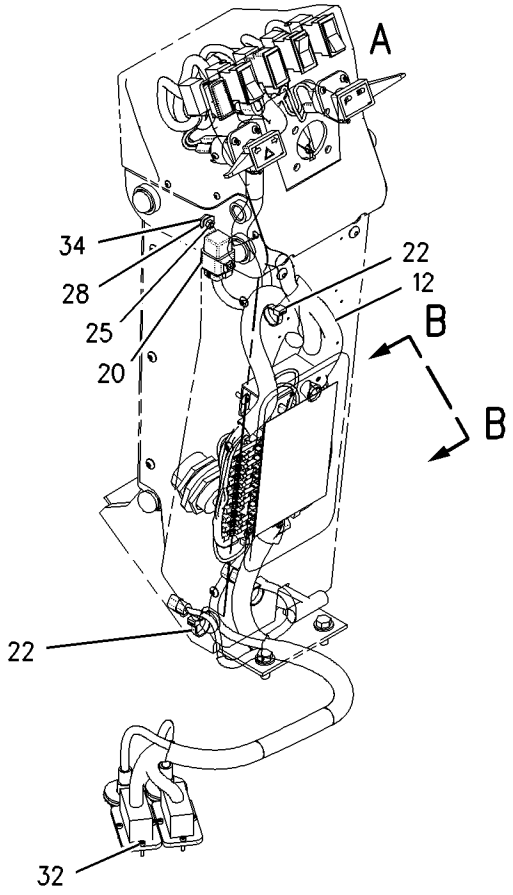

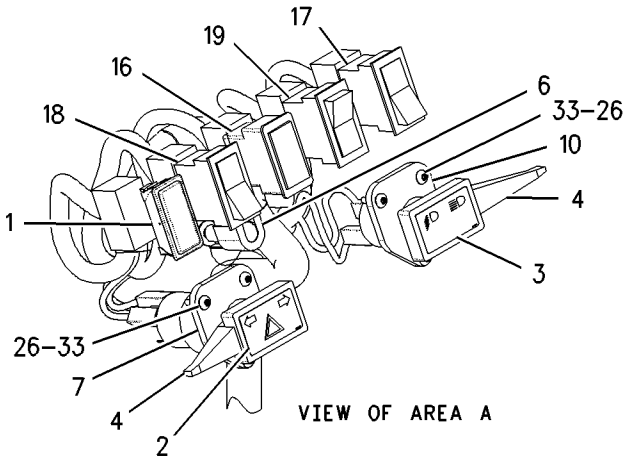

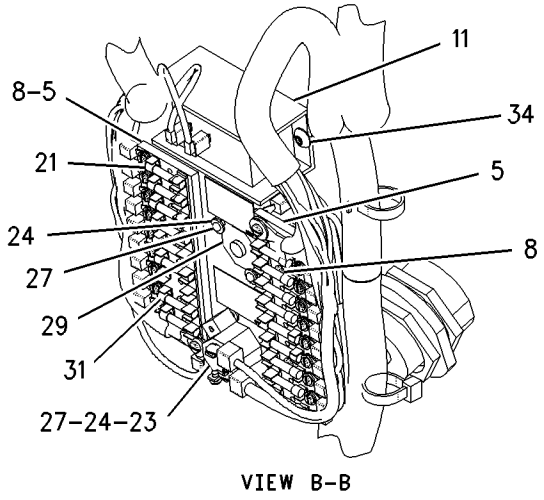

GRAPHIC #1 g00784381

109-0401 WIRING GP-UNIT INJECTOR

S/N: 80M1-UP

PART OF 123-0200 ENGINE AR

SMCS-1408 **i01486814**

NOTE	REF NO	GRAPHIC REF	PART NUMBER	QTY	PART NAME 1 2 3 4 5 6 (PRODUCT LEVEL)	SEE PAGE
	1	1	**7E-6508**	2	CAP AS	
	2	1	**107-6761**	1	CLIP	
	3	1	**2H-3755**	1	BOLT (5/16-18X0.62 IN)	
	4	1	**9M-1974**	1	WASHER-HARD (8.8X16X2MM THK)	
	5	1	**179-7087**	1	HARNESS AS (UNIT INJECTOR)	
	6	1	**033-6034**	1	SEAL-O-RING	
	7	1	**5L-4019**	1	RING-RETAINING	

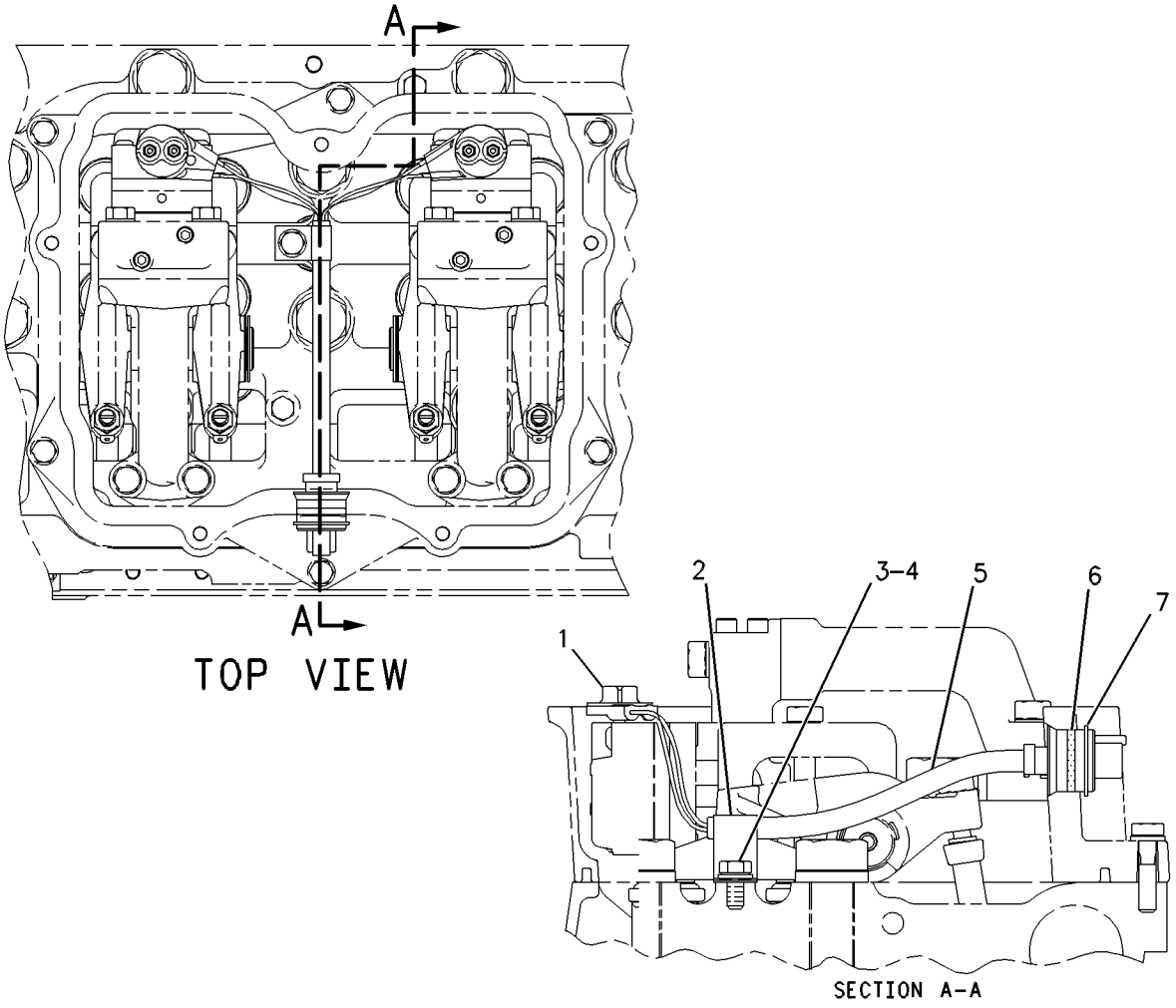

GRAPHIC #1 g00586543

MEMORANDA

8E-1295 CASE & PARTS GP-PLANETARY

S/N: 1KY1-UP

PART OF 8E-1298 TRANSMISSION AR

SMCS-3064 **i01275605**

NOTE	REF NO	GRAPHIC REF	PART NUMBER	QTY	PART NAME 1 2 3 4 5 6 (PRODUCT LEVEL)	SEE PAGE
	1	1	**9S-4183**	1	PLUG (1 1/16-12 THD)	
	2	1	**3D-2824**	1	SEAL-O-RING (23.47MM ID)	
	3	1	**6T-6899**	1	MANIFOLD	
	4	1	**8M-4992**	2	SEAL-O-RING (40.87MM ID)	
	5	1	**5P-2587**	1	SEAL-O-RING (520.07MM ID)	
	6	1	**0S-1587**	2	BOLT (1/2-13X1.75IN)	
	7	1	**5P-8245**	2	WASHER-HARD (3MM THK)	
	8	1	**030-7947**	2	ELBOW (9/16-18 STR THD) (90 DEG)	
	9	1	**3J-1907**	8	SEAL-O-RING (11.89MM ID)	
	10	1	**2M-3403**	3	BOLT (3/8-16X3-5/8)	
	11	1	**5M-2894**	8	WASHER (2.5MM THK)	
	12	1	**122-8431**	1	CASE AS-TRANSMISSION	
	13	1	**1A-2223**	2	DOWEL	
	14	1	**136-7816**	1	COVER	
	15	1	**9S-4191**	4	PLUG-O-RING (9/16-18 THD)	
	16	1	**0S-1591**	20	BOLT (3/8-16X1.5 IN)	
	17	1	**0T-0102**	1	BOLT (3/8-16X0.625IN)	
	18	1	**7B-1597**	1	CLIP (9.52MM ID)	
	19	1	**6T-6791**	1	TUBE AS	
	20	1	**8E-9086**	1	GASKET	
	21	1	**1A-2029**	4	BOLT (3/8-16X1.125IN)	
	22	1	**7G-3737**	1	GASKET	
	23	1	**6V-0852**	2	CAP-DUST	
	24	1	**6V-3965**	2	FITTING AS	
	25	1	**136-1738**	1	COVER AS-TRANSMISSION	

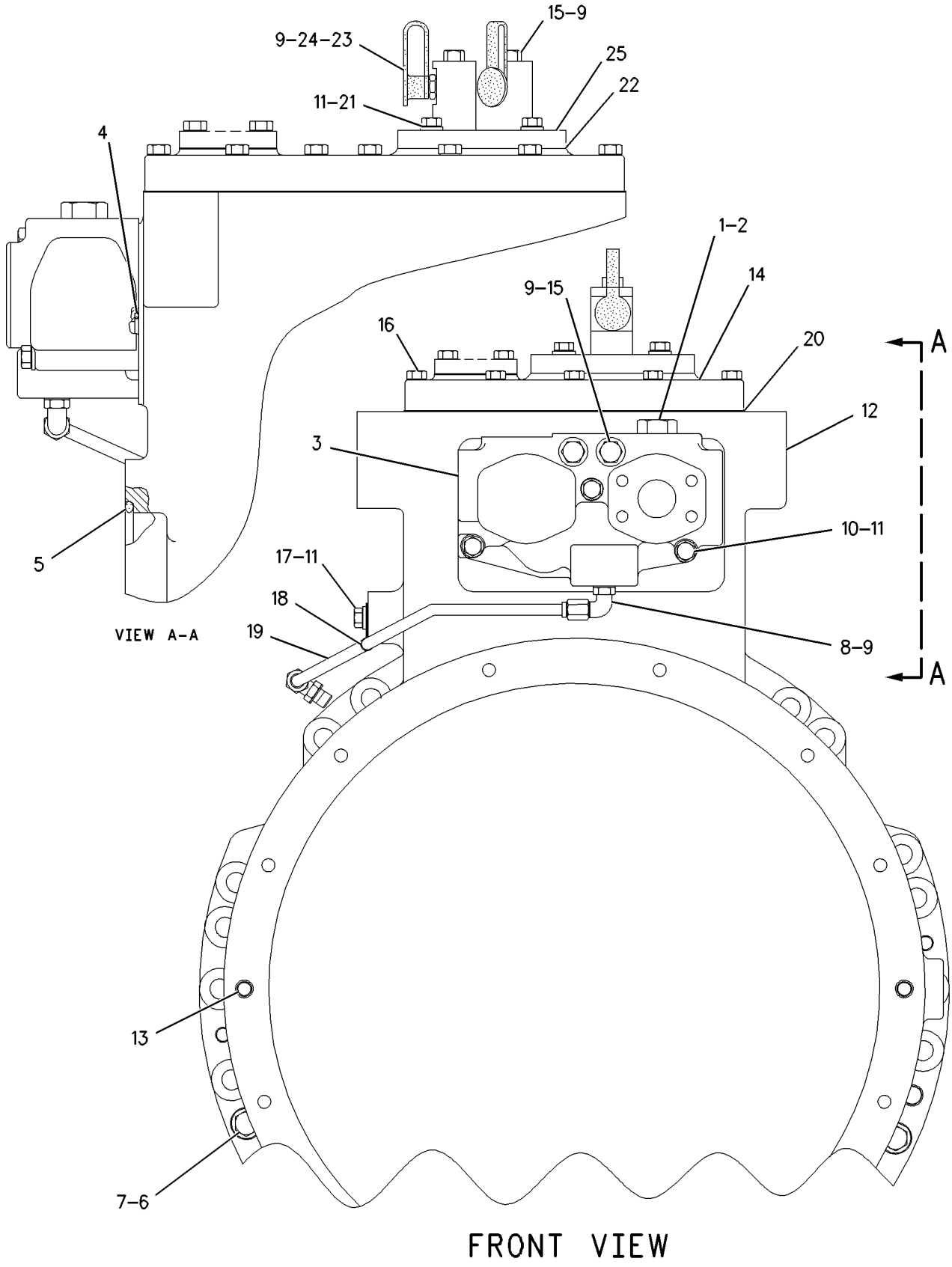

GRAPHIC #1

g00677442

6Y-6324 CASE AS-TRANSFER

S/N: 1KY1-493
FIELD INSTALLATION

SMCS-3159 **i00543481**

NOTE	REF NO	GRAPHIC REF	PART NUMBER	QTY	PART NAME 1 2 3 4 5 6 (PRODUCT LEVEL)	SEE PAGE
	1	1	**8P-8837**	1	TUBE AS	
	2	1	**2A-3798**	2	DOWEL	
	3	1	**0S-1594**	1	BOLT (3/8-16X1IN)	
	4	1	**5M-2894**	1	WASHER (2.5MM THK)	
	5	1	**8M-8659**	2	DOWEL	

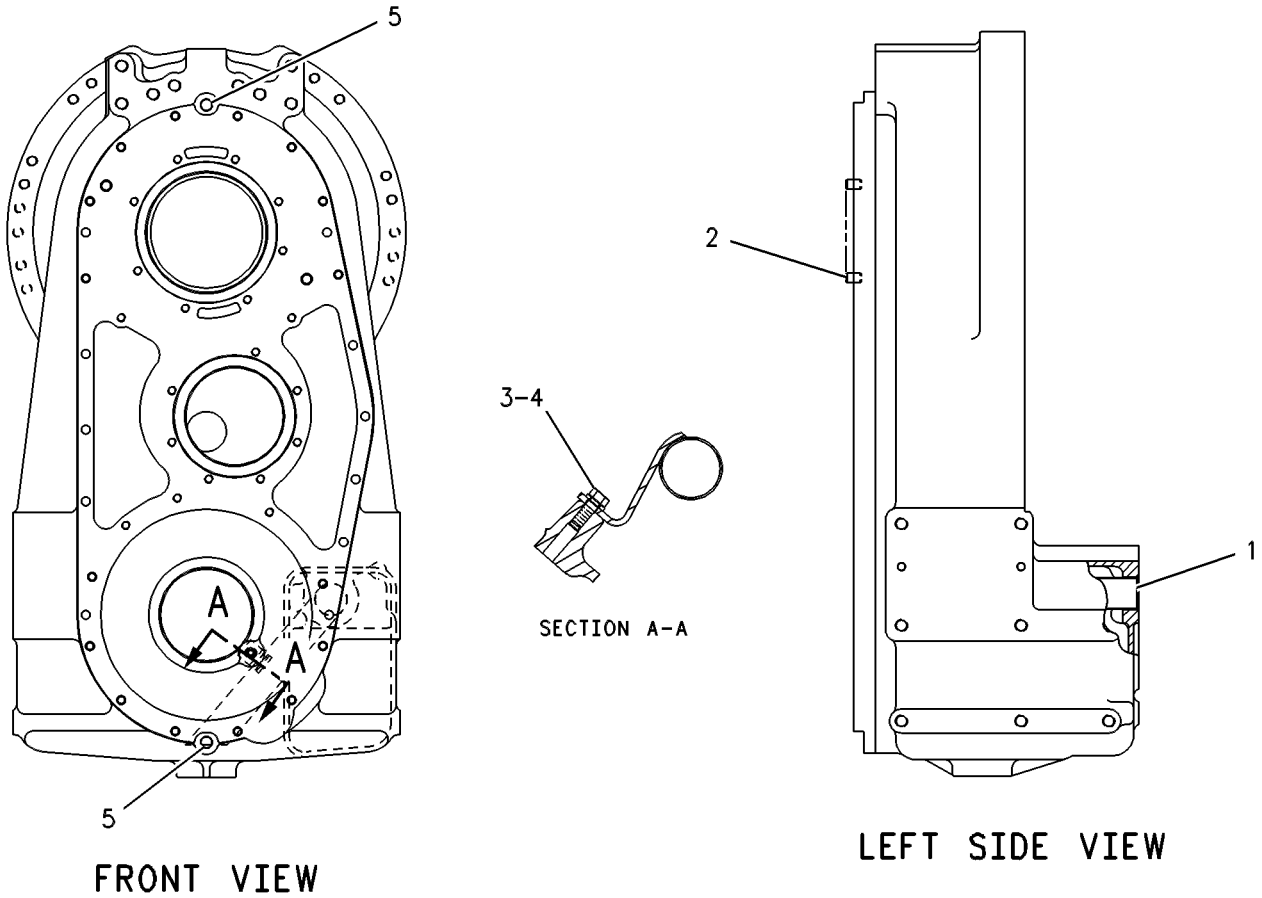

GRAPHIC #1 g00265914

POWER TRAIN

8X-9040 CHAIN GP-DRIVE

S/N: 7KK1-UP

PART OF 8X-8405 POWER TRAIN AR

SMCS-3261, 4063 **i01440828**

NOTE	PART NUMBER	QTY	PART NAME 1 2 3 4 5 6 (PRODUCT LEVEL)	SEE PAGE
	178-3132	4	CHAIN GP	
			(EACH INCLUDES)	
	178-3133	1	LINK-CONNECTING	
	140-9555	2	PIN-SPRING	

8X-8981 CONTROL GP-DIFFERENTIAL LOCK

S/N: 7KK1-UP

PART OF 8X-8404 HYDRAULIC AR

SMCS-3264 **i01331968**

NOTE	REF NO	GRAPHIC REF	PART NUMBER	QTY	PART NAME 1 2 3 4 5 6 (PRODUCT LEVEL)	SEE PAGE
	1	1	**5P-7981**	1	ELBOW-O-RING (9/16-18 THD)	
	2	1	**5P-9617**	1	ADAPTER (9/16-18-2A TO 7/16-20-2B THD)	
	3	1	**6V-3966**	1	FITTING	
Y	4	1	**7Y-4075**	1	FILTER GP-OIL	393
	5	1	**8C-3415**	1	TEE	
	6	1	**8C-3446**	1	VALVE-FLUID SAMPLING	
	7	1	**8C-3451**	1	CAP-DUST	
I	8	1	**129-8524**	1	HOSE AS	
I	9	1	**136-2615**	1	HOSE AS	
I	10	1	**136-2616**	1	HOSE AS	
I	11	1	**136-2617**	1	HOSE AS	
Y	12	1	**144-6295**	1	VALVE & MTG GP-DIFF LOCK	455
	13	1	**3D-2824**	3	SEAL-O-RING (23.47MM ID)	
	14	1	**3G-8054**	2	CLIP (TAB)	
	15	1	**3G-8057**	2	CLIP (SLOT)	
	16	1	**3J-1907**	3	SEAL-O-RING (11.89MM ID)	
	17	1	**3J-7354**	3	SEAL-O-RING (8.92MM ID)	
	18	1	**3K-0360**	2	SEAL-O-RING (16.36MM ID)	
	19	1	**4J-0520**	1	SEAL-O-RING (32.92MM ID)	
	20	1	**5P-7466**	2	CLIP (SLOT)	
	21	1	**5P-7467**	2	CLIP (TAB)	
	22	1	**5P-8112**	2	GROMMET	
	23	1	**6V-0852**	1	CAP-DUST	
	24	1	**6V-0974**	2	GROMMET	
	25	1	**6V-8397**	6	SEAL-O-RING (9.27MM ID)	
	26	1	**6V-8636**	1	CONNECTOR-SEAL	
	27	1	**6V-8723**	1	ELBOW-90 DEGREE	
	28	1	**6V-9004**	1	ELBOW-45 DEGREE (1 1/16-12 THD)	
	29	1	**6V-9200**	1	ELBOW-FACE SEAL (90 DEGREES) (9.27MM ID)	
	30	1	**6V-9343**	2	ELBOW (90 DEGREE)	
	31	1	**6V-9746**	1	SEAL-O-RING (18.94MM ID)	
M	32	1	**7X-0818**	2	BOLT (M8X1.25X45MM)	
	33	1	**8C-3206**	2	FLANGE-HALF	
	34	1	**8M-4438**	2	SEAL-O-RING (17.12M ID)	
	35	1	**8T-4121**	4	WASHER-HARD (2.5MM THK)	
M	36	1	**8T-4183**	2	BOLT (M12X1.75X40 MM)	
M	37	1	**8T-4196**	4	BOLT (M10X1.50X35MM)	
M	38	1	**8T-4200**	4	BOLT (M8X1.25X16MM)	
	39	1	**8T-4223**	4	WASHER-HARD (3MM THK)	
	40	1	**8T-4224**	6	WASHER-HARD (8.8X16X2MM THK)	
M	41	1	**8T-4244**	2	NUT (M12X1.75 THD)	
	42	1	**9S-4191**	1	PLUG-O-RING (9/16-18 THD)	

I-SEE HOSE FABRICATION GUIDE
M-METRIC PART
Y-SEPARATE ILLUSTRATION

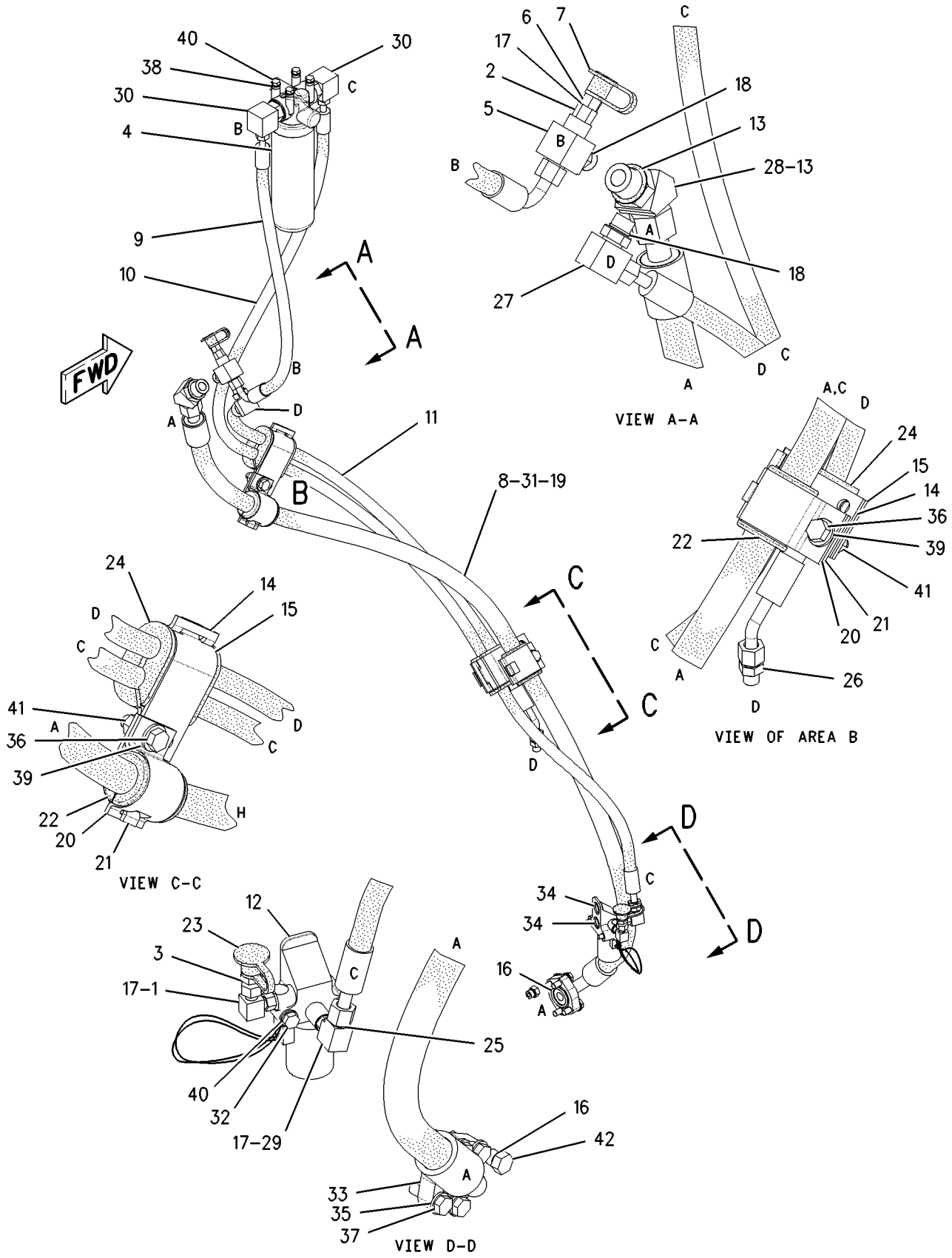

GRAPHIC #1 g00710237

8E-1581 CONTROL GP-TRANSMISSION HYD

S/N: 1KY1-518

PART OF 8E-1298 TRANSMISSION AR

SMCS-3073 **i00107581**

NOTE	REF NO	GRAPHIC REF	PART NUMBER	QTY	PART NAME 1 2 3 4 5 6 (PRODUCT LEVEL)	SEE PAGE
Y	1	1	*117-5309*	1	VALVE GP-TRANSMISSION CONTROL	470
	2	1	**4H-3283**	4	BOLT (3/8-16X9.5IN)	
	3	1	**5M-2894**	4	WASHER (2.5MM THK)	
	4	1	**6Y-7125**	2	SLEEVE	
	5	1	**8M-4432**	4	SEAL-O-RING	
	6	1	**104-6729**	1	RETAINER	
	7	1	**104-6730**	1	GASKET	
	8	1	**1A-2029**	2	BOLT (3/8-16X1.125IN)	

Y-SEPARATE ILLUSTRATION

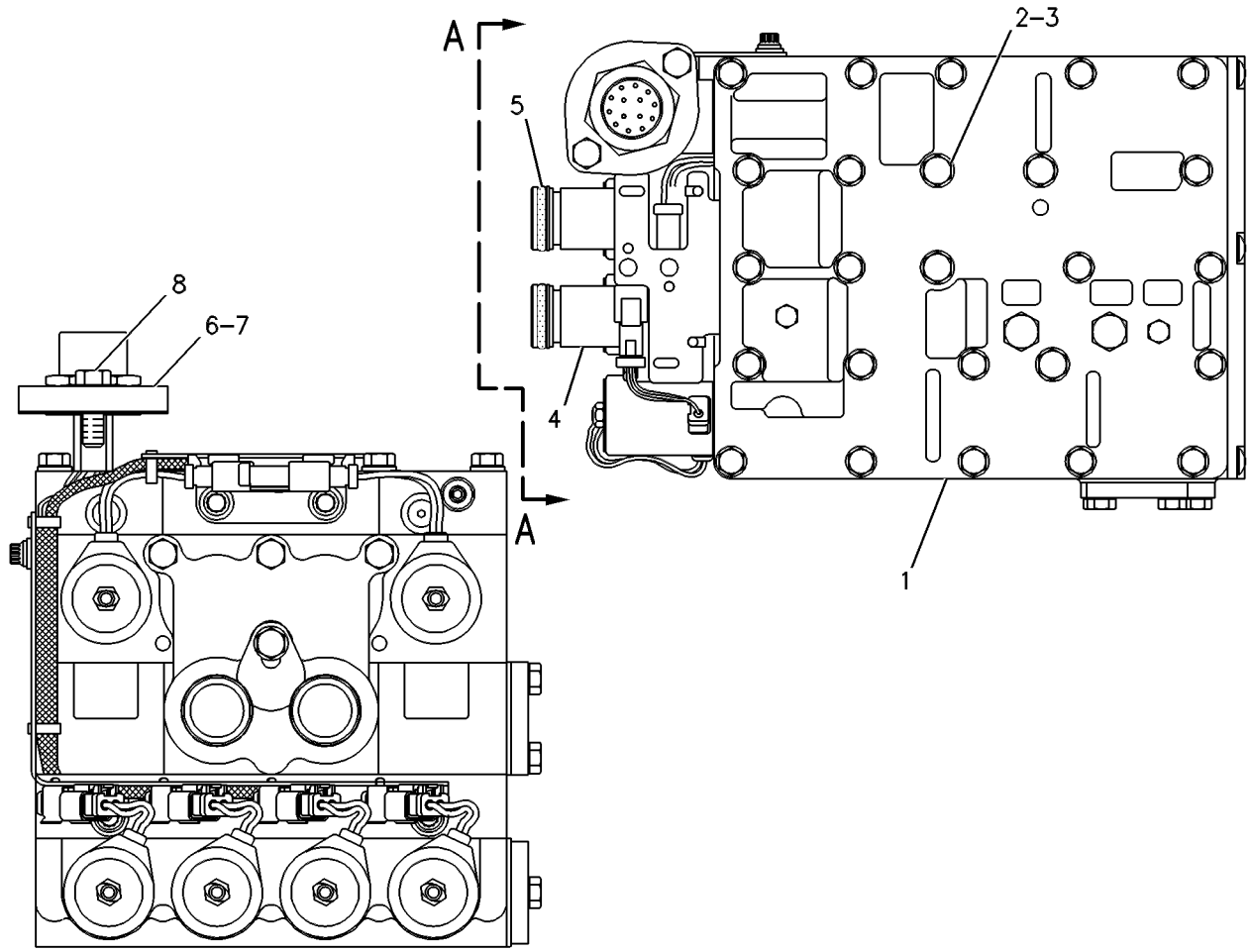

VIEW A-A

GRAPHIC #1 g00088776

136-1739 CONTROL GP-TRANSMISSION HYD

S/N: 1KY519-UP

PART OF 8E-1298 TRANSMISSION AR

SMCS-3073 **i00886532**

NOTE	REF NO	GRAPHIC REF	PART NUMBER	QTY	PART NAME 1 2 3 4 5 6 (PRODUCT LEVEL)	SEE PAGE
Y	1	1	*136-3738*	1	VALVE GP-TRANSMISSION CONTROL	472
	2	1	**4H-3283**	4	BOLT (3/8-16X9.5IN)	
	3	1	**5M-2894**	4	WASHER (2.5MM THK)	
	4	1	**6Y-7125**	2	SLEEVE	
	5	1	**8M-4432**	4	SEAL-O-RING	
	6	1	**104-6729**	1	RETAINER	
	7	1	**104-6730**	1	GASKET	
	8	1	**1A-2029**	2	BOLT (3/8-16X1.125IN)	
	9	1	**146-3074**	2	SLEEVE	
	10	1	**6V-4365**	4	SEAL-O-RING (9.19MM ID)	

Y-SEPARATE ILLUSTRATION

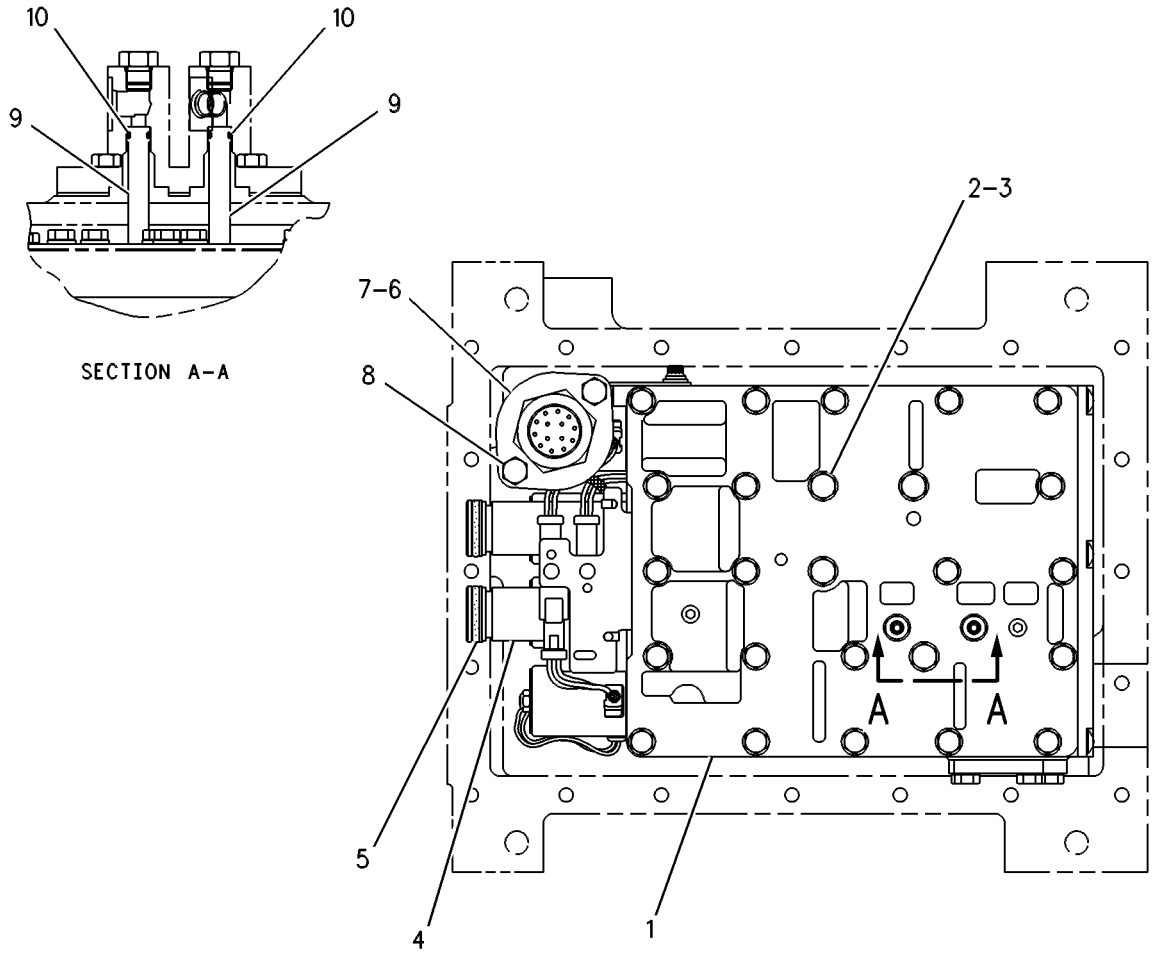

GRAPHIC #1 g00272435

122-8326 COVER GP-SHIPPING

S/N: 1KY1-UP

PART OF 8E-1298 TRANSMISSION AR

SMCS-3030, 3064, 3188 **i00107550**

NOTE	REF NO	GRAPHIC REF	PART NUMBER	QTY	PART NAME 1 2 3 4 5 6 (PRODUCT LEVEL)	SEE PAGE
	1	1	**1F-7958**	4	NUT-FULL (1/2-13 THD)	
	2	1	**5P-8245**	4	WASHER (3MM THK)	
	3	1	**1P-9269**	1	COVER	
	4	1	**3F-5792**	1	SEAL-O-RING (129.77MM ID)	
	5	1	**1S-3725**	4	COVER	
	6	1	**8E-7366**	4	GASKET	
	7	1	**0T-0318**	16	BOLT (7/16-14X1IN)	
	8	1	**3E-4046**	1	PLUG	
	9	1	**3D-2992**	1	SEAL	
	10	1	**1S-6595**	1	GASKET	
	11	1	**0T-0102**	2	BOLT (3/8-16X0.625IN)	
	12	1	**0S-1595**	2	BOLT (1/2-13X1.25IN)	
	13	1	**3H-0110**	1	COVER	
	14	1	**3J-3712**	1	GASKET	
	15	1	**7J-0402**	1	COVER	
	16	1	**8E-7367**	1	GASKET	
	17	1	**0S-1621**	4	BOLT (1/2-13X1.0IN)	
	18	1	**9S-8010**	1	PLUG-O-RING (1 5/8-12 THD)	
	19	1	**2S-4078**	1	SEAL-O-RING (37.46MM ID)	
	20	1	**0S-0509**	2	BOLT (3/8-16X.75IN)	
	21	1	**5M-3154**	1	COVER	

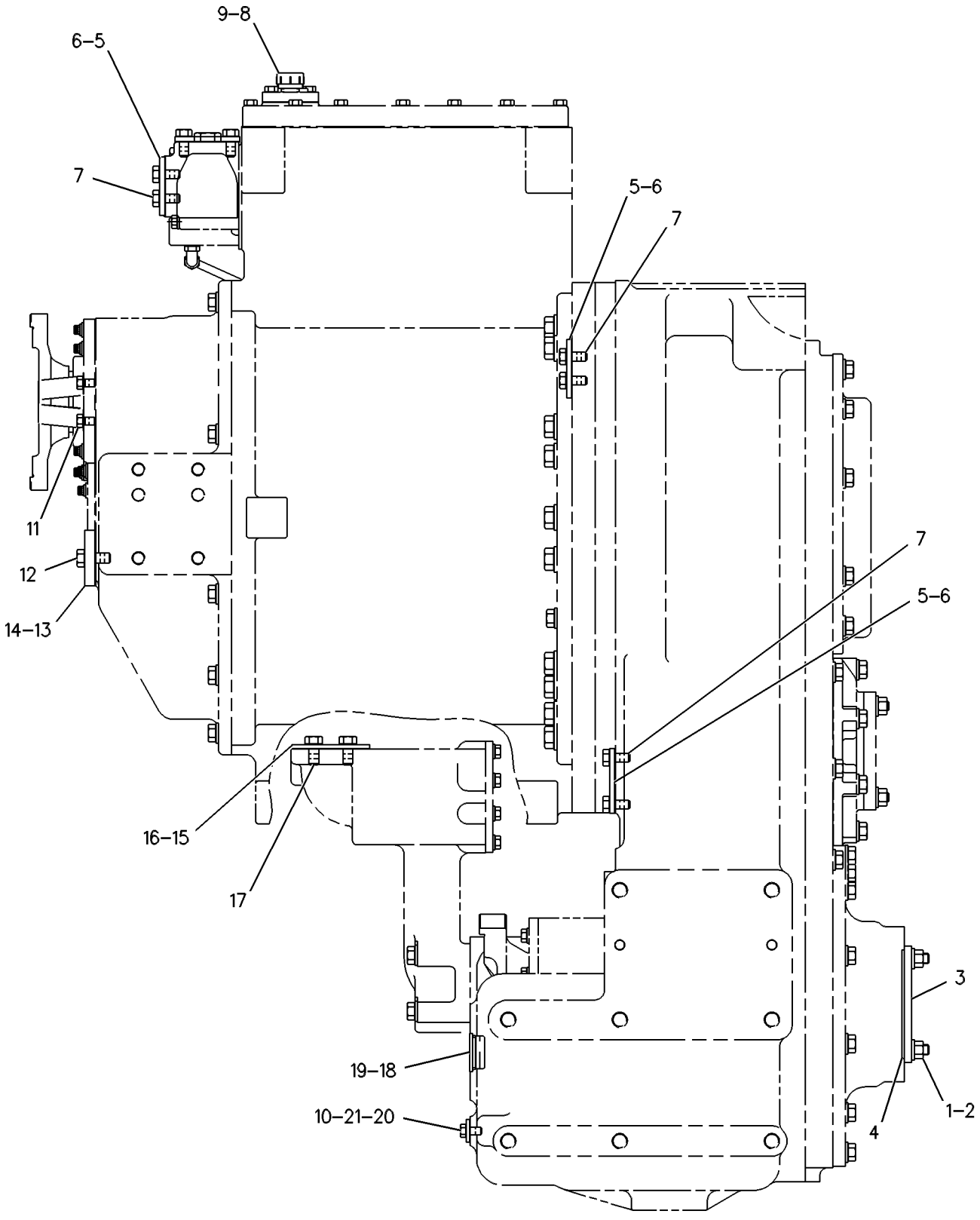

LEFT SIDE VIEW

GRAPHIC #1 g00088302

POWER TRAIN

8X-9042 DIFFERENTIAL & BEVEL GEAR GP

S/N: 7KK1-63

PART OF 8X-8405 POWER TRAIN AR

SMCS-3256, 3258 **i01298875**

NOTE	REF NO	GRAPHIC REF	PART NUMBER	QTY	PART NAME 1 2 3 4 5 6 (PRODUCT LEVEL)	SEE PAGE
Y	1	1	*116-8235*	1	DIFFERENTIAL GP	384
	2	1	**116-8226**	1	CARRIER AS	
	3	1	**3S-7023**	4	WASHER (6.0MM THK)	
	4	1	**7I-5005**	4	BUSHING	
	5	1	**2A-7122**	2	CAP-BEARING	
M	6	1	**8T-6624**	4	BOLT (M30X3.5X180MM)	
	7	1	**7I-4999**	1	SHIM PACK (INCLUDES 20 SHIMS)	
	8	1	**2M-3340**	1	SEAL-O-RING (380.36MM ID)	
M	9	1	**6A-5591**	2	BOLT (M12X1.75X25MM)	
	10	1	**7I-5004**	1	LOCK	
	11	1	**9K-4454**	1	LOCK	
	12	1	**4D-0537**	2	DOWEL	
	13	1	**5P-8245**	2	WASHER-HARD (3MM THK)	
	14	1	**8T-4167**	20	WASHER (4.0MM THK)	
M	15	1	**7X-2576**	20	BOLT (M24X3X70MM)	
		1	**116-8239**	1	PINION AS	
	16	1	**125-5721**	1	SHAFT	
	17	1	**5P-8043**	1	CONE-ROLLER BEARING	
	18	1	**9S-8004**	1	PLUG-O-RING (9/16-18 THD)	
	19	1	**5P-8044**	1	CUP-ROLLER BEARING	
	20	1	**8F-1610**	1	CONE-ROLLER BEARING	
	21	1	**5P-7843**	1	CUP-ROLLER BEARING	
	22	1	**125-5722**	1	RETAINER	
M	23	1	**6V-4248**	6	BOLT (M10X1.50X25MM)	
	24	1	**6V-5839**	6	WASHER (2.5MM THK)	
	25	1	**117-7127**	1	SEAL-LIP TYPE	
	26	1	**8F-6230**	1	SEAL-O-RING (228.19MM ID)	
	27	1	**9C-5276**	1	NUT-STAKE	
	28	1	**141-8570**	1	WASHER	
	29	1	**2A-7163**	1	HOUSING-PINION	
	30	1	**116-8241**	1	YOKE AS	
	31	1	**3J-1907**	1	SEAL-O-RING (11.89MM ID)	

M-METRIC PART
Y-SEPARATE ILLUSTRATION

8X-9042 DIFFERENTIAL & BEVEL GEAR GP *(contd.)* i01298875

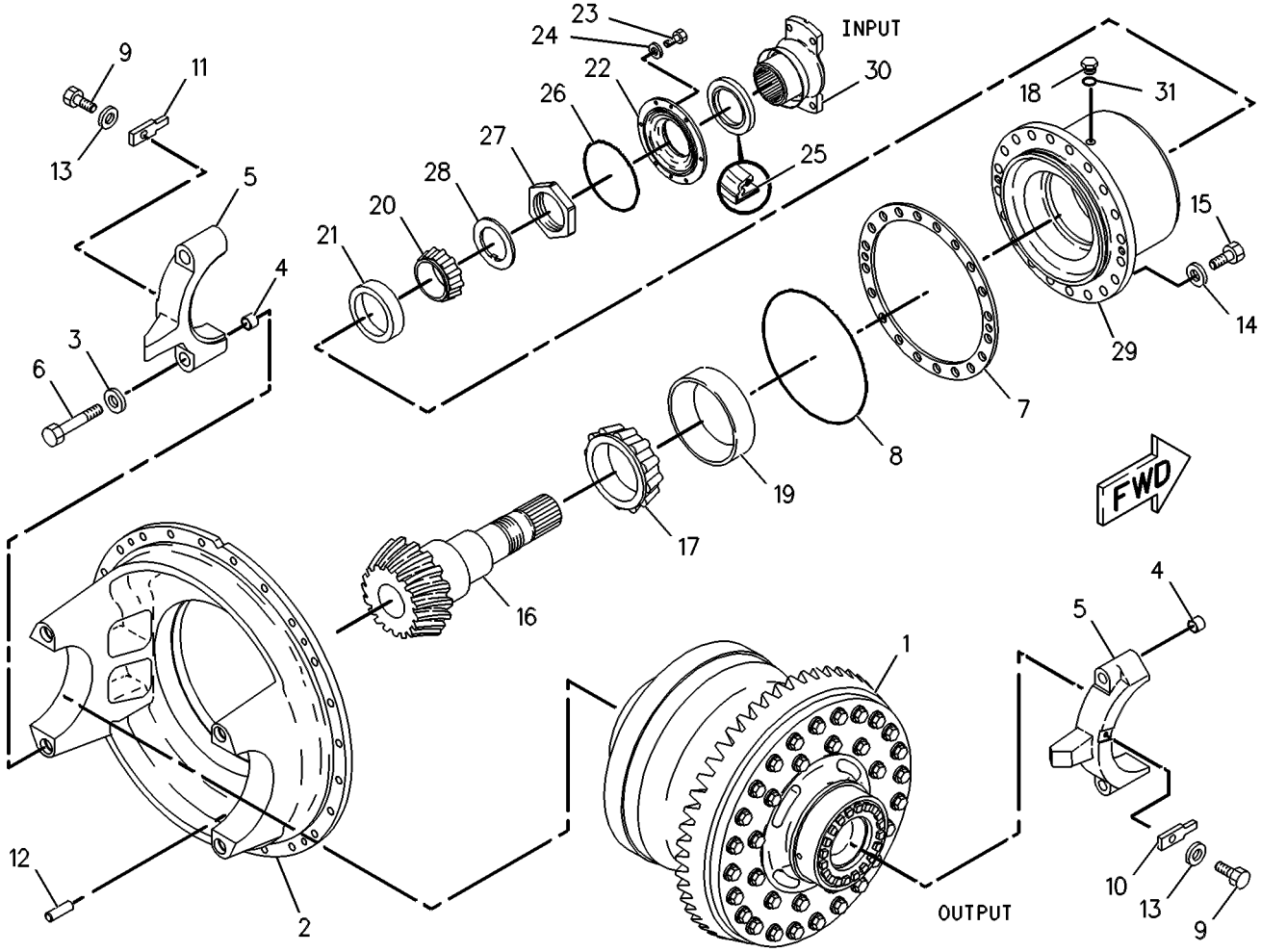

GRAPHIC #1 g00086288

POWER TRAIN

8X-9042 DIFFERENTIAL & BEVEL GEAR GP

S/N: 7KK64-UP

PART OF 8X-8405 POWER TRAIN AR

SMCS-3256, 3258 **i01298877**

NOTE	REF NO	GRAPHIC REF	PART NUMBER	QTY	PART NAME 1 2 3 4 5 6 (PRODUCT LEVEL)	SEE PAGE
CY	1	1	**154-6622**	1	DIFFERENTIAL GP	386
	2	1	**116-8226**	1	CARRIER AS	
	3	1	**3S-7023**	4	WASHER (6.0MM THK)	
	4	1	**7I-5005**	4	BUSHING	
	5	1	**2A-7122**	2	CAP-BEARING	
M	6	1	**8T-6624**	4	BOLT (M30X3.5X180MM)	
	7	1	**7I-4999**	1	SHIM PACK (INCLUDES 20 SHIMS)	
	8	1	**2M-3340**	1	SEAL-O-RING (380.36MM ID)	
M	9	1	**6A-5591**	2	BOLT (M12X1.75X25MM)	
	10	1	**7I-5004**	1	LOCK	
	11	1	**9K-4454**	1	LOCK	
	12	1	**4D-0537**	2	DOWEL	
	13	1	**5P-8245**	2	WASHER-HARD (3MM THK)	
	14	1	**8T-4167**	20	WASHER (4.0MM THK)	
M	15	1	**7X-2576**	20	BOLT (M24X3X70MM)	
		1	**116-8239**	1	PINION AS	
	16	1	**154-2728**	1	SHAFT-PINION	
	17	1	**5P-8043**	1	CONE-ROLLER BEARING	
	18	1	**9S-8004**	1	PLUG-O-RING (9/16-18 THD)	
	19	1	**5P-8044**	1	CUP-ROLLER BEARING	
	20	1	**8F-1610**	1	CONE-ROLLER BEARING	
	21	1	**5P-7843**	1	CUP-ROLLER BEARING	
	22	1	**125-5722**	1	RETAINER	
M	23	1	**6V-4248**	6	BOLT (M10X1.50X25MM)	
	24	1	**6V-5839**	7	WASHER (2.5MM THK)	
	25	1	**117-7127**	1	SEAL-LIP TYPE	
	26	1	**8F-6230**	1	SEAL-O-RING (228.19MM ID)	
	27	1	**9C-5276**	1	NUT-STAKE	
	28	1	**141-8570**	1	WASHER	
	29	1	**2A-7163**	1	HOUSING-PINION	
	30	1	**116-8241**	1	YOKE AS	
	31	1	**3J-1907**	1	SEAL-O-RING (11.89MM ID)	
	32	1	**6L-1698**	1	SPACER (0.5IN THK)	
M	33	1	**6V-1820**	1	BOLT (M10X1.50X30MM)	
	34	1	**160-2728**	1	TUBE AS (LOWER)	
		1	**6V-8553**	1	NUT-FACE SEAL	
		1	**6V-8560**	1	SLEEVE	
	35	1	**160-2729**	1	TUBE AS (UPPER)	
		1	**6V-8553**	1	NUT-FACE SEAL	
		1	**6V-8560**	1	SLEEVE	
	36	1	**3J-1907**	1	SEAL-O-RING (11.89MM ID)	
	37	1	**5P-9297**	1	CLIP (9.52MM ID)	
	38	1	**6V-8397**	2	SEAL-O-RING (9.27MM ID)	
	39	1	**6V-8781**	1	TEE-FACE SEAL	

C-CHANGE FROM PREVIOUS TYPE
M-METRIC PART
Y-SEPARATE ILLUSTRATION

8X-9042 DIFFERENTIAL & BEVEL GEAR GP *(contd.)* i01298877

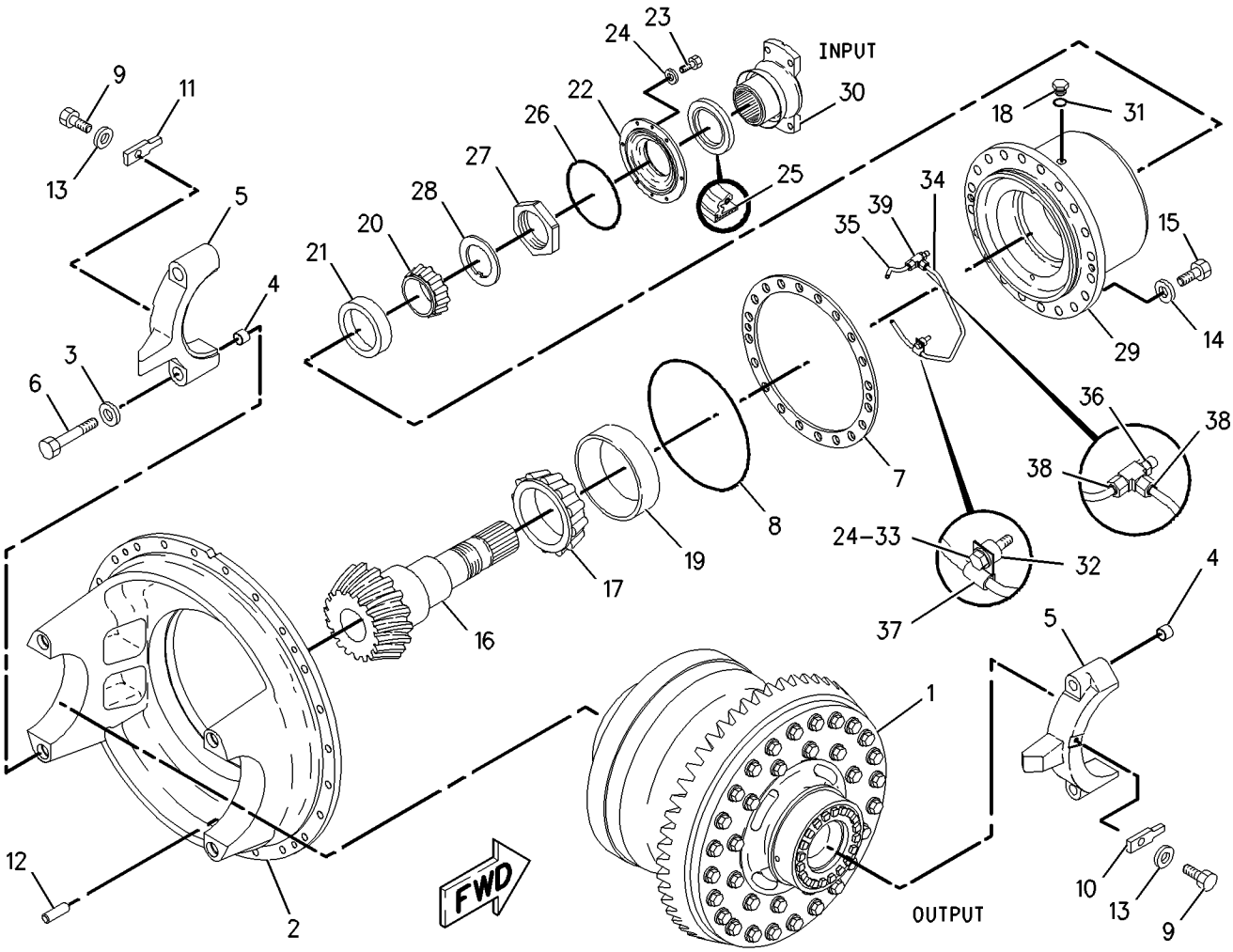

GRAPHIC #1 g00688289

116-8235 DIFFERENTIAL GP

S/N: 7KK1-63

PART OF 8X-9042 DIFFERENTIAL & BEVEL GEAR GP

SMCS-3258, 3283, 3284 **i00546534**

NOTE	REF NO	GRAPHIC REF	PART NUMBER	QTY	PART NAME 1 2 3 4 5 6 (PRODUCT LEVEL)	SEE PAGE
	1	1	**2A-7152**	1	HOUSING AS	
	2	1	**3D-6509**	2	DOWEL	
	3	1	**4B-9880**	1	BALL	
	4	1	**2A-7180**	1	PISTON	
	5	1	**7G-9224**	1	RING-SEAL	
	6	1	**9G-0333**	1	RING-SEAL	
	7	1	**117-0019**	6	DISC-FRICTION	
M	8	1	**6V-3532**	24	BOLT (M20X2.5X60MM)	
	9	1	**8T-3282**	40	WASHER-HARD (3.5MM THK)	
	10	1	**3D-8513**	2	WASHER-THRUST	
	11	1	**7I-5006**	1	GEAR-DIFFERENTIAL BEVEL (24 TEETH)	
	12	1	**8W-9150**	1	GEAR-DIFFERENTIAL BEVEL (24 TEETH)	
	13	1	**7I-4935**	1	SPACER	
	14	1	**6G-0387**	6	DISC	
M	15	1	**6V-3669**	16	BOLT (M20X2.5X80MM)	
	16	1	**9V-9840**	1	SPIDER	
	17	1	**8W-9151**	4	PINION-DIFFERENTIAL	
	18	1	**4D-7541**	4	RETAINER	
	19	1	**4D-7534**	4	BEARING AS-ROLLER	
	20	1	**2F-9064**	4	NUT (2-1/8-12 THD)	
	21	1	**4D-7536**	4	LOCK-NUT	
	22	1	**6G-6272**	2	RING-SEAL	
	23	1	**9D-8799**	1	RING	
	24	1	**2S-1914**	1	SEAL-RING (.487MM ID)	
	25	1	**116-8238**	1	GEAR-BEVEL (51 TEETH)	
	26	1	**3D-9553**	1	CAGE-BEARING	
	27	1	**7T-7616**	1	CONE-ROLLER BEARING	
	28	1	**7T-7617**	1	CUP-ROLLER BEARING	
	29	1	**3D-9552**	1	RING-ADJUSTMENT	
	30	1	**2D-9457**	1	CONE-ROLLER BEARING	
	31	1	**4F-2041**	1	CUP-ROLLER BEARING	
	32	1	**8W-3064**	1	RING-ADJUSTMENT	
	33	1	**2A-7151**	1	CAGE AS	
	34	1	**2D-6642**	2	BALL	
	35	1	**2A-7154**	1	HOUSING-DIFFERENTIAL	
	36	1	**2A-7322**	1	HOUSING-DIFFERENTIAL	
M	37	1	**8T-0674**	12	BOLT (M24X3.0X180MM)	
	38	1	**6V-8237**	12	WASHER (4.0MM THK)	
	39	1	**3D-6509**	6	DOWEL	

M-METRIC PART

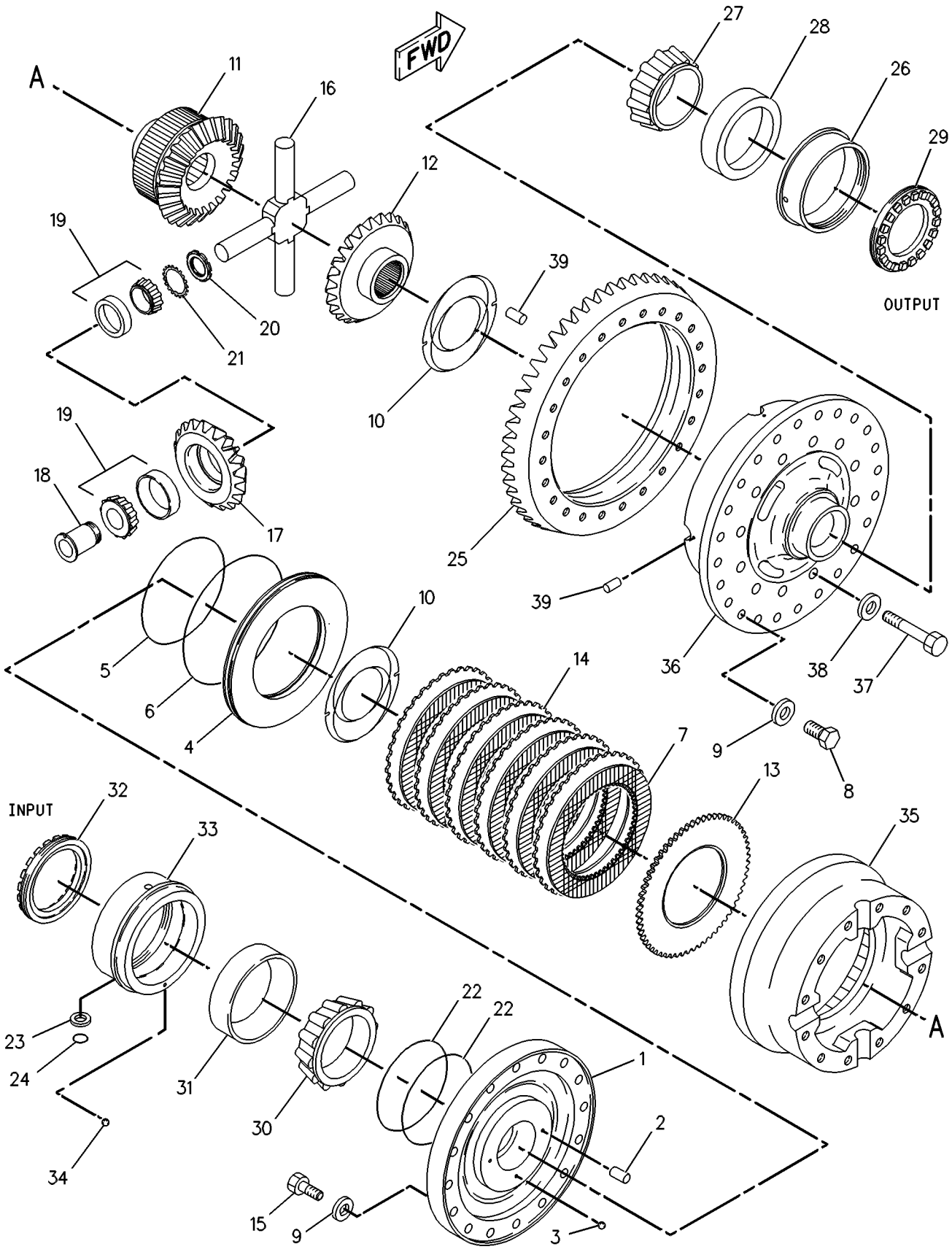

GRAPHIC #1 g00264033

154-6622 DIFFERENTIAL GP

S/N: 7KK64-UP

PART OF 8X-9042 DIFFERENTIAL & BEVEL GEAR GP

SMCS-3258, 3283, 3284 **i01102530**

NOTE	REF NO	GRAPHIC REF	PART NUMBER	QTY	PART NAME 1 2 3 4 5 6 (PRODUCT LEVEL)	SEE PAGE
	1	1	**2A-7151**	1	CAGE AS	
M		1	**9X-2609**	2	SETSCREW-SOCKET	
	2	1	**2A-7180**	1	PISTON	
	3	1	**2D-9457**	1	CONE-ROLLER BEARING	
	4	1	**3D-9552**	1	RING-ADJUSTMENT	
	5	1	**3D-9553**	1	CAGE-BEARING	
	6	1	**4D-7536**	4	LOCK-NUT	
	7	1	**4D-7541**	4	RETAINER	
	8	1	**4F-2041**	1	CUP-ROLLER BEARING	
	9	1	**6G-0387**	6	DISC	
	10	1	**6G-6272**	2	RING-SEAL	
	11	1	**7I-4935**	1	SPACER (12MM THK)	
	12	1	**7I-5006**	1	GEAR-DIFFERENTIAL BEVEL (24 TEETH)	
	13	1	**7T-7616**	1	CONE-ROLLER BEARING	
	14	1	**7T-7617**	1	CUP-ROLLER BEARING	
	15	1	**8W-3064**	1	RING-ADJUSTMENT	
	16	1	**8W-9150**	1	GEAR-DIFFERENTIAL BEVEL (24 TEETH)	
	17	1	**8W-9151**	4	PINION-DIFFERENTIAL	
	18	1	**9D-8799**	1	RING	
	19	1	**9V-9840**	1	SPIDER	
	20	1	**116-8238**	1	GEAR-BEVEL (51 TEETH)	
	21	1	**117-0019**	6	DISC-FRICTION	
	22	1	**154-6619**	2	WASHER	
	23	1	**156-6013**	1	HOUSING AS	
M		1	**9X-2609**	1	SETSCREW-SOCKET	
	24	1	**161-9237**	1	HOUSING AS	
		1	**3D-6509**	4	DOWEL	
		1	**6V-8237**	12	WASHER (4.0MM THK)	
M		1	**8T-0674**	12	BOLT (M24X3.0X180MM)	
		1	**9L-8951**	2	DOWEL	
		1	**161-9238**	1	HOUSING-DIFFERENTIAL	
		1	**161-9239**	1	HOUSING-DIFFERENTIAL	
	25	1	**2F-9064**	4	NUT (2-1/8-12 THD)	
	26	1	**2S-1914**	1	SEAL-RING (.487MM ID)	
	27	1	**4D-7534**	4	BEARING AS-ROLLER	
M	28	1	**6V-3532**	24	BOLT (M20X2.5X60MM)	
M	29	1	**6V-3669**	16	BOLT (M20X2.5X80MM)	
	30	1	**7G-9224**	1	RING-SEAL	
M	31	1	**8C-7562**	4	SCREW-FLAT HEAD	
	32	1	**8T-3282**	40	WASHER-HARD (3.5MM THK)	
	33	1	**9G-0333**	1	RING-SEAL	

M-METRIC PART

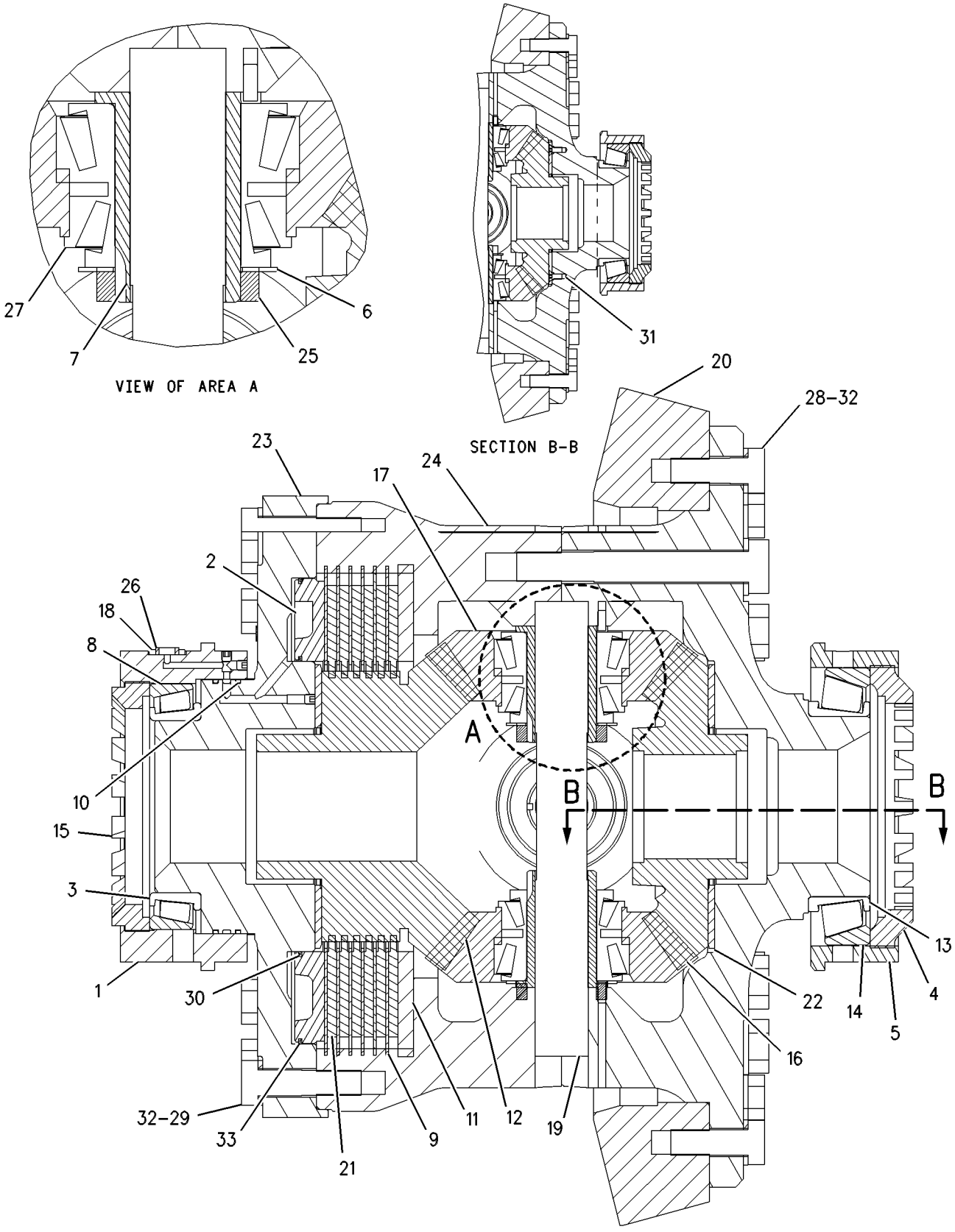

GRAPHIC #1 g00450639

120-6162 FASTENER GP-TANDEM

S/N: 7KK1-UP

PART OF 8X-8405 POWER TRAIN AR

SMCS-4062 **i00107512**

NOTE	PART NUMBER	QTY	PART NAME 1 2 3 4 5 6 (PRODUCT LEVEL)	SEE PAGE
M	**8T-0664**	60	BOLT (M24X3X70MM)	
	5P-9519	2	SEAL-O-RING (843.0MM ID)	
	6V-8237	60	WASHER (4MM THK)	

M-METRIC PART

MEMORANDA

8X-9049 FILLER GP-POWER TRAIN OIL

S/N: 7KK1-UP

PART OF 8X-8405 POWER TRAIN AR

SMCS-3005, 3081 **i01176382**

NOTE	REF NO	GRAPHIC REF	PART NUMBER	QTY	PART NAME 1 2 3 4 5 6 (PRODUCT LEVEL)	SEE PAGE
	1	1	**2J-1799**	1	GASKET	
I	2	1	**4E-2801**	1	HOSE AS	
	3	1	**4K-5537**	1	GASKET	
	4	1	**175-0254**	1	BRACKET	
	5	1	**6K-3317**	1	CLAMP	
	6	1	**7J-8611**	1	ELBOW (1/4-18 NPTF)	
	7	1	**7S-1801**	1	ANCHOR-CHAIN	
	8	1	**7S-1803**	1	CAP AS-OIL FILLER	
	9	1	**7V-5542**	1	PLUNGER AS-LEVEL	
	10	1	**7X-3392**	2	WASHER-HARD (3MM THK)	
	11	1	**7X-5331**	2	ELBOW-90 DEGREE	
	12	1	**9G-5127**	1	BREATHER	
	13	1	**9U-1412**	1	BRACKET	
	14	1	**9F-2978**	2	NUT-WELD (3/8-16 THD)	
	15	1	**004-5933**	1	TEE-PIPE	
	16	1	**125-2754**	1	TUBE AS	
	17	1	**125-3534**	1	ANGLE	
	18	1	**4B-0418**	1	CLIP (12.7MM ID)	
	19	1	**4J-5477**	2	SEAL-O-RING (8.61MM ID)	
	20	1	**4L-6454**	1	BOLT (3/8-16X1 IN)	
	21	1	**4L-9337**	2	BOLT (3/8-16X1.5IN)	
	22	1	**5M-3062**	1	BOLT (3/8-16X.75IN)	
	23	1	**6V-8801**	4	NUT (3/8-16 THD)	
	24	1	**7B-7501**	1	CLIP (12.7MM ID)	
	25	1	**7X-0772**	2	WASHER-HARD (2.5MM THK)	
	26	1	**8C-4436**	2	BOLT (1/2-13X1.375IN)	
	27	1	**8T-4896**	8	WASHER-HARD (2.5MM THK)	
	28	1	**9B-7237**	2	BOLT (3/8-16X1.25IN)	
	29	1	**9V-5085**	1	TUBE AS	
	30	1	**8T-2501**	2	BOLT (3/8-16X2.0IN)	

I-SEE HOSE FABRICATION GUIDE

8X-9049 **FILLER GP-POWER TRAIN OIL** *(contd.)* **i01176382**

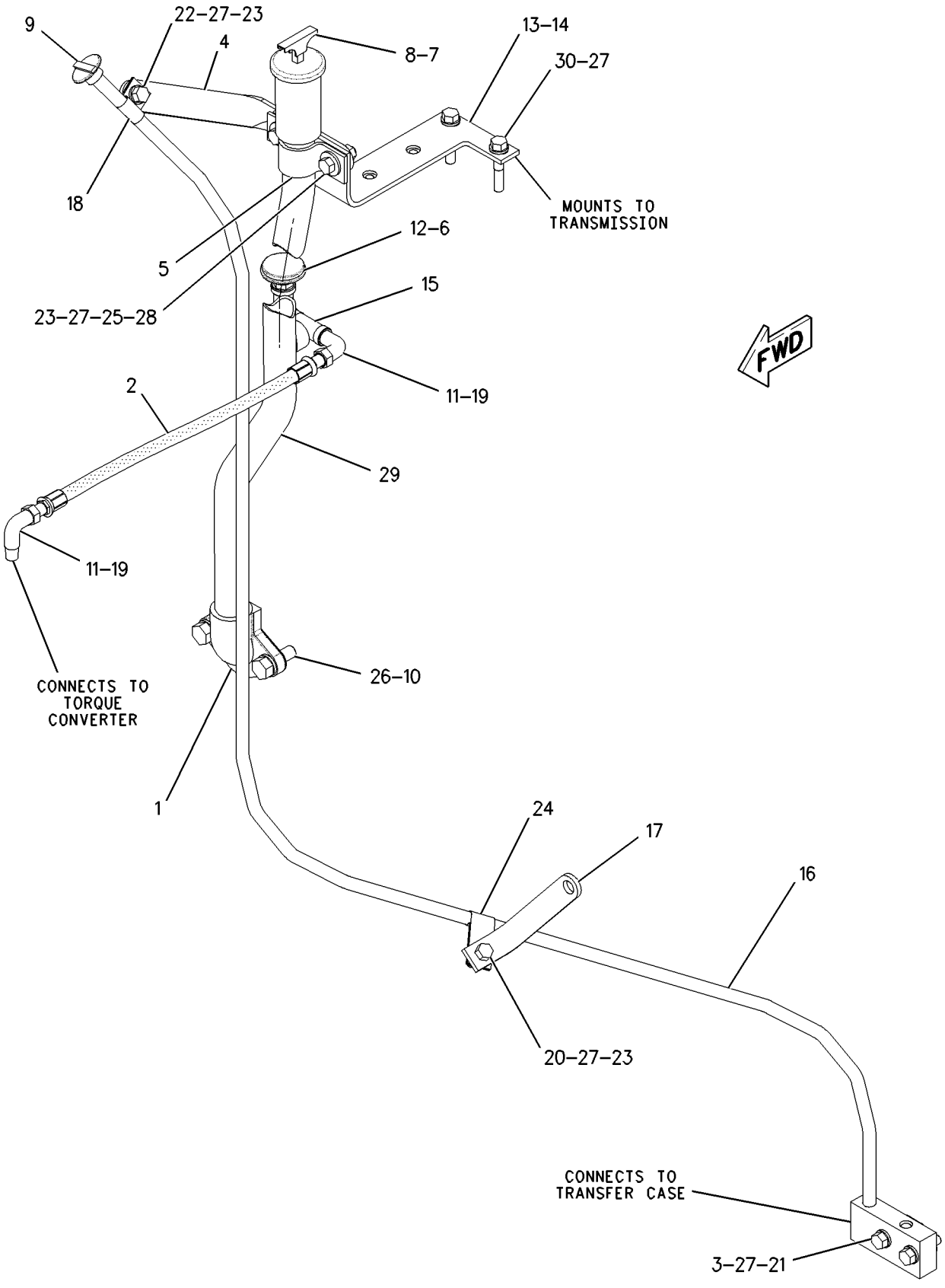

GRAPHIC #1 g00635351

7G-5000 FILTER GP-OIL

S/N: 7KK1-UP
WITH HOUSING
PART OF 8X-9026 LINES GP-POWER TRAIN OIL

SMCS-3004, 3067 **i01515483**

NOTE	REF NO	GRAPHIC REF	PART NUMBER	QTY	PART NAME 1 2 3 4 5 6 (PRODUCT LEVEL)	SEE PAGE
	1	1	**7G-0749**	1	BASE-TMSN OIL FILTER	
	2	1	**7G-4998**	1	SPOOL-BYPASS	
	3	1	**7M-1297**	1	SPRING	
	4	1	**2J-6356**	1	RING-RETAINING	
	5	1	**3S-8652**	1	SPRING	
	6	1	**9S-4191**	2	PLUG-STRAIGHT THREAD	
		1	**3J-1907**	2	SEAL-O-RING	
	7	1	**6P-5332**	1	RETAINER	
	8	1	**1R-0741**	1	FILTER ELEMENT AS-OIL (DISPOSABLE)	
					-OR-	
CA		1	**4T-3132**	1	FILTER ELEMENT AS-OIL (FIRE RESISTANT FLUIDS)	
					—OR—	
		1	**132-8876**	1	FILTER ELEMENT AS-OIL (CLEANOUT/HIGH EFFICIENCY)	
C	9	1	**9G-8629**	1	HOUSING AS-OIL FILTER	
	10	1	**5P-3620**	1	SEAL-O-RING	

A-NOT PART OF THIS GROUP
C-CHANGE FROM PREVIOUS TYPE

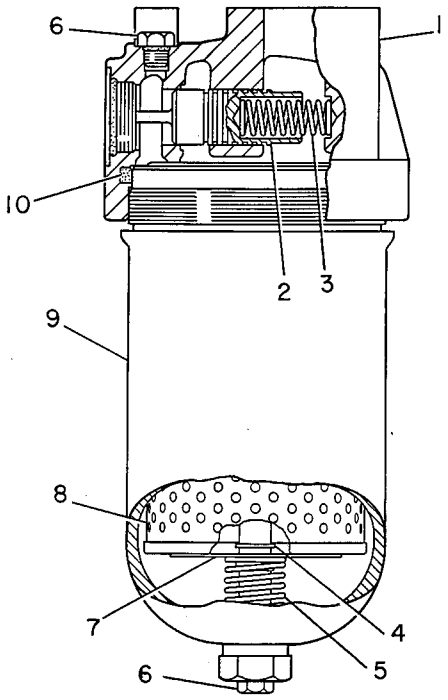

GRAPHIC #1 g00081934

7Y-4075 FILTER GP-OIL

S/N: 7KK1-UP

PART OF 8X-8981 CONTROL GP-DIFFERENTIAL LOCK

SMCS-3004, 3067 **i01329021**

NOTE	REF NO	GRAPHIC REF	PART NUMBER	QTY	PART NAME 1 2 3 4 5 6 (PRODUCT LEVEL)	SEE PAGE
	1	1	**4I-3950**	1	FILTER AS-OIL (PILOT)	
		1	**103-8236**	1	SEAL-O-RING	

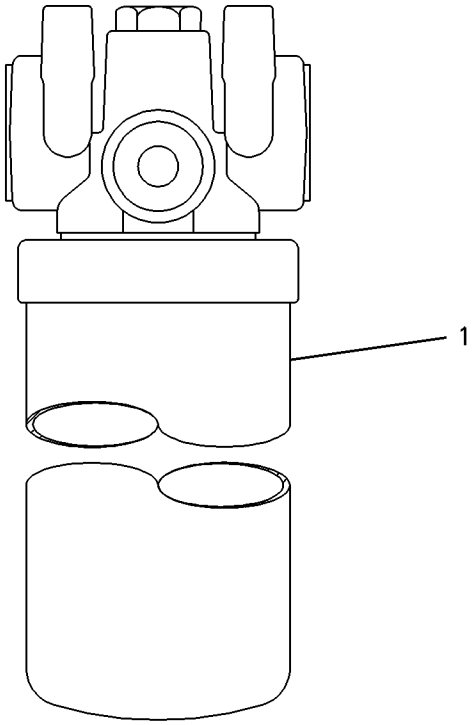

GRAPHIC #1 g00083564

POWER TRAIN

8X-9041 FINAL DRIVE GP

S/N: 7KK1-66

PART OF 8X-8405 POWER TRAIN AR

SMCS-4050 **i01218227**

NOTE	REF NO	GRAPHIC REF	PART NUMBER	QTY	PART NAME 1 2 3 4 5 6 (PRODUCT LEVEL)	SEE PAGE
	1	1	**7D-2626**	2	GEAR-RING (76 TEETH)	
	2	1	**7I-5003**	4	WASHER-THRUST	
	3	1	**2A-7174**	2	CARRIER-PLANETARY	
	4	1	**148-4467**	2	GEAR-SUN (20 TEETH)	
	5	1	**5D-6792**	8	RING-RETAINING	
	6	1	**8X-5699**	8	SHAFT-PLANETARY	
	7	1	**148-4468**	8	GEAR (27 TEETH)	
	8	1	**6Y-4119**	16	BEARING-ROLLER	
	9	1	**8X-7650**	16	WASHER (89.7 X 146 X 5.16MM THK)	
M	10	1	**6V-8675**	30	BOLT (M12X1.75X35MM)	
	11	1	**8X-9564**	8	SPACER (26.97MM THK)	
	12	1	**116-8242**	2	RETAINER	
	13	1	**5P-8245**	30	WASHER-HARD (3MM THK)	
	14	1	**5D-6297**	2	CONE-ROLLER BEARING	
	15	1	**5D-6298**	4	CUP-ROLLER BEARING	
	16	1	**5D-6296**	2	CONE-ROLLER BEARING	
	17	1	**116-7527**	2	HOUSING	
M	18	1	**6V-8133**	76	BOLT (M24X3.0X80MM)	
	19	1	**8S-5141**	2	SEAL-LIP	
	20	1	**7I-4918**	4	SPROCKET	
	21	1	**116-7528**	2	HOUSING	
	22	1	**3D-8422**	2	SEAL-O-RING	
	23	1	**6V-8237**	76	WASHER (4.0MM THK)	
M	24	1	**8T-0300**	2	BOLT (M20X2.50X35MM)	
B	25	1	**116-8243**	2	SHIM PACK (INCLUDES 17 SHIMS)	
	26	1	**7I-4996**	4	WASHER-THRUST (705.86 X 784.00 X 6.97MM THK)	
	27	1	**7I-4997**	2	RING-WEAR	
J	28	1	**121-0878**	2	SEAL-LIP TYPE	
	29	1	**7I-4874**	2	RETAINER	
	30	1	**7I-5000**	2	RING-ADJUSTMENT	
	31	1	**116-8244**	2	LOCK	
	32	1	**1H-6227**	2	SEAL-O-RING (101MM ID)	
	33	1	**9F-2247**	2	PLUG-PIPE	
	34	1	**5T-7676**	8	RETAINER	
	35	1	**7I-4998**	2	SHAFT	
M	36	1	**6V-3668**	16	BOLT (M12X1.75X30MM)	
	37	1	**7I-5001**	2	BEARING	
	38	1	**116-8245**	2	RETAINER	
	39	1	**3K-0360**	4	SEAL-O-RING (16.36MM ID)	
	40	1	**9X-2230**	4	PLUG-MAGNETIC DRAIN	
					AVAILABLE REPAIR KIT(S):	
AJ			**165-9948**	2	KIT-SEAL & SLEEVE	
					(KIT IS FOR REPAIR OF AXLE HOUSING FLANGE & INCLUDES LARGER DIAMETER SEAL TO BE USED WITH SLEEVE)	

A-NOT PART OF THIS GROUP
B-USE AS REQUIRED
J-REPAIR KIT MARKED J AVAILABLE FOR PART MARKED J
M-METRIC PART

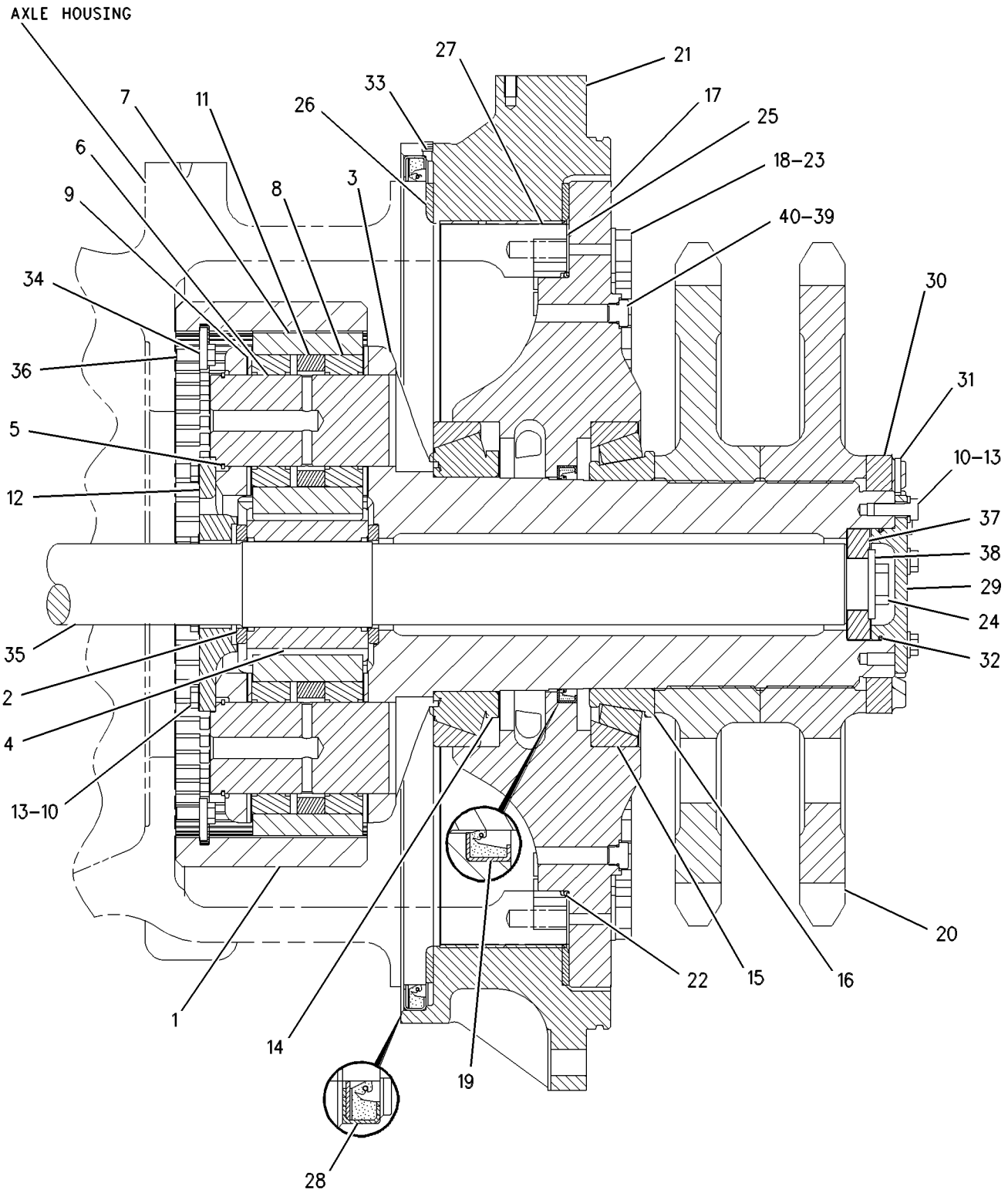

GRAPHIC #1 g00525185

129-8533 FINAL DRIVE GP

S/N: 7KK1-61
AN ATTACHMENT

SMCS-4050 **i00563904**

NOTE	REF NO	GRAPHIC REF	PART NUMBER	QTY	PART NAME 1 2 3 4 5 6 (PRODUCT LEVEL)	SEE PAGE
	1	1	**7D-2626**	1	GEAR-RING (76 TEETH)	
	2	1	**7I-5003**	2	WASHER-THRUST	
	3	1	**2A-7174**	1	CARRIER-PLANETARY	
	4	1	**5T-0307**	1	GEAR-SUN (20 TEETH)	
	5	1	**5D-6792**	4	RING-RETAINING	
	6	1	**8X-5699**	4	SHAFT-PLANETARY	
	7	1	**5T-0308**	4	GEAR-PLANETARY (27 TEETH)	
	8	1	**6Y-4119**	8	BEARING-ROLLER	
	9	1	**8X-7650**	8	WASHER	
M	10	1	**6V-8675**	15	BOLT (M12X1.75X35MM)	
	11	1	**8X-9564**	4	SPACER	
	12	1	**116-8242**	1	RETAINER	
	13	1	**5P-8245**	15	WASHER (3MM THK)	
	14	1	**5D-6297**	1	CONE-ROLLER BEARING	
	15	1	**5D-6298**	2	CUP-ROLLER BEARING	
	16	1	**5D-6296**	1	CONE-ROLLER BEARING	
	17	1	**116-7527**	1	HOUSING	
	18	1	**8S-5141**	1	SEAL-LIP	
	19	1	**7I-4918**	2	SPROCKET	
M	20	1	**8T-0300**	1	BOLT	
	21	1	**7I-4874**	1	RETAINER	
	22	1	**7I-5000**	1	RING-ADJUSTMENT	
	23	1	**116-8244**	1	LOCK	
	24	1	**1H-6227**	1	SEAL-O-RING (101MM ID)	
	25	1	**116-8245**	1	RETAINER	
	26	1	**7I-5001**	1	BEARING	

M-METRIC PART

129-8533 FINAL DRIVE GP *(contd.)* **i00563904**

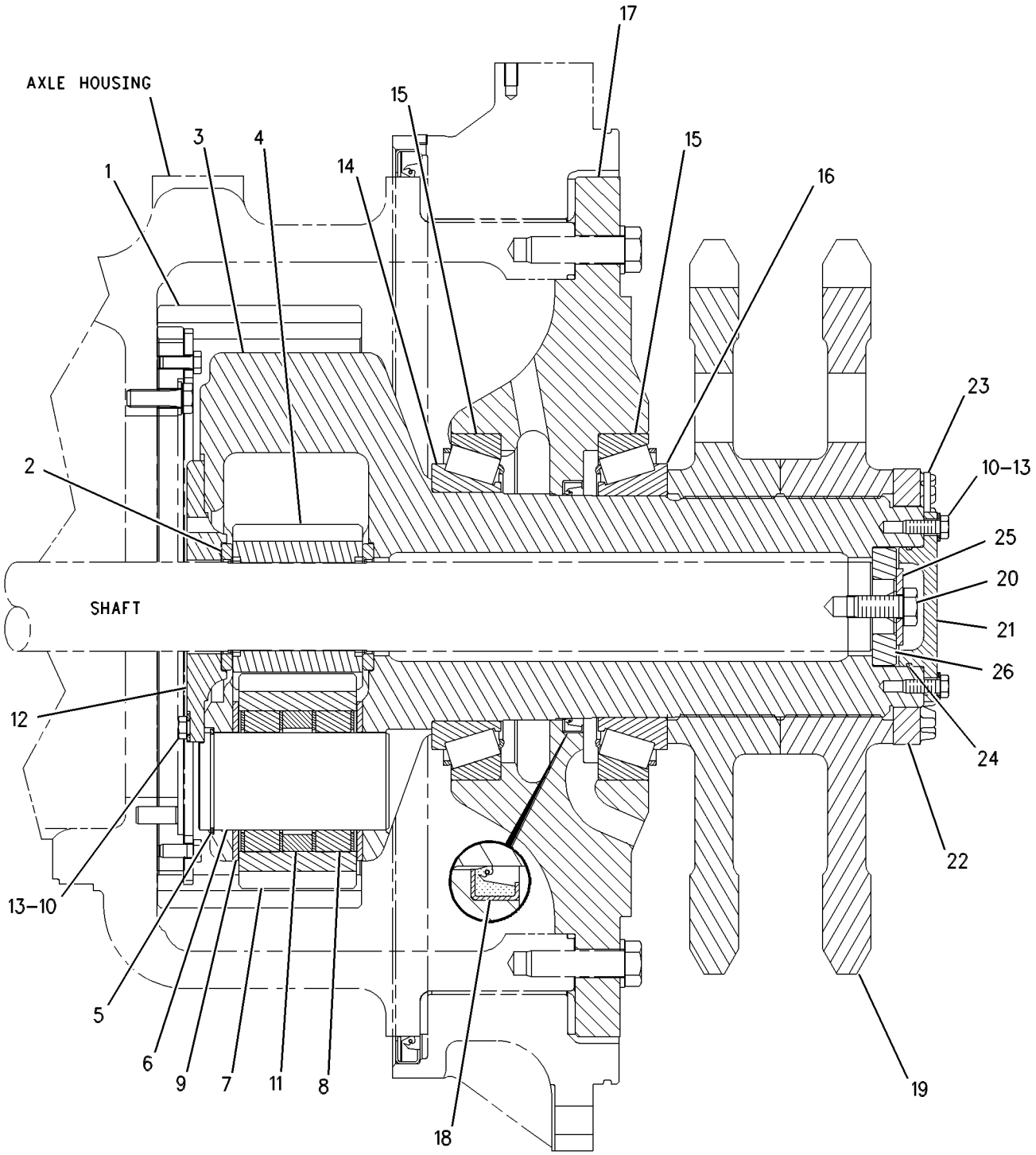

GRAPHIC #1 g00277487

129-8533 FINAL DRIVE GP

S/N: 7KK62-UP
AN ATTACHMENT

SMCS-4050 **i01123839**

NOTE	REF NO	GRAPHIC REF	PART NUMBER	QTY	PART NAME 1 2 3 4 5 6 (PRODUCT LEVEL)	SEE PAGE
	1	1	**2A-7174**	1	CARRIER-PLANETARY	
	2	1	**5D-6296**	1	CONE-ROLLER BEARING	
	3	1	**5D-6792**	4	RING-RETAINING	
	4	1	**6Y-4119**	8	BEARING-ROLLER	
	5	1	**7D-2626**	1	GEAR-RING (76 TEETH)	
	6	1	**7I-4874**	1	RETAINER	
	7	1	**7I-4918**	2	SPROCKET	
	8	1	**7I-5000**	1	RING-ADJUSTMENT	
	9	1	**7I-5001**	1	BEARING	
	10	1	**7I-5003**	2	WASHER-THRUST	
	11	1	**8S-5141**	1	SEAL-LIP	
	12	1	**8X-5699**	4	SHAFT-PLANETARY	
	13	1	**8X-7650**	8	WASHER (89.7 X 146 X 5.16MM THK)	
	14	1	**8X-9564**	4	SPACER (26.97MM THK)	
	15	1	**116-7527**	1	HOUSING	
	16	1	**116-8242**	1	RETAINER	
	17	1	**116-8244**	1	LOCK	
	18	1	**116-8245**	1	RETAINER	
	19	1	**148-4467**	1	GEAR-SUN (20 TEETH)	
	20	1	**148-4468**	4	GEAR (27 TEETH)	
	21	1	**1H-6227**	1	SEAL-O-RING (101MM ID)	
	22	1	**3K-0360**	2	SEAL-O-RING (16.36MM ID)	
	23	1	**5D-6297**	1	CONE-ROLLER BEARING	
	24	1	**5D-6298**	2	CUP-ROLLER BEARING	
	25	1	**5P-8245**	15	WASHER-HARD (3MM THK)	
M	26	1	**6V-8675**	15	BOLT (M12X1.75X35MM)	
M	27	1	**8T-0300**	1	BOLT (M20X2.50X35MM)	
	28	1	**9X-2230**	2	PLUG-MAGNETIC DRAIN	

M-METRIC PART

129-8533 FINAL DRIVE GP *(contd.)* i01123839

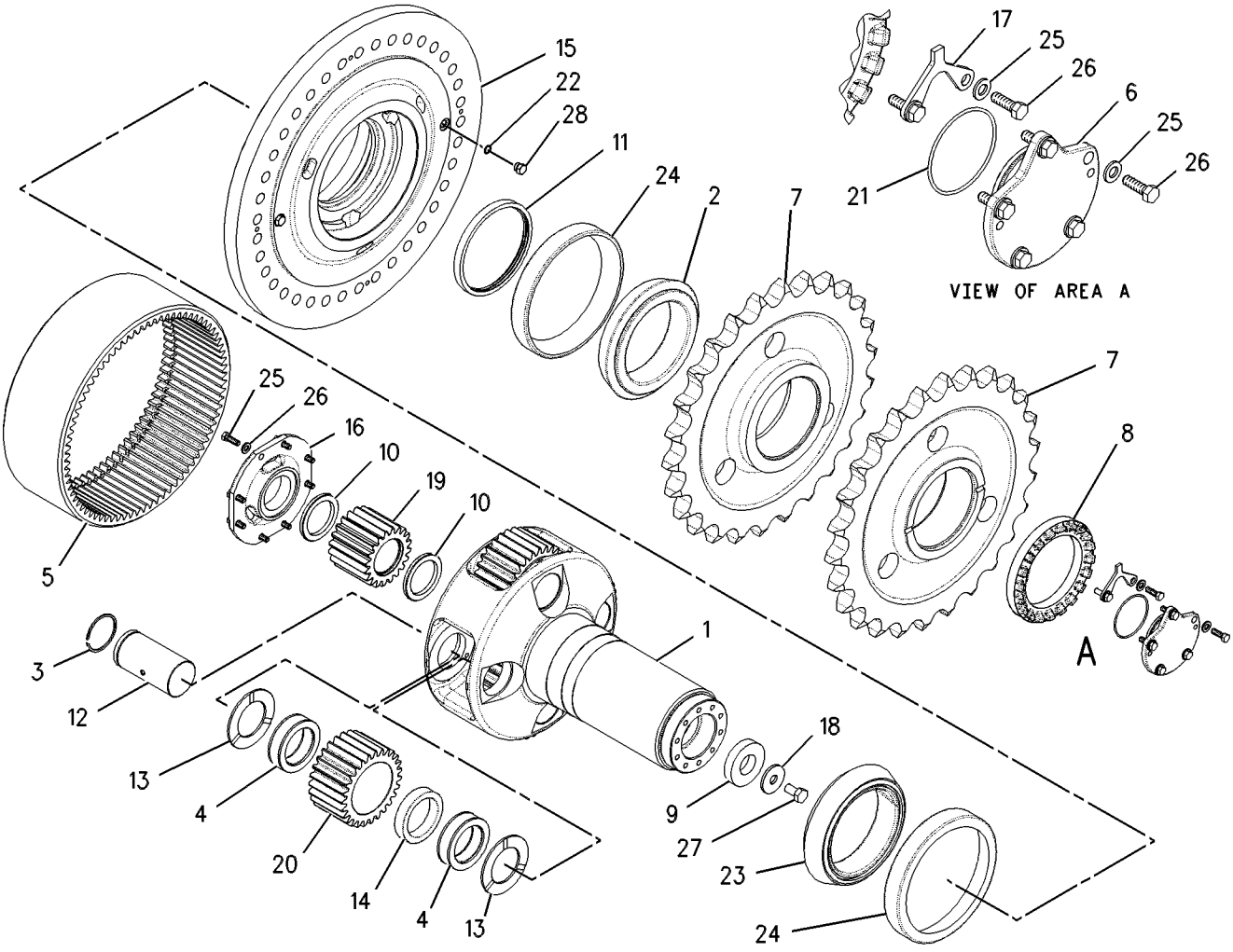

GRAPHIC #1 g00603457

POWER TRAIN

165-9955 FINAL DRIVE GP

S/N: 7KK67-UP

PART OF 8X-8405 POWER TRAIN AR

SMCS-4050 **i01130272**

NOTE	REF NO	GRAPHIC REF	PART NUMBER	QTY	PART NAME 1 2 3 4 5 6 (PRODUCT LEVEL)	SEE PAGE
	1	1	**2A-7174**	2	CARRIER-PLANETARY	
	2	1	**5D-6296**	2	CONE-ROLLER BEARING	
	3	1	**5D-6792**	8	RING-RETAINING	
	4	1	**5T-7676**	8	RETAINER	
	5	1	**6Y-4119**	16	BEARING-ROLLER	
	6	1	**7D-2626**	2	GEAR-RING (76 TEETH)	
	7	1	**7I-4874**	2	RETAINER	
	8	1	**7I-4918**	4	SPROCKET	
	9	1	**7I-4996**	4	WASHER-THRUST (705.86 X 784.00 X 6.97MM THK)	
	10	1	**7I-4997**	2	RING-WEAR	
	11	1	**7I-4998**	2	SHAFT	
	12	1	**7I-5000**	2	RING-ADJUSTMENT	
	13	1	**7I-5001**	2	BEARING	
	14	1	**7I-5003**	4	WASHER-THRUST	
	15	1	**8S-5141**	2	SEAL-LIP	
	16	1	**8X-5699**	8	SHAFT-PLANETARY	
	17	1	**8X-7650**	16	WASHER (89.7 X 146 X 5.16MM THK)	
	18	1	**8X-9564**	8	SPACER (26.97MM THK)	
	19	1	**116-7527**	2	HOUSING	
	20	1	**116-8242**	2	RETAINER	
	21	1	**116-8243**	2	SHIM PACK (INCLUDES 17 SHIMS)	
	22	1	**116-8244**	2	LOCK	
	23	1	**116-8245**	2	RETAINER	
	24	1	**148-4467**	2	GEAR-SUN (20 TEETH)	
	25	1	**148-4468**	8	GEAR (27 TEETH)	
	26	1	**156-6398**	2	HOUSING	
	27	1	**165-9951**	6	PLATE-RETAINER	
	28	1	**165-9954**	2	SEAL-LIP TYPE	
	29	1	**1H-6227**	2	SEAL-O-RING (101MM ID)	
	30	1	**3D-8422**	2	SEAL-O-RING	
	31	1	**3K-0360**	4	SEAL-O-RING (16.36MM ID)	
	32	1	**5D-6297**	2	CONE-ROLLER BEARING	
	33	1	**5D-6298**	4	CUP-ROLLER BEARING	
	34	1	**5P-8245**	30	WASHER-HARD (3MM THK)	
M	35	1	**6V-3668**	16	BOLT (M12X1.75X30MM)	
M	36	1	**6V-8133**	76	BOLT (M24X3.0X80MM)	
	37	1	**6V-8237**	76	WASHER (4.0MM THK)	
M	38	1	**6V-8675**	30	BOLT (M12X1.75X35MM)	
M	39	1	**8T-0300**	2	BOLT (M20X2.50X35MM)	
	40	1	**9F-2247**	2	PLUG-PIPE	
	41	1	**9X-2230**	4	PLUG-MAGNETIC DRAIN	
M	42	1	**9X-2616**	48	SCREW-SOCKET (M8X1.25X16MM)	
					AVAILABLE REPAIR KIT(S):	
B			**165-9948**	2	KIT-SEAL & SLEEVE	

B-USE AS REQUIRED
M-METRIC PART

165-9955 FINAL DRIVE GP *(contd.)* **i01130272**

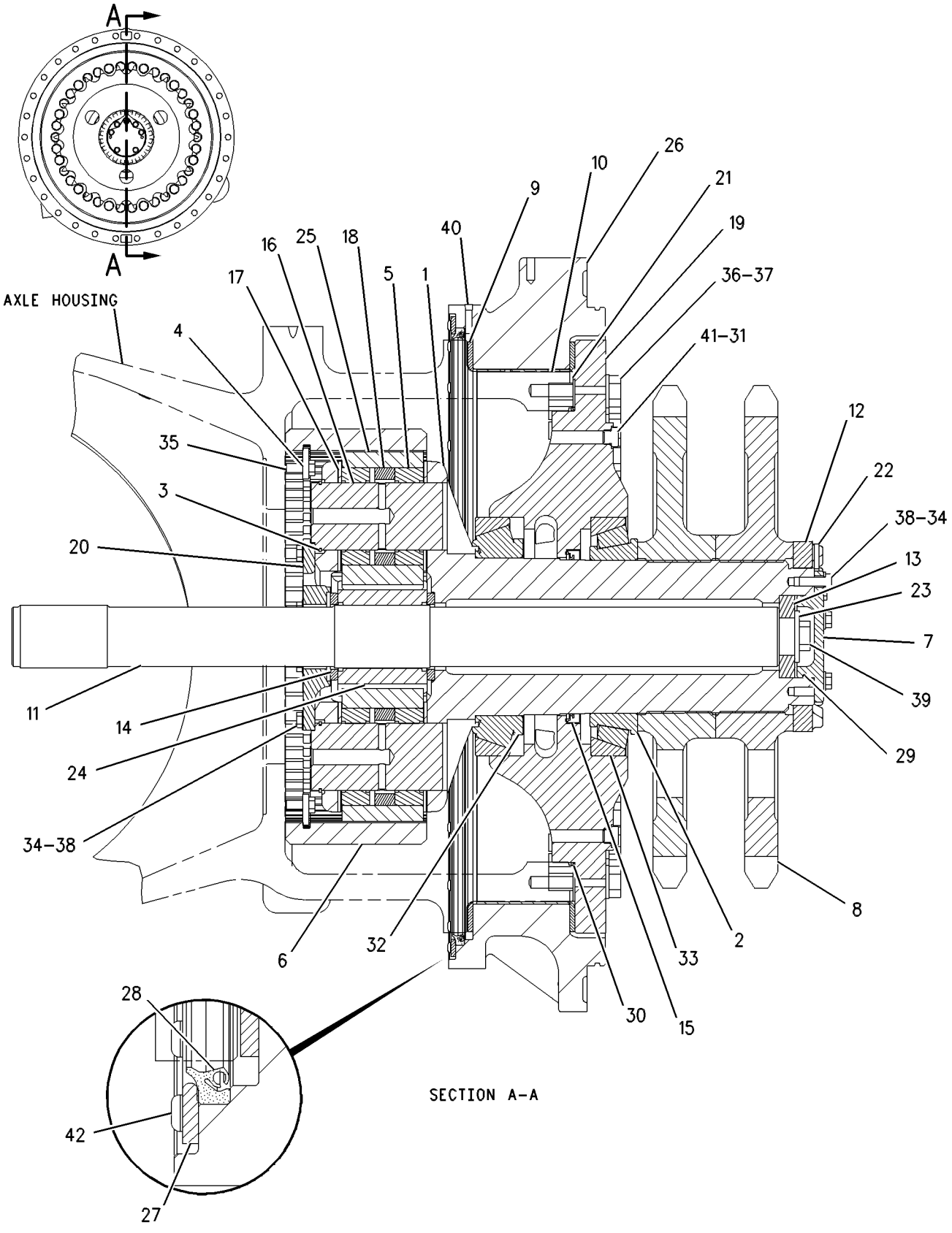

GRAPHIC #1 g00531278

8E-1296 GEAR & CASE GP-INPUT TRANSFER

S/N: 1KY1-UP

PART OF 8E-1298 TRANSMISSION AR

SMCS-3159 **i01044443**

NOTE	REF NO	GRAPHIC REF	PART NUMBER	QTY	PART NAME 1 2 3 4 5 6 (PRODUCT LEVEL)	SEE PAGE
	1	1	**8E-5872**	1	CASE-TRANSFER	
	2	1	**0S-1585**	12	BOLT (1/2-13X1.50IN)	
	3	1	**5P-8245**	12	WASHER (3MM THK)	
	4	1	**169-1634**	1	GEAR-TRANSFER (36 TEETH)	
	5	1	**3L-9409**	1	CUP-ROLLER BEARING	
	6	1	**3L-9410**	1	CONE-ROLLER BEARING	
	7	1	**3P-3495**	1	SHIM PACK (INCL 14 SHIMS)	
	8	1	**6Y-7996**	1	CAGE-BEARING	
	9	1	**9L-7494**	6	BOLT-12 POINT HEAD (3/8-16X31.75)	
	10	1	**5M-2894**	16	WASHER (2.5MM THK)	
	11	1	**9X-7743**	1	SEAL-LIP	
	12	1	**121-3173**	1	YOKE AS	
	13	1	**4F-8503**	1	PLUG-CUP	
	14	1	**2N-0822**	1	PLATE	
	15	1	**3P-6061**	1	GASKET	
	16	1	**030-8539**	4	BOLT-12 POINT HEAD (3/8-16X25.4IN)	
	17	1	**9S-7949**	1	CUP-ROLLER BEARING	
	18	1	**9S-7950**	1	CONE-ROLLER BEARING	
	19	1	**169-1633**	1	GEAR-TRANSFER (34 TEETH)	
	20	1	**3P-9658**	1	SHIM PACK (INCL 17 SHIMS)	
	21	1	**6V-1270**	6	BOLT-12 POINT HEAD (3/8-16X28.58IN)	
	22	1	**6Y-7995**	1	CAGE-BEARING	
	23	1	**7D-8636**	1	CONE-BEARING	
	24	1	**7D-8637**	1	CUP-BEARING	
	25	1	**1B-3953**	1	CONE-ROLLER BEARING	
	26	1	**1B-3955**	1	CUP-ROLLER BEARING	
	27	1	**2K-8257**	1	SEAL-O-RING (148.82MM ID)	

8E-1296 GEAR & CASE GP-INPUT TRANSFER *(contd.)* i01044443

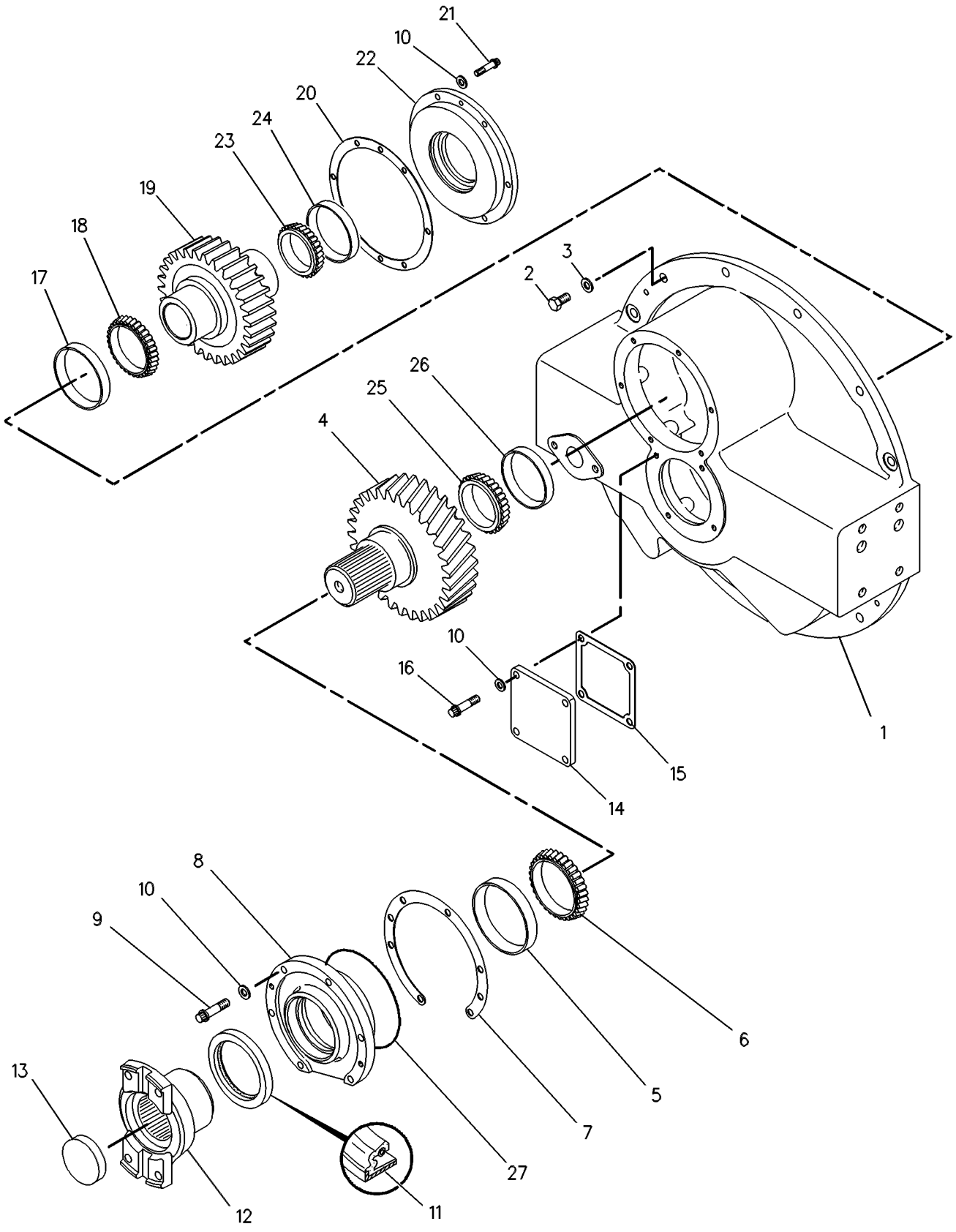

GRAPHIC #1 g00086356

8E-1297 GEAR & CASE GP-OUTPUT TRANSFER

S/N: 1KY1-493

PART OF 8E-1298 TRANSMISSION AR

SMCS-3159 **i00889127**

NOTE	REF NO	GRAPHIC REF	PART NUMBER	QTY	PART NAME 1 2 3 4 5 6 (PRODUCT LEVEL)	SEE PAGE
	1	1	**123-4982**	1	CASE AS-TRANSFER	
	2	1	**0S-1594**	1	BOLT (3/8-16X1IN)	
	3	1	**2A-3798**	2	DOWEL	
	4	1	**5M-2894**	1	WASHER (2.5MM THK)	
	5	1	**8P-8837**	1	TUBE AS	
	6	1	**8M-8659**	2	DOWEL	
	7	1	**123-5298**	1	CAGE-BEARING	
	8	1	**6Y-6848**	1	COVER	
B	9	1	**6Y-6329**	1	SHIM PACK	
					(INCLUDES 13 SHIMS)	
	10	1	**123-2997**	1	CAGE AS-BEARING	
	11	1	**3D-0490**	4	STUD-TAPERLOCK	
	12	1	**1P-9269**	1	COVER	
	13	1	**1F-7958**	4	NUT-FULL (1/2-13 THD)	
	14	1	**1A-1460**	7	BOLT (1/2-13X2IN)	
	15	1	**8D-5396**	1	WASHER	
	16	1	**5F-7404**	1	LOCKNUT-BEARING	
	17	1	**5P-5167**	1	RACE-BEARING OUTER	
	18	1	**5P-5168**	1	BEARING-INNER	
	19	1	**124-0323**	1	CAGE AS	
	20	1	**3D-0490**	4	STUD-TAPERLOCK	
	21	1	**1P-7834**	2	CUP-BEARING	
	22	1	**1P-7835**	2	CONE-BEARING	
	23	1	**5J-1086**	1	SEAL-O-RING (323.44MM ID)	
	24	1	**1P-4078**	1	SPACER (10.08MM THK)	
	25	1	**6P-4947**	1	RETAINER	
	26	1	**2A-4639**	6	BOLT (3/8-16X1.625IN)	
	27	1	**5M-2894**	20	WASHER (2.5MM THK)	
	28	1	**8E-0364**	1	SHAFT-TRANSFER	
	29	1	**129-0987**	1	DRAIN AS	
	30	1	**8F-0212**	1	SEAL-O-RING (31.47MM ID)	
	31	1	**3H-1461**	1	SEAL-O-RING (34.52MM ID)	
	32	1	**129-0988**	1	PLUG	
	33	1	**2K-4472**	1	SEAL-O-RING (158.34MM ID)	
	34	1	**8E-0366**	1	CAGE-BEARING	
	35	1	**8E-0367**	1	YOKE-OUTPUT	
	36	1	**125-8111**	1	RETAINER	
	37	1	**1A-3103**	1	BOLT (3/4-16X3.75IN)	
	38	1	**4L-9564**	1	SEAL-O-RING (81.92MM ID)	
	39	1	**034-3557**	10	BOLT-LOCKING (3/8-16X1.125IN)	
	40	1	**3T-6175**	1	GEAR (35 TEETH)	
	41	1	**123-2877**	1	GEAR-TRANSFER (35 TEETH)	
	42	1	**124-0503**	2	CONE-TAPERED	
	43	1	**124-0504**	2	CUP-TAPERED	
	44	1	**7L-2181**	1	SEAL-O-RING (177.39MM ID)	
	45	1	**123-2876**	1	GEAR-TRANSFER (30 TEETH)	
	46	1	**1D-4593**	2	BOLT (5/8-11X5.5IN)	
	47	1	**5P-8247**	20	WASHER-HARD (3.5MM THK)	
	48	1	**5P-2587**	1	SEAL-O-RING (520.07MM ID)	
	49	1	**124-0501**	2	CONE-TAPERED	
	50	1	**124-0502**	2	CUP-TAPERED	
	51	1	**117-7127**	1	SEAL-LIP TYPE	
	52	1	**6H-1717**	2	BOLT (1/2-13X1.125IN)	
	53	1	**9X-8874**	8	BOLT (1/2-13X3IN)	
	54	1	**7B-3235**	3	BOLT (1/2-13X1.375IN)	
	55	1	**9X-8873**	8	BOLT (1/2-13X2.25IN)	

8E-1297 **GEAR & CASE GP-OUTPUT TRANSFER** *(contd.)* **i00889127**

NOTE	REF NO	GRAPHIC REF	PART NUMBER	QTY	PART NAME 1 2 3 4 5 6 (PRODUCT LEVEL)	SEE PAGE
B	56	1	**6V-6640**		SEALANT (14ML)	
	57	1	**0S-1569**	18	BOLT (5/8-11X4IN)	
	58	1	**6P-4903**	1	PLATE AS	
	59	1	**7B-3028**	2	SCREW-DRIVE (#4X3/16IN)	
	60	1	**7S-2962**	1	WASHER-SPRING	
	61	1	**4S-8603**	1	TUBE AS-SCREEN	
	62	1	**4S-8598**	1	SCREEN-SUCTION	
	63	1	**7T-7371**	1	HOUSING-SCREEN	
	64	1	**9X-8875**	4	BOLT (1/2-13X3.5IN)	
	65	1	**2H-2665**	1	SEAL-O-RING (62.87MM ID)	
	66	1	**5F-8000**	1	SEAL-O-RING (50.39MM ID)	
	67	1	**8H-8257**	1	SEAL-O-RING	
	68	1	**1A-5822**	7	BOLT (1/2-13X2.75IN)	
	69	1	**5P-8245**	51	WASHER (3MM THK)	
B	70	1	**6Y-6328**	1	SHIM PACK	
					(INCLUDES 13 SHIMS)	
	71	1	**0S-1587**	8	BOLT (1/2-13X1.75IN)	
	72	1	**3F-5792**	1	SEAL-O-RING (129.77MM ID)	
	73	1	**6V-1289**	1	LOCKWASHER-BEARING	
	74	1	**0S-1594**	4	BOLT (3/8-16X1IN)	
	75	1	**5F-0149**	1	SEAL-O-RING (91.44MM ID)	
	76	1	**2P-1294**	1	PLUG-SEAL	

B-USE AS REQUIRED

8E-1297 **GEAR & CASE GP-OUTPUT TRANSFER** *(contd.)* **i00889127**

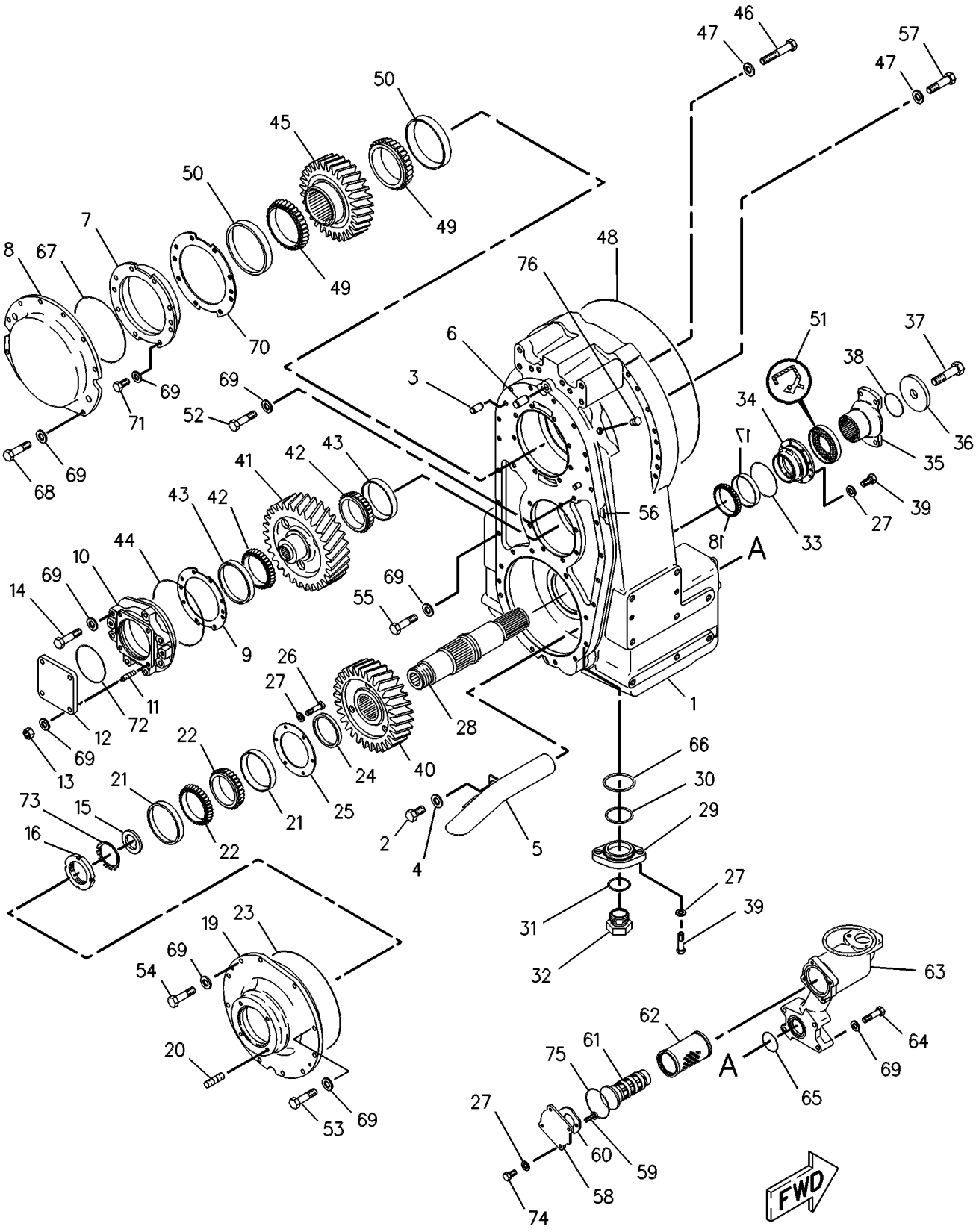

GRAPHIC #1 g00284133

MEMORANDA

POWER TRAIN

8E-1297 GEAR & CASE GP-OUTPUT TRANSFER

S/N: 1KY494-UP

PART OF 8E-1298 TRANSMISSION AR

SMCS-3159 **i01446545**

NOTE	REF NO	GRAPHIC REF	PART NUMBER	QTY	PART NAME 1 2 3 4 5 6 (PRODUCT LEVEL)	SEE PAGE
C	1	1	**129-5387**	1	CASE AS-TRANSFER	
	2	1	**0S-1594**	1	BOLT (3/8-16X1 IN)	
	3	1	**4D-6473**	2	DOWEL	
	4	1	**5M-2894**	1	WASHER-HARD (10.2X18.5X2.5MM THK)	
	5	1	**8P-8837**	1	TUBE AS	
	6	1	**8M-8659**	2	DOWEL	
	7	1	**123-5298**	1	CAGE-BEARING	
	8	1	**6Y-6848**	1	COVER	
B	9	1	**6Y-6329**	1	SHIM PACK (INCLUDES 13 SHIMS)	
					(INCLUDES 13 SHIMS)	
	10	1	**123-2997**	1	CAGE AS-BEARING	
	11	1	**3D-0490**	4	STUD-TAPERLOCK (1/2-13 X 2.0 IN OAL)	
	12	1	**1P-9269**	1	COVER	
	13	1	**1F-7958**	4	NUT-FULL (1/2-13 THD)	
	14	1	**1A-1460**	7	BOLT (1/2-13X2 IN)	
	15	1	**8D-5396**	1	WASHER	
	16	1	**5F-7404**	1	LOCKNUT-BEARING	
	17	1	**5P-5167**	1	RACE-BEARING OUTER	
	18	1	**5P-5168**	1	BEARING-INNER	
	19	1	**124-0323**	1	CAGE AS	
	20	1	**3D-0490**	4	STUD-TAPERLOCK (1/2-13 X 2.0 IN OAL)	
	21	1	**1P-7834**	2	CUP-BEARING	
	22	1	**1P-7835**	2	CONE-BEARING	
	23	1	**5J-1086**	1	SEAL-O-RING (323.44MM ID)	
	24	1	**1P-4078**	1	SPACER (10.08MM THK)	
	25	1	**6P-4947**	1	RETAINER	
	26	1	**2A-4639**	6	BOLT (3/8-16X1.625 IN)	
	27	1	**5M-2894**	20	WASHER-HARD (10.2X18.5X2.5MM THK)	
	28	1	**8E-0364**	1	SHAFT-TRANSFER	
	29	1	**129-0987**	1	DRAIN AS	
	30	1	**8F-0212**	1	SEAL-O-RING (31.47MM ID)	
	31	1	**3H-1461**	1	SEAL-O-RING (34.52MM ID)	
	32	1	**129-0988**	1	PLUG	
	33	1	**2K-4472**	1	SEAL-O-RING (158.34MM ID)	
	34	1	**8E-0366**	1	CAGE-BEARING	
	35	1	**8E-0367**	1	YOKE-OUTPUT	
	36	1	**125-8111**	1	RETAINER	
	37	1	**1A-3103**	1	BOLT (3/4-16X3.75IN)	
	38	1	**4L-9564**	1	SEAL-O-RING (81.92MM ID)	
	39	1	**034-3557**	10	BOLT-LOCKING (3/8-16X1.125 IN)	
	40	1	**3T-6175**	1	GEAR (35 TEETH)	
	41	1	**123-2877**	1	GEAR-TRANSFER (35 TEETH)	
	42	1	**124-0503**	2	CONE-TAPERED	
	43	1	**124-0504**	2	CUP-TAPERED	
	44	1	**7L-2181**	1	SEAL-O-RING (177.39MM ID)	
	45	1	**123-2876**	1	GEAR-TRANSFER (30 TEETH)	
	46	1	**1D-4593**	2	BOLT (5/8-11X5.5 IN)	
	47	1	**5P-8247**	20	WASHER-HARD (17X32X3.5MM THK)	
	48	1	**5P-2587**	1	SEAL-O-RING (520.07MM ID)	
	49	1	**124-0501**	2	CONE-TAPERED	
	50	1	**124-0502**	2	CUP-TAPERED	
	51	1	**117-7127**	1	SEAL-LIP TYPE	
	52	1	**6H-1717**	2	BOLT (1/2-13X1.125 IN)	
	53	1	**9X-8874**	8	BOLT (1/2-13X3IN)	
	54	1	**7B-3235**	3	BOLT (1/2-13X1.375 IN)	
	55	1	**9X-8873**	8	BOLT (1/2-13X2.25 IN)	

8E-1297 **GEAR & CASE GP-OUTPUT TRANSFER** *(contd.)* **i01446545**

NOTE	REF NO	GRAPHIC REF	PART NUMBER	QTY	PART NAME 1 2 3 4 5 6 (PRODUCT LEVEL)	SEE PAGE
B	56	1	**6V-6640**		SEALANT (14ML)	
	57	1	**0S-1569**	18	BOLT (5/8-11X4 IN)	
	58	1	**6P-4903**	1	PLATE AS	
	59	1	**7B-3028**	2	SCREW-DRIVE (NO 4X3/16 IN)	
	60	1	**7S-2962**	1	WASHER-SPRING	
	61	1	**4S-8603**	1	TUBE AS	
	62	1	**4S-8598**	1	SCREEN-SUCTION	
	63	1	**7T-7371**	1	HOUSING-SCREEN	
	64	1	**9X-8875**	4	BOLT (1/2-13X3.5IN)	
	65	1	**2H-2665**	1	SEAL-O-RING (62.87MM ID)	
	66	1	**5F-8000**	1	SEAL-O-RING (50.39MM ID)	
	67	1	**8H-8257**	1	SEAL-O-RING	
	68	1	**1A-5822**	7	BOLT (1/2-13X2.75 IN)	
	69	1	**5P-8245**	51	WASHER-HARD (13.5X25.5X3MM THK)	
B	70	1	**6Y-6328**	1	SHIM PACK (INCLUDES 13 SHIMS)	
					(INCLUDES 13 SHIMS)	
	71	1	**0S-1587**	8	BOLT (1/2-13X1.75 IN)	
	72	1	**3F-5792**	1	SEAL-O-RING (129.77MM ID)	
	73	1	**6V-1289**	1	LOCKWASHER-BEARING	
	74	1	**0S-1594**	4	BOLT (3/8-16X1 IN)	
	75	1	**5F-0149**	1	SEAL-O-RING (91.44MM ID)	
	76	1	**2P-1294**	1	PLUG-SEAL	

B-USE AS REQUIRED
C-CHANGE FROM PREVIOUS TYPE

8E-1297 **GEAR & CASE GP-OUTPUT TRANSFER** *(contd.)* **i01446545**

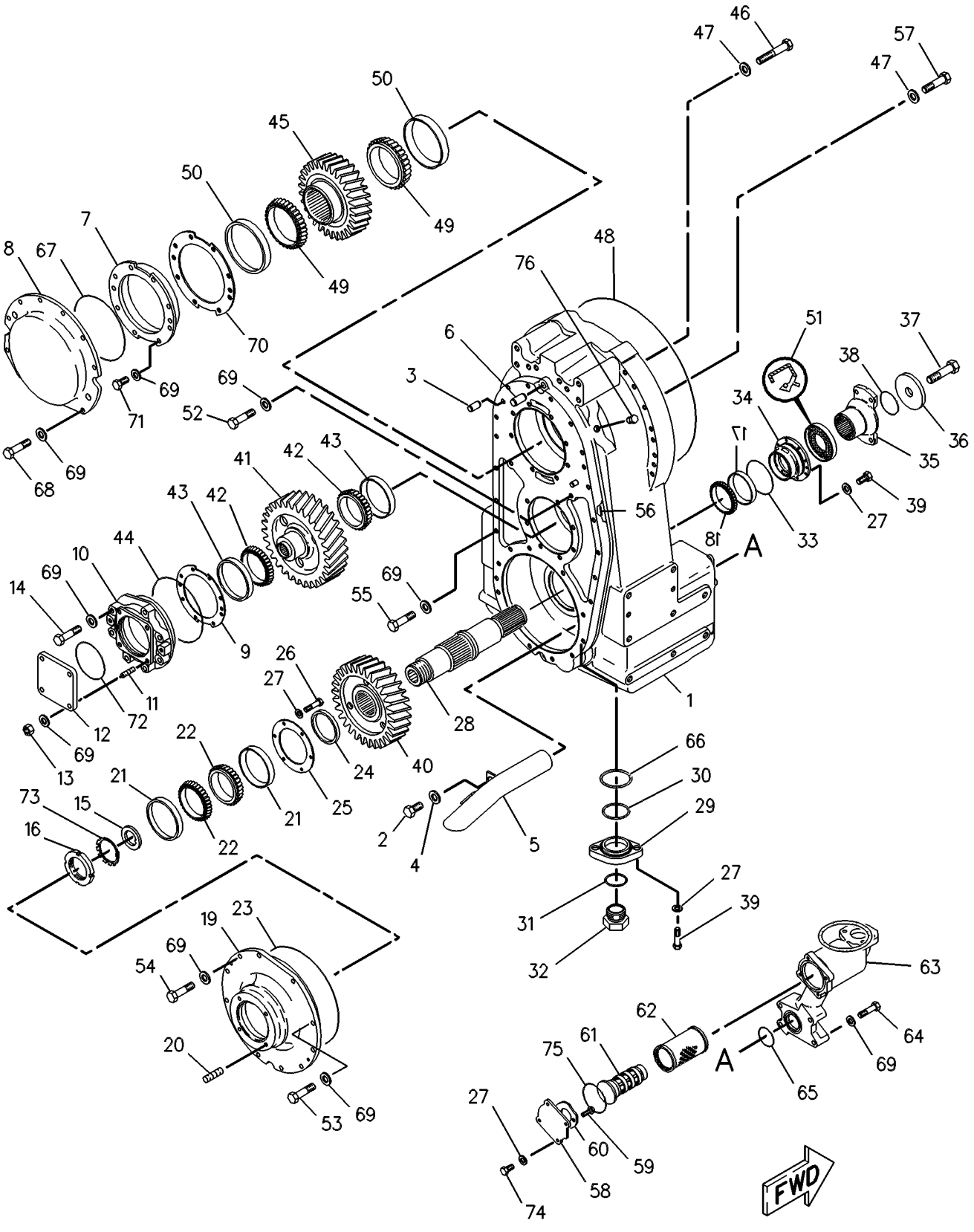

GRAPHIC #1 g00284133

MEMORANDA

8X-9043 HOUSING GP-REAR AXLE

S/N: 7KK1-UP

PART OF 8X-8405 POWER TRAIN AR

SMCS-3260 **i00647044**

NOTE	REF NO	GRAPHIC REF	PART NUMBER	QTY	PART NAME 1 2 3 4 5 6 (PRODUCT LEVEL)	SEE PAGE
	1	1	**135-8106**	1	HOUSING AS	
	2	1	**8D-4154**	36	BOLT (3/4-16X2.75)	
M	3	1	**8T-4196**	8	BOLT (M10X1.50X35MM)	
	4	1	**137-5081**	2	HUB	
	5	1	**2K-0337**	36	LOCKNUT (3/4-16 THD)	
	6	1	**5P-8248**	36	WASHER-HARD (3.5MM THK)	
	7	1	**8K-0589**	4	DOWEL	
	8	1	**8T-4121**	8	WASHER (2.5MM THK)	
	9	1	**6V-8234**	1	PIN-SPRING	
	10	1	**6W-8401**	1	PIN	
	11	1	**4H-6112**	1	BREATHER	
	12	1	**3B-7722**	1	BUSHING-PIPE	
M	13	1	**8T-4193**	24	BOLT (M16X2.0X50MM)	
	14	1	**8T-4122**	24	WASHER (3.5MM THK)	
	15	1	**5D-7523**	1	SEAL-O-RING	
	16	1	**8M-5576**	2	PLUG-MAGNETIC	
	17	1	**6F-4868**	2	GASKET	
	18	1	**2H-3932**	1	SEAL (28.17MM ID)	
B	19	1	**9M-5874**	1	SHIM PACK (INCLS 30 SHIMS)	
	20	1	**8M-3391**	1	COVER	
M	21	1	**6V-8197**	2	BOLT (M12X1.75X40MM)	
	22	1	**5P-8245**	2	WASHER (3MM THK)	

B-USE AS REQUIRED
M-METRIC PART

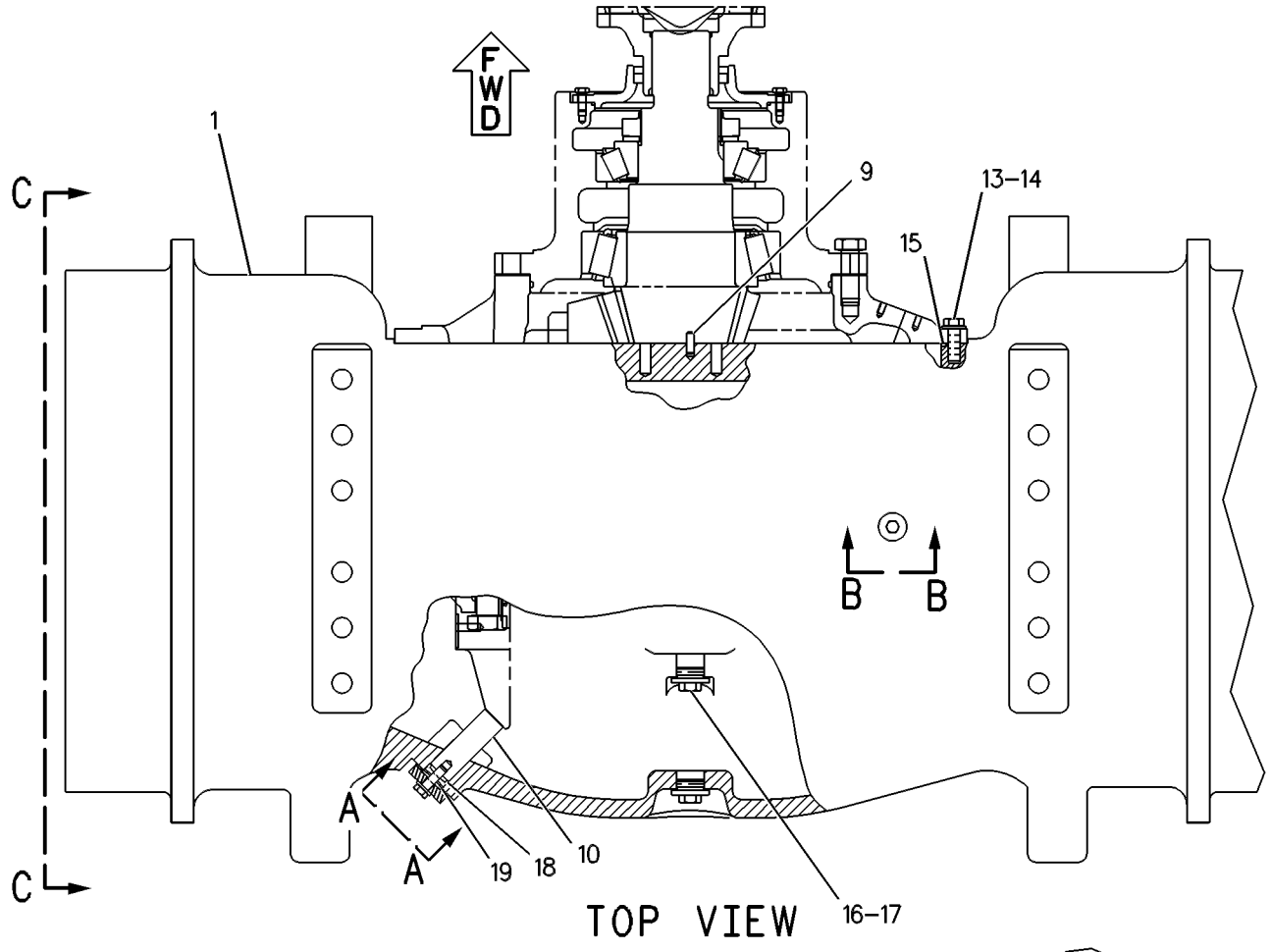

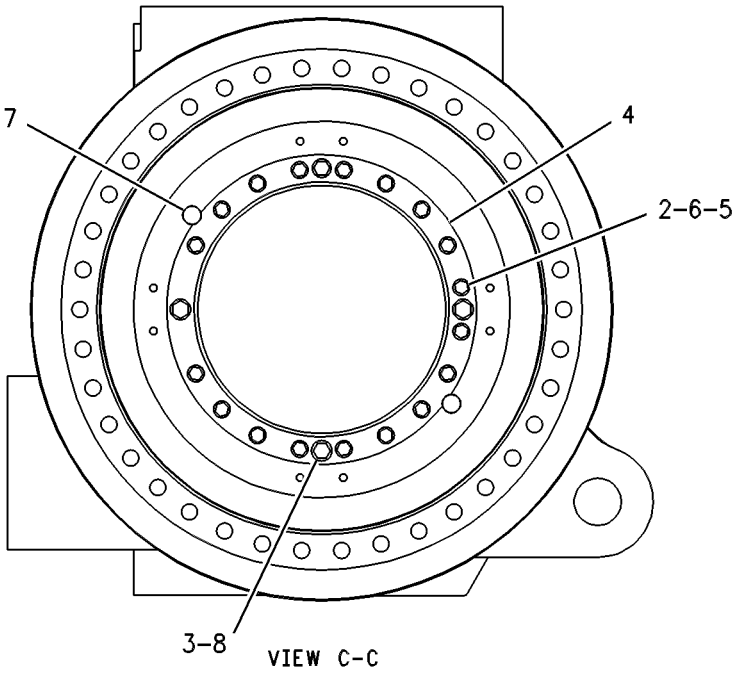

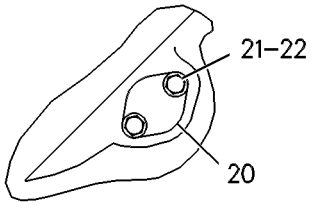

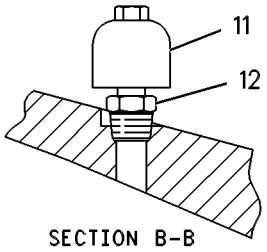

GRAPHIC #1 g00283887

8X-9026 LINES GP-POWER TRAIN OIL

S/N: 7KK1-UP
PART OF 8X-8404 HYDRAULIC AR
TYPE 1

SMCS-3016 **i00867293**

NOTE	REF NO	GRAPHIC REF	PART NUMBER	QTY	PART NAME 1 2 3 4 5 6 (PRODUCT LEVEL)	SEE PAGE
	1	1	**125-4950**	1	TUBE AS	
	2	1	**125-9355**	1	BRACKET	
I	3	1	**125-6677**	1	HOSE AS	
I	4	1	**125-6678**	1	HOSE AS	
	5	1	**128-3889**	1	HOSE AS	
	6	1	**125-6690**	1	HOSE AS	
I	7	1	**125-6691**	1	HOSE AS	
	8	1	**1P-3706**	1	SEAL (57.9MM ID)	
	9	1	**1P-4578**	6	FLANGE	
	10	1	**1P-4579**	8	FLANGE-HALF	
	11	1	**1P-4582**	4	FLANGE-HALF	
	12	1	**2S-4078**	1	SEAL-O-RING (37.46MM ID)	
	13	1	**3D-2824**	2	SEAL-O-RING (23.47MM ID)	
	14	1	**3J-1907**	5	SEAL-O-RING (11.89MM ID)	
	15	1	**3R-2360**	1	CLIP (38.1MM ID)	
	16	1	**4J-0522**	3	SEAL-O-RING (37.69MM ID)	
	17	1	**4J-0524**	4	SEAL-O-RING (47.22MM ID)	
	18	1	**4J-0527**	2	SEAL-O-RING (56.74MM ID)	
	19	1	**5K-9090**	1	SEAL-O-RING (23.52MM ID)	
	20	1	**6V-1867**	1	CLIP (SLOT)	
	21	1	**6V-1868**	1	CLIP (TAB)	
	22	1	**6V-1869**	1	GROMMET	
	23	1	**6V-8188**	1	NUT (1/2-13 THD)	
	24	1	**6V-8397**	2	SEAL-O-RING (9.27MM ID)	
	25	1	**6V-8637**	1	CONNECTOR-SEAL	
	26	1	**6V-8724**	2	ELBOW (9/16-18 THD)	
	27	1	**6V-9007**	1	ELBOW-90 DEGREE (1 1/16-12 THD)	
	28	1	**6V-9746**	2	SEAL-O-RING (18.94MM ID)	
	29	1	**6V-9875**	1	CONNECTOR	
	30	1	**6W-5619**	1	HOSE AS	
	31	1	**7P-9980**	1	BLOCK	
	32	1	**7X-0328**	4	BOLT (1/2-13X3.50IN)	
	33	1	**8B-6127**	1	CLIP (9.52MM ID)	
	34	1	**8T-4223**	27	WASHER-HARD (3MM THK)	
	35	1	**8T-4896**	5	WASHER-HARD (2.5MM THK)	
	36	1	**8T-5360**	12	WASHER (2.5MM THK)	
	37	1	**8T-8916**	12	BOLT (7/16-14X1.50IN)	
	38	1	**8T-8917**	1	BOLT (1/2-13X1.25IN)	
	39	1	**8T-8919**	21	BOLT (1/2-13X1.75IN)	
	40	1	**5M-3062**	1	BOLT (3/8-16X.750IN)	
	41	1	**5S-7379**	4	BOLT (3/8-16X.875IN)	
	42	1	**6V-0852**	3	CAP-DUST	
	43	1	**6V-3965**	2	NIPPLE AS	
Y	44	1	*7G-5000*	1	FILTER GP-OIL	392
	45	1	**3J-7354**	1	SEAL-O-RING (8.92MM ID)	
	46	1	**5P-2955**	2	BOLT (5/16-18X2.50IN)	
	47	1	**5P-9617**	1	ADAPTER	
	48	1	**8C-3446**	1	VALVE-FLUID SAMPLING	
	49	1	**8C-3451**	1	CAP-DUST	
CY	50	1	**121-4298**	1	VALVE GP-MODULATING	458
	51	1	**8M-4435**	2	SEAL (18.64MM ID)	
	52	1	**8S-0768**	1	SEAL-O-RING	
	53	1	**8T-9377**	3	BOLT (3/8-16X2.25IN)	
	54	1	**8T-4224**	2	WASHER-HARD (2MM THK)	
	55	1	**107-6684**	1	MANIFOLD	

8X-9026 **LINES GP-POWER TRAIN OIL** ***(contd.)*** **i00867293**

NOTE	REF NO	GRAPHIC REF	PART NUMBER	QTY	PART NAME 1 2 3 4 5 6 (PRODUCT LEVEL)	SEE PAGE
	56	1	**5P-1075**	6	WASHER-HARD (3MM THK)	

C-CHANGE FROM PREVIOUS TYPE
I-SEE HOSE FABRICATION GUIDE
Y-SEPARATE ILLUSTRATION

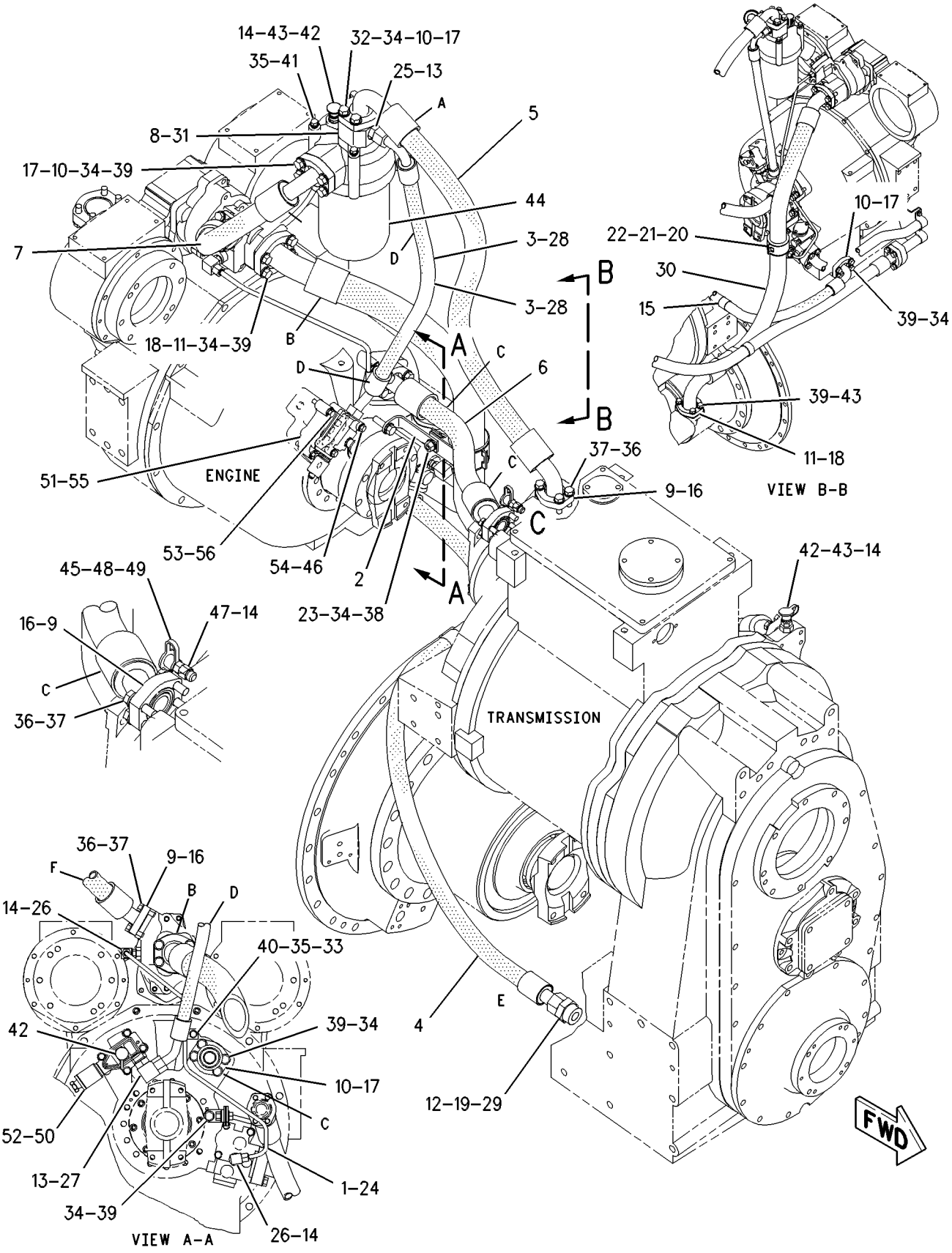

GRAPHIC #1 g00437290

MEMORANDA

8X-9026 LINES GP-POWER TRAIN OIL

S/N: 7KK1-UP
PART OF 8X-8404 HYDRAULIC AR
TYPE 2

SMCS-3016 **i01304444**

NOTE	REF NO	GRAPHIC REF	PART NUMBER	QTY	PART NAME 1 2 3 4 5 6 (PRODUCT LEVEL)	SEE PAGE
	1	1	**8C-3446**	1	VALVE AS-FLUID SAMPLING (POWER TRAIN OIL)	
	2	1	**8C-3451**	1	CAP-DUST	
	3	1	**107-6684**	1	MANIFOLD	
	4	1	**125-4950**	1	TUBE AS	
I	5	1	**125-6691**	1	HOSE AS	
	6	1	**125-9355**	1	BRACKET	
I	7	1	**128-3889**	1	HOSE AS	
CY	8	1	**183-2047**	1	VALVE GP-MODULATING	459
I	9	1	**125-6677**	1	HOSE AS	
I	10	1	**125-6678**	1	HOSE AS	
I	11	1	**125-6690**	1	HOSE AS	
	12	1	**1P-3706**	1	SEAL (54.5MM ID)	
	13	1	**1P-4578**	6	FLANGE-HALF	
	14	1	**1P-4579**	8	FLANGE-HALF	
	15	1	**1P-4582**	4	FLANGE-HALF	
	16	1	**2S-4078**	1	SEAL-O-RING	
	17	1	**3D-2824**	2	SEAL-O-RING	
	18	1	**3J-1907**	5	SEAL-O-RING	
	19	1	**3J-7354**	1	SEAL-O-RING	
	20	1	**3R-2360**	1	CLIP (38.1MM ID)	
	21	1	**4J-0522**	3	SEAL-O-RING	
	22	1	**4J-0524**	4	SEAL-O-RING	
	23	1	**4J-0527**	2	SEAL-O-RING	
	24	1	**5K-9090**	1	SEAL-O-RING	
	25	1	**5M-3062**	1	BOLT (3/8-16X0.75 IN)	
	26	1	**5P-1075**	6	WASHER-HARD (10.2X22.5X3MM THK)	
	27	1	**5P-2955**	2	BOLT (5/16-18X2.50 IN)	
	28	1	**5P-9617**	1	ADAPTER	
	29	1	**5S-7379**	4	BOLT (3/8-16X0.875 IN)	
	30	1	**6V-0852**	3	CAP-DUST	
	31	1	**6V-1867**	1	CLIP (SLOT)	
	32	1	**6V-1868**	1	CLIP (TAB)	
	33	1	**6V-1869**	1	GROMMET	
	34	1	**6V-3965**	2	FITTING AS (QUICK DISCONNECT)	
	35	1	**6V-8188**	1	NUT (1/2-13 THD)	
	36	1	**6V-8397**	2	SEAL-O-RING	
	37	1	**6V-8637**	1	CONNECTOR-SEAL	
	38	1	**6V-8724**	2	ELBOW	
	39	1	**6V-9007**	1	ELBOW	
	40	1	**6V-9746**	2	SEAL-O-RING	
	41	1	**6V-9875**	1	CONNECTOR	
	42	1	**6W-5619**	1	HOSE AS	
Y	43	1	*7G-5000*	1	FILTER GP-OIL	392
	44	1	**7P-9980**	1	BLOCK	
	45	1	**7X-0328**	4	BOLT (1/2-13X3.50 IN)	
	46	1	**8B-6127**	1	CLIP (9.52MM ID)	
	47	1	**8M-4435**	2	SEAL-O-RING	
	48	1	**8S-0768**	1	SEAL-O-RING	
	49	1	**8T-4223**	27	WASHER-HARD (13.5X25.5X3MM THK)	
	50	1	**8T-4224**	2	WASHER-HARD (8.8X16X2MM THK)	
	51	1	**8T-4896**	5	WASHER-HARD (10.2X18.5X2.5MM THK)	
	52	1	**8T-5360**	12	WASHER (12X22.5X2.5MM THK)	
	53	1	**8T-8916**	12	BOLT (7/16-14X1.5 IN)	
	54	1	**8T-8917**	1	BOLT (1/2-13X1.25 IN)	
	55	1	**8T-8919**	21	BOLT (1/2-13X1.75 IN)	

8X-9026 LINES GP-POWER TRAIN OIL *(contd.)*

i01304444

NOTE	REF NO	GRAPHIC REF	PART NUMBER	QTY	PART NAME 1 2 3 4 5 6 (PRODUCT LEVEL)	SEE PAGE
	56	1	**8T-9377**	3	BOLT (3/8-16X2.25 IN)	

C-CHANGE FROM PREVIOUS TYPE
I-SEE HOSE FABRICATION GUIDE
Y-SEPARATE ILLUSTRATION

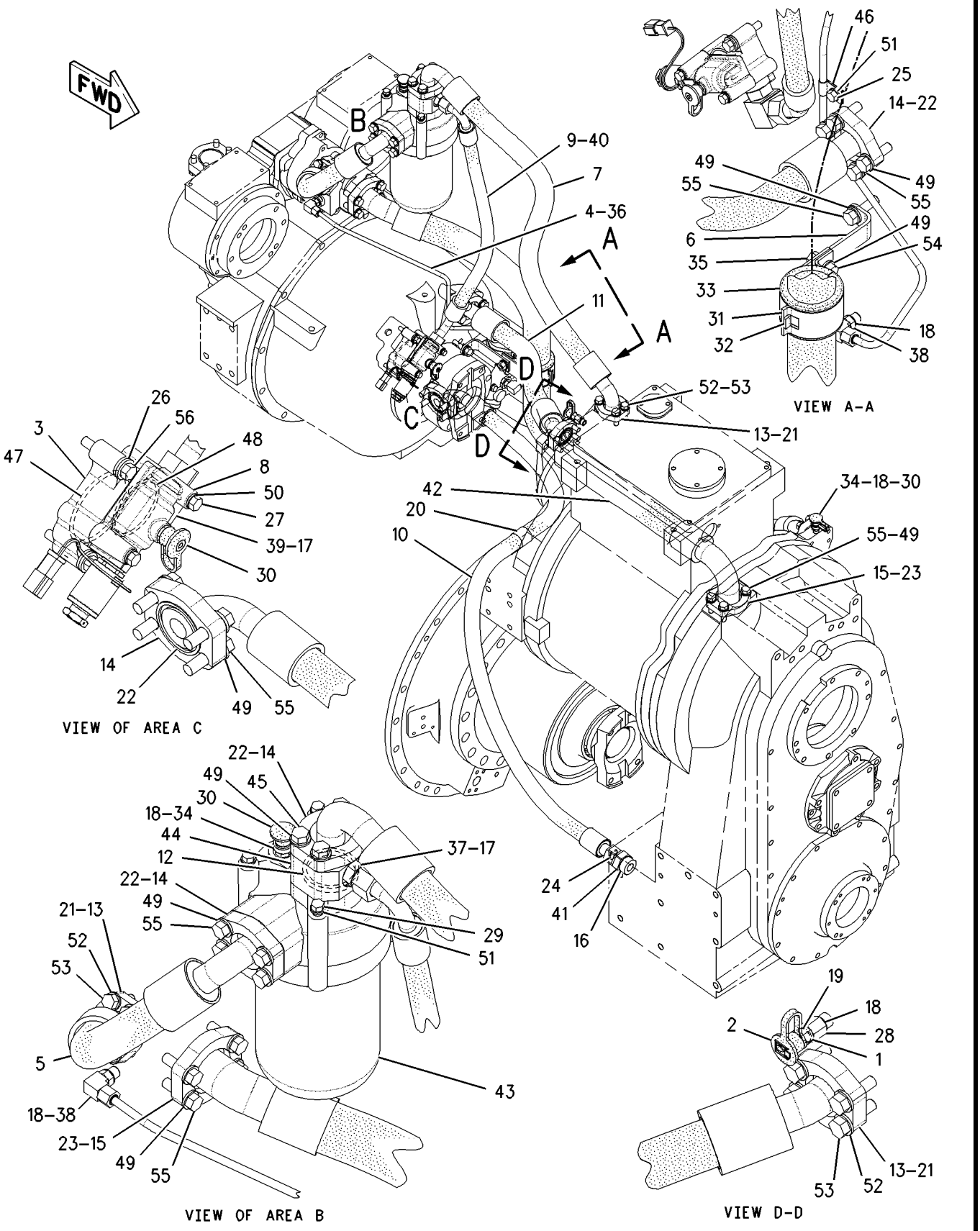

GRAPHIC #1 g00758325

120-4408 MOUNTING GP-REAR AXLE

S/N: 7KK1-UP

PART OF 8X-8405 POWER TRAIN AR

SMCS-3260, 3278 **i00107744**

NOTE	PART NUMBER	QTY	PART NAME 1 2 3 4 5 6 (PRODUCT LEVEL)	SEE PAGE
M	**8C-3222**	6	BOLT (M30X3.5X80MM)	
M	**8T-6624**	12	BOLT (M30X3.5X180MM)	
	9X-8399	18	WASHER (6.0MM THK)	

M-METRIC PART

POWER TRAIN

6Y-7886 PLANETARY GP-TRANSMISSION

S/N: 1KY1-UP

PART OF 8E-1298 TRANSMISSION AR

SMCS-3063, 3155, 3160, 3169, 3170, 3187, 3190 **i01124836**

NOTE	REF NO	GRAPHIC REF	PART NUMBER	QTY	PART NAME 1 2 3 4 5 6 (PRODUCT LEVEL)	SEE PAGE
	1	1	**3J-1907**	1	SEAL-O-RING (11.89MM ID)	
	2	1	**0T-0065**	20	BOLT (3/8-16X3.5IN)	
	3	1	**5M-2894**	20	WASHER (2.5MM THK)	
	4	1	**5P-2587**	1	SEAL-O-RING (520.07MM ID)	
	5	1	**121-3038**	1	SPACER AS	
	6	1	**6Y-5793**	2	RING-SEAL	
	7	1	**169-7055**	7	DISC-FRICTION	
R	8	1	**3P-7447**	5	PLATE-CLUTCH	
	9	1	**9N-4273**	1	SLINGER-OIL	
	10	1	**123-0999**	1	GEAR-RING (75 TEETH)	
	11	1	**2P-5860**	18	BOLT (1/2-13X20.375IN)	
	12	1	**5P-8245**	20	WASHER-HARD (3MM THK)	
	13	1	**6Y-7993**	1	HOUSING-CLUTCH	
	14	1	**7D-1979**	1	SEAL-O-RING	
	15	1	**1P-0016**	1	RING	
	16	1	**123-0997**	1	GEAR-SUN (30 TEETH)	
	17	1	**9S-4191**	1	PLUG-O-RING (9/16-18 THD)	
	18	1	**6Y-7885**	1	CARRIER-PLANETARY	
	19	1	**2D-8363**	1	SEAL-O-RING (494.16MM ID)	
	20	1	**8S-6212**	2	BOLT (7/16 X 14 X 13IN)	
	21	1	**3P-3743**	1	RING-RETAINING	
	22	1	**3P-4050**	1	SPACER (0.125 IN THK)	
	23	1	**5J-5794**	2	BOLT (1/2-13X3.5IN)	
	24	1	**6Y-8542**	5	SHAFT-PLANETARY	
	25	1	**8E-8310**	10	DISC-THRUST	
	26	1	**124-3306**	5	BEARING-CAGED	
	27	1	**110-9286**	5	GEAR-PLANET (22 TEETH)	
	28	1	**3P-7832**	6	DOWEL	
	29	1	**7M-1199**	12	SPRING	
	30	1	**7F-2122**	3	SEAL-O-RING (69.22MM ID)	
	31	1	**1T-0414**	10	BOLT-12 POINT HEAD (5/16-18X1)	
	32	1	**1P-9261**	1	RING-SEAL	
	33	1	**9M-4355**	20	DAMPER-BOLT	
R	34	1	**3P-7489**	4	PLATE-CLUTCH	
	35	1	**6I-9255**	5	DISC-FRICTION	
	36	1	**9W-8298**	6	DOWEL	
	37	1	**6V-8187**	6	NUT (1/4-28 THD)	
	38	1	**6Y-8119**	1	GEAR-RING (90 TEETH)	
	39	1	**6T-6051**	1	MANIFOLD AS	
		1	**3D-2824**	2	SEAL-O-RING (23.47MM ID)	
	40	1	**3J-1907**	1	SEAL-O-RING (11.89MM ID)	
	41	1	**3F-3442**	1	DOWEL (49MM OAL)	
	42	1	**6T-6052**	1	PLUG-ORIFICE	
	43	1	**7M-8480**	4	DOWEL (14.1MM OD X 31.75MM LONG)	
	44	1	**9S-4191**	1	PLUG-O-RING (9/16-18 THD)	
		1	**9S-8008**	2	PLUG-O-RING (1 1/16-12 THD)	
	45	1	**6P-7379**	1	HOUSING AS	
	46	1	**8B-1312**	3	DOWEL	
	47	1	**8E-0361**	1	HOUSING AS-CLUTCH	
	48	1	**7M-8480**	4	DOWEL (14.1MM OD X 31.75MM LONG)	
	49	1	**8E-0359**	1	HUB AS-CLUTCH	
	50	1	**4S-8537**	1	DOWEL	
	51	1	**8E-0360**	1	HOUSING AS-CLUTCH	
	52	1	**4S-8537**	1	DOWEL	
	53	1	**6B-6863**	1	PIN-SPRING	
	54	1	**6P-7705**	1	CARRIER-RING	

NOTE	REF NO	GRAPHIC REF	PART NUMBER	QTY	PART NAME 1 2 3 4 5 6 (PRODUCT LEVEL)	SEE PAGE
	55	1	**3P-2792**	1	SEAL-RING	
	56	1	**3P-2768**	1	PISTON-CLUTCH	
	57	1	**3P-3304**	1	PLATE-RETAINER	
	58	1	**9M-2095**	1	RING-RETAINING	
	59	1	**6Y-7992**	1	HOUSING-CLUTCH	
	60	1	**155-8147**	6	SETSCREW	
	61	1	**7G-4818**	1	RING-SEAL	
	62	1	**3P-2793**	2	SEAL-RING	
	63	1	**9W-6099**	1	PISTON-CLUTCH	
	64	1	**3S-2708**	6	PIN-SPRING	
	65	1	**6V-0836**	1	RING-RETAINING	
	66	1	**8T-1141**	1	RING-RETAINING	
	67	1	**6Y-3484**	1	BALL BEARING	
	68	1	**5P-3119**	1	RING-RETAINING	
	69	1	**3P-2685**	1	PISTON-CLUTCH	
	70	1	**3P-2794**	1	SEAL-RING	
	71	1	**9W-8371**	3	SPRING-DISC	
	72	2	**112-4511**	4	PIN-SPRING	
	73	2	**124-3307**	1	BALL BEARING	
	74	2	**9W-3136**	2	RING-RETAINING	
	75	2	**7G-2510**	6	GEAR-PLANETARY (20 TEETH)	
	76	2	**5M-5018**	12	BEARING-ROLLER (43.218 MM OD X 25.273)	
	77	2	**8F-8544**	2	BOLT (3/8-16X6.25IN)	
	78	2	**5M-6126**	6	BEARING	
R	79	2	**3P-7447**	9	PLATE-CLUTCH	
	80	2	**7G-2476**	6	GEAR (20 TEETH)	
	81	2	**6Y-8118**	1	GEAR-RING (90 TEETH)	
	82	2	**8J-8322**	1	RING-RETAINING (52.73MM ID)	
	83	2	**8E-8304**	24	DISC-THRUST	
	84	2	**8E-4090**	6	SHAFT-PLANETARY	
	85	2	**3P-2414**	1	HOUSING-CLUTCH	
	86	2	**9G-4733**	6	TUBE	
	87	2	**8E-4085**	1	GEAR-SUN (26 TEETH)	
	88	2	**1P-0014**	1	LOCKRING	
	89	2	**8E-4087**	1	GEAR-RING (90 TEETH)	
	90	2	**6Y-9021**	1	SHAFT AS-OUTPUT	
	91	2	**5P-0403**	2	BEARING-ROLLER	
	92	2	**8S-9104**	1	RING-RETAINING	
	93	2	**136-1020**	1	BALL BEARING	
	94	2	**9F-3788**	1	RING-METAL SEAL	
	95	2	**8E-0330**	1	CARRIER AS	
	96	2	**4S-8537**	1	DOWEL	
	97	2	**8E-4088**	1	GEAR-RING (87 TEETH)	
	98	2	**6T-3720**	1	GEAR-RING (80 TEETH)	
	99	2	**3T-2139**	1	HOUSING AS-CLUTCH	
	100	2	**9S-1343**	1	PLUG-CUP	
	101	2	**108-2736**	2	LOCKRING	
	102	2	**3P-3321**	1	SEAL-METAL RING	
	103	2	**8E-4086**	1	GEAR-SUN (29 TEETH)	
	104	2	**6F-0156**	1	RING-METAL SEAL	
	105	2	**1M-3937**	2	RING-METAL SEAL	
	106	2	**6Y-3484**	1	BALL BEARING	
	107	2	**6Y-8083**	1	SLEEVE	
	108	2	**8T-1141**	1	RING-RETAINING	
	109	2	**8K-2692**	1	RING-RETAINING	
	110	2	**3P-2794**	2	SEAL-RING	
	111	2	**6Y-8203**	1	GEAR-SUN (48 TEETH)	
	112	2	**3P-2685**	2	PISTON-CLUTCH	
	113	2	**5P-3119**	1	RING-RETAINING	

6Y-7886 **PLANETARY GP-TRANSMISSION** ***(contd.)*** **i01124836**

NOTE	REF NO	GRAPHIC REF	PART NUMBER	QTY	PART NAME 1 2 3 4 5 6 (PRODUCT LEVEL)	SEE PAGE
	114	2	**9H-5537**	24	SPRING	
	115	2	**6Y-8202**	1	GEAR-SUN (48 TEETH)	
	116	2	**136-5083**	1	CARRIER-PLANETARY	
	117	2	**8E-4091**	4	SHAFT-PLANETARY	
	118	2	**6Y-8206**	4	GEAR-PLANETARY (32 TEETH)	
	119	2	**8P-4617**	1	SEAL-METAL RING	
	120	2	**0S-1599**	1	BOLT (1/2-20X2.75IN)	
	121	2	**6Y-8205**	4	GEAR-PLANET (29 TEETH)	
	122	2	**7H-7658**	12	SPRING	
	123	2	**8E-2729**	12	DISC AS-FRICTION	
	124	2	**8M-4390**	1	SEAL-O-RING (56.74MM ID)	
	125	2	**1P-3958**	8	ROLLER AS-SPECIAL	
	126	2	**9W-8297**	6	DOWEL	
	127	2	**3P-2793**	3	SEAL-RING	
	128	2	**9W-6099**	1	PISTON-CLUTCH	
	129	2	**7G-4818**	1	RING-SEAL	
	130	2	**3S-2708**	11	PIN-SPRING	
	131	2	**3P-3246**	4	SHAFT-PLANETARY	
	132	2	**8E-8316**	16	DISC-THRUST	
	133	2	**6V-0836**	1	RING-RETAINING	
	134	2	**6Y-8084**	1	CARRIER-RING	
	135	2	**7G-2928**	1	PLATE-RETAINER	
	136	2	**123-0420**	1	SHAFT AS-INPUT	
	137	2	**4B-9783**	1	BALL	
	138	2	**3P-3737**	1	PLATE AS	
	139	2	**2D-6642**	2	BALL	
	140	2	**7M-8479**	2	DOWEL (14.1MM OD X 50.8MM LONG)	
	141	2	**5N-2882**	3	SETSCREW-HEX SOCKET (5/16-18THD)	
	142	2	**5S-0003**	3	NUT (5/16-18 THD)	

R-REMFG PART MAY BE AVAILABLE

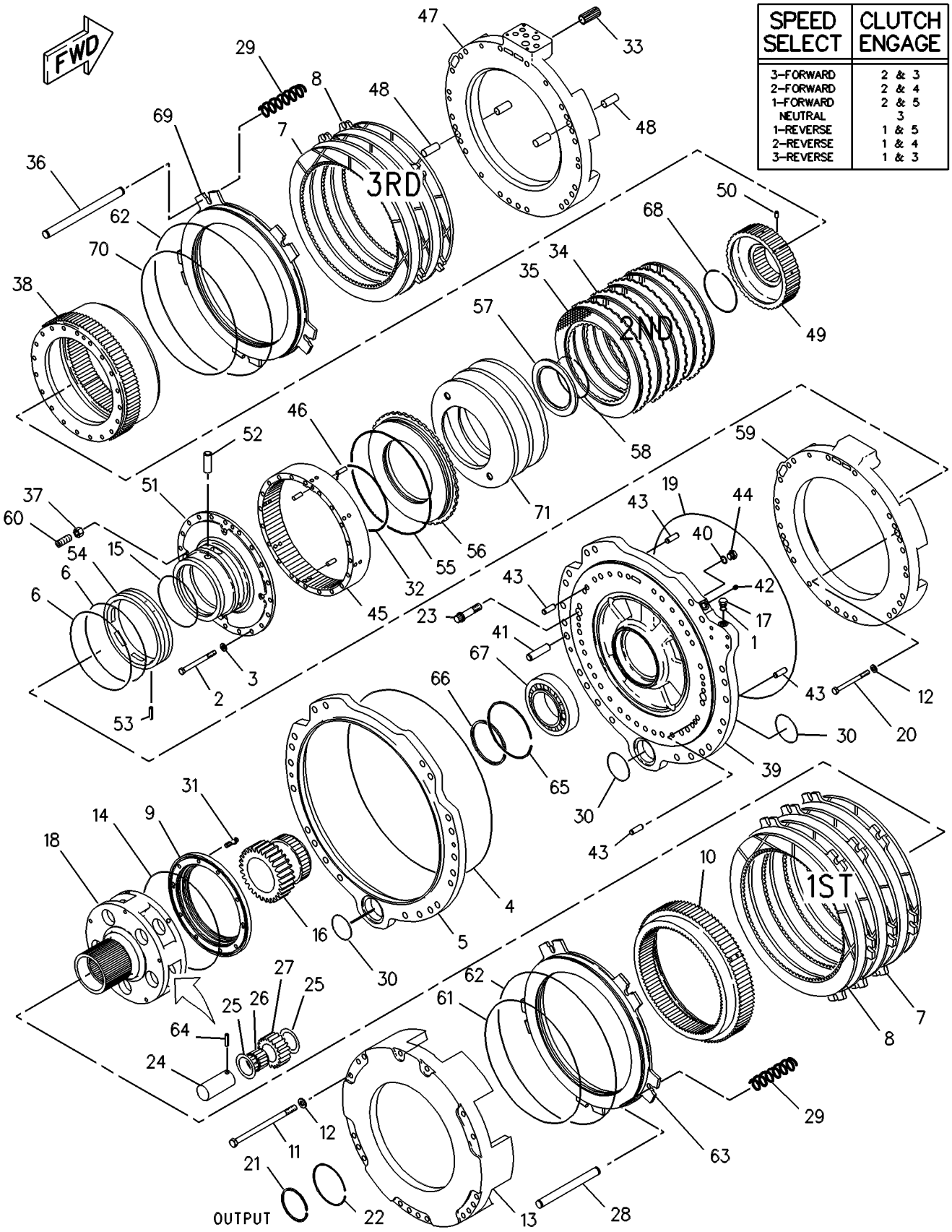

GRAPHIC #1 g00345176

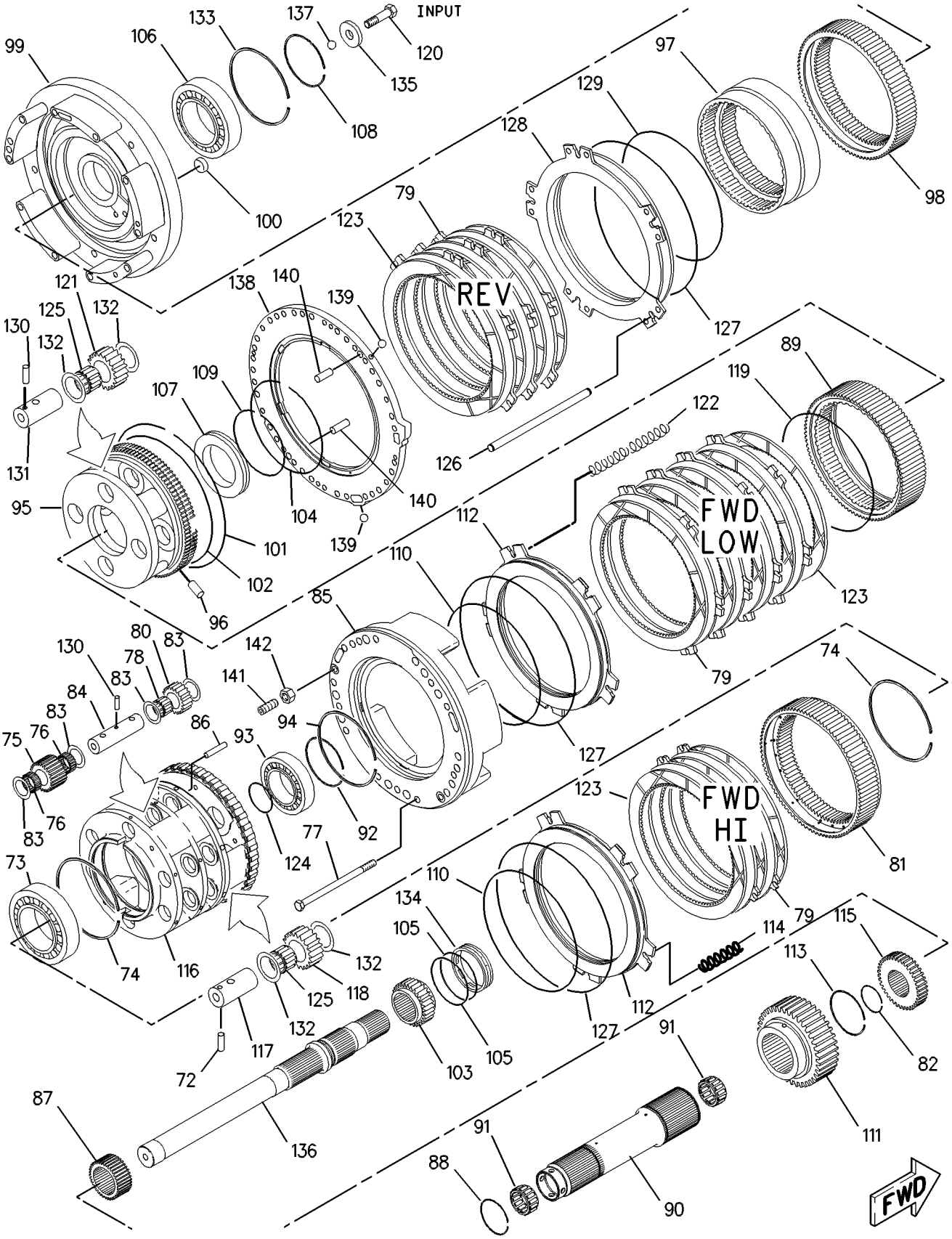

GRAPHIC #2 g00516144

8X-8405 POWER TRAIN AR

S/N: 7KK1-UP

PART OF 8X-8402 CHASSIS AR

SMCS-3000 **i01021466**

NOTE	PART NUMBER	QTY	PART NAME 1 2 3 4 5 6 (PRODUCT LEVEL)	SEE PAGE
Y	**8X-9039**	1	BRAKE GP-SERVICE & PARKING	560
Y	**8X-9040**	1	CHAIN GP-DRIVE	373
Y	**8X-9042**	1	DIFFERENTIAL & BEVEL GEAR GP	380
Y	**120-4409**	1	FASTENER GP-BRAKE	570
Y	**120-6162**	1	FASTENER GP-TANDEM	388
Y	**8X-9049**	1	FILLER GP-POWER TRAIN OIL	390
Y	**165-9955**	1	FINAL DRIVE GP	400
			—OR—	
Y	**8X-9041**	1	FINAL DRIVE GP	394
Y	**8X-9043**	1	HOUSING GP-REAR AXLE	412
Y	**120-4408**	1	MOUNTING GP-REAR AXLE	421
Y	**8X-9044**	1	SHAFT GP-DRIVE	430
Y	**8X-9045**	1	SHAFT GP-DRIVE	431
Y	**8X-9046**	1	SUPPORT GP-TRANSMISSION	432
Y	**8X-9047**	1	TANDEM & COVER GP	434
Y	**8E-3673**	1	TORQUE CONVERTER GP	449
Y	**8E-1298**	1	TRANSMISSION AR	451

Y-SEPARATE ILLUSTRATION

3T-5446 PUMP GP-TRANSMISSION

S/N: 7KK1-UP

PART OF 3T-5447 PUMP GP-TRANSMISSION

SMCS-3066 **i01108386**

NOTE	REF NO	GRAPHIC REF	PART NUMBER	QTY	PART NAME 1 2 3 4 5 6 (PRODUCT LEVEL)	SEE PAGE
	1	1	**6P-4354**	1	MANIFOLD AS-PUMP	
		1	**5M-3320**	2	BEARING	
	2	1	**3T-6989**	1	GEAR AS-PUMP (8 TEETH)	
	3	1	**2D-8009**	2	SEAL-O-RING (142.47MM ID)	
	4	1	**0S-1619**	2	BOLT (3/8-16X3.0IN)	
	5	1	**3S-0004**	6	WASHER (2.29MM THK)	
	6	1	**3T-6992**	1	BODY AS-OIL PUMP	
		1	**8M-8489**	4	DOWEL (12.54MM DIA)	
	7	1	**2P-1014**	1	COVER AS-PUMP	
	8	1	**5M-3320**	2	BEARING	
	9	1	**5S-6622**	1	SEAL-LIP	
	10	1	**3T-6990**	1	GEAR AS-PUMP (8 TEETH)	
		1	**2B-9373**	1	KEY-WOODRUFF (.75X.25IN)	
	11	1	**1A-5183**	2	BOLT (3/8-16X4.75IN)	
	12	1	**8S-9191**	2	BOLT (3/8-16X4IN)	
	13	1	**9S-1018**	4	WASHER (.84MM THK)	

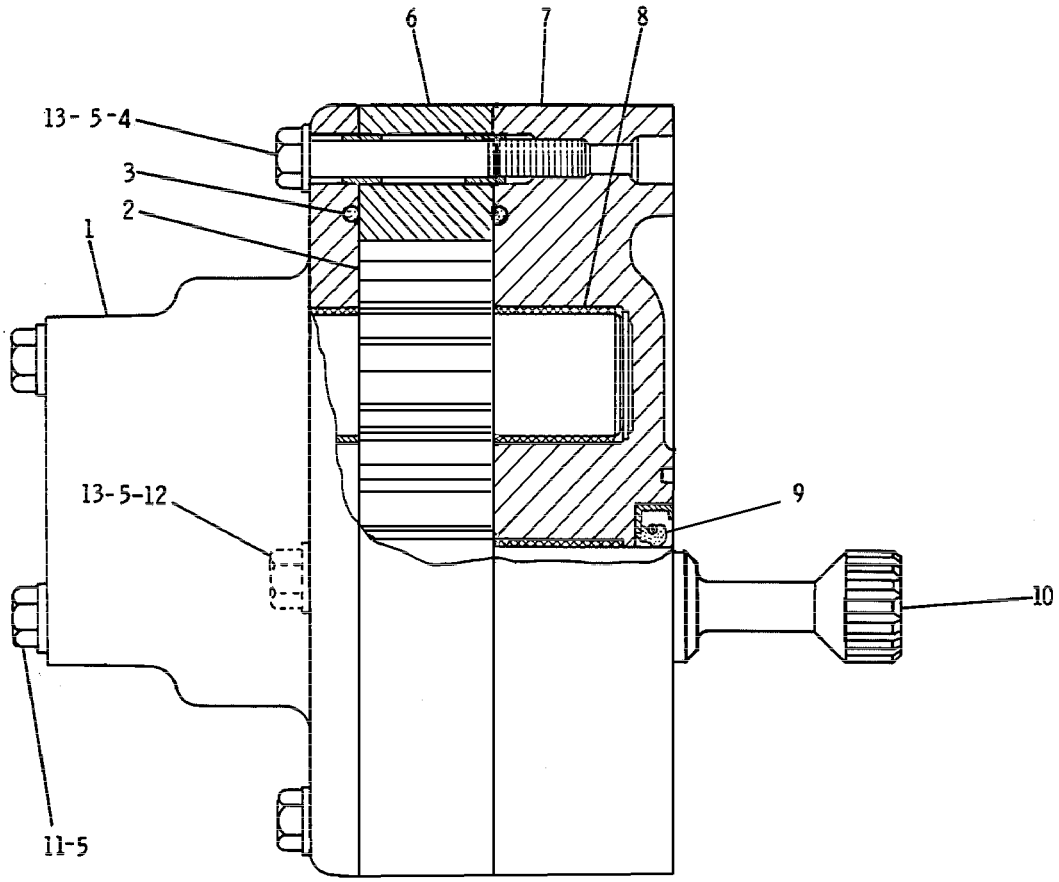

GRAPHIC #1 g00082886

3T-5447 PUMP GP-TRANSMISSION

S/N: 7KK1-UP

PART OF 8X-8404 HYDRAULIC AR

SMCS-3066 **i01110800**

NOTE	REF NO	GRAPHIC REF	PART NUMBER	QTY	PART NAME 1 2 3 4 5 6 (PRODUCT LEVEL)	SEE PAGE
	1	1	**1A-2029**	2	BOLT (3/8-16X1.125IN)	
		1	**5M-2894**	2	WASHER (2.5MM THK)	
	2	1	**5J-5793**	2	BOLT-12 POINT HEAD (1/2-13X1.75IN)	
	3	1	**7S-9203**	3	WASHER	
	4	1	**6P-1272**	1	ADAPTER AS	
		1	**1H-0974**	2	DOWEL	
	5	1	**2S-4080**	1	GASKET-ADAPTER	
	6	1	**4K-5175**	1	BOLT-12 POINT HEAD (1/2-13X1.5IN)	
	7	1	**8M-5252**	1	SEAL-O-RING (66.27MM ID)	
Y	8	1	**3T-5446**	1	PUMP GP-TRANSMISSION	428

Y-SEPARATE ILLUSTRATION

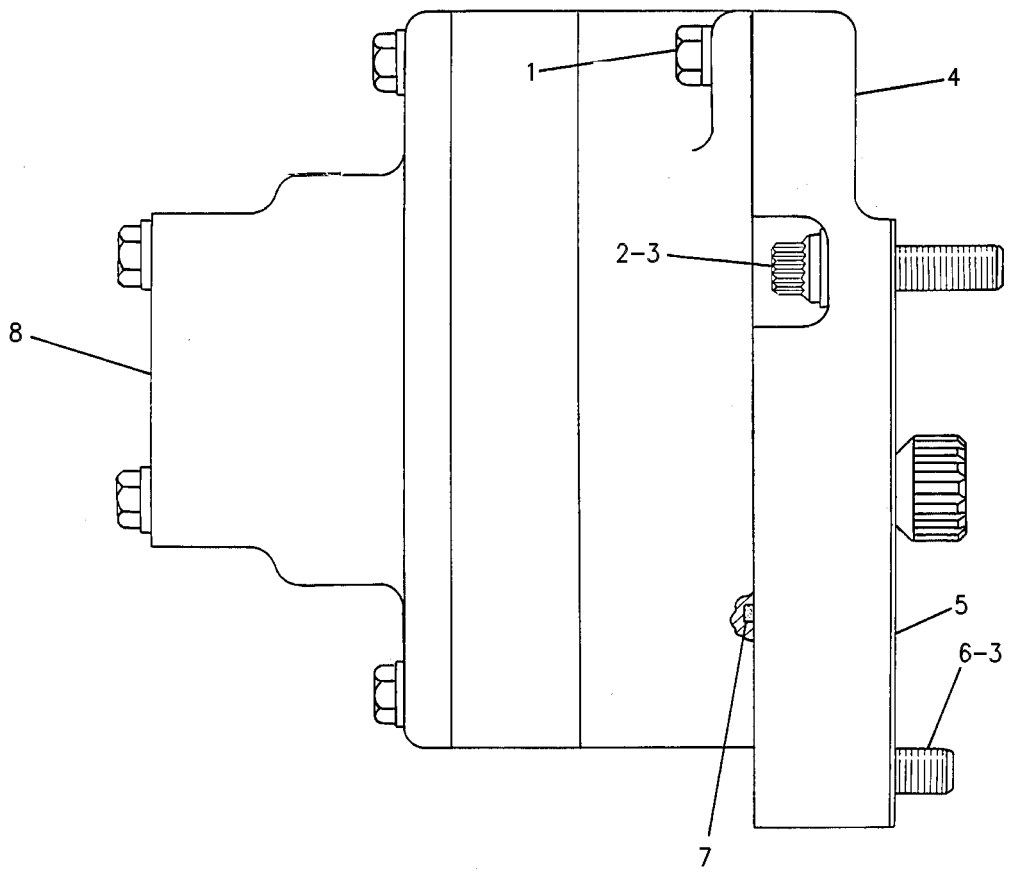

GRAPHIC #1 g00086986

8X-9044 SHAFT GP-DRIVE

S/N: 7KK1-UP

PART OF 8X-8405 POWER TRAIN AR

SMCS-3253 **i00108110**

NOTE	REF NO	GRAPHIC REF	PART NUMBER	QTY	PART NAME 1 2 3 4 5 6 (PRODUCT LEVEL)	SEE PAGE
Y	1	1	**117-0546**	1	UNIVERSAL JOINT GP	453
	2	1	**0S-0484**	8	BOLT (1/2-20X2.25IN)	

Y-SEPARATE ILLUSTRATION

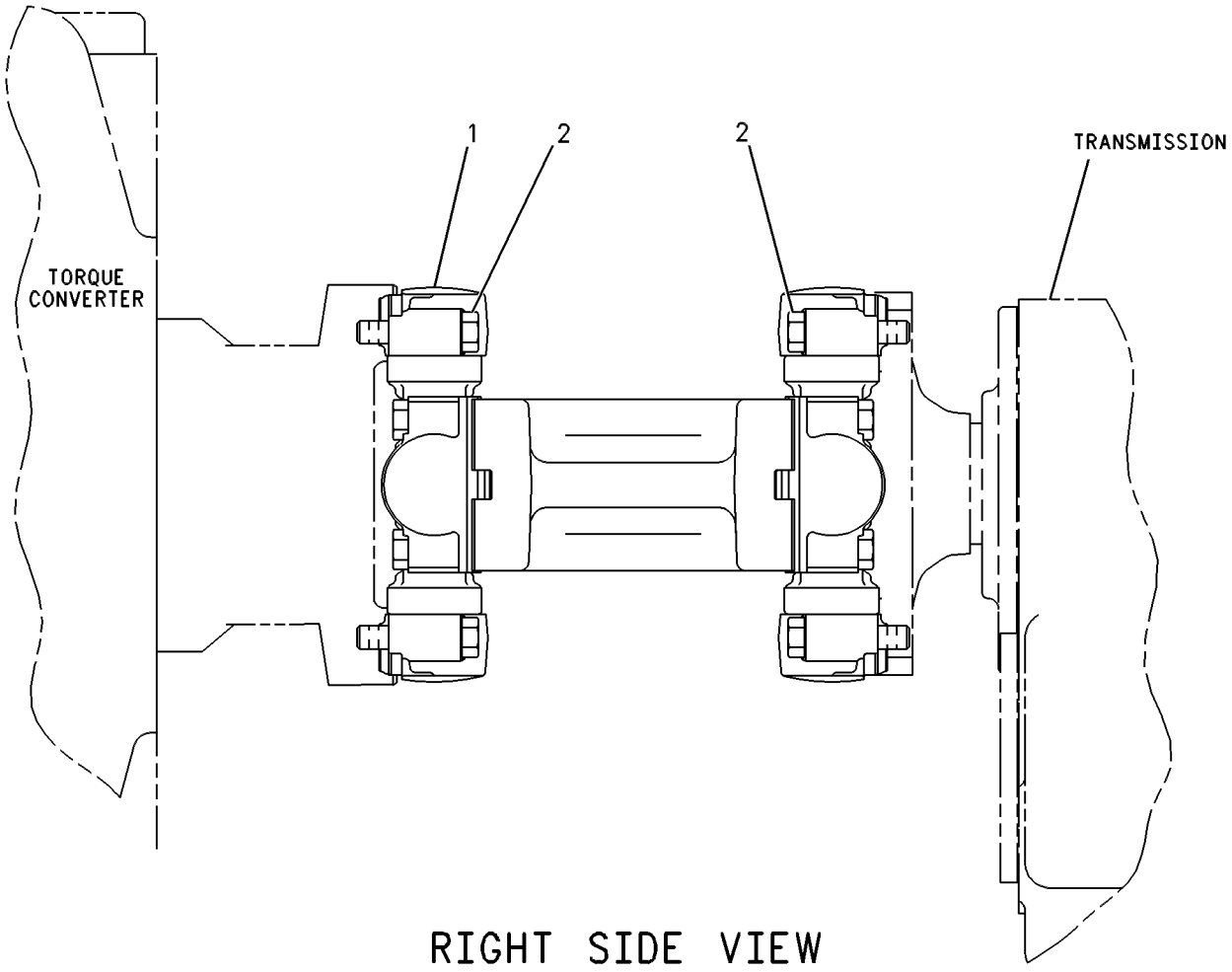

RIGHT SIDE VIEW

GRAPHIC #1 g00088394

8X-9045 SHAFT GP-DRIVE

S/N: 7KK1-UP

PART OF 8X-8405 POWER TRAIN AR

SMCS-3253 **i00556288**

NOTE	REF NO	GRAPHIC REF	PART NUMBER	QTY	PART NAME 1 2 3 4 5 6 (PRODUCT LEVEL)	SEE PAGE
CY	1	1	**143-2518**	1	UNIVERSAL JOINT GP	454
	2	1	**0S-2318**	8	BOLT (5/8-18X3.25IN)	

C-CHANGE FROM PREVIOUS TYPE
Y-SEPARATE ILLUSTRATION

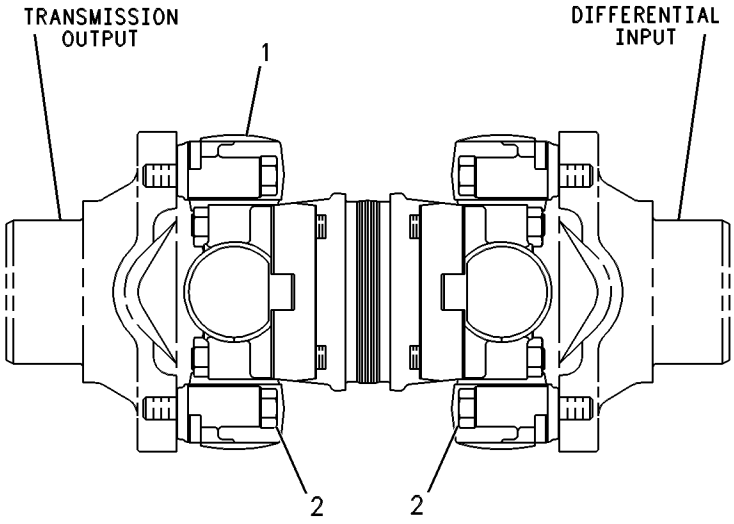

RIGHT SIDE VIEW

GRAPHIC #1 g00086302

8X-9046 SUPPORT GP-TRANSMISSION

S/N: 7KK1-UP

PART OF 8X-8405 POWER TRAIN AR

SMCS-3030, 3150 **i00108242**

NOTE	REF NO	GRAPHIC REF	PART NUMBER	QTY	PART NAME 1 2 3 4 5 6 (PRODUCT LEVEL)	SEE PAGE
	1	1	**8X-8937**	2	SUPPORT AS	
					(EACH INCLUDES)	
		1	**4D-8148**	2	DOWEL (1.26IN LG)	
	2	1	**9W-9930**	2	MOUNT AS	
	3	1	**8T-3282**	2	WASHER-HARD (3.5MM THK)	
M	4	1	**8T-4649**	2	BOLT (M24X3X140MM)	
M	5	1	**8T-0070**	2	BOLT (M20X2.5X120MM)	
	6	1	**9W-6584**	2	WASHER (10MM THK)	
	7	1	**9W-6582**	2	SLEEVE	
	8	1	**0S-1589**	8	BOLT (5/8-11X1.75IN)	
	9	1	**5P-8247**	8	WASHER-HARD (3.5MM THK)	
	10	1	**8X-8932**	2	SUPPORT AS	
					(EACH INCLUDES)	
		1	**1A-2223**	2	DOWEL	
	11	1	**9W-7385**	2	SLEEVE	
	12	1	**9W-7388**	2	WASHER (12.0MM THK)	
	13	1	**6V-8237**	2	WASHER (4MM THK)	
	14	1	**6Y-9980**	2	MOUNT AS	
	15	1	**5P-8248**	8	WASHER-HARD (3.5MM THK)	
	16	1	**0L-1178**	8	BOLT (3/4-10X2IN)	

M-METRIC PART

8X-9046 **SUPPORT GP-TRANSMISSION** ***(contd.)*** **i00108242**

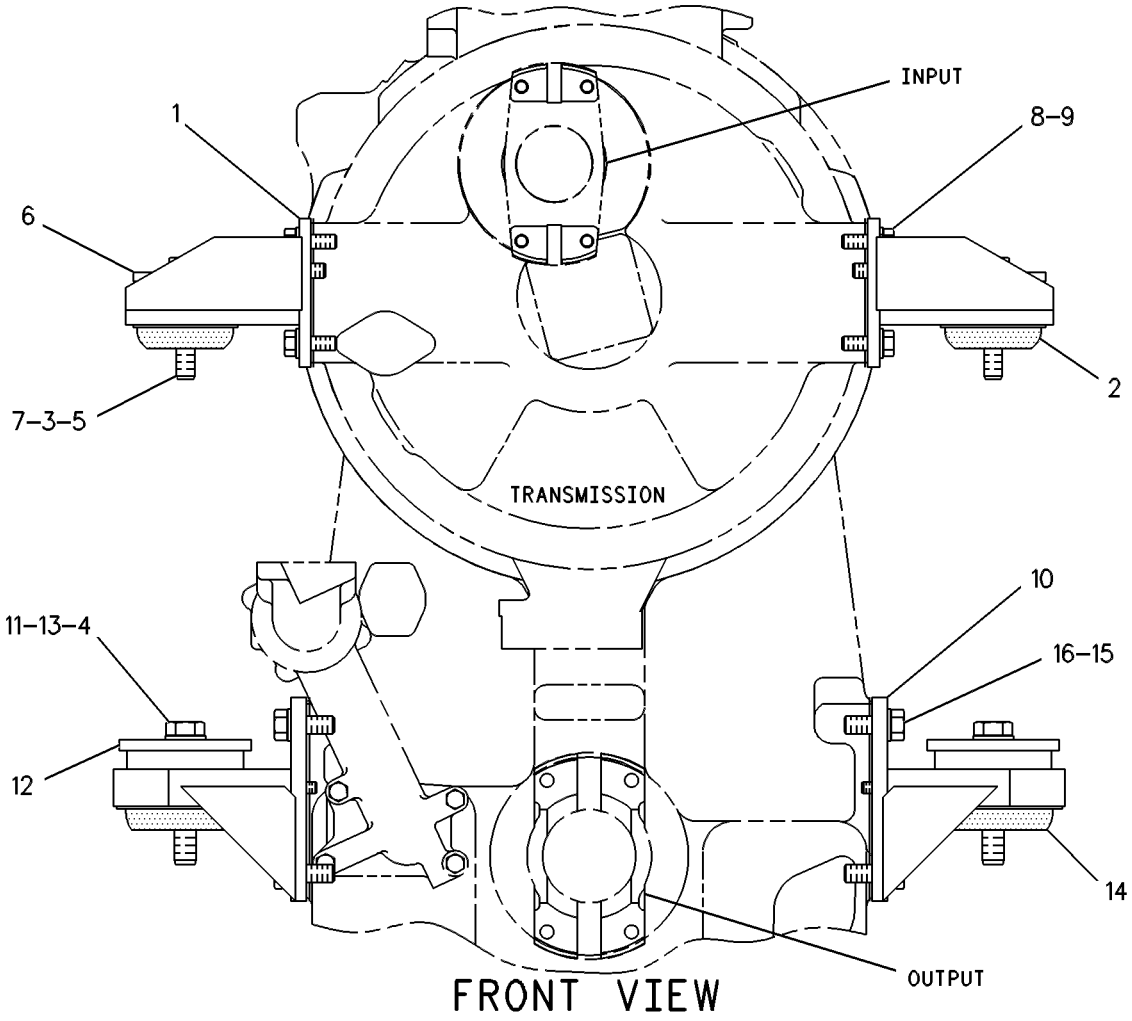

GRAPHIC #1 g00086324

POWER TRAIN

8X-9047 TANDEM & COVER GP

S/N: 7KK1-UP

PART OF 8X-8405 POWER TRAIN AR

SMCS-4062, 4064 **i00729255**

NOTE	REF NO	GRAPHIC REF	PART NUMBER	QTY	PART NAME 1 2 3 4 5 6 (PRODUCT LEVEL)	SEE PAGE
	1	1	**1Q-5461**	1	RECEIVER	
	2	1	**1Q-5468**	1	CAP	
	3	1	**4H-6112**	1	BREATHER	
	4	1	**5P-3501**	1	ADAPTER (1/4-18 THD)	
	5	1	**7J-8611**	1	ELBOW (1/4-18 NPTF THD)	
	6	1	**7M-8485**	2	SEAL-O-RING (29.74MM ID)	
	7	1	**9Y-9236**	1	BODY AS-GAUGE	
	8	1	**9S-9334**	3	PLUG (1 5/16-12 THD)	
	9	1	**120-6156**	2	COVER	
	10	1	**120-6157**	4	COVER	
	11	1	**120-6158**	4	GASKET	
	12	1	**120-6159**	2	GASKET	
	13	1	**120-6161**	1	GASKET	
	14	1	**152-2693**	1	COVER AS	
	15	1	**3J-1907**	2	SEAL-O-RING (11.89MM ID)	
M	16	1	**8T-4139**	43	BOLT (M12X1.75X30MM)	
	17	1	**8T-4223**	43	WASHER-HARD (3MM THK)	
	18	1	**120-6141**	1	HOUSING AS-TANDEM DRIVE	
	19	1	**120-6150**	2	PLATE-TREAD	
	20	1	**9R-3845**	8	BOSS (M12X1.75X38.0MM)	
	21	1	**9R-2613**	8	BOSS (M10X1.5X25.0MM)	
	22	1	**120-6149**	2	BAR	
M	23	1	**8T-3597**	12	NUT-WELD (M12X1.75 THD)	
	29	1	**5T-6553**	1	PLATE	
	30	1	**8T-4121**	2	WASHER (2.5MM THK)	
M	31	1	**8T-4136**	2	BOLT (M10X1.50X25MM)	
	32	1	**8W-6458**	1	GUARD	
	33	1	**9S-8004**	1	PLUG-O-RING (9/16-18 THD)	

M-METRIC PART

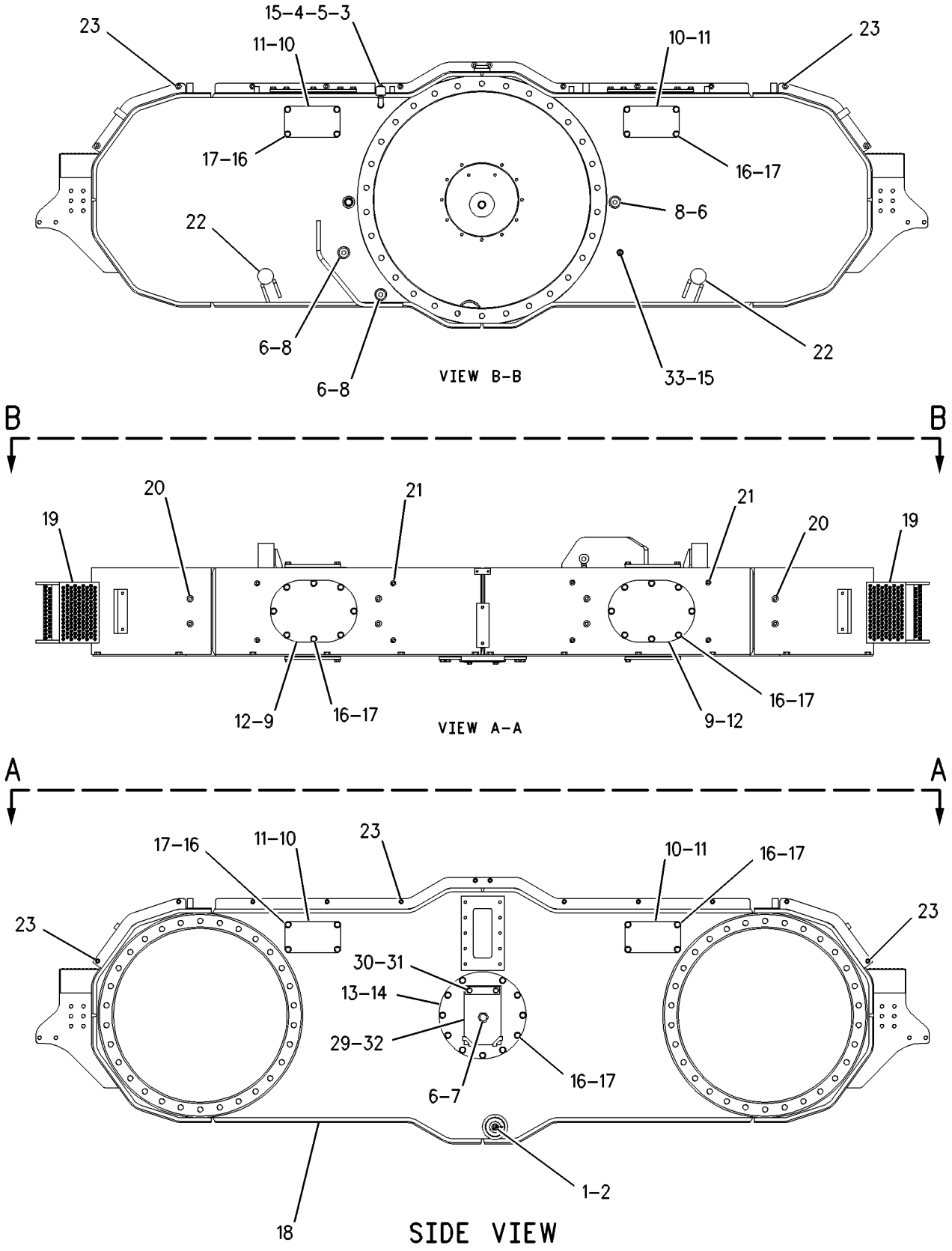

GRAPHIC #1

g00333839

POWER TRAIN

186-4825 TIRE GP

S/N: 7KK1-UP
29.5R29 * L5 RL5K 6S
AN ATTACHMENT

SMCS-4203 **i01342320**

NOTE	PART NUMBER	QTY	PART NAME 1 2 3 4 5 6 (PRODUCT LEVEL)	SEE PAGE
			(NO SERVICED PARTS)	

MEMORANDA

POWER TRAIN

1T-1881 TORQUE CONVERTER GP

S/N: 4DT1-UP

FREE-WHEEL & LOCKUP

PART OF 8E-3673 TORQUE CONVERTER GP

SMCS-3101 **i01518137**

NOTE	REF NO	GRAPHIC REF	PART NUMBER	QTY	PART NAME 1 2 3 4 5 6 (PRODUCT LEVEL)	SEE PAGE
	1	1	**1T-1452**	1	HOUSING AS	
	2	1	**5J-7386**	2	PLUG-ORIFICE (1/8-27 THD)	
	3	1	**1T-0936**	1	PLUG-PIPE	
	4	1	**1T-0867**	1	PLATE-REINFORCEMENT	
	5	1	**1T-1498**	1	PLATE-CLAMP	
	6	1	**1T-1224**	1	HUB-IMPELLER	
	7	1	**9W-3136**	1	RING-RETAINING	
	8	1	**1T-1659**	1	SLEEVE AS	
	9	1	**5S-4441**	1	DOWEL	
		1	**1T-1658**	1	SLEEVE-WEAR	
	10	1	**1T-0897**	2	RING-RETAINING	
	11	1	**6Y-5888**	2	RING-SEAL	
	12	1	**1T-1657**	1	CARRIER-BEARING	
	13	1	**1T-1220**	1	CARRIER-RING	
	14	1	**1L-7205**	1	BALL BEARING	
	15	1	**1T-1856**	1	RETAINER-BEARING	
	16	1	**3S-0127**	8	BOLT-12 POINT HEAD	
	17	1	**1T-0136**	1	SEAL-O-RING	
	18	1	**1T-1006**	1	RETAINER	
	19	1	**8B-5144**	1	BOLT (5/8-18X3IN)	
B	20	1	**1T-1011**	3	SHIM (0.254MM THK)	
B	21	1	**1T-1012**	3	SHIM (0.076MM THK)	
	22	1	*1T-2000*	1	YOKE AS	
	23	1	**1T-1857**	1	ROTOR-SENSOR	
	24	1	**1T-1222**	1	GASKET	
	25	1	**1T-1223**	1	SHAFT-OUTPUT	
	26	1	**1T-1815**	1	CARRIER AS	
	27	1	**1T-1353**	1	BEARING-SLEEVE	
		1	**1T-1814**	1	CARRIER-STATOR	
	28	1	**1T-1221**	1	CARRIER-RING	
	29	1	**9W-6990**	1	RING-SEAL	
	30	1	**5P-5855**	8	BOLT-12 POINT HEAD (1/2-13X1.75 IN)	
	31	1	**5F-3999**	1	SEAL-O-RING	
	32	1	**1T-0794**	1	RING-SEAL METAL (3/8-16X1.25IN)	
	33	1	**1T-1229**	1	IMPELLER-CONVERTER (2.5MM THK)	
	34	1	**1T-0795**	3	RING-RETAINING	
	35	1	**1T-1423**	1	CAM-FREEWHEEL	
	36	1	**1T-0782**	1	TURBINE-CONVERTER	
	37	1	**1T-0804**	1	RING-CLAMP	
	38	1	**1T-2003**	1	PLATE-CLUTCH BACKING	
	39	1	**1T-2002**		PLATE-CLUTCH	
	40	1	**8E-8337**	2	DISC-FRICTION	
	41	1	**7G-0141**	1	RING-SEAL	
	42	1	**1T-2001**	1	PISTON-LOCKUP CLUTCH	
	43	1	**1T-1359**	1	HUB	
	44	1	**1T-1910**	2	PLATE-SIDE	
	45	1	**1T-0806**	2	RETAINER-BEARING	
	46	1	**1T-0786**	2	BEARING-THRUST	
	47	1	**0L-1351**	6	BOLT (3/8-16X0.875 IN)	
	48	1	**6V-9191**	1	BALL BEARING	
	49	1	**1T-1617**	1	PLATE-RETAINER	
	50	1	**8S-4724**	2	BOLT (7/16-20X2.25IN)	
	51	1	**1T-1236**	1	PILOT-FLYWHEEL	
	52	1	**1T-0895**	1	RING-RETAINING	
	53	1	**1T-1616**	1	WASHER-SPRING	

1T-1881 TORQUE CONVERTER GP *(contd.)* i01518137

NOTE	REF NO	GRAPHIC REF	PART NUMBER	QTY	PART NAME 1 2 3 4 5 6 (PRODUCT LEVEL)	SEE PAGE
	54	1	**1T-1356**	1	RING-SEAL	
	55	1	**1T-0847**	1	LOCKPIN-RACE	
	56	1	**1T-0807**	2	RACE-THRUST BEARING	
	57	1	**8M-2530**	18	BOLT-12 POINT HEAD (1/2-13X1.25 IN)	
	58	1	**8S-3371**	1	RING-SEAL	
	59	1	**1T-1834**	1	STATOR-CONVERTER	
	60	1	**1T-0896**	1	RING-RETAINING	
	61	1	**1T-1410**	13	ROLLER-FREEWHEEL	
	62	1	**1T-0680**	13	SPRING-FREEWHEEL	
	63	1	**3P-2573**	1	RACE-BEARING INNER	
	64	1	**1J-4034**	1	SEAL-LIP	
	65	1	**3P-2574**	1	RACE & ROLLER AS	
	66	1	**0S-1588**	36	BOLT (3/8-16X1.25 IN)	
	67	1	**5M-2894**	36	WASHER-HARD (10.2X18.5X2.5MM THK)	
B-USE AS REQUIRED						

1T-1881 **TORQUE CONVERTER GP** ***(contd.)*** **i01518137**

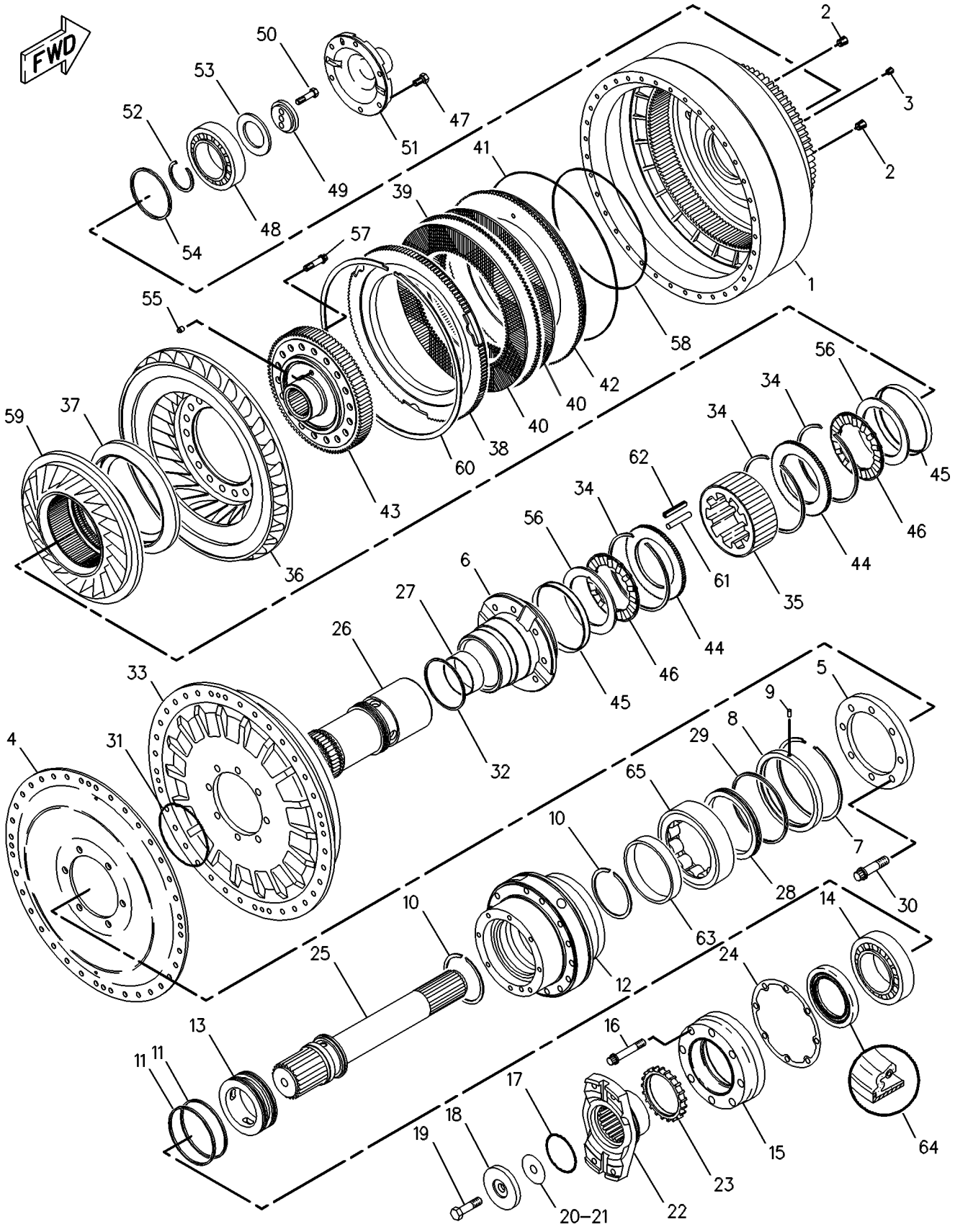

GRAPHIC #1 g00086272

MEMORANDA

POWER TRAIN

1T-2028 TORQUE CONVERTER GP

S/N: 4DT1-68

PART OF 8E-3673 TORQUE CONVERTER GP

SMCS-3101 **i00107709**

NOTE	REF NO	GRAPHIC REF	PART NUMBER	QTY	PART NAME 1 2 3 4 5 6 (PRODUCT LEVEL)	SEE PAGE
	1	1	**1T-1452**	1	HOUSING AS	
	2	1	**5J-7386**	2	PLUG-ORIFICE	
	3	1	**1T-0936**	1	PLUG-PIPE	
	4	1	**1T-0867**	1	PLATE-REINFORCEMENT	
	5	1	**1T-1498**	1	PLATE-CLAMP	
	6	1	**1T-1224**	1	HUB-IMPELLER	
	7	1	**9W-3136**	1	RING-RETAINING	
	8	1	**1T-1659**	1	SLEEVE AS	
	9	1	**3P-2573**	1	RACE-BEARING INNER	
	10	1	**1T-0897**	2	RING-RETAINER	
	11	1	**6Y-5888**	2	RING-SEAL	
	12	1	**1T-1657**	1	CARRIER-BEARING	
	13	1	**1T-1220**	1	CARRIER-RING	
	14	1	**1L-7205**	1	BALL BEARING	
	15	1	**1T-1856**	1	RETAINER-BEARING	
	16	1	**3S-0127**	8	BOLT-12 POINT HEAD	
	17	1	**1T-0136**	1	SEAL-O-RING	
	18	1	**1T-1006**	1	RETAINER	
	19	1	**8B-5144**	1	BOLT (5/8-18X3IN)	
B	20	1	**1T-1011**	3	SHIM (0.254MM THK)	
B	21	1	**1T-1012**	3	SHIM (0.076MM THK)	
	22	1	**1T-2000**	1	YOKE AS	
	23	1	**1T-1857**	1	ROTOR-SENSOR	
	24	1	**1T-1222**	1	GASKET	
	25	1	**1T-1223**	1	SHAFT-OUTPUT	
	26	1	**1T-1815**	1	CARRIER AS	
	27	1	**1T-1353**	1	BEARING-SLEEVE	
	28	1	**1T-1221**	1	CARRIER-RING	
	29	1	**9W-6990**	1	RING-SEAL	
	30	1	**5P-5855**	8	BOLT-12 POINT HEAD	
	31	1	**5F-3999**	1	SEAL-O-RING	
	32	1	**1T-0794**	1	RING-SEAL METAL (3/8-16X1.25IN)	
	33	1	**1T-1229**	1	IMPELLER-CONVERTER (2.5MM THK)	
	34	1	**1T-0795**	3	RING-RETAINING	
	35	1	**1T-1423**	1	CAM-FREEWHEEL	
	36	1	**1T-0782**	1	TURBINE-CONVERTER	
	37	1	**1T-0804**	1	RING-CLAMP	
	38	1	**6P-9553**	1	PLATE-CLUTCH BACKING	
	39	1	**1T-1315**	1	PLATE-CLUTCH	
	40	1	**1T-0887**	2	DISC AS-CLUTCH	
	41	1	**7G-0141**	1	RING-SEAL	
	42	1	**1T-1426**	1	PISTON-LOCKUP CLUTCH	
	43	1	**1T-1359**	1	HUB	
	44	1	**1T-1910**	2	PLATE-SIDE	
	45	1	**1T-0806**	2	RETAINER-BEARING	
	46	1	**1T-0786**	2	BEARING-THRUST	
	47	1	**0L-1351**	6	BOLT (3/8-16X.875IN)	
	48	1	**6V-9191**	1	BALL BEARING	
	49	1	**1T-1617**	1	PLATE-RETAINER	
	50	1	**8S-4724**	2	BOLT (7/16-20X2.25IN)	
	51	1	**1T-1236**	1	PILOT-FLYWHEEL	
	52	1	**1T-0895**	1	RING-RETAINING	
	53	1	**1T-1616**	1	WASHER-SPRING	
	54	1	**1T-1356**	1	RING-SEAL	
	55	1	**1T-0847**	1	LOCKPIN-RACE	
	56	1	**1T-0807**	2	RACE-THRUST BEARING	

1T-2028 TORQUE CONVERTER GP *(contd.)* i00107709

NOTE	REF NO	GRAPHIC REF	PART NUMBER	QTY	PART NAME 1 2 3 4 5 6 (PRODUCT LEVEL)	SEE PAGE
	57	1	**8M-2530**	18	BOLT-12 POINT HEAD (1/2-13X1.25IN)	
	58	1	**8S-3371**	1	RING-SEAL	
	59	1	**1T-1834**	1	STATOR-CONVERTER	
	60	1	**1T-0896**	1	RING-RETAINING	
	61	1	**1T-1410**	13	ROLLER-FREEWHEEL	
	62	1	**1T-0680**	13	SPRING-FREEWHEEL	
	63	1	**3P-2573**	1	RACE-BEARING INNER	
	64	1	**1J-4034**	1	SEAL-LIP	
	65	1	**3P-2574**	1	RACE & ROLLER AS	
	66	1	**0S-1588**	36	BOLT (3/8-16X1.25IN)	
	67	1	**5M-2894**	36	WASHER (2.5MM THK)	
B-USE AS REQUIRED						

1T-2028 TORQUE CONVERTER GP *(contd.)* i00107709

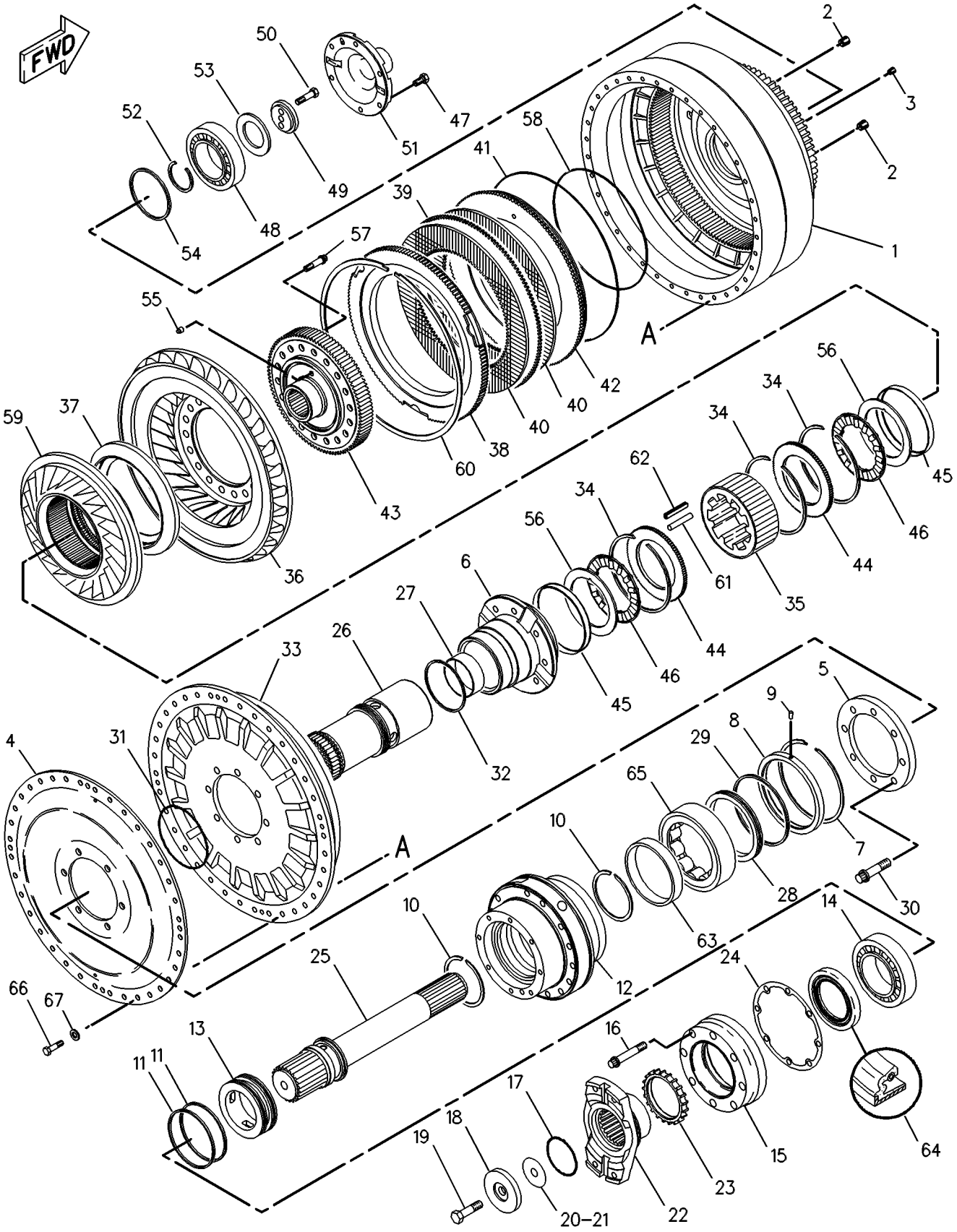

GRAPHIC #1 g00089192

MEMORANDA

POWER TRAIN

1T-2028 TORQUE CONVERTER GP

S/N: 4DT69-UP

PART OF 8E-3673 TORQUE CONVERTER GP

SMCS-3101 **i01096769**

NOTE	REF NO	GRAPHIC REF	PART NUMBER	QTY	PART NAME 1 2 3 4 5 6 (PRODUCT LEVEL)	SEE PAGE
	1	1	**1T-1452**	1	HOUSING AS	
	2	1	**5J-7386**	2	PLUG-ORIFICE (1/8-27 THD)	
	3	1	**1T-0936**	1	PLUG-PIPE (1/16-27 THD)	
	4	1	**1T-0867**	1	PLATE-REINFORCEMENT	
	5	1	**1T-1498**	1	PLATE-CLAMP	
	6	1	**1T-1224**	1	HUB-IMPELLER	
	7	1	**9W-3136**	1	RING-RETAINING	
	8	1	**1T-1659**	1	SLEEVE AS	
	9	1	**5S-4441**	1	DOWEL	
		1	**1T-1658**	1	SLEEVE-WEAR	
	10	1	**1T-0897**	2	RING-RETAINING	
	11	1	**6Y-5888**	2	RING-SEAL	
	12	1	**1T-1657**	1	CARRIER-BEARING	
	13	1	**1T-1220**	1	CARRIER-RING	
	14	1	**1L-7205**	1	BALL BEARING	
	15	1	**1T-1856**	1	RETAINER-BEARING	
	16	1	**3S-0127**	8	BOLT-12 POINT HEAD	
	17	1	**1T-0136**	1	SEAL-O-RING	
	18	1	**1T-1006**	1	RETAINER	
	19	1	**8B-5144**	1	BOLT (5/8-18X3IN)	
B	20	1	**1T-1011**	3	SHIM (0.254MM THK)	
B	21	1	**1T-1012**	3	SHIM (0.076MM THK)	
	22	1	**1T-2000**	1	YOKE AS	
	23	1	**1T-1857**	1	ROTOR-SENSOR	
	24	1	**1T-1222**	1	GASKET	
	25	1	**1T-1223**	1	SHAFT-OUTPUT	
	26	1	**1T-1815**	1	CARRIER AS	
	27	1	**1T-1353**	1	BEARING-SLEEVE	
		1	**1T-1814**	1	CARRIER-STATOR	
	28	1	**1T-1221**	1	CARRIER-RING	
	29	1	**9W-6990**	1	RING-SEAL	
	30	1	**5P-5855**	8	BOLT-12 POINT HEAD	
	31	1	**5F-3999**	1	SEAL-O-RING (123.42MM ID)	
	32	1	**1T-0794**	1	RING-SEAL METAL (3/8-16X1.25IN)	
	33	1	**1T-1229**	1	IMPELLER-CONVERTER (2.5MM THK)	
	34	1	**1T-0795**	3	RING-RETAINING	
	35	1	**1T-1423**	1	CAM-FREEWHEEL	
	36	1	**1T-0782**	1	TURBINE-CONVERTER	
	37	1	**1T-0804**	1	RING-CLAMP	
	38	1	**6P-9553**	1	PLATE-CLUTCH BACKING	
	39	1	**1T-1315**	1	PLATE-CLUTCH	
	40	1	**1T-0887**	2	DISC AS-CLUTCH	
	41	1	**7G-0141**	1	RING-SEAL	
	42	1	**1T-1426**	1	PISTON-LOCKUP CLUTCH	
	43	1	**1T-1359**	1	HUB	
	44	1	**1T-1910**	2	PLATE-SIDE	
	45	1	**1T-0806**	2	RETAINER-BEARING	
	46	1	**1T-0786**	2	BEARING-THRUST	
	47	1	**0L-1351**	6	BOLT (3/8-16X.875IN)	
	48	1	**6V-9191**	1	BALL BEARING	
	49	1	**1T-1617**	1	PLATE-RETAINER	
	50	1	**8S-4724**	2	BOLT (7/16-20X2.25IN)	
	51	1	**1T-1236**	1	PILOT-FLYWHEEL	
	52	1	**1T-0895**	1	RING-RETAINING	
	53	1	**1T-1616**	1	WASHER-SPRING	
	54	1	**1T-1356**	1	RING-SEAL	

1T-2028 TORQUE CONVERTER GP *(contd.)* i01096769

NOTE	REF NO	GRAPHIC REF	PART NUMBER	QTY	PART NAME 1 2 3 4 5 6 (PRODUCT LEVEL)	SEE PAGE
	55	1	**1T-0847**	1	LOCKPIN-RACE	
	56	1	**1T-0807**	2	RACE-THRUST BEARING	
	57	1	**8M-2530**	18	BOLT-12 POINT HEAD (1/2-13X1.25IN)	
	58	1	**8S-3371**	1	RING-SEAL	
	59	1	**148-2974**	1	STATOR-CONVERTER	
	60	1	**1T-0896**	1	RING-RETAINING	
	61	1	**1T-1410**	13	ROLLER-FREEWHEEL	
	62	1	**1T-0680**	13	SPRING-FREEWHEEL	
	63	1	**3P-2573**	1	RACE-BEARING INNER	
	64	1	**1J-4034**	1	SEAL-LIP	
	65	1	**3P-2574**	1	RACE & ROLLER AS	
	66	1	**0S-1588**	36	BOLT (3/8-16X1.25IN)	
	67	1	**5M-2894**	36	WASHER (2.5MM THK)	
B-USE AS REQUIRED						

1T-2028 TORQUE CONVERTER GP *(contd.)* i01096769

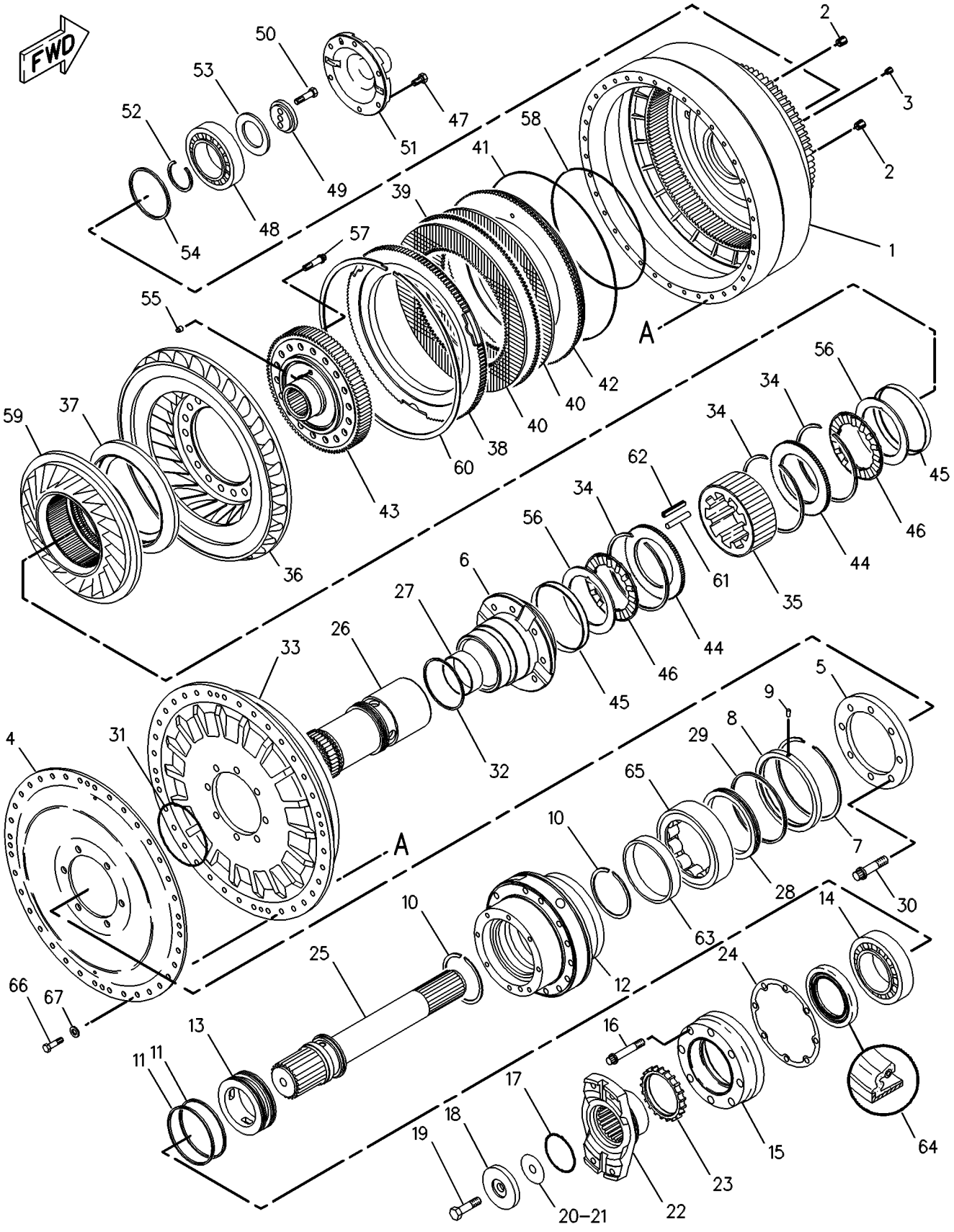

GRAPHIC #1 g00089192

8E-3673 TORQUE CONVERTER GP

S/N: 7KK1-31

PART OF 8X-8405 POWER TRAIN AR

SMCS-3101 **i01251118**

NOTE	REF NO	GRAPHIC REF	PART NUMBER	QTY	PART NAME 1 2 3 4 5 6 (PRODUCT LEVEL)	SEE PAGE
Y	1	1	**1T-1881**	1	TORQUE CONVERTER GP	438
	2	1	**8E-4064**	1	HOUSING-TORQUE CONVERTER	
	3	1	**8L-3017**	2	SEAL-O-RING	
	4	1	**0S-1585**	24	BOLT (1/2-13X1.50IN)	
	5	1	**5P-8245**	24	WASHER-HARD (3MM THK)	
	6	1	**6P-8340**	1	SLEEVE	
	7	1	**8M-4433**	2	SEAL-O-RING (29.74MM ID)	
	8	1	**4H-6730**	1	SEAL-O-RING (532.21MM ID)	
	9	1	**6P-8339**	1	LOCK	
	10	1	**0L-1351**	1	BOLT (3/8-16X.875IN)	
	11	1	**5M-2894**	1	WASHER (2.5MM THK)	
	12	1	**9S-4185**	1	PLUG-O-RING (3/4-16 THD)	
	13	1	**3K-0360**	1	SEAL-O-RING (16.36MM ID)	

Y-SEPARATE ILLUSTRATION

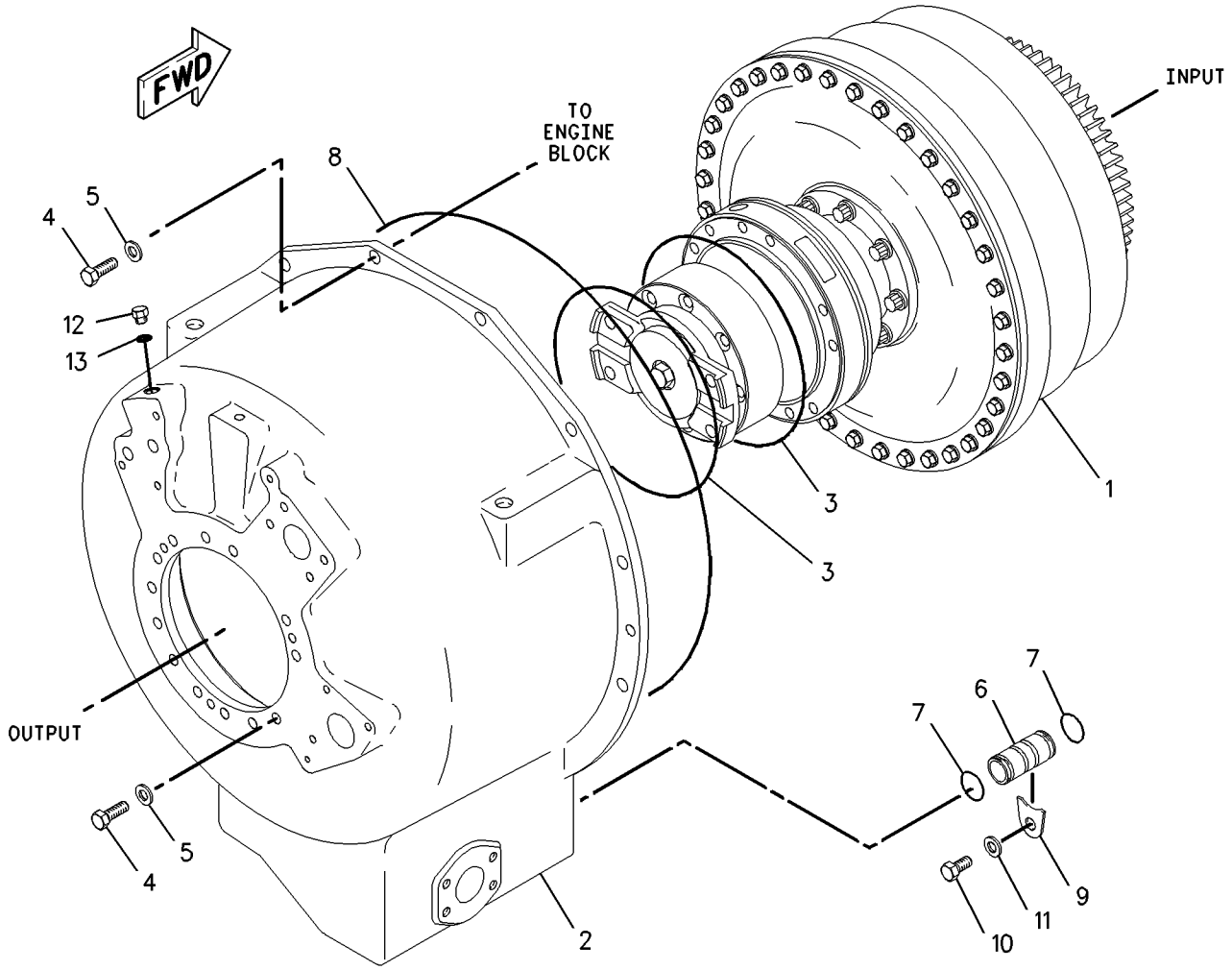

GRAPHIC #1 g00666515

8E-3673 TORQUE CONVERTER GP

S/N: 7KK32-UP

PART OF 8X-8405 POWER TRAIN AR

SMCS-3101 **i01251103**

NOTE	REF NO	GRAPHIC REF	PART NUMBER	QTY	PART NAME 1 2 3 4 5 6 (PRODUCT LEVEL)	SEE PAGE
Y	1	1	**1T-2028**	1	TORQUE CONVERTER GP	442
	2	1	**8E-4064**	1	HOUSING-TORQUE CONVERTER	
	3	1	**146-7311**	1	SEAL-O-RING	
	4	1	**0S-1585**	24	BOLT (1/2-13X1.50IN)	
	5	1	**5P-8245**	24	WASHER-HARD (3MM THK)	
	6	1	**6P-8340**	1	SLEEVE	
	7	1	**8M-4433**	2	SEAL-O-RING (29.74MM ID)	
	8	1	**4H-6730**	1	SEAL-O-RING (532.21MM ID)	
	9	1	**6P-8339**	1	LOCK	
	10	1	**0L-1351**	1	BOLT (3/8-16X.875IN)	
	11	1	**5M-2894**	1	WASHER (2.5MM THK)	
	12	1	**9S-4185**	1	PLUG-O-RING (3/4-16 THD)	
	13	1	**3K-0360**	1	SEAL-O-RING (16.36MM ID)	
	14	1	**146-7312**	1	SEAL-O-RING	

Y-SEPARATE ILLUSTRATION

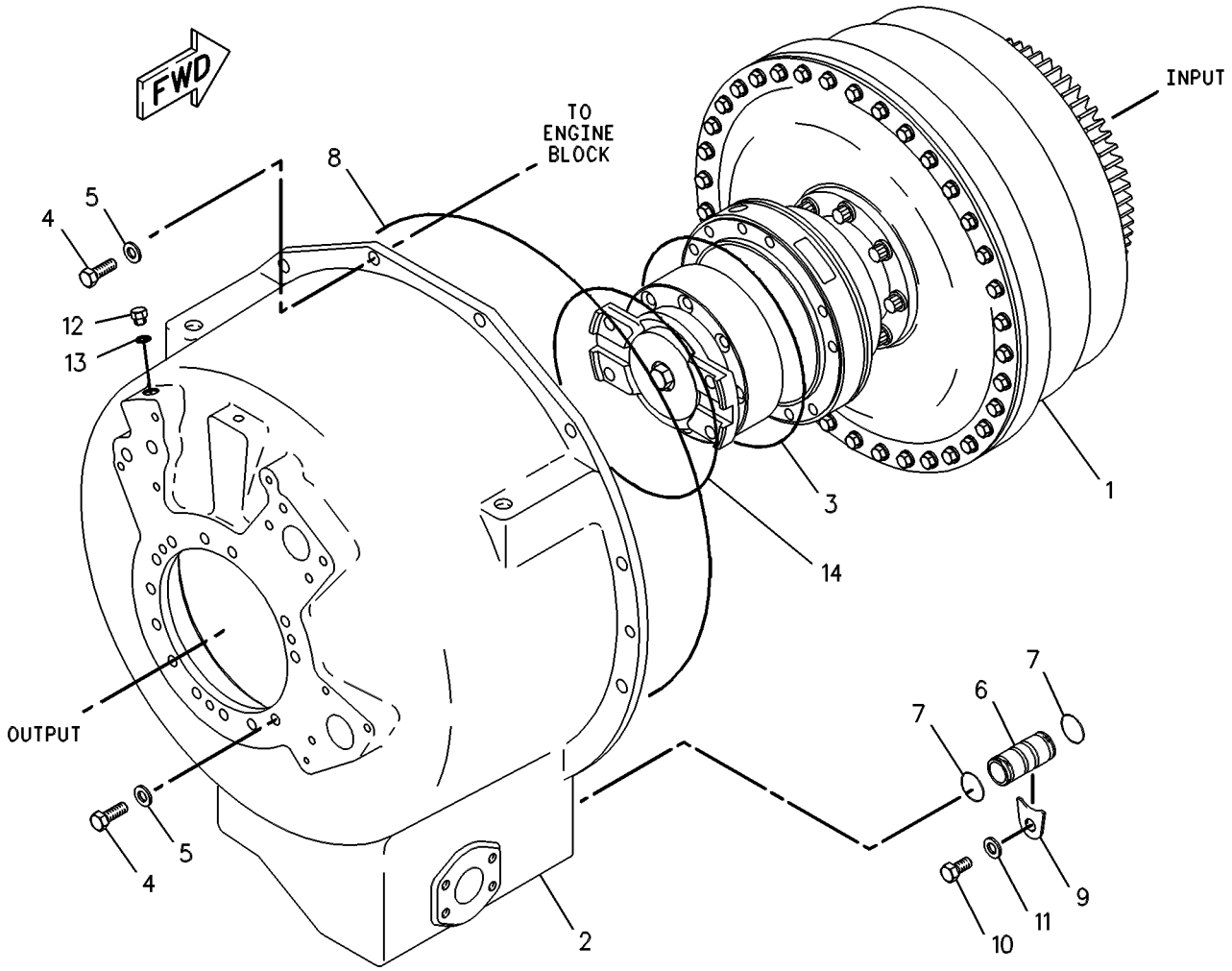

GRAPHIC #1 g00089128

8E-1298 TRANSMISSION AR*R

S/N: 1KY1-518

PART OF 8X-8405 POWER TRAIN AR

SMCS-3030, 3063, 3064, 3155, 3160, 3169, 3170, 3187, 3190 **i01500265**

NOTE	REF NO	GRAPHIC REF	PART NUMBER	QTY	PART NAME 1 2 3 4 5 6 (PRODUCT LEVEL)	SEE PAGE
Y	1	1	*8E-1295*	1	CASE & PARTS GP-PLANETARY	370
Y	2	1	*8E-1581*	1	CONTROL GP-TRANSMISSION HYD	376
Y	3	1	*6Y-7886*	1	PLANETARY GP-TRANSMISSION	422
Y	4	1	*8E-1297*	1	GEAR & CASE GP-OUTPUT TRANSFER	404
Y	5	1	**8E-1296**	1	GEAR & CASE GP-INPUT TRANSFER	402
Y	6	1	*122-8326*	1	COVER GP-SHIPPING	378

Y-SEPARATE ILLUSTRATION

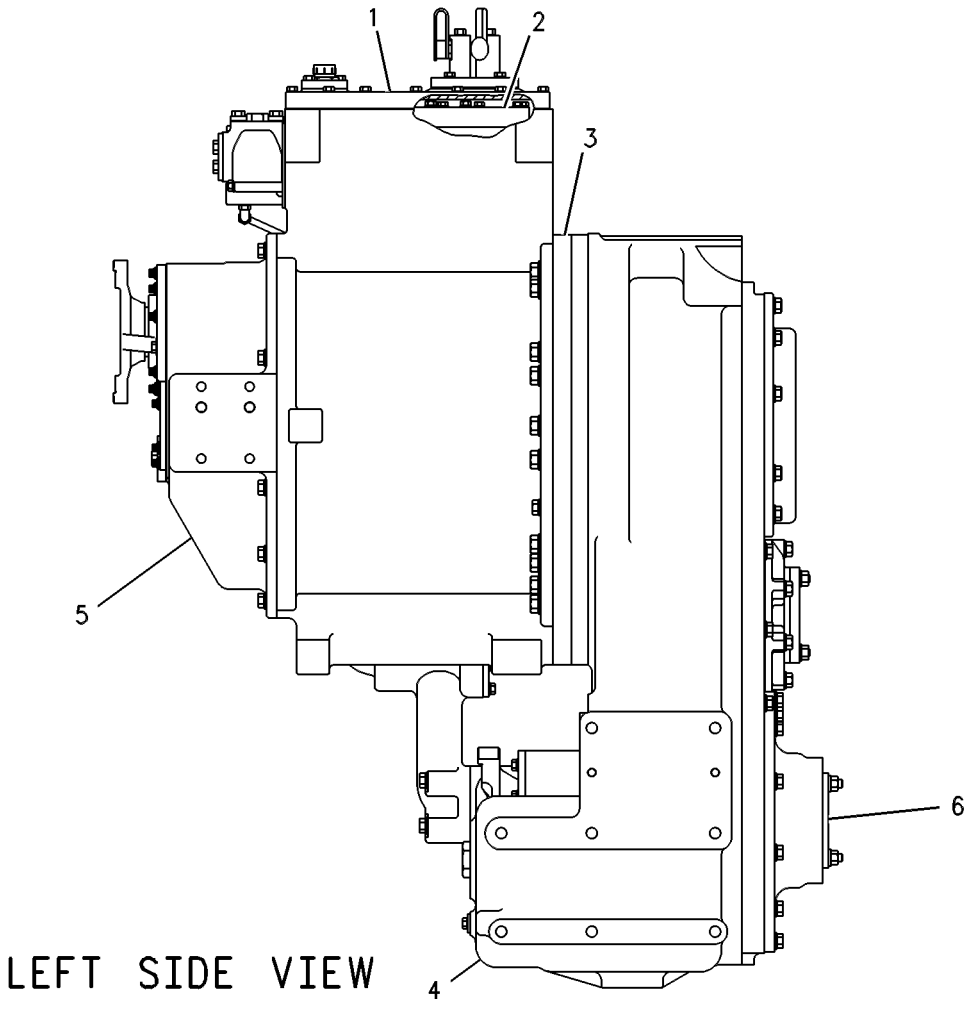

GRAPHIC #1 g00277559

8E-1298 TRANSMISSION AR

S/N: 1KY519-UP

PART OF 8X-8405 POWER TRAIN AR

SMCS-3030, 3063, 3064, 3155, 3160, 3169, 3170, 3187, 3190 **i00543540**

NOTE	REF NO	GRAPHIC REF	PART NUMBER	QTY	PART NAME 1 2 3 4 5 6 (PRODUCT LEVEL)	SEE PAGE
Y	1	1	*8E-1295*	1	CASE & PARTS GP-PLANETARY	370
CY	2	1	*136-1739*	1	CONTROL GP-TRANSMISSION HYD	377
Y	3	1	*6Y-7886*	1	PLANETARY GP	422
Y	4	1	*8E-1297*	1	GEAR & CASE GP-OUTPUT TRANSFER	404
Y	5	1	**8E-1296**	1	GEAR & CASE GP-INPUT TRANSFER	402
Y	6	1	*122-8326*	1	COVER GP-SHIPPING	378

C-CHANGE FROM PREVIOUS TYPE
Y-SEPARATE ILLUSTRATION

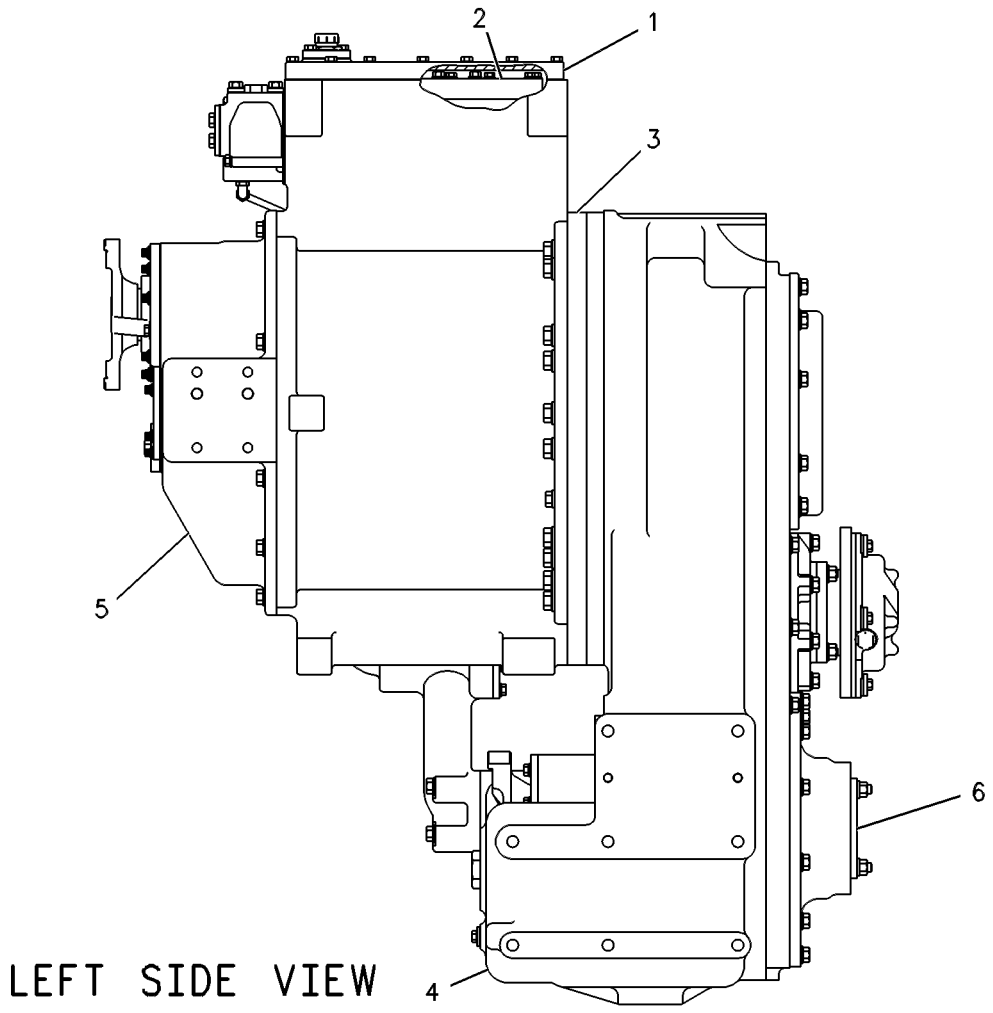

GRAPHIC #1 g00086912

117-0546 UNIVERSAL JOINT GP

S/N: 7KK1-UP

PART OF 8X-9044 SHAFT GP-DRIVE

SMCS-3251, 3253 **i00107683**

NOTE	REF NO	GRAPHIC REF	PART NUMBER	QTY	PART NAME 1 2 3 4 5 6 (PRODUCT LEVEL)	SEE PAGE
	1	1	**0S-0484**	8	BOLT (1/2-20X2.25IN)	
	2	1	**8W-9912**	2	SPIDER & BEARING GP	

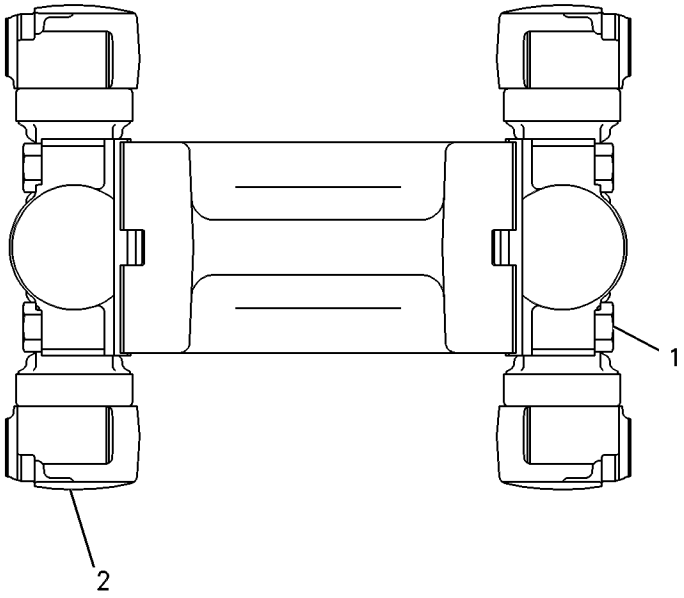

GRAPHIC #1 g00086320

143-2518 UNIVERSAL JOINT GP

S/N: 7KK1-UP

PART OF 8X-9045 SHAFT GP-DRIVE

SMCS-3251, 3253 **i00546565**

NOTE	REF NO	GRAPHIC REF	PART NUMBER	QTY	PART NAME 1 2 3 4 5 6 (PRODUCT LEVEL)	SEE PAGE
	1	1	**0S-2318**	8	BOLT (5/8-18X3.25IN)	
	2	1	**106-0933**	2	SPIDER & BEARING GP	
	3	1	**143-2519**	1	SHAFT	

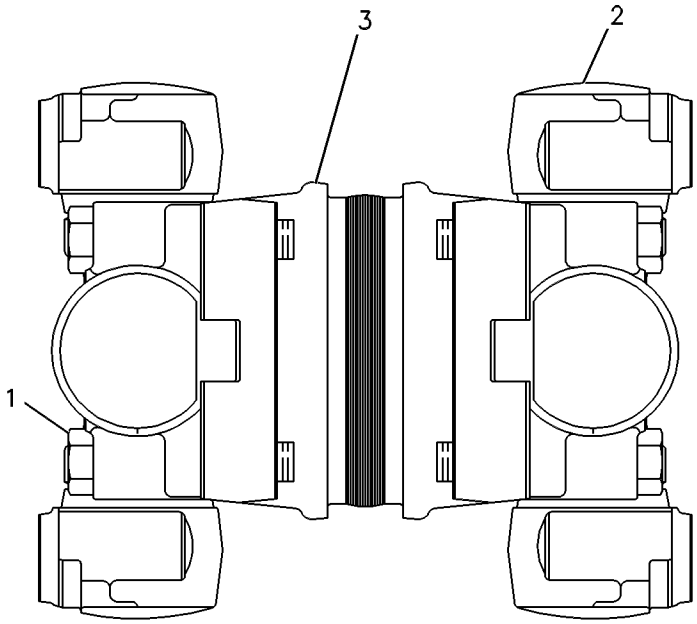

GRAPHIC #1 g00086306

144-6295 VALVE & MTG GP-DIFF LOCK

S/N: 7KK1-UP

PART OF 8X-8981 CONTROL GP-DIFFERENTIAL LOCK

SMCS-3272 **i01455629**

NOTE	REF NO	GRAPHIC REF	PART NUMBER	QTY	PART NAME 1 2 3 4 5 6 (PRODUCT LEVEL)	SEE PAGE
Y	1	1	**144-6294**	1	VALVE GP-SOLENOID (DIFFERENTIAL LOCK)	467
	2	1	**148-2516**	1	MANIFOLD	
					AVAILABLE REPAIR KIT(S):	
			6G-5979	1	KIT-CARTRIDGE SEAL	

Y-SEPARATE ILLUSTRATION

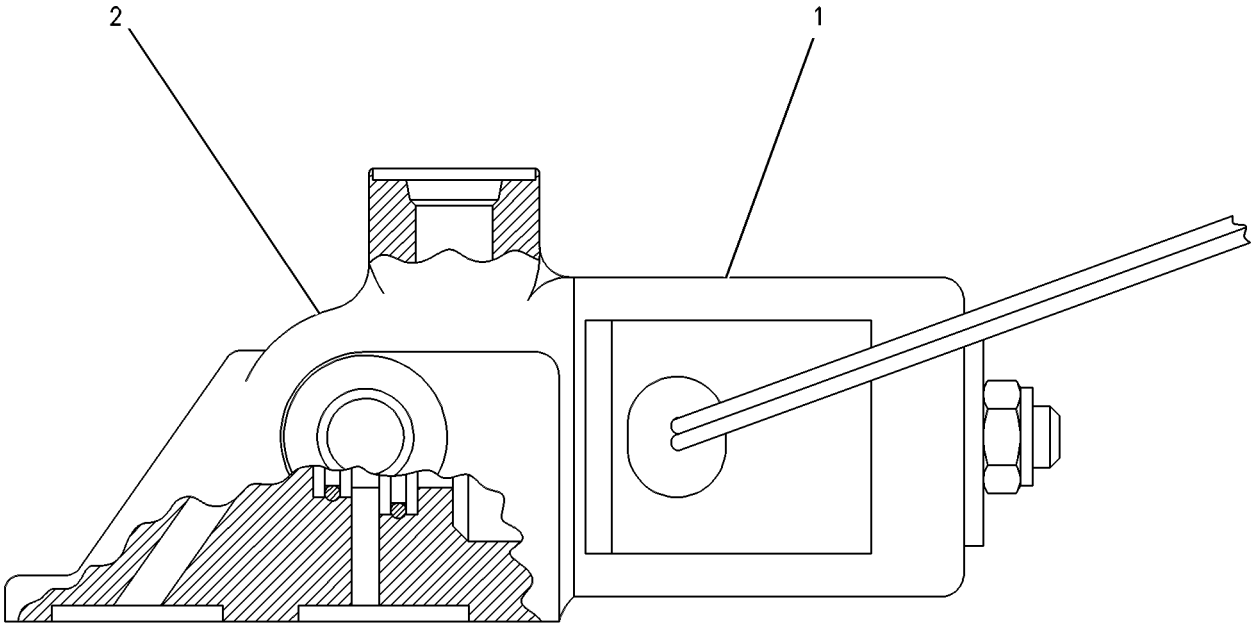

GRAPHIC #1 g00295280

131-8350 VALVE GP

S/N: 7KK1-UP

PART OF 117-4079 VALVE GP-COMBINATION

SMCS-3073 **i00130936**

NOTE	REF NO	GRAPHIC REF	PART NUMBER	QTY	PART NAME 1 2 3 4 5 6 (PRODUCT LEVEL)	SEE PAGE
	1	1	**109-1144**	1	VALVE	
	2	1	**130-5770**	1	SLEEVE	

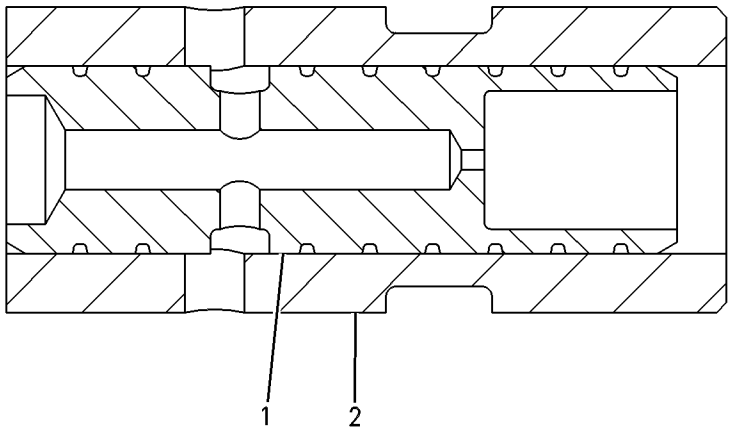

GRAPHIC #1 g00087876

121-0357 VALVE GP-MODULATING

S/N: 7KK1-UP

PART OF 121-4298, 183-2047 VALVE GP-MODULATING

SMCS-3139 **i01197908**

NOTE	REF NO	GRAPHIC REF	PART NUMBER	QTY	PART NAME 1 2 3 4 5 6 (PRODUCT LEVEL)	SEE PAGE
	1	1	**8E-3095**	1	BODY	
	2	1	**112-5282**	1	SEAL-O-RING (16.36MM ID)	
	3	1	**117-2983**	1	SEAL-O-RING (13.34MM ID)	
	4	1	**116-1254**	1	SPOOL AS	
	5	1	**118-3731**	1	SPRING	
	6	1	**121-0358**	1	CARTRIDGE AS	
	7	1	**5P-7538**	1	BALL	

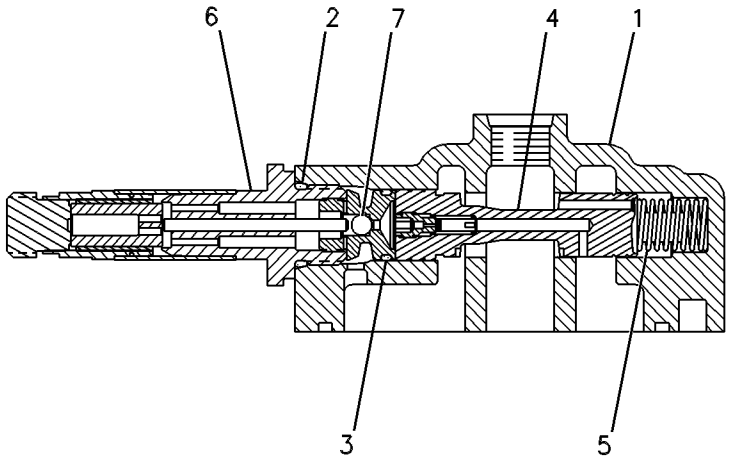

GRAPHIC #1 g00086284

121-4298 VALVE GP-MODULATING

S/N: 7KK1-UP

PART OF 8X-9026 LINES GP-POWER TRAIN OIL

SMCS-3139 **i01513114**

NOTE	REF NO	GRAPHIC REF	PART NUMBER	QTY	PART NAME 1 2 3 4 5 6 (PRODUCT LEVEL)	SEE PAGE
	1	1	**176-0394**	1	NUT-LOCKING	
	2	1	**122-4974**	1	SPACER	
	3	1	**156-6173**	1	COIL AS	
		1	**1S-9593**	2	STRAP-CABLE	
		1	**3E-3365**	1	WEDGE-RECEPTACLE LOCK (2 PIN)	
		1	**102-8802**	1	KIT-RECEPTACLE (2 PIN)	
					(INCLUDES RECEPTACLE AS AND WEDGE)	
		1	**8T-8729**	2	PIN-CONNECTOR	
Y	4	1	**121-0357**	1	VALVE GP-MODULATING (TC LOCKUP CLUTCH)	457
	5	1	**6V-3965**	1	FITTING AS (QUICK DISCONNECT)	
	6	1	**3J-1907**	1	SEAL-O-RING	

Y-SEPARATE ILLUSTRATION

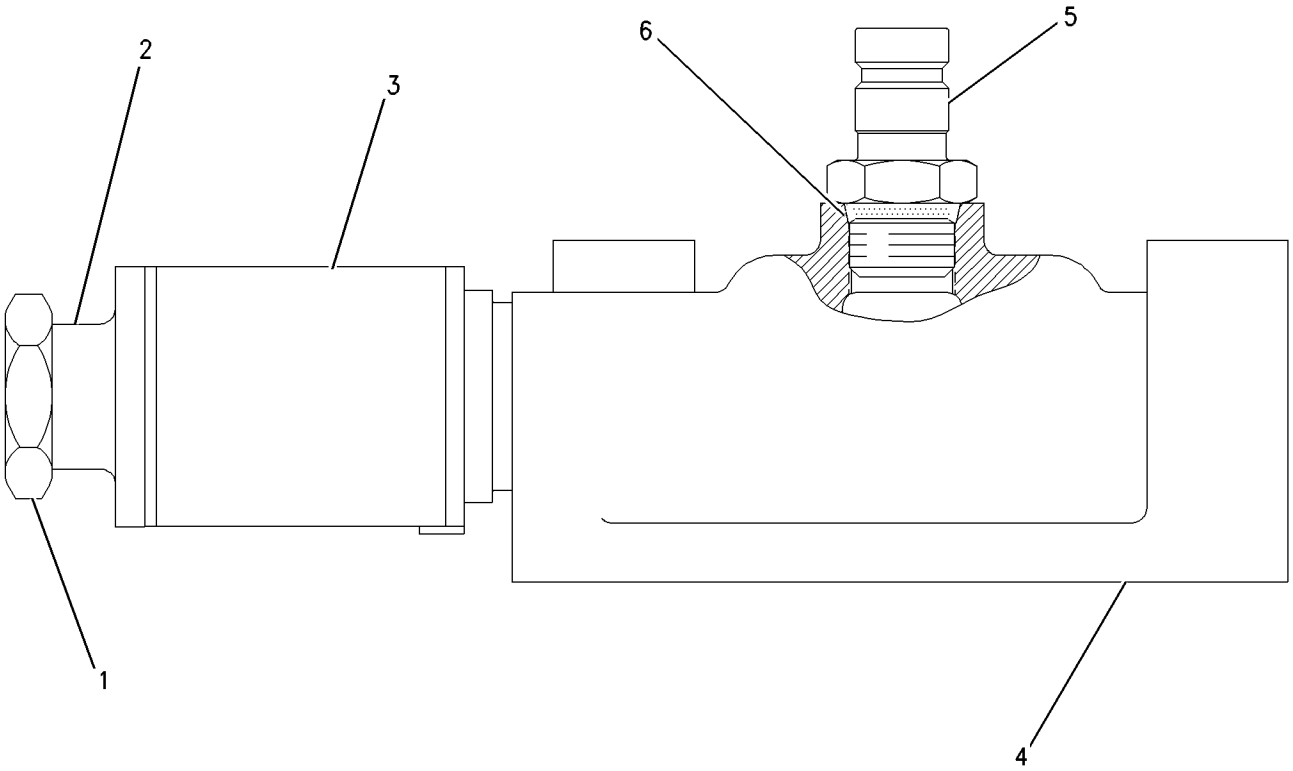

GRAPHIC #1 g00660675

183-2047 VALVE GP-MODULATING

S/N: 7KK1-UP

PART OF 8X-9026 LINES GP-POWER TRAIN OIL

SMCS-3139 **i01513112**

NOTE	REF NO	GRAPHIC REF	PART NUMBER	QTY	PART NAME 1 2 3 4 5 6 (PRODUCT LEVEL)	SEE PAGE
	1	1	**176-0394**	1	NUT-LOCKING	
	2	1	**122-4974**	1	SPACER	
	3	1	**156-6173**	1	COIL AS	
		1	**1S-9593**	2	STRAP-CABLE	
		1	**3E-3365**	1	WEDGE-RECEPTACLE LOCK (2 PIN)	
		1	**102-8802**	1	KIT-RECEPTACLE (2 PIN)	
					(INCLUDES WEDGE)	
		1	**8T-8729**	2	PIN-CONNECTOR	
Y	4	1	*121-0357*	1	VALVE GP-MODULATING (TC LOCKUP CLUTCH)	457
	5	1	**6V-3965**	1	FITTING AS (QUICK DISCONNECT)	
	6	1	**3J-1907**	1	SEAL-O-RING	

Y-SEPARATE ILLUSTRATION

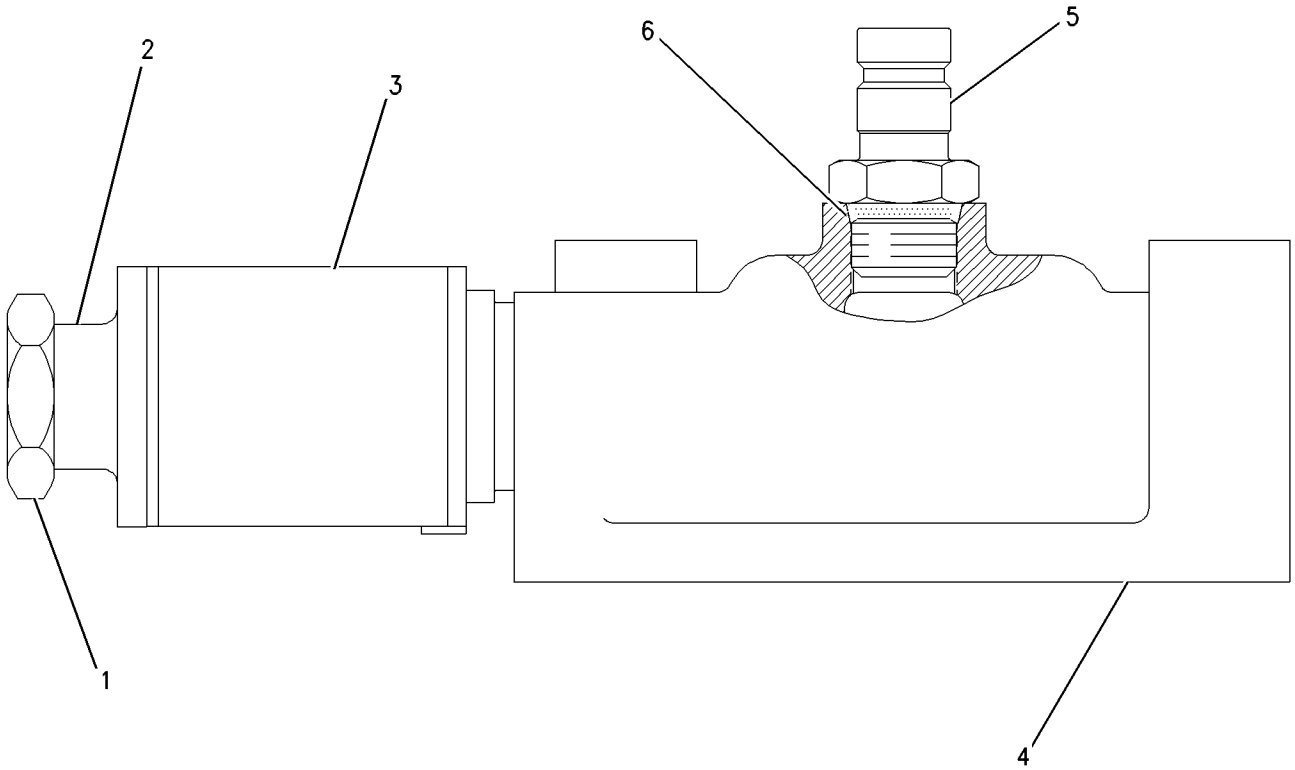

GRAPHIC #1 g00660675

8P-1471 VALVE GP-RELIEF–TORQUE CONVERTER OUTLET

S/N: 7KK1-UP

PART OF 8X-9030 LINES GP-TORQUE CONV COOLER

SMCS-3133 **i01340050**

NOTE	REF NO	GRAPHIC REF	PART NUMBER	QTY	PART NAME 1 2 3 4 5 6 (PRODUCT LEVEL)	SEE PAGE
	1	1	**9S-8004**	2	PLUG-O-RING (9/16-18 THD)	
		1	**3J-1907**	2	SEAL-O-RING (11.89MM ID)	
	2	1	**2P-4538**	1	SPOOL AS-RELIEF	
	3	1	**8M-2537**	1	RETAINER	
	4	1	**1L-3162**	1	RING-RETAINING	
	5	1	**5M-9548**	1	SPRING	
	6	1	**9M-4313**	1	POPPET	
	7	1	**8M-4986**	2	SEAL-O-RING (37.69MM ID)	
	8	1	**0S-1594**	4	BOLT (3/8-16X1 IN)	
		1	**3B-4506**	4	LOCKWASHER (9.78MM X17.14MM X2.92MM THK)	
	9	1	**4M-8239**	2	COVER	
	10	1	**8M-8627**	1	SPRING	
B	11	1	**5M-9622**	2	SPACER (1.6MM THK)	
B		1	**5M-9623**	3	SPACER (0.9MM THK)	
B		1	**5M-9624**	1	SPACER (0.25MM THK)	
	12	1	**141-1546**	1	PLUG-PIPE	
	13	1	**7W-6534**	1	PLUG-PIPE (3/8-18 NPTF THD)	

B-USE AS REQUIRED

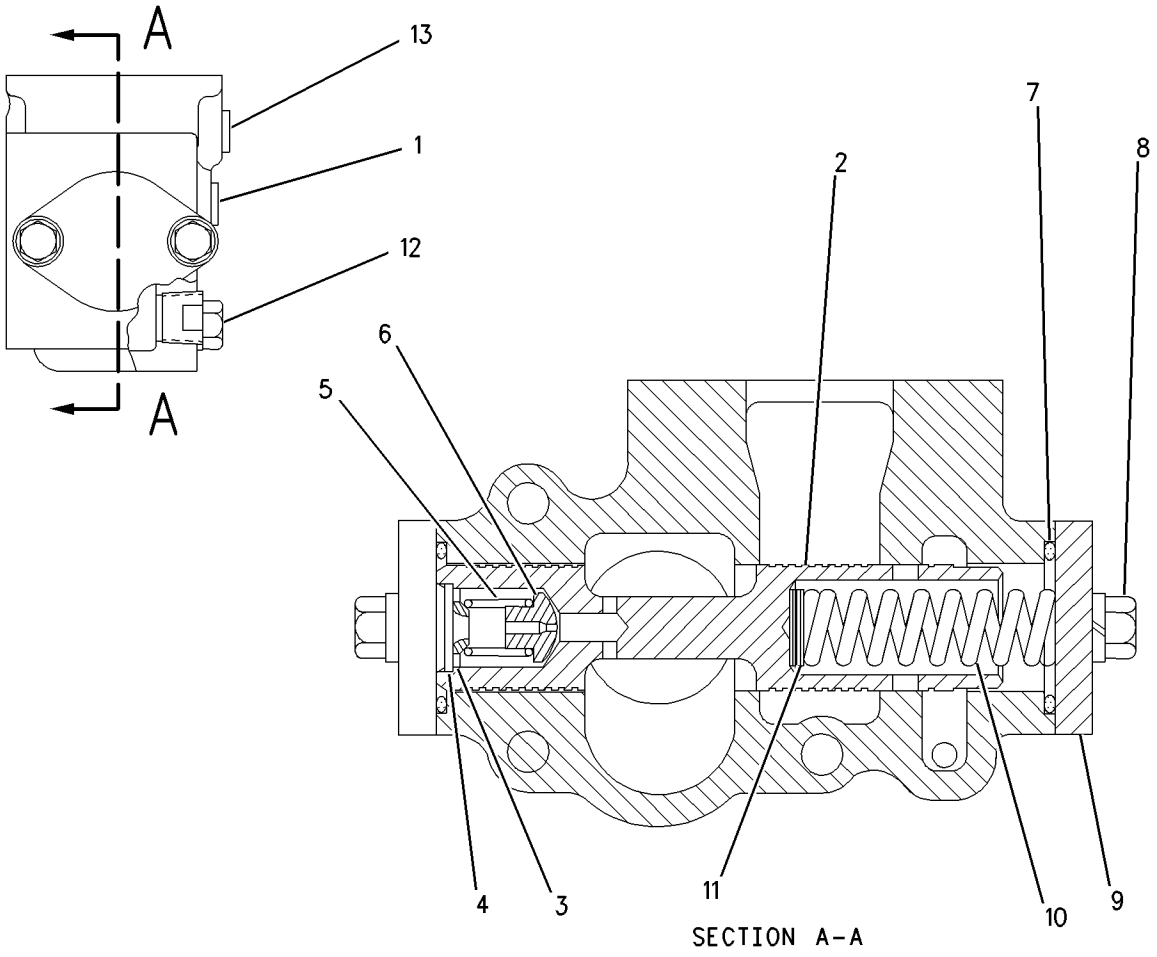

GRAPHIC #1 g00708622

8E-1719 VALVE GP-SELECTOR

S/N: 1KY1-UP

PART OF 117-5309, 136-3738 VALVE GP-TRANSMISSION CONTROL

SMCS-3157 **i00107761**

NOTE	REF NO	GRAPHIC REF	PART NUMBER	QTY	PART NAME 1 2 3 4 5 6 (PRODUCT LEVEL)	SEE PAGE
	1	1	**8E-1710**	1	MANIFOLD	
	2	1	**8E-1713**	1	SPOOL-SELECTOR	
	3	1	**6Y-0726**	2	RETAINER	
	4	1	**6I-9519**	1	SPRING	
	5	1	**6Y-0727**	1	STOP	
	6	1	**5P-6261**	1	RING-RETAINING	
	7	1	**6J-2419**	1	SEAL-O-RING (36.17MM ID)	
	8	1	**7S-6997**	1	COVER	
	9	1	**2B-2695**	2	BOLT (5/16-18X.875IN)	

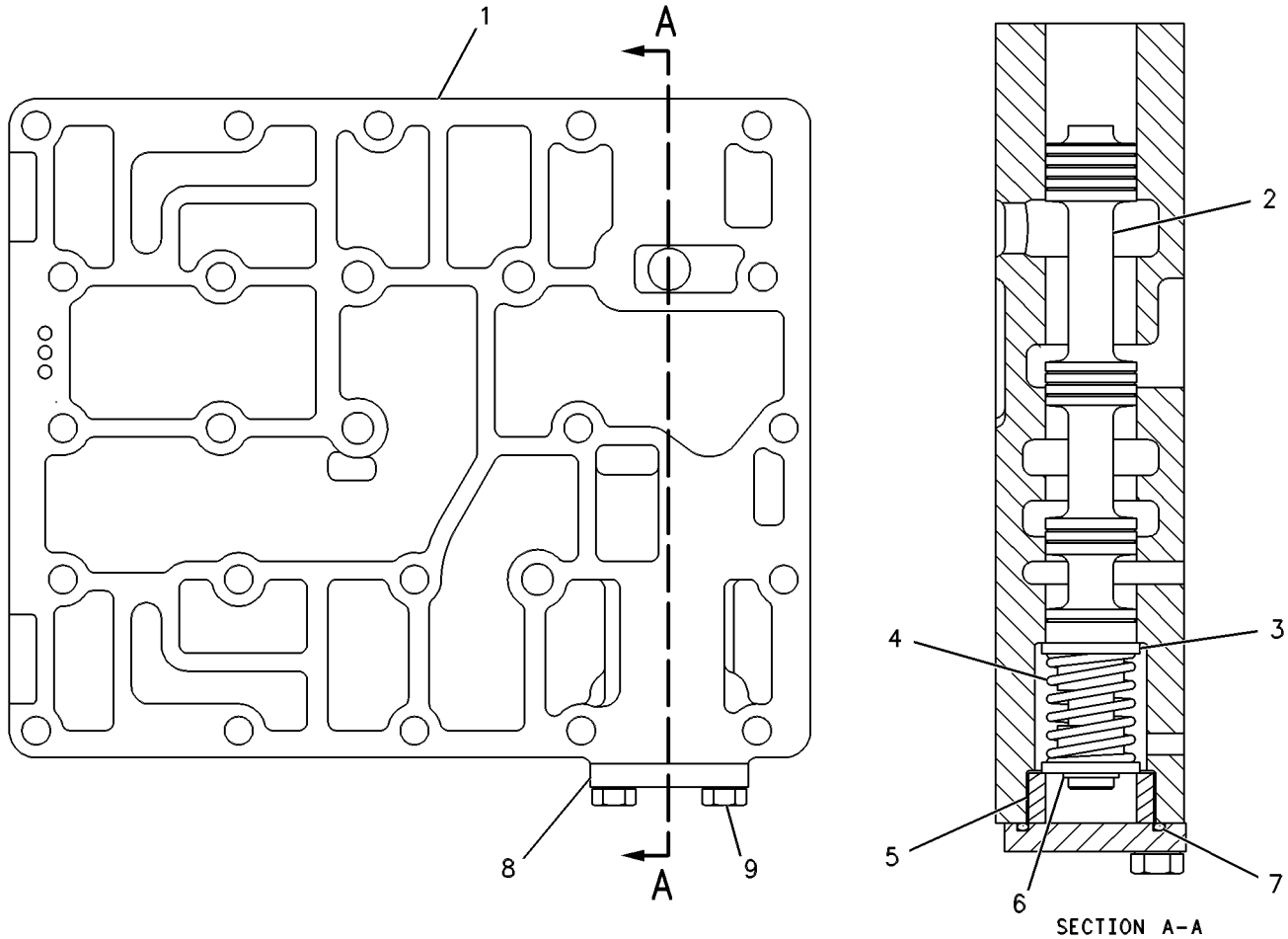

GRAPHIC #1 g00086372

8E-1720 VALVE GP-SELECTOR

S/N: 1KY1-UP

PART OF 117-5309, 136-3738 VALVE GP-TRANSMISSION CONTROL

SMCS-3157 **i00107765**

NOTE	REF NO	GRAPHIC REF	PART NUMBER	QTY	PART NAME 1 2 3 4 5 6 (PRODUCT LEVEL)	SEE PAGE
	1	1	**8E-1721**	1	MANIFOLD-BOTTOM	
	2	1	**2S-4872**	1	STOP	
	3	1	**2S-0696**	1	DOWEL	
	4	1	**8E-1714**	1	SPOOL-SELECTOR	
	5	1	**6Y-0726**	2	RETAINER	
	6	1	**6I-9519**	1	SPRING	
	7	1	**6Y-0729**	1	STOP	
	8	1	**6J-2419**	1	SEAL-O-RING (36.17MM ID)	
	9	1	**5P-6261**	1	RING-RETAINING	
	10	1	**2B-2695**	2	BOLT (5/16-18X.875IN)	
	11	1	**7S-6997**	1	COVER	

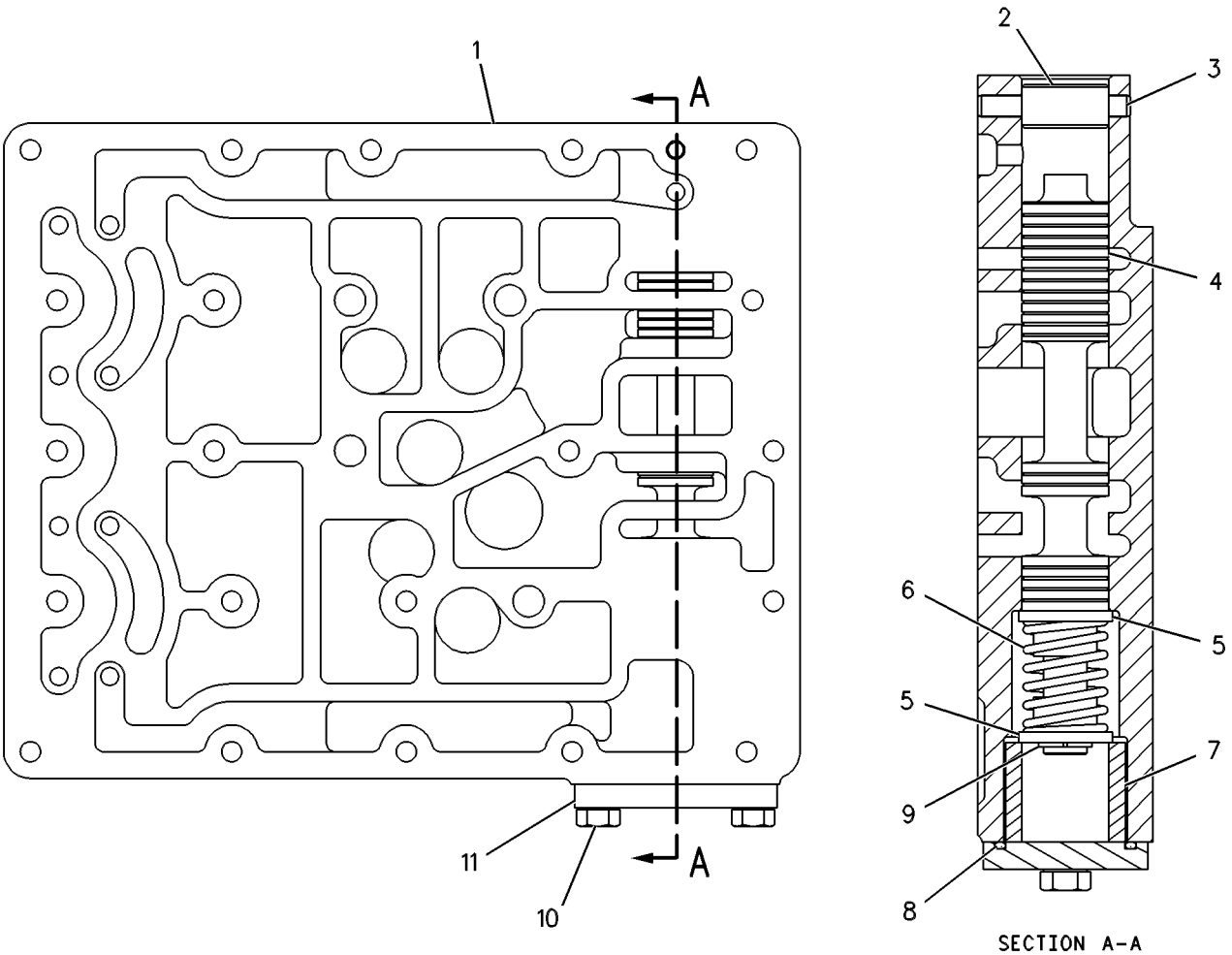

GRAPHIC #1 g00086374

MEMORANDA

8E-1718 VALVE GP-SELECTOR & PRESS CONT

S/N: 1KY1-UP

PART OF 117-5309, 136-3738 VALVE GP-TRANSMISSION CONTROL

SMCS-3083 **i01349719**

NOTE	REF NO	GRAPHIC REF	PART NUMBER	QTY	PART NAME 1 2 3 4 5 6 (PRODUCT LEVEL)	SEE PAGE
	1	1	**3T-3494**	1	SPOOL-RATIO	
	2	1	**6P-4940**	1	STOP	
	3	1	**9W-5568**	1	SLUG	
	4	1	**6Y-0724**	1	SPOOL-SPEED SELECTOR	
	5	1	**9W-5567**	1	SPOOL AS-RELIEF	
		1	**3D-8317**	1	RING-RETAINING	
		1	**4B-9880**	1	BALL (7.94MM DIA)	
		1	**4M-2381**	1	SPRING	
		1	**8M-1013**	1	RETAINER	
	6	1	**7G-4842**	1	SPRING (OUTER)	
	7	1	**9P-3041**	1	SPRING (INNER)	
	8	1	**6Y-0726**	4	RETAINER	
	9	1	**6I-9519**	2	SPRING	
	10	1	**6Y-0727**	2	STOP	
	11	1	**4J-0521**	2	SEAL-O-RING (34.52MM ID)	
	12	1	**5P-6261**	2	RING-RETAINING	
	13	1	**6F-6673**	2	SEAL-O-RING (31.34MM ID)	
	14	1	**7G-9573**	1	PISTON-LOAD	
B	15	1	**5M-9622**	1	SPACER (1.6MM THK)	
B	16	1	**5M-9623**	1	SPACER (0.9MM THK)	
B	17	1	**5M-9624**	3	SPACER (0.25MM THK)	
	18	1	**6P-9785**	1	SPRING	
	19	1	**3P-8485**	1	RING-RETAINING	
	20	1	**6P-9786**	1	RETAINER	
	21	1	**6P-9783**	1	SPRING (INNER)	
	22	1	**6P-9784**	1	SPRING (OUTER)	
	23	1	**6Y-0725**	1	SPOOL-SELECTOR	
	24	1	**8E-6433**	1	SPOOL-DIFFERENTIAL	
	25	1	**2S-4872**	1	STOP	
	26	1	**3T-4215**	1	SLUG	
	27	1	**8E-1711**	1	BODY-PRESSURE SELECTOR	
	28	1	**122-9278**	1	COVER	
	31	1	**030-8294**	5	SCREW-BUTTON HEAD	
	32	1	**5H-8853**	1	SEAL-O-RING (9.3MM ID)	
	33	1	**9W-9830**	1	ORIFICE-SCREEN	
	34	1	**2S-0696**	2	DOWEL	
	35	1	**8P-9296**	2	ORIFICE-PLUG	
	36	1	**6Y-0744**	1	STOP	

B-USE AS REQUIRED

8E-1718 VALVE GP-SELECTOR & PRESS CONT *(contd.)* i01349719

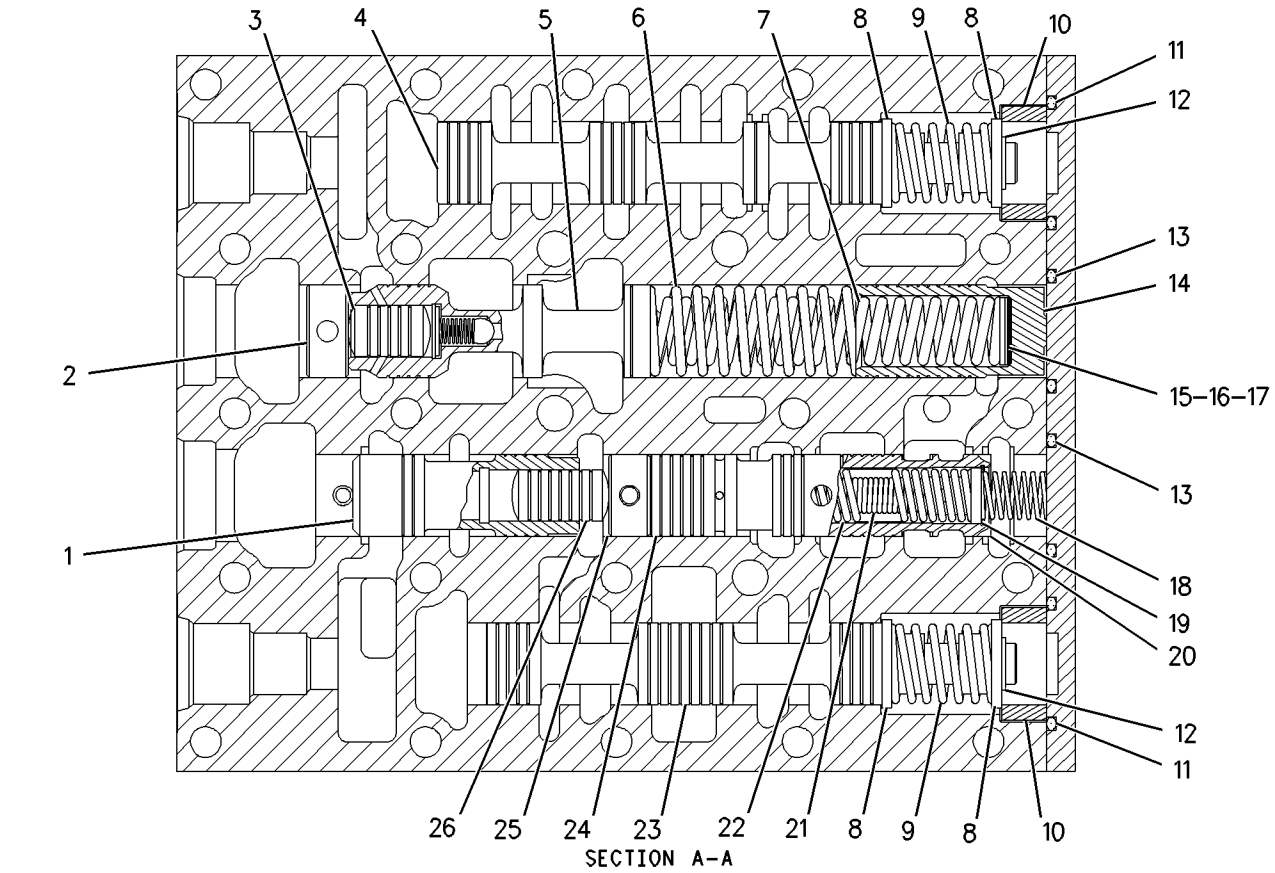

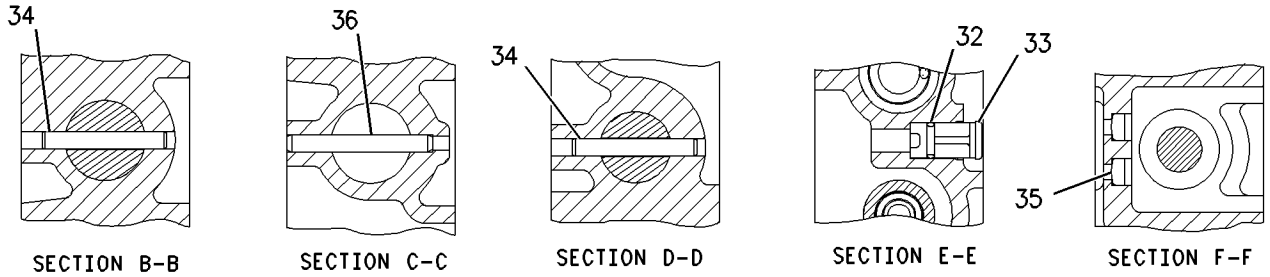

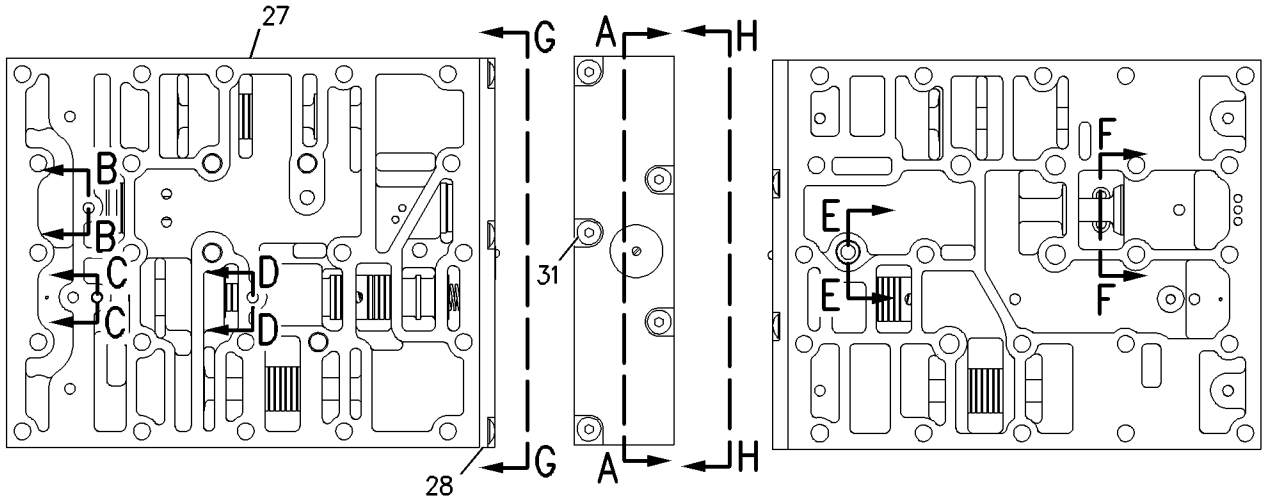

GRAPHIC #1 g00712374

3E-3748 VALVE GP-SOLENOID

S/N: 1KY519-UP
12 VOLT DC
PART OF 136-3738 VALVE GP-TRANSMISSION CONTROL

SMCS-5479 **i01289435**

NOTE	REF NO	GRAPHIC REF	PART NUMBER	QTY	PART NAME 1 2 3 4 5 6 (PRODUCT LEVEL)	SEE PAGE
	1	1	**3E-3747**	1	COIL AS	
	2	1	**1S-9593**	2	STRAP-CABLE (0.62IN DIA)	
	3	1	**3E-3361**	1	PLUG AS-CONNECTOR	
		1	**8T-8730**	2	SOCKET-CONNECTOR	
		1	**3E-3362**	1	WEDGE-PLUG LOCK	
	4	1	**104-5970**	1	LOCKNUT	
	5	1	**4B-4276**	1	WASHER (1.6MM THK)	
	6	1	**7X-1121**	1	CARTRIDGE AS	
					AVAILABLE REPAIR KIT(S):	
			100-4083	1	KIT-SEAL	
					(INCLUDES O-RING SEALS & BACKUP RING)	

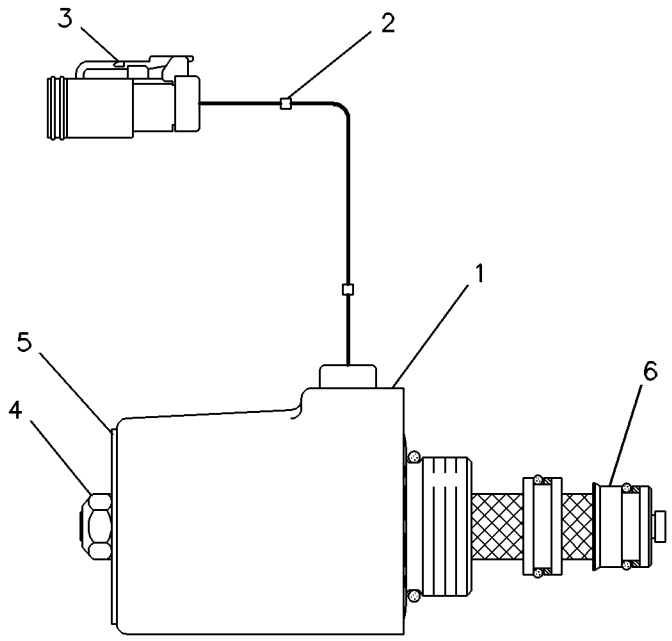

GRAPHIC #1 g00083412

144-6294 VALVE GP-SOLENOID

S/N: 7KK1-UP

PART OF 144-6295 VALVE & MTG GP-DIFF LOCK

SMCS-5479 **i00604478**

NOTE	REF NO	GRAPHIC REF	PART NUMBER	QTY	PART NAME 1 2 3 4 5 6 (PRODUCT LEVEL)	SEE PAGE
	1	1	**142-0350**	1	CARTRIDGE AS	
	2	1	**111-0343**	1	LOCKNUT	
	3	1	**8C-9987**	1	WASHER (2.5MM THK)	
	4	1	**141-8605**	1	COIL AS	
		1	**1S-9593**	2	STRAP-CABLE (0.62IN DIA)	
		1	**7N-7779**	1	SOCKET	
		1	**7N-7780**	1	PIN-CONNECTOR	
		1	**7N-9737**	1	HOUSING-PLUG	
					AVAILABLE REPAIR KIT(S):	
			6G-5979	1	KIT-CARTRIDGE SEAL	

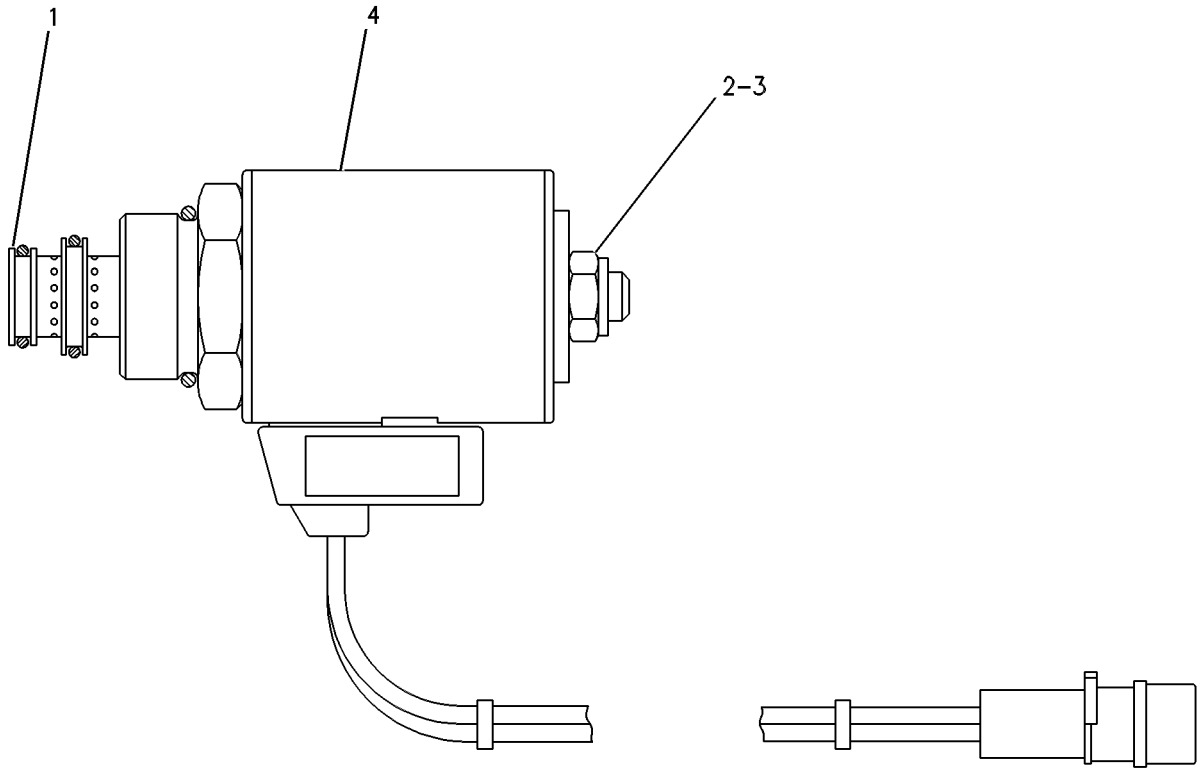

GRAPHIC #1 g00279018

147-5399 VALVE GP-SOLENOID

S/N: 1KY1-UP
12 VOLT DC
PART OF 117-5309, 136-3738 VALVE GP-TRANSMISSION CONTROL

SMCS-5479 **i01482358**

NOTE	REF NO	GRAPHIC REF	PART NUMBER	QTY	PART NAME 1 2 3 4 5 6 (PRODUCT LEVEL)	SEE PAGE
	1	1	**107-8611**	1	CARTRIDGE AS	
		1	**111-0343**	1	LOCKNUT	
		1	**149-5628**	1	WASHER (1.2MM THK)	
	2	1	*118-8182*	1	COIL AS	
		1	**1S-9593**	2	STRAP-CABLE	
		1	**3E-3362**	1	WEDGE-PLUG LOCK (2 PIN)	
		1	**155-2270**	1	KIT-CONNECTING PLUG (2 PIN)	
					(INCLUDES PLUG AS AND WEDGE)	
	3	1	**149-5628**	1	WASHER (1.2MM THK)	
	4	1	**111-0343**	1	LOCKNUT	

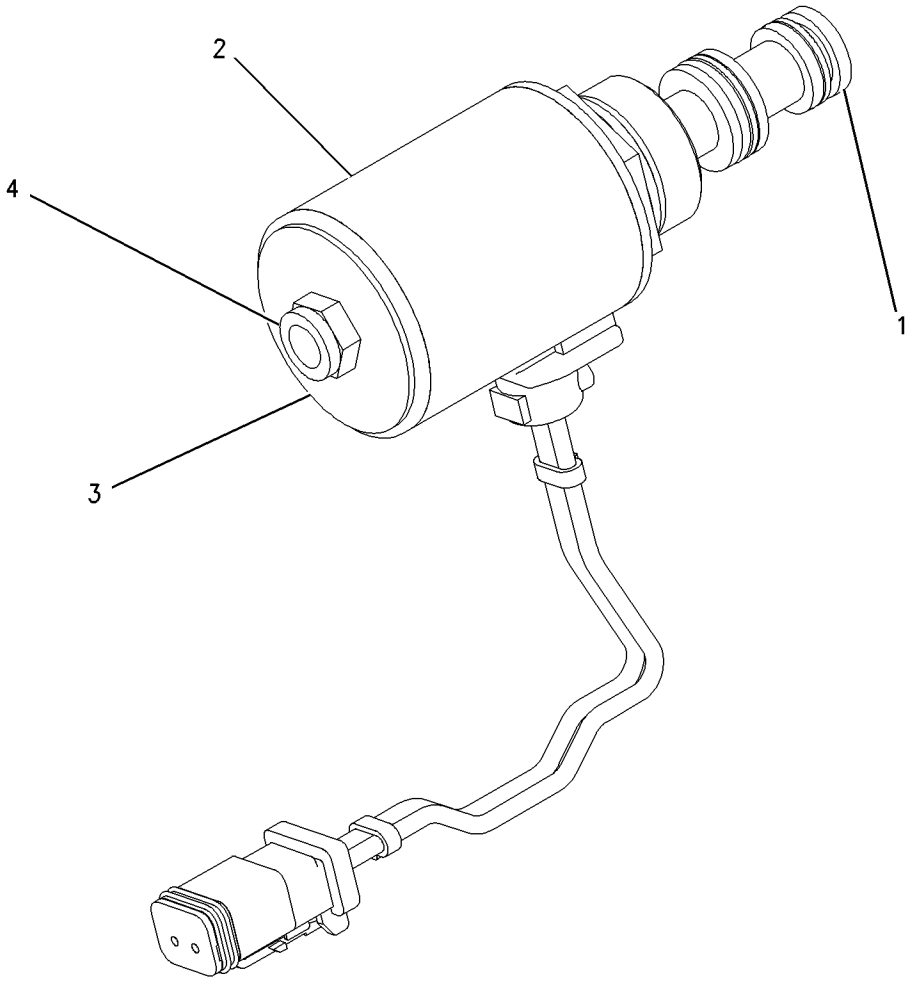

GRAPHIC #1 g00747733

MEMORANDA

117-5309 VALVE GP-TRANSMISSION CONTROL

S/N: 1KY1-518

PART OF 8E-1581 CONTROL GP-TRANSMISSION HYD

SMCS-3073 **i01499979**

NOTE	REF NO	GRAPHIC REF	PART NUMBER	QTY	PART NAME 1 2 3 4 5 6 (PRODUCT LEVEL)	SEE PAGE
Y	1	1	**8E-1720**	1	VALVE GP-SELECTOR	462
	2	1	**8E-1712**	1	PLATE-DIVIDER	
Y	3	1	**8E-1719**	1	VALVE GP-SELECTOR	461
Y	4	1	**8E-1718**	1	VALVE GP-SELECTOR & PRESS CONT	464
	5	1	**6Y-0708**	1	MANIFOLD-TOP	
	6	1	**126-7649**	1	CLIP AS	
	7	1	**1T-0416**	5	BOLT (5/16-18X0.75 IN)	
	8	1	**9M-1974**	27	WASHER-HARD (8.8X16X2MM THK)	
	9	1	**6V-1050**	21	BOLT (5/16-18X7.5 IN)	
Y	10	1	**147-5399**	6	VALVE GP-SOLENOID (TRANSMISSION CLUTCH)	468
	11	1	**126-7979**	1	CLIP AS-CONNECTING	
	12	1	**119-3367**	1	HARNESS AS-TRANSMISSION	
		1	**102-8802**	6	KIT-RECEPTACLE (2 PIN) (TRANSMISSION SHIFT SOLENOIDS)	
	13	1	**3S-2093**	8	STRAP-CABLE	
	14	1	**6Y-7115**	1	ELBOW	
	15	1	**126-7980**	1	RETAINER	
	16	1	**2B-2694**	3	BOLT (5/16-18X2 IN)	
	17	1	**1D-4539**	1	BOLT (5/16-18X2.5 IN)	
	19	1	**3J-6021**	1	PLUG	
	20	1	**9S-8007**	4	PLUG-O-RING	
	21	1	**7J-0204**	4	SEAL-O-RING	
	22	1	**9F-2247**	2	PLUG-PIPE (1/8-27 THD)	
	23	1	**9S-8004**	2	PLUG	
	24	1	**3J-1907**	2	SEAL-O-RING	
	25	1	**8M-4986**	2	SEAL-O-RING	

Y-SEPARATE ILLUSTRATION

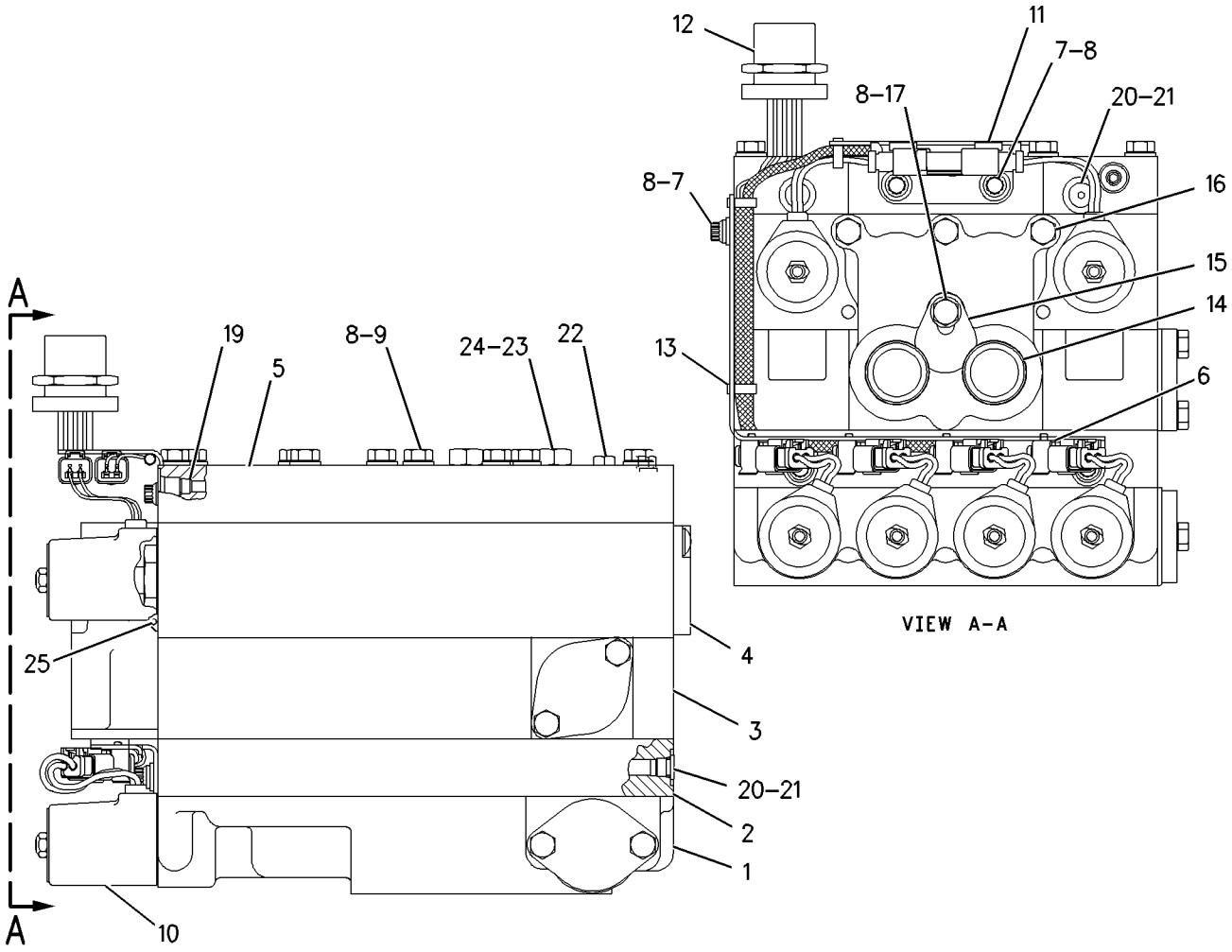

GRAPHIC #1

g00778385

136-3738 VALVE GP-TRANSMISSION CONTROL

S/N: 1KY519-UP

PART OF 136-1739 CONTROL GP-TRANSMISSION HYD

TYPE 1

SMCS-3073 **i00543430**

NOTE	REF NO	GRAPHIC REF	PART NUMBER	QTY	PART NAME 1 2 3 4 5 6 (PRODUCT LEVEL)	SEE PAGE
Y	1	1	**8E-1720**	1	VALVE GP-SELECTOR (SPEED)	462
	2	1	**8E-1712**	1	PLATE-DIVIDER	
Y	3	1	**8E-1719**	1	VALVE GP-SELECTOR (HI/FORWARD)	461
Y	4	1	**8E-1718**	1	VALVE GP-SELECTOR & PRESS CONT	464
	5	1	**136-1865**	1	MANIFOLD-TOP	
	6	1	**126-7649**	1	CLIP AS	
	7	1	**1T-0416**	5	BOLT (5/16-18X.75IN)	
	8	1	**9M-1974**	27	WASHER-HARD (2MM THK)	
	9	1	**6V-1050**	21	BOLT (5/16-18X7.5 IN)	
Y	10	1	**3E-3748**	6	VALVE GP-SOLENOID (CLUTCH)	466
	11	1	**126-7979**	1	CLIP AS-CONNECTING	
	12	1	**119-3367**	1	HARNESS AS	
	13	1	**3S-2093**	8	STRAP-CABLE (1.75IN DIA)	
	14	1	**6Y-7115**	1	ELBOW	
	15	1	**126-7980**	1	RETAINER	
	16	1	**2B-2694**	3	BOLT (5/16-18X2IN)	
	17	1	**1D-4539**	1	BOLT (5/16-18X2.5IN)	
	18	1	**9S-8007**	4	PLUG-O-RING (3/8-24 THD)	
	19	1	**7J-0204**	4	SEAL-O-RING (7.65MM ID)	
	20	1	**9F-2247**	2	PLUG-PIPE	
	21	1	**8M-4986**	2	SEAL-O-RING (37.69MM ID)	

Y-SEPARATE ILLUSTRATION

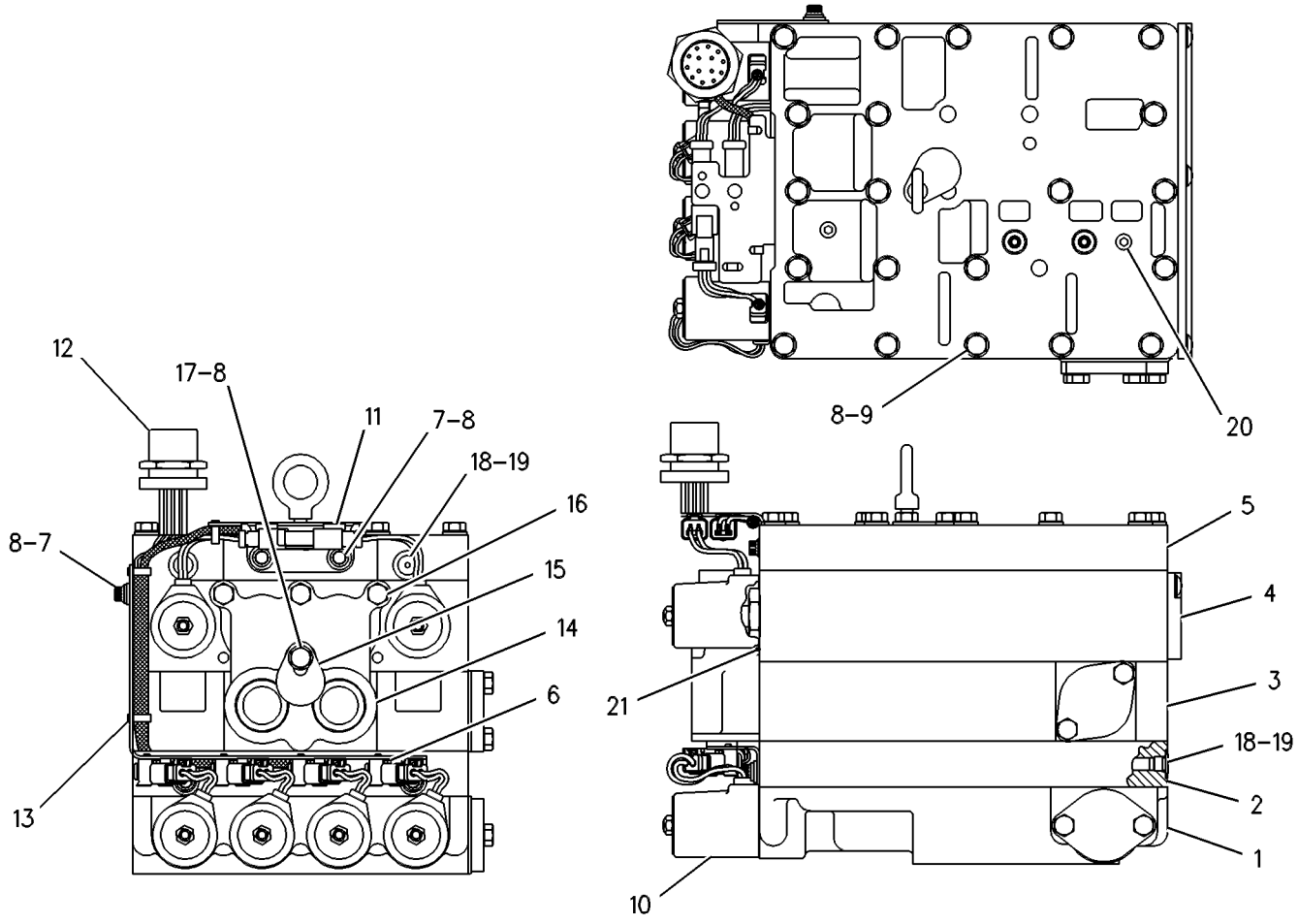

GRAPHIC #1

g00272436

136-3738 VALVE GP-TRANSMISSION CONTROL

S/N: 1KY519-UP

PART OF 136-1739 CONTROL GP-TRANSMISSION HYD

TYPE 2

SMCS-3073 **i01497996**

NOTE	REF NO	GRAPHIC REF	PART NUMBER	QTY	PART NAME 1 2 3 4 5 6 (PRODUCT LEVEL)	SEE PAGE
Y	1	1	**8E-1720**	1	VALVE GP-SELECTOR (SPEED)	462
	2	1	**8E-1712**	1	PLATE-DIVIDER	
Y	3	1	**8E-1719**	1	VALVE GP-SELECTOR (HI/FORWARD)	461
Y	4	1	**8E-1718**	1	VALVE GP-SELECTOR & PRESS CONT	464
	5	1	**136-1865**	1	MANIFOLD-TOP	
	6	1	**126-7649**	1	CLIP AS	
	7	1	**1T-0416**	5	BOLT (5/16-18X0.75 IN)	
	8	1	**9M-1974**	27	WASHER-HARD (8.8X16X2MM THK)	
	9	1	**6V-1050**	21	BOLT (5/16-18X7.5 IN)	
Y	10	1	**147-5399**	6	VALVE GP-SOLENOID (CLUTCH)	468
	11	1	**126-7979**	1	CLIP AS-CONNECTING	
	12	1	**119-3367**	1	HARNESS AS-TRANSMISSION	
		1	**102-8802**	6	KIT-RECEPTACLE (2 PIN) (SHIFT SOLENOIDS) (EACH INCLUDES RECEPTACLE AS & WEDGE)	
	13	1	**3S-2093**	8	STRAP-CABLE	
	14	1	**6Y-7115**	1	ELBOW	
	15	1	**126-7980**	1	RETAINER	
	16	1	**2B-2694**	3	BOLT (5/16-18X2 IN)	
	17	1	**1D-4539**	1	BOLT (5/16-18X2.5 IN)	
	18	1	**9S-8007**	4	PLUG-O-RING	
	19	1	**7J-0204**	4	SEAL-O-RING	
	20	1	**9F-2247**	2	PLUG-PIPE	
	21	1	**8M-4986**	2	SEAL-O-RING	

Y-SEPARATE ILLUSTRATION

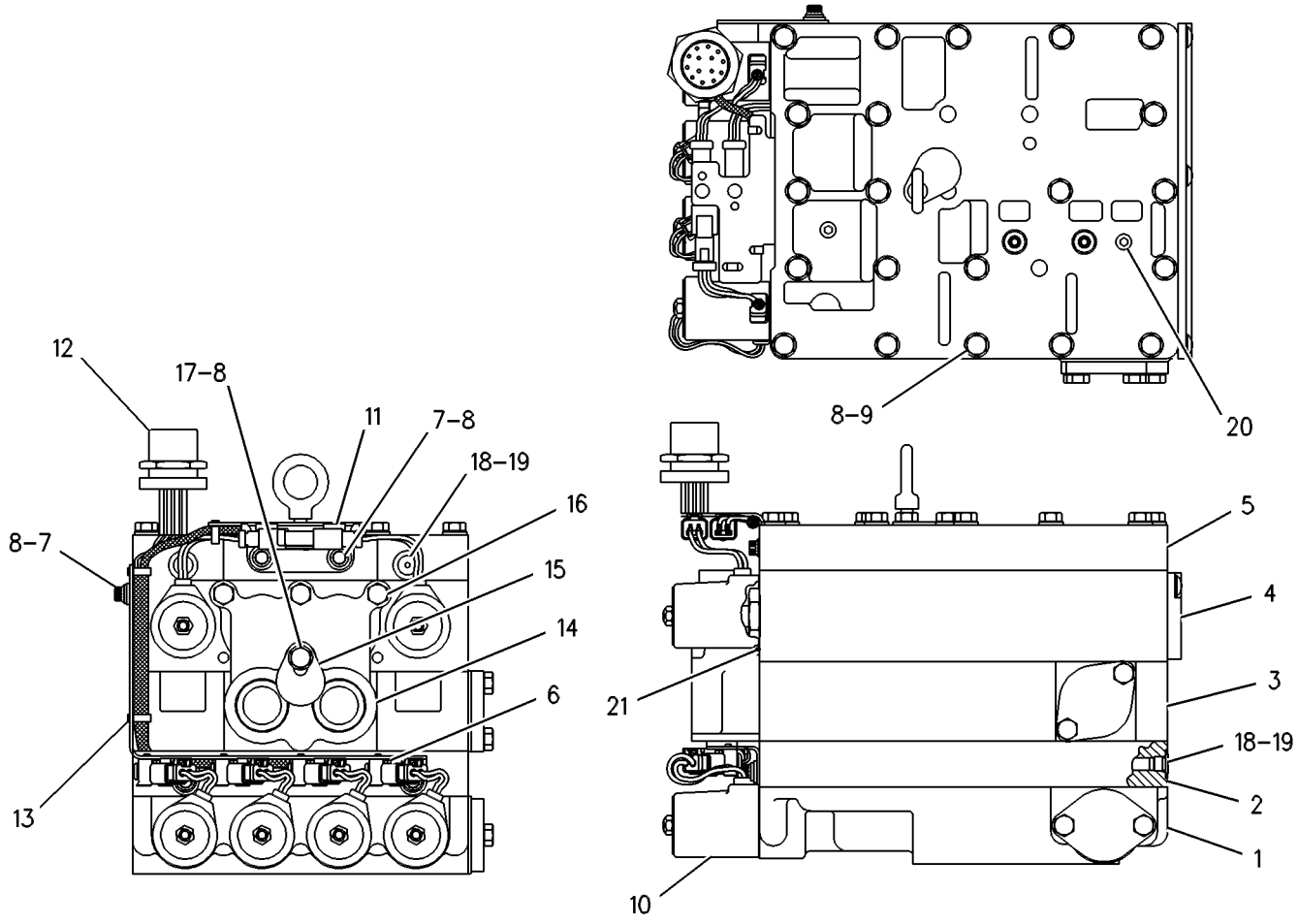

GRAPHIC #1

g00272436

8X-9069 WHEEL GP

S/N: 7KK1-UP
29.5 X 29
PART OF 8X-8403 INSTALLATION AR-FIELD

SMCS-4201, 4202, 4203, 4208, 4209, 4210, 4215 **i01504726**

NOTE	REF NO	GRAPHIC REF	PART NUMBER	QTY	PART NAME 1 2 3 4 5 6 (PRODUCT LEVEL)	SEE PAGE
	1	1	**124-0159**	6	RIM AS	
	2	1	**3F-9194**	12	FLANGE	
	3	1	**8W-9590**	6	BAND AS	
	4	1	**3D-5852**	6	LOCK RING	
	5	1	**2D-2444**	6	SEAL-O-RING	
	6	1	**2G-6595**	6	VALVE GP-TIRE	
					(EACH INCLUDES)	
	7	1	**9K-7951**	1	CAP-VALVE (STEM)	
	8	1	**6F-3930**	1	CORE-VALVE	
	9	1	**7D-5252**	1	SPUD AS	
	10	1	**2D-2508**	1	GROMMET	
	11	1	**2D-2509**	1	LOCKNUT	

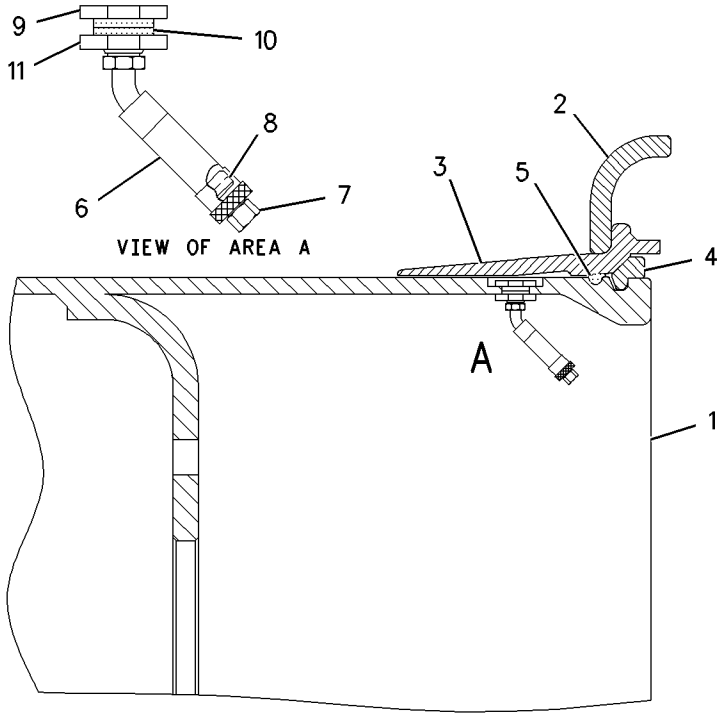

GRAPHIC #1 g00780716

POWER TRAIN

129-8518 WHEEL GP

S/N: 7KK1-UP
25 X 29
AN ATTACHMENT

SMCS-4201, 4202, 4203, 4208, 4209, 4210, 4215 **i01500024**

NOTE	REF NO	GRAPHIC REF	PART NUMBER	QTY	PART NAME 1 2 3 4 5 6 (PRODUCT LEVEL)	SEE PAGE
	1	1	**124-0159**	1	RIM AS	
	2	1	**3F-9194**	2	FLANGE	
	3	1	**8W-9590**	1	BAND AS	
	4	1	**3D-5852**	1	LOCK RING	
	5	1	**2D-2444**	1	SEAL-O-RING	
	6	1	**2G-6595**	1	VALVE GP-TIRE	
	7	1	**9K-7951**	1	CAP-VALVE (STEM)	
	8	1	**6F-3930**	1	CORE-VALVE	
	9	1	**7D-5252**	1	SPUD AS	
	10	1	**2D-2508**	1	GROMMET	
	11	1	**2D-2509**	1	LOCKNUT	

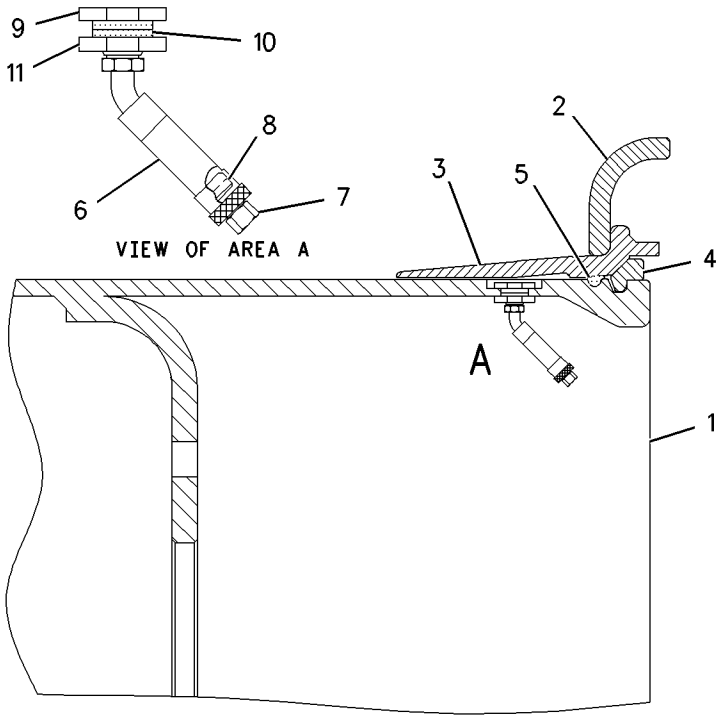

GRAPHIC #1 g00778383

FRAME AND BODY

191-1933 AXLE AR-FRONT

S/N: 7KK94-UP

PART OF 8X-8402 CHASSIS AR

SMCS-4303, 4305, 4313, 5225 **i01457153**

NOTE	REF NO	GRAPHIC REF	PART NUMBER	QTY	PART NAME 1 2 3 4 5 6 (PRODUCT LEVEL)	SEE PAGE
Y	1	1	**8X-8974**	1	AXLE GP-FRONT	480
Y	2	1	*8X-9016*	1	CYLINDER & MTG GP-WHEEL LEAN	591
Y	3	1	*8X-9017*	1	CYLINDER & MTG GP-STEERING	590
Y	4	1	*192-5493*	1	LINES GP-GREASE	520

Y-SEPARATE ILLUSTRATION

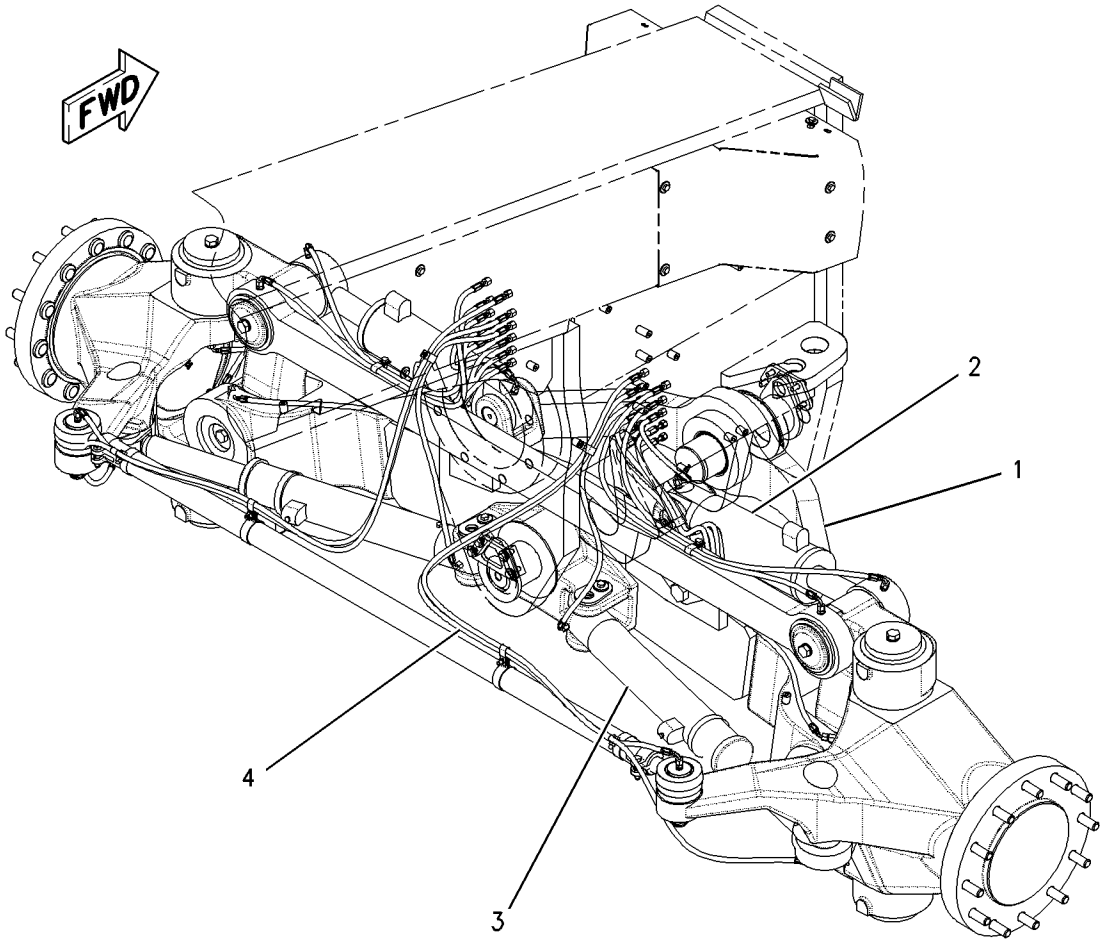

GRAPHIC #1 g00763458

MEMORANDA

FRAME AND BODY

8X-8974 AXLE GP-FRONT

S/N: 7KK1-65

PART OF 8X-8402 CHASSIS AR

SMCS-4305, 4313, 5225 **i00917478**

NOTE	REF NO	GRAPHIC REF	PART NUMBER	QTY	PART NAME 1 2 3 4 5 6 (PRODUCT LEVEL)	SEE PAGE
	1	1	**5M-6667**	2	LOCKNUT	
	2	1	**1T-0310**	4	RING-METAL SEAL	
	3	1	**2G-9491**	2	SEAL	
	4	1	**8T-3282**	6	WASHER-HARD (3.5MM THK)	
	5	1	**7X-0607**	2	WASHER-HARD (8.0MM THK)	
	6	1	**5P-7843**	2	CUP-ROLLER BEARING	
	7	1	**5T-0504**	4	WASHER (20MM THK)	
	8	1	**7K-9218**	2	SEAL-LIP (114.3MM ID)	
	9	1	**9W-6688**	1	SEAL GP-DUO-CONE	
	10	1	**4M-0660**	2	RING-SEALING	
	11	1	**9X-4598**	4	SEAL-LIP	
	12	1	**9X-4599**	4	SEAL-LIP	
	13	1	**117-1954**	2	SPINDLE AS	
					(EACH INCLUDES)	
	14	1	**8X-0274**	12	STUD	
	15	1	**144-9799**	1	ARM AS-RH	
	16	1	**117-2171**	1	PIN	
	17	1	**135-4299**	2	BEARING-SLEEVE	
	18	1	**9X-4599**	2	SEAL-LIP	
	19	1	**138-6160**	1	BEARING	
	20	1	**144-9800**	1	ARM AS-LH	
	21	1	**138-6160**	1	BEARING	
	22	1	**117-2171**	1	PIN	
	23	1	**135-4299**	2	BEARING-SLEEVE	
	24	1	**9X-4599**	2	SEAL-LIP	
	25	1	**117-2177**	1	HOUSING-SPINDLE	
	26	1	**117-2178**	1	HOUSING-SPINDLE	
	27	1	**117-2182**	2	WASHER-THRUST	
	28	1	**117-2183**	4	WASHER-THRUST	
	29	1	**117-2187**	2	RETAINER	
	30	1	**117-2188**	2	COVER	
	31	1	**117-2189**	4	WASHER	
	32	1	**117-2191**	2	WASHER	
	33	1	**117-2193**	2	RETAINER	
	34	1	**124-9536**	2	CONE-TAPERED	
	35	1	**124-9537**	2	CONE-TAPERED	
	36	1	**124-9539**	2	CUP-TAPERED	
M	37	1	**129-2220**	2	SETSCREW-SOCKET	
	38	1	**1T-0132**	2	SEAL-O-RING (234.54MM ID)	
	39	1	**5P-7593**	4	SEAL-O-RING (170.82MM ID)	
M	40	1	**7X-2553**	2	BOLT (M16X2.0X40MM)	
M	41	1	**7X-2562**	4	BOLT (M20X2.5X45MM)	
M	42	1	**8T-0362**	6	BOLT (M20X2.5X110MM)	
M	43	1	**7X-2581**	1	BOLT (M30X3.5X100MM)	
	44	1	**7X-7731**	2	PLUG-PIPE (3/4-14 NPTF THD)	
	45	1	**133-8521**	1	PIN AS-FRONT	
	46	1	**8T-4123**	6	WASHER-PLATED (3.5MM THK)	
M	47	1	**8T-4131**	2	NUT (M20X2.50 THD)	
M	48	1	**8T-4195**	4	BOLT (M10X1.50X30MM)	
M	49	1	**8T-4780**	6	BOLT (M20X2.5X30MM)	
	50	1	**9K-6784**	2	SPACER	
	51	1	**9X-4597**	4	SEAL-LIP	
B	52	1	**117-2149**	6	SHIM (.127MM THK)	
Y	53	1	*117-2151*	1	LINK GP-STEERING	522
	54	1	**117-2152**	1	BAR AS	
	55	1	**126-6917**	2	BEARING-SLEEVE	

8X-8974 **AXLE GP-FRONT** ***(contd.)*** **i00917478**

NOTE	REF NO	GRAPHIC REF	PART NUMBER	QTY	PART NAME 1 2 3 4 5 6 (PRODUCT LEVEL)	SEE PAGE
M	56	1	**7X-7962**	2	BOSS-WELD (M10X1.5X30.0MM)	
	57	1	**117-2150**	1	AXLE AS	
	58	1	**117-2180**	4	BEARING-SLEEVE	
	59	1	**117-2181**	4	BEARING-SLEEVE	
M	60	1	**7X-7962**	2	BOSS-WELD (M10X1.5X30.0MM)	
	61	1	**131-8739**	1	BRACKET	
	62	1	**8T-4121**	4	WASHER (2.5MM THK)	
	63	1	**117-2156**	4	SEAL	
	64	1	**133-8522**	1	PIN AS-REAR	
	65	1	**117-2176**	4	PIN	
	66	1	**130-6439**	2	PIN	

B-USE AS REQUIRED
M-METRIC PART
Y-SEPARATE ILLUSTRATION

8X-8974 **AXLE GP-FRONT** *(contd.)* **i00917478**

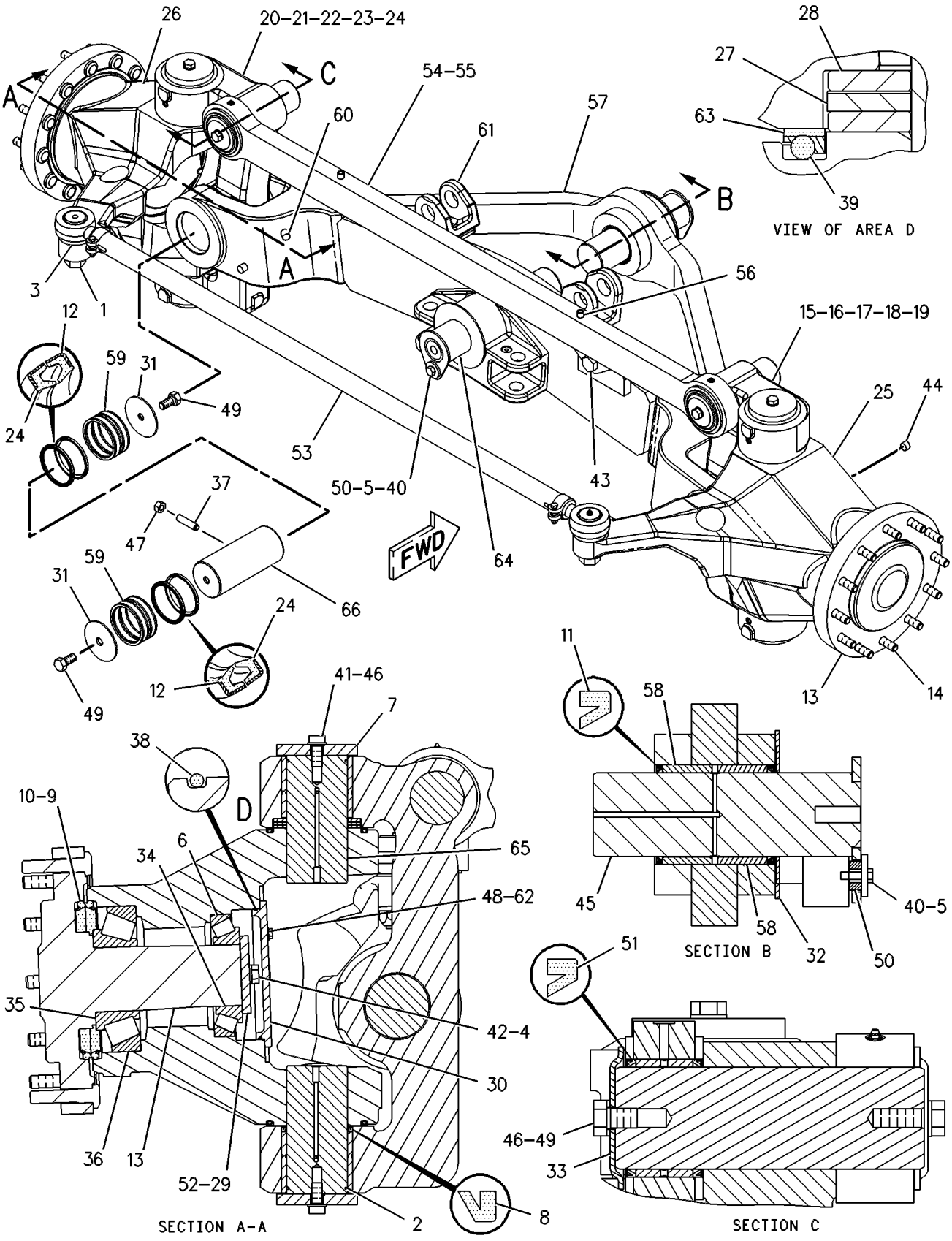

GRAPHIC #1 g00277798

MEMORANDA

8X-8974 AXLE GP-FRONT

S/N: 7KK66-UP

PART OF 191-1933 AXLE AR-FRONT, 8X-8402 CHASSIS AR

SMCS-4305, 4313, 5225 **i01499260**

NOTE	REF NO	GRAPHIC REF	PART NUMBER	QTY	PART NAME 1 2 3 4 5 6 (PRODUCT LEVEL)	SEE PAGE
	1	1	**1T-0310**	4	RING-METAL SEAL	
	2	1	**2G-9491**	2	SEAL	
	3	1	**5P-7843**	2	CUP-ROLLER BEARING	
	4	1	**7K-9218**	2	SEAL-LIP	
	5	1	**9G-5319**	2	SEAL GP-DUO-CONE	
					(EACH INCLUDES)	
		1	**4M-0660**	2	RING-SEALING	
	6	1	**9X-4597**	4	SEAL-LIP	
	7	1	**9X-4598**	4	SEAL-LIP	
	8	1	**9X-4599**	4	SEAL-LIP	
B	9	1	**117-2149**	6	SHIM (.127MM THK)	
	10	1	**117-2150**	1	AXLE AS (FRONT)	
	10A	1	**117-2180**	4	BEARING-SLEEVE	
	10B	1	**117-2181**	4	BEARING-SLEEVE	
Y	11	1	*117-2151*	1	LINK GP-STEERING	522
	12	1	**117-2152**	1	BAR AS	
	12A	1	**126-6917**	2	BEARING-SLEEVE	
	13	1	**117-2156**	4	SEAL	
	14	1	**117-2177**	1	HOUSING-SPINDLE (RH)	
	15	1	**117-2178**	1	HOUSING-SPINDLE (LH)	
	16	1	*117-2182*	2	WASHER-THRUST	
	17	1	**117-2183**	4	WASHER-THRUST (114.65 X 163.00 X 6.00MM THK)	
	18	1	**117-2187**	2	RETAINER	
	19	1	**117-2188**	2	COVER	
	21	1	**117-2191**	2	WASHER (111 X 220 X 5MM THK)	
	22	1	**117-2193**	2	RETAINER	
	23	1	**124-9536**	2	CONE-TAPERED (ROLLER BEARING)	
	24	1	**124-9537**	2	CONE-TAPERED (ROLLER BEARING)	
	25	1	**124-9539**	2	CUP-TAPERED (ROLLER BEARING)	
	26	1	**174-1521**	2	PIN AS	
	27	1	**133-8521**	1	PIN AS-FRONT	
	28	1	**133-8522**	1	PIN AS-REAR	
	29	1	**144-9799**	1	ARM AS-RH	
		1	**144-9784**	1	ARM-FRONT AXLE	
	29A	1	**117-2171**	1	PIN	
	29B	1	**135-4299**	2	BEARING-SLEEVE	
		1	**9X-4599**	2	SEAL-LIP	
		1	**174-1525**	1	BEARING-SLEEVE	
	30	1	**144-9800**	1	ARM AS-LH	
		1	**144-9785**	1	ARM-FRONT AXLE	
	30A	1	**117-2171**	1	PIN	
	30B	1	**135-4299**	2	BEARING-SLEEVE	
		1	**9X-4599**	2	SEAL-LIP	
		1	**174-1525**	1	BEARING-SLEEVE	
	31	1	**154-7122**	2	PLATE AS	
	32	1	**117-2176**	4	PIN	
	33	1	**162-4228**	2	SPINDLE AS	
					(EACH INCLUDES)	
		1	**8X-0274**	12	STUD	
	34	1	**174-1524**	2	PLATE (HEX)	
	35	1	**1T-0132**	2	SEAL-O-RING	
	36	1	**5M-6667**	2	LOCKNUT	
	37	1	**5P-1076**	8	WASHER-HARD (13.5X30X4MM THK)	
	38	1	**5P-7593**	4	SEAL-O-RING	
M	40	1	**7X-2581**	2	BOLT (M30X3.5X100MM)	
	41	1	**7X-7731**	1	PLUG-PIPE	

8X-8974 AXLE GP-FRONT *(contd.)*

i01499260

NOTE	REF NO	GRAPHIC REF	PART NUMBER	QTY	PART NAME 1 2 3 4 5 6 (PRODUCT LEVEL)	SEE PAGE
M	42	1	**8T-0360**	6	BOLT (M20X2.5X90 MM)	
	43	1	**8T-3282**	6	WASHER-HARD (22X35X3.5MM THK)	
	44	1	**8T-4121**	4	WASHER-HARD (11X21X2.5MM THK)	
	45	1	**8T-4123**	6	WASHER-PLATED (22X35X3.5MM THK)	
M	46	1	**7X-2562**	8	BOLT (M20X2.5X45MM)	
M	47	1	**8T-4195**	4	BOLT (M10X1.5X30MM)	
M	48	1	**8T-4780**	4	BOLT (M20X2.5X30MM)	
M	49	1	**8T-4956**	8	BOLT (M12X1.75X35MM)	
	50	1	**5T-0504**	4	WASHER (20MM THK)	

B-USE AS REQUIRED
M-METRIC PART
Y-SEPARATE ILLUSTRATION

8X-8974 AXLE GP-FRONT *(contd.)* i01499260

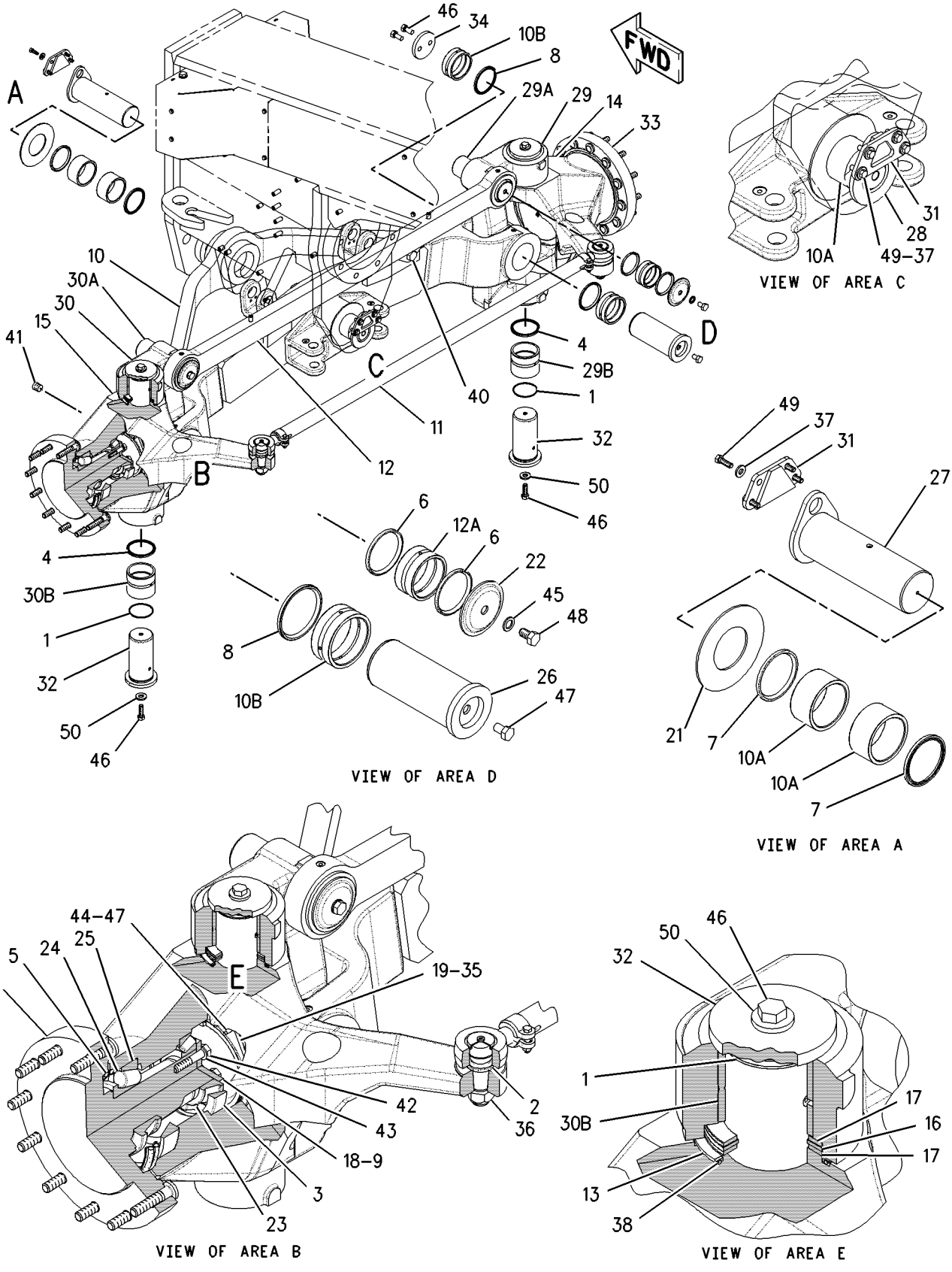

GRAPHIC #1 g00778114

MEMORANDA

FRAME AND BODY

8X-8991 ENCLOSURE GP-ENGINE

S/N: 7KK1-74

PART OF 8X-8402 CHASSIS AR

SMCS-7263 **i01392611**

NOTE	REF NO	GRAPHIC REF	PART NUMBER	QTY	PART NAME 1 2 3 4 5 6 (PRODUCT LEVEL)	SEE PAGE
	1	1	**2P-6578**	1	PLATE-INSTRUCTION (CRANKCASE DRAIN AND FILL)	
	2	1	**7B-3028**	4	SCREW-DRIVE (NO 4X3/16 IN)	
	3	1	**117-2233**	2	HANDHOLD	
	4	1	**120-4216**	1	HOOD AS-FRONT	
		1	**9R-2613**	1	BOSS (M10X25MM)	
	5	1	**120-4618**	1	GRATE AS	
	6	2	**121-0262**	2	TUBE AS	
	7	1	**121-0423**	4	DOOR AS-LH	
					(EACH INCLUDES)	
		1	**7P-7304**	1	BRACKET	
		1	**8G-0871**	1	HANDLE	
		1	**9V-0453**	1	BUSHING-TERMINAL	
	8	1	**121-0424**	4	DOOR AS-RH	
					(EACH INCLUDES)	
		1	**7P-7304**	1	BRACKET	
		1	**8G-0871**	1	HANDLE	
		1	**9V-0453**	1	BUSHING-TERMINAL	
	9	2	**121-0716**	1	TUBE AS-RH	
	10	2	**121-0717**	1	TUBE AS-LH	
	11	2	**121-0871**	1	TUBE AS	
	12	2	**121-0894**	1	TUBE AS	
	13	2	**121-0950**	1	TUBE AS-LH	
	14	2	**121-0973**	1	TUBE AS-RH	
	15	2	**121-2634**	2	TUBE AS	
	16	1,2	**121-2724**	2	TUBE AS	
	17	1	**121-3023**	1	DOOR AS-RH	
		1	**8X-4116**	1	PLATE	
	18	1	**121-3024**	1	DOOR AS-LH	
		1	**8X-4116**	1	PLATE	
	19	1	**121-3311**	1	DOOR AS-RH	
	20	1	**121-3312**	1	DOOR AS-LH	
	21	1	**121-3566**	2	COVER	
	22	1	**121-3567**	2	COVER AS	
	23	1	**121-3867**	16	HINGE	
	24	1	**121-3868**	8	HINGE AS	
	25	1	**121-3869**	8	HINGE AS	
	26	1	**121-3993**	4	PLATE	
	27	2	**121-3994**	10	PLATE	
	28	2	**123-1010**	1	TUBE AS-RH	
	29	2	**123-1012**	1	TUBE AS-LH	
	30	2	**128-1468**	1	TUBE AS	
M	31	2	**129-3178**	24	LOCKNUT	
	32	2	**138-0728**	1	SHEET AS	
		2	**9Y-7595**	4	SPACER (30MM OD X 14MM OAL)	
	33	2	**138-0732**	1	TUBE AS	
	34	2	**138-0733**	1	TUBE AS	
	35	2	**138-0734**	2	PLATE	
	36	1	**138-0744**	12	HINGE	
	37	1	**138-0745**	6	HINGE AS	
	38	1	**138-0746**	6	HINGE AS	
	39	1	**138-0747**	1	DOOR AS	
		1	**8G-0871**	1	HANDLE	
		1	**9V-0453**	1	BUSHING-TERMINAL	
	40	1	**138-0748**	1	DOOR AS	
		1	**8G-0871**	1	HANDLE	
		1	**9V-0453**	1	BUSHING-TERMINAL	

8X-8991 **ENCLOSURE GP-ENGINE** *(contd.)* **i01392611**

NOTE	REF NO	GRAPHIC REF	PART NUMBER	QTY	PART NAME 1 2 3 4 5 6 (PRODUCT LEVEL)	SEE PAGE
	41	2	**154-6867**	1	BRACKET AS	
	42	1	**117-2234**	4	HANDHOLD	
	43	1	**120-4234**	1	HOOD AS-REAR	
	44	1	**124-3416**	4	WASHER	
	45	2	**129-7261**	4	PLATE	
	46	2	**1S-4244**	10	PIN (9.40MM OD)	
	47	2	**2V-9166**	20	WASHER (.391X1X.6MM THK)	
	48	2	**3B-4615**	10	PIN-COTTER	
	49	2	**3V-0613**	30	BUMPER	
	50	1,2	**5P-1076**	78	WASHER-HARD (13.5X30X4MM THK)	
	51	1	**5P-8502**	10	PADLOCK GP	
					(EACH INCLUDES)	
A		1	**5P-8500**	1	KEY	
A		1	**8Y-6364**	1	SLEEVE	
	52	2	**6V-8188**	10	NUT (1/2-13 THD)	
	53	2	**7P-7975**	10	LATCH	
B	54	2	**7X-0605**	6	WASHER-HARD (13X28X1.6MM THK)	
	55	1,2	**7X-7729**	16	WASHER (11X25X3MM THK)	
M	56	2	**8C-8454**	24	SCREW-MACHINE FLAT HEAD	
	57	2	**8G-0873**	10	SPRING	
	58	1,2	**8T-4121**	152	WASHER-HARD (11X21X2.5MM THK)	
M	59	2	**8T-4133**	4	NUT (M10X1.5 THD)	
M	60	1	**8T-4136**	124	BOLT (M10X1.5X25MM)	
M	61	1,2	**8T-4137**	36	BOLT (M10X1.5X20MM)	
M	62	1,2	**8T-4139**	66	BOLT (M12X1.75X30MM)	
M	63	1	**8T-4182**	4	BOLT (M10X1.5X45MM)	
M	64	1	**8T-4183**	2	BOLT (M12X1.75X40 MM)	
	65	2	**9V-0344**	10	PIN (LATCH STRIKER)	
	66	2	**9V-0450**	10	PIN (15MM OD)	
	67	2	**9X-8256**	24	WASHER (6.6X12X2MM THK)	

A-NOT PART OF THIS GROUP
B-USE AS REQUIRED
M-METRIC PART

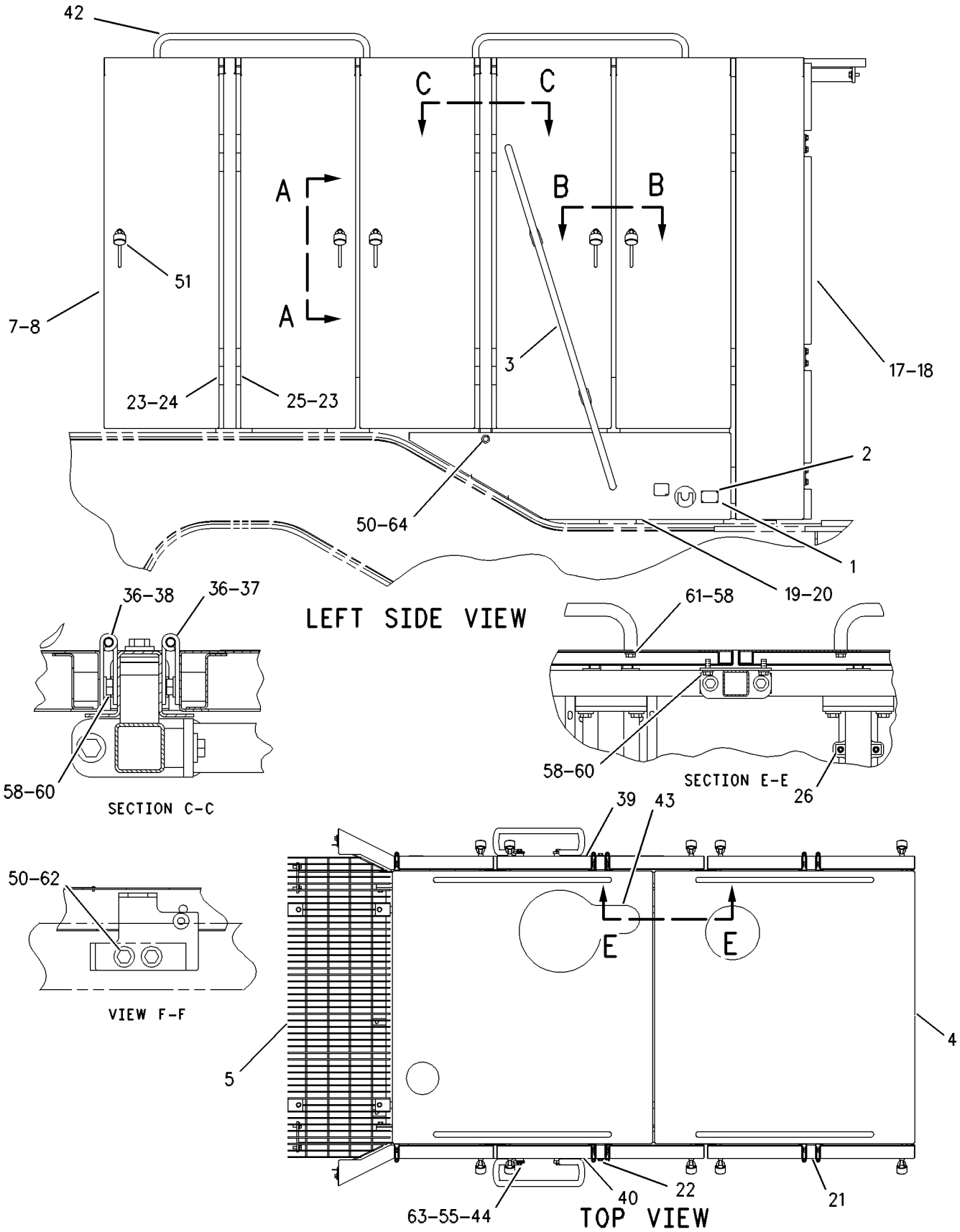

GRAPHIC #1 g00610465

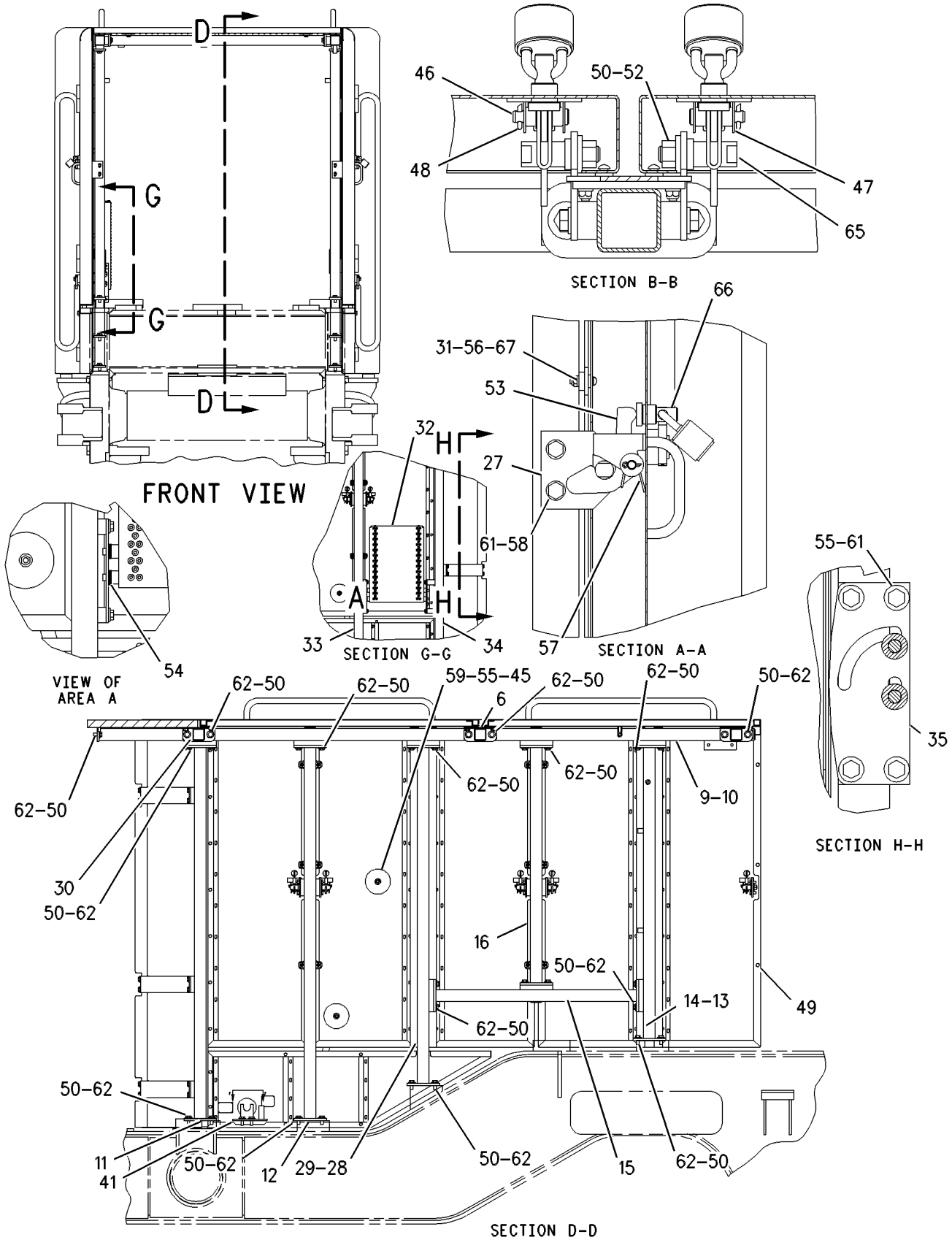

GRAPHIC #2 g00610468

FRAME AND BODY

8X-8991 ENCLOSURE GP-ENGINE

S/N: 7KK75-UP

PART OF 8X-8402 CHASSIS AR, 190-5567 ENCLOSURE GP-ENGINE

SMCS-7263 **i01392647**

NOTE	REF NO	GRAPHIC REF	PART NUMBER	QTY	PART NAME 1 2 3 4 5 6 (PRODUCT LEVEL)	SEE PAGE
	1	1	**2P-6578**	1	PLATE-INSTRUCTION (CRANKCASE DRAIN AND FILL)	
	2	1	**7B-3028**	4	SCREW-DRIVE (NO 4X3/16 IN)	
	3	1	**117-2233**	2	HANDHOLD	
	4	1	**120-4216**	1	HOOD AS-FRONT	
		1	**9R-2613**	1	BOSS (M10X25MM)	
	5	1	**120-4618**	1	GRATE AS	
	6	2	**121-0262**	2	TUBE AS	
	7	1	**121-0423**	4	DOOR AS-LH	
					(EACH INCLUDES)	
		1	**7P-7304**	1	BRACKET	
		1	**8G-0871**	1	HANDLE	
		1	**9V-0453**	1	BUSHING-TERMINAL	
	8	1	**121-0424**	4	DOOR AS-RH	
					(EACH INCLUDES)	
		1	**7P-7304**	1	BRACKET	
		1	**8G-0871**	1	HANDLE	
		1	**9V-0453**	1	BUSHING-TERMINAL	
	9	2	**121-0716**	1	TUBE AS-RH	
	10	2	**121-0717**	1	TUBE AS-LH	
C	11	2	**176-1695**	1	TUBE AS	
	12	2	**121-0894**	1	TUBE AS	
	13	2	**121-0950**	1	TUBE AS-LH	
	14	2	**121-0973**	1	TUBE AS-RH	
	15	2	**121-2634**	2	TUBE AS	
	16	1,2	**121-2724**	2	TUBE AS	
	17	1	**121-3023**	1	DOOR AS-RH	
		1	**8X-4116**	1	PLATE	
	18	1	**121-3024**	1	DOOR AS-LH	
		1	**8X-4116**	1	PLATE	
	19	1	**121-3311**	1	DOOR AS-RH	
	20	1	**121-3312**	1	DOOR AS-LH	
	21	1	**121-3566**	2	COVER	
	22	1	**121-3567**	2	COVER AS	
C	23	1	**121-3867**	12	HINGE	
C	24	1	**121-3868**	6	HINGE AS	
C	25	1	**121-3869**	6	HINGE AS	
	26	1	**121-3993**	4	PLATE	
	27	2	**121-3994**	10	PLATE	
	28	2	**123-1010**	1	TUBE AS-RH	
	29	2	**123-1012**	1	TUBE AS-LH	
	30	2	**128-1468**	1	TUBE AS	
M	31	2	**129-3178**	24	LOCKNUT	
	32	2	**138-0728**	1	SHEET AS	
		2	**9Y-7595**	4	SPACER (30MM OD X 14MM OAL)	
	33	2	**138-0732**	1	TUBE AS	
C	34	2	**176-1696**	1	TUBE AS	
	35	2	**138-0734**	2	PLATE	
C	36	1	**138-0744**	10	HINGE	
C	37	1	**138-0745**	5	HINGE AS	
C	38	1	**138-0746**	5	HINGE AS	
	39	1	**138-0747**	1	DOOR AS	
		1	**8G-0871**	1	HANDLE	
		1	**9V-0453**	1	BUSHING-TERMINAL	
	40	1	**138-0748**	1	DOOR AS	
		1	**8G-0871**	1	HANDLE	
		1	**9V-0453**	1	BUSHING-TERMINAL	

8X-8991 **ENCLOSURE GP-ENGINE** ***(contd.)*** **i01392647**

NOTE	REF NO	GRAPHIC REF	PART NUMBER	QTY	PART NAME 1 2 3 4 5 6 (PRODUCT LEVEL)	SEE PAGE
	41	2	**154-6867**	1	BRACKET AS	
	42	1	**117-2234**	4	HANDHOLD	
	43	1	**120-4234**	1	HOOD AS-REAR	
	44	1	**124-3416**	4	WASHER	
	45	2	**129-7261**	4	PLATE	
	46	2	**1S-4244**	10	PIN (9.40MM OD)	
	47	2	**2V-9166**	20	WASHER (.391X1X.6MM THK)	
	48	2	**3B-4615**	10	PIN-COTTER	
	49	2	**3V-0613**	30	BUMPER	
	50	1,2	**5P-1076**	78	WASHER-HARD (13.5X30X4MM THK)	
	51	1	**5P-8502**	10	PADLOCK GP	
					(EACH INCLUDES)	
A		1	**5P-8500**	1	KEY	
A		1	**8Y-6364**	1	SLEEVE	
	52	2	**6V-8188**	10	NUT (1/2-13 THD)	
	53	2	**7P-7975**	10	LATCH	
B	54	2	**7X-0605**	6	WASHER-HARD (13X28X1.6MM THK)	
C	55	1,2	**7X-7729**	40	WASHER (11X25X3MM THK)	
M	56	2	**8C-8454**	24	SCREW-MACHINE FLAT HEAD	
	57	2	**8G-0873**	10	SPRING	
C	58	1,2	**8T-4121**	128	WASHER-HARD (11X21X2.5MM THK)	
M	59	2	**8T-4133**	4	NUT (M10X1.5 THD)	
CM	60	1	**8T-4136**	100	BOLT (M10X1.5X25MM)	
CM	61	1,2	**8T-4137**	60	BOLT (M10X1.5X20MM)	
M	62	1,2	**8T-4139**	66	BOLT (M12X1.75X30MM)	
M	63	1	**8T-4182**	4	BOLT (M10X1.5X45MM)	
M	64	1	**8T-4183**	2	BOLT (M12X1.75X40 MM)	
	65	2	**9V-0344**	10	PIN (LATCH STRIKER)	
	66	2	**9V-0450**	10	PIN (15MM OD)	
	67	2	**9X-8256**	24	WASHER (6.6X12X2MM THK)	
C	68	2	**167-0785**	6	STRAP	

A-NOT PART OF THIS GROUP
B-USE AS REQUIRED
C-CHANGE FROM PREVIOUS TYPE
M-METRIC PART

8X-8991 **ENCLOSURE GP-ENGINE** *(contd.)* **i01392647**

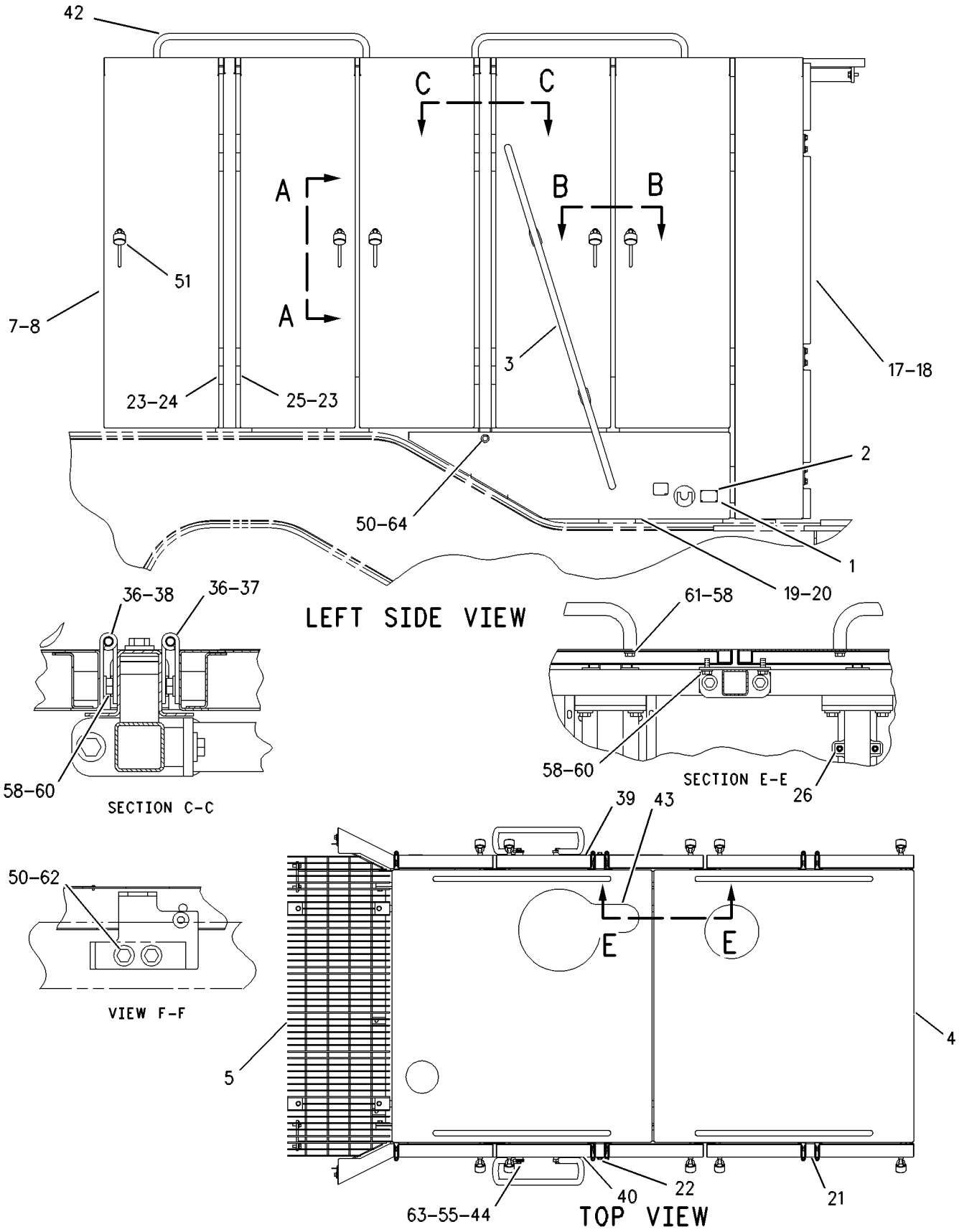

GRAPHIC #1 g00610465

8X-8991 **ENCLOSURE GP-ENGINE** ***(contd.)*** **i01392647**

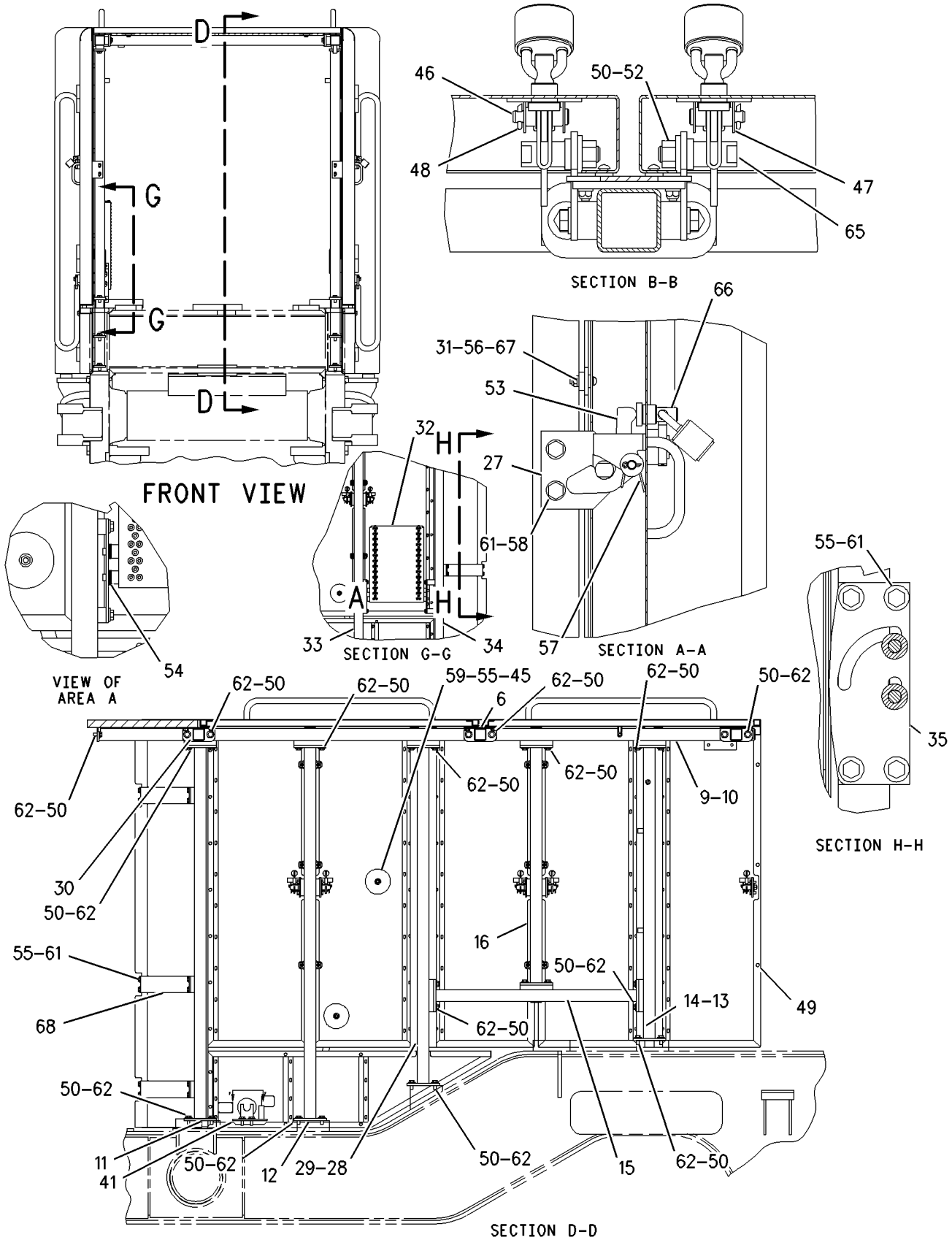

GRAPHIC #2

g00639122

FRAME AND BODY

187-1984 ENCLOSURE GP-ENGINE

S/N: 7KK82-87

PART OF 8X-8402 CHASSIS AR

SMCS-7263 **i01415613**

NOTE	PART NUMBER	QTY	PART NAME 1 2 3 4 5 6 (PRODUCT LEVEL)	SEE PAGE
	1P-4278	2	CLAMP-HOSE	
	1S-4244	10	PIN (9.40MM OD)	
	2P-6578	1	PLATE-INSTRUCTION (CRANKCASE DRAIN AND FILL)	
	2V-9166	20	WASHER (.391X1X.6MM THK)	
	3B-4615	10	PIN-COTTER	
	3V-0613	30	BUMPER	
	5P-1076	4	WASHER-HARD (13.5X30X4MM THK)	
	5P-1076	52	WASHER-HARD (13.5X30X4MM THK)	
BE	**5P-1251**		HOSE (25.4MM ID) (105CM)	
BE	**5P-1465**		HOSE (297CM)	
	5P-2566	4	BOLT (1/2-13X1.5 IN)	
	6K-0806	4	STRAP-CABLE	
	6V-8188	8	NUT (1/2-13 THD)	
	7B-3028	4	SCREW-DRIVE (NO 4X3/16 IN)	
	7M-8485	1	SEAL-O-RING	
	7P-7975	10	LATCH	
	7X-0605	6	WASHER-HARD (13X28X1.6MM THK)	
	7X-7729	40	WASHER (11X25X3MM THK)	
	7X-7958	1	CLAMP-HOSE	
M	**8C-8454**	24	SCREW-MACHINE FLAT HEAD	
	8G-0873	10	SPRING	
	8T-4121	122	WASHER-HARD (11X21X2.5MM THK)	
M	**8T-4133**	4	NUT (M10X1.5 THD)	
M	**8T-4136**	98	BOLT (M10X1.5X25MM)	
M	**8T-4137**	56	BOLT (M10X1.5X20MM)	
M	**8T-4139**	44	BOLT (M12X1.75X30MM)	
M	**8T-4182**	4	BOLT (M10X1.5X45MM)	
	8T-6767	1	PLUG-PIPE	
	9V-0344	8	PIN (LATCH STRIKER)	
	9V-0450	10	PIN (15MM OD)	
	9X-8256	24	WASHER (6.6X12X2MM THK)	
	9Y-9236	1	BODY AS-GAUGE	
	031-1119	1	CAP AS-RADIATOR	
	117-2233	2	HANDHOLD	
	117-2234	4	HANDHOLD	
	120-4216	1	HOOD AS-FRONT	
	9R-2613	1	BOSS (M10X25MM)	
	120-4234	1	HOOD AS-REAR	
	120-4618	1	GRATE AS	
	121-0262	2	TUBE AS	
	121-0423	4	DOOR AS-LH	
	7P-7304	1	BRACKET	
	8G-0871	1	HANDLE	
	9V-0453	1	BUSHING-TERMINAL	
	121-0424	4	DOOR AS-RH	
	7P-7304	1	BRACKET	
	8G-0871	1	HANDLE	
	9V-0453	1	BUSHING-TERMINAL	
	121-0716	1	TUBE AS-RH	
	121-0717	1	TUBE AS-LH	
	121-0894	1	TUBE AS	
	121-0950	1	TUBE AS-LH	
	121-0973	1	TUBE AS-RH	
	121-2634	2	TUBE AS	
	121-2724	2	TUBE AS	
	121-3023	1	DOOR AS-RH	

187-1984 **ENCLOSURE GP-ENGINE** *(contd.)* **i01415613**

NOTE	PART NUMBER	QTY	PART NAME 1 2 3 4 5 6 (PRODUCT LEVEL)	SEE PAGE
	121-3024	1	DOOR AS-LH	
	121-3311	1	DOOR AS-RH	
	121-3312	1	DOOR AS-LH	
	121-3566	2	COVER	
	121-3567	2	COVER AS	
	121-3867	12	HINGE	
	121-3868	6	HINGE AS	
	121-3869	6	HINGE AS	
	121-3993	4	PLATE	
	121-3994	8	PLATE	
	123-1010	1	TUBE AS-RH	
	123-1012	1	TUBE AS-LH	
	124-3416	4	WASHER	
	125-5458	1	TANK AS	
	128-1468	1	TUBE AS	
M	**129-3178**	24	LOCKNUT	
	129-7261	4	PLATE	
	138-0728	1	SHEET AS	
	9Y-7595	4	SPACER (30MM OD X 14MM OAL)	
	138-0732	1	TUBE AS	
	138-0734	2	PLATE	
	138-0744	10	HINGE	
	138-0745	5	HINGE AS	
	138-0746	5	HINGE AS	
	138-0747	1	DOOR AS (LH HINGE)	
	7P-7304	1	BRACKET	
	8G-0871	1	HANDLE	
	9V-0453	1	BUSHING-TERMINAL	
	138-0748	1	DOOR AS (RH HINGE)	
	7P-7304	1	BRACKET	
	8G-0871	1	HANDLE	
	9V-0453	1	BUSHING-TERMINAL	
	167-0785	6	STRAP	
	176-1695	1	TUBE AS	
	176-1696	1	TUBE AS	

B-USE AS REQUIRED
E-ORDER BY THE CENTIMETER
M-METRIC PART

190-5567 ENCLOSURE GP-ENGINE

S/N: 7KK88-UP

PART OF 8X-8402 CHASSIS AR

SMCS-7263 **i01456676**

NOTE	REF NO	GRAPHIC REF	PART NUMBER	QTY	PART NAME 1 2 3 4 5 6 (PRODUCT LEVEL)	SEE PAGE
Y	1	1	*8X-8991*	1	ENCLOSURE GP-ENGINE	488
Y	2	1	*190-5110*	1	TANK GP-COOLANT	126

Y-SEPARATE ILLUSTRATION

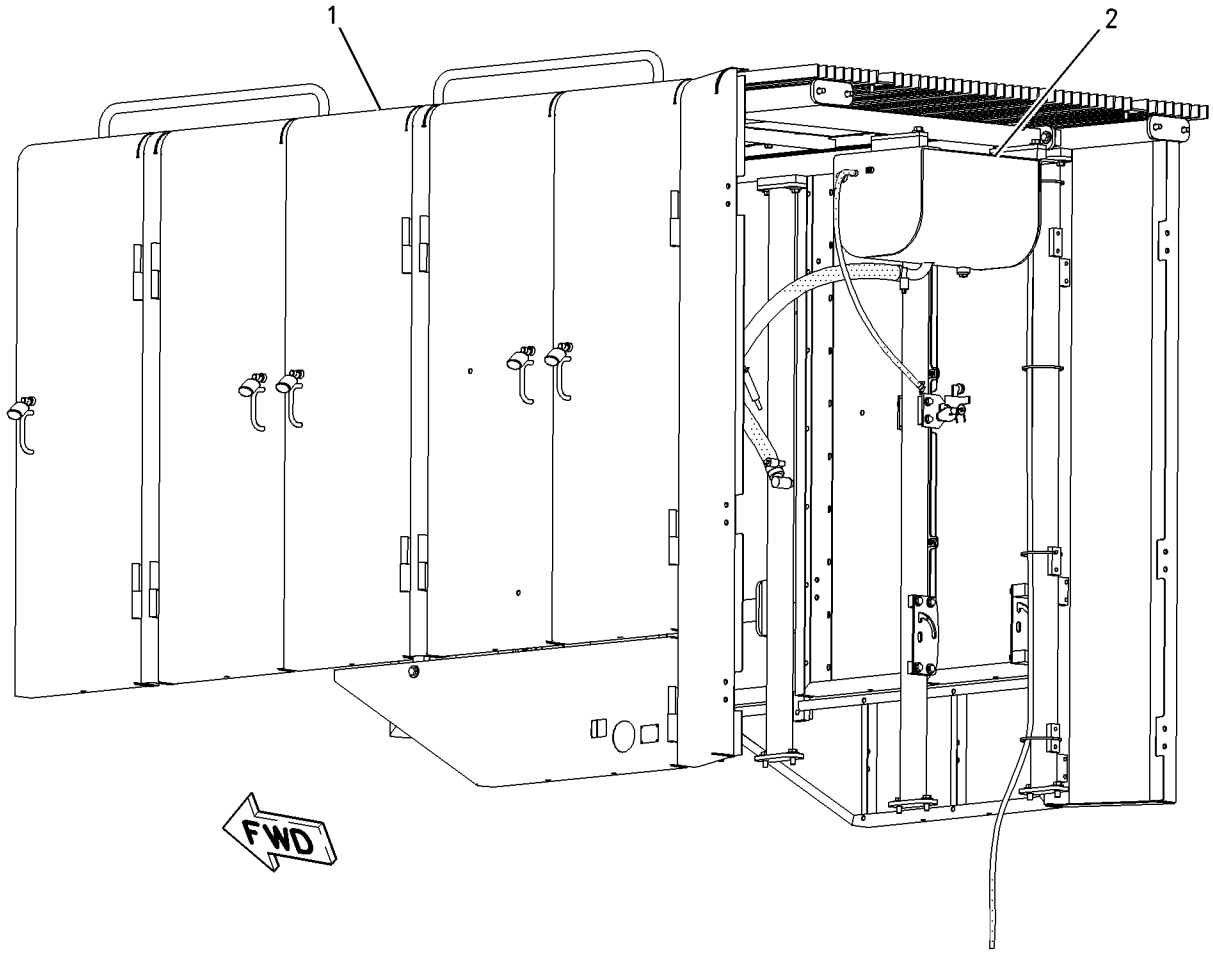

GRAPHIC #1 g00762065

FRAME AND BODY

148-0154 FENDER & SUPPORT GP

S/N: 7KK1-UP
AN ATTACHMENT

SMCS-7252 **i00736509**

NOTE	REF NO	GRAPHIC REF	PART NUMBER	QTY	PART NAME 1 2 3 4 5 6 (PRODUCT LEVEL)	SEE PAGE
	1	1	**9R-8760**	16	PLATE	
	2	1	**121-4664**	4	BAFFLE	
	3	1	**148-0148**	2	FENDER AS	
					(EACH INCLUDES)	
M		1	**8T-3597**	10	NUT-WELD (M12X1.75 THD)	
	4	1	**148-0149**	2	TUBE AS	
	5	1	**148-0150**	2	ARM AS-LH	
	6	1	**148-0151**	2	ARM AS-RH	
	7	1	**148-0157**	4	HANDHOLD	
	8	1	**5P-1076**	140	WASHER-HARD (4MM THK)	
	9	1	**7W-2278**	60	SPACER	
M	10	1	**8T-4139**	60	BOLT (M12X1.75X30MM)	
M	11	1	**8T-4183**	20	BOLT (M12X1.75X40MM)	
M	12	1	**8T-4192**	16	BOLT (M12X1.75X25MM)	
M	13	1	**8T-4195**	8	BOLT (M10X1.50X30MM)	
M	14	1	**8T-4196**	20	BOLT (M10X1.50X35MM)	
M	15	1	**8T-4244**	60	NUT (M12X1.75 THD)	
M	16	1	**8T-5041**	24	BOLT (M12X1.75X120MM)	

M-METRIC PART

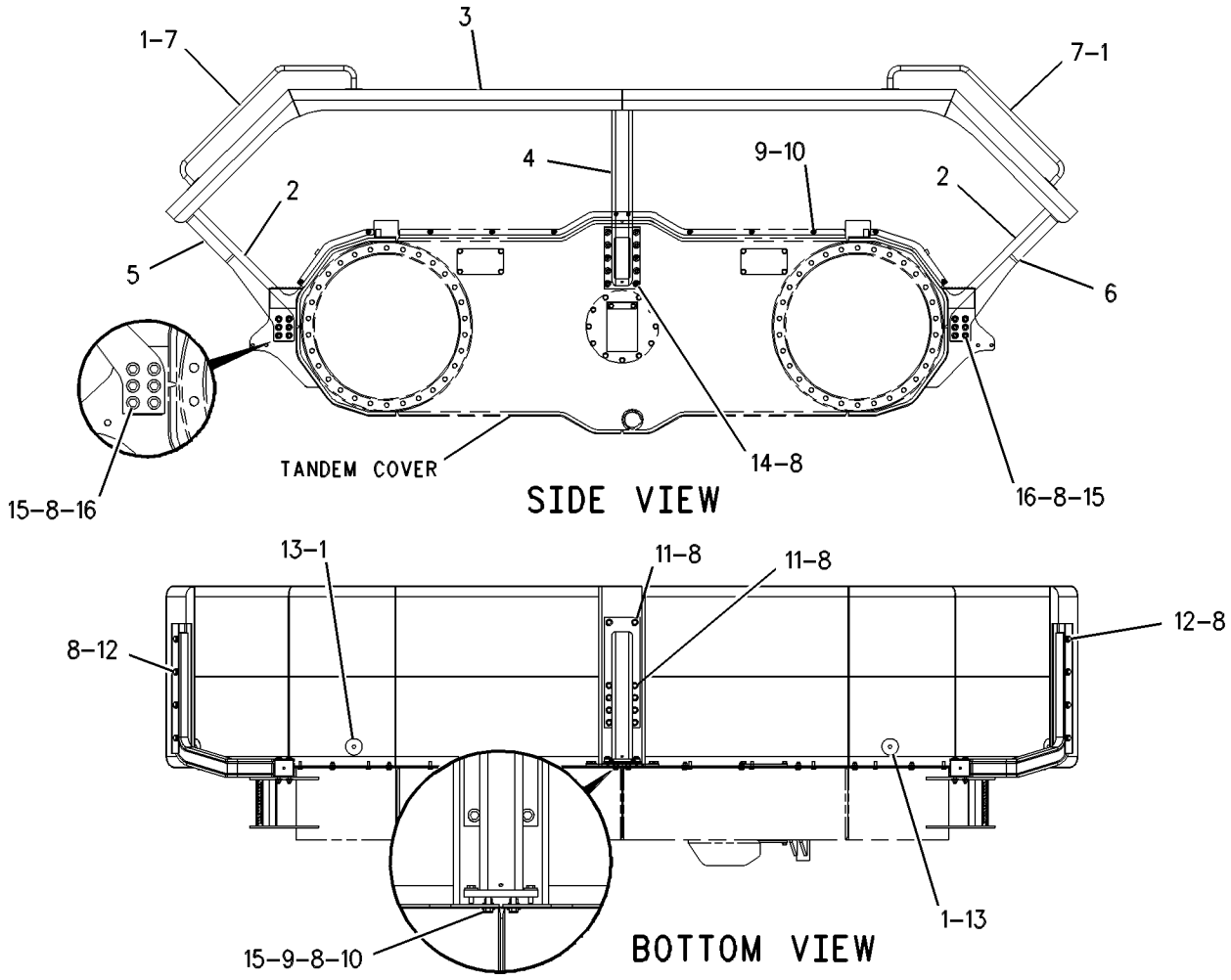

GRAPHIC #1 g00337352

FRAME AND BODY

8X-8988 FRAME GP-FRONT

S/N: 7KK1-UP

PART OF 8X-8402 CHASSIS AR

SMCS-7050, 7051 **i01500418**

NOTE	REF NO	GRAPHIC REF	PART NUMBER	QTY	PART NAME 1 2 3 4 5 6 (PRODUCT LEVEL)	SEE PAGE
	1	1	**125-6895**	1	COVER AS (RH-FRONT)	
	2	1	**125-6896**	1	COVER AS (LH-FRONT)	
	3	1	**132-1501**	1	COVER (RH)	
	4	1	**132-1502**	1	COVER (LH)	
Y	5	1	*190-0802*	1	FRAME GP-FRONT	501
M	6	1	**8T-4133**	4	NUT (M10X1.5 THD)	
M	7	1	**8T-4137**	20	BOLT (M10X1.5X20MM)	
	8	1	**8T-4222**	20	WASHER-PLATED (11X32X2.5MM THK)	

M-METRIC PART
Y-SEPARATE ILLUSTRATION

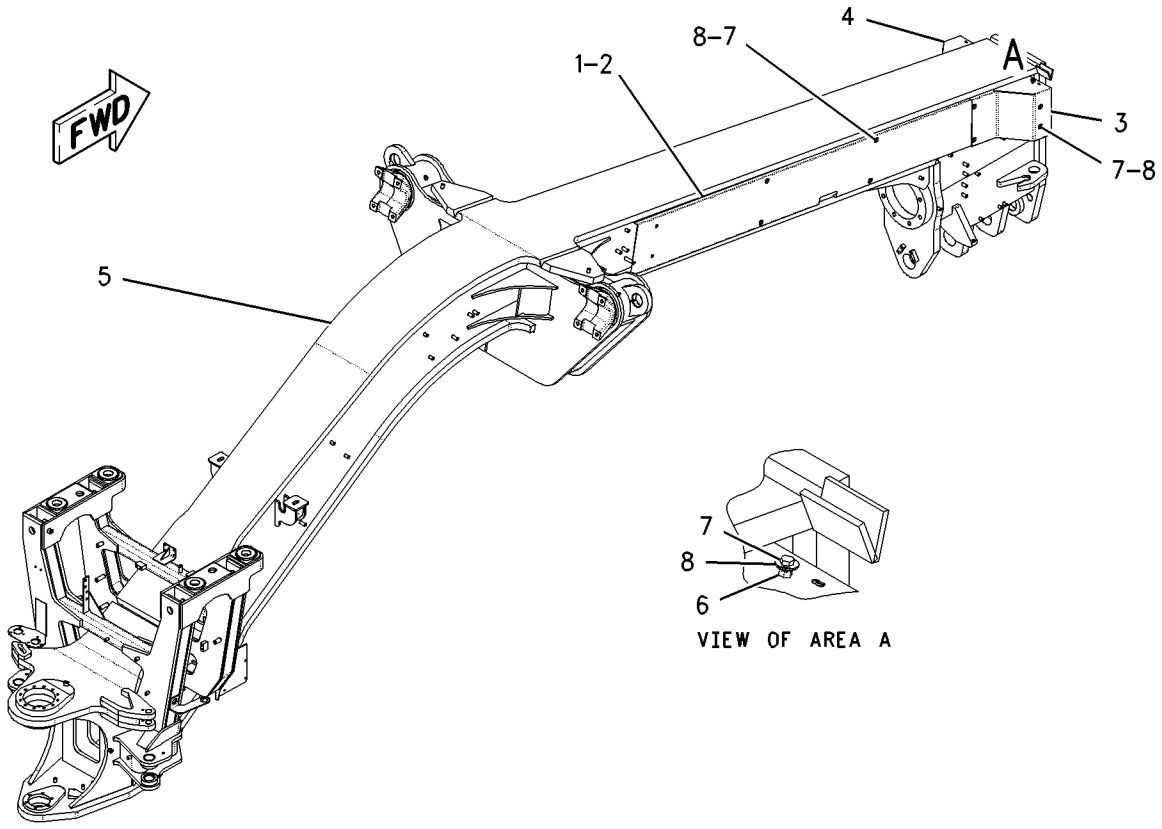

GRAPHIC #1 g00778468

FRAME AND BODY

190-0802 FRAME GP-FRONT

S/N: 7KK1-UP

PART OF 8X-8988 FRAME GP-FRONT

SMCS-7050, 7051 **i01499084**

NOTE	REF NO	GRAPHIC REF	PART NUMBER	QTY	PART NAME 1 2 3 4 5 6 (PRODUCT LEVEL)	SEE PAGE
	1	1	**6Y-5590**	3	DISC-THRUST	
	2	1	**6Y-5745**	3	DISC-THRUST	
	3	1	**8X-0570**	3	SHIM PACK (INCLUDES 33 SHIMS)	
	4	1	**9X-7702**	3	SEAL-LIP TYPE	
	5	1	**125-6870**	1	FRAME AS	
M	5A	1	**7X-0751**	4	BOSS-WELD (M10X1.5-6 THD)	
	5B	1	**8R-7783**	1	BOSS (45MM THK)	
	5C	1	**8X-4711**	1	BOSS AS (M12X1.75X20.0MM)	
	5D	1	**9R-2613**	48	BOSS (M10X25MM)	
	6	1	**128-3871**	3	RETAINER	
	7	1	**144-5904**	3	YOKE	
	8	1	**7J-1335**	3	BEARING	
	9	1	**7J-1337**	3	BEARING (6.5IN OD)	
	10	1	**8T-4123**	6	WASHER-PLATED (22X35X3.5MM THK)	
M	11	1	**8T-6430**	6	BOLT (M20X2.5X50MM)	
	12	1	**9W-5560**	4	BEARING-SLEEVE	
	13	1	**9X-7703**	3	SEAL-LIP	

M-METRIC PART

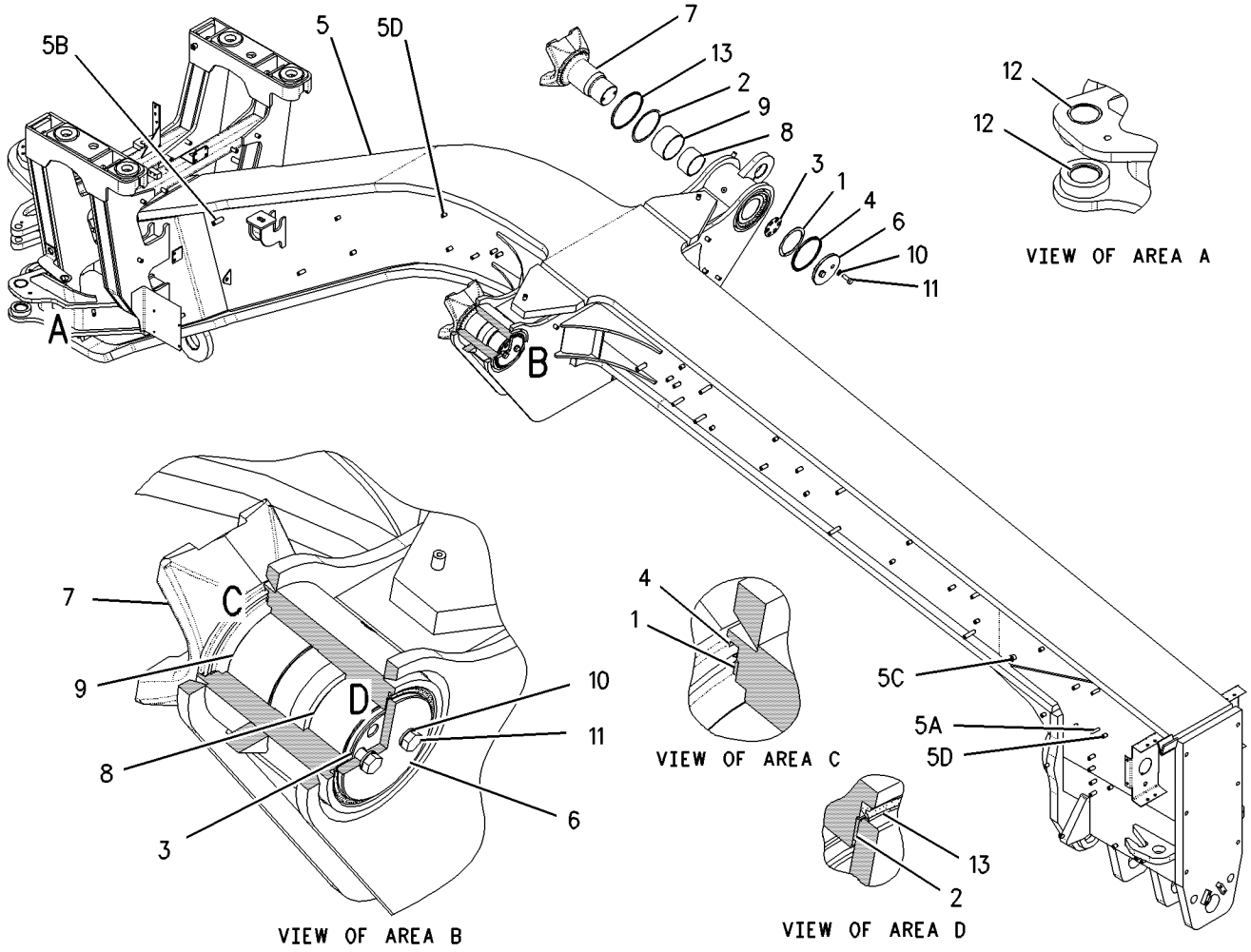

GRAPHIC #1 g00778099

FRAME AND BODY

8X-8989 FRAME GP-REAR

S/N: 7KK1-92

PART OF 8X-8402 CHASSIS AR

SMCS-7050, 7051 **i01159961**

NOTE	REF NO	GRAPHIC REF	PART NUMBER	QTY	PART NAME 1 2 3 4 5 6 (PRODUCT LEVEL)	SEE PAGE
	1	1	**9W-5560**	4	BEARING-SLEEVE	
	2	1	**144-9787**	1	FRAME AS-ENGINE	
	3	1	**9R-2613**	39	BOSS (M10X25MM) (25MM THK)	
	4	1	**8X-6110**	2	BLOCK	
	5	1	**8R-7783**	10	BOSS (45MM THK)	
	6	1	**8X-4711**	6	BOSS AS (M12X1.75X20.0MM)	

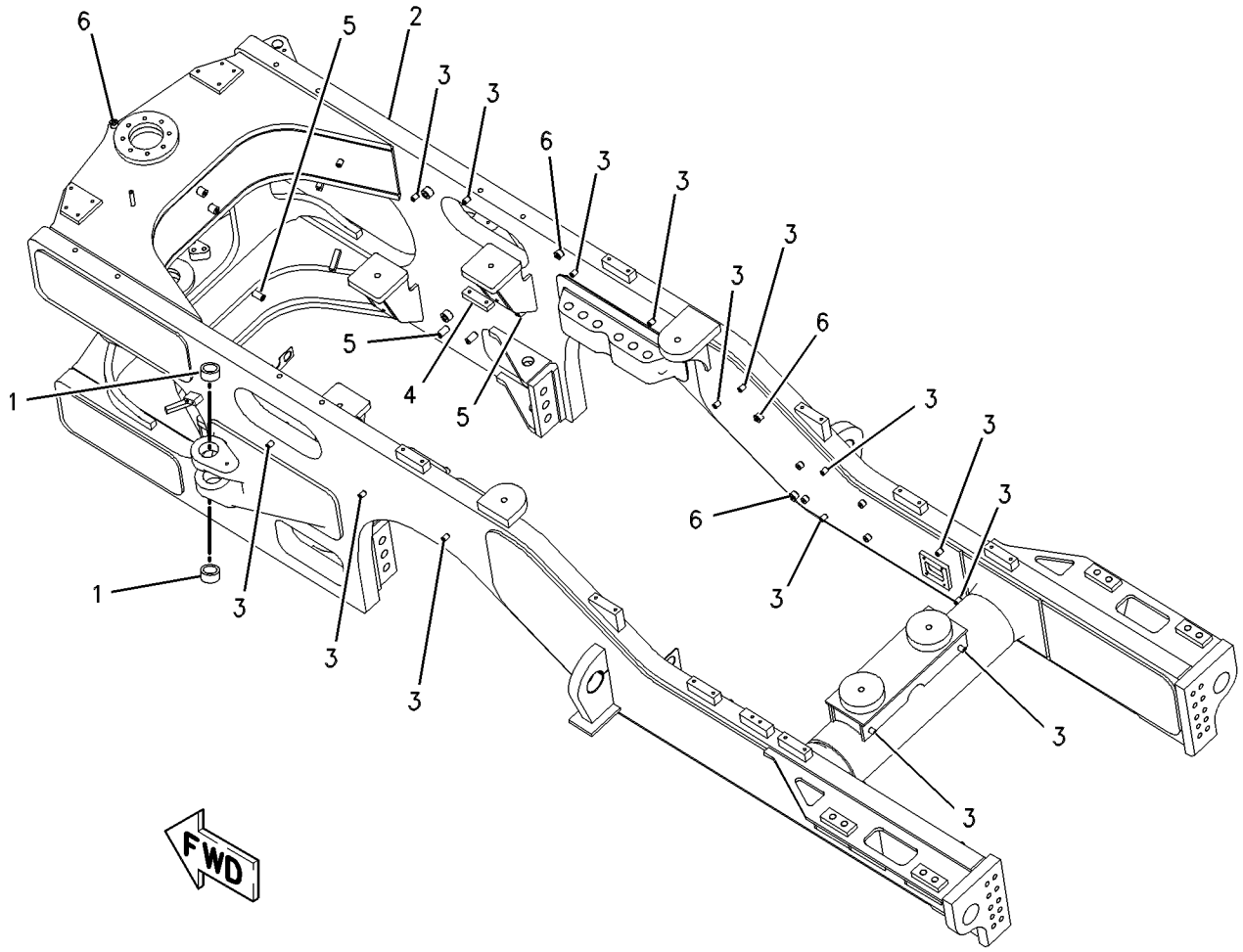

GRAPHIC #1 g00608447

FRAME AND BODY

8X-8989 FRAME GP-REAR

S/N: 7KK93-UP

PART OF 8X-8402 CHASSIS AR

SMCS-7050, 7051 **i01497254**

NOTE	REF NO	GRAPHIC REF	PART NUMBER	QTY	PART NAME 1 2 3 4 5 6 (PRODUCT LEVEL)	SEE PAGE
	1	1	**9W-5560**	4	BEARING-SLEEVE	
	2	1	**193-0974**	1	FRAME AS	
	3	1	**9R-2613**	40	BOSS (M10X25MM)	
	4	1	**8X-6110**	2	BLOCK	
	5	1	**8R-7783**	10	BOSS (M12X45MM)	
	6	1	**8X-4711**	6	BOSS AS (M12X1.75X20.0MM)	

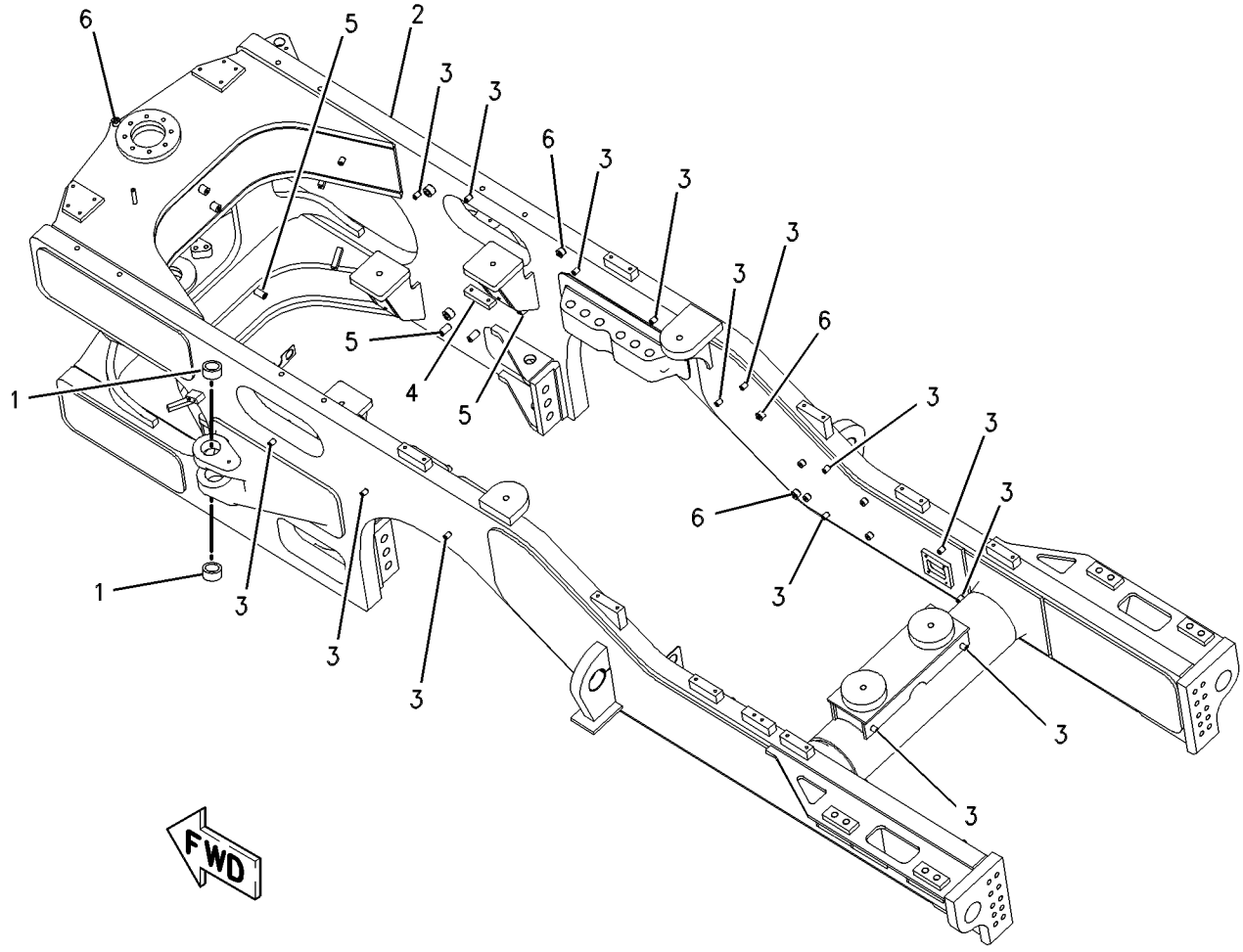

GRAPHIC #1 g00608447

8X-9002 GUARD & SUPPORT GP-RADIATOR

S/N: 7KK1-UP

PART OF 8X-8402 CHASSIS AR, 190-5568 RADIATOR & MOUNTING GP, 187-5267 RADIATOR GP

SMCS-7155 **i01434126**

NOTE	REF NO	GRAPHIC REF	PART NUMBER	QTY	PART NAME 1 2 3 4 5 6 (PRODUCT LEVEL)	SEE PAGE
	1	1	**7C-6921**	12	SPACER (11X20X22.8MM THK)	
	2	1	**124-8661**	1	TUBE AS	
	3	1	**124-8662**	1	SUPPORT AS-RH	
M		1	**8T-3490**	12	NUT-WELD (M10X1.5 THD)	
		1	**124-8665**	1	BLOCK	
	4	1	**124-8663**	1	SUPPORT AS-LH	
M		1	**8T-3490**	12	NUT-WELD (M10X1.5 THD)	
		1	**124-8665**	1	BLOCK	
	5	1	**125-0175**	1	COVER AS	
M		1	**8T-3490**	2	NUT-WELD (M10X1.5 THD)	
	6	1	**125-1159**	2	BRACKET AS	
					(EACH INCLUDES)	
M		1	**8T-3490**	2	NUT-WELD (M10X1.5 THD)	
	7	1	**125-1172**	1	SUPPORT	
	8	1	**125-2044**	1	SUPPORT	
	9	1	**125-2225**	3	STRIP	
	10	1	**125-2226**	3	BAFFLE	
	11	1	**125-2769**	1	SUPPORT AS-LOWER	
		1	**5D-9629**	6	ROD	
M		1	**6V-9632**	2	NUT-WELD (M6X1 THD)	
C	12	1	**153-7804**	1	SHEET-RH	
M		1	**8T-3490**	2	NUT-WELD (M10X1.5 THD)	
C	13	1	**153-7805**	1	SHEET-LH	
M		1	**8T-3490**	2	NUT-WELD (M10X1.5 THD)	
C	14	1	**153-7939**	1	SUPPORT AS	
		1	**5D-9629**	4	ROD	
M		1	**8T-3490**	5	NUT-WELD (M10X1.5 THD)	
	15	1	**5P-1076**	4	WASHER-HARD (13.5X30X4MM THK)	
	16	1	**6B-4594**	21	RIVET	
M	17	1	**7X-2562**	2	BOLT (M20X2.5X45MM)	
M	18	1	**7X-2564**	8	BOLT (M20X2.5X90MM)	
	19	1	**7X-7729**	12	WASHER (11X25X3MM THK)	
	20	1	**8T-4121**	27	WASHER-HARD (11X21X2.5MM THK)	
	21	1	**8T-4123**	10	WASHER-PLATED (22X35X3.5MM THK)	
M	22	1	**8T-4136**	4	BOLT (M10X1.5X25MM)	
M	23	1	**8T-4137**	23	BOLT (M10X1.5X20MM)	
M	24	1	**8T-4956**	4	BOLT (M12X1.75X35MM)	
M	25	1	**8T-6466**	12	BOLT (M10X1.50X60MM)	

C-CHANGE FROM PREVIOUS TYPE
M-METRIC PART

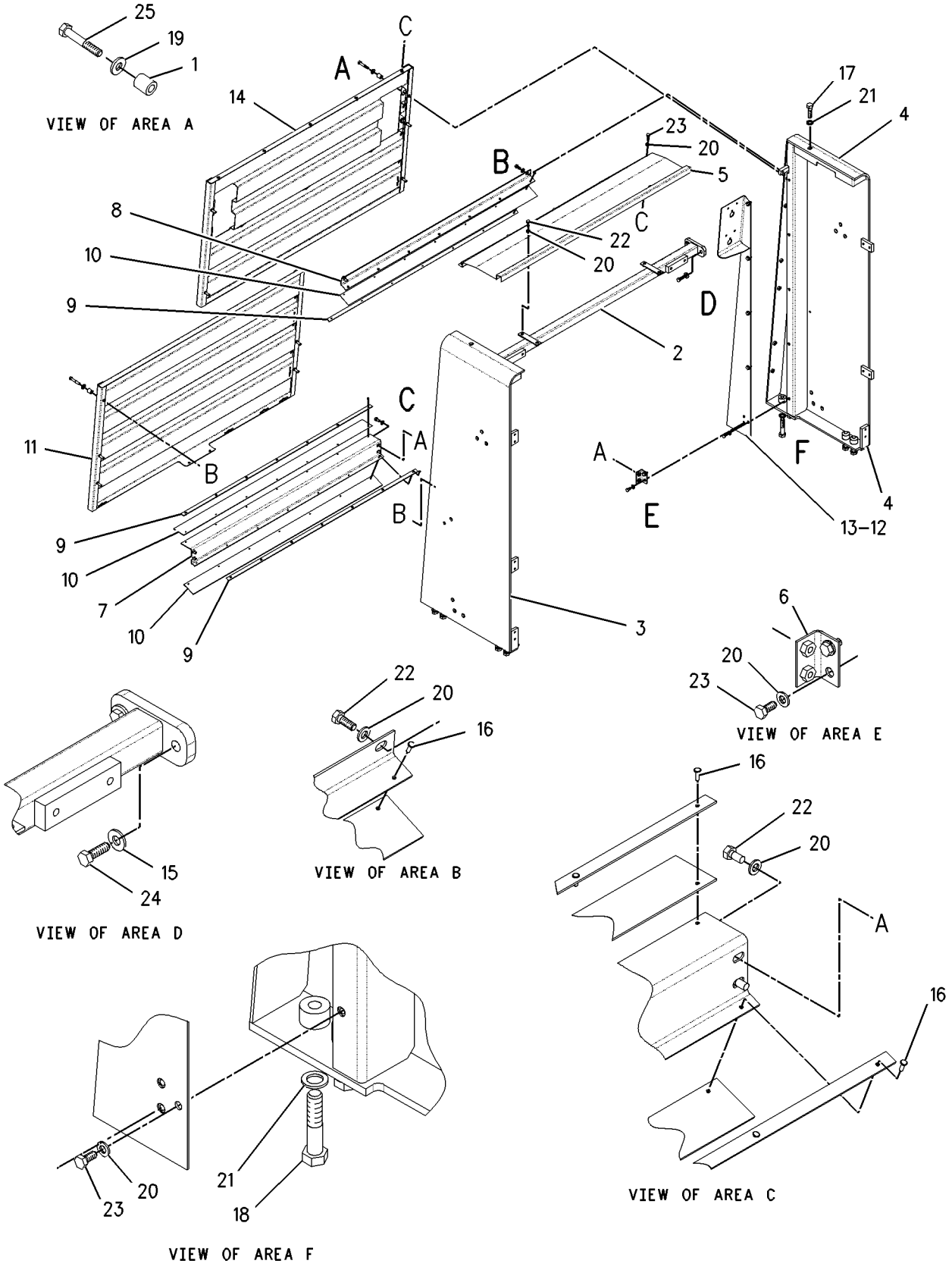

GRAPHIC #1

g00765293

8X-9238 HITCH GP-ARTICULATING

S/N: 7KK1-UP

PART OF 8X-8402 CHASSIS AR

SMCS-7057, 7100 **i01183236**

NOTE	REF NO	GRAPHIC REF	PART NUMBER	QTY	PART NAME 1 2 3 4 5 6 (PRODUCT LEVEL)	SEE PAGE
B	1	1	**3K-6401**	1	SHIM PACK (INCLUDES 19 SHIMS)	
	2	1	**5P-2525**	2	CUP-ROLLER BEARING	
	3	1	**5P-2673**	2	SEAL-LIP	
	4	1	**5P-3723**	2	CONE-ROLLER BEARING	
	5	1	**5P-9769**	2	CONE-ROLLER BEARING	
	6	1	**6D-7690**	2	CUP-ROLLER BEARING	
	7	1	**7K-9212**	2	SEAL-LIP (88.9MM ID)	
	8	1	**8G-5258**	4	SPACER (20MM THK)	
B	9	1	**9K-0721**	1	SHIM PACK (INCLUDES 20 SHIMS)	
	10	1	**9K-0725**	1	CAP	
	11	1	**9K-0726**	1	CAP	
	12	1	**9K-0805**	1	CAP	
	13	1	**9K-0806**	1	CAP	
	14	1	**117-2021**	1	PIN	
	15	1	**117-2022**	1	PLATE	
	16	1	**117-2023**	1	SPACER (62.09MM THK)	
	17	1	**117-2024**	1	PLATE	
B	18	1	**117-2025**	1	SHIM PACK (INCLUDES 26 SHIMS)	
B	19	1	**117-2026**	1	SHIM PACK (INCLUDES 26 SHIMS)	
	20	1	**117-2027**	1	PIN	
	21	1	**178-9481**	1	PLATE AS	
	22	1	**4D-0514**	1	PLUG-PIPE (1/16-27 NPTF)	
	23	1	**7X-0334**	6	BOLT (1/2-13X5IN)	
	24	1	**7X-0341**	12	BOLT (1/2-13X7.0IN)	
	25	1	**7X-0583**	4	WASHER-HARD (5MM THK)	
M	26	1	**7X-2563**	8	BOLT (M20X2.5X60MM)	
	27	1	**8T-4123**	8	WASHER-PLATED (3.5MM THK)	
M	28	1	**8T-4140**	8	BOLT (M16X2.0X60MM)	
M	29	1	**8T-4193**	8	BOLT (M16X2.0X50MM)	
	30	1	**8T-4223**	18	WASHER-HARD (3MM THK)	
	31	1	**9F-2247**	1	PLUG-PIPE	
	32	1	**9X-8257**	12	WASHER (3.50MM THK)	

B-USE AS REQUIRED
M-METRIC PART

8X-9238 **HITCH GP-ARTICULATING** ***(contd.)*** **i01183236**

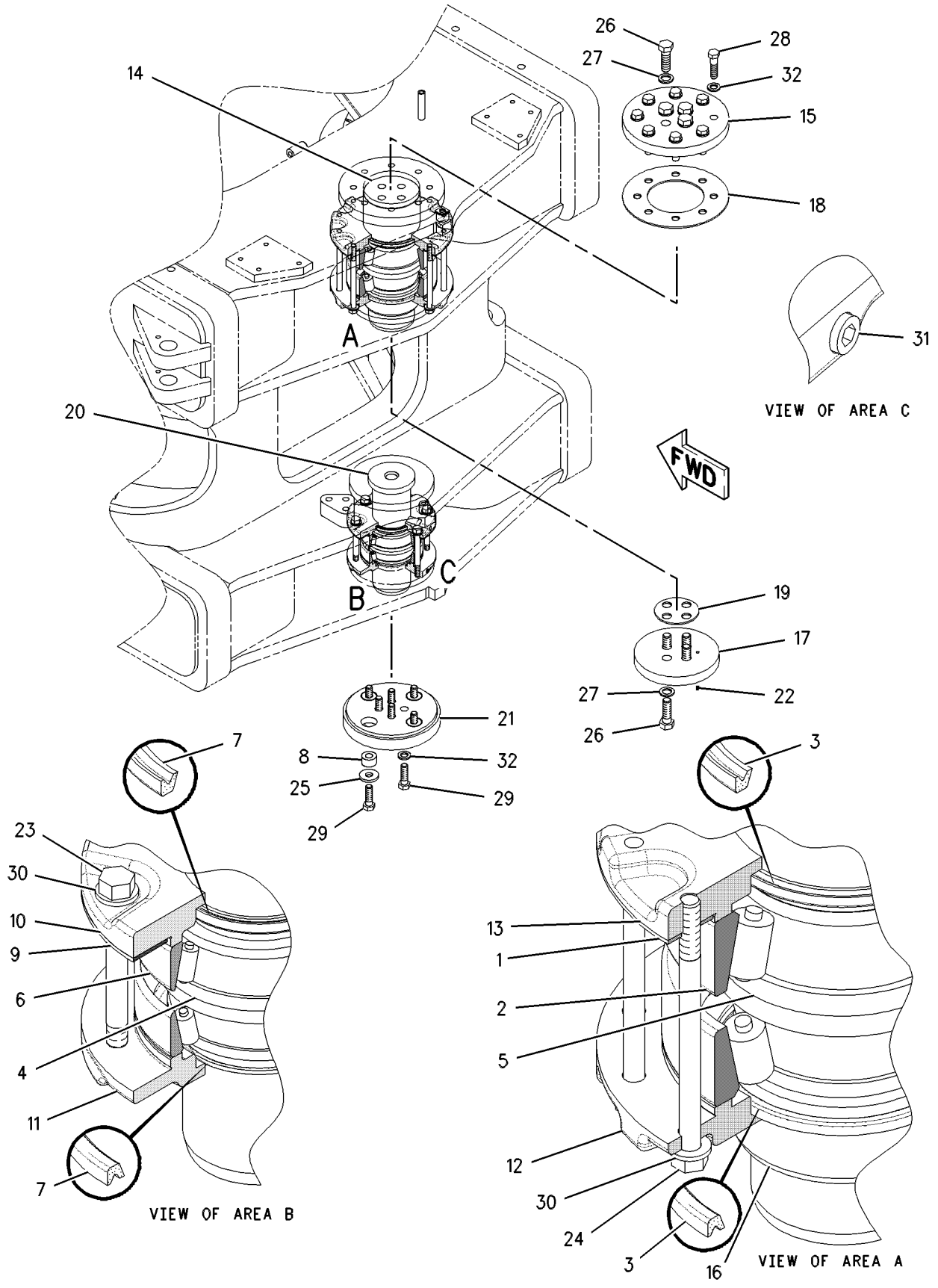

GRAPHIC #1 g00635754

155-8345 LINES GP-CENTRAL LUBRICATION

S/N: 7KK65-UP

PART OF 8X-8402 CHASSIS AR

SMCS-7510 **i01130292**

NOTE	REF NO	GRAPHIC REF	PART NUMBER	QTY	PART NAME 1 2 3 4 5 6 (PRODUCT LEVEL)	SEE PAGE
	1	1	**3B-7285**	1	NIPPLE-PIPE	
	2	1	**3B-7734**	4	NIPPLE	
	3	2	**7X-0492**	1	ELBOW-90 DEGREE (1/8-27 THD)	
	4	2	**8C-6865**	1	CONNECTOR	
	5	1	**8T-4128**	6	ADAPTER-ORFS	
I	6	2	**132-2011**	1	HOSE AS	
I	7	2	**132-2013**	1	HOSE AS	
I	8	2	**155-8347**	1	HOSE AS	
I	9	2	**155-8348**	1	HOSE AS	
I	10	2	**155-8349**	1	HOSE AS	
I	11	2	**155-8351**	1	HOSE AS	
I	12	2	**156-5303**	1	HOSE AS	
I	13	2	**156-5304**	1	HOSE AS	
	14	1	**2R-1939**	1	CLIP (27.0MM ID)	
	15	1	**3B-7733**	1	NIPPLE-PIPE	
	16	2	**4J-5477**	16	SEAL-O-RING (8.61MM ID)	
	17	1,2	**4K-8864**	16	CLIP (14.2MM ID)	
	18	1,2	**8T-4121**	16	WASHER (2.5MM THK)	
M	19	1,2	**8T-4137**	16	BOLT (M10X1.50X20MM)	
	20	2	**9M-4995**	2	CLIP (12.7MM ID)	

I-SEE HOSE FABRICATION GUIDE
M-METRIC PART

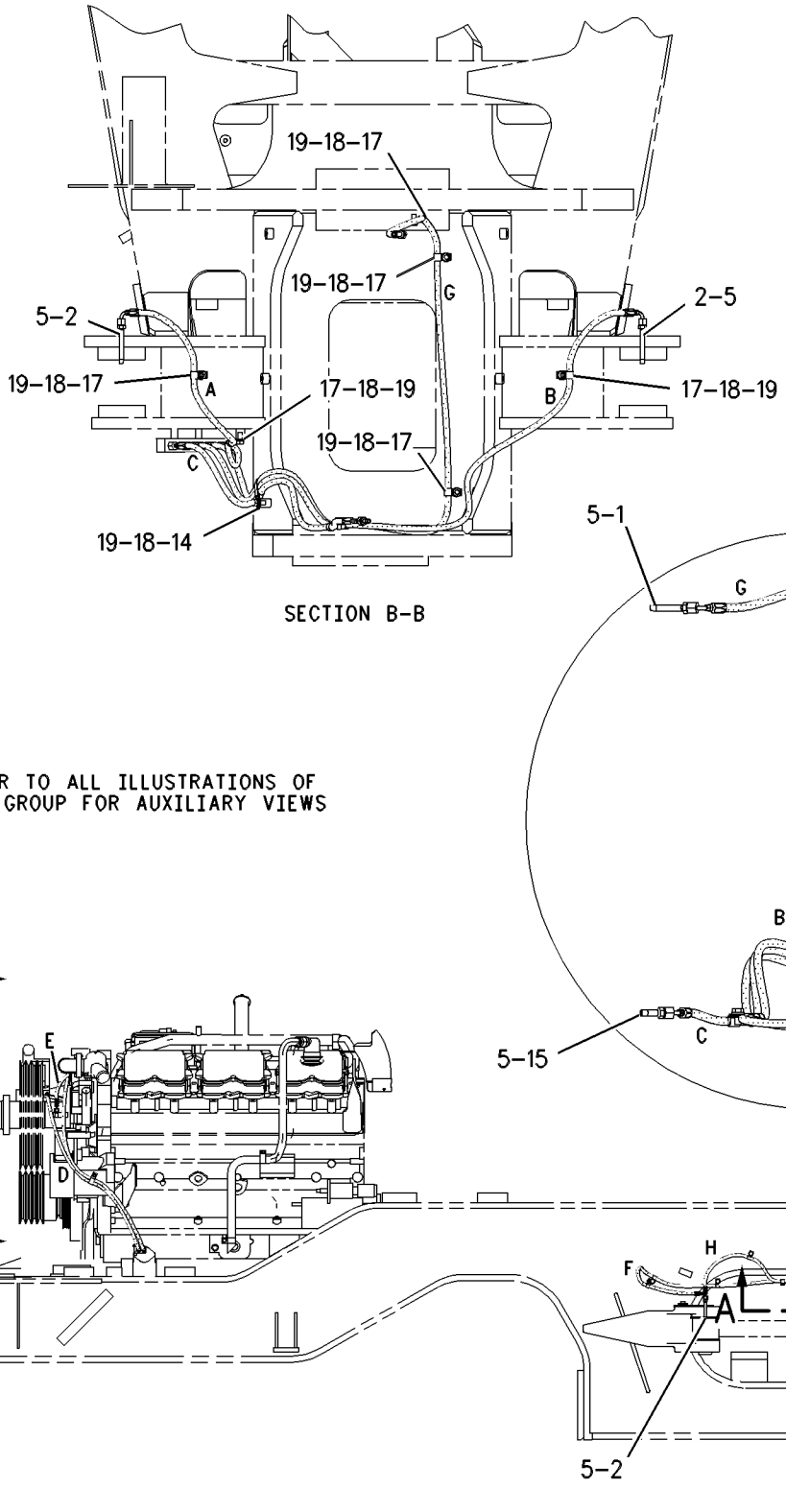

RIGHT SIDE VIEW

GRAPHIC #1 g00425261

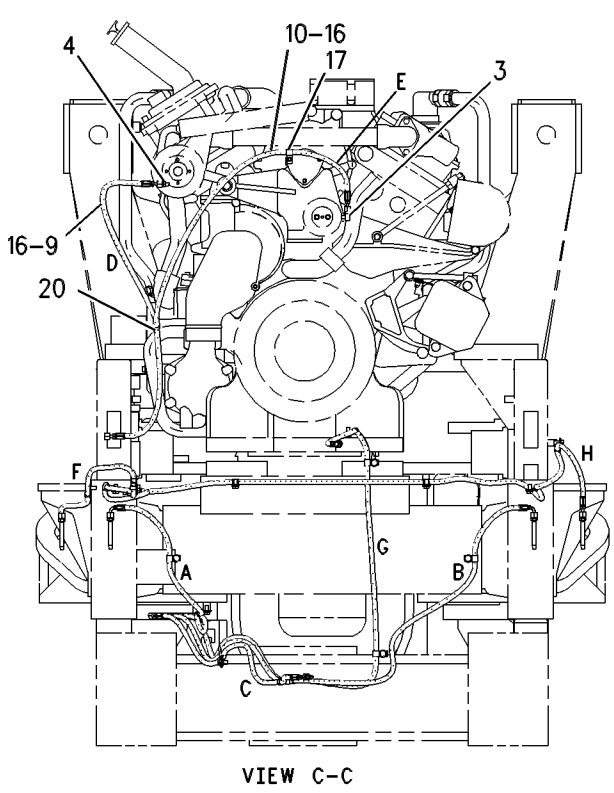

VIEW C-C

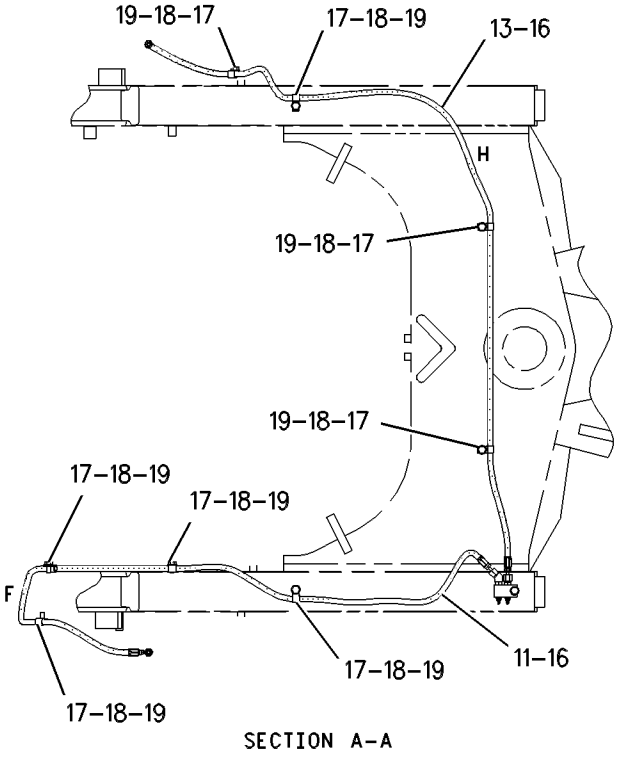

SECTION A-A

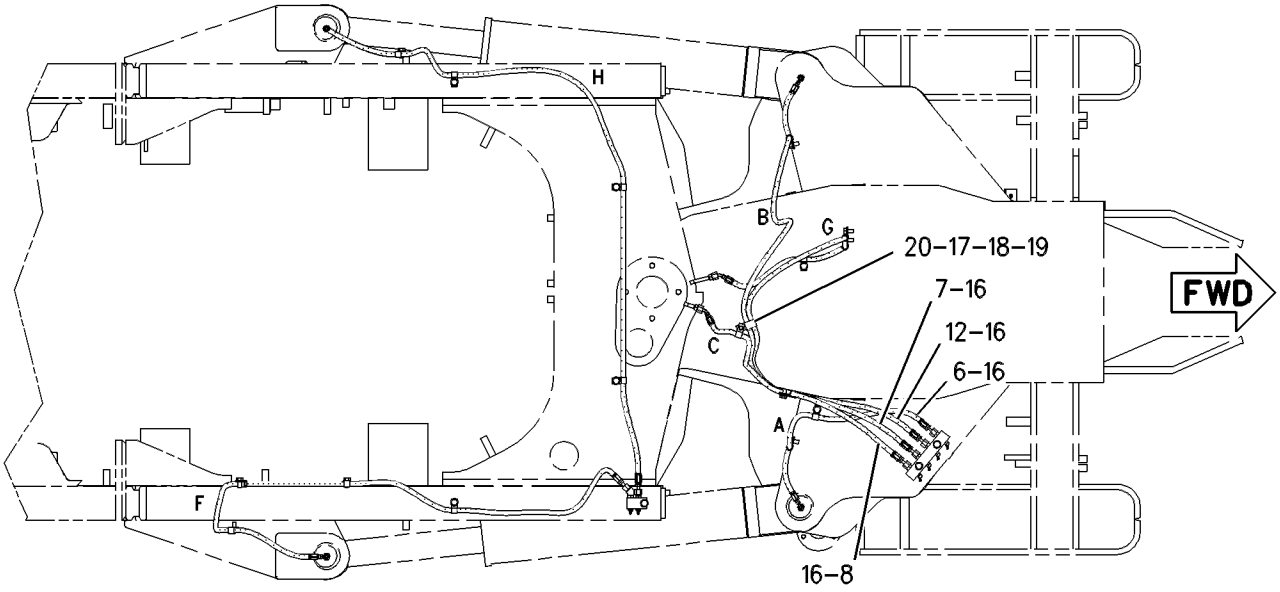

BOTTOM VIEW

GRAPHIC #2

g00425263

MEMORANDA

FRAME AND BODY

129-8537 LINES GP-GREASE

S/N: 7KK1-UP

PART OF 8X-8402 CHASSIS AR

SMCS-7510 **i01305695**

NOTE	REF NO	GRAPHIC REF	PART NUMBER	QTY	PART NAME 1 2 3 4 5 6 (PRODUCT LEVEL)	SEE PAGE
	1	1	**7X-0492**	3	ELBOW	
	2	1	**8C-6865**	12	CONNECTOR	
I	3	1	**134-3808**	1	HOSE AS	
I	4	1	**134-3809**	1	HOSE AS	
I	5	1	**134-3810**	1	HOSE AS	
I	6	1	**134-3821**	1	HOSE AS	
I	7	1	**134-3822**	1	HOSE AS	
I	8	1	**134-3823**	1	HOSE AS	
I	9	1	**134-3824**	1	HOSE AS	
I	10	1	**134-3825**	1	HOSE AS	
I	11	1	**134-3830**	1	HOSE AS	
I	12	1	**134-3831**	1	HOSE AS	
I	13	1	**134-3832**	1	HOSE AS	
I	14	1	**134-3808**	1	HOSE AS	
I	15	1	**134-3809**	1	HOSE AS	
I	16	1	**134-3810**	1	HOSE AS	
I	17	1	**134-3822**	1	HOSE AS	
	18	1	**2R-1939**	19	CLIP	
	19	1	**4J-5477**	30	SEAL-O-RING	
	20	1	**4K-8864**	9	CLIP	
	21	1	**8T-4121**	22	WASHER-HARD (11X21X2.5MM THK)	
M	22	1	**8T-4137**	21	BOLT (M10X1.5X20MM)	
	23	1	**9M-4995**	6	CLIP	

I-SEE HOSE FABRICATION GUIDE
M-METRIC PART

129-8537 **LINES GP-GREASE** *(contd.)* **i01305695**

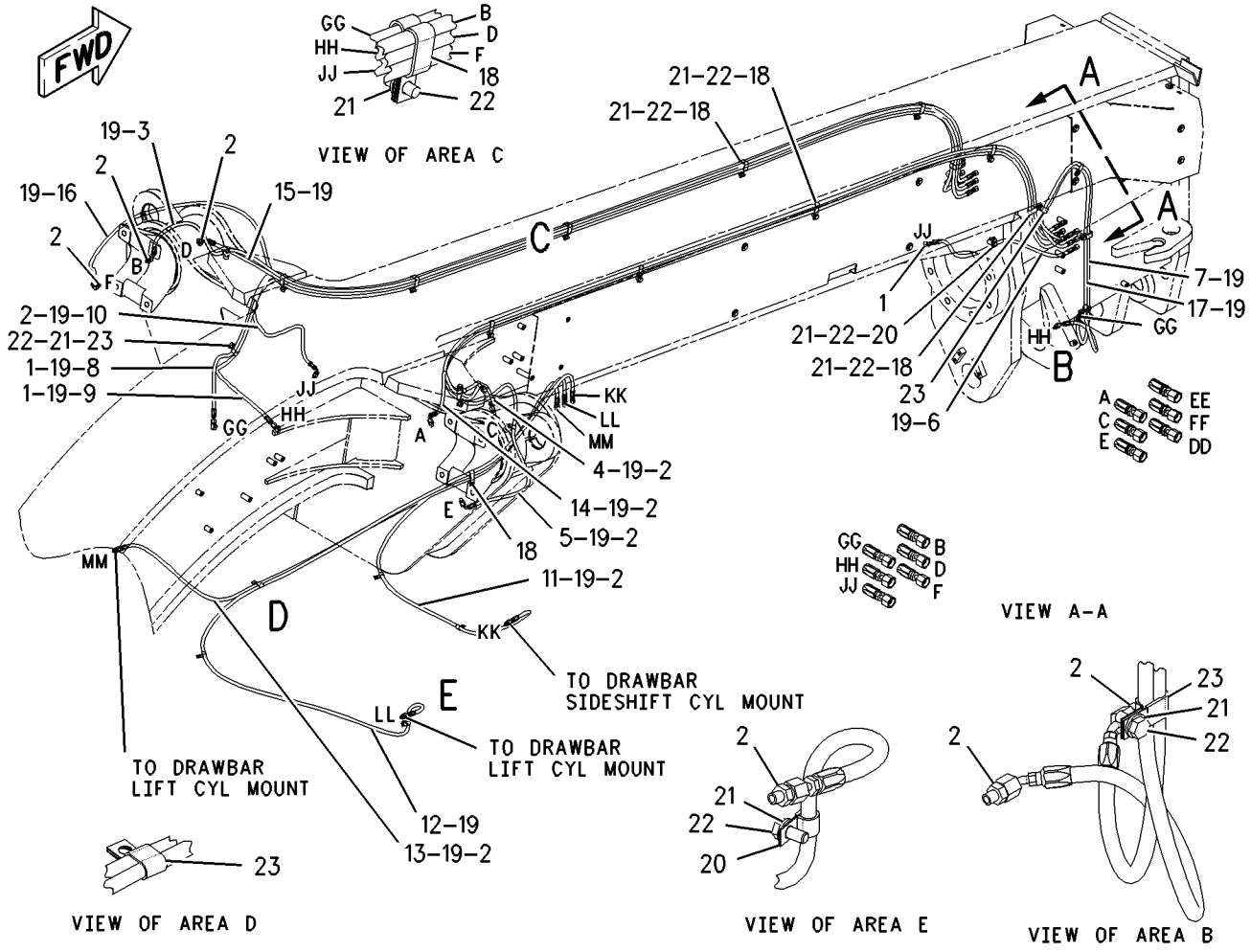

GRAPHIC #1 g00730725

129-8538 LINES GP-GREASE

S/N: 7KK1-64

PART OF 8X-8402 CHASSIS AR

SMCS-7510 **i00543338**

NOTE	REF NO	GRAPHIC REF	PART NUMBER	QTY	PART NAME 1 2 3 4 5 6 (PRODUCT LEVEL)	SEE PAGE
	1	1	**3B-7285**	1	NIPPLE-PIPE	
	2	1	**3B-7734**	4	NIPPLE	
	3	2	**7X-0492**	1	ELBOW-90 DEGREE	
	4	1,2	**8C-6865**	2	CONNECTOR	
	5	1	**8T-4128**	5	ADAPTER-ORFS	
I	6	2	**132-2011**	1	HOSE AS	
I	7	2	**132-2012**	1	HOSE AS	
I	8	2	**132-2013**	1	HOSE AS	
I	9	2	**132-2014**	1	HOSE AS	
I	10	2	**132-2015**	1	HOSE AS	
I	11	2	**132-2016**	1	HOSE AS	
	12	2	**132-2017**	1	HOSE AS	
I	13	2	**132-2018**	1	HOSE AS	
	14	1	**2R-1939**	1	CLIP (27.0MM ID)	
	15	2	**4J-5477**	16	SEAL-O-RING (8.61MM ID)	
	16	1,2	**4K-8864**	15	CLIP (14.2MM ID)	
	17	1,2	**8T-4121**	19	WASHER (2.5MM THK)	
M	18	1,2	**8T-4137**	19	BOLT (M10X1.50X20MM)	
	19	1,2	**9M-4995**	8	CLIP (12.7MM ID)	

I-SEE HOSE FABRICATION GUIDE
M-METRIC PART

129-8538 **LINES GP-GREASE** *(contd.)* **i00543338**

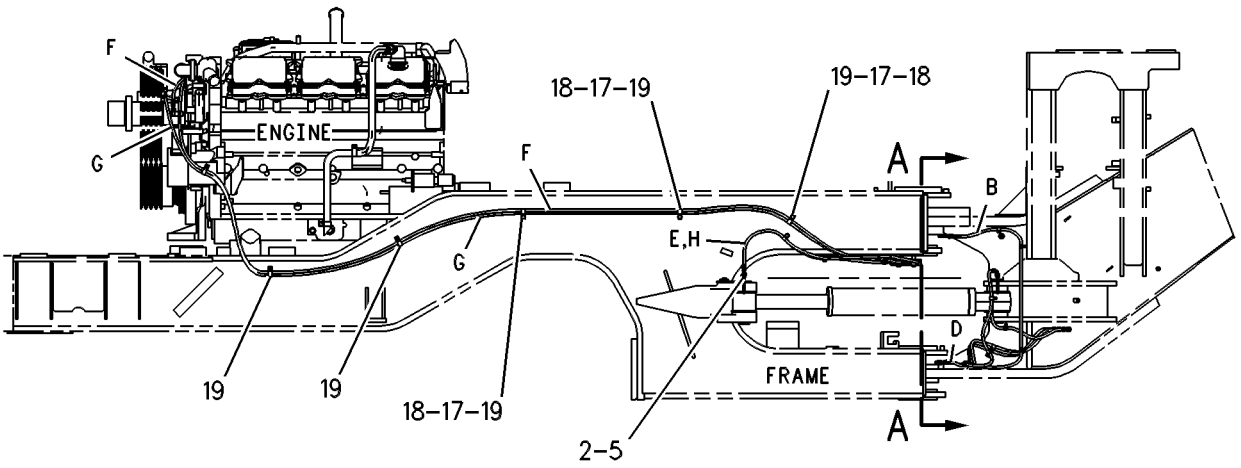

RIGHT SIDE VIEW

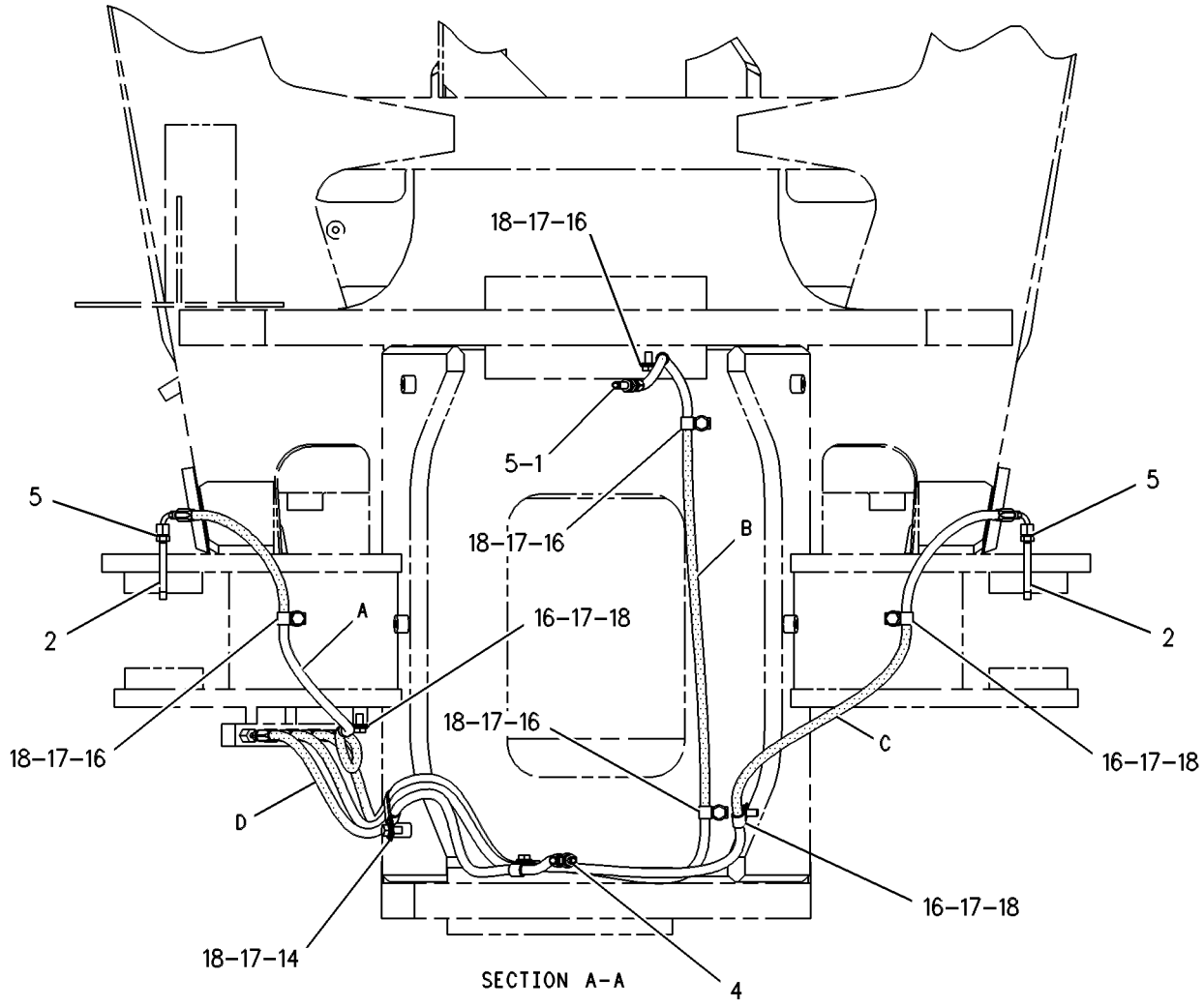

SECTION A-A

GRAPHIC #1

g00264262

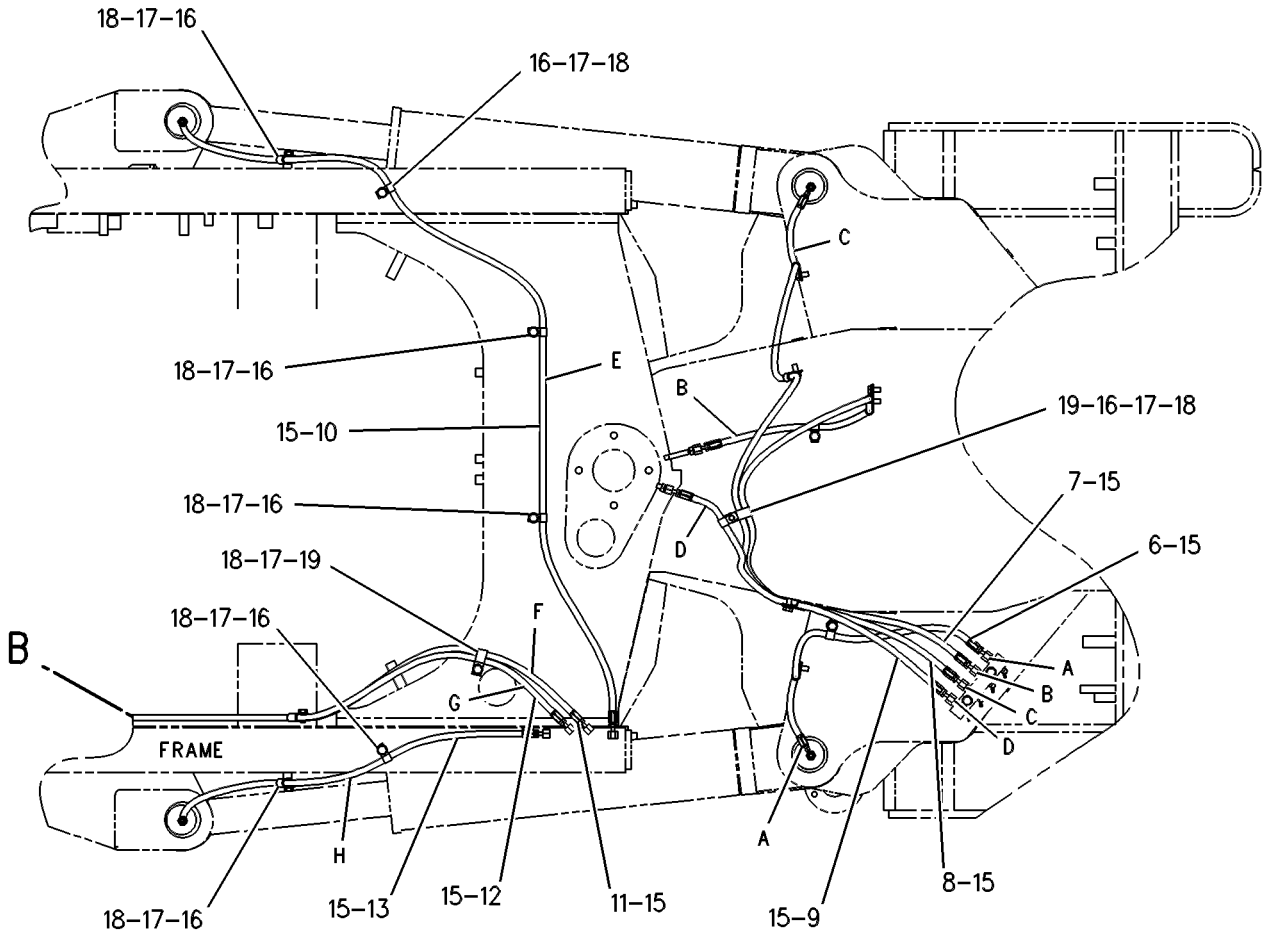

BOTTOM VIEW

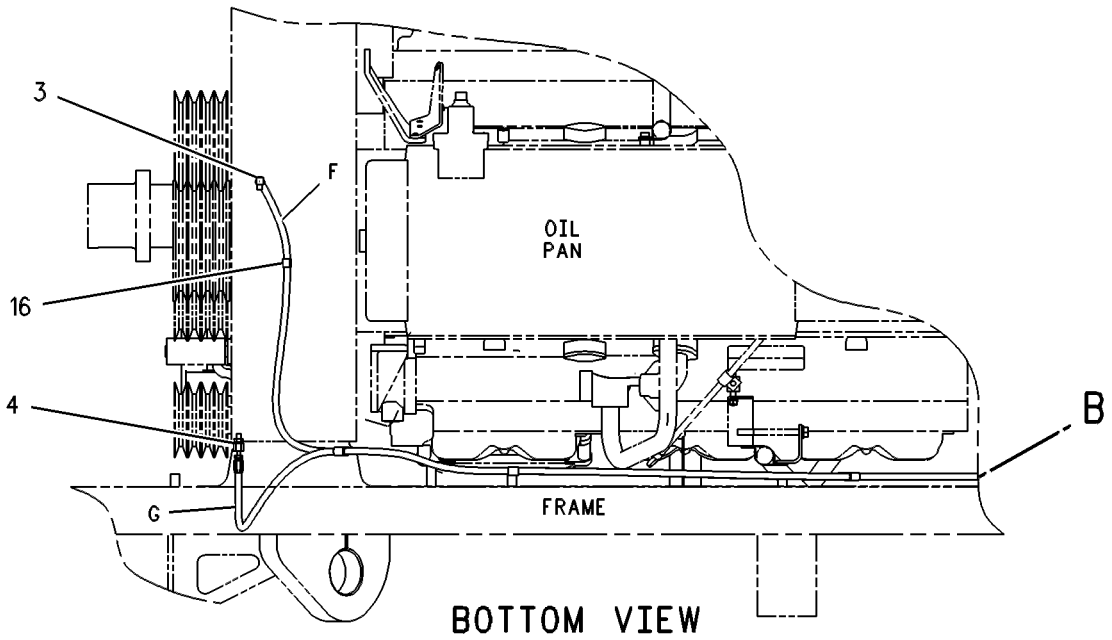

BOTTOM VIEW

GRAPHIC #2 g00264263

MEMORANDA

FRAME AND BODY

129-8539 LINES GP-GREASE

S/N: 7KK1-UP

PART OF 8X-8402 CHASSIS AR

SMCS-7510 **i01374028**

NOTE	REF NO	GRAPHIC REF	PART NUMBER	QTY	PART NAME 1 2 3 4 5 6 (PRODUCT LEVEL)	SEE PAGE
	1	1	**8C-6865**	8	CONNECTOR	
I	2	1	**133-2220**	1	HOSE AS	
I	3	1	**156-7014**	1	HOSE AS	
I	4	1	**133-2222**	1	HOSE AS	
I	5	1	**133-2223**	1	HOSE AS	
I	6	1	**133-2224**	1	HOSE AS	
I	7	1	**133-2225**	1	HOSE AS	
I	8	1	**133-2226**	1	HOSE AS	
I	9	1	**133-2227**	1	HOSE AS	
I	10	1	**133-2228**	1	HOSE AS	
I	11	1	**133-2229**	1	HOSE AS	
	12	1	**4J-5477**	20	SEAL-O-RING (7.67MM ID)	
	13	1	**4K-8864**	6	CLIP	
	14	1	**8T-4121**	10	WASHER-HARD (11X21X2.5MM THK)	
M	15	1	**8T-4137**	10	BOLT (M10X1.5X20MM)	
	16	1	**9M-4995**	7	CLIP	
	17	1	**3B-7733**	2	FITTING	
	18	1	**8T-4128**	2	ADAPTER	

I-SEE HOSE FABRICATION GUIDE
M-METRIC PART

129-8539 **LINES GP-GREASE** ***(contd.)*** **i01374028**

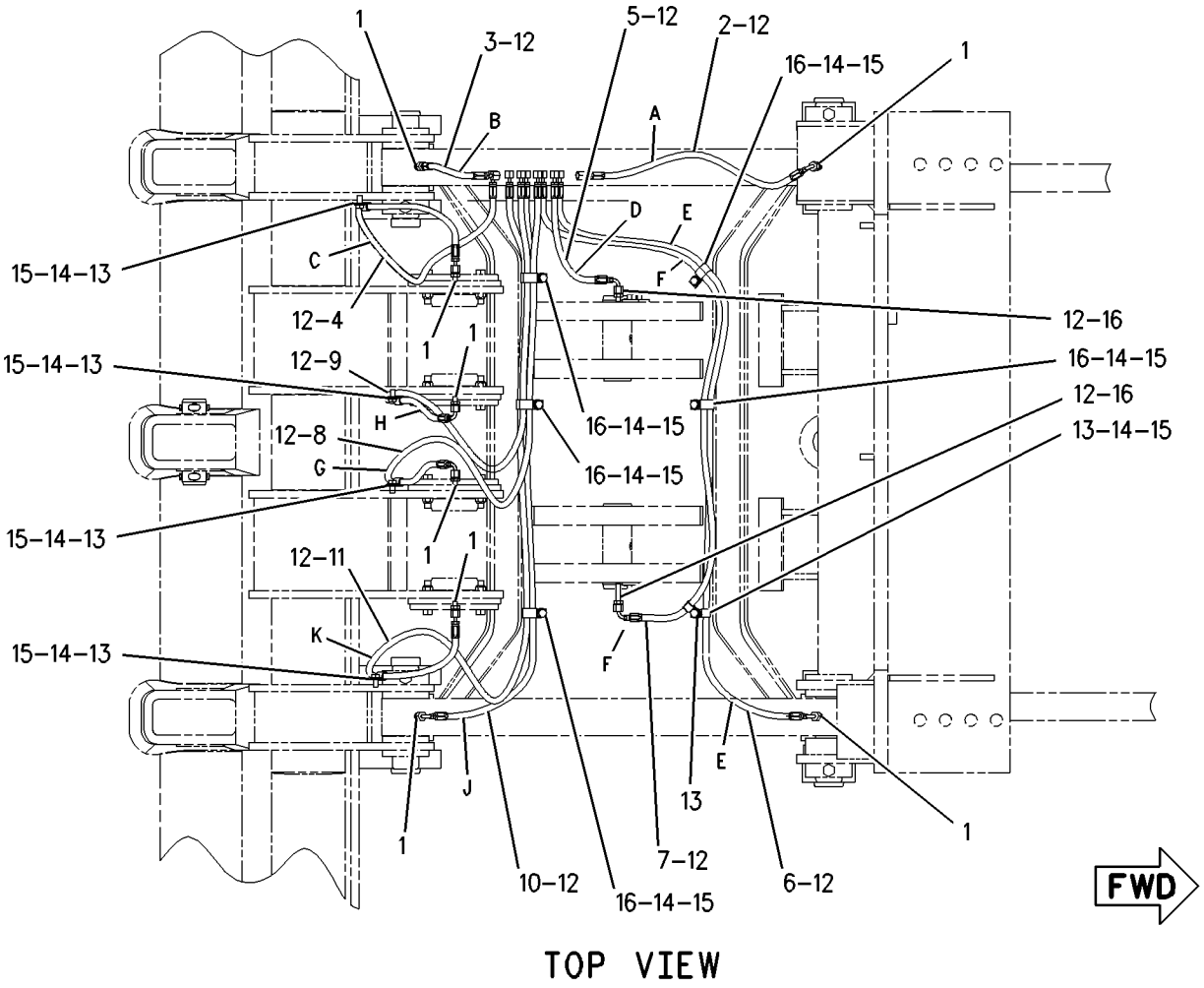

TOP VIEW

GRAPHIC #1 g00726352

192-5493 LINES GP-GREASE–FRONT AXLE

S/N: 7KK94-UP

PART OF 191-1933 AXLE AR-FRONT

SMCS-7510 **i01457202**

NOTE	REF NO	GRAPHIC REF	PART NUMBER	QTY	PART NAME 1 2 3 4 5 6 (PRODUCT LEVEL)	SEE PAGE
	1	1	**7X-0492**	4	ELBOW	
	2	1	**8C-6865**	14	CONNECTOR	
I	3	1	**134-3811**	2	HOSE AS	
I	4	1	**134-3812**	2	HOSE AS	
I	5	1	**134-3813**	2	HOSE AS	
I	6	1	**134-3815**	2	HOSE AS	
I	7	1	**134-3816**	2	HOSE AS	
I	8	1	**134-3817**	2	HOSE AS	
I	9	1	**134-3818**	2	HOSE AS	
I	10	1	**134-3819**	2	HOSE AS	
I	11	1	**134-3820**	2	HOSE AS	
	12	1	**144-7687**	4	SWIVEL	
I	13	1	**156-7015**	2	HOSE AS	
I	14	1	**175-4163**	2	HOSE AS	
	25	1	**2R-1939**	6	CLIP	
	26	1	**4J-5477**	44	SEAL-O-RING	
	27	1	**8S-6109**	4	CLIP (SLOT)	
	28	1	**8S-6110**	4	CLIP (TAB)	
	29	1	**8T-4121**	18	WASHER-HARD (11X21X2.5MM THK)	
M	30	1	**8T-4133**	6	NUT (M10X1.5 THD)	
M	31	1	**8T-4136**	4	BOLT (M10X1.5X25MM)	
M	32	1	**8T-4137**	4	BOLT (M10X1.5X20MM)	
M	33	1	**8T-4195**	4	BOLT (M10X1.5X30MM)	
	34	1	**9M-4995**	14	CLIP	

I-SEE HOSE FABRICATION GUIDE
M-METRIC PART

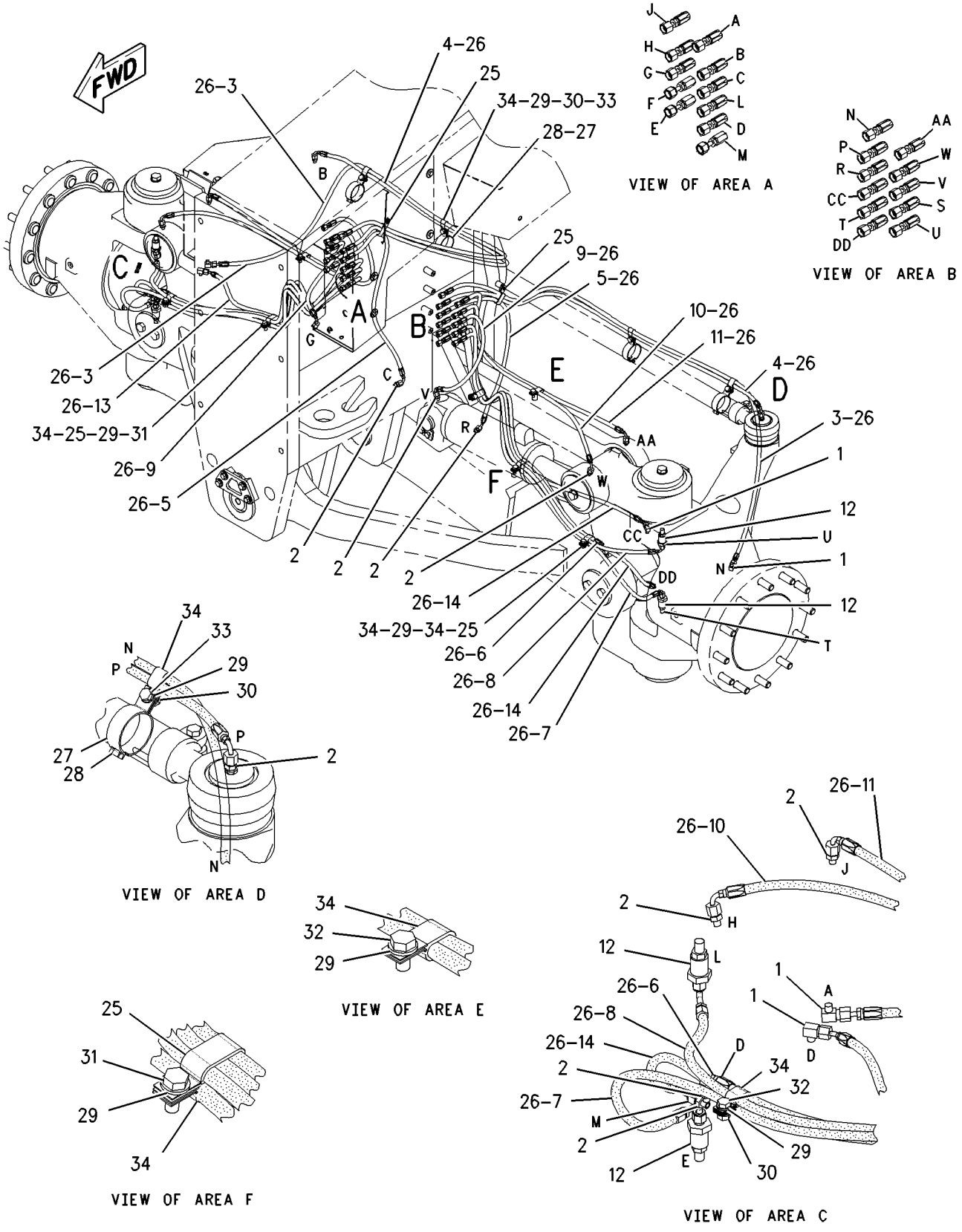

GRAPHIC #1 g00764723

117-2151 LINK GP-STEERING

S/N: 7KK1-UP

PART OF 8X-8974 AXLE GP-FRONT

SMCS-4305, 4318, 4329 **i00965489**

NOTE	REF NO	GRAPHIC REF	PART NUMBER	QTY	PART NAME 1 2 3 4 5 6 (PRODUCT LEVEL)	SEE PAGE
	1	1	**9D-3704**	1	SOCKET AS	
	2	1	**3S-2909**	1	RING	
	3	1	**163-9236**	1	RACE (SPHERICAL)	
	4	1	**7D-1292**	1	STUD-BALL	
	5	1	**7D-5435**	1	COVER	
	6	1	**9D-3706**	1	SOCKET AS	
	7	1	**3S-2909**	1	RING	
	8	1	**163-9236**	1	RACE (SPHERICAL)	
	9	1	**7D-1292**	1	STUD-BALL	
	10	1	**7D-5435**	1	COVER	
	11	1	**117-2164**	1	TIE ROD	
	12	1	**127-6325**	2	CLAMP AS	

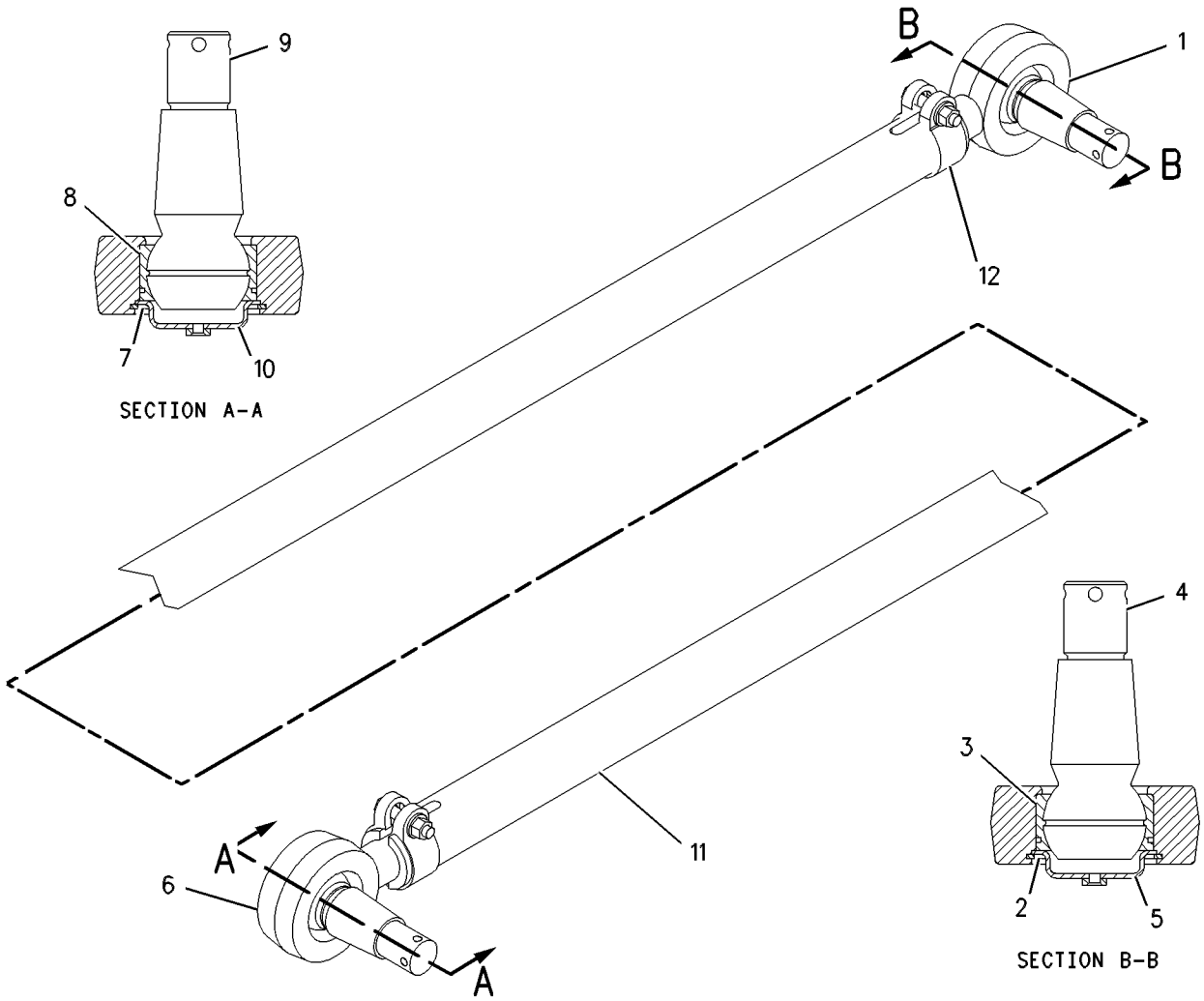

GRAPHIC #1 g00492188

FRAME AND BODY

134-2573 LINK GP-STEERING FRAME LOCK

S/N: 7KK1-UP

PART OF 8X-8402 CHASSIS AR

SMCS-7506 **i00735126**

NOTE	REF NO	GRAPHIC REF	PART NUMBER	QTY	PART NAME 1 2 3 4 5 6 (PRODUCT LEVEL)	SEE PAGE
	1	1	**117-2248**	2	PIN AS	
	2	1	**154-6617**	1	LINK	
	3	1	**8T-4223**	2	WASHER-HARD (3MM THK)	
M	4	1	**8T-4956**	2	BOLT (M12X1.75X35MM)	

M-METRIC PART

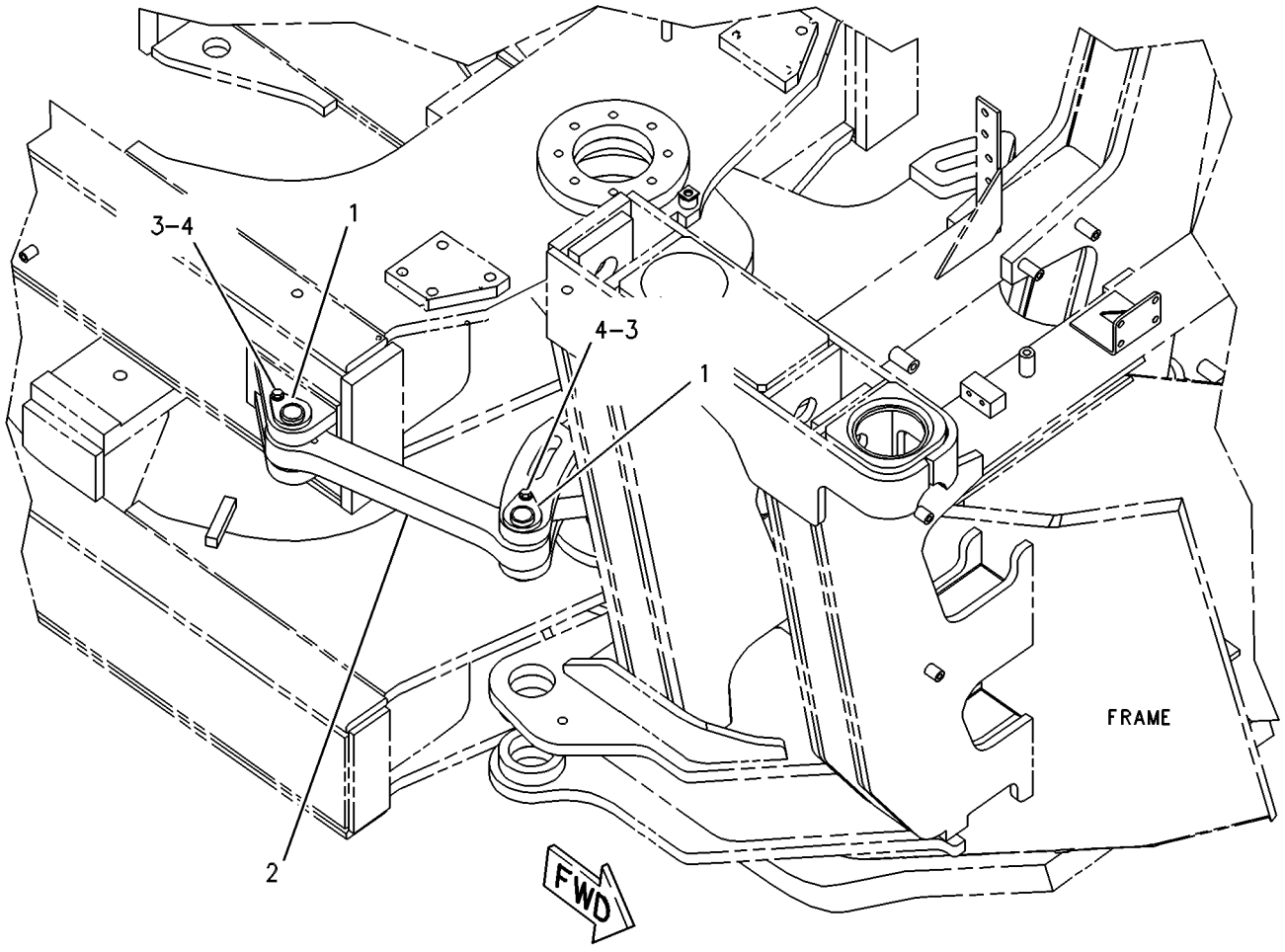

GRAPHIC #1 g00088592

131-9276 LUBRICATION AR-AUTOMATIC

S/N: 7KK1-UP
AN ATTACHMENT
TYPE 1

SMCS-7540 **i01187950**

NOTE	REF NO	GRAPHIC REF	PART NUMBER	QTY	PART NAME 1 2 3 4 5 6 (PRODUCT LEVEL)	SEE PAGE
	1	1	**2T-1925**	4	ELBOW (90 DEGREES)	
	2	2	**2T-2396**	2	ELBOW (90 DEGREES)	
	3	1,2	**3B-8489**	21	FITTING-GREASE (1/8-27 THD)	
	4	1,2	**5K-3771**	21	UNION-ADAPTER	
Y	5	2	**5T-5009**	1	VALVE GP-LUBE DISTRIBUTION	551
Y	6	1,2	**5T-5010**	6	VALVE GP-LUBE DISTRIBUTION	552
	7	1,2	**5T-5012**	55	CAP-PROTECTION	
	8	1	**5T-6374**	1	SPACER (40 MM THK)	
	9	1,2	**7X-0492**	53	ELBOW-90 DEGREE (1/8-27 THD)	
	10	1	**8C-6865**	2	CONNECTOR (PIPE THD TO O-RING FACE SEAL)	
	11	2	**8C-6872**	1	CONNECTOR (PIPE THD TO O-RING FACE SEAL)	
Y	12	1	**8W-2597**	5	VALVE GP-LUBE DISTRIBUTION	553
	13	1	**8X-1386**	1	SPACER (22.0MM THK)	
	14	1	**004-6683**	4	NIPPLE-PIPE (HEXAGON)	
	15	1,2	**126-0208**	6	SPACER (50.8MM THK)	
I	16	1	**141-2087**	1	HOSE AS	
I	17	1	**141-2088**	1	HOSE AS	
I	18	1	**141-2089**	1	HOSE AS	
I	19	1	**141-2090**	1	HOSE AS	
I	20	1	**141-2092**	1	HOSE AS	
I	21	1	**141-2093**	1	HOSE AS	
I	22	1	**141-2094**	1	HOSE AS	
I	23	1	**141-2095**	1	HOSE AS	
I	24	1	**141-2096**	1	HOSE AS	
I	25	2	**141-2097**	1	HOSE AS	
I	26	1	**141-2098**	1	HOSE AS	
I	27	1	**141-2099**	1	HOSE AS	
	28	2	**141-2101**	1	PLATE	
	29	1,2	**141-2102**	2	PLATE	
	30	2	**141-2103**	1	PLATE	
	31	1	**141-2104**	1	PLATE AS	
M		1	**6V-9632**	4	NUT-WELD (M6X1 THD)	
M		1	**8T-3490**	5	NUT-WELD (M10X1.5 THD)	
	32	1	**141-2105**	2	ADAPTER	
Y	33	2	**141-2107**	1	VALVE GP-LUBE DISTRIBUTION	554
Y	34	1	**141-2108**	1	PUMP GP-LUBRICATION	538
I	35	1	**141-6323**	1	HOSE AS	
I	36	1	**141-6324**	1	HOSE AS	
I	37	1	**141-6326**	1	HOSE AS	
I	38	2	**141-6622**	1	HOSE AS	
I	39	2	**141-6623**	1	HOSE AS	
I	40	2	**141-6645**	1	HOSE AS	
Y	41	2	**154-6503**	1	VALVE GP-PRESSURE CONTROL	216
	42	1	**176-0861**	2	PLATE AS	
					(EACH INCLUDES)	
		1	**5G-4313**	6	SPACER (12.0MM THK)	
	43	1	**176-0862**	1	TUBE AS	
	44	1	**176-0863**	1	TUBE AS	
	45	1,2	**100-4336**	14	CLIP (SLOT)	
I	46	1	**141-2098**	1	HOSE AS	
I	47	1	**141-2099**	1	HOSE AS	
	48	1	**3E-4321**	2	CLIP	
	49	2	**3G-8047**	1	GROMMET	
	50	2	**3G-8054**	1	CLIP (TAB)	
	51	2	**3G-8057**	1	CLIP (SLOT)	

131-9276 LUBRICATION AR-AUTOMATIC *(contd.)* i01187950

NOTE	REF NO	GRAPHIC REF	PART NUMBER	QTY	PART NAME 1 2 3 4 5 6 (PRODUCT LEVEL)	SEE PAGE
	52	1,2	**3J-5390**	9	PLUG (3/8-18 THD)	
	53	1	**3J-7354**	2	SEAL-O-RING (8.92MM ID)	
	54	2	**3K-0360**	3	SEAL-O-RING (16.36MM ID)	
	55	2	**4D-7794**	1	CLIP (10.0MM ID)	
	56	1	**4J-0522**	2	SEAL-O-RING (37.69MM ID)	
	57	1	**4J-5477**	4	SEAL-O-RING (8.61MM ID)	
M	58	1,2	**5C-7261**	7	NUT (M8X1.25 THD)	
	59	1	**5P-7464**	1	CLIP (SLOT)	
	60	1	**5P-7465**	1	CLIP (TAB)	
	61	1	**6V-1249**	1	GROMMET (22.00MM OD)	
	62	1,2	**6V-8397**	23	SEAL-O-RING (9.27MM ID)	
	63	1,2	**6V-8398**	28	SEAL-O-RING (12.47MM ID)	
	64	2	**6V-8634**	1	CONNECTOR-SEAL (ORFS 11/16-16; PORT 9/16-18)	
	65	2	**6V-8723**	1	ELBOW-90 DEGREE (3/4-16 THD)	
	66	2	**6V-8782**	1	TEE-FACE SEAL	
	67	1,2	**6V-8789**	2	TEE-FACE SEAL	
	68	1,2	**6V-8936**	4	REDUCER AS	
	69	1	**6V-8980**	2	ELBOW-90 DEGREE (11/16-16 THD)	
	70	1	**6V-8981**	1	ELBOW-90 DEGREE BULKHEAD (13/16-16 THD)	
	71	1	**6V-9168**	2	NUT (11/16-16 THD)	
	72	1,2	**6V-9169**	3	NUT-BULKHEAD (13/16-16 THD)	
	73	1	**6V-9200**	2	ELBOW-FACE SEAL (90 DEGREES)	
	74	1	**6V-9836**	2	TEE-SWIVEL	
	75	2	**6V-9837**	2	TEE-SWIVEL	
	76	2	**6V-9851**	1	ELBOW-90 DEGREE SWIVEL (13/16-16 THD)	
	77	2	**7T-3823**	1	CONTROL GP-ELECTRONIC (AUTO LUBE TIMER)	
		2	**7N-7779**	2	SOCKET	
		2	**7N-7780**	1	PIN-CONNECTOR (BLADE)	
		2	**7N-7782**	1	HOUSING-PLUG (1 PIN, 2 SOCKET)	
M	78	1,2	**7X-2541**	6	BOLT	
	79	1	**8C-6868**	2	CONNECTOR (PIPE THD TO O-RING FACE SEAL)	
	80	1,2	**8C-6871**	3	CONNECTOR (PIPE THD TO O-RING FACE SEAL)	
M	81	2	**8C-8451**	4	BOLT (M6X1.0X40MM)	
	82	1	**8C-8988**	1	ELBOW-45 DEGREE SWIVEL	
	83	2	**8C-8989**	1	ELBOW (45 DEG)	
	84	1	**8M-2773**	2	CLIP (17.46MM ID)	
	85	1,2	**8T-4121**	22	WASHER-HARD (2.5MM THK)	
M	86	1,2	**8T-4136**	9	BOLT (M10X1.50X25MM)	
M	87	1,2	**8T-4137**	8	BOLT (M10X1.50X20MM)	
M	88	1	**8T-4185**	1	BOLT (M10X1.5X50MM)	
M	89	2	**8T-4192**	8	BOLT (M12X1.75X25MM)	
M	90	2	**8T-4195**	3	BOLT (M10X1.50X30MM)	
	91	2	**8T-4223**	8	WASHER-HARD (3MM THK)	
	92	1,2	**8T-4224**	22	WASHER-HARD (8.8X16X2MM THK)	
M	93	1	**8T-4648**	8	BOLT (M12X1.75X70MM)	
M	94	1	**8T-5005**	1	BOLT (M10X1.50X70MM)	
M	95	2	**8T-6466**	2	BOLT (M10X1.50X60MM)	
M	96	1	**8T-6869**	4	BOLT (M8X1.25X60MM)	
	97	1,2	**8T-6895**	2	TEE-UNION ORIFICE	
M	98	1,2	**8T-6912**	5	BOLT (M8X1.25X50MM)	
	99	2	**9G-9152**	1	CLIP (10.5MM ID)	
	100	1,2	**9X-8250**	14	CLIP (SLOT)	
	101	2	**9X-8256**	4	WASHER (2MM THK)	

I-SEE HOSE FABRICATION GUIDE
M-METRIC PART
Y-SEPARATE ILLUSTRATION

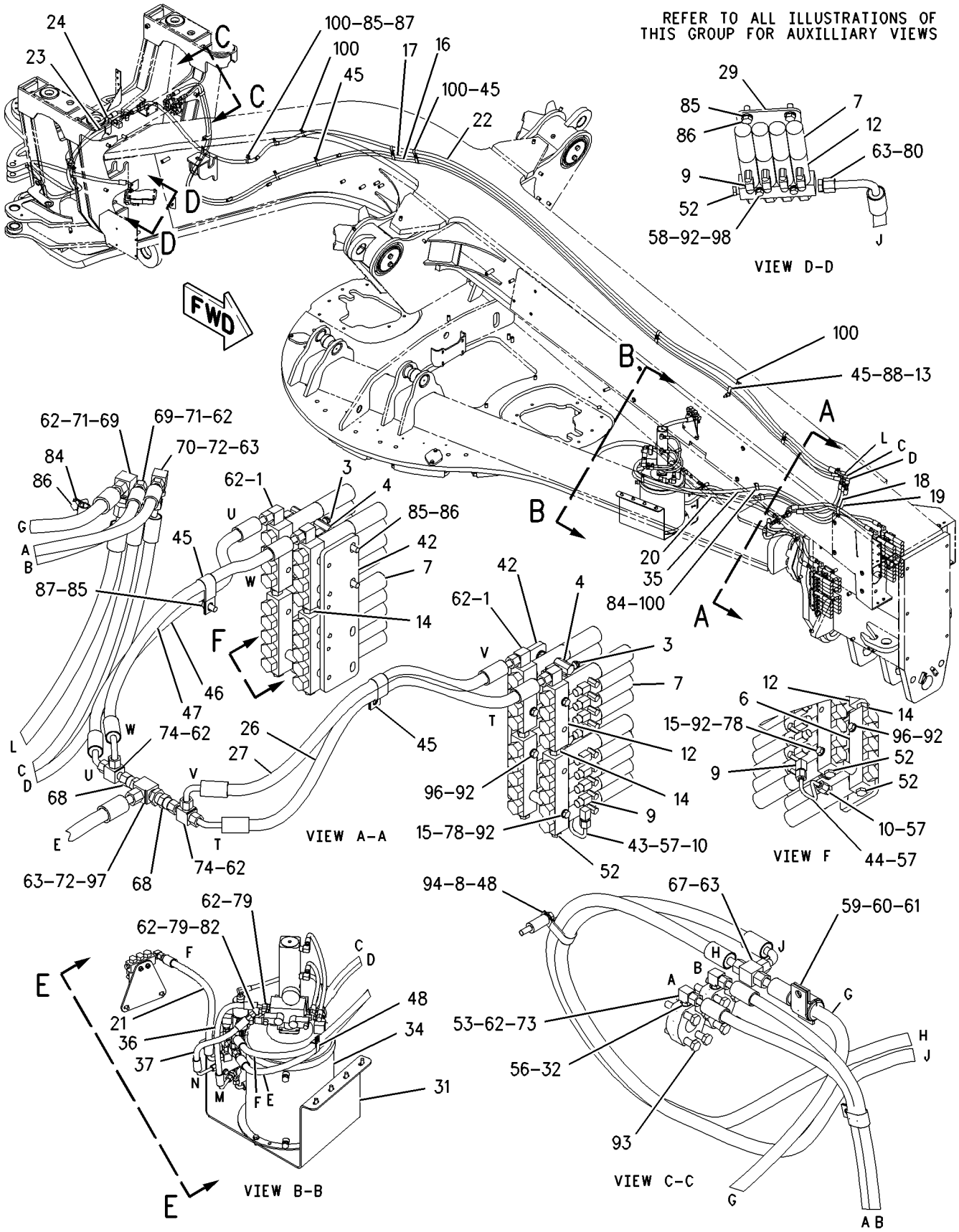

GRAPHIC #1

g00664083

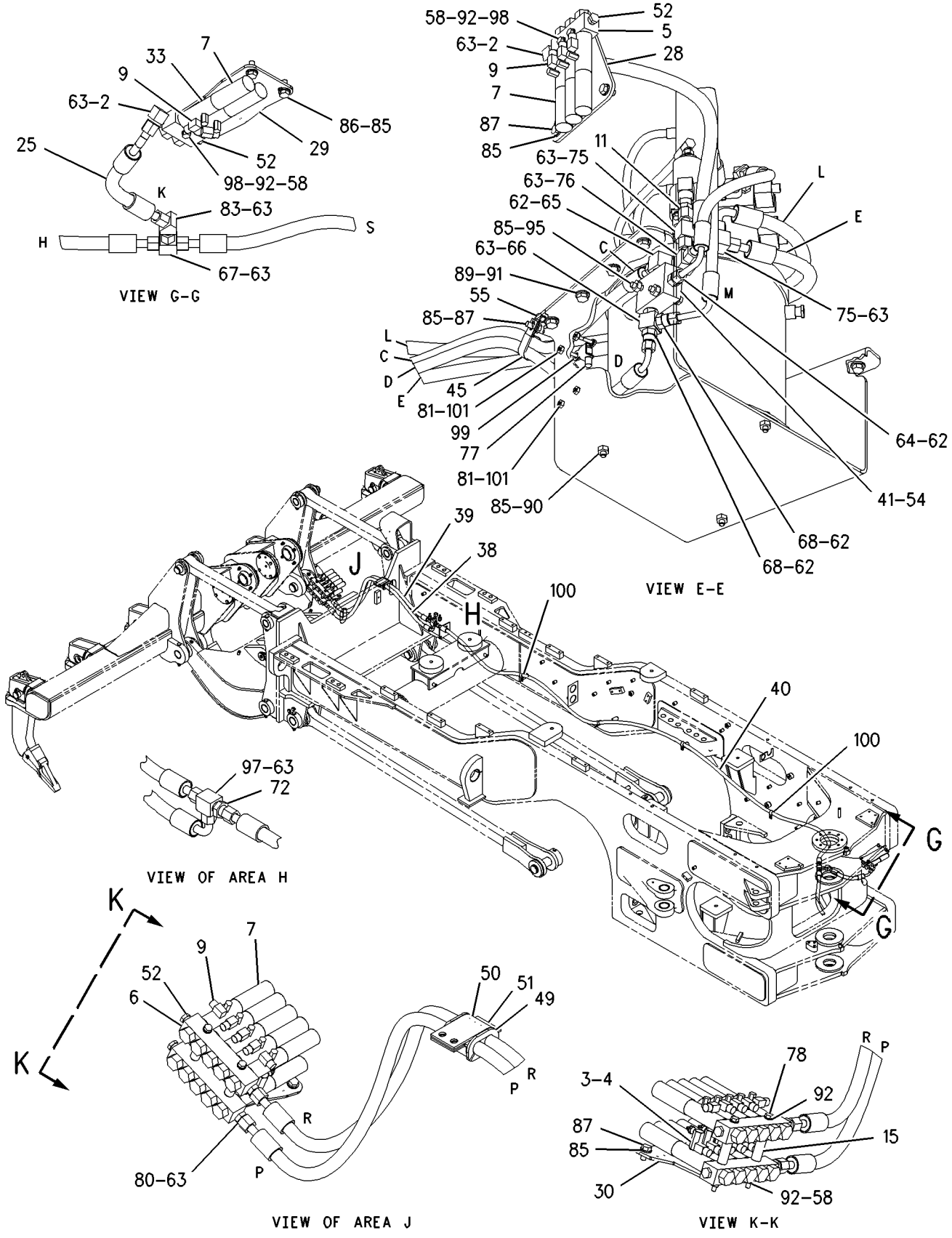

GRAPHIC #2

g00664084

FRAME AND BODY

131-9276 LUBRICATION AR-AUTOMATIC

S/N: 7KK1-UP
AN ATTACHMENT
TYPE 2

SMCS-7540 **i01497981**

NOTE	REF NO	GRAPHIC REF	PART NUMBER	QTY	PART NAME 1 2 3 4 5 6 (PRODUCT LEVEL)	SEE PAGE
	1	1	**2T-1925**	4	ELBOW	
	2	2	**2T-2396**	2	ELBOW	
C	3	1,2	**3B-8489**	53	FITTING-GREASE (AUTOMATIC LUBRICATION)	
	4	1,2	**5K-3771**	21	UNION-ADAPTER	
Y	5	2	**5T-5009**	1	VALVE GP-LUBE DISTRIBUTION	551
Y	6	1,2	**5T-5010**	6	VALVE GP-LUBE DISTRIBUTION	552
	7	1,2	**5T-5012**	55	CAP-PROTECTION	
	8	1	**5T-6374**	1	SPACER (10.5X20X40MM THK)	
	9	1,2	**7X-0492**	53	ELBOW	
	10	1	**8C-6865**	2	CONNECTOR	
Y	12	1	**8W-2597**	5	VALVE GP-LUBE DISTRIBUTION	553
	13	1	**8X-1386**	1	SPACER (12.2X23X22MM THK)	
	14	1	**004-6683**	4	NIPPLE-PIPE	
	15	1,2	**126-0208**	6	SPACER (10.31X17.45X50.8MM THK))	
I	16	1	**141-2087**	1	HOSE AS	
I	17	1	**141-2088**	1	HOSE AS	
I	18	1	**141-2089**	1	HOSE AS	
I	19	1	**141-2090**	1	HOSE AS	
C	20	2	**194-7929**	1	HOSE AS	
CI	21	1	**163-0032**	1	HOSE AS	
I	22	1	**141-2094**	1	HOSE AS	
I	23	1	**141-2095**	1	HOSE AS	
I	24	1	**141-2096**	1	HOSE AS	
I	25	2	**141-2097**	1	HOSE AS	
I	26	1	**141-2098**	2	HOSE AS	
I	27	1	**141-2099**	2	HOSE AS	
	28	2	**141-2101**	1	PLATE	
	29	1,2	**141-2102**	2	PLATE	
	30	2	**141-2103**	1	PLATE	
	31	1	**141-2104**	1	PLATE AS	
M		1	**6V-9632**	4	NUT-WELD (M6X1 THD)	
M		1	**8T-3490**	5	NUT-WELD (M10X1.5 THD)	
	32	1	**141-2105**	2	ADAPTER	
Y	33	2	**141-2107**	1	VALVE GP-LUBE DISTRIBUTION	554
CY	34	1	**194-7924**	1	PUMP GP-LUBRICATION	540
CI	35	2	**124-6414**	1	HOSE AS	
C	36	1	**194-7930**	1	HOSE AS	
CI	37	1	**180-1499**	1	HOSE AS	
I	38	2	**141-6622**	1	HOSE AS	
I	39	2	**141-6623**	1	HOSE AS	
I	40	2	**141-6645**	1	HOSE AS	
Y	41	2	**154-6503**	1	VALVE GP-PRESSURE CONTROL	216
	42	1	**176-0861**	2	PLATE AS	
					(EACH INCLUDES)	
		1	**5G-4313**	6	SPACER (10.34X15.88X12MM THK)	
	43	1	**176-0862**	1	TUBE AS	
	44	1	**176-0863**	1	TUBE AS	
	45	1,2	**100-4336**	14	CLIP (SLOT)	
	48	1	**3E-4321**	2	CLIP	
	49	2	**3G-8047**	1	GROMMET	
	50	2	**3G-8054**	1	CLIP (TAB)	
	51	2	**3G-8057**	1	CLIP (SLOT)	
	52	1,2	**3J-5390**	9	PLUG (3/8-18 THD)	
	53	1	**3J-7354**	2	SEAL-O-RING	
	54	2	**3K-0360**	3	SEAL-O-RING	

131-9276 **LUBRICATION AR-AUTOMATIC** *(contd.)* **i01497981**

NOTE	REF NO	GRAPHIC REF	PART NUMBER	QTY	PART NAME 1 2 3 4 5 6 (PRODUCT LEVEL)	SEE PAGE
	55	2	**4D-7794**	1	CLIP	
	56	1	**4J-0522**	2	SEAL-O-RING	
	57	1	**4J-5477**	4	SEAL-O-RING	
M	58	1,2	**5C-7261**	7	NUT (M8X1.25 THD)	
	59	1	**5P-7464**	1	CLIP (SLOT)	
	60	1	**5P-7465**	1	CLIP (TAB)	
	61	1	**6V-1249**	1	GROMMET	
C	62	1,2	**6V-8397**	20	SEAL-O-RING	
C	63	1,2	**6V-8398**	27	SEAL-O-RING	
	64	2	**6V-8634**	1	CONNECTOR	
	65	2	**6V-8723**	1	ELBOW	
	66	2	**6V-8782**	1	TEE-FACE SEAL	
	67	1,2	**6V-8789**	2	TEE-FACE SEAL	
	68	1,2	**6V-8936**	4	REDUCER	
	69	1	**6V-8980**	2	ELBOW	
	70	1	**6V-8981**	1	ELBOW	
	71	1	**6V-9168**	2	NUT (11/16-16 THD)	
	72	1,2	**6V-9169**	3	NUT-BULKHEAD (13/16-16 THD)	
	73	1	**6V-9200**	2	ELBOW	
	74	1	**6V-9836**	2	TEE-SWIVEL	
	75	2	**6V-9837**	2	TEE-SWIVEL	
	76	2	**6V-9851**	1	ELBOW	
	77	2	**7T-3823**	1	CONTROL GP-ELECTRONIC (AUTO LUBE TIMER)	
		2	**7N-7779**	2	SOCKET-CONNECTOR	
		2	**7N-7780**	1	PIN-CONNECTOR (BLADE)	
		2	**7N-7782**	1	HOUSING-PLUG (1 PIN, 2 SOCKET)	
M	78	1,2	**7X-2541**	6	BOLT (M8X1.25X140MM)	
C	79	1,2	**3B-6552**	11	ELBOW	
	80	1,2	**8C-6871**	3	CONNECTOR	
M	81	2	**8C-8451**	4	BOLT (M6X1X40MM)	
C	82	2	**8L-5008**	3	ELBOW-PIPE	
	83	2	**8C-8989**	1	ELBOW	
	84	1	**8M-2773**	2	CLIP	
	85	1,2	**8T-4121**	22	WASHER-HARD (11X21X2.5MM THK)	
M	86	1,2	**8T-4136**	9	BOLT (M10X1.5X25MM)	
M	87	1,2	**8T-4137**	8	BOLT (M10X1.5X20MM)	
M	88	1	**8T-4185**	1	BOLT (M10X1.5X50MM)	
M	89	2	**8T-4192**	8	BOLT (M12X1.75X25MM)	
M	90	2	**8T-4195**	3	BOLT (M10X1.5X30MM)	
	91	2	**8T-4223**	8	WASHER-HARD (13.5X25.5X3MM THK)	
	92	1,2	**8T-4224**	22	WASHER-HARD (8.8X16X2MM THK)	
M	93	1	**8T-4648**	8	BOLT (M12X1.75X70MM)	
M	94	1	**8T-5005**	1	BOLT (M10X1.50X70MM)	
M	95	2	**8T-6466**	2	BOLT (M10X1.50X60MM)	
M	96	1	**8T-6869**	4	BOLT (M8X1.25X60MM)	
	97	1,2	**8T-6895**	2	TEE-UNION ORIFICE	
M	98	1,2	**8T-6912**	5	BOLT (M8X1.25X50MM)	
	99	2	**9G-9152**	1	CLIP	
	100	1,2	**9X-8250**	14	CLIP	
	101	2	**9X-8256**	4	WASHER (6.6X12X2MM THK)	
C	102	1	**193-2158**	1	PLATE	
C	103	1	**193-3886**	1	PLATE	
C	104	1	**195-7057**	1	FILM-GREASE PT	
C	105	1	**196-4240**	1	FILM-GREASE PT	
C	106	1	**196-4241**	1	FILM-GREASE PT	
C	107	2	**196-4242**	1	FILM	
C	108	2	**196-4243**	1	FILM-GREASE PT	

C-CHANGE FROM PREVIOUS TYPE
I-SEE HOSE FABRICATION GUIDE
M-METRIC PART
Y-SEPARATE ILLUSTRATION

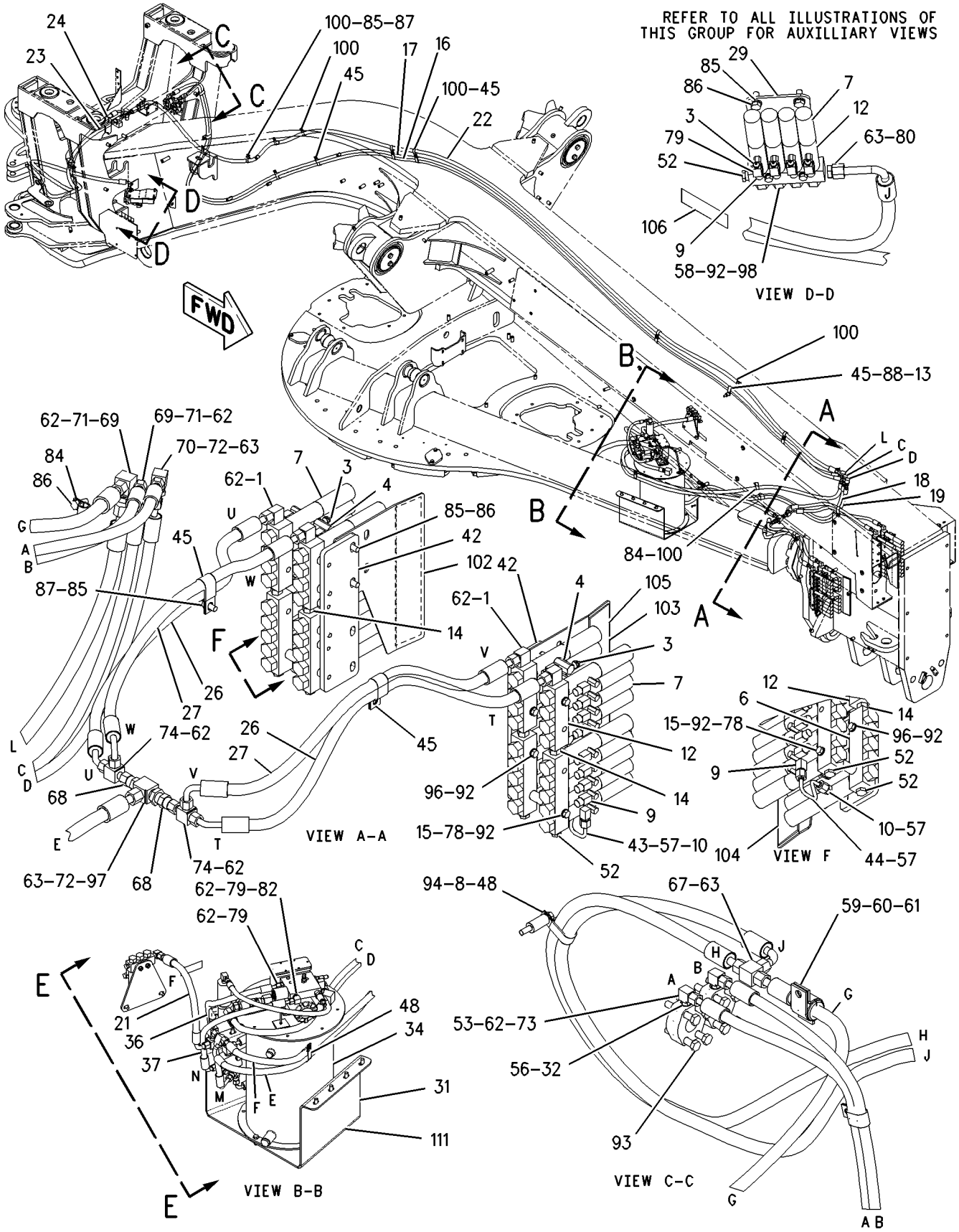

GRAPHIC #1 g00779941

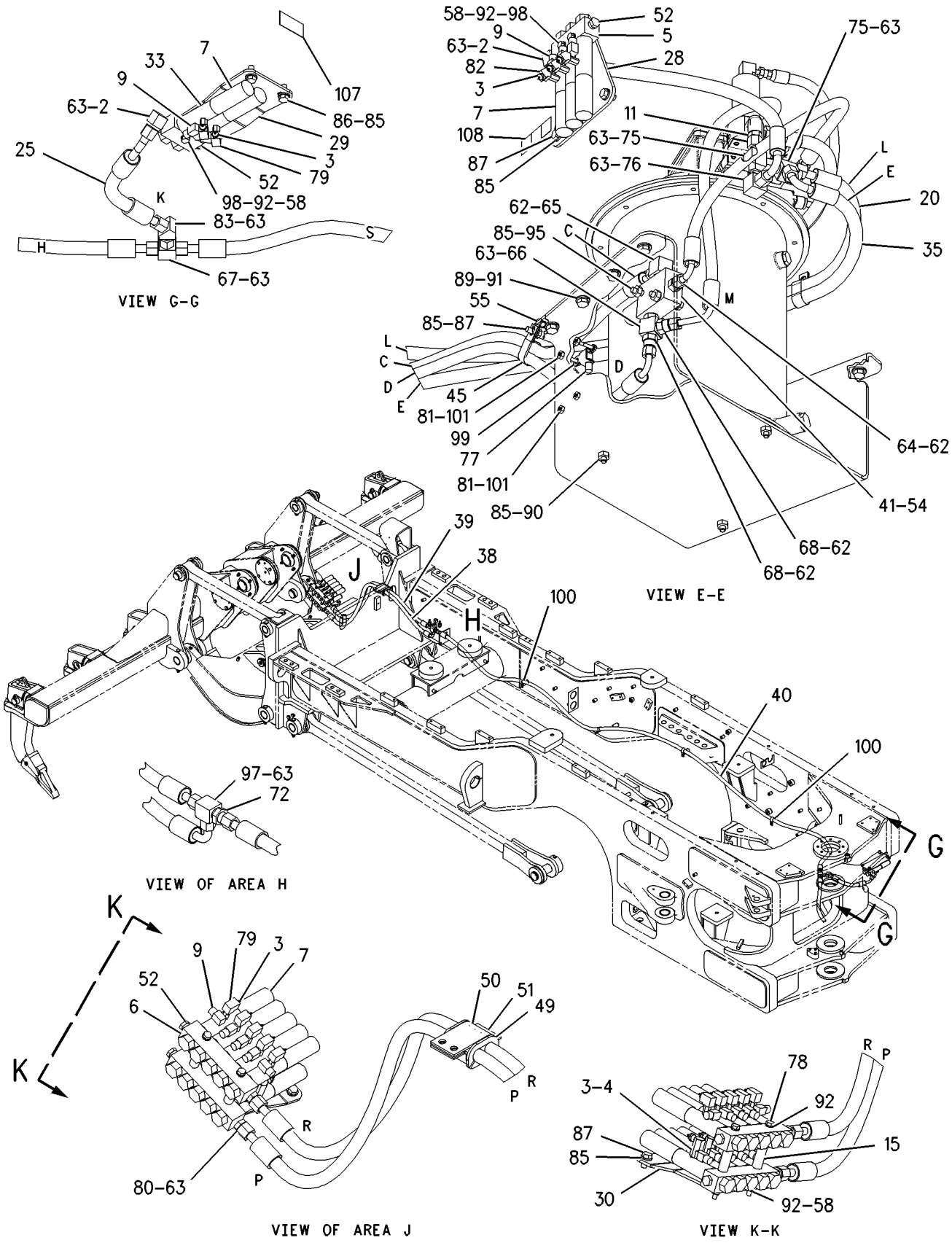

GRAPHIC #2 g00779943

8X-8996 LUBRICATION AR-CENTRAL

S/N: 7KK1-UP
MANUAL
AN ATTACHMENT

SMCS-7510, 7540 **i01500290**

NOTE	PART NUMBER	QTY	PART NAME 1 2 3 4 5 6 (PRODUCT LEVEL)	SEE PAGE
	196-4242	1	FILM (HITCH PIN)	
	195-7057	1	FILM-GREASE PT (MULTIPLE FRONT END POINTS)	
	196-4240	1	FILM-GREASE PT (MULTIPLE FRONT END POINTS)	
	196-4241	1	FILM-GREASE PT (ARTICULATION CYLINDER)	
	196-4243	1	FILM-GREASE PT (BLADE LIFT/CENTER SHIFT CYL)	
Y	*8X-9061*	1	LUBRICATION GP-CENTRAL (FRONT)	534
Y	*8X-9062*	1	LUBRICATION GP-CENTRAL (CENTER)	535
Y	*8X-9063*	1	LUBRICATION GP-CENTRAL (RIPPER)	536
	193-2158	1	PLATE	
	193-3886	1	PLATE	

Y-SEPARATE ILLUSTRATION

8X-9061 LUBRICATION GP-CENTRAL

S/N: 7KK1-UP
FRONT
PART OF 8X-8996 LUBRICATION AR-CENTRAL
AN ATTACHMENT

SMCS-7510, 7540 **i01164740**

NOTE	REF NO	GRAPHIC REF	PART NUMBER	QTY	PART NAME 1 2 3 4 5 6 (PRODUCT LEVEL)	SEE PAGE
	1	1	**3B-8485**	37	FITTING-HYDRAULIC (1/8-27 NPTF)(45 DEGREE)	
	2	1	**5M-6214**	3	PLUG-PIPE (1/8-27 THD)	
	3	1	**8X-3163**	1	BLOCK	
	4	1	**8X-4493**	6	BLOCK	
	5	1	**9S-4182**	3	PLUG (7/16-20 THD)	
	6	1	**126-0208**	8	SPACER (50.8MM THK)	
	7	1	**175-4162**	2	BLOCK	
	8	1	**3J-7354**	40	SEAL-O-RING (8.92MM ID)	
	9	1	**6V-8647**	37	CONNECTOR-SEAL	
	10	1	**8T-4121**	10	WASHER (2.5MM THK)	
M	11	1	**8T-5436**	8	BOLT (M10X1.50X130MM)	
M	12	1	**8T-6466**	2	BOLT (M10X1.50X60MM)	

M-METRIC PART

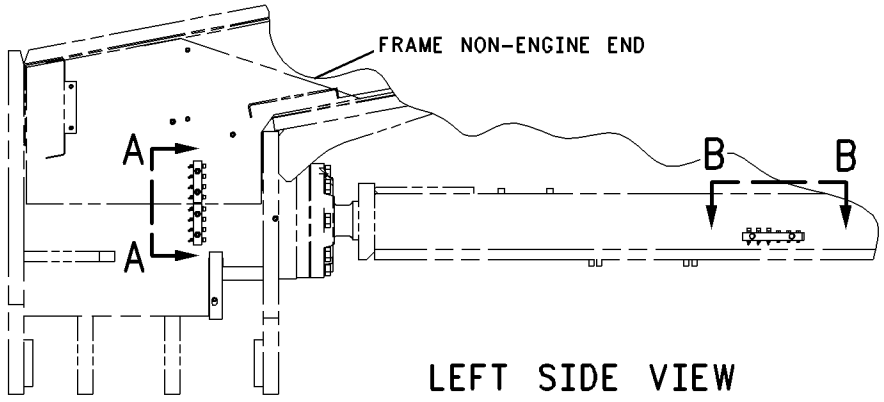

LEFT SIDE VIEW

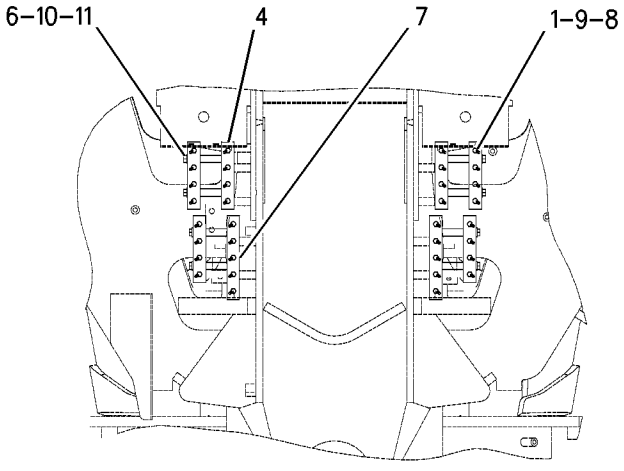

VIEW A–A

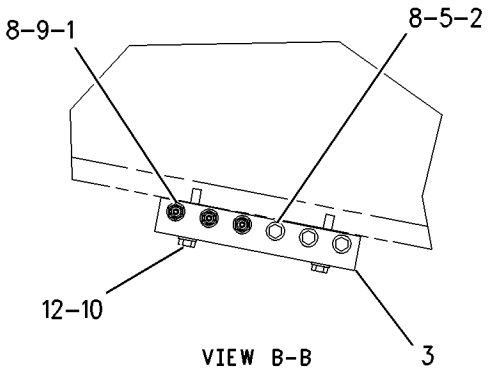

VIEW B-B

GRAPHIC #1 g00622953

8X-9062 LUBRICATION GP-CENTRAL

S/N: 7KK1-UP
CENTER
PART OF 8X-8996 LUBRICATION AR-CENTRAL
AN ATTACHMENT

SMCS-7510, 7540 **i00852638**

NOTE	REF NO	GRAPHIC REF	PART NUMBER	QTY	PART NAME 1 2 3 4 5 6 (PRODUCT LEVEL)	SEE PAGE
	1	1	**3B-8485**	6	FITTING-HYDRAULIC	
	2	1	**3B-8489**	2	FITTING-GREASE (1/8-27 THD)	
	3	1	**8X-4493**	1	BLOCK	
	4	1	**141-2106**	2	BLOCK	
	5	1	**3J-7354**	8	SEAL-O-RING (8.92MM ID)	
	6	1	**6V-8647**	7	CONNECTOR-SEAL	
	7	1	**6V-9000**	1	ELBOW-SEAL	
	8	1	**8T-4121**	4	WASHER (2.5MM THK)	
M	9	1	**8T-4182**	4	BOLT (M10X1.5X45MM)	

M-METRIC PART

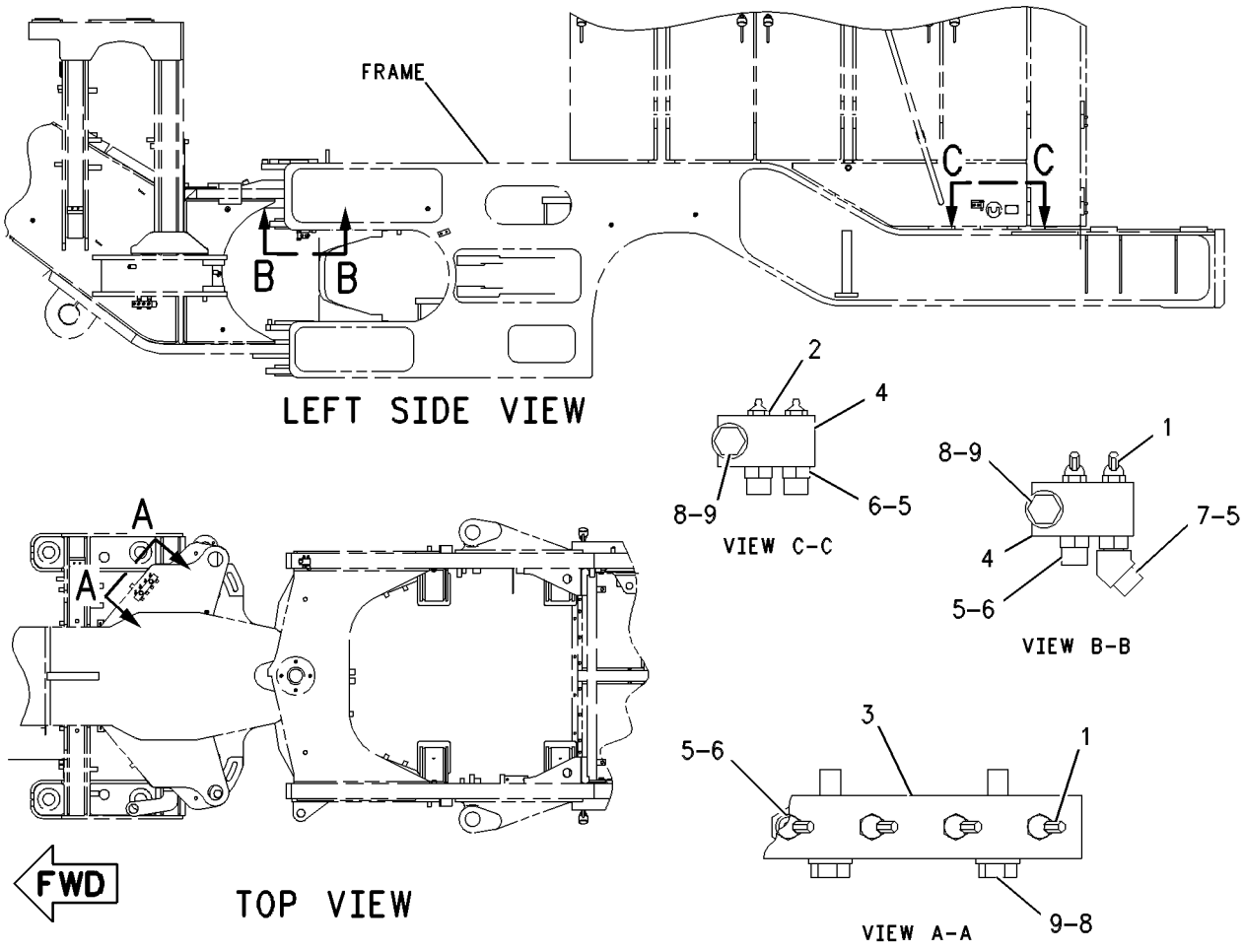

GRAPHIC #1 g00425865

8X-9063 LUBRICATION GP-CENTRAL

S/N: 7KK1-UP
RIPPER
PART OF 8X-8996 LUBRICATION AR-CENTRAL
AN ATTACHMENT

SMCS-7510, 7540 **i01164245**

NOTE	REF NO	GRAPHIC REF	PART NUMBER	QTY	PART NAME 1 2 3 4 5 6 (PRODUCT LEVEL)	SEE PAGE
	1	1	**3B-8489**	10	FITTING-GREASE (1/8-27 THD)	
	2	1	**8X-3163**	2	BLOCK	
	3	1	**126-0208**	2	SPACER (50.8MM THK)	
	4	1	**3J-7354**	10	SEAL-O-RING (8.92MM ID)	
	5	1	**6V-8628**	2	ELBOW-90 DEGREE (9/16-18 THD)	
	6	1	**6V-8647**	8	CONNECTOR-SEAL	
M	7	1	**7X-2545**	2	BOLT (M10X1.5X150MM)	
	8	1	**8T-4121**	2	WASHER (2.5MM THK)	

M-METRIC PART

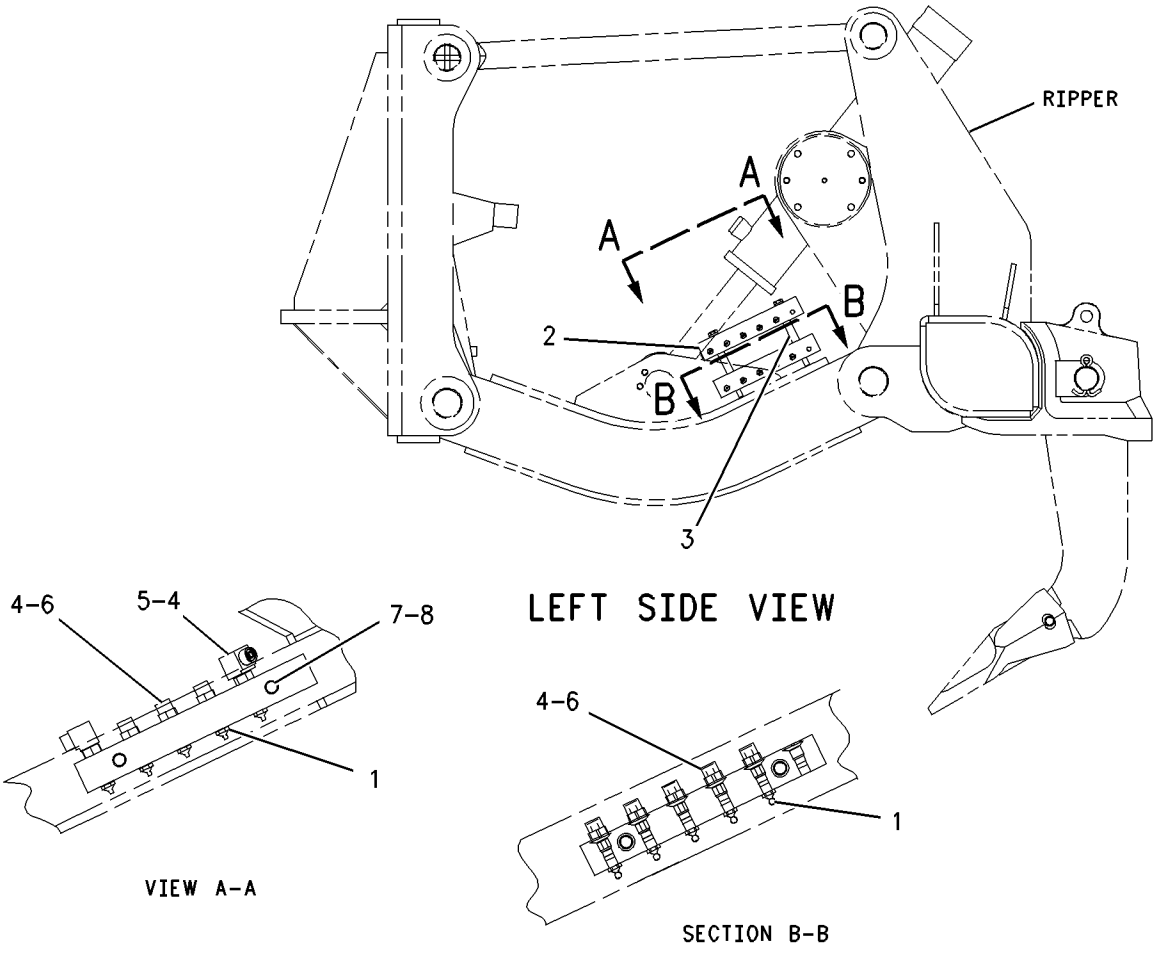

GRAPHIC #1 g00620513

FRAME AND BODY

8X-9003 PLATFORM AR

S/N: 7KK1-UP

PART OF 8X-8401 CAB AR, 8X-8402 CHASSIS AR

SMCS-7253 **i00908856**

NOTE	PART NUMBER	QTY	PART NAME 1 2 3 4 5 6 (PRODUCT LEVEL)	SEE PAGE
Y	**128-2038**	1	AIR CONDITIONER & MOUNTING GP	778
Y	*8X-8978*	1	CONSOLE GP-OPERATOR	796
Y	*8X-8983*	1	CONSOLE GP-TMSN CONTROL	799
Y	*8X-8979*	1	CONTROL GP-PARKING BRAKE	562
Y	*8X-9012*	1	CONTROL GP-STEERING	584
Y	*8X-8964*	1	INSULATION GP-WEATHER	816
Y	*126-6023*	1	LINES GP-STEERING	661
Y	*8X-8982*	1	PEDAL GP-BRAKE, TMSN & GOV	842
Y	*8X-9064*	1	SEAT GP-SUSPENSION	859
Y	*8X-9034*	1	VALVE & LINKAGE GP	692
Y	*8X-9008*	1	WIRING GP-STEERING CONSOLE	364
Y	*128-5218*	1	WIRING GP-PLATFORM	342
Y	*8X-9007*	1	WIRING GP-SHIFT CONSOLE	360
	117-1960	1	PLATFORM AS	
	8X-4711	2	BOSS AS (M12X1.75X20.0MM)	
	7T-1099	9	LINK	
	9R-2613	7	BOSS (M10X1.5X25.0MM)	
M	**8T-3490**	21	NUT-WELD (M10X1.5 THD)	
M	**8T-3597**	4	NUT-WELD (M12X1.75 THD)	
M	**6V-9632**	8	NUT-WELD (M6X1 THD)	

M-METRIC PART
Y-SEPARATE ILLUSTRATION

141-2108 PUMP GP-LUBRICATION

S/N: 7KK1-UP
PART OF 131-9276 LUBRICATION AR-AUTOMATIC
AN ATTACHMENT

SMCS-7516, 7540 **i01130299**

NOTE	PART NUMBER	QTY	PART NAME 1 2 3 4 5 6 (PRODUCT LEVEL)	SEE PAGE
	139-2490	1	CONTAINER	
	4J-4382	2	PLUG-PIPE (1/2-14 NPTF THD)	
	149-5603	1	PUMP GP-LUBRICATION	
	162-0081	1	TIMER	
	162-0082	1	SOLENIOD	
			AVAILABLE REPAIR KIT(S):	
	8X-2325	1	KIT-PUMP	
	162-0071	1	KIT-REPAIR	
	162-0080	1	KIT-REPAIR	

MEMORANDA

194-7924 PUMP GP-LUBRICATION

S/N: 7KK1-UP
PART OF 131-9276 LUBRICATION AR-AUTOMATIC
AN ATTACHMENT

SMCS-7516, 7540 **i01498000**

NOTE	REF NO	GRAPHIC REF	PART NUMBER	QTY	PART NAME 1 2 3 4 5 6 (PRODUCT LEVEL)	SEE PAGE
	1	1	**8X-2321**	1	VALVE-CHECK	
	2	1	**194-7925**	1	PUMP GP-GREASE	
		1	**194-7928**	1	MOTOR AS-HYDRAULIC	
		1	**195-8695**	1	VALVE	
		1	**195-8696**	1	COIL AS-SOLENOID	
		1	**195-8697**	1	VALVE AS-PRESSURE REDUCING	
		1	**195-8698**	1	VALVE AS-FLOW CONTROL	
	3	1	**197-1563**	1	VALVE AS-VENT	
	4	1	**032-3506**	1	ADAPTER-PIPE	
	5	1	**033-8248**	1	CLIP	
	6	1	**130-5300**	1	CLIP	
	7	1	**155-2270**	1	KIT-CONNECTING PLUG (2 PIN) (LUBRICATION PUMP)	
					(INCLUDES PLUG AS & WEDGE)	
	8	1	**3J-1907**	1	SEAL-O-RING	
	9	1	**3J-7354**	1	SEAL-O-RING	
	10	1	**3M-7045**	1	PLUG (3/4-14 NPT)	
	11	1	**4J-4382**	1	PLUG-PIPE (1/2-14 NPTF)	
	12	1	**6V-3966**	1	FITTING	
	13	1	**6V-8397**	2	SEAL-O-RING	
	14	1	**6V-8398**	1	SEAL-O-RING	
	15	1	**6V-8636**	1	CONNECTOR	
	16	1	**6V-9200**	1	ELBOW	
	17	1	**8C-6872**	1	CONNECTOR	

194-7924 PUMP GP-LUBRICATION *(contd.)* i01498000

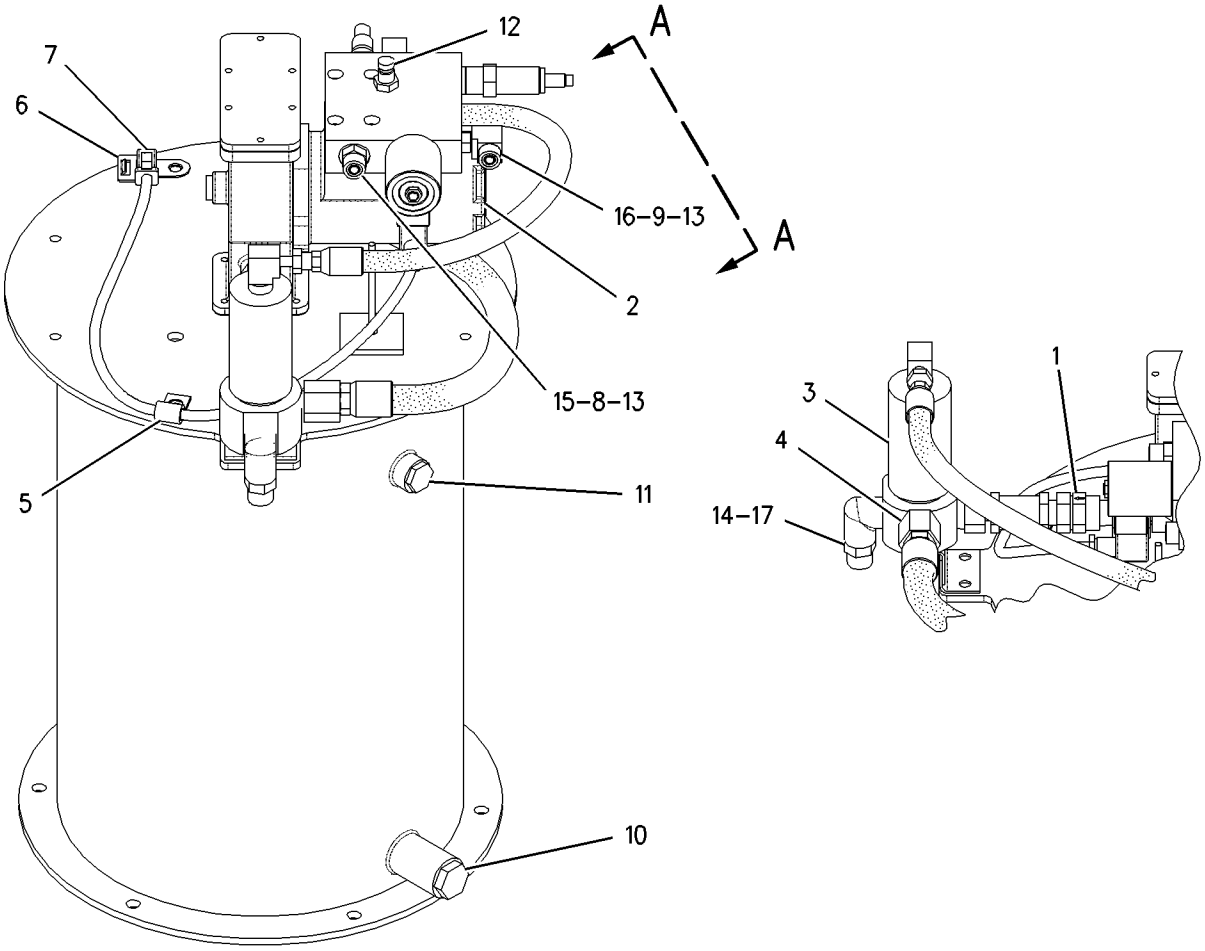

GRAPHIC #1 g00778929

152-2679 SHIELD GP-ENGINE COMPARTMENT

S/N: 7KK1-58, 60-UP
PART OF 8X-8402 CHASSIS AR

SMCS-7263 **i01143172**

NOTE	REF NO	GRAPHIC REF	PART NUMBER	QTY	PART NAME 1 2 3 4 5 6 (PRODUCT LEVEL)	SEE PAGE
	1	2	**2P-0018**	3	SPACER	
	2	2	**5K-7147**	1	BRACKET	
	4	1	**152-2690**	1	BAFFLE	
	5	2	**156-9404**	2	BRACKET	
	6	1	**162-8601**	1	PLATE AS	
	7	1	**162-8605**	1	PLATE AS	
	8	1	**162-8606**	1	PLATE AS	
	9	1	**163-5033**	1	PLATE AS	
	10	1	**0L-1143**	6	BOLT (3/8-16X2.50IN)	
	11	1	**152-2689**	1	BAFFLE	
	12	1	**2D-1290**	1	GROMMET	
	13	1	**5M-2894**	6	WASHER (2.5MM THK)	
	14	2	**5N-3389**	2	BRACKET	
	15	1,2	**7W-2278**	25	SPACER	
	16	1,2	**8T-4121**	11	WASHER (2.5MM THK)	
M	17	2	**8T-4133**	3	NUT (M10X1.50 THD)	
M	18	1,2	**8T-4136**	31	BOLT (M10X1.50X25MM)	
M	19	2	**8T-4186**	3	BOLT (M10X1.50X40MM)	
	20	1,2	**8T-4222**	29	WASHER-PLATED (2.5MM THK)	
	21	2	**9P-0719**	3	GROMMET	

M-METRIC PART

152-2679 **SHIELD GP-ENGINE COMPARTMENT** *(contd.)* **i01143172**

REFER TO ALL ILLUSTRATIONS OF
THIS GROUP FOR AUXILIARY VIEWS

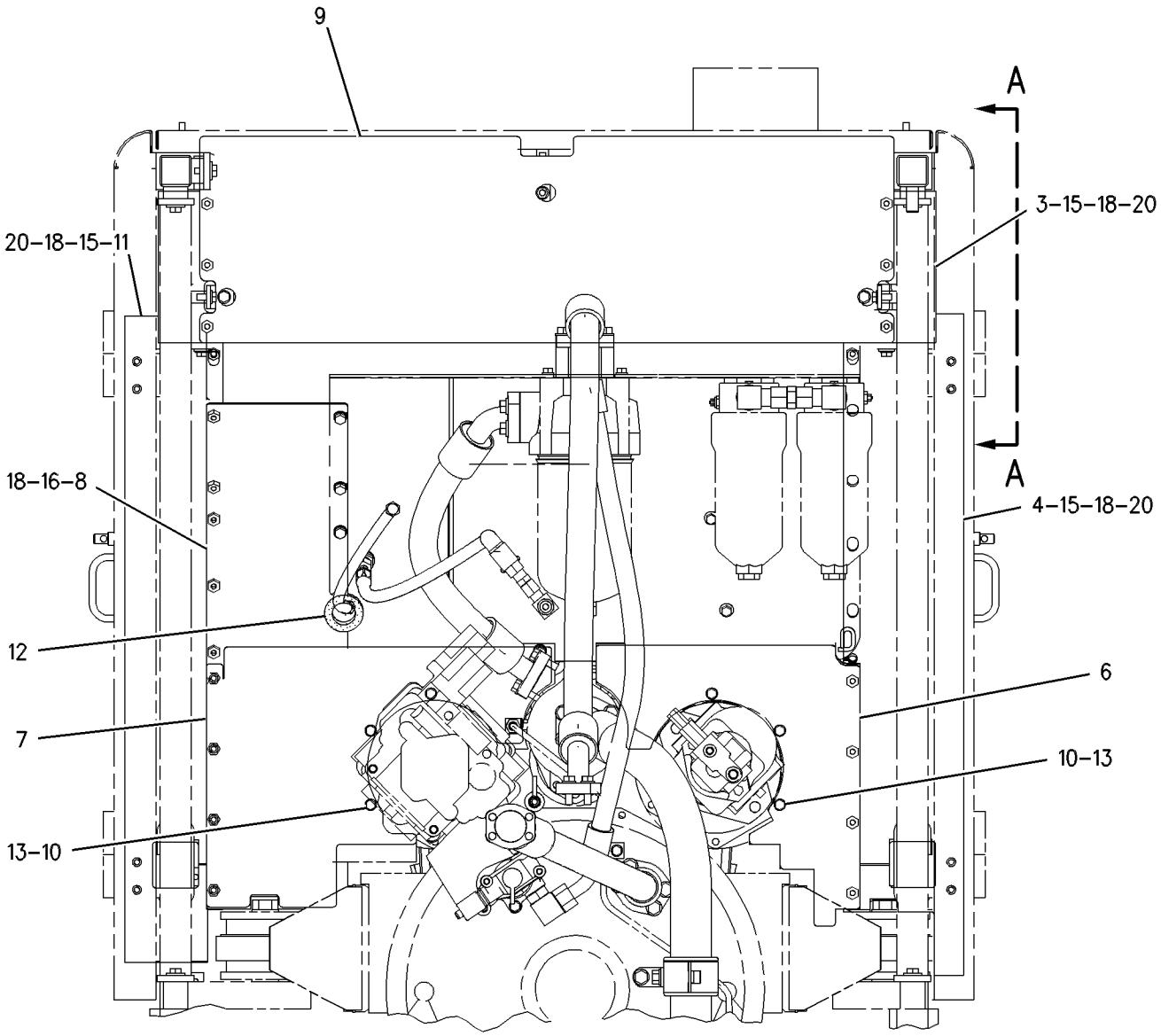

REAR VIEW

GRAPHIC #1 g00603379

152-2679 **SHIELD GP-ENGINE COMPARTMENT** ***(contd.)*** **i01143172**

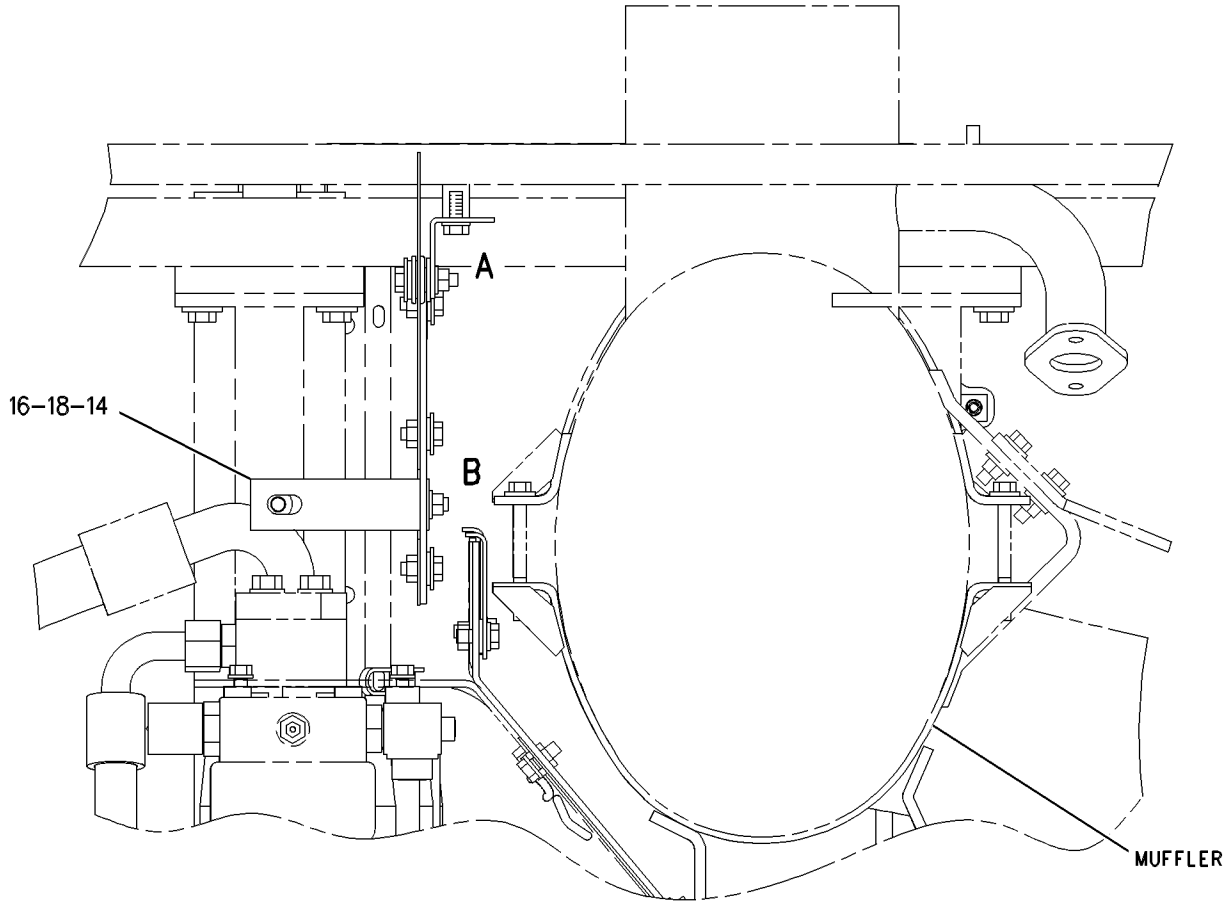

VIEW A–A

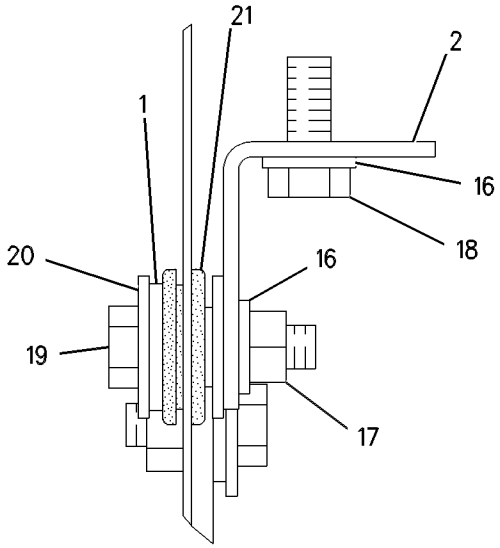

VIEW OF AREA A

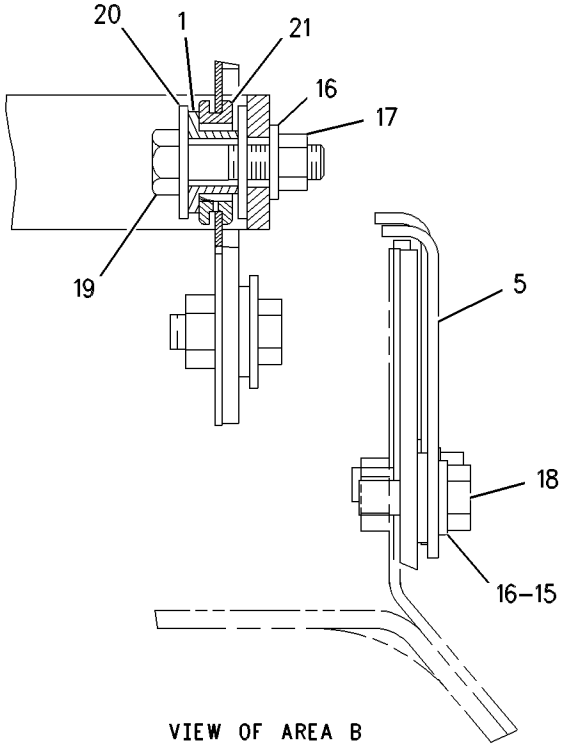

VIEW OF AREA B

GRAPHIC #2

g00604209

MEMORANDA

FRAME AND BODY

8X-9000 STEP GP-FRONT

S/N: 7KK1-60

PART OF 8X-8402 CHASSIS AR

SMCS-7254 **i00556256**

NOTE	REF NO	GRAPHIC REF	PART NUMBER	QTY	PART NAME 1 2 3 4 5 6 (PRODUCT LEVEL)	SEE PAGE
	1	1	**1D-4689**	8	BOLT (1/2-13X1.75IN)	
	2	1	**1D-4691**	24	BOLT-CARRIAGE	
	3	1	**4V-9804**	12	PLATE	
	4	1	**4V-9810**	8	STEP AS	
					(EACH INCLUDES)	
	5	1	**4V-9803**	2	PLATE	
	6	1	**5M-5722**	16	ADAPTER	
	7	1	**8F-6437**	8	WASHER (4.76MM THK)	
	8	1	**141-4043**	4	BELT	
	9	1	**9M-1853**	8	MOUNTING	
	10	1	**117-2127**	2	LADDER AS	
	11	1	**117-2128**	4	BRACKET	
	12	1	**117-2129**	4	TUBE	
	13	1	**125-6857**	8	ROD END	
	14	1	**1K-6872**	32	LOCKNUT (1/2-13 THD)	
	15	1	**5P-1076**	8	WASHER-HARD (4MM THK)	
	16	1	**6V-8181**	8	NUT-FULL	
M	17	1	**7X-2555**	2	BOLT (M16X2.0X80MM)	
M	18	1	**8T-4132**	6	NUT (M16X2.0 THD)	
M	19	1	**8T-4139**	8	BOLT (M12X1.75X30MM)	
M	20	1	**8T-4193**	4	BOLT (M16X2.0X50MM)	
	21	1	**8T-4223**	48	WASHER-HARD (3MM THK)	
M	22	1	**8T-4244**	16	NUT (M12X1.75 THD)	
M	23	1	**8T-4648**	8	BOLT (M12X1.75X70MM)	

M-METRIC PART

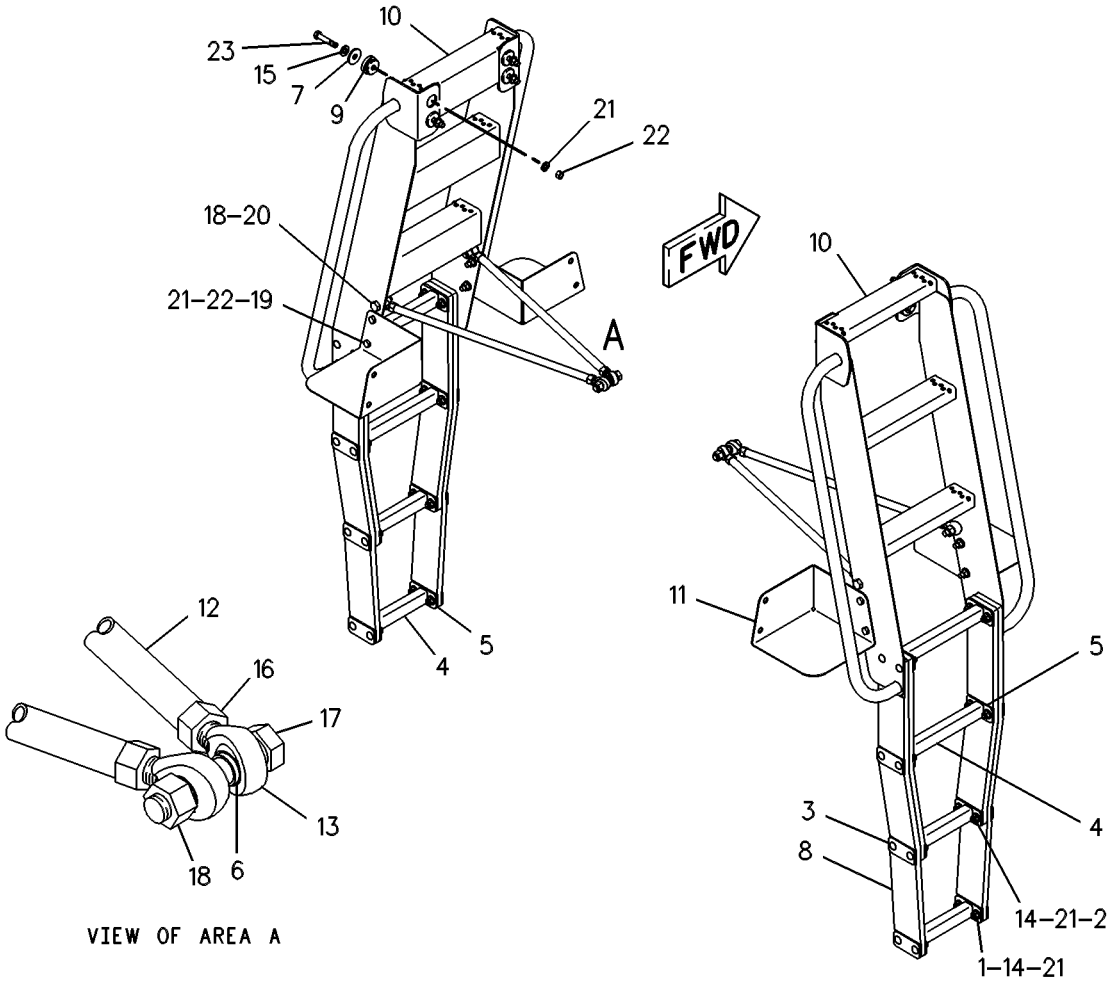

GRAPHIC #1 g00088416

FRAME AND BODY

8X-9000 STEP GP-FRONT

S/N: 7KK61-UP

PART OF 8X-8402 CHASSIS AR

SMCS-7254 **i01298414**

NOTE	REF NO	GRAPHIC REF	PART NUMBER	QTY	PART NAME 1 2 3 4 5 6 (PRODUCT LEVEL)	SEE PAGE
	1	1	**1D-4689**	8	BOLT (1/2-13X1.75IN)	
	2	1	**1D-4691**	24	BOLT-CARRIAGE	
	3	1	**4V-9804**	12	PLATE	
	4	1	**4V-9810**	8	STEP AS	
					(EACH INCLUDES)	
	5	1	**4V-9803**	2	PLATE	
	6	1	**5M-5722**	16	ADAPTER	
	7	1	**8F-6437**	8	WASHER (4.76MM THK)	
	8	1	**141-4043**	4	BELT	
	9	1	**9M-1853**	8	MOUNTING	
C	10	1	**154-7088**	2	STEP AS	
C	11	1	**117-2128**	2	BRACKET	
	12	1	**117-2129**	4	TUBE	
	13	1	**125-6857**	8	ROD END	
	14	1	**1K-6872**	32	LOCKNUT (1/2-13 THD)	
C	15	1	**5P-1076**	16	WASHER-HARD (4MM THK)	
	16	1	**6V-8181**	8	NUT-FULL (5/8-18 THD)	
M	17	1	**7X-2555**	2	BOLT (M16X2.0X80MM)	
M	18	1	**8T-4132**	6	NUT (M16X2.0 THD)	
CM	19	1	**8T-4139**	4	BOLT (M12X1.75X30MM)	
CM	20	1	**8T-4140**	4	BOLT (M16X2.0X60MM)	
C	21	1	**8T-4223**	40	WASHER-HARD (3MM THK)	
CM	22	1	**8T-4244**	12	NUT (M12X1.75 THD)	
M	23	1	**8T-4648**	8	BOLT (M12X1.75X70MM)	
C	24	1	**9X-8257**	4	WASHER (3.50MM THK)	

C-CHANGE FROM PREVIOUS TYPE
M-METRIC PART

8X-9000 **STEP GP-FRONT** *(contd.)* **i01298414**

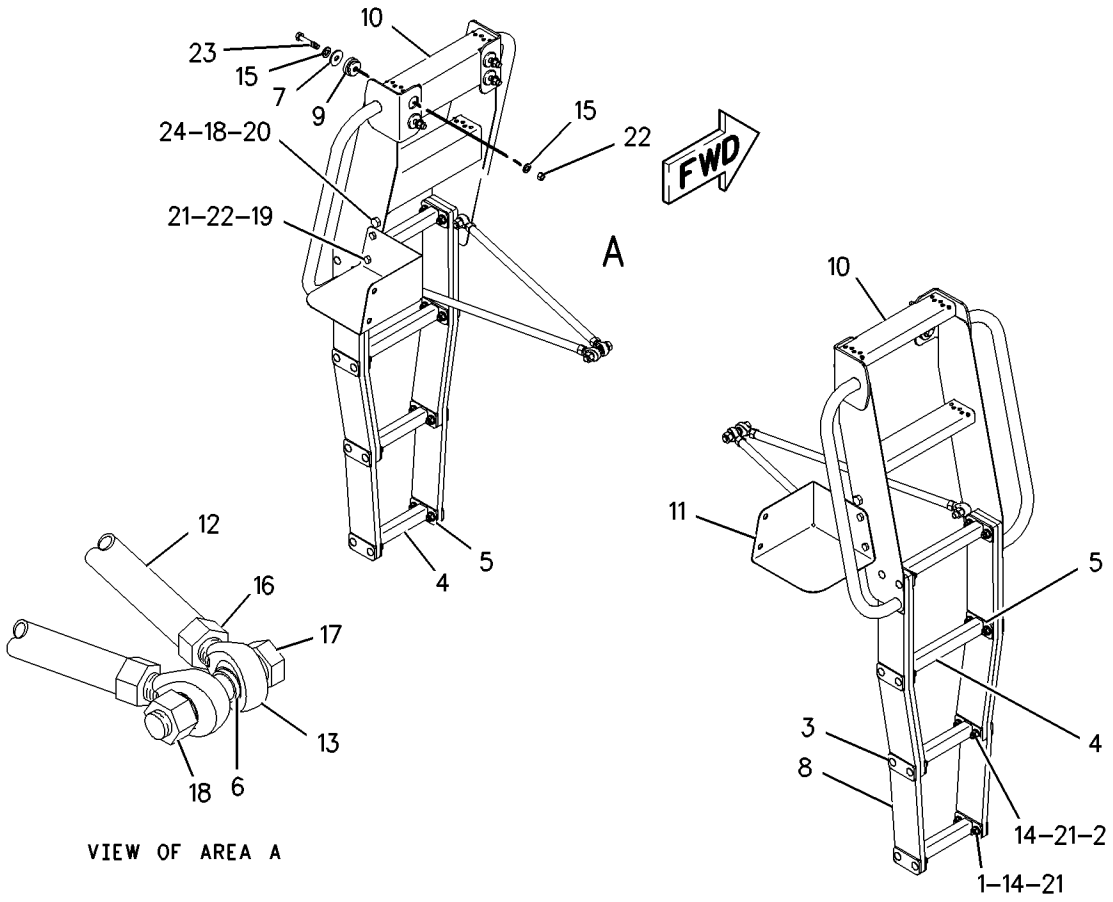

GRAPHIC #1 g00687993

FRAME AND BODY

8X-9006 STEP GP-REAR

S/N: 7KK1-UP

PART OF 8X-8402 CHASSIS AR

SMCS-7254 **i00735122**

NOTE	REF NO	GRAPHIC REF	PART NUMBER	QTY	PART NAME 1 2 3 4 5 6 (PRODUCT LEVEL)	SEE PAGE
	1	1	**8V-4744**	4	STEP AS	
					(EACH INCLUDES)	
	2	1	**4V-9803**	2	PLATE	
	3	1	**8V-4746**	8	BELT	
	4	1	**129-8516**	2	STEP AS	
					(EACH INCLUDES)	
	5	1	**129-8517**	1	TREAD	
	6	1	**5P-1076**	60	WASHER-HARD (4MM THK)	
M	7	1	**6V-7687**	32	LOCKNUT (M12X1.75 THD)	
M	8	1	**8T-4192**	28	BOLT (M12X1.75X25MM)	
M	9	1	**8T-4194**	32	BOLT (M12X1.75X50MM)	
	10	1	**8T-4223**	32	WASHER-HARD (3MM THK)	
	11	1	**123-5669**	2	STEP AS	
					(EACH INCLUDES)	
M	12	1	**8T-3597**	2	NUT-WELD (M12X1.75 THD)	

QUANTITIES SHOWN ARE THOSE REQUIRED FOR BOTH LH AND RH SIDES
M-METRIC PART

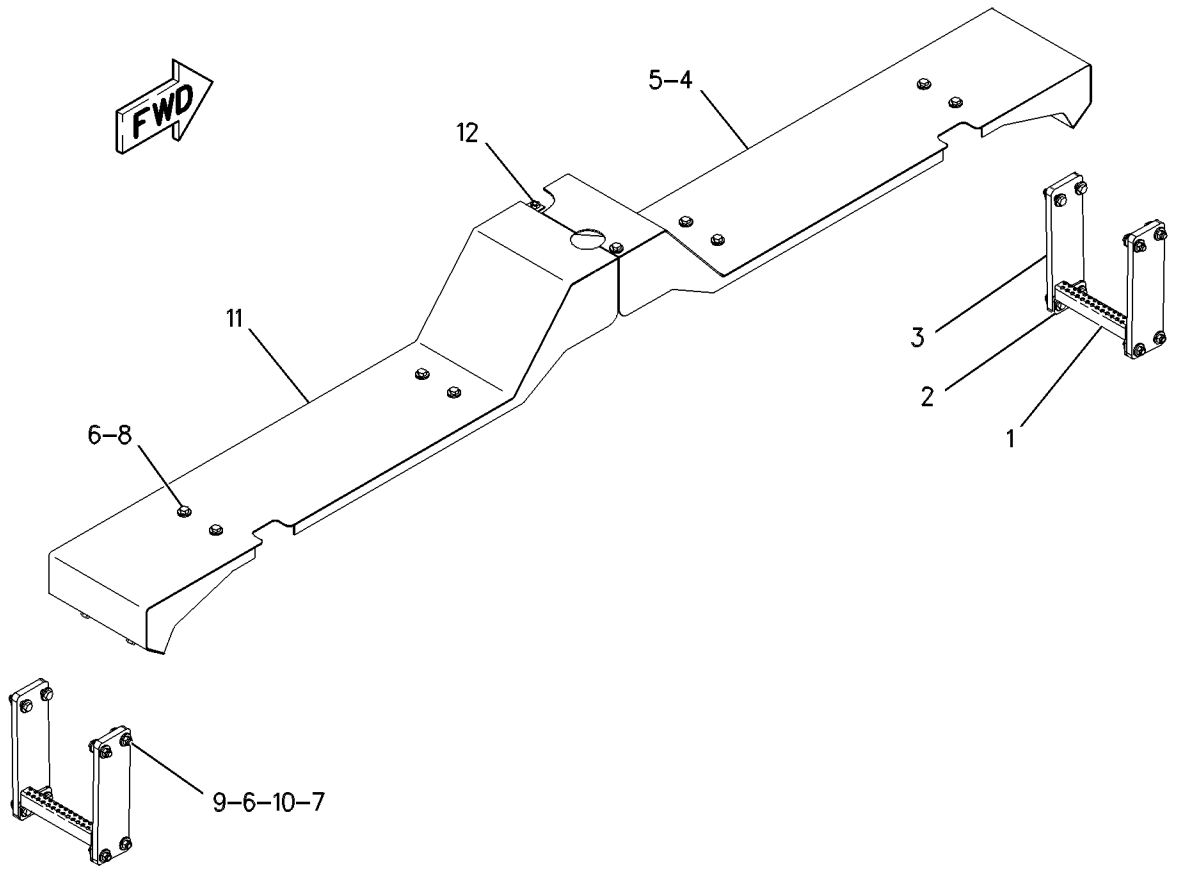

GRAPHIC #1 g00328343

5T-5009 VALVE GP-LUBE DISTRIBUTION–3 INJECTOR

S/N: 7KK1-UP
PART OF 131-9276 LUBRICATION AR-AUTOMATIC
AN ATTACHMENT

SMCS-7540 **i01486220**

NOTE	REF NO	GRAPHIC REF	PART NUMBER	QTY	PART NAME 1 2 3 4 5 6 (PRODUCT LEVEL)	SEE PAGE
J	1	1	**5T-5045**	3	INJECTOR GP-GREASE	
					(EACH INCLUDES)	
	2	1	**8X-1106**	1	FITTING	
	3	1	**191-0554**	1	PACKING	
					AVAILABLE REPAIR KIT(S):	
J			**8W-2555**	1	KIT-INJECTOR (GREASE)	
					(INCLUDES PLUNGER, PISTON ROD, SPRING, & PACKING)	
J-KIT MARKED J AVAILABLE FOR PART MARKED J						

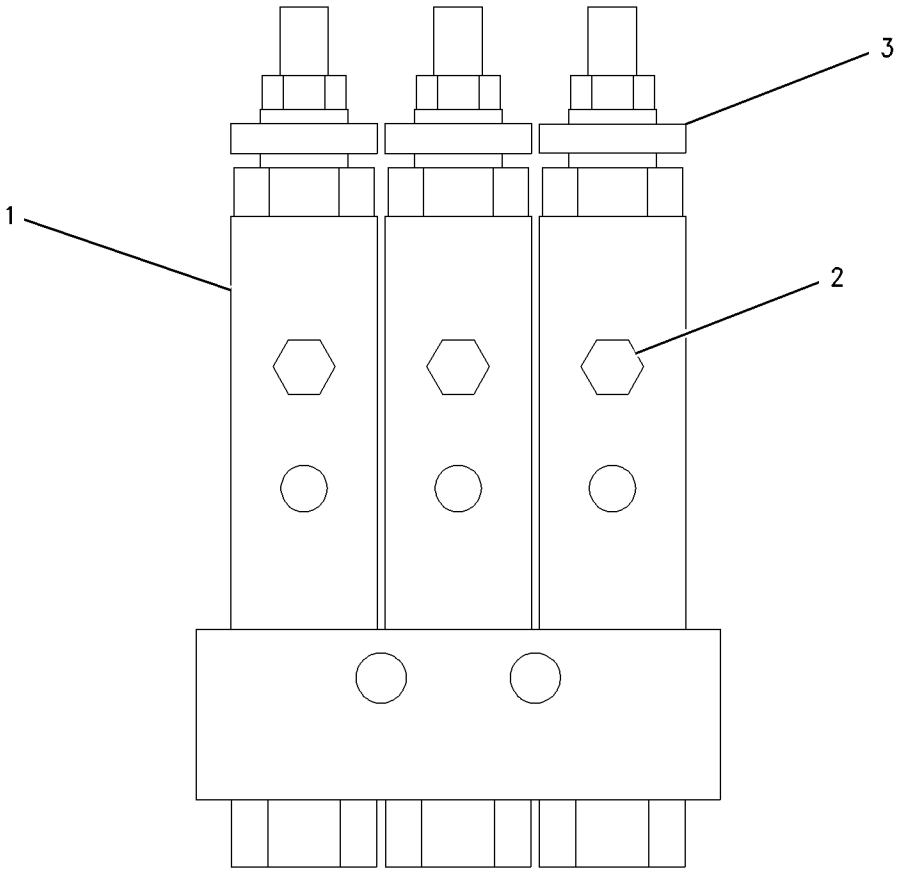

GRAPHIC #1 g00752550

5T-5010 VALVE GP-LUBE DISTRIBUTION–5 INJECTOR

S/N: 7KK1-UP
PART OF 131-9276 LUBRICATION AR-AUTOMATIC
AN ATTACHMENT

SMCS-7540 **i01485303**

NOTE	REF NO	GRAPHIC REF	PART NUMBER	QTY	PART NAME 1 2 3 4 5 6 (PRODUCT LEVEL)	SEE PAGE
J	1	1	**5T-5045**	5	INJECTOR GP-GREASE	
					(EACH INCLUDES)	
	1A	1	**8X-1106**	1	FITTING	
	2	1	**191-0554**	5	PACKING	
					AVAILABLE REPAIR KIT(S):	
J			**8W-2555**	1	KIT-INJECTOR (GREASE)	
					(INCLUDES PLUNGER, PISTON ROD, SPRING & PACKING)	

J-KIT MARKED J AVAILABLE FOR PART MARKED J

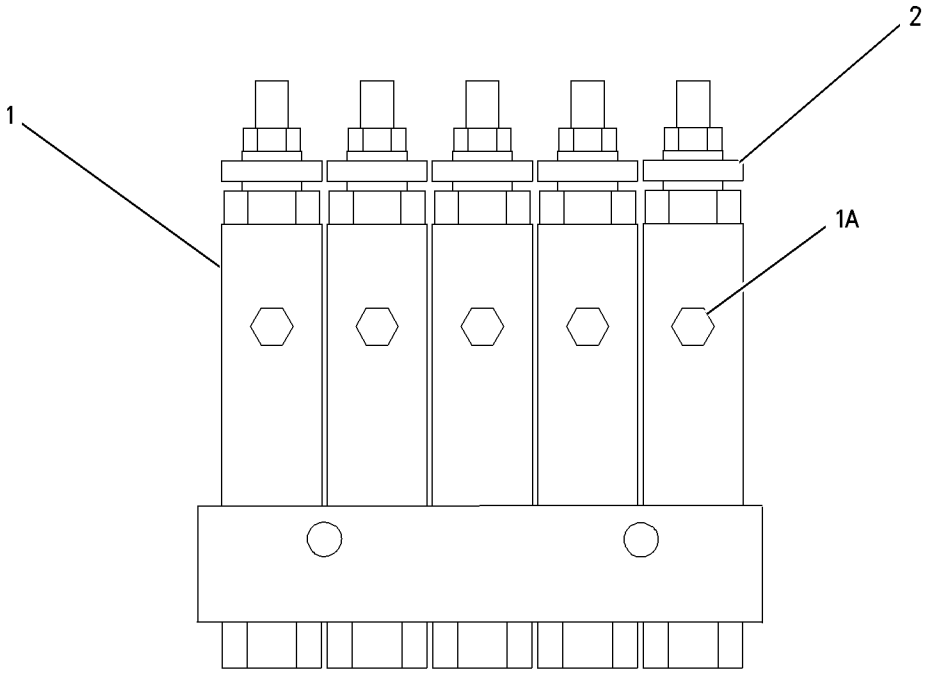

GRAPHIC #1 g00756600

8W-2597 VALVE GP-LUBE DISTRIBUTION–4 INJECTOR

S/N: 7KK1-UP
PART OF 131-9276 LUBRICATION AR-AUTOMATIC
AN ATTACHMENT

SMCS-7540 **i01485306**

NOTE	REF NO	GRAPHIC REF	PART NUMBER	QTY	PART NAME 1 2 3 4 5 6 (PRODUCT LEVEL)	SEE PAGE
J	1	1	**5T-5045**	4	INJECTOR GP-GREASE	
					(EACH INCLUDES)	
	1A	1	**8X-1106**	1	FITTING	
	2	1	**191-0554**	4	PACKING	
					AVAILABLE REPAIR KIT(S):	
J			**8W-2555**	1	KIT-INJECTOR (GREASE)	
					(INCLUDES PLUNGER, PISTON ROD, SPRING & PACKING)	

J-REPAIR KIT MARKED J AVAILABLE FOR PART MARKED J

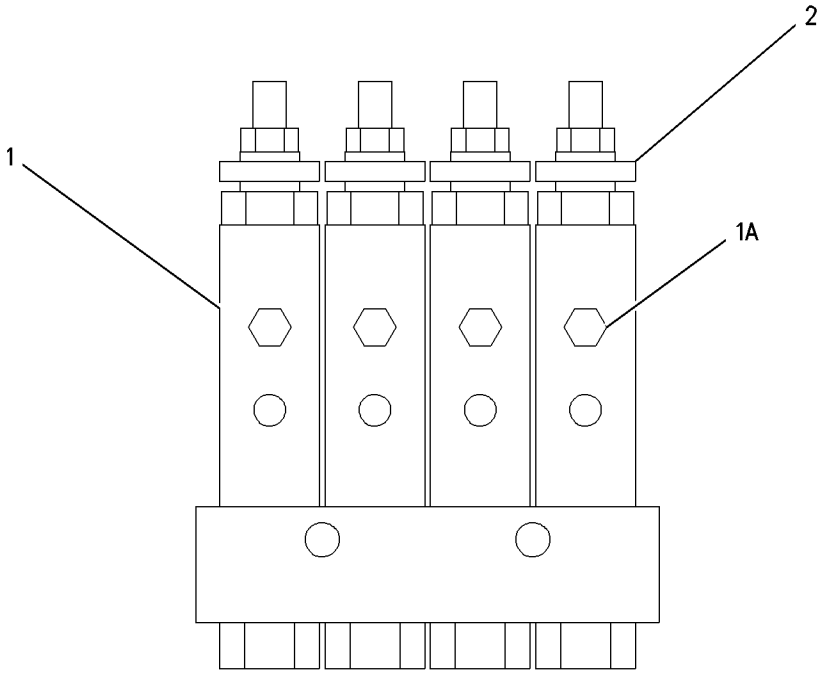

GRAPHIC #1 g00752264

141-2107 VALVE GP-LUBE DISTRIBUTION–AUTOLUBE MANIFOLD

S/N: 7KK1-UP
2 INJECTOR
PART OF 131-9276 LUBRICATION AR-AUTOMATIC
AN ATTACHMENT

SMCS-7540 **i01486231**

NOTE	REF NO	GRAPHIC REF	PART NUMBER	QTY	PART NAME 1 2 3 4 5 6 (PRODUCT LEVEL)	SEE PAGE
J	1	1	**5T-5045**	2	INJECTOR GP-GREASE	
					(EACH INCLUDES)	
	2	1	**8X-1106**	1	FITTING	
					AVAILABLE REPAIR KIT(S):	
J			**8W-2555**	1	KIT-INJECTOR (GREASE)	
					(INCLUDES PLUNGER, PISTON, ROD, SPRING & PACKING)	

J-KIT MARKED J AVAILABLE FOR PART MARKED J

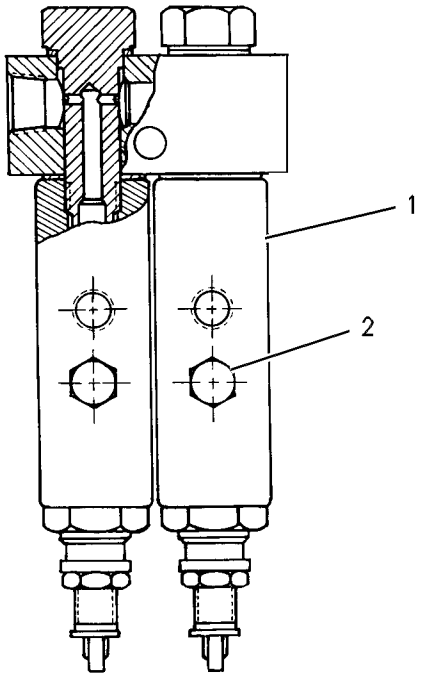

GRAPHIC #1 g00283987

3G-7397 ACCUMULATOR GP

S/N: 7KK1-UP

PART OF 3G-7399 ACCUMULATOR GP

FIELD REPLACEMENT ORDER 3G-7399—PAGE 556

SMCS-4263, 4264, 5077 **i01181924**

NOTE	REF NO	GRAPHIC REF	PART NUMBER	QTY	PART NAME 1 2 3 4 5 6 (PRODUCT LEVEL)	SEE PAGE
	1	1	**8T-6376**	1	PLATE-HYDRAULIC ACCUMULATOR	
	2	1	**9J-9870**	6	RETAINER	
	3	1	**9J-9871**	2	RING-RETAINING	
	4	1	**9T-2238**	1	VALVE AS	
		1	**175-3185**	1	CORE	
		1	**6J-0368**	1	CAP	
	5	1	**5M-6708**	1	WASHER (5.56MM THK)	
	6	1	**2K-6830**	2	RING-BACKUP	
	7	1	**1H-8128**	2	SEAL-O-RING (94.84MM ID)	
	8	1	**9J-9867**	1	HEAD	
	9	1	**9J-9869**	1	PISTON	
	10	1	**9J-9872**	1	SEAL AS	
	11	1	**5J-7154**	1	RING-WEAR	
	12	1	**9J-9868**	1	HEAD	
	13	1	**3G-2960**	1	COVER-PROTECTION	
	14	1	**7J-5311**	1	PLATE-WARNING (HIGH PRESS CYLINDER)	

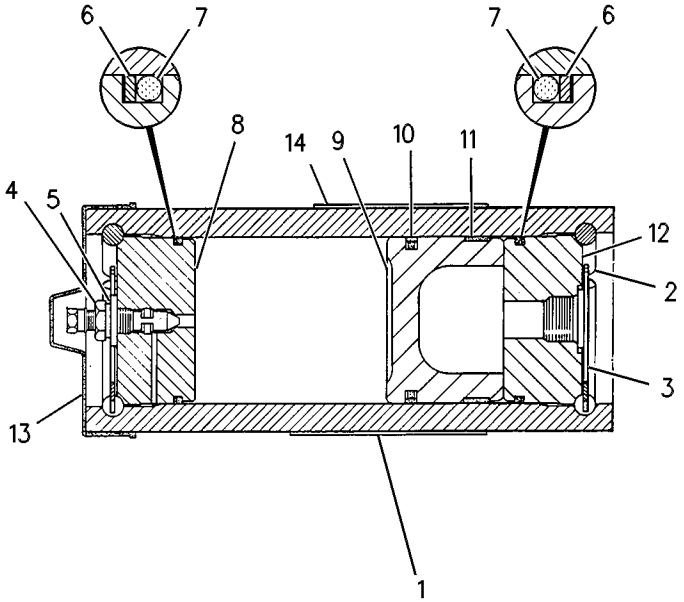

GRAPHIC #1 g00088112

3G-7399 ACCUMULATOR GP

S/N: 7KK1-UP

FIELD REPLACEMENT FOR 3G-7397—PAGE 555: FOR 133-6184—PAGE 583

FIELD INSTALLATION

SMCS-4263, 4264, 5077 **i00775444**

NOTE	REF NO	GRAPHIC REF	PART NUMBER	QTY	PART NAME 1 2 3 4 5 6 (PRODUCT LEVEL)	SEE PAGE
Y	1	1	*3G-7397*	1	ACCUMULATOR GP	555

Y-SEPARATE ILLUSTRATION

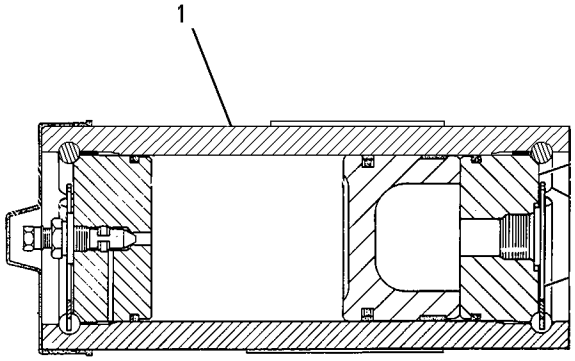

GRAPHIC #1 g00356592

BRAKING SYSTEM

127-8521 ACCUMULATOR GP

S/N: 7KK1-UP

PART OF 8X-8980 CONTROL GP-SERVICE BRAKE

SMCS-4263, 4264 **i01461620**

NOTE	REF NO	GRAPHIC REF	PART NUMBER	QTY	PART NAME 1 2 3 4 5 6 (PRODUCT LEVEL)	SEE PAGE
	1	1	**6E-3456**	1	ACCUMULATOR AS	
	2	1	**7J-5311**	1	PLATE-WARNING (HIGH PRESSURE CYLINDER)	
	3	1	**8T-6376**	1	PLATE-HYDRAULIC ACCUMULATOR	
	4	1	**6E-3475**	1	COVER	
	5	1	**175-3184**	1	VALVE GP	
		1	**6J-0368**	1	CAP	
		1	**175-3185**	1	CORE	
	6	1	**114-3361**	1	SEAL-O-RING	
	7	1	**6E-3458**	1	HEAD	
	8	1	**175-7915**	1	RING-BACKUP	
	9	1	**175-7903**	1	SEAL-O-RING	
	10	1	**8T-8390**	1	RING-WEAR	
	11	1	**174-2415**	1	SEAL AS	
	12	1	**168-2466**	1	PISTON	

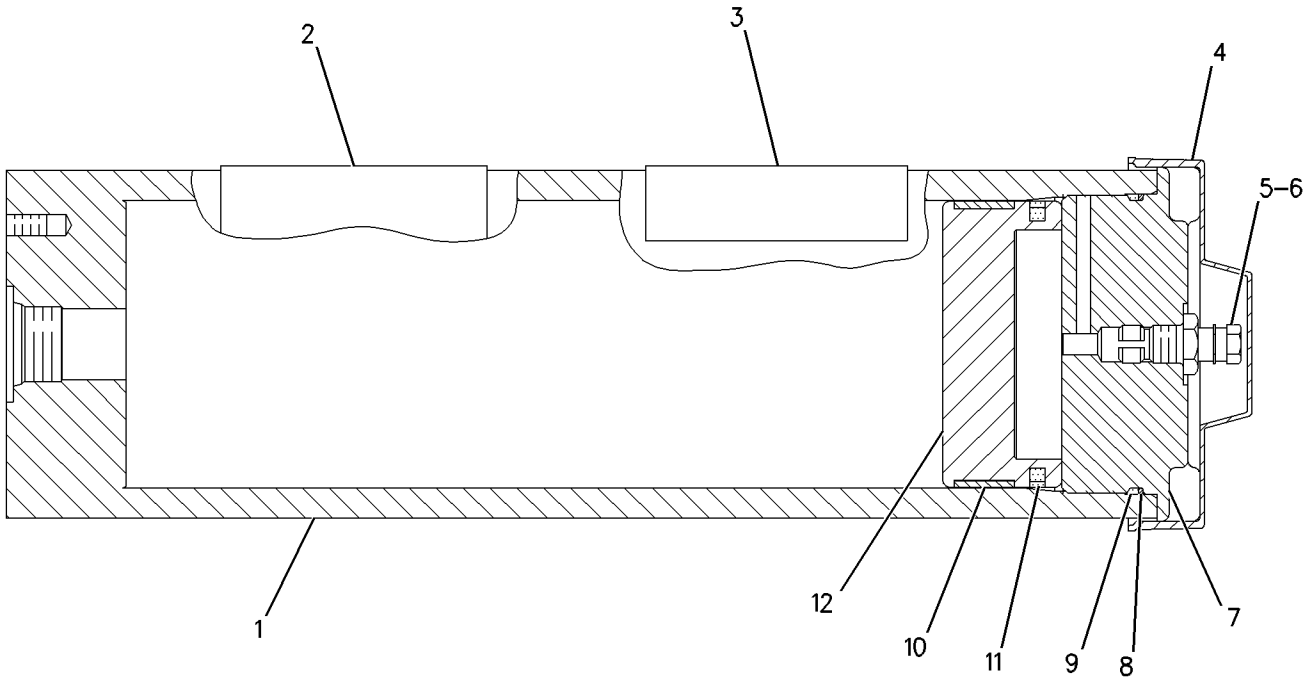

GRAPHIC #1 g00764392

BRAKING SYSTEM

129-8534 BRAKE GP-SERVICE

S/N: 7KK1-UP
AN ATTACHMENT

SMCS-4072, 4073, 4205, 4251, 4255 **i01176588**

NOTE	REF NO	GRAPHIC REF	PART NUMBER	QTY	PART NAME 1 2 3 4 5 6 (PRODUCT LEVEL)	SEE PAGE
	1	1	**118-4906**	1	SPINDLE	
	2	1	**118-4907**	1	HOUSING	
	3	1	**118-4908**	1	COVER	
	4	1	**118-4909**	1	SPACER	
	5	1	**118-4910**	1	HUB-BRAKE	
	6	1	**118-4911**	1	SPACER	
	7	1	**118-4912**	1	RETAINER	
	8	1	**119-3999**	1	RING	
	9	1	**7I-4918**	1	SPROCKET	
	10	1	**5D-6296**	1	CONE-ROLLER BEARING	
	11	1	**5D-6297**	1	CONE-ROLLER BEARING	
	12	1	**5D-6298**	2	CUP-ROLLER BEARING	
B	13	1	**4D-5642**	1	SHIM PACK	
					(INCLUDES 14 SHIMS)	
M	14	1	**8T-0357**	8	BOLT (M16X2.0X70MM)	
	15	1	**5D-6328**	1	DAMPER AS	
	16	1	**9W-7018**	12	DISC-FRICTION	
	17	1	**7D-7504**	13	PLATE-OUTER	
	18	1	**2G-5593**	1	PISTON	
	19	1	**131-5422**	1	HOUSING	
	20	1	**2G-5558**	1	PISTON	
	21	1	**2G-8071**	18	SPRING AS	
	22	1	**5P-6268**	1	SEAL-RING	
	23	1	**123-7266**	1	SEAL-RING	
	24	1	**5P-6270**	1	SEAL-RING	
	25	1	**123-7267**	1	SEAL-RING	
	26	1	**9D-7987**	1	SEAL (465.84MM ID)	
	27	1	**124-3520**	1	SEAL-RING (437.06MM ID)	
	28	1	**123-7265**	1	SEAL-RING	
	29	1	**5P-6266**	1	SEAL-RING	
	30	1	**2G-5681**	4	SPRING	
	31	1	**2G-5677**	4	SPRING-GUIDE	
	32	1	**6M-9155**	4	PIN	
M	33	1	**8T-0643**	12	BOLT (M10X1.50X80MM)	
	34	1	**6V-5839**	12	WASHER (2.5MM THK)	
	35	1	**9S-8004**	8	PLUG-O-RING (9/16-18 THD)	
	36	1	**3J-1907**	8	SEAL-O-RING (11.89MM ID)	
	37	1	**9W-6692**	1	SEAL GP-DUO-CONE	
	38	1	**3D-6215**	1	RETAINER AS-SEAL	
	39	1	**0S-0130**	4	PIN	
	40	1	**8X-0274**	24	STUD	
	41	1	**5D-7523**	1	SEAL-O-RING	
	42	1	**9D-7984**	1	SEAL (11.13MM ID)	
M	43	1	**8T-4184**	6	BOLT (M12X1.75X45MM)	
	44	1	**8T-4223**	6	WASHER-HARD (3MM THK)	
	45	1	**2H-6340**	1	SEAL-O-RING (278.76MM ID)	

B-USE AS REQUIRED
M-METRIC PART

129-8534 BRAKE GP-SERVICE *(contd.)* **i01176588**

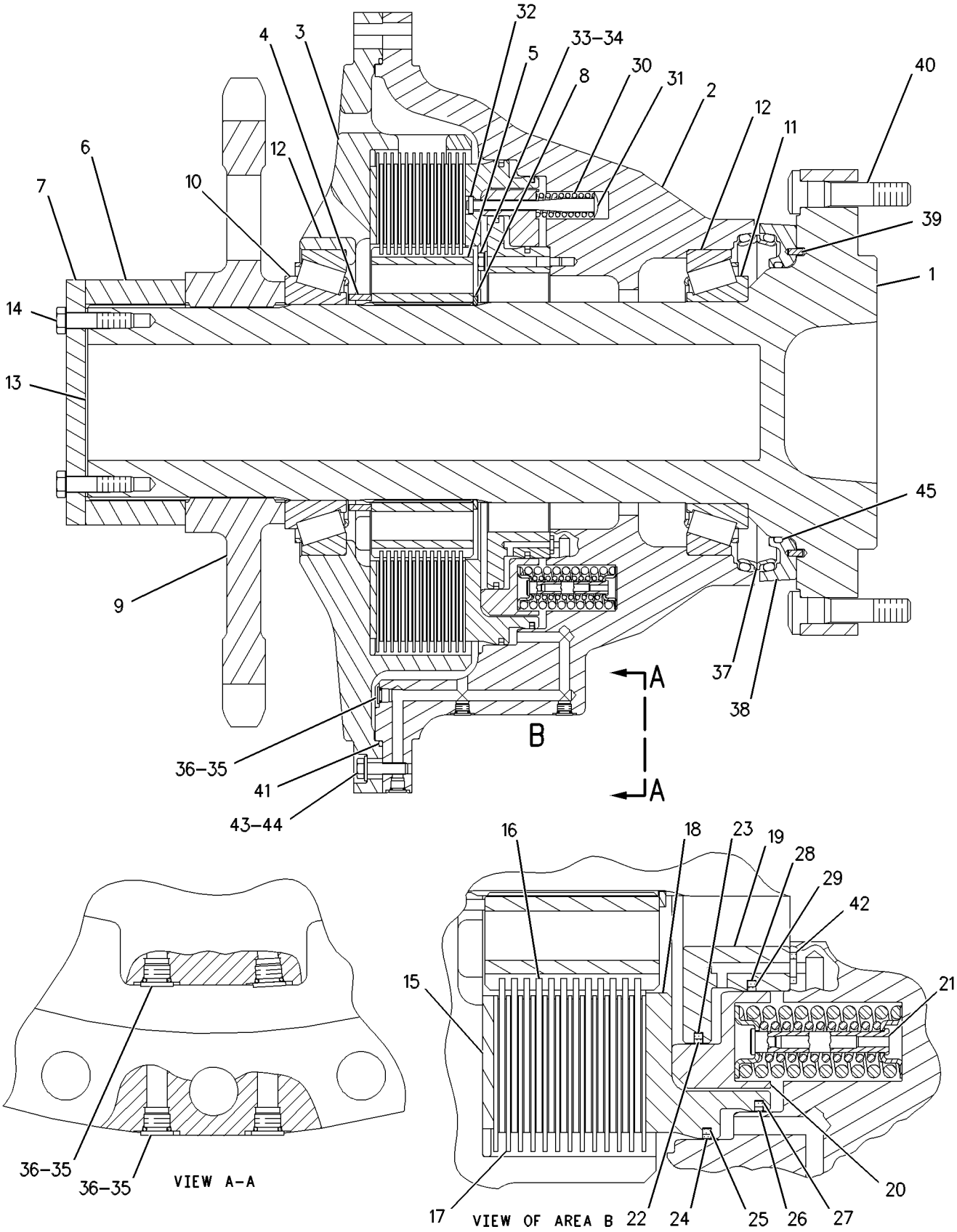

GRAPHIC #1

g00639218

BRAKING SYSTEM

8X-9039 BRAKE GP-SERVICE & PARKING

S/N: 7KK1-UP

PART OF 8X-8405 POWER TRAIN AR

SMCS-4251, 4267 **i01068121**

NOTE	REF NO	GRAPHIC REF	PART NUMBER	QTY	PART NAME 1 2 3 4 5 6 (PRODUCT LEVEL)	SEE PAGE
	1	1	**118-4906**	4	SPINDLE	
	2	1	**118-4907**	4	HOUSING	
	3	1	**118-4908**	4	COVER	
	4	1	**118-4909**	4	SPACER	
	5	1	**118-4910**	4	HUB-BRAKE	
	6	1	**118-4911**	4	SPACER	
	7	1	**118-4912**	4	RETAINER	
	8	1	**119-3999**	4	RING	
	9	1	**7I-4918**	4	SPROCKET	
	10	1	**5D-6296**	4	CONE-ROLLER BEARING	
	11	1	**5D-6297**	4	CONE-ROLLER BEARING	
	12	1	**5D-6298**	8	CUP-ROLLER BEARING	
B	13	1	**4D-5642**	4	SHIM PACK (EACH INCLUDES 14 SHIMS)	
M	14	1	**8T-0357**	32	BOLT (M16X2.0X70MM)	
	15	1	**5D-6328**	4	DAMPER AS	
	16	1	**9W-7018**	48	DISC-FRICTION	
	17	1	**7D-7504**	52	PLATE-OUTER	
	18	1	**2G-5593**	4	PISTON	
	19	1	**131-5422**	4	HOUSING	
	20	1	**2G-5558**	4	PISTON	
	21	1	**2G-8071**	72	SPRING AS	
	22	1	**5P-6268**	4	SEAL-RING	
	23	1	**123-7266**	4	SEAL-RING	
	24	1	**5P-6270**	4	SEAL-RING	
	25	1	**123-7267**	4	SEAL-RING	
	26	1	**9D-7987**	4	SEAL (465.84MM ID)	
	27	1	**124-3520**	4	SEAL-RING (437.06MM ID)	
	28	1	**123-7265**	4	SEAL-RING	
	29	1	**5P-6266**	4	SEAL-RING	
	30	1	**2G-5681**	16	SPRING	
	31	1	**2G-5677**	16	SPRING-GUIDE	
	32	1	**6M-9155**	16	PIN	
M	33	1	**8T-0643**	48	BOLT (M10X1.50X80MM)	
	34	1	**6V-5839**	48	WASHER (2.5MM THK)	
	35	1	**9S-8004**	32	PLUG-O-RING (9/16-18 THD)	
	36	1	**3J-1907**	32	SEAL-O-RING (11.89MM ID)	
	37	1	**9W-6692**	4	SEAL GP-DUO-CONE	
		1	**1U-5933**	1	INSTALLER AS-SEAL	
		1	**8T-0535**	1	GAUGE	
		1	**8T-0540**	1	TOOL-ADJUSTMENT	
	38	1	**3D-6215**	4	RETAINER AS-SEAL	
					(EACH INCLUDES)	
	39	1	**0S-0130**	4	PIN	
	40	1	**8X-0274**	96	STUD	
	41	1	**5D-7523**	4	SEAL-O-RING	
	42	1	**9D-7984**	4	SEAL (11.13MM ID)	
M	43	1	**8T-4184**	24	BOLT (M12X1.75X45MM)	
	44	1	**8T-4223**	24	WASHER-HARD (3MM THK)	
	45	1	**2H-6340**	4	SEAL-O-RING (278.76MM ID)	
					QUANTITIES SHOWN ARE	
					THOSE REQUIRED FOR	
					BOTH LH AND RH SIDES	

B-USE AS REQUIRED
M-METRIC PART

8X-9039 BRAKE GP-SERVICE & PARKING *(contd.)* **i01068121**

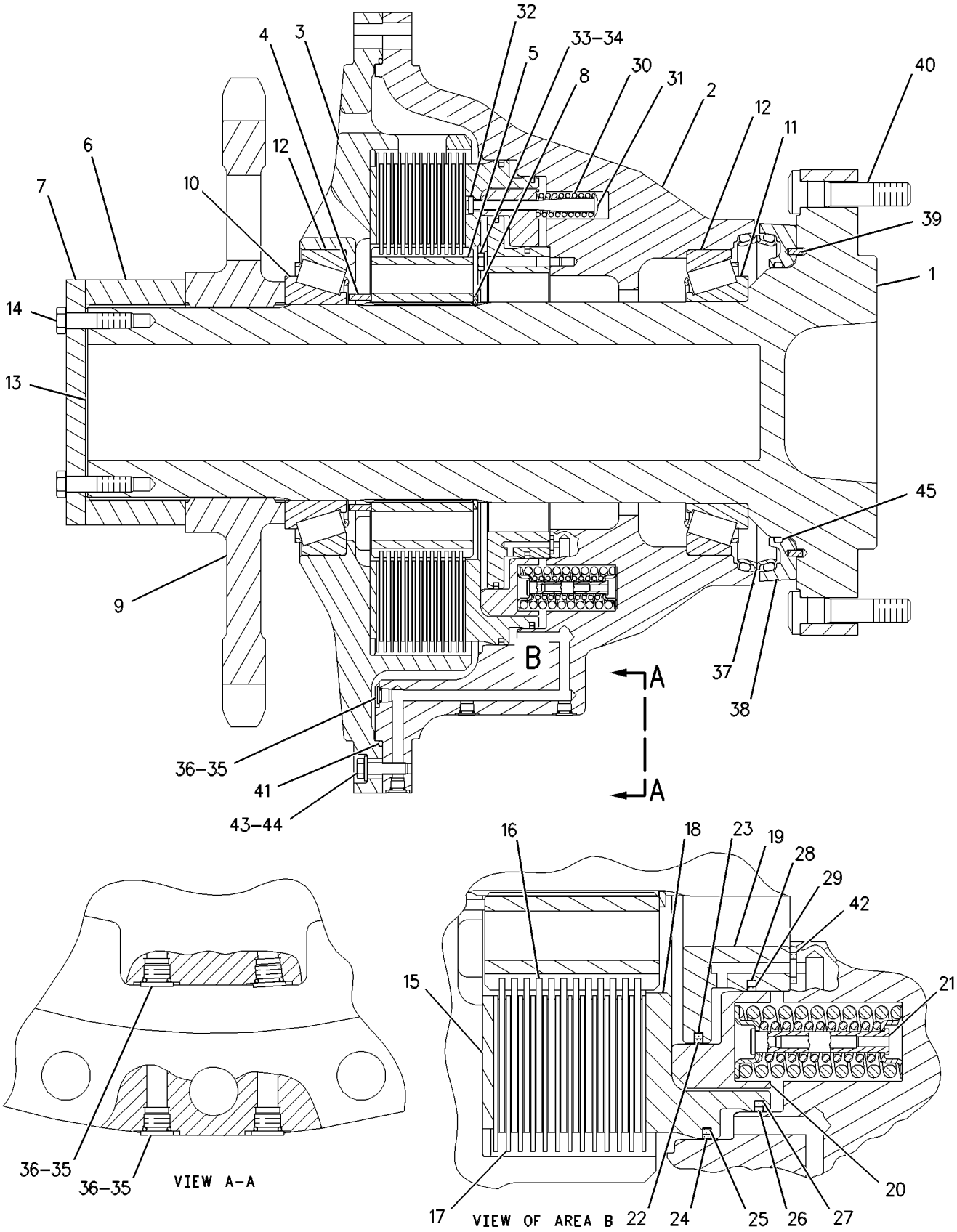

GRAPHIC #1

g00569894

8X-8979 CONTROL GP-PARKING BRAKE

S/N: 7KK1-81

PART OF 8X-9003 PLATFORM AR

SMCS-4257, 4282, 4284 **i00110738**

NOTE	REF NO	GRAPHIC REF	PART NUMBER	QTY	PART NAME 1 2 3 4 5 6 (PRODUCT LEVEL)	SEE PAGE
	1	1	**2M-4036**	1	ROD END	
	2	1	**3B-4607**	1	COTTER	
	3	1	**4J-5325**	1	PIN	
	4	1	**095-0843**	1	COTTER	
	5	1	**095-1314**	1	PIN-CLEVIS	
	6	1	**117-2118**	1	LEVER-BRAKE	
	7	1	**117-2119**	1	LINK-BRAKE CHAIN	
	8	1	**117-2120**	1	HANDLE AS-BRAKE	
	9	1	**117-2124**	1	BUSHING	
	10	1	**128-1127**	1	CABLE AS	
	11	1	**5P-8522**	1	GROMMET	
M	12	1	**8T-4189**	2	BOLT (M8X1.25X20MM)	
	13	1	**8T-4224**	6	WASHER-HARD (2MM THK)	

M-METRIC PART

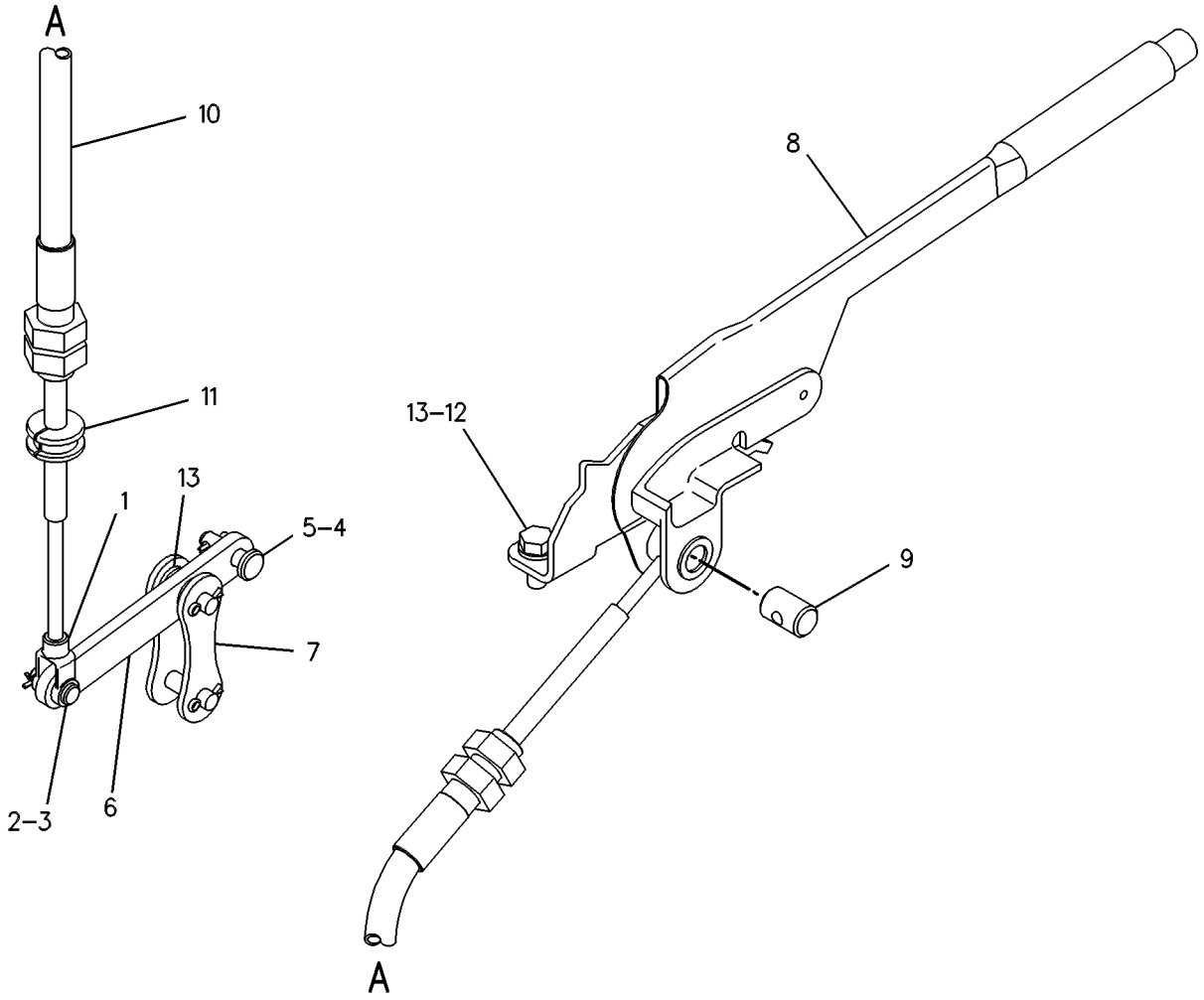

GRAPHIC #1 g00086462

MEMORANDA

BRAKING SYSTEM

8X-8980 CONTROL GP-SERVICE BRAKE

S/N: 7KK1-UP

PART OF 8X-8404 HYDRAULIC AR

SMCS-4257, 4265, 4269 **i01500407**

NOTE	REF NO	GRAPHIC REF	PART NUMBER	QTY	PART NAME 1 2 3 4 5 6 (PRODUCT LEVEL)	SEE PAGE
J	1	1	**124-3490**	1	VALVE GP-BRAKE CONTROL	
H	2	1	**128-2993**	1	VALVE GP-BRAKE CONTROL	
		1	**117-7798**	1	BOOT	
M	3	1	**8T-7547**	1	BOLT (M8X1.25X30MM)	
	4	1	**8T-4224**	2	WASHER-HARD (8.8X16X2MM THK)	
M	5	1	**9X-8496**	1	STUD-TAPERLOCK (M8-1.25X65MM)	
M		1	**5C-7261**	1	NUT (M8X1.25 THD)	
	6	1	**6V-8639**	1	CONNECTOR	
	7	1	**6V-8398**	23	SEAL-O-RING	
	8	1	**3K-0360**	10	SEAL-O-RING	
	9	1	**6V-8625**	5	ELBOW	
I	10	1	**129-8509**	2	HOSE AS	
I	11	1	**129-8510**	2	HOSE AS	
I	12	1	**136-9309**	1	HOSE AS	
I	13	1	**136-9310**	1	HOSE AS	
	14	1	**3G-8054**	8	CLIP (TAB)	
		1	**3G-8057**	8	CLIP (SLOT)	
	15	1	**3G-8047**	7	GROMMET	
M	16	1	**8T-4196**	2	BOLT (M10X1.5X35MM)	
	17	1	**8T-4121**	47	WASHER-HARD (11X21X2.5MM THK)	
	18	1	**5P-7464**	5	CLIP (SLOT)	
		1	**5P-7465**	5	CLIP (TAB)	
		1	**6V-1249**	5	GROMMET	
M	19	1	**8T-4139**	4	BOLT (M12X1.75X30MM)	
	20	1	**5P-1076**	2	WASHER-HARD (13.5X30X4MM THK)	
	21	1	**9R-4764**	6	ROD	
M	22	1	**8T-4133**	10	NUT (M10X1.5 THD)	
M	23	1	**8T-4136**	20	BOLT (M10X1.5X25MM)	
I	24	1	**129-8506**	1	HOSE AS	
I	25	1	**129-8507**	1	HOSE AS	
I	26	1	**129-8508**	1	HOSE AS	
	27	1	**6V-0852**	2	CAP-DUST	
		1	**6V-3965**	2	FITTING AS (QUICK DISCONNECT)	
	28	1	**3J-1907**	16	SEAL-O-RING	
	29	1	**6V-8637**	3	CONNECTOR-SEAL	
	30	1	**3D-2824**	8	SEAL-O-RING	
	31	1	**6V-9746**	10	SEAL-O-RING	
	32	1	**6V-8636**	2	CONNECTOR	
	33	1	**6V-8397**	6	SEAL-O-RING	
	34	1	**129-8511**	1	TUBE AS	
	35	1	**5P-6944**	1	ADAPTER-STRAIGHT THREAD	
I	36	1	**129-8497**	1	HOSE AS	
P	37	1	**138-6157**	1	VALVE GP-ACCUMULATOR CHARGING	
M	38	1	**8T-4137**	8	BOLT (M10X1.5X20MM)	
I	39	1	**129-8496**	1	HOSE AS	
	40	1	**129-8513**	1	TUBE AS	
	41	1	**129-8512**	1	TUBE AS	
	42	1	**129-0884**	1	MANIFOLD	
M	43	1	**8T-4183**	2	BOLT (M12X1.75X40 MM)	
	44	1	**8T-4223**	9	WASHER-HARD (13.5X25.5X3MM THK)	
M	45	1	**8T-4244**	2	NUT (M12X1.75 THD)	
	46	1	**6V-9182**	1	ELBOW	
	47	1	**7M-8485**	8	SEAL-O-RING	
	48	1	**6V-8633**	4	CONNECTOR	
	49	1	**8T-6876**	1	ELBOW	
	50	1	**129-8530**	1	TUBE AS	

8X-8980 CONTROL GP-SERVICE BRAKE *(contd.)* i01500407

NOTE	REF NO	GRAPHIC REF	PART NUMBER	QTY	PART NAME 1 2 3 4 5 6 (PRODUCT LEVEL)	SEE PAGE
	51	1	**129-8531**	1	TUBE AS	
	52	1	**6V-8716**	2	CONNECTOR	
Y	53	1	**127-8521**	2	ACCUMULATOR GP	557
	54	1	**6V-9990**	1	GROMMET	
	55	1	**127-1635**	1	BRACKET AS	
		1	**9U-1478**	2	CLAMP	
	56	1	**4L-6454**	2	BOLT (3/8-16X1 IN)	
	57	1	**8C-8762**	1	ELBOW	
	58	1	**6V-9836**	1	TEE-SWIVEL	
	59	1	**6V-8634**	1	CONNECTOR	
	60	1	**5P-8874**	1	ADAPTER	
	61	1	**6V-9844**	1	TEE-SWIVEL	
	62	1	**8T-6338**	1	TEE-O-RING PORT	
I	63	1	**129-8505**	1	HOSE AS	
I	64	1	**129-8494**	1	HOSE AS	
M	65	1	**8T-4192**	3	BOLT (M12X1.75X25MM)	
	66	1	**8T-0197**	1	CONNECTOR	
	67	1	**5K-9090**	3	SEAL-O-RING	
	68	1	**6V-8635**	3	CONNECTOR	
I	69	1	**129-8502**	1	HOSE AS	
	70	1	**5P-7466**	1	CLIP (SLOT)	
		1	**5P-7467**	1	CLIP (TAB)	
		1	**5P-8112**	1	GROMMET	
	71	1	**6V-9343**	1	ELBOW	
	72	1	**9X-6580**	1	NUT-O-RING SEAL	
	73	1	**8X-5974**	1	MANIFOLD	
M	74	1	**8T-4172**	1	BOLT (M10X1.50X80MM)	
	75	1	**6V-8941**	1	REDUCER	
	76	1	**5P-9299**	16	CLIP	
	77	1	**126-7147**	2	TUBE AS	
	78	1	**126-7149**	2	TUBE AS	
	79	1	**126-7146**	2	TUBE AS	
	80	1	**126-7148**	2	TUBE AS	
	81	1	**129-8492**	4	BRACKET	
	82	1	**6V-9873**	8	CONNECTOR-SEAL	
	83	1	**152-2676**	1	SHIELD AS	
M		1	**8T-3490**	10	NUT-WELD (M10X1.5 THD)	
		1	**7T-1099**	4	LINK	
M	84	1	**8T-4195**	2	BOLT (M10X1.5X30MM)	
	85	1	**8T-1685**	1	TEE	
	86	1	**7J-8581**	1	CLIP	
	87	1	**6V-9002**	1	ELBOW	
M	88	1	**7X-2543**	1	BOLT (M10X1.5X120MM)	
	89	1	**5T-6374**	1	SPACER (10.5X20X40MM THK)	
	90	1	**4H-1225**	2	WASHER (11X22X6MM THK)	
	91	2	**7X-2459**	2	TEE-O-RING	
	92	2	**6V-8397**	11	SEAL-O-RING	
	93	2	**9T-3096**	3	VALVE GP-CHECK (SERVICE BRAKE)	
	94	2	**3J-1907**	12	SEAL-O-RING	
	95	2	**6V-8636**	3	CONNECTOR	
Y	96	2	*2G-6535*	2	SLACK ADJUSTER GP	581
	97	2	**6V-0852**	3	CAP-DUST	
		2	**6V-3965**	3	FITTING AS (QUICK DISCONNECT)	
	98	2	**3K-0360**	6	SEAL-O-RING	
	99	2	**6V-8633**	2	CONNECTOR	
	100	2	**3D-2824**	7	SEAL-O-RING	
	101	2	**6V-8398**	13	SEAL-O-RING	
	102	2	**9D-7198**	2	JUNCTION BLOCK	
	103	2	**6V-8639**	6	CONNECTOR	

8X-8980 CONTROL GP-SERVICE BRAKE *(contd.)* i01500407

NOTE	REF NO	GRAPHIC REF	PART NUMBER	QTY	PART NAME 1 2 3 4 5 6 (PRODUCT LEVEL)	SEE PAGE
M	104	2	**8T-4139**	4	BOLT (M12X1.75X30MM)	
	105	2	**8T-4223**	11	WASHER-HARD (13.5X25.5X3MM THK)	
M	106	2	**8T-6912**	4	BOLT (M8X1.25X50MM)	
	107	2	**6V-8638**	4	CONNECTOR-SEAL	
	108	2	**8T-4224**	4	WASHER-HARD (8.8X16X2MM THK)	
	109	2	**129-8493**	2	BRACKET	
		2	**8T-4167**	2	WASHER-HARD (26X44X4MM THK)	
	110	2	**6V-8716**	1	CONNECTOR	
	111	2	**6V-9746**	5	SEAL-O-RING	
	112	2	**7M-8485**	1	SEAL-O-RING	
	113	2	**3G-8054**	2	CLIP (TAB)	
		2	**3G-8057**	2	CLIP (SLOT)	
	114	2	**3G-8047**	2	GROMMET	
M	115	2	**8T-4195**	2	BOLT (M10X1.5X30MM)	
	116	2	**8T-4121**	20	WASHER-HARD (11X21X2.5MM THK)	
M	117	2	**8T-4133**	4	NUT (M10X1.5 THD)	
	118	2	**9R-4764**	2	ROD	
	119	2	**5P-7466**	1	CLIP (SLOT)	
		2	**5P-7467**	1	CLIP (TAB)	
		2	**5P-8112**	1	GROMMET	
M	120	2	**8T-4192**	3	BOLT (M12X1.75X25MM)	
Y	121	2	*143-4794*	1	SCREEN GP	580
M	122	2	**8T-4191**	8	BOLT (M10X1.5X16MM)	
	123	2	**8T-5429**	1	ELBOW	
	124	2	**8T-6451**	2	ELBOW	
	125	2	**8T-2883**	1	TEE	
	126	2	**6V-8733**	1	UNION-FACE SEAL	
I	127	2	**129-8503**	1	HOSE AS	
I	128	2	**129-8500**	1	HOSE AS	
I	129	2	**129-8498**	1	HOSE AS	
I	130	2	**129-8499**	1	HOSE AS	
	131	2	**4L-6454**	5	BOLT (3/8-16X1 IN)	
		2	**5P-1075**	5	WASHER-HARD (10.2X22.5X3MM THK)	
	132	2	**128-6847**	1	VALVE GP-CHECK (BRAKE PUMP)	
	133	2	**9V-1882**	1	FLANGE	
	134	2	**1P-3703**	1	SEAL-RECTANGULAR	
M	135	2	**8T-6466**	4	BOLT (M10X1.50X60MM)	
	136	2	**6V-0397**	2	FLANGE-HALF	
	137	2	**4J-0522**	1	SEAL-O-RING	
M	138	2	**8T-4183**	4	BOLT (M12X1.75X40 MM)	
	139	2	**5S-7379**	2	BOLT (3/8-16X0.875 IN)	
Y	140	2	*5T-1060*	1	PUMP GP-ELECTRIC DRIVE	574
	141	2	**5T-1086**	1	PLATE	
	142	2	**2M-9780**	4	SEAL-O-RING	
Y	143	2	*130-3214*	1	FILTER GP-OIL	571
	144	2	**6V-8724**	1	ELBOW	
I	145	2	**129-8501**	1	HOSE AS	
I	146	2	**136-7461**	1	HOSE AS	
	147	2	**3J-7354**	1	SEAL-O-RING	
	148	2	**5P-9617**	1	ADAPTER (9/16-18 THRD)	
	149	2	**8C-3446**	1	VALVE AS-FLUID SAMPLING	
	150	2	**8C-3451**	1	CAP-DUST	
	151	2	**8T-9107**		TEE	
					AVAILABLE REPAIR KIT(S):	
P			**101-8087**	1	KIT-REPAIR	
					(INCLUDES PLUGS, POPPETS AND O-RINGS)	
J			**124-3489**	1	KIT-SEAL	
					(INCLUDES BOOT & SEALS)	
H			**117-7799**	1	KIT-SEAL	

8X-8980 **CONTROL GP-SERVICE BRAKE** *(contd.)* **i01500407**

H-KIT MARKED H AVAILABLE FOR PARTS MARKED H
I-SEE HOSE FABRICATION GUIDE
J-KIT MARKED J AVAILABLE FOR PARTS MARKED J
M-METRIC PART
P-KIT MARKED P AVAILABLE FOR PARTS MARKED P
Y-SEPARATE ILLUSTRATION

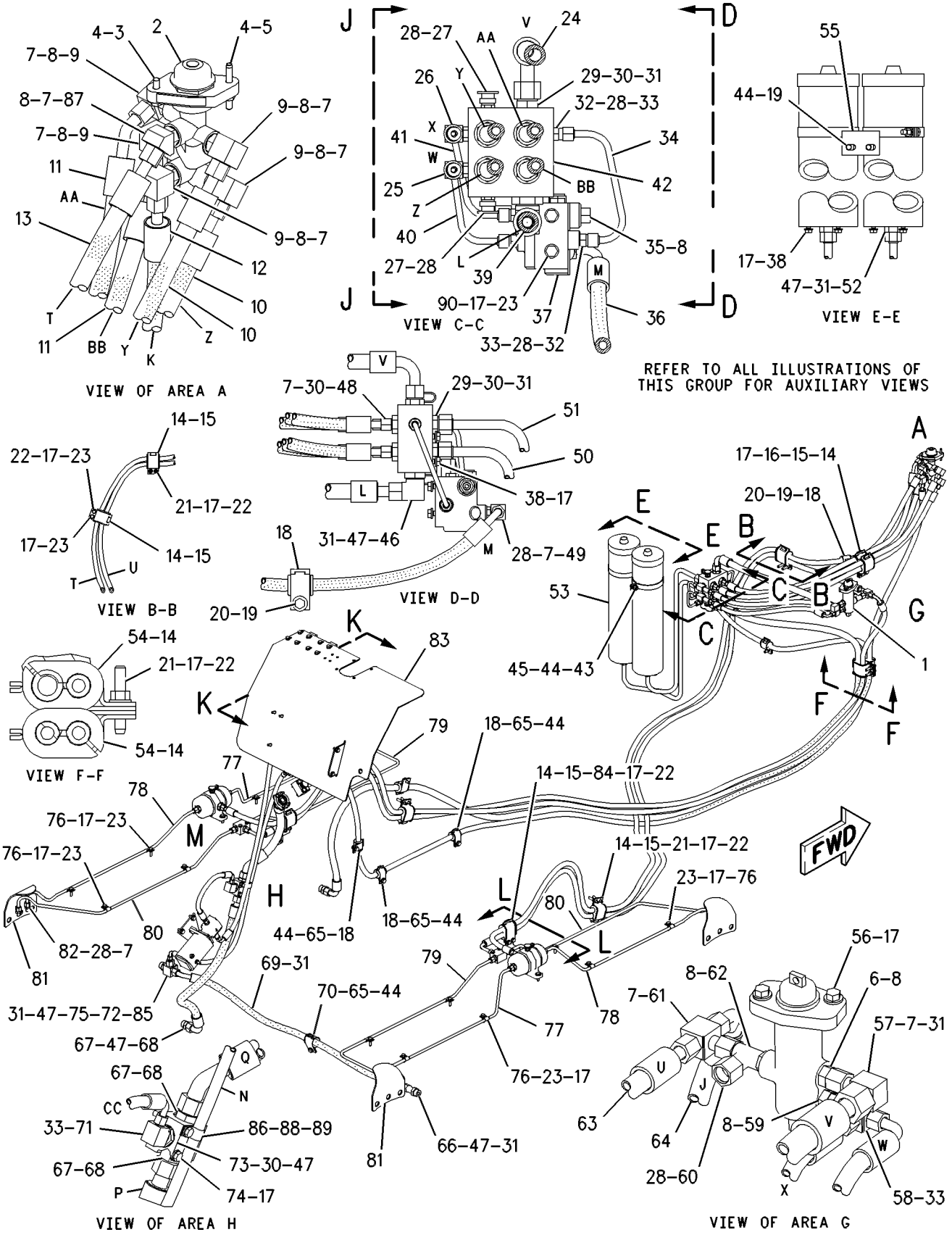

GRAPHIC #1

g00296880

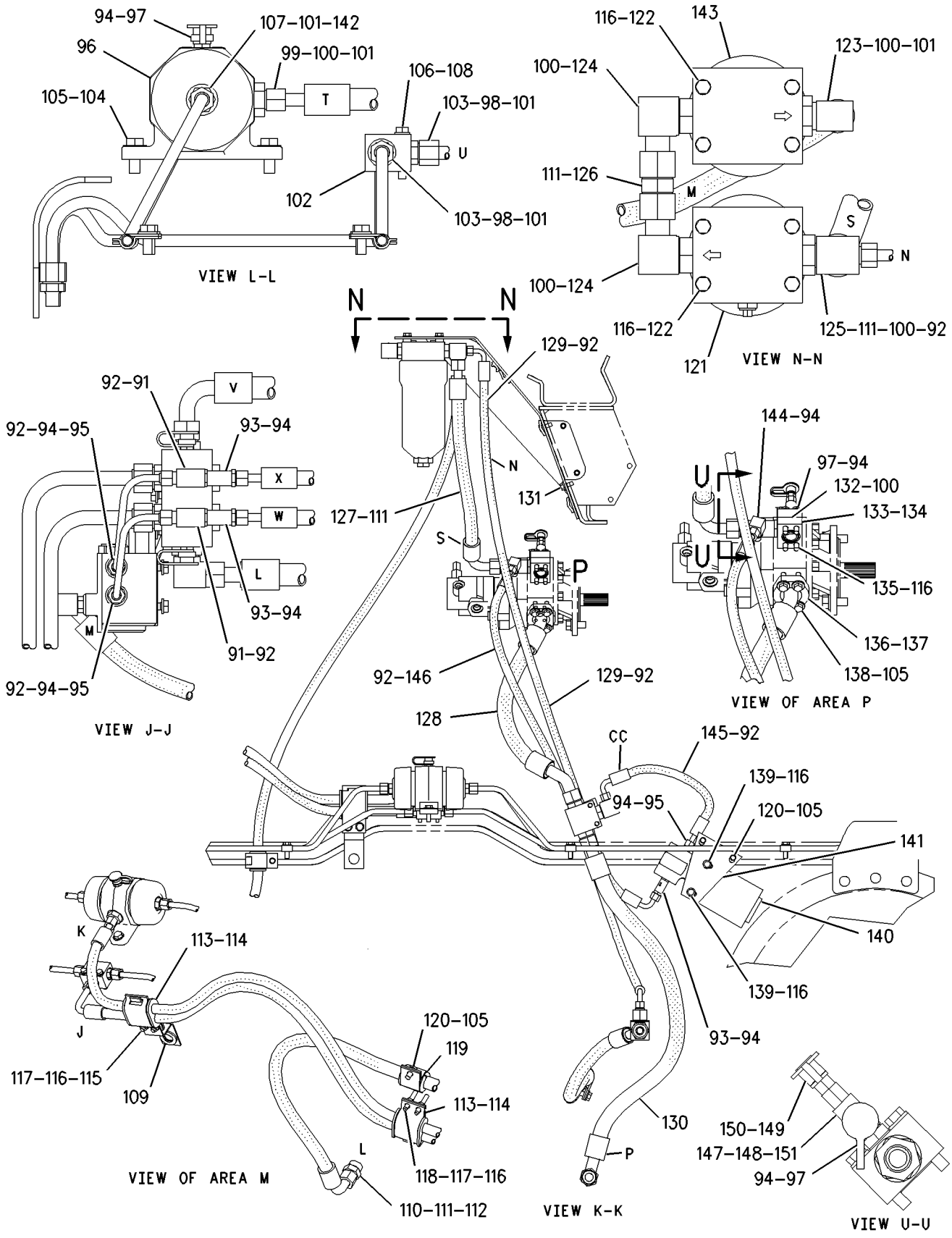

GRAPHIC #2

g00778846

BRAKING SYSTEM

120-4409 FASTENER GP-BRAKE

S/N: 7KK1-UP

PART OF 8X-8405 POWER TRAIN AR

i01313018

NOTE	REF NO	GRAPHIC REF	PART NUMBER	QTY	PART NAME 1 2 3 4 5 6 (PRODUCT LEVEL)	SEE PAGE
	1	1	**5D-7523**	4	SEAL-O-RING (684.28MM ID)	
	2	1	**6V-8237**	120	WASHER (4.0MM THK)	
M	3	1	**8T-0666**	108	BOLT (M24X3.0X90MM)	
M	4	1	**8T-0667**	12	BOLT (M24X3X100MM)	

M-METRIC PART

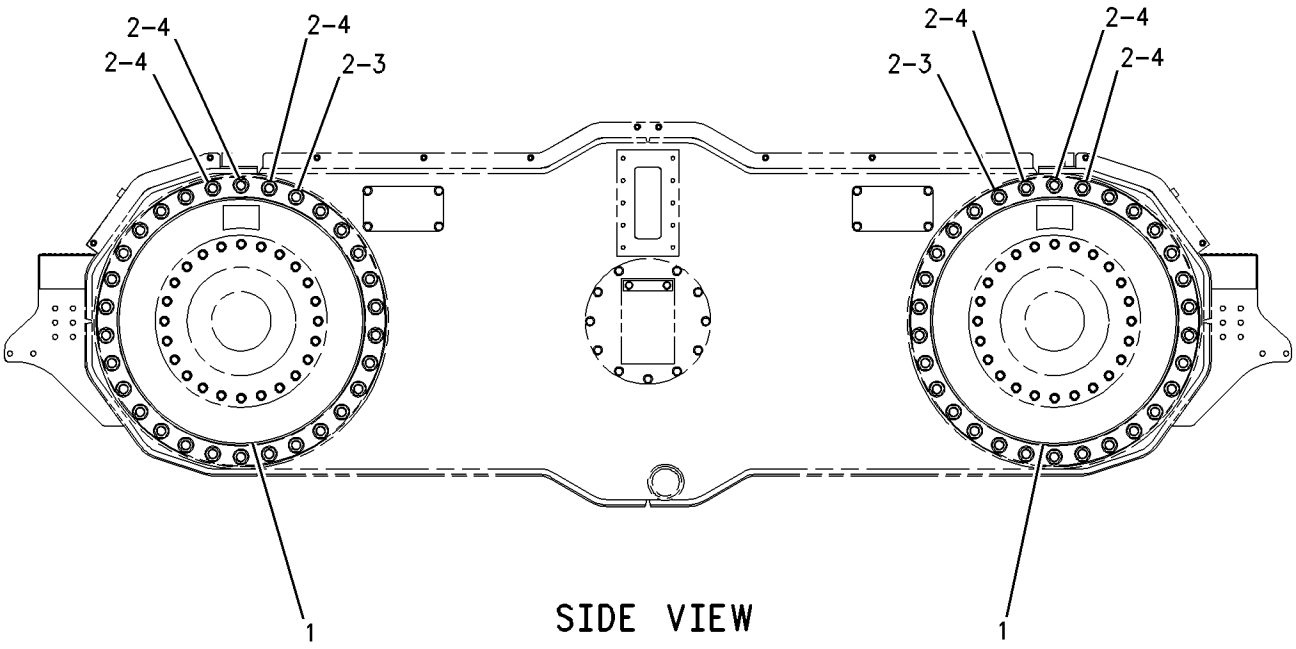

SIDE VIEW

GRAPHIC #1

g00696996

130-3214 FILTER GP-OIL

S/N: 7KK1-UP

PART OF 8X-8980 CONTROL GP-SERVICE BRAKE

SMCS-4295 **i00698274**

NOTE	REF NO	GRAPHIC REF	PART NUMBER	QTY	PART NAME 1 2 3 4 5 6 (PRODUCT LEVEL)	SEE PAGE
	1	1	**134-0964**	1	ELEMENT-FILTER	
	2	1	**136-7033**	1	BASE-HYDRAULIC OIL FILTER	
	3	1	**6R-0365**	1	SEAL-O-RING (88.49MM ID)	
	4	1	**136-7032**	1	HOUSING-HYDRAULIC OIL FILTER	
	5	1	**3K-0360**	1	SEAL-O-RING (16.36MM ID)	
	6	1	**9S-4185**	1	PLUG-O-RING (3/4-16 THD)	
	7	1	**134-0404**	1	INDICATOR AS	
	8	1	**3J-1907**	1	SEAL-O-RING (11.89MM ID)	
	9	1	**5F-9144**	1	SEAL-O-RING (7.65MM ID)	

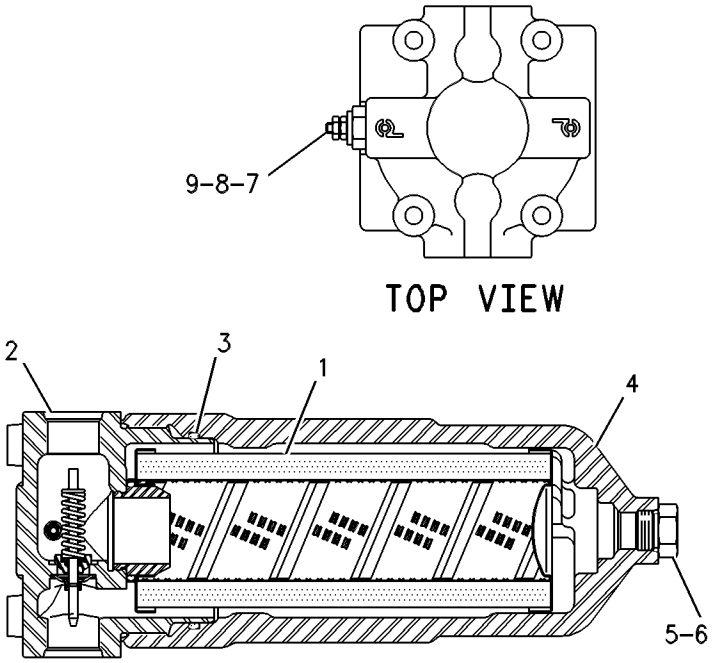

GRAPHIC #1 g00088442

BRAKING SYSTEM

8X-9001 PUMP & MTG GP-BRAKE & DIF LOCK

S/N: 7KK1-UP

PART OF 8X-8404 HYDRAULIC AR

SMCS-3264, 4268 **i00556279**

NOTE	REF NO	GRAPHIC REF	PART NUMBER	QTY	PART NAME 1 2 3 4 5 6 (PRODUCT LEVEL)	SEE PAGE
Y	1	1	**124-3493**	1	PUMP GP-GEAR	578
	2	1	**8T-4122**	2	WASHER (3.5MM THK)	
	3	1	**8T-9393**	2	BOLT (5/8-11X1.50IN)	
	4	1	**9X-7371**	1	SEAL-O-RING (126.59MM ID)	

Y-SEPARATE ILLUSTRATION

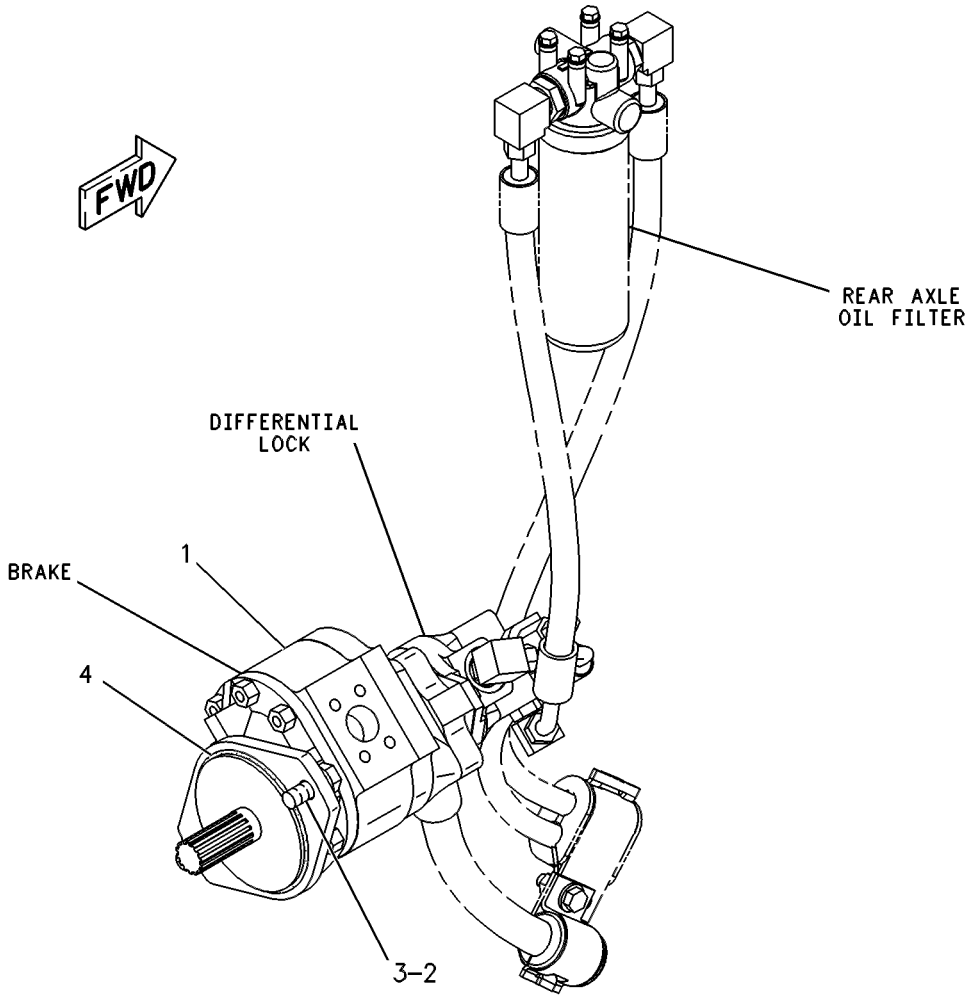

GRAPHIC #1 g00087118

MEMORANDA

5T-1060 PUMP GP-ELECTRIC DRIVE

S/N: 7KK1-UP

PART OF 8X-8980 CONTROL GP-SERVICE BRAKE

SMCS-4354 **i01111651**

NOTE	REF NO	GRAPHIC REF	PART NUMBER	QTY	PART NAME 1 2 3 4 5 6 (PRODUCT LEVEL)	SEE PAGE
	1	1	**8C-9514**	1	MOTOR AS (PARK BRAKE RELEASE)	
	2	1	**6V-8186**	2	NUT-FULL (5/16-24 THD)	
		1	**8T-4224**	2	WASHER-HARD (2MM THK)	
		1	**3F-9556**	2	LOCKWASHER (8.4MM ID)	
	3	1	**3B-4505**	4	LOCKWASHER (5/16IN)	
	4	1	**1T-0416**	4	BOLT (5/16-18X.75IN)	
J	5	1	**8W-3221**	1	PUMP AS (PARK BRAKE RELEASE)	
	6	1	**5P-0711**	1	SEAL-LIP	
	7	1	**8W-3593**	1	SHAFT-GOVERNOR CONTROL	
	8	1	**8T-5068**	8	BOLT-12 POINT HEAD	
		1	**012-0380**	8	LOCKWASHER	
	9	1	**1V-8795**	1	COUPLING	
	10	1	**1V-8796**	1	GASKET	
					AVAILABLE REPAIR KIT(S):	
J			**8W-3592**	1	KIT-RELIEF VALVE	
					(INCLUDES SCREW, NUT, GASKET, BALL & SPRING)	
J			**8W-3594**	1	KIT-GASKET	
					(INCLUDES GASKETS)	

J-REPAIR KIT(S) MARKED J AVAILABLE FOR PART(S) MARKED J

5T-1060 PUMP GP-ELECTRIC DRIVE *(contd.)* i01111651

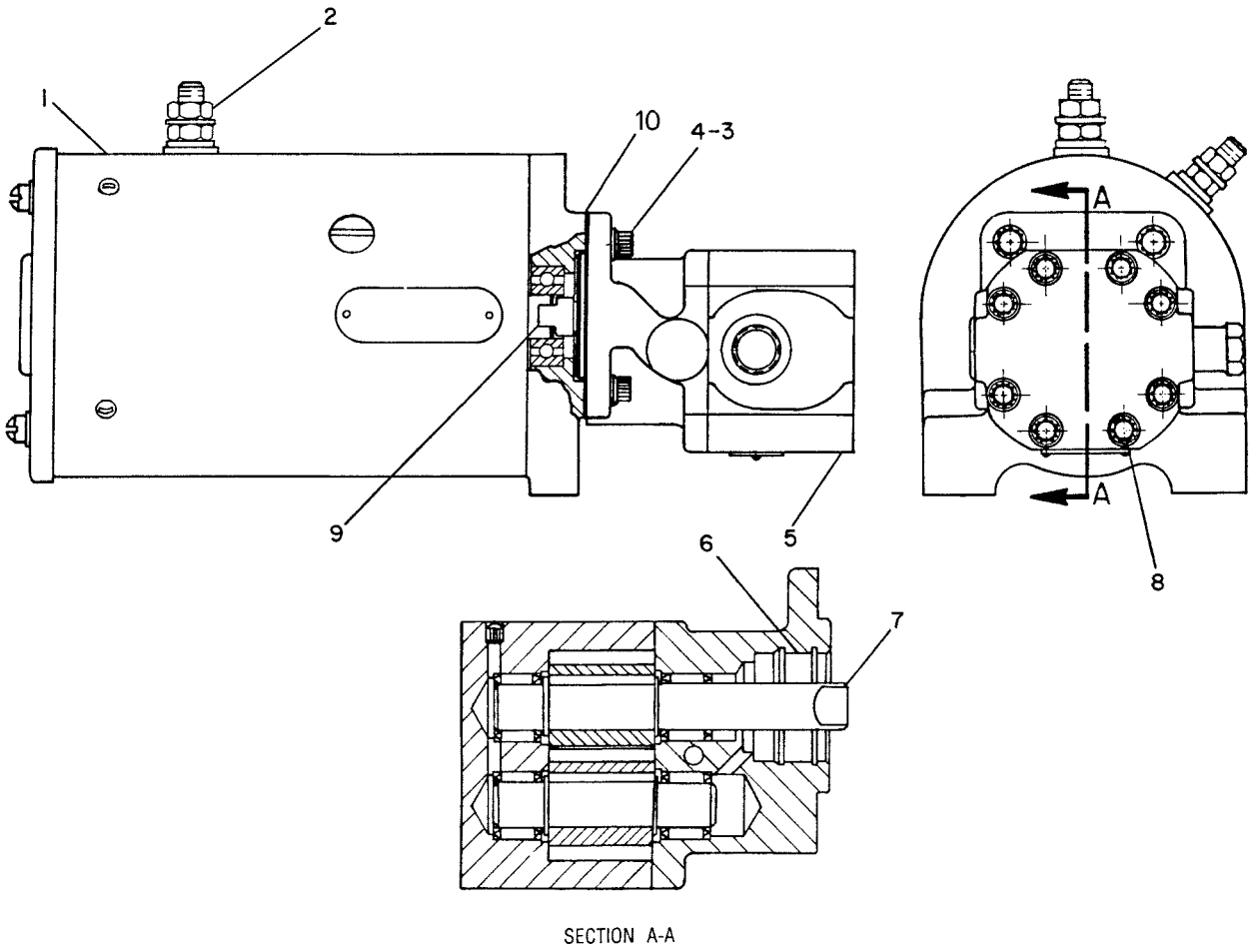

GRAPHIC #1 g00082288

123-8915 PUMP GP-ELECTRIC DRIVE

S/N: 7KK1-UP
PART OF 156-4301 PRELUBRICATION AR-ENGINE
AN ATTACHMENT

SMCS-4354 **i01233451**

NOTE	REF NO	GRAPHIC REF	PART NUMBER	QTY	PART NAME 1 2 3 4 5 6 (PRODUCT LEVEL)	SEE PAGE
Y	1	1	**117-3915**	1	MOTOR GP-ELEC HYD PUMP	663
	2	1	**1A-2209**	2	BOLT (3/8-24X1.25IN)	
	3	1	**5Y-0254**	2	LOCKWASHER	
	4	1	**123-8914**	1	PUMP	

Y-SEPARATE ILLUSTRATION

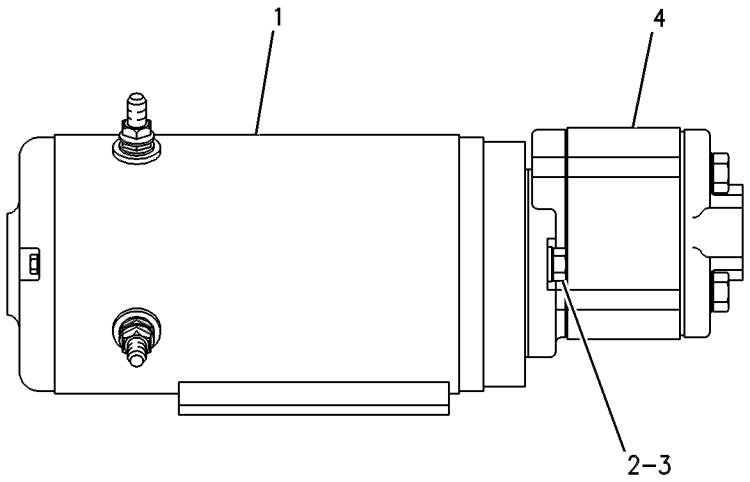

GRAPHIC #1 g00085788

BRAKING SYSTEM

4T-7388 PUMP GP-GEAR

S/N: 7KK1-UP

PART OF 124-3493 PUMP GP-GEAR

SMCS-4268, 5073 **i00553942**

NOTE	REF NO	GRAPHIC REF	PART NUMBER	QTY	PART NAME 1 2 3 4 5 6 (PRODUCT LEVEL)	SEE PAGE
	1	1	**5H-9899**	1	RING-RETAINING	
	2	1	**1U-3875**	1	COUPLING-SPLINE	
	3	1	**6V-3365**	2	SEAL-LIP	
	4	1	**1U-3130**	1	PLUG	
	5	1	**3F-8156**	4	BOLT-SOCKET HEAD	
					AVAILABLE REPAIR KIT(S):	
			1U-3876	1	KIT-SEAL (INCLUDES RINGS & SEALS)	
			4T-7389	1	KIT-RELIEF VALVE	

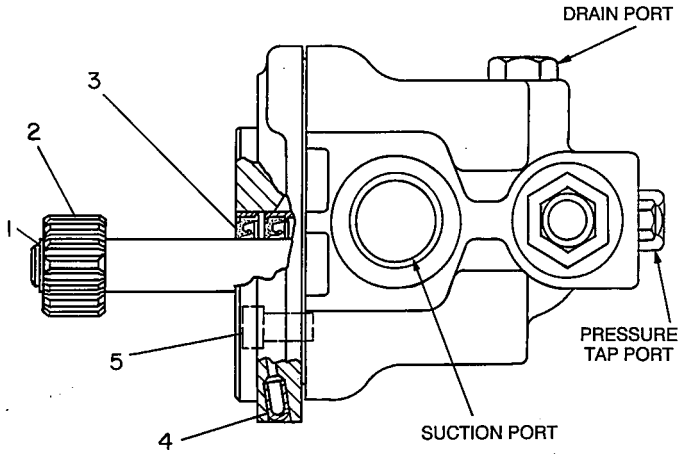

GRAPHIC #1 g00158862

BRAKING SYSTEM

124-3493 PUMP GP-GEAR

S/N: 7KK1-UP

PART OF 8X-9001 PUMP & MTG GP-BRAKE & DIF LOCK

SMCS-4268, 5073 **i00584208**

NOTE	REF NO	GRAPHIC REF	PART NUMBER	QTY	PART NAME 1 2 3 4 5 6 (PRODUCT LEVEL)	SEE PAGE
	1	1	**137-4751**	1	GEAR-DRIVE	
	2	1	**139-3213**	2	SEAL	
	3	1	**008-3214**	1	RING-RETAINING	
	4	1	**1G-9732**	1	BALL	
	5	1	**4T-9298**	4	BUSHING-TERMINAL	
	6	1	**6J-2386**	4	DOWEL	
	7	1	**137-4754**	2	PLATE-ISOLATION	
	8	1	**137-4752**	1	GEAR-IDLER	
	9	1	**7J-4772**	1	COUPLING-SPLINE	
Y	10	1	**4T-7388**	1	PUMP GP-GEAR	577
	11	1	**4L-9337**	2	BOLT (3/8-16X1.50IN)	
	12	1	**7X-0608**	2	WASHER-HARD (2.0MM THK)	
	13	1	**3E-6747**	1	SEAL-O-RING	
	14	1	**137-4750**	1	PLATE-ADAPTER	
	15	1	**6V-3551**	1	SEAL-O-RING	
	16	1	**5S-1522**	1	RING-SNAP	
	17	1	**137-4762**	1	PLATE-ISOLATION	
	18	1	**137-4761**	1	PLATE-ISOLATION	
	19	1	**6E-2943**	1	PLUG	
	20	1	**137-4745**	1	FLANGE AS	
	21	1	**137-4747**	1	PLATE-TRANSITION	
	22	1	**137-4746**	1	BODY AS	
	23	1	**140-7399**	8	STUD	
	24	1	**5P-7213**	8	WASHER-HARD (2MM THK)	
	25	1	**6B-6684**	8	NUT-FULL (1/2-20 THD)	
					AVAILABLE REPAIR KIT(S):	
			137-4806	1	KIT-SEAL	
					(INCLS O'RINGS, RINGS, RETAINERS, & SEAL)	

Y-SEPARATE ILLUSTRATION

124-3493 PUMP GP-GEAR *(contd.)* **i00584208**

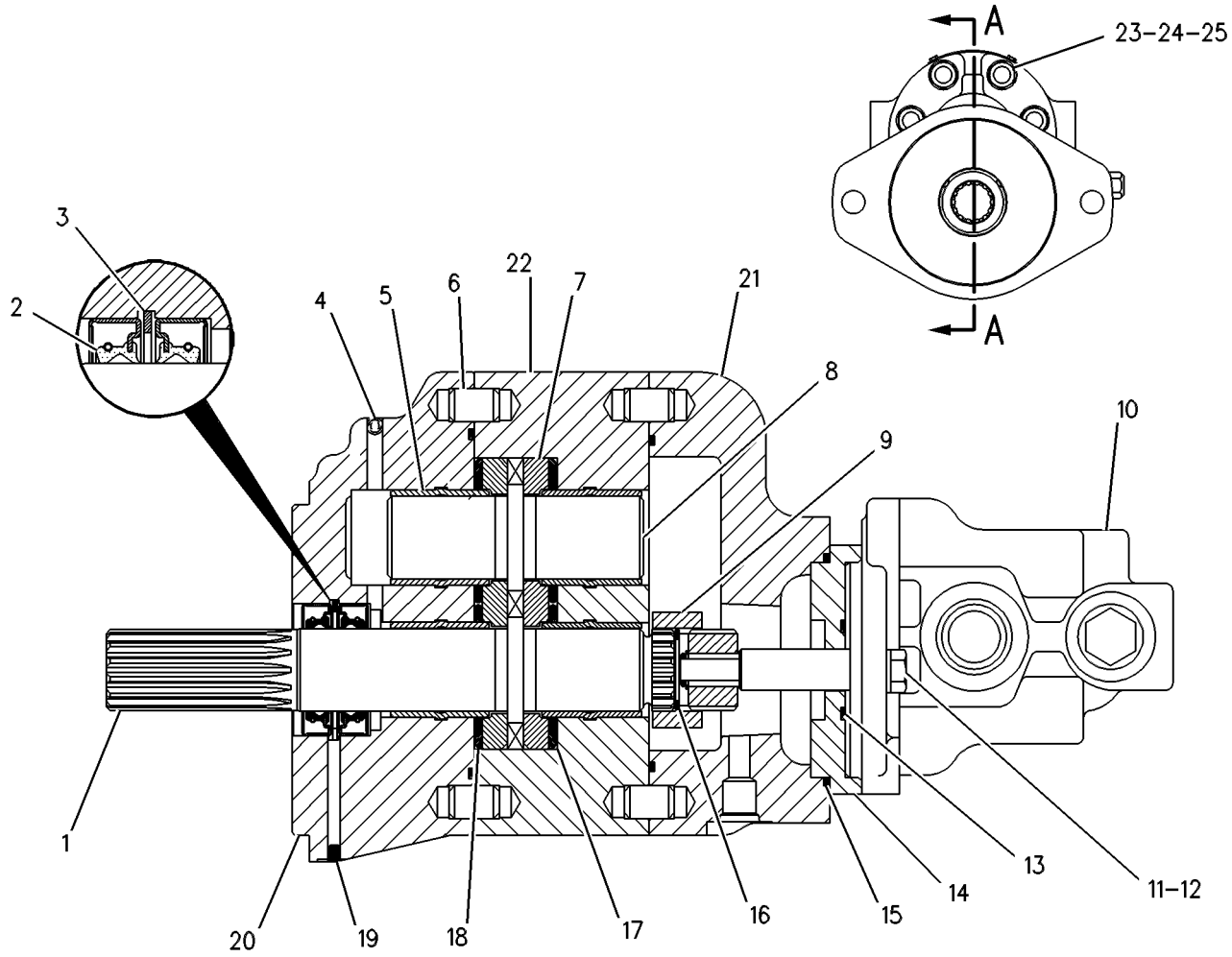

GRAPHIC #1 g00277289

BRAKING SYSTEM

143-4794 SCREEN GP

S/N: 7KK1-UP

PART OF 8X-8980 CONTROL GP-SERVICE BRAKE

SMCS-4295 **i00680489**

NOTE	REF NO	GRAPHIC REF	PART NUMBER	QTY	PART NAME 1 2 3 4 5 6 (PRODUCT LEVEL)	SEE PAGE
	1	1	**133-0761**	1	SCREEN	
	2	1	**136-7033**	1	BASE-HYDRAULIC OIL FILTER	
	3	1	**6R-0365**	1	SEAL-O-RING (88.49MM ID)	
	4	1	**136-7032**	1	HOUSING-HYDRAULIC OIL FILTER	
	5	1	**3K-0360**	1	SEAL-O-RING (16.36MM ID)	
	6	1	**9S-4185**	1	PLUG-O-RING (3/4-16 THD)	
	7	1	**134-0404**	1	INDICATOR AS	
	8	1	**3J-1907**	1	SEAL-O-RING (11.89MM ID)	
	9	1	**5F-9144**	1	SEAL-O-RING (7.65MM ID)	

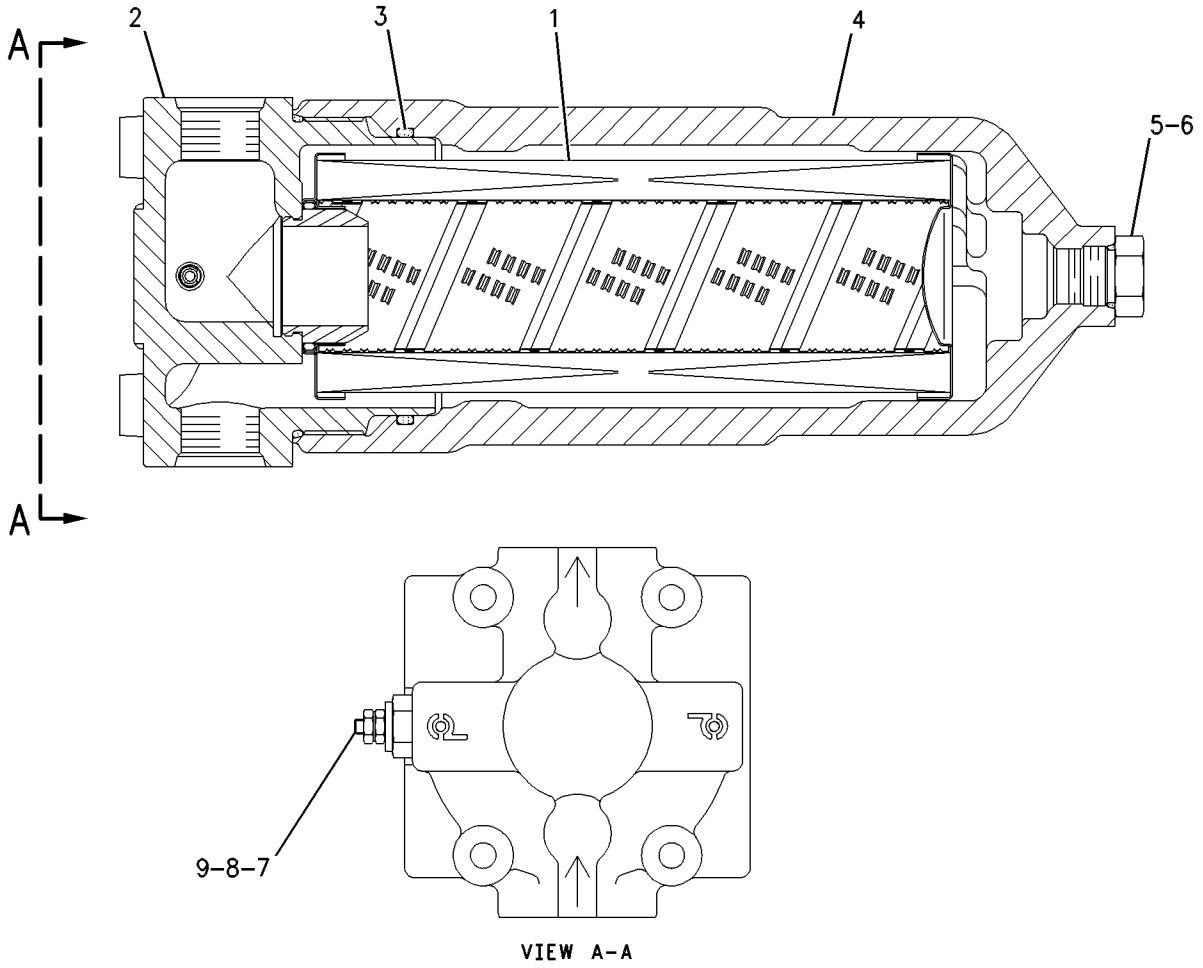

VIEW A-A

GRAPHIC #1 g00304283

BRAKING SYSTEM

2G-6535 SLACK ADJUSTER GP

S/N: 7KK1-UP

PART OF 8X-8980 CONTROL GP-SERVICE BRAKE

SMCS-4261 **i01515692**

NOTE	REF NO	GRAPHIC REF	PART NUMBER	QTY	PART NAME 1 2 3 4 5 6 (PRODUCT LEVEL)	SEE PAGE
	1	1	**2G-8932**	2	HOUSING	
	2	1	**2G-7282**	1	BASE	
	3	1	**2G-1202**	2	SPRING	
	4	1	**7F-2122**	2	SEAL-O-RING	
J	5	1	**9V-3222**	2	PISTON AS	
	7	1	**2H-4145**	2	SEAL-O-RING	
					AVAILABLE REPAIR KIT(S):	
J			**9V-3225**	1	KIT-PISTON (BRAKE SLACK ADJUSTER)	
					(INCLUDES RINGS, SEALS, SPRINGS, INSTRUCTIONS, & PISTON ASSEMBLY)	
J			**9C-0645**	1	KIT-PISTON (BRAKE SLACK ADJUSTER)	
					(INCLUDES SEALS, RING, INSTRUCTIONS, & PISTON ASSEMBLY)	
J-KITS MARKED J AVAILABLE FOR PART MARKED J						

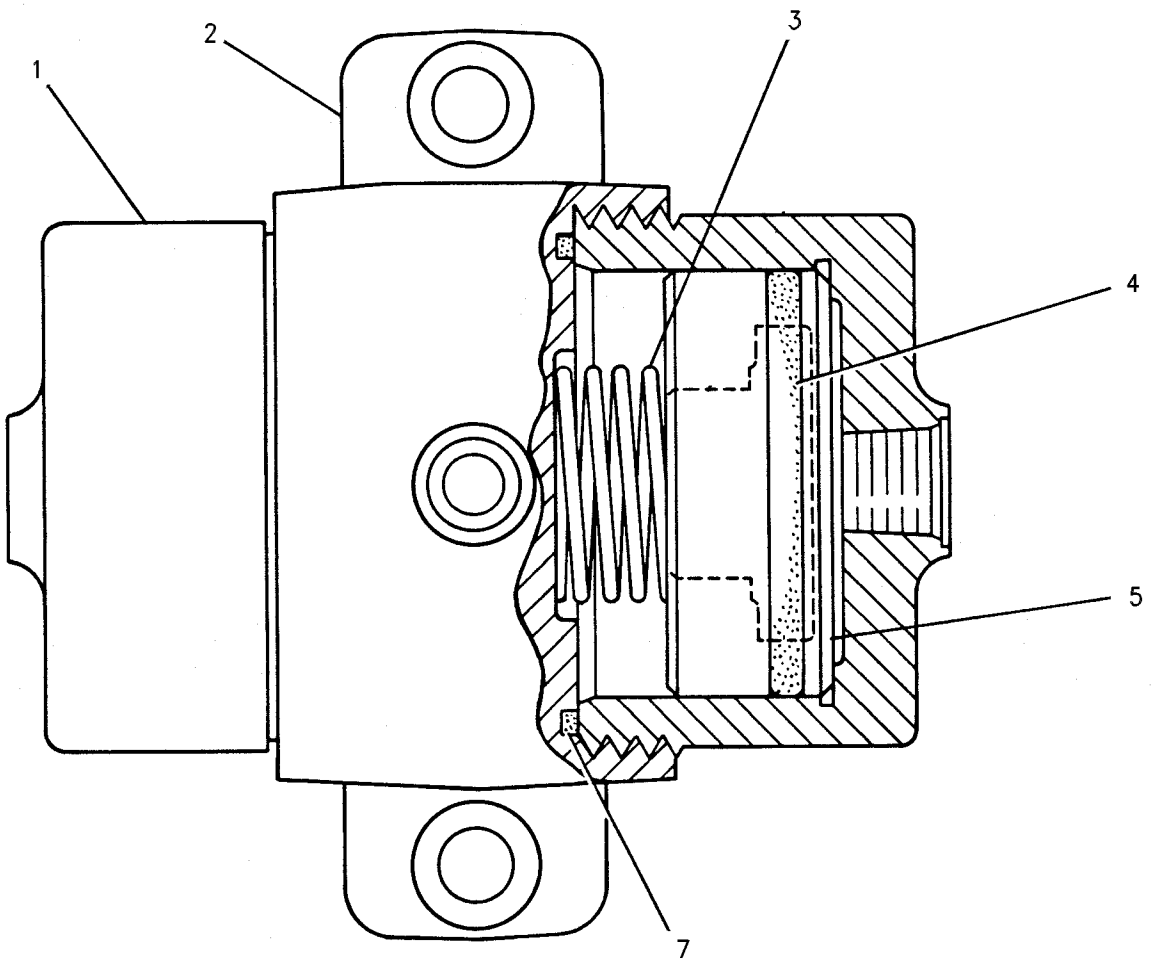

GRAPHIC #1 g00535703

8X-9011 ACCUMULATOR & MTG GP-HYDRAULIC

S/N: 7KK1-UP

PART OF 8X-8404 HYDRAULIC AR

SMCS-4293, 5077, 5081 **i01371632**

NOTE	REF NO	GRAPHIC REF	PART NUMBER	QTY	PART NAME 1 2 3 4 5 6 (PRODUCT LEVEL)	SEE PAGE
Y	1	1	**133-6184**	2	ACCUMULATOR AS	583
	2	1	**6G-1548**	8	CLIP	
	3	1	**132-2869**	2	PLATE AS	
	4	1	**8T-4121**	8	WASHER-HARD (11X21X2.5MM THK)	
M	6	1	**8T-4195**	14	BOLT (M10X1.5X30MM)	
	7	1	**8T-2561**	6	WASHER-HARD (10.5X28.5X5MM THK)	

M-METRIC PART
Y-SEPARATE ILLUSTRATION

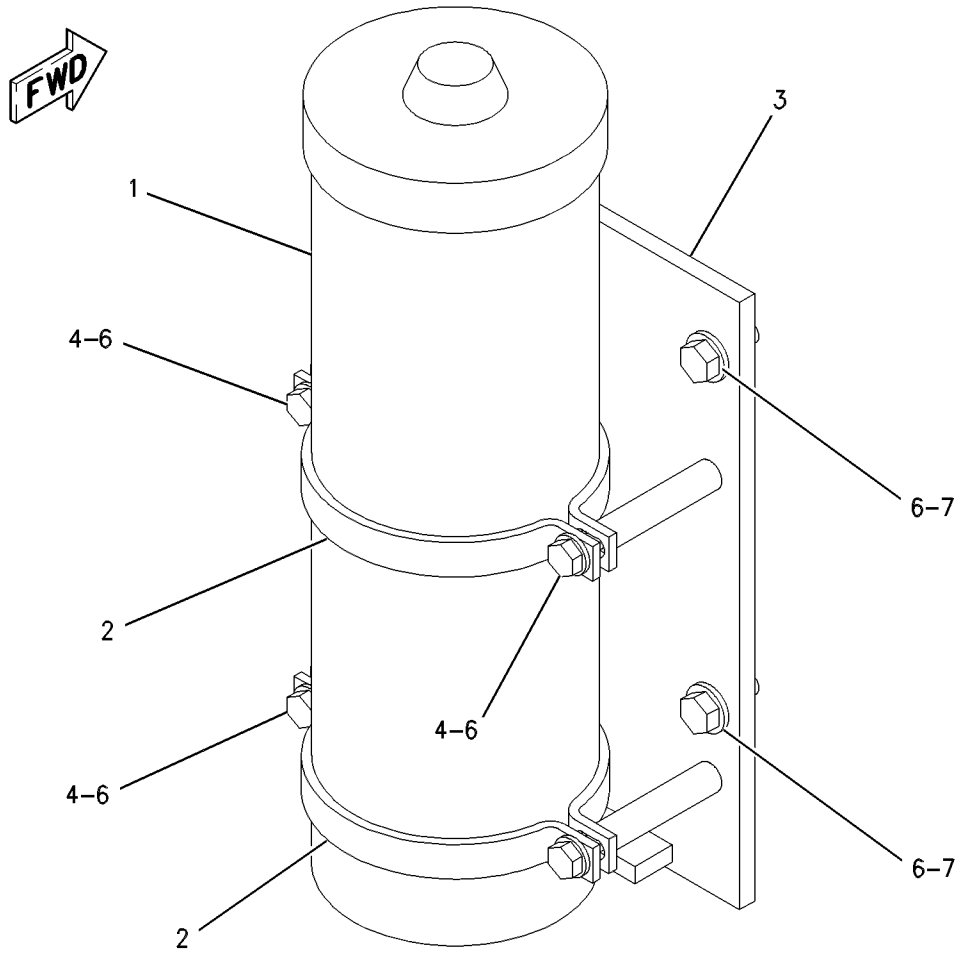

GRAPHIC #1 g00334019

133-6184 ACCUMULATOR AS

S/N: 7KK1-UP

PART OF 8X-9011 ACCUMULATOR & MTG GP-HYDRAULIC

FIELD REPLACEMENT ORDER 3G-7399—PAGE 556

SMCS-5077 **i01181876**

NOTE	REF NO	GRAPHIC REF	PART NUMBER	QTY	PART NAME 1 2 3 4 5 6 (PRODUCT LEVEL)	SEE PAGE
	1	1	**8T-6376**	1	PLATE-HYDRAULIC ACCUMULATOR	
	2	1	**9J-9870**	6	RETAINER	
	3	1	**9J-9871**	2	RING-RETAINING	
	4	1	**9T-2238**	1	VALVE AS	
		1	**175-3185**	1	CORE	
		1	**6J-0368**	1	CAP	
	5	1	**5M-6708**	1	WASHER (5.56MM THK)	
	6	1	**2K-6830**	2	RING-BACKUP	
	7	1	**1H-8128**	2	SEAL-O-RING (94.84MM ID)	
	8	1	**9J-9867**	1	HEAD	
	9	1	**9J-9869**	1	PISTON	
	10	1	**9J-9872**	1	SEAL AS	
	11	1	**5J-7154**	1	RING-WEAR	
	12	1	**9J-9868**	1	HEAD	
	13	1	**3G-2960**	1	COVER-PROTECTION	
	14	1	**7J-5311**	1	PLATE-WARNING (HIGH PRESS CYLINDER)	

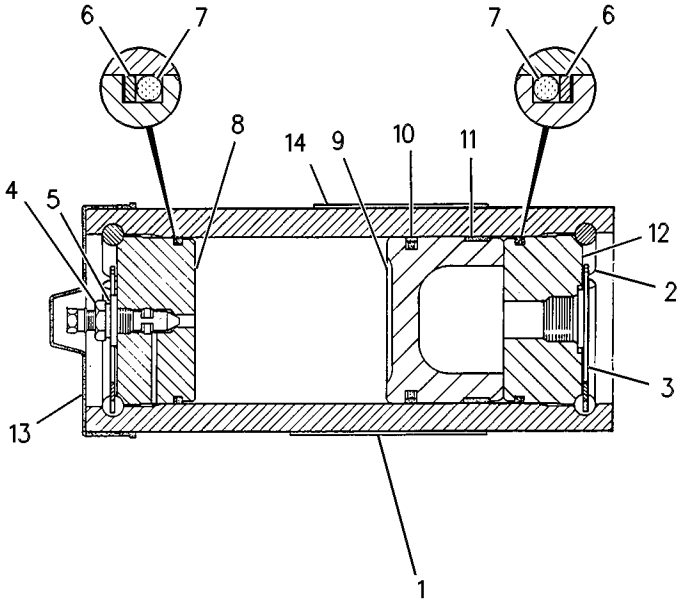

GRAPHIC #1 g00088112

HYDRAULIC SYSTEM

8X-9012 CONTROL GP-STEERING

S/N: 7KK1-81

PART OF 8X-9003 PLATFORM AR

SMCS-4301, 4309, 4310, 4338, 4343 **i00111171**

NOTE	REF NO	GRAPHIC REF	PART NUMBER	QTY	PART NAME 1 2 3 4 5 6 (PRODUCT LEVEL)	SEE PAGE
	1	1	**3K-0806**	1	SPRING	
	2	1	**5T-4030**	1	BRACKET	
	3	1	**6G-3237**	1	RING	
	4	1	**6G-3239**	3	PIN	
	5	1	**6G-3241**	1	GASKET	
	6	1	**6G-3242**	1	INSULATOR	
	7	1	**6G-3244**	1	RETAINER	
	8	1	**6G-3274**	1	BUTTON	
	9	1	**6G-5243**	1	SEAL	
	10	1	**6G-5244**	1	RETAINER	
	11	1	**6G-5374**	1	STEERING WHEEL	
	12	1	**6S-3065**	1	NUT	
	13	1	**6V-3345**	1	FILM-HORN	
	14	1	**6V-5834**	3	SCREW-HEAD (10-14X0.75IN)	
	15	1	**8W-1979**	1	WIRE AS	
	16	1	**009-4184**	4	SPRING-HORN	
	17	1	**009-4185**	4	BRUSH-HORN	
Y	18	1	**117-4077**	1	PUMP GP-METERING	672
	19	1	**4D-3120**	4	BOLT	

Y-SEPARATE ILLUSTRATION

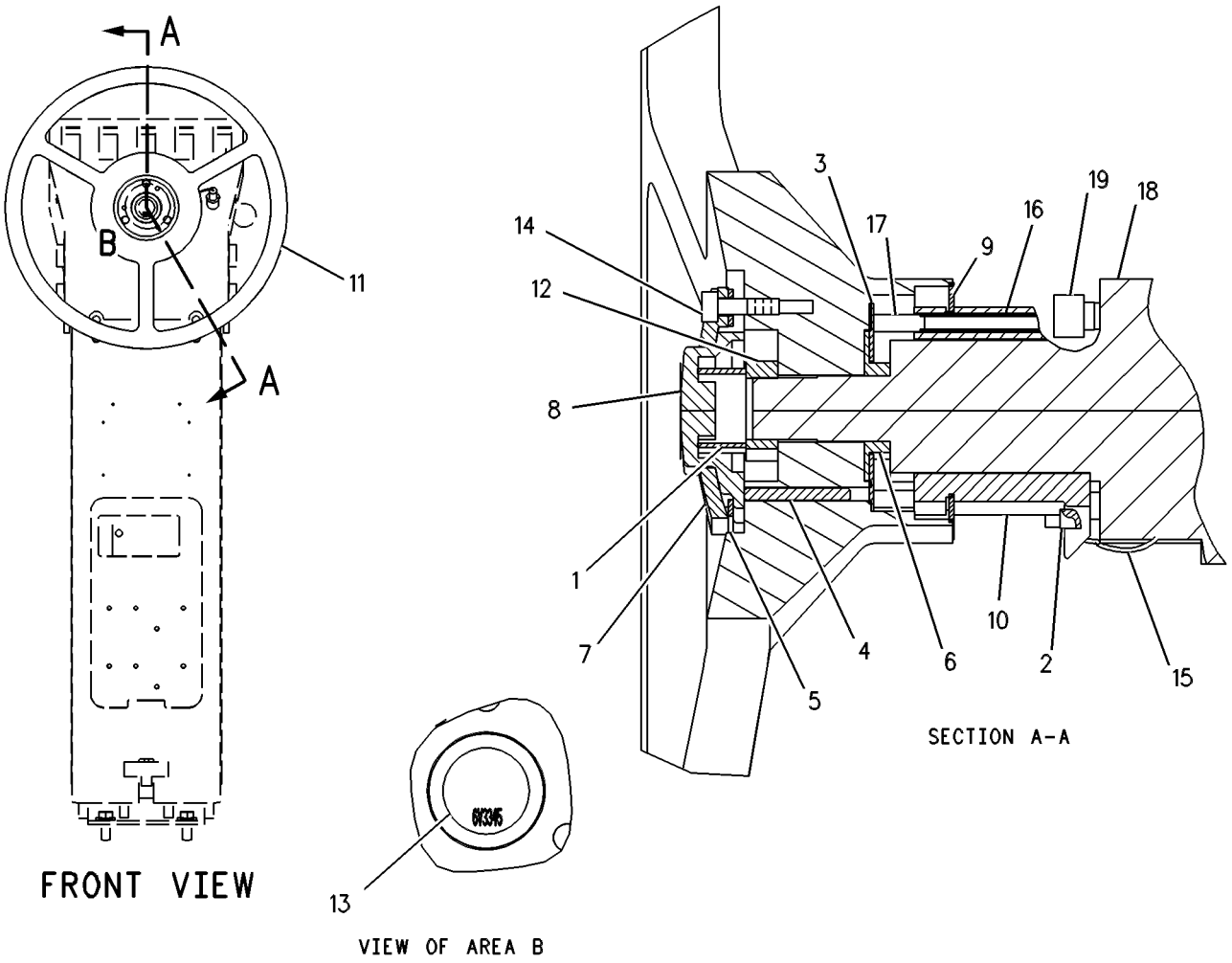

GRAPHIC #1 g00088756

HYDRAULIC SYSTEM

8X-9013 CYLINDER & MTG GP-ARTICULATION

S/N: 7KK1-UP

PART OF 8X-8404 HYDRAULIC AR

SMCS-5265 **i01114739**

NOTE	REF NO	GRAPHIC REF	PART NUMBER	QTY	PART NAME 1 2 3 4 5 6 (PRODUCT LEVEL)	SEE PAGE
Y	1	1	**143-3033**	2	CYLINDER GP-ARTICULATION	592
	2	1	**8T-4223**	2	WASHER-HARD (3MM THK)	
	3	1	**159-9266**	4	PIN AS	
B	4	1	**5V-0353**	12	WASHER (1.6MM THK)	
B	5	1	**5V-0354**	8	WASHER (3MM THK)	
	6	1	**7K-9205**	8	SEAL-LIP (63.5MM ID)	
M	7	1	**8T-4910**	2	BOLT (M12X1.75X60MM)	
	8	1	**9V-4924**	4	SPACER (11.5MM THK)	
	9	1	**7X-0590**	4	WASHER-HARD (6.0MM THK)	
M	10	1	**8T-4244**	2	NUT (M12X1.75 THD)	
M	11	1	**8T-4183**	2	BOLT (M12X1.75X40 THD)	

B-USE AS REQUIRED
M-METRIC PART
Y-SEPARATE ILLUSTRATION

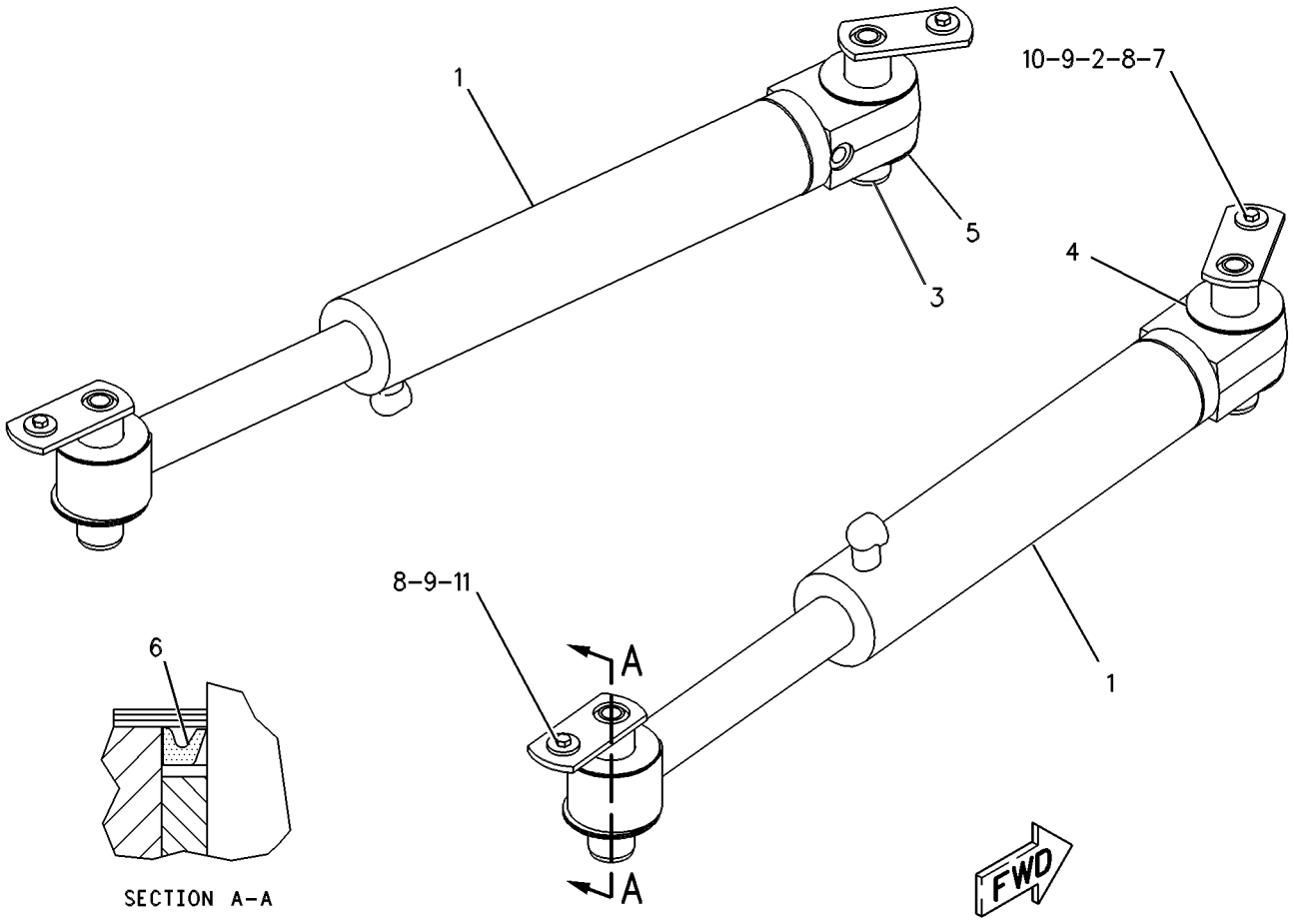

GRAPHIC #1 g00277279

140-8444 CYLINDER & MTG GP-BLADE TIP

S/N: 7KK1-UP

PART OF 8X-8404 HYDRAULIC AR

SMCS-5106 **i01433897**

NOTE	REF NO	GRAPHIC REF	PART NUMBER	QTY	PART NAME 1 2 3 4 5 6 (PRODUCT LEVEL)	SEE PAGE
Y	1	1	**143-5988**	2	CYLINDER GP-BLADE TIP	594
	2	1	**5G-8574**	2	PIN AS	
	3	1	**7X-0590**	4	WASHER-HARD (13.5X44.5X6MM THK)	
M	4	1	**8T-4956**	4	BOLT (M12X1.75X35MM)	
	5	1	**194-6555**	2	PIN AS	
	6	1	**9V-4924**	4	SPACER (11.5MM THK)	

M-METRIC PART
Y-SEPARATE ILLUSTRATION

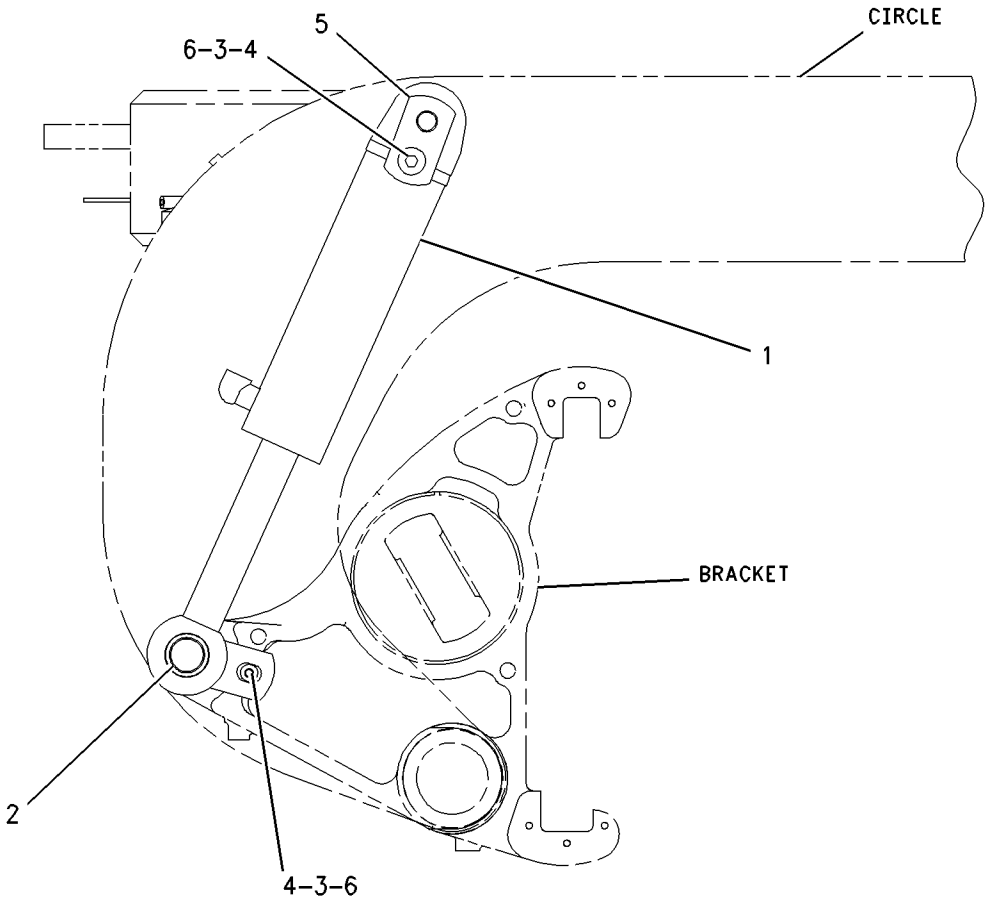

RIGHT SIDE VIEW

GRAPHIC #1 g00751491

8X-9004 CYLINDER & MTG GP-CSHFT & LIFT

S/N: 7KK1-UP

PART OF 8X-8404 HYDRAULIC AR

SMCS-5223 **i01380589**

NOTE	REF NO	GRAPHIC REF	PART NUMBER	QTY	PART NAME 1 2 3 4 5 6 (PRODUCT LEVEL)	SEE PAGE
Y	1	1	**117-0832**	3	CYLINDER GP-CENTERSHIFT & LIFT	596
	2	1	**128-8808**	6	CAP AS	
					(EACH INCLUDES)	
		1	**9J-5284**	1	BEARING-SLEEVE	
	3	1	**6V-8237**	12	WASHER (4.0MM THK)	
M	4	1	**8T-0671**	12	BOLT (M24X3X150MM)	

M-METRIC PART
Y-SEPARATE ILLUSTRATION

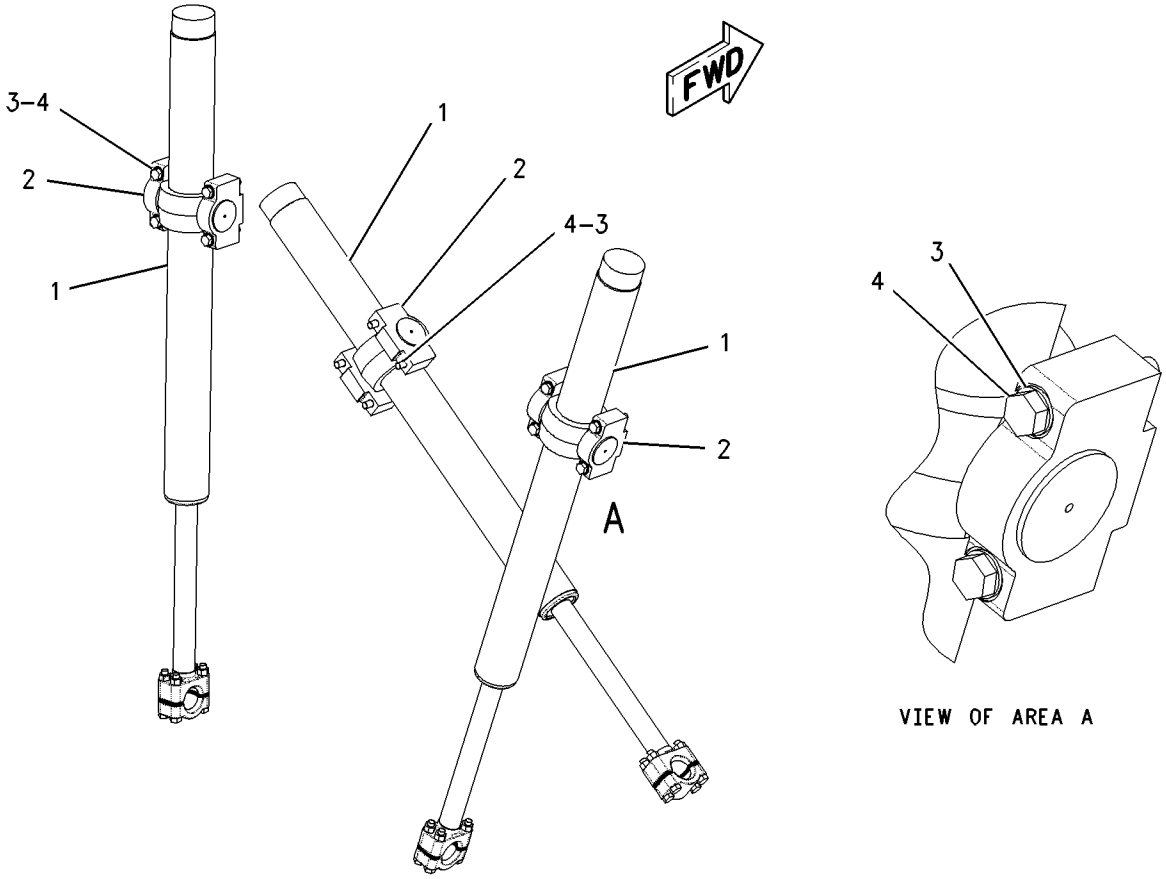

GRAPHIC #1 g00729081

HYDRAULIC SYSTEM

140-8443 CYLINDER & MTG GP-SIDESHIFT

S/N: 7KK1-UP

PART OF 8X-8404 HYDRAULIC AR

SMCS-5229 **i00699528**

NOTE	REF NO	GRAPHIC REF	PART NUMBER	QTY	PART NAME 1 2 3 4 5 6 (PRODUCT LEVEL)	SEE PAGE
	1	1	**8S-1069**	1	WASHER (12.7MM THK)	
	2	1	**117-2190**	1	PLATE-RETAINER	
	3	1	**138-7426**	1	PIN	
Y	4	1	**141-2914**	1	CYLINDER GP-SIDESHIFT	600
M	5	1	**7X-2553**	1	BOLT (M16X2.0X40MM)	
	6	1	**8G-0876**	1	PIN AS	
	7	1	**7X-0515**	1	WASHER (5MM THK)	
M	8	1	**8T-4192**	2	BOLT (M12X1.75X25MM)	
	9	1	**8T-4223**	2	WASHER-HARD (3MM THK)	

M-METRIC PART
Y-SEPARATE ILLUSTRATION

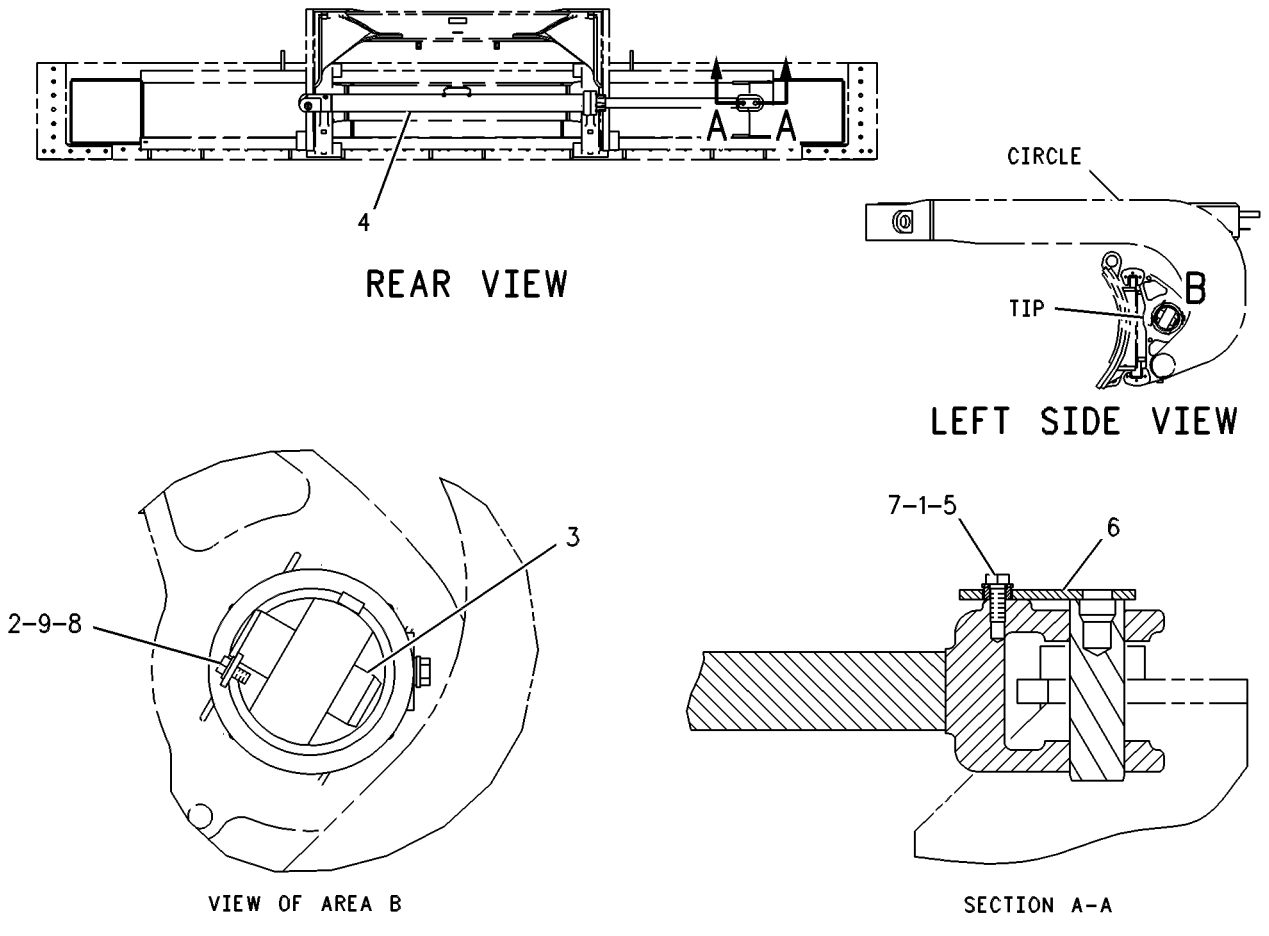

GRAPHIC #1 g00283898

HYDRAULIC SYSTEM

8X-9017 CYLINDER & MTG GP-STEERING

S/N: 7KK1-UP

PART OF 191-1933 AXLE AR-FRONT, 8X-8404 HYDRAULIC AR

SMCS-4303 **i01127550**

NOTE	REF NO	GRAPHIC REF	PART NUMBER	QTY	PART NAME 1 2 3 4 5 6 (PRODUCT LEVEL)	SEE PAGE
	1	1	**2G-9491**	2	SEAL	
	2	1	**9R-6014**	4	TUBE	
	3	1	**3S-2909**	2	RING	
	4	1	**163-9236**	2	RACE (SPHERICAL) (2 PIECE)	
	5	1	**7D-1292**	2	STUD-BALL	
	6	1	**7D-5435**	2	COVER	
	7	1	**7X-0618**	2	WASHER-HARD (5.0MM THK)	
	8	1	**9V-4924**	2	SPACER (11.5MM THK)	
Y	9	1	**141-1924**	2	CYLINDER GP-STEERING	602
	10	1	**117-2195**	2	PIN AS	
	11	1	**5M-6667**	2	LOCKNUT	
M	12	1	**8T-4183**	2	BOLT (M12X1.75X40 THD)	

M-METRIC PART
Y-SEPARATE ILLUSTRATION

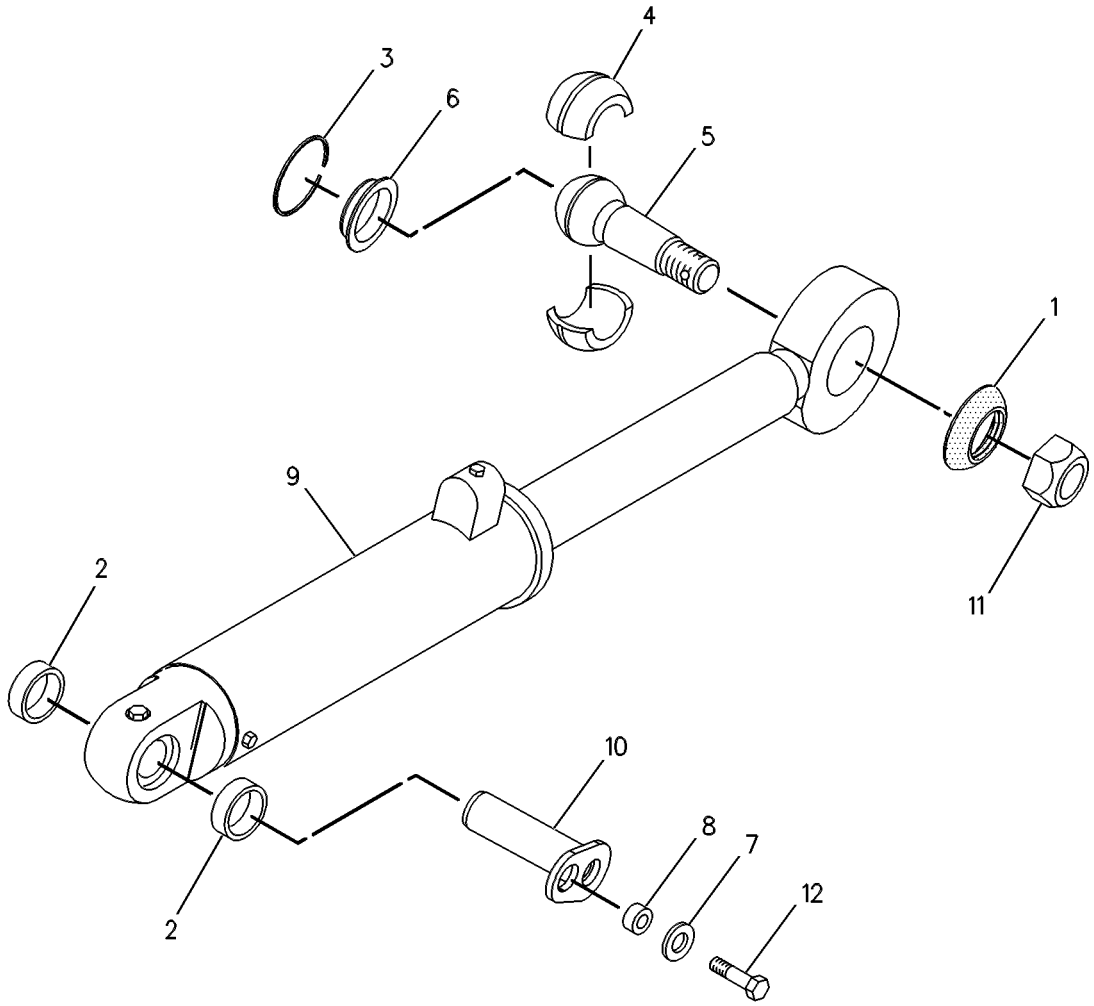

GRAPHIC #1 g00277168

HYDRAULIC SYSTEM

8X-9016 CYLINDER & MTG GP-WHEEL LEAN

S/N: 7KK1-UP

PART OF 191-1933 AXLE AR-FRONT, 8X-8404 HYDRAULIC AR

SMCS-5211 **i00698787**

NOTE	REF NO	GRAPHIC REF	PART NUMBER	QTY	PART NAME 1 2 3 4 5 6 (PRODUCT LEVEL)	SEE PAGE
	1	1	**138-7426**	2	PIN	
	3	1	**7K-9204**	4	SEAL-LIP	
	5	1	**9X-4597**	4	SEAL-LIP	
Y	6	1	**117-0836**	2	CYLINDER GP-WHEEL LEAN	604
	7	1	**117-2190**	2	PLATE-RETAINER	
	8	1	**117-2193**	2	RETAINER	
	9	1	**8T-4123**	2	WASHER-PLATED (3.5MM THK)	
M	10	1	**8T-4192**	4	BOLT (M12X1.75X25MM)	
	11	1	**8T-4223**	4	WASHER-HARD (3MM THK)	
M	12	1	**8T-4780**	2	BOLT (M20X2.5X30MM)	

QUANTITIES SHOWN ARE THOSE REQUIRED FOR BOTH LH AND RH SIDES
M-METRIC PART
Y-SEPARATE ILLUSTRATION

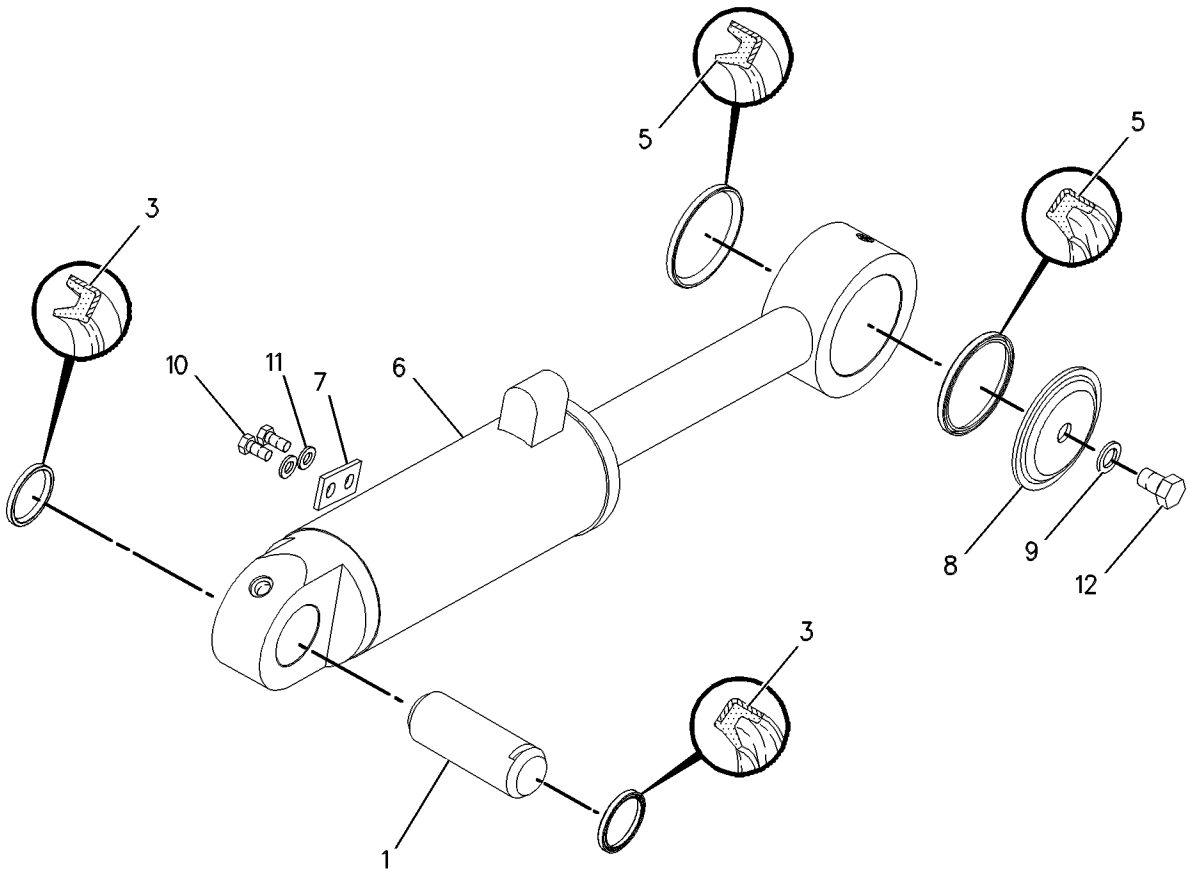

GRAPHIC #1 g00303823

143-3033 CYLINDER GP-ARTICULATION

S/N: 7KK1-UP
127.0MM BORE X 621.2MM STROKE
PART OF 8X-9013 CYLINDER & MTG GP-ARTICULATION

SMCS-5265 **i01433799**

NOTE	REF NO	GRAPHIC REF	PART NUMBER	QTY	PART NAME 1 2 3 4 5 6 (PRODUCT LEVEL)	SEE PAGE
R	1	1	**143-3035**	1	CYLINDER AS	
		1	**6E-1497**	1	BOSS	
	1A	1	**3G-2791**	1	BEARING-SLEEVE	
	2	1	**2J-0564**	1	LOCKNUT	
J	3	1	**4J-4630**	1	RING-WEAR	
J	4	1	**5J-5020**	1	SEAL AS	
	5	1	**6E-5683**	1	PISTON	
	6	1	**143-3039**	1	HEAD	
R	7	1	**143-3037**	1	ROD AS	
	7A	1	**3G-2791**	1	BEARING-SLEEVE	
J	8	1	**2K-4096**	1	RING	
J	9	1	**175-7904**	1	SEAL-O-RING	
J	10	1	**167-2469**	1	SEAL-WIPER	
J	11	1	**167-2319**	1	SEAL-U-CUP	
J	12	1	**167-2208**	1	SEAL AS-BUFFER	
J	13	1	**8C-9161**	1	RING-WEAR	
					AVAILABLE REPAIR KIT(S):	
J			**193-2347**	1	KIT-SEAL (ARTICULATION CYLINDER)	
					(INCLUDES RINGS & SEALS)	

J-KIT MARKED J SERVICES PARTS MARKED J
R-REMFG PART MAY BE AVAILABLE

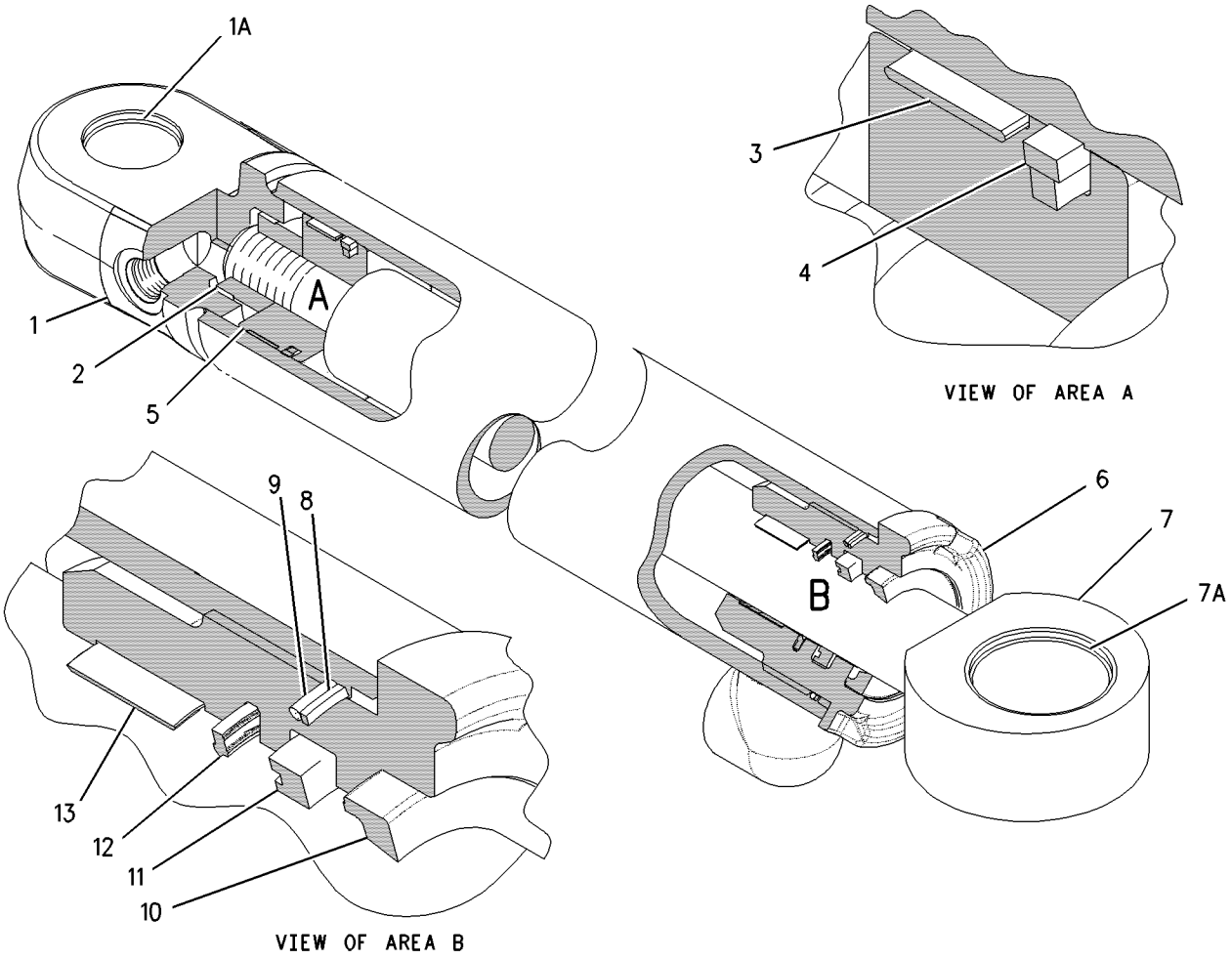

GRAPHIC #1 g00764982

143-5988 CYLINDER GP-BLADE TIP

S/N: 7KK1-UP
120.65 MM BORE X 294 MM STROKE
PART OF 140-8444 CYLINDER & MTG GP-BLADE TIP

SMCS-5106 **i01452559**

NOTE	REF NO	GRAPHIC REF	PART NUMBER	QTY	PART NAME 1 2 3 4 5 6 (PRODUCT LEVEL)	SEE PAGE
R	1	1	**143-5989**	1	CYLINDER AS	
	1A	1	**118-2289**	1	BEARING-SLEEVE	
	1B	1	**6E-1497**	1	BOSS	
M	2	1	**173-9682**	1	BOLT-HEX HEAD (M36X4X100MM)	
	3	1	**7D-5238**	1	WASHER (.25IN THK)	
	4	1	**133-8773**	1	PISTON	
	5	1	**175-7903**	1	SEAL-O-RING	
	6	1	**2J-3961**	1	RING-BACKUP	
	7	1	**120-6679**	1	HEAD	
R	8	1	**143-5990**	1	ROD AS	
	8A	1	**118-2289**	1	BEARING-SLEEVE	
	9	1	**167-2463**	1	SEAL-WIPER	
	10	1	**167-2312**	1	SEAL-U-CUP	
	11	1	**167-2201**	1	SEAL AS-BUFFER	
	12	1	**8T-0785**	1	RING-WEAR	
	13	1	**8T-8390**	1	RING-WEAR	
	14	1	**4T-8588**	1	SEAL AS	

M-METRIC PART
R-REMFG PART MAY BE AVAILABLE

143-5988 CYLINDER GP-BLADE TIP *(contd.)* i01452559

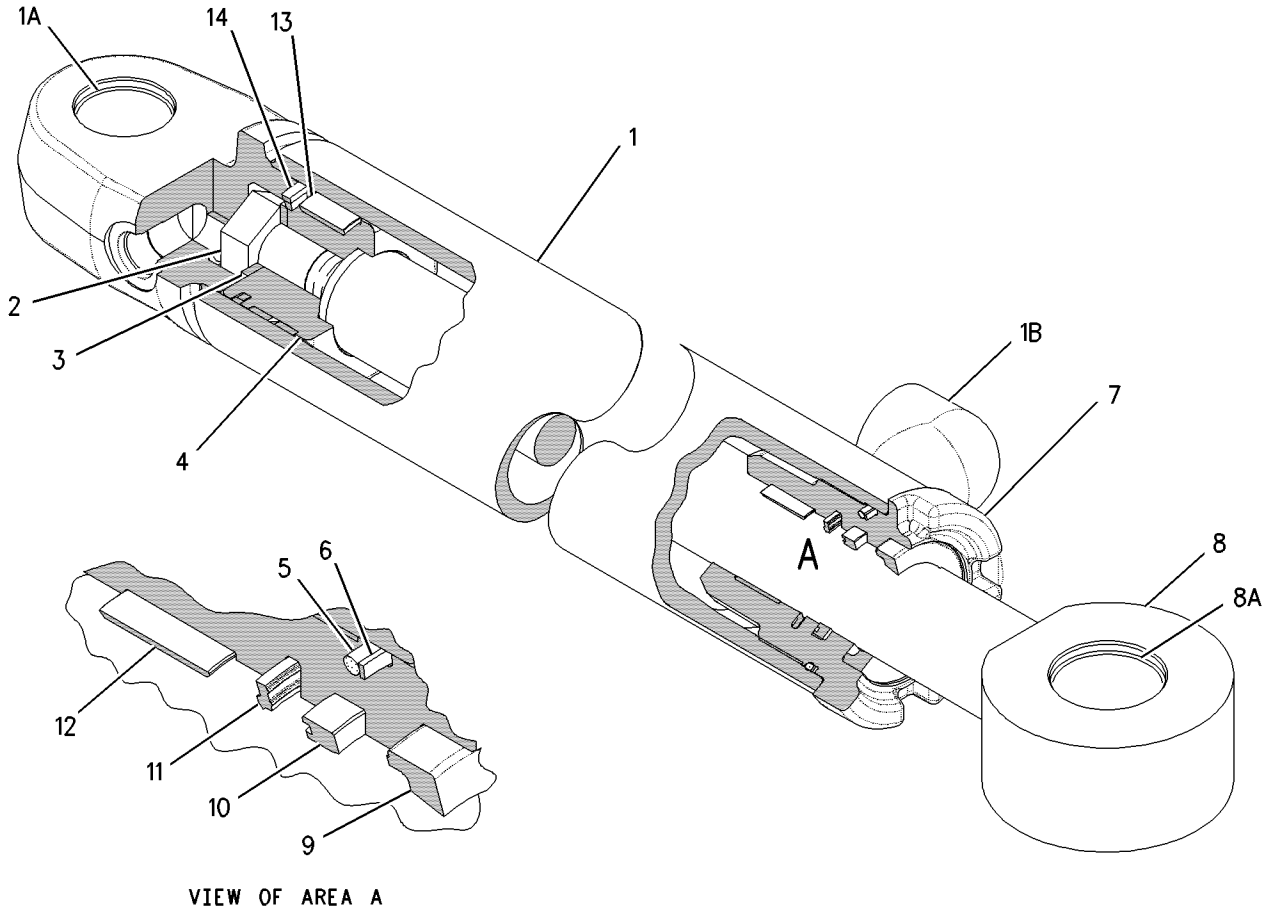

GRAPHIC #1 g00762260

HYDRAULIC SYSTEM

117-0832 CYLINDER GP-CENTERSHIFT & LIFT

S/N: 7KK1-UP

133.35 MM BORE X 1000 MM STROKE

PART OF 8X-9004 CYLINDER & MTG GP-CSHFT & LIFT

SMCS-5102, 5223 **i01463157**

NOTE	REF NO	GRAPHIC REF	PART NUMBER	QTY	PART NAME 1 2 3 4 5 6 (PRODUCT LEVEL)	SEE PAGE
R	1	1	**117-8630**	1	CYLINDER AS	
		1	**6E-1497**	1	BOSS	
		1	**7J-9694**	2	BEARING-SLEEVE	
	2	1	**5J-3488**	1	LOCKNUT	
	3	1	**2D-0714**	1	RING-WEAR	
	4	1	**8T-0763**	1	SEAL AS	
	5	1	**6E-3319**	1	PISTON	
	6	1	**175-7905**	1	SEAL-O-RING	
	7	1	**2J-7767**	1	RING-BACKUP	
	8	1	**6E-3326**	1	HEAD	
R	9	1	**117-8631**	1	ROD AS	
	10	1	**167-2469**	1	SEAL-WIPER	
	11	1	**167-2319**	1	SEAL-U-CUP	
	12	1	**167-2208**	1	SEAL AS-BUFFER	
	13	1	**8C-9161**	1	RING-WEAR	
M	14	1	**7X-0851**	4	NUT (M24X3.00 THD)	
B	15	1	**3G-0911**	22	SHIM (.8MM THK)	
M	16	1	**8T-0672**	4	BOLT (M24X3.0X160MM)	
	17	1	**3G-0910**	1	CAP-BEARING	

B-USE AS REQUIRED
M-METRIC PART
R-REMFG PART MAY BE AVAILABLE

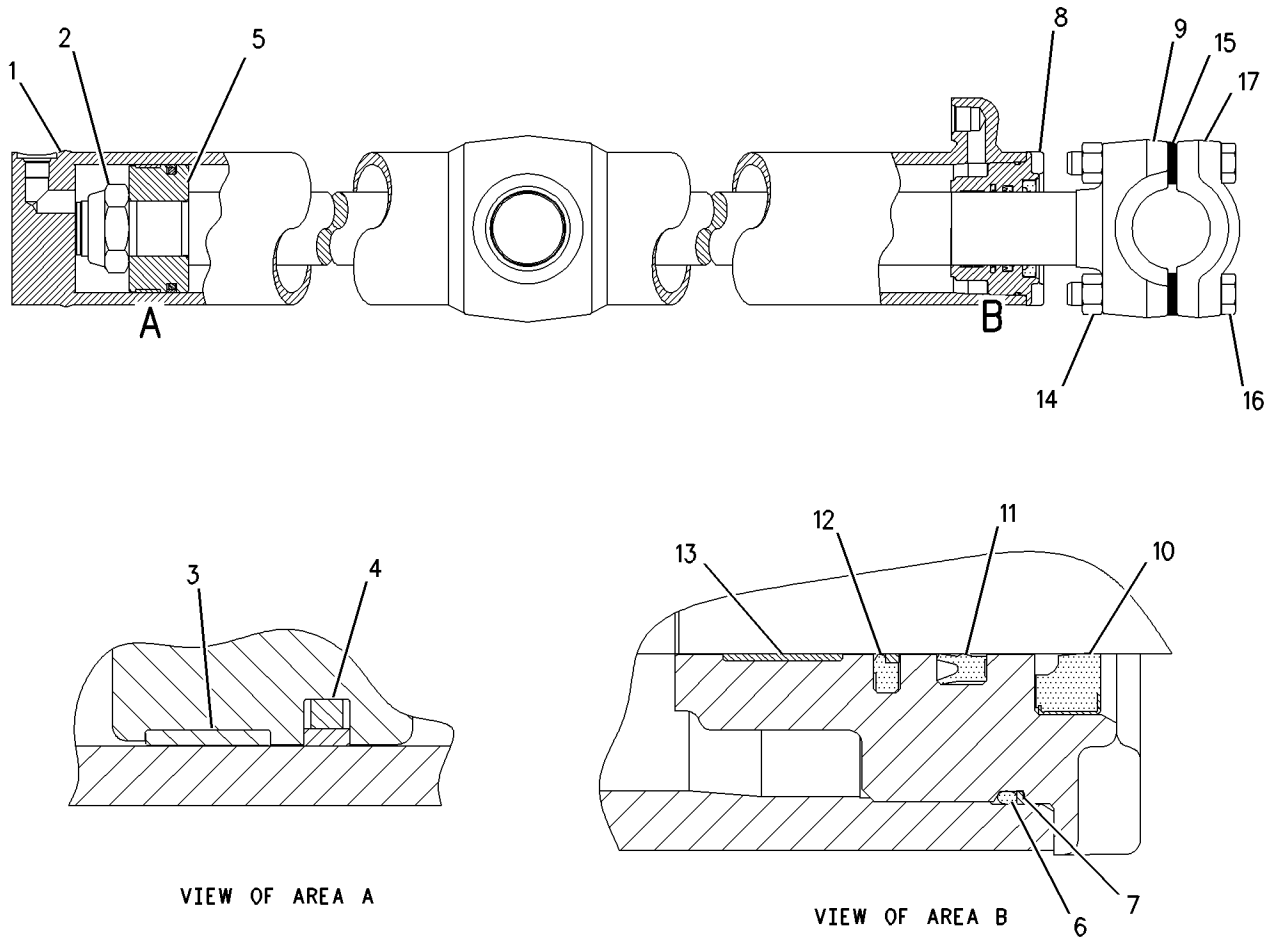

GRAPHIC #1 g00785117

HYDRAULIC SYSTEM

113-7754 CYLINDER GP-RIPPER LIFT

S/N: 7KK1-UP
101.6 MM BORE X 482.6 MM STROKE
PART OF 8E-9638 RIPPER AR

SMCS-5352 **i01458624**

NOTE	REF NO	GRAPHIC REF	PART NUMBER	QTY	PART NAME 1 2 3 4 5 6 (PRODUCT LEVEL)	SEE PAGE
R	1	1	**113-7755**	1	CYLINDER AS	
	1A	1	**8J-9911**	2	BEARING-SLEEVE	
M	2	1	**173-9683**	1	BOLT-HEX HEAD (M30X3.5X90MM)	
	3	1	**3S-7023**	1	WASHER (34X57X6MM THK)	
	4	1	**5J-5402**	1	SEAL AS	
	5	1	**6J-2797**	1	RING-WEAR	
	6	1	**9T-3133**	1	PISTON	
R	7	1	**113-7756**	1	ROD AS	
	7A	1	**8J-9910**	1	BEARING-SLEEVE	
	8	1	**175-7900**	1	SEAL-O-RING	
	9	1	**2K-6830**	1	RING-BACKUP	
	10	1	**6E-0775**	1	HEAD	
	11	1	**4T-5613**	1	RING-WEAR	
	12	1	**167-2195**	1	SEAL AS-BUFFER	
	13	1	**167-2304**	1	SEAL-U-CUP	
	14	1	**167-2457**	1	SEAL-WIPER	

M-METRIC PART
R-REMFG PART MAY BE AVAILABLE

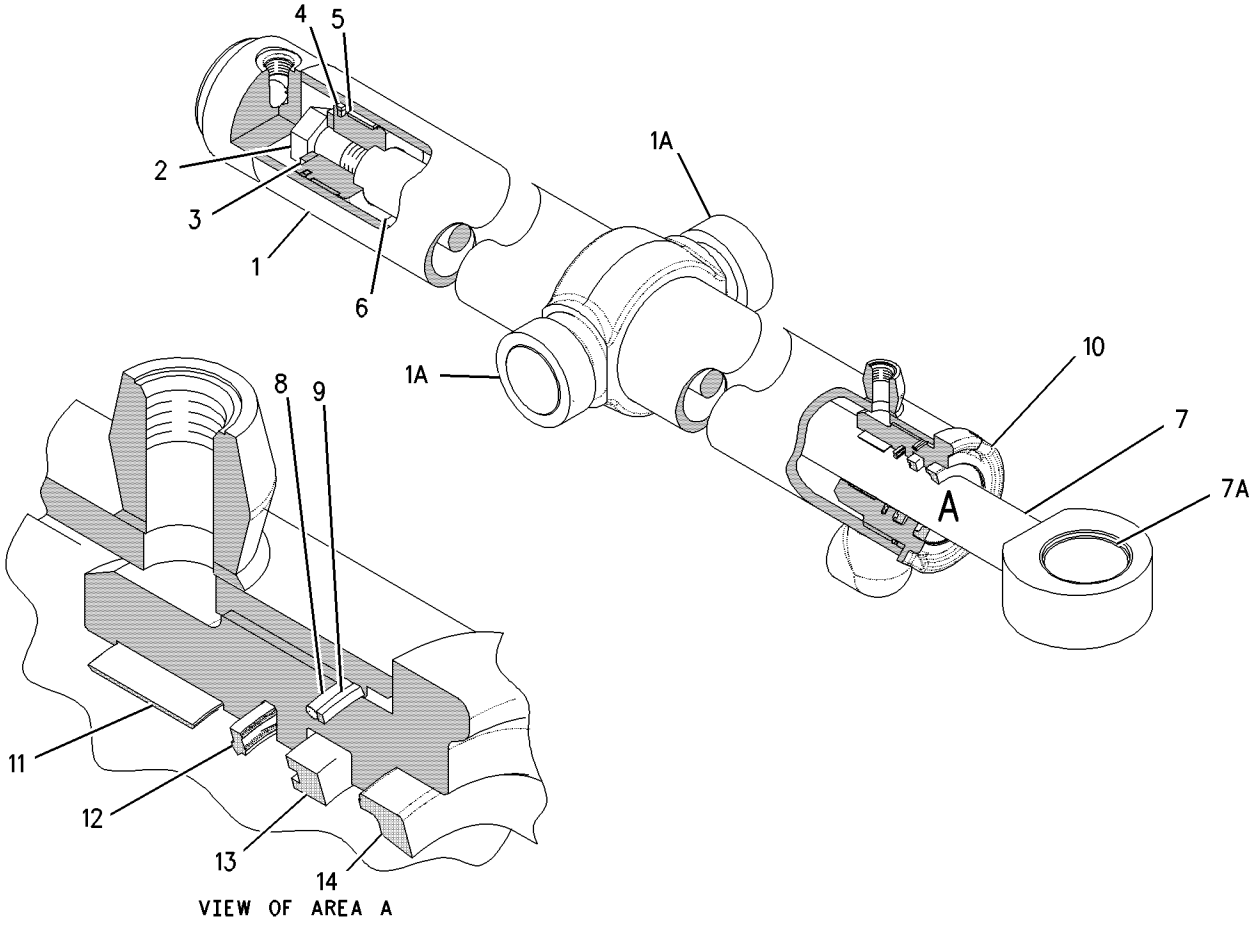

GRAPHIC #1 g00762964

MEMORANDA

HYDRAULIC SYSTEM

141-2914 CYLINDER GP-SIDESHIFT

S/N: 7KK1-UP
127 MM BORE X 2115 MM STROKE
PART OF 140-8443 CYLINDER & MTG GP-SIDESHIFT

SMCS-5229 **i01434437**

NOTE	REF NO	GRAPHIC REF	PART NUMBER	QTY	PART NAME 1 2 3 4 5 6 (PRODUCT LEVEL)	SEE PAGE
R	1	1	**141-2916**	1	CYLINDER AS	
		1	**1J-6472**	2	RING-RETAINING	
		1	**5J-1446**	1	BEARING	
	2	1	**2J-0564**	1	LOCKNUT	
	3	1	**4J-4630**	1	RING-WEAR	
	4	1	**9X-7264**	1	SEAL AS	
					(INCLUDES EXPANDER RING & SEAL RING)	
	5	1	**6E-5683**	1	PISTON	
	6	1	**5F-3144**	1	SEAL-O-RING	
	7	1	**2K-4096**	1	RING	
	8	1	**8T-8374**	1	SEAL-HEAD	
M	9	1	**7Y-5216**	8	BOLT-SOCKET HEAD (M20X2.5X80MM)	
	10	1	**126-5060**	1	HEAD	
R	11	1	**141-2918**	1	ROD AS	
	12	1	**167-2471**	1	SEAL-WIPER	
	13	1	**167-2320**	1	SEAL-U-CUP	
	14	1	**167-2209**	1	SEAL AS-BUFFER	
					(INCLUDES BUFFER SEAL & BACKUP RING)	
	15	1	**8C-9101**	1	RING-WEAR	

M-METRIC PART
R-REMFG PART MAY BE AVAILABLE

141-2914 CYLINDER GP-SIDESHIFT *(contd.)* i01434437

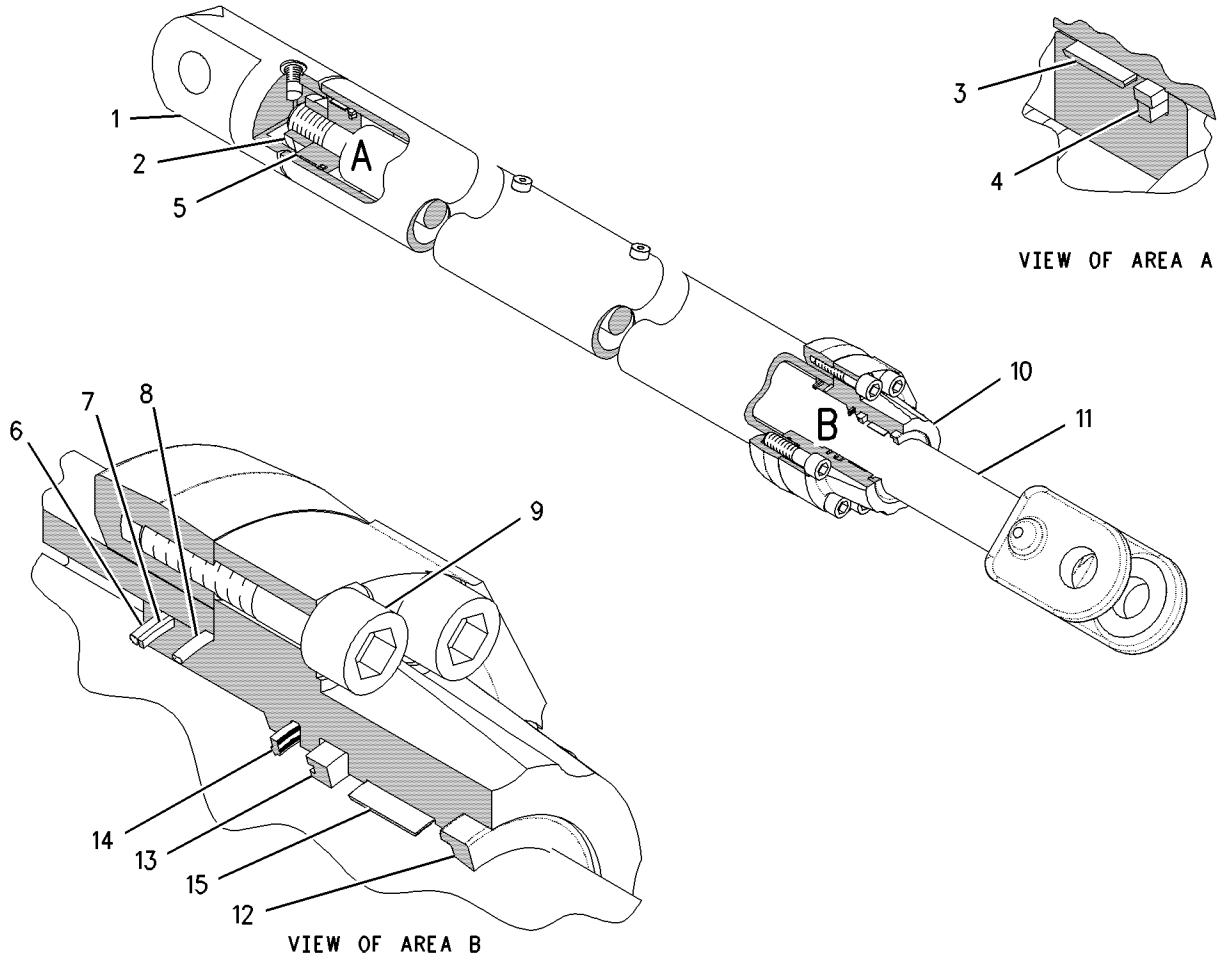

GRAPHIC #1 g00763874

141-1924 CYLINDER GP-STEERING

S/N: 7KK1-UP
88.9 MM BORE X 445.0 MM STROKE
PART OF 8X-9017 CYLINDER & MTG GP-STEERING

SMCS-4303 **i01404243**

NOTE	REF NO	GRAPHIC REF	PART NUMBER	QTY	PART NAME 1 2 3 4 5 6 (PRODUCT LEVEL)	SEE PAGE
R	1	1	**141-1925**	1	CYLINDER AS	
	2	1	**4D-4431**	1	BEARING-ALIGNING	
	3	1	**6V-2766**	2	PLUG-PIPE	
	4	1	**2H-5549**	2	RING-RETAINING	
	5	1	**7J-9885**	1	RING-WEAR	
	6	1	**6E-1500**	1	PISTON	
R	7	1	**163-5644**	1	ROD AS	
	8	1	**175-7898**	1	SEAL-O-RING (88.49MM ID)	
	9	1	**4J-9224**	1	RING-BACKUP	
	10	1	**6E-1501**	1	HEAD	
	11	1	**8T-5668**	1	RING-WEAR	
	12	1	**167-2201**	1	SEAL AS-BUFFER	
	13	1	**167-2312**	1	SEAL-U-CUP	
	14	1	**5J-8156**	1	WIPER-ROD	
	15	1	**1N-5999**	3	PLUG (3/8-24 THD)	
	16	1	**7J-0204**	3	SEAL-O-RING (7.65MM ID)	
M	17	1	**173-9682**	1	BOLT-HEX HEAD (M36X4X100MM)	
	18	1	**106-1017**	1	WASHER (36.7X77X6MM THK)	
	19	1	**4T-8054**	1	SEAL AS	

M-METRIC PART
R-REMFG PART MAY BE AVAILABLE

141-1924 CYLINDER GP-STEERING *(contd.)* i01404243

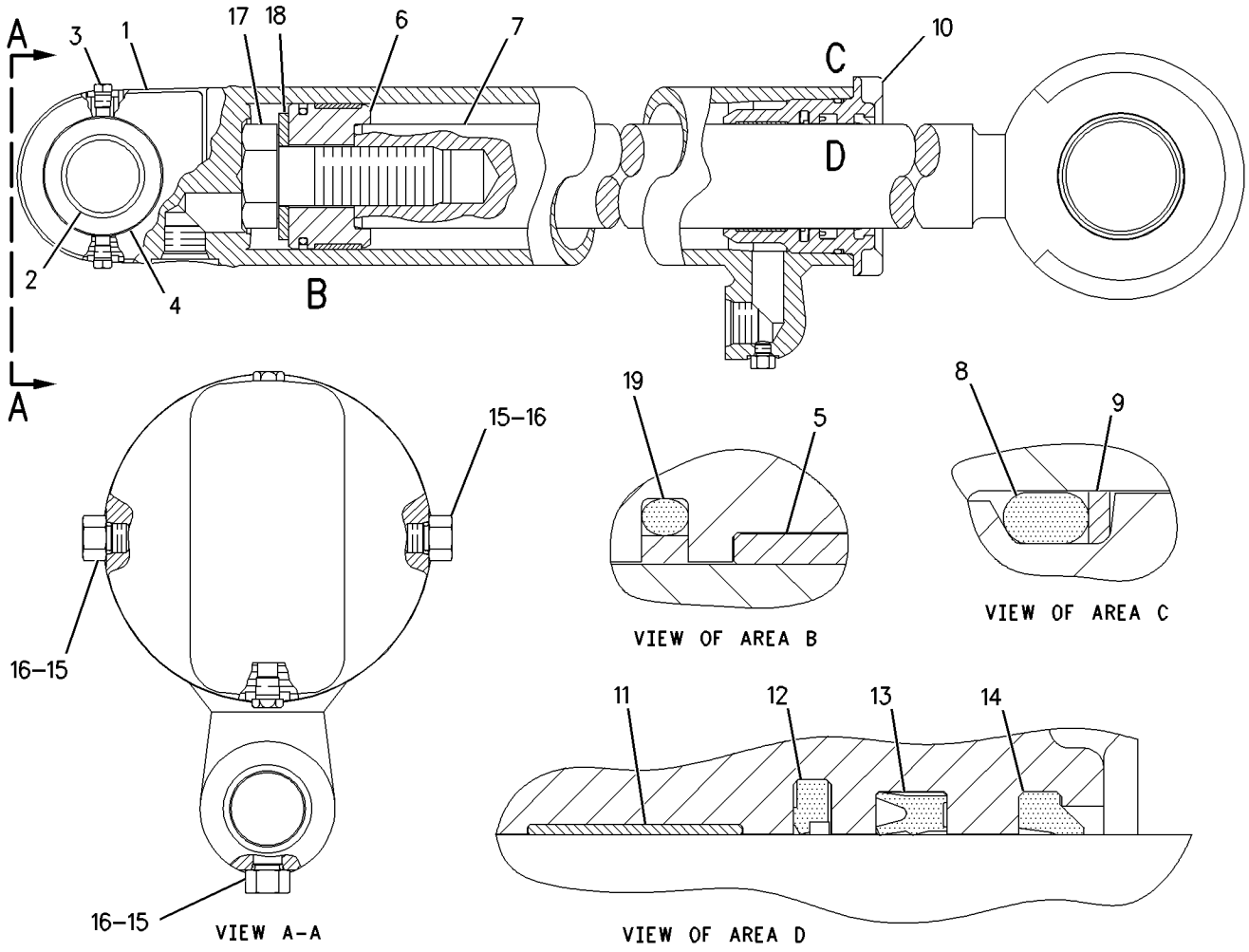

GRAPHIC #1 g00739811

HYDRAULIC SYSTEM

117-0836 CYLINDER GP-WHEEL LEAN

S/N: 7KK1-UP

120.65 MM X 243 MM STROKE

PART OF 8X-9016 CYLINDER & MTG GP-WHEEL LEAN

SMCS-5211 **i01433355**

NOTE	REF NO	GRAPHIC REF	PART NUMBER	QTY	PART NAME 1 2 3 4 5 6 (PRODUCT LEVEL)	SEE PAGE
R	1	1	**118-1951**	1	CYLINDER AS	
		1	**118-2289**	1	BEARING-SLEEVE	
M	2	1	**173-9682**	1	BOLT-HEX HEAD (M36X4X100MM)	
	3	1	**106-1017**	1	WASHER (36.7X77X6MM THK)	
	4	1	**9T-8199**	1	PISTON	
	5	1	**175-7903**	1	SEAL-O-RING	
	6	1	**2J-3961**	1	RING-BACKUP	
	7	1	**120-6679**	1	HEAD	
R	8	1	**118-1953**	1	ROD AS	
		1	**126-6917**	1	BEARING-SLEEVE	
	9	1	**167-2463**	1	SEAL-WIPER	
	10	1	**167-2312**	1	SEAL-U-CUP	
	11	1	**167-2201**	1	SEAL AS-BUFFER	
	12	1	**8T-0785**	1	RING-WEAR	
	13	1	**8T-8390**	1	RING-WEAR	
	14	1	**4T-8588**	1	SEAL AS	

M-METRIC PART
R-REMFG PART MAY BE AVAILABLE

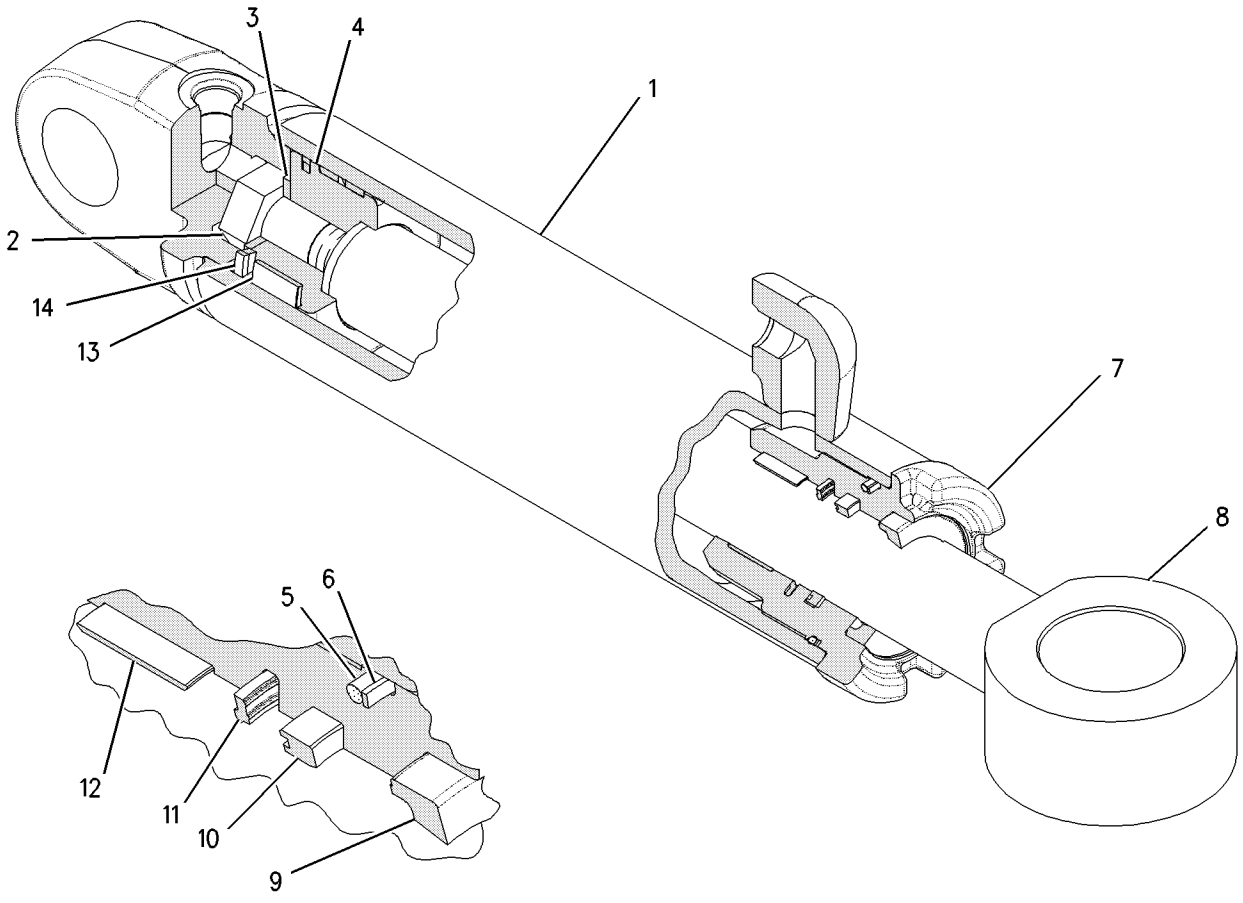

GRAPHIC #1 g00762856

HYDRAULIC SYSTEM

8X-8986 DRIVE & MTG GP-CIRCLE

S/N: 7KK1-UP

PART OF 8X-8402 CHASSIS AR

SMCS-5207 **i00111685**

NOTE	REF NO	GRAPHIC REF	PART NUMBER	QTY	PART NAME 1 2 3 4 5 6 (PRODUCT LEVEL)	SEE PAGE
Y	1	1	**117-2100**	1	DRIVE GP-CIRCLE	606
	2	1	**4H-6996**	1	PIN-SPRING	
	3	1	**9D-1491**	1	COUPLING	
	4	1	**8T-5439**	9	WASHER (6.0MM THK)	
M	5	1	**7X-2563**	9	BOLT (M20X2.5X60MM)	
	6	1	**5F-5434**	1	VENT AS	

M-METRIC PART
Y-SEPARATE ILLUSTRATION

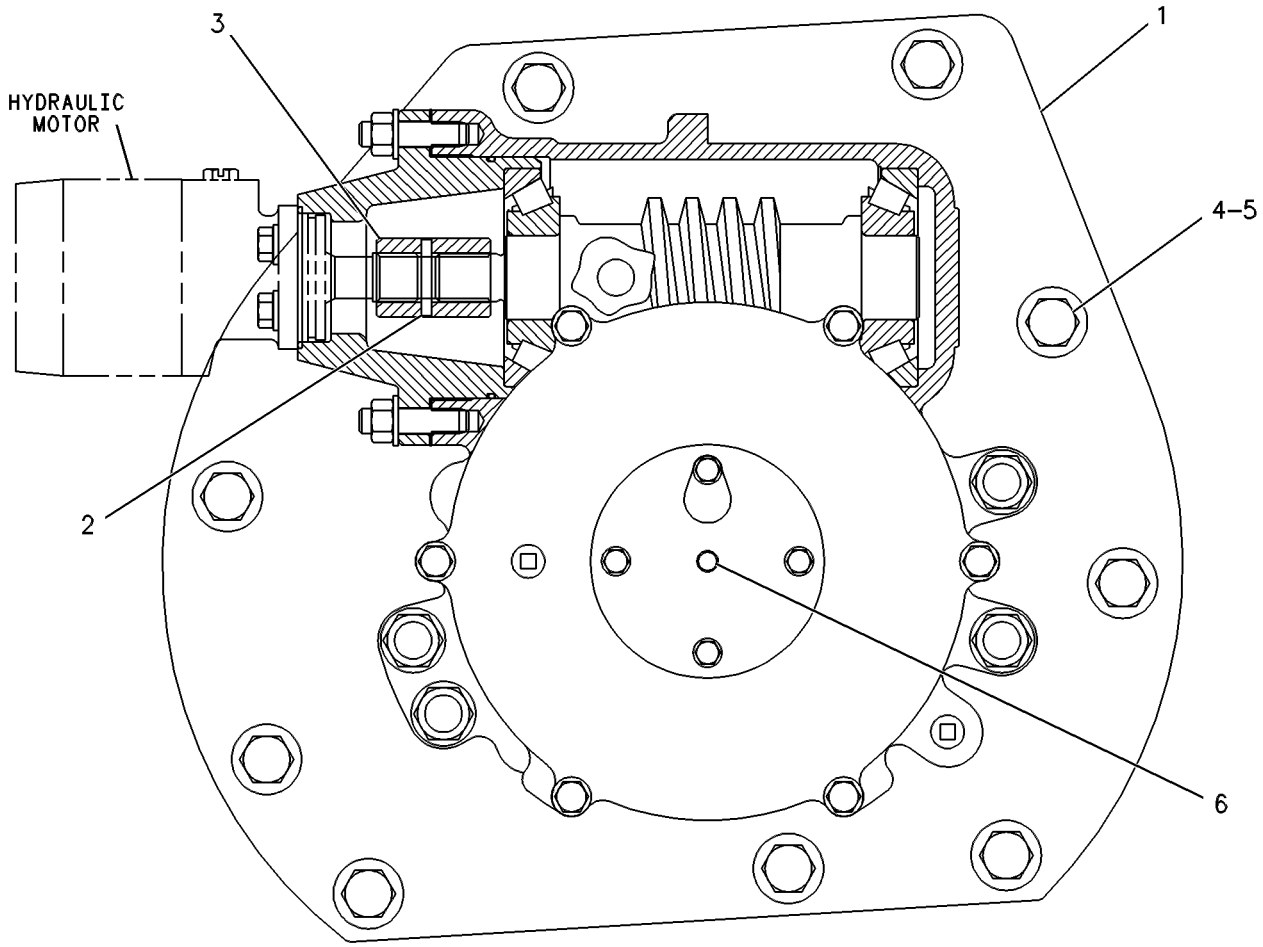

GRAPHIC #1 g00086502

HYDRAULIC SYSTEM

117-2100 DRIVE GP-CIRCLE

S/N: 7KK1-UP

PART OF 8X-8986 DRIVE & MTG GP-CIRCLE

SMCS-5207 **i01063188**

NOTE	REF NO	GRAPHIC REF	PART NUMBER	QTY	PART NAME 1 2 3 4 5 6 (PRODUCT LEVEL)	SEE PAGE
	1	1	**1A-1415**	1	NUT	
	2	1	**2G-0339**	1	LOCK-NUT	
	3	1	**2G-0478**	10	DISC	
	4	1	**4D-8186**	1	PLUG-PIPE	
	5	1	**9W-6645**	2	SEAL GP-DUO-CONE	
					(EACH INCLUDES)	
		1	**8T-0533**	1	GAUGE-SEAL HEIGHT	
		1	**1U-8698**	1	INSTALLER AS-DUO-CONE SEAL	
		1	**5K-5129**	2	RING-SEALING	
		1	**8T-0540**	1	TOOL-ADJUSTMENT	
	6	1	**5T-8059**	1	WORM-CIRCLE DRIVE	
	7	1	**5T-8060**	1	ADAPTER	
	8	1	**6G-1536**	1	SPACER (13.0MM THK)	
	9	1	**6G-1539**	1	COVER	
	10	1	**6G-4833**	1	ADAPTER	
	11	1	**6G-5542**	2	SPACER (8.8 MM THK)	
B	12	1	**6G-5543**	19	SHIM (0.13MM THK)	
	13	1	**6G-6122**	1	SPRING-DISC	
	14	1	**6Y-7953**	11	DISC-FRICTION	
	15	1	**8D-3984**	2	CONE-BEARING	
	16	1	**8D-3986**	2	CUP-ROLLER BEARING	
B	17	1	**8D-4523**	2	SHIM (0.010MM THK)	
	18	1	**8D-7333**	1	COLLAR	
	19	1	**8W-4347**	1	PINION-CIRCLE DRIVE	
	20	1	**8W-6179**	1	WASHER-THRUST	
	21	1	**8X-4028**	1	GEAR-WORM (36 TEETH)	
	22	1	**9D-0089**	1	CAGE AS	
	22A	1	**7J-2604**	1	BEARING-SLEEVE (101.6MM OD)	
	24	1	**0L-1351**	4	BOLT (3/8-16X.875IN)	
	25	1	**0S-1585**	7	BOLT (1/2-13X1.50IN)	
	26	1	**0S-1594**	4	BOLT (3/8-16X1 IN)	
	27	1	**1A-2029**	4	BOLT (3/8-16X1.125IN)	
	28	1	**2B-7410**	2	PLUG-PIPE	
	29	1	**2D-6533**	1	SEAL-O-RING (304.39MM ID)	
	30	1	**2D-8009**	1	SEAL-O-RING (142.47MM ID)	
	31	1	**4K-0367**	4	NUT (5/8-11 THD)	
	32	1	**5K-7143**	2	BOLT (1/2-13X1.50IN)	
	33	1	**5M-2894**	12	WASHER (2.5MM THK)	
	34	1	**5P-8245**	9	WASHER-HARD (3MM THK)	
	35	1	**5P-8247**	4	WASHER-HARD (3.5MM THK)	
	36	1	**5P-8249**	8	WASHER-HARD (4.0MM THK)	
	37	1	**5T-8058**	1	HOUSING AS-DRIVE	
		1	**3J-2333**	2	BEARING-SLEEVE	
		1	**4D-4823**	4	STUD-TAPERLOCK (5/8-11X2.8IN)	
		1	**4D-7259**	4	STUD-TAPERLOCK (7/8-9X4.2IN)	
	38	1	**6G-1541**	1	SHAFT-DRIVE PINION	
	39	1	**6G-5538**	1	COVER	
	40	1	**6G-5539**	1	GASKET	
B	41	1	**6G-5544**	5	SHIM (0.25MM THK)	
	42	1	**6G-5547**	1	PLATE	
	43	1	**6J-1536**	4	BOLT (7/8-9X6.5IN)	
	44	1	**6K-0545**	4	LOCKNUT (7/8-9 THD)	
B	45	1	**8D-4522**	4	SHIM (0.005MM THK)	
	46	1	**8D-7341**	1	GASKET	
	47	1	**8D-7343**	1	WASHER-THRUST	
	48	1	**8D-7424**	1	SPACER (6.0 MM THK)	

117-2100 DRIVE GP-CIRCLE *(contd.)* i01063188

NOTE	REF NO	GRAPHIC REF	PART NUMBER	QTY	PART NAME 1 2 3 4 5 6 (PRODUCT LEVEL)	SEE PAGE
	49	1	**8T-0336**	1	FITTING-RELIEF	
	50	1	**9D-0088**	1	COVER	
B-USE AS REQUIRED						

117-2100 DRIVE GP-CIRCLE *(contd.)* **i01063188**

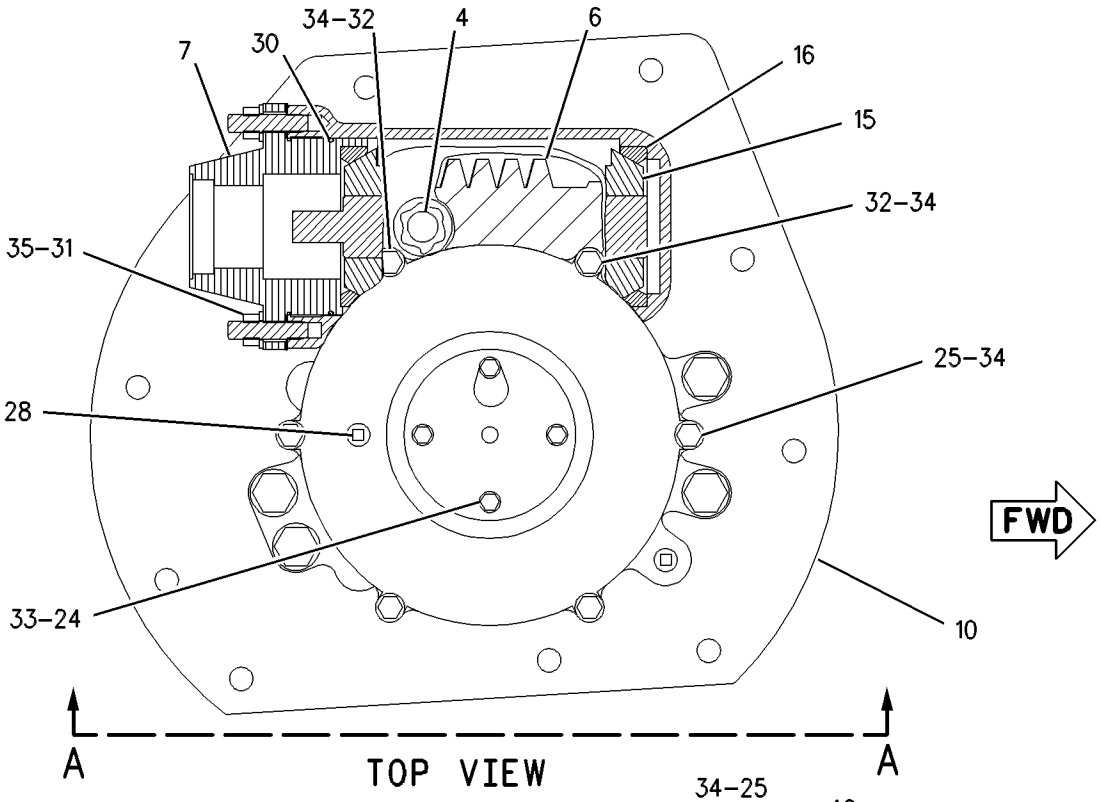

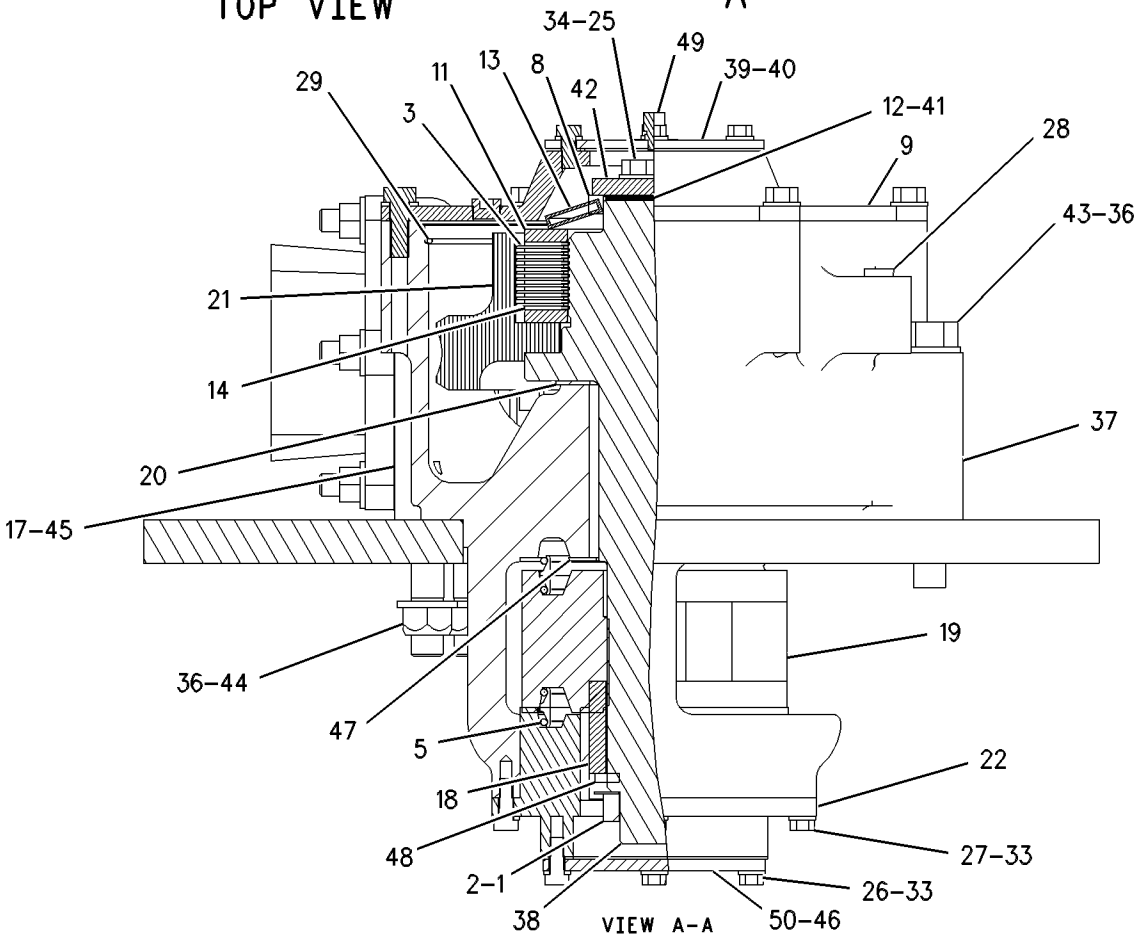

GRAPHIC #1 g00608002

HYDRAULIC SYSTEM

8X-8404 HYDRAULIC AR

S/N: 7KK1-UP

PART OF 8X-8402 CHASSIS AR

SMCS-1374, 5050, 5051, 5056, 5057, 5073 **i01457206**

NOTE	PART NUMBER	QTY	PART NAME 1 2 3 4 5 6 (PRODUCT LEVEL)	SEE PAGE
Y	*8X-9011*	1	ACCUMULATOR & MTG GP-HYDRAULIC	582
Y	*8X-8981*	1	CONTROL GP-DIFFERENTIAL LOCK	374
Y	*8X-8980*	1	CONTROL GP-SERVICE BRAKE	564
Y	*8X-9013*	1	CYLINDER & MTG GP-ARTICULATION	586
Y	*140-8444*	1	CYLINDER & MTG GP-BLADE TIP	587
Y	*8X-9004*	1	CYLINDER & MTG GP-CSHFT & LIFT	588
Y	*140-8443*	1	CYLINDER & MTG GP-SIDESHIFT	589
Y	*8X-9017*	1	CYLINDER & MTG GP-STEERING	590
			S/N: 7KK1-93	
Y	*8X-9016*	1	CYLINDER & MTG GP-WHEEL LEAN	591
			S/N: 7KK1-93	
Y	*142-2310*	1	LINES GP-FRONT	610
Y	*8X-9018*	1	LINES GP-HYDRAULIC	622
Y	*8X-9019*	1	LINES GP-HYDRAULIC	630
Y	*8X-9026*	1	LINES GP-POWER TRAIN OIL	414
Y	*8X-9027*	1	LINES GP-PUMP	640
Y	*8X-9023*	1	LINES GP-RIPPER	648
Y	*8X-9029*	1	LINES GP-SECONDARY STEERING	654
Y	*8X-9028*	1	LINES GP-STEERING	656
Y	*8X-9030*	1	LINES GP-TORQUE CONV COOLER	90
Y	*8X-9031*	2	MOTOR & MTG GP-CIRCLE DRIVE	662
Y	*8X-9001*	1	PUMP & MTG GP-BRAKE & DIF LOCK	572
Y	*8X-9032*	1	PUMP & MTG GP-PISTON	666
Y	*124-7636*	1	PUMP GP-GEAR	670
Y	*3T-5447*	1	PUMP GP-TRANSMISSION	429
Y	*8X-9033*	1	TANK & MTG GP-HYDRAULIC	690

Y-SEPARATE ILLUSTRATION

HYDRAULIC SYSTEM

142-2310 LINES GP-FRONT

S/N: 7KK1-82

PART OF 8X-8404 HYDRAULIC AR

SMCS-5057 **i00656497**

NOTE	REF NO	GRAPHIC REF	PART NUMBER	QTY	PART NAME 1 2 3 4 5 6 (PRODUCT LEVEL)	SEE PAGE
	1	2	**2B-0941**	2	SPACER (19MM THK)	
	2	1	**3H-5788**	2	SPACER	
	3	1,2	**9D-7198**	4	JUNCTION BLOCK	
Y	4	1	**9T-5604**	1	SWIVEL GP	686
	5	1	**124-6365**	2	PLATE	
I	6	1	**124-6382**	2	HOSE AS	
	7	1	**124-6392**	2	HOSE AS	
I	8	2	**124-6400**	2	HOSE AS	
I	9	1	**124-6401**	2	HOSE AS	
I	10	1	**124-6402**	2	HOSE AS	
	11	1	**135-5871**	2	CLAMP	
	12	1	**142-2239**	1	GUIDE AS-HOSE	
I	13	2	**142-2313**	2	HOSE AS	
I	14	2	**142-2314**	1	HOSE AS	
I	15	2	**142-2315**	1	HOSE AS	
I	16	1	**142-2316**	2	HOSE AS	
I	17	1	**142-2317**	2	HOSE AS	
	18	1	**142-2318**	1	TUBE AS	
	19	1	**142-2319**	1	TUBE AS	
	20	1	**8T-8917**	4	BOLT (1/2-13X1.25IN)	
M	21	1	**8T-6685**	2	BOLT (M10X1.50X110MM)	
M	22	2	**8T-5436**	2	BOLT (M10X1.50X130MM)	
	23	1	**8T-5429**	4	ELBOW-90 DEGREE	
	24	1	**8T-4994**	2	WASHER (5MM THK)	
	25	2	**2M-9780**	4	SEAL-O-RING (19.18MM ID)	
	26	1	**3B-4628**	2	COTTER	
	27	1	**3D-2824**	6	SEAL-O-RING (23.47MM ID)	
	28	1,2	**3G-8047**	12	GROMMET	
	29	1,2	**3G-8054**	12	CLIP (TAB)	
	30	1,2	**3G-8057**	12	CLIP (SLOT)	
	31	1,2	**3K-0360**	20	SEAL-O-RING (16.36MM ID)	
	32	1,2	**6V-8398**	34	SEAL-O-RING (12.47MM ID)	
	33	1	**6V-8625**	2	ELBOW-90 DEGREE (3/4-16 THD)	
	34	1	**6V-8633**	2	CONNECTOR	
	35	2	**6V-8638**	4	CONNECTOR-SEAL	
	36	1,2	**6V-8639**	16	CONNECTOR-SEAL	
	37	1	**6V-9746**	4	SEAL-O-RING (18.94MM ID)	
	38	2	**6V-9874**	2	CONNECTOR	
	39	1	**7G-3832**	2	GROMMET	
	40	1	**7G-3833**	2	CLIP (TAB)	
	41	1	**7G-3834**	2	CLIP (SLOT)	
	42	1	**8D-9092**	1	PIN	
	43	1	**8T-1885**	2	CLIP (SLOT)	
	44	1	**8T-1886**	2	CLIP (TAB)	
	45	1,2	**8T-4121**	49	WASHER (2.5MM THK)	
M	46	1,2	**8T-4133**	15	NUT (M10X1.50 THD)	
M	47	1,2	**8T-4136**	12	BOLT (M10X1.50X25MM)	
M	48	1	**8T-4172**	2	BOLT (M10X1.50X80MM)	
M	49	1,2	**8T-4195**	16	BOLT (M10X1.50X30MM)	
	50	1	**8T-4223**	4	WASHER-HARD (3MM THK)	

I-SEE HOSE FABRICATION GUIDE
M-METRIC PART
Y-SEPARATE ILLUSTRATION

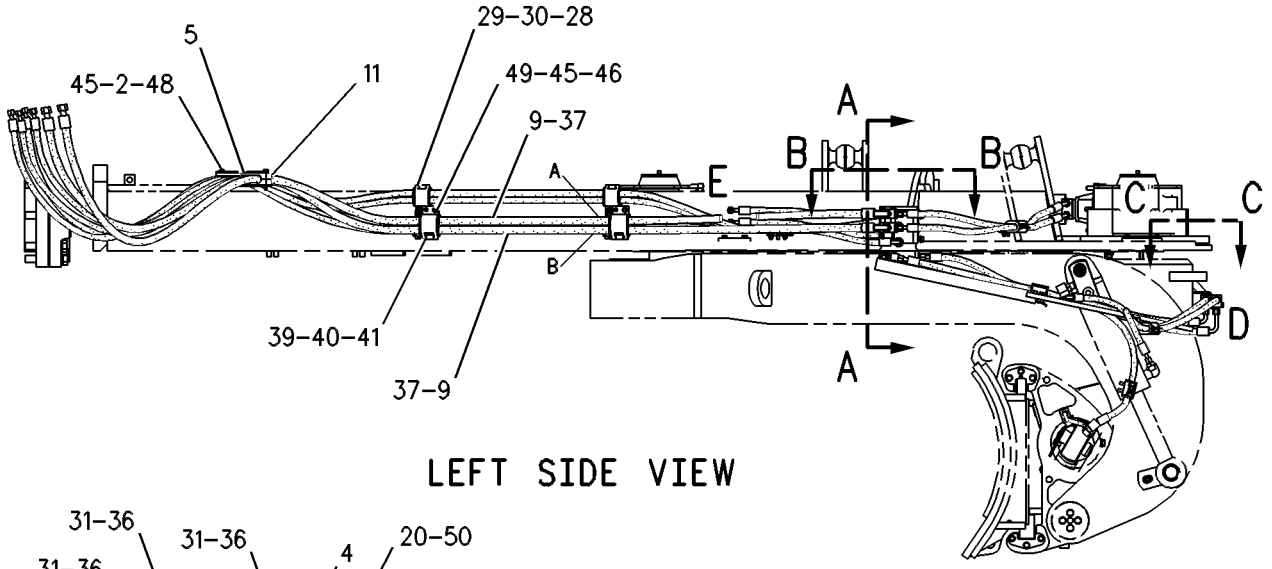

LEFT SIDE VIEW

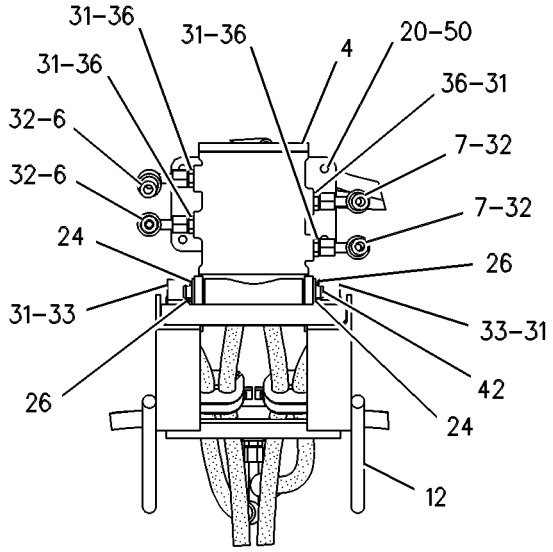

SECTION A-A

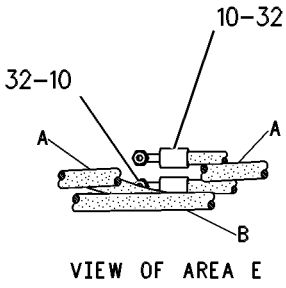

VIEW OF AREA E

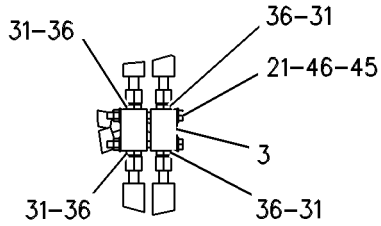

VIEW C-C

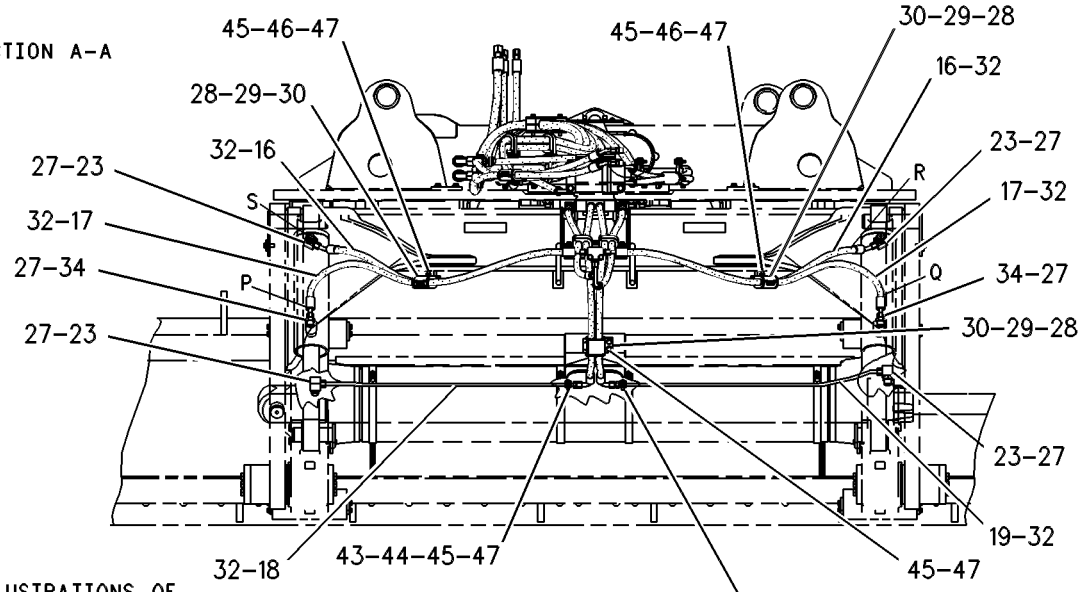

REFER TO ALL ILLUSTRATIONS OF THIS GROUP FOR AUXILIARY VIEWS

REAR VIEW

GRAPHIC #1 g00283920

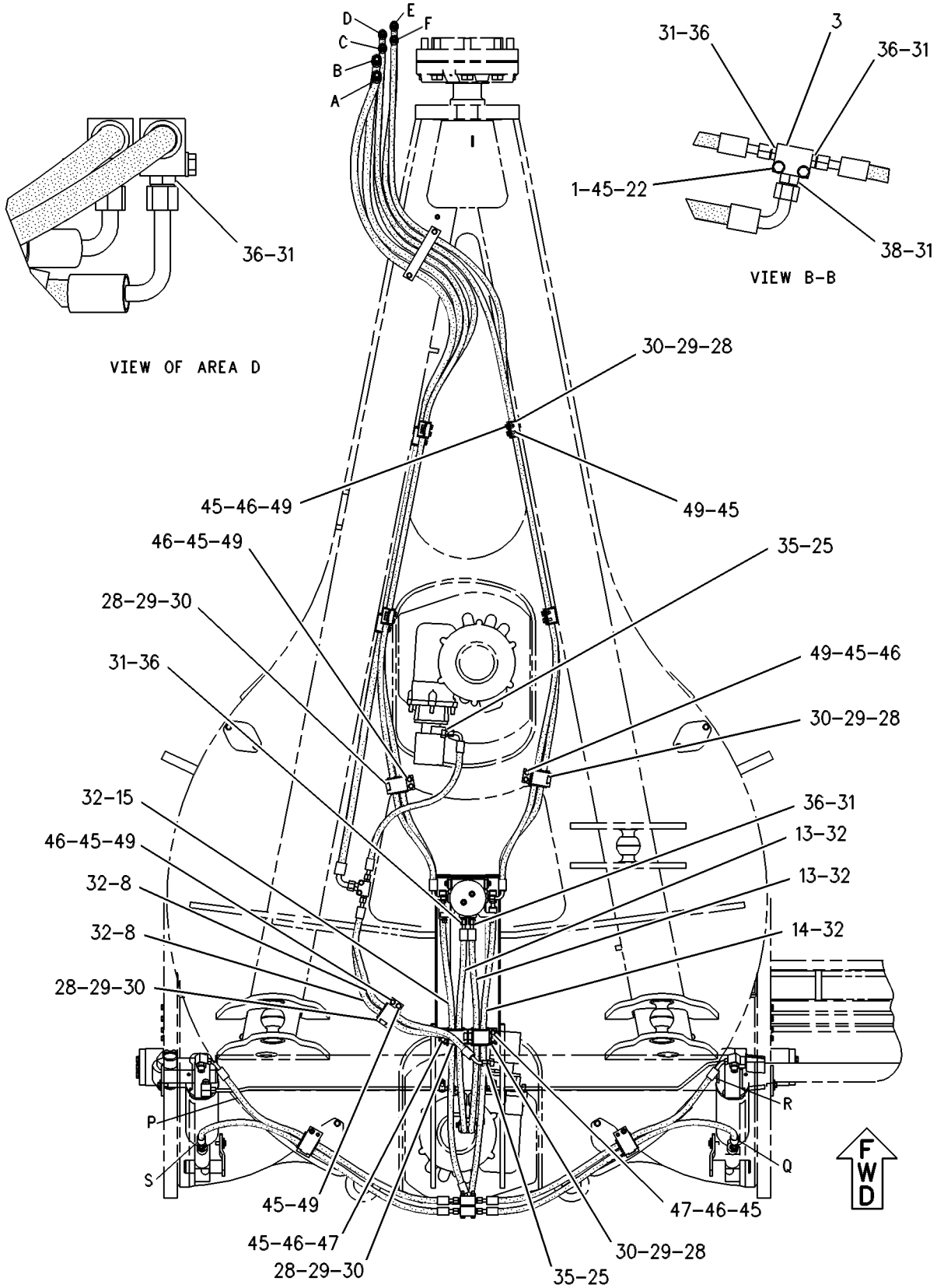

TOP VIEW

GRAPHIC #2 g00288596

MEMORANDA

HYDRAULIC SYSTEM

142-2310 LINES GP-FRONT

S/N: 7KK83-UP
PART OF 8X-8404 HYDRAULIC AR
TYPE 1

SMCS-5057 **i01337090**

NOTE	REF NO	GRAPHIC REF	PART NUMBER	QTY	PART NAME 1 2 3 4 5 6 (PRODUCT LEVEL)	SEE PAGE
	1	2	**2B-0941**	2	SPACER (10.5X19X19MM THK)	
	2	1	**3H-5788**	2	SPACER	
	3	1,2	**9D-7198**	4	JUNCTION BLOCK	
Y	4	1	**173-1011**	1	SWIVEL GP	687
	5	1	**124-6365**	2	PLATE	
I	6	1	**124-6382**	2	HOSE AS	
I	7	1	**124-6392**	2	HOSE AS	
I	8	2	**124-6400**	2	HOSE AS	
I	9	1	**124-6401**	2	HOSE AS	
I	10	1	**124-6402**	2	HOSE AS	
	11	1	**135-5871**	2	CLAMP	
	12	1	**142-2239**	1	GUIDE AS-HOSE	
		1	**9R-2060**	2	BOSS (M10X1.5X21MM OAL)	
I	13	2	**142-2313**	2	HOSE AS	
I	14	2	**142-2314**	1	HOSE AS	
I	15	2	**142-2315**	1	HOSE AS	
I	16	1	**142-2316**	2	HOSE AS	
I	17	1	**142-2317**	2	HOSE AS	
	18	1	**142-2318**	1	TUBE AS	
	19	1	**142-2319**	1	TUBE AS	
	20	1	**8T-8917**	4	BOLT (1/2-13X1.25 IN)	
M	21	1	**8T-6685**	2	BOLT (M10X1.50X110MM)	
M	22	2	**8T-5436**	2	BOLT (M10X1.50X130MM)	
	23	1	**8T-5429**	4	ELBOW	
	24	1	**8T-4994**	2	WASHER-HARD (20X36.5X5MM THK)	
	25	2	**2M-9780**	4	SEAL-O-RING (19.18MM ID)	
	26	1	**3B-4628**	2	COTTER	
	27	1	**3D-2824**	6	SEAL-O-RING (23.47MM ID)	
	28	1,2	**3G-8047**	12	GROMMET	
	29	1,2	**3G-8054**	12	CLIP (TAB)	
	30	1,2	**3G-8057**	12	CLIP (SLOT)	
	31	1,2	**3K-0360**	20	SEAL-O-RING (16.36MM ID)	
	32	1,2	**6V-8398**	34	SEAL-O-RING (12.47MM ID)	
	33	1	**6V-8625**	2	ELBOW	
	34	1	**6V-8633**	2	CONNECTOR	
	35	2	**6V-8638**	4	CONNECTOR	
	36	1,2	**6V-8639**	16	CONNECTOR	
	37	1	**6V-9746**	4	SEAL-O-RING (18.94MM ID)	
	38	2	**6V-9874**	2	CONNECTOR (ORFS)	
	39	1	**7G-3832**	2	GROMMET	
	40	1	**7G-3833**	2	CLIP (TAB)	
	41	1	**7G-3834**	2	CLIP (SLOT)	
	42	1	**8D-9092**	1	PIN	
	43	1	**8T-1885**	2	CLIP (SLOT)	
	44	1	**8T-1886**	2	CLIP (TAB)	
	45	1,2	**8T-4121**	49	WASHER-HARD (11X21X2.5MM THK)	
M	46	1,2	**8T-4133**	15	NUT (M10X1.5 THD)	
M	47	1,2	**8T-4136**	12	BOLT (M10X1.5X25MM)	
M	48	1	**8T-4172**	2	BOLT (M10X1.50X80MM)	
M	49	1,2	**8T-4195**	16	BOLT (M10X1.5X30MM)	
	50	1	**8T-4223**	4	WASHER-HARD (13.5X25.5X3MM THK)	

I-SEE HOSE FABRICATION GUIDE
M-METRIC PART
Y-SEPARATE ILLUSTRATION

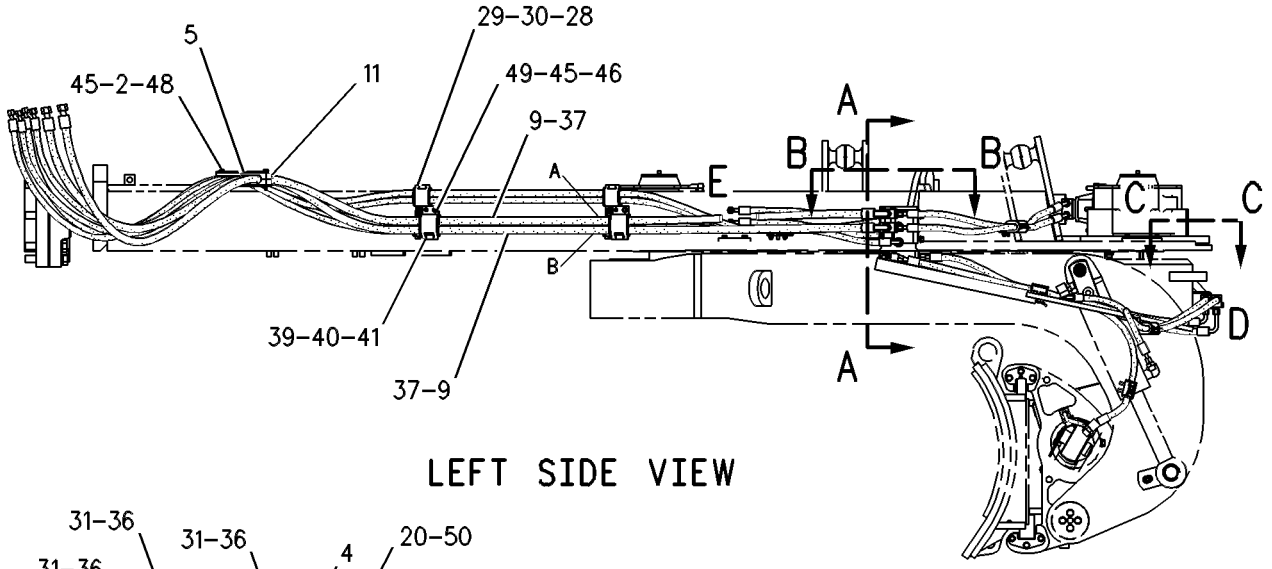

LEFT SIDE VIEW

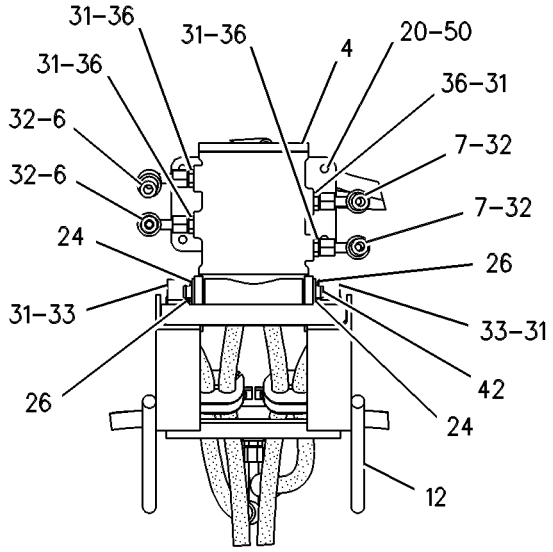

SECTION A-A

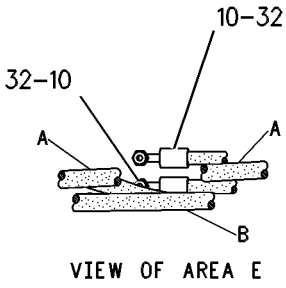

VIEW OF AREA E

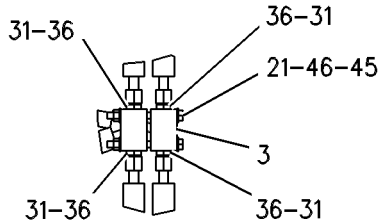

VIEW C-C

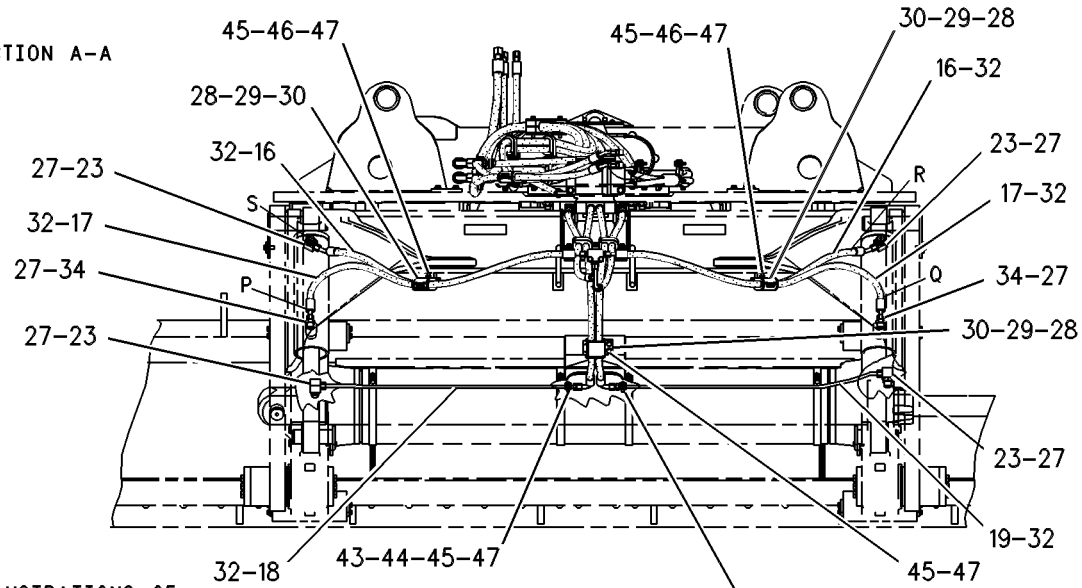

REFER TO ALL ILLUSTRATIONS OF THIS GROUP FOR AUXILIARY VIEWS

REAR VIEW

GRAPHIC #1 g00283920

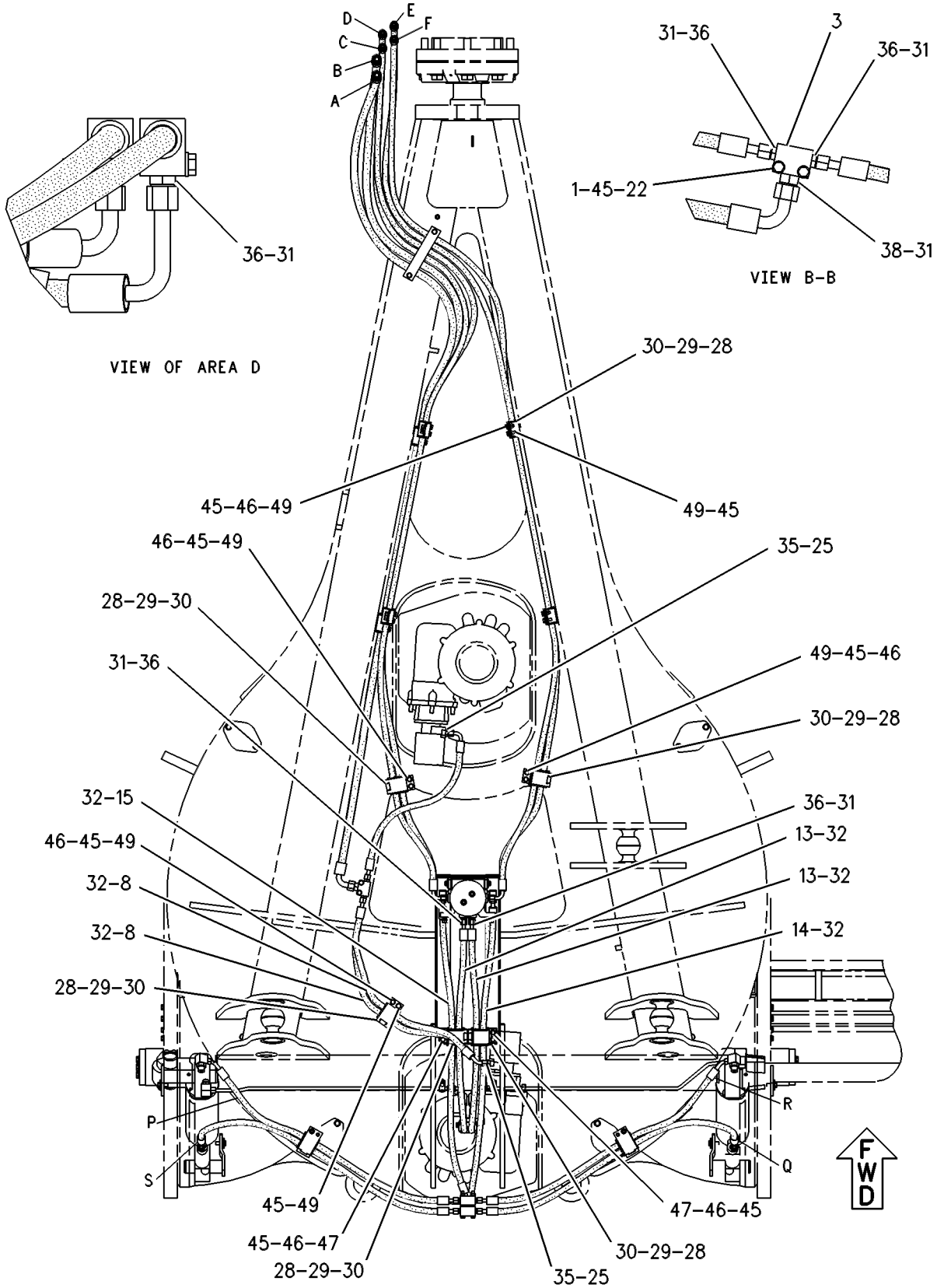

TOP VIEW

GRAPHIC #2 g00288596

MEMORANDA

HYDRAULIC SYSTEM

142-2310 LINES GP-FRONT

S/N: 7KK83-UP
PART OF 8X-8404 HYDRAULIC AR
TYPE 2

SMCS-5057 **i01498600**

NOTE	REF NO	GRAPHIC REF	PART NUMBER	QTY	PART NAME 1 2 3 4 5 6 (PRODUCT LEVEL)	SEE PAGE
	1	1	**2B-0941**	2	SPACER (10.5X19X19MM THK)	
	2	1	**3H-5788**	2	SPACER	
	3	1	**9D-7198**	4	JUNCTION BLOCK	
	4	1	**124-6365**	2	PLATE	
I	5	1	**124-6382**	1	HOSE AS	
I	6	1	**124-6392**	1	HOSE AS	
I	7	1	**124-6400**	1	HOSE AS	
I	8	1	**124-6401**	1	HOSE AS	
I	9	1	**124-6402**	1	HOSE AS	
	10	1	**135-5871**	2	CLAMP	
	11	1	**142-2239**	1	GUIDE AS-HOSE	
I	12	1	**142-2313**	2	HOSE AS	
I	13	1	**142-2314**	1	HOSE AS	
I	14	1	**142-2315**	1	HOSE AS	
I	15	1	**142-2316**	2	HOSE AS	
I	16	1	**142-2317**	2	HOSE AS	
	17	1	**142-2318**	1	TUBE AS	
	18	1	**142-2319**	1	TUBE AS	
Y	19	1	**173-1011**	1	SWIVEL GP	687
I	20	1	**124-6382**	1	HOSE AS	
I	21	1	**124-6392**	1	HOSE AS	
I	22	1	**124-6400**	1	HOSE AS	
I	23	1	**124-6401**	1	HOSE AS	
I	24	1	**124-6402**	1	HOSE AS	
	25	1	**2M-9780**	4	SEAL-O-RING	
	26	1	**3B-4628**	2	COTTER	
	27	1	**3D-2824**	6	SEAL-O-RING	
	28	1	**3G-8047**	13	GROMMET	
	29	1	**3G-8054**	13	CLIP (TAB)	
	30	1	**3G-8057**	13	CLIP (SLOT)	
	31	1	**3K-0360**	20	SEAL-O-RING	
	32	1	**6V-8398**	34	SEAL-O-RING	
	33	1	**6V-8625**	2	ELBOW	
	34	1	**6V-8633**	2	CONNECTOR	
	35	1	**6V-8638**	4	CONNECTOR-SEAL	
	36	1	**6V-8639**	16	CONNECTOR	
	37	1	**6V-9746**	4	SEAL-O-RING	
	38	1	**6V-9874**	2	CONNECTOR-SEAL	
	39	1	**7G-3832**	3	GROMMET	
	40	1	**7G-3833**	3	CLIP (TAB)	
	41	1	**7G-3834**	3	CLIP (SLOT)	
	42	1	**8D-9092**	1	PIN	
	43	1	**8T-1885**	2	CLIP (SLOT)	
	44	1	**8T-1886**	2	CLIP (TAB)	
	45	1	**8T-4121**	54	WASHER-HARD (11X21X2.5MM THK)	
M	46	1	**8T-4133**	17	NUT (M10X1.5 THD)	
M	47	1	**8T-4136**	12	BOLT (M10X1.5X25MM)	
M	48	1	**8T-4172**	2	BOLT (M10X1.50X80MM)	
M	49	1	**8T-4195**	19	BOLT (M10X1.5X30MM)	
	50	1	**8T-4223**	4	WASHER-HARD (13.5X25.5X3MM THK)	
	51	1	**8T-4994**	2	WASHER-HARD (20X36.5X3.5MM THK)	
	52	1	**8T-5429**	4	ELBOW	
M	53	1	**8T-5436**	2	BOLT (M10X1.50X130MM)	
M	54	1	**8T-6685**	2	BOLT (M10X1.50X110MM)	
	55	1	**8T-8917**	4	BOLT (1/2-13X1.25 IN)	

I-SEE HOSE FABRICATION GUIDE
M-METRIC PART
Y-SEPARATE ILLUSTRATION

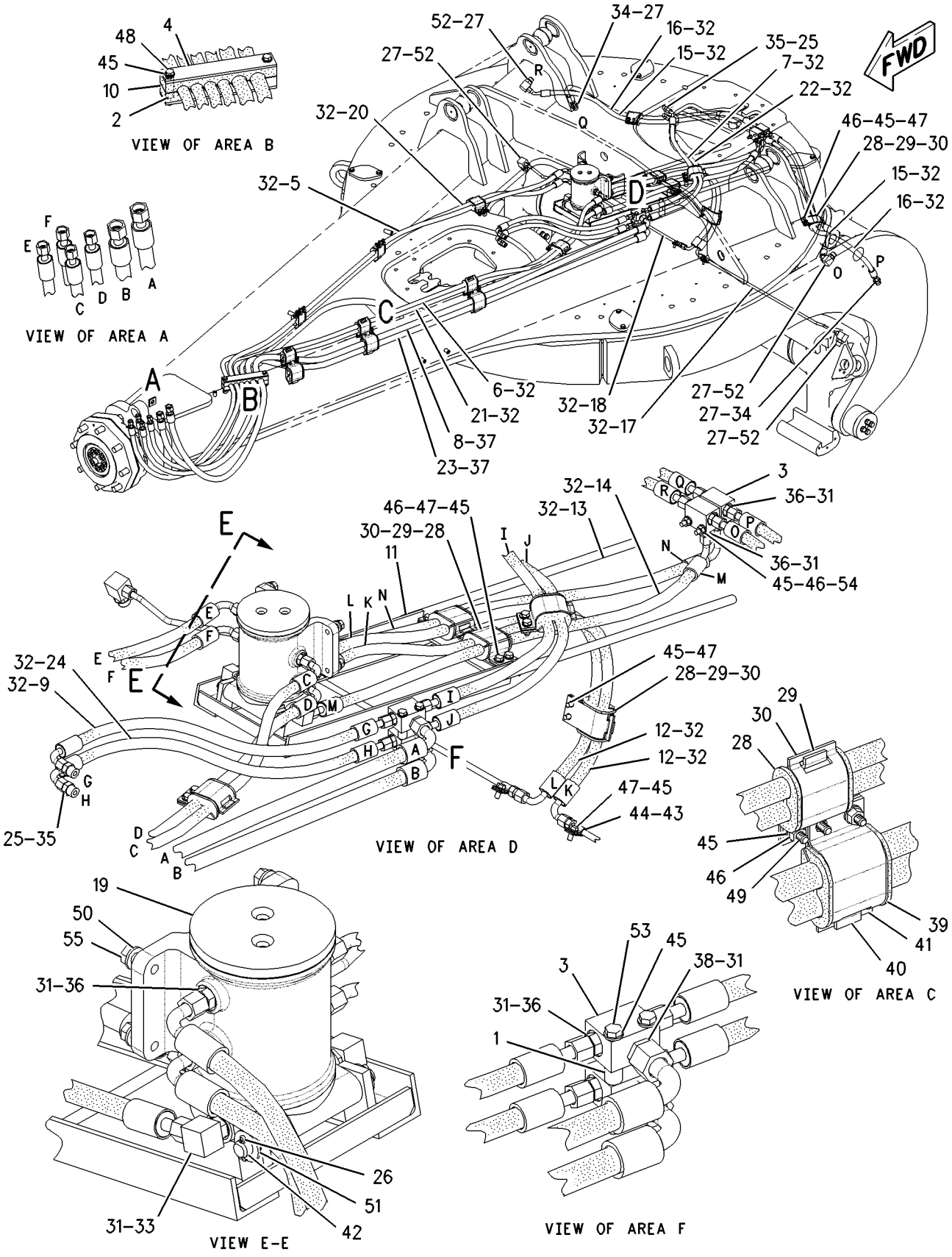

GRAPHIC #1 g00778901

MEMORANDA

HYDRAULIC SYSTEM

8X-9018 LINES GP-HYDRAULIC

S/N: 7KK1-94
5 CIRCUITS, LH
PART OF 8X-8404 HYDRAULIC AR

SMCS-5057 **i00758854**

NOTE	REF NO	GRAPHIC REF	PART NUMBER	QTY	PART NAME 1 2 3 4 5 6 (PRODUCT LEVEL)	SEE PAGE
	1	2	**1W-6702**	2	CLAMP	
	2	2	**5P-9810**	1	UNION	
Y	3	2	**7T-6517**	1	VALVE & MTG GP-SOLENOID	696
	4	2	**9D-7198**	3	JUNCTION BLOCK	
I	5	2	**124-6403**	1	HOSE AS	
I	6	2	**124-6404**	1	HOSE AS	
I	7	2	**124-6405**	1	HOSE AS	
I	8	2	**124-6406**	1	HOSE AS	
I	9	2	**124-6407**	1	HOSE AS	
I	10	2	**124-6408**	1	HOSE AS	
I	11	2	**124-6409**	1	HOSE AS	
I	12	2	**124-6410**	1	HOSE AS	
I	13	2	**124-6411**	1	HOSE AS	
I	14	2	**124-6412**	1	HOSE AS	
I	15	2	**124-6413**	1	HOSE AS	
I	16	2	**124-6414**	1	HOSE AS	
I	17	2	**124-6415**	1	HOSE AS	
	18	2	**124-6417**	2	PLATE	
	19	1	**124-6418**	1	PLATE	
	20	1	**124-6419**	1	CLAMP	
	21	1	**124-6420**	2	CLAMP	
Y	22	2	**141-1811**	1	VALVE GP-CHECK	704
	23	1	**2P-1293**	2	LOCKNUT-BULKHEAD (1 3/16-12 THD)	
	24	2	**3D-2824**	5	SEAL-O-RING (23.47MM ID)	
	25	2	**3K-0360**	19	SEAL-O-RING (16.36MM ID)	
	26	2	**5P-7464**	3	CLIP (SLOT)	
	27	2	**5P-7465**	3	CLIP (TAB)	
	28	2	**6V-1249**	3	GROMMET	
	29	2	**6V-8398**	24	SEAL-O-RING (12.47MM ID)	
	30	2	**6V-8625**	4	ELBOW-90 DEGREE (3/4-16 THD)	
	31	2	**6V-8633**	1	CONNECTOR	
	32	2	**6V-8639**	6	CONNECTOR-SEAL	
	33	1	**6V-8995**	4	UNION-BULKHEAD	
	34	1	**6V-8997**	2	UNION	
	35	2	**6V-9002**	7	ELBOW-45 DEGREE (3/4-16 THD)	
	36	1	**6V-9169**	4	NUT-BULKHEAD (13/16-16 THD)	
	37	2	**6V-9746**	4	SEAL-O-RING (18.94MM ID)	
	38	2	**6V-9874**	2	CONNECTOR	
	39	1,2	**8T-4121**	22	WASHER (2.5MM THK)	
M	40	2	**8T-4133**	4	NUT (M10X1.50 THD)	
M	41	2	**8T-4186**	2	BOLT (M10X1.50X40MM)	
M	42	1	**8T-4195**	8	BOLT (M10X1.50X30MM)	
M	43	2	**8T-4196**	2	BOLT (M10X1.50X35MM)	
	44	2	**8T-5361**	2	WASHER (5MM THK)	
	45	2	**8T-5429**	1	ELBOW-90 DEGREE	
M	46	2	**8T-6466**	6	BOLT (M10X1.50X60MM)	
I	47	2	**8X-8975**	1	HOSE AS	

I-SEE HOSE FABRICATION GUIDE
M-METRIC PART
Y-SEPARATE ILLUSTRATION

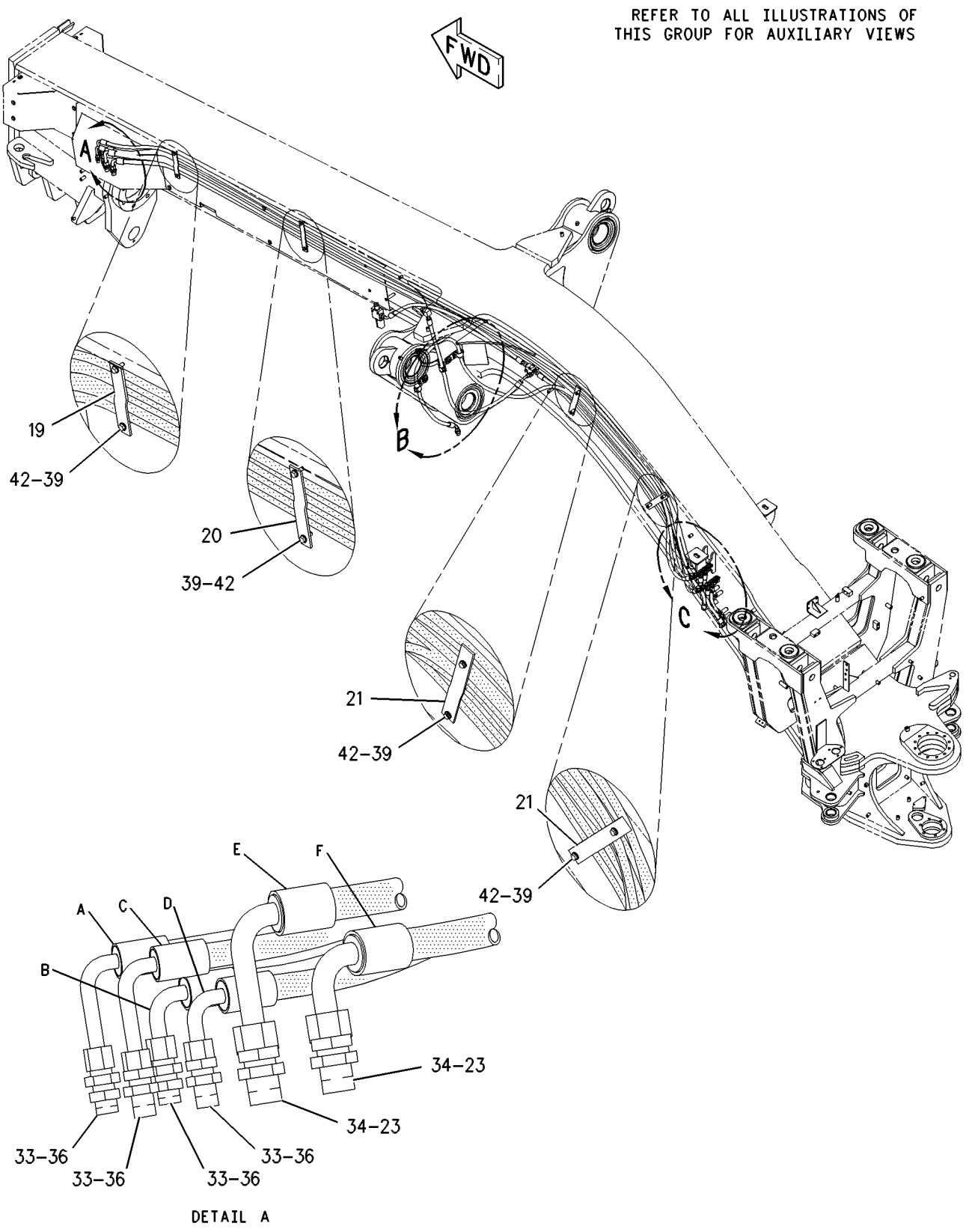

GRAPHIC #1 g00344894

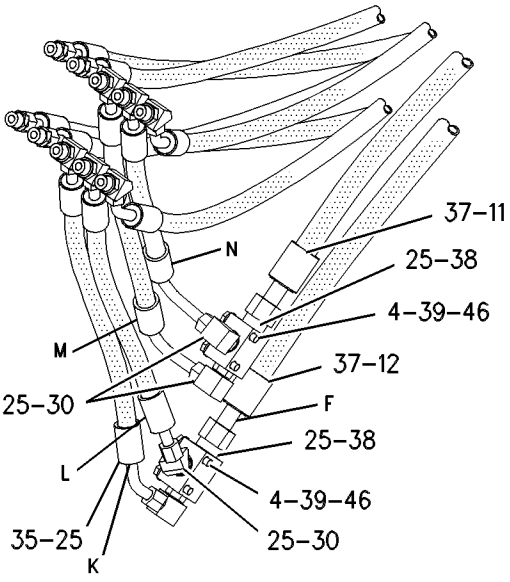

VIEW D-D

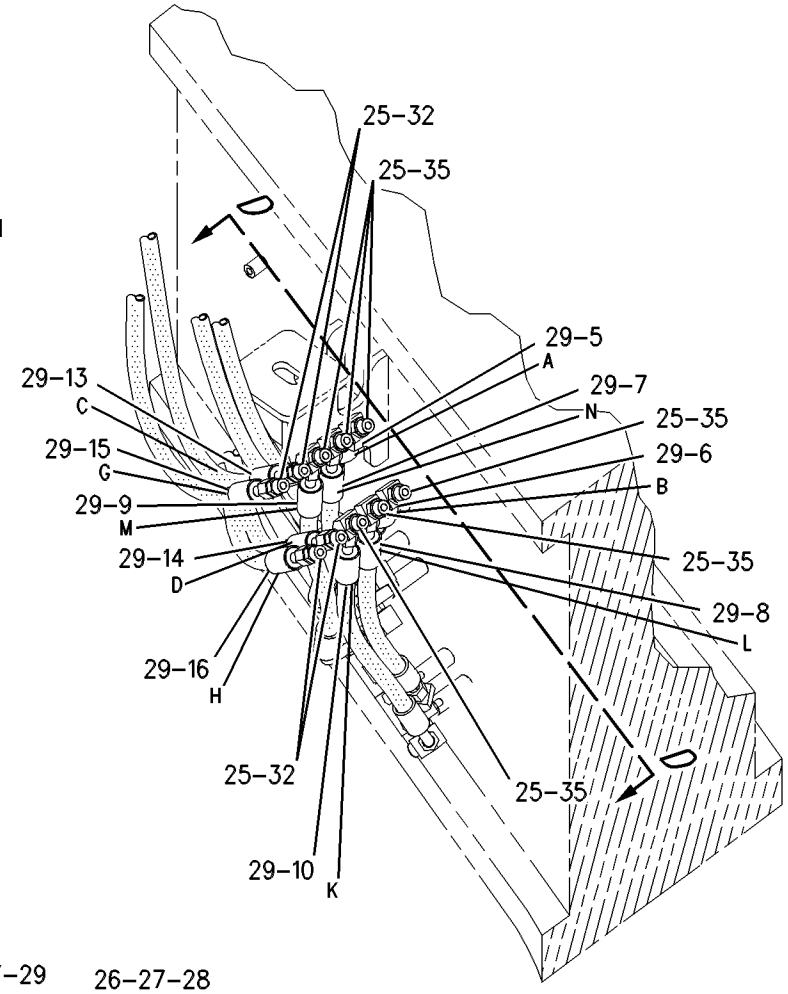

DETAIL C

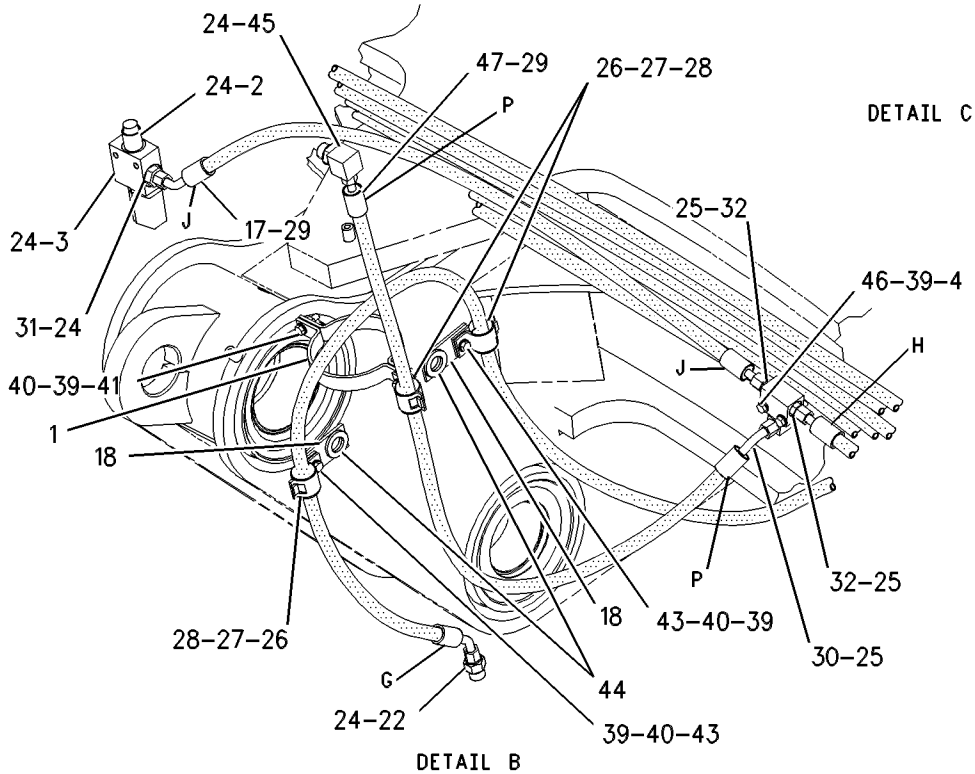

DETAIL B

GRAPHIC #2

g00351872

MEMORANDA

HYDRAULIC SYSTEM

8X-9018 LINES GP-HYDRAULIC

S/N: 7KK95-UP
5 CIRCUITS, LH
PART OF 8X-8404 HYDRAULIC AR

SMCS-5057 **i01497430**

NOTE	REF NO	GRAPHIC REF	PART NUMBER	QTY	PART NAME 1 2 3 4 5 6 (PRODUCT LEVEL)	SEE PAGE
	1	2	**1W-6702**	2	CLAMP	
C	2	2	**6V-1722**	1	ADAPTER-O-RING	
C	3	2	**8T-1686**	1	ELBOW	
	4	2	**9D-7198**	3	JUNCTION BLOCK	
I	5	2	**124-6403**	1	HOSE AS	
I	6	2	**124-6404**	1	HOSE AS	
I	7	2	**124-6405**	1	HOSE AS	
I	8	2	**124-6406**	1	HOSE AS	
I	9	2	**124-6407**	1	HOSE AS	
I	10	2	**124-6408**	1	HOSE AS	
I	11	2	**124-6409**	1	HOSE AS	
I	12	2	**124-6410**	1	HOSE AS	
I	13	2	**124-6411**	1	HOSE AS	
I	14	2	**124-6412**	1	HOSE AS	
I	15	2	**124-6413**	1	HOSE AS	
I	16	2	**124-6414**	1	HOSE AS	
I	17	2	**124-6415**	1	HOSE AS	
	18	2	**124-6417**	2	PLATE	
	19	1	**124-6418**	1	PLATE	
	20	1	**124-6419**	1	CLAMP	
	21	1	**124-6420**	2	CLAMP	
Y	22	2	**141-1811**	1	VALVE GP-CHECK (BLADE LIFT)	704
	23	1	**2P-1293**	2	LOCKNUT-BULKHEAD (1 3/16-12 THD)	
C	24	2	**3D-2824**	3	SEAL-O-RING	
C	25	2	**3K-0360**	20	SEAL-O-RING	
	26	2	**5P-7464**	3	CLIP (SLOT)	
	27	2	**5P-7465**	3	CLIP (TAB)	
	28	2	**6V-1249**	3	GROMMET	
	29	2	**6V-8398**	24	SEAL-O-RING	
	30	2	**6V-8625**	4	ELBOW	
	32	2	**6V-8639**	6	CONNECTOR	
	33	1	**6V-8995**	4	UNION-BULKHEAD	
	34	1	**6V-8997**	2	UNION	
	35	2	**6V-9002**	7	ELBOW	
	36	1	**6V-9169**	4	NUT-BULKHEAD (13/16-16 THD)	
	37	2	**6V-9746**	4	SEAL-O-RING	
	38	2	**6V-9874**	2	CONNECTOR-SEAL	
	39	1,2	**8T-4121**	22	WASHER-HARD (11X21X2.5MM THK)	
M	40	2	**8T-4133**	4	NUT (M10X1.5 THD)	
M	41	2	**8T-4186**	2	BOLT (M10X1.5X40MM)	
M	42	1	**8T-4195**	8	BOLT (M10X1.5X30MM)	
M	43	2	**8T-4196**	2	BOLT (M10X1.5X35MM)	
	44	2	**8T-5361**	2	WASHER-HARD (28X49X5MM THK)	
	45	2	**8T-5429**	1	ELBOW	
M	46	2	**8T-6466**	6	BOLT (M10X1.50X60MM)	
I	47	2	**8X-8975**	1	HOSE AS	

C-CHANGE FROM PREVIOUS TYPE
I-SEE HOSE FABRICATION GUIDE
M-METRIC PART
Y-SEPARATE ILLUSTRATION

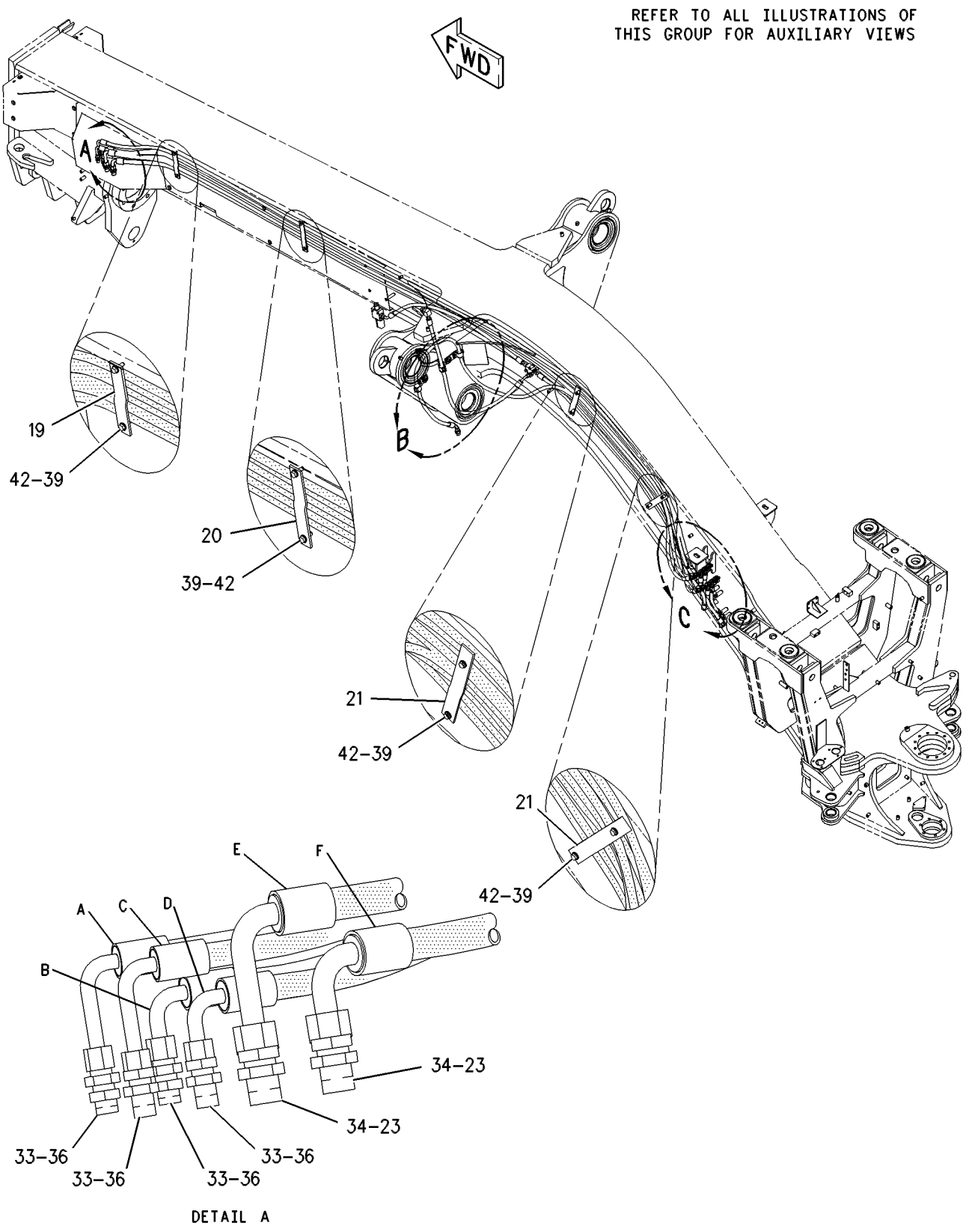

GRAPHIC #1 g00344894

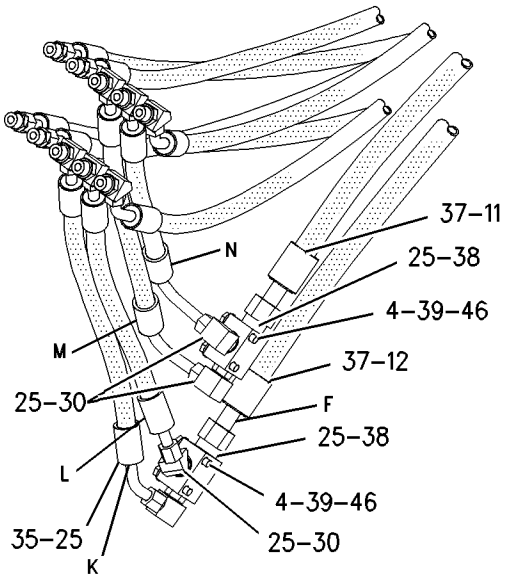

VIEW D-D

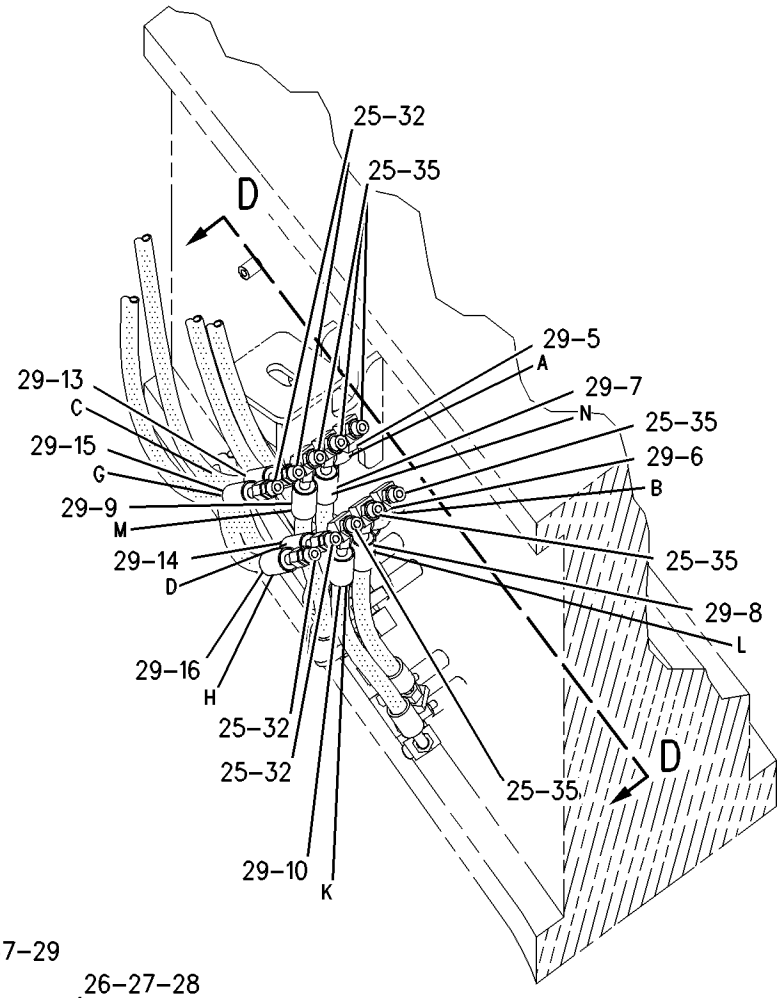

VIEW OF AREA C

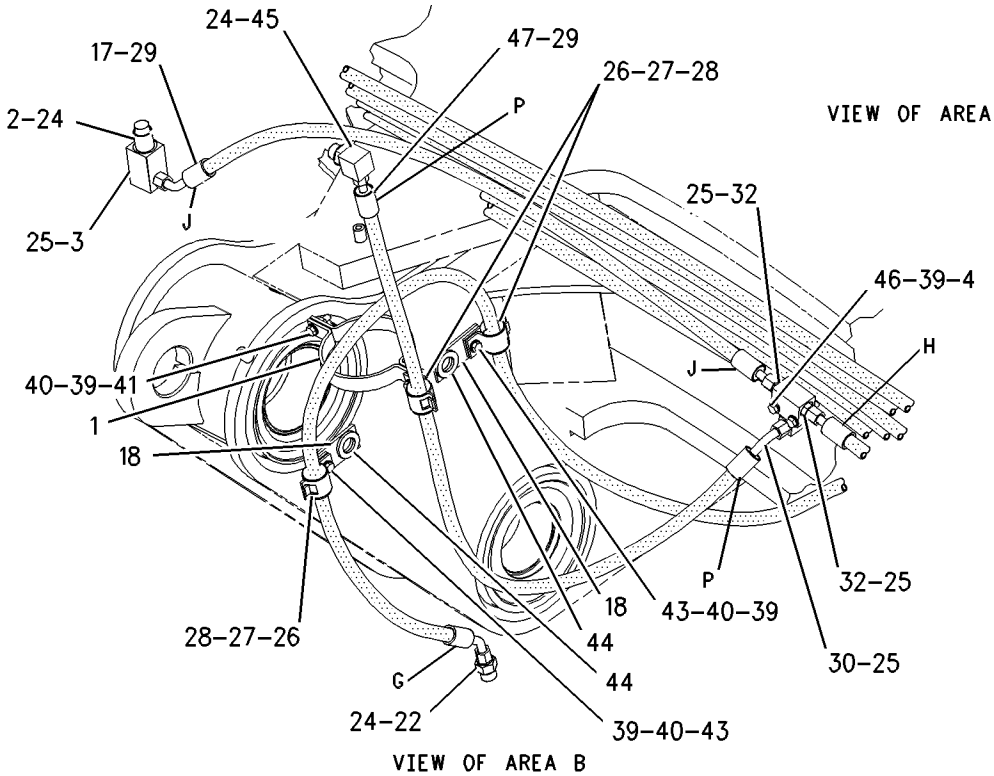

VIEW OF AREA B

GRAPHIC #2

g00778182

MEMORANDA

HYDRAULIC SYSTEM

8X-9019 LINES GP-HYDRAULIC

S/N: 7KK1-29
4 CIRCUITS, RH
PART OF 8X-8404 HYDRAULIC AR

SMCS-5057 **i00111530**

NOTE	REF NO	GRAPHIC REF	PART NUMBER	QTY	PART NAME 1 2 3 4 5 6 (PRODUCT LEVEL)	SEE PAGE
	1	1	**1W-6702**	4	CLAMP	
	2	1	**5D-2645**	6	CLAMP	
	3	1	**5P-9810**	1	UNION	
	4	1	**6Y-9542**	4	CLAMP	
Y	5	1	**7T-6517**	1	VALVE & MTG GP-SOLENOID	696
I	6	1	**8X-8975**	1	HOSE AS	
	7	1	**9D-7198**	5	JUNCTION BLOCK	
I	8	1	**124-6361**	2	HOSE AS	
I	9	1	**124-6362**	1	HOSE AS	
I	10	1	**124-6363**	1	HOSE AS	
	11	1	**124-6374**	2	PLATE	
I	12	1	**124-6378**	1	HOSE AS	
I	13	1	**124-6379**	1	HOSE AS	
I	14	1	**124-6385**	1	HOSE AS	
I	15	1	**124-6386**	1	HOSE AS	
I	16	1	**124-6387**	1	HOSE AS	
I	17	1	**124-6388**	1	HOSE AS	
I	18	1	**124-6413**	1	HOSE AS	
I	19	1	**124-6414**	1	HOSE AS	
I	20	1	**124-6415**	1	HOSE AS	
	21	1	**124-6417**	4	PLATE	
I	22	1	**124-6421**	1	HOSE AS	
I	23	1	**124-6422**	1	HOSE AS	
I	24	1	**124-6423**	1	HOSE AS	
I	25	1	**124-6424**	1	HOSE AS	
	26	1	**3D-2824**	15	SEAL-O-RING (23.47MM ID)	
	27	1	**3G-8047**	8	GROMMET	
	28	1	**3G-8054**	8	CLIP (TAB)	
	29	1	**3G-8057**	8	CLIP (SLOT)	
	30	1	**3K-0360**	23	SEAL-O-RING (16.36MM ID)	
	31	1	**5P-7464**	8	CLIP (SLOT)	
	32	1	**5P-7465**	8	CLIP (TAB)	
	33	1	**6V-1249**	8	GROMMET	
	34	1	**6V-8398**	36	SEAL-O-RING (12.47MM ID)	
	35	1	**6V-8625**	1	ELBOW-90 DEGREE (3/4-16 THD)	
	36	1	**6V-8633**	8	CONNECTOR	
	37	1	**6V-8639**	19	CONNECTOR-SEAL	
	38	1	**6V-9002**	2	ELBOW-45 DEGREE (3/4-16 THD)	
	39	1	**8T-0077**	1	CONNECTOR	
	40	1	**8T-4121**	66	WASHER (2.5MM THK)	
M	41	1	**8T-4133**	22	NUT (M10X1.50 THD)	
M	42	1	**8T-4136**	17	BOLT (M10X1.50X25MM)	
M	43	1	**8T-4137**	9	BOLT (M10X1.50X20MM)	
M	44	1	**8T-4186**	8	BOLT (M10X1.50X40MM)	
M	45	1	**8T-4196**	4	BOLT (M10X1.50X35MM)	
M	46	1	**8T-4198**	4	BOLT (M10X1.50X100MM)	
	47	1	**8T-5361**	4	WASHER (5MM THK)	
	48	1	**8T-5429**	5	ELBOW-90 DEGREE	
M	49	1	**8T-6466**	2	BOLT (M10X1.50X60MM)	

I-SEE HOSE FABRICATION GUIDE
M-METRIC PART
Y-SEPARATE ILLUSTRATION

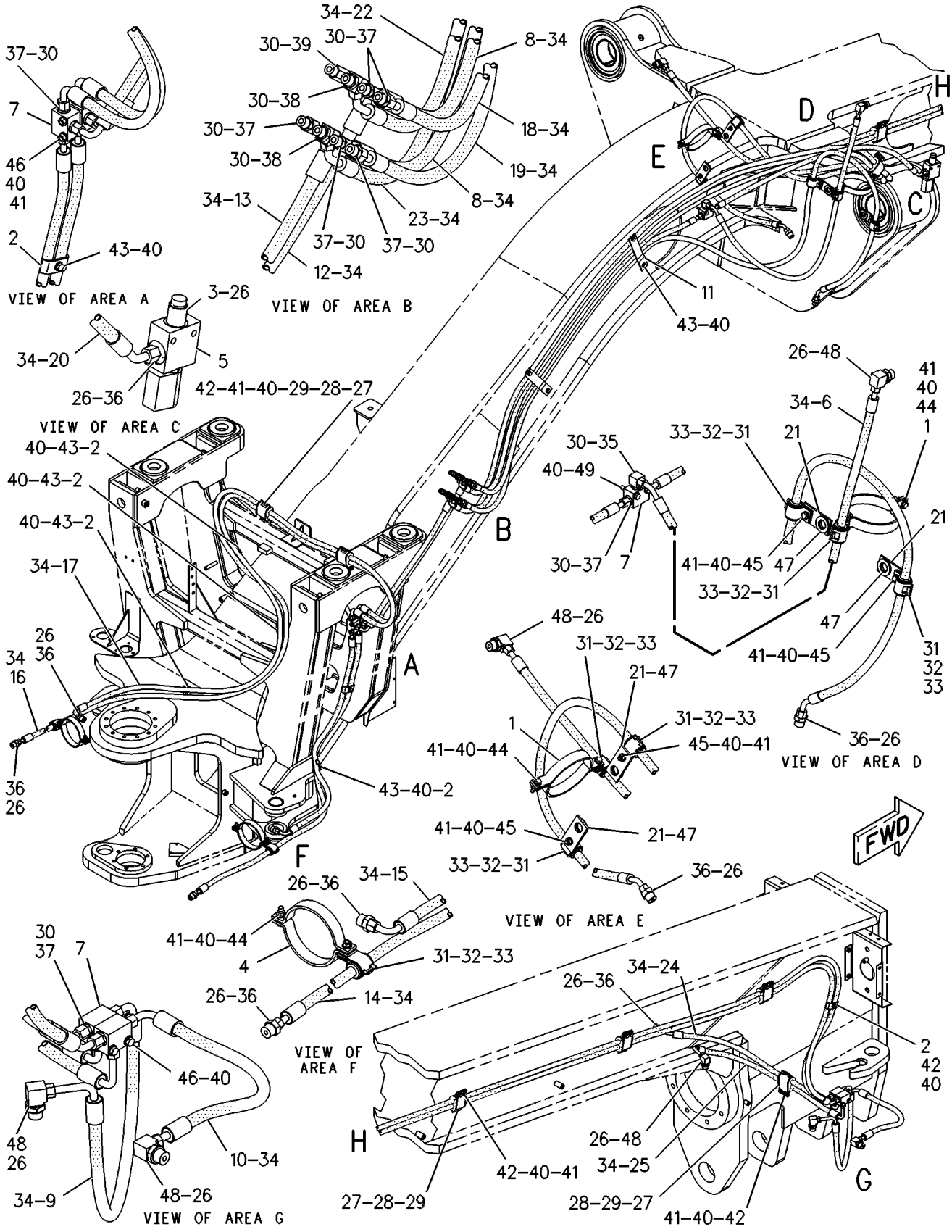

GRAPHIC #1 g00086944

HYDRAULIC SYSTEM

8X-9019 LINES GP-HYDRAULIC

S/N: 7KK30-94
4 CIRCUITS, RH
PART OF 8X-8404 HYDRAULIC AR

SMCS-5057 **i01498856**

NOTE	REF NO	GRAPHIC REF	PART NUMBER	QTY	PART NAME 1 2 3 4 5 6 (PRODUCT LEVEL)	SEE PAGE
	1	3	**1W-6702**	4	CLAMP	
	2	2	**5D-2645**	1	CLAMP	
	3	2	**5P-9810**	1	UNION	
Y	4	2	**7T-6517**	1	VALVE & MTG GP-SOLENOID	696
I	5	3	**8X-8975**	1	HOSE AS	
	6	2,3	**9D-7198**	5	JUNCTION BLOCK	
I	7	2	**124-6361**	2	HOSE AS	
I	8	3	**124-6362**	1	HOSE AS	
I	9	3	**124-6363**	1	HOSE AS	
	10	1,3	**124-6374**	2	PLATE	
I	11	2	**124-6378**	1	HOSE AS	
I	12	2	**124-6379**	1	HOSE AS	
I	13	2	**124-6385**	1	HOSE AS	
I	14	2	**124-6387**	1	HOSE AS	
I	15	2	**124-6413**	1	HOSE AS	
I	16	2	**124-6414**	1	HOSE AS	
I	17	2	**124-6415**	1	HOSE AS	
	18	3	**124-6417**	3	PLATE	
I	19	2	**124-6421**	1	HOSE AS	
I	20	3	**124-6423**	1	HOSE AS	
I	21	3	**124-6424**	1	HOSE AS	
CI	22	2	**135-2832**	1	HOSE AS	
CI	23	2	**136-9311**	1	HOSE AS	
CI	24	2	**136-9312**	1	HOSE AS	
CY	25	3	**141-1811**	2	VALVE GP-CHECK (HYDRAULIC OIL)	704
C	26	2	**144-1589**	4	CLAMP	
	27	2,3	**3D-2824**	15	SEAL-O-RING	
C	28	1,2,3	**3G-8047**	14	GROMMET	
C	29	1,2,3	**3G-8054**	14	CLIP (TAB)	
C	30	1,2,3	**3G-8057**	14	CLIP (SLOT)	
	31	2,3	**3K-0360**	23	SEAL-O-RING	
	32	2,3	**5P-7464**	8	CLIP (SLOT)	
	33	2,3	**5P-7465**	8	CLIP (TAB)	
	34	2,3	**6V-1249**	8	GROMMET	
	35	2,3	**6V-8398**	36	SEAL-O-RING	
	36	3	**6V-8625**	1	ELBOW	
C	37	2,3	**6V-8633**	4	CONNECTOR	
	38	2,3	**6V-8639**	19	CONNECTOR	
	39	2	**6V-9002**	2	ELBOW	
	41	2	**8T-0077**	1	CONNECTOR	
C	42	1,2,3	**8T-4121**	77	WASHER-HARD (11X21X2.5MM THK)	
CM	43	1,2,3	**8T-4133**	27	NUT (M10X1.5 THD)	
CM	44	1,2,3	**8T-4136**	28	BOLT (M10X1.5X25MM)	
CM	45	1,2,3	**8T-4137**	5	BOLT (M10X1.5X20MM)	
CM	46	2,3	**8T-4186**	7	BOLT (M10X1.5X40MM)	
CM	47	3	**8T-4196**	3	BOLT (M10X1.5X35MM)	
M	48	2,3	**8T-4198**	4	BOLT (M10X1.5X100MM)	
	49	3	**8T-5361**	3	WASHER-HARD (28X49X5MM THK)	
	50	3	**8T-5429**	7	ELBOW	
CM	51	3	**8T-6466**	3	BOLT (M10X1.50X60MM)	

C-CHANGE FROM PREVIOUS TYPE
I-SEE HOSE FABRICATION GUIDE
M-METRIC PART
Y-SEPARATE ILLUSTRATION

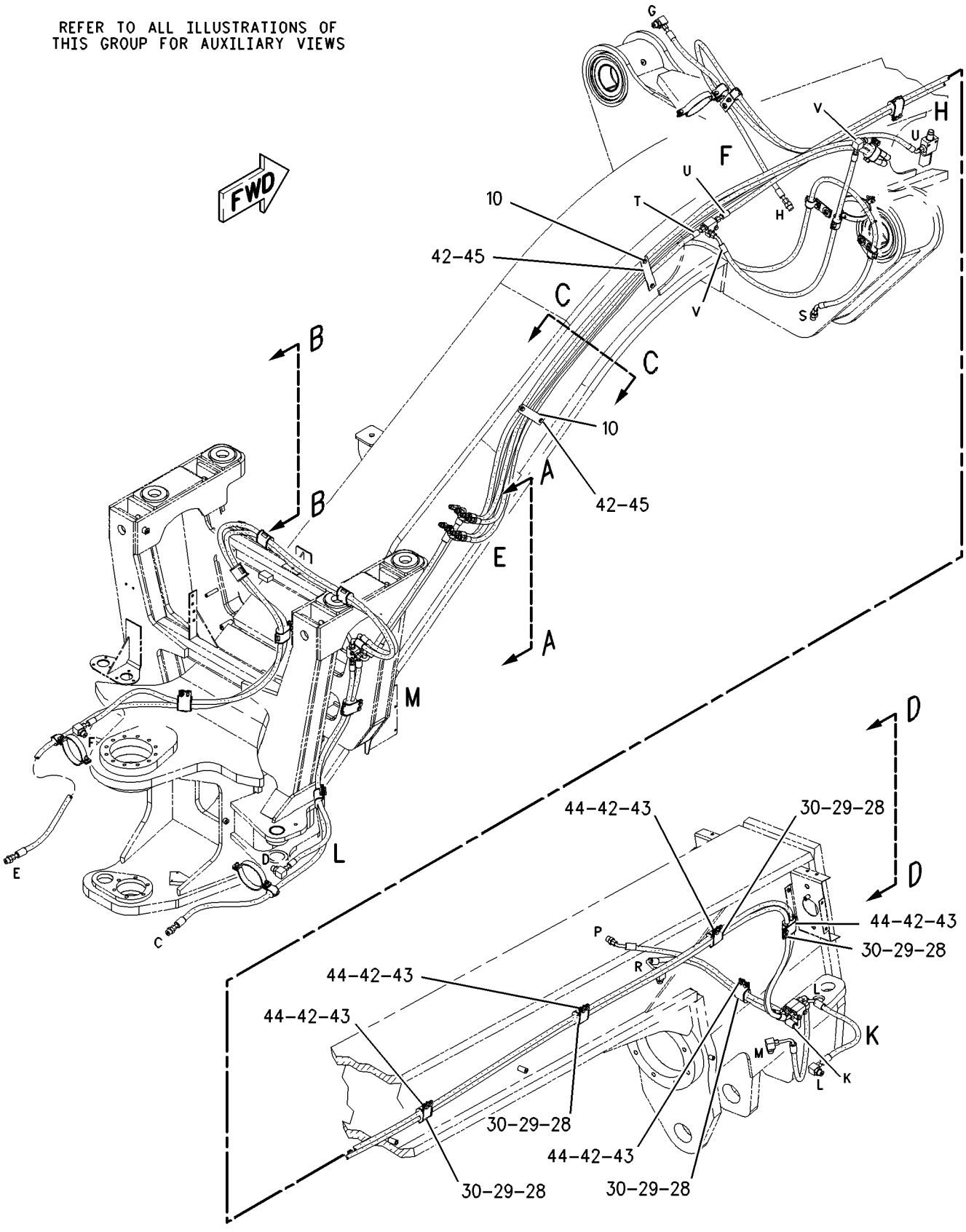

GRAPHIC #1 g00777789

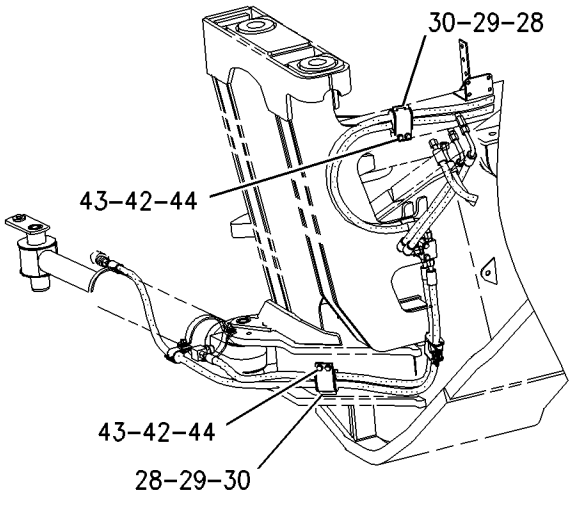

VIEW A-A

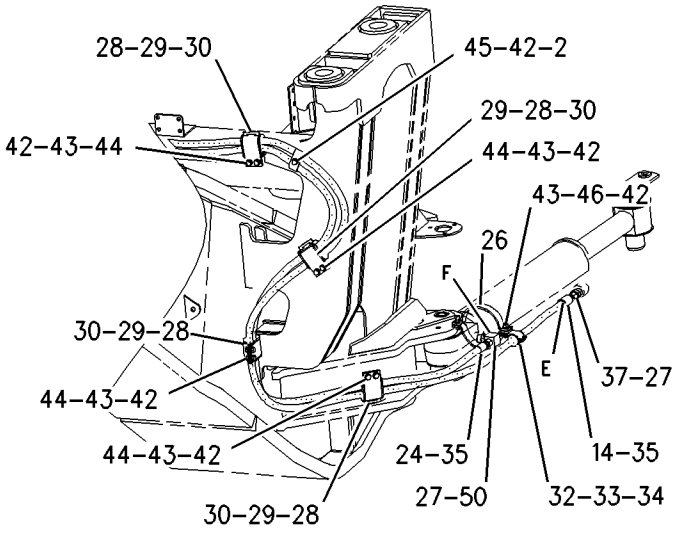

VIEW B-B

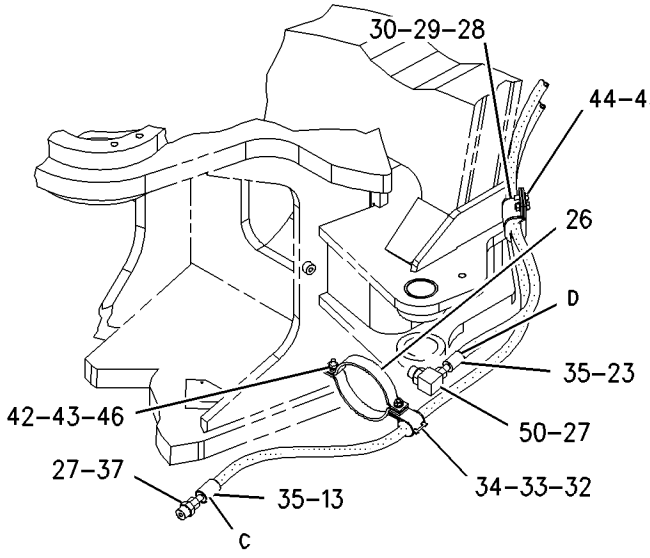

VIEW OF AREA L

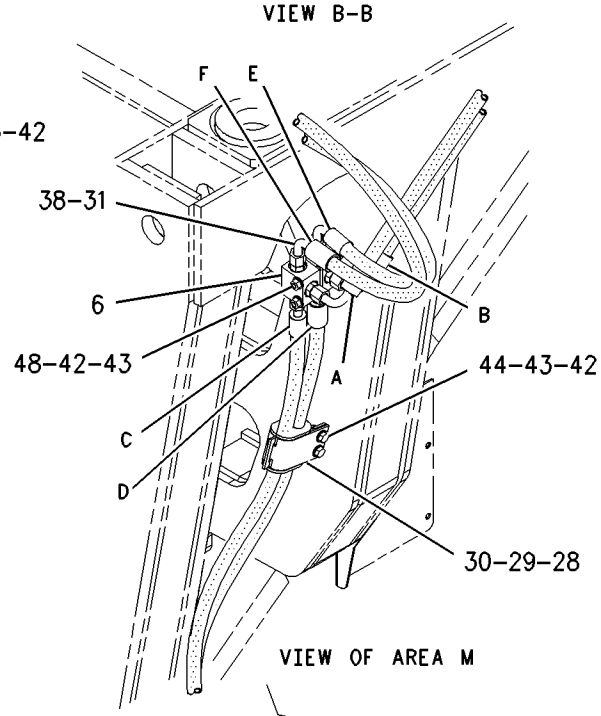

VIEW OF AREA M

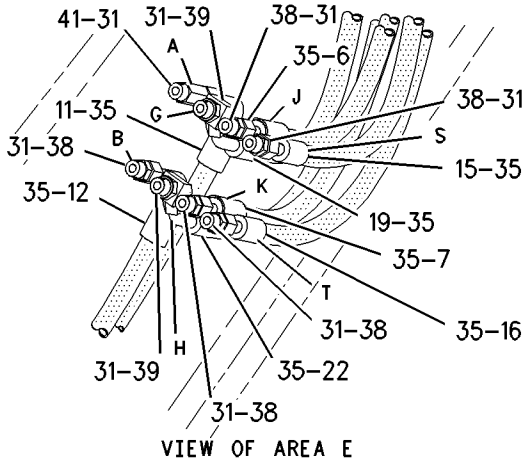

VIEW OF AREA E

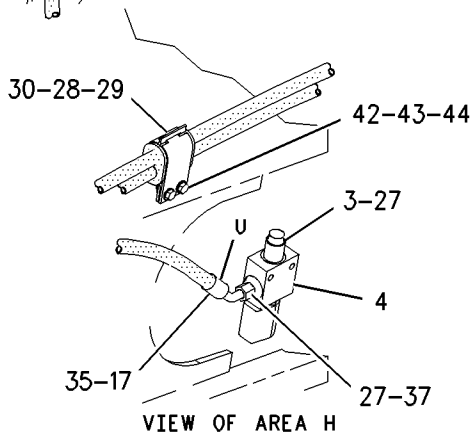

VIEW OF AREA H

GRAPHIC #2

g00777802

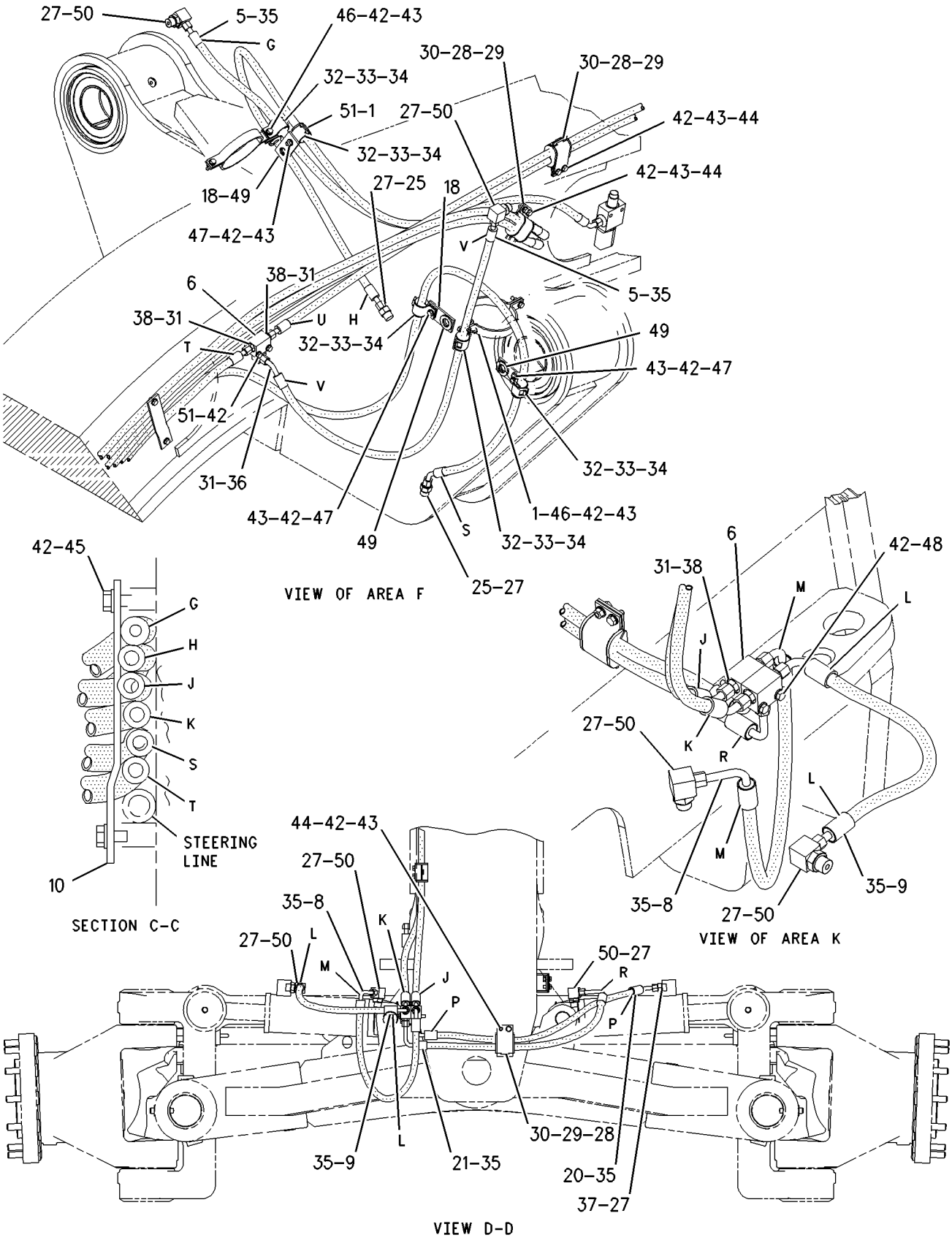

GRAPHIC #3 g00777807

HYDRAULIC SYSTEM

8X-9019 LINES GP-HYDRAULIC

S/N: 7KK95-UP
4 CIRCUITS, RH
PART OF 8X-8404 HYDRAULIC AR

SMCS-5057 **i01497445**

NOTE	REF NO	GRAPHIC REF	PART NUMBER	QTY	PART NAME 1 2 3 4 5 6 (PRODUCT LEVEL)	SEE PAGE
	1	3	**1W-6702**	4	CLAMP	
	2	2	**5D-2645**	1	CLAMP	
C	3	2	**8T-1686**	1	ELBOW	
C	4	2	**6V-1722**	1	ADAPTER-O-RING	
I	5	3	**8X-8975**	1	HOSE AS	
	6	2,3	**9D-7198**	5	JUNCTION BLOCK	
I	7	2	**124-6361**	2	HOSE AS	
I	8	3	**124-6362**	1	HOSE AS	
I	9	3	**124-6363**	1	HOSE AS	
	10	1,3	**124-6374**	2	PLATE	
I	11	2	**124-6378**	1	HOSE AS	
I	12	2	**124-6379**	1	HOSE AS	
I	13	2	**124-6385**	1	HOSE AS	
I	14	2	**124-6387**	1	HOSE AS	
I	15	2	**124-6413**	1	HOSE AS	
I	16	2	**124-6414**	1	HOSE AS	
I	17	2	**124-6415**	1	HOSE AS	
	18	3	**124-6417**	3	PLATE	
I	19	2	**124-6421**	1	HOSE AS	
I	20	3	**124-6423**	1	HOSE AS	
I	21	3	**124-6424**	1	HOSE AS	
I	22	2	**135-2832**	1	HOSE AS	
I	23	2	**136-9311**	1	HOSE AS	
I	24	2	**136-9312**	1	HOSE AS	
Y	25	3	**141-1811**	2	VALVE GP-CHECK (HYDRAULIC OIL)	704
	26	2	**144-1589**	4	CLAMP	
C	27	2,3	**3D-2824**	13	SEAL-O-RING	
	28	1,2,3	**3G-8047**	14	GROMMET	
	29	1,2,3	**3G-8054**	14	CLIP (TAB)	
	30	1,2,3	**3G-8057**	14	CLIP (SLOT)	
C	31	2,3	**3K-0360**	24	SEAL-O-RING	
	32	2,3	**5P-7464**	8	CLIP (SLOT)	
	33	2,3	**5P-7465**	8	CLIP (TAB)	
	34	2,3	**6V-1249**	8	GROMMET	
	35	2,3	**6V-8398**	36	SEAL-O-RING	
	36	3	**6V-8625**	1	ELBOW	
C	37	2,3	**6V-8633**	3	CONNECTOR	
	38	2,3	**6V-8639**	19	CONNECTOR	
	39	2	**6V-9002**	2	ELBOW	
	41	2	**8T-0077**	1	CONNECTOR	
	42	1,2,3	**8T-4121**	77	WASHER-HARD (11X21X2.5MM THK)	
M	43	1,2,3	**8T-4133**	27	NUT (M10X1.5 THD)	
M	44	1,2,3	**8T-4136**	28	BOLT (M10X1.5X25MM)	
M	45	1,2,3	**8T-4137**	5	BOLT (M10X1.5X20MM)	
M	46	2,3	**8T-4186**	7	BOLT (M10X1.5X40MM)	
M	47	3	**8T-4196**	3	BOLT (M10X1.5X35MM)	
M	48	2,3	**8T-4198**	4	BOLT (M10X1.5X100MM)	
	49	3	**8T-5361**	3	WASHER-HARD (28X49X5MM THK)	
	50	3	**8T-5429**	7	ELBOW	
CM	51	3	**8T-6466**	3	BOLT (M10X1.50X60MM)	

C-CHANGE FROM PREVIOUS TYPE
I-SEE HOSE FABRICATION GUIDE
M-METRIC PART
Y-SEPARATE ILLUSTRATION

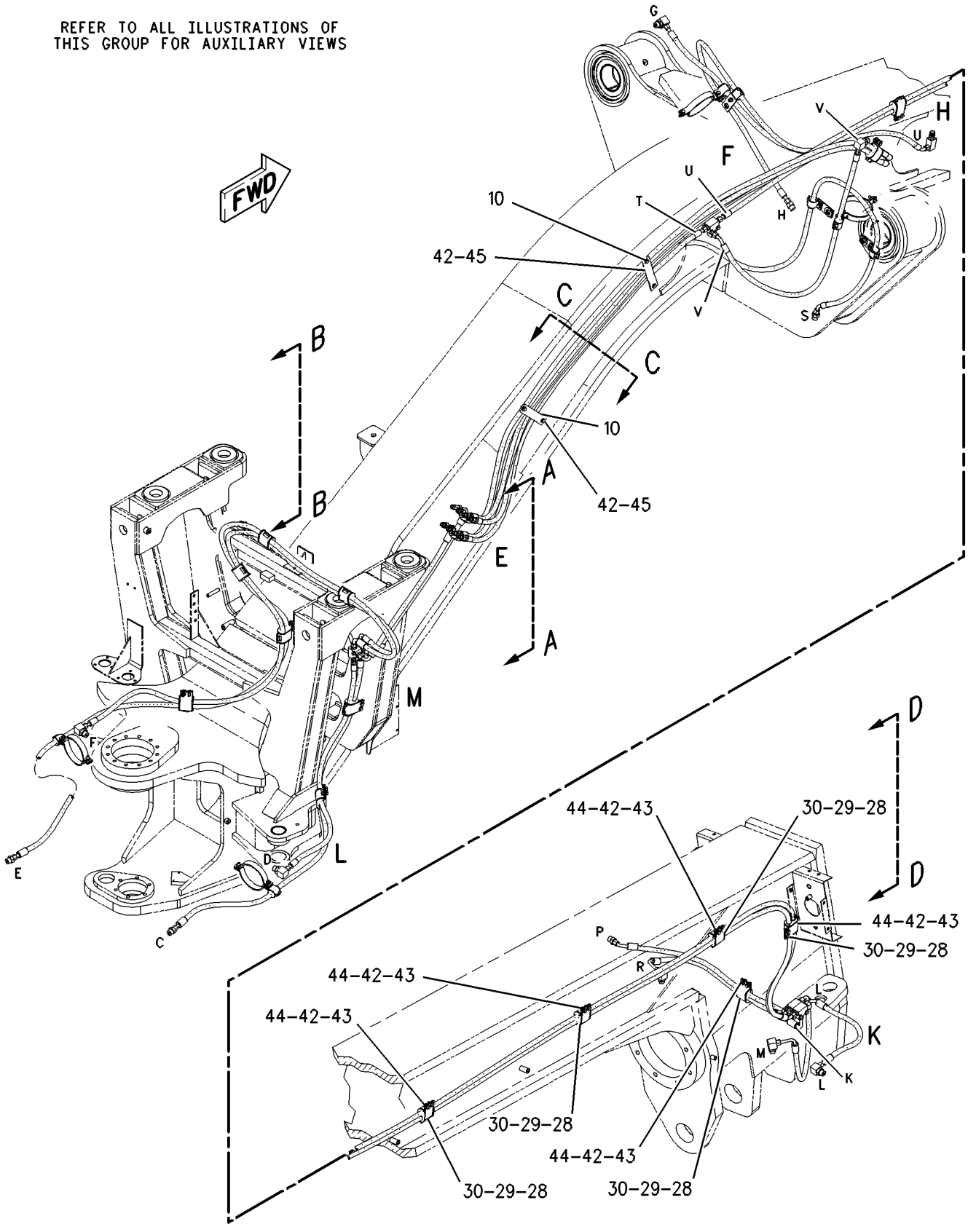

GRAPHIC #1 g00779986

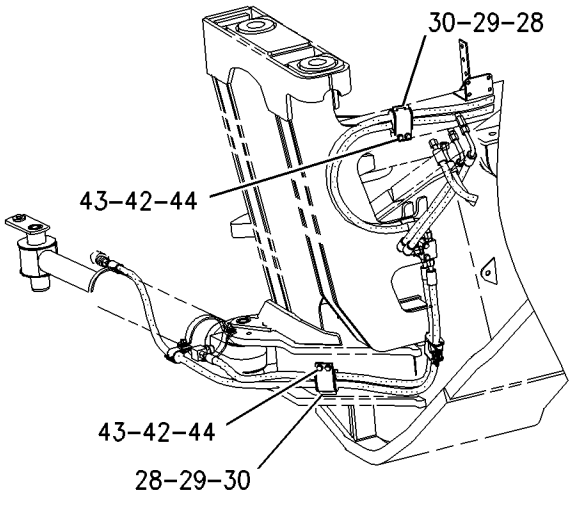

VIEW A-A

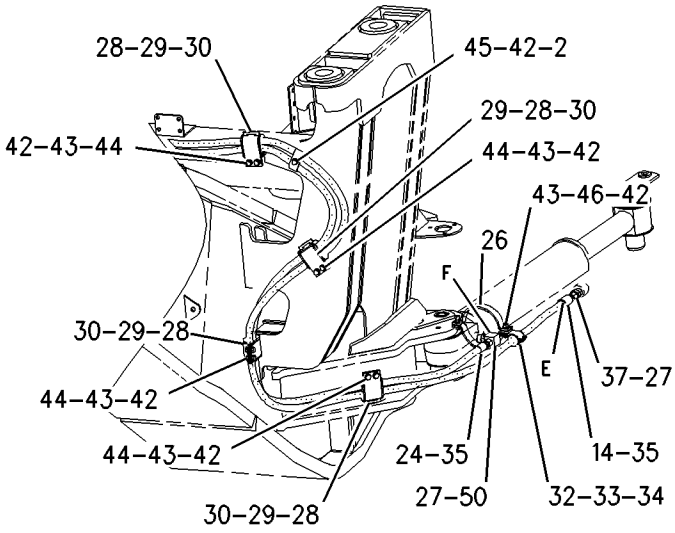

VIEW B-B

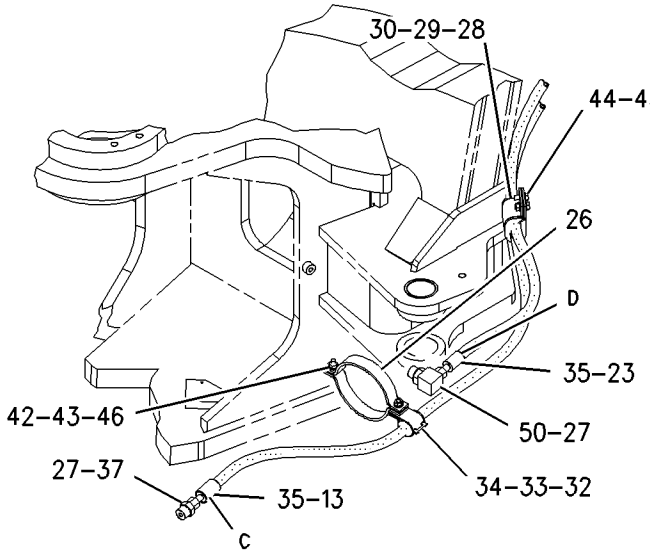

VIEW OF AREA L

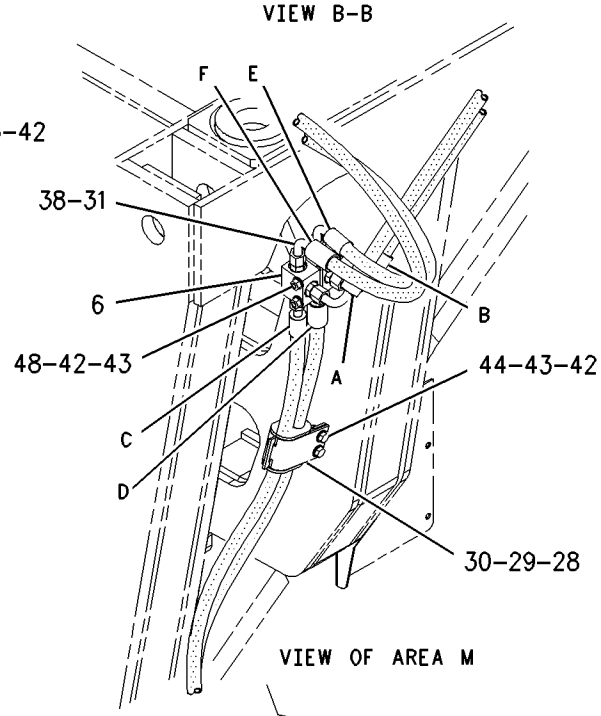

VIEW OF AREA M

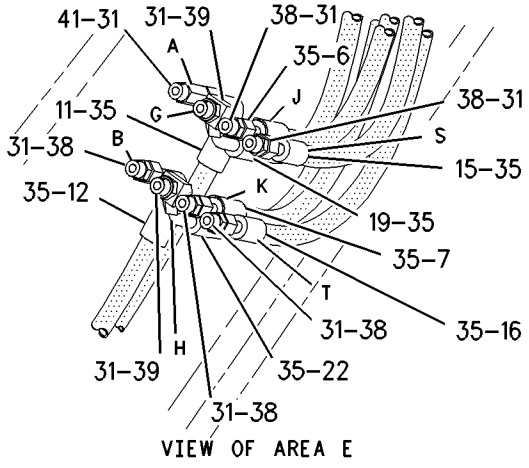

VIEW OF AREA E

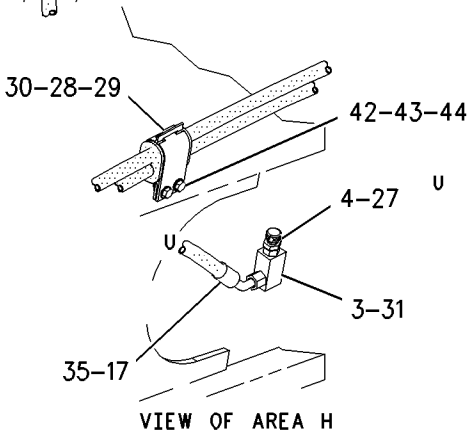

VIEW OF AREA H

GRAPHIC #2

g00779987

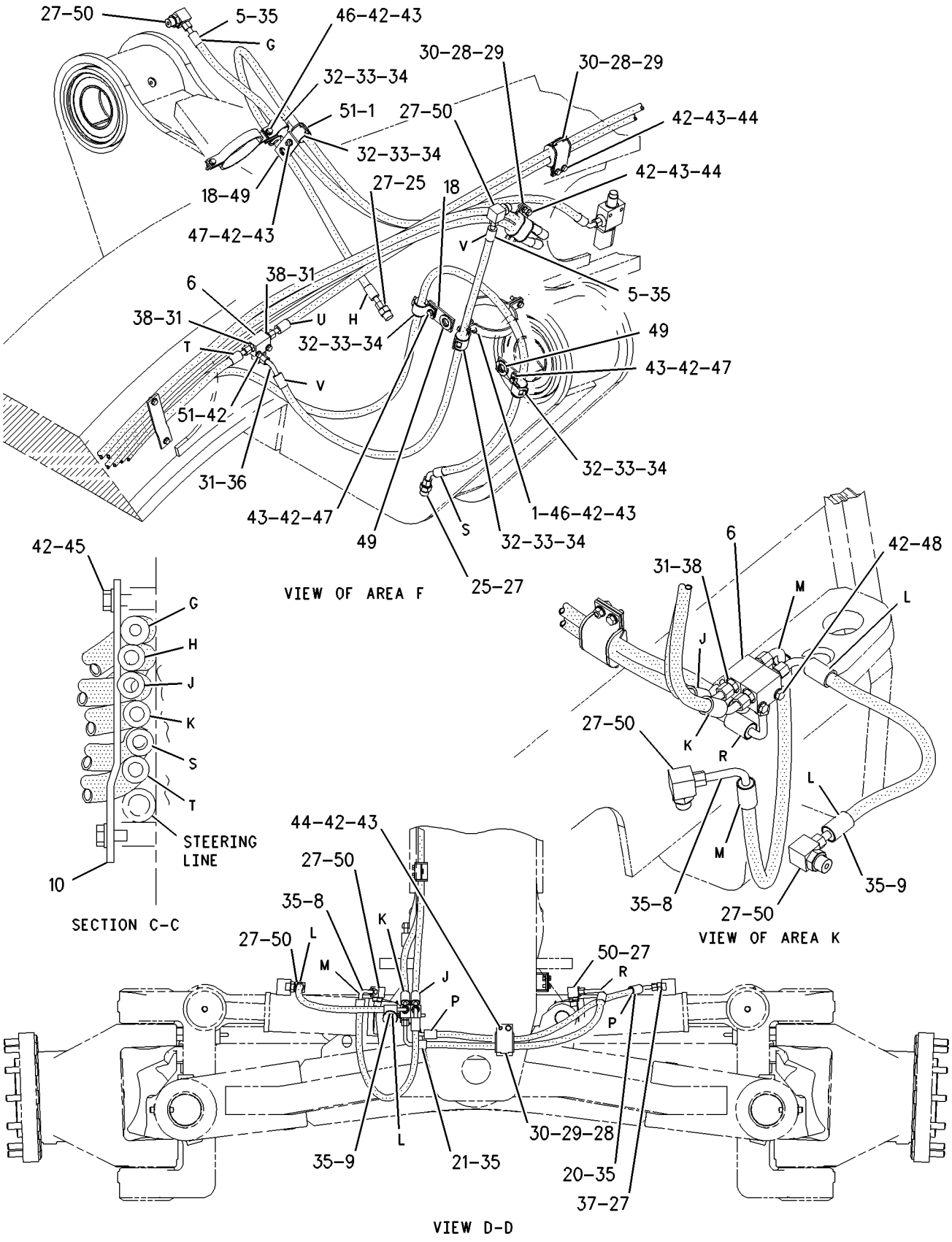

GRAPHIC #3 g00777807

HYDRAULIC SYSTEM

8X-9027 LINES GP-PUMP

S/N: 7KK1-UP

PART OF 8X-8404 HYDRAULIC AR

SMCS-5057 **i01466790**

NOTE	REF NO	GRAPHIC REF	PART NUMBER	QTY	PART NAME 1 2 3 4 5 6 (PRODUCT LEVEL)	SEE PAGE
	1	2	**127-6317**	1	BRACKET AS	
	2	3	**5P-9617**	1	ADAPTER (9/16-18 THRD)	
	3	3	**6C-7044**	1	BLOCK	
	4	3	**8C-3446**	1	VALVE AS-FLUID SAMPLING (STEERING OIL)	
	5	3	**8C-3451**	1	CAP-DUST	
	6	2	**9T-3096**	1	VALVE GP-CHECK (ELECTRIC DRIVE)	
	7	1	**125-2027**	1	TUBE AS	
	8	3	**125-4626**	1	BLOCK-MANIFOLD	
	9	2	**127-5709**	1	ADAPTER	
	10	1,2	**127-6286**	2	CLAMP	
	11	1,2	**127-6288**	2	CLAMP	
	12	1,2	**127-6289**	2	BLOCK	
	13	1,2	**127-6290**	2	CLAMP	
	14	1,2	**127-6291**	2	CLAMP	
	15	1,2	**127-6292**	2	CLAMP	
	16	1,2	**127-6293**	2	CLAMP	
	17	1,2	**127-6294**	2	CLAMP	
	18	1,2	**127-6295**	2	CLAMP	
	19	1,2	**127-6296**	2	CLAMP	
	20	1,2	**127-6297**	2	CLAMP	
	21	1,2	**127-6298**	2	CLAMP	
	22	1,2	**127-6299**	4	PLATE	
	23	1,2	**127-7156**	4	PLATE	
	24	1	**127-8400**	2	BRACKET AS	
I	25	1	**127-9826**	1	HOSE AS	
I	26	2	**127-9829**	1	HOSE AS	
I	27	2	**128-0478**	1	HOSE AS	
I	28	3	**128-0835**	1	HOSE AS	
I	29	3	**128-1698**	1	HOSE AS	
	30	3	**128-2407**	1	BRACKET	
I	31	2	**128-3733**	1	HOSE AS	
	32	3	**128-5882**	1	BLOCK	
	33	1	**128-7332**	1	TUBE AS	
	34	1	**128-7333**	1	TUBE AS	
	35	1	**128-7334**	1	TUBE AS	
I	36	1	**128-8420**	1	HOSE AS	
	37	3	**128-8424**	1	PLATE	
	38	1	**128-8813**	2	BRACKET AS	
	39	2	**129-4139**	2	BRACKET AS	
I	40	1	**140-2980**	1	HOSE AS	
I	41	1	**140-2981**	1	HOSE AS	
	42	3	**143-3288**	1	VALVE GP-CHECK (STEERING)	
	43	1	**175-5296**	1	HOSE-HUMP	
	44	3,4	**092-7385**	5	CLIP	
Y	45	2	**117-4079**	1	VALVE GP-COMBINATION (STEERING)	706
	46	3,4	**119-5916**	5	CLIP	
J	47	2	**124-7589**	1	ACCUMULATOR AS (STEERING)	
I	48	3	**125-6992**	1	HOSE AS	
I	49	1	**127-5807**	1	HOSE AS	
I	50	2	**128-0477**	1	HOSE AS	
I	51	2	**128-0478**	1	HOSE AS	
I	52	2	**128-0479**	1	HOSE AS	
I	53	2	**128-0480**	1	HOSE AS	
I	54	2	**128-0833**	1	HOSE AS	
I	55	2	**128-0834**	1	HOSE AS	
I	56	2	**128-1645**	1	HOSE AS	

8X-9027 **LINES GP-PUMP** ***(contd.)*** **i01466790**

NOTE	REF NO	GRAPHIC REF	PART NUMBER	QTY	PART NAME 1 2 3 4 5 6 (PRODUCT LEVEL)	SEE PAGE
I	57	1	**128-5510**	1	HOSE AS	
I	58	1	**128-8419**	1	HOSE AS	
I	59	1	**129-5845**	1	HOSE AS	
I	60	2	**130-1260**	1	HOSE AS	
	61	3	**1P-3705**	1	SEAL-RECTANGULAR	
	62	3	**1P-4579**	4	FLANGE-HALF	
	63	4	**1S-0994**	1	CLIP	
	64	1	**2M-9780**	2	SEAL-O-RING	
	65	3	**2P-1293**	1	LOCKNUT-BULKHEAD (1 3/16-12 THD)	
E	66	1	**7X-7894**		HOSE (21CM)	
	67	1,2,3	**3D-2824**	19	SEAL-O-RING	
	68	2,3	**3J-1907**	9	SEAL-O-RING	
	69	2,3	**3J-7354**	4	SEAL-O-RING	
	70	4	**3V-0403**	1	BRACKET	
	71	3	**4J-0520**	2	SEAL-O-RING	
	72	2	**4J-0521**	1	SEAL-O-RING	
	73	1,2,3	**4J-0522**	7	SEAL-O-RING	
	74	1	**4J-0524**	2	SEAL-O-RING	
	75	1,2	**4J-5267**	2	SEAL-O-RING	
	76	4	**4W-3588**	3	BRACKET	
	77	1	**5K-9090**	2	SEAL-O-RING	
	78	4	**5P-7462**	3	CLIP (SLOT)	
	79	4	**5P-7463**	3	CLIP (TAB)	
	80	4	**5P-7466**	1	CLIP (SLOT)	
	81	4	**5P-7467**	1	CLIP (TAB)	
	82	1,3,4	**5P-7468**	6	CLIP (SLOT)	
	83	1,3,4	**5P-7469**	6	CLIP (TAB)	
	84	4	**5P-7470**	2	CLIP (SLOT)	
	85	4	**5P-7471**	2	CLIP (TAB)	
	86	4	**5P-8112**	1	GROMMET	
	87	4	**5P-8182**	2	GROMMET	
	88	1,3,4	**5P-8444**	6	GROMMET	
	89	2	**5P-9810**	1	UNION	
	90	1	**6J-2680**	2	SEAL-O-RING	
	91	2,3	**6V-0397**	12	FLANGE-HALF	
	92	4	**6V-0683**	3	GROMMET	
	93	3	**6V-0852**	2	CAP-DUST	
	94	3	**6V-3695**	2	PLATE-FACE	
	95	1,2,3	**6V-8397**	12	SEAL-O-RING	
	96	1	**6V-8629**	2	ELBOW-FACE SEAL	
	97	3	**6V-8635**	1	CONNECTOR	
	98	3	**6V-8637**	8	CONNECTOR-SEAL	
	99	2,3	**6V-8724**	3	ELBOW	
	100	3	**6V-8781**	1	TEE-FACE SEAL	
	101	3	**6V-8784**	1	TEE-FACE SEAL	
	102	3	**6V-8994**	1	UNION-BULKHEAD	
	103	3	**6V-8997**	1	UNION	
	104	2	**6V-9004**	1	ELBOW	
	105	2,3	**6V-9007**	5	ELBOW	
	106	3	**6V-9168**	2	NUT (11/16-16 THD)	
	107	2	**6V-9200**	1	ELBOW (90 DEGREE)	
	108	1,2	**6V-9746**	21	SEAL-O-RING	
	109	2	**6V-9872**	1	CONNECTOR	
	110	4	**7D-1553**	1	CLIP	
	111	4	**7G-3832**	1	GROMMET	
	112	4	**7G-3833**	1	CLIP (TAB)	
	113	4	**7G-3834**	1	CLIP (SLOT)	
	114	3	**7M-8485**	1	SEAL-O-RING	
	115	3	**7X-2459**	1	TEE-O-RING	

8X-9027 **LINES GP-PUMP** *(contd.)* **i01466790**

NOTE	REF NO	GRAPHIC REF	PART NUMBER	QTY	PART NAME 1 2 3 4 5 6 (PRODUCT LEVEL)	SEE PAGE
	116	4	**7X-7906**	2	CLIP	
	117	4	**7X-7907**	2	CLIP	
	118	3	**8C-3205**	4	FLANGE-HALF	
	119	3	**8C-3206**	4	FLANGE-HALF	
	120	1,2	**8D-7185**	16	WASHER (11.9X38.1X3MM THK)	
	121	1	**8H-7521**	1	SEAL-O-RING	
	122	3	**8T-0379**	1	TEE-BULKHEAD	
	123	2	**8T-2353**	1	ADAPTER-STRAIGHT THREAD	
	124	1,2,3,4	**8T-4121**	78	WASHER-HARD (11X21X2.5MM THK)	
M	125	2,3,4	**8T-4133**	10	NUT (M10X1.5 THD)	
M	126	1,2,3,4	**8T-4136**	38	BOLT (M10X1.5X25MM)	
M	127	1,2,3	**8T-4137**	22	BOLT (M10X1.5X20MM)	
M	128	2,3	**8T-4176**	8	BOLT (M12X1.75X90MM)	
M	129	2,3,4	**8T-4183**	32	BOLT (M12X1.75X40 MM)	
M	130	4	**8T-4186**	1	BOLT (M10X1.5X40MM)	
M	131	1,3,4	**8T-4192**	5	BOLT (M12X1.75X25MM)	
M	132	1	**8T-4193**	4	BOLT (M16X2X50MM)	
M	133	1,2,4	**8T-4194**	12	BOLT (M12X1.75X50MM)	
M	134	2,3	**8T-4196**	20	BOLT (M10X1.5X35MM)	
M	135	3	**8T-4198**	4	BOLT (M10X1.5X100MM)	
	136	1,2,3,4	**8T-4223**	64	WASHER-HARD (13.5X25.5X3MM THK)	
	137	1,4	**8T-4224**	5	WASHER-HARD (8.8X16X2MM THK)	
M	138	4	**8T-4648**	1	BOLT (M12X1.75X70MM)	
	139	1	**8T-4985**	6	CLAMP-HOSE	
	140	1	**8T-6675**	4	CLAMP-HOSE	
	141	2	**8T-8901**	1	TEE-O-RING PORT	
	142	1	**9S-4183**	1	PLUG	
I	143	1	**9U-3993**	1	HOSE AS	
	144	4	**9V-4924**	2	SPACER (11.5MM THK) (11.5MM THK)	
	145	1	**9X-8257**	4	WASHER (17.5X30X3.5MM THK)	
					AVAILABLE REPAIR KIT(S):	
J			**139-4740**	1	KIT-BLADDER	

E-ORDER BY THE CENTIMETER
I-SEE HOSE FABRICATION GUIDE
J-KIT MARKED J AVAILABLE FOR PART MARKED J
M-METRIC PART
Y-SEPARATE ILLUSTRATION

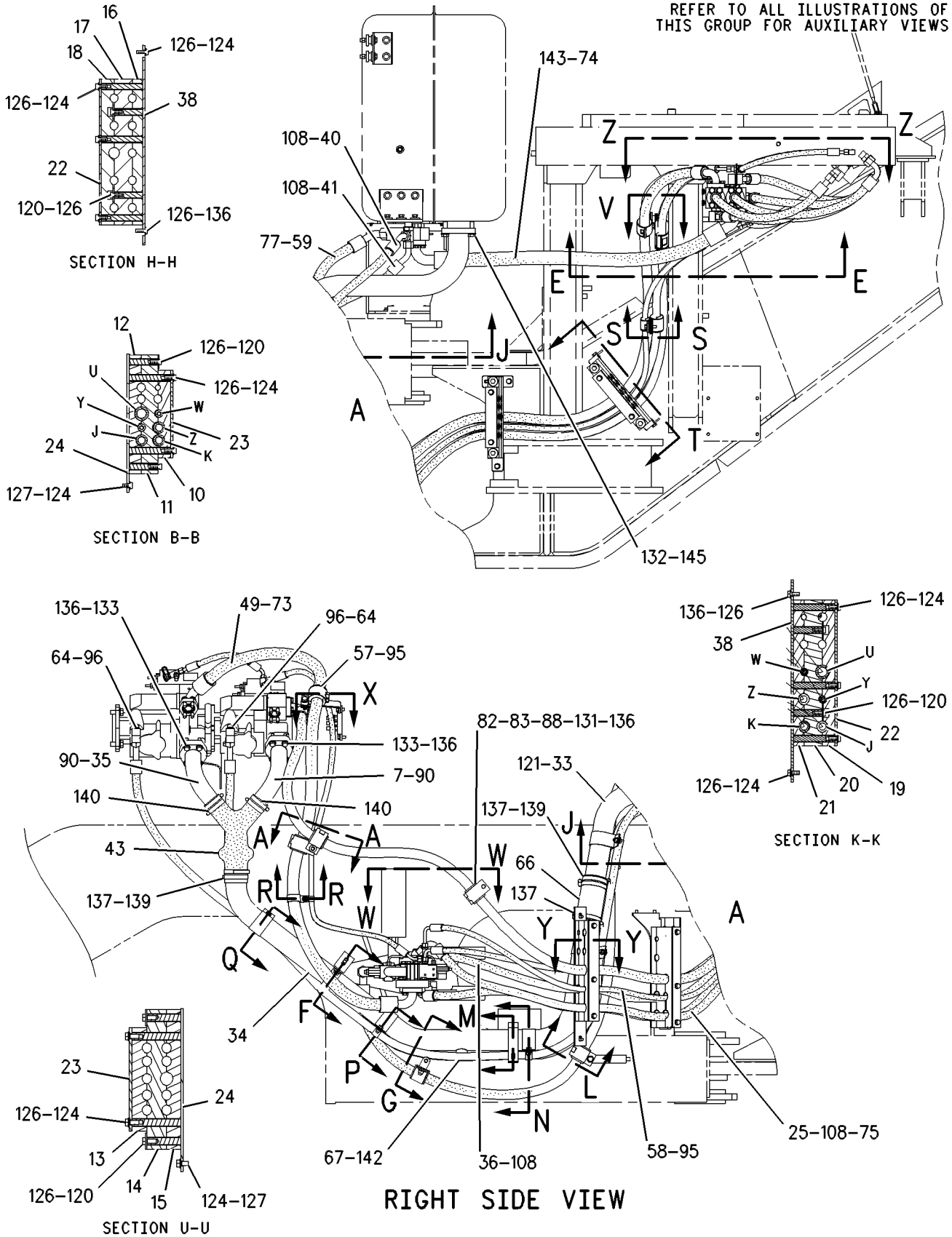

GRAPHIC #1 g00599644

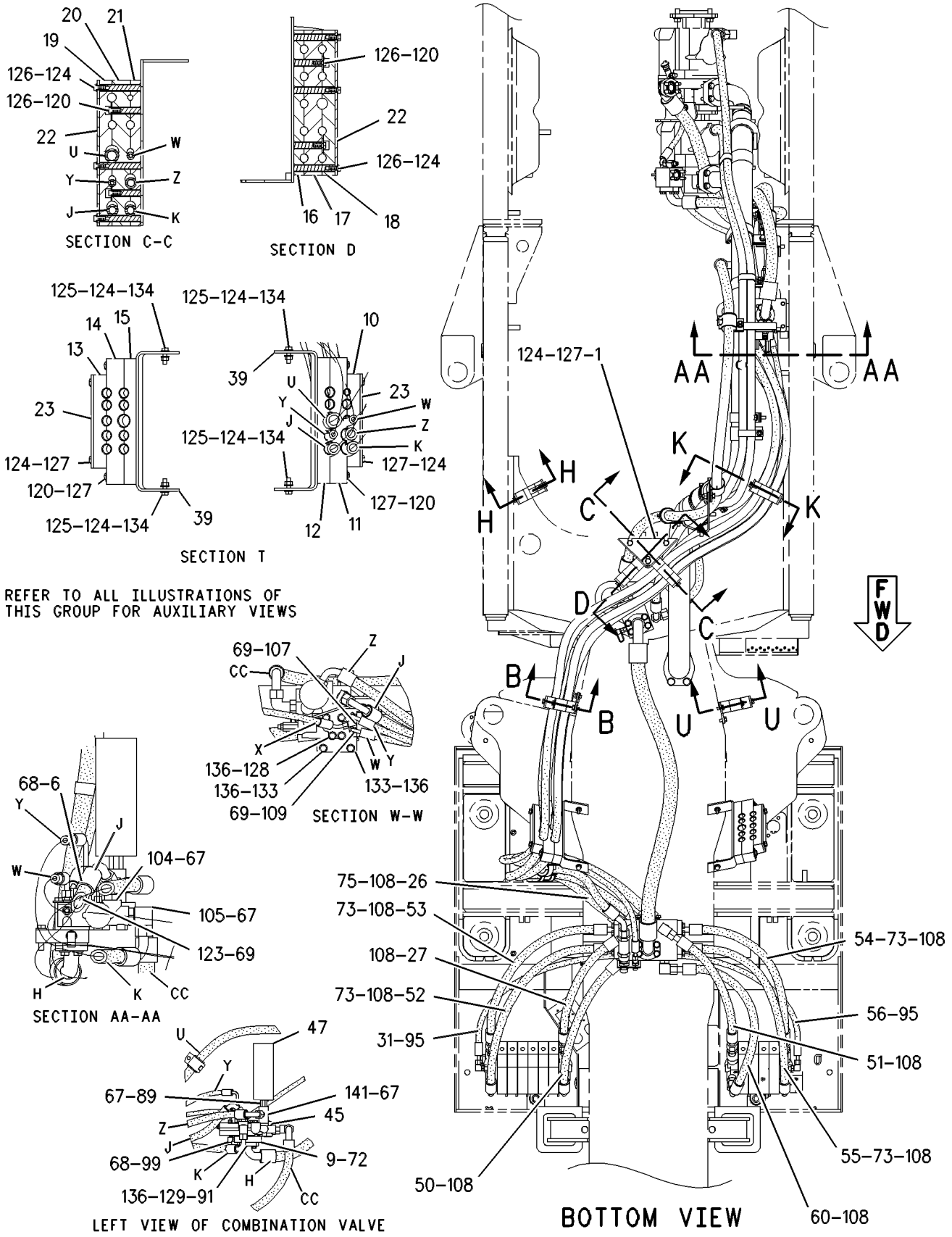

GRAPHIC #2 g00599646

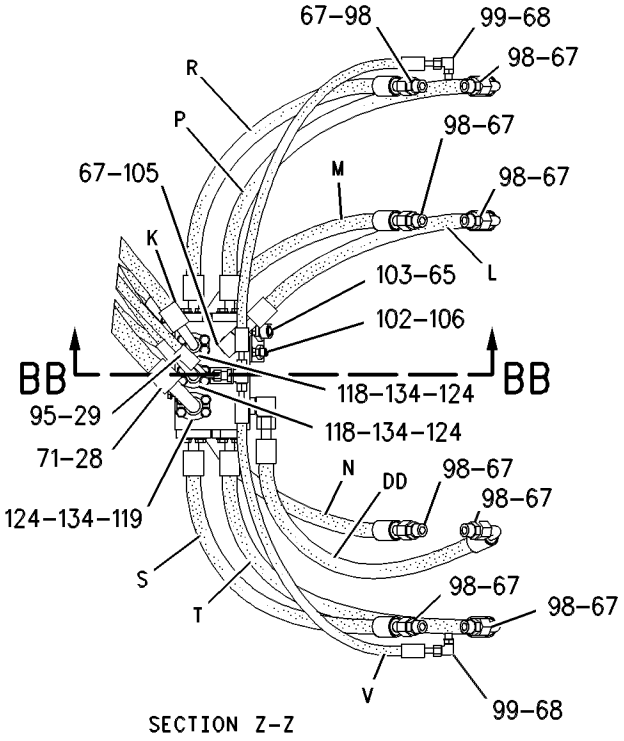

SECTION Z-Z

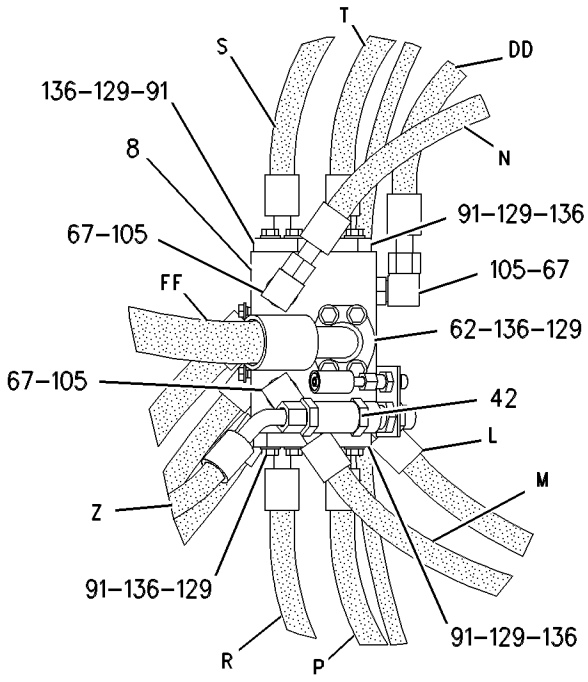

SECTION E-E

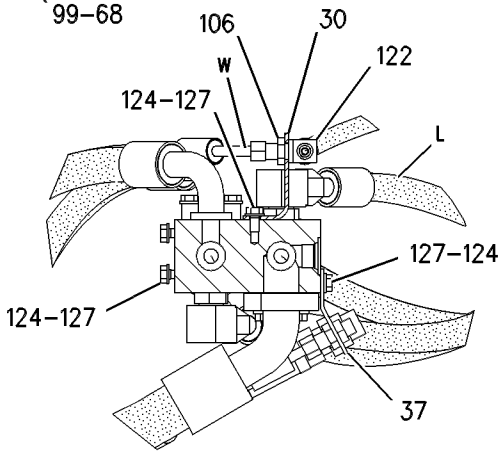

SECTION BB-BB

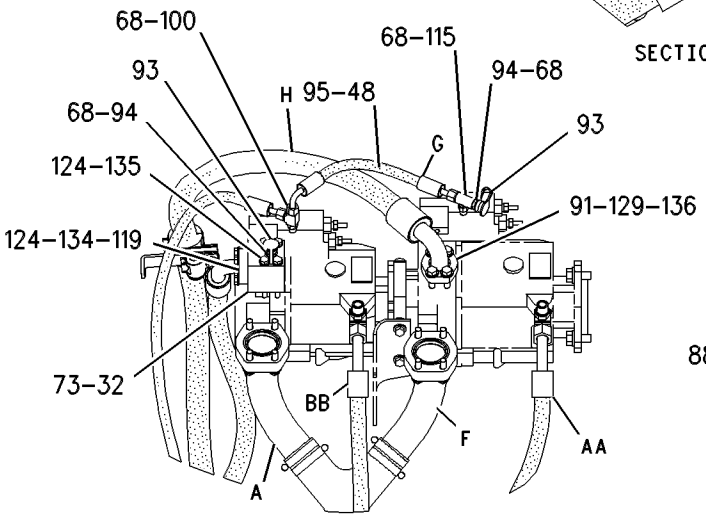

LEFT VIEW OF PUMP GROUP MOUNTING

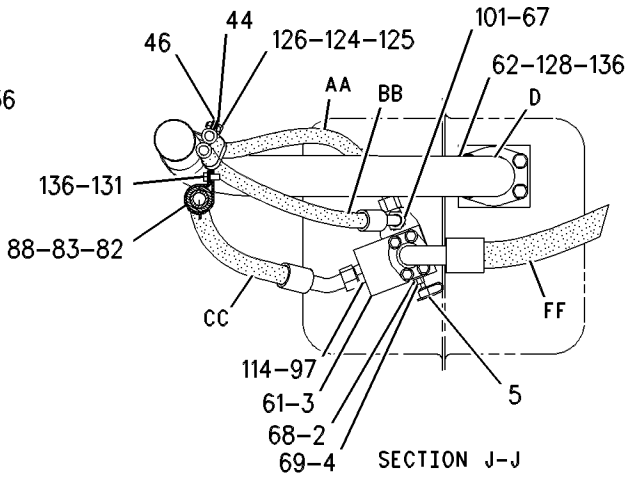

SECTION J-J

GRAPHIC #3

g00599648

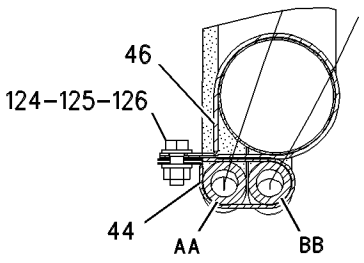

SECTION N

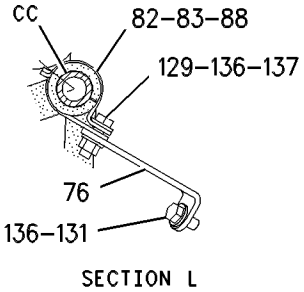

SECTION L

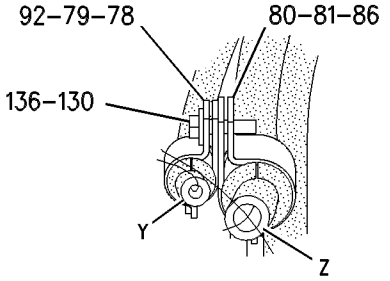

SECTION S-S

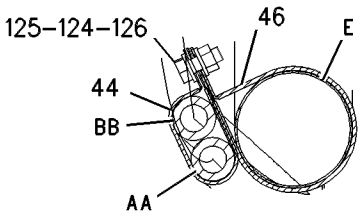

SECTION Q

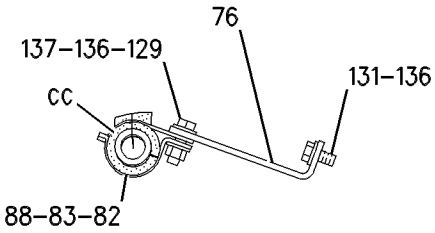

SECTION G

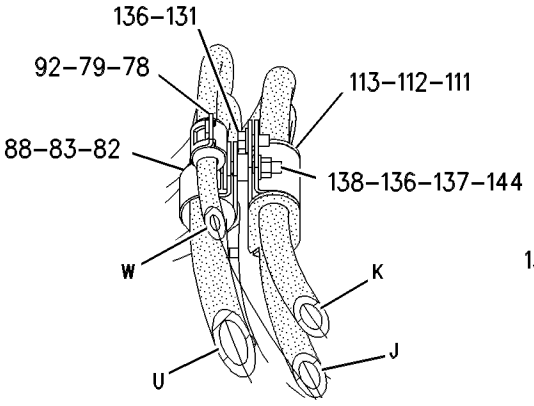

SECTION V

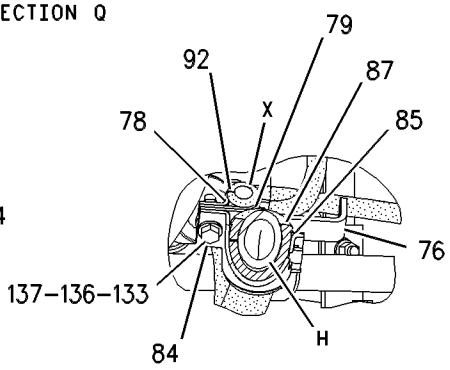

SECTION X

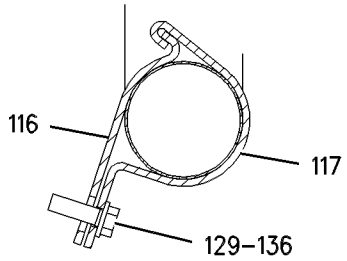

SECTION M

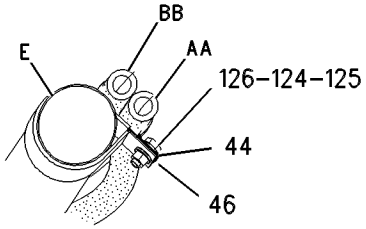

SECTION Y-Y

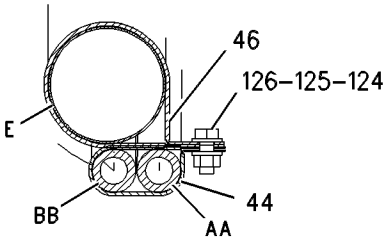

SECTION P

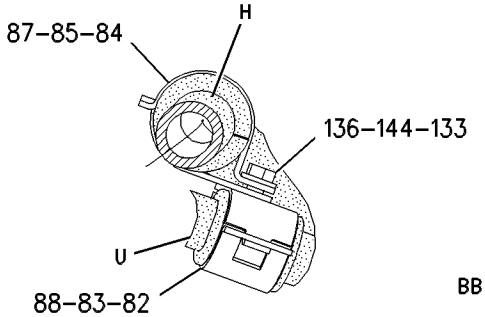

SECTION A-A

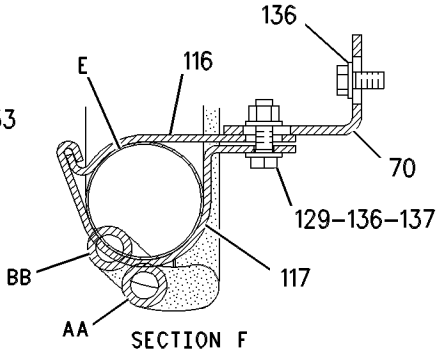

SECTION F

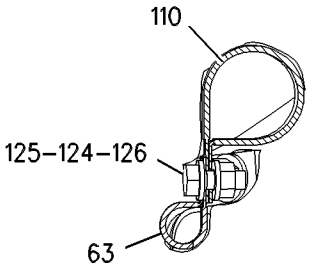

SECTION R-R

GRAPHIC #4

g00599651

MEMORANDA

HYDRAULIC SYSTEM

8X-9023 LINES GP-RIPPER

S/N: 7KK1-UP

PART OF 8X-8404 HYDRAULIC AR

SMCS-5057, 5352, 5356 **i01346771**

NOTE	REF NO	GRAPHIC REF	PART NUMBER	QTY	PART NAME 1 2 3 4 5 6 (PRODUCT LEVEL)	SEE PAGE
I	1	1	**129-9837**	1	HOSE AS	
I	2	1	**129-9838**	1	HOSE AS	
	3	1	**3G-8047**	7	GROMMET	
	4	1	**3G-8054**	7	CLIP (TAB)	
	5	1	**3G-8057**	7	CLIP (SLOT)	
	6	1	**3K-0360**	4	SEAL-O-RING (16.36MM ID)	
	7	1	**6V-9032**	1	TEE-O-RING	
	8	1	**6V-8398**	4	SEAL-O-RING (12.47MM ID)	
	9	1	**6V-8639**	2	CONNECTOR	
	10	1	**3J-1907**	1	SEAL-O-RING (11.89MM ID)	
	11	1	**8T-4121**	12	WASHER-HARD (11X21X2.5MM THK)	
M	12	1	**8T-4133**	4	NUT (M10X1.5 THD)	
M	13	1	**8T-4183**	2	BOLT (M12X1.75X40 MM)	
M	14	1	**8T-4192**	5	BOLT (M12X1.75X25MM)	
	15	1	**8T-4223**	9	WASHER-HARD (13.5X25.5X3MM THK)	
M	16	1	**8T-4244**	2	NUT (M12X1.75 THD)	
I	17	1	**143-9452**	1	HOSE AS	
	18	1	**9X-6581**	1	NUT-ORFS	
J	19	1	**140-0357**	1	VALVE GP-SEQUENCE	
	20	1	**6V-8724**	1	ELBOW	
	21	1	**6V-8938**	1	REDUCER-O-RING	
	22	1	**6V-9002**	2	ELBOW-FACE SEAL (3/4-16 THD)	
	23	1	**7J-9108**	1	SEAL-O-RING (15.72MM ID)	
	24	1	**2M-9780**	1	SEAL-O-RING (19.18MM ID)	
	25	1	**5P-7462**	5	CLIP (SLOT)	
		1	**5P-7463**	5	CLIP (TAB)	
		1	**6V-0683**	5	GROMMET	
M	26	1	**8T-4136**	4	BOLT (M10X1.5X25MM)	
M	27	1	**8T-4178**	2	BOLT (M10X1.5X90MM)	
	28	1	**6V-8397**	2	SEAL-O-RING (9.27MM ID)	
	29	1	**4W-3588**	2	BRACKET	
					AVAILABLE REPAIR KIT(S):	
J			**6E-3579**	1	KIT-SEAL	

I-SEE HOSE FABRICATION GUIDE
J-PART MARKED J INCLUDES KIT MARKED J
M-METRIC PART

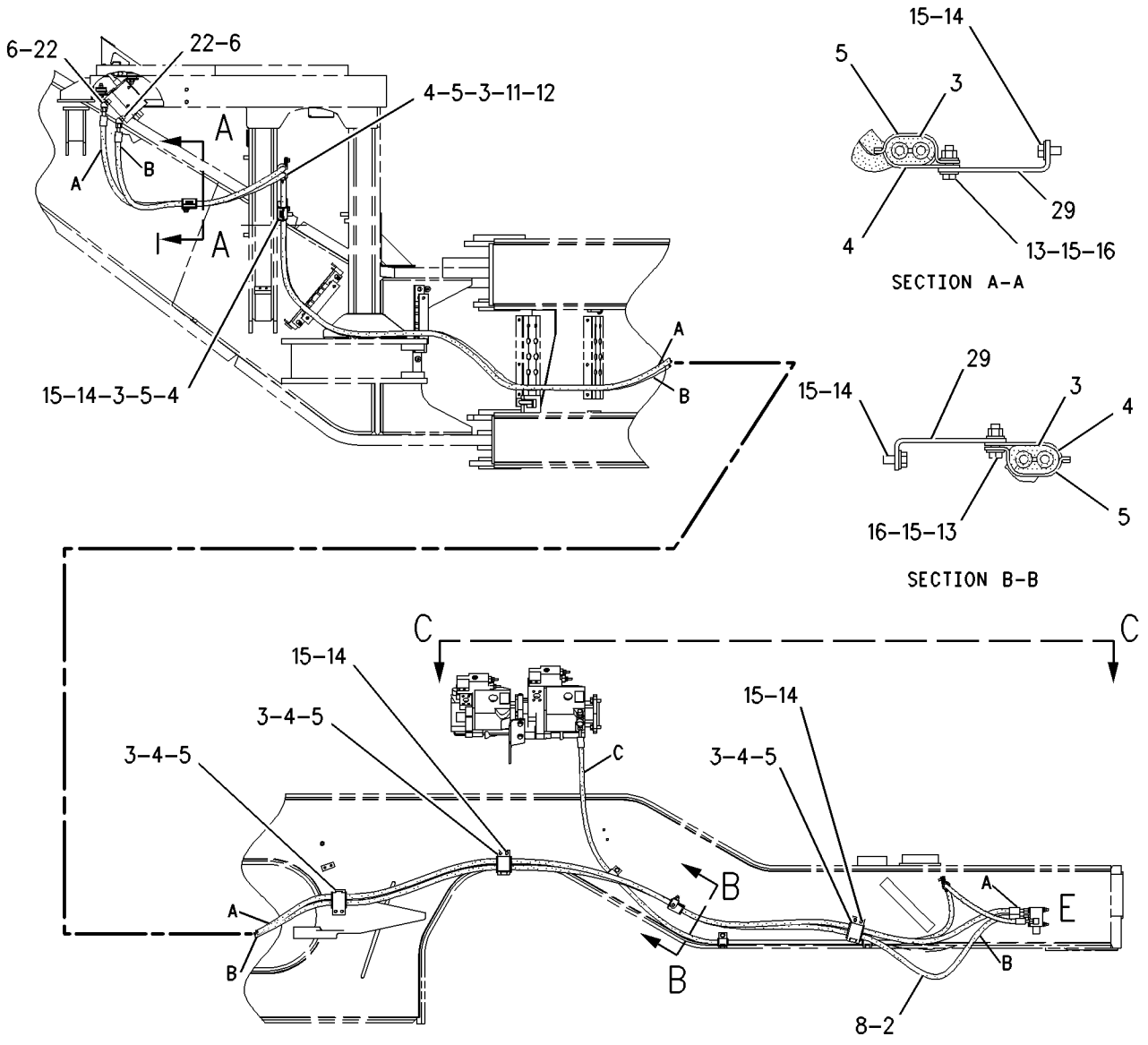

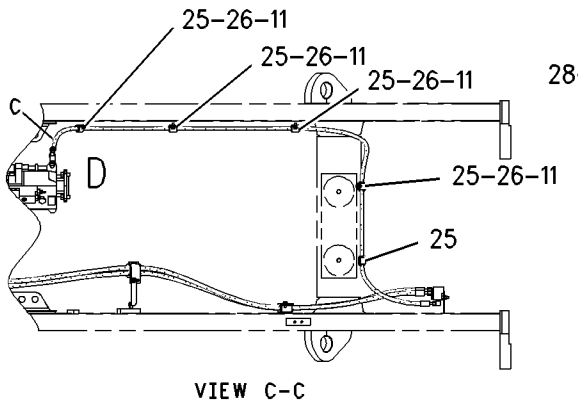

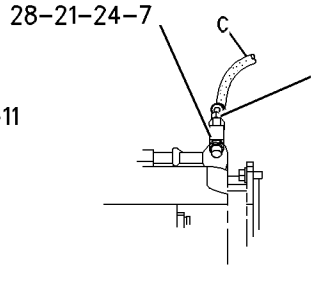

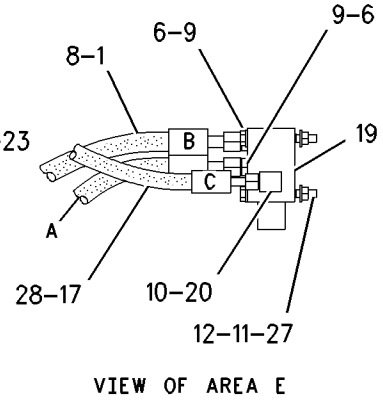

GRAPHIC #1 g00711247

HYDRAULIC SYSTEM

125-5737 LINES GP-RIPPER

S/N: 7KK1-39

PART OF 8E-9638 RIPPER AR

SMCS-5057, 5352, 5356 **i00567227**

NOTE	REF NO	GRAPHIC REF	PART NUMBER	QTY	PART NAME 1 2 3 4 5 6 (PRODUCT LEVEL)	SEE PAGE
	1	1	**1B-5964**	7	SPACER	
	2	1	**5H-3473**	11	CLAMP	
I	3	1	**128-5209**	1	HOSE AS	
I	4	1	**128-5210**	1	HOSE AS	
I	5	1	**128-5525**	1	HOSE AS	
I	6	1	**128-5526**	1	HOSE AS	
	7	1	**3K-0360**	4	SEAL-O-RING (16.36MM ID)	
	8	1	**5S-7383**	7	BOLT (3/8-16X1.75IN)	
	9	1	**6V-8398**	10	SEAL-O-RING (12.47MM ID)	
	10	1	**6V-8625**	2	ELBOW-90 DEGREE (3/4-16 THD)	
	11	1	**6V-8801**	4	NUT (3/8-16 THD)	
	12	1	**6V-9851**	2	ELBOW-90 DEGREE SWIVEL	
	13	1	**8T-1686**	2	ELBOW-90 DEGREE	

I-SEE HOSE FABRICATION GUIDE

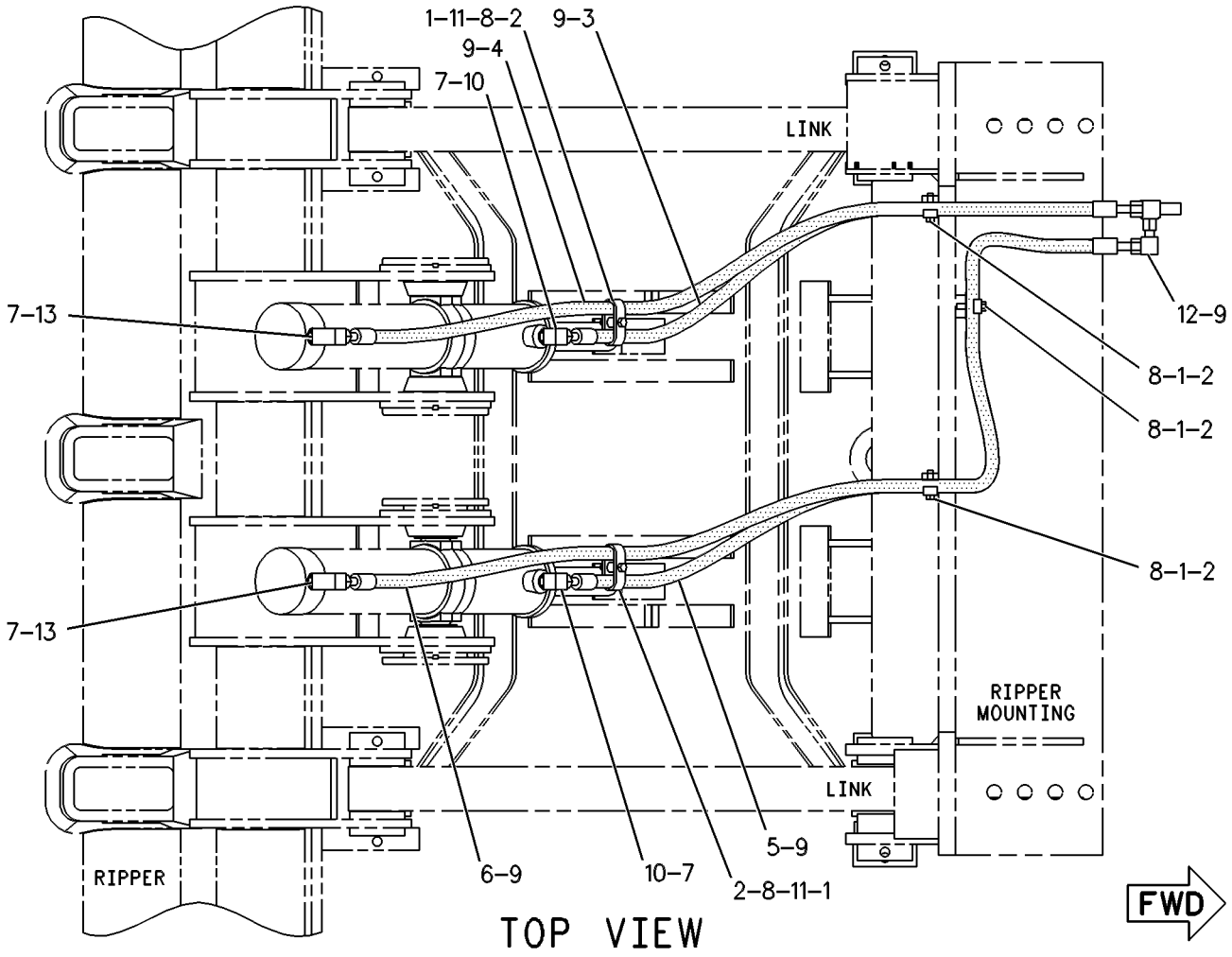

GRAPHIC #1 g00086760

MEMORANDA

HYDRAULIC SYSTEM

125-5737 LINES GP-RIPPER

S/N: 7KK40-UP

PART OF 8E-9638 RIPPER AR

SMCS-5057, 5352, 5356 **i00686945**

NOTE	REF NO	GRAPHIC REF	PART NUMBER	QTY	PART NAME 1 2 3 4 5 6 (PRODUCT LEVEL)	SEE PAGE
C	1	1	**3G-8047**	5	GROMMET	
C	2	1	**3G-8054**	5	CLIP (TAB)	
C		1	**3G-8057**	5	CLIP (SLOT)	
I	3	1	**128-5209**	1	HOSE AS	
I	4	1	**128-5210**	1	HOSE AS	
I	5	1	**128-5525**	1	HOSE AS	
I	6	1	**128-5526**	1	HOSE AS	
C	7	1	**3K-0360**	6	SEAL-O-RING (16.36MM ID)	
C	8	1	**6V-8782**	1	TEE-FACE SEAL	
	9	1	**6V-8398**	11	SEAL-O-RING (12.47MM ID)	
	10	1	**6V-8625**	2	ELBOW-90 DEGREE (3/4-16 THD)	
C	11	1	**6V-8639**	1	CONNECTOR-SEAL	
	12	1	**6V-9851**	2	ELBOW-90 DEGREE SWIVEL	
	13	1	**8T-1686**	2	ELBOW-90 DEGREE	
CM	14	1	**8T-4136**	9	BOLT (M10X1.50X25MM)	
CM	15	1	**8T-4196**	1	BOLT (M10X1.50X35MM)	
C	16	1	**6V-9837**	1	TEE	
C	17	1	**8T-4121**	17	WASHER (2.5MM THK)	
CM	18	1	**8T-4133**	7	NUT (M10X1.50 THD)	

C-CHANGE FROM PREVIOUS TYPE
I-SEE HOSE FABRICATION GUIDE
M-METRIC PART

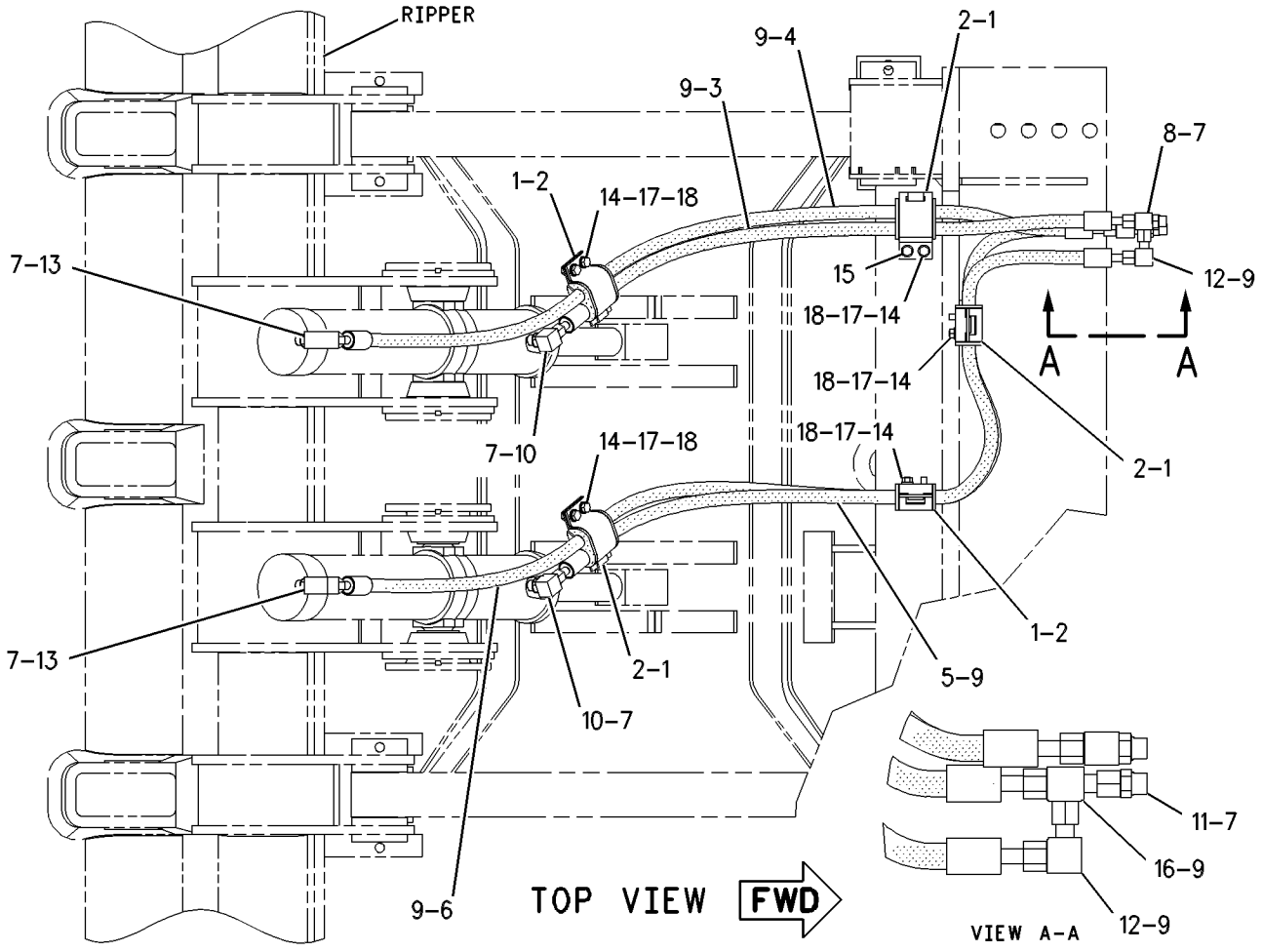

GRAPHIC #1

g00277901

HYDRAULIC SYSTEM

8X-9029 LINES GP-SECONDARY STEERING

S/N: 7KK1-UP

PART OF 8X-8404 HYDRAULIC AR

SMCS-4304 **i00110743**

NOTE	REF NO	GRAPHIC REF	PART NUMBER	QTY	PART NAME 1 2 3 4 5 6 (PRODUCT LEVEL)	SEE PAGE
Y	1	1	**117-5099**	1	VALVE GP-UNLOADING	747
I	2	1	**129-6619**	1	HOSE AS	
I	3	1	**129-6620**	1	HOSE AS	
I	4	1	**129-6621**	1	HOSE AS	
	5	1	**129-6622**	1	HOSE AS	
	6	1	**1P-4579**	2	FLANGE-HALF	
	7	1	**3D-2824**	2	SEAL-O-RING (23.47MM ID)	
	8	1	**3J-1907**	1	SEAL-O-RING (11.89MM ID)	
	9	1	**3K-0360**	1	SEAL-O-RING (16.36MM ID)	
	10	1	**4J-0520**	1	SEAL-O-RING (32.92MM ID)	
	11	1	**4J-0524**	1	SEAL (47.22MM ID)	
M	12	1	**8T-4172**	4	BOLT (M10X1.50X80MM)	
	13	1	**5K-9090**	1	SEAL-O-RING (23.52MM ID)	
M	14	1	**8T-4183**	4	BOLT (M12X1.75X40MM)	
	15	1	**5P-7462**	1	CLIP (SLOT)	
	16	1	**5P-7463**	1	CLIP (TAB)	
	17	1	**5P-7466**	2	CLIP (SLOT)	
	18	1	**5P-7467**	2	CLIP (TAB)	
	19	1	**5P-7468**	1	CLIP (SLOT)	
	20	1	**5P-7469**	1	CLIP (TAB)	
	21	1	**5P-8112**	2	GROMMET	
	22	1	**5P-8444**	1	GROMMET	
	23	1	**6V-0683**	1	GROMMET (19MM ID)	
	24	1	**6V-8397**	2	SEAL-O-RING (9.27MM ID)	
	25	1	**6V-8716**	1	CONNECTOR-SEAL	
	26	1	**6V-9001**	1	ELBOW-45 DEGREE (9/16-18 THD)	
	27	1	**6V-9004**	1	ELBOW-45 DEGREE (1 1/16-12 THD)	
	28	1	**6V-9005**	1	ELBOW-45 DEGREE	
	29	1	**6V-9007**	1	ELBOW-90 DEGREE (1 1/16-12 THD)	
	30	1	**6V-9746**	4	SEAL-O-RING (18.94MM ID)	
	31	1	**6V-9877**	1	ELBOW-90 DEGREE	
	32	1	**7M-8485**	2	SEAL-O-RING (29.74MM ID)	
M	33	1	**8T-4183**	1	BOLT (M12X1.75X40MM)	
M	34	1	**8T-4192**	2	BOLT (M12X1.75X25MM)	
	35	1	**8T-4223**	9	WASHER-HARD (3MM THK)	
M	36	1	**8T-4244**	1	NUT (M12X1.75 THD)	
	37	1	**8T-4121**	4	WASHER (2.5MM THK)	
M	38	1	**8T-4956**	1	BOLT (M12X1.75X35MM)	

I-SEE HOSE FABRICATION GUIDE
M-METRIC PART
Y-SEPARATE ILLUSTRATION

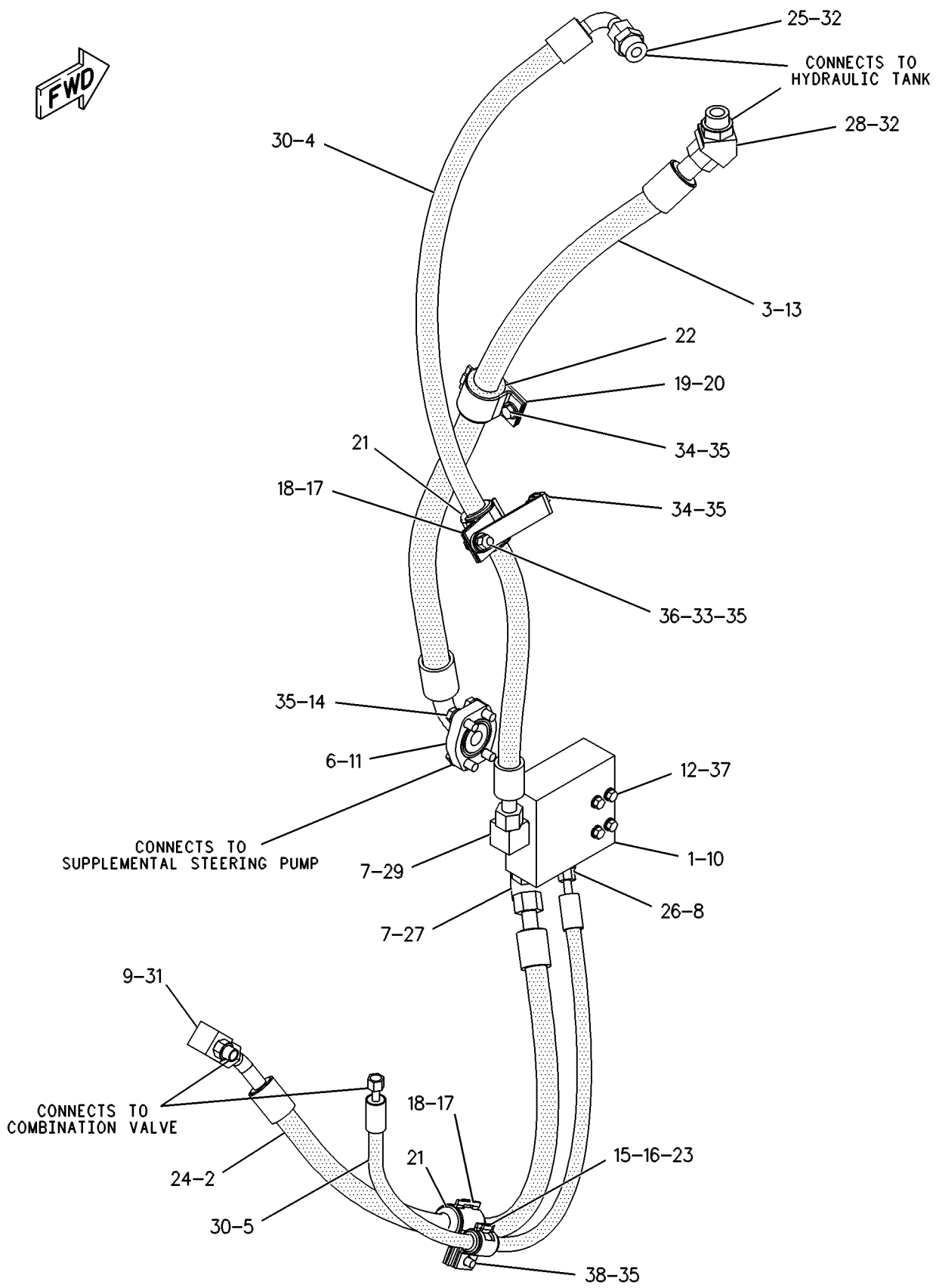

GRAPHIC #1 g00087120

HYDRAULIC SYSTEM

8X-9028 LINES GP-STEERING

S/N: 7KK1-35

PART OF 8X-8404 HYDRAULIC AR

SMCS-4304 **i00110742**

NOTE	REF NO	GRAPHIC REF	PART NUMBER	QTY	PART NAME 1 2 3 4 5 6 (PRODUCT LEVEL)	SEE PAGE
	1	1	**8T-4223**	8	WASHER-HARD (3MM THK)	
	2	1	**7K-1181**	2	STRAP-CABLE (4.00IN DIA)	
Y	3	1	**117-4078**	1	VALVE GP-RELIEF	740
I	4	1	**124-6395**	1	HOSE AS	
I	5	1	**124-6396**	1	HOSE AS	
I	6	1	**124-6397**	1	HOSE AS	
I	7	1	**124-6398**	1	HOSE AS	
I	8	1	**124-6399**	1	HOSE AS	
	9	1	**127-1647**	2	ELBOW-45 DEGREE	
I	10	1	**131-0544**	1	HOSE AS	
	11	1	**3D-2824**	4	SEAL-O-RING (23.47MM ID)	
	12	1	**3G-8047**	2	GROMMET	
	13	1	**3G-8054**	2	CLIP (TAB)	
	14	1	**3G-8057**	2	CLIP (SLOT)	
	15	1	**3K-0360**	8	SEAL-O-RING (16.36MM ID)	
	16	1	**5P-7466**	8	CLIP (SLOT)	
	17	1	**5P-7467**	8	CLIP (TAB)	
	18	1	**5P-8112**	8	GROMMET	
	19	1	**6V-8398**	8	SEAL-O-RING (12.47MM ID)	
	20	1	**6V-8625**	1	ELBOW-90 DEGREE (3/4-16 THD)	
	21	1	**6V-8633**	2	CONNECTOR	
	22	1	**6V-8639**	2	CONNECTOR-SEAL	
	23	1	**6V-9746**	4	SEAL-O-RING (18.94MM ID)	
	24	1	**6V-9874**	2	CONNECTOR	
	25	1	**8T-1686**	1	ELBOW-90 DEGREE	
	26	1	**8T-4121**	9	WASHER (2.5MM THK)	
M	27	1	**8T-4133**	2	NUT (M10X1.50 THD)	
M	28	1	**8T-4136**	4	BOLT (M10X1.50X25MM)	
M	29	1	**8T-4178**	3	BOLT (M10X1.50X90MM)	
M	30	1	**8T-4192**	8	BOLT (M12X1.75X25MM)	

I-SEE HOSE FABRICATION GUIDE
M-METRIC PART
Y-SEPARATE ILLUSTRATION

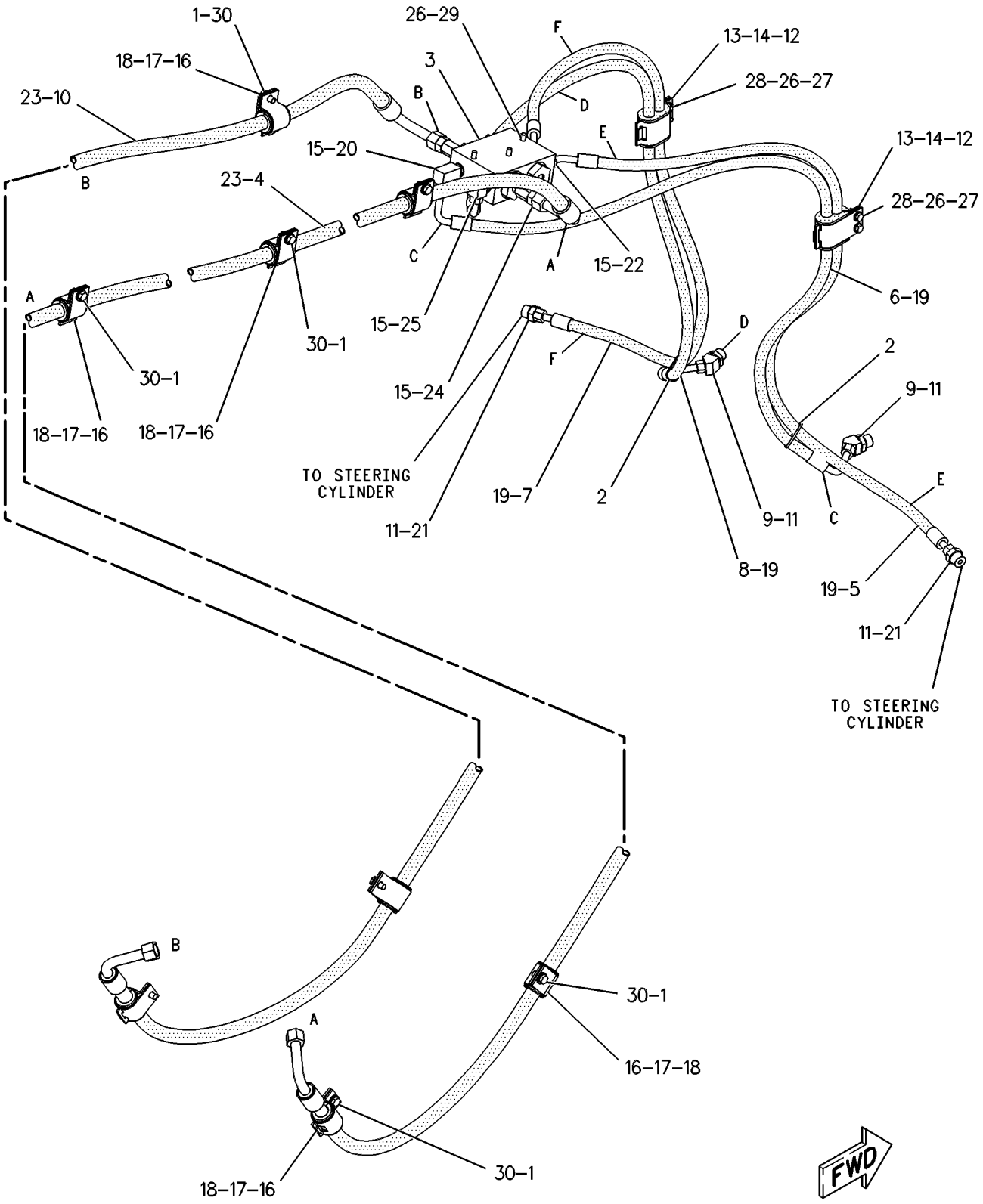

GRAPHIC #1 g00086606

HYDRAULIC SYSTEM

8X-9028 LINES GP-STEERING

S/N: 7KK36-UP

PART OF 8X-8404 HYDRAULIC AR

SMCS-4304 **i00746638**

NOTE	REF NO	GRAPHIC REF	PART NUMBER	QTY	PART NAME 1 2 3 4 5 6 (PRODUCT LEVEL)	SEE PAGE
C	2	1	**6V-8397**	1	SEAL-O-RING (9.27MM ID)	
Y	3	2	**117-4078**	1	VALVE GP-RELIEF	740
I	4	2	**124-6395**	1	HOSE AS	
I	5	2	**124-6396**	1	HOSE AS	
I	6	2	**124-6397**	1	HOSE AS	
I	7	2	**124-6398**	1	HOSE AS	
I	8	2	**124-6399**	1	HOSE AS	
C	9	1	**6V-8556**	1	NUT (1 3/16-12 THD)	
I	10	2	**131-0544**	1	HOSE AS	
C	11	2	**3D-2824**	5	SEAL-O-RING (23.47MM ID)	
	12	2	**3G-8047**	2	GROMMET	
	13	2	**3G-8054**	2	CLIP (TAB)	
	14	2	**3G-8057**	2	CLIP (SLOT)	
	15	1	**3K-0360**	8	SEAL-O-RING (16.36MM ID)	
	16	1,2	**5P-7466**	10	CLIP (SLOT)	
	17	1,2	**5P-7467**	10	CLIP (TAB)	
	18	1,2	**5P-8112**	10	GROMMET	
C	19	1,2	**6V-8398**	12	SEAL-O-RING (12.47MM ID)	
	20	1	**6V-8625**	1	ELBOW-90 DEGREE (3/4-16 THD)	
C	21	1,2	**6V-8633**	5	CONNECTOR	
	22	1,2	**6V-8639**	2	CONNECTOR-SEAL	
C	23	1,2	**6V-9746**	5	SEAL-O-RING (18.94MM ID)	
	24	1	**6V-9874**	2	CONNECTOR	
	25	1	**8T-1686**	1	ELBOW-90 DEGREE	
C	26	1,2	**8T-4121**	19	WASHER (2.5MM THK)	
M	27	2	**8T-4133**	2	NUT (M10X1.50 THD)	
CM	28	1,2	**8T-4136**	14	BOLT (M10X1.50X25MM)	
M	29	1	**8T-4178**	3	BOLT (M10X1.50X90MM)	
C	31	1	**6V-8942**	1	REDUCER-O-RING	
C	32	1	**8T-5082**	2	UNION	

C-CHANGE FROM PREVIOUS TYPE
I-SEE HOSE FABRICATION GUIDE
M-METRIC PART
Y-SEPARATE ILLUSTRATION

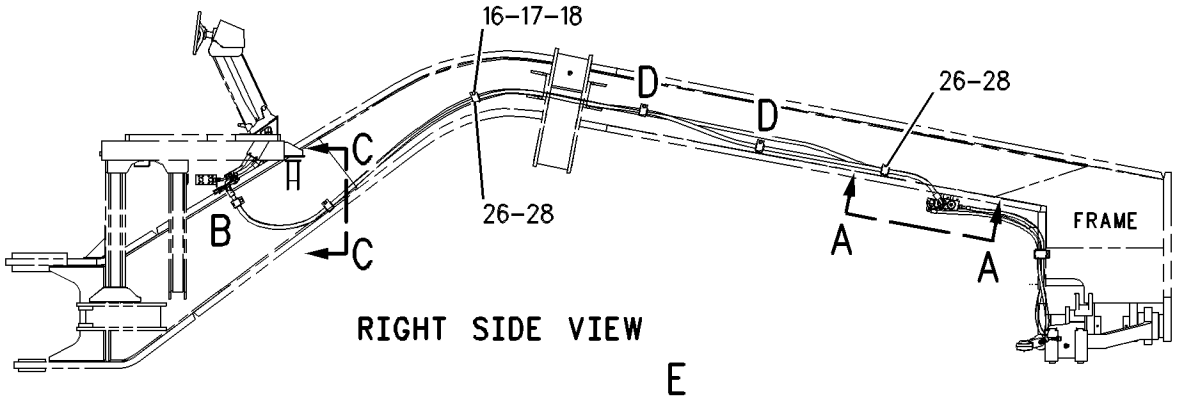

RIGHT SIDE VIEW

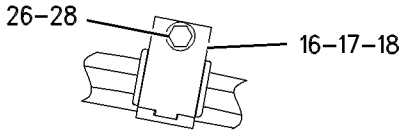

VIEW OF AREAS MARKED D
(TYPICAL CLIP INSTALLATION)

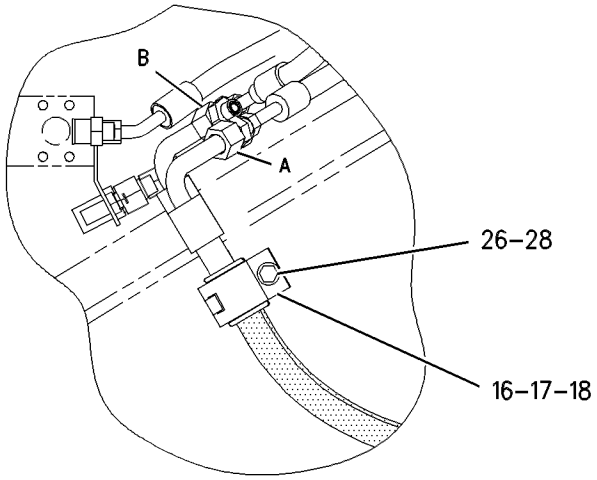

VIEW OF AREA B

E

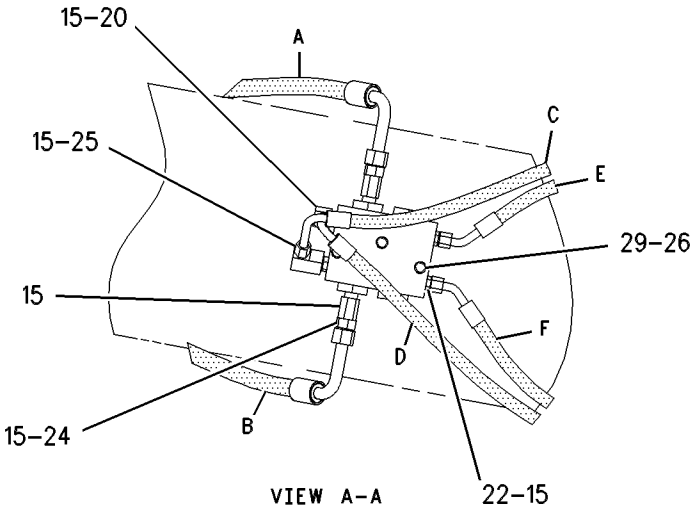

VIEW A-A

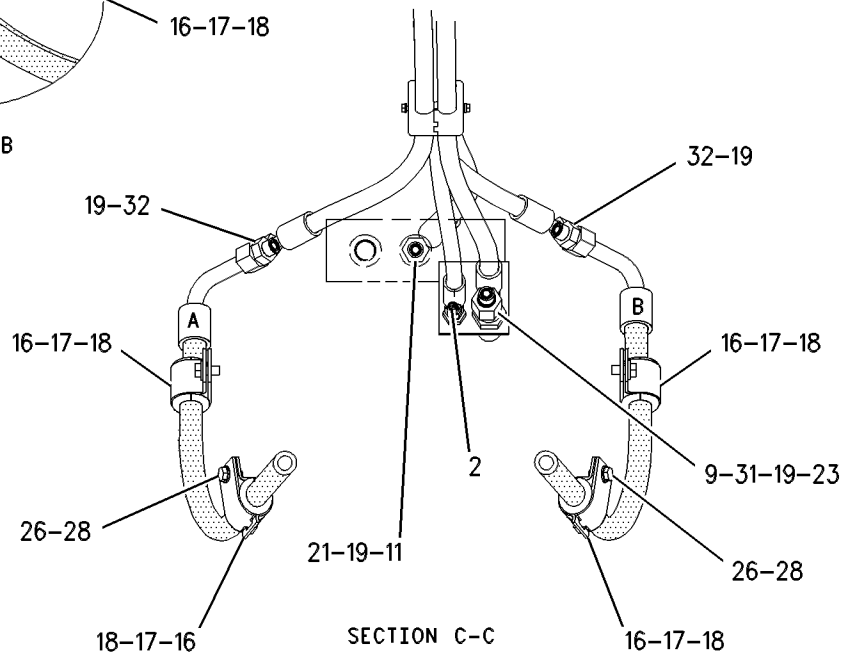

SECTION C-C

GRAPHIC #1

g00335798

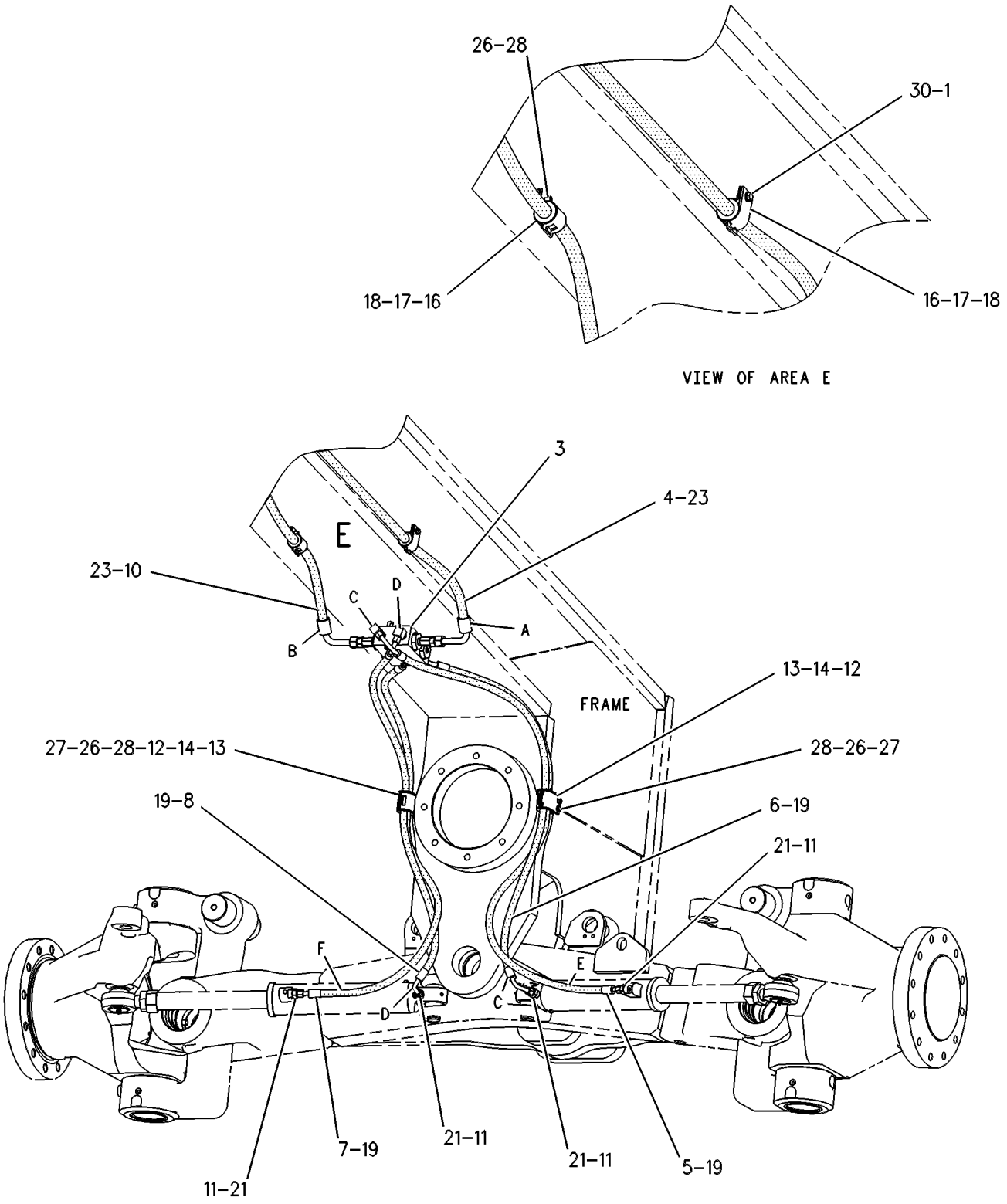

GRAPHIC #2 g00288616

HYDRAULIC SYSTEM

126-6023 LINES GP-STEERING

S/N: 7KK1-81

PART OF 8X-9003 PLATFORM AR

SMCS-4304 **i00567245**

NOTE	REF NO	GRAPHIC REF	PART NUMBER	QTY	PART NAME 1 2 3 4 5 6 (PRODUCT LEVEL)	SEE PAGE
I	1	1	**128-2794**	1	HOSE AS	
I	2	1	**128-2795**	1	HOSE AS	
I	3	1	**128-2796**	1	HOSE AS	
I	4	1	**128-2797**	1	HOSE AS	
I	5	1	**128-2798**	1	HOSE AS	
	6	1	**139-2467**	2	GROMMET	
	7	1	**3J-7354**	1	SEAL-O-RING (8.92MM ID)	
	8	1	**3K-0360**	4	SEAL-O-RING (16.36MM ID)	
	9	1	**6V-8397**	1	SEAL-O-RING (9.27MM ID)	
	10	1	**6V-8398**	4	SEAL-O-RING (12.47MM ID)	
	11	1	**6V-8639**	2	CONNECTOR-SEAL	
	12	1	**6V-9002**	2	ELBOW-45 DEGREE (3/4-16 THD)	
	13	1	**6V-9200**	1	ELBOW-FACE SEAL	
M	14	1	**8T-4171**	2	BOLT (M6X1.0X12MM)	
	15	1	**9X-8256**	2	WASHER (2MM THK)	

I-SEE HOSE FABRICATION GUIDE
M-METRIC PART

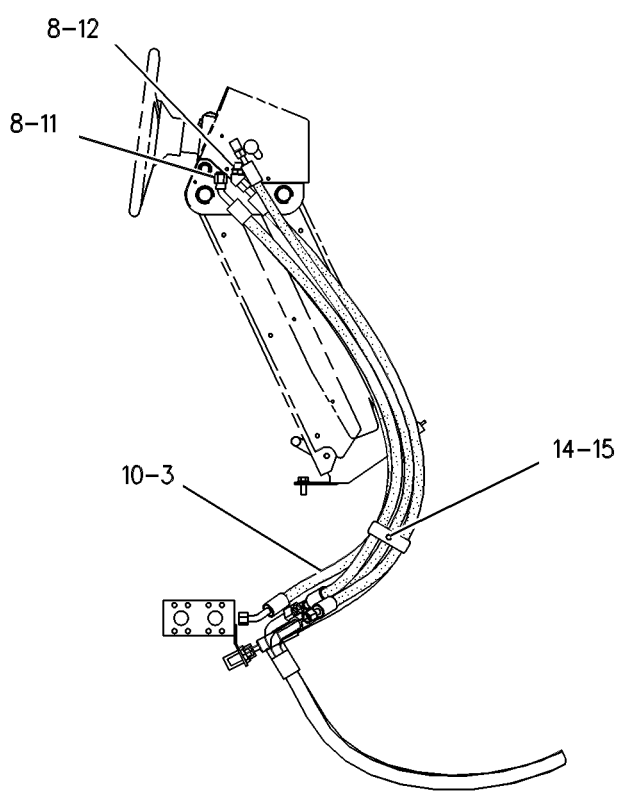

RIGHT SIDE VIEW

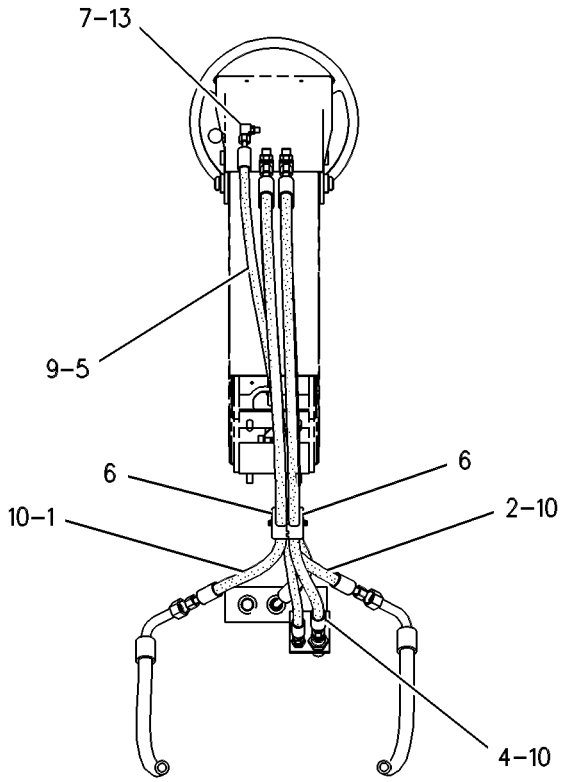

FRONT VIEW

GRAPHIC #1 g00279222

HYDRAULIC SYSTEM

8X-9031 MOTOR & MTG GP-CIRCLE DRIVE

S/N: 7KK1-UP

PART OF 8X-8404 HYDRAULIC AR

SMCS-5082, 5207 **i00110745**

NOTE	REF NO	GRAPHIC REF	PART NUMBER	QTY	PART NAME 1 2 3 4 5 6 (PRODUCT LEVEL)	SEE PAGE
Y	1	1	**121-9270**	1	MOTOR GP-GEROTOR	664
	2	1	**8T-4223**	4	WASHER-HARD (3MM THK)	
	3	1	**5P-2566**	4	BOLT (1/2-13X1.50IN)	
	4	1	**2H-3931**	1	SEAL-O-RING (82.14MM ID)	

Y-SEPARATE ILLUSTRATION

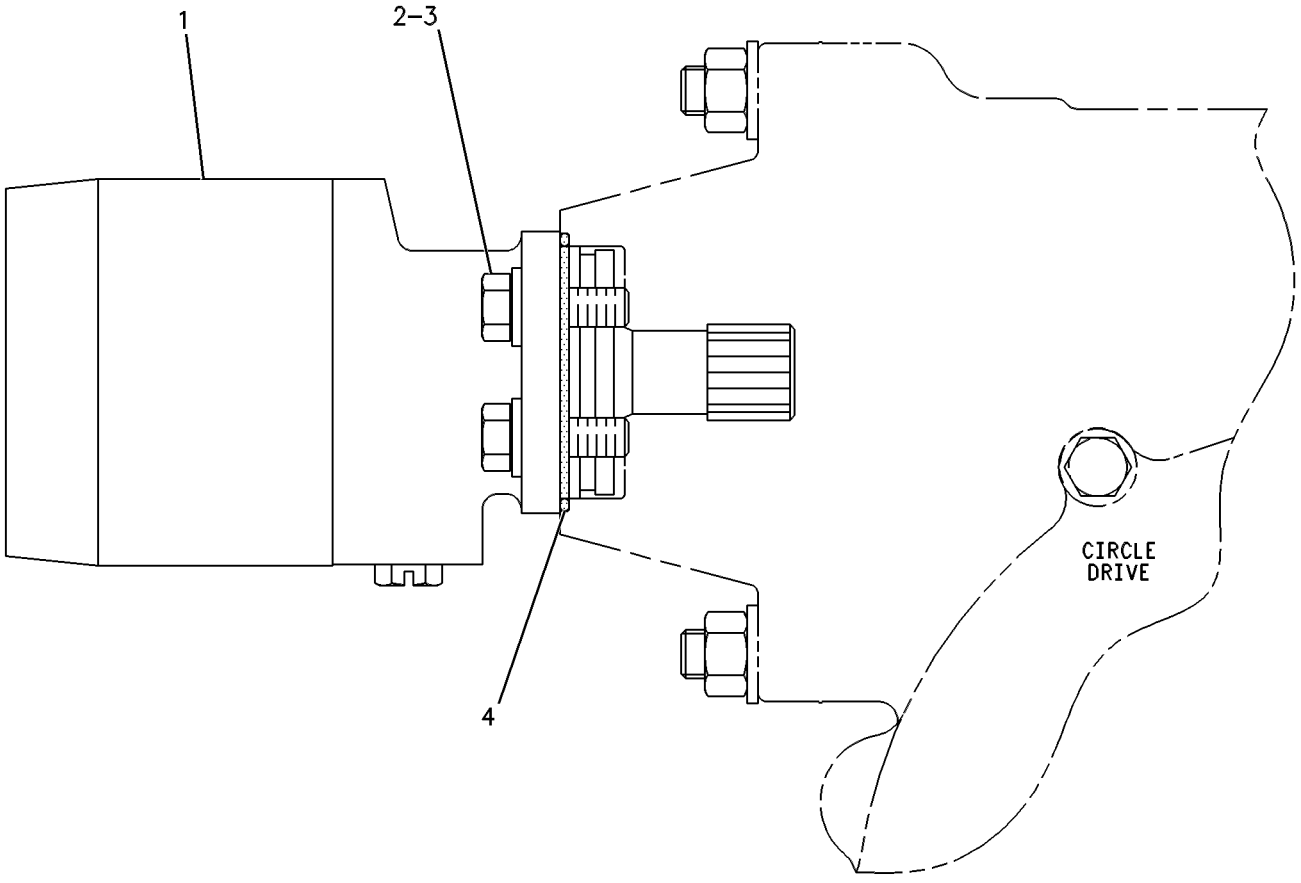

GRAPHIC #1 g00086508

117-3915 MOTOR GP-ELEC HYD PUMP

S/N: 7KK1-UP
24 VOLT
PART OF 123-8915 PUMP GP-ELECTRIC DRIVE
AN ATTACHMENT

SMCS-4324, 4325 **i01441397**

NOTE	REF NO	GRAPHIC REF	PART NUMBER	QTY	PART NAME 1 2 3 4 5 6 (PRODUCT LEVEL)	SEE PAGE
	1	1	**6V-8801**	2	NUT (3/8-16 THD)	
	2	1	**7X-0608**	2	WASHER-HARD (10.2X16X2.0MM THK)	

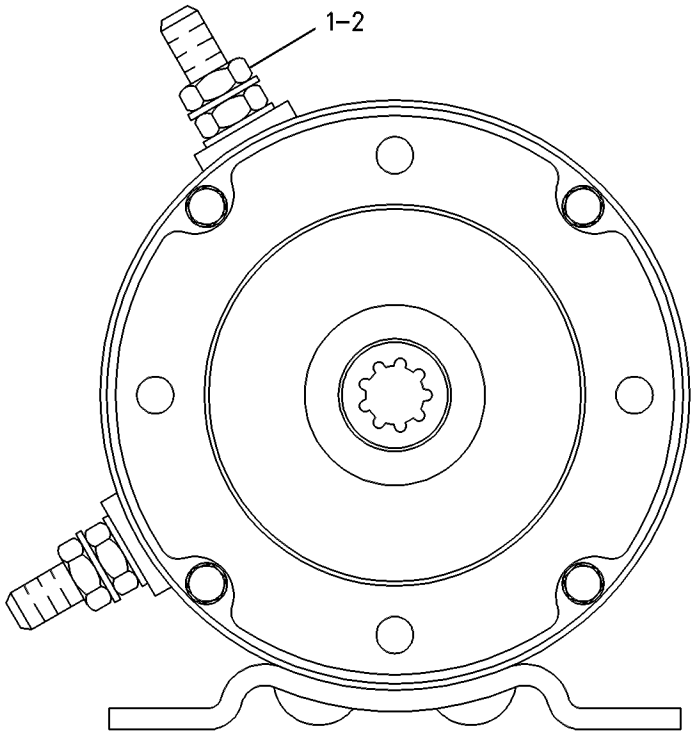

GRAPHIC #1 g00085784

HYDRAULIC SYSTEM

121-9270 MOTOR GP-GEROTOR

S/N: 7KK1-UP

PART OF 8X-9031 MOTOR & MTG GP-CIRCLE DRIVE

SMCS-5082, 5206 **i00108519**

NOTE	REF NO	GRAPHIC REF	PART NUMBER	QTY	PART NAME 1 2 3 4 5 6 (PRODUCT LEVEL)	SEE PAGE
	1	1	**7X-4733**	1	SEAL-LIP	
	2	1	**9T-8070**	1	HOUSING AS	
	3	1	**6Y-2932**	1	BEARING-THRUST	
	4	1	**6Y-2933**	2	RACE	
	5	1	**6Y-2934**	1	BEARING-ROLLER	
	6	1	**8T-1698**	1	BEARING-NEEDLE	
	7	1	**9T-9071**	1	SHIM	
	8	1	**9T-8058**	1	BACKUP	
	9	1	**9T-8059**	1	SEAL	
	10	1	**9T-8057**	1	SHAFT-GOVERNOR CONTROL	
	11	1	**6Y-2935**	1	BEARING	
	12	1	**9T-8053**	5	SEAL	
	13	1	**122-8503**	1	LINK-DRIVE	
	14	1	**9T-8061**	1	PLATE	
	15	1	**122-8504**	1	ROTOR SET-GEROTOR	
	16	1	**9T-8065**	1	MANIFOLD	
	17	1	**9J-4963**	1	RING	
	18	1	**9T-8069**	1	PLATE AS	
	19	1	**9T-8067**	1	COVER	
	20	1	**122-8505**	7	BOLT (3/8-24X3.8IN)	
					AVAILABLE REPAIR KIT(S):	
			9T-9072	1	KIT-SEAL	
					(INCLUDES RING,SEALS,SHIM,GREASE PACK)	

121-9270 MOTOR GP-GEROTOR *(contd.)* i00108519

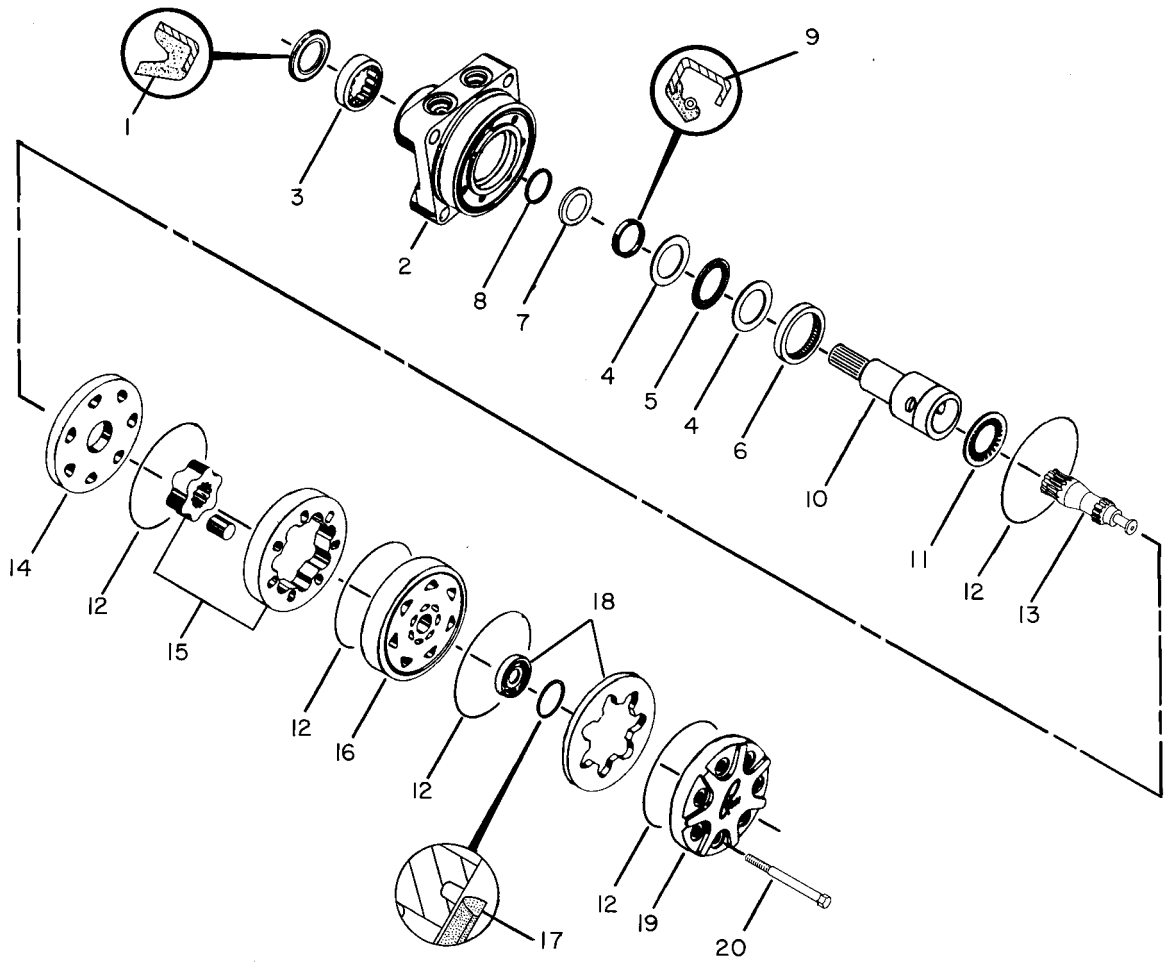

GRAPHIC #1 g00082184

8X-9032 PUMP & MTG GP-PISTON

S/N: 7KK1-UP

PART OF 8X-8404 HYDRAULIC AR

SMCS-5070 **i00698332**

NOTE	REF NO	GRAPHIC REF	PART NUMBER	QTY	PART NAME 1 2 3 4 5 6 (PRODUCT LEVEL)	SEE PAGE
Y	1	1	**117-0517**	1	PUMP GP-PISTON	674
	2	1	**125-0355**	1	BRACKET	
	3	1	**8T-4122**	4	WASHER (3.5MM THK)	
M	4	1	**8T-4192**	2	BOLT (M12X1.75X25MM)	
	5	1	**8T-4223**	2	WASHER-HARD (3MM THK)	
	6	1	**8T-9393**	4	BOLT (5/8-11X1.50IN)	
	7	1	**9X-7371**	1	SEAL-O-RING (126.59MM ID)	

M-METRIC PART
Y-SEPARATE ILLUSTRATION

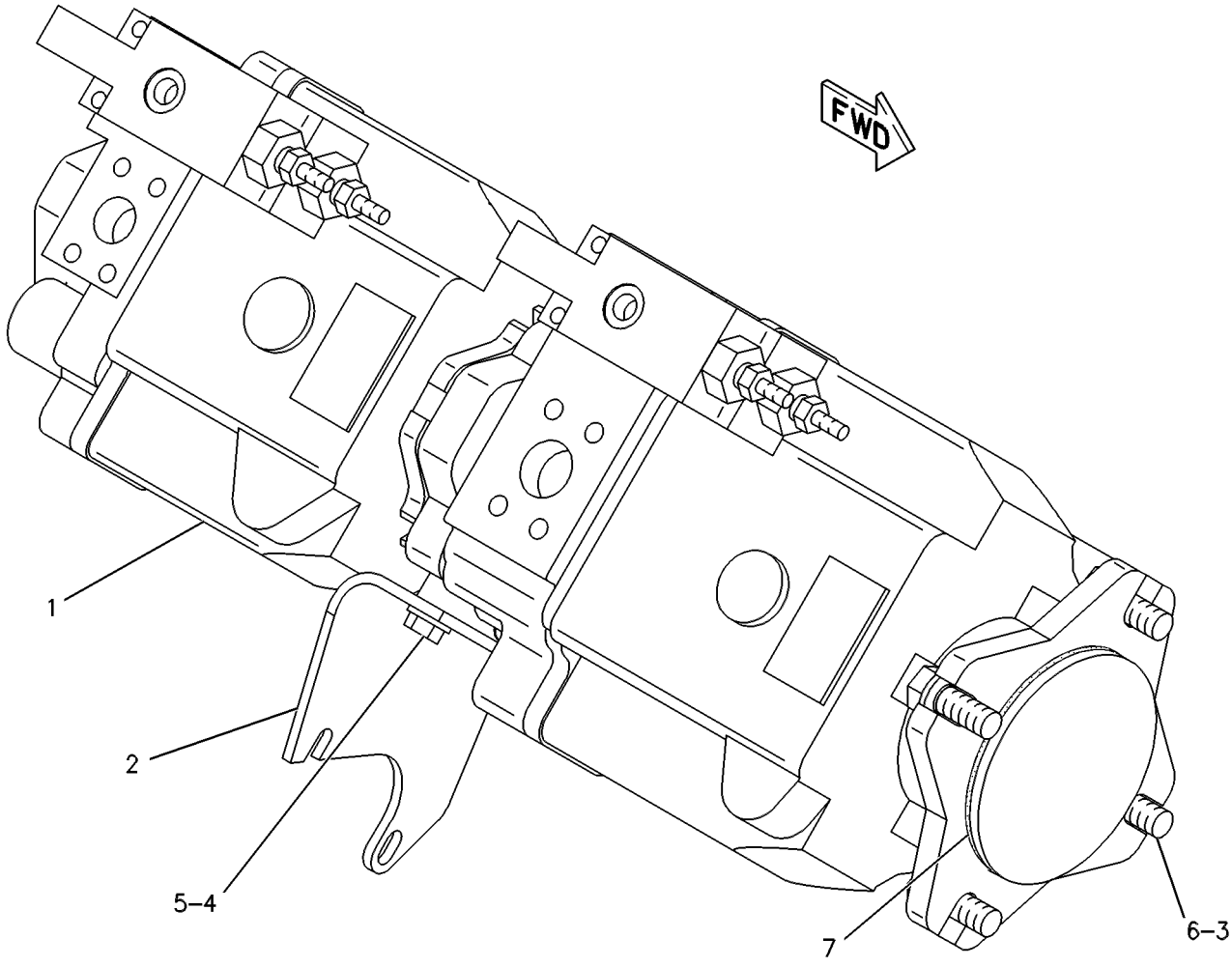

GRAPHIC #1 g00086426

MEMORANDA

HYDRAULIC SYSTEM

117-5098 PUMP GP-GEAR

S/N: 7KK1-UP

PART OF 124-7636 PUMP GP-GEAR

SMCS-4306 **i01016151**

NOTE	REF NO	GRAPHIC REF	PART NUMBER	QTY	PART NAME 1 2 3 4 5 6 (PRODUCT LEVEL)	SEE PAGE
	1	1	**142-2135**	1	GEAR-DRIVE	
	2	1	**142-2131**	1	FLANGE AS	
					(INCLUDES BUSHINGS)	
J	3	1	**139-3213**	2	SEAL	
J	4	1	**008-3214**	1	RING-RETAINING	
	5	1	**142-2136**	1	GEAR-IDLER	
	6	1	**4T-9300**	1	BUSHING-TERMINAL	
	7	1	**4T-9301**	1	BUSHING-TERMINAL	
	8	1	**6J-2386**	2	DOWEL	
	9	1	**142-2132**	1	BODY AS (INCLS BUSHINGS)	
	10	1	**107-2884**	2	PLATE-ISOLATION	
	11	1	**142-2133**	1	SPACER	
	12	1	**107-2886**	2	SPACER	
	13	1	**142-2134**	1	BODY	
	14	1	**1B-2886**	6	BOLT (1/2-13X3.75IN)	
	15	1	**142-2137**	1	PLUG	
J	16	1	**077-3790**	4	SEAL	
	17	1	**4T-9298**	2	BUSHING-TERMINAL	
	18	1	**077-4643**	2	PLATE-ISOLATION	
J	19	1	**6E-2943**	1	PLUG	
	20	1	**9F-2247**	2	PLUG-PIPE	
	21	1	**0S-1595**	8	BOLT (1/2-13X1.25IN)	
J	22	1	**9X-7722**	1	SEAL-O-RING (31.42MM ID)	
	23	1	**6R-3966**	2	PLATE-PRESSURE	
	24	1	**107-2891**	2	PISTON	
	25	1	**107-2893**	2	SPRING	
	26	1	**107-2887**	2	PISTON	
	27	1	**107-2888**	2	SPRING	
					AVAILABLE REPAIR KIT(S):	
J			**142-2138**	1	KIT-SEAL	

J-KITS MARKED J INCLUDE PARTS MARKED J

117-5098 PUMP GP-GEAR *(contd.)* **i01016151**

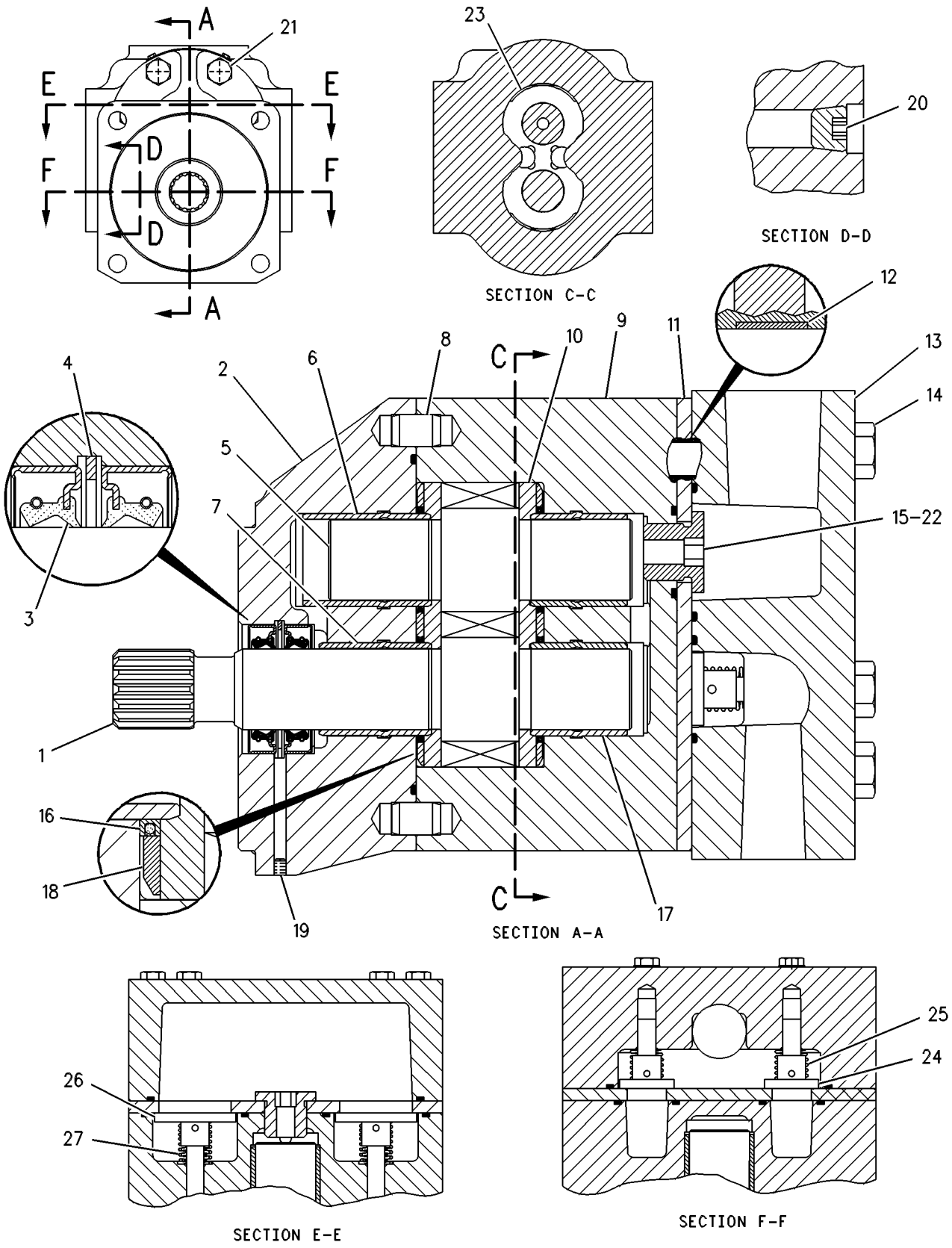

GRAPHIC #1 g00278126

HYDRAULIC SYSTEM

124-7636 PUMP GP-GEAR

S/N: 7KK1-UP

PART OF 8X-8404 HYDRAULIC AR

SMCS-4306 **i00552901**

NOTE	REF NO	GRAPHIC REF	PART NUMBER	QTY	PART NAME 1 2 3 4 5 6 (PRODUCT LEVEL)	SEE PAGE
	1	1	**3F-5792**	1	SEAL-O-RING (129.77MM ID)	
Y	2	1	**117-5098**	1	PUMP GP-GEAR	668
	3	1	**6V-8188**	4	NUT (1/2-13 THD)	
	4	1	**8T-4223**	4	WASHER-HARD (3MM THK)	

Y-SEPARATE ILLUSTRATION

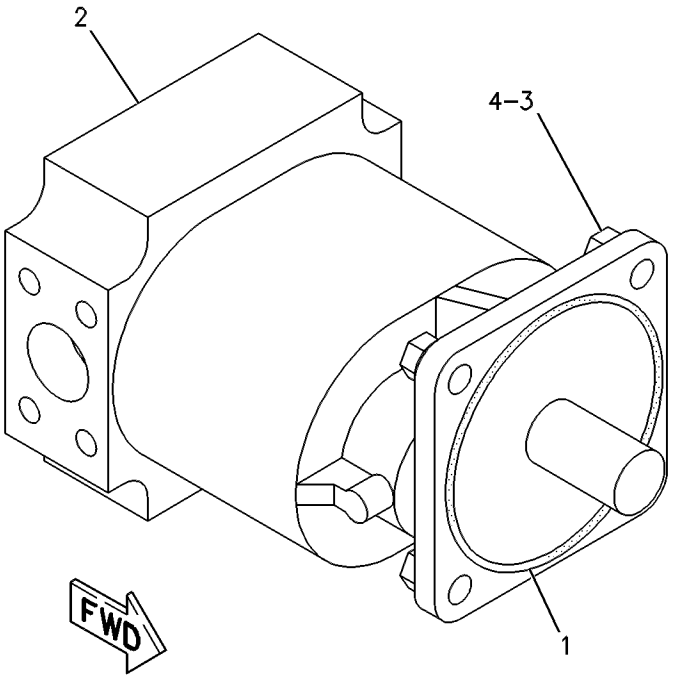

GRAPHIC #1 g00086444

MEMORANDA

HYDRAULIC SYSTEM

117-4077 PUMP GP-METERING

S/N: 7KK1-UP

PART OF 8X-9012 CONTROL GP-STEERING

SMCS-4312 **i00552764**

NOTE	REF NO	GRAPHIC REF	PART NUMBER	QTY	PART NAME 1 2 3 4 5 6 (PRODUCT LEVEL)	SEE PAGE
	1	1	**119-8094**	7	BOLT	
	2	1	**114-5180**	1	CAP	
	3	1	**9J-5686**	3	SEAL-O-RING (72.75MM ID)	
	4	1	**114-5190**	1	SPACER (4.04MM THK)	
	5	1	**7J-6839**	1	DRIVE-CONTROL END	
	6	1	**6E-5884**	1	HOUSING	
	7	1	**7F-8267**	1	SEAL-O-RING (47.2MM ID)	
	8	1	**9J-5442**	1	RING-RETAINING (INTERNAL)(2.279IN OD)	
	9	1	**9T-9010**	1	BUSHING-TERMINAL	
	10	1	**7J-8009**	1	PIN (0.25 ODX1.62IN OAL)	
	11	1	**3G-6891**	2	RACE	
	12	1	**6E-5887**	1	RETAINER	
	13	1	**6E-6150**	1	SPACER	
	14	1	**102-2804**	1	SEAL	
	15	1	**5L-1100**	1	BEARING-THRUST	
	16	1	**6S-7826**	1	RETAINER-BALL	
	17	1	**6S-7827**	1	BALL	
	18	1	**5F-9144**	1	SEAL-O-RING (7.65MM ID)	
	19	1	**3G-6907**	1	SEAT	
	20	1	**1H-1023**	1	SEAL-O-RING (9.25MM ID)	
	21	1	**3G-6906**	1	SCREW (9/16-18X0.559IN)	
	22	1	**6E-5885**	1	SHAFT-GOVERNOR CONTROL	
	23	1	**065-1153**	1	RING-SNAP	
	24	1	**9J-2935**	1	RING-RETAINING	
	25	1	**9U-9693**	1	BALL BEARING	
	26	1	**8F-5340**	1	SEAL-LIP (25.4MM ID)	
	27	1	**131-1587**	1	GEROTER AS	
					AVAILABLE REPAIR KIT(S):	
			114-5324	1	KIT-SEAL	

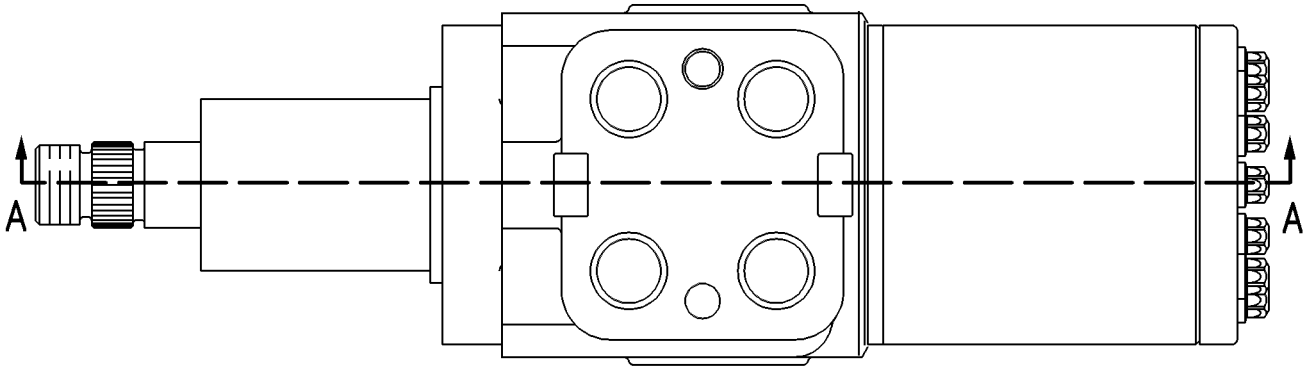

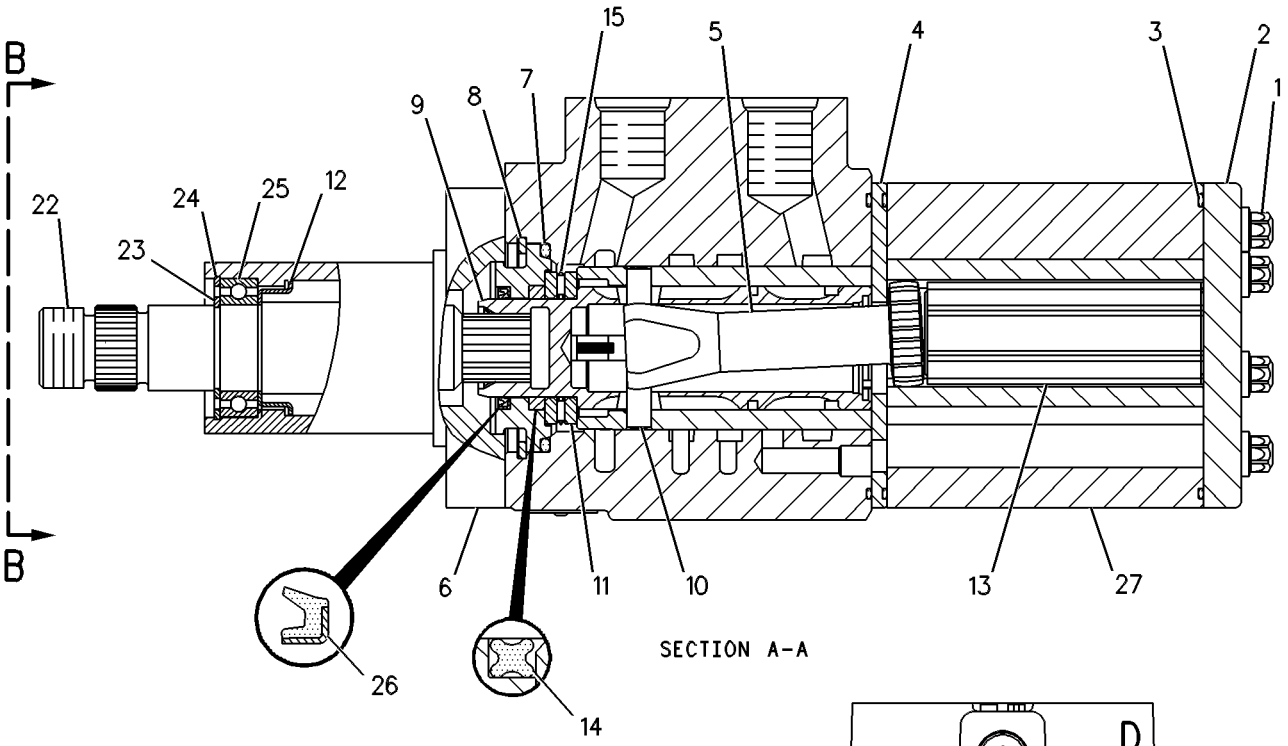

SECTION A-A

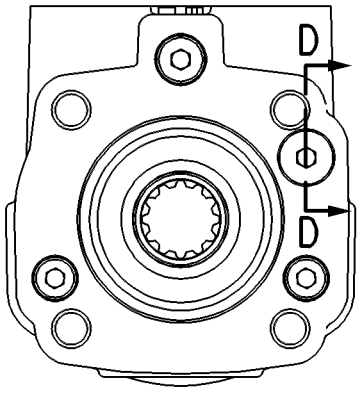

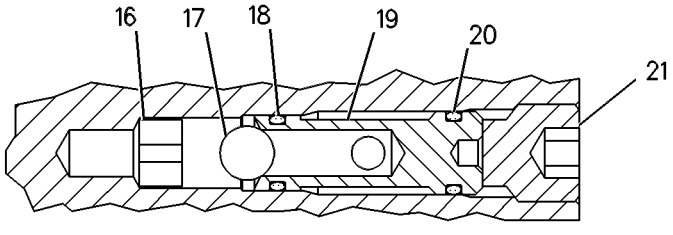

SECTION D-D

VIEW B-B

GRAPHIC #1 g00273366

HYDRAULIC SYSTEM

117-0517 PUMP GP-PISTON

S/N: 7KK1-UP

PART OF 8X-9032 PUMP & MTG GP-PISTON

SMCS-5070 **i00107756**

NOTE	PART NUMBER	QTY	PART NAME 1 2 3 4 5 6 (PRODUCT LEVEL)	SEE PAGE
M	**6V-8675**	4	BOLT (M12X1.75X35MM)	
	122-9365	1	COUPLING-SHAFT	
Y	**121-4311**	1	PUMP GP-PISTON	676
Y	**121-4312**	1	PUMP GP-PISTON	678
	117-8801	1	SEAL-O-RING	

M-METRIC PART
Y-SEPARATE ILLUSTRATION

MEMORANDA

HYDRAULIC SYSTEM

121-4311 PUMP GP-PISTON

S/N: 7KK1-UP

PART OF 117-0517 PUMP GP-PISTON

SMCS-5070 **i01029502**

NOTE	REF NO	GRAPHIC REF	PART NUMBER	QTY	PART NAME 1 2 3 4 5 6 (PRODUCT LEVEL)	SEE PAGE
	1	1	**6E-4224**	1	PLUG-SWASHPLATE	
	2	1	**033-6036**	1	SEAL-O-RING (23.47MM ID)	
	3	1	**100-3402**	1	BEARING-SWASH	
	4	1	**100-3405**	1	BEARING-SWASH	
M	5	1	**6V-8837**	3	BOLT (M6X1X16MM)	
	6	1	**4F-4097**	1	SEAL-O-RING	
M	7	1	**3E-4302**	2	SCREW-FLAT HEAD (M4X0.7X10.0MM)	
	8	1	**100-3404**	1	COVER-TRUNNION	
	9	1	**9T-1636**	1	SEAT	
	10	1	**9T-1710**	1	POPPET	
	11	1	**9T-1699**	1	SPRING	
	12	1	**119-6224**	1	HEAD-PUMP	
B	13	1	**6E-1436**	1	KIT-SHAFT SHIM (17 SHIMS)	
	14	1	**6Y-4280**	1	CONE-ROLLER BEARING	
	15	1	**7T-9755**	1	CUP-ROLLER BEARING	
	16	1	**9T-9460**	1	PLATE-VALVE	
	17	1	**3E-7417**	3	PLUG (M10X1 THD)	
	18	1	**8T-7876**	3	SEAL-O-RING (8.2MM ID)	
	19	1	**7L-9061**	2	SEAL-O-RING (18.72MM ID)	
	20	1	**100-3413**	1	GASKET	
Y	21	1	**100-3412**	1	ROTATING GP-PUMP	681
	22	1	**100-3409**	1	SPRING-BIAS	
	23	1	**100-3408**	1	KIT-BIAS PISTON	
					(INCLUDES SPRING, ROD, PISTON, & SEAL)	
	24	1	**002-1212**	1	CUP-ROLLER BEARING	
	25	1	**2F-8509**	1	CONE-ROLLER BEARING	
	26	1	**121-5620**	1	SHAFT-PUMP	
	27	1	**102-2067**	1	HOUSING-PUMP	
	28	1	**006-8663**	1	RING	
	29	1	**8T-4750**	1	SEAL-LIP (RUBBER)	
Y	30	1	**100-3416**	1	SWASHPLATE GP	683
	31	1	**100-3415**	1	KIT-CONTROL PISTON	
					(INCLUDES ROD, PISTON, & SEAL)	
	32	1	**9T-1652**	1	PIN	
M	33	1	**6V-8337**	4	BOLT-SOCKET HEAD (M8X1.25X35MM)	
Y	34	1	**104-3122**	1	VALVE GP-PRESS & FLOW CMPNSTR	736
	35	1	**9S-4190**	1	PLUG-O-RING (7/16-20 THD)	
	36	1	**033-6027**	1	SEAL-O-RING (19.18MM ID)	
	37	1	**095-0888**	2	PIN-SPRING	
	38	1	**8T-5039**	3	SEAL-O-RING (10.77MM ID)	
M	39	1	**6V-7673**	4	BOLT (M12X1.75X50MM)	
M	40	1	**8T-0372**	1	BOLT (M12X1.75X90MM)	
M	41	1	**6V-8336**	1	BOLT (M12X1.75X70MM)	
	42	1	**9T-7745**	1	COVER	
	43	1	**8C-3089**	1	SEAL-O-RING (82.22MM ID)	
M	44	1	**6V-6317**	2	BOLT (M10X20MM)	
	45	1	**6V-5839**	2	WASHER (2.5MM THK)	

B-USE AS REQUIRED
M-METRIC PART
Y-SEPARATE ILLUSTRATION

121-4311 PUMP GP-PISTON *(contd.)* i01029502

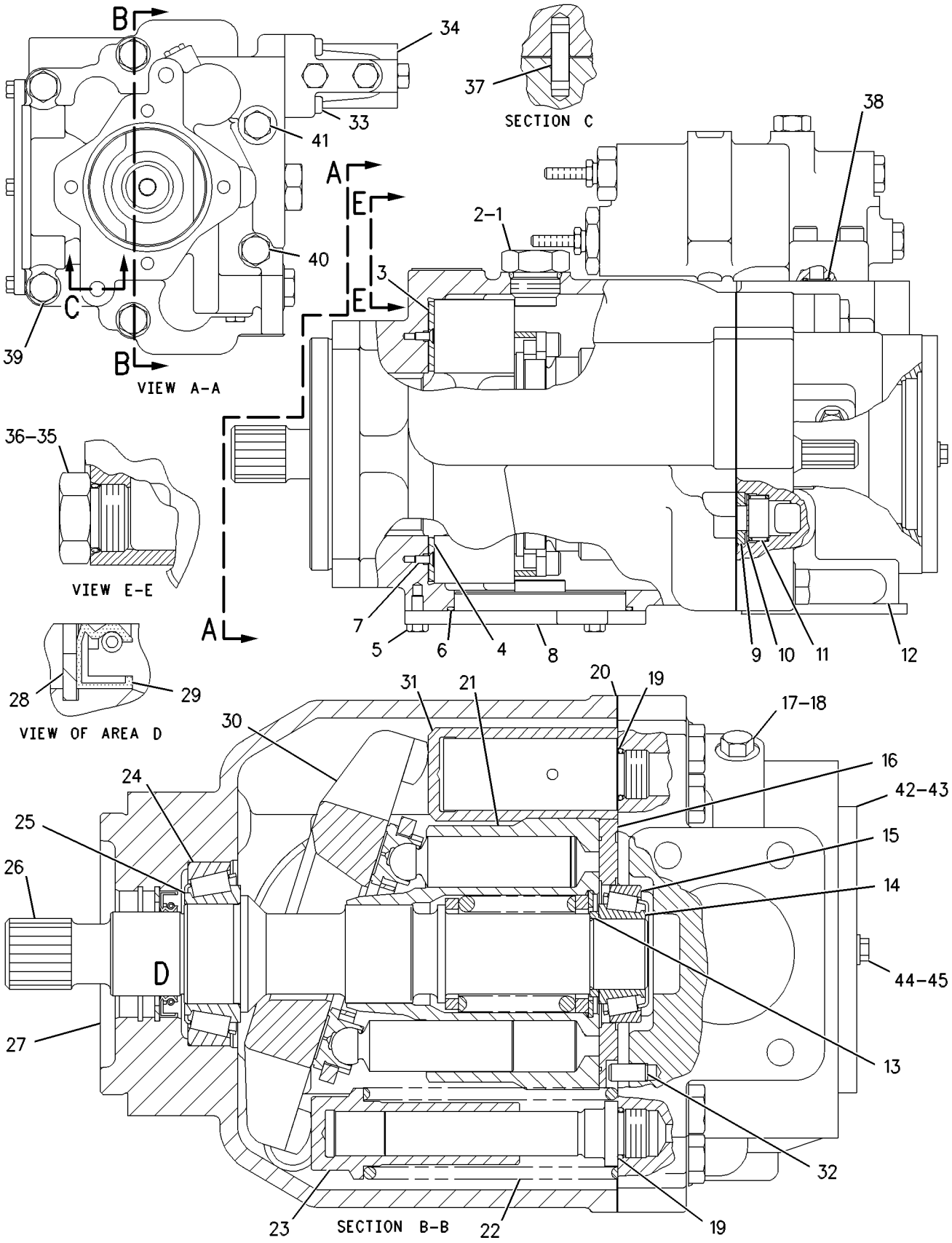

GRAPHIC #1 g00531433

HYDRAULIC SYSTEM

121-4312 PUMP GP-PISTON

S/N: 7KK1-UP

PART OF 117-0517 PUMP GP-PISTON

SMCS-5070 **i01247160**

NOTE	REF NO	GRAPHIC REF	PART NUMBER	QTY	PART NAME 1 2 3 4 5 6 (PRODUCT LEVEL)	SEE PAGE
	1	1	**121-4510**	1	SHAFT-PUMP	
	2	1	**6E-4237**	1	BEARING	
	3	1	**6E-4224**	1	PLUG-SWASHPLATE	
	4	1	**033-6036**	1	SEAL-O-RING (23.47MM ID)	
	5	1	**9S-4190**	1	PLUG-O-RING (7/16-20 THD)	
	6	1	**9T-1699**	1	SPRING	
	7	1	**9T-1710**	1	POPPET	
	8	1	**9T-1636**	1	SEAT	
	9	1	**6E-4227**	1	COVER	
M	10	1	**6V-8837**	3	BOLT (M6X1X16 MM)	
	11	1	**4F-4097**	1	SEAL-O-RING (94.92MM ID)	
	12	1	**6E-4236**	1	BEARING	
M	13	1	**3E-4302**	2	SCREW-FLAT HEAD (M4X0.7X10.0MM)	
	14	1	**8T-5039**	3	SEAL-O-RING (10.77MM ID)	
	15	1	**095-0888**	2	PIN-SPRING	
M	16	1	**8T-0343**	4	BOLT-SOCKET HEAD	
M	17	1	**095-0705**	2	BOLT-SOCKET HEAD (M16X2X100MM)	
Y	18	1	**104-3122**	1	VALVE GP-PRESS & FLOW CMPNSTR (PUMP OUTLET CONTROL)	736
	19	1	**6E-4245**	1	HOUSING	
M	20	1	**6V-8337**	4	BOLT-SOCKET HEAD (M8X1.25X35MM)	
	21	1	**033-6027**	1	SEAL-O-RING (19.18MM ID)	
	22	1	**7K-8876**	1	CUP-BEARING	
	23	1	**6E-4213**	1	KIT-BIAS PISTON	
					(INCL SPRING, ROD, PISTON & PACKING)	
	24	1	**6E-4214**	1	SPRING-BIAS	
Y	25	1	**6E-4216**	1	ROTATING GP-PUMP	680
	26	1	**6E-4225**	1	GASKET	
	27	1	**7L-9061**	2	SEAL-O-RING (18.72MM ID)	
	28	1	**3E-7417**	2	PLUG (M10X1 THD)	
	29	1	**8T-7876**	2	SEAL-O-RING (8.2MM ID)	
	30	1	**6E-4233**	1	PLATE-VALVE-RH	
	31	1	**005-0471**	1	CONE-BEARING	
	32	1	**005-0469**	1	CUP-ROLLER BEARING	
B	33	1	**103-6282**	1	SHIM PACK (INCLS 17 SHIMS)	
	34	1	**9T-1652**	1	PIN	
	35	1	**6E-4215**	1	KIT-PISTON	
					(INCL PACKING, ROD & PISTON)	
Y	36	1	**6E-4221**	1	SWASHPLATE GP	682
	37	1	**6L-8797**	2	RING-RETAINING	
	38	1	**9X-7547**	2	SEAL-LIP	
	39	1	**7K-8877**	1	CONE-BEARING	
	40	1	**121-4511**	1	HEAD-PUMP	
	41	1	**6E-2943**	1	PLUG	
	42	1	**121-4513**	1	ADAPTER-THRU DRIVE	
	43	1	**8C-3089**	1	SEAL-O-RING (82.22MM ID)	
M	44	1	**8T-8441**	2	BOLT-SOCKET HEAD (M12X1.75X25MM)	

B-USE AS REQUIRED
M-METRIC PART
Y-SEPARATE ILLUSTRATION

121-4312 PUMP GP-PISTON *(contd.)* **i01247160**

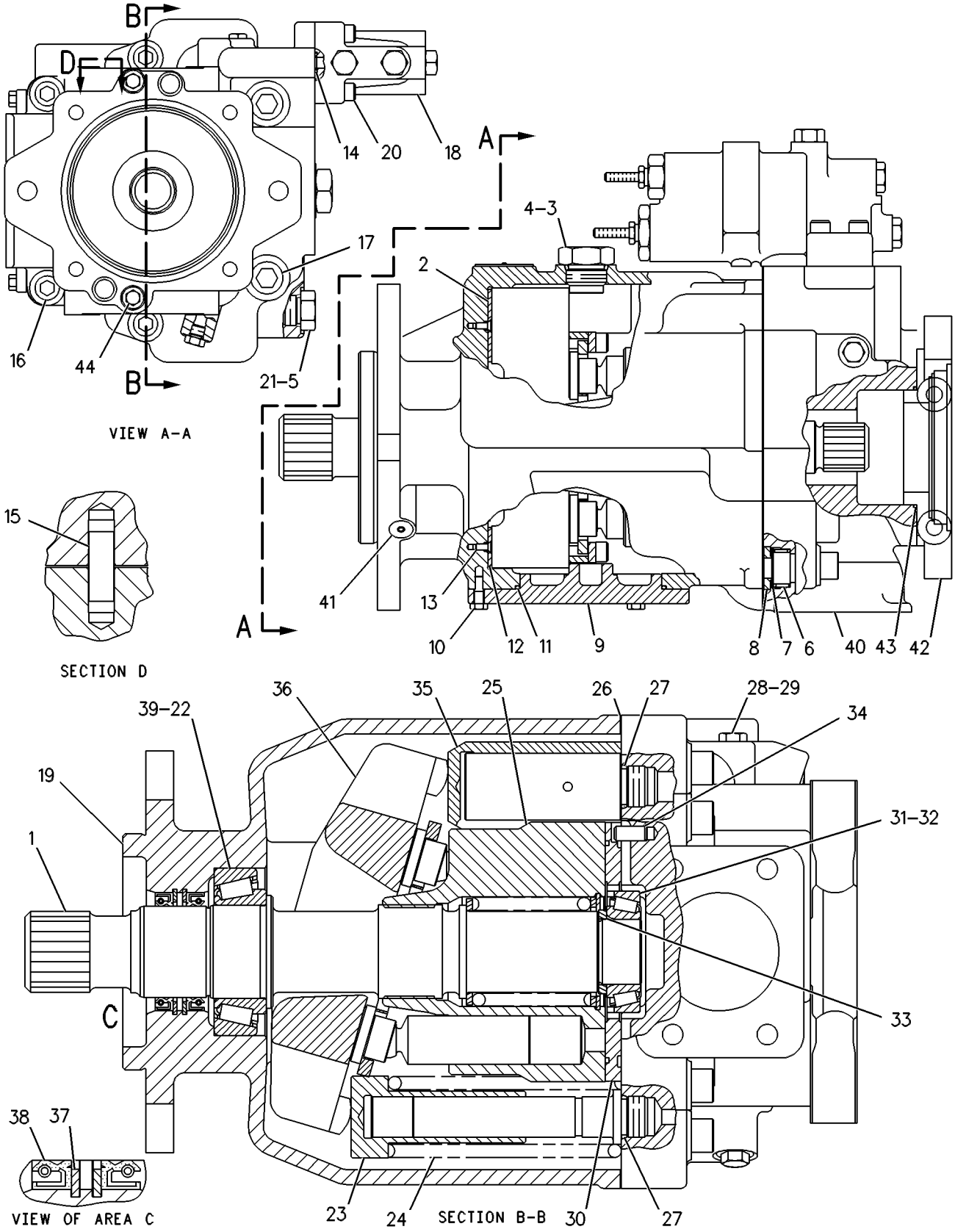

GRAPHIC #1 g00086442

HYDRAULIC SYSTEM

6E-4216 ROTATING GP-PUMP

S/N: 7KK1-UP

PART OF 121-4312 PUMP GP-PISTON

SMCS-5070 **i00110729**

NOTE	REF NO	GRAPHIC REF	PART NUMBER	QTY	PART NAME 1 2 3 4 5 6 (PRODUCT LEVEL)	SEE PAGE
	1	1	**9T-4906**	1	RING-RETAINING	
	2	1	**6E-4219**	1	GUIDE	
M	3	1	**6V-5192**	4	BOLT-SOCKET HEAD (M8X1.25X30MM)	
	4	1	**6E-4218**	2	PLATE-SPACER	
	5	1	**6E-4217**	2	PLATE-LIMITER	
	6	1	**9T-8452**	9	PISTON	
	7	1	**9T-8445**	1	GUIDE	
	8	1	**9T-8446**	1	SPRING	
	9	1	**9T-8448**	1	BARREL	
	10	1	**9T-8450**	1	PLATE-RETAINING	

M-METRIC PART

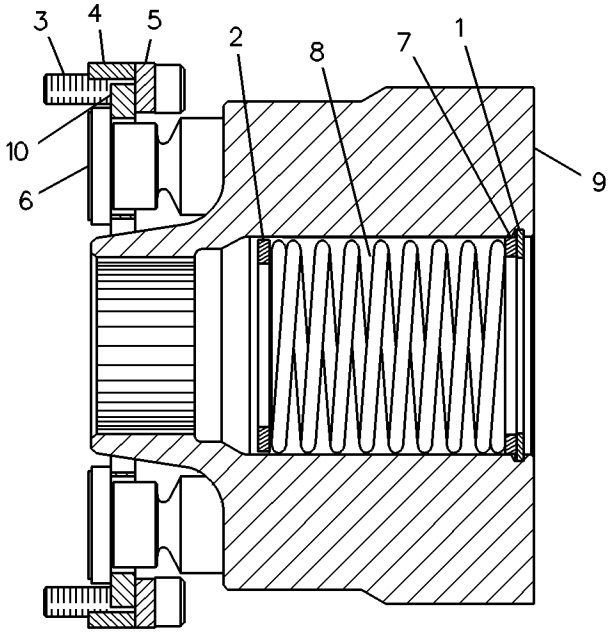

GRAPHIC #1 g00083062

100-3412 ROTATING GP-PUMP

S/N: 7KK1-UP

PART OF 121-4311 PUMP GP-PISTON

SMCS-5070 **i00107545**

NOTE	REF NO	GRAPHIC REF	PART NUMBER	QTY	PART NAME 1 2 3 4 5 6 (PRODUCT LEVEL)	SEE PAGE
	1	1	**9T-7774**	1	BARREL	
	2	1	**3J-8500**	1	RING-RETAINING	
	3	1	**9T-7769**	1	GUIDE-OUTER	
M	4	1	**6V-5192**	4	BOLT-SOCKET HEAD (M8X1.25X30MM)	
	5	1	**100-3410**	2	PLATE	
	6	1	**100-3411**	2	PLATE-SPACER	
	7	1	**9T-7765**	9	PISTON	
	8	1	**9T-7767**	1	PLATE-RETRACTION	
	9	1	**9T-7773**	1	GUIDE-INNER	
	10	1	**9T-7771**	1	SPRING	

M-METRIC PART

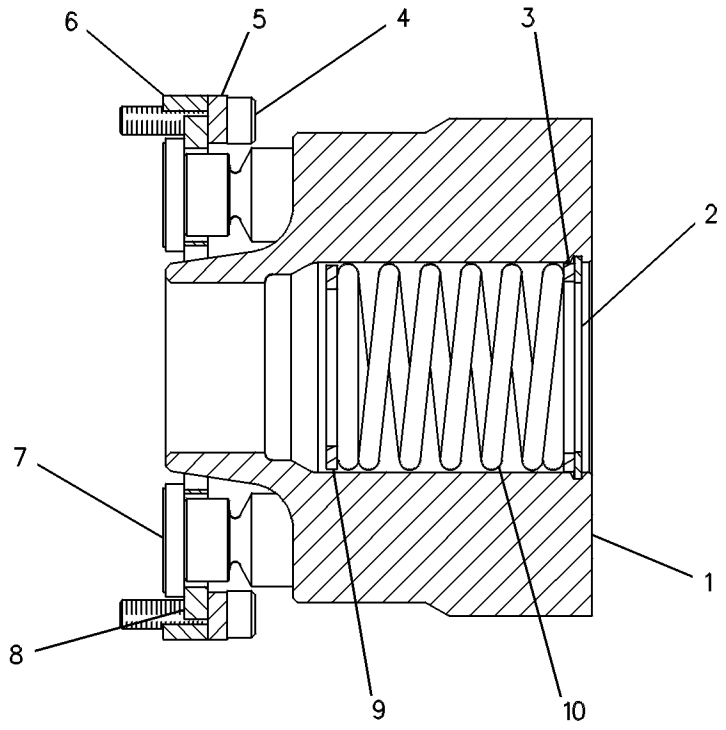

GRAPHIC #1 g00084780

6E-4221 SWASHPLATE GP

S/N: 7KK1-UP

PART OF 121-4312 PUMP GP-PISTON

FIELD REPLACEMENT ORDER 184-1527—PAGE 685

SMCS-5070 **i01246590**

NOTE	PART NUMBER	QTY	PART NAME 1 2 3 4 5 6 (PRODUCT LEVEL)	SEE PAGE
	139-0532	2	BLOCK-STOP	
	8F-7219	2	SEAL-O-RING (4.47MM ID)	

100-3416 SWASHPLATE GP

S/N: 7KK1-UP

PART OF 121-4311 PUMP GP-PISTON

FIELD REPLACEMENT ORDER 169-3290—PAGE 684

SMCS-5070 **i00107546**

NOTE	REF NO	GRAPHIC REF	PART NUMBER	QTY	PART NAME 1 2 3 4 5 6 (PRODUCT LEVEL)	SEE PAGE
	1	1	**139-0532**	2	BLOCK-STOP	
	2	1	**8F-7219**	2	SEAL-O-RING (4.47MM ID)	

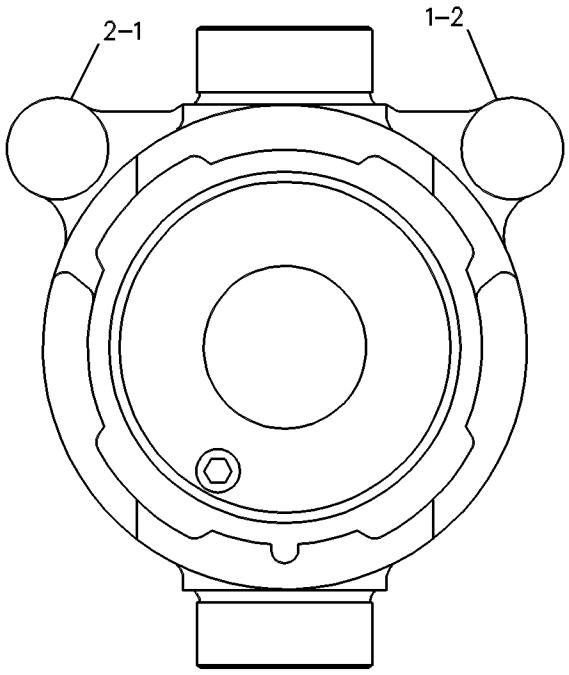

GRAPHIC #1 g00088794

HYDRAULIC SYSTEM

169-3290 SWASHPLATE GP

S/N: 7KK1-UP

FIELD REPLACEMENT FOR 100-3416—PAGE 683

SMCS-5070 **i01067918**

NOTE	PART NUMBER	QTY	PART NAME 1 2 3 4 5 6 (PRODUCT LEVEL)	SEE PAGE
	1H-3937	2	PIN	
	167-1801	2	STOP-SWASHPLATE	

HYDRAULIC SYSTEM

184-1527 SWASHPLATE GP

S/N: 7KK1-UP

FIELD REPLACEMENT FOR 6E-4221—PAGE 682

SMCS-5070 **i01247539**

NOTE	PART NUMBER	QTY	PART NAME 1 2 3 4 5 6 (PRODUCT LEVEL)	SEE PAGE
	1H-3937	2	PIN	
	167-1801	2	STOP-SWASHPLATE	

HYDRAULIC SYSTEM

9T-5604 SWIVEL GP

S/N: 7KK1-82

PART OF 142-2310 LINES GP-FRONT

SMCS-5060 **i00110751**

NOTE	REF NO	GRAPHIC REF	PART NUMBER	QTY	PART NAME 1 2 3 4 5 6 (PRODUCT LEVEL)	SEE PAGE
B	1	1	**5J-1246**	6	SHIM (.13MM THK)	
	2	1	**4K-1493**	2	SCREW-HOLLOW	
	3	1	**8J-0380**	1	RETAINER	
	4	1	**9T-5603**	1	BODY	
	5	1	**8J-2331**	7	SEAL	
	6	1	**2H-3928**	7	SEAL-O-RING (107.54MM ID)	
	7	1	**8J-0386**	1	ROTOR	
	8	1	**5P-2566**	4	BOLT (1/2-13X1.50IN)	
		1	**8T-4223**	4	WASHER-HARD (3MM THK)	
	9	1	**3H-0107**	4	SEAL-O-RING	
	10	1	**8J-0377**	1	COVER	
	11	1	**4J-9964**	2	SEAL	
	12	1	**8J-2330**	2	SEAL	

B-USE AS REQUIRED

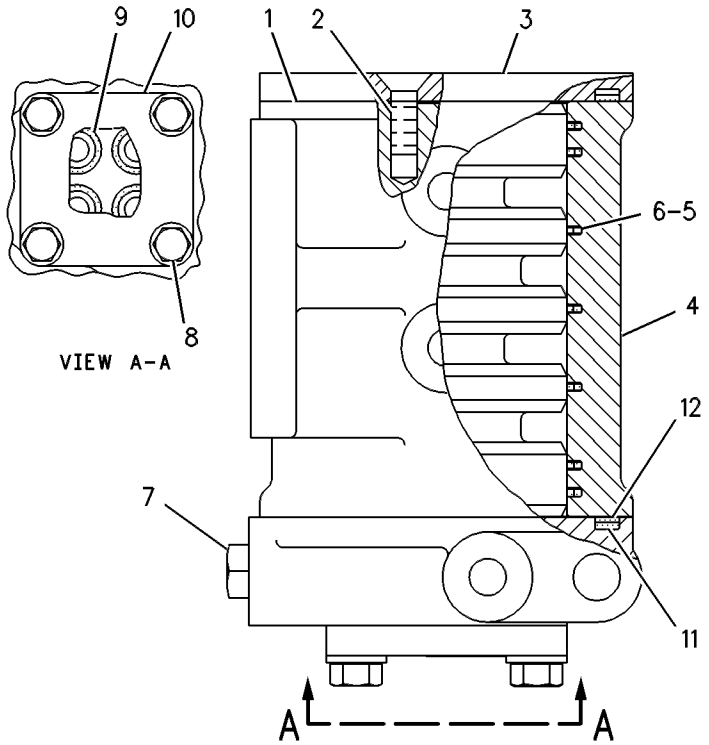

GRAPHIC #1 g00085646

173-1011 SWIVEL GP

S/N: 7KK83-UP

PART OF 142-2310 LINES GP-FRONT

SMCS-5060 **i01337016**

NOTE	REF NO	GRAPHIC REF	PART NUMBER	QTY	PART NAME 1 2 3 4 5 6 (PRODUCT LEVEL)	SEE PAGE
	1	1	**173-1009**	1	RETAINER	
	2	1	**8J-2331**	7	SEAL	
	3	1	**2H-3928**	7	SEAL-O-RING (107.54MM ID)	
	4	1	**173-1007**	2	SEAL	
	5	1	**9T-5603**	1	BODY	
	6	1	**4J-9964**	2	SEAL	
	7	1	**8T-4223**	4	WASHER-HARD (3MM THK)	
	8	1	**5P-2566**	6	BOLT (1/2-13X1.50 IN)	
	9	1	**3H-0107**	4	SEAL-O-RING (21.82MM ID)	
	10	1	**8J-0377**	1	COVER	
	11	1	**173-1008**	1	ROTOR	
B	12	1	**5J-1246**	6	SHIM (.13MM THK)	

B-USE AS REQUIRED

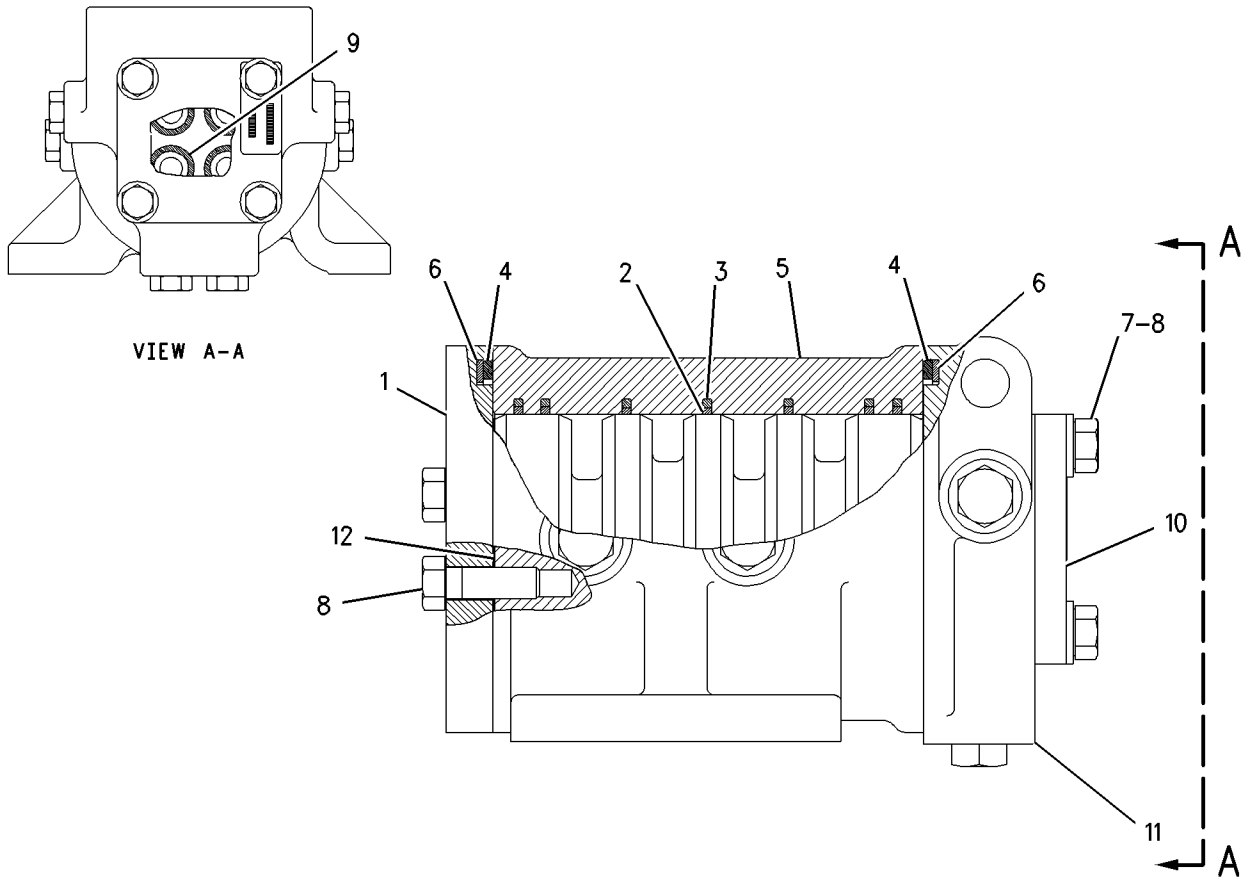

GRAPHIC #1 g00710910

HYDRAULIC SYSTEM

114-6430 TANK & FILTER GP-HYDRAULIC

S/N: 7KK1-UP

PART OF 8X-9033 TANK & MTG GP-HYDRAULIC

SMCS-4332, 5056, 5068 **i00690527**

NOTE	REF NO	GRAPHIC REF	PART NUMBER	QTY	PART NAME 1 2 3 4 5 6 (PRODUCT LEVEL)	SEE PAGE
	1	1	**119-3150**	1	TANK AS	
		1	**7J-5544**	1	FITTING (3/4X16 THD)	
M		1	**8T-4219**	2	STUD-WELD (M10X1.5X17.5MM)	
	2	1	**129-4887**	1	COVER AS	
M	3	1	**6V-4248**	70	BOLT (M10X1.50X25MM)	
M	4	1	**6V-7744**	72	LOCKNUT (M10X1.50 THD)	
	5	1	**8J-8543**	1	PLATE	
	6	1	**5H-6005**	4	SEAL-O-RING (10.77MM ID)	
M	7	1	**6V-7732**	4	BOLT (M10X1.5X25MM)	
	8	1	**6J-1081**	1	GLASS-SIGHT	
	9	1	**9T-4105**	1	RETAINER	
	10	1	**6J-1080**	1	GROMMET	
	11	1	**9J-1985**	1	TUBE AS	
	12	1	**1L-4349**	1	SPRING	
	13	1	**3G-3498**	1	FLANGE	
	14	1	**5K-9107**	2	BOLT-LOCKING (3/8-16X0.75IN)	
	15	1	**9J-1988**	1	VALVE	
	16	1	**4M-6921**	1	SPRING-BUMPER	
	17	1	**2K-4973**	1	LOCKNUT (3/8-16 THD)	
	18	1	**7D-1195**	1	SEAL-O-RING (56.52MM ID)	
	19	1	**9J-1979**	1	RETAINER AS	
	20	1	**119-3165**	1	ROD	
	21	1	**1R-0722**	2	ELEMENT AS-HYD REVERSE FLOW	
	22	1	**141-9661**	1	SPACER	
M	23	1	**6V-8675**	4	BOLT (M12X1.75X35MM)	
	24	1	**5P-8245**	4	WASHER (3MM THK)	
	25	1	**0S-0509**	2	BOLT (3/8-16X.75IN)	
	26	1	**9J-1991**	1	HANDLE	
	27	1	**6E-2267**	1	CAP	
	28	1	**6D-9157**	1	SEAL-O-RING (142.24MM ID)	
D	29	1	**5P-9119**		SEALANT (2.7 M)	
	30	1	**1U-2827**	1	GUIDE-VALVE	
	31	1	**7B-3039**	1	SPRING	
	32	1	**8J-8783**	1	VALVE	
	33	1	**8J-8782**	1	BODY-DRAIN VALVE	
	34	1	**9J-7031**	1	PLUG-DRAIN	
	35	1	**5M-2057**	1	SEAL-O-RING (34.59MM ID)	
	36	1	**6V-5839**	2	WASHER (2.5MM THK)	
	37	1	**8T-3298**	1	SEAL-RECTANGULAR (51.7MM ID)	
	38	1	**086-0507**	1	PIN	
	39	1	**3D-6678**	1	STRAINER AS	
	40	1	**7B-2805**	1	LOCKRING	
	41	1	**4J-3815**	1	GASKET	
	42	1	**8T-2275**	1	BALL	
	43	1	**4J-3754**	1	CAP-FILLER	
	44	1	**4J-3816**	1	PLATE	
	45	1	**5D-1902**	1	COVER-HYDRAULIC CAP	
	46	1	**5D-1901**	1	WASHER (0.105MM THK)	
	47	1	**1M-8649**	1	RING-RETAINING	
	48	1	**1L-5072**	1	DOWEL	
	49	1	**9M-7394**	1	LEVER	
	50	1	**1N-5998**	1	PLUG-O-RING (1 7/8-12 THD)	
	51	1	**6K-6307**	1	SEAL-O-RING (43.69MM ID)	

D-ORDER BY THE METER
M-METRIC PART

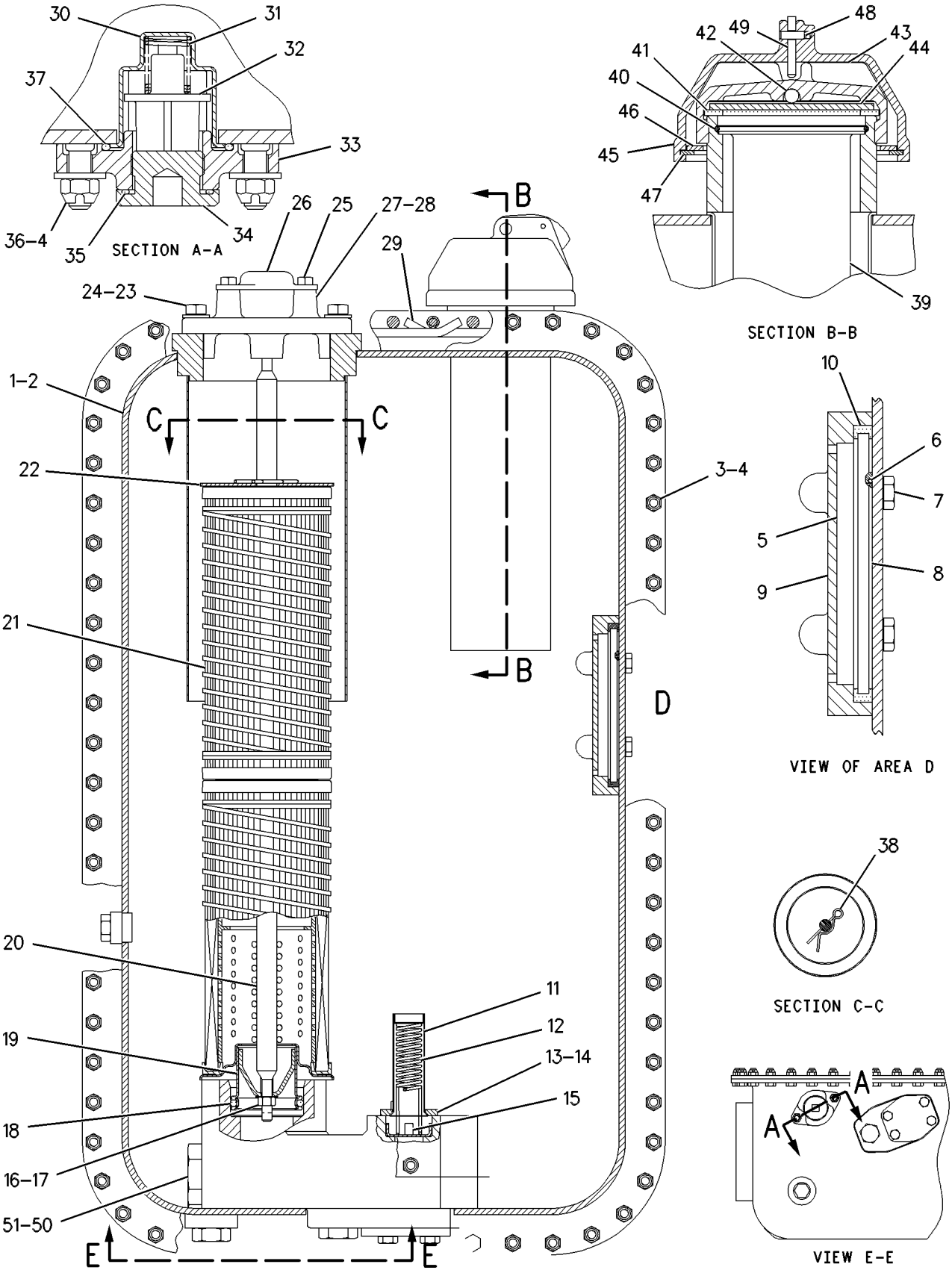

GRAPHIC #1

g00298138

HYDRAULIC SYSTEM

8X-9033 TANK & MTG GP-HYDRAULIC

S/N: 7KK1-UP

PART OF 8X-8404 HYDRAULIC AR

SMCS-4332, 5056, 5068 **i00110749**

NOTE	REF NO	GRAPHIC REF	PART NUMBER	QTY	PART NAME 1 2 3 4 5 6 (PRODUCT LEVEL)	SEE PAGE
	1	1	**118-8189**	2	BRACKET	
	2	1	**118-8192**	2	BRACKET	
	3	1	**118-8195**	1	BRACKET AS-LH	
	4	1	**119-6550**	1	PLATE-TREAD	
	5	1	**5P-1076**	28	WASHER-HARD (4MM THK)	
	6	1	**7X-0590**	10	WASHER-HARD (6.0MM THK)	
	7	1	**8D-3786**	10	MOUNTING	
M	8	1	**8T-4139**	18	BOLT (M12X1.75X30MM)	
M	9	1	**8T-4244**	10	NUT (M12X1.75 THD)	
M	10	1	**8T-4910**	10	BOLT (M12X1.75X60MM)	
	11	1	**118-8194**	1	BRACKET AS-RH	
		1	**7T-1099**	1	LINK	
	12	1	**119-6550**	1	PLATE-TREAD	
Y	13	1	**114-6430**	1	TANK & FILTER GP-HYDRAULIC	688

M-METRIC PART
Y-SEPARATE ILLUSTRATION

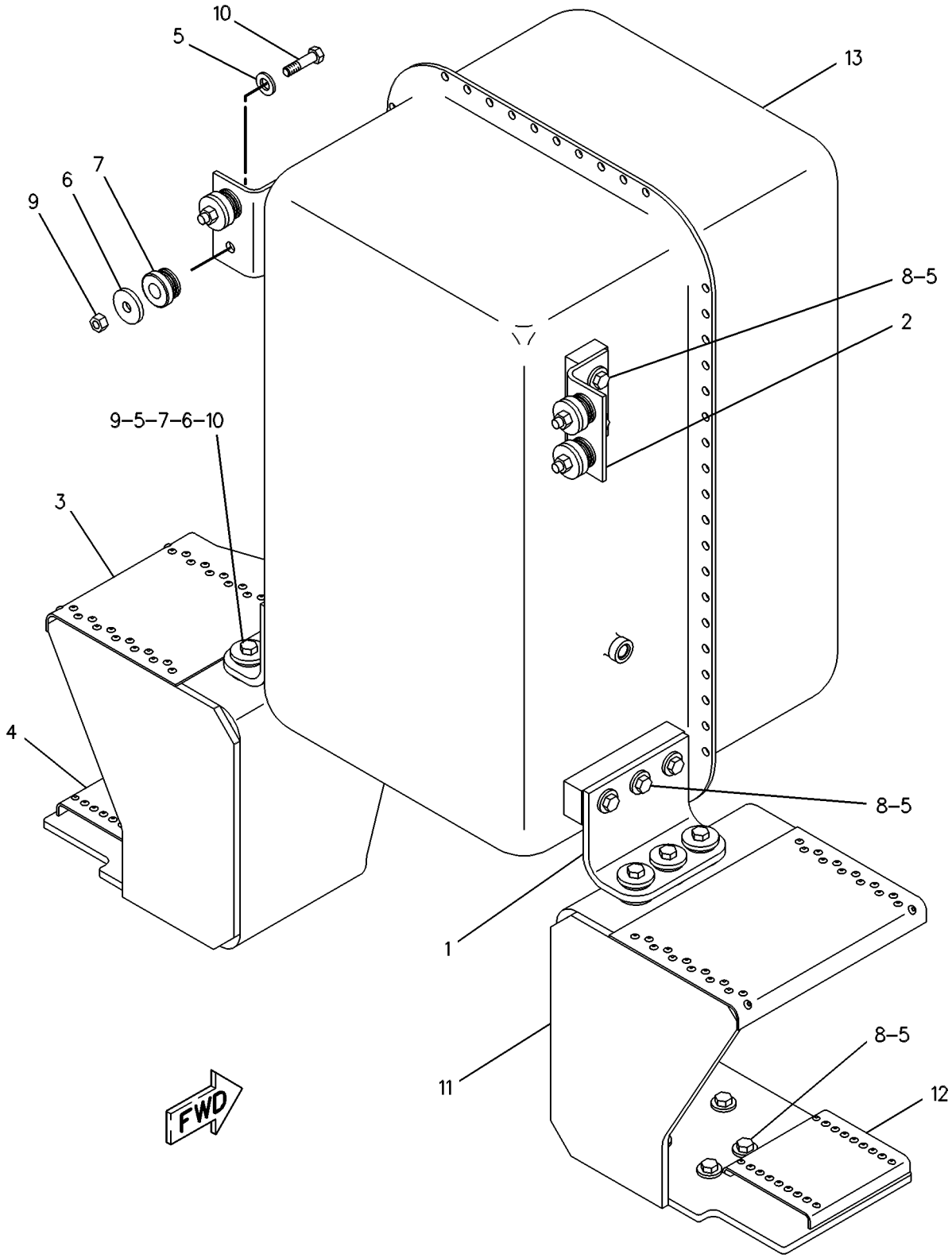

GRAPHIC #1 g00086980

HYDRAULIC SYSTEM

8X-9034 VALVE & LINKAGE GP

S/N: 7KK1-78

PART OF 8X-9003 PLATFORM AR

SMCS-5051, 5063 **i00543618**

NOTE	REF NO	GRAPHIC REF	PART NUMBER	QTY	PART NAME 1 2 3 4 5 6 (PRODUCT LEVEL)	SEE PAGE
Y	1	1	**144-1568**	1	VALVE GP-BANK 4	698
Y	2	1	**117-1815**	1	VALVE GP-BANK	702
	3	1	**8X-5499**	2	RETAINER	
	4	1	**101-2457**	2	LEVER	
	5	1	**8D-5634**	2	LEVER	
	6	1	**2G-6740**	1	KNOB-RIPPER	
	7	1	**7H-3641**	17	ROD END	
	8	1	**117-1969**	9	ROD	
	9	1	**8D-5633**	2	LEVER	
	10	1	**101-2458**	1	LEVER	
	11	1	**8X-4279**	2	SPACER	
	12	1	**8D-5640**	11	BEARING	
B	13	1	**8D-5636**	4	SHIM (.254MM THK)	
B	14	1	**8D-5637**	4	SHIM (.762MM THK)	
	15	1	**6L-1962**	9	NUT-JAM	
	16	1	**4M-6425**	17	BOLT (5/16-18X1IN)	
	17	1	**117-1968**	35	SPACER	
	18	1	**4L-6454**	2	BOLT (3/8-16X1.0IN)	
	19	1	**8D-5641**	9	BEARING	
	20	1	**2G-6757**	1	KNOB-BLADE LIFT	
	21	1	**2G-8573**	2	CAP	
	22	1	**2G-6749**	1	KNOB-SIDESHIFT	
	23	1	**2G-6747**	1	KNOB-BLADE TIP	
	24	1	**8D-5632**	2	LEVER	
	25	1	**2G-6751**	1	KNOB-CIRCLE DRIVE	
	26	1	**2G-6748**	1	KNOB-BLADE LIFT	
	27	1	**2G-6756**	1	KNOB-WHEEL LEAN	
	28	1	**2G-6752**	1	KNOB-ARTICULATION	
	29	1	**2G-6755**	1	KNOB-CENTERSHIFT	
	30	1	**5P-1075**	2	WASHER-HARD (3MM THK)	
	31	1	**7X-7729**	8	WASHER (3MM THK)	
	32	1	**2G-8572**	2	WASHER (2.54MM THK)	
M	33	1	**8T-4244**	2	NUT (M12X1.75 THD)	
	34	1	**6V-8186**	18	NUT-FULL (5/16-24 THD)	
	35	1	**9D-2804**	1	SHAFT-GOVERNOR CONTROL	
	36	1	**8F-6437**	6	WASHER (4.76MM THK)	
	37	1	**9M-1853**	6	MOUNTING	
M	38	1	**8T-4194**	6	BOLT (M12X1.75X50MM)	

B-USE AS REQUIRED
M-METRIC PART
Y-SEPARATE ILLUSTRATION

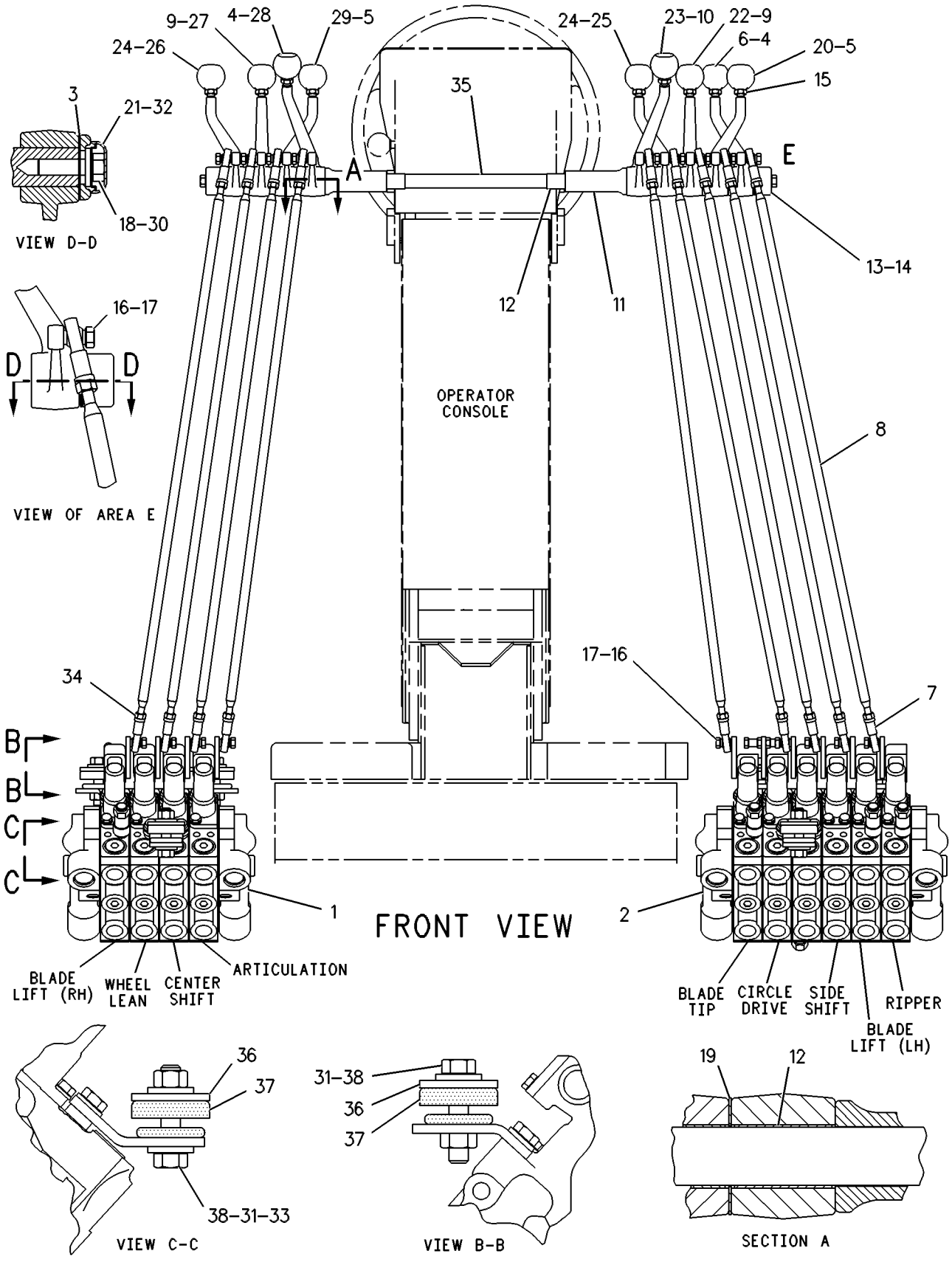

GRAPHIC #1 g00263744

HYDRAULIC SYSTEM

8X-9034 VALVE & LINKAGE GP

S/N: 7KK79-UP

PART OF 8X-9003 PLATFORM AR

SMCS-5051, 5063 **i01429279**

NOTE	REF NO	GRAPHIC REF	PART NUMBER	QTY	PART NAME 1 2 3 4 5 6 (PRODUCT LEVEL)	SEE PAGE
CY	1	1	**165-4499**	1	VALVE GP-BANK 4	700
CY	2	1	**165-4563**	1	VALVE GP-CONTROL	730
	3	1	**8X-5499**	2	RETAINER	
	4	1	**101-2457**	2	LEVER	
	5	1	**8D-5634**	2	LEVER	
	6	1	**2G-6740**	1	KNOB-RIPPER	
	7	1	**7H-3641**	17	ROD END	
	8	1	**117-1969**	9	ROD	
	9	1	**8D-5633**	2	LEVER	
	10	1	**101-2458**	1	LEVER	
	11	1	**8X-4279**	2	SPACER (84MM THK)	
	12	1	**8D-5640**	11	BEARING	
B	13	1	**8D-5636**	4	SHIM (.254MM THK)	
B	14	1	**8D-5637**	4	SHIM (.762MM THK)	
	15	1	**6L-1962**	9	NUT-JAM	
	16	1	**4M-6425**	17	BOLT (5/16-18X1 IN)	
	17	1	**117-1968**	35	SPACER	
	18	1	**4L-6454**	2	BOLT (3/8-16X1 IN)	
	19	1	**8D-5641**	9	BEARING	
	20	1	**2G-6757**	1	KNOB-BLADE LIFT	
	21	1	**2G-8573**	2	CAP	
	22	1	**2G-6749**	1	KNOB-SIDESHIFT	
	23	1	**2G-6747**	1	KNOB-BLADE TIP	
	24	1	**8D-5632**	2	LEVER	
	25	1	**2G-6751**	1	KNOB-CIRCLE DRIVE	
	26	1	**2G-6748**	1	KNOB-BLADE LIFT	
	27	1	**2G-6756**	1	KNOB-WHEEL LEAN	
	28	1	**2G-6752**	1	KNOB-ARTICULATION	
	29	1	**2G-6755**	1	KNOB-CENTERSHIFT	
	30	1	**5P-1075**	2	WASHER-HARD (10.2X22.5X3MM THK)	
	31	1	**7X-7729**	8	WASHER (11X25X3MM THK)	
	32	1	**2G-8572**	2	WASHER-SPECIAL (10X27.81X2.54MM THK)	
M	33	1	**8T-4244**	2	NUT (M12X1.75 THD)	
	34	1	**6V-8186**	18	NUT-FULL (5/16-24 THD)	
	35	1	**9D-2804**	1	SHAFT-GOVERNOR CONTROL	
	36	1	**8F-6437**	6	WASHER (13.5X50.8X4.76MM THK)	
	37	1	**9M-1853**	6	MOUNTING	
M	38	1	**8T-4194**	6	BOLT (M12X1.75X50MM)	

B-USE AS REQUIRED
C-CHANGE FROM PREVIOUS TYPE
M-METRIC PART
Y-SEPARATE ILLUSTRATION

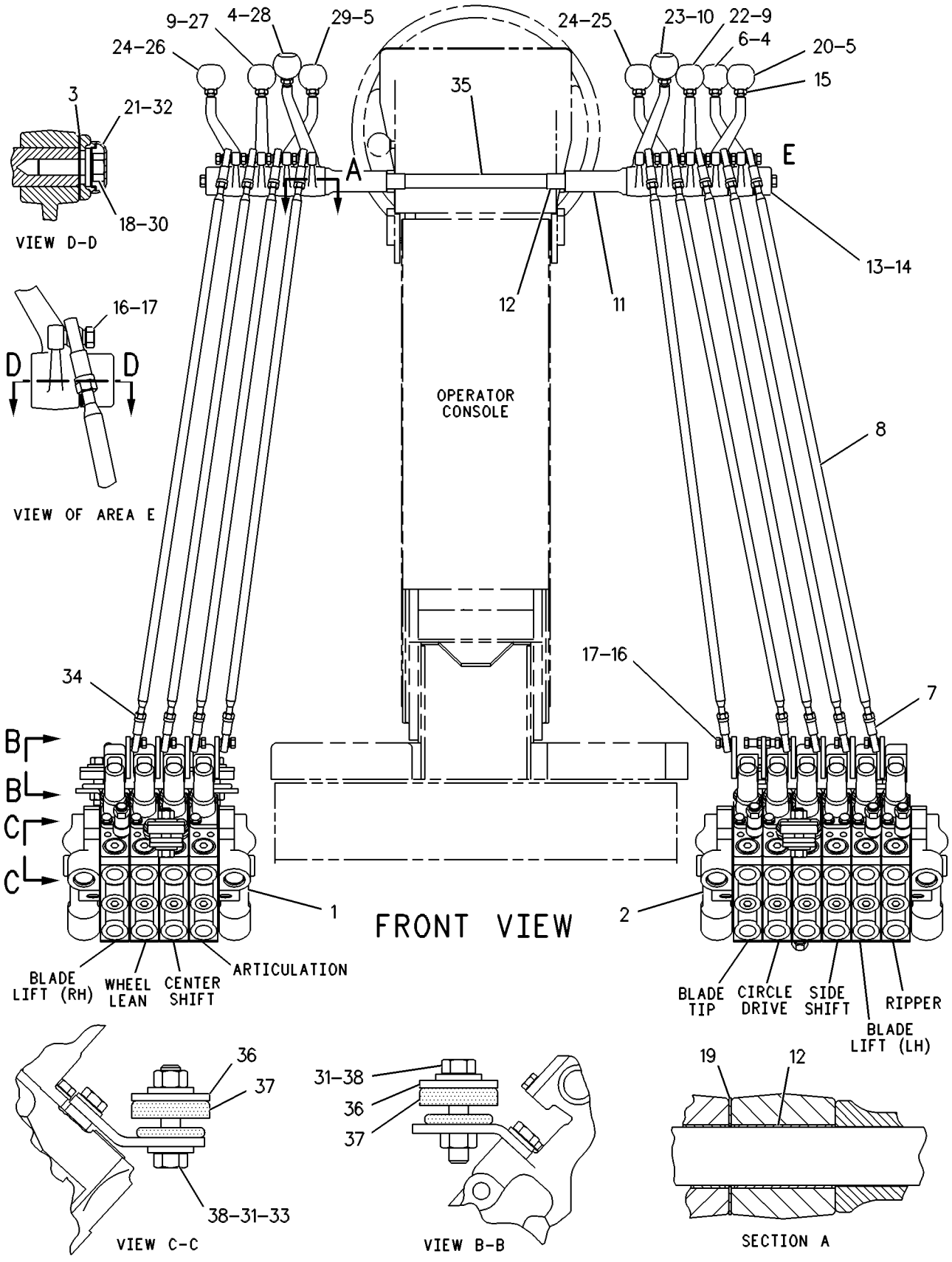

GRAPHIC #1 g00263744

7T-6517 VALVE & MTG GP-SOLENOID

S/N: 7KK1-UP

PART OF 8X-9018, 8X-9019 LINES GP-HYDRAULIC

TYPE 1

SMCS-5479 **i00999925**

NOTE	REF NO	GRAPHIC REF	PART NUMBER	QTY	PART NAME 1 2 3 4 5 6 (PRODUCT LEVEL)	SEE PAGE
Y	1	1	**6T-8046**	1	VALVE GP-SOLENOID	745
C	2	1	**8C-6162**	1	MANIFOLD	

C-CHANGE FROM PREVIOUS TYPE
Y-SEPARATE ILLUSTRATION

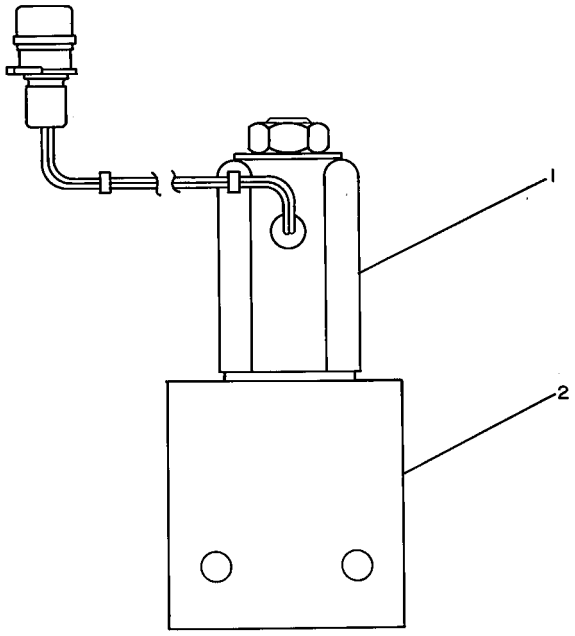

GRAPHIC #1 g00082062

7T-6517 VALVE & MTG GP-SOLENOID

S/N: 7KK1-UP

PART OF 8X-9018, 8X-9019 LINES GP-HYDRAULIC

TYPE 2

SMCS-5479 **i01294348**

NOTE	REF NO	GRAPHIC REF	PART NUMBER	QTY	PART NAME 1 2 3 4 5 6 (PRODUCT LEVEL)	SEE PAGE
Y	1	1	**149-2658**	1	VALVE GP-SOLENOID	746
	2	1	**8C-6162**	1	MANIFOLD	

Y-SEPARATE ILLUSTRATION

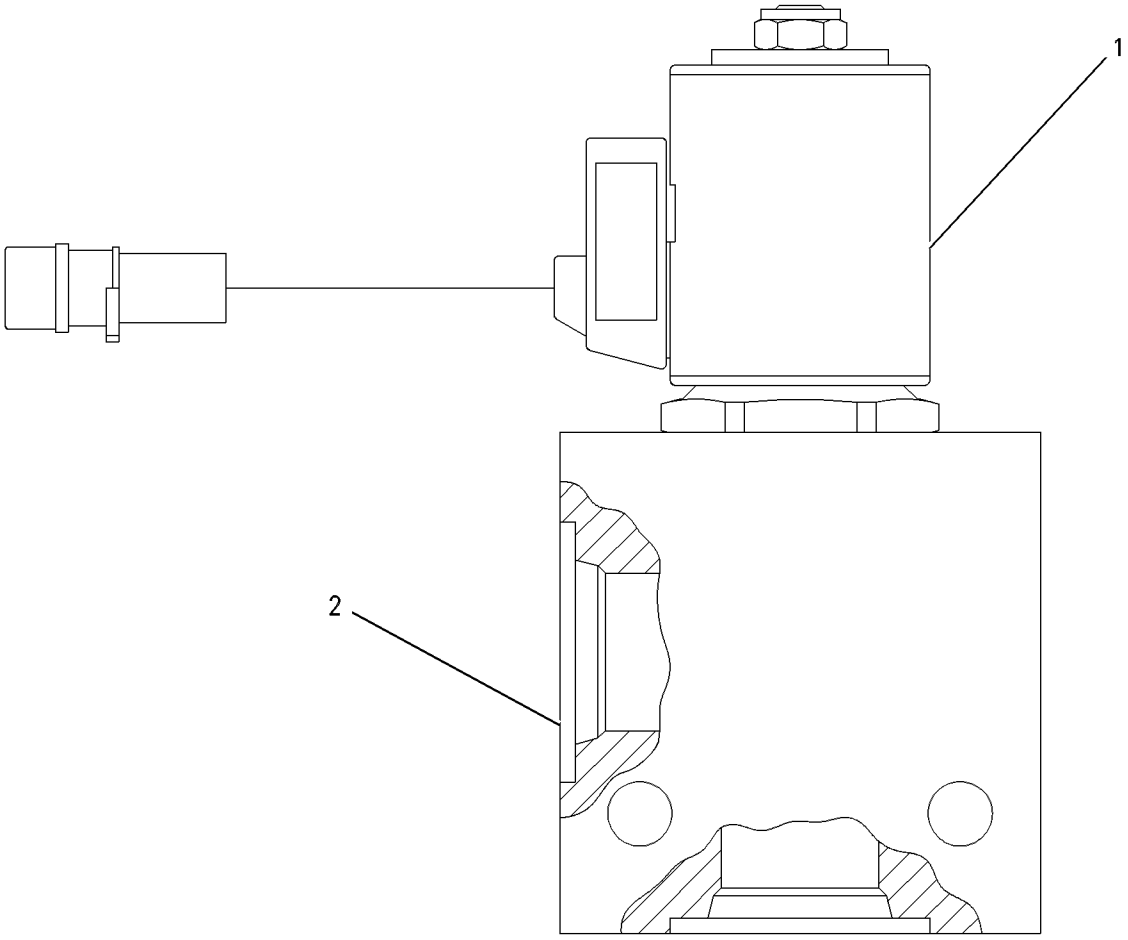

GRAPHIC #1 g00355892

HYDRAULIC SYSTEM

144-1568 VALVE GP-BANK 4

S/N: 7KK1-78
RH
PART OF 8X-9034 VALVE & LINKAGE GP

SMCS-5051 **i00546577**

NOTE	REF NO	GRAPHIC REF	PART NUMBER	QTY	PART NAME 1 2 3 4 5 6 (PRODUCT LEVEL)	SEE PAGE
M	1	1	**7X-2546**	2	BOLT (M10X1.50X180MM)	
M	2	1	**137-6720**	1	BOLT-HEX HEAD	
	3	1	**6B-0933**	2	SPACER	
	4	1	**101-0509**	5	PLATE-SEAL	
Y	5	1	**144-1186**	1	VALVE GP-CONTROL (ARTICULATION)	728
Y	6	1	**117-7876**	1	VALVE GP-CONTROL (CENTERSHIFT)	710
Y	7	1	**117-7877**	1	VALVE GP-CONTROL (WHEEL LEAN)	712
Y	8	1	**119-9546**	1	VALVE GP-CONTROL (BLADE LIFT)	726
M	9	1	**8T-4195**	2	BOLT (M10X1.50X30MM)	
	10	1	**102-8385**	1	MANIFOLD	
M	11	1	**8T-6466**	2	BOLT (M10X1.50X60MM)	
	12	1	**9S-4180**	1	PLUG-O-RING (5/16-24 THD)	
	13	1	**4J-7533**	1	SEAL-O-RING (6.07MM ID)	
	14	1	**8T-4121**	9	WASHER (2.5MM THK)	
M	15	1	**8T-4186**	1	BOLT (M10X1.50X40MM)	
	16	1	**104-7429**	1	PLATE	
M	17	1	**8T-4136**	4	BOLT (M10X1.50X25MM)	
	18	1	**117-2040**	1	BRACKET AS	
M	19	1	**8T-3597**	2	NUT-WELD (M12X1.75 THD)	

M-METRIC PART
Y-SEPARATE ILLUSTRATION

144-1568 VALVE GP-BANK 4 *(contd.)* i00546577

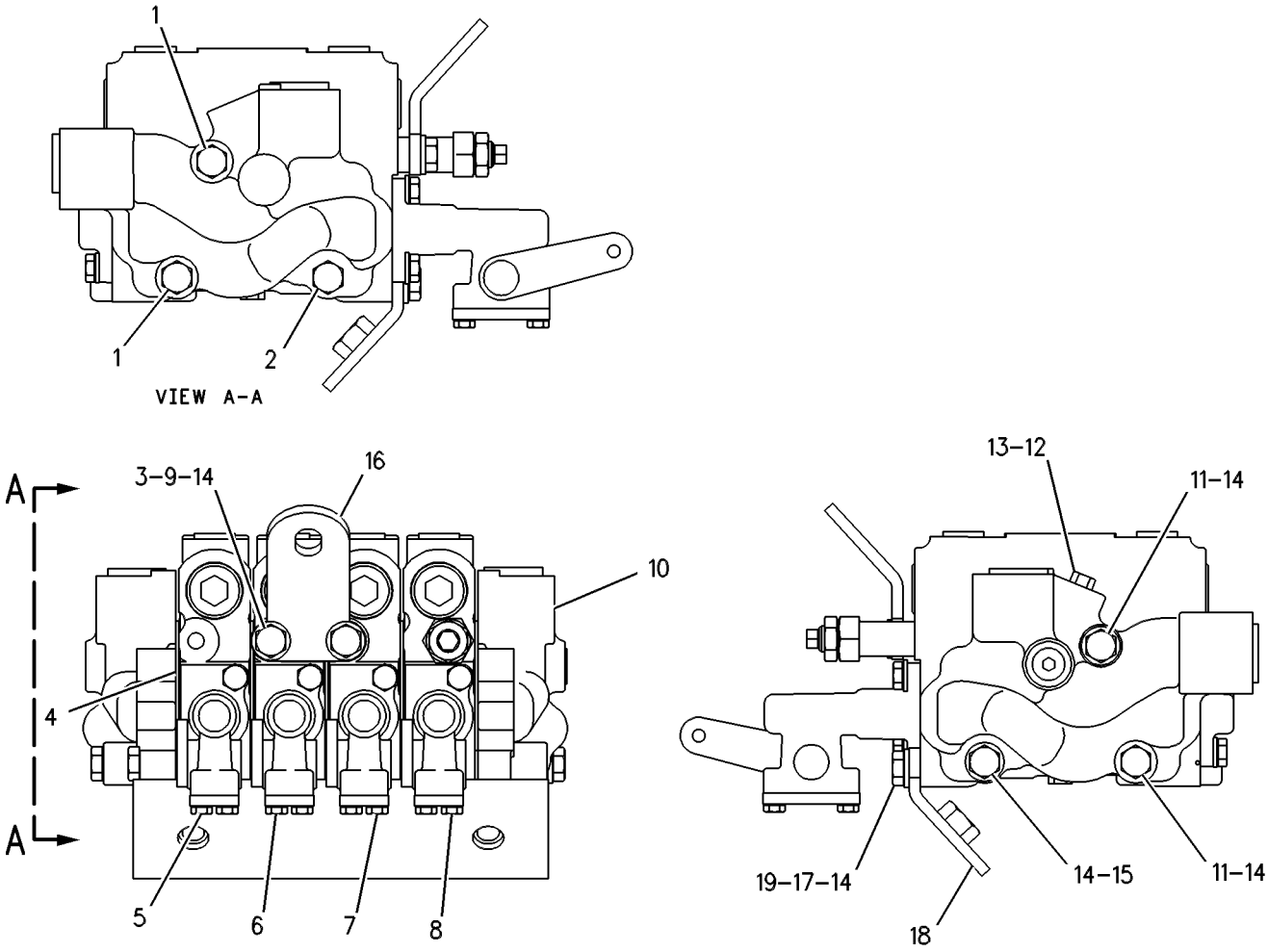

GRAPHIC #1 g00273997

HYDRAULIC SYSTEM

165-4499 VALVE GP-BANK 4—RH

S/N: 7KK79-UP

PART OF 8X-9034 VALVE & LINKAGE GP

SMCS-5051 **i01429236**

NOTE	REF NO	GRAPHIC REF	PART NUMBER	QTY	PART NAME 1 2 3 4 5 6 (PRODUCT LEVEL)	SEE PAGE
M	1	1	**7X-2546**	2	BOLT (M10X1.50X180MM)	
M	2	1	**137-6720**	1	BOLT-HEX HEAD (M10X1.50X160MM)	
	3	1	**118-6865**	1	MANIFOLD	
	4	1	**101-0509**	5	PLATE-SEAL	
Y	5	1	**144-1186**	1	VALVE GP-CONTROL (ARTICULATION)	728
Y	6	1	**117-7876**	1	VALVE GP-CONTROL (CENTER SHIFT)	710
Y	7	1	**117-7877**	1	VALVE GP-CONTROL (WHEEL LEAN)	712
Y	8	1	**167-4327**	1	VALVE GP-CONTROL (BLADE LIFT)	732
Z	9	1			PLATE-IDENTIFICATION	
	10	1	**102-8385**	1	MANIFOLD	
M	11	1	**8T-6466**	2	BOLT (M10X1.50X60MM)	
	12	1	**9S-4180**	1	PLUG-O-RING	
	13	1	**4J-7533**	1	SEAL-O-RING	
	14	1	**8T-4121**	9	WASHER-HARD (11X21X2.5MM THK)	
M	15	1	**8T-4186**	1	BOLT (M10X1.5X40MM)	
	16	1	**117-2040**	1	BRACKET AS	
M		1	**8T-3597**	2	NUT-WELD (M12X1.75 THD)	
M	17	1	**8T-4136**	4	BOLT (M10X1.5X25MM)	
	18	1	**104-7429**	1	PLATE	
M	19	1	**8T-4195**	2	BOLT (M10X1.5X30MM)	
	20	1	**6B-0933**	2	SPACER (10.31X19.05X6.35MM THK)	

M-METRIC PART
Y-SEPARATE ILLUSTRATION
Z-NOT SERVICED SEPARATELY

165-4499 VALVE GP-BANK 4 *(contd.)* i01429236

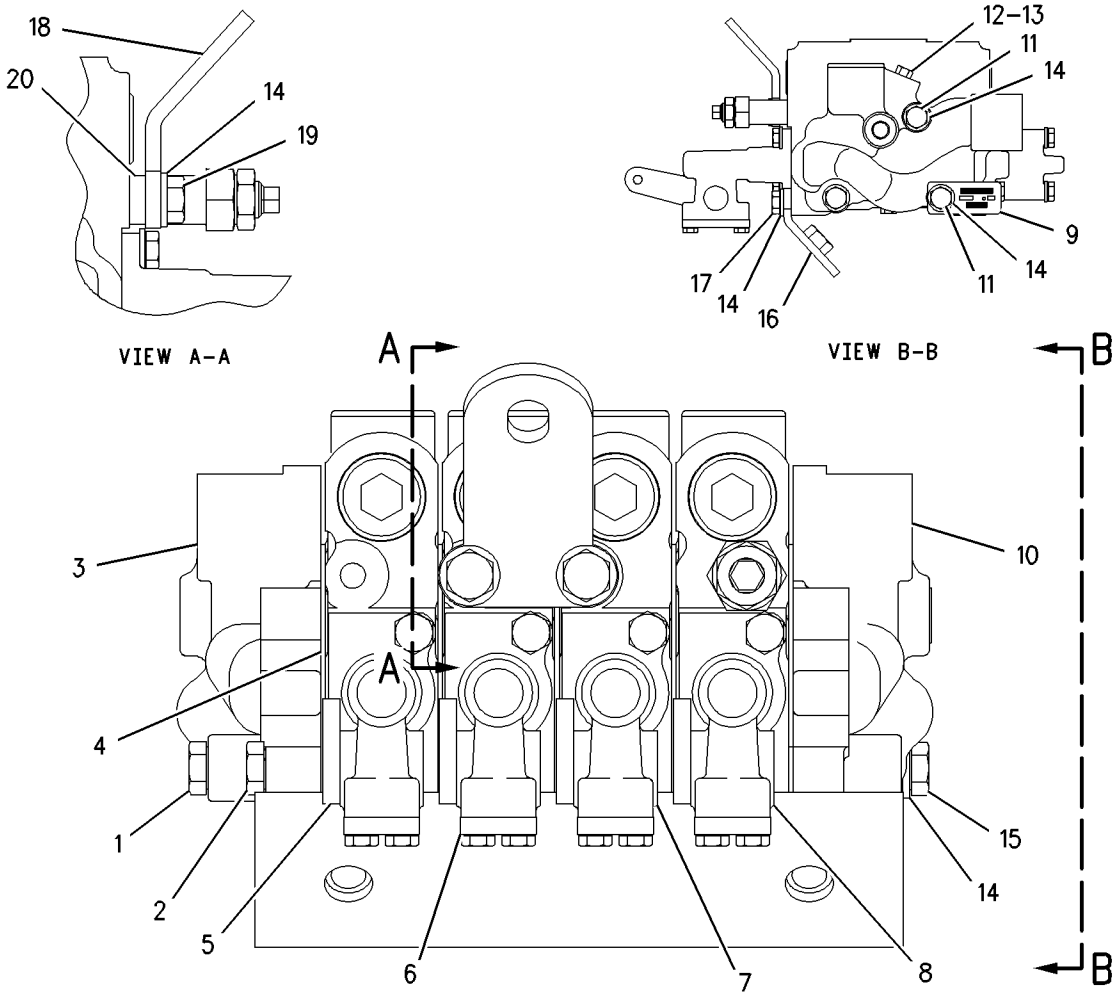

GRAPHIC #1 g00763460

HYDRAULIC SYSTEM

117-1815 VALVE GP-BANK 6

S/N: 7KK1-78
LH
PART OF 8X-9034 VALVE & LINKAGE GP

SMCS-5051 **i00698231**

NOTE	REF NO	GRAPHIC REF	PART NUMBER	QTY	PART NAME 1 2 3 4 5 6 (PRODUCT LEVEL)	SEE PAGE
M	1	1	**7X-0474**	2	BOLT (M10X1.5X220MM)	
M	2	1	**7X-2547**	1	BOLT (M10X1.5X200MM)	
	3	1	**118-6866**	1	MANIFOLD	
	4	1	**101-0509**	7	PLATE-SEAL	
Y	5	1	**117-7884**	1	VALVE GP-CONTROL (BLADE TIP)	720
Y	6	1	**117-7883**	1	VALVE GP-CONTROL (CIRCLE DRIVE)	718
Y	7	1	**117-7882**	1	VALVE GP-CONTROL (CIRCLE DRIVE)	716
Y	8	1	**117-7885**	1	VALVE GP-CONTROL (SIDESHIFT)	722
Y	9	1	**119-9538**	1	VALVE GP-CONTROL (BLADE LIFT)	724
Y	10	1	**117-7879**	1	VALVE GP-CONTROL (RIPPER)	714
	11	1	**102-6238**	1	MANIFOLD	
	12	1	**9S-4180**	1	PLUG-O-RING (5/16-24 THD)	
	13	1	**4J-7533**	1	SEAL-O-RING (6.07MM ID)	
M	14	1	**137-6719**	1	BOLT-HEX HEAD (M10X1.50X80MM)	
	15	1	**5B-5620**	1	BOLT (5/16-18X2.125IN)	
M	16	1	**8T-4198**	2	BOLT (M10X1.50X100MM)	
	17	1	**8T-4121**	9	WASHER (2.5MM THK)	
	18	1	**6B-0933**	2	SPACER	
	19	1	**7H-3641**	1	ROD END	
M	20	1	**8T-4136**	4	BOLT (M10X1.50X25MM)	
M	21	1	**8T-4195**	2	BOLT (M10X1.50X30MM)	
	22	1	**104-7429**	1	PLATE	
	23	1	**117-1968**	2	SPACER	
	24	1	**5B-3180**	3	NUT (5/16-18 THD)	
	25	1	**3F-9556**	2	LOCKWASHER (8.4MM ID)	
	26	1	**117-2040**	1	BRACKET AS	
M		1	**8T-3597**	2	NUT-WELD (M12X1.75 THD)	

M-METRIC PART
Y-SEPARATE ILLUSTRATION

117-1815 VALVE GP-BANK 6 *(contd.)* i00698231

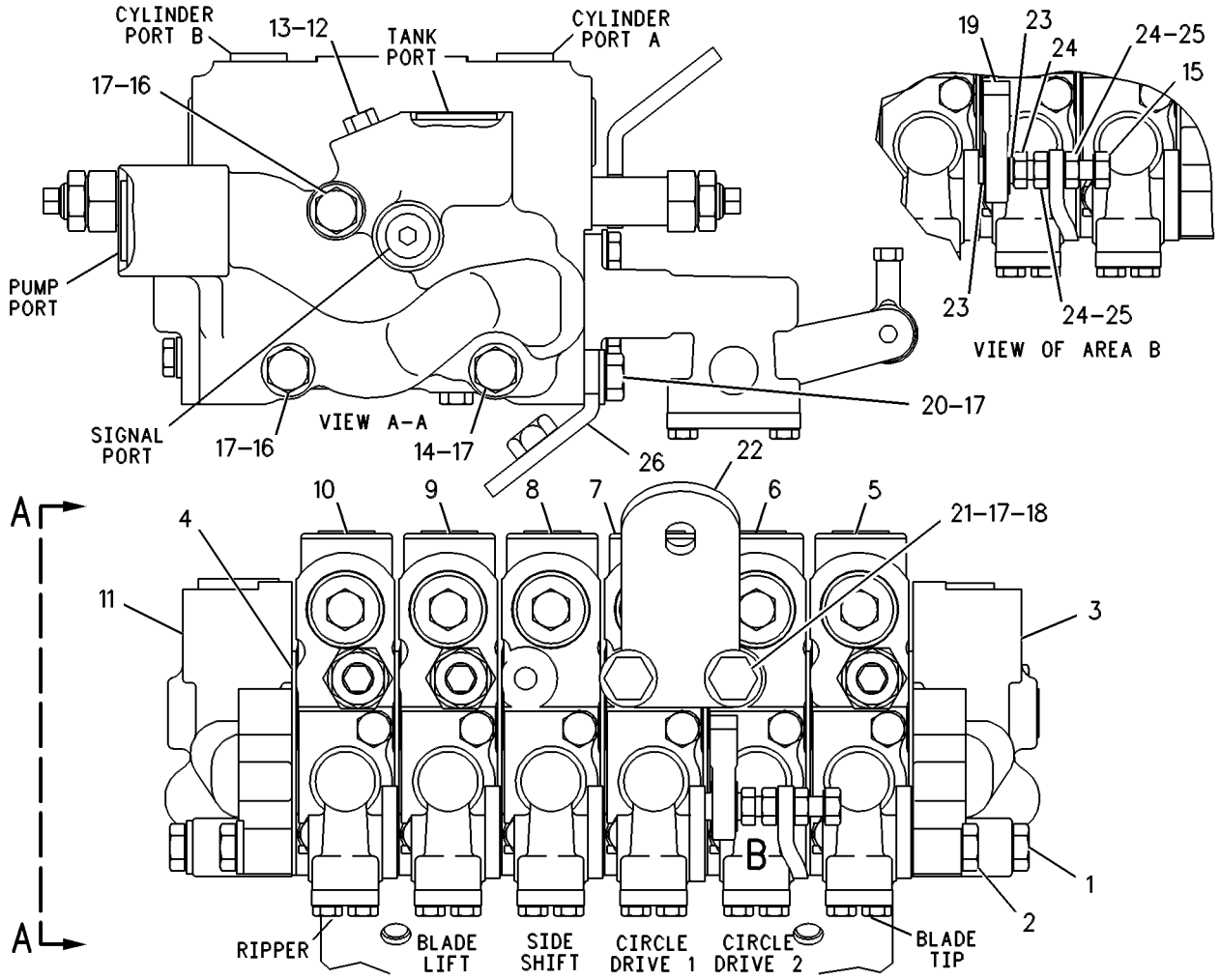

GRAPHIC #1 g00263771

HYDRAULIC SYSTEM

141-1811 VALVE GP-CHECK

S/N: 7KK1-UP

PART OF 8X-9018, 8X-9019 LINES GP-HYDRAULIC

SMCS-5067, 5079 **i00563914**

NOTE	REF NO	GRAPHIC REF	PART NUMBER	QTY	PART NAME 1 2 3 4 5 6 (PRODUCT LEVEL)	SEE PAGE
	1	1	**3D-2824**	1	SEAL-O-RING (23.47MM ID)	
	2	1	**6V-8398**	1	SEAL-O-RING (12.47MM ID)	

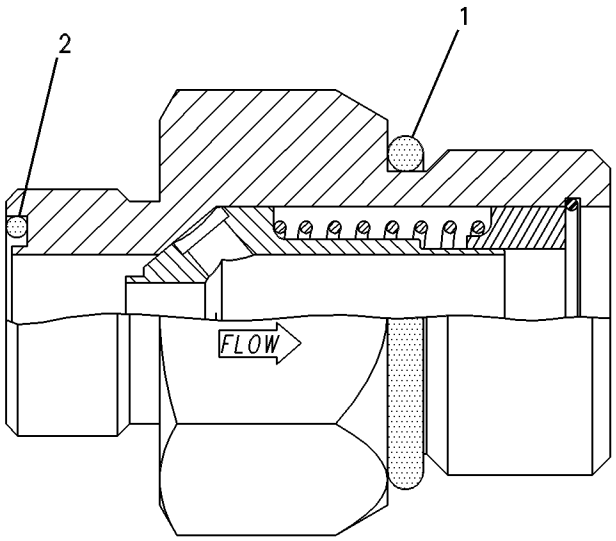

GRAPHIC #1 g00278308

6E-2866 VALVE GP-COMBINATION

S/N: 7KK1-UP
COMBINATION
PART OF 117-4079 VALVE GP-COMBINATION

SMCS-5064 **i01518125**

NOTE	REF NO	GRAPHIC REF	PART NUMBER	QTY	PART NAME 1 2 3 4 5 6 (PRODUCT LEVEL)	SEE PAGE
	1	1	**8J-6815**	2	PLUG-ORIFICE	
	2	1	**3P-9498**	1	PLUG-ORIFICE	

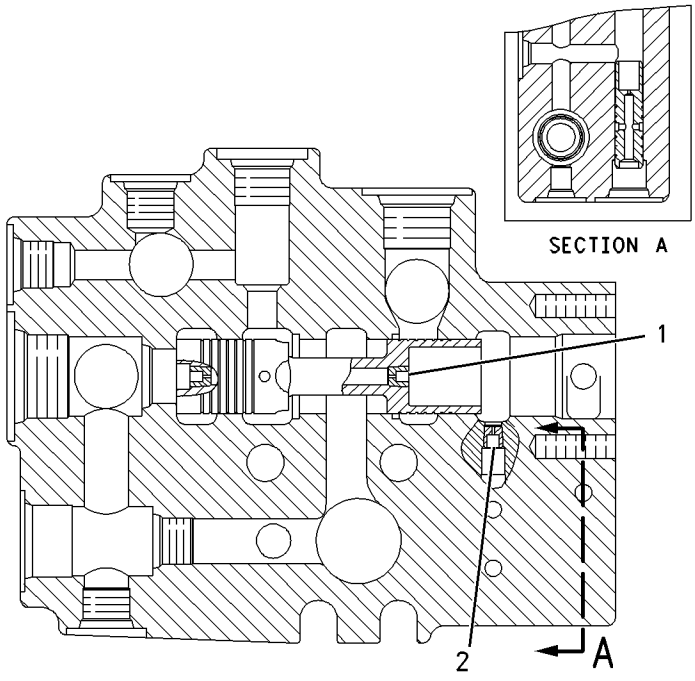

GRAPHIC #1 g00787826

HYDRAULIC SYSTEM

117-4079 VALVE GP-COMBINATION

S/N: 7KK1-UP
PART OF 8X-9027 LINES GP-PUMP
TYPE 1

SMCS-5064 **i01349679**

NOTE	REF NO	GRAPHIC REF	PART NUMBER	QTY	PART NAME 1 2 3 4 5 6 (PRODUCT LEVEL)	SEE PAGE
Y	1	1	*6E-2866*	1	VALVE GP-COMBINATION	705
Y	2	1	**127-8480**	1	VALVE GP-RELIEF	741
	3	1	**127-3598**	1	INSERT	
	4	1	**3T-8236**	1	SPRING	
M	5	1	**6V-5230**	2	BOLT (M10X1.5X60MM)	
	6	1	**6V-3965**	1	FITTING AS	
	7	1	**3J-1907**	1	SEAL-O-RING (11.89MM ID)	
	8	1	**6V-8647**	2	CONNECTOR-SEAL (7/16-20 THD)	
	9	1	**3J-7354**	2	SEAL-O-RING (8.92MM ID)	
	10	1	**6E-1923**	1	TUBE AS	
	11	1	**4J-5477**	2	SEAL-O-RING (8.61MM ID)	
Y	12	1	**4T-4935**	1	VALVE GP-RELIEF	738
	13	1	**9S-8009**	1	PLUG-O-RING (1 3/16-12 THD)	
	14	1	**2M-9780**	1	SEAL-O-RING (19.18MM ID)	
	15	1	**1H-0337**	1	VALVE	
	16	1	**9F-6705**	1	SPRING	
	17	1	**9S-4189**	1	PLUG-O-RING	
	18	1	**6E-1924**	1	SPRING (OUTER)	
	19	1	**6E-1925**	1	SPRING (INNER)	
	20	1	**5M-2057**	1	SEAL-O-RING (34.59MM ID)	
	21	1	**8M-3175**	2	WASHER-HARD (3MM THK)	
	22	1	**6V-0852**	1	CAP-DUST	
Y	23	1	**6E-4703**	1	VALVE GP-RELIEF	739
	24	1	**3K-8460**	1	PLUG (1/2-20 THD)	
	25	1	**1J-9671**	1	SEAL-O-RING (10.52MM ID)	
	26	1	**9S-8001**	3	PLUG-O-RING (5/16-24 THD)	
	27	1	**4J-7533**	3	SEAL-O-RING (6.07MM ID)	
Y	28	1	**4T-1860**	1	VALVE GP-SHUTTLE	744
	31	1	**2S-4078**	1	SEAL-O-RING (37.46MM ID)	
	32	1	**4K-1388**	1	SEAL-O-RING (26.59MM ID)	
	33	1	**8T-8987**	1	ELBOW-O-RING	
	34	1	**5K-9090**	1	SEAL-O-RING (23.52MM ID)	

M-METRIC PART
Y-SEPARATE ILLUSTRATION

117-4079 VALVE GP-COMBINATION *(contd.)* **i01349679**

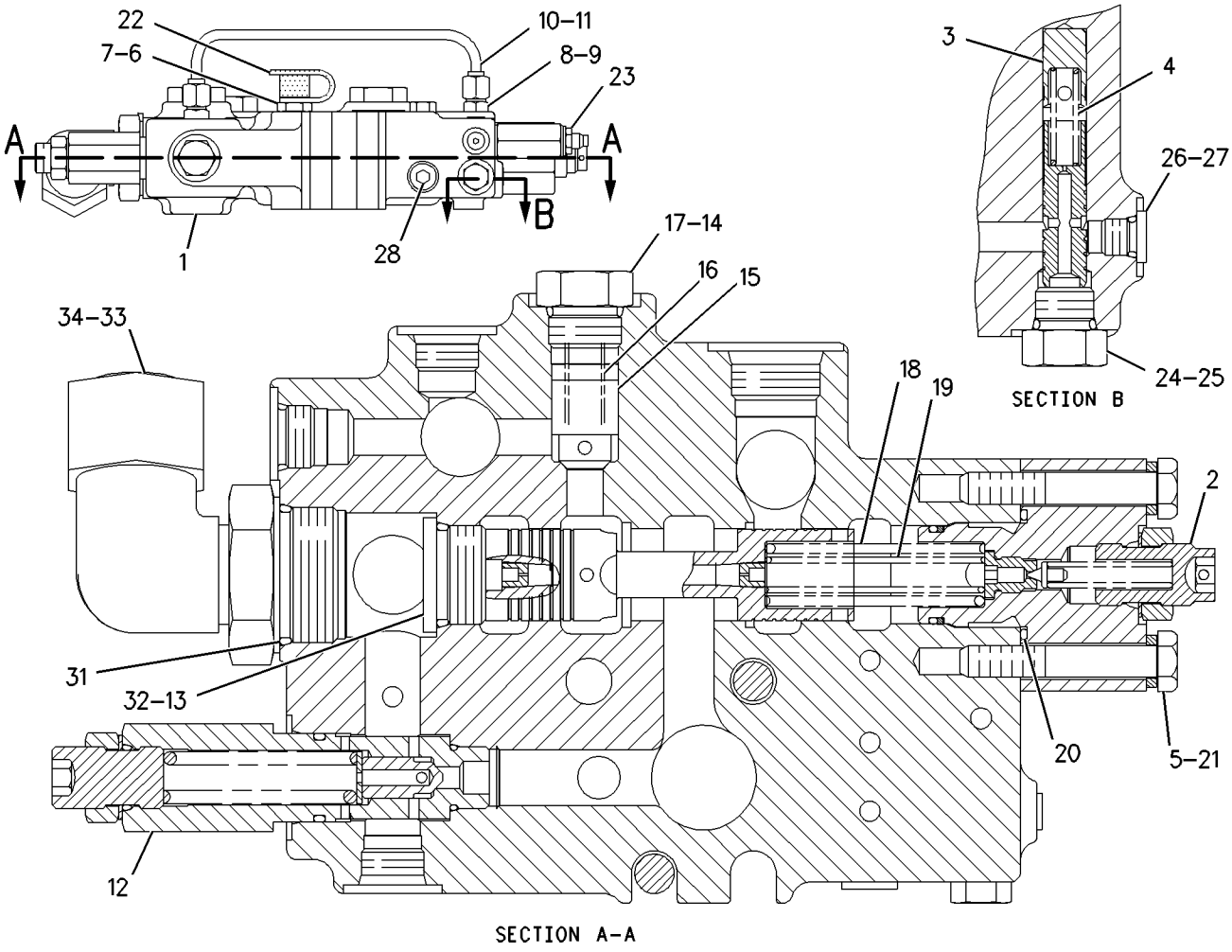

GRAPHIC #1 g00712323

HYDRAULIC SYSTEM

117-4079 VALVE GP-COMBINATION

S/N: 7KK1-UP
PART OF 8X-9027 LINES GP-PUMP
TYPE 2

SMCS-5064 **i01349694**

NOTE	REF NO	GRAPHIC REF	PART NUMBER	QTY	PART NAME 1 2 3 4 5 6 (PRODUCT LEVEL)	SEE PAGE
C	1	1	**3P-9498**	1	PLUG-ORIFICE	
Y	2	1	**127-8480**	1	VALVE GP-RELIEF	741
C	3	1	**8J-6815**	2	PLUG-ORIFICE	
	4	1	**3T-8236**	1	SPRING	
M	5	1	**6V-5230**	2	BOLT (M10X1.5X60MM)	
	6	1	**6V-3965**	1	FITTING AS	
	7	1	**3J-1907**	1	SEAL-O-RING (11.89MM ID)	
	8	1	**6V-8647**	2	CONNECTOR-SEAL (7/16-20 THD)	
C	9	1	**3J-7354**	3	SEAL-O-RING (8.92MM ID)	
	10	1	**6E-1923**	1	TUBE AS	
	11	1	**4J-5477**	2	SEAL-O-RING (8.61MM ID)	
Y	12	1	**4T-4935**	1	VALVE GP-RELIEF	738
	13	1	**9S-8009**	1	PLUG-O-RING (1 3/16-12 THD)	
	14	1	**2M-9780**	1	SEAL-O-RING (19.18MM ID)	
	15	1	**1H-0337**	1	VALVE	
	16	1	**9F-6705**	1	SPRING	
	17	1	**9S-4189**	1	PLUG-O-RING	
	18	1	**6E-1924**	1	SPRING (OUTER)	
	19	1	**6E-1925**	1	SPRING (INNER)	
	20	1	**5M-2057**	1	SEAL-O-RING (34.59MM ID)	
	21	1	**8M-3175**	2	WASHER-HARD (3MM THK)	
	22	1	**6V-0852**	1	CAP-DUST	
Y	23	1	**6E-4703**	1	VALVE GP-RELIEF	739
C	24	1	**9S-8003**	1	PLUG-O-RING (1/2-20 THD)	
	25	1	**1J-9671**	1	SEAL-O-RING (10.52MM ID)	
C	26	1	**9S-8001**	2	PLUG-O-RING (5/16-24 THD)	
C	27	1	**4J-7533**	2	SEAL-O-RING (6.07MM ID)	
Y	28	1	**4T-1860**	1	VALVE GP-SHUTTLE	744
	31	1	**2S-4078**	1	SEAL-O-RING (37.46MM ID)	
	32	1	**4K-1388**	1	SEAL-O-RING (26.59MM ID)	
	33	1	**8T-8987**	1	ELBOW-O-RING	
C	34	1	**6V-8398**	1	SEAL-O-RING (12.47MM ID)	
C	35	1	**9S-8002**	1	PLUG-O-RING (7/16-20 THD)	
CY	36	1	**131-8350**	1	VALVE GP	456
C	37	1	**7X-4776**	2	RING-BACKUP	
C	38	1	**3K-0360**	1	SEAL-O-RING (16.36MM ID)	

C-CHANGE FROM PREVIOUS TYPE
M-METRIC PART
Y-SEPARATE ILLUSTRATION

117-4079 VALVE GP-COMBINATION *(contd.)* i01349694

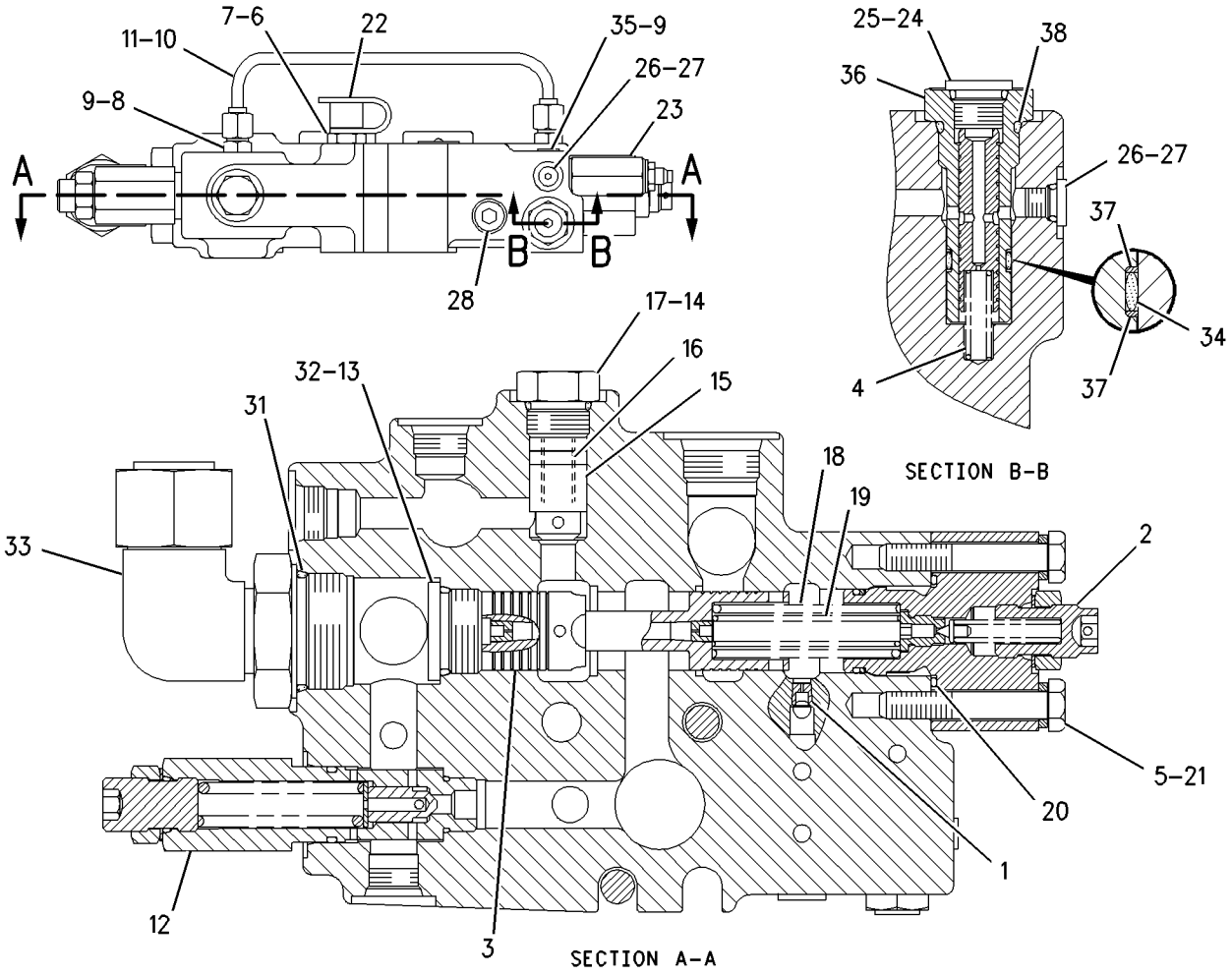

GRAPHIC #1 g00712344

HYDRAULIC SYSTEM

117-7876 VALVE GP-CONTROL

S/N: 7KK1-UP
CENTERSHIFT
PART OF 144-1568, 165-4499 VALVE GP-BANK 4

SMCS-5051 **i00552852**

NOTE	REF NO	GRAPHIC REF	PART NUMBER	QTY	PART NAME 1 2 3 4 5 6 (PRODUCT LEVEL)	SEE PAGE
	1	1	**6E-3044**	1	BODY	
	2	1	**117-7889**	1	STEM	
	3	1	**101-1978**	1	COVER	
	4	1	**2K-8199**	2	SEAL-O-RING (28.24MM ID)	
M	5	1	**8T-4189**	4	BOLT (M8X1.25X20MM)	
	6	1	**8T-4224**	4	WASHER-HARD (2MM THK)	
	7	1	**111-8233**	1	SPRING	
	8	1	**102-7412**	1	SPRING	
	9	1	**101-1973**	4	RETAINER	
	10	1	**101-1971**	1	LEVER	
	11	1	**101-1970**	1	LEVER AS	
	12	1	**8M-4437**	2	SEAL-O-RING	
	13	1	**101-1983**	2	RING-BACKUP	
	14	1	**4D-9986**	1	SEAL-O-RING (23.47MM ID)	
	15	1	**101-2480**	1	COVER	
M	16	1	**8T-4138**	2	BOLT (M6X1.0X20MM)	
	17	1	**5B-9318**	1	BALL (4.76MM)	
	18	1	**6E-3007**	1	SPRING	
	19	1	**6E-4502**	1	PLUG	
	20	1	**4J-7533**	1	SEAL-O-RING (6.07MM ID)	
	21	1	**7J-9933**	2	SEAL-O-RING (21.89MM ID)	
	22	1	**6E-5153**	1	SPRING	
	23	1	**108-2187**	1	PLUG-PIPE	
	24	1	**9S-8005**	1	PLUG-O-RING (3/4-16 THD)	
	25	1	**3K-0360**	3	SEAL-O-RING (16.36MM ID)	
	26	1	**106-3659**	1	PISTON	
	27	1	**9J-0404**	2	PLUG	
	28	1	**106-3658**	2	VALVE	
	29	1	**9J-0403**	2	SPRING	
	30	1	**101-1984**	1	BODY	
	31	1	**6E-3019**	1	VALVE	
	32	1	**6E-3013**	2	SEAT	

M-METRIC PART

117-7876 VALVE GP-CONTROL *(contd.)* **i00552852**

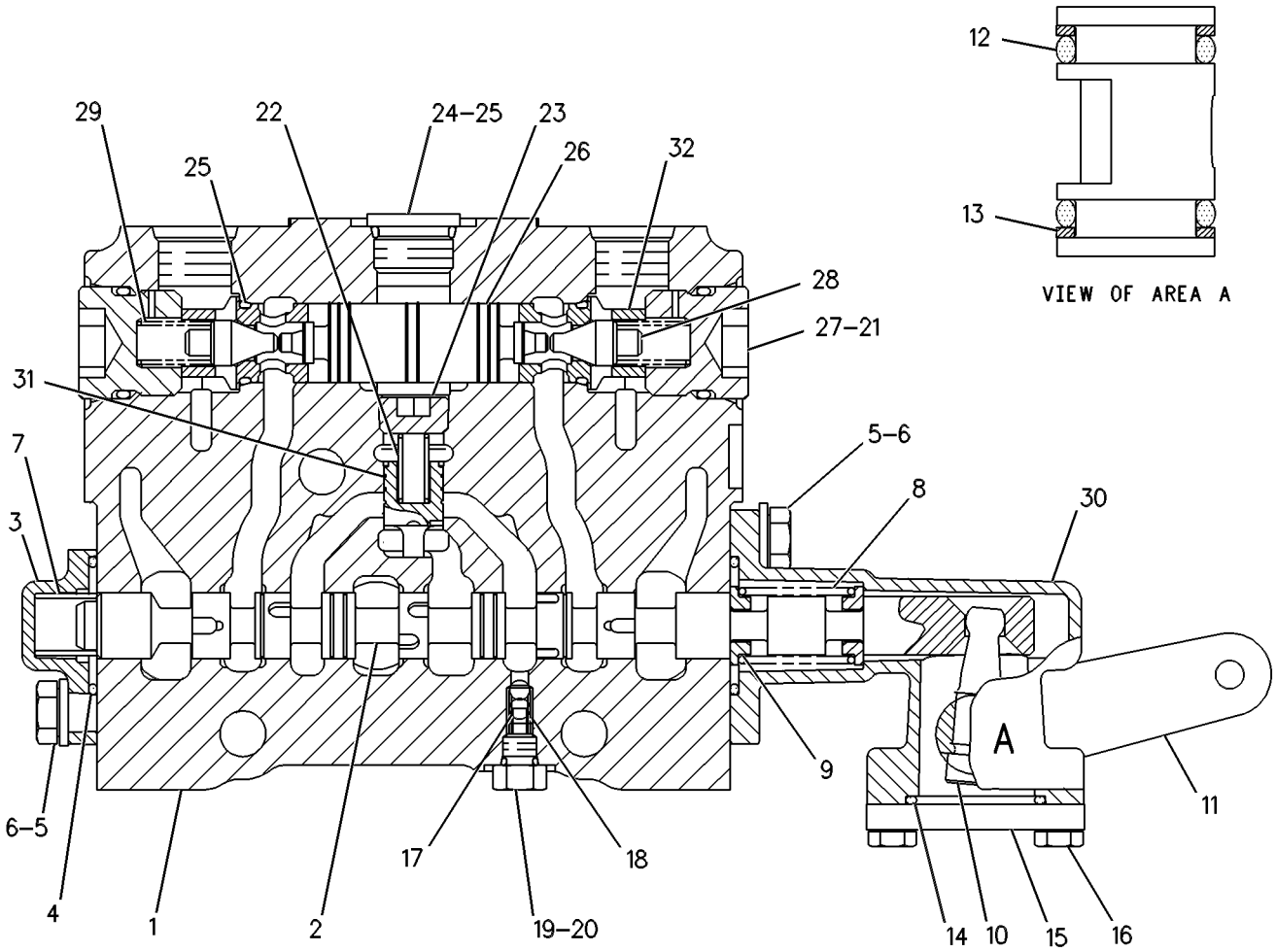

GRAPHIC #1 g00268875

HYDRAULIC SYSTEM

117-7877 VALVE GP-CONTROL

S/N: 7KK1-UP

WHEEL LEAN

PART OF 144-1568, 165-4499 VALVE GP-BANK 4

SMCS-5051 **i00552863**

NOTE	REF NO	GRAPHIC REF	PART NUMBER	QTY	PART NAME 1 2 3 4 5 6 (PRODUCT LEVEL)	SEE PAGE
	1	1	**6E-3044**	1	BODY	
	2	1	**117-7890**	1	STEM	
	3	1	**101-1978**	1	COVER	
	4	1	**2K-8199**	2	SEAL-O-RING (28.24MM ID)	
M	5	1	**8T-4189**	4	BOLT (M8X1.25X20MM)	
	6	1	**8T-4224**	4	WASHER-HARD (2MM THK)	
	7	1	**111-8233**	1	SPRING	
	8	1	**102-7412**	1	SPRING	
	9	1	**101-1973**	4	RETAINER	
	10	1	**101-1971**	1	LEVER	
	11	1	**101-1970**	1	LEVER AS	
	12	1	**8M-4437**	2	SEAL-O-RING	
	13	1	**101-1983**	2	RING-BACKUP	
	14	1	**4D-9986**	1	SEAL-O-RING (23.47MM ID)	
	15	1	**101-2480**	1	COVER	
M	16	1	**8T-4138**	2	BOLT (M6X1.0X20MM)	
	17	1	**5B-9318**	1	BALL (4.76MM)	
	18	1	**6E-3007**	1	SPRING	
	19	1	**6E-4502**	1	PLUG	
	20	1	**4J-7533**	1	SEAL-O-RING (6.07MM ID)	
	21	1	**7J-9933**	2	SEAL-O-RING (21.89MM ID)	
	22	1	**6E-5153**	1	SPRING	
	23	1	**9S-8005**	1	PLUG-O-RING (3/4-16 THD)	
	24	1	**108-2187**	1	PLUG-PIPE	
	25	1	**3K-0360**	3	SEAL-O-RING (16.36MM ID)	
	26	1	**106-3659**	1	PISTON	
	27	1	**9J-0404**	2	PLUG	
	28	1	**106-3658**	2	VALVE	
	29	1	**9J-0403**	2	SPRING	
	30	1	**101-1984**	1	BODY	
	31	1	**6E-3019**	1	VALVE	
	32	1	**6E-3013**	2	SEAT	

M-METRIC PART

117-7877 VALVE GP-CONTROL *(contd.)* i00552863

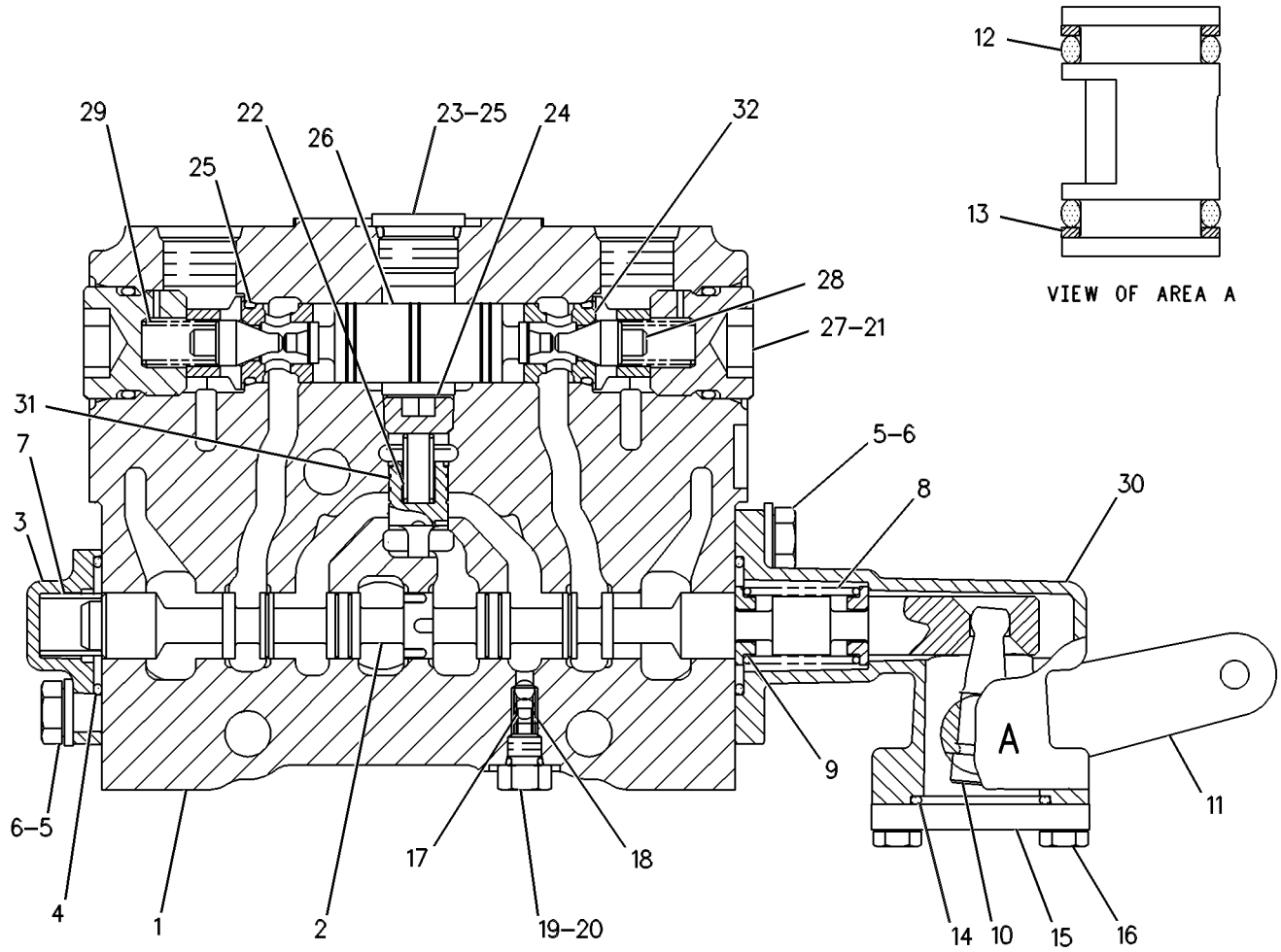

GRAPHIC #1 g00268888

HYDRAULIC SYSTEM

117-7879 VALVE GP-CONTROL

S/N: 7KK1-UP

RIPPER

PART OF 117-1815 VALVE GP-BANK 6, 165-4563 VALVE GP-CONTROL

SMCS-5051 **i00579823**

NOTE	REF NO	GRAPHIC REF	PART NUMBER	QTY	PART NAME 1 2 3 4 5 6 (PRODUCT LEVEL)	SEE PAGE
	1	1	**111-8233**	1	SPRING	
	2	1	**117-7892**	1	STEM	
	3	1	**101-1978**	1	COVER	
	4	1	**2K-8199**	2	SEAL-O-RING (28.24MM ID)	
M	5	1	**8T-4189**	4	BOLT (M8X1.25X20MM)	
	6	1	**8T-4224**	4	WASHER-HARD (2MM THK)	
	7	1	**106-3658**	2	VALVE	
	8	1	**7J-9933**	2	SEAL-O-RING (21.89MM ID)	
Y	9	1	**139-8472**	1	VALVE GP-RELIEF	742
	10	1	**106-3659**	1	PISTON	
	11	1	**102-7412**	1	SPRING	
	12	1	**101-1973**	4	RETAINER	
	13	1	**101-1971**	1	LEVER	
	14	1	**101-1982**	1	LEVER AS	
	15	1	**8M-4437**	2	SEAL-O-RING	
	16	1	**101-1983**	2	RING-BACKUP	
	17	1	**4D-9986**	1	SEAL-O-RING (23.47MM ID)	
	18	1	**101-2480**	1	COVER	
M	19	1	**8T-4138**	2	BOLT (M6X1.0X20MM)	
	20	1	**5B-9318**	1	BALL (4.76MM)	
	21	1	**6E-3007**	1	SPRING	
	22	1	**6E-4502**	1	PLUG	
	23	1	**4J-7533**	1	SEAL-O-RING (6.07MM ID)	
	24	1	**3K-0360**	3	SEAL-O-RING (16.36MM ID)	
	25	1	**6E-5153**	1	SPRING	
	26	1	**108-2187**	1	PLUG-PIPE	
	27	1	**9J-0403**	2	SPRING	
	28	1	**9J-0404**	2	PLUG	
	29	1	**9S-8005**	1	PLUG-O-RING (3/4-16 THD)	
	30	1	**101-1984**	1	BODY	
	31	1	**6E-3019**	1	VALVE	
	32	1	**6E-3013**	2	SEAT	

M-METRIC PART
Y-SEPARATE ILLUSTRATION

117-7879 VALVE GP-CONTROL *(contd.)* i00579823

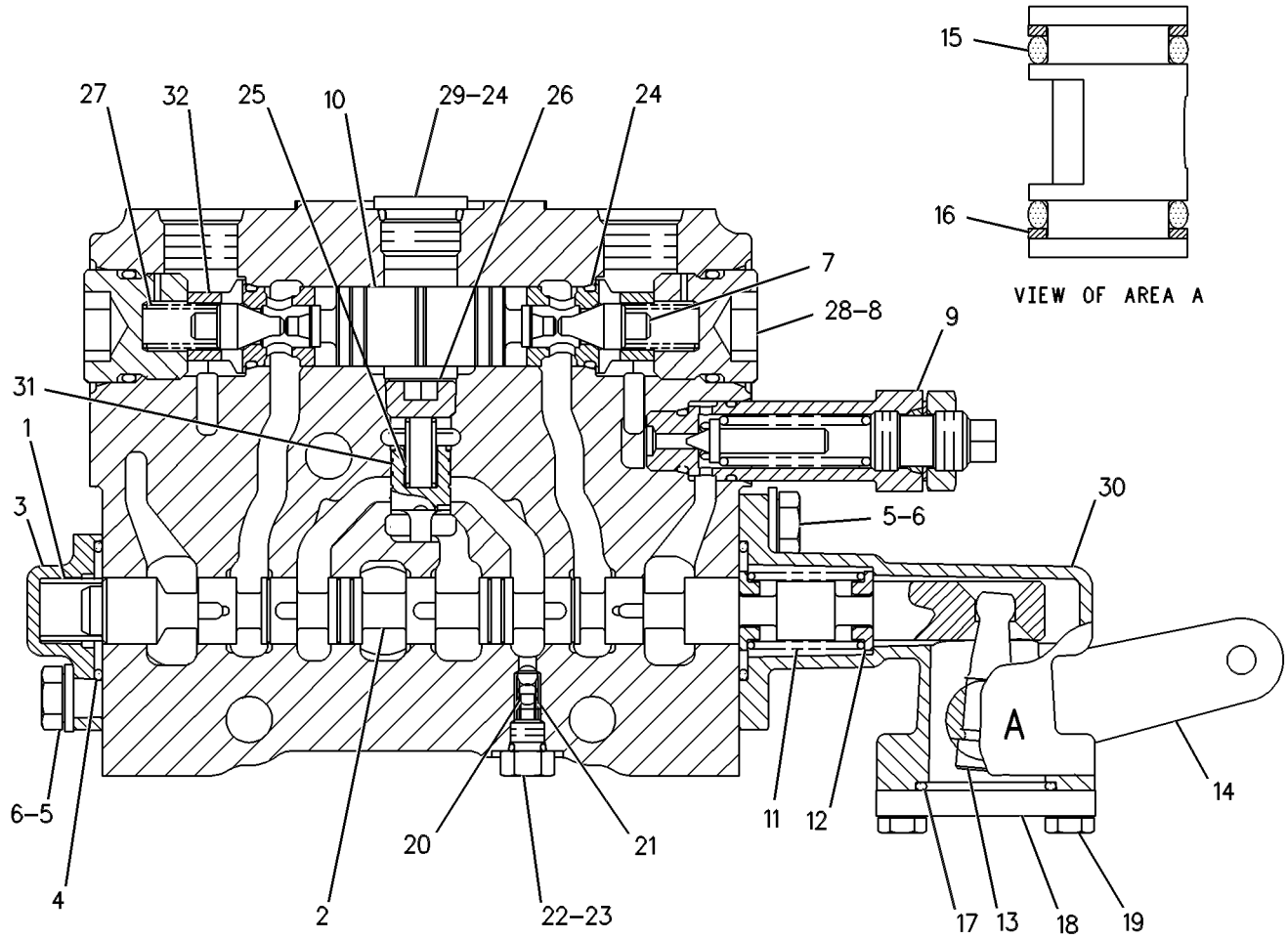

GRAPHIC #1 g00278319

HYDRAULIC SYSTEM

117-7882 VALVE GP-CONTROL

S/N: 7KK1-UP
CIRCLE DRIVE
PART OF 117-1815 VALVE GP-BANK 6, 165-4563 VALVE GP-CONTROL

SMCS-5051 **i01175098**

NOTE	REF NO	GRAPHIC REF	PART NUMBER	QTY	PART NAME 1 2 3 4 5 6 (PRODUCT LEVEL)	SEE PAGE
	1	1	**6E-3044**	1	BODY	
	2	1	**101-1151**	1	STEM	
	3	1	**101-1978**	1	COVER	
	4	1	**2K-8199**	2	SEAL-O-RING (28.24MM ID)	
M	5	1	**8T-4189**	4	BOLT (M8X1.25X20MM)	
	6	1	**8T-4224**	4	WASHER-HARD (2MM THK)	
	7	1	**118-6867**	1	SPRING	
	8	1	**102-7412**	1	SPRING	
	9	1	**101-1973**	4	RETAINER	
	10	1	**101-1971**	1	LEVER	
	11	1	**101-1982**	1	LEVER AS	
	12	1	**8M-4437**	2	SEAL-O-RING	
	13	1	**101-1983**	2	RING-BACKUP	
	14	1	**4D-9986**	1	SEAL-O-RING (23.47MM ID)	
	15	1	**101-2480**	1	COVER	
M	16	1	**8T-4138**	2	BOLT (M6X1.0X20MM)	
	17	1	**5B-9318**	1	BALL (4.76MM DIA)	
	18	1	**6E-3007**	1	SPRING	
	19	1	**6E-4502**	1	PLUG	
	20	1	**4J-7533**	1	SEAL-O-RING (6.07MM ID)	
	21	1	**7J-9933**	2	SEAL-O-RING (21.89MM ID)	
	22	1	**6E-5153**	1	SPRING	
	23	1	**108-2187**	1	PLUG-PIPE	
	24	1	**9S-8005**	1	PLUG-O-RING (3/4-16 THD)	
	25	1	**3K-0360**	3	SEAL-O-RING (16.36MM ID)	
	26	1	**106-3659**	1	PISTON	
	27	1	**9J-0404**	2	PLUG	
	28	1	**106-3658**	2	VALVE	
	29	1	**9J-0403**	2	SPRING	
	30	1	**6E-3013**	2	SEAT	
	31	1	**6E-3019**	1	VALVE	
	32	1	**101-1984**	1	BODY	

M-METRIC PART

117-7882 VALVE GP-CONTROL *(contd.)* i01175098

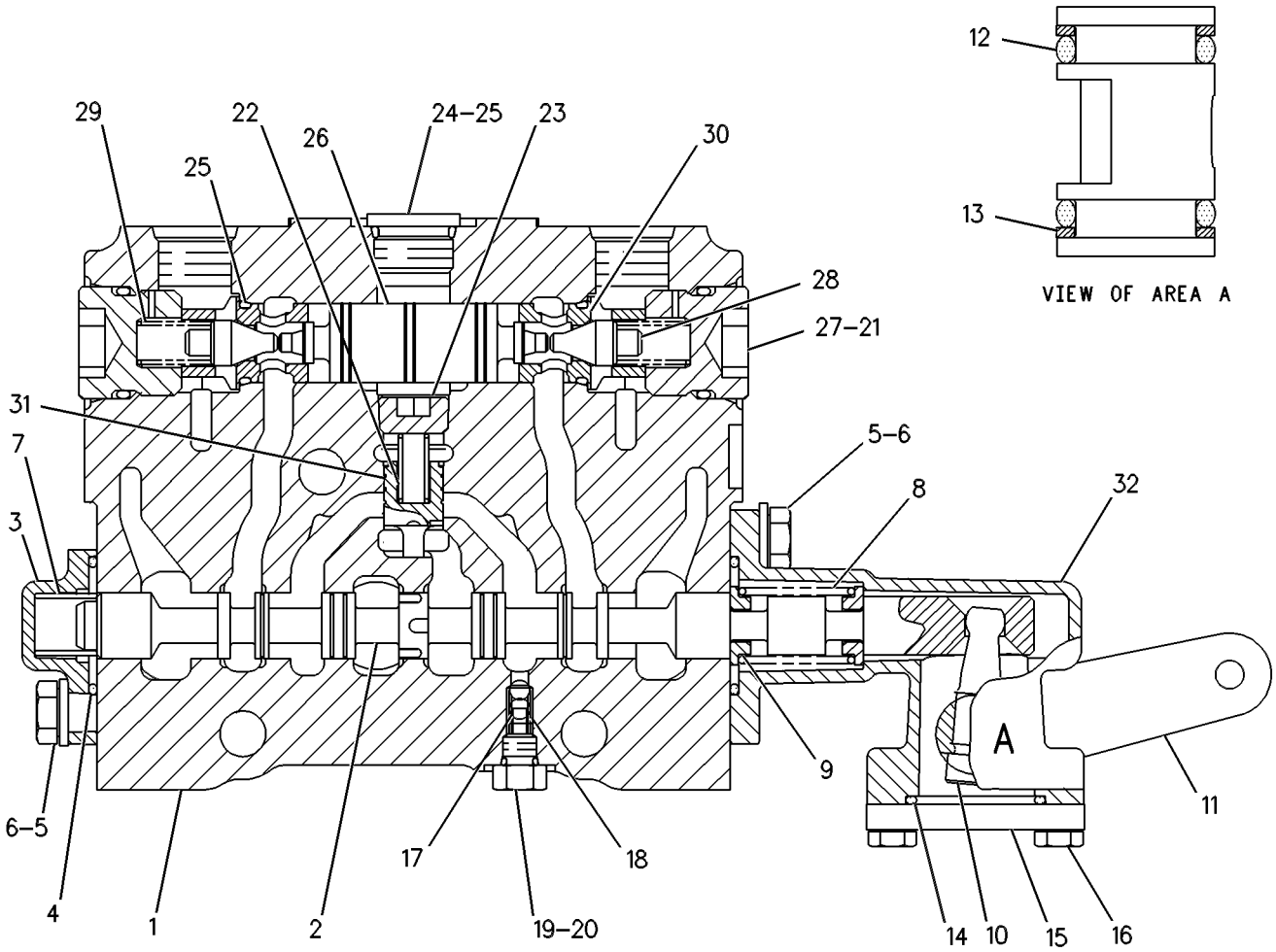

GRAPHIC #1 g00284092

HYDRAULIC SYSTEM

117-7883 VALVE GP-CONTROL

S/N: 7KK1-UP
CIRCLE DRIVE
PART OF 117-1815 VALVE GP-BANK 6, 165-4563 VALVE GP-CONTROL

SMCS-5051 **i01152096**

NOTE	REF NO	GRAPHIC REF	PART NUMBER	QTY	PART NAME 1 2 3 4 5 6 (PRODUCT LEVEL)	SEE PAGE
	1	1	**6E-3044**	1	BODY	
	2	1	**101-1151**	1	STEM	
	3	1	**101-1978**	1	COVER	
	4	1	**2K-8199**	2	SEAL-O-RING (28.24MM ID)	
M	5	1	**8T-4189**	4	BOLT (M8X1.25X20MM)	
	6	1	**8T-4224**	4	WASHER-HARD (2MM THK)	
	7	1	**118-6867**	1	SPRING	
	8	1	**102-7412**	1	SPRING	
	9	1	**101-1973**	4	RETAINER	
	10	1	**101-1971**	1	LEVER	
	11	1	**109-8210**	1	LEVER AS	
	12	1	**8M-4437**	2	SEAL-O-RING	
	13	1	**101-1983**	2	RING-BACKUP	
	14	1	**4D-9986**	1	SEAL-O-RING (23.47MM ID)	
	15	1	**101-2480**	1	COVER	
M	16	1	**8T-4138**	2	BOLT (M6X1.0X20MM)	
	17	1	**5B-9318**	1	BALL (4.76MM DIA)	
	18	1	**6E-3007**	1	SPRING	
	19	1	**6E-4502**	1	PLUG	
	20	1	**4J-7533**	1	SEAL-O-RING (6.07MM ID)	
	21	1	**7J-9933**	2	SEAL-O-RING (21.89MM ID)	
	22	1	**6E-5153**	1	SPRING	
	23	1	**108-2187**	1	PLUG-PIPE	
	24	1	**9S-8005**	1	PLUG-O-RING (3/4-16 THD)	
	25	1	**3K-0360**	3	SEAL-O-RING (16.36MM ID)	
	26	1	**106-3659**	1	PISTON	
	27	1	**9J-0404**	2	PLUG	
	28	1	**106-3658**	2	VALVE	
	29	1	**9J-0403**	2	SPRING	
	30	1	**6E-3013**	2	SEAT	
	31	1	**6E-3019**	1	VALVE	
	32	1	**101-1984**	1	BODY	

M-METRIC PART

117-7883 VALVE GP-CONTROL *(contd.)* i01152096

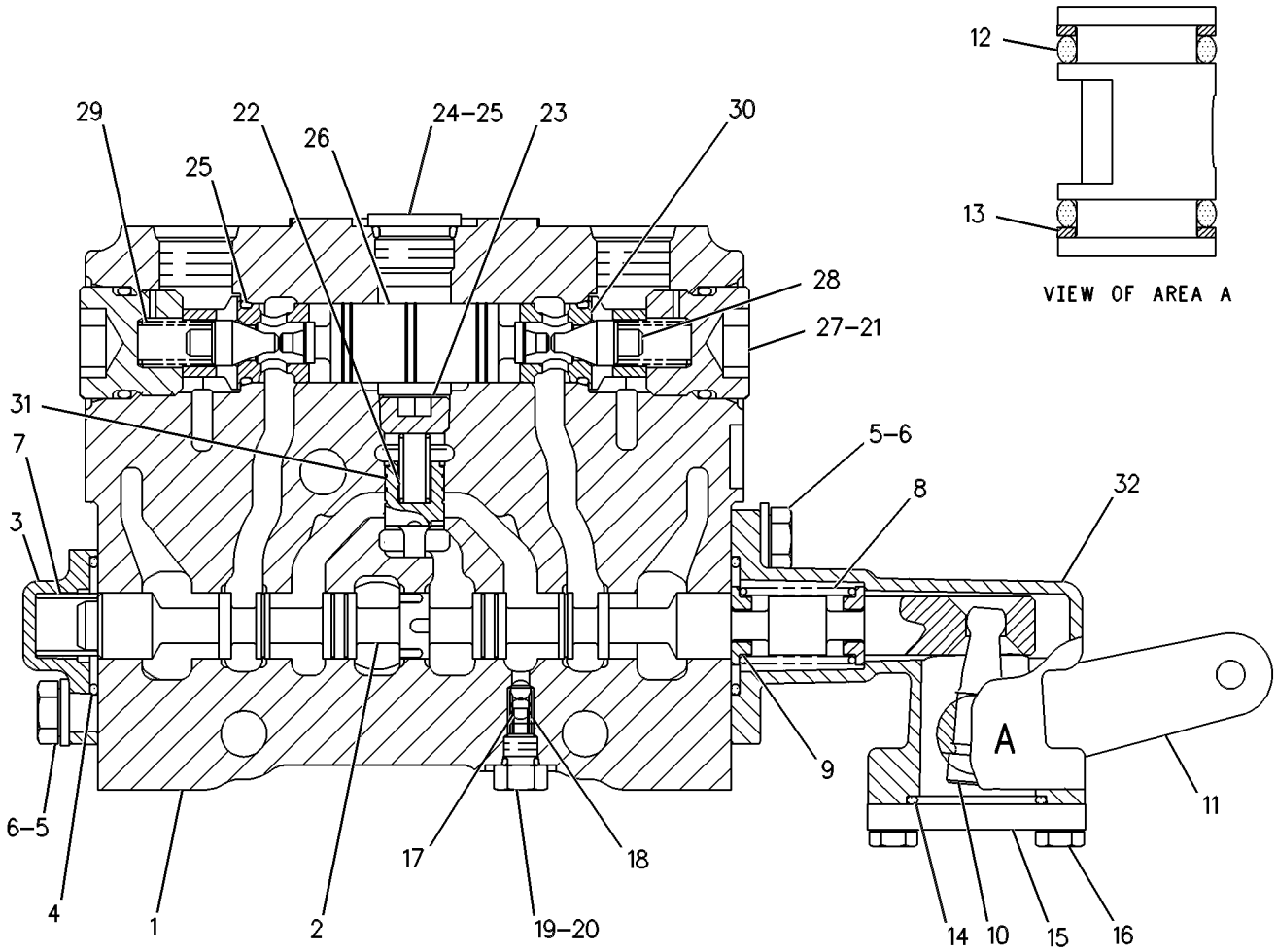

GRAPHIC #1 g00268896

HYDRAULIC SYSTEM

117-7884 VALVE GP-CONTROL

S/N: 7KK1-UP

BLADE TIP

PART OF 117-1815 VALVE GP-BANK 6, 165-4563 VALVE GP-CONTROL

SMCS-5051 **i00579824**

NOTE	REF NO	GRAPHIC REF	PART NUMBER	QTY	PART NAME 1 2 3 4 5 6 (PRODUCT LEVEL)	SEE PAGE
	1	1	**6E-3058**	1	BODY	
	2	1	**117-7895**	1	STEM	
	3	1	**101-1978**	1	COVER	
	4	1	**2K-8199**	2	SEAL-O-RING (28.24MM ID)	
M	5	1	**8T-4189**	4	BOLT (M8X1.25X20MM)	
	6	1	**8T-4224**	4	WASHER-HARD (2MM THK)	
	7	1	**106-3658**	2	VALVE	
	8	1	**7J-9933**	2	SEAL-O-RING (21.89MM ID)	
Y	9	1	**139-8472**	1	VALVE GP-RELIEF	742
	10	1	**111-8233**	1	SPRING	
	11	1	**102-7412**	1	SPRING	
	12	1	**101-1973**	4	RETAINER	
	13	1	**101-1971**	1	LEVER	
	14	1	**101-1982**	1	LEVER AS	
	15	1	**8M-4437**	2	SEAL-O-RING	
	16	1	**101-1983**	2	RING-BACKUP	
	17	1	**4D-9986**	1	SEAL-O-RING (23.47MM ID)	
	18	1	**101-2480**	1	COVER	
M	19	1	**8T-4138**	2	BOLT (M6X1.0X20MM)	
	20	1	**5B-9318**	1	BALL (4.76MM)	
	21	1	**6E-3007**	1	SPRING	
	22	1	**6E-4502**	1	PLUG	
	23	1	**4J-7533**	1	SEAL-O-RING (6.07MM ID)	
	24	1	**106-3659**	1	PISTON	
	25	1	**6E-5153**	1	SPRING	
	26	1	**108-2187**	1	PLUG-PIPE	
	27	1	**9J-0403**	2	SPRING	
	28	1	**9J-0404**	2	PLUG	
	29	1	**9S-8005**	1	PLUG-O-RING (3/4-16 THD)	
	30	1	**3K-0360**	3	SEAL-O-RING (16.36MM ID)	
	31	1	**6E-3013**	2	SEAT	
	32	1	**6E-3019**	1	VALVE	
	33	1	**101-1984**	1	BODY	

M-METRIC PART
Y-SEPARATE ILLUSTRATION

117-7884 VALVE GP-CONTROL ***(contd.)*** **i00579824**

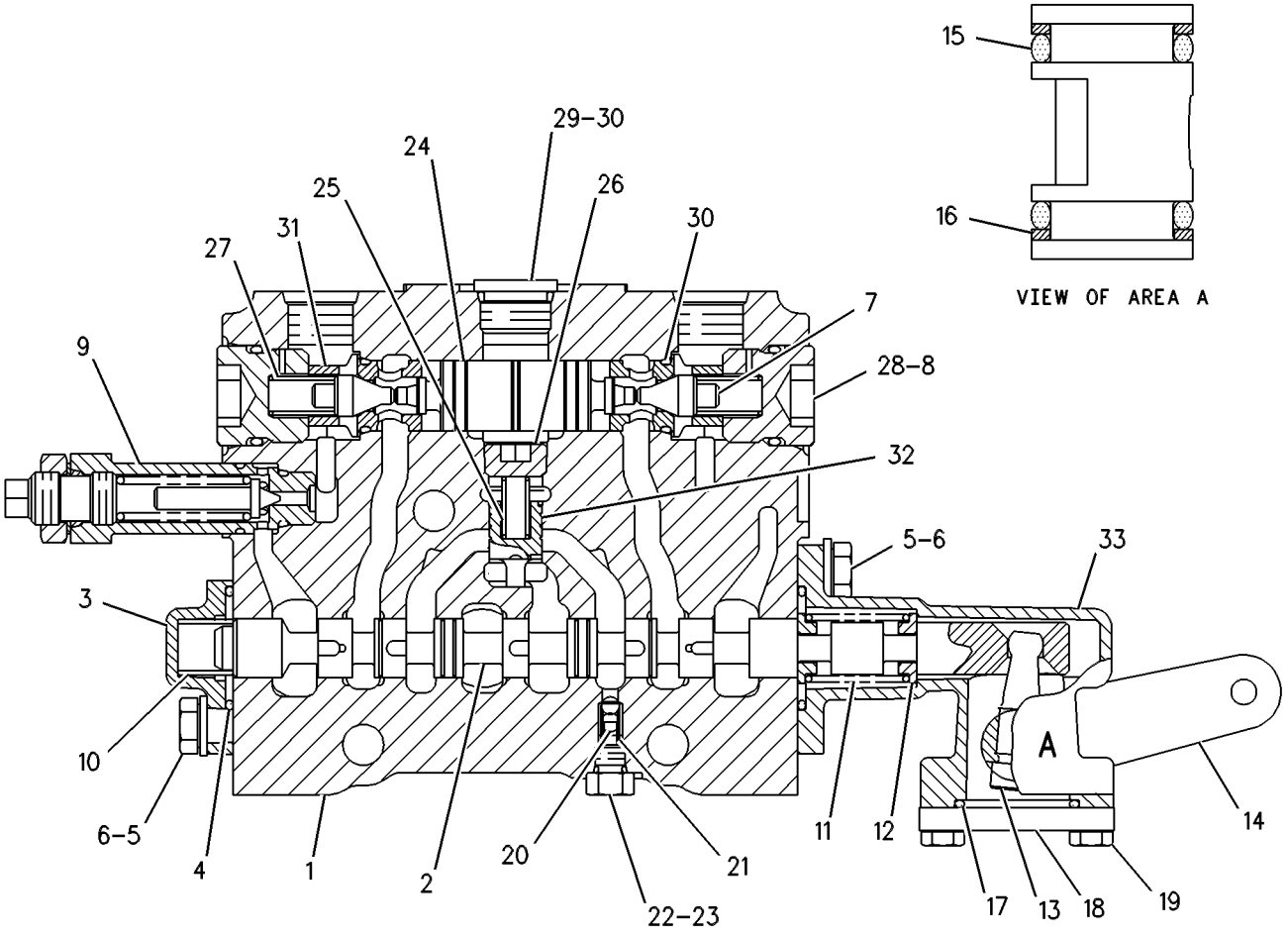

GRAPHIC #1 g00278322

HYDRAULIC SYSTEM

117-7885 VALVE GP-CONTROL

S/N: 7KK1-UP

SIDESHIFT

PART OF 117-1815 VALVE GP-BANK 6, 165-4563 VALVE GP-CONTROL

SMCS-5051 **i00579833**

NOTE	REF NO	GRAPHIC REF	PART NUMBER	QTY	PART NAME 1 2 3 4 5 6 (PRODUCT LEVEL)	SEE PAGE
	1	1	**6E-3058**	1	BODY	
	2	1	**117-7893**	1	STEM	
	3	1	**101-1978**	1	COVER	
	4	1	**2K-8199**	2	SEAL-O-RING (28.24MM ID)	
M	5	1	**8T-4189**	4	BOLT (M8X1.25X20MM)	
	6	1	**8T-4224**	4	WASHER-HARD (2MM THK)	
	7	1	**106-3658**	2	VALVE	
	8	1	**7J-9933**	2	SEAL-O-RING (21.89MM ID)	
Y	9	1	**139-8472**	1	VALVE GP-RELIEF	742
	10	1	**111-8233**	1	SPRING	
	11	1	**102-7412**	1	SPRING	
	12	1	**101-1973**	4	RETAINER	
	13	1	**101-1971**	1	LEVER	
	14	1	**101-1982**	1	LEVER AS	
	15	1	**8M-4437**	2	SEAL-O-RING	
	16	1	**101-1983**	2	RING-BACKUP	
	17	1	**4D-9986**	1	SEAL-O-RING (23.47MM ID)	
	18	1	**101-2480**	1	COVER	
M	19	1	**8T-4138**	2	BOLT (M6X1.0X20MM)	
	20	1	**5B-9318**	1	BALL (4.76MM)	
	21	1	**6E-3007**	1	SPRING	
	22	1	**6E-4502**	1	PLUG	
	23	1	**4J-7533**	1	SEAL-O-RING (6.07MM ID)	
	24	1	**106-3659**	1	PISTON	
	25	1	**6E-5153**	1	SPRING	
	26	1	**108-2187**	1	PLUG-PIPE	
	27	1	**9J-0403**	2	SPRING	
	28	1	**9J-0404**	2	PLUG	
	29	1	**9S-8005**	1	PLUG-O-RING (3/4-16 THD)	
	30	1	**3K-0360**	3	SEAL-O-RING (16.36MM ID)	
	31	1	**6E-3013**	2	SEAT	
	32	1	**6E-3019**	1	VALVE	
	33	1	**101-1984**	1	BODY	

M-METRIC PART
Y-SEPARATE ILLUSTRATION

117-7885 VALVE GP-CONTROL ***(contd.)*** **i00579833**

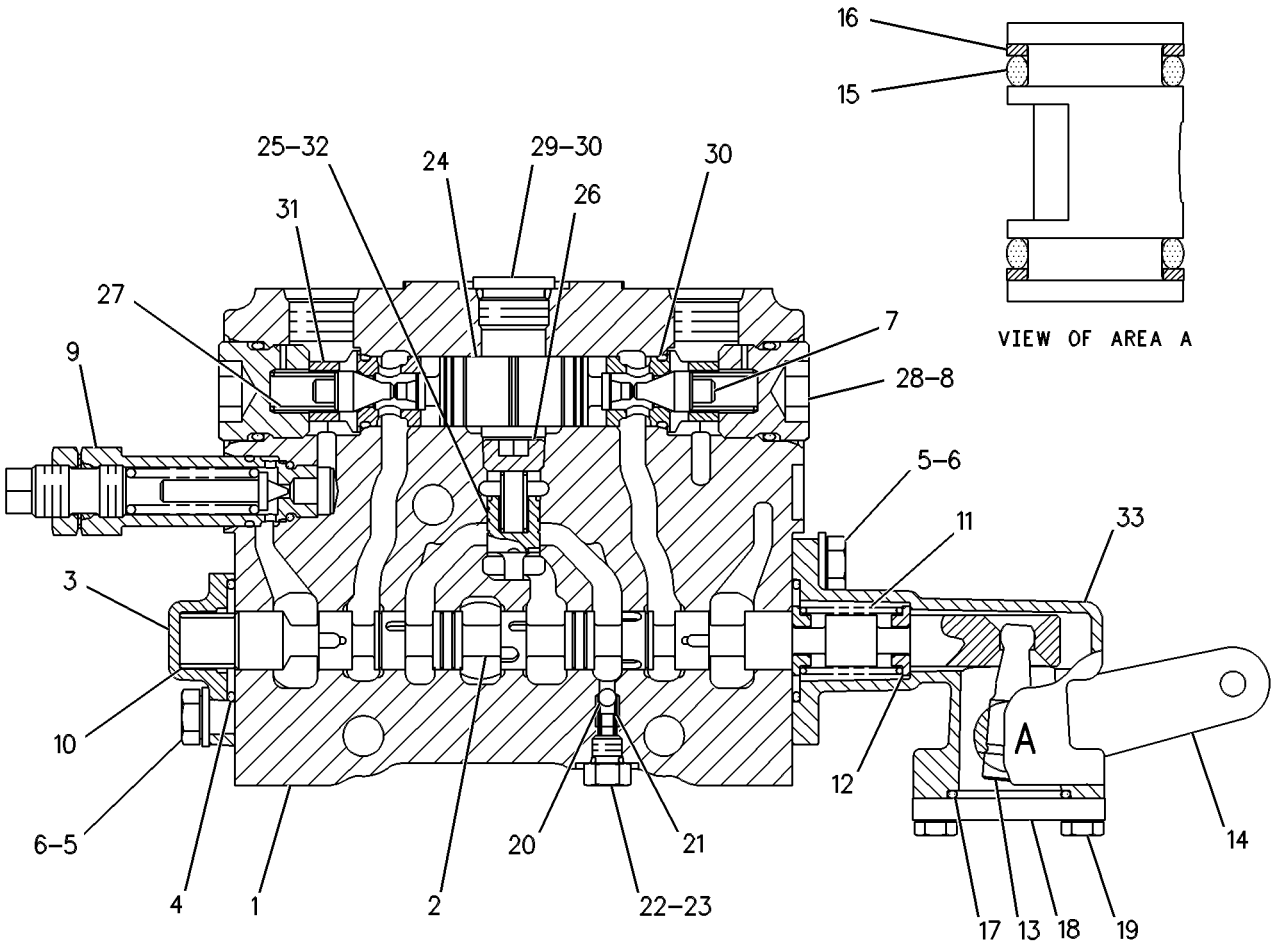

GRAPHIC #1 g00278324

HYDRAULIC SYSTEM

119-9538 VALVE GP-CONTROL

S/N: 7KK1-UP
BLADE LIFT
PART OF 117-1815 VALVE GP-BANK 6

SMCS-5051 **i00569663**

NOTE	REF NO	GRAPHIC REF	PART NUMBER	QTY	PART NAME 1 2 3 4 5 6 (PRODUCT LEVEL)	SEE PAGE
	1	1	**123-3115**	1	BODY	
	2	1	**117-7891**	1	STEM	
	3	1	**101-1978**	1	COVER	
	4	1	**2K-8199**	2	SEAL-O-RING (28.24MM ID)	
M	5	1	**8T-4189**	4	BOLT (M8X1.25X20MM)	
	6	1	**8T-4224**	4	WASHER-HARD (2MM THK)	
Y	7	1	**139-8474**	1	VALVE GP-RELIEF	743
	8	1	**102-7412**	1	SPRING	
	9	1	**101-1973**	4	RETAINER	
	10	1	**101-1971**	1	LEVER	
	11	1	**101-1982**	1	LEVER AS	
	12	1	**8M-4437**	2	SEAL-O-RING	
	13	1	**101-1983**	2	RING-BACKUP	
	14	1	**4D-9986**	1	SEAL-O-RING (23.47MM ID)	
	15	1	**101-2480**	1	COVER	
M	16	1	**8T-4138**	2	BOLT (M6X1.0X20MM)	
	17	1	**5B-9318**	1	BALL (4.76MM)	
	18	1	**6E-3007**	1	SPRING	
	19	1	**6E-4502**	1	PLUG	
	20	1	**4J-7533**	1	SEAL-O-RING (6.07MM ID)	
	21	1	**7J-9933**	2	SEAL-O-RING (21.89MM ID)	
	22	1	**6E-5153**	1	SPRING	
	23	1	**108-2187**	1	PLUG-PIPE	
	24	1	**9S-8005**	1	PLUG-O-RING (3/4-16 THD)	
	25	1	**3K-0360**	3	SEAL-O-RING (16.36MM ID)	
	26	1	**124-3385**	1	PISTON	
	27	1	**111-8233**	1	SPRING	
	28	1	**106-3658**	2	VALVE	
	29	1	**9J-0403**	2	SPRING	
	30	1	**9J-0404**	2	PLUG	
	31	1	**6E-3013**	2	SEAT	
	32	1	**6E-3019**	1	VALVE	
	33	1	**101-1984**	1	BODY	

M-METRIC PART
Y-SEPARATE ILLUSTRATION

119-9538 VALVE GP-CONTROL *(contd.)* i00569663

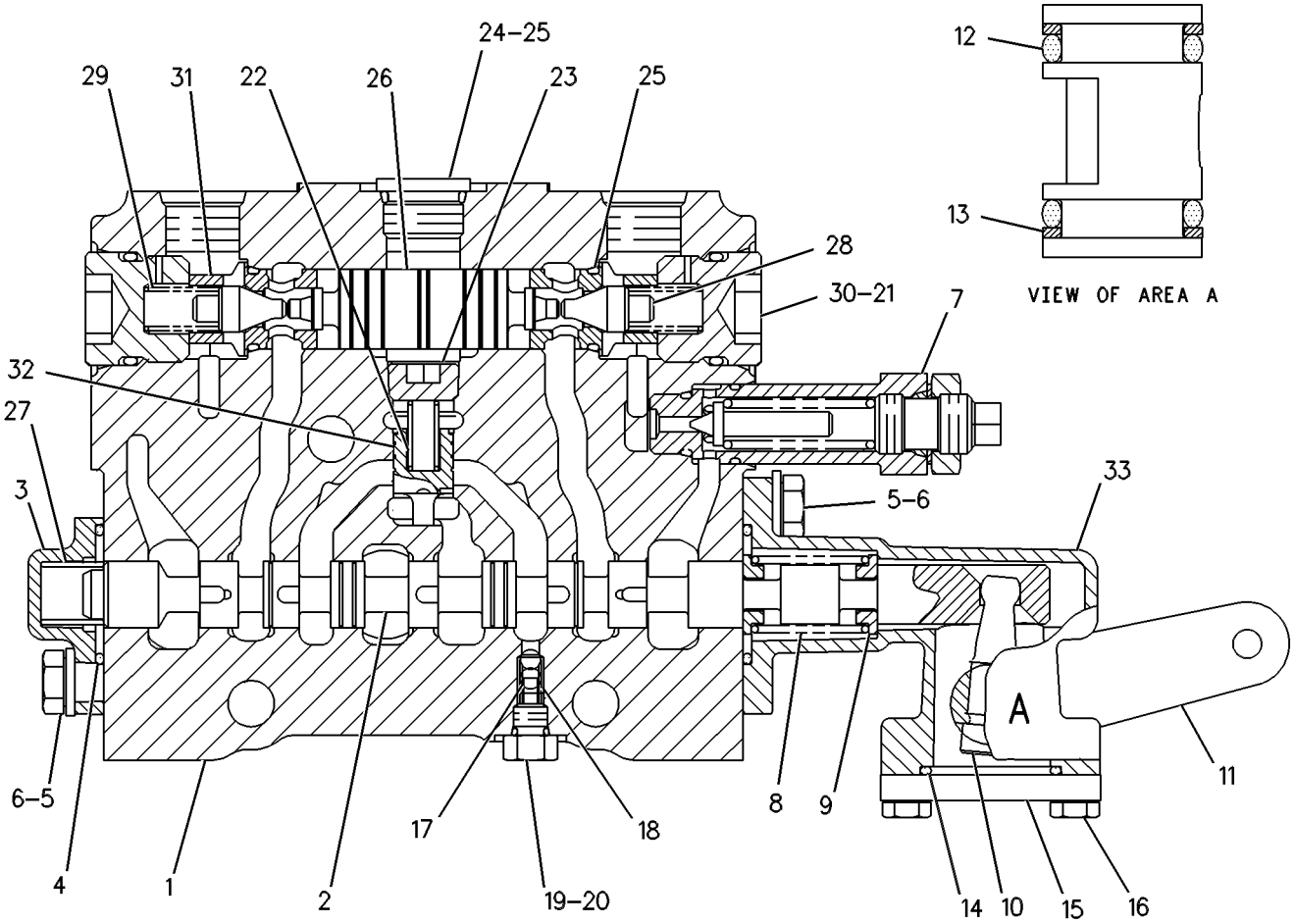

GRAPHIC #1 g00273912

HYDRAULIC SYSTEM

119-9546 VALVE GP-CONTROL

S/N: 7KK1-UP
BLADE LIFT
PART OF 144-1568 VALVE GP-BANK 4

SMCS-5051 **i00645718**

NOTE	REF NO	GRAPHIC REF	PART NUMBER	QTY	PART NAME 1 2 3 4 5 6 (PRODUCT LEVEL)	SEE PAGE
	1	1	**123-3115**	1	BODY	
	2	1	**117-7891**	1	STEM	
	3	1	**101-1978**	1	COVER	
	4	1	**2K-8199**	2	SEAL-O-RING (28.24MM ID)	
M	5	1	**8T-4189**	4	BOLT (M8X1.25X20MM)	
	6	1	**8T-4224**	4	WASHER-HARD (2MM THK)	
	7	1	**111-8233**	1	SPRING	
	8	1	**7J-9933**	2	SEAL-O-RING (21.89MM ID)	
Y	9	1	**139-8474**	1	VALVE GP-RELIEF	743
	10	1	**106-3658**	2	VALVE	
	11	1	**102-7412**	1	SPRING	
	12	1	**101-1973**	4	RETAINER	
	13	1	**101-1971**	1	LEVER	
	14	1	**101-1970**	1	LEVER AS	
	15	1	**8M-4437**	2	SEAL-O-RING	
	16	1	**101-1983**	2	RING-BACKUP	
	17	1	**4D-9986**	1	SEAL-O-RING (23.47MM ID)	
	18	1	**101-2480**	1	COVER	
M	19	1	**8T-4138**	2	BOLT (M6X1.0X20MM)	
	20	1	**5B-9318**	1	BALL (4.76MM)	
	21	1	**6E-3007**	1	SPRING	
	22	1	**6E-4502**	1	PLUG	
	23	1	**4J-7533**	1	SEAL-O-RING (6.07MM ID)	
	24	1	**124-3385**	1	PISTON	
	25	1	**6E-5153**	1	SPRING	
	26	1	**108-2187**	1	PLUG-PIPE	
	27	1	**9J-0403**	2	SPRING	
	28	1	**9J-0404**	2	PLUG	
	29	1	**9S-8005**	1	PLUG-O-RING (3/4-16 THD)	
	30	1	**3K-0360**	3	SEAL-O-RING (16.36MM ID)	
	31	1	**101-1984**	1	BODY	
	32	1	**6E-3013**	2	SEAT	
	33	1	**6E-3019**	1	VALVE	

M-METRIC PART
Y-SEPARATE ILLUSTRATION

119-9546 VALVE GP-CONTROL *(contd.)* i00645718

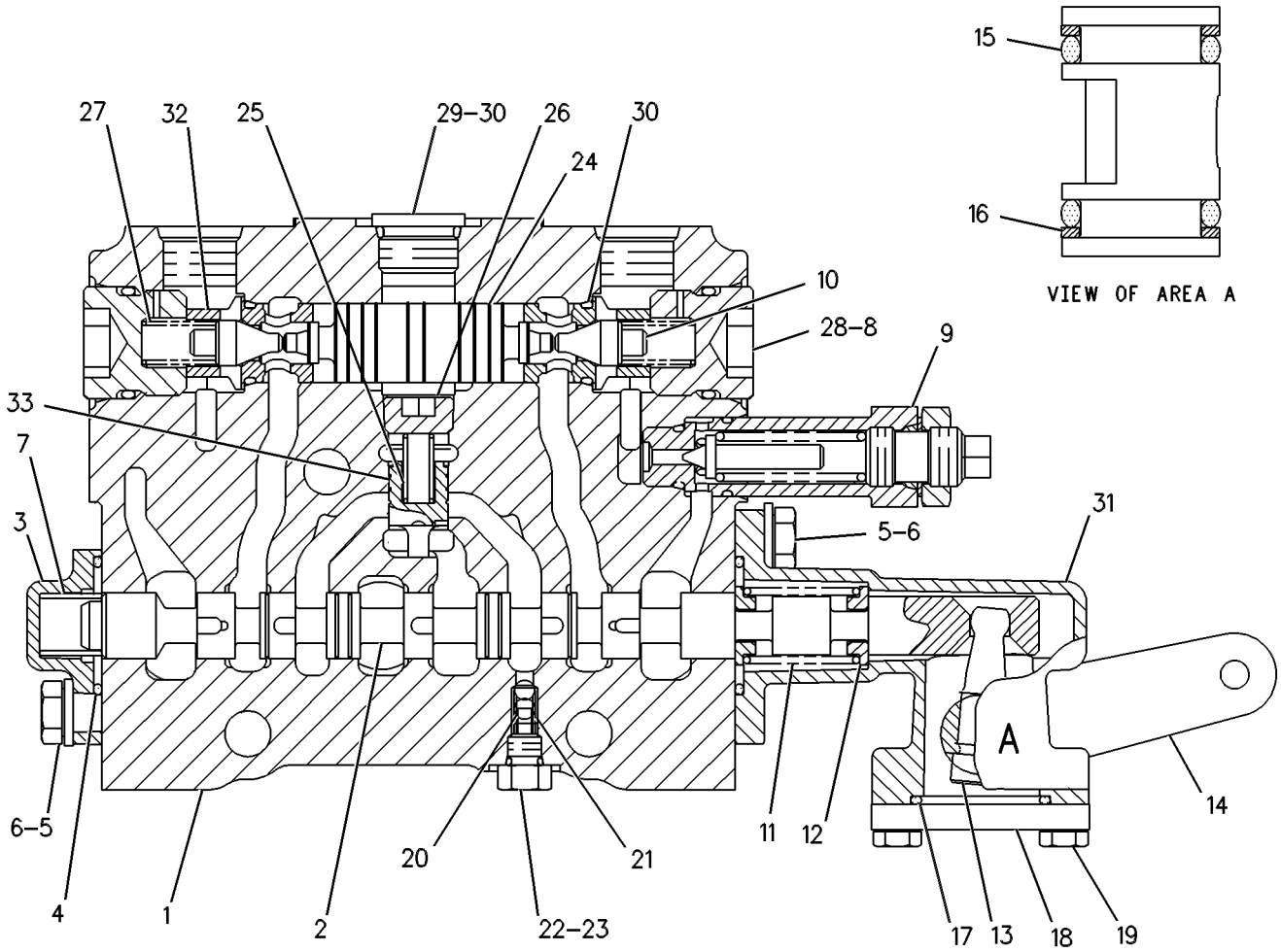

GRAPHIC #1 g00267527

HYDRAULIC SYSTEM

144-1186 VALVE GP-CONTROL

S/N: 7KK1-UP

PART OF 144-1568, 165-4499 VALVE GP-BANK 4

SMCS-5051 **i00546570**

NOTE	REF NO	GRAPHIC REF	PART NUMBER	QTY	PART NAME 1 2 3 4 5 6 (PRODUCT LEVEL)	SEE PAGE
	1	1	**6E-3044**	1	BODY	
	2	1	**111-8233**	1	SPRING	
	3	1	**101-1978**	1	COVER	
	4	1	**2K-8199**	2	SEAL-O-RING (28.24MM ID)	
M	5	1	**8T-4189**	4	BOLT (M8X1.25X20MM)	
	6	1	**8T-4224**	4	WASHER-HARD (2MM THK)	
	7	1	**101-1984**	1	BODY	
	8	1	**102-7412**	1	SPRING	
	9	1	**101-1973**	4	RETAINER	
	10	1	**101-1971**	1	LEVER	
	11	1	**101-1970**	1	LEVER AS	
	12	1	**8M-4437**	2	SEAL-O-RING	
	13	1	**101-1983**	2	RING-BACKUP	
	14	1	**4D-9986**	1	SEAL-O-RING (23.47MM ID)	
	15	1	**101-2480**	1	COVER	
M	16	1	**8T-4138**	2	BOLT (M6X1.0X20MM)	
	17	1	**5B-9318**	1	BALL (4.76MM)	
	18	1	**6E-3007**	1	SPRING	
	19	1	**6E-4502**	1	PLUG	
	20	1	**4J-7533**	1	SEAL-O-RING (6.07MM ID)	
	21	1	**6E-3019**	1	VALVE	
	22	1	**6E-5153**	1	SPRING	
	23	1	**108-2187**	1	PLUG-PIPE	
	24	1	**9S-8005**	1	PLUG-O-RING (3/4-16 THD)	
	25	1	**3K-0360**	3	SEAL-O-RING (16.36MM ID)	
	26	1	**106-3659**	1	PISTON	
	27	1	**6E-3013**	2	SEAT	
	28	1	**106-3658**	2	VALVE	
	29	1	**9J-0403**	2	SPRING	
	30	1	**9J-0404**	2	PLUG	
	31	1	**7J-9933**	2	SEAL-O-RING (21.89MM ID)	

M-METRIC PART

144-1186 VALVE GP-CONTROL *(contd.)* i00546570

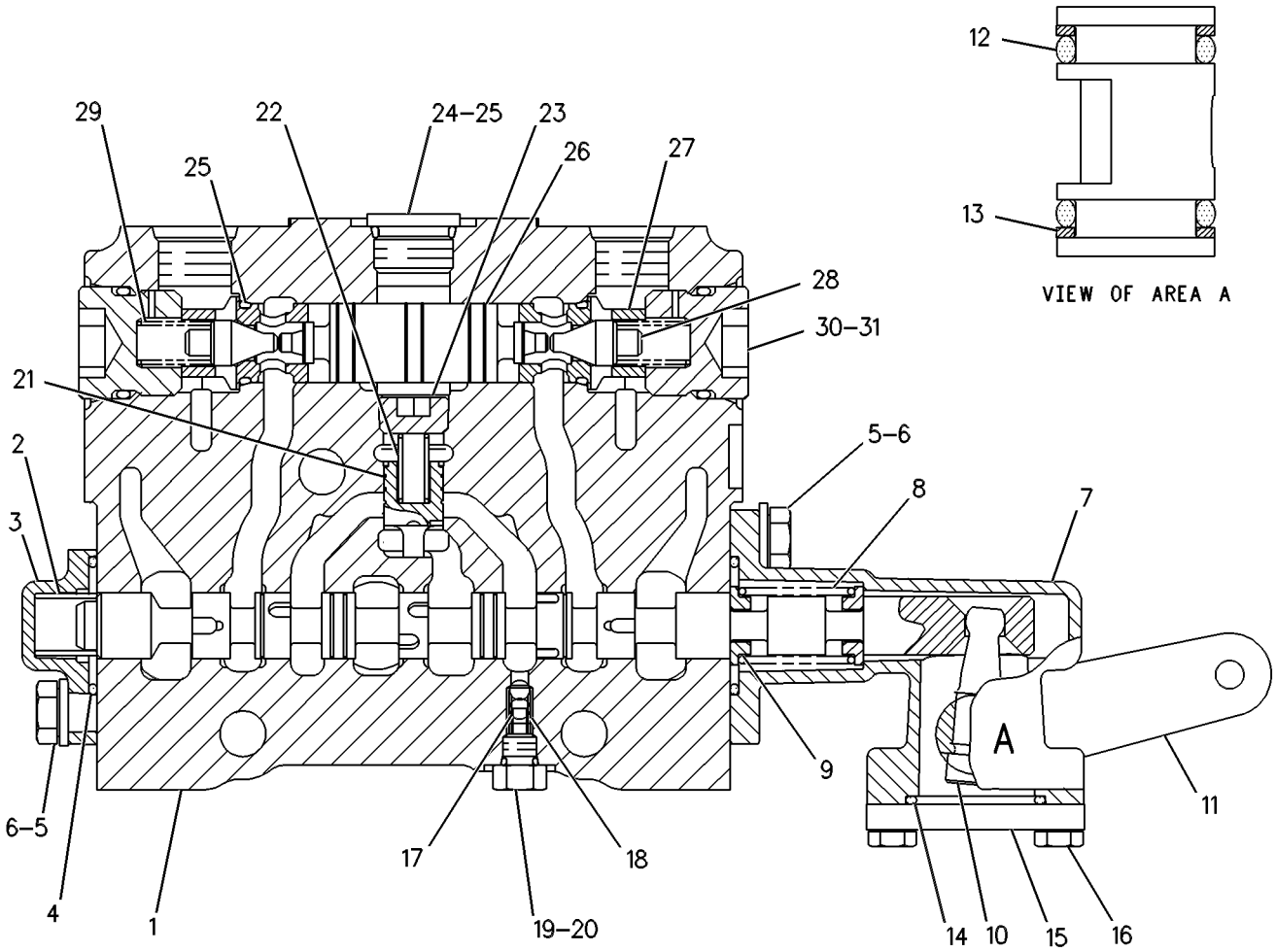

GRAPHIC #1 g00274002

HYDRAULIC SYSTEM

165-4563 VALVE GP-CONTROL

S/N: 7KK79-UP

PART OF 8X-9034 VALVE & LINKAGE GP

SMCS-5051 **i01429282**

NOTE	REF NO	GRAPHIC REF	PART NUMBER	QTY	PART NAME 1 2 3 4 5 6 (PRODUCT LEVEL)	SEE PAGE
M	1	1	**7X-0474**	2	BOLT (M10X1.5X220MM)	
M	2	1	**7X-2547**	1	BOLT (M10X1.5X200MM)	
	3	1	**118-6866**	1	MANIFOLD	
	4	1	**101-0509**	7	PLATE-SEAL	
Y	5	1	**117-7884**	1	VALVE GP-CONTROL (BLADE TIP)	720
Y	6	1	**117-7883**	1	VALVE GP-CONTROL (CIRCLE DRIVE)	718
Y	7	1	**117-7882**	1	VALVE GP-CONTROL (CIRCLE DRIVE)	716
Y	8	1	**117-7885**	1	VALVE GP-CONTROL (SIDESHIFT)	722
Y	9	1	**175-6616**	1	VALVE GP-CONTROL (BLADE LIFT)	734
Y	10	1	**117-7879**	1	VALVE GP-CONTROL (RIPPER)	714
	11	1	**102-6238**	1	MANIFOLD	
	12	1	**9S-4180**	1	PLUG-O-RING	
	13	1	**4J-7533**	1	SEAL-O-RING (6.07MM ID)	
M	14	1	**137-6719**	1	BOLT-HEX HEAD (M10X1.50X80MM)	
	15	1	**5B-5620**	1	BOLT (5/16-18X2.125IN)	
M	16	1	**8T-4198**	2	BOLT (M10X1.5X100MM)	
	17	1	**8T-4121**	9	WASHER-HARD (11X21X2.5MM THK)	
	18	1	**6B-0933**	2	SPACER (6.35MM THK)	
	19	1	**7H-3641**	1	ROD END	
M	20	1	**8T-4136**	4	BOLT (M10X1.5X25MM)	
M	21	1	**8T-4195**	2	BOLT (M10X1.5X30MM)	
	22	1	**104-7429**	1	PLATE	
	23	1	**117-1968**	2	SPACER	
	24	1	**5B-3180**	3	NUT (5/16-18 THD)	
	25	1	**3F-9556**	2	LOCKWASHER	
	26	1	**117-2040**	1	BRACKET AS	
M		1	**8T-3597**	2	NUT-WELD (M12X1.75 THD)	

M-METRIC PART
Y-SEPARATE ILLUSTRATION

165-4563 VALVE GP-CONTROL *(contd.)* i01429282

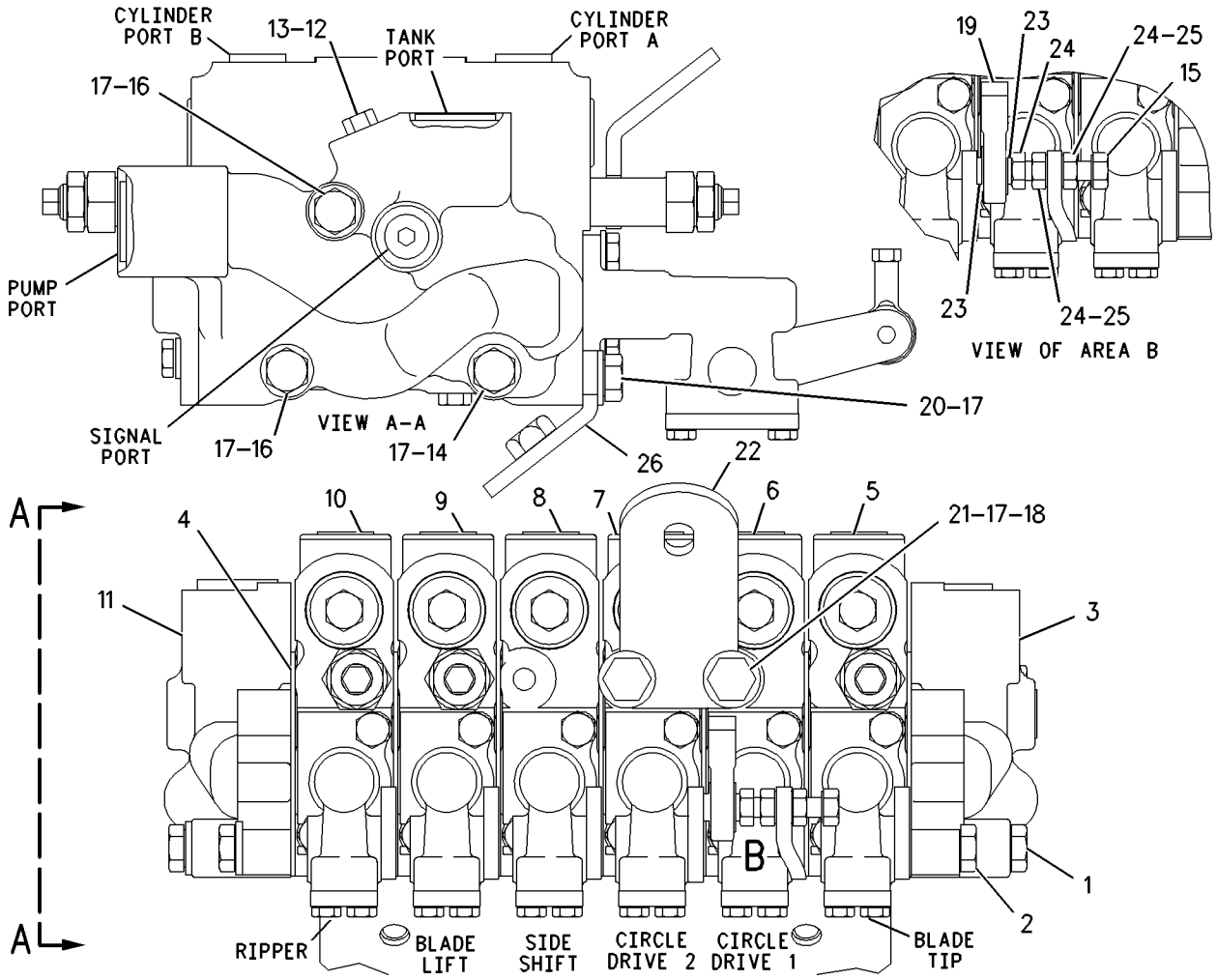

GRAPHIC #1 g00753298

HYDRAULIC SYSTEM

167-4327 VALVE GP-CONTROL

S/N: 7KK79-UP

PART OF 165-4499 VALVE GP-BANK 4

SMCS-5051 **i01440738**

NOTE	REF NO	GRAPHIC REF	PART NUMBER	QTY	PART NAME 1 2 3 4 5 6 (PRODUCT LEVEL)	SEE PAGE
	1	1	**6E-3043**	1	BODY	
Z	2	1		1	PLATE-IDENTIFICATION	
	3	1	**101-1980**	1	HOUSING	
	4	1	**101-1972**	1	DETENT	
	5	1	**108-4916**	1	DETENT GP-CONTROL VALVE	
	6	1	**5B-9318**	1	BALL	
M	7	1	**8T-6869**	2	BOLT (M8X1.25X60MM)	
	8	1	**2K-8199**	2	SEAL-O-RING	
M	9	1	**8T-4189**	2	BOLT (M8X1.25X20MM)	
	10	1	**8T-4224**	4	WASHER-HARD (8.8X16X2MM THK)	
	11	1	**101-1984**	1	BODY	
	12	1	**102-7412**	1	SPRING	
	13	1	**101-1973**	4	RETAINER	
	14	1	**101-1971**	1	LEVER (BLADE LIFT)	
	15	1	**101-1970**	1	LEVER AS (BLADE LIFT)	
	16	1	**8M-4437**	2	SEAL-O-RING	
	17	1	**101-1983**	2	RING-BACKUP (14.65MM ID)	
	18	1	**4D-9986**	1	SEAL-O-RING	
	19	1	**101-2480**	1	COVER	
M	20	1	**8T-4138**	2	BOLT (M6X1X20MM)	
	21	1	**6E-3007**	1	SPRING	
	22	1	**6E-4502**	1	PLUG	
	23	1	**4J-7533**	1	SEAL-O-RING	
	24	1	**6E-3019**	1	VALVE	
	25	1	**6E-5153**	1	SPRING	
	26	1	**108-2187**	1	PLUG-PIPE	
	27	1	**9S-8005**	1	PLUG	
	28	1	**3K-0360**	3	SEAL-O-RING	
	29	1	**106-3660**	2	PISTON	
	30	1	**6E-3013**	2	SEAT	
	31	1	**106-3658**	2	VALVE	
	32	1	**9J-0403**	2	SPRING	
	33	1	**9J-0404**	2	PLUG	
	34	1	**7J-9933**	2	SEAL-O-RING	
Y	35	1	**139-8474**	1	VALVE GP-RELIEF	743
Z	36	1			STEM	
	37	1	**111-8234**	1	SPRING	

M-METRIC PART
Y-SEPARATE ILLUSTRATION
Z-NOT SERVICED SEPARATELY

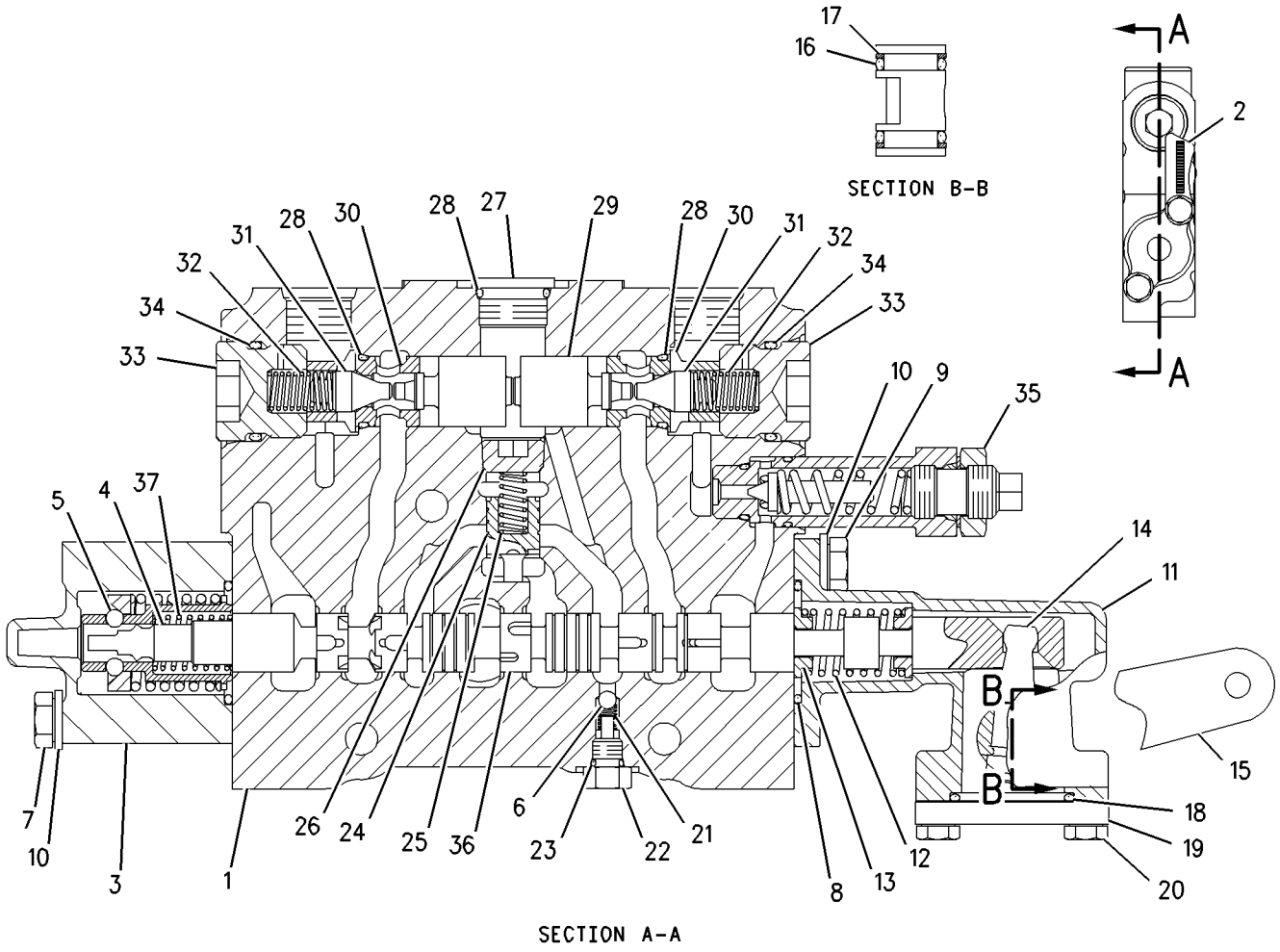

GRAPHIC #1 g00763682

HYDRAULIC SYSTEM

175-6616 VALVE GP-CONTROL

S/N: 7KK79-UP
BLADE LIFT
PART OF 165-4563 VALVE GP-CONTROL

SMCS-5051 **i01438117**

NOTE	REF NO	GRAPHIC REF	PART NUMBER	QTY	PART NAME 1 2 3 4 5 6 (PRODUCT LEVEL)	SEE PAGE
	1	1	**6E-3043**	1	BODY	
Z	2	1		1	PLATE-IDENTIFICATION	
	3	1	**101-1980**	1	HOUSING	
	4	1	**101-1972**	1	DETENT	
	5	1	**108-4916**	1	DETENT GP-CONTROL VALVE	
	6	1	**5B-9318**	1	BALL	
M	7	1	**8T-6869**	2	BOLT (M8X1.25X60MM)	
	8	1	**2K-8199**	2	SEAL-O-RING	
M	9	1	**8T-4189**	2	BOLT (M8X1.25X20MM)	
	10	1	**8T-4224**	4	WASHER-HARD (8.8X16X2MM THK)	
	11	1	**101-1984**	1	BODY	
	12	1	**102-7412**	1	SPRING	
	13	1	**101-1973**	4	RETAINER	
	14	1	**101-1971**	1	LEVER (BLADE LIFT)	
	15	1	**101-1982**	1	LEVER AS (BLADE LIFT)	
	16	1	**8M-4437**	2	SEAL-O-RING	
	17	1	**101-1983**	2	RING-BACKUP (14.65MM ID)	
	18	1	**4D-9986**	1	SEAL-O-RING	
	19	1	**101-2480**	1	COVER	
M	20	1	**8T-4138**	2	BOLT (M6X1X20MM)	
	21	1	**6E-3007**	1	SPRING	
	22	1	**6E-4502**	1	PLUG	
	23	1	**4J-7533**	1	SEAL-O-RING	
	24	1	**6E-3019**	1	VALVE	
	25	1	**6E-5153**	1	SPRING	
	26	1	**108-2187**	1	PLUG-PIPE	
	27	1	**9S-8005**	1	PLUG	
	28	1	**3K-0360**	3	SEAL-O-RING	
	29	1	**106-3660**	2	PISTON	
	30	1	**6E-3013**	2	SEAT	
	31	1	**106-3658**	2	VALVE	
	32	1	**9J-0403**	2	SPRING	
	33	1	**9J-0404**	2	PLUG	
	34	1	**7J-9933**	2	SEAL-O-RING	
Y	35	1	**139-8474**	1	VALVE GP-RELIEF	743
Z	36	1			STEM	
	37	1	**111-8234**	1	SPRING	

M-METRIC PART
Y-SEPARATE ILLUSTRATION
Z-NOT SERVICED SEPARATELY

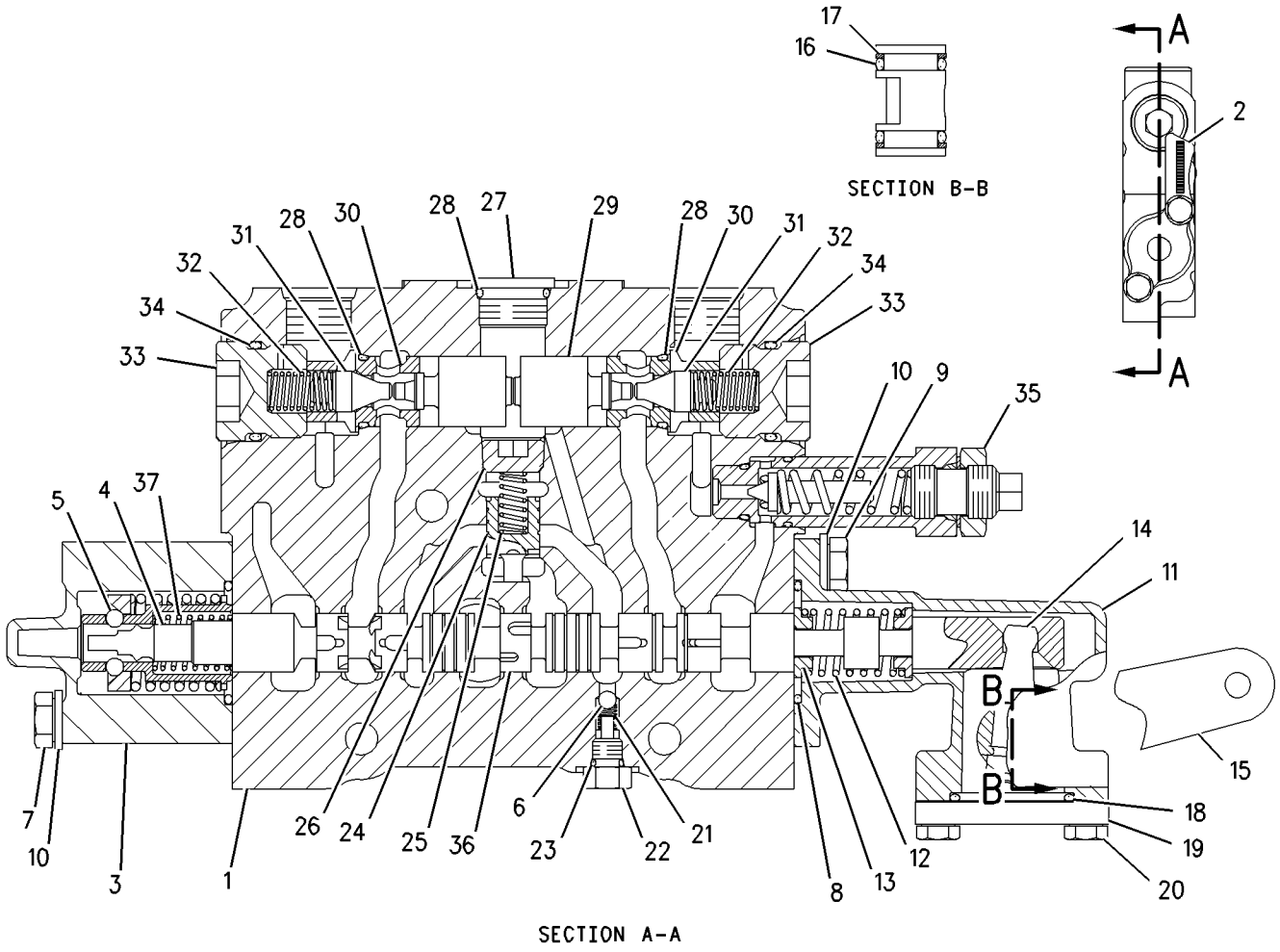

GRAPHIC #1 g00763682

HYDRAULIC SYSTEM

104-3122 VALVE GP-PRESS & FLOW CMPNSTR

S/N: 7KK1-UP

PART OF 121-4311, 121-4312 PUMP GP-PISTON

SMCS-5086 **i00111552**

NOTE	REF NO	GRAPHIC REF	PART NUMBER	QTY	PART NAME 1 2 3 4 5 6 (PRODUCT LEVEL)	SEE PAGE
	1	1	**108-4814**	1	BODY-COMPENSATOR	
	2	1	**9S-4191**	1	PLUG-O-RING (9/16-18 THD)	
	3	1	**3J-1907**	3	SEAL-O-RING (11.89MM ID)	
	4	1	**108-4815**	1	SPOOL-MARGIN	
	5	1	**9T-2186**	2	PLUG	
	6	1	**6E-4239**	1	SPOOL-CUTOFF	
	7	1	**6E-4230**	2	SPRING-GUIDE	
	8	1	**6E-4228**	1	SPRING-CUTOFF	
	9	1	**6E-6140**	1	PLUG-COMPENSATOR	
	10	1	**033-6036**	1	SEAL-O-RING (23.47MM ID)	
	11	1	**6E-6141**	2	LOCKNUT-SEALING	
M	12	1	**129-7632**	2	SCREW-ADJUSTMENT	
	13	1	**6E-6142**	1	PLUG-MARGIN	
	14	1	**033-6027**	1	SEAL-O-RING (19.18MM ID)	
	15	1	**9T-7750**	1	SPRING	
	16	1	**108-4816**	1	PIN-SPRING STOP	
	17	1	**9T-1857**	2	GUIDE	
	18	1	**6E-6420**	1	VALVE-NEEDLE	
	19	1	**6E-6419**	1	RING	
	20	1	**9X-7680**	1	SEAL-O-RING	

M-METRIC PART

104-3122 VALVE GP-PRESS & FLOW CMPNSTR *(contd.)* i00111552

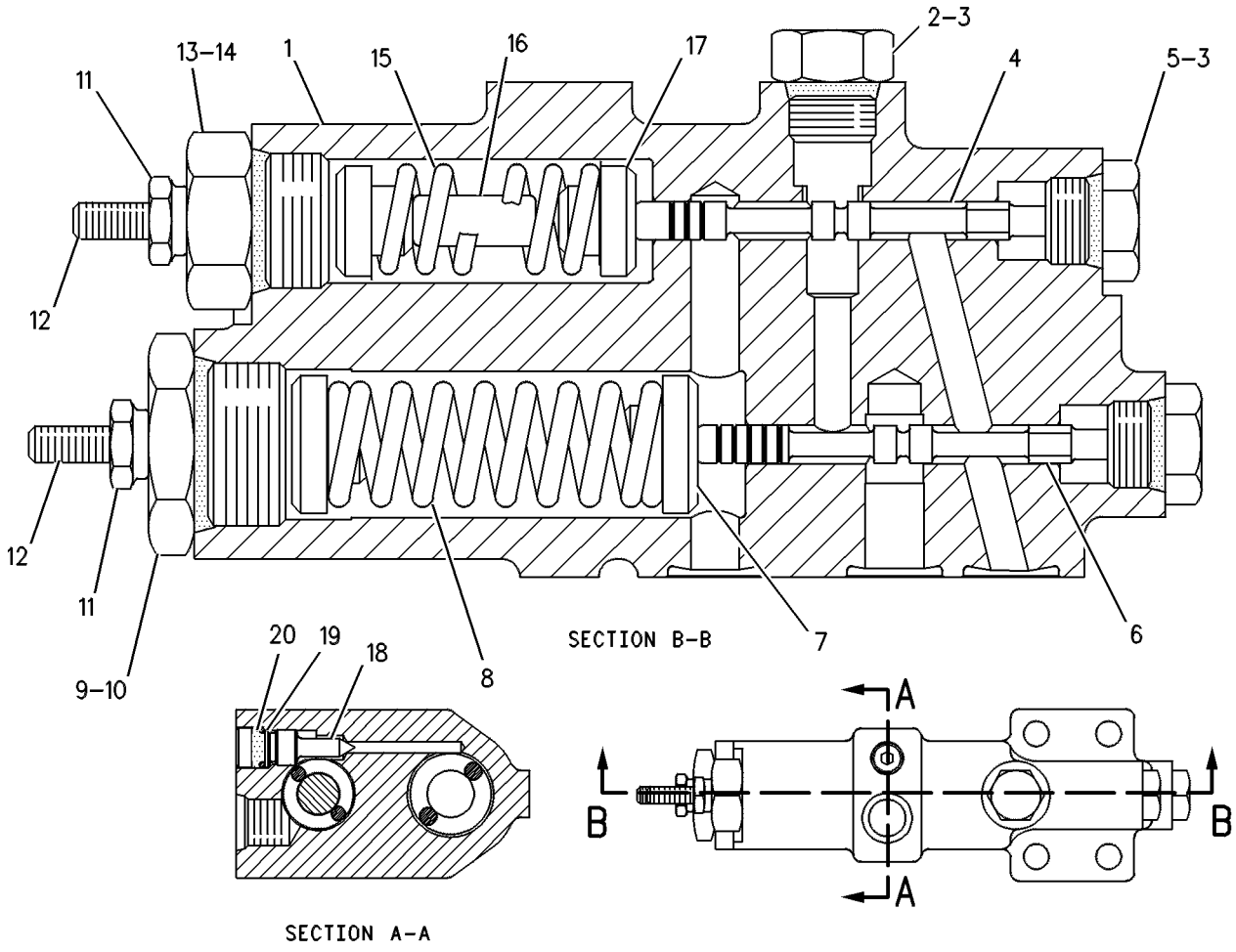

GRAPHIC #1 g00084774

HYDRAULIC SYSTEM

4T-4935 VALVE GP-RELIEF

S/N: 7KK1-UP
DIRECT OPERATED
PART OF 117-4079 VALVE GP-COMBINATION

SMCS-4322, 5069, 5117 **i00111654**

NOTE	REF NO	GRAPHIC REF	PART NUMBER	QTY	PART NAME 1 2 3 4 5 6 (PRODUCT LEVEL)	SEE PAGE
	1	1	**6E-1835**	1	RETAINER AS	
	2	1	**9X-6395**	1	NUT-ORFS (3/4-16 THD)	
	3	1	**7J-9933**	1	SEAL-O-RING (21.89MM ID)	
	4	1	**4T-7571**	1	PLATE	
	5	1	**6J-6439**	1	VALVE	
	6	1	**3K-0360**	2	SEAL-O-RING (16.36MM ID)	
	7	1	**4T-4942**	1	SPRING	

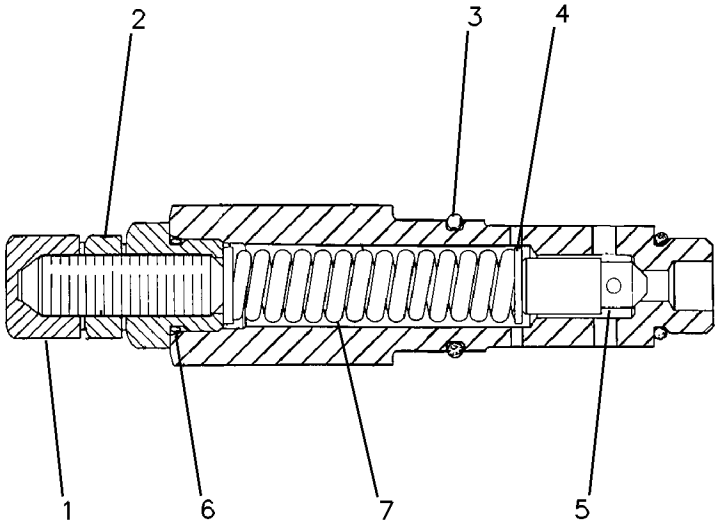

GRAPHIC #1 g00082648

6E-4703 VALVE GP-RELIEF

S/N: 7KK1-UP
DIRECT OPERATED
PART OF 117-4079 VALVE GP-COMBINATION

SMCS-4322, 5069, 5117 **i00111661**

NOTE	REF NO	GRAPHIC REF	PART NUMBER	QTY	PART NAME 1 2 3 4 5 6 (PRODUCT LEVEL)	SEE PAGE
	1	1	**4D-2297**	1	SEAL-O-RING (15.60MM ID)	
	2	1	**3J-1907**	1	SEAL-O-RING (11.89MM ID)	
	3	1	**3G-3726**	1	NUT	

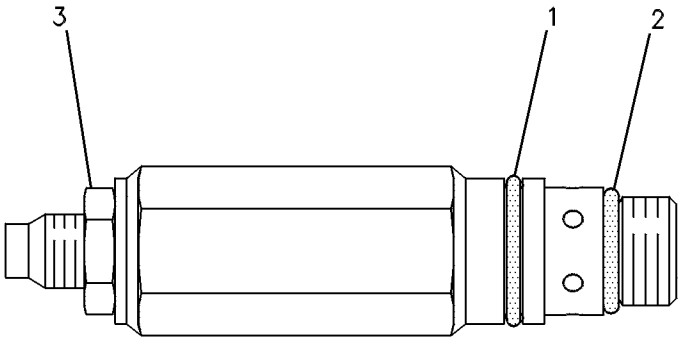

GRAPHIC #1 g00084814

HYDRAULIC SYSTEM

117-4078 VALVE GP-RELIEF

S/N: 7KK1-UP

PART OF 8X-9028 LINES GP-STEERING

SMCS-4322, 5069, 5117 **i00111609**

NOTE	REF NO	GRAPHIC REF	PART NUMBER	QTY	PART NAME 1 2 3 4 5 6 (PRODUCT LEVEL)	SEE PAGE
	1	1	**4T-9337**	1	BODY-RELIEF	
	2	1	**5P-3903**	2	ADAPTER-O-RING	
	3	1	**9S-8005**	2	PLUG-O-RING (3/4-16 THD)	
	4	1	**3K-0360**	2	SEAL-O-RING (16.36MM ID)	
	5	1	**4T-9336**	2	SEAT	
B	6	1	**3G-8592**	2	SHIM (.13MM THK)	
B	7	1	**5J-4857**	34	SHIM (.01MM THK)	
	8	1	**3G-7444**	2	VALVE	
	9	1	**5J-9631**	2	SPRING	
	10	1	**1N-6002**	4	SEAL-O-RING	
	11	1	**4J-0521**	2	SEAL-O-RING (34.52MM ID)	

B-USE AS REQUIRED

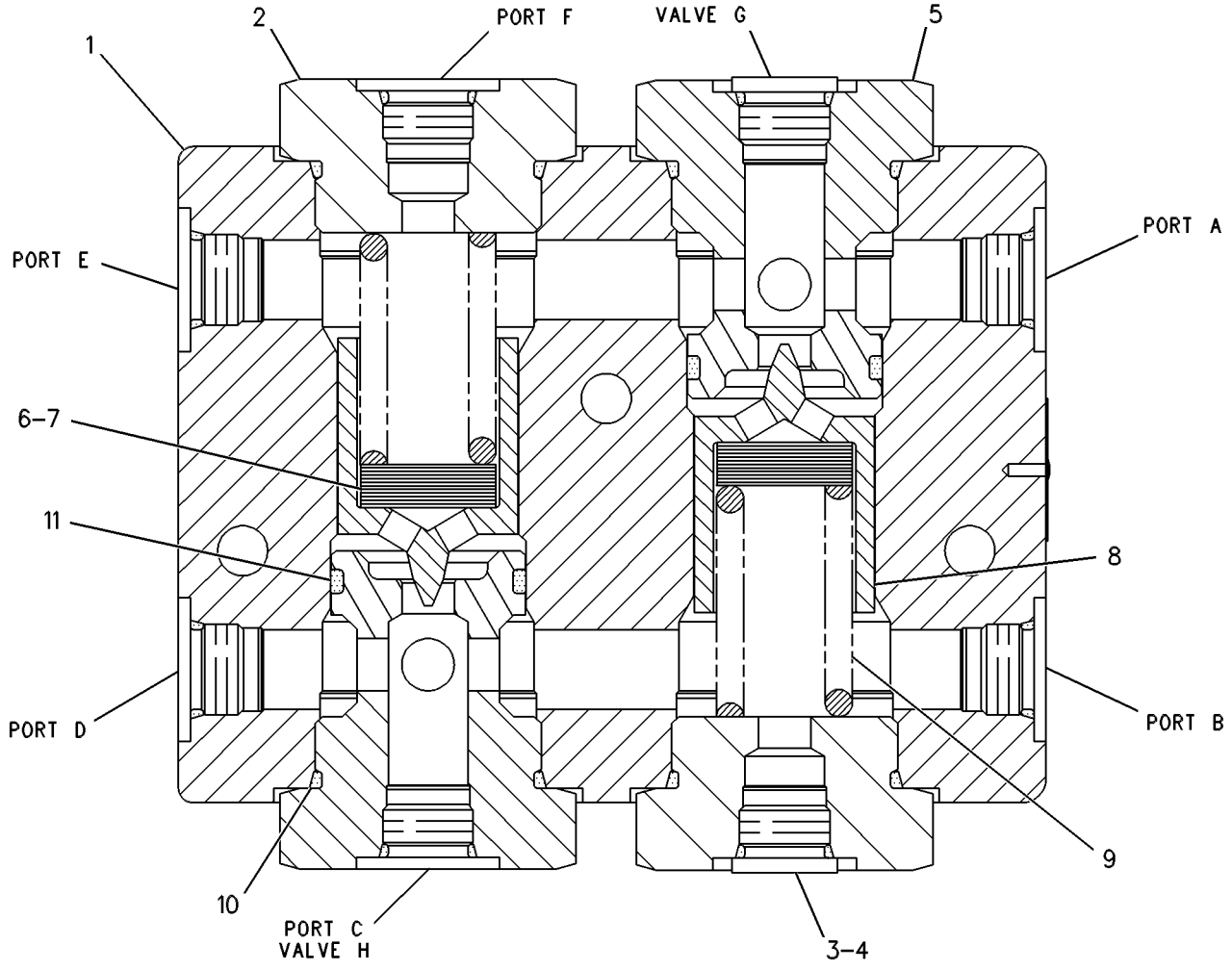

GRAPHIC #1 g00086614

HYDRAULIC SYSTEM

127-8480 VALVE GP-RELIEF

S/N: 7KK1-UP

PART OF 117-4079 VALVE GP-COMBINATION

SMCS-4322, 5069, 5117 **i00111649**

NOTE	REF NO	GRAPHIC REF	PART NUMBER	QTY	PART NAME 1 2 3 4 5 6 (PRODUCT LEVEL)	SEE PAGE
	1	1	**3J-7354**	1	SEAL-O-RING (8.92MM ID)	
	2	1	**4T-5074**	1	RING-BACKUP	
	3	1	**6V-5556**	1	SEAL-O-RING (25.07MM ID)	
	4	1	**4T-4509**	1	SEAT	
	5	1	**108-5157**	1	VALVE	
	6	1	**125-1393**	1	SPRING	
	7	1	**3K-0360**	1	SEAL-O-RING (16.36MM ID)	
	8	1	**9X-6395**	1	NUT-ORFS (3/4-16 THD)	
	9	1	**6E-5200**	1	RETAINER AS	

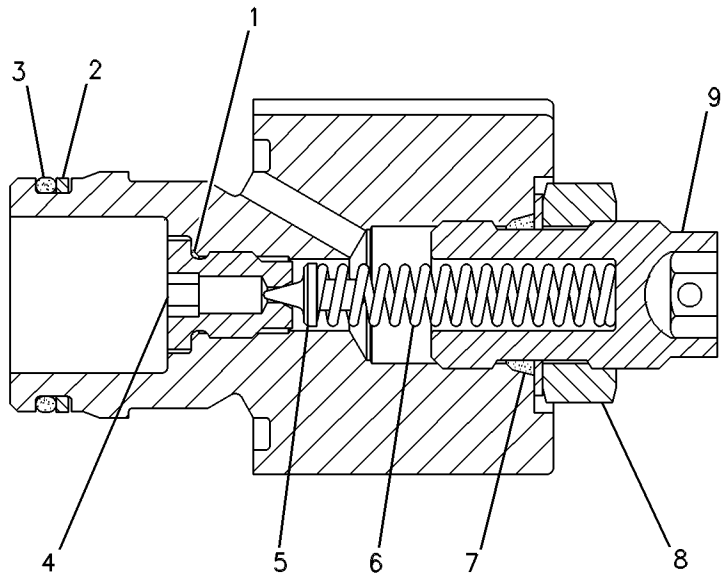

GRAPHIC #1 g00086594

HYDRAULIC SYSTEM

139-8472 VALVE GP-RELIEF

S/N: 7KK1-UP

PART OF 117-7879, 117-7884, 117-7885 VALVE GP-CONTROL

SMCS-4322, 5069, 5117 **i00553791**

NOTE	REF NO	GRAPHIC REF	PART NUMBER	QTY	PART NAME 1 2 3 4 5 6 (PRODUCT LEVEL)	SEE PAGE
	1	1	**114-6635**	1	RETAINER AS	
	2	1	**2P-1279**	1	LOCKNUT (9/16-18 THD)	
	3	1	**3J-1907**	2	SEAL-O-RING (11.89MM ID)	
	4	1	**2J-6089**	1	SPRING	
	5	1	**6E-3006**	1	BODY	
	6	1	**131-8777**	1	VALVE	
	7	1	**4D-2297**	1	SEAL-O-RING (15.60MM ID)	
	8	1	**2A-3211**	1	WASHER (0.8MM THICK)	

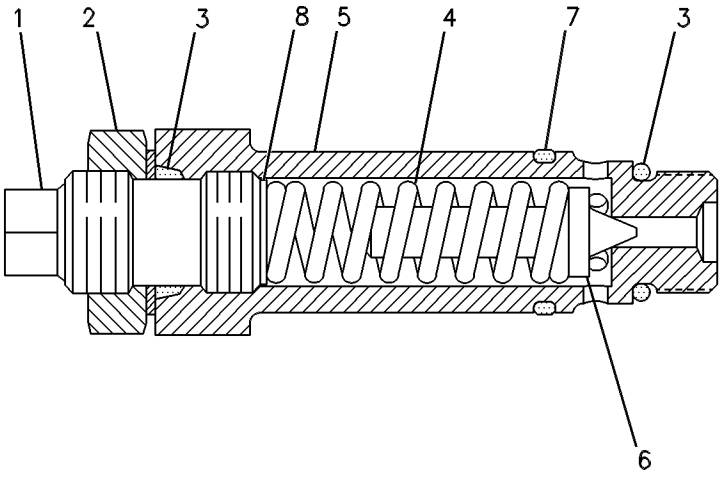

GRAPHIC #1 g00109400

HYDRAULIC SYSTEM

139-8474 VALVE GP-RELIEF

S/N: 7KK1-UP

PART OF 119-9538, 119-9546, 167-4327, 175-6616 VALVE GP-CONTROL

SMCS-4322, 5069, 5117 **i00111651**

NOTE	REF NO	GRAPHIC REF	PART NUMBER	QTY	PART NAME 1 2 3 4 5 6 (PRODUCT LEVEL)	SEE PAGE
	1	1	**114-6635**	1	RETAINER AS	
	2	1	**2P-1279**	1	LOCKNUT (9/16-18 THD)	
	3	1	**3J-1907**	2	SEAL-O-RING (11.89MM ID)	
	4	1	**2J-6089**	1	SPRING	
	5	1	**2A-3211**	1	WASHER	
	6	1	**131-8777**	1	VALVE	
	7	1	**4D-2297**	1	SEAL-O-RING (15.60MM ID)	

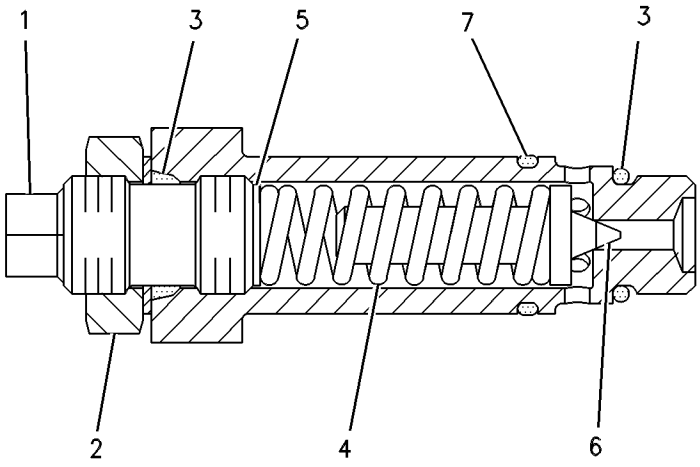

GRAPHIC #1 g00089282

HYDRAULIC SYSTEM

4T-1860 VALVE GP-SHUTTLE

S/N: 7KK1-UP

PART OF 117-4079 VALVE GP-COMBINATION

SMCS-5079 **i01492721**

NOTE	REF NO	GRAPHIC REF	PART NUMBER	QTY	PART NAME 1 2 3 4 5 6 (PRODUCT LEVEL)	SEE PAGE
Z	1	1		1	SEAT	
	2	1	**1M-6718**	1	BALL	
Z	3	1		1	VALVE	
	4	1	**8C-3085**	1	SEAL-O-RING	
	5	1	**6V-5586**	1	SEAL-O-RING	
	6	1	**3J-1907**	1	SEAL-O-RING	
	7	1	**4T-5070**	2	RING-BACKUP	
	8	1	**4T-5071**	2	RING-BACKUP	

Z-NOT SERVICED SEPARATELY

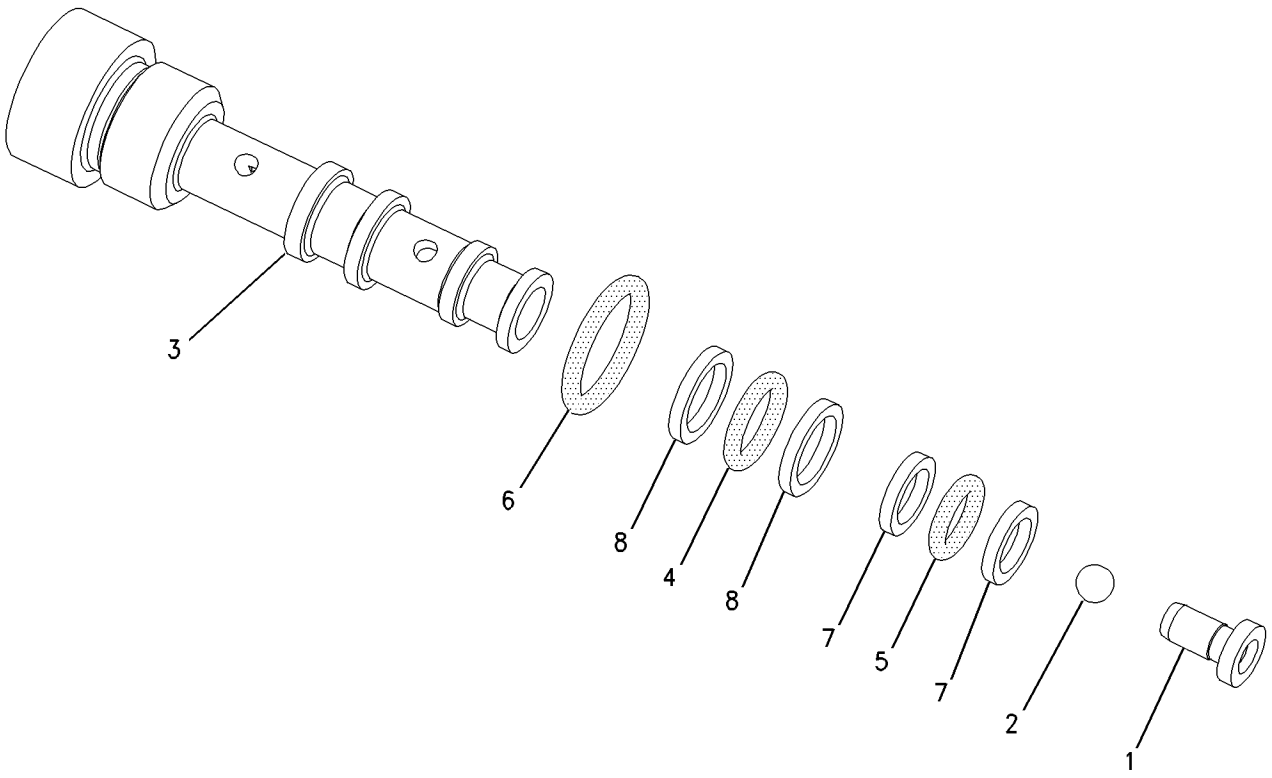

GRAPHIC #1 g00775006

6T-8046 VALVE GP-SOLENOID

S/N: 7KK1-UP

PART OF 7T-6517 VALVE & MTG GP-SOLENOID

FIELD REPLACEMENT ORDER 149-2658—PAGE 746

SMCS-5479 **i01211552**

NOTE	REF NO	GRAPHIC REF	PART NUMBER	QTY	PART NAME 1 2 3 4 5 6 (PRODUCT LEVEL)	SEE PAGE
	1	1	**6T-8470**	1	COIL AS	
	2	1	**7N-9737**	1	HOUSING-PLUG	
		1	**7N-7780**	1	PIN-CONNECTOR (BLADE)	
		1	**7N-7779**	1	SOCKET	
	3	1	**1S-9593**	2	STRAP-CABLE (0.62IN DIA)	
	4	1	**3G-8171**	1	CARTRIDGE	
	5	1	**9S-1354**	1	NUT (5/8-18 THD)	
	6	1	**8T-8890**	1	WASHER	
					AVAILABLE REPAIR KIT(S):	
			3G-8175	1	KIT-SEAL	
					(INCLUDES O-RINGS & BACK-UP RINGS)	

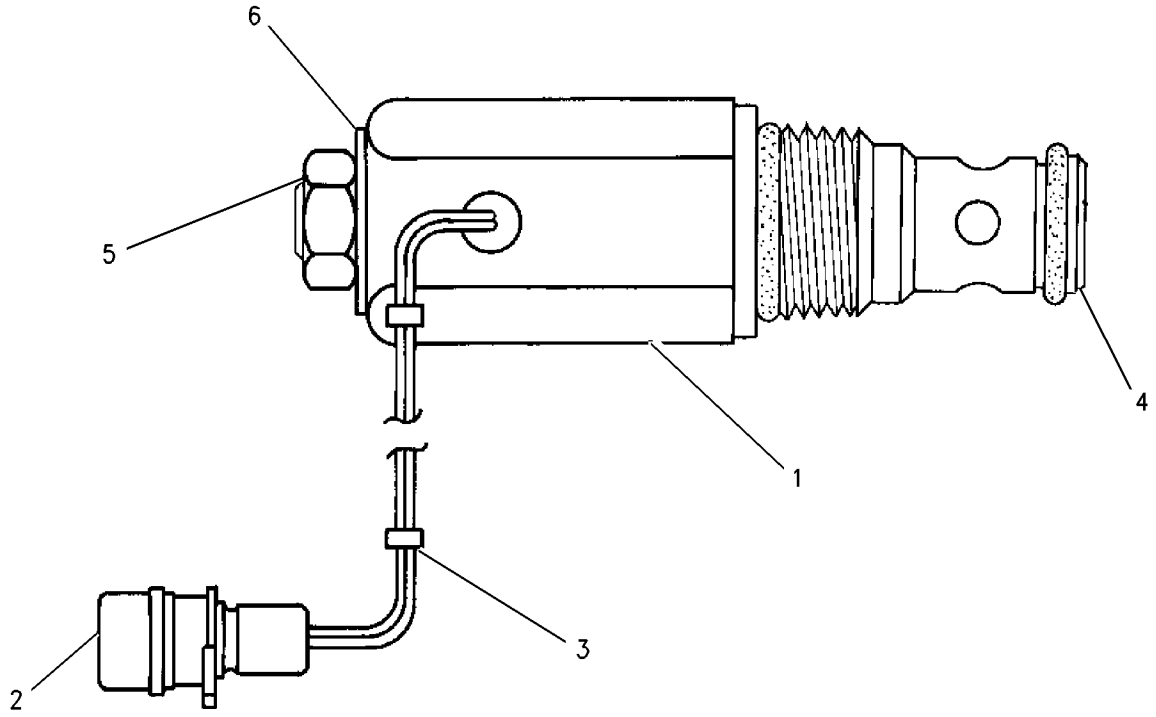

GRAPHIC #1 g00647490

149-2658 VALVE GP-SOLENOID

S/N: 7KK1-UP

PART OF 7T-6517 VALVE & MTG GP-SOLENOID

FIELD REPLACEMENT FOR 6T-8046—PAGE 745

SMCS-5479 **i00697987**

NOTE	REF NO	GRAPHIC REF	PART NUMBER	QTY	PART NAME 1 2 3 4 5 6 (PRODUCT LEVEL)	SEE PAGE
	1	1	**149-2611**	1	CARTRIDGE AS	
		1	**8C-9987**	1	WASHER (2.5MM THK)	
		1	**111-0343**	1	LOCKNUT	
	2	1	**111-0343**	1	LOCKNUT	
	3	1	**141-8605**	1	COIL AS	
		1	**1S-9593**	2	STRAP-CABLE (0.62IN DIA)	
		1	**7N-7779**	1	SOCKET	
		1	**7N-7780**	1	PIN-CONNECTOR (BLADE)	
		1	**7N-9737**	1	HOUSING-PLUG (1 PIN,1 SOCKET)	
	4	1	**8C-9987**	1	WASHER (2.5MM THK)	
					AVAILABLE REPAIR KIT(S):	
			3G-8175	1	KIT-SEAL	
					(INCLUDES O-RINGS & BACK UP RING)	

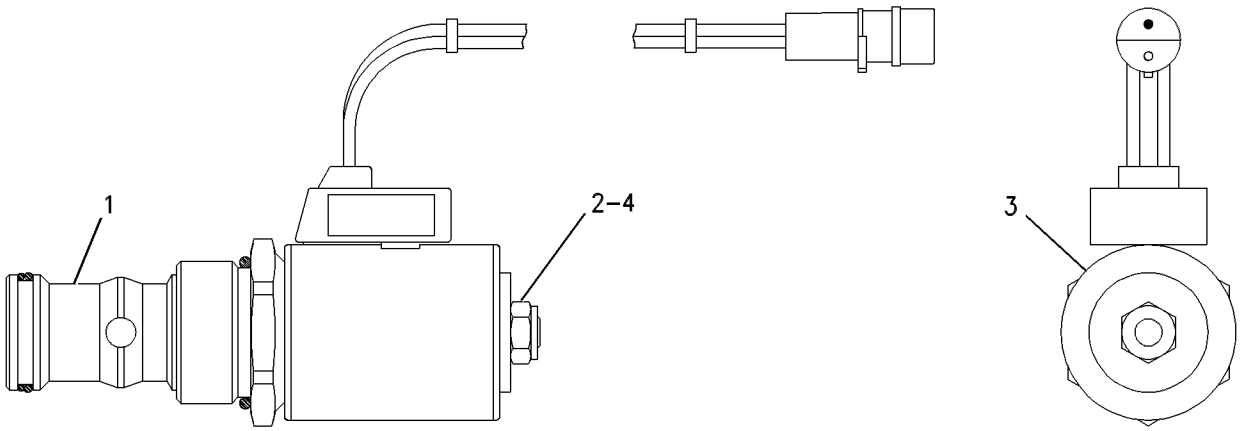

GRAPHIC #1 g00336842

HYDRAULIC SYSTEM

117-5099 VALVE GP-UNLOADING

S/N: 7KK1-UP

PART OF 8X-9029 LINES GP-SECONDARY STEERING

SMCS-5059, 505U **i01371460**

NOTE	REF NO	GRAPHIC REF	PART NUMBER	QTY	PART NAME 1 2 3 4 5 6 (PRODUCT LEVEL)	SEE PAGE
	1	1	**9T-6630**	1	VALVE GP-CHECK (HYDRAULIC OIL)	
		1	**2M-9780**	1	SEAL-O-RING (19.18MM ID)	
		1	**4M-6582**	1	SEAL-O-RING (15.88MM ID)	
		1	**5P-2199**	1	RING-BACKUP	
	2	1	**137-8400**	1	VALVE GP-UNLOADING	
		1	**2M-9780**	1	SEAL-O-RING (19.18MM ID)	
		1	**161-6149**	1	SEAL-O-RING (12.42MM ID)	
		1	**161-6161**	1	RING-BACKUP	
J	3	1	**104-7845**	1	VALVE GP-DIVERTER	
	4	1	**4J-0520**	1	SEAL-O-RING (32.92MM ID)	
	5	1	**9S-8001**	1	PLUG-O-RING (5/16-24 THD)	
		1	**4J-7533**	1	SEAL-O-RING (6.07MM ID)	
	6	1	**9S-8005**	1	PLUG-O-RING (3/4-16 THD)	
		1	**3K-0360**	1	SEAL-O-RING (16.36MM ID)	
					AVAILABLE REPAIR KIT(S):	
J			**2U-7354**	1	KIT-SEAL (INCLUDES SEALS & RINGS)	

J-REPAIR KIT(S) MARKED J AVAILABLE FOR PART MARKED J

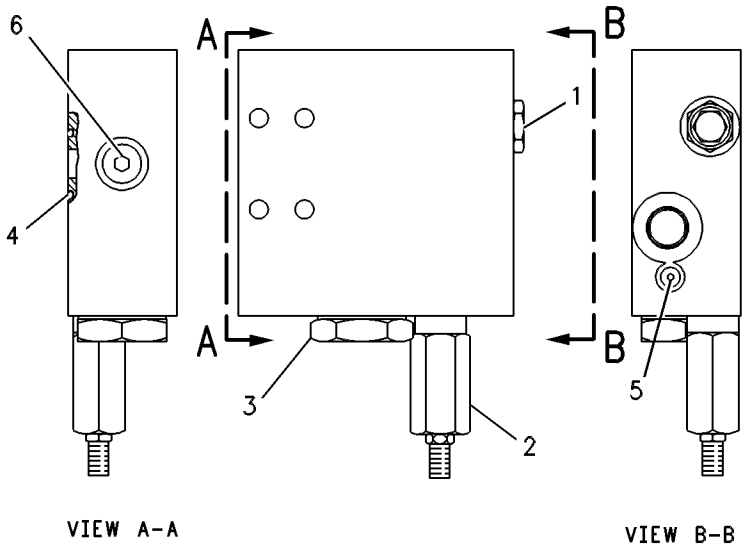

GRAPHIC #1 g00273542

IMPLEMENTS

138-7427 CIRCLE GP

S/N: 7KK1-UP

PART OF 8X-8402 CHASSIS AR

SMCS-6152, 6154, 6155 **i01458764**

NOTE	REF NO	GRAPHIC REF	PART NUMBER	QTY	PART NAME 1 2 3 4 5 6 (PRODUCT LEVEL)	SEE PAGE
	1	1	**3B-8489**	2	FITTING-GREASE	
	2	1	**9X-4597**	4	SEAL-LIP	
	3	1	**138-7429**	1	BRACKET AS	
	4	1	**194-3857**	2	PIN	
	5	1	**138-7435**	2	SPACER	
B	6	1	**138-7436**	2	SHIM PACK (EACH INCLS 26 SHIMS)	
	7	1	**140-8448**	4	PLATE	
Y	8	1	**140-8449**	1	GUARD GP-ROCK	752
	9	1	**140-8466**	6	SEGMENT	
	10	1	**194-4723**	1	CIRCLE AS	
	11	1	**087-5379**	2	BEARING-SLEEVE	
M	12	1	**6V-9667**	36	BOLT (M20X2.5X100MM)	
	13	1	**7T-5886**	12	DOWEL	
M	14	1	**8T-4193**	16	BOLT (M16X2X50MM)	
	15	1	**9X-3927**	2	PLUG	
	16	1	**9X-8257**	16	WASHER (17.5X30X3.5MM THK)	

B-USE AS REQUIRED
M-METRIC PART
Y-SEPARATE ILLUSTRATION

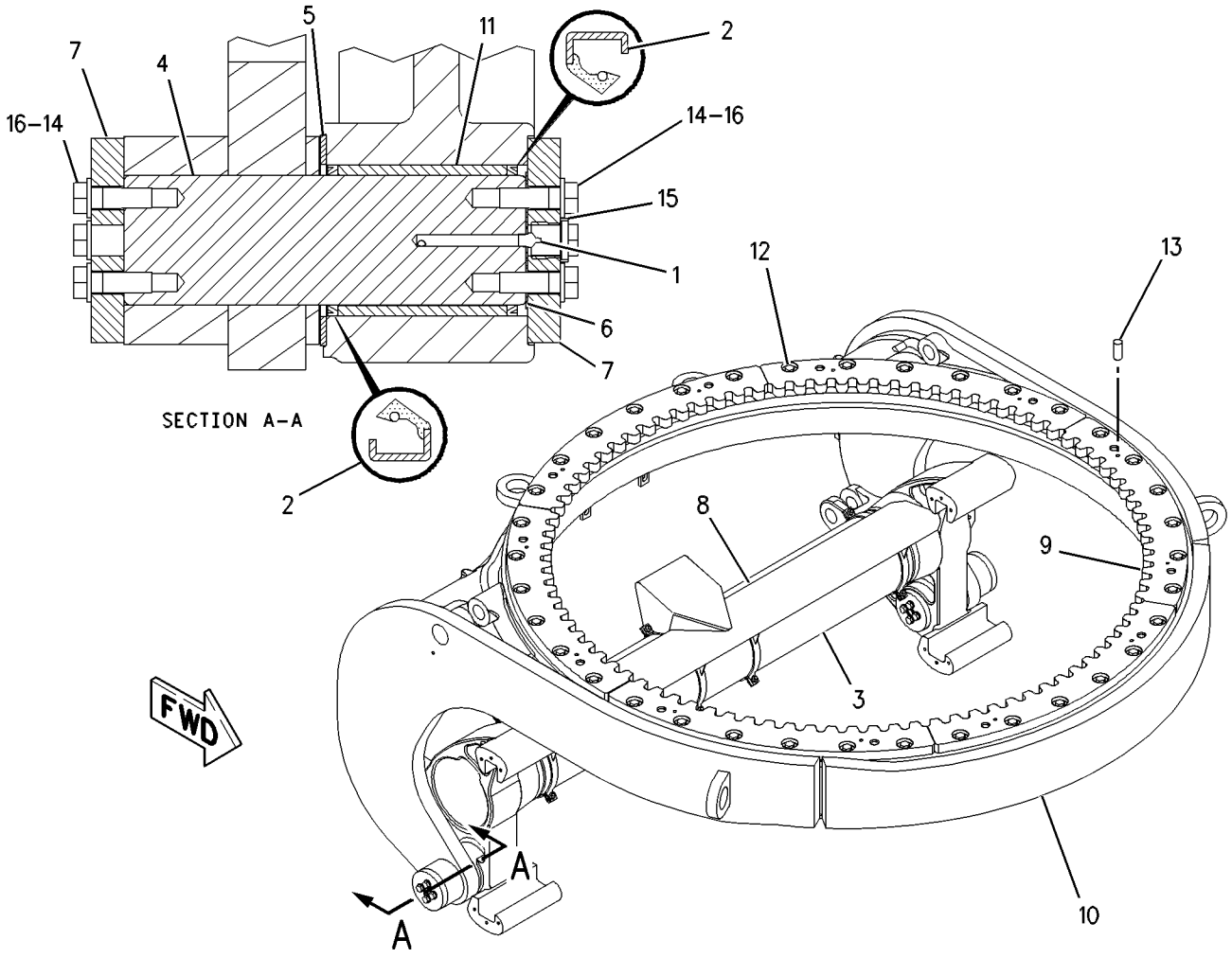

GRAPHIC #1 g00553081

MEMORANDA

IMPLEMENTS

8X-8985 DRAWBAR GP

S/N: 7KK1-UP

PART OF 8X-8402 CHASSIS AR

SMCS-6153, 6170, 6171 **i01502665**

NOTE	REF NO	GRAPHIC REF	PART NUMBER	QTY	PART NAME 1 2 3 4 5 6 (PRODUCT LEVEL)	SEE PAGE
	1	1	**1D-6306**	16	NUT (1-8 THD)	
	2	1	**9X-8399**	8	WASHER (33X56X6MM THK)	
	3	1	**4D-8318**	16	SETSCREW-SQUARE HEAD	
	4	1	**6G-4173**	8	SHOE-CIRCLE GUIDE	
	5	1	**6G-4524**	16	STRIP-WEAR	
B	6	1	**6G-4642**	136	SHIM (0.8MM THK)	
B	7	1	**6G-4643**	32	SHIM (0.25MM THK)	
B	8	1	**117-2242**	1	SHIM PACK (INCLUDES 8 SHIMS)	
	9	1	**117-2244**	8	STRIP-WEAR	
	10	1	**117-2245**	1	CAP	
	11	1	**117-2246**	1	ADAPTER	
	12	1	**117-2247**	1	BALL	
	13	1	**136-2364**	1	DRAWBAR AS	
	18	1	**7X-0572**	24	WASHER-HARD (24X44.5X6MM THK)	
M	19	1	**7Y-5215**	8	BOLT-SOCKET HEAD (M24X3X90MM)	
M	20	1	**8C-3236**	8	BOLT (M30X3.5X160MM)	
M	21	1	**8C-8729**	2	BOLT-SOCKET HEAD (M12X1.75X80MM)	
	22	1	**8P-1438**	4	COVER	
	23	1	**1D-5976**	24	BOLT (7/8-9X7IN)	
M	24	1	**8T-4183**	8	BOLT (M12X1.75X40 MM)	
	25	1	**8T-4223**	8	WASHER-HARD (13.5X25.5X3MM THK)	

B-USE AS REQUIRED
M-METRIC PART

8X-8985 **DRAWBAR GP** ***(contd.)*** **i01502665**

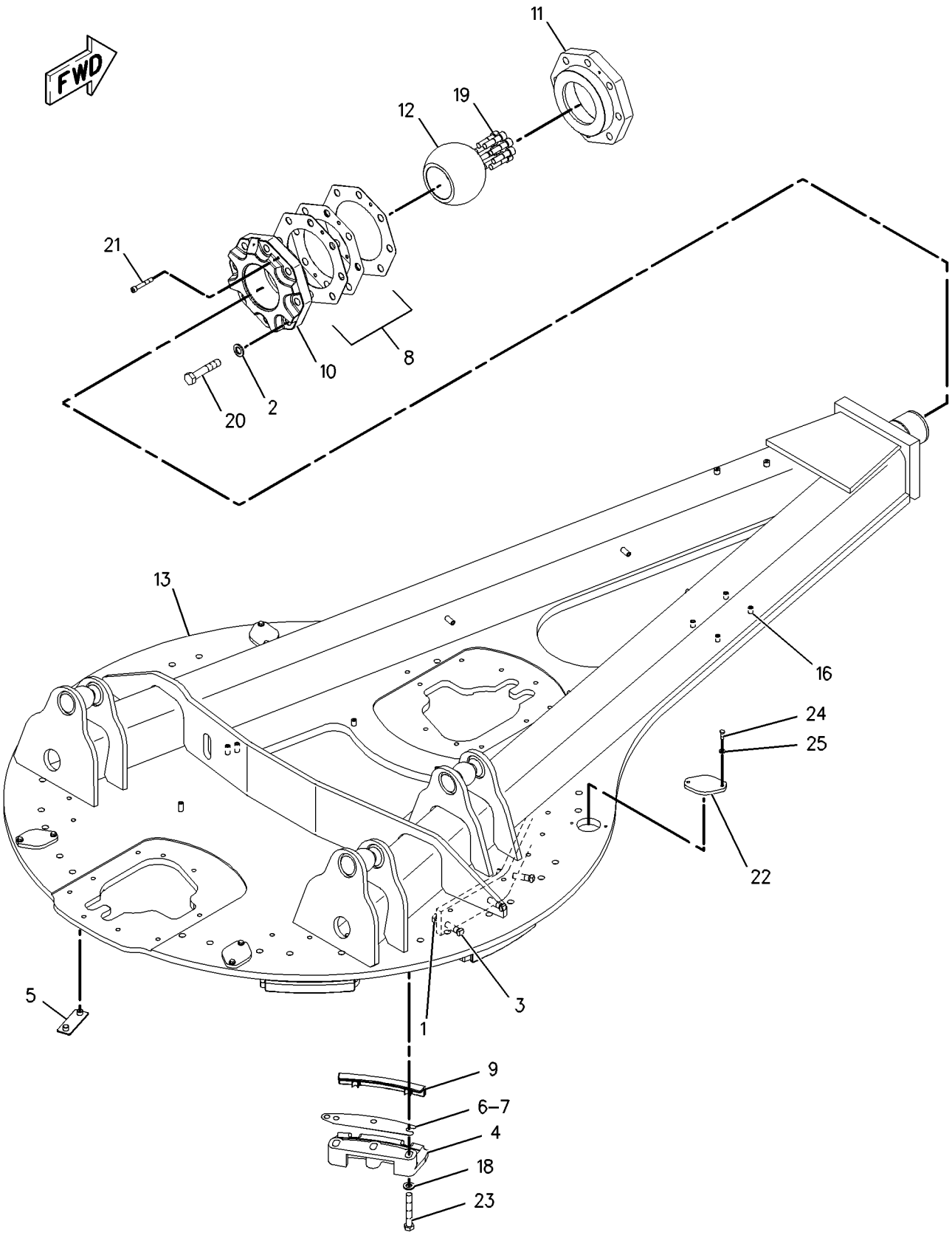

GRAPHIC #1 g00779418

140-8449 GUARD GP-ROCK

S/N: 7KK1-UP

PART OF 138-7427 CIRCLE GP

SMCS-7182 **i01473807**

NOTE	REF NO	GRAPHIC REF	PART NUMBER	QTY	PART NAME 1 2 3 4 5 6 (PRODUCT LEVEL)	SEE PAGE
M	1	1	**8T-4956**	8	BOLT (M12X1.75X35MM)	
	2	1	**142-4229**	4	CLAMP	
	3	1	**8T-4223**	8	WASHER-HARD (13.5X25.5X3MM THK)	
	4	1	**199-6566**	1	PLATE AS	
	5	1	**142-4229**	4	CLAMP	
M	6	1	**8T-3490**	2	NUT-WELD (M10X1.5 THD)	
M	7	1	**8T-3597**	2	NUT-WELD (M12X1.75 THD)	

M-METRIC PART

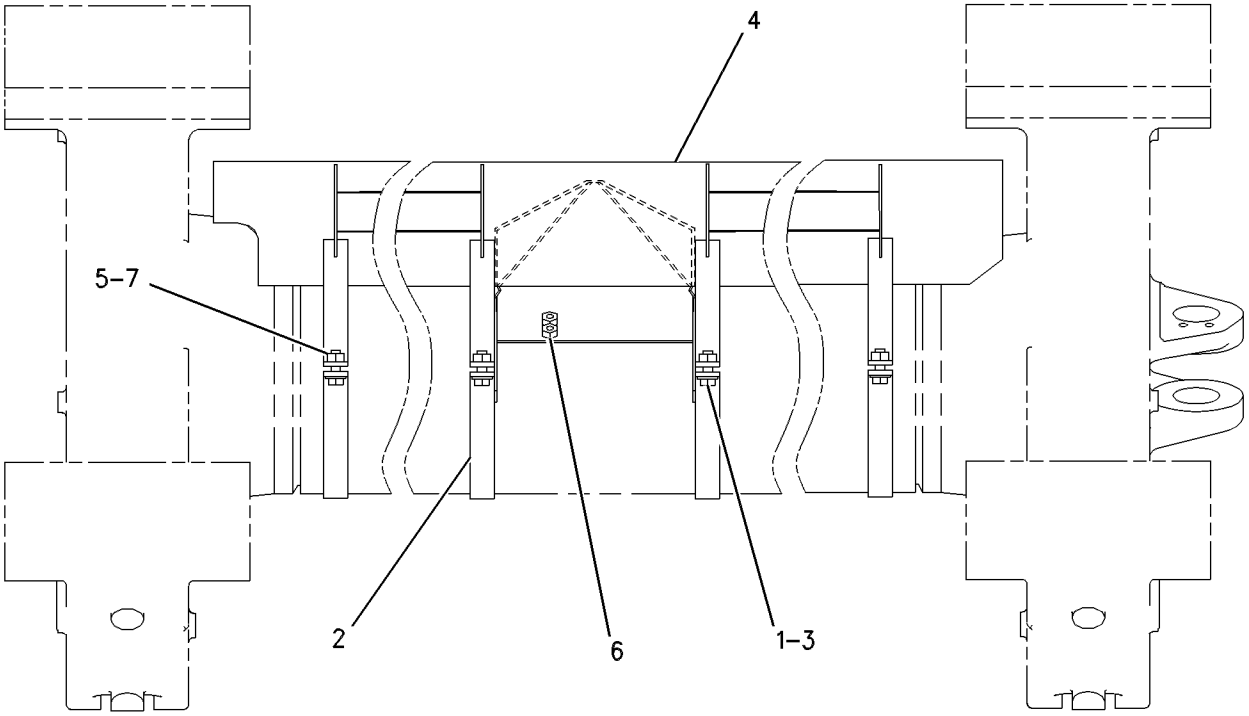

FRONT VIEW

GRAPHIC #1 g00331989

IMPLEMENTS

140-8440 MOLDBOARD AS

S/N: 7KK1-UP

PART OF 8X-8403 INSTALLATION AR-FIELD

SMCS-6151, 6174 **i00579849**

NOTE	REF NO	GRAPHIC REF	PART NUMBER	QTY	PART NAME 1 2 3 4 5 6 (PRODUCT LEVEL)	SEE PAGE
	1	1	**139-2404**	1	PLATE-WEAR	
	2	1	**140-8438**	1	RAIL-TOP	
	3	1	**140-8439**	1	RAIL-BOTTOM	
	4	1	**140-8450**	1	BRACKET AS	

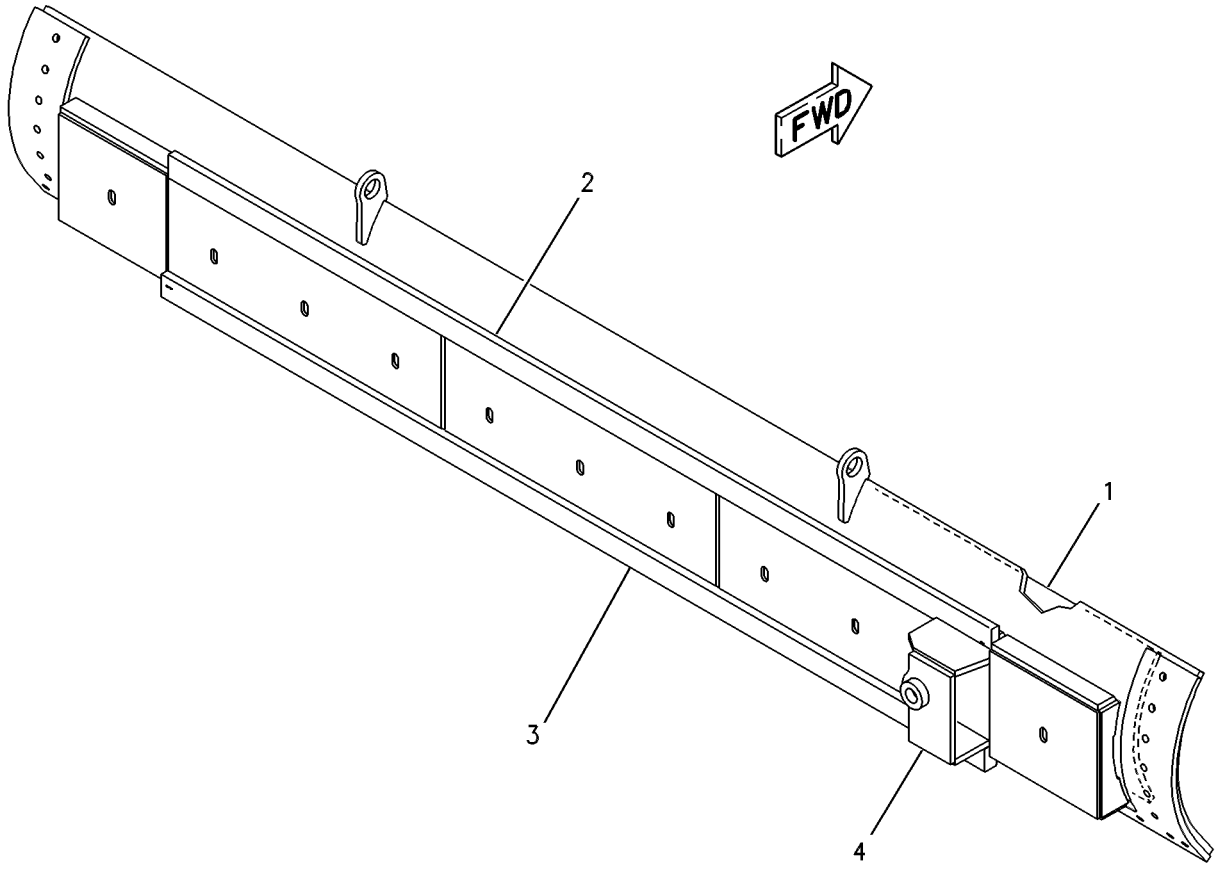

GRAPHIC #1 g00277560

IMPLEMENTS

135-8283 PLATE GP-PUSH

S/N: 7KK1-UP
AN ATTACHMENT

SMCS-6077 **i00543411**

NOTE	REF NO	GRAPHIC REF	PART NUMBER	QTY	PART NAME 1 2 3 4 5 6 (PRODUCT LEVEL)	SEE PAGE
	1	1	**135-8284**	1	PLATE AS	
M	2	1	**7X-2575**	6	BOLT (M24X3X60MM)	
	3	1	**8T-4167**	6	WASHER (4.0MM THK)	

M-METRIC PART

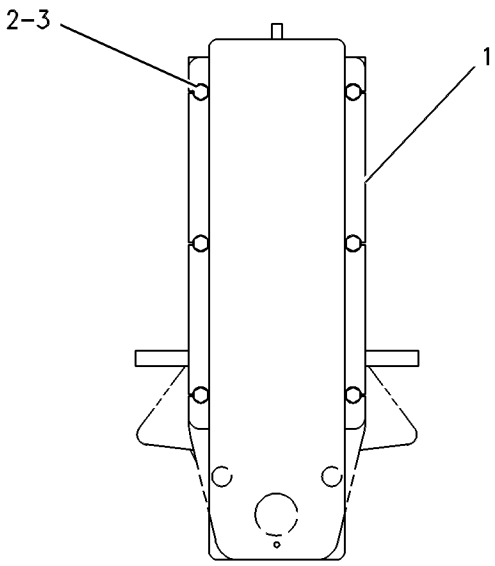

FRONT VIEW

GRAPHIC #1 g00267425

178-4096 ADAPTER GP–(24H)

S/N: 7KK1-UP

FIELD INSTALLATION

SMCS-6803, 6814 **i01234654**

NOTE	REF NO	GRAPHIC REF	PART NUMBER	QTY	PART NAME 1 2 3 4 5 6 (PRODUCT LEVEL)	SEE PAGE
	1	1	**140-8440**	1	MOLDBOARD AS	
		1	**139-2404**	1	PLATE-WEAR	
		1	**140-8438**	1	RAIL-TOP	
		1	**140-8439**	1	RAIL-BOTTOM	
		1	**140-8450**	1	BRACKET AS	
	2	1	**178-4094**	80	BIT AS-CUTTING	
		1	**178-4092**	1	CLIP-CIRCLE	
	3	1	**178-4095**	8	ADAPTER-BIT	
	4	1	**1J-3527**	10	BOLT-PLOW (1-8X4.5 IN)	
	5	1	**2J-3507**	54	NUT-FULL (1-8 THD)	
	6	1	**4J-9058**	44	BOLT-PLOW (1-8X3.25 IN)	
	7	1	**5P-8250**	55	WASHER (5.0MM THK)	

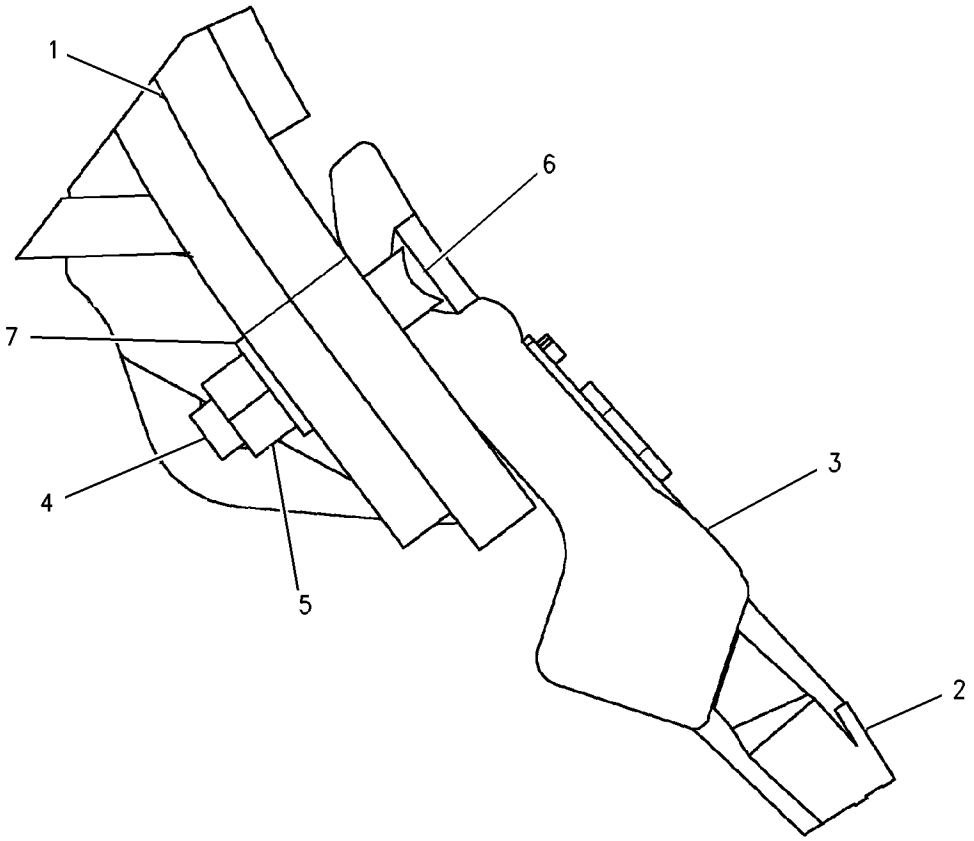

GRAPHIC #1 g00666173

WORK TOOLS

178-4097 BIT AS

S/N: 7KK1-UP

FIELD INSTALLATION

SMCS-6804 **i01288414**

NOTE	REF NO	GRAPHIC REF	PART NUMBER	QTY	PART NAME 1 2 3 4 5 6 (PRODUCT LEVEL)	SEE PAGE
	1	1	**178-4092**	1	CLIP-CIRCLE	

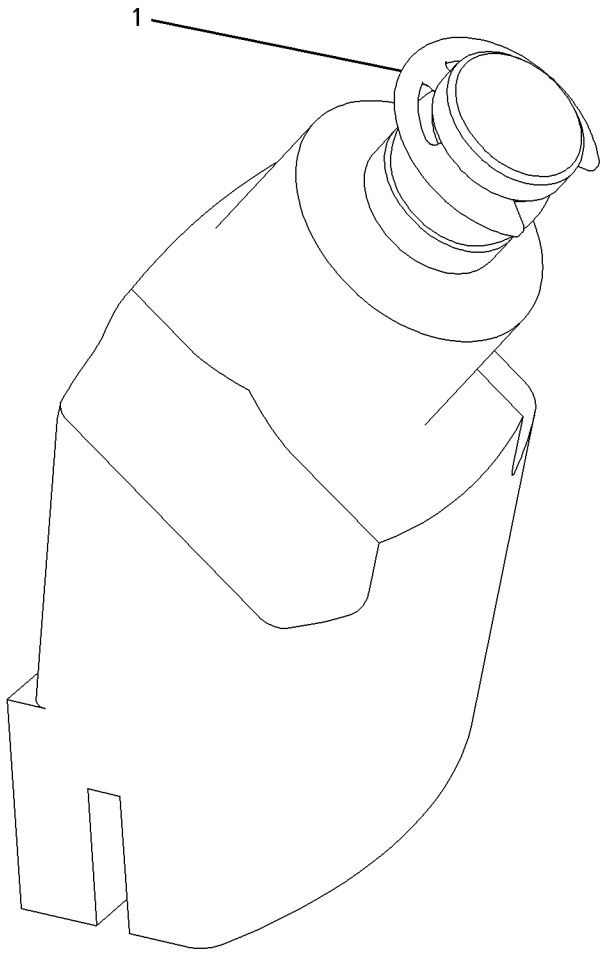

GRAPHIC #1 g00683528

WORK TOOLS

109-3113 EDGE GP-CUTTING

S/N: 7KK1-UP
13 IN WIDE X 28 MM THICK
AN ATTACHMENT

SMCS-6801 **i00602737**

NOTE	PART NUMBER	QTY	PART NAME 1 2 3 4 5 6 (PRODUCT LEVEL)	SEE PAGE
	109-3118	2	BIT	
	1J-3527	22	BOLT-PLOW (1-8X4.5 IN)	
	4J-9058	44	BOLT-PLOW (1-8X3.25 IN)	
	109-3117	6	EDGE-CUTTING	
	2J-3507	66	NUT-FULL (1-8 THD)	
	5P-8250	66	WASHER (5.0MM THK)	

WORK TOOLS

109-3114 EDGE GP-CUTTING

S/N: 7KK1-UP
13 IN WIDE X 45 MM THICK
AN ATTACHMENT

SMCS-6801 **i00602797**

NOTE	PART NUMBER	QTY	PART NAME 1 2 3 4 5 6 (PRODUCT LEVEL)	SEE PAGE
	109-3118	2	BIT	
	1J-3527	22	BOLT-PLOW (1-8X4.5 IN)	
	4J-9058	44	BOLT-PLOW (1-8X3.25 IN)	
	109-3116	6	EDGE-CUTTING	
	2J-3507	66	NUT-FULL (1-8 THD)	
	5P-8250	66	WASHER (5.0MM THK)	

WORK TOOLS

135-9691 EDGE GP-CUTTING

S/N: 7KK1-UP
16 IN WIDE X 28.5 MM THICK
AN ATTACHMENT

SMCS-6801 **i00902446**

NOTE	PART NUMBER	QTY	PART NAME 1 2 3 4 5 6 (PRODUCT LEVEL)	SEE PAGE
	109-3118	2	BIT	
	1J-3527	22	BOLT-PLOW (1-8X4.5 IN)	
	4J-9058	44	BOLT-PLOW (1-8X3.25 IN)	
	135-9690	6	EDGE-CUTTING	
	2J-3507	66	NUT-FULL (1-8 THD)	
	5P-8250	66	WASHER (5.0MM THK)	

WORK TOOLS

138-6442 EDGE GP-CUTTING

S/N: 7KK1-UP
16 IN WIDE X 45 MM THICK
AN ATTACHMENT

SMCS-6801 **i00602862**

NOTE	PART NUMBER	QTY	PART NAME 1 2 3 4 5 6 (PRODUCT LEVEL)	SEE PAGE
	109-3118	2	BIT	
	1J-3527	22	BOLT-PLOW (1-8X4.5 IN)	
	4J-9058	44	BOLT-PLOW (1-8X3.25 IN)	
	138-6440	6	EDGE-CUTTING	
	2J-3507	66	NUT-FULL (1-8 THD)	
	5P-8250	66	WASHER (5.0MM THK)	

WORK TOOLS

132-1019 EDGE-CUTTING

S/N: 7KK1-UP
13 IN WIDE X 60 MM THICK
FIELD INSTALLATION

SMCS-6801 **i00645723**

NOTE	REF NO	GRAPHIC REF	PART NUMBER	QTY	PART NAME 1 2 3 4 5 6 (PRODUCT LEVEL)	SEE PAGE
					(INDIVIDUAL PARTS ARE NOT SERVICED SEPARATELY)	

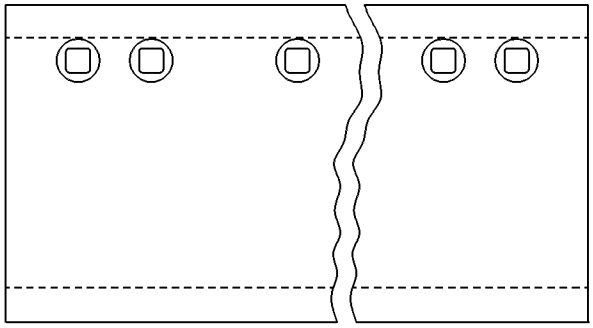

GRAPHIC #1 g00284140

WORK TOOLS

132-4753 EDGE-CUTTING

S/N: 7KK1-UP
13 IN WIDE X 60 MM THICK SERRATED EDGE
FIELD INSTALLATION

SMCS-6801 **i00553755**

NOTE	REF NO	GRAPHIC REF	PART NUMBER	QTY	PART NAME 1 2 3 4 5 6 (PRODUCT LEVEL)	SEE PAGE
					(INDIVIDUAL PARTS ARE NOT SERVICED SEPARATELY)	

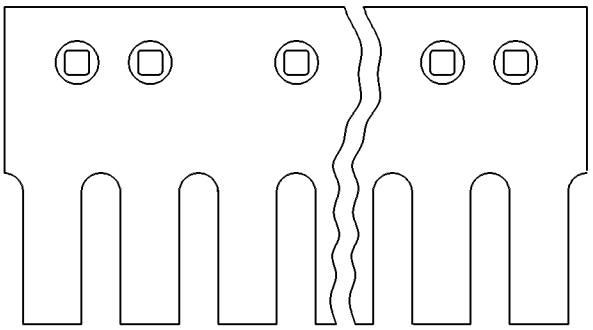

GRAPHIC #1 g00273363

WORK TOOLS

135-9349 EDGE-CUTTING

S/N: 7KK1-UP
16 IN WIDE X 60 MM THICK
FIELD INSTALLATION

SMCS-6801 **i00883774**

NOTE	REF NO	GRAPHIC REF	PART NUMBER	QTY	PART NAME 1 2 3 4 5 6 (PRODUCT LEVEL)	SEE PAGE
					NO SERVICEABLE PARTS	

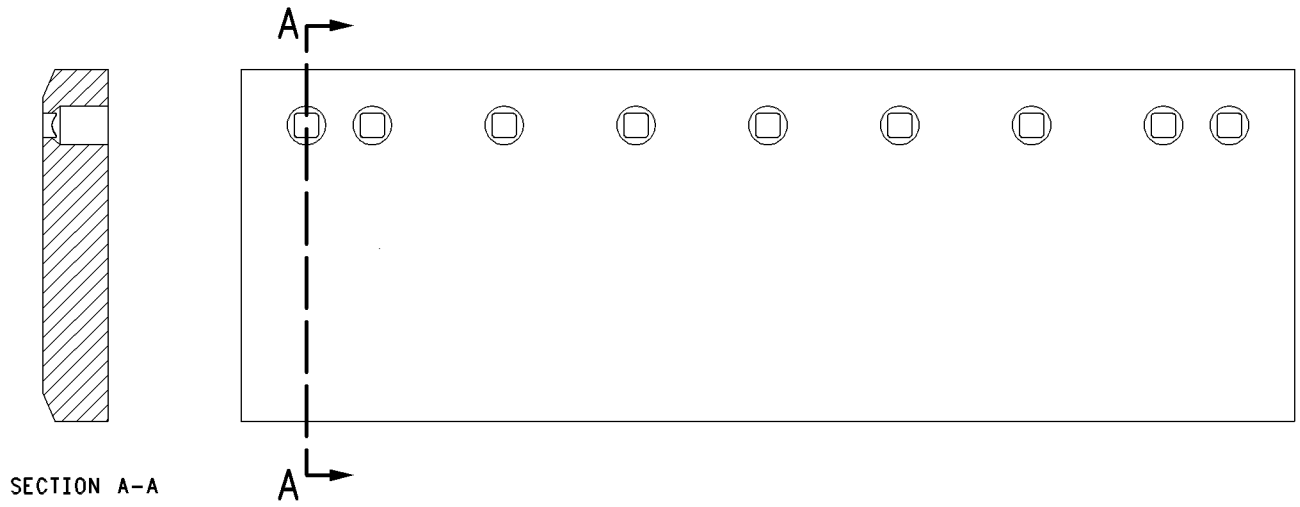

SECTION A-A

GRAPHIC #1 g00451986

135-9576 EDGE-CUTTING

S/N: 7KK1-UP
16 IN WIDE X 75 MM THICK
FIELD INSTALLATION

SMCS-6801 **i00883808**

NOTE	REF NO	GRAPHIC REF	PART NUMBER	QTY	PART NAME 1 2 3 4 5 6 (PRODUCT LEVEL)	SEE PAGE
					NO SERVICEABLE PARTS	

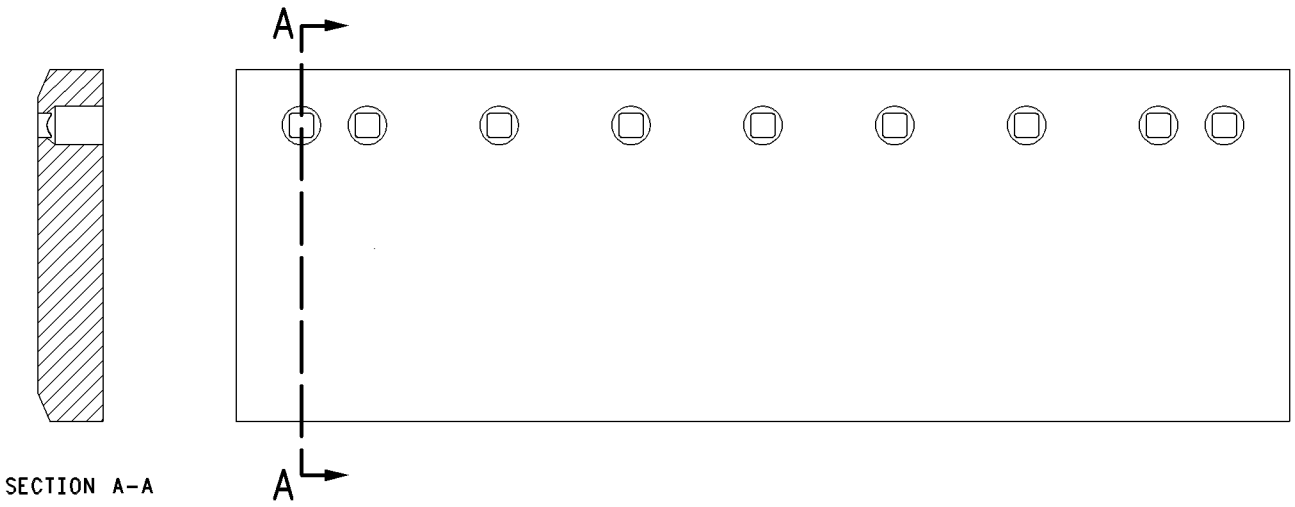

SECTION A-A

GRAPHIC #1 g00452172

WORK TOOLS

135-9796 EDGE-CUTTING

S/N: 7KK1-UP
16 IN WIDE X 60 MM THICK SERRATED EDGE
FIELD INSTALLATION

SMCS-6801 **i00902445**

NOTE	REF NO	GRAPHIC REF	PART NUMBER	QTY	PART NAME 1 2 3 4 5 6 (PRODUCT LEVEL)	SEE PAGE
					NO SERVICEABLE PARTS	

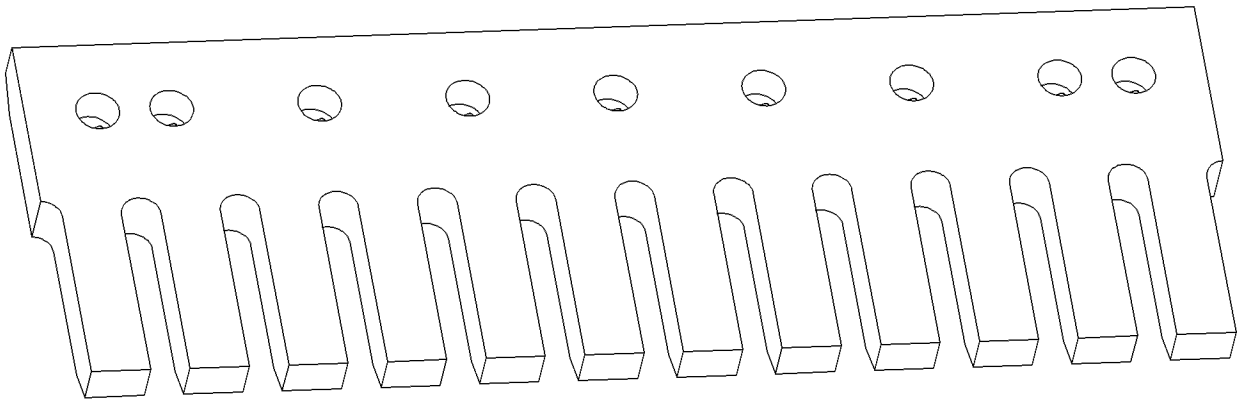

GRAPHIC #1 g00461526

WORK TOOLS

135-9797 EDGE-CUTTING

S/N: 7KK1-UP
16 IN WIDE X 75 MM THICK SERRATED EDGE
FIELD INSTALLATION

SMCS-6801 **i00902444**

NOTE	REF NO	GRAPHIC REF	PART NUMBER	QTY	PART NAME 1 2 3 4 5 6 (PRODUCT LEVEL)	SEE PAGE
					NO SERVICEABLE PARTS	

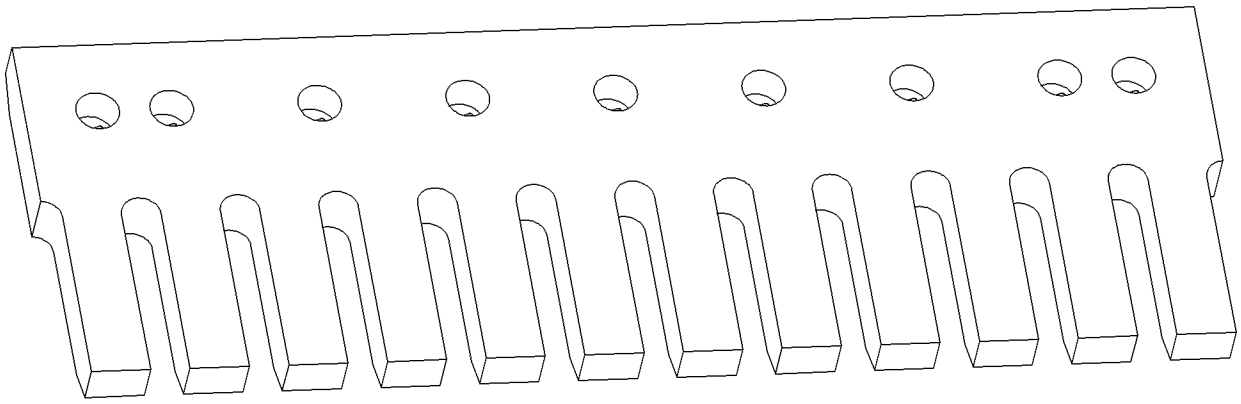

GRAPHIC #1 g00461573

WORK TOOLS

140-8451 MOUNTING GP-BLADE

S/N: 7KK1-UP

PART OF 8X-8403 INSTALLATION AR-FIELD

SMCS-6151 **i00677340**

NOTE	REF NO	GRAPHIC REF	PART NUMBER	QTY	PART NAME 1 2 3 4 5 6 (PRODUCT LEVEL)	SEE PAGE
	1	1	**140-8441**	2	STRIP-WEAR	
	2	1	**140-8442**	2	STRIP-WEAR	
	3	1	**140-8452**	4	PLATE	
	4	1	**140-8453**	4	PLATE	
B	5	1	**140-8454**	6	SHIM	
B	6	1	**140-8455**	6	SHIM	
	7	1	**8T-4223**	24	WASHER-HARD (3MM THK)	
M	8	1	**8T-4139**	24	BOLT (M12X1.75X30MM)	

B-USE AS REQUIRED
M-METRIC PART

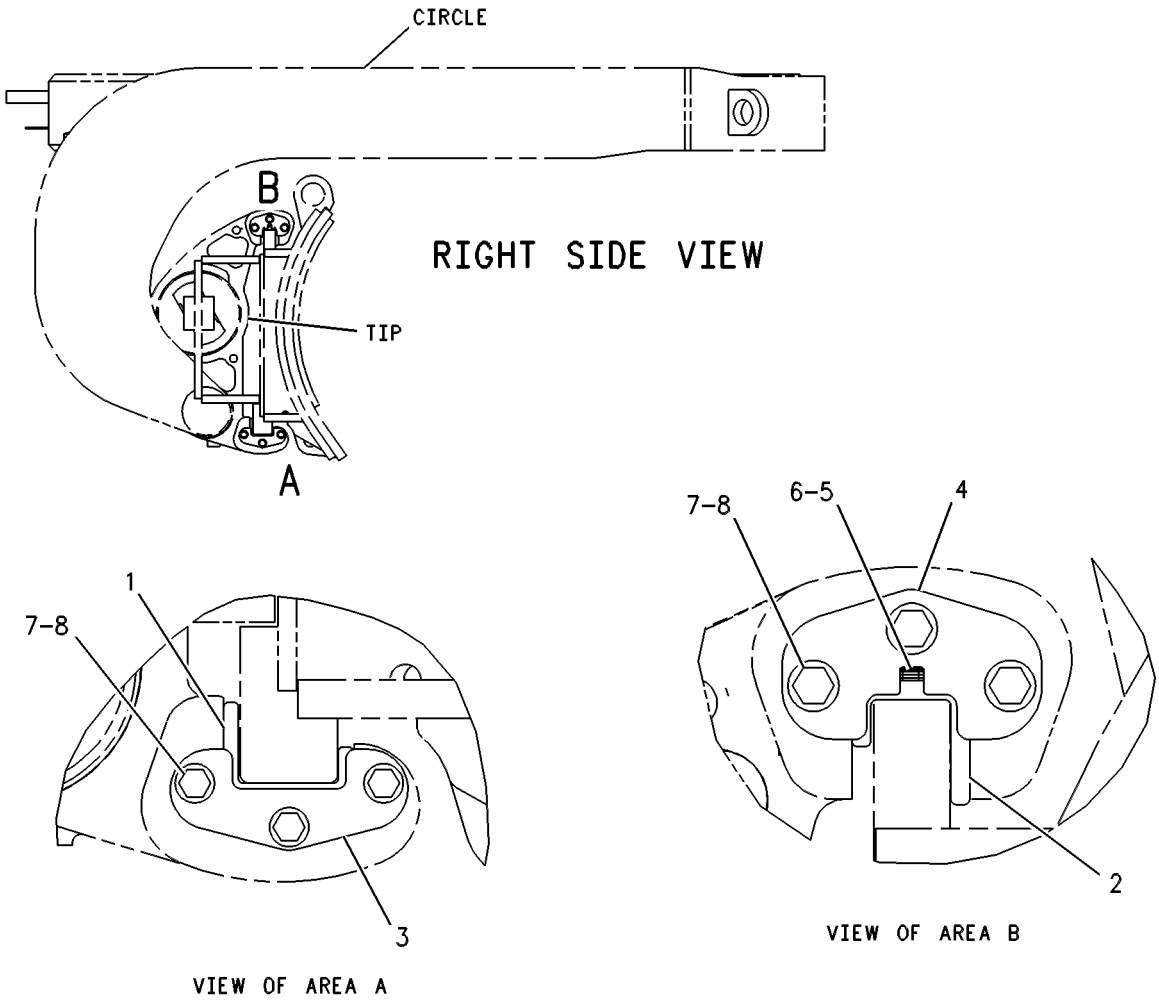

GRAPHIC #1 g00283971

WORK TOOLS

125-5738 MOUNTING GP-RIPPER

S/N: 7KK1-UP

PART OF 8E-9638 RIPPER AR

SMCS-6165, 6324 **i01062442**

NOTE	REF NO	GRAPHIC REF	PART NUMBER	QTY	PART NAME 1 2 3 4 5 6 (PRODUCT LEVEL)	SEE PAGE
	1	1	**133-7130**	2	CAM AS	
	2	1	**126-3080**	2	LINK AS	
					(EACH INCLUDES)	
	3	1	**133-6614**	1	BOSS	
	4	1	**2K-4615**	1	BOSS	
M	5	1	**6V-7687**	2	LOCKNUT (M12X1.75 THD)	
M	6	1	**8T-4778**	6	LOCKNUT (M16X2.00 THD)	
	7	1	**6K-0715**	2	PIN	
M	8	1	**7X-2557**	4	BOLT (M16X2.0X140MM)	
M	9	1	**8T-5092**	2	BOLT (M12X1.75X150MM)	
M	10	1	**8T-4174**	4	BOLT (M16X2.0X120MM)	
M	11	1	**8T-4184**	4	BOLT (M12X1.75X45MM)	
	12	1	**8T-4223**	4	WASHER-HARD (3MM THK)	
	13	1	**8J-9607**	4	PIN	
	14	1	**138-5769**	2	PIN	
	15	1	**126-5300**	1	PLATE AS	
	15A	1	**9R-2613**	2	BOSS (M10X25MM)	
	16	1	**2K-6279**	2	BOSS	
	17	1	**3V-8621**	2	BOSS	
	18	1	**133-7132**	2	PLATE	
	19	1	**3R-3602**	2	SPACER (0.25IN THK)	

M-METRIC PART

125-5738 **MOUNTING GP-RIPPER** *(contd.)* **i01062442**

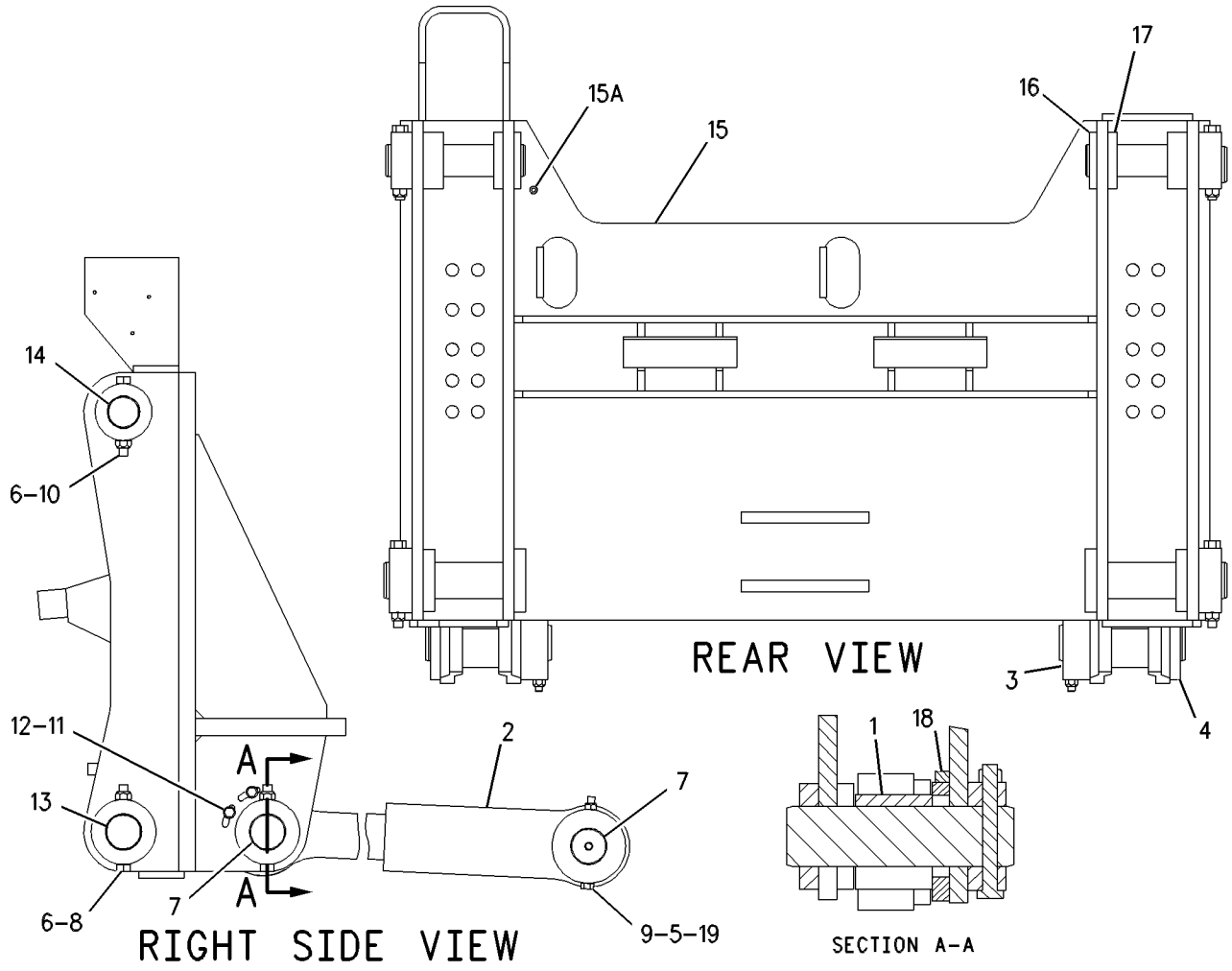

GRAPHIC #1

g00598229

WORK TOOLS

8E-9638 RIPPER AR

S/N: 7KK1-UP

PART OF 8X-8400 COMMON AR-MOTOR GRADER

SMCS-6325 **i00111669**

NOTE	PART NUMBER	QTY	PART NAME 1 2 3 4 5 6 (PRODUCT LEVEL)	SEE PAGE
Y	**113-7754**	2	CYLINDER GP-RIPPER LIFT	598
Y	*125-5737*	1	LINES GP-RIPPER	650
Y	*125-5738*	1	MOUNTING GP-RIPPER	768
Y	*125-5739*	1	RIPPER GP	772

Y-SEPARATE ILLUSTRATION

MEMORANDA

WORK TOOLS

125-5739 RIPPER GP

S/N: 7KK1-65

PART OF 8E-9638 RIPPER AR

SMCS-6325 **i00111639**

NOTE	REF NO	GRAPHIC REF	PART NUMBER	QTY	PART NAME 1 2 3 4 5 6 (PRODUCT LEVEL)	SEE PAGE
	1	1	**2K-0703**	2	BAR	
	2	1	**6H-3615**	6	PLUG-PROTECTION (1/8-27 THD)	
	3	1	**3K-8510**	2	PIN	
	4	1	**4K-3004**	4	BEARING-TRUNNION SUPPLEMENTARY	
Y	5	1	*8J-2189*	3	TOOTH GP-RIPPER	776
	6	1	**9D-6584**	8	SEAL-LIP	
	7	1	**127-1655**	1	FRAME & BEARING AS	
	8	1	**3B-8489**	4	FITTING-GREASE (1/8-27 THD)	
	9	1	**9W-0099**	4	BEARING-SLEEVE	
	10	1	**3V-2024**	8	BOSS	
	11	1	**8P-9770**	1	PLATE	
M	12	1	**8T-4192**	4	BOLT (M12X1.75X25MM)	
M	13	1	**8T-4910**	16	BOLT (M12X1.75X60MM)	
M	14	1	**8T-4174**	2	BOLT (M16X2.0X120MM)	
M	15	1	**8T-6385**	2	BOLT (M16X2.0X180MM)	
	16	1	**8J-9607**	2	PIN	
	17	1	**8J-9608**	2	PIN	
	18	1	**127-2120**	1	CARRIAGE AS	
	19	1	**5K-7748**	7	HOLDER-TOOTH	
	20	1	**128-3320**	2	LINK AS	
					(EACH INCLUDES)	
	21	1	**3G-2582**	2	BEARING	
M	22	1	**6V-7687**	16	LOCKNUT (M12X1.75 THD)	
M	23	1	**8T-4778**	4	LOCKNUT (M16X2.00 THD)	

M-METRIC PART
Y-SEPARATE ILLUSTRATION

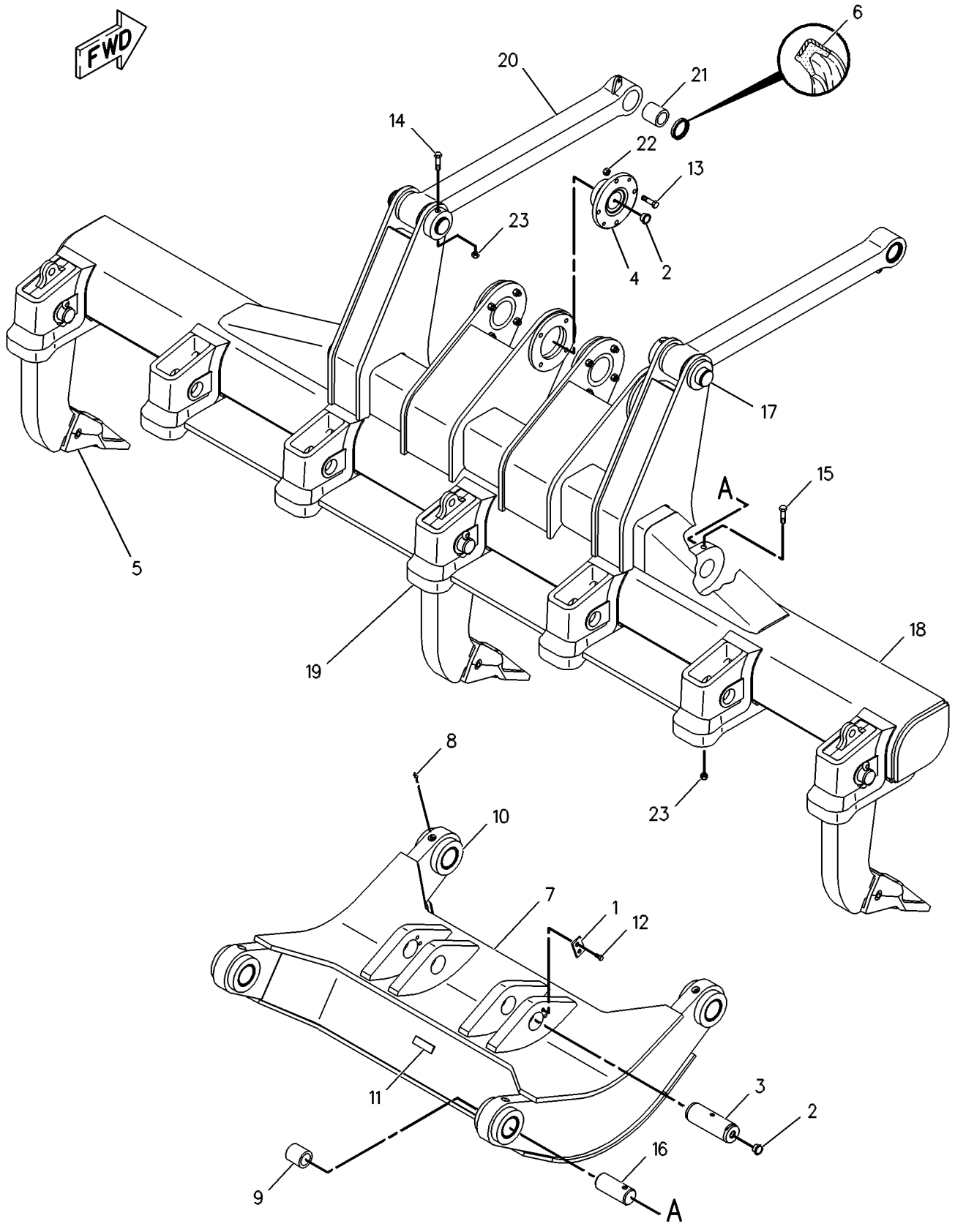

GRAPHIC #1 g00088638

WORK TOOLS

125-5739 RIPPER GP

S/N: 7KK66-UP

PART OF 8E-9638 RIPPER AR

SMCS-6325 **i01064246**

NOTE	REF NO	GRAPHIC REF	PART NUMBER	QTY	PART NAME 1 2 3 4 5 6 (PRODUCT LEVEL)	SEE PAGE
	1	1	**2K-0703**	2	BAR	
	2	1	**6H-3615**	6	PLUG-PROTECTION (1/8-27 THD)	
	3	1	**3K-8510**	2	PIN	
	4	1	**4K-3004**	4	BEARING-TRUNNION SUPPLEMENTARY	
CY	5	1	*136-8310*	3	TOOTH GP-RIPPER	777
	6	1	**9D-6584**	8	SEAL-LIP	
	7	1	**127-1655**	1	FRAME & BEARING AS	
	8	1	**3B-8489**	4	FITTING-GREASE (1/8-27 THD)	
	9	1	**9W-0099**	4	BEARING-SLEEVE	
	10	1	**3V-2024**	8	BOSS	
	11	1	**8P-9770**	1	PLATE	
M	12	1	**8T-4192**	4	BOLT (M12X1.75X25MM)	
M	13	1	**8T-4910**	16	BOLT (M12X1.75X60MM)	
M	14	1	**8T-4174**	2	BOLT (M16X2.0X120MM)	
M	15	1	**8T-6385**	2	BOLT (M16X2.0X180MM)	
	16	1	**8J-9607**	2	PIN	
	17	1	**8J-9608**	2	PIN	
	18	1	**127-2120**	1	CARRIAGE AS	
	19	1	**5K-7748**	7	HOLDER-TOOTH	
	20	1	**128-3320**	2	LINK AS	
					(EACH INCLUDES)	
	21	1	**3G-2582**	2	BEARING	
M	22	1	**6V-7687**	16	LOCKNUT (M12X1.75 THD)	
M	23	1	**8T-4778**	4	LOCKNUT (M16X2.00 THD)	

C-CHANGE FROM PREVIOUS TYPE
M-METRIC PART
Y-SEPARATE ILLUSTRATION

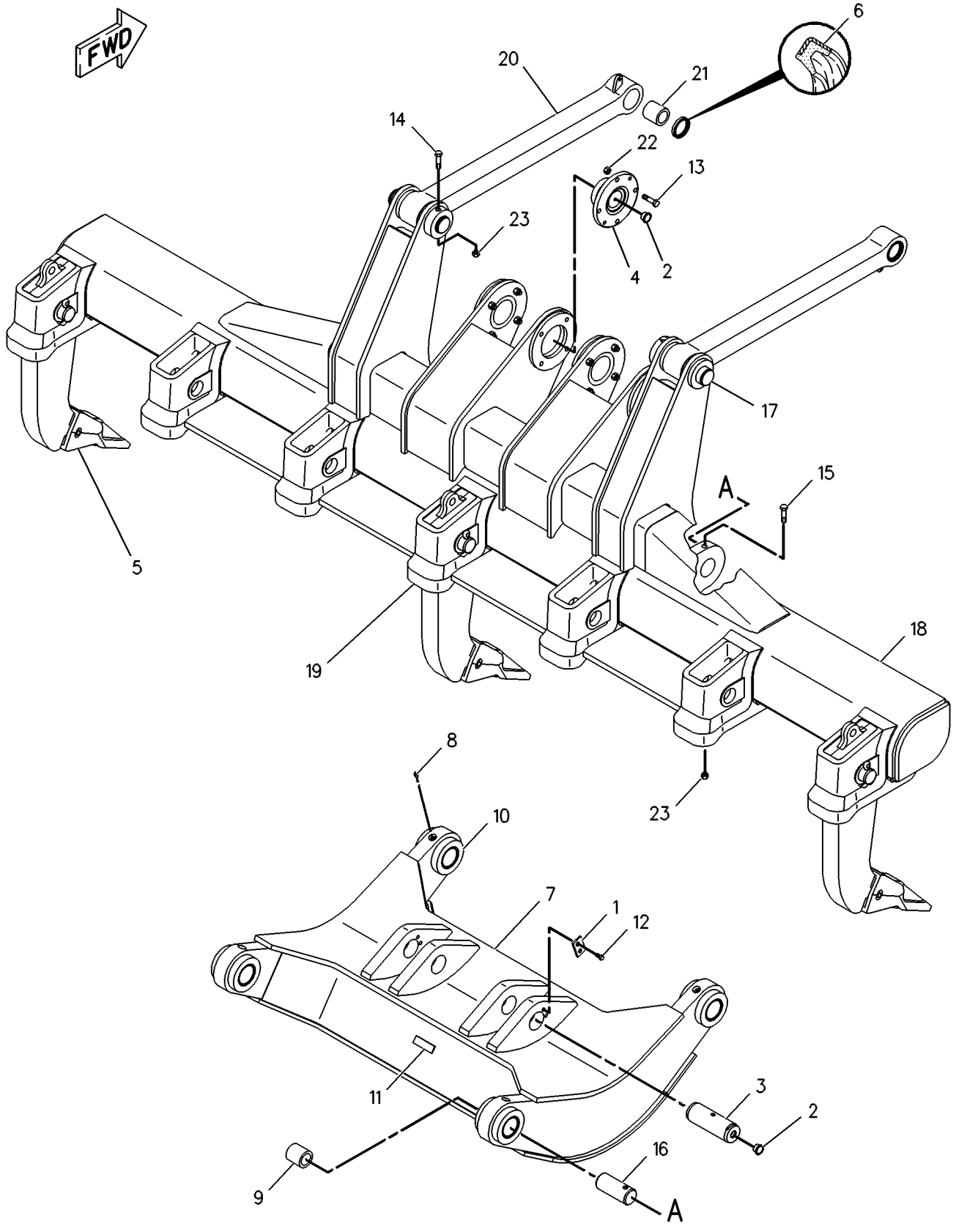

GRAPHIC #1 g00088638

WORK TOOLS

8J-2189 TOOTH GP-RIPPER

S/N: 7KK1-65
PART OF 125-5739 RIPPER GP
ALSO AN ATTACHMENT

SMCS-6808 **i01169214**

NOTE	REF NO	GRAPHIC REF	PART NUMBER	QTY	PART NAME 1 2 3 4 5 6 (PRODUCT LEVEL)	SEE PAGE
	1	1	**3B-5325**	2	COTTER	
	2	1	**8J-2190**	1	PIN	
	3	1	**9J-3139**	1	SHANK-RIPPER	
	4	1	**8E-6358**	1	PIN-G.E.T.	
		1	**1U-2405**	1	RETAINER	
	5	1	**6Y-0359**	1	TIP-RIPPER	

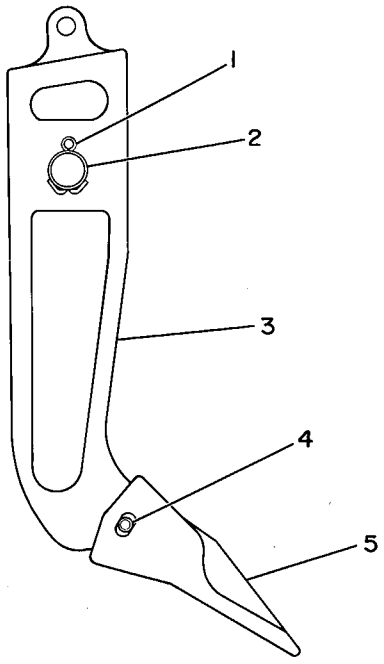

GRAPHIC #1 g00081660

WORK TOOLS

136-8310 TOOTH GP-RIPPER

S/N: 7KK66-UP
HEAVY DUTY SPIRAL RETAINER
PART OF 125-5739 RIPPER GP
FOR USE WITH 8E-9638—PAGE 770
ALSO AN ATTACHMENT

SMCS-6808 **i01034124**

NOTE	PART NUMBER	QTY	PART NAME 1 2 3 4 5 6 (PRODUCT LEVEL)	SEE PAGE
	3B-5325	2	COTTER	
	8J-2190	1	PIN	
	114-0358	1	PIN-G.E.T.	
	114-0359	1	RETAINER AS-G.E.T.	
	138-0797	1	SHANK-RIPPER	
	6Y-0359	1	TIP-RIPPER	

OPERATOR STATION

128-2038 AIR CONDITIONER & MOUNTING GP

S/N: 7KK1-81

PART OF 8X-9003 PLATFORM AR

SMCS-7320 **i00543321**

NOTE	REF NO	GRAPHIC REF	PART NUMBER	QTY	PART NAME 1 2 3 4 5 6 (PRODUCT LEVEL)	SEE PAGE
Y	1	1	**8X-8977**	1	AIR CONDITIONER GP	780
	2	1	**4D-3100**	1	GROMMET	
M	3	1	**8T-4137**	7	BOLT (M10X1.50X20MM)	
	4	1	**128-2035**	1	ADAPTER AS	
	5	1	**117-2305**	1	PLATE	
	6	1	**117-2304**	1	PLATE	
	7	1	**9X-8256**	7	WASHER (2MM THK)	
M	8	1	**8T-4138**	7	BOLT (M6X1.0X20MM)	
	9	1	**7X-7729**	18	WASHER (3MM THK)	
BD	10	1	**5P-5969**		SEAL	

B-USE AS REQUIRED
D-ORDER BY THE METER
M-METRIC PART
Y-SEPARATE ILLUSTRATION

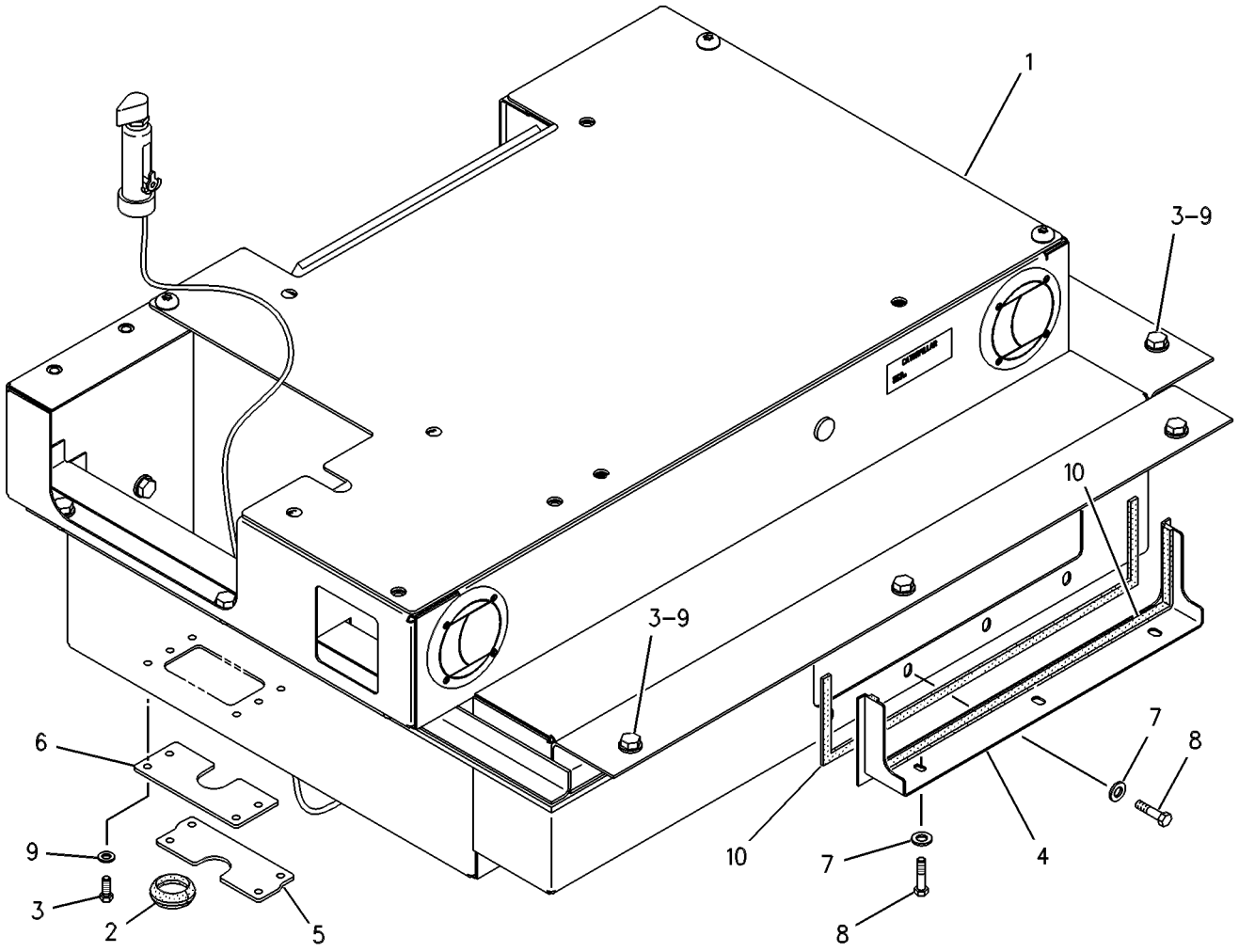

GRAPHIC #1 g00267020

MEMORANDA

OPERATOR STATION

8X-8977 AIR CONDITIONER GP

S/N: 7KK1-UP

PART OF 128-2038 AIR CONDITIONER & MOUNTING GP

SMCS-7320 **i01157298**

NOTE	REF NO	GRAPHIC REF	PART NUMBER	QTY	PART NAME 1 2 3 4 5 6 (PRODUCT LEVEL)	SEE PAGE
	1	2	**2R-0368**	2	WASHER	
	2	2	**2V-0099**	1	KNOB	
	3	1	**3B-4501**	2	LOCKWASHER (1.02MM THK)	
	5	2	**3E-0400**	2	WHEEL-BLOWER	
	6	1	**3E-5464**	1	SWITCH AS-THERMOSTAT	
J	7	2	**3E-6392**	1	MOTOR AS-FAN	
		2	**9X-9013**	1	KIT-BRUSH (INCLUDES PLUG AND BRUSH AS)	
		2	**102-8802**	1	KIT-RECEPTACLE (2 PIN) (2 PIN)	
		2	**3E-3365**	1	WEDGE-RECEPTACLE	
		2	**8T-8729**	2	PIN-CONNECTOR	
	8	1	**3T-3197**	2	GROMMET	
	9	1	**5C-9134**	2	LOUVER AS	
	10	2	**9X-2488**	6	CLAMP-HOSE	
	11	1	**1H-4318**	1	GROMMET	
	12	2	**7X-6021**	1	BRACKET AS	
M	13	2	**6V-9632**	2	NUT-WELD (M6X1 THD)	
	14	2	**8C-4586**	2	CLAMP-MOTOR	
	15	2	**8P-5141**	4	PLATE-ORIFICE	
	16	1	**8T-6631**	2	SCREW-MACHINE (8-32X0.5IN)	
	17	2	**9G-1950**	1	RESISTOR	
	18	1	**9X-2185**	4	SCREW (NO 8)	
	19	1	**9X-8117**	2	TUBE AS	
	20	1	**104-2091**	8	SCREW-FLAT HEAD (NO.6-20X0.5IN)	
	21	1	**117-2070**	1	CASE AS	
M	22	2	**6V-9632**	4	NUT-WELD (M6X1 THD)	
	23	1	**7T-1099**	1	LINK	
M		1	**8T-3490**	41	NUT-WELD (M10X1.5 THD)	
	24	2	**117-2074**	1	COIL AS	
	25	2	**117-2075**	1	COIL AS	
	26	2	**117-2076**	1	BRACKET AS	
	27	1	**117-2110**	1	COVER AS	
	28	1	**6C-3680**	10	RIVET-POP	
	29	2	**122-0473**	2	SPACER-RUBBER (6.5MM THK)	
	30	1	**122-1169**	1	HARNESS AS	
	31	1	**128-2043**	2	SEAL	
	32	1	**128-5538**	1	VALVE AS	
		1	**6V-6717**	1	SCREW-WASHER HEAD	
		1	**3E-1841**	1	LEVER	
		1	**8Y-5737**	1	CLIP (COMPRESSION)	
		1	**037-4426**	1	RETAINER	
		1	**102-0341**	1	CLIP (TAB)	
	33	2	**134-9561**	1	BRACKET	
	34	1	**068-8993**	2	GROMMET	
	35	2	**156-4452**	1	CABLE AS	
	36	1	**3S-2093**	1	STRAP-CABLE	
M	37	2	**6V-7743**	14	LOCKNUT (M6X1.00 THD)	
M	38	2	**7X-0490**	1	BOLT (M6X200MM)	
	39	1,2	**7X-7729**	22	WASHER (3MM THK)	
M	40	2	**8C-8451**	1	BOLT (M6X1.0X40MM)	
M	41	1,2	**8T-4133**	5	NUT (M10X1.50 THD)	
M	42	1	**8T-4137**	17	BOLT (M10X1.50X20MM)	
M	43	2	**8T-4171**	2	BOLT (M6X1.0X12MM)	
	44	2	**8T-4205**	4	WASHER-HARD (2MM THK)	
M	45	2	**9X-2041**	3	SCREW-TRUSS HEAD (M10X1.5X20MM)	
	46	2	**9X-8256**	14	WASHER (2MM THK)	
BD	47	1	**5P-6903**		SEAL (50CM)	

8X-8977 AIR CONDITIONER GP *(contd.)* i01157298

NOTE	REF NO	GRAPHIC REF	PART NUMBER	QTY	PART NAME 1 2 3 4 5 6 (PRODUCT LEVEL)	SEE PAGE
BE	48	1,2	**9X-2127**		SEAL (137CM)	
BE	49	1	**9X-2126**		SEAL (532CM)	
BE	50	1	**9X-6382**		SEAL (292CM)	
BE	51	2	**136-1953**		HOSE (52CM)	
	53	1	**8C-3756**	1	FILM-IDENTIFICATION	
	54	1	**117-2071**	1	COVER-TOP	
	55	1	**117-2072**	1	COVER-BOTTOM	
	56	1	**117-2197**	1	PLATE	

B-USE AS REQUIRED
D-ORDER BY THE METER
E-ORDER BY THE CENTIMETER
J-KIT(S) MARKED J AVAILABLE FOR PART MARKED J
M-METRIC PART

8X-8977 AIR CONDITIONER GP *(contd.)* i01157298

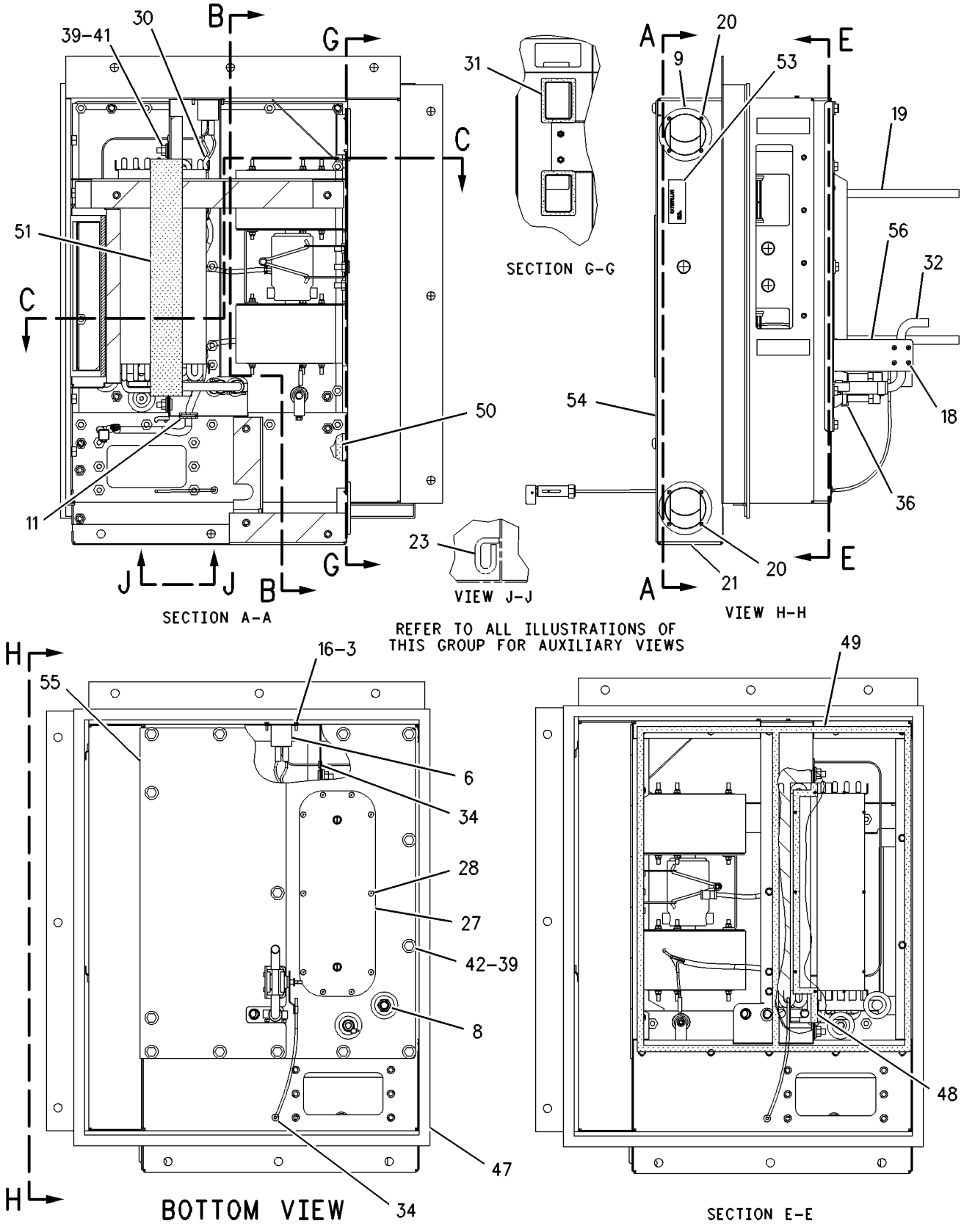

GRAPHIC #1 g00589179

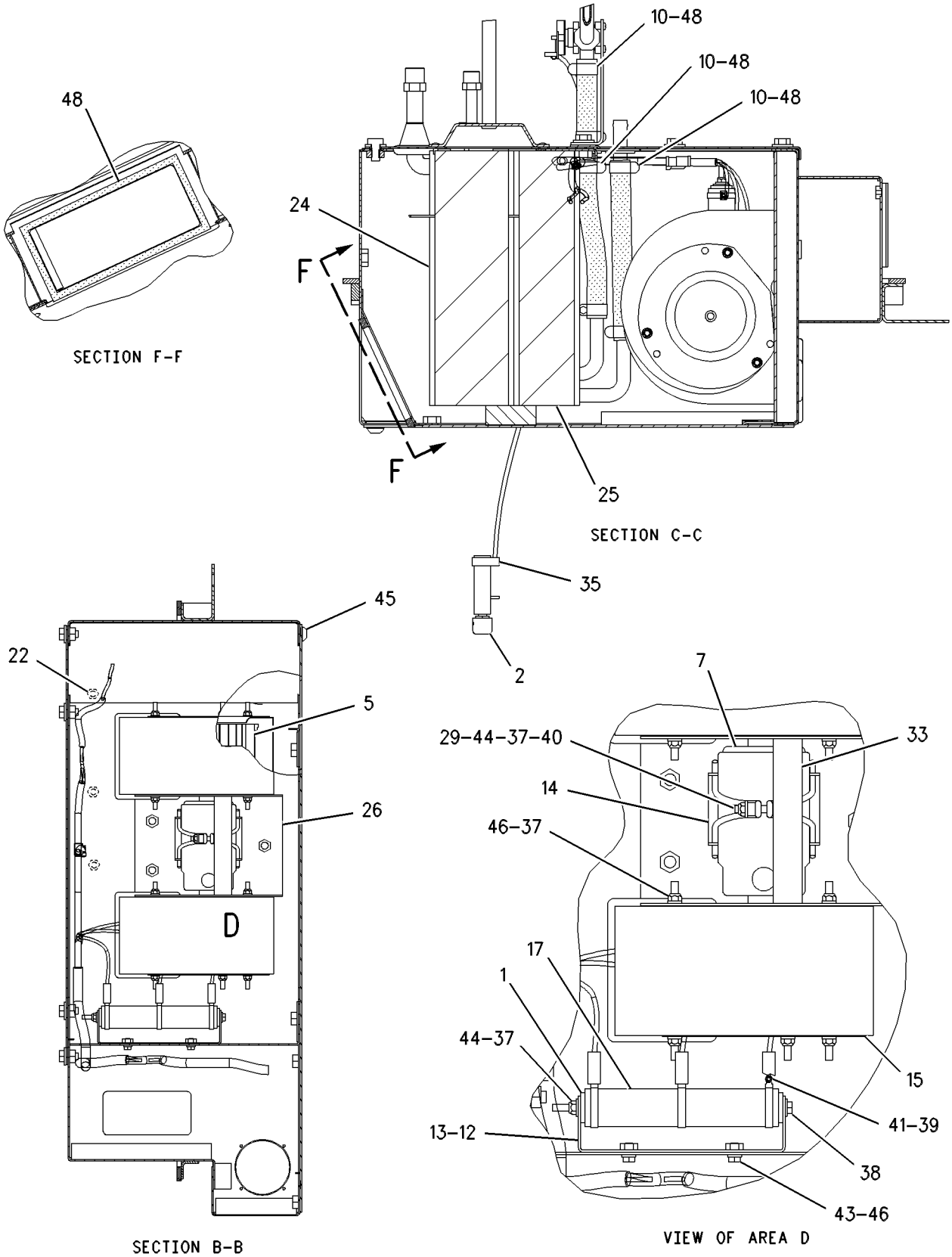

GRAPHIC #2

g00589166

OPERATOR STATION

8Y-4200 ARMREST GP–RH

S/N: 7KK1-UP

PART OF 119-7128 SEAT GP

SMCS-7307, 7312 **i00983746**

NOTE	REF NO	GRAPHIC REF	PART NUMBER	QTY	PART NAME 1 2 3 4 5 6 (PRODUCT LEVEL)	SEE PAGE
Y	1	1	**8Y-5904**	1	ARMREST GP	785
	2	1	**8Y-5897**	1	BRACKET AS	
	3	1	**7X-0456**	1	BOLT (7/16-14X4.5IN)	
	4	1	**0S-1594**	1	BOLT (3/8-16X1.0IN)	
	5	1	**5V-1498**	1	LOCKNUT (3/8-16 THD)	
	6	1	**9X-8873**	1	BOLT (1/2-13X2.25IN)	
		1	**2M-0849**	1	WASHER (5MM THK)	
		1	**1K-6872**	1	LOCKNUT (1/2-13 THD)	

Y-SEPARATE ILLUSTRATION

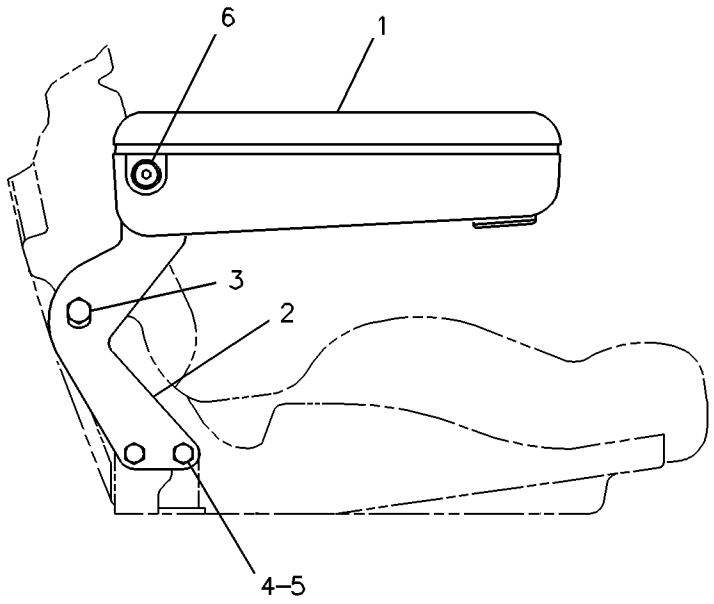

GRAPHIC #1 g00083050

OPERATOR STATION

8Y-5904 ARMREST GP

S/N: 7KK1-UP

PART OF 8Y-4200, 8Y-6000 ARMREST GP

SMCS-7307, 7312 **i01301541**

NOTE	REF NO	GRAPHIC REF	PART NUMBER	QTY	PART NAME 1 2 3 4 5 6 (PRODUCT LEVEL)	SEE PAGE
	1	1	**8Y-5906**	1	BASE-ARMREST	
L	2	1	**8S-7803**	1	RING-RETAINING	
J	3	1	**6V-2687**	4	SCREW-PAN HEAD (10-24X1IN)	
L	4	1	**8T-8641**	1	WASHER (M9.8X16.0X0.8MM THK)	
L	5	1	**3E-4312**	1	NUT-SQUARE	
					AVAILABLE REPAIR KIT(S):	
J			**8Y-5988**	1	KIT-CUSHION (ARMREST)	
					(INCLUDES CUSHION & SCREWS)	
L			**8Y-6028**	1	KIT-ADJUSTER (ARMREST)	
					(INCLUDES KNOB AS, NUT, WASHER, RING & SPRING)	

J-KIT MARKED J INCLUDES PART MARKED J
L-KIT MARKED L INCLUDES PARTS MARKED L

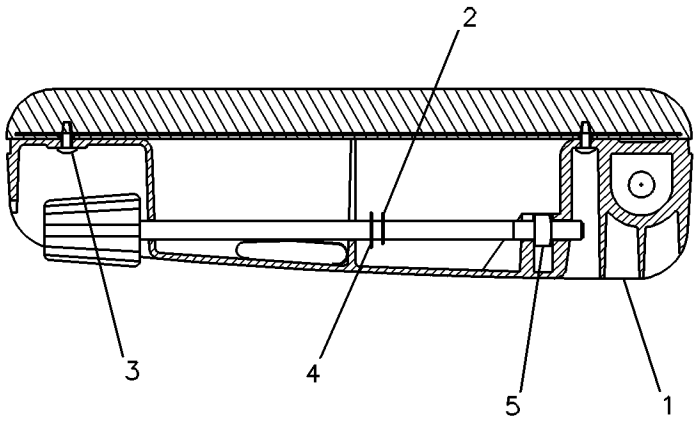

GRAPHIC #1 g00083048

OPERATOR STATION

8Y-6000 ARMREST GP–LH

S/N: 7KK1-UP

PART OF 119-7128 SEAT GP

SMCS-7307, 7312 **i00978047**

NOTE	REF NO	GRAPHIC REF	PART NUMBER	QTY	PART NAME 1 2 3 4 5 6 (PRODUCT LEVEL)	SEE PAGE
Y	1	1	**8Y-5904**	1	ARMREST GP	785
	2	1	**8Y-5898**	1	BRACKET AS	
	3	1	**7X-0456**	1	BOLT (7/16-14X4.5IN)	
	4	1	**0S-1594**	1	BOLT (3/8X1.0IN)	
	5	1	**5V-1498**	1	LOCKNUT (3/8-16 THD)	
	6	1	**9X-8873**	1	BOLT (1/2-13X2.25IN)	
		1	**2M-0849**	1	WASHER (5MM THK)	
		1	**1K-6872**	1	LOCKNUT (1/2-13 THD)	

Y-SEPARATE ILLUSTRATION

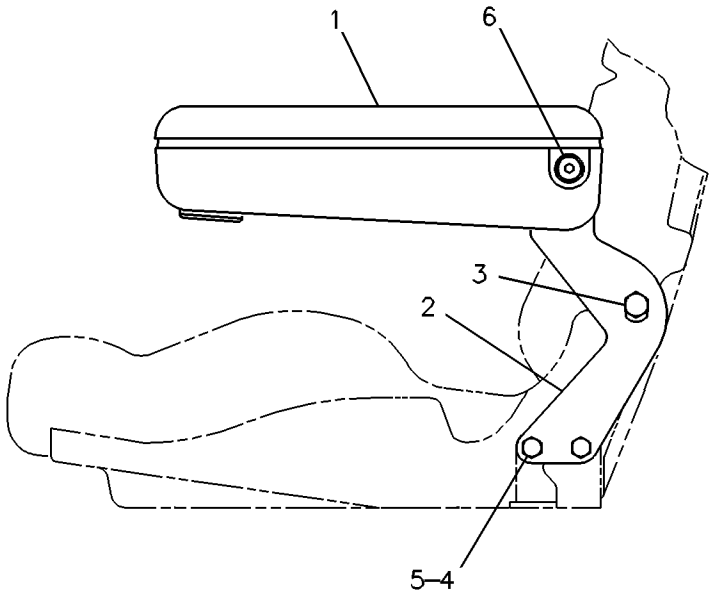

GRAPHIC #1 g00083046

OPERATOR STATION

8X-8401 CAB AR

S/N: 7KK1-UP

PART OF 8X-8400 COMMON AR-MOTOR GRADER

i01428336

NOTE	PART NUMBER	QTY	PART NAME 1 2 3 4 5 6 (PRODUCT LEVEL)	SEE PAGE
Y	*125-0530*	1	DOOR GP-CAB	806
Y	*8X-8963*	1	DUCT & CONTROL GP	808
Y	*125-0532*	1	FAN GP-DEFROSTER	812
Y	*117-2005*	1	INSTALLATION GP-RADIO	815
Y	*8X-8965*	1	LINER GP-CAB	818
Y	**6V-1970**	1	LITERATURE GP	826
Y	**8X-2795**	1	MIRROR GP-REAR VIEW	827
Y	*8X-8973*	1	MOUNTING GP-CAB	830
Y	*8X-8968*	1	PANEL GP-INSTRUMENT	838
CY	*8X-9003*	1	PLATFORM AR	537
Y	*8X-8969*	1	ROPS GP	850
Y	*8X-8967*	1	WINDOW GP	872
Y	*8X-8971*	1	WIPER & WASHER GP-WINDOW	874
Y	*8X-8972*	1	WIRING GP-CAB	318

C-CHANGE FROM PREVIOUS TYPE
Y-SEPARATE ILLUSTRATION

OPERATOR STATION

3E-1906 COMPRESSOR GP-REFRIGERANT

S/N: 80M1-1211

FIELD REPLACEMENT FOR 134-3997—PAGE 794

SMCS-1802 **i01377893**

NOTE	REF NO	GRAPHIC REF	PART NUMBER	QTY	PART NAME 1 2 3 4 5 6 (PRODUCT LEVEL)	SEE PAGE
C	1	1	**134-3998**	1	COIL AS-24 VOLT	
		1	**9W-0852**	2	PIN-CONNECTOR	
		1	**102-8802**	1	KIT-RECEPTACLE (2 PIN)	
					(INCLUDES RECEPTACLE AS AND WEDGE)	
Y	2	1	**134-3997**	1	COMPRESSOR GP-REFRIGERANT	794

C-CHANGE FROM PREVIOUS TYPE
Y-SEPARATE ILLUSTRATION

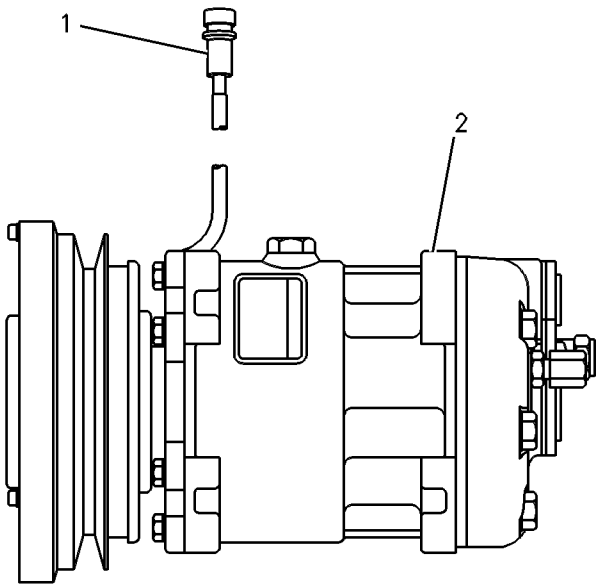

GRAPHIC #1 g00087586

3E-1906 COMPRESSOR GP-REFRIGERANT

S/N: 8OM1212-UP

PART OF 126-7653 COMPRESSOR GP-REFRIGERANT

FIELD REPLACEMENT FOR 134-3997—PAGE 794

SMCS-1802 **i01350675**

NOTE	REF NO	GRAPHIC REF	PART NUMBER	QTY	PART NAME 1 2 3 4 5 6 (PRODUCT LEVEL)	SEE PAGE
C	1	1	**7T-4532**	1	PLUG AS	
C	2	1	**9X-7385**	2	SEAL-O-RING (20.22MM ID)	

C-CHANGE FROM PREVIOUS TYPE

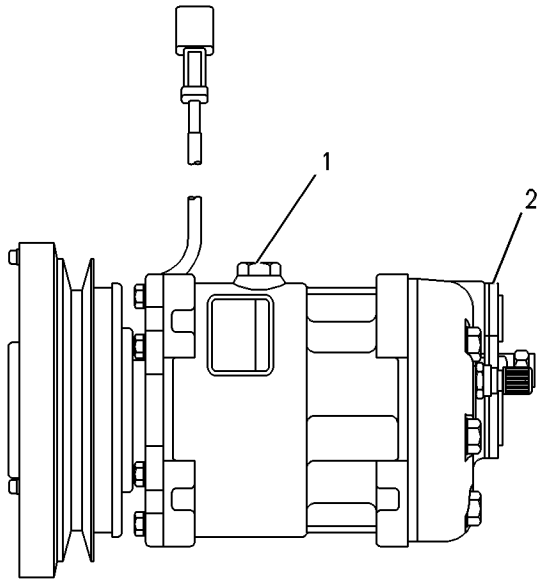

GRAPHIC #1 g00273360

OPERATOR STATION

126-7653 COMPRESSOR GP-REFRIGERANT

S/N: 80M1-1211

PART OF 123-0200 ENGINE AR

SMCS-1802 **i00551812**

NOTE	REF NO	GRAPHIC REF	PART NUMBER	QTY	PART NAME 1 2 3 4 5 6 (PRODUCT LEVEL)	SEE PAGE
Y	1	1	*134-3997*	1	COMPRESSOR GP-REFRIGERANT	794
	2	1	**9L-1130**	1	V-BELT	
	3	1	**0S-1591**	1	BOLT (3/8-16X1.5IN)	
	4	1	**5M-2894**	10	WASHER (2.5MM THK)	
	5	1	**9S-8752**	3	NUT-FULL (3/8-16 THD)	
	6	1	**0S-1595**	2	BOLT (1/2-13X1.25IN)	
	7	1	**5P-8245**	4	WASHER (3MM THK)	
	8	1	**3B-1915**	1	BOLT (3/8-16X1.375IN)	
	9	1	**1A-1460**	1	BOLT (1/2-13X2IN)	
	10	1	**1F-7958**	1	NUT-FULL (1/2-13 THD)	
	11	1	**8S-5383**	1	BLOCK	
	12	1	**4K-0367**	2	NUT (5/8-11 THD)	
	13	1	**4R-1419**	1	ROD	
	14	1	**9Y-4815**	1	BRACKET	
	15	1	**4P-7363**	2	BRACKET	
	16	1	**0S-1590**	1	BOLT (3/8-16X2IN)	
	17	1	**091-0081**	1	SPACER	
	18	1	**9G-9150**	1	CLIP (10.2MM ID)	
	19	1	**2A-4639**	4	BOLT (3/8-16X1.625IN)	
	20	1	**111-8568**	1	GUARD AS	
		1	**1F-0750**	3	NUT-WELD (3/8-16 THD)	

Y-SEPARATE ILLUSTRATION

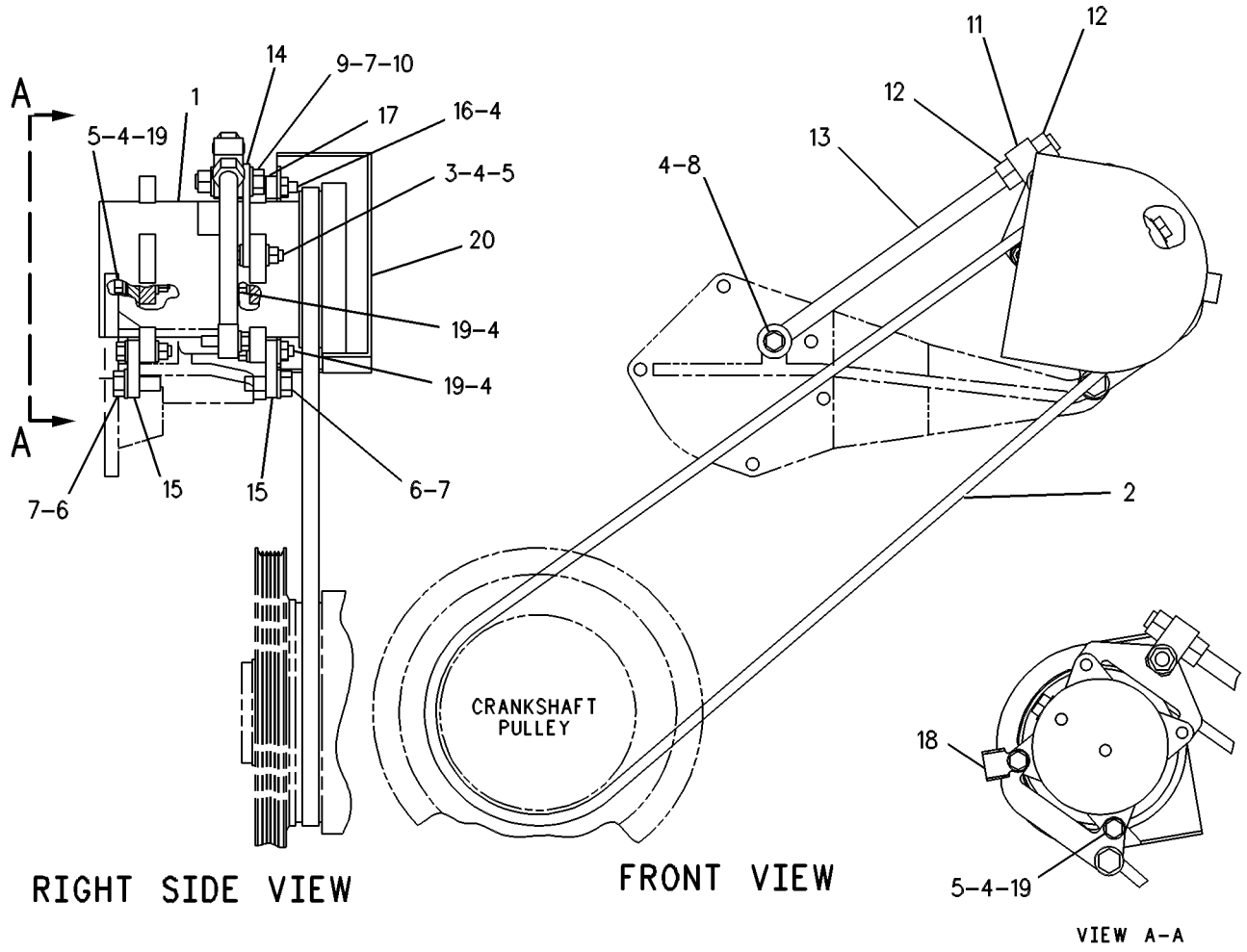

GRAPHIC #1

g00270880

OPERATOR STATION

126-7653 COMPRESSOR GP-REFRIGERANT

S/N: 80M1212-UP

PART OF 123-0200 ENGINE AR

SMCS-1802 **i00552000**

NOTE	REF NO	GRAPHIC REF	PART NUMBER	QTY	PART NAME 1 2 3 4 5 6 (PRODUCT LEVEL)	SEE PAGE
CY	1	1	**3E-1906**	1	COMPRESSOR GP-REFRIGERANT	788
	2	1	**9L-1130**	1	V-BELT	
	3	1	**0S-1591**	1	BOLT (3/8-16X1.5IN)	
	4	1	**5M-2894**	10	WASHER (2.5MM THK)	
	5	1	**9S-8752**	3	NUT-FULL (3/8-16 THD)	
	6	1	**0S-1595**	2	BOLT (1/2-13X1.25IN)	
	7	1	**5P-8245**	4	WASHER (3MM THK)	
	8	1	**3B-1915**	1	BOLT (3/8-16X1.375IN)	
	9	1	**1A-1460**	1	BOLT (1/2-13X2IN)	
	10	1	**1F-7958**	1	NUT-FULL (1/2-13 THD)	
	11	1	**8S-5383**	1	BLOCK	
	12	1	**4K-0367**	2	NUT (5/8-11 THD)	
	13	1	**4R-1419**	1	ROD	
	14	1	**9Y-4815**	1	BRACKET	
	15	1	**4P-7363**	2	BRACKET	
	16	1	**0S-1590**	1	BOLT (3/8-16X2IN)	
	17	1	**091-0081**	1	SPACER	
	18	1	**9G-9150**	1	CLIP (10.2MM ID)	
	19	1	**2A-4639**	4	BOLT (3/8-16X1.625IN)	
	20	1	**111-8568**	1	GUARD AS	
		1	**1F-0750**	3	NUT-WELD (3/8-16 THD)	

C-CHANGE FROM PREVIOUS TYPE
Y-SEPARATE ILLUSTRATION

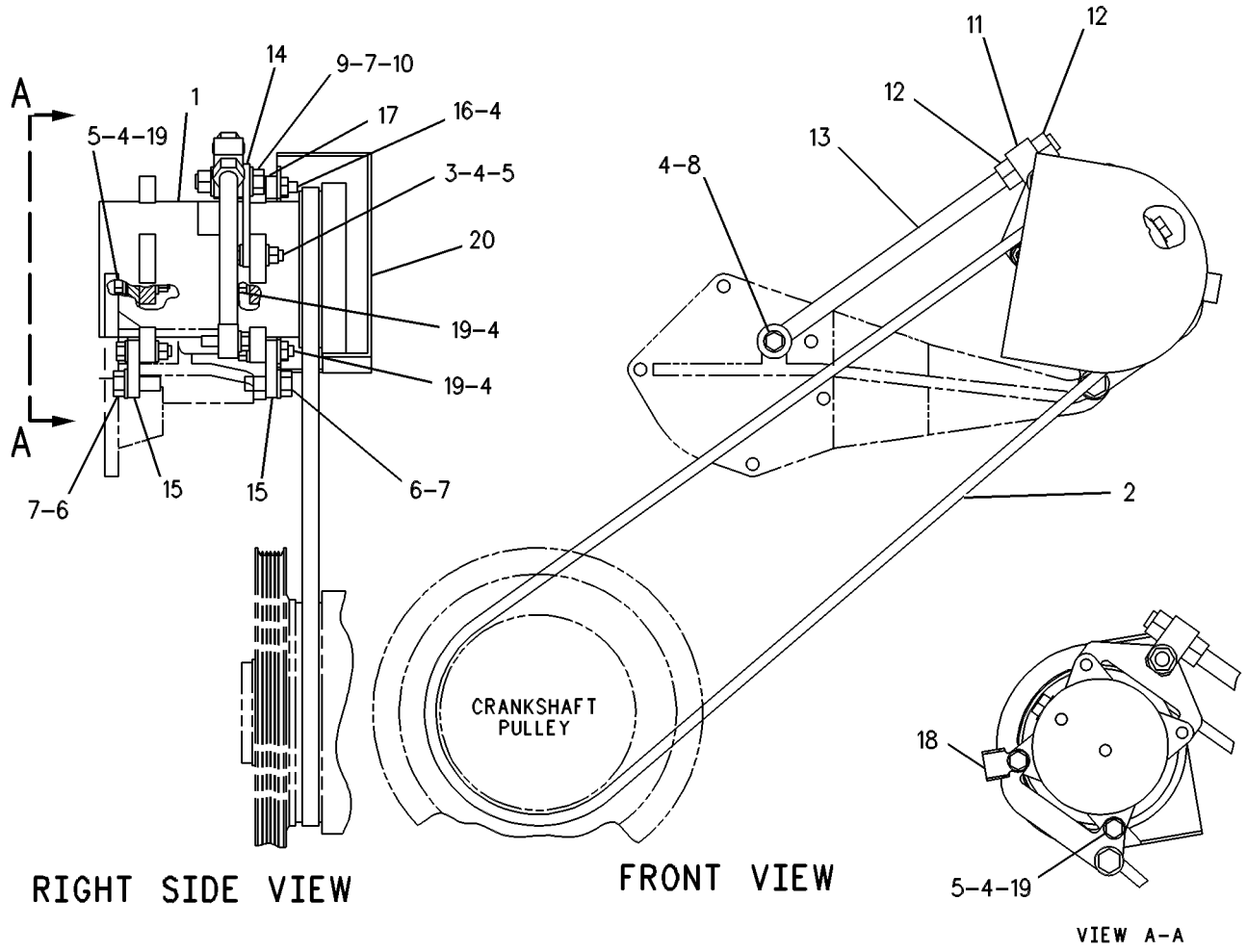

GRAPHIC #1

g00270880

134-3997 COMPRESSOR GP-REFRIGERANT

S/N: 8OM1-1211

PART OF 126-7653, 3E-1906 COMPRESSOR GP-REFRIGERANT

FIELD REPLACEMENT ORDER 3E-1906—PAGE 788, 142-2387 HARNESS AS

SMCS-1802 **i01271404**

NOTE	REF NO	GRAPHIC REF	PART NUMBER	QTY	PART NAME 1 2 3 4 5 6 (PRODUCT LEVEL)	SEE PAGE
	1	1	**3E-3658**	1	COMPRESSOR AS	
	1A	1	**7T-4532**	1	PLUG AS	
	1B	1	**9X-7385**	2	SEAL-O-RING (20.22MM ID)	

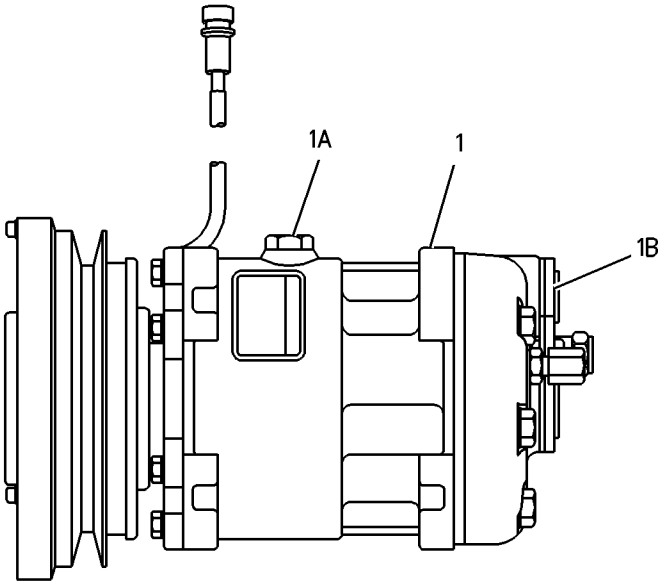

GRAPHIC #1 g00665686

OPERATOR STATION

6I-4720 CONDENSER & MTG GP-REFRIGERANT

S/N: 7KK1-UP

PART OF 6I-0673 INSTALLATION AR-ENGINE

SMCS-1805 **i00698316**

NOTE	PART NUMBER	QTY	PART NAME 1 2 3 4 5 6 (PRODUCT LEVEL)	SEE PAGE
	108-0677	1	ANGLE AS	
	1Y-1965	2	PLATE-SPACER	
	4L-9337	10	BOLT (3/8-16X1.50IN)	
	5M-3062	8	BOLT (3/8-16X.750IN)	
	5S-7383	2	BOLT (3/8-16X1.75IN)	
	107-5959	1	BRACKET AS-LH	
	4K-2542	2	BOSS	
	107-5956	1	BRACKET AS-RH	
	4K-2542	2	BOSS	
	107-5957	1	BRACKET-LH	
	107-5958	1	BRACKET-RH	
	126-9180	1	CONDENSER	
	6N-8744	4	MOUNT	
	8T-2561	8	WASHER (5MM THK)	
	5P-1075	12	WASHER-HARD (3MM THK)	

OPERATOR STATION

8X-8978 CONSOLE GP-OPERATOR

S/N: 7KK1-81

PART OF 8X-9003 PLATFORM AR

SMCS-5258 **i01500358**

NOTE	REF NO	GRAPHIC REF	PART NUMBER	QTY	PART NAME 1 2 3 4 5 6 (PRODUCT LEVEL)	SEE PAGE
	1	1	**117-2035**	1	BASE AS	
	2	1	**190-1677**	1	CHANNEL AS	
M		1	**6V-9632**	6	NUT-WELD (M6X1 THD)	
		1	**7T-1099**	3	LINK	
	3	1	**7B-9323**	1	PIN	
	4	1	**3B-4607**	1	COTTER	
	5	1	**2A-6908**	1	CYLINDER	
	6	1	**3E-8043**	4	SCREW (3/8-16X.75 IN)	
	7	1	**117-2039**	1	HOOD	
	8	1	**8X-3789**	1	PANEL	
	9	1	**2A-7184**	2	PLATE	
	10	1	**8C-3442**	1	SPRING-COIL	
	11	1	**2K-7979**	13	BEARING-SLEEVE	
M	12	1	**9X-2042**	12	SCREW-TRUSS HEAD (M6X1X12MM)	
	13	1	**169-3679**	1	CHANNEL AS	
		1	**3W-4871**	4	NUT (6-32-2B THD)	
M		1	**6V-9632**	8	NUT-WELD (M6X1 THD)	
		1	**7T-1099**	5	LINK	
		1	**169-3677**	1	CHANNEL	
	14	1	**8X-1908**	1	PANEL	
	15	1	**8X-1911**	1	PANEL	
	16	1	**8X-2160**	1	LEVER	
	17	1	**8X-3951**	1	PANEL	
	18	1	**5M-8500**	1	KNOB (STEERING WHEEL TILT CONTROL)	
	19	1	**1V-5773**	1	FILM (STEERING WHEEL TILT CONTROL)	
	20	1	**3E-9865**	1	LOCKNUT (1/4-20 THD)	
	21	1	**3Y-2806**	1	SPRING	
	22	1	**8X-1904**	1	SPACER (20X35X26MM THK)	
	23	1	**030-8535**	1	BOLT-LOCKING (3/8-16X0.875 IN)	
	24	1	**8X-1907**	1	SHAFT	
M	25	1	**8T-4133**	1	NUT (M10X1.5 THD)	
	26	1	**8T-2561**	11	WASHER-HARD (10.5X28.5X5MM THK)	
	27	1	**2G-8572**	8	WASHER-SPECIAL (10X27.81X2.54MM THK)	
	28	1	**2G-8573**	8	CAP	
	29	1	**5P-8167**	2	BOLT (3/8-16X0.625 IN)	
	30	1	**8X-5123**	1	RETAINER	
	31	1	**8X-2161**	1	LEVER	
	32	1	**9M-5590**	1	BALL	
	33	1	**110-6241**	1	BRACKET	
	34	1	**6D-4054**	6	FASTENER	
	35	1	**8X-1913**	6	SPACER-FLANGED	
	36	1	**3K-6060**	6	LOCKNUT	
M	37	1	**9X-1046**	10	SCREW (M4X0.7X18MM)	
	38	1	**8X-2893**	10	NUT (M4X0.7 THD)	
	39	1	**031-2666**	1	ROD	
	40	1	**6V-8183**	1	NUT-FULL (3/8-24 THD)	
	41	1	**8X-1914**	1	SHAFT	
	42	1	**8X-1915**	1	SPACER (10.31X25.4X35MM THK)	
M	43	1	**8T-4139**	4	BOLT (M12X1.75X30MM)	
	44	1	**8X-6779**	2	PLATE	
	45	1	**8T-4223**	4	WASHER-HARD (13.5X25.5X3MM THK)	
	46	1	**5P-1075**	4	WASHER-HARD (10.2X22.5X3MM THK)	
	47	1	**8X-3965**	1	RATCHET	
	48	1	**3F-7514**	4	PIN	
M	49	1	**8T-9006**	2	BOLT-SOCKET HEAD (M3X.5X20MM)	
	50	1	**4B-4314**	1	RIVET	

8X-8978 **CONSOLE GP-OPERATOR** *(contd.)* **i01500358**

NOTE	REF NO	GRAPHIC REF	PART NUMBER	QTY	PART NAME 1 2 3 4 5 6 (PRODUCT LEVEL)	SEE PAGE
	51	1	**5S-7383**	6	BOLT (3/8-16X1.75 IN)	
	52	1	**6G-2914**	1	LATCH	
	53	1	**7I-4890**	1	PLATE AS	
	54	1	**8L-7905**	2	RIVET-POP	
B	55	1	**8D-5641**	14	BEARING	
BD	56	1	**5P-5637**		SEAL	
	57	1	**6G-8814**	2	BRACKET	

B-USE AS REQUIRED
D-ORDER BY THE METER
M-METRIC PART

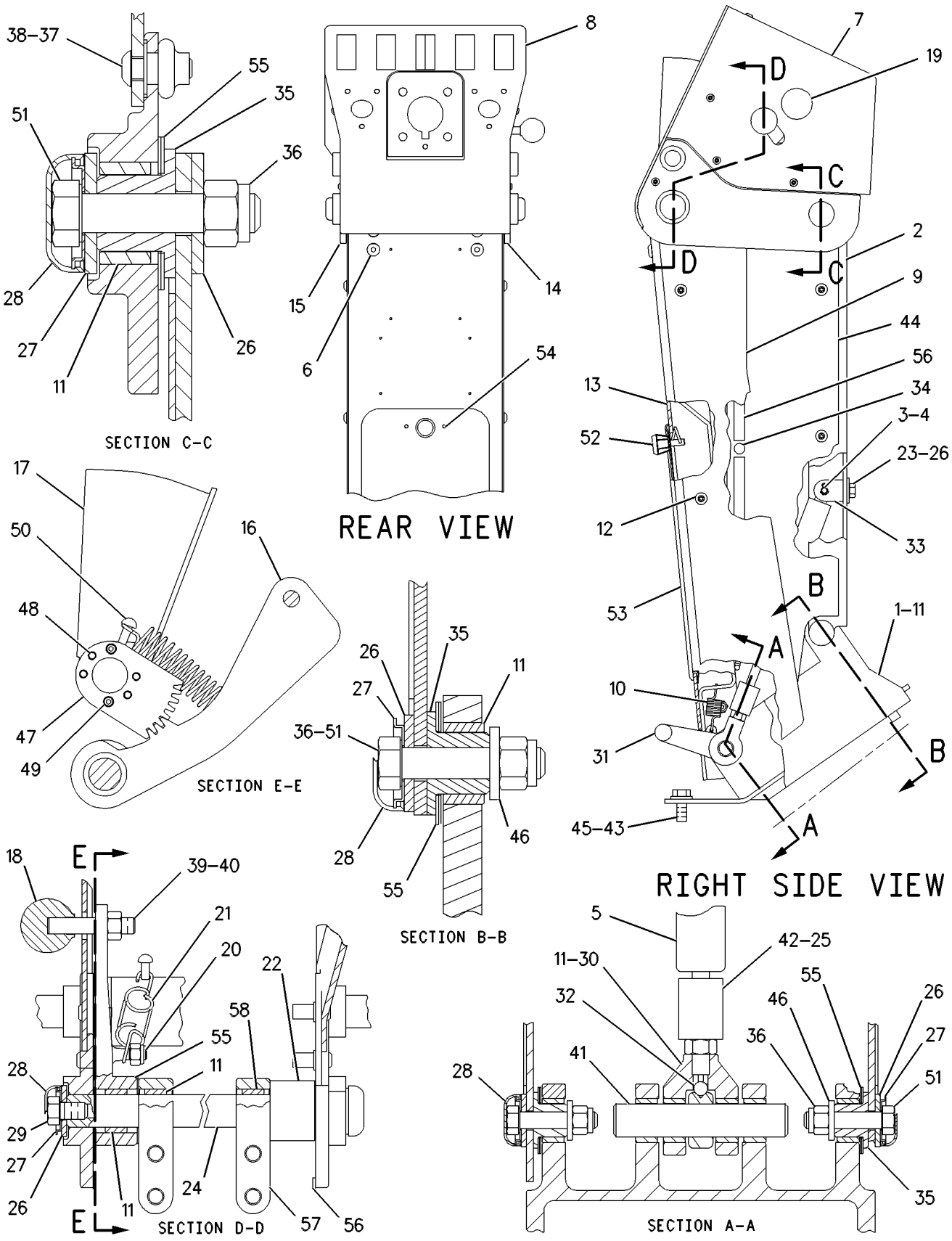

GRAPHIC #1 g00596751

OPERATOR STATION

8X-8983 CONSOLE GP-TMSN CONTROL

S/N: 7KK1-81

PART OF 8X-9003 PLATFORM AR

SMCS-5258 **i00926368**

NOTE	REF NO	GRAPHIC REF	PART NUMBER	QTY	PART NAME 1 2 3 4 5 6 (PRODUCT LEVEL)	SEE PAGE
	1	1	**5P-5454**	1	ASHTRAY	
	2	1	**5P-5824**	1	HOLDER-ASH TRAY	
	3	1	**7M-0706**	1	KNOB	
	4	1	**161-1343**	1	CONTROL GP-TRANSMISSION (SHIFT LEVER)	
	5	1	**145-1026**	1	FILM-CONTROL	
	6	1	**106-9932**	1	LENS	
	7	1	**122-6777**	1	GATE	
	8	1	**122-6778**	1	FILM-PANEL	
	9	1	**123-8396**	1	COVER	
	10	1	**123-8397**	1	COVER	
	11	1	**123-8399**	1	PLATE AS	
	12	1	**127-9461**	1	PLATE AS	
M	13	1	**9X-2041**	10	SCREW-TRUSS HEAD (M10X1.5X20MM)	
M	14	1	**9X-2043**	8	SCREW-TRUSS HEAD (M6X1X14MM)	
M	15	1	**9X-2045**	4	SCREW-TRUSS HEAD (M6X1X20MM)	

M-METRIC PART

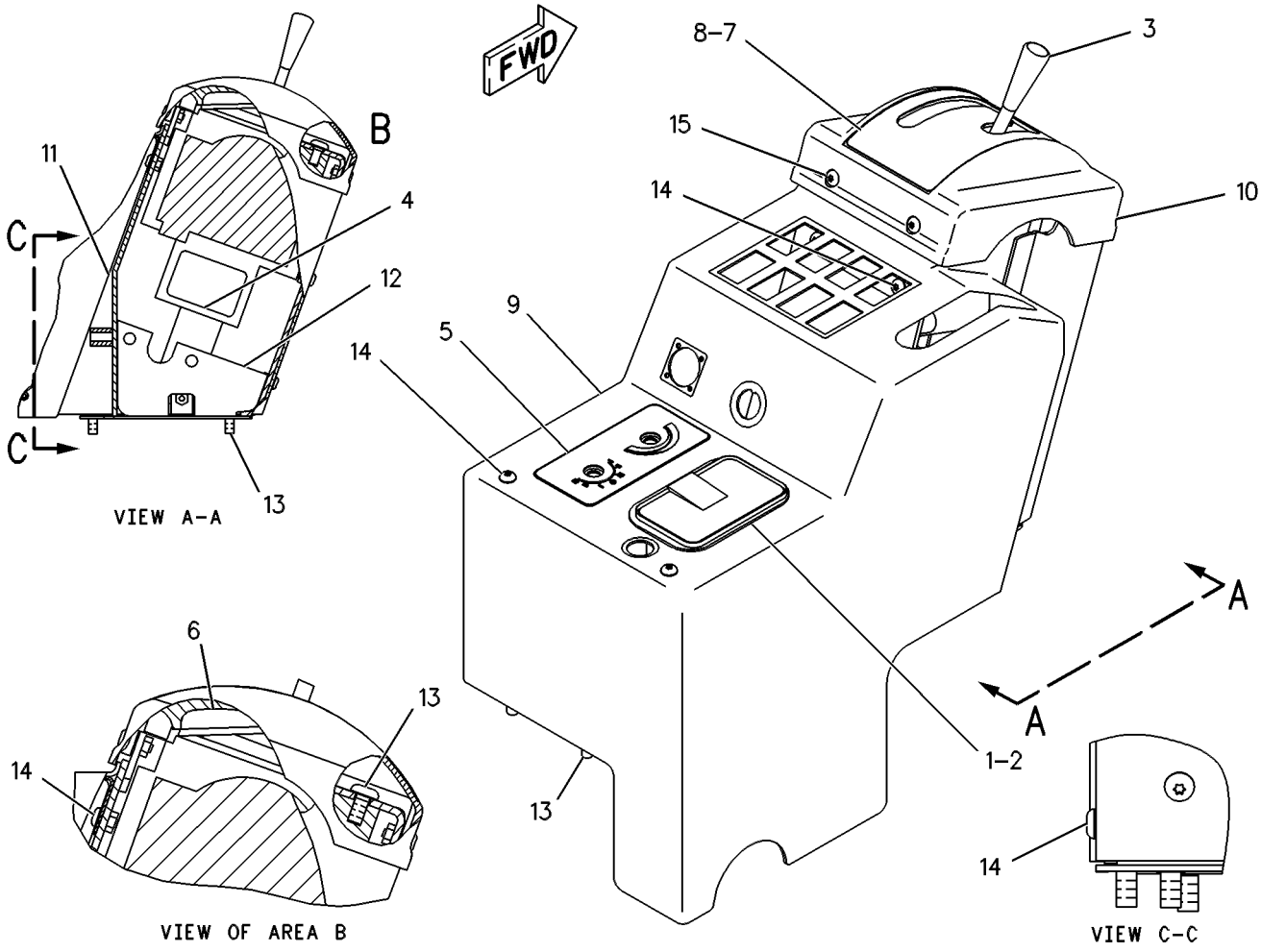

GRAPHIC #1 g00086470

OPERATOR STATION

103-5526 CONTROL GP-MONITOR SYS DIMMER

S/N: 7KK1-UP

PART OF 8X-8968 PANEL GP-INSTRUMENT

SMCS-7490 **i01082077**

NOTE	REF NO	GRAPHIC REF	PART NUMBER	QTY	PART NAME 1 2 3 4 5 6 (PRODUCT LEVEL)	SEE PAGE
	1	1	**5P-9132**	2	SCREW-WASHER HEAD (HEX)	
	2	1	**3E-3383**	1	WEDGE-RECEPTACLE LOCK	
	3	1	**8T-8729**	6	PIN-CONNECTOR	

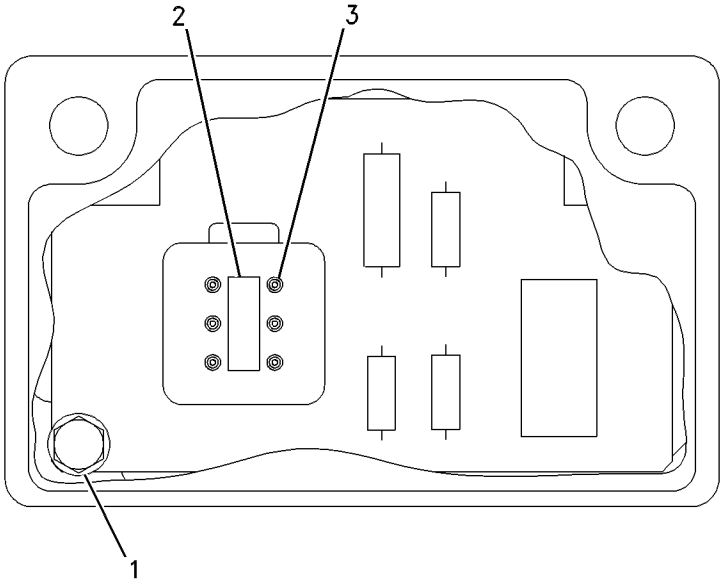

GRAPHIC #1 g00316579

MEMORANDA

OPERATOR STATION

8X-4525 DOOR GP-CAB—RH

S/N: 7KK1-UP
LOW PROFILE
PART OF 125-0530 DOOR GP-CAB

SMCS-7308 **i01485890**

NOTE	REF NO	GRAPHIC REF	PART NUMBER	QTY	PART NAME 1 2 3 4 5 6 (PRODUCT LEVEL)	SEE PAGE
	1	1	**199-2677**	1	LINK	
	2	1	**1H-3338**	1	LOCKWASHER	
	3	1	**5T-7486**	1	RETAINER-SPRING	
	4	1	**6D-6581**	14	RIVET-POP	
	5	1	**6V-2773**	2	PLUG	
	6	1	**6V-7636**	4	PIN AS-SPRING	
	7	1	**8X-4066**	1	HINGE	
	8	1	**8X-4243**	1	COVER-RH	
	9	1	**8X-4262**	1	COVER-RH	
	10	1	**8X-4446**	1	GLASS	
	11	1	**8X-4448**	1	GLASS	
	12	1	**8Y-4398**	1	LINK-CONNECTING	
	13	1	**8Y-4400**	1	LATCH AS-DOOR	
	14	1	**8Y-4401**	1	HANDLE AS-INSIDE	
	15	1	**8Y-4619**	1	HANDLE AS (OUTSIDE)	
	16	1	**8Y-4620**	1	LINK-CONNECTING	
J	17	1	**8Y-4801**	1	LOCK AS-CYLINDER	
M	18	1	**9X-2546**	4	BOLT (M6X1X20MM)	
	19	1	**107-9641**	1	PLATE AS	
	20	1	**108-5950**	1	LATCH AS-RH	
	21	1	**108-5952**	1	LINK-TAG-RH	
	22	1	**114-9190**	1	SEAL	
	23	1	**128-0037**	1	KNOB-BALL	
	24	1	**199-2712**	1	HANDLE	
	25	1	**199-2737**	1	DOOR AS (RH)	
M		1	**6V-9632**	8	NUT-WELD (M6X1 THD)	
M		1	**8T-3490**	2	NUT-WELD (M10X1.5 THD)	
	26	1	**8T-4121**	2	WASHER-HARD (11X21X2.5MM THK)	
M	27	1	**8T-4137**	2	BOLT (M10X1.5X20MM)	
M	28	1	**8T-4181**	10	BOLT (M6X1X20MM)	
	29	1	**8X-4245**	1	BOSS	
M	30	1	**9X-2042**	7	SCREW-TRUSS HEAD (M6X1X12MM)	
	31	1	**9X-8256**	6	WASHER (6.6X12X2MM THK)	
D	32	1	**069-5688**		SEAL (2.7M)	
D	32A	1	**069-5688**		SEAL (2.4M)	

D-ORDER BY THE METER
J-REQUIRES 5P8500 KEY
M-METRIC PART

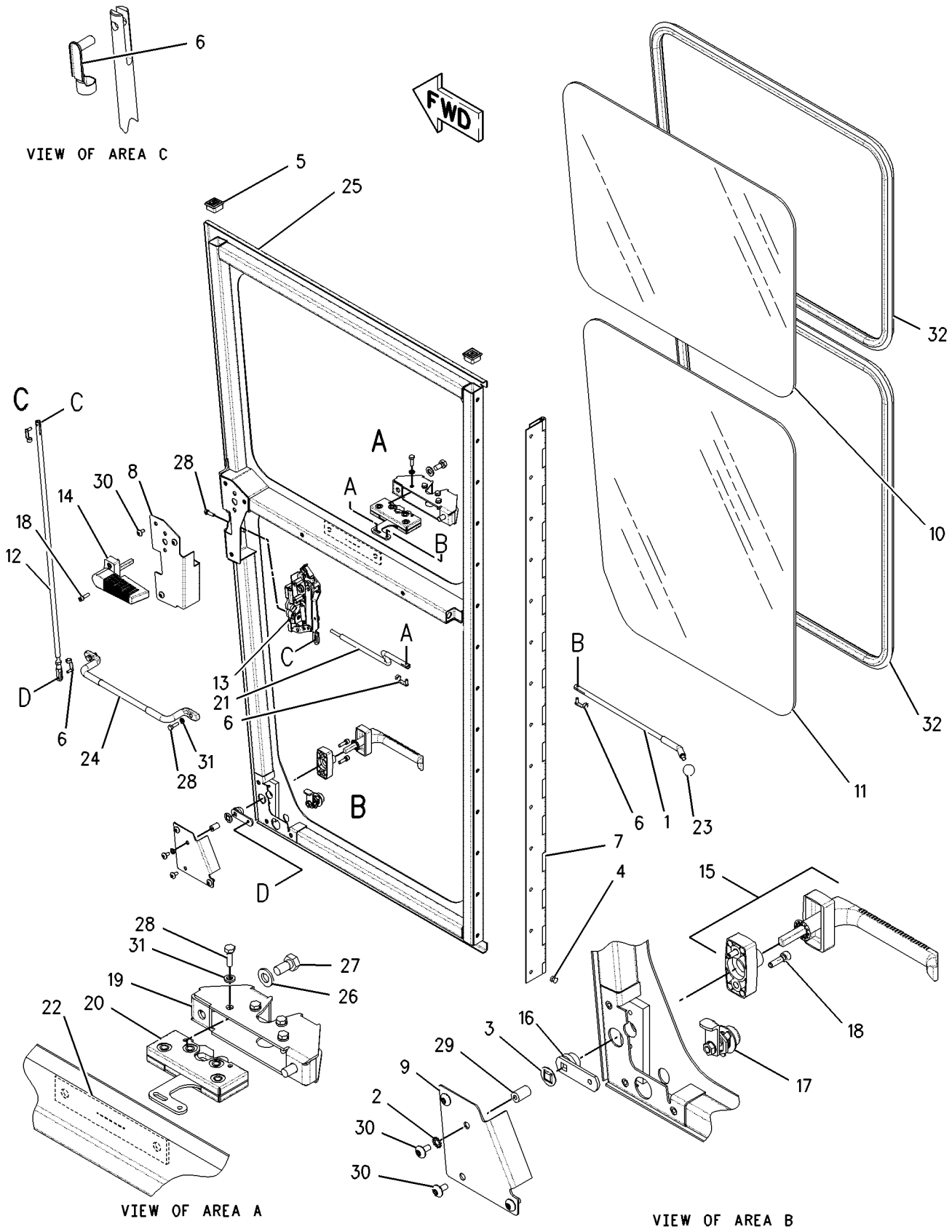

GRAPHIC #1 g00772926

OPERATOR STATION

8X-4526 DOOR GP-CAB—LH

S/N: 7KK1-UP
LOW PROFILE
PART OF 125-0530 DOOR GP-CAB

SMCS-7308 **i01488501**

NOTE	REF NO	GRAPHIC REF	PART NUMBER	QTY	PART NAME 1 2 3 4 5 6 (PRODUCT LEVEL)	SEE PAGE
	1	1	**199-2677**	1	LINK	
	2	1	**1H-3338**	1	LOCKWASHER	
	3	1	**5T-7486**	1	RETAINER-SPRING	
	4	1	**6D-6581**	14	RIVET-POP	
	5	1	**6V-2773**	2	PLUG	
	6	1	**6V-7636**	4	PIN AS-SPRING	
	7	1	**8X-4066**	1	HINGE	
	8	1	**8X-4244**	1	COVER-LH	
	9	1	**8X-4263**	1	COVER-LH	
	10	1	**8X-4446**	1	GLASS	
	11	1	**8X-4448**	1	GLASS	
	12	1	**8Y-4398**	1	LINK-CONNECTING	
	13	1	**8Y-4399**	1	LATCH AS-DOOR	
	14	1	**8Y-4401**	1	HANDLE AS-INSIDE	
	15	1	**8Y-4619**	1	HANDLE AS (OUTSIDE)	
	16	1	**8Y-4620**	1	LINK-CONNECTING	
J	17	1	**8Y-4801**	1	LOCK AS-CYLINDER	
M	18	1	**9X-2546**	4	BOLT (M6X1X20MM)	
	19	1	**107-9641**	1	PLATE AS	
	20	1	**108-5949**	1	LATCH AS-LH	
	21	1	**108-5951**	1	LINK-TAG-LH	
	22	1	**114-9190**	1	SEAL	
	23	1	**128-0037**	1	KNOB-BALL	
	24	1	**199-2712**	1	HANDLE	
	25	1	**199-2738**	1	DOOR AS (LH)	
M		1	**6V-9632**	8	NUT-WELD (M6X1 THD)	
M		1	**8T-3490**	2	NUT-WELD (M10X1.5 THD)	
	26	1	**8T-4121**	2	WASHER-HARD (11X21X2.5MM THK)	
M	27	1	**8T-4137**	2	BOLT (M10X1.5X20MM)	
M	28	1	**8T-4181**	10	BOLT (M6X1X20MM)	
	29	1	**8X-4245**	1	BOSS	
M	30	1	**9X-2042**	7	SCREW-TRUSS HEAD (M6X1X12MM)	
	31	1	**9X-8256**	6	WASHER (6.6X12X2MM THK)	
D	32	1	**069-5688**		SEAL (2.4M)	
D	32A	1	**069-5688**		SEAL (2.7M)	

D-ORDER BY THE METER
J-REQUIRES 5P8500 KEY
M-METRIC PART

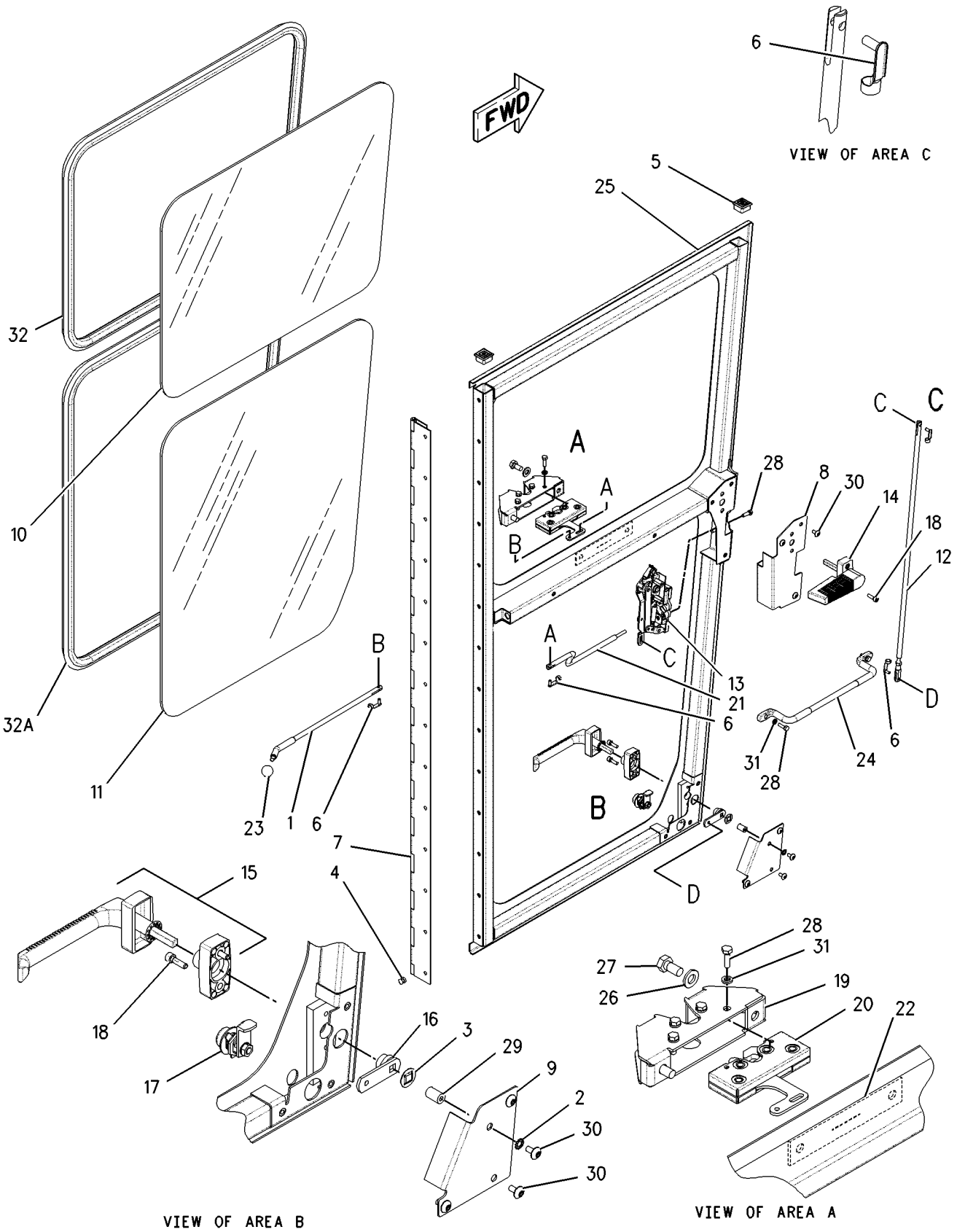

GRAPHIC #1 g00772891

OPERATOR STATION

125-0530 DOOR GP-CAB

S/N: 7KK1-UP

PART OF 8X-8401 CAB AR

SMCS-7308 **i00552907**

NOTE	REF NO	GRAPHIC REF	PART NUMBER	QTY	PART NAME 1 2 3 4 5 6 (PRODUCT LEVEL)	SEE PAGE
Y	1	1	*8X-4526*	1	DOOR GP-CAB (LH)	804
Y	2	1	*8X-4525*	1	DOOR GP-CAB (RH)	802
D	3	1	**6V-5163**		SEAL (1.1M)	
B	4	1	**4J-3915**	8	SHIM (1.52MM THK)	
	5	1	**8T-4157**	2	STRIKER AS	
					(EACH INCLUDES)	
		1	**8T-4158**	1	WASHER	
BD	6	1	**8T-4156**		SEAL	
M	7	1	**8C-8454**	28	SCREW-MACHINE FLAT HEAD	
	8	1	**117-1963**	2	PLATE AS	
					(EACH INCLUDES)	
	9	1	**117-2309**	1	BAR	
	10	1	**8T-4121**	4	WASHER (2.5MM THK)	
M	11	1	**8T-4133**	4	NUT (M10X1.50 THD)	
	12	1	**106-6553**	4	BUMPER-CONICAL	
BD	13	1	**5P-5969**		SEAL	
M	14	1	**8T-4137**	4	BOLT (M10X1.50X20MM)	
	15	1	**8Y-6385**	2	SHIELD-STRIKER	

B-USE AS REQUIRED
D-ORDER BY THE METER
M-METRIC PART
Y-SEPARATE ILLUSTRATION

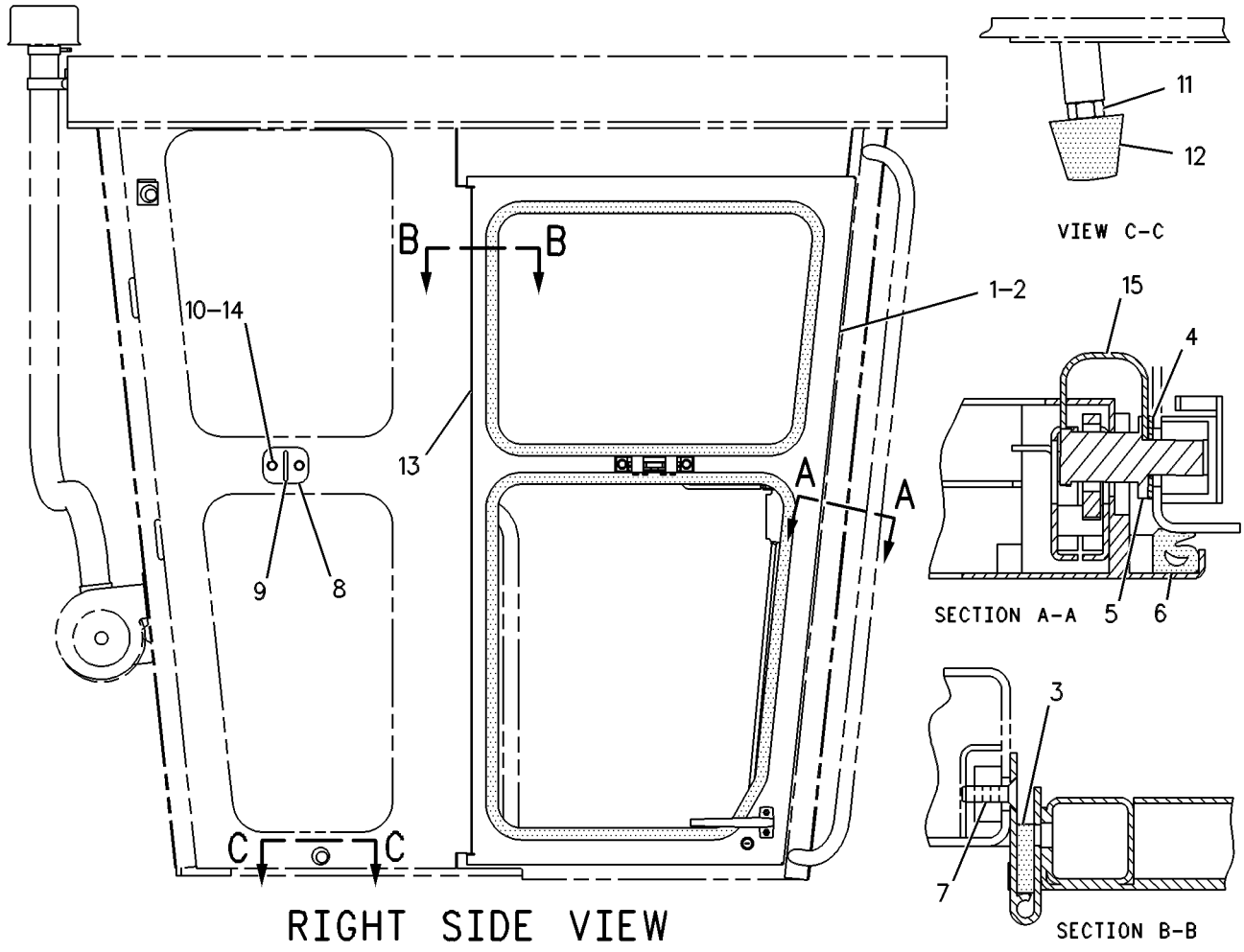

GRAPHIC #1

g00273909

OPERATOR STATION

8X-8963 DUCT & CONTROL GP

S/N: 7KK1-UP

PART OF 8X-8401 CAB AR

SMCS-7337 **i00746315**

NOTE	REF NO	GRAPHIC REF	PART NUMBER	QTY	PART NAME 1 2 3 4 5 6 (PRODUCT LEVEL)	SEE PAGE
	1	1	**7T-7358**	1	FILTER-AIR	
M	2	1	**9X-2045**	1	SCREW-TRUSS HEAD (M6X1X20MM)	
	3	1	**117-2090**	1	DUCT AS	
		1	**3V-2844**	4	NUT	
		1	**118-5619**	2	SCREW-FLAT HEAD (NO.6-20X1.0IN)	
	4	1	**9X-8122**	1	PLATE AS	
	5	1	**8R-1778**	1	COVER-FILTER	
	6	1	**3W-3465**	2	SCREW	
	7	1	**2R-2376**	2	WASHER (0.8MM THK)	
	8	1	**136-3978**	1	DUCT AS	
M		1	**9X-2045**	1	SCREW-TRUSS HEAD (M6X1X20MM)	
		1	**106-4496**	1	BRACKET AS	
M		1	**6V-9632**	1	NUT-WELD (M6X1 THD)	
M	9	1	**9X-2041**	4	SCREW-TRUSS HEAD (M10X1.5X20MM)	
	10	1	**3G-3265**	24	RIVET	
	11	1	**6G-2395**	2	DOOR GP	
					(EACH INCLUDES)	
		1	**6G-7222**	2	ROLLER	
	12	1	**6G-2396**	2	GASKET	
	13	1	**117-2196**	1	SEAL	

M-METRIC PART

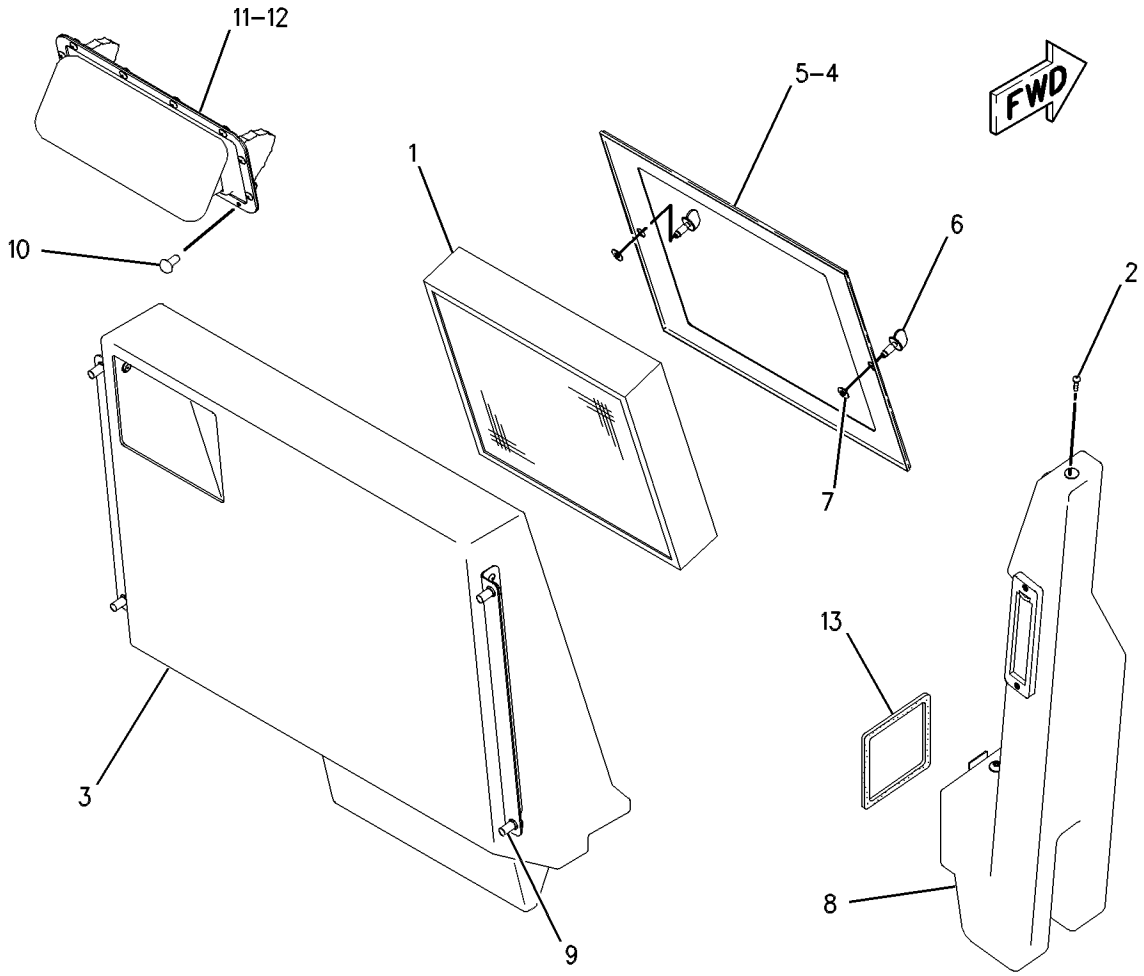

GRAPHIC #1 g00335180

OPERATOR STATION

8Y-6883 EXTENSION GP-BACKREST

S/N: 7KK1-UP
FABRIC
PART OF 119-7128 SEAT GP

SMCS-7312 **i01395720**

NOTE	REF NO	GRAPHIC REF	PART NUMBER	QTY	PART NAME 1 2 3 4 5 6 (PRODUCT LEVEL)	SEE PAGE
L	1	1	**8Y-5947**	2	FASTENER	
	2	1	**8Y-5877**	1	PAN AS-EXTENSION	
					AVAILABLE REPAIR KIT(S):	
L			**119-7130**	1	KIT-CUSHION (CLOTH BACKREST)	
					(INCLUDES CUSHION AS AND FASTNERS)	

L-KIT MARKED L INCLUDES PART MARKED L

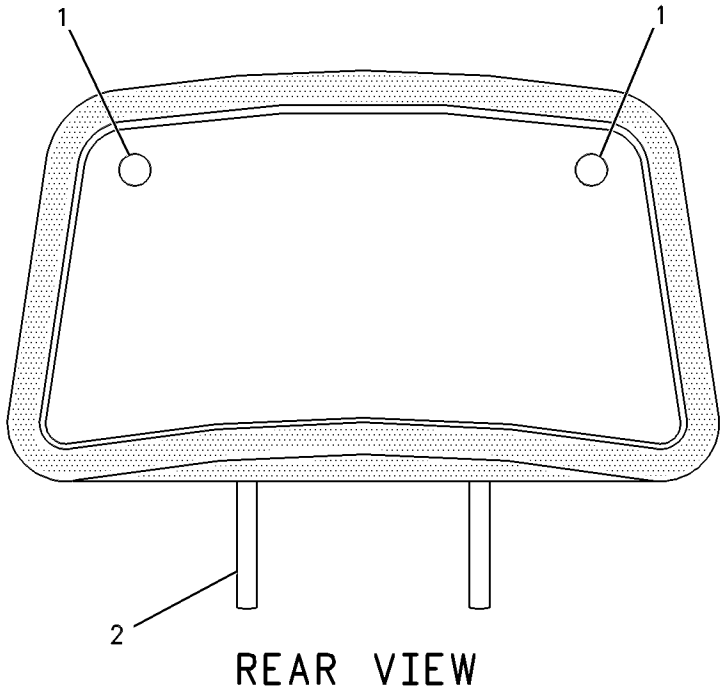

REAR VIEW

GRAPHIC #1 g00086580

OPERATOR STATION

9X-9657 FAN GP-DEFROSTER

S/N: 7KK1-UP

PART OF 125-0532 FAN GP-DEFROSTER

SMCS-7316 **i01299269**

NOTE	REF NO	GRAPHIC REF	PART NUMBER	QTY	PART NAME 1 2 3 4 5 6 (PRODUCT LEVEL)	SEE PAGE
	1	1	**6G-5987**	1	BRACKET	
	2	1	**7L-8316**	1	SETSCREW-SOCKET (10-32X.25IN)	
	3	1	**1B-2713**	1	BOLT (1/4-20X1.75IN)	
	4	1	**9X-0343**	1	MOTOR AS	
		1	**7N-7779**	1	SOCKET	
		1	**7N-7780**	1	PIN-CONNECTOR (BLADE)	
		1	**7N-9737**	1	HOUSING-PLUG	
	5	1	**3D-8749**	1	GUARD	
	6	1	**3D-8748**	1	FAN AS	
	7	1	**7T-0582**	1	BOLT	
	8	1	**1M-1230**	2	NUT & LOCK AS	
	9	1	**3T-6774**	1	GROMMET	
	10	1	**3D-8752**	1	LOCKNUT (5/16-24 THD)	
	11	1	**3D-8747**	1	BRACKET	
	12	1	**5P-0537**	4	WASHER (2MM THK)	
	13	1	**9X-9689**	1	BASE-FAN	
	14	1	**9M-1974**	2	WASHER-HARD (2MM THK)	
	15	1	**2D-6235**	1	LOCKNUT (1/4-20 THD)	

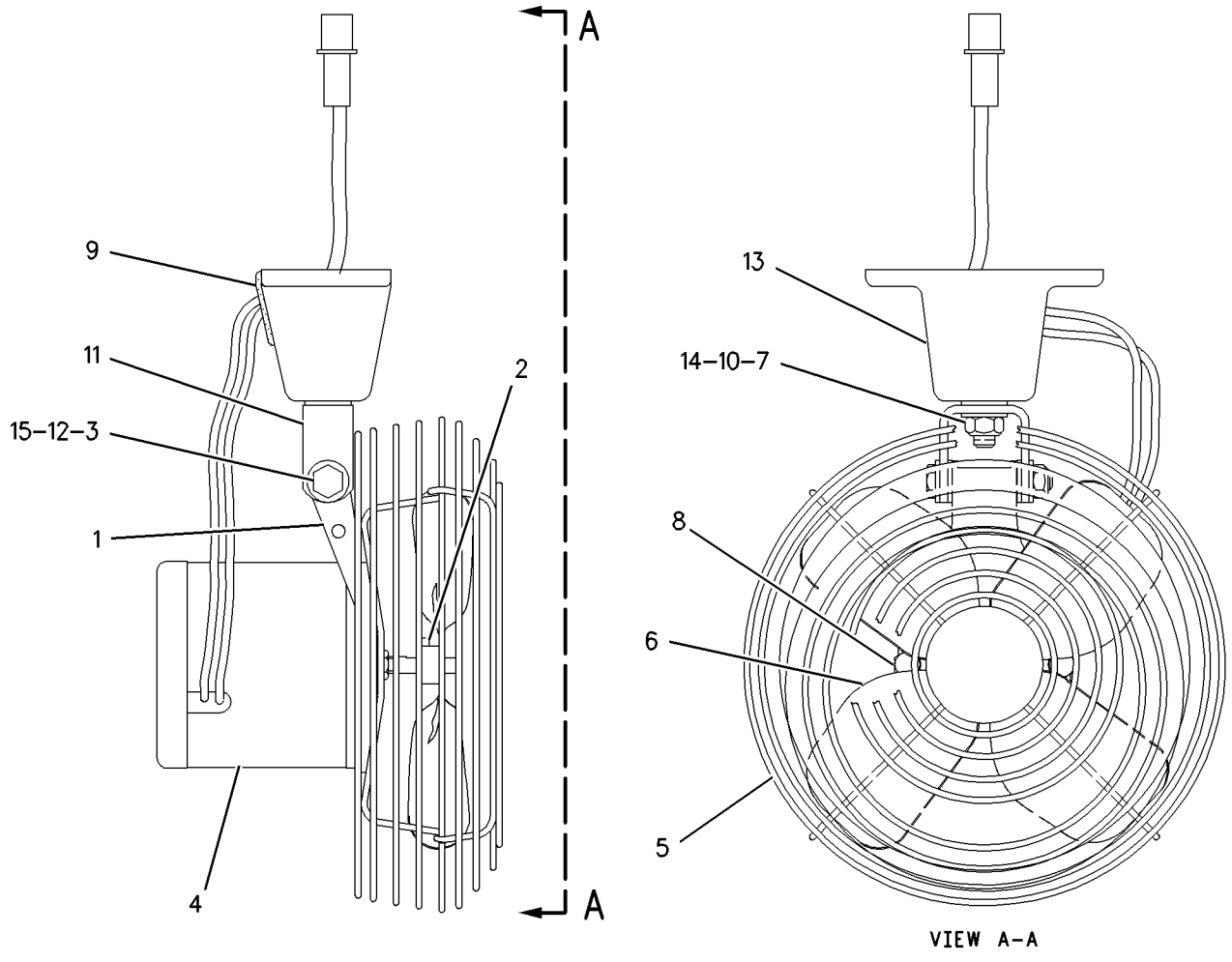

VIEW A-A

GRAPHIC #1 g00688576

OPERATOR STATION

125-0532 FAN GP-DEFROSTER–FRONT

S/N: 7KK1-UP
PART OF 8X-8401 CAB AR
TYPE 1

SMCS-7316 **i00111620**

NOTE	REF NO	GRAPHIC REF	PART NUMBER	QTY	PART NAME 1 2 3 4 5 6 (PRODUCT LEVEL)	SEE PAGE
	1	1	**7T-4003**	1	RESISTOR	
Y	2	1	**9X-9657**	1	FAN GP-DEFROSTER	811
M	3	1	**9X-1046**	2	SCREW (M4X0.7X18MM)	
M	4	1	**9X-2046**	4	SCREW-TRUSS HEAD (M6X1X35MM)	

M-METRIC PART
Y-SEPARATE ILLUSTRATION

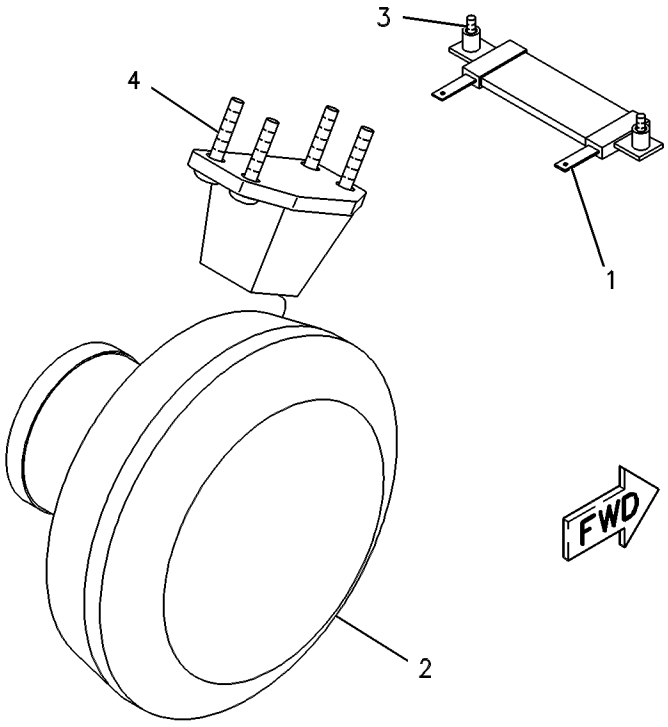

GRAPHIC #1 g00086542

OPERATOR STATION

125-0532 FAN GP-DEFROSTER–FRONT

S/N: 7KK1-UP
PART OF 8X-8401 CAB AR
TYPE 2

SMCS-7316 **i01497967**

NOTE	REF NO	GRAPHIC REF	PART NUMBER	QTY	PART NAME 1 2 3 4 5 6 (PRODUCT LEVEL)	SEE PAGE
C	1	1	**7T-4003**	2	RESISTOR	
CY	2	1	**9X-9657**	2	FAN GP-DEFROSTER	811
CM	3	1	**9X-1046**	4	SCREW (M4X0.7X18MM)	
CM	4	1	**9X-2046**	8	SCREW-TRUSS HEAD (M6X1X35MM)	

C-CHANGE FROM PREVIOUS TYPE
M-METRIC PART
Y-SEPARATE ILLUSTRATION

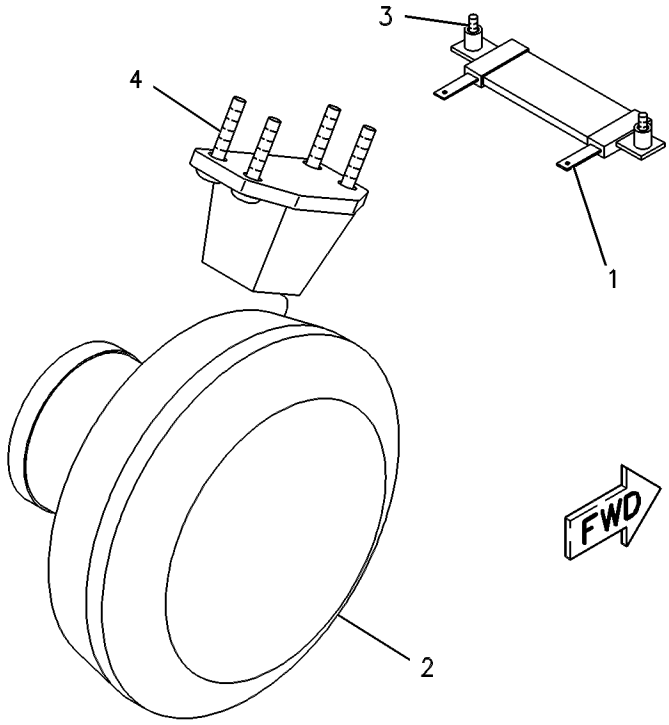

GRAPHIC #1 g00086542

OPERATOR STATION

154-7114 FILTER GP-CAB AIR

S/N: 7KK67-UP

PART OF 154-7111 PRESSURIZER GP-CAB

SMCS-7342 **i01057680**

NOTE	REF NO	GRAPHIC REF	PART NUMBER	QTY	PART NAME 1 2 3 4 5 6 (PRODUCT LEVEL)	SEE PAGE
	1	1	**154-7108**	1	FILTER ELEMENT-PRIMARY AIR	

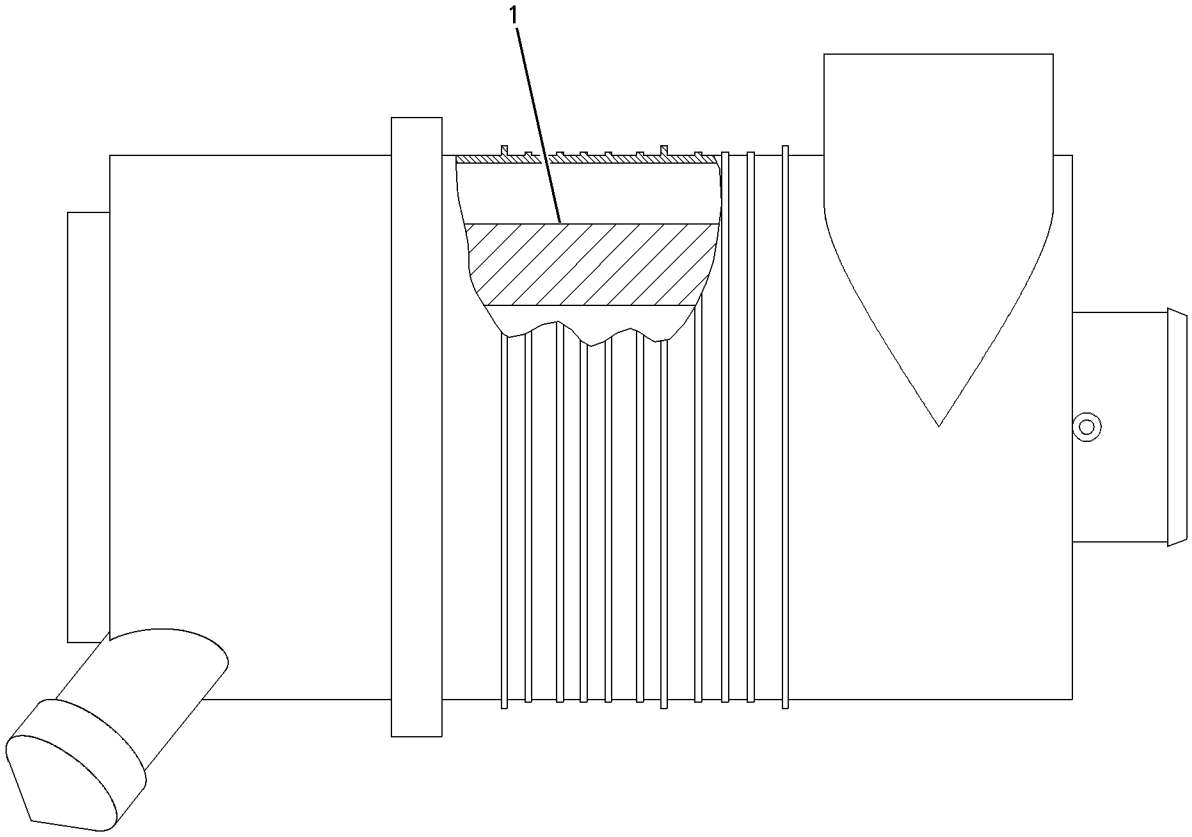

GRAPHIC #1 g00551436

OPERATOR STATION

117-2005 INSTALLATION GP-RADIO

S/N: 7KK1-UP

PART OF 8X-8401 CAB AR

SMCS-7338 **i00999842**

NOTE	REF NO	GRAPHIC REF	PART NUMBER	QTY	PART NAME 1 2 3 4 5 6 (PRODUCT LEVEL)	SEE PAGE
	1	1	**2A-6684**	1	BRACKET	
	2	1	**1V-3593**	1	CLIP	
	4	1	**5P-8439**	1	GROMMET	
	5	1	**6Y-7385**	1	BRACKET	
	6	1	**6Y-7386**	1	BRACKET AS	
	7	1	**9V-7451**	1	NUT-WELD (1/4-20 THD)	
	8	1	**9U-8263**	1	COVER	
	9	1	**9W-3072**	1	ANTENNA AS	
	10	1	**109-8981**	1	CABLE AS-COAXIAL (2MM THK)	
	11	1	**5P-4115**	1	WASHER (2MM THK)	
	12	1	**5S-7349**	1	BOLT (1/4-20X0.5IN)	
	13	1	**8T-4121**	6	WASHER (2.5MM THK)	
M	14	1	**8T-4137**	6	BOLT (M10X1.50X20MM)	
	15	1	**8K-1433**	1	GROMMET (12.70MM ID)	

M-METRIC PART

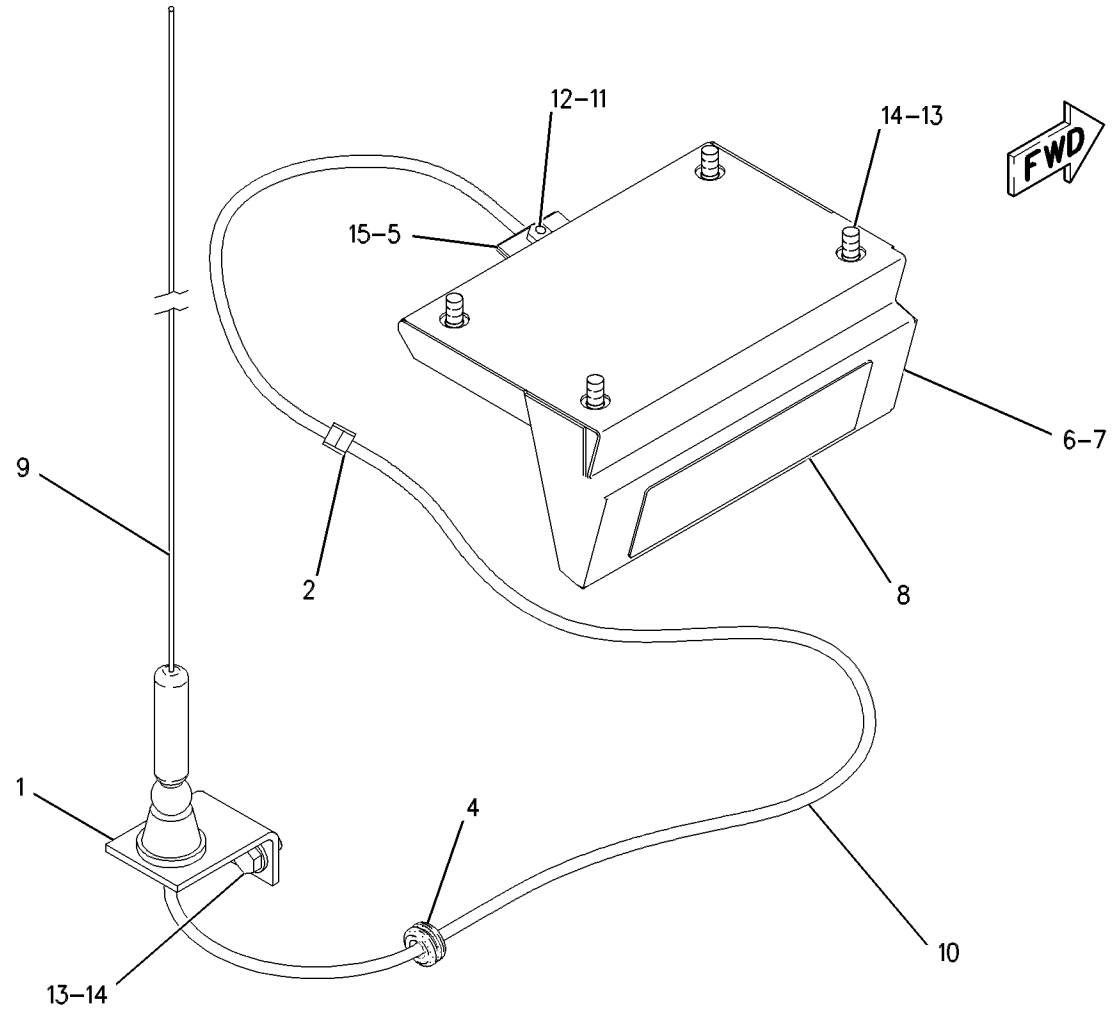

GRAPHIC #1 g00516725

OPERATOR STATION

8X-8964 INSULATION GP-WEATHER

S/N: 7KK1-81

PART OF 8X-9003 PLATFORM AR

SMCS-7329 **i00903276**

NOTE	REF NO	GRAPHIC REF	PART NUMBER	QTY	PART NAME 1 2 3 4 5 6 (PRODUCT LEVEL)	SEE PAGE
	1	1	**8X-8055**	3	PLUG	
	2	1	**112-9164**	9	BOOT	
	3	1	**117-1972**	1	COVER AS-RH	
	4	1	**117-1975**	1	COVER AS-LH	
	5	1	**117-2037**	1	FLOOR MAT	
	6	1	**138-0749**	1	FLOORPLATE AS-RH	
M	7	1	**8T-3490**	3	NUT-WELD (M10X1.5 THD)	
	8	1	**7X-7729**	12	WASHER (3MM THK)	
M	9	1	**8T-4137**	12	BOLT (M10X1.50X20MM)	
M	10	1	**9X-2045**	6	SCREW-TRUSS HEAD (M6X1X20MM)	
BD	11	1	**6V-0505**		SEAL	
	12	1	**117-2061**	1	FLOORPLATE AS-LH	
M	13	1	**8T-3490**	3	NUT-WELD (M10X1.5 THD)	
	14	1	**5V-0594**	1	BUTTON-PLUG	
	15	1	**138-0750**	1	PLATE	
	16	1	**101-2867**	6	WASHER-HARD	
BD	17	1	**6V-5163**		SEAL	

B-USE AS REQUIRED
D-ORDER BY THE METER
M-METRIC PART

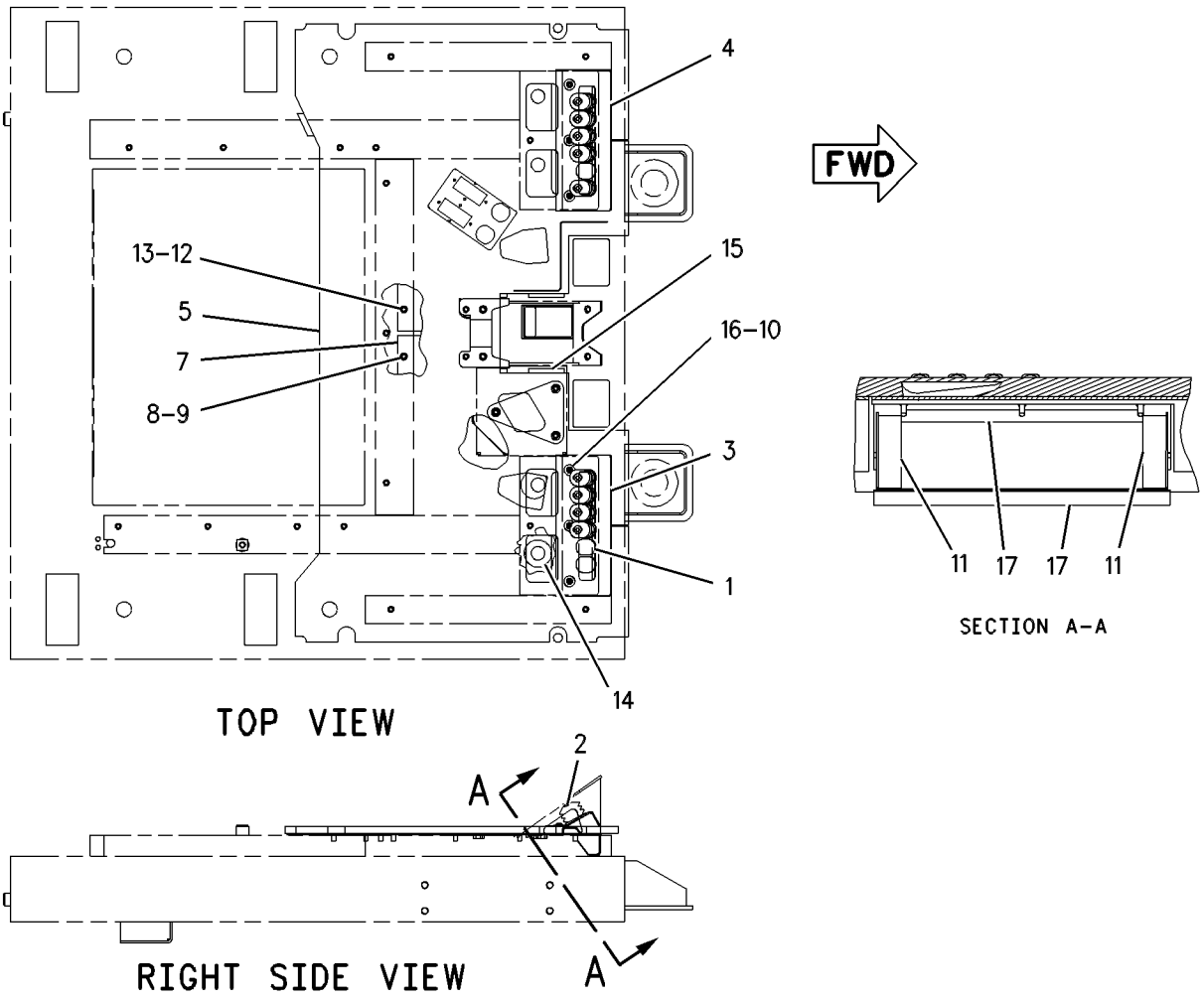

GRAPHIC #1

g00461640

OPERATOR STATION

8X-8965 LINER GP-CAB

S/N: 7KK1-UP
PART OF 8X-8401 CAB AR

SMCS-7329 **i00902344**

NOTE	REF NO	GRAPHIC REF	PART NUMBER	QTY	PART NAME 1 2 3 4 5 6 (PRODUCT LEVEL)	SEE PAGE
	1	1	**2N-3479**	8	SCREW (10-24X.5IN)	
Y	2	1	**3E-6389**	1	LAMP GP-DOME	247
	3	1	**3H-6782**	4	SPACER	
	4	1	**6T-7695**	2	SPEAKER AS-RADIO	
M	5	1	**9X-2045**	20	SCREW-TRUSS HEAD (M6X1X20MM)	
	6	1	**117-2097**	1	HEADLINER-FRONT	
		1	**3V-2844**	11	NUT	
	7	1	**101-2867**	20	WASHER-HARD	
	8	1	**117-2096**	1	HEADLINER-REAR	
	9	1	**6V-5834**	3	SCREW-HEAD (10-14X0.75IN)	

M-METRIC PART
Y-SEPARATE ILLUSTRATION

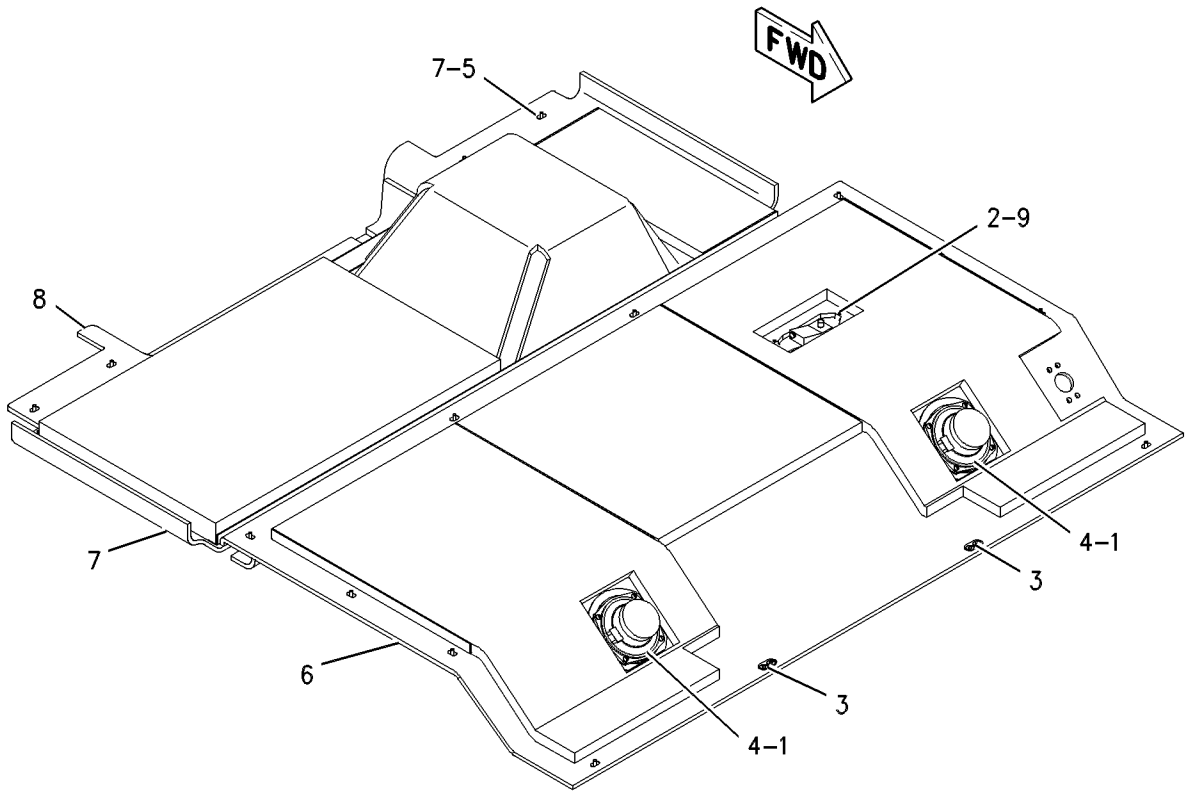

TOP VIEW

GRAPHIC #1 g00462367

MEMORANDA

OPERATOR STATION

8X-8993 LINES GP-AIR CONDITIONER

S/N: 7KK1-UP

PART OF 8X-8402 CHASSIS AR

SMCS-1808, 7320 **i01063276**

NOTE	REF NO	GRAPHIC REF	PART NUMBER	QTY	PART NAME 1 2 3 4 5 6 (PRODUCT LEVEL)	SEE PAGE
	1	1	**1P-6356**	1	PLATE	
	2	1	**3E-3535**	1	DRYER	
	3	1	**103-6100**	2	COUPLER-QUICK	
	4	1	**106-1018**	1	ACCUMULATOR-REFRIGERANT	
	5	1	**123-3202**	1	STRAP-CABLE	
I	6	1	**131-1994**	1	HOSE AS	
I	7	1	**131-1995**	1	HOSE AS	
	8	1	**131-1996**	1	HOSE AS	
I	9	1	**131-1997**	1	HOSE AS	
I	10	1	**131-1998**	1	HOSE AS	
	12	1	**148-0134**	1	FITTING AS-AIR CONDITIONER	
		1	**3E-4051**	1	CAP-SEAL	
		1	**3E-4057**	1	VALVE AS-AIR CONDITIONER	
M	13	1	**085-8091**	1	BOLT (M10X1.5X55MM)	
	14	1	**3E-4055**	1	FITTING AS-AIR CONDITIONER	
		1	**3E-4052**	1	CAP-SEAL	
		1	**3E-4058**	1	VALVE AS-AIR CONDITIONER	
	15	1	**5P-1075**	1	WASHER-HARD (3MM THK)	
	16	1	**6D-1641**	7	CLIP (25.0MM ID)	
	17	1	**6V-4356**	1	CLIP (TAB)	
	18	1	**6V-4357**	1	CLIP (SLOT)	
	19	1	**8S-6109**	1	CLIP (SLOT)	
	20	1	**8S-6110**	1	CLIP (TAB)	
	21	1	**8T-4121**	6	WASHER (2.5MM THK)	
M	22	1	**8T-4136**	1	BOLT (M10X1.50X25MM)	
M	23	1	**8T-4137**	4	BOLT (M10X1.50X20MM)	
M	24	1	**8T-4196**	1	BOLT (M10X1.50X35MM)	
	25	1	**9X-7380**	2	SEAL-O-RING (7.65MM ID)	
	26	1	**9X-7381**	4	SEAL-O-RING (10.82MM ID)	
	27	1	**9X-7382**	2	SEAL-O-RING (14.00MM ID)	
	28	1	**9X-7383**	2	SEAL-O-RING (17.17MM ID)	
	29	1	**9X-7385**	2	SEAL-O-RING (20.22MM ID)	
E	30	1	**7X-7702**		CONDUIT-FLEXIBLE (56CM)	
E	31	1	**8C-5063**		CONDUIT-FLEXIBLE (55CM)	

E-ORDER BY THE CENTIMETER
I-SEE HOSE FABRICATION GUIDE
M-METRIC PART

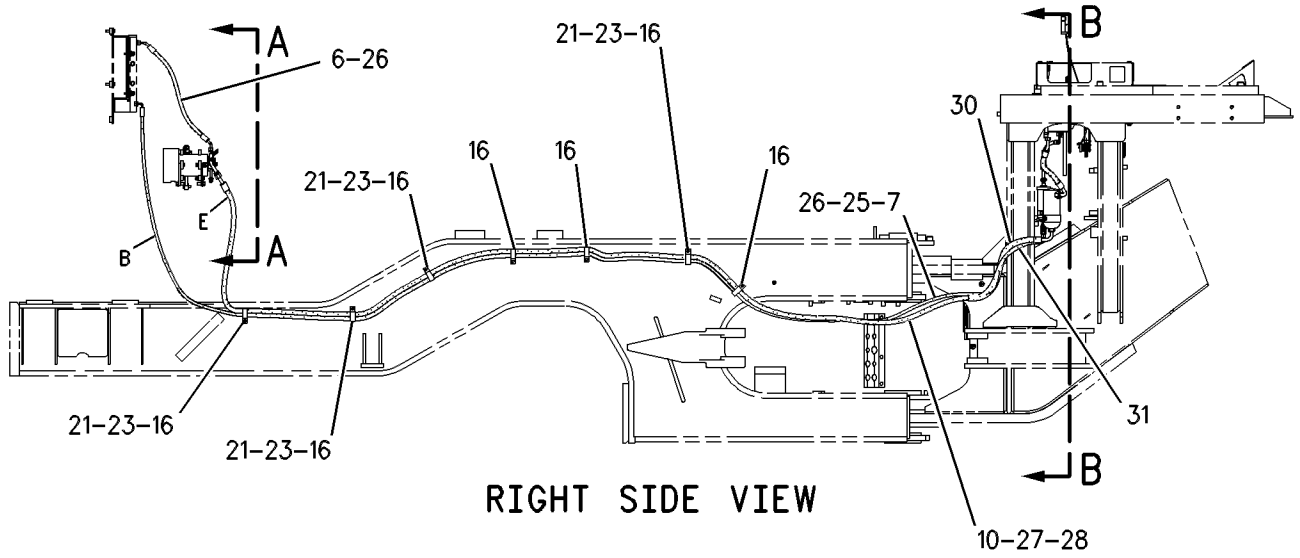

RIGHT SIDE VIEW

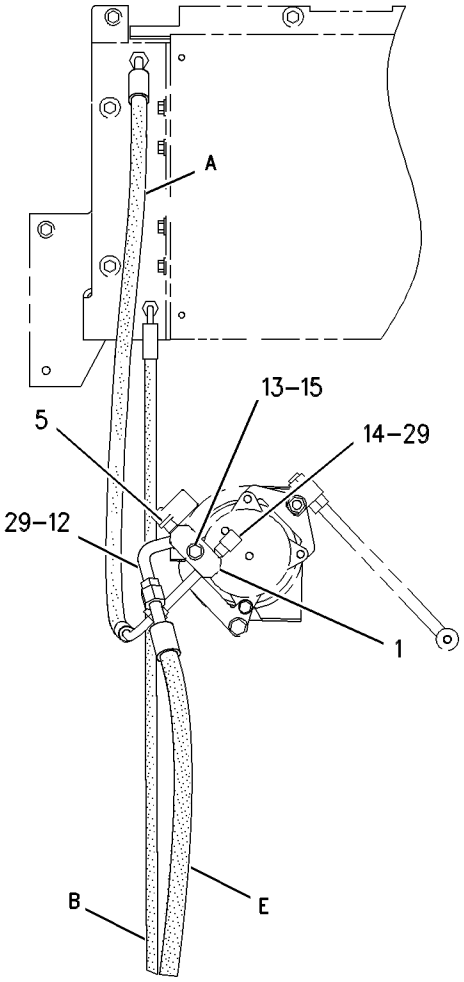

VIEW A-A

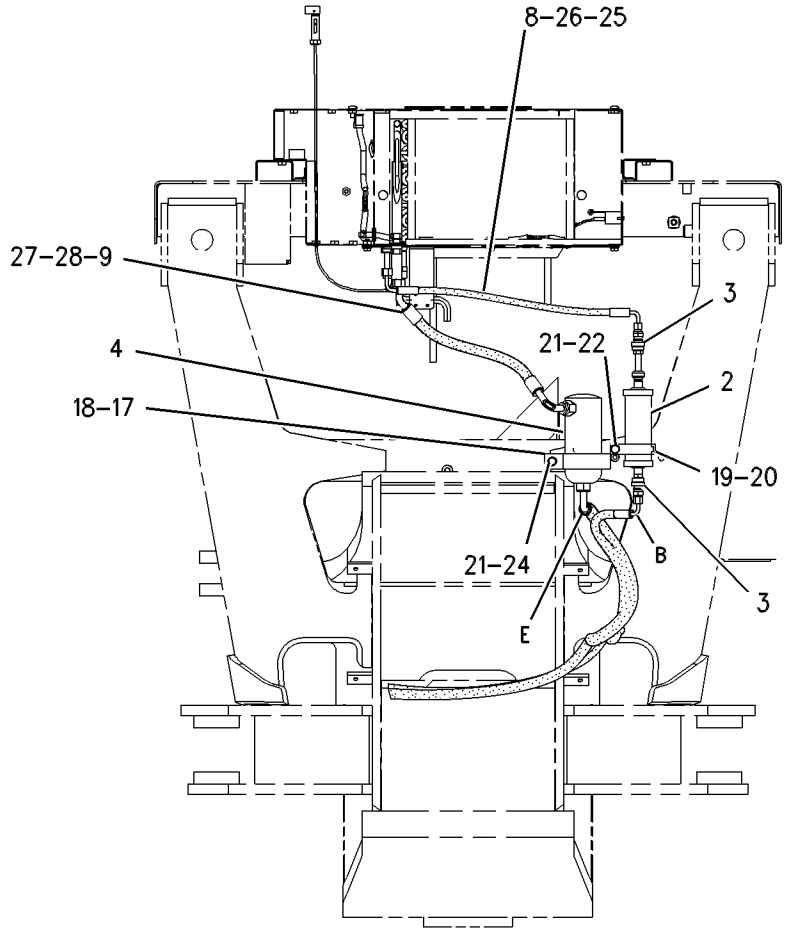

SECTION B-B

GRAPHIC #1

g00553451

OPERATOR STATION

8X-8962 LINES GP-CAB AIR

S/N: 7KK1-66

PART OF 8X-8403 INSTALLATION AR-FIELD

SMCS-7311 **i00111675**

NOTE	REF NO	GRAPHIC REF	PART NUMBER	QTY	PART NAME 1 2 3 4 5 6 (PRODUCT LEVEL)	SEE PAGE
	1	1	**6B-3771**	1	CLAMP	
	2	1	**117-2198**	1	TUBE	
Y	3	1	**125-9663**	1	PRESSURIZER GP-CAB	846
	4	1	**127-1664**	2	CLAMP	
M	5	1	**6V-5219**	1	BOLT (M8X1.25X40MM)	
M	6	1	**8T-4200**	3	BOLT (M8X1.25X16MM)	
	7	1	**8T-4224**	7	WASHER-HARD (2MM THK)	
M	8	1	**8T-7547**	3	BOLT (M8X1.25X30MM)	
	9	1	**077-9549**	1	CAP	

M-METRIC PART
Y-SEPARATE ILLUSTRATION

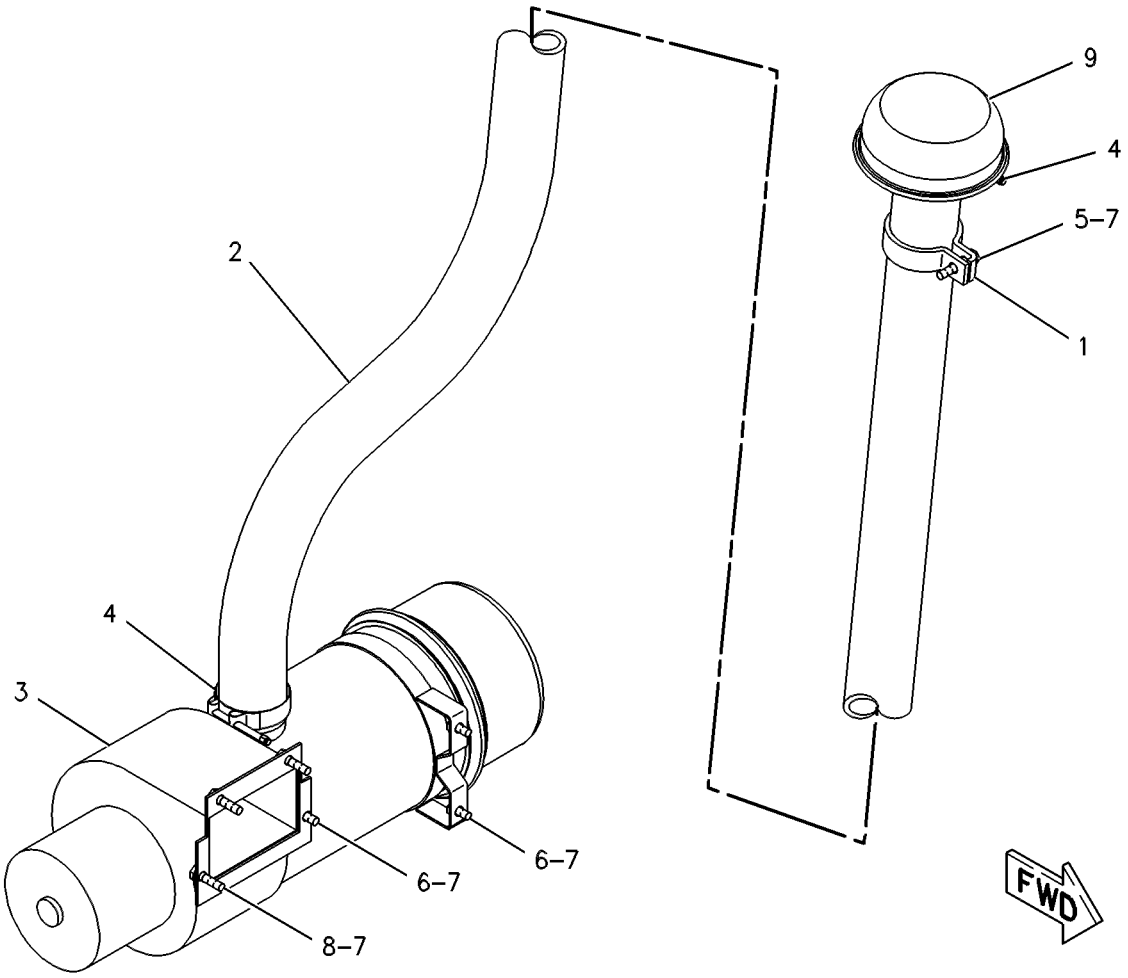

GRAPHIC #1 g00089266

MEMORANDA

OPERATOR STATION

8X-8997 LINES GP-HEATER

S/N: 7KK1-UP

PART OF 8X-8402 CHASSIS AR

SMCS-7304 **i01063919**

NOTE	REF NO	GRAPHIC REF	PART NUMBER	QTY	PART NAME 1 2 3 4 5 6 (PRODUCT LEVEL)	SEE PAGE
	1	1	**3B-7255**	1	BUSHING-TERMINAL	
	2	1	**9X-2488**	4	CLAMP-HOSE	
	4	1	**6B-4661**	1	BUSHING-REDUCER	
	5	1	**8F-8151**	2	VALVE-SHUTOFF	
	6	1	**6D-1641**	5	CLIP (25.0MM ID)	
	7	1	**8T-4121**	10	WASHER (2.5MM THK)	
M	8	1	**8T-4133**	5	NUT (M10X1.50 THD)	
M	9	1	**8T-4195**	4	BOLT (M10X1.50X30MM)	
M	10	1	**8T-4196**	1	BOLT (M10X1.50X35MM)	
E	11	1	**136-1953**		HOSE (746 CM)	
E	12	1	**136-1953**		HOSE (730 CM)	

E-ORDER BY THE CENTIMETER
M-METRIC PART

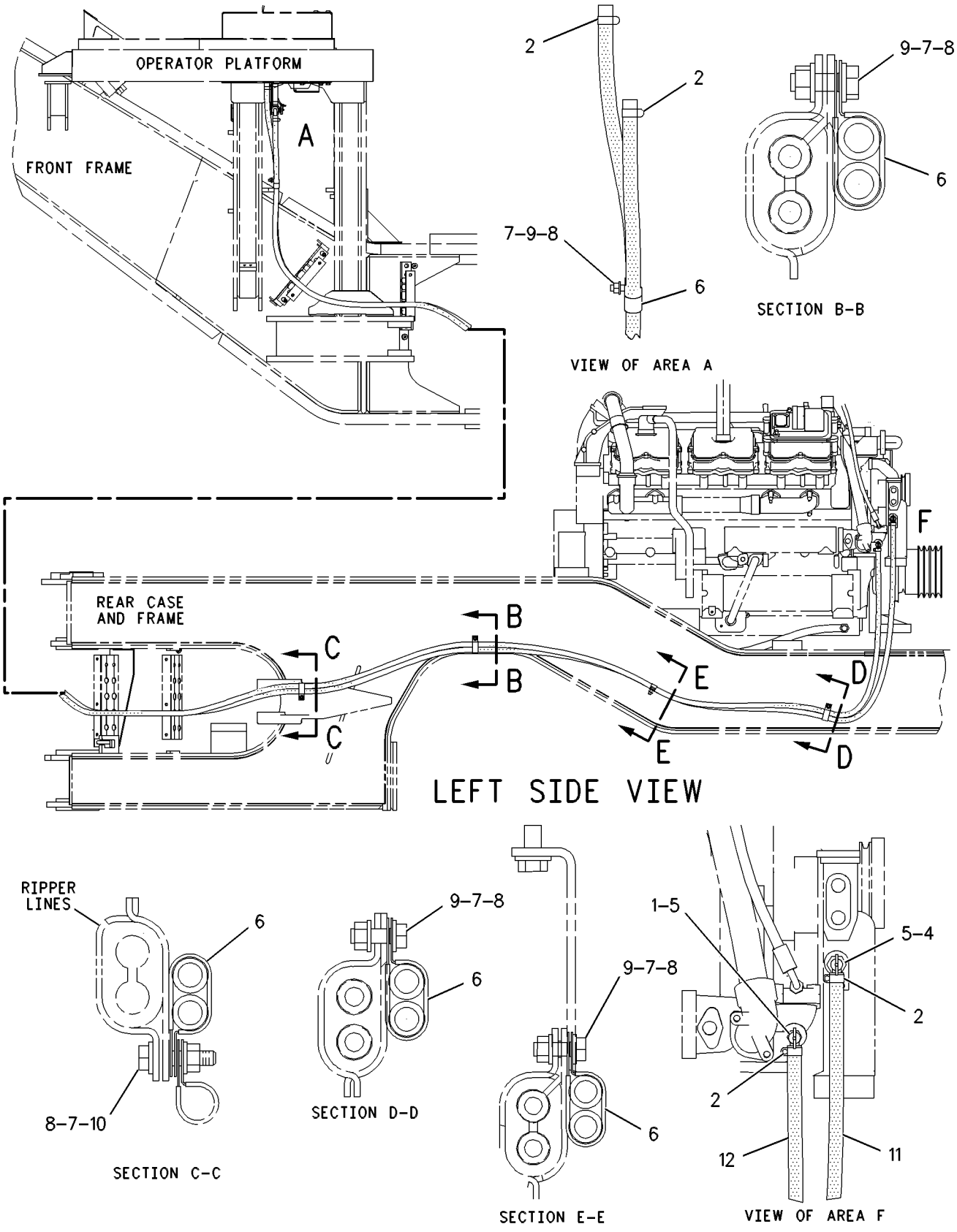

GRAPHIC #1 g00297313

OPERATOR STATION

6V-1970 LITERATURE GP

S/N: 7KK1-UP

PART OF 8X-8401 CAB AR

i01399654

NOTE	PART NUMBER	QTY	PART NAME 1 2 3 4 5 6 (PRODUCT LEVEL)	SEE PAGE
	5P-8500	2	KEY (MASTER)	
	5P-7958	1	SLEEVE-CABLE SPLICE	

OPERATOR STATION

8X-2795 MIRROR GP-REAR VIEW

S/N: 7KK1-UP
INSIDE
PART OF 8X-8401 CAB AR

SMCS-7319 **i00111633**

NOTE	REF NO	GRAPHIC REF	PART NUMBER	QTY	PART NAME 1 2 3 4 5 6 (PRODUCT LEVEL)	SEE PAGE
	1	1	**8Y-4512**	1	MIRROR	
	2	1	**2G-8241**	2	CLAMP	
M	3	1	**9X-2046**	4	SCREW-TRUSS HEAD (M6X1X35MM)	
	4	1	**2G-8572**	2	WASHER (2.54MM THK)	
	5	1	**2G-8573**	2	CAP	
	6	1	**2G-8242**	2	ARM	
	7	1	**5P-1075**	2	WASHER-HARD (3MM THK)	
	8	1	**8H-1728**	2	NUT-ACORN	
	9	1	**5S-7379**	2	BOLT (3/8-16X.875IN)	
	10	1	**1P-2378**	2	CAP	

M-METRIC PART

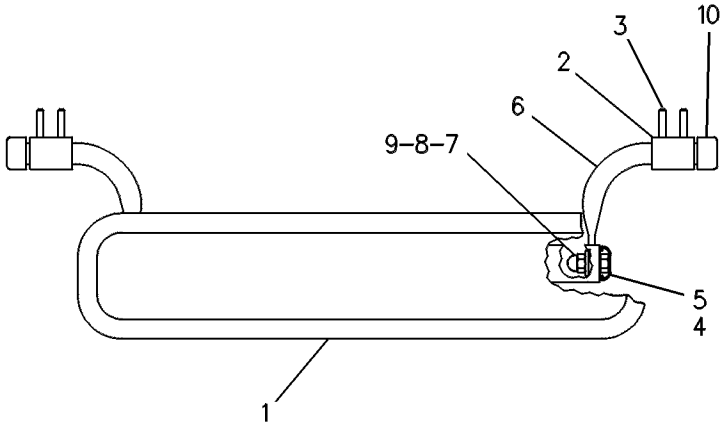

GRAPHIC #1 g00084778

OPERATOR STATION

138-0727 MIRROR GP-REAR VIEW

S/N: 7KK1-UP

PART OF 8X-8403 INSTALLATION AR-FIELD

SMCS-7319 **i00645724**

NOTE	REF NO	GRAPHIC REF	PART NUMBER	QTY	PART NAME 1 2 3 4 5 6 (PRODUCT LEVEL)	SEE PAGE
M	1	1	**8T-4133**	8	NUT (M10X1.50 THD)	
M	2	1	**8T-4137**	8	BOLT (M10X1.50X20MM)	
	3	1	**8T-4121**	24	WASHER (2.5MM THK)	
	4	1	**6G-8831**	4	CLAMP	
	5	1	**5P-6879**	2	MIRROR	
	6	1	**113-8218**	2	ARM	
	7	1	**123-4586**	4	BLOCK	
	8	1	**123-4587**	4	BRACKET	
M	9	1	**8T-4182**	8	BOLT (M10X1.5X45MM)	
M	10	1	**8T-4186**	4	BOLT (M10X1.50X40MM)	
M	11	1	**6V-7744**	4	LOCKNUT (M10X1.50 THD)	
B	12	1	**9C-5928**	8	SPACER	

B-USE AS REQUIRED
M-METRIC PART

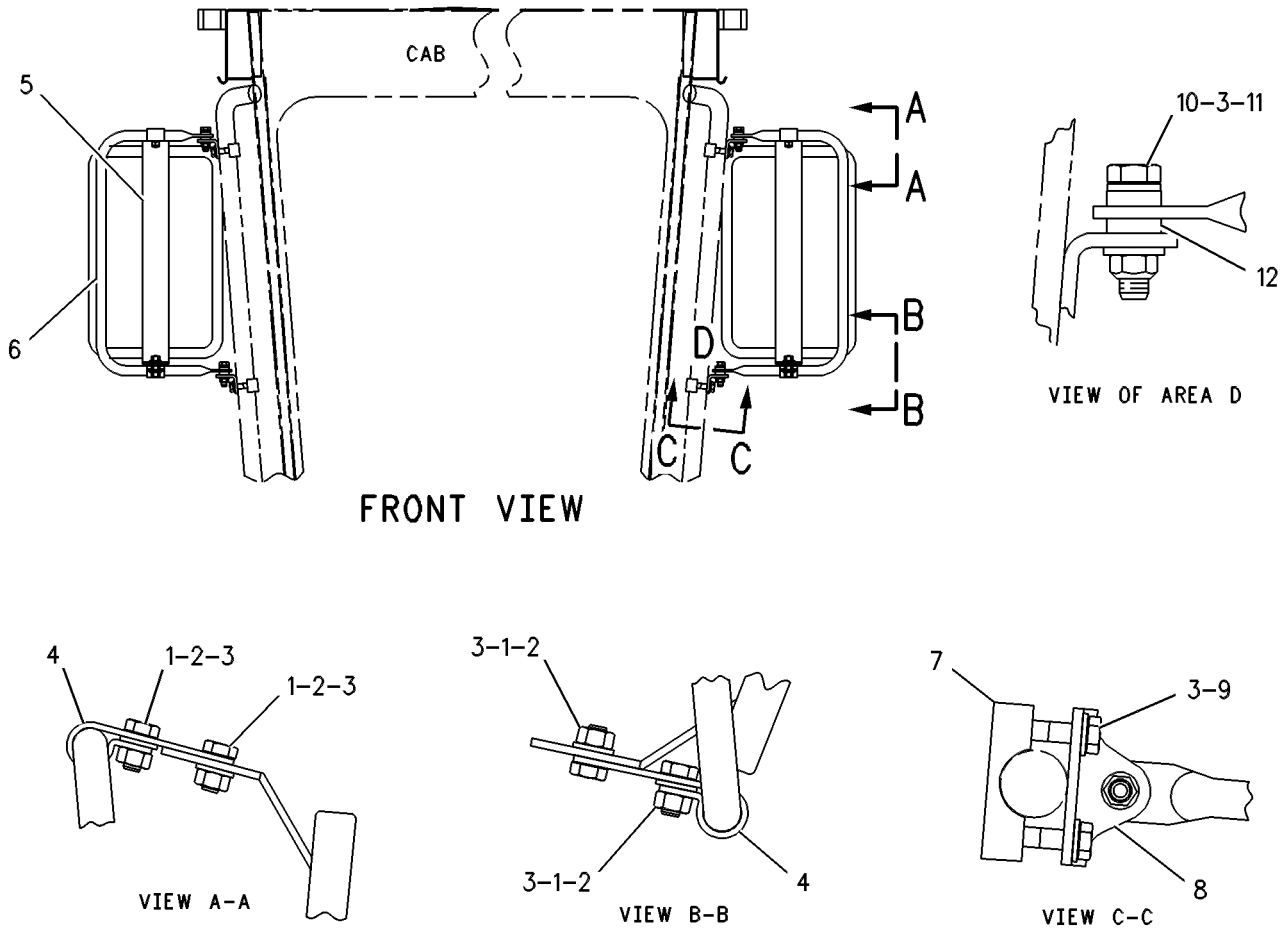

GRAPHIC #1 g00283968

OPERATOR STATION

109-0598 MODULE GP-SPEEDOMETER & TACH

S/N: 7KK1-UP

PART OF 8X-8968 PANEL GP-INSTRUMENT

SMCS-7451, 7462, 7463, 7490 **i01480374**

NOTE	REF NO	GRAPHIC REF	PART NUMBER	QTY	PART NAME 1 2 3 4 5 6 (PRODUCT LEVEL)	SEE PAGE
	1	1	**102-8805**	1	KIT-RECEPTACLE (6 PIN)	
					(INCLUDES RECEPTACLE AS AND WEDGE)	
	2	1	**8T-8729**	6	PIN-CONNECTOR	
	3	1	**3E-3383**	1	WEDGE-RECEPTACLE LOCK	

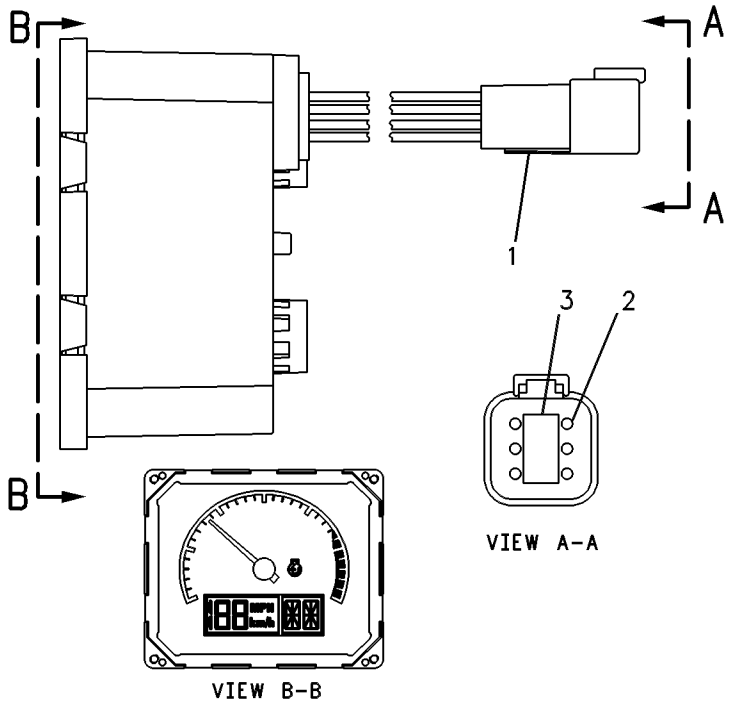

GRAPHIC #1 g00087428

OPERATOR STATION

8X-8973 MOUNTING GP-CAB

S/N: 7KK1-UP

PART OF 8X-8401 CAB AR

SMCS-7301 **i00934142**

NOTE	REF NO	GRAPHIC REF	PART NUMBER	QTY	PART NAME 1 2 3 4 5 6 (PRODUCT LEVEL)	SEE PAGE
	1	1	**117-2196**	1	SEAL	
	2	1	**117-1996**	1	PLATE	
	3	1	**135-3290**	1	BOX AS-STORAGE	
	4	1	**6V-2491**	13	RIVET-POP	
	5	1	**8Y-6336**	1	LATCH AS	
	6	1	**117-2303**	1	PLATE AS	
	7	1	**135-3292**	1	COVER	
	8	1	**135-3296**	1	HINGE	
M	9	1	**9X-2042**	6	SCREW-TRUSS HEAD (M6X1.0X12MM)	
	10	1	**9X-8257**	4	WASHER (3.50MM THK)	
D	12	1	**6V-0505**		SEAL (7.1M)	
	13	1	**117-2019**	1	PLATE	
M	16	1	**7X-2555**	2	BOLT (M16X2.0X80MM)	
M	17	1	**8T-4132**	2	NUT (M16X2.0 THD)	
M	18	1	**9X-2045**	10	SCREW-TRUSS HEAD (M6X1X20MM)	
	19	1	**7X-7729**	3	WASHER (3MM THK)	
M	20	1	**8T-4131**	2	NUT (M20X2.50 THD)	
M	21	1	**8T-4141**	2	BOLT (M20X2.5X70MM)	
	22	1	**8T-5439**	4	WASHER (6.0MM THK)	
M	23	1	**8T-4137**	3	BOLT (M10X1.50X20MM)	
	24	1	**135-7745**	1	FLOOR MAT	
	25	1	**136-3435**	1	DUCT AS	
	26	1	**3V-2844**	4	NUT	
	27	1	**8Y-6388**	1	LOUVER AS	
	28	1	**8Y-6390**	1	LOUVER AS	
	29	1	**104-2091**	2	SCREW-FLAT HEAD (NO.6-20X0.5IN)	
	30	1	**118-5619**	2	SCREW-FLAT HEAD (NO.6-20X1.0IN)	

D-ORDER BY THE METER
M-METRIC PART

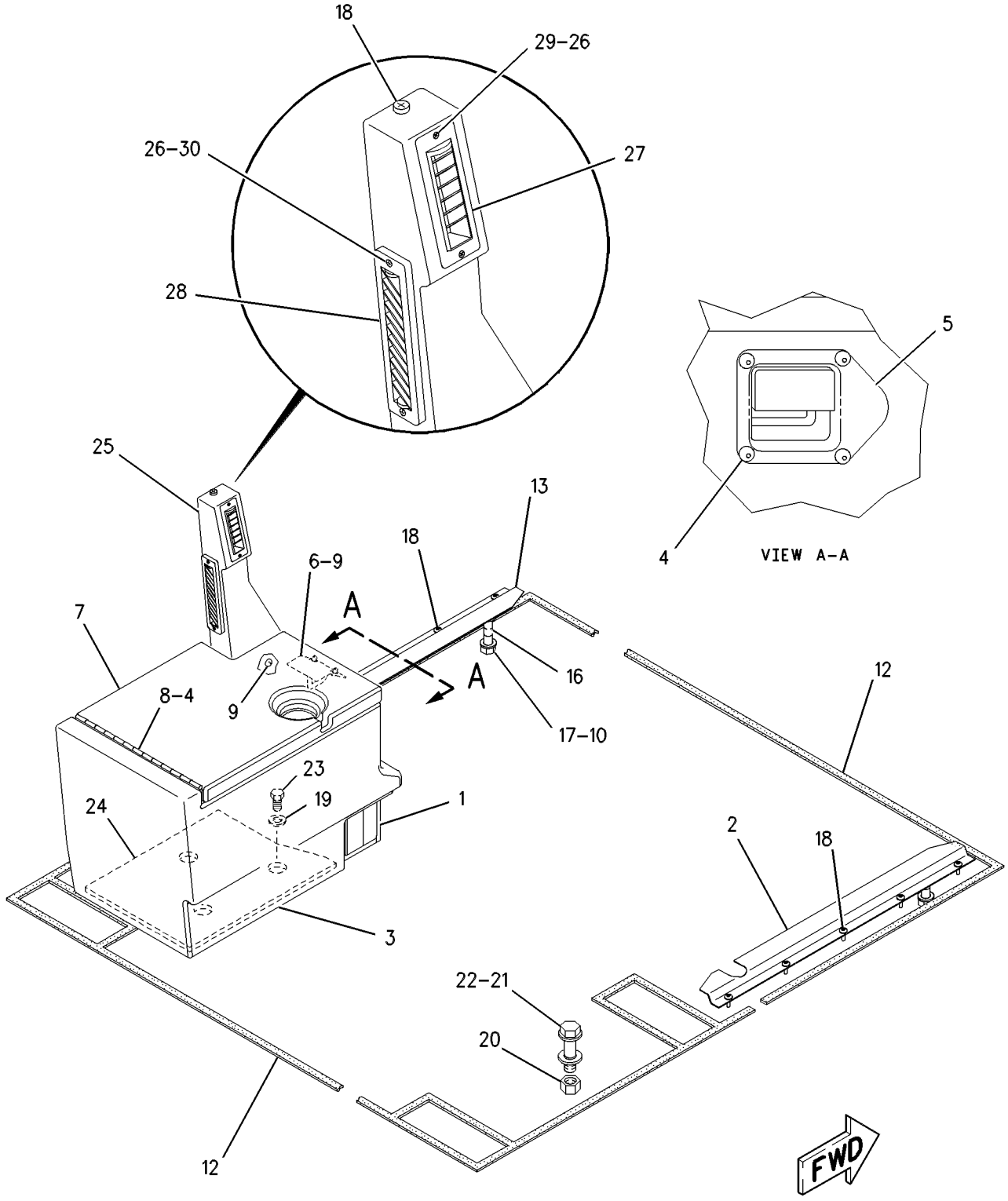

GRAPHIC #1 g00483040

OPERATOR STATION

8X-8994 MOUNTING GP-PLATFORM

S/N: 7KK1-UP

PART OF 8X-8402 CHASSIS AR

SMCS-7253 **i01047080**

NOTE	REF NO	GRAPHIC REF	PART NUMBER	QTY	PART NAME 1 2 3 4 5 6 (PRODUCT LEVEL)	SEE PAGE
	1	1	**125-6875**	4	WASHER	
	2	1	**137-6617**	12	MOUNT AS	
	3	1	**137-6627**	6	SLEEVE	
	4	1	**140-8465**	2	PLATE	
	5	1	**2J-8937**	4	PIN	
	6	1	**3B-4627**	4	COTTER	
	7	1	**4F-0255**	4	PIN	
M	8	1	**7X-2488**	4	BOLT (M20X2.5X160MM)	
M	9	1	**8C-8478**	2	BOLT (M20X2.5X140MM)	
	10	1	**8T-4123**	10	WASHER-PLATED (3.5MM THK)	
M	11	1	**8T-4131**	4	NUT (M20X2.50 THD)	
	12	1	**9W-6584**	6	WASHER (10MM THK)	

M-METRIC PART

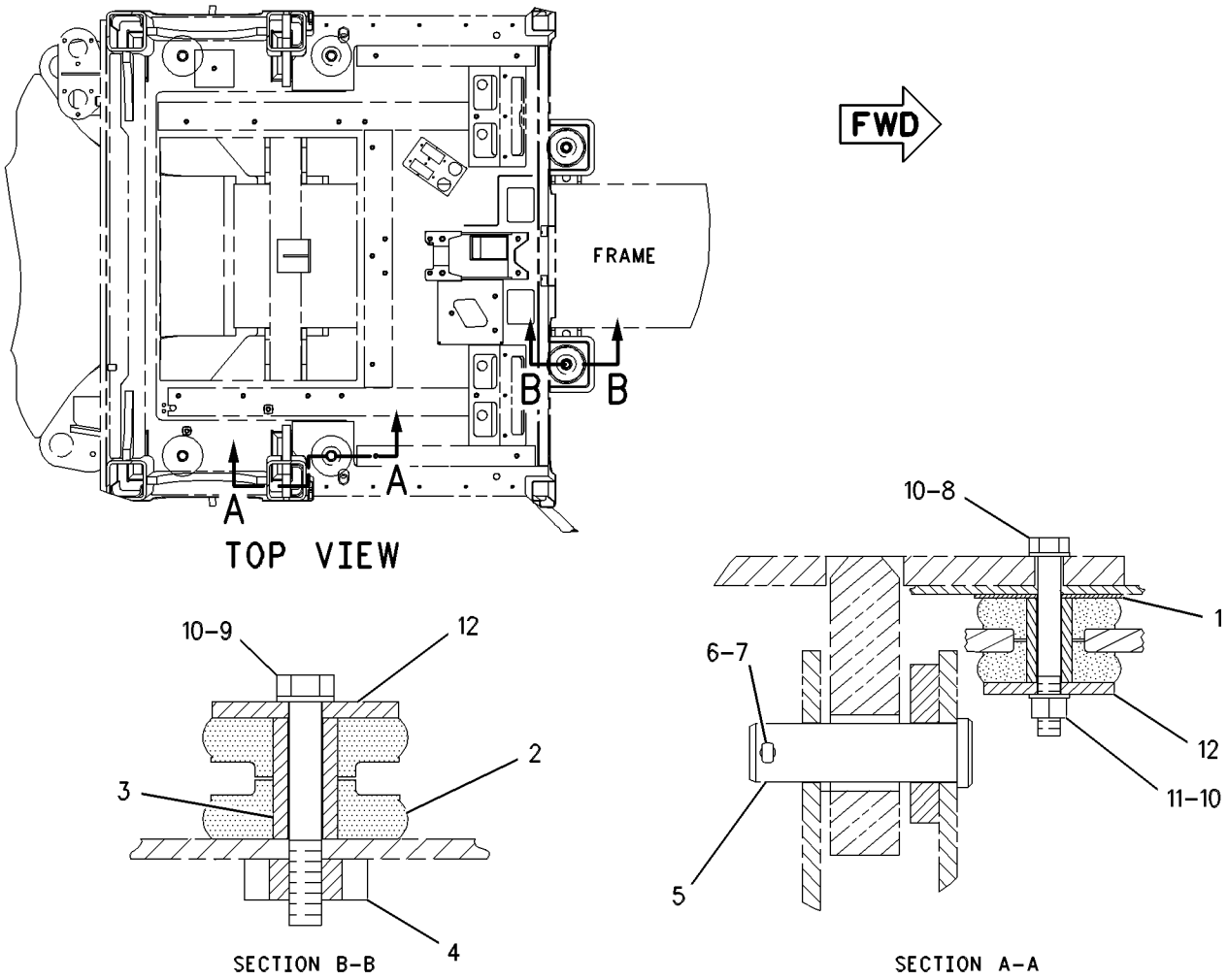

GRAPHIC #1 g00542986

MEMORANDA

OPERATOR STATION

8Y-5992 PAN GP-SEAT—BOTTOM

S/N: 7KK1-UP

PART OF 8Y-6882 SEAT GP

SMCS-7312 **i01395727**

NOTE	REF NO	GRAPHIC REF	PART NUMBER	QTY	PART NAME 1 2 3 4 5 6 (PRODUCT LEVEL)	SEE PAGE
	1	1	**8Y-5892**	1	PAN AS-SEAT (BOTTOM)	
JL	2	1	**3K-4897**	4	PIN-SPRING	
N	3	1	**9M-5733**	1	RIVET-POP (4.78MM DIA)	
N	4	1	**6V-2456**	2	RING-RETAINING	
JZ	5	1		1	ROD AS	
JLZ	6	1		2	SPRING	
LZ	7	1		1	ROD AS	
LZ	8	1		1	BUSHING-TERMINAL	
NZ	9	1		1	BRACKET	
NZ	10	1		1	CABLE AS	
NZ	11	1		1	PIN	
NZ	12	1		1	ADJUSTER AS	
					AVAILABLE REPAIR KIT(S):	
J			**8Y-5995**	1	KIT-SEAT TILT	
					(INCLUDES BUSHING & LOCKPIN)	
L			**8Y-5998**	1	KIT-BACK TILT	
					(INCLUDES BUSHING)	
N			**8Y-5999**	1	KIT-ADJUSTER (PAN BOTTOM)	

J-KIT(S) MARKED J INCLUDES PART(S) MARKED J
L-KIT(S) MARKED L INCLUDES PART(S) MARKED L
N-KIT(S) MARKED N INCLUDES PART(S) MARKED N
Z-NOT SERVICED SEPARATELY

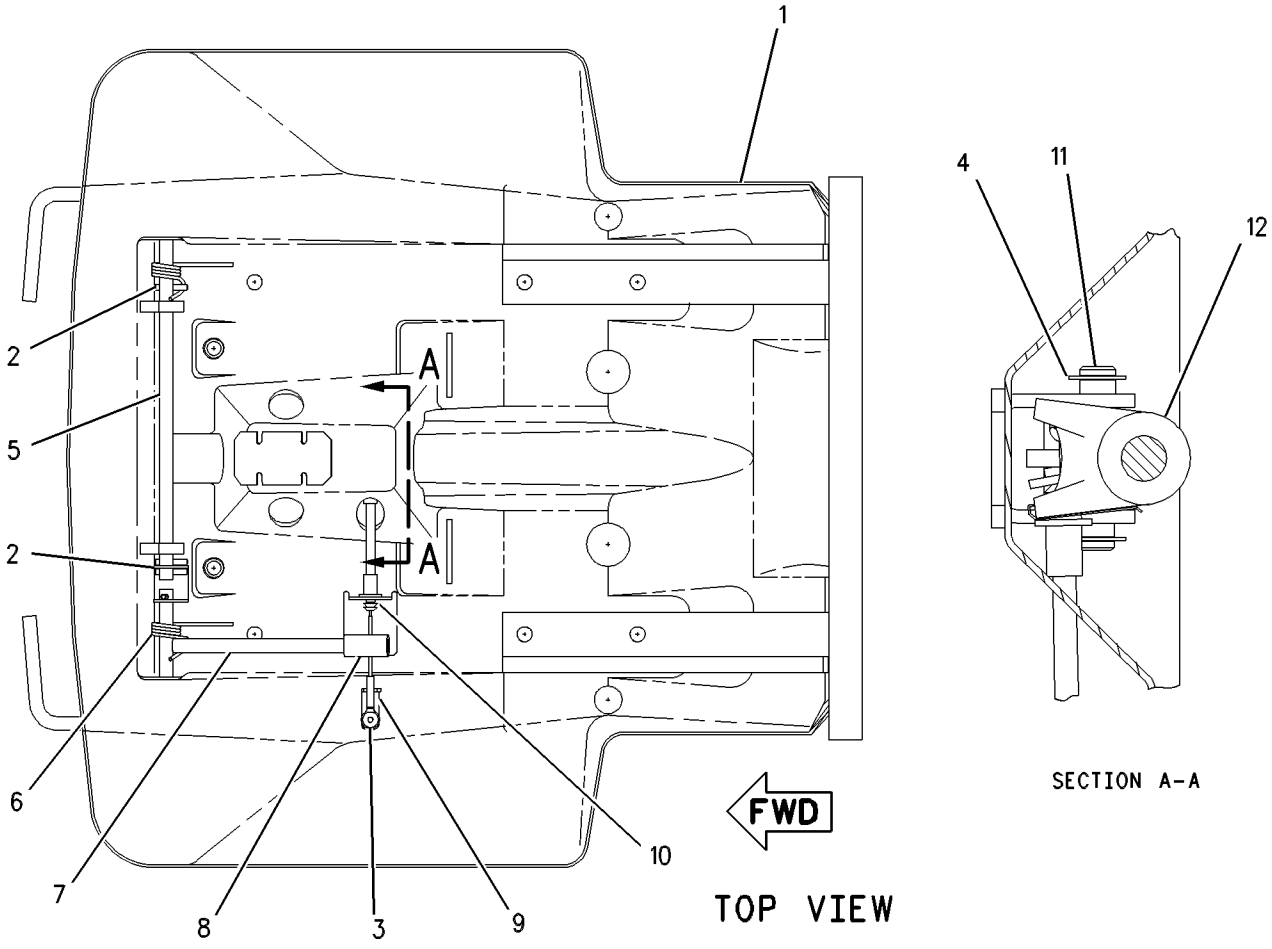

GRAPHIC #1 g00527029

OPERATOR STATION

108-8421 PAN GP-SEAT–BACK

S/N: 7KK1-UP

PART OF 8Y-6882 SEAT GP

SMCS-7312 **i01221111**

NOTE	REF NO	GRAPHIC REF	PART NUMBER	QTY	PART NAME 1 2 3 4 5 6 (PRODUCT LEVEL)	SEE PAGE
	1	1	**9M-5733**	2	RIVET-POP (4.78MM DIA)	
	2	1	**8Y-6006**	1	LID AS	
	3	1	**8Y-6010**	1	LANYARD	
	4	1	**4S-8287**	8	RIVET-POP (6MM DIA)	
	5	1	**8Y-5972**	1	LATCH	
	6	1	**108-8423**	1	SHAFT AS-LUMBAR	
	7	1	**3E-4336**	1	STUD-BALL	
	8	1	**3E-4335**	1	CLIP	
	9	1	**2F-7306**	1	SCREW-MACHINE (6-32X.25IN)	
	10	1	**8F-1462**	1	WASHER-PLATED	
E	11	1	**3E-6575**		SEAL (76CM)	
	12	1	**108-8424**	1	PAN-LUMBAR	
	13	1	**8Y-5903**	2	CAM	
	14	1	**3E-4362**	2	PIN-SPRING	

E-ORDER BY THE CENTIMETER

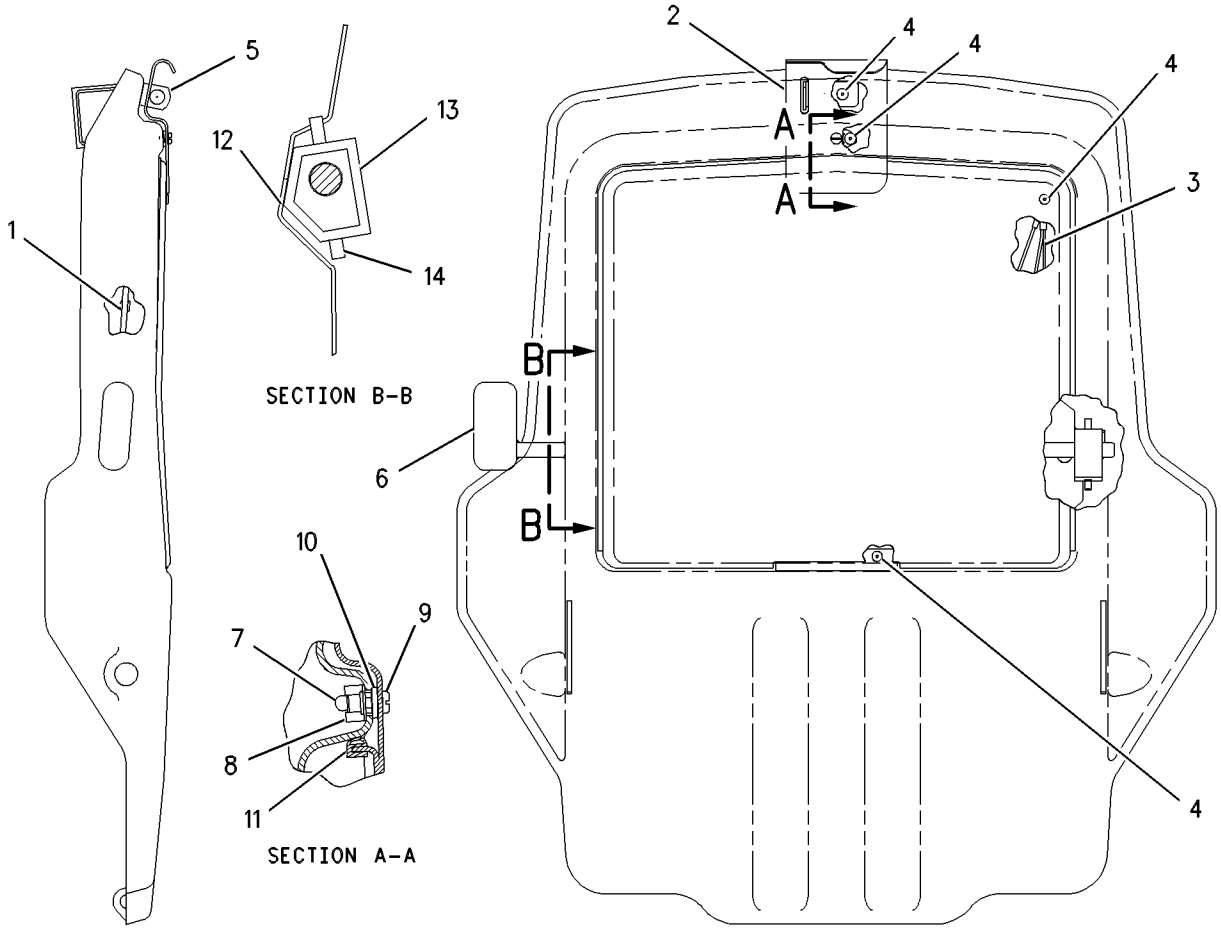

GRAPHIC #1 g00383446

MEMORANDA

OPERATOR STATION

8X-8968 PANEL GP-INSTRUMENT

S/N: 7KK1-UP

PART OF 8X-8401 CAB AR

SMCS-7450, 7451 **i01446330**

NOTE	REF NO	GRAPHIC REF	PART NUMBER	QTY	PART NAME 1 2 3 4 5 6 (PRODUCT LEVEL)	SEE PAGE
	1	1	**3T-0304**	1	BASE-INDICATOR LIGHT	
M	2	1	**9X-2043**	5	SCREW-TRUSS HEAD (M6X1X14MM)	
	3	1	**100-5566**	1	BEZEL	
	4	1	**100-5567**	1	BEZEL	
	5	1	*152-3002*	1	CONTROL GP-EMS ELECTRONIC	
Y	6	1	**103-5526**	1	CONTROL GP-MONITOR SYS DIMMER	800
M	7	1	**5C-7261**	2	NUT (M8X1.25 THD)	
	8	1	**117-1978**	1	PLATE	
	9	1	**138-0729**	1	PLATE AS	
	10	1	**122-1173**	1	HARNESS AS	
	11	1	**125-7144**	1	INDICATOR AS	
		1	**115-1748**	4	LAMP (24 VOLT)	
		1	**123-0306**	4	SOCKET AS	
	12	1	**129-1669**	1	HARNESS AS	
Y	13	1	**109-0598**	1	MODULE GP-SPEEDOMETER & TACH	829
M	14	1	**121-9870**	2	SCREW-MACHINE	
L	15	1	**166-6942**	1	MODULE GP-QUAD GAUGE	
		1	**186-3735**	6	PIN-CONNECTOR	
		1	**3E-3383**	1	WEDGE-RECEPTACLE LOCK	
	16	1	**9N-0869**	8	WASHER-HARD (8.8X25.5X2MM THK)	
M	17	1	**9X-2046**	8	SCREW-TRUSS HEAD (M6X1X35MM)	
	18	1	**107-5014**	4	KNOB	
M	19	1	**7Y-7256**	12	SCREW-TRUSS HEAD (M4X0.7X35MM)	
J	20	1	**9X-9688**	1	SWITCH AS-PUSH BUTTON (OPERATOR MONITOR)	
	21	1	**3E-3365**	1	WEDGE-RECEPTACLE LOCK (2 PIN)	
	22	1	**3K-0835**	1	NUT (5/8-24 THD)	
	23	1	**6F-0253**	1	LOCKWASHER	
	24	1	**8T-8729**	2	PIN-CONNECTOR	
	25	1	**8T-8748**	1	ADAPTER-MOUNT	
	26	1	**117-1970**	1	DUCT AS	
	27	1	**4B-4274**	14	WASHER (5.5X13X1.2MM THK)	
	28	1	**6C-3680**	14	RIVET-POP	
	29	1	**117-2239**	1	PLATE AS	
M	30	1	**6V-9632**	5	NUT-WELD (M6X1 THD)	
	31	1	**7T-1099**	1	LINK	
	32	1	**117-2299**	2	ANGLE	
	33	1	**117-2300**	4	ANGLE AS (EACH INCLUDES)	
M	34	1	**6V-9632**	1	NUT-WELD (M6X1 THD)	
	35	1	**3V-2844**	20	NUT	
	36	1	**8Y-6388**	8	LOUVER AS	
	37	1	**8Y-6390**	2	LOUVER AS	
	38	1	**104-2091**	16	SCREW-FLAT HEAD (6-20X0.5 IN)	
	39	1	**118-5619**	4	SCREW-FLAT HEAD (NO.6-20X1.0IN)	
	40	1	**152-7134**	1	FILM-MONITOR	
	41	1	**141-9226**	1	FILM-INSTRUCTION	
	42	1	**109-5008**	2	BUMPER-CONICAL	
	43	1	**6T-7058**	1	LENS-RED	
	44	1	**7N-5876**	4	LAMP (24 VOLT)	
	45	1	**7N-1996**	1	LAMP (28 VOLT)	
					AVAILABLE REPAIR KIT(S):	
J			**102-8802**	1	KIT-RECEPTACLE (2 PIN) (INCLS RECEPTACLE AS & WEDGE)	
L			**102-8805**	1	KIT-RECEPTACLE (6 PIN) (INCLS RECEPTACLE AS & WEDGE)	

J-KIT MARKED J AVAILABLE FOR PART MARKED J
L-KIT MARKED L AVAILABLE FOR PART MARKED L
M-METRIC PART
Y-SEPARATE ILLUSTRATION

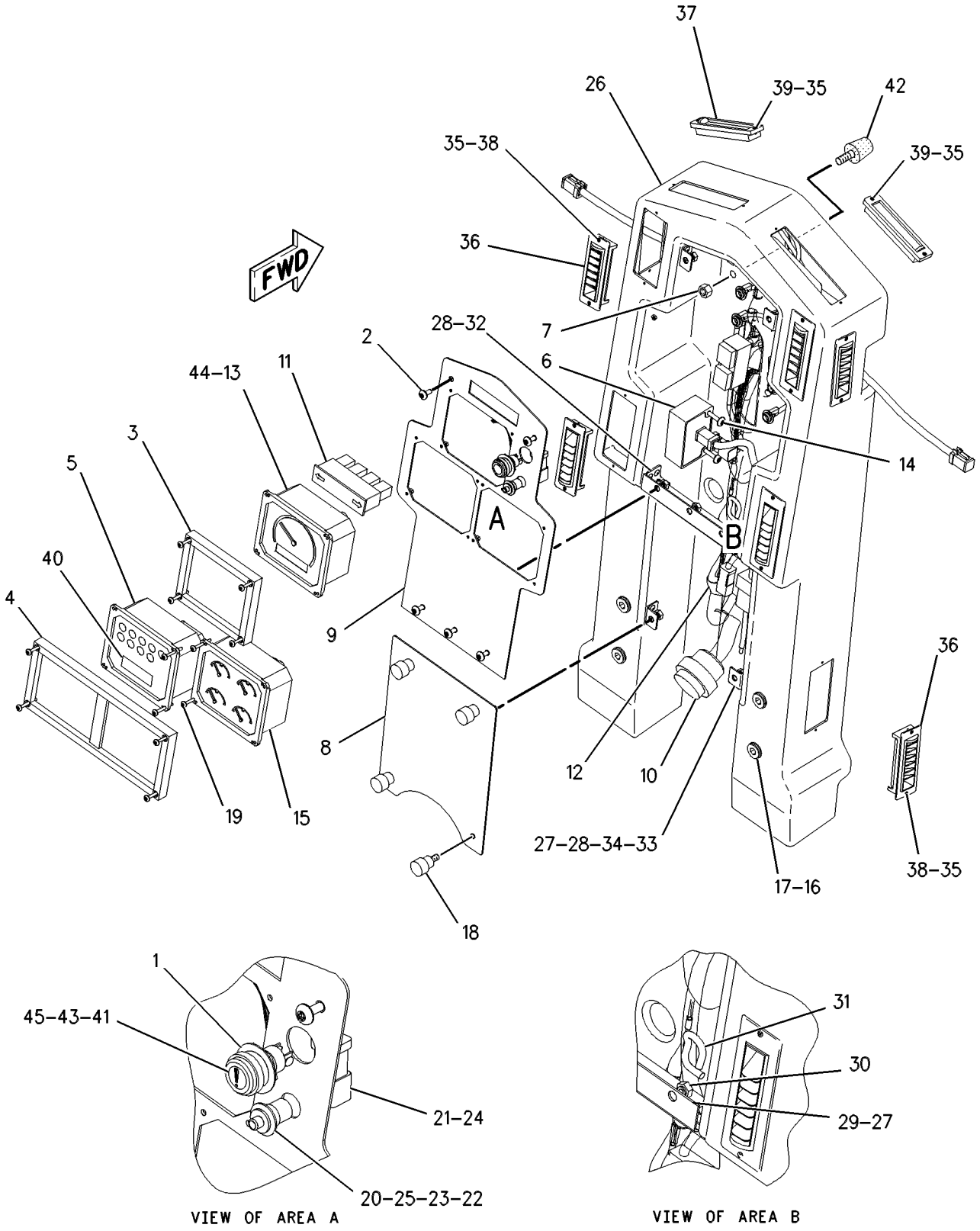

GRAPHIC #1 g00346652

MEMORANDA

OPERATOR STATION

8X-8982 PEDAL GP-BRAKE, TMSN & GOV

S/N: 7KK1-UP
PART OF 8X-9003 PLATFORM AR
TYPE 1

SMCS-1265, 3191, 4269 **i01103031**

NOTE	REF NO	GRAPHIC REF	PART NUMBER	QTY	PART NAME 1 2 3 4 5 6 (PRODUCT LEVEL)	SEE PAGE
	1	1	**2N-3162**	6	SCREW-MACHINE (10-24X1.25IN)	
	2	1	**3B-4607**	2	COTTER	
Y	3	1	**3E-7700**	1	SENSOR GP-POSITION (THROTTLE)	262
	4	1	**5D-3426**	2	ROLLER	
	5	1	**5M-9708**	2	SPRING	
	6	1	**6K-8139**	1	PIN	
	7	1	**7B-9323**	2	PIN	
M	8	1	**8T-1745**	1	SETSCREW-SOCKET	
	9	1	**8T-0277**	5	PIN-SPRING	
	10	1	**8Y-5936**	2	SPRING	
	11	1	**117-2030**	1	PLATE AS	
M	12	1	**6V-9632**	1	NUT-WELD (M6X1 THD)	
	13	1	**117-2034**	1	CAM AS	
	14	1	**117-2036**	3	PEDAL	
	15	1	**117-2038**	2	SPACER (14.3MM THK)	
	16	1	**117-2125**	3	PIN	
M	17	1	**5C-2890**	3	NUT (M6X1.00 THD)	
	18	1	**8T-4121**	9	WASHER (2.5MM THK)	
M	19	1	**8T-4195**	9	BOLT (M10X1.50X30MM)	
M	20	1	**8T-4971**	1	BOLT (M6X1.0X30MM)	
M	21	1	**9X-2480**	2	BOLT (M6X1.0X45MM)	
	22	1	**117-2031**	2	PLATE AS	
					(EACH INCLUDES)	
M	23	1	**6V-9632**	1	NUT-WELD (M6X1 THD)	
Y	24A	1	**147-1680**	1	SENSOR GP-POSITION (BRAKE)	266
Y	24B	1	**147-1680**	1	SENSOR GP-POSITION (NEUTRALIZER)	266

M-METRIC PART
Y-SEPARATE ILLUSTRATION

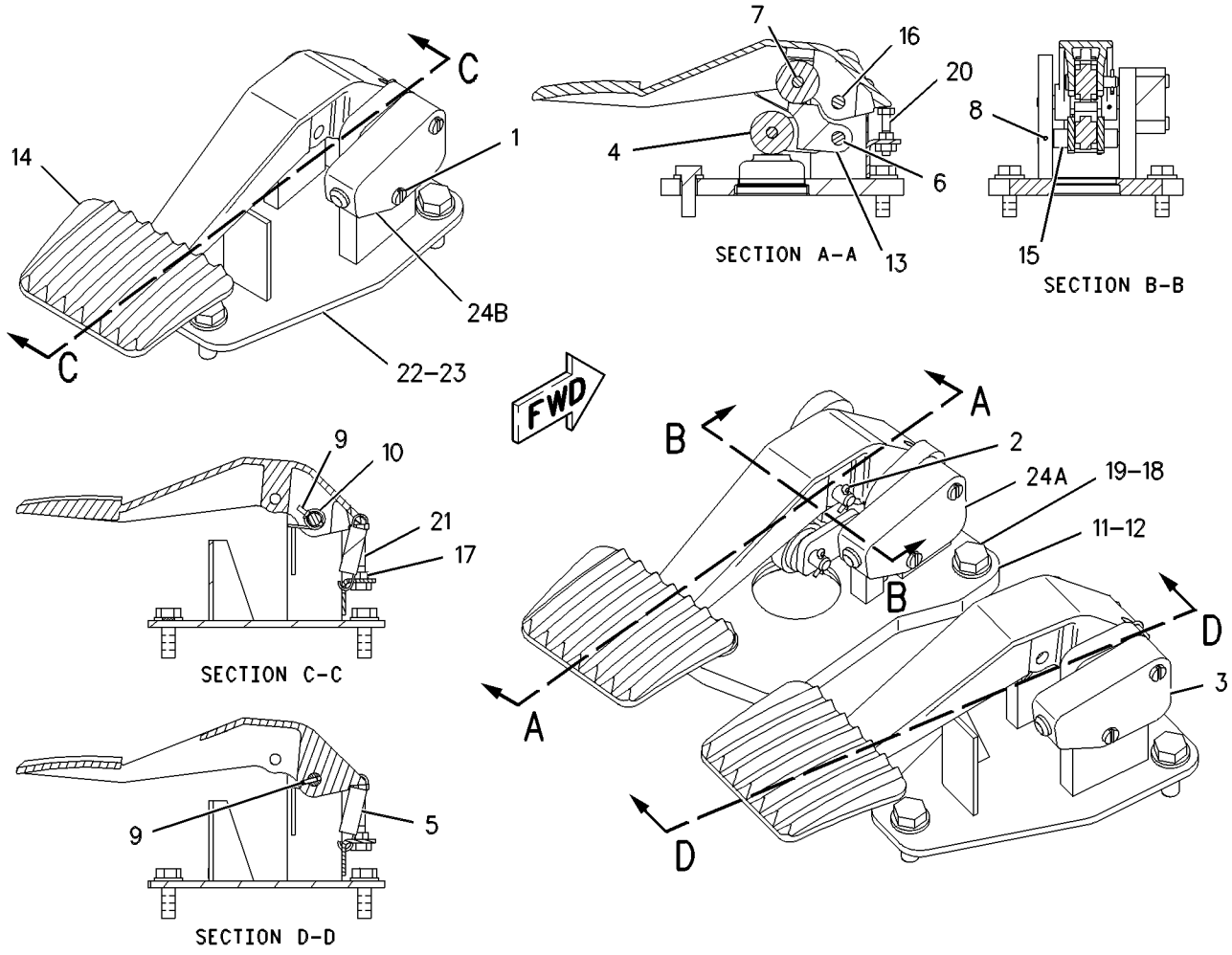

GRAPHIC #1 g00611527

OPERATOR STATION

8X-8982 PEDAL GP-BRAKE, TMSN & GOV

S/N: 7KK1-UP
PART OF 8X-9003 PLATFORM AR
TYPE 2

SMCS-1265, 3191, 4269 **i01370325**

NOTE	REF NO	GRAPHIC REF	PART NUMBER	QTY	PART NAME 1 2 3 4 5 6 (PRODUCT LEVEL)	SEE PAGE
	1	1	**2N-3162**	6	SCREW-MACHINE (10-24X1.25 IN)	
	2	1	**3B-4607**	2	COTTER	
CY	3	1	**176-1602**	1	SENSOR GP-POSITION (THROTTLE)	267
	4	1	**5D-3426**	2	ROLLER	
	5	1	**5M-9708**	2	SPRING	
	6	1	**6K-8139**	1	PIN	
	7	1	**7B-9323**	2	PIN	
M	8	1	**8T-1745**	1	SETSCREW-SOCKET	
	9	1	**8T-0277**	5	PIN-SPRING	
	10	1	**8Y-5936**	2	SPRING	
	11	1	**117-2030**	1	PLATE AS	
M	12	1	**6V-9632**	1	NUT-WELD (M6X1 THD)	
	13	1	**117-2034**	1	CAM AS	
	14	1	**117-2036**	3	PEDAL	
	15	1	**117-2038**	2	SPACER (14.3MM THK)	
	16	1	**117-2125**	3	PIN	
M	17	1	**5C-2890**	3	NUT (M6X1 THD)	
	18	1	**8T-4121**	9	WASHER-HARD (11X21X2.5MM THK)	
M	19	1	**8T-4195**	9	BOLT (M10X1.5X30MM)	
M	20	1	**8T-4971**	1	BOLT (M6X1X30MM)	
M	21	1	**9X-2480**	2	BOLT (M6X1.0X45MM)	
	22	1	**117-2031**	2	PLATE AS	
					(EACH INCLUDES)	
M	23	1	**6V-9632**	1	NUT-WELD (M6X1 THD)	
Y	24A	1	**147-1680**	1	SENSOR GP-POSITION (BRAKE)	266
Y	24B	1	**147-1680**	1	SENSOR GP-POSITION (NEUTRALIZER)	266

C-CHANGE FROM PREVIOUS TYPE
M-METRIC PART
Y-SEPARATE ILLUSTRATION

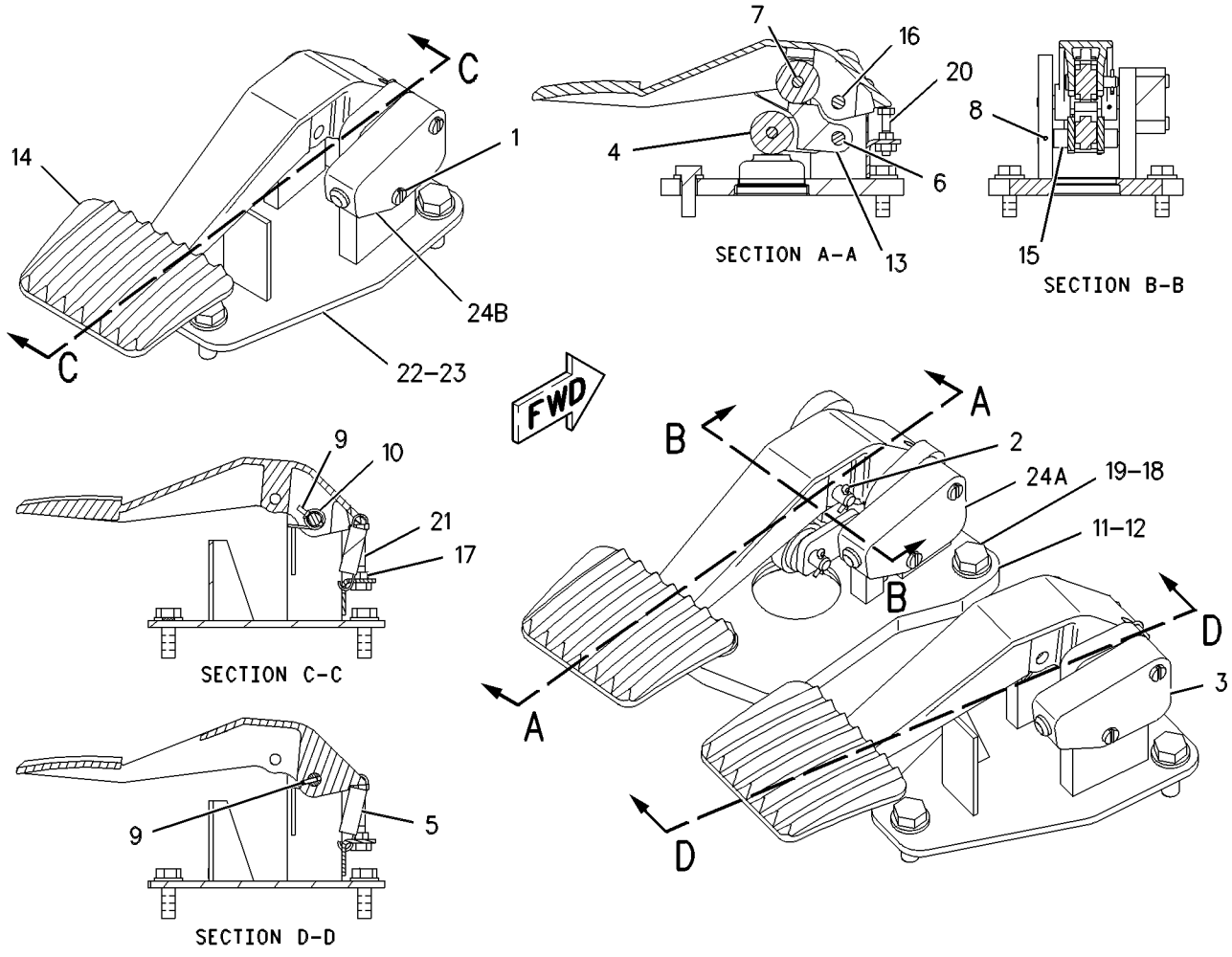

GRAPHIC #1 g00611527

OPERATOR STATION

125-9663 PRESSURIZER GP-CAB

S/N: 7KK1-66

PART OF 8X-8962 LINES GP-CAB AIR

SMCS-7311 **i01504192**

NOTE	REF NO	GRAPHIC REF	PART NUMBER	QTY	PART NAME 1 2 3 4 5 6 (PRODUCT LEVEL)	SEE PAGE
	1	1	**174-1504**	1	MOTOR AS	
		1	**3E-3365**	1	WEDGE-RECEPTACLE LOCK (2 PIN)	
		1	**9W-0852**	2	PIN-CONNECTOR	
		1	**102-8802**	1	KIT-RECEPTACLE (2 PIN)	
M	2	1	**5C-9553**	3	BOLT (M6X1X16MM)	
	3	1	**9X-8256**	3	WASHER (6.6X12X2MM THK)	
	4	1	**127-4539**	1	GASKET	
	5	1	**127-8179**	1	PLATE	
	6	1	**127-4538**	1	GASKET	
	7	1	**127-8531**	1	WHEEL-BLOWER	
	8	1	**2A-3211**	2	WASHER (5.5X12.3X.8MM THK)	
	9	1	**3B-4502**	2	LOCKWASHER	
	10	1	**4B-2049**	2	NUT (10-32 THD)	
	12	1	**127-1664**	1	CLAMP	
	13	1	**6N-7675**	1	NUT AS-WING (7/16-20 THD)	
	15	1	**078-0070**	1	ELEMENT (CAB AIR)	
	16	1	**5R-0203**	1	BAND AS	

M-METRIC PART

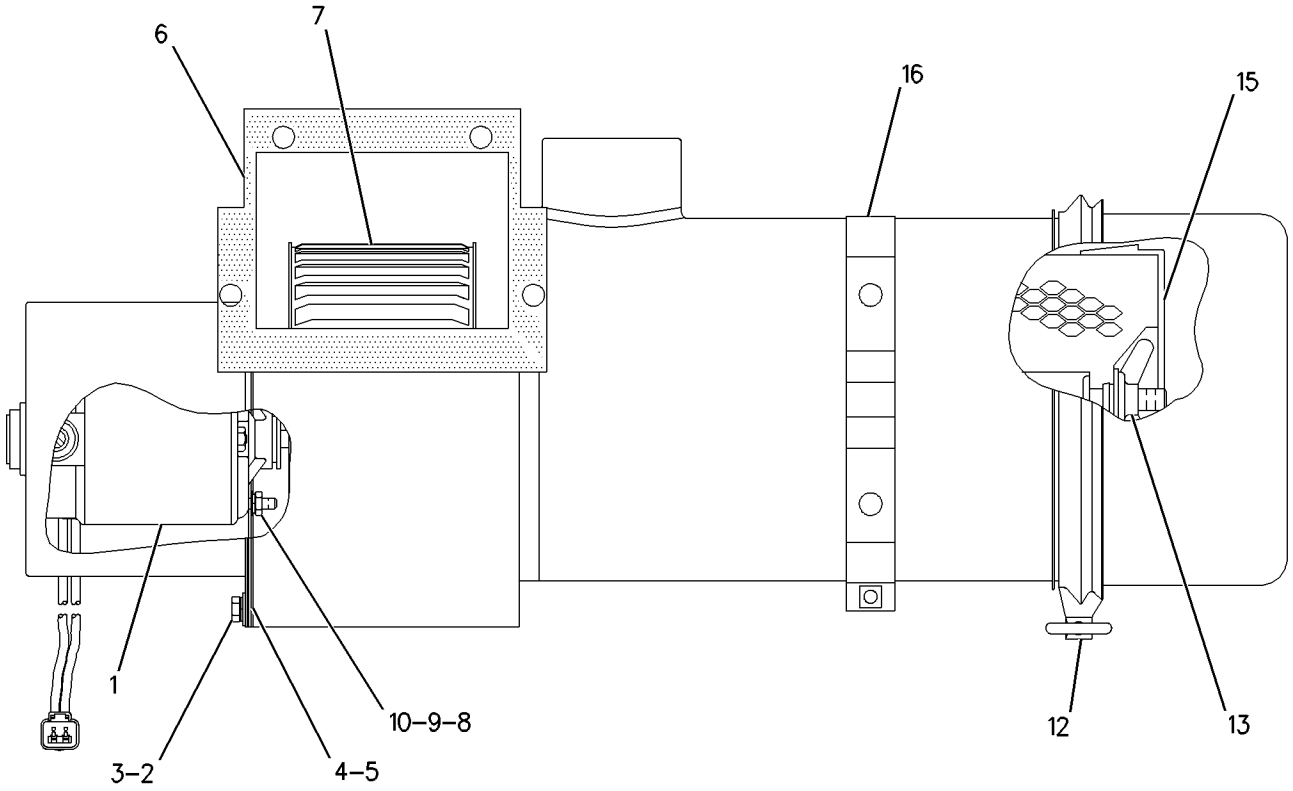

GRAPHIC #1 g00779358

MEMORANDA

OPERATOR STATION

154-7111 PRESSURIZER GP-CAB

S/N: 7KK1-UP

PART OF 154-7119 LINES GP-AIR

SMCS-7311 **i01286364**

NOTE	REF NO	GRAPHIC REF	PART NUMBER	QTY	PART NAME 1 2 3 4 5 6 (PRODUCT LEVEL)	SEE PAGE
	1	1	**1M-1230**	2	NUT & LOCK AS	
	2	1	**9M-7959**	1	CLAMP (HOSE)	
	3	1	**154-7091**	1	PLATE AS	
M		1	**6V-9632**	2	NUT-WELD (M6X1 THD)	
	4	1	**154-7109**	1	PLATE AS	
	6	1	**154-7112**	1	SCROLL AS	
	7	1	**154-7113**	1	COVER AS	
Y	8	1	**154-7114**	1	FILTER GP-CAB AIR	814
	9	1	**154-7115**	1	MOTOR-BLOWER	
	10	1	**154-7116**	1	BAND AS	
	11	1	**154-7117**	1	WHEEL-BLOWER	
	12	1	**175-0251**	1	KIT-GASKET	
					(INCLUDES GASKETS FOR BLOWER FLANGE, FILTER SEAL, MOTOR HOUSING, ENTRY RING AND PRESSURIZER MOTOR)	
	13	1	**1V-8506**	1	GROMMET	
M	14	1	**5C-7261**	2	NUT (M8X1.25 THD)	
M	15	1	**8T-4200**	2	BOLT (M8X1.25X16MM)	
	16	1	**8T-4224**	4	WASHER-HARD (8.8X16X2MM THK)	
M	17	1	**8T-4970**	6	BOLT (M6X1X14MM)	
	18	1	**9X-8256**	6	WASHER (2MM THK)	
D	19	1	**5P-5950**		SEAL (.3M)	

D-ORDER BY THE METER
M-METRIC PART
Y-SEPARATE ILLUSTRATION

154-7111 PRESSURIZER GP-CAB *(contd.)* **i01286364**

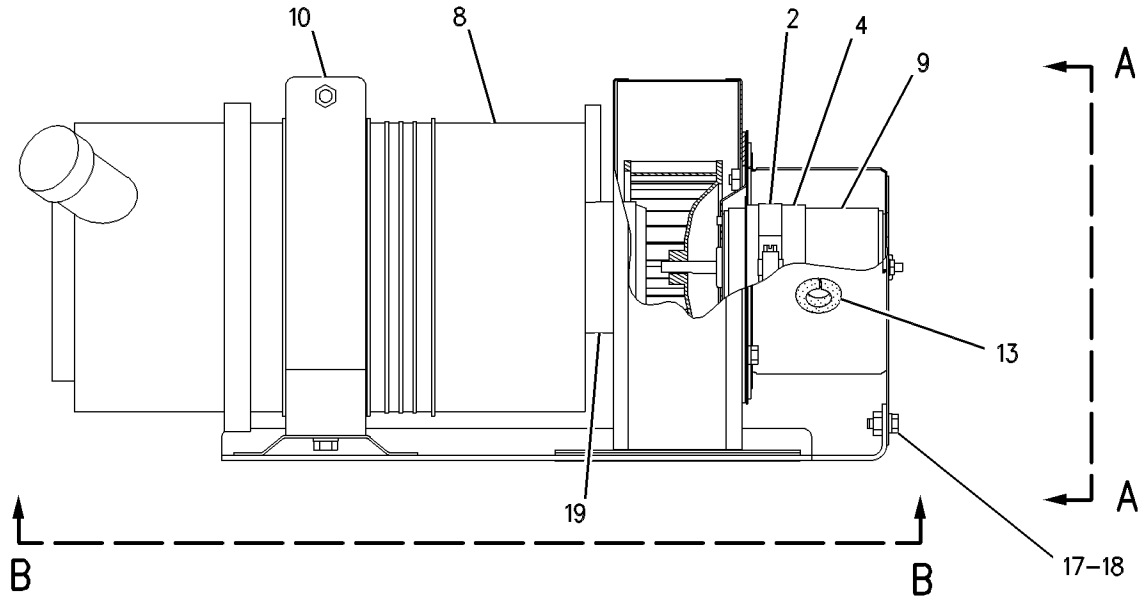

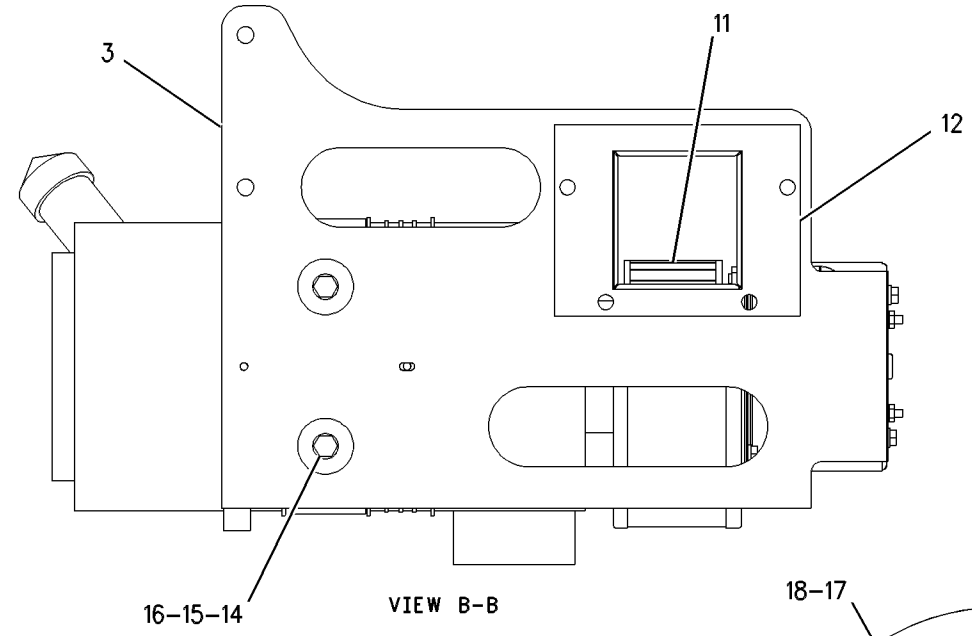

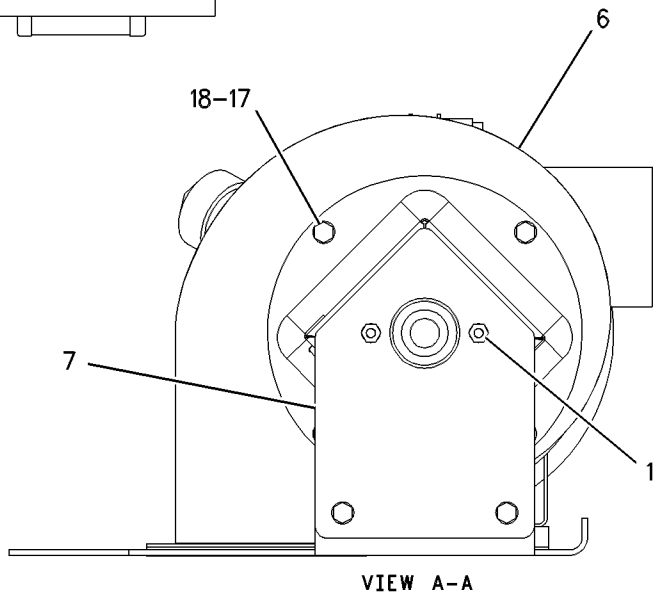

GRAPHIC #1 g00628738

OPERATOR STATION

8X-8969 ROPS GP

S/N: 7KK1-UP

PART OF 8X-8401 CAB AR

SMCS-7266, 7323, 7325 **i00999752**

NOTE	REF NO	GRAPHIC REF	PART NUMBER	QTY	PART NAME 1 2 3 4 5 6 (PRODUCT LEVEL)	SEE PAGE
	1	1	**117-2001**	1	ROPS AS	
	2	1	**159-3759**	2	FILM-INSTRUCTION (DO NOT DRILL/WELD ROPS)	

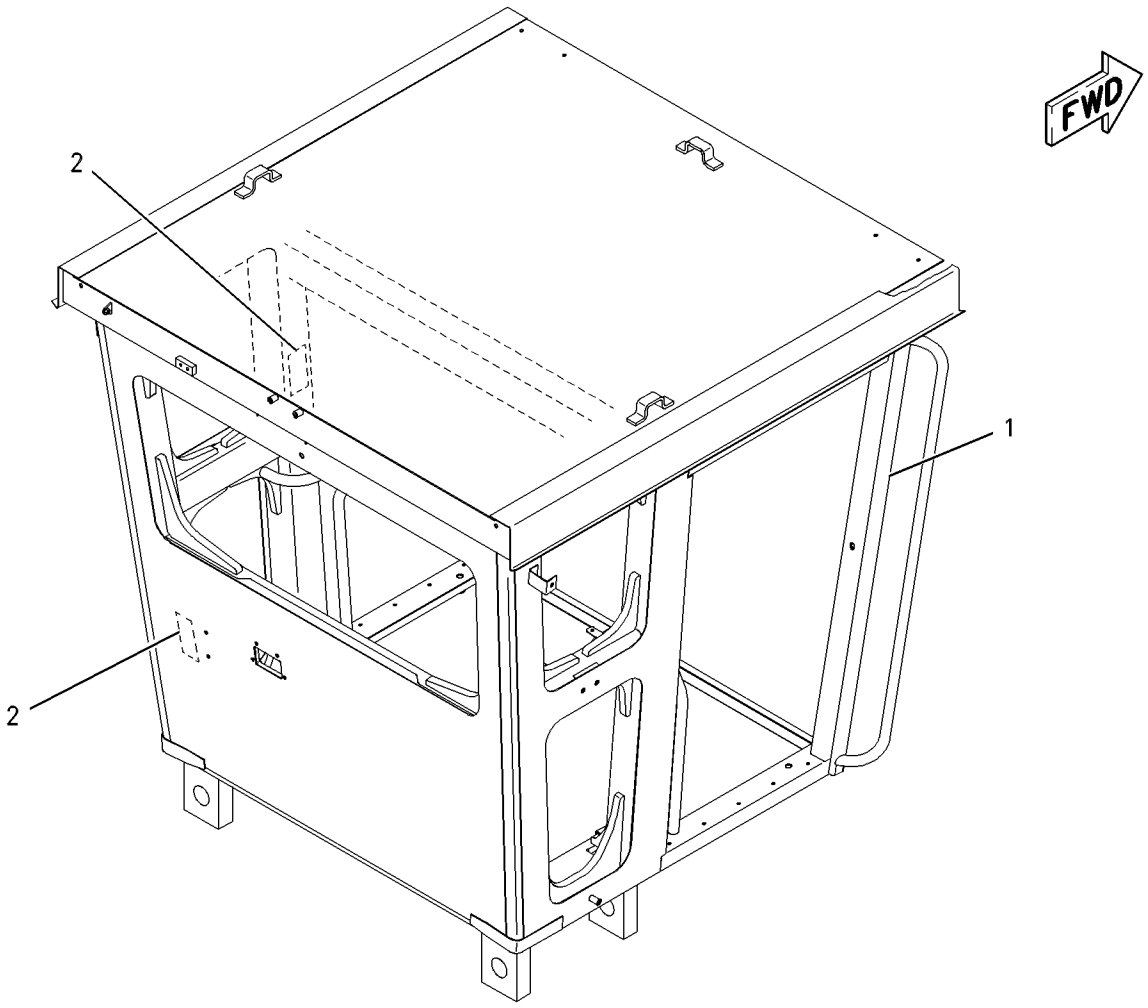

GRAPHIC #1 g00516420

OPERATOR STATION

8Y-3792 SEAT BELT GP

S/N: 7KK1-UP

PART OF 119-7128 SEAT GP

SMCS-7327 **i01453662**

NOTE	REF NO	GRAPHIC REF	PART NUMBER	QTY	PART NAME 1 2 3 4 5 6 (PRODUCT LEVEL)	SEE PAGE
	1	1	**8S-0934**	1	LOCKNUT-FLANGE (7/16-20 THD)	
	2	1	**8T-5360**	1	WASHER (12X22.5X2.5MM THK)	
	3	1	**8Y-5953**	2	BOLT-HEX (7/16-20X1.5 IN)	

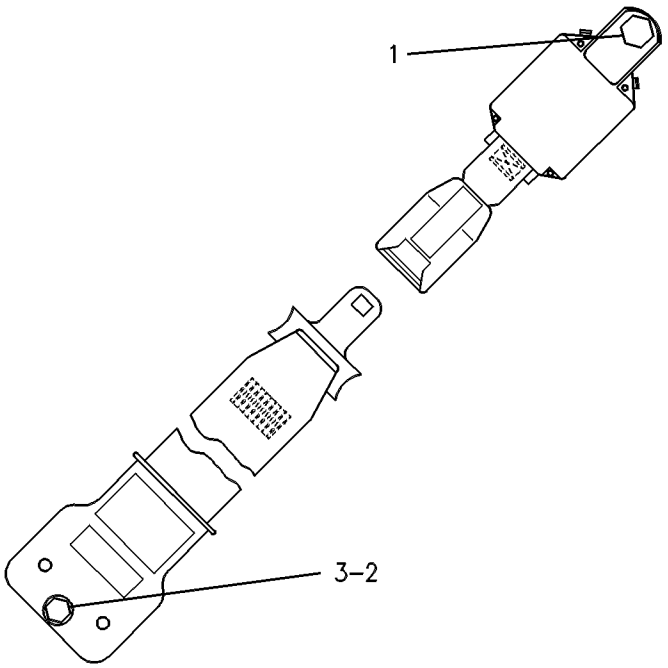

GRAPHIC #1 g00084568

122-4617 SEAT BELT GP–RETRACTABLE

S/N: 7KK1-UP

PART OF 119-7128 SEAT GP

SMCS-7327 **i01429927**

NOTE	REF NO	GRAPHIC REF	PART NUMBER	QTY	PART NAME 1 2 3 4 5 6 (PRODUCT LEVEL)	SEE PAGE
	1	1	**4D-6432**	1	LOCKNUT	
	2	1	**8T-5360**	1	WASHER (12X22.5X2.5MM THK)	
	3	1	**8Y-5953**	1	BOLT-HEX (7/16-20X1.5 IN)	
	4	1	**1A-4350**	1	BOLT (7/16-20X1.75 IN)	

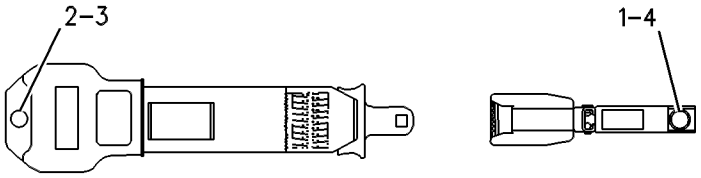

GRAPHIC #1 g00086974

OPERATOR STATION

156-1148 SEAT BELT GP

S/N: 7KK1-UP
RETRACTABLE
PART OF 119-7128 SEAT GP

SMCS-7327 **i01453673**

NOTE	REF NO	GRAPHIC REF	PART NUMBER	QTY	PART NAME 1 2 3 4 5 6 (PRODUCT LEVEL)	SEE PAGE
	1	1	**1L-9080**	1	BOLT (7/16-20X1.5IN)	
	2	1	**8T-5360**	1	WASHER (12X22.5X2.5MM THK)	
	3	1	**1A-4350**	1	BOLT (7/16-20X1.75 IN)	
	4	1	**4D-6432**	1	LOCKNUT	

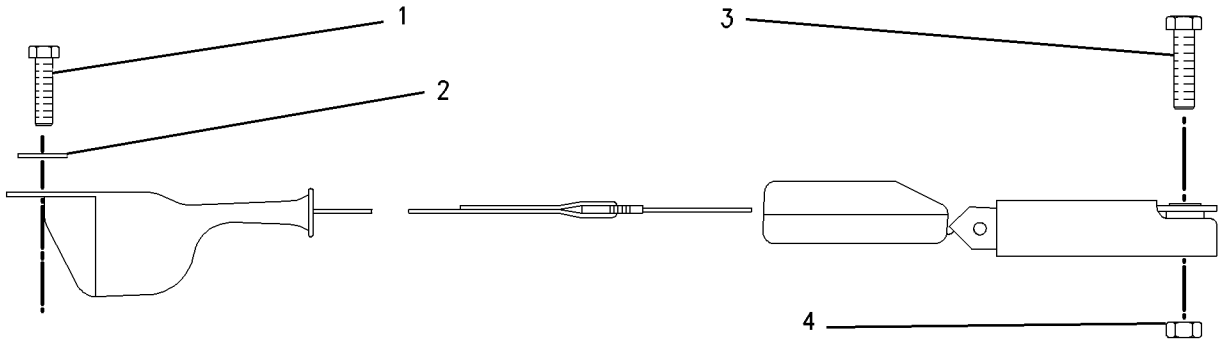

GRAPHIC #1 g00760019

OPERATOR STATION

8Y-6882 SEAT GP—CLOTH

S/N: 7KK1-UP
LUMBAR - GRAY
PART OF 119-7128 SEAT GP

SMCS-7312 **i01395807**

NOTE	REF NO	GRAPHIC REF	PART NUMBER	QTY	PART NAME 1 2 3 4 5 6 (PRODUCT LEVEL)	SEE PAGE
Y	1	1	**108-8421**	1	PAN GP-SEAT (BACK)	836
	8	1	**8Y-5930**	1	BAR AS-SLIDE	
	9	1	**8Y-5931**	1	BAR AS-LATCH	
	10	1	**8S-7803**	2	RING-RETAINING	
	11	1	**8Y-5932**	1	LATCH AS	
	12	1	**8Y-5936**	1	SPRING	
	13	1	**095-0878**	1	PIN-SPRING	
	14	1	**8Y-6051**	2	SPACER (14.24MM THK)	
	15	1	**7B-7525**	2	BOLT-SOCKET HEAD (7/16-14X1.25 IN)	
	16	1	**8Y-5981**	2	BUSHING-BACKREST	
	17	1	**8Y-5937**	1	BRACKET AS-RH	
	18	1	**8Y-5938**	1	BRACKET AS-LH	
		1	**4D-6432**	1	LOCKNUT	
	19	1	**7U-4898**	6	SCREW (3/8-16X0.75 IN)	
	20	1	**2K-4973**	6	LOCKNUT (3/8-16 THD)	
	21	1	**8Y-5979**	1	PIN	
	22	1	**6V-2456**	2	RING-RETAINING	
	23	1	**8Y-5928**	2	SPRING	
	24	1	**2B-2695**	4	BOLT (5/16-18X.875 IN)	
JS	25	1	**8Y-5947**	4	FASTENER	
	26	1	**8Y-6833**	1	SPRING-RH	
	27	1	**8Y-6834**	1	SPRING-LH	
	28	1	**1C-0569**	2	BOLT (5/16-18X.5 IN)	
Y	29	1	*8Y-5992*	1	PAN GP-SEAT (BOTTOM)	834
L	30	1	**113-0899**	10	SCREW-FLAT HEAD (6-20X.5 IN)	
	31	1	**119-7127**	1	CUSHION AS	
B	32	1	**061-8803**	4	SHIM (1.52MM THK)	
S	33	1	**9L-7469**	2	LOCKPIN	
	34	1	**8Y-5929**	1	PLATE AS-SLIDE	
		1	**4K-9097**	7	NUT-WELD (5/16-18 THD)	
JZ	35	1		1	CUSHION AS	
LZ	36	1		2	KNOB-SEAT TILT	
LZ	37	1		1	KNOB-SLIDE	
LZ	38	1		1	KNOB-SLIDE	
LZ	39	1		1	KNOB-BACK TILT	
LZ	40	1		1	KNOB-BACK TILT	
LZ	41	1		1	KNOB-SEAT TILT	
SZ	42	1		1	PAN AS	
					AVAILABLE REPAIR KIT(S):	
S			**8Y-6933**	1	KIT-TILT PAN	
L			**112-4577**	1	KIT-SEAT KNOB	
J			**119-7141**	1	KIT-SEAT CUSHION (CLOTH)	
			149-4745	1	KIT-SLIDER BLOCK	
					(INCLUDES BLOCKS AND A BOLT)	

B-USE AS REQUIRED
J-KIT MARKED J INCLUDES PART(S) MARKED J
L-KIT MARKED L INCLUDES PART(S) MARKED L
S-KIT MARKED S INCLUDES PART(S) MARKED S
Y-SEPARATE ILLUSTRATION
Z-NOT SERVICED SEPARATELY

8Y-6882 SEAT GP *(contd.)*

i01395807

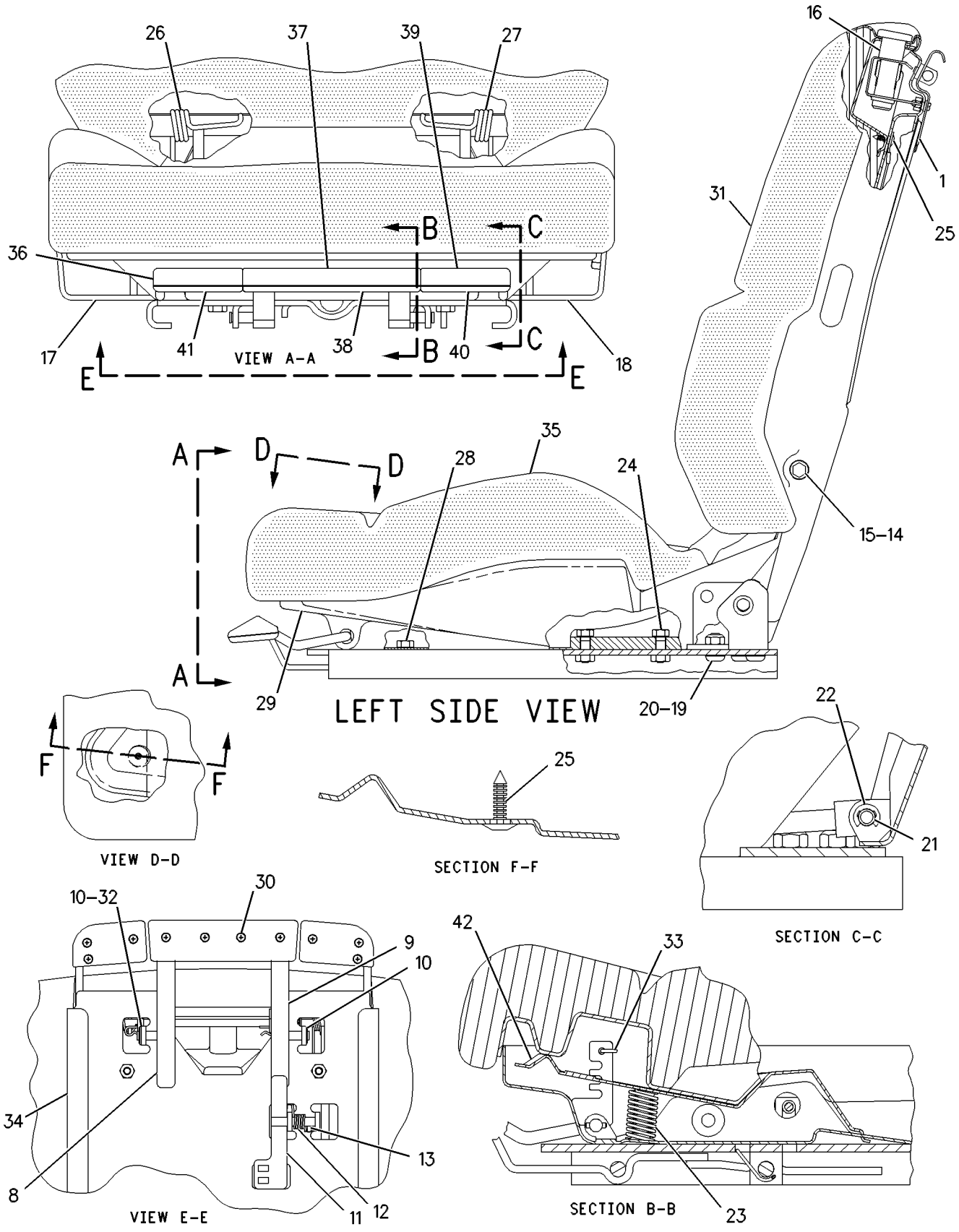

GRAPHIC #1

g00591423

OPERATOR STATION

119-7128 SEAT GP—CLOTH

S/N: 7KK1-UP
LUMBAR - GRAY
PART OF 8X-9064 SEAT GP-SUSPENSION
TYPE 1

SMCS-7312 **i01281229**

NOTE	PART NUMBER	QTY	PART NAME 1 2 3 4 5 6 (PRODUCT LEVEL)	SEE PAGE
Y	**8Y-4200**	1	ARMREST GP	784
Y	**8Y-6000**	1	ARMREST GP	786
Y	**8Y-6883**	1	EXTENSION GP-BACKREST	810
Y	**8Y-3792**	1	SEAT BELT GP (RETRACTABLE)	851
Y	**8Y-6882**	1	SEAT GP (CLOTH)	854

Y-SEPARATE ILLUSTRATION

119-7128 SEAT GP–CLOTH

S/N: 7KK1-UP
LUMBAR - GRAY
PART OF 8X-9064 SEAT GP-SUSPENSION
TYPE 2

SMCS-7312 **i01294214**

NOTE	REF NO	GRAPHIC REF	PART NUMBER	QTY	PART NAME 1 2 3 4 5 6 (PRODUCT LEVEL)	SEE PAGE
Y	1	1	**8Y-6883**	1	EXTENSION GP-BACKREST	810
Y	2	1	**8Y-6882**	1	SEAT GP (CLOTH)	854
Y	3	1	**8Y-6000**	1	ARMREST GP (LH)	786
Y	4	1	**8Y-4200**	1	ARMREST GP (RH)	784
Y	5	1	*122-4617*	1	SEAT BELT GP (RETRACTABLE)	852

Y-SEPARATE ILLUSTRATION

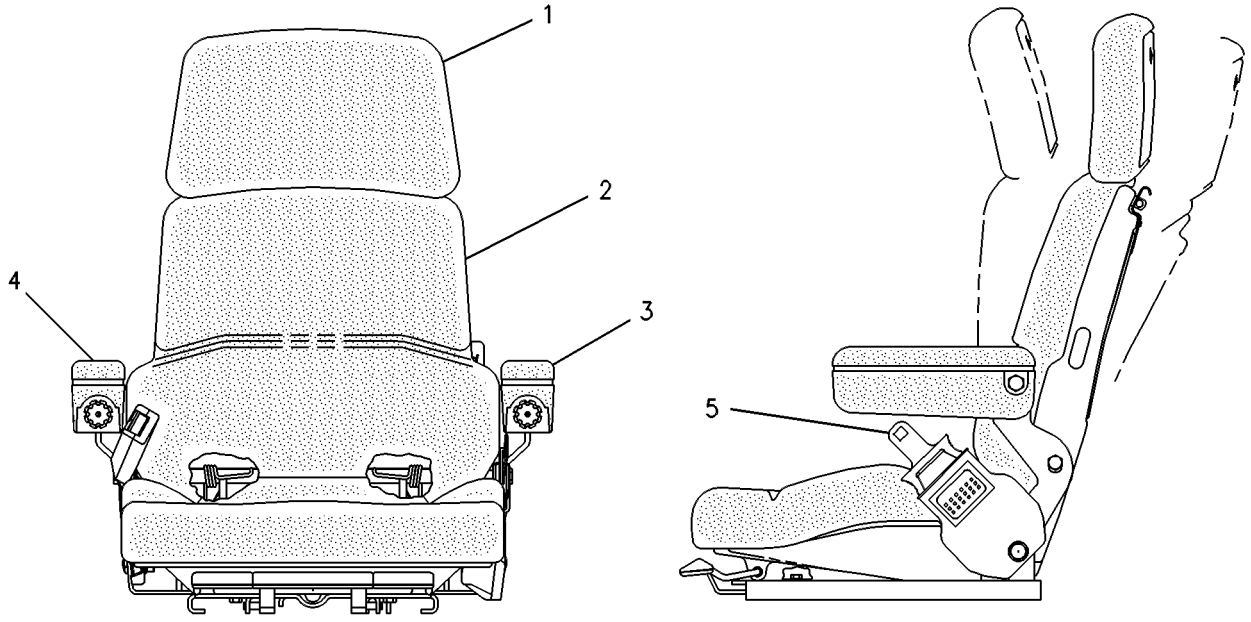

FRONT VIEW RIGHT SIDE VIEW

GRAPHIC #1 g00089006

119-7128 SEAT GP–CLOTH

S/N: 7KK1-UP
LUMBAR - GRAY
PART OF 8X-9064 SEAT GP-SUSPENSION
TYPE 3

SMCS-7312 **i01294215**

NOTE	REF NO	GRAPHIC REF	PART NUMBER	QTY	PART NAME 1 2 3 4 5 6 (PRODUCT LEVEL)	SEE PAGE
Y	1	1	**8Y-6883**	1	EXTENSION GP-BACKREST	810
Y	2	1	**8Y-6882**	1	SEAT GP (CLOTH)	854
Y	3	1	**8Y-6000**	1	ARMREST GP (LH)	786
Y	4	1	**8Y-4200**	1	ARMREST GP (RH)	784
CY	5	1	**156-1148**	1	SEAT BELT GP (RETRACTABLE)	853

C-CHANGE FROM PREVIOUS TYPE
Y-SEPARATE ILLUSTRATION

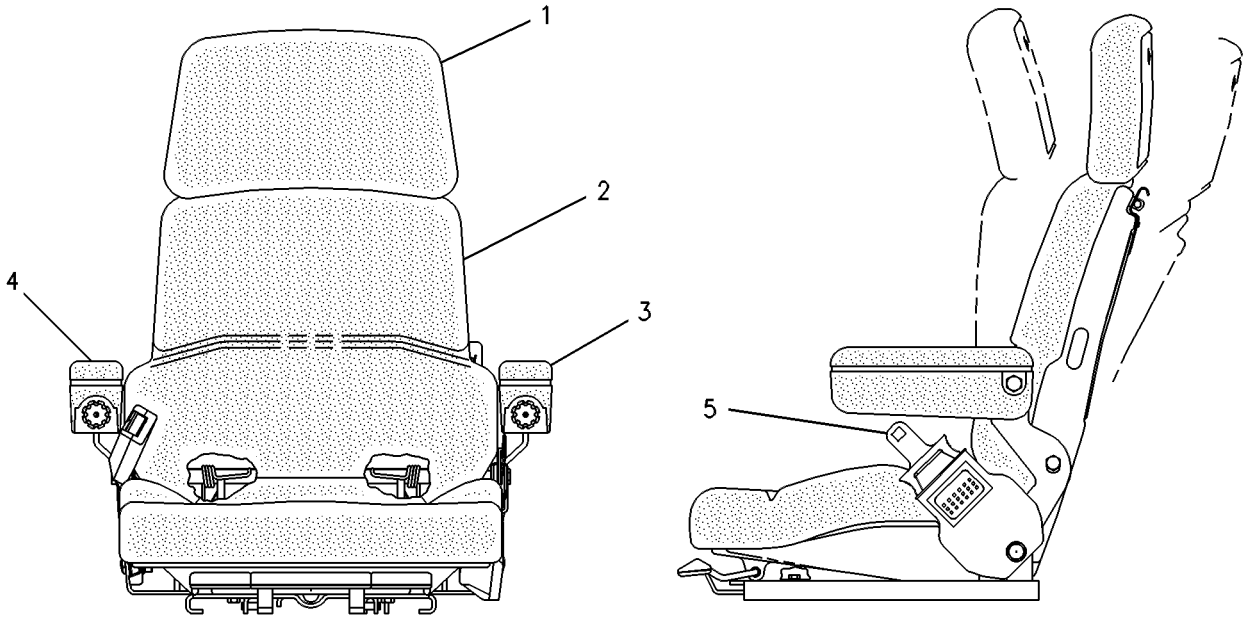

FRONT VIEW RIGHT SIDE VIEW

GRAPHIC #1 g00089006

OPERATOR STATION

8X-9064 SEAT GP-SUSPENSION

S/N: 7KK1-UP

PART OF 8X-9003 PLATFORM AR

SMCS-7312 **i00877658**

NOTE	REF NO	GRAPHIC REF	PART NUMBER	QTY	PART NAME 1 2 3 4 5 6 (PRODUCT LEVEL)	SEE PAGE
Y	1	1	*119-7128*	1	SEAT GP	856
	2	1	**8Y-5889**	1	KIT-SLIDER BLOCK	
					(INCLUDES BLOCKS AND BOLT)	
M	3	1	**6V-8335**	4	BOLT-SELF LOCKING (M10X1.5X40MM)	
	4	1	**7X-7729**	4	WASHER (3MM THK)	
Y	5	1	*117-7607*	1	SUSPENSION GP-SEAT	862

M-METRIC PART
Y-SEPARATE ILLUSTRATION

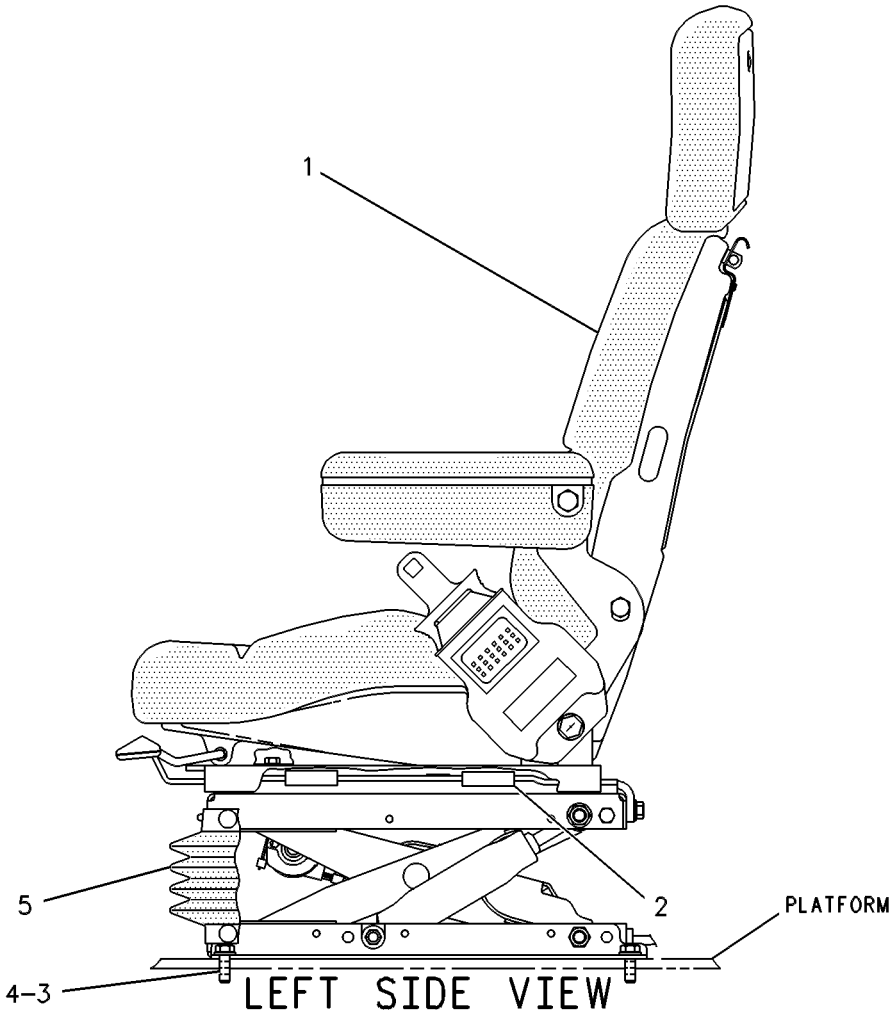

GRAPHIC #1 g00086500

OPERATOR STATION

8X-9064 SEAT GP-SUSPENSION

S/N: 7KK1-81

PART OF 8X-9003 PLATFORM AR

SMCS-7312 **i01144401**

NOTE	REF NO	GRAPHIC REF	PART NUMBER	QTY	PART NAME 1 2 3 4 5 6 (PRODUCT LEVEL)	SEE PAGE
Y	1	1	*119-7128*	1	SEAT GP	856
C	2	1	**166-7225**	1	KIT-SLIDER BLOCK	
					(INCLUDES BLOCKS, SETSCREWS, AND BOLT)	
CM	3	1	**8T-0722**	4	BOLT-LOCKING (M10X1.5X30MM)	
	4	1	**7X-7729**	4	WASHER (3MM THK)	
CY	5	1	**149-2404**	1	SUSPENSION GP-SEAT	866

C-CHANGE FROM PREVIOUS TYPE
M-METRIC PART
Y-SEPARATE ILLUSTRATION

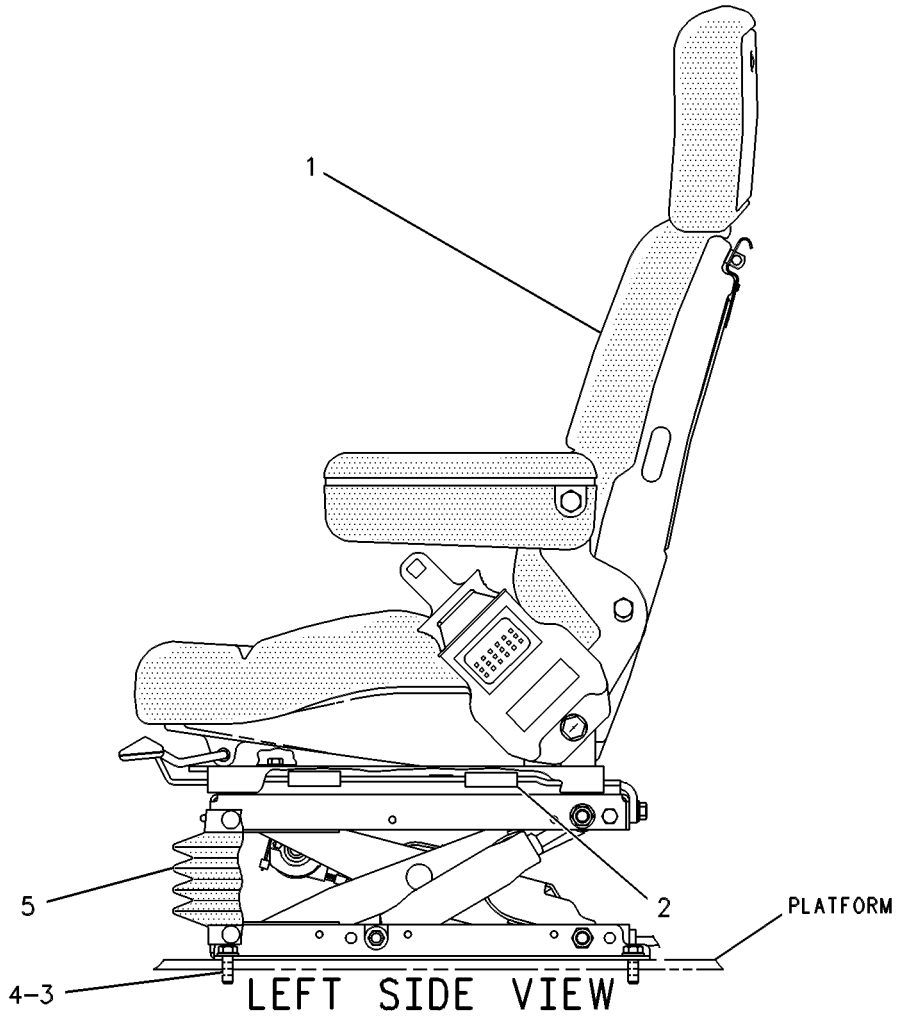

GRAPHIC #1 g00086500

MEMORANDA

OPERATOR STATION

117-7607 SUSPENSION GP-SEAT

S/N: 7KK1-UP

PART OF 8X-9064 SEAT GP-SUSPENSION

FIELD REPLACEMENT ORDER 149-2404—PAGE 866

SMCS-7324 **i01313453**

NOTE	REF NO	GRAPHIC REF	PART NUMBER	QTY	PART NAME 1 2 3 4 5 6 (PRODUCT LEVEL)	SEE PAGE
	1	1	**6K-0806**	1	STRAP-CABLE	
	2	1	**102-6317**	4	BUMPER	
	3	2	**8Y-6917**	1	BOOT	
	4	1,2	**123-8157**	2	SHAFT	
	5	1,2	**2K-4973**	4	LOCKNUT (3/8-16 THD)	
	6	2	**4V-8556**	1	BOLT (3/8-16X2.34IN)	
	7	2	**8Y-6922**	1	HOUSING AS	
	8	1	**5P-8167**	1	BOLT (3/8-16X.625 IN)	
	9	2	**8M-3267**	1	SCREW-HEX SOCKET	
	10	1	**8T-2501**	2	BOLT (3/8-16X2.0 IN)	
	11	1	**3H-5841**	1	BOLT (3/8-16X1.0IN)	
	12	1	**123-9131**	1	ABSORBER-SHOCK	
	13	1,2	**1B-4430**	4	NUT-JAM (1/2-20 THD)	
	14	1,2	**3J-4818**	4	LOCKWASHER (1/2IN)	
	15	1	**4B-4278**	3	WASHER (1.6MM THK)	
	16	1	**4V-7884**	2	BEARING	
	17	1	**5M-3062**	2	BOLT (3/8-16X.75 IN)	
	18	1	**128-0613**	1	KIT-TETHER	
					(INCLUDES 2 TETHERS)	
	19	1	**128-0686**	2	SPACER (27.8MM THK)	
	20	1	**8L-8413**	5	STRAP-CABLE (1.12IN DIA)	
	21	2	**124-7128**	1	BUSHING-RELIEF	
BE	22	2	**5R-7545**		TUBE-NYLON	
	23	1	**148-3749**	1	SCISSORS AS	
	24	1	**9M-0164**	1	CLAMP-HOSE	
	25	2	**102-8802**	1	KIT-RECEPTACLE (2 PIN)	
					(INCLUDES WEDGE & RECEPTACLE AS)	
JZ	26	2		1	SPRING	
JZ	27	2		1	FITTING	
LZ	28	2		1	CLAMP-HOSE	
NZ	29	1		1	HOUSING AS	
NZ	30	1		1	BLOCK-SLIDER	
PZ	31	2		30	CLIP	
QZ	32	1		4	ROLLER	
QZ	33	1		4	BEARING	
SZ	34	2		1	HARNESS	
SZ	35	2		1	LOCKRING	
SZ	36	2		1	LOCKWASHER	
SZ	37	2		1	NUT	
					AVAILABLE REPAIR KIT(S):	
J			**124-6329**	1	KIT-AIR SPRING	
L			**123-9144**	1	KIT-COMPRESSOR	
					(INCLUDES HOSE CLAMP, 2 AIR TUBES, & 2 TIE WRAPS)	
N			**123-8223**	1	KIT-HOUSING	
					(INCLUDES TIE WRAP)	
P			**8Y-6928**	1	KIT-FASTENER	
Q			**123-9128**	1	KIT-ROLLER	
					(INCLUDES TIE WRAP)	
S			**123-8266**	1	KIT-WIRING HARNESS	
					(INCLUDES 5-TIE WRAPS)	

B-USE AS REQUIRED
E-ORDER BY THE CENTIMETER
J-KIT MARKED J INCLUDES PART(S) MARKED J
L-KIT MARKED L INCLUDES PART(S) MARKED L
N-KIT MARKED N INCLUDES PART(S) MARKED N
P-KIT MARKED P INCLUDES PART(S) MARKED P
Q-KIT MARKED Q INCLUDES PART(S) MARKED Q
S-KIT MARKED S INCLUDES PART(S) MARKED S
Z-NOT SERVICED SEPARATELY

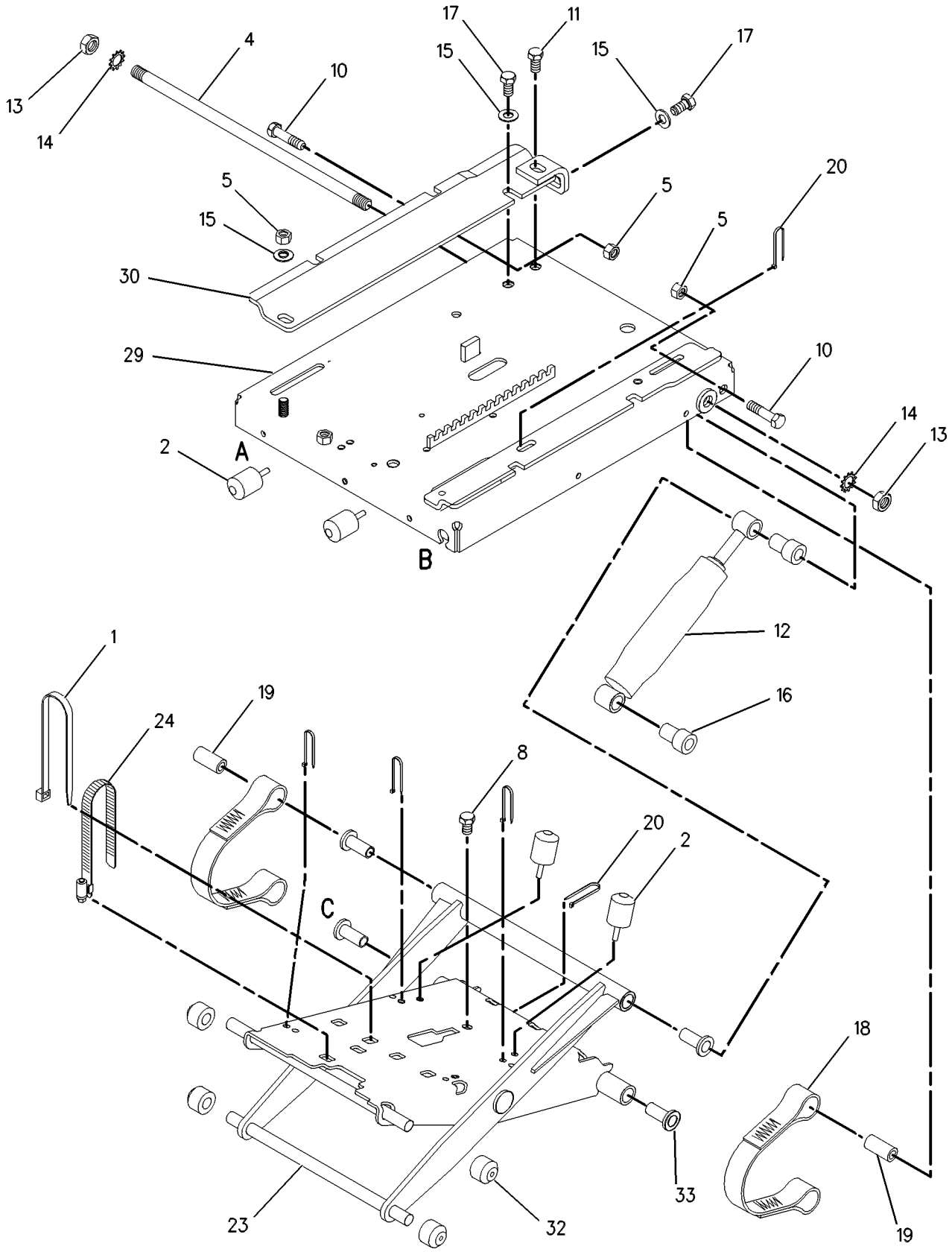

GRAPHIC #1 g00324462

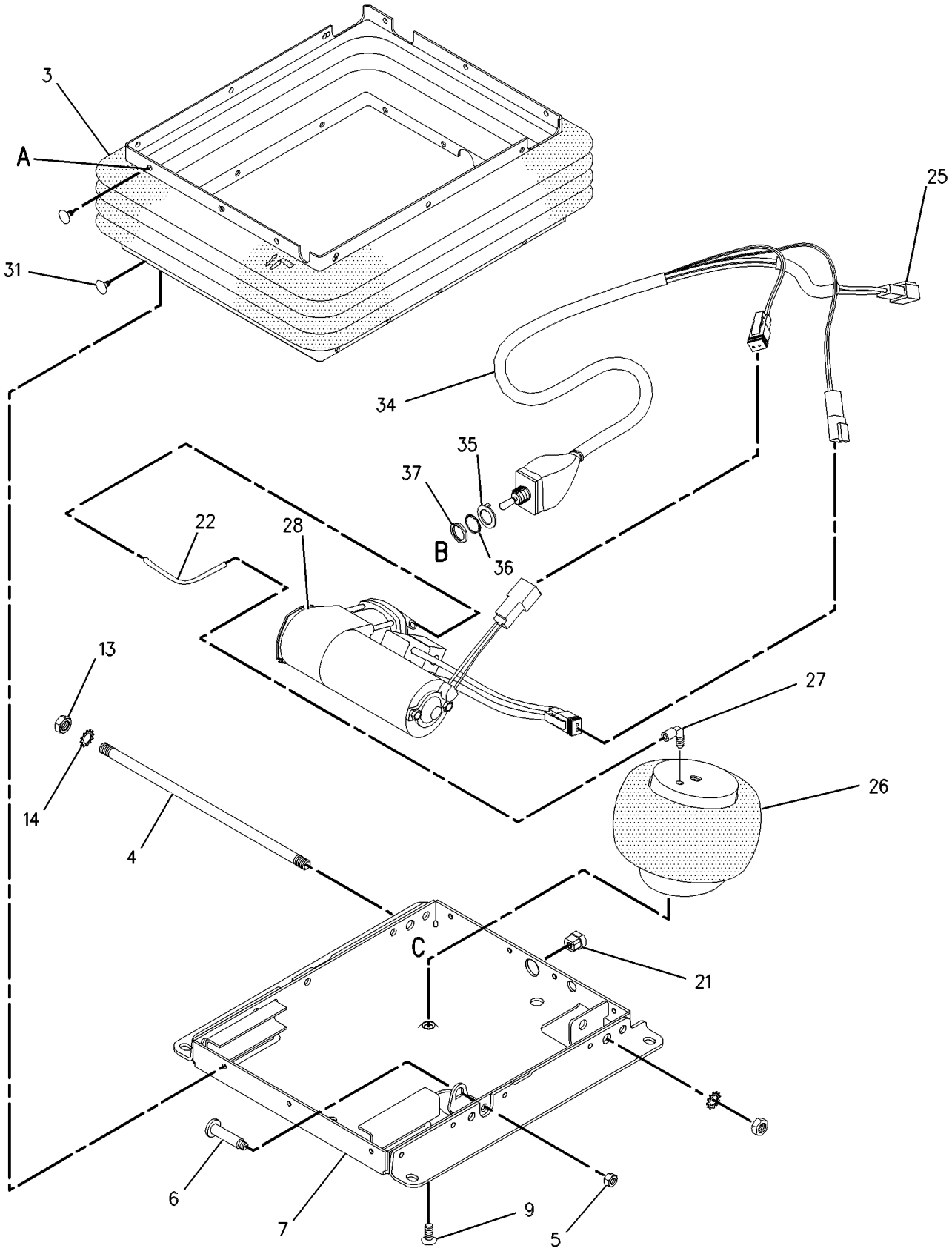

GRAPHIC #2 g00324463

OPERATOR STATION

149-2404 SUSPENSION GP-SEAT—AIR

S/N: 7KK1-UP
24 VOLTS
PART OF 8X-9064 SEAT GP-SUSPENSION
FIELD REPLACEMENT FOR 117-7607—PAGE 862

SMCS-7324 **i01429961**

NOTE	REF NO	GRAPHIC REF	PART NUMBER	QTY	PART NAME 1 2 3 4 5 6 (PRODUCT LEVEL)	SEE PAGE
	1	1	**6K-0806**	1	STRAP-CABLE	
	2	1	**102-6317**	4	BUMPER	
	3	2	**8Y-6917**	1	BOOT	
	4	1,2	**123-8157**	2	SHAFT	
	5	1,2	**2K-4973**	3	LOCKNUT (3/8-16 THD)	
	6	2	**4V-8556**	1	BOLT (3/8-16X2.34 IN)	
	7	2	**166-7401**	1	HOUSING AS (LOWER)	
M		2	**8T-3490**	4	NUT-WELD (M10X1.5 THD)	
	8	1	**5P-8167**	1	BOLT (3/8-16X0.625 IN)	
	9	2	**8M-3267**	1	SCREW-HEX SOCKET (3/8-16X0.75 IN)	
	10	1	**8T-2501**	2	BOLT (3/8-16X2 IN)	
	11	1	**166-7221**	1	HOUSING AS (UPPER)	
	12	1	**123-9131**	1	ABSORBER-SHOCK	
	13	1,2	**1B-4430**	4	NUT-JAM (1/2-20 THD)	
	14	1,2	**3J-4818**	4	LOCKWASHER	
B	15	1	**160-7765**	1	WASHER (16.26X22.23X1.97MM THK)	
B	16	1	**160-7766**	3	WASHER (16.26X22.23X0.51MM THK)	
B	17	1	**160-7767**	8	WASHER (3.68X12.57X0.51MM THK)	
	18	1	**4V-7884**	2	BEARING	
	19	1	**128-0686**	2	SPACER (27.8MM THK)	
	20	1	**8L-8413**	5	STRAP-CABLE	
	21	2	**124-7128**	1	BUSHING-RELIEF	
BE	22	2	**147-6541**		TUBE	
	23	1	**148-3749**	1	SCISSORS AS	
	24	1	**9M-0164**	1	CLAMP-HOSE	
	25	2	**147-6523**	1	COMPRESSOR	
	26	1	**145-0326**	1	FILM-INSTRUCTION (SEAT ADJUSTMENT)	
	27	2	**147-4549**	2	FITTING-ELBOW	
	28	2	**147-6522**	1	SPRING-AIR	
NZ	29	2		1	NUT	
PZ	30	1		2	TETHER	
JZ	31	2		30	CLIP	
LZ	32	1		4	ROLLER	
LZ	33	1		4	BEARING	
NZ	34	2		1	HARNESS	
NZ	35	2		1	LOCK RING	
NZ	36	2		1	LOCKWASHER	
					AVAILABLE REPAIR KIT(S):	
J			**8Y-6928**	1	KIT-FASTENER (SEAT SUSPENSION)	
L			**123-9128**	1	KIT-ROLLER	
					(INCLUDES TIE WRAP)	
N			**123-8266**	1	KIT-WIRING HARNESS	
					(INCLUDES 5-TIE WRAPS)	
P			**128-0613**	1	KIT-TETHER	

B-USE AS REQUIRED
E-ORDER BY THE CENTIMETER
J-KIT MARKED J INCLUDES PART(S) MARKED J
L-KIT MARKED L INCLUDES PART(S) MARKED L
M-METRIC PART
N-KIT MARKED N INCLUDES PART(S) MARKED N
P-KIT MARKED P INCLUDES PART(S) MARKED P
Z-NOT SERVICED SEPARATELY

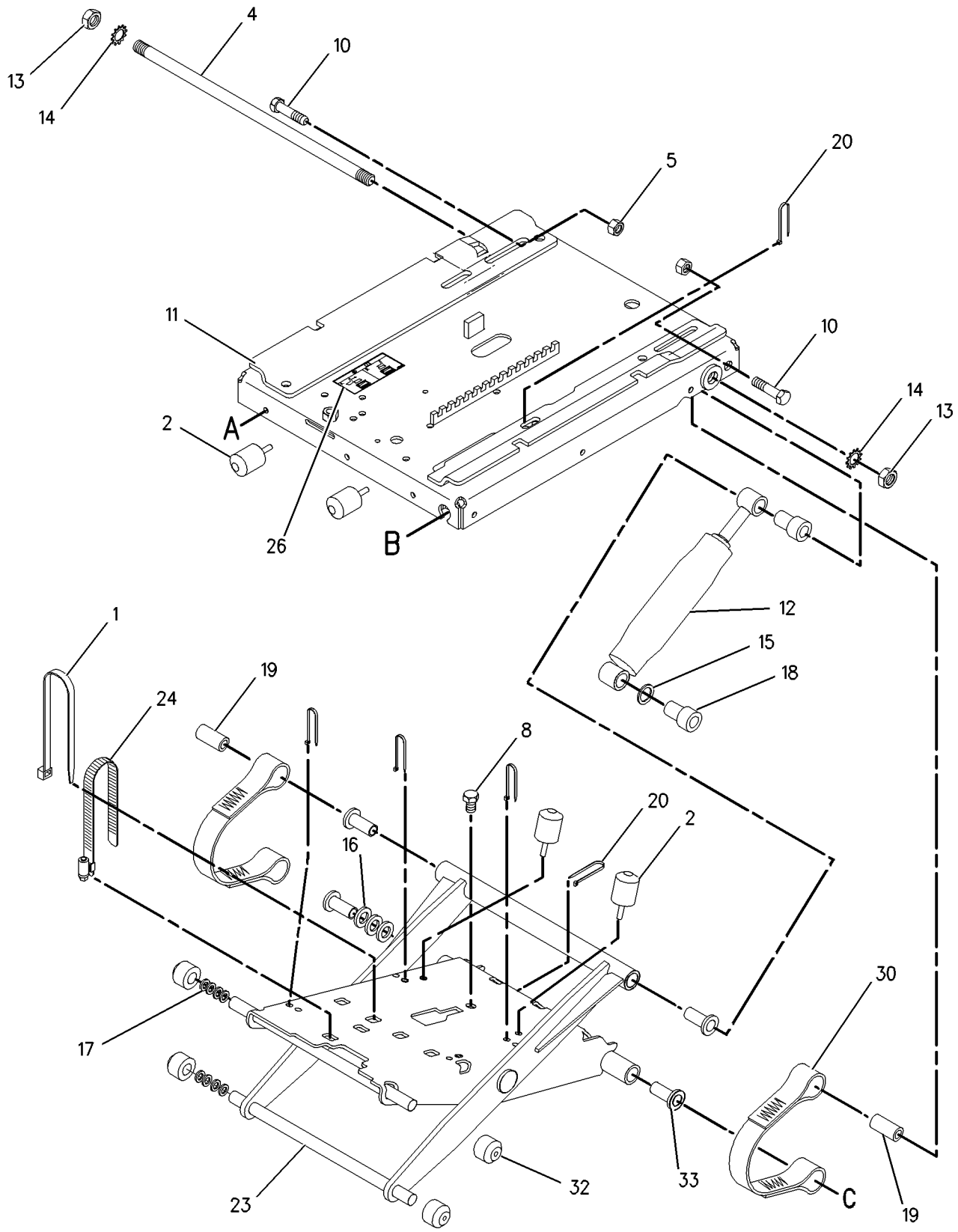

GRAPHIC #1 g00649641

149-2404 SUSPENSION GP-SEAT *(contd.)* i01429961

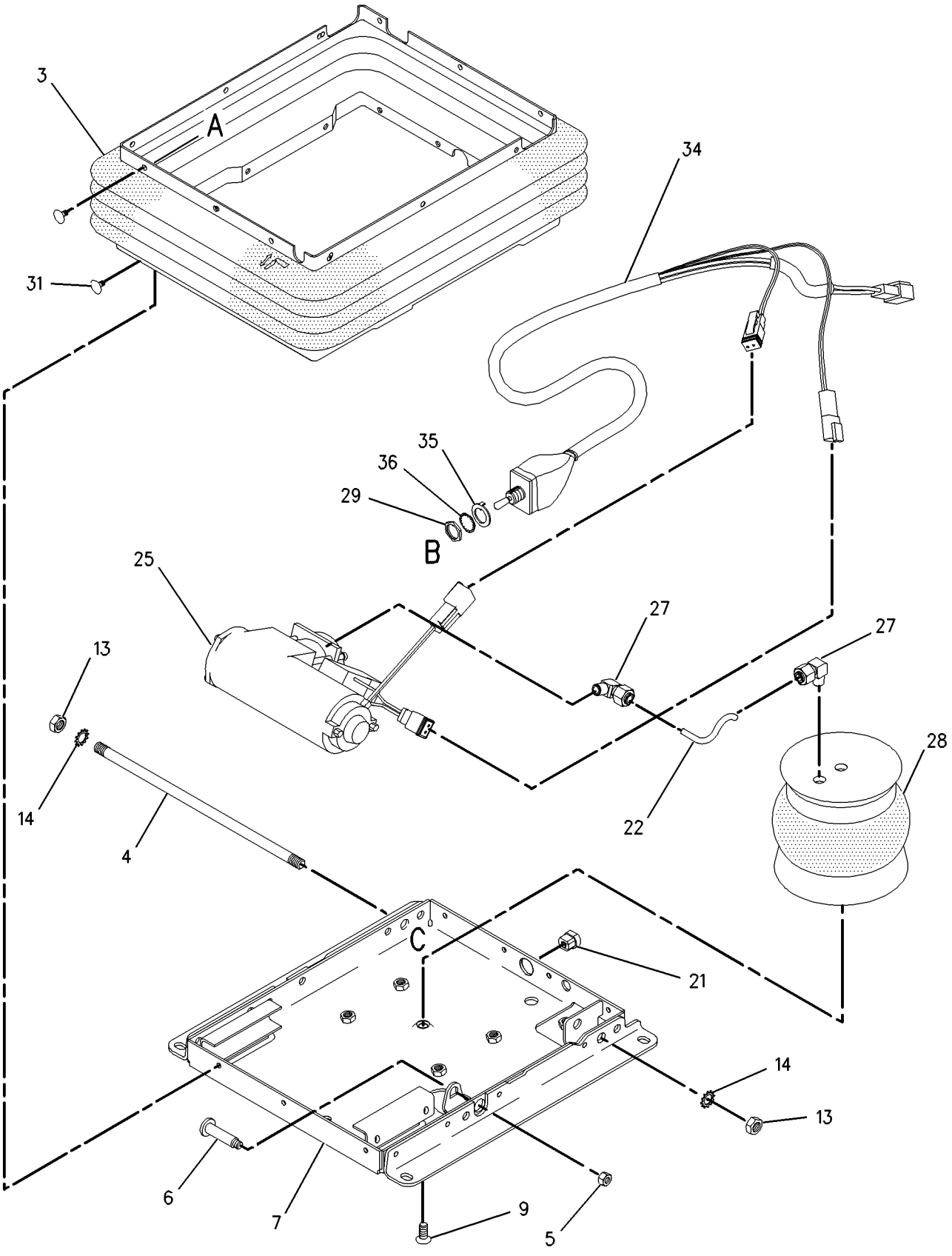

GRAPHIC #2 g00649644

MEMORANDA

OPERATOR STATION

125-5768 WASHER GP-WINDOW

S/N: 7KK1-UP

PART OF 8X-8402 CHASSIS AR

SMCS-7306 **i01172139**

NOTE	REF NO	GRAPHIC REF	PART NUMBER	QTY	PART NAME 1 2 3 4 5 6 (PRODUCT LEVEL)	SEE PAGE
	1	1	**3S-2093**	1	STRAP-CABLE (1.75IN DIA)	
	2	1	**7Y-3474**	2	VALVE AS	
	3	1	**127-0833**	2	BOTTLE AS-WASHER	
					(EACH INCLUDES)	
	3A	1	**8E-8292**	1	CAP-VENTED	
	3B	1	**7T-8891**	1	PUMP AS-WASHER	
	3C	1	**8E-8293**	1	GROMMET	
M	4	1	**5C-7261**	4	NUT (M8X1.25 THD)	
	5	1	**6K-8178**	1	CLIP (15.88MM ID)	
M	6	1	**7X-2537**	4	BOLT (M8X1.25X35MM)	
	7	1	**8T-4224**	8	WASHER-HARD (8.8X16X2MM THK)	
	8	1	**9X-8582**	4	CLIP (7.94MM ID)	
D	9	1	**5P-5992**		HOSE (.12M)	
D	10	1	**5P-5992**		HOSE (.12M)	
D	11	1	**5P-5992**		HOSE (2.3M)	
D	12	1	**5P-5992**		HOSE (2.4M)	

D-ORDER BY THE METER
M-METRIC PART

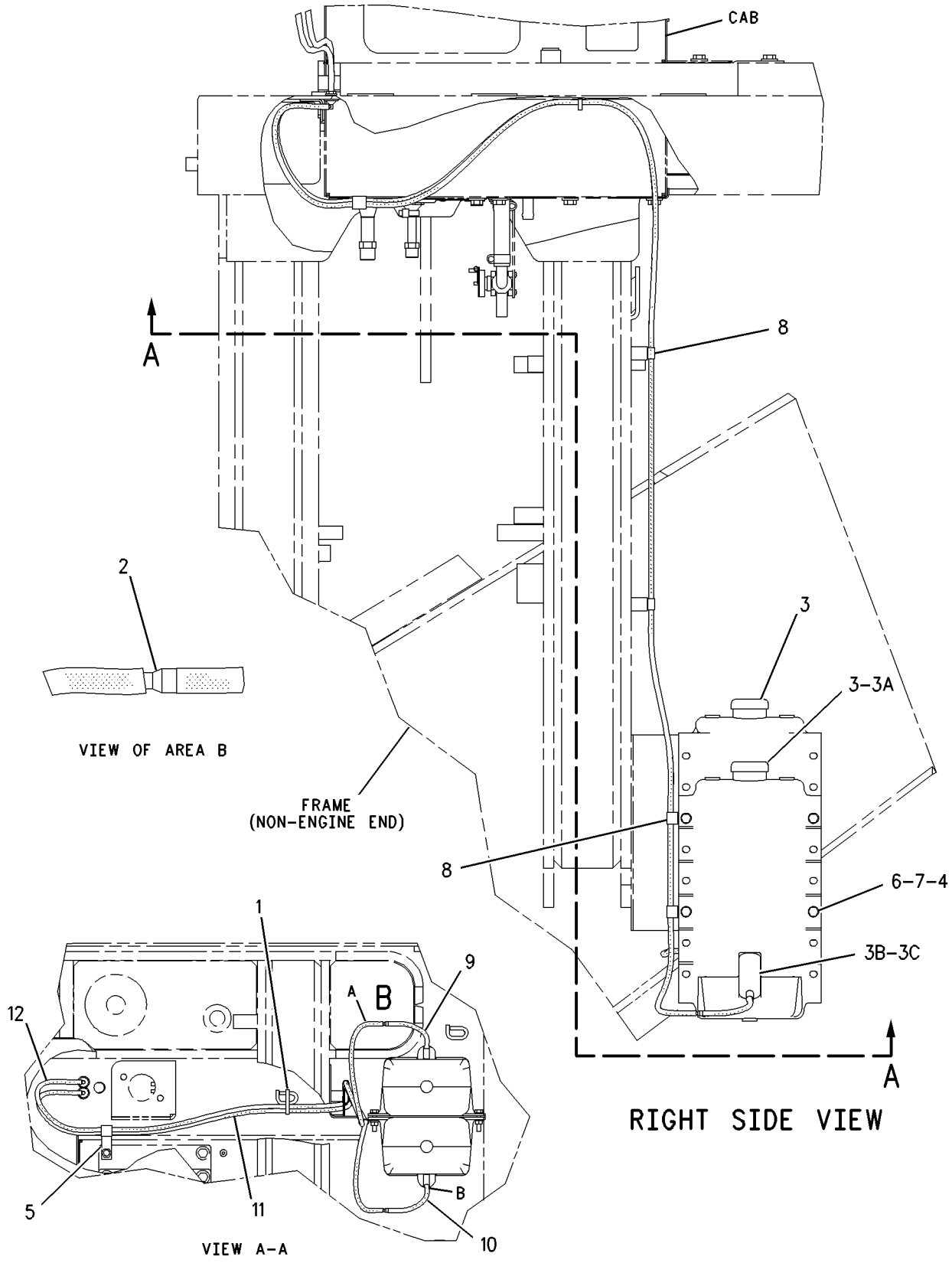

GRAPHIC #1

g00667106

OPERATOR STATION

8X-8967 WINDOW GP

S/N: 7KK1-UP

PART OF 8X-8401 CAB AR

SMCS-7310, 7340 **i00749621**

NOTE	REF NO	GRAPHIC REF	PART NUMBER	QTY	PART NAME 1 2 3 4 5 6 (PRODUCT LEVEL)	SEE PAGE
	1	1	**119-0782**	1	GLASS (10MM THK)	
	2	1	*117-2093*	1	GLASS (5MM THK)	
	3	1	*117-2094*	2	GLASS (TOP/SIDE)	
	4	1	*117-2095*	2	GLASS (BOTTOM/SIDE)	
	5	1	*117-3169*	1	FILM-WINDSHIELD	
	6	1	**137-1282**	2	RETAINER (1664MM LG)	
	7	1	**137-1283**	1	RETAINER (816MM LG)	
	8	1	**137-1284**	1	RETAINER (1016MM LG)	
E	10	1	**122-8341**		SEAL (587CM)	
M	11	1	**8T-4137**	35	BOLT (M10X1.50X20MM)	
		1	**8T-4121**	35	WASHER (2.5MM THK)	
BD	12	1	**5P-5768**		SEAL	

B-USE AS REQUIRED
D-ORDER BY THE METER
E-ORDER BY THE CENTIMETER
M-METRIC PART

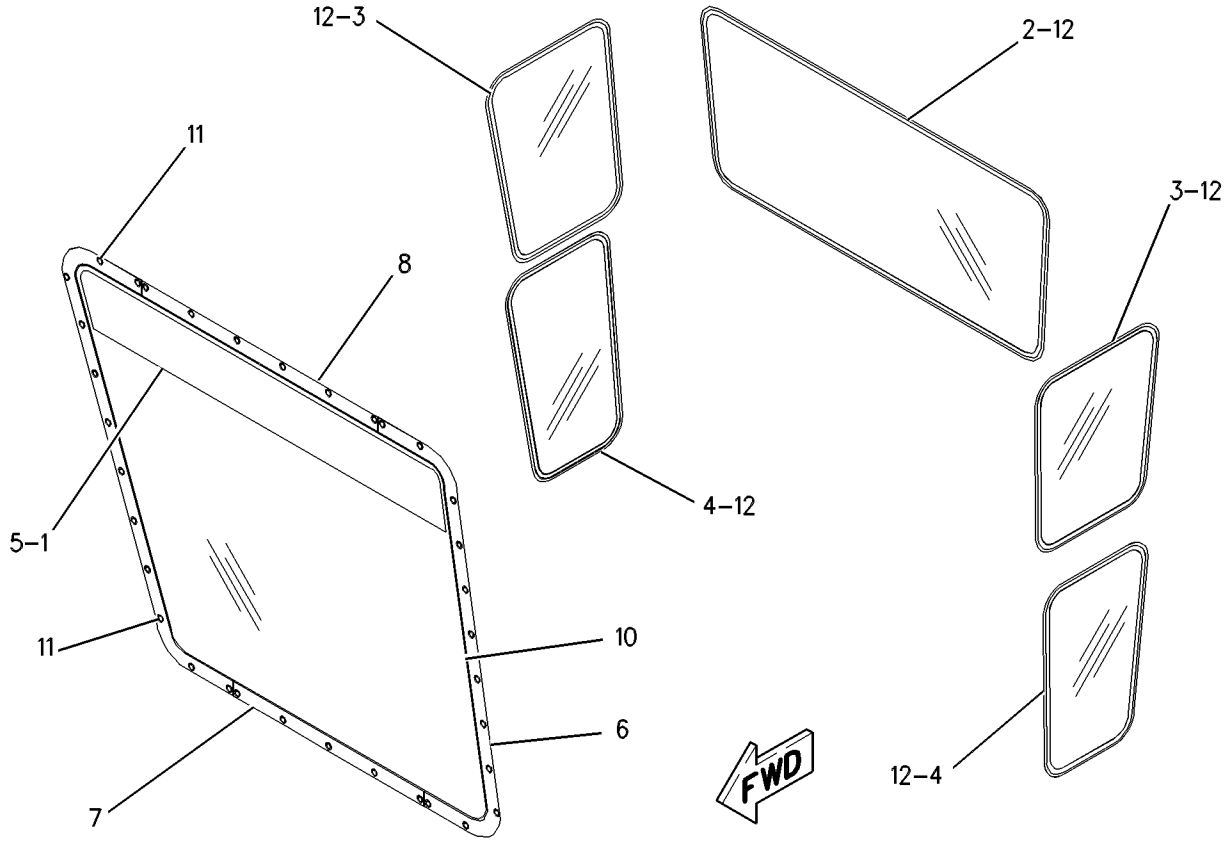

GRAPHIC #1 g00337726

MEMORANDA

OPERATOR STATION

8X-8971 WIPER & WASHER GP-WINDOW

S/N: 7KK1-UP

PART OF 8X-8401 CAB AR

SMCS-7305, 7306 **i00999746**

NOTE	REF NO	GRAPHIC REF	PART NUMBER	QTY	PART NAME 1 2 3 4 5 6 (PRODUCT LEVEL)	SEE PAGE
	1	1	**3S-2093**	2	STRAP-CABLE (1.75IN DIA)	
	2	1	**4B-4283**	1	WASHER (3.5MM THK)	
	3	1	**6V-5851**	1	BLADE AS-WIPER	
	4	1	**8T-5400**	4	CONNECTOR	
J	5	1	**118-7135**	1	MOTOR GP-WINDOW WIPER	
		1	**8T-8729**	5	PIN-CONNECTOR	
		1	**8T-8737**	1	PLUG-SEAL	
J	6	1	**127-6507**	1	MOTOR AS	
	7	1	**8T-8729**	5	PIN-CONNECTOR	
	8	1	**8T-8737**	1	PLUG-SEAL	
	9	1	**3F-9556**	1	LOCKWASHER (8.4MM ID)	
M	10	1	**5C-7261**	1	NUT (M8X1.25 THD)	
	11	1	**5P-4115**	8	WASHER (2MM THK)	
M	12	1	**8T-4138**	2	BOLT (M6X1.0X20MM)	
	13	1	**9X-8256**	2	WASHER (2MM THK)	
D	14	1	**5P-5992**		HOSE (0.43M)	
	15	1	**127-6509**	1	ARM AS-WET WIPER	
	16	1	**134-0297**	1	BLADE AS-WIPER	
	17	1	**138-0721**	2	SHEET AS	
M	17A	1	**6V-9632**	4	NUT-WELD (M6X1 THD)	
M	18	1	**5C-9553**	8	BOLT (M6X1.0X16MM)	
D	19	1	**5P-5992**		HOSE (0.32M)	
	20	1	**8Y-9676**	1	ARM AS-WIPER	
	21	1	**1V-3593**	10	CLIP	
					AVAILABLE REPAIR KIT(S):	
J			**102-8805**	1	KIT-RECEPTACLE (6 PIN)	
					(INCLUDES WEDGE & RECEPTACLE AS)	

D-ORDER BY THE METER
J-KIT MARKED J AVAILABLE FOR PARTS MARKED J
M-METRIC PART

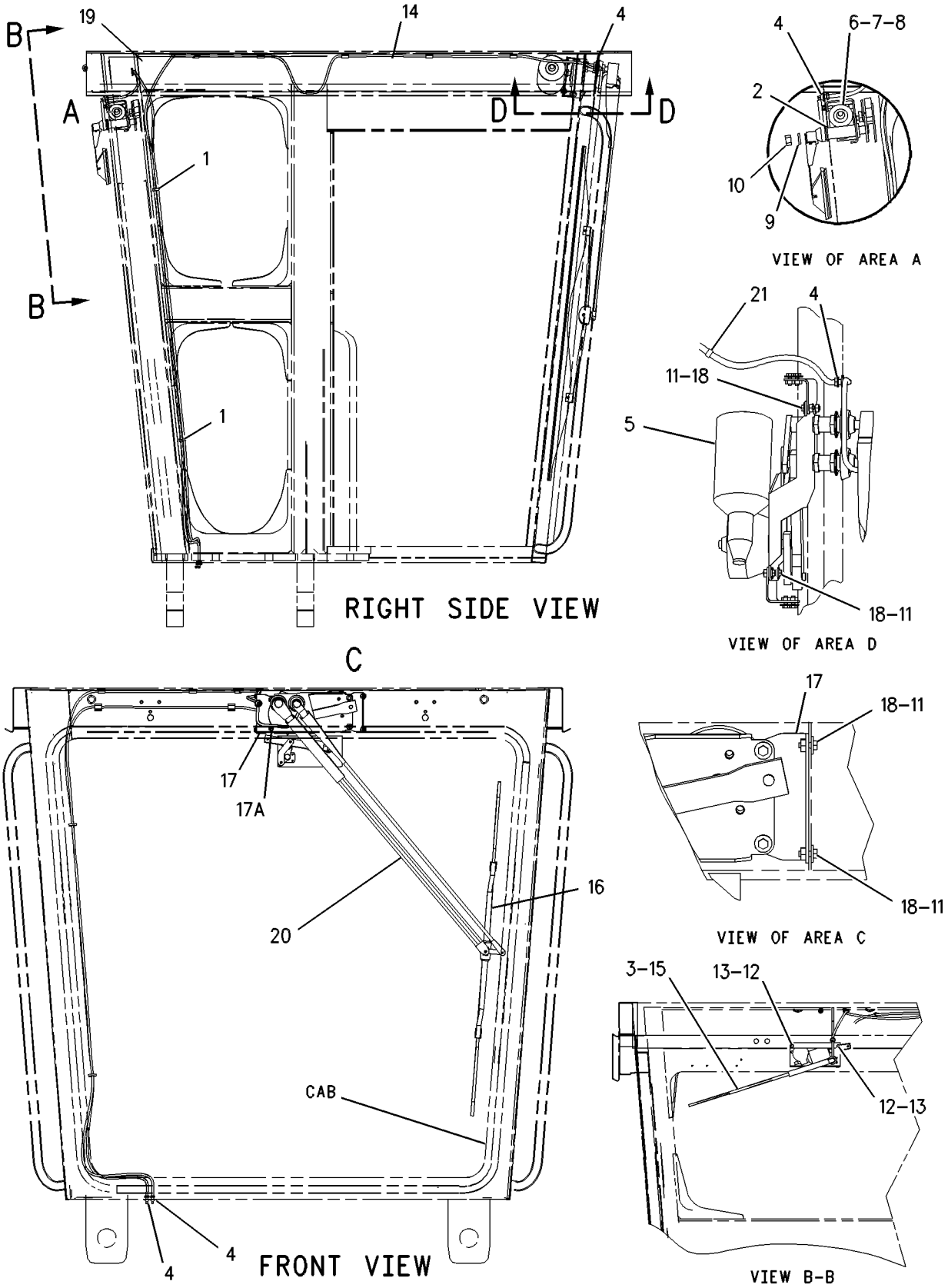

GRAPHIC #1 g00516577

SERVICE EQUIPMENT AND SUPPLIES

128-2041 FILM GP

S/N: 7KK1-UP

PART OF 3E-4456 PLATE & FILM GP

i00645721

NOTE	REF NO	GRAPHIC REF	PART NUMBER	QTY	PART NAME 1 2 3 4 5 6 (PRODUCT LEVEL)	SEE PAGE
	1	1	**130-2668**	2	FILM-CAT	
	2	1	**130-2669**	2	FILM-24H	
	3	1	**130-2670**	1	FILM-CAT	
BE	4	1	**130-6635**		FILM	
BE	5	1	**136-5205**		FILM-STRIPE	
BE	6	1	**8C-4970**		FILM	
	7	1	**138-0730**	2	FILM-STRIPE	

B-USE AS REQUIRED
E-ORDER BY THE CENTIMETER

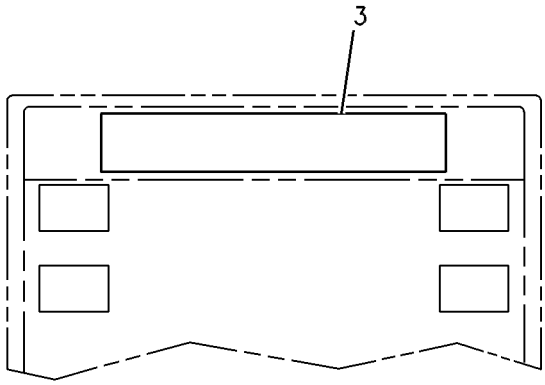

REAR VIEW

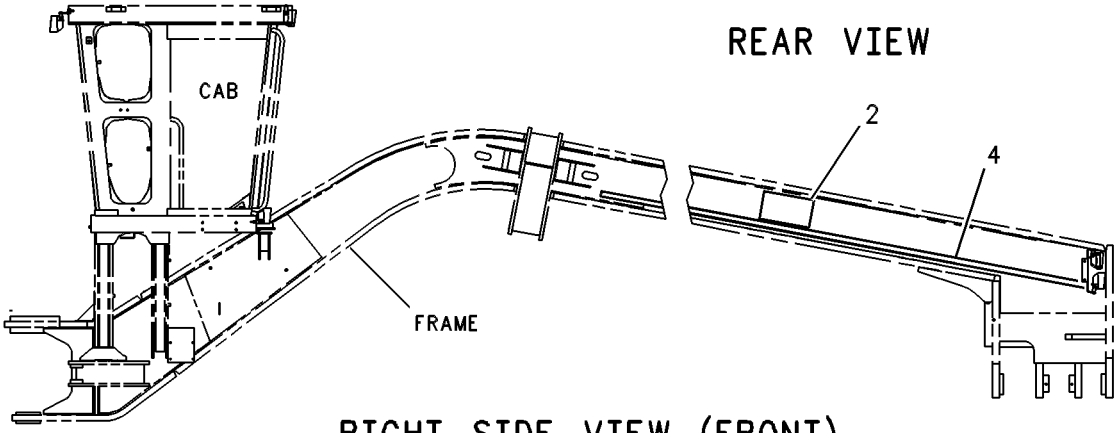

RIGHT SIDE VIEW (FRONT)

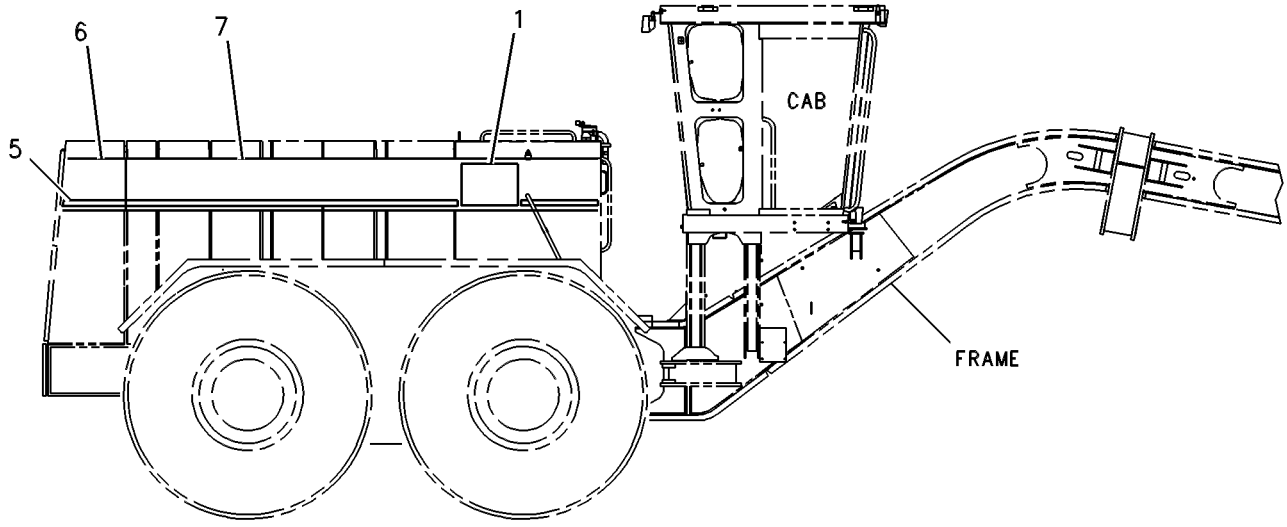

RIGHT SIDE VIEW (REAR)

GRAPHIC #1 g00284205

SERVICE EQUIPMENT AND SUPPLIES

3E-4456 PLATE & FILM GP

S/N: 7KK1-UP

PART OF 8X-8402 CHASSIS AR

SMCS-7405, 7557 **i01348083**

NOTE	PART NUMBER	QTY	PART NAME 1 2 3 4 5 6 (PRODUCT LEVEL)	SEE PAGE
	1P-2807	2	FILM (LIFT EYE LOCATION)	
			ON RH & LH OUTBOARD SIDE OF MAIN FRAME NEAR BLADE LIFT CYLINDER SUPPORTS	
Y	*128-2041*	1	FILM GP	876
	5P-1175	1	FILM-ENGINE OIL (ENGINE OIL FILL)	
			ON ENGINE OIL FILLER CAP	
	7X-3229	2	FILM-LIFT & TIE DOWN	
			CENTER OUTSIDE OF LH & RH REAR FRAME RAILS TO CENTER OF LIFTING EYES	
	185-1898	1	FILM-NOTICE (SHIPPING)	
			CENTER ON OUTSIDE OF LH REAR FRAME RAIL TO THE REAR OF THE LIFTING EYE	
	7X-7644	12	FILM-TIE DOWN	
			2-ON RH & LH BOTTOM OF MAINFRAME BOLSTER AS FRONT PLATE	
			2-ON RH & LH TIE DOWN EYES UNDER PLATFORM ON MAIN FRAME BELLY	
			2-ABOVE RH & LH TOW HOOKS ON MAIN FRAME BOLSTER AS	
			2-ON RH & LH REAR FRAME RAILS TO FRONT OF RIPPER MOUNTING BLADES	
			4-ON RH, LH & REAR OF CIRCLE	
	5P-4713	4	FILM-WARNING (DO NOT LIFT)	
			2-ABOVE RH & LH TOW HOOKS ON MAIN FRAME BOLSTER AS	
			2-ON RH & LH FRAME RAILS TO FRONT OF RIPPER MOUNTING PLATES	
	9X-1878	1	PLATE (PRODUCT IDENTIFICATION)	
			ON THE REAR LEFT SIDE ON THE OUTSIDE SURFACE OF THE CAB PLATFORM	
	3N-3790	1	PLATE-SERIAL NUMBER (ENGINE)	
			LOCATE ON LH SIDE OF BLOCK NEAR FRONT FACE AT BOTTOM OF WATER JACKET	
	6V-9648	1	PLATE-SERVICE INFORMATION	
			ON STEERING COLUMN	
	4B-4158	8	SCREW-DRIVE (3/16X0.25 IN)	

Y-SEPARATE ILLUSTRATION

SERVICE EQUIPMENT AND SUPPLIES

3E-4698 PLATE & FILM GP

S/N: 7KK1-UP
AN ATTACHMENT

SMCS-7405, 7557 **i01348203**

NOTE	REF NO	GRAPHIC REF	PART NUMBER	QTY	PART NAME 1 2 3 4 5 6 (PRODUCT LEVEL)	SEE PAGE
	1	1	**9T-7308**	5	FILM-WARNING (HIGH PRESSURE CYLINDER)	
	2	1	**5P-7244**	2	PLATE-WARNING (NO CLEARANCE)	
	3	1	**6V-4611**	2	FILM-WARNING (JUMPER CABLE)	
	4	1	**5P-3999**	1	PLATE-MAIN FRAME (DO NOT DRILL OR WELD)	
	5	1	**4B-4158**	12	SCREW-DRIVE (3/16X.25 IN)	
	6	1	**9Y-4294**	2	FILM-WARNING (FUEL INJECTOR)	
A	7	1	**159-3759**	2	FILM-INSTRUCTION (DO NOT DRILL/WELD ROPS)	
A	8	1	**7J-5311**	5	PLATE-WARNING (HIGH PRESSURE CYLINDER)	
A	9	1	**8T-6376**	5	PLATE-HYDRAULIC ACCUMULATOR	

A-NOT PART OF THIS GROUP

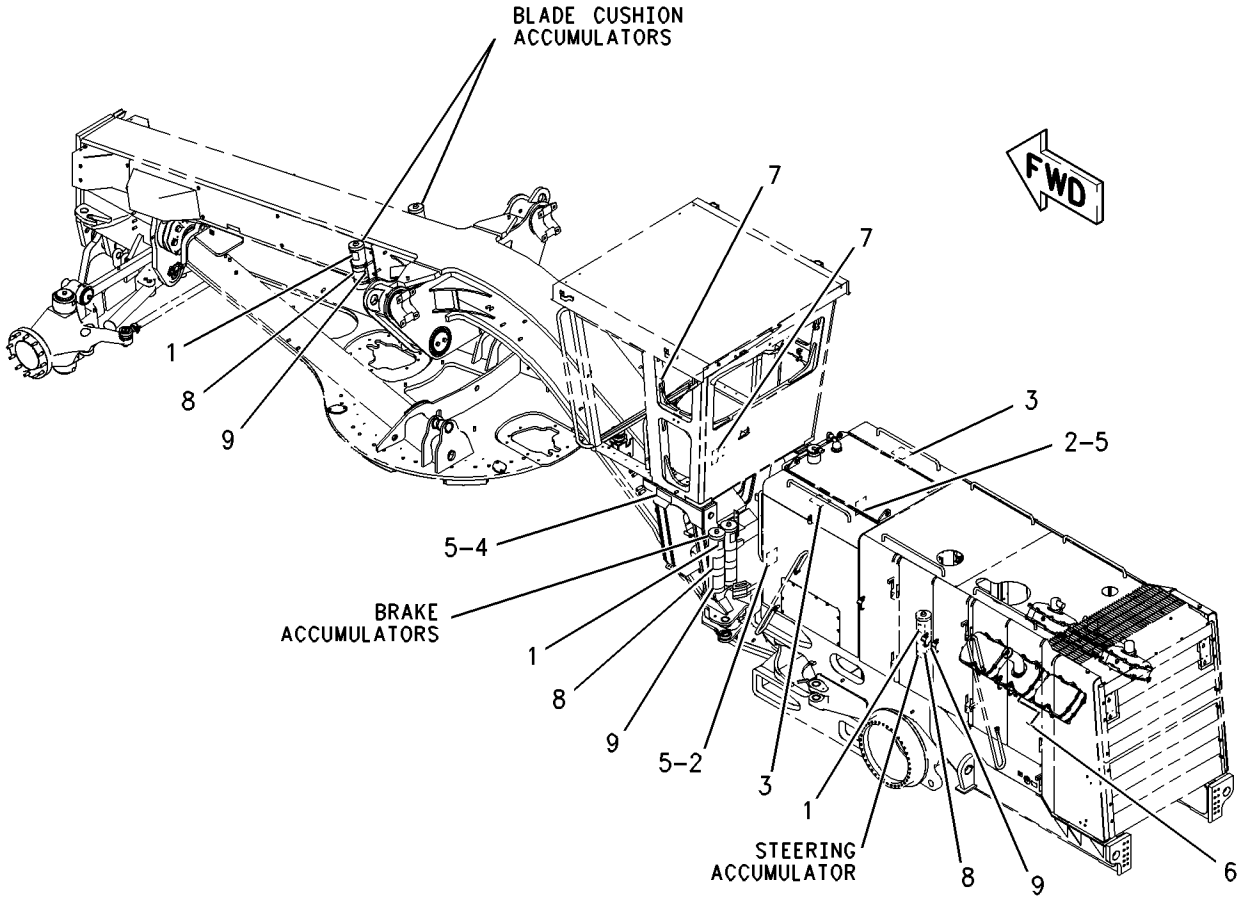

GRAPHIC #1 g00745596

SERVICE EQUIPMENT AND SUPPLIES

3E-4699 PLATE & FILM GP

S/N: 7KK1-UP
FRENCH
AN ATTACHMENT

SMCS-7405, 7557 **i00722906**

NOTE	PART NUMBER	QTY	PART NAME 1 2 3 4 5 6 (PRODUCT LEVEL)	SEE PAGE
	6V-4612	2	FILM-WARNING (JUMPER CABLE)	
			INSIDE EACH BATTERY BOX. CENTER ON COVER ASSEMBLY	
	7X-0943	5	FILM-WARNING (HIGH PRESS CYLINDER)	
			AS INDICATED:	
			2- ONE ON EACH BRAKE ACCUMULATOR LOCATED ON BACK SIDE OF REAR ROPS SUPPORT	
			2- ON ON EACH BLADE FLOAT ACCUMULATOR LOCATED ON FRONT FACE OF FUNNY FACE	
			1- ON STEERING ACCUMULATOR LOCATED ON COMBINATION VALVE AT THE RH INSIDE ON ENGINE END FRAME	
	104-0137	2	FILM-WARNING	
			ON RH & LH SIDE OF ENGINE ON CENTER VALVE COVER	
	5P-4000	1	PLATE-MAIN FRAME (DO NOT DRILL OR WELD)	
			ON LH SIDE OF MAIN FRAME ON LEFT FRONT PLATFORM SUPPORT PLATE	
	1P-7082	4	PLATE-WARNING (HIGH PRESS CYLINDER)	
			ON BRAKE AND BLADE LIFT ACCUMULATORS	
	1S-3399	2	PLATE-WARNING	
			ON EACH SIDE OF FUEL TANK - ABOVE HYD TANK SUPPORTS	
	4B-4158	12	SCREW (DRIVE)	

SERVICE EQUIPMENT AND SUPPLIES

3E-4700 PLATE & FILM GP

S/N: 7KK1-UP
GERMAN
AN ATTACHMENT

SMCS-7405, 7557 **i00721980**

NOTE	PART NUMBER	QTY	PART NAME 1 2 3 4 5 6 (PRODUCT LEVEL)	SEE PAGE
	6V-4615	2	FILM-WARNING (JUMPER CABLE)	
			INSIDE OF EACH BATTERY BOX	
	7X-0946	5	FILM-WARNING (HIGH PRESS. CYLINDER)	
			AS INDICATED:	
			2- ONE ON EACH BRAKE ACCUMULATOR LOCATED ON BACK SIDE OF REAR ROPS SUPPORT	
			2- ONE ON EACH BLADE FLOAT ACCUMULATOR LOCATED ON FRONT FACE OF FUNNY FACE	
			1- ON STEERING ACCUMULATOR LOCATED ON COMBINATION VALVE AT THE RH INSIDE ON ENGINE END FRAME	
	104-0140	2	FILM-WARNING	
			ON RH & LH SIDE OF ENGINE ON CENTER VALVE COVER	
	3E-5545	4	PLATE-INSTRUCTION (HYD ACCUMULATOR)	
			ON BRAKE AND BLADE LIFT ACCUMULATORS	
	1P-7084	4	PLATE-WARNING (HIGH PRESSURE)	
			ON BRAKE AND BLADE LIFT ACCUMULATORS	
	1S-3847	2	PLATE-WARNING	
			ON EACH SIDE OF FUEL TANK - ABOVE HYD TANK SUPPORTS	
	4B-4158	12	SCREW (DRIVE)	

SERVICE EQUIPMENT AND SUPPLIES

3E-4701 PLATE & FILM GP

S/N: 7KK1-UP
JAPANESE
AN ATTACHMENT

SMCS-7405, 7557 **i01187642**

NOTE	PART NUMBER	QTY	PART NAME 1 2 3 4 5 6 (PRODUCT LEVEL)	SEE PAGE
	6V-7225	4	FILM-WARNING (HIGH PRESSURE CYLINDER)	
			PLACE OVER ENGLISH PLATE PART NUMBER 7J-5311, LOCATED ON BRAKE AND BLADE LIFT ACCUMULATORS.	
	9X-6700	2	FILM-WARNING (JUMPER CABLE)	
			LOCATE INSIDE OF EACH BATTERY BOX. CENTER ON COVER ASSEMBLY.	
	104-0145	2	FILM-WARNING (UNIT INJECTOR)	
			LOCATE ON RH & LH SIDE OF ENGINE, ON CENTER VALVE COVER.	
	173-8295	5	FILM-WARNING (HIGH PRESSURE CYLINDER)	
			2- ONE ON EACH BRAKE ACCUMULATOR, LOCATED ON BACK SIDE OF REAR ROPS SUPPORT.	
			2- ONE ON EACH BLADE FLOAT ACCUMULATOR, LOCATED ON THE FRONT FACE OF FUNNY FACE.	
			1- ON STEERING ACCUMULATOR, LOCATED ON COMBINATION VALVE, AT THE RH INSIDE ON ENGINE END FRAME.	
	102-6628	4	PLATE-INSTRUCTION (HYDRAULIC ACCUMULATOR)	
			PLACE OVER ENGLISH PLATE PART NUMBER 8T-6376 LOCATED ON BRAKE AND BLADE LIFT ACCUMULATOR.	
	6V-7217	2	PLATE-WARNING (NO CLEARANCE)	
			LOCATE ON EACH SIDE OF FUEL TANK, ABOVE HYD. TANK SUPPORTS.	
	4B-4158	12	SCREW-DRIVE	

SERVICE EQUIPMENT AND SUPPLIES

3E-4702 PLATE & FILM GP

S/N: 7KK1-UP
PORTUGUESE
AN ATTACHMENT

SMCS-7405, 7557 **i00722912**

NOTE	PART NUMBER	QTY	PART NAME 1 2 3 4 5 6 (PRODUCT LEVEL)	SEE PAGE
	6V-4614	2	FILM-WARNING (JUMPER CABLE)	
			INSIDE OF EACH BATTERY BOX. CENTER ON COVER ASSEMBLY	
	7X-0945	5	FILM-WARNING (HIGH PRESS. CYLINDER)	
			AS INDICATED	
			2- ONE ON EACH BRAKE ACCUMULATOR LOCATED ON BACK SIDE OF REAR ROPS SUPPORT	
			2- ONE ON EACH BLADE FLOAT ACCUMULATOR LOCATED ON FRONT FACE OF FUNNY FACE	
			1- ON STEERING ACCUMULATOR LOCATED ON COMBINATION VALVE AT THE RH INSIDE ON ENGINE END FRAME	
	104-0139	2	FILM-WARNING	
			ON RH & LH SIDES OF ENGINE ON CENTER VALVE COVER	
	3E-5544	4	PLATE-INSTRUCTION (HYD ACCUMULATOR)	
			ON BRAKE AND BLADE LIFT ACCUMULATORS	
	1S-3846	2	PLATE-WARNING	
			ON EACH SIDE OF FUEL TANK - ABOVE HYD TANK SUPPORTS	
	9S-5113	4	PLATE-WARNING (HIGH PRESSURE)	
			ON BRAKE AND BLADE LIFT ACCUMULATORS	
	4B-4158	12	SCREW (DRIVE)	

SERVICE EQUIPMENT AND SUPPLIES

3E-4703 PLATE & FILM GP

S/N: 7KK1-UP
SPANISH
AN ATTACHMENT

SMCS-7405, 7557 **i00722936**

NOTE	PART NUMBER	QTY	PART NAME 1 2 3 4 5 6 (PRODUCT LEVEL)	SEE PAGE
	6V-4613	2	FILM-WARNING (JUMPER CABLE)	
			INSIDE OF EACH BATTERY BOX. CENTER ON COVER ASSEMBLY	
	7X-0944	5	FILM-WARNING (HIGH PRESS. CYLINDER)	
			AS INDICATED	
			2- ONE ON EACH BRAKE ACCUMULATOR LOCATED ON BACK SIDE OF REAR ROPS SUPPORT	
			2- ONE ON EACH BLADE FLOAT ACCUMULATOR LOCATED ON FRONT FACE OF FUNNY FACE	
			1- ON STEERING ACCUMULATOR LOCATED ON COMBINATION VALVE AT THE RH INSIDE ON ENGINE END FRAME	
	104-0138	2	FILM-WARNING	
			ON RH & LH SIDE OF ENGINE ON CENTER VALVE COVER	
	3E-5543	4	PLATE-INSTRUCTION (HYD ACCUMULATOR)	
			ON BRAKE AND BLADE LIFT ACCUMULATORS	
	5P-4001	1	PLATE-MAIN FRAME (DO NOT DRILL OR WELD)	
			ON LH SIDE OF MAIN FRAME ON LEFT FRONT PLATFORM SUPPORT PLATE	
	1P-7083	4	PLATE-WARNING (HIGH PRESSURE)	
			ON BRAKE AND BLADE LIFT ACCUMULATORS	
	1S-3400	2	PLATE-WARNING	
			ON EACH SIDE OF FUEL TANK - ABOVE HYD TANK SUPPORTS	
	4B-4158	12	SCREW (DRIVE)	

SERVICE EQUIPMENT AND SUPPLIES

127-7436 PLATE & FILM GP

S/N: 7KK1-UP
ENGLISH
AN ATTACHMENT

SMCS-7405, 7557 **i00723140**

NOTE	PART NUMBER	QTY	PART NAME 1 2 3 4 5 6 (PRODUCT LEVEL)	SEE PAGE
	125-0473	1	FILM-ADHESIVE	
			LOCATE ON CENTER OF PANEL BENEATH FUSE PANEL USE ONLY WHEN MACHINE IS EQUIPPED WITH ENGINE PRELUBE	
	129-6728	2	FILM-NOTICE	
			LOCATE AS INDICATED:	
			1- ON BOTTOM FACE OF RADIO MOUNTING BRACKET	
			1- ON BACK SIDE OF RADIO MOUNTING BRACKET COVER PLATE	
	6V-9648	1	PLATE-SERVICE INFORMATION	
			LOCATE ON REAR OF OPERATOR STEERING CONSOLE	
	5P-8197	1	PLATE-WARNING (DO NOT OPERATE)	
			LOCATE ON REAR OF OPERATOR STEERING CONSOLE	
	4B-4158	8	SCREW (DRIVE)	

SERVICE EQUIPMENT AND SUPPLIES

127-7437 PLATE & FILM GP

S/N: 7KK1-UP
FRENCH, CAB
AN ATTACHMENT

SMCS-7405, 7557 **i00722974**

NOTE	PART NUMBER	QTY	PART NAME 1 2 3 4 5 6 (PRODUCT LEVEL)	SEE PAGE
	130-2408	2	FILM-NOTICE	
			1 - ON BOTTOM FACE OF RADIO MOUNTING BRACKET	
			1 - ON BACK SIDE OF RADIO MOUNTING BRACKET COVER PLATE	
	6V-9648	1	PLATE-SERVICE INFORMATION	
			ON REAR OF OPERATOR STEERING CONSOLE	
	5P-8198	1	PLATE-WARNING	
			ON REAR OF OPERATOR STEERING CONSOLE	
	4B-4158	8	SCREW-DRIVE	

SERVICE EQUIPMENT AND SUPPLIES

127-7438 PLATE & FILM GP

S/N: 7KK1-UP
GERMAN
AN ATTACHMENT

SMCS-7405, 7557 **i00790921**

NOTE	PART NUMBER	QTY	PART NAME 1 2 3 4 5 6 (PRODUCT LEVEL)	SEE PAGE
	130-2411	2	FILM-NOTICE	
			1 - ON BOTTOM FACE OF RADIO MOUNTING BRACKET	
			1 - ON BACK SIDE OF RADIO MOUNTING BRACKET COVER PLATE	
	6V-9648	1	PLATE-SERVICE INFORMATION	
			ON THE REAR OF OPERATOR STEERING CONSOLE	
	5P-8201	1	PLATE-WARNING (DO NOT OPERATE)	
			ON THE REAR OF OPERATOR STEERING CONSOLE	
	4B-4158	8	SCREW-DRIVE	

SERVICE EQUIPMENT AND SUPPLIES

127-7439 PLATE & FILM GP

S/N: 7KK1-UP
JAPANESE, CAB
AN ATTACHMENT

SMCS-7405, 7557 **i00722982**

NOTE	PART NUMBER	QTY	PART NAME 1 2 3 4 5 6 (PRODUCT LEVEL)	SEE PAGE
	130-2416	2	FILM-NOTICE	
			1 - ON BOTTOM FACE OF RADIO MOUNTING BRACKET	
			1 - ON BACK SIDE OF RADIO MOUNTING BRACKET COVER PLATE	
	6V-9648	1	PLATE-SERVICE INFORMATION	
			ON REAR OF OPERATOR STEERING CONSOLE	
	5P-8203	1	PLATE-WARNING	
			ON REAR OF OPERATOR STEERING CONSOLE	
	4B-4158	8	SCREW-DRIVE	

SERVICE EQUIPMENT AND SUPPLIES

127-7440 PLATE & FILM GP

S/N: 7KK1-UP
PORTUGUESE, CAB
AN ATTACHMENT

SMCS-7405, 7557 **i00722733**

NOTE	PART NUMBER	QTY	PART NAME 1 2 3 4 5 6 (PRODUCT LEVEL)	SEE PAGE
	130-2410	2	FILM-NOTICE	
			1 - ON BOTTOM FACE OF RADIO MOUNTING BRACKET	
			1 - ON BACK SIDE OF RADIO MOUNTING BRACKET COVER PLATE	
	6V-9648	1	PLATE-SERVICE INFORMATION	
			ON REAR OF OPERATING STEERING CONSOLE	
	5P-8200	1	PLATE-WARNING	
			ON REAR OF OPERATING STEERING CONSOLE	
	4B-4158	8	SCREW-DRIVE	

SERVICE EQUIPMENT AND SUPPLIES

128-3621 PLATE & FILM GP

S/N: 7KK1-UP
SPANISH, CAB
AN ATTACHMENT

SMCS-7405, 7557 **i00775681**

NOTE	PART NUMBER	QTY	PART NAME 1 2 3 4 5 6 (PRODUCT LEVEL)	SEE PAGE
	130-2409	2	FILM-NOTICE	
			1 - ON BOTTOM FACE OF RADIO MOUNTING BRACKET	
			1 - ON BACK SIDE OF RADIO MOUNTING BRACKET COVER PLATE	
	6V-9648	1	PLATE-SERVICE INFORMATION	
			ON REAR OF OPERATOR STEERING CONSOLE	
	5P-8199	1	PLATE-WARNING	
			ON REAR OF OPERATOR STEERING CONSOLE	
	4B-4158	8	SCREW-DRIVE	

SERVICE EQUIPMENT AND SUPPLIES

154-7089 PLATE & FILM GP

S/N: 7KK1-UP
INDONESIAN
AN ATTACHMENT

SMCS-7405, 7557 **i01188027**

NOTE	PART NUMBER	QTY	PART NAME 1 2 3 4 5 6 (PRODUCT LEVEL)	SEE PAGE
	173-8301	4	FILM-INSTRUCTION (HYDRAULIC ACCUMULATOR)	
			PLACE OVER ENGLISH PLATE PART NUMBER 8T-6376, LOCATED ON BRAKE AND BLADE LIFT ACCUMULATORS.	
	151-5895	2	FILM-WARNING (UNIT INJECTOR)	
			LOCATE ON LH SIDE OF ENGINE, ON CENTER VALVE COVER.	
	173-8297	2	FILM-WARNING (JUMPER CABLE)	
			LOCATE INSIDE OF EACH BATTERY BOX. CENTER ON COVER.	
	173-8298	5	FILM-WARNING (HIGH PRESSURE CYLINDER)	
			2- ONE ON EACH BRAKE ACCUMULATOR, LOCATED ON BACK SIDE OF REAR ROPS SUPPORT.	
			2- ONE ON EACH BLADE FLOAT ACCUMULATOR, LOCATED ON FRONT FACE OF FUNNY FACE.	
			1- ON STEERING ACCUMULATOR LOCATED ON COMBINATION VALVE, AT THE RH INSIDE ON ENGINE END FRAME.	
	173-8300	4	FILM-WARNING (HIGH PRESSURE CYLINDER)	
			PLACE OVER ENGLISH PLATE PART NUMBER 7J-5311, LOCATED ON BRAKE AND BLADE LIFT ACCUMULATORS.	
	173-8296	1	PLATE (DO NOT DRILL OR WELD)	
			LOCATE ON LH SIDE OF MAIN FRAME, ON LEFT FRONT PLATFORM SUPPORT PLATE.	
	152-7123	2	PLATE-WARNING (NO CLEARANCE FOR MACH TURN)	
			LOCATE ON EACH SIDE OF FUEL TANK, ABOVE HYD. TANK SUPPORTS.	
	4B-4158	12	SCREW-DRIVE	

SERVICE EQUIPMENT AND SUPPLIES

154-7090 PLATE & FILM GP

S/N: 7KK1-UP
INDONESIAN
AN ATTACHMENT

SMCS-7405, 7557 **i01188094**

NOTE	PART NUMBER	QTY	PART NAME 1 2 3 4 5 6 (PRODUCT LEVEL)	SEE PAGE
	9X-1883	1	PLATE-INFORMATION (SERVICE NUMBERS)	
			LOCATE ON REAR OF OPERATOR STEERING CONSOLE.	
	152-7124	1	PLATE-WARNING (DO NOT OPERATE)	
			LOCATE ON REAR OF OPERATOR STEERING CONSOLE.	
	4B-4158	12	SCREW-DRIVE	

SERVICE EQUIPMENT AND SUPPLIES

8X-9237 TOOL BOX GP

S/N: 7KK1-66

PART OF 8X-8402 CHASSIS AR

SMCS-7259 **i00545219**

NOTE	REF NO	GRAPHIC REF	PART NUMBER	QTY	PART NAME 1 2 3 4 5 6 (PRODUCT LEVEL)	SEE PAGE
	1	1	**129-7249**	1	TOOL BOX	
	2	1	**5P-8502**	1	PADLOCK GP	
A		1	**5P-8500**	1	KEY	
A		1	**8Y-6364**	1	SLEEVE	
	3	1	**8T-4121**	4	WASHER (2.5MM THK)	
M	4	1	**8T-4137**	4	BOLT (M10X1.50X20MM)	

A-NOT PART OF THIS GROUP
M-METRIC PART

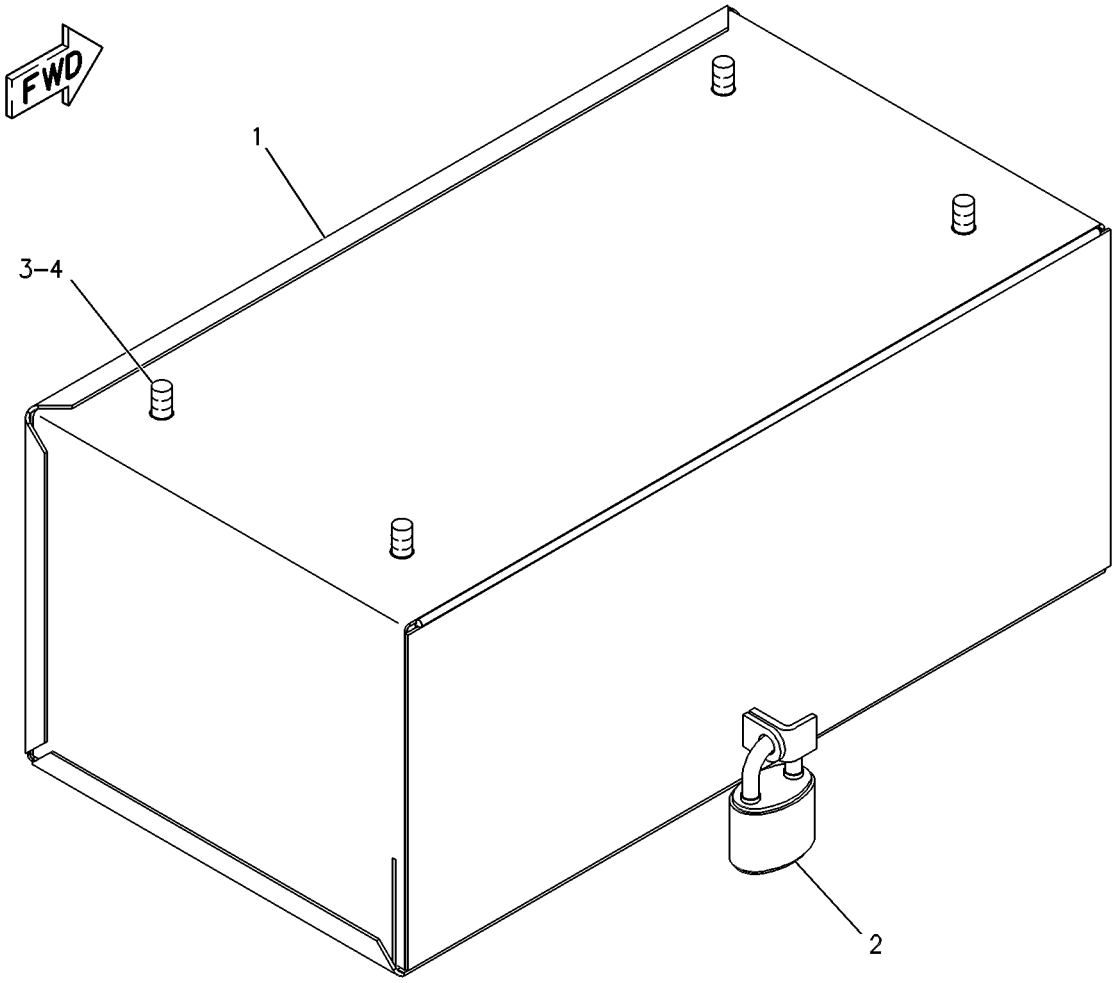

GRAPHIC #1 g00086506

MEMORANDA

PART NUMBER INDEX

Part	Page
0	
0L-1143	69
	70
	78
	94
	98
	102
	172
	542
0L-1178	432
0L-1351	11
	12
	52
	75
	76
	78
	168
	438
	442
	446
	449
	450
	606
0L-1352	55
	56
	94
	96
	98
	102
0L-2070	72
	76
	78
	174
	176
	178
	180
	182
	184
	186
0S-0130	558
	560
0S-0484	430
	453
0S-0509	8
	10
	136
	168
	334
	378
	688
0S-1566	13
	222
	224
0S-1569	405
	409
0S-1571	51
	76
	78
	96
	128
	168
	222
	224
0S-1585	46
	222
	224
	402
	449
	450
	606
0S-1587	94
	98
	102
	370
	405
	409
0S-1588	16
	52
	55
	94
	96
	98
	102
	168
	172
	439
	443
	447
0S-1589	432
0S-1590	76
	128
	136
	790
	792
0S-1591	76
	94
	98
	102
	112
	114
	116
	136
	370
	790
	792
0S-1594	8
	11
	12
	14
	76
	94
	98
	102
	108
	109
	110
	136
	168
	334
	372
	404
	405
	408
	409
	460
	606
	784
	786
0S-1595	222
	224
	378
	668
	790
	792
0S-1599	424
0S-1617	128
	146
	154
	174
	176
	178
	180
	182
	184
	186
	194
	195
	196
	197
	198
	200
	202
0S-1618	8
	146
	154
	156
0S-1619	55
	70
	94
	96
	98
	102
	428
0S-1620	334
0S-1621	378
0S-2318	431
	454
0T-0055	14
0T-0065	96
	422
0T-0102	370
	378
0T-0318	378
0T-0573	56
	57
	96
	128
1	
1A-0168	48
1A-1135	112
	114
	116
1A-1415	606
1A-1460	48
	222
	224
	404
	408
	790
	792
1A-2029	48
	52
	55
	76
	78
	94
	98
	102
	370
	376
	377
	429
	606
1A-2209	576
1A-2223	370
	432
1A-3103	404
	408
1A-4350	852
	853
1A-5183	428
1A-5822	405
	409
1A-5964	55
	188
	189
	190
	191
1A-9579	18
1B-2578	313
	314
1B-2713	811
1B-2790	18
	168
1B-2886	94
	98
	102
	650
1B-7182	112
	114
	116
	128
	193
1B-8701	264
	344
	350
1B-8705	10
	51
1B-9575	52
	146
	154
	156
	168
1C-0569	854
1D-4539	470
	472
	474
1D-4541	40
	42
	146
	154

► **PRIMARY REFERENCE**

PART NUMBER INDEX

Part	Page	Part	Page	Part	Page	Part	Page
	156		447	1P-4078	404	1S-7251	82
1D-4566	52	1J-6472	600		408		288
1D-4593	404	1J-9671	706	1P-4278	106		292
	408		708		120		296
1D-4689	546	1K-6872	546		122		344
	548		548		126		345
1D-4691	546		784		496		350
	548		786	1P-4578	90		351
1D-4706	128	1K-9007	122		414	1S-7252	82
1D-5976	750		344		418		288
1D-6306	750		356	1P-4579	90		292
1F-0750	73	1L-3162	460		414		296
	74	1L-4349	688		418	1S-7446	298
	88	1L-5072	688		641		302
	120	1L-7205	438		654	1S-8687	8
	122		442	1P-4582	414	1S-8976	92
	124		446		418	1S-9209	48
	141	1L-9080	853	1P-5762	90	1S-9593	458
	222	1M-0644	84	1P-6356	820		459
	224	1M-1230	811	1P-7082	880		466
	790		848	1P-7083	884		467
	792	1M-3419	130	1P-7084	881		468
1F-2771	48	1M-3937	423	1P-7346	51		745
1F-7958	8	1M-6119	226	1P-7834	404		746
	168		227		408	1T-0132	480
	222		288	1P-7835	404		484
	224		292		408	1T-0136	438
	378		296	1P-7919	80		442
	404		344	1P-9261	422		446
	408		350	1P-9269	378	1T-0310	480
	790	1M-6120	226		404		484
	792		227		408	1T-0414	422
1G-9732	578		288	1Q-5461	434	1T-0416	470
1H-0337	706		292	1Q-5468	434		472
	708		296	1R-0716	72		474
1H-0974	429		344	1R-0722	688		574
1H-1023	298		350	1R-0741	392	1T-0550	52
	302	1M-6718	744	1R-0749	168	1T-0680	439
	672	1M-8649	688	1S-0994	330		443
1H-2415	222	1M-9968	299		641		447
	224		303	1S-0996	344	1T-0720	52
1H-2629	298	1M-9971	298		350	1T-0782	438
	302		302	1S-1014	288		442
1H-3244	220	1N-3279	144		292		446
	358	1N-4929	94		296	1T-0786	438
1H-3338	802		98		344		442
	804		102		350		446
1H-3937	684	1N-5998	688	1S-3399	880	1T-0794	438
	685	1N-5999	40	1S-3400	884		442
1H-4318	780		42	1S-3725	378		446
1H-6227	394		602	1S-3846	883	1T-0795	438
	396	1N-6002	740	1S-3847	881		442
	398	1P-0014	423	1S-4244	489		446
	400	1P-0016	422		493	1T-0804	438
1H-8128	555	1P-0436	168		496		442
	583		193	1S-4589	222		446
1H-8306	208	1P-2378	827		224	1T-0806	438
	212	1P-2807	878	1S-4915	288		442
1J-3527	755	1P-3703	566		292		446
	757	1P-3705	90		296	1T-0807	439
	758		641		344		442
	759	1P-3706	414		345		447
	760		418		350	1T-0847	439
1J-4034	439	1P-3707	206		351		442
	443	1P-3958	424	1S-6595	378		447

► **PRIMARY REFERENCE**

PART NUMBER INDEX

Part	Page
1T-0867	438
	442
	446
1T-0887	442
	446
1T-0895	438
	442
	446
1T-0896	439
	443
	447
1T-0897	438
	442
	446
1T-0936	438
	442
	446
1T-1006	438
	442
	446
1T-1011	438
	442
	446
1T-1012	438
	442
	446
1T-1220	438
	442
	446
1T-1221	438
	442
	446
1T-1222	438
	442
	446
1T-1223	438
	442
	446
1T-1224	438
	442
	446
1T-1229	438
	442
	446
1T-1236	438
	442
	446
1T-1315	442
	446
1T-1353	438
	442
	446
1T-1356	439
	442
	446
1T-1359	438
	442
	446
1T-1410	439
	443
	447
1T-1423	438
	442
	446
1T-1426	442
1T-1452	438
	442
	446
1T-1498	438
	442
	446
1T-1616	438
	442
	446
1T-1617	438
	442
	446
1T-1657	438
	442
	446
1T-1658	438
	446
1T-1659	438
	442
	446
1T-1814	438
	446
1T-1815	438
	442
	446
1T-1834	439
	443
1T-1856	438
	442
	446
1T-1857	438
	442
	446
1T-1881	▶438
	449
1T-1910	438
	442
	446
1T-2000	438
	442
	446
1T-2001	438
1T-2002	438
1T-2003	438
1T-2028	▶442
	▶446
1U-2405	776
1U-2827	688
1U-3130	577
1U-3875	577
1U-3876	577
1U-5933	560
1U-8698	606
1U-8846	14
	40
	42
1V-3593	815
	874
1V-5773	796
1V-6341	260
1V-8506	848
1V-8795	574
1V-8796	574
1W-3136	55
1W-4755	76
1W-4795	144
1W-5278	73
1W-5283	35
	36
1W-5380	136
1W-5381	128
1W-6694	134
1W-6702	622
	626
	630
	632
	636
1W-7384	134
1W-9460	60
1Y-1965	134
	795
2	
2A-1538	68
2A-3211	742
	743
	846
2A-3746	146
	154
	156
2A-3798	372
	404
2A-4429	44
	45
2A-4639	404
	408
	790
	792
2A-6684	815
2A-6908	796
2A-7122	380
	382
2A-7151	384
	386
2A-7152	384
2A-7154	384
2A-7163	380
	382
2A-7174	394
	396
	398
	400
2A-7180	384
	386
2A-7184	796
2A-7322	384
2B-0941	610
	614
	618
2B-2694	470
	472
	474
2B-2695	51
	309
	461
	462
2B-7410	606
2B-9373	428
2D-0714	596
2D-1290	542
2D-2444	476
	477
2D-2508	476
	477
2D-2509	476
	477
2D-6235	811
2D-6374	46
2D-6392	298
	302
2D-6398	52
2D-6533	606
2D-6642	384
	424
2D-8009	428
	606
2D-8363	422
2D-9457	384
	386
2F-0808	144
2F-6678	299
	303
2F-7306	836
2F-8509	676
2F-9064	384
	386
2G-0339	606
2G-0478	606
2G-1202	581
2G-5558	558
	560
2G-5593	558
	560
2G-5677	558
	560
2G-5681	558
	560
2G-6535	565
	▶581
2G-6595	476
	477
2G-6740	692
	694
2G-6747	692
	694
2G-6748	692
	694
2G-6749	692
	694
2G-6751	692
	694
2G-6752	692
	694
2G-6755	692
	694
2G-6756	692
	694
2G-6757	692
	694
2G-7282	581

▶ **PRIMARY REFERENCE**

PART NUMBER INDEX

Part	Page
2G-8071	558
	560
2G-8241	827
2G-8242	827
2G-8572	692
	694
	796
	827
2G-8573	692
	694
	796
	827
2G-8932	581
2G-9000	▶145
	206
	208
2G-9491	480
	484
	590
2H-1190	146
	154
	156
2H-2665	405
	409
2H-3429	264
	298
	302
	344
	350
2H-3755	368
2H-3920	317
	318
	322
	326
2H-3922	308
2H-3928	686
	687
2H-3931	662
2H-3932	412
2H-4145	581
2H-5549	602
2H-6340	558
	560
2H-6488	55
2J-0564	592
	600
2J-1799	390
2J-3507	755
	757
	758
	759
	760
2J-3961	594
	604
2J-6089	742
	743
2J-6356	392
2J-7767	596
2J-8163	298
	302
2J-8937	832
2K-0337	412
2K-0703	772
	774
2K-2813	40
2K-4096	592
	600
2K-4472	404
	408
2K-4615	768
2K-4821	220
2K-4973	56
	57
	130
	133
	141
	688
	854
	862
	866
2K-6279	768
2K-6830	555
	583
	598
2K-7979	796
2K-8199	710
	712
	714
	716
	718
	720
	722
	724
	726
	728
	732
	734
2K-8257	402
2L-6679	299
2L-6726	264
	344
	351
2L-8075	220
2M-0849	784
	786
2M-1395	92
2M-2488	14
2M-2742	8
2M-3340	380
	382
2M-3403	370
2M-4036	562
2M-5173	134
2M-9780	72
	82
	217
	566
	610
	614
	618
	641
	648
	706
	708
	747
2N-0822	402
2N-1287	52
2N-2765	143
2N-2766	139
	140
	143
2N-3162	842
	844
2N-3479	818
2N-5775	34
2N-7174	40
	42
2N-7228	66
2N-8109	18
	71
2N-9827	48
2P-0018	542
2P-1014	428
2P-1279	742
	743
2P-1293	622
	626
	641
2P-1294	405
	409
2P-1974	14
2P-2508	3
2P-2772	11
	12
	55
2P-2817	60
2P-2975	345
	351
2P-3203	59
2P-3205	84
2P-3206	188
	189
	190
	191
2P-3760	76
2P-3761	76
2P-4339	361
2P-4538	460
2P-5616	220
2P-5860	422
2P-6578	488
	492
	496
2P-7418	133
2P-8511	80
2P-9845	69
2R-0368	780
2R-1939	508
	512
	514
	520
2R-2376	808
2S-0696	462
	464
2S-1914	384
	386
2S-2053	73
2S-2760	84
2S-4078	378
	414
	418
	706
	708
2S-4080	429
2S-4872	462
	464
2S-6150	8
2S-6151	8
2S-6160	8
2S-7010	74
2S-9006	8
2T-1925	524
	528
2T-2396	524
	528
2U-7354	747
2V-0099	360
	780
2V-8652	330
2V-9166	489
	493
	496
2W-0219	72
2W-0534	75
2W-1733	20
	22
2W-1734	20
	22
	24
2W-3815	26
	28
2W-4088	20
2W-5698	144
2W-6000	26
2W-6687	128
2W-7434	94
	98
	102
2W-7609	52
2W-7610	52
2W-7615	52
2W-7675	52
2W-8038	52
2W-8225	72
2W-9319	4
	▶11
2W-9626	141
2W-9637	133
2W-9638	132
3	
3B-0551	208
	212
3B-0623	35
	36
3B-0645	30
	32
	33
	35
	36
3B-1915	94
	98
	102
	136
	222
	224
	790

▶ **PRIMARY REFERENCE**

PART NUMBER INDEX

Part	Page	Part	Page	Part	Page	Part	Page
	792	3D-5852	476		247		191
3B-4501	780		477		257		578
3B-4502	846	3D-6215	558		267	3E-6772	40
3B-4505	574		560		284		42
3B-4506	460	3D-6509	384		336	3E-6900	236
3B-4607	562		386		340	3E-7181	360
	796	3D-6678	688	3E-3377	261	3E-7294	358
	842	3D-8317	464	3E-3383	800	3E-7417	676
	844	3D-8422	394		829		678
3B-4615	489		400		838	3E-7689	336
	493	3D-8513	384	3E-3389	317		340
	496	3D-8747	811	3E-3535	820	3E-7700	▶262
3B-4617	8	3D-8748	811	3E-3658	794		842
3B-4627	832	3D-8749	811	3E-3747	466	3E-7753	208
3B-4628	610	3D-8752	811	3E-3748	▶466		212
	614	3D-9552	384		472	3E-7771	298
	618		386	3E-4046	378		303
3B-5325	776	3D-9553	384	3E-4051	820	3E-7842	332
	777		386	3E-4052	820	3E-8043	796
3B-6491	208	3E-0109	366	3E-4055	820	3E-8646	318
	212	3E-0154	82	3E-4057	820		322
3B-6552	134		▶311	3E-4058	820		326
	529		▶312	3E-4302	676	3E-8766	360
3B-7255	824	3E-0155	▶317		678		364
3B-7285	508		318	3E-4312	785	3E-8769	360
	514		322	3E-4321	524	3E-8770	360
3B-7722	412		326		528	3E-8775	364
3B-7733	508	3E-0400	780	3E-4335	836		366
	518	3E-1841	780	3E-4336	836	3E-8781	360
3B-7734	508	3E-1906	▶788	3E-4362	836	3E-8782	360
	514		▶789	3E-4456	1	3E-8783	360
3B-8485	534		792		▶878	3E-8812	364
	535	3E-3361	466	3E-4698	▶879	3E-8821	319
3B-8489	524	3E-3362	466	3E-4699	▶880		323
	528		468	3E-4700	▶881		327
	535	3E-3365	122	3E-4701	▶882	3E-8822	319
	536		219	3E-4702	▶883		323
	748		255	3E-4703	▶884		327
	772		260	3E-5169	336	3E-8825	319
	774		280		340		323
3C-6969	361		281	3E-5239	358		327
3D-0490	404		286		360		360
	408		310		364		361
3D-2824	370		332		366		364
	374		336	3E-5464	780		366
	414		344	3E-5543	884	3E-8857	364
	418		356	3E-5544	883		366
	422		458	3E-5545	881	3E-9199	230
	564		459	3E-6328	▶219		231
	565		780		360	3E-9330	319
	610		838	3E-6333	286		323
	614		846	3E-6389	▶247		327
	618	3E-3368	40		818	3E-9865	796
	622		268	3E-6392	780	3F-0379	298
	626		269	3E-6466	122		302
	630		272		▶256	3F-3442	422
	632		273		318	3F-5792	378
	636		274		322		405
	641		275		326		409
	654		276		344		670
	656		277		356	3F-6156	71
	658		278	3E-6575	836	3F-7514	796
	704		279	3E-6747	188	3F-8156	577
3D-2871	55		282		189	3F-9194	476
3D-2992	378	3E-3371	168		190		477

▶ **PRIMARY REFERENCE**

PART NUMBER INDEX

Part	Page	Part	Page	Part	Page	Part	Page
3F-9556	574		658		525		741
	702	3G-8171	745		528		747
	730	3G-8175	745		534	3K-0806	584
	874		746		535	3K-0835	838
3G-0910	596	3G-8592	740		536	3K-1470	172
3G-0911	596	3H-0107	686		540	3K-3256	14
3G-2292	51		687		566		56
3G-2582	772	3H-0110	378		641		57
	774	3H-1461	404		661	3K-4897	834
3G-2791	592		408		706	3K-6060	796
3G-2960	555	3H-5788	610		708	3K-6401	506
	583		614		741	3K-8460	706
3G-3265	808		618	3J-8500	681	3K-8510	772
3G-3498	688	3H-5841	862	3K-0360	82		774
3G-3726	739	3H-5932	228		164	3K-8782	318
3G-6891	672	3H-6782	818		208		322
3G-6906	672	3H-9269	76		212		326
3G-6907	672	3J-1907	164		240		364
3G-7397	▶555		208		332		366
	556		212		336	3L-2875	52
3G-7399	▶556		332		340	3L-3380	298
3G-7444	740		336		344		302
3G-8047	524		340		351	3L-9409	402
	528		370		374	3L-9410	402
	564		374		394	3M-7045	540
	566		380		398	3N-3763	299
	610		382		400		303
	614		392		449	3N-3790	878
	618		414		450	3P-1323	26
	630		418		525		28
	632		422		528		32
	636		434		564	3P-2404	332
	648		458		565	3P-2414	423
	652		459		571	3P-2573	439
	656		460		580		442
	658		470		610		443
3G-8054	374		540		614		447
	524		558		618	3P-2574	439
	528		560		622		443
	564		564		626		447
	566		565		630	3P-2685	423
	610		571		632	3P-2768	423
	614		580		636	3P-2792	423
	618		641		648	3P-2793	423
	630		648		650		424
	632		654		652	3P-2794	423
	636		706		654	3P-3246	424
	648		708		656	3P-3304	423
	652		736		658	3P-3321	423
	656		739		661	3P-3495	402
	658		742		708	3P-3737	424
3G-8057	374		743		710	3P-3743	422
	524		744		712	3P-4050	422
	528	3J-2333	606		714	3P-6061	402
	564	3J-3712	378		716	3P-7447	422
	566	3J-4818	862		718		423
	610		866		720	3P-7489	422
	614	3J-5390	525		722	3P-7832	422
	618		528		724	3P-8485	464
	630	3J-6021	470		726	3P-9498	705
	632	3J-7354	216		728		708
	636		332		732	3P-9658	402
	648		374		734	3P-9847	90
	652		414		738		106
	656		418		740	3R-1317	132

▶ **PRIMARY REFERENCE**

PART NUMBER INDEX

Part	Page
3R-2360	414
	418
3R-3602	768
3R-8801	298
	303
3S-0004	428
3S-0036	55
3S-0127	438
	442
	446
3S-1307	14
3S-2093	122
	319
	323
	327
	332
	334
	342
	344
	351
	356
	364
	366
	470
	472
	474
	780
	870
	874
3S-2708	423
	424
3S-2909	522
	590
3S-6049	288
	292
3S-6050	288
	292
	296
3S-6605	30
	32
	33
	146
	154
	156
3S-7023	380
	382
	598
3S-8652	392
3S-8664	106
3S-9643	94
	98
	102
3T-0304	838
3T-2139	423
3T-2662	360
	364
	366
3T-3043	350
3T-3044	350
3T-3045	336
	340
3T-3123	360
3T-3158	360
3T-3197	780
3T-3270	360
3T-3272	360
3T-3410	342
3T-3412	350
3T-3418	298
	302
3T-3422	298
	302
3T-3423	298
	299
	302
	303
3T-3424	298
	299
	302
	303
3T-3434	298
	302
3T-3494	464
3T-4215	464
3T-4709	299
3T-4710	299
3T-5446	▶428
	429
3T-5447	▶429
	609
3T-6175	404
	408
3T-6354	220
3T-6774	811
3T-6989	428
3T-6990	428
3T-6992	428
3T-8236	706
	708
3T-9494	299
	302
	303
3T-9524	298
	303
3T-9525	299
	302
3V-0403	641
3V-0613	489
	493
	496
3V-2024	772
	774
3V-2844	808
	818
	830
	838
3V-4694	318
	322
	326
3V-8621	768
3W-3465	808
3W-4871	796
3Y-2806	796
4B-0418	168
	390
4B-2049	299
	303
	846
4B-2051	330
4B-4158	878
	879
	880
	881
	882
	883
	884
	885
	886
	887
	888
	889
	890
	891
	892
4B-4161	72
4B-4274	264
	345
	351
	838
4B-4276	466
4B-4278	862
4B-4283	874
4B-4314	796
4B-4863	330
	360
	364
	366
4B-5324	334
	364
	366
	424
4B-9783	384
4B-9880	464
4D-0514	506
4D-0537	380
	382
4D-1326	312
	313
4D-1836	336
	340
4D-2297	739
	742
	743
4D-3100	778
4D-3120	584
4D-3704	50
4D-4431	602
4D-4823	606
4D-5642	558
	560
4D-5980	206
4D-6432	852
	853
	854
4D-6473	408
4D-7259	606
4D-7388	330
	334
	345
	351
4D-7534	384
4D-7536	384
	386
4D-7541	384
	386
4D-7794	525
	529
4D-8148	432
4D-8186	606
4D-8318	750
4D-9517	106
	122
4D-9986	710
	712
	714
	716
	718
	720
	722
	724
	726
	728
	732
	734
4E-0724	228
4E-1063	204
	206
4E-2250	264
	345
	351
4E-2801	390
4F-0255	832
4F-0411	14
4F-2041	384
	386
4F-2294	315
4F-4097	676
	678
4F-8503	402
4H-1225	565
4H-3283	376
	377
4H-6112	412
	434
4H-6730	449
	450
4H-6996	605
4H-7869	305
4I-3950	393
4J-0520	374
	641
	654
	747
4J-0521	464
	641
	740
4J-0522	90
	414
	418
	525
	529
	566
	641
4J-0524	90
	414

4

▶ **PRIMARY REFERENCE**

PART NUMBER INDEX

Part	Page	Part	Page	Part	Page	Part	Page
	418	4K-5122	318		303	4N-1946	94
	641		322	4M-2381	464		98
	654		326	4M-5281	82		102
4J-0527	90	4K-5175	429	4M-5317	52	4N-1948	112
	414	4K-5537	390	4M-6425	286		114
	418	4K-6498	330		692		116
4J-3754	688	4K-8864	508		694	4N-2198	94
4J-3815	688		512	4M-6582	747		98
4J-3816	688		514	4M-6921	688		102
4J-3915	806		518	4M-8239	460	4N-2199	94
4J-4382	538	4K-9097	854	4M-8973	286		98
	540	4L-2729	299	4N-0342	10		102
4J-4630	592		303	4N-0614	26	4N-2380	94
	600	4L-6454	88		32		98
4J-5267	641		90	4N-0683	30		102
4J-5325	562		106		67	4N-2388	4
4J-5477	390		120	4N-0684	20		►85
	508		122		22	4N-2514	50
	512		124		24	4N-2564	128
	514		245		52	4N-2803	44
	518		286	4N-0685	26		45
	520		390		28	4N-3841	309
	525		565		32	4N-4307	96
	529		566	4N-0794	16	4N-4668	18
	706		692		94	4N-5614	66
	708		694		98	4N-5837	5
4J-7533	698	4L-6459	106		102		►108
	700	4L-6499	313	4N-0848	52		►109
	702	4L-8337	136	4N-0864	11		►110
	706	4L-9337	73		12	4N-5858	28
	708		74		94	4N-5893	35
	710		88		98		36
	712		132		102	4N-5906	44
	714		136		245	4N-5962	73
	716		141	4N-0913	76	4N-6413	222
	718		192	4N-0914	76		224
	720		390	4N-0922	4	4N-6658	26
	722		578		►20		28
	724		795		►22		32
	726	4L-9564	404	4N-0932	64	4N-6672	78
	728		408	4N-0933	11	4N-6876	4
	730	4M-0200	334		12		►13
	732	4M-0660	480		55	4N-7183	52
	734		484		76	4N-8150	76
	747	4M-1336	94		172	4N-8452	94
4J-9058	755		98	4N-0955	48		98
	757		102	4N-1059	306		102
	758		112	4N-1114	13	4N-8628	128
	759		114	4N-1151	59	4N-9968	16
	760		116	4N-1156	94	4P-0519	16
4J-9224	602	4M-1815	299		98	4P-0692	78
4J-9448	264		303		102	4P-0707	174
4J-9964	686	4M-1827	298	4N-1186	52		176
	687		302	4N-1232	52		178
4K-0367	222	4M-1828	298	4N-1235	52		180
	224		302	4N-1650	30		182
	606	4M-1829	298	4N-1682	11		184
	790		302		12		186
	792	4M-1831	298	4N-1683	11	4P-3117	16
4K-1388	706		302		12	4P-3864	94
	708	4M-1853	298	4N-1684	11		98
4K-1493	686		302		12		102
4K-2542	795	4M-1854	298	4N-1799	94	4P-5969	134
4K-3004	772		302		98	4P-7363	790
	774	4M-1896	299		102		792

► **PRIMARY REFERENCE**

PART NUMBER INDEX

Part	Page
4P-7429	334
4P-7581	332
	334
4P-8134	332
	334
4P-8495	60
	62
4P-8769	222
	224
4P-9853	16
4R-1419	790
	792
4S-4455	332
	345
	351
4S-5367	8
4S-6466	78
4S-8287	836
4S-8537	422
	423
4S-8598	405
	409
4S-8603	405
	409
4T-1860	706
	708
	▶744
4T-3132	392
4T-4509	741
4T-4935	706
	708
	▶738
4T-4942	738
4T-5070	744
4T-5071	744
4T-5074	741
4T-5613	598
4T-7388	▶577
	578
4T-7389	577
4T-7571	738
4T-8054	602
4T-8588	594
	604
4T-9298	578
	668
4T-9300	668
4T-9301	668
4T-9336	740
4T-9337	740
4V-7884	862
	866
4V-8556	862
	866
4V-9803	546
	548
	550
4V-9804	546
	548
4V-9810	546
	548
4W-0235	3
	▶133
4W-0413	4
	▶86
4W-1890	78
4W-2109	78
4W-2110	78
4W-3588	641
	648
4W-4588	26
	28
4W-4794	94
	98
	102
4W-5492	20
	22
	24
4W-5698	20
	22
4W-5699	20
	22
4W-5700	20
	22
4W-5701	20
	22
4W-5702	60
	62
4W-5703	60
	62
4W-5998	69
4W-6061	26
	28

5

Part	Page
5B-3180	702
	730
5B-5620	702
	730
5B-5821	48
5B-7890	136
5B-9318	710
	712
	714
	716
	718
	720
	722
	724
	726
	728
	732
	734
5B-9603	94
	98
	102
	222
	224
5B-9627	122
	124
5C-2874	330
5C-2890	122
	318
	322
	326
	345
	356
5C-7261	258
	330
	525
	529
	564
	838
	848
	870
	874
5C-8312	364
	366
5C-9134	780
5C-9553	846
	874
5D-1901	688
5D-1902	688
5D-2645	630
	632
	636
5D-3426	842
	844
5D-6296	394
	396
	398
	400
	558
	560
5D-6297	394
	396
	398
	400
	558
	560
5D-6298	394
	396
	398
	400
	558
	560
5D-6328	558
	560
5D-6792	394
	396
	398
	400
5D-7523	412
	558
	560
	570
5D-9629	504
5F-0149	405
	409
5F-3144	600
5F-3999	438
	442
	446
5F-5434	605
5F-7403	52
5F-7404	52
	404
	408
5F-8000	405
5F-9144	571
	580
	672
5G-4313	524
	528
5G-8574	587
5H-1504	40
	42
	69
5H-3473	650
5H-4871	330
5H-6005	688
5H-8853	464
5H-8985	112
	114
	116
5H-9899	577
5J-1086	404
	408
5J-1246	686
	687
5J-1446	600
5J-3488	596
5J-4857	740
5J-5020	592
5J-5314	298
	302
5J-5402	598
5J-5793	429
5J-5794	422
5J-7154	555
	583
5J-7386	438
	442
	446
5J-8156	602
5J-9631	740
5K-3294	332
5K-3771	524
	528
5K-5068	134
5K-5129	606
5K-7143	606
5K-7147	542
5K-7748	772
	774
5K-9065	52
5K-9090	414
	418
	565
	641
	654
	706
5K-9107	688
5L-1100	672
5L-4019	368
5L-4507	358
5L-7200	364
	366
5M-2057	688
	706
	708
5M-2894	8
	11

▶ **PRIMARY REFERENCE**

PART NUMBER INDEX

Part	Page	Part	Page	Part	Page	Part	Page
	12	5M-5018	423		344		408
	14	5M-5722	546		345		422
	16		548		350	5P-2673	506
	40	5M-6126	423		351	5P-2755	136
	42	5M-6214	48	5P-1075	88	5P-2955	414
	52		86		120		418
	55		534		130	5P-3119	423
	56	5M-6667	480		141	5P-3418	220
	57		484		415	5P-3419	220
	69		590		418	5P-3501	434
	70	5M-6668	358		566	5P-3620	392
	75		360		692	5P-3723	506
	76		364		694	5P-3903	740
	78		366		795	5P-3999	879
	84	5M-6687	130		796	5P-4000	880
	94	5M-6708	555		820	5P-4001	884
	96		583		827	5P-4115	360
	98	5M-8500	796	5P-1076	65		366
	102	5M-9548	460		122		815
	128	5M-9622	460		126		874
	136		464		204	5P-4479	52
	139	5M-9623	460		206	5P-4536	126
	140		464		288	5P-4713	878
	150	5M-9624	460		292	5P-4868	132
	151		464		296	5P-5167	404
	152	5M-9708	842		336		408
	168		844		340	5P-5168	404
	174	5M-9735	8		345		408
	176	5N-0093	26		351	5P-5454	799
	178		28		356	5P-5637	797
	180	5N-2840	332		484	5P-5677	122
	182	5N-2882	424		489		344
	184	5N-3389	542		493	5P-5768	872
	186	5N-5536	330		496	5P-5824	799
	222	5P-0063	64		499	5P-5855	51
	224	5P-0076	148		504		174
	334		149		546		176
	370		150		548		178
	372		151		550		180
	376		152		564		182
	377	5P-0403	423		690		184
	402	5P-0537	168	5P-1175	878		186
	404		193	5P-1251	126		438
	408		811		496		442
	422	5P-0695	288	5P-1255	74		446
	429		292	5P-1262	106	5P-5950	848
	439		296		122	5P-5969	778
	443		344		124		806
	447		345	5P-1268	106	5P-5991	164
	449		350	5P-1370	52	5P-5992	870
	450		351	5P-1465	106		874
	542	5P-0711	574		122	5P-6008	360
	606	5P-0747	82		126	5P-6261	461
	790		226		496		462
	792		227	5P-2199	217		464
5M-3034	298		288		747	5P-6266	558
	302		292	5P-2525	506		560
5M-3062	74		296	5P-2566	90	5P-6268	558
	390		344		126		560
	414		345		496	5P-6270	558
	418		350		662		560
	795		351		686	5P-6298	299
	862	5P-0761	288		687		302
5M-3154	378		292	5P-2587	370	5P-6313	286
5M-3320	428		296		404	5P-6314	286

► **PRIMARY REFERENCE**

PART NUMBER INDEX

Part	Page	Part	Page	Part	Page	Part	Page
5P-6879	828	5P-7807	220		790		150
5P-6903	780	5P-7815	172		792		151
5P-6944	332	5P-7843	380	5P-8247	13		152
	564		382		222	5R-0203	846
5P-7213	578		480		224	5R-7545	862
5P-7244	879		484		404	5S-0003	424
5P-7462	163	5P-7907	286		408	5S-0581	112
	164	5P-7958	826		432		114
	641	5P-7981	374		606		116
	648	5P-8043	380	5P-8248	68	5S-1188	136
	654		382		412	5S-1522	578
5P-7463	163	5P-8044	380		432	5S-4441	438
	164		382	5P-8249	606		446
	641	5P-8068	16	5P-8250	755	5S-6622	428
	648	5P-8112	374		757	5S-7349	220
	654		565		758		815
5P-7464	525		566		759	5S-7379	73
	529		641		760		122
	564		654	5P-8356	30		124
	622		656	5P-8429	52		414
	626		658	5P-8439	318		418
	630	5P-8167	796		322		566
	632		862		326		827
	636		866		815	5S-7382	92
5P-7465	525	5P-8182	641	5P-8444	90	5S-7383	133
	529	5P-8197	885		641		134
	564	5P-8198	886		654		650
	622	5P-8199	890	5P-8500	208		795
	626	5P-8200	889		212		797
	630	5P-8201	887		489	5T-0307	396
	632	5P-8203	888		493	5T-0308	396
	636	5P-8245	8		826	5T-0504	480
5P-7466	374		48		893		485
	565		55	5P-8502	208	5T-1060	566
	566		58		212		►574
	641		67		489	5T-1086	566
	654		168		493	5T-4030	584
	656		174		893	5T-5009	524
	658		176	5P-8522	562		528
5P-7467	374		178	5P-8874	565		►551
	565		180	5P-9085	336	5T-5010	524
	566		182		340		528
	641		184		345		►552
	654		186		351	5T-5012	524
	656		222	5P-9119	688		528
	658		224	5P-9132	800	5T-5045	551
5P-7468	90		332	5P-9297	342		552
	345		334		345		553
	351		370		351		554
	641		378		382	5T-6374	524
	654		380	5P-9299	75		528
5P-7469	90		382		565		565
	345		394	5P-9519	388	5T-6553	434
	351		396	5P-9617	374	5T-7486	802
	641		398		414		804
	654		400		418	5T-7676	394
5P-7470	641		402		566		400
5P-7471	641		405		640	5T-8058	606
5P-7530	78		409	5P-9769	506	5T-8059	606
5P-7538	457		412	5P-9810	622	5T-8060	606
5P-7593	480		422		630	5T-8645	208
	484		449		632		212
5P-7684	40		450		641	5V-0353	586
	42		606	5P-9890	148	5V-0354	586
5P-7701	239		688		149	5V-0594	816

► **PRIMARY REFERENCE**

PART NUMBER INDEX

Part	Page
5V-1498	784
	786
5V-6106	208
	212
5Y-0254	576
6	
6A-5591	380
	382
6B-0933	698
	700
	702
	730
6B-1124	8
6B-3771	138
	822
6B-4594	504
6B-4661	824
6B-6683	260
6B-6684	578
6B-6863	422
6B-8692	126
6B-9081	16
6C-3680	780
	838
6C-7044	640
6C-7783	288
	292
	296
6D-1641	820
	824
6D-3025	264
	345
	351
6D-4054	796
6D-4244	288
	292
	296
	332
	345
	351
6D-4246	163
	164
6D-6581	802
	804
6D-7690	506
6D-9157	688
6E-0410	217
6E-0775	598
6E-1436	676
6E-1497	592
	594
	596
6E-1500	602
6E-1501	602
6E-1835	738
6E-1923	706
	708
6E-1924	706
	708
6E-1925	706
	708
6E-2267	688
6E-2866	▶705
	706
6E-2943	578
	668
	678
6E-3006	742
6E-3007	710
	712
	714
	716
	718
	720
	722
	724
	726
	728
	732
	734
6E-3013	710
	712
	714
	716
	718
	720
	722
	724
	726
	728
	732
	734
6E-3019	710
	712
	714
	716
	718
	720
	722
	724
	726
	728
	732
	734
	736
6E-3043	732
	734
6E-3044	710
	712
	716
	718
	728
6E-3058	720
	722
6E-3319	596
6E-3326	596
6E-3456	557
6E-3458	557
6E-3475	557
6E-3579	648
6E-4213	678
6E-4214	678
6E-4215	678
6E-4216	678
	▶680
6E-4217	680
6E-4218	680
6E-4219	680
6E-4221	678
	▶682
6E-4224	676
	678
6E-4225	678
6E-4227	678
6E-4228	736
6E-4230	736
6E-4233	678
6E-4236	678
6E-4237	678
6E-4239	736
6E-4245	678
6E-4287	217
6E-4502	710
	712
	714
	716
	718
	720
	722
	724
	726
	728
	732
	734
6E-4703	706
	708
	▶739
6E-5153	710
	712
	714
	716
	718
	720
	722
	724
	726
	728
	732
	734
6E-5200	741
6E-5683	592
	600
6E-5884	672
6E-5885	672
6E-5887	672
6E-6140	736
6E-6141	736
6E-6142	736
6E-6150	672
6E-6419	736
6E-6420	736
6F-0156	423
6F-0253	838
6F-3930	476
	477
6F-4868	412
6F-6673	464
6F-7024	50
6F-7045	308
6G-0387	384
	386
6G-1536	606
6G-1539	606
6G-1541	606
6G-1548	582
6G-2395	808
6G-2396	808
6G-2914	797
6G-3237	584
6G-3239	584
6G-3241	584
6G-3242	584
6G-3244	584
6G-3274	584
6G-4173	750
6G-4524	750
6G-4642	750
6G-4643	750
6G-4833	606
6G-5243	584
6G-5244	584
6G-5374	584
6G-5538	606
6G-5539	606
6G-5542	606
6G-5543	606
6G-5544	606
6G-5547	606
6G-5979	455
	467
6G-5987	811
6G-6122	606
6G-6272	384
	386
6G-7222	808
6G-8814	797
6G-8831	828
6H-1717	404
	408
6H-3615	772
	774
6I-0672	6
	▶132
6I-0673	1
	▶6
6I-1387	5
	▶67
6I-1419	4
	▶52
6I-1426	71
6I-1446	169
6I-1447	169
6I-2188	136
6I-2431	120
6I-2435	120
6I-2942	141
6I-2969	141
6I-3814	65
6I-3815	5
	▶65
6I-4611	30
6I-4720	6
	▶795
6I-9255	422
6I-9519	461
	462
	464
6J-0368	555

▶ **PRIMARY REFERENCE**

PART NUMBER INDEX

Part	Page
	557
	583
6J-0488	364
6J-1080	688
6J-1081	688
6J-1536	606
6J-2245	78
6J-2386	578
	668
6J-2419	461
	462
6J-2680	641
6J-2797	598
6J-6439	738
6K-0545	606
6K-0715	768
6K-0806	126
	496
	862
	866
6K-3317	390
6K-6307	688
6K-8139	842
	844
6K-8178	870
6K-8420	80
6K-9591	358
6L-1596	158
6L-1698	382
6L-1962	692
	694
6L-4428	30
6L-8797	678
6M-9155	558
	560
6N-0008	94
	98
	102
6N-0448	76
6N-0452	76
6N-0624	76
6N-1186	8
6N-1410	94
	98
	102
6N-1411	94
	98
	102
6N-1872	220
6N-1903	48
6N-1944	220
6N-2206	71
6N-2229	4
	▶46
6N-2508	14
6N-2509	14
6N-2946	168
6N-3026	96
6N-3279	298
	302
6N-3826	298
	302
6N-4414	168
6N-5267	94
	98
6N-5534	102
	94
	98
	102
6N-6037	46
6N-6872	69
6N-7145	94
	98
	102
6N-7346	48
6N-7567	48
6N-7575	48
6N-7654	46
6N-7672	286
6N-7675	846
6N-8400	106
6N-8589	364
	366
6N-8744	795
6N-8942	60
	62
6N-9135	30
6N-9349	358
6N-9364	222
	224
6N-9365	67
6N-9590	106
6P-1272	429
6P-3236	360
6P-4354	428
6P-4903	405
	409
6P-4940	464
6P-4947	404
	408
6P-5332	392
6P-7379	422
6P-7705	422
6P-8339	449
	450
6P-8340	449
	450
6P-9553	442
	446
6P-9783	464
6P-9784	464
6P-9785	464
6P-9786	464
6R-0365	571
	580
6R-3966	668
6S-3065	584
6S-6308	8
6S-7826	672
6S-7827	672
6S-9720	168
6T-0363	299
	302
6T-0371	299
	302
6T-0465	344
	350
6T-1120	299
	303
6T-3643	358
6T-3720	423
6T-3764	245
6T-6051	422
6T-6052	422
6T-6791	370
6T-6899	370
6T-7058	838
6T-7695	818
6T-8046	696
	▶745
6T-8470	745
6V-0397	566
	641
6V-0505	816
	830
6V-0683	163
	164
	641
	648
	654
6V-0836	423
	424
6V-0852	370
	374
	414
	418
	564
	565
	641
	706
	708
6V-0885	▶298
	305
6V-0890	▶302
	306
6V-0974	374
6V-1050	470
	472
	474
6V-1179	236
6V-1197	174
	176
	178
	180
	182
	184
	186
6V-1249	525
	529
	564
	622
	626
	630
	632
	636
6V-1270	402
6V-1289	405
	409
6V-1322	298
	302
6V-1722	626
	636
6V-1820	382
6V-1867	414
	418
6V-1868	414
	418
6V-1869	414
	418
6V-1970	787
	▶826
6V-2313	264
	345
	351
6V-2383	332
6V-2455	260
6V-2456	834
	854
6V-2485	40
	▶268
6V-2491	830
6V-2686	286
6V-2687	785
6V-2722	246
	344
	350
6V-2766	602
6V-2773	802
	804
6V-3319	52
6V-3345	584
6V-3365	577
6V-3505	217
6V-3532	384
	386
6V-3536	66
6V-3549	148
	149
	150
	151
	152
6V-3551	578
6V-3582	138
6V-3668	394
	400
6V-3669	384
	386
6V-3695	641
6V-3830	16
	76
6V-3831	18
	71
6V-3965	370
	414
	418
	458
	459
	564
	565
	706
	708
6V-3966	374
	540
6V-4248	380
	382
	688
6V-4356	820
6V-4357	820
6V-4365	90
	377

▶ **PRIMARY REFERENCE**

PART NUMBER INDEX

Part	Page
6V-4589	52
	63
	148
	149
	150
	151
	152
	192
	215
6V-4611	879
6V-4612	880
6V-4613	884
6V-4614	883
6V-4615	881
6V-5048	40
	42
	72
	76
	148
	149
	150
	168
	174
	176
	178
	180
	182
	184
	186
	193
6V-5049	40
	42
	146
	148
	149
	150
	151
	152
	154
	156
	168
6V-5051	208
	212
6V-5100	18
6V-5134	172
6V-5142	162
6V-5163	806
	816
6V-5192	680
	681
6V-5219	138
	318
	322
	326
	822
6V-5230	706
	708
6V-5266	40
	42
6V-5556	741
6V-5586	744
6V-5834	584
	818
6V-5839	380
	382
6V-5851	874
6V-6317	676
6V-6640	405
	409
6V-6717	780
6V-6923	215
6V-7217	882
6V-7225	882
6V-7423	52
6V-7636	802
	804
6V-7673	676
6V-7676	204
	206
6V-7687	550
	768
	772
	774
6V-7732	688
6V-7743	780
6V-7744	288
	292
	296
	345
	351
	688
	828
6V-7978	330
6V-8133	394
	400
6V-8181	546
	548
6V-8183	796
6V-8186	315
	574
	692
	694
6V-8187	220
	358
	422
6V-8188	298
	303
	414
	418
	489
	493
	496
	670
6V-8189	286
6V-8197	412
6V-8234	412
6V-8237	3
	68
	384
	386
	388
	394
	400
	432
	570
	588
6V-8335	859
6V-8336	676
6V-8337	676
	678
6V-8362	316
	360
	366
6V-8369	317
	318
	322
	326
6V-8373	299
	303
	364
	366
6V-8376	345
	351
	358
	360
	364
	366
6V-8378	312
	313
	314
6V-8397	163
	164
	240
	374
	382
	414
	418
	525
	529
	540
	564
	565
	641
	648
	654
	658
	661
6V-8398	163
	164
	240
	242
	525
	529
	540
	564
	565
	610
	614
	618
	622
	626
	630
	632
	636
	650
	652
	656
	658
	660
	704
	708
6V-8553	382
6V-8556	658
6V-8560	382
6V-8625	240
	360
	366
	610
	614
	618
	622
	626
	630
	632
	636
	650
	652
	656
	658
6V-8626	172
6V-8628	536
6V-8629	82
	641
6V-8633	564
	565
	610
	614
	618
	622
	630
	632
	636
	650
	652
	656
	658
6V-8634	168
	525
	529
	565
6V-8635	565
	641
6V-8636	168
	374
	540
	564
	565
6V-8637	414
	418
	564
	641
6V-8638	566
	610
	614
	618
6V-8639	564
	565
	610
	614
	618
	622
	626
	630
	632
	636
	648
	652
	656

► **PRIMARY REFERENCE**

PART NUMBER INDEX

Part	Page	Part	Page	Part	Page	Part	Page
	658	6V-8942	658		802	6W-8401	412
	661	6V-8980	525		804	6Y-0359	776
6V-8647	534		529		808		777
	535	6V-8981	525		838	6Y-0708	470
	536		529		842	6Y-0724	464
	706	6V-8994	641		844	6Y-0725	464
	708	6V-8995	163		848	6Y-0726	461
6V-8675	394		164		874		462
	396		622	6V-9648	878		464
	398		626		885	6Y-0727	461
	400	6V-8997	622		886		464
	674		626		887	6Y-0729	462
	688		641		888	6Y-0744	464
6V-8676	162	6V-9000	535		889	6Y-2932	664
	194	6V-9001	654		890	6Y-2933	664
	195	6V-9002	565	6V-9667	748	6Y-2934	664
	196		622	6V-9746	16	6Y-2935	664
	198		626		82	6Y-3484	423
	202		630		374	6Y-4119	394
6V-8716	565		632		414		396
	566		636		418		398
	654		648		564		400
6V-8721	192		661		566	6Y-4280	676
6V-8723	374	6V-9003	78		610	6Y-5590	501
	525		172		614	6Y-5745	501
	529	6V-9004	374		618	6Y-5793	422
6V-8724	168		641		622	6Y-5888	438
	414		654		626		442
	418	6V-9005	654		641		446
	566	6V-9007	414		654	6Y-6324	►372
	641		418		656	6Y-6328	405
	648		641		658		409
6V-8731	242		654	6V-9832	16	6Y-6329	404
6V-8733	566	6V-9009	172	6V-9836	525		408
6V-8781	382	6V-9032	648		529	6Y-6584	318
	641	6V-9168	525		565		322
6V-8782	525		529	6V-9837	106		326
	529		641		525		336
	652	6V-9169	163		529		340
6V-8784	641		164		652	6Y-6815	330
6V-8789	525		525	6V-9844	565	6Y-6848	404
	529		529	6V-9850	163		408
6V-8801	73		622		164	6Y-7115	470
	88		626		240		472
	90	6V-9182	564	6V-9851	525		474
	132	6V-9189	258		529	6Y-7125	376
	134	6V-9191	438		650		377
	141		442		652	6Y-7385	815
	192		446	6V-9872	641	6Y-7386	815
	286	6V-9200	374	6V-9873	168	6Y-7885	422
	312		525		565	6Y-7886	►422
	334		529	6V-9874	82		451
	364		540		610		452
	390		641		614	6Y-7953	606
	650		661		618	6Y-7992	423
	663	6V-9343	374		622	6Y-7993	422
6V-8837	676		565		626	6Y-7995	402
	678	6V-9505	360		656	6Y-7996	402
6V-8928	318	6V-9632	358		658	6Y-8083	423
	322		504	6V-9875	414	6Y-8084	424
	326		524		418	6Y-8118	423
6V-8936	525		528	6V-9877	654	6Y-8119	422
	529		537	6V-9990	565	6Y-8202	424
6V-8938	648		780	6W-5619	414	6Y-8203	423
6V-8941	565		796		418	6Y-8205	424

► **PRIMARY REFERENCE**

PART NUMBER INDEX

Part	Page
6Y-8206	424
6Y-8542	422
6Y-9021	423
6Y-9542	630
6Y-9980	68
	432
7	
7B-1597	370
7B-2742	168
	193
7B-2805	688
7B-3028	405
	409
	488
	492
	496
7B-3039	688
7B-3235	58
	404
	408
7B-7501	390
7B-7525	854
7B-9323	796
	842
	844
7C-0145	85
	98
	102
7C-0307	16
	94
	96
	98
	102
7C-1068	112
	114
7C-1511	84
7C-1512	84
7C-1909	6
	▶130
7C-1933	94
	98
	102
7C-3386	128
7C-6514	18
7C-6921	504
7C-7047	141
7C-7407	30
7C-8859	134
7C-9009	238
7C-9614	30
	32
	33
7C-9770	130
7D-1195	688
7D-1292	522
	590
7D-1553	90
	641
7D-1649	168
7D-1979	422
7D-2626	394
	396
	398
	400
7D-5238	594
7D-5252	476
	477
7D-5435	522
	590
7D-7111	48
7D-7233	126
	208
	212
	342
	345
	351
7D-7504	558
	560
7D-8636	402
7D-8637	402
7E-3205	136
7E-3696	239
7E-5346	193
7E-5665	60
	62
7E-6508	368
7E-7312	40
	42
7E-9262	20
	22
	24
7E-9344	6
	▶88
7E-9345	6
	▶134
7E-9665	4
	▶48
7E-9666	4
	▶8
7F-0560	246
7F-2122	422
	581
7F-3488	298
	302
7F-3491	298
	302
7F-3525	299
	302
7F-7621	220
7F-8267	672
7F-8607	193
7G-0141	438
	442
	446
7G-0749	392
7G-2476	423
7G-2510	423
7G-2928	424
7G-3737	370
7G-3832	610
	614
	618
	641
7G-3833	610
	614
	618
	641
7G-3834	610
	614
	618
	641
7G-4818	423
	424
7G-4842	464
7G-4998	392
7G-5000	▶392
	414
	418
7G-7053	336
	340
7G-9224	384
	386
7G-9573	464
7H-3641	692
	694
	702
	730
7H-7658	424
7I-1334	8
7I-4874	394
	396
	398
	400
7I-4890	797
7I-4918	394
	396
	398
	400
	558
	560
7I-4935	384
	386
7I-4996	394
	400
7I-4997	394
	400
7I-4998	394
	400
7I-4999	380
	382
7I-5000	394
	396
	398
	400
7I-5001	394
	396
	398
	400
7I-5003	394
	396
	398
	400
7I-5004	380
	382
7I-5005	380
	382
7I-5006	384
	386
7J-0204	470
	472
	474
	602
7J-0402	378
7J-1335	501
7J-1337	501
7J-2604	606
7J-4772	578
7J-5311	555
	557
	583
	879
7J-5544	688
7J-6839	672
7J-8009	672
7J-8581	565
7J-8611	390
	434
7J-9108	82
	648
7J-9694	596
7J-9885	602
7J-9933	710
	712
	714
	716
	718
	720
	722
	724
	726
	728
	732
	734
	738
7K-1181	82
	208
	212
	336
	340
	656
7K-8876	678
7K-8877	678
7K-9204	591
7K-9205	586
7K-9212	506
7K-9218	480
	484
7L-2181	404
	408
7L-2894	298
	302
7L-8316	811
7L-9061	676
	678
7M-0324	298
	302
7M-0325	298
	302
7M-0326	298
	302
7M-0327	298
	302
7M-0706	799
7M-1199	422
7M-1297	392
7M-1674	134
7M-7273	143

▶ **PRIMARY REFERENCE**

PART NUMBER INDEX

Part	Page
7M-8479	424
7M-8480	422
7M-8485	72
	126
	434
	496
	564
	566
	641
	654
7M-8651	298
	302
7N-0060	226
	227
7N-0210	245
7N-0296	286
7N-0718	▶308
	344
	350
7N-1059	288
	292
	296
	▶305
7N-1564	52
7N-1565	52
7N-1639	122
	124
7N-1996	838
7N-2059	286
7N-2156	84
7N-2443	51
7N-2851	88
7N-2867	318
	322
	326
7N-3718	345
	351
7N-3864	122
	124
7N-4932	106
7N-5274	288
	292
	296
	344
	350
7N-5659	52
7N-5876	360
	838
7N-7078	60
7N-7779	336
	340
	345
	351
	467
	525
	529
	745
	746
	811
7N-7780	336
	340
	345
	351
	467
	525
	529
	745
	746
	811
7N-7781	336
	340
	345
	351
7N-7782	525
	529
7N-9021	220
7N-9023	220
7N-9737	467
	745
	746
	811
7N-9801	286
7N-9943	247
7P-7304	488
	492
	496
	497
7P-7975	489
	493
	496
7P-9980	414
	418
7S-1801	390
7S-1803	390
7S-1912	330
7S-2962	405
	409
7S-5005	20
	22
	24
7S-6997	461
	462
7S-8767	94
	98
	102
7S-9203	429
7T-0020	247
7T-0582	811
7T-0969	336
	340
7T-0970	336
	340
7T-1099	358
	537
	565
	690
	780
	796
	838
7T-3823	525
	529
7T-3974	298
	302
7T-4003	812
	813
7T-4532	789
	794
7T-5886	748
7T-6517	622
	630
7T-6799	316
7T-7358	808
7T-7371	405
	409
7T-7616	384
	386
7T-7617	384
	386
7T-8891	870
7T-9123	299
	303
7T-9302	317
7T-9303	318
	322
	326
7T-9755	676
7T-9983	288
	292
	296
	345
	351
7U-4898	854
7V-5542	390
7V-9275	358
7W-1096	136
7W-1668	48
7W-1890	126
7W-1944	136
7W-2243	▶34
7W-2278	499
	542
7W-3145	136
7W-3215	48
7W-3267	48
7W-3279	48
7W-3447	40
	42
7W-4990	32
7W-5300	240
	242
7W-5532	122
	124
7W-5775	122
	124
7W-5919	136
7W-5990	106
7W-6492	26
	32
	33
	128
7W-6534	32
	33
	63
	94
	98
	102
	460
7W-7233	122
	124
7X-0288	136
7X-0289	141
7X-0290	90
	632
	▶696
	▶697
7X-0328	414
	418
7X-0331	65
7X-0334	506
7X-0341	506
7X-0350	122
	124
7X-0456	784
	786
7X-0474	702
	730
7X-0490	780
7X-0492	508
	512
	514
	520
	524
	528
7X-0515	589
7X-0562	298
	303
7X-0572	750
7X-0578	134
7X-0583	506
7X-0590	586
	587
	690
7X-0605	489
	493
	496
7X-0607	480
7X-0608	312
	578
	663
7X-0618	590
7X-0620	312
	313
	314
	330
7X-0751	501
7X-0772	390
7X-0818	374
7X-0851	3
	596
7X-0943	880
7X-0944	884
7X-0945	883
7X-0946	881
7X-1121	466
7X-2459	565
	641
7X-2476	204
	206
7X-2488	832
7X-2535	264
7X-2537	870
7X-2541	525
	529
7X-2543	565
7X-2545	536
7X-2546	698
	700

▶ **PRIMARY REFERENCE**

PART NUMBER INDEX

Part	Page	Part	Page	Part	Page	Part	Page
7X-2547	702		356	8C-5222	48		746
	730	7X-7894	641	8C-5607	264	8D-3786	690
7X-2553	480	7X-7906	642		345	8D-3984	606
	589	7X-7907	642		351	8D-3986	606
7X-2555	546	7X-7958	126	8C-5608	264	8D-4154	412
	548		496		345	8D-4522	606
	830	7X-7962	481		351	8D-4523	606
7X-2557	768	7Y-3474	870	8C-5917	226	8D-5396	404
7X-2562	480	7Y-3883	288		227		408
	485	7Y-4075	374		288	8D-5529	6
	504		▶393		292	8D-5632	692
7X-2563	204	7Y-5215	750		296		694
	206	7Y-5216	600	8C-6162	696	8D-5633	692
	506	7Y-5548	292		697		694
	605		296	8C-6354	360	8D-5634	692
7X-2564	504		345	8C-6358	246		694
7X-2575	754		351	8C-6711	218	8D-5636	692
7X-2576	380	7Y-7256	838	8C-6865	508		694
	382				512	8D-5637	692
7X-2581	480				514		694
	484	**8**			518	8D-5640	692
7X-2634	131				520		694
7X-3229	878	8B-1312	422		524	8D-5641	692
7X-3349	330	8B-2327	8		528		694
7X-3373	298	8B-5144	438	8C-6868	525		797
	302		442	8C-6870	163	8D-7185	642
7X-3392	390		446		164	8D-7333	606
7X-4733	664	8B-6127	414		240	8D-7341	606
7X-4776	708		418	8C-6871	106	8D-7343	606
7X-5331	390	8B-7430	136		525	8D-7424	606
7X-6021	780	8C-3085	744		529	8D-9092	610
7X-6212	336	8C-3089	298	8C-6872	106		614
	340		302		163		618
7X-6222	342		676		164	8E-0330	423
7X-6315	236		678		240	8E-0359	422
7X-6412	330	8C-3100	112		242	8E-0360	422
7X-6414	330		114		524	8E-0361	422
7X-7644	878	8C-3121	73		540	8E-0364	404
7X-7702	820		74	8C-6874	16		408
7X-7729	212	8C-3132	217	8C-7507	330	8E-0366	404
	345	8C-3205	642	8C-7562	386		408
	351	8C-3206	374	8C-7581	336	8E-0367	404
	489		642		340		408
	493	8C-3222	421	8C-8451	525	8E-1123	319
	496	8C-3236	750		529		323
	504	8C-3415	374		780		327
	692	8C-3442	796	8C-8454	489	8E-1295	▶370
	694	8C-3445	72		493		451
	778	8C-3446	72		496		452
	780		374		806	8E-1296	▶402
	816		414	8C-8478	832		451
	830		418	8C-8729	750		452
	859		566	8C-8762	565	8E-1297	▶404
	860		640	8C-8988	525		▶408
7X-7731	64	8C-3451	374	8C-8989	525		451
	94		414		529		452
	98		418	8C-9101	600	8E-1298	427
	102		566	8C-9161	592		▶451
	480		640		596		▶452
	484	8C-3756	781	8C-9514	574	8E-1581	▶376
7X-7877	342	8C-4436	88	8C-9660	298		451
	346		390		302	8E-1710	461
	352	8C-4586	780		364	8E-1711	464
7X-7888	122	8C-4970	876		366	8E-1712	470
	345	8C-5063	820	8C-9987	467		472

▶ **PRIMARY REFERENCE**

PART NUMBER INDEX

Part	Page	Part	Page	Part	Page	Part	Page
	474		683	8L-7905	797	8M-6802	146
8E-1713	461	8F-8151	824	8L-8413	226		154
8E-1714	462	8F-8544	423		227		156
8E-1718	▶464	8F-8804	67		288	8M-8489	84
	470	8G-0871	488		292		428
	472		492		296	8M-8627	460
	474		496		344	8M-8659	372
8E-1719	▶461		497		350		404
	470	8G-0873	489		862		408
	472		493		866	8M-8948	364
	474		496	8M-1013	464		366
8E-1720	▶462	8G-0876	589	8M-1865	228	8M-9024	76
	470	8G-5258	506	8M-2530	439	8M-9124	55
	472	8H-1728	827		443	8N-0634	52
	474	8H-5303	308		447	8N-0869	288
8E-1721	462	8H-5306	308	8M-2537	460		292
8E-2729	424	8H-7521	642	8M-2770	336		296
8E-3095	457	8H-8257	405		340		344
8E-3673	427		409		345		345
	▶449	8H-8769	228		351		350
	▶450	8J-0377	686	8M-2772	318		351
8E-4064	449		687		322	8N-0879	136
	450	8J-0380	686		326	8N-0935	52
8E-4085	423	8J-0386	686		334	8N-1513	366
8E-4086	423	8J-2189	772		345	8N-1515	350
8E-4087	423		▶776		351	8N-1517	342
8E-4088	423	8J-2190	776	8M-2773	92	8N-1518	350
8E-4090	423		777		163	8N-1528	350
8E-4091	424	8J-2330	686		168	8N-1608	60
8E-5170	96	8J-2331	686		345	8N-1725	288
8E-5872	402		687		351		292
8E-6303	134	8J-4351	90		525		296
8E-6304	134	8J-6815	705		529		344
8E-6358	776		708	8M-3175	706		350
8E-6433	464	8J-8322	423		708	8N-2104	76
8E-7366	378	8J-8543	688	8M-3267	862	8N-2113	96
8E-7367	378	8J-8782	688		866	8N-2248	345
8E-8292	870	8J-8783	688	8M-3391	412		351
8E-8293	870	8J-9607	768	8M-4390	424	8N-2282	96
8E-8304	423		772	8M-4432	376	8N-2299	128
8E-8310	422		774		377	8N-2306	96
8E-8316	424	8J-9608	772	8M-4433	449	8N-2574	136
8E-8337	438		774		450	8N-2694	134
8E-9086	370	8J-9910	598	8M-4435	414	8N-2705	128
8E-9638	2	8J-9911	598		418	8N-5579	8
	▶770	8K-0589	412	8M-4437	710	8N-6097	8
8F-0212	404	8K-1433	815		712	8N-6739	76
	408	8K-2692	423		714	8N-6740	76
8F-1434	298	8L-2746	78		716	8N-7257	122
	303	8L-2779	168		718		124
	312	8L-2786	16		720	8N-7806	52
	313		168		722	8N-8666	50
	314		174		724	8N-8846	126
8F-1462	836		176		726	8P-1438	750
8F-1610	380		178		728	8P-1471	90
	382		180		732		▶460
8F-1846	106		182		734	8P-4617	424
8F-5340	672		184	8M-4438	374	8P-5141	780
8F-6230	380		186	8M-4986	460	8P-8837	372
	382		282		470		404
8F-6437	546	8L-3017	449		472		408
	548	8L-3441	60		474	8P-9296	464
	692		62	8M-4992	370	8P-9770	772
	694	8L-5008	529	8M-5252	429		774
8F-7219	682	8L-7593	330	8M-5576	412	8R-1778	808

▶ **PRIMARY REFERENCE**

PART NUMBER INDEX

Part	Page
8R-7783	501
	502
	503
8S-0023	172
8S-0024	172
8S-0768	414
	418
8S-0934	851
8S-1069	589
8S-2332	305
	306
8S-2634	345
	351
8S-3371	439
	443
	447
8S-4724	438
	442
	446
8S-5141	394
	396
	398
	400
8S-5383	222
	224
	790
	792
8S-6109	520
	820
8S-6110	520
	820
8S-6212	422
8S-6511	84
8S-6822	130
8S-6824	130
8S-7803	785
	854
8S-9104	423
8S-9191	222
	224
	428
8T-0070	432
8T-0075	163
	164
8T-0077	630
	632
	636
8T-0119	332
8T-0197	565
8T-0249	163
	164
8T-0277	842
	844
8T-0289	330
8T-0300	394
	396
	398
	400
8T-0328	220
	299
	303
8T-0336	607
8T-0337	248
	249
	250
	251
	252
	253
	254
8T-0343	678
8T-0357	558
	560
8T-0360	485
8T-0362	480
8T-0372	676
8T-0379	642
8T-0533	606
8T-0535	560
8T-0540	560
	606
8T-0643	558
	560
8T-0664	388
8T-0666	570
8T-0667	570
8T-0670	68
8T-0671	588
8T-0672	596
8T-0674	384
	386
8T-0722	860
8T-0763	596
8T-0785	594
	604
8T-1141	423
8T-1685	565
8T-1686	163
	164
	174
	176
	178
	180
	182
	184
	186
	626
	636
	650
	652
	656
	658
8T-1698	664
8T-1745	842
	844
8T-1885	610
	614
	618
8T-1886	610
	614
	618
8T-1905	168
8T-2225	288
	292
	296
	344
	345
	350
	351
8T-2275	688
8T-2353	642
8T-2501	134
	390
	862
	866
8T-2502	92
	106
	120
8T-2561	582
	795
	796
8T-2883	566
8T-3282	384
	386
	432
	480
	485
8T-3298	688
8T-3490	258
	504
	524
	528
	537
	565
	752
	780
	802
	804
	816
	866
8T-3518	246
8T-3519	246
8T-3597	434
	499
	537
	550
	698
	700
	702
	730
	752
8T-3612	318
	322
	326
8T-3844	345
	351
8T-4121	82
	163
	204
	206
	208
	212
	240
	253
	254
	258
	264
	288
	292
	296
	318
	322
	326
	330
	336
	340
	342
	345
	351
	360
	374
	412
	434
	481
	485
	489
	493
	496
	504
	508
	512
	514
	518
	520
	525
	529
	534
	535
	536
	542
	564
	566
	582
	610
	614
	618
	622
	626
	630
	632
	636
	642
	648
	652
	654
	656
	658
	698
	700
	702
	730
	802
	804
	806
	815
	820
	824
	828
	842
	844
	872
	893
8T-4122	122
	124
	412
	572
	666
8T-4123	163
	164
	204
	206

► **PRIMARY REFERENCE**

PART NUMBER INDEX

Part	Page	Part	Page	Part	Page	Part	Page
	480		489		828		342
	485		493		830		345
	501		496		872		351
	504		504		893	8T-4181	802
	506		520	8T-4138	710		804
	591		525		712	8T-4182	489
	832		529		714		493
8T-4128	508		542		716		496
	514		564		718		535
	518		610		720		828
8T-4131	480		614		722	8T-4183	374
	830		618		724		489
	832		630		726		493
8T-4132	546		632		728		499
	548		636		732		564
	830		642		734		566
8T-4133	163		648		778		586
	253		652		874		590
	254		656	8T-4139	204		642
	264		658		206		648
	288		698		434		654
	292		700		489		750
	296		702		493	8T-4184	242
	336		730		496		558
	345		820		499		560
	351	8T-4137	82		546		768
	489		204		548	8T-4185	208
	493		206		564		212
	496		208		566		525
	500		212		690		529
	520		258		767	8T-4186	163
	542		318		796		240
	564		322	8T-4140	506		345
	566		326		548		351
	610		336	8T-4141	830		542
	614		340	8T-4156	806		622
	618		342	8T-4157	806		626
	622		345	8T-4158	806		630
	626		351	8T-4167	204		632
	630		360		206		636
	632		489		380		642
	636		493		382		698
	642		496		566		700
	648		500		754		828
	652		504	8T-4171	288	8T-4189	82
	656		508		358		330
	658		512		661		562
	780		514		780		710
	796		518	8T-4172	565		712
	806		520		610		714
	824		525		614		716
	828		529		618		718
8T-4136	163		564		654		720
	288		630	8T-4174	768		722
	292		632		772		724
	296		636		774		726
	318		642	8T-4176	642		728
	322		778	8T-4178	648		732
	326		780		656		734
	330		802		658	8T-4191	566
	336		804	8T-4179	318	8T-4192	82
	340		806		322		122
	345		815		326		288
	351		816		336		292
	434		820		340		296

► **PRIMARY REFERENCE**

PART NUMBER INDEX

Part	Page
	330
	345
	351
	356
	499
	525
	529
	550
	565
	566
	589
	591
	642
	648
	654
	656
	666
	772
	774
8T-4193	412
	506
	546
	642
	748
8T-4194	550
	642
	692
	694
8T-4195	258
	264
	288
	292
	296
	330
	342
	345
	351
	480
	485
	499
	520
	525
	529
	565
	566
	582
	610
	614
	618
	622
	626
	698
	700
	702
	730
	824
	842
	844
8T-4196	374
	412
	499
	564
	622
	626
	630
	632
	636
	642
	652
	820
	824
8T-4198	630
	632
	636
	642
	702
	730
8T-4200	138
	374
	822
	848
8T-4205	82
	220
	298
	302
	358
	780
8T-4219	688
8T-4222	500
	542
8T-4223	82
	88
	90
	123
	124
	206
	242
	319
	322
	326
	330
	336
	340
	342
	374
	414
	418
	434
	506
	523
	525
	529
	546
	548
	550
	558
	560
	564
	566
	586
	589
	591
	610
	614
	618
	642
	648
	654
	656
	662
	666
	670
	686
	687
	750
	752
	767
	768
	796
8T-4224	73
	74
	82
	138
	258
	286
	330
	374
	414
	418
	525
	529
	562
	564
	566
	574
	642
	710
	712
	714
	716
	718
	720
	722
	724
	726
	728
	732
	734
	822
	848
	870
8T-4244	90
	374
	499
	546
	548
	564
	586
	648
	654
	690
	692
	694
8T-4648	525
	529
	546
	548
	642
8T-4649	432
8T-4750	676
8T-4778	768
	772
	774
8T-4780	480
	485
	591
8T-4835	90
8T-4896	73
	74
	88
	90
	92
	106
	123
	124
	126
	132
	134
	141
	192
	245
	286
	334
	364
	390
	414
	418
8T-4908	330
8T-4910	206
	586
	690
	772
	774
8T-4956	90
	485
	504
	523
	587
	654
	752
8T-4970	848
8T-4971	842
	844
8T-4985	642
8T-4986	106
8T-4994	610
	614
	618
8T-5005	525
	529
8T-5039	676
	678
8T-5041	499
8T-5068	574
8T-5082	658
8T-5092	768
8T-5360	90
	414
	418
	851
	852
	853
8T-5361	622
	626
	630
	632
	636
8T-5400	874
8T-5429	566
	610

► **PRIMARY REFERENCE**

PART NUMBER INDEX

Part	Page	Part	Page	Part	Page	Part	Page
	614		94		332	8V-4744	550
	618		98		336	8V-4746	550
	622		102		340	8W-1979	584
	626	8T-6763	30		344	8W-2555	551
	630		32		458		552
	632		33		459		553
	636	8T-6764	40		780		554
8T-5436	534		42		800	8W-2597	524
	610		87		829		528
	614		94		838		►553
	618		98		874	8W-3064	384
8T-5439	605		102	8T-8730	40		386
	830		112		268	8W-3221	574
8T-5668	602		114		269	8W-3592	574
8T-6338	565		116		270	8W-3593	574
8T-6376	555		122		271	8W-3594	574
	557		124		272	8W-4347	606
	583	8T-6765	55		274	8W-5658	208
	879		136		275		212
8T-6385	772	8T-6767	96		282	8W-6049	168
	774		126		315	8W-6179	606
8T-6430	501		496		466	8W-6445	288
8T-6431	264	8T-6869	258	8T-8731	271		292
	345		525	8T-8732	283		296
	351		529	8T-8737	317		345
8T-6451	566		732		334		351
8T-6466	336		734		874	8W-6458	434
	504	8T-6871	122	8T-8748	838	8W-9150	384
	525		124	8T-8890	745		386
	529	8T-6876	168	8T-8901	642	8W-9151	384
	534		564	8T-8916	90		386
	566	8T-6895	525		414	8W-9590	476
	622		529		418		477
	626	8T-6912	258	8T-8917	414	8W-9912	453
	630		525		418	8X-0274	480
	632		529		610		484
	636		566		614		558
	698	8T-7008	245		618		560
	700	8T-7547	138	8T-8919	90	8X-0570	501
8T-6624	380		564		414	8X-1106	551
	382		822		418		552
	421	8T-7876	676	8T-8920	122		553
8T-6631	780		678		124		554
8T-6675	106	8T-8374	600	8T-8987	706	8X-1386	524
	122	8T-8390	557		708		528
	124		594	8T-9006	796	8X-1904	796
	642		604	8T-9107	566	8X-1907	796
8T-6685	610	8T-8441	678	8T-9377	106	8X-1908	796
	614	8T-8640	345		414	8X-1911	796
	618		351		419	8X-1913	796
8T-6693	330	8T-8641	785	8T-9383	332	8X-1914	796
8T-6756	164	8T-8729	168	8T-9393	572	8X-1915	796
8T-6757	20		247		666	8X-2160	796
	22		256	8T-9405	364	8X-2161	796
	24		257		366	8X-2321	540
	30		260	8T-9655	228	8X-2325	538
	32		261		319	8X-2795	787
	33		262		323		►827
	63		263		326	8X-2893	796
8T-6761	55		266	8T-9757	226	8X-3163	534
	59		267		227		536
	94		280		288	8X-3789	796
	98		283		292	8X-3951	796
	102		286		296	8X-3965	796
8T-6762	64		317	8T-9762	220	8X-4028	606

► **PRIMARY REFERENCE**

PART NUMBER INDEX

Part	Page
8X-4066	802
	804
8X-4116	488
	492
8X-4243	802
8X-4244	804
8X-4245	802
	804
8X-4262	802
8X-4263	804
8X-4279	692
	694
8X-4446	802
	804
8X-4448	802
	804
8X-4493	534
	535
8X-4525	►802
	806
8X-4526	►804
	806
8X-4711	330
	501
	502
	503
	537
8X-4814	286
8X-5123	796
8X-5153	364
	366
8X-5154	364
	366
8X-5499	692
	694
8X-5699	394
	396
	398
	400
8X-5804	330
	336
	340
8X-5974	565
8X-6058	330
8X-6110	502
	503
8X-6296	364
	366
8X-6634	330
8X-6635	330
8X-6643	330
8X-6779	796
8X-7174	330
8X-7650	394
	396
	398
	400
8X-8055	816
8X-8400	►2
8X-8401	2
	►787
8X-8402	►1
	2
8X-8403	2
	►3
8X-8404	1
	►609
8X-8405	1
	►427
8X-8932	432
8X-8937	432
8X-8962	3
	►822
8X-8963	787
	►808
8X-8964	537
	►816
8X-8965	787
	►818
8X-8967	787
	►872
8X-8968	787
	►838
8X-8969	787
	►850
8X-8971	787
	►874
8X-8972	►318
	►322
	►326
	787
8X-8973	787
	►830
8X-8974	1
	478
	►480
	►484
8X-8975	622
	626
	630
	632
	636
8X-8977	778
	►780
8X-8978	537
	►796
8X-8979	537
	►562
8X-8980	►564
	609
8X-8981	►374
	609
8X-8982	537
	►842
	►844
8X-8983	537
	►799
8X-8985	1
	►750
8X-8986	1
	►605
8X-8988	1
	►500
8X-8989	1
	►502
	►503
8X-8991	1
	►488
	►492
	498
8X-8993	1
	►820
8X-8994	1
	►832
8X-8995	1
	►163
	►164
8X-8996	►533
8X-8997	1
	►824
8X-9000	1
	►546
	►548
8X-9001	►572
	609
8X-9002	1
	118
	122
	►504
8X-9003	1
	►537
	787
8X-9004	►588
	609
8X-9005	204
	206
	►208
	►212
8X-9006	1
	►550
8X-9007	►360
	537
8X-9008	►364
	►366
	537
8X-9009	1
	►336
	►340
8X-9010	1
	►344
	►350
8X-9011	►582
	609
8X-9012	537
	►584
8X-9013	►586
	609
8X-9016	478
	►591
	609
8X-9017	478
	►590
	609
8X-9018	609
	►622
	►626
8X-9019	609
	►630
	►632
	►636
8X-9023	609
	►648
8X-9026	►414
	►418
	609
8X-9027	609
	►640
8X-9028	609
	►656
	►658
8X-9029	609
	►654
8X-9030	►90
	609
8X-9031	609
	►662
8X-9032	609
	►666
8X-9033	609
	►690
8X-9034	537
	►692
	►694
8X-9035	6
	►286
8X-9037	►288
	►292
8X-9038	6
	►332
8X-9039	427
	►560
8X-9040	►373
	427
8X-9041	►394
	427
8X-9042	►380
	►382
	427
8X-9043	►412
	427
8X-9044	427
	►430
8X-9045	427
	►431
8X-9046	427
	►432
8X-9047	427
	►434
8X-9049	►390
	427
8X-9051	3
	►258
8X-9053	3
8X-9054	3
8X-9061	533
	►534
8X-9062	533
	►535
8X-9063	533
	►536
8X-9064	537
	►859
	►860
8X-9065	►294
8X-9069	3
	►476
8X-9089	6
	►68
8X-9160	68
8X-9161	68

► **PRIMARY REFERENCE**

PART NUMBER INDEX

Part	Page
8X-9237	1
	▶893
8X-9238	1
	▶506
8X-9564	394
	396
	398
	400
8Y-3792	▶851
	856
8Y-4200	▶784
	856
	857
	858
8Y-4398	802
	804
8Y-4399	804
8Y-4400	802
8Y-4401	802
	804
8Y-4512	827
8Y-4619	802
	804
8Y-4620	802
	804
8Y-4801	802
	804
8Y-5737	780
8Y-5877	810
8Y-5889	859
8Y-5892	834
8Y-5897	784
8Y-5898	786
8Y-5903	836
8Y-5904	784
	▶785
	786
8Y-5906	785
8Y-5928	854
8Y-5929	854
8Y-5930	854
8Y-5931	854
8Y-5932	854
8Y-5936	842
	844
	854
8Y-5937	854
8Y-5938	854
8Y-5947	810
	854
8Y-5953	851
	852
8Y-5972	836
8Y-5979	854
8Y-5981	854
8Y-5988	785
8Y-5992	▶834
	854
8Y-5995	834
8Y-5998	834
8Y-5999	834
8Y-6000	▶786
	856
	857
	858
8Y-6006	836
8Y-6010	836
8Y-6028	785
8Y-6051	854
8Y-6336	830
8Y-6364	208
	212
	489
	493
	893
8Y-6385	806
8Y-6388	830
	838
8Y-6390	830
	838
8Y-6833	854
8Y-6834	854
8Y-6882	▶854
	856
	857
	858
8Y-6883	▶810
	856
	857
	858
8Y-6917	862
	866
8Y-6922	862
8Y-6928	862
	866
8Y-6933	854
8Y-9676	874
9B-7233	220
	316
	336
	340
	345
	351
	358
	360
	364
	366
9B-7237	88
	106
	134
	141
	390
9C-0645	581
9C-5276	380
	382
9C-5928	828
9D-0088	607
9D-0089	606
9D-0630	206
	208
9D-1491	605
9D-2804	692
	694
9D-3704	522
9D-3706	522
9D-6584	772
	774
9D-7198	565
	610
	614
	618
	622
	626
	630
	632
	636
9D-7984	558
	560
9D-7987	558
	560
9D-8799	384
	386
9F-0440	208
	212
9F-2247	394
	400
	470
	472
	474
	506
	668
9F-2978	76
	88
	390
9F-3788	423
9F-5599	299
	302
9F-5644	308
	314
9F-6705	706
	708
9F-7882	52
9F-9327	330
9G-0003	226
	227
	288
	292
	296
9G-0004	226
	227
	288
	292
	296
9G-0333	384
	386
9G-0549	226
	227
	288
	292
	296
9G-0747	364
	366
9G-1950	780
9G-2264	364
	366
9G-2758	344
	350
9G-4101	298
	299
	302
	303
9G-4360	358
9G-4733	423
9G-5127	390
9G-5319	484
9G-5589	364
	366
9G-6770	299
	303
9G-7641	▶316
	360
9G-8629	392
9G-8909	288
	292
	296
9G-9150	332
	336
	344
	350
	790
	792
9G-9152	525
	529
9H-1031	26
	28
	32
9H-3757	298
	302
9H-5537	424
9J-0403	710
	712
	714
	716
	718
	720
	722
	724
	726
	728
	732
	734
9J-0404	710
	712
	714
	716
	718
	720
	722
	724
	726
	728
	732
	734
9J-1979	688
9J-1985	688
9J-1988	688
9J-1991	688
9J-2935	672
9J-3139	776
9J-4963	664
9J-5284	588
9J-5442	672
9J-5686	672
9J-7031	688
9J-9867	555
	583

9

▶ **PRIMARY REFERENCE**

PART NUMBER INDEX

Part	Page
9J-9868	555
	583
9J-9869	555
	583
9J-9870	555
	583
9J-9871	555
	583
9J-9872	555
	583
9K-0721	506
9K-0725	506
9K-0726	506
9K-0805	506
9K-0806	506
9K-4454	380
	382
9K-6784	480
9K-7951	476
	477
9L-1130	790
	792
9L-5854	26
9L-6770	220
9L-6776	220
9L-6842	76
9L-7469	854
9L-7494	402
9L-7712	66
9L-8951	386
9L-9132	172
9M-0164	862
	866
9M-0853	76
9M-1853	546
	548
	692
	694
9M-1869	134
9M-1974	18
	128
	168
	174
	176
	178
	180
	182
	184
	186
	193
	228
	309
	368
	470
	472
	474
	811
9M-2095	423
9M-2793	106
9M-2904	73
	74
	208
	212
9M-3695	131
9M-4225	55
9M-4313	460
9M-4355	422
9M-4995	508
	512
	514
	518
	520
9M-5590	796
9M-5733	834
	836
9M-5874	412
9M-6527	112
	114
	116
9M-7129	146
9M-7394	688
9M-7606	298
	302
9M-7609	298
	302
9M-7959	848
9M-8406	82
	164
	288
	292
	296
	336
	340
	345
	351
9N-0869	146
	154
	156
	228
	319
	323
	327
	838
9N-0942	220
9N-0943	220
9N-2038	144
9N-3388	220
9N-4273	422
9N-5576	14
9P-0719	542
9P-3041	464
9P-7121	208
	212
9R-2060	614
9R-2613	434
	488
	492
	496
	501
	502
	503
	537
	768
9R-3845	434
9R-4764	264
	345
	351
	564
	566
9R-6014	590
9R-6414	288
	292
	296
	345
	351
9R-8760	499
9S-1018	428
9S-1343	423
9S-1354	745
9S-1366	94
	98
	102
	168
9S-2009	220
9S-2013	220
9S-2302	220
9S-2390	220
9S-2544	220
	298
	302
9S-4167	193
9S-4180	194
	195
	196
	197
	198
	200
	202
	698
	700
	702
	730
9S-4182	76
	168
	534
9S-4183	370
	642
9S-4185	16
	208
	212
	449
	450
	571
	580
9S-4189	706
	708
9S-4190	32
	33
	63
	72
	676
	678
9S-4191	168
	208
	212
	370
	374
	392
	422
	736
9S-4693	358
9S-5113	883
9S-7949	402
9S-7950	402
9S-8001	194
	195
	196
	197
	198
	200
	202
	216
	708
9S-8002	193
	194
	195
	196
	197
	198
	200
	202
	204
	706
	708
	747
9S-8003	194
	195
	196
	197
	708
9S-8004	40
	42
	146
	154
	156
	168
	194
	195
	196
	197
	198
	200
	202
	380
	382
	434
	460
	470
	558
	560
9S-8005	710
	712
	714
	716
	718
	720
	722
	724
	726
	728
	732
	734
	740
	747
9S-8006	40
	42
9S-8007	194
	195
	196
	197
	198

► **PRIMARY REFERENCE**

PART NUMBER INDEX

Part	Page	Part	Page	Part	Page	Part	Page
	200	9T-8445	680	9W-6688	480		273
	202	9T-8446	680	9W-6692	558		275
	470	9T-8448	680		560		276
	472	9T-8450	680	9W-6990	438		277
	474	9T-8452	680		442		279
9S-8008	422	9T-9010	672		446		280
9S-8009	706	9T-9071	664	9W-7018	558		282
	708	9T-9072	664		560		283
9S-8010	378	9T-9460	676	9W-7385	68		284
9S-8752	14	9U-1412	390		432		356
	40	9U-1478	565	9W-7388	68	9X-1878	878
	42	9U-2277	332		432	9X-1883	892
	52	9U-3993	642	9W-8297	424	9X-2041	780
	75	9U-8263	815	9W-8298	422		799
	78	9U-9693	672	9W-8371	423		808
	108	9V-0344	489	9W-9830	464	9X-2042	796
	109		493	9W-9930	432		802
	110		496	9X-0141	318		804
	168	9V-0450	489		322		830
	790		493		326	9X-2043	319
	792		496		342		323
9S-9272	80	9V-0453	488	9X-0146	318		327
9S-9334	72		492		322		360
	434		496		326		364
9T-1636	676		497	9X-0259	330		366
	678	9V-1882	566	9X-0261	148		799
9T-1652	676	9V-3222	581		149		838
	678	9V-3225	581		150	9X-2045	319
9T-1699	676	9V-4924	586		332		323
	678		587	9X-0262	174		327
9T-1710	676		590		176		799
	678		642		178		808
9T-1857	736	9V-5085	390		180		816
9T-2186	736	9V-7451	815		182		818
9T-2238	555	9V-9840	384		184		830
	583		386		186	9X-2046	812
9T-3096	565	9W-0099	772	9X-0263	40		813
	640		774		42		827
9T-3133	598	9W-0335	360	9X-0343	811		838
9T-4105	688	9W-0742	▶246	9X-1046	319	9X-2126	781
9T-4906	680		345		323	9X-2127	781
9T-5603	686		352		327	9X-2185	780
	687	9W-0852	317		360	9X-2230	394
9T-5604	610		788		364		398
	▶686		846		366		400
9T-6630	747	9W-3072	815		796	9X-2374	240
9T-7308	879	9W-3136	423		812	9X-2480	842
9T-7745	676		438		813		844
9T-7750	736		442	9X-1339	318	9X-2488	780
9T-7765	681		446		322		824
9T-7767	681	9W-3258	80		326	9X-2500	220
9T-7769	681	9W-3797	238	9X-1343	334	9X-2546	802
9T-7771	681		239		366		804
9T-7773	681		244	9X-1386	260	9X-2609	386
9T-7774	681	9W-5560	501		281	9X-2616	400
9T-8053	664		502	9X-1484	218	9X-3064	257
9T-8057	664		503	9X-1813	40	9X-3066	256
9T-8058	664	9W-5567	464		122	9X-3402	273
9T-8059	664	9W-5568	464		168		276
9T-8061	664	9W-6099	423		261	9X-3455	250
9T-8065	664		424		268		251
9T-8067	664	9W-6582	432		269		252
9T-8069	664	9W-6584	432		270		253
9T-8070	664		832		271		254
9T-8199	604	9W-6645	606		272	9X-3463	248

▶ **PRIMARY REFERENCE**

PART NUMBER INDEX

Part	Page
	249
	250
	251
	252
	253
	254
	255
9X-3495	332
9X-3882	240
9X-3894	240
9X-3927	748
9X-4243	250
	251
	252
	253
	254
9X-4244	250
	251
	252
	253
	254
9X-4493	256
	257
9X-4597	480
	484
	591
	748
9X-4598	480
	484
9X-4599	480
	484
9X-5535	218
9X-5592	▶263
	264
9X-6165	264
	346
	352
9X-6258	334
	364
	366
9X-6382	781
9X-6395	738
	741
9X-6458	78
	94
	96
	98
	102
	168
9X-6580	565
9X-6581	648
9X-6700	882
9X-6874	▶250
	258
9X-7144	342
9X-7147	342
9X-7148	366
9X-7164	▶251
	258
9X-7165	▶252
	258
9X-7169	▶253
9X-7170	▶254
9X-7264	600
9X-7371	14
9X-7378	332
9X-7380	820
9X-7381	820
9X-7382	820
9X-7383	820
9X-7385	789
	794
	820
9X-7408	106
9X-7547	678
9X-7680	162
	198
	202
	736
9X-7681	188
	189
	190
	191
9X-7702	501
9X-7703	501
9X-7722	668
9X-7734	172
9X-7743	402
9X-7797	251
	254
9X-7798	250
	252
	253
9X-7803	▶220
	222
	224
9X-8117	780
9X-8122	808
9X-8194	330
9X-8250	332
	525
	529
9X-8256	122
	288
	319
	323
	327
	346
	356
	358
	489
	493
	496
	525
	529
	661
	778
	780
	802
	804
	846
	848
	874
9X-8257	506
9X-8399	421
	750
9X-8496	564
9X-8582	870
9X-8600	208
	212
9X-8873	404
	408
	784
	786
9X-8874	404
	408
9X-8875	405
	409
9X-8876	16
9X-8878	67
9X-8879	168
9X-8880	222
	224
9X-9013	780
9X-9365	122
	258
	344
	356
9X-9657	▶811
	812
	813
9X-9688	838
9X-9689	811
9X-9730	227
	296
9X-9731	226
	288
	292
9X-9751	244
9X-9752	238
	244
9X-9753	238
	239
	244
9X-9755	239
9Y-1569	4
	▶50
9Y-1650	76
9Y-2764	72
9Y-3368	26
	28
9Y-3488	14
9Y-4294	879
9Y-4815	790
	792
9Y-6089	13
9Y-6188	60
9Y-6189	60
9Y-6190	60
9Y-7595	488
	492
	497
9Y-7769	122
	124
9Y-7770	67
9Y-9236	126
	434
	496
9Y-9497	60
	62
9Y-9635	59
9Y-9929	52

0

Part	Page
002-1212	676
002-6453	106
002-6454	240
	242
004-5933	390
004-6683	524
	528
005-0469	678
005-0471	678
005-8615	16
006-5707	16
	208
	212
	240
	242
006-8663	676
008-3214	578
	668
009-4184	584
009-4185	584
012-0380	574
014-0816	317
030-7947	370
030-8194	52
030-8294	464
030-8535	796
030-8539	402
030-9612	220
030-9615	164
031-0223	48
031-1119	126
	496
031-2666	796
031-2701	156
032-1267	52
032-3506	540
033-5853	162
033-6027	40
	42
	162
	676
	678
	736
033-6028	218
033-6033	168
	174
	176
	178
	180
	182
	184
	186
	192
	215

▶ **PRIMARY REFERENCE**

PART NUMBER INDEX

Part	Page
033-6034	368
033-6036	676
	678
	736
033-6039	162
	218
033-6042	162
033-8248	336
	340
	540
034-3557	404
	408
036-7222	14
036-9821	298
	302
036-9823	298
	302
037-4426	780
045-4065	299
	303
061-8561	40
	42
	72
061-8803	854
061-9593	238
	240
	242
065-1153	672
068-8993	780
069-5688	802
	804
077-3790	668
077-4643	668
077-9549	138
	822
078-0070	846
085-8091	820
086-0507	688
087-5379	748
090-9013	106
091-0081	790
	792
092-7385	640
095-0705	678
095-0843	562
095-0878	854
095-0888	676
	678
095-1314	562
098-5687	168
098-8968	366

1

Part	Page
100-3055	▶283
	332
100-3402	676
100-3404	676
100-3405	676
100-3408	676
100-3409	676
100-3410	681
100-3411	681
100-3412	676
100-3413	676
100-3415	676
100-3416	676
	▶683
100-4019	222
100-4083	466
100-4336	524
	528
100-4417	5
	▶309
100-5566	838
100-5567	838
100-6531	220
100-6532	220
100-6621	106
100-6889	69
100-7401	140
101-0204	334
101-0205	334
101-0509	698
	700
	702
	730
101-0523	30
101-0681	88
101-1151	716
	718
101-1970	710
	712
	726
	728
	732
101-1971	710
	712
	714
	716
	718
	720
	722
	724
	726
	728
	732
101-1972	732
	734
101-1973	710
	712
	714
	716
	718
	720
	722
	724
	726
	728
	732
	734
101-1978	710
	712
	714
	716
	718
	720
	722
	724
	726
	728
	732
	734
101-1980	732
	734
101-1982	714
	716
	720
	722
	724
	734
101-1983	710
	712
	714
	716
	718
	720
	722
	724
	726
	728
	732
	734
101-1984	710
	712
	714
	716
	718
	720
	722
	724
	726
	728
	732
	734
101-2457	692
	694
101-2458	692
	694
101-2480	710
	712
	714
	716
	718
	720
	722
	724
	726
	728
	732
	734
101-2749	108
	109
	110
101-2867	816
	818
101-3374	10
101-4910	224
101-6713	51
101-7788	69
101-8087	566
101-8909	208
	212
101-8917	30
102-0341	780
102-2067	676
102-2240	94
	98
	102
	168
102-2804	672
102-6238	702
	730
102-6317	862
	866
102-6628	882
102-7412	710
	712
	714
	716
	718
	720
	722
	724
	726
	728
	732
	734
102-7494	37
	38
	44
	45
102-7535	168
	▶215
102-7886	126
102-8385	698
	700
102-8802	122
	219
	255
	256
	260
	280
	281
	286
	310
	332
	334
	336
	340
	344
	356
	458
	459
	470
	474
	780
	788
	838
	846
	862
102-8803	168
	247
	257
	262
	263
	266
	267
	284

▶ **PRIMARY REFERENCE**

PART NUMBER INDEX

Part	Page
	318
	322
	332
	334
	336
	340
102-8804	261
102-8805	318
	322
	326
	336
	340
	829
	838
	874
102-8806	317
	356
102-8807	332
	342
102-8808	40
	268
	269
	332
	342
	366
102-8809	336
	340
	350
102-8810	342
102-8812	315
102-8813	40
	268
	269
	272
	275
	277
	279
	282
102-9862	319
	323
	327
103-1032	364
	366
103-1057	258
103-5526	▶800
	838
103-5678	364
	366
103-6091	40
103-6092	174
	176
	178
	180
	182
	184
	▶269
103-6093	148
	149
	▶270
103-6100	820
103-6282	678
103-8236	393
104-0137	880
104-0138	884
104-0139	883
104-0140	881
104-0145	882
104-2091	780
	830
	838
104-3122	676
	678
	▶736
104-5970	466
104-6729	376
	377
104-6730	376
	377
104-7429	698
	700
	702
	730
104-7845	747
105-0196	108
	▶112
105-1482	84
105-2508	193
105-3763	220
105-3764	220
105-3785	112
	114
105-3790	112
	114
105-3800	34
	▶35
	44
105-4728	305
	306
105-4729	5
	▶306
	307
105-6122	228
	▶235
105-6138	55
106-0735	174
	176
	178
	180
106-0933	454
106-1017	602
	604
106-1018	820
106-1792	40
	42
106-3027	146
	154
106-3658	710
	712
	714
	716
	718
	720
	722
	724
	726
	728
	732
	734
106-3659	710
	712
	714
	716
	718
	720
	722
	728
106-3660	732
	734
106-3969	131
106-3973	131
106-4496	808
106-4572	120
106-6553	806
106-7687	220
106-7688	220
106-7689	220
106-7690	220
106-8704	332
	336
106-8964	▶248
	258
106-9488	18
106-9932	799
107-0568	88
107-0572	88
107-0677	194
	195
	196
	197
	198
	200
	202
	▶218
107-1954	▶66
	69
107-2884	668
107-2886	668
107-2887	668
107-2888	668
107-2891	668
107-2893	668
107-3202	172
107-5014	838
107-5851	248
	249
107-5852	248
	249
107-5853	248
	249
107-5854	248
	249
107-5956	795
107-5957	795
107-5958	795
107-5959	795
107-6684	414
	418
107-6689	▶249
	258
107-6761	368
107-7322	42
107-7373	84
107-8106	139
107-8107	139
107-8611	468
107-9326	188
	189
	190
	191
107-9570	40
	42
107-9641	802
	804
108-0219	40
	42
108-0358	364
	366
108-0677	795
108-1434	78
108-1552	4
	▶40
	▶42
108-1553	4
	▶10
108-1874	5
	▶69
108-1887	40
	42
	▶44
	▶45
108-2187	710
	712
	714
	716
	718
	720
	722
	724
	726
	728
	732
	734
108-2736	423
108-3206	344
	350
108-3251	96
108-3401	288
	292
	296
	344
	350
108-3612	139
	140
108-3956	18
108-4814	736
108-4815	736
108-4816	736
108-4916	732
	734
108-5157	741
108-5603	66
108-5803	40
	42
	162
108-5806	40
	42

▶ **PRIMARY REFERENCE**

PART NUMBER INDEX

Part	Page
108-5949	804
108-5950	802
108-5951	804
108-5952	802
108-6278	10
108-7090	5
	▶188
	▶189
	▶190
	▶191
108-7930	112
	114
	116
108-8162	360
108-8421	▶836
	854
108-8423	836
108-8424	836
109-0072	16
	76
	94
	98
	102
109-0073	94
	96
	98
	102
	128
109-0074	94
	98
	102
109-0075	94
	98
	102
109-0076	76
	92
	94
	98
	102
109-0077	85
	98
	102
109-0078	76
109-0079	128
109-0361	336
	340
109-0401	5
	▶368
109-0598	▶829
	838
109-1144	456
109-2823	5
	▶60
109-3113	▶757
109-3114	▶758
109-3116	758
109-3117	757
109-3118	757
	758
	759
	760
109-3206	162
109-3416	51
109-5008	838
109-5839	16
109-6550	106
	122
109-7081	264
	344
	350
109-7082	264
	344
	350
109-8210	718
109-8217	96
109-8981	815
109-9010	4
	▶30
109-9685	162
109-9913	330
110-1627	40
	42
110-2220	26
110-6241	796
110-6844	334
110-7885	318
	322
	326
110-8213	334
110-9286	422
111-0343	467
	468
	746
111-2721	112
	114
	116
111-3247	334
111-7916	▶158
	188
111-8233	710
	712
	714
	720
	722
	724
	726
	728
111-8234	732
	734
111-8411	236
111-8568	790
	792
111-8606	32
111-8863	194
	195
	196
	197
112-1579	108
	109
	110
112-1580	108
	109
	110
112-3258	96
112-3830	106
112-4511	423
112-4577	854
112-5282	94
	98
	102
	457
112-7750	139
	140
112-7751	139
	140
112-9164	816
112-9217	51
113-0899	854
113-1921	172
113-5276	4
	▶260
113-7754	▶598
	770
113-7755	598
113-7756	598
113-8218	828
114-0358	777
114-0359	777
114-0966	20
114-2687	78
114-3361	557
114-4427	32
	33
	78
114-5180	672
114-5190	672
114-5324	672
114-5333	332
114-6430	▶688
	690
114-6635	742
	743
114-8684	18
114-9190	802
	804
115-0635	222
	224
115-1748	838
115-3069	344
	350
115-3598	158
	159
	160
	161
115-6469	228
116-0765	76
116-1254	457
116-1979	84
116-1980	5
	▶84
116-2698	76
116-3912	163
116-5819	168
116-5821	14
116-6264	14
116-7220	69
116-7221	188
	189
	190
	191
116-7222	158
	159
	160
	161
116-7527	394
	396
	398
	400
116-7528	394
116-8226	380
	382
116-8235	380
	▶384
116-8238	384
	386
116-8239	380
	382
116-8241	380
	382
116-8242	394
	396
	398
	400
116-8243	394
	400
116-8244	394
	396
	398
	400
116-8245	394
	396
	398
	400
117-0019	384
	386
117-0517	666
	▶674
117-0546	430
	▶453
117-0832	588
	▶596
117-0836	591
	▶604
117-1601	192
117-1620	194
	195
	196
	197
	198
	200
	202
117-1815	692
	▶702
117-1954	480
117-1960	537
117-1963	806
117-1968	692
	694
117-1969	692
	694
117-1970	838
117-1972	816
117-1975	816
117-1978	838
117-1996	830
117-2001	850
117-2005	787
	▶815

▶ **PRIMARY REFERENCE**

PART NUMBER INDEX

Part	Page
117-2019	830
117-2021	506
117-2022	506
117-2023	506
117-2024	506
117-2025	506
117-2026	506
117-2027	506
117-2030	842
	844
117-2031	842
	844
117-2034	842
	844
117-2035	796
117-2036	842
	844
117-2037	816
117-2038	842
	844
117-2039	796
117-2040	698
	700
	702
	730
117-2061	816
117-2070	780
117-2071	781
117-2072	781
117-2074	780
117-2075	780
117-2076	780
117-2090	808
117-2093	872
117-2094	872
117-2095	872
117-2096	818
117-2097	818
117-2100	605
	▶606
117-2101	318
	322
	326
117-2102	318
	322
	326
117-2104	318
	322
	326
117-2110	780
117-2118	562
117-2119	562
117-2120	562
117-2124	562
117-2125	842
	844
117-2127	546
117-2128	546
	548
117-2129	546
	548
117-2146	318
	322
	326
117-2149	480
	484
117-2150	481
	484
117-2151	480
	484
	▶522
117-2152	480
	484
117-2156	481
	484
117-2164	522
117-2171	480
	484
117-2176	481
	484
117-2177	480
	484
117-2178	480
	484
117-2180	481
	484
117-2181	481
	484
117-2182	480
	484
117-2183	480
	484
117-2187	480
	484
117-2188	480
	484
117-2189	480
117-2190	589
	591
117-2191	480
	484
117-2193	480
	484
	591
117-2195	590
117-2196	808
	830
117-2197	781
117-2198	822
117-2200	208
	212
117-2227	208
	212
117-2231	204
	206
117-2233	204
	206
	488
	492
	496
117-2234	204
	206
	489
	493
	496
117-2239	838
117-2242	750
117-2244	750
117-2245	750
117-2246	750
117-2247	750
117-2248	523
117-2299	838
117-2300	838
117-2303	830
117-2304	778
117-2305	778
117-2309	806
117-2983	457
117-3147	6
	▶73
117-3148	73
117-3169	872
117-3915	576
	▶663
117-4077	584
	▶672
117-4078	656
	658
	▶740
117-4079	640
	▶706
	▶708
117-4844	90
117-5098	▶668
	670
117-5099	654
	▶747
117-5309	376
	▶470
117-7127	380
	382
	404
	408
117-7607	859
	▶862
117-7798	564
117-7799	566
117-7876	698
	700
	▶710
117-7877	698
	700
	▶712
117-7879	702
	▶714
	730
117-7882	702
	▶716
	730
117-7883	702
	▶718
	730
117-7884	702
	▶720
	730
117-7885	702
	▶722
	730
117-7889	710
117-7890	712
117-7891	724
	726
117-7892	714
117-7893	722
117-7895	720
117-8630	596
117-8631	596
117-8801	674
117-9512	▶26
	30
117-9514	▶32
117-9650	172
117-9712	51
118-1951	604
118-1953	604
118-2252	1
	▶204
	▶206
118-2289	594
	604
118-3731	457
118-4906	558
	560
118-4907	558
	560
118-4908	558
	560
118-4909	558
	560
118-4910	558
	560
118-4911	558
	560
118-4912	558
	560
118-5068	75
118-5619	808
	830
	838
118-6335	148
	149
	150
	151
	152
118-6865	700
118-6866	702
	730
118-6867	716
	718
118-7135	874
118-7214	94
	98
	102
118-8157	174
	176
	178
	180
	182
	184
	186
118-8182	468
118-8189	690
118-8192	690
118-8194	690
118-8195	690
118-8475	58
118-9115	58
118-9692	5
	▶334

▶ **PRIMARY REFERENCE**

PART NUMBER INDEX

Part	Page
119-0782	872
119-1708	188
	189
	190
	191
119-1733	318
	322
	326
119-3150	688
119-3165	688
119-3367	470
	472
	474
119-3999	558
	560
119-4436	318
	322
	326
119-4774	120
119-5916	640
119-6224	676
119-6550	690
119-7127	854
119-7128	▶856
	▶857
	▶858
	859
	860
119-7130	810
119-7141	854
119-8094	672
119-8583	4
	▶70
119-9015	18
119-9538	702
	▶724
119-9546	698
	▶726
120-4216	488
	492
	496
120-4234	489
	493
	496
120-4408	▶421
	427
120-4409	427
	▶570
120-4618	488
	492
	496
120-6086	168
120-6141	434
120-6149	434
120-6150	434
120-6156	434
120-6157	434
120-6158	434
120-6159	434
120-6161	434
120-6162	▶388
	427
120-6679	594
	604
121-0262	488
	492
	496
121-0357	▶457
	458
	459
121-0358	457
121-0423	488
	492
	496
121-0424	488
	492
	496
121-0596	334
121-0703	344
	350
121-0716	488
	492
	496
121-0717	488
	492
	496
121-0871	488
121-0878	394
121-0894	488
	492
	496
121-0950	488
	492
	496
121-0973	488
	492
	496
121-2634	488
	492
	496
121-2724	488
	492
	496
121-3023	488
	492
	496
121-3024	488
	492
	497
121-3038	422
121-3173	402
121-3311	488
	492
	497
121-3312	488
	492
	497
121-3566	488
	492
	497
121-3567	488
	492
	497
121-3867	488
	492
	497
121-3868	488
	492
	497
121-3869	488
	492
	497
121-3993	488
	492
	497
121-3994	488
	492
	497
121-4034	4
	▶172
121-4075	90
121-4077	90
121-4298	414
	▶458
121-4311	674
	▶676
121-4312	674
	▶678
121-4510	678
121-4511	678
121-4513	678
121-4664	499
121-5620	676
121-6766	168
121-9270	662
	▶664
121-9870	838
122-0163	66
122-0321	44
	45
122-0322	44
	45
122-0473	780
122-1163	342
122-1165	122
	344
	356
122-1168	360
122-1169	780
122-1170	364
	366
122-1173	838
122-1175	344
	350
122-2271	330
122-4617	▶852
	857
122-4974	458
	459
122-6777	799
122-6778	799
122-8326	▶378
	451
	452
122-8341	872
122-8431	370
122-8503	664
122-8504	664
122-8505	664
122-8862	▶280
	344
	350
122-8863	▶281
	332
122-9278	464
122-9286	136
122-9365	674
122-9943	84
123-0200	1
	▶4
123-0306	838
123-0420	424
123-0555	168
123-0997	422
123-0999	422
123-1010	488
	492
	497
123-1012	488
	492
	497
123-2876	404
	408
123-2877	404
	408
123-2923	94
	98
	102
123-2997	404
	408
123-3115	724
	726
123-3132	218
123-3202	820
123-4106	330
123-4586	828
123-4587	828
123-4731	40
123-4982	404
123-5150	82
123-5298	404
	408
123-5669	550
123-5842	360
123-5843	360
123-5844	360
123-5847	360
123-5850	361
123-5851	361
123-5852	360
123-5853	364
	366
123-5855	364
	366
123-6449	122
	344
	356
123-6666	112
123-7265	558
	560
123-7266	558
	560
123-7267	558
	560
123-8157	862
	866
123-8223	862
123-8266	862
	866
123-8396	799

▶ **PRIMARY REFERENCE**

PART NUMBER INDEX

Part	Page
123-8397	799
123-8399	799
123-8914	576
123-8915	82
	▶576
123-9128	862
	866
123-9131	862
	866
123-9144	862
124-0159	476
	477
124-0323	404
	408
124-0501	404
	408
124-0502	404
	408
124-0503	404
	408
124-0504	404
	408
124-3069	74
124-3306	422
124-3307	423
124-3385	724
	726
124-3416	489
	493
	497
124-3489	566
124-3490	564
124-3493	572
	▶578
124-3520	558
	560
124-4456	5
	▶64
124-4461	4
	▶58
124-6329	862
124-6361	630
	632
	636
124-6362	630
	632
	636
124-6363	630
	632
	636
124-6365	610
	614
	618
124-6374	630
	632
	636
124-6378	630
	632
	636
124-6379	630
	632
	636
124-6382	610
	614
	618
124-6385	630
	632
	636
124-6386	630
124-6387	630
	632
	636
124-6388	630
124-6392	610
	614
	618
124-6395	656
	658
124-6396	656
	658
124-6397	656
	658
124-6398	656
	658
124-6399	656
	658
124-6400	610
	614
	618
124-6401	610
	614
	618
124-6402	610
	614
	618
124-6403	622
	626
124-6404	622
	626
124-6405	622
	626
124-6406	622
	626
124-6407	622
	626
124-6408	622
	626
124-6409	622
	626
124-6410	622
	626
124-6411	622
	626
124-6412	622
	626
124-6413	622
	626
	630
124-6414	528
	622
	626
	630
	632
124-6415	622
	626
	630
	632
124-6417	622
	626
	630
	632
	636
124-6418	622
	626
124-6419	622
	626
124-6420	622
	626
124-6421	630
	632
	636
124-6422	630
124-6423	630
	632
	636
124-6424	630
	632
	636
124-6640	146
	154
	156
124-6641	146
124-6864	120
124-7128	862
	866
124-7589	640
124-7609	51
124-7636	609
	▶670
124-8661	504
124-8662	504
124-8663	504
124-8665	504
124-9325	208
	212
	▶261
124-9336	146
124-9337	146
124-9536	480
	484
124-9537	480
	484
124-9539	480
	484
125-0175	504
125-0355	666
125-0473	885
125-0530	787
	▶806
125-0532	787
	▶812
	▶813
125-1159	504
125-1172	504
125-1173	146
125-1302	288
	358
125-1393	741
125-2027	640
125-2044	504
125-2117	3
125-2225	504
125-2226	504
125-2487	48
125-2730	146
125-2754	390
125-2769	504
125-3225	174
	▶194
125-3429	146
125-3430	▶146
	148
125-3431	4
	▶148
	▶149
	▶150
	▶151
	▶152
125-3534	390
125-3688	146
125-3960	130
	▶131
125-4392	4
	▶222
	▶224
125-4393	6
	▶141
125-4626	640
125-4950	414
	418
125-5458	126
	497
125-5721	380
125-5722	380
	382
125-5737	▶650
	▶652
	770
125-5738	▶768
	770
125-5739	770
	▶772
	▶774
125-5768	1
	▶870
125-5835	146
	154
	156
125-6533	298
	303
125-6535	299
	303
125-6536	299
	303
125-6537	298
	303
125-6677	414
	418
125-6678	414
	418
125-6690	414
	418
125-6691	414
	418
125-6743	120
125-6796	168

▶ **PRIMARY REFERENCE**

PART NUMBER INDEX

Part	Page
125-6797	168
125-6857	546
	548
125-6870	501
125-6875	832
125-6894	318
	322
	326
125-6895	500
125-6896	500
125-6992	640
125-7144	838
125-8111	404
	408
125-9355	414
	418
125-9663	822
	▶846
126-0208	524
	528
	534
	536
126-1372	▶28
	33
126-1373	▶33
126-1455	4
	▶228
126-1768	273
126-3080	768
126-5060	600
126-5300	768
126-5397	132
126-6023	537
	▶661
126-6908	65
126-6917	480
	484
	604
126-7146	565
126-7147	565
126-7148	565
126-7149	565
126-7234	194
126-7235	194
126-7280	4
	▶56
126-7282	4
	▶51
126-7292	5
	▶174
	▶176
	▶178
	▶180
	▶182
	▶184
	▶186
126-7574	236
126-7649	470
	472
	474
126-7653	4
	▶790
	▶792
126-7979	470
	472
126-7980	470
	472
	474
126-9180	795
127-0833	870
127-1635	565
127-1647	656
127-1655	772
	774
127-1664	138
	822
	846
127-1969	174
	176
	178
	180
	182
	184
	186
127-2120	772
	774
127-2397	134
127-3512	5
	▶63
127-3598	706
127-4278	92
127-4279	92
127-4280	92
127-4538	846
127-4539	846
127-5134	4
	▶139
127-5709	640
127-5807	640
127-6286	640
127-6288	640
127-6289	640
127-6290	640
127-6291	640
127-6292	640
127-6293	640
127-6294	640
127-6295	640
127-6296	640
127-6297	640
127-6298	640
127-6299	640
127-6317	640
127-6325	522
127-6356	84
127-6467	144
127-6507	874
127-6509	874
127-7156	640
127-7436	▶885
127-7437	▶886
127-7438	▶887
127-7439	▶888
127-7440	▶889
127-8179	846
127-8400	640
127-8480	706
	708
	▶741
127-8521	▶557
	565
127-8531	846
127-9186	▶264
	344
	350
127-9461	799
127-9826	640
127-9829	640
127-9885	114
128-0037	802
	804
128-0087	131
128-0317	116
128-0477	640
128-0478	640
128-0479	640
128-0480	640
128-0613	862
	866
128-0686	862
	866
128-0737	6
	▶92
128-0739	6
	▶192
128-0833	640
128-0834	640
128-0835	640
128-1127	562
128-1468	488
	492
	497
128-1478	▶120
	122
	124
128-1562	122
	124
128-1563	122
	124
128-1567	122
	124
128-1617	122
	124
128-1618	122
	124
128-1621	122
	124
128-1630	122
	124
128-1633	120
128-1634	120
128-1645	640
128-1698	640
128-2035	778
128-2038	537
	▶778
128-2041	▶876
	878
128-2043	780
128-2313	4
	▶128
128-2407	640
128-2477	358
128-2794	661
128-2795	661
128-2796	661
128-2797	661
128-2798	661
128-2977	106
128-2978	106
128-2981	5
	▶80
128-2993	564
128-3320	772
	774
128-3621	▶890
128-3733	640
128-3809	92
128-3871	501
128-3889	414
	418
128-5209	650
	652
128-5210	650
	652
128-5218	▶342
	537
128-5510	641
128-5525	650
	652
128-5526	650
	652
128-5538	780
128-5882	640
128-6611	168
128-6612	78
128-6847	566
128-6900	286
128-7332	640
128-7333	640
128-7334	640
128-8419	641
128-8420	640
128-8424	640
128-8557	193
128-8808	588
128-8813	640
129-0372	193
129-0373	193
129-0375	193
129-0884	564
129-0987	404
	408
129-0988	404
	408
129-1669	838
129-1670	318
	322
	326
129-2220	480
129-3069	112
129-3178	488
	492
	497
129-3574	222
129-4139	640
129-4832	192
	▶193
129-4877	222

▶ **PRIMARY REFERENCE**

PART NUMBER INDEX

Part	Page	Part	Page	Part	Page	Part	Page
	224	129-9452	139		▶168		▶195
129-4887	688		140	130-5770	456	133-2220	518
129-5225	76	129-9837	648	130-5787	168	133-2222	518
129-5387	408	129-9838	648	130-5880	168	133-2223	518
129-5453	208	130-0062	336	130-6228	5	133-2224	518
	212		340		▶143	133-2225	518
129-5845	641	130-0926	4	130-6270	143	133-2226	518
129-6619	654		▶55		▶144	133-2227	518
129-6620	654	130-0992	4	130-6439	481	133-2228	518
129-6621	654		▶12	130-6469	258	133-2229	518
129-6622	654	130-1133	4	130-6635	876	133-3524	75
129-6628	56		▶136	130-7291	78	133-6184	582
	57	130-1260	641	130-7292	78		▶583
	▶282	130-1979	163	131-0544	656	133-6614	768
129-6728	885		164		658	133-7130	768
129-7249	893	130-1980	163	131-1587	672	133-7132	768
129-7261	489		164	131-1994	820	133-8521	480
	493	130-1981	163	131-1995	820		484
	497		164	131-1996	820	133-8522	481
129-7632	736	130-1982	163	131-1997	820		484
129-8349	4		164	131-1998	820	133-8773	594
	▶14	130-2408	886	131-3098	158	134-0297	874
129-8350	14	130-2409	890	131-3815	112	134-0404	571
129-8492	565	130-2410	889		114		580
129-8493	566	130-2411	887	131-4798	344	134-0964	571
129-8494	565	130-2416	888		350	134-1487	109
129-8496	564	130-2668	876	131-5422	558		▶114
129-8497	564	130-2669	876		560	134-1598	178
129-8498	566	130-2670	876	131-6205	5		▶196
129-8499	566	130-3214	566		▶59	134-1599	196
129-8500	566		▶571	131-6206	4	134-2263	66
129-8501	566	130-3453	122		▶72	134-2573	1
129-8502	565		▶257	131-7123	51		▶523
129-8503	566		344	131-8350	▶456	134-3500	88
129-8505	565		356		708	134-3808	512
129-8506	564	130-3601	▶238	131-8739	481	134-3809	512
129-8507	564		294	131-8777	742	134-3810	512
129-8508	564	130-3602	▶245		743	134-3811	520
129-8509	564		294	131-9276	▶524	134-3812	520
129-8510	564	130-3603	▶239		▶528	134-3813	520
129-8511	564		294	132-1019	▶761	134-3815	520
129-8512	564	130-3604	294	132-1113	73	134-3816	520
129-8513	564		▶330	132-1114	73	134-3817	520
129-8516	550	130-4607	194	132-1501	500	134-3818	520
129-8517	550	130-5203	169	132-1502	500	134-3819	520
129-8518	▶477	130-5300	334	132-2011	508	134-3820	520
129-8524	374		540		514	134-3821	512
129-8528	▶244	130-5475	4	132-2012	514	134-3822	512
	294		▶76	132-2013	508	134-3823	512
129-8529	▶240	130-5753	4		514	134-3824	512
	▶242		▶18	132-2014	514	134-3825	512
	294	130-5754	4	132-2015	514	134-3830	512
129-8530	564		▶16	132-2016	514	134-3831	512
129-8531	565	130-5756	4	132-2017	514	134-3832	512
129-8533	▶396		▶75	132-2018	514	134-3997	788
	▶398	130-5758	75	132-2869	582		790
129-8534	▶558	130-5759	4	132-4753	▶762		▶794
129-8537	1		▶71	132-8876	392	134-3998	788
	▶512	130-5760	4	133-0761	580	134-9404	197
129-8538	1		▶94	133-1461	▶230	134-9405	180
	▶514	130-5761	4	133-1705	162		▶197
129-8539	1		▶96	133-1706	195	134-9561	780
	▶518	130-5763	4		196	134-9932	4
129-9417	136		▶78	133-1707	195		▶98
129-9428	▶229	130-5764	4	133-1708	176		▶102

▶ **PRIMARY REFERENCE**

PART NUMBER INDEX

Part	Page
135-2652	162
	198
	202
135-2655	162
135-2707	5
135-2832	632
	636
135-3225	66
135-3290	830
135-3292	830
135-3296	830
135-3749	▶231
135-4299	480
	484
135-4486	144
135-4928	114
	116
135-5871	610
	614
	618
135-7745	830
135-7876	8
135-8106	412
135-8283	▶754
135-8284	754
135-9349	▶763
135-9576	▶764
135-9690	759
135-9691	▶759
135-9796	▶765
135-9797	▶766
136-1020	423
136-1107	116
136-1738	370
136-1739	▶377
	452
136-1865	472
	474
136-1869	159
	160
	161
136-1953	781
	824
136-2364	750
136-2615	374
136-2616	374
136-2617	374
136-3435	830
136-3738	377
	▶472
	▶474
136-3978	808
136-5083	424
136-5205	876
136-6051	▶232
	▶233
136-7032	571
	580
136-7033	571
	580
136-7461	566
136-7816	370
136-8310	774
	▶777
136-9309	564
136-9310	564
136-9311	632
	636
136-9312	632
	636
137-1282	872
137-1283	872
137-1284	872
137-1339	110
	▶116
137-1344	116
137-1970	116
137-4707	120
137-4745	578
137-4746	578
137-4747	578
137-4750	578
137-4751	578
137-4752	578
137-4754	578
137-4761	578
137-4762	578
137-4806	578
137-5081	412
137-5226	318
	322
	326
137-5227	318
	322
137-6500	44
	45
137-6501	44
	45
137-6617	832
137-6627	832
137-6719	702
	730
137-6720	698
	700
137-8142	4
	▶57
137-8400	747
138-0721	874
138-0727	3
	▶828
138-0728	488
	492
	497
138-0729	838
138-0730	876
138-0732	488
	492
	497
138-0733	488
138-0734	488
	492
	497
138-0736	206
138-0740	212
138-0744	488
	492
	497
138-0745	488
	492
	497
138-0746	488
	492
	497
138-0747	488
	492
	497
138-0748	488
	492
	497
138-0749	816
138-0750	816
138-0797	777
138-3051	330
138-3053	330
138-3055	330
138-3057	330
138-3059	330
138-3061	330
138-3063	330
138-3065	330
138-3067	330
138-3094	274
	278
138-4309	197
	198
	200
	202
138-4311	197
	198
	200
	202
138-4313	197
	198
	200
	202
138-5769	768
138-6157	564
138-6160	480
138-6256	▶162
	197
	198
	200
	202
138-6440	760
138-6442	▶760
138-6744	116
138-7426	589
	591
138-7427	1
	▶748
138-7429	748
138-7435	748
138-7436	748
138-8754	159
138-8756	▶159
	189
139-0532	682
	683
139-2404	753
	755
139-2467	661
139-2490	538
139-3213	578
	668
139-4740	642
139-8472	714
	720
	722
	▶742
139-8474	724
	726
	732
	734
	▶743
140-0357	648
140-2749	5
140-2980	640
140-2981	640
140-3141	74
140-3142	74
140-3143	74
140-3144	6
	▶74
140-7399	578
140-8438	753
	755
140-8439	753
	755
140-8440	3
	▶753
	755
140-8441	767
140-8442	767
140-8443	▶589
	609
140-8444	▶587
	609
140-8448	748
140-8449	748
	▶752
140-8450	753
	755
140-8451	3
	▶767
140-8452	767
140-8453	767
140-8454	767
140-8455	767
140-8465	832
140-8466	748
140-9555	373
141-0284	193
141-0875	5
141-0876	5
141-0877	5
141-0878	5
141-0880	5
141-0881	5
141-0882	5
141-0883	5
141-0884	5
141-1546	460
141-1811	622
	626
	632
	636
	▶704
141-1924	590
	▶602
141-1925	602

▶ **PRIMARY REFERENCE**

PART NUMBER INDEX

Part	Page
141-2087	524
	528
141-2088	524
	528
141-2089	524
	528
141-2090	524
	528
141-2092	524
141-2093	524
141-2094	524
	528
141-2095	524
	528
141-2096	524
	528
141-2097	524
	528
141-2098	524
	528
141-2099	524
	528
141-2101	524
	528
141-2102	524
	528
141-2103	524
	528
141-2104	524
	528
141-2105	524
	528
141-2106	535
141-2107	524
	528
	▶554
141-2108	524
	▶538
141-2914	589
	▶600
141-2916	600
141-2918	600
141-4043	546
	548
141-4109	▶87
	102
141-6323	524
141-6324	524
141-6326	524
141-6607	42
141-6622	524
	528
141-6623	524
	528
141-6645	524
	528
141-8570	380
	382
141-8605	467
	746
141-9226	838
141-9661	688
142-0350	467
142-2131	668
142-2132	668
142-2133	668
142-2134	668
142-2135	668
142-2136	668
142-2137	668
142-2138	668
142-2239	610
	614
	618
142-2310	609
	▶610
	▶614
	▶618
142-2313	610
	614
	618
142-2314	610
	614
	618
142-2315	610
	614
	618
142-2316	610
	614
	618
142-2317	610
	614
	618
142-2318	610
	614
	618
142-2319	610
	614
	618
142-3984	311
	▶313
142-3985	311
	▶314
142-4229	752
142-6217	26
142-7072	26
143-2518	431
	▶454
143-2519	454
143-3033	586
	▶592
143-3035	592
143-3037	592
143-3039	592
143-3288	640
143-3615	▶36
	37
	38
	45
143-3616	▶37
143-4794	566
	▶580
143-5988	587
	▶594
143-5989	594
143-5990	594
143-9452	648
144-0835	182
	▶198
144-0837	198
144-1186	698
	700
	▶728
144-1568	692
	▶698
144-1589	632
	636
144-5904	501
144-6294	455
	▶467
144-6295	374
	▶455
144-7687	520
144-9784	484
144-9785	484
144-9787	502
144-9799	480
	484
144-9800	480
	484
145-0326	866
145-1026	799
145-6050	164
145-6975	242
146-3074	377
146-6204	120
146-7311	450
146-7312	450
147-1680	▶266
	346
	352
	842
	844
147-4549	866
147-5399	▶468
	470
	474
147-6522	866
147-6523	866
147-6541	866
148-0134	820
148-0148	499
148-0149	499
148-0150	499
148-0151	499
148-0154	▶499
148-0157	499
148-2516	455
148-2974	447
148-3749	862
	866
148-4467	394
	398
	400
148-4468	394
	398
	400
149-1950	198
	200
	202
149-2404	860
	▶866
149-2611	746
149-2658	697
	▶746
149-4745	854
149-5603	538
149-5628	468
150-1156	60
	62
150-2392	146
	154
	156
150-7989	270
151-2940	22
	24
151-2941	22
	24
151-2946	51
151-5895	891
151-7090	▶234
152-2671	▶307
152-2675	318
	322
	326
152-2676	565
152-2679	1
	▶542
152-2689	542
152-2690	542
152-2691	82
152-2693	434
152-2938	172
152-2939	172
152-3002	838
152-4055	5
152-7123	891
152-7124	892
152-7134	838
152-7504	82
153-1256	116
153-3962	▶271
	332
153-7804	504
153-7805	504
153-7939	504
154-2728	382
154-6503	▶216
	524
	528
154-6506	216
	▶217
154-6617	523
154-6619	386
154-6622	382
	▶386
154-6732	198
	200
154-6734	198
	200
154-6735	198
	200
	202
154-6867	489
	493
154-7088	548
154-7089	▶891
154-7090	▶892
154-7091	848

▶ **PRIMARY REFERENCE**

PART NUMBER INDEX

Part	Page
154-7096	319
	323
	327
154-7105	138
154-7106	138
154-7108	814
154-7109	848
154-7111	138
	▶848
154-7112	848
154-7113	848
154-7114	▶814
	848
154-7115	848
154-7116	848
154-7117	848
154-7119	3
	▶138
154-7122	484
155-2260	270
	272
	273
	274
	275
	276
	277
	278
	279
	282
	318
	322
	326
	334
	350
	356
155-2265	318
	322
	326
	350
155-2270	315
	318
	322
	326
	334
	350
	356
	468
	540
155-2271	334
155-2274	318
	322
	326
155-3625	332
155-6637	156
155-8147	423
155-8345	1
	▶508
155-8347	508
155-8348	508
155-8349	508
155-8351	508
156-1148	▶853
	858
156-4301	▶82
156-4302	82
156-4303	82
156-4452	780
156-5303	508
156-5304	508
156-6013	386
156-6173	458
	459
156-6398	400
156-7014	518
156-7015	520
156-9404	542
158-0252	255
158-8772	344
	350
	▶358
158-8773	358
159-0264	358
159-0266	358
159-0835	160
159-0836	▶160
	190
159-3239	358
159-3759	850
	879
159-4564	▶226
159-4565	▶227
159-4566	▶296
159-9266	586
160-2728	382
160-2729	382
160-6244	336
	340
160-7765	866
160-7766	866
160-7767	866
160-8178	60
	62
160-9874	5
161-1343	799
161-2019	318
161-2020	318
161-3528	141
161-6149	747
161-6161	747
161-7293	55
161-8627	198
	200
	202
161-9237	386
161-9238	386
161-9239	386
161-9925	151
	152
	▶272
161-9926	150
	▶273
161-9929	42
	▶274
161-9931	186
	▶275
162-0071	538
162-0080	538
162-0081	538
162-0082	538
162-0149	149
	150
	151
	▶154
162-0150	154
	156
162-0151	154
	156
162-0152	154
	156
162-0153	154
162-0155	154
162-0156	154
162-0158	154
162-0160	154
	156
162-2077	255
162-2501	172
162-4228	484
162-5372	255
162-8601	542
162-8605	542
162-8606	542
163-0032	528
163-3103	140
163-3104	140
163-5033	542
163-5644	602
163-9236	522
	590
164-0759	198
	200
	202
164-6086	344
	350
165-4499	694
	▶700
165-4563	694
	▶730
165-5674	364
	366
165-6170	75
165-6881	198
165-9948	394
	400
165-9951	400
165-9954	400
165-9955	▶400
	427
166-5985	198
	200
	202
166-6942	838
166-7221	866
166-7225	860
166-7401	866
166-9145	56
	57
167-0138	▶315
	358
167-0785	493
	497
167-1709	42
	▶276
167-1801	684
	685
167-2195	598
167-2201	594
	602
	604
167-2208	592
	596
167-2209	600
167-2304	598
167-2312	594
	602
	604
167-2319	592
	596
167-2320	600
167-2457	598
167-2463	594
	604
167-2469	592
	596
167-2471	600
167-4327	700
	▶732
167-8132	46
168-2466	557
168-4538	60
169-1034	184
	▶200
169-1035	200
169-1633	402
169-1634	402
169-1918	▶142
169-3290	▶684
169-3677	796
169-3679	796
169-7055	422
171-2066	▶255
171-5349	280
	281
171-8708	309
	▶310
172-0802	235
	▶236
172-3280	60
172-9313	56
	57
173-0147	62
173-0148	62
173-1007	687
173-1008	687
173-1009	687
173-1011	614
	618
	▶687
173-4652	224
173-7188	34
	37
	38
	45
173-8295	882
173-8296	891
173-8297	891
173-8298	891
173-8300	891
173-8301	891
173-9682	594

▶ **PRIMARY REFERENCE**

PART NUMBER INDEX

Part	Page
	602
	604
173-9683	598
174-0677	136
174-1504	846
174-1521	484
174-1524	484
174-1525	484
174-2415	557
174-3998	136
174-7526	161
174-7527	▶161
	191
174-8943	198
	202
175-0251	848
175-0254	390
175-3184	557
175-3185	555
	557
	583
175-4162	534
175-4163	520
175-5296	640
175-6616	730
	▶734
175-7783	120
175-7784	120
175-7898	602
175-7900	598
175-7903	557
	594
	604
175-7904	592
175-7905	596
175-7915	557
176-0394	458
	459
176-0861	524
	528
176-0862	524
	528
176-0863	524
	528
176-1602	▶267
	844
176-1695	492
	497
176-1696	492
	497
177-5385	4
177-7496	62
177-9526	364
	366
178-3132	373
178-3133	373
178-4092	755
	756
178-4094	755
178-4095	755
178-4096	▶755
178-4097	▶756
178-9481	506
179-7024	4
	▶140
179-7087	368
180-1499	528
180-6644	152
	▶156
180-6645	156
180-6646	156
180-6647	156
180-9340	277
	278
	279
183-2047	418
	▶459
183-4019	237
184-1527	▶685
185-1898	878
186-3733	356
186-3735	122
	219
	255
	281
	284
	310
	838
186-4825	▶436
186-5235	▶237
	322
	326
187-1507	62
187-1984	1
	▶496
187-5267	1
	▶122
187-8953	24
188-8849	255
190-0802	500
	▶501
190-1677	796
190-5108	1
	▶106
190-5110	▶126
	498
190-5567	1
	▶498
190-5568	1
	▶118
190-5579	118
	▶356
190-5581	118
	▶124
190-7653	4
	▶24
191-0554	551
	552
	553
191-1933	1
	▶478
192-1322	▶38
192-2208	62
192-5493	478
	▶520
192-8807	62
192-8808	5
	▶62
193-0974	503
193-2158	529
	533
193-2347	592
193-3886	529
	533
194-3857	748
194-4723	748
194-4773	136
194-6555	587
194-6722	▶277
194-6724	▶278
194-6725	▶279
194-7924	528
	▶540
194-7925	540
194-7928	540
194-7929	528
194-7930	528
195-7057	529
	533
195-8695	540
195-8696	540
195-8697	540
195-8698	540
196-4240	529
	533
196-4241	529
	533
196-4242	529
	533
196-4243	529
	533
196-9523	20
	22
197-1563	540
197-4927	326
198-7707	141
198-7708	141
199-2677	802
	804
199-2712	802
	804
199-2737	802
199-2738	804
199-6566	752

2

201-4155	202
201-4201	186
	▶202
201-4202	202
201-4203	202

▶ **PRIMARY REFERENCE**



© 2001 Caterpillar
All Rights Reserved

Printed in U.S.A.