CATERPILLAR®

CCRP4105-20
September 2010

RUTHZIL TRATOR COMERCIAL DE PEÇAS LTDA 11 97083-6812 ROLANDO CITRANGULO

Parts Manual

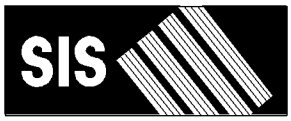

See "General Information" for New Parts Manual Features.

24M Motor Grader

B9K1-Up (Machine)
RHX2054-Up (Engine)
HKY1-Up (Transmission)
T9K1-Up (Torque Converter)

Powered By C18 Engine
This Parts Manual is also Available in .PDF Format on Compact Disc (CD-ROM) - Caterpillar Form No. SERP4105

Product and Dealer Information

Note: For product identification plate locations, see the section “Product Identification Information” in the Operation and Maintenance Manual.

Delivery Date: _____

Product Information

Model: _____

Product Identification Number: _____

Engine Serial Number: _____

Transmission Serial Number: _____

Generator Serial Number: _____

Attachment Serial Numbers: _____

Attachment Information: _____

Customer Equipment Number: _____

Dealer Equipment Number: _____

Dealer Information

Name: _____ Branch: _____

Address: _____

_____

_____

	Dealer Contact	Phone Number	Hours
Sales:	_____	_____	_____
Parts:	_____	_____	_____
Service:	_____	_____	_____

MEMORANDA

TABLE OF CONTENTS

Name	Page
GENERAL INFORMATION	A5
REPAIR ALTERNATIVES	A8
SUPPLEMENTAL COOLANT ADDITIVES	A9
MAINTENANCE PARTS	A10
INDEX	A14
MACHINE ARRANGEMENT	1
COMMON AR	1
CONVERSION AR-CERTIFICATION	3
ENGINE ARRANGEMENT	4
ENGINE AR-COMPLETE	4
ENGINE AR-CORE	9
BASIC ENGINE	12
ACTUATOR GP-VALVE	12
ADAPTER GP-PUMP DRIVE	14
BASE GP-VALVE COVER & INJ HARN	15
BRACKET GP-MOUNTING	20
CAMSHAFT GP	21
COVER GP-CYLINDER BLOCK	23
COVER GP-FLYWHEEL HOUSING	25
COVER GP-FRONT HOUSING	27
COVER GP-SOUND SUPPRESSION	30
COVER GP-VALVE MECHANISM	31
CRANKSHAFT GP	37
CYLINDER BLOCK AS	38
CYLINDER BLOCK GP	43
CYLINDER HEAD AS	51
CYLINDER HEAD GP	53
DAMPER GP	57
DRIVE GP-ACCESSORY	58
DRIVE GP-PUMP	59
ENGINE BRAKE GP	60
FASTENER GP-FRONT HOUSING	62
FASTENER GP-VALVE MECHANISM	64
FLYWHEEL GP	65
GEAR GP-CAMSHAFT	66
GEAR GP-FRONT	67
GEAR GP-REAR	70
GUARD GP-BELT	71
HOUSING GP-FLYWHEEL	72
HOUSING GP-FRONT	74
LIFTING GP-ENGINE	77
MECHANISM GP-FUEL PUMP & VALVE	79
MOUNTING GP-ALTERNATOR & COMPR	82
MOUNTING GP-ENGINE & XMSN	83
PAN GP-OIL	85
PANEL GP-SOUND SUPPRESSION	93
PISTON & ROD GP	95
PLATE AS-FRONT HOUSING	96
PLUG GP-CYLINDER BLOCK	97
PLUG GP-CYLINDER HEAD	99
PULLEY GP-CRANKSHAFT	100
ROCKER ARM GP	101
SEAL GP-CRANKSHAFT	108
SUPPORT GP-ENGINE	110
SUPPRESSION GP-SOUND	111
LUBRICATION SYSTEM	112
FASTENER GP-OIL PUMP MOUNTING	112
FILLER GP-ENGINE OIL	113
FILTER GP-ENGINE OIL	114
FUMES DISPOSAL GP	118
GAUGE GP-OIL LEVEL (DIPSTICK)	119
LINES GP-ENGINE OIL	120
LINES GP-ENGINE OIL DRAIN	122
LINES GP-TURBOCHARGER OIL	123
PUMP GP-ENGINE OIL	124
COOLING SYSTEM	125
COOLING AR	125
FAN & MOTOR GP	129
FASTENER GP-WATER PUMP	131
LINES GP-WATER	132
PUMP GP-WATER	135
RADIATOR GP	137
TANK GP-COOLANT	140
AIR INLET AND EXHAUST SYSTEM	141
AFTERCOOLER GP-AIR	141
AIR CLEANER GP	142
LINES GP-AFTERCOOLER AIR	145
MANIFOLD GP-EXHAUST	147
MOUNTING GP-MUFFLER	148
MUFFLER GP	149
PRECLEANER GP	150
TURBOCHARGER GP	151
FUEL SYSTEM	153
FILTER & MTG GP-FUEL	153
FILTER GP-FUEL	155
FILTER GP-WATER SEP & FUEL	157
LINES GP-FUEL	158
MANIFOLD GP-FUEL	166
PUMP & MTG GP-FUEL TRANSFER	167
PUMP GP-FUEL INJECTION	168
PUMP GP-FUEL PRM & WATER SEP	169
TANK AR-FUEL	170
TANK GP-FUEL	172
VALVE GP-CHECK	180
ELECTRICAL AND STARTING SYSTEM	182
ALARM GP	182

TABLE OF CONTENTS

Name	Page
BATTERY & WIRING GP	183
BRACKET GP-MOUNTING	189
CAMERA AR	190
CONNECTION GP-ELECTRICAL	191
CONTROL & MTG GP-ENGINE ELEK	192
CONTROL GP-IMPLEMENT	193
CONTROL GP-UNPROGRAMMED	194
CONVERTER GP-ELECTRICAL	196
ELECTRONICS GP-COMMUNICATION	198
ELECTRONICS GP-IMPLEMENT	199
ELECTRONICS GP-MONITOR	202
ELECTRONICS GP-POWER TRAIN	208
GRADE CONTROL AR	209
GRADE CONTROL AR-LASER	211
GRADE CONTROL GP	212
INSTALLATION AR-COMMUNICATION	213
INSTALLATION GP-SECURITY	218
LAMP GP	220
LAMP GP-DOME	221
LAMP GP-FLOOD	222
LAMP GP-HEAD	228
LAMP GP-SIGNAL	232
LAMP GP-WARNING BEACON	238
LIGHTING GP-FLOOD	243
LIGHTING GP-ROADING	262
LIGHTING GP-WARNING BEACON	264
LINES GP-ALTERNATOR AIR	265
MAST GP	267
MOTOR GP-ELECTRIC	269
MOUNTING GP-MAST	270
MOUNTING GP-RECEIVER	272
MOUNTING GP-SENSOR	274
PANEL GP-CIRCUIT BREAKER	275
RADIO GP-COMMUNICATION	287
RECEIVER AR-LASER	289
RECEIVER AR-SATELLITE	291
RECEIVER GP-LASER	293
RECEIVER GP-SATELLITE	294
SENSOR & MOUNTING GP	296
SENSOR & MTG GP-POSITION	297
SENSOR AR-GRADE	299
SENSOR GP-ENGINE	302
SENSOR GP-FUEL LEVEL	304
SENSOR GP-POSITION	305
SENSOR GP-PRESSURE	307
SENSOR GP-SONIC	314
SENSOR GP-SPEED	315
SENSOR GP-TEMPERATURE	319
STARTING AID GP-ETHER	325
STARTING AR-COLD WEATHER	326
STARTING MOTOR GP-ELECTRIC	328
SWITCH GP-BYPASS	336
SWITCH GP-DISCONNECT	337
SWITCH GP-MAGNETIC	338
SWITCH GP-PRESSURE	343
SWITCH GP-ROCKER	344
SWITCH GP-WIPER	346
TARGET GP-LASER	349
VALVE GP-ETHER STARTING	351
WARNING GP-BACKUP	352
WIRING GP-CAB	353
WIRING GP-CAMERA	365
WIRING GP-ENGINE ELECTRONIC	366
WIRING GP-FRONT	370
WIRING GP-GRADE CONTROL	381
WIRING GP-MONITOR	384
WIRING GP-REAR	388
WIRING GP-REAR LIGHTING	422
POWER TRAIN	426
AXLE GP-REAR	426
BASE GP-OIL FILTER	427
CARRIER GP-DIFFERENTIAL	429
CASE & PARTS GP-PLANETARY	430
CHAIN GP-DRIVE	431
CONTROL GP-DIFFERENTIAL LOCK	432
CONTROL GP-TRANSMISSION HYD	435
COVER GP-SHIPPING	438
DIFFERENTIAL & BEVEL GEAR GP	440
DIFFERENTIAL GP	442
DRIVE GP-FINAL	444
FASTENER GP-TANDEM	446
FILLER GP-POWER TRAIN OIL	447
FILTER GP-OIL	449
GEAR GP-INPUT TRANSFER	453
GEAR GP-OUTPUT TRANSFER	455
HOUSING AS-DIFFERENTIAL	459
HOUSING GP-REAR AXLE	460
LINES GP-POWER TRAIN OIL	463
LINES GP-TORQUE CONV COOLER	471
MOTOR GP-PISTON	473
MOUNTING GP-REAR AXLE	474
PINION GP-DIFFERENTIAL	475
PLANETARY GP-TRANSMISSION	477
SHAFT GP-DRIVE	484
TANDEM & COVER GP	486
TIRE GP	491
TORQUE CONVERTER GP	498
TRANSMISSION AR	503
UNIVERSAL JOINT GP	504
VALVE & MTG GP-SOLENOID	506
VALVE GP-MANIFOLD	507
VALVE GP-MODULATING	509
VALVE GP-RELIEF	511
WHEEL & TIRE GP	512
WHEEL AR	513
WHEEL GP	514

TABLE OF CONTENTS

Name	Page
FRAME AND BODY	516
AXLE AR-FRONT	516
AXLE GP-FRONT	517
COVER GP-CONTROL VALVE	521
COVER GP-PROTECTION	524
ENCLOSURE AR-ENGINE	525
ENCLOSURE GP-ENGINE	526
FASTENER GP-PLATFORM	538
FASTENER GP-SENSOR	539
FENDER & SUPPORT GP	540
FRAME GP-FRONT	542
FRAME GP-REAR	543
GUARD GP-BOTTOM	544
GUARD GP-BRAKE	547
GUARD GP-MUD	548
GUARD GP-RADIATOR	550
GUARD GP-ROCK	552
HANDRAIL GP	553
HITCH GP-ARTICULATING	556
LINES GP-AUTOMATIC LUBRICATION	560
LINK GP-STEERING	569
LINK GP-STEERING FRAME LOCK	570
LUBRICATION AR-AUTOMATIC	571
MOUNTING GP-VALVE	577
PUMP GP-LUBRICATION	579
REFLECTOR GP	581
SHIELD GP-HEAT	582
STEP GP	583
SUPPORT GP-PLATFORM	594
SUPPRESSION GP-SOUND	595
VALVE GP-LUBE DISTRIBUTION	599
BRAKING SYSTEM	612
ACCUMULATOR GP-BRAKE	612
BRAKE GP-SERVICE & PARKING	613
CONTROL GP-SERVICE BRAKE	620
FASTENER GP-BRAKE	627
PUMP & MOTOR GP-BRAKE RELEASE	628
SLACK ADJUSTER GP	630
HYDRAULIC SYSTEM	631
ACCUMULATOR & MTG GP-HYDRAULIC	631
ACCUMULATOR GP-BLADE CUSHION	632
ACCUMULATOR GP-HYDRAULIC	634
BASE GP-OIL FILTER	635
COOLER GP-HYDRAULIC OIL	637
CYLINDER & MTG GP-ARTICULATION	641
CYLINDER & MTG GP-BLADE TIP	642
CYLINDER & MTG GP-CSHFT & LIFT	643
CYLINDER & MTG GP-SIDESHIFT	644
CYLINDER & MTG GP-STEERING	645
CYLINDER & MTG GP-WHEEL LEAN	646
CYLINDER GP-ARTICULATION	647
CYLINDER GP-BLADE TIP	648
CYLINDER GP-HYDRAULIC	649
CYLINDER GP-RIPPER	651
CYLINDER GP-SIDESHIFT	653
CYLINDER GP-STEERING	655
CYLINDER GP-WHEEL LEAN	657
DRIVE & MTG GP-CIRCLE	658
DRIVE GP-CIRCLE	660
FILTER & MTG GP-HYDRAULIC	669
FILTER GP-OIL	675
FLOAT AR-BLADE	680
LINES GP-FRONT	681
LINES GP-HYDRAULIC	685
LINES GP-HYDRAULIC FAN	701
LINES GP-PUMP	704
LINES GP-RIPPER	731
LINES GP-SECONDARY STEERING	735
LINES GP-STEERING	737
MANIFOLD GP-CONTROL	743
MANIFOLD GP-VALVE	750
MOTOR & MTG GP-CIRCLE DRIVE	756
MOTOR GP-GEROTOR	758
PUMP & MTG GP-PISTON	760
PUMP & MTG GP-PISTON & GEAR	761
PUMP GP-GEAR	762
PUMP GP-PISTON	765
PUMP GP-PISTON & GEAR	773
ROTATING GP-MOTOR	774
ROTATING GP-PUMP	775
SWASHPLATE GP	777
SWIVEL GP	778
TANK & MTG GP-HYDRAULIC	780
TANK GP-HYDRAULIC	781
VALVE GP-BANK 5	784
VALVE GP-CHECK	788
VALVE GP-CONTROL	790
VALVE GP-DIVERTER	806
VALVE GP-PRESSURE REDUCING	807
VALVE GP-PUMP CONTROL	810
VALVE GP-RELIEF	812
VALVE GP-SHUTTLE	813
VALVE GP-SOLENOID	814
VALVE GP-SOLENOID & MANIFOLD	816
VALVE GP-STEERING	817
VALVE GP-UNLOADING	820
IMPLEMENTS	821
CIRCLE GP	821
DRAWBAR GP	823
IMPLEMENT AR	825
MOLDBOARD AS	826
PLATE GP-PUSH	827

TABLE OF CONTENTS

Name	Page
OPERATOR STATION	828
ACCESS GP-CAB	828
ADJUSTER GP-SEAT	829
AIR COMPRESSOR GP-SEAT	830
AIR CONDITIONER & HEATER GP	831
AIR CONDITIONER & MOUNTING GP	835
AIR CONDITIONER AR	837
ARMREST GP	838
BLOWER & MTG GP-CAB	840
BLOWER GP-CAB	841
CAB AR	843
COMPRESSOR GP-REFRIGERANT	844
CONDENSER & ACCUMULATOR GP	845
CONTROL & MTG GP-JOYSTICK	847
CONTROL GP-AIR & TEMPERATURE	850
CONTROL GP-JOYSTICK	851
CONTROL GP-STEERING	855
COVER GP-PLATFORM	865
CUSHION GP-ARM	869
DISPLAY AR-MONITOR	870
DISPLAY GP-CAMERA	872
DISPLAY GP-MONITOR	873
DOOR GP-CAB	876
DUCT & FILTER GP-CAB AIR	893
DUCT GP-CAB AIR	894
FAN GP-CIRCULATING	896
FILTER GP-CAB AIR	898
FOOTREST GP	899
HEATER GP-CAB	900
HORN GP-AIR	901
HORN GP-ELECTRIC	902
INSTALLATION GP-RADIO	903
LINER GP-CAB	905
LINES GP-AIR CONDITIONER	907
LINES GP-HEATER	909
MIRROR GP-REAR VIEW	910
MOUNTING GP-CONTROL	914
MOUNTING GP-PEDAL	915
MOUNTING GP-PLATFORM	916
PAN GP-BACKREST	921
PAN GP-SEAT	923
PANEL GP-CAB	924
PANEL GP-CONTROL	926
PANEL GP-INSTRUMENT	930
PLATFORM AR	931
PLATFORM GP	933
PLATFORM GP-OPERATOR	934
RADIO GP	938
RECLINER GP-SEAT	945
ROPS GP	946
SCREEN GP-SUN	947
SEAT & MOUNTING GP	948
SEAT GP	949
SEAT GP-SUSPENSION	952
SUPPORT GP-CONTROL	953
SUSPENSION GP-SEAT	959
TRIM GP-CAB	961
WASHER GP-WINDOW	963
WINDOW GP-CAB	965
WIPER & WASHER GP-WINDOW	966
WORK TOOLS	968
ADAPTER GP	968
EDGE GP-CUTTING	969
EDGE-CUTTING	975
MOUNTING GP-BLADE	984
MOUNTING GP-RIPPER	985
RIPPER AR	986
RIPPER GP	987
TOOTH GP-RIPPER	989
SERVICE EQUIPMENT AND SUPPLIES	990
FILM GP	990
FILM GP-INTERNATIONAL	993
PLATE & FILM GP	994
PART NUMBER INDEX	B1

GENERAL INFORMATION

1. MACHINE IDENTIFICATION

Caterpillar machines are identified by Product Identification Numbers (PIN). Some components included in a machine may be identified by Serial Numbers (S/N). Typical components that will be serialized include engines, transmissions, bulldozers, and rippers. The machine and engine are further identified by arrangement numbers and in some cases modification numbers. These numbers are shown on the product identification plate(s) and on the master plate in the operator's compartment.

Caterpillar dealers need all of these numbers to determine accurate parts identification.

SIS *New Feature*

Effective First Quarter 2001 the Caterpillar Product Identification Number (PIN) changed from 8 to 17 characters. In an effort to provide uniform equipment identification, Caterpillar and other construction equipment manufacturers are moving to comply with the latest version of the product identification numbering standard. Non-road machine PINs are defined by ISO 10261. The new PIN format will apply to all Caterpillar machines and generator sets. The PIN plates and frame marking will display the 17 character PIN. The new format will look like the following:

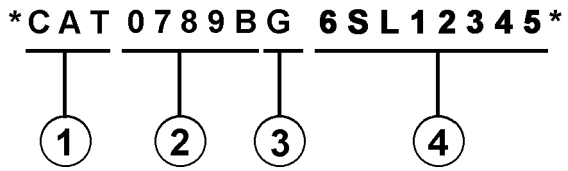

Where:

1. Caterpillar's World Manufacturing Code (characters 1-3)

2. Machine Descriptor (characters 4-8)

3. Check Character (character 9)

4. Machine Indicator Section (MIS) or Product Sequence Number (characters 10-17). These were previously referred to as the Serial Number.

Machines and generator sets produced before First Quarter 2001 will maintain their 8 character PIN format.

Components such as engines, transmissions, axles, etc. and work tools will continue to use an 8 character Serial Number (S/N).

2. ORDERING PARTS

⚠ WARNING

When replacement parts are required for this product Caterpillar recommends using Caterpillar replacement parts or parts with equivalent specifications including, but not limited to, physical dimensions, type, strength and material.

Failure to heed this warning can lead to premature failures, product damage, personal injury or death.

Quality Caterpillar replacement parts are available from Caterpillar dealers throughout the world. Their parts inventories are up to date and include all parts normally required to protect your investment in Caterpillar machines. Dealers may offer repair kits or remanufactured parts to allow selection of the most effective repair alternative for a particular situation. When ordering parts, your order should specify the quantity, part number, part name, and the serial number/product identification number of the machine for which the parts are needed.

3. PARTS MANUAL ORGANIZATION

Product information in this manual is presented as "information elements" that represent all of the components for the specific model. Engine Arrangement and Seat Group are examples of information elements. The information elements are organized alphabetically by part name and secondarily by part number within each major section of the manual.

4. TABLE OF CONTENTS

A table of contents (TOC) is found at the beginning of the manual. The TOC lists each section of the manual with a complete list of all information elements organized as they appear in the manual. Page numbers are provided for quick reference to detailed parts identification illustrations and serviceable consist lists.

5. MAINTENANCE PARTS INDEX

The Maintenance Parts Index, located near the beginning of the manual, references most frequently used maintenance part numbers, providing description, quantity, usage and page number. This information is organized alphabetically by part description.

6. INDEX

The index located near the front of the manual is an alphabetical listing of all information elements included in the manual. Page numbers are provided for quick reference to detailed parts identification illustrations and serviceable consist lists.

7. PART NUMBER INDEX

A numerical index listing all part numbers and the corresponding page number(s) appears at the back of the manual.

8. CAPTIONS

Captions located at the beginning of each information element identify the part number and part name along with additional descriptive information. PIN and S/N information found in each caption should be used to select correct information for a specific machine. Field replacement options, identification of optional attachment components, and where used ("part of") information is also provided.

The first line of a caption is shown in larger type font to indicate the beginning of an information element. Captions for additional pages that may be required to illustrate an information element will be shown in standard type font and will include the term *(contd.)* .

9. NON-SERVICED PARTS

In some instances it is necessary to display non-serviced parts that are a link to a lower level serviceable consist lists. These non-serviced part numbers are shown in *italic* type indicating that they are not available.

10. PARTS LIST REFERENCE NUMBERS

Numbers shown in the Ref No column correspond to numbers used in the associated graphic(s). An alphabetic suffix may be added to a reference number to identify lower level consist items. Numbers shown in the Graphic Ref column refer to the graphic number identifier displayed in the lower left corner of each illustration. The Graphic Ref number may be used in combination with the item Ref No to determine the correct part number. There may be intentional omission of a Ref No in a consist list as information is updated to reflect the latest serviceable part numbers.

11. INDENTED PART NAMES

When a part name is indented in a parts list, it is part of (included in) the group or assembly under which it is indented.

12. ILLUSTRATION REFERENCE LETTERS

When necessary, illustrations contain reference letters (A, B, C etc.) that are intended to track lines and harnesses from one point to another. They are also used to show where to reconnect illustrations that have been separated.

13. ABBREVIATIONS AND SYMBOLS

O.D. – Outside Diameter
I.D. – Inside Diameter
A – Not Part Of This Group
B – Use As Required
C – Change From Previous Type
D – Order By The Meter
E – Order By The Centimeter
F – Not Shown
G – Order By The Inch
I – Refer To Hydraulic Information System
M – Metric Part
R – Remfg Part May Be Available
Y – Separate Illustration
Z – Not Serviced Separately

SIS *New Feature*

14. DESCRIPTION OF TYPE CHANGES

Type - A type is defined as any configuration change that requires an additional Information Element for an Arrangement, Group, or Assembly. If serial number breaks for types are not available, a type # (Type 1, Type 2, etc.) will be displayed in the caption. These "type" changes are identified with a "C" note (change from previous type) in the Parts List. Only the "types" that apply to this Parts Manual will be included. Additional types may exist causing "C" notes to appear on an Information Element when no other types are shown.

15.<END>

This symbol indicates the end of an information element.

NOTE:

Continuing improvement and advancement of product design may cause changes to your machine which may not be included in this publication. Whenever a question arises regarding your Caterpillar product or this publication, please consult your Caterpillar dealer for the latest available information.

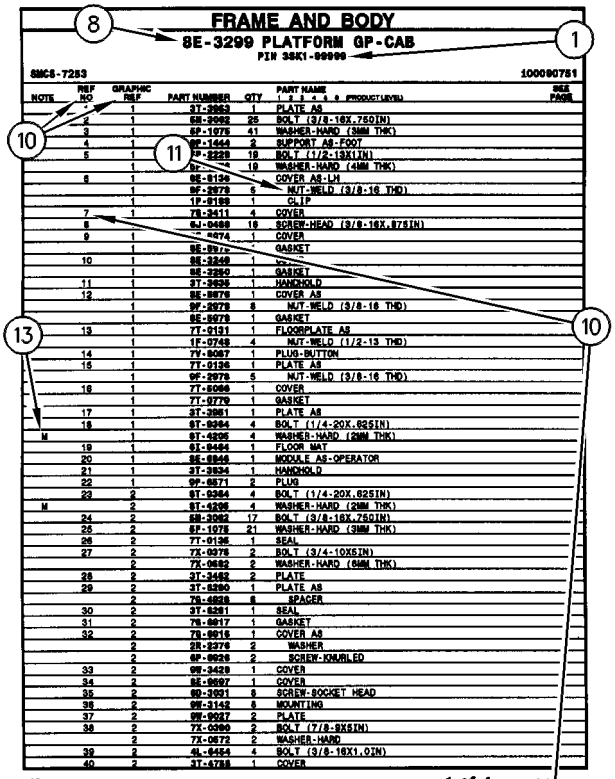

FRAME AND BODY

8E-3299 PLATFORM GP-CAB

PIN 3SK1-99999

SMCS-7253 100090751

NOTE	REF NO	GRAPHIC REF	PART NUMBER	QTY	PART NAME 1 2 3 4 5 6 (PRODUCT LEVEL)	SEE PAGE
	*	1	3T-3553	1	PLATE AS	
	2	1	6E-2002	25	BOLT (3/8-16X.750IN)	
	3	1	6F-1075	41	WASHER-HARD (3MM THK)	
	4	1	9F-1444	2	SUPPORT AS-FOOT	
	5	1	7P-2229	18	BOLT (1/2-13X1IN)	
		1	6F-	18	WASHER-HARD (4MM THK)	
	6	1	6E-6136		COVER AS-LH	
		1	9F-2978	6	NUT-WELD (3/8-16 THD)	
		1	1P-0188	1	CLIP	
	7	1	7S-3411	4	COVER	
	8		9J-0488	18	SCREW-HEAD (3/8-16X.875IN)	
	9	1	-4474	1	COVER	
		1	6E-897		GASKET	
	10	1	6E-3249	1		
		1	6E-3250	1	GASKET	
	11	1	3T-3638	1	HANDHOLD	
	12	1	6E-9978	1	COVER AS	
		1	9F-2978	8	NUT-WELD (3/8-16 THD)	
		1	6E-9979	1	GASKET	
	13	1	7T-0131	1	FLOORPLATE AS	
		1	1F-0748	4	NUT-WELD (1/2-13 THD)	
	14	1	7V-9067	1	PLUG-BUTTON	
	15	1	7T-0136	1	PLATE AS	
		1	9F-2978	5	NUT-WELD (3/8-16 THD)	
	16	1	7T-9066	1	COVER	
		1	7T-9779	1	GASKET	
	17	1	3T-3861	1	PLATE AS	
	18	1	6T-9364	4	BOLT (1/4-20X.625IN)	
M		1	9T-4205	4	WASHER-HARD (2MM THK)	
	19	1	6L-9494	1	FLOOR MAT	
	20	1	8E-6846	1	MODULE AS-OPERATOR	
	21	1	3T-3834	1	HANDHOLD	
	22	1	9F-6671	2	PLUG	
	23	2	6T-9364	4	BOLT (1/4-20X.625IN)	
M		2	9T-4205	4	WASHER-HARD (2MM THK)	
	24	2	6E-3062	17	BOLT (3/8-16X.750IN)	
	26	2	6F-1075	21	WASHER-HARD (3MM THK)	
	26	2	7T-0135	1	SEAL	
	27	2	7X-0075	2	BOLT (3/4-10X5IN)	
		2	7X-0682	2	WASHER-HARD (6MM THK)	
	28	2	3T-3452	2	PLATE	
	29	2	3T-3290	1	PLATE AS	
		2	7S-6828	8	SPACER	
	30	2	3T-6281	1	SEAL	
	31	2	7S-6817	1	GASKET	
	32	2	7S-9616	1	COVER AS	
		2	2R-3276	2	WASHER	
		2	6F-9626	2	SCREW-KNURLED	
	33	2	9W-3429	1	COVER	
	34	2	8E-9697	1	COVER	
	35	2	6D-3931	8	SCREW-SOCKET HEAD	
	36	2	9W-3142	8	MOUNTING	
	37	2	9W-9027	2	PLATE	
	38	2	7X-0990	2	BOLT (7/8-9X5IN)	
		2	7X-0672	2	WASHER-HARD	
	39	2	4L-6454	4	BOLT (3/8-16X1.0IN)	
	40	2	3T-4788	1	COVER	

12 FRAME AND BODY 1 of 4 SELP4570-01

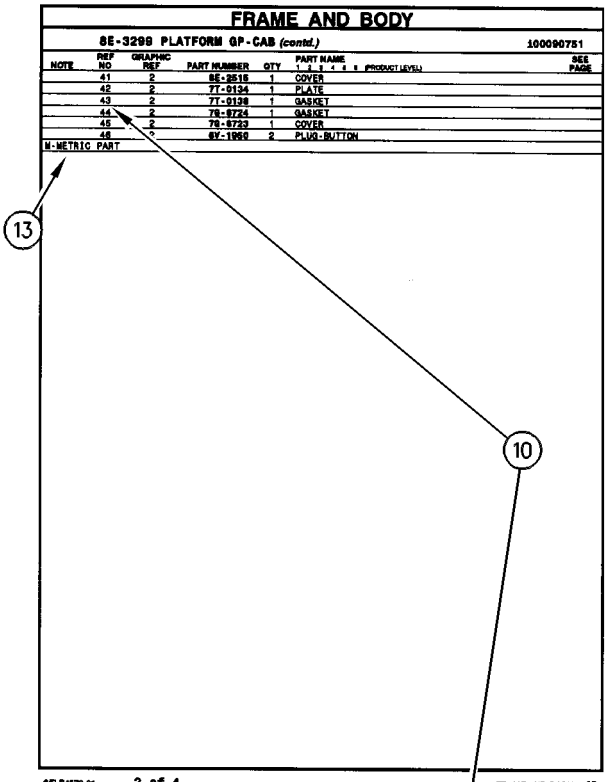

FRAME AND BODY

8E-3299 PLATFORM GP-CAB (contd.) 100090751

NOTE	REF NO	GRAPHIC REF	PART NUMBER	QTY	PART NAME 1 2 3 4 5 6 (PRODUCT LEVEL)	SEE PAGE
	41	2	6E-2516	1	COVER	
	42	2	7T-0134	1	PLATE	
	43	2	7T-0138	1	GASKET	
	44	2	7S-9724	1	GASKET	
	45	2	7S-9723	1	COVER	
	46	2	6V-1950	2	PLUG-BUTTON	

M-METRIC PART

SELP4570-01 2 of 4 FRAME AND BODY 13

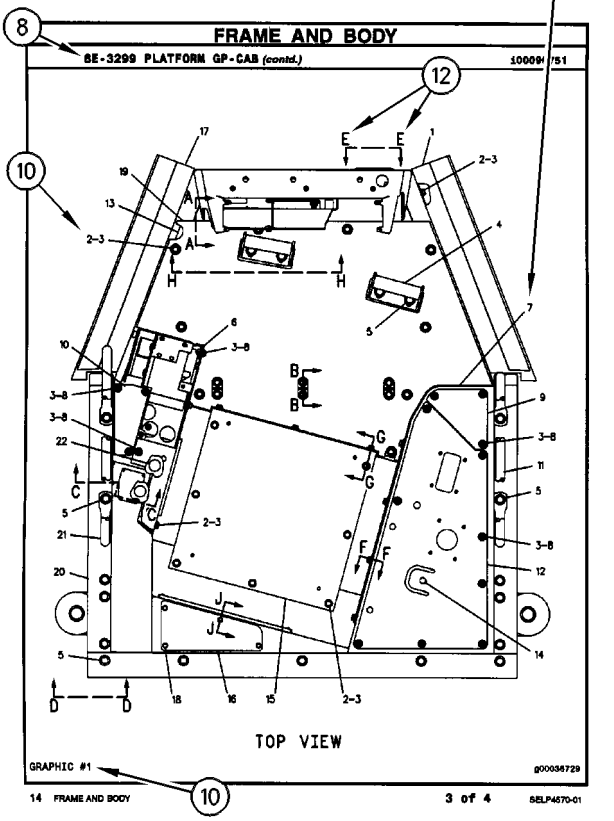

FRAME AND BODY

8E-3299 PLATFORM GP-CAB (contd.) 100090751

14 FRAME AND BODY 3 of 4 SELP4570-01

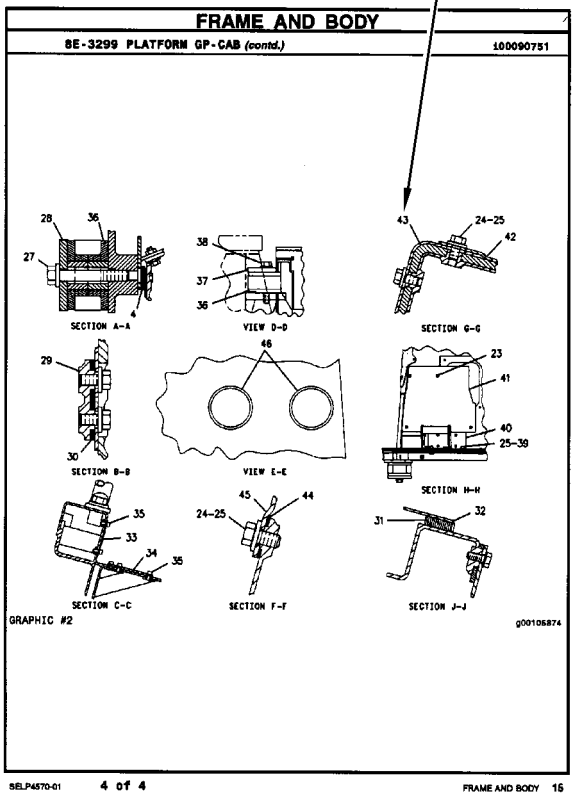

FRAME AND BODY

8E-3299 PLATFORM GP-CAB (contd.) 100090751

SELP4570-01 4 of 4 FRAME AND BODY 16

REPAIR ALTERNATIVES

REMANUFACTURED COMPONENTS

As an option when making repairs consider Caterpillar Remanufactured Components. Components that are available through the Caterpillar Remanufactured Program are identified three ways in the parts book:

- with the letter R in the note field of the parts list
- with an R* at the beginning of the first line of the caption
- with an *R at the end of the first line of the caption

Typical components included in the Remanufacturing Program include:

ALTERNATORS
CONNECTING RODS
CRANKSHAFTS - UNDERSIZE
CRANKSHAFTS - UPGRADE TO NEW
CYLINDER HEADS
ELECTRONIC CONTROL MODULES (ECM)
ELECTRONIC SENSORS
FUEL INJECTORS
FUEL NOZZLES
FUEL PUMPS
GOVERNORS
OIL PUMPS
PISTONS
SHORT BLOCKS
STARTERS
TURBOCHARGERS - COMPLETE
TURBOCHARGER CARTRIDGES
WATER PUMPS

Caterpillar Remanufactured engines for many engine arrangements are also available.

SUPPLEMENTAL COOLANT ADDITIVES

CUSTOMER BENEFITS:

Protects against cavitation, foam, erosion, corrosion, and scale buildup in cooling systems.

- Provides measured coolant conditioner.

DESCRIPTION:

Additives deplete from the coolant with normal operation. For this reason, Supplemental Coolant Additives (SCA) must be added to all heavy duty coolants at regular intervals. In addition, when not using a fully formulated, pre-charged antifreeze, like Caterpillar's DEAC, an initial charge of SCA must be added to the cooling system. The amount of SCA added to the system is dependent on the capacity of the system.

The SCA for initial fill is provided as a liquid. SCA's for maintenance intervals are available in liquid form and as a spin-on element. (No Spin-on available for 3600 Family of Engines)

NOTE:

The amount of SCA added at initial fill is not the same as the amount added at maintenance intervals.

The coolant additive elements can be used with any ethylene or propylene glycol type antifreeze which meets ASTM D4985 or ASTM D5345 Specifications.

NOTE:

For use with standard heavy duty coolant only, not for use with Extended Life Coolant.

PARTS NEEDED:

Cooling System Capacity		Liquid SCA at Initial Fill	Liquid SCA at Maintenance*	Spin-on SCA Maintenance Element*
Liters	Gallons			
22-30	(6-8)	3P-2044 (1)	6V-3542 (1)	111-2370 (1)
30-38	(8-10)	3P-2044 (1) 6V-3542 (1)	111-2372 (1)	111-2369 (1)
38-49	(10-13)	3P-2044 (1) 8T-1589 (1)	111-2372 (1)	111-2369 (1)
49-64	(13-17)	3P-2044 (2)	8T-1589 (1)	9N-3368 (1)
64-83	(17-22)	3P-2044 (2) 8T-1589 (1)	111-2372 (1) 6V-3542 (1)	111-2371 (1)
83-114	(22-30)	3P-2044 (3) 8T-1589 (1)	3P-2044 (1)	9N-3718 (1)
114-163	(30-43)	3P-2044 (5)	3P-2044 (1) 6V-3542 (1)	111-2371 (2)
163-242	(43-64)	3P-2044 (8)	3P-2044 (2)	9N-3718 (2)

** Normal maintenance period is 250 hrs. See your Operation and Maintenance Manual for complete coolant maintenance instructions.*

( ) Indicates quantity required.

MAINTENANCE PARTS

DESCRIPTION	PART NUMBER	QTY	WHERE USED	PAGE
AIR INLET AND EXHAUST SYSTEM				
FILTER ELEMENT AS-AIR (PRIMARY)	245-3818	1	AIR CLEANER GP	142
FILTER ELEMENT AS-AIR (SECONDARY)	245-3819	1	AIR CLEANER GP	142
BASIC ENGINE				
PLUG-DRAIN (ENGINE OIL PAN)	109-5839	1	PAN GP-OIL	87
SEAL-VALVE COVER	242-9537	1	COVER GP-VALVE MECHANISM	31
		1	COVER GP-VALVE MECHANISM	33
		1	COVER GP-VALVE MECHANISM	34
		1	COVER GP-VALVE MECHANISM	36
COOLING SYSTEM				
CAP AS-RADIATOR	294-3342	1	LINES GP-WATER	133
		1	TANK GP-COOLANT	140
GASKET-REGULATOR (HOUSING) (WATER TEMPERATURE)	139-3550	1	COOLING AR	127
REGULATOR-TEMPERATURE (92-DEG C) (COOLANT)	248-5513	2	COOLING AR	127
ELECTRICAL AND STARTING SYSTEM				
BATTERY (12-VOLT) (12-VOLT)	153-5720	2	BATTERY & WIRING GP	183
		2	BATTERY & WIRING GP	186
BELT-DRIVE	9X-8139	1	LAMP GP-WARNING BEACON	239
BREATHER AS (ALTERNATOR)	8X-4575	1	LINES GP-ALTERNATOR AIR	265
CAP AS	180-9900	1	WIRING GP-CAB	353
CIRCUIT BREAKER AS (150-AMPERE) (ALTERNATOR)	171-2215	1	PANEL GP-CIRCUIT BREAKER	275
		1	PANEL GP-CIRCUIT BREAKER	279
		1	PANEL GP-CIRCUIT BREAKER	282
CIRCUIT BREAKER AS (150-AMPERE) (BATTERY)	171-2215	1	PANEL GP-CIRCUIT BREAKER	275
		1	PANEL GP-CIRCUIT BREAKER	279
		1	PANEL GP-CIRCUIT BREAKER	282
CIRCUIT BREAKER AS (20-AMPERE)	6T-3644	2	WIRING GP-CAB	354
		2	WIRING GP-CAB	361
CIRCUIT BREAKER AS (80-AMPERE) (LOAD)	171-2210	1	PANEL GP-CIRCUIT BREAKER	275
		1	PANEL GP-CIRCUIT BREAKER	279
		1	PANEL GP-CIRCUIT BREAKER	282
CIRCUIT BREAKER AS (80-AMPERE) (MAIN)	171-2210	1	PANEL GP-CIRCUIT BREAKER	275
		1	PANEL GP-CIRCUIT BREAKER	279
		1	PANEL GP-CIRCUIT BREAKER	282
FILTER (ETHER START)	358-4889	1	VALVE GP-ETHER STARTING	351
FUSE (10-AMPERE)	113-8490	17	WIRING GP-CAB	353
		17	WIRING GP-CAB	358
FUSE (15-AMPERE)	113-8491	9	WIRING GP-CAB	353
		9	WIRING GP-CAB	358
FUSE (20-AMPERE)	113-8492	5	WIRING GP-CAB	353
		5	WIRING GP-CAB	358
	122-2271	1	PANEL GP-CIRCUIT BREAKER	285
FUSE (25-AMPERE)	123-4106	1	PANEL GP-CIRCUIT BREAKER	285
FUSE (30-AMPERE)	124-3548	1	WIRING GP-CAB	353

MAINTENANCE PARTS

DESCRIPTION	PART NUMBER	QTY	WHERE USED	PAGE
		1	WIRING GP-CAB	358
KEY (BATTERY DISCONNECT)	8H-5306	1	SWITCH GP-DISCONNECT	337
KEY AS-ELECTRONIC (SECURITY)	206-5162	1	INSTALLATION GP-SECURITY	218
LAMP (24-VOLT) (DOME)	7N-9943	1	LAMP GP-DOME	221
LAMP (24-VOLT, 21-WATT)	9X-4493	1	LAMP GP	220
LAMP (24-VOLT, 70-WATT)	9X-7849	1	LAMP GP-WARNING BEACON	239
LAMP (24-VOLT, HID)	290-8160	1	LAMP GP-FLOOD	227
LAMP AS-LED (24-VOLT, GREEN)	250-2299	1	WIRING GP-CAB	353
		1	WIRING GP-CAB	358
LAMP AS-LED (24-VOLT, RED)	242-3282	1	INSTALLATION GP-SECURITY	218
LAMP GP-SIGNAL (12-VOLT, 24-VOLT, TURN)	334-5410	4	LAMP GP-SIGNAL	235
LAMP GP-SIGNAL (24-VOLT, TURN)	199-3368	4	LAMP GP-SIGNAL	234
LAMP-HALOGEN (12/24-VOLT, 35-WATT)	209-6638	1	LAMP GP-FLOOD	224
		1	LAMP GP-FLOOD	226
		1	LAMP GP-HEAD	230
		1	LAMP GP-HEAD	231
LAMP-HALOGEN (24-VOLT, 70-WATT)	351-9918	1	LAMP GP-FLOOD	222
	9X-3463	1	LAMP GP-FLOOD	225
LAMP-HALOGEN (24-VOLT, 70-WATT) (FLOODLIGHT)	9X-3463	1	LAMP GP-FLOOD	223
LAMP-HALOGEN (24-VOLT, 70-WATT) (HIGH BEAM)	9X-3463	1	LAMP GP-HEAD	228
LAMP-HALOGEN (24-VOLT, 70-WATT) (LOW BEAM)	9X-3463	1	LAMP GP-HEAD	229
FRAME AND BODY				
BREATHER	178-8063	1	PUMP GP-LUBRICATION	579
FUEL SYSTEM				
CAP AS-FILLER (FUEL TANK)	7X-7700	1	TANK GP-FUEL	172
		1	TANK GP-FUEL	176
FILTER AS-WATER SEP & FUEL (PRIMARY)	326-1644	1	FILTER GP-WATER SEP & FUEL	157
FILTER-FUEL (ADVANCED EFFICIENCY)	1R-0762	1	FILTER GP-FUEL	155
STRAINER-FUEL	9P-7121	1	TANK GP-FUEL	172
		1	TANK GP-FUEL	176

MAINTENANCE PARTS

DESCRIPTION	PART NUMBER	QTY	WHERE USED	PAGE
HYDRAULIC SYSTEM				
CAP-FILLER (HYDRAULIC TANK)	4J-3754	1	TANK GP-HYDRAULIC	781
FILTER ELEMENT AS-OIL (ULTRA HIGH EFFICIENCY)	1R-1809	1	FILTER GP-OIL	676
		1	FILTER GP-OIL	677
FILTER ELEMENT-OIL (ULTRA HIGH EFFICIENCY)	338-3540	1	FILTER GP-OIL	678
		1	FILTER GP-OIL	679
FILTER-OIL (ADVANCED EFFICIENCY) (POWER TRAIN)	1G-8878	1	FILTER GP-OIL	675
PLUG-DRAIN (HYDRAULIC TANK OIL)	9J-7031	1	TANK GP-HYDRAULIC	781
SCREEN (CONTROL MANIFOLD)	6E-5066	1	MANIFOLD GP-CONTROL	743
		1	MANIFOLD GP-CONTROL	744
		1	MANIFOLD GP-CONTROL	748
SCREEN (HYDRAULIC TANK)	6E-1752	2	TANK GP-HYDRAULIC	781
STRAINER (HYDRAULIC TANK FILL)	3D-6678	1	TANK GP-HYDRAULIC	781
LUBRICATION SYSTEM				
CAP-OIL FILLER (ENGINE)	9L-8439	1	FILLER GP-ENGINE OIL	113
FILTER-ENGINE OIL (ADVANCED EFFICIENCY)	1R-1808	1	FILTER GP-ENGINE OIL	116
PLUG-DRAIN (ENGINE OIL PAN)	109-5839	1	LINES GP-ENGINE OIL DRAIN	122
OPERATOR STATION				
BLADE AS-WIPER (1180-MM)	134-0297	1	WIPER & WASHER GP-WINDOW	966
BLADE AS-WIPER (400-MM)	6V-5851	1	WIPER & WASHER GP-WINDOW	966
CAP-VENTED (WINDOW WASHER RESERVOIR)	8E-8292	1	WASHER GP-WINDOW	963
DRYER-REFRIGERANT (IN-LINE)	283-4237	1	CONDENSER & ACCUMULATOR GP	845
FILTER ELEMENT AS-AIR (PRIMARY)	231-0167	1	FILTER GP-CAB AIR	898
FILTER ELEMENT AS-CAB AIR (CAB AIR)	7T-7358	1	DUCT & FILTER GP-CAB AIR	893
FILTER ELEMENT-CAB AIR (ULTRA HIGH EFFICIENCY, CARBON)	326-7963	1	FILTER GP-CAB AIR	898
GASKET	107-4396	1	CONDENSER & ACCUMULATOR GP	845
LAMP AS (24-VOLT)	250-8335	2	LINER GP-CAB	905
LAMP AS-LED (24-VOLT, GREEN)	250-2299	1	PANEL GP-CONTROL	926
SEAT BELT GP (RETRACTABLE)	222-0345	1	SEAT GP	949

MAINTENANCE PARTS

DESCRIPTION	PART NUMBER	QTY	WHERE USED	PAGE
POWER TRAIN				
BREATHER (REAR AXLE)	9T-1119	1	HOUSING GP-REAR AXLE	461
BREATHER (TANDEM)	9T-1119	1	TANDEM & COVER GP	487
		1	TANDEM & COVER GP	489
BREATHER (TRANSMISSION)	4H-6112	1	LINES GP-POWER TRAIN OIL	463
		1	LINES GP-POWER TRAIN OIL	467
CAP-FILLER (TANDEM)	7H-1447	1	TANDEM & COVER GP	487
		1	TANDEM & COVER GP	489
CUP-DUST	235-3503	1	PINION GP-DIFFERENTIAL	475
FILTER ELEMENT AS-OIL (ADVANCED EFFICIENCY)	328-3655	1	LINES GP-POWER TRAIN OIL	467
FILTER ELEMENT AS-OIL (ADVANCED EFFICIENCY) (POWER TRAIN)	328-3655	1	FILTER GP-OIL	451
FILTER ELEMENT AS-OIL (ADVANCED EFFICIENCY) (TRANSMISSION)	328-3655	1	FILTER GP-OIL	450
FILTER ELEMENT AS-OIL (ULTRA HIGH EFFICIENCY)	1R-1809	1	LINES GP-POWER TRAIN OIL	463
FILTER-OIL (ADVANCED EFFICIENCY) (POWER TRAIN)	1G-8878	1	FILTER GP-OIL	449
PLUG-DRAIN	9J-7031	1	GEAR GP-OUTPUT TRANSFER	455
PLUG-DRAIN (MAGNETIC) (FINAL DRIVE)	9X-2230	4	DRIVE GP-FINAL	444
PLUG-MAGNETIC (REAR AXLE, OIL DRAIN)	8M-5576	1	HOUSING GP-REAR AXLE	461
SCREEN GP-MAGNETIC (TRANSFER GEAR)	4S-8603	1	GEAR GP-OUTPUT TRANSFER	455
SCREEN-SUCTION (TRANSFER GEAR)	4S-8598	1	GEAR GP-OUTPUT TRANSFER	455

INDEX

Name	Page

A

ACCESS GP-CAB 828
ACCUMULATOR & MTG GP-HYDRAULIC–BLADE CUSHION 631
ACCUMULATOR GP-BLADE CUSHION–CHARGED 632
ACCUMULATOR GP-BLADE CUSHION–UNCHARGED 633
ACCUMULATOR GP-BRAKE–CHARGED 612
ACCUMULATOR GP-HYDRAULIC 634
ACCUMULATOR-REFRIGERANT 845
ACTUATOR GP-VALVE 12, 13
ADAPTER GP–(24H) 968
ADAPTER GP-PUMP DRIVE 14
ADAPTER-FAST FILL FUEL 170
ADJUSTER GP-SEAT 829
AFTERCOOLER GP-AIR 141
AIR CLEANER GP 142
AIR CLEANER GP–CAB AIR PRECLEANER 144
AIR COMPRESSOR GP-SEAT 830
AIR CONDITIONER & HEATER GP 831, 833
AIR CONDITIONER & MOUNTING GP 835, 836
AIR CONDITIONER AR 837
ALARM GP 182
ALARM GP (BACKUP) 352
ALTERNATOR GP-CHARGING (24-VOLT, 150-AMPERE) 58
ARMREST GP–LH 839
ARMREST GP–RH 838
ATOMIZER GP-ETHER 325
AXLE AR-FRONT 516
AXLE GP-FRONT 517
AXLE GP-REAR 426

B

BASE AS (FUSE, RELAY PANEL) 360
BASE GP-OIL FILTER 427
BASE GP-OIL FILTER–HYDRAULIC 636
BASE GP-OIL FILTER–POWER TRAIN 428, 635
BASE GP-VALVE COVER & INJ HARN 15, 17, 18, 19
BATTERY & WIRING GP 183, 186
BATTERY (12-VOLT) (12-VOLT) 183, 186
BELT-DRIVE 239
BLADE AS-WIPER (1180-MM) 966
BLADE AS-WIPER (400-MM) 966
BLOCK AS-JUNCTION (BATTERY) 388
BLOWER & MTG GP-CAB 840
BLOWER GP-CAB–AIR CONDITIONER, HEATER FAN 841
BRACKET GP-MOUNTING 20, 189, 211, 290
BRACKET GP-MOUNTING–MAST 189
BRAKE GP-SERVICE & PARKING–FRONT TANDEM 613
BRAKE GP-SERVICE & PARKING–REAR TANDEM 616
BRAKE GP-SERVICE & PARKING–TANDEM 619
BREATHER 579
BREATHER (REAR AXLE) 461
BREATHER (TANDEM) 487, 489
BREATHER (TRANSMISSION) 463, 467
BREATHER AS (ALTERNATOR) 265

C

CAB AR 843
CAMERA AR–WORK AREA VISUAL SYSTEM . . . 190
CAMERA GP (115-DEG, COLOR) (REAR VIEW) 365
CAMSHAFT GP 21, 22
CAP AS 353
CAP AS-FILLER (FUEL TANK) 172, 176
CAP AS-RADIATOR 133, 140
CAP-FILLER (HYDRAULIC TANK) 781
CAP-FILLER (TANDEM) 487, 489
CAP-OIL FILLER (ENGINE) 113
CAP-VENTED (WINDOW WASHER RESERVOIR) 963
CARRIER GP-DIFFERENTIAL 429
CASE & PARTS GP-PLANETARY 430
CHAIN GP-DRIVE–TANDEM 431
CIRCLE GP 821
CIRCUIT BREAKER AS (150-AMPERE) (ALTERNATOR) 275, 279, 282
CIRCUIT BREAKER AS (150-AMPERE) (BATTERY) 275, 279, 282
CIRCUIT BREAKER AS (20-AMPERE) 354

INDEX

Name	Page
	361
CIRCUIT BREAKER AS (80-AMPERE) (LOAD)	275
	279
	282
CIRCUIT BREAKER AS (80-AMPERE) (MAIN)	275
	279
	282
COMMON AR	1
COMPRESSOR GP-REFRIGERANT	844
CONDENSER & ACCUMULATOR GP–REFRIGERANT	845
CONNECTION GP-ELECTRICAL	191
CONNECTOR GP-ELECTRONIC (WORK AREA VISUAL SYSTEM)	365
	872
CONTROL & MTG GP-ENGINE ELEK	192
CONTROL & MTG GP-JOYSTICK–OPERATOR PLATFORM	847
CONTROL GP-AIR & TEMPERATURE	850
CONTROL GP-DIFFERENTIAL LOCK	432
CONTROL GP-ELECTRONIC (GAUGE CLUSTER)	353
CONTROL GP-IMPLEMENT	193
CONTROL GP-JOYSTICK–LH	852
	853
CONTROL GP-JOYSTICK–RH	851
	854
CONTROL GP-SERVICE BRAKE	620
CONTROL GP-STEERING	855
	860
CONTROL GP-TRANSMISSION HYD	435
CONTROL GP-UNPRGMED MONITOR (MESSENGER)	203
CONTROL GP-UNPROGRAMMED (BASIC)	354
CONTROL GP-UNPROGRAMMED (ENGINE)	192
CONTROL GP-UNPROGRAMMED (IMPLEMENT 1)	195
CONTROL GP-UNPROGRAMMED (IMPLEMENT 2)	194
CONTROL GP-UNPROGRAMMED (PRODUCT LINK 300) (PRODUCT LINK 300)	213
	217
CONTROL GP-UNPROGRAMMED (TRANSMISSION)	435
CONTROL GP-UNPROGRAMMED–IMPLEMENT 1	195
CONTROL GP-UNPROGRAMMED–IMPLEMENT 2	194
CONVERSION AR-CERTIFICATION	3
CONVERTER GP-ELECTRICAL	197
CONVERTER GP-ELECTRICAL–RADIO	196
COOLER GP-HYDRAULIC OIL	637
	639
COOLING AR	125
	127
CORE	632
	633
CORE AS-AFTERCOOLER	141
CORE AS-ENGINE OIL COOLER	127
CORE AS-OIL COOLER (HYDRAULIC)	637
	639
CORE AS-RADIATOR	137
CORE AS-TRANSMISSION COOLER	127
COVER GP-CONTROL VALVE	521
	523
COVER GP-CYLINDER BLOCK	23
	24
COVER GP-FLYWHEEL HOUSING	25
	26
COVER GP-FRONT HOUSING	27
	28
	29
COVER GP-PLATFORM	865
	867
COVER GP-PROTECTION	524
COVER GP-SHIPPING	438
COVER GP-SOUND SUPPRESSION–FRONT HOUSING	30
COVER GP-VALVE MECHANISM	31
	32
	33
	34
	35
	36
CRANKSHAFT GP	37
CUP-DUST	475
CUSHION GP-ARM	869
CYLINDER & MTG GP-ARTICULATION	641
CYLINDER & MTG GP-BLADE TIP	642
CYLINDER & MTG GP-CSHFT & LIFT	643
CYLINDER & MTG GP-SIDESHIFT	644
CYLINDER & MTG GP-STEERING	645
CYLINDER & MTG GP-WHEEL LEAN	646
CYLINDER BLOCK AS	38
	39
	40
	41
	42
CYLINDER BLOCK GP	43
	45
	47
	49
	50
CYLINDER GP-ARTICULATION	647
CYLINDER GP-BLADE TIP	648
CYLINDER GP-HYDRAULIC–BLADE LIFT, CENTERSHIFT	649
CYLINDER GP-RIPPER	651
CYLINDER GP-SIDESHIFT	653

INDEX

Name	Page
CYLINDER GP-STEERING	655
CYLINDER GP-WHEEL LEAN	657
CYLINDER HEAD AS	51
CYLINDER HEAD GP	53
	55

D

DAMPER GP	57
DIFFERENTIAL & BEVEL GEAR GP	440
DIFFERENTIAL GP	442
DISPLAY AR-MONITOR–CD610	871
DISPLAY AR-MONITOR–CD700	870
DISPLAY GP-CAMERA–WORK AREA VISUAL SYSTEM	872
DISPLAY GP-MONITOR (CD610)	210
	875
DISPLAY GP-MONITOR (CD700C)	873
DISPLAY GP-MONITOR–CD610	875
DISPLAY GP-MONITOR–CD700C	873
DISPLAY GP-MONITOR–LIGHT BAR	874
DOOR GP (AIR VENTED)	961
	962
DOOR GP-ACCESS	172
	176
DOOR GP-ACCESS (BREAKERS, 24-VOLT OUTLET)	526
DOOR GP-CAB–LH	882
	885
	888
DOOR GP-CAB–RH	876
	879
	890
DRAIN GP-ECOLOGY	461
DRAWBAR GP	823
DRIVE & MTG GP-CIRCLE	658
	659
DRIVE GP-ACCESSORY	58
DRIVE GP-CIRCLE	660
	663
	666
DRIVE GP-FINAL	444
DRIVE GP-PUMP	59
DRYER-REFRIGERANT (IN-LINE)	845
DUCT & FILTER GP-CAB AIR	893
DUCT GP-CAB AIR–CAB AIR	894

E

EDGE GP-CUTTING	969
	970
	971
	972
	973
	974
EDGE-CUTTING	975
	976
	977
	978
	979
	980
	981
	982
	983
ELECTRONICS GP-COMMUNICATION–PRODUCT LINK 300	198
ELECTRONICS GP-IMPLEMENT	199
	201
ELECTRONICS GP-IMPLEMENT–IMPLEMENT 2	200
ELECTRONICS GP-MONITOR–ARABIC, CHINESE, ENGLISH, PORTUGUESE, RUSSIAN	206
ELECTRONICS GP-MONITOR–DANISH, ENGLISH, FINNISH, NORWEGIAN, PORTUGUESE, SWEDISH	204
ELECTRONICS GP-MONITOR–DUTCH, ENGLISH, FRENCH, GERMAN, PORTUGUESE, SPANISH	202
ELECTRONICS GP-MONITOR–ENGLISH, GREEK, HEBREW, ITALIAN, PORTUGUESE, TURKISH	205
ELECTRONICS GP-MONITOR–ENGLISH, PORTUGUESE, ROMANIAN, SLOVENIAN	207
ELECTRONICS GP-MONITOR–MESSENGER	203
ELECTRONICS GP-POWER TRAIN	208
ENCLOSURE AR-ENGINE–ENGINE	525
ENCLOSURE GP-ENGINE	526
	532
ENGINE AR-COMPLETE	4
	6
	8
ENGINE AR-CORE	9
	10
	11
ENGINE BRAKE GP	60
	61

F

FAN & MOTOR GP	129
FAN GP-CIRCULATING	896
	897
FASTENER GP-BRAKE	627
FASTENER GP-CYLINDER HEAD	55
FASTENER GP-FRONT HOUSING	62
	63
FASTENER GP-OIL PUMP MOUNTING–ENGINE	112
FASTENER GP-PLATFORM	538

INDEX

Name	Page
FASTENER GP-SENSOR	539
FASTENER GP-TANDEM	446
FASTENER GP-VALVE MECHANISM	64
FASTENER GP-WATER PUMP	131
FENDER & SUPPORT GP	540
FILLER GP-ENGINE OIL	113
FILLER GP-POWER TRAIN OIL	447
FILM (EXTERIOR SOUND)	3
FILM GP	990
FILM GP–ENGLISH	991
FILM GP-INTERNATIONAL	993
FILM-IDENTIFICATION (DASH, RH)	930
FILM-IDENTIFICATION (FILL, DRAIN)	994
	1000
FILM-IDENTIFICATION (FUSE PANEL)	275
	279
	282
	924
	925
	994
	1000
FILM-IDENTIFICATION (FUSE)	924
	925
FILM-IDENTIFICATION (HORN)	847
	957
FILM-IDENTIFICATION (IGNITION SWITCH)	218
FILM-IDENTIFICATION (LOWER)	961
	962
FILM-IDENTIFICATION (PANEL SWITCHES)	928
FILM-IDENTIFICATION (POWER RECEPTACLE, 12-VOLT)	197
FILM-IDENTIFICATION (TORQUE CONVERTER LOCK)	930
FILM-IDENTIFICATION (UPPER)	961
	962
FILM-IDENTIFICATION (VARIABLE BLADE FLOAT)	926
FILM-IDENTIFICATION (WINDOW WIPER CONTROLS)	905
FILM-INFORMATION (PRODUCT LINK, READ OMM)	213
	217
	991
FILM-INSTRUCTION (ADJUSTMENT CONTROL)	848
	957
FILM-INSTRUCTION (BLADE CONTROL, LH)	929
FILM-INSTRUCTION (BLADE CONTROL, RH)	929
FILM-INSTRUCTION (DO NOT DRILL, WELD ROPS)	946
FILM-INSTRUCTION (ENGINE SHUTDOWN)	994
	1000
FILM-INSTRUCTION (MACHINE SECURITY, CONSOLE)	218
FILM-INSTRUCTION (NO FLOAT)	193
FILM-INSTRUCTION (OPERATOR CONSOLE, LH)	847
	957
FILM-INSTRUCTION (OPERATOR CONSOLE, RH)	847
	957
FILM-INSTRUCTION (SEAT ADJUSTMENT)	959
FILM-WARNING (BLADE, DO NOT CLIMB, READ OMM)	189
	270
	350
FILM-WARNING (DO NOT LIFT)	994
	1000
FILM-WARNING (HIGH PRESSURE CYLINDER)	994
FILM-WARNING (HIGH PRESSURE, READ OMM)	632
	633
FILM-WARNING (HOT FLUID)	1000
FILM-WARNING (LASER TRANSMITTER)	270
FILM-WARNING (NO WELD, NO DRILL, READ OMM)	991
FILM-WARNING (PRODUCT LINK RADIO, INTL)	217
	993
FILM-WARNING (PRODUCT LINK RADIO, U.S.)	213
	991
FILM-WARNING (SEAT BELT, INTERNATIONAL)	993
FILTER & MTG GP-FUEL	153
FILTER & MTG GP-HYDRAULIC	669
	671
	673
FILTER (ETHER START)	351
FILTER AS-WATER SEP & FUEL (PRIMARY)	157
FILTER ELEMENT AS-AIR (PRIMARY)	142
	898
FILTER ELEMENT AS-AIR (SECONDARY)	142
FILTER ELEMENT AS-CAB AIR (CAB AIR)	893
FILTER ELEMENT AS-OIL (ADVANCED EFFICIENCY)	467
FILTER ELEMENT AS-OIL (ADVANCED EFFICIENCY) (POWER TRAIN)	451
FILTER ELEMENT AS-OIL (ADVANCED EFFICIENCY) (TRANSMISSION)	450
FILTER ELEMENT AS-OIL (ULTRA HIGH EFFICIENCY)	463
	676
	677
FILTER ELEMENT-CAB AIR (ULTRA HIGH EFFICIENCY, CARBON)	898

INDEX

Name	Page
FILTER ELEMENT-OIL (ULTRA HIGH EFFICIENCY)	678, 679
FILTER GP-CAB AIR–HIGH EFFICIENCY	898
FILTER GP-ENGINE OIL	116
FILTER GP-ENGINE OIL–ENGINE	114
FILTER GP-FUEL	155
FILTER GP-OIL	449, 450, 451, 675, 676
FILTER GP-OIL–TRANSMISSION	677, 678, 679
FILTER GP-WATER SEP & FUEL–PRIMARY	157
FILTER-ENGINE OIL (ADVANCED EFFICIENCY)	116
FILTER-FUEL (ADVANCED EFFICIENCY)	155
FILTER-OIL (ADVANCED EFFICIENCY) (POWER TRAIN)	449, 675
FINAL DRIVE GP	444
FLOAT AR-BLADE	680
FLOOR MAT	961, 962
FLYWHEEL GP	65
FOOTREST GP	899
FRAME GP-FRONT	542
FRAME GP-REAR	543
FUMES DISPOSAL GP	118
FUSE (10-AMPERE)	353, 358
FUSE (15-AMPERE)	353, 358
FUSE (20-AMPERE)	285, 353, 358
FUSE (25-AMPERE)	285
FUSE (30-AMPERE)	353, 358

G

Name	Page
GASKET	845
GASKET-REGULATOR (HOUSING) (WATER TEMPERATURE)	127
GAUGE AS-OIL LEVEL (DIPSTICK) (POWER TRAIN OIL)	447
GAUGE AS-OIL LEVEL (ENGINE)	119
GAUGE GP-OIL LEVEL (DIPSTICK)	119
GAUGE-LIQUID LEVEL (SIGHT GLASS) (HYDRAULIC OIL)	781
GAUGE-SIGHT	133
GAUGE-SIGHT (COOLANT)	140
GAUGE-SIGHT (TANDEM OIL LEVEL)	487, 489
GEAR GP-CAMSHAFT	66
GEAR GP-FRONT	67
GEAR GP-INPUT TRANSFER	453
GEAR GP-OUTPUT TRANSFER	455
GEAR GP-REAR	70
GRADE CONTROL AR–ACCUGRADE	209, 210
GRADE CONTROL AR-LASER–ADVANCED TRACKING SYSTEM	211
GRADE CONTROL GP–ACCUGRADE	212
GUARD GP-BELT–ALTERNATOR	71
GUARD GP-BOTTOM	544, 546
GUARD GP-BRAKE	547
GUARD GP-MUD	548
GUARD GP-RADIATOR	550
GUARD GP-ROCK	552

H

Name	Page
HANDRAIL GP	553, 554
HANDRAIL GP–REAR	555
HARNESS AS-ALARM	901
HARNESS AS-BOX	275, 279, 282
HARNESS AS-CAB (MAIN CAB)	353, 358
HARNESS AS-CHASSIS	218, 390, 397, 406, 415
HARNESS AS-CONTROL (LH)	847
HARNESS AS-CONTROL (RH)	847
HARNESS AS-ENGINE	17, 366, 368, 390, 398, 407, 416
HARNESS AS-ENGINE (INJECTOR, VARIABLE VALVE)	15
HARNESS AS-ENGINE (UNIT INJECTOR)	18, 19
HARNESS AS-FRONT CHASSIS	384
HARNESS AS-FRONT CHASSIS (LH)	376
HARNESS AS-FRONT CHASSIS (LH) (FLOODLIGHTS, LH)	370, 373
HARNESS AS-FRONT CHASSIS (RH)	377

INDEX

Name	Page
HARNESS AS-FRONT CHASSIS (RH) (FLOODLIGHTS, RH)	370, 373
HARNESS AS-FRONT LIGHTING	246, 247, 254, 256
HARNESS AS-FRONT LIGHTING (LH) (LH)	354, 360
HARNESS AS-FRONT LIGHTING (REAR)	353, 360
HARNESS AS-FRONT LIGHTING (RH) (RH)	353, 360
HARNESS AS-HEATER & AIR COND (POWER)	831, 833
HARNESS AS-LIGHTING	243, 390, 398, 407, 416
HARNESS AS-MONITOR	386
HARNESS AS-MOTOR	841
HARNESS AS-MOTOR (AUTOLUBE ACTUATION)	370, 373, 376
HARNESS AS-PANEL	929
HARNESS AS-POWER	217
HARNESS AS-POWER (PRODUCT LINK RADIO)	213, 215, 216
HARNESS AS-RADIO	384, 938, 941, 942, 943
HARNESS AS-REAR CHASSIS	390, 395, 404, 413
HARNESS AS-REAR LIGHTING	422, 424
HARNESS AS-SENSOR	399, 408, 417
HARNESS AS-SENSOR (ANGLE)	382
HARNESS AS-SENSOR (FUEL)	155
HARNESS AS-SENSOR (INCLINATION)	382
HARNESS AS-SENSOR (ROTATION)	382
HARNESS AS-SENSOR (STEERING CYLINDER POSITION)	370
HARNESS AS-SENSOR (STEERING CYLINDER POSITION,LH)	373
HARNESS AS-SENSOR (STEERING CYLINDER POSITION,RH)	373, 376
HARNESS AS-SOLENOID (VARIABLE BLADE FLOAT)	680
HARNESS AS-SWITCH	390, 395, 404, 413, 923
HARNESS AS-SWITCH (GRADE CONTROL)	381, 929
HARNESS AS-SWITCH (HEATER)	900
HARNESS AS-TRANSMISSION	435
HARNESS AS-VALVE (SEAT AIR COMPRESSOR)	959
HARNESS AS-WIRING (LIGHT BAR)	384
HARNESS AS-WIRING (MAST)	267
HARNESS AS-WIRING (RADIATOR)	352
HARNESS AS-WIRING (SPEED SENSOR)	316
HARNESS AS-WORK TOOL	382
HEATER GP-CAB	900
HITCH GP-ARTICULATING	556, 558
HORN GP-AIR	901
HORN GP-ELECTRIC	902
HOUSING AS-DIFFERENTIAL	459
HOUSING GP-FILTER	450, 676, 677, 678, 679
HOUSING GP-FILTER (POWER TRAIN)	451
HOUSING GP-FLYWHEEL	72
HOUSING GP-FRONT	74, 75
HOUSING GP-REAR AXLE	460, 461

I

Name	Page
IMPLEMENT AR	825
INSTALLATION AR-COMMUNICATION–PRODUCT LINK 321SR	213, 215, 216, 217
INSTALLATION GP-RADIO	904
INSTALLATION GP-RADIO–SATELLITE ANTENNA	903
INSTALLATION GP-SECURITY	218

INDEX

Name	Page

K

KEY (BATTERY DISCONNECT) 337
KEY AS-ELECTRONIC (SECURITY) 218
KIT-PISTON (SLACK ADJUSTER) 630

L

LAMP (24-VOLT) (DOME) 221
LAMP (24-VOLT, 21-WATT) 220
LAMP (24-VOLT, 70-WATT) 239
LAMP (24-VOLT, HID) 227
LAMP AS (24-VOLT) 905
LAMP AS-LED (24-VOLT, GREEN) 353
358
926
LAMP AS-LED (24-VOLT, RED) 218
LAMP GP 220
LAMP GP-DOME–WITH SWITCH 221
LAMP GP-FLOOD 222
223
225
LAMP GP-FLOOD–24-VOLT, 35-WATT, HID 224
LAMP GP-FLOOD–HID 226
227
LAMP GP-HEAD–HIGH BEAM 228
231
LAMP GP-HEAD–LOW BEAM 229
230
LAMP GP-SIGNAL 233
LAMP GP-SIGNAL (12-VOLT, 24-VOLT, TURN) . . . 235
LAMP GP-SIGNAL (24-VOLT, TURN) 234
LAMP GP-SIGNAL–STOP, TAIL 232
237
LAMP GP-SIGNAL–TURN 234
235
236
LAMP GP-WARNING BEACON 240
LAMP GP-WARNING BEACON–
AMBER, ROTATING 239
LAMP GP-WARNING BEACON–
AMBER, STROBE 241
242
LAMP GP-WARNING BEACON–
STROBE LIGHT 238
LAMP-HALOGEN (12/24-VOLT, 35-WATT) 224
226
230
231
LAMP-HALOGEN (24-VOLT, 70-WATT) 222
225
LAMP-HALOGEN (24-VOLT, 70-WATT)
(FLOODLIGHT) 223
LAMP-HALOGEN (24-VOLT, 70-WATT)
(HIGH BEAM) 228
LAMP-HALOGEN (24-VOLT, 70-WATT)
(LOW BEAM) 229
LIFTING GP-ENGINE 77
78
LIGHTING GP-FLOOD 258
260
LIGHTING GP-FLOOD–
ENGINE ENCLOSURE 250
251
LIGHTING GP-FLOOD–
ENGINE ENCLOSURE, LH 243
LIGHTING GP-FLOOD–FRONT FRAME 248
249
252
253
LIGHTING GP-FLOOD–
FRONT FRAME, REAR 244
245
LIGHTING GP-FLOOD–
OPERATOR PLATFORM 246
247
254
256
LIGHTING GP-ROADING–FRONT FRAME 262
263
LIGHTING GP-WARNING BEACON 264
LINER GP-CAB 905
LINES GP-AFTERCOOLER AIR 145
146
LINES GP-AIR CONDITIONER 907
LINES GP-ALTERNATOR AIR 265
LINES GP-AUTOMATIC LUBRICATION–
ART CYL, HITCH, RIPPER 566
LINES GP-AUTOMATIC LUBRICATION–
CSHIFT/LIFT CYL, MOLDBOARD 563
LINES GP-AUTOMATIC LUBRICATION–
FRONT AXLE 560
LINES GP-ENGINE OIL DRAIN 122
LINES GP-ENGINE OIL–FILTER 120
LINES GP-FRONT 681
LINES GP-FUEL 158
160
162
164
LINES GP-HEATER 909
LINES GP-HYDRAULIC 685
LINES GP-HYDRAULIC–BLADE FLOAT 694
LINES GP-HYDRAULIC FAN 701
LINES GP-POWER TRAIN OIL 463
467
LINES GP-PUMP–IMPLEMENT 704
713
722
LINES GP-RIPPER 731
733

INDEX

Name	Page
LINES GP-SECONDARY STEERING	735
LINES GP-STEERING	737
LINES GP-TORQUE CONV COOLER	471
LINES GP-TURBOCHARGER OIL	123
LINES GP-WATER	132
	133
LINK GP-STEERING	569
LINK GP-STEERING FRAME LOCK	570
LITERATURE GP	2
LOCKOUT-SWITCH (BATTERY DISCONNECT)	183
	186
LUBRICATION AR-AUTOMATIC	571

M

MANIFOLD GP-CONTROL	748
MANIFOLD GP-CONTROL–BRAKE CHARGE, HYD FAN CONTROL	744
MANIFOLD GP-CONTROL–PARKING BRAKE	746
MANIFOLD GP-CONTROL–PILOT SHUTOFF	747
MANIFOLD GP-CONTROL–STEERING	743
MANIFOLD GP-EXHAUST	147
MANIFOLD GP-FUEL	160
	162
	164
	166
MANIFOLD GP-VALVE–INLET	750
	752
	754
MAST GP–LASER RECEIVER	267
	268
MECHANISM GP-FUEL PUMP & VALVE	79
	80
	81
MIRROR GP-REAR VIEW	910
MIRROR GP-REAR VIEW–EXTERIOR, HEATED	911
MIRROR GP-REAR VIEW–INTERIOR	913
MODULE GP-DISPLAY (GAUGE CLUSTER)	361
MODULE GP-DISPLAY (WORK AREA VISUAL SYSTEM)	872
MODULE GP-INTERFACE (KEY)	218
MOLDBOARD AS	826
MOTOR & MTG GP-CIRCLE DRIVE	756
	757
MOTOR GP-ELECTRIC–CIRCULATING FAN	269
MOTOR GP-GEROTOR	757
	758
MOTOR GP-PISTON	473
MOUNTING GP-ALTERNATOR & COMPR	82
MOUNTING GP-BLADE	984
MOUNTING GP-CONTROL–WITH ENCLOSURE	914
MOUNTING GP-ENGINE & XMSN	83
MOUNTING GP-MAST–LASER RECEIVER	270
	271
MOUNTING GP-MUFFLER	148
MOUNTING GP-PEDAL	915
MOUNTING GP-PLATFORM	916
	917
MOUNTING GP-PLATFORM–LH	918
	919
MOUNTING GP-PLATFORM–RH	920
MOUNTING GP-REAR AXLE	474
MOUNTING GP-RECEIVER–MAST	272
MOUNTING GP-RIPPER	985
MOUNTING GP-SENSOR–ATMOSPHERIC AIR, ENGINE OIL	274
MOUNTING GP-VALVE–IMPLEMENT	577
MUFFLER GP	149

P

PADLOCK GP	170
	183
	186
	994
	1000
PAN GP-BACKREST–LUMBAR	921
	922
PAN GP-OIL	89
	91
PAN GP-OIL–ENGINE	85
	87
PAN GP-SEAT–LUMBAR	923
PANEL GP-CAB	924
	925
PANEL GP-CIRCUIT BREAKER	275
	279
	282
	285
PANEL GP-CONTROL–ACCUGRADE	929
PANEL GP-CONTROL–ACCUGRADE, LH	928
PANEL GP-CONTROL–VARIABLE BLADE FLOAT	926
PANEL GP-INSTRUMENT	930
PANEL GP-SOUND SUPPRESSION	93
PANEL GP-SOUND SUPPRESSION–ENGINE FRONT HOUSING	94
PINION GP-DIFFERENTIAL	475
PISTON & ROD GP	95
PLANETARY GP-TRANSMISSION	477
PLATE & FILM GP	994
	1000
	1007
PLATE & FILM GP–ARABIC, WITH MONITOR SOFTWARE	1022
PLATE & FILM GP–CHINESE, WITH MONITOR SOFTWARE	1023

INDEX

Name	Page
PLATE & FILM GP– DANISH, WITH MONITOR SOFTWARE	1014
PLATE & FILM GP– DUTCH, WITH MONITOR SOFTWARE	1013
PLATE & FILM GP– ENGLISH, WITH MONITOR SOFTWARE	1008
PLATE & FILM GP– FINNISH, WITH MONITOR SOFTWARE	1026
PLATE & FILM GP– FRENCH, WITH MONITOR SOFTWARE	1011
PLATE & FILM GP– GERMAN, WITH MONITOR SOFTWARE	1012
PLATE & FILM GP– GREEK, WITH MONITOR SOFTWARE	1018
PLATE & FILM GP– HEBREW, WITH MONITOR SOFTWARE	1019
PLATE & FILM GP– ITALIAN, WITH MONITOR SOFTWARE	1017
PLATE & FILM GP– NORWEGIAN, WITH MONITOR SFWR	1016
PLATE & FILM GP– PORTUGESE, WITH MONITOR SFWR	1009
PLATE & FILM GP– ROMANIAN, WITH MONITOR SFWR	1024
PLATE & FILM GP– RUSSIAN, WITH MONITOR SOFTWARE	1021
PLATE & FILM GP– SLOVENIAN, WITH MONITOR SFWR	1025
PLATE & FILM GP– SPANISH, WITH MONITOR SOFTWARE	1010
PLATE & FILM GP– SWEDISH, WITH MONITOR SOFTWARE	1015
PLATE & FILM GP– TURKISH, WITH MONITOR SOFTWARE	1020
PLATE AS-FRONT HOUSING	96
PLATE GP-MOUNTING	843
PLATE GP-PUSH	827
PLATE-SERIAL NUMBER (TRANSMISSION)	479
PLATFORM AR	932
PLATFORM AR–DUAL	931
PLATFORM GP–LH	933
PLATFORM GP-OPERATOR	934, 935, 936, 937
PLUG GP-CYLINDER BLOCK	97, 98
PLUG GP-CYLINDER HEAD	99
PLUG-DRAIN	455
PLUG-DRAIN (ENGINE OIL PAN)	87, 122
PLUG-DRAIN (HYDRAULIC TANK OIL)	781
PLUG-DRAIN (MAGNETIC) (FINAL DRIVE)	444
PLUG-MAGNETIC (REAR AXLE, OIL DRAIN)	461
PRECLEANER GP–CAB AIR	150
PULLEY GP-CRANKSHAFT	100
PUMP & MOTOR GP-BRAKE RELEASE– PARKING, SECONDARY	628
PUMP & MTG GP-FUEL TRANSFER–REAR	167
PUMP & MTG GP-PISTON & GEAR– BRAKE, DIFFERENTIAL LOCK, HYDRAULIC FAN, TRANSMISSION CHARGE	761
PUMP & MTG GP-PISTON– IMPLEMENT, STEERING	760
PUMP GP-ENGINE OIL	124
PUMP GP-FUEL INJECTION	168
PUMP GP-FUEL PRM & WATER SEP	169
PUMP GP-FUEL TRANSFER	167
PUMP GP-GEAR	762, 764
PUMP GP-GEAR (TRANSMISSION CHARGE)	761
PUMP GP-LUBRICATION	571, 579
PUMP GP-PISTON & GEAR–BRAKE, DIFFERENTIAL LOCK, HYDRAULIC FAN	773
PUMP GP-PISTON– BRAKE, HYDRAULIC FAN	771
PUMP GP-PISTON–IMPLEMENT	768
PUMP GP-PISTON–IMPLEMENT, STEERING	765
PUMP GP-PISTON–STEERING	766
PUMP GP-WATER	135, 136

R

RADIATOR GP	137
RADIO GP (AM/FM/WB/XM/ CD PLAYER)	942
RADIO GP–AM, FM	944
RADIO GP–AM/FM/WB	938
RADIO GP–AM/FM/WB/CD PLAYER	939, 941
RADIO GP–AM/FM/WB/SIRIUS/ CD PLAYER	940
RADIO GP–AM/FM/WB/SIRIUS/CD PLAYER	943
RADIO GP–AM/FM/WB/XM/CD PLAYER	942
RADIO GP-COMMUNICATION– PRODUCT LINK 121SR	287, 288
RECEIVER AR-LASER–ACCUGRADE, DUAL	290
RECEIVER AR-LASER– ACCUGRADE, SINGLE	289
RECEIVER AR-SATELLITE– ACCUGRADE, DUAL GNSS, MS992	292
RECEIVER AR-SATELLITE– ACCUGRADE, SINGLE GNSS, MS992	291
RECEIVER GP-LASER–ACCUGRADE, DUAL	293
RECEIVER GP-SATELLITE– ACCUGRADE, DUAL GNSS, MS992	294
RECEIVER GP-SATELLITE– ACCUGRADE, SINGLE GNSS, MS992	295
RECLINER GP-SEAT	945

INDEX

Name	Page
REFLECTOR GP	581
REGULATOR-TEMPERATURE (92-DEG C) (COOLANT)	127
RELAY (24-VOLT)	353
	358
RELAY AS (24-VDC, 20-AMPERE) (HEATED MIRRORS)	911
RELAY AS (24-VOLT) (BLADE FLOOD LAMP ONE)	358
RELAY AS (24-VOLT) (BLADE FLOOD LAMP TWO)	358
RELAY AS (24-VOLT) (BLADE)	358
RELAY AS (24-VOLT) (CAB FLOODLIGHTS)	353
	358
RELAY AS (24-VOLT) (FRONT MACHINE FLOODLIGHTS)	353
RELAY AS (24-VOLT) (GRADE, SLOPE)	381
RELAY AS (24-VOLT) (HEATED MIRRORS)	353
RELAY AS (24-VOLT) (REAR FLOODLIGHT)	358
RELAY AS (24-VOLT) (THROTTLE RELAY)	353
RELAY AS (24-VOLT) (THROTTLE)	358
RIPPER AR	986
RIPPER GP	987
ROCKER ARM GP	101
	107
ROCKER ARM GP–EXHAUST	103
	106
ROCKER ARM GP–INTAKE	104
ROCKER ARM GP–NON-BRAKE	105
ROCKER ARM GP–UNIT INJECTOR	102
ROPS GP	946
ROTATING GP-MOTOR	774
ROTATING GP-PUMP	775
ROTATING GP-PUMP–BRAKE, HYDRAULIC FAN	776

S

Name	Page
SCREEN (CONTROL MANIFOLD)	743
	744
	748
SCREEN (HYDRAULIC TANK)	781
SCREEN GP-MAGNETIC (TRANSFER GEAR)	455
SCREEN GP-SUN	947
SCREEN-SUCTION (TRANSFER GEAR)	455
SEAL GP-CRANKSHAFT–FRONT	109
SEAL GP-CRANKSHAFT–REAR	108
SEAL GP-DUO-CONE	517
SEAL GP-FINAL DRIVE	613
	616
SEAL-CRANKSHAFT (REAR)	108
SEAL-VALVE COVER	31
	33
	34
	36
SEAT & MOUNTING GP	948
SEAT BELT GP (RETRACTABLE)	949
SEAT GP–CLOTH	949
	950
SEAT GP-SUSPENSION	952
SENSOR & MOUNTING GP	296
SENSOR & MTG GP-POSITION	297
SENSOR & MTG GP-POSITION (VARIABLE BLADE FLOAT)	926
SENSOR AR-GRADE	299
SENSOR AR-GRADE–DUAL SONIC	301
SENSOR AR-GRADE–SINGLE SONIC	300
SENSOR AS-ANGLE (AS400TC) (ANGLE)	296
SENSOR AS-SONIC (ST300)	314
SENSOR AS-TEMPERATURE	322
SENSOR GP-ENGINE	4
	7
	302
SENSOR GP-FUEL LEVEL	172
	176
	304
SENSOR GP-POSITION	305
	306
SENSOR GP-POSITION (BLADE ROTATION)	296
SENSOR GP-POSITION (ROTARY) (ARTICULATION)	390
	395
	404
	413
SENSOR GP-POSITION (STEERING CYLINDER)	655
SENSOR GP-POSITION (VARIABLE BLADE FLOAT)	297
SENSOR GP-PRESSURE	307
	308
	309
	310
	311
	312
	313
SENSOR GP-PRESSURE (AIR INLET MANIFOLD)	302
SENSOR GP-PRESSURE (ATMOSPHERIC AIR)	302
	390
	395
	404
	413
SENSOR GP-PRESSURE (ATMOSPHERIC)	310
SENSOR GP-PRESSURE (BRAKE ACCUMULATOR)	744
	748
SENSOR GP-PRESSURE (FUEL)	155
SENSOR GP-PRESSURE (IMPLEMENT PUMP OIL)	390

INDEX

Name	Page
	395
	404
	413
SENSOR GP-SONIC	314
SENSOR GP-SPEED	315
	316
	317
	318
SENSOR GP-SPEED (TIMING, CAMSHAFT)	302
SENSOR GP-SPEED (TIMING, CRANKSHAFT)	302
SENSOR GP-SPEED (TRANSMISSION INPUT)	453
SENSOR GP-SPEED (TRANSMISSION OUTPUT)	455
SENSOR GP-TEMPERATURE	320
	321
	322
	323
	324
SENSOR GP-TEMPERATURE (FUEL)	155
SENSOR GP-TEMPERATURE (HYDRAULIC OIL)	637
	639
SENSOR GP-TEMPERATURE (IMPLEMENT, BRAKE OIL)	390
	395
	404
	413
SENSOR GP-TEMPERATURE (STEERING OIL)	376
SENSOR GP-TEMPERATURE (TRANSMISSION OIL)	435
SENSOR GP-TEMPERATURE–TRANSMISSION OIL	319
SERVICE GP-IMPLEMENT	199
SERVICE GP-MONITOR	205
	206
	207
SERVICE GP-POWER TRAIN	208
SHAFT GP-DRIVE	484
	485
SHIELD GP-HEAT	582
SLACK ADJUSTER GP	630
SOFTWARE	875
SOFTWARE GP-COMMUNICATION	198
SOFTWARE GP-COMMUNICATION (PRODUCT LINK 121SR)	216
	287
	288
SOFTWARE GP-IMPLEMENT	199
SOFTWARE GP-MONITOR	205
	206
	207
SOFTWARE GP-POWER TRAIN	208
SOLENOID	579
SOLENOID AS-STARTING MOTOR (24-VOLT)	330
SPIDER & BEARING GP	504
STARTING AID GP-ETHER	325
STARTING AR-COLD WEATHER	326
STARTING MOTOR GP-ELECTRIC	328
	329
	332
	333
STEP GP	588
	590
	591
STEP GP–LH	587
	592
STEP GP–REAR	583
	585
STEP GP–RH	593
STRAINER (HYDRAULIC TANK FILL)	781
STRAINER-FUEL	172
	176
SUPPORT GP-CONTROL–JOYSTICK, LH	953
SUPPORT GP-CONTROL–JOYSTICK, RH	955
SUPPORT GP-CONTROL–OPERATOR PLATFORM	957
SUPPORT GP-ENGINE	110
SUPPORT GP-LIGHT	264
	843
SUPPORT GP-PLATFORM	594
SUPPRESSION GP-SOUND–ENGINE ENCLOSURE	111
SUPPRESSION GP-SOUND–REAR FRAME	595
	597
SUSPENSION GP-SEAT–AIR, HEATED	959
SWASHPLATE GP	777
SWITCH AS (FORWARD, NEUTRAL, REVERSE)	852
	853
SWITCH AS (LOWER LIMIT)	267
SWITCH AS (UPPER LIMIT)	267
SWITCH AS-FOOT (DIFFERENTIAL LOCK)	353
	358
SWITCH AS-LIMIT (SEAT ADJUSTMENT)	923
SWITCH AS-MAGNETIC (START RELAY)	340
SWITCH AS-PRESSURE (COMPRESSOR, HIGH SIDE)	390
	395
	404
	413
SWITCH AS-PRESSURE (COMPRESSOR, LOW SIDE)	390
	395
	404
	413
SWITCH AS-PRESSURE (PARKING BRAKE)	746
SWITCH AS-PRESSURE (POWER TRAIN)	675

INDEX

Name	Page
SWITCH AS-PUSH BUTTON (AUTO/MANUAL SIDESHIFT)	928
SWITCH AS-PUSH BUTTON (BLADE CONTROL)	929
SWITCH AS-PUSH BUTTON (HORN)	847
SWITCH AS-ROCKER (24-VOLT) (BLADE OFFSET, LH)	928
SWITCH AS-ROCKER (24-VOLT) (BLADE OFFSET, RH)	928
SWITCH AS-ROCKER (24-VOLT) (HEADLIGHT DIMMER)	353 358
SWITCH AS-ROCKER (24-VOLT) (TURN SIGNAL)	358
SWITCH AS-ROCKER (AIR CONDITIONER ON, OFF)	850
SWITCH AS-ROCKER (CAB FLOODLIGHTS)	353 358
SWITCH AS-ROCKER (ENGINE COMPRESSION BRAKE)	344
SWITCH AS-ROCKER (ENGINE, HIGH IDLE, HOLD)	353 358
SWITCH AS-ROCKER (FRONT DEFROSTER)	353 358
SWITCH AS-ROCKER (HAZARD)	353 358
SWITCH AS-ROCKER (HEADLIGHTS, TAIL LIGHTS)	353 358
SWITCH AS-ROCKER (HEATED MIRRORS)	911
SWITCH AS-ROCKER (HYDRAULIC LOCKOUT)	353 358
SWITCH AS-ROCKER (PARKING BRAKE ON, OFF)	353 358
SWITCH AS-ROCKER (PARKING BRAKE RETRACT)	353 360
SWITCH AS-ROCKER (REAR DEFROSTER)	353 358
SWITCH AS-ROCKER (SECONDARY STEERING)	353 358
SWITCH AS-ROCKER (STAIRWAY ACCESS LIGHTS)	345
SWITCH AS-ROCKER (THROTTLE HOLD MODE)	353 358
SWITCH AS-ROCKER (VARIABLE BLADE FLOAT)	926
SWITCH AS-ROCKER (WARNING BEACON)	353
SWITCH AS-START (KEY)	353 358
SWITCH AS-TEMPERATURE	326
SWITCH AS-WIPER (24-VOLT) (FRONT INTERMITTENT)	346
SWITCH GP-BYPASS	336
SWITCH GP-DIFF PRESSURE	449
SWITCH GP-DISCONNECT (BATTERY)	183 186
SWITCH GP-DISCONNECT–BATTERY	337
SWITCH GP-MAGNETIC	338 339 340 341 342
SWITCH GP-MAGNETIC (24-VOLT) (START RELAY)	338
SWITCH GP-PRESSURE	343
SWITCH GP-ROCKER–CAB ACCESS	345
SWITCH GP-ROCKER–ENGINE BRAKE	344
SWITCH GP-TOGGLE (ENGINE OIL EVAC)	243
SWITCH GP-TOGGLE (REAR LIGHTS)	422 424
SWITCH GP-WIPER (24-VOLT, INTERMITTENT)	348 361
SWITCH GP-WIPER–INTERMITTENT	346 347 348
SWIVEL GP–CIRCLE DRIVE	778

T

TANDEM & COVER GP	486
TANDEM & COVER GP–LH	489
TANDEM & COVER GP–RH	487
TANK & MTG GP-HYDRAULIC–HYDRAULIC	780
TANK AR-FUEL	170
TANK AS-WINDOW WASHER	963
TANK GP-COOLANT	140
TANK GP-FUEL	172 176
TANK GP-HYDRAULIC	781
TARGET GP-LASER	211 349 350
TIRE GP	491 492 493 494 495 496 497
TOOTH GP-RIPPER	989
TORQUE CONVERTER GP	498 500
TRANSMISSION AR	503

INDEX

Name	Page
TRIM GP-CAB	961
	962
TURBOCHARGER GP	151
	152

U

Name	Page
UNIVERSAL JOINT GP	504
	505

V

Name	Page
VALVE & MTG GP-SOLENOID– DIFFERENTIAL LOCK SOLENOID VALVE	506
VALVE AS-GAS	633
VALVE AS-GAS (HYDRAULIC ACCUMULATOR)	632
VALVE GP-ACTUATOR (STEERING)	817
VALVE GP-BANK 5–LH	784
VALVE GP-BANK 5–RH	785
	786
	787
VALVE GP-BRAKE CONTROL	620
VALVE GP-CHECK	579
	701
	737
	739
	788
	789
	816
VALVE GP-CHECK & RELIEF (LINE, BLADE SIDESHIFT)	794
VALVE GP-CHECK & RELIEF (LINE, BLADE TIP)	802
VALVE GP-CHECK & RELIEF (LINE, RIPPER)	790
VALVE GP-CHECK (ARTICULATION)	800
VALVE GP-CHECK (BLADE LIFT)	685
	694
	796
VALVE GP-CHECK (BLADE TIP)	802
VALVE GP-CHECK (CENTERSHIFT)	804
VALVE GP-CHECK (CIRCLE DRIVE)	792
VALVE GP-CHECK (HYDRAULIC FAN)	704
	713
	722
VALVE GP-CHECK (RIPPER)	790
VALVE GP-CHECK (SIDESHIFT)	794
VALVE GP-CHECK (STEERING LINES PRESSURE)	855
	860
VALVE GP-CHECK (WHEEL LEAN)	798
VALVE GP-CHECK–FUEL	180
	181
VALVE GP-CONTROL–ARTICULATION	800
VALVE GP-CONTROL–BLADE LIFT	796
VALVE GP-CONTROL–BLADE TIP	802
VALVE GP-CONTROL–CENTERSHIFT	804
VALVE GP-CONTROL–CIRCLE DRIVE	792
VALVE GP-CONTROL–RIPPER	790
VALVE GP-CONTROL–SIDESHIFT	794
VALVE GP-CONTROL–WHEEL LEAN	798
VALVE GP-DIVERTER	820
VALVE GP-DIVERTER–BRAKE CHARGING	806
VALVE GP-DRAIN	125
VALVE GP-ETHER STARTING	351
VALVE GP-FLOW DIVIDER	681
VALVE GP-LUBE DISTRIBUTION– 2-INJECTOR	601
	605
VALVE GP-LUBE DISTRIBUTION– 3-INJECTOR	603
VALVE GP-LUBE DISTRIBUTION– 4-INJECTOR	602
	607
	609
VALVE GP-LUBE DISTRIBUTION– 5-INJECTOR	599
	600
	606
	608
VALVE GP-LUBE DISTRIBUTION– 6-INJECTOR	604
	610
	611
VALVE GP-MANIFOLD–TRANSMISSION	507
VALVE GP-MODULATING	509
	510
VALVE GP-PRESSURE REDUCING	807
	808
	809
VALVE GP-PUMP CONTROL– PRESSURE, FLOW COMPENSATOR	810
	811
VALVE GP-RELIEF	511
	812
VALVE GP-RELIEF (BRAKE ACCUMULATOR)	744
	748
VALVE GP-RELIEF (DIFFERENTIAL LOCK)	432
VALVE GP-RELIEF (IMPLEMENT PILOT PRESSURE)	754
VALVE GP-RELIEF (STEERING PILOT PRESSURE)	817
VALVE GP-SEQUENCE (RIPPER CYLINDER)	733
VALVE GP-SHUTTLE	813
VALVE GP-SHUTTLE (HYDRAULIC FAN)	744
	748
VALVE GP-SOLENOID	814
	815
VALVE GP-SOLENOID & MANIFOLD	816
VALVE GP-SOLENOID (ARTICULATION)	800

INDEX

Name	Page
VALVE GP-SOLENOID (BLADE CUSHION)	816
VALVE GP-SOLENOID (BLADE LIFT)	796
VALVE GP-SOLENOID (BLADE TIP)	802
VALVE GP-SOLENOID (CENTERSHIFT)	804
VALVE GP-SOLENOID (CIRCLE DRIVE)	792
VALVE GP-SOLENOID (DIFFERENTIAL LOCK)	506
VALVE GP-SOLENOID (HYDRAULIC FAN)	744
	748
VALVE GP-SOLENOID (IMPLEMENT PILOT OIL)	747
VALVE GP-SOLENOID (PARKING BRAKE)	746
VALVE GP-SOLENOID (RIPPER)	790
VALVE GP-SOLENOID (SIDESHIFT)	794
VALVE GP-SOLENOID (WHEEL LEAN)	798
VALVE GP-STEERING	817
VALVE GP-TIRE	514
	515
VALVE GP-UNLOADING	820

W

Name	Page
WARNING GP-BACKUP	352
WASHER GP-WINDOW	963
WATER SEP & FUEL PRM PUMP GP	169
WHEEL & TIRE GP	512
WHEEL AR	513
WHEEL GP	514
	515
WINDOW GP-CAB	965
WIPER & WASHER GP-WINDOW	966
WIRING GP-CAB	353
	358
WIRING GP-CAMERA–WORK AREA VISUAL SYSTEM	365
WIRING GP-ENGINE ELECTRONIC	366
WIRING GP-ENGINE ELECTRONIC–ELECTRONIC CONTROL	368
WIRING GP-FRONT	370
	373
	376
WIRING GP-GRADE CONTROL	381
	382
WIRING GP-MONITOR	384
	386
WIRING GP-REAR–CIRCUIT BREAKER PANEL	388
WIRING GP-REAR LIGHTING	422
	424
WIRING GP-REAR–SENSORS	390
	395
	404
	413
WIRING GP-SENSOR (VARIABLE BLADE FLOAT)	680

MEMORANDA

MACHINE ARRANGEMENT

259-9204 COMMON AR

S/N: B9K1-UP

SMCS-7000 **i03903427**

NOTE	PART NUMBER	QTY	PART NAME 1 2 3 4 5 6 (PRODUCT LEVEL)	SEE PAGE
Y	**265-4505**	1	AXLE AR-FRONT	516
Y	*266-7000*	1	CAB AR	843
Y	*220-3775*	1	COOLING AR	125
Y	*222-9025*	1	ENCLOSURE AR-ENGINE	525
Y	*268-0247*	1	LUBRICATION AR-AUTOMATIC	571
Y	*278-3509*	1	RIPPER AR	986
Y	*220-3808*	1	TANK AR-FUEL	170
YR	**267-5245**	1	TRANSMISSION AR	503
Y	*271-9317*	1	WHEEL AR	513
Y	*253-3993*	1	AIR CLEANER GP	142
Y	**271-9315**	1	AXLE GP-REAR	426
Y	*266-8986*	1	BATTERY & WIRING GP	183
Y	*266-9719*	1	CHAIN GP-DRIVE	431
Y	*268-5760*	1	CIRCLE GP	821
Y	*268-0240*	1	CONTROL GP-DIFFERENTIAL LOCK	432
Y	*351-8347*	1	CONTROL GP-SERVICE BRAKE	
Y	*253-9005*	1	CONTROL GP-STEERING	855
			S/N: B9K1-335	
Y	*344-1108*	1	LINES GP-STEERING	737
			S/N: B9K336-UP	
Y	*270-9113*	1	COVER GP-CONTROL VALVE	521
Y	*253-9016*	1	CYLINDER & MTG GP-ARTICULATION	641
Y	*140-8444*	1	CYLINDER & MTG GP-BLADE TIP	642
Y	*278-0560*	1	CYLINDER & MTG GP-CSHFT & LIFT	643
Y	*140-8443*	1	CYLINDER & MTG GP-SIDESHIFT	644
Y	*265-6740*	1	DRAWBAR GP	823
Y	*265-6741*	1	DRIVE & MTG GP-CIRCLE	659
Y	*252-7065*	1	DRIVE & MTG GP-CIRCLE	658
Y	*253-3988*	1	DRIVE GP-ACCESSORY	58
Y	*226-1260*	1	FILLER GP-POWER TRAIN OIL	447
Y	*271-0564*	1	FILTER & MTG GP-HYDRAULIC	669
Y	*272-5561*	1	FILTER GP-ENGINE OIL	114
Y	*224-0781*	1	FRAME GP-REAR	543
Y	*223-7566*	1	FRAME GP-FRONT	542
Y	*266-6778*	1	GUARD GP-BOTTOM	544
Y	*266-6777*	1	GUARD GP-RADIATOR	550
Y	*252-0981*	1	HITCH GP-ARTICULATING	556
Y	*253-3990*	1	LINES GP-AFTERCOOLER AIR	145
Y	*271-9306*	1	LINES GP-AIR CONDITIONER	907
Y	*309-8579*	1	LINES GP-ALTERNATOR AIR	265
Y	*253-3999*	1	LINES GP-ENGINE OIL DRAIN	122
Y	*253-9006*	1	LINES GP-FRONT	681
Y	*253-3995*	1	LINES GP-FUEL	158
Y	*268-0243*	1	LINES GP-HEATER	909
Y	*268-0242*	1	LINES GP-HYDRAULIC FAN	701
Y	*268-0245*	1	LINES GP-POWER TRAIN OIL	463
Y	*268-0241*	1	LINES GP-PUMP	704
Y	*226-1742*	1	LINES GP-RIPPER	733
Y	*268-0244*	1	LINES GP-SECONDARY STEERING	735
Y	*268-0246*	1	LINES GP-TORQUE CONV COOLER	471
Y	*253-3992*	1	LINES GP-WATER	132
Y	*286-1777*	1	LINES GP-WATER	133
Y	*134-2573*	1	LINK GP-STEERING FRAME LOCK	570
Y	*140-8451*	1	MOUNTING GP-BLADE	984
Y	*253-3991*	1	MOUNTING GP-ENGINE & XMSN	83
Y	*253-9017*	1	MOUNTING GP-VALVE	577

MACHINE ARRANGEMENT

259-9204 **COMMON AR** ***(contd.)*** **i03903427**

NOTE	PART NUMBER	QTY	PART NAME 1 2 3 4 5 6 (PRODUCT LEVEL)	SEE PAGE
Y	*253-3994*	1	MUFFLER GP	149
Y	*268-0237*	1	PUMP & MTG GP-PISTON & GEAR	761
Y	*268-0238*	1	PUMP & MTG GP-PISTON	760
Y	*124-7636*	1	PUMP GP-GEAR	764
Y	*265-4498*	1	SHAFT GP-DRIVE	485
Y	*8X-9045*	1	SHAFT GP-DRIVE	484
Y	*253-3997*	1	STARTING AID GP-ETHER	325
Y	*266-2417*	1	STEP GP	583
Y	*266-9722*	1	TANDEM & COVER GP	486
Y	*226-1744*	1	TANK & MTG GP-HYDRAULIC	780
YR	*268-5675*	1	TORQUE CONVERTER GP	498
Y	*266-8965*	1	WARNING GP-BACKUP	352
Y	*284-6992*	1	WASHER GP-WINDOW	963
Y	*273-5910*	1	BRAKE GP-SERVICE & PARKING	619
Y	*266-8956*	1	WIRING GP-FRONT	370
Y	*266-8962*	1	WIRING GP-REAR (CIRCUIT BREAKER PANEL)	388
Y	*266-8963*	1	WIRING GP-REAR (SENSORS)	390
Y	*266-8964*	1	WIRING GP-REAR LIGHTING	422
Y	**140-8440**	1	MOLDBOARD AS	826
	6V-1970	1	LITERATURE GP	
	5P-8500	2	KEY	
	5P-7958	1	SLEEVE-CABLE SPLICE	
	8X-9053	1	FASTENER GP-RIPPER	
	6V-8237	28	WASHER (26X44X4-MM THK)	
M	**125-2117**	28	BOLT-SOCKET HEAD (M24X3X70-MM)	

M-METRIC PART
R-REMFG PART MAY BE AVAILABLE
Y-SEPARATE ILLUSTRATION

<END>

MACHINE ARRANGEMENT

314-7907 CONVERSION AR-CERTIFICATION

S/N: B9K1-UP

SMCS-7000 **i03012019**

NOTE	PART NUMBER	QTY	PART NAME 1 2 3 4 5 6 (PRODUCT LEVEL)	SEE PAGE
Y	*306-8083*	1	GUARD GP-BOTTOM	546
Y	*313-6666*	1	REFLECTOR GP	581
Y	*272-5997*	1	SUPPRESSION GP-SOUND (ENGINE ENCLOSURE)	111
Y	*307-9336*	1	SUPPRESSION GP-SOUND (REAR FRAME)	595
	205-3239	1	FILM (EXTERIOR SOUND)	

Y-SEPARATE ILLUSTRATION

<END>

ENGINE ARRANGEMENT

215-7486 ENGINE AR-COMPLETE

S/N: RHX5526-6415

SMCS-1000 **i03865437**

NOTE	PART NUMBER	QTY	PART NAME 1 2 3 4 5 6 (PRODUCT LEVEL)	SEE PAGE
Y	*126-7631*	1	CONNECTION GP-ELECTRICAL	191
Y	*243-1560*	1	CONTROL & MTG GP-ENGINE ELEK	192
Y	*107-6736*	1	COVER GP-CYLINDER BLOCK (TURBOCHARGER DRAIN COVER)	23
Y	*140-9746*	1	COVER GP-CYLINDER BLOCK	24
Y	*216-5540*	1	COVER GP-FLYWHEEL HOUSING	25
Y	*220-6390*	1	COVER GP-FLYWHEEL HOUSING	26
Y	*120-9847*	1	COVER GP-FRONT HOUSING	27
Y	*159-6159*	1	COVER GP-FRONT HOUSING (CAM, IDLER GEAR)	28
Y	*235-8781*	1	COVER GP-FRONT HOUSING	29
Y	*230-0104*	1	COVER GP-SOUND SUPPRESSION	30
Y	*239-4113*	1	COVER GP-VALVE MECHANISM	35
Y	*227-3705*	1	DAMPER GP	57
Y	*6I-3638*	1	DRIVE GP-PUMP	59
Y	*314-8601*	1	ENGINE AR-CORE	10
			S/N: RHX5526-6415	
Y	*4P-6846*	1	FASTENER GP-FRONT HOUSING	62
Y	*108-9382*	1	FASTENER GP-FRONT HOUSING	63
Y	*4N-2481*	1	FASTENER GP-OIL PUMP MOUNTING	112
Y	*109-2373*	1	FASTENER GP-WATER PUMP	131
Y	*263-7310*	1	FILLER GP-ENGINE OIL	113
Y	*275-7664*	1	FILTER & MTG GP-FUEL	153
Y	*292-4057*	1	FILTER GP-ENGINE OIL	116
Y	*273-6561*	1	FLYWHEEL GP	65
Y	*159-9362*	1	FUMES DISPOSAL GP	118
Y	*221-1764*	1	GAUGE GP-OIL LEVEL (DIPSTICK) (ENGINE)	119
Y	*278-0095*	1	GEAR GP-REAR	70
Y	*220-6368*	1	HOUSING GP-FLYWHEEL	72
Y	*243-5786*	1	HOUSING GP-FRONT	75
Y	*111-2088*	1	LIFTING GP-ENGINE (REAR)	77
Y	*111-2355*	1	LIFTING GP-ENGINE (FRONT)	78
Y	*219-4443*	1	LINES GP-ENGINE OIL (FILTER)	120
Y	*275-7666*	1	LINES GP-FUEL	160
Y	*262-9967*	1	LINES GP-TURBOCHARGER OIL	123
Y	*274-9994*	1	COOLING AR (INCLUDES XMSN & ENG OIL CLRS)	127
Y	*225-0998*	1	MANIFOLD GP-EXHAUST	147
Y	*188-1754*	1	MOUNTING GP-ALTERNATOR & COMPR	82
Y	*308-6602*	1	BRACKET GP-MOUNTING	20
Y	*275-7668*	1	MOUNTING GP-MUFFLER	148
Y	*260-0266*	1	MOUNTING GP-SENSOR (ATMOSPHERIC AIR, ENGINE OIL)	274
Y	*307-7409*	1	PAN GP-OIL	89
Y	*174-3874*	1	PANEL GP-SOUND SUPPRESSION (ENGINE, LH)	93
Y	*227-9980*	1	PANEL GP-SOUND SUPPRESSION (FRONT HOUSING)	94
Y	*230-5379*	1	PLUG GP-CYLINDER BLOCK	97
Y	*230-5378*	1	PLUG GP-CYLINDER HEAD	99
Y	*170-1757*	1	PULLEY GP-CRANKSHAFT	100
Y	*150-4279*	1	PUMP & MTG GP-FUEL TRANSFER	167
YR	**161-4113**	1	PUMP GP-ENGINE OIL	124
Y	*174-5986*	1	PUMP GP-WATER	136
Y	*231-1973*	1	SENSOR GP-ENGINE	302
Y	*308-6784*	1	STARTING MOTOR GP-ELECTRIC	332
Y	*235-5021*	1	SUPPORT GP-ENGINE	110
Y	*262-1079*	1	TURBOCHARGER GP	151
Y	*315-0498*	1	WIRING GP-ENGINE ELECTRONIC	368
			S/N: RHX5526-6415	
	219-7184	1	ELECTRONICS GP-ENGINE RATINGS	

ENGINE ARRANGEMENT

215-7486 **ENGINE AR-COMPLETE** *(contd.)* **i03865437**

NOTE	PART NUMBER	QTY	PART NAME 1 2 3 4 5 6 (PRODUCT LEVEL)	SEE PAGE
			PLEASE USE THE GASKET KIT LINK IN SIS OR CONTACT YOUR LOCAL DEALER FOR THE LATEST GASKET KIT INFORMATION	

R-REMFG PART MAY BE AVAILABLE
Y-SEPARATE ILLUSTRATION

ENGINE ARRANGEMENT

263-7760 ENGINE AR-COMPLETE

S/N: RHX2094-UP

PART OF 276-1430 ENGINE AR-COMPLETE

SMCS-1000 **i03642322**

NOTE	PART NUMBER	QTY	PART NAME 1 2 3 4 5 6 (PRODUCT LEVEL)	SEE PAGE
Y	*126-7631*	1	CONNECTION GP-ELECTRICAL (CYLINDER BLOCK GROUND)	191
Y	*243-1560*	1	CONTROL & MTG GP-ENGINE ELEK	192
Y	*107-6736*	1	COVER GP-CYLINDER BLOCK (TURBOCHARGER DRAIN COVER)	23
Y	*140-9746*	1	COVER GP-CYLINDER BLOCK	24
Y	*216-5540*	1	COVER GP-FLYWHEEL HOUSING (BOTTOM)	25
Y	*220-6390*	1	COVER GP-FLYWHEEL HOUSING (TURN TOOL ACCESS)	26
Y	*120-9847*	1	COVER GP-FRONT HOUSING (OIL FILLER)	27
Y	*159-6159*	1	COVER GP-FRONT HOUSING (CAM, IDLER GEAR)	28
Y	*235-8781*	1	COVER GP-FRONT HOUSING (AIR COMPRESSOR)	29
Y	*230-0104*	1	COVER GP-SOUND SUPPRESSION	30
Y	*239-4113*	1	COVER GP-VALVE MECHANISM	35
			S/N: RHX2094-8291	
Y	*187-1328*	1	COVER GP-VALVE MECHANISM	32
			S/N: RHX8292-UP	
Y	*227-3705*	1	DAMPER GP	57
Y	*6I-3638*	1	DRIVE GP-PUMP	59
Y	*241-5934*	1	ENGINE AR-CORE	9
			S/N: RHX2094-6448	
Y	*316-3531*	1	ENGINE AR-CORE	11
			S/N: RHX6449-UP	
Y	*4P-6846*	1	FASTENER GP-FRONT HOUSING (SUPPORT HARDWARE)	62
Y	*108-9382*	1	FASTENER GP-FRONT HOUSING	63
Y	*4N-2481*	1	FASTENER GP-OIL PUMP MOUNTING	112
Y	*109-2373*	1	FASTENER GP-WATER PUMP	131
Y	*263-7310*	1	FILLER GP-ENGINE OIL	113
Y	*275-7664*	1	FILTER & MTG GP-FUEL	153
Y	*292-4057*	1	FILTER GP-ENGINE OIL	116
Y	*273-6561*	1	FLYWHEEL GP	65
Y	*159-9362*	1	FUMES DISPOSAL GP	118
Y	*221-1764*	1	GAUGE GP-OIL LEVEL (DIPSTICK) (ENGINE)	119
Y	*278-0095*	1	GEAR GP-REAR	70
Y	*220-6368*	1	HOUSING GP-FLYWHEEL	72
Y	*243-5786*	1	HOUSING GP-FRONT	75
Y	*111-2088*	1	LIFTING GP-ENGINE (REAR)	77
Y	*111-2355*	1	LIFTING GP-ENGINE (FRONT)	78
Y	*219-4443*	1	LINES GP-ENGINE OIL (FILTER)	120
Y	*275-7666*	1	LINES GP-FUEL	160
Y	*262-9967*	1	LINES GP-TURBOCHARGER OIL	123
Y	*274-9994*	1	COOLING AR (INCLUDES XMSN & ENG OIL CLRS)	127
Y	*225-0998*	1	MANIFOLD GP-EXHAUST	147
Y	*188-1754*	1	MOUNTING GP-ALTERNATOR & COMPR	82
Y	*308-6602*	1	BRACKET GP-MOUNTING	20
			S/N: RHX5022-UP	
Y	*275-7668*	1	MOUNTING GP-MUFFLER	148
Y	*260-0266*	1	MOUNTING GP-SENSOR (ATMOSPHERIC AIR, ENGINE OIL)	274
Y	*277-8461*	1	PAN GP-OIL	85
			S/N: RHX2094-5021	
Y	*307-7409*	1	PAN GP-OIL	89
			S/N: RHX5022-UP	
Y	*174-3874*	1	PANEL GP-SOUND SUPPRESSION (ENGINE, LH)	93
Y	*227-9980*	1	PANEL GP-SOUND SUPPRESSION (FRONT HOUSING)	94
Y	*230-5379*	1	PLUG GP-CYLINDER BLOCK	97
Y	*230-5378*	1	PLUG GP-CYLINDER HEAD	99

ENGINE ARRANGEMENT

263-7760 ENGINE AR-COMPLETE *(contd.)* i03642322

NOTE	PART NUMBER	QTY	PART NAME 1 2 3 4 5 6 (PRODUCT LEVEL)	SEE PAGE
Y	*170-1757*	1	PULLEY GP-CRANKSHAFT	100
Y	*150-4279*	1	PUMP & MTG GP-FUEL TRANSFER	167
YR	**161-4113**	1	PUMP GP-ENGINE OIL	124
Y	*174-5986*	1	PUMP GP-WATER	136
Y	*231-1973*	1	SENSOR GP-ENGINE	302
Y	*209-8423*	1	STARTING MOTOR GP-ELECTRIC	328
			S/N: RHX2094-5021	
Y	*308-6784*	1	STARTING MOTOR GP-ELECTRIC	332
			S/N: RHX5022-UP	
Y	*235-5021*	1	SUPPORT GP-ENGINE	110
Y	*262-1079*	1	TURBOCHARGER GP	151
Y	*233-6216*	1	WIRING GP-ENGINE ELECTRONIC	366
			S/N: RHX2094-5225	
Y	*315-0498*	1	WIRING GP-ENGINE ELECTRONIC	368
			S/N: RHX5226-UP	
			PLEASE USE THE GASKET KIT LINK IN SIS OR CONTACT YOUR LOCAL DEALER FOR THE LATEST GASKET KIT INFORMATION	

R-REMFG PART MAY BE AVAILABLE
Y-SEPARATE ILLUSTRATION

ENGINE ARRANGEMENT

276-1430 ENGINE AR-COMPLETE

S/N: B9K1-UP

SMCS-1000 **i02764951**

NOTE	PART NUMBER	QTY	PART NAME 1 2 3 4 5 6 (PRODUCT LEVEL)	SEE PAGE
Y	**263-7760**	1	ENGINE AR-COMPLETE	6
Y	*278-0685*	1	SWITCH GP-ROCKER (ENGINE COMPRESSION BRAKE)	344

Y-SEPARATE ILLUSTRATION

ENGINE ARRANGEMENT

241-5934 ENGINE AR-CORE

S/N: RHX2094-6448

PART OF 263-7760 ENGINE AR-COMPLETE

SMCS-1000 **i02831401**

NOTE	PART NUMBER	QTY	PART NAME 1 2 3 4 5 6 (PRODUCT LEVEL)	SEE PAGE
Y	*233-7245*	1	ACTUATOR GP-VALVE (EXHAUST)	12
Y	*234-5005*	1	BASE GP-VALVE COVER & INJ HARN	15
Y	*234-7935*	1	CAMSHAFT GP	21
Y	*223-9732*	1	CRANKSHAFT GP	37
Y	*261-0191*	1	CYLINDER BLOCK GP	43
Y	*235-2974*	1	CYLINDER HEAD GP	
			S/N: RHX2094-4126	
Y	*274-1953*	1	CYLINDER HEAD GP	55
			S/N: RHX4127-6448	
Y	*207-0449*	1	GEAR GP-FRONT	67
Y	*266-3699*	1	MECHANISM GP-FUEL PUMP & VALVE	80
Y	*220-1441*	6	PISTON & ROD GP	95
Y	*235-1402*	6	PUMP GP-FUEL INJECTION	168

Y-SEPARATE ILLUSTRATION

ENGINE ARRANGEMENT

314-8601 ENGINE AR-CORE

S/N: RHX5226-6415

PART OF 215-7486 ENGINE AR-COMPLETE

SMCS-1000 **i03865441**

NOTE	PART NUMBER	QTY	PART NAME 1 2 3 4 5 6 (PRODUCT LEVEL)	SEE PAGE
Y	*278-5662*	1	BASE GP-VALVE COVER & INJ HARN	19
Y	*234-7935*	1	CAMSHAFT GP	21
Y	*223-9732*	1	CRANKSHAFT GP	37
Y	*297-3207*	1	CYLINDER BLOCK GP	49
Y	*274-1953*	1	CYLINDER HEAD GP	55
Y	*109-1657*	1	FASTENER GP-VALVE MECHANISM	64
Y	*207-0449*	1	GEAR GP-FRONT	67
Y	*190-0009*	1	MECHANISM GP-FUEL PUMP & VALVE	79
Y	*220-1441*	6	PISTON & ROD GP	95
Y	*235-1402*	6	PUMP GP-FUEL INJECTION	168

Y-SEPARATE ILLUSTRATION

ENGINE ARRANGEMENT

316-3531 ENGINE AR-CORE

S/N: RHX6449-UP

PART OF 263-7760 ENGINE AR-COMPLETE

SMCS-1000 **i03438664**

NOTE	PART NUMBER	QTY	PART NAME 1 2 3 4 5 6 (PRODUCT LEVEL)	SEE PAGE
Y	*322-8542*	1	ACTUATOR GP-VALVE	13
Y	*234-5005*	1	BASE GP-VALVE COVER & INJ HARN	15
Y	*314-9614*	1	CAMSHAFT GP	22
Y	*223-9732*	1	CRANKSHAFT GP	37
Y	**297-3207**	1	CYLINDER BLOCK GP	49
			S/N: RHX6449-6607	
Y	*261-0191*	1	CYLINDER BLOCK GP	43
			S/N: RHX6608-UP	
Y	*274-1953*	1	CYLINDER HEAD GP	55
Y	*207-0449*	1	GEAR GP-FRONT	67
Y	*266-3699*	1	MECHANISM GP-FUEL PUMP & VALVE	80
Y	*220-1441*	6	PISTON & ROD GP	95
Y	*235-1402*	6	PUMP GP-FUEL INJECTION	168

Y-SEPARATE ILLUSTRATION

BASIC ENGINE

233-7245 ACTUATOR GP-VALVE

S/N: RHX2094-6448
24-VOLT. EXHAUST
PART OF 241-5934 ENGINE AR-CORE

SMCS-1130 **i03362408**

NOTE	REF NO	GRAPHIC REF	PART NUMBER	QTY	PART NAME 1 2 3 4 5 6 (PRODUCT LEVEL)	SEE PAGE
YR	1	1	**239-9624**	3	ENGINE BRAKE GP	60
C	2	1	**304-9553**	9	STUD (1/2-12X166.5-MM)	
	3	1	**234-9505**	3	SUPPORT	
	4	1	**234-9508**	3	BOLT (1/2-13X5.65-IN)	
C	5	1	**282-3731**	6	SPACER AS	
					(EACH INCLUDES)	
		1	**294-3075**	1	STUD-TAPERLOCK (3/8-16X1.79-IN)	
		1	**294-3076**	1	STUD-TAPERLOCK (3/8-16X3.1-IN)	
	7	1	**235-1088**	6	NUT (3/8-16-THD)	
	8	1	**235-1089**	12	NUT-FLANGE (1/2-13-THD)	
	9	1	**8T-7062**	3	STUD-TAPERLOCK (1/2-13X55, 1/2-13X21-MM)	

C-CHANGE FROM PREVIOUS TYPE
R-REMFG PART MAY BE AVAILABLE
Y-SEPARATE ILLUSTRATION

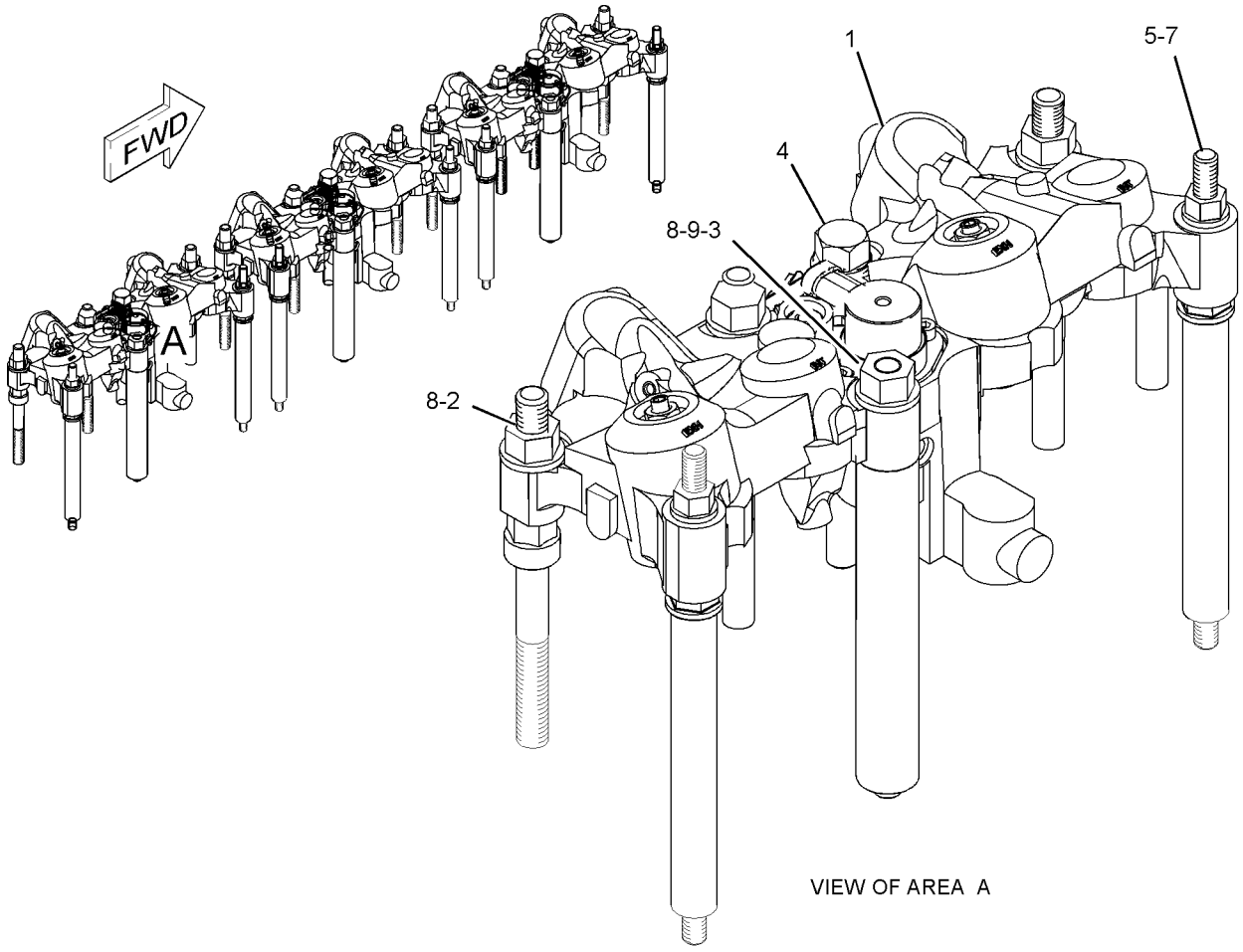

GRAPHIC #1 **<END>** g01089483

BASIC ENGINE

322-8542 ACTUATOR GP-VALVE

S/N: RHX6449-UP
24-VOLT. CAT BRAKE
PART OF 316-3531 ENGINE AR-CORE

SMCS-1130 **i03951518**

NOTE	REF NO	GRAPHIC REF	PART NUMBER	QTY	PART NAME 1 2 3 4 5 6 (PRODUCT LEVEL)	SEE PAGE
	1	1	**234-9505**	3	SUPPORT	
	2	1	**234-9508**	3	BOLT (1/2-13X5.65-IN)	
	3	1	**235-1088**	6	NUT (3/8-16-THD)	
	4	1	**235-1089**	12	NUT-FLANGE (1/2-13-THD)	
	5	1	**282-3731**	6	SPACER AS	
					(EACH INCLUDES)	
		1	**294-3075**	1	STUD-TAPERLOCK (3/8-16X1.79-IN)	
		1	**294-3076**	1	STUD-TAPERLOCK (3/8-16X3.1-IN)	
	6	1	**304-9553**	9	STUD (1/2-12X166.5-MM)	
Y	7	1	**330-1919**	3	ENGINE BRAKE GP	61
	8	1	**8T-7062**	3	STUD-TAPERLOCK (1/2-13X55, 1/2-13X21-MM)	

Y-SEPARATE ILLUSTRATION

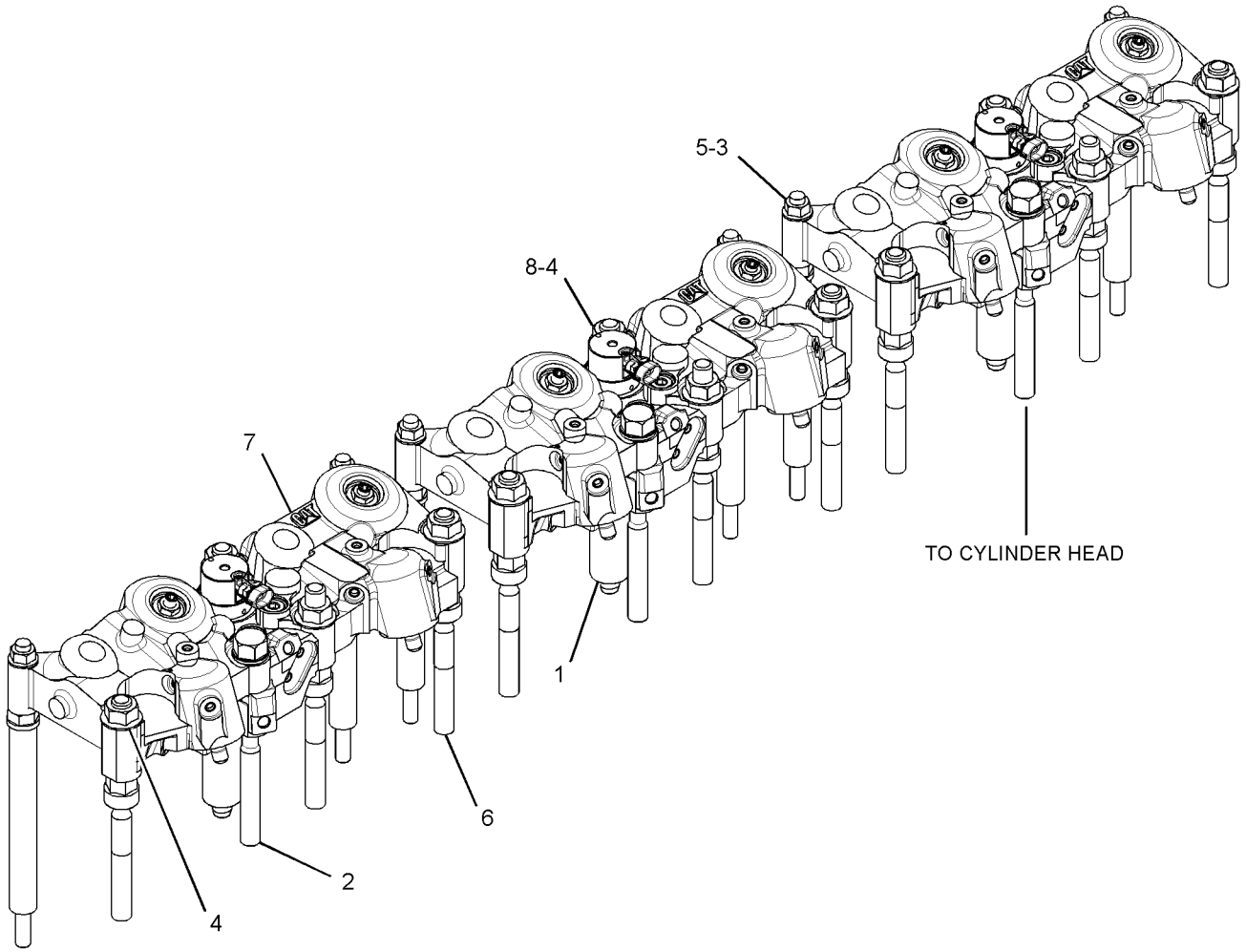

GRAPHIC #1 **<END>** g02161879

BASIC ENGINE

133-9907 ADAPTER GP-PUMP DRIVE

S/N: RHX2094-UP

PART OF 6I-3638 DRIVE GP-PUMP

SMCS-3108 **i03260721**

NOTE	REF NO	GRAPHIC REF	PART NUMBER	QTY	PART NAME 1 2 3 4 5 6 (PRODUCT LEVEL)	SEE PAGE
	1	1	**1B-3867**	2	BALL BEARING	
	2	1	**4F-7957**	3	BOLT (1/4-20X0.875-IN)	
	3	1	**6I-4575**	1	GEAR (34-TEETH)	
	4	1	**9X-2038**	3	WASHER (7X19X2-MM THK)	
	5	1	**133-9906**	1	ADAPTER	
	6	1	**1H-8647**	1	RING-SNAP	

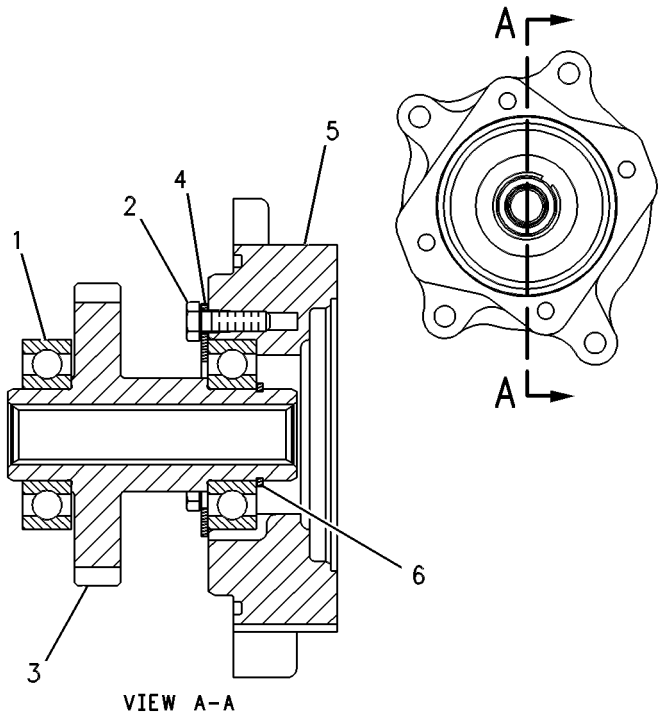

VIEW A-A

GRAPHIC #1 **<END>** g00263602

BASIC ENGINE

234-5005 BASE GP-VALVE COVER & INJ HARN

S/N: RHX2094-6448

PART OF 241-5934 ENGINE AR-CORE

SMCS-1120, 1408 **i03622540**

NOTE	REF NO	GRAPHIC REF	PART NUMBER	QTY	PART NAME 1 2 3 4 5 6 (PRODUCT LEVEL)	SEE PAGE
	1	1	**123-3202**	3	STRAP-CABLE	
	2	1	**6V-0128**	1	SEAL-CONNECTOR	
	3	1	**7E-6508**	6	CAP AS	
	4	1	**9L-8925**	14	BOLT (5/16-18X1.25-IN)	
	5	1	**122-1472**	1	BOLT (5/16-18X2.36-IN)	
	6	1	**177-4152**	1	BASE-VALVE MECHANISM COVER	
	7	1	**234-5002**	1	HARNESS AS-ENGINE (INJECTOR, VARIABLE VALVE)	
		1	**102-8801**	1	KIT-RECEPTACLE (12-PIN)	
					(INCLUDES RECEPTACLE AS & WEDGE)	
		1	**103-8134**	1	KIT-RECEPTACLE (12-PIN)	
					(INCLUDES RECEPTACLE AS & WEDGE)	
		1	**3S-2093**	6	STRAP-CABLE	
E		1	**119-3662**		TUBE-HEAT SHRINK (10.85-MM DIA) (13-CM)	
E		1	**125-7875**		TUBE-HEAT SHRINK (7.44-MM DIA) (15-CM)	
		1	**9X-3401**	12	PIN-CONNECTOR (16-GA TO 18-GA)	
					—OR—	
		1	**126-1767**	12	PIN-CONNECTOR (14-GA TO 16-GA)	
	8	1	**100-5218**	3	CLIP	
	9	1	**100-5219**	3	CLIP	
	10	1	**4F-7957**	2	BOLT (1/4-20X0.875-IN)	
	11	1	**5P-0537**	8	WASHER-HARD (7.2X14.5X2-MM THK)	
	12	1	**8H-3127**	6	BOLT (1/4-20X0.75-IN)	
	13	1	**5P-5678**	1	SEAL	

E-ORDER BY THE CENTIMETER

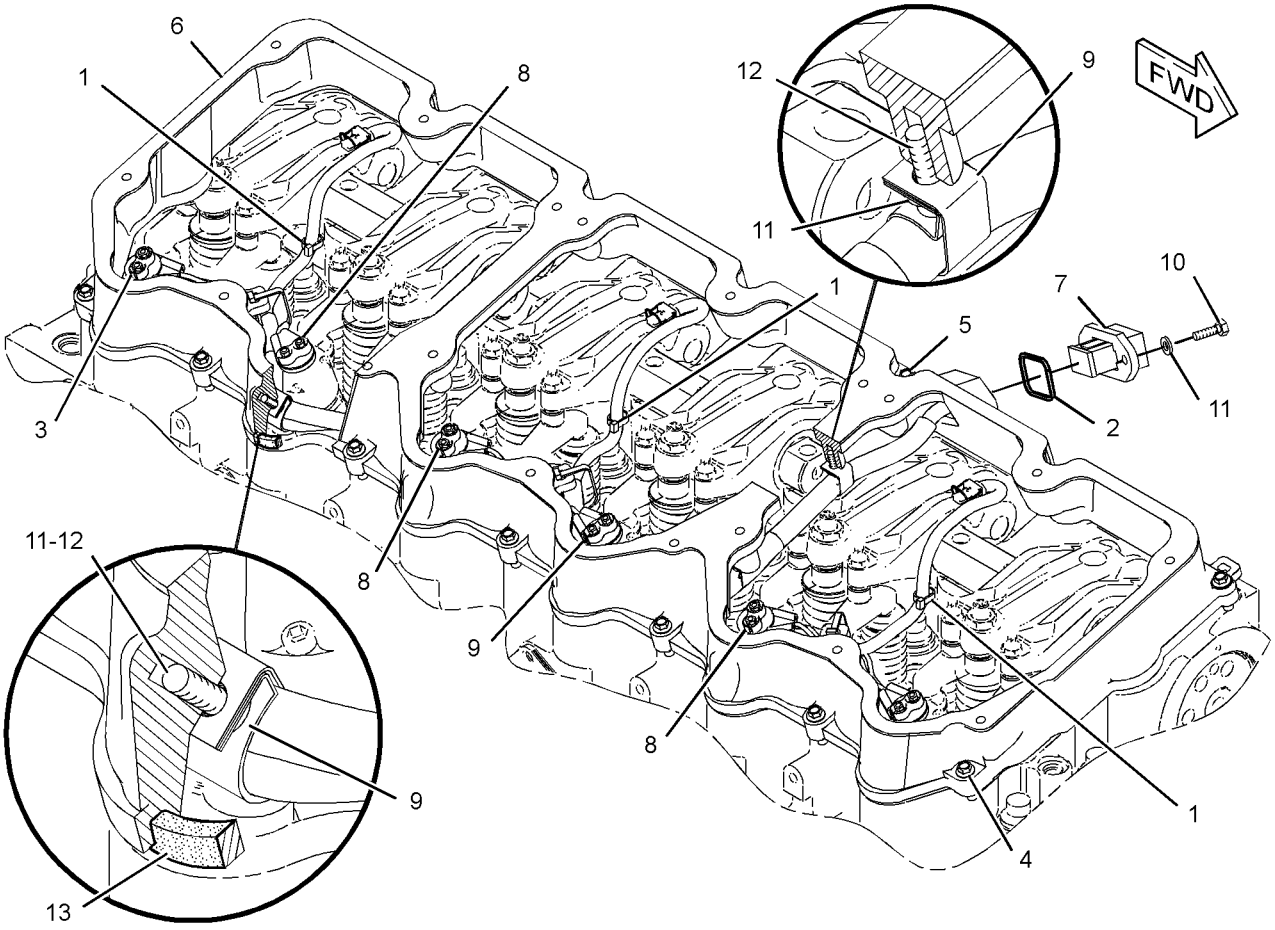

GRAPHIC #1 **<END>** g01677199

BASIC ENGINE

234-5005 BASE GP-VALVE COVER & INJ HARN

S/N: RHX5744-8616

PART OF 241-5934, 316-3531 ENGINE AR-CORE

SMCS-1120, 1408 **i03640766**

NOTE	REF NO	GRAPHIC REF	PART NUMBER	QTY	PART NAME 1 2 3 4 5 6 (PRODUCT LEVEL)	SEE PAGE
	1	1	**6V-0128**	1	SEAL-CONNECTOR	
	2	1	**7E-6508**	6	CAP AS	
	3	1	**9L-8925**	14	BOLT (5/16-18X1.25-IN)	
	4	1	**122-1472**	1	BOLT (5/16-18X2.36-IN)	
	5	1	**123-3202**	6	STRAP-CABLE	
	6	1	**289-8215**	1	BASE-VALVE MECHANISM COVER	
	7	1	**307-1610**	1	HARNESS AS-ENGINE	
		1	**3S-2093**	6	STRAP-CABLE	
		1	**103-8134**		KIT-RECEPTACLE (12-PIN)	
					(INCLUDES RECEPTACLE AS & WEDGE)	
	8	1	**100-5218**	3	CLIP	
	9	1	**100-5219**	3	CLIP	
	10	1	**4F-7957**	2	BOLT (1/4-20X0.875-IN)	
	11	1	**5P-0537**	8	WASHER-HARD (7.2X14.5X2-MM THK)	
	12	1	**8H-3127**	6	BOLT (1/4-20X0.75-IN)	
	13	1	**272-0390**	1	SEAL	

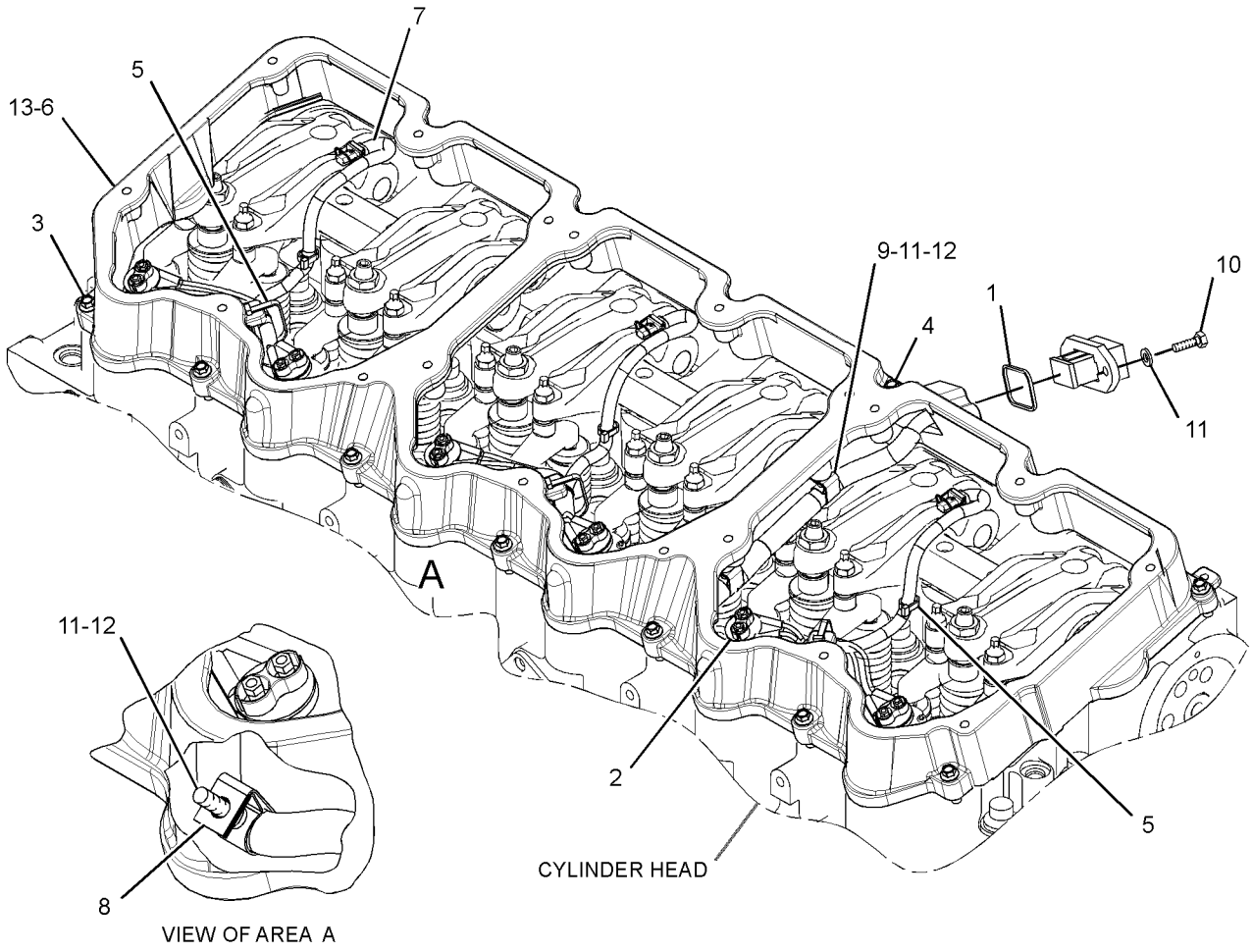

GRAPHIC #1 **<END>** g01745775

BASIC ENGINE

234-5005 BASE GP-VALVE COVER & INJ HARN

S/N: RHX8617-UP

PART OF 316-3531 ENGINE AR-CORE

SMCS-1120, 1408 **i03854905**

NOTE	REF NO	GRAPHIC REF	PART NUMBER	QTY	PART NAME 1 2 3 4 5 6 (PRODUCT LEVEL)	SEE PAGE
	1	1	**6V-0128**	1	SEAL-CONNECTOR	
	2	1	**7E-6508**	6	CAP AS	
	3	1	**9L-8925**	14	BOLT (5/16-18X1.25-IN)	
	4	1	**122-1472**	1	BOLT (5/16-18X2.36-IN)	
	5	1	**123-3202**	6	STRAP-CABLE	
	6	1	**289-8215**	1	BASE-VALVE MECHANISM COVER	
C	7	1	**326-4512**	6	MOUNTING-CABLE TIE	
C	8	1	**352-2826**	1	HARNESS AS-ENGINE (UNIT INJECTOR)	
		1	**103-8134**	1	KIT-RECEPTACLE (12-PIN)	
		1	**102-8801**	1	KIT-RECEPTACLE (12-PIN)	
					(EACH INCLUDES RECEPTACLE AS & WEDGE)	
		1	**3S-2093**	6	STRAP-CABLE	
E		1	**125-7874**		TUBE-HEAT SHRINK (5.72-MM DIA) (20-CM)	
E		1	**125-7875**		TUBE-HEAT SHRINK (7.44-MM DIA) (5-CM)	
		1	**180-9339**	12	PIN-CONNECTOR (14-GA TO 18-GA)	
	9	1	**4F-7957**	2	BOLT (1/4-20X0.875-IN)	
C	10	1	**5P-0537**	2	WASHER-HARD (7.2X14.5X2-MM THK)	
	11	1	**272-0390**	1	SEAL	

C-CHANGE FROM PREVIOUS TYPE
E-ORDER BY THE CENTIMETER

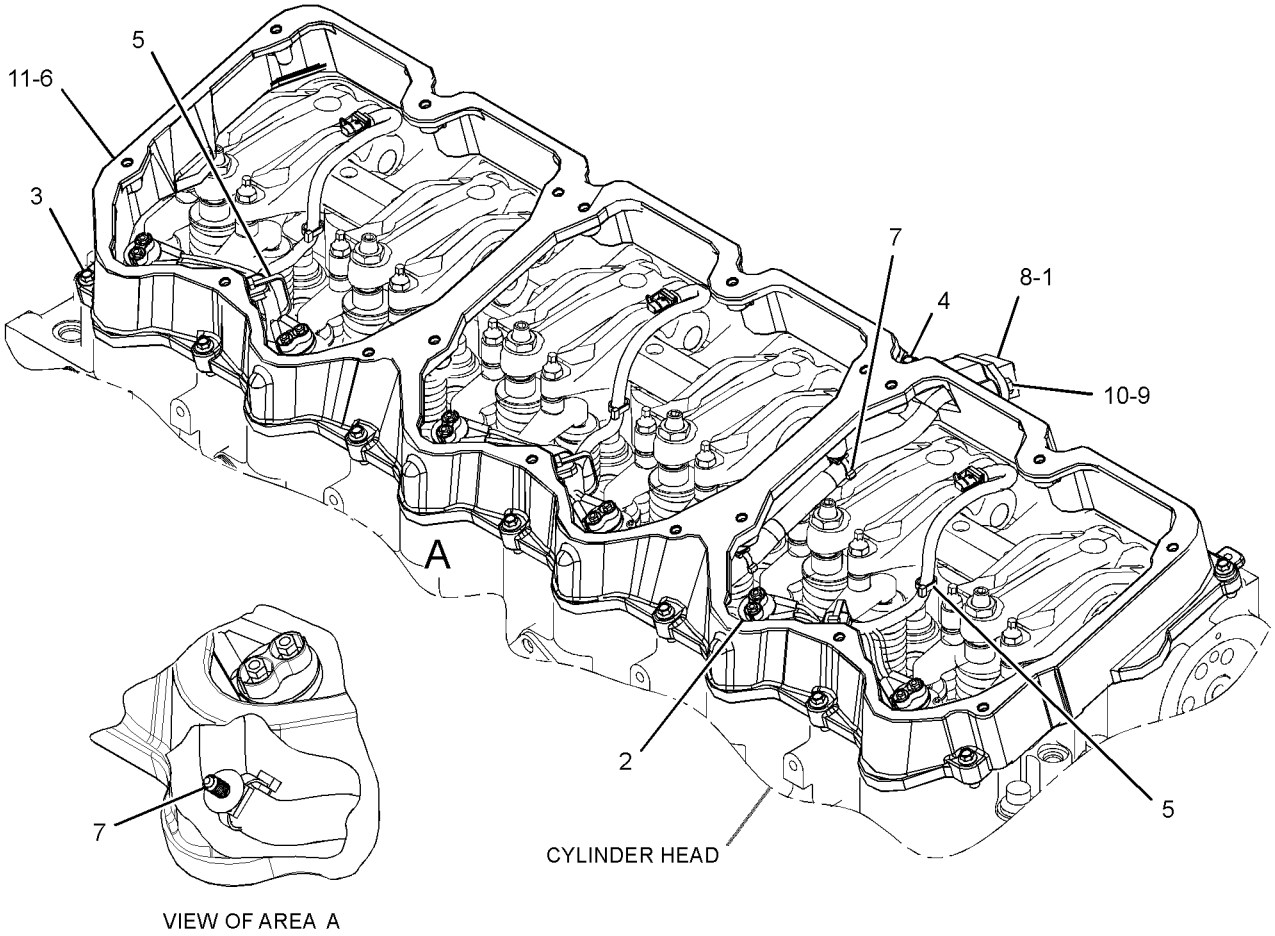

GRAPHIC #1 **<END>** g02102176

BASIC ENGINE

278-5662 BASE GP-VALVE COVER & INJ HARN

S/N: RHX5226-UP

PART OF 314-8601 ENGINE AR-CORE

SMCS-1120, 1408 **i03858037**

NOTE	REF NO	GRAPHIC REF	PART NUMBER	QTY	PART NAME 1 2 3 4 5 6 (PRODUCT LEVEL)	SEE PAGE
	1	1	**123-3202**	3	STRAP-CABLE	
	2	1	**6V-0128**	1	SEAL-CONNECTOR	
	3	1	**7E-6508**	6	CAP AS	
	4	1	**9L-8925**	14	BOLT (5/16-18X1.25-IN)	
	5	1	**122-1472**	1	BOLT (5/16-18X2.36-IN)	
C	6	1	**289-8215**	1	BASE-VALVE MECHANISM COVER	
	7	1	**343-9866**	1	HARNESS AS-ENGINE (UNIT INJECTOR)	
		1	**103-8134**	1	KIT-RECEPTACLE (12-PIN)	
		1	**102-8801**	1	KIT-RECEPTACLE (12-PIN)	
					(EACH KIT INCLUDES RECEPTACLE AS & WEDGE)	
		1	**7E-6513**	6	CONNECTOR AS	
		1	**8T-8737**	3	PLUG-SEAL	
		1	**180-9339**	9	PIN-CONNECTOR (14-GA TO 18-GA)	
	8	1	**326-4512**	6	MOUNTING-CABLE TIE	
C	9	1	**272-0390**	1	SEAL	
	10	1	**4F-7957**	2	BOLT (1/4-20X0.875-IN)	
	11	1	**5P-0537**	2	WASHER-HARD (7.2X14.5X2-MM THK)	

C-CHANGE FROM PREVIOUS TYPE

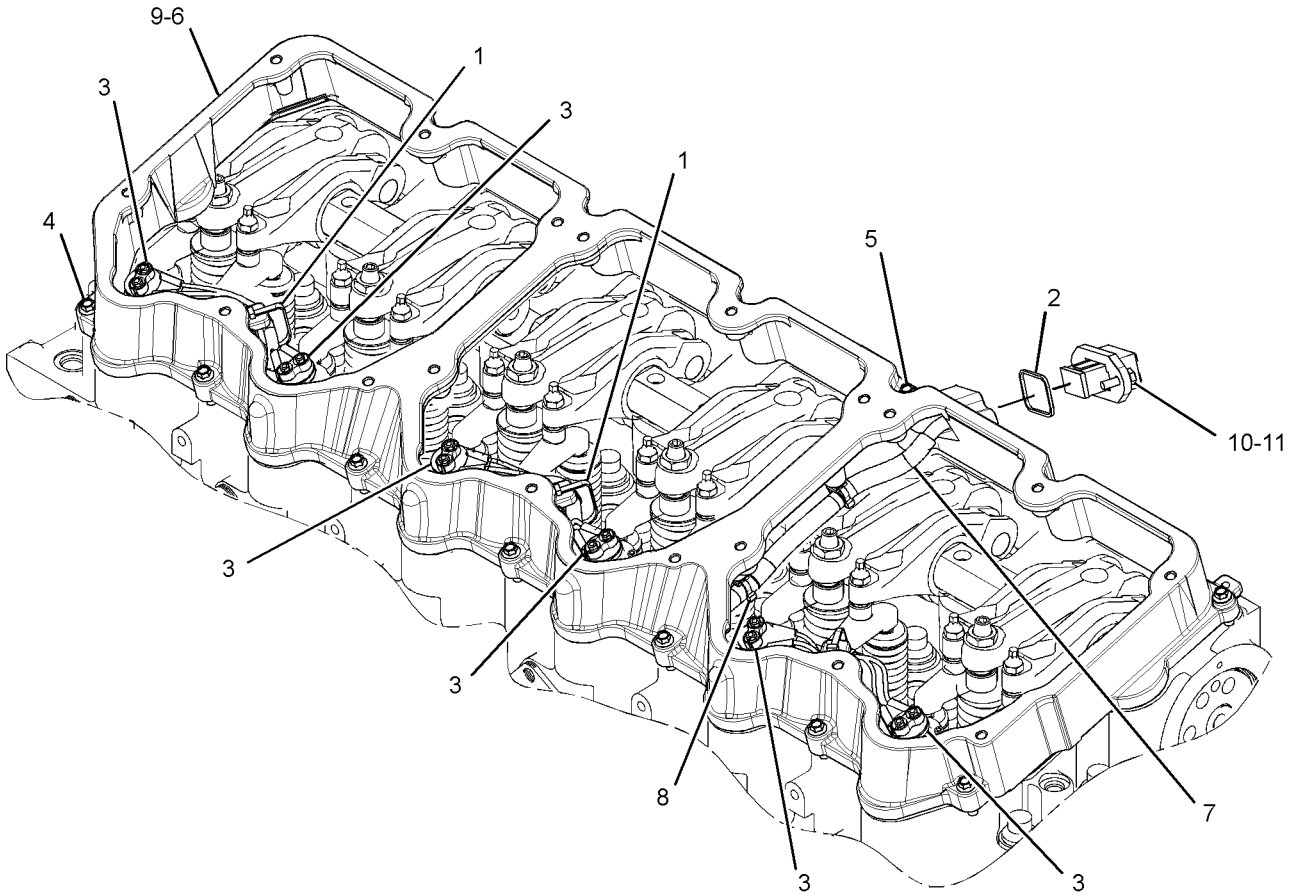

GRAPHIC #1 **<END>** g02060774

BASIC ENGINE

308-6602 BRACKET GP-MOUNTING

S/N: RHX2054-UP

PART OF 215-7486, 263-7760 ENGINE AR-COMPLETE

SMCS-0635 **i02768494**

NOTE	REF NO	GRAPHIC REF	PART NUMBER	QTY	PART NAME 1 2 3 4 5 6 (PRODUCT LEVEL)	SEE PAGE
	1	1	**308-6601**	1	BRACKET AS	
	1A	1	**7X-7729**	2	WASHER (11X25X3-MM THK)	
M	1B	1	**8T-3612**	2	NUT-WELD (M8X1.25-THD)	
	2	1	**0S-1594**	2	BOLT (3/8-16X1-IN)	
	3	1	**5M-2894**	2	WASHER-HARD (10.2X18.5X2.5-MM THK)	

M-METRIC PART

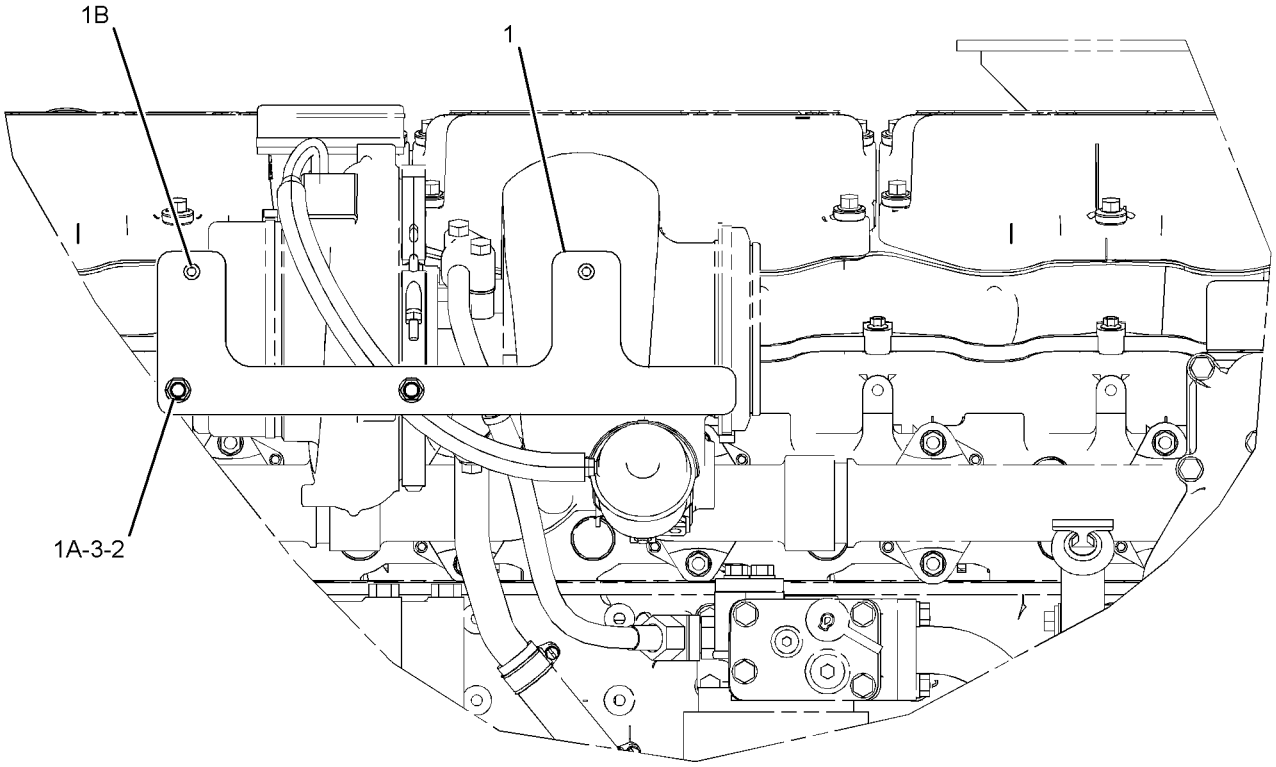

LEFT SIDE VIEW OF ENGINE

GRAPHIC #1 **<END>** g01387522

BASIC ENGINE

234-7935 CAMSHAFT GP

S/N: RHX2094-UP

PART OF 241-5934, 314-8601 ENGINE AR-CORE

SMCS-1210 **i03482504**

NOTE	REF NO	GRAPHIC REF	PART NUMBER	QTY	PART NAME 1 2 3 4 5 6 (PRODUCT LEVEL)	SEE PAGE
	1	1	**6V-1197**	1	SEAL-O-RING	
	2	1	**102-9089**	1	COVER	
	3	1	**119-0036**	3	SCREW-FLAT HEAD (5/16-18X0.875-IN)	
	4	1	**332-7298**	1	CAMSHAFT	

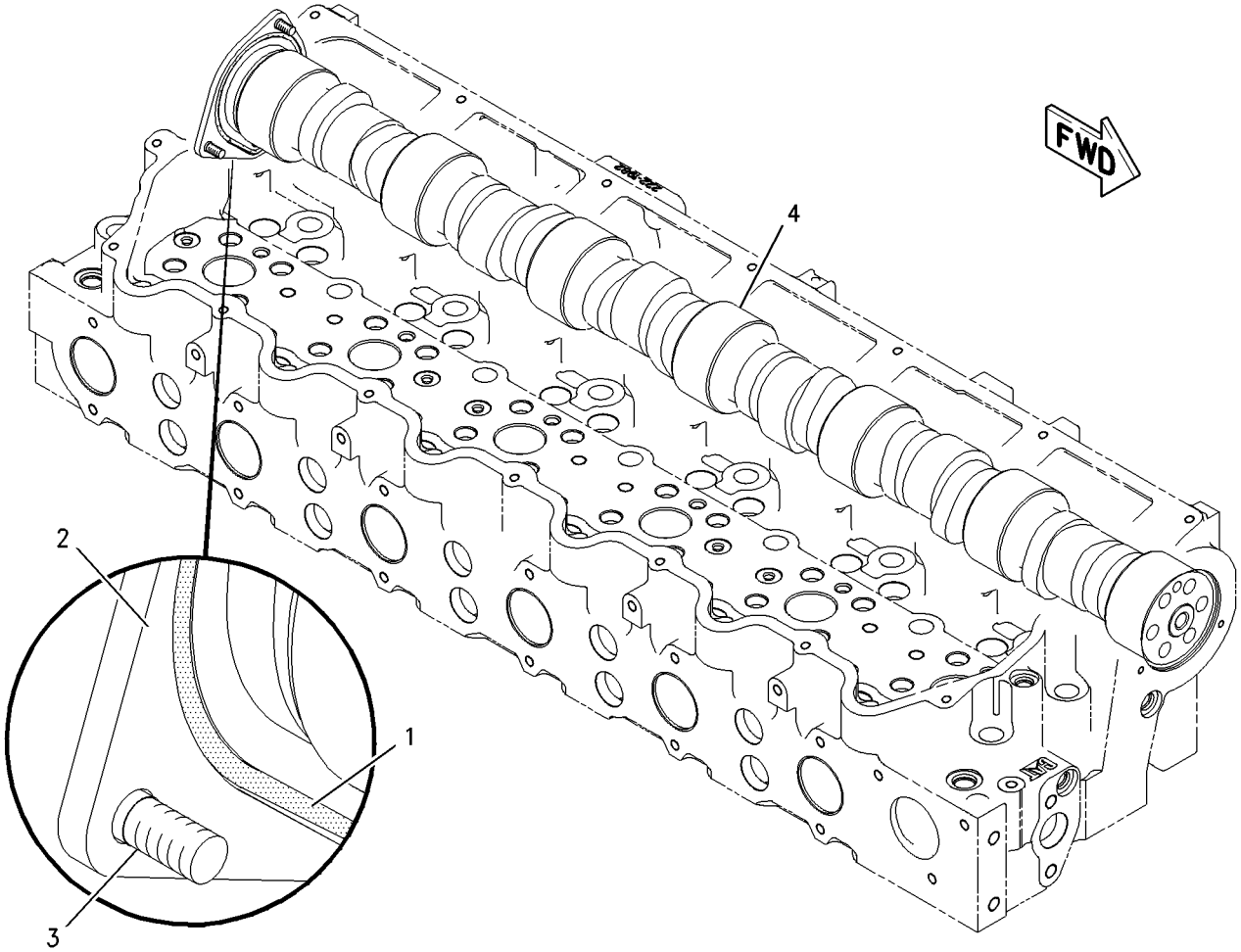

GRAPHIC #1 **<END>** g01002422

BASIC ENGINE

314-9614 CAMSHAFT GP

S/N: RHX6449-UP

PART OF 316-3531 ENGINE AR-CORE

SMCS-1210 **i02973255**

NOTE	REF NO	GRAPHIC REF	PART NUMBER	QTY	PART NAME 1 2 3 4 5 6 (PRODUCT LEVEL)	SEE PAGE
	1	1	**6V-1197**	1	SEAL-O-RING	
	2	1	**102-9089**	1	COVER	
	3	1	**119-0036**	3	SCREW-FLAT HEAD (5/16-18X0.875-IN)	
	4	1	**310-7612**	1	CAMSHAFT	

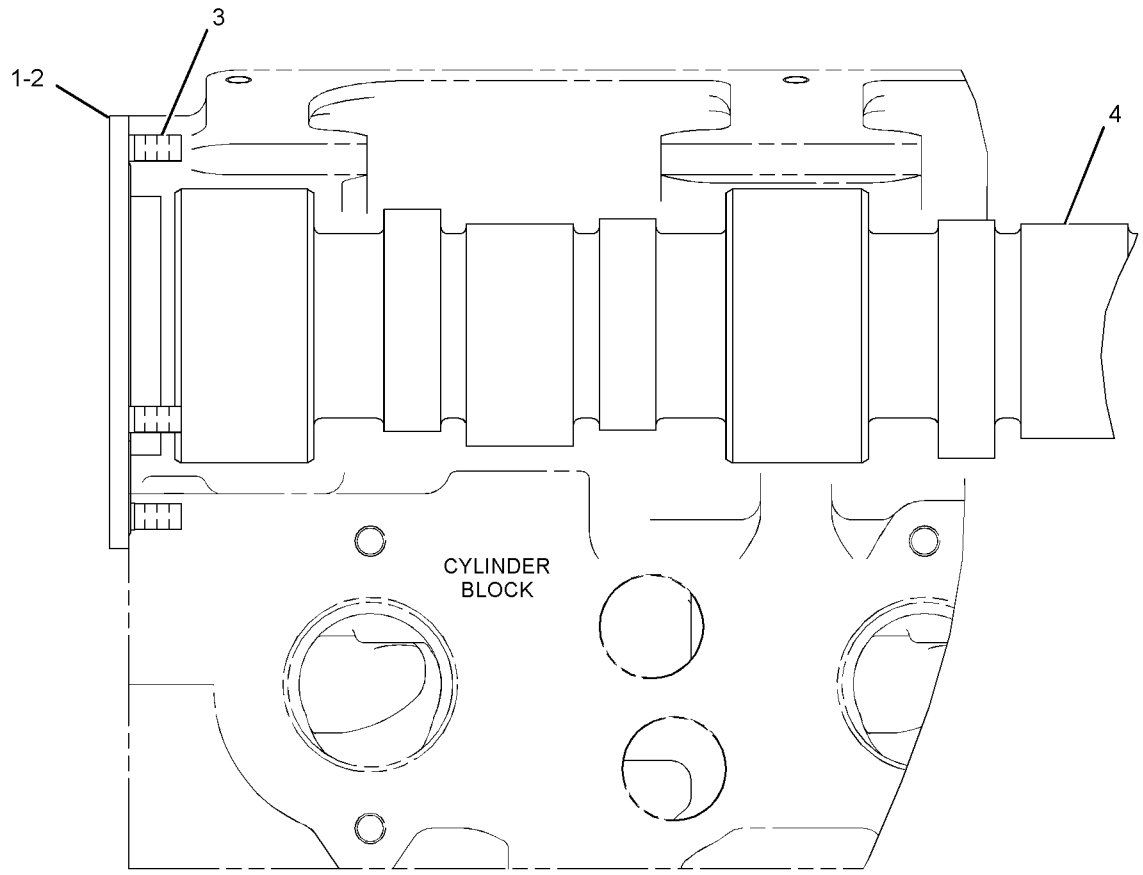

RIGHT SIDE VIEW OF ENGINE

GRAPHIC #1 **<END>** g01503366

BASIC ENGINE

107-6736 COVER GP-CYLINDER BLOCK

S/N: RHX2094-UP
PART OF 215-7486, 263-7760 ENGINE AR-COMPLETE
FOR USE WITH MID MOUNTED TURBO AND/OR RH OIL FILL

SMCS-1201 **i02763877**

NOTE	REF NO	GRAPHIC REF	PART NUMBER	QTY	PART NAME 1 2 3 4 5 6 (PRODUCT LEVEL)	SEE PAGE
	1	1	**0S-1594**	2	BOLT (3/8-16X1-IN)	
	2	1	**5M-2894**	2	WASHER-HARD (10.2X18.5X2.5-MM THK)	
	3	1	**4W-9890**	1	COVER	
	4	1	**4N-0699**	1	GASKET	

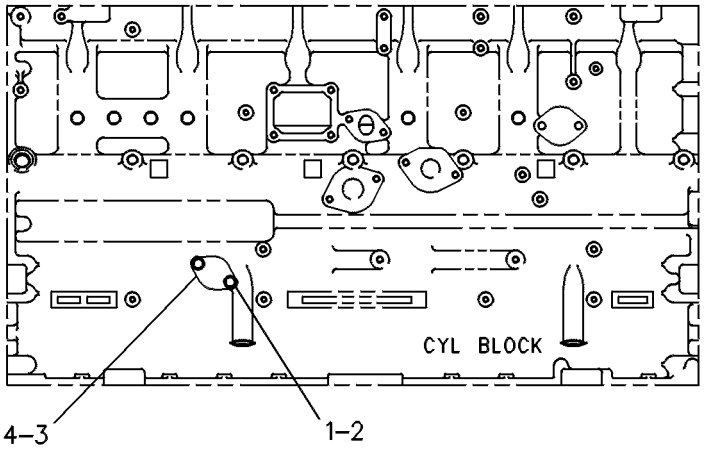

LEFT SIDE VIEW

GRAPHIC #1 **<END>** g00244599

BASIC ENGINE

140-9746 COVER GP-CYLINDER BLOCK

S/N: RHX2054-UP
NO. 4 CYLINDER WATER OPENING
PART OF 215-7486, 263-7760 ENGINE AR-COMPLETE

SMCS-1201 **i02668546**

NOTE	REF NO	GRAPHIC REF	PART NUMBER	QTY	PART NAME 1 2 3 4 5 6 (PRODUCT LEVEL)	SEE PAGE
	1	1	**145-3849**	1	COVER	
	2	1	**126-4935**	1	SEAL-INTEGRAL	
	3	1	**0S-1594**	4	BOLT (3/8-16X1-IN)	
	4	1	**5M-2894**	4	WASHER-HARD (10.2X18.5X2.5-MM THK)	

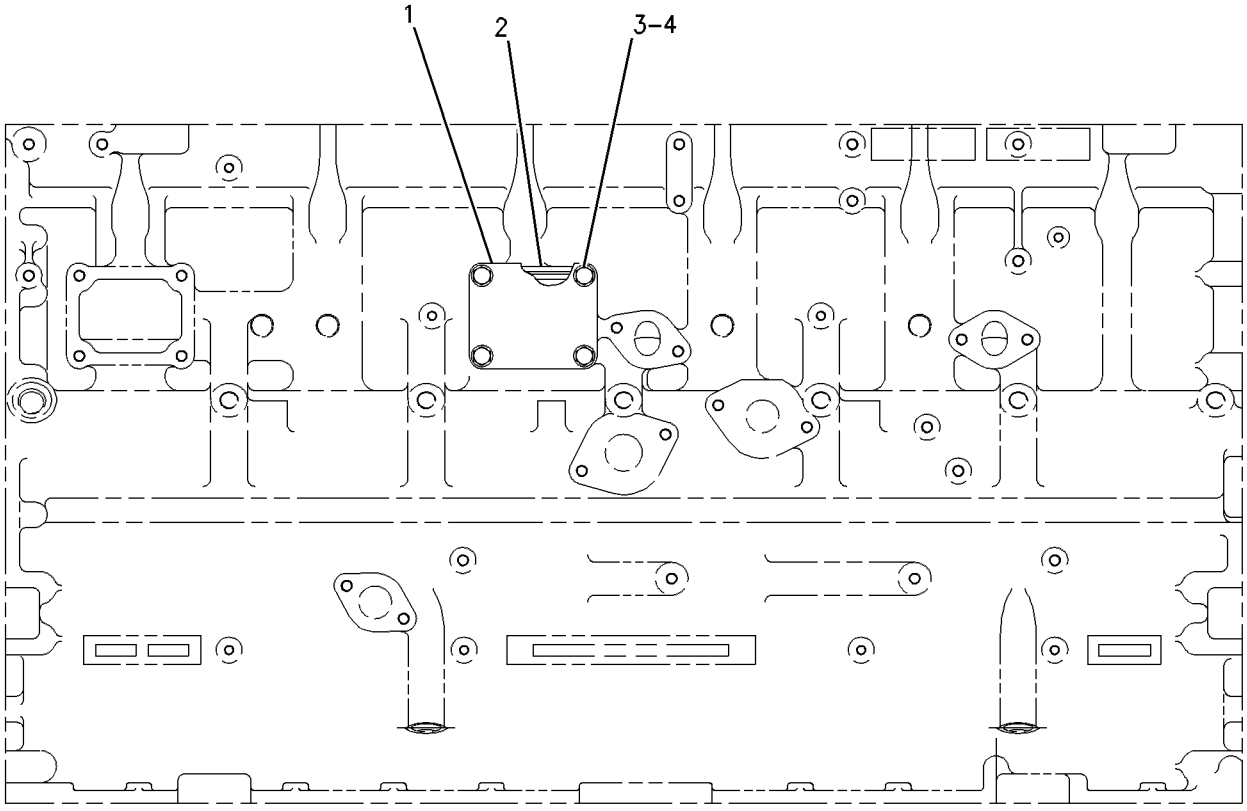

GRAPHIC #1 **<END>** g00506684

BASIC ENGINE

216-5540 COVER GP-FLYWHEEL HOUSING

S/N: RHX2054-UP

PART OF 215-7486, 263-7760 ENGINE AR-COMPLETE

SMCS-1157 **i01963594**

NOTE	REF NO	GRAPHIC REF	PART NUMBER	QTY	PART NAME 1 2 3 4 5 6 (PRODUCT LEVEL)	SEE PAGE
	1	1	**217-5900**	1	COVER	
	2	1	**4M-6480**	1	GASKET	
M	3	1	**6V-4248**	2	BOLT (M10X1.5X25-MM)	
	4	1	**6V-5839**	2	WASHER (11X21X2.5-MM THK)	

M-METRIC PART

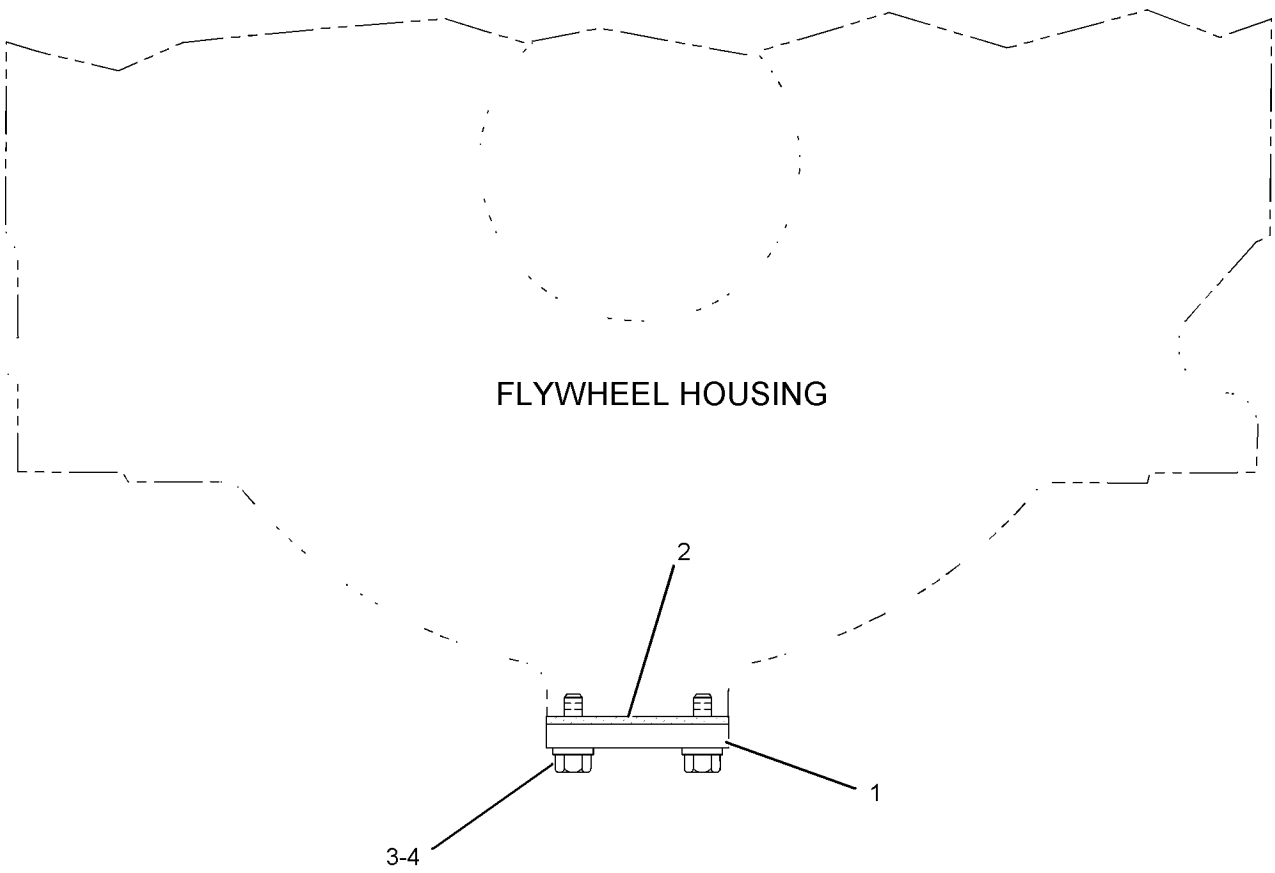

GRAPHIC #1 **<END>** g01020213

BASIC ENGINE

220-6390 COVER GP-FLYWHEEL HOUSING

S/N: RHX2054-UP

PART OF 215-7486, 263-7760 ENGINE AR-COMPLETE

SMCS-1157 **i01964481**

NOTE	REF NO	GRAPHIC REF	PART NUMBER	QTY	PART NAME 1 2 3 4 5 6 (PRODUCT LEVEL)	SEE PAGE
	1	1	**9Y-6089**	1	GASKET	
M	2	1	**6V-4429**	3	BOLT (M16X2X40-MM)	
	3	1	**9X-8268**	3	WASHER (17.5X30X3.5-MM THK)	
	4	1	**4N-1114**	1	COVER	

M-METRIC PART

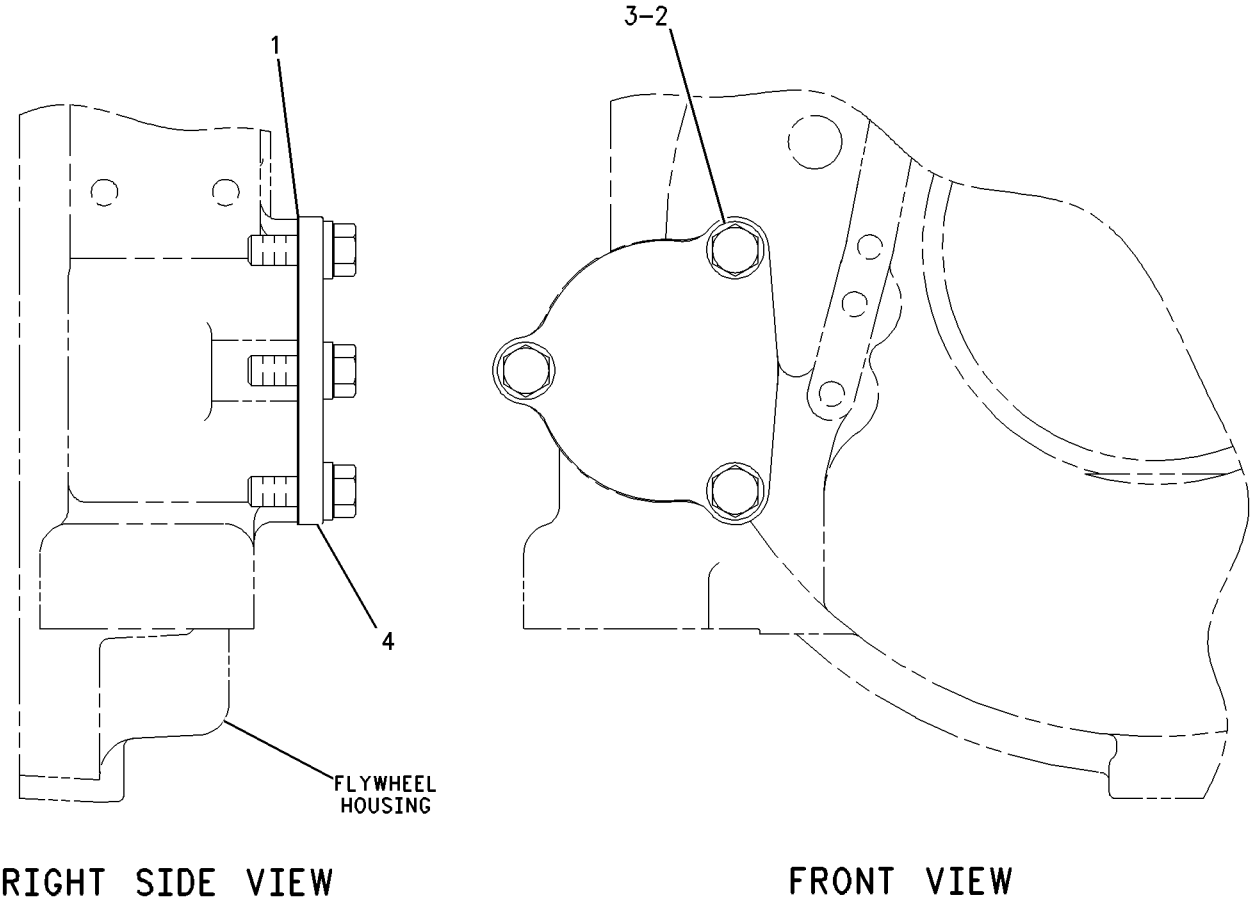

RIGHT SIDE VIEW FRONT VIEW

GRAPHIC #1 **<END>** g00783561

BASIC ENGINE

120-9847 COVER GP-FRONT HOUSING

S/N: RHX2054-UP

PROVIDES COVER FOR OIL FILLER OPENING ON FRONT HOUSING

PART OF 215-7486, 263-7760 ENGINE AR-COMPLETE

SMCS-1151, 1166 **i00670788**

NOTE	REF NO	GRAPHIC REF	PART NUMBER	QTY	PART NAME 1 2 3 4 5 6 (PRODUCT LEVEL)	SEE PAGE
	1	1	**7C-1445**	1	COVER	
	2	1	**2B-2695**	2	BOLT (5/16-18X0.875-IN)	
	3	1	**9M-1974**	2	WASHER-HARD (8.8X16X2-MM THK)	
	4	1	**061-9455**	1	SEAL-O-RING	

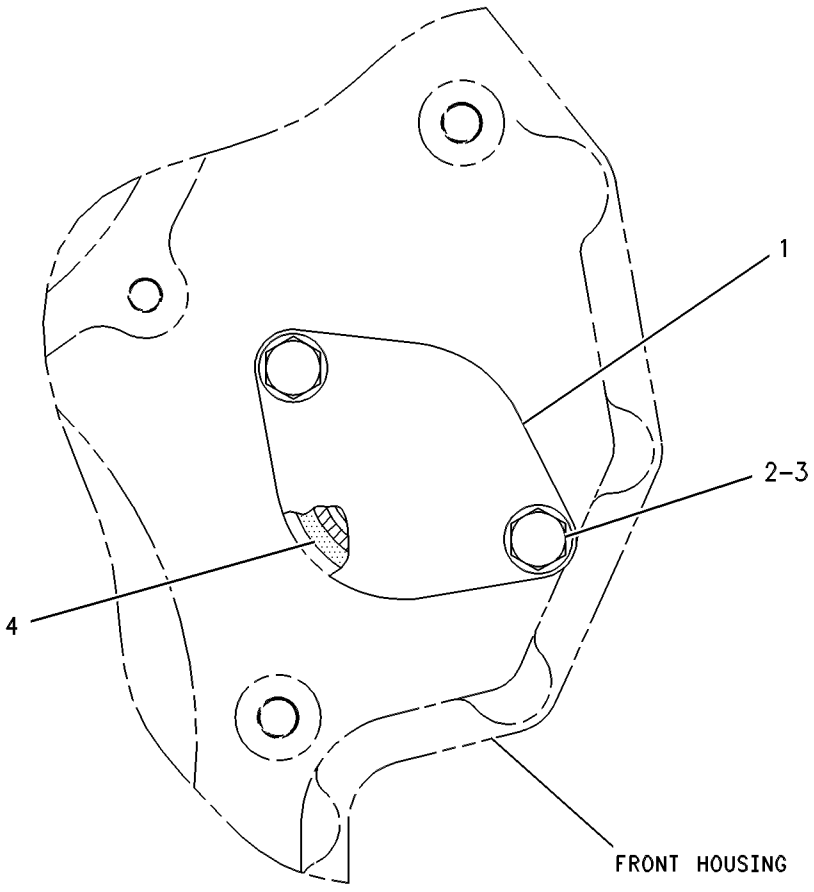

GRAPHIC #1 **<END>** g00252251

BASIC ENGINE

159-6159 COVER GP-FRONT HOUSING

S/N: RHX2054-UP
CAM AND IDLER GEAR ACCESS
PART OF 215-7486, 263-7760 ENGINE AR-COMPLETE

SMCS-1151, 1166 **i03784814**

NOTE	REF NO	GRAPHIC REF	PART NUMBER	QTY	PART NAME 1 2 3 4 5 6 (PRODUCT LEVEL)	SEE PAGE
	1	1	**297-1813**	12	SCREW-HEAD (5/16-18X1-IN)	
	2	1	**175-1367**	2	SPACER (8.8X16X10-MM THK) (MARKED X)	
	3	1	**209-3569**	1	COVER GP-FRONT HOUSING	
		1	**160-7271**	1	SEAL	
	4	1	**031-4155**	2	LOCKNUT (5/16-18-THD) (MARKED X)	
	5	1	**175-1366**	2	STUD (MARKED X)	
	6	1	**238-5078**	2	SEAL-O-RING (MARKED X)	

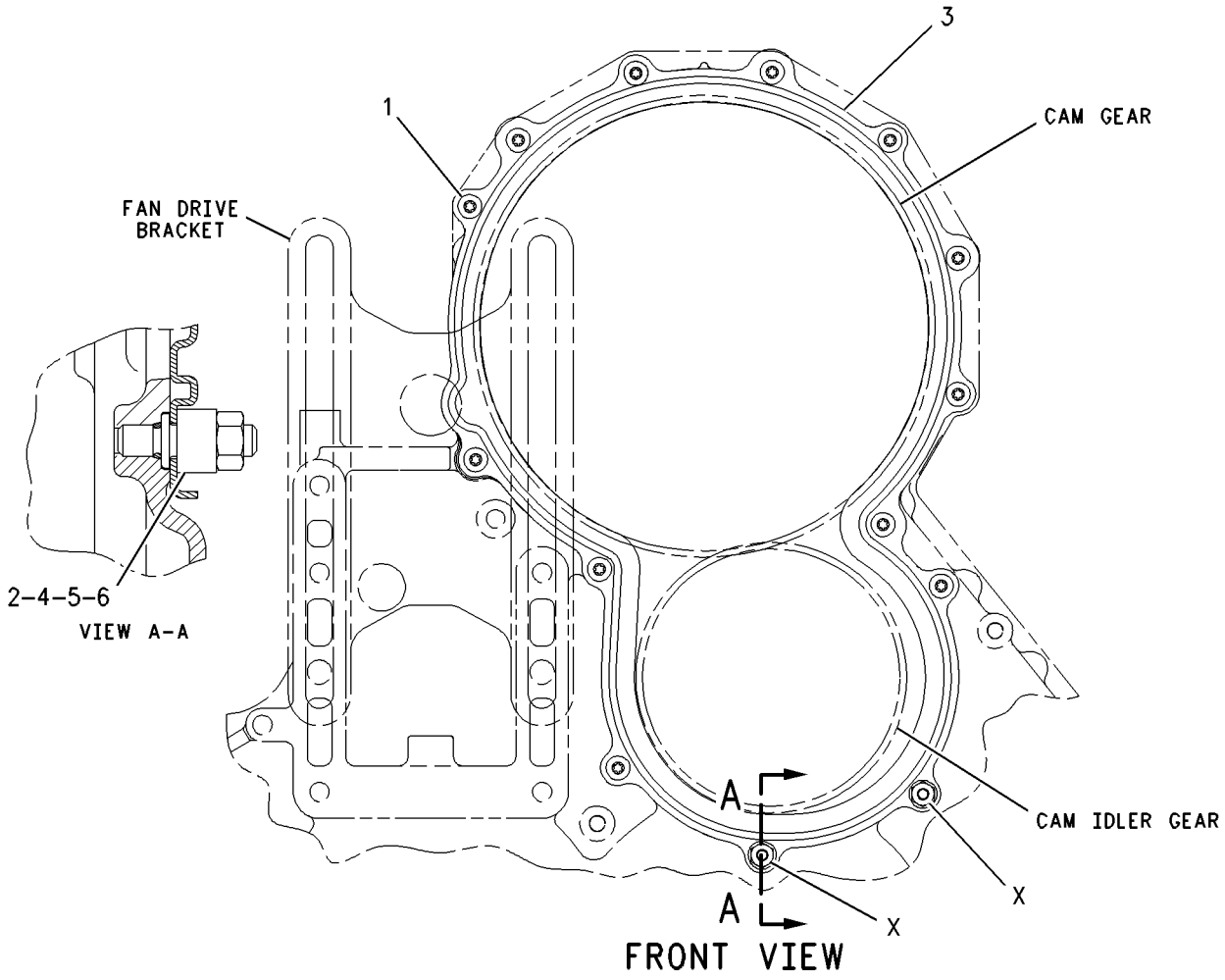

GRAPHIC #1 **<END>** g00631258

BASIC ENGINE

235-8781 COVER GP-FRONT HOUSING

S/N: RHX2054-UP
PART OF 215-7486, 263-7760 ENGINE AR-COMPLETE
FOR USE WITH ACERT BLOCK

SMCS-1151, 1166 **i03827774**

NOTE	REF NO	GRAPHIC REF	PART NUMBER	QTY	PART NAME 1 2 3 4 5 6 (PRODUCT LEVEL)	SEE PAGE
	1	1	**6N-1709**	2	SPACER (0.547X1.0X0.57-IN THK)	
	2	1	**117-0218**	1	COVER	
	3	1	**117-0219**	1	GASKET	
	4	1	**1F-7958**	3	NUT-FULL (1/2-13-THD)	
	5	1	*307-2671*	1	PLUG AS	
		1	**9S-8002**	1	PLUG-O-RING	
		1	**214-7566**	1	SEAL-O-RING	
	6	1	**5P-8245**	3	WASHER-HARD (13.5X25.5X3-MM THK)	

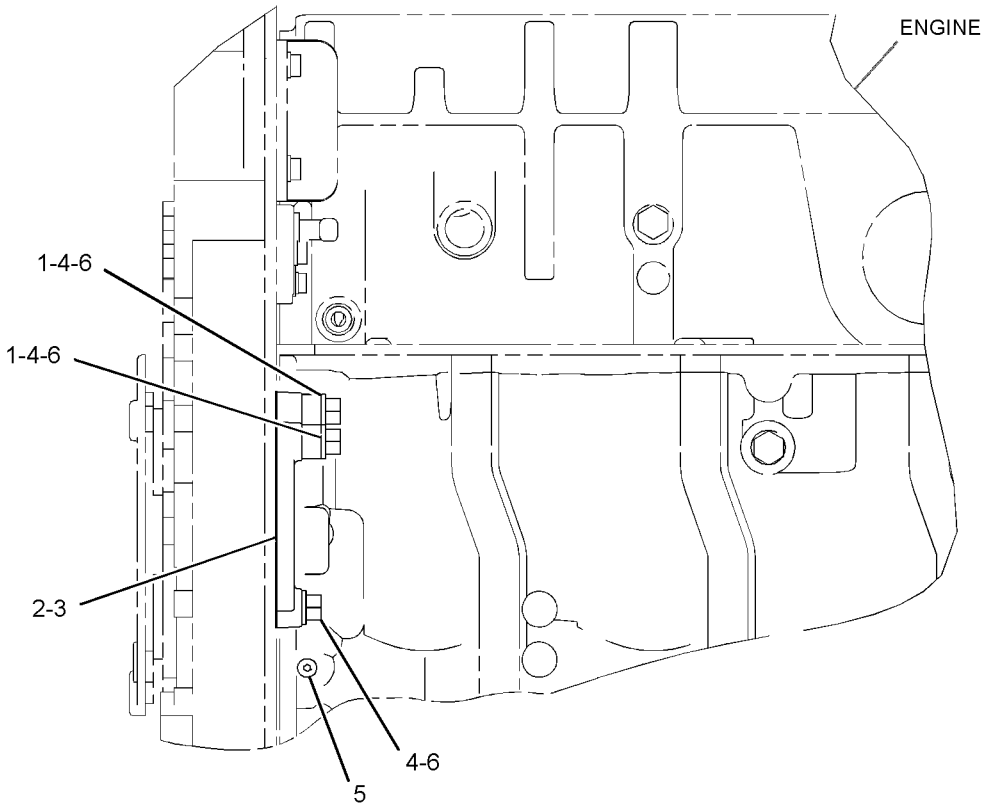

LEFT SIDE VIEW

GRAPHIC #1 **<END>** g02124596

BASIC ENGINE

230-0104 COVER GP-SOUND SUPPRESSION–FRONT HOUSING

S/N: RHX2054-UP
FOR THE WATER PUMP AREA
PART OF 215-7486, 263-7760 ENGINE AR-COMPLETE
FOR USE WITH FULL FRONT SOUND SUPPRESSION PANEL GROUP. CANNOT BE USED WITH ALTERNATOR MOUNTING GROUP AND ACCESSORY DRIVE GROUP

SMCS-1801 **i01897574**

NOTE	REF NO	GRAPHIC REF	PART NUMBER	QTY	PART NAME 1 2 3 4 5 6 (PRODUCT LEVEL)	SEE PAGE
	1	1	**100-3098**	1	COVER AS-PANEL	
	2	1	**0S-1588**	1	BOLT (3/8-16X1.25 IN)	
	3	1	**0T-0055**	1	BOLT (3/8-16X4.25 IN)	
	4	1	**1A-5183**	2	BOLT (3/8-16X4.75 IN)	
	5	1	**5M-2894**	1	WASHER-HARD (10.2X18.5X2.5MM THK)	
	6	1	**9X-6458**	3	WASHER-HARD (10.2X22.5X3MM THK)	

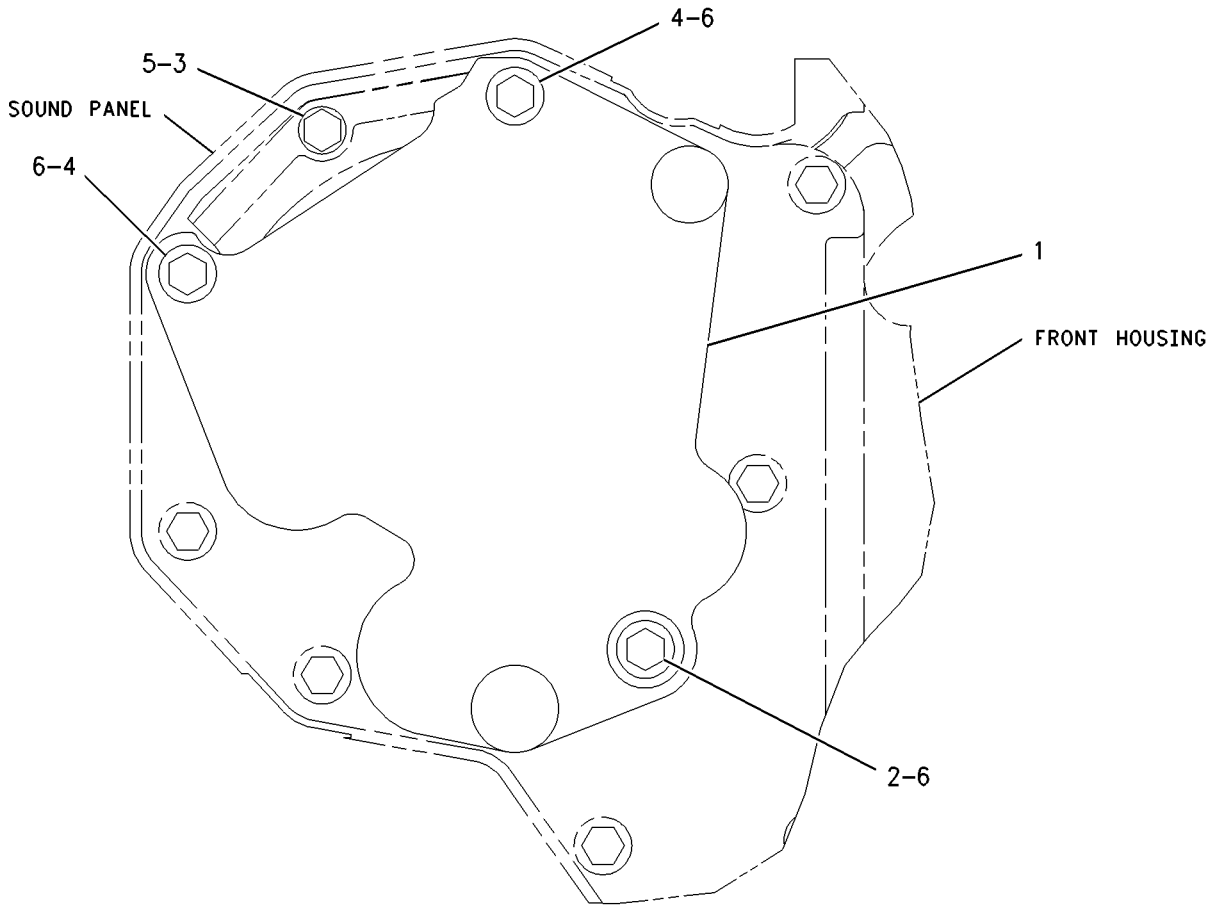

FRONT VIEW

GRAPHIC #1 **<END>** g00987886

BASIC ENGINE

150-3135 COVER GP-VALVE MECHANISM

S/N: RHX8292-UP

PART OF 187-1328 COVER GP-VALVE MECHANISM

SMCS-1107, 1120 **i02207417**

NOTE	REF NO	GRAPHIC REF	PART NUMBER	QTY	PART NAME 1 2 3 4 5 6 (PRODUCT LEVEL)	SEE PAGE
	1	1	**150-2557**	1	COVER-VALVE MECH	
	2	1	**242-9537**	1	SEAL-VALVE COVER	
	3	1	**243-1159**	6	FASTENER AS	
					(EACH INCLUDES)	
		1	**149-7378**	1	GROMMET	

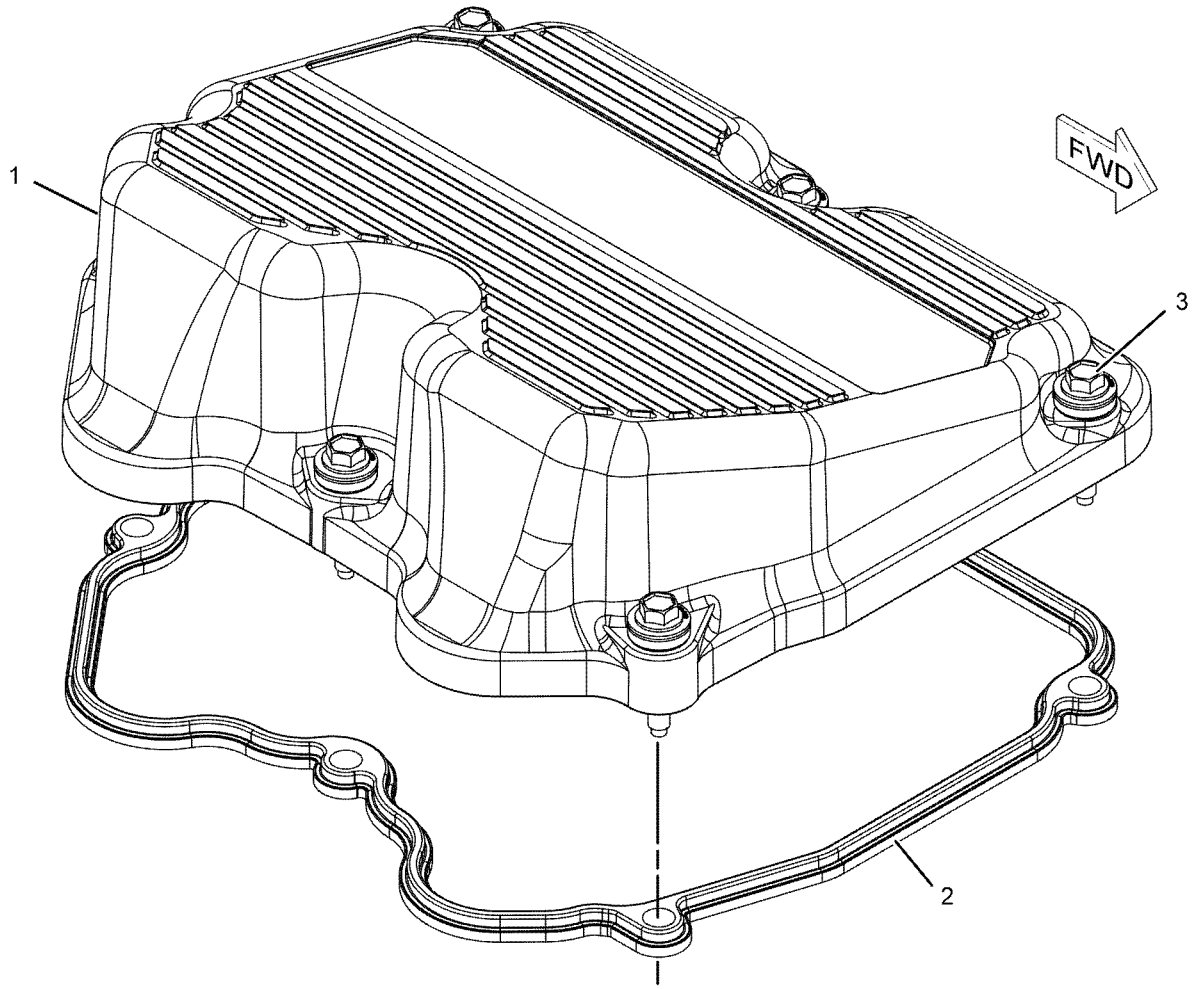

GRAPHIC #1 **<END>** g01055147

BASIC ENGINE

187-1328 COVER GP-VALVE MECHANISM

S/N: RHX8292-UP
REAR MOUNTED BREATHER, NO OIL FILL
PART OF 263-7760 ENGINE AR-COMPLETE

SMCS-1107, 1120 **i03636768**

NOTE	REF NO	GRAPHIC REF	PART NUMBER	QTY	PART NAME 1 2 3 4 5 6 (PRODUCT LEVEL)	SEE PAGE
Y	1	1	*150-3135*	2	COVER GP-VALVE MECHANISM	31
CY	2	1	*341-6804*	1	COVER GP-VALVE MECHANISM	36

C-CHANGE FROM PREVIOUS TYPE
Y-SEPARATE ILLUSTRATION

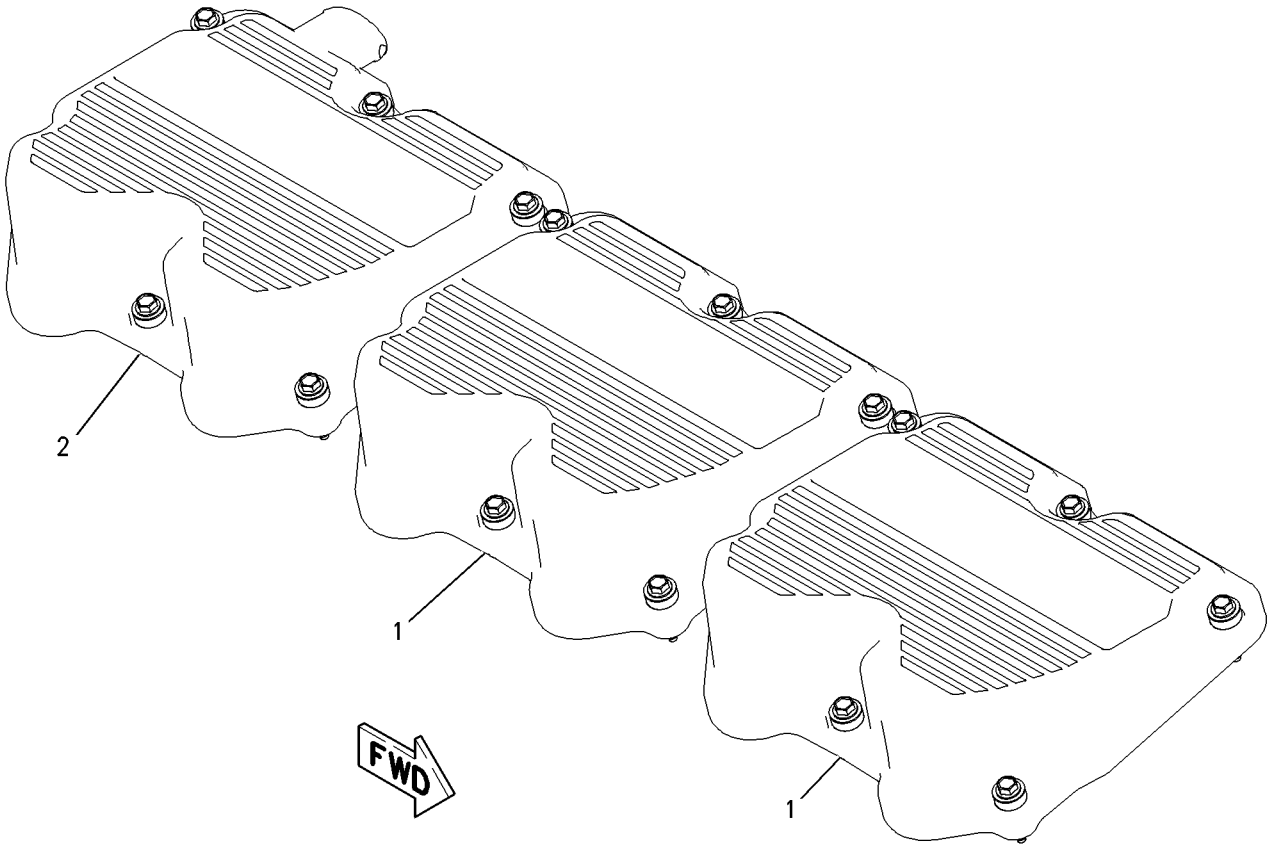

GRAPHIC #1 **<END>** g00740203

BASIC ENGINE

225-1148 COVER GP-VALVE MECHANISM

S/N: RHX2054-UP

PART OF 239-4113 COVER GP-VALVE MECHANISM

SMCS-1107, 1120 **i02810054**

NOTE	REF NO	GRAPHIC REF	PART NUMBER	QTY	PART NAME 1 2 3 4 5 6 (PRODUCT LEVEL)	SEE PAGE
	1	1	**242-9537**	1	SEAL-VALVE COVER	
	2	1	**243-1159**	6	FASTENER AS	
					(EACH INCLUDES)	
		1	**149-7378**	1	GROMMET	
	3	1	**225-1144**	1	COVER-VALVE	

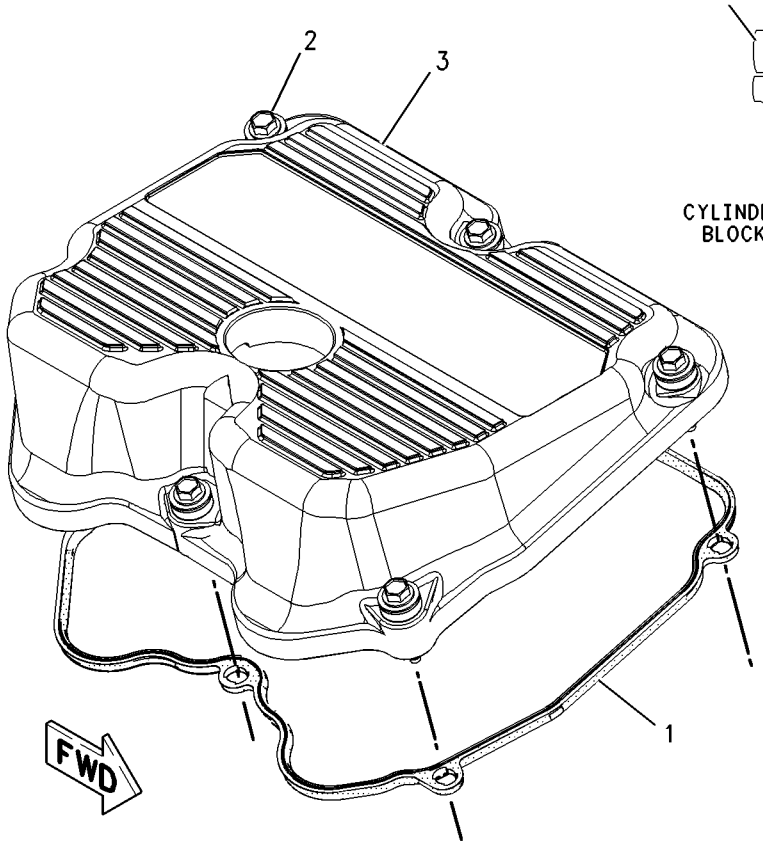

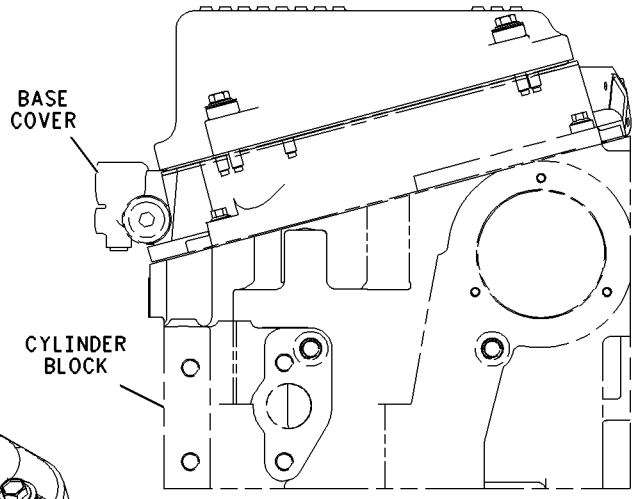

FRONT VIEW
(TYPICAL INSTALLATION)

GRAPHIC #1 **<END>** g00991113

BASIC ENGINE

239-4111 COVER GP-VALVE MECHANISM

S/N: RHX2094-UP

PART OF 239-4113 COVER GP-VALVE MECHANISM

SMCS-1107, 1120 **i02305859**

NOTE	REF NO	GRAPHIC REF	PART NUMBER	QTY	PART NAME 1 2 3 4 5 6 (PRODUCT LEVEL)	SEE PAGE
	1	1	**269-6348**	1	COVER AS-VALVE	
	2	1	**242-9537**	1	SEAL-VALVE COVER	
	3	1	**243-1159**	6	FASTENER AS	
					(EACH INCLUDES)	
		1	**149-7378**	1	GROMMET	

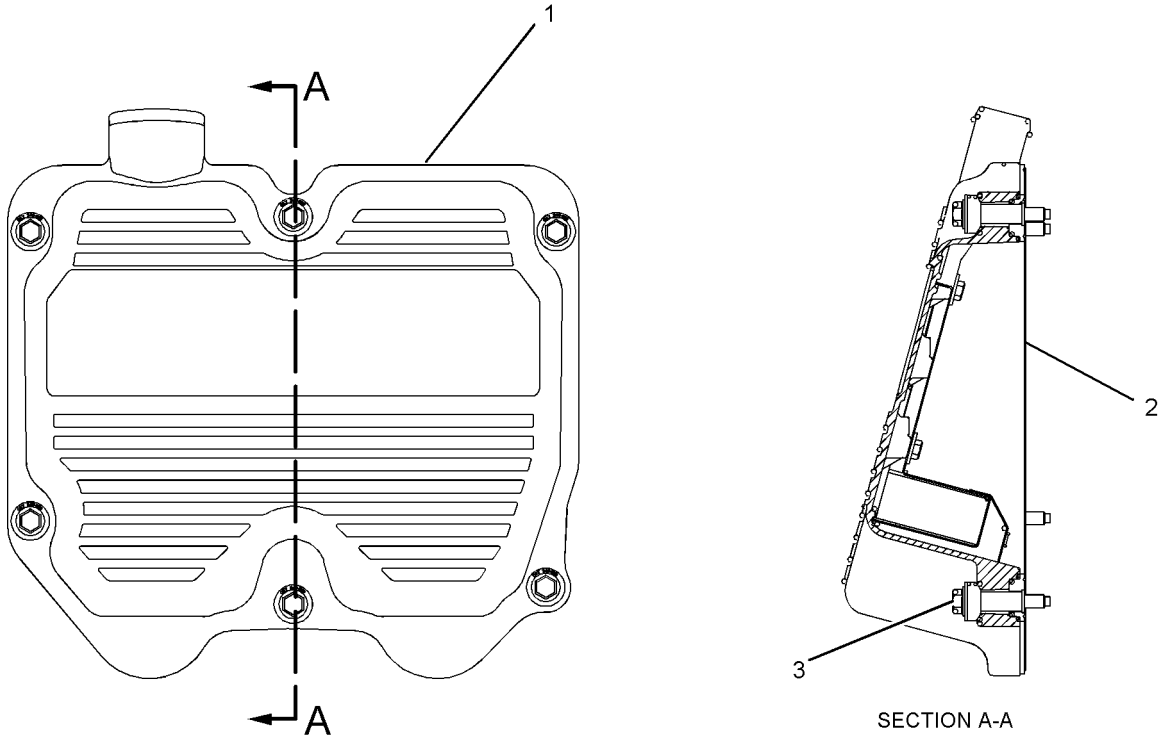

SECTION A-A

GRAPHIC #1 **<END>** g01052702

BASIC ENGINE

239-4113 COVER GP-VALVE MECHANISM

S/N: RHX2054-8291

PART OF 215-7486, 263-7760 ENGINE AR-COMPLETE

SMCS-1107, 1120 **i02039988**

NOTE	REF NO	GRAPHIC REF	PART NUMBER	QTY	PART NAME 1 2 3 4 5 6 (PRODUCT LEVEL)	SEE PAGE
Y	1	1	*225-1148*	2	COVER GP-VALVE MECHANISM	33
Y	2	1	*239-4111*	1	COVER GP-VALVE MECHANISM	34

Y-SEPARATE ILLUSTRATION

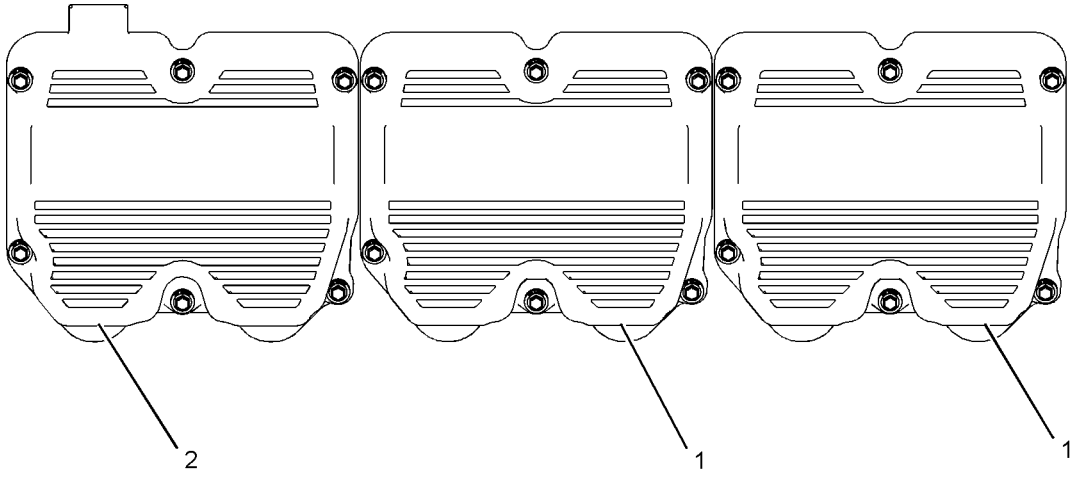

TOP VIEW

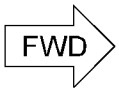

GRAPHIC #1 **<END>** g01052729

BASIC ENGINE

341-6804 COVER GP-VALVE MECHANISM

S/N: RHX8292-UP

PART OF 187-1328 COVER GP-VALVE MECHANISM

SMCS-1107, 1120 **i03531580**

NOTE	REF NO	GRAPHIC REF	PART NUMBER	QTY	PART NAME 1 2 3 4 5 6 (PRODUCT LEVEL)	SEE PAGE
	1	1	**242-9537**	1	SEAL-VALVE COVER	
	2	1	**243-1159**	6	FASTENER AS	
					(EACH INCLUDES)	
	2A	1	**149-7378**	1	GROMMET	
	3	1	**239-4106**	1	COVER AS-VALVE	

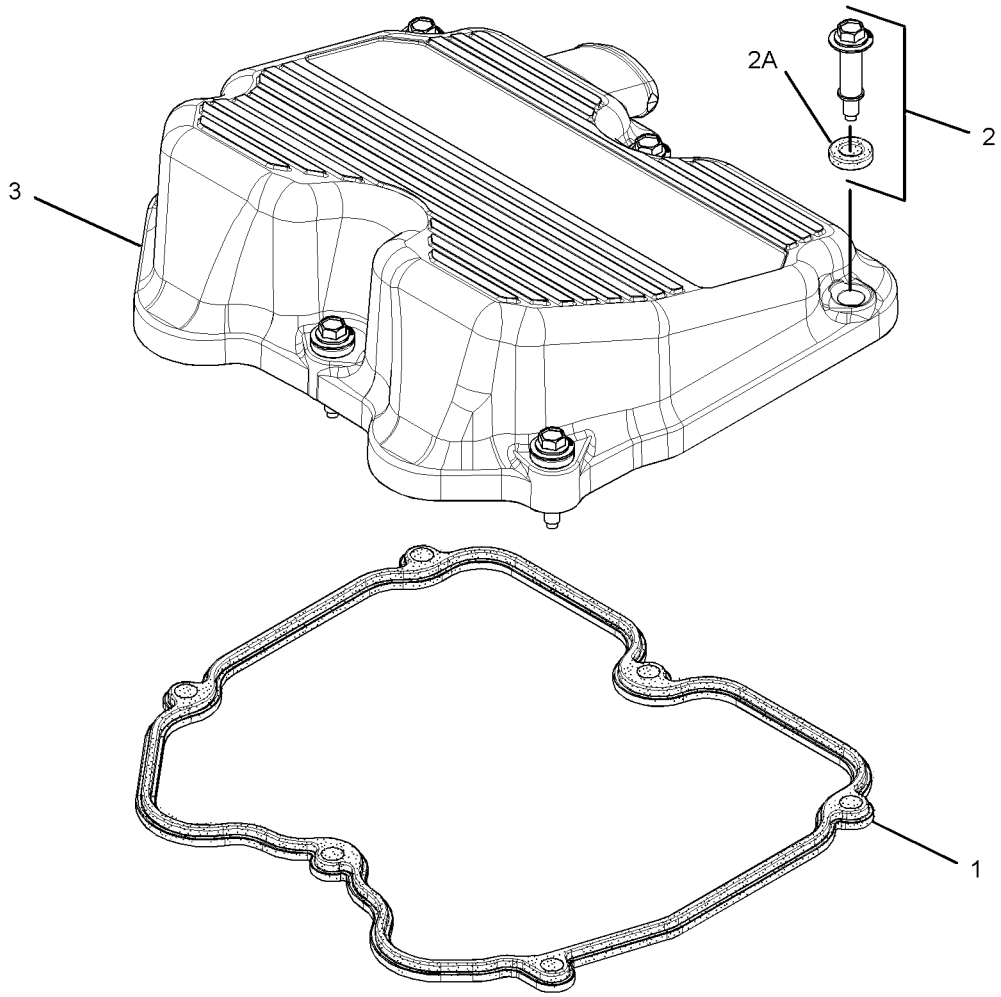

GRAPHIC #1 **<END>** g01860954

BASIC ENGINE

223-9732 CRANKSHAFT GP

S/N: RHX2094-UP

PART OF 241-5934, 314-8601, 316-3531 ENGINE AR-CORE

SMCS-1202, 1203, 1204, 1232 **i03927770**

NOTE	REF NO	GRAPHIC REF	PART NUMBER	QTY	PART NAME 1 2 3 4 5 6 (PRODUCT LEVEL)	SEE PAGE
J	1	1	**253-1752**	2	PLATE-THRUST	
Y	2	1	*319-7401*	1	SEAL GP-CRANKSHAFT (FRONT)	109
R	3	1	**189-4918**	1	CRANKSHAFT AS	
	3A	1	**4N-0684**	1	DOWEL	
	3B	1	**7S-5005**	1	DOWEL	
	3C	1	**187-8981**	1	GEAR-CRANKSHAFT (80-TEETH)	
J	4	1	**317-8766**	7	BEARING-MAIN (STANDARD)	
AB		1	**4W-5698**		BEARING-MAIN (0.63-MM US)	
AB		1	**4W-5699**		BEARING-MAIN (1.27-MM US)	
AB		1	**4W-5700**		BEARING-MAIN (0.63-MM OS)	
AB		1	**4W-5701**		BEARING-MAIN (0.63-MM OS, 0.63-MM US)	
					AVAILABLE REPAIR KIT(S):	
AJ			**243-6718**		KIT-CRANKSHAFT BEARING (STANDARD)	
					(INCLUDES A COMPLETE SET OF MAIN BEARINGS AND THURST PLATES)	

A-NOT PART OF THIS GROUP
B-USE AS REQUIRED
J-KIT MARKED J INCLUDES PARTS MARKED J
R-REMFG PART MAY BE AVAILABLE
Y-SEPARATE ILLUSTRATION

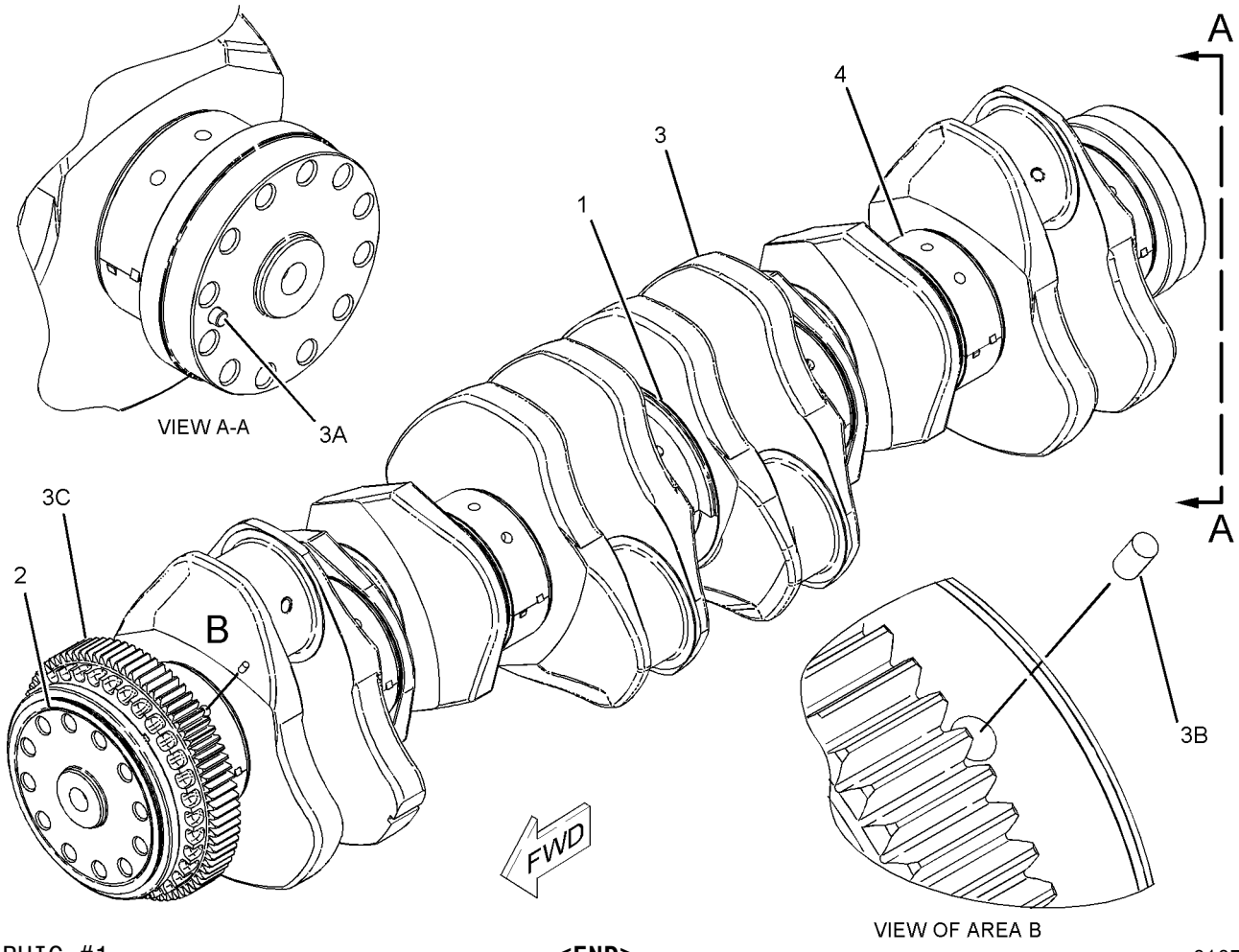

GRAPHIC #1 **<END>** g01070662

BASIC ENGINE

229-8568 CYLINDER BLOCK AS

S/N: RHX2054-4917

PART OF 261-0052 CYLINDER BLOCK AS

SMCS-1201 **i02228404**

NOTE	REF NO	GRAPHIC REF	PART NUMBER	QTY	PART NAME 1 2 3 4 5 6 (PRODUCT LEVEL)	SEE PAGE
	1	1	**167-8081**	7	CAP-CRANKSHAFT BEARING	
	2	1	**167-8083**	14	BOLT (7/8-14X7.5-IN)	
	3	1	**9H-1031**	14	WASHER-HARD (24X41.5X6-MM THK)	

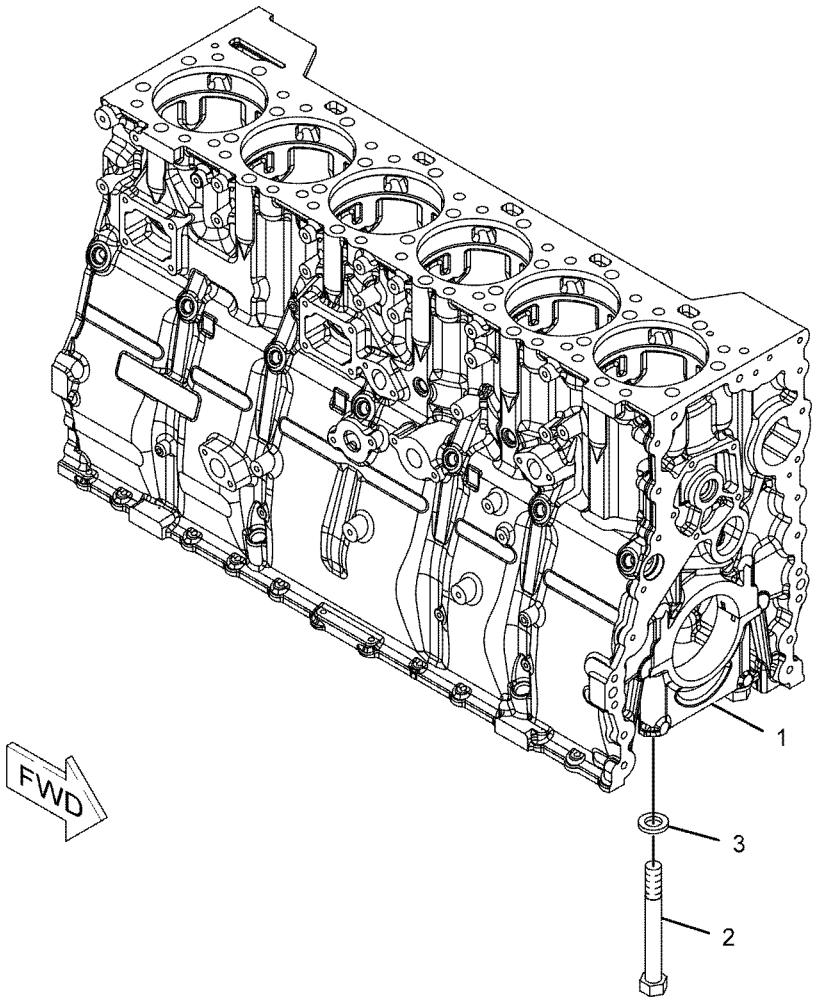

GRAPHIC #1 **<END>** g01122669

BASIC ENGINE

261-0052 CYLINDER BLOCK AS

S/N: RHX2054-4917

PART OF 261-0191 CYLINDER BLOCK GP

SMCS-1201 **i02228386**

NOTE	REF NO	GRAPHIC REF	PART NUMBER	QTY	PART NAME 1 2 3 4 5 6 (PRODUCT LEVEL)	SEE PAGE
	1	1	**155-0809**	6	SEAL-LINER	
	2	1	**155-0810**	6	SEAL-LINER	
	3	1	**155-2793**	6	SEAL-LINER	
	4	1	**253-8766**	6	LINER-CYLINDER	
Y	5	1	**229-8568**	1	CYLINDER BLOCK AS	38
	6	1	**9L-5854**	6	BAND-FILLER (130.2-MM ID)	

Y-SEPARATE ILLUSTRATION

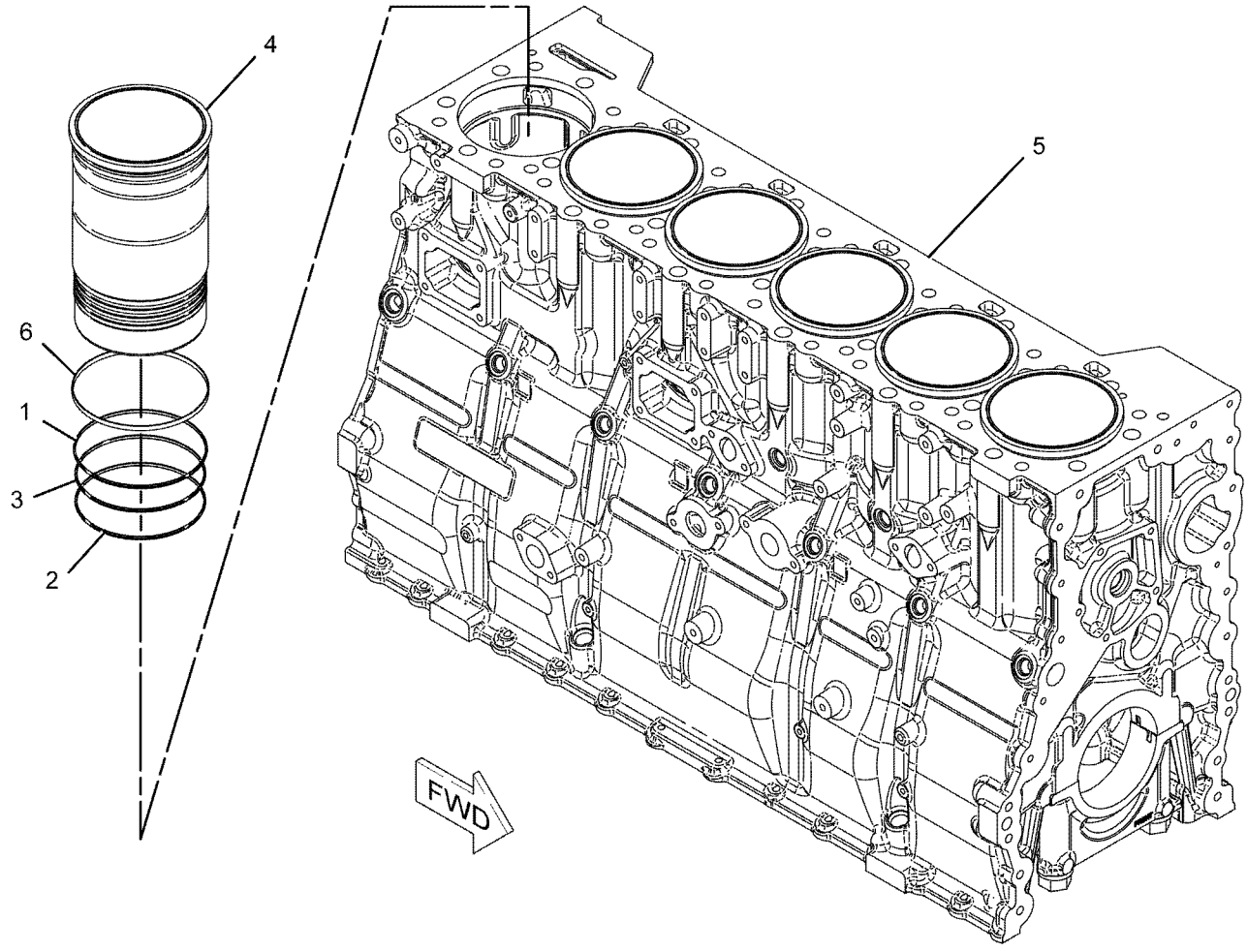

GRAPHIC #1 **<END>** g01122528

BASIC ENGINE

267-4631 CYLINDER BLOCK AS*R

S/N: RHX2094-UP

PART OF 301-3018, 323-8451 CYLINDER BLOCK AS, 297-4267 CYLINDER BLOCK GP

SMCS-1201 **i03853517**

NOTE	REF NO	GRAPHIC REF	PART NUMBER	QTY	PART NAME 1 2 3 4 5 6 (PRODUCT LEVEL)	SEE PAGE
	1	1	**167-8081**	7	CAP-CRANKSHAFT BEARING	
	2	1	**3P-1323**	14	BOLT-BEARING CAP (7/8-14X7.75-IN)	
	3	1	**9H-1031**	14	WASHER-HARD (24X41.5X6-MM THK)	

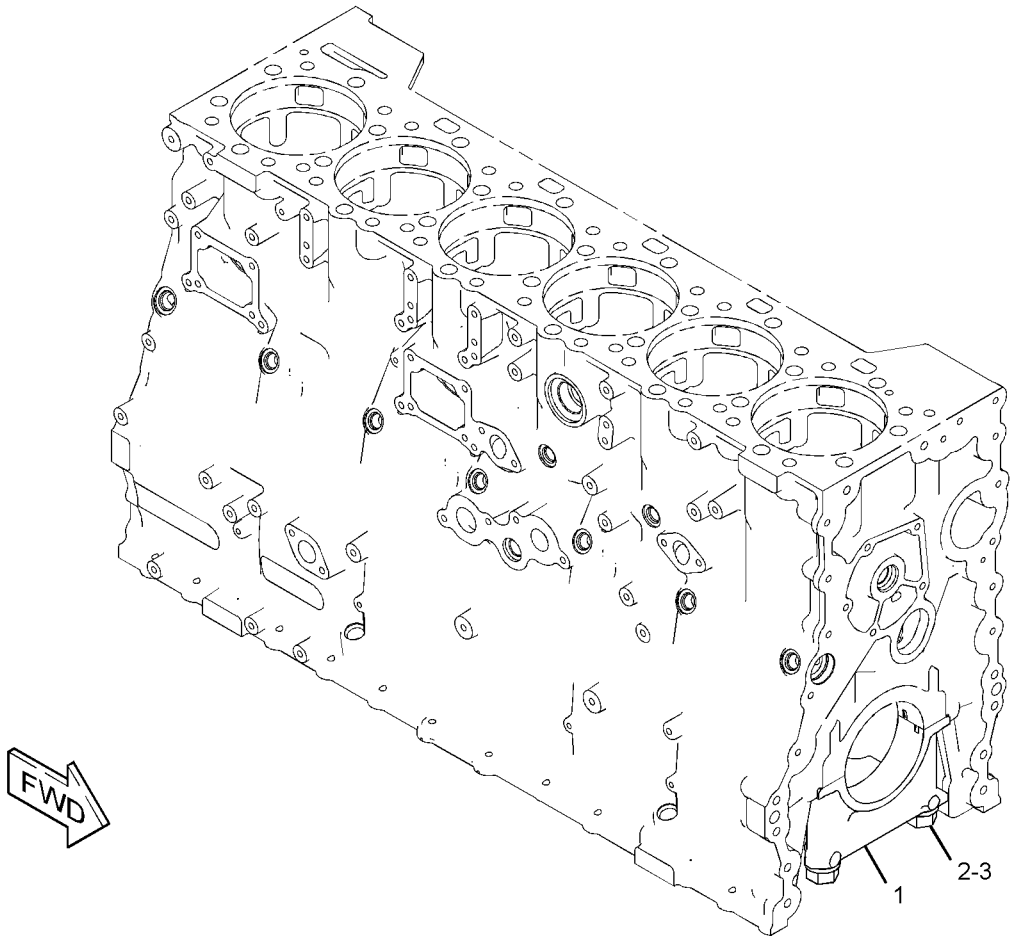

GRAPHIC #1 **<END>** g01177294

BASIC ENGINE

301-3018 CYLINDER BLOCK AS

S/N: RHX4918-5238
PART OF 261-0191 CYLINDER BLOCK GP
FIELD REPLACEMENT ORDER 323-8451—PAGE 42

SMCS-1201 **i02680503**

NOTE	REF NO	GRAPHIC REF	PART NUMBER	QTY	PART NAME 1 2 3 4 5 6 (PRODUCT LEVEL)	SEE PAGE
	1	1	**155-0809**	6	SEAL-LINER	
	2	1	**155-0810**	6	SEAL-LINER	
	3	1	**155-2793**	6	SEAL-LINER	
	4	1	**253-8766**	6	LINER-CYLINDER	
Y	5	1	**267-4631**	1	CYLINDER BLOCK AS	40
	6	1	**9L-5854**	6	BAND-FILLER (130.2-MM ID)	

Y-SEPARATE ILLUSTRATION

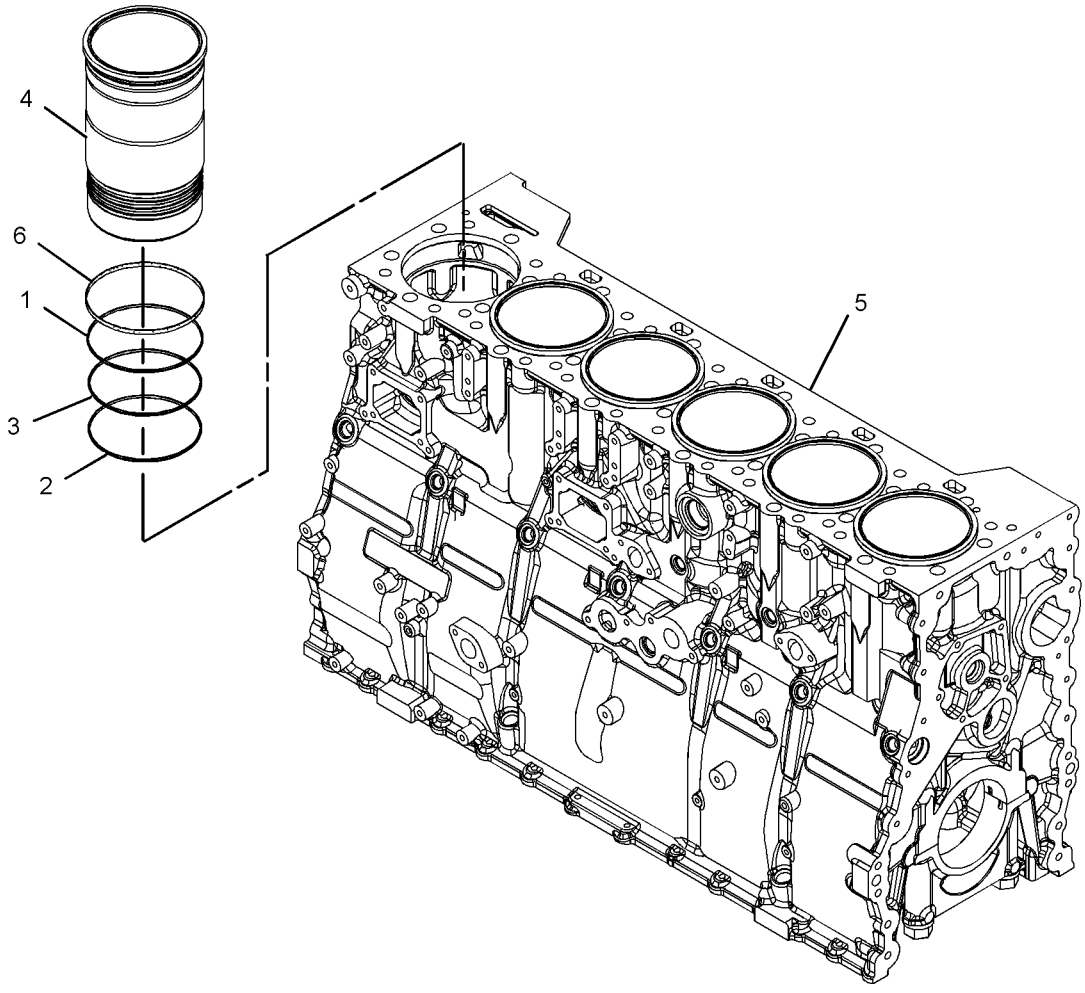

GRAPHIC #1 **<END>** g01347377

BASIC ENGINE

323-8451 CYLINDER BLOCK AS

S/N: RHX2094-UP
PART OF 261-0191 CYLINDER BLOCK GP
FIELD REPLACEMENT FOR 301-3018—PAGE 41

SMCS-1201 **i03148541**

NOTE	REF NO	GRAPHIC REF	PART NUMBER	QTY	PART NAME 1 2 3 4 5 6 (PRODUCT LEVEL)	SEE PAGE
	1	1	**155-0809**	6	SEAL-LINER	
	2	1	**155-2793**	12	SEAL-LINER	
Y	3	1	**267-4631**	1	CYLINDER BLOCK AS	40
	4	1	**322-1126**	6	LINER-CYLINDER	
	5	1	**9L-5854**	6	BAND-FILLER (130.2-MM ID)	

Y-SEPARATE ILLUSTRATION

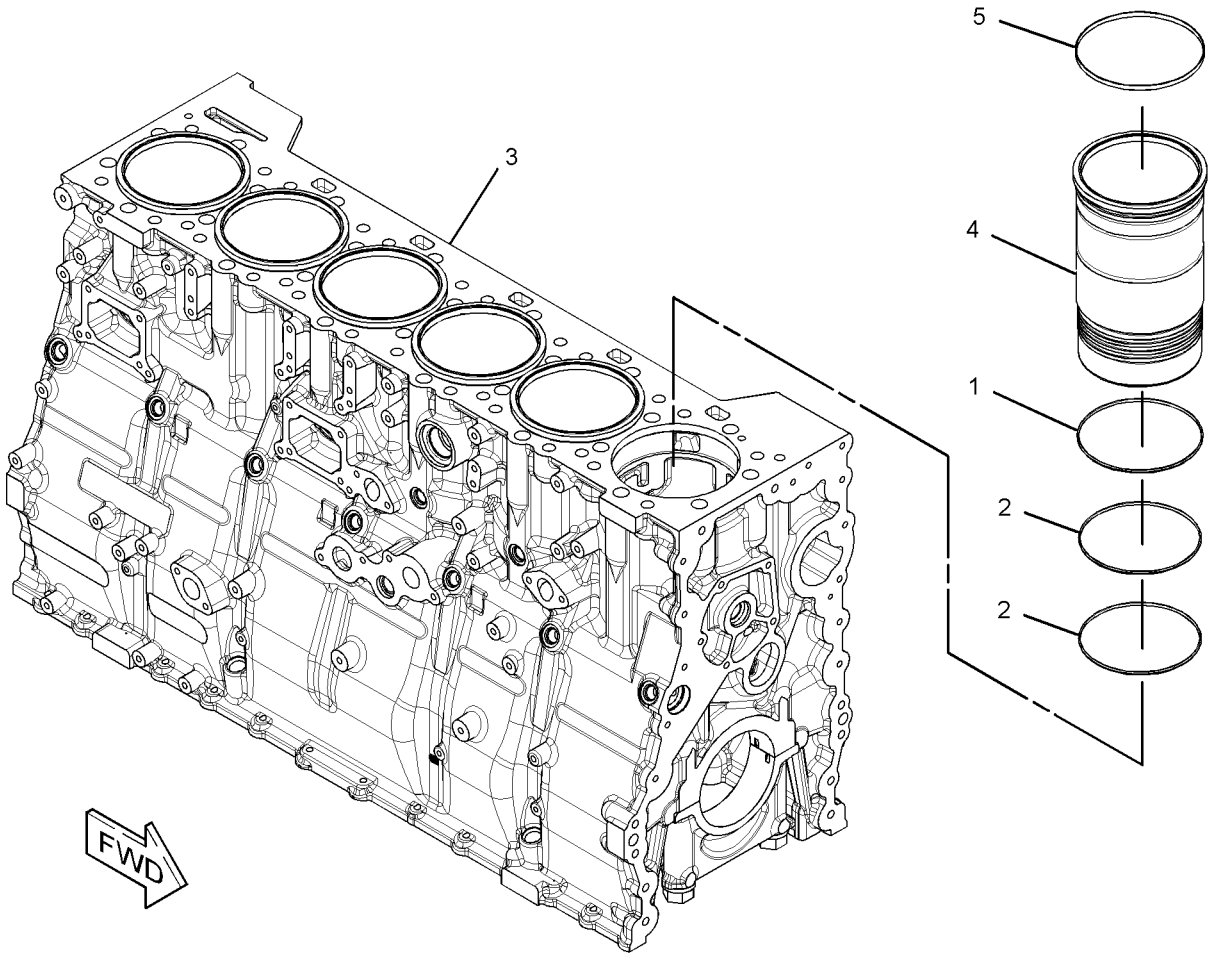

GRAPHIC #1 **<END>** g01620021

BASIC ENGINE

261-0191 CYLINDER BLOCK GP

S/N: RHX2094-4917

PART OF 241-5934 ENGINE AR-CORE

SMCS-1201 **i02413200**

NOTE	REF NO	GRAPHIC REF	PART NUMBER	QTY	PART NAME 1 2 3 4 5 6 (PRODUCT LEVEL)	SEE PAGE
	1	1	**1S-9540**	1	DOWEL	
	2	1	**4N-1650**	1	DOWEL	
	3	1	**6I-1055**	1	DOWEL	
	4	1	**6I-4421**	1	PLATE-SPACER	
	5	1	**8S-9094**	1	PLUG-ORIFICE	
	6	1	**142-2329**	1	SEAL	
	7	1	**227-1204**	1	GASKET	
	8	1	**250-0466**	2	SEAL-O-RING	
Y	9	1	**261-0052**	1	CYLINDER BLOCK AS	39
	10	1	**100-7399**	2	PLUG	
	11	1	**4N-0683**	4	DOWEL	
	12	1	**5P-0840**	1	SEAL-O-RING	

Y-SEPARATE ILLUSTRATION

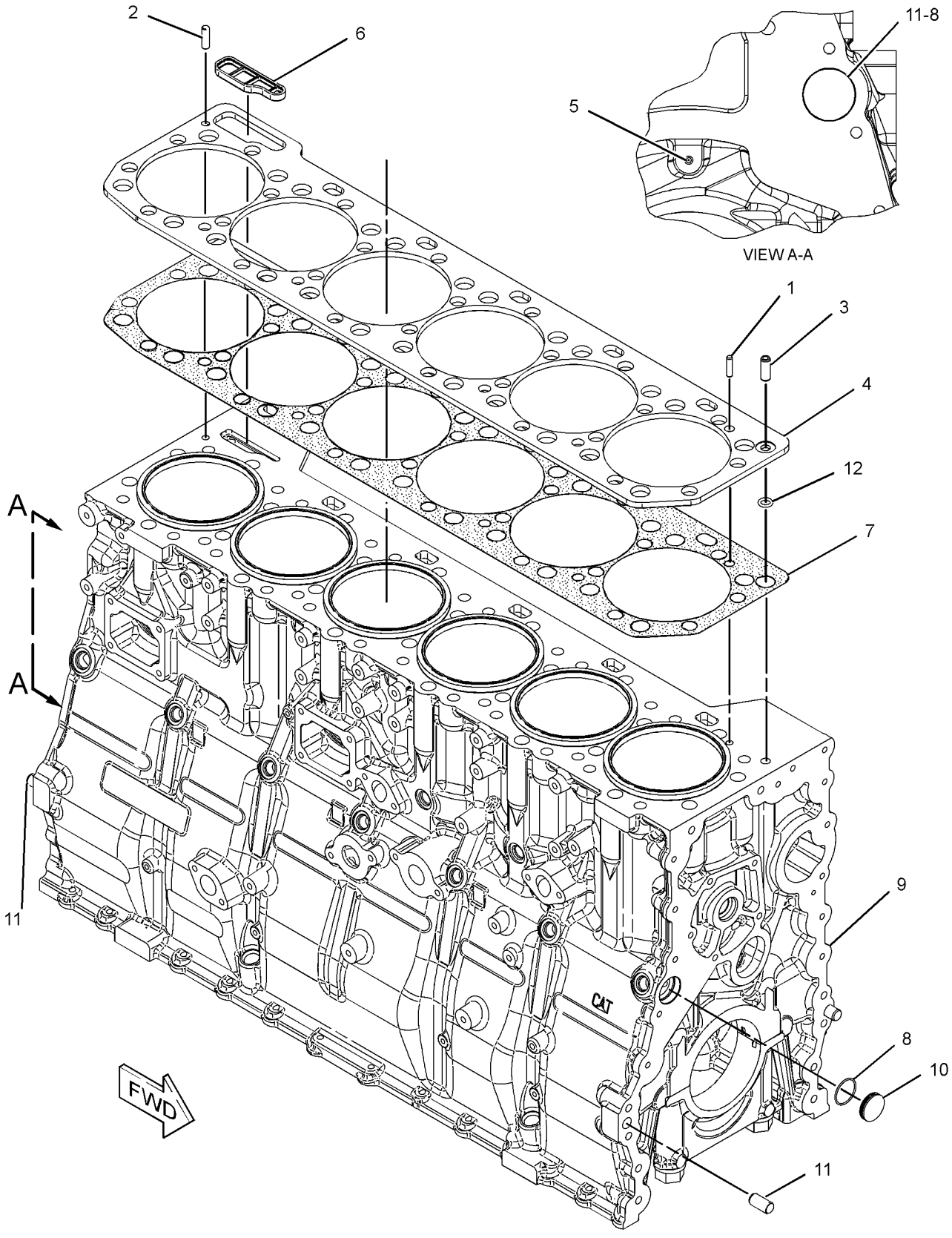

GRAPHIC #1 **<END>** g01215462

BASIC ENGINE

261-0191 CYLINDER BLOCK GP

S/N: RHX4918-6448

PART OF 241-5934 ENGINE AR-CORE

SMCS-1201 **i03596103**

NOTE	REF NO	GRAPHIC REF	PART NUMBER	QTY	PART NAME 1 2 3 4 5 6 (PRODUCT LEVEL)	SEE PAGE
	1	1	**1S-9540**	1	DOWEL	
	2	1	**4N-1650**	1	DOWEL	
	3	1	**6I-1055**	1	DOWEL	
	4	1	**6I-4421**	1	PLATE-SPACER	
	5	1	**142-2329**	1	SEAL	
C	6	1	*201-4340*	1	PLUG AS	
		1	**6V-4589**	1	SEAL-O-RING	
		1	**9S-8006**	1	PLUG-O-RING	
	7	1	**227-1204**	1	GASKET	
	8	1	**250-0466**	2	SEAL-O-RING	
CY	9	1	*301-3018*	1	CYLINDER BLOCK AS	41
CY	10	1	*305-9196*	1	PLUG GP-CYLINDER BLOCK	98
	11	1	**100-7399**	2	PLUG	
	12	1	**4N-0683**	4	DOWEL	
	13	1	**5P-0840**	1	SEAL-O-RING	

C-CHANGE FROM PREVIOUS TYPE
Y-SEPARATE ILLUSTRATION

261-0191 **CYLINDER BLOCK GP** *(contd.)* **i03596103**

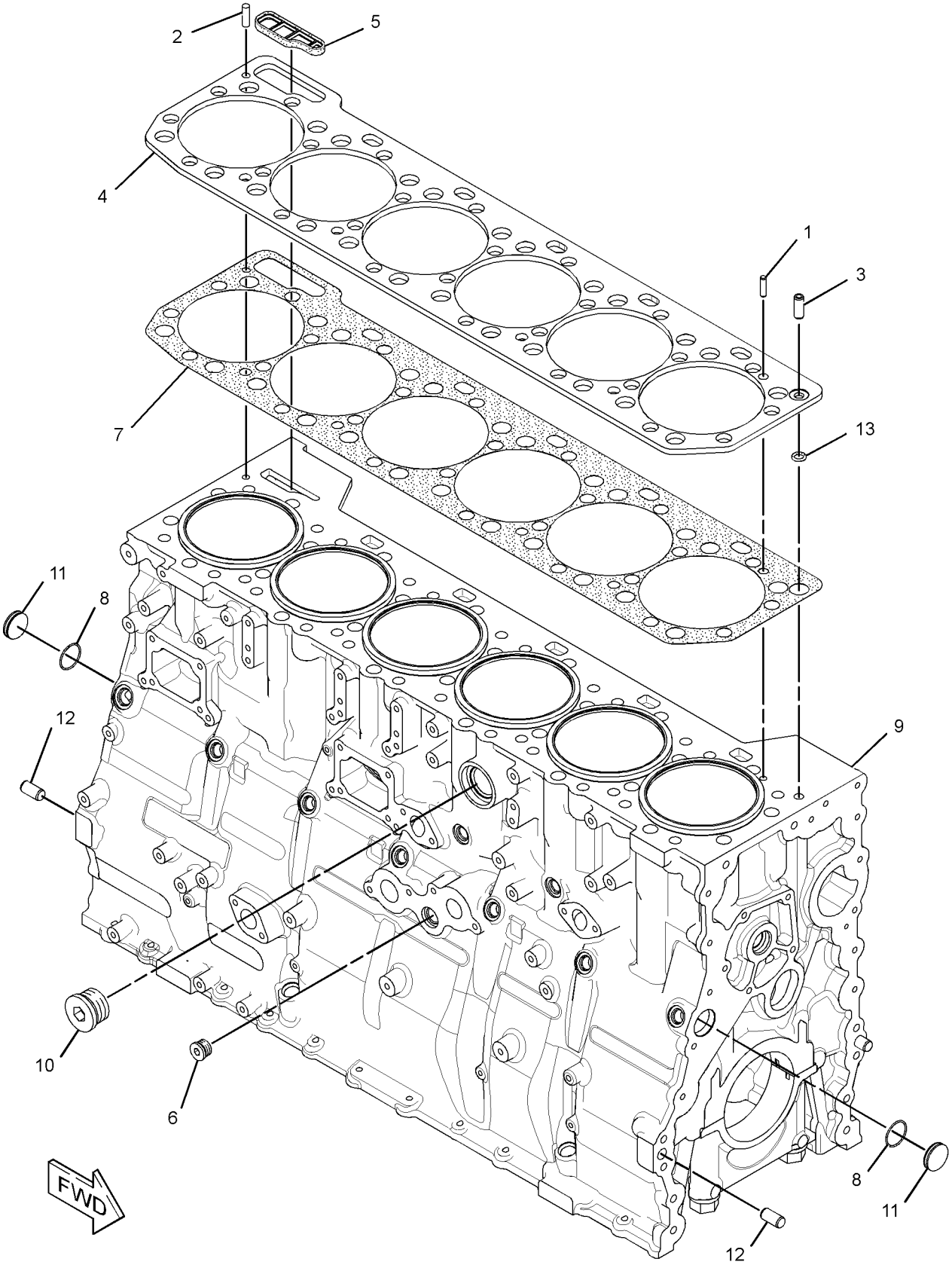

GRAPHIC #1 **<END>** g01347328

BASIC ENGINE

261-0191 CYLINDER BLOCK GP

S/N: RHX6608-UP

PART OF 316-3531 ENGINE AR-CORE

SMCS-1201 **i03833976**

NOTE	REF NO	GRAPHIC REF	PART NUMBER	QTY	PART NAME 1 2 3 4 5 6 (PRODUCT LEVEL)	SEE PAGE
	1	1	**1S-9540**	1	DOWEL	
	2	1	**4N-1650**	1	DOWEL	
	3	1	**6I-1055**	1	DOWEL	
	4	1	**6I-4421**	1	PLATE-SPACER	
	5	1	**142-2329**	1	SEAL	
	6	1	*309-5131*	1	PLUG AS	
		1	**238-5081**	1	SEAL-O-RING	
		1	**9S-8006**	1	PLUG-O-RING	
	7	1	**227-1204**	1	GASKET	
	8	1	**250-0466**	2	SEAL-O-RING	
CY	9	1	*323-8451*	1	CYLINDER BLOCK AS	42
Y	10	1	*305-9196*	1	PLUG GP-CYLINDER BLOCK	98
	11	1	**100-7399**	2	PLUG	
	12	1	**4N-0683**	4	DOWEL	
	13	1	**5P-0840**	1	SEAL-O-RING	

C-CHANGE FROM PREVIOUS TYPE
Y-SEPARATE ILLUSTRATION

261-0191 **CYLINDER BLOCK GP** *(contd.)* **i03833976**

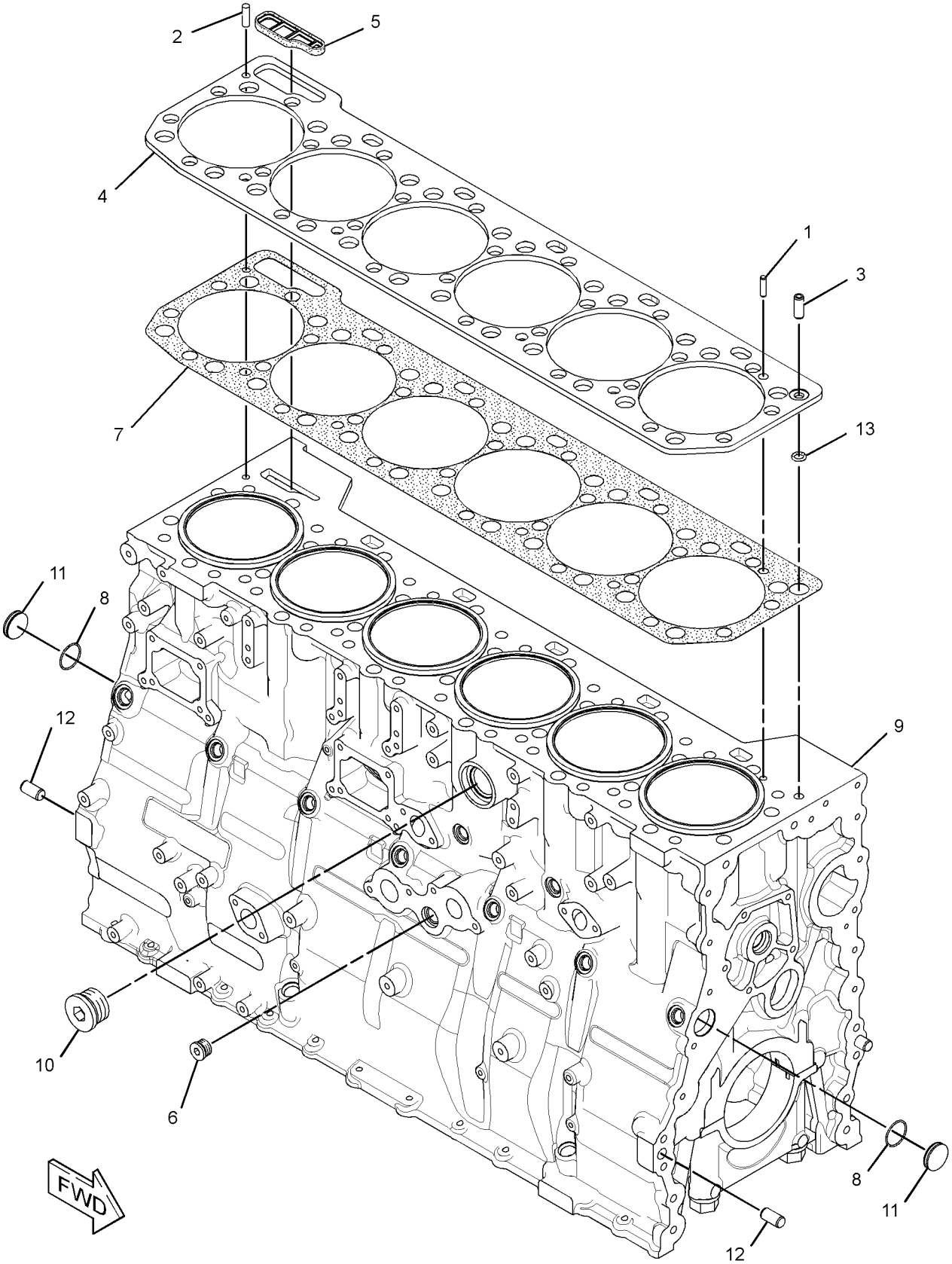

GRAPHIC #1 **<END>** g01347328

BASIC ENGINE

297-3207 CYLINDER BLOCK GP

S/N: RHX5226-UP

PART OF 314-8601, 316-3531 ENGINE AR-CORE

SMCS-1201 **i03463392**

NOTE	REF NO	GRAPHIC REF	PART NUMBER	QTY	PART NAME 1 2 3 4 5 6 (PRODUCT LEVEL)	SEE PAGE
	1	1	**1S-9540**	1	DOWEL	
	2	1	**4N-1650**	1	DOWEL	
	3	1	**6I-1055**	1	DOWEL	
	4	1	**6I-4421**	1	PLATE-SPACER	
	6	1	**142-2329**	1	SEAL	
	7	1	**227-1204**	1	GASKET	
	8	1	**250-0466**	2	SEAL-O-RING	
Y	9	1	*297-4267*	1	CYLINDER BLOCK GP	50
	10	1	**100-7399**	2	PLUG	
	11	1	**4N-0683**	4	DOWEL	
	12	1	**5P-0840**	1	SEAL-O-RING	
Y	13	1	*305-9196*	1	PLUG GP-CYLINDER BLOCK	98
	14	1	*201-4340*	1	PLUG AS	
		1	**6V-4589**	1	SEAL-O-RING	
		1	**9S-8006**	1	PLUG-O-RING	

Y-SEPARATE ILLUSTRATION

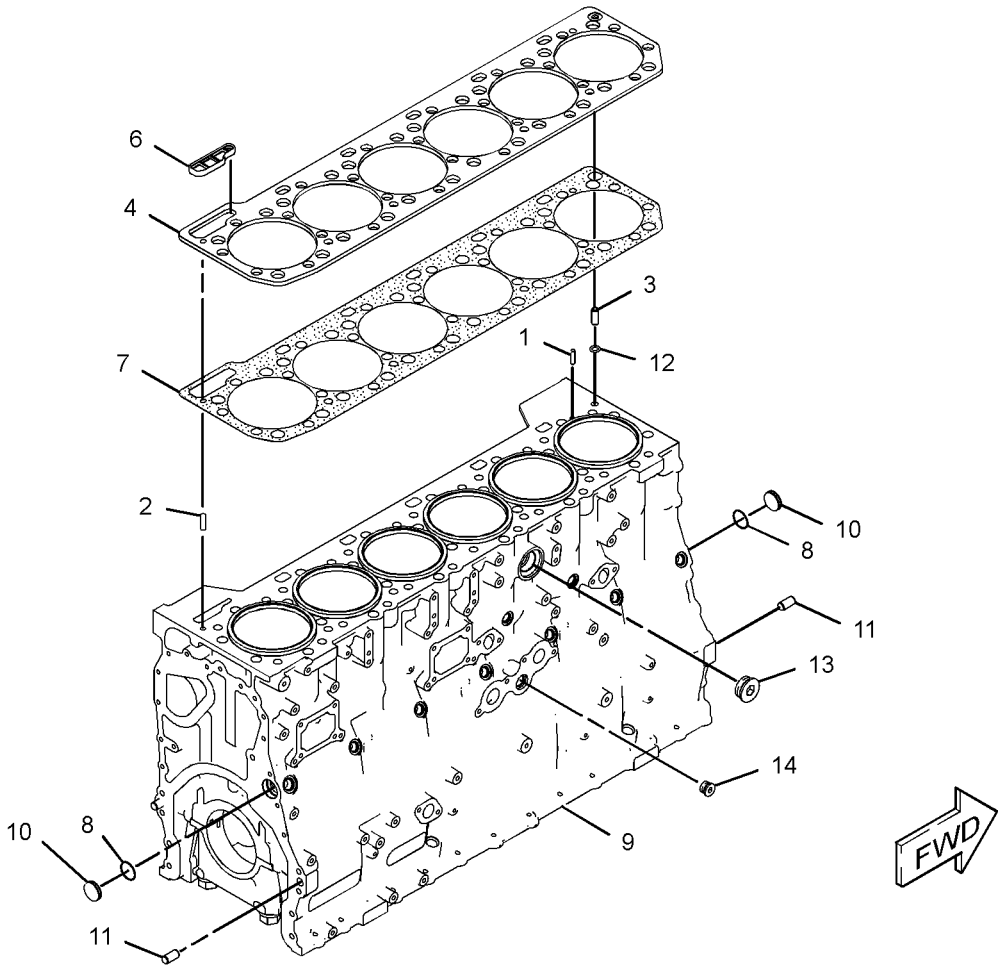

GRAPHIC #1 **<END>** g01832635

BASIC ENGINE

297-4267 CYLINDER BLOCK GP

S/N: RHX6449-UP

PART OF 297-3207 CYLINDER BLOCK GP

SMCS-1201 **i03649949**

NOTE	REF NO	GRAPHIC REF	PART NUMBER	QTY	PART NAME 1 2 3 4 5 6 (PRODUCT LEVEL)	SEE PAGE
	1	1	**155-0809**	6	SEAL-LINER	
	2	1	**155-2793**	12	SEAL-LINER	
YR	3	1	**267-4631**	1	CYLINDER BLOCK AS	40
	4	1	**322-1126**	6	LINER-CYLINDER BLOCK	
	5	1	**9L-5854**	6	BAND-FILLER (130.2-MM ID)	

R-REMFG PART MAY BE AVAILABLE
Y-SEPARATE ILLUSTRATION

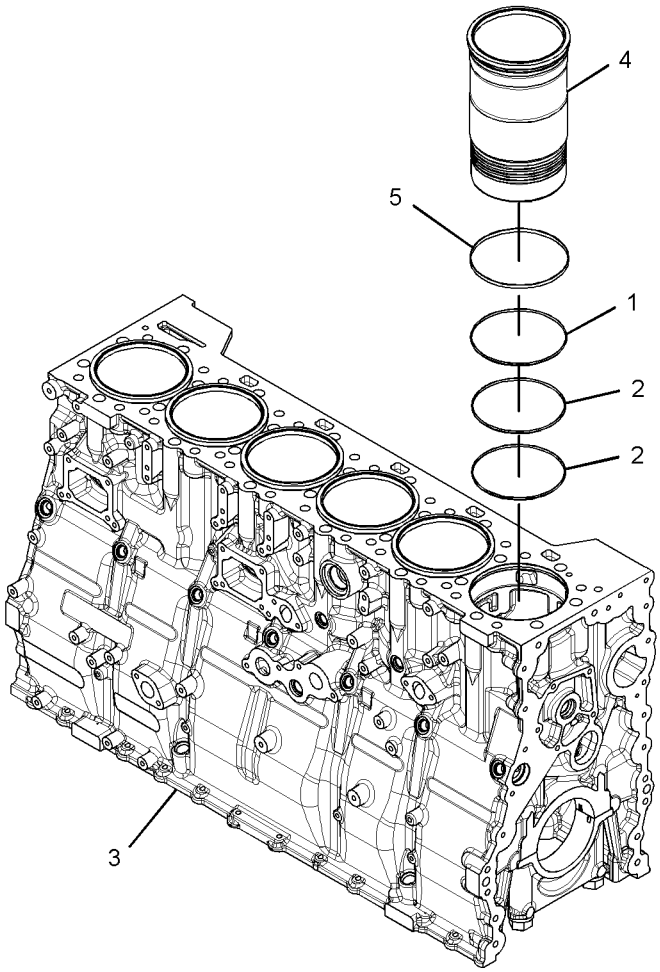

GRAPHIC #1 **<END>** g01662006

BASIC ENGINE

281-1640 CYLINDER HEAD AS

S/N: RHX4127-UP
CONTAINS PRECISION PRE-MACHINED VALVE SEAT INSERTS
PART OF 263-5055 CYLINDER HEAD GP

SMCS-1100 **i03804492**

NOTE	REF NO	GRAPHIC REF	PART NUMBER	QTY	PART NAME 1 2 3 4 5 6 (PRODUCT LEVEL)	SEE PAGE
	1	1	**122-7375**	24	GUIDE-VALVE (STANDARD)	
AB		1	**122-0447**		GUIDE-VALVE (0.51-MM OS)	
AB		1	**122-8612**		GUIDE-VALVE (0.13-MM OS)	
	2	1	**216-5582**	7	BUSHING (STANDARD)	
AB		1	**217-0751**		BUSHING (0.25-MM OS)	
AB		1	**217-0752**		BUSHING (0.762-MM OS)	
AB		1	**261-3429**		BUSHING (1.778-MM OS)	
AB		1	**261-3430**		BUSHING (1.27-MM OS)	
	3	1	**226-5561**	12	INSERT-VALVE SEAT (EXHAUST) (STANDARD)	
AB		1	**288-4883**		INSERT-VALVE SEAT (0.51-MM OS, EXHAUST)	
AB		1	**288-4884**		INSERT-VALVE SEAT (0.76-MM OS, EXHAUST)	
	4	1	**263-4920**	6	SLEEVE-INJECTOR (INLET)	
	6	1	**280-3979**	12	INSERT-VALVE SEAT (INLET) (STANDARD)	
AB		1	**288-4881**		INSERT-VALVE SEAT (INLET) (0.51-MM OS)	
AB		1	**288-4882**		INSERT-VALVE SEAT (0.76-MM OS, INLET)	
	7	1	**166-2904**	12	SEAL-O-RING	
	8	1	**3B-0623**	17	PLUG-CUP	
	9	1	**3B-0645**	20	PLUG-CUP	
	10	1	**8T-6757**	3	PLUG-PIPE	
	11	1	**9X-7430**	6	SEAL-O-RING	

A-NOT PART OF THIS GROUP
B-USE AS REQUIRED

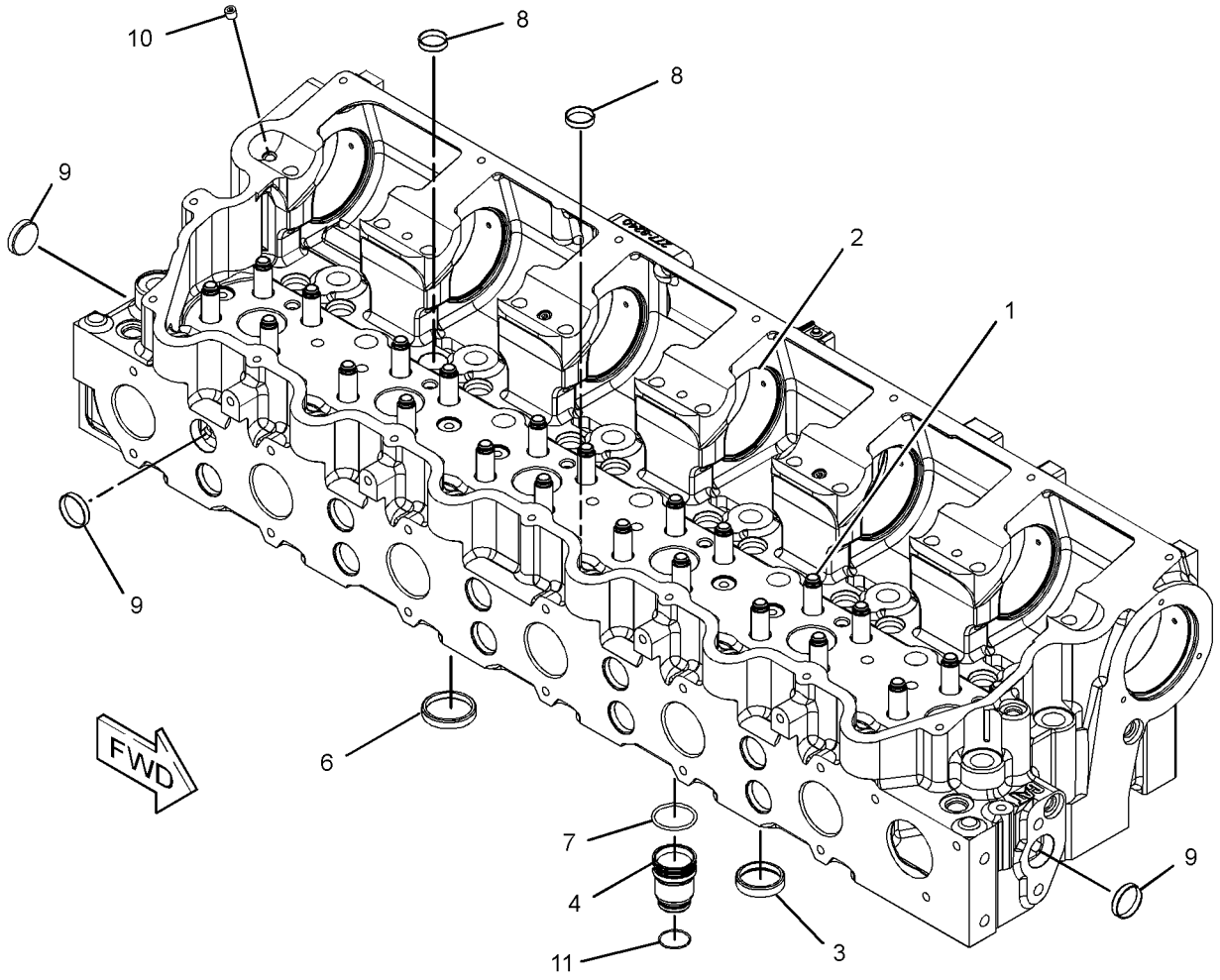

GRAPHIC #1 **<END>** g01207161

BASIC ENGINE

263-5055 CYLINDER HEAD GP*R

S/N: RHX4127-UP

PART OF 274-1953 CYLINDER HEAD GP

SMCS-1100 **i02857219**

NOTE	REF NO	GRAPHIC REF	PART NUMBER	QTY	PART NAME 1 2 3 4 5 6 (PRODUCT LEVEL)	SEE PAGE
	1	1	**2A-4429**	48	LOCK-RETAINER	
	2	1	**6I-0928**	24	WASHER-SPECIAL	
	3	1	**163-2478**	24	SEAL-VALVE STEM	
	4	1	**247-9908**	24	SPRING-VALVE (OUTER)	
CY	5	1	**281-1640**	1	CYLINDER HEAD AS	51
	6	1	**153-7024**	12	VALVE-EXHAUST	
C	7	1	**186-2001**	24	ROTOCOIL AS	
	8	1	**211-3122**	24	SPRING-VALVE (INNER)	
	9	1	**236-5605**	12	VALVE-INLET	

C-CHANGE FROM PREVIOUS TYPE
Y-SEPARATE ILLUSTRATION

263-5055 **CYLINDER HEAD GP** *(contd.)* **i02857219**

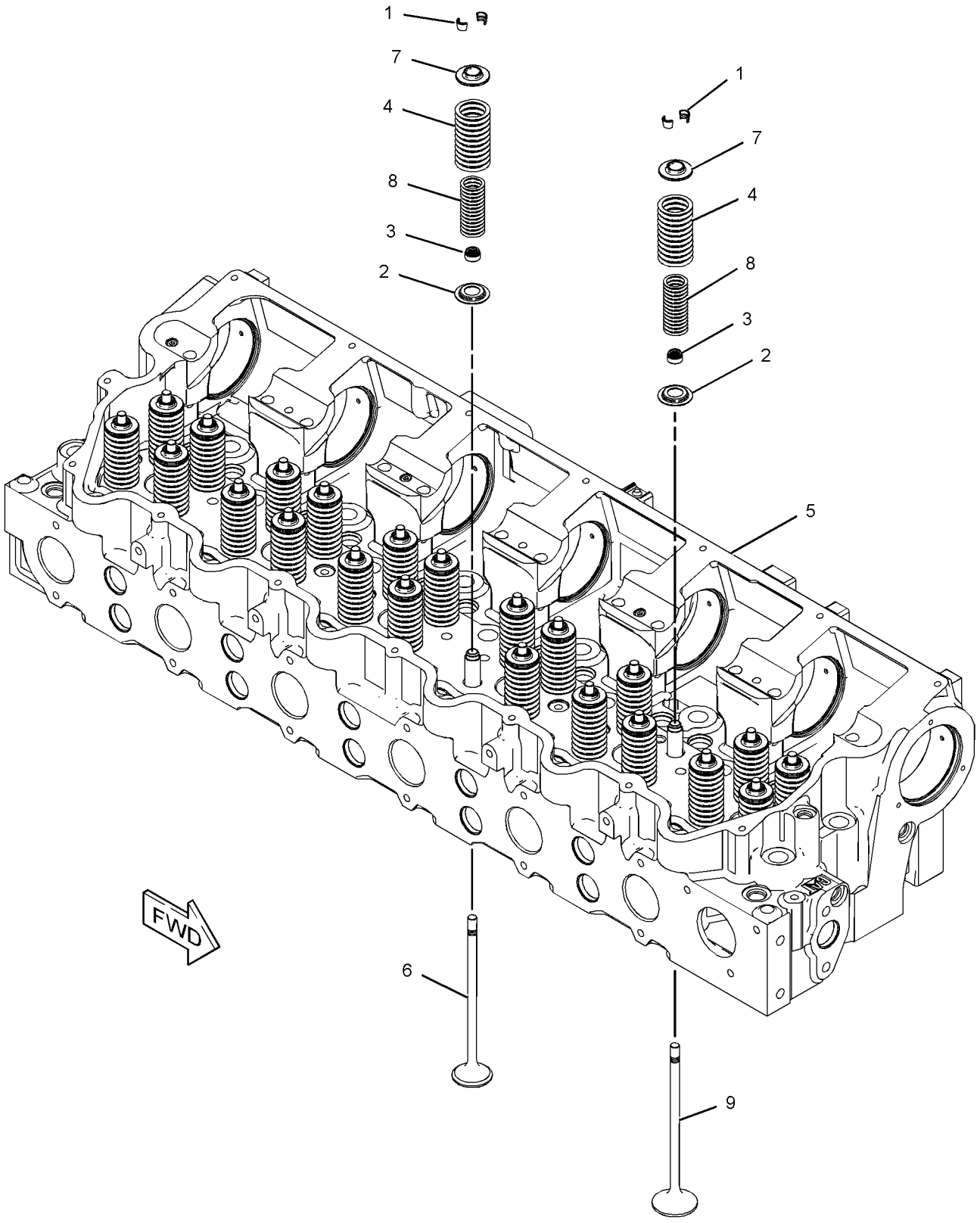

GRAPHIC #1 **<END>** g01207023

BASIC ENGINE

274-1953 CYLINDER HEAD GP

S/N: RHX2094-UP

PART OF 241-5934, 314-8601, 316-3531 ENGINE AR-CORE

SMCS-1100 **i03895782**

NOTE	REF NO	GRAPHIC REF	PART NUMBER	QTY	PART NAME 1 2 3 4 5 6 (PRODUCT LEVEL)	SEE PAGE
	1	1	**3E-6772**	24	SEAL	
	2	1	*6I-4025*	16	FASTENER GP-CYLINDER HEAD	
					(EACH INCLUDES)	
		1	**5H-1504**	1	WASHER-HARD (20X33.5X5-MM THK)	
		1	**124-1855**	1	BOLT-12 POINT HEAD (3/4-16X7.638-IN)	
	3	1	*106-5673*	10	FASTENER GP-CYLINDER HEAD	
					(EACH INCLUDES)	
		1	**5H-1504**	1	WASHER-HARD (20X33.5X5-MM THK)	
		1	**124-1854**	1	BOLT-12 POINT HEAD (3/4-16X8.5-IN)	
YR	4	1	*263-5055*	1	CYLINDER HEAD GP	53
	5	1	**281-8261**	6	SLEEVE AS-EXHAUST	
	6	1	**224-5122**	1	GASKET (CYLINDER HEAD)	
	7	1	**5P-0840**	1	SEAL-O-RING	
	8	1	*183-3407*	3	PLUG AS	
					(EACH INCLUDES)	
		1	**214-7568**	1	SEAL-O-RING	
		1	**9S-8004**	1	PLUG-O-RING	

R-REMFG PART MAY BE AVAILABLE
Y-SEPARATE ILLUSTRATION

274-1953 **CYLINDER HEAD GP** *(contd.)* **i03895782**

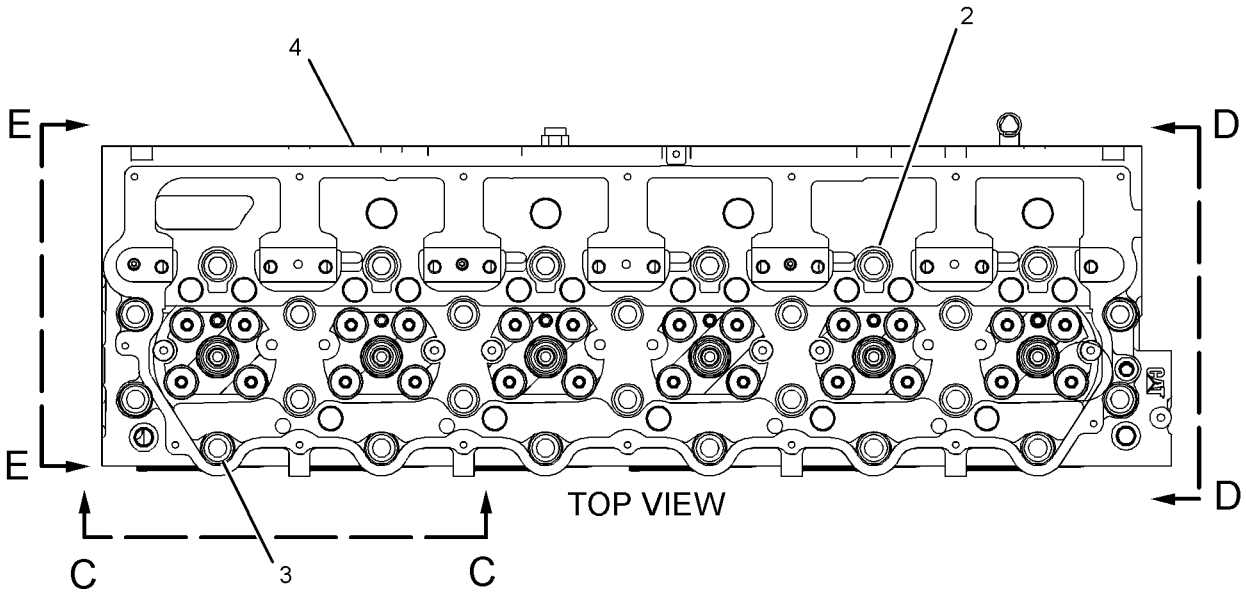

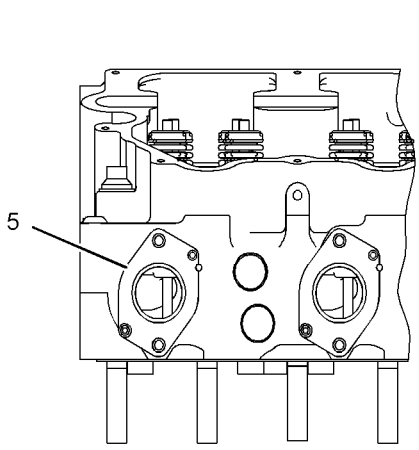

VIEW C-C

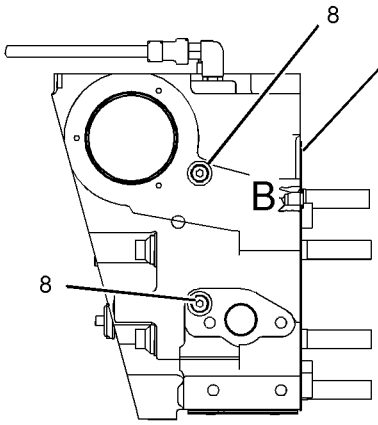

VIEW D-D

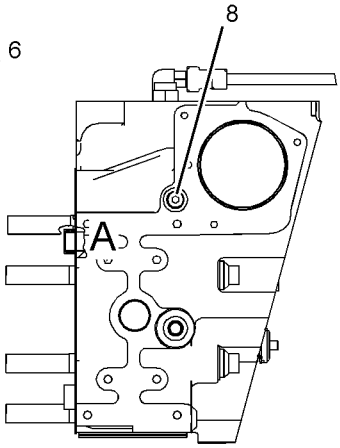

VIEW E-E

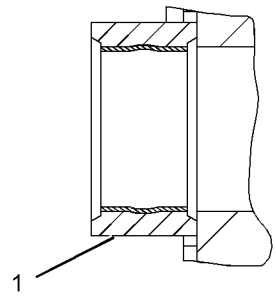

VIEW OF AREA A

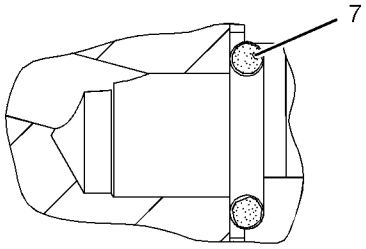

VIEW OF AREA B

GRAPHIC #1 **<END>** g01648636

BASIC ENGINE

227-3705 DAMPER GP

S/N: RHX2054-UP

PART OF 215-7486, 263-7760 ENGINE AR-COMPLETE

SMCS-1205 **i01925129**

NOTE	REF NO	GRAPHIC REF	PART NUMBER	QTY	PART NAME 1 2 3 4 5 6 (PRODUCT LEVEL)	SEE PAGE
	1	1	**6N-7654**	1	SPACER (6.312X8.18X0.312-IN THK)	
R	2	1	**167-8130**	1	DAMPER AS	
	3	1	**0S-1585**	12	BOLT (1/2-13X1.5-IN)	
	4	1	**1A-3203**	6	BOLT (5/8-18X4.75-IN)	
	5	1	**227-3704**	1	ADAPTER-DAMPER	

R-REMFG PART MAY BE AVAILABLE

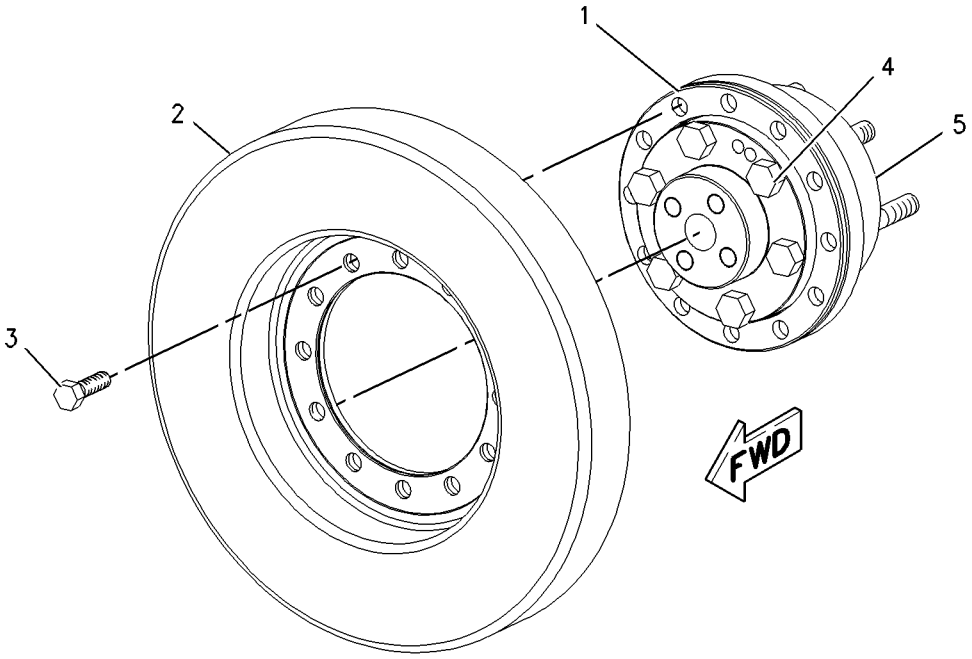

GRAPHIC #1 **<END>** g01003023

BASIC ENGINE

253-3988 DRIVE GP-ACCESSORY

S/N: B9K1-UP

PART OF 259-9204 COMMON AR

SMCS-1207 **i03779989**

NOTE	REF NO	GRAPHIC REF	PART NUMBER	QTY	PART NAME 1 2 3 4 5 6 (PRODUCT LEVEL)	SEE PAGE
	1	1	**217-8938**	1	BELT TENSIONER (REFRIGERANT COMPRESSOR)	
Y	2	1	**218-0324**	1	COMPRESSOR GP-REFRIGERANT	844
	3	1	**273-3219**	1	PULLEY-ALTERNATOR	
	4	1	**348-7891**	1	BELT-SERPENTINE (ALTERNATOR, COMPRESSOR)	
Y	5	1	*275-2192*	1	GUARD GP-BELT (ALTERNATOR)	71
	6	1	**249-0313**	1	ALTERNATOR GP-CHARGING (24-VOLT, 150-AMPERE)	
	7	1	**8T-4121**	1	WASHER-HARD (11X21X2.5-MM THK)	
M	8	1	**8T-4172**	1	BOLT (M10X1.5X80-MM)	
	9	1	**8T-4223**	3	WASHER-HARD (13.5X25.5X3-MM THK)	
M	10	1	**8T-4244**	1	NUT (M12X1.75-THD)	
	11	1	**8T-4835**	1	BOLT (1/2-13X2-IN)	
M	12	1	**8T-5436**	2	BOLT (M10X1.5X130-MM)	
M	13	1	**8T-7930**	1	BOLT (M12X1.75X160-MM)	
	14	1	**8T-7934**	2	WASHER-HARD (11X21X5-MM THK)	

M-METRIC PART
Y-SEPARATE ILLUSTRATION

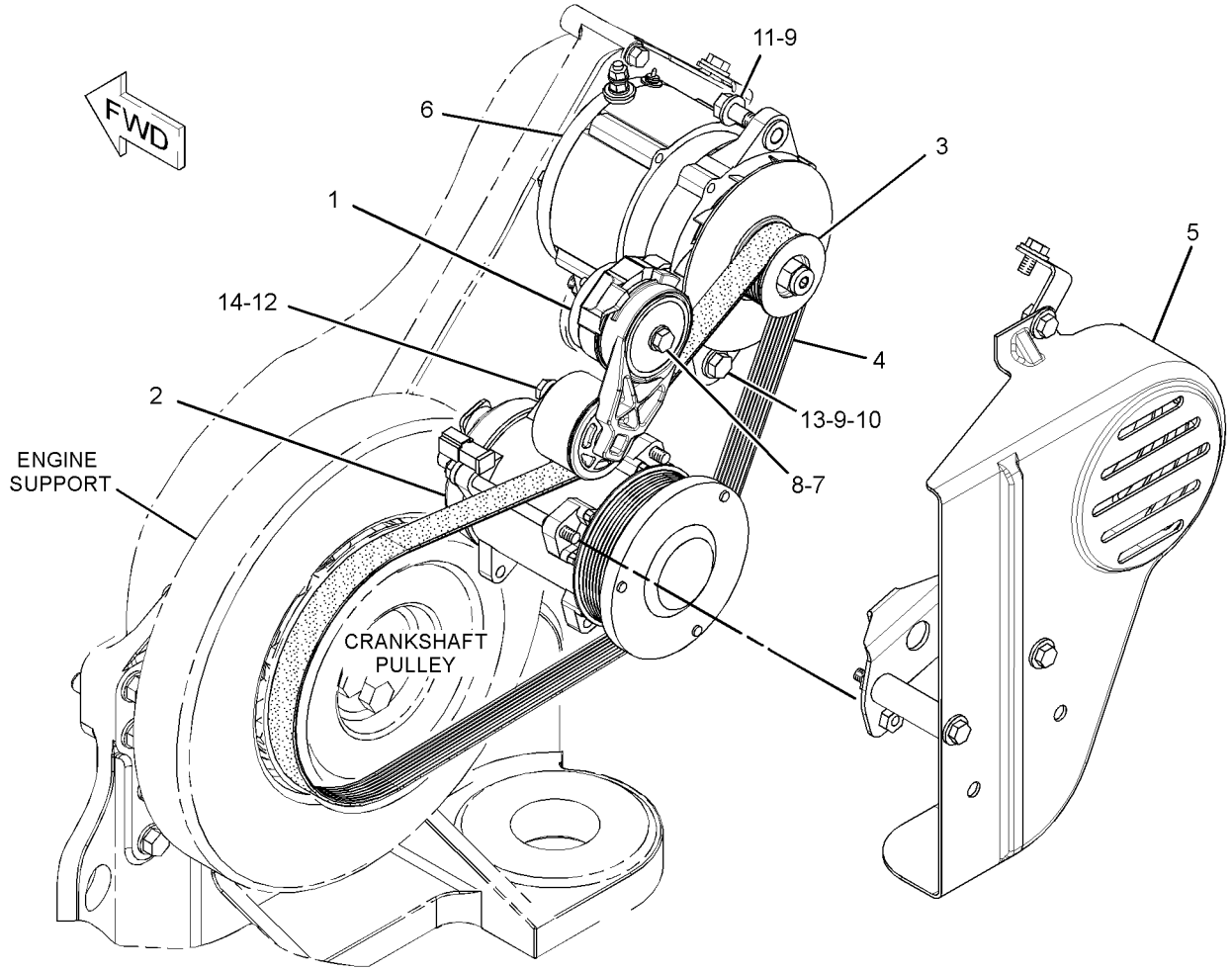

GRAPHIC #1 **<END>** g01376994

BASIC ENGINE

6I-3638 DRIVE GP-PUMP

S/N: RHX2054-UP
LEFT HAND REARWARD FACING SAE 2 BOLT FLANGE WITH SPLINE DRIVE
PART OF 215-7486, 263-7760 ENGINE AR-COMPLETE
FOR USE WITH THE 2.5 BASE MODULE LARGE CAM GEAR TRAIN, CUSTOMER SUPPLIED SAE "A" PUMP WITH 11 TOOTH 16/32 DEPTH SPLINE

SMCS-3108 **i01949792**

NOTE	REF NO	GRAPHIC REF	PART NUMBER	QTY	PART NAME 1 2 3 4 5 6 (PRODUCT LEVEL)	SEE PAGE
	1	1	**0S-1590**	3	BOLT (3/8-16X2-IN)	
	2	1	**8T-9527**	1	SEAL-O-RING	
YC	3	1	*133-9907*	1	ADAPTER GP-PUMP DRIVE	14
	4	1	**5M-2894**	4	WASHER-HARD (10.2X18.5X2.5-MM THK)	
	5	1	**9S-8752**	1	NUT-FULL (3/8-16-THD)	

C-CHANGE FROM PREVIOUS TYPE
Y-SEPARATE ILLUSTRATION

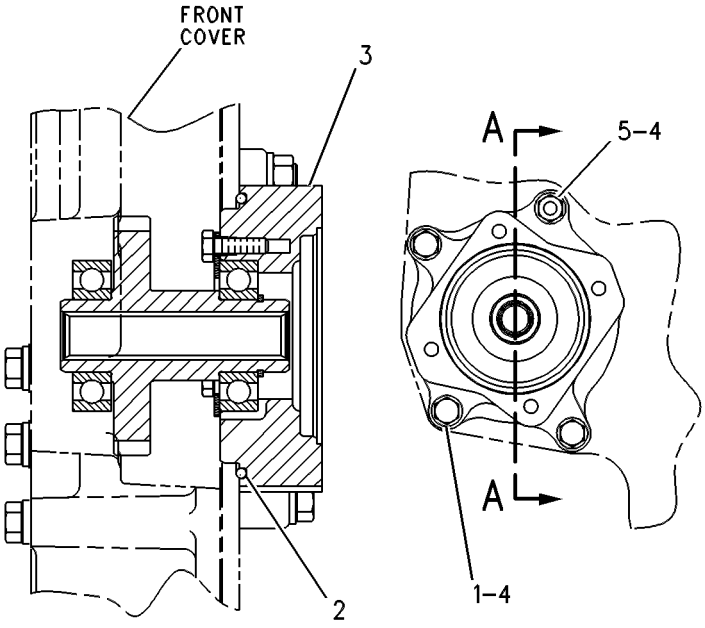

VIEW A-A

GRAPHIC #1 **<END>** g00263601

BASIC ENGINE

239-9624 ENGINE BRAKE GP*R

S/N: RHX2094-UP

PART OF 233-7245 ACTUATOR GP-VALVE

SMCS-1129 **i02961086**

NOTE	REF NO	GRAPHIC REF	PART NUMBER	QTY	PART NAME 1 2 3 4 5 6 (PRODUCT LEVEL)	SEE PAGE
	1	1	**230-9446**	2	SCREW-ADJUSTMENT	
	2	1	**250-9378**	1	VALVE AS-BRAKE	
	3	1	**230-9447**	2	NUT-JAM	

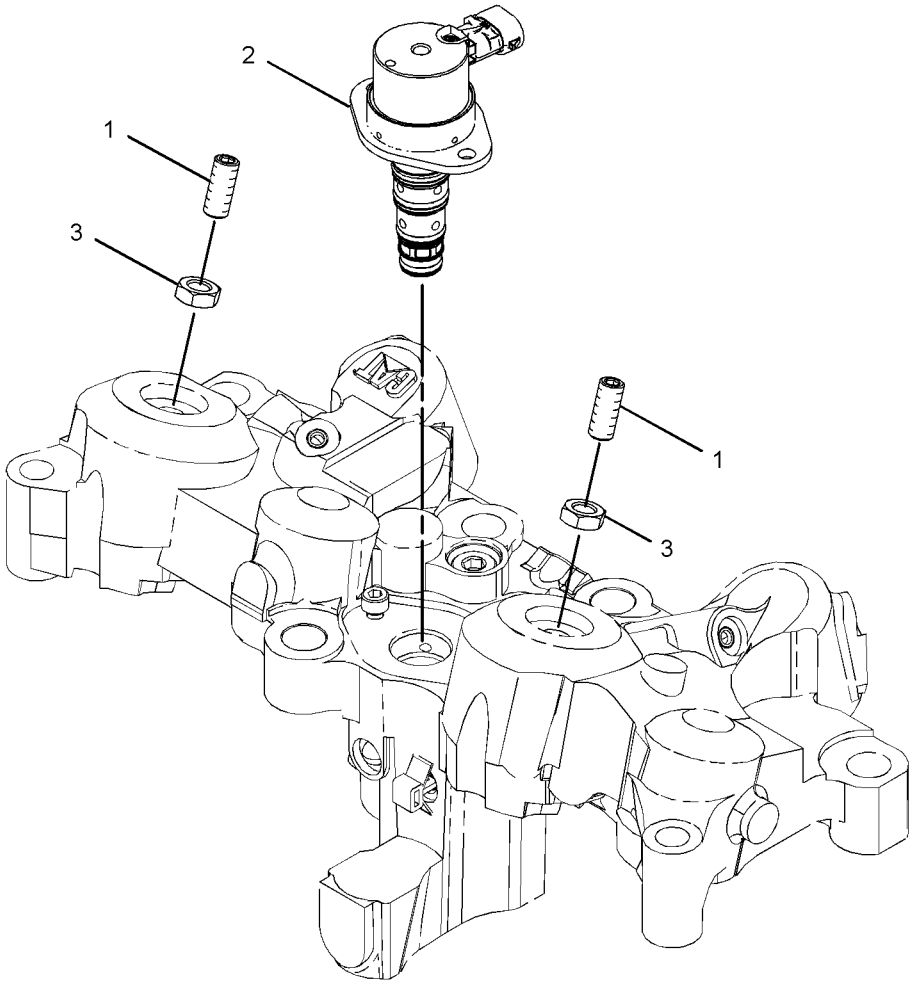

GRAPHIC #1 **<END>** g01271040

BASIC ENGINE

330-1919 ENGINE BRAKE GP

S/N: RHX6449-UP

PART OF 322-8542 ACTUATOR GP-VALVE

SMCS-1129 **i03862282**

NOTE	REF NO	GRAPHIC REF	PART NUMBER	QTY	PART NAME 1 2 3 4 5 6 (PRODUCT LEVEL)	SEE PAGE
	1	1	**230-9446**	2	SCREW-ADJUSTMENT	
	2	1	**230-9447**	2	NUT-JAM	
	3	1	**236-5958**	2	BOLT	
	4	1	**250-9378**	1	VALVE AS-BRAKE	

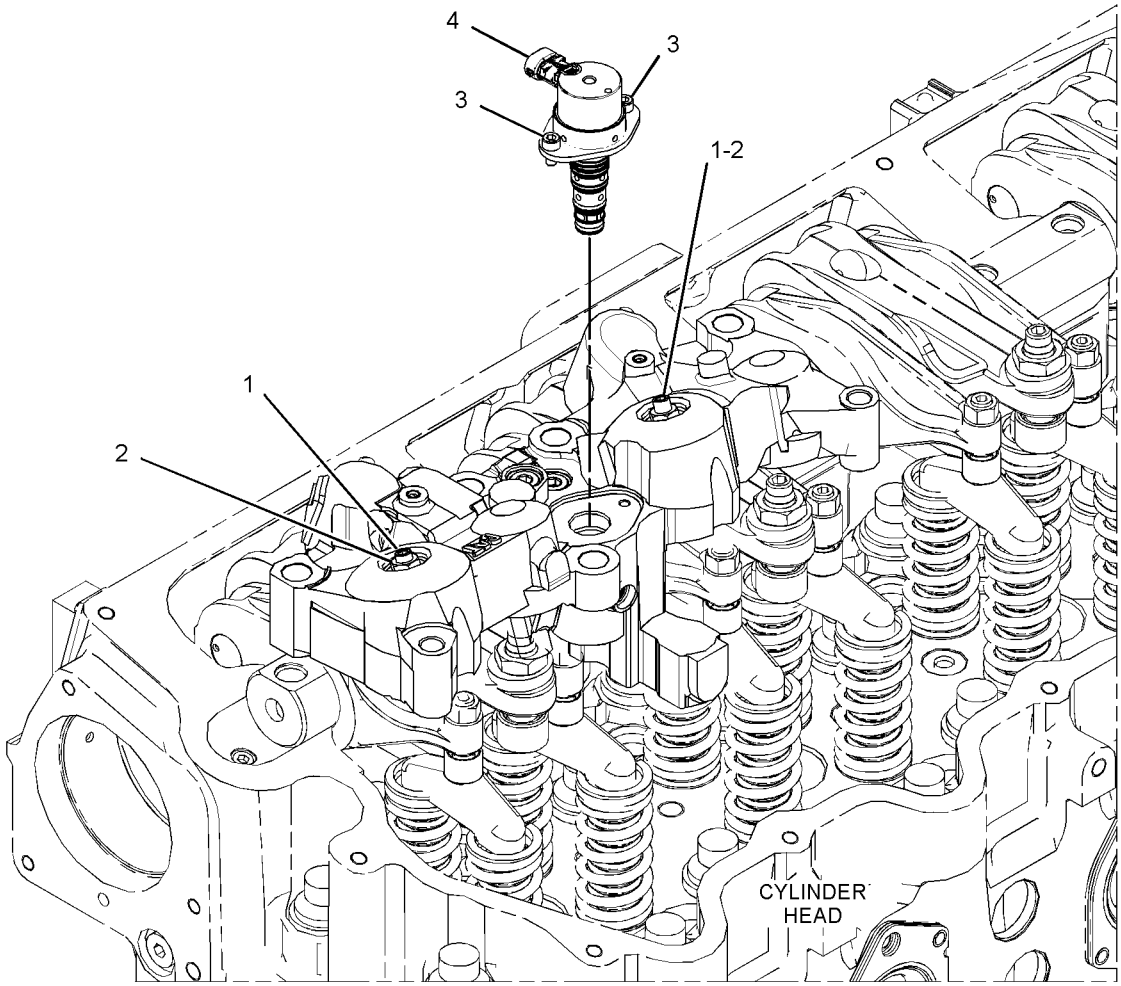

GRAPHIC #1 **<END>** g02165006

BASIC ENGINE

4P-6846 FASTENER GP-FRONT HOUSING

S/N: RHX2054-UP

PART OF 215-7486, 263-7760 ENGINE AR-COMPLETE

SMCS-1151 **i02544049**

NOTE	REF NO	GRAPHIC REF	PART NUMBER	QTY	PART NAME 1 2 3 4 5 6 (PRODUCT LEVEL)	SEE PAGE
	1	1	**7N-0452**	1	PLATE	
	2	1	**0S-1594**	2	BOLT (3/8-16X1-IN)	
	3	1	**5M-2894**	2	WASHER-HARD (10.2X18.5X2.5-MM THK)	

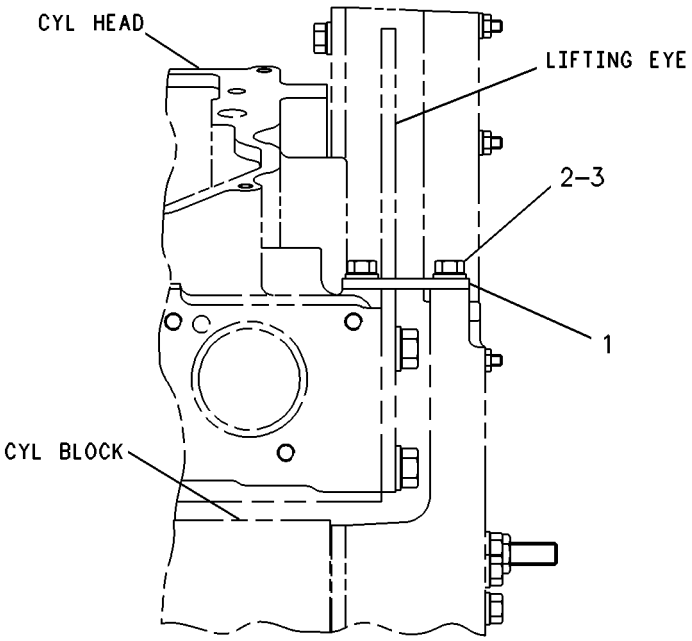

RIGHT SIDE VIEW

GRAPHIC #1 **<END>** g00231021

BASIC ENGINE

108-9382 FASTENER GP-FRONT HOUSING

S/N: RHX2054-UP

PART OF 215-7486, 263-7760 ENGINE AR-COMPLETE

FOR USE WITH FRONT HOUSING WHEN FAN DRIVE IS NOT INSTALLED

SMCS-1151 **i00670762**

NOTE	REF NO	GRAPHIC REF	PART NUMBER	QTY	PART NAME 1 2 3 4 5 6 (PRODUCT LEVEL)	SEE PAGE
	1	1	**1F-7958**	2	NUT-FULL (1/2-13-THD)	
	2	1	**5P-8245**	2	WASHER-HARD (13.5X25.5X3-MM THK)	
	3	1	**149-5268**	2	STUD-TAPERLOCK	

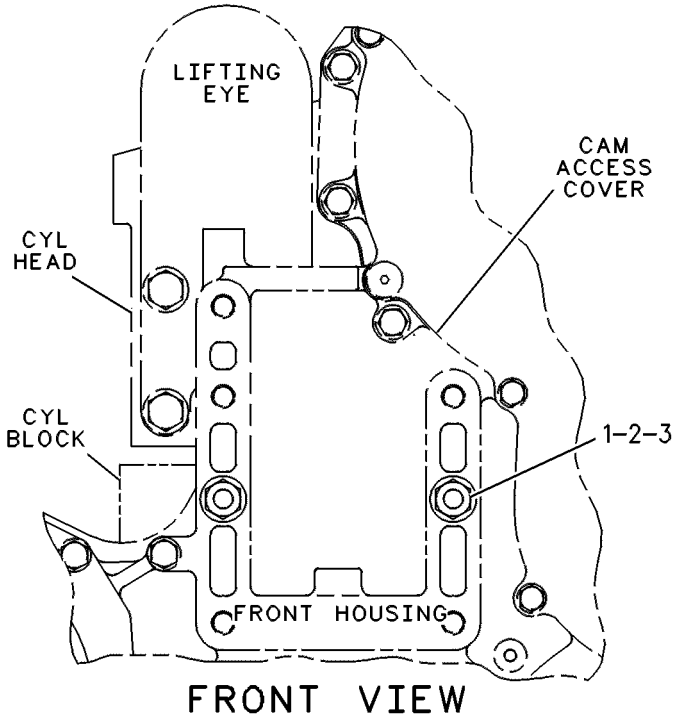

FRONT VIEW

GRAPHIC #1 **<END>** g00237936

BASIC ENGINE

109-1657 FASTENER GP-VALVE MECHANISM

S/N: RHX5226-UP

PART OF 314-8601 ENGINE AR-CORE

SMCS-1102, 1107 **i04042337**

NOTE	REF NO	GRAPHIC REF	PART NUMBER	QTY	PART NAME 1 2 3 4 5 6 (PRODUCT LEVEL)	SEE PAGE
	1	1	**8L-8413**	6	STRAP-CABLE	
	2	1	**356-5212**	12	BOLT-12 POINT HEAD	

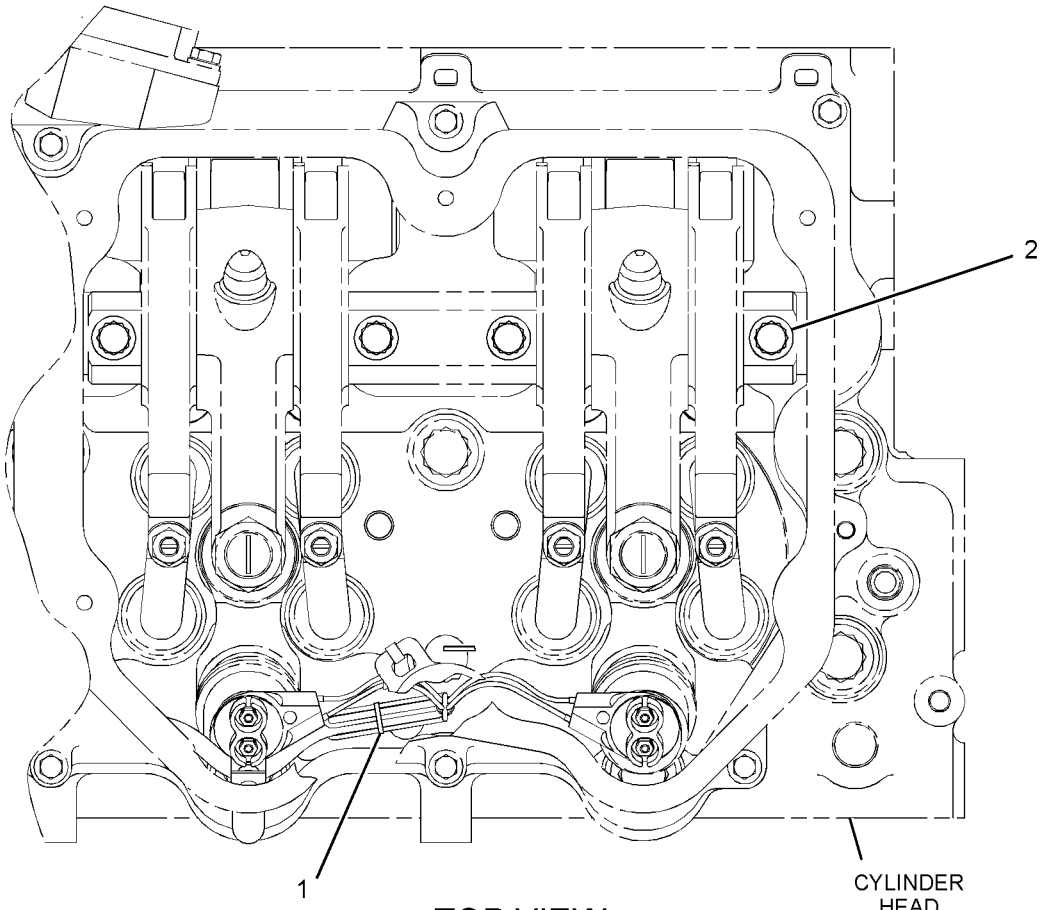

TOP VIEW

GRAPHIC #1 **<END>** g02257193

BASIC ENGINE

273-6561 FLYWHEEL GP

S/N: RHX2054-UP

PART OF 215-7486, 263-7760 ENGINE AR-COMPLETE

SMCS-1156, 1158 **i02733468**

NOTE	REF NO	GRAPHIC REF	PART NUMBER	QTY	PART NAME 1 2 3 4 5 6 (PRODUCT LEVEL)	SEE PAGE
	1	1	**273-6559**	1	FLYWHEEL AS	
		1	**4N-2514**	1	GEAR (113-TEETH)	
	2	1	**0S-1602**	12	BOLT (5/8-18X3.5-IN)	
	3	1	**4D-3704**	12	WASHER-HARD (17X30X5-MM THK)	

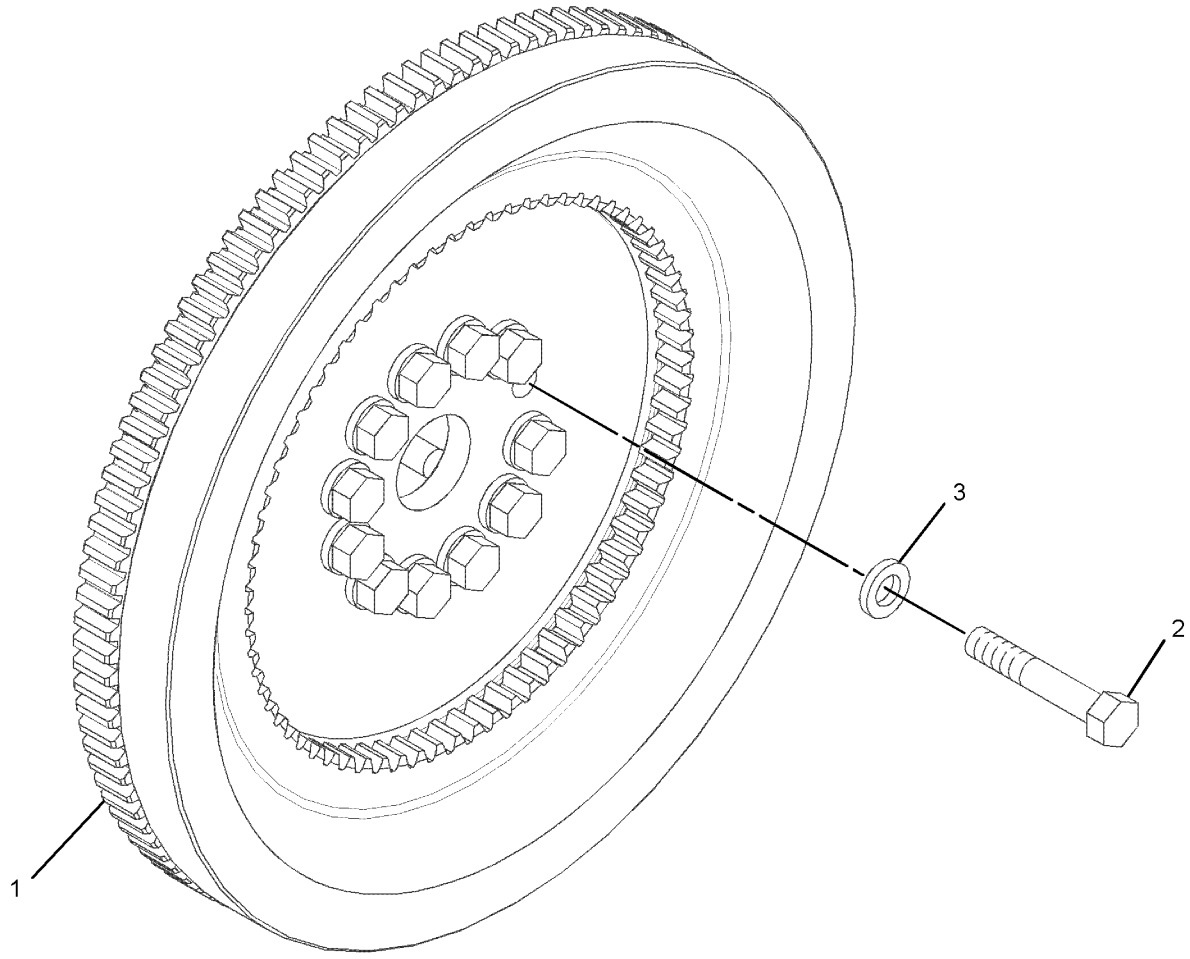

GRAPHIC #1 **<END>** g01372764

BASIC ENGINE

204-9316 GEAR GP-CAMSHAFT

S/N: RHX2054-UP
96-TEETH
PART OF 207-0449 GEAR GP-FRONT

SMCS-1212 **i02758303**

NOTE	REF NO	GRAPHIC REF	PART NUMBER	QTY	PART NAME 1 2 3 4 5 6 (PRODUCT LEVEL)	SEE PAGE
	1	1	9X-8872	16	BOLT-LOCKING (3/8-16X0.875-IN)	
	2	1	103-0126	1	DOWEL	

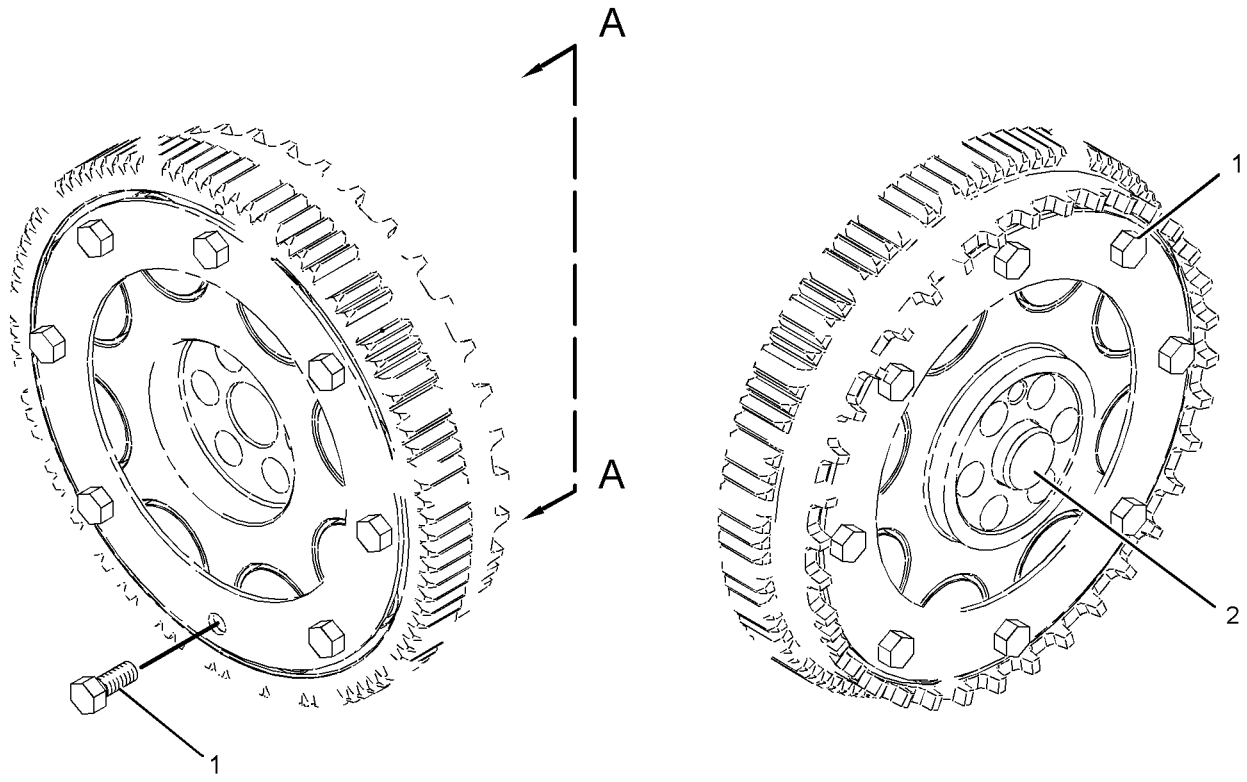

VIEW A-A

GRAPHIC #1 **<END>** g01381153

BASIC ENGINE

207-0449 GEAR GP-FRONT

S/N: RHX2094-UP
SHOT-PEENED CLUSTER IDLER AND AN 8 BOLT CAM GEAR RETAINER
PART OF 241-5934, 314-8601, 316-3531 ENGINE AR-CORE

SMCS-1151, 1162, 1206 **i02868063**

NOTE	REF NO	GRAPHIC REF	PART NUMBER	QTY	PART NAME 1 2 3 4 5 6 (PRODUCT LEVEL)	SEE PAGE
	1	2	**0S-1571**	1	BOLT (3/8-16X1.75-IN)	
	2	2	**2J-3118**	5	BOLT-LOCKING (3/8-16X1.25-IN)	
	3	1	**5P-4142**	2	BOLT-LOCKING (3/8-16X1.5-IN)	
	4	2	**1B-8705**	1	KEY-WOODRUFF	
	5	2	**1P-7346**	1	WASHER-HARD (10.2X35X6-MM THK)	
	6	1	**126-1756**	10	BOLT-LOCKING (5/16-18X0.875-IN)	
	7	2	**112-9217**	1	PLATE-THRUST	
	8	2	**130-4701**	1	GEAR AS (56-TEETH)	
		2	**130-4698**	1	BEARING-SLEEVE	
	9	2	**151-5966**	1	SHAFT AS-STUB	
		2	**6I-3623**	1	DOWEL	
	10	1	**6I-3624**	2	PLATE-THRUST	
	11	2	**6I-3625**	1	GEAR AS (71-TEETH)	
		2	**101-8468**	1	BEARING-SLEEVE	
Y	12	2	**204-9316**	1	GEAR GP-CAMSHAFT (96-TEETH)	66
	13	2	**197-4971**	1	SHAFT-STUB	
	14	2	**158-3416**	1	SHAFT-STUB	
	15	1	**031-3185**	6	BOLT-12 POINT HEAD (5/8-11X3-IN)	
	16	2	**149-9110**	1	GEAR-OIL PUMP DRIVE (69-TEETH)	
	17	1,2	**9S-8752**	10	NUT-FULL (3/8-16-THD)	
	18	1,2	**9X-6458**	12	WASHER-HARD (10.2X22.5X3-MM THK)	
	19	1	**117-8801**	1	SEAL-O-RING	
	20	1	**5E-8771**	1	SEAL-O-RING	
	21	2	**159-1533**	1	PLATE-SEALING	
	22	2	**159-8524**	1	ADAPTER AS	
		2	**6V-3677**	1	DOWEL	
	23	2	**102-5861**	1	PLATE-THRUST	
	24	1	**107-0583**	3	BOLT-LOCKING (1/4-20X0.87-IN)	
	25	2	**187-8979**	1	GEAR AS (105, 63-TEETH)	
		2	**1B-8705**	1	KEY-WOODRUFF	
		2	**6I-4582**	1	GEAR (63-TEETH)	
		2	**131-7123**	1	BEARING-SLEEVE	

Y-SEPARATE ILLUSTRATION

207-0449 **GEAR GP-FRONT** *(contd.)* **i02868063**

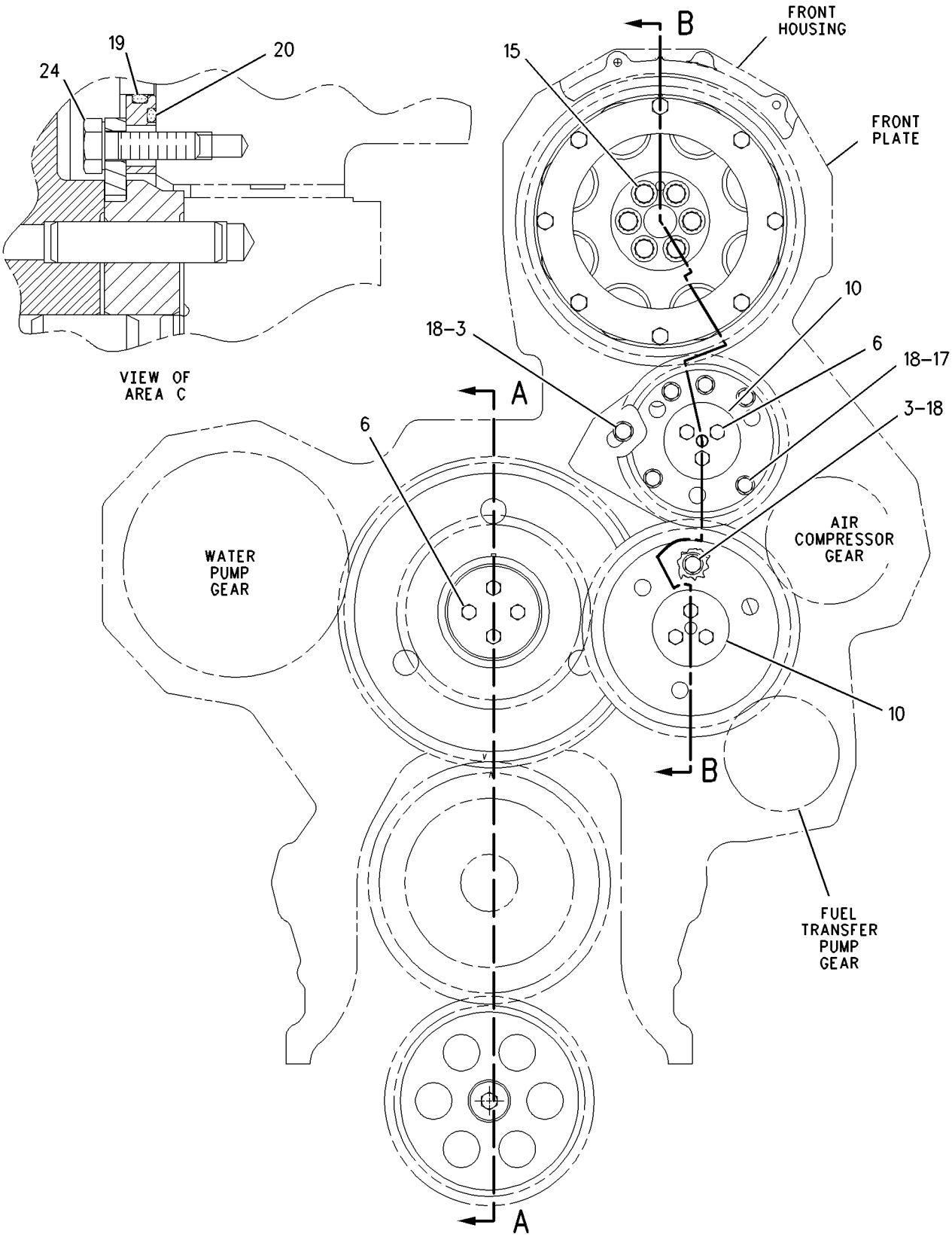

GRAPHIC #1 g00809001

207-0449 **GEAR GP-FRONT** *(contd.)* **i02868063**

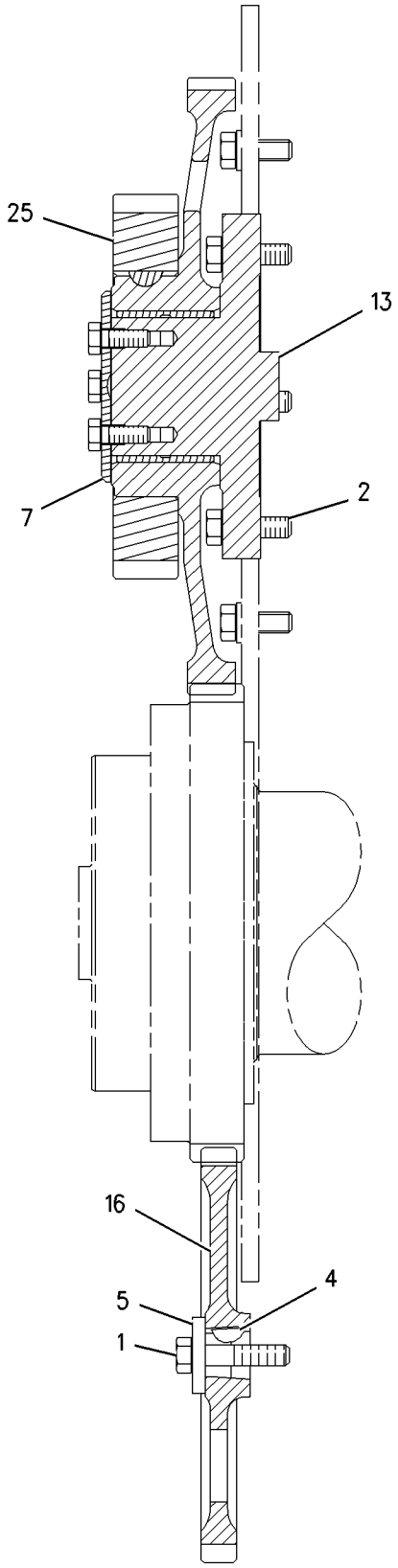

SECTION A-A

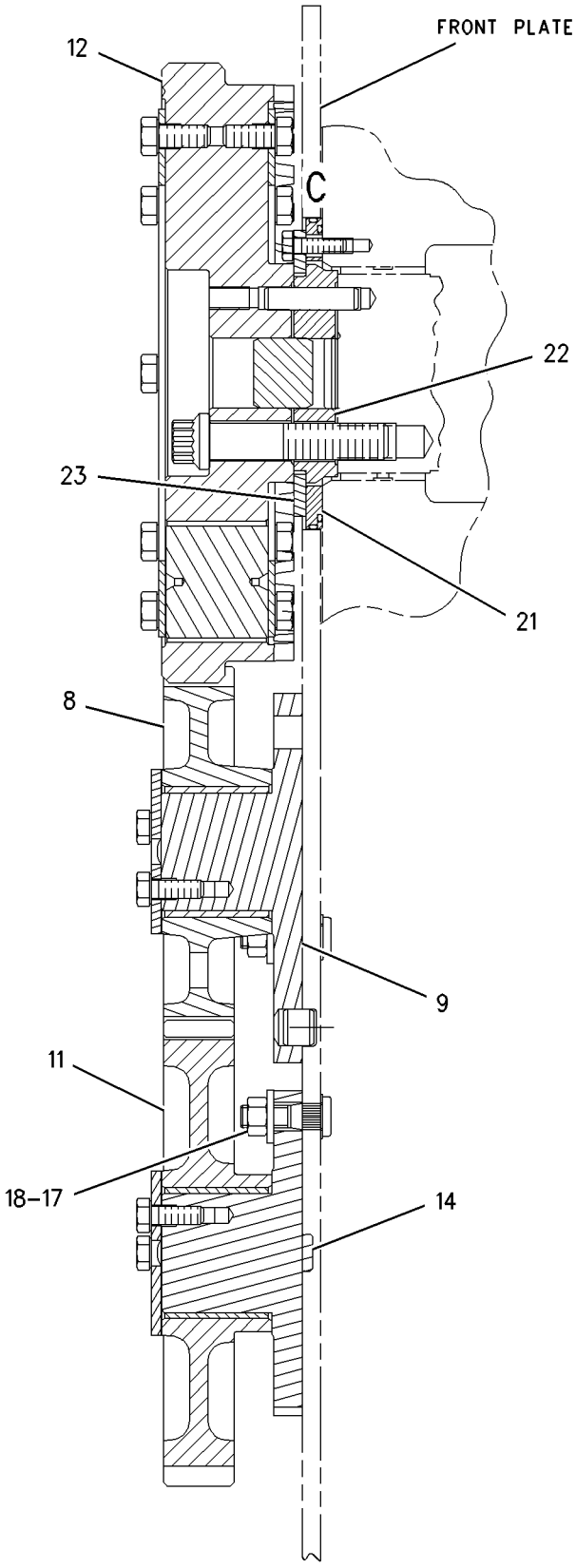

SECTION B-B

GRAPHIC #2 **<END>** g00809003

BASIC ENGINE

278-0095 GEAR GP-REAR

S/N: RHX2054-UP

PART OF 215-7486, 263-7760 ENGINE AR-COMPLETE

SMCS-1204, 1206 **i03535960**

NOTE	REF NO	GRAPHIC REF	PART NUMBER	QTY	PART NAME 1 2 3 4 5 6 (PRODUCT LEVEL)	SEE PAGE
	1	1	**206-4198**	1	GEAR AS (51-TEETH)	
		1	**4N-0684**	1	DOWEL	
	2	1	**207-8211**	2	GEAR AS-IDLER (53-TEETH)	
					(EACH INCLUDES)	
		1	**209-8621**	1	BEARING	
	3	1	**207-8213**	1	GEAR AS-PUMP DRIVE (51-TEETH)	
		1	**4F-6024**	1	PIN	
	4	1	**209-9770**	2	RETAINER AS	
					(EACH INCLUDES)	
		1	**5B-5821**	1	DOWEL	
	5	1	**229-1472**	1	GEAR AS (51-TEETH)	
		1	**4F-6024**	1	PIN	
	6	1	**246-1112**	2	ADAPTER AS	
					(EACH INCLUDES)	
		1	**209-8624**	1	BEARING-SLEEVE	
M	7	1	**136-4183**	12	BOLT-12 POINT HEAD (M10X1.5X30-MM)	
M	8	1	**189-6123**	8	BOLT-12 POINT HEAD (M12X1.75X60-MM)	
	9	1	**2W-2072**	2	SEAL-O-RING	

M-METRIC PART

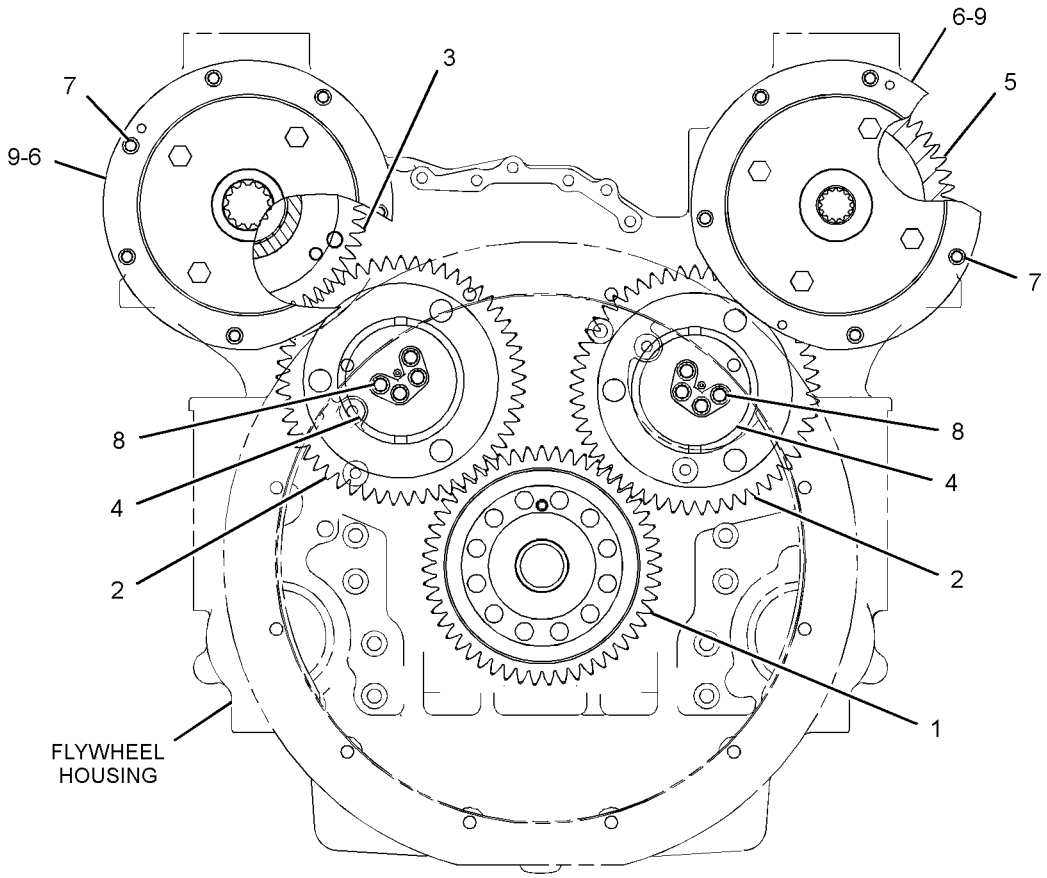

REAR VIEW OF ENGINE

GRAPHIC #1 **<END>** g01372722

BASIC ENGINE

275-2192 GUARD GP-BELT–ALTERNATOR

S/N: B9K1-UP

PART OF 253-3988 DRIVE GP-ACCESSORY

SMCS-7174 **i02704602**

NOTE	REF NO	GRAPHIC REF	PART NUMBER	QTY	PART NAME 1 2 3 4 5 6 (PRODUCT LEVEL)	SEE PAGE
	1	1	**269-9423**	1	GUARD AS	
	2	1	**275-2152**	1	BRACKET AS	
	3	1	**298-6172**	1	BRACKET AS	
M		1	**8T-3490**	4	NUT-WELD (M10X1.5-THD)	
	4	1	**300-8571**	2	SPACER (11X25X82.5-MM THK)	
	5	1	**5P-4116**	1	WASHER-HARD (8.8X20.5X2-MM THK)	
	6	1	**7X-7729**	4	WASHER (11X25X3-MM THK)	
M	7	1	**8T-4137**	2	BOLT (M10X1.5X20-MM)	
M	8	1	**8T-4908**	1	BOLT (M8X1.25X25-MM)	
M	9	1	**8T-6685**	2	BOLT (M10X1.5X110-MM)	

M-METRIC PART

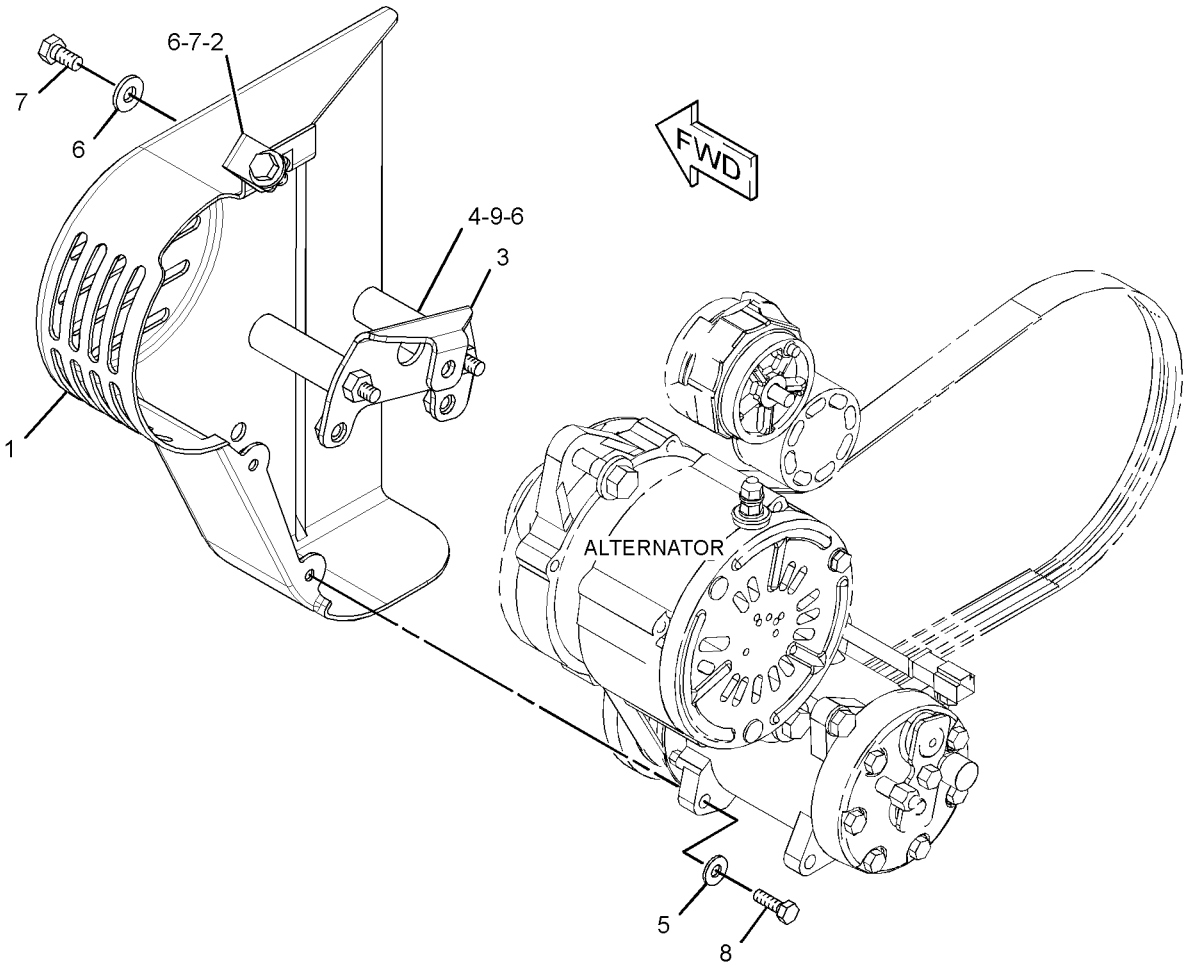

GRAPHIC #1 **<END>** g01365301

BASIC ENGINE

220-6368 HOUSING GP-FLYWHEEL

S/N: RHX2054-9114

PART OF 215-7486, 263-7760 ENGINE AR-COMPLETE

SMCS-1157 **i03688467**

NOTE	REF NO	GRAPHIC REF	PART NUMBER	QTY	PART NAME 1 2 3 4 5 6 (PRODUCT LEVEL)	SEE PAGE
Y	1	1	*319-0785*	1	SEAL GP-CRANKSHAFT (REAR FLYWHEEL HOUSING)	108
	2	1	*148-8411*	2	PLUG AS	
					(EACH INCLUDES)	
		1	**9S-4185**	1	PLUG-O-RING (3/4-16 THD)	
		1	**3K-0360**	1	SEAL-O-RING (16.36MM ID)	
	3	1	**155-5619**	1	GASKET	
	4	1	**175-3721**	2	COVER	
	5	1	**220-8217**	1	HOUSING AS-FLYWHEEL	
		1	**1W-3136**	1	BAFFLE	
		1	**209-8622**	2	BUSHING	
	6	1	*148-8395*	2	PLUG AS	
					(EACH INCLUDES)	
		1	**9S-8005**	1	PLUG-O-RING (3/4-16 THD)	
		1	**3K-0360**	1	SEAL-O-RING (16.36MM ID)	
	7	1	*155-3624*	4	PLUG AS	
					(EACH INCLUDES)	
		1	**3J-7354**	1	SEAL-O-RING (8.92MM ID)	
		1	**9S-4182**	1	PLUG-O-RING (7/16-20 THD)	
	8	1	**165-3930**	7	BOLT (3/8-16X1.625-IN)	
	9	1	**1J-9671**	1	SEAL-O-RING (10.52MM ID)	
	10	1	**223-4903**	6	BOLT	
	11	1	**2P-2772**	1	COVER	
	12	1	**4M-0189**	2	SEAL-O-RING (104.37MM ID)	
	13	1	**234-8937**	1	SEAL-INTEGRAL	
	14	1	**5J-5793**	1	BOLT-12 POINT HEAD (1/2-13X1.75-IN)	
	15	1	**5J-5794**	8	BOLT (1/2-13X3.5-IN)	
	16	1	**5P-8245**	13	WASHER-HARD (13.5X25.5X3-MM THK)	
M	17	1	**6A-5591**	4	BOLT (M12X1.75X25-MM)	
M	18	1	**6V-4248**	1	BOLT (M10X1.5X25-MM)	
	19	1	**6V-5839**	2	WASHER (11X21X2.5-MM THK)	
M	20	1	**8T-0643**	1	BOLT (M10X1.5X80-MM)	
	21	1	**9S-8003**	1	PLUG (1/2-20 THD)	
	22	1	**165-3932**	1	BOLT (3/8-16X2-IN)	

M-METRIC PART
Y-SEPARATE ILLUSTRATION

220-6368 **HOUSING GP-FLYWHEEL** *(contd.)* **i03688467**

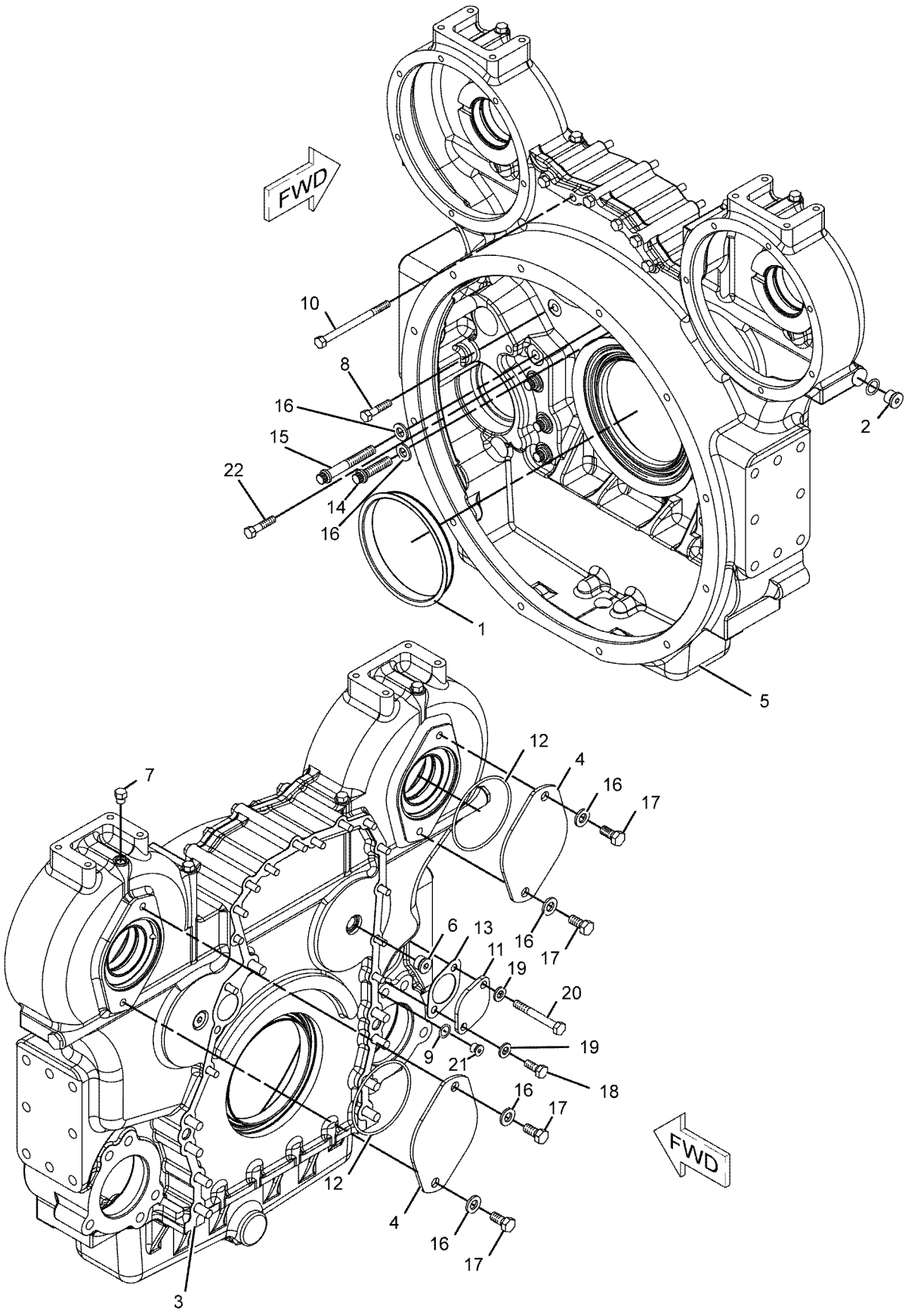

GRAPHIC #1 **<END>** g01071147

BASIC ENGINE

241-0478 HOUSING GP-FRONT

S/N: RHX2094-UP

PART OF 243-5786 HOUSING GP-FRONT

SMCS-1151, 1162, 1206 **i03026682**

NOTE	REF NO	GRAPHIC REF	PART NUMBER	QTY	PART NAME 1 2 3 4 5 6 (PRODUCT LEVEL)	SEE PAGE
	1	1	**187-5420**	1	HOUSING-FRONT	
	2	1	**3E-8044**	1	STUD (1/2-13X2.95-IN)	

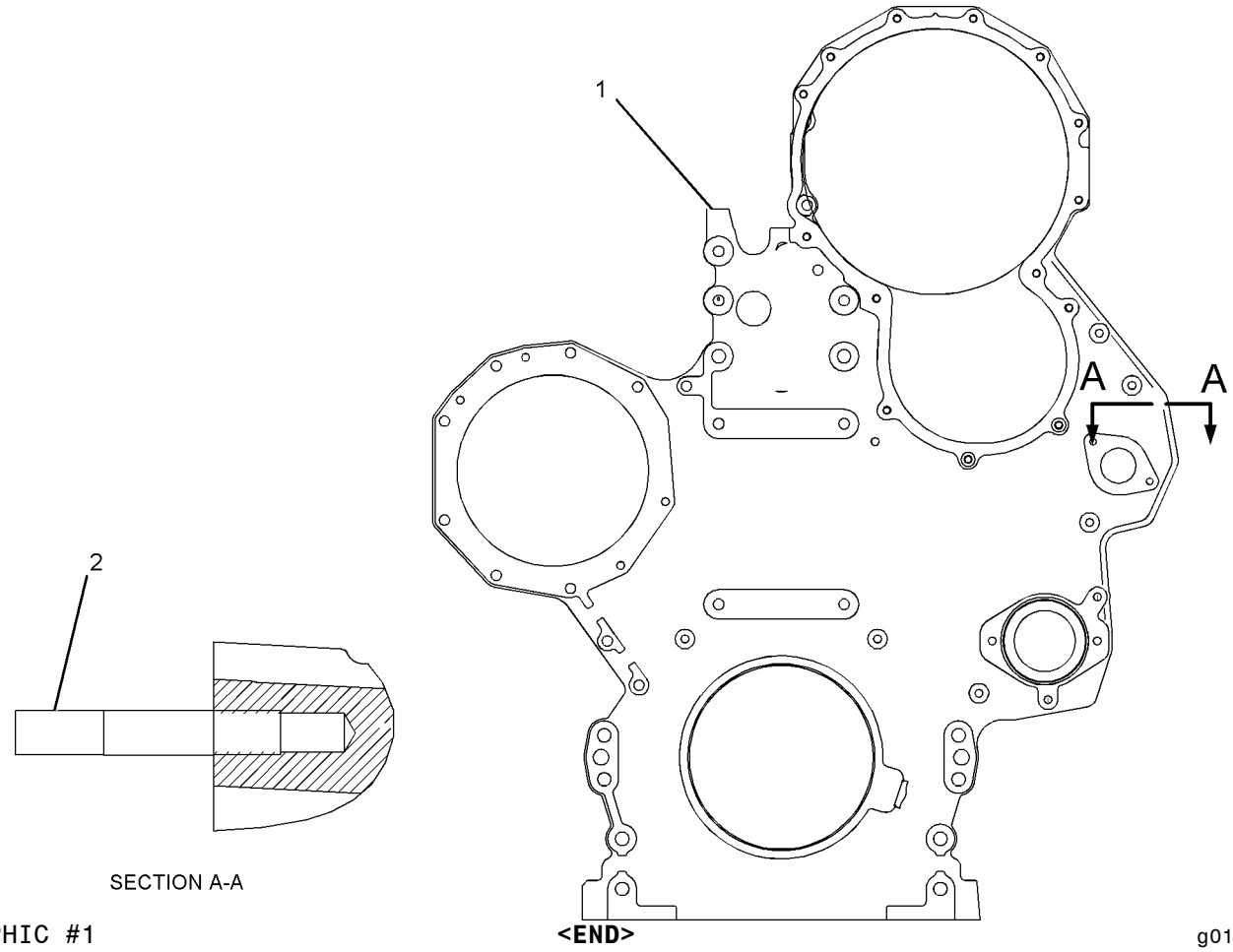

GRAPHIC #1

<END>

g01071877

BASIC ENGINE

243-5786 HOUSING GP-FRONT

S/N: RHX2054-UP

PART OF 215-7486, 263-7760 ENGINE AR-COMPLETE

SMCS-1151, 1162, 1206 **i03917009**

NOTE	REF NO	GRAPHIC REF	PART NUMBER	QTY	PART NAME 1 2 3 4 5 6 (PRODUCT LEVEL)	SEE PAGE
	1	1	**155-9524**	1	SEAL-INTEGRAL	
	2	1	**166-9144**	1	GASKET	
Y	3	1	**241-0478**	1	HOUSING GP-FRONT	74
Y	4	1	*353-9979*	1	PLATE AS-FRONT HOUSING	96
	5	1	**0L-2070**	1	BOLT (3/8-16X2.25-IN)	
	6	1	**0S-1588**	9	BOLT (3/8-16X1.25-IN)	
	7	1	**0T-0055**	1	BOLT (3/8-16X4.25-IN)	
	8	1	**5M-2894**	20	WASHER-HARD (10.2X18.5X2.5-MM THK)	
	9	1	**5P-4255**	8	BOLT-LOCKING (3/8-16X1-IN)	
	10	1	**9S-8752**	1	NUT-FULL (3/8-16-THD)	

Y-SEPARATE ILLUSTRATION

243-5786 **HOUSING GP-FRONT** *(contd.)* **i03917009**

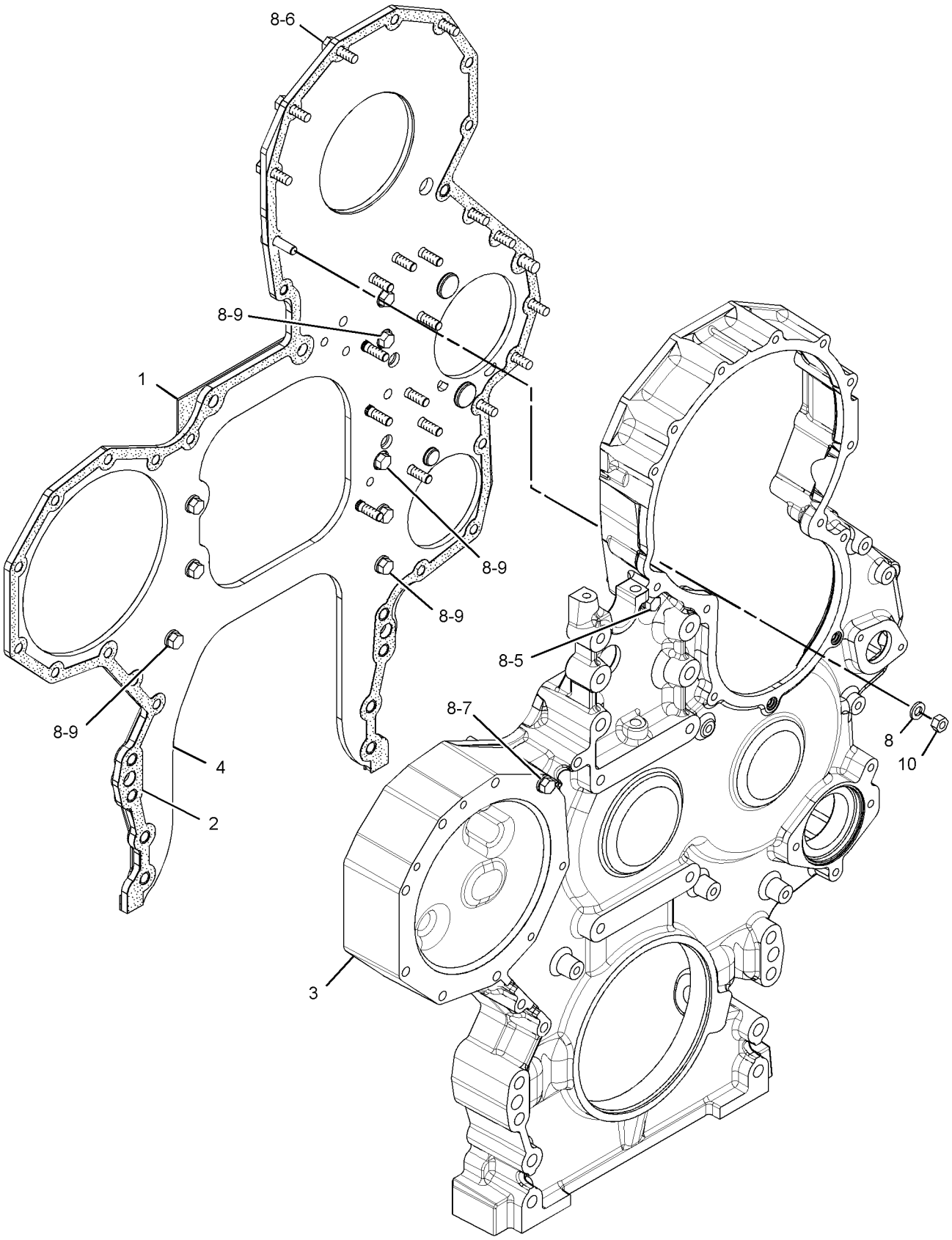

GRAPHIC #1 **<END>** g02151521

BASIC ENGINE

111-2088 LIFTING GP-ENGINE

S/N: RHX2054-UP
REAR, LOW PROFILE LIFTING EYE
PART OF 215-7486, 263-7760 ENGINE AR-COMPLETE

SMCS-1122 **i02332229**

NOTE	REF NO	GRAPHIC REF	PART NUMBER	QTY	PART NAME 1 2 3 4 5 6 (PRODUCT LEVEL)	SEE PAGE
	1	1	**109-9985**	1	EYE-LIFTING	
	2	1	**0S-1594**	8	BOLT (3/8-16X1-IN)	
	3	1	**5M-2894**	8	WASHER-HARD (10.2X18.5X2.5-MM THK)	

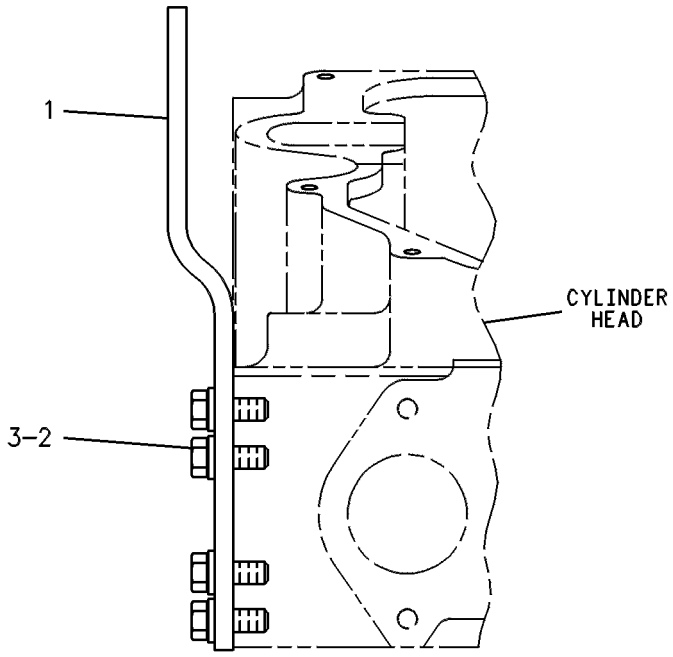

GRAPHIC #1 **<END>** g00238183

BASIC ENGINE

111-2355 LIFTING GP-ENGINE

S/N: RHX2054-UP
FRONT- OFFSET LIFTING EYE
PART OF 215-7486, 263-7760 ENGINE AR-COMPLETE
CANNOT BE USED WITH ALTERNATOR MOUNTING

SMCS-1122 **i00833389**

NOTE	REF NO	GRAPHIC REF	PART NUMBER	QTY	PART NAME 1 2 3 4 5 6 (PRODUCT LEVEL)	SEE PAGE
	1	1	**110-4344**	1	EYE-LIFTING	
	2	1	**0S-1595**	4	BOLT (1/2-13X1.25-IN)	
	3	1	**5P-8245**	4	WASHER-HARD (13.5X25.5X3-MM THK)	

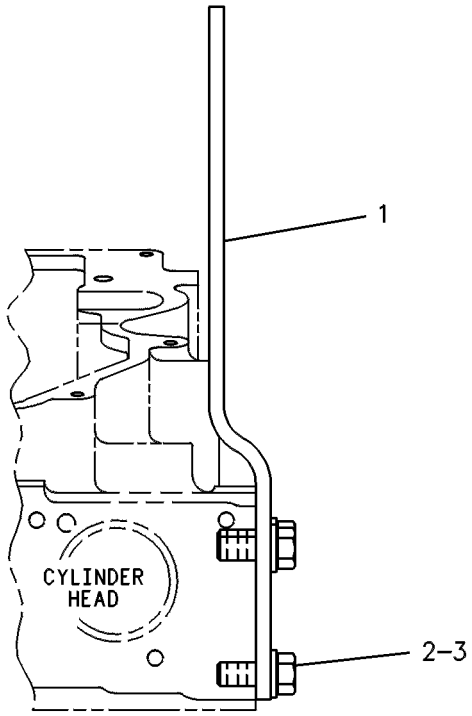

GRAPHIC #1 **<END>** g00238181

BASIC ENGINE

190-0009 MECHANISM GP-FUEL PUMP & VALVE

S/N: RHX5226-UP

PART OF 314-8601 ENGINE AR-CORE

SMCS-1102, 1251 **i03690834**

NOTE	REF NO	GRAPHIC REF	PART NUMBER	QTY	PART NAME 1 2 3 4 5 6 (PRODUCT LEVEL)	SEE PAGE
CY	1	1	*328-4236*	3	ROCKER ARM GP	105
	2	1	**348-7743**	12	BRIDGE-VALVE	

C-CHANGE FROM PREVIOUS TYPE
Y-SEPARATE ILLUSTRATION

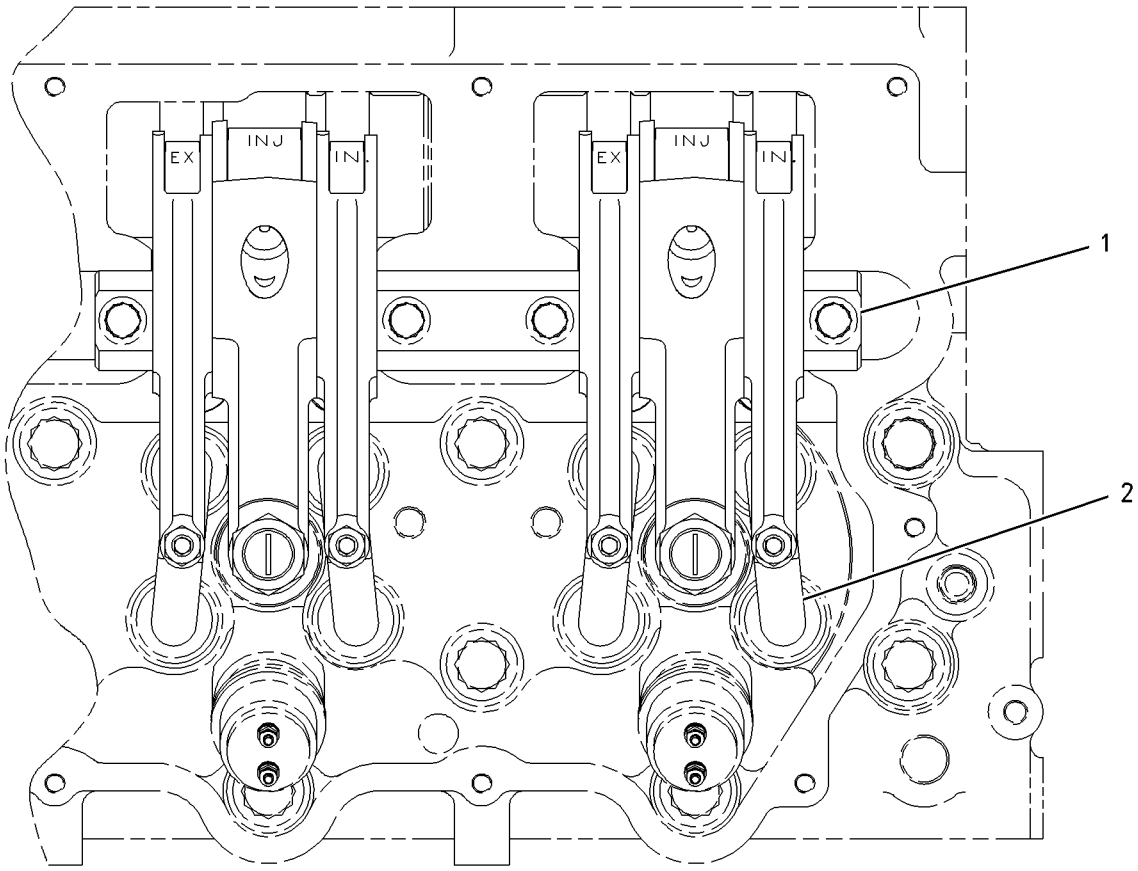

TOP VIEW

GRAPHIC #1 **<END>** g00814910

BASIC ENGINE

266-3699 MECHANISM GP-FUEL PUMP & VALVE

S/N: RHX2094-UP
PART OF 241-5934, 316-3531 ENGINE AR-CORE
TYPE 1

SMCS-1102, 1251 **i03826643**

NOTE	REF NO	GRAPHIC REF	PART NUMBER	QTY	PART NAME 1 2 3 4 5 6 (PRODUCT LEVEL)	SEE PAGE
	1	1	**348-7743**	12	BRIDGE-VALVE	
CY	2	1	*328-4242*	3	ROCKER ARM GP	107

C-CHANGE FROM PREVIOUS TYPE
Y-SEPARATE ILLUSTRATION

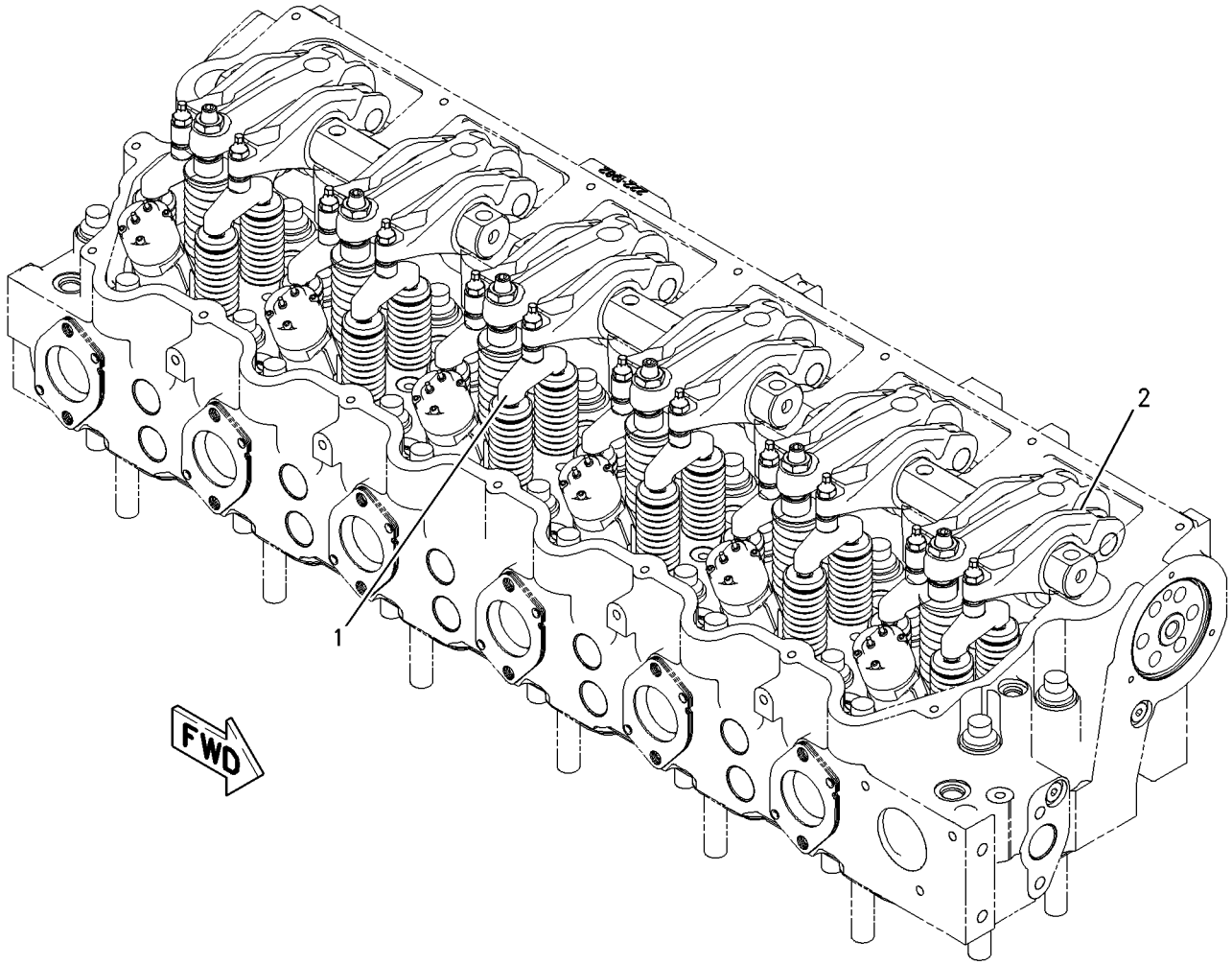

GRAPHIC #1 **<END>** g01002983

BASIC ENGINE

266-3699 MECHANISM GP-FUEL PUMP & VALVE

S/N: RHX2094-UP
PART OF 241-5934, 316-3531 ENGINE AR-CORE
TYPE 2

SMCS-1102, 1251 **i03026784**

NOTE	REF NO	GRAPHIC REF	PART NUMBER	QTY	PART NAME 1 2 3 4 5 6 (PRODUCT LEVEL)	SEE PAGE
	1	1	**6I-1458**	12	BRIDGE-VALVE	
CY	2	1	*278-1938*	3	ROCKER ARM GP	101

C-CHANGE FROM PREVIOUS TYPE
Y-SEPARATE ILLUSTRATION

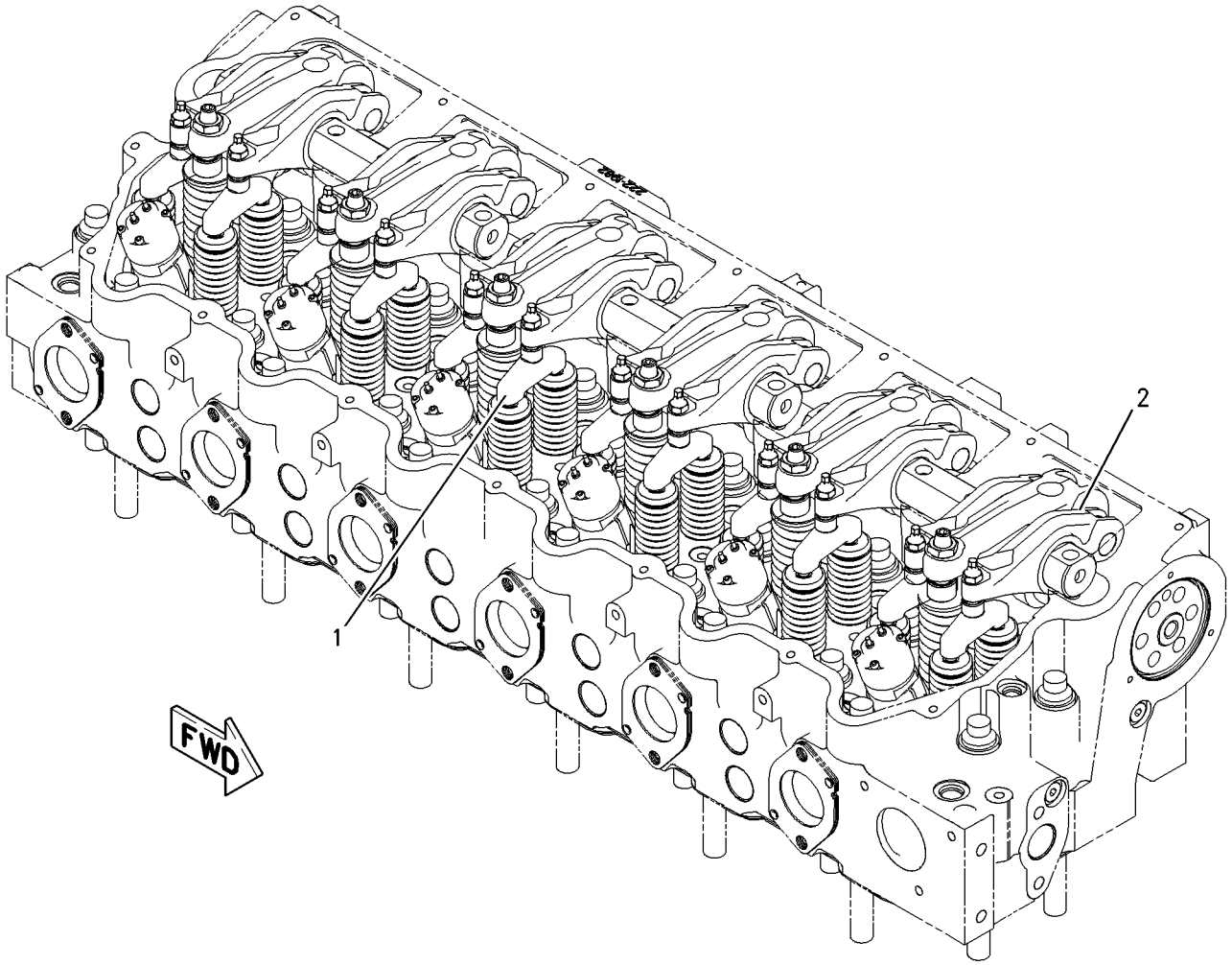

GRAPHIC #1 **<END>** g01002983

BASIC ENGINE

188-1754 MOUNTING GP-ALTERNATOR & COMPR

S/N: RHX2054-UP

PART OF 215-7486, 263-7760 ENGINE AR-COMPLETE

SMCS-1405, 1802 **i01444958**

NOTE	REF NO	GRAPHIC REF	PART NUMBER	QTY	PART NAME 1 2 3 4 5 6 (PRODUCT LEVEL)	SEE PAGE
	1	1	**188-1755**	1	SUPPORT	
	2	1	**0S-1608**	2	BOLT (3/8-16X3.75-IN)	
	3	1	**0T-0573**	2	BOLT (3/8-16X2.75-IN)	
	4	1	**2P-1974**	2	STUD-TAPERLOCK (3/8-16X4.2-IN)	
	5	1	**5M-2894**	6	WASHER-HARD (10.2X18.5X2.5-MM THK)	
	6	1	**9S-8752**	2	NUT-FULL (3/8-16-THD)	

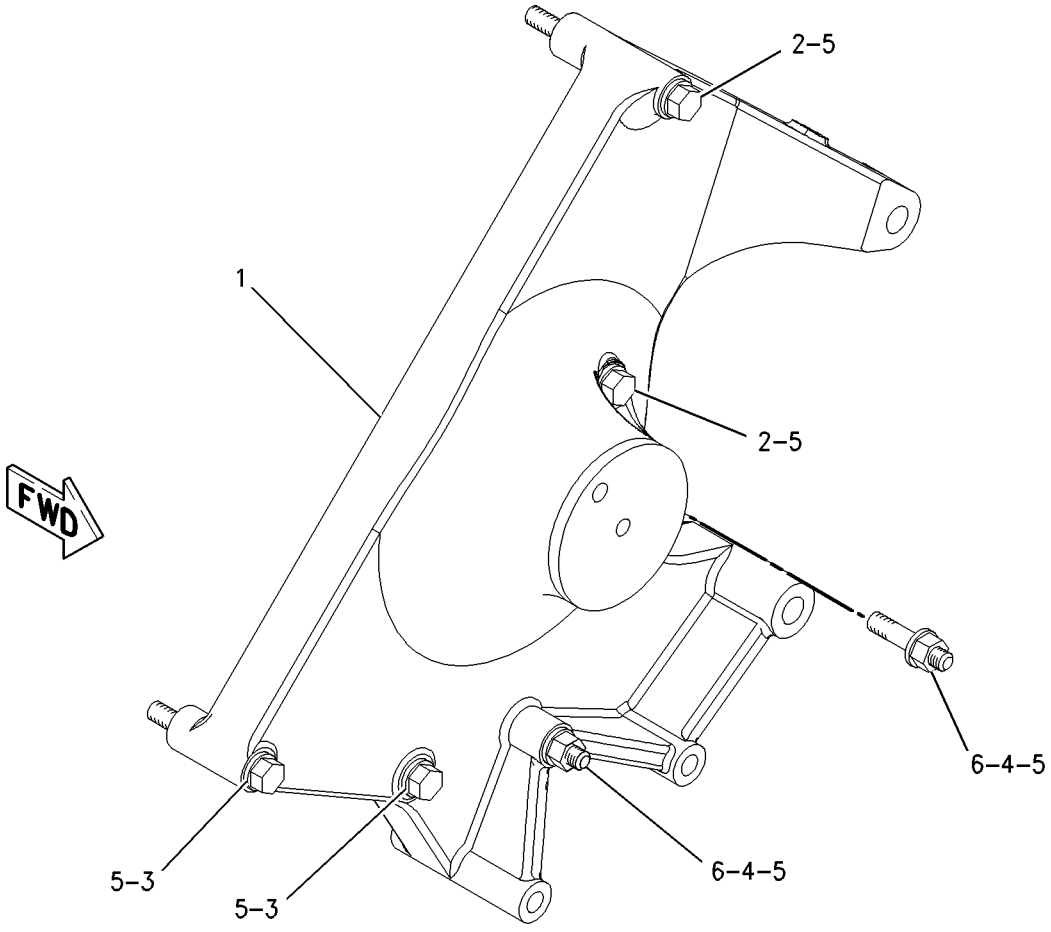

GRAPHIC #1 **<END>** g00759989

BASIC ENGINE

253-3991 MOUNTING GP-ENGINE & XMSN

S/N: B9K1-UP

PART OF 259-9204 COMMON AR

SMCS-1152, 1153, 1154, 3082 **i03492011**

NOTE	REF NO	GRAPHIC REF	PART NUMBER	QTY	PART NAME 1 2 3 4 5 6 (PRODUCT LEVEL)	SEE PAGE
	1	1	**6Y-9980**	4	MOUNT AS	
	2	1	**8X-8932**	2	SUPPORT AS	
					(EACH INCLUDES)	
		1	**1A-2223**	2	DOWEL	
	3	1	**8X-8937**	2	SUPPORT AS	
					(EACH INCLUDES)	
		1	**4D-8148**	2	DOWEL	
	4	1	**9W-6582**	2	SLEEVE	
	5	1	**9W-7385**	6	SLEEVE	
	6	1	**9W-9930**	2	MOUNT AS	
	7	1	**9W-9940**	2	MOUNT AS	
	8	1	**264-2006**	2	SUPPORT AS	
	9	1	**0L-1178**	8	BOLT (3/4-10X2-IN)	
	10	1	**5P-8247**	8	WASHER-HARD (17X32X3.5-MM THK)	
	11	1	**5P-8248**	8	WASHER-HARD (20X36.5X3.5-MM THK)	
M	12	1	**8C-3290**	6	BOLT (M24X3X150-MM)	
	13	1	**8T-4123**	2	WASHER (22X35X3.5-MM THK)	
	14	1	**8T-4167**	6	WASHER-HARD (26X44X4-MM THK)	
M	15	1	**8T-4183**	11	BOLT (M12X1.75X40-MM)	
M	16	1	**8T-4193**	20	BOLT (M16X2X50-MM)	
	17	1	**8T-4223**	11	WASHER-HARD (13.5X25.5X3-MM THK)	
M	18	1	**8T-6381**	2	BOLT (M20X2.5X120-MM)	
	19	1	**9W-6584**	2	WASHER (20.5X114X10-MM THK)	
	20	1	**9W-7388**	10	WASHER (26X144X12-MM THK)	
	21	1	**9X-8257**	12	WASHER (17.5X30X3.5-MM THK)	

M-METRIC PART

253-3991 **MOUNTING GP-ENGINE & XMSN** *(contd.)* **i03492011**

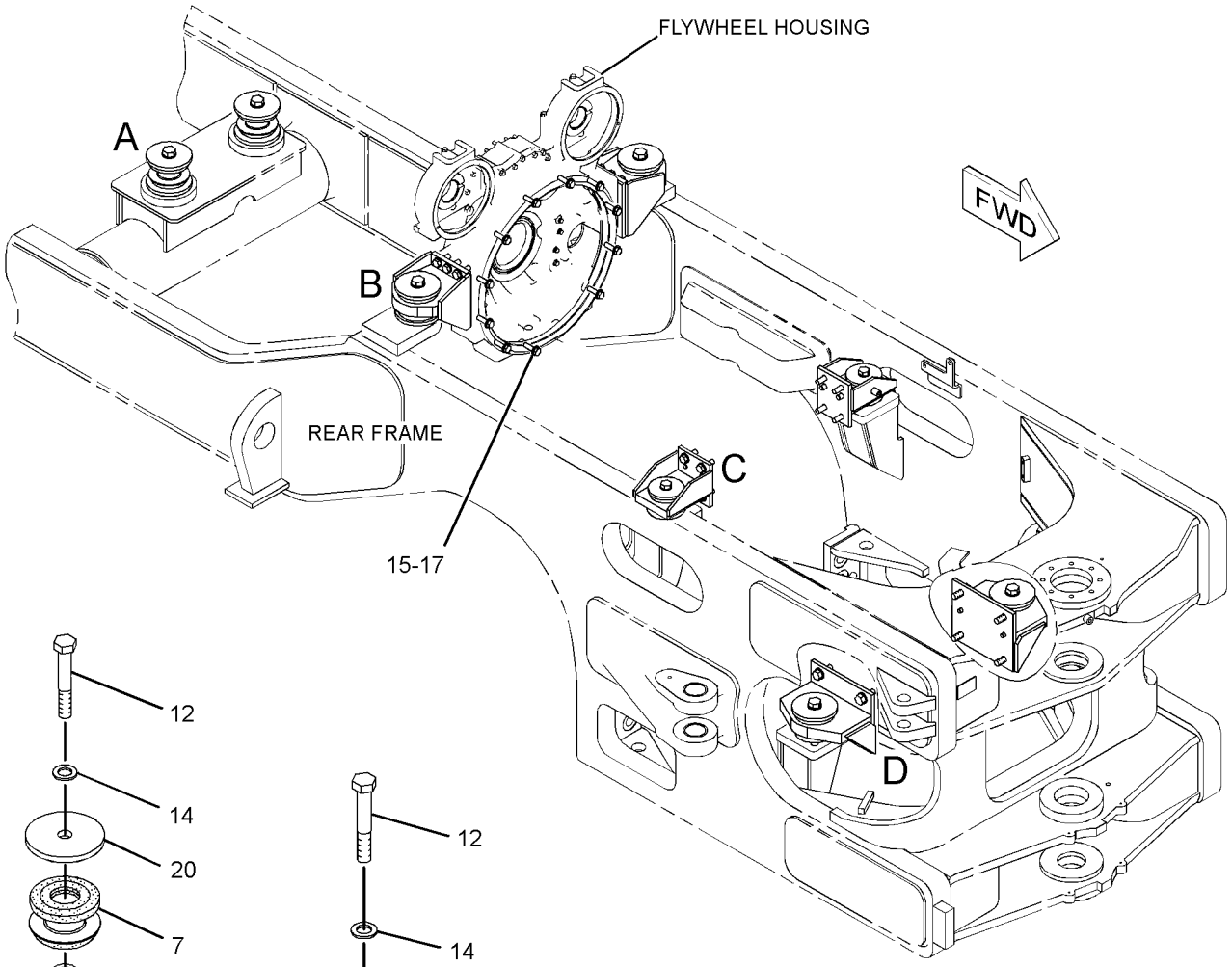

VIEW OF AREA A
(EXPLODED)

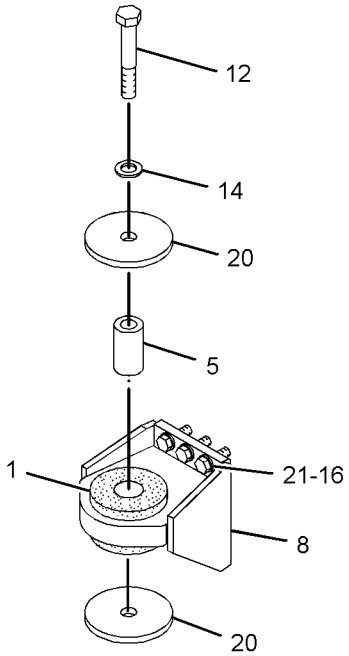

VIEW OF AREA B
(EXPLODED)

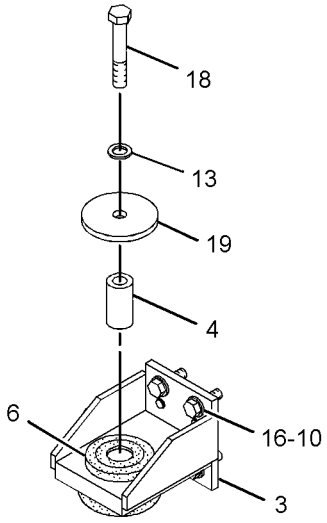

VIEW OF AREA C
(EXPLODED)

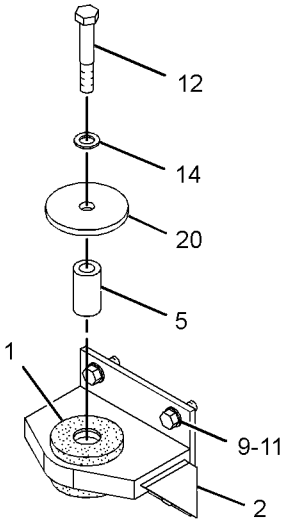

VIEW OF AREA D
(EXPLODED)

GRAPHIC #1 **<END>** g01377417

BASIC ENGINE

277-8461 PAN GP-OIL—ENGINE

S/N: RHX2094-3790

PART OF 263-7760 ENGINE AR-COMPLETE

SMCS-1302 **i02644072**

NOTE	REF NO	GRAPHIC REF	PART NUMBER	QTY	PART NAME 1 2 3 4 5 6 (PRODUCT LEVEL)	SEE PAGE
	1	1	**2P-3204**	40	BOLT-WASHER HEAD	
	2	1	**4P-7373**	1	TUBE AS	
	3	1	**9N-3167**	1	PLATE	
	4	1	**115-2365**	1	BRACKET-TUBE	
	5	1	**230-7201**	1	COVER	
	6	1	**275-4261**	1	PAN-OIL	
	7	1	**281-0570**	1	TUBE AS	
	8	1	**0L-1351**	1	BOLT (3/8-16X0.875-IN)	
	9	1	**0S-1585**	2	BOLT (1/2-13X1.5-IN)	
	10	1	**0S-1591**	2	BOLT (3/8-16X1.5-IN)	
	11	1	**109-0072**	1	SEAL-O-RING	
	12	1	**109-0078**	1	SEAL-O-RING	
	13	1	**1A-2029**	3	BOLT (3/8-16X1.125-IN)	
	14	1	**2K-4973**	2	LOCKNUT (3/8-16-THD)	
	15	1	**4N-1151**	2	GASKET	
	16	1	**5M-2894**	3	WASHER-HARD (10.2X18.5X2.5-MM THK)	
	17	1	**5P-7701**	1	SEAL-O-RING	
	18	1	**6V-3830**	1	SEAL-O-RING	
	19	1	**9S-9334**	1	PLUG-O-RING	
	20	1	**9X-6458**	3	WASHER-HARD (10.2X22.5X3-MM THK)	

277-8461 **PAN GP-OIL** *(contd.)* **i02644072**

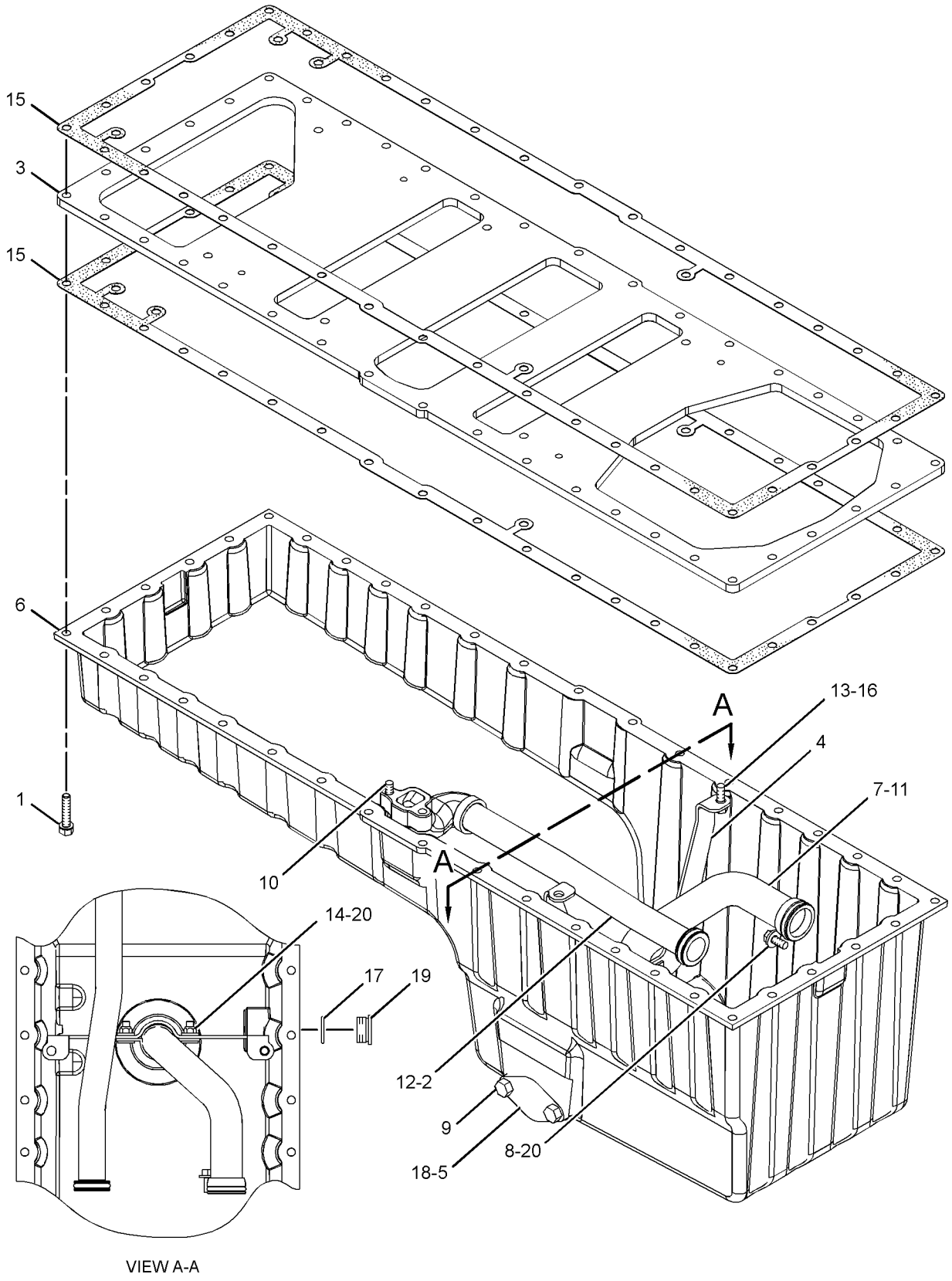

GRAPHIC #1 **<END>** g01272330

BASIC ENGINE

277-8461 PAN GP-OIL—ENGINE

S/N: RHX3791-5021

PART OF 263-7760 ENGINE AR-COMPLETE

SMCS-1302 **i03818588**

NOTE	REF NO	GRAPHIC REF	PART NUMBER	QTY	PART NAME 1 2 3 4 5 6 (PRODUCT LEVEL)	SEE PAGE
C	1	1	**2P-3205**	40	BOLT-WASHER HEAD (3/8-16X1.75-IN)	
	2	1	**4P-7373**	1	TUBE AS	
	3	1	**9N-3167**	1	PLATE	
	4	1	**115-2365**	1	BRACKET-TUBE	
	5	1	**6V-3830**	1	SEAL-O-RING	
	6	1	**275-4261**	1	PAN-OIL	
	7	1	**281-0570**	1	TUBE AS	
	8	1	**0L-1351**	1	BOLT (3/8-16X0.875-IN)	
C	9	1	**0S-1595**	2	BOLT (1/2-13X1.25-IN)	
	10	1	**0S-1591**	2	BOLT (3/8-16X1.5-IN)	
	11	1	**5P-5846**	1	SEAL-O-RING	
	12	1	**5P-8068**	1	SEAL-O-RING	
	13	1	**1A-2029**	3	BOLT (3/8-16X1.125-IN)	
	14	1	**2K-4973**	2	LOCKNUT (3/8-16-THD)	
	15	1	**188-0210**	2	GASKET	
	16	1	**5M-2894**	3	WASHER-HARD (10.2X18.5X2.5-MM THK)	
	17	1	*319-6234*	1	PLUG AS	
		1	**9S-9334**	1	PLUG-O-RING	
		1	**238-5084**	1	SEAL-O-RING	
	20	1	**9X-6458**	3	WASHER-HARD (10.2X22.5X3-MM THK)	
	21	1	**4P-0519**	1	ADAPTER AS-DRAIN	
		1	**109-5839**	1	PLUG-DRAIN (ENGINE OIL PAN)	
		1	**109-5840**	1	ADAPTER-PLUG	
	22	1	**6B-9081**	1	BUSHING-REDUCING	
	23	1	**6D-3534**	1	CONNECTOR-HOSE	

C-CHANGE FROM PREVIOUS TYPE

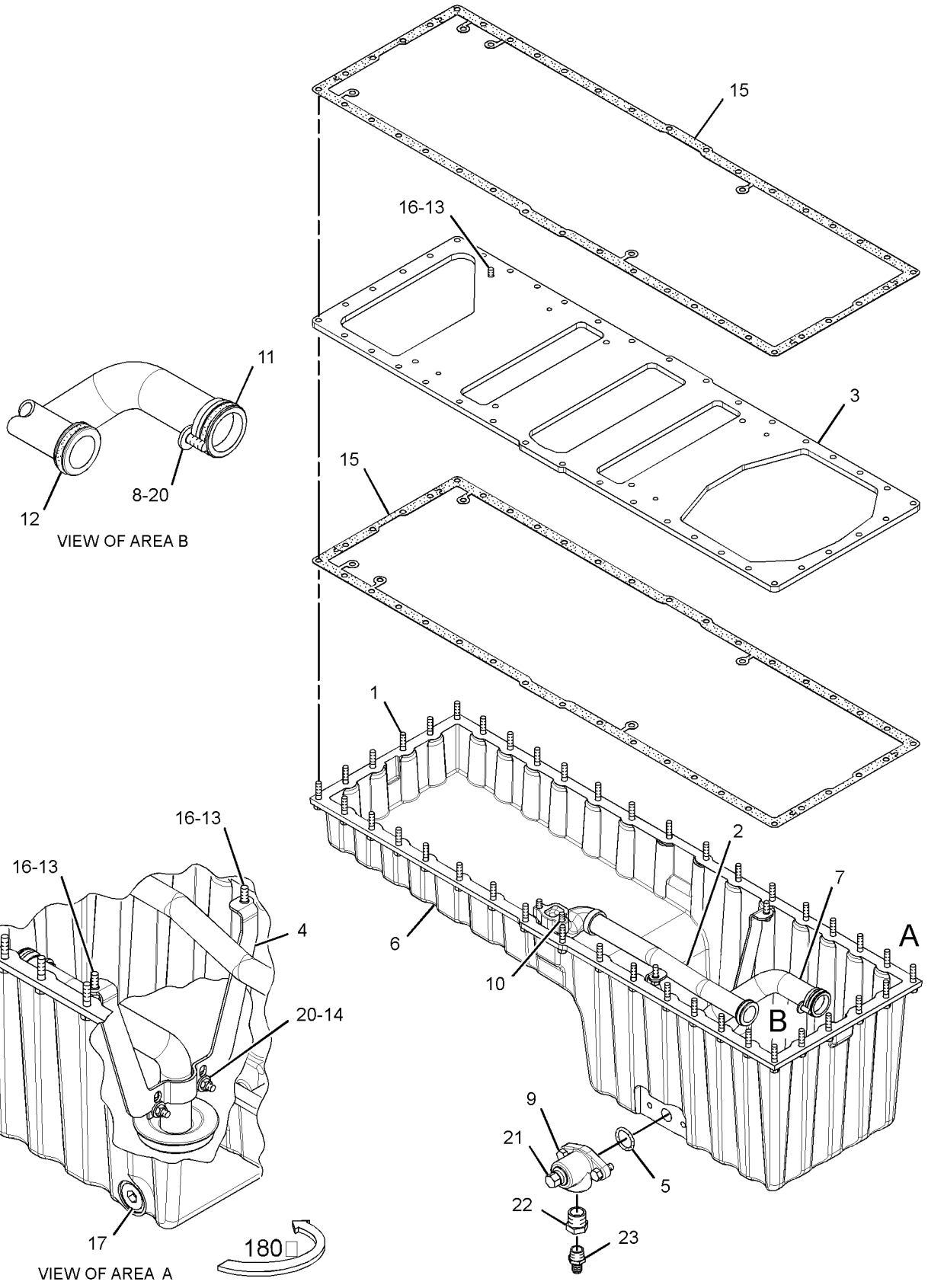

GRAPHIC #1 **<END>** g02070819

BASIC ENGINE

307-7409 PAN GP-OIL

S/N: RHX2054-8669

PART OF 215-7486, 263-7760 ENGINE AR-COMPLETE

SMCS-1302 **i02774581**

NOTE	REF NO	GRAPHIC REF	PART NUMBER	QTY	PART NAME 1 2 3 4 5 6 (PRODUCT LEVEL)	SEE PAGE
	1	1	**4P-7373**	1	TUBE AS	
	2	1	**9N-3167**	1	PLATE	
	3	1	**115-2365**	1	BRACKET-TUBE	
	4	1	**230-7201**	1	COVER	
	5	1	**275-4261**	1	PAN-OIL	
	6	1	**281-0570**	1	TUBE AS	
	7	1	**0L-1351**	1	BOLT (3/8-16X0.875-IN)	
	8	1	**0S-1591**	2	BOLT (3/8-16X1.5-IN)	
	9	1	**0S-1595**	2	BOLT (1/2-13X1.25-IN)	
	10	1	**109-0072**	1	SEAL-O-RING	
	11	1	**109-0078**	1	SEAL-O-RING	
	12	1	**1A-2029**	3	BOLT (3/8-16X1.125-IN)	
	13	1	**2K-4973**	2	LOCKNUT (3/8-16-THD)	
	14	1	**2P-3205**	40	BOLT-WASHER HEAD (3/8-16X1.75-IN)	
	15	1	**4N-1151**	2	GASKET	
	16	1	**5M-2894**	3	WASHER-HARD (10.2X18.5X2.5-MM THK)	
	17	1	**5P-7701**	1	SEAL-O-RING	
	18	1	**6V-3830**	1	SEAL-O-RING	
	19	1	**9S-9334**	1	PLUG-O-RING	
	20	1	**9X-6458**	3	WASHER-HARD (10.2X22.5X3-MM THK)	

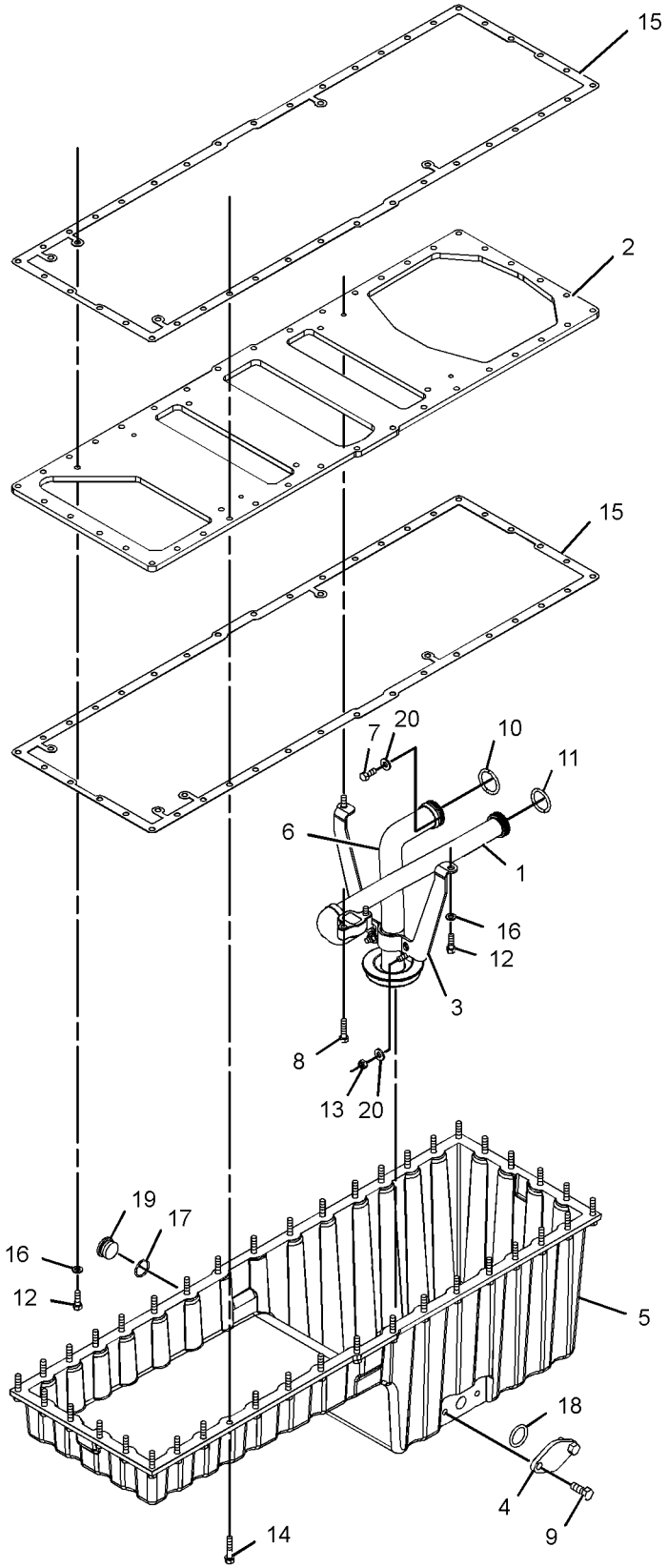

GRAPHIC #1 **<END>** g01389819

BASIC ENGINE

307-7409 PAN GP-OIL

S/N: RHX8670-UP

PART OF 263-7760 ENGINE AR-COMPLETE

SMCS-1302 **i03818752**

NOTE	REF NO	GRAPHIC REF	PART NUMBER	QTY	PART NAME 1 2 3 4 5 6 (PRODUCT LEVEL)	SEE PAGE
	1	1	**4P-7373**	1	TUBE AS	
	2	1	**9N-3167**	1	PLATE	
	3	1	**115-2365**	1	BRACKET-TUBE	
	4	1	**230-7201**	1	COVER	
	5	1	**275-4261**	1	PAN-OIL	
	6	1	**281-0570**	1	TUBE AS	
C	7	1	**0S-1594**	1	BOLT (3/8-16X1-IN)	
	8	1	**0S-1591**	2	BOLT (3/8-16X1.5-IN)	
	9	1	**0S-1595**	2	BOLT (1/2-13X1.25-IN)	
C	10	1	**5P-8068**	1	SEAL-O-RING	
C	11	1	**5P-5846**	1	SEAL-O-RING	
	12	1	**1A-2029**	3	BOLT (3/8-16X1.125-IN)	
	13	1	**2K-4973**	2	LOCKNUT (3/8-16-THD)	
	14	1	**2P-3205**	40	BOLT-WASHER HEAD (3/8-16X1.75-IN)	
C	15	1	**188-0210**	2	GASKET	
	16	1	**5M-2894**	3	WASHER-HARD (10.2X18.5X2.5-MM THK)	
C	17	1	*319-6234*	1	PLUG AS	
	17A	1	**238-5084**	1	SEAL-O-RING	
		1	**9S-9334**	1	PLUG-O-RING	
	18	1	**6V-3830**	1	SEAL-O-RING	
	20	1	**9X-6458**	3	WASHER-HARD (10.2X22.5X3-MM THK)	

C-CHANGE FROM PREVIOUS TYPE

307-7409 **PAN GP-OIL** *(contd.)* **i03818752**

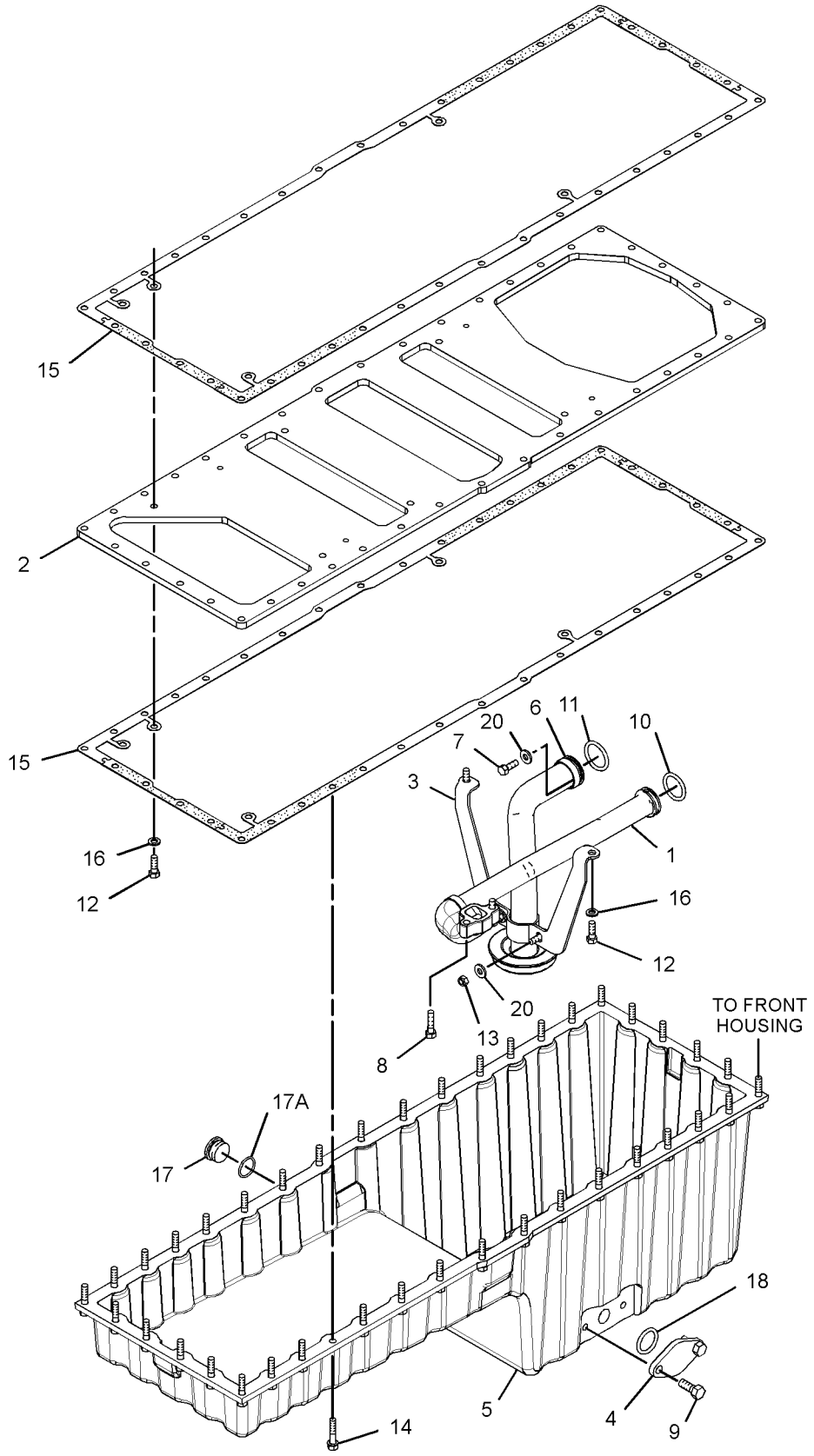

GRAPHIC #1 **<END>** g02071074

BASIC ENGINE

174-3874 PANEL GP-SOUND SUPPRESSION

S/N: RHX2054-UP
LEFT HAND MOUNTED SOUND PANEL
PART OF 215-7486, 263-7760 ENGINE AR-COMPLETE
FOR USE WITH BRAKESAVER OR NON-BRAKESAVER ENGINES, ALL APPLICATIONS

SMCS-1801 **i02716705**

NOTE	REF NO	GRAPHIC REF	PART NUMBER	QTY	PART NAME 1 2 3 4 5 6 (PRODUCT LEVEL)	SEE PAGE
	1	1	**173-1957**	1	PANEL AS	
	2	1	**0S-1588**	3	BOLT (3/8-16X1.25-IN)	
	3	1	**9X-6458**	3	WASHER-HARD (10.2X22.5X3-MM THK)	

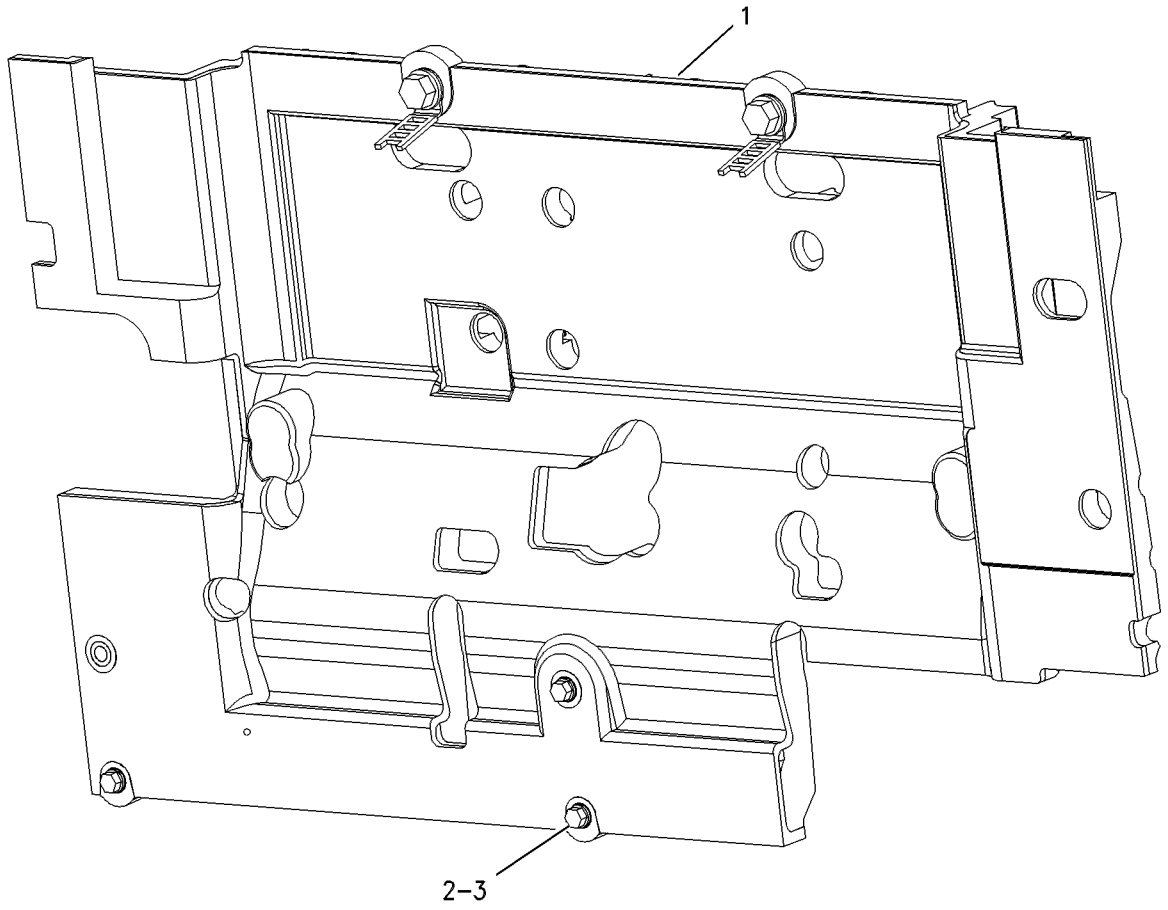

GRAPHIC #1 **<END>** g00618571

BASIC ENGINE

227-9980 PANEL GP-SOUND SUPPRESSION–

ENGINE FRONT HOUSING

S/N: RHX2054-UP

PART OF 215-7486, 263-7760 ENGINE AR-COMPLETE

CANNOT BE USED WITH ALTERNATOR MOUNTING GROUPS AND ACCESSORY DRIVE GROUPS

SMCS-1801 **i03202335**

NOTE	REF NO	GRAPHIC REF	PART NUMBER	QTY	PART NAME 1 2 3 4 5 6 (PRODUCT LEVEL)	SEE PAGE
	1	1	**324-6804**	1	COVER AS (SOUND SUPPRESSION)	
	2	1	**0S-1588**	1	BOLT (3/8-16X1.25-IN)	
	3	1	**0S-1594**	3	BOLT (3/8-16X1-IN) (MARKED X)	
	4	1	**0T-0055**	2	BOLT (3/8-16X4.25-IN)	
	5	1	**1A-5964**	4	BOLT (3/8-16X4.5-IN) (MARKED Y)	
	6	1	**5M-2894**	2	WASHER-HARD (10.2X18.5X2.5-MM THK)	
	7	1	**9S-8752**	1	NUT-FULL (3/8-16-THD)	
	8	1	**9X-6458**	9	WASHER-HARD (10.2X22.5X3-MM THK)	

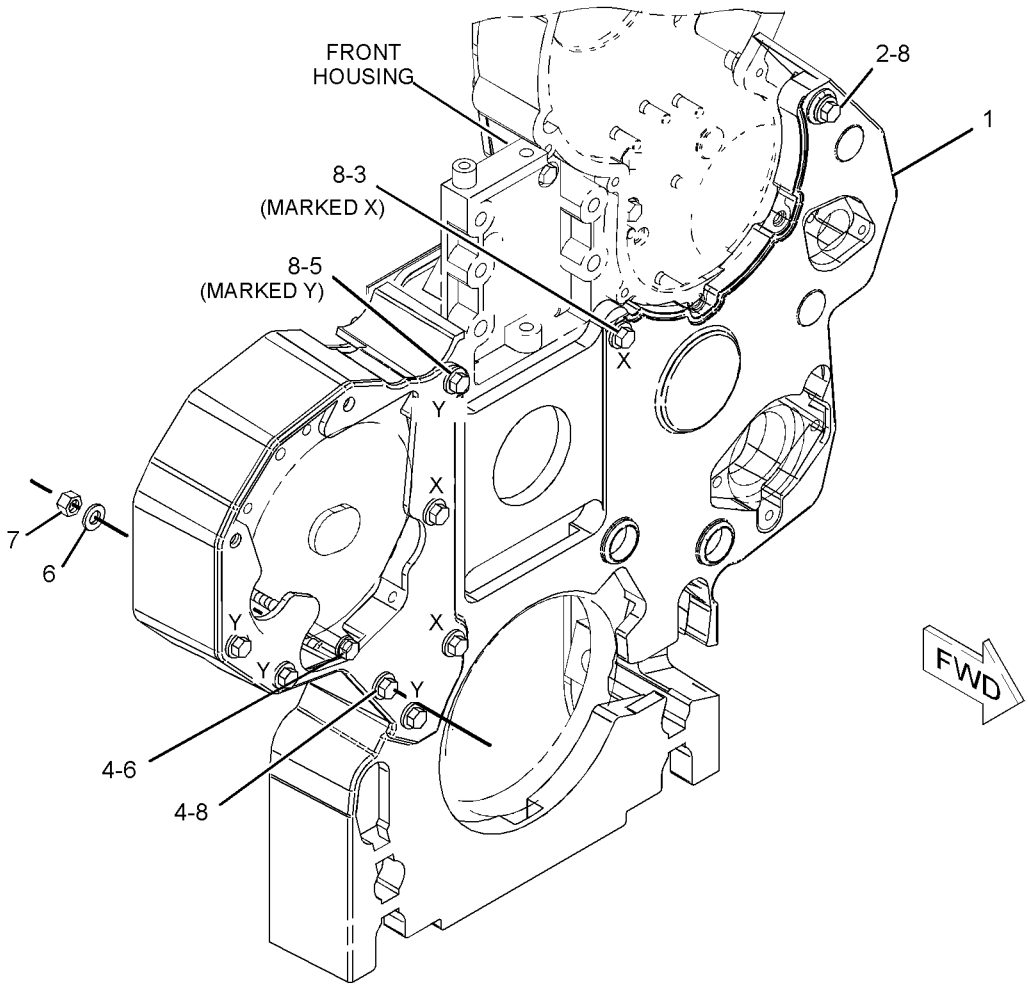

GRAPHIC #1 **<END>** g01436233

BASIC ENGINE

220-1441 PISTON & ROD GP

S/N: RHX2094-UP
18:1 COMPRESSION RATIO
PART OF 241-5934, 314-8601, 316-3531 ENGINE AR-CORE

SMCS-1225 **i03595722**

NOTE	REF NO	GRAPHIC REF	PART NUMBER	QTY	PART NAME 1 2 3 4 5 6 (PRODUCT LEVEL)	SEE PAGE
	1	1	**151-5925**	1	BOLT (7/16-14-THD)	
	2	1	**180-7350**	1	PIN-PISTON	
	3	1	**238-2707**	1	RING-PISTON (INTERMEDIATE)	
	4	1	**246-5659**	1	RING-PISTON (OIL CONTROL)	
	5	1	**274-8359**	1	TUBE AS	
R	6	1	**329-4511**	1	BODY AS-PISTON	
	7	1	**223-9159**	1	RING-PISTON-TOP	
R	8	1	**224-3245**	1	ROD AS	
	8A	1	**219-4458**	2	PIN-DOWEL	
	8B	1	**213-3217**	4	BOLT (M11X1.25X84-MM)	
	8C	1	**229-6259**	1	BEARING	
	9	1	**224-3246**	1	BEARING-CONNECTING ROD (STANDARD)	
AB		1	**232-3235**		BEARING-CONNECTING ROD (0.64-MM US)	
AB		1	**232-3236**		BEARING-CONNECTING ROD (1.27-MM US)	
	10	1	**230-2569**	2	RETAINER-PIN	

A-NOT PART OF THIS GROUP
B-USE AS REQUIRED
R-REMFG PART MAY BE AVAILABLE

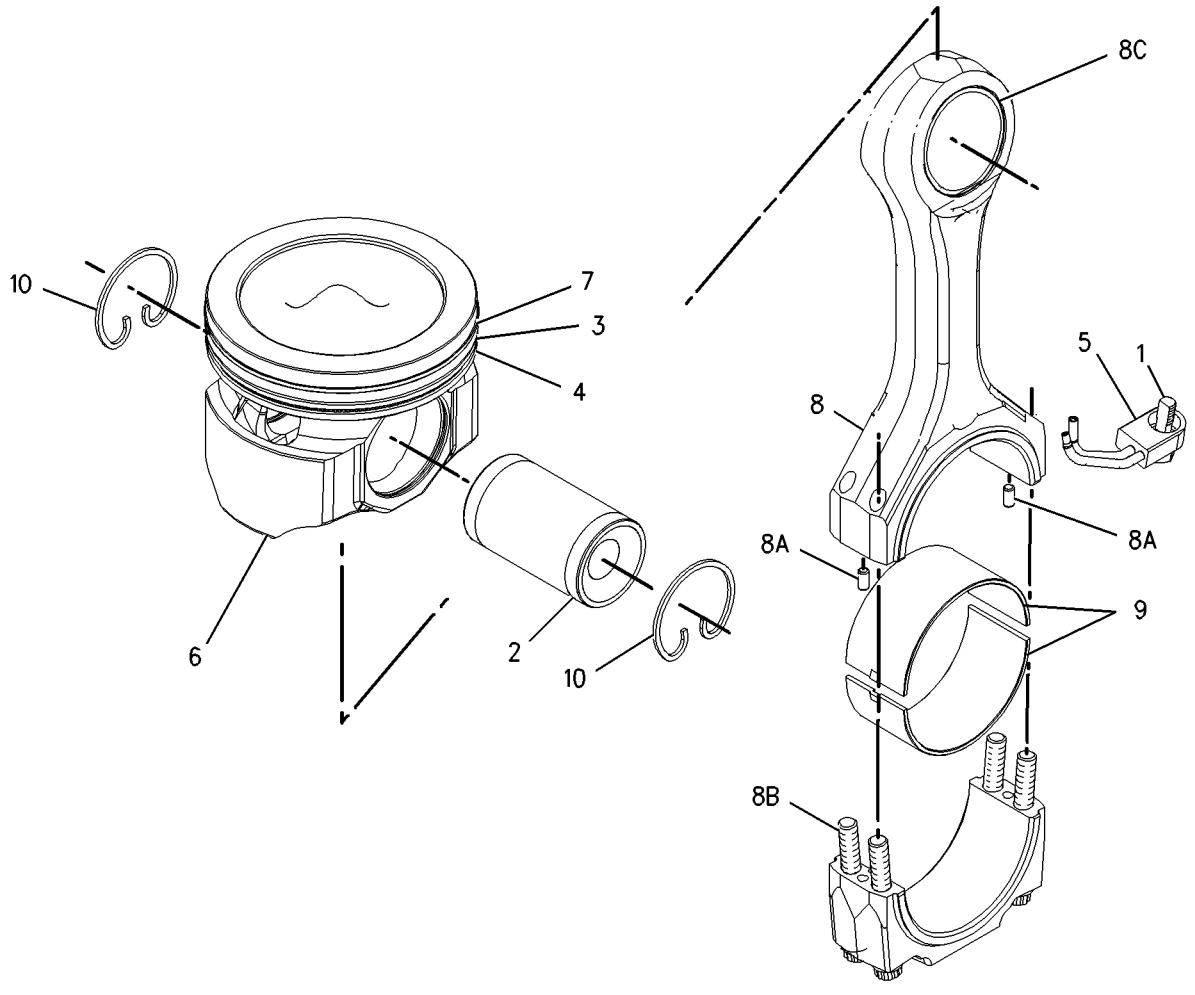

GRAPHIC #1 **<END>** g01002106

BASIC ENGINE

353-9979 PLATE AS-FRONT HOUSING

S/N: RHX2054-UP

PART OF 243-5786 HOUSING GP-FRONT

SMCS-1151, 1162 **i03839613**

NOTE	REF NO	GRAPHIC REF	PART NUMBER	QTY	PART NAME 1 2 3 4 5 6 (PRODUCT LEVEL)	SEE PAGE
	1	1	**126-1757**	9	WASHER (10.85X19.3X1.27-MM THK)	
	2	1	**129-5427**	2	WASHER-SPECIAL (SEALING)	
	3	1	**129-5428**	12	STUD (BRAKE)	
	4	1	**158-8881**	1	PLATE	
	5	1	**334-6832**	2	STUD-SPECIAL (BRAKE)	

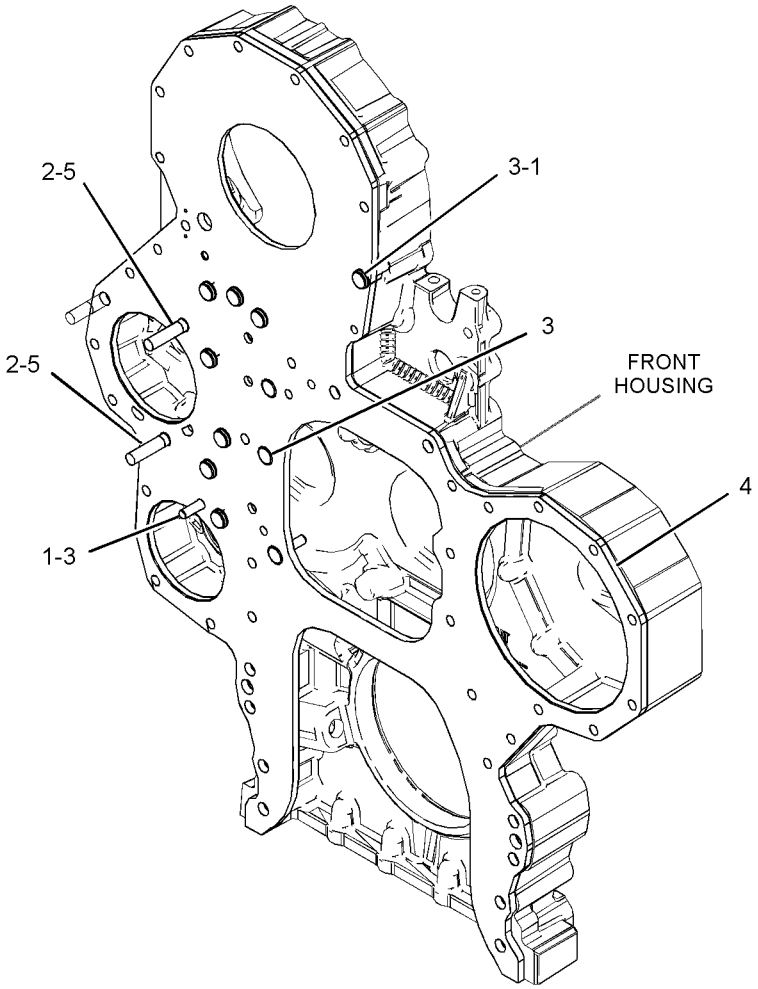

GRAPHIC #1 **<END>** g02089016

BASIC ENGINE

230-5379 PLUG GP-CYLINDER BLOCK

S/N: RHX2054-UP

PART OF 215-7486, 263-7760 ENGINE AR-COMPLETE

SMCS-1201 **i03760583**

NOTE	REF NO	GRAPHIC REF	PART NUMBER	QTY	PART NAME 1 2 3 4 5 6 (PRODUCT LEVEL)	SEE PAGE
	1	1	*353-5126*	3	PLUG AS	
					(EACH INCLUDES)	
		1	**9S-8005**	1	PLUG-O-RING	
		1	**6V-6609**	1	SEAL-O-RING	
	2	1	*307-2671*	1	PLUG AS	
		1	**9S-8002**	1	PLUG-O-RING	
		1	**214-7566**	1	SEAL-O-RING	
	3	1	*307-2673*	6	PLUG AS	
					(EACH INCLUDES)	
		1	**9S-8005**	1	PLUG-O-RING	
		1	**238-5080**	1	SEAL-O-RING	
	4	1	*309-5131*	1	PLUG AS	
		1	**9S-8006**	1	PLUG-O-RING	
		1	**238-5081**	1	SEAL-O-RING	

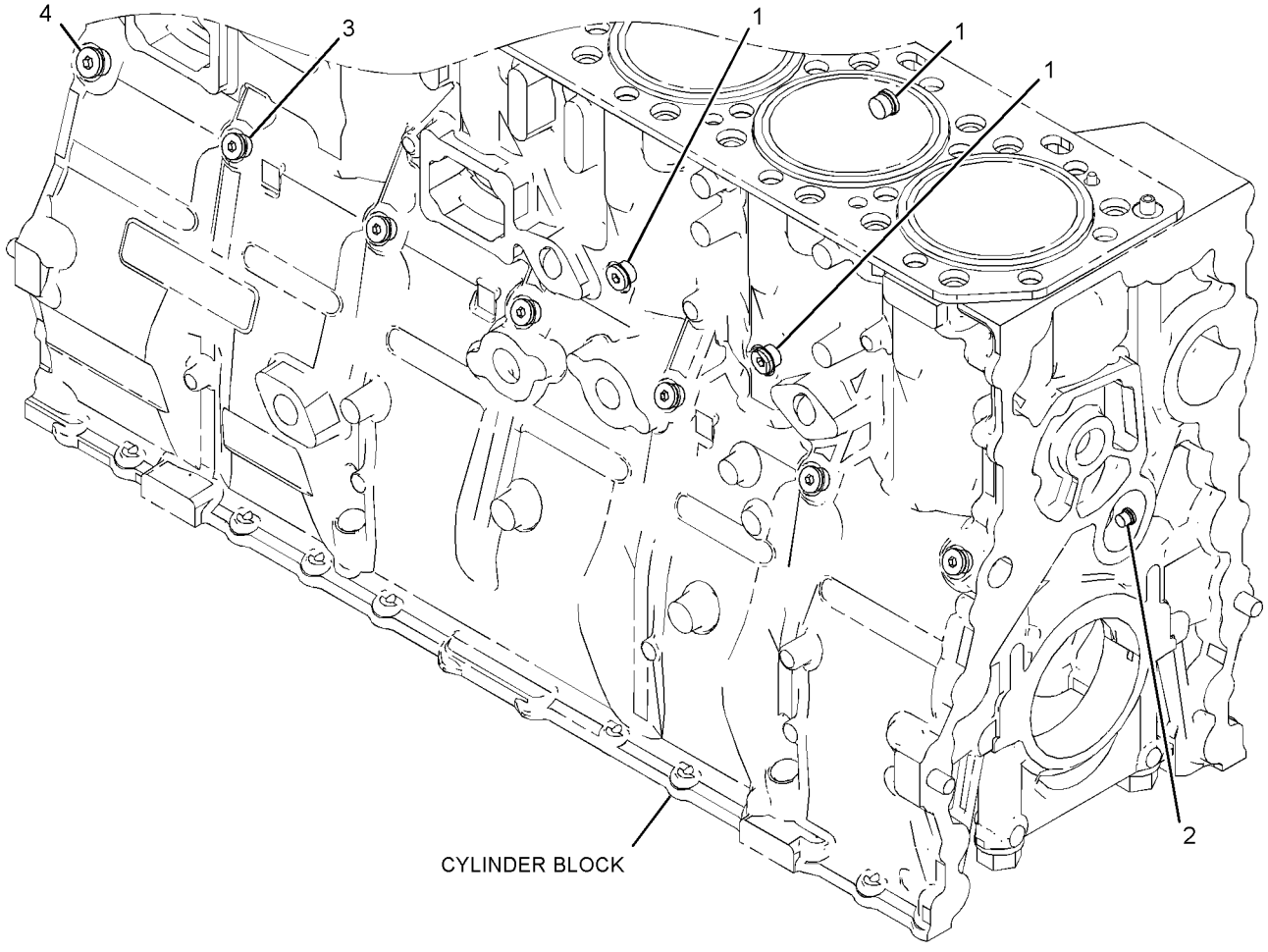

GRAPHIC #1 **<END>** g02029205

BASIC ENGINE

305-9196 PLUG GP-CYLINDER BLOCK

S/N: RHX4918-UP

PART OF 261-0191, 297-3207 CYLINDER BLOCK GP

SMCS-1201 **i02680401**

NOTE	REF NO	GRAPHIC REF	PART NUMBER	QTY	PART NAME 1 2 3 4 5 6 (PRODUCT LEVEL)	SEE PAGE
	1	1	**6V-5065**	1	SEAL-O-RING	
	2	1	**9S-8010**	1	PLUG	

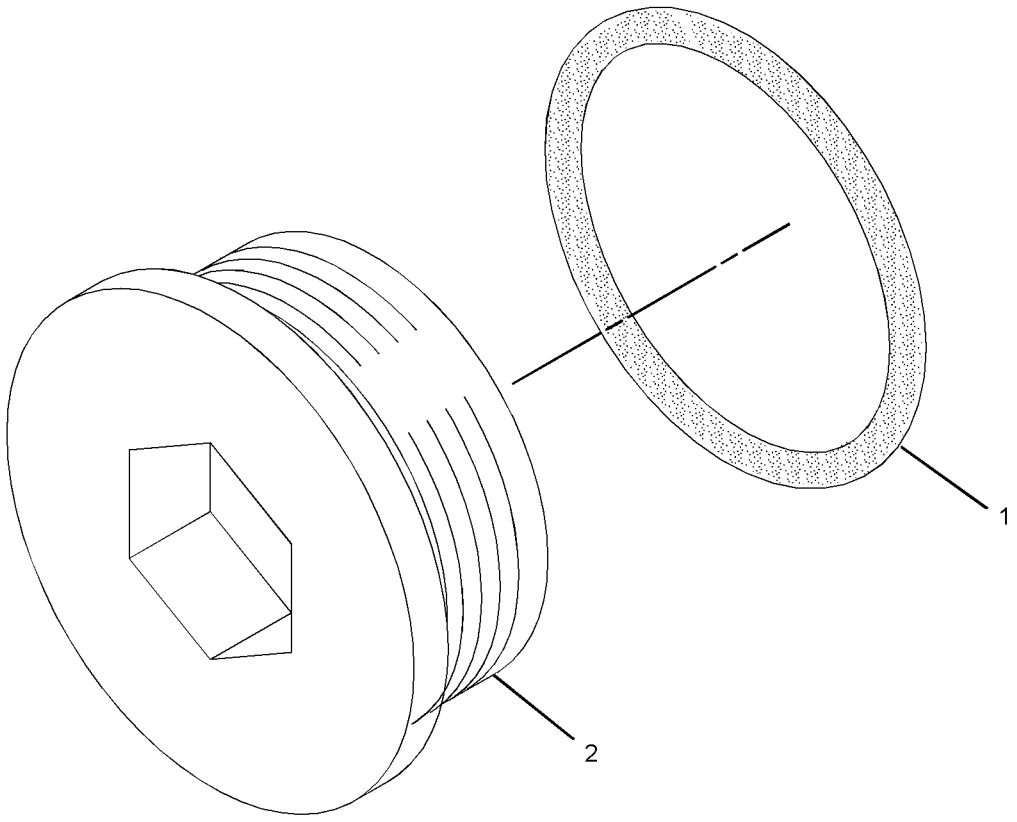

GRAPHIC #1 **<END>** g01347363

BASIC ENGINE

230-5378 PLUG GP-CYLINDER HEAD

S/N: RHX2054-UP

PART OF 215-7486, 263-7760 ENGINE AR-COMPLETE

SMCS-1100 **i03796730**

NOTE	REF NO	GRAPHIC REF	PART NUMBER	QTY	PART NAME 1 2 3 4 5 6 (PRODUCT LEVEL)	SEE PAGE
	1	1	*353-5125*	1	PLUG AS	
		1	**6V-3251**	1	SEAL-O-RING	
		1	**9S-8006**	1	PLUG-O-RING	
	2	1	*353-5126*	2	PLUG AS	
					(EACH INCLUDES)	
		1	**6V-6609**	1	SEAL-O-RING	
		1	**9S-8005**	1	PLUG-O-RING	
	3	1	*183-3407*	4	PLUG AS	
					(EACH INCLUDES)	
		1	**9S-8004**	1	PLUG-O-RING	
		1	**214-7568**	1	SEAL-O-RING	
	4	1	*307-2673*	1	PLUG AS	
		1	**9S-8005**	1	PLUG-O-RING	
		1	**238-5080**	1	SEAL-O-RING	

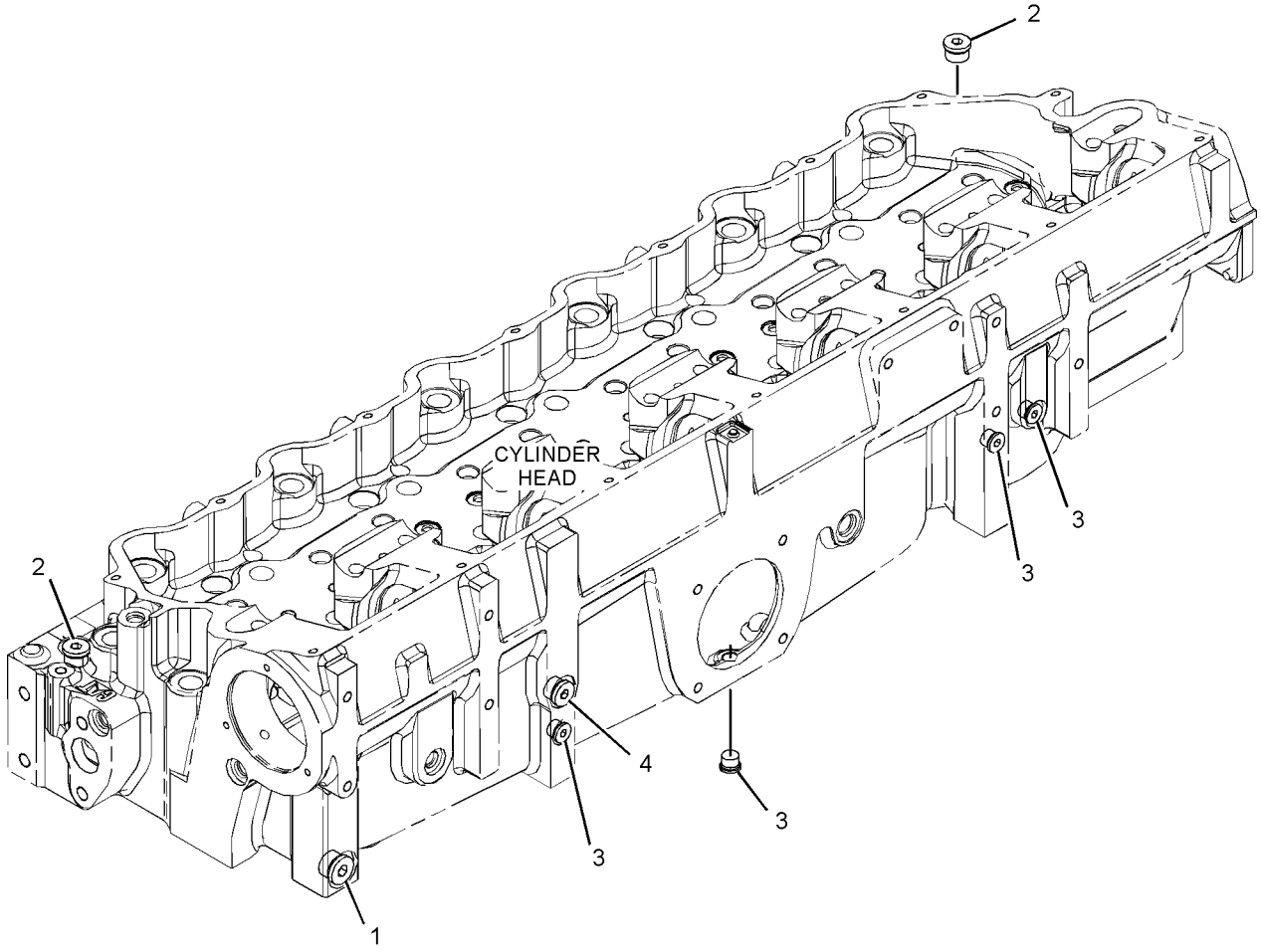

GRAPHIC #1 **<END>** g02057569

BASIC ENGINE

170-1757 PULLEY GP-CRANKSHAFT

S/N: RHX2054-UP

PART OF 215-7486, 263-7760 ENGINE AR-COMPLETE

SMCS-1205 **i01288019**

NOTE	REF NO	GRAPHIC REF	PART NUMBER	QTY	PART NAME 1 2 3 4 5 6 (PRODUCT LEVEL)	SEE PAGE
	1	1	**172-4848**	1	PULLEY (8 GROOVE)	
	2	1	**7X-0345**	4	BOLT (5/8-11X1.75IN)	

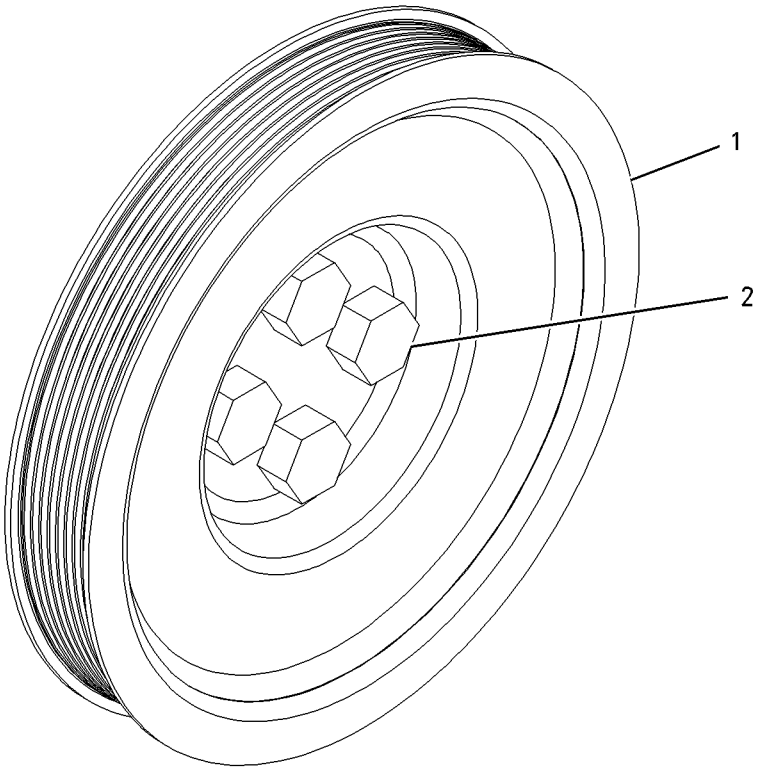

GRAPHIC #1 **<END>** g00684206

BASIC ENGINE

278-1938 ROCKER ARM GP

S/N: RHX2094-UP

PART OF 266-3699 MECHANISM GP-FUEL PUMP & VALVE

SMCS-1102, 1123 **i03753002**

NOTE	REF NO	GRAPHIC REF	PART NUMBER	QTY	PART NAME 1 2 3 4 5 6 (PRODUCT LEVEL)	SEE PAGE
	1	1	**6I-0901**	1	SHAFT AS-ROCKER ARM	
		1	**4B-9782**	2	BALL	
	2	1	**276-5317**	4	NUT (3/8-24-THD)	
	3	1	**192-4151**	2	BUTTON	
	4	1	**196-5069**	2	SCREW-ARM ADJUSTMENT (9/16-18X2-IN)	
	5	1	**196-5070**	2	NUT-JAM (9/16-18-THD)	
R	6	1	**203-8824**	2	ROCKER ARM AS (INLET)	
	7	1	**274-4491**	4	SCREW-ARM ADJUSTMENT (3/8-24X1.20-IN)	
	8	1	**258-8721**	4	BUTTON	
R	9	1	**276-4132**	2	ROCKER ARM AS (VALVE)	
R	10	1	**278-1363**	2	ROCKER ARM AS (UNIT INJECTOR)	
	11	1	**061-8639**	2	SEAL-O-RING	
	12	1	**8L-2777**	4	SEAL-O-RING	

R-REMFG PART MAY BE AVAILABLE

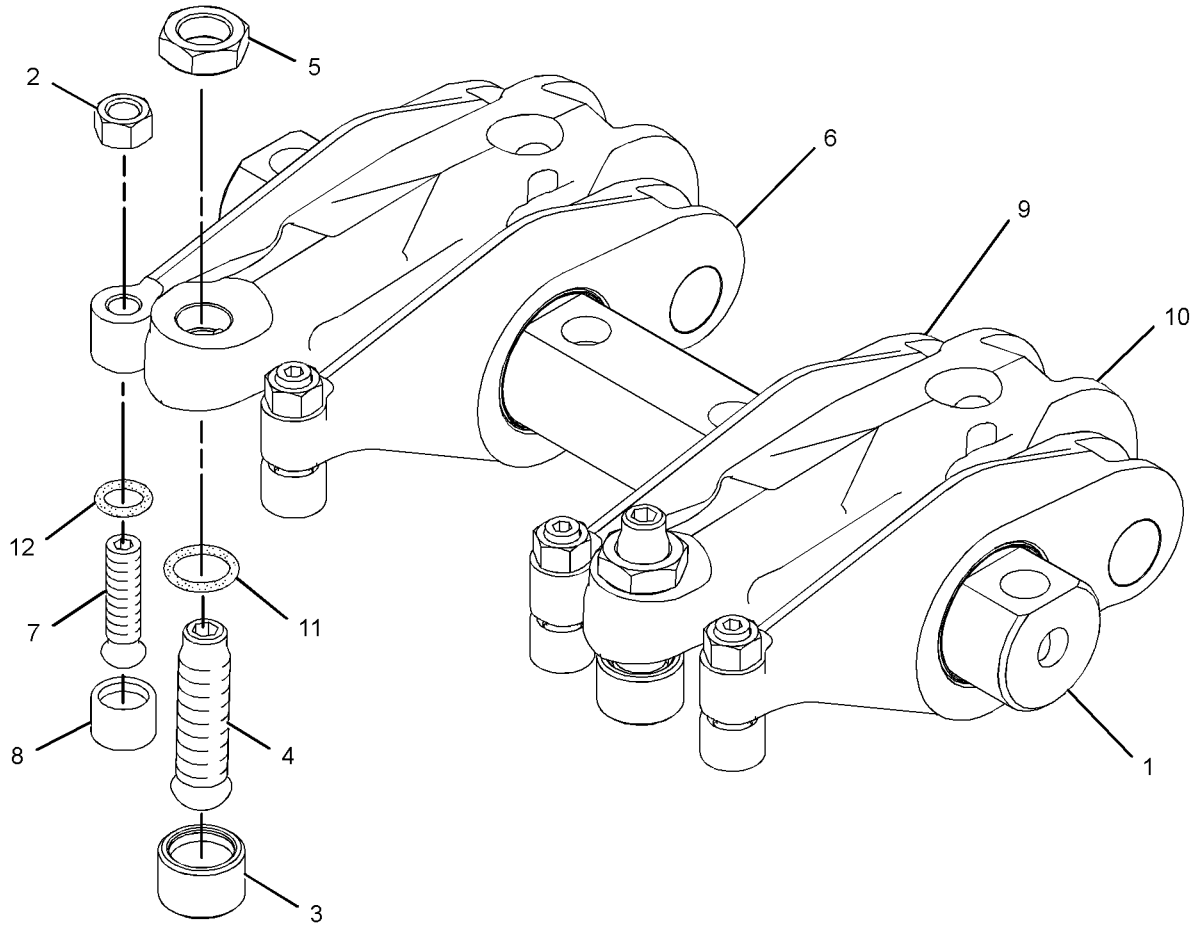

GRAPHIC #1 **<END>** g01306645

BASIC ENGINE

301-5352 ROCKER ARM GP—UNIT INJECTOR

S/N: RHX2094-UP

PART OF 328-4242 ROCKER ARM GP

SMCS-1102, 1123 **i02730627**

NOTE	REF NO	GRAPHIC REF	PART NUMBER	QTY	PART NAME 1 2 3 4 5 6 (PRODUCT LEVEL)	SEE PAGE
	1	1	**192-4151**	1	BUTTON	
	2	1	**196-5069**	1	SCREW-ARM ADJUSTMENT	
	3	1	**196-5070**	1	NUT-JAM (9/16-18-THD)	
R	4	1	**278-1363**	1	ROCKER ARM AS	
	5	1	**061-8639**	1	SEAL-O-RING	

R-REMFG PART MAY BE AVAILABLE

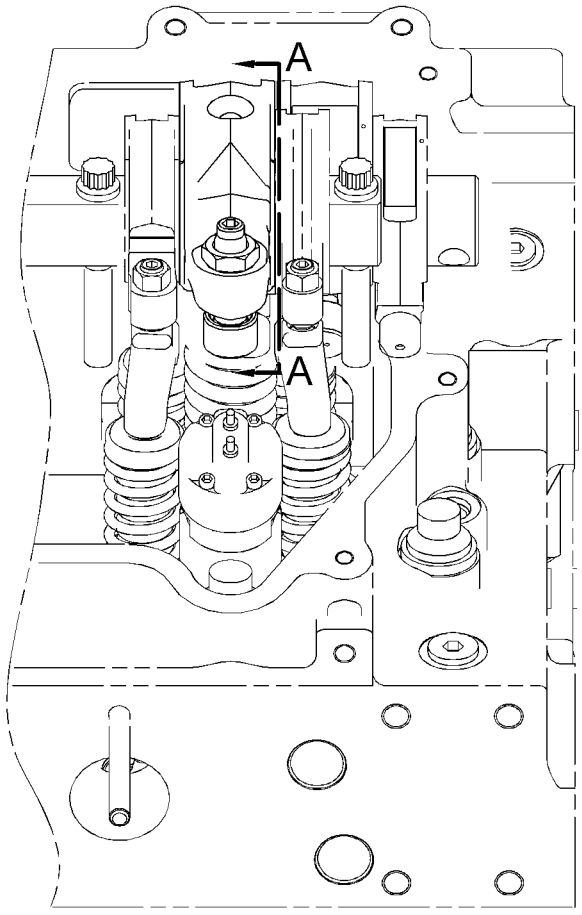

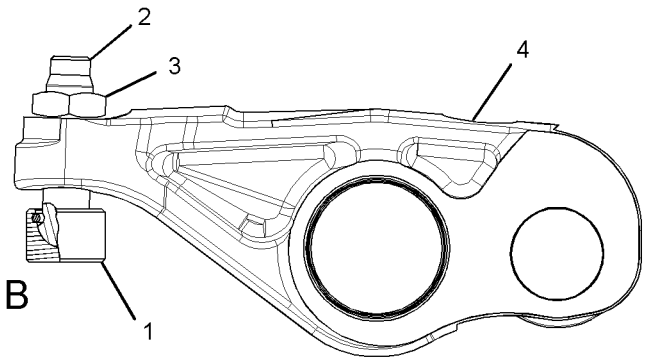

VIEW A-A

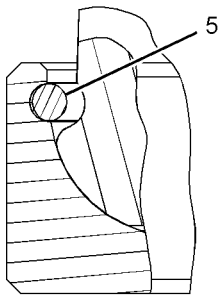

VIEW OF AREA B

GRAPHIC #1 **<END>** g01340074

BASIC ENGINE

320-2794 ROCKER ARM GP–EXHAUST

S/N: RHX2094-UP

PART OF 328-4242 ROCKER ARM GP

SMCS-1102, 1123 **i03008823**

NOTE	REF NO	GRAPHIC REF	PART NUMBER	QTY	PART NAME 1 2 3 4 5 6 (PRODUCT LEVEL)	SEE PAGE
	1	1	**258-8721**	1	BUTTON	
	2	1	**274-4491**	1	SCREW-ARM ADJUSTMENT (3/8-24X1.20-IN)	
	3	1	**276-5317**	1	NUT (3/8-24-THD)	
R	4	1	**320-2795**	1	ROCKER ARM AS	
	5	1	**8L-2777**	1	SEAL-O-RING	

R-REMFG PART MAY BE AVAILABLE

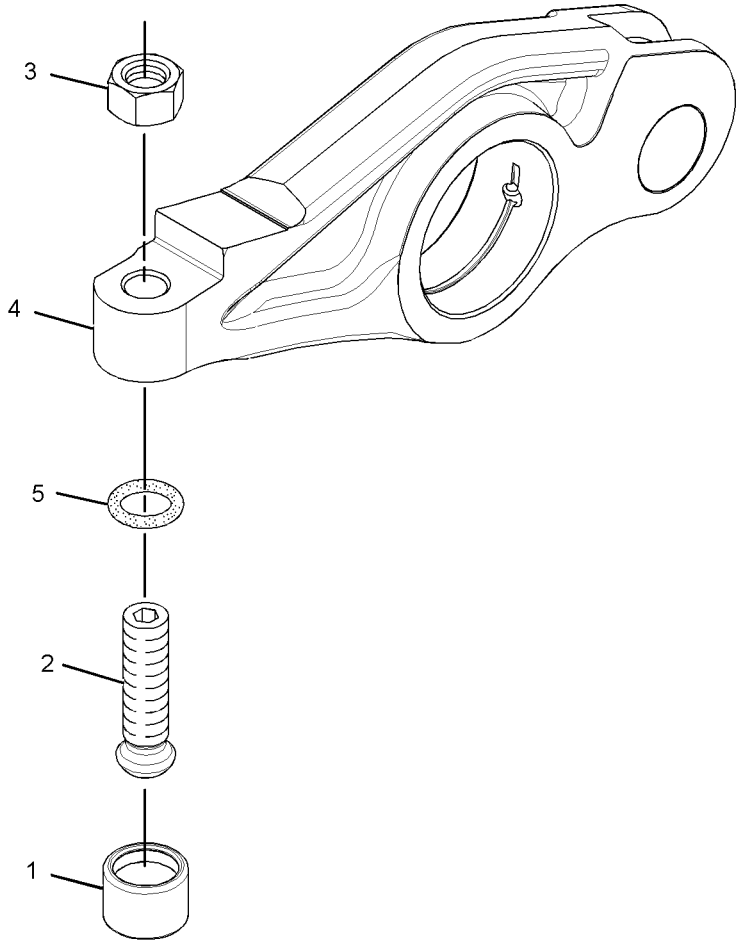

GRAPHIC #1 **<END>** g01533674

BASIC ENGINE

320-2796 ROCKER ARM GP–INTAKE*R

S/N: RHX2094-UP

PART OF 328-4236, 328-4242 ROCKER ARM GP

SMCS-1102, 1123 **i03008827**

NOTE	REF NO	GRAPHIC REF	PART NUMBER	QTY	PART NAME 1 2 3 4 5 6 (PRODUCT LEVEL)	SEE PAGE
	1	1	**258-8721**	1	BUTTON	
	2	1	**274-4491**	1	SCREW-ARM ADJUSTMENT (3/8-24X1.20-IN)	
	3	1	**276-5317**	1	NUT (3/8-24-THD)	
R	4	1	**320-2797**	1	ROCKER ARM AS	
	5	1	**8L-2777**	1	SEAL-O-RING	

R-REMFG PART MAY BE AVAILABLE

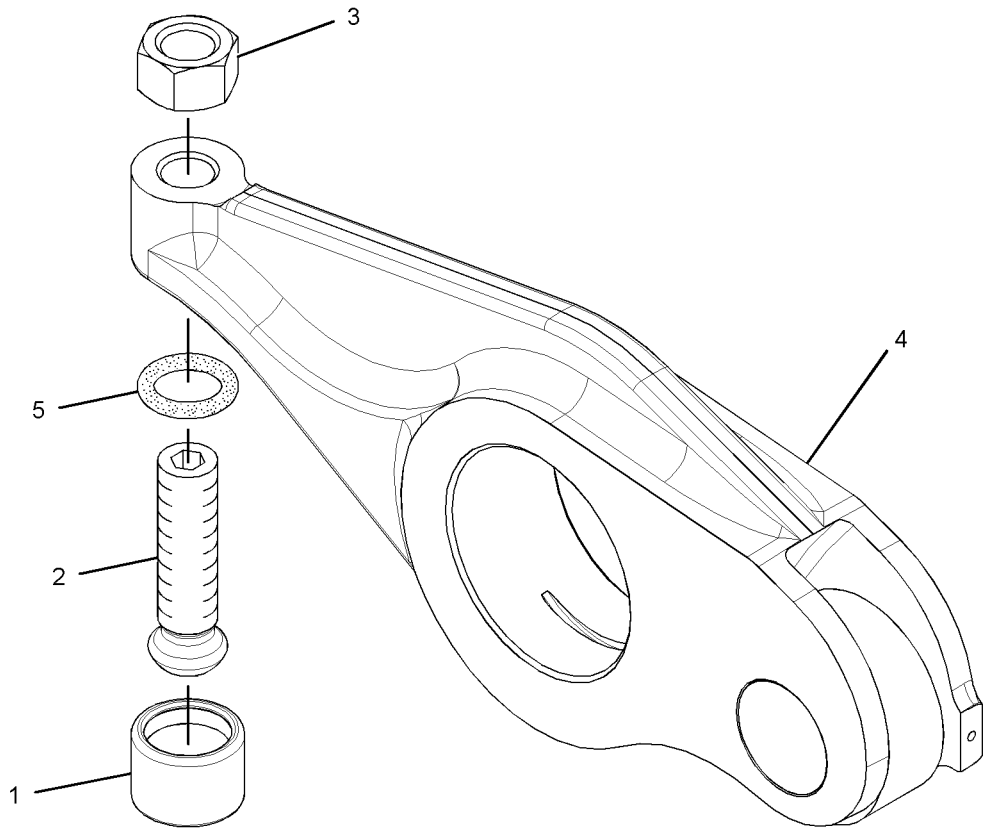

GRAPHIC #1 **<END>** g01526902

BASIC ENGINE

328-4236 ROCKER ARM GP—NON-BRAKE

S/N: RHX8764-UP

PART OF 190-0009 MECHANISM GP-FUEL PUMP & VALVE

SMCS-1102, 1123 **i03837671**

NOTE	REF NO	GRAPHIC REF	PART NUMBER	QTY	PART NAME 1 2 3 4 5 6 (PRODUCT LEVEL)	SEE PAGE
	1	1	**307-8322**	1	SHAFT AS-ROCKER ARM	
		1	**4B-9782**	2	BALL	
YR	2	1	*320-2796*	2	ROCKER ARM GP (INTAKE)	104
YR	2A	1	*320-2796*	2	ROCKER ARM GP (EXHAUST)	104
YR	3	1	*328-4238*	2	ROCKER ARM GP (UNIT INJECTOR)	106

R-REMFG PART MAY BE AVAILABLE
Y-SEPARATE ILLUSTRATION

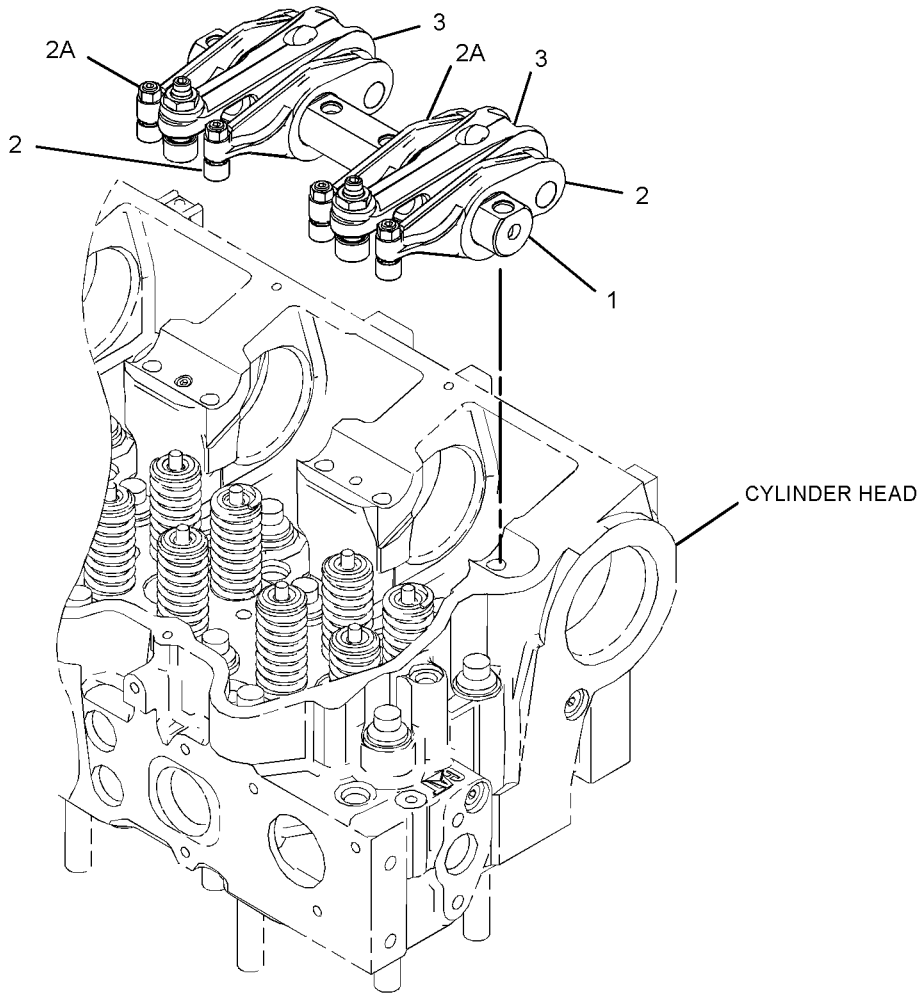

GRAPHIC #1 **<END>** g02086418

BASIC ENGINE

328-4238 ROCKER ARM GP–EXHAUST*R

S/N: RHX2218-UP

PART OF 328-4236 ROCKER ARM GP

SMCS-1102, 1123 **i03326327**

NOTE	REF NO	GRAPHIC REF	PART NUMBER	QTY	PART NAME 1 2 3 4 5 6 (PRODUCT LEVEL)	SEE PAGE
	1	1	192-4151	1	BUTTON	
	2	1	196-5069	1	SCREW-ARM ADJUSTMENT (9/16-18X2-IN)	
	3	1	196-5070	1	NUT-JAM (9/16-18-THD)	
R	4	1	278-1365	1	ROCKER ARM AS	
	5	1	061-8639	1	SEAL-O-RING	

R-REMFG PART MAY BE AVAILABLE

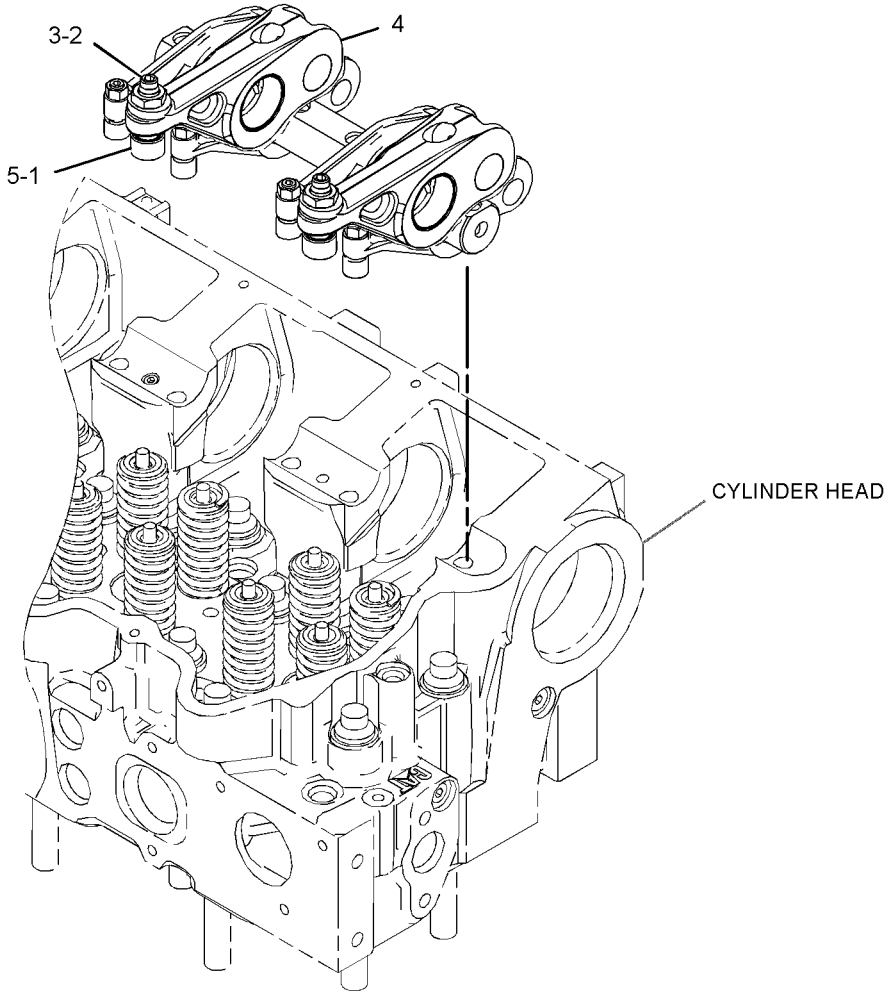

GRAPHIC #1

<END>

g01707153

BASIC ENGINE

328-4242 ROCKER ARM GP

S/N: RHX2094-UP

PART OF 266-3699 MECHANISM GP-FUEL PUMP & VALVE

SMCS-1102, 1123 **i03899375**

NOTE	REF NO	GRAPHIC REF	PART NUMBER	QTY	PART NAME 1 2 3 4 5 6 (PRODUCT LEVEL)	SEE PAGE
YR	1	1	*301-5352*	2	ROCKER ARM GP (UNIT INJECTOR)	102
	2	1	**307-8322**	1	SHAFT AS-ROCKER ARM	
		1	**4B-9782**	2	BALL	
YR	3	1	*320-2794*	2	ROCKER ARM GP (EXHAUST)	103
YR	4	1	*320-2796*	2	ROCKER ARM GP (INTAKE)	104

R-REMFG PART MAY BE AVAILABLE
Y-SEPARATE ILLUSTRATION

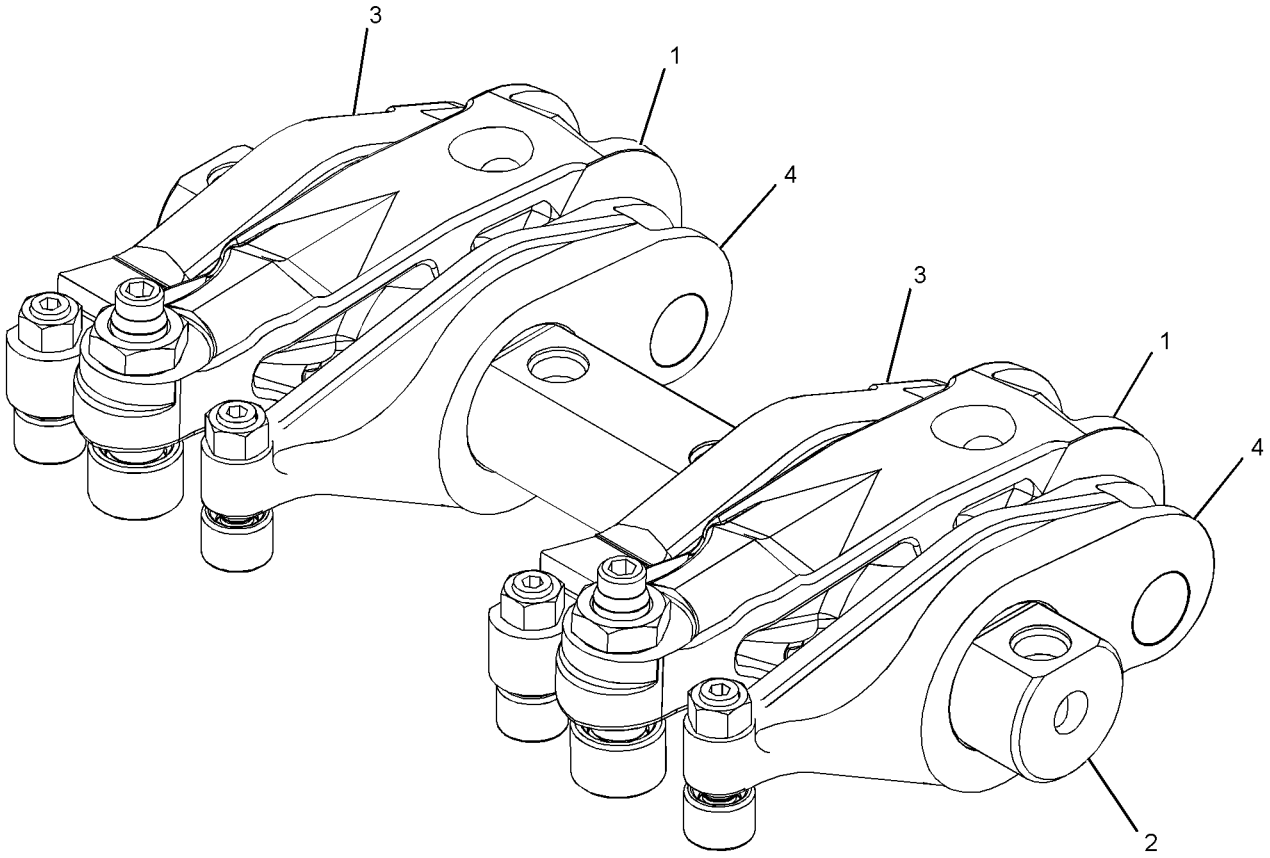

GRAPHIC #1 **<END>** g01825493

BASIC ENGINE

319-0785 SEAL GP-CRANKSHAFT–REAR

S/N: RHX2094-UP
PART OF 220-6368 HOUSING GP-FLYWHEEL
FOR USE WITH CCW ROTATION, REAR

SMCS-1160, 1161 **i02958100**

NOTE	REF NO	GRAPHIC REF	PART NUMBER	QTY	PART NAME 1 2 3 4 5 6 (PRODUCT LEVEL)	SEE PAGE
	1	1	142-5868	1	SEAL - CRANKSHAFT (REAR)	

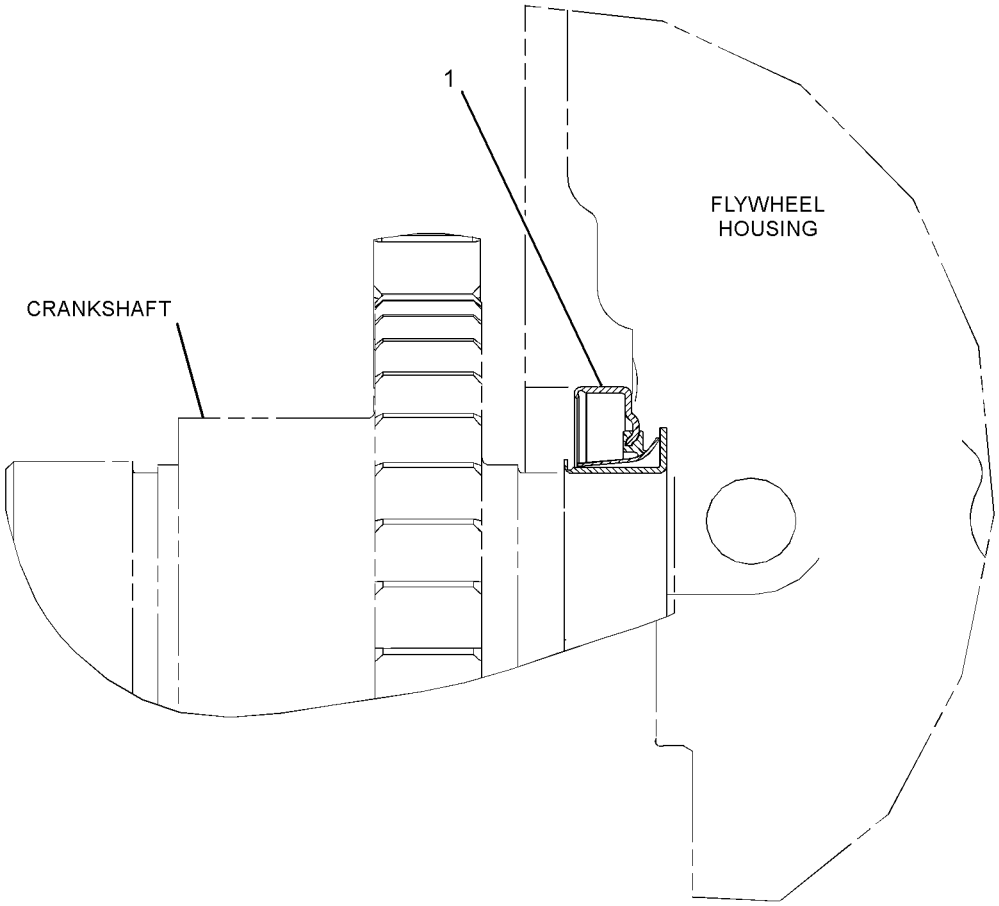

RIGHT SIDE VIEW OF ENGINE

GRAPHIC #1 **<END>** g01496733

BASIC ENGINE

319-7401 SEAL GP-CRANKSHAFT–FRONT

S/N: RHX2094-UP

PART OF 223-9732 CRANKSHAFT GP

SMCS-1160, 1161 **i02957871**

NOTE	REF NO	GRAPHIC REF	PART NUMBER	QTY	PART NAME 1 2 3 4 5 6 (PRODUCT LEVEL)	SEE PAGE
	1	1	142-5867	1	SEAL - CRANKSHAFT (FRONT)	

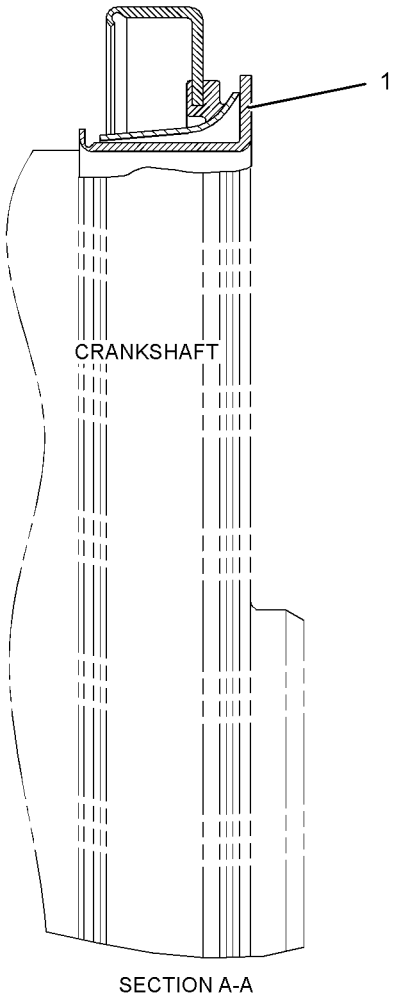

SECTION A-A

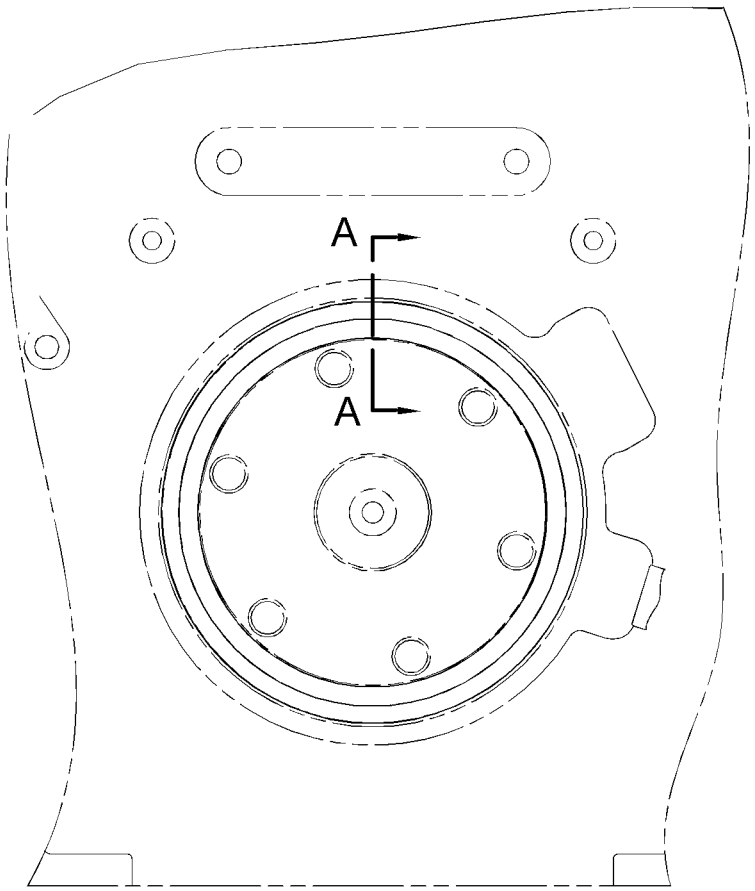

FRONT VIEW OF ENGINE

GRAPHIC #1

<END>

g01516169

BASIC ENGINE

235-5021 SUPPORT GP-ENGINE

S/N: RHX2054-UP

PART OF 215-7486, 263-7760 ENGINE AR-COMPLETE

SMCS-1152, 1153, 1154 **i02490113**

NOTE	REF NO	GRAPHIC REF	PART NUMBER	QTY	PART NAME 1 2 3 4 5 6 (PRODUCT LEVEL)	SEE PAGE
	1	1	**9Y-7770**	1	SUPPORT-ENGINE	
	1A	1	**4N-0683**	2	DOWEL	
	2	1	**8F-8804**	8	BOLT (1/2-13X5.75-IN)	
	3	1	**5P-8245**	8	WASHER-HARD (13.5X25.5X3-MM THK)	

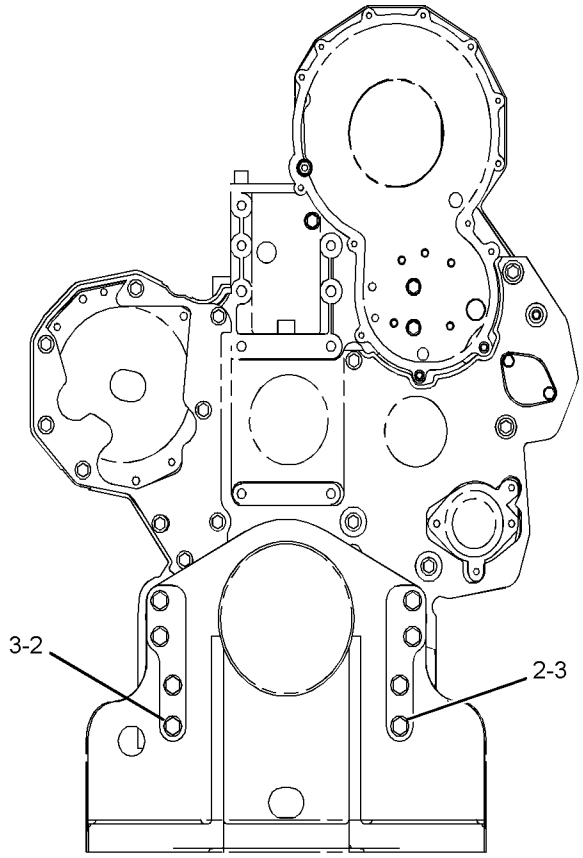

FRONT VIEW

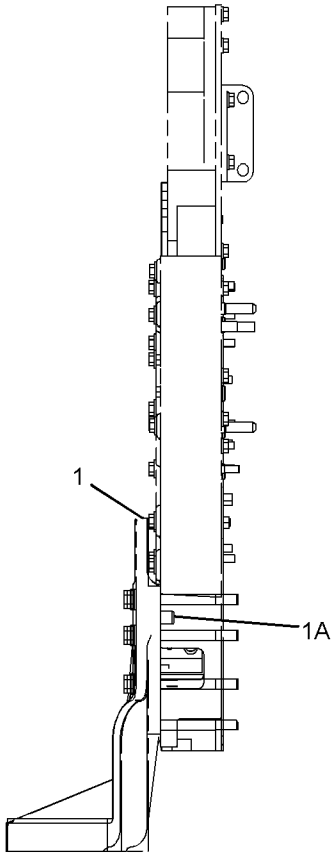

LEFT SIDE VIEW

GRAPHIC #1 **<END>** g01051817

BASIC ENGINE

272-5997 SUPPRESSION GP-SOUND—ENGINE ENCLOSURE

S/N: B9K1-UP

PART OF 314-7907 CONVERSION AR-CERTIFICATION

SMCS-1801 **i02757843**

NOTE	REF NO	GRAPHIC REF	PART NUMBER	QTY	PART NAME 1 2 3 4 5 6 (PRODUCT LEVEL)	SEE PAGE
	1	1	268-3908	1	INSULATION	
	2	1	268-3992	1	INSULATION	
	3	1	268-3993	1	INSULATION	
	4	1	268-8250	1	INSULATION	
	5	1	268-8252	2	INSULATION	
	6	1	268-8282	1	INSULATION	
	7	1	268-8284	1	INSULATION	
	8	1	278-9897	1	INSULATION	
	9	1	283-7168	1	INSULATION	

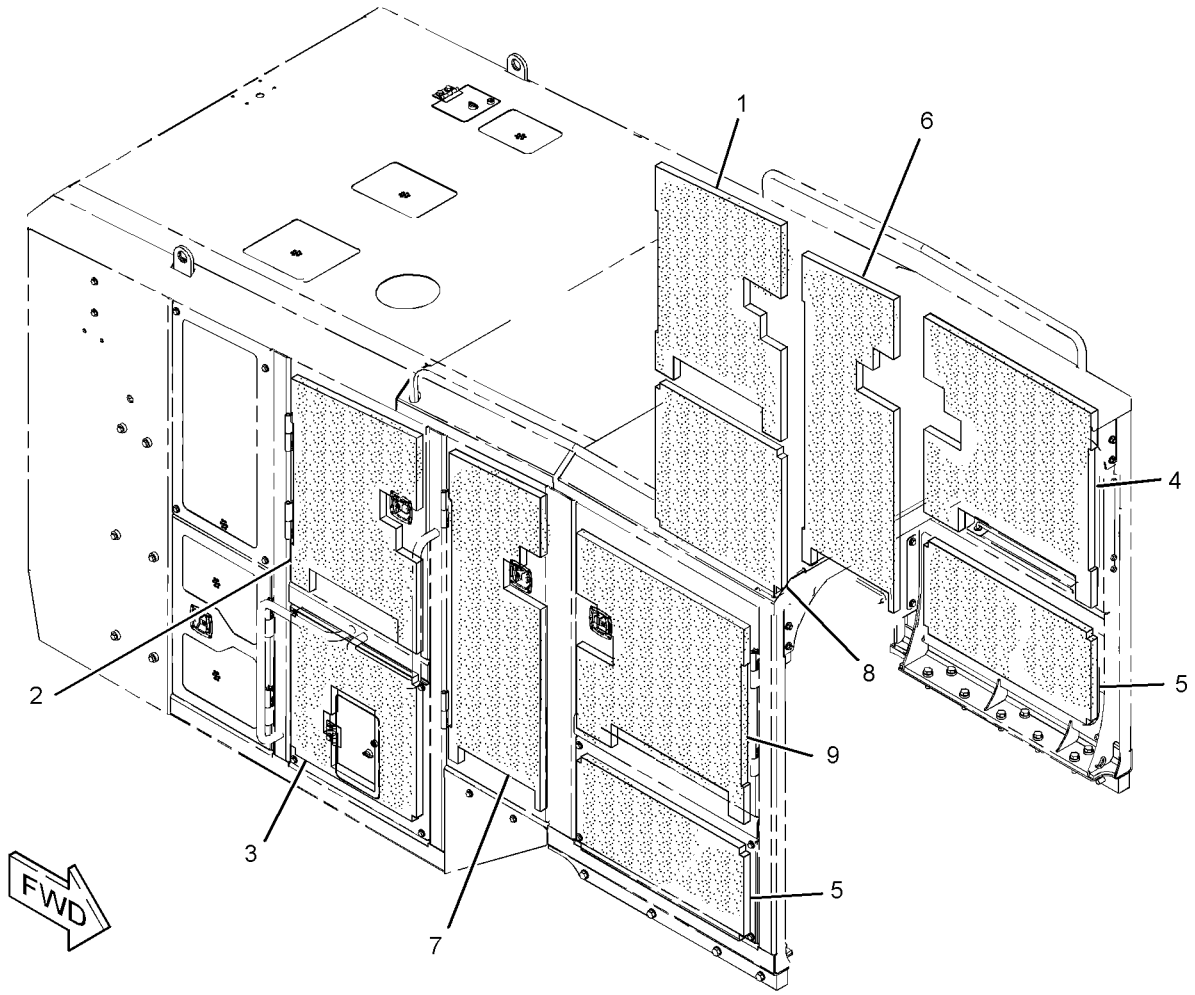

GRAPHIC #1 **<END>** g01381432

LUBRICATION SYSTEM

4N-2481 FASTENER GP-OIL PUMP MOUNTING—ENGINE

S/N: RHX2054-UP

PART OF 215-7486, 263-7760 ENGINE AR-COMPLETE

SMCS-1304 **i02728826**

NOTE	REF NO	GRAPHIC REF	PART NUMBER	QTY	PART NAME 1 2 3 4 5 6 (PRODUCT LEVEL)	SEE PAGE
	1	1	**0L-1143**	2	BOLT (3/8-16X2.5-IN)	
	2	1	**0S-1590**	1	BOLT (3/8-16X2-IN)	
	3	1	**5M-2894**	3	WASHER-HARD (10.2X18.5X2.5-MM THK)	

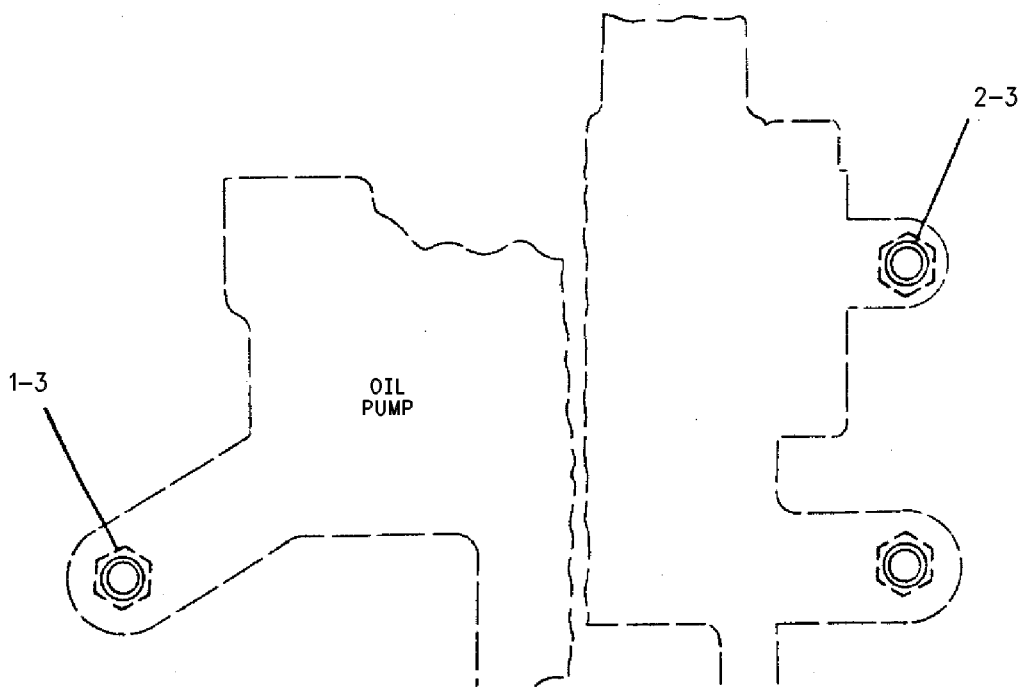

GRAPHIC #1 **<END>** g00604525

LUBRICATION SYSTEM

263-7310 FILLER GP-ENGINE OIL

S/N: RHX2054-UP
FRONT, RIGHT HAND CYLINDER BLOCK
PART OF 215-7486, 263-7760 ENGINE AR-COMPLETE

SMCS-1316, 7513 **i04001904**

NOTE	REF NO	GRAPHIC REF	PART NUMBER	QTY	PART NAME 1 2 3 4 5 6 (PRODUCT LEVEL)	SEE PAGE
	1	1	**9L-8439**	1	CAP-OIL FILLER (ENGINE)	
	2	1	**197-1488**	1	TUBE AS-OIL FILLER	
	3	1	**263-7313**	1	BRACKET AS	
		1	**1F-0750**	1	NUT-WELD (3/8-16-THD)	
	4	1	**0S-0509**	2	BOLT (3/8-16X0.75-IN)	
	5	1	**0S-1588**	2	BOLT (3/8-16X1.25-IN)	
	6	1	**5M-2894**	2	WASHER-HARD (10.2X18.5X2.5-MM THK)	
	7	1	**7C-4355**	1	CLIP	
	8	1	**210-9246**	1	SEAL-O-RING	
	9	1	**9X-6458**	1	WASHER-HARD (10.2X22.5X3-MM THK)	

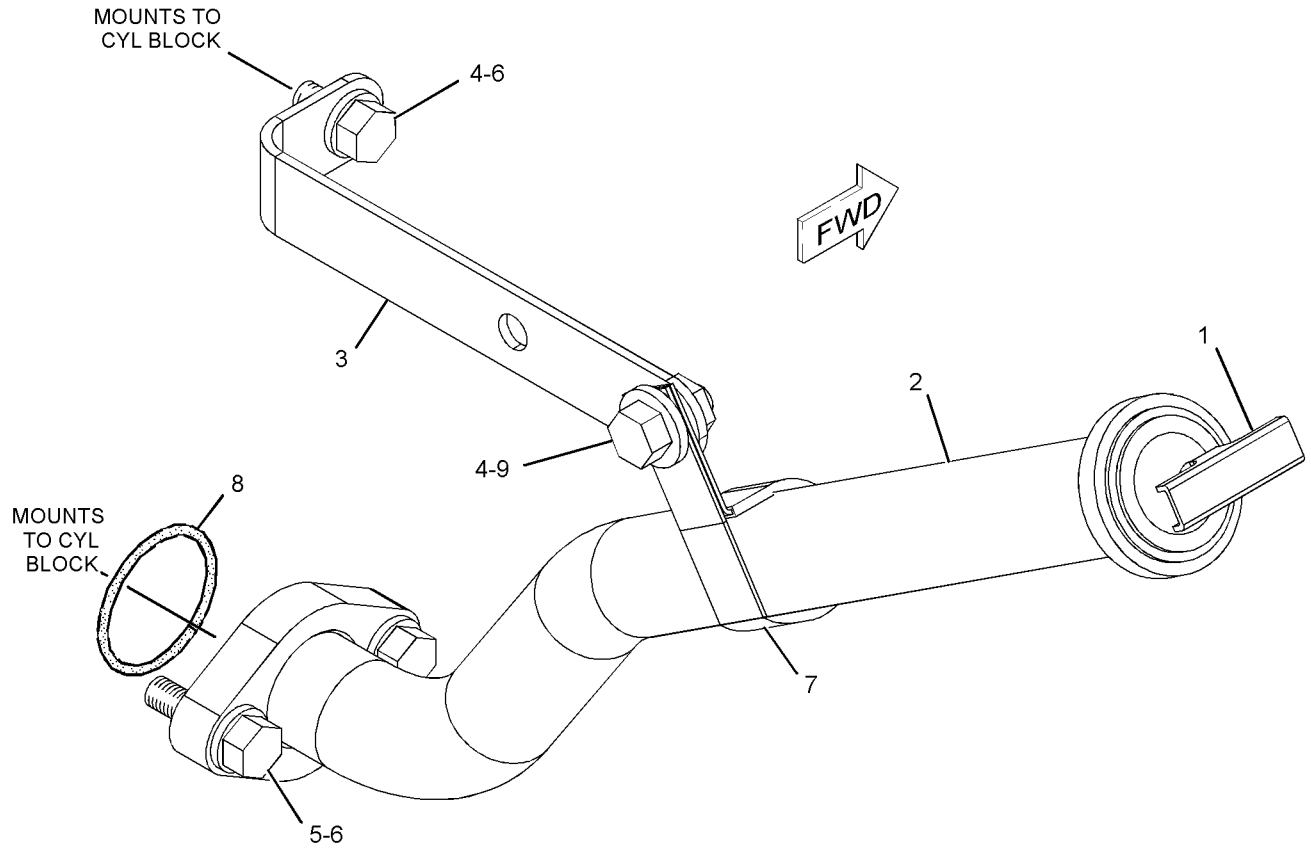

GRAPHIC #1 **<END>** g01381921

LUBRICATION SYSTEM

272-5561 FILTER GP-ENGINE OIL—ENGINE

S/N: B9K1-UP

PART OF 259-9204 COMMON AR

SMCS-1306, 1308 **i02764537**

NOTE	REF NO	GRAPHIC REF	PART NUMBER	QTY	PART NAME 1 2 3 4 5 6 (PRODUCT LEVEL)	SEE PAGE
	1	1	**3J-7354**	1	SEAL-O-RING	
	2	1	**8C-3445**	1	CAP-DUST	
	3	1	**8C-3446**	1	VALVE-FLUID SAMPLING (ENGINE OIL)	
	4	1	**102-5828**	1	COVER	
	5	1	**102-5829**	1	ADAPTER	
	6	1	*164-5596*	1	TEE AS	
		1	**5K-9090**	1	SEAL-O-RING	
		1	**7M-8485**	1	SEAL-O-RING	
		1	**8C-6515**	1	TEE	
	7	1	**190-1106**	1	BASE AS-OIL FILTER (ENGINE)	
		1	**2P-4304**	1	STUD-HOLLOW	
	8	1	**266-6821**	1	PLATE AS	
I	9	1	**282-3649**	1	HOSE AS	
I	10	1	**285-5269**	1	HOSE AS	
	11	1	*148-8335*	1	CONNECTOR AS	
		1	**5K-9090**	1	SEAL-O-RING	
		1	**6V-8635**	1	CONNECTOR	
		1	**7M-8485**	1	SEAL-O-RING	
	12	1	*148-8357*	2	ELBOW AS	
					(EACH INCLUDES)	
		1	**5K-9090**	1	SEAL-O-RING	
		1	**6V-9008**	1	ELBOW	
		1	**7M-8485**	1	SEAL-O-RING	
	13	1	*164-4180*	1	PLUG AS	
		1	**7M-8485**	1	SEAL-O-RING	
		1	**9S-4181**	1	PLUG-O-RING	
	14	1	**198-4777**	4	WASHER-HARD (11X25X10-MM THK)	
	15	1	**3J-1907**	1	SEAL-O-RING	
	16	1	**6V-3908**	2	SEAL-O-RING	
	17	1	**7D-7233**	2	CLIP	
	18	1	**8C-6712**	1	ELBOW (90-DEG)	
	19	1	**8T-4121**	6	WASHER-HARD (11X21X2.5-MM THK)	
M	20	1	**8T-4133**	1	NUT (M10X1.5-THD)	
M	21	1	**8T-4136**	1	BOLT (M10X1.5X25-MM)	
M	22	1	**8T-4196**	8	BOLT (M10X1.5X35-MM)	

I-REFER TO HYDRAULIC INFORMATION SYSTEM
M-METRIC PART

272-5561 **FILTER GP-ENGINE OIL** *(contd.)* **i02764537**

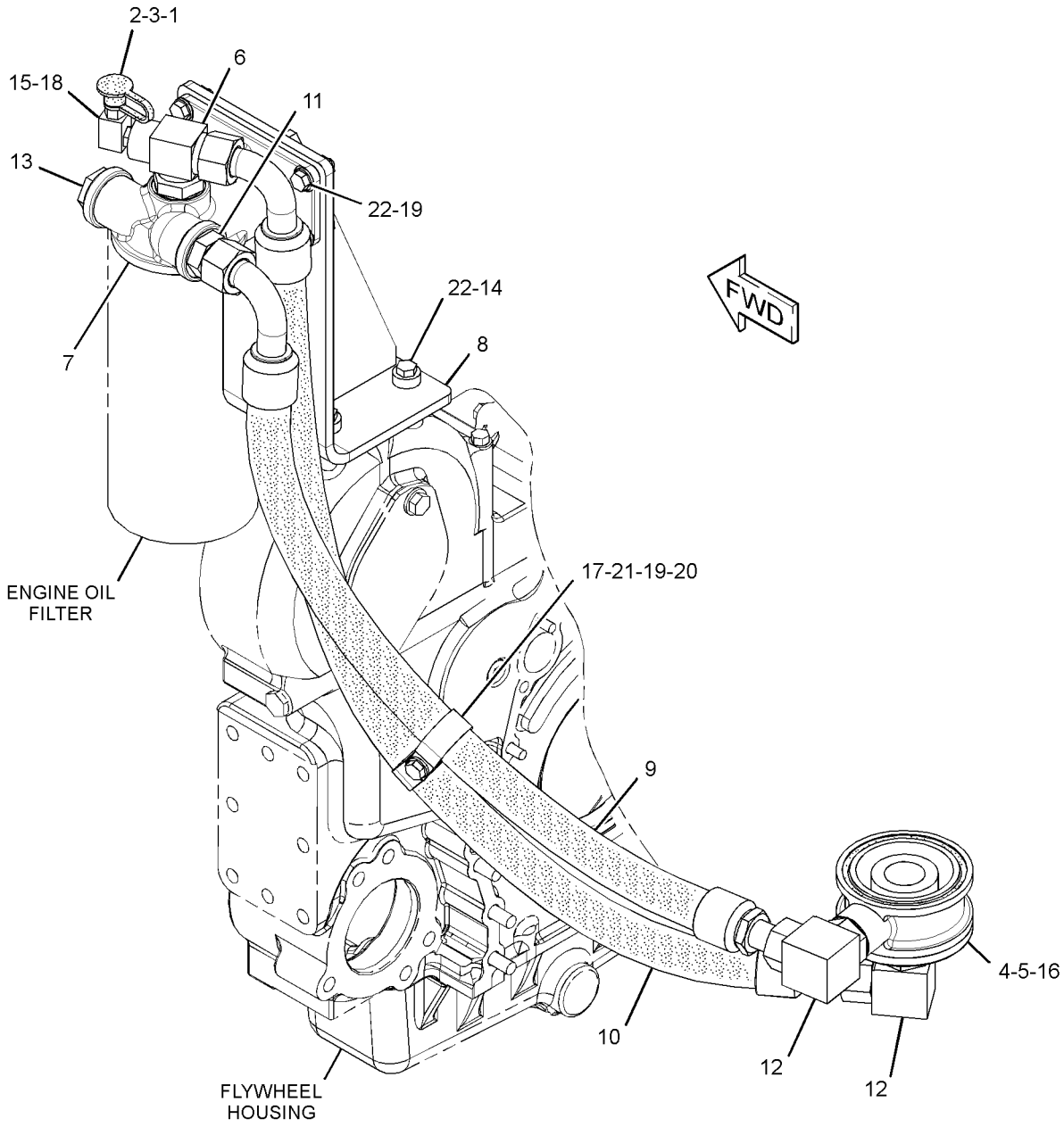

GRAPHIC #1 **<END>** g01387345

LUBRICATION SYSTEM

292-4057 FILTER GP-ENGINE OIL

S/N: RHX2054-UP

PART OF 215-7486, 263-7760 ENGINE AR-COMPLETE

SMCS-1306, 1308 **i02768467**

NOTE	REF NO	GRAPHIC REF	PART NUMBER	QTY	PART NAME 1 2 3 4 5 6 (PRODUCT LEVEL)	SEE PAGE
	1	1	**2P-3760**	1	GASKET	
	2	1	**2P-4301**	1	BASE AS	
	2A	1	**2P-4304**	1	STUD-HOLLOW	
	3	1	**2P-4305**	2	GASKET	
	4	1	**4N-8150**	1	SPRING	
	5	1	**9M-0853**	1	PLUNGER-VALVE	
	6	1	**249-7734**	1	COVER	
	7	1	**259-8357**	1	ADAPTER-OIL FILTER	
	8	1	**0S-1588**	6	BOLT (3/8-16X1.25-IN)	
	9	1	**0S-1590**	4	BOLT (3/8-16X2-IN)	
	10	1	**0S-1594**	4	BOLT (3/8-16X1-IN)	
	11	1	**136-7227**	1	SEAL-O-RING	
	12	1	**1R-1808**	1	FILTER-ENGINE OIL (ADVANCED EFFICIENCY)	
	13	1	**2P-3761**	1	COVER	
	14	1	**3J-1907**	1	SEAL-O-RING	
	15	1	**3J-7354**	1	SEAL-O-RING	
	16	1	**5M-2894**	14	WASHER-HARD (10.2X18.5X2.5-MM THK)	
	17	1	**9S-8002**	1	PLUG-O-RING	
	18	1	**9S-8004**	1	PLUG-O-RING	
	19	1	**9S-8006**	1	PLUG-O-RING	
	20	1	**9S-8752**	4	NUT-FULL (3/8-16-THD)	

292-4057 **FILTER GP-ENGINE OIL** *(contd.)* **i02768467**

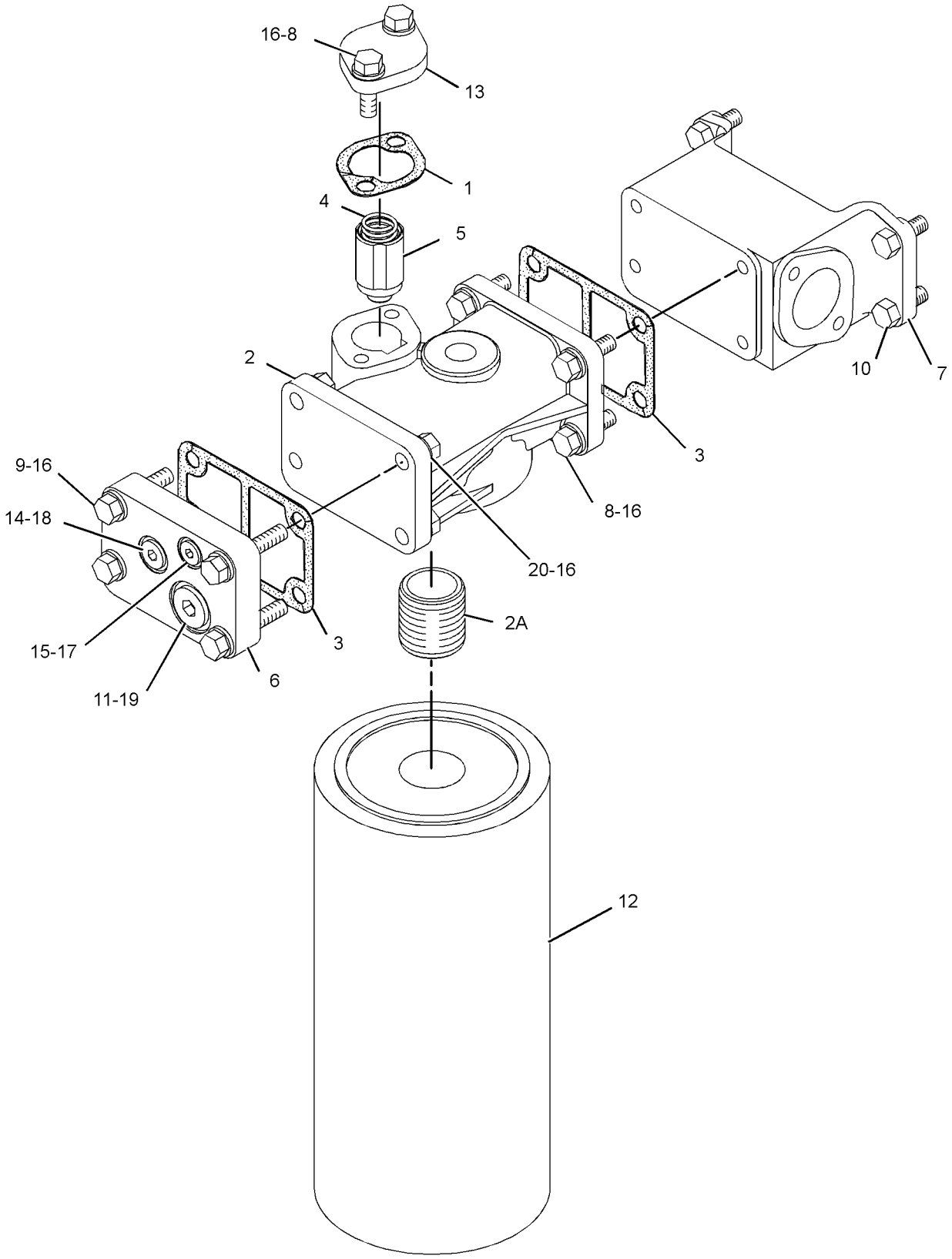

GRAPHIC #1 **<END>** g01389842

LUBRICATION SYSTEM

159-9362 FUMES DISPOSAL GP

S/N: RHX2054-UP
REAR VALVE COVER MOUNTED FUMES DISPOSAL
PART OF 215-7486, 263-7760 ENGINE AR-COMPLETE

SMCS-1317 **i03496900**

NOTE	REF NO	GRAPHIC REF	PART NUMBER	QTY	PART NAME 1 2 3 4 5 6 (PRODUCT LEVEL)	SEE PAGE
	1	1	9M-0164	1	CLAMP-HOSE	
	2	1	161-6622	1	CLIP	
	3	1	207-8128	1	HOSE AS (FUMES DISPOSAL)	
	4	1	5P-2369	1	CLIP	

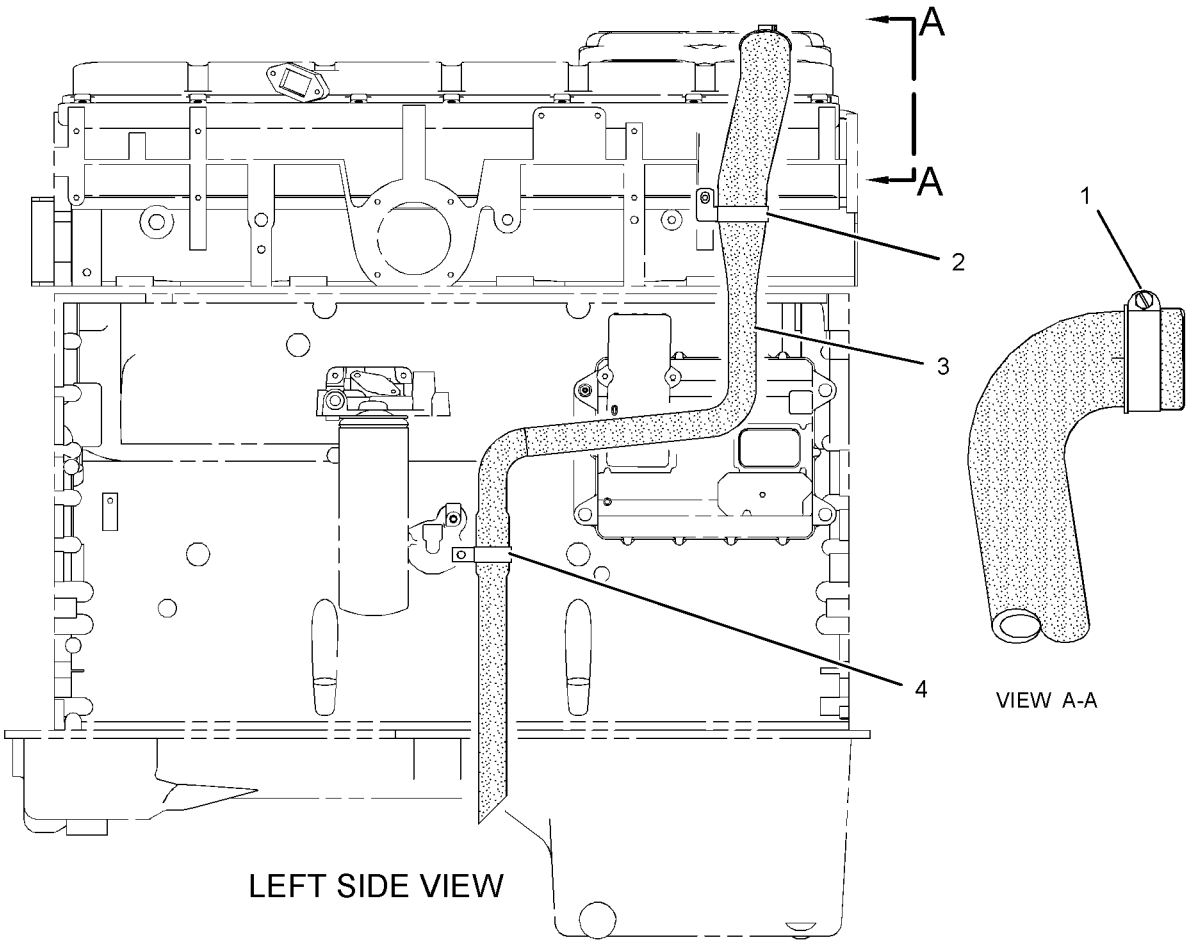

GRAPHIC #1 **<END>** g01436024

LUBRICATION SYSTEM

221-1764 GAUGE GP-OIL LEVEL (DIPSTICK)

S/N: RHX2054-UP

PART OF 215-7486, 263-7760 ENGINE AR-COMPLETE

SMCS-1326 **i02774523**

NOTE	REF NO	GRAPHIC REF	PART NUMBER	QTY	PART NAME 1 2 3 4 5 6 (PRODUCT LEVEL)	SEE PAGE
	1	1	**161-1827**	1	TUBE AS	
	2	1	**165-6170**	3	PLUG	
	3	1	**221-1870**	1	GAUGE AS-OIL LEVEL (ENGINE)	
	4	1	**0S-0509**	1	BOLT (3/8-16X0.75-IN)	
	5	1	**118-5068**	1	SEAL-O-RING	
	6	1	**5M-2894**	1	WASHER-HARD (10.2X18.5X2.5-MM THK)	

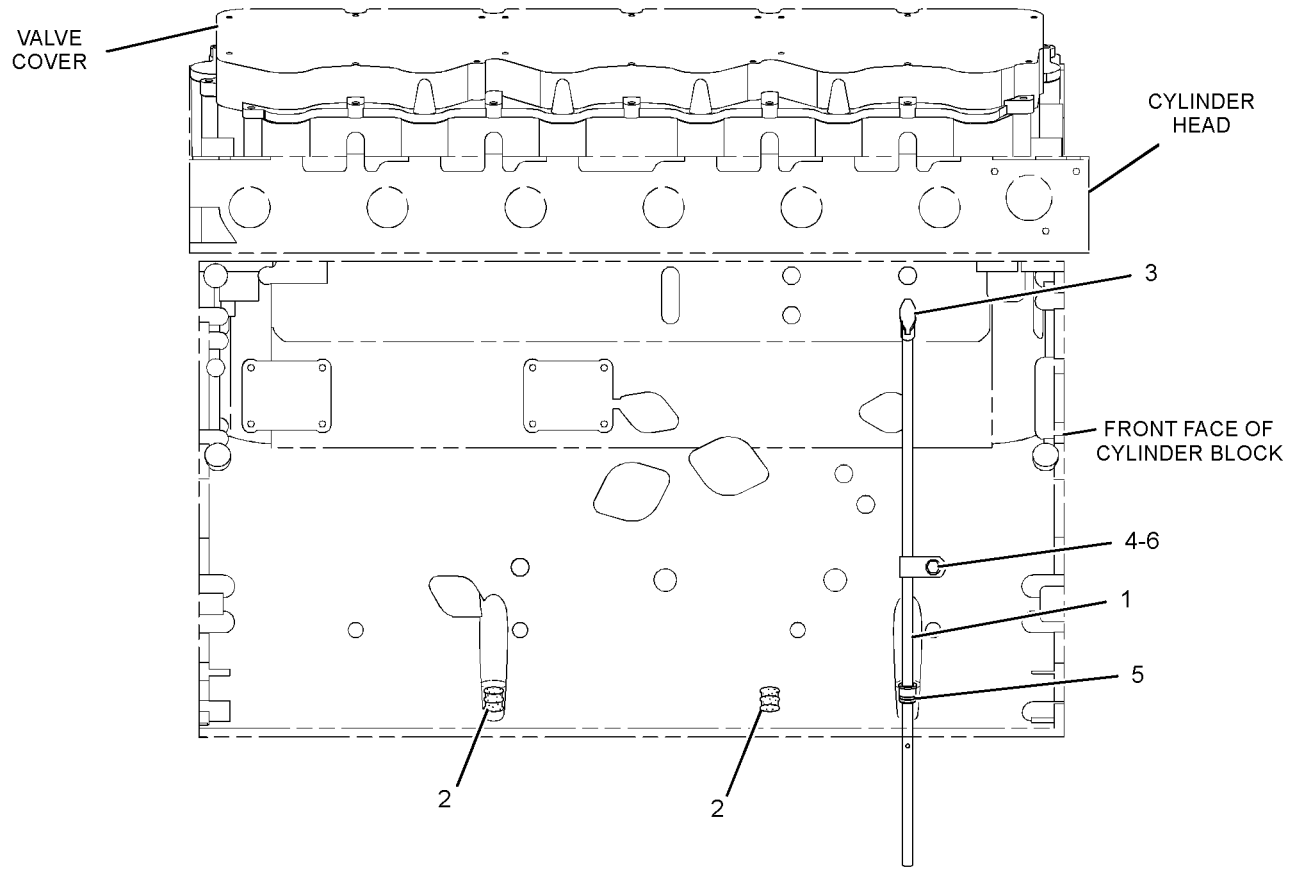

RIGHT SIDE VIEW OF ENGINE

GRAPHIC #1 **<END>** g01390080

LUBRICATION SYSTEM

219-4443 LINES GP-ENGINE OIL–FILTER

S/N: RHX2054-UP

PART OF 215-7486, 263-7760 ENGINE AR-COMPLETE

SMCS-1307 **i03901212**

NOTE	REF NO	GRAPHIC REF	PART NUMBER	QTY	PART NAME 1 2 3 4 5 6 (PRODUCT LEVEL)	SEE PAGE
	1	1	**1W-6137**	1	TUBE AS	
	2	1	**2P-3760**	1	GASKET	
	3	1	**4N-0826**	1	ELBOW	
	4	1	**4N-1216**	1	TUBE-COOLER BYPASS	
	5	1	**4N-8150**	1	SPRING	
	6	1	**9M-0853**	1	PLUNGER-VALVE	
	7	1	**203-0147**	1	TUBE AS	
	8	1	**223-5814**	1	BODY-COOLER BYPASS (ENGINE OIL)	
	9	1	**0S-1588**	4	BOLT (3/8-16X1.25-IN)	
	10	1	**0S-1594**	10	BOLT (3/8-16X1-IN)	
	11		*321-8642*	2	PLUG AS	
					(EACH INCLUDES)	
		1	**9S-8003**	1	PLUG	
			214-7567	1	SEAL-O-RING	
	12	1	**2N-3350**	2	SEAL-O-RING	
	13	1	**2P-3761**	1	COVER	
	14	1	**3E-6790**	1	SEAL-O-RING	
	15	1	**113-5304**	2	SEAL-O-RING	
	16	1	**5M-2894**	6	WASHER-HARD (10.2X18.5X2.5-MM THK)	
	17	1	**5P-8068**	2	SEAL-O-RING	
	18	1	**8C-5230**	2	SEAL-O-RING	

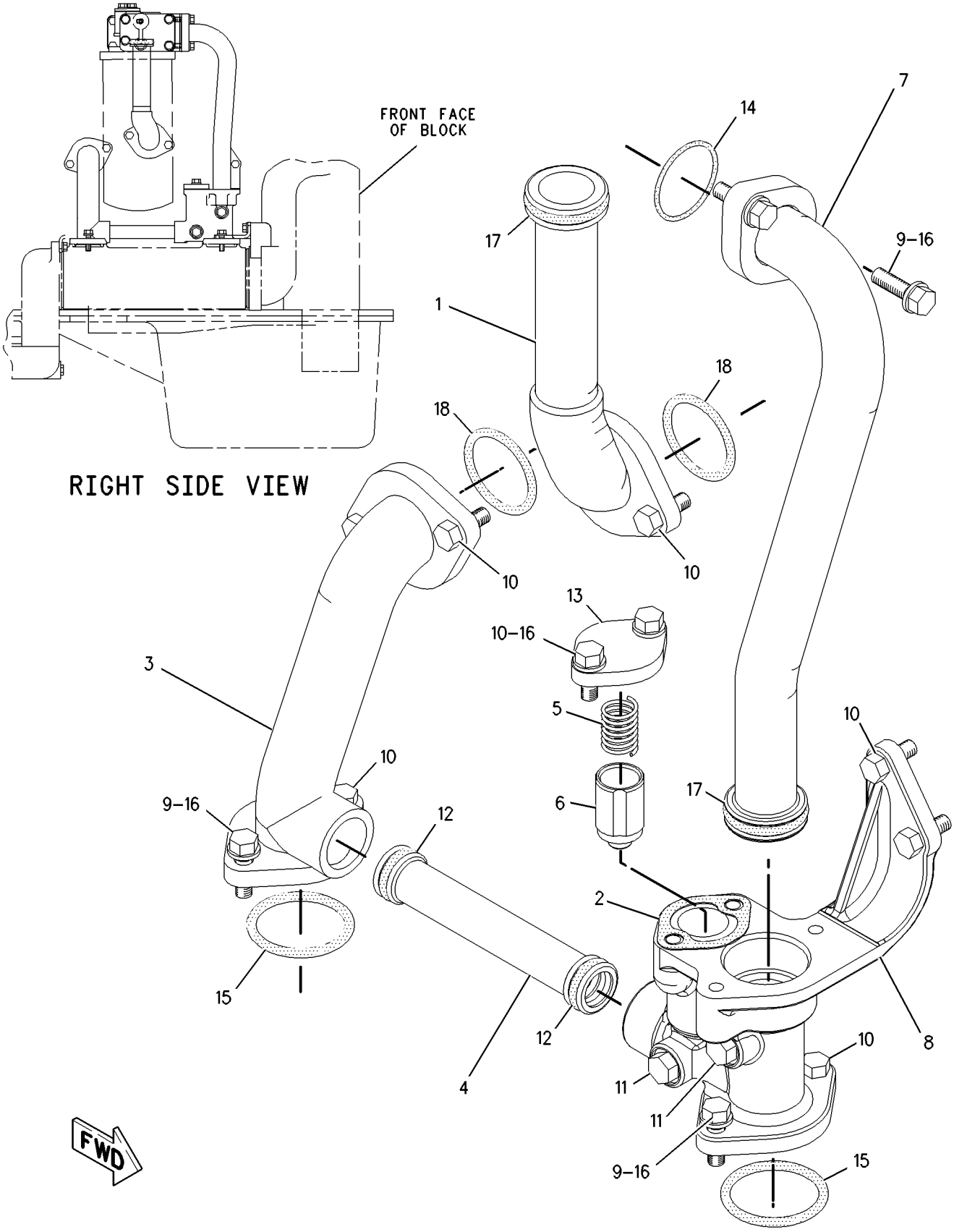

GRAPHIC #1 **<END>** g01002356

LUBRICATION SYSTEM

253-3999 LINES GP-ENGINE OIL DRAIN

S/N: B9K1-UP

PART OF 259-9204 COMMON AR

SMCS-1307 **i02732337**

NOTE	REF NO	GRAPHIC REF	PART NUMBER	QTY	PART NAME 1 2 3 4 5 6 (PRODUCT LEVEL)	SEE PAGE
	1	1	**2V-2043**	1	NUT-BULKHEAD (1-5/8-12-THD)	
	2	1	**4P-0519**	1	ADAPTER AS-DRAIN	
		1	**109-5839**	1	PLUG-DRAIN (ENGINE OIL PAN)	
		1	**109-5840**	1	ADAPTER-PLUG	
	3	1	**4P-9853**	1	BLOCK	
I	4	1	**8D-5529**	1	HOSE	
	5	1	**110-8827**	1	FITTING (QUICK DISCONNECT, MALE)	
		1	**110-8826**	1	CAP-DUST	
	6	1	*153-6247*	1	CONNECTOR AS	
		1	**8C-6875**	1	CONNECTOR	
		1	**5K-9090**	1	SEAL-O-RING	
I	7	1	**282-2614**	1	HOSE AS	
	8	1	*148-8335*	1	CONNECTOR AS	
		1	**6V-8635**	1	CONNECTOR	
		1	**5K-9090**	1	SEAL-O-RING	
		1	**7M-8485**	1	SEAL-O-RING	
	9	1	**5P-8068**	1	SEAL-O-RING	
	10	1	**6V-3830**	1	SEAL-O-RING	
	11	1	**9X-8876**	2	BOLT (1/2-13X4.75-IN)	

I-REFER TO HYDRAULIC INFORMATION SYSTEM

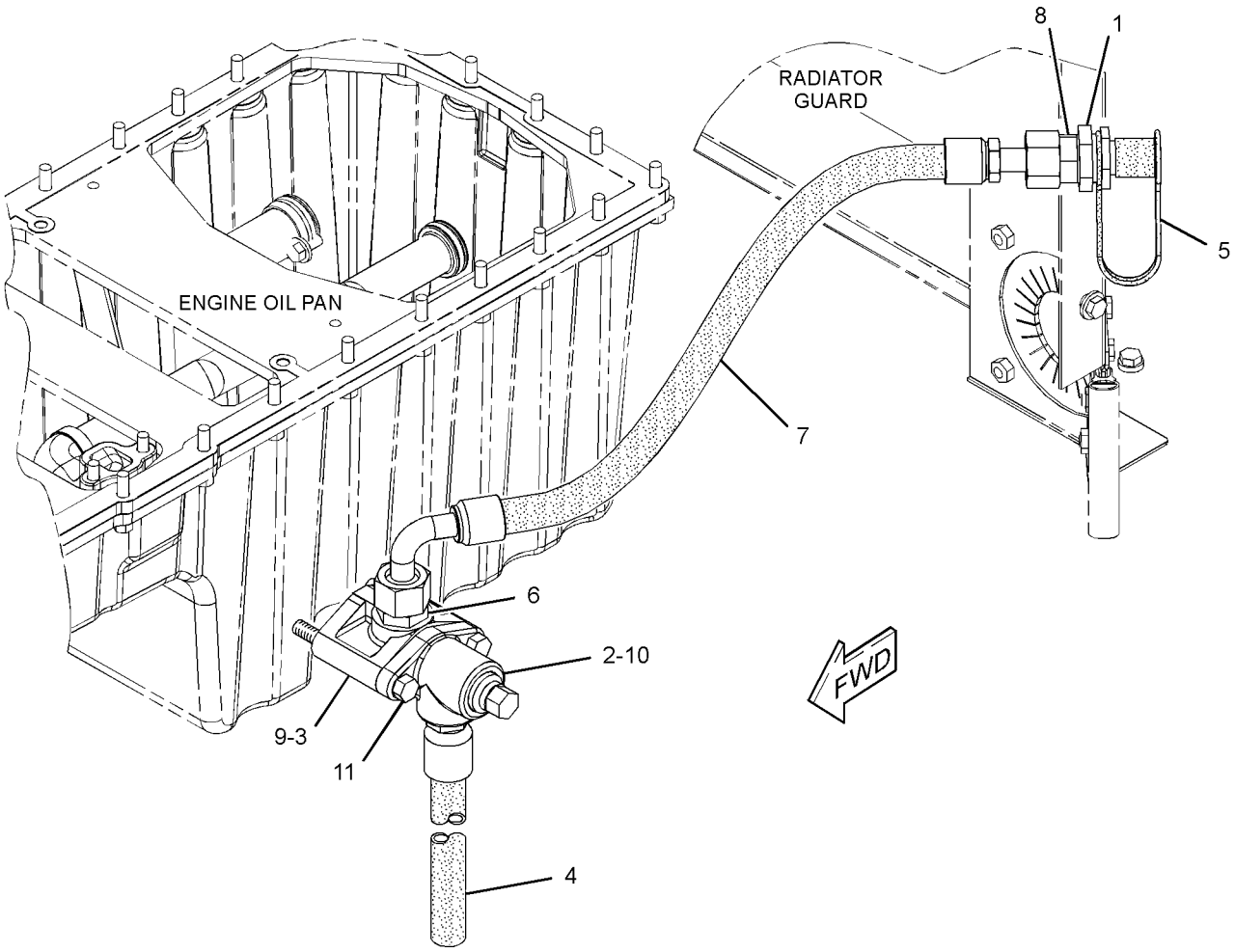

GRAPHIC #1 **<END>** g01377100

LUBRICATION SYSTEM

262-9967 LINES GP-TURBOCHARGER OIL

S/N: RHX2054-UP

PART OF 215-7486, 263-7760 ENGINE AR-COMPLETE

SMCS-1052, 1307 **i02783385**

NOTE	REF NO	GRAPHIC REF	PART NUMBER	QTY	PART NAME 1 2 3 4 5 6 (PRODUCT LEVEL)	SEE PAGE
	1	1	**126-2702**	1	SEAL-INTEGRAL	
	2	1	**198-6068**	1	SEAL-INTEGRAL	
C	3	1	**210-9246**	1	SEAL-O-RING	
	4	1	**159-9584**	1	TUBE AS-SUPPLY	
C	5	1	**246-6036**	1	HOSE	
C	6	1	**255-0746**	1	TUBE AS	
C	7	1	**269-8788**	2	CLAMP-BAND	
C	8	1	**288-1426**	1	TUBE AS-DRAIN	
C	9	1	**0S-1571**	2	BOLT (3/8-16X1.75-IN)	
C	10	1	**0S-1591**	2	BOLT (3/8-16X1.5-IN)	
	12	1	**3B-1915**	2	BOLT (3/8-16X1.375-IN)	
C	13	1	**5M-2894**	4	WASHER-HARD (10.2X18.5X2.5-MM THK)	
	14	1	*155-3504*	1	ELBOW AS	
		1	**2M-9780**	1	SEAL-O-RING	
		1	**6V-9003**	1	ELBOW	
		1	**7J-9108**	1	SEAL-O-RING	

C-CHANGE FROM PREVIOUS TYPE

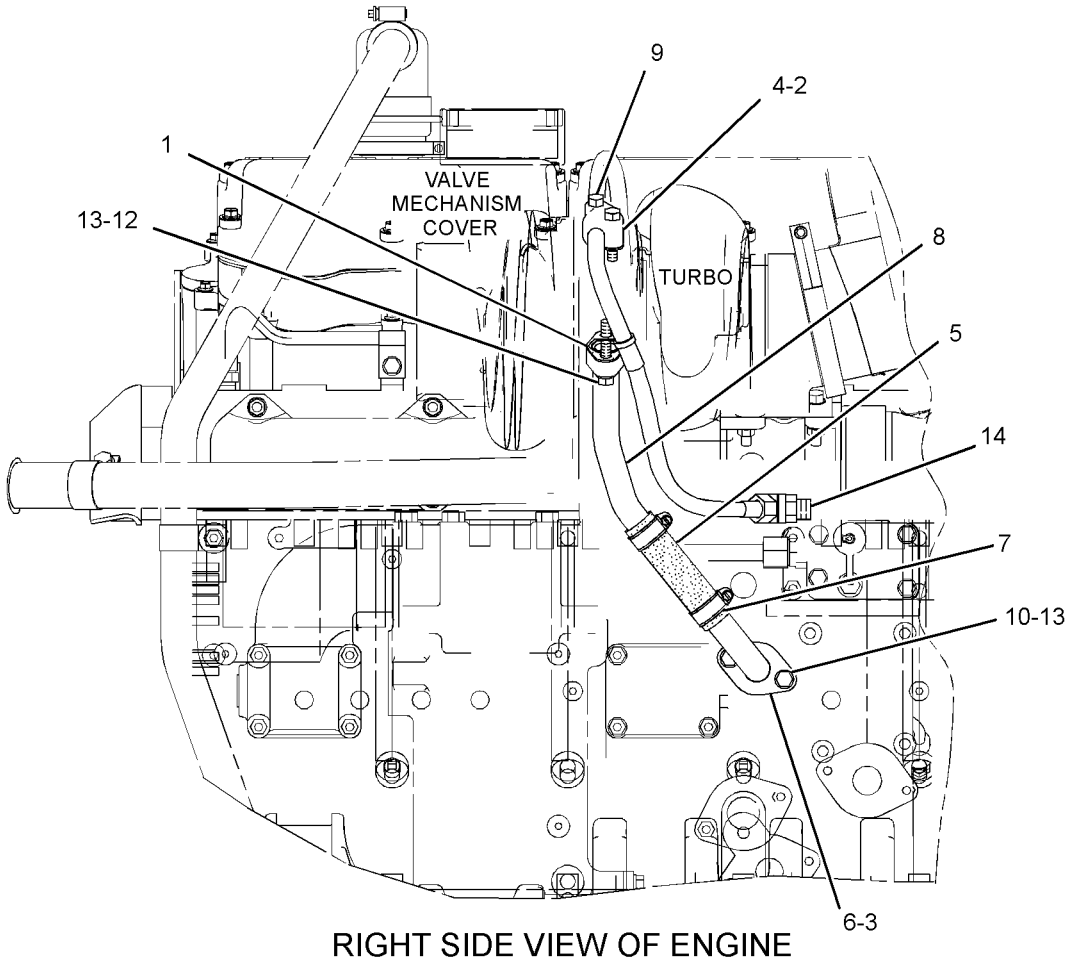

RIGHT SIDE VIEW OF ENGINE

GRAPHIC #1 **<END>** g01399599

LUBRICATION SYSTEM

161-4113 PUMP GP-ENGINE OIL*R

S/N: RHX2054-UP

PART OF 215-7486, 263-7760 ENGINE AR-COMPLETE

SMCS-1304, 1315 **i03709503**

NOTE	REF NO	GRAPHIC REF	PART NUMBER	QTY	PART NAME 1 2 3 4 5 6 (PRODUCT LEVEL)	SEE PAGE
	1	1	**1W-7238**	1	SHAFT AS-PUMP DRIVE (8-TEETH)	
	2	1	**1W-7239**	1	SHAFT AS-IDLER (8-TEETH)	
	3	1	**2P-3205**	4	BOLT-WASHER HEAD (3/8-16X1.75-IN)	
	4	1	**2S-2760**	1	SPRING	
	5	1	**6N-1931**	1	PLUNGER	
	6	1	**9Y-1792**	1	RETAINER	
	7	1	**235-1587**	1	BODY AS	
		1	**7N-2156**	2	BEARING-SLEEVE	
		1	**8M-8489**	2	DOWEL	
	8	1	**127-6356**	1	COVER AS-PUMP	
		1	**8S-6511**	2	BEARING-SLEEVE	
	9	1	**1M-0644**	2	BOLT (3/8-16X2.25-IN)	
	10	1	**2S-7905**	1	PLUG-PIPE	
	11	1	**5M-2894**	2	WASHER-HARD (10.2X18.5X2.5-MM THK)	

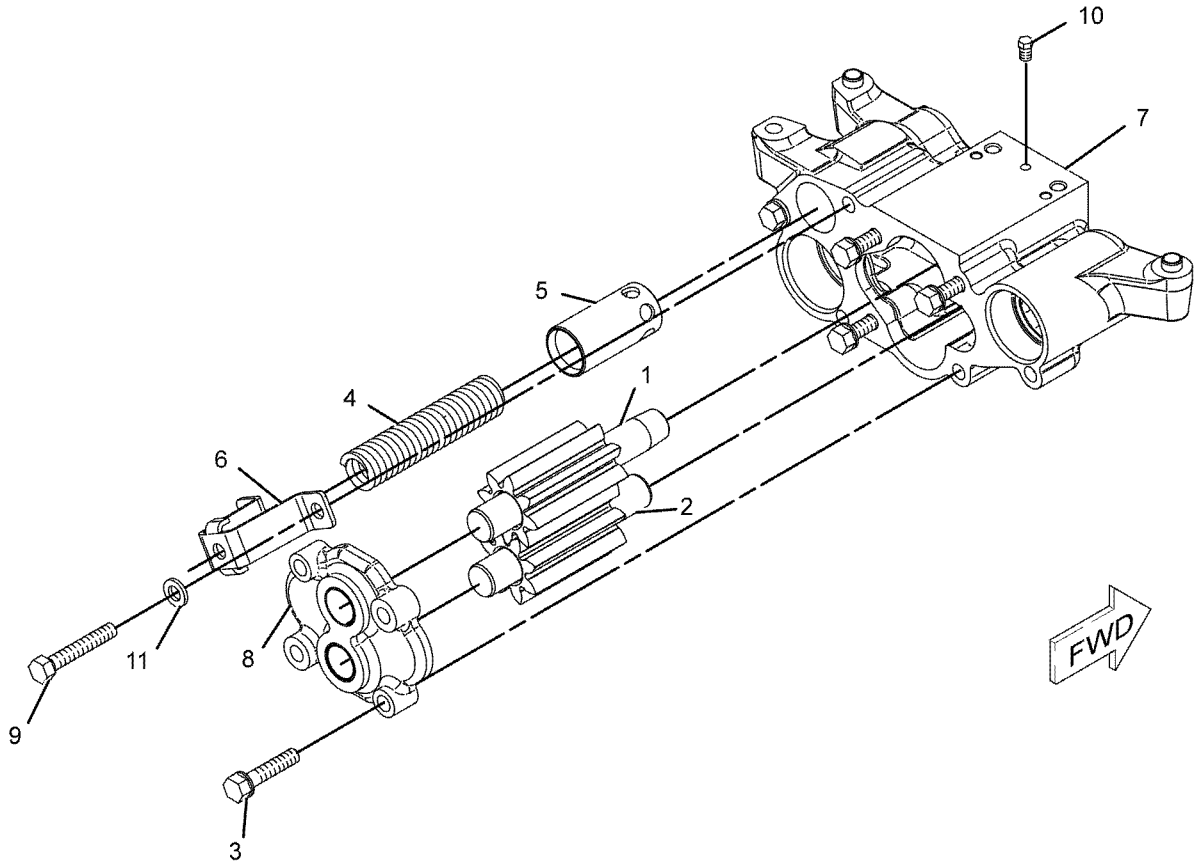

GRAPHIC #1 **<END>** g01066948

COOLING SYSTEM

220-3775 COOLING AR

S/N: B9K1-UP
PART OF 259-9204 COMMON AR

SMCS-1350 **i02721865**

NOTE	REF NO	GRAPHIC REF	PART NUMBER	QTY	PART NAME 1 2 3 4 5 6 (PRODUCT LEVEL)	SEE PAGE
	1	1	**5D-1026**	1	CLAMP-BAND	
	2	1	**5P-4961**	2	CLAMP-HOSE	
	3	1	**003-7764**	1	END-HOSE	
Y	4	1	*177-9085*	1	AFTERCOOLER GP-AIR	141
Y	5	1	*178-7998*	1	FAN & MOTOR GP	129
	6	1	*184-2420*	1	ADAPTER AS	
		1	**3E-7401**	1	ADAPTER	
		1	**6V-8397**	1	SEAL-O-RING	
	7	1	*184-2509*	1	VALVE GP-DRAIN	
		1	**3K-0360**	1	SEAL-O-RING	
		1	**7E-4761**	1	VALVE-DRAIN (COOLANT DRAIN)	
Y	8	1	*253-3960*	1	COOLER GP-HYDRAULIC OIL	637
	9	1	**266-8804**	1	PLATE	
	10	1	**269-6650**	1	COUPLING AS	
Y	11	1	*276-2386*	1	RADIATOR GP	137
	12	1	*148-8371*	1	ELBOW AS	
		1	**6V-8397**	1	SEAL-O-RING	
		1	**8C-8988**	1	ELBOW	
	13	1	**198-4771**	8	WASHER-HARD (26X47X12-MM THK)	
	14	1	**198-4777**	1	WASHER-HARD (11X25X10-MM THK)	
	15	1	**6V-9168**	1	NUT (11/16-16-THD)	
M	16	1	**7X-2576**	8	BOLT (M24X3X70-MM)	
	17	1	**8M-2773**	4	CLIP	
	18	1	**8T-4121**	3	WASHER-HARD (11X21X2.5-MM THK)	
M	19	1	**8T-4136**	1	BOLT (M10X1.5X25-MM)	
M	20	1	**8T-4137**	2	BOLT (M10X1.5X20-MM)	
M	21	1	**8T-4191**	1	BOLT (M10X1.5X16-MM)	
E	22	1	**6V-8523**		HOSE (253-CM)	
E	22A	1	**6V-8523**		HOSE (66-CM)	
E	23	1	**5P-0767**		HOSE (43-CM)	

E-ORDER BY THE CENTIMETER
M-METRIC PART
Y-SEPARATE ILLUSTRATION

220-3775 **COOLING AR** *(contd.)* **i02721865**

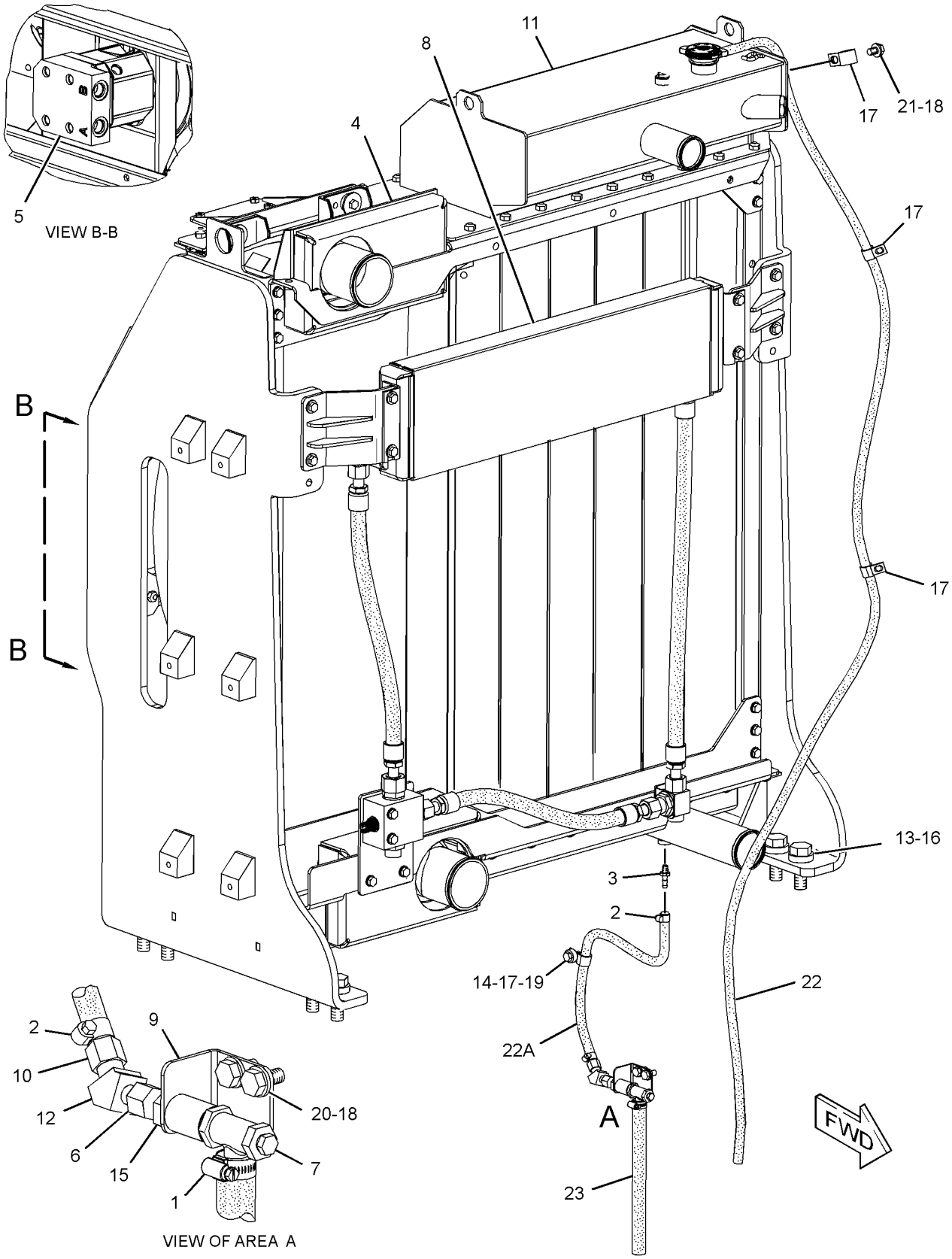

GRAPHIC #1 **<END>** g01369582

COOLING SYSTEM

274-9994 COOLING AR

S/N: RHX2054-UP

PART OF 215-7486, 263-7760 ENGINE AR-COMPLETE

SMCS-1350 **i03434966**

NOTE	REF NO	GRAPHIC REF	PART NUMBER	QTY	PART NAME 1 2 3 4 5 6 (PRODUCT LEVEL)	SEE PAGE
	1	1	**2S-0795**	2	GASKET	
	2	1	**3S-9643**	2	SEAL-LIP TYPE (WATER TEMPERATURE REGULATOR)	
	3	1	**4N-1156**	1	GASKET-REGULATOR COVER (WATER TEMPERATURE)	
	4	1	**4N-1199**	2	CLIP	
	5	1	**8T-4983**	2	CLAMP-HOSE	
	6	1	**9Y-4104**	1	HOSE	
	7	1	**125-0434**	1	SEAL-INTEGRAL	
	8	1	**126-4935**	1	SEAL-INTEGRAL	
R	9	1	**133-0125**	1	CORE AS-ENGINE OIL COOLER	
	10	1	**137-7331**	1	HOUSING-REGULATOR	
	11	1	**139-3550**	1	GASKET-REGULATOR (HOUSING) (WATER TEMPERATURE)	
	12	1	**143-9393**	1	STUD	
R	13	1	**145-9283**	1	CORE AS-TRANSMISSION COOLER	
	14	1	**147-0192**	1	BONNET	
	15	1	*217-9060*	1	VALVE AS-FLUID SAMPLING	
		1	**3J-7354**	1	SEAL-O-RING	
		1	**154-9023**	1	VALVE-SAMPLING	
	16	1	**157-0670**	1	CAP-DUST	
	17	1	**161-3565**	1	COVER-WATER PUMP	
	18	1	**170-4673**	1	BONNET-INLET	
	19	1	**187-6237**	1	ADAPTER	
	20	1	**235-8159**	1	BRACKET AS	
	21	1	**239-6304**	1	MANIFOLD-HOUSING	
	22	1	**248-5513**	2	REGULATOR-TEMPERATURE (92-DEG C) (COOLANT)	
	23	1	**274-9991**	1	BONNET-OUTLET	
	24	1	**0L-1351**	2	BOLT (3/8-16X0.875-IN)	
	25	1	**0L-2070**	2	BOLT (3/8-16X2.25-IN)	
	26	1	**0S-1588**	1	BOLT (3/8-16X1.25-IN)	
	27	1	**0S-1591**	3	BOLT (3/8-16X1.5-IN)	
	28	1	**0S-1608**	1	BOLT (3/8-16X3.75-IN)	
	29	1	**0T-0065**	2	BOLT (3/8-16X3.5-IN)	
	30	1	**109-0077**	3	SEAL-O-RING	
	31	1	**1A-2029**	4	BOLT (3/8-16X1.125-IN)	
	32	1	**1B-2790**	1	BOLT (5/16-18X1.375-IN)	
	33	1	**1D-4566**	4	BOLT (1/2-13X3.5-IN)	
	34	1	**3E-4352**	1	WASHER-HARD (8.8X20.5X2.5-MM THK)	
	36	1	**3K-0360**	4	SEAL-O-RING	
	37	1	**3P-1932**	1	ADAPTER	
	38	1	**4F-0411**	3	BOLT (3/8-16X6.5-IN)	
	39	1	**5B-2638**	4	BOLT (3/8-16X5.25-IN)	
	40	1	**5M-2894**	10	WASHER-HARD (10.2X18.5X2.5-MM THK)	
	41	1	**6V-5064**	2	SEAL-O-RING	
	43	1	**7X-7731**	4	PLUG-PIPE	
	44	1	**8S-9089**	6	BOLT (1/2-13X4.5-IN)	
	45	1	**8T-6767**	1	PLUG-PIPE	
	46	1	*183-7263*	1	PLUG AS	
		1	**3J-7354**	1	SEAL-O-RING	
		1	**9S-8002**	1	PLUG-O-RING	
	47	1	**9S-8005**	3	PLUG-O-RING	
	48	1	**9S-9334**	2	PLUG-O-RING	
	49	1	**9X-6458**	4	WASHER-HARD (10.2X22.5X3-MM THK)	
	50	1	**9X-8873**	2	BOLT (1/2-13X2.25-IN)	

R-REMFG PART MAY BE AVAILABLE

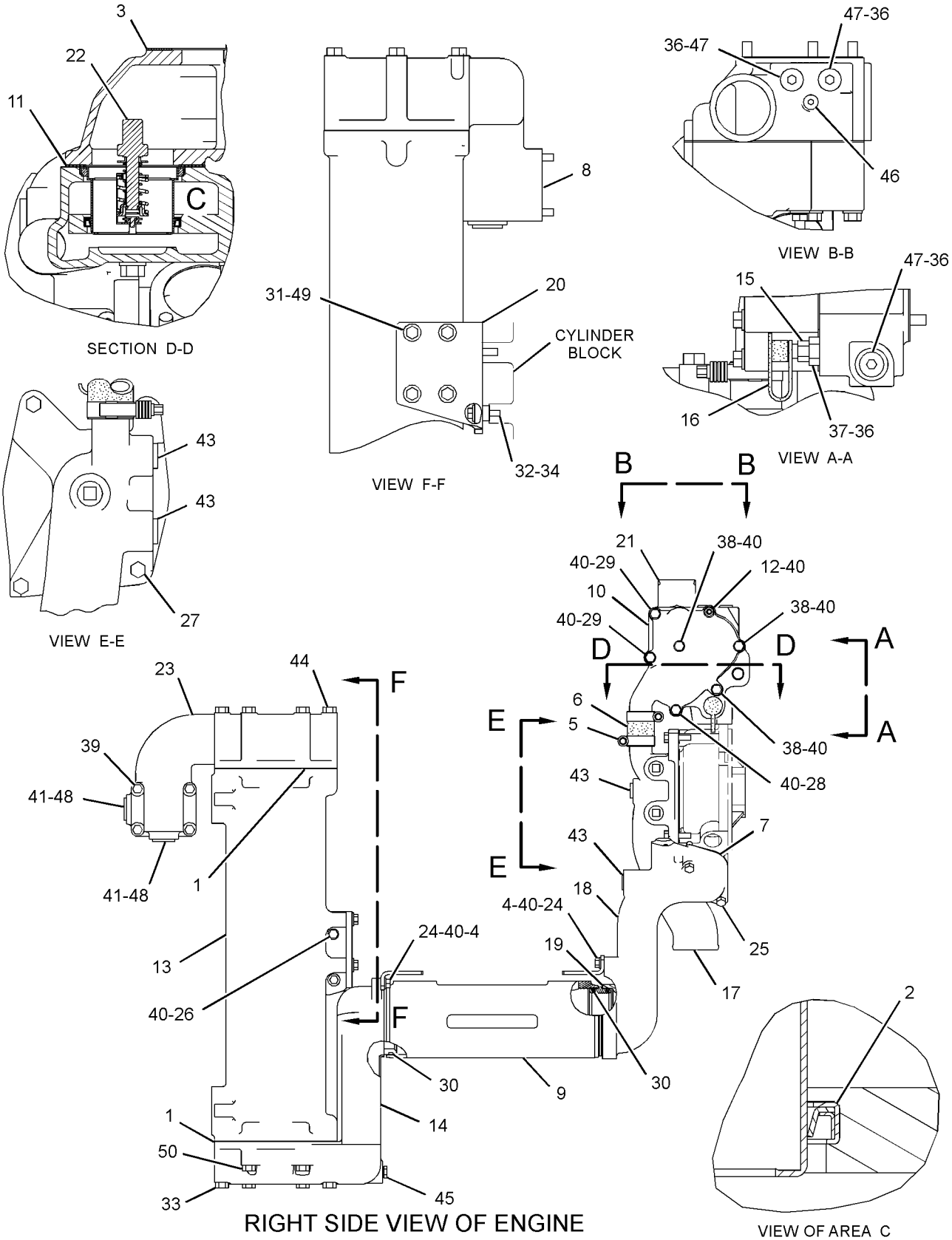

GRAPHIC #1 **<END>** g01794074

COOLING SYSTEM

178-7998 FAN & MOTOR GP

S/N: B9K1-UP

PART OF 220-3775 COOLING AR

SMCS-1356, 1386 **i02723734**

NOTE	REF NO	GRAPHIC REF	PART NUMBER	QTY	PART NAME 1 2 3 4 5 6 (PRODUCT LEVEL)	SEE PAGE
	1	1	**244-5929**	1	SPIDER AS-FAN (8-BLADE)	
	2	1	**266-6789**	1	SHROUD AS	
	3	1	**266-6800**	1	ADAPTER-FAN	
	4	1	**274-1682**	1	SUPPORT AS-MOTOR	
	5	1	**280-3172**	2	PLATE AS	
	6	1	**280-3175**	2	PLATE AS	
	7	1	**280-3627**	2	PLATE	
YR	8	1	**213-5268**	1	MOTOR GP-PISTON (HYDRAULIC FAN)	473
M	9	1	**8T-0722**	24	BOLT-LOCKING (M10X1.5X30-MM)	
	10	1	**8T-4121**	46	WASHER-HARD (11X21X2.5-MM THK)	
	11	1	**8T-4123**	1	WASHER (22X35X3.5-MM THK)	
M	12	1	**8T-4131**	1	NUT (M20X2.5-THD)	
M	13	1	**8T-4136**	6	BOLT (M10X1.5X25-MM)	
M	14	1	**8T-4195**	8	BOLT (M10X1.5X30-MM)	
M	15	1	**8T-4196**	8	BOLT (M10X1.5X35-MM)	
	16	1	**8T-4223**	2	WASHER-HARD (13.5X25.5X3-MM THK)	
M	17	1	**8T-4956**	2	BOLT (M12X1.75X35-MM)	

M-METRIC PART
R-REMFG PART MAY BE AVAILABLE
Y-SEPARATE ILLUSTRATION

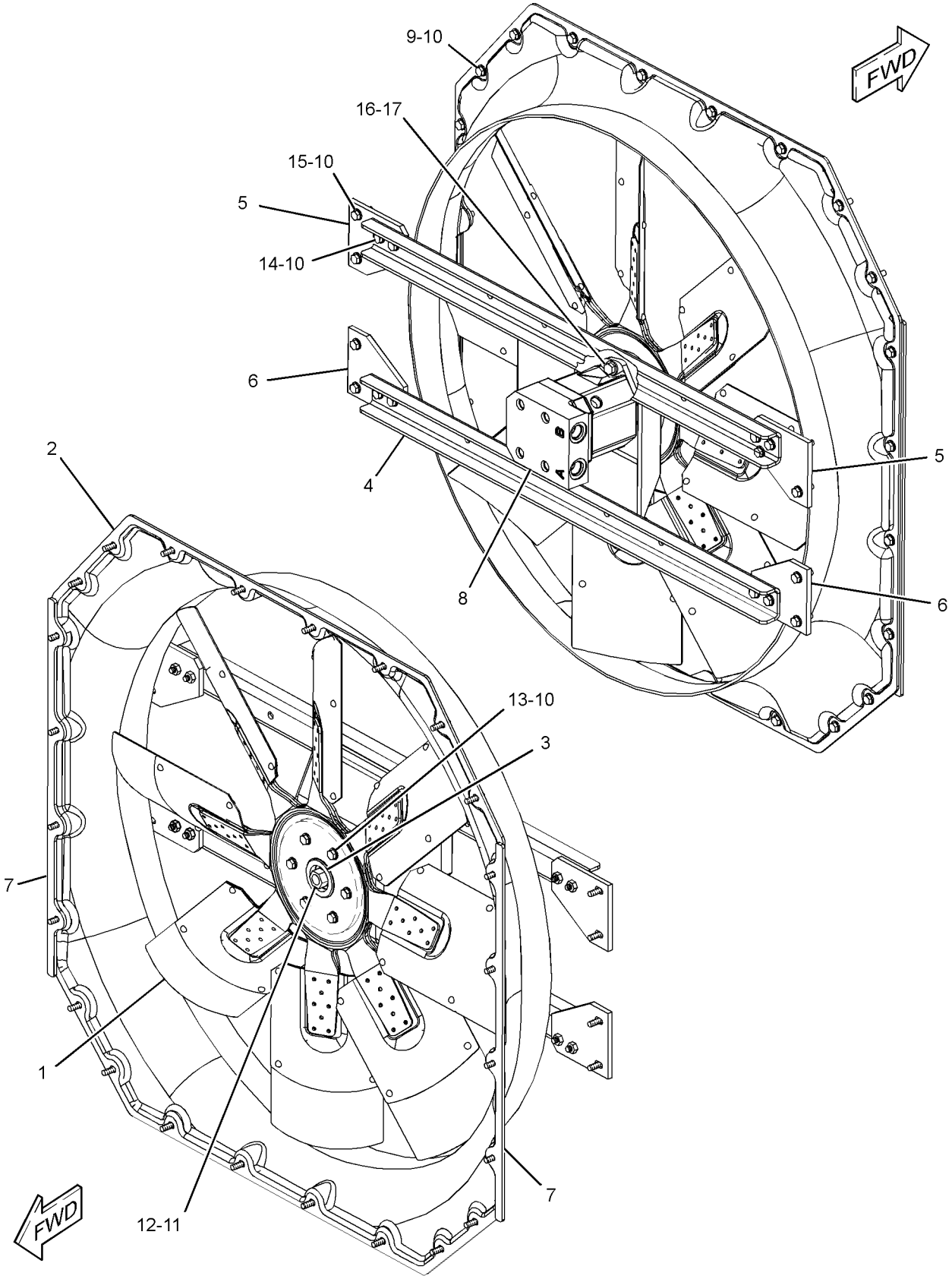

GRAPHIC #1 **<END>** g01369857

COOLING SYSTEM

109-2373 FASTENER GP-WATER PUMP

S/N: RHX2054-UP
FOR USE WHEN ALTERNATOR MOUNTING BRACKET IS NOT INSTALLED
PART OF 215-7486, 263-7760 ENGINE AR-COMPLETE
CANNOT BE USED WITH RH FRONT OIL GUIDE

SMCS-1361 **i02332393**

NOTE	REF NO	GRAPHIC REF	PART NUMBER	QTY	PART NAME 1 2 3 4 5 6 (PRODUCT LEVEL)	SEE PAGE
	1	1	**0S-1591**	1	BOLT (3/8-16X1.5-IN)	

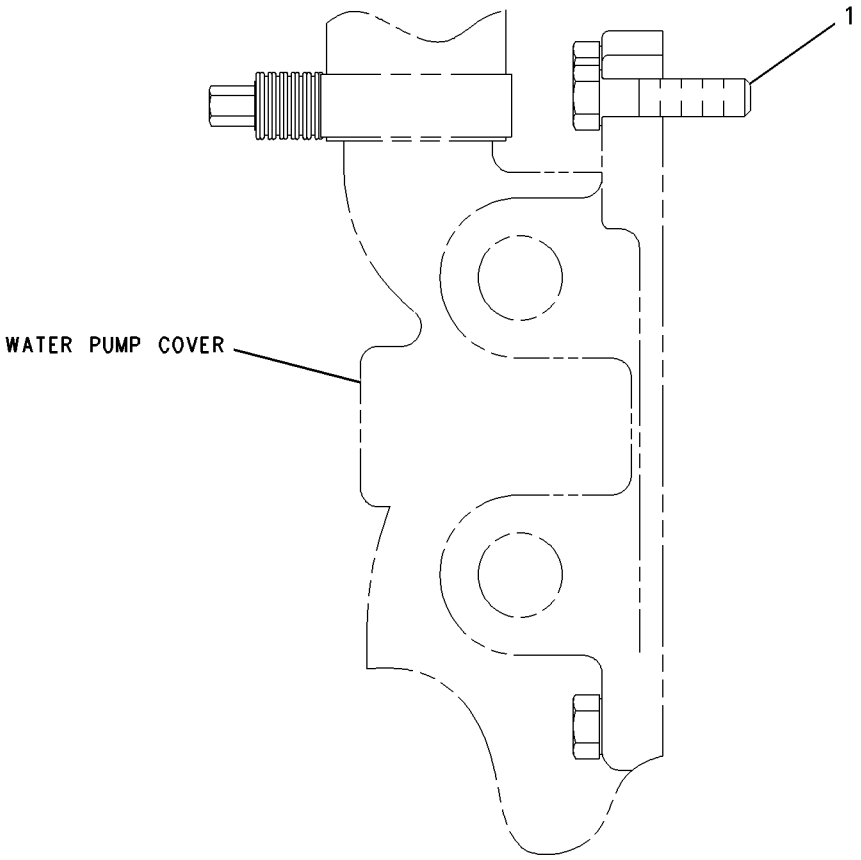

RIGHT SIDE VIEW

GRAPHIC #1 **<END>** g00832155

COOLING SYSTEM

253-3992 LINES GP-WATER

S/N: B9K1-UP

PART OF 259-9204 COMMON AR

SMCS-1355, 1380, 1393 **i02728114**

NOTE	REF NO	GRAPHIC REF	PART NUMBER	QTY	PART NAME 1 2 3 4 5 6 (PRODUCT LEVEL)	SEE PAGE
	1	1	**157-0670**	1	CAP-DUST	
	2	1	**161-0018**	2	HOSE	
	3	1	**275-8486**	1	TUBE AS	
	4	1	**281-1113**	1	HOSE	
	5	1	**154-9025**	1	VALVE-FLUID SAMPLING (ENGINE COOLANT)	
	6	1	**209-4579**	2	CLAMP	
	7	1	**216-4983**	4	CLAMP	

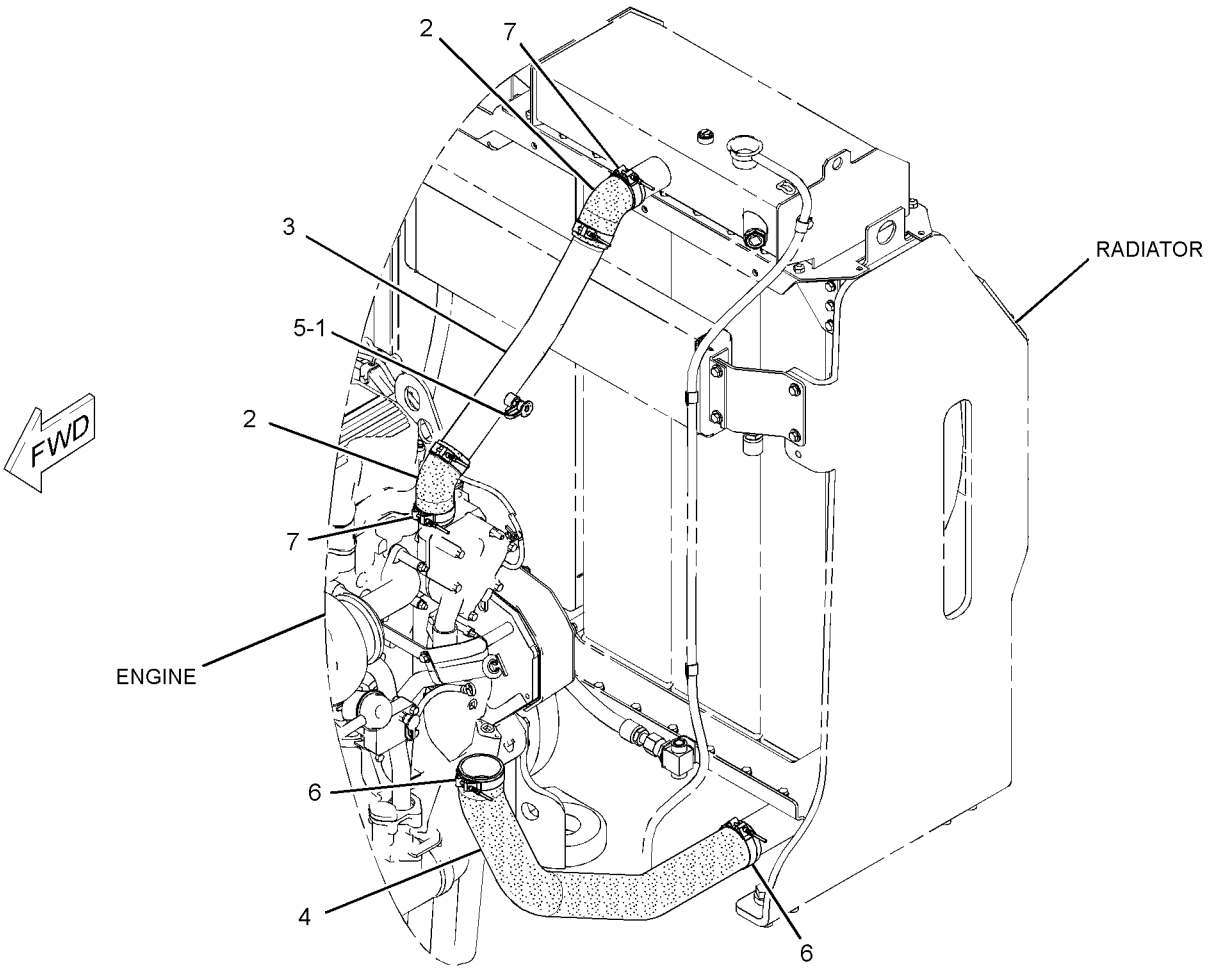

GRAPHIC #1 **<END>** g01376977

COOLING SYSTEM

286-1777 LINES GP-WATER

S/N: B9K1-UP
PART OF 259-9204 COMMON AR

SMCS-1355, 1380, 1393 **i02878074**

NOTE	REF NO	GRAPHIC REF	PART NUMBER	QTY	PART NAME 1 2 3 4 5 6 (PRODUCT LEVEL)	SEE PAGE
	1	1	**6V-2492**	1	CONNECTOR	
	2	1	**7M-8485**	1	SEAL-O-RING	
	3	1	**9Y-9236**	1	GAUGE-SIGHT	
	4	1	*150-3026*	2	ELBOW AS	
					(EACH INCLUDES)	
		1	**6V-4292**	1	ELBOW	
		1	**3K-0360**	1	SEAL-O-RING	
	5	1	**286-1778**	1	TUBE AS	
	6	1	**294-3342**	1	CAP AS-RADIATOR	
	7	1	**033-8248**	1	CLIP	
	8	1	**069-4269**	1	STEM	
	9	1	**3D-2824**	1	SEAL-O-RING	
	10	1	**5D-1026**	2	CLAMP-BAND	
	11	1	**6D-4244**	2	CLIP	
	12	1	**7D-7233**	2	CLIP	
	13	1	**8T-1117**	2	CLAMP-HOSE	
	14	1	**8T-4121**	6	WASHER-HARD (11X21X2.5-MM THK)	
M	15	1	**8T-4136**	1	BOLT (M10X1.5X25-MM)	
M	16	1	**8T-4137**	3	BOLT (M10X1.5X20-MM)	
M	17	1	**8T-4195**	2	BOLT (M10X1.5X30-MM)	
E	18	1	**5P-1251**		HOSE (129-CM)	
E	19	1	**9X-2133**		HOSE (143-CM)	
E	20	1	**8C-3681**		HOSE (151-CM)	

E-ORDER BY THE CENTIMETER
M-METRIC PART

286-1777 **LINES GP-WATER** *(contd.)* **i02878074**

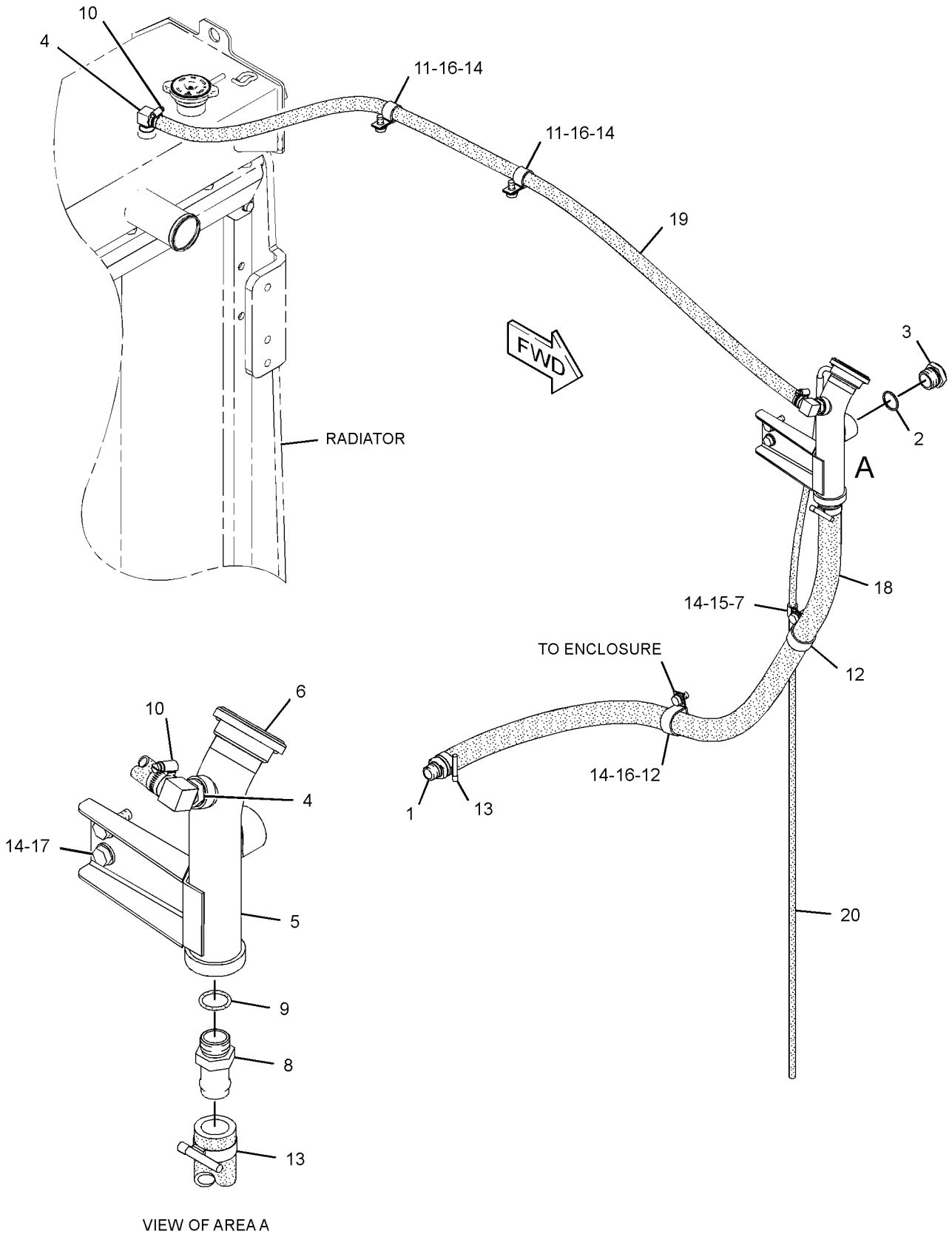

GRAPHIC #1 **<END>** g01384447

COOLING SYSTEM

161-5719 PUMP GP-WATER*R

S/N: RHX2054-UP

PART OF 174-5986 PUMP GP-WATER

SMCS-1361 **i02740969**

NOTE	REF NO	GRAPHIC REF	PART NUMBER	QTY	PART NAME 1 2 3 4 5 6 (PRODUCT LEVEL)	SEE PAGE
	1	1	**161-5718**	1	HOUSING-WATER PUMP	
	2	1	**129-9907**	1	IMPELLER-PUMP	
W	3	1	**9M-6527**	1	WASHER-HARD (10.2X25.5X5-MM THK)	
	4	1	**0S-1591**	1	BOLT (3/8-16X1.5-IN)	
	5	1	**1A-1135**	1	BOLT (5/8-11X2-IN)	
W	6	1	**128-0317**	1	SEAL GP (WATER PUMP)	
	7	1	**153-9023**	1	GEAR (74-TEETH)	
W	8	1	**153-1256**	1	SEAL-LIP TYPE	
W	9	1	**135-4928**	1	SHAFT-WATER PUMP	
W	10	1	**5S-0581**	1	WASHER-HARD (17X38X8-MM THK)	
	11	1	**1B-7182**	4	BOLT (5/16-18X1.25-IN)	
W	12	1	**108-7930**	1	BEARING AS-ROLLER	
W	13	1	**136-1107**	1	RETAINER	
W	14	1	**136-3742**	1	PLUG-FELT	
					AVAILABLE REPAIR KIT(S):	
W			**138-6744**	1	KIT-PUMP REBUILD (WATER)	
					INCLUDES WASHER, SEALS, BEARING AS, FILTERS, SHAFT-WATER PUMP, AND RETAINER	

W-KIT MARKED W INCLUDES PARTS MARKED W

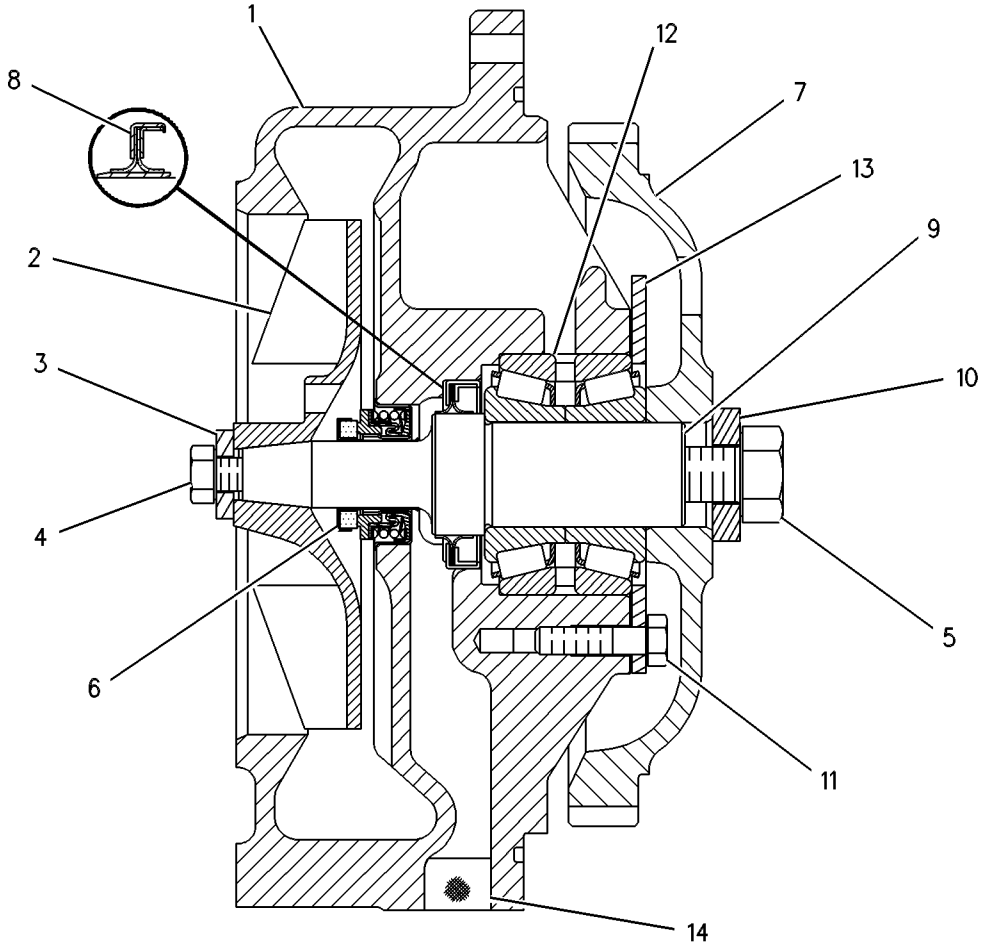

GRAPHIC #1 **<END>** g00263499

COOLING SYSTEM

174-5986 PUMP GP-WATER

S/N: RHX2054-UP
HEAVY DUTY PUMP
PART OF 215-7486, 263-7760 ENGINE AR-COMPLETE

SMCS-1361 **i02610618**

NOTE	REF NO	GRAPHIC REF	PART NUMBER	QTY	PART NAME 1 2 3 4 5 6 (PRODUCT LEVEL)	SEE PAGE
YR	1	1	**161-5719**	1	PUMP GP-WATER	135
	2	1	**4P-2383**	1	ADAPTER	
	3	1	**9M-3786**	1	SEAL-O-RING	
	4	1	**122-3772**	1	SEAL-O-RING	
	5	1	**109-0077**	1	SEAL-O-RING	

R-REMFG PART MAY BE AVAILABLE
Y-SEPARATE ILLUSTRATION

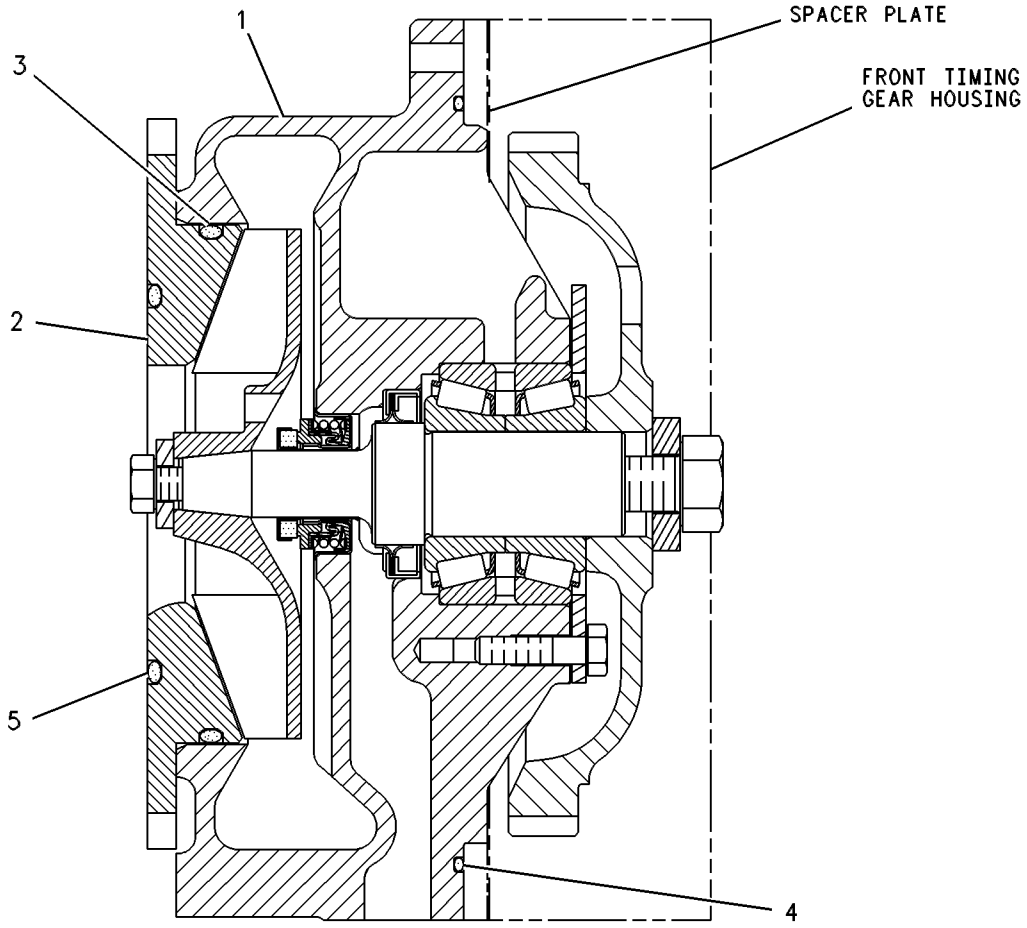

GRAPHIC #1 **<END>** g00263504

COOLING SYSTEM

276-2386 RADIATOR GP

S/N: B9K1-UP

PART OF 220-3775 COOLING AR

SMCS-1353 **i02975459**

NOTE	REF NO	GRAPHIC REF	PART NUMBER	QTY	PART NAME 1 2 3 4 5 6 (PRODUCT LEVEL)	SEE PAGE
	1	1	**266-6785**	1	TANK AS-RADIATOR	
	2	1	**266-6786**	1	CHANNEL AS (RH)	
	3	1	**266-6787**	1	CHANNEL AS (LH)	
	4	1,2	**272-5438**	6	SEAL-RADIATOR (DUROMETER, WIDE)	
	5	2	**273-9623**	1	BAFFLE AS	
	6	2	**274-1687**	1	BRACKET AS	
	7	2	**274-1689**	1	BRACKET AS	
	8	1	**280-4304**	1	CHANNEL AS	
	9	1	**280-4305**	1	CHANNEL AS	
Y	10	1	*300-1706*	1	TANK GP-COOLANT	140
	11	1	**223-8985**	3	CORE AS-RADIATOR	
	12	1,2	**8T-4121**	60	WASHER-HARD (11X21X2.5-MM THK)	
M	13	1,2	**8T-4136**	52	BOLT (M10X1.5X25-MM)	
M	14	2	**8T-4195**	8	BOLT (M10X1.5X30-MM)	
D	15	2	**6V-2499**		SEAL (0.2-M EACH)	
E	16	2	**120-5281**		SEAL (115-CM EACH)	
E	17	2	**128-8423**		SEAL (32-CM)	

D-ORDER BY THE METER
E-ORDER BY THE CENTIMETER
M-METRIC PART
Y-SEPARATE ILLUSTRATION

276-2386 **RADIATOR GP** *(contd.)* **i02975459**

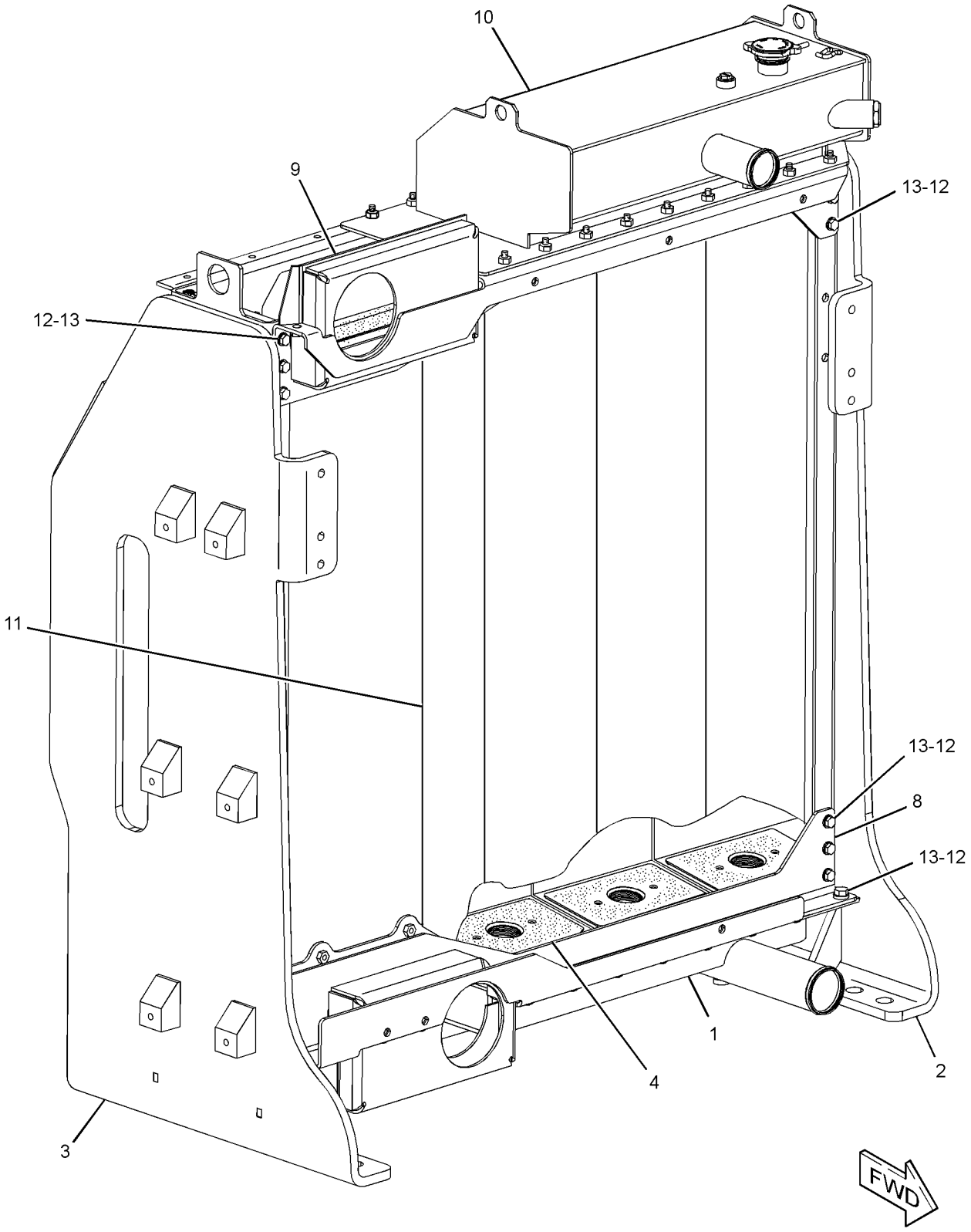

GRAPHIC #1 g01370340

276-2386 **RADIATOR GP** *(contd.)* **i02975459**

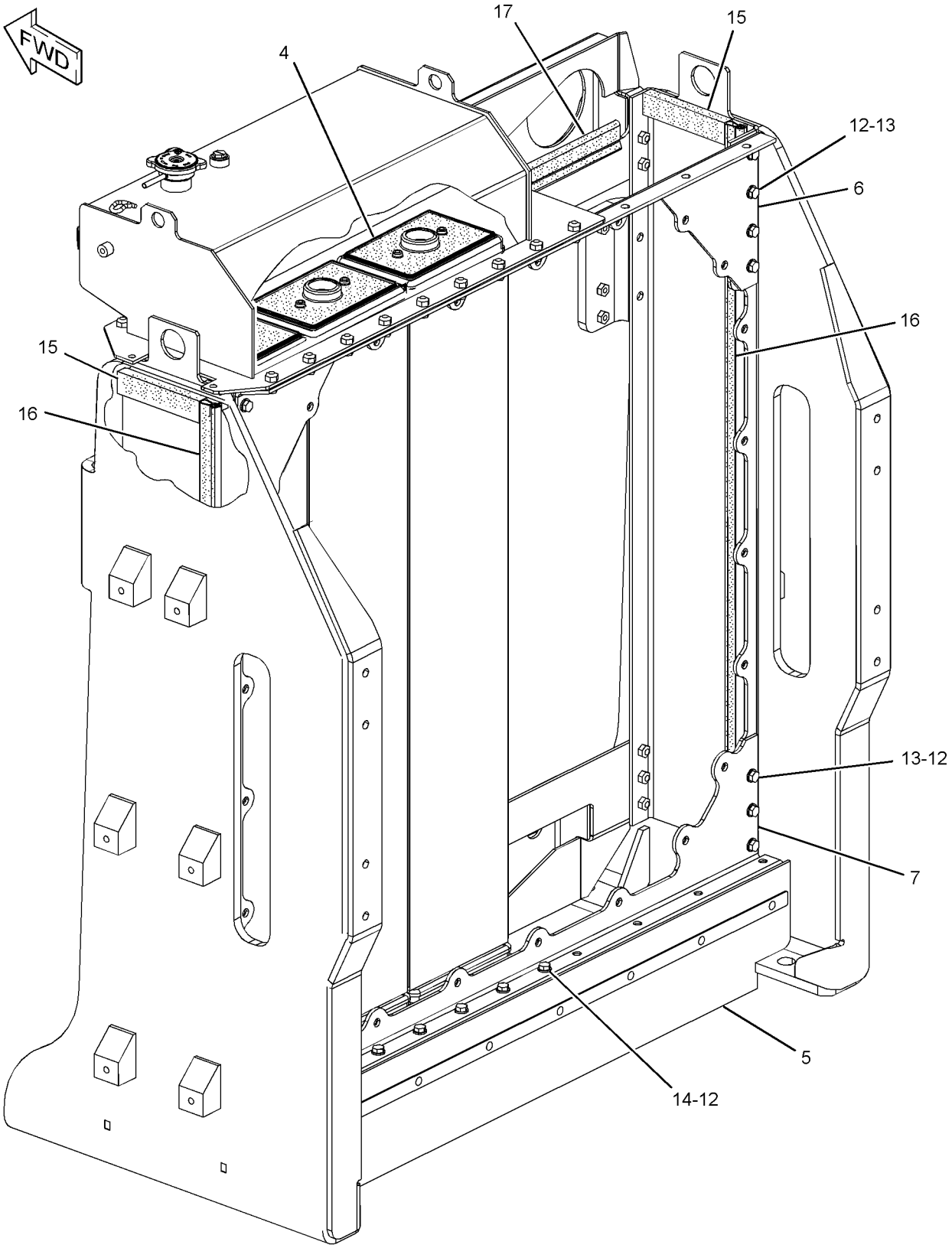

GRAPHIC #2 **<END>** g01370341

COOLING SYSTEM

300-1706 TANK GP-COOLANT

S/N: B9K1-UP

PART OF 276-2386 RADIATOR GP

SMCS-1354, 1377 **i02723791**

NOTE	REF NO	GRAPHIC REF	PART NUMBER	QTY	PART NAME 1 2 3 4 5 6 (PRODUCT LEVEL)	SEE PAGE
	1	1	**9Y-9236**	1	GAUGE-SIGHT (COOLANT)	
	2	1	**294-3342**	1	CAP AS-RADIATOR	
	3	1	**300-1707**	1	TANK AS-COOLANT	
		1	**1P-1669**	1	PLUG-SEAL	
	4	1	**7M-8485**	1	SEAL-O-RING	

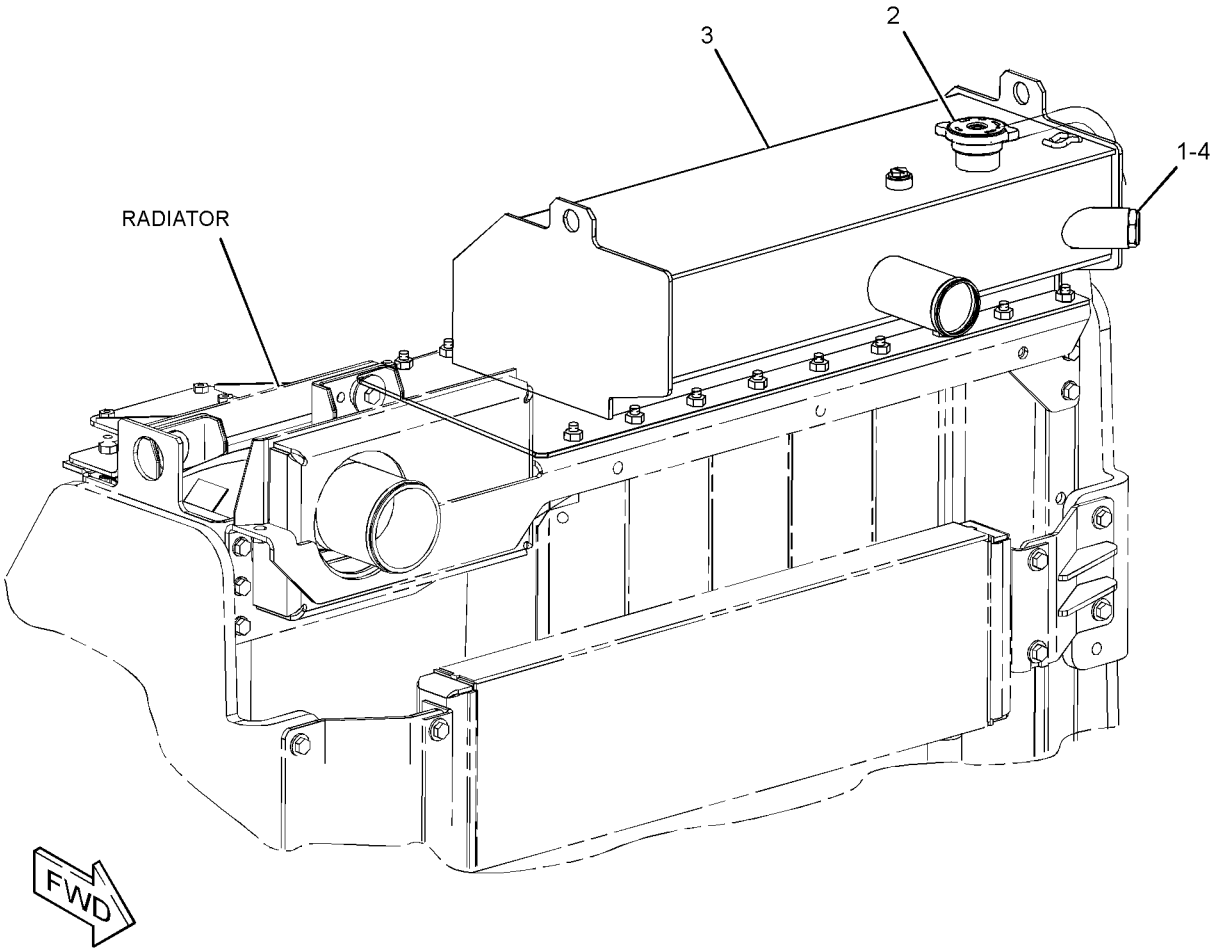

GRAPHIC #1 **<END>** g01370806

AIR INLET AND EXHAUST SYSTEM

177-9085 AFTERCOOLER GP-AIR

S/N: B9K1-UP

PART OF 220-3775 COOLING AR

SMCS-1063, 1064, 1079 **i02721864**

NOTE	REF NO	GRAPHIC REF	PART NUMBER	QTY	PART NAME 1 2 3 4 5 6 (PRODUCT LEVEL)	SEE PAGE
	1	1	**121-3307**	4	MOUNT AS-RESILIENT	
	2	1	**270-8390**	2	SEAL	
	3	1	**271-2945**	1	BRACKET AS	
	4	1	**274-7831**	1	CORE AS-AFTERCOOLER	
	5	1	**277-7224**	1	PLATE AS	
	6	1	**8T-4121**	10	WASHER-HARD (11X21X2.5-MM THK)	
M	7	1	**8T-4133**	4	NUT (M10X1.5-THD)	
M	8	1	**8T-4195**	6	BOLT (M10X1.5X30-MM)	
	9	1	**8T-4226**	4	WASHER-PLATED (10.5X45X3-MM THK)	
M	10	1	**8T-6466**	4	BOLT (M10X1.5X60-MM)	
D	11	1	**6V-2499**		SEAL (1.1-M)	

D-ORDER BY THE METER
M-METRIC PART

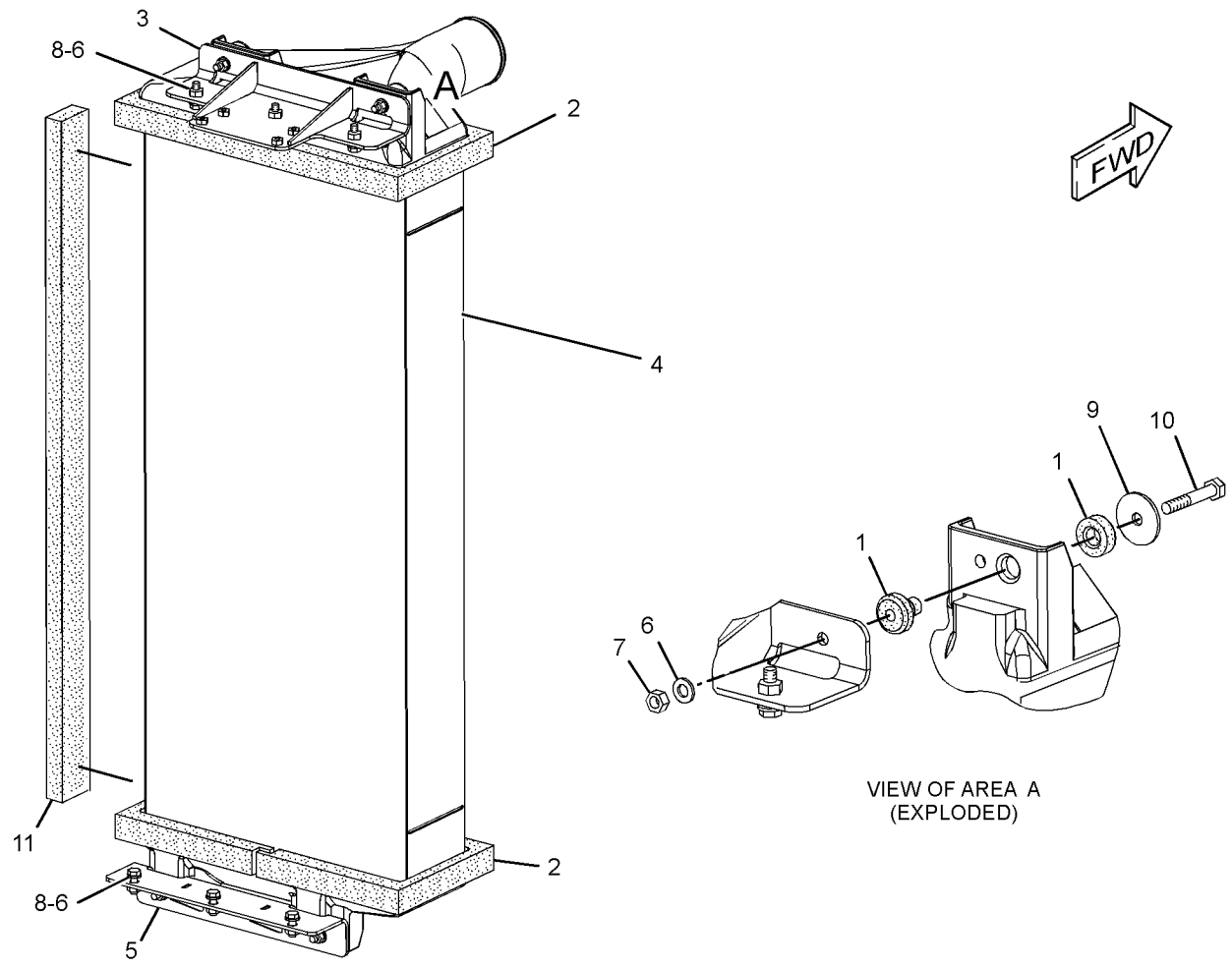

VIEW OF AREA A
(EXPLODED)

GRAPHIC #1 **<END>** g01369612

AIR INLET AND EXHAUST SYSTEM

253-3993 AIR CLEANER GP

S/N: B9K1-UP

PART OF 259-9204 COMMON AR

SMCS-1051, 1054 **i03789969**

NOTE	REF NO	GRAPHIC REF	PART NUMBER	QTY	PART NAME 1 2 3 4 5 6 (PRODUCT LEVEL)	SEE PAGE
	1	1	**5P-0597**	3	CLAMP-HOSE	
	2	1	**9N-0720**	1	ELBOW AS-AIR INLET	
	3	1	**3E-7424**	8	CLAMP-HOSE	
	4	1	**162-2177**	2	HOSE	
	5	1	**245-3816**	2	CAP AS-AIR CLEANER	
	6	1	**262-0498**	2	CLAMP-HOSE	
	7	1	**271-8691**	2	TUBE	
	8	1	**274-1701**	1	TUBE AS	
	9	1	**310-7718**	2	AIR CLEANER GP	
					(EACH INCLUDES)	
		1	**245-3818**	1	FILTER ELEMENT AS-AIR (PRIMARY)	
		1	**245-3819**	1	FILTER ELEMENT AS-AIR (SECONDARY)	
		1	**246-4617**	2	BRACKET AS	
		1	**262-0569**	1	COVER AS	
	10	1	**310-8511**	1	HOSE	
	11	1	**310-8512**	1	HOSE	
	12	1	**311-7845**	1	VALVE-CHECK	
M	13	1	**099-3649**	8	BOLT (M8X1.25X40-MM)	
	14	1	**124-6524**	1	SPACER (11X25X10.5-MM THK)	
	16	1	**4P-0489**	1	SPACER (11X25X26.8-MM THK)	
	17	1	**6V-3378**	1	CLIP	
	18	1	**8T-4121**	2	WASHER-HARD (11X21X2.5-MM THK)	
M	19	1	**8T-4185**	1	BOLT (M10X1.5X50-MM)	
M	20	1	**8T-4196**	1	BOLT (M10X1.5X35-MM)	
	21	1	**5P-4116**	8	WASHER-HARD (8.8X20.5X2-MM THK)	

M-METRIC PART

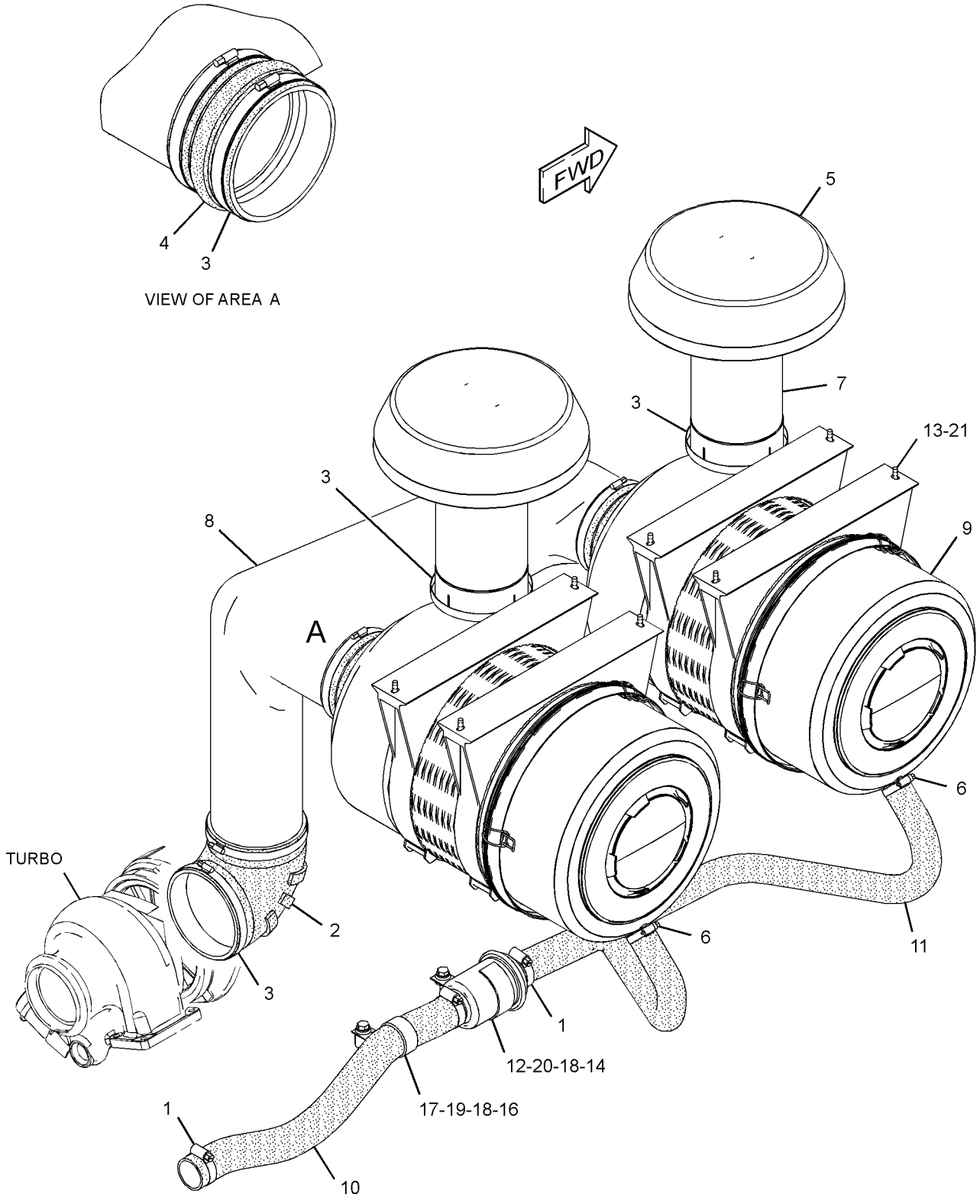

GRAPHIC #1 **<END>** g02048919

AIR INLET AND EXHAUST SYSTEM

275-5230 AIR CLEANER GP–CAB AIR PRECLEANER

S/N: B9K1-UP

PART OF 265-6595 AIR CONDITIONER AR

SMCS-1051, 1054 **i02852260**

NOTE	REF NO	GRAPHIC REF	PART NUMBER	QTY	PART NAME 1 2 3 4 5 6 (PRODUCT LEVEL)	SEE PAGE
	1	1	**6V-3582**	2	CLAMP-HOSE	
	3	1	**154-7116**	1	BAND AS	
Y	4	1	*283-0774*	1	PRECLEANER GP	150
	5	1	**283-0776**	1	HOSE	
M	6	1	**5C-9553**	4	BOLT (M6X1X16-MM)	
M	7	1	**8T-4200**	2	BOLT (M8X1.25X16-MM)	
	8	1	**8T-4205**	4	WASHER-HARD (7.2X14.5X2-MM THK)	
	9	1	**8T-4224**	2	WASHER-HARD (8.8X16X2-MM THK)	
Y	10	1	**308-0857**	1	FILTER GP-CAB AIR	898

M-METRIC PART
Y-SEPARATE ILLUSTRATION

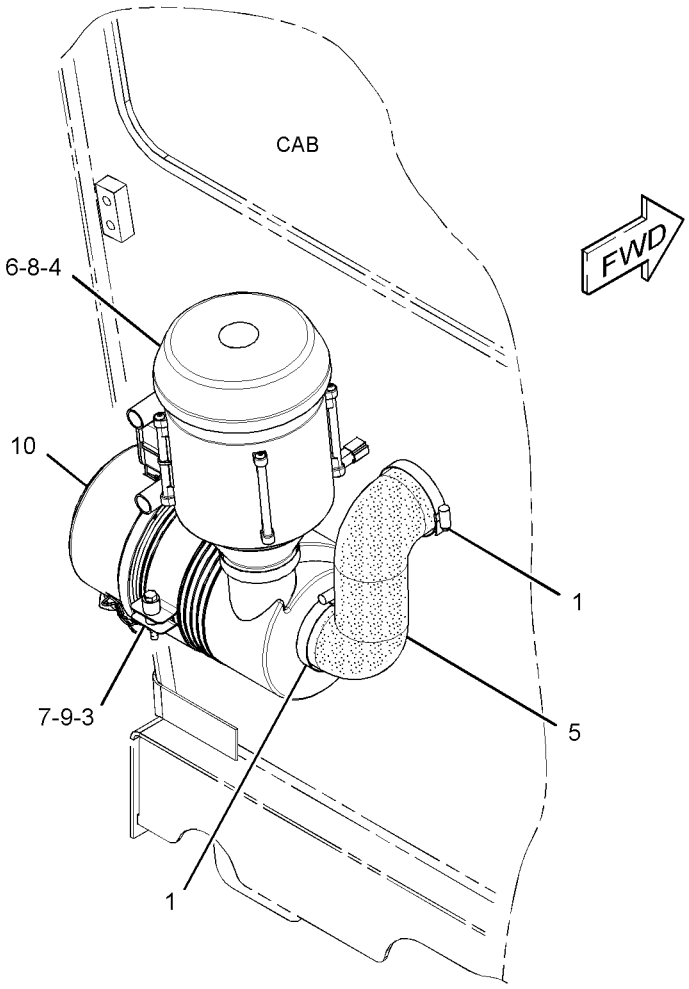

GRAPHIC #1 **<END>** g01424333

AIR INLET AND EXHAUST SYSTEM

253-3990 LINES GP-AFTERCOOLER AIR

S/N: B9K1-357

PART OF 259-9204 COMMON AR

SMCS-1063, 1071 **i02728066**

NOTE	REF NO	GRAPHIC REF	PART NUMBER	QTY	PART NAME 1 2 3 4 5 6 (PRODUCT LEVEL)	SEE PAGE
	1	1	**9R-5008**	1	SPACER (11X20X6-MM THK)	
	2	1	**101-3125**	1	GASKET (AIR INLET MANIFOLD)	
	3	1	**109-4203**	1	ELBOW (AIR INLET)	
	4	1	**127-0929**	1	CLAMP (V-BAND)	
	5	1	**217-8947**	1	ELBOW (AFTERCOOLER, OUTLET)	
	6	1	**265-7594**	1	TUBE	
	7	1	**265-7595**	1	TUBE	
	8	1	**274-1707**	4	HOSE	
	9	1	**133-9229**	1	CLIP	
	10	1	*183-7263*	1	PLUG AS	
		1	**9S-8002**	1	PLUG-O-RING	
		1	**3J-7354**	1	SEAL-O-RING	
	11	1	**208-7448**	8	CLAMP	
	12	1	**7X-7729**	1	WASHER (11X25X3-MM THK)	
	13	1	**8C-3089**	1	SEAL-O-RING	
M	14	1	**8T-4186**	1	BOLT (M10X1.5X40-MM)	
	15	1	**8T-4896**	4	WASHER-HARD (10.2X18.5X2.5-MM THK)	
	16	1	**9B-7237**	4	BOLT (3/8-16X1.25-IN)	

M-METRIC PART

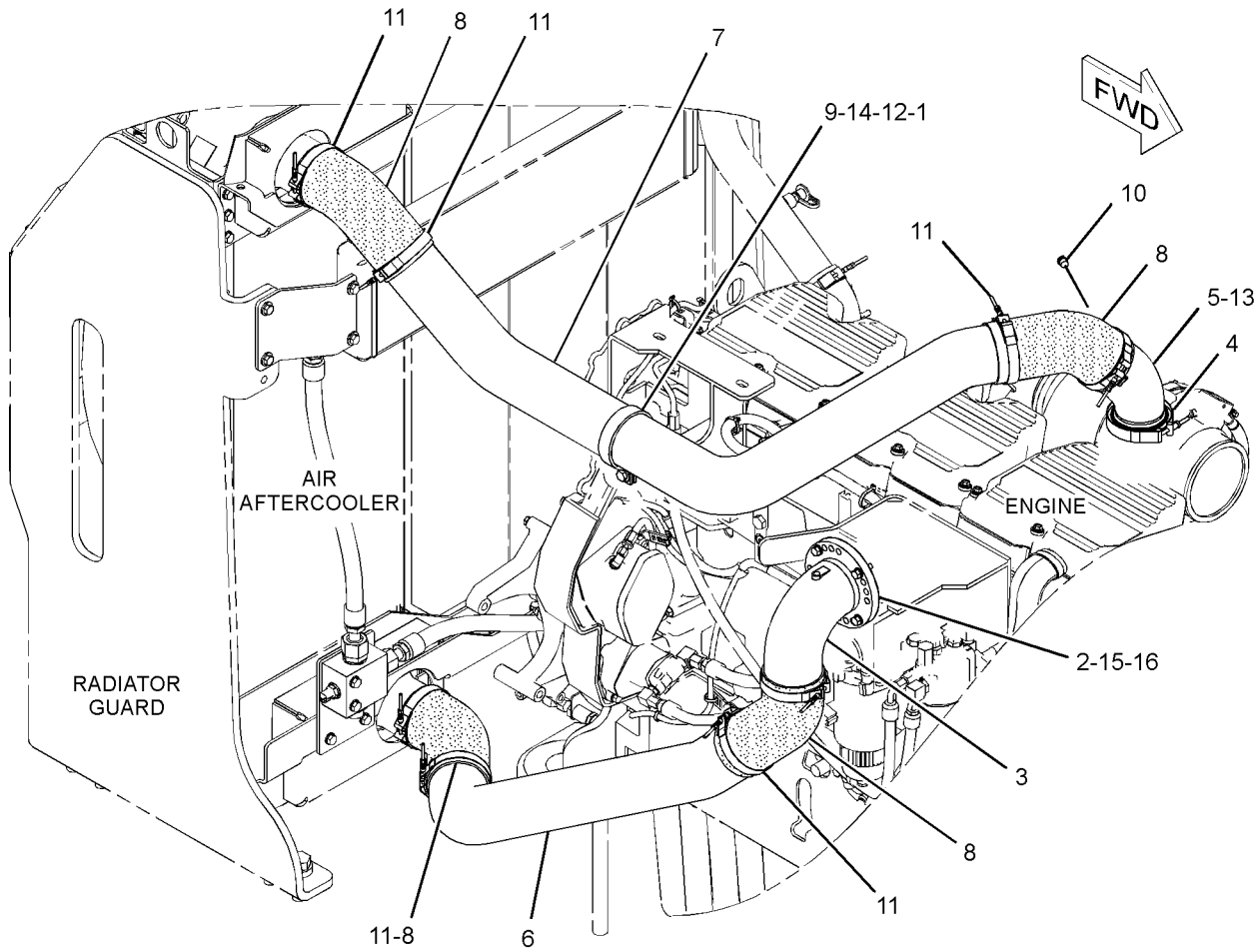

GRAPHIC #1 **<END>** g01376974

AIR INLET AND EXHAUST SYSTEM

253-3990 LINES GP-AFTERCOOLER AIR

S/N: B9K358-UP
PART OF 259-9204 COMMON AR

SMCS-1063, 1071 **i03902316**

NOTE	REF NO	GRAPHIC REF	PART NUMBER	QTY	PART NAME 1 2 3 4 5 6 (PRODUCT LEVEL)	SEE PAGE
C	1	1	**8T-7934**	1	WASHER-HARD (11X21X5-MM THK)	
	2	1	**101-3125**	1	GASKET (AIR INLET MANIFOLD)	
	3	1	**109-4203**	1	ELBOW (AIR INLET)	
	4	1	**127-0929**	1	CLAMP (V-BAND)	
	5	1	**217-8947**	1	ELBOW (AFTERCOOLER, OUTLET)	
C	6	1	**354-5657**	1	TUBE	
C	7	1	**354-5656**	1	TUBE	
	8	1	**274-1707**	4	HOSE	
	9	1	**133-9229**	1	CLIP	
	10	1	*183-7263*	1	PLUG AS	
		1	**9S-8002**	1	PLUG-O-RING	
		1	**3J-7354**	1	SEAL-O-RING	
C	11	1	**346-4791**	8	CLAMP-BAND	
	12	1	**7X-7729**	1	WASHER (11X25X3-MM THK)	
	13	1	**8C-3089**	1	SEAL-O-RING	
M	14	1	**8T-4186**	1	BOLT (M10X1.5X40-MM)	
	15	1	**8T-4896**	4	WASHER-HARD (10.2X18.5X2.5-MM THK)	
	16	1	**9B-7237**	4	BOLT (3/8-16X1.25-IN)	

C-CHANGE FROM PREVIOUS TYPE
M-METRIC PART

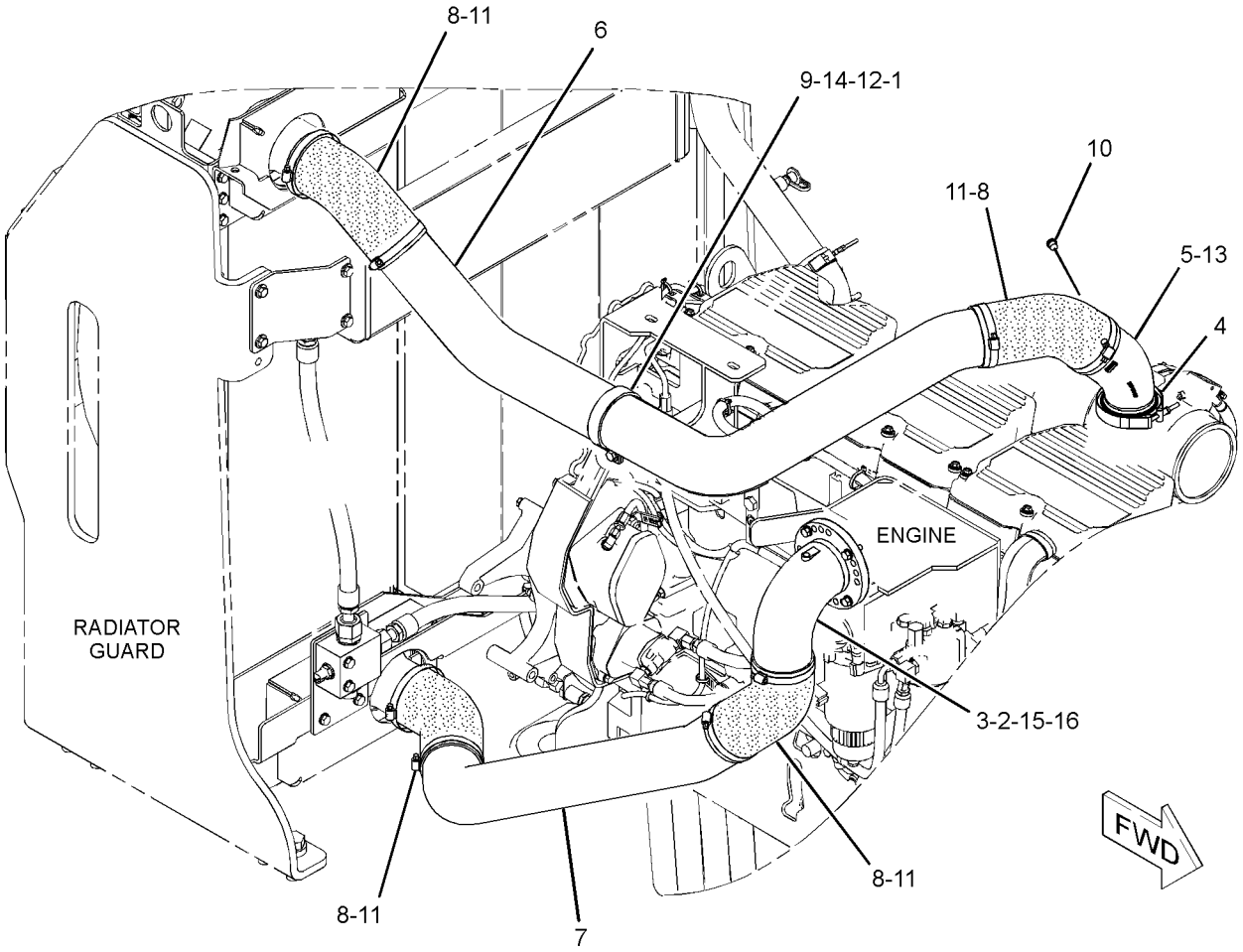

GRAPHIC #1 **<END>** g02158015

AIR INLET AND EXHAUST SYSTEM

225-0998 MANIFOLD GP-EXHAUST

S/N: RHX2054-UP

PART OF 215-7486, 263-7760 ENGINE AR-COMPLETE

SMCS-1059 **i01983154**

NOTE	REF NO	GRAPHIC REF	PART NUMBER	QTY	PART NAME 1 2 3 4 5 6 (PRODUCT LEVEL)	SEE PAGE
	1	1	**106-1792**	12	STUD-TAPERLOCK	
	2	1	**108-3612**	12	SPACER (11.13X19.05X53MM THK)	
	3	1	**133-3359**	2	MANIFOLD-EXHAUST	
	4	1	**150-1916**	1	MANIFOLD-EXHAUST	
	5	1	**2N-2766**	12	LOCKNUT (3/8X16X2 THD)	

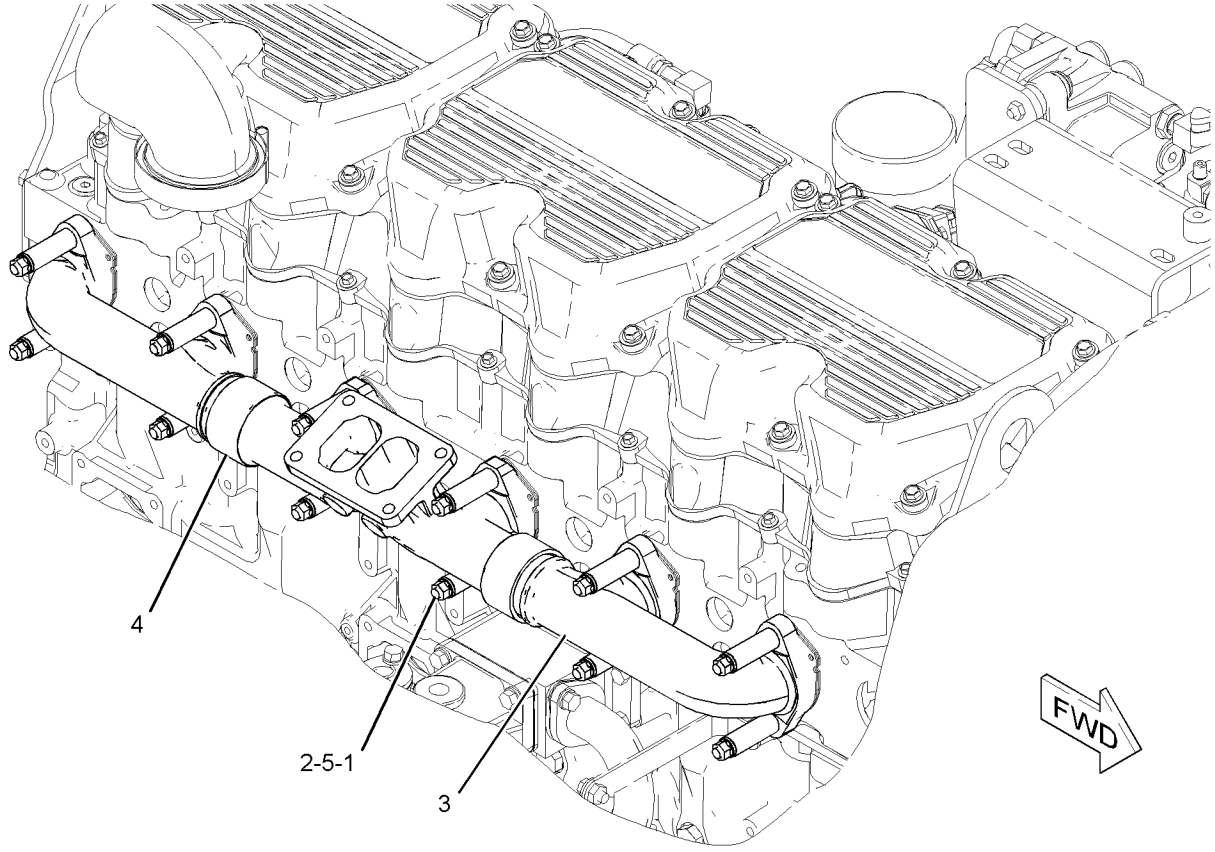

GRAPHIC #1 **<END>** g01031054

AIR INLET AND EXHAUST SYSTEM

275-7668 MOUNTING GP-MUFFLER

S/N: RHX2054-UP

PART OF 215-7486, 263-7760 ENGINE AR-COMPLETE

SMCS-1062 **i03041548**

NOTE	REF NO	GRAPHIC REF	PART NUMBER	QTY	PART NAME 1 2 3 4 5 6 (PRODUCT LEVEL)	SEE PAGE
	1	1	**101-3120**	2	SPACER (10.5X25X20-MM THK)	
	2	1	**275-7662**	1	BRACKET AS	
		1	**7T-1099**	1	LINK	
		1	**8J-6030**	1	NUT-WELD (3/8-16X28-THD)	
M		1	**8T-3490**	1	NUT-WELD (M10X1.5-THD)	
	3	1	**1C-2251**	2	BOLT (3/8-16X1.87-IN)	
	4	1	**0S-1591**	3	BOLT (3/8-16X1.5-IN)	
	5	1	**5M-2894**	5	WASHER-HARD (10.2X18.5X2.5-MM THK)	

M-METRIC PART

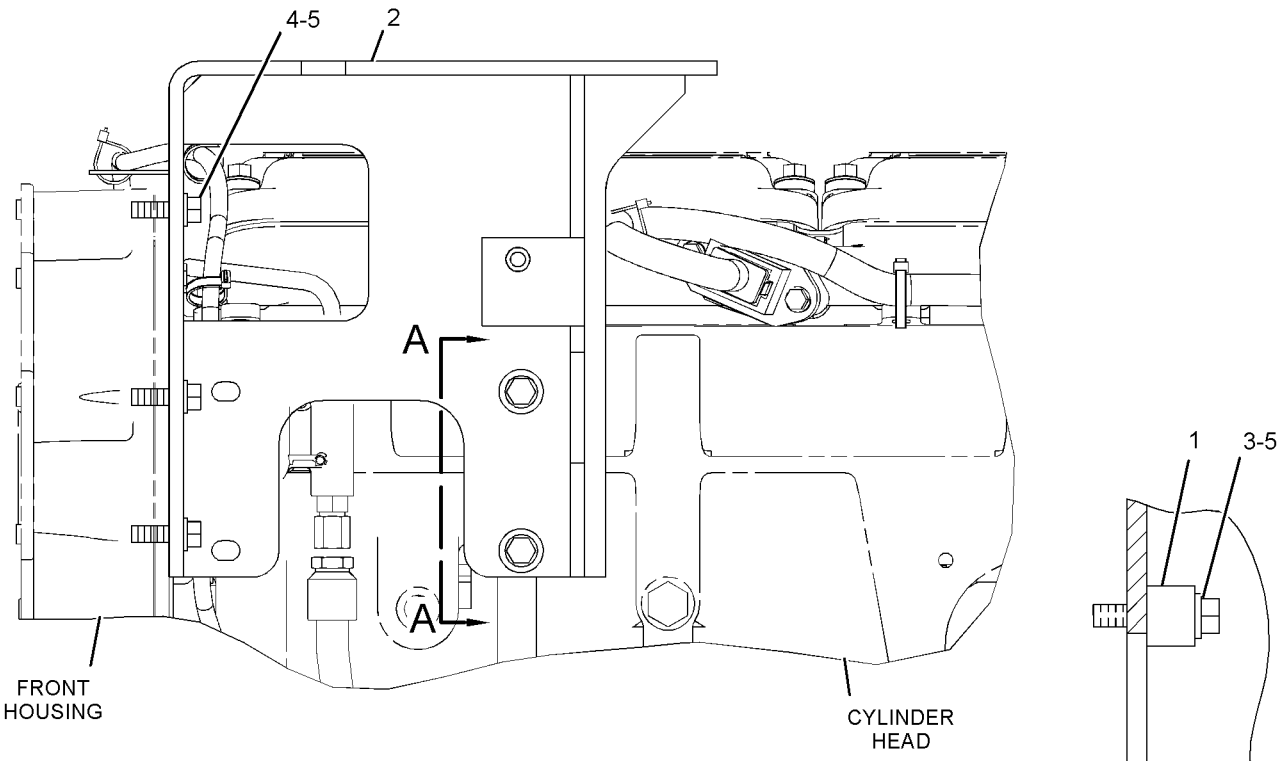

LEFT SIDE VIEW OF ENGINE

SECTION A-A

GRAPHIC #1 **<END>** g01372612

AIR INLET AND EXHAUST SYSTEM

253-3994 MUFFLER GP

S/N: B9K1-UP

PART OF 259-9204 COMMON AR

SMCS-1062 **i03153989**

NOTE	REF NO	GRAPHIC REF	PART NUMBER	QTY	PART NAME 1 2 3 4 5 6 (PRODUCT LEVEL)	SEE PAGE
	1	1	**7E-3509**	1	PIPE AS-EXHAUST EXTENSION	
		1	**7E-1397**	1	CLAMP-PIPE	
	2	1	**9N-1941**	1	CLAMP-V-BAND	
	3	1	**241-9265**	1	CLAMP-MUFFLER	
	4	1	**266-6812**	1	BRACKET AS	
	5	1	**275-0568**	1	MUFFLER AS	
	6	1	**309-9898**	1	TUBE AS	
	7	1	**122-4026**	4	SPACER (13X25X25-MM THK)	
	8	1	**7X-0575**	2	WASHER-HARD (10.2X22.5X5-MM THK)	
	9	1	**125-0915**	2	SPACER (10.5X20X29-MM THK)	
	10	1	**6L-8550**	2	BOLT-HIGH TEMPERATURE	
	11	1	**8T-4223**	4	WASHER-HARD (13.5X25.5X3-MM THK)	
M	12	1	**8T-4910**	4	BOLT (M12X1.75X60-MM)	
	13	1	**5P-4116**	2	WASHER-HARD (8.8X20.5X2-MM THK)	
M	14	1	**8T-7547**	2	BOLT (M8X1.25X30-MM)	
	15	1	**309-7558**	1	PLATE	

M-METRIC PART

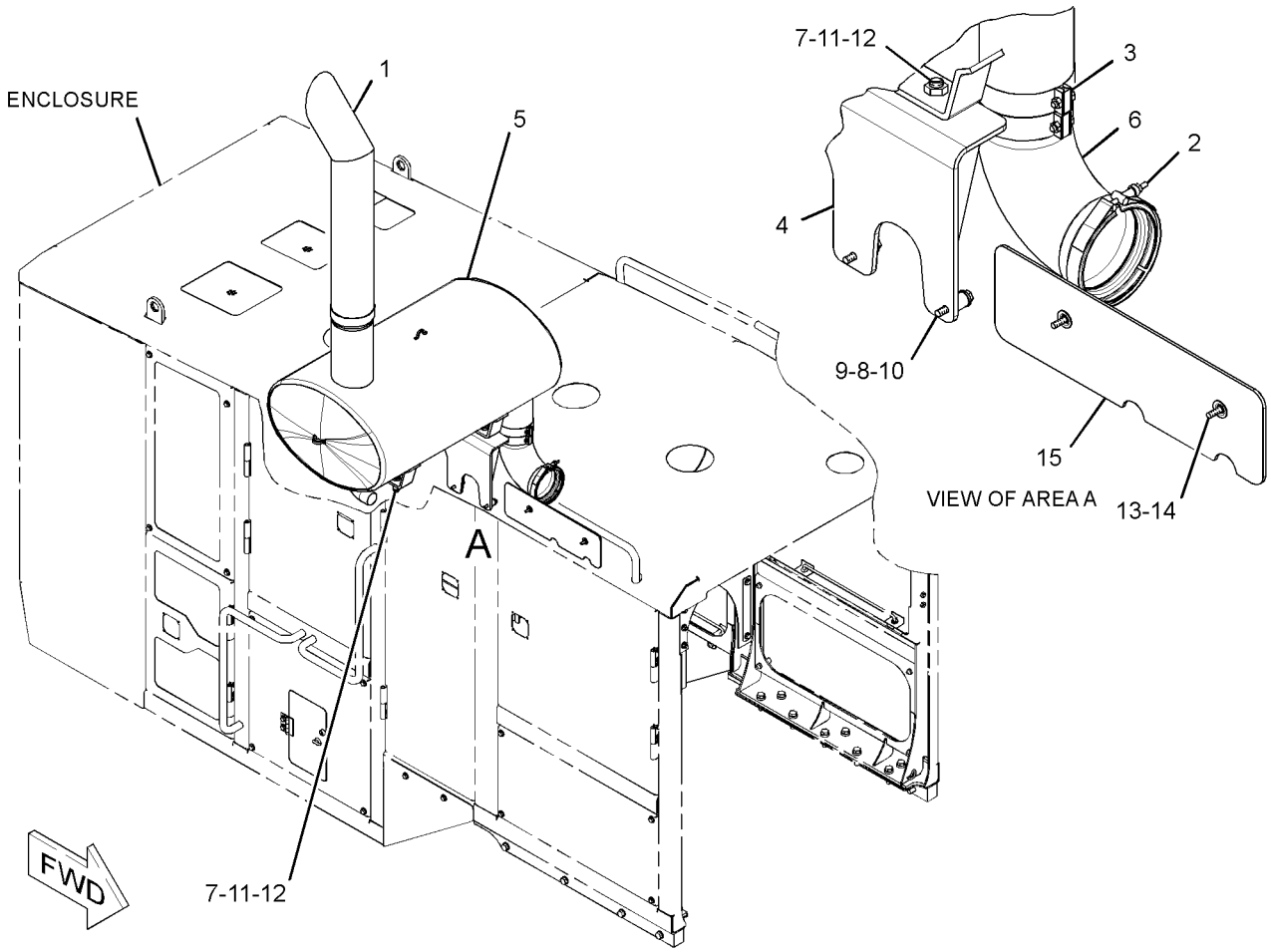

GRAPHIC #1 **<END>** g01441585

AIR INLET AND EXHAUST SYSTEM

283-0774 PRECLEANER GP—CAB AIR

S/N: B9K1-UP

PART OF 275-5230 AIR CLEANER GP

SMCS-1055 **i03460799**

NOTE	REF NO	GRAPHIC REF	PART NUMBER	QTY	PART NAME 1 2 3 4 5 6 (PRODUCT LEVEL)	SEE PAGE
	1	1	6V-3582	1	CLAMP-HOSE	
	2	1	235-0320	1	CAP AS-AIR CLEANER (PRECLEANER)	
		1	3E-7404	1	CLAMP-HOSE	
	3	1	209-5104	1	PRESSURIZER AS-CAB	
		1	321-3374	1	MOTOR AS-BLOWER (24-VOLT, CAB AIR)	
		1	9W-0852	2	PIN-CONNECTOR (14-GA TO 16-GA)	
		1	102-8802	1	KIT-RECEPTACLE (2-PIN)	
					(INCLUDES RECEPTACLE AS & WEDGE)	
	4	1	283-0775	1	HOSE	
	5	1	9X-6654	1	CLAMP-HOSE	

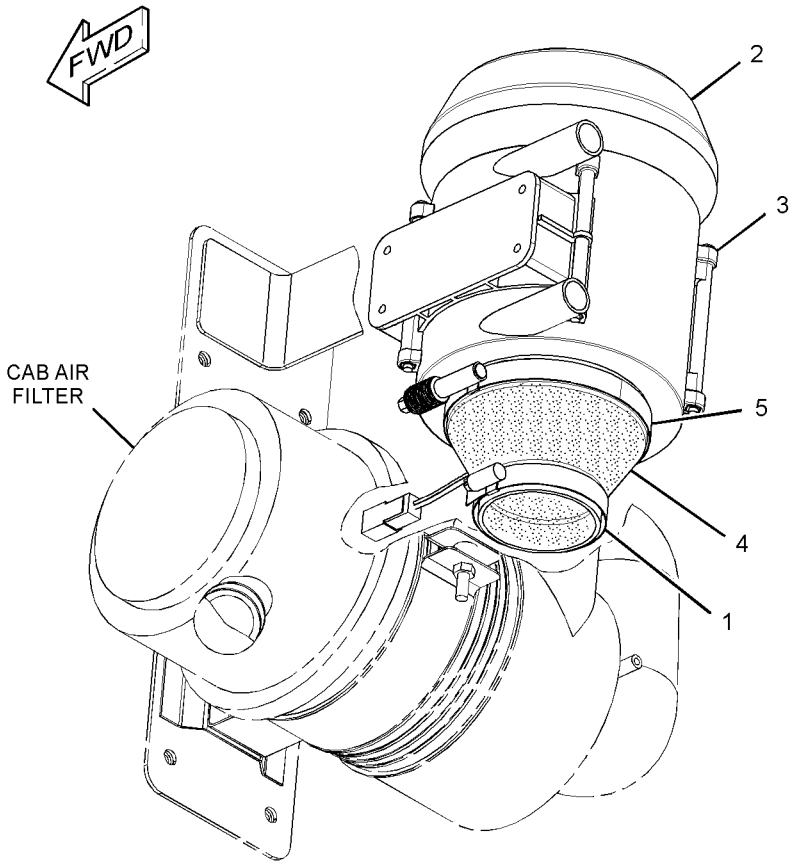

GRAPHIC #1 **<END>** g01384931

AIR INLET AND EXHAUST SYSTEM

262-1079 TURBOCHARGER GP

S/N: RHX2054-UP

PART OF 215-7486, 263-7760 ENGINE AR-COMPLETE

SMCS-1052, 1053 **i03866295**

NOTE	REF NO	GRAPHIC REF	PART NUMBER	QTY	PART NAME 1 2 3 4 5 6 (PRODUCT LEVEL)	SEE PAGE
	1	1	**1S-4295**	1	GASKET (TURBOCHARGER)	
Y	2	1	**296-7636**	1	TURBOCHARGER GP	152
	3	1	**2N-2765**	4	BOLT-HIGH TEMPERATURE (3/8-16X1.75-IN)	
	4	1	**2N-2766**	4	LOCKNUT (3/8-16-THD)	

Y-SEPARATE ILLUSTRATION

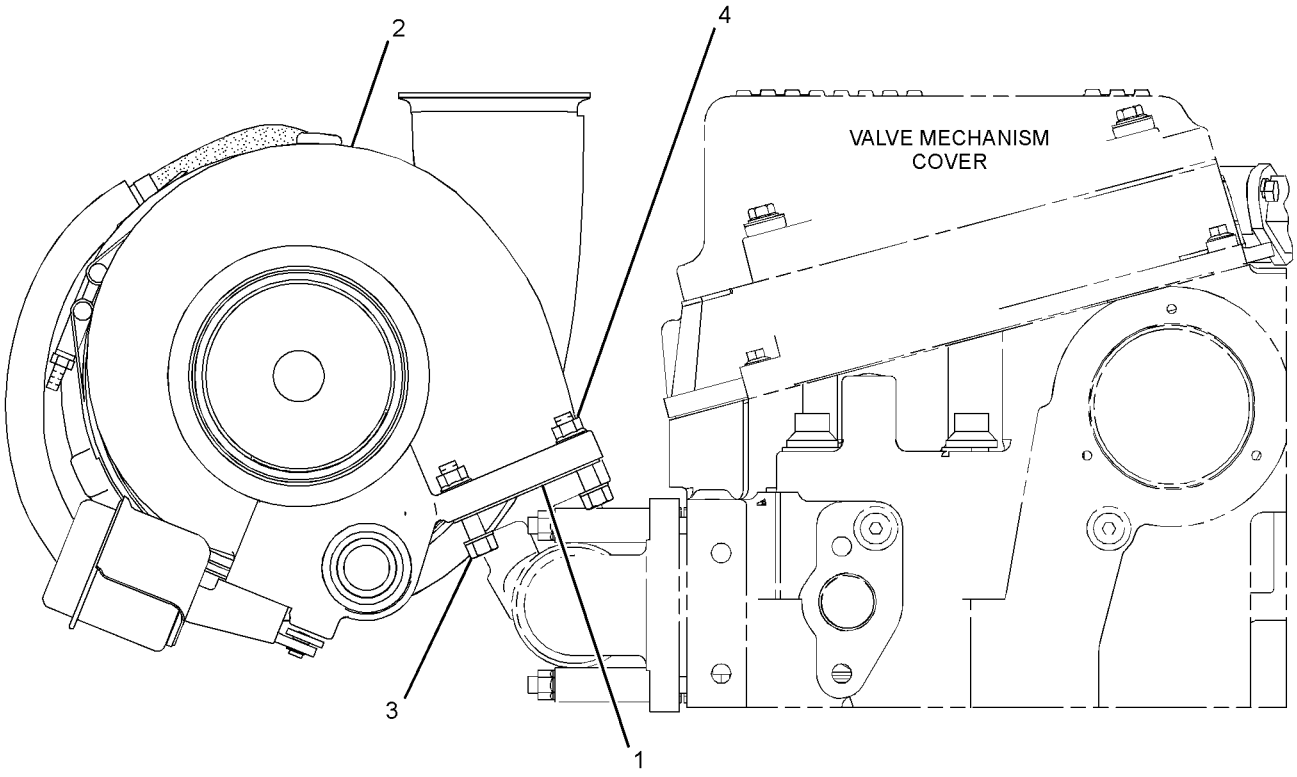

FRONT VIEW OF ENGINE

GRAPHIC #1 **<END>** g01684693

AIR INLET AND EXHAUST SYSTEM

296-7636 TURBOCHARGER GP

S/N: RHX2094-UP

PART OF 262-1079 TURBOCHARGER GP

SMCS-1052, 1053 **i02757872**

NOTE	REF NO	GRAPHIC REF	PART NUMBER	QTY	PART NAME 1 2 3 4 5 6 (PRODUCT LEVEL)	SEE PAGE
	1	1	**9N-2038**	1	CLAMP AS-TURBINE	
	2	1	**161-6958**	1	CLIP-HOSE	
	3	1	**161-6963**	2	CLAMP	
	4	1	**268-2960**	1	CLAMP AS (COMPRESSOR)	
	5	1	**301-9278**	1	CARTRIDGE GP-TURBOCHARGER	
	6	1	**115-7087**	1	BOLT (M6X0.04X10.4-MM)	
E	7	1	**242-3360**		HOSE (49-CM)	
E	8	1	**258-4524**		SLEEVE (35-CM)	

E-ORDER BY THE CENTIMETER

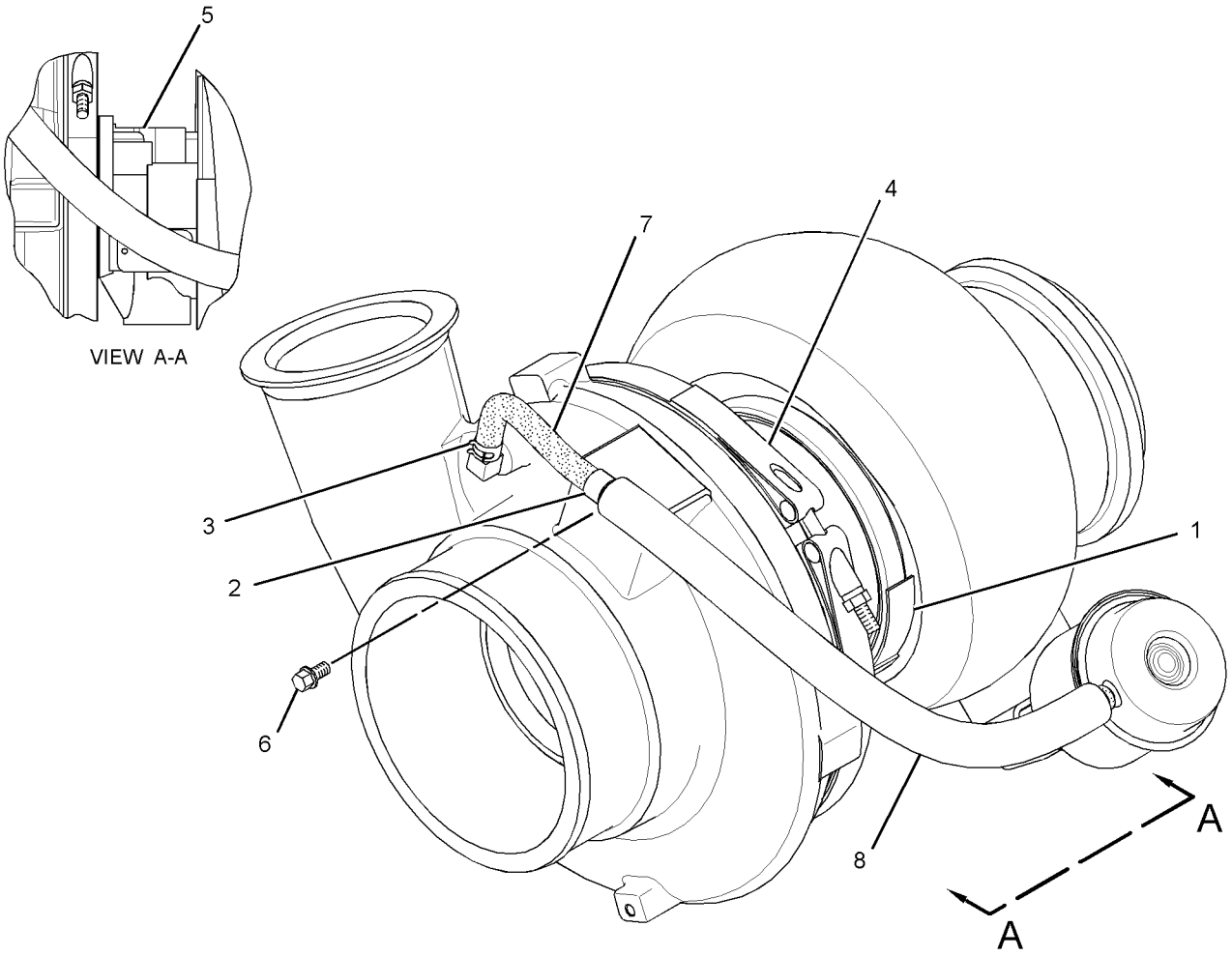

GRAPHIC #1 **<END>** g01381397

FUEL SYSTEM

275-7664 FILTER & MTG GP-FUEL

S/N: RHX2054-UP

PART OF 215-7486, 263-7760 ENGINE AR-COMPLETE

SMCS-1261, 1262, 1274 **i02910480**

NOTE	REF NO	GRAPHIC REF	PART NUMBER	QTY	PART NAME 1 2 3 4 5 6 (PRODUCT LEVEL)	SEE PAGE
	1	1	**8T-9655**	6	MOUNT-ISOLATION	
	2	1	**101-3120**	5	SPACER (10.5X25X20-MM THK)	
Y	3	1	**190-8977**	1	PUMP GP-FUEL PRM & WATER SEP	169
	4	1	**191-1782**	1	SPACER (8.5X12.7X38.2-MM THK)	
	5	1	**191-1783**	2	SPACER (8.5X12.7X87.3-MM THK)	
	6	1	**275-7663**	1	BRACKET AS	
		1	**7T-1099**	1	LINK	
		1	**8J-6030**	2	NUT-WELD (3/8-16-THD)	
M		1	**8T-3490**	4	NUT-WELD (M10X1.5-THD)	
M		1	**8T-3612**	3	NUT-WELD (M8X1.25-THD)	
Y	7	1	*275-7667*	1	FILTER GP-FUEL	155
	8	1	**005-4173**	1	ELBOW	
	9	1	**0S-1571**	5	BOLT (3/8-16X1.75-IN)	
	10	1	*148-8345*	1	CONNECTOR AS	
		1	**2M-9780**	1	SEAL-O-RING	
		1	**6V-8398**	1	SEAL-O-RING	
		1	**6V-8638**	1	CONNECTOR	
	11	1	*164-5619*	2	PLUG AS	
					(EACH INCLUDES)	
		1	**2M-9780**	1	SEAL-O-RING	
		1	**9S-8006**	1	PLUG-O-RING	
	12	1	**5M-2894**	5	WASHER-HARD (10.2X18.5X2.5-MM THK)	
	13	1	**7X-0579**	3	WASHER-HARD (8.8X25.5X2-MM THK)	
M	14	1	**7X-2539**	2	BOLT (M8X1.25X110-MM)	
M	15	1	**8T-6869**	1	BOLT (M8X1.25X60-MM)	

M-METRIC PART
Y-SEPARATE ILLUSTRATION

275-7664 **FILTER & MTG GP-FUEL** *(contd.)* **i02910480**

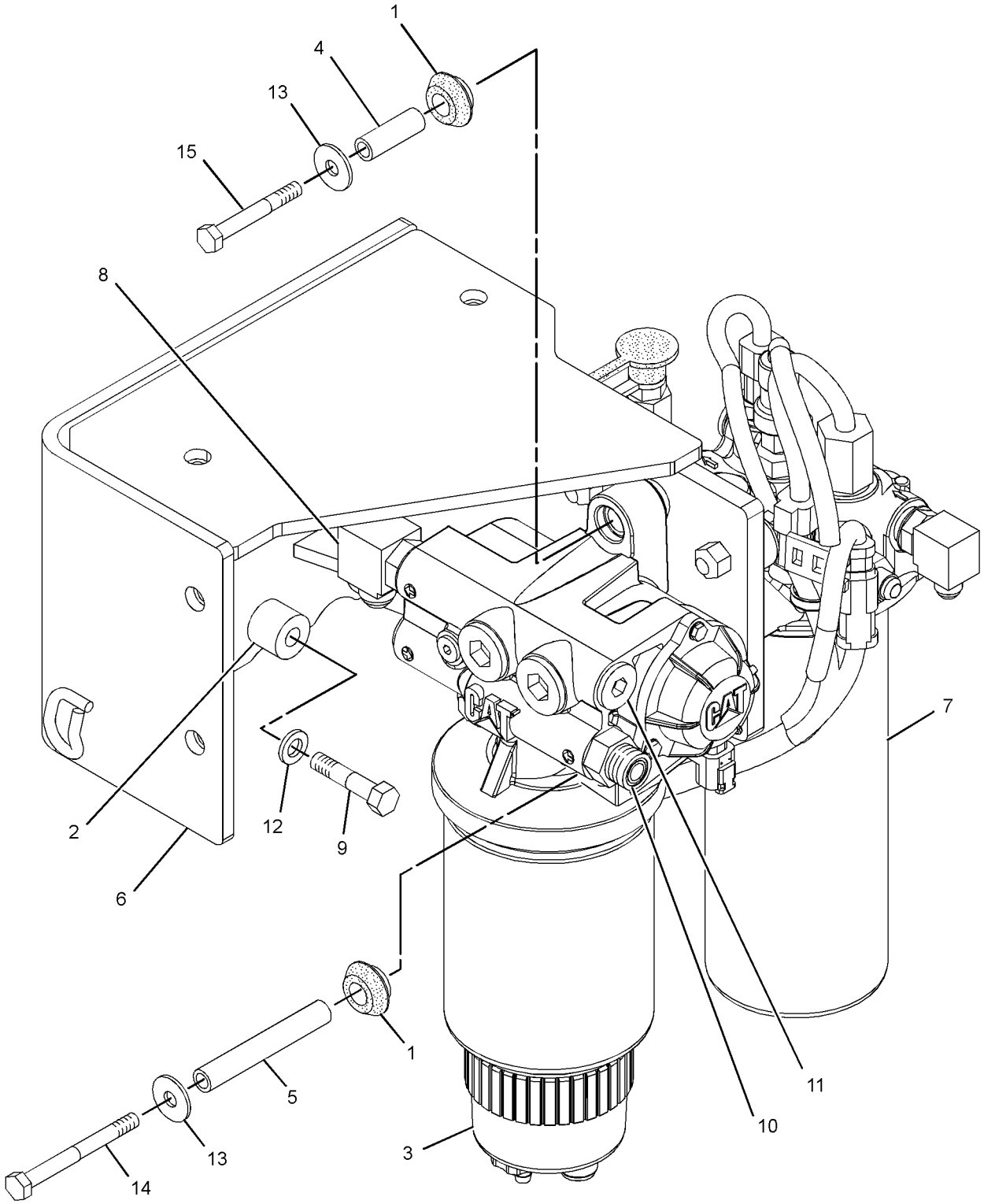

GRAPHIC #1 **<END>** g01448556

FUEL SYSTEM

275-7667 FILTER GP-FUEL

S/N: RHX2094-UP

PART OF 275-7664 FILTER & MTG GP-FUEL

SMCS-1261 **i03588203**

NOTE	REF NO	GRAPHIC REF	PART NUMBER	QTY	PART NAME 1 2 3 4 5 6 (PRODUCT LEVEL)	SEE PAGE
	1	1	**1R-0762**	1	FILTER-FUEL (ADVANCED EFFICIENCY)	
	2	1	**3S-2093**	1	STRAP-CABLE	
	3	1	**127-0785**	1	ELBOW	
Y	4	1	*233-6742*	1	VALVE GP-CHECK (FUEL)	180
Y	5	1	*234-5013*	1	SENSOR GP-TEMPERATURE (FUEL)	322
	6	1	**237-9310**	1	BASE AS	
		1	**9S-4167**	1	STUD-HOLLOW (1-14X1.47-IN)	
Y	7	1	*239-2396*	1	SENSOR GP-PRESSURE (FUEL)	311
Y	8	1	**275-1253**	1	SWITCH GP-PRESSURE (FUEL FILTER, DIFFERENTIAL)	343
	9	1	**312-2688**	1	HARNESS AS-SENSOR (FUEL)	
		1	**102-8803**	1	KIT-RECEPTACLE (3-PIN)	
		1	**102-8806**	1	KIT-RECEPTACLE (8-PIN)	
					(EACH RECEPTACLE KIT INCLUDES RECEPTACLE AS & WEDGE)	
		1	**230-4011**	1	PLUG AS-CONNECTOR (2-PIN)	
		1	**264-7029**	1	SEAL-CONNECTOR	
		1	**230-4012**	1	RECEPTACLE AS-CONNECTOR (2-PIN)	
		1	**8T-8737**	1	PLUG-SEAL	
		1	**9X-3401**	12	PIN-CONNECTOR (16-GA TO 18-GA)	
					—OR—	
		1	**126-1767**	12	PIN-CONNECTOR (14-GA TO 16-GA)	
	10	1	**005-4362**	1	ELBOW	
	11	1	**030-8188**	1	CONNECTOR	
	12	1	*148-8336*	1	CONNECTOR AS	
		1	**3J-1907**	1	SEAL-O-RING	
		1	**6V-8397**	1	SEAL-O-RING	
		1	**6V-8636**	1	CONNECTOR	
	13	1	**235-3595**	1	ADAPTER	
	14	1	**186-1667**	1	CONNECTOR AS	
		1	**2R-6806**	1	CONNECTOR-O-RING	
		1	**214-7568**	1	SEAL-O-RING	
	15	1	**3P-1932**	1	ADAPTER	
	16	1	**4P-7581**	1	CLIP	
	17	1	**5S-7383**	2	BOLT (3/8-16X1.75-IN)	
	18	1	**6V-0852**	1	CAP-DUST	
	19	1	**6V-3965**	1	FITTING (QUICK DISCONNECT)	
	20	1	**6V-5048**	2	SEAL-O-RING	
	21	1	**6V-5049**	1	SEAL-O-RING	
	22	1	**8L-2786**	5	SEAL-O-RING	
	23	1	**8T-2353**	1	ADAPTER	
	24	1	**8T-4896**	2	WASHER-HARD (10.2X18.5X2.5-MM THK)	
	25	1	**9S-8005**	1	PLUG-O-RING	

Y-SEPARATE ILLUSTRATION

275-7667 **FILTER GP-FUEL** *(contd.)* **i03588203**

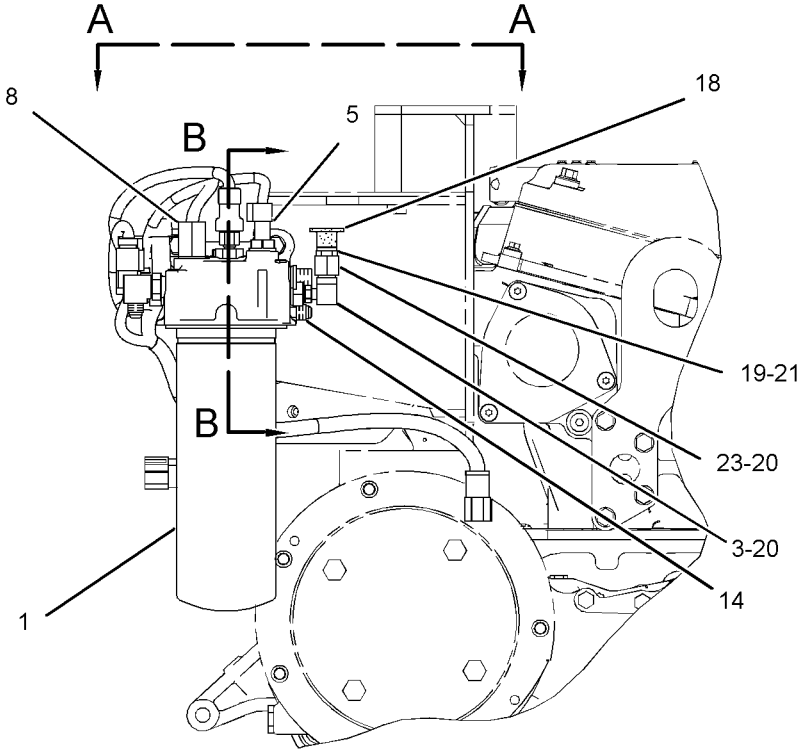

REAR VIEW OF ENGINE

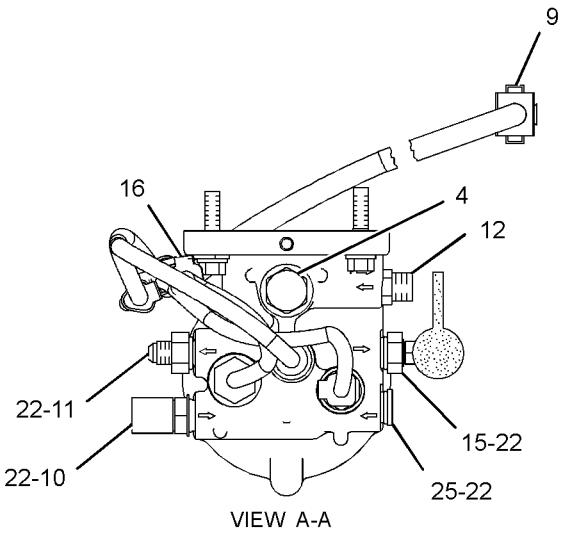

VIEW A-A

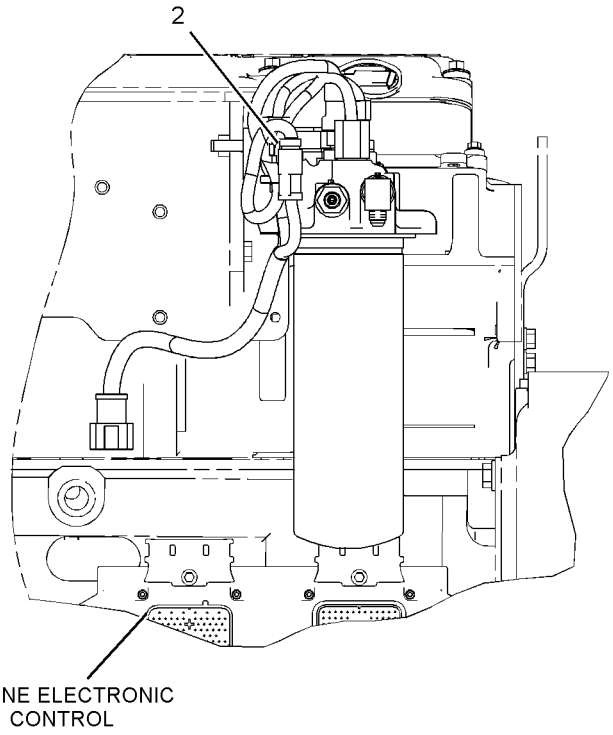

ENGINE ELECTRONIC CONTROL

LEFT SIDE VIEW OF ENGINE

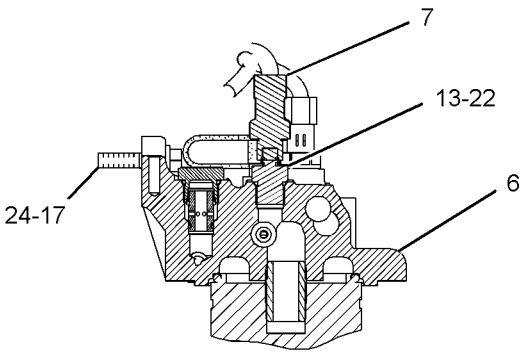

SECTION B-B

GRAPHIC #1 **<END>** g01951464

FUEL SYSTEM

174-9570 FILTER GP-WATER SEP & FUEL–PRIMARY

S/N: RHX2094-UP

PART OF 190-8977 PUMP GP-FUEL PRM & WATER SEP

SMCS-1261, 1263 **i03671378**

NOTE	REF NO	GRAPHIC REF	PART NUMBER	QTY	PART NAME 1 2 3 4 5 6 (PRODUCT LEVEL)	SEE PAGE
	1	1	**326-1644**	1	FILTER AS-WATER SEP & FUEL (PRIMARY)	
	1A	1	**220-8678**	1	SEAL-RING (FUEL, WATER SEPARATOR)	
	2	1	**343-5527**	1	BOWL AS	
	2A	1	**3J-1907**	1	SEAL-O-RING	
	2B	1	**5F-9144**	1	SEAL-O-RING	
	2C	1	**8F-7219**	1	SEAL-O-RING	
	2D	1	**9S-8004**	1	PLUG-O-RING	

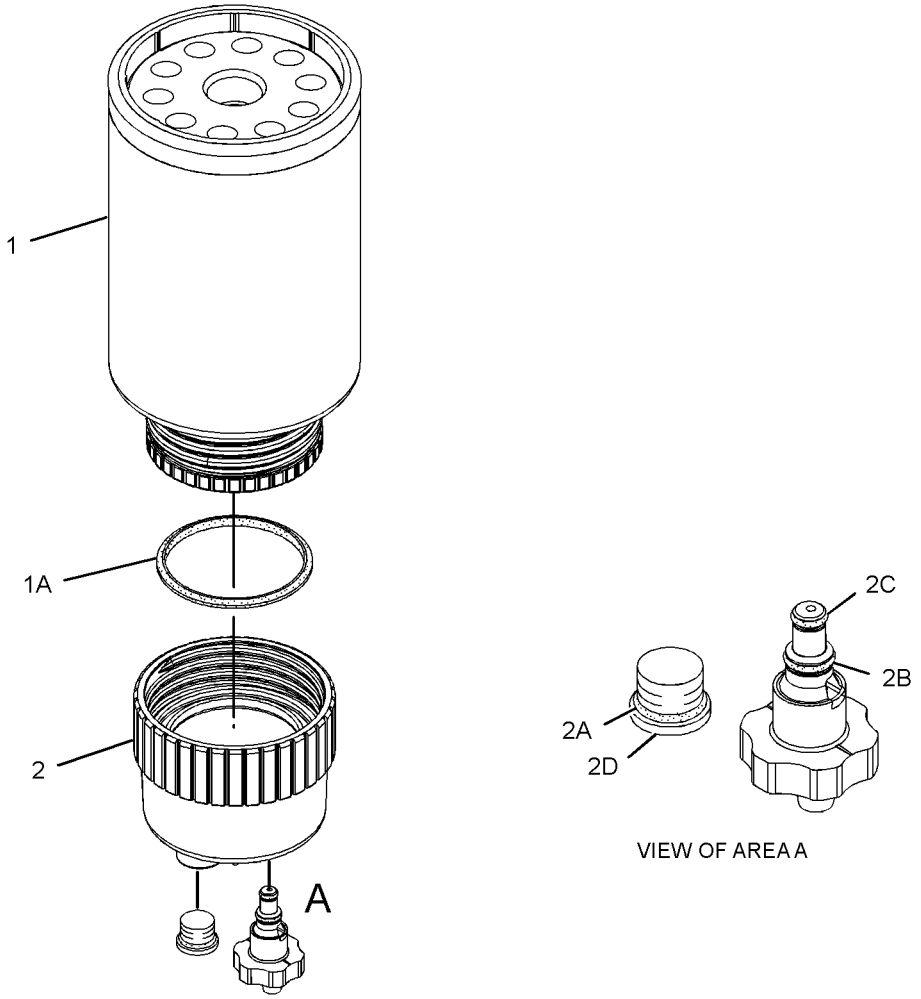

GRAPHIC #1 **<END>** g01960053

FUEL SYSTEM

253-3995 LINES GP-FUEL

S/N: B9K1-UP

PART OF 259-9204 COMMON AR

SMCS-1274 **i02732240**

NOTE	REF NO	GRAPHIC REF	PART NUMBER	QTY	PART NAME 1 2 3 4 5 6 (PRODUCT LEVEL)	SEE PAGE
	1	1	**3S-2093**	1	STRAP-CABLE	
I	2	1	**282-3650**	1	HOSE AS	
	3	1	**282-9429**	1	PLATE AS	
M		1	**8T-3490**	2	NUT-WELD (M10X1.5-THD)	
I	4	1	**283-0116**	1	HOSE AS	
	5	1	**033-8248**	1	CLIP	
	6	1	*148-8318*	1	CONNECTOR AS	
		1	**6V-8634**	1	CONNECTOR	
		1	**3K-0360**	1	SEAL-O-RING	
		1	**6V-8397**	1	SEAL-O-RING	
	7	1	*148-8340*	1	CONNECTOR AS	
		1	**6V-8639**	1	CONNECTOR	
		1	**3K-0360**	1	SEAL-O-RING	
		1	**6V-8398**	1	SEAL-O-RING	
	8	1	**198-4777**	2	WASHER-HARD (11X25X10-MM THK)	
	9	1	**1S-0994**	3	CLIP	
	10	1	**8M-2773**	2	CLIP	
	11	1	**8T-4121**	5	WASHER-HARD (11X21X2.5-MM THK)	
M	12	1	**8T-4133**	1	NUT (M10X1.5-THD)	
M	13	1	**8T-4136**	4	BOLT (M10X1.5X25-MM)	
M	14	1	**8T-4195**	2	BOLT (M10X1.5X30-MM)	
E	15	1	**8C-6959**		HOSE (98-CM)	

E-ORDER BY THE CENTIMETER
I-REFER TO HYDRAULIC INFORMATION SYSTEM
M-METRIC PART

253-3995 **LINES GP-FUEL** ***(contd.)*** **i02732240**

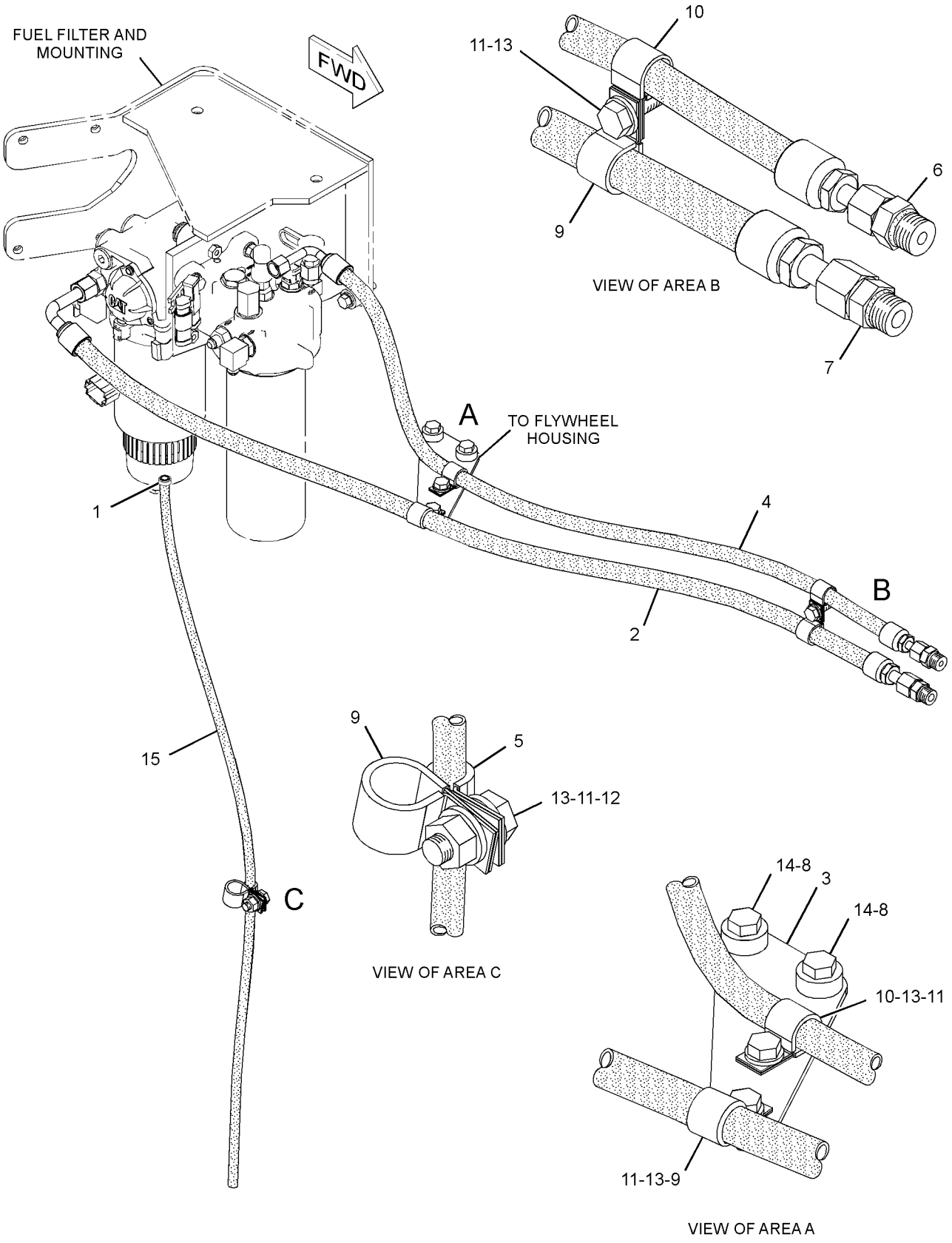

GRAPHIC #1 **<END>** g01377405

FUEL SYSTEM

275-7666 LINES GP-FUEL

S/N: RHX2054-5549

PART OF 215-7486, 263-7760 ENGINE AR-COMPLETE

SMCS-1274 **i02733510**

NOTE	REF NO	GRAPHIC REF	PART NUMBER	QTY	PART NAME 1 2 3 4 5 6 (PRODUCT LEVEL)	SEE PAGE
I	1	1	**7W-7536**	1	HOSE AS	
	2	1	**110-8330**	1	SPACER (11.3X19.05X90-MM THK)	
I	3	1	**118-5618**	1	HOSE AS	
	4	1	**168-8974**	1	TUBE AS (FUEL SUPPLY)	
	5	1	*193-7404*	1	MANIFOLD GP-FUEL	
		1	**168-0300**	1	MANIFOLD	
	5A	1	**2R-6806**	2	CONNECTOR-O-RING	
	5B	1	**6V-6609**	2	SEAL-O-RING	
	5C	1	**9S-8005**	2	PLUG-O-RING	
	5D	1	**033-6042**	2	SEAL-O-RING	
I	6	1	**194-0431**	1	HOSE AS	
I	7	1	**203-2075**	1	HOSE AS	
	8	1	**033-6042**	2	SEAL-O-RING	
	9	1	**0S-1594**	1	BOLT (3/8-16X1-IN)	
	10	1	**0S-1619**	2	BOLT (3/8-16X3-IN)	
	11	1	*155-7319*	1	ELBOW AS	
		1	**3K-0360**	1	SEAL-O-RING	
		1	**118-4728**	1	ELBOW	
	12	1	*164-6877*	1	ELBOW AS	
		1	**3J-1907**	1	SEAL-O-RING	
		1	**030-7947**	1	ELBOW	
	13	1	**1A-5964**	1	BOLT (3/8-16X4.5-IN)	
	14	1	**2P-7214**	1	ELBOW	
	15	1	**2R-6806**	1	CONNECTOR-O-RING	
	16	1	**5K-5338**	1	CLIP	
	17	1	**5M-2894**	5	WASHER-HARD (10.2X18.5X2.5-MM THK)	
	18	1	**6V-5839**	1	WASHER (11X21X2.5-MM THK)	
M	19	1	**6V-6317**	1	BOLT (M10X1.5X20-MM)	
	20	1	**7S-3916**	1	CLIP (TAB)	
	21	1	**7S-3919**	1	CLIP (SLOT)	
	22	1	**7V-6571**	1	GROMMET	
	23	1	**8M-2773**	3	CLIP	
	24	1	**9S-8752**	1	NUT-FULL (3/8-16-THD)	

I-REFER TO HYDRAULIC INFORMATION SYSTEM
M-METRIC PART

275-7666 **LINES GP-FUEL** *(contd.)* **i02733510**

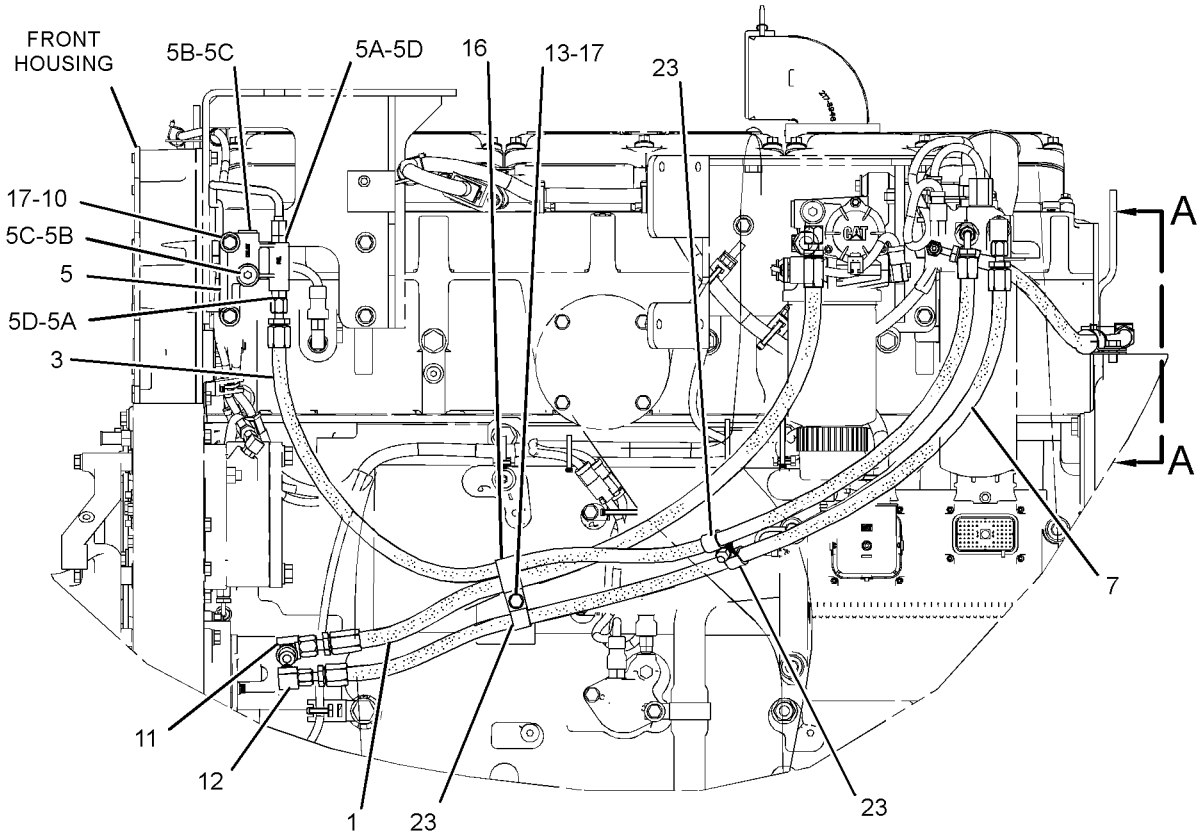

LEFT SIDE VIEW OF ENGINE

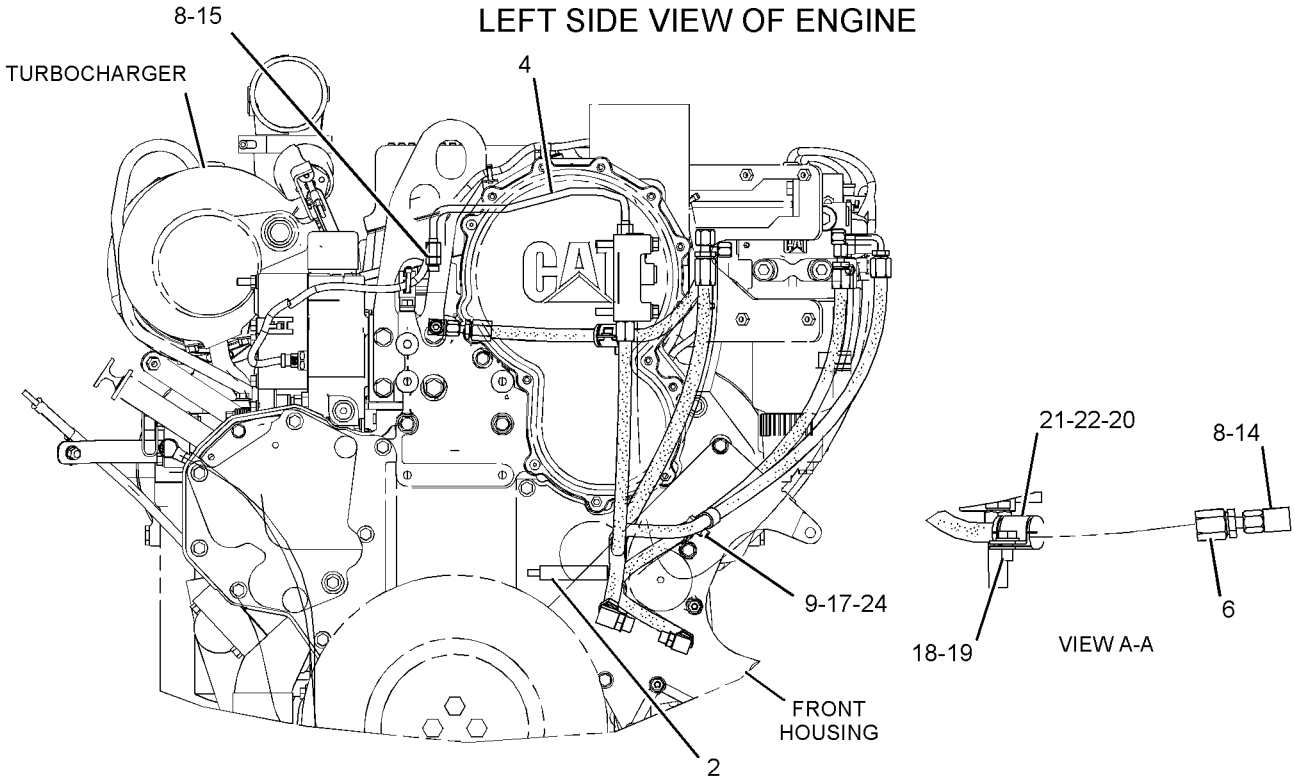

FRONT VIEW OF ENGINE

GRAPHIC #1 **<END>** g01372650

FUEL SYSTEM

275-7666 LINES GP-FUEL

S/N: RHX5550-8787

PART OF 215-7486, 263-7760 ENGINE AR-COMPLETE

SMCS-1274 **i03041541**

NOTE	REF NO	GRAPHIC REF	PART NUMBER	QTY	PART NAME 1 2 3 4 5 6 (PRODUCT LEVEL)	SEE PAGE
	1	1	**110-8330**	1	SPACER (11.3X19.05X90-MM THK)	
	2	1	**168-8974**	1	TUBE AS (FUEL SUPPLY)	
	3	1	*193-7404*	1	MANIFOLD GP-FUEL	
		1	**168-0300**	1	MANIFOLD	
	3A	1	**2R-6806**	2	CONNECTOR-O-RING	
	3B	1	**6V-6609**	2	SEAL-O-RING	
	3C	1	**9S-8005**	2	PLUG-O-RING	
	3D	1	**033-6042**	2	SEAL-O-RING	
I	4	1	**194-0431**	1	HOSE AS	
I	5	1	**203-2075**	1	HOSE AS	
I	6	1	**316-9819**	1	HOSE AS	
I	7	1	**318-0825**	1	HOSE AS	
	8	1	**033-6042**	2	SEAL-O-RING	
	9	1	**0S-1594**	1	BOLT (3/8-16X1-IN)	
	10	1	**0S-1619**	2	BOLT (3/8-16X3-IN)	
C	11	1	**132-7551**	1	SPACER (11X19X6-MM THK)	
	12	1	*155-7319*	1	ELBOW AS	
		1	**3K-0360**	1	SEAL-O-RING	
		1	**118-4728**	1	ELBOW	
	13	1	*164-6877*	1	ELBOW AS	
		1	**3J-1907**	1	SEAL-O-RING	
		1	**030-7947**	1	ELBOW	
C	14	1	**1A-5183**	1	BOLT (3/8-16X4.75-IN)	
	15	1	**2P-7214**	1	ELBOW	
	16	1	**2R-6806**	1	CONNECTOR-O-RING	
C	17	1	**4D-7733**	1	CLIP	
	18	1	**5M-2894**	5	WASHER-HARD (10.2X18.5X2.5-MM THK)	
C	19	1	**6D-4246**	1	CLIP	
	20	1	**6V-5839**	1	WASHER (11X21X2.5-MM THK)	
M	21	1	**6V-6317**	1	BOLT (M10X1.5X20-MM)	
	22	1	**7S-3916**	1	CLIP (TAB)	
	23	1	**7S-3919**	1	CLIP (SLOT)	
	24	1	**7V-6571**	1	GROMMET	
C	25	1	**8M-2773**	2	CLIP	
	26	1	**9S-8752**	1	NUT-FULL (3/8-16-THD)	

C-CHANGE FROM PREVIOUS TYPE
I-REFER TO HYDRAULIC INFORMATION SYSTEM
M-METRIC PART

275-7666 **LINES GP-FUEL** *(contd.)* **i03041541**

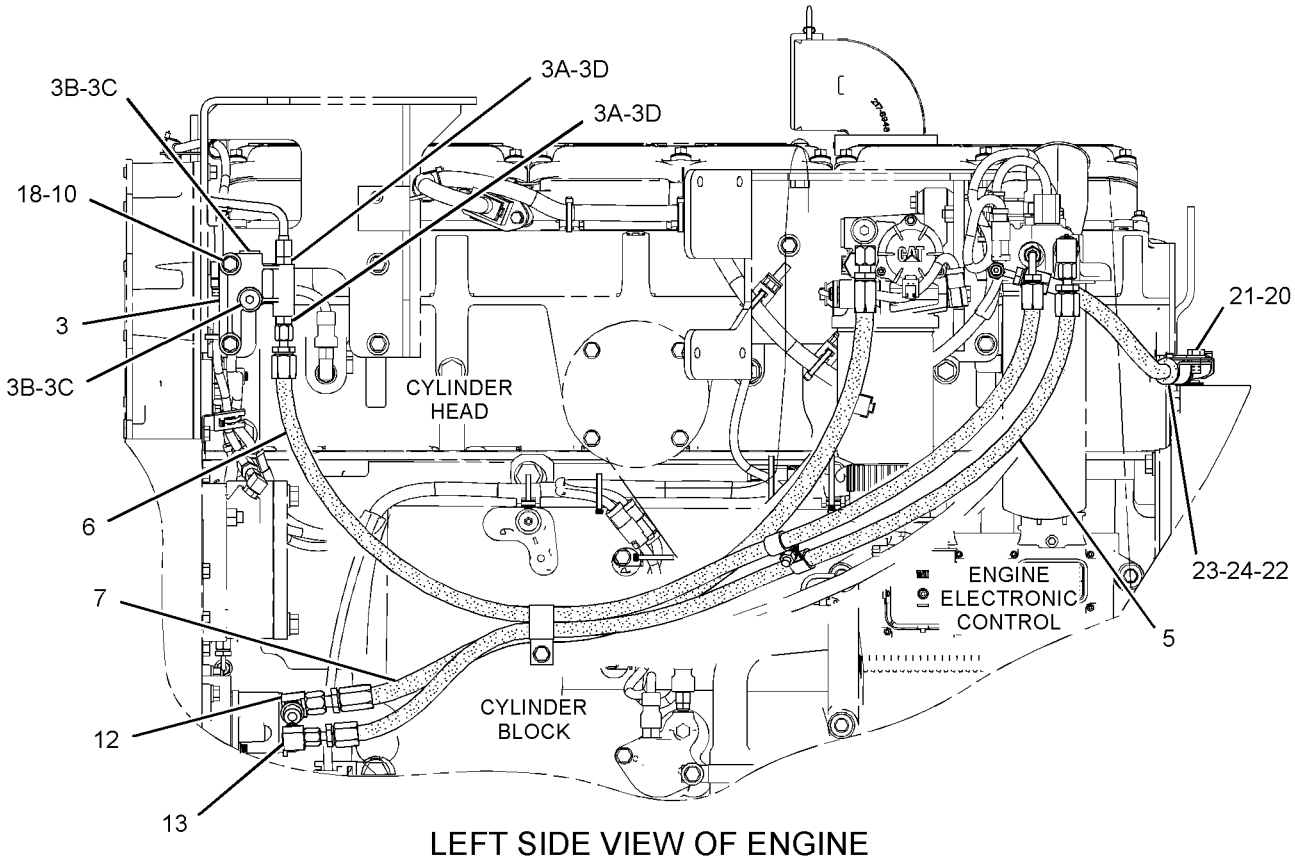

LEFT SIDE VIEW OF ENGINE

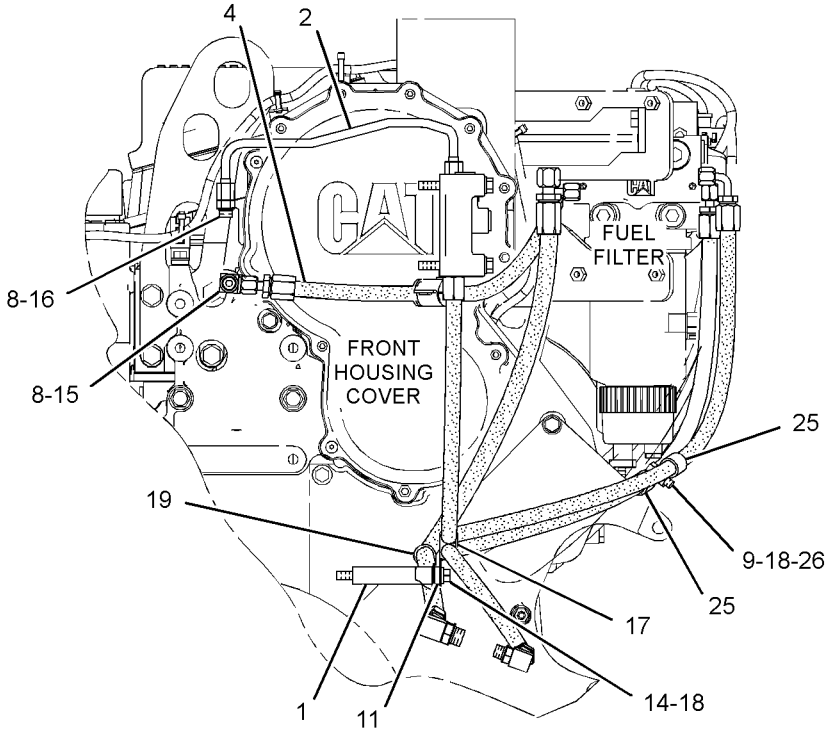

FRONT VIEW OF ENGINE

GRAPHIC #1 **<END>** g01634580

FUEL SYSTEM

275-7666 LINES GP-FUEL

S/N: RHX8788-UP

PART OF 263-7760 ENGINE AR-COMPLETE

SMCS-1274 **i03849190**

NOTE	REF NO	GRAPHIC REF	PART NUMBER	QTY	PART NAME 1 2 3 4 5 6 (PRODUCT LEVEL)	SEE PAGE
	1	1	**168-8974**	1	TUBE AS (FUEL SUPPLY)	
Y	2	1	*193-7404*	1	MANIFOLD GP-FUEL	166
I	3	1	**194-0431**	1	HOSE AS	
I	4	1	**203-2075**	1	HOSE AS	
C	5	1	**206-5017**	1	SPACER (11X20X5-MM THK)	
C	6	1	**214-7568**	2	SEAL-O-RING	
I	7	1	**316-9819**	1	HOSE AS	
I	8	1	**318-0825**	1	HOSE AS	
C	9	1	**0S-1571**	1	BOLT (3/8-16X1.75-IN)	
	10	1	**0S-1594**	1	BOLT (3/8-16X1-IN)	
	11	1	**0S-1619**	2	BOLT (3/8-16X3-IN)	
C	12	1	**0T-0573**	1	BOLT (3/8-16X2.75-IN)	
C	13	1	**133-9640**	1	BRACKET	
	14	1	*155-7319*	1	ELBOW AS	
		1	**3K-0360**	1	SEAL-O-RING	
		1	**118-4728**	1	ELBOW	
	15	1	*164-6877*	1	ELBOW AS	
		1	**3J-1907**	1	SEAL-O-RING	
		1	**030-7947**	1	ELBOW	
	16	1	**2P-7214**	1	ELBOW	
	17	1	**2R-6806**	1	CONNECTOR-O-RING	
C	18	1	**5F-7667**	1	SPACER (11.1X19X44.5-MM THK)	
C	19	1	**5M-2894**	4	WASHER-HARD (10.2X18.5X2.5-MM THK)	
C	20	1	**5P-8939**	1	GROMMET	
	21	1	**6V-5839**	1	WASHER (11X21X2.5-MM THK)	
M	22	1	**6V-6317**	1	BOLT (M10X1.5X20-MM)	
	23	1	**7S-3916**	1	CLIP (TAB)	
	24	1	**7S-3919**	1	CLIP (SLOT)	
C	25	1	**7V-6571**	3	GROMMET	
C	26	1	**8T-1889**	3	CLIP (SLOT)	
C	27	1	**8T-1890**	3	CLIP (TAB)	
C	28	1	**9M-8406**	2	CLIP	
C	29	1	**9S-8752**	2	NUT-FULL (3/8-16-THD)	
C	30	1	**9X-6458**	3	WASHER-HARD (10.2X22.5X3-MM THK)	

C-CHANGE FROM PREVIOUS TYPE
I-REFER TO HYDRAULIC INFORMATION SYSTEM
M-METRIC PART
Y-SEPARATE ILLUSTRATION

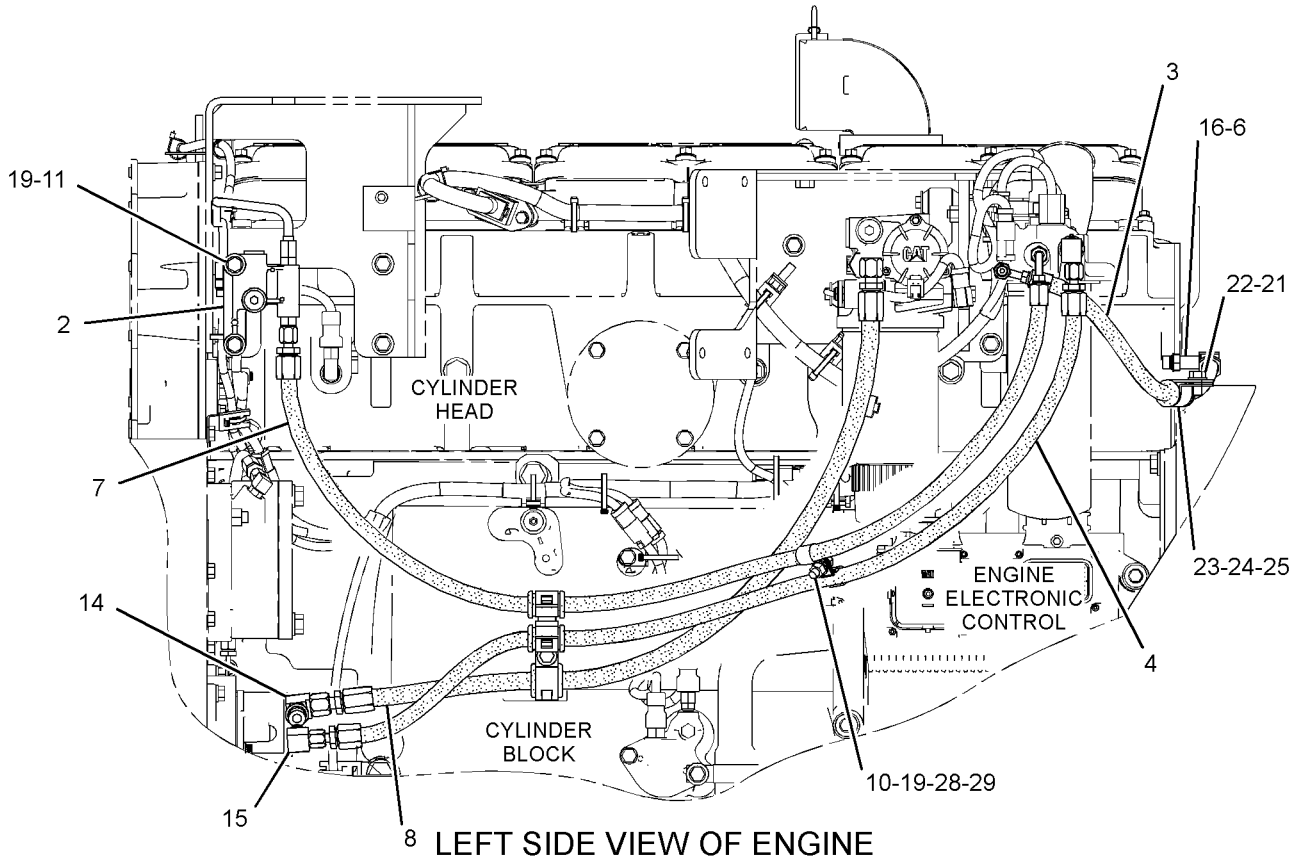

LEFT SIDE VIEW OF ENGINE

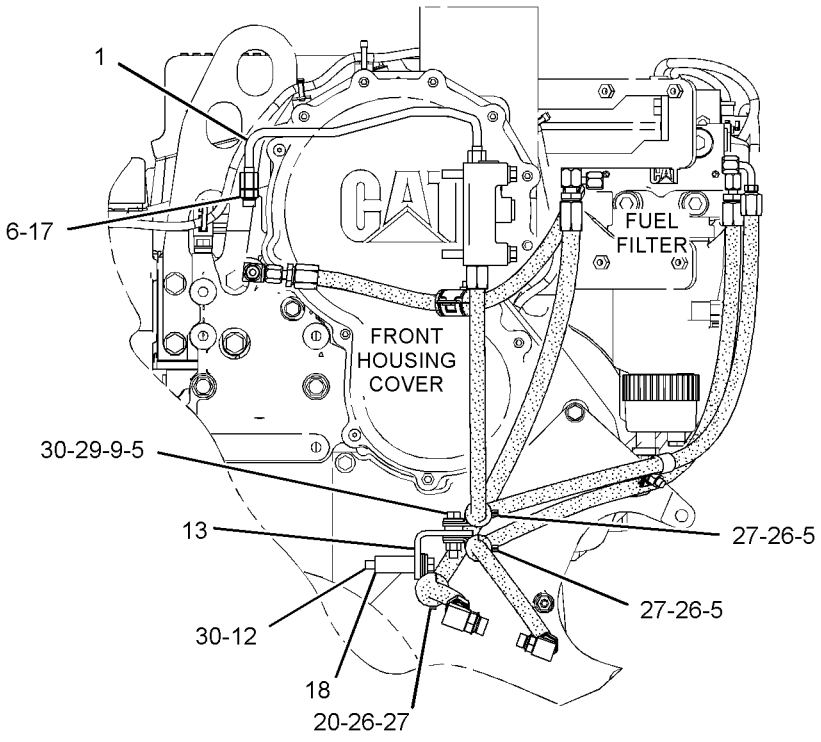

FRONT VIEW OF ENGINE

GRAPHIC #1 **<END>** g02198893

FUEL SYSTEM

193-7404 MANIFOLD GP-FUEL

S/N: RHX8788-UP

PART OF 275-7666 LINES GP-FUEL

SMCS-1274, 1380, 1702 **i04000712**

NOTE	REF NO	GRAPHIC REF	PART NUMBER	QTY	PART NAME 1 2 3 4 5 6 (PRODUCT LEVEL)	SEE PAGE
	1	1	**168-0300**	1	MANIFOLD	
	2	1	**313-9614**	2	ADAPTER AS	
					(EACH INCLUDES)	
		1	**2R-6806**	1	CONNECTOR-O-RING	
		1	**214-7568**	1	SEAL-O-RING	
	3	1	**353-5126**	2	PLUG AS	
					(EACH INCLUDES)	
		1	**6V-6609**	1	SEAL-O-RING	
		1	**9S-8005**	1	PLUG-O-RING	

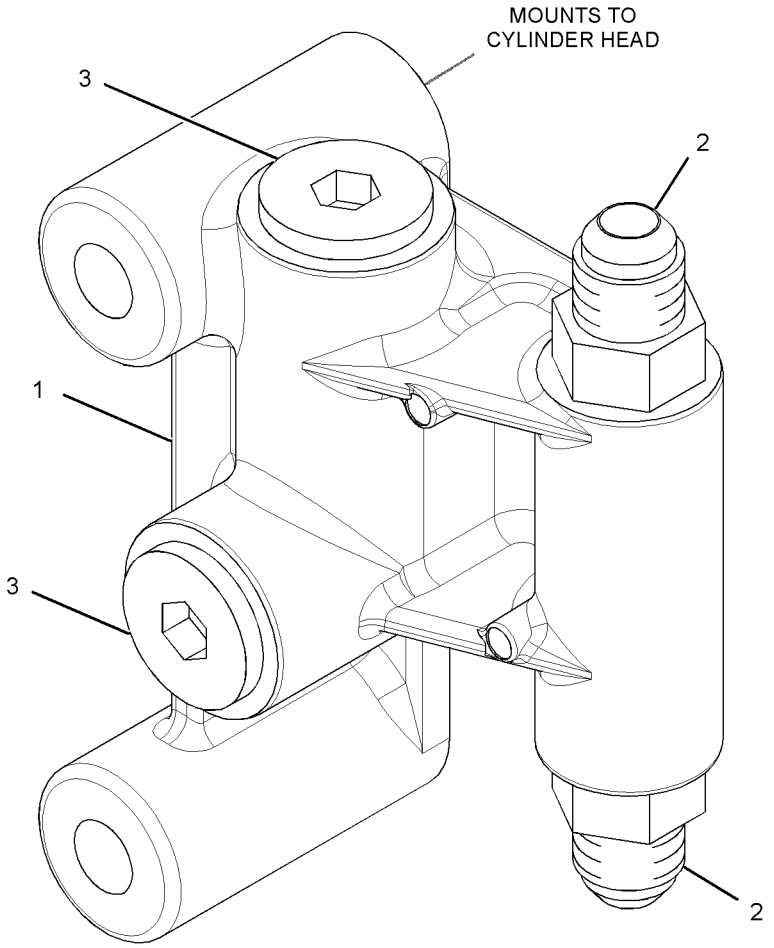

GRAPHIC #1 **<END>** g02184395

FUEL SYSTEM

150-4279 PUMP & MTG GP-FUEL TRANSFER–REAR

S/N: RHX2054-UP

ALLOWS USE OF FRONT MOUNTED PUMP EXCEPT WHEN LH MOUNTING GP-ALTERNATOR IS PROVIDED

PART OF 215-7486, 263-7760 ENGINE AR-COMPLETE

SMCS-1256 **i03644431**

NOTE	REF NO	GRAPHIC REF	PART NUMBER	QTY	PART NAME 1 2 3 4 5 6 (PRODUCT LEVEL)	SEE PAGE
	1	1	**133-9116**	1	COVER	
CJR	2	1	**316-6864**	1	PUMP GP-FUEL TRANSFER	
	3	1	**0S-0699**	2	STUD	
	4	1	**107-5769**	2	SEAL-O-RING	
	5	1	**1T-0765**	2	BOLT (3/8-16X1-IN)	
	6	1	**5M-2894**	2	WASHER-HARD (10.2X18.5X2.5-MM THK)	
	7	1	**9S-8752**	2	NUT-FULL (3/8-16-THD)	
					AVAILABLE REPAIR KIT(S):	
AJ				1	KIT-SPRING	

A-NOT PART OF THIS GROUP
C-CHANGE FROM PREVIOUS TYPE
J-KIT MARKED J SERVICES PART MARKED J
R-REMFG PART MAY BE AVAILABLE

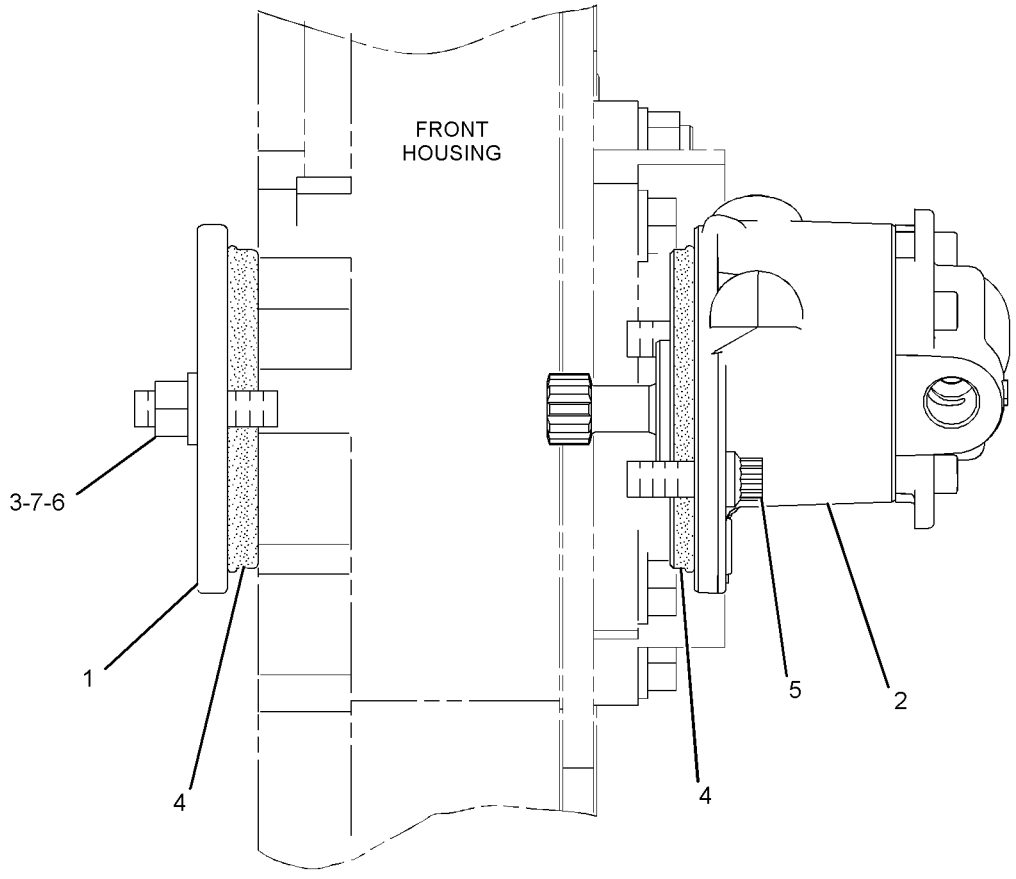

LEFT SIDE VIEW OF ENGINE

GRAPHIC #1 **<END>** g01364794

FUEL SYSTEM

235-1402 PUMP GP-FUEL INJECTION

S/N: RHX2094-UP

PART OF 241-5934, 314-8601, 316-3531 ENGINE AR-CORE

SMCS-1251, 1290 **i02604396**

NOTE	REF NO	GRAPHIC REF	PART NUMBER	QTY	PART NAME 1 2 3 4 5 6 (PRODUCT LEVEL)	SEE PAGE
	1	1	**6I-0213**	1	CLAMP	
	2	1	**100-5072**	1	SPACER (9.8X15.85X37.6-MM THK)	
CR	3	1	**253-0616**	1	INJECTOR GP-FUEL	
	3A	1	**230-3728**	1	SEAL-O-RING	
	3B	1	**230-3775**	1	SEAL-O-RING	
	3C	1	**9X-7317**	1	SEAL-O-RING	
	4	1	**8S-9191**	1	BOLT (3/8-16X4-IN)	

C-CHANGE FROM PREVIOUS TYPE
R-REMFG PART MAY BE AVAILABLE

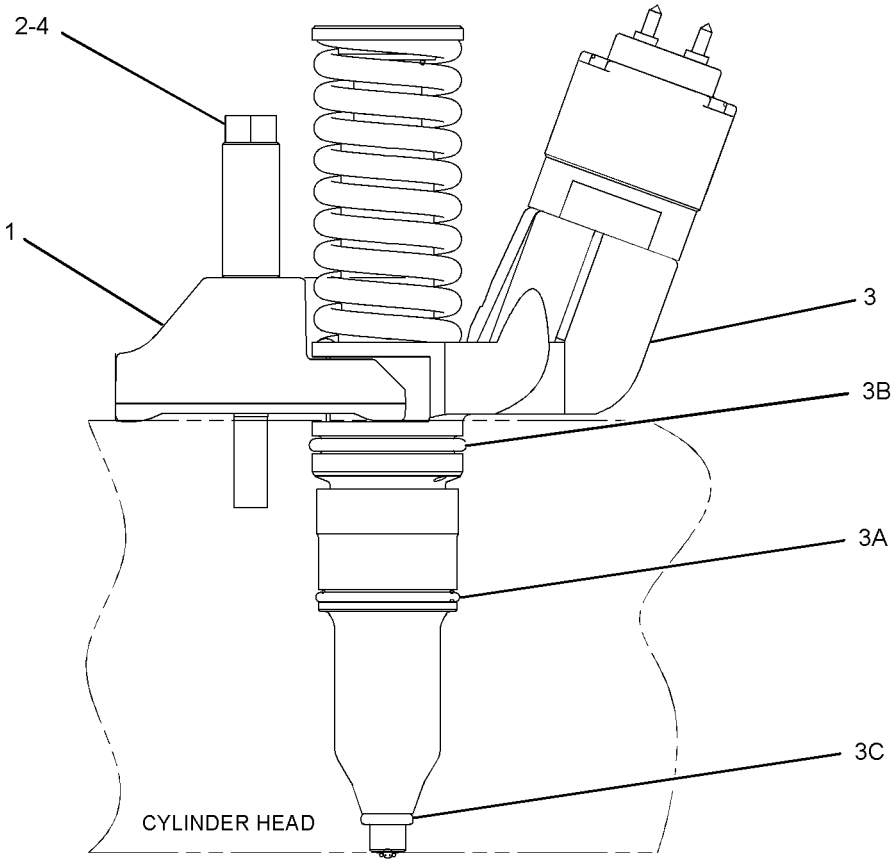

GRAPHIC #1 **<END>** g01111489

FUEL SYSTEM

190-8977 PUMP GP-FUEL PRM & WATER SEP

S/N: RHX2094-UP

PART OF 275-7664 FILTER & MTG GP-FUEL

SMCS-1258, 1261, 1263 **i04014532**

NOTE	REF NO	GRAPHIC REF	PART NUMBER	QTY	PART NAME 1 2 3 4 5 6 (PRODUCT LEVEL)	SEE PAGE
Y	1	1	*174-9570*	1	FILTER GP-WATER SEP & FUEL (PRIMARY)	157
	2	1	**190-8970**	1	PUMP AS-FUEL PRIMING	

Y-SEPARATE ILLUSTRATION

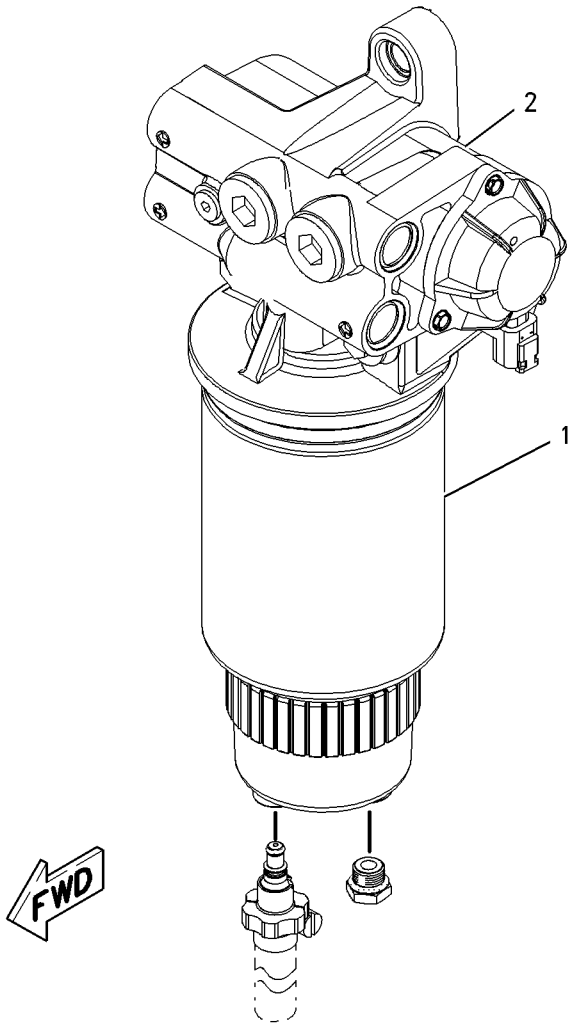

GRAPHIC #1 **<END>** g00904493

FUEL SYSTEM

220-3808 TANK AR-FUEL

S/N: B9K1-UP

PART OF 259-9204 COMMON AR

SMCS-1273 **i03339140**

NOTE	REF NO	GRAPHIC REF	PART NUMBER	QTY	PART NAME 1 2 3 4 5 6 (PRODUCT LEVEL)	SEE PAGE
	1	1	**9D-0630**	1	CAP-DUST	
	2	1	**117-2231**	4	BRACKET AS	
					(EACH INCLUDES)	
		1	**4E-1063**	1	MOUNT-FLEXIBLE	
	3	1	**124-2463**	1	ADAPTER-FAST FILL FUEL	
Y	4	1	*275-0604*	1	TANK GP-FUEL	172
	5	1	**325-7668**	1	TUBE AS	
	6	1	**310-8881**	4	PIN	
	7	1	**198-4769**	8	WASHER (22X40X10-MM THK)	
	8	1	**1P-3707**	1	SEAL-RECTANGULAR	
	9	1	**3B-4631**	4	PIN-COTTER	
	10	1	**4D-5980**	1	GROMMET	
	11	1	**246-2641**	2	PADLOCK GP	
					(EACH INCLUDES)	
		1	**5P-8500**	1	KEY	
M	12	1	**8T-4141**	8	BOLT (M20X2.5X70-MM)	
	13	1	**8T-4223**	4	WASHER-HARD (13.5X25.5X3-MM THK)	
M	14	1	**8T-4910**	4	BOLT (M12X1.75X60-MM)	

M-METRIC PART
Y-SEPARATE ILLUSTRATION

220-3808 **TANK AR-FUEL** *(contd.)* **i03339140**

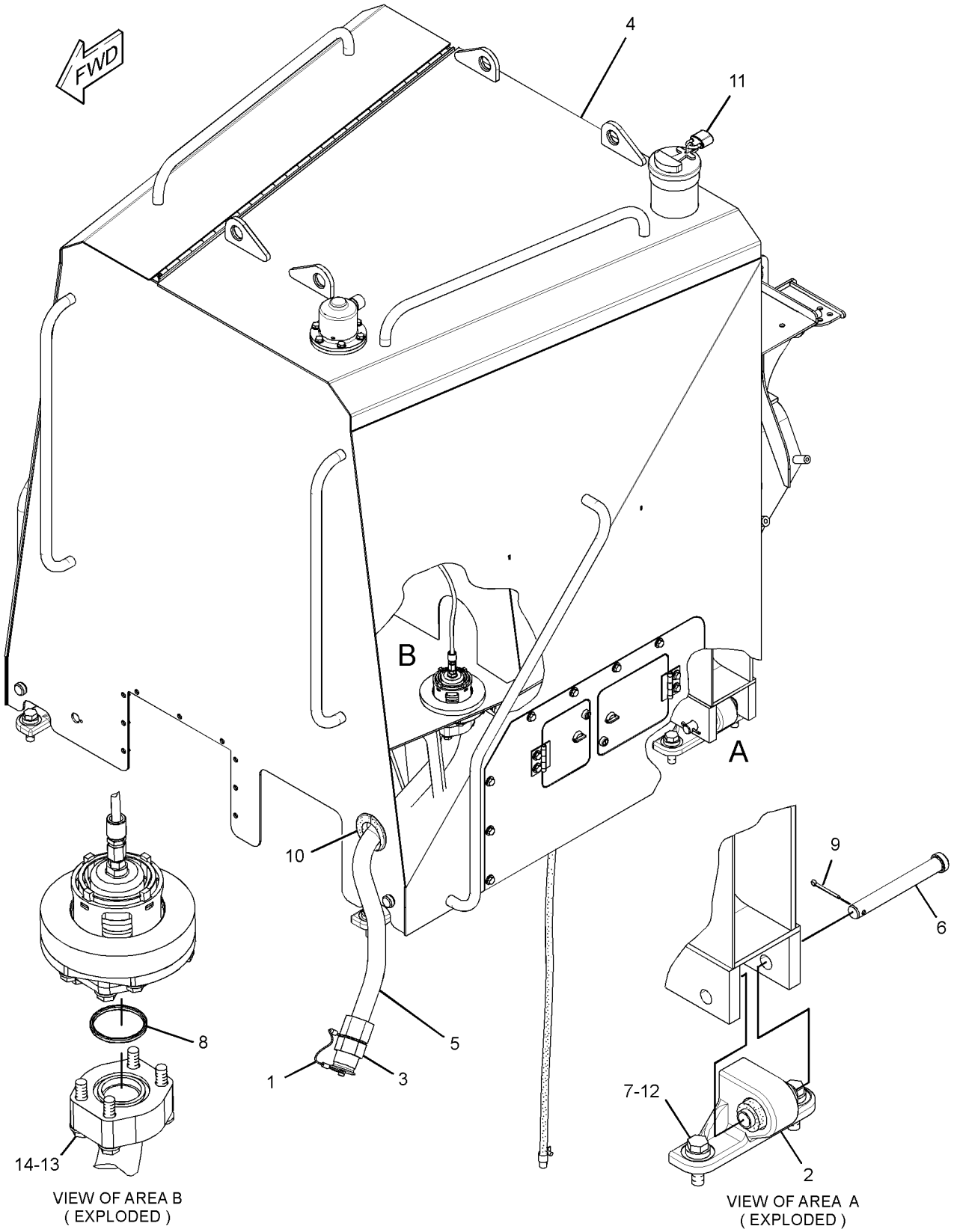

GRAPHIC #1 **<END>** g01378989

FUEL SYSTEM

275-0604 TANK GP-FUEL

S/N: B9K1-307

PART OF 220-3808 TANK AR-FUEL

SMCS-1273 **i02723860**

NOTE	REF NO	GRAPHIC REF	PART NUMBER	QTY	PART NAME 1 2 3 4 5 6 (PRODUCT LEVEL)	SEE PAGE
	1	2	**3E-7753**	1	FLOAT AS	
	2	2	**6S-8620**	3	CLAMP-HOSE	
HW	3	1	**7X-7700**	1	CAP AS-FILLER (FUEL TANK)	
		1	**9X-8600**	1	SEAL-O-RING	
	4	1	**9P-7121**	1	STRAINER-FUEL	
	5	2	**109-0897**	2	VALVE-BALL	
Y	6	2	**124-9325**	1	SENSOR GP-FUEL LEVEL	304
	7	2	**149-8142**	1	CONNECTOR	
	8	2	**163-5455**	1	VALVE AS-SHUTOFF (FAST FILL FUEL)	
I	9	2	**208-1574**	1	HOSE AS	
X	10	1	**223-4591**	1	VENT AS	
	11	1	**267-1430**	1	TANK AS-FUEL	
	12	2	**269-0173**	1	PLATE	
	13	1	**273-3968**	1	DOOR AS	
	14	1	**274-4313**	1	COVER AS	
	15	1	*274-4315*	1	DOOR GP-ACCESS	
		1	**226-0295**	1	LOCK AS	
		1	**233-4871**	1	CAM	
		1	**203-6066**	1	LATCH AS	
		1	**274-4317**	1	DOOR AS	
		1	**1V-8284**	1	HINGE	
	16	2	**277-0742**	1	VALVE-DRAIN	
	17	2	**277-3071**	2	TUBE AS	
	18	1	*281-8315*	1	DOOR GP-ACCESS	
		1	**226-0295**	1	LOCK AS	
		1	**233-4871**	1	CAM	
		1	**203-6066**	1	LATCH AS	
		1	**281-8314**	1	DOOR AS	
		1	**1V-8284**	1	HINGE	
	19	1	**310-1968**	1	HOSE AS	
	20	2	*148-8340*	4	CONNECTOR AS	
					(EACH INCLUDES)	
		2	**3K-0360**	1	SEAL-O-RING	
		2	**6V-8398**	1	SEAL-O-RING	
		2	**6V-8639**	1	CONNECTOR	
	21	2	*148-8386*	1	ELBOW AS	
		2	**3E-7426**	1	ELBOW	
		2	**5K-9090**	1	SEAL-O-RING	
		2	**6V-8400**	1	SEAL-O-RING	
	22	2	*148-8411*	2	PLUG AS	
					(EACH INCLUDES)	
		2	**3K-0360**	1	SEAL-O-RING	
		2	**9S-4185**	1	PLUG-O-RING	
	23	2	*153-6251*	1	CONNECTOR AS	
		2	**4K-1388**	1	SEAL-O-RING	
		2	**6V-8400**	1	SEAL-O-RING	
		2	**9X-8260**	1	CONNECTOR	
	24	1	**1H-8128**	1	SEAL-O-RING	
	26	2	**3K-0360**	1	SEAL-O-RING	
	27	2	**5H-6734**	1	SEAL-O-RING	
	28	1,2	**5P-2618**	2	CONNECTOR	
	30	2	**5P-9299**	2	CLIP	
	31	2	**6V-5051**	1	SEAL-O-RING	
	32	2	**6V-9172**	1	NUT (1-7/16-12-THD)	
	33	2	**6V-9833**	1	CAP AS	
	34	1,2	**7X-7729**	24	WASHER (11X25X3-MM THK)	

275-0604 **TANK GP-FUEL** *(contd.)* **i02723860**

NOTE	REF NO	GRAPHIC REF	PART NUMBER	QTY	PART NAME 1 2 3 4 5 6 (PRODUCT LEVEL)	SEE PAGE
	35	1,2	**8M-2773**	3	CLIP	
	36	1,2	**8T-4121**	24	WASHER-HARD (11X21X2.5-MM THK)	
M	37	2	**8T-4136**	1	BOLT (M10X1.5X25-MM)	
M	38	1,2	**8T-4137**	30	BOLT (M10X1.5X20-MM)	
M	40	2	**8T-4185**	4	BOLT (M10X1.5X50-MM)	
M	41	2	**8T-4191**	1	BOLT (M10X1.5X16-MM)	
M	42	1,2	**8T-4195**	12	BOLT (M10X1.5X30-MM)	
E	44	1	**5P-1442**		HOSE (154.4-CM)	
E	44A	2	**5P-1442**		HOSE (67-CM)	
					AVAILABLE REPAIR KIT(S):	
H			**9X-2205**	1	KIT-CAP FILTER (FUEL TANK)	
					(INCLUDES FILTER AS, SCREWS, GASKETS, & VALVE)	

E-ORDER BY THE CENTIMETER
H-KIT MARKED H SERVICES PART MARKED H
I-REFER TO HYDRAULIC INFORMATION SYSTEM
M-METRIC PART
W-REQUIRES CORPORATE KEY
X-KIT MARKED X SERVICES PART MARKED X
Y-SEPARATE ILLUSTRATION

275-0604 **TANK GP-FUEL** *(contd.)* **i02723860**

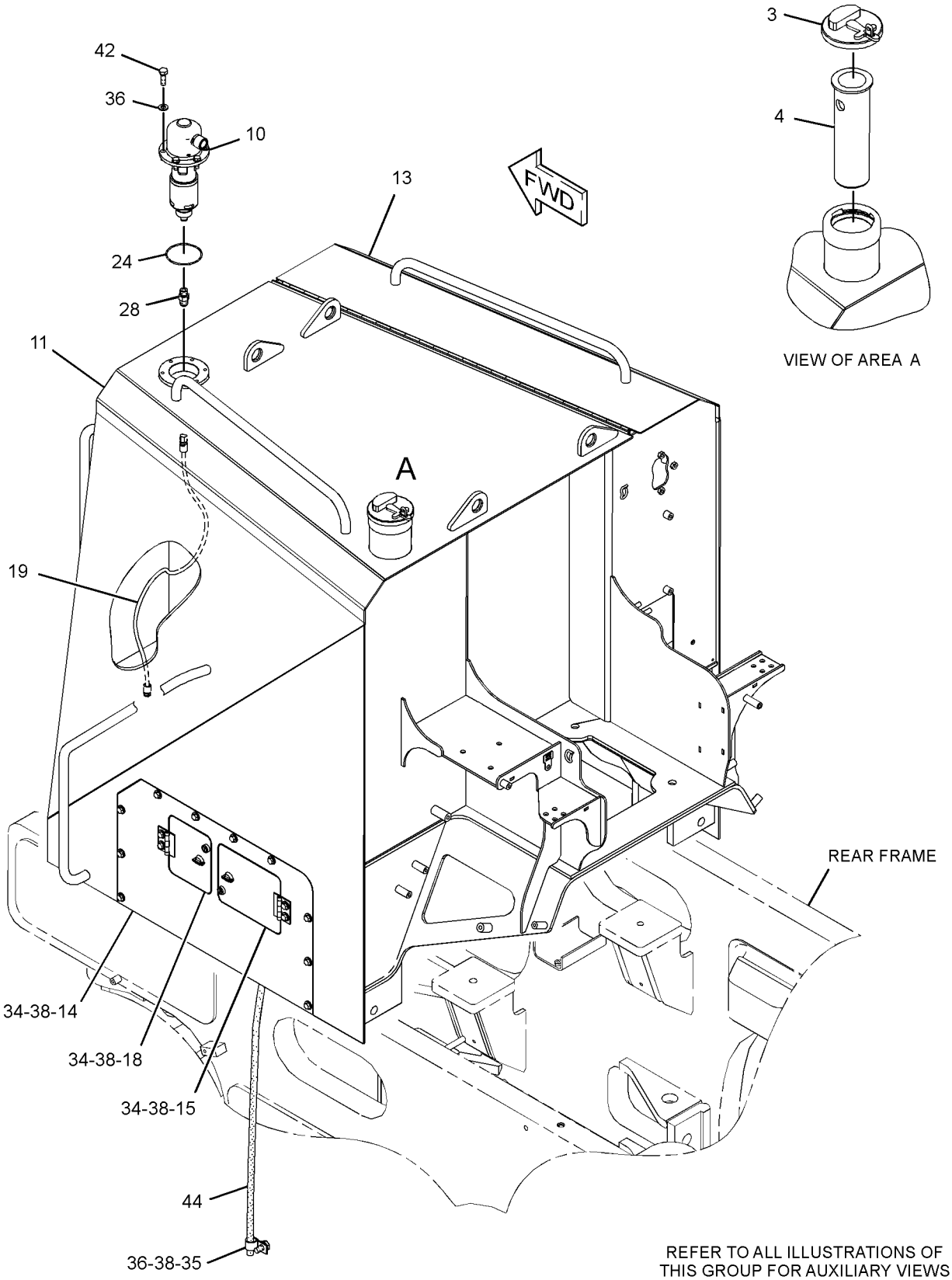

GRAPHIC #1

g01377869

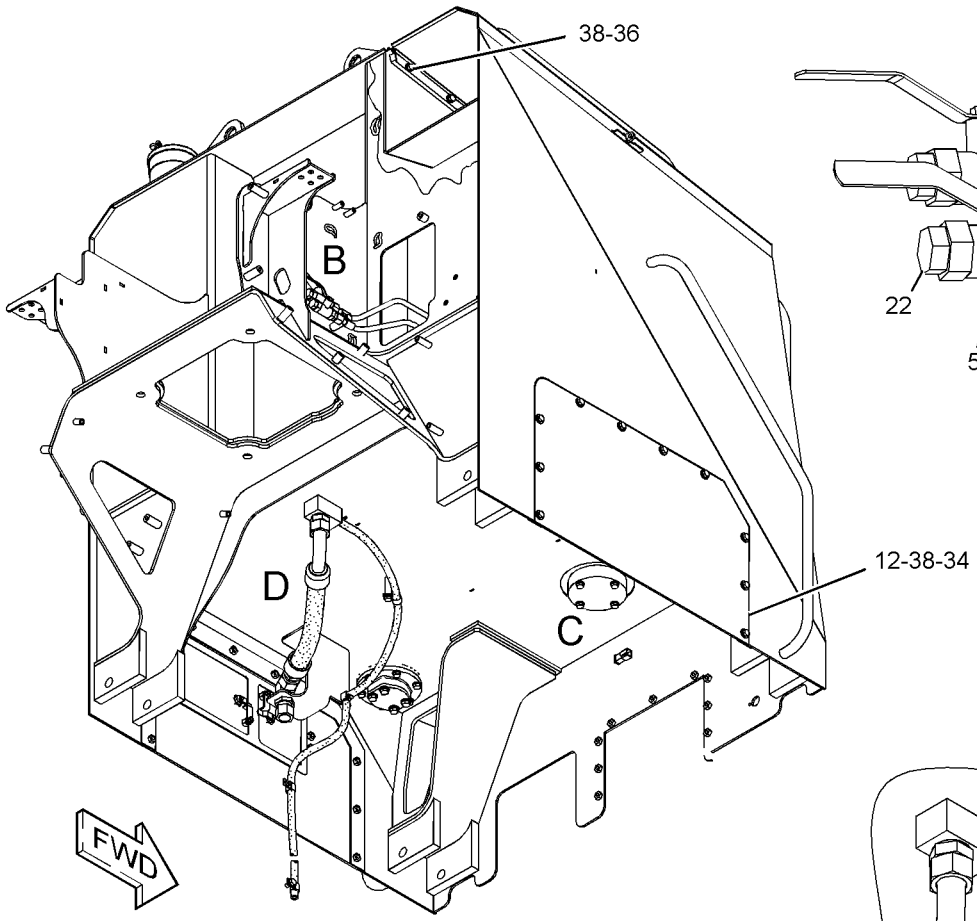

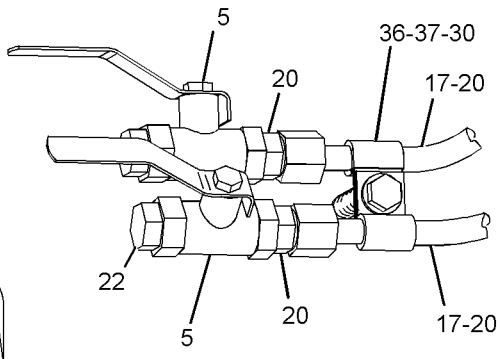

VIEW OF AREA B

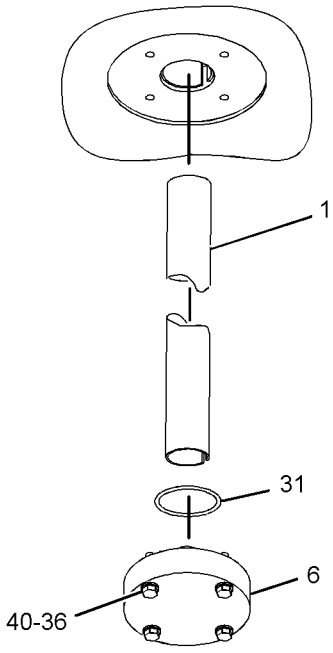

VIEW OF AREA C
(EXPLODED)

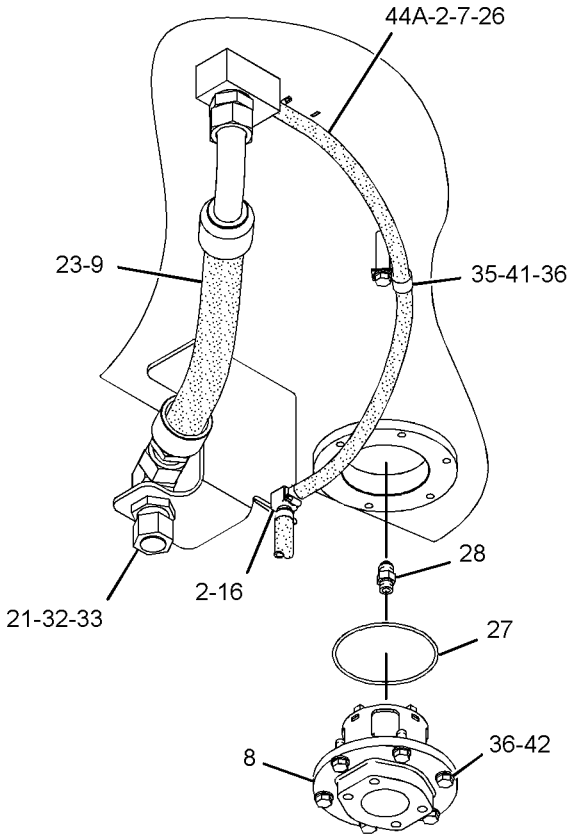

VIEW OF AREA D
(EXPLODED)

GRAPHIC #2 **<END>** g01377870

FUEL SYSTEM

275-0604 TANK GP-FUEL

S/N: B9K308-UP

PART OF 220-3808 TANK AR-FUEL

SMCS-1273 **i03360182**

NOTE	REF NO	GRAPHIC REF	PART NUMBER	QTY	PART NAME 1 2 3 4 5 6 (PRODUCT LEVEL)	SEE PAGE
	1	2	**3E-7753**	1	FLOAT AS	
	2	2	**6S-8620**	3	CLAMP-HOSE	
HW	3	1	**7X-7700**	1	CAP AS-FILLER (FUEL TANK)	
		1	**9X-8600**	1	SEAL-O-RING	
	4	1	**9P-7121**	1	STRAINER-FUEL	
	5	2	**109-0897**	2	VALVE-BALL	
Y	6	2	**124-9325**	1	SENSOR GP-FUEL LEVEL	304
	7	2	**149-8142**	1	CONNECTOR	
C	8	1	**199-9985**	1	PLATE	
I	9	2	**208-1574**	1	HOSE AS	
C	10	2	**252-5806**	1	VALVE AS-SHUTOFF (FAST FILL FUEL)	
	11	2	**269-0173**	1	PLATE	
	12	1	**274-4313**	1	COVER AS	
	13	1	*274-4315*	1	DOOR GP-ACCESS	
		1	**226-0295**	1	LOCK AS	
		1	**233-4871**	1	CAM	
		1	**203-6066**	1	LATCH AS	
		1	**274-4317**	1	DOOR AS	
		1	**1V-8284**	1	HINGE	
	14	2	**277-0742**	1	VALVE-DRAIN	
	15	2	**277-3071**	2	TUBE AS	
C	16	1	**277-4844**	1	GASKET	
	17	1	*281-8315*	1	DOOR GP-ACCESS	
		1	**226-0295**	1	LOCK AS	
		1	**233-4871**	1	CAM	
		1	**203-6066**	1	LATCH AS	
		1	**281-8314**	1	DOOR AS	
		1	**1V-8284**	1	HINGE	
	18	1	**310-1968**	1	HOSE AS	
C	19	1	**325-7655**	1	TANK AS-FUEL	
C	20	1	**325-7656**	1	DOOR AS	
C	21	1	**329-6659**	1	HINGE AS	
	22	2	*148-8340*	4	CONNECTOR AS	
					(EACH INCLUDES)	
		2	**6V-8639**	1	CONNECTOR	
		2	**3K-0360**	1	SEAL-O-RING	
		2	**6V-8398**	1	SEAL-O-RING	
	23	2	*148-8386*	1	ELBOW AS	
		2	**3E-7426**	1	ELBOW	
		2	**5K-9090**	1	SEAL-O-RING	
		2	**6V-8400**	1	SEAL-O-RING	
	24	2	*148-8411*	2	PLUG AS	
					(EACH INCLUDES)	
		2	**9S-4185**	1	PLUG-O-RING	
		2	**3K-0360**	1	SEAL-O-RING	
	25	2	*153-6251*	1	CONNECTOR AS	
		2	**9X-8260**	1	CONNECTOR	
		2	**4K-1388**	1	SEAL-O-RING	
		2	**6V-8400**	1	SEAL-O-RING	
	26	1	**1H-8128**	1	SEAL-O-RING	
C	27	1,2	**1J-9671**	2	SEAL-O-RING	
CM	28	1	**238-0251**	6	SCREW-BUTTON HEAD (M10X1.5X25-MM)	
C	29	1	**308-0415**	1	VENT AS	
	31	2	**3K-0360**	1	SEAL-O-RING	
	33	2	**5H-6734**	1	SEAL-O-RING	
	34	1,2	**5P-2618**	2	CONNECTOR	

275-0604 **TANK GP-FUEL** *(contd.)* **i03360182**

NOTE	REF NO	GRAPHIC REF	PART NUMBER	QTY	PART NAME 1 2 3 4 5 6 (PRODUCT LEVEL)	SEE PAGE
	35	2	**5P-9299**	2	CLIP	
	36	2	**6V-5051**	1	SEAL-O-RING	
	37	2	**6V-9172**	1	NUT (1-7/16-12-THD)	
	38	2	**6V-9833**	1	CAP AS	
C	39	1,2	**7X-7729**	30	WASHER (11X25X3-MM THK)	
	40	1,2	**8M-2773**	3	CLIP	
C	41	1,2	**8T-4121**	30	WASHER-HARD (11X21X2.5-MM THK)	
M	42	2	**8T-4136**	1	BOLT (M10X1.5X25-MM)	
M	43	1,2	**8T-4137**	30	BOLT (M10X1.5X20-MM)	
M	45	2	**8T-4185**	4	BOLT (M10X1.5X50-MM)	
M	46	2	**8T-4191**	1	BOLT (M10X1.5X16-MM)	
CM	47	1,2	**8T-4195**	18	BOLT (M10X1.5X30-MM)	
E	49	1	**5P-1442**		HOSE (155-CM)	
E	49A	2	**5P-1442**		HOSE (67-CM)	
					AVAILABLE REPAIR KIT(S):	
H			**9X-2205**	1	KIT-CAP FILTER (FUEL TANK)	
					(INCLUDES FILTER AS, SCREWS, GASKETS & VALVE)	

C-CHANGE FROM PREVIOUS TYPE
E-ORDER BY THE CENTIMETER
H-KIT MARKED H SERVICES PART MARKED H
I-REFER TO HYDRAULIC INFORMATION SYSTEM
M-METRIC PART
W-REQUIRES CORPORATE KEY
Y-SEPARATE ILLUSTRATION

275-0604 **TANK GP-FUEL** *(contd.)* **i03360182**

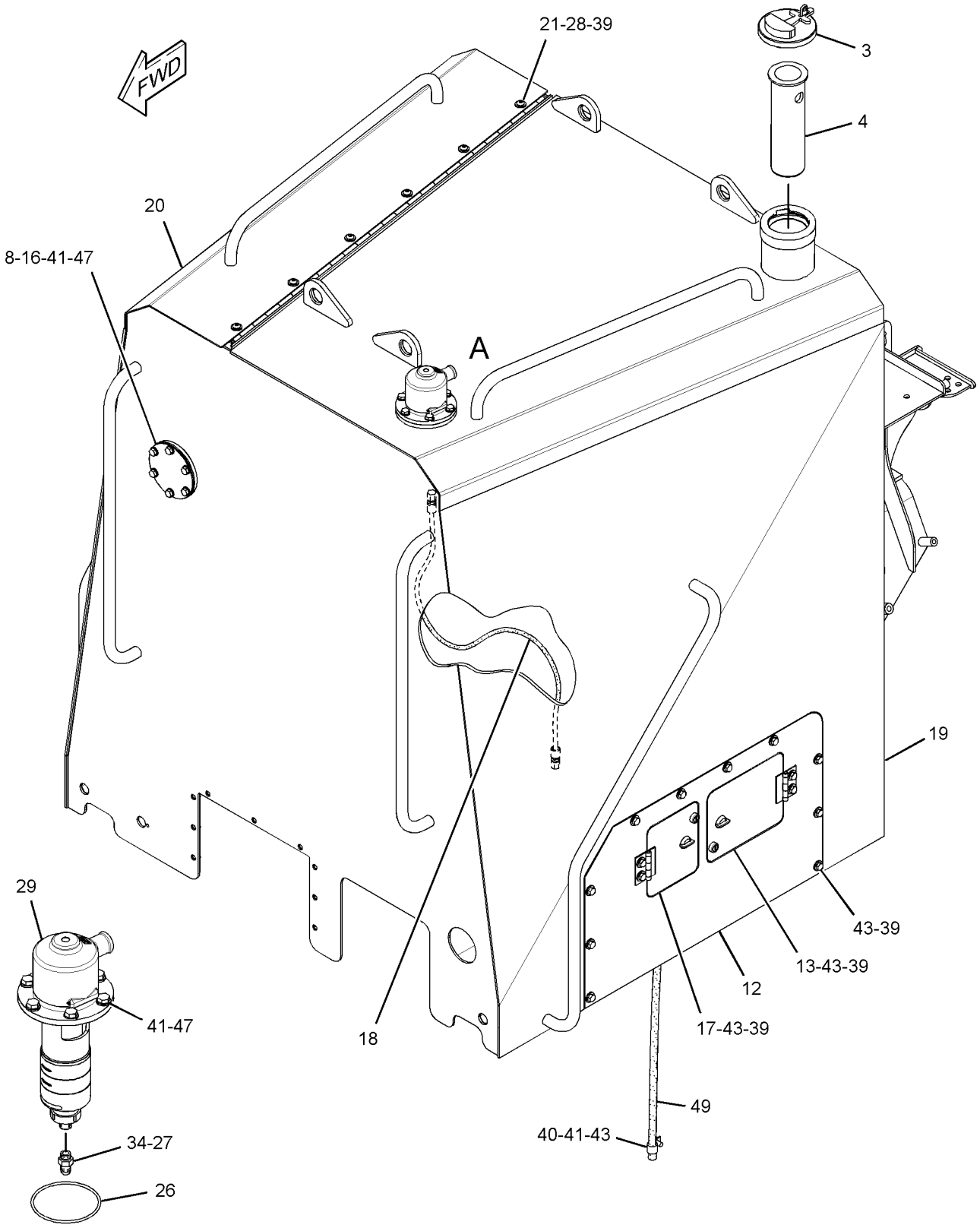

VIEW OF AREA A
(EXPLODED)

GRAPHIC #1 g02113851

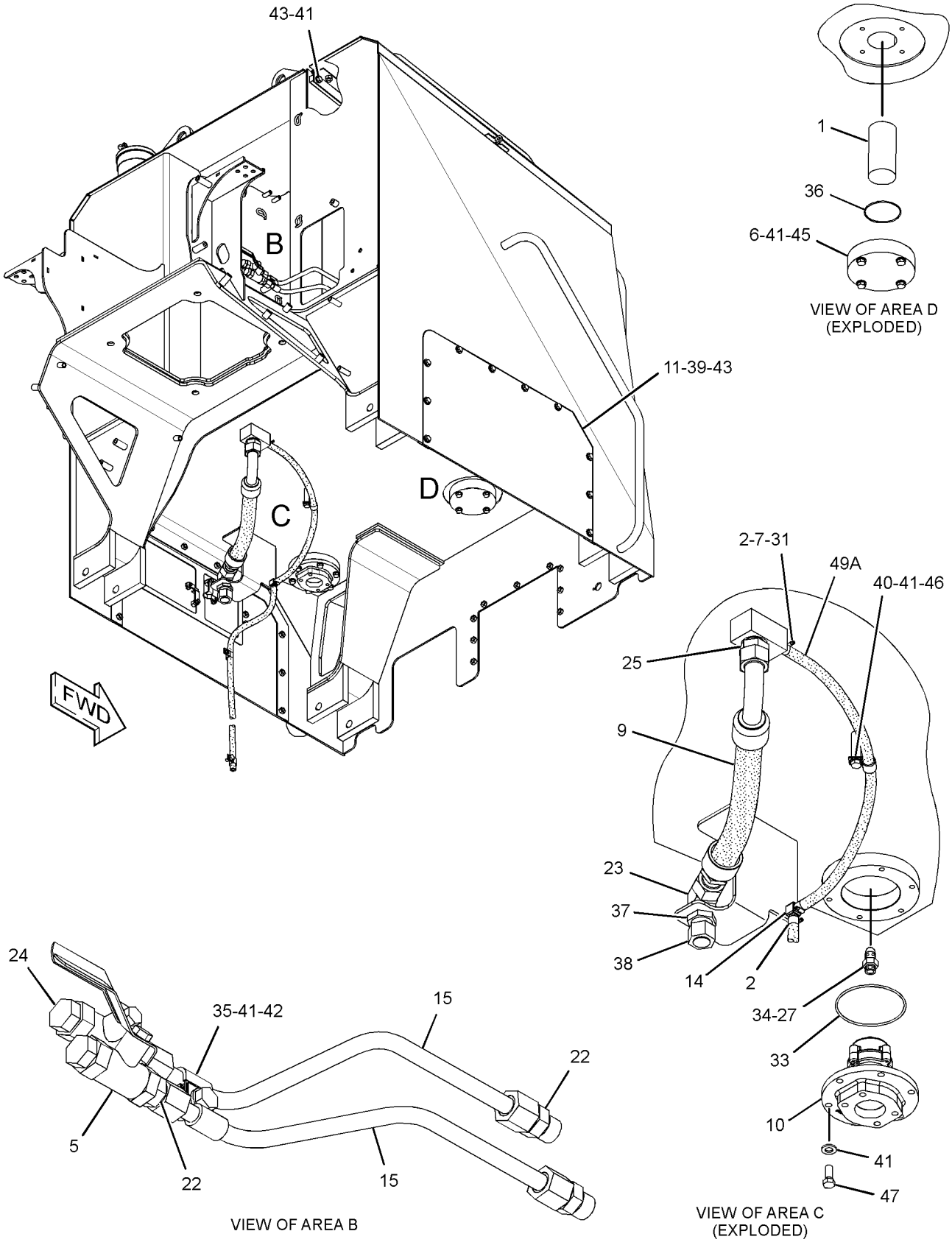

GRAPHIC #2 **<END>** g02113852

FUEL SYSTEM

233-6742 VALVE GP-CHECK–FUEL

S/N: RHX2094-UP

PART OF 275-7667 FILTER GP-FUEL

SMCS-1250, 1274 **i03808154**

NOTE	REF NO	GRAPHIC REF	PART NUMBER	QTY	PART NAME 1 2 3 4 5 6 (PRODUCT LEVEL)	SEE PAGE
CY	1	1	281-2725	1	VALVE GP-CHECK (FUEL)	181
	2	1	238-5081	1	SEAL-O-RING	

C-CHANGE FROM PREVIOUS TYPE
Y-SEPARATE ILLUSTRATION

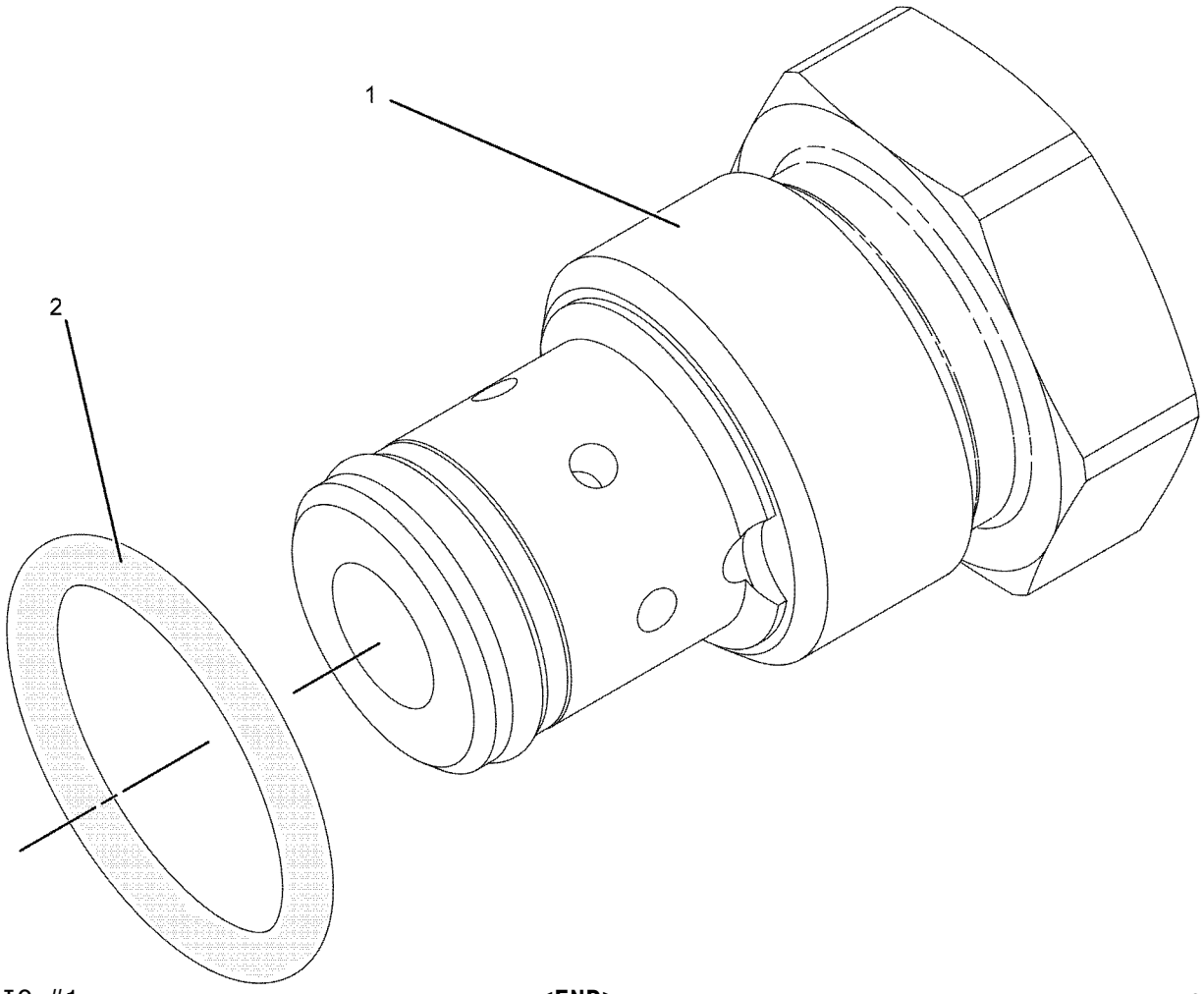

GRAPHIC #1 **<END>** g01031823

FUEL SYSTEM

281-2725 VALVE GP-CHECK–FUEL

S/N: RHX2094-UP

PART OF 233-6742 VALVE GP-CHECK

SMCS-1250, 1274 **i02444582**

NOTE	REF NO	GRAPHIC REF	PART NUMBER	QTY	PART NAME 1 2 3 4 5 6 (PRODUCT LEVEL)	SEE PAGE
	1	1	6V-6923	1	RING-BACKUP	
	2	1	033-6033	1	SEAL-O-RING	

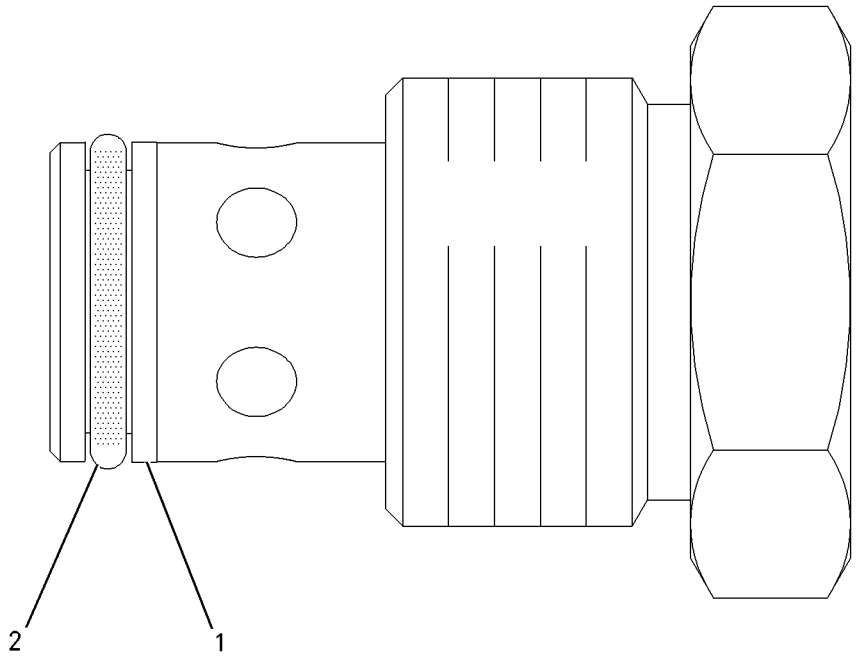

GRAPHIC #1 **<END>** g00864141

ELECTRICAL AND STARTING SYSTEM

3E-6328 ALARM GP

S/N: B9K1-UP
24-VOLT
PART OF 266-7006 WIRING GP-CAB

SMCS-7400, 7402, 7407 **i03540520**

NOTE	REF NO	GRAPHIC REF	PART NUMBER	QTY	PART NAME 1 2 3 4 5 6 (PRODUCT LEVEL)	SEE PAGE
	1	1	**102-8802**	1	KIT-RECEPTACLE (2-PIN)	
					(INCLUDES RECEPTACLE AS & WEDGE)	
	2	1	**186-3735**	2	PIN-CONNECTOR (16-GA TO 18-GA)	

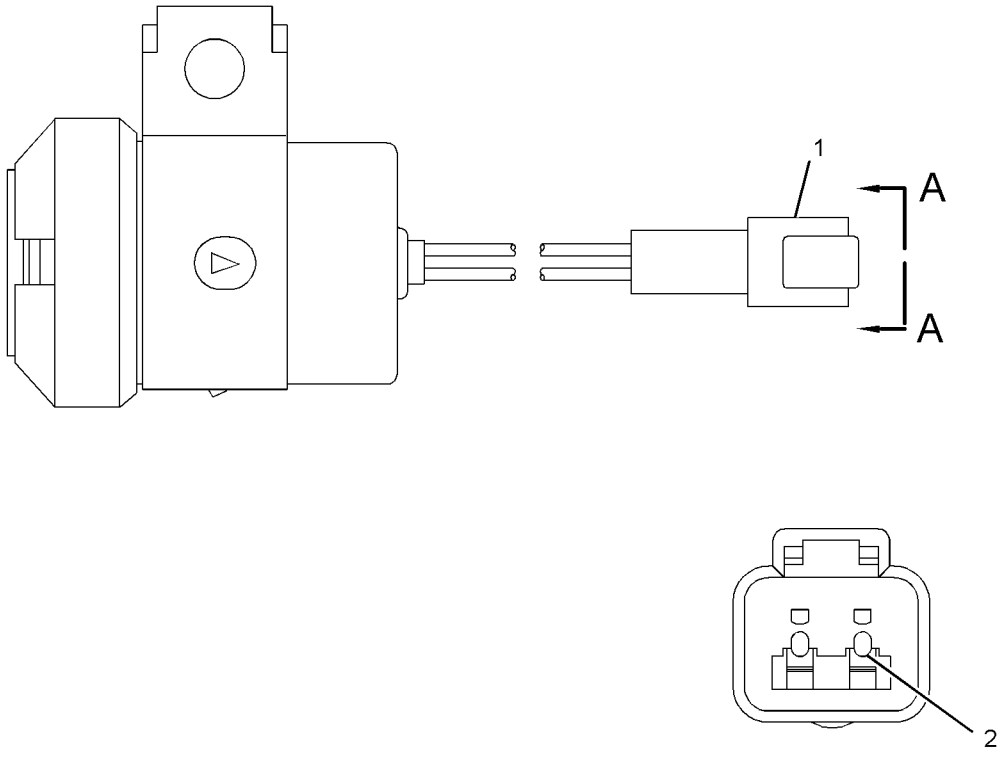

VIEW A-A

GRAPHIC #1 **<END>** g01342739

ELECTRICAL AND STARTING SYSTEM

266-8986 BATTERY & WIRING GP

S/N: B9K1-357

PART OF 259-9204 COMMON AR

SMCS-1401, 1402, 1408 **i02762737**

NOTE	REF NO	GRAPHIC REF	PART NUMBER	QTY	PART NAME 1 2 3 4 5 6 (PRODUCT LEVEL)	SEE PAGE
Y	1	1	7N-0718	1	SWITCH GP-DISCONNECT (BATTERY)	337
	2	1	8S-2634	1	COVER AS	
	3	1	9G-2758	1	LOCKOUT-SWITCH (BATTERY DISCONNECT)	
	4	1	153-5720	2	BATTERY (12-VOLT) (12-VOLT)	
	5	1	199-9800	1	JUNCTION BLOCK	
	6	1	236-2340	1	CABLE AS-BATTERY (JUMPER)	
		1	9G-0002	1	COVER AS-TERMINAL (RED)	
		1	9G-0005	1	COVER AS-TERMINAL (BLACK)	
E		1	159-8049		CABLE (00-GA, RED) (17-CM)	
		1	8C-5918	1	TERMINAL AS (NEGATIVE)	
		1	1M-6119	1	BOLT (5/16-18X1.375-IN)	
		1	1M-6120	1	NUT (5/16-18-THD)	
		1	8T-9756	1	TERMINAL AS (POSITIVE)	
		1	1M-6119	1	BOLT (5/16-18X1.375-IN)	
		1	1M-6120	1	NUT (5/16-18-THD)	
	7	1	269-3383	1	CABLE AS	
		1	1S-7252	1	TERMINAL-CABLE (00-GA, 3/8-IN SCREW)	
		1	9G-0005	1	COVER AS-TERMINAL (BLACK)	
		1	9G-8909	1	COVER-TERMINAL (BLACK)	
E		1	159-8050		CABLE (00-GA, BLACK) (85-CM)	
		1	8C-5918	1	TERMINAL AS (NEGATIVE)	
		1	1M-6119	1	BOLT (5/16-18X1.375-IN)	
		1	1M-6120	1	NUT (5/16-18-THD)	
	8	1	270-4333	1	CABLE AS	
		1	1S-7251	1	TERMINAL-CABLE (00-GA, 1/2-IN SCREW)	
		1	8N-0869	1	COVER-TERMINAL (RED)	
		1	9G-0004	1	COVER AS-TERMINAL (RED)	
E		1	159-8049		CABLE (00-GA, RED) (72-CM)	
		1	8C-5917	1	TERMINAL AS-BATTERY (POSITIVE)	
		1	1M-6119	1	BOLT (5/16-18X1.375-IN)	
		1	1M-6120	1	NUT (5/16-18-THD)	
	9	1	274-7500	1	HOLD-DOWN AS	
	10	1	293-6463	1	CABLE AS	
		1	1S-7252	1	TERMINAL-CABLE (00-GA, 3/8-IN SCREW)	
		1	8S-3020	1	TERMINAL-CABLE (00-GA, 3/8-IN SCREW)	
		1	9G-8909	1	COVER-TERMINAL (BLACK)	
E		1	159-8050		CABLE (00-GA, BLACK) (30-CM)	
	11	1	307-6369	1	CABLE AS	
		1	4D-1248	1	TERMINAL (00-GA, 3/8-IN SCREW)	
		1	8S-3020	1	TERMINAL-CABLE (00-GA, 3/8-IN SCREW)	
E		1	159-8050		CABLE (00-GA, BLACK) (280-CM)	
	12	1	307-7515	1	BRACKET AS	
	13	1	307-7517	1	RECEPTACLE AS-CONNECTOR	
		1	6V-2722		TUBE-HEAT SHRINK (0.1-M)	
		1	1S-7251	1	TERMINAL-CABLE (00-GA, 1/2-IN SCREW)	
		1	1S-7252	1	TERMINAL-CABLE (00-GA, 3/8-IN SCREW)	
		1	8N-0869	1	COVER-TERMINAL (RED)	
		1	9G-8909	1	COVER-TERMINAL (BLACK)	
E		1	159-8049		CABLE (00-GA, RED) (81-CM)	
E		1	159-8050		CABLE (00-GA, BLACK) (76-CM)	
	14	1	067-2551	1	CLIP	
	15	1	245-8842	3	CLIP	
	16	1	1P-7009	2	CLIP	
M	17	1	5A-3604	4	BOLT-SOCKET HEAD (M8X1.25X25-MM)	
	18	1	5P-4116	4	WASHER-HARD (8.8X20.5X2-MM THK)	
	19	1	246-2641	1	PADLOCK GP	

266-8986 **BATTERY & WIRING GP** *(contd.)* **i02762737**

NOTE	REF NO	GRAPHIC REF	PART NUMBER	QTY	PART NAME 1 2 3 4 5 6 (PRODUCT LEVEL)	SEE PAGE
		1	**5P-8500**	1	KEY	
	20	1	**7K-1181**	5	STRAP-CABLE	
M	21	1	**7X-2546**	5	BOLT (M10X1.5X180-MM)	
M	22	1	**8T-1159**	3	BOLT-SOCKET HEAD (M10X1.5X25-MM)	
	23	1	**8T-4121**	16	WASHER-HARD (11X21X2.5-MM THK)	
M	24	1	**8T-4136**	3	BOLT (M10X1.5X25-MM)	
M	25	1	**8T-4137**	8	BOLT (M10X1.5X20-MM)	
M	26	1	**8T-4179**	2	BOLT (M12X1.75X20-MM)	
	27	1	**8T-4223**	2	WASHER-HARD (13.5X25.5X3-MM THK)	
	28	1	**9M-8406**	9	CLIP	

E-ORDER BY THE CENTIMETER
M-METRIC PART
Y-SEPARATE ILLUSTRATION

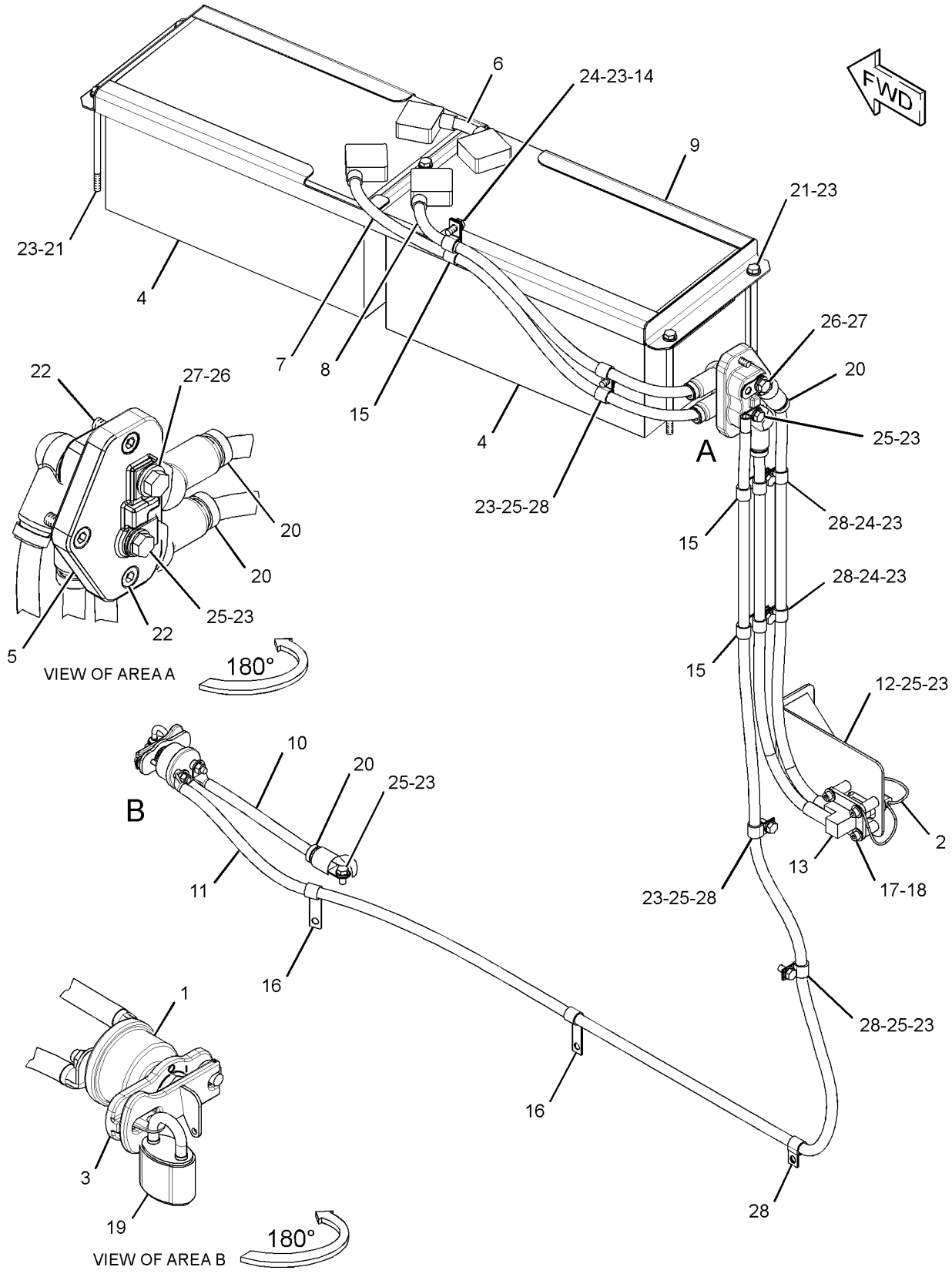

GRAPHIC #1 **<END>** g01386498

ELECTRICAL AND STARTING SYSTEM

266-8986 BATTERY & WIRING GP

S/N: B9K358-UP

PART OF 259-9204 COMMON AR

SMCS-1401, 1402, 1408 **i03916850**

NOTE	REF NO	GRAPHIC REF	PART NUMBER	QTY	PART NAME 1 2 3 4 5 6 (PRODUCT LEVEL)	SEE PAGE
Y	1	1	7N-0718	1	SWITCH GP-DISCONNECT (BATTERY)	337
	2	1	8S-2634	1	COVER AS	
	3	1	9G-2758	1	LOCKOUT-SWITCH (BATTERY DISCONNECT)	
	4	1	153-5720	2	BATTERY (12-VOLT) (12-VOLT)	
	5	1	199-9800	1	JUNCTION BLOCK	
	6	1	236-2340	1	CABLE AS-BATTERY (JUMPER)	
		1	9G-0002	1	COVER AS-TERMINAL (RED)	
		1	9G-0005	1	COVER AS-TERMINAL (BLACK)	
E		1	159-8049		CABLE (00-GA, RED) (17-CM)	
		1	8C-5918	1	TERMINAL AS (NEGATIVE)	
		1	1M-6119	1	BOLT (5/16-18X1.375-IN)	
		1	1M-6120	1	NUT (5/16-18-THD)	
		1	8T-9756	1	TERMINAL AS (POSITIVE)	
		1	1M-6119	1	BOLT (5/16-18X1.375-IN)	
		1	1M-6120	1	NUT (5/16-18-THD)	
	7	1	269-3383	1	CABLE AS	
		1	1S-7252	1	TERMINAL-CABLE (00-GA, 3/8-IN SCREW)	
		1	9G-0005	1	COVER AS-TERMINAL (BLACK)	
		1	9G-8909	1	COVER-TERMINAL (BLACK)	
E		1	159-8050		CABLE (00-GA, BLACK) (85-CM)	
		1	8C-5918	1	TERMINAL AS (NEGATIVE)	
		1	1M-6119	1	BOLT (5/16-18X1.375-IN)	
		1	1M-6120	1	NUT (5/16-18-THD)	
	8	1	270-4333	1	CABLE AS	
		1	1S-7251	1	TERMINAL-CABLE (00-GA, 1/2-IN SCREW)	
		1	8N-0869	1	COVER-TERMINAL (RED)	
		1	9G-0004	1	COVER AS-TERMINAL (RED)	
E		1	159-8049		CABLE (00-GA, RED) (72-CM)	
		1	8C-5917	1	TERMINAL AS-BATTERY (POSITIVE)	
		1	1M-6119	1	BOLT (5/16-18X1.375-IN)	
		1	1M-6120	1	NUT (5/16-18-THD)	
	9	1	274-7500	1	HOLD-DOWN AS	
	11	1	307-6369	1	CABLE AS	
		1	4D-1248	1	TERMINAL (00-GA, 3/8-IN SCREW)	
		1	8S-3020	1	TERMINAL-CABLE (00-GA, 3/8-IN SCREW)	
E		1	159-8050		CABLE (00-GA, BLACK) (280-CM)	
	12	1	307-7515	1	BRACKET AS	
	13	1	307-7517	1	RECEPTACLE AS-CONNECTOR	
		1	6V-2722		TUBE-HEAT SHRINK (0.1-M)	
		1	1S-7251	1	TERMINAL-CABLE (00-GA, 1/2-IN SCREW)	
		1	1S-7252	1	TERMINAL-CABLE (00-GA, 3/8-IN SCREW)	
		1	8N-0869	1	COVER-TERMINAL (RED)	
		1	9G-8909	1	COVER-TERMINAL (BLACK)	
E		1	159-8049		CABLE (00-GA, RED) (81-CM)	
E		1	159-8050		CABLE (00-GA, BLACK) (76-CM)	
	14	1	067-2551	1	CLIP	
	15	1	245-8842	3	CLIP	
	16	1	1P-7009	2	CLIP	
M	17	1	5A-3604	4	BOLT-SOCKET HEAD (M8X1.25X25-MM)	
	18	1	5P-4116	4	WASHER-HARD (8.8X20.5X2-MM THK)	
	19	1	246-2641	1	PADLOCK GP	
		1	5P-8500	1	KEY	
C	20	1	7K-1181	4	STRAP-CABLE	
M	21	1	7X-2546	5	BOLT (M10X1.5X180-MM)	
M	22	1	8T-1159	3	BOLT-SOCKET HEAD (M10X1.5X25-MM)	
	23	1	8T-4121	16	WASHER-HARD (11X21X2.5-MM THK)	

266-8986 **BATTERY & WIRING GP** *(contd.)* **i03916850**

NOTE	REF NO	GRAPHIC REF	PART NUMBER	QTY	PART NAME 1 2 3 4 5 6 (PRODUCT LEVEL)	SEE PAGE
M	24	1	**8T-4136**	3	BOLT (M10X1.5X25-MM)	
M	25	1	**8T-4137**	8	BOLT (M10X1.5X20-MM)	
M	26	1	**8T-4179**	2	BOLT (M12X1.75X20-MM)	
	27	1	**8T-4223**	2	WASHER-HARD (13.5X25.5X3-MM THK)	
	28	1	**9M-8406**	9	CLIP	
C	29	1	**132-1806**	1	STRAP AS-GROUND	

C-CHANGE FROM PREVIOUS TYPE
E-ORDER BY THE CENTIMETER
M-METRIC PART
Y-SEPARATE ILLUSTRATION

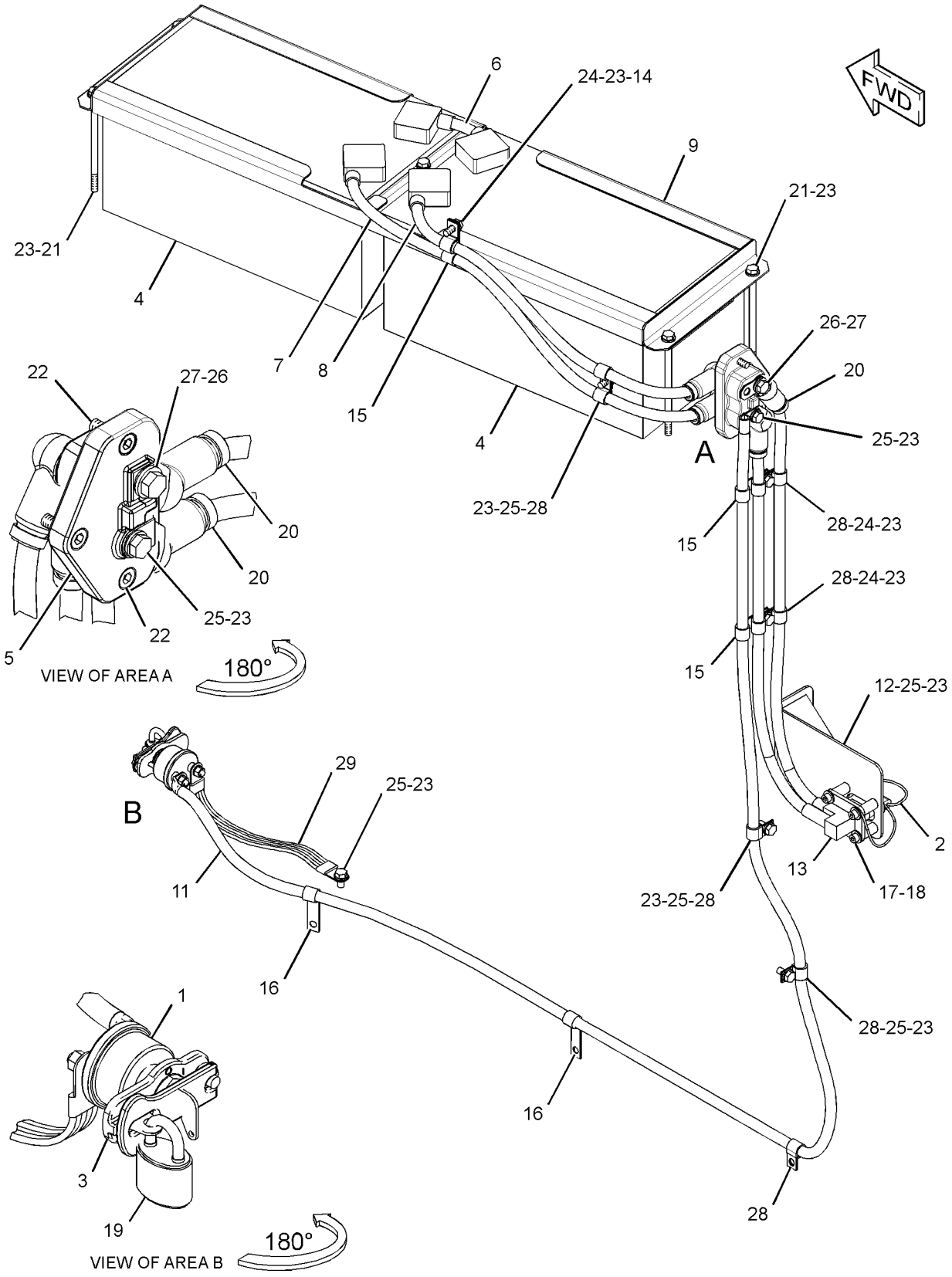

GRAPHIC #1 **<END>** g02152700

ELECTRICAL AND STARTING SYSTEM

272-2286 BRACKET GP-MOUNTING–MAST

S/N: B9K1-UP

PART OF 292-7971, 292-7972 RECEIVER AR-SATELLITE

SMCS-0635, 7010 **i03753210**

NOTE	PART NUMBER	QTY	PART NAME 1 2 3 4 5 6 (PRODUCT LEVEL)	SEE PAGE
	248-1503	1	BRACKET GP-MOUNTING	
	7X-0343	4	BOLT (5/8-11X1.25-IN)	
	7X-0366	3	BOLT (3/4-10X2-IN)	
	8T-4122	4	WASHER-HARD (17X32X3.5-MM THK)	
	8T-4994	3	WASHER-HARD (20X36.5X3.5-MM THK)	
	254-9136	1	CABLE-COILED (RECEIVER)	
	252-8744	1	FILM-WARNING (BLADE, DO NOT CLIMB, READ OMM)	

<END>

ELECTRICAL AND STARTING SYSTEM

278-1867 CAMERA AR—WORK AREA VISUAL SYSTEM

S/N: B9K1-UP

SMCS-7348 **i02811891**

NOTE	PART NUMBER	QTY	PART NAME 1 2 3 4 5 6 (PRODUCT LEVEL)	SEE PAGE
Y	*266-7027*	1	DISPLAY GP-CAMERA	872
Y	*267-5504*	1	WIRING GP-CAMERA (WORK AREA VISUAL SYSTEM)	365

Y-SEPARATE ILLUSTRATION

<END>

ELECTRICAL AND STARTING SYSTEM

126-7631 CONNECTION GP-ELECTRICAL

S/N: RHX2094-UP
CYLINDER BLOCK GROUND
PART OF 215-7486, 263-7760 ENGINE AR-COMPLETE
FOR USE WITH BLOCK SOUND PANEL

SMCS-1408, 4459, 7553 **i02756705**

NOTE	REF NO	GRAPHIC REF	PART NUMBER	QTY	PART NAME 1 2 3 4 5 6 (PRODUCT LEVEL)	SEE PAGE
	1	1	**126-8449**	1	STUD (3/8-16, 5/8-18X3.1-IN)	
	2	1	**8T-4896**	2	WASHER-HARD (10.2X18.5X2.5-MM THK)	
	3	1	**6V-8801**	1	NUT (3/8-16-THD)	
	4	1	**9M-7783**	1	SPACER (0.65X1.188X0.81-IN THK)	
	5	1	**5P-8247**	1	WASHER-HARD (17X32X3.5-MM THK)	

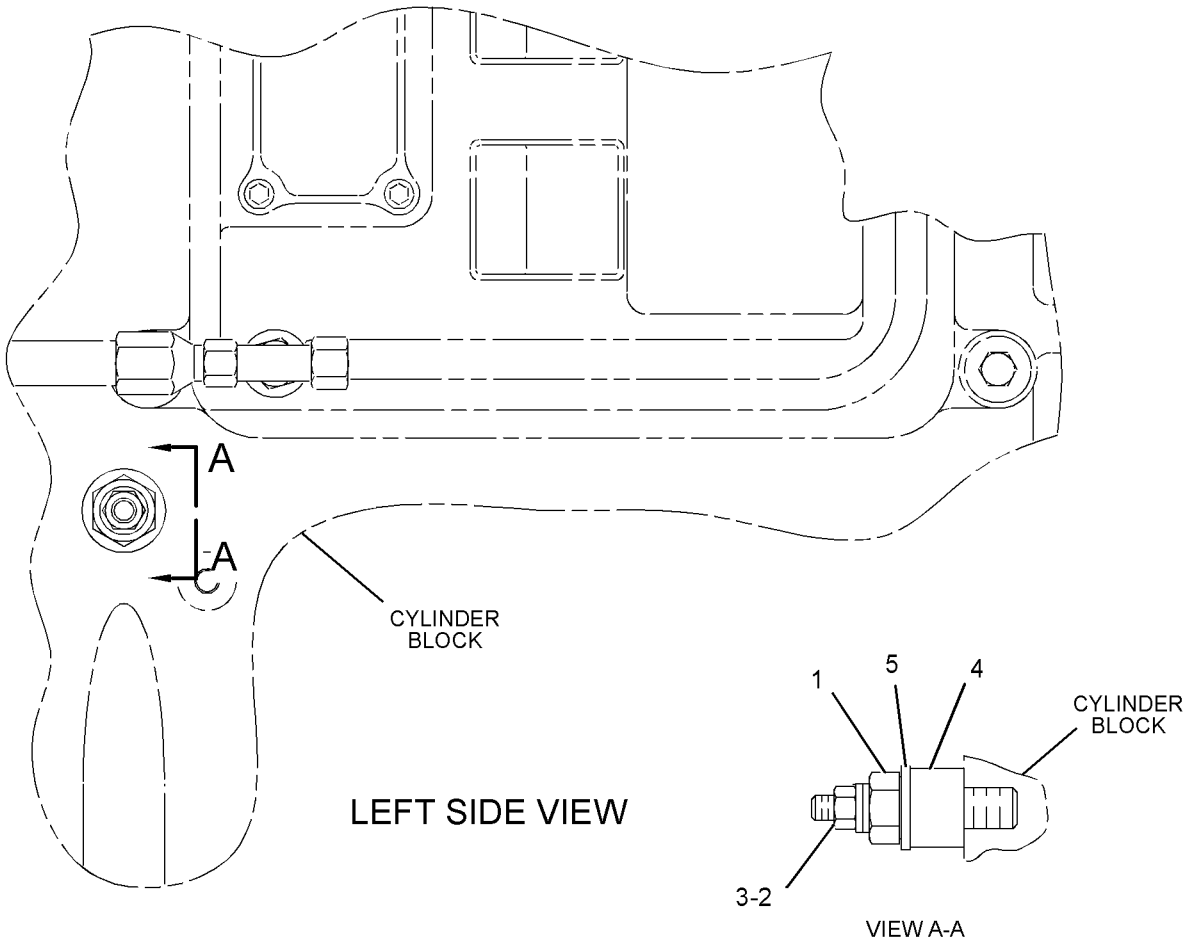

GRAPHIC #1 **<END>** g01380369

ELECTRICAL AND STARTING SYSTEM

243-1560 CONTROL & MTG GP-ENGINE ELEK

S/N: RHX2094-UP
AIR COOLED
PART OF 215-7486, 263-7760 ENGINE AR-COMPLETE

SMCS-1901 **i03009843**

NOTE	REF NO	GRAPHIC REF	PART NUMBER	QTY	PART NAME 1 2 3 4 5 6 (PRODUCT LEVEL)	SEE PAGE
	1	1	**6I-1418**	4	SPACER (8.2X12.7X28.7-MM THK)	
	3	1	**155-0696**	1	SUPPORT AS	
	3A	1	**5L-3708**	1	STUD-TAPERLOCK (5/16-18X1.28-IN)	
	4	1	**155-0698**	1	SUPPORT AS	
	4A	1	**5L-3708**	1	STUD-TAPERLOCK (5/16-18X1.28-IN)	
C	5	1	**161-7419**	4	STUD	
R	6	1	**262-2878**	1	CONTROL GP-UNPROGRAMMED (ENGINE)	
	8	1	**233-0891**	2	BRACKET AS	
					(EACH INCLUDES)	
M		1	**232-1693**	1	BOLT-FLANGE HEAD (M6X1X35-MM)	
C	9	1	**6V-3964**	4	WASHER-HARD (8.8X25.5X5-MM THK)	
	10	1	**8T-9655**	8	MOUNT-ISOLATION	
C	11	1	**9M-1974**	4	WASHER-HARD (8.8X16X2-MM THK)	
C	12	1	**9N-0869**	4	WASHER-HARD (8.8X25.5X2-MM THK)	

C-CHANGE FROM PREVIOUS TYPE
M-METRIC PART
R-REMFG PART MAY BE AVAILABLE

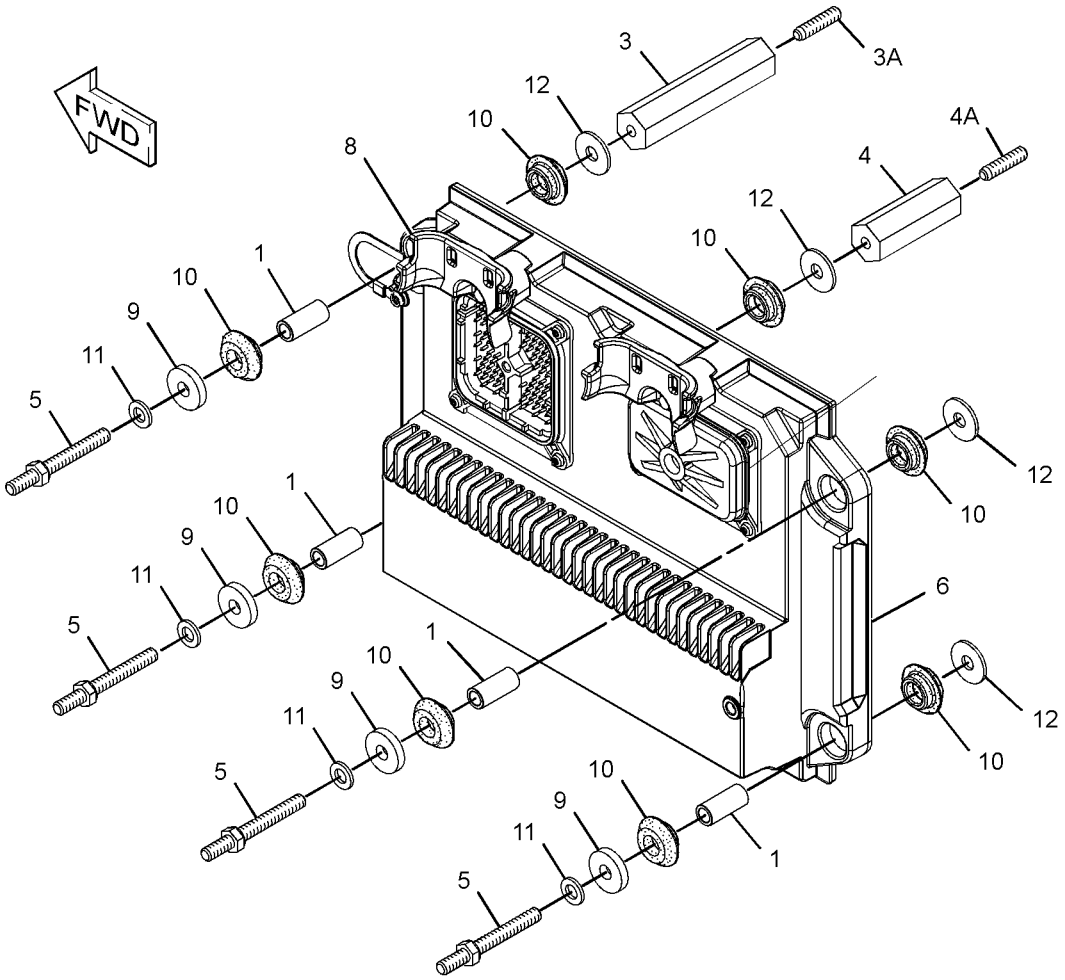

GRAPHIC #1 **<END>** g01300423

ELECTRICAL AND STARTING SYSTEM

299-9146 CONTROL GP-IMPLEMENT

S/N: B9K1-UP

PART OF 266-7000 CAB AR

SMCS-5700, 5701 **i04003659**

NOTE	REF NO	GRAPHIC REF	PART NUMBER	QTY	PART NAME 1 2 3 4 5 6 (PRODUCT LEVEL)	SEE PAGE
	1	1	**114-6658**	2	WASHER (6.5X17X1-MM THK)	
	2	1	**358-4931**	1	CONTROL AS-PROPORTIONAL (IMPLEMENT)	
		1	**8T-8737**	1	PLUG-SEAL	
		1	**9X-3401**	5	PIN-CONNECTOR (16-GA TO 18-GA)	
	3	1	**281-0431**	1	PLATE AS	
	4	1	**286-0277**	1	FILM-INSTRUCTION (NO FLOAT)	
	5	1	**299-0878**	1	BRACKET AS	
M		1	**6V-9632**	2	NUT-WELD (M6X1-THD)	
Y	6	1	*299-0881*	1	MOUNTING GP-CONTROL (WITH ENCLOSURE)	914
M	7	1	**9X-2044**	2	SCREW-TRUSS HEAD (M6X1X16-MM)	

M-METRIC PART
Y-SEPARATE ILLUSTRATION

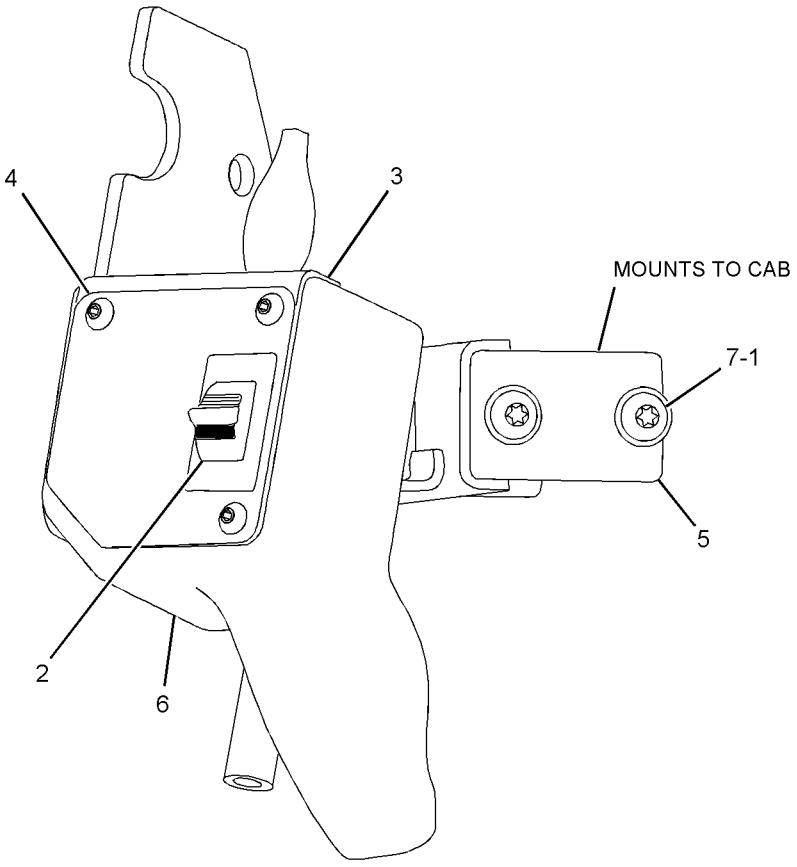

GRAPHIC #1 **<END>** g01384707

ELECTRICAL AND STARTING SYSTEM

275-8969 CONTROL GP-UNPROGRAMMED–IMPLEMENT 2

S/N: B9K1-UP

PART OF 266-7006 WIRING GP-CAB

SMCS-7610 **i03027249**

NOTE	PART NUMBER	QTY	PART NAME 1 2 3 4 5 6 (PRODUCT LEVEL)	SEE PAGE
R	304-5687	1	CONTROL GP-UNPROGRAMMED (IMPLEMENT 2)	

R-REMFG PART MAY BE AVAILABLE

<END>

ELECTRICAL AND STARTING SYSTEM

275-8970 CONTROL GP-UNPROGRAMMED–IMPLEMENT 1

S/N: B9K342-363

SMCS-7610 **i03817490**

NOTE	PART NUMBER	QTY	PART NAME 1 2 3 4 5 6 (PRODUCT LEVEL)	SEE PAGE
R	304-5687	1	CONTROL GP-UNPROGRAMMED (IMPLEMENT 1)	

R-REMFG PART MAY BE AVAILABLE

<END>

ELECTRICAL AND STARTING SYSTEM

233-3134 CONVERTER GP-ELECTRICAL–RADIO

S/N: B9K1-UP

SMCS-1421 **i02193584**

NOTE	REF NO	GRAPHIC REF	PART NUMBER	QTY	PART NAME 1 2 3 4 5 6 (PRODUCT LEVEL)	SEE PAGE
	1	1	**184-3579**	1	CONVERTER-POWER (20-AMPERE)	
M	2	1	**174-8131**	4	SCREW-TRUSS HEAD (M4X0.7X12-MM)	
	3	1	**8T-0328**	4	WASHER-HARD (5.5X10X1-MM THK)	

M-METRIC PART

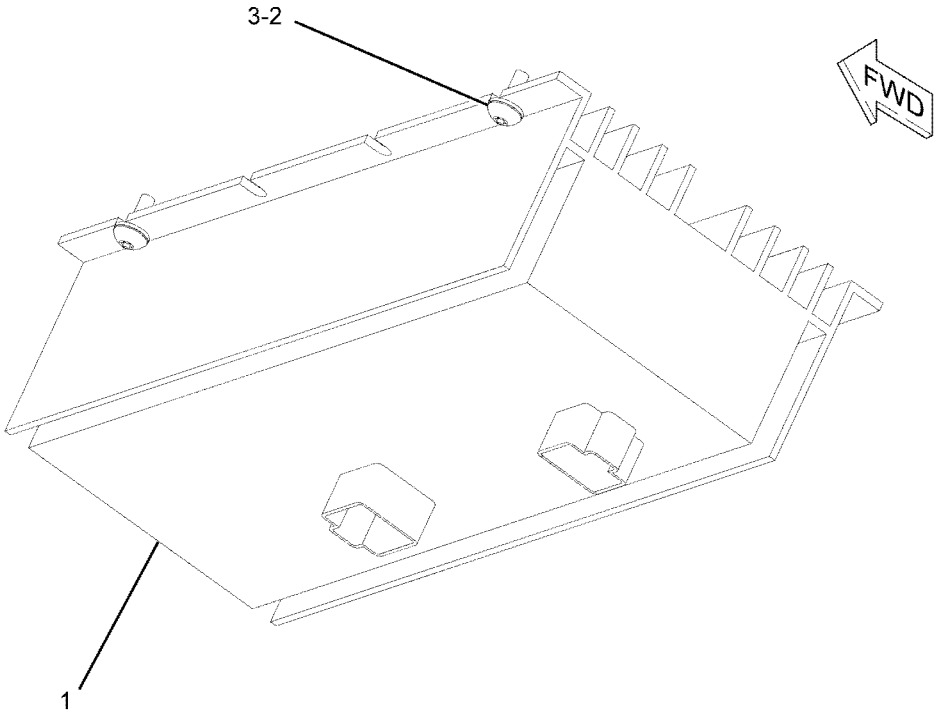

GRAPHIC #1 **<END>** g01110748

ELECTRICAL AND STARTING SYSTEM

233-3135 CONVERTER GP-ELECTRICAL

S/N: B9K1-UP

PART OF 266-7000 CAB AR

SMCS-1421 **i02713600**

NOTE	REF NO	GRAPHIC REF	PART NUMBER	QTY	PART NAME 1 2 3 4 5 6 (PRODUCT LEVEL)	SEE PAGE
	1	1	**117-2311**	1	SOCKET-AUXILIARY POWER (12-VOLT) (AUXILIARY)	
	2	1	**169-2876**	1	FILM-IDENTIFICATION (POWER RECEPTACLE, 12-VOLT)	
	3	1	**209-0381**	1	CONVERTER-POWER (24-VOLT TO 12-VOLT)	
M	4	1	**174-8131**	4	SCREW-TRUSS HEAD (M4X0.7X12-MM)	
	5	1	**8T-0328**	4	WASHER-HARD (5.5X10X1-MM THK)	

M-METRIC PART

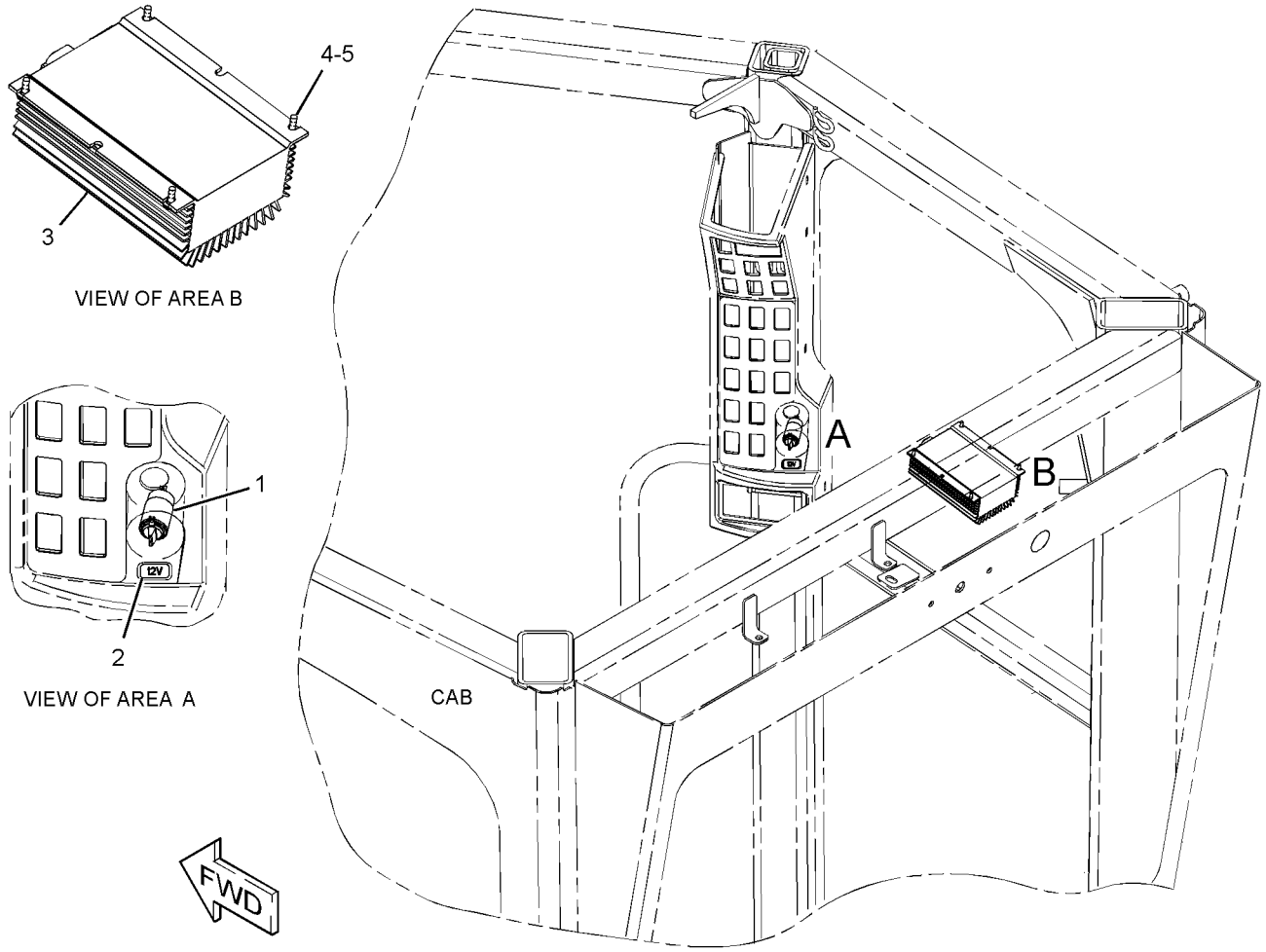

GRAPHIC #1 **<END>** g01372060

ELECTRICAL AND STARTING SYSTEM

262-1421 ELECTRONICS GP-COMMUNICATION–

PRODUCT LINK 300

S/N: B9K289-UP

PART OF 266-7029 INSTALLATION AR-COMMUNICATION

SMCS-7606, 7610, 7620 **i03915092**

NOTE	PART NUMBER	QTY	PART NAME 1 2 3 4 5 6 (PRODUCT LEVEL)	SEE PAGE
	355-5105	1	SOFTWARE GP-COMMUNICATION	
			-OR-	
	355-9764	1	SERVICE GP-COMMUNICATION	
			(OPTIONAL SERVICE REPLACEMENT)(INCLUDES CONTROL GP & SOFTWARE)	
	7X-6315	1	STRAP AS-GROUND	
	126-7574	1	SCREW-PAN HEAD (8-32X9.52-MM)	
	134-4126	1	WASHER (4.52X8.28X0.76-MM THK)	

<END>

ELECTRICAL AND STARTING SYSTEM

250-9257 ELECTRONICS GP-IMPLEMENT

S/N: B9K1-UP

PART OF 266-7000 CAB AR

SMCS-5701, 7610, 7620 **i03992254**

NOTE	PART NUMBER	QTY	PART NAME 1 2 3 4 5 6 (PRODUCT LEVEL)	SEE PAGE
	358-7810	1	SOFTWARE GP-IMPLEMENT	
			-OR-	
	358-7811	1	SERVICE GP-IMPLEMENT	
			(OPTIONAL SERVICE REPLACEMENT)(INCLUDES CONTROL GP & SOFTWARE)	

<END>

ELECTRICAL AND STARTING SYSTEM

250-9258 ELECTRONICS GP-IMPLEMENT–IMPLEMENT 2

S/N: B9K1-UP

PART OF 266-7000 CAB AR

SMCS-5701, 7610, 7620 **i03644922**

NOTE	PART NUMBER	QTY	PART NAME 1 2 3 4 5 6 (PRODUCT LEVEL)	SEE PAGE
	349-6967	1	SOFTWARE GP-IMPLEMENT	
			-OR-	
	349-6988	1	SERVICE GP-IMPLEMENT	
			(OPTIONAL SERVICE REPLACEMENT)(INCLUDES CONTROL GP & SOFTWARE)	

<END>

ELECTRICAL AND STARTING SYSTEM

303-2246 ELECTRONICS GP-IMPLEMENT

S/N: B9K250-UP

SMCS-5701, 7610, 7620 **i02765287**

NOTE	PART NUMBER	QTY	PART NAME 1 2 3 4 5 6 (PRODUCT LEVEL)	SEE PAGE
	298-6011	1	CONFIGURATION-PREMIUM	

<END>

ELECTRICAL AND STARTING SYSTEM

250-9254 ELECTRONICS GP-MONITOR–

DUTCH, ENGLISH, FRENCH, GERMAN, PORTUGUESE, SPANISH

S/N: B9K1-UP

PART OF 302-5137, 309-8777, 309-8778, 309-8779, 309-8780, 309-8781, 309-8782

PLATE & FILM GP

SMCS-7490, 7610, 7620 **i03988775**

NOTE	PART NUMBER	QTY	PART NAME 1 2 3 4 5 6 (PRODUCT LEVEL)	SEE PAGE
	360-7545	1	SOFTWARE GP-MONITOR (MESSENGER)	
			-OR-	
	360-7546	1	SERVICE GP-MONITOR (MESSENGER)	
			(OPTIONAL SERVICE REPLACEMENT)(INCLUDES CONTROL GP & SOFTWARE)	

<END>

ELECTRICAL AND STARTING SYSTEM

275-9650 ELECTRONICS GP-MONITOR–MESSENGER

S/N: B9K1-UP

PART OF 266-7006 WIRING GP-CAB

SMCS-7490, 7610, 7620 **i03812870**

NOTE	PART NUMBER	QTY	PART NAME 1 2 3 4 5 6 (PRODUCT LEVEL)	SEE PAGE
	308-3869	1	CONTROL GP-UNPRGMED MONITOR (MESSENGER)	

<END>

ELECTRICAL AND STARTING SYSTEM

302-0359 ELECTRONICS GP-MONITOR–

DANISH, ENGLISH, FINNISH, NORWEGIAN, PORTUGUESE, SWEDISH

S/N: B9K1-UP

PART OF 309-8783, 309-8784, 309-8786, 309-8796 PLATE & FILM GP

SMCS-7490, 7610, 7620 **i03988779**

NOTE	PART NUMBER	QTY	PART NAME 1 2 3 4 5 6 (PRODUCT LEVEL)	SEE PAGE
	360-7547	1	SOFTWARE GP-MONITOR (MESSENGER)	
			-OR-	
	360-7548	1	SERVICE GP-MONITOR (MESSENGER)	
			(OPTIONAL SERVICE REPLACEMENT) (INCLUDES CONTROL GP & SOFTWARE)	

<END>

ELECTRICAL AND STARTING SYSTEM

302-0360 ELECTRONICS GP-MONITOR–

ENGLISH, GREEK, HEBREW, ITALIAN, PORTUGUESE, TURKISH

S/N: B9K1-UP

PART OF 309-8787, 309-8788, 309-8789, 309-8790 PLATE & FILM GP

SMCS-7490, 7610, 7620 **i03995965**

NOTE	PART NUMBER	QTY	PART NAME 1 2 3 4 5 6 (PRODUCT LEVEL)	SEE PAGE
	360-7549	1	SOFTWARE GP-MONITOR	
			-OR-	
	360-7550	1	SERVICE GP-MONITOR	
			(OPTIONAL SERVICE REPLACEMENT) (INCLUDES CONTROL GP & SOFTWARE)	

<END>

ELECTRICAL AND STARTING SYSTEM

302-0361 ELECTRONICS GP-MONITOR–

ARABIC, CHINESE, ENGLISH, PORTUGUESE, RUSSIAN

S/N: B9K1-UP

PART OF 309-8791, 309-8792, 309-8793 PLATE & FILM GP

SMCS-7490, 7610, 7620 **i03995968**

NOTE	PART NUMBER	QTY	PART NAME 1 2 3 4 5 6 (PRODUCT LEVEL)	SEE PAGE
	360-7551	1	SOFTWARE GP-MONITOR	
			-OR-	
	360-7552	1	SERVICE GP-MONITOR	
			(OPTIONAL SERVICE REPLACEMENT)(INCLUDES CONTROL GP & SOFTWARE)	

<END>

ELECTRICAL AND STARTING SYSTEM

302-0362 ELECTRONICS GP-MONITOR–

ENGLISH, PORTUGUESE, ROMANIAN, SLOVENIAN

S/N: B9K1-UP

PART OF 309-8794, 309-8795 PLATE & FILM GP

SMCS-7490, 7610, 7620 **i03995969**

NOTE	PART NUMBER	QTY	PART NAME 1 2 3 4 5 6 (PRODUCT LEVEL)	SEE PAGE
	360-7553	1	SOFTWARE GP-MONITOR	
			-OR-	
	360-7554	1	SERVICE GP-MONITOR	
			(OPTIONAL SERVICE REPLACEMENT)(INCLUDES CONTROL GP & SOFTWARE)	

<END>

ELECTRICAL AND STARTING SYSTEM

310-3221 ELECTRONICS GP-POWER TRAIN

S/N: HKY1-UP

PART OF 267-5245 TRANSMISSION AR

SMCS-4800, 4808, 7610, 7620 **i03992363**

NOTE	PART NUMBER	QTY	PART NAME 1 2 3 4 5 6 (PRODUCT LEVEL)	SEE PAGE
	358-6192	1	SOFTWARE GP-POWER TRAIN	
			-OR-	
	358-6193	1	SERVICE GP-POWER TRAIN	
			(OPTIONAL SERVICE REPLACEMENT)(INCLUDES CONTROL GP & SOFTWARE)	

<END>

ELECTRICAL AND STARTING SYSTEM

269-2210 GRADE CONTROL AR–ACCUGRADE

S/N: B9K1-UP

FOR USE WITH MOTOR GRADER TIER 3

SMCS-7220 **i02811905**

NOTE	PART NUMBER	QTY	PART NAME 1 2 3 4 5 6 (PRODUCT LEVEL)	SEE PAGE
Y	**285-2042**	1	GRADE CONTROL GP	212
Y	*266-8961*	1	WIRING GP-GRADE CONTROL	382

Y-SEPARATE ILLUSTRATION

<END>

ELECTRICAL AND STARTING SYSTEM

291-1106 GRADE CONTROL AR–ACCUGRADE

S/N: B9K1-UP

SMCS-7220 **i03337640**

NOTE	PART NUMBER	QTY	PART NAME 1 2 3 4 5 6 (PRODUCT LEVEL)	SEE PAGE
	167-8712	1	ALARM	
	167-8713	1	BAFFLE AS	
	283-9530	1	DISPLAY GP-MONITOR (CD610)	
	283-7966	1	PLATE	
M	**9X-2043**	2	SCREW-TRUSS HEAD (M6X1X14-MM)	
M	**9X-2046**	2	SCREW-TRUSS HEAD (M6X1X35-MM)	
	285-2290	2	SCREW-TRUSS HEAD (M6X1X14-MM)	
	114-6658	6	WASHER (6.5X17X1-MM THK)	

M-METRIC PART

<END>

ELECTRICAL AND STARTING SYSTEM

317-6526 GRADE CONTROL AR-LASER–
ADVANCED TRACKING SYSTEM
S/N: B9K1-UP

SMCS-7220 **i03910928**

NOTE	PART NUMBER	QTY	PART NAME 1 2 3 4 5 6 (PRODUCT LEVEL)	SEE PAGE
Y	**226-2333**	1	MAST GP (LASER RECEIVER)	267
Y	**234-9970**	1	MOUNTING GP-RECEIVER (MAST)	272
Y	**295-9880**	1	TARGET GP-LASER	350
	248-1503	1	BRACKET GP-MOUNTING	
	7X-0343	4	BOLT (5/8-11X1.25-IN)	
	7X-0366	3	BOLT (3/4-10X2-IN)	
	8T-4122	4	WASHER-HARD (17X32X3.5-MM THK)	
	8T-4994	3	WASHER-HARD (20X36.5X3.5-MM THK)	
	248-1496	1	RISER AS (MAST)	
	3B-4512	1	LOCKWASHER	
	9S-1362	1	BOLT (3/4-16X2-IN)	
	231-0049	1	CABLE-COILED (MAST)	

Y-SEPARATE ILLUSTRATION

<END>

ELECTRICAL AND STARTING SYSTEM

285-2042 GRADE CONTROL GP–ACCUGRADE

S/N: B9K1-UP

PART OF 269-2210 GRADE CONTROL AR

SMCS-7220 **i03116203**

NOTE	REF NO	GRAPHIC REF	PART NUMBER	QTY	PART NAME 1 2 3 4 5 6 (PRODUCT LEVEL)	SEE PAGE
Y	1	1	**314-3323**	1	PANEL GP-CONTROL (ACCUGRADE)	928
Y	2	1	*319-1617*	1	PANEL GP-CONTROL	929

Y-SEPARATE ILLUSTRATION

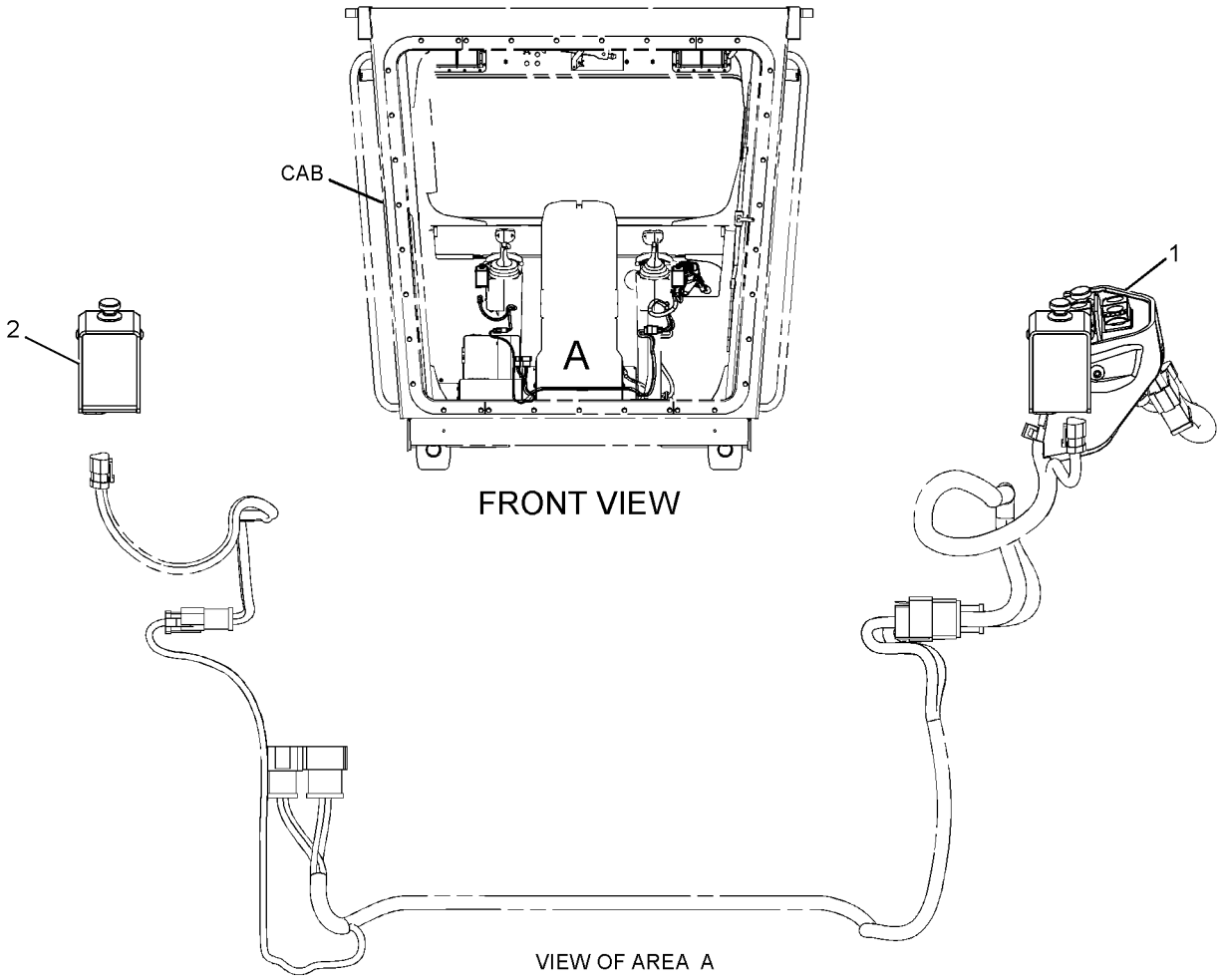

GRAPHIC #1 **<END>** g01431842

ELECTRICAL AND STARTING SYSTEM

266-7029 INSTALLATION AR-COMMUNICATION–

PRODUCT LINK 321SR

S/N: B9K1-288

SMCS-7606 **i02908793**

NOTE	REF NO	GRAPHIC REF	PART NUMBER	QTY	PART NAME 1 2 3 4 5 6 (PRODUCT LEVEL)	SEE PAGE
	1	1	**3S-2093**	7	STRAP-CABLE	
	2	1	**8C-5607**	8	MOUNT-ISOLATION	
	3	1	**307-0047**	1	FILM-INFORMATION (PRODUCT LINK, READ OMM)	
	4	1	**261-9391**	1	HARNESS AS-POWER (PRODUCT LINK RADIO)	
		1	**102-8801**	1	KIT-RECEPTACLE (12-PIN)	
					(INCLUDES RECEPTACLE AS & WEDGE)	
		1	**9X-6772**	2	STRAP-CABLE	
		1	**155-2255**	1	KIT-CONNECTING PLUG (12-PIN)	
					(INCLUDES PLUG AS, WEDGE, & INTERFACE SEAL)	
		1	**160-7690**	1	PLUG AS-CONNECTOR (70-PIN)	
Y	5	1	**263-9088**	1	RADIO GP-COMMUNICATION (PRODUCT LINK 121SR)	287
	6	1	**266-2861**	1	ANTENNA AS (PRODUCT LINK)	
		1	**223-4296**	1	ANTENNA (FLEXIBLE)	
	7	1	**5P-8439**	1	GROMMET	
M	8	1	**8T-2947**	4	BOLT (M6X1X45-MM)	
M	9	1	**8T-4138**	4	BOLT (M6X1X20-MM)	
	10	1	**9X-6165**	4	WASHER (6.5X22X2.5-MM THK)	
	11	1	**9X-8256**	4	WASHER (6.6X12X2-MM THK)	
	12	1	**230-1340**	1	FILM-WARNING (PRODUCT LINK RADIO, U.S.)	
	13	1	**285-1133**	1	CONTROL GP-UNPROGRAMMED (PRODUCT LINK 300) (PRODUCT LINK 300)	
		1	**7X-6315**	1	STRAP AS-GROUND	
		1	**126-7574**	1	SCREW-PAN HEAD (8-32X9.52-MM)	
		1	**134-4126**	1	WASHER (4.52X8.28X0.76-MM THK)	

M-METRIC PART
Y-SEPARATE ILLUSTRATION

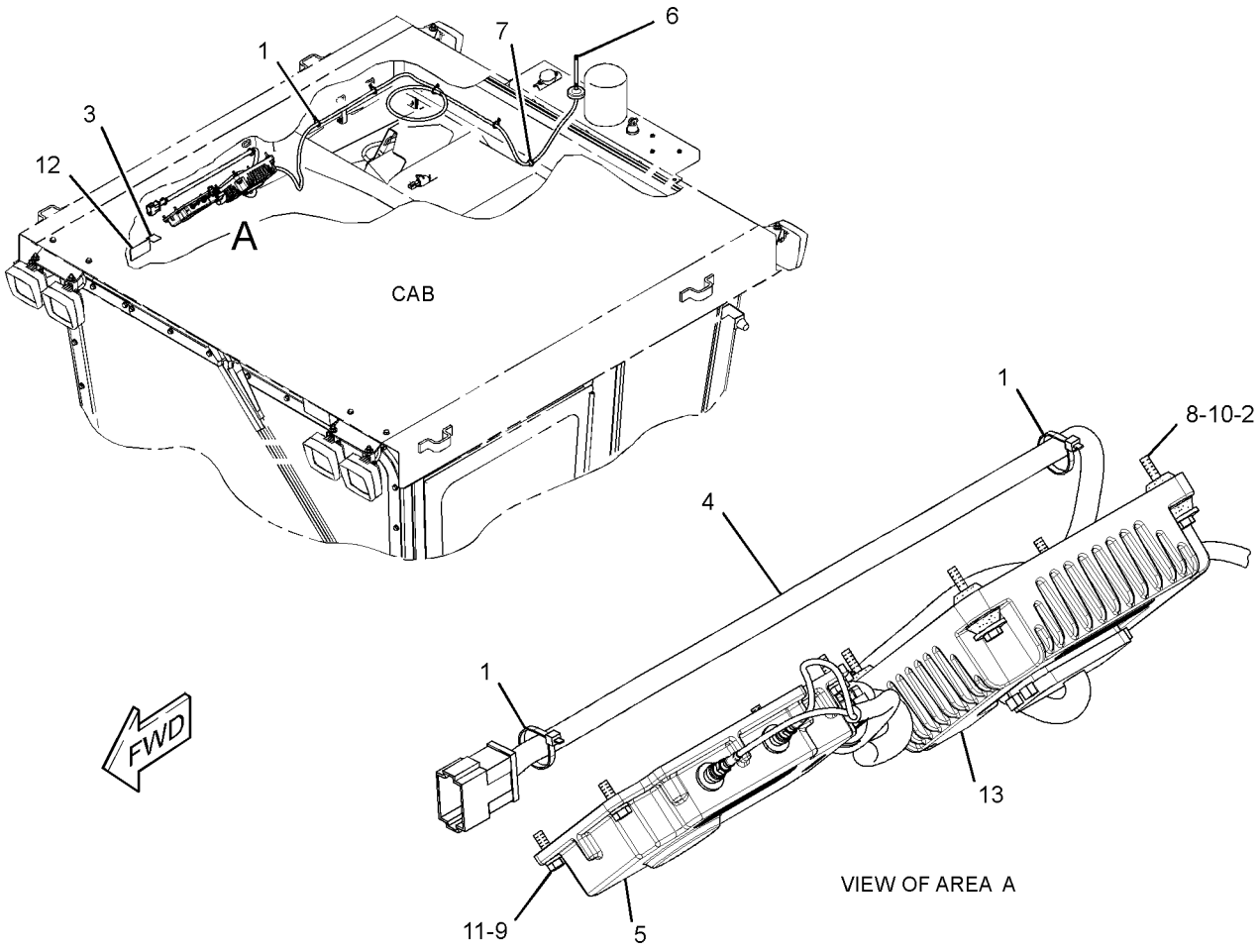

GRAPHIC #1 **<END>** g01422928

ELECTRICAL AND STARTING SYSTEM

266-7029 INSTALLATION AR-COMMUNICATION–
PRODUCT LINK 321SR
S/N: B9K289-364

SMCS-7606 **i03419202**

NOTE	REF NO	GRAPHIC REF	PART NUMBER	QTY	PART NAME 1 2 3 4 5 6 (PRODUCT LEVEL)	SEE PAGE
C	1	1	**3S-2093**	11	STRAP-CABLE	
	2	1	**8C-5607**	8	MOUNT-ISOLATION	
C	3	1	**8C-5608**	4	SPACER (6.5X9.5X25.4-MM THK)	
	4	1	**261-9391**	1	HARNESS AS-POWER (PRODUCT LINK RADIO)	
CY	5	1	**262-1421**	1	ELECTRONICS GP-COMMUNICATION (PRODUCT LINK 300)	198
Y	6	1	**263-9088**	1	RADIO GP-COMMUNICATION (PRODUCT LINK 121SR)	287
C	7	1	**310-2393**	1	ANTENNA AS	
		1	**301-0589**	1	ANTENNA (FLEXIBLE)	
C	8	1	**323-1685**	1	PLATE AS	
	9	1	**5P-8525**	1	GROMMET	
M	10	1	**8T-2947**	4	BOLT (M6X1X45-MM)	
M	11	1	**8T-4138**	4	BOLT (M6X1X20-MM)	
	12	1	**9X-6165**	4	WASHER (6.5X22X2.5-MM THK)	
	13	1	**9X-8256**	4	WASHER (6.6X12X2-MM THK)	
	14	1	**242-9964**	1	SPACER	

C-CHANGE FROM PREVIOUS TYPE
M-METRIC PART
Y-SEPARATE ILLUSTRATION

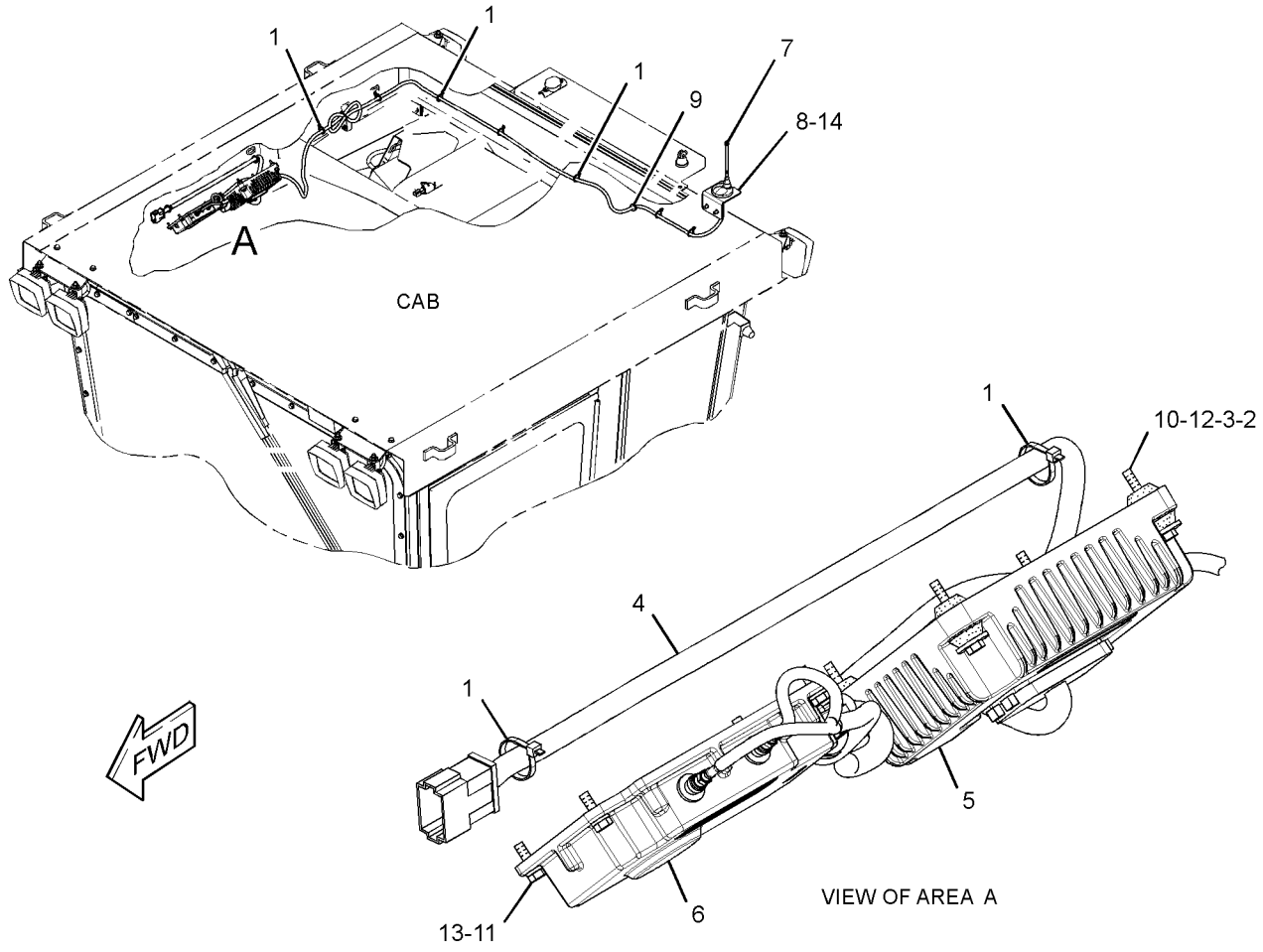

GRAPHIC #1 **<END>** g01927934

ELECTRICAL AND STARTING SYSTEM

266-7029 INSTALLATION AR-COMMUNICATION–
PRODUCT LINK 321SR
S/N: B9K365-UP

SMCS-7606 **i03996626**

NOTE	REF NO	GRAPHIC REF	PART NUMBER	QTY	PART NAME 1 2 3 4 5 6 (PRODUCT LEVEL)	SEE PAGE
	1	1	**3S-2093**	11	STRAP-CABLE	
	2	1	**8C-5607**	8	MOUNT-ISOLATION	
	3	1	**8C-5608**	4	SPACER (6.5X9.5X25.4-MM THK)	
	4	1	**261-9391**	1	HARNESS AS-POWER (PRODUCT LINK RADIO)	
Y	5	1	**262-1421**	1	ELECTRONICS GP-COMMUNICATION (PRODUCT LINK 300)	198
CY	6	1	**336-3545**	1	RADIO GP-COMMUNICATION (PRODUCT LINK 121SR)	288
		1	**336-3566**	1	SOFTWARE GP-COMMUNICATION (PRODUCT LINK 121SR)	
	7	1	**310-2393**	1	ANTENNA AS (450-CM)	
		1	**301-0589**	1	ANTENNA (FLEXIBLE)	
	8	1	**323-1685**	1	PLATE AS	
	9	1	**5P-8525**	1	GROMMET	
M	10	1	**8T-2947**	4	BOLT (M6X1X45-MM)	
M	11	1	**8T-4138**	4	BOLT (M6X1X20-MM)	
	12	1	**9X-6165**	4	WASHER (6.5X22X2.5-MM THK)	
	13	1	**9X-8256**	4	WASHER (6.6X12X2-MM THK)	
	14	1	**242-9964**	1	SPACER	

C-CHANGE FROM PREVIOUS TYPE
M-METRIC PART
Y-SEPARATE ILLUSTRATION

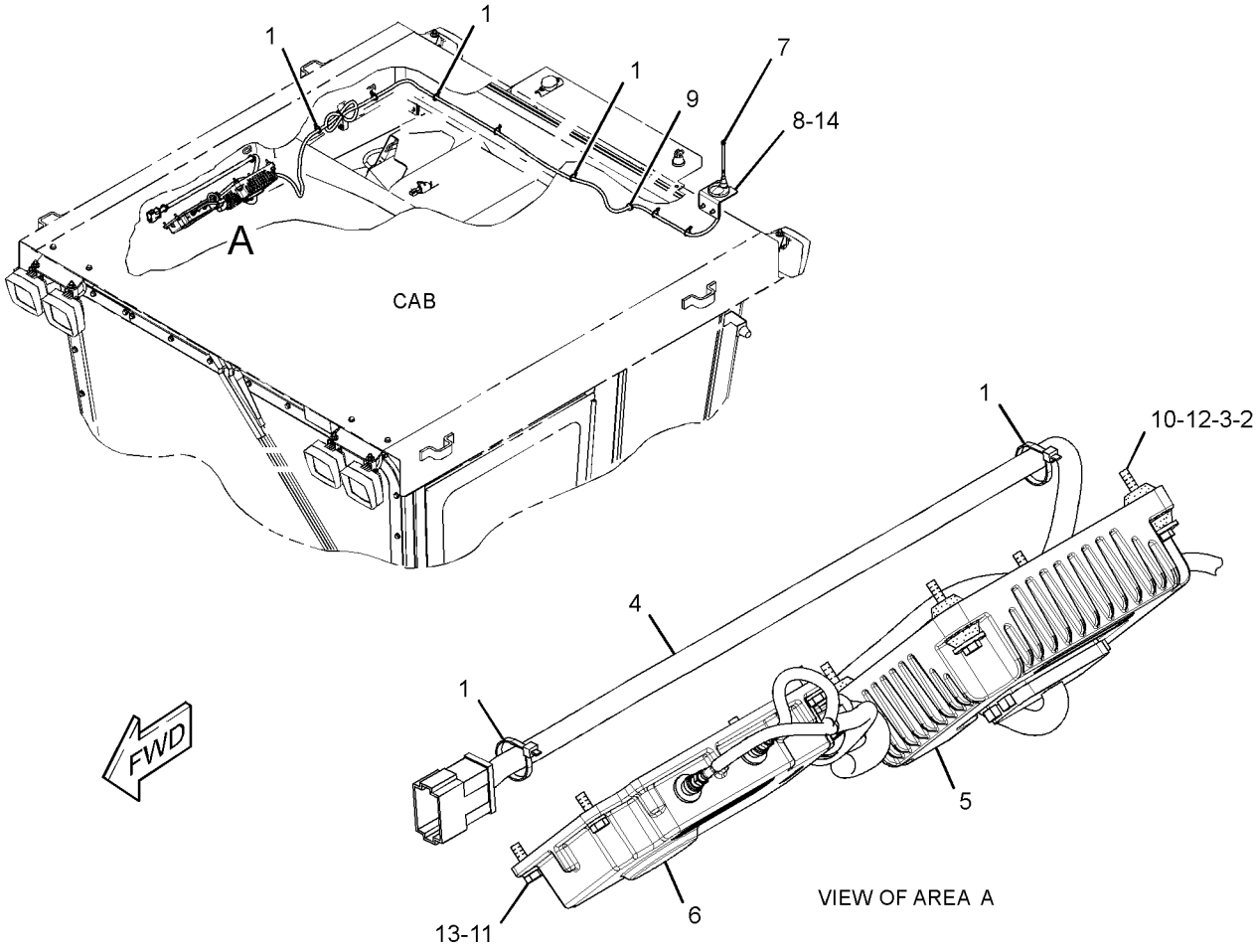

GRAPHIC #1 **<END>** g01927934

ELECTRICAL AND STARTING SYSTEM

313-6836 INSTALLATION AR-COMMUNICATION–
PRODUCT LINK 321SR
S/N: B9K1-UP

SMCS-7606 **i02908794**

NOTE	REF NO	GRAPHIC REF	PART NUMBER	QTY	PART NAME 1 2 3 4 5 6 (PRODUCT LEVEL)	SEE PAGE
	1	1	**3S-2093**	7	STRAP-CABLE	
	2	1	**8C-5607**	8	MOUNT-ISOLATION	
	3	1	**230-1341**	1	FILM-WARNING (PRODUCT LINK RADIO, INTL)	
	4	1	**261-9391**	1	HARNESS AS-POWER	
Y	5	1	**263-9088**	1	RADIO GP-COMMUNICATION (PRODUCT LINK 121SR)	287
	6	1	**266-2861**	1	ANTENNA AS (PRODUCT LINK)	
		1	**223-4296**	1	ANTENNA (FLEXIBLE)	
	7	1	**285-1133**	1	CONTROL GP-UNPROGRAMMED (PRODUCT LINK 300) (PRODUCT LINK 300)	
		1	**7X-6315**	1	STRAP AS-GROUND	
		1	**126-7574**	1	SCREW-PAN HEAD (8-32X9.52-MM)	
		1	**134-4126**	1	WASHER (4.52X8.28X0.76-MM THK)	
	8	1	**307-0047**	1	FILM-INFORMATION (PRODUCT LINK, READ OMM)	
	9	1	**5P-8439**	1	GROMMET	
M	10	1	**8T-2947**	4	BOLT (M6X1X45-MM)	
M	11	1	**8T-4138**	4	BOLT (M6X1X20-MM)	
	12	1	**9X-6165**	4	WASHER (6.5X22X2.5-MM THK)	
	13	1	**9X-8256**	4	WASHER (6.6X12X2-MM THK)	

M-METRIC PART
Y-SEPARATE ILLUSTRATION

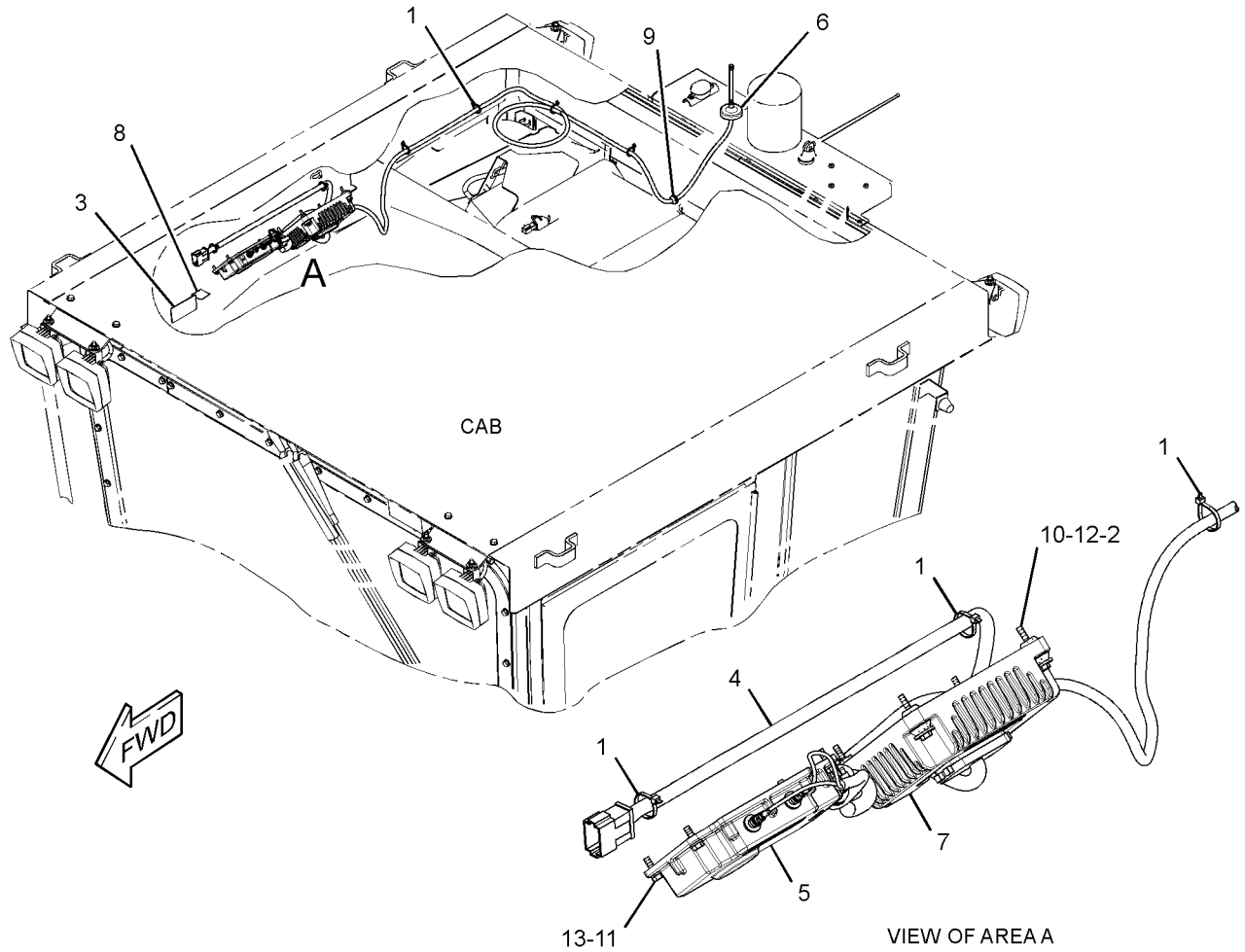

GRAPHIC #1 **<END>** g01440950

ELECTRICAL AND STARTING SYSTEM

266-7040 INSTALLATION GP-SECURITY

S/N: B9K1-UP

SMCS-7631 **i03492083**

NOTE	REF NO	GRAPHIC REF	PART NUMBER	QTY	PART NAME 1 2 3 4 5 6 (PRODUCT LEVEL)	SEE PAGE
	1	1	**3S-2093**	1	STRAP-CABLE	
	2	1	**8C-5607**	4	MOUNT-ISOLATION	
	3	1	**198-5389**	1	FILM-IDENTIFICATION (IGNITION SWITCH)	
	4	1	**205-0826**	1	FILM-INSTRUCTION (MACHINE SECURITY, CONSOLE)	
	5	1	**206-5162**	1	KEY AS-ELECTRONIC (SECURITY)	
	6	1	**205-8257**	1	COIL AS (EXCITER)	
		1	**207-5271**	1	WASHER (27X60.5X0.36-MM THK)	
		1	**186-3735**	2	PIN-CONNECTOR (16-GA TO 18-GA)	
D		1	**5P-5677**		WIRE (18-GA, BLACK) (0.4-M)	
	7	1	**218-0404**	1	MODULE GP-INTERFACE (KEY)	
	8	1	**219-6314**	1	KEY RING (IDENTIFICATION)	
	11	1	**238-8813**	1	HARNESS AS-CHASSIS	
		1	**102-8805**	1	KIT-RECEPTACLE (6-PIN)	
					(INCLUDES RECEPTACLE AS & WEDGE)	
		1	**155-2265**	1	KIT-CONNECTING PLUG (8-PIN)	
		1	**155-2270**	2	KIT-CONNECTING PLUG (2-PIN)	
					(EACH PLUG KIT INCLUDES PLUG AS, WEDGE, & INTERFACE SEAL)	
	12	1	**242-3282**	1	LAMP AS-LED (24-VOLT, RED)	
		1	**186-3735**	2	PIN-CONNECTOR (16-GA TO 18-GA)	
M	13	1	**132-0111**	2	SCREW (M6X1X35-MM)	
	14	1	**102-8802**	1	KIT-RECEPTACLE (2-PIN)	
					(INCLUDES RECEPTACLE AS & WEDGE)	
	15	1	**4P-8134**	1	CLIP	
	16	1	**9X-6165**	2	WASHER (6.5X22X2.5-MM THK)	
	17	1	**8C-5608**	2	SPACER (6.5X9.5X25.4-MM THK)	

D-ORDER BY THE METER
M-METRIC PART

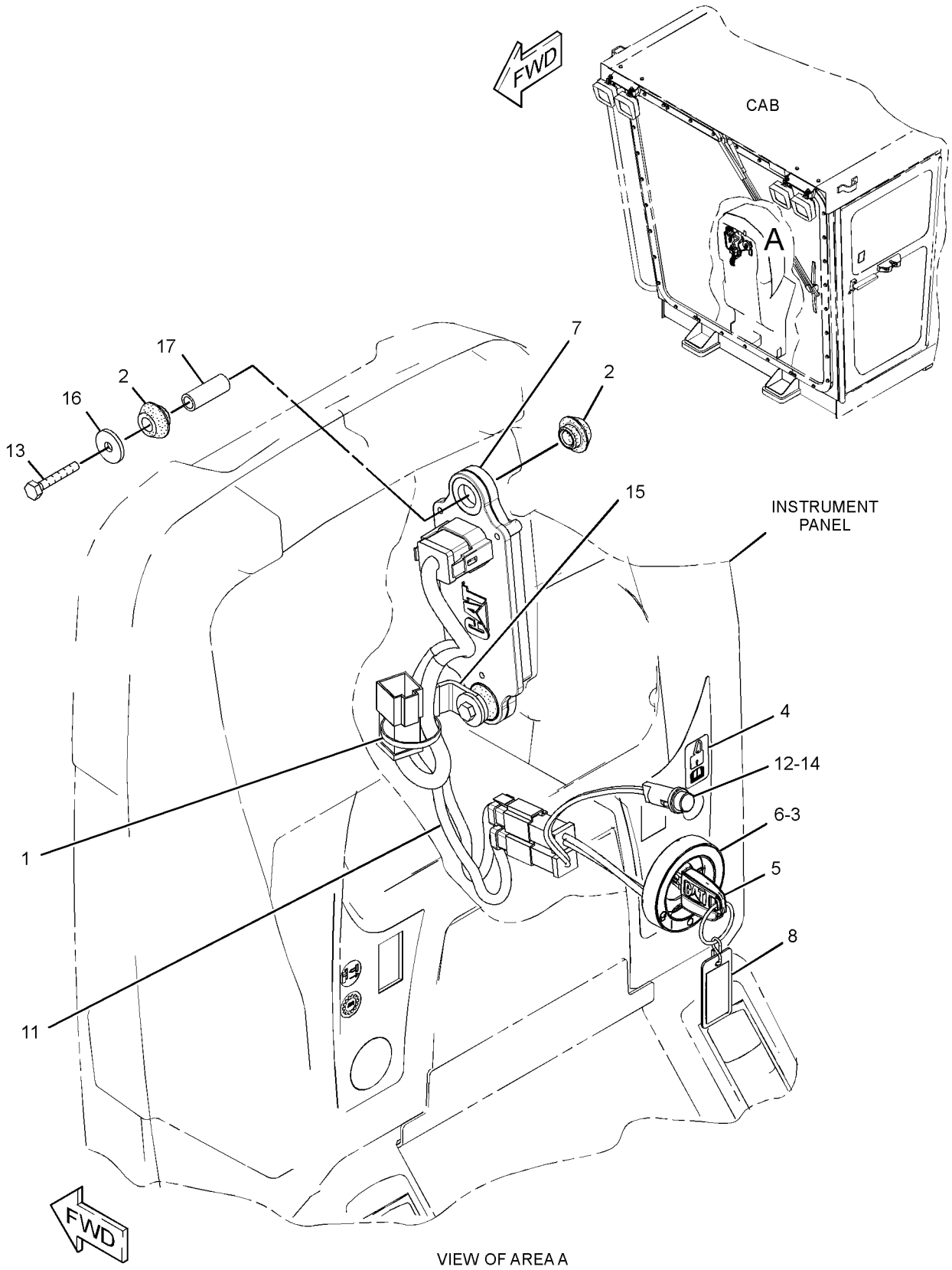

GRAPHIC #1

<END>

g01572533

ELECTRICAL AND STARTING SYSTEM

261-1502 LAMP GP

S/N: B9K1-UP
24 VOLT
PART OF 266-8964 WIRING GP-REAR LIGHTING

SMCS-1429 **i02556523**

NOTE	REF NO	GRAPHIC REF	PART NUMBER	QTY	PART NAME 1 2 3 4 5 6 (PRODUCT LEVEL)	SEE PAGE
	1	1	**264-5346**	1	LENS	
	2	1	**9X-4493**	1	LAMP (24-VOLT, 21-WATT)	
	3	1	**186-3735**	2	PIN-CONNECTOR (16-GA TO 18-GA)	
	4	1	**102-8802**	1	KIT-RECEPTACLE (2-PIN)	
					(INCLUDES RECEPTACLE AS & WEDGE)	

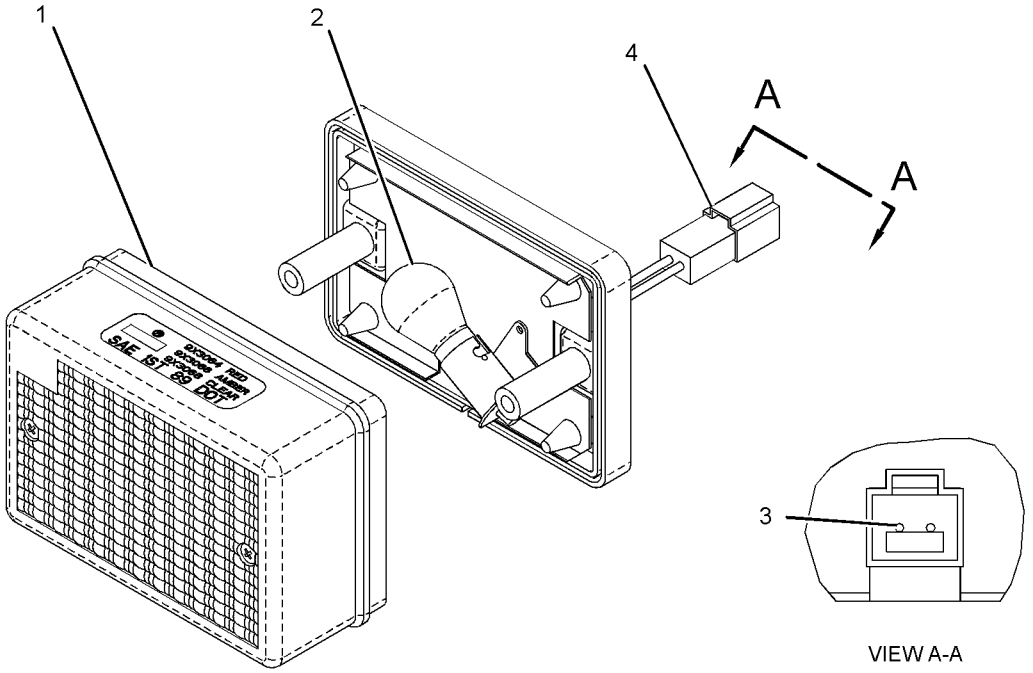

GRAPHIC #1 **<END>** g01279825

ELECTRICAL AND STARTING SYSTEM

3E-6389 LAMP GP-DOME—WITH SWITCH

S/N: B9K1-UP
24-VOLT
PART OF 266-7007 LINER GP-CAB

SMCS-1433 **i03205534**

NOTE	REF NO	GRAPHIC REF	PART NUMBER	QTY	PART NAME 1 2 3 4 5 6 (PRODUCT LEVEL)	SEE PAGE
	1	1	7N-9943	1	LAMP (24-VOLT) (DOME)	
	2	1	102-8803	1	KIT-RECEPTACLE (3-PIN)	
					(INCLUDES RECEPTACLE AS & WEDGE)	
	3	1	186-3735	3	PIN-CONNECTOR (16-GA TO 18-GA)	
	4	1	7T-0020	1	LENS-DOME LAMP	

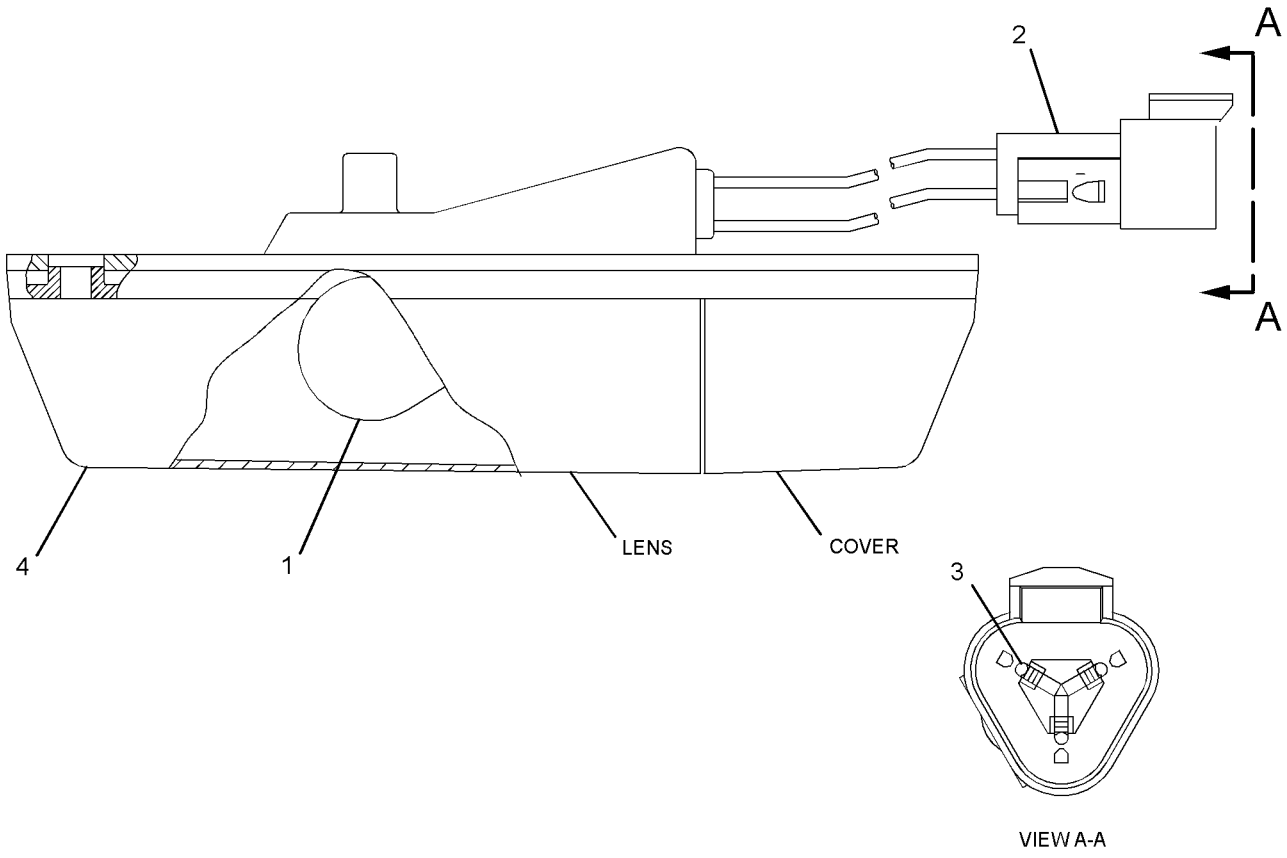

GRAPHIC #1 **<END>** g01270113

ELECTRICAL AND STARTING SYSTEM

147-0319 LAMP GP-FLOOD

S/N: B9K1-UP
24-VOLT, 70-WATT
PART OF 266-8967, 266-8969, 266-8971, 266-8976, 266-8979, 273-7357 LIGHTING GP-FLOOD

SMCS-1434 **i03792112**

NOTE	REF NO	GRAPHIC REF	PART NUMBER	QTY	PART NAME 1 2 3 4 5 6 (PRODUCT LEVEL)	SEE PAGE
	1	1	351-9918	1	LAMP-HALOGEN (24-VOLT, 70-WATT)	
	2	1	158-0250	1	BODY AS-LAMP	
	3	1	336-7235	1	LENS AS (FLOODLIGHT)	
	4	1	158-0252	1	BEZEL	
	5	1	188-8849	2	CLAMP	

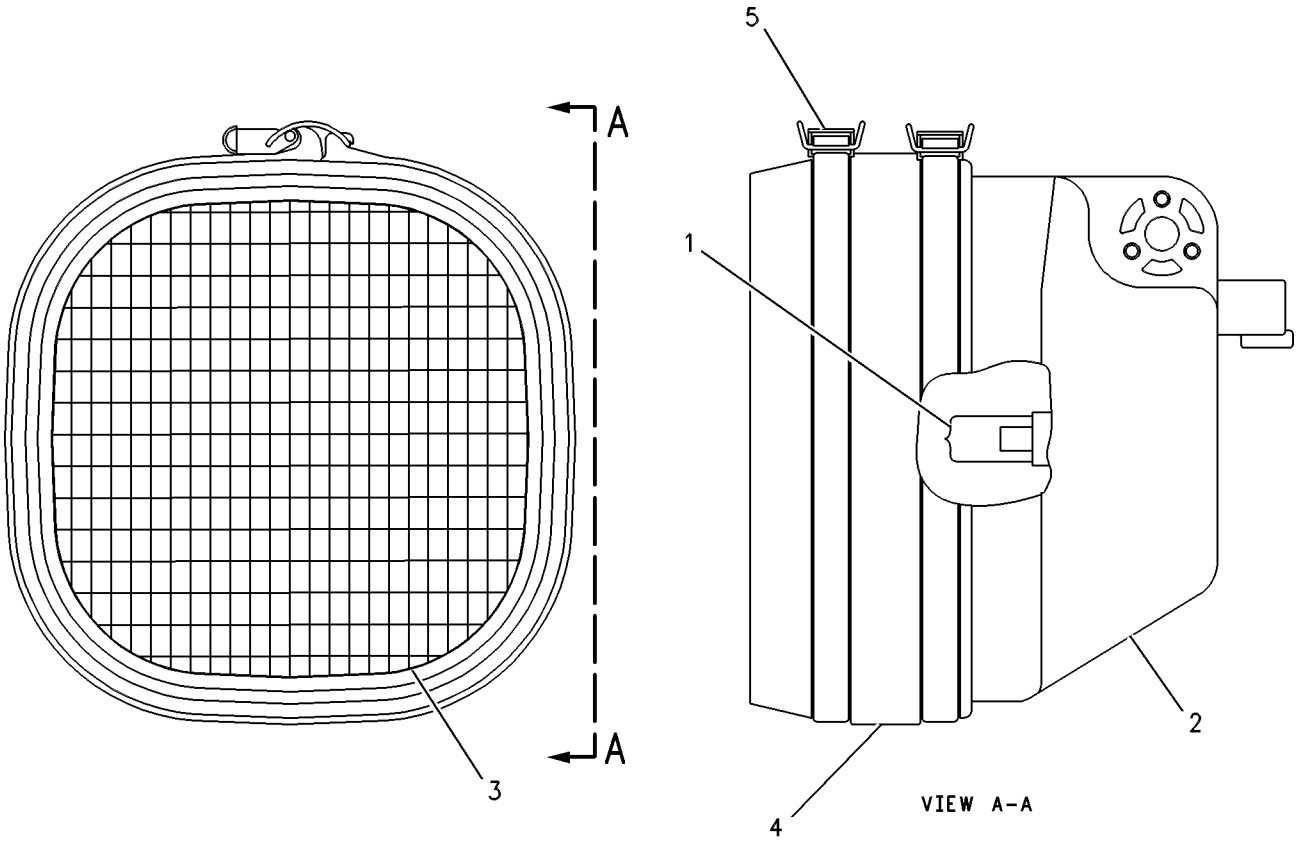

GRAPHIC #1 **<END>** g00458549

ELECTRICAL AND STARTING SYSTEM

176-0780 LAMP GP-FLOOD

S/N: B9K1-UP
24-VOLT, 65-WATT
PART OF 282-0810 LIGHTING GP-FLOOD

SMCS-1434 **i02651200**

NOTE	REF NO	GRAPHIC REF	PART NUMBER	QTY	PART NAME 1 2 3 4 5 6 (PRODUCT LEVEL)	SEE PAGE
	1	1	107-5851	4	SCREW (M4X32-MM)	
	2	1	107-5853	1	LENS AS (FLOODLIGHT)	
	3	1	107-5852	1	SEAL	
	4	1	139-8660	1	BODY AS-LAMP	
	5	1	9X-3463	1	LAMP-HALOGEN (24-VOLT, 70-WATT) (FLOODLIGHT)	
	6	1	102-8802	1	KIT-RECEPTACLE (2-PIN)	
					(INCLUDES RECEPTACLE AS & WEDGE)	
	7	1	186-3735	2	PIN-CONNECTOR (16-GA TO 18-GA)	
M	8	1	8T-6912	1	BOLT (M8X1.25X50-MM)	
M	9	1	8T-7963	1	LOCKNUT (M8X1.25-THD)	
	10	1	165-0699	1	KIT-MOUNTING BRACKET	
					(INCLUDES BRACKET, BOLTS, LOCKNUT)	
M	11	1	8T-4182	1	BOLT (M10X1.5X45-MM)	

M-METRIC PART

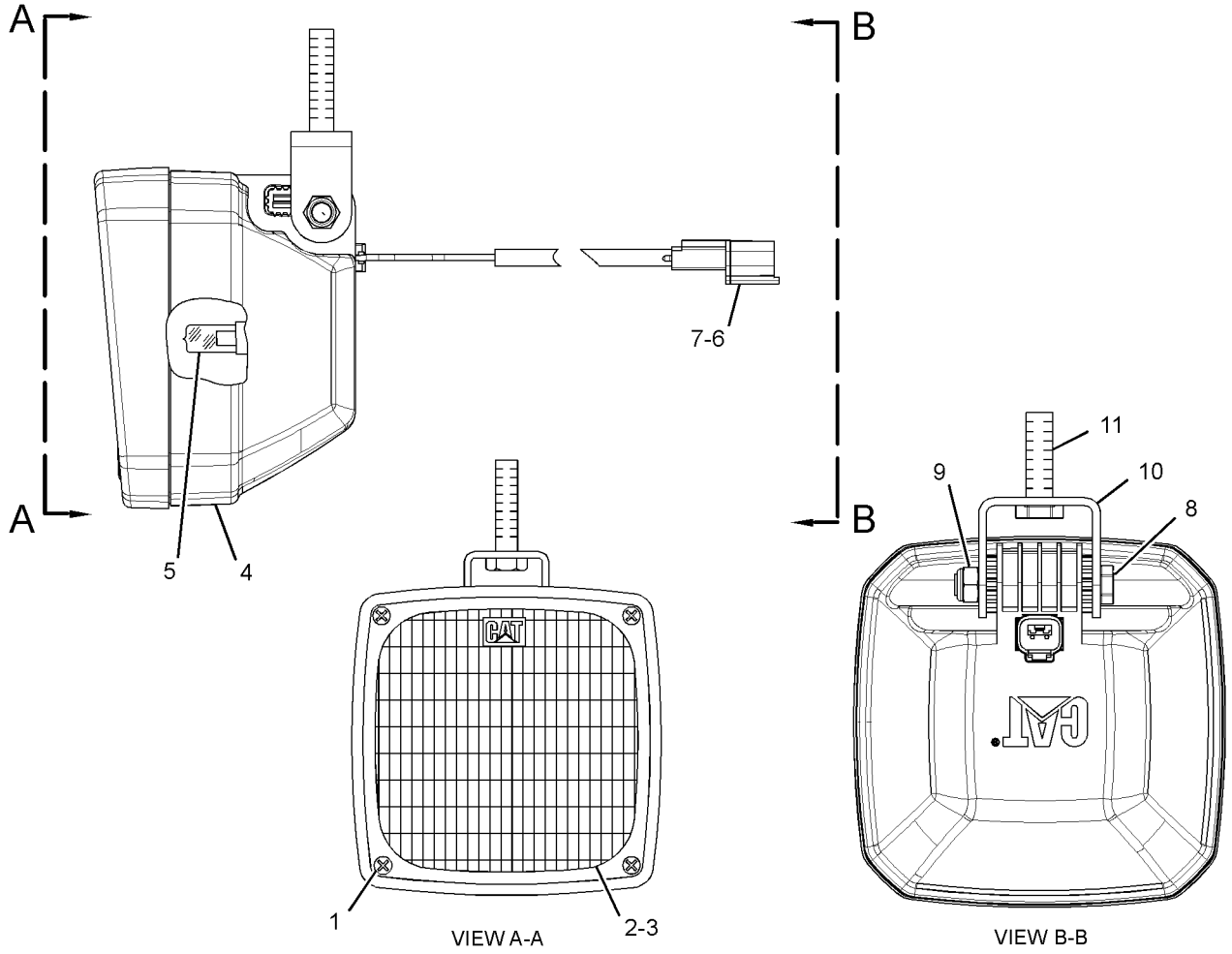

GRAPHIC #1 **<END>** g01371429

ELECTRICAL AND STARTING SYSTEM

210-8422 LAMP GP-FLOOD–24-VOLT, 35-WATT, HID

S/N: B9K1-UP

PART OF 266-8968, 266-8970, 266-8972, 266-8977, 266-8980, 273-7356 LIGHTING GP-FLOOD

FIELD REPLACEMENT ORDER 277-0467–PAGE 226

SMCS-1434 **i02732831**

NOTE	REF NO	GRAPHIC REF	PART NUMBER	QTY	PART NAME 1 2 3 4 5 6 (PRODUCT LEVEL)	SEE PAGE
	1	1	229-9969	1	LENS AS (FLOODLIGHT)	
	2	1	209-6638	1	LAMP-HALOGEN (12/24-VOLT, 35-WATT)	
M	3	1	120-9027	4	SCREW-PAN HEAD (M3X0.5X16-MM)	
CM	4	1	8T-6869	1	BOLT (M8X1.25X60-MM)	
CM	5	1	6V-9189	1	LOCKNUT (M8X1.25-THD)	
C	6	1	296-7759	1	BRACKET AS	
	7	1	229-9974	1	BEZEL	

C-CHANGE FROM PREVIOUS TYPE
M-METRIC PART

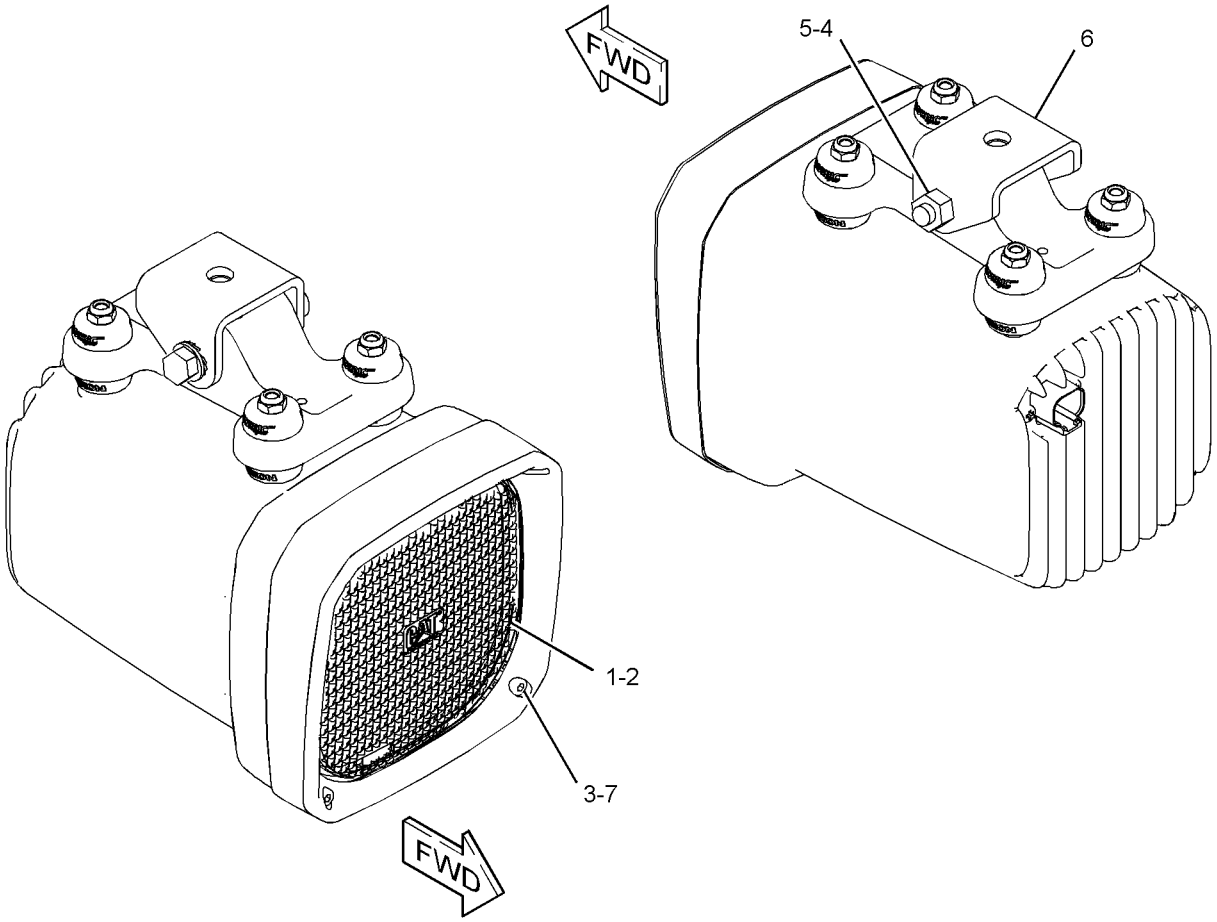

GRAPHIC #1 **<END>** g01371136

ELECTRICAL AND STARTING SYSTEM

234-4325 LAMP GP-FLOOD

S/N: B9K1-UP
24-VOLT
PART OF 266-8960 LIGHTING GP-FLOOD

SMCS-1434 **i03801030**

NOTE	REF NO	GRAPHIC REF	PART NUMBER	QTY	PART NAME 1 2 3 4 5 6 (PRODUCT LEVEL)	SEE PAGE
	1	1	9X-3463	1	LAMP-HALOGEN (24-VOLT, 70-WATT)	
M	2	1	8T-0389	1	LOCKNUT (M10X1.5-THD)	
	3	1	9X-4244	2	SCREW-SPECIAL (M4X1.79X25-MM)	
	4	1	202-6614	1	LENS AS (FLOODLIGHT)	
	5	1	234-7730	1	BODY AS	
	6	1	164-7556	1	BRACKET (LAMP RETAINING)	
	7	1	234-7731	1	BRACKET AS	
	8	1	8T-4121	1	WASHER-HARD (11X21X2.5-MM THK)	

M-METRIC PART

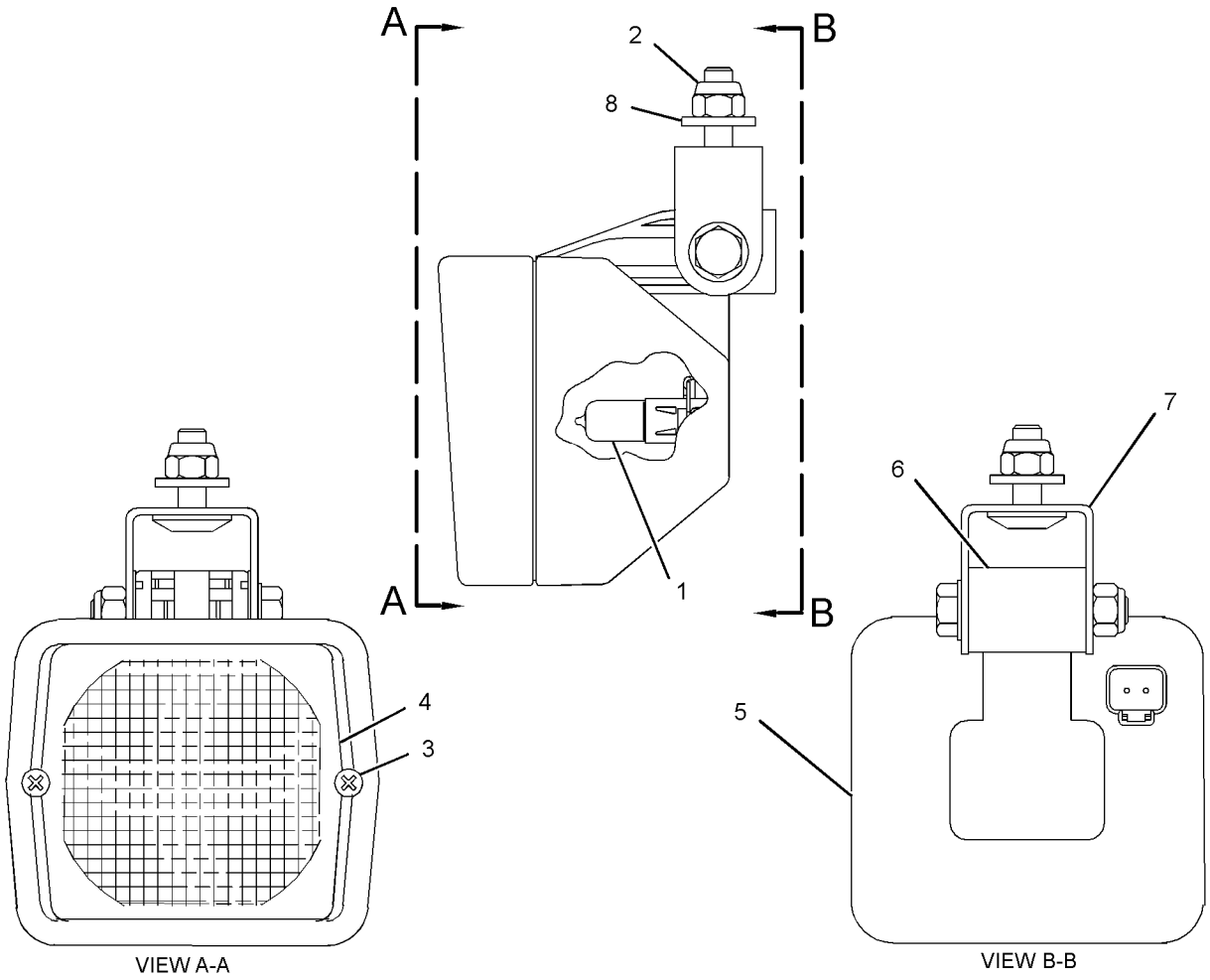

GRAPHIC #1 **<END>** g01246703

ELECTRICAL AND STARTING SYSTEM

277-0467 LAMP GP-FLOOD–HID

S/N: B9K1-UP
24-VOLT, 35-WATT
PART OF 282-0811 LIGHTING GP-FLOOD
FIELD REPLACEMENT FOR 210-8422–PAGE 224

SMCS-1434 **i03495040**

NOTE	REF NO	GRAPHIC REF	PART NUMBER	QTY	PART NAME 1 2 3 4 5 6 (PRODUCT LEVEL)	SEE PAGE
	1	1	277-3082	1	LENS AS	
	2	1	209-6638	1	LAMP-HALOGEN (12/24-VOLT, 35-WATT)	
M	3	1	120-9027	4	SCREW-PAN HEAD (M3X0.5X16-MM)	
	4	1	229-9974	1	BEZEL	
M	5	1	8T-6869	1	BOLT (M8X1.25X60-MM)	
M	6	1	6V-9189	1	LOCKNUT (M8X1.25-THD)	
C	7	1	296-7759	1	BRACKET AS	

C-CHANGE FROM PREVIOUS TYPE
M-METRIC PART

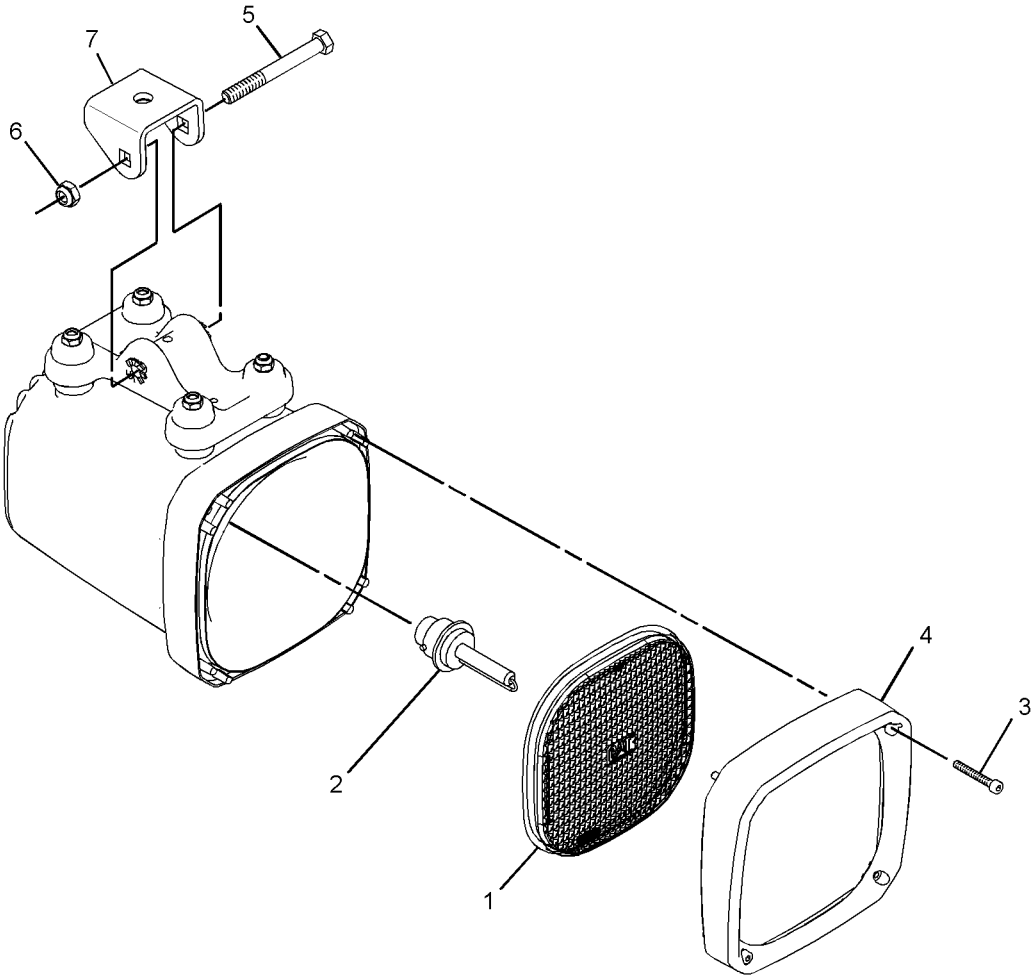

GRAPHIC #1 **<END>** g01354860

ELECTRICAL AND STARTING SYSTEM

290-8119 LAMP GP-FLOOD–HID

S/N: B9K1-UP
24-VOLT, 35-WATT
FIELD REPLACEMENT FOR 210-8426–PAGE 231

SMCS-1434 **i02786660**

NOTE	REF NO	GRAPHIC REF	PART NUMBER	QTY	PART NAME 1 2 3 4 5 6 (PRODUCT LEVEL)	SEE PAGE
	1	1	229-9971	1	LENS AS	
	2	1	290-8160	1	LAMP (24-VOLT, HID)	
M	3	1	151-8754	1	BOLT (M10X1.5X40-MM)	
	4	1	8T-4121	1	WASHER-HARD (11X21X2.5-MM THK)	
M	5	1	120-9027	4	SCREW-PAN HEAD (M3X0.5X16-MM)	
M	6	1	5P-8347	1	BOLT (M8X1.25X70-MM)	
M	7	1	6V-9189	1	LOCKNUT (M8X1.25-THD)	
	8	1	290-8996	1	BRACKET	
	9	1	229-9974	1	BEZEL	
	10	1	290-8159	1	BALLAST AS (24-VOLT, 35-WATT, HID)	

M-METRIC PART

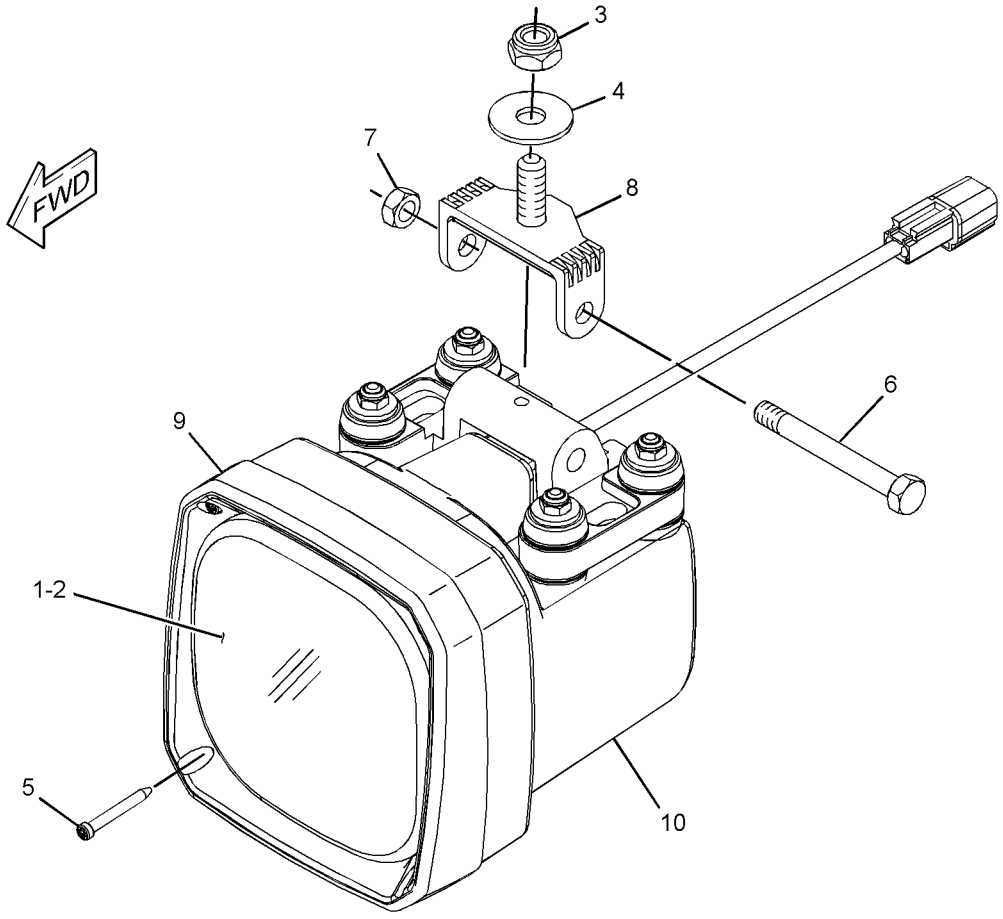

GRAPHIC #1 **<END>** g01396641

ELECTRICAL AND STARTING SYSTEM

157-0305 LAMP GP-HEAD—HIGH BEAM

S/N: B9K1-UP
24-VOLT
PART OF 266-8973 LIGHTING GP-ROADING

SMCS-1429 **i03607961**

NOTE	REF NO	GRAPHIC REF	PART NUMBER	QTY	PART NAME 1 2 3 4 5 6 (PRODUCT LEVEL)	SEE PAGE
	1	1	188-8849	2	CLAMP	
	2	1	9X-3463	1	LAMP-HALOGEN (24-VOLT, 70-WATT) (HIGH BEAM)	
	3	1	158-0250	1	BODY AS-LAMP	
	4	1	158-0249	1	LENS AS (HEADLIGHT, HIGH BEAM)	
	5	1	158-0252	1	BEZEL	

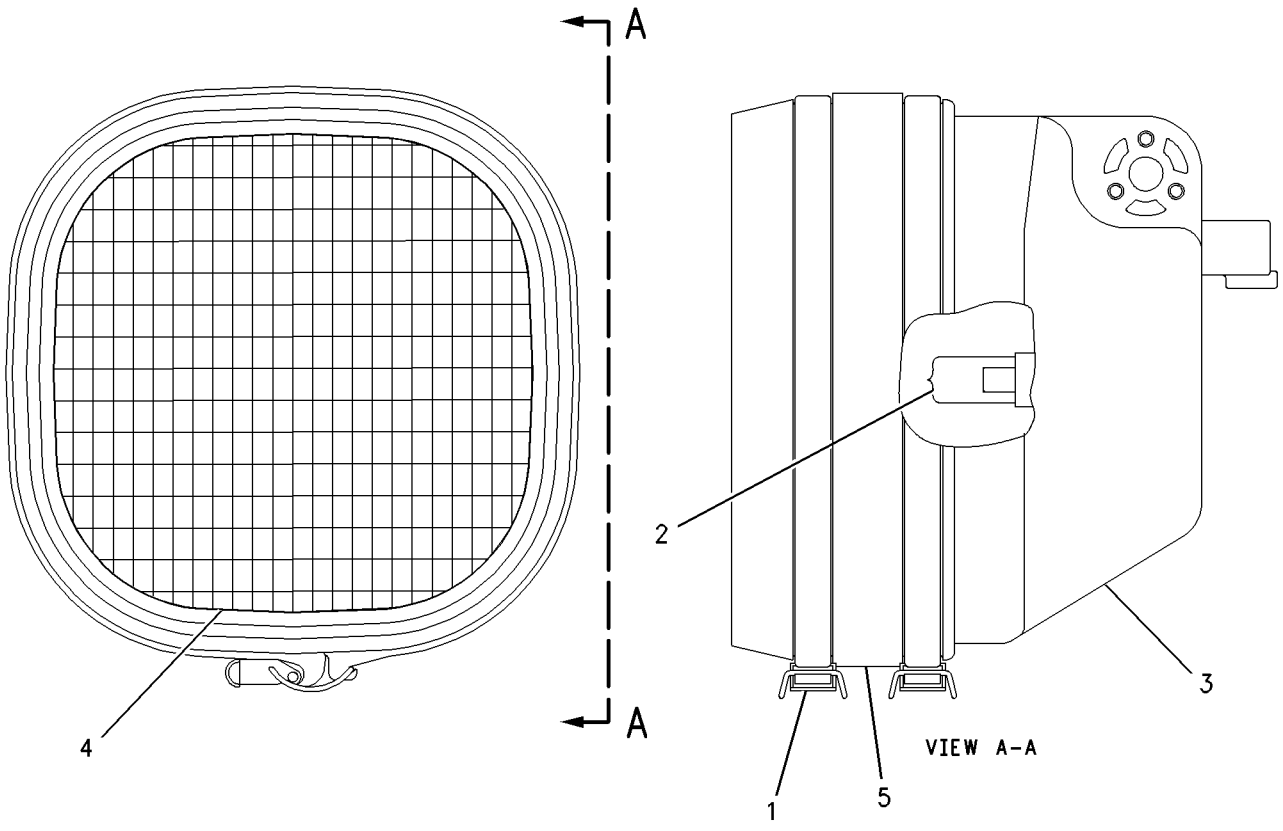

GRAPHIC #1 **<END>** g00725230

ELECTRICAL AND STARTING SYSTEM

161-3509 LAMP GP-HEAD–LOW BEAM

S/N: B9K1-UP
24-VOLT, 70-WATT
PART OF 266-8973 LIGHTING GP-ROADING

SMCS-1429 **i03412724**

NOTE	REF NO	GRAPHIC REF	PART NUMBER	QTY	PART NAME 1 2 3 4 5 6 (PRODUCT LEVEL)	SEE PAGE
	1	1	9X-3463	1	LAMP-HALOGEN (24-VOLT, 70-WATT) (LOW BEAM)	
	2	1	158-0250	1	BODY AS-LAMP	
	3	1	162-2077	1	LENS AS (HEADLIGHT, LOW BEAM)	
	4	1	158-0252	1	BEZEL	
	5	1	188-8849	2	CLAMP	

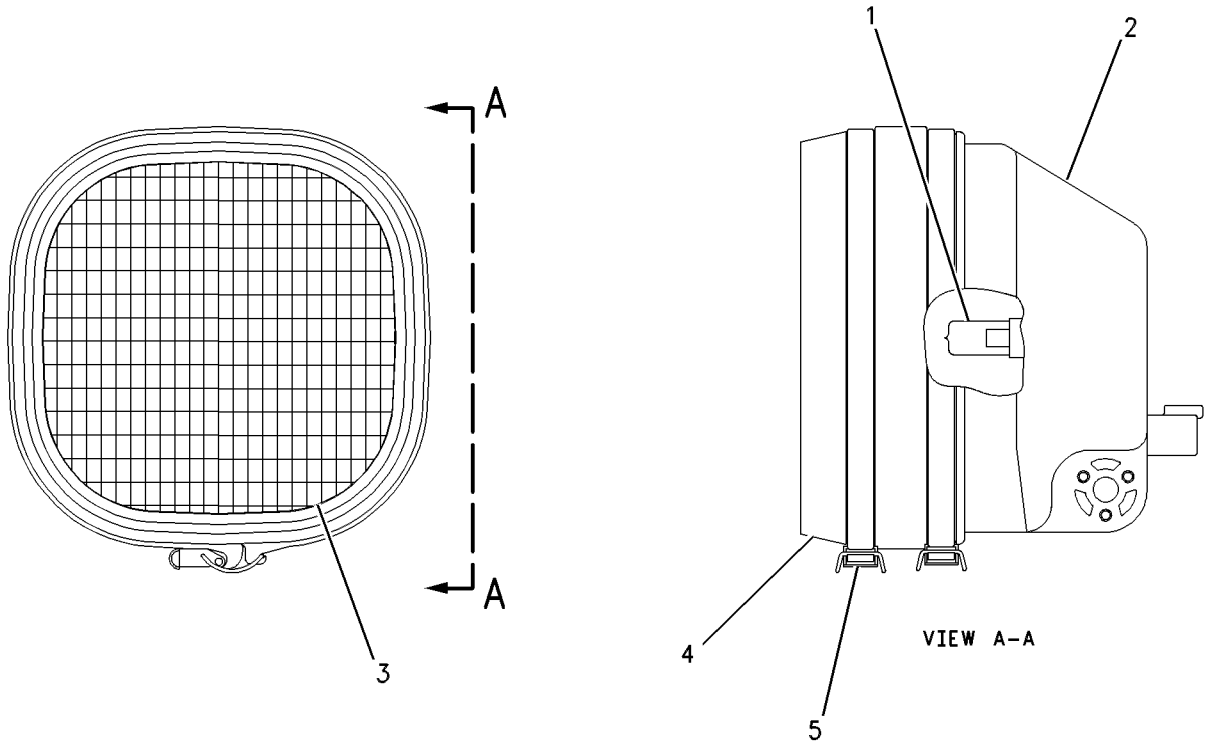

GRAPHIC #1 **<END>** g00514339

ELECTRICAL AND STARTING SYSTEM

210-8425 LAMP GP-HEAD—LOW BEAM

S/N: B9K1-UP
24-VOLT, 35-WATT. HID
PART OF 266-8974 LIGHTING GP-ROADING

SMCS-1429 **i02835371**

NOTE	REF NO	GRAPHIC REF	PART NUMBER	QTY	PART NAME 1 2 3 4 5 6 (PRODUCT LEVEL)	SEE PAGE
	1	1	229-9970	1	LENS AS	
	2	1	209-6638	1	LAMP-HALOGEN (12/24-VOLT, 35-WATT)	
M	3	1	120-9027	4	SCREW-PAN HEAD (M3X0.5X16-MM)	
CM	4	1	8T-6869	1	BOLT (M8X1.25X60-MM)	
CM	5	1	6V-9189	1	LOCKNUT (M8X1.25-THD)	
C	6	1	296-7759	1	BRACKET AS	
	7	1	229-9974	1	BEZEL	

C-CHANGE FROM PREVIOUS TYPE
M-METRIC PART

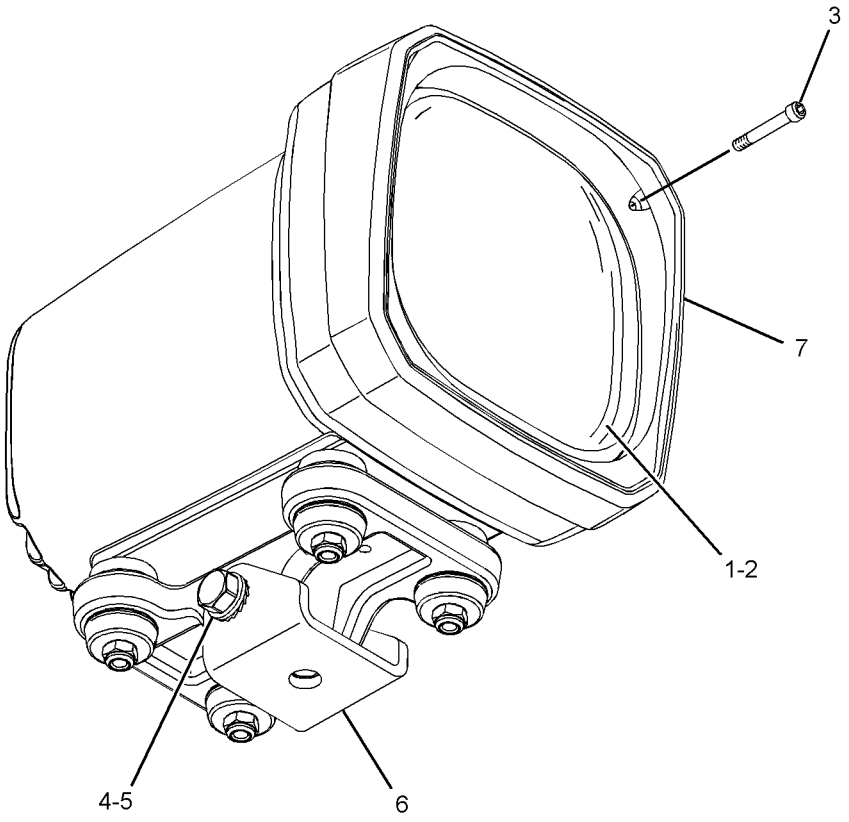

GRAPHIC #1 **<END>** g01414530

ELECTRICAL AND STARTING SYSTEM

210-8426 LAMP GP-HEAD–HIGH BEAM

S/N: B9K1-UP
24-VOLT, 35-WATT. HID
PART OF 266-8974 LIGHTING GP-ROADING
FIELD REPLACEMENT ORDER 290-8119–PAGE 227

SMCS-1429 **i02761040**

NOTE	REF NO	GRAPHIC REF	PART NUMBER	QTY	PART NAME 1 2 3 4 5 6 (PRODUCT LEVEL)	SEE PAGE
	1	1	229-9971	1	LENS AS	
	2	1	209-6638	1	LAMP-HALOGEN (12/24-VOLT, 35-WATT)	
M	3	1	120-9027	4	SCREW-PAN HEAD (M3X0.5X16-MM)	
	4	1	229-9974	1	BEZEL	
M	5	1	8T-6869	1	BOLT (M8X1.25X60-MM)	
M	6	1	6V-9189	1	LOCKNUT (M8X1.25-THD)	
	7	1	296-7759	1	BRACKET AS	

M-METRIC PART

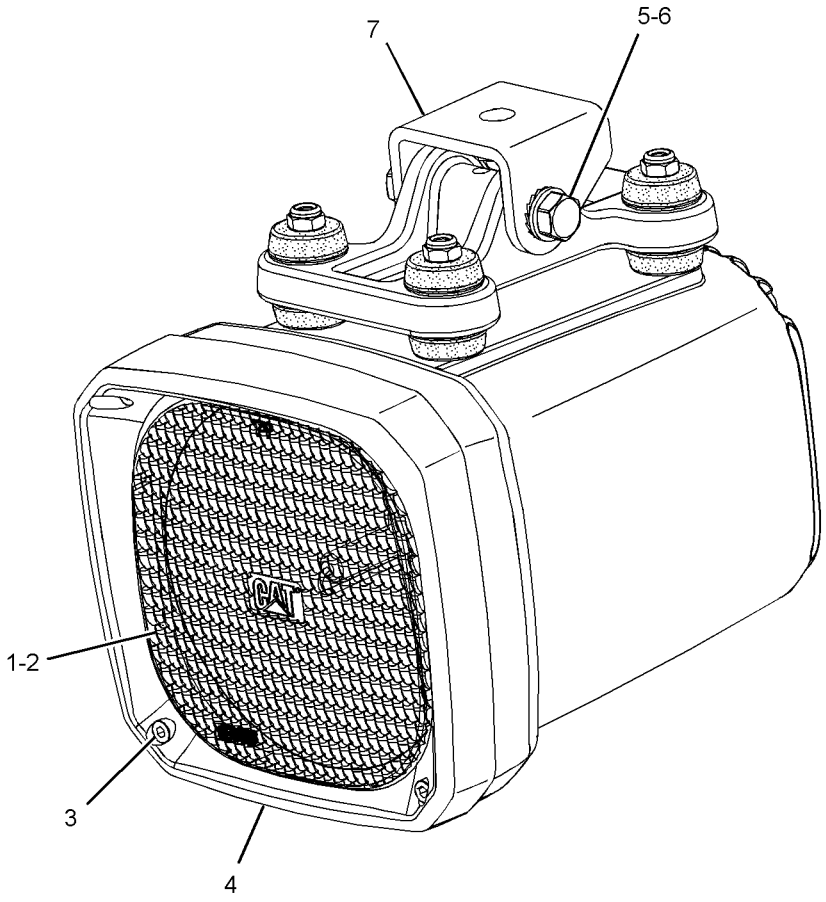

GRAPHIC #1 **<END>** g01397131

ELECTRICAL AND STARTING SYSTEM

135-0426 LAMP GP-SIGNAL–STOP, TAIL

S/N: B9K1-309
12-VOLT/24-VOLT
PART OF 266-8964 WIRING GP-REAR LIGHTING

SMCS-1430, 1432 **i02427577**

NOTE	REF NO	GRAPHIC REF	PART NUMBER	QTY	PART NAME 1 2 3 4 5 6 (PRODUCT LEVEL)	SEE PAGE
	1	1	**102-8803**	1	KIT-RECEPTACLE (3-PIN)	
					(INCLUDES RECEPTACLE AS & WEDGE)	
	2	1	**186-3735**	3	PIN-CONNECTOR (16-GA TO 18-GA)	

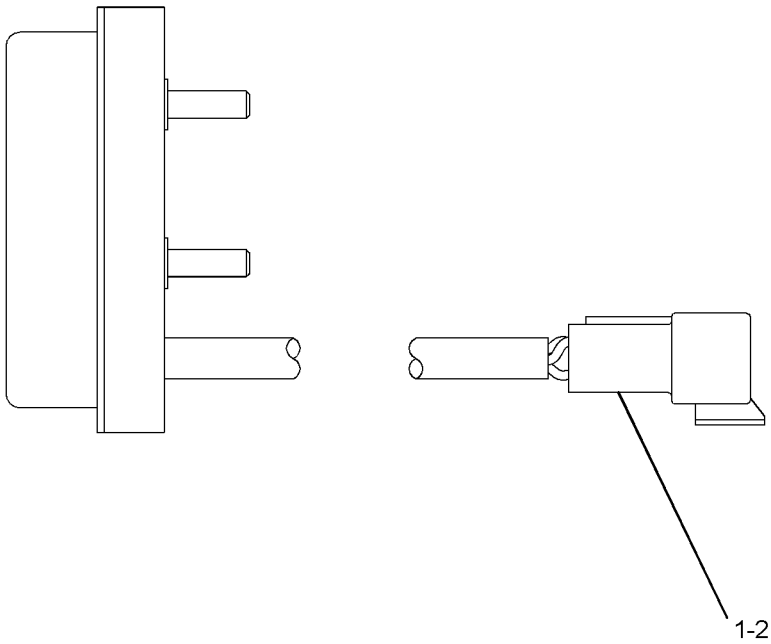

GRAPHIC #1 **<END>** g01213248

ELECTRICAL AND STARTING SYSTEM

199-3368 LAMP GP-SIGNAL

S/N: B9K1-345
24-VOLT
PART OF 266-8966 LAMP GP-SIGNAL
FIELD REPLACEMENT ORDER 334-5410—PAGE 236

SMCS-1430, 1432 **i02435050**

NOTE	REF NO	GRAPHIC REF	PART NUMBER	QTY	PART NAME 1 2 3 4 5 6 (PRODUCT LEVEL)	SEE PAGE
	1	1	102-8802	1	KIT-RECEPTACLE (2-PIN)	
					(INCLUDES RECEPTACLE AS AND WEDGE)	
	2	1	186-3735	2	PIN-CONNECTOR (16-GA TO 18-GA)	

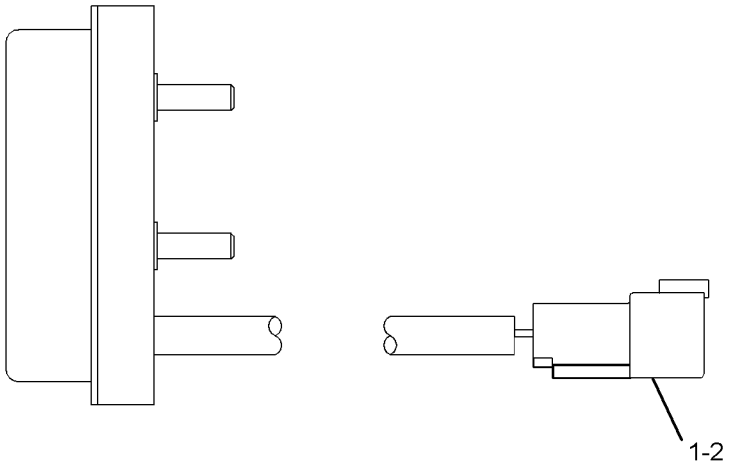

GRAPHIC #1 **<END>** g01217868

ELECTRICAL AND STARTING SYSTEM

266-8966 LAMP GP-SIGNAL–TURN

S/N: B9K1-345
24-VOLT

SMCS-1430, 1432 **i02790868**

NOTE	REF NO	GRAPHIC REF	PART NUMBER	QTY	PART NAME 1 2 3 4 5 6 (PRODUCT LEVEL)	SEE PAGE
Y	1	1	199-3368	4	LAMP GP-SIGNAL (24-VOLT, TURN)	233
	2	1	299-0457	1	BRACKET AS (RH)	
	3	1	299-0458	1	BRACKET AS (LH)	
	4	1	130-5300	2	CLIP	
	5	1	272-1777	8	WASHER-HARD (11X18.5X15-MM THK)	
	6	1	3E-6753	4	GROMMET	
M	7	1	5C-2890	6	NUT (M6X1-THD)	
	8	1	7K-1181	2	STRAP-CABLE	
	9	1	8T-4121	8	WASHER-HARD (11X21X2.5-MM THK)	
M	10	1	8T-4186	8	BOLT (M10X1.5X40-MM)	
	11	1	8T-4205	6	WASHER-HARD (7.2X14.5X2-MM THK)	

M-METRIC PART
Y-SEPARATE ILLUSTRATION

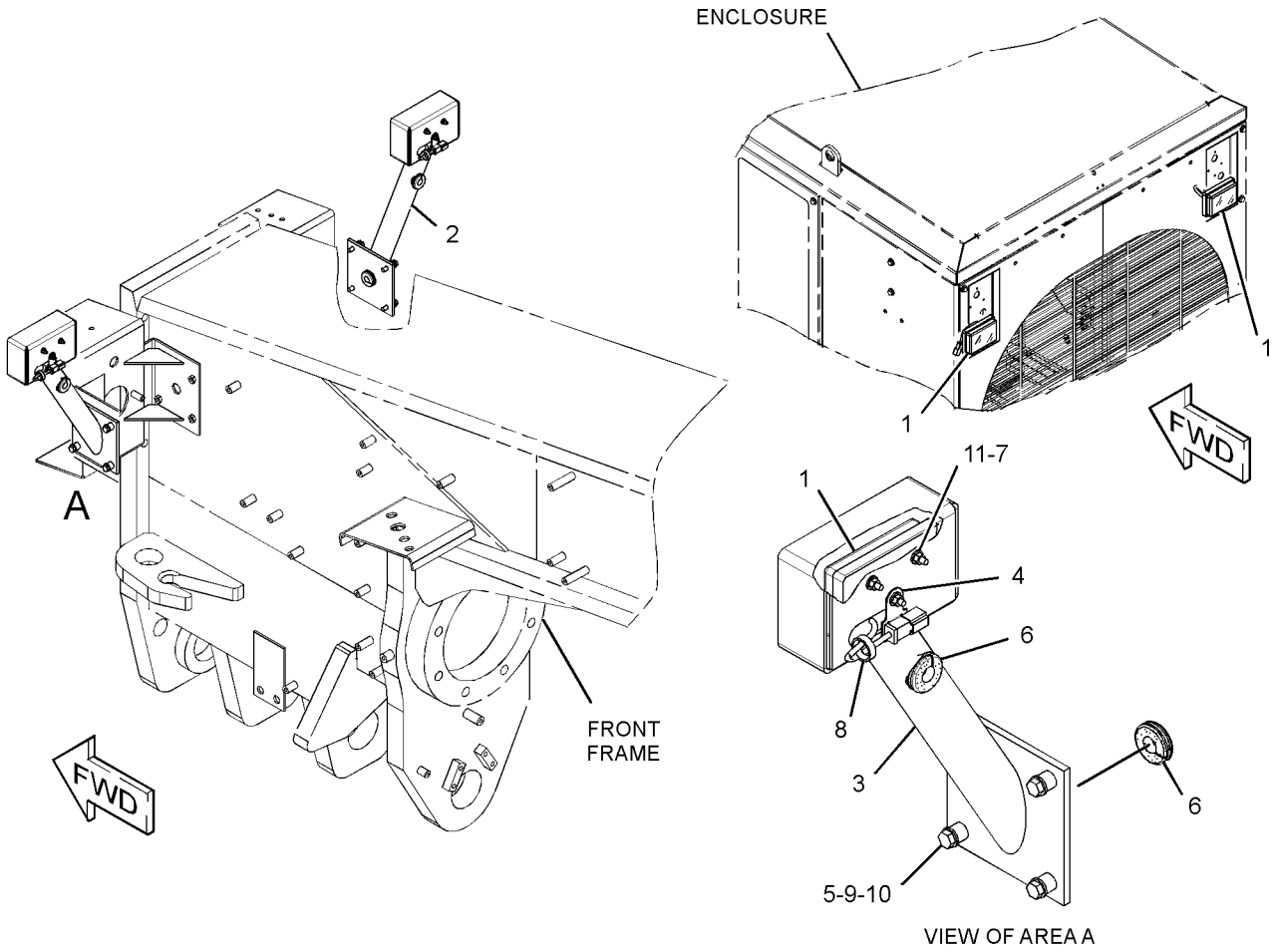

GRAPHIC #1 **<END>** g01384609

ELECTRICAL AND STARTING SYSTEM

266-8966 LAMP GP-SIGNAL–TURN

S/N: B9K346-UP
24-VOLT

SMCS-1430, 1432 **i03832924**

NOTE	REF NO	GRAPHIC REF	PART NUMBER	QTY	PART NAME 1 2 3 4 5 6 (PRODUCT LEVEL)	SEE PAGE
CY	1	1	334-5410	4	LAMP GP-SIGNAL (12-VOLT, 24-VOLT, TURN)	236
	2	1	299-0457	1	BRACKET AS (RH)	
	3	1	299-0458	1	BRACKET AS (LH)	
	4	1	130-5300	2	CLIP	
	5	1	272-1777	8	WASHER-HARD (11X18.5X15-MM THK)	
	6	1	3E-6753	4	GROMMET	
M	7	1	5C-2890	6	NUT (M6X1-THD)	
	8	1	7K-1181	2	STRAP-CABLE	
	9	1	8T-4121	8	WASHER-HARD (11X21X2.5-MM THK)	
M	10	1	8T-4186	8	BOLT (M10X1.5X40-MM)	
	11	1	8T-4205	6	WASHER-HARD (7.2X14.5X2-MM THK)	

C-CHANGE FROM PREVIOUS TYPE
M-METRIC PART
Y-SEPARATE ILLUSTRATION

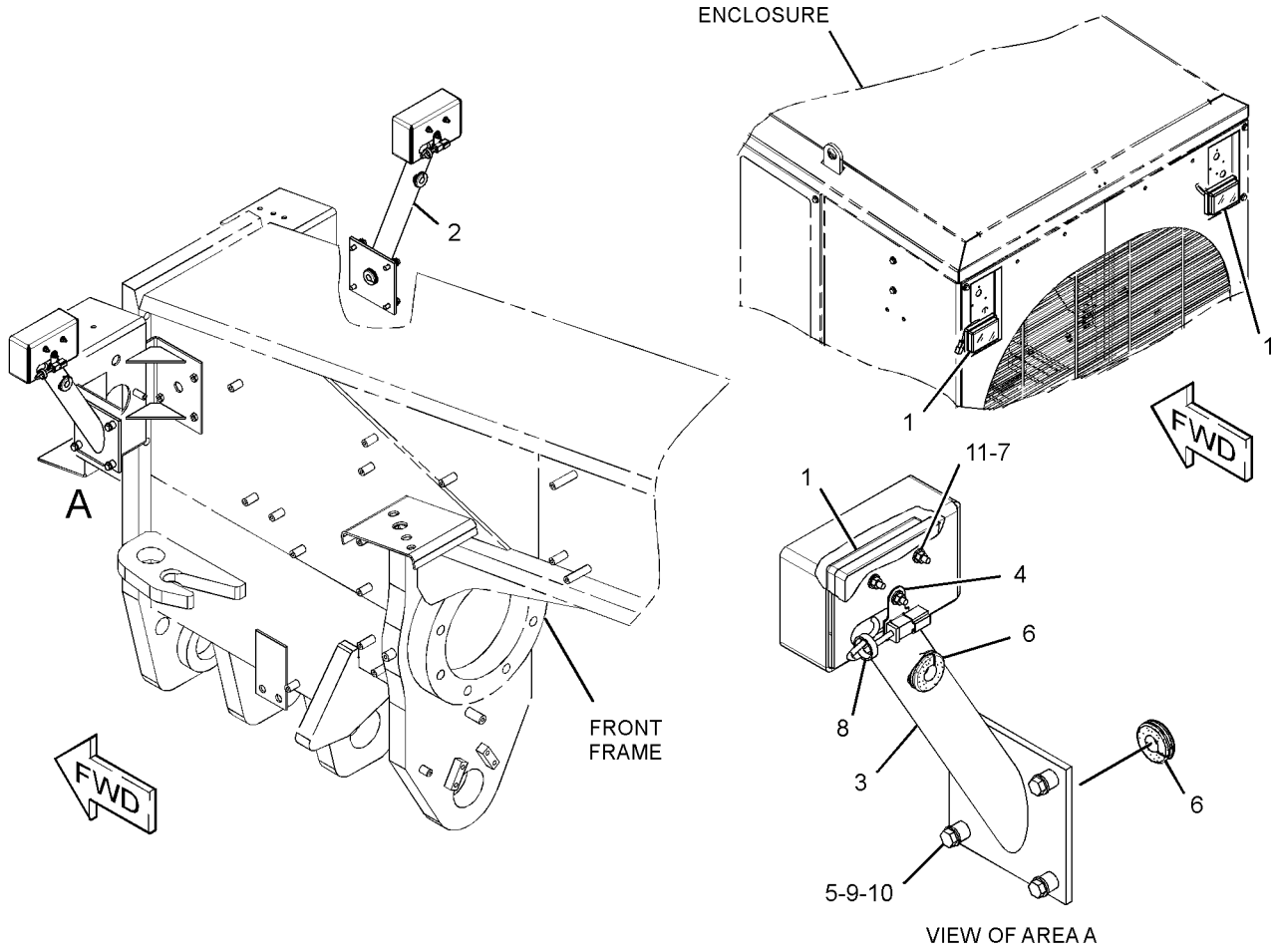

GRAPHIC #1 **<END>** g01384609

ELECTRICAL AND STARTING SYSTEM

334-5410 LAMP GP-SIGNAL–TURN

S/N: B9K1-UP
12-VOLT, 24-VOLT
PART OF 266-8966 LAMP GP-SIGNAL
FIELD REPLACEMENT FOR 199-3368–PAGE 233

SMCS-1430, 1432 **i03368604**

NOTE	REF NO	GRAPHIC REF	PART NUMBER	QTY	PART NAME 1 2 3 4 5 6 (PRODUCT LEVEL)	SEE PAGE
	1	1	102-8802	1	KIT-RECEPTACLE (2-PIN)	
					(INCLUDES RECEPTACLE AS & WEDGE)	
	2	1	186-3735	2	PIN-CONNECTOR (16-GA TO 18-GA)	

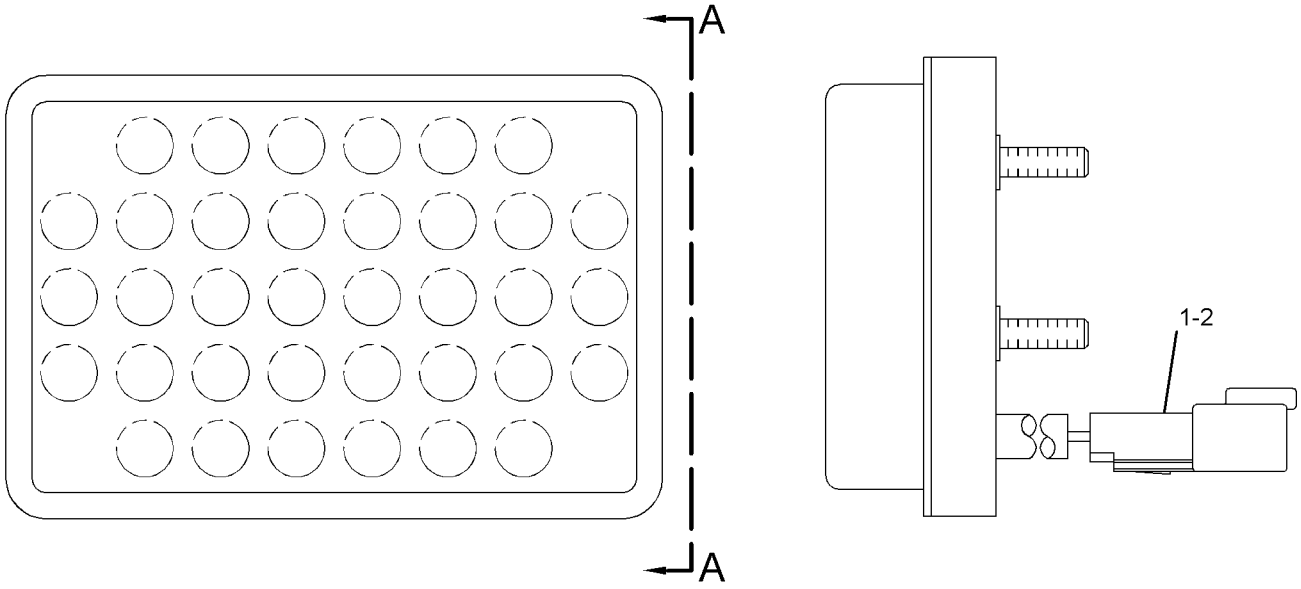

GRAPHIC #1 **<END>** g01756193

ELECTRICAL AND STARTING SYSTEM

334-8049 LAMP GP-SIGNAL–STOP, TAIL

S/N: B9K310-UP
12-VOLT TO 24-VOLT
PART OF 266-8964 WIRING GP-REAR LIGHTING

SMCS-1430, 1432 **i03361044**

NOTE	REF NO	GRAPHIC REF	PART NUMBER	QTY	PART NAME 1 2 3 4 5 6 (PRODUCT LEVEL)	SEE PAGE
	1	1	102-8803	1	KIT-RECEPTACLE (3-PIN)	
					(INCLUDES RECEPTACLE AS & WEDGE)	
	2	1	186-3735	3	PIN-CONNECTOR (16-GA TO 18-GA)	

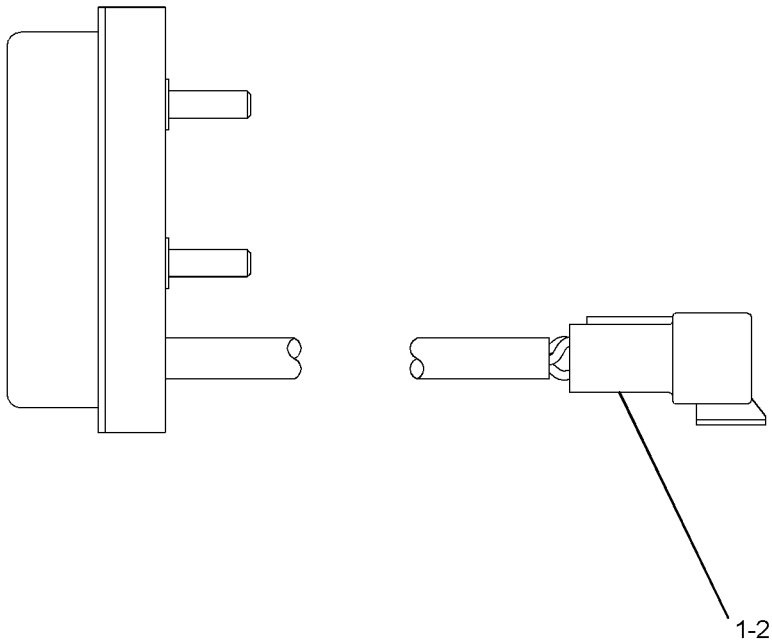

GRAPHIC #1 **<END>** g01213248

ELECTRICAL AND STARTING SYSTEM

110-7563 LAMP GP-WARNING BEACON—STROBE LIGHT

S/N: B9K1-UP
PART OF 283-0756 LAMP GP-WARNING BEACON
CANNOT BE USED WITH 235-3937—PAGE 239

SMCS-1431 **i02333959**

NOTE	REF NO	GRAPHIC REF	PART NUMBER	QTY	PART NAME 1 2 3 4 5 6 (PRODUCT LEVEL)	SEE PAGE
	1	1	**102-8802**	1	KIT-RECEPTACLE (2-PIN)	
					(INCLUDES RECEPTACLE AS & WEDGE)	
	2	1	**8T-8729**	2	PIN-CONNECTOR	
	3	1	**198-0316**	1	LENS (WARNING BEACON) (AMBER)	
F			**198-0315**	1	TUBE-FLASH (8 PRONG CONNECTION)	
F			**127-8158**	1	TUBE-FLASH (3 PRONG CONNECTION)	

F-NOT SHOWN

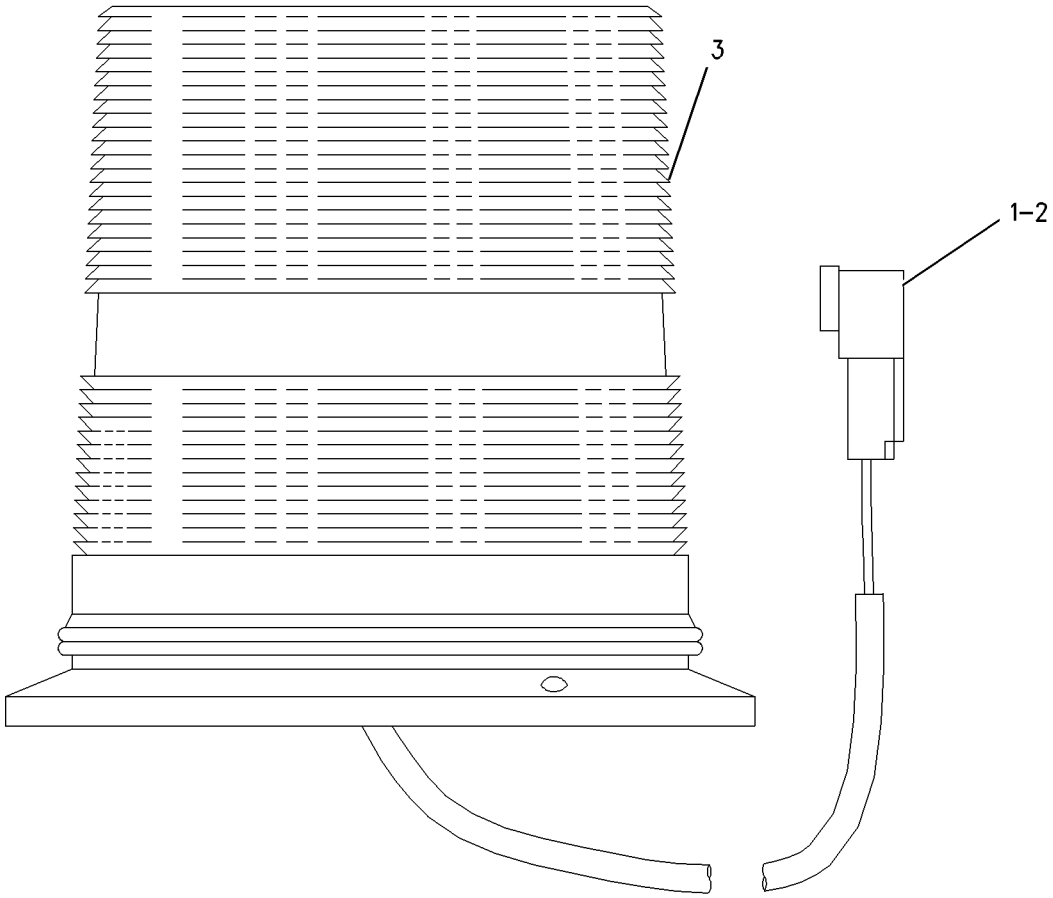

GRAPHIC #1 **<END>** g00748973

ELECTRICAL AND STARTING SYSTEM

235-3937 LAMP GP-WARNING BEACON—AMBER, ROTATING

S/N: B9K1-UP
24-VOLT, 70-WATT
CANNOT BE USED WITH 110-7563—PAGE 238

SMCS-1431 **i02761709**

NOTE	REF NO	GRAPHIC REF	PART NUMBER	QTY	PART NAME 1 2 3 4 5 6 (PRODUCT LEVEL)	SEE PAGE
	1	1	**272-9800**	1	LENS (AMBER)	
	2	1	**9X-7849**	1	LAMP (24-VOLT, 70-WATT)	
	3	1	**9X-8139**	1	BELT-DRIVE	
M	5	1	**6V-8225**	3	NUT (M6X1-THD)	
	6	1	**5P-0537**	3	WASHER-HARD (7.2X14.5X2-MM THK)	
	7	1	**102-8802**	1	KIT-RECEPTACLE (2-PIN)	
					(INCLUDES RECEPTACLE AS & WEDGE)	
	9	1	**186-3735**	2	PIN-CONNECTOR (16-GA TO 18-GA)	

M-METRIC PART

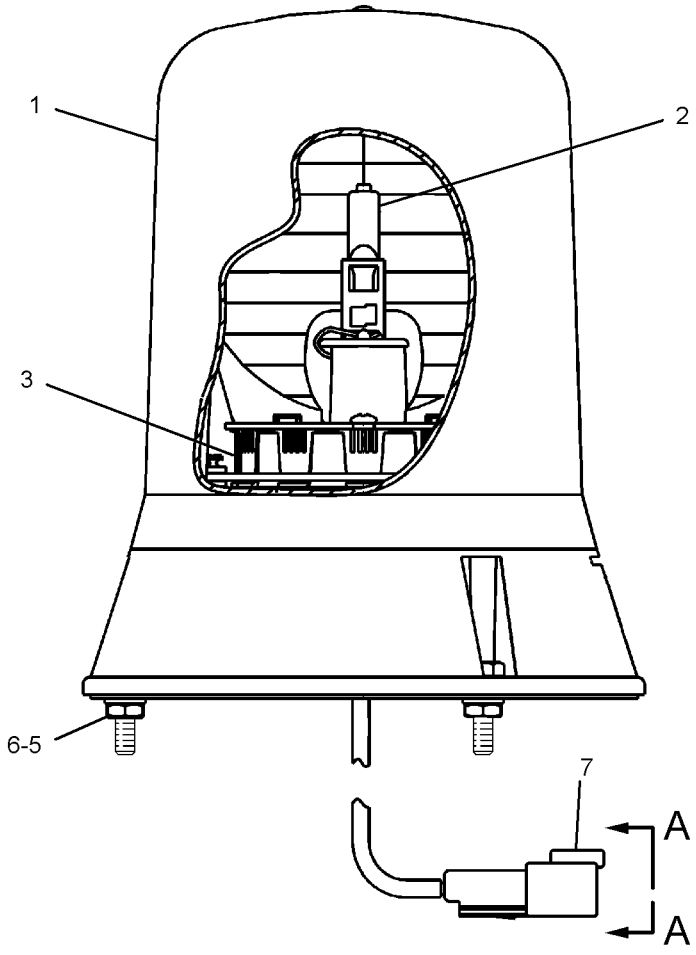

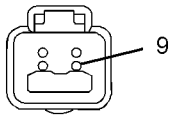

VIEW A-A

GRAPHIC #1 **<END>** g01199570

ELECTRICAL AND STARTING SYSTEM

283-0756 LAMP GP-WARNING BEACON

S/N: B9K1-UP

SMCS-1431 **i02757517**

NOTE	REF NO	GRAPHIC REF	PART NUMBER	QTY	PART NAME 1 2 3 4 5 6 (PRODUCT LEVEL)	SEE PAGE
	1	1	7K-1181	1	STRAP-CABLE	
Y	2	1	110-7563	1	LAMP GP-WARNING BEACON (STROBE LIGHT)	238
	3	1	5P-8439	1	GROMMET	

Y-SEPARATE ILLUSTRATION

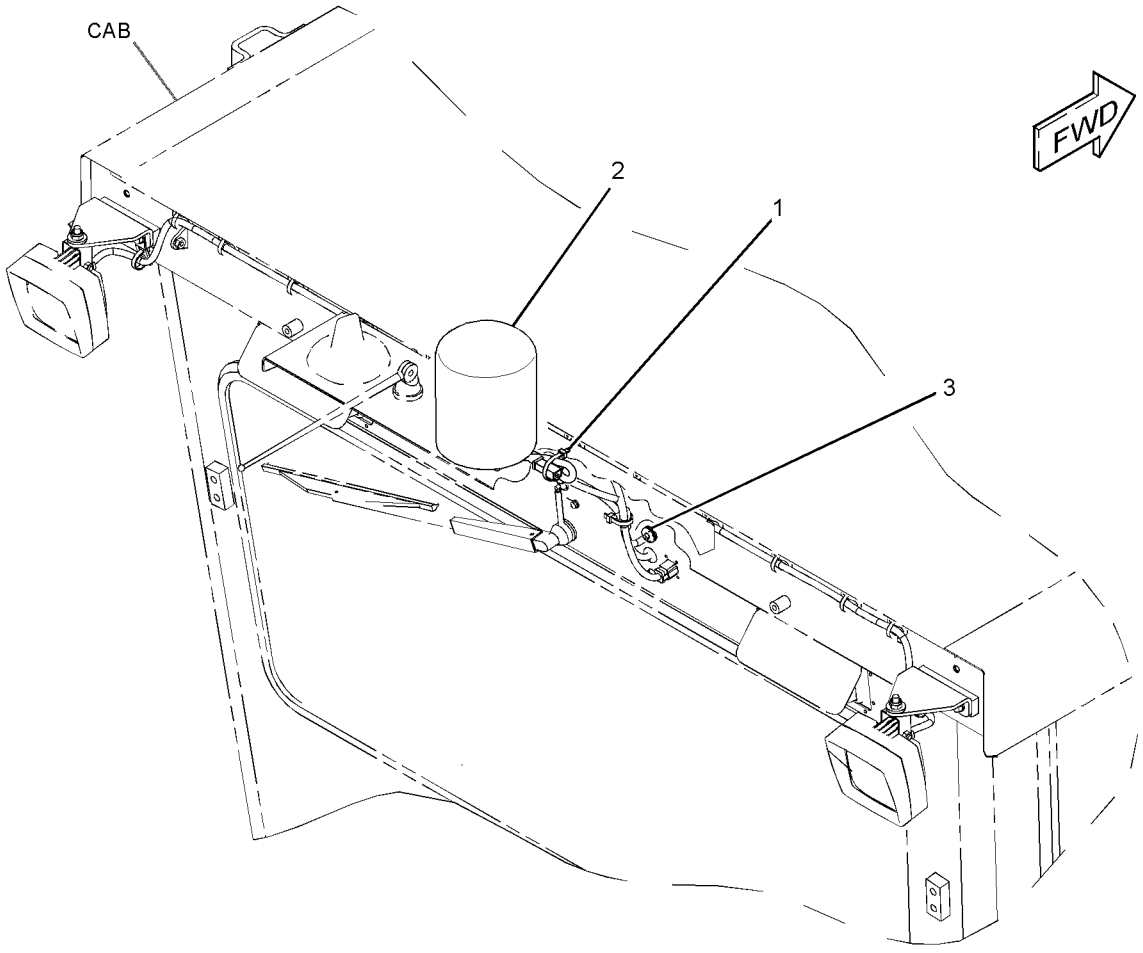

GRAPHIC #1 **<END>** g01382345

ELECTRICAL AND STARTING SYSTEM

284-3757 LAMP GP-WARNING BEACON–AMBER, STROBE

S/N: B9K1-UP
12-VOLT, 24-VOLT
CANNOT BE USED WITH 235-3937–PAGE 239

SMCS-1431 **i02733504**

NOTE	REF NO	GRAPHIC REF	PART NUMBER	QTY	PART NAME 1 2 3 4 5 6 (PRODUCT LEVEL)	SEE PAGE
	1	1	**102-8802**	1	KIT-RECEPTACLE (2-PIN)	
					(INCLUDES RECEPTACLE AS & WEDGE)	
	2	1	**186-3735**	2	PIN-CONNECTOR (16-GA TO 18-GA)	

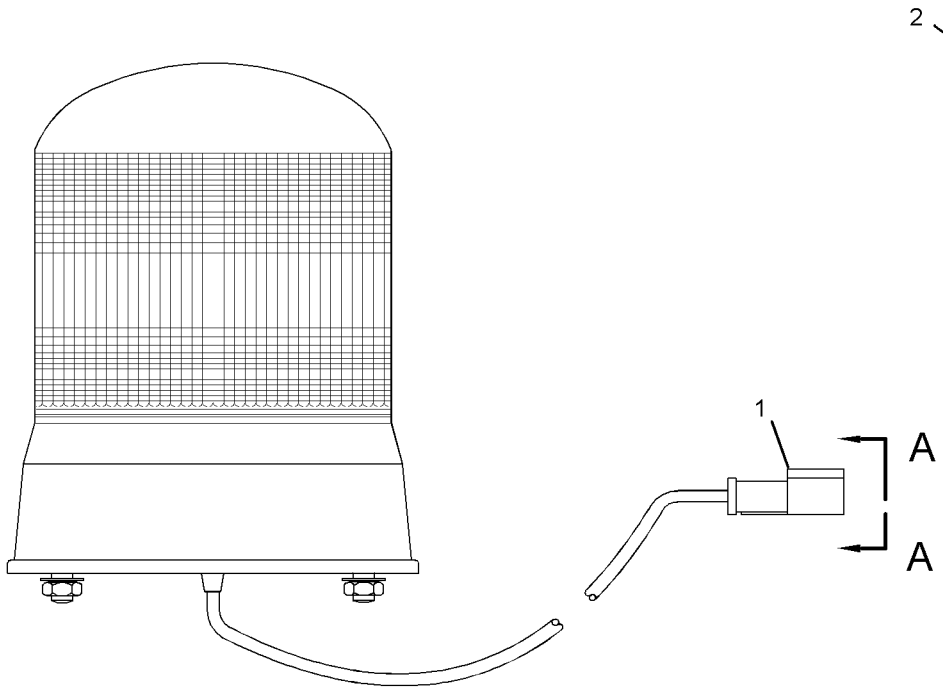

GRAPHIC #1 **<END>** g01373385

ELECTRICAL AND STARTING SYSTEM

338-1132 LAMP GP-WARNING BEACON–AMBER, STROBE

S/N: B9K1-UP

PART OF 331-1592 LIGHTING GP-WARNING BEACON

SMCS-1431 **i03950358**

NOTE	REF NO	GRAPHIC REF	PART NUMBER	QTY	PART NAME 1 2 3 4 5 6 (PRODUCT LEVEL)	SEE PAGE
	1	1	**102-8802**	1	KIT-RECEPTACLE (2-PIN)	
					(INCLUDES RECEPTACLE AS AND WEDGE)	
C	2	1	**8T-8729**	2	PIN-CONNECTOR (16-GA TO 18-GA)	
	3	1	**356-7515**	1	LENS	
CE	4	1	**9X-1386**		SLEEVE (44-CM)	

C-CHANGE FROM PREVIOUS TYPE
E-ORDER BY THE CENTIMETER

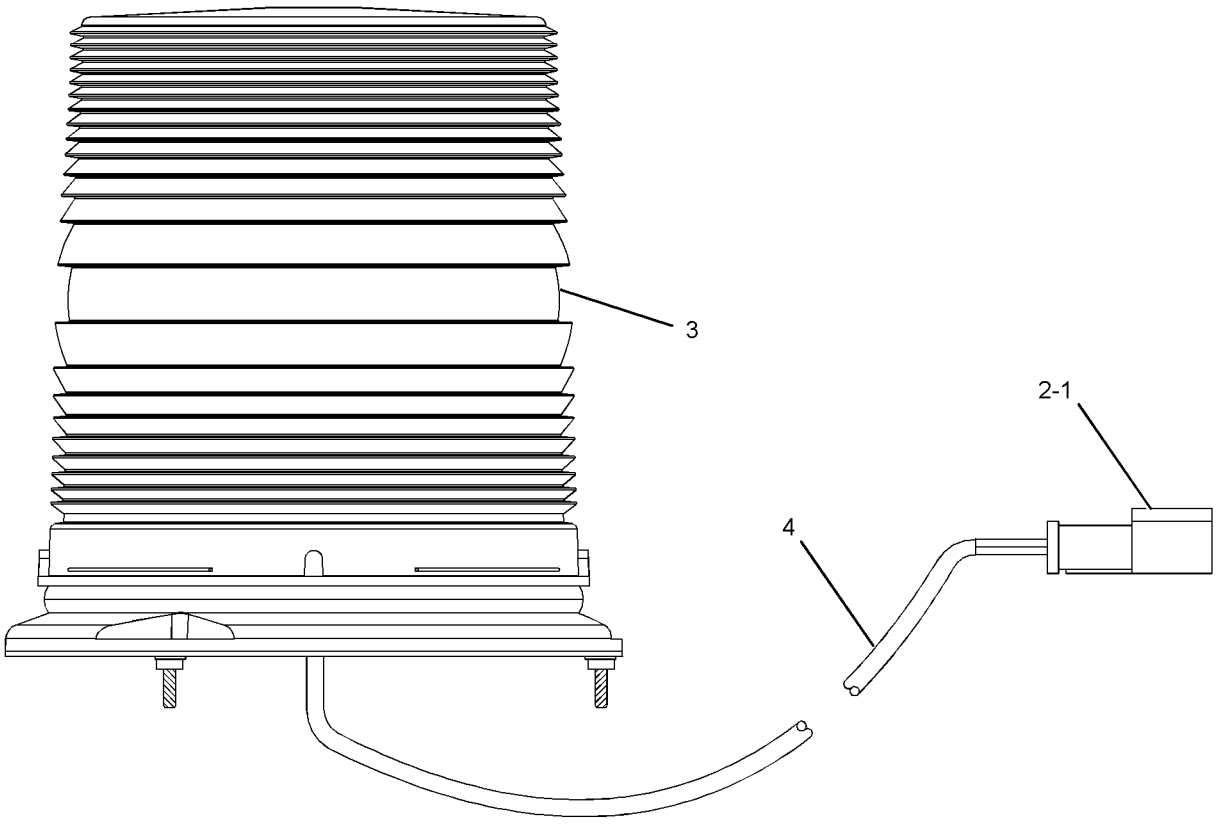

GRAPHIC #1 **<END>** g02193876

ELECTRICAL AND STARTING SYSTEM

266-8960 LIGHTING GP-FLOOD—ENGINE ENCLOSURE, LH

S/N: B9K1-UP

PART OF 269-2207, 269-2209 PLATFORM AR

SMCS-1434 **i03022528**

NOTE	REF NO	GRAPHIC REF	PART NUMBER	QTY	PART NAME 1 2 3 4 5 6 (PRODUCT LEVEL)	SEE PAGE
	1	1	170-2512	1	SWITCH GP-TOGGLE (ENGINE OIL EVAC)	
		1	3E-3383	1	WEDGE-RECEPTACLE LOCK (6-PIN)	
		1	6T-3631	2	NUT-HEX (15/32-32-THD)	
		1	6T-3632	1	LOCKWASHER	
		1	6T-3633	1	RING-LOCKING	
		1	186-3735	6	PIN-CONNECTOR (16-GA TO 18-GA)	
		1	102-8805	1	KIT-RECEPTACLE (6-PIN)	
					(INCLUDES RECEPTACLE AS & WEDGE)	
Y	2	1	234-4325	2	LAMP GP-FLOOD (24-VOLT)	225
	3	1	274-8115	2	HARNESS AS-LIGHTING	
					(EACH INCLUDES)	
		1	155-2270	1	KIT-CONNECTING PLUG (2-PIN)	
					(INCLUDES PLUG AS, WEDGE, & INTERFACE SEAL)	
	4	1	7K-1181	10	STRAP-CABLE	
	5	1	8T-4121	2	WASHER-HARD (11X21X2.5-MM THK)	
	6	1	9X-7345	2	GROMMET	
	7	1	320-2690	1	FILM-LIGHTS	
	8	1	6T-6969	1	GUARD-SWITCH	

Y-SEPARATE ILLUSTRATION

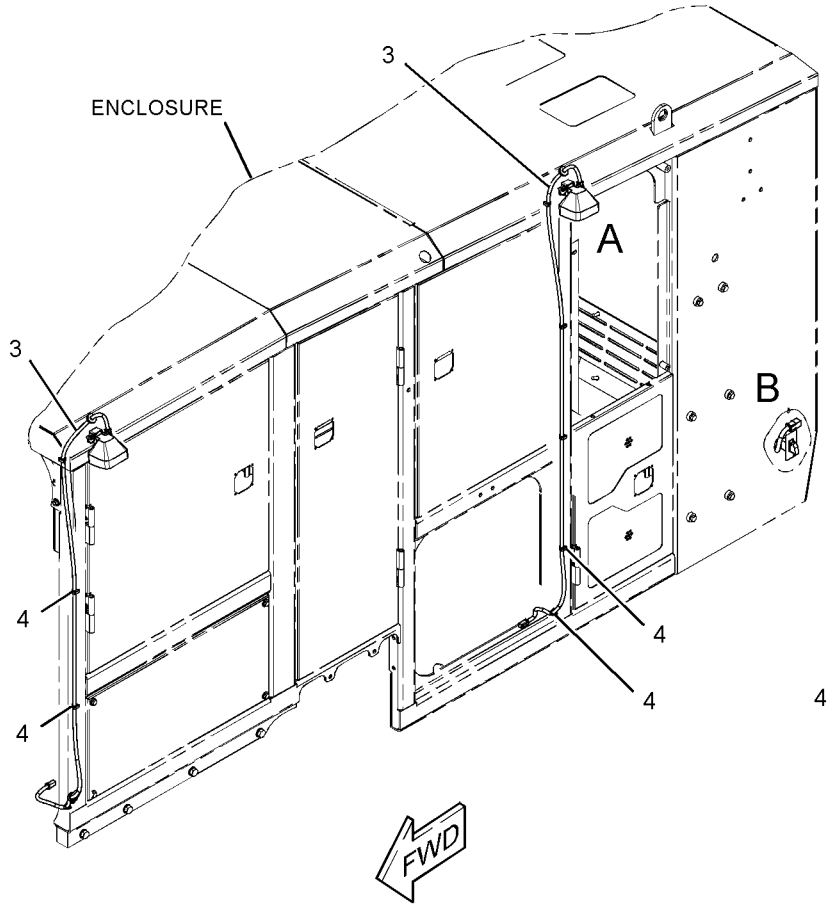

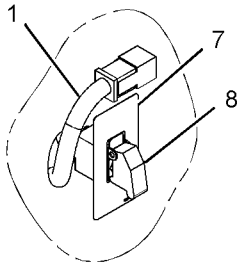

VIEW OF AREA B

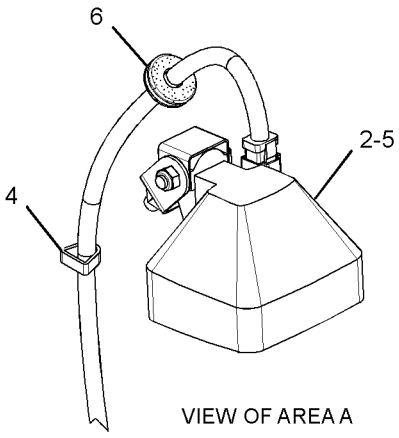

VIEW OF AREA A

GRAPHIC #1 **<END>** g01625512

ELECTRICAL AND STARTING SYSTEM

266-8967 LIGHTING GP-FLOOD—FRONT FRAME, REAR

S/N: B9K1-UP

CANNOT BE USED WITH OPERATOR PLATFORM

SMCS-1434 **i02761278**

NOTE	REF NO	GRAPHIC REF	PART NUMBER	QTY	PART NAME 1 2 3 4 5 6 (PRODUCT LEVEL)	SEE PAGE
	1	1	**9X-9365**	4	BRACKET	
	2	1	**140-1088**	4	BRACKET AS	
					(EACH INCLUDES)	
M		1	**8T-3490**	1	NUT-WELD (M10X1.5-THD)	
		1	**115-0617**	1	BRACKET	
Y	3	1	**147-0319**	4	LAMP GP-FLOOD (24-VOLT, 65-WATT)	222
M	4	1	**5C-7261**	4	NUT (M8X1.25-THD)	
	5	1	**8T-4121**	8	WASHER-HARD (11X21X2.5-MM THK)	
M	6	1	**8T-4136**	8	BOLT (M10X1.5X25-MM)	
	7	1	**8T-4224**	8	WASHER-HARD (8.8X16X2-MM THK)	
M	8	1	**8T-6869**	4	BOLT (M8X1.25X60-MM)	

M-METRIC PART
Y-SEPARATE ILLUSTRATION

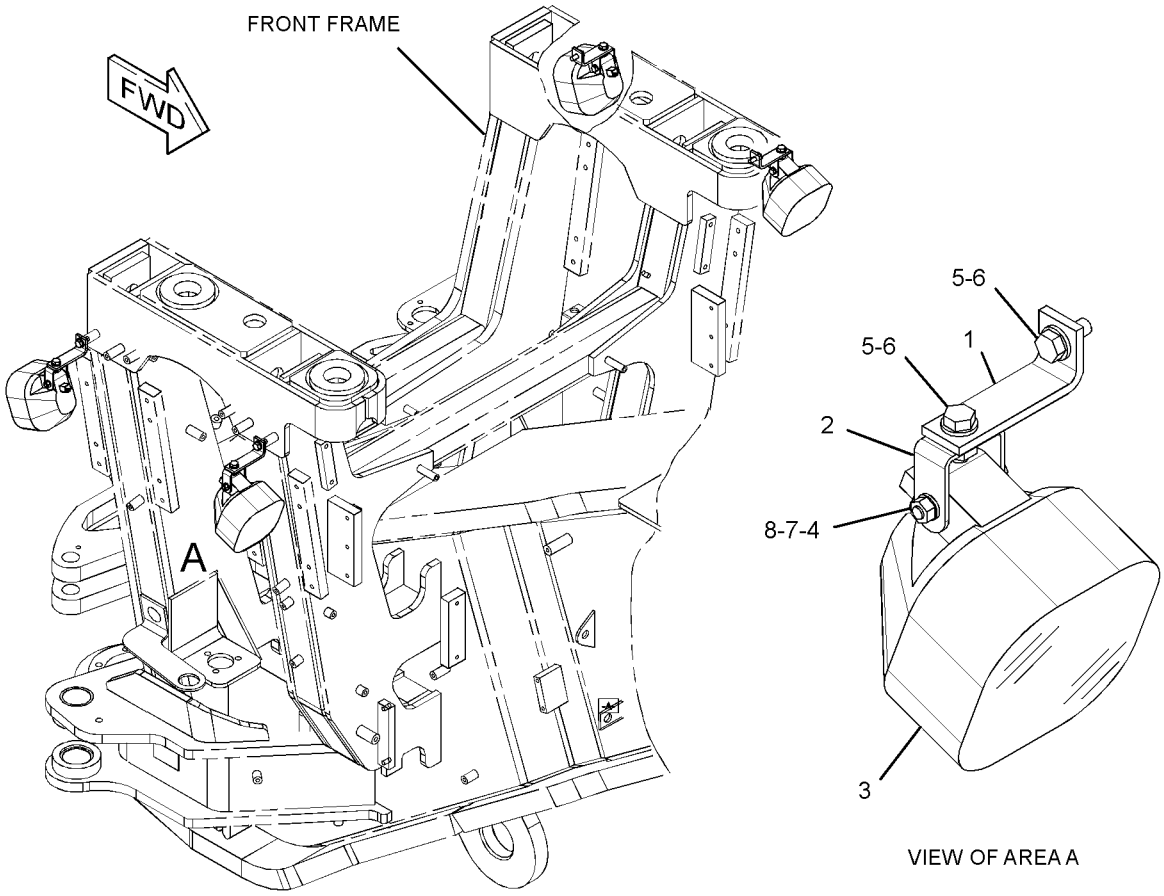

GRAPHIC #1 **<END>** g01383272

ELECTRICAL AND STARTING SYSTEM

266-8968 LIGHTING GP-FLOOD—FRONT FRAME, REAR

S/N: B9K1-UP
HID
CANNOT BE USED WITH OPERATOR PLATFORM

SMCS-1434 **i02761288**

NOTE	REF NO	GRAPHIC REF	PART NUMBER	QTY	PART NAME 1 2 3 4 5 6 (PRODUCT LEVEL)	SEE PAGE
Y	1	1	**210-8422**	4	LAMP GP-FLOOD (24-VOLT, 35-WATT, HID)	224
	2	1	**243-1352**	4	BRACKET AS	
	3	1	**8T-4121**	8	WASHER-HARD (11X21X2.5-MM THK)	
M	4	1	**8T-4136**	8	BOLT (M10X1.5X25-MM)	

M-METRIC PART
Y-SEPARATE ILLUSTRATION

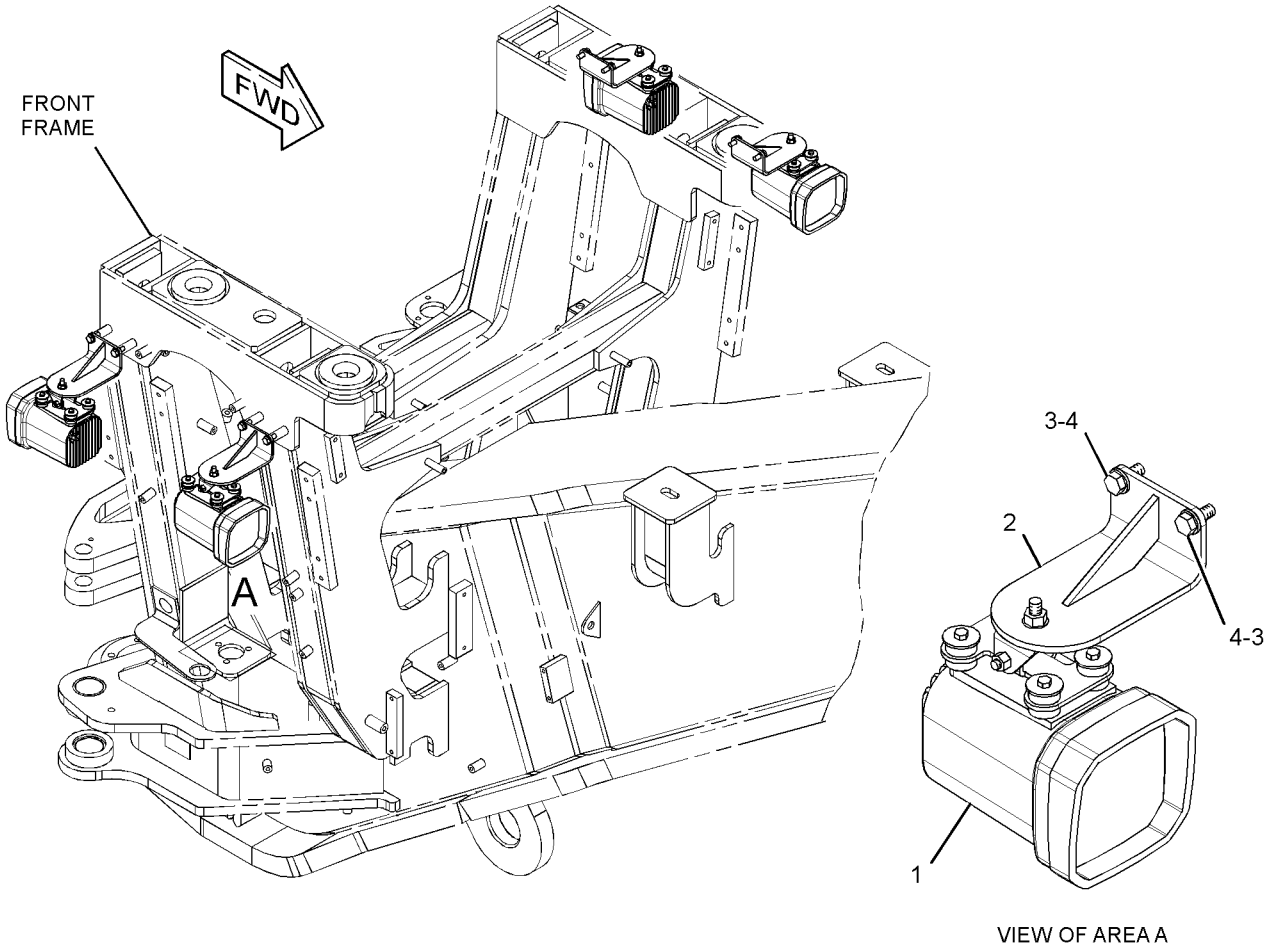

VIEW OF AREA A

GRAPHIC #1 **<END>** g01383773

ELECTRICAL AND STARTING SYSTEM

266-8969 LIGHTING GP-FLOOD—OPERATOR PLATFORM

S/N: B9K1-UP

SMCS-1434 **i02761337**

NOTE	REF NO	GRAPHIC REF	PART NUMBER	QTY	PART NAME 1 2 3 4 5 6 (PRODUCT LEVEL)	SEE PAGE
	1	1	**9X-9365**	4	BRACKET	
	2	1	**140-1088**	4	BRACKET AS	
					(EACH INCLUDES)	
M		1	**8T-3490**	1	NUT-WELD (M10X1.5-THD)	
		1	**115-0617**	1	BRACKET	
	3	1	**130-5300**	1	CLIP	
Y	4	1	**147-0319**	4	LAMP GP-FLOOD (24-VOLT, 65-WATT)	222
	5	1	**274-7505**	1	HARNESS AS-FRONT LIGHTING	
		1	**102-8802**	1	KIT-RECEPTACLE (2-PIN)	
					(INCLUDES RECEPTACLE AS & WEDGE)	
		1	**155-2270**	1	KIT-CONNECTING PLUG (2-PIN)	
					(INCLUDES PLUG AS, WEDGE, & INTERFACE SEAL)	
M	6	1	**5C-7261**	4	NUT (M8X1.25-THD)	
	7	1	**8M-2772**	12	CLIP	
	8	1	**8T-4121**	20	WASHER-HARD (11X21X2.5-MM THK)	
M	9	1	**8T-4136**	8	BOLT (M10X1.5X25-MM)	
M	10	1	**8T-4137**	12	BOLT (M10X1.5X20-MM)	
	11	1	**8T-4224**	8	WASHER-HARD (8.8X16X2-MM THK)	
M	12	1	**8T-6869**	4	BOLT (M8X1.25X60-MM)	

M-METRIC PART
Y-SEPARATE ILLUSTRATION

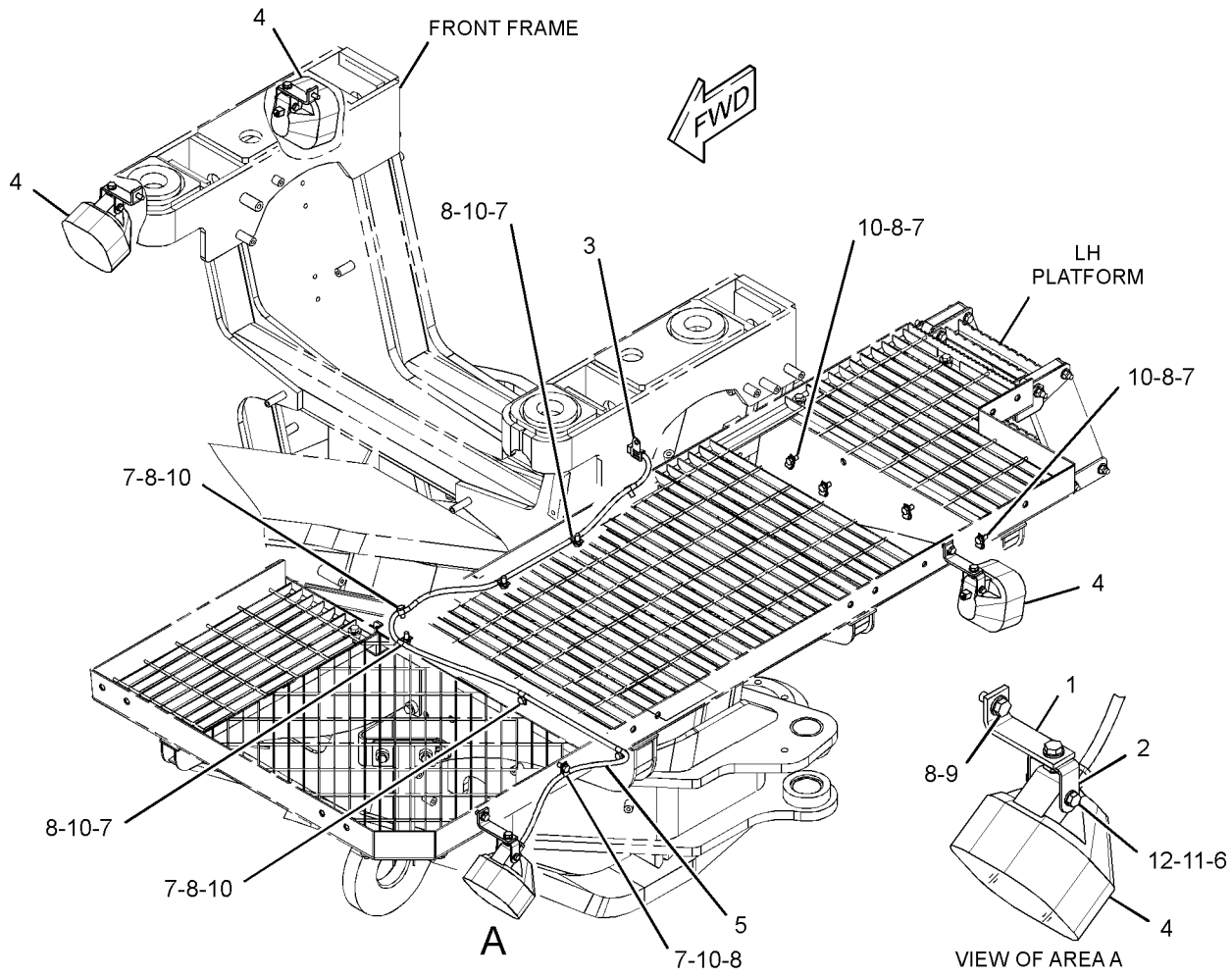

GRAPHIC #1 **<END>** g01384119

ELECTRICAL AND STARTING SYSTEM

266-8970 LIGHTING GP-FLOOD—OPERATOR PLATFORM

S/N: B9K1-UP
HID

SMCS-1434 **i02761414**

NOTE	REF NO	GRAPHIC REF	PART NUMBER	QTY	PART NAME 1 2 3 4 5 6 (PRODUCT LEVEL)	SEE PAGE
Y	1	1	**210-8422**	4	LAMP GP-FLOOD (24-VOLT, 35-WATT, HID)	224
	2	1	**243-1352**	4	BRACKET AS	
	3	1	**274-7505**	1	HARNESS AS-FRONT LIGHTING	
		1	**102-8802**	1	KIT-RECEPTACLE (2-PIN)	
					(INCLUDES RECEPTACLE AS & WEDGE)	
		1	**155-2270**	1	KIT-CONNECTING PLUG (2-PIN)	
					(INCLUDES PLUG AS, WEDGE, & INTERFACE SEAL)	
	4	1	**130-5300**	1	CLIP	
	5	1	**5P-8439**	1	GROMMET	
	6	1	**8M-2772**	13	CLIP	
	7	1	**8T-4121**	19	WASHER-HARD (11X21X2.5-MM THK)	
M	8	1	**8T-4136**	8	BOLT (M10X1.5X25-MM)	
M	9	1	**8T-4137**	11	BOLT (M10X1.5X20-MM)	

M-METRIC PART
Y-SEPARATE ILLUSTRATION

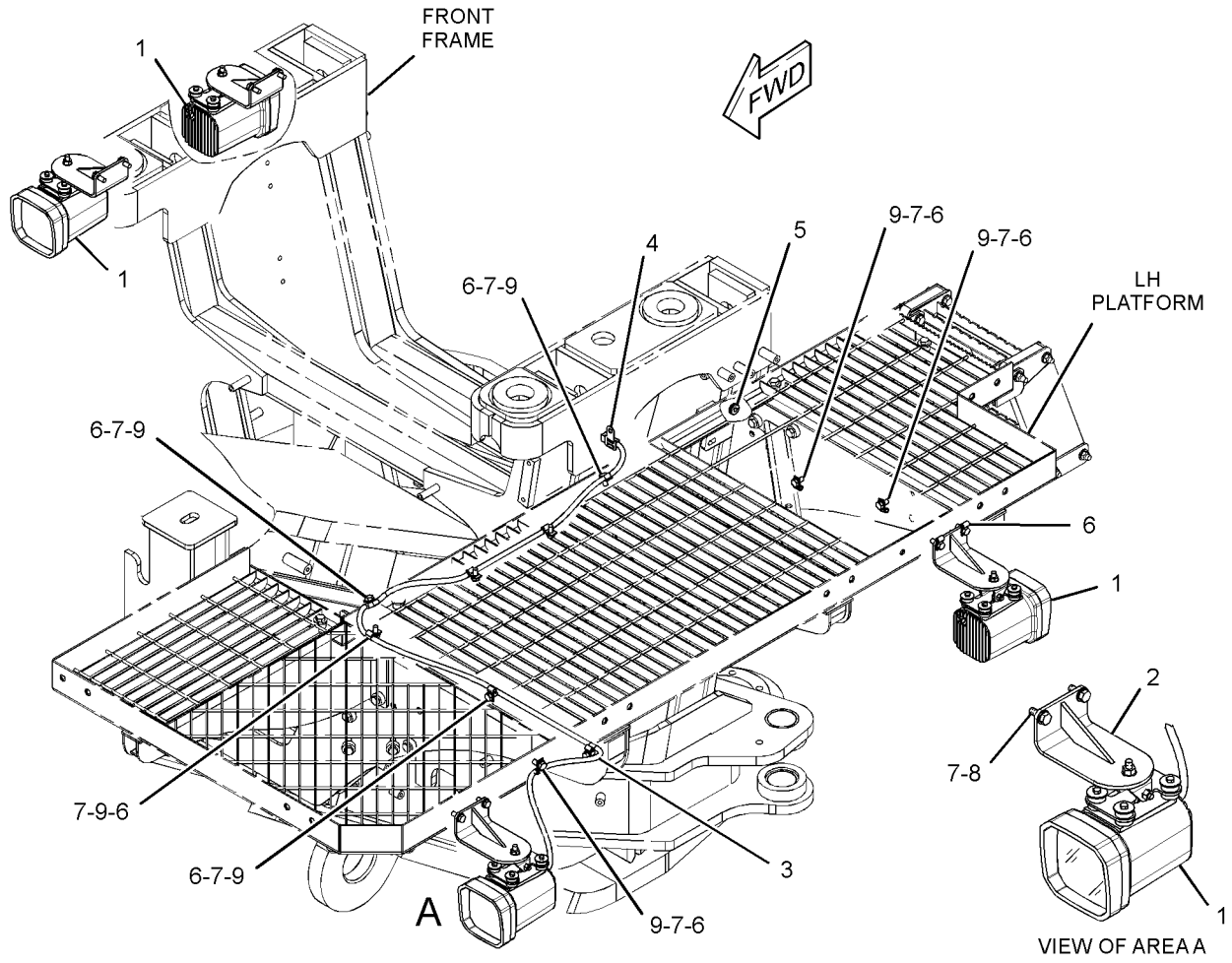

GRAPHIC #1 **<END>** g01384141

ELECTRICAL AND STARTING SYSTEM

266-8971 LIGHTING GP-FLOOD–FRONT FRAME

S/N: B9K1-UP

SMCS-1434 **i02760802**

NOTE	REF NO	GRAPHIC REF	PART NUMBER	QTY	PART NAME 1 2 3 4 5 6 (PRODUCT LEVEL)	SEE PAGE
	1	1	**9X-9365**	2	BRACKET	
	2	1	**140-1088**	2	BRACKET AS	
					(EACH INCLUDES)	
M		1	**8T-3490**	1	NUT-WELD (M10X1.5-THD)	
		1	**115-0617**	1	BRACKET	
Y	3	1	**147-0319**	2	LAMP GP-FLOOD (24-VOLT, 65-WATT)	222
M	4	1	**5C-7261**	2	NUT (M8X1.25-THD)	
	5	1	**8T-4121**	4	WASHER-HARD (11X21X2.5-MM THK)	
M	6	1	**8T-4136**	4	BOLT (M10X1.5X25-MM)	
	7	1	**8T-4224**	4	WASHER-HARD (8.8X16X2-MM THK)	
M	8	1	**8T-6869**	2	BOLT (M8X1.25X60-MM)	

M-METRIC PART
Y-SEPARATE ILLUSTRATION

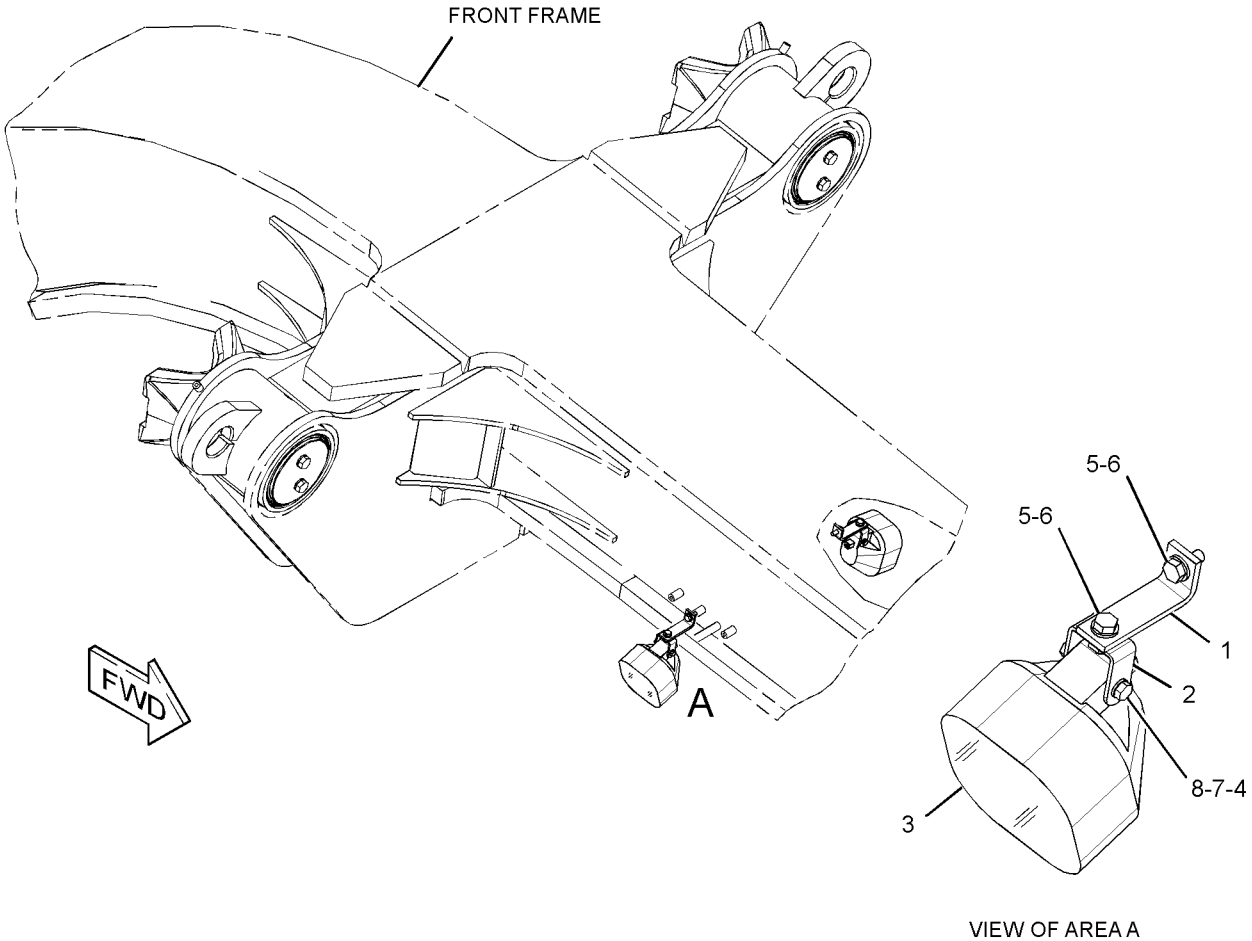

VIEW OF AREA A

GRAPHIC #1 **<END>** g01383667

ELECTRICAL AND STARTING SYSTEM

266-8972 LIGHTING GP-FLOOD–FRONT FRAME

S/N: B9K1-UP

SMCS-1434 **i02761047**

NOTE	REF NO	GRAPHIC REF	PART NUMBER	QTY	PART NAME 1 2 3 4 5 6 (PRODUCT LEVEL)	SEE PAGE
Y	1	1	**210-8422**	2	LAMP GP-FLOOD (24-VOLT, 35-WATT, HID)	224
	2	1	**243-1352**	2	BRACKET AS	
	3	1	**4D-7794**	2	CLIP	
	4	1	**8T-4121**	4	WASHER-HARD (11X21X2.5-MM THK)	
M	5	1	**8T-4136**	4	BOLT (M10X1.5X25-MM)	

M-METRIC PART
Y-SEPARATE ILLUSTRATION

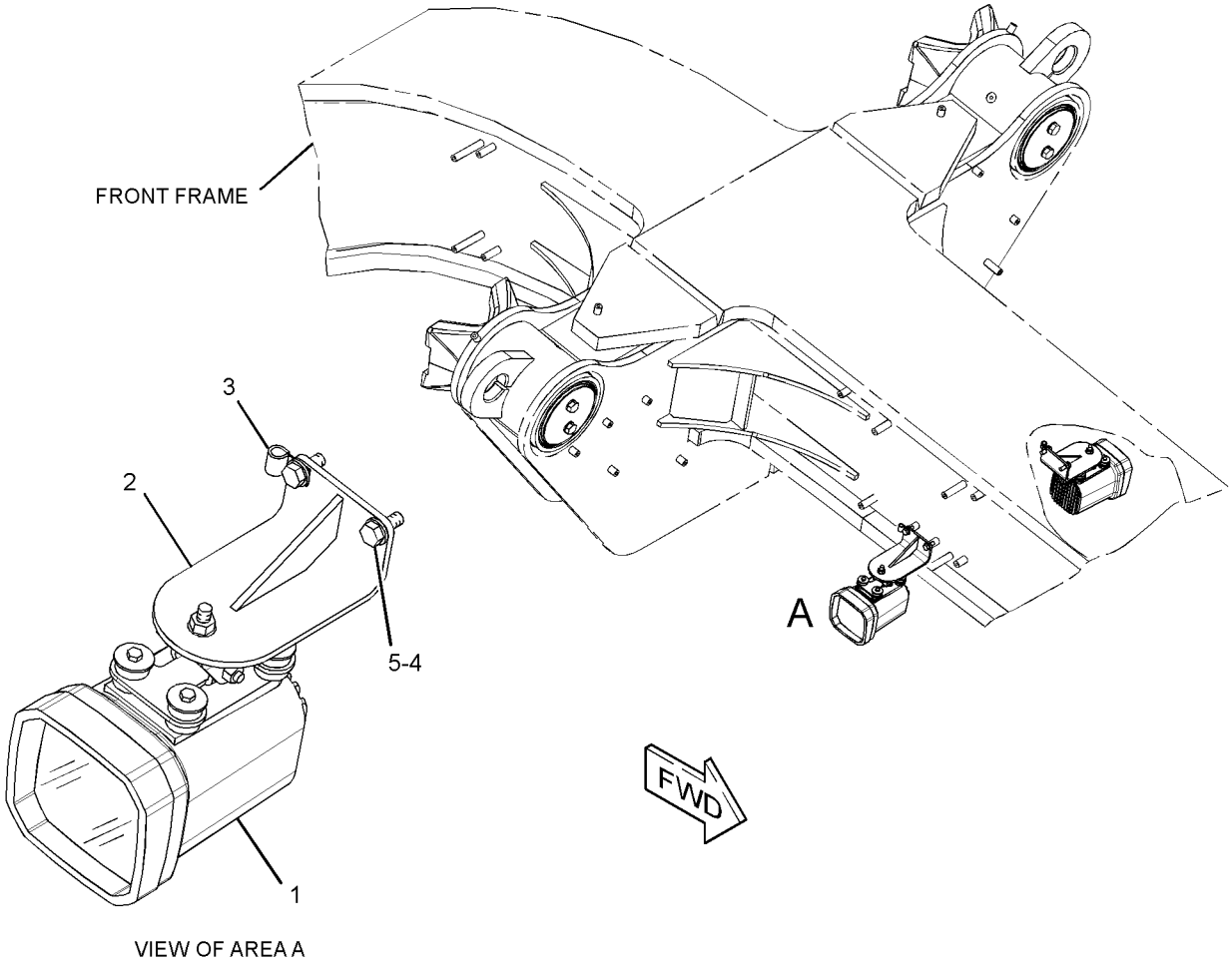

VIEW OF AREA A

GRAPHIC #1 **<END>** g01383673

ELECTRICAL AND STARTING SYSTEM

266-8976 LIGHTING GP-FLOOD—ENGINE ENCLOSURE

S/N: B9K1-UP

SMCS-1434 **i02760309**

NOTE	REF NO	GRAPHIC REF	PART NUMBER	QTY	PART NAME 1 2 3 4 5 6 (PRODUCT LEVEL)	SEE PAGE
	1	1	**9X-9365**	2	BRACKET	
	2	1	**140-1088**	2	BRACKET AS	
					(EACH INCLUDES)	
M		1	**8T-3490**	1	NUT-WELD (M10X1.5-THD)	
Y	3	1	**147-0319**	2	LAMP GP-FLOOD (24-VOLT, 65-WATT)	222
M	4	1	**5C-7261**	2	NUT (M8X1.25-THD)	
	5	1	**8T-4121**	4	WASHER-HARD (11X21X2.5-MM THK)	
M	6	1	**8T-4136**	4	BOLT (M10X1.5X25-MM)	
	7	1	**8T-4224**	4	WASHER-HARD (8.8X16X2-MM THK)	
M	8	1	**8T-6869**	2	BOLT (M8X1.25X60-MM)	
	9	1	**9X-7345**	2	GROMMET	

M-METRIC PART
Y-SEPARATE ILLUSTRATION

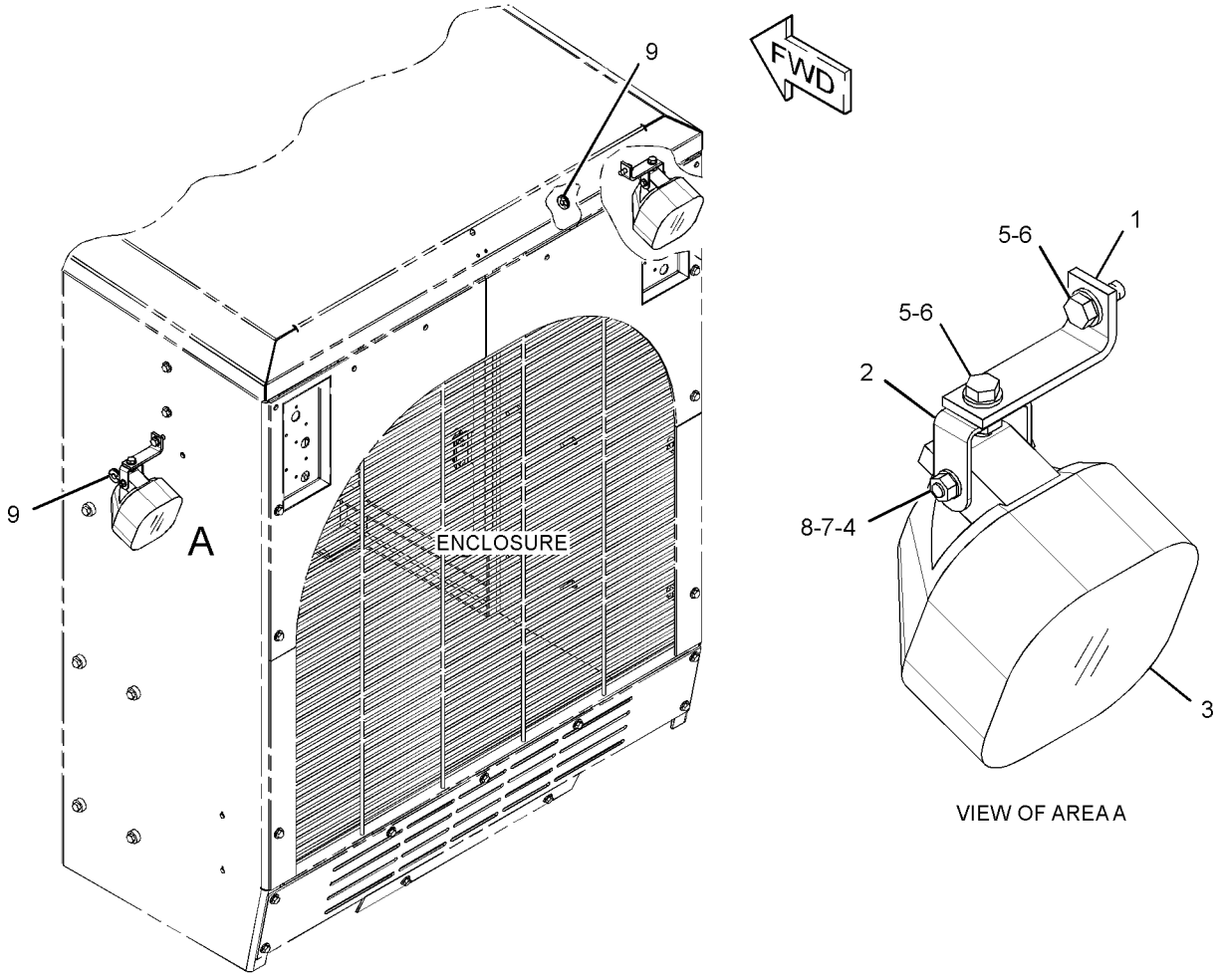

GRAPHIC #1 **<END>** g01385155

ELECTRICAL AND STARTING SYSTEM

266-8977 LIGHTING GP-FLOOD–ENGINE ENCLOSURE

S/N: B9K1-UP

SMCS-1434 **i02760908**

NOTE	REF NO	GRAPHIC REF	PART NUMBER	QTY	PART NAME 1 2 3 4 5 6 (PRODUCT LEVEL)	SEE PAGE
Y	1	1	**210-8422**	2	LAMP GP-FLOOD (24-VOLT, 35-WATT, HID)	224
	2	1	**243-1352**	2	BRACKET AS	
	3	1	**132-7551**	4	SPACER (11X19X6-MM THK)	
	4	1	**8T-4121**	4	WASHER-HARD (11X21X2.5-MM THK)	
M	5	1	**8T-4136**	4	BOLT (M10X1.5X25-MM)	
	6	1	**9X-7345**	2	GROMMET	

M-METRIC PART
Y-SEPARATE ILLUSTRATION

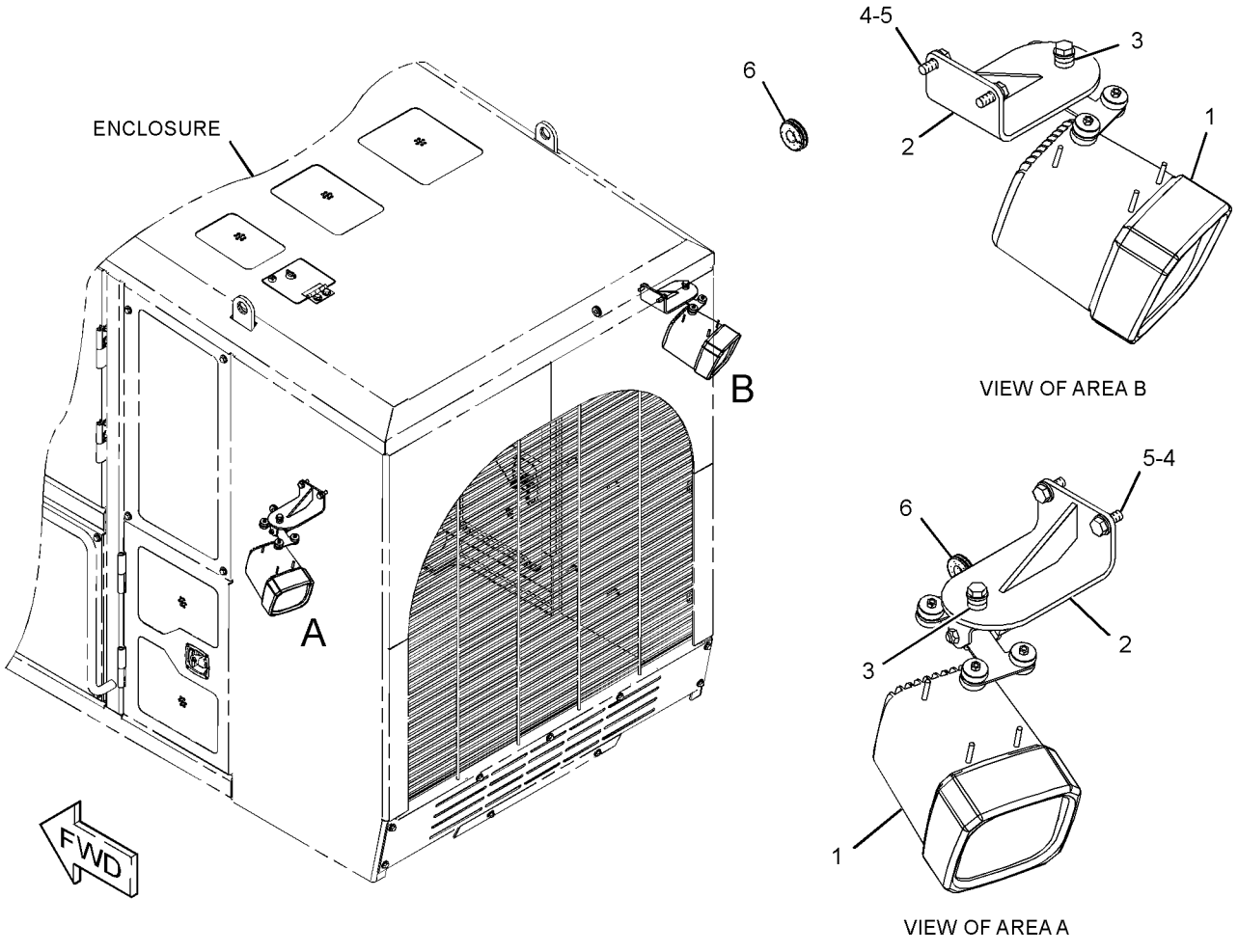

GRAPHIC #1 **<END>** g01397238

ELECTRICAL AND STARTING SYSTEM

266-8979 LIGHTING GP-FLOOD—FRONT FRAME

S/N: B9K1-UP

SMCS-1434 **i02760641**

NOTE	REF NO	GRAPHIC REF	PART NUMBER	QTY	PART NAME 1 2 3 4 5 6 (PRODUCT LEVEL)	SEE PAGE
	1	1	**9X-9365**	2	BRACKET	
	2	1	**140-1088**	2	BRACKET AS	
					(EACH INCLUDES)	
		1	**115-0617**	1	BRACKET	
M		1	**8T-3490**	1	NUT-WELD (M10X1.5-THD)	
Y	3	1	**147-0319**	2	LAMP GP-FLOOD (24-VOLT, 65-WATT)	222
M	4	1	**5C-7261**	2	NUT (M8X1.25-THD)	
	5	1	**8T-4121**	4	WASHER-HARD (11X21X2.5-MM THK)	
M	6	1	**8T-4136**	4	BOLT (M10X1.5X25-MM)	
	7	1	**8T-4224**	4	WASHER-HARD (8.8X16X2-MM THK)	
M	8	1	**8T-6869**	2	BOLT (M8X1.25X60-MM)	

M-METRIC PART
Y-SEPARATE ILLUSTRATION

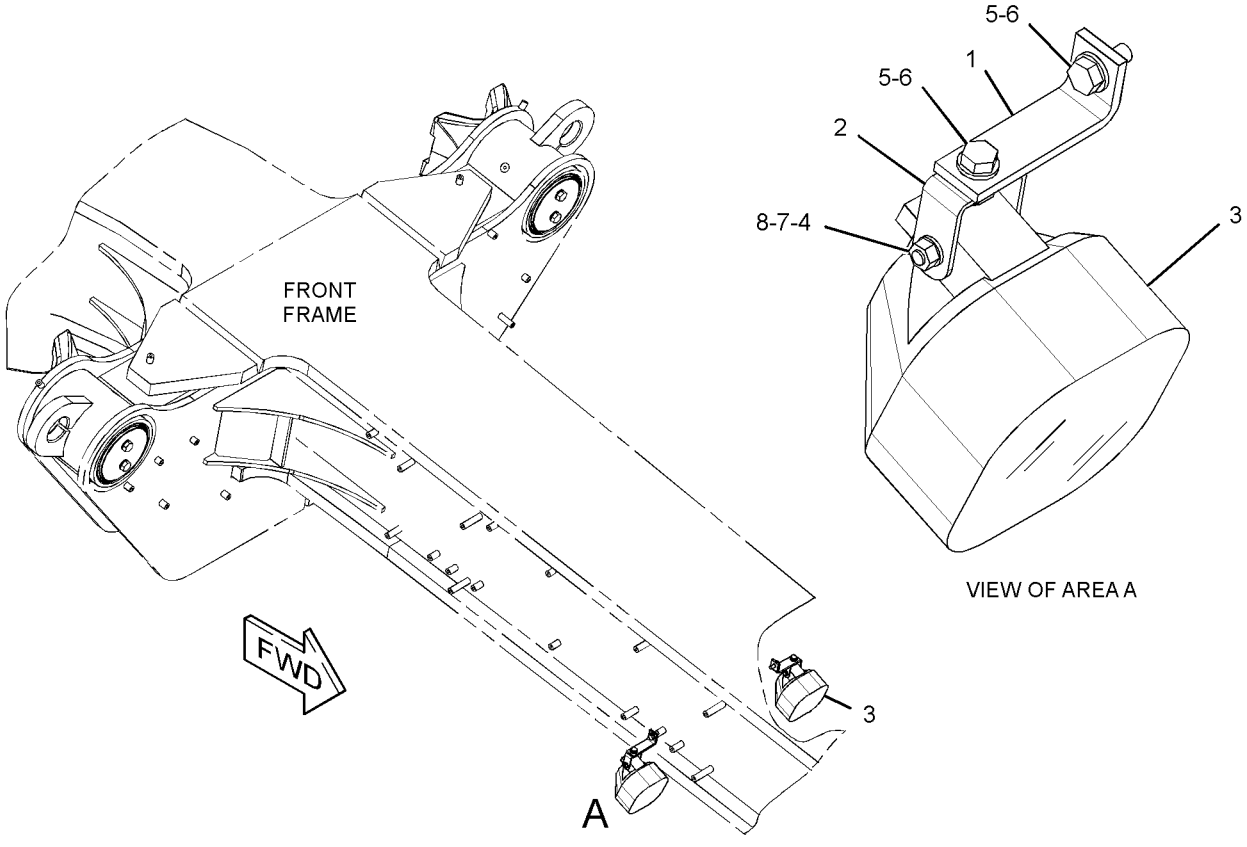

GRAPHIC #1 **<END>** g01384131

ELECTRICAL AND STARTING SYSTEM

266-8980 LIGHTING GP-FLOOD—FRONT FRAME

S/N: B9K1-UP

SMCS-1434 **i02786743**

NOTE	REF NO	GRAPHIC REF	PART NUMBER	QTY	PART NAME 1 2 3 4 5 6 (PRODUCT LEVEL)	SEE PAGE
Y	1	1	**210-8422**	2	LAMP GP-FLOOD (24-VOLT, 35-WATT, HID)	224
	2	1	**243-1352**	2	BRACKET AS	
	3	1	**4D-7794**	2	CLIP	
	4	1	**8T-4121**	4	WASHER-HARD (11X21X2.5-MM THK)	
M	5	1	**8T-4136**	4	BOLT (M10X1.5X25-MM)	

M-METRIC PART
Y-SEPARATE ILLUSTRATION

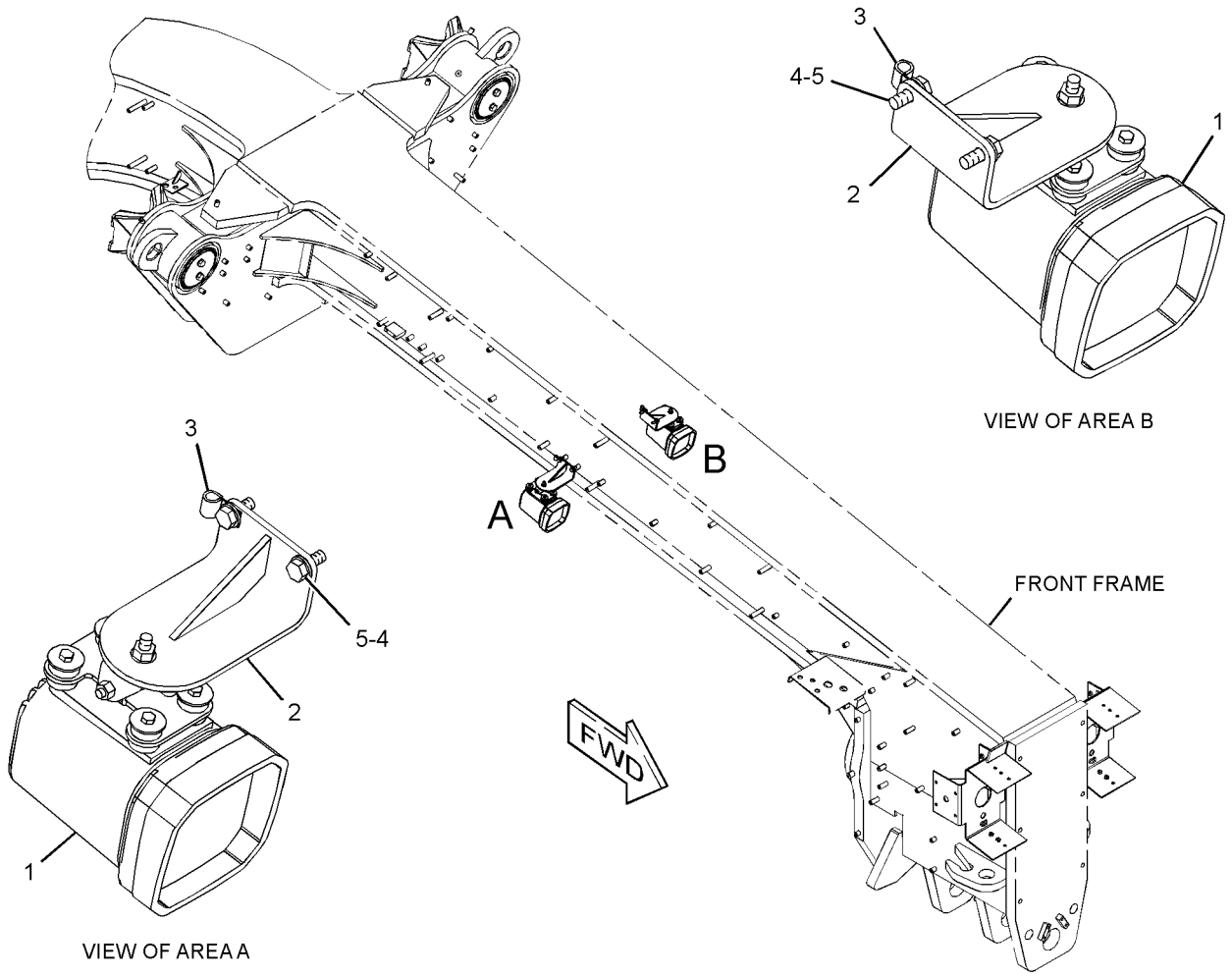

GRAPHIC #1 **<END>** g01397323

ELECTRICAL AND STARTING SYSTEM

273-7356 LIGHTING GP-FLOOD—OPERATOR PLATFORM

S/N: B9K1-UP

SMCS-1434 **i02757800**

NOTE	REF NO	GRAPHIC REF	PART NUMBER	QTY	PART NAME 1 2 3 4 5 6 (PRODUCT LEVEL)	SEE PAGE
Y	1	1	**210-8422**	4	LAMP GP-FLOOD (24-VOLT, 35-WATT, HID)	224
	2	1	**243-1352**	4	BRACKET AS	
	3	1	**274-7505**	2	HARNESS AS-FRONT LIGHTING	
		1	**102-8802**	1	KIT-RECEPTACLE (2-PIN)	
					(INCLUDES RECEPTACLE AS & WEDGE)	
		1	**155-2270**	1	KIT-CONNECTING PLUG (2-PIN)	
					(INCLUDES PLUG AS, WEDGE, & INTERFACE SEAL)	
	4	1	**130-5300**	2	CLIP	
	5	1	**8M-2772**	27	CLIP	
	6	1	**8T-4121**	31	WASHER-HARD (11X21X2.5-MM THK)	
M	7	1	**8T-4136**	8	BOLT (M10X1.5X25-MM)	
M	8	1	**8T-4137**	23	BOLT (M10X1.5X20-MM)	

M-METRIC PART
Y-SEPARATE ILLUSTRATION

273-7356 **LIGHTING GP-FLOOD** *(contd.)* **i02757800**

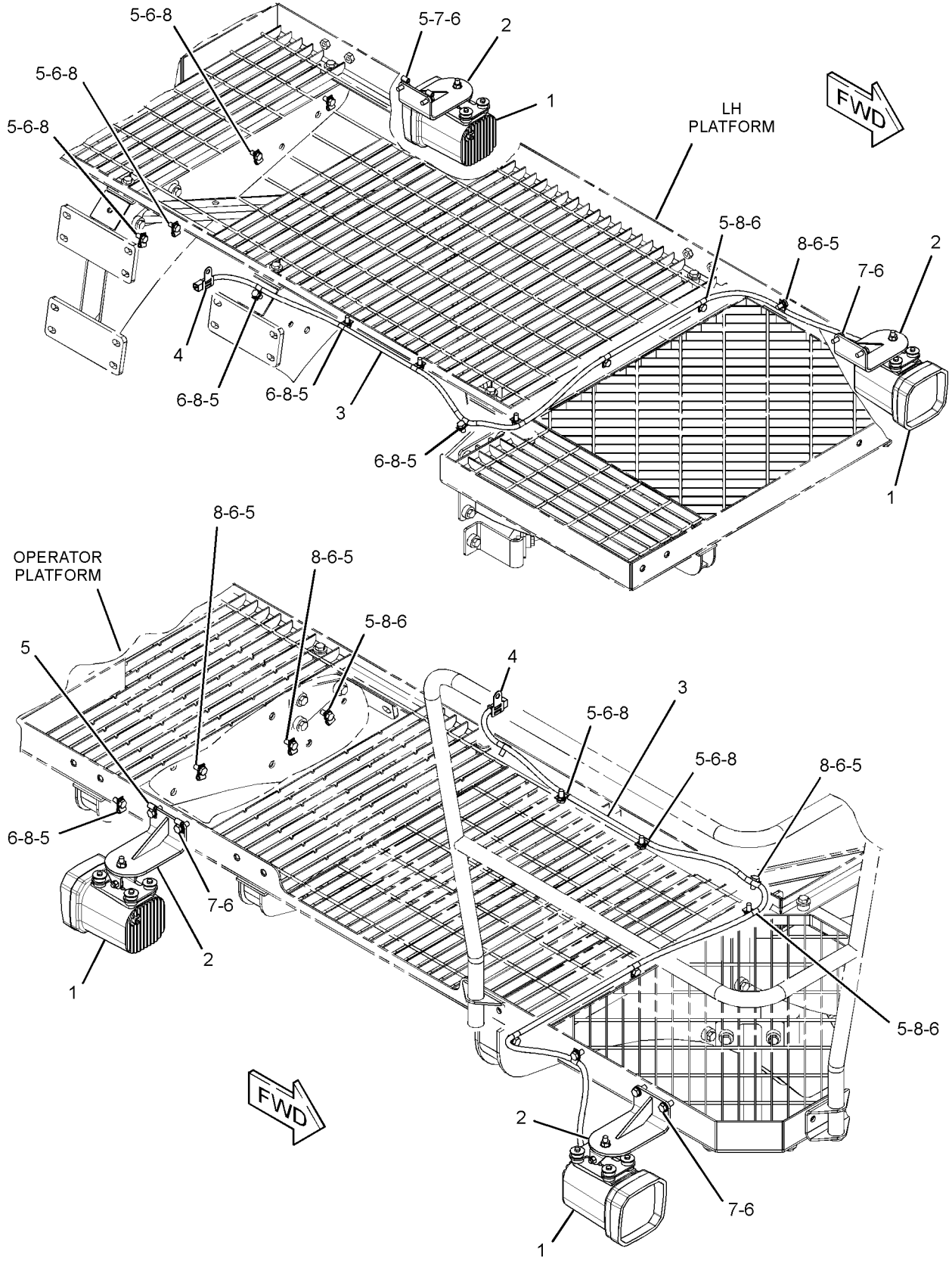

GRAPHIC #1 **<END>** g01383689

ELECTRICAL AND STARTING SYSTEM

273-7357 LIGHTING GP-FLOOD—OPERATOR PLATFORM

S/N: B9K1-UP

SMCS-1434 **i02757786**

NOTE	REF NO	GRAPHIC REF	PART NUMBER	QTY	PART NAME 1 2 3 4 5 6 (PRODUCT LEVEL)	SEE PAGE
	1	1	**9X-9365**	4	BRACKET	
	2	1	**140-1088**	4	BRACKET AS	
					(EACH INCLUDES)	
M		1	**8T-3490**	1	NUT-WELD (M10X1.5-THD)	
		1	**115-0617**	1	BRACKET	
	3	1	**130-5300**	2	CLIP	
Y	4	1	**147-0319**	4	LAMP GP-FLOOD (24-VOLT, 65-WATT)	222
	5	1	**274-7505**	2	HARNESS AS-FRONT LIGHTING	
					(EACH INCLUDES)	
		1	**102-8802**	1	KIT-RECEPTACLE (2-PIN)	
					(INCLUDES RECEPTACLE AS & WEDGE)	
		1	**155-2270**	1	KIT-CONNECTING PLUG (2-PIN)	
					(INCLUDES PLUG AS, WEDGE, & INTERFACE SEAL)	
M	6	1	**5C-7261**	4	NUT (M8X1.25-THD)	
	7	1	**8M-2772**	26	CLIP	
	8	1	**8T-4121**	32	WASHER-HARD (11X21X2.5-MM THK)	
M	9	1	**8T-4136**	8	BOLT (M10X1.5X25-MM)	
M	10	1	**8T-4137**	24	BOLT (M10X1.5X20-MM)	
	11	1	**8T-4224**	8	WASHER-HARD (8.8X16X2-MM THK)	
M	12	1	**8T-6869**	4	BOLT (M8X1.25X60-MM)	

M-METRIC PART
Y-SEPARATE ILLUSTRATION

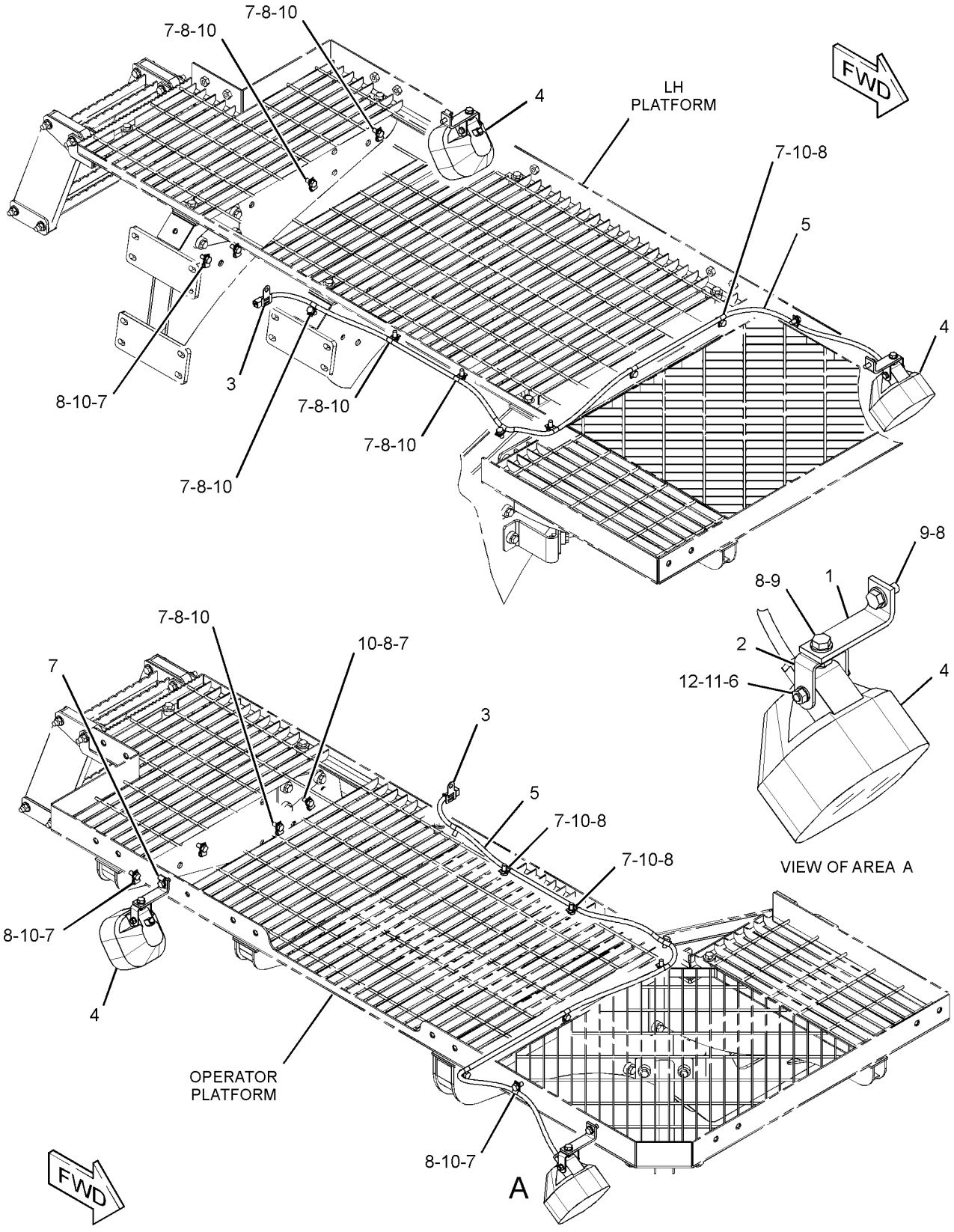

GRAPHIC #1 **<END>** g01384911

ELECTRICAL AND STARTING SYSTEM

282-0810 LIGHTING GP-FLOOD

S/N: B9K1-UP
CAB ROOF

SMCS-1434 **i02815138**

NOTE	REF NO	GRAPHIC REF	PART NUMBER	QTY	PART NAME 1 2 3 4 5 6 (PRODUCT LEVEL)	SEE PAGE
	1	1	**283-1102**	2	BRACKET	
	2	1	**283-1103**	2	BRACKET AS	
Y	3	1	**176-0780**	6	LAMP GP-FLOOD (24-VOLT, 65-WATT)	223
	4	1	**4P-7581**	2	CLIP	
	5	1	**5P-1076**	6	WASHER-HARD (13.5X30X4-MM THK)	
	6	1	**7K-1181**	6	STRAP-CABLE	
M	7	1	**8T-0389**	6	LOCKNUT (M10X1.5-THD)	
	8	1	**8T-4121**	8	WASHER-HARD (11X21X2.5-MM THK)	
M	9	1	**8T-4137**	4	BOLT (M10X1.5X20-MM)	
M	10	1	**8T-4195**	4	BOLT (M10X1.5X30-MM)	

M-METRIC PART
Y-SEPARATE ILLUSTRATION

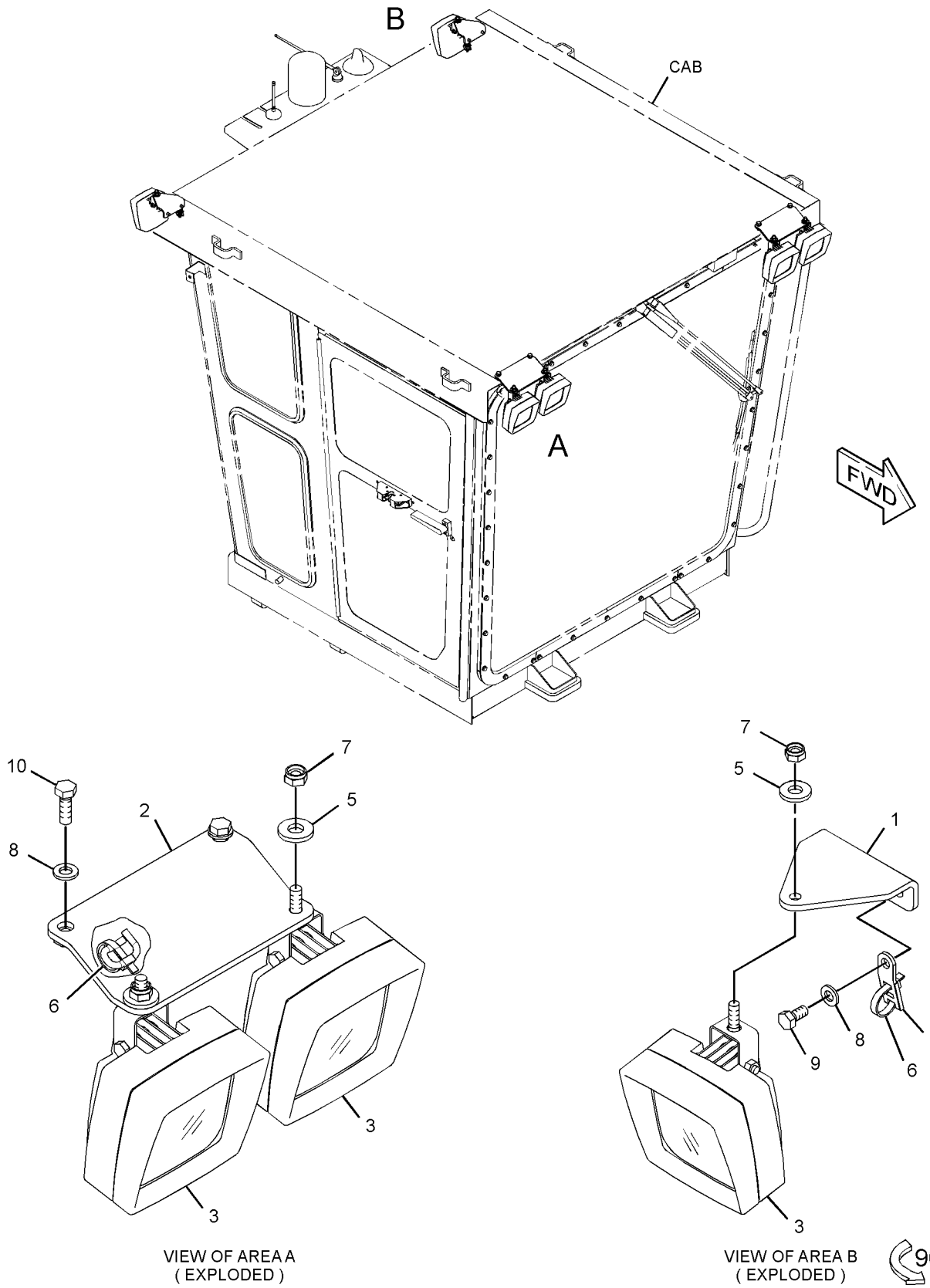

GRAPHIC #1 **<END>** g01382151

ELECTRICAL AND STARTING SYSTEM

282-0811 LIGHTING GP-FLOOD

S/N: B9K1-UP
CAB ROOF

SMCS-1434 **i03430382**

NOTE	REF NO	GRAPHIC REF	PART NUMBER	QTY	PART NAME 1 2 3 4 5 6 (PRODUCT LEVEL)	SEE PAGE
	1	1	**7K-1181**	6	STRAP-CABLE	
Y	2	1	**277-0467**	6	LAMP GP-FLOOD (24-VOLT, 35-WATT, HID)	226
	3	1	**283-1102**	2	BRACKET	
	4	1	**283-1103**	2	BRACKET AS	
	5	1	**4P-7581**	2	CLIP	
	6	1	**5P-1076**	6	WASHER-HARD (13.5X30X4-MM THK)	
	7	1	**8T-4121**	8	WASHER-HARD (11X21X2.5-MM THK)	
M	8	1	**8T-4137**	10	BOLT (M10X1.5X20-MM)	
M	9	1	**8T-4195**	4	BOLT (M10X1.5X30-MM)	

M-METRIC PART
Y-SEPARATE ILLUSTRATION

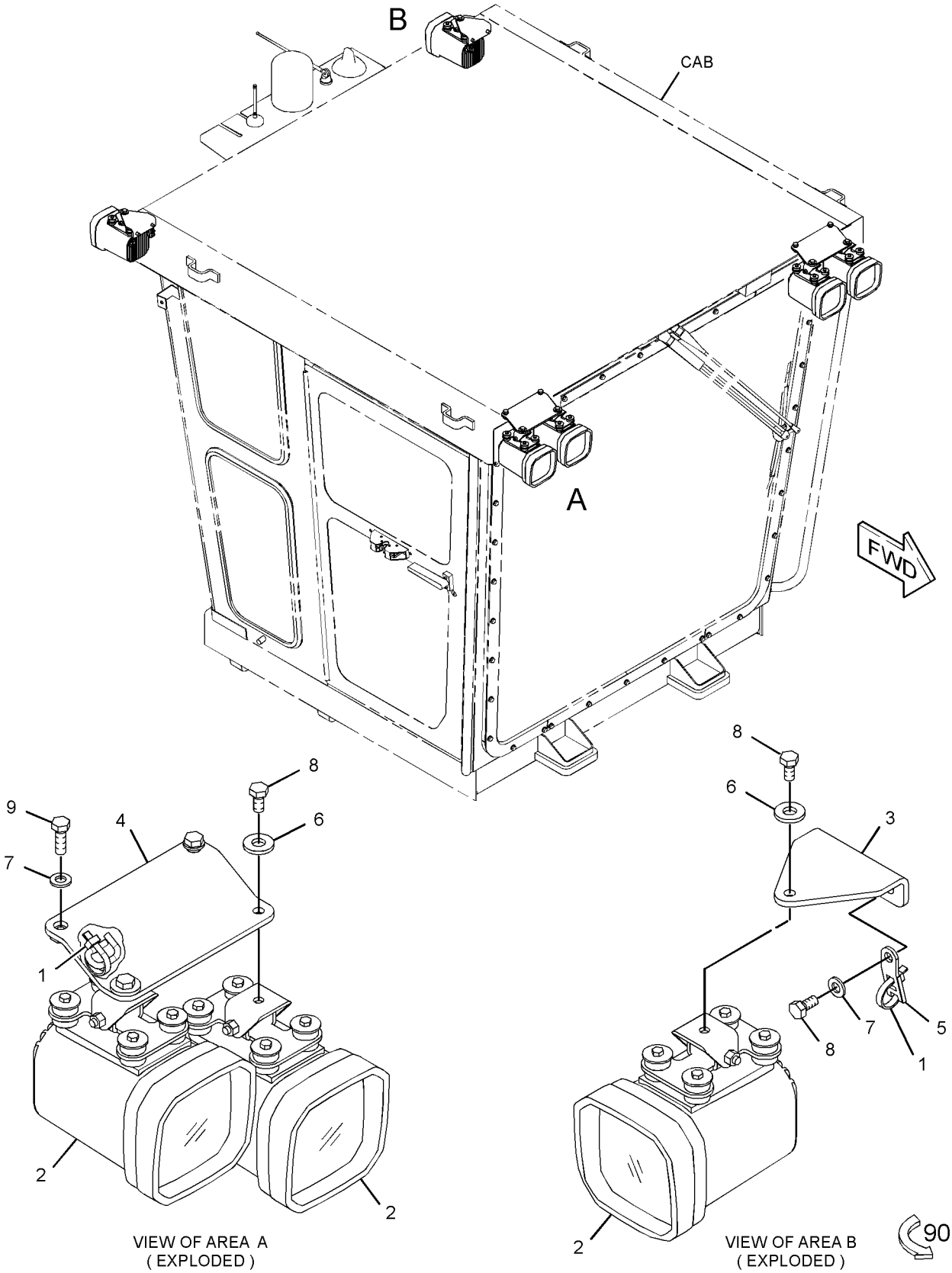

GRAPHIC #1

<END>

g01927856

ELECTRICAL AND STARTING SYSTEM

266-8973 LIGHTING GP-ROADING–FRONT FRAME

S/N: B9K1-UP

SMCS-1429 **i02761032**

NOTE	REF NO	GRAPHIC REF	PART NUMBER	QTY	PART NAME 1 2 3 4 5 6 (PRODUCT LEVEL)	SEE PAGE
	1	1	**140-1088**	4	BRACKET AS	
					(EACH INCLUDES)	
M		1	**8T-3490**	1	NUT-WELD (M10X1.5-THD)	
		1	**115-0617**	1	BRACKET	
Y	2	1	**157-0305**	2	LAMP GP-HEAD (24-VOLT)	228
Y	3	1	**161-3509**	2	LAMP GP-HEAD (24-VOLT)	229
M	4	1	**5C-7261**	4	NUT (M8X1.25-THD)	
	5	1	**8T-4121**	4	WASHER-HARD (11X21X2.5-MM THK)	
M	6	1	**8T-4136**	4	BOLT (M10X1.5X25-MM)	
	7	1	**8T-4224**	8	WASHER-HARD (8.8X16X2-MM THK)	
M	8	1	**8T-6869**	4	BOLT (M8X1.25X60-MM)	

M-METRIC PART
Y-SEPARATE ILLUSTRATION

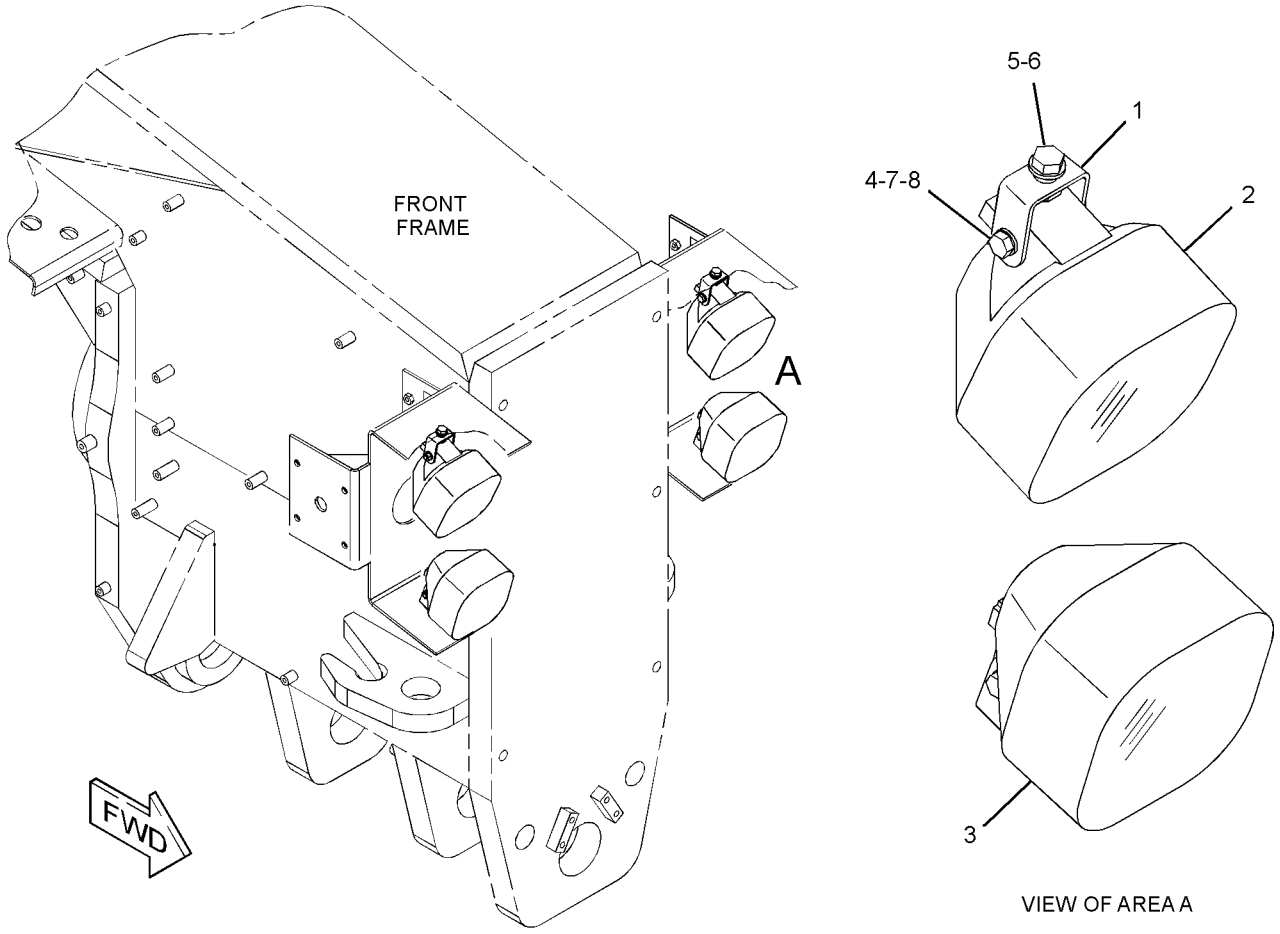

GRAPHIC #1 **<END>** g01397210

ELECTRICAL AND STARTING SYSTEM

266-8974 LIGHTING GP-ROADING–FRONT FRAME

S/N: B9K1-UP
HID

SMCS-1429 **i02812461**

NOTE	REF NO	GRAPHIC REF	PART NUMBER	QTY	PART NAME 1 2 3 4 5 6 (PRODUCT LEVEL)	SEE PAGE
Y	1	1	**210-8425**	2	LAMP GP-HEAD (24-VOLT, 35-WATT, HID) (LOW BEAM)	230
Y	2	1	**210-8426**	2	LAMP GP-HEAD (24-VOLT, 35-WATT, HID) (HIGH BEAM)	231
	3	1	**132-7551**	4	SPACER (11X19X6-MM THK)	

Y-SEPARATE ILLUSTRATION

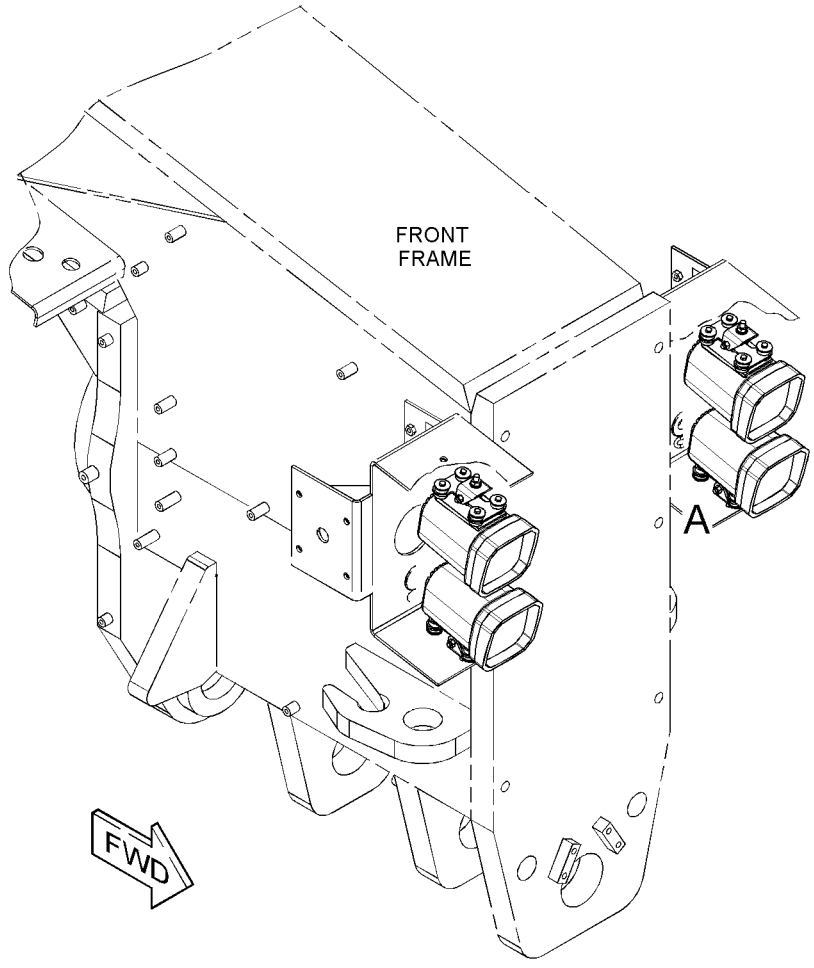

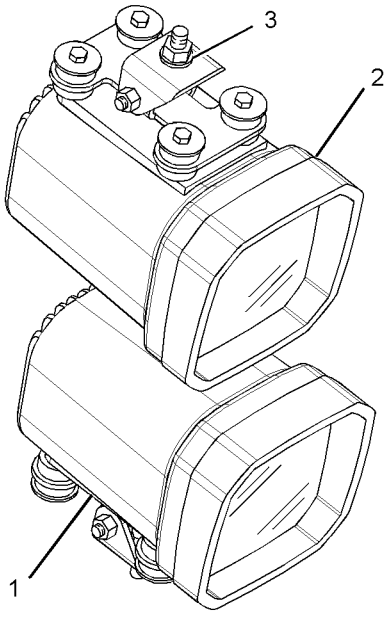

VIEW OF AREA A

GRAPHIC #1 **<END>** g01383300

ELECTRICAL AND STARTING SYSTEM

331-1592 LIGHTING GP-WARNING BEACON

S/N: B9K1-UP

SMCS-1431 **i04020899**

NOTE	REF NO	GRAPHIC REF	PART NUMBER	QTY	PART NAME 1 2 3 4 5 6 (PRODUCT LEVEL)	SEE PAGE
Y	1	1	**338-1132**	1	LAMP GP-WARNING BEACON (AMBER, STROBE)	242
	2	1	**323-1692**	1	SUPPORT GP-LIGHT	
	3	1	**8T-4121**	3	WASHER-HARD (11X21X2.5-MM THK)	
M	4	1	**8T-4137**	3	BOLT (M10X1.5X20-MM)	

M-METRIC PART
Y-SEPARATE ILLUSTRATION

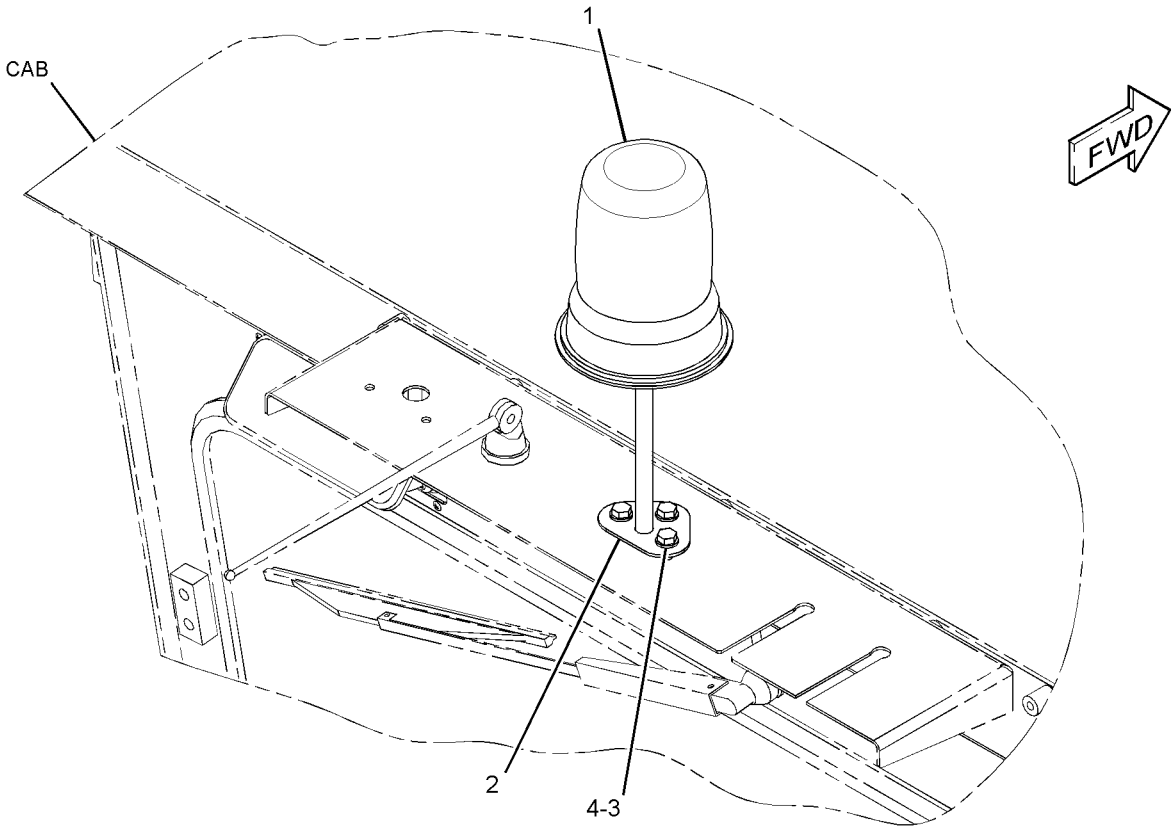

GRAPHIC #1 **<END>** g01641954

ELECTRICAL AND STARTING SYSTEM

309-8579 LINES GP-ALTERNATOR AIR

S/N: B9K1-UP

PART OF 259-9204 COMMON AR

SMCS-1405 **i02764209**

NOTE	REF NO	GRAPHIC REF	PART NUMBER	QTY	PART NAME 1 2 3 4 5 6 (PRODUCT LEVEL)	SEE PAGE
	1	1	**8X-4575**	1	BREATHER AS (ALTERNATOR)	
	2	1	**226-4911**	1	TUBE	
	3	1	**275-2152**	1	BRACKET AS	
	4	1	**292-4905**	1	GUARD AS	
	5	1	**309-6919**	1	PLATE AS	
M		1	**8T-3490**	1	NUT-WELD (M10X1.5-THD)	
M		1	**8T-3597**	1	NUT-WELD (M12X1.75-THD)	
	6	1	**104-3173**	1	CLIP	
	7	1	**133-9229**	1	CLIP	
	8	1	**5P-0597**	4	CLAMP-HOSE	
	9	1	**8T-4121**	5	WASHER-HARD (11X21X2.5-MM THK)	
M	10	1	**8T-4133**	1	NUT (M10X1.5-THD)	
M	11	1	**8T-4136**	2	BOLT (M10X1.5X25-MM)	
M	12	1	**8T-4183**	1	BOLT (M12X1.75X40-MM)	
M	13	1	**8T-4186**	1	BOLT (M10X1.5X40-MM)	
M	14	1	**8T-4195**	1	BOLT (M10X1.5X30-MM)	
	15	1	**8T-4223**	1	WASHER-HARD (13.5X25.5X3-MM THK)	
	16	1	**9D-6196**	1	CLIP (SLOT)	
	17	1	**9D-6197**	1	CLIP (TAB)	
E	18	1	**5P-1259**		HOSE (14-CM)	
E	19	1	**5P-1471**		HOSE (77-CM)	

E-ORDER BY THE CENTIMETER
M-METRIC PART

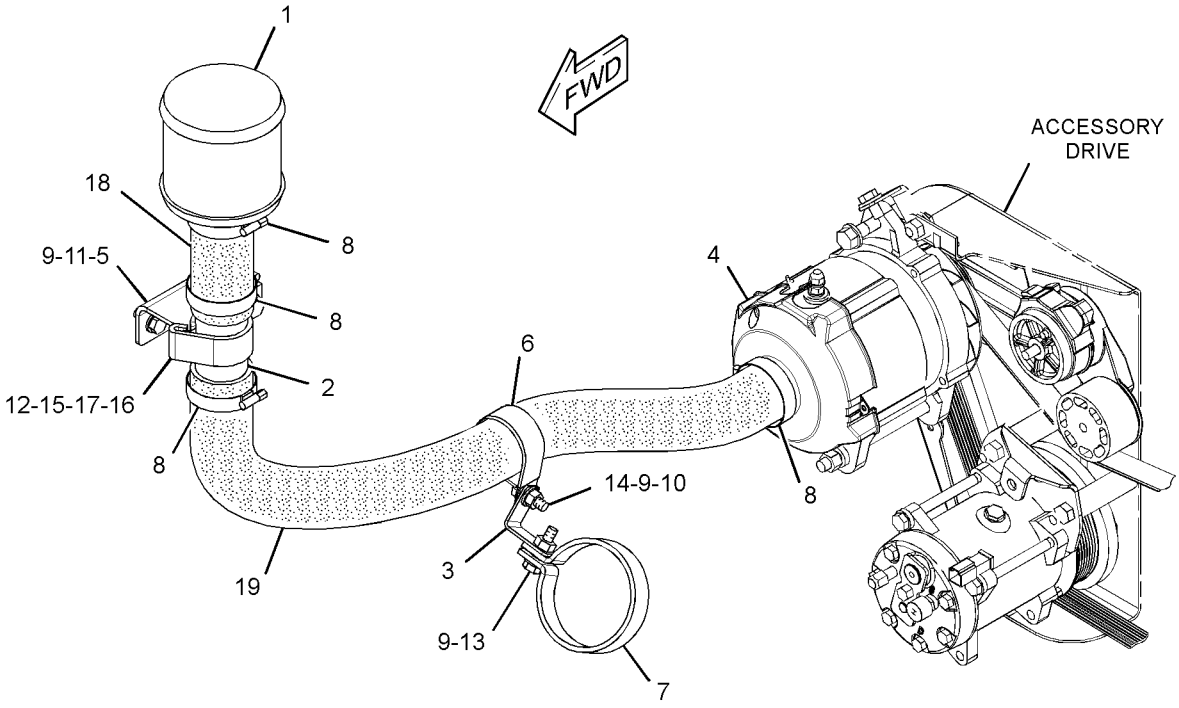

GRAPHIC #1 **<END>** g01387409

ELECTRICAL AND STARTING SYSTEM

226-2333 MAST GP–LASER RECEIVER

S/N: B9K1-UP

PART OF 317-6526 GRADE CONTROL AR-LASER, 292-0281 MAST GP, 292-0310 RECEIVER AR-LASER

SMCS-7220, 79NS **i03588632**

NOTE	PART NUMBER	QTY	PART NAME 1 2 3 4 5 6 (PRODUCT LEVEL)	SEE PAGE
	256-5732	1	HARNESS AS-WIRING (MAST)	
	256-4580	1	MOTOR AS	
	256-4579	1	SCREW AS	
	256-5720	1	SWITCH AS (UPPER LIMIT)	
	256-5721	1	SWITCH AS (LOWER LIMIT)	
	256-4581	1	BUSHING	
	256-4582	1	GEAR (141-TEETH)	
	256-5722	1	GEAR (15-TEETH)	
	260-6480	1	RING-SNAP	
	260-6478	1	SEAL-O-RING	
	256-5719	1	SEAL-WIPER	
			AVAILABLE REPAIR KIT(S):	
	295-8930	1	KIT-CIRCUIT BOARD	
			(INCLUDES BOARD AS, SCREWS, LOCKWASHERS, LOCTITE & GREASE)	
A	**245-4747**	1	KIT-ADAPTER (MAST)	
			(INCLUDES ADAPTER, BOLTS & WASHER)	
			(FOR USE WITH LR400 RECEIVER)	

A-NOT PART OF THIS GROUP

<END>

ELECTRICAL AND STARTING SYSTEM

292-0281 MAST GP–LASER RECEIVER

S/N: B9K1-UP

PART OF 292-0301 RECEIVER AR-LASER

SMCS-7220, 79NS **i03091092**

NOTE	PART NUMBER	QTY	PART NAME 1 2 3 4 5 6 (PRODUCT LEVEL)	SEE PAGE
Y	**226-2333**	1	MAST GP (LASER RECEIVER)	267
Y	*292-0302*	1	MOUNTING GP-MAST (LASER RECEIVER)	270
Y	**234-9970**	1	MOUNTING GP-RECEIVER (MAST)	272

Y-SEPARATE ILLUSTRATION

<END>

ELECTRICAL AND STARTING SYSTEM

170-5335 MOTOR GP-ELECTRIC—CIRCULATING FAN

S/N: B9K1-UP
27-VOLT
PART OF 170-4820 FAN GP-CIRCULATING

SMCS-5927 **i02427690**

NOTE	REF NO	GRAPHIC REF	PART NUMBER	QTY	PART NAME 1 2 3 4 5 6 (PRODUCT LEVEL)	SEE PAGE
	1	1	**102-8802**	1	KIT-RECEPTACLE (2-PIN)	
					(INCLUDES RECEPTACLE AS & WEDGE)	
	2	1	**9W-0852**	2	PIN-CONNECTOR (14-GA TO 16-GA)	

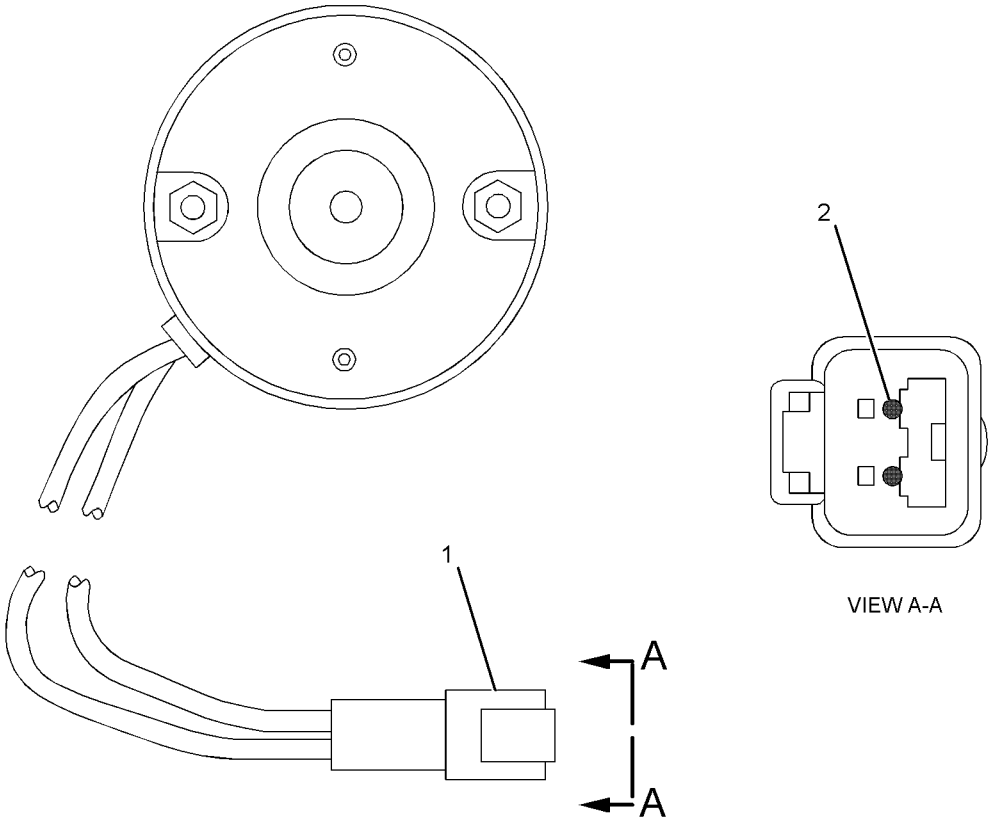

GRAPHIC #1 **<END>** g01224350

ELECTRICAL AND STARTING SYSTEM

292-0302 MOUNTING GP-MAST—LASER RECEIVER

S/N: B9K1-UP

PART OF 292-0281 MAST GP, 292-0310 RECEIVER AR-LASER

SMCS-79NS **i02622638**

NOTE	PART NUMBER	QTY	PART NAME 1 2 3 4 5 6 (PRODUCT LEVEL)	SEE PAGE
M	**8T-4648**	4	BOLT (M12X1.75X70-MM)	
	237-7552	3	FILM-WARNING (LASER TRANSMITTER)	
	252-8744	1	FILM-WARNING (BLADE, DO NOT CLIMB, READ OMM)	
M	**8T-4244**	4	NUT (M12X1.75-THD)	
	8T-4223	8	WASHER-HARD (13.5X25.5X3-MM THK)	

M-METRIC PART

<END>

ELECTRICAL AND STARTING SYSTEM

292-0908 MOUNTING GP-MAST–LASER RECEIVER

S/N: B9K1-UP

PART OF 292-0301 RECEIVER AR-LASER

SMCS-79NS **i02674350**

NOTE	PART NUMBER	QTY	PART NAME 1 2 3 4 5 6 (PRODUCT LEVEL)	SEE PAGE
	231-0049	1	CABLE-COILED (MAST)	
	248-1503	1	BRACKET GP-MOUNTING	
	7X-0343	4	BOLT (5/8-11X1.25-IN)	
	7X-0366	3	BOLT (3/4-10X2-IN)	
	8T-4122	4	WASHER-HARD (17X32X3.5-MM THK)	
	8T-4994	3	WASHER-HARD (20X36.5X3.5-MM THK)	
	248-1496	1	RISER AS (MAST)	
	3B-4512	1	LOCKWASHER	
	9S-1362	1	BOLT (3/4-16X2-IN)	

<END>

ELECTRICAL AND STARTING SYSTEM

234-9970 MOUNTING GP-RECEIVER–MAST

S/N: B9K1-UP

PART OF 317-6526 GRADE CONTROL AR-LASER, 292-0281 MAST GP, 292-0310 RECEIVER AR-LASER

SMCS-7009, 7010 **i02294016**

NOTE	REF NO	GRAPHIC REF	PART NUMBER	QTY	PART NAME 1 2 3 4 5 6 (PRODUCT LEVEL)	SEE PAGE
	1	2	**253-8967**	1	ROD-THREADED	
	2	2	**253-8969**	1	BRACKET	
	3	2	**237-4132**	4	MOUNT-FLEXIBLE	
	4	1	**237-4133**	2	GASKET	
	5	1	**237-4134**	1	CLAMP	
	6	1	**237-4135**	1	MOUNT-FLEXIBLE	
	7	2	**237-7252**	1	BOLT (3/4-16X1.25-IN)	
	8	2	**3B-4508**	4	LOCKWASHER	
	9	2	**3B-4512**	1	LOCKWASHER	
	10	2	**4M-6425**	2	BOLT (5/16-18X1-IN)	
	11	2	**5W-1437**	2	LOCKWASHER	
	12	2	**8T-9383**	2	BOLT (1/2-13X0.75-IN)	
	13	2	**9B-0453**	2	LOCKWASHER	
	14	2	**253-8981**	4	ROD-THREADED	
	15	2	**6V-8188**	6	NUT (1/2-13-THD)	

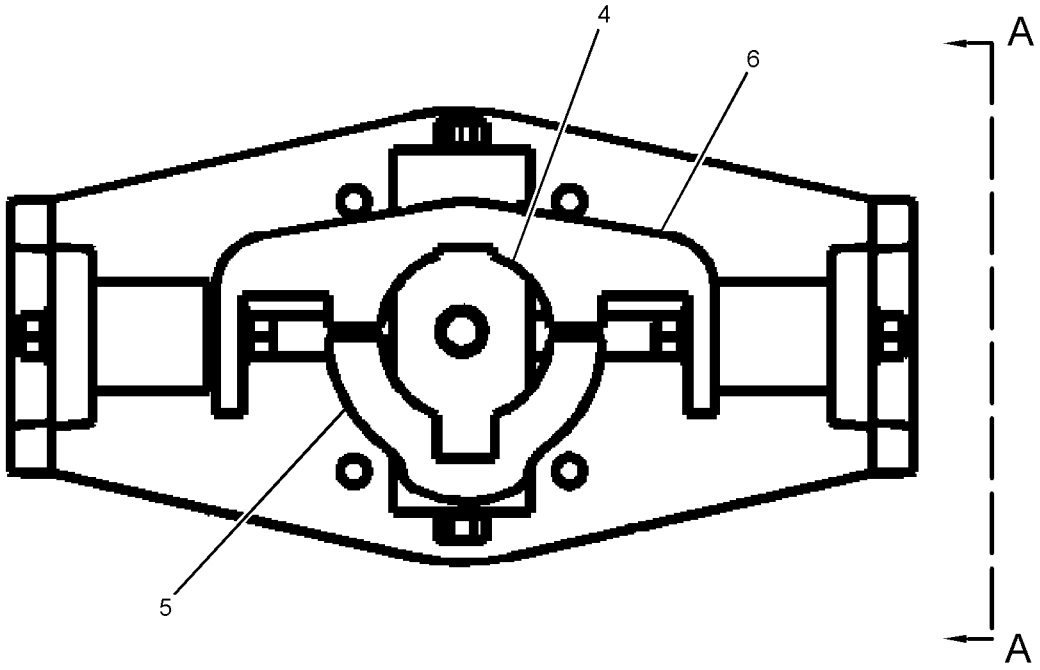

REFER TO ALL ILLUSTRATIONS OF THIS GROUP FOR AUXILIARY VIEWS

GRAPHIC #1 g01186401

234-9970 **MOUNTING GP-RECEIVER** *(contd.)* **i02294016**

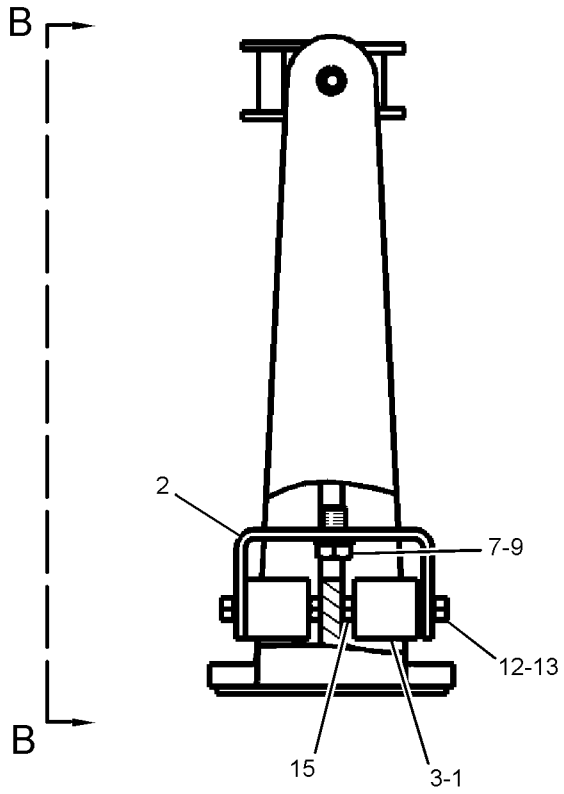

VIEW A-A

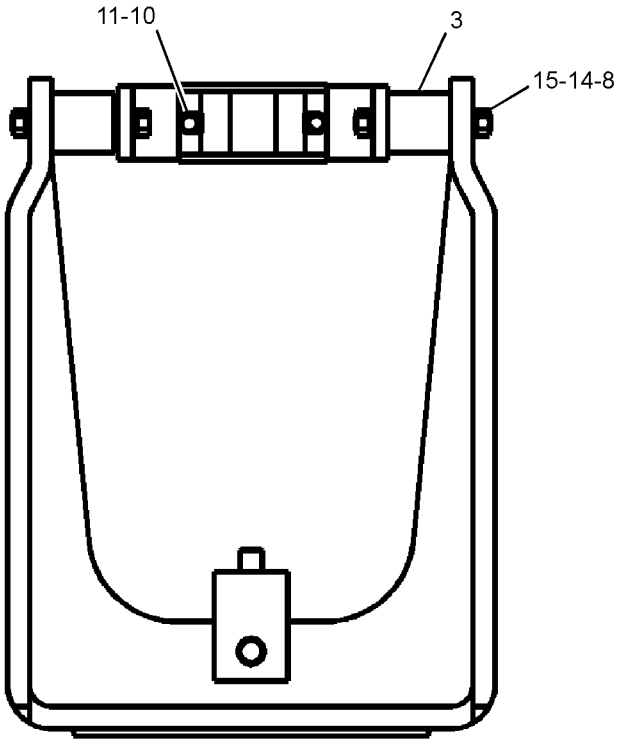

VIEW B-B

GRAPHIC #2 **<END>** g01186365

ELECTRICAL AND STARTING SYSTEM

260-0266 MOUNTING GP-SENSOR–

ATMOSPHERIC AIR, ENGINE OIL

S/N: RHX2054-UP

PROVIDES A SPACER TO CREATE CLEARANCE BETWEEN THE FUMES DISPOSAL TUBE AND MACHINE SIDE ENGINE HARNESS

PART OF 215-7486, 263-7760 ENGINE AR-COMPLETE

SMCS-1439, 1923, 1924, 5645, 5736, 5953, 7215 **i04004726**

NOTE	REF NO	GRAPHIC REF	PART NUMBER	QTY	PART NAME 1 2 3 4 5 6 (PRODUCT LEVEL)	SEE PAGE
	1	1	**6P-9592**	1	SPACER (0.438X1X0.72-IN THK)	
	2	1	**166-6693**	1	ADAPTER	
	3	1	**1T-0720**	1	BOLT-12 POINT HEAD (3/8-16X1.25-IN)	
	4	1	**3S-1307**	1	BOLT-12 POINT HEAD (3/8-16X2-IN)	
	5	1	**5M-2894**	2	WASHER-HARD (10.2X18.5X2.5-MM THK)	
	6	1	**6V-3683**	1	SEAL-O-RING	
	7	1	*307-2671*	1	PLUG AS	
		1	**214-7566**	1	SEAL-O-RING	
		1	**9S-8002**	1	PLUG-O-RING	
	8	1	**8J-4351**	1	SEAL-O-RING	

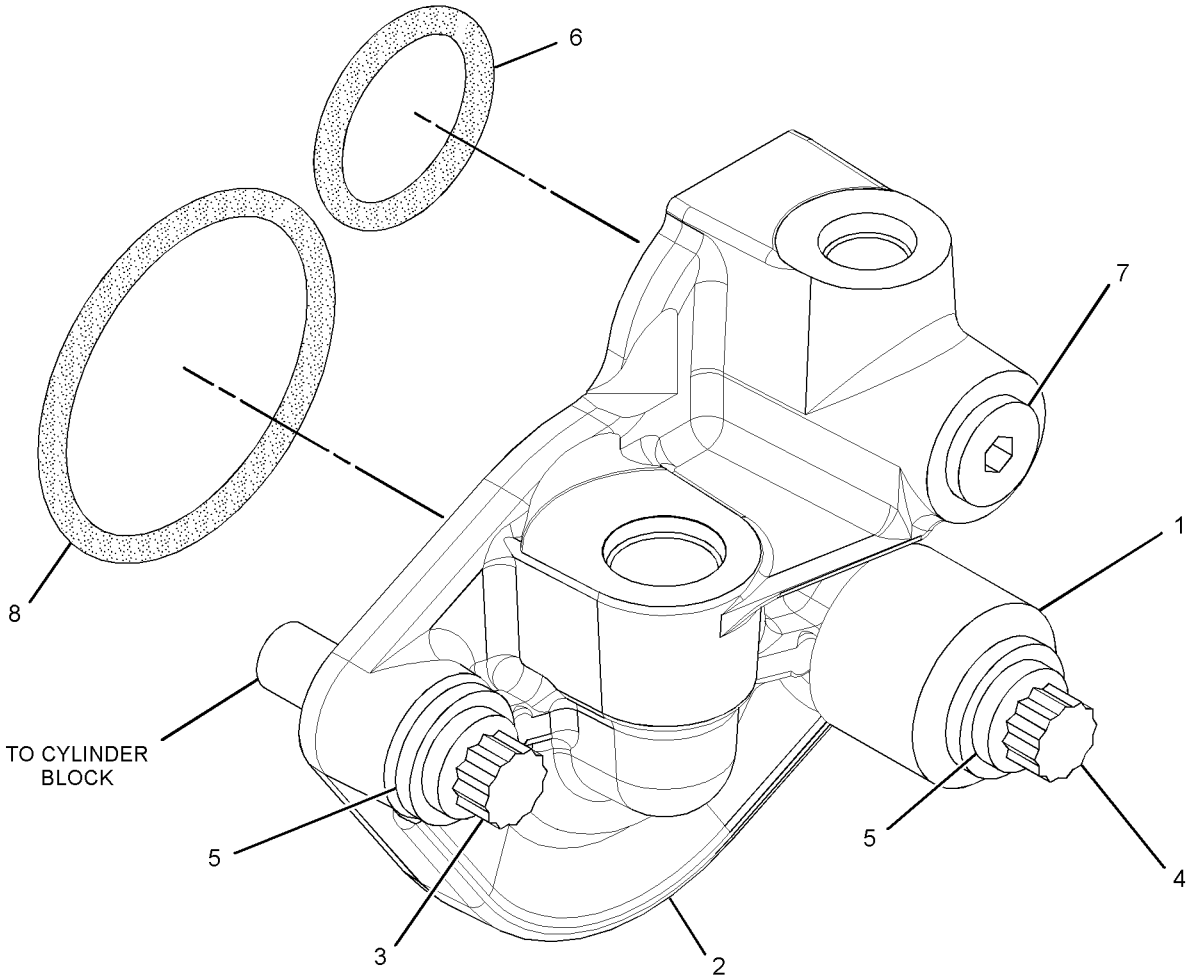

GRAPHIC #1 **<END>** g02183093

ELECTRICAL AND STARTING SYSTEM

270-4330 PANEL GP-CIRCUIT BREAKER

S/N: B9K1-258

PART OF 266-8962 WIRING GP-REAR

SMCS-1417, 1420, 1422 **i02762650**

NOTE	REF NO	GRAPHIC REF	PART NUMBER	QTY	PART NAME 1 2 3 4 5 6 (PRODUCT LEVEL)	SEE PAGE
	1	2	3S-2093	4	STRAP-CABLE	
Y	2	2	118-3534	1	SWITCH GP-MAGNETIC (24-VOLT) (START RELAY)	338
Y	2A	2	118-3534	1	SWITCH GP-MAGNETIC (24-VOLT) (BRAKE RETRACT)	338
	3	2	171-2210	1	CIRCUIT BREAKER AS (80-AMPERE) (LOAD)	
	3A	2	171-2210	1	CIRCUIT BREAKER AS (80-AMPERE) (MAIN)	
					(EACH INCLUDES)	
		2	6V-8187	2	NUT (1/4-28-THD)	
		2	8T-4205	2	WASHER-HARD (7.2X14.5X2-MM THK)	
		2	253-2111	2	LOCKWASHER	
	4	2	171-2215	1	CIRCUIT BREAKER AS (150-AMPERE) (BATTERY)	
	4A	2	171-2215	1	CIRCUIT BREAKER AS (150-AMPERE) (ALTERNATOR)	
					(EACH INCLUDES)	
		2	6V-8187	2	NUT (1/4-28-THD)	
		2	8T-4205	2	WASHER-HARD (7.2X14.5X2-MM THK)	
		2	253-2111	2	LOCKWASHER	
	5	1	172-4863	1	JUNCTION BLOCK	
Y	6	2	241-8368	1	SWITCH GP-MAGNETIC (24-VOLT) (MAIN RELAY)	342
	7	2	261-0140	1	PLATE	
	8	2	269-3379	1	CABLE AS	
		2	9X-9825	1	TERMINAL-CABLE (00-GA, 1/2-IN SCREW)	
E		2	159-8049		CABLE (00-GA, RED) (8-CM)	
		2	208-4617	1	TERMINAL-RING (00-GA, 1/2-IN SCREW)	
	9	2	269-3380	1	CABLE AS	
		2	8S-3020	1	TERMINAL-CABLE (00-GA, 3/8-IN SCREW)	
		2	9X-9825	1	TERMINAL-CABLE (00-GA, 1/2-IN SCREW)	
E		2	159-8049		CABLE (00-GA, RED) (9-CM)	
	10	2	270-4326	1	WIRING AS	
	11	1	270-4327	1	CABLE AS	
D		1	6V-2369		CABLE (4-GA, BLACK) (0.4-M)	
		1	5P-3454	1	TERMINAL-RING (4-GA, 5/16-IN SCREW)	
		1	9G-4344	2	TERMINAL-RING (4-GA, 1/2-IN SCREW)	
	12	2	270-4329	1	HARNESS AS-BOX	
	13	1	270-4334	1	PANEL AS	
M		1	6V-9632	4	NUT-WELD (M6X1-THD)	
	14	1	270-5321	1	PANEL GP-CIRCUIT BREAKER	
M		1	5C-7261	2	NUT (M8X1.25-THD)	
		1	7X-0608	2	WASHER-HARD (10.2X16X2-MM THK)	
		1	9F-5644	2	LOCKWASHER	
	15	2	274-7492	1	BAR-BUS	
	16	1	274-7499	1	BOX AS	
		1	5D-9629	3	ROD	
M		1	6V-9632	6	NUT-WELD (M6X1-THD)	
M		1	8T-3490	5	NUT-WELD (M10X1.5-THD)	
M		1	8T-8874	3	NUT-WELD (M5X0.8-THD)	
M		1	9R-2821	1	BOSS (M10X1.5X15-MM)	
		1	130-5300	3	CLIP	
	17	2	290-6002	1	FILM-IDENTIFICATION (FUSE PANEL)	
	18	2	113-8373	8	SCREW-BUTTON HEAD (10-32X0.75-IN)	
	19	2	4B-4274	8	WASHER (5.5X13X1.2-MM THK)	
M	20	2	5C-7261	1	NUT (M8X1.25-THD)	
M	21	1,2	5C-9553	4	BOLT (M6X1X16-MM)	
	22	1	5P-9299	1	CLIP	
M	23	2	6V-8225	1	NUT (M6X1-THD)	
	24	2	7X-0608	1	WASHER-HARD (10.2X16X2-MM THK)	
M	25	1,2	7X-2548	2	BOLT (M12X1.75X16-MM)	
M	26	1	8C-8580	3	BOLT-SOCKET HEAD (M5X0.8X16-MM)	

270-4330 **PANEL GP-CIRCUIT BREAKER** *(contd.)* **i02762650**

NOTE	REF NO	GRAPHIC REF	PART NUMBER	QTY	PART NAME 1 2 3 4 5 6 (PRODUCT LEVEL)	SEE PAGE
	27	1	**8T-0328**	3	WASHER-HARD (5.5X10X1-MM THK)	
	28	1,2	**8T-4121**	6	WASHER-HARD (11X21X2.5-MM THK)	
M	29	1	**8T-4136**	5	BOLT (M10X1.5X25-MM)	
M	30	1,2	**8T-4138**	7	BOLT (M6X1X20-MM)	
M	31	2	**8T-4191**	1	BOLT (M10X1.5X16-MM)	
	32	1,2	**8T-4223**	2	WASHER-HARD (13.5X25.5X3-MM THK)	
	33	2	**9F-5644**	1	LOCKWASHER	
	34	1,2	**9X-8256**	12	WASHER (6.6X12X2-MM THK)	

D-ORDER BY THE METER
E-ORDER BY THE CENTIMETER
M-METRIC PART
Y-SEPARATE ILLUSTRATION

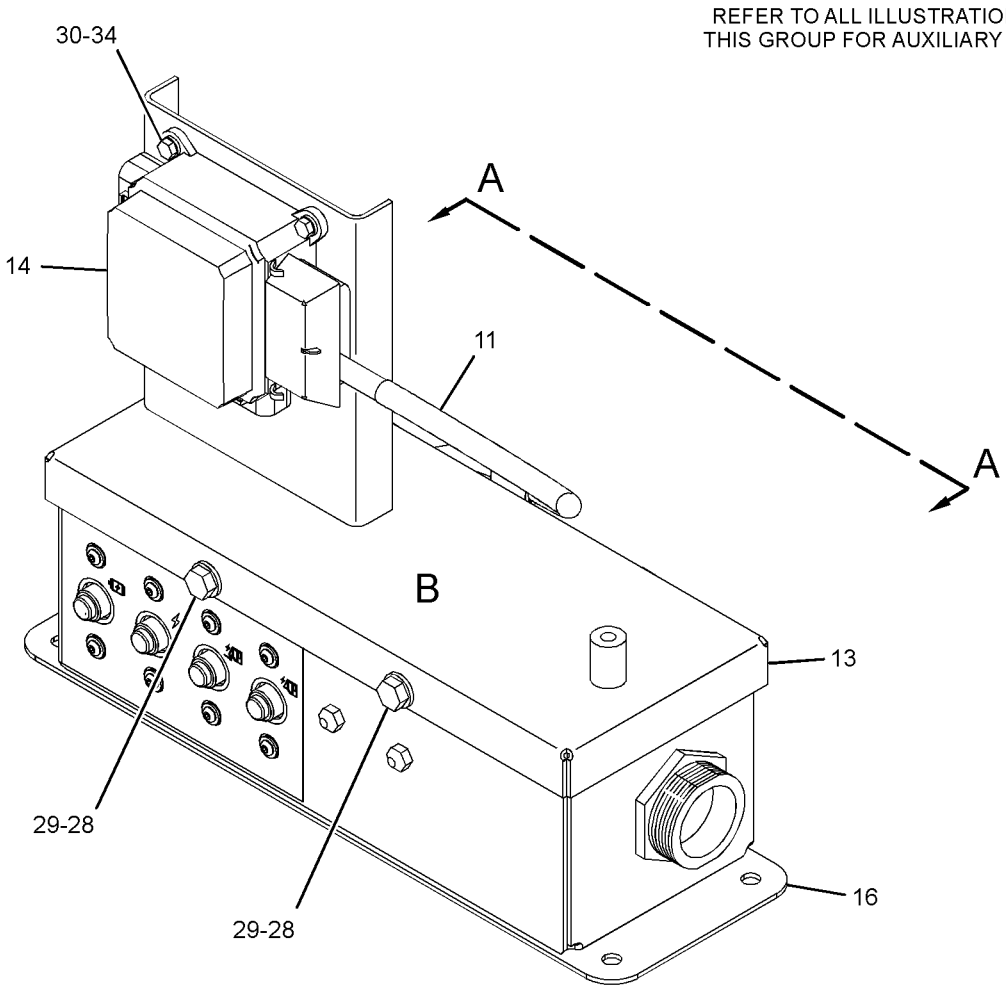

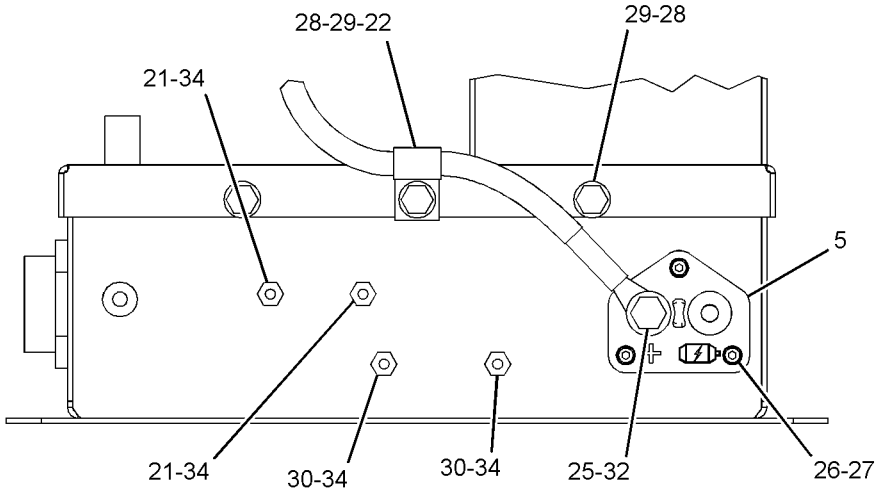

VIEW A-A

GRAPHIC #1

g01384403

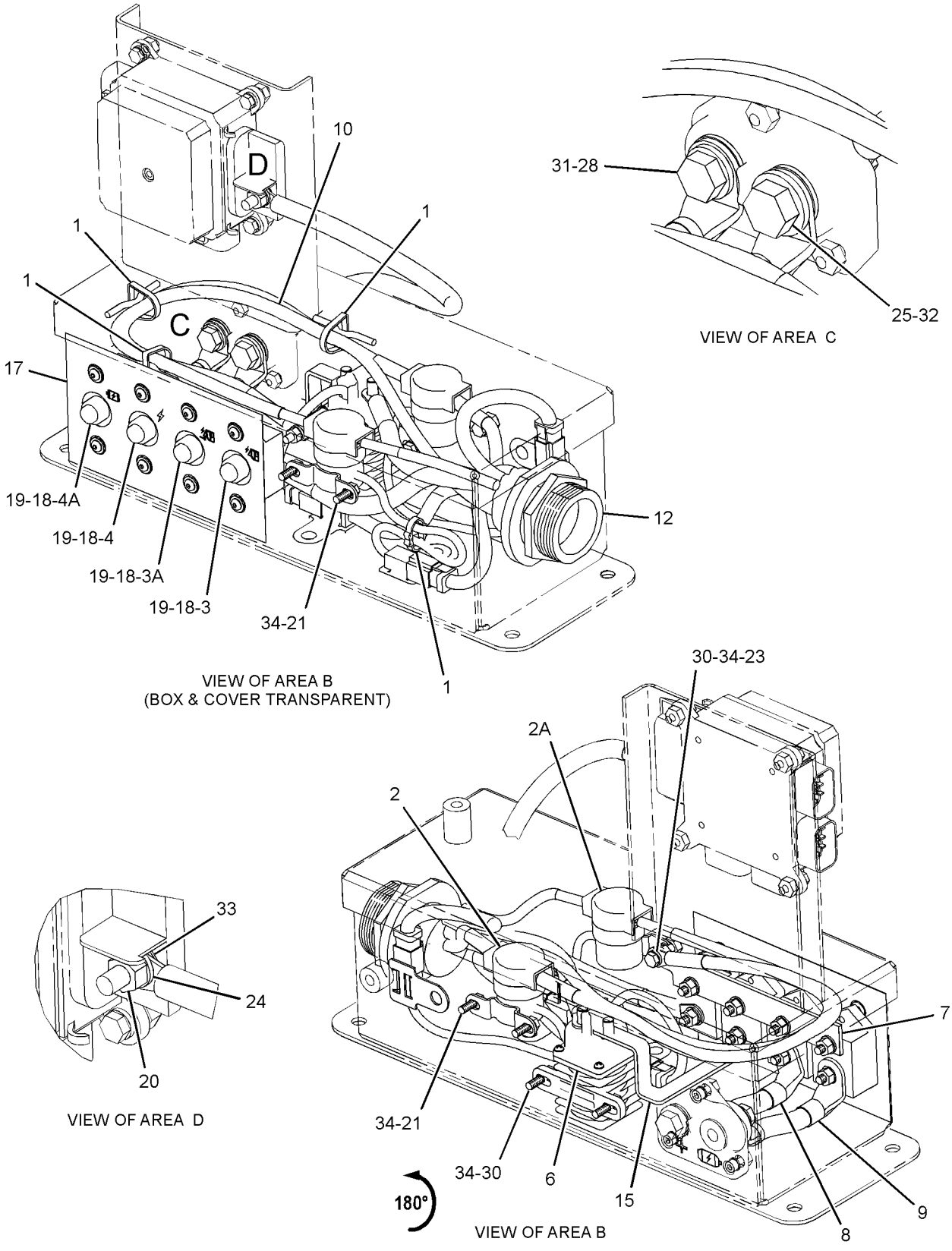

GRAPHIC #2 **<END>** g01394447

ELECTRICAL AND STARTING SYSTEM

270-4330 PANEL GP-CIRCUIT BREAKER

S/N: B9K259-275

PART OF 266-8962 WIRING GP-REAR

SMCS-1417, 1420, 1422 **i02876778**

NOTE	REF NO	GRAPHIC REF	PART NUMBER	QTY	PART NAME 1 2 3 4 5 6 (PRODUCT LEVEL)	SEE PAGE
	1	2	3S-2093	4	STRAP-CABLE	
Y	2	2	118-3534	1	SWITCH GP-MAGNETIC (24-VOLT) (START RELAY)	338
Y	2A	2	118-3534	1	SWITCH GP-MAGNETIC (24-VOLT) (BRAKE RETRACT)	338
	3	2	171-2210	1	CIRCUIT BREAKER AS (80-AMPERE) (LOAD)	
	3A	2	171-2210	1	CIRCUIT BREAKER AS (80-AMPERE) (MAIN)	
					(EACH INCLUDES)	
		2	6V-8187	2	NUT (1/4-28-THD)	
		2	8T-4205	2	WASHER-HARD (7.2X14.5X2-MM THK)	
		2	253-2111	2	LOCKWASHER	
	4	2	171-2215	1	CIRCUIT BREAKER AS (150-AMPERE) (BATTERY)	
	4A	2	171-2215	1	CIRCUIT BREAKER AS (150-AMPERE) (ALTERNATOR)	
					(EACH INCLUDES)	
		2	6V-8187	2	NUT (1/4-28-THD)	
		2	8T-4205	2	WASHER-HARD (7.2X14.5X2-MM THK)	
		2	253-2111	2	LOCKWASHER	
	5	2	172-4863	1	JUNCTION BLOCK	
Y	6	2	241-8368	1	SWITCH GP-MAGNETIC (24-VOLT) (MAIN RELAY)	342
	7	2	261-0140	1	PLATE	
	8	2	269-3379	1	CABLE AS	
		2	9X-9825	1	TERMINAL-CABLE (00-GA, 1/2-IN SCREW)	
E		2	159-8049		CABLE (00-GA, RED) (8-CM)	
		2	283-8657	1	TERMINAL-RING	
	9	2	269-3380	1	CABLE AS	
		2	8S-3020	1	TERMINAL-CABLE (00-GA, 3/8-IN SCREW)	
		2	283-8657	1	TERMINAL-RING	
E		2	159-8049		CABLE (00-GA, RED) (9-CM)	
	10	2	270-4326	1	WIRING AS	
	11	1	270-4327	1	CABLE AS	
D		1	6V-2369		CABLE (4-GA, BLACK) (0.4-M)	
		1	5P-3454	1	TERMINAL-RING (4-GA, 5/16-IN SCREW)	
		1	9G-4344	2	TERMINAL-RING (4-GA, 1/2-IN SCREW)	
	12	1	270-4329	1	HARNESS AS-BOX	
	13	2	274-7492	1	BAR-BUS	
	14	2	274-7499	1	BOX AS	
		2	5D-9629	3	ROD	
M		2	6V-9632	6	NUT-WELD (M6X1-THD)	
M		2	8T-3490	5	NUT-WELD (M10X1.5-THD)	
M		2	8T-8874	3	NUT-WELD (M5X0.8-THD)	
M		2	9R-2821	1	BOSS (M10X1.5X15-MM)	
		2	130-5300	3	CLIP	
	15	2	290-6002	1	FILM-IDENTIFICATION (FUSE PANEL)	
C	16	2	313-9200	1	BLOCK AS-FUSE	
M		2	5C-7261	1	NUT (M8X1.25-THD)	
		2	7X-0608	1	WASHER-HARD (10.2X16X2-MM THK)	
		2	9F-5644	1	LOCKWASHER	
C	17	2	315-3166	1	COVER AS-PANEL	
M		2	8T-3612	4	NUT-WELD (M8X1.25-THD)	
	18	2	113-8373	8	SCREW-BUTTON HEAD (10-32X0.75-IN)	
	19	2	4B-4274	8	WASHER (5.5X13X1.2-MM THK)	
M	20	1	5C-7261	1	NUT (M8X1.25-THD)	
M	21	2	5C-9553	4	BOLT (M6X1X16-MM)	
	22	1	5P-9299	1	CLIP	
M	23	2	6V-8225	1	NUT (M6X1-THD)	
	24	1	7X-0608	1	WASHER-HARD (10.2X16X2-MM THK)	
M	25	2	7X-2548	2	BOLT (M12X1.75X16-MM)	
M	26	2	8C-8580	3	BOLT-SOCKET HEAD (M5X0.8X16-MM)	

270-4330 **PANEL GP-CIRCUIT BREAKER** *(contd.)* **i02876778**

NOTE	REF NO	GRAPHIC REF	PART NUMBER	QTY	PART NAME 1 2 3 4 5 6 (PRODUCT LEVEL)	SEE PAGE
	27	2	**8T-0328**	3	WASHER-HARD (5.5X10X1-MM THK)	
	28	1,2	**8T-4121**	6	WASHER-HARD (11X21X2.5-MM THK)	
M	29	1,2	**8T-4136**	5	BOLT (M10X1.5X25-MM)	
CM	30	2	**8T-4138**	3	BOLT (M6X1X20-MM)	
CM	31	2	**8T-4189**	4	BOLT (M8X1.25X20-MM)	
M	32	2	**8T-4191**	1	BOLT (M10X1.5X16-MM)	
	33	2	**8T-4223**	2	WASHER-HARD (13.5X25.5X3-MM THK)	
C	34	2	**8T-4224**	4	WASHER-HARD (8.8X16X2-MM THK)	
	35	1	**9F-5644**	1	LOCKWASHER	
C	36	2	**9X-8256**	8	WASHER (6.6X12X2-MM THK)	

C-CHANGE FROM PREVIOUS TYPE
D-ORDER BY THE METER
E-ORDER BY THE CENTIMETER
M-METRIC PART
Y-SEPARATE ILLUSTRATION

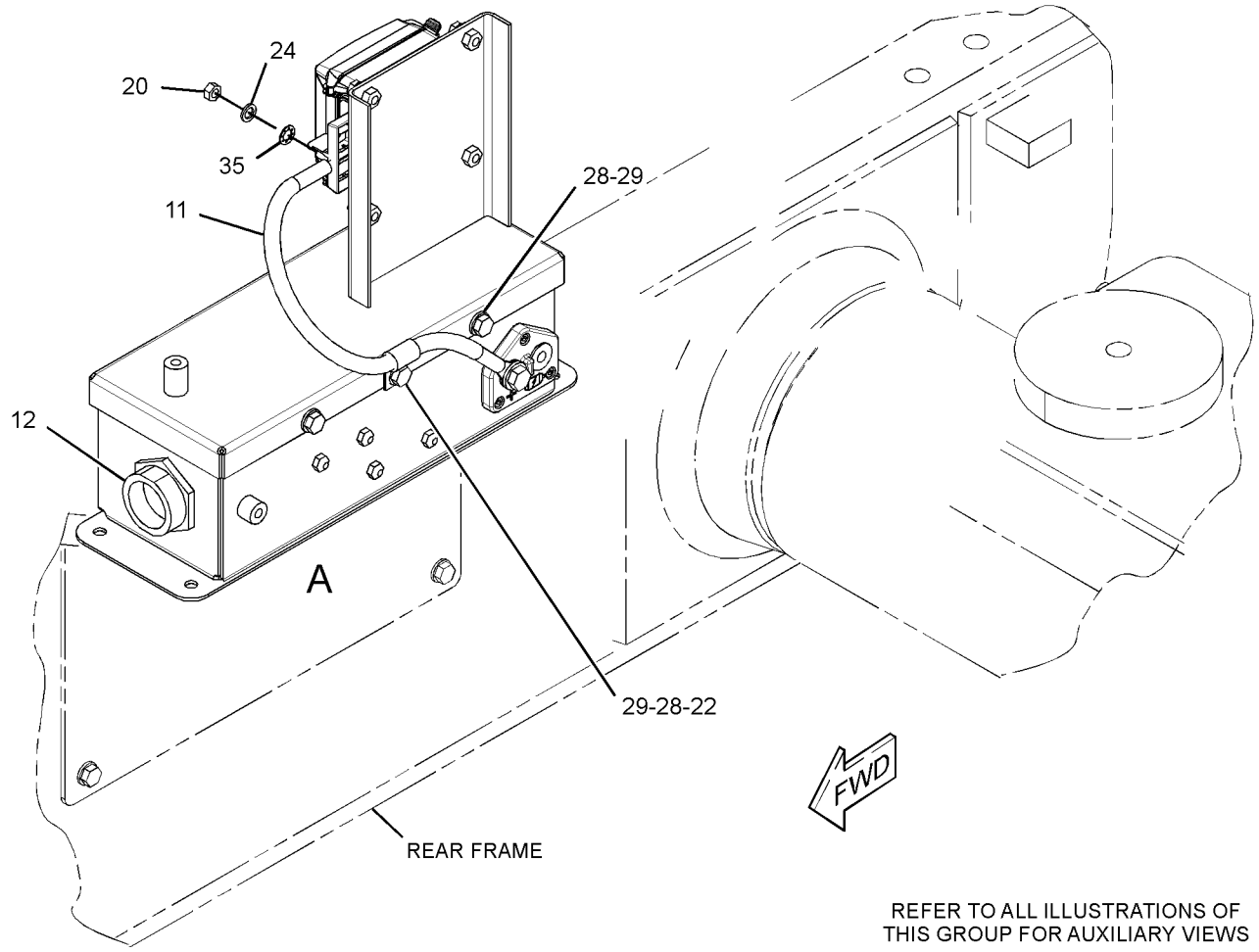

REFER TO ALL ILLUSTRATIONS OF THIS GROUP FOR AUXILIARY VIEWS

GRAPHIC #1

g01526465

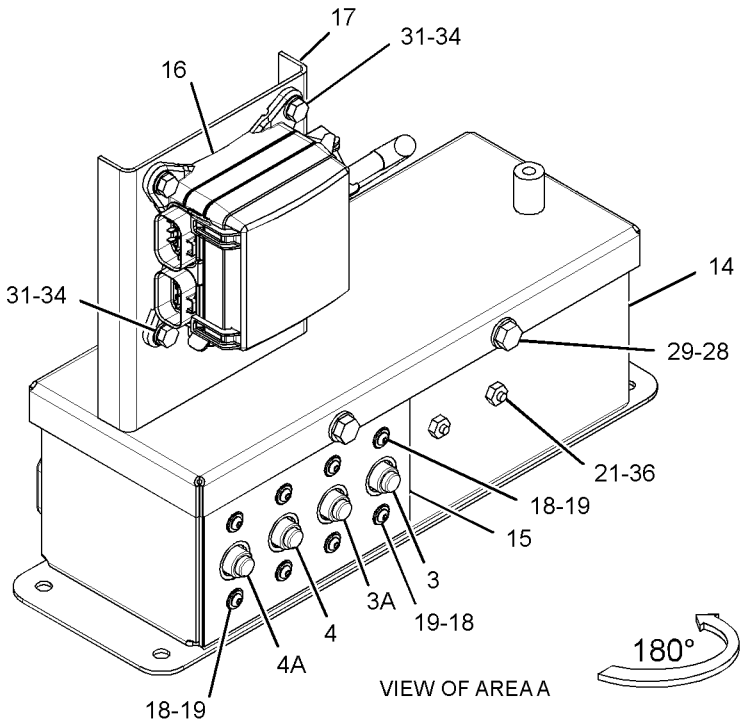

VIEW OF AREA A

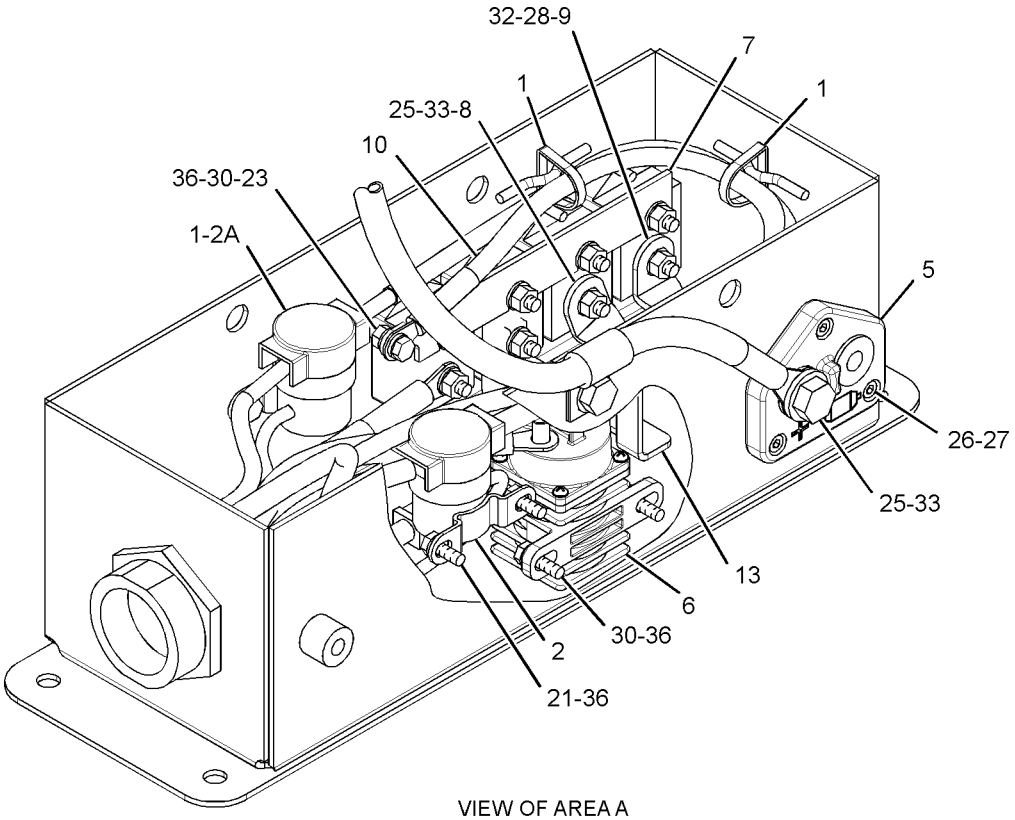

VIEW OF AREA A
(PANEL COVER REMOVED)

GRAPHIC #2 **<END>** g01526467

ELECTRICAL AND STARTING SYSTEM

270-4330 PANEL GP-CIRCUIT BREAKER

S/N: B9K276-UP

PART OF 266-8962 WIRING GP-REAR

SMCS-1417, 1420, 1422 **i03034943**

NOTE	REF NO	GRAPHIC REF	PART NUMBER	QTY	PART NAME 1 2 3 4 5 6 (PRODUCT LEVEL)	SEE PAGE
	1	2	3S-2093	4	STRAP-CABLE	
Y	2	2	118-3534	1	SWITCH GP-MAGNETIC (24-VOLT) (START RELAY)	338
Y	2A	2	118-3534	1	SWITCH GP-MAGNETIC (24-VOLT) (BRAKE RETRACT)	338
	3	2	171-2210	1	CIRCUIT BREAKER AS (80-AMPERE) (LOAD)	
	3A	2	171-2210	1	CIRCUIT BREAKER AS (80-AMPERE) (MAIN)	
					(EACH INCLUDES)	
		2	6V-8187	2	NUT (1/4-28-THD)	
		2	8T-4205	2	WASHER-HARD (7.2X14.5X2-MM THK)	
		2	253-2111	2	LOCKWASHER	
	4	2	171-2215	1	CIRCUIT BREAKER AS (150-AMPERE) (BATTERY)	
	4A	2	171-2215	1	CIRCUIT BREAKER AS (150-AMPERE) (ALTERNATOR)	
					(EACH INCLUDES)	
		2	6V-8187	2	NUT (1/4-28-THD)	
		2	8T-4205	2	WASHER-HARD (7.2X14.5X2-MM THK)	
		2	253-2111	2	LOCKWASHER	
	5	2	172-4863	1	JUNCTION BLOCK	
Y	6	2	241-8368	1	SWITCH GP-MAGNETIC (24-VOLT) (MAIN RELAY)	342
	7	2	261-0140	1	PLATE	
	8	2	269-3379	1	CABLE AS	
		2	9X-9825	1	TERMINAL-CABLE (00-GA, 1/2-IN SCREW)	
E		2	159-8049		CABLE (00-GA, RED) (8-CM)	
		2	283-8657	1	TERMINAL-RING	
	9	2	269-3380	1	CABLE AS	
		2	8S-3020	1	TERMINAL-CABLE (00-GA, 3/8-IN SCREW)	
		2	283-8657	1	TERMINAL-RING	
E		2	159-8049		CABLE (00-GA, RED) (9-CM)	
C	10	2	323-2128	1	WIRE AS	
	11	1	270-4327	1	CABLE AS	
D		1	6V-2369		CABLE (4-GA, BLACK) (0.4-M)	
		1	5P-3454	1	TERMINAL-RING (4-GA, 5/16-IN SCREW)	
		1	9G-4344	2	TERMINAL-RING (4-GA, 1/2-IN SCREW)	
	12	1	270-4329	1	HARNESS AS-BOX	
	13	2	274-7492	1	BAR-BUS	
	14	2	274-7499	1	BOX AS	
		2	5D-9629	3	ROD	
M		2	6V-9632	6	NUT-WELD (M6X1-THD)	
M		2	8T-3490	5	NUT-WELD (M10X1.5-THD)	
M		2	8T-8874	3	NUT-WELD (M5X0.8-THD)	
M		2	9R-2821	1	BOSS (M10X1.5X15-MM)	
		2	130-5300	3	CLIP	
	15	2	290-6002	1	FILM-IDENTIFICATION (FUSE PANEL)	
	16	2	313-9200	1	BLOCK AS-FUSE	
M		2	5C-7261	1	NUT (M8X1.25-THD)	
		2	7X-0608	1	WASHER-HARD (10.2X16X2-MM THK)	
		2	9F-5644	1	LOCKWASHER	
	17	2	315-3166	1	COVER AS-PANEL	
M		2	8T-3612	4	NUT-WELD (M8X1.25-THD)	
	18	2	113-8373	8	SCREW-BUTTON HEAD (10-32X0.75-IN)	
	19	2	4B-4274	8	WASHER (5.5X13X1.2-MM THK)	
M	20	1	5C-7261	1	NUT (M8X1.25-THD)	
M	21	2	5C-9553	4	BOLT (M6X1X16-MM)	
	22	1	5P-9299	1	CLIP	
	24	1	7X-0608	1	WASHER-HARD (10.2X16X2-MM THK)	
M	25	2	7X-2548	2	BOLT (M12X1.75X16-MM)	
M	26	2	8C-8580	3	BOLT-SOCKET HEAD (M5X0.8X16-MM)	
	27	2	8T-0328	3	WASHER-HARD (5.5X10X1-MM THK)	

270-4330 **PANEL GP-CIRCUIT BREAKER** *(contd.)* **i03034943**

NOTE	REF NO	GRAPHIC REF	PART NUMBER	QTY	PART NAME 1 2 3 4 5 6 (PRODUCT LEVEL)	SEE PAGE
	28	1,2	**8T-4121**	6	WASHER-HARD (11X21X2.5-MM THK)	
M	29	1,2	**8T-4136**	5	BOLT (M10X1.5X25-MM)	
CM	30	2	**8T-4138**	2	BOLT (M6X1X20-MM)	
M	31	2	**8T-4189**	4	BOLT (M8X1.25X20-MM)	
M	32	2	**8T-4191**	1	BOLT (M10X1.5X16-MM)	
	33	2	**8T-4223**	2	WASHER-HARD (13.5X25.5X3-MM THK)	
	34	2	**8T-4224**	4	WASHER-HARD (8.8X16X2-MM THK)	
	35	1	**9F-5644**	1	LOCKWASHER	
C	36	2	**9X-8256**	6	WASHER (6.6X12X2-MM THK)	

C-CHANGE FROM PREVIOUS TYPE
D-ORDER BY THE METER
E-ORDER BY THE CENTIMETER
M-METRIC PART
Y-SEPARATE ILLUSTRATION

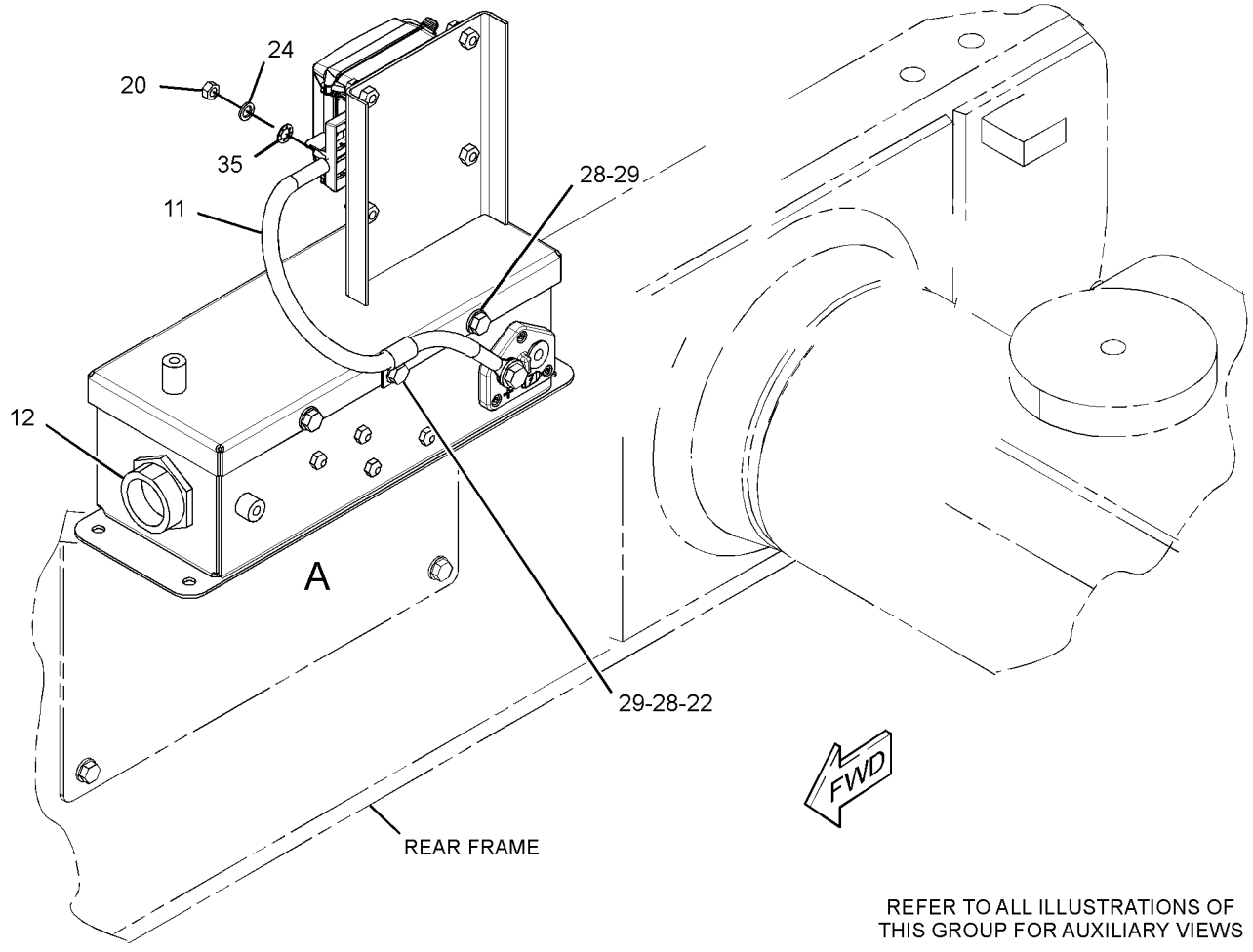

REFER TO ALL ILLUSTRATIONS OF THIS GROUP FOR AUXILIARY VIEWS

GRAPHIC #1 g01526465

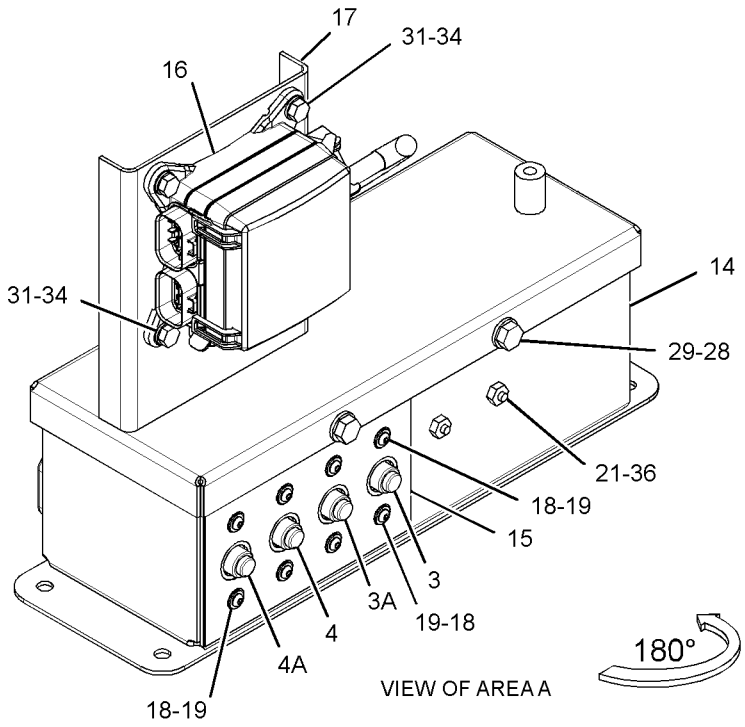

VIEW OF AREA A

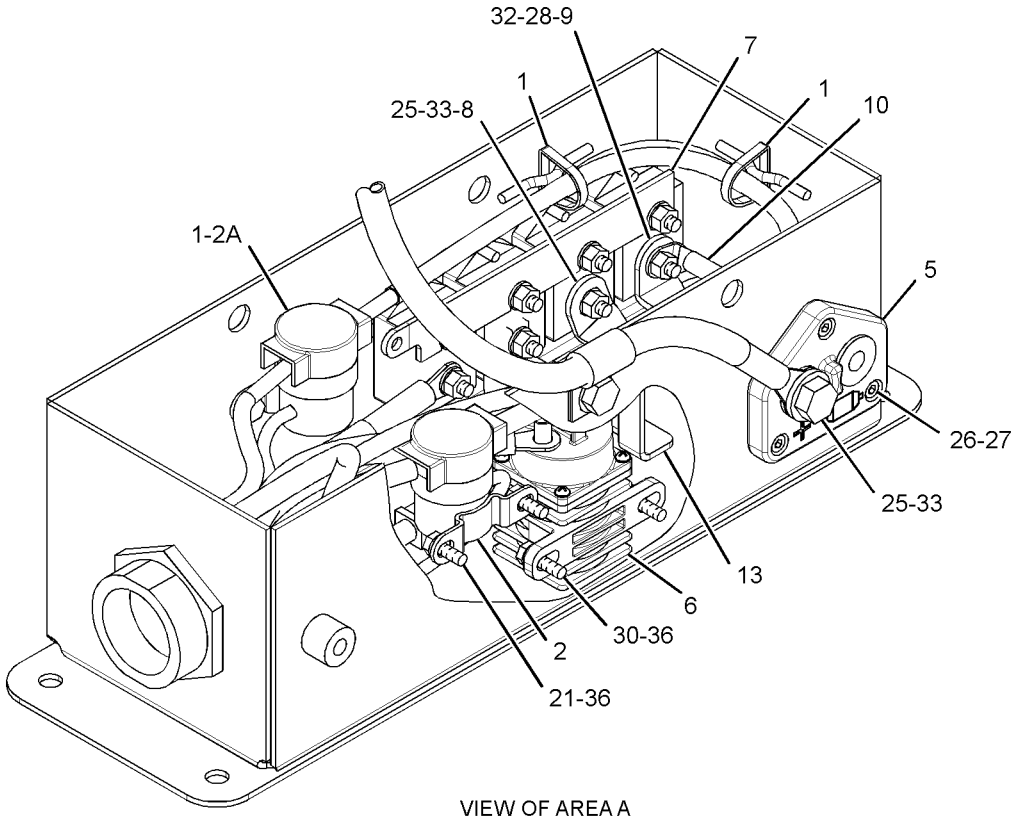

VIEW OF AREA A
(PANEL COVER REMOVED)

GRAPHIC #2 **<END>** g01560114

ELECTRICAL AND STARTING SYSTEM

272-8019 PANEL GP-CIRCUIT BREAKER

S/N: B9K1-UP

PART OF 267-5505 STARTING AR-COLD WEATHER

SMCS-1417, 1420, 1422 **i02760358**

NOTE	REF NO	GRAPHIC REF	PART NUMBER	QTY	PART NAME 1 2 3 4 5 6 (PRODUCT LEVEL)	SEE PAGE
	1	1	**5N-5536**	2	BLOCK-FUSE	
	2	1	**8X-7174**	1	PLATE	
	3	1	**9X-0259**	1	GASKET	
	4	1	**275-4040**	1	WIRE AS	
	5	1	**281-2691**	1	BOX AS	
M		1	**8T-8874**	8	NUT-WELD (M5X0.8-THD)	
	6	1	**281-2692**	1	COVER	
	7	1	**281-2693**	1	PLATE AS	
M		1	**8T-8874**	8	NUT-WELD (M5X0.8-THD)	
M		1	**9X-2032**	4	NUT-WELD (M4X0.7-THD)	
	8	1	**115-1499**	1	STRIP-TERMINAL	
	9	1	**122-2271**	1	FUSE (20-AMPERE)	
	10	1	**123-4106**	1	FUSE (25-AMPERE)	
M	11	1	**6V-4298**	16	BOLT (M5X0.8X16-MM)	
M	12	1	**7I-2272**	4	BOLT (M5X0.8X12-MM)	
	13	1	**7X-0620**	8	WASHER-HARD (5.5X13X1.6-MM THK)	
	14	1	**8C-7507**	8	LOCKWASHER	
	15	1	**8C-7508**	4	LOCKWASHER	
M	16	1	**8T-4647**	4	SCREW-MACHINE (M4X0.7X20-MM)	

M-METRIC PART

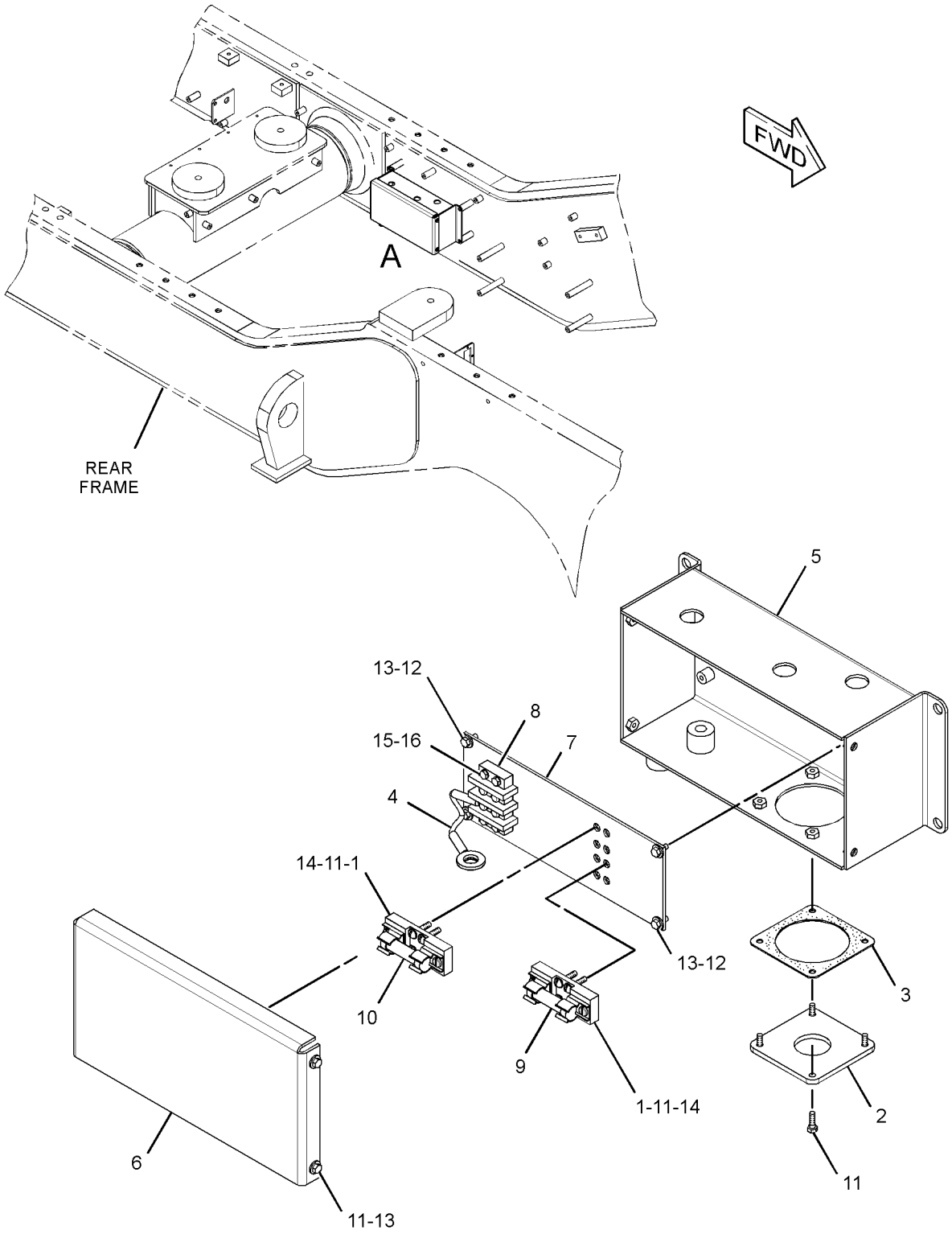

VIEW OF AREA A
(EXPLODED)

GRAPHIC #1 **<END>** g01383758

ELECTRICAL AND STARTING SYSTEM

263-9088 RADIO GP-COMMUNICATION–PRODUCT LINK 121SR

S/N: B9K1-UP

PART OF 266-7029, 313-6836 INSTALLATION AR-COMMUNICATION

SMCS-733T **i03729421**

NOTE	PART NUMBER	QTY	PART NAME 1 2 3 4 5 6 (PRODUCT LEVEL)	SEE PAGE
	336-3566	1	SOFTWARE GP-COMMUNICATION (PRODUCT LINK 121SR)	

<END>

ELECTRICAL AND STARTING SYSTEM

336-3545 RADIO GP-COMMUNICATION–PRODUCT LINK 121SR

S/N: B9K365-UP

PART OF 266-7029 INSTALLATION AR-COMMUNICATION

SMCS-733T **i03729461**

NOTE	PART NUMBER	QTY	PART NAME 1 2 3 4 5 6 (PRODUCT LEVEL)	SEE PAGE
	336-3566	1	SOFTWARE GP-COMMUNICATION (PRODUCT LINK 121SR)	

<END>

ELECTRICAL AND STARTING SYSTEM

292-0301 RECEIVER AR-LASER–ACCUGRADE, SINGLE

S/N: B9K1-UP

FOR USE WITH MOTOR GRADER

SMCS-7009 **i04040580**

NOTE	PART NUMBER	QTY	PART NAME 1 2 3 4 5 6 (PRODUCT LEVEL)	SEE PAGE
Y	*292-0281*	1	MAST GP (LASER RECEIVER)	268
Y	*292-0908*	1	MOUNTING GP-MAST (LASER RECEIVER)	271
Y	*292-0285*	1	RECEIVER GP-LASER	293
	235-4587	1	CASE-PLASTIC	

Y-SEPARATE ILLUSTRATION

<END>

ELECTRICAL AND STARTING SYSTEM

292-0310 RECEIVER AR-LASER–ACCUGRADE, DUAL

S/N: B9K1-UP

FOR USE WITH MOTOR GRADER

SMCS-7009 **i04042904**

NOTE	PART NUMBER	QTY	PART NAME 1 2 3 4 5 6 (PRODUCT LEVEL)	SEE PAGE
Y	**226-2333**	2	MAST GP (LASER RECEIVER)	267
Y	*292-0302*	2	MOUNTING GP-MAST (LASER RECEIVER)	270
Y	**234-9970**	2	MOUNTING GP-RECEIVER (MAST)	272
Y	*292-0285*	2	RECEIVER GP-LASER (ACCUGRADE, DUAL)	293
	248-1503	2	BRACKET GP-MOUNTING	
			(EACH INCLUDES)	
	7X-0343	4	BOLT (5/8-11X1.25-IN)	
	7X-0366	3	BOLT (3/4-10X2-IN)	
	8T-4122	4	WASHER-HARD (17X32X3.5-MM THK)	
	8T-4994	3	WASHER-HARD (20X36.5X3.5-MM THK)	
	248-1496	2	RISER AS (MAST)	
			(EACH INCLUDES)	
	3B-4512	1	LOCKWASHER	
	9S-1362	1	BOLT (3/4-16X2-IN)	
	231-0049	2	CABLE-COILED (MAST)	
	235-4587	1	CASE-PLASTIC	

Y-SEPARATE ILLUSTRATION

<END>

ELECTRICAL AND STARTING SYSTEM

292-7971 RECEIVER AR-SATELLITE–
ACCUGRADE, SINGLE GNSS, MS992
S/N: B9K1-UP

SMCS-7010 **i04041187**

NOTE	PART NUMBER	QTY	PART NAME 1 2 3 4 5 6 (PRODUCT LEVEL)	SEE PAGE
Y	*272-2286*	1	BRACKET GP-MOUNTING (MAST)	189
Y	*292-0292*	1	RECEIVER GP-SATELLITE (ACCUGRADE, SINGLE GNSS, MS992)	295
	271-6373	1	MAST AS	
	248-1502	1	RISER (ANGLE)	
	3E-9861	4	LOCKNUT (5/8-11-THD)	
	7X-0347	4	BOLT (5/8-11X2.25-IN)	
	8T-4122	8	WASHER-HARD (17X32X3.5-MM THK)	

Y-SEPARATE ILLUSTRATION

<END>

ELECTRICAL AND STARTING SYSTEM

292-7972 RECEIVER AR-SATELLITE–
ACCUGRADE, DUAL GNSS, MS992
S/N: B9K1-UP

SMCS-7010 **i04041188**

NOTE	PART NUMBER	QTY	PART NAME 1 2 3 4 5 6 (PRODUCT LEVEL)	SEE PAGE
Y	*272-2286*	1	BRACKET GP-MOUNTING (MAST)	189
Y	*292-0291*	1	RECEIVER GP-SATELLITE (ACCUGRADE, DUAL GNSS, MS992)	294
	271-6373	1	MAST AS	
	248-1502	1	RISER (ANGLE)	
	3E-9861	4	LOCKNUT (5/8-11-THD)	
	7X-0347	4	BOLT (5/8-11X2.25-IN)	
	8T-4122	8	WASHER-HARD (17X32X3.5-MM THK)	

Y-SEPARATE ILLUSTRATION

<END>

ELECTRICAL AND STARTING SYSTEM

292-0285 RECEIVER GP-LASER–ACCUGRADE, DUAL

S/N: B9K1-UP

PART OF 292-0301, 292-0310 RECEIVER AR-LASER

SMCS-7009 **i03768195**

NOTE	PART NUMBER	QTY	PART NAME 1 2 3 4 5 6 (PRODUCT LEVEL)	SEE PAGE
	342-9559	1	RECEIVER AS-LASER	
	276-0764	1	CABLE-COILED (LASER RECEIVER)	

<END>

ELECTRICAL AND STARTING SYSTEM

292-0291 RECEIVER GP-SATELLITE–

ACCUGRADE, DUAL GNSS, MS992

S/N: B9K1-UP

PART OF 292-7972 RECEIVER AR-SATELLITE

SMCS-7010 **i03939430**

NOTE	PART NUMBER	QTY	PART NAME 1 2 3 4 5 6 (PRODUCT LEVEL)	SEE PAGE
	252-9628	2	MOUNTING GP-RECEIVER (TARGET)	
			(EACH INCLUDES)	
	8R-1803	5	WASHER (10.5X18X1-MM THK)	
M	**8T-9388**	4	BOLT (M10X1.5X25-MM)	
	113-0693	5	LOCKWASHER	
	289-8449	1	HANDLE AS	
	353-2794	2	RECEIVER AS-SATELLITE (GNSS, MS992)	
	255-0939	1	CASE-PLASTIC (RECEIVER)	
	286-3017	2	HANDLE (RECEIVER)	

M-METRIC PART

<END>

ELECTRICAL AND STARTING SYSTEM

292-0292 RECEIVER GP-SATELLITE–
ACCUGRADE, SINGLE GNSS, MS992
S/N: B9K1-UP
PART OF 292-7971 RECEIVER AR-SATELLITE

SMCS-7010 **i03939432**

NOTE	PART NUMBER	QTY	PART NAME 1 2 3 4 5 6 (PRODUCT LEVEL)	SEE PAGE
	252-9628	1	MOUNTING GP-RECEIVER (TARGET)	
	8R-1803	5	WASHER (10.5X18X1-MM THK)	
M	**8T-9388**	4	BOLT (M10X1.5X25-MM)	
	113-0693	5	LOCKWASHER	
	289-8449	1	HANDLE AS	
	353-2794	1	RECEIVER AS-SATELLITE (GNSS, MS992)	
	255-0939	1	CASE-PLASTIC (RECEIVER)	
	286-3017	1	HANDLE (RECEIVER)	

M-METRIC PART

<END>

ELECTRICAL AND STARTING SYSTEM

249-7789 SENSOR & MOUNTING GP

S/N: B9K1-UP

PART OF 262-2017 SENSOR AR-GRADE

SMCS-1408, 1439, 1906, 1907, 1912, 1917, 1923, 1924, 7400

i03091096

NOTE	PART NUMBER	QTY	PART NAME 1 2 3 4 5 6 (PRODUCT LEVEL)	SEE PAGE
	244-1714	1	SENSOR GP-POSITION (BLADE ROTATION)	
	269-3277	1	RING	
	284-5170	1	SOFTWARE (ROTATION SENSOR)	
	276-6146	2	SENSOR AS-ANGLE (AS400TC) (ANGLE)	
	255-0941	1	BRACKET AS-SENSOR	
	269-3303	3	SCREW (M6X1-THD)	
	269-3304	3	SPACER-SPECIAL	
	250-2172	1	KIT-BRACKET	
			(INCLUDES BOLTS & WASHER-HARD)	

<END>

ELECTRICAL AND STARTING SYSTEM

276-8491 SENSOR & MTG GP-POSITION

S/N: B9K1-UP

PART OF 276-8498 PANEL GP-CONTROL

SMCS-1408, 4806, 7400 **i02662279**

NOTE	REF NO	GRAPHIC REF	PART NUMBER	QTY	PART NAME 1 2 3 4 5 6 (PRODUCT LEVEL)	SEE PAGE
	1	1	**112-0858**	4	BEARING	
	2	1	**127-3008**	2	SPRING	
	3	1	**142-2527**	4	GASKET	
Y	4	1	**219-2392**	2	SENSOR GP-POSITION (VARIABLE BLADE FLOAT)	306
	5	1	**244-2710**	2	BLOCK	
	6	1	**244-2711**	2	SHAFT	
	7	1	**249-4099**	2	PLATE	
	8	1	**276-8492**	1	PLATE AS	
M		1	**6V-9632**	4	NUT-WELD (M6X1-THD)	
		1	**091-4537**	4	BOSS-THREADED (M6X1-THD)	
	9	1	**276-9617**	2	DETENT	
	10	1	**127-4838**	2	SETSCREW-SOCKET (8-32X0.375-IN)	
	11	1	**1M-6718**	2	BALL	
M	12	1	**3T-0849**	4	BOLT-SOCKET HEAD (M6X1X25-MM)	
	13	1	**8T-0328**	4	WASHER-HARD (5.5X10X1-MM THK)	
	14	1	**8T-5410**	2	SEAL-LIP TYPE	
M	15	1	**8T-6699**	4	BOLT-SOCKET HEAD (M5X0.8X35-MM)	
	16	1	**8T-7566**	4	PIN-SPRING	
	17	1	**9X-8256**	4	WASHER (6.6X12X2-MM THK)	

M-METRIC PART
Y-SEPARATE ILLUSTRATION

276-8491 SENSOR & MTG GP-POSITION *(contd.)* **i02662279**

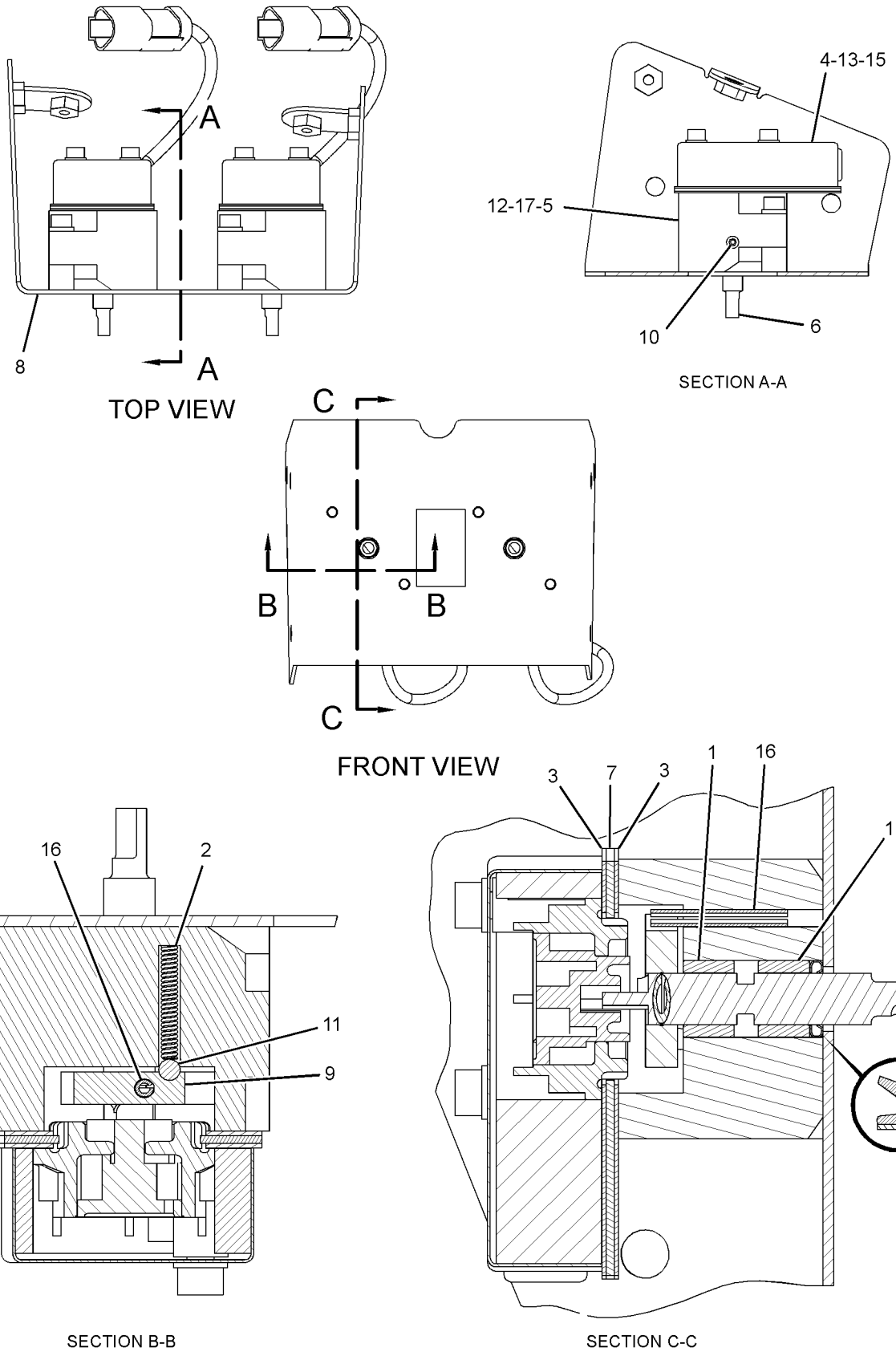

GRAPHIC #1 **<END>** g01316794

ELECTRICAL AND STARTING SYSTEM

262-2017 SENSOR AR-GRADE

S/N: B9K1-UP

FOR USE WITH M SERIES MOTOR GRADER

SMCS-5953, 6060 **i03645916**

NOTE	PART NUMBER	QTY	PART NAME 1 2 3 4 5 6 (PRODUCT LEVEL)	SEE PAGE
Y	*249-7789*	1	SENSOR & MOUNTING GP (ACCUGRADE)	296
	324-2694	1	FASTENER GP-SENSOR (ANGLE)	
	061-6665	2	BOLT (1/2-13X1.25-IN)	
M	**9X-2537**	4	BOLT-SOCKET HEAD (M6X1X70-MM)	
	186-0359	1	CLIP	
M	**5C-2890**	4	NUT (M6X1-THD)	
	9X-8256	8	WASHER (6.6X12X2-MM THK)	

M-METRIC PART
Y-SEPARATE ILLUSTRATION

<END>

ELECTRICAL AND STARTING SYSTEM

262-2018 SENSOR AR-GRADE–SINGLE SONIC

S/N: B9K1-UP

FOR USE WITH H SERIES, M SERIES MOTOR GRADER

SMCS-5953, 6060 **i03242694**

NOTE	PART NUMBER	QTY	PART NAME 1 2 3 4 5 6 (PRODUCT LEVEL)	SEE PAGE
Y	**248-1484**	2	FASTENER GP-SENSOR	539
Y	**249-7792**	1	SENSOR GP-SONIC (SINGLE)	314
	248-1493	1	CASE-PLASTIC	

Y-SEPARATE ILLUSTRATION

<END>

ELECTRICAL AND STARTING SYSTEM

262-2019 SENSOR AR-GRADE–DUAL SONIC

S/N: B9K1-UP

FOR USE WITH H SERIES, M SERIES MOTOR GRADER

SMCS-5953, 6060 **i03242696**

NOTE	PART NUMBER	QTY	PART NAME 1 2 3 4 5 6 (PRODUCT LEVEL)	SEE PAGE
Y	**248-1484**	2	FASTENER GP-SENSOR	539
Y	**249-7792**	2	SENSOR GP-SONIC (DUAL)	314
	248-1493	1	CASE-PLASTIC	

Y-SEPARATE ILLUSTRATION

<END>

ELECTRICAL AND STARTING SYSTEM

231-1973 SENSOR GP-ENGINE

S/N: RHX2054-UP

PART OF 215-7486, 263-7760 ENGINE AR-COMPLETE

SMCS-1052, 1087, 1439, 1906, 1912, 1917, 1923, 1924, 1925

i03774110

NOTE	REF NO	GRAPHIC REF	PART NUMBER	QTY	PART NAME 1 2 3 4 5 6 (PRODUCT LEVEL)	SEE PAGE
	1	1	**9X-0262**	1	ADAPTER	
	2	1	**132-9770**	1	SPACER AS	
		1	**1W-6448**	2	DOWEL	
CY	3	1	*274-7395*	1	SENSOR GP-TEMPERATURE (INTAKE AIR MANIFOLD)	323
CY	4	1	*274-7396*	1	SENSOR GP-TEMPERATURE (ENGINE COOLANT)	324
Y	5	1	*214-2484*	1	SENSOR GP-SPEED (TIMING, CRANKSHAFT)	317
Y	6	1	*239-2395*	1	SENSOR GP-PRESSURE (ATMOSPHERIC AIR)	310
Y	7	1	*239-2396*	1	SENSOR GP-PRESSURE (ENGINE OIL)	311
Y	8	1	*239-5928*	1	SENSOR GP-SPEED (TIMING, CAMSHAFT)	318
	9	1	**241-6186**	1	ELBOW	
	10	1	**0S-1591**	1	BOLT (3/8-16X1.5-IN)	
Y	11	1	*239-5674*	1	SENSOR GP-PRESSURE (AIR INLET MANIFOLD)	313
	12	1	**2H-3755**	2	BOLT (5/16-18X0.43-IN)	
	13	1	**3P-1155**	1	SEAL-O-RING	
	14	1	**5M-2894**	1	WASHER-HARD (10.2X18.5X2.5-MM THK)	
	15	1	**6V-5048**	1	SEAL-O-RING	
	16	1	**6V-5049**	1	SEAL-O-RING	
	17	1	**9M-1974**	2	WASHER-HARD (8.8X16X2-MM THK)	

C-CHANGE FROM PREVIOUS TYPE
Y-SEPARATE ILLUSTRATION

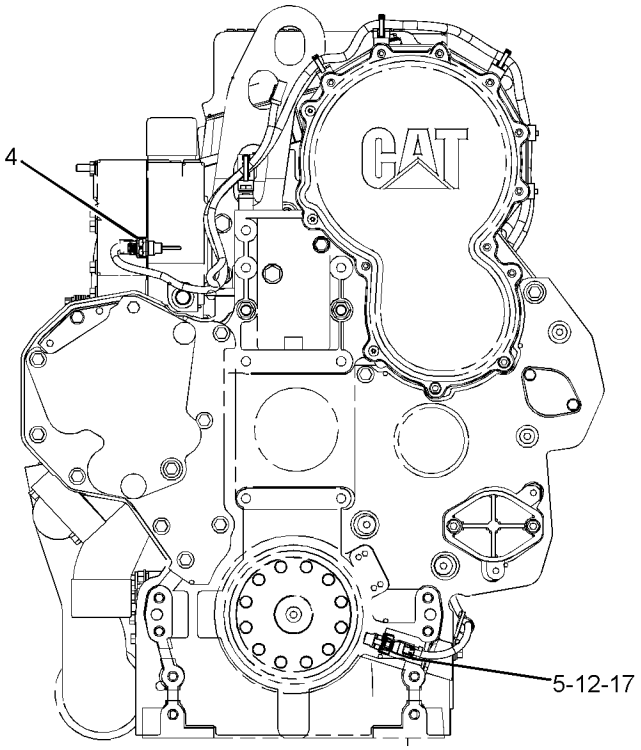

FRONT VIEW

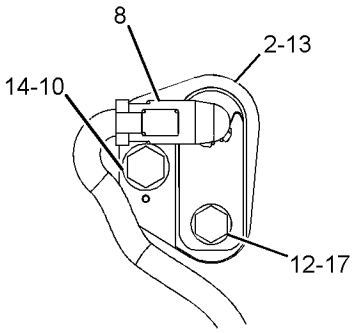

SECTION A-A

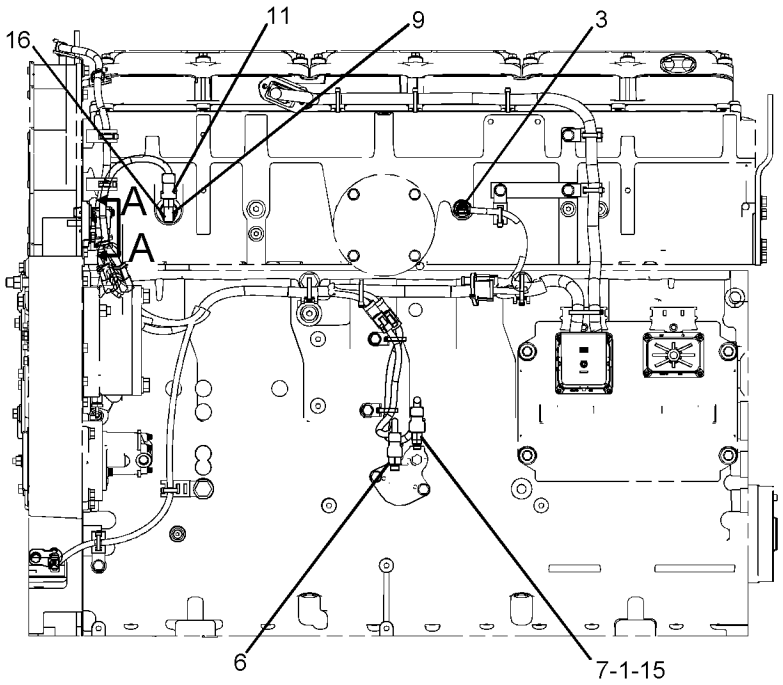

LEFT SIDE VIEW

GRAPHIC #1 **<END>** g01055021

ELECTRICAL AND STARTING SYSTEM

124-9325 SENSOR GP-FUEL LEVEL

S/N: B9K1-UP

PART OF 275-0604 TANK GP-FUEL

SMCS-1280, 1439 **i02787701**

NOTE	REF NO	GRAPHIC REF	PART NUMBER	QTY	PART NAME 1 2 3 4 5 6 (PRODUCT LEVEL)	SEE PAGE
	1	1	102-8804	1	KIT-RECEPTACLE (4-PIN)	
					(INCLUDES RECEPTACLE AS & WEDGE)	
	2	1	3E-3377	1	WEDGE-RECEPTACLE LOCK (4-PIN)	
	3	1	186-3735	4	PIN-CONNECTOR (16-GA TO 18-GA)	

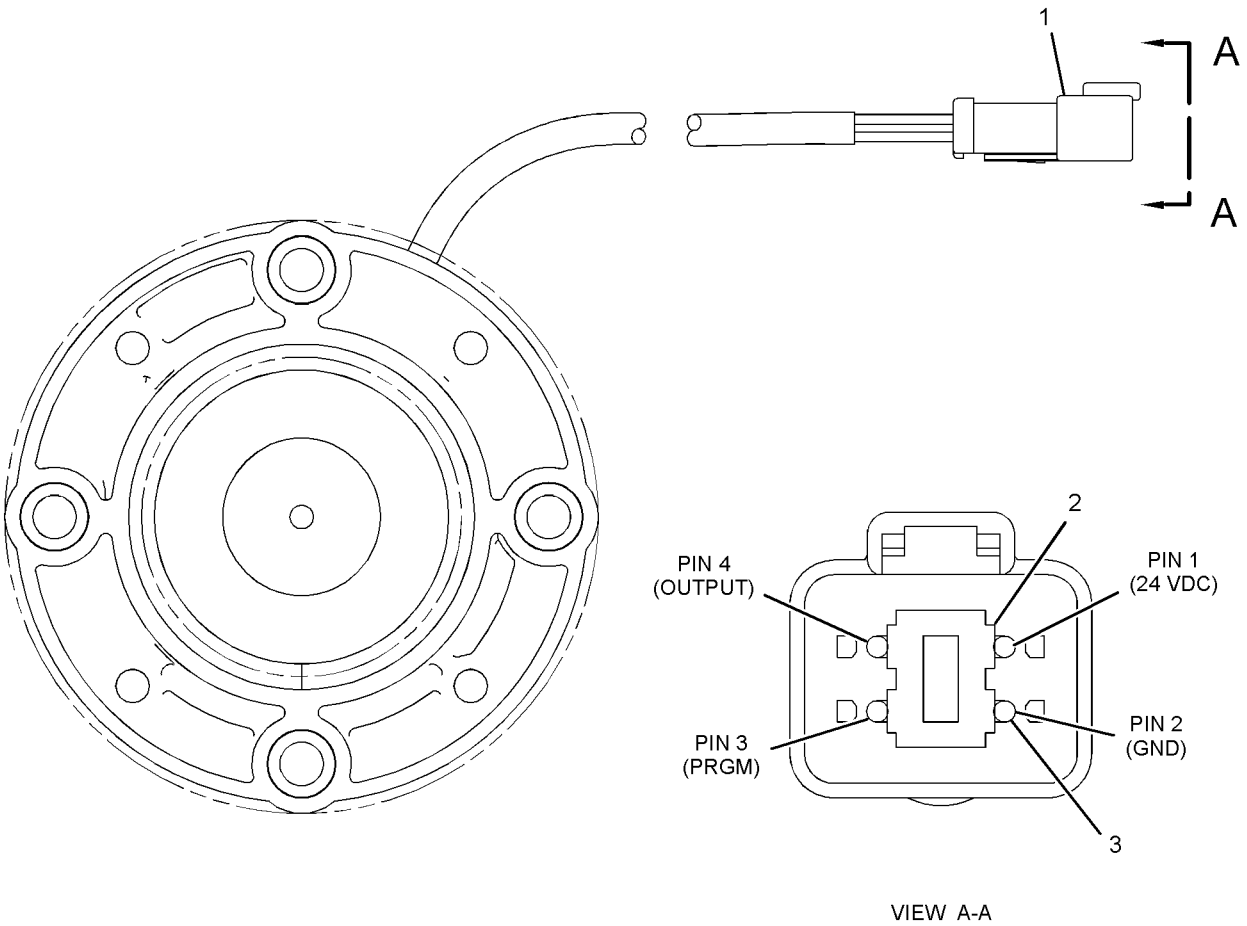

VIEW A-A

GRAPHIC #1 **<END>** g01392955

ELECTRICAL AND STARTING SYSTEM

198-8372 SENSOR GP-POSITION

S/N: B9K1-336

PART OF 266-8963 WIRING GP-REAR

SMCS-1408, 3168, 3175, 4269, 4809 **i02406429**

NOTE	REF NO	GRAPHIC REF	PART NUMBER	QTY	PART NAME 1 2 3 4 5 6 (PRODUCT LEVEL)	SEE PAGE
	2	1	**102-8803**	1	KIT-RECEPTACLE (3-PIN)	
					(INCLUDES RECEPTACLE AS. & WEDGE)	
	3	1	**9X-3401**	3	PIN-CONNECTOR (16-GA TO 18-GA)	
	4	1	**3E-3371**	1	WEDGE-RECEPTACLE LOCK (3-PIN)	
E	5	1	**119-3662**		TUBE-HEAT SHRINK (10.85-MM DIA) (5-CM)	
E	6	1	**9X-1813**		SLEEVE (17-CM)	
	7	1	**172-1482**	1	CLAMP	
M	8	1	**3E-8048**	2	SCREW-MACHINE (M3X0.5X6-MM)	

E-ORDER BY THE CENTIMETER
M-METRIC PART

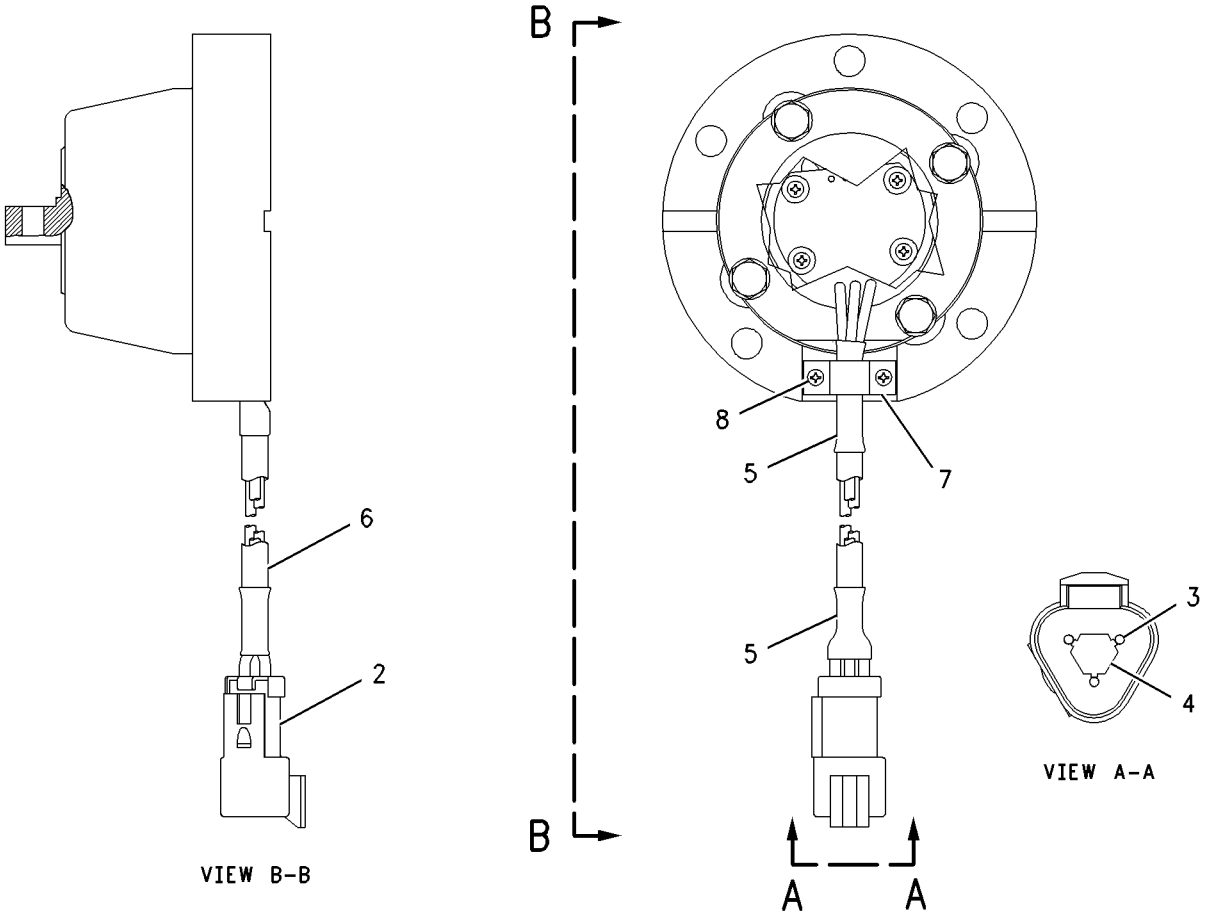

GRAPHIC #1 **<END>** g00884067

ELECTRICAL AND STARTING SYSTEM

219-2392 SENSOR GP-POSITION

S/N: B9K1-UP

PART OF 276-8491 SENSOR & MTG GP-POSITION

SMCS-1408, 3168, 3175, 4269, 4809 **i01816866**

NOTE	REF NO	GRAPHIC REF	PART NUMBER	QTY	PART NAME 1 2 3 4 5 6 (PRODUCT LEVEL)	SEE PAGE
	1	1	**102-8803**	1	KIT-RECEPTACLE (3-PIN)	
					(INCLUDES RECEPTACLE AS & WEDGE)	
	2	1	**186-3735**	3	PIN-CONNECTOR (16-GA TO 18-GA)	
	3	1	**3E-3371**	1	WEDGE-RECEPTACLE LOCK (3-PIN)	

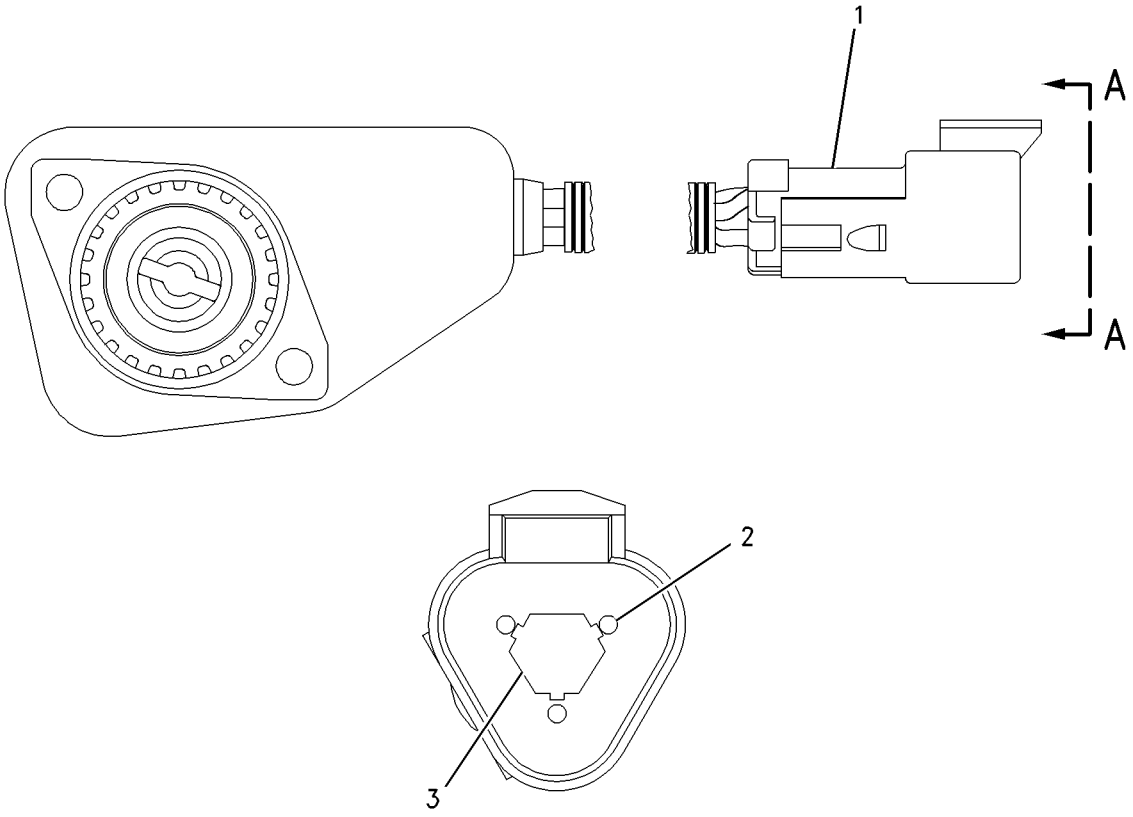

VIEW A-A

GRAPHIC #1 **<END>** g00931978

ELECTRICAL AND STARTING SYSTEM

194-6722 SENSOR GP-PRESSURE

S/N: B9K1-UP; RHX2094-UP

PART OF 239-2395 SENSOR GP-PRESSURE, 266-8963 WIRING GP-REAR

SMCS-1052, 1058, 1408, 1718, 1907, 1912, 1916, 1917, 1923, 1924, 1925, 3175, 4351, 4352, 7400, 7494

i03698115

NOTE	REF NO	GRAPHIC REF	PART NUMBER	QTY	PART NAME 1 2 3 4 5 6 (PRODUCT LEVEL)	SEE PAGE
E	1	1	9X-1813		SLEEVE (34-CM)	
	2	1	155-2260	1	KIT-CONNECTING PLUG (3-PIN)	
					(INCLUDES PLUG AS, WEDGE & INTERFACE SEAL)	
	3	1	180-9340	3	SOCKET-CONNECTOR (14-GA TO 18-GA)	

E-ORDER BY THE CENTIMETER

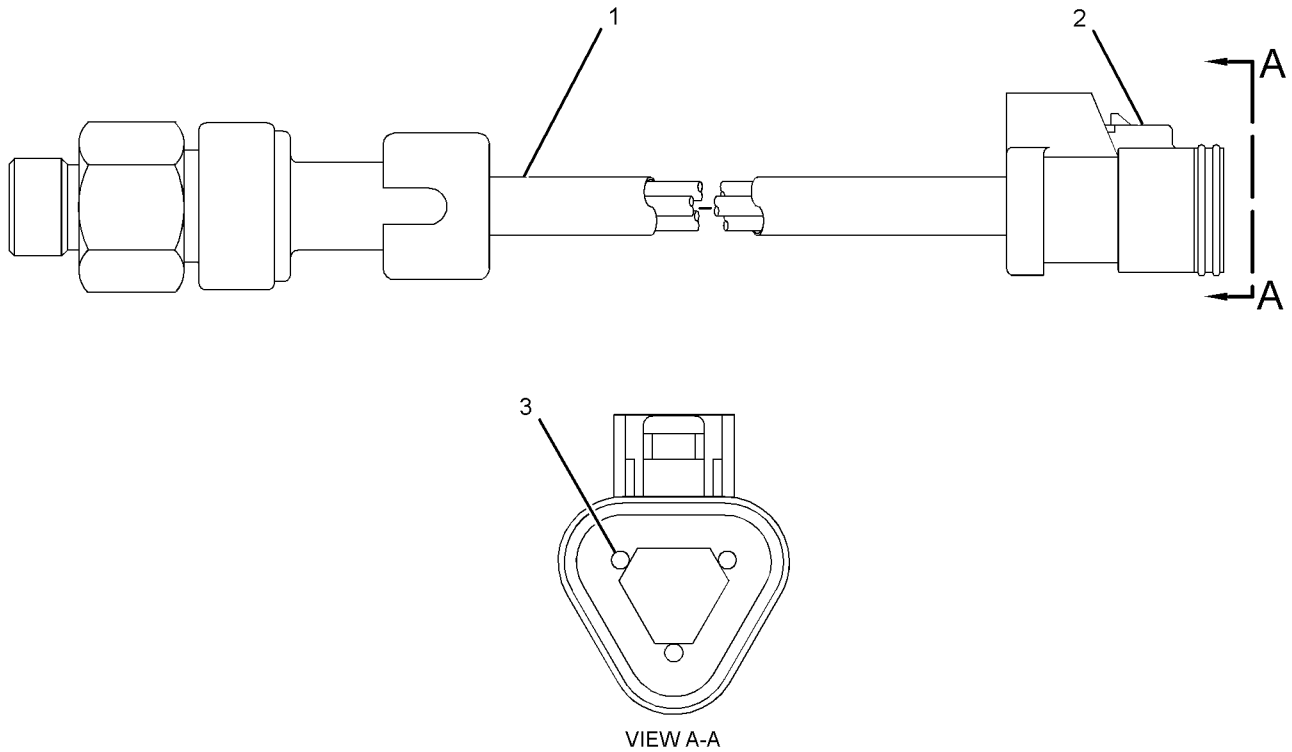

GRAPHIC #1

<END>

g01991395

ELECTRICAL AND STARTING SYSTEM

194-6725 SENSOR GP-PRESSURE

S/N: RHX2094-UP

PART OF 239-2396 SENSOR GP-PRESSURE

SMCS-1052, 1058, 1408, 1718, 1907, 1912, 1916, 1917, 1923, 1924, 1925, 3175, 4351, 4352, 7400, 7494

i03642385

NOTE	REF NO	GRAPHIC REF	PART NUMBER	QTY	PART NAME 1 2 3 4 5 6 (PRODUCT LEVEL)	SEE PAGE
E	1	1	9X-1813		SLEEVE (34-CM)	
	2	1	155-2260	1	KIT-CONNECTING PLUG (3-PIN)	
					(INCLUDES PLUG AS, INTERFACE SEAL & WEDGE)	
	3	1	180-9340	3	SOCKET-CONNECTOR (14-GA TO 18-GA)	

E-ORDER BY THE CENTIMETER

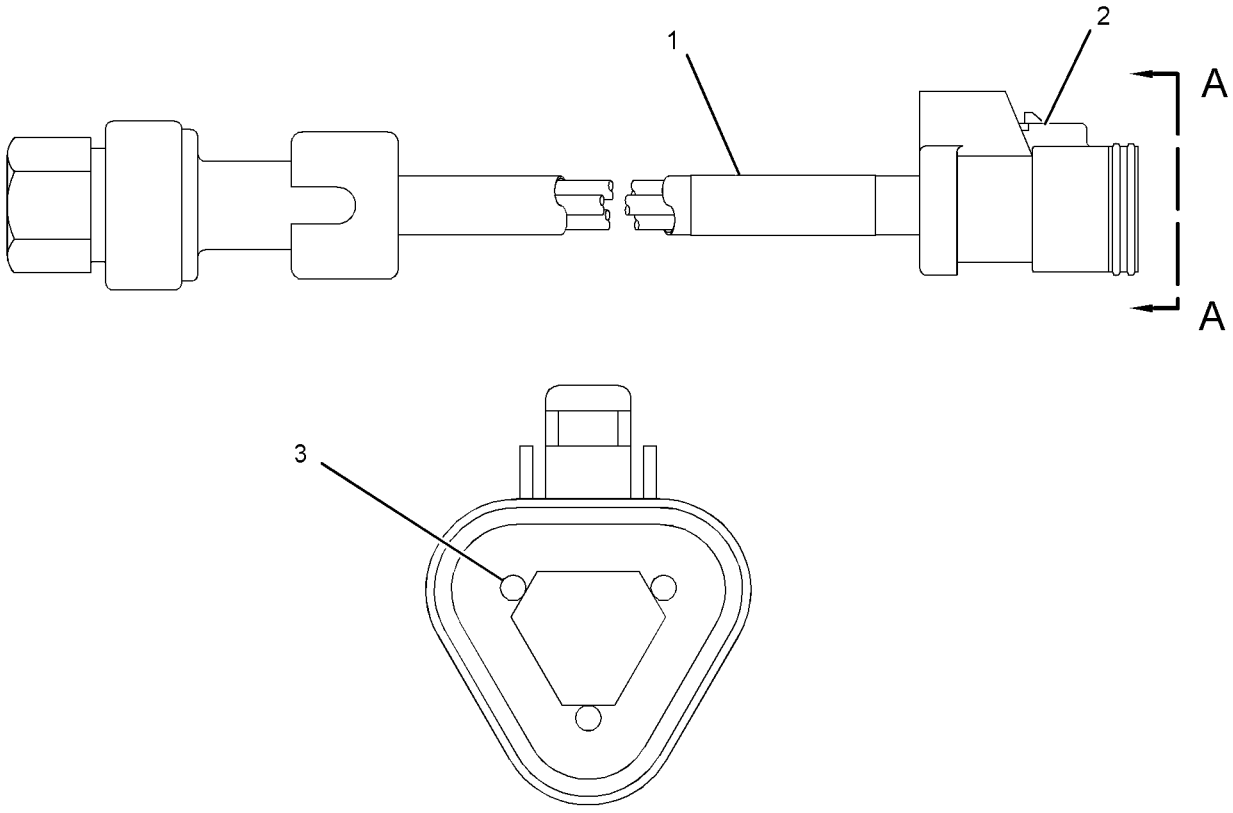

VIEW A-A

GRAPHIC #1

<END>

g01662003

ELECTRICAL AND STARTING SYSTEM

237-0957 SENSOR GP-PRESSURE

S/N: B9K1-UP

PART OF 272-0984, 353-2606 MANIFOLD GP-CONTROL, 266-8963 WIRING GP-REAR

SMCS-1052, 1058, 1408, 1718, 1907, 1912, 1916, 1917, 1923, 1924, 1925, 3175, 4351, 4352, 7400, 7494

i03492300

NOTE	REF NO	GRAPHIC REF	PART NUMBER	QTY	PART NAME 1 2 3 4 5 6 (PRODUCT LEVEL)	SEE PAGE
BE	1	1	9X-1813		SLEEVE	
	2	1	155-2260	1	KIT-CONNECTING PLUG (3-PIN)	
					(INCLUDES PLUG AS, WEDGE & INTERFACE SEAL)	

B-USE AS REQUIRED
E-ORDER BY THE CENTIMETER

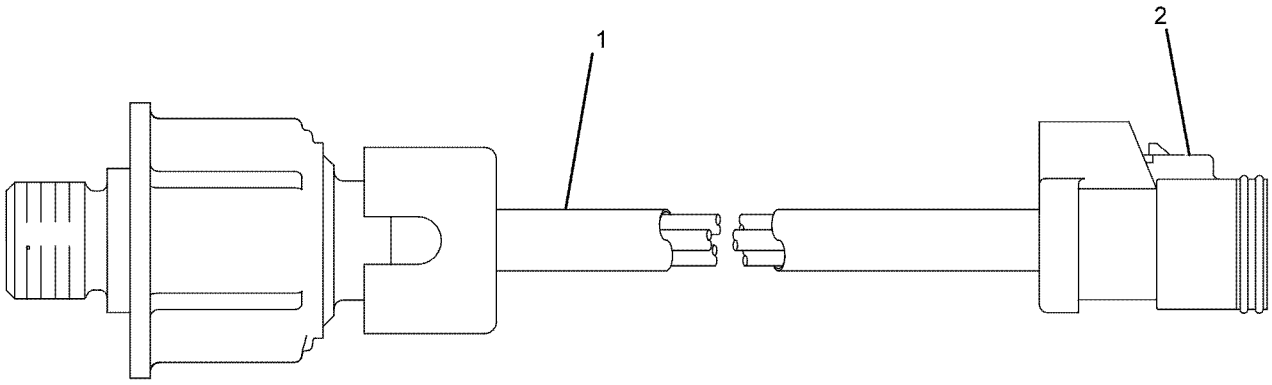

GRAPHIC #1

<END>

g01131622

ELECTRICAL AND STARTING SYSTEM

239-2395 SENSOR GP-PRESSURE

S/N: RHX2094-UP

PART OF 231-1973 SENSOR GP-ENGINE

SMCS-1052, 1058, 1408, 1718, 1907, 1912, 1916, 1917, 1923, 1924, 1925, 3175, 4351, 4352, 7400, 7494 **i03993925**

NOTE	REF NO	GRAPHIC REF	PART NUMBER	QTY	PART NAME 1 2 3 4 5 6 (PRODUCT LEVEL)	SEE PAGE
Y	1	1	194-6722	1	SENSOR GP-PRESSURE (ATMOSPHERIC)	307
	2	1	214-7568	1	SEAL-O-RING	

Y-SEPARATE ILLUSTRATION

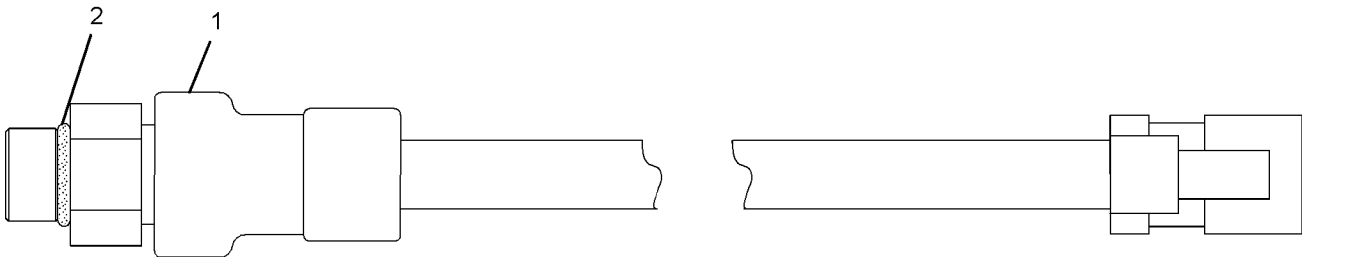

GRAPHIC #1 **<END>** g01019702

ELECTRICAL AND STARTING SYSTEM

239-2396 SENSOR GP-PRESSURE

S/N: RHX2094-UP

PART OF 275-7667 FILTER GP-FUEL, 231-1973 SENSOR GP-ENGINE

SMCS-1052, 1058, 1408, 1718, 1907, 1912, 1916, 1917, 1923, 1924, 1925, 3175, 4351, 4352, 7400, 7494

i03821338

NOTE	REF NO	GRAPHIC REF	PART NUMBER	QTY	PART NAME 1 2 3 4 5 6 (PRODUCT LEVEL)	SEE PAGE
Y	1	1	194-6725	1	SENSOR GP-PRESSURE	308
	2	1	214-7566	1	SEAL-O-RING	

Y-SEPARATE ILLUSTRATION

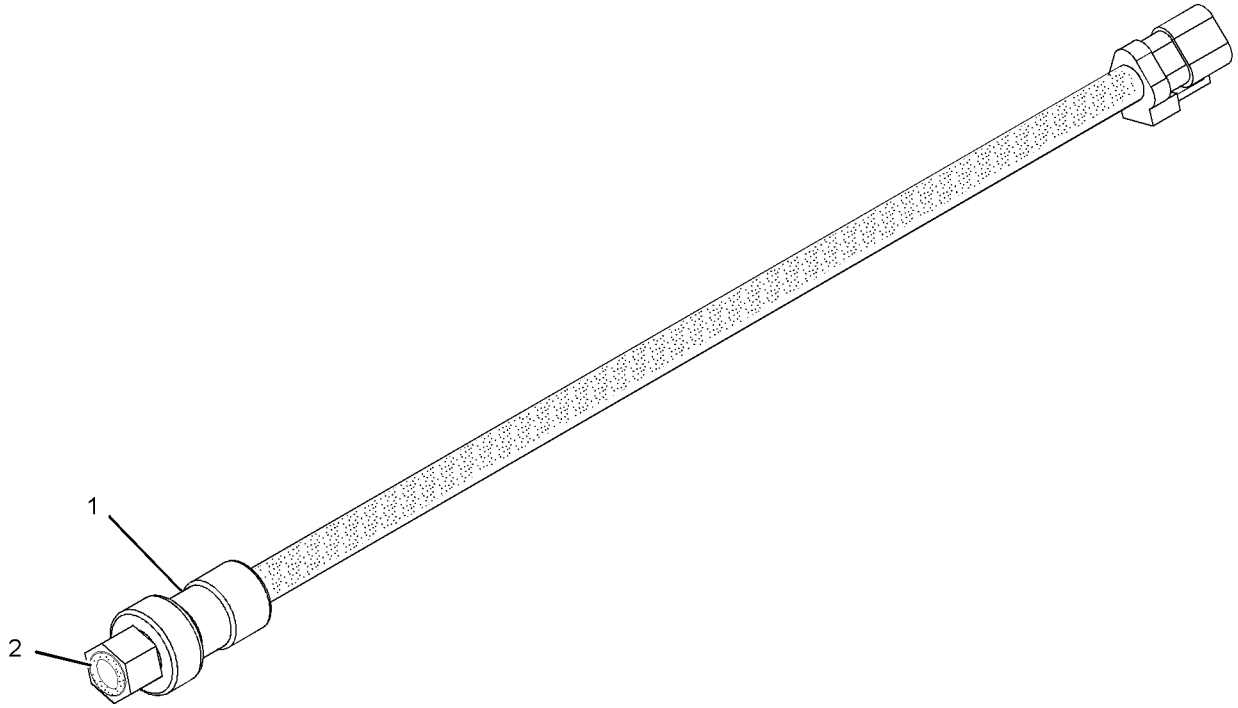

GRAPHIC #1

<END>

g01019323

ELECTRICAL AND STARTING SYSTEM

239-3478 SENSOR GP-PRESSURE

S/N: RHX2094-UP

PART OF 239-5674 SENSOR GP-PRESSURE

SMCS-1052, 1058, 1408, 1718, 1907, 1912, 1916, 1917, 1923, 1924, 1925, 3175, 4351, 4352, 7400, 7494

i03570562

NOTE	REF NO	GRAPHIC REF	PART NUMBER	QTY	PART NAME 1 2 3 4 5 6 (PRODUCT LEVEL)	SEE PAGE
	1	1	**102-8803**	1	KIT-RECEPTACLE (3-PIN)	
					(INCLUDES RECEPTACLE AS & WEDGE)	
	2	1	**180-9339**	3	PIN-CONNECTOR (14-GA TO 18-GA)	
E	3	1	**9X-1813**		SLEEVE (34-CM)	

E-ORDER BY THE CENTIMETER

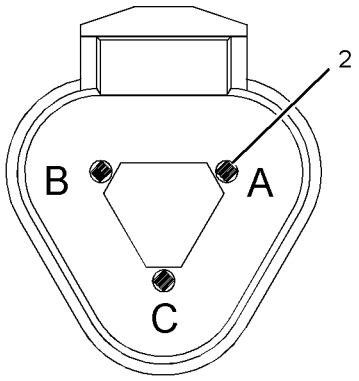

VIEW A-A

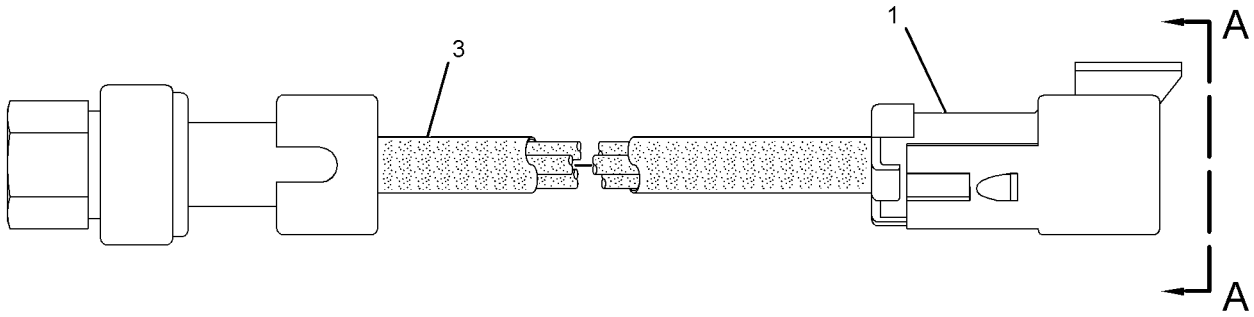

GRAPHIC #1 **<END>** g01896473

ELECTRICAL AND STARTING SYSTEM

239-5674 SENSOR GP-PRESSURE

S/N: RHX2094-UP

PART OF 231-1973 SENSOR GP-ENGINE

SMCS-1052, 1058, 1408, 1718, 1907, 1912, 1916, 1917, 1923, 1924, 1925, 3175, 4351, 4352, 7400, 7494

i03821202

NOTE	REF NO	GRAPHIC REF	PART NUMBER	QTY	PART NAME 1 2 3 4 5 6 (PRODUCT LEVEL)	SEE PAGE
Y	1	1	239-3478	1	SENSOR GP-PRESSURE	312
	2	1	214-7566	1	SEAL-O-RING	

Y-SEPARATE ILLUSTRATION

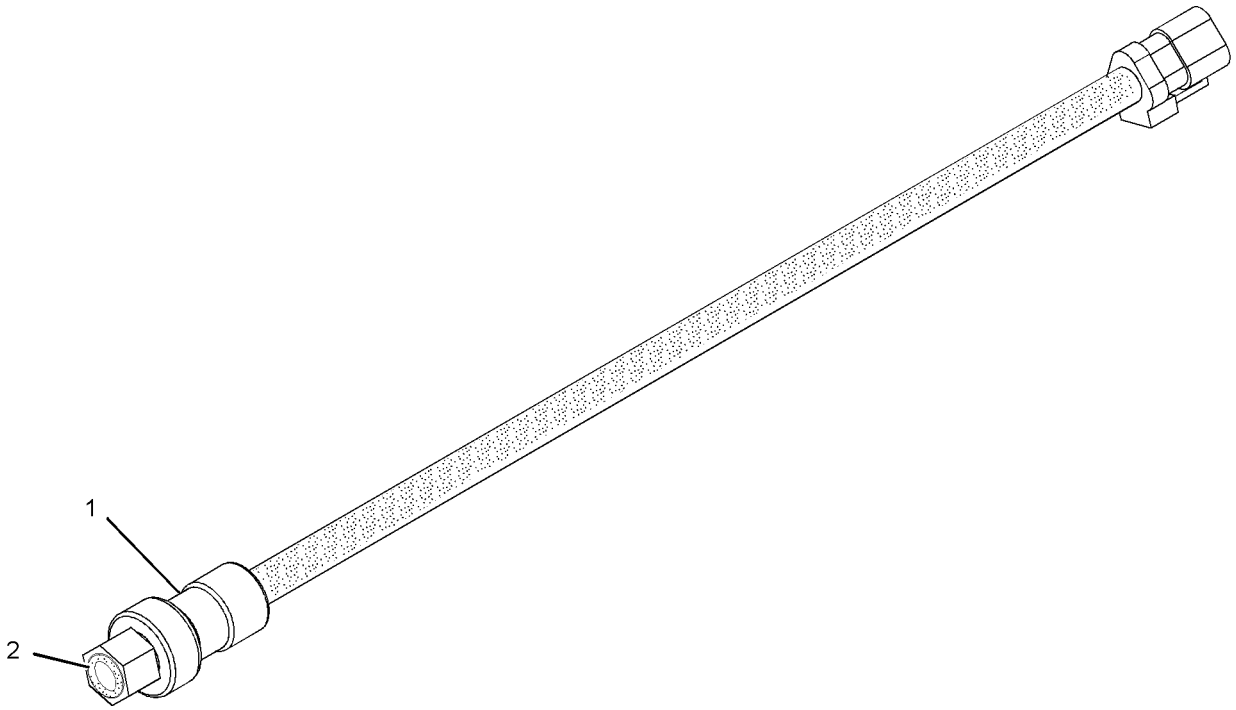

GRAPHIC #1

<END>

g01019323

ELECTRICAL AND STARTING SYSTEM

249-7792 SENSOR GP-SONIC

S/N: B9K1-UP

PART OF 262-2018, 262-2019 SENSOR AR-GRADE

SMCS-1408, 5645 **i02676383**

NOTE	PART NUMBER	QTY	PART NAME 1 2 3 4 5 6 (PRODUCT LEVEL)	SEE PAGE
	248-1488	1	BRACKET GP-MOUNTING	
	1B-2578	2	NUT (3/8-16-THD)	
	5P-1075	1	WASHER-HARD (10.2X22.5X3-MM THK)	
	096-4836	1	PIN-COTTER	
	248-1497	1	CABLE-COILED (SENSOR)	
	248-1487	1	ROD	
	244-1715	1	SENSOR AS-SONIC (ST300)	

<END>

ELECTRICAL AND STARTING SYSTEM

196-1185 SENSOR GP-SPEED

S/N: HKY1-UP

PART OF 273-9197 GEAR GP-OUTPUT TRANSFER

SMCS-1907, 1912, 3141, 3175, 4803, 7493 **i03256770**

NOTE	REF NO	GRAPHIC REF	PART NUMBER	QTY	PART NAME 1 2 3 4 5 6 (PRODUCT LEVEL)	SEE PAGE
	1	1	171-5349	1	STRAP-MARKER	
	2	1	102-8802	1	KIT-RECEPTACLE (2-PIN)	
					(INCLUDES RECEPTACLE AS & WEDGE)	
	3	1	186-3735	2	PIN-CONNECTOR (16-GA TO 18-GA)	
	4	1	3E-3365	1	WEDGE-RECEPTACLE LOCK (2-PIN)	
BE	5	1	9X-1813		SLEEVE	

B-USE AS REQUIRED
E-ORDER BY THE CENTIMETER

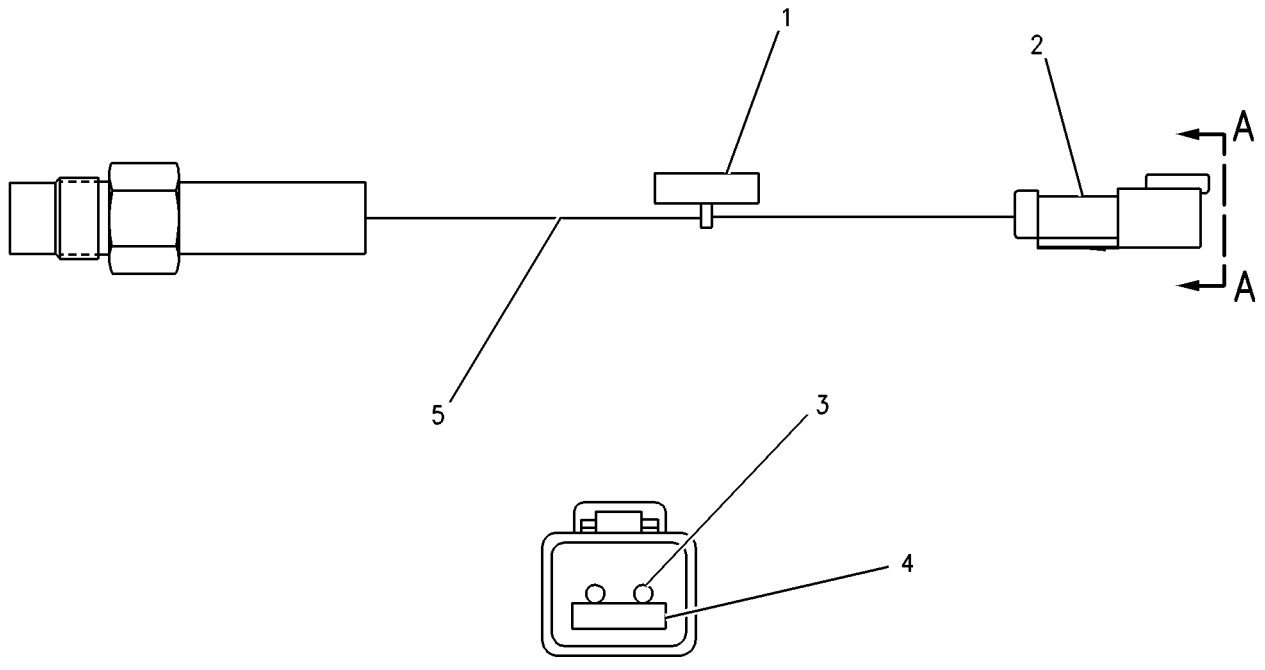

VIEW A-A

GRAPHIC #1 **<END>** g00680294

ELECTRICAL AND STARTING SYSTEM

201-6617 SENSOR GP-SPEED

S/N: RHX2094-UP

PART OF 239-5928 SENSOR GP-SPEED

SMCS-1907, 1912, 3141, 3175, 4803, 7493 **i04046309**

NOTE	REF NO	GRAPHIC REF	PART NUMBER	QTY	PART NAME 1 2 3 4 5 6 (PRODUCT LEVEL)	SEE PAGE
	1	1	**133-0261**	1	BRACKET	
	2	1	**189-0852**	1	HARNESS AS-WIRING (SPEED SENSOR)	
		1	**102-8802**	1	KIT-RECEPTACLE (2-PIN)	
					(INCLUDES RECEPTACLE AS & WEDGE)	
E		1	**9X-1813**		SLEEVE (16-CM)	
		1	**155-2270**	1	KIT-CONNECTING PLUG (2-PIN)	
					(INCLUDES PLUG AS, WEDGE & INTERFACE SEAL)	
		1	**180-9339**	2	PIN-CONNECTOR (14-GA TO 18-GA)	
		1	**180-9340**	2	SOCKET-CONNECTOR (14-GA TO 18-GA)	

E-ORDER BY THE CENTIMETER

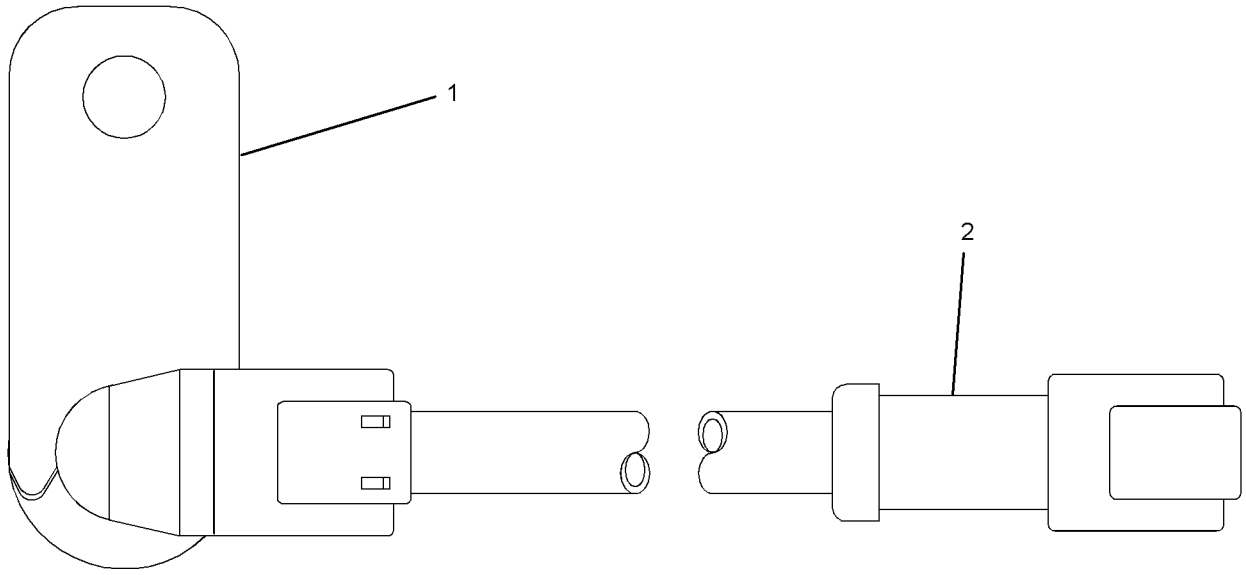

GRAPHIC #1 **<END>** g01977393

ELECTRICAL AND STARTING SYSTEM

214-2484 SENSOR GP-SPEED

S/N: RHX2094-UP

PART OF 231-1973 SENSOR GP-ENGINE

SMCS-1907, 1912, 3141, 3175, 4803, 7493 **i03319926**

NOTE	REF NO	GRAPHIC REF	PART NUMBER	QTY	PART NAME 1 2 3 4 5 6 (PRODUCT LEVEL)	SEE PAGE
	1	1	228-4947	1	SEAL-O-RING	
	2	1	191-8303	1	SENSOR GP-SPEED	
		1	137-6645	1	PAD (CONNECTOR)	

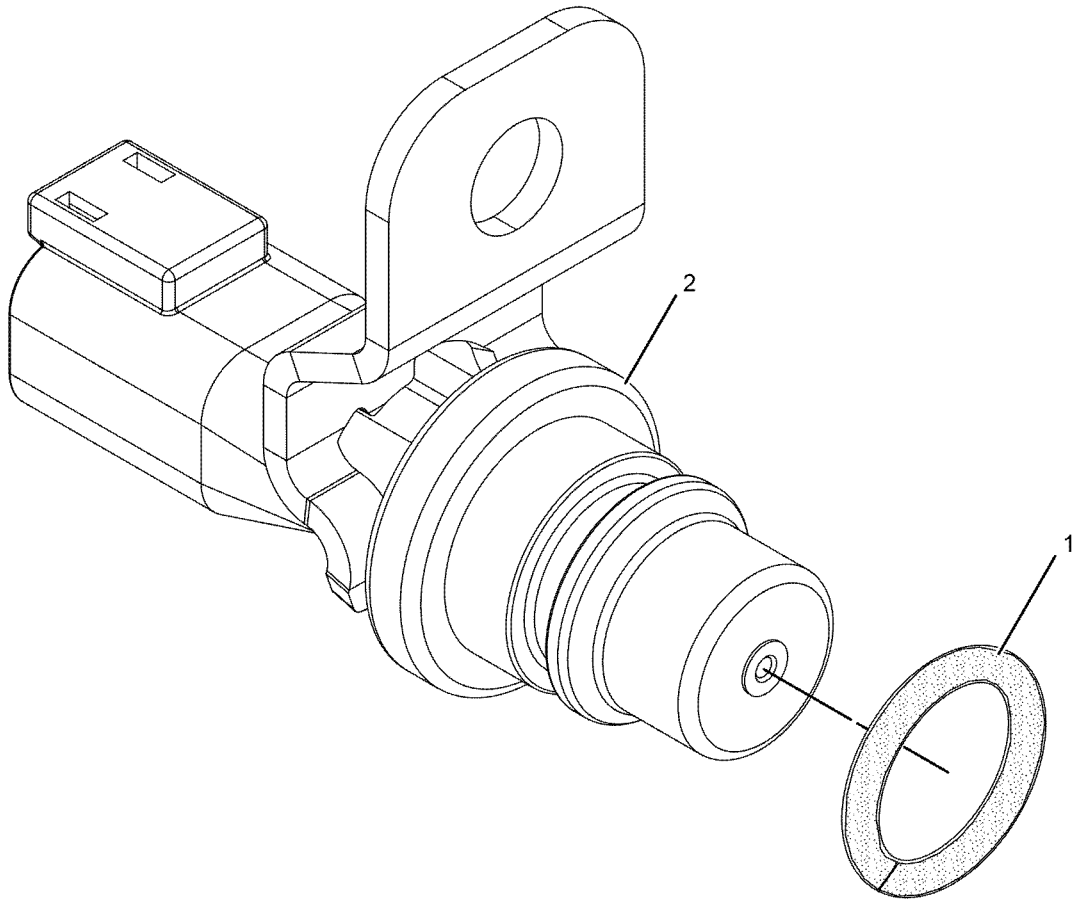

GRAPHIC #1 **<END>** g01021497

ELECTRICAL AND STARTING SYSTEM

239-5928 SENSOR GP-SPEED

S/N: RHX2094-UP

PART OF 231-1973 SENSOR GP-ENGINE

SMCS-1907, 1912, 3141, 3175, 4803, 7493 **i03186390**

NOTE	REF NO	GRAPHIC REF	PART NUMBER	QTY	PART NAME 1 2 3 4 5 6 (PRODUCT LEVEL)	SEE PAGE
	1	1	228-4947	1	SEAL-O-RING	
Y	2	1	201-6617	1	SENSOR GP-SPEED	316

Y-SEPARATE ILLUSTRATION

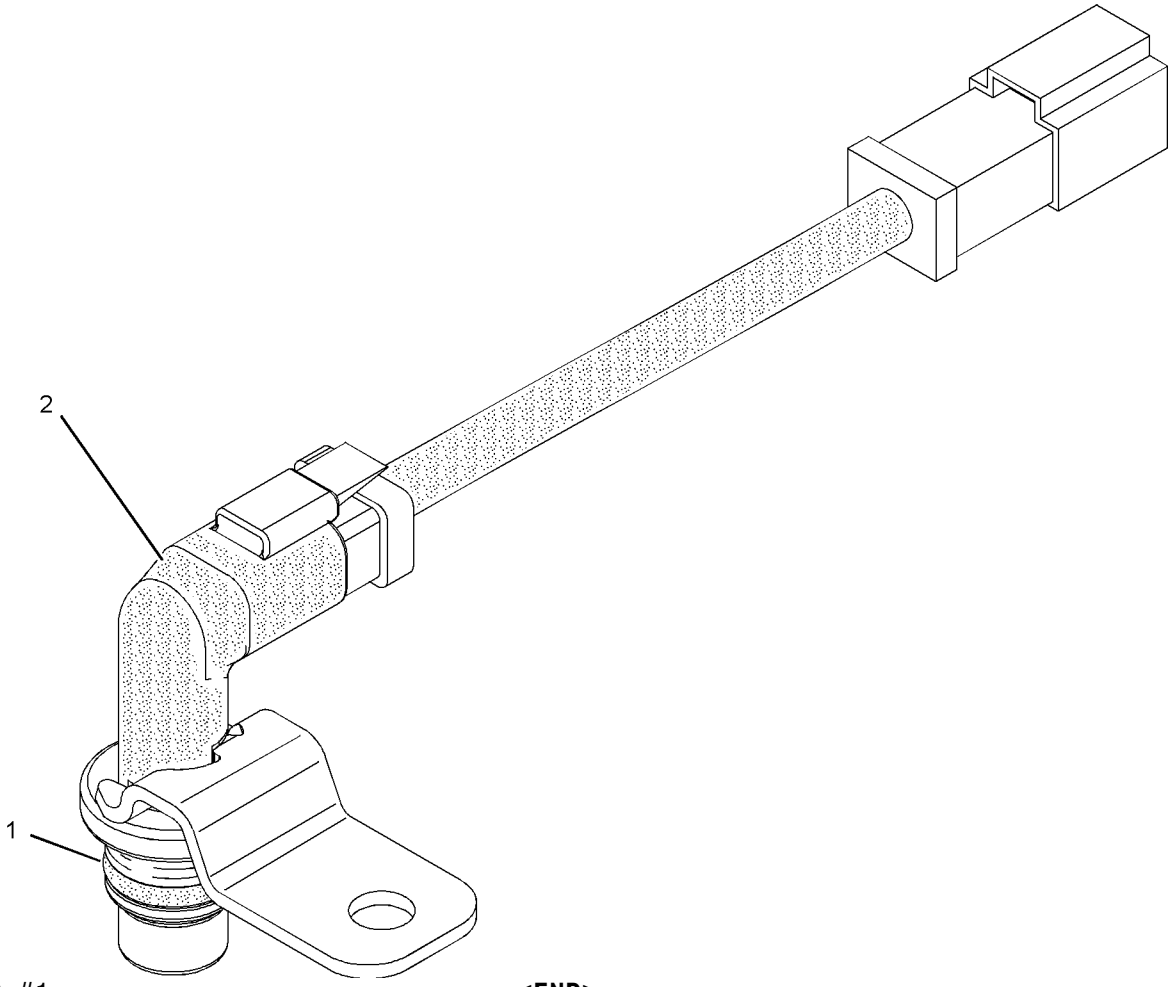

GRAPHIC #1 **<END>** g01019337

ELECTRICAL AND STARTING SYSTEM

134-2252 SENSOR GP-TEMPERATURE–TRANSMISSION OIL

S/N: B9K1-UP

PART OF 266-8963 WIRING GP-REAR

SMCS-1087, 1439, 1906, 1919, 1921, 1922, 1928, 1929, 192T, 1932, 301T, 3194, 3290, 429T, 509T, 7344

i03572345

NOTE	REF NO	GRAPHIC REF	PART NUMBER	QTY	PART NAME 1 2 3 4 5 6 (PRODUCT LEVEL)	SEE PAGE
	1	1	186-3735	3	PIN-CONNECTOR (16-GA TO 18-GA)	
E	2	1	9X-1386		SLEEVE (33-CM)	
	3	1	102-8803	1	KIT-RECEPTACLE (3-PIN)	
					(INCLUDES RECEPTACLE AS & WEDGE)	

E-ORDER BY THE CENTIMETER

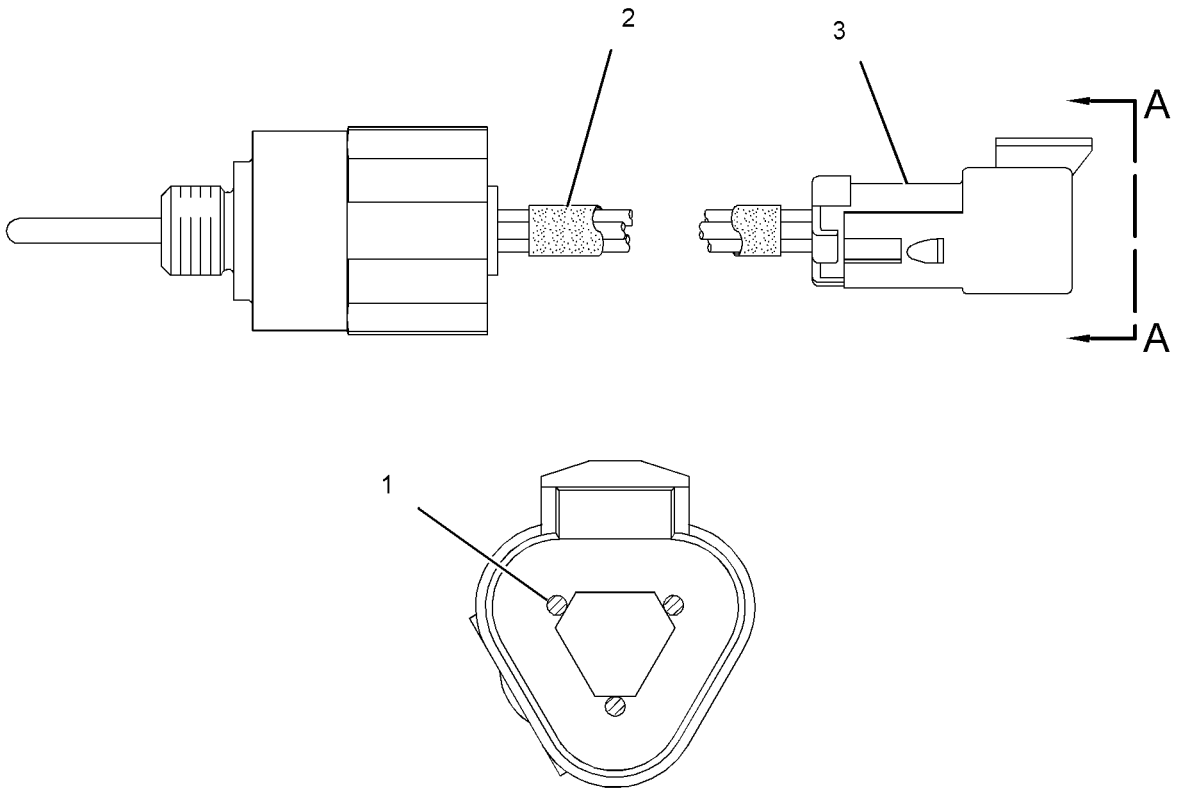

VIEW A-A

GRAPHIC #1 **<END>** g01903134

ELECTRICAL AND STARTING SYSTEM

145-7028 SENSOR GP-TEMPERATURE

S/N: HKY1-UP

PART OF 273-9199 CONTROL GP-TRANSMISSION HYD

SMCS-1087, 1439, 1906, 1919, 1921, 1922, 1928, 1929, 192T, 1932, 301T, 3194, 3290, 429T, 509T, 7344 **i03422020**

NOTE	REF NO	GRAPHIC REF	PART NUMBER	QTY	PART NAME 1 2 3 4 5 6 (PRODUCT LEVEL)	SEE PAGE
	1	1	**102-8802**	1	KIT-RECEPTACLE (2-PIN)	
					(INCLUDES RECEPTACLE AS & WEDGE)	
J	2	1	**153-5043**		SLEEVE (2.8-DM)	
	3	1	**186-3735**	2	PIN-CONNECTOR (16-GA TO 18-GA)	
J-ORDER BY THE DECIMETER						

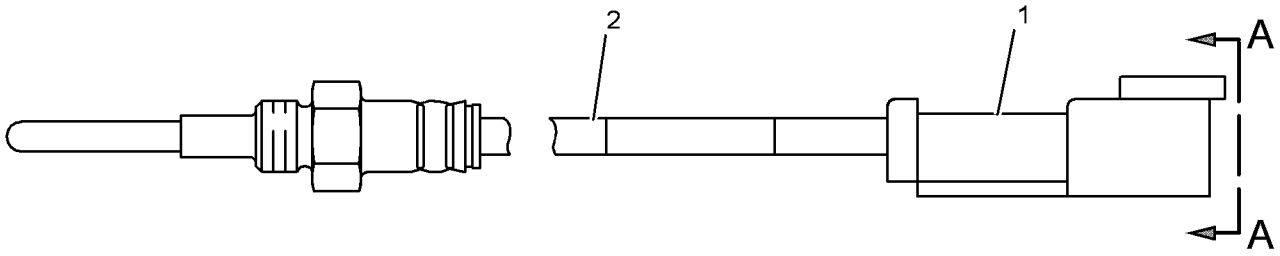

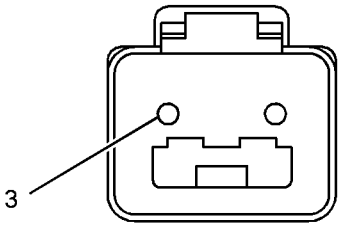

VIEW
A-A

GRAPHIC #1 **<END>** g01740798

ELECTRICAL AND STARTING SYSTEM

191-6587 SENSOR GP-TEMPERATURE

S/N: B9K342-UP

PART OF 266-8956 WIRING GP-FRONT

SMCS-1087, 1439, 1906, 1919, 1921, 1922, 1928, 1929, 192T, 1932, 301T, 3194, 3290, 429T, 509T, 7344

i03817529

NOTE	REF NO	GRAPHIC REF	PART NUMBER	QTY	PART NAME 1 2 3 4 5 6 (PRODUCT LEVEL)	SEE PAGE
J	1	1	153-5043		SLEEVE (2-DM)	
	2	1	155-2270	1	KIT-CONNECTING PLUG (2-PIN)	
					(INCLUDES PLUG AS, WEDGE & INTERFACE SEAL)	
	3	1	180-9340	2	SOCKET-CONNECTOR (14-GA TO 18-GA)	

J-ORDER BY THE DECIMETER

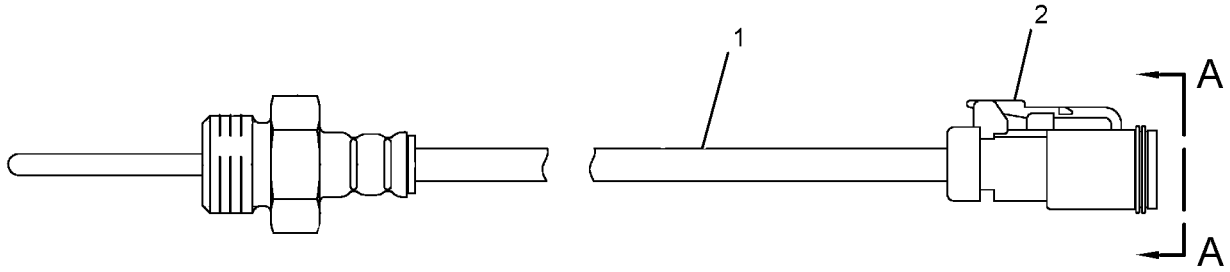

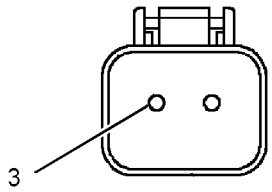

VIEW A-A

GRAPHIC #1 **<END>** g02069919

ELECTRICAL AND STARTING SYSTEM

234-5013 SENSOR GP-TEMPERATURE

S/N: RHX2094-UP

PART OF 275-7667 FILTER GP-FUEL

SMCS-1087, 1439, 1906, 1919, 1921, 1922, 1928, 1929, 192T, 1932, 301T, 3194, 3290, 429T, 509T, 7344

i03603728

NOTE	REF NO	GRAPHIC REF	PART NUMBER	QTY	PART NAME 1 2 3 4 5 6 (PRODUCT LEVEL)	SEE PAGE
	1	1	256-6453	1	SENSOR AS-TEMPERATURE	
	2	1	238-5080	1	SEAL-O-RING	

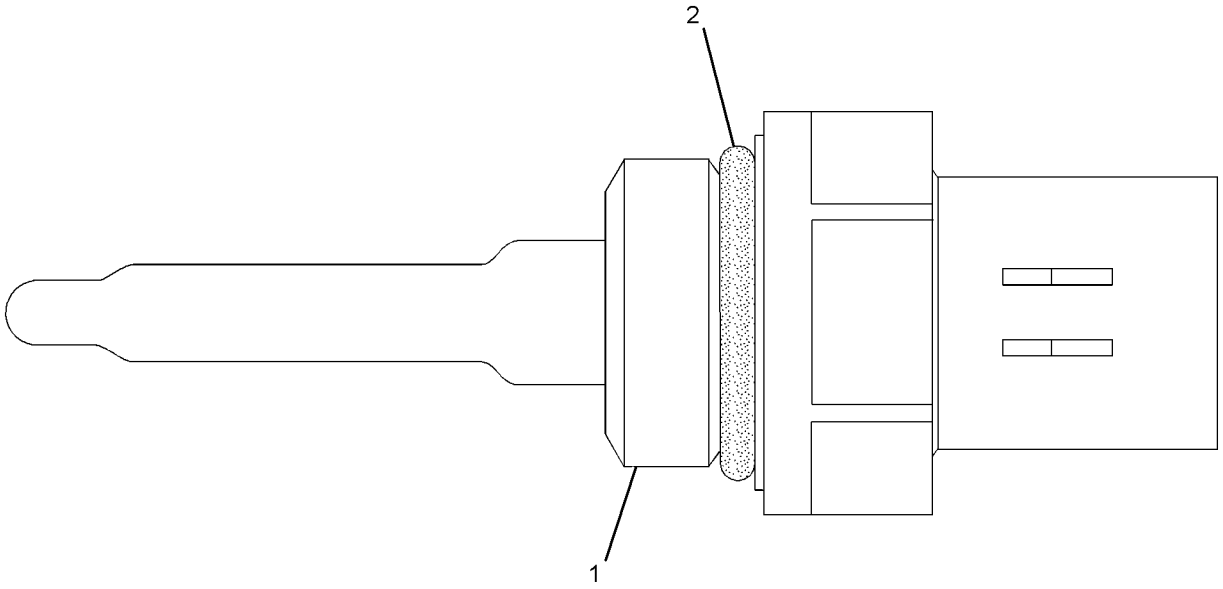

GRAPHIC #1

<END>

g01164268

ELECTRICAL AND STARTING SYSTEM

274-7395 SENSOR GP-TEMPERATURE

S/N: RHX2094-UP

PART OF 231-1973 SENSOR GP-ENGINE

SMCS-1087, 1439, 1906, 1919, 1921, 1922, 1928, 1929, 192T, 1932, 301T, 3194, 3290, 429T, 509T, 7344

i03886183

NOTE	REF NO	GRAPHIC REF	PART NUMBER	QTY	PART NAME 1 2 3 4 5 6 (PRODUCT LEVEL)	SEE PAGE
	1	1	264-4297	1	SENSOR GP-TEMPERATURE	
		1	137-6645	1	PAD	
	2	1	238-5080	1	SEAL-O-RING	

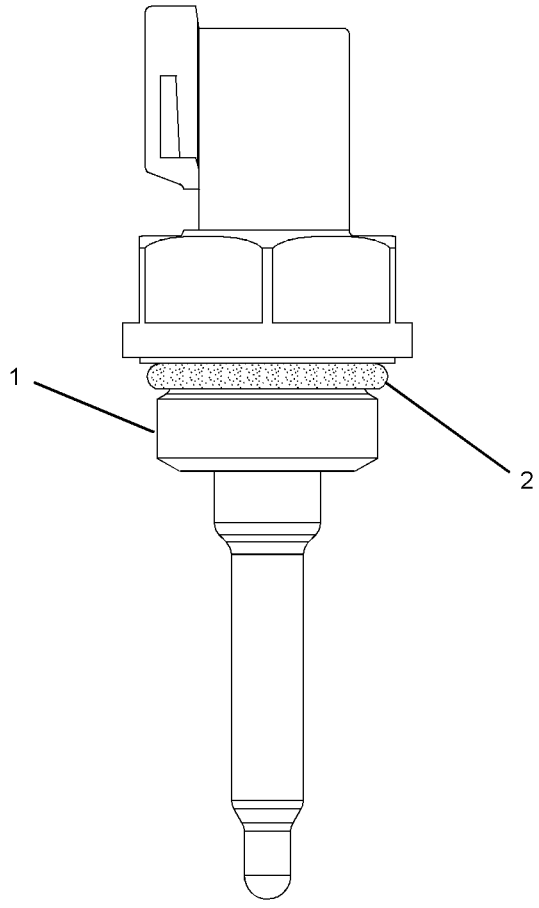

GRAPHIC #1

<END>

g01353734

ELECTRICAL AND STARTING SYSTEM

274-7396 SENSOR GP-TEMPERATURE

S/N: RHX2094-UP

PART OF 231-1973 SENSOR GP-ENGINE

SMCS-1087, 1439, 1906, 1919, 1921, 1922, 1928, 1929, 192T, 1932, 301T, 3194, 3290, 429T, 509T, 7344 **i03442340**

NOTE	REF NO	GRAPHIC REF	PART NUMBER	QTY	PART NAME 1 2 3 4 5 6 (PRODUCT LEVEL)	SEE PAGE
	1	1	264-4297	1	SENSOR GP-TEMPERATURE	
		1	137-6645	1	PAD	
	2	1	6V-6609	1	SEAL-O-RING	

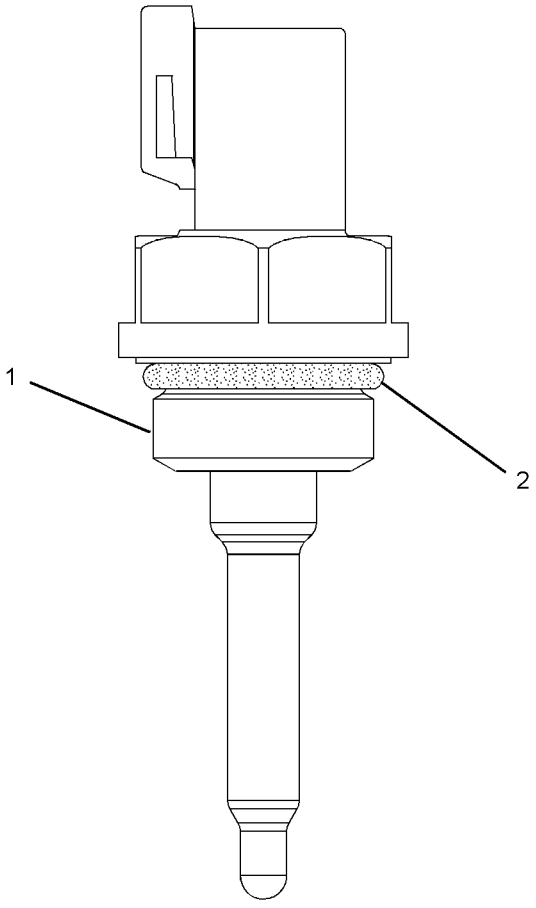

GRAPHIC #1 **<END>** g01353734

ELECTRICAL AND STARTING SYSTEM

253-3997 STARTING AID GP-ETHER

S/N: B9K1-UP

PART OF 259-9204 COMMON AR

SMCS-1456 **i02732335**

NOTE	REF NO	GRAPHIC REF	PART NUMBER	QTY	PART NAME 1 2 3 4 5 6 (PRODUCT LEVEL)	SEE PAGE
	1	1	**7N-2059**	1	CLAMP AS	
	2	1	**230-1434**	1	FITTING AS	
		1	**236-4545**	1	NUT-SLEEVE (5/16-24-THD)	
Y	3	1	**239-1134**	1	VALVE GP-ETHER STARTING (24-VOLT)	351
	4	1	**247-5556**	1	ATOMIZER GP-ETHER	
	5	1	**6V-2686**	1	CLIP	
	6	1	**8T-4121**	1	WASHER-HARD (11X21X2.5-MM THK)	
M	7	1	**8T-4136**	1	BOLT (M10X1.5X25-MM)	
M	8	1	**8T-4189**	4	BOLT (M8X1.25X20-MM)	
	9	1	**8T-4224**	4	WASHER-HARD (8.8X16X2-MM THK)	
D	10	1	**5P-5630**		TUBE (1.2-M)	
A			**7N-0296**	1	CYLINDER AS-ETHER	
					(MUST BE PROCURED LOCALLY FROM YOUR CATERPILLAR DEALER)	

A-NOT PART OF THIS GROUP
D-ORDER BY THE METER
M-METRIC PART
Y-SEPARATE ILLUSTRATION

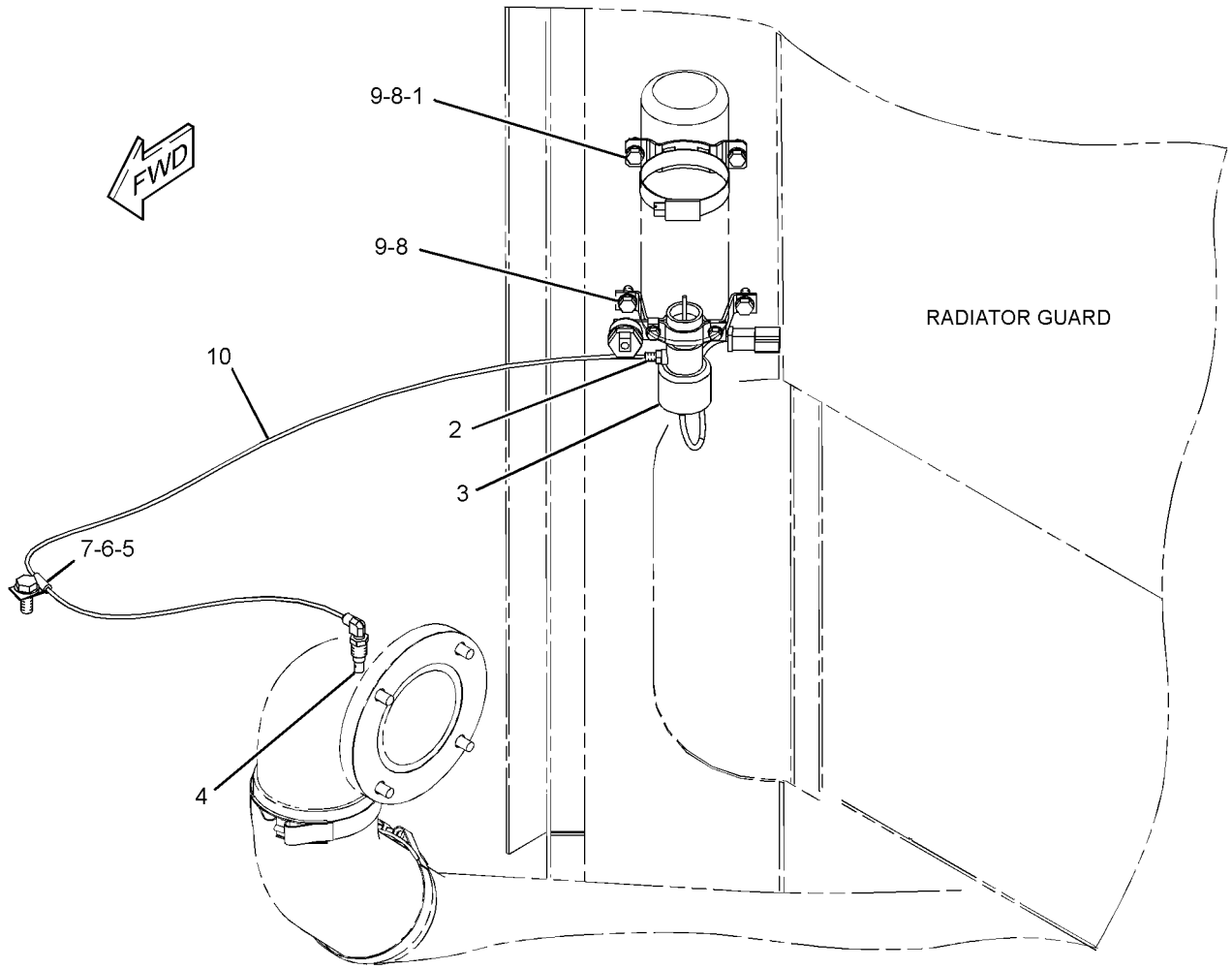

GRAPHIC #1 **<END>** g01378517

ELECTRICAL AND STARTING SYSTEM

267-5505 STARTING AR-COLD WEATHER

S/N: B9K1-UP
240-VOLT

SMCS-1450 **i03956169**

NOTE	REF NO	GRAPHIC REF	PART NUMBER	QTY	PART NAME 1 2 3 4 5 6 (PRODUCT LEVEL)	SEE PAGE
	1	1	**6Y-6815**	3	GASKET AS (CONNECTOR)	
	2	1	**7X-6412**	1	RECEPTACLE AS	
		1	**7X-3349**	4	SCREW-HEX HEAD (12-24X0.75-IN)	
		1	**9X-0259**	1	GASKET	
	3	1	**7X-6414**	1	BOX	
	4	1	**8L-7593**	1	BUSHING-TERMINAL	
	5	1	**8X-5804**	1	STRAP AS-GROUND	
	6	1	**9W-3797**	1	SWITCH AS-TEMPERATURE	
	7	1	**9X-9751**	1	HOUSING AS (THERMOSTAT)	
	8	1	**9X-9752**	1	HOUSING AS (OIL HEATER)	
	9	1	**9X-9753**	1	ELEMENT AS-HEATER (HYDRAULIC OIL)	
	10	1	**246-3513**	1	ELEMENT AS-JACKET WATER HEATER (240-VOLT, 1500-WATT)	
		1	**7M-8485**	1	SEAL-O-RING	
		1	**133-6517**	1	CAP AS-DUST	
Y	11	1	*272-8019*	1	PANEL GP-CIRCUIT BREAKER	285
	12	1	**273-2606**	1	WIRE AS	
	13	1	**273-2608**	1	WIRE AS	
	14	1	**273-2610**	1	WIRE AS	
	15	1	**273-2612**	1	WIRE AS	
	16	1	**4D-7388**	1	CLIP	
M	17	1	**5C-7261**	2	NUT (M8X1.25-THD)	
	18	1	**6D-4246**	1	CLIP	
	19	1	**7S-1912**	6	CLIP	
	20	1	**7X-6413**	1	PLUG AS-CONNECTOR	
		1	**9X-0258**	1	GASKET	
	21	1	**7X-7729**	3	WASHER (11X25X3-MM THK)	
	22	1	**8D-9671**	1	CLIP	
M	23	1	**8T-4137**	3	BOLT (M10X1.5X20-MM)	
M	24	1	**8T-4189**	4	BOLT (M8X1.25X20-MM)	
M	25	1	**8T-4192**	3	BOLT (M12X1.75X25-MM)	
	26	1	**8T-4223**	3	WASHER-HARD (13.5X25.5X3-MM THK)	
	27	1	**8T-4224**	8	WASHER-HARD (8.8X16X2-MM THK)	
M	28	1	**8T-4908**	2	BOLT (M8X1.25X25-MM)	

M-METRIC PART
Y-SEPARATE ILLUSTRATION

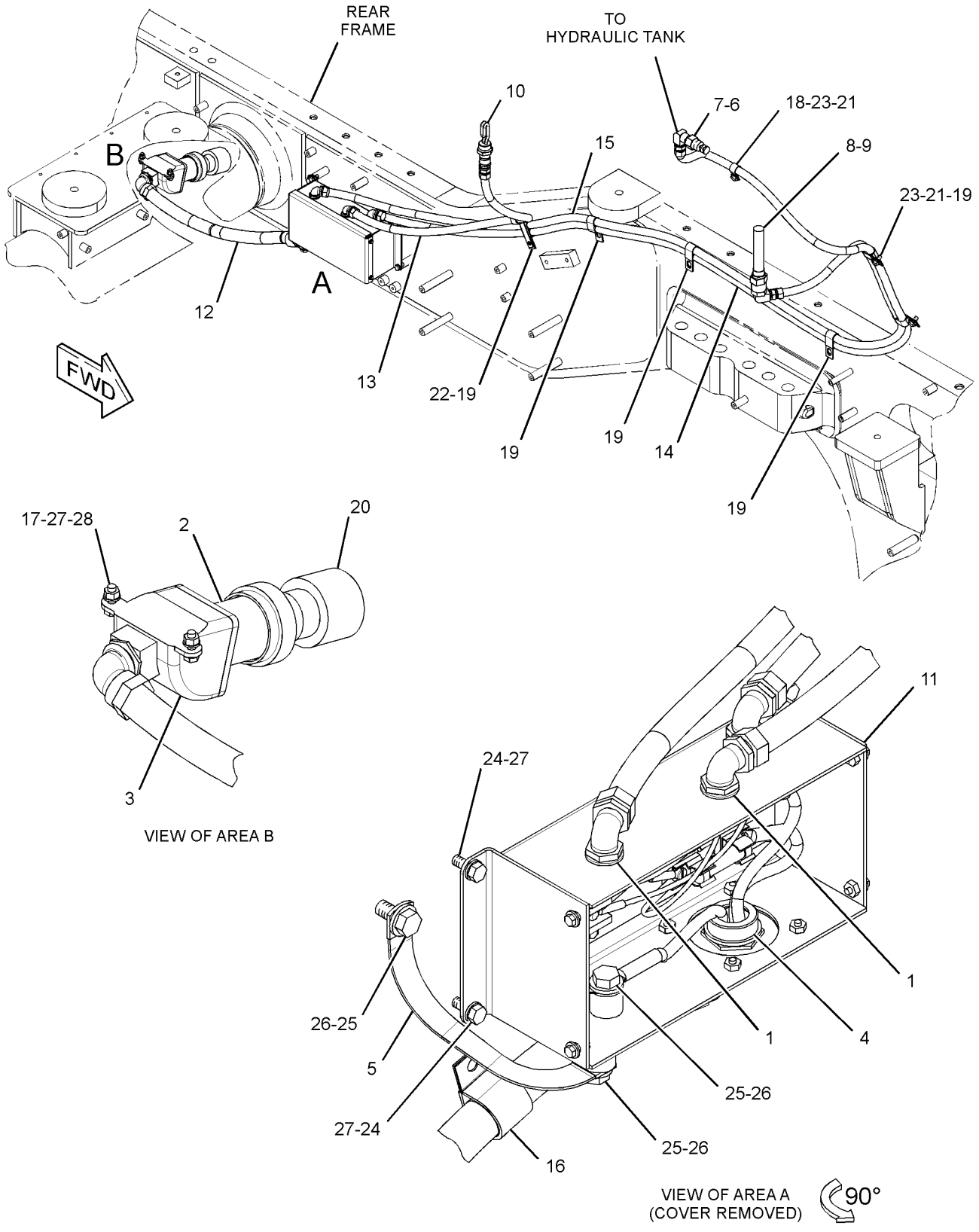

GRAPHIC #1 **<END>** g01822957

ELECTRICAL AND STARTING SYSTEM

209-8423 STARTING MOTOR GP-ELECTRIC

S/N: RHX2094-5021

PART OF 263-7760 ENGINE AR-COMPLETE

SMCS-1453 **i03123004**

NOTE	REF NO	GRAPHIC REF	PART NUMBER	QTY	PART NAME 1 2 3 4 5 6 (PRODUCT LEVEL)	SEE PAGE
	1	1	**4N-1059**	1	GASKET	
	2	1	**185-6393**	1	CABLE AS-STARTING MOTOR	
E		1	**5P-0746**		CABLE (0-GA, BLACK) (30-CM)	
		1	**1M-4986**	1	TERMINAL-RING (0-GA, 1/2-IN SCREW)	
		1	**030-1707**	1	TERMINAL-RING (0-GA, 3/8-IN SCREW)	
YR	3	1	**237-1962**	1	STARTING MOTOR GP-ELECTRIC (24-VOLT)	329
	4	1	**220-0771**	3	BOLT-12 POINT HEAD (M16X2X45-MM)	

E-ORDER BY THE CENTIMETER
R-REMFG PART MAY BE AVAILABLE
Y-SEPARATE ILLUSTRATION

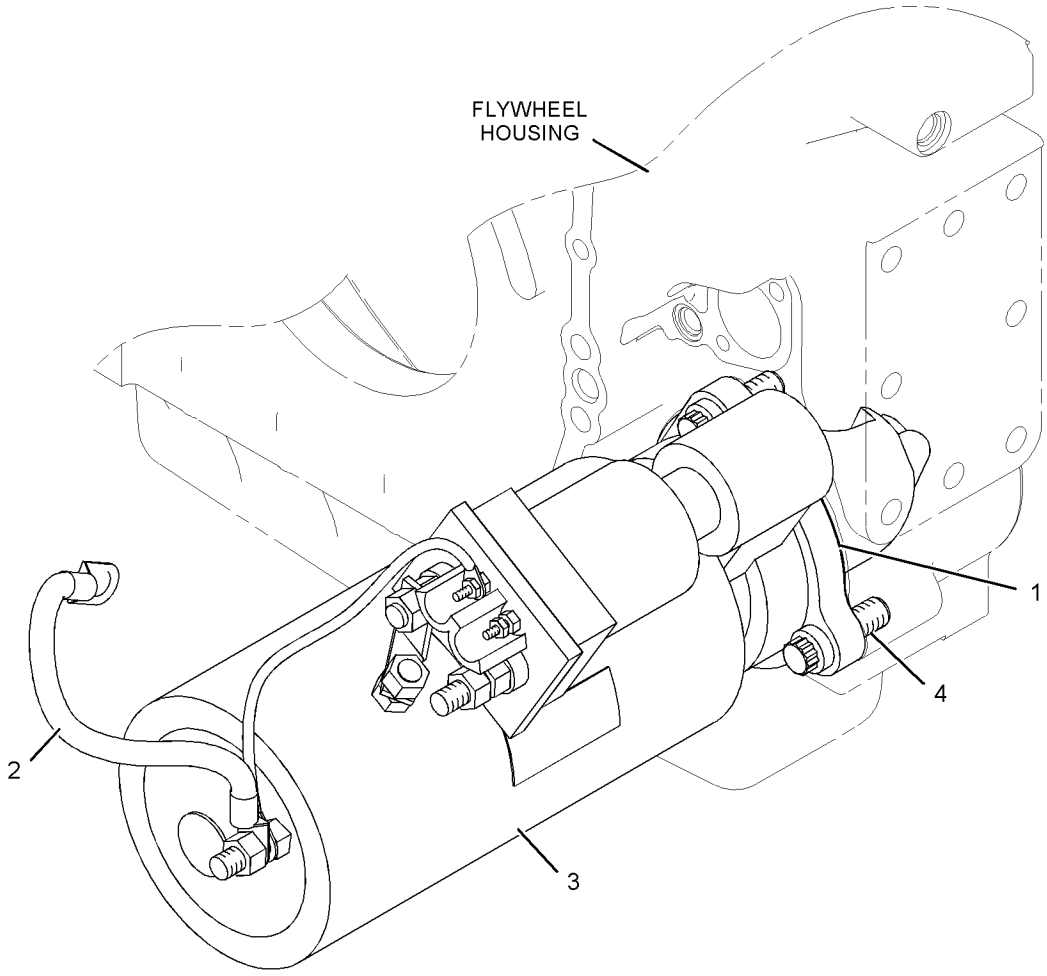

GRAPHIC #1 **<END>** g01023567

ELECTRICAL AND STARTING SYSTEM

237-1962 STARTING MOTOR GP-ELECTRIC*R

S/N: RHX2054-UP
24-VOLT
PART OF 209-8423, 308-6784 STARTING MOTOR GP-ELECTRIC
FIELD REPLACEMENT ORDER 338-3454—PAGE 333

SMCS-1453 **i03630206**

NOTE	REF NO	GRAPHIC REF	PART NUMBER	QTY	PART NAME 1 2 3 4 5 6 (PRODUCT LEVEL)	SEE PAGE
	1	1	7M-0326	1	CONNECTOR	
	2	1	9H-3757	2	WASHER (0.516X1X0.094-IN THK)	
	3	1	1S-7446	3	SCREW-MACHINE (8-32X0.437-IN)	
	4	1	8C-9660	3	WASHER (4.6X7.9X0.8-MM THK)	
	5	1	9S-2544	9	SCREW-HEX HEAD (8-32X11.13-MM)	
	6	1	7M-0327	1	WASHER-THRUST (17.4X25.4X1.6-MM THK)	
	7	1	3T-3418	1	FRAME AS-END	
		1	3T-3423	1	CUP	
		1	3T-3424	1	PLUG-FELT	
		1	9G-4101	1	BUSHING-END	
	8	1	3T-9525	1	PLATE AS-BRUSH	
	8A	1	6T-0371	1	INSULATOR	
	8B	1	5P-6298	12	SCREW-MACHINE (10-32X0.5-IN)	
		1	9F-5599	12	LOCKWASHER	
	8C	1	7F-3525	6	WASHER-BUSHING (0.207X0.39X0.09-IN THK)	
	8D	1	6T-0372	1	PLATE	
	8E	1	3T-4709	3	PLATE	
	8F	1	2L-6679	3	PLATE-INSULATOR	
	8G	1	3T-4710	3	PLATE	
	8H	1	6T-0363	6	HOLDER AS-BRUSH (STARTING MOTOR)	
					(EACH INCLUDES)	
	8J	1	3T-9494	1	SPRING	
	9	1	1T-0808	2	WASHER (0.516X0.812X0.09-IN THK)	
	10	1	3T-3422	1	WIRE AS (STARTING MOTOR)	
	11	1	2J-8163	2	SEAL-O-RING	
	12	1	7X-3373	1	BOLT (5/16-18X0.88-IN)	
	13	1	3T-3434	6	PLUG	
	14	1	5J-5314	5	BOLT (5/16-18X1.5-IN)	
	15	1	3L-3380	1	BUSHING-TERMINAL	
	16	1	036-9821	1	WASHER	
	17	1	4M-1828	1	RETAINER-SPRING	
	18	1	306-3998	1	BOOT-RUBBER	
	19	1	9M-7609	1	SPRING (SHIFT LEVER)	
	20	1	4M-1827	1	RETAINER-SPRING	
	21	1	8C-3089	1	SEAL-O-RING	
	22	1	4M-1853	1	LEVER AS-SHIFT	
	23	1	5M-3034	1	LOCKNUT (5/16-24-THD)	
	24	1	7L-2894	4	GASKET	
	25	1	4M-1831	4	PLUG-LEVER HOUSING	
	26	1	4M-1854	1	SHAFT-LEVER	
	27	1	1H-1023	1	SEAL-O-RING	
	28	1	2D-6392	1	SEAL-O-RING	
	29	1	7T-3974	1	HOUSING AS-DRIVE	
	30	1	6N-3826	1	DRIVE AS-MOTOR	
	31	1	2H-3429	2	RING-RETAINING	
	32	1	6V-1322	4	BOLT (1/4-20X0.375-IN)	
	33	1	8T-4205	4	WASHER-HARD (7.2X14.5X2-MM THK)	
	34	1	6N-3279	1	INSULATOR	
	35	1	0S-1597	13	BOLT (1/4-28X1-IN)	
	36	1	1M-9971	1	SPACER (0.835X1.72X0.188-IN THK)	
	37	1	1H-2629	3	STRIP-INSULATION	
	38	1	7M-0324	1	COIL AS-FIELD	
	39	1	3R-8797	12	SCREW & WASHER AS (3/8-24X0.72-IN)	
	40	1	7F-3488	6	SHOE-POLE	

237-1962 STARTING MOTOR GP-ELECTRIC *(contd.)* i03630206

NOTE	REF NO	GRAPHIC REF	PART NUMBER	QTY	PART NAME 1 2 3 4 5 6 (PRODUCT LEVEL)	SEE PAGE
	41	1	**7M-8651**	1	ARMATURE AS	
	42	1	**7M-0325**	1	INSULATOR	
	43	1	**3T-9524**	6	BRUSH AS	
	44	1	**3N-3763**	1	KIT-TERMINAL (STARTING MOTOR)	
					(INCLUDES BUSHINGS & WASHERS)	
	45	1	**125-6537**	1	INSULATOR	
	46	1	**3R-8801**	1	CLAMP	
	47	1	**8F-1434**	2	LOCKWASHER	
	48	1	**6V-8188**	6	NUT (1/2-13-THD)	
	49	1	**7X-0562**	6	WASHER-HARD (13.5X19X0.8-MM THK)	
	50	1	**4B-2049**	6	NUT (10-32-THD)	
	51	1	**8T-0328**	10	WASHER-HARD (5.5X10X1-MM THK)	
	52	1	**3T-9494**	6	SPRING (STARTING MOTOR)	
	53	1	**3E-7771**	1	HOUSING AS (STARTING MOTOR)	
	54	1	**9G-4101**	1	BUSHING-END	
	55	1	**3T-3424**	3	PLUG-FELT	
	56	1	**3T-3423**	3	CUP	
	57	1	**1M-9968**	1	BUSHING	
	58	1	**2F-6678**	1	SEAL-LIP TYPE	
	59	1	**4L-2729**	1	WASHER (0.844X1.9X0.188-IN THK)	
	60	1	**4M-1896**	1	BUSHING-TERMINAL	
	61	1	**045-4065**	4	SCREW-MACHINE (10-32X0.75-IN)	
	62	1	**125-6535**	1	COVER-STARTING MOTOR	
	63	1	**7T-9123**	1	GASKET-PLATE	
	64	1	**318-2082**	1	SOLENOID AS-STARTING MOTOR (24-VOLT)	
	65	1	**125-6536**	1	TERMINAL AS	

237-1962 STARTING MOTOR GP-ELECTRIC *(contd.)* i03630206

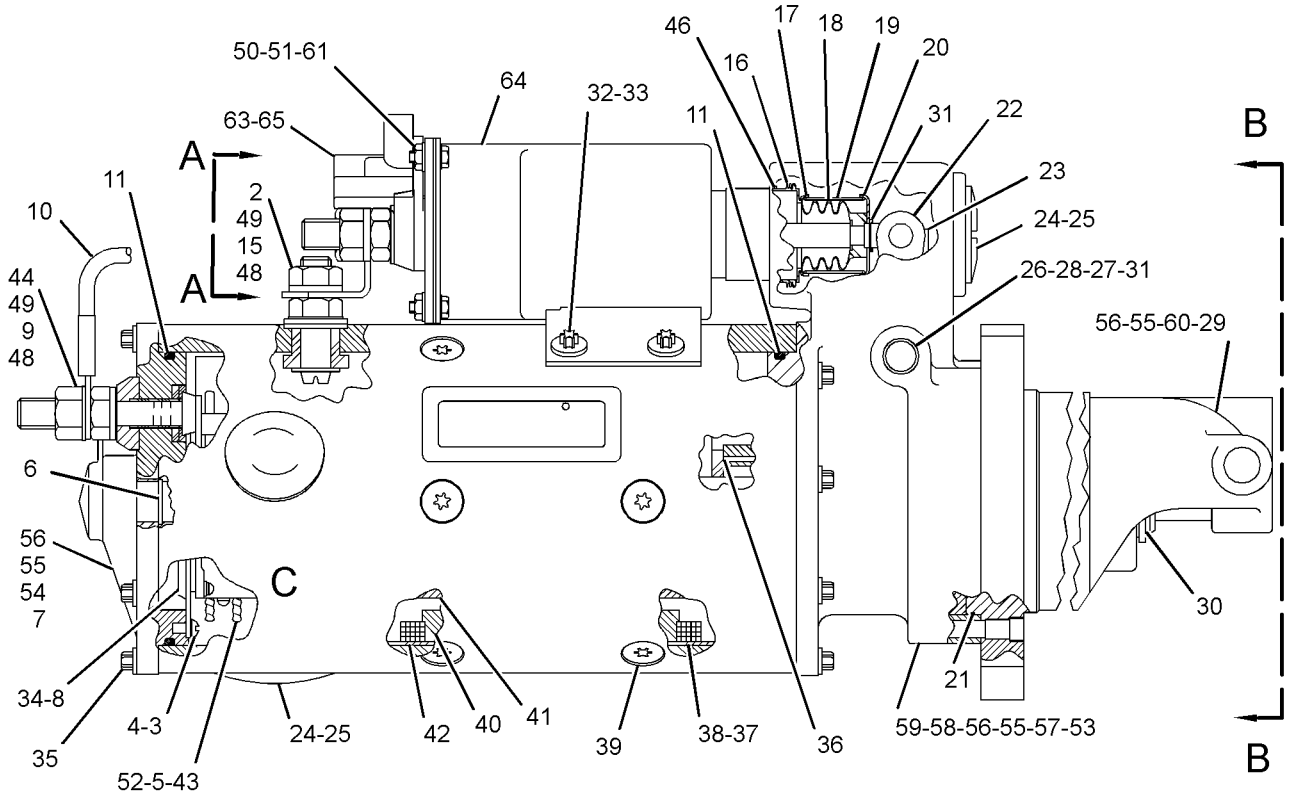

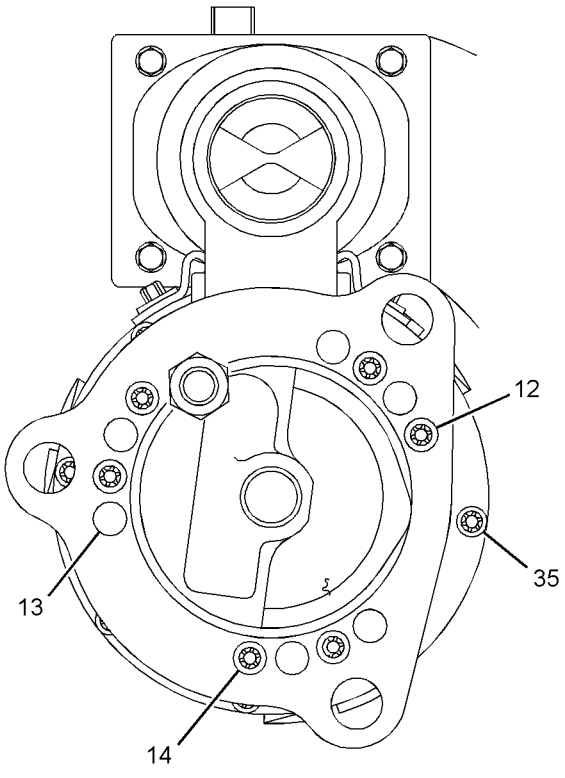

VIEW B-B

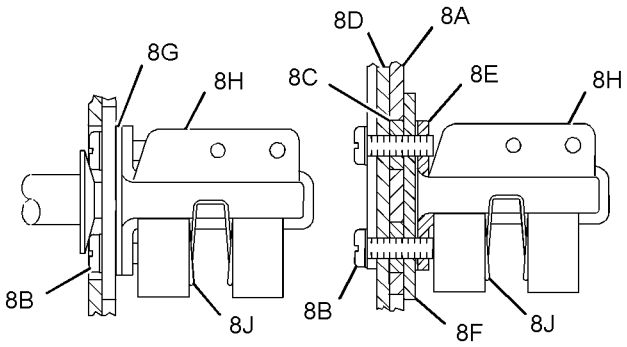

VIEW OF AREA C

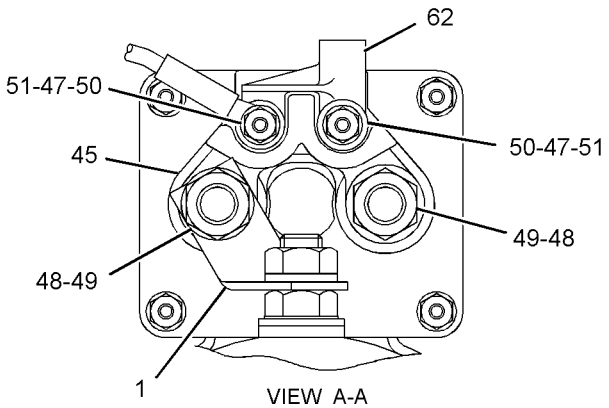

VIEW A-A

GRAPHIC #1 **<END>** g01453239

ELECTRICAL AND STARTING SYSTEM

308-6784 STARTING MOTOR GP-ELECTRIC

S/N: RHX2054-UP

PART OF 215-7486, 263-7760 ENGINE AR-COMPLETE

SMCS-1453 **i02774637**

NOTE	REF NO	GRAPHIC REF	PART NUMBER	QTY	PART NAME 1 2 3 4 5 6 (PRODUCT LEVEL)	SEE PAGE
	1		9Y-6089	1	GASKET	
	2		306-8156	1	STRAP AS-GROUND	
	3		220-0771	3	BOLT-12 POINT HEAD (M16X2X45-MM)	
YR	4		237-1962	1	STARTING MOTOR GP-ELECTRIC (24-VOLT)	329

R-REMFG PART MAY BE AVAILABLE
Y-SEPARATE ILLUSTRATION

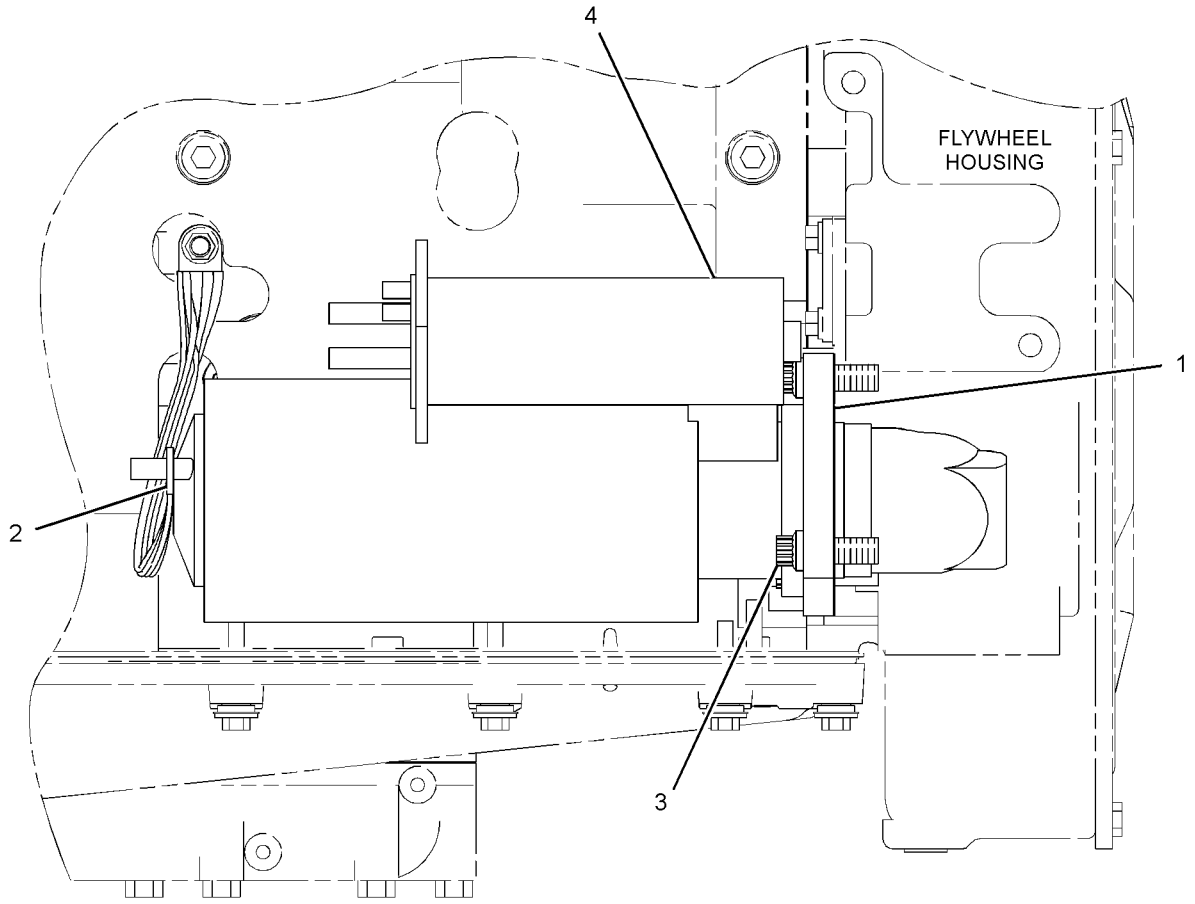

LEFT SIDE VIEW OF ENGINE

GRAPHIC #1 **<END>** g01364955

ELECTRICAL AND STARTING SYSTEM

338-3454 STARTING MOTOR GP-ELECTRIC

S/N: RHX2054-UP
24-VOLT
FIELD REPLACEMENT FOR 237-1962—PAGE 329

SMCS-1453 **i03784531**

NOTE	REF NO	GRAPHIC REF	PART NUMBER	QTY	PART NAME 1 2 3 4 5 6 (PRODUCT LEVEL)	SEE PAGE
	1	1	7M-0326	1	CONNECTOR	
	2	1	9H-3757	2	WASHER (0.516X1X0.094-IN THK)	
	3	1	1S-7446	3	SCREW-MACHINE (8-32X0.437-IN)	
	4	1	8C-9660	3	WASHER (4.6X7.9X0.8-MM THK)	
	5	1	9S-2544	9	SCREW-HEX HEAD (8-32X11.13-MM)	
	6	1	7M-0327	1	WASHER-THRUST (17.4X25.4X1.6-MM THK)	
	7	1	3T-3418	1	FRAME AS-END	
		1	3T-3423	1	CUP	
		1	3T-3424	1	PLUG-FELT	
		1	9G-4101	1	BUSHING-END	
	8	1	3T-9525	1	PLATE AS-BRUSH	
	8A	1	2L-6679	3	PLATE-INSULATOR	
	8B	1	3T-4709	3	PLATE	
	8C	1	3T-4710	3	PLATE	
	8D	1	5P-6298	12	SCREW-MACHINE (10-32X0.5-IN)	
	8E	1	6T-0363	6	HOLDER AS-BRUSH	
					(EACH INCLUDES)	
	8F	1	3T-9494	1	SPRING	
	8G	1	6T-0371	1	INSULATOR	
	8H	1	6T-0372	1	PLATE	
	8J	1	7F-3525	6	WASHER-BUSHING (0.207X0.39X0.09-IN THK)	
	8K	1	9F-5599	12	LOCKWASHER	
	9	1	1T-0808	2	WASHER (0.516X0.812X0.09-IN THK)	
	10	1	3T-3422	1	WIRE AS	
	11	1	2J-8163	2	SEAL-O-RING	
	12	1	7X-3373	1	BOLT (5/16-18X0.88-IN)	
	13	1	3T-3434	6	PLUG	
	14	1	5J-5314	5	BOLT (5/16-18X1.5-IN)	
	15	1	3L-3380	1	BUSHING-TERMINAL	
	16	1	8C-3089	1	SEAL-O-RING	
	17	1	4M-1853	1	LEVER AS-SHIFT	
	18	1	5M-3034	1	LOCKNUT (5/16-24-THD)	
	19	1	7L-2894	4	GASKET	
	20	1	4M-1831	4	PLUG-LEVER HOUSING	
	21	1	4M-1854	1	SHAFT-LEVER	
	22	1	1H-1023	1	SEAL-O-RING	
	23	1	2D-6392	1	SEAL-O-RING	
	24	1	7T-3974	1	HOUSING AS-DRIVE	
	25	1	6N-3826	1	DRIVE AS-MOTOR	
	26	1	2H-3429	1	RING-RETAINING	
	27	1	6V-1322	4	BOLT (1/4-20X0.375-IN)	
	28	1	8T-4205	4	WASHER-HARD (7.2X14.5X2-MM THK)	
	29	1	6N-3279	1	INSULATOR	
	30	1	0S-1597	13	BOLT (1/4-28X1-IN)	
	31	1	1M-9971	1	SPACER (0.835X1.72X0.188-IN THK)	
	32	1	1H-2629	3	STRIP-INSULATION	
	33	1	7M-0324	1	COIL AS-FIELD	
	34	1	3R-8797	12	SCREW & WASHER AS (3/8-24X0.72-IN)	
	35	1	7F-3488	6	SHOE-POLE	
	36	1	7M-8651	1	ARMATURE AS	
	37	1	7M-0325	1	INSULATOR	
	38	1	3T-9524	6	BRUSH AS	
	39	1	3N-3763	1	KIT-TERMINAL (STARTING MOTOR)	
					(INCLUDES BUSHINGS & WASHERS)	
	40	1	338-3453	1	SOLENOID AS-STARTING MOTOR (24-VOLT)	

338-3454 STARTING MOTOR GP-ELECTRIC *(contd.)* i03784531

NOTE	REF NO	GRAPHIC REF	PART NUMBER	QTY	PART NAME 1 2 3 4 5 6 (PRODUCT LEVEL)	SEE PAGE
		1	**3R-8801**	1	CLAMP	
	41	1	**3R-8801**	1	CLAMP	
	42	1	**8F-1434**	2	LOCKWASHER	
	43	1	**6V-8188**	6	NUT (1/2-13-THD)	
	44	1	**7X-0562**	6	WASHER-HARD (13.5X19X0.8-MM THK)	
	45	1	**4B-2049**	6	NUT (10-32-THD)	
	46	1	**8T-0328**	10	WASHER-HARD (5.5X10X1-MM THK)	
	47	1	**3T-9494**	6	SPRING	
	48	1	**3E-7771**	1	HOUSING AS (STARTING MOTOR)	
	49	1	**9G-4101**	1	BUSHING-END	
	50	1	**3T-3424**	3	PLUG-FELT	
	51	1	**3T-3423**	3	CUP	
	52	1	**1M-9968**	1	BUSHING	
	53	1	**2F-6678**	1	SEAL-LIP TYPE	
	54	1	**4L-2729**	1	WASHER (0.844X1.9X0.188-IN THK)	
	55	1	**4M-1896**	1	BUSHING-TERMINAL	
	56	1	**045-4065**	4	SCREW-MACHINE (10-32X0.75-IN)	
	57	1	**125-6537**	1	INSULATOR	
	58	1	**125-6535**	1	COVER-STARTING MOTOR	

338-3454 STARTING MOTOR GP-ELECTRIC *(contd.)* i03784531

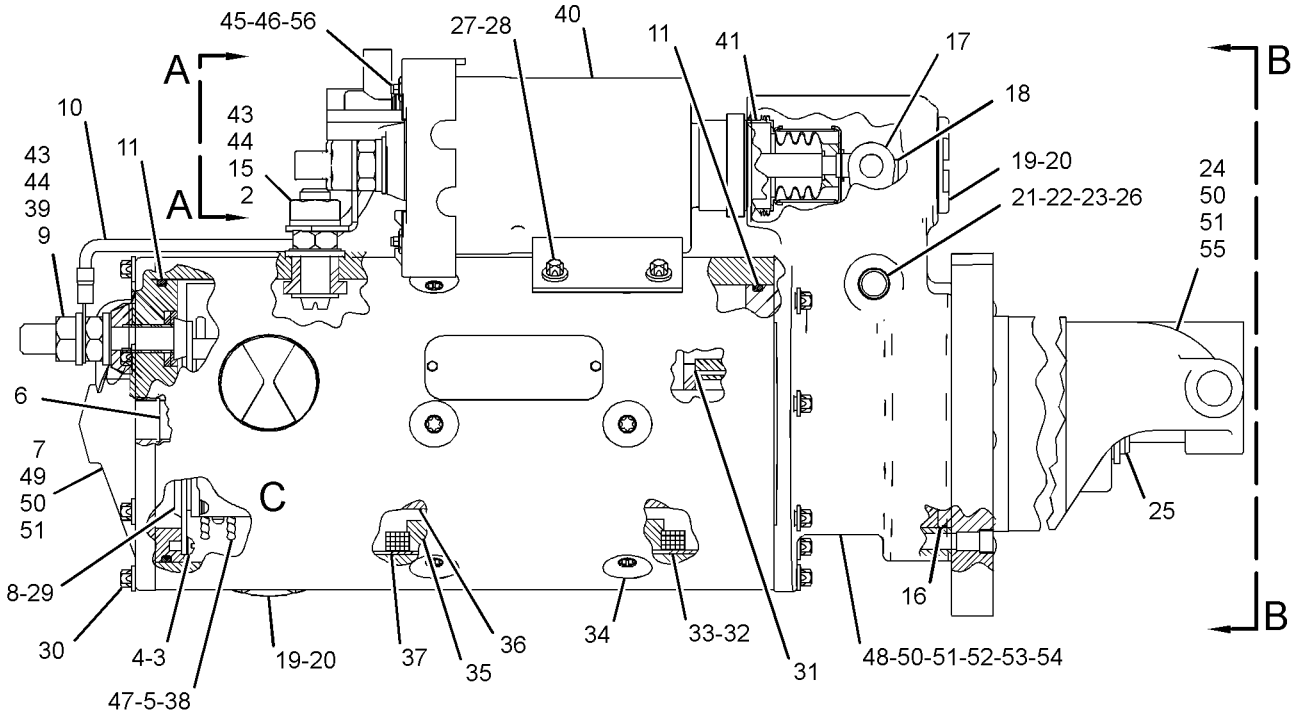

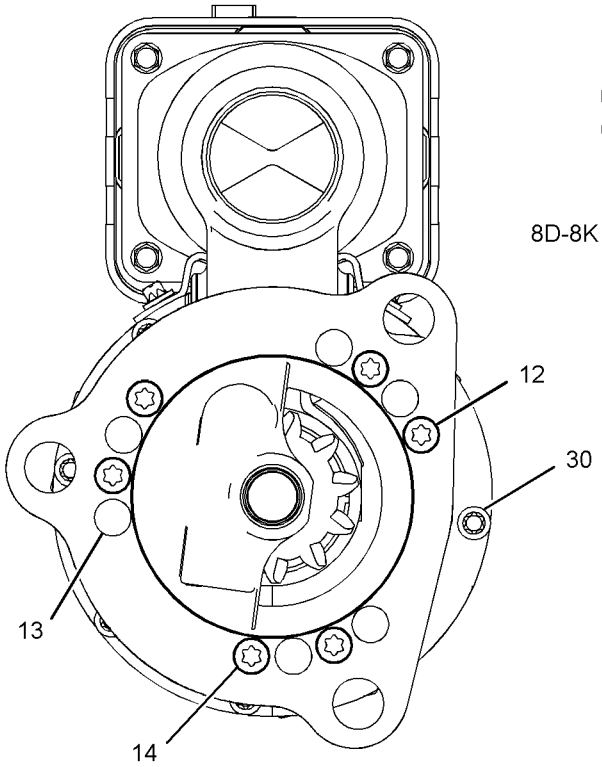

VIEW B-B

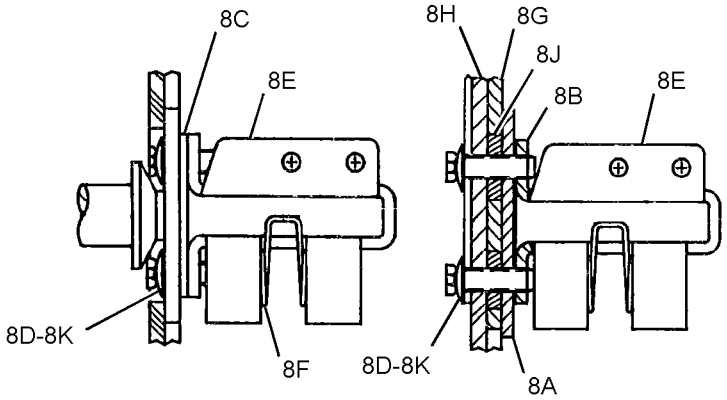

VIEW OF AREA C

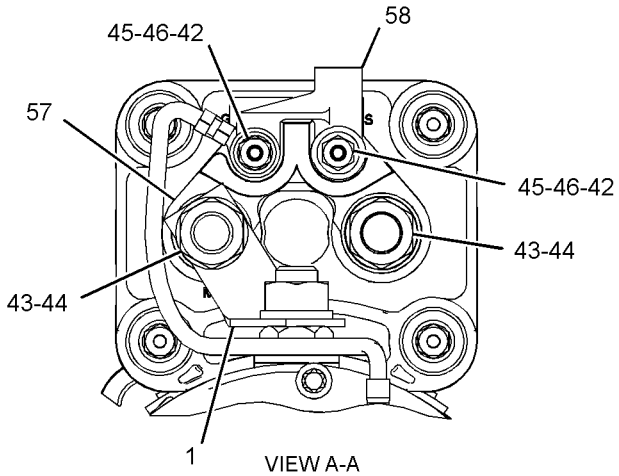

VIEW A-A

GRAPHIC #1 **<END>** g02064553

ELECTRICAL AND STARTING SYSTEM

164-7577 SWITCH GP-BYPASS

S/N: B9K1-UP

PART OF 238-1029, 249-2304, 333-9308, 342-7817 BASE GP-OIL FILTER

SMCS-1408, 1435 **i03948449**

NOTE	REF NO	GRAPHIC REF	PART NUMBER	QTY	PART NAME 1 2 3 4 5 6 (PRODUCT LEVEL)	SEE PAGE
E	1	1	9X-1813		SLEEVE (19-CM)	
	2	1	102-8802	1	KIT-RECEPTACLE (2-PIN)	
					(INCLUDES RECEPTACLE AS & WEDGE)	
	3	1	186-3735	2	PIN-CONNECTOR (16-GA TO 18-GA)	
	4	1	3D-2824	1	SEAL-O-RING	

E-ORDER BY THE CENTIMETER

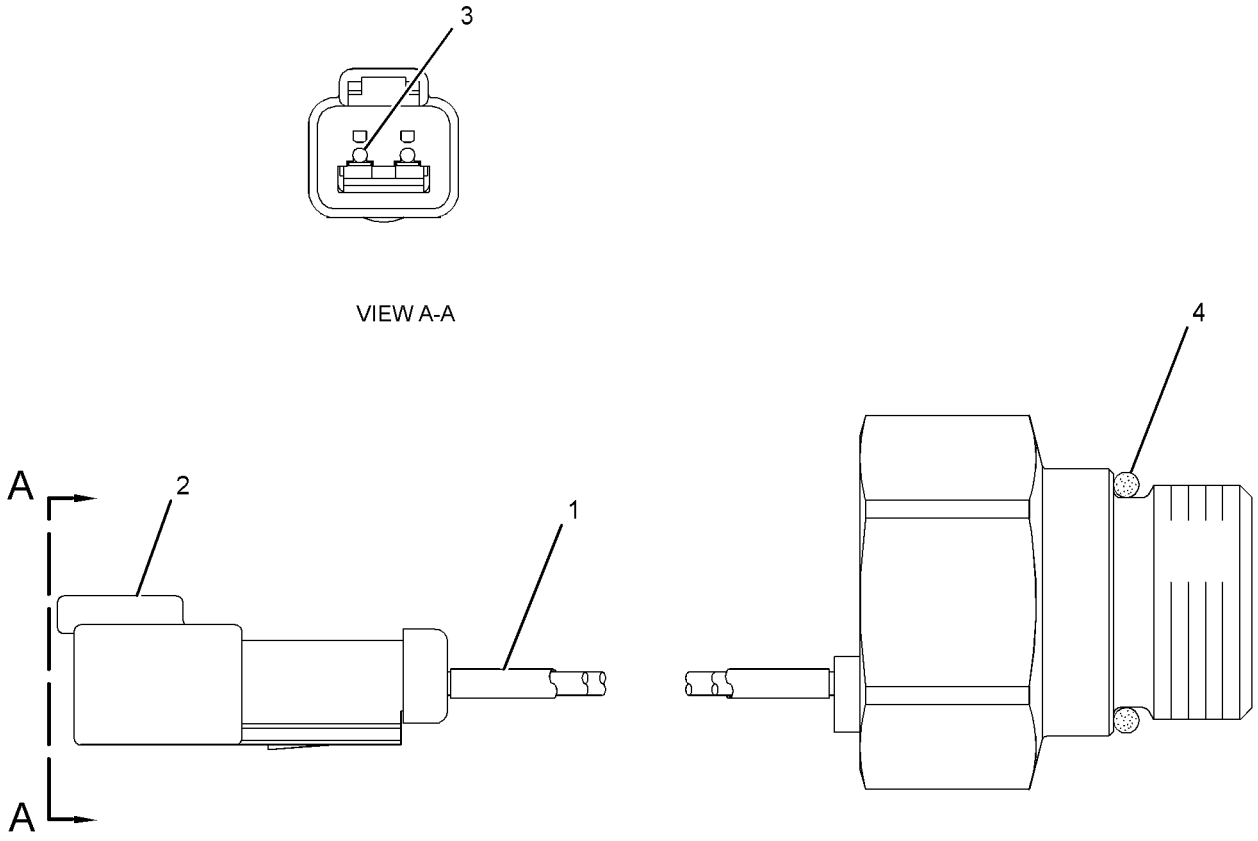

GRAPHIC #1 **<END>** g02157795

ELECTRICAL AND STARTING SYSTEM

7N-0718 SWITCH GP-DISCONNECT–BATTERY

S/N: B9K1-UP
12-VOLT
PART OF 266-8986 BATTERY & WIRING GP

SMCS-1411 **i02459121**

NOTE	REF NO	GRAPHIC REF	PART NUMBER	QTY	PART NAME 1 2 3 4 5 6 (PRODUCT LEVEL)	SEE PAGE
	1	1	**8H-5306**	1	KEY (BATTERY DISCONNECT)	
	2	1	**8H-5303**	1	NUT (3/4-16-THD)	
	3	1	**2H-3922**	2	LOCKWASHER	
	4	1	**9F-5644**	2	LOCKWASHER	
	5	1	**6F-7045**	2	NUT-FULL (3/8-24-THD)	

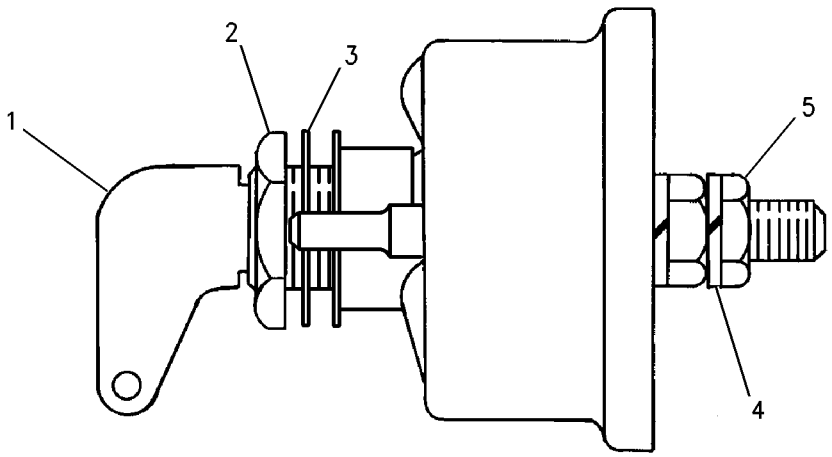

GRAPHIC #1 **<END>** g00715584

ELECTRICAL AND STARTING SYSTEM

118-3534 SWITCH GP-MAGNETIC

S/N: B9K1-UP
24-VOLT
PART OF 270-4330 PANEL GP-CIRCUIT BREAKER

SMCS-7499 **i04020911**

NOTE	PART NUMBER	QTY	PART NAME 1 2 3 4 5 6 (PRODUCT LEVEL)	SEE PAGE
Y	175-2308	1	SWITCH GP-MAGNETIC (24-VOLT) (START RELAY)	339
			—OR—	
Y	175-2309	1	SWITCH GP-MAGNETIC (24-VOLT) (START RELAY)	340

Y-SEPARATE ILLUSTRATION

<END>

ELECTRICAL AND STARTING SYSTEM

175-2308 SWITCH GP-MAGNETIC

S/N: B9K1-UP
24-VOLT
PART OF 118-3534 SWITCH GP-MAGNETIC

SMCS-7499 **i03371288**

NOTE	REF NO	GRAPHIC REF	PART NUMBER	QTY	PART NAME 1 2 3 4 5 6 (PRODUCT LEVEL)	SEE PAGE
	1	1	102-8802	1	KIT-RECEPTACLE (2-PIN)	
					(INCLUDES RECEPTACLE AS & WEDGE)	
	2	1	186-3735	2	PIN-CONNECTOR (16-GA TO 18-GA)	
	3	1	1H-3338	2	LOCKWASHER (EXTERNAL TOOTH)	
	4	1	012-0380	2	LOCKWASHER	
M	5	1	5C-2890	2	NUT (M6X1-THD)	
E	6	1	9X-1813		SLEEVE (16-CM)	

E-ORDER BY THE CENTIMETER
M-METRIC PART

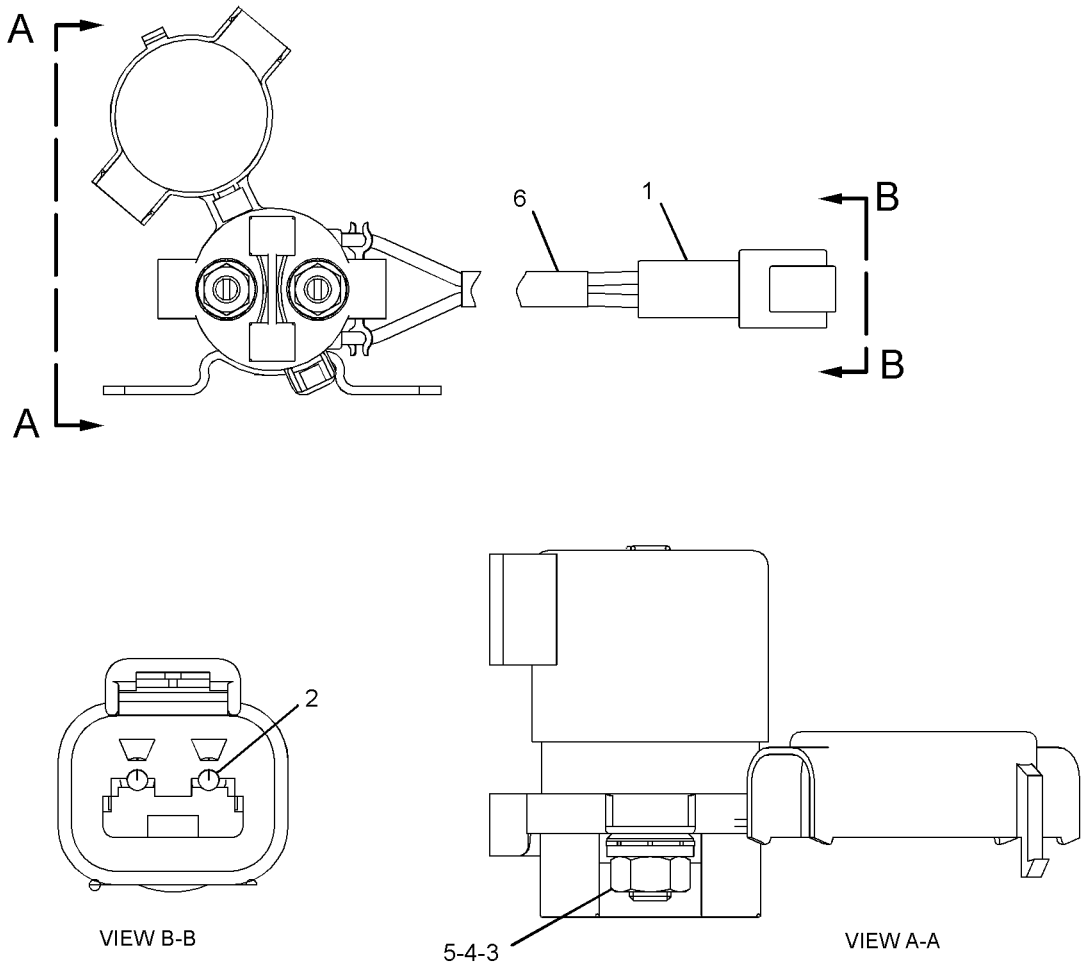

GRAPHIC #1 **<END>** g01266266

ELECTRICAL AND STARTING SYSTEM

175-2309 SWITCH GP-MAGNETIC

S/N: B9K1-UP
24-VOLT
PART OF 118-3534 SWITCH GP-MAGNETIC

SMCS-7499 **i03371361**

NOTE	REF NO	GRAPHIC REF	PART NUMBER	QTY	PART NAME 1 2 3 4 5 6 (PRODUCT LEVEL)	SEE PAGE
	1	1	117-9081	1	SWITCH AS-MAGNETIC (START RELAY)	
	1A	1	1H-3338	2	LOCKWASHER (EXTERNAL TOOTH)	
M	1B	1	5C-2890	2	NUT (M6X1-THD)	
	1C	1	012-0380	2	LOCKWASHER	
	2	1	102-8802	1	KIT-RECEPTACLE (2-PIN)	
					(INCLUDES RECEPTACLE AS & WEDGE)	
	3	1	186-3735	2	PIN-CONNECTOR (16-GA TO 18-GA)	
E	4	1	9X-1813		SLEEVE (16-CM)	

E-ORDER BY THE CENTIMETER
M-METRIC PART

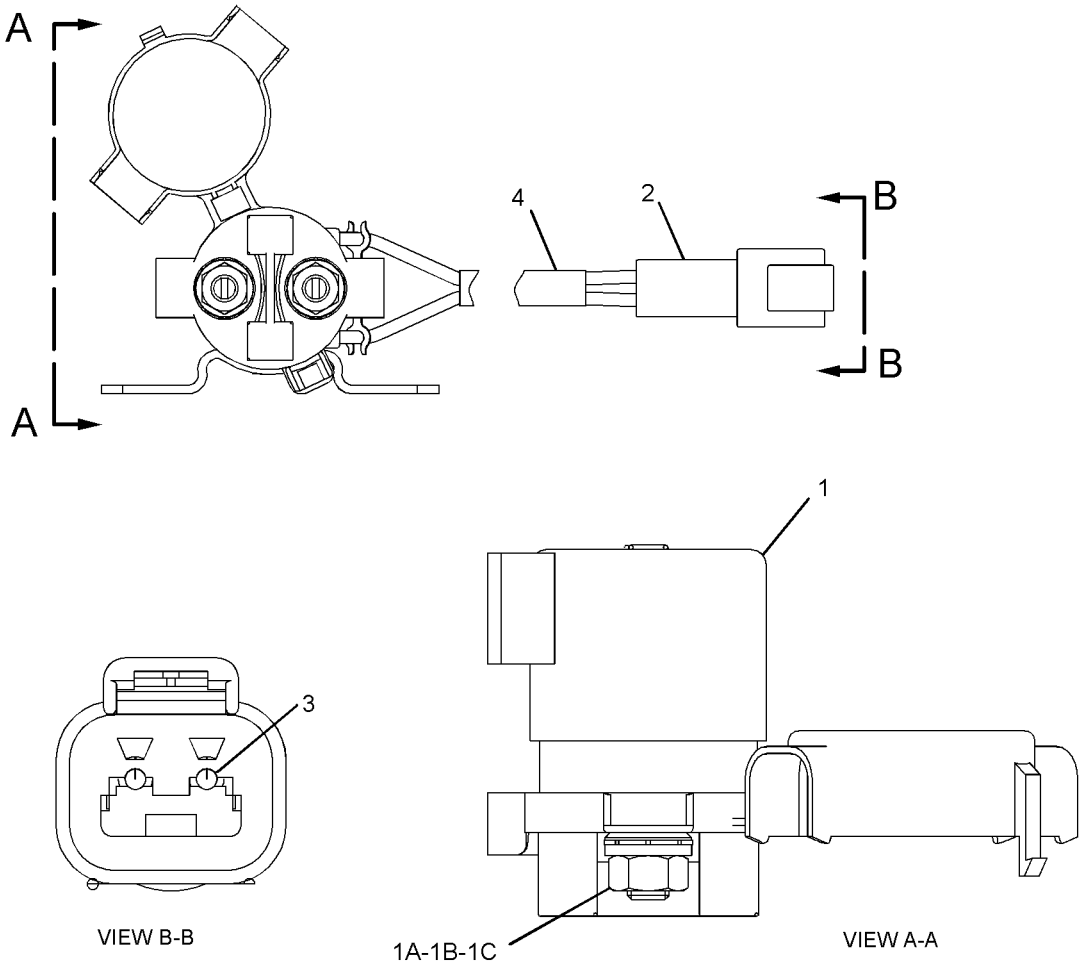

GRAPHIC #1 **<END>** g01266277

ELECTRICAL AND STARTING SYSTEM

209-5582 SWITCH GP-MAGNETIC

S/N: B9K1-363
24-VOLT
PART OF 266-7006 WIRING GP-CAB

SMCS-7499 **i03753277**

NOTE	REF NO	GRAPHIC REF	PART NUMBER	QTY	PART NAME 1 2 3 4 5 6 (PRODUCT LEVEL)	SEE PAGE
	1	1	**102-8802**	1	KIT-RECEPTACLE (2-PIN)	
					(INCLUDES RECEPTACLE AS & WEDGE)	
	2	1	**8T-8729**	2	PIN-CONNECTOR (16-GA TO 18-GA)	
	3	1	**3F-9556**	2	LOCKWASHER	
	4	1	**6V-8186**	2	NUT-FULL (5/16-24-THD)	
	5	1	**6V-8378**	2	NUT (10-32-THD)	
	6	1	**8F-1434**	2	LOCKWASHER	

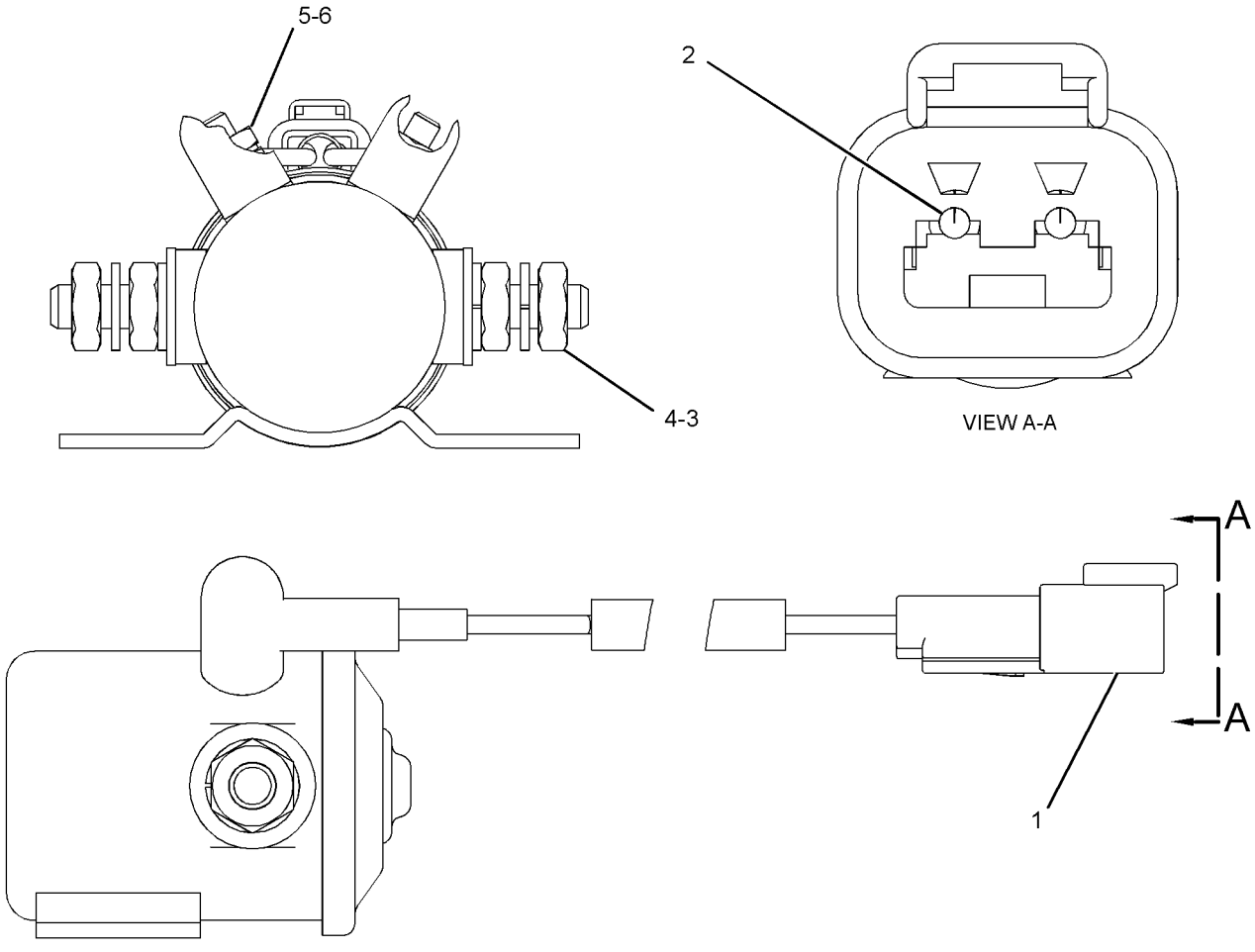

GRAPHIC #1 **<END>** g01279452

ELECTRICAL AND STARTING SYSTEM

241-8368 SWITCH GP-MAGNETIC

S/N: B9K1-UP
24-VOLT
PART OF 270-4330 PANEL GP-CIRCUIT BREAKER

SMCS-7499 **i03570587**

NOTE	REF NO	GRAPHIC REF	PART NUMBER	QTY	PART NAME 1 2 3 4 5 6 (PRODUCT LEVEL)	SEE PAGE
	1	1	**155-2270**	1	KIT-CONNECTING PLUG (2-PIN)	
					(INCLUDES PLUG AS, WEDGE & INTERFACE SEAL)	
	2	1	**4F-2294**	2	NUT-JAM (5/16-24-THD)	
	3	1	**186-3736**	2	SOCKET-CONNECTOR (16-GA TO 18-GA)	

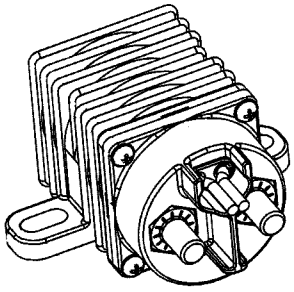

ISOMETRIC VIEW

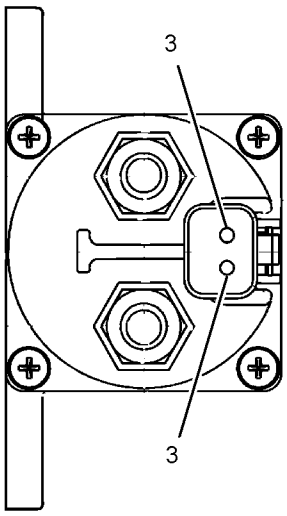

VIEW A-A

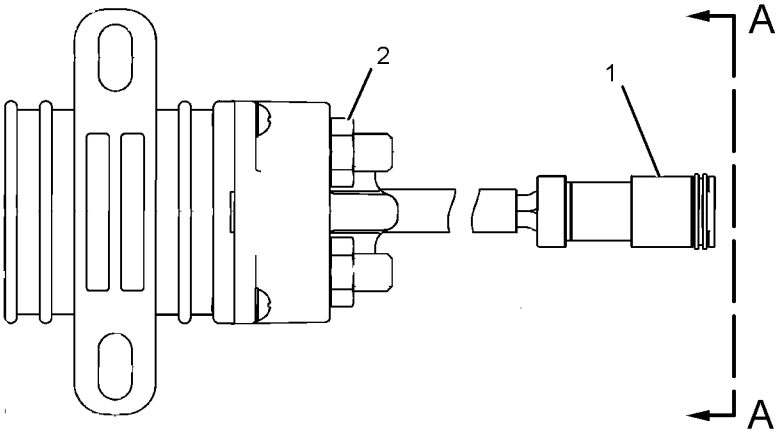

GRAPHIC #1 **<END>** g01077362

ELECTRICAL AND STARTING SYSTEM

275-1253 SWITCH GP-PRESSURE

S/N: RHX2094-UP
AMPSEAL CONNECTOR
PART OF 275-7667 FILTER GP-FUEL

SMCS-1435 **i03524880**

NOTE	REF NO	GRAPHIC REF	PART NUMBER	QTY	PART NAME 1 2 3 4 5 6 (PRODUCT LEVEL)	SEE PAGE
	1	1	230-4011	1	PLUG AS-CONNECTOR (2-PIN)	
			264-7029	1	SEAL-CONNECTOR	
E	2	1	9X-1813		SLEEVE (14-CM)	
	3	1	6V-4589	1	SEAL-O-RING	
	4	1	9X-7737	1	SEAL-O-RING	
	5	1	144-1636	2	PIN-CONNECTOR (14-GA TO 18-GA)	

E-ORDER BY THE CENTIMETER

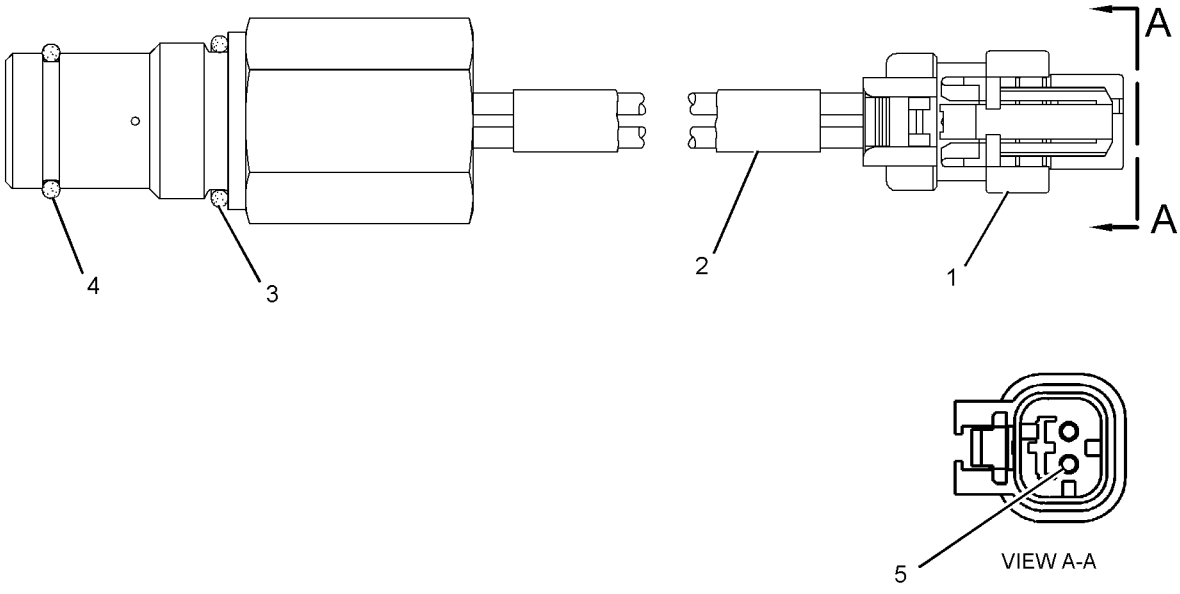

GRAPHIC #1 **<END>** g01238534

ELECTRICAL AND STARTING SYSTEM

278-0685 SWITCH GP-ROCKER–ENGINE BRAKE

S/N: B9K1-UP

PART OF 276-1430 ENGINE AR-COMPLETE

SMCS-7332 **i02675567**

NOTE	REF NO	GRAPHIC REF	PART NUMBER	QTY	PART NAME 1 2 3 4 5 6 (PRODUCT LEVEL)	SEE PAGE
	1	1	278-8040	1	SWITCH AS-ROCKER (ENGINE COMPRESSION BRAKE)	

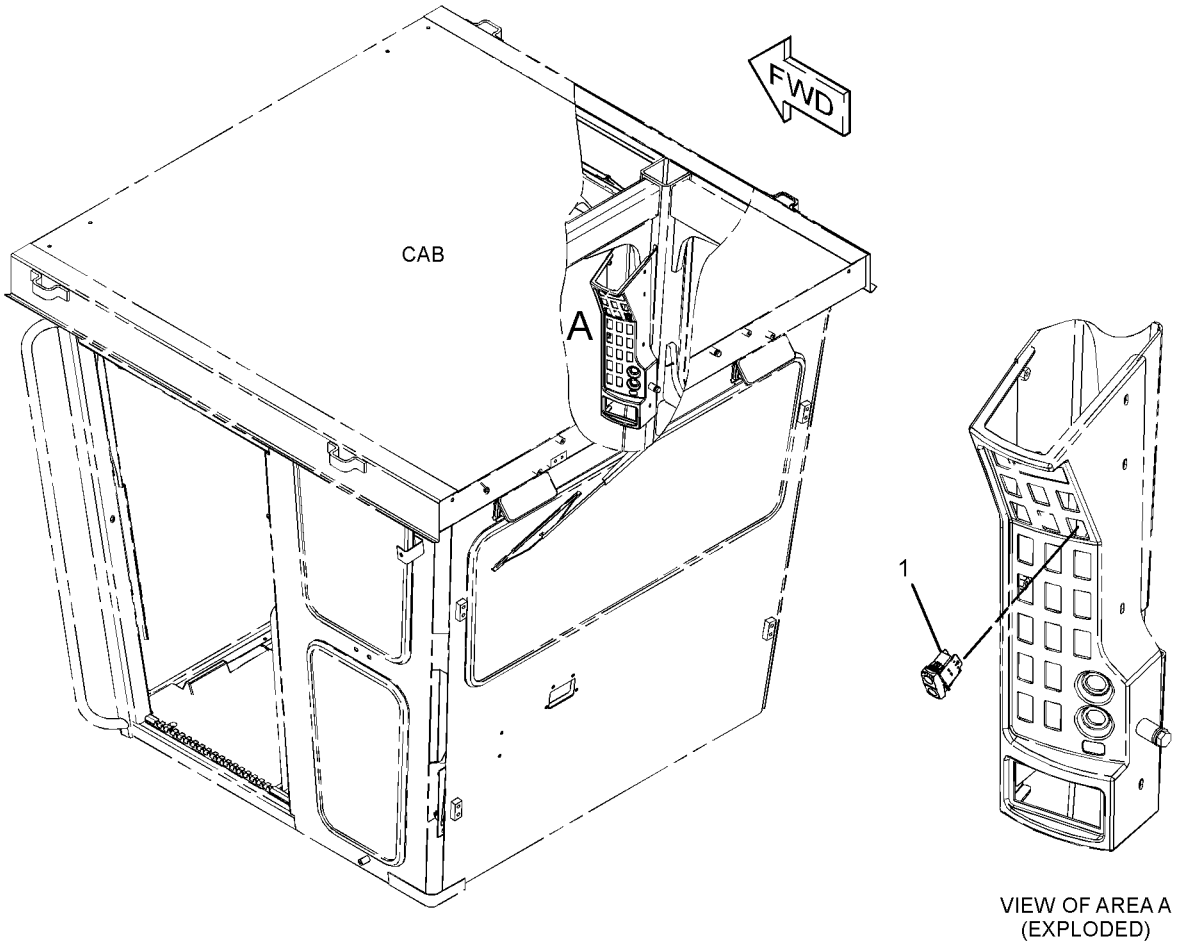

VIEW OF AREA A
(EXPLODED)

GRAPHIC #1 **<END>** g01317352

ELECTRICAL AND STARTING SYSTEM

281-1668 SWITCH GP-ROCKER–CAB ACCESS

S/N: B9K1-UP

PART OF 269-2207, 269-2209 PLATFORM AR

SMCS-7332 **i02757750**

NOTE	REF NO	GRAPHIC REF	PART NUMBER	QTY	PART NAME 1 2 3 4 5 6 (PRODUCT LEVEL)	SEE PAGE
	1	1	243-0774	1	SWITCH AS-ROCKER (STAIRWAY ACCESS LIGHTS)	

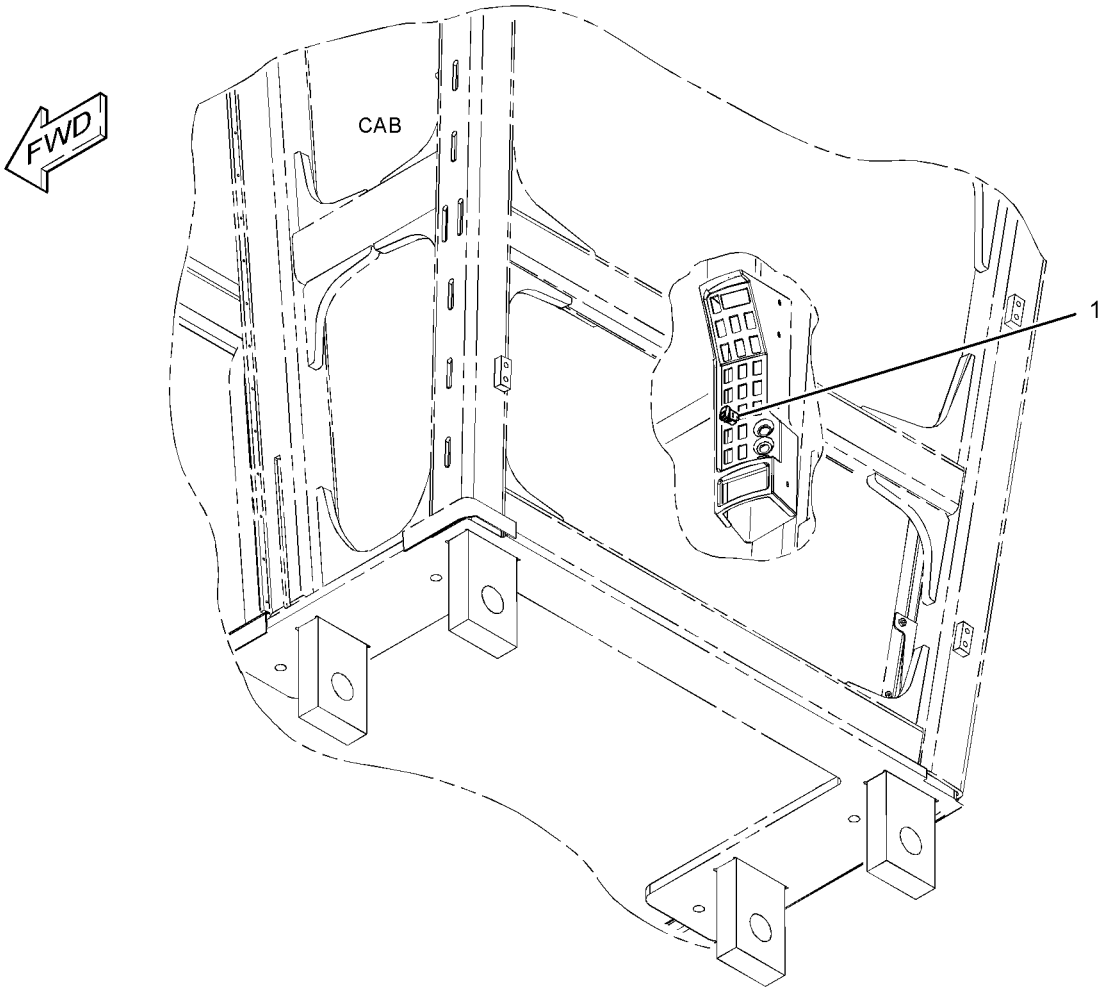

GRAPHIC #1 **<END>** g01382482

ELECTRICAL AND STARTING SYSTEM

3E-0155 SWITCH GP-WIPER–INTERMITTENT

S/N: B9K1-UP
24 VOLT
PART OF 266-7006 WIRING GP-CAB

SMCS-7305, 7332 **i02935205**

NOTE	REF NO	GRAPHIC REF	PART NUMBER	QTY	PART NAME 1 2 3 4 5 6 (PRODUCT LEVEL)	SEE PAGE
	1	1	110-7886	1	SWITCH AS-WIPER (24-VOLT) (FRONT INTERMITTENT)	
	1A	1	2H-3920	1	LOCKWASHER	
	1B	1	3E-3389	1	WEDGE-RECEPTACLE LOCK (8-PIN)	
	1C	1	6V-8369	1	NUT (7/16-28-THD)	
	1D	1	8T-8737	1	PLUG-SEAL	
C	1E	1	9W-0852	4	PIN-CONNECTOR (14-GA TO 16-GA)	
C	1F	1	102-8806	1	KIT-RECEPTACLE (8-PIN)	
					(INCLUDES RECEPTACLE AS & WEDGE)	
	1G	1	186-3735	3	PIN-CONNECTOR (16-GA TO 18-GA)	
	2	1	7T-9302	1	KNOB AS-WIPER SWITCH	

C-CHANGE FROM PREVIOUS TYPE

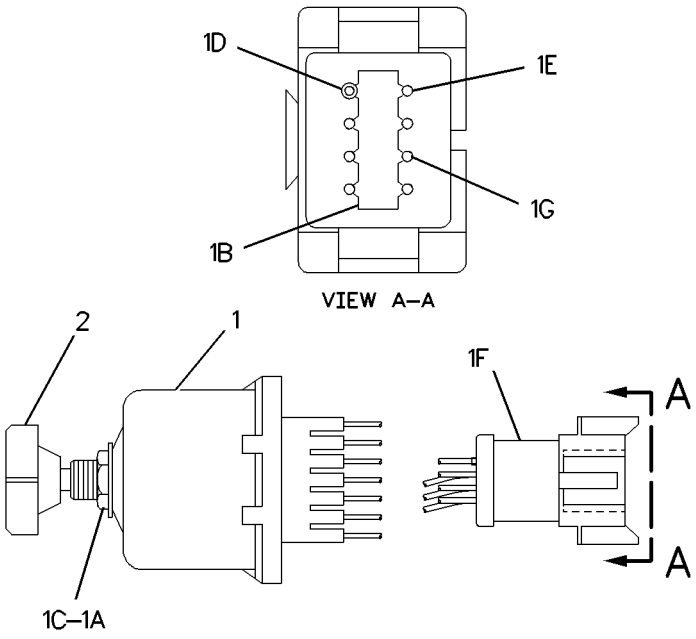

GRAPHIC #1 **<END>** g00899239

ELECTRICAL AND STARTING SYSTEM

275-7741 SWITCH GP-WIPER–INTERMITTENT

S/N: B9K1-363
24-VOLT
PART OF 275-7764 SWITCH GP-WIPER

SMCS-7305, 7332 **i02895040**

NOTE	REF NO	GRAPHIC REF	PART NUMBER	QTY	PART NAME 1 2 3 4 5 6 (PRODUCT LEVEL)	SEE PAGE
	1	1	6V-8369	1	NUT (7/16-28-THD)	
	2	1	2H-3920	1	LOCKWASHER	
	3	1	8T-8737	2	PLUG-SEAL	
	4	1	186-3735	6	PIN-CONNECTOR (16-GA TO 18-GA)	
	5	1	102-8806	1	KIT-RECEPTACLE (8-PIN)	
					(INCLUDES RECEPTACLE AS & WEDGE)	

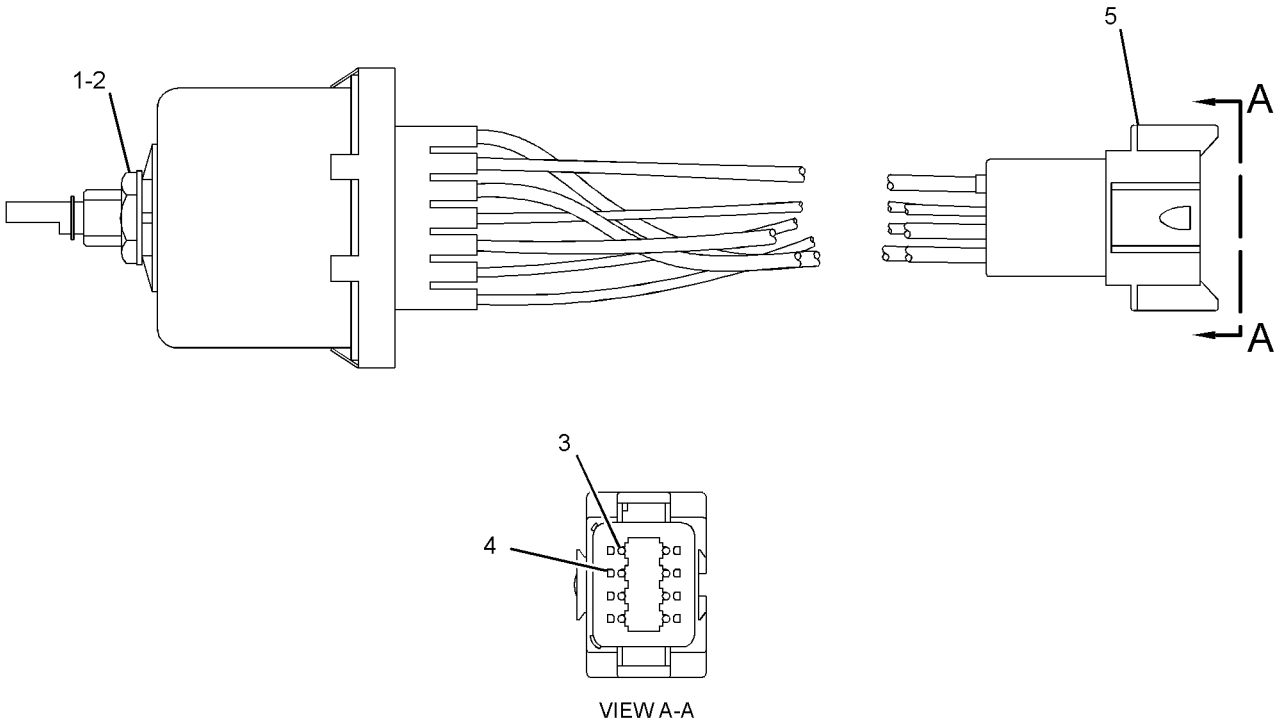

GRAPHIC #1 **<END>** g01445891

ELECTRICAL AND STARTING SYSTEM

275-7764 SWITCH GP-WIPER–INTERMITTENT

S/N: B9K1-363
24-VOLT
PART OF 266-7006 WIRING GP-CAB

SMCS-7305, 7332 **i02980144**

NOTE	REF NO	GRAPHIC REF	PART NUMBER	QTY	PART NAME 1 2 3 4 5 6 (PRODUCT LEVEL)	SEE PAGE
Y	1	1	275-7741	1	SWITCH GP-WIPER (24-VOLT, INTERMITTENT)	347
	2	1	7T-9302	1	KNOB AS-WIPER SWITCH	
		1	014-0816	1	SETSCREW (8-32X0.5-IN)	

Y-SEPARATE ILLUSTRATION

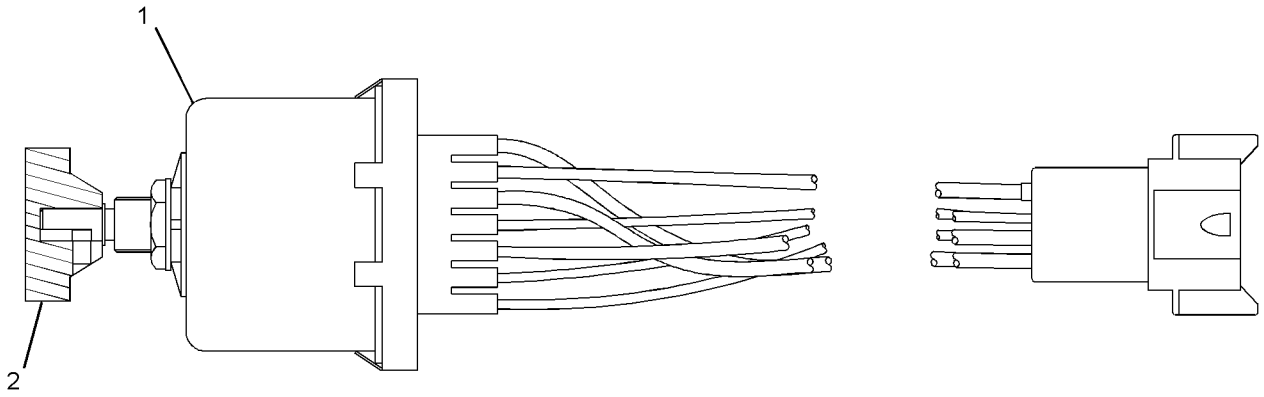

GRAPHIC #1 **<END>** g01516002

ELECTRICAL AND STARTING SYSTEM

256-2907 TARGET GP-LASER

S/N: B9K1-UP

PART OF 295-9880 TARGET GP-LASER

SMCS-7009 **i03778209**

NOTE	REF NO	GRAPHIC REF	PART NUMBER	QTY	PART NAME 1 2 3 4 5 6 (PRODUCT LEVEL)	SEE PAGE
	1	1	**291-1915**	1	TARGET AS-LASER	
	2	1	**275-3378**	1	SPACER (16.7X38.1X12.7-MM THK)	
	3	1	**7X-0345**	1	BOLT (5/8-11X1.75-IN)	
	4	1	**7M-4672**	1	WASHER (0.656X1.31X0.109-IN THK)	
	5	1	**8T-9368**	4	BOLT (1/4-20X2.25-IN)	
	6	1	**9X-6165**	8	WASHER (6.5X22X2.5-MM THK)	
	7	1	**8C-5607**	8	MOUNT-ISOLATION	
	8	1	**8C-5608**	4	SPACER (6.5X9.5X25.4-MM THK)	
	9	1	**275-4012**	4	BUSHING	
	10	1	**6V-8185**	4	NUT (1/4-20-THD)	
	11	1	**5P-4115**	4	WASHER-HARD (7.2X19X2-MM THK)	
	12	1	**252-9628**	1	MOUNTING GP-RECEIVER (TARGET)	
	12A	1	**113-0693**	1	LOCKWASHER	
	12B	1	**8R-1803**	1	WASHER (10.5X18X1-MM THK)	
	12C	1	**289-8449**	1	HANDLE AS	
	13	1	**264-3171**	1	PLATE-SHOCK	

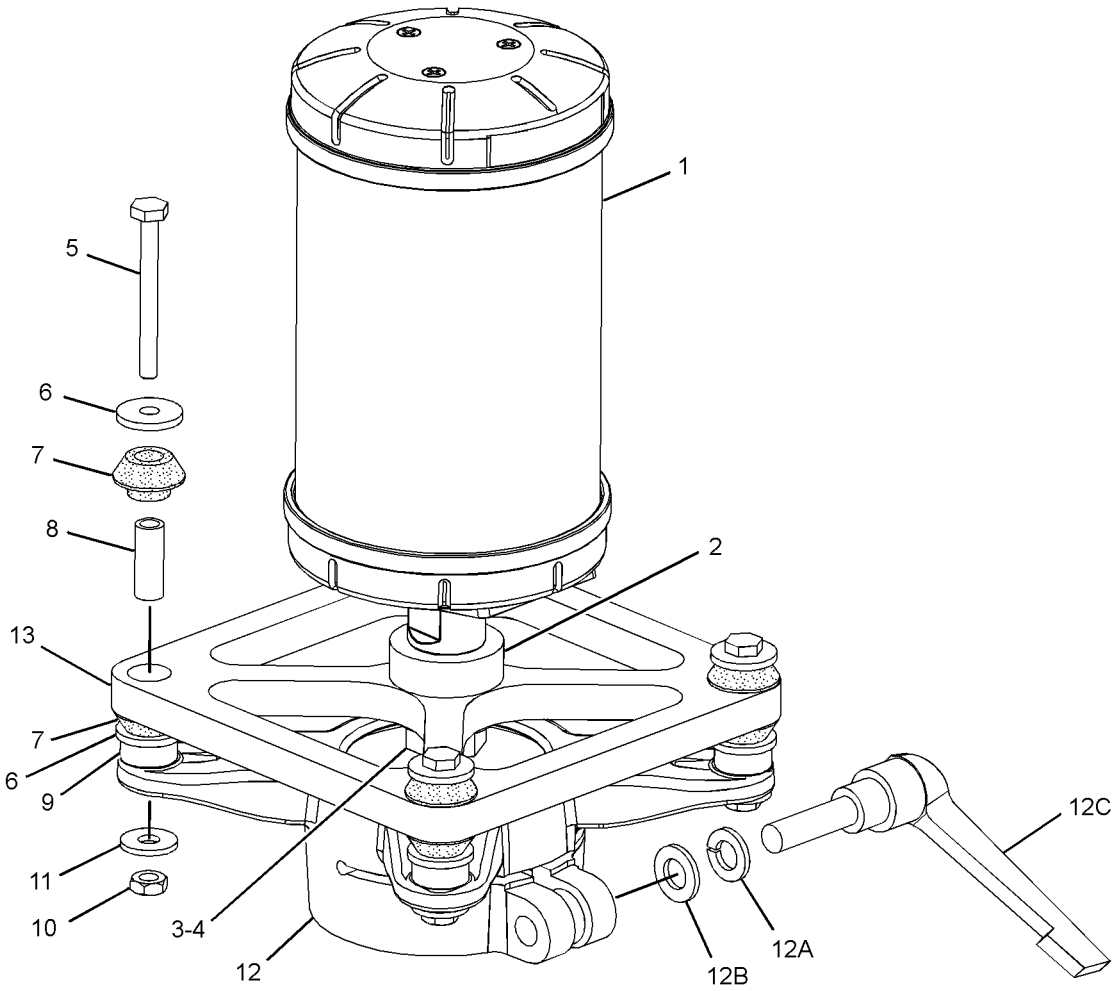

GRAPHIC #1 **<END>** g02059833

ELECTRICAL AND STARTING SYSTEM

295-9880 TARGET GP-LASER

S/N: B9K1-UP

PART OF 317-6526 GRADE CONTROL AR-LASER

SMCS-7009 **i03910854**

NOTE	PART NUMBER	QTY	PART NAME 1 2 3 4 5 6 (PRODUCT LEVEL)	SEE PAGE
Y	*256-2907*	1	TARGET GP-LASER (GRADE CONTROL)	349
	275-3376	1	BLOCK	
	276-0764	1	CABLE-COILED (LASER RECEIVER)	
	244-1719	1	CASE-CARRYING	
	252-8744	1	FILM-WARNING (BLADE, DO NOT CLIMB, READ OMM)	

Y-SEPARATE ILLUSTRATION

<END>

ELECTRICAL AND STARTING SYSTEM

239-1134 VALVE GP-ETHER STARTING

S/N: B9K1-UP
24-VOLT
PART OF 253-3997 STARTING AID GP-ETHER

SMCS-1456 **i03894416**

NOTE	REF NO	GRAPHIC REF	PART NUMBER	QTY	PART NAME 1 2 3 4 5 6 (PRODUCT LEVEL)	SEE PAGE
	1	1	**7N-9801**	1	GASKET	
	2	1	**102-8802**	1	KIT-RECEPTACLE (2-PIN)	
					(INCLUDES RECEPTACLE AS & WEDGE)	
	3	1	**8T-8729**	2	PIN-CONNECTOR (16-GA TO 18-GA)	
	4	1	**358-4889**	1	FILTER (ETHER START)	

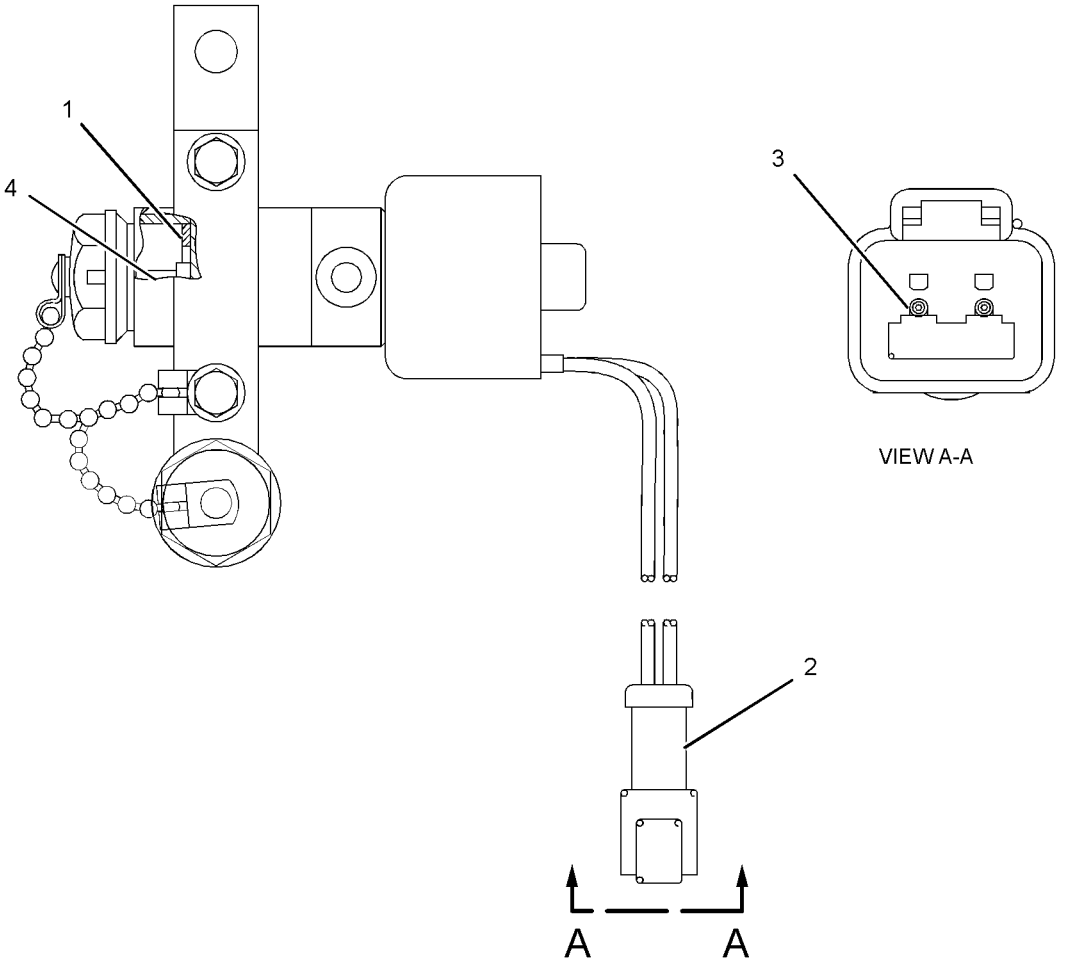

GRAPHIC #1 **<END>** g02138138

ELECTRICAL AND STARTING SYSTEM

266-8965 WARNING GP-BACKUP

S/N: B9K1-UP

PART OF 259-9204 COMMON AR

SMCS-7406 **i02762672**

NOTE	REF NO	GRAPHIC REF	PART NUMBER	QTY	PART NAME 1 2 3 4 5 6 (PRODUCT LEVEL)	SEE PAGE
	1	1	**213-9100**	1	ALARM GP (BACKUP)	
		1	**102-8802**	1	KIT-RECEPTACLE (2-PIN)	
					(INCLUDES RECEPTACLE AS & WEDGE)	
D		1	**5P-5623**		WIRE-ELECTRICAL (16-GA, BLACK) (0.4-M EACH)	
		1	**186-3735**	2	PIN-CONNECTOR (16-GA TO 18-GA)	
E		1	**9X-1813**		SLEEVE (31-CM)	
	2	1	**270-4321**	1	HARNESS AS-WIRING (RADIATOR)	
	3	1	**130-5300**	2	CLIP	
	4	1	**4D-7794**	4	CLIP	
	5	1	**5P-4116**	4	WASHER-HARD (8.8X20.5X2-MM THK)	
M	6	1	**8T-4189**	4	BOLT (M8X1.25X20-MM)	

D-ORDER BY THE METER
E-ORDER BY THE CENTIMETER
M-METRIC PART

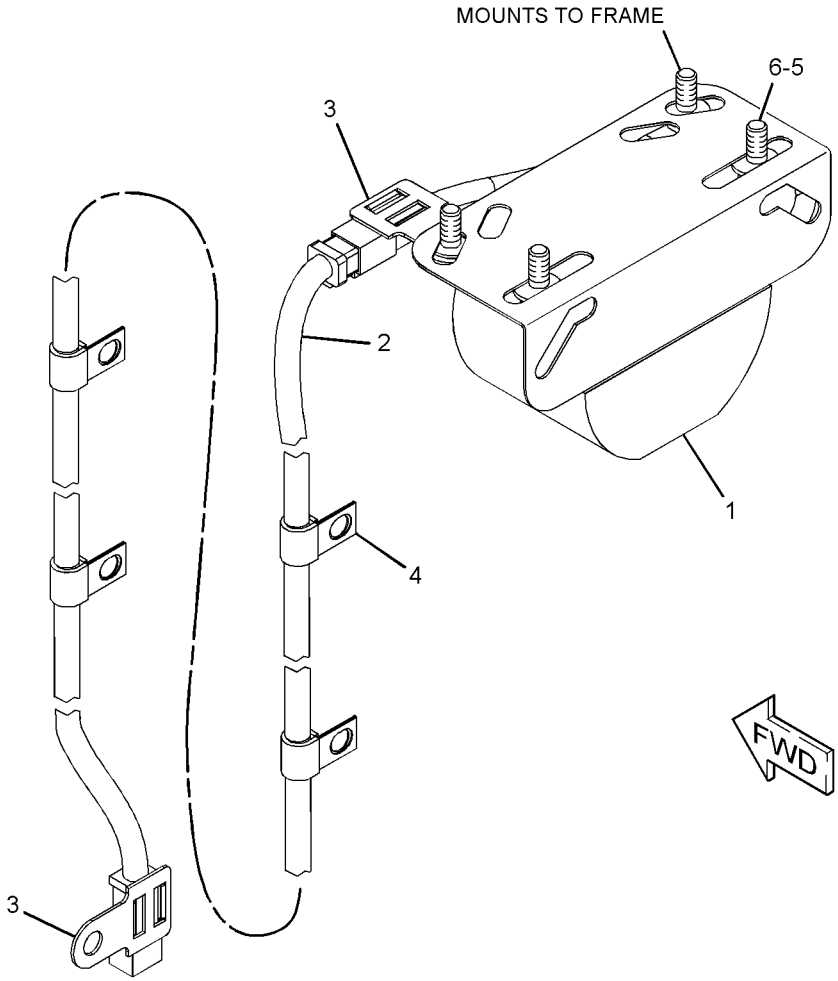

GRAPHIC #1 **<END>** g01384446

ELECTRICAL AND STARTING SYSTEM

266-7006 WIRING GP-CAB

S/N: B9K1-UP

PART OF 266-7000 CAB AR

SMCS-1408, 7301 **i02762197**

NOTE	REF NO	GRAPHIC REF	PART NUMBER	QTY	PART NAME 1 2 3 4 5 6 (PRODUCT LEVEL)	SEE PAGE
	1	1	1S-2342	1	STRAP AS-GROUND	
Y	2	3	3E-0155	2	SWITCH GP-WIPER (24-VOLT, INTERMITTENT)	346
	3	2	3E-5239	3	RELAY AS (24-VOLT) (FRONT MACHINE FLOODLIGHTS)	
	3A	2	3E-5239	1	RELAY AS (24-VOLT) (HEATED MIRRORS)	
	3B	2	3E-5239	3	RELAY AS (24-VOLT) (CAB FLOODLIGHTS)	
	3C	2	3E-5239	1	RELAY AS (24-VOLT) (THROTTLE RELAY)	
Y	4	2	3E-6328	1	ALARM GP (24-VOLT)	182
	5	1,2,3	3S-2093	76	STRAP-CABLE	
	6	2,3	8T-9655	16	MOUNT-ISOLATION	
	7	2	110-7887	1	SWITCH AS-START (KEY)	
		2	7T-6799	1	NUT-MOUNTING (1-32-THD)	
		2	102-8804	1	KIT-RECEPTACLE (4-PIN)	
		2	186-3735	4	PIN-CONNECTOR (16-GA TO 18-GA)	
	8	3	113-8490	17	FUSE (10-AMPERE)	
	9	3	113-8491	9	FUSE (15-AMPERE)	
	10	3	113-8492	5	FUSE (20-AMPERE)	
	11	3	117-2311	1	SOCKET-AUXILIARY POWER (12-VOLT)	
	12	3	124-3548	1	FUSE (30-AMPERE)	
	13	3	128-6157	1	PLATE	
	14	3	147-1380	1	SWITCH AS-FOOT (DIFFERENTIAL LOCK)	
		3	102-8802	1	KIT-RECEPTACLE (2-PIN) (INCLUDES RECEPTACLE AS & WEDGE)	
		3	186-3735	2	PIN-CONNECTOR (16-GA TO 18-GA)	
	15	3	161-3128	8	RELAY (24-VOLT)	
	16	3	170-6888	1	PULLER-FUSE	
	17	3	180-9900	1	CAP AS	
Y	18	2	209-5582	1	SWITCH GP-MAGNETIC (24-VOLT) (AIR INLET HEATER)	341
	19	3	222-7890	1	SWITCH AS-ROCKER (PARKING BRAKE ON, OFF)	
	20	3	228-6089	4	PLUG (ROCKER SWITCH)	
	21	3	229-2580	1	SWITCH AS-ROCKER (ENGINE, HIGH IDLE, HOLD)	
	22	3	236-4611	1	SWITCH AS-ROCKER (FRONT DEFROSTER)	
	22A	3	236-4611	1	SWITCH AS-ROCKER (REAR DEFROSTER)	
	23	2	236-4615	1	SWITCH AS-ROCKER (SECONDARY STEERING)	
	24	3	236-4616	1	SWITCH AS-ROCKER (HAZARD)	
	25	3	237-9736	1	SWITCH AS-ROCKER (WARNING BEACON)	
	26	3	246-4311	1	GUARD (SWITCH)	
	27	3	249-5479	1	SWITCH AS-ROCKER (24-VOLT) (HEADLIGHT DIMMER)	
	28	3	249-5480	1	SWITCH AS-ROCKER (CAB FLOODLIGHTS)	
	29	3	249-5486	1	SWITCH AS-ROCKER (HEADLIGHTS, TAIL LIGHTS)	
	30	3	249-5493	1	SWITCH AS-ROCKER (THROTTLE HOLD MODE)	
	31	2	250-2299	1	LAMP AS-LED (24-VOLT, GREEN)	
	32	2	250-3010	1	CONTROL GP-ELECTRONIC (GAUGE CLUSTER)	
	33	3	251-1197	1	SWITCH AS-ROCKER (HYDRAULIC LOCKOUT)	
Y	34	3	275-9650	1	ELECTRONICS GP-MONITOR (MESSENGER)	203
	35	1	281-1658	1	HARNESS AS-CAB (MAIN CAB)	
	36	2	282-0804	1	PLATE AS	
M		2	8T-3612	4	NUT-WELD (M8X1.25-THD)	
	37	3	282-0806	1	PLATE AS	
	38	1	282-3783	1	HARNESS AS-FRONT LIGHTING (RH) (RH)	
	39	1	282-3784	1	HARNESS AS-FRONT LIGHTING (REAR)	
	40	2	282-4337	1	PLATE AS	
	41	2	282-4339	1	PLATE AS	
Y	42	3	*282-9485*	1	PANEL GP-CAB	924
	43	3	284-3620	1	SWITCH AS-ROCKER (PARKING BRAKE RETRACT)	

266-7006 **WIRING GP-CAB** *(contd.)* **i02762197**

NOTE	REF NO	GRAPHIC REF	PART NUMBER	QTY	PART NAME 1 2 3 4 5 6 (PRODUCT LEVEL)	SEE PAGE
	44	1	**284-6972**	1	HARNESS AS-FRONT LIGHTING (LH) (LH)	
	45	2	**286-0320**	1	GASKET	
	46	2	**286-0321**	1	GASKET	
	47	1	**286-0322**	1	GASKET	
	48	1	**286-0323**	2	GASKET	
	49	1,2,3	**096-6166**	41	WASHER-HARD (4.5X9X1-MM THK)	
	50	1,2,3	**130-5300**	3	CLIP	
	51	1,2,3	**134-2540**	4	RESISTOR AS-CONNECTION (3-PIN)	
M	52	2	**174-8131**	3	SCREW-TRUSS HEAD (M4X0.7X12-MM)	
	53	2	**189-3158**	1	SUPPRESSOR-ARC	
	54	3	**1H-4393**	4	LOCKWASHER	
R	55	2,3	**262-1408**	2	CONTROL GP-UNPROGRAMMED (BASIC)	
	56	2	**304-5235**	1	FLASHER AS	
	57	2	**310-5324**	1	PLATE AS	
	58	3	**3S-9557**	4	SCREW-PAN HEAD (4-40X0.5-IN)	
	59	2,3	**4P-8134**	2	CLIP	
M	60	2	**5C-9553**	4	BOLT (M6X1X16-MM)	
	61	2,3	**5P-4116**	18	WASHER-HARD (8.8X20.5X2-MM THK)	
	62	1	**5P-8439**	1	GROMMET	
	63	3	**5P-8525**	1	GROMMET	
	64	3	**6T-3644**	2	CIRCUIT BREAKER AS (20-AMPERE)	
	65	1,2	**7K-1181**	4	STRAP-CABLE	
	66	3	**7U-4892**	4	SCREW (8-32X0.75-IN)	
	67	2	**8N-1523**	1	LOCKWASHER	
	68	1	**8T-4121**	2	WASHER-HARD (11X21X2.5-MM THK)	
M	69	1	**8T-4137**	2	BOLT (M10X1.5X20-MM)	
M	70	2	**8T-4171**	2	BOLT (M6X1X12-MM)	
M	71	1,2	**8T-4179**	3	BOLT (M12X1.75X20-MM)	
M	72	1,2,3	**8T-4189**	12	BOLT (M8X1.25X20-MM)	
	73	1,2	**8T-4223**	3	WASHER-HARD (13.5X25.5X3-MM THK)	
	74	1,3	**8T-4224**	2	WASHER-HARD (8.8X16X2-MM THK)	
M	75	2,3	**8T-6912**	8	BOLT (M8X1.25X50-MM)	
M	76	1,2	**8T-9405**	40	BOLT-SOCKET HEAD (M4X0.7X16-MM)	
	77	3	**9W-0335**	1	LIGHTER AS-CIGAR (24-VOLT)	
M	78	2	**9X-1046**	12	SCREW (M4X0.7X18-MM)	
	79	2	**9X-2026**	2	WASHER (6.5X17X1-MM THK)	
M	80	2,3	**9X-2044**	18	SCREW-TRUSS HEAD (M6X1X16-MM)	
	81	2	**9X-8256**	4	WASHER (6.6X12X2-MM THK)	

M-METRIC PART
R-REMFG PART MAY BE AVAILABLE
Y-SEPARATE ILLUSTRATION

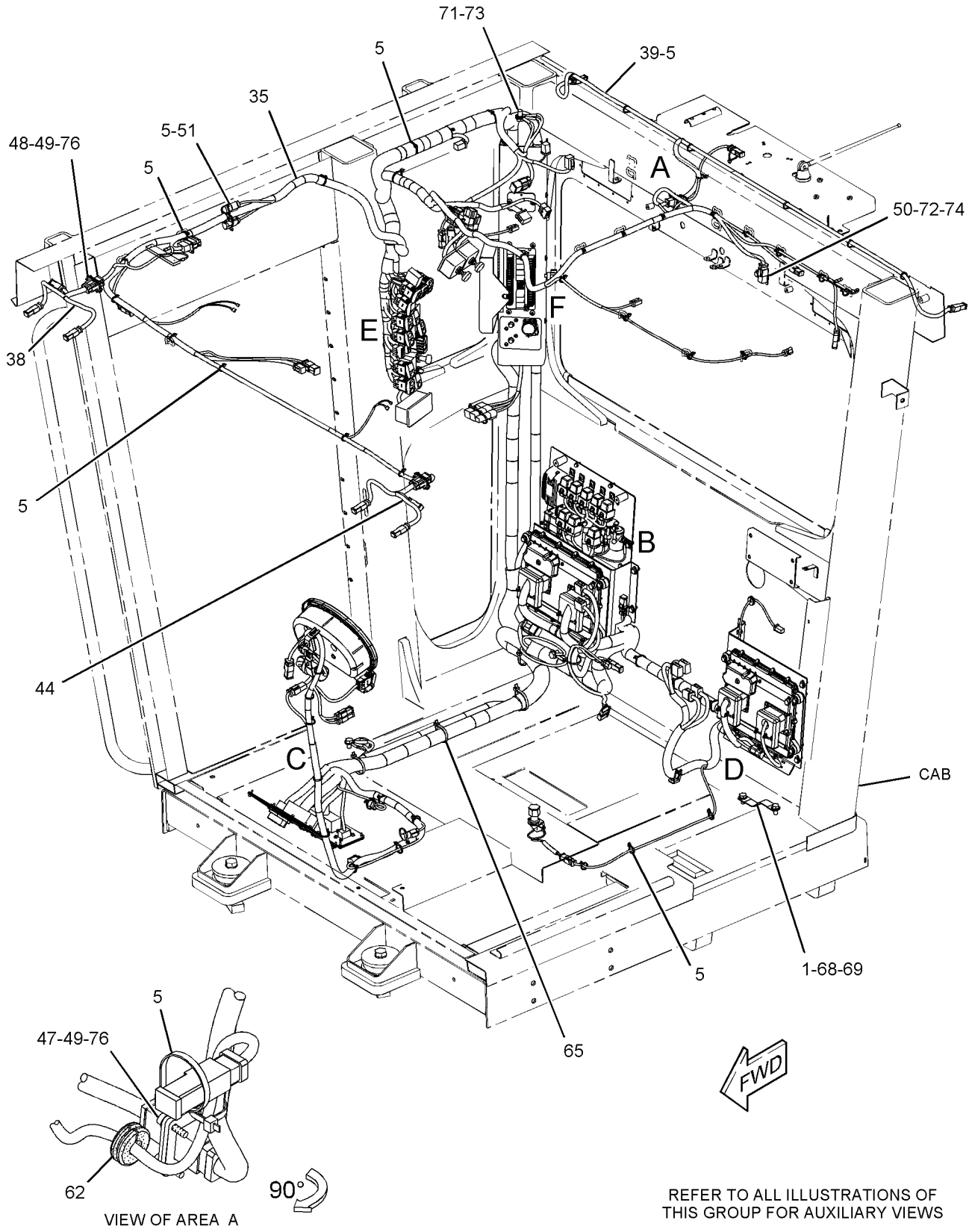

REFER TO ALL ILLUSTRATIONS OF THIS GROUP FOR AUXILIARY VIEWS

GRAPHIC #1

g01396623

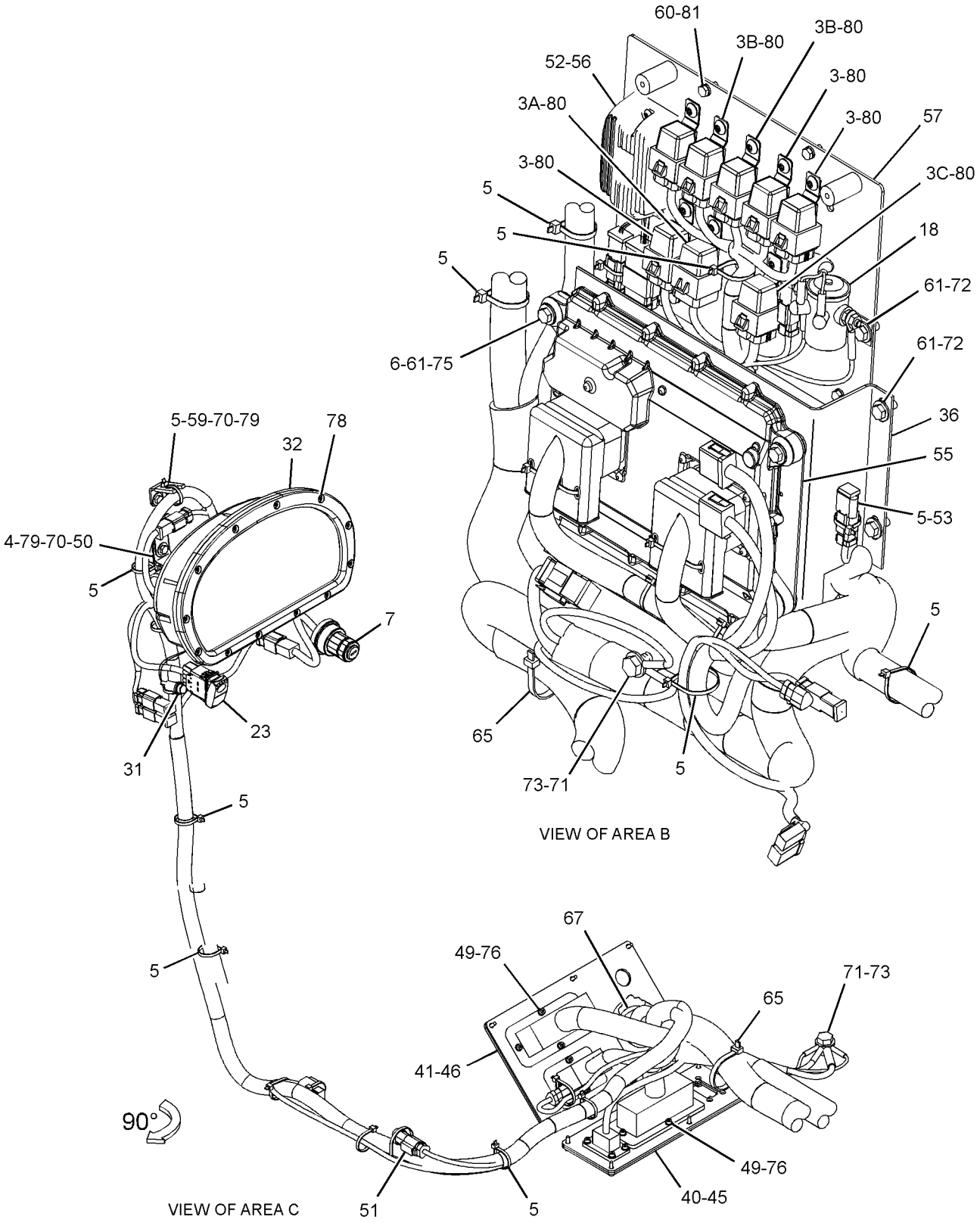

GRAPHIC #2 g01396629

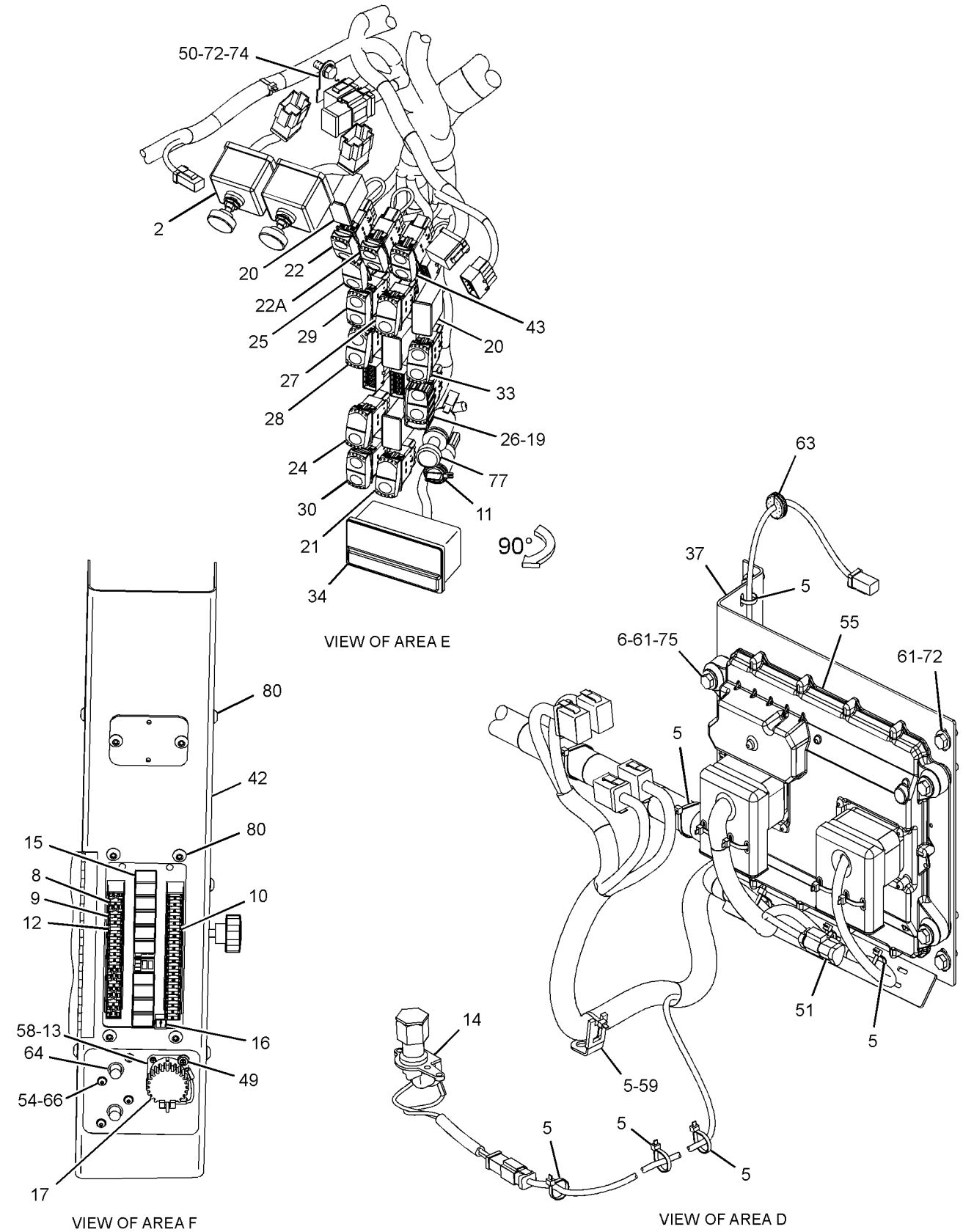

GRAPHIC #3 **<END>** g01396636

ELECTRICAL AND STARTING SYSTEM

266-7006 WIRING GP-CAB

S/N: B9K1-341

PART OF 266-7000 CAB AR

SMCS-1408, 7301 **i03555500**

NOTE	REF NO	GRAPHIC REF	PART NUMBER	QTY	PART NAME 1 2 3 4 5 6 (PRODUCT LEVEL)	SEE PAGE
	1	1	1S-2342	1	STRAP AS-GROUND	
C	2	2	102-8802	1	KIT-RECEPTACLE (2-PIN)	
					(INCLUDES RECEPTACLE AS & WEDGE)	
	3	2	3E-5239	1	RELAY AS (24-VOLT) (BLADE)	
	3A	2	3E-5239	1	RELAY AS (24-VOLT) (BLADE FLOOD LAMP ONE)	
	3B	2	3E-5239	1	RELAY AS (24-VOLT) (BLADE FLOOD LAMP TWO)	
	3C	2	3E-5239	1	RELAY AS (24-VOLT) (THROTTLE)	
	3D	2	3E-5239	2	RELAY AS (24-VOLT) (CAB FLOODLIGHTS)	
	3E	2	3E-5239	1	RELAY AS (24-VOLT) (REAR FLOODLIGHT)	
Y	4	2	3E-6328	1	ALARM GP (24-VOLT)	182
C	5	1,2,3	3S-2093	81	STRAP-CABLE	
C	6	2,3	6I-1418	8	SPACER (8.2X12.7X28.7-MM THK)	
	7	2,3	8T-9655	16	MOUNT-ISOLATION	
	8	2	110-7887	1	SWITCH AS-START (KEY)	
		2	7T-6799	1	NUT-MOUNTING (1-32-THD)	
		2	102-8804	1	KIT-RECEPTACLE (4-PIN)	
					(INCLUDES RECEPTACLE AS & WEDGE)	
		2	186-3735	4	PIN-CONNECTOR (16-GA TO 18-GA)	
	9	3	113-8490	17	FUSE (10-AMPERE)	
	10	3	113-8491	9	FUSE (15-AMPERE)	
	11	3	113-8492	5	FUSE (20-AMPERE)	
	12	3	117-2311	1	SOCKET-AUXILIARY POWER (12-VOLT)	
	13	3	124-3548	1	FUSE (30-AMPERE)	
	14	3	128-6157	1	PLATE	
	15	3	147-1380	1	SWITCH AS-FOOT (DIFFERENTIAL LOCK)	
		3	102-8802	1	KIT-RECEPTACLE (2-PIN)	
					(INCLUDES RECEPTACLE AS & WEDGE)	
		3	186-3735	2	PIN-CONNECTOR (16-GA TO 18-GA)	
	16	3	161-3128	8	RELAY (24-VOLT)	
	17	3	170-6888	1	PULLER-FUSE	
	18	3	180-9900	1	CAP AS	
Y	19	2	209-5582	1	SWITCH GP-MAGNETIC (24-VOLT) (AIR INLET HEATER)	341
	20	3	222-7890	1	SWITCH AS-ROCKER (PARKING BRAKE ON, OFF)	
C	21	3	228-6089	9	PLUG (ROCKER SWITCH)	
	22	3	229-2580	1	SWITCH AS-ROCKER (ENGINE, HIGH IDLE, HOLD)	
	23	3	236-4611	1	SWITCH AS-ROCKER (FRONT DEFROSTER)	
	23A	3	236-4611	1	SWITCH AS-ROCKER (REAR DEFROSTER)	
	24	2	236-4615	1	SWITCH AS-ROCKER (SECONDARY STEERING)	
	25	3	236-4616	1	SWITCH AS-ROCKER (HAZARD)	
	26	3	246-4311	1	GUARD (SWITCH)	
	27	3	249-5479	1	SWITCH AS-ROCKER (24-VOLT) (HEADLIGHT DIMMER)	
	28	3	249-5480	1	SWITCH AS-ROCKER (CAB FLOODLIGHTS)	
C	29	1	249-5482	1	SWITCH AS-ROCKER (24-VOLT) (TURN SIGNAL)	
	30	3	249-5486	1	SWITCH AS-ROCKER (HEADLIGHTS, TAIL LIGHTS)	
	31	3	249-5493	1	SWITCH AS-ROCKER (THROTTLE HOLD MODE)	
	32	2	250-2299	1	LAMP AS-LED (24-VOLT, GREEN)	
	33	3	251-1197	1	SWITCH AS-ROCKER (HYDRAULIC LOCKOUT)	
Y	34	3	275-9650	1	ELECTRONICS GP-MONITOR (MESSENGER)	203
	35	1	281-1658	1	HARNESS AS-CAB (MAIN CAB)	
		1	102-8802	9	KIT-RECEPTACLE (2-PIN)	
		1	102-8803	2	KIT-RECEPTACLE (3-PIN)	
		1	102-8804	1	KIT-RECEPTACLE (4-PIN)	
		1	102-8805	3	KIT-RECEPTACLE (6-PIN)	
		1	102-8806	3	KIT-RECEPTACLE (8-PIN)	
		1	102-8801	1	KIT-RECEPTACLE (12-PIN)	

266-7006 **WIRING GP-CAB** ***(contd.)*** **i03555500**

NOTE	REF NO	GRAPHIC REF	PART NUMBER	QTY	PART NAME 1 2 3 4 5 6 (PRODUCT LEVEL)	SEE PAGE
		1	**166-5229**	2	KIT-RECEPTACLE (12-PIN)	
		1	**194-4254**	2	KIT-RECEPTACLE (8-PIN)	
		1	**197-7565**	1	KIT-RECEPTACLE (4-PIN)	
					(EACH KIT INCLUDES RECEPTACLE AS & WEDGE)	
		1	**7G-7917**	9	PLUG-SEAL	
		1	**7G-7918**	1	PLUG-SEAL	
		1	**7G-7919**	3	PLUG-SEAL	
		1	**7R-2751**	2	PLUG-CONNECTOR	
		1	**7T-0094**	4	SOCKET-CONNECTOR (12-GA TO 14-GA)	
		1	**7X-6222**	1	PLUG AS-CONNECTOR (24-PIN)	
		1	**3E-4367**	1	RING-RETAINING	
M		1	**3E-8558**	1	BOLT (M5X0.8X39.37-MM)	
		1	**9X-3265**	2	SEAL-CONNECTOR (24-PIN)	
		1	**8C-6354**	1	CAP-RECEPTACLE	
		1	**8N-1517**	1	RECEPTACLE AS-CONNECTOR (25-PIN)	
		1	**8N-1522**	1	NUT (2-1/4-16-THD)	
		1	**8N-1521**	1	BELL AS-END	
		1	**9X-6856**	7	PIN-CONNECTOR (16-GA TO 18-GA)	
		1	**8N-1540**	3	PIN-CONNECTOR (12-GA TO 14-GA)	
		1	**8N-1543**	1	SOCKET-CONNECTOR (10-GA)	
		1	**8N-1548**	2	PIN-CONNECTOR (4-GA)	
		1	**186-3735**	141	PIN-CONNECTOR (16-GA TO 18-GA)	
		1	**186-3736**	171	SOCKET-CONNECTOR (16-GA TO 18-GA)	
		1	**8T-8737**	359	PLUG-SEAL	
		1	**9W-0844**	47	SOCKET-CONNECTOR (14-GA)	
		1	**9W-0852**	33	PIN-CONNECTOR (14-GA TO 16-GA)	
		1	**9W-1951**	1	RECEPTACLE-CONNECTOR (9-PIN)	
		1	**9X-0145**	1	RECEPTACLE AS-CONNECTOR (24-PIN)	
		1	**9X-1054**	7	PLUG AS-CONNECTOR (4-PIN)	
		1	**9X-3402**	3	SOCKET-CONNECTOR (16-GA TO 18-GA)	
		1	**9X-6772**	1	STRAP-CABLE	
		1	**103-0213**	2	RECEPTACLE AS-CONNECTOR (70-PIN)	
E		1	**119-3662**		TUBE-HEAT SHRINK (10.85-MM DIA) (215-CM)	
E		1	**125-7874**		TUBE-HEAT SHRINK (5.72-MM DIA) (270-CM)	
E		1	**125-7875**		TUBE-HEAT SHRINK (7.44-MM DIA) (150-CM)	
		1	**9X-3402**	110	SOCKET-CONNECTOR (16-GA TO 18-GA)	
		1	**126-1768**	20	SOCKET-CONNECTOR (14-GA)	
		1	**126-1774**	4	COVER-CONNECTOR	
		1	**128-5016**	4	SEAL-CABLE	
		1	**147-1445**	2	PLUG AS-CONNECTOR (70-PIN)	
					(EACH INCLUDES)	
		1	**159-9322**	1	SEAL-O-RING	
		1	**147-1446**	2	PLUG AS-CONNECTOR (70-PIN)	
					(EACH INCLUDES)	
		1	**159-9322**	1	SEAL-O-RING	
		1	**155-2255**	5	KIT-CONNECTING PLUG (12-PIN)	
		1	**155-2256**	3	KIT-CONNECTING PLUG (12-PIN)	
		1	**155-2265**	6	KIT-CONNECTING PLUG (8-PIN)	
		1	**155-2260**	9	KIT-CONNECTING PLUG (3-PIN)	
		1	**155-2270**	15	KIT-CONNECTING PLUG (2-PIN)	
		1	**155-2271**	3	KIT-CONNECTING PLUG (4-PIN)	
		1	**155-2274**	6	KIT-CONNECTING PLUG (6-PIN)	
					(EACH KIT INCLUDES PLUG AS, WEDGE, & INTERFACE SEAL)	
		1	**177-9648**	1	KIT-CONNECTING PLUG (2-PIN)	
		1	**177-9656**	1	KIT-CONNECTING PLUG (4-PIN)	
					(EACH KIT INCLUDES PLUG AS & WEDGE)	
E		1	**185-1861**	128	SEAL-WIRE	
		1	**202-5397**	63	PLUG	

266-7006 **WIRING GP-CAB** *(contd.)* **i03555500**

NOTE	REF NO	GRAPHIC REF	PART NUMBER	QTY	PART NAME 1 2 3 4 5 6 (PRODUCT LEVEL)	SEE PAGE
		1	**245-7434**	19	KIT-CONNECTING PLUG (10-PIN)	
					(EACH KIT INCLUDES PLUG CONNECTOR, WIRE ASSEMBLIES, & PLUGS)	
		1	**230-4011**	1	PLUG AS-CONNECTOR (2-PIN)	
		1	**230-4012**	1	RECEPTACLE AS-CONNECTOR (2-PIN)	
		1	**230-4013**	1	PLUG AS-CONNECTOR (3-PIN)	
		1	**264-7030**	1	SEAL-CONNECTOR	
		1	**230-5010**	1	PLUG AS-CONNECTOR (6-PIN)	
		1	**264-7032**	1	SEAL-CONNECTOR	
		1	**230-5011**	1	RECEPTACLE AS-CONNECTOR (6-PIN)	
		1	**238-2319**	1	BASE AS (FUSE, RELAY PANEL)	
		1	**9X-8256**	2	WASHER (6.6X12X2-MM THK)	
M		1	**095-0742**	2	SCREW-MACHINE (M6X1X16-MM)	
		1	**239-7352**	1	PLUG AS-CONNECTOR (6-PIN)	
		1	**264-7032**	1	SEAL-CONNECTOR	
		1	**239-7353**	1	RECEPTACLE AS-CONNECTOR (6-PIN)	
	36	2	**282-0804**	1	PLATE AS	
M		2	**8T-3612**	4	NUT-WELD (M8X1.25-THD)	
	37	3	**282-0806**	1	PLATE AS	
M		3	**8T-3612**	4	NUT-WELD (M8X1.25-THD)	
	38	1	**282-3783**	1	HARNESS AS-FRONT LIGHTING (RH) (RH)	
		1	**102-8802**	3	KIT-RECEPTACLE (2-PIN)	
					(EACH KIT INCLUDES RECEPTACLE AS & WEDGE)	
		1	**186-3736**	4	SOCKET-CONNECTOR (16-GA TO 18-GA)	
		1	**8T-8737**	8	PLUG-SEAL	
		1	**9W-0844**	8	SOCKET-CONNECTOR (14-GA)	
		1	**155-2265**	1	KIT-CONNECTING PLUG (8-PIN)	
		1	**155-2270**	3	KIT-CONNECTING PLUG (2-PIN)	
					(EACH KIT INCLUDES PLUG AS, WEDGE, & INTERFACE SEAL)	
	39	1	**282-3784**	1	HARNESS AS-FRONT LIGHTING (REAR)	
		1	**102-8802**	2	KIT-RECEPTACLE (2-PIN)	
					(EACH KIT INCLUDES RECEPTACLE AS & WEDGE)	
		1	**8T-8737**	4	PLUG-SEAL	
		1	**9W-0844**	8	SOCKET-CONNECTOR (14-GA)	
E		1	**114-8843**		SLEEVE-PLASTIC (100-CM)	
		1	**155-2270**	2	KIT-CONNECTING PLUG (2-PIN)	
		1	**155-2271**	1	KIT-CONNECTING PLUG (4-PIN)	
					(EACH KIT INCLUDES PLUG AS, WEDGE, & INTERFACE SEAL)	
	40	2	**282-4337**	1	PLATE AS	
M		2	**9X-2032**	12	NUT-WELD (M4X0.7-THD)	
	41	2	**282-4339**	1	PLATE AS	
M		2	**9X-2032**	8	NUT-WELD (M4X0.7-THD)	
Y	42	3	*282-9485*	1	PANEL GP-CAB	924
	43	3	**284-3620**	1	SWITCH AS-ROCKER (PARKING BRAKE RETRACT)	
	44	1	**284-6972**	1	HARNESS AS-FRONT LIGHTING (LH) (LH)	
		1	**102-8802**	3	KIT-RECEPTACLE (2-PIN)	
					(EACH KIT INCLUDES RECEPTACLE AS & WEDGE)	
		1	**186-3736**	4	SOCKET-CONNECTOR (16-GA TO 18-GA)	
		1	**8T-8737**	8	PLUG-SEAL	
		1	**9W-0844**	8	SOCKET-CONNECTOR (14-GA)	
		1	**155-2265**	1	KIT-CONNECTING PLUG (8-PIN)	
		1	**155-2270**	3	KIT-CONNECTING PLUG (2-PIN)	
					(EACH KIT INCLUDES PLUG AS, WEDGE, & INTERFACE SEAL)	
	45	2	**286-0320**	1	GASKET	
	46	2	**286-0321**	1	GASKET	
	47	1	**286-0322**	1	GASKET	
	48	1	**286-0323**	2	GASKET	

266-7006 **WIRING GP-CAB** *(contd.)* **i03555500**

NOTE	REF NO	GRAPHIC REF	PART NUMBER	QTY	PART NAME 1 2 3 4 5 6 (PRODUCT LEVEL)	SEE PAGE
	49	2	**310-5324**	1	PLATE AS	
M		2	**6V-9632**	11	NUT-WELD (M6X1-THD)	
M		2	**9X-2032**	3	NUT-WELD (M4X0.7-THD)	
C	50	2	**313-2152**	1	MODULE GP-DISPLAY (GAUGE CLUSTER)	
C	51	2	**114-6658**	2	WASHER (6.5X17X1-MM THK)	
	52	1,2,3	**096-6166**	41	WASHER-HARD (4.5X9X1-MM THK)	
	53	1,2	**130-5300**	3	CLIP	
	54	1	**134-2540**	4	RESISTOR AS-CONNECTION (3-PIN)	
M	55	2	**174-8131**	3	SCREW-TRUSS HEAD (M4X0.7X12-MM)	
	56	2	**189-3158**	1	SUPPRESSOR-ARC	
	57	3	**1H-4393**	4	LOCKWASHER	
CY	58	3	**275-7764**	2	SWITCH GP-WIPER (24-VOLT, INTERMITTENT)	348
CY	59	3	*275-7764*	1	SWITCH GP-WIPER (24-VOLT, INTERMITTENT)	348
CY	60	2	*275-8969*	1	CONTROL GP-UNPROGRAMMED	194
	61	2	**304-5235**	1	FLASHER AS	
	63	3	**3S-9557**	4	SCREW-PAN HEAD (4-40X0.5-IN)	
C	64	1	**4H-3001**	2	PLUG-BUTTON	
	65	2,3	**4P-8134**	2	CLIP	
C	66	2,3	**5P-4116**	20	WASHER-HARD (8.8X20.5X2-MM THK)	
C	67	1,3	**5P-8525**	2	GROMMET	
	68	3	**6T-3644**	2	CIRCUIT BREAKER AS (20-AMPERE)	
					(EACH INCLUDES)	
		3	**6V-8376**	2	SCREW-MACHINE (8-32X0.25-IN)	
		3	**9B-7233**	2	LOCKWASHER	
C	69	3	**6V-3884**	2	SCREW-HEX SOCKET (1/4-20X0.5-IN)	
C	70	1	**7K-1181**	3	STRAP-CABLE	
	71	3	**7U-4892**	4	SCREW (8-32X0.75-IN)	
	72	2	**8N-1523**	1	LOCKWASHER	
M	73	2	**8T-4171**	2	BOLT (M6X1X12-MM)	
CM	74	1,2	**8T-4179**	5	BOLT (M12X1.75X20-MM)	
CM	75	2,3	**8T-4189**	13	BOLT (M8X1.25X20-MM)	
C	76	1,2	**8T-4223**	5	WASHER-HARD (13.5X25.5X3-MM THK)	
C	77	1	**8T-4224**	1	WASHER-HARD (8.8X16X2-MM THK)	
M	78	2,3	**8T-6912**	8	BOLT (M8X1.25X50-MM)	
M	79	1,2	**8T-9405**	40	BOLT-SOCKET HEAD (M4X0.7X16-MM)	
	80	3	**9W-0335**	1	LIGHTER AS-CIGAR (24-VOLT)	
M	81	2	**9X-1046**	12	SCREW (M4X0.7X18-MM)	
	82	2	**9X-2026**	2	WASHER (6.5X17X1-MM THK)	
CM	83	2,3	**9X-2044**	19	SCREW-TRUSS HEAD (M6X1X16-MM)	

C-CHANGE FROM PREVIOUS TYPE
E-ORDER BY THE CENTIMETER
M-METRIC PART
Y-SEPARATE ILLUSTRATION

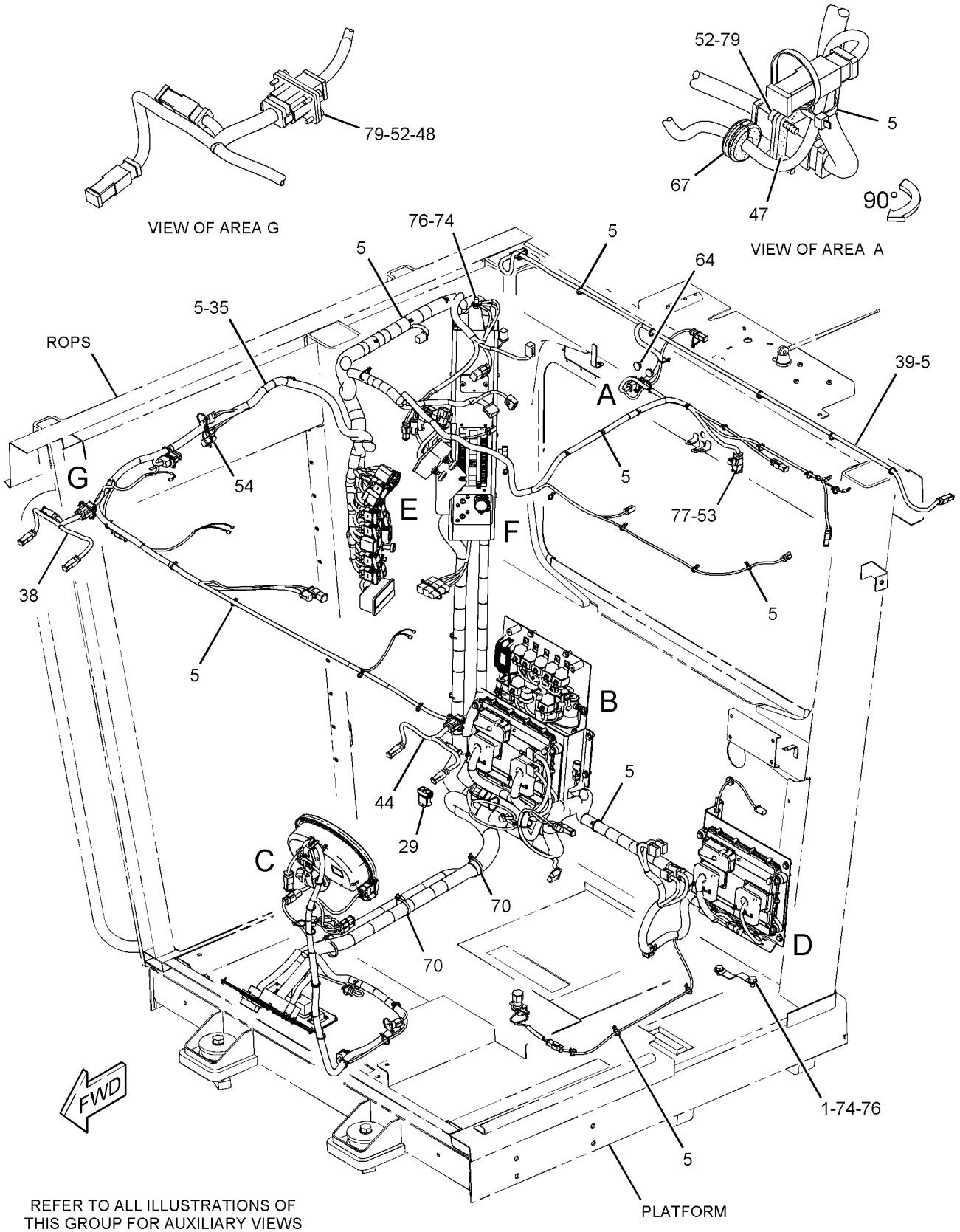

REFER TO ALL ILLUSTRATIONS OF THIS GROUP FOR AUXILIARY VIEWS

GRAPHIC #1

g01886795

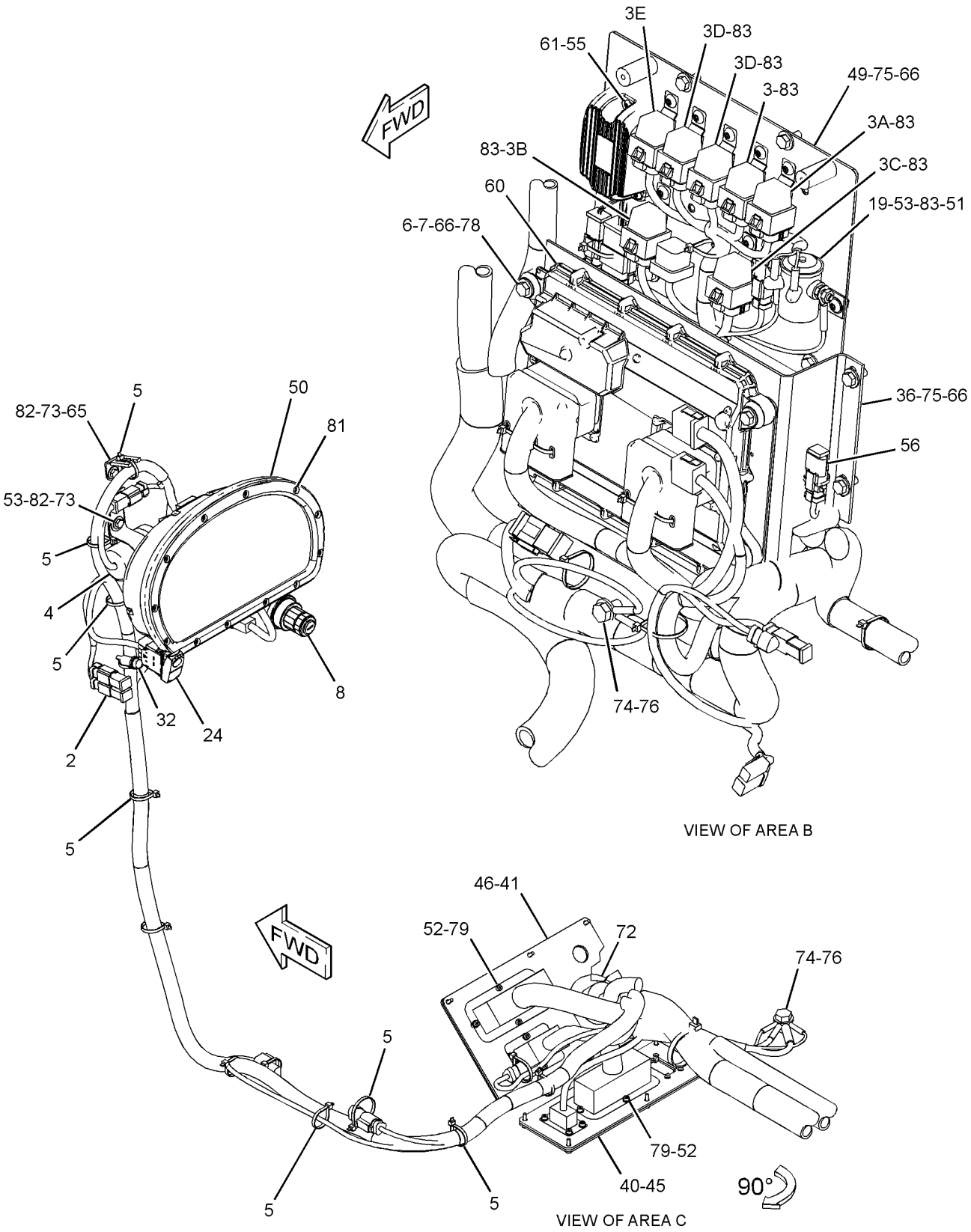

GRAPHIC #2 g01886797

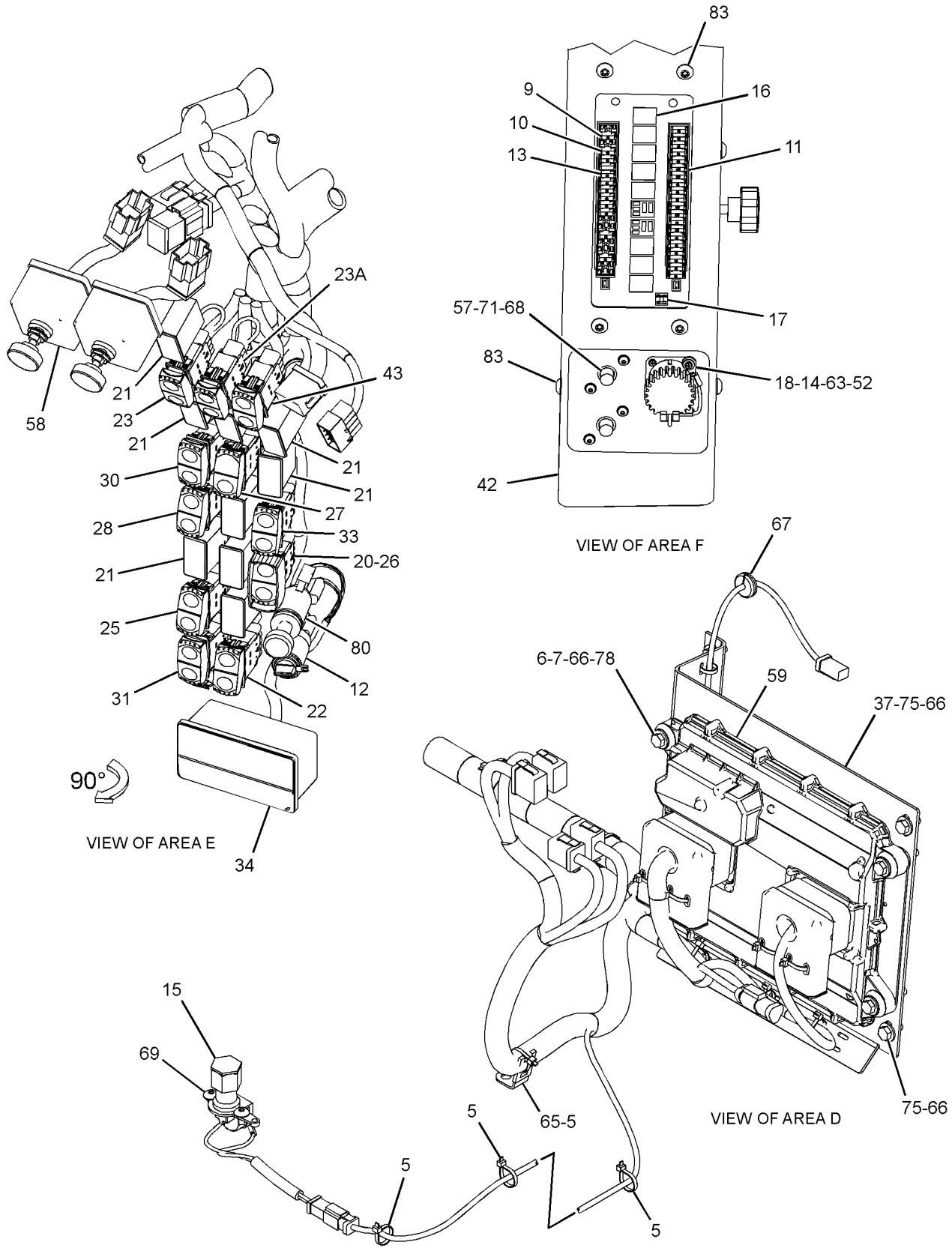

GRAPHIC #3 **<END>** g01886799

ELECTRICAL AND STARTING SYSTEM

267-5504 WIRING GP-CAMERA–WORK AREA VISUAL SYSTEM

S/N: B9K1-UP

PART OF 278-1867 CAMERA AR

SMCS-1408, 7348 **i02760701**

NOTE	REF NO	GRAPHIC REF	PART NUMBER	QTY	PART NAME 1 2 3 4 5 6 (PRODUCT LEVEL)	SEE PAGE
	1	1	**251-4243**	1	CONNECTOR GP-ELECTRONIC (WORK AREA VISUAL SYSTEM)	
	2	1	**283-1626**	1	COVER	
J	3	1	**251-4160**	1	CAMERA GP (115-DEG, COLOR) (REAR VIEW)	
	4	1	**251-8248**	1	CABLE AS-COMMUNICATION (CAMERA)	
	5	1	**261-3223**	2	CABLE AS-COAXIAL (3-M)	
M	6	1	**6V-8225**	2	NUT (M6X1-THD)	
	7	1	**7K-1181**	32	STRAP-CABLE	
M	8	1	**8T-4138**	6	BOLT (M6X1X20-MM)	
	9	1	**9G-1307**	1	GROMMET	
	10	1	**9X-8256**	6	WASHER (6.6X12X2-MM THK)	
					AVAILABLE REPAIR KIT(S):	
J			**251-4162**	1	KIT-BRACKET (CAMERA)	
					(INCLUDES BOLTS, NUTS, GASKET, BRACKET, & ALLEN KEY)	

J-KIT MARKED J SERVICES PART MARKED J
M-METRIC PART

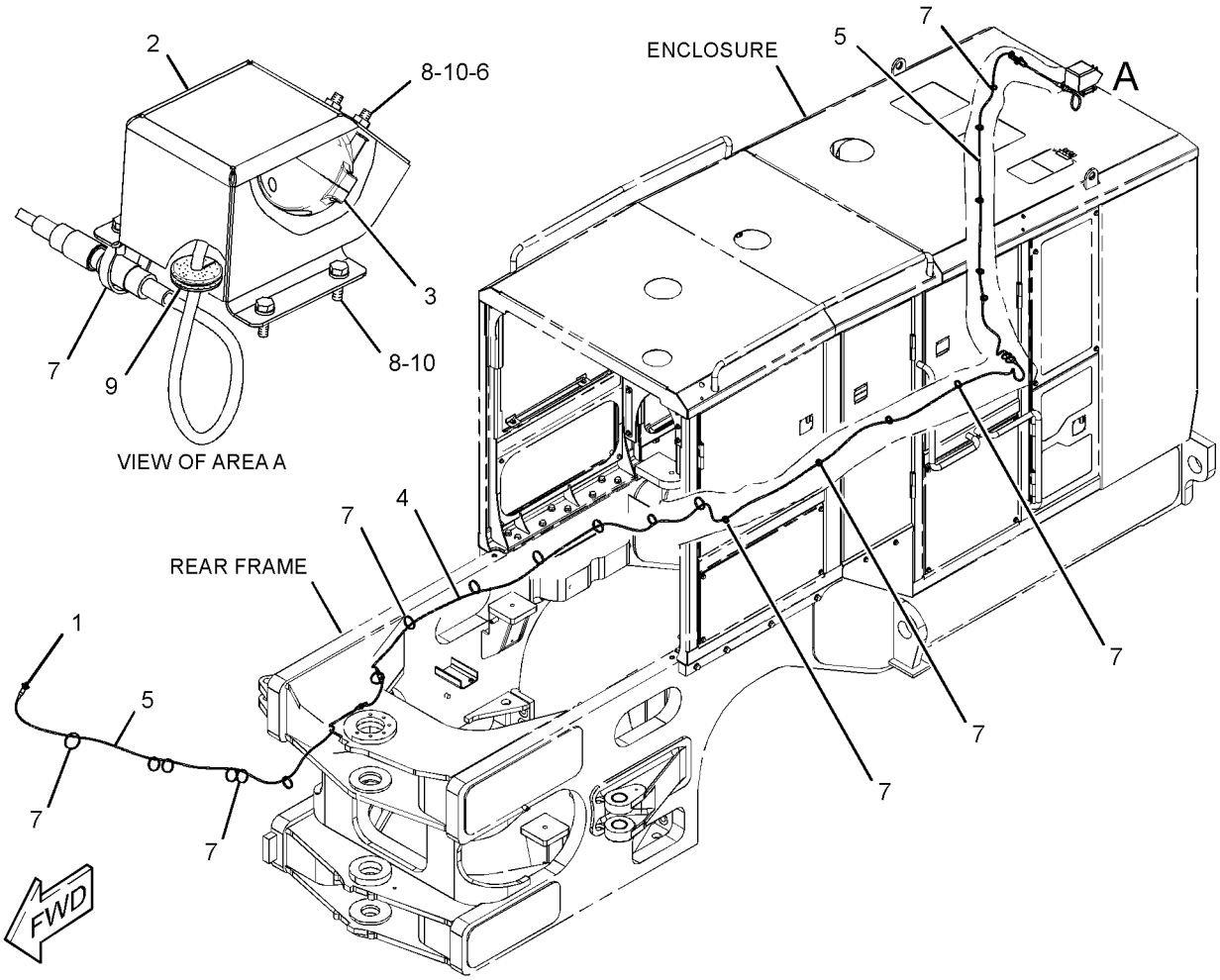

GRAPHIC #1 **<END>** g01384975

ELECTRICAL AND STARTING SYSTEM

233-6216 WIRING GP-ENGINE ELECTRONIC

S/N: RHX2094-5225

PART OF 263-7760 ENGINE AR-COMPLETE

SMCS-1408, 1900 **i03276741**

NOTE	REF NO	GRAPHIC REF	PART NUMBER	QTY	PART NAME 1 2 3 4 5 6 (PRODUCT LEVEL)	SEE PAGE
C	1	1	3S-2093	20	STRAP-CABLE	
	2	1	8M-2773	1	CLIP	
	3	1	239-5929	1	HARNESS AS-ENGINE	
		1	102-8802	1	KIT-RECEPTACLE (2-PIN)	
					(INCLUDES RECEPTACLE AS & WEDGE)	
		1	102-8803	2	KIT-RECEPTACLE (3-PIN)	
					(EACH INCLUDES RECEPTACLE AS & WEDGE)	
		1	8T-8737	80	PLUG-SEAL	
		1	155-2255	1	KIT-CONNECTING PLUG (12-PIN)	
					(INCLUDES PLUG AS & WEDGE)	
		1	155-2265		KIT-CONNECTING PLUG (8-PIN)	
					(INCLUDES PLUG AS & WEDGE)	
		1	155-2260	1	KIT-CONNECTING PLUG (3-PIN)	
					(INCLUDES PLUG AS & WEDGE)	
		1	155-2269	6	PLUG AS-CONNECTOR (2-PIN)	
					(EACH INCLUDES)	
		1	155-2270	1	KIT-CONNECTING PLUG (2-PIN)	
					(INCLUDES PLUG AS & WEDGE)	
		1	227-4002	1	PLUG AS-CONNECTOR (108-PIN)	
	4	1	0S-0509	3	BOLT (3/8-16X0.75-IN)	
	5	1	0S-1576	2	BOLT (5/8-18X2-IN)	
	6	1	0S-1594	2	BOLT (3/8-16X1-IN)	
	7	1	104-6202	2	CLIP	
	8	1	132-5789	4	CLIP	
	9	1	1A-4273	1	BOLT (5/8-18X1.25-IN)	
	10	1	3B-1915	1	BOLT (3/8-16X1.375-IN)	
	11	1	4P-7429	1	CLIP	
	12	1	4P-7581	1	CLIP	
	14	1	4P-8134	5	CLIP	
	15	1	5M-2894	5	WASHER-HARD (10.2X18.5X2.5-MM THK)	
	16	1	5P-8247	3	WASHER-HARD (17X32X3.5-MM THK)	
	17	1	8T-4223	1	WASHER-HARD (13.5X25.5X3-MM THK)	
	18	1	8T-4896	1	WASHER-HARD (10.2X18.5X2.5-MM THK)	
C	19	1	288-1023	1	BRACKET-SUPPORT	
C	20	1	206-1345	2	STRAP-CABLE	

C-CHANGE FROM PREVIOUS TYPE

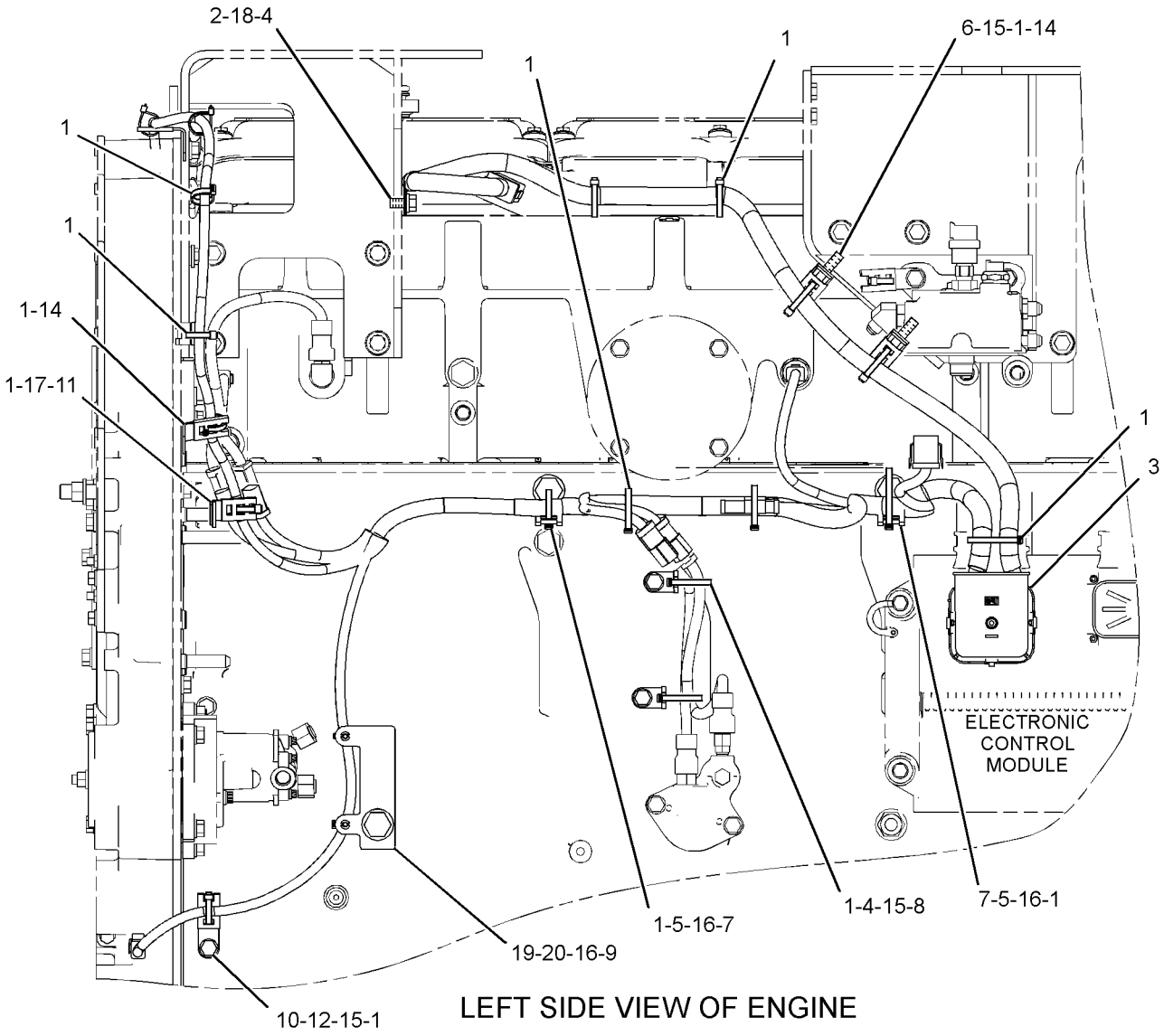

LEFT SIDE VIEW OF ENGINE

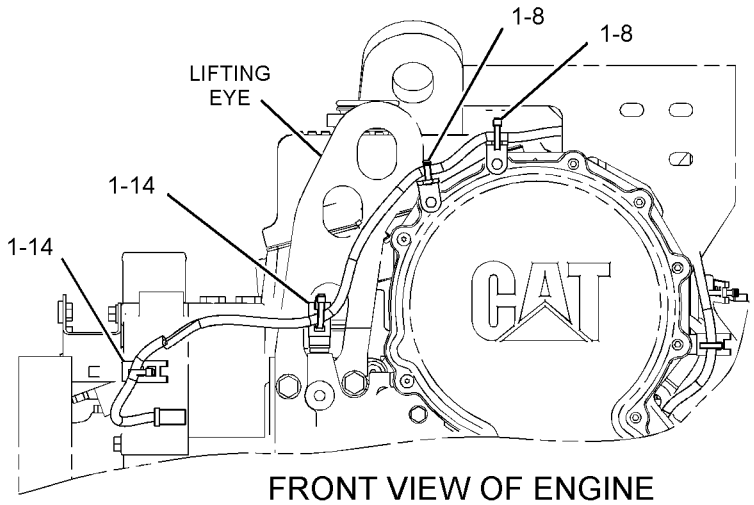

FRONT VIEW OF ENGINE

GRAPHIC #1

<END>

g01893295

ELECTRICAL AND STARTING SYSTEM

315-0498 WIRING GP-ENGINE ELECTRONIC–

ELECTRONIC CONTROL

S/N: RHX5226-UP

PART OF 215-7486, 263-7760 ENGINE AR-COMPLETE

SMCS-1408, 1900 **i03321168**

NOTE	REF NO	GRAPHIC REF	PART NUMBER	QTY	PART NAME 1 2 3 4 5 6 (PRODUCT LEVEL)	SEE PAGE
	1	1	3S-2093	17	STRAP-CABLE	
	2	1	206-1345	2	STRAP-CABLE	
	3	1	239-5929	1	HARNESS AS-ENGINE	
		1	102-8802	1	KIT-RECEPTACLE (2-PIN)	
		1	102-8803	2	KIT-RECEPTACLE (3-PIN)	
					(EACH RECEPTACLE KIT INCLUDE A RECEPTACLE AS & WEDGE)	
		1	155-2255	1	KIT-CONNECTING PLUG (12-PIN)	
		1	155-2270	5	KIT-CONNECTING PLUG (2-PIN)	
		1	155-2265	1	KIT-CONNECTING PLUG (8-PIN)	
					(EACH PLUG KIT INCLUDE A PLUG AS & WEDGE)	
		1	9X-3401	6	PIN-CONNECTOR (16-GA TO 18-GA)	
					(OR)	
		1	126-1767	6	PIN-CONNECTOR (14-GA TO 16-GA)	
		1	194-5226	62	WIRE AS (16-GA)	
					(OR)	
		1	194-5227	62	WIRE AS (14-GA)	
		1	211-6807	1	COVER (CONNECTOR)	
		1	264-5732	1	PLUG AS-CONNECTOR (120-PIN)	
		1	288-7324	1	SEAL-CONNECTOR	
		1	8T-8737	81	PLUG-SEAL	
E		1	114-8843		SLEEVE-PLASTIC (160-CM)	
E		1	125-7875		TUBE-HEAT SHRINK (7.44-MM DIA) (15-CM)	
	4	1	288-1023	1	BRACKET-SUPPORT	
	5	1	0S-0509	3	BOLT (3/8-16X0.75-IN)	
	6	1	0S-1576	2	BOLT (5/8-18X2-IN)	
	7	1	104-6202	2	CLIP	
	8	1	132-5789	4	CLIP	
	9	1	1A-4273	1	BOLT (5/8-18X1.25-IN)	
	10	1	3B-1915	1	BOLT (3/8-16X1.375-IN)	
	11	1	4P-7429	1	CLIP	
	12	1	4P-7581	1	CLIP	
	13	1	4P-8134	3	CLIP	
	14	1	5M-2894	3	WASHER-HARD (10.2X18.5X2.5-MM THK)	
	15	1	5P-8247	3	WASHER-HARD (17X32X3.5-MM THK)	
	16	1	8T-4896	1	WASHER-HARD (10.2X18.5X2.5-MM THK)	
	17	1	8M-2773	1	CLIP	

E-ORDER BY THE CENTIMETER

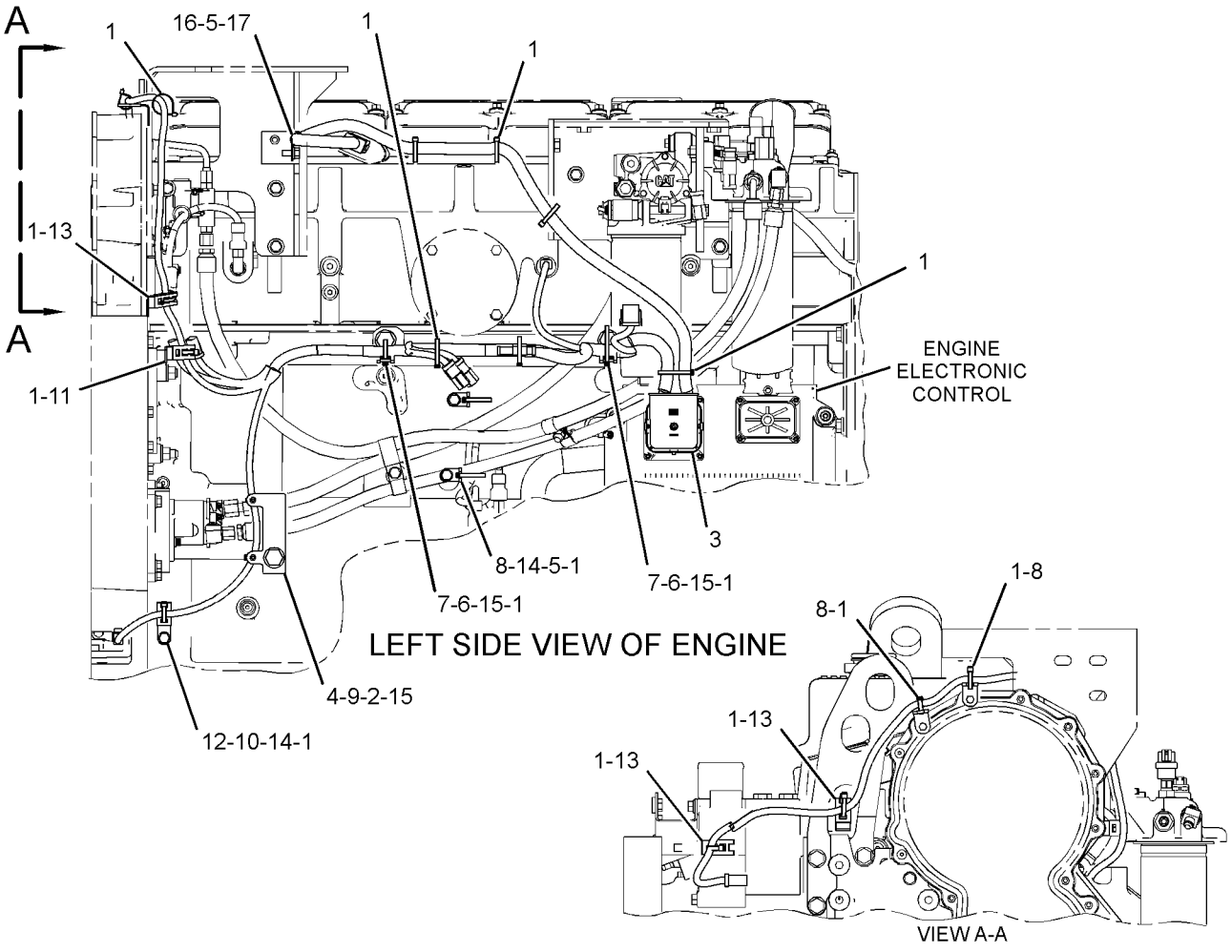

GRAPHIC #1 **<END>** g01935941

ELECTRICAL AND STARTING SYSTEM

266-8956 WIRING GP-FRONT

S/N: B9K1-298

PART OF 259-9204 COMMON AR

SMCS-1408 **i03003286**

NOTE	REF NO	GRAPHIC REF	PART NUMBER	QTY	PART NAME 1 2 3 4 5 6 (PRODUCT LEVEL)	SEE PAGE
	1	1,2	3S-2093	7	STRAP-CABLE	
	2	1	134-3355	1	STRAP AS	
	4	1	169-5414	1	CLIP	
	5	2	174-7875	2	HORN AS (24-VOLT, HIGH TONE)	
					(EACH INCLUDES)	
		2	177-9853	1	RECEPTACLE AS (2-PIN)	
		2	178-3586	1	LOCK	
	6	2	197-6453	2	BRACKET AS	
	7	1	240-7193	1	RESISTOR AS (500-OHM, 2-WATT)	
		1	102-8802	1	KIT-RECEPTACLE (2-PIN)	
					(INCLUDES RECEPTACLE AS & WEDGE)	
		1	186-3735	1	PIN-CONNECTOR (16-GA TO 18-GA)	
	8	2	284-8868	1	HARNESS AS-SENSOR (STEERING CYLINDER POSITION)	
	9	2	284-8869	1	HARNESS AS-SENSOR (STEERING CYLINDER POSITION)	
	10	1	307-6582	1	HARNESS AS-FRONT CHASSIS (RH) (FLOODLIGHTS, RH)	
	11	1	307-6583	1	HARNESS AS-FRONT CHASSIS (LH) (FLOODLIGHTS, LH)	
	12	1	308-9222	1	HARNESS AS-MOTOR (AUTOLUBE ACTUATION)	
	13	1,2	033-8248	10	CLIP	
	14	2	119-5708	2	CLIP	
	15	2	130-5300	1	CLIP	
	16	2	130-5301	2	CLIP	
	17	1	174-5907	6	CLIP	
	18	1	4D-7735	1	CLIP	
	19	1,2	4D-7794	19	CLIP	
	20	1	4P-7581	3	CLIP	
	21	1	4S-1962	3	CLIP	
	22	2	5P-9085	2	CLIP	
	23	1	6D-4244	1	CLIP	
	24	1	6D-4246	1	CLIP	
	25	2	6S-1066	2	GROMMET	
	26	1,2	7K-1181	13	STRAP-CABLE	
	27	1,2	8M-2770	11	CLIP	
	28	1,2	8M-2772	7	CLIP	
	29	1	8M-2773	2	CLIP	
	30	2	8M-2784	4	GROMMET	
	31	1,2	8T-4121	63	WASHER-HARD (11X21X2.5-MM THK)	
M	32	1,2	8T-4136	17	BOLT (M10X1.5X25-MM)	
M	33	1,2	8T-4137	46	BOLT (M10X1.5X20-MM)	
M	34	1	8T-4179	1	BOLT (M12X1.75X20-MM)	
	35	1	8T-4223	1	WASHER-HARD (13.5X25.5X3-MM THK)	
	36	2	9M-8406	6	CLIP	
	37	1	9X-8250	1	CLIP	
	38	1	9X-8402	1	CLIP	
	39	2	4P-7428	1	CLIP	

M-METRIC PART

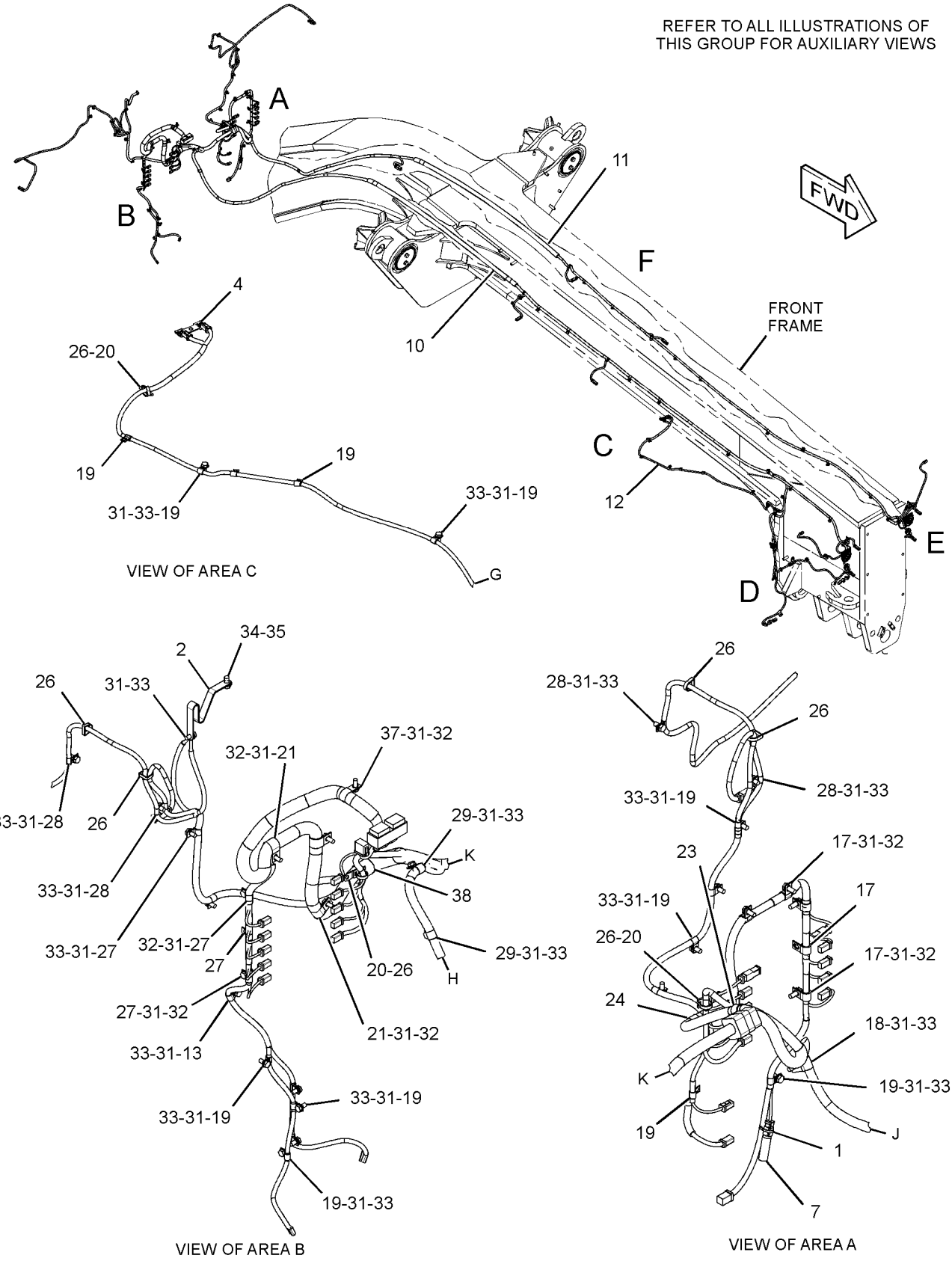

GRAPHIC #1 g01523567

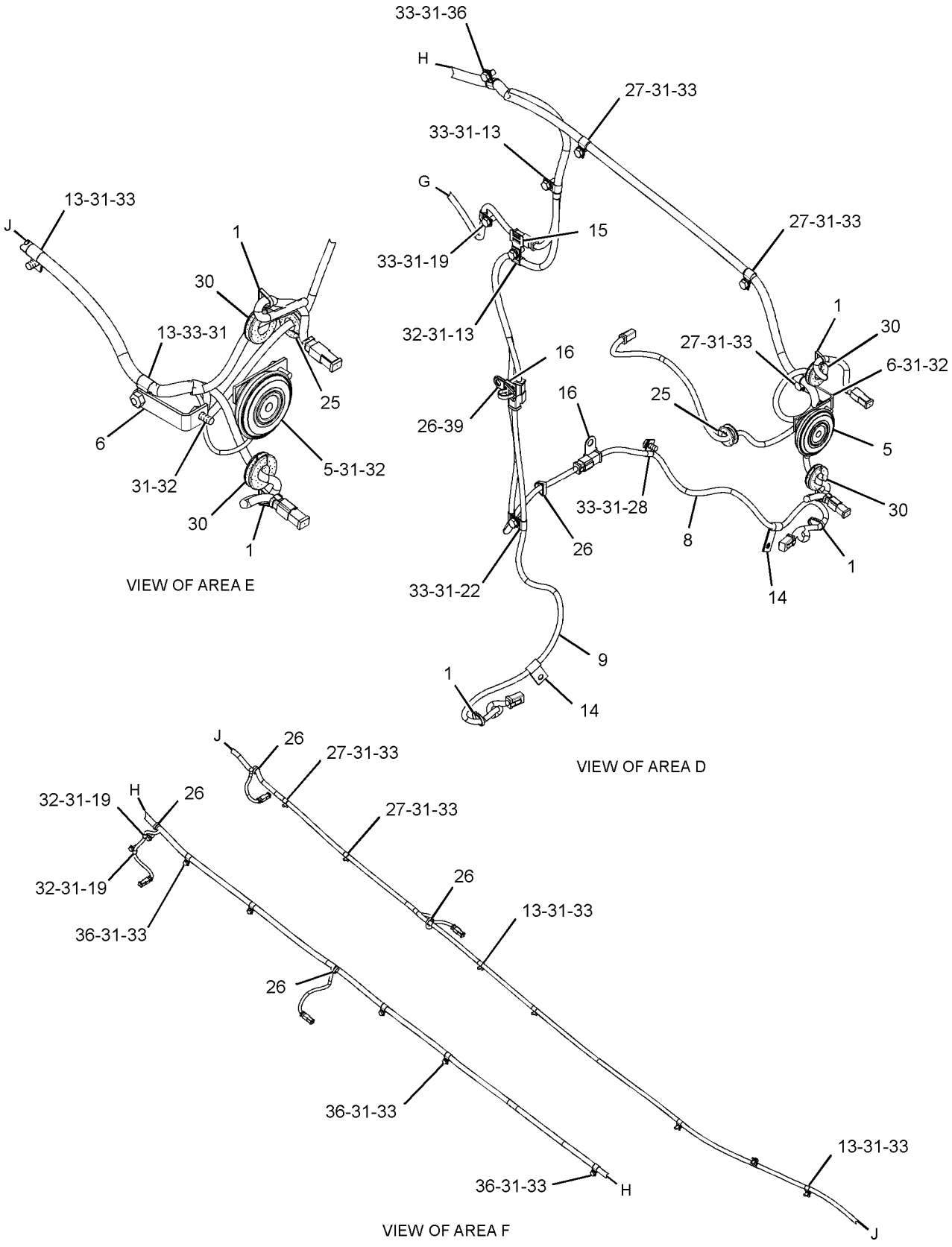

GRAPHIC #2 **<END>** g01440581

ELECTRICAL AND STARTING SYSTEM

266-8956 WIRING GP-FRONT

S/N: B9K299-341

PART OF 259-9204 COMMON AR

SMCS-1408 **i03199381**

NOTE	REF NO	GRAPHIC REF	PART NUMBER	QTY	PART NAME 1 2 3 4 5 6 (PRODUCT LEVEL)	SEE PAGE
	1	1,2	3S-2093	7	STRAP-CABLE	
	2	1	134-3355	1	STRAP AS	
	4	1	169-5414	1	CLIP	
	6	2	197-6453	2	BRACKET AS	
	7	1	240-7193	1	RESISTOR AS (500-OHM, 2-WATT)	
		1	102-8802	1	KIT-RECEPTACLE (2-PIN)	
					(INCLUDES RECEPTACLE AS & WEDGE)	
		1	186-3735	1	PIN-CONNECTOR (16-GA TO 18-GA)	
	8	2	284-8868	1	HARNESS AS-SENSOR (STEERING CYLINDER POSITION,LH)	
	9	2	284-8869	1	HARNESS AS-SENSOR (STEERING CYLINDER POSITION,RH)	
	10	1	307-6582	1	HARNESS AS-FRONT CHASSIS (RH) (FLOODLIGHTS, RH)	
	11	1	307-6583	1	HARNESS AS-FRONT CHASSIS (LH) (FLOODLIGHTS, LH)	
	12	1	308-9222	1	HARNESS AS-MOTOR (AUTOLUBE ACTUATION)	
	13	1,2	033-8248	10	CLIP	
	14	2	119-5708	2	CLIP	
	15	2	130-5300	1	CLIP	
	16	2	130-5301	2	CLIP	
	17	1	174-5907	6	CLIP	
	18	1	4D-7735	1	CLIP	
	19	1,2	4D-7794	19	CLIP	
	20	1	4P-7581	3	CLIP	
	21	1	4S-1962	3	CLIP	
	22	2	5P-9085	2	CLIP	
	23	1	6D-4244	1	CLIP	
	24	1	6D-4246	1	CLIP	
	25	2	6S-1066	2	GROMMET	
	26	1,2	7K-1181	13	STRAP-CABLE	
	27	1,2	8M-2770	11	CLIP	
	28	1,2	8M-2772	7	CLIP	
	29	1	8M-2773	2	CLIP	
	30	2	8M-2784	4	GROMMET	
C	31	1,2	8T-4121	62	WASHER-HARD (11X21X2.5-MM THK)	
CM	32	1,2	8T-4136	16	BOLT (M10X1.5X25-MM)	
M	33	1,2	8T-4137	46	BOLT (M10X1.5X20-MM)	
M	34	1	8T-4179	1	BOLT (M12X1.75X20-MM)	
	35	1	8T-4223	1	WASHER-HARD (13.5X25.5X3-MM THK)	
	36	2	9M-8406	6	CLIP	
	37	1	9X-8250	1	CLIP	
	38	1	9X-8402	1	CLIP	
	39	2	4P-7428	1	CLIP	

C-CHANGE FROM PREVIOUS TYPE
M-METRIC PART

266-8956 **WIRING GP-FRONT** *(contd.)* **i03199381**

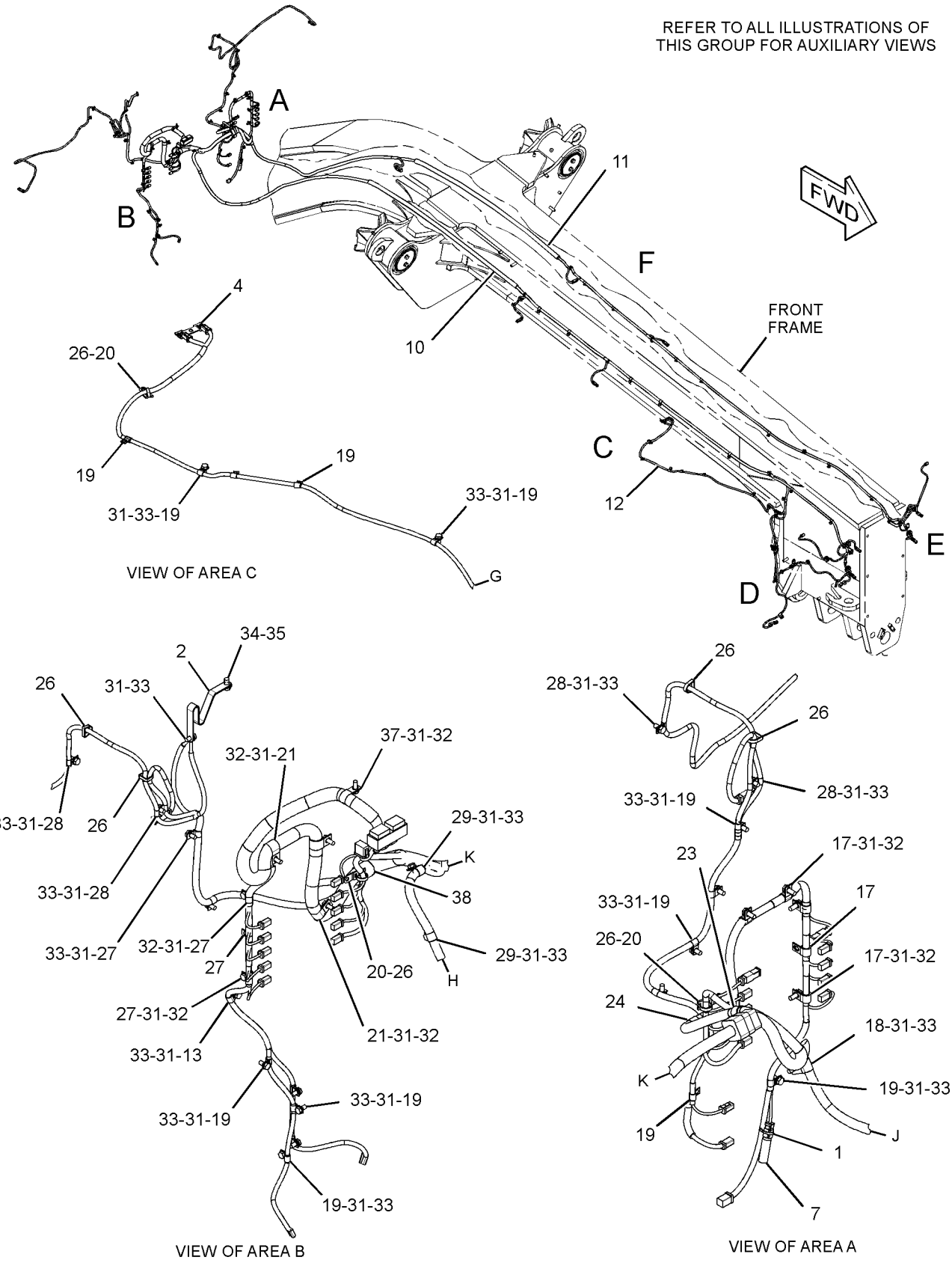

GRAPHIC #1

g01929515

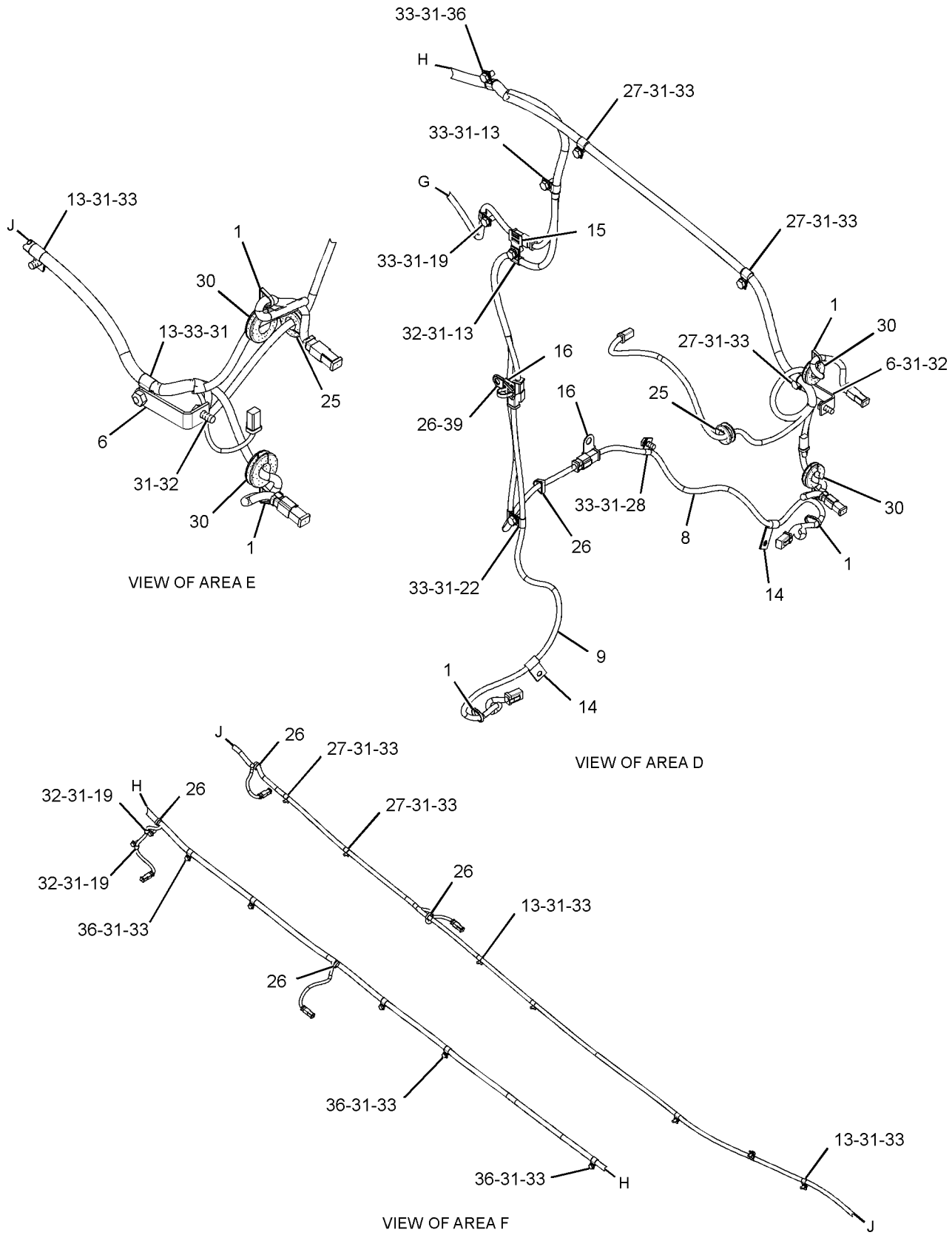

GRAPHIC #2 **<END>** g01929517

ELECTRICAL AND STARTING SYSTEM

266-8956 WIRING GP-FRONT

S/N: B9K342-UP

PART OF 259-9204 COMMON AR

SMCS-1408 **i03734780**

NOTE	REF NO	GRAPHIC REF	PART NUMBER	QTY	PART NAME 1 2 3 4 5 6 (PRODUCT LEVEL)	SEE PAGE
	1	1,2	3S-2093	7	STRAP-CABLE	
	2	1,2	7K-1181	13	STRAP-CABLE	
	3	2	134-3355	1	STRAP AS	
	4	1	169-5414	1	CLIP	
CY	5	1	191-6587	1	SENSOR GP-TEMPERATURE (STEERING OIL)	321
	6	1,2	197-6453	2	BRACKET AS	
	7	2	240-7193	1	RESISTOR AS (500-OHM, 2-WATT)	
		2	102-8802	1	KIT-RECEPTACLE (2-PIN)	
					(INCLUDES RECEPTACLE AS & WEDGE)	
		2	186-3735	1	PIN-CONNECTOR (16-GA TO 18-GA)	
	8	1	284-8868	1	HARNESS AS-SENSOR (STEERING CYLINDER POSITION,LH)	
		1	102-8804	1	KIT-RECEPTACLE (4-PIN)	
					(INCLUDES RECEPTACLE AS & WEDGE)	
		1	8T-8729	3	PIN-CONNECTOR (16-GA TO 18-GA)	
		1	8T-8730	3	SOCKET-CONNECTOR (16-GA TO 18-GA)	
		1	8T-8737	2	PLUG-SEAL	
E		1	114-8843		SLEEVE-PLASTIC (40-CM)	
		1	155-2271	1	KIT-CONNECTING PLUG (4-PIN)	
					(INCLUDES PLUG AS, WEDGE & INTERFACE SEAL)	
	9	1	284-8869	1	HARNESS AS-SENSOR (STEERING CYLINDER POSITION,RH)	
		1	8T-8730	6	SOCKET-CONNECTOR (16-GA TO 18-GA)	
		1	8T-8737	2	PLUG-SEAL	
E		1	114-8843		SLEEVE-PLASTIC (40-CM)	
		1	155-2271	2	KIT-CONNECTING PLUG (4-PIN)	
					(EACH KIT INCLUDES PLUG AS, WEDGE & INTERFACE SEAL)	
	10	1	307-6583	1	HARNESS AS-FRONT CHASSIS (LH)	
		1	102-8802	8	KIT-RECEPTACLE (2-PIN)	
		1	102-8805	1	KIT-RECEPTACLE (6-PIN)	
					(EACH KIT INCLUDES RECEPTACLE AS & WEDGE)	
E		1	5P-5110		HOSE (165-CM)	
		1	8T-8729	32	PIN-CONNECTOR (16-GA TO 18-GA)	
		1	8T-8730	36	SOCKET-CONNECTOR (16-GA TO 18-GA)	
		1	8T-8737	26	PLUG-SEAL	
		1	9W-0844	14	SOCKET-CONNECTOR (14-GA)	
		1	9W-0852	5	PIN-CONNECTOR (14-GA TO 16-GA)	
		1	9X-3402	5	SOCKET-CONNECTOR (16-GA TO 18-GA)	
		1	113-0580	1	RECEPTACLE AS-CONNECTOR (40-PIN)	
E		1	114-8843		SLEEVE-PLASTIC (460-CM)	
E		1	114-8845		SLEEVE-PLASTIC (20-CM)	
E		1	119-3662		TUBE-HEAT SHRINK (10.85-MM DIA) (20-CM)	
E		1	125-7874		TUBE-HEAT SHRINK (5.72-MM DIA) (20-CM)	
E		1	125-7875		TUBE-HEAT SHRINK (7.44-MM DIA) (5-CM)	
		1	155-2270	21	KIT-CONNECTING PLUG (2-PIN)	
		1	155-2274	2	KIT-CONNECTING PLUG (6-PIN)	
					(EACH KIT INCLUDES PLUG AS, WEDGE & INTERFACE SEAL)	
E		1	1P-0810		TAPE-ELECTRICAL (3-CM)	
	11	1	308-9222	1	HARNESS AS-MOTOR (AUTOLUBE ACTUATION)	
		1	102-8802	1	KIT-RECEPTACLE (2-PIN)	
					(INCLUDES RECEPTACLE AS & WEDGE)	
		1	9W-0844	4	SOCKET-CONNECTOR (14-GA)	
		1	9W-0852	2	PIN-CONNECTOR (14-GA TO 16-GA)	
E		1	114-8843		SLEEVE-PLASTIC (40-CM)	
E		1	125-7875		TUBE-HEAT SHRINK (7.44-MM DIA) (10-CM)	

266-8956 **WIRING GP-FRONT** ***(contd.)*** **i03734780**

NOTE	REF NO	GRAPHIC REF	PART NUMBER	QTY	PART NAME 1 2 3 4 5 6 (PRODUCT LEVEL)	SEE PAGE
		1	**155-2270**	2	KIT-CONNECTING PLUG (2-PIN)	
					(EACH KIT INCLUDES PLUG AS, WEDGE & INTERFACE SEAL)	
C	12	1	**347-1356**	1	HARNESS AS-FRONT CHASSIS (RH)	
		1	**102-8802**	8	KIT-RECEPTACLE (2-PIN)	
		1	**102-8804**	1	KIT-RECEPTACLE (4-PIN)	
					(EACH KIT INCLUDES RECEPTACLE AS & WEDGE)	
		1	**3E-6286**	1	PLUG AS-CONNECTOR	
		1	**5P-4571**	4	TERMINAL-BLADE (14-GA TO 16-GA)	
E		1	**5P-5110**		HOSE (171-CM)	
		1	**9X-0196**	2	WIRE AS	
		1	**8T-8729**	3	PIN-CONNECTOR (16-GA TO 18-GA)	
		1	**8T-8730**	100	SOCKET-CONNECTOR (16-GA TO 18-GA)	
		1	**8T-8737**	43	PLUG-SEAL	
		1	**9W-0844**	28	SOCKET-CONNECTOR (14-GA)	
		1	**9X-3401**	2	PIN-CONNECTOR (16-GA TO 18-GA)	
		1	**9X-3402**	8	SOCKET-CONNECTOR (16-GA TO 18-GA)	
		1	**9X-4391**	1	PLUG AS-CONNECTOR (70-PIN)	
		1	**3E-4367**	1	RING-RETAINING	
M		1	**3E-8557**	1	BOLT (M5X0.8X39.37-MM)	
		1	**9X-5615**	2	SEAL (INTERFACE, 70-PIN)	
E		1	**114-8843**		SLEEVE-PLASTIC (480-CM)	
E		1	**114-8844**		SLEEVE-PLASTIC (20-CM)	
E		1	**114-8845**		SLEEVE-PLASTIC (20-CM)	
E		1	**119-3662**		TUBE-HEAT SHRINK (10.85-MM DIA) (20-CM)	
E		1	**125-7874**		TUBE-HEAT SHRINK (5.72-MM DIA) (5-CM)	
E		1	**125-7875**		TUBE-HEAT SHRINK (7.44-MM DIA) (35-CM)	
		1	**2L-8069**	2	TERMINAL-RING (2-GA TO 10-GA, 3/8-IN SCREW)	
		1	**155-2255**	1	KIT-CONNECTING PLUG (12-PIN)	
		1	**155-2270**	19	KIT-CONNECTING PLUG (2-PIN)	
		1	**155-2271**	1	KIT-CONNECTING PLUG (4-PIN)	
					(EACH KIT INCLUDES PLUG AS, WEDGE & INTERFACE SEAL)	
	13	1,2	**033-8248**	10	CLIP	
	14	1	**119-5708**	2	CLIP	
C	15	1	**130-5300**	2	CLIP	
	16	1	**130-5301**	2	CLIP	
	17	2	**174-5907**	6	CLIP	
C	18	1	**3J-1907**	1	SEAL-O-RING	
	19	2	**4D-7735**	1	CLIP	
	20	1,2	**4D-7794**	19	CLIP	
	21	1	**4P-7428**	1	CLIP	
	22	1,2	**4P-7581**	3	CLIP	
	23	2	**4S-1962**	3	CLIP	
	24	1	**5P-9085**	2	CLIP	
	25	2	**6D-4244**	1	CLIP	
	26	2	**6D-4246**	1	CLIP	
	27	1,2	**6S-1066**	2	GROMMET	
	28	1,2	**8M-2770**	11	CLIP	
	29	1,2	**8M-2772**	7	CLIP	
	30	2	**8M-2773**	2	CLIP	
	31	1,2	**8M-2784**	4	GROMMET	
	32	1,2	**8T-4121**	62	WASHER-HARD (11X21X2.5-MM THK)	
M	33	1,2	**8T-4136**	16	BOLT (M10X1.5X25-MM)	
M	34	1,2	**8T-4137**	46	BOLT (M10X1.5X20-MM)	
M	35	2	**8T-4179**	1	BOLT (M12X1.75X20-MM)	
	36	2	**8T-4223**	1	WASHER-HARD (13.5X25.5X3-MM THK)	
	37	1	**9M-8406**	6	CLIP	
	38	2	**9X-8250**	1	CLIP	
	39	2	**9X-8402**	1	CLIP	

266-8956 **WIRING GP-FRONT** *(contd.)* **i03734780**

C-CHANGE FROM PREVIOUS TYPE
E-ORDER BY THE CENTIMETER
M-METRIC PART
Y-SEPARATE ILLUSTRATION

266-8956 **WIRING GP-FRONT** *(contd.)* **i03734780**

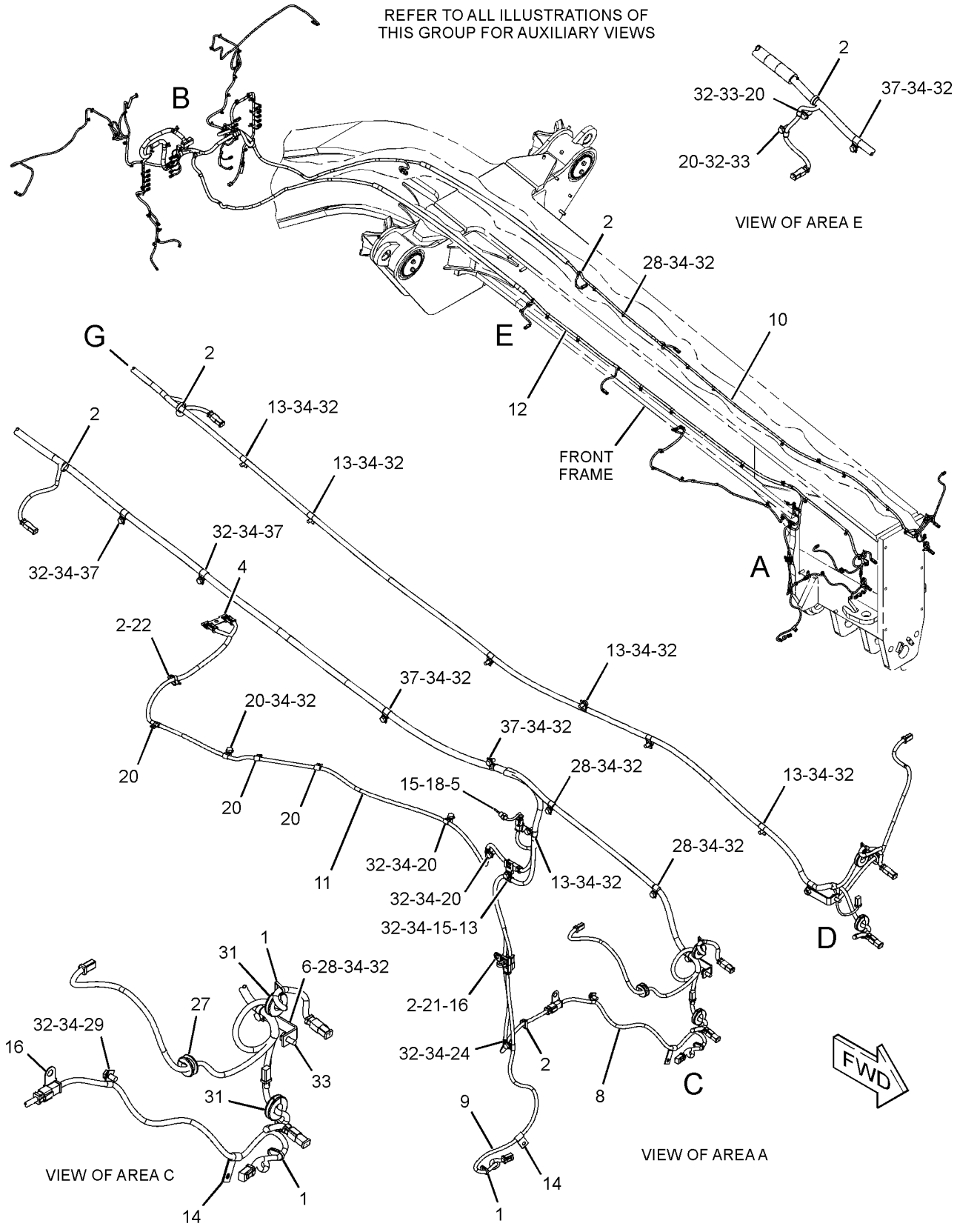

GRAPHIC #1 g02022353

266-8956 **WIRING GP-FRONT** *(contd.)* **i03734780**

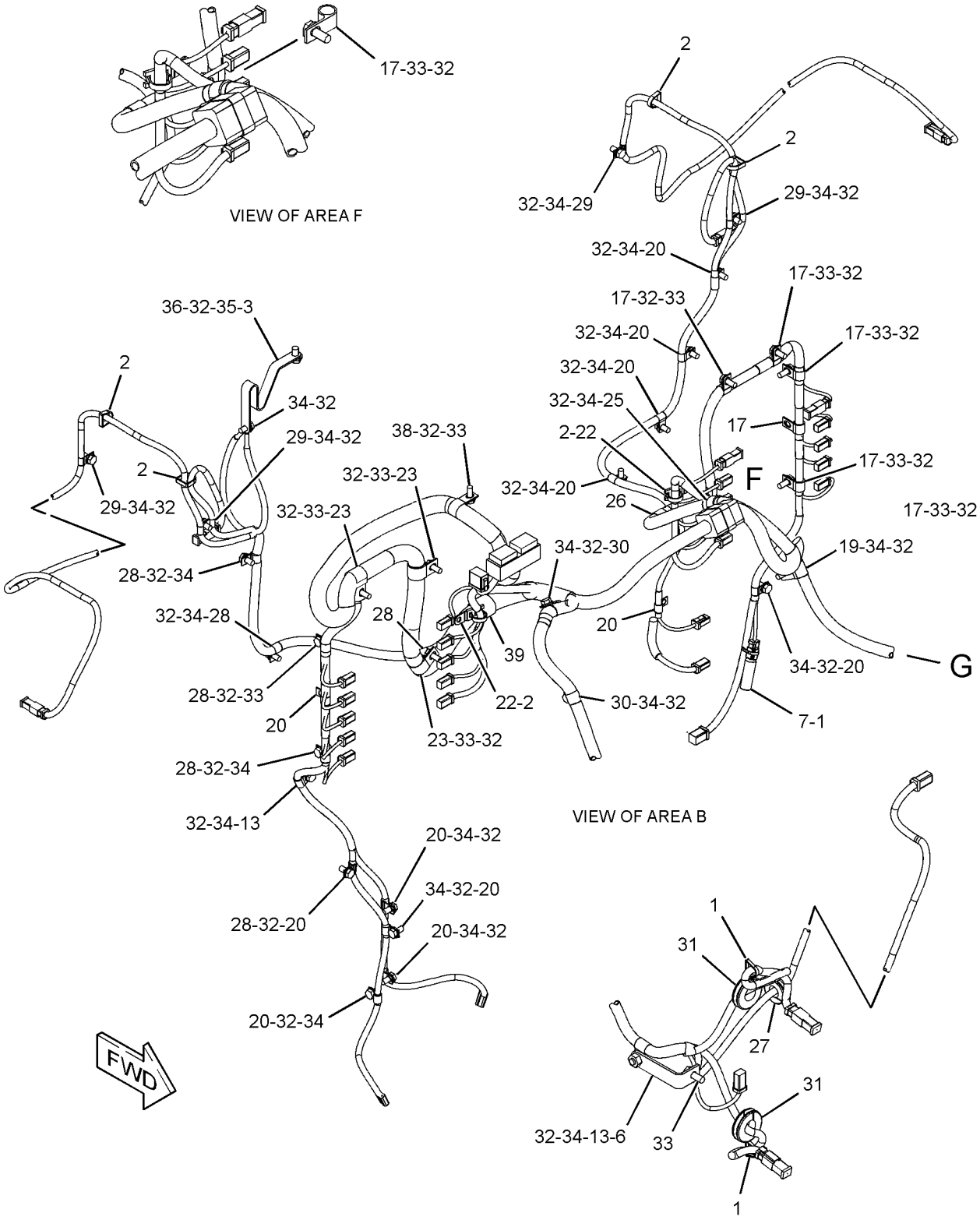

REFER TO ALL ILLUSTRATIONS OF THIS GROUP FOR AUXILIARY VIEWS

GRAPHIC #2 **<END>** g02022593

ELECTRICAL AND STARTING SYSTEM

266-7026 WIRING GP-GRADE CONTROL

S/N: B9K1-UP

PART OF 266-7000 CAB AR

SMCS-1408 **i02854332**

NOTE	REF NO	GRAPHIC REF	PART NUMBER	QTY	PART NAME 1 2 3 4 5 6 (PRODUCT LEVEL)	SEE PAGE
	1	1	**3E-5239**	1	RELAY AS (24-VOLT) (GRADE, SLOPE)	
	2	1	**7K-1181**	13	STRAP-CABLE	
	4	1	**281-1663**	1	HARNESS AS-SWITCH (GRADE CONTROL)	
	6	1	**096-6166**	4	WASHER-HARD (4.5X9X1-MM THK)	
	7	1	**134-2540**	1	RESISTOR AS-CONNECTION (3-PIN)	
M	8	1	**8T-4171**	1	BOLT (M6X1X12-MM)	
M	9	1	**8T-9405**	4	BOLT-SOCKET HEAD (M4X0.7X16-MM)	
	10	1	**9X-8256**	1	WASHER (6.6X12X2-MM THK)	

M-METRIC PART

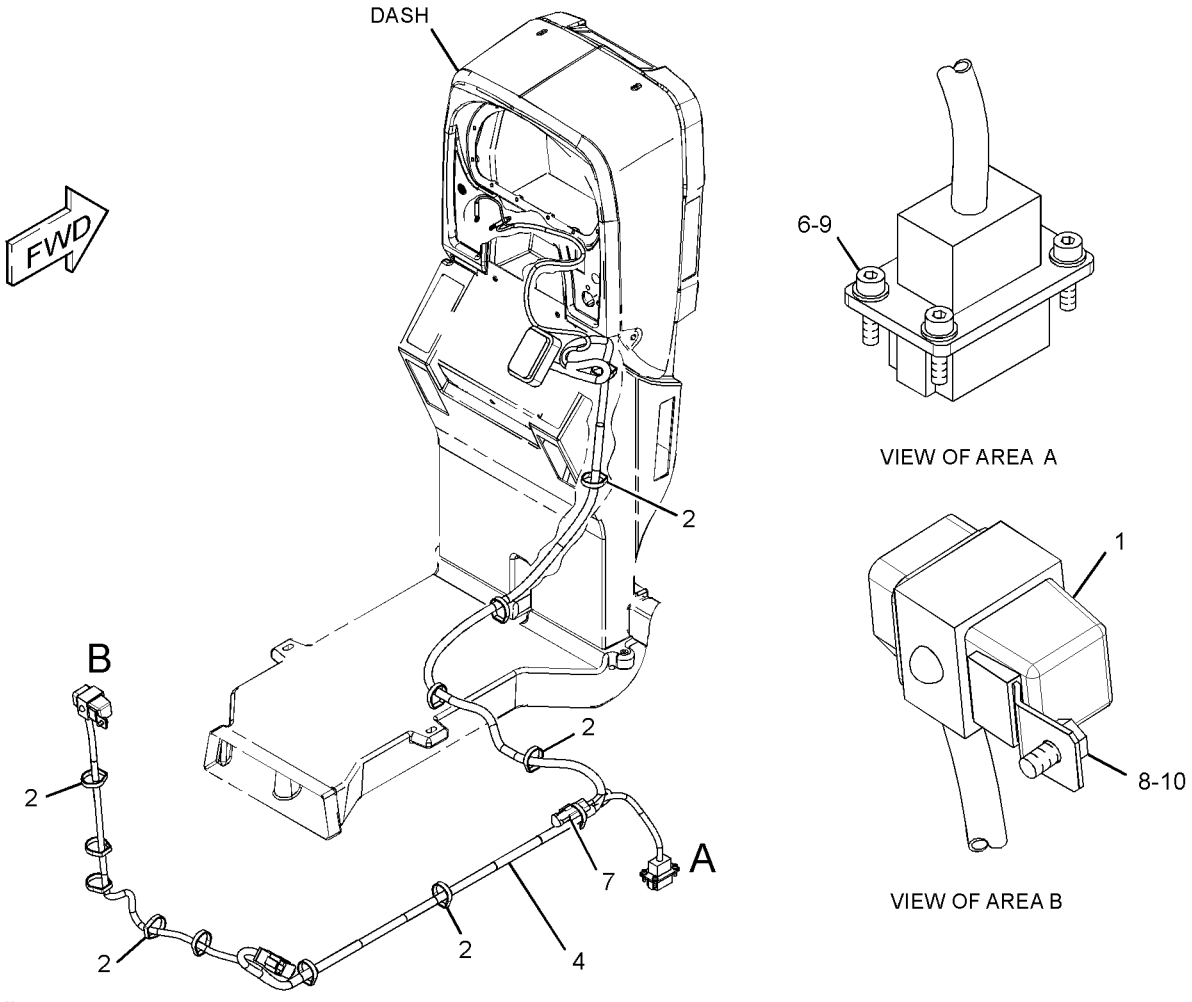

GRAPHIC #1 **<END>** g01441104

ELECTRICAL AND STARTING SYSTEM

266-8961 WIRING GP-GRADE CONTROL

S/N: B9K1-UP

PART OF 269-2210 GRADE CONTROL AR

SMCS-1408 **i03151502**

NOTE	REF NO	GRAPHIC REF	PART NUMBER	QTY	PART NAME 1 2 3 4 5 6 (PRODUCT LEVEL)	SEE PAGE
	1	1	9G-9154	2	CLIP	
	3	1	255-3482	1	BRACKET	
	4	1	272-3261	1	HARNESS AS-WORK TOOL	
	6	1	276-8827	1	HARNESS AS-SENSOR (INCLINATION)	
	7	1	130-5300	3	CLIP	
	8	1	134-2540	1	RESISTOR AS-CONNECTION (3-PIN)	
	9	1	186-0359	1	CLIP	
	10	1	236-2356	1	HARNESS AS-SENSOR (ANGLE)	
	11	1	243-3250	1	HARNESS AS-SENSOR (ROTATION)	
	13	1	4D-7794	4	CLIP	
	14	1	4D-9517	7	CLIP	
	15	1	4K-8302	3	CLIP	
	17	1	7K-1181	4	STRAP-CABLE	
	18	1	8M-2770	14	CLIP	
	20	1	8T-4121	13	WASHER-HARD (11X21X2.5-MM THK)	
M	21	1	8T-4137	13	BOLT (M10X1.5X20-MM)	
	22	1	8T-4223	1	WASHER-HARD (13.5X25.5X3-MM THK)	
M	23	1	8T-4244	1	NUT (M12X1.75-THD)	
	24	1	8X-5489	2	SLEEVE	
	25	1	293-6465	1	PLATE	
	26	1	4P-7581	1	CLIP	
	27	1	6D-3479	2	CLIP	
	28	1	264-3643	2	BOLT (M12X1.75X55-MM)	

M-METRIC PART

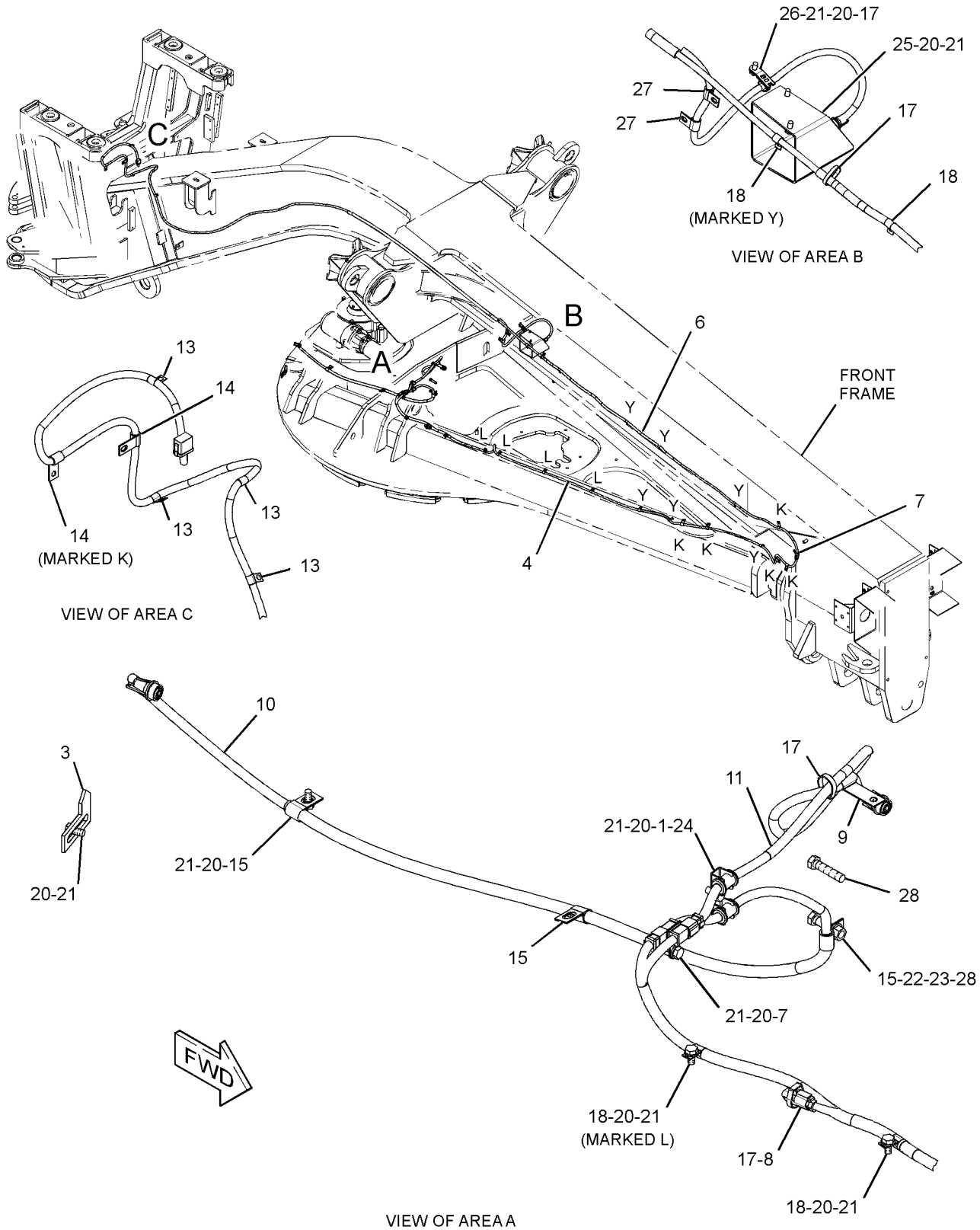

GRAPHIC #1 **<END>** g01822995

ELECTRICAL AND STARTING SYSTEM

253-1964 WIRING GP-MONITOR

S/N: B9K1-UP

PART OF 292-7975 DISPLAY AR-MONITOR

SMCS-1408 **i02902266**

NOTE	REF NO	GRAPHIC REF	PART NUMBER	QTY	PART NAME 1 2 3 4 5 6 (PRODUCT LEVEL)	SEE PAGE
	1	1	7K-1181	1	STRAP-CABLE	
	2	1	140-7480	1	BRACKET-MOUNTING	
	3	1	167-8610	1	BRACKET AS	
	4	1	222-9151	2	WASHER-HARD (11X32X5-MM THK)	
	5	1	245-8334	2	KNOB	
	6	1	252-5190	1	HARNESS AS-FRONT CHASSIS	
		1	102-8801	1	KIT-RECEPTACLE (12-PIN)	
					(INCLUDES RECEPTACLE AS & WEDGE)	
		1	248-5358	1	PLUG AS-CONNECTOR (39-PIN)	
		1	155-2255	1	KIT-CONNECTING PLUG (12-PIN)	
					(INCLUDES PLUG AS, WEDGE, & INTERFACE SEAL)	
	7	1	253-1963	1	BRACKET AS	
	8	1	253-7461	1	HARNESS AS-RADIO	
		1	190-7614	1	KIT-RECEPTACLE (12-PIN)	
					(INCLUDES RECEPTACLE AS & WEDGE)	
		1	167-8987	1	PLUG AS-CONNECTOR (8-PIN)	
	9	1	273-1719	1	BRACKET AS	
	10	1	273-5924	1	KNOB	
	11	1	295-8369	1	PLATE	
	12	1	295-8370	1	BRACKET AS	
		1	7T-1099	2	LINK	
M		1	6V-9632	1	NUT-WELD (M6X1-THD)	
M		1	8T-3490	2	NUT-WELD (M10X1.5-THD)	
M		1	9X-2032	4	NUT-WELD (M4X0.7-THD)	
	13	1	295-8381	1	PLATE AS	
	14	1	296-1067	1	HARNESS AS-WIRING (LIGHT BAR)	
		1	102-8804	1	KIT-RECEPTACLE (4-PIN)	
					(INCLUDES RECEPTACLE AS & WEDGE)	
		1	230-5008	3	PLUG AS-CONNECTOR (4-PIN)	
	15	1	300-7909	1	BRACKET AS	
		1	205-7047	2	INSERT-THREADED (M4X0.7-THD)	
	16	1	114-6658	2	WASHER (6.5X17X1-MM THK)	
	17	1	096-6166	6	WASHER-HARD (4.5X9X1-MM THK)	
	18	1	117-8929	1	WASHER (6.6X22X2-MM THK)	
	19	1	130-5300	2	CLIP	
	20	1	204-0813	3	BOLT (M6X1X40-MM)	
	21	1	3B-4610	2	PIN-COTTER	
	22	1	4L-7125	4	LOCKWASHER	
M	23	1	5C-7261	2	NUT (M8X1.25-THD)	
	24	1	5P-4116	6	WASHER-HARD (8.8X20.5X2-MM THK)	
	25	1	5P-6419	1	GROMMET	
	26	1	5S-7349	2	BOLT (1/4-20X0.5-IN)	
	27	1	6B-8193	2	PIN-CLEVIS	
M	28	1	7X-2537	2	BOLT (M8X1.25X35-MM)	
	29	1	8C-5607	6	MOUNT-ISOLATION	
	30	1	8C-5608	3	SPACER (6.5X9.5X25.4-MM THK)	
	31	1	8T-4205	2	WASHER-HARD (7.2X14.5X2-MM THK)	
	32	1	8T-4224	4	WASHER-HARD (8.8X16X2-MM THK)	
M	33	1	8T-4908	2	BOLT (M8X1.25X25-MM)	
M	34	1	8T-7852	6	BOLT (M4X0.7X10-MM)	
M	35	1	9X-1046	6	SCREW (M4X0.7X18-MM)	
M	36	1	9X-2045	2	SCREW-TRUSS HEAD (M6X1X20-MM)	
	37	1	9X-6165	3	WASHER (6.5X22X2.5-MM THK)	
D	38	1	5P-7657		SEAL (0.2-M)	

D-ORDER BY THE METER
M-METRIC PART

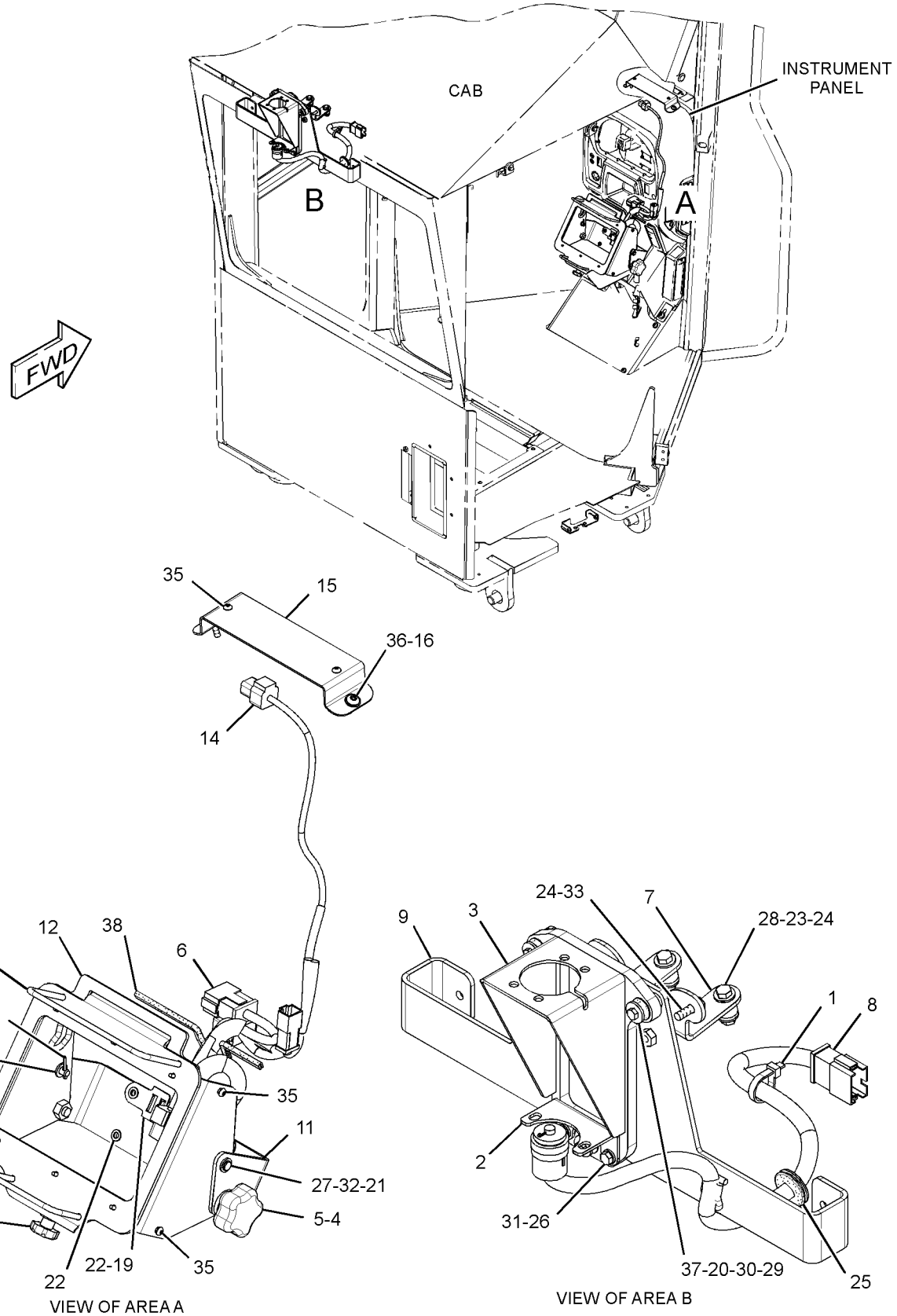

GRAPHIC #1 **<END>** g01524819

ELECTRICAL AND STARTING SYSTEM

253-1967 WIRING GP-MONITOR

S/N: B9K1-UP

PART OF 292-7980 DISPLAY AR-MONITOR

SMCS-1408 **i03495740**

NOTE	REF NO	GRAPHIC REF	PART NUMBER	QTY	PART NAME 1 2 3 4 5 6 (PRODUCT LEVEL)	SEE PAGE
	1	1	095-0817	2	LOCKWASHER	
	2	1	167-8712	1	ALARM	
	3	1	167-8713	1	BAFFLE AS	
	4	1	167-8714	1	WIRE AS	
	5	1	248-2284	2	KNOB-CONTROL	
	6	1	251-0077	1	BRACKET AS	
M		1	8T-3490	1	NUT-WELD (M10X1.5-THD)	
	7	1	251-9571	1	BRACKET AS	
M		1	8T-3490	1	NUT-WELD (M10X1.5-THD)	
	8	1	295-8963	1	PLATE	
	9	1	296-4922	1	HARNESS AS-MONITOR	
		1	102-8801	1	KIT-RECEPTACLE (12-PIN)	
					(INCLUDES RECEPTACLE AS & WEDGE)	
		1	9X-6772	2	STRAP-CABLE	
		1	126-1774	1	COVER-CONNECTOR	
		1	147-1444	1	PLUG AS-CONNECTOR (70-PIN)	
		1	155-2255	1	KIT-CONNECTING PLUG (12-PIN)	
		1	155-2270	1	KIT-CONNECTING PLUG (2-PIN)	
					(EACH INCLUDES PLUG AS, WEDGE, & INTERFACE SEAL)	
	10	1	130-5300	3	CLIP	
	11	1	4L-7125	4	LOCKWASHER	
	12	1	8T-4121	2	WASHER-HARD (11X21X2.5-MM THK)	
M	13	1	8T-4171	4	BOLT (M6X1X12-MM)	
	14	1	8T-4205	4	WASHER-HARD (7.2X14.5X2-MM THK)	
D	15	1	5P-7657		SEAL (0.2-M)	

D-ORDER BY THE METER
M-METRIC PART

253-1967 **WIRING GP-MONITOR** *(contd.)* **i03495740**

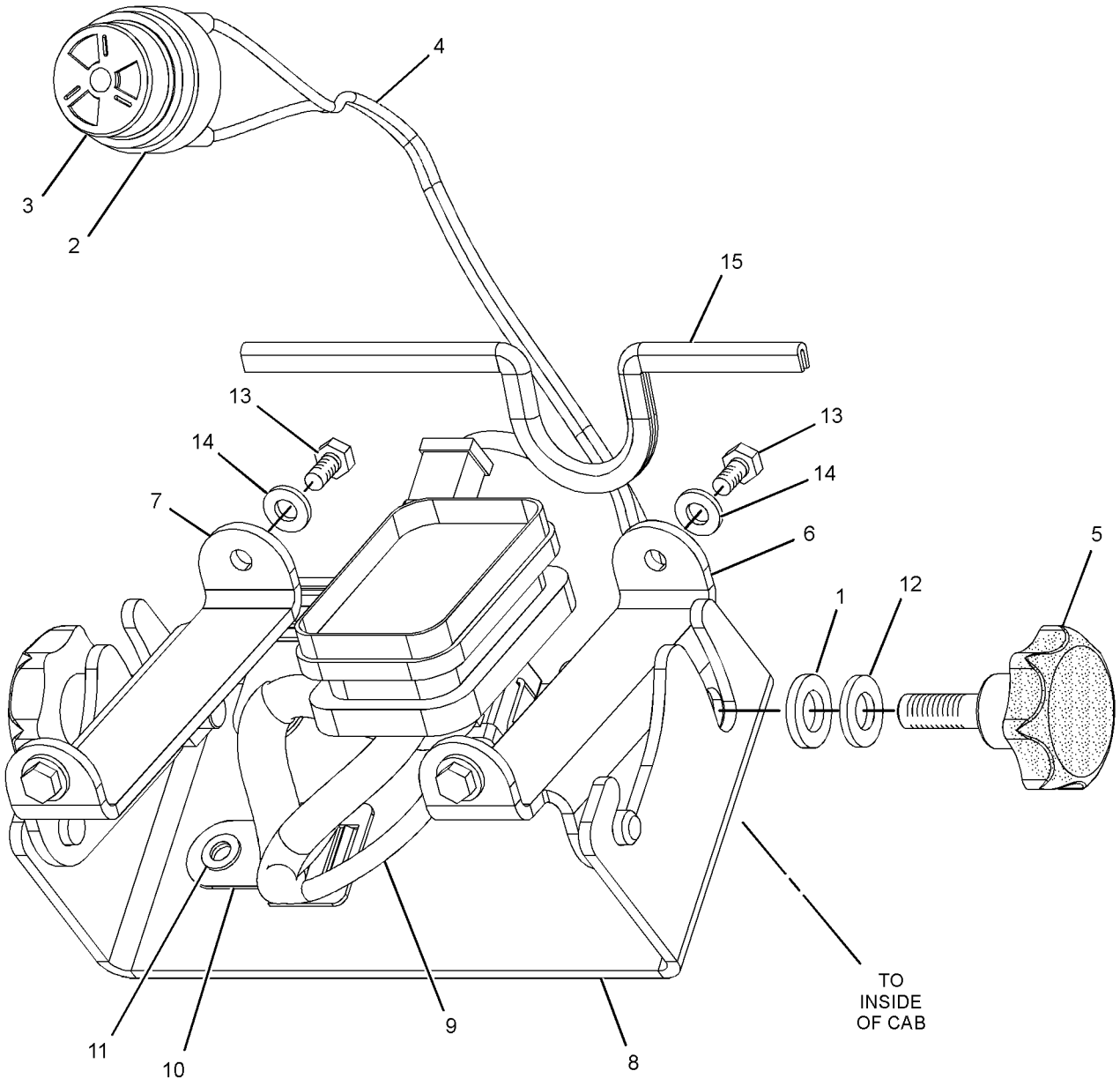

GRAPHIC #1 **<END>** g01332375

ELECTRICAL AND STARTING SYSTEM

266-8962 WIRING GP-REAR—CIRCUIT BREAKER PANEL

S/N: B9K1-UP

PART OF 259-9204 COMMON AR

SMCS-1408 **i03493380**

NOTE	REF NO	GRAPHIC REF	PART NUMBER	QTY	PART NAME 1 2 3 4 5 6 (PRODUCT LEVEL)	SEE PAGE
	1	1	269-3381	1	CABLE AS	
		1	1S-7251	1	TERMINAL-CABLE (00-GA, 1/2-IN SCREW)	
		1	8T-8827	1	BOOT (RED)	
		1	9X-9120	1	BOOT (RED)	
E		1	159-8049		CABLE (00-GA, RED) (118-CM)	
		1	208-4617	1	TERMINAL-RING (00-GA, 1/2-IN SCREW)	
	2	1	269-4983	1	BRACKET AS	
Y	3	1	270-4330	1	PANEL GP-CIRCUIT BREAKER	275
	4	1	270-4332	1	BRACKET AS	
M		1	8T-3490	5	NUT-WELD (M10X1.5-THD)	
M		1	9R-2672	1	BOSS-THREADED (M10X1.5-THD)	
	5	1	274-7486	1	CABLE AS	
		1	8T-8827	1	BOOT (RED)	
		1	1S-7251	2	TERMINAL-CABLE (00-GA, 1/2-IN SCREW)	
		1	8N-0869	1	COVER-TERMINAL (RED)	
E		1	159-8049		CABLE (00-GA, RED) (84-CM)	
	6	1	274-7487	1	BRACKET AS	
M		1	8T-3490	1	NUT-WELD (M10X1.5-THD)	
	7	1	274-7488	1	CABLE AS	
		1	1S-7251	1	TERMINAL-CABLE (00-GA, 1/2-IN SCREW)	
		1	8N-0869	1	COVER-TERMINAL (RED)	
E		1	159-8049		CABLE (00-GA, RED) (146-CM)	
		1	190-3848	1	TERMINAL-RING	
	8	1	274-7489	1	CABLE AS	
		1	1S-7251	1	TERMINAL-CABLE (00-GA, 1/2-IN SCREW)	
		1	9G-8909	2	COVER-TERMINAL (BLACK)	
		1	030-1709	1	TERMINAL-RING (0-GA, 1/4-IN SCREW)	
E		1	159-8050		CABLE (00-GA, BLACK) (80-CM)	
	9	1	274-7508	1	CABLE AS	
		1	4D-1248	1	TERMINAL (00-GA, 3/8-IN SCREW)	
		1	9G-0004	1	COVER AS-TERMINAL (RED)	
		1	9G-8909	1	COVER-TERMINAL (BLACK)	
E		1	159-8050		CABLE (00-GA, BLACK) (115-CM)	
	10	1	307-7629	1	CABLE AS	
		1	1S-7251	1	TERMINAL-CABLE (00-GA, 1/2-IN SCREW)	
		1	9G-0002	1	COVER AS-TERMINAL (RED)	
		1	8T-8827	1	BOOT (RED)	
		1	190-3848	1	TERMINAL-RING	
		1	159-8049		CABLE (00-GA, RED) (273-CM)	
	11	1	245-8842	3	CLIP	
	12	1	6K-8178	1	CLIP	
	13	1	6V-8188	6	NUT (1/2-13-THD)	
	14	1	7K-1181	12	STRAP-CABLE	
	15	1	8C-6358	1	BLOCK AS-JUNCTION (BATTERY)	
		1	1D-5117	3	NUT-JAM (1/2-13-THD)	
		1	8T-3519	3	BOLT-BRONZE (1/2-13X2-IN)	
	16	1	8T-4121	19	WASHER-HARD (11X21X2.5-MM THK)	
M	17	1	8T-4136	6	BOLT (M10X1.5X25-MM)	
M	18	1	8T-4137	11	BOLT (M10X1.5X20-MM)	
M	19	1	8T-4179	2	BOLT (M12X1.75X20-MM)	
M	20	1	8T-4191	1	BOLT (M10X1.5X16-MM)	
M	21	1	8T-4195	1	BOLT (M10X1.5X30-MM)	
	22	1	8T-4223	8	WASHER-HARD (13.5X25.5X3-MM THK)	
	23	1	9M-8406	17	CLIP	

266-8962 **WIRING GP-REAR** *(contd.)* **i03493380**

E-ORDER BY THE CENTIMETER
M-METRIC PART
Y-SEPARATE ILLUSTRATION

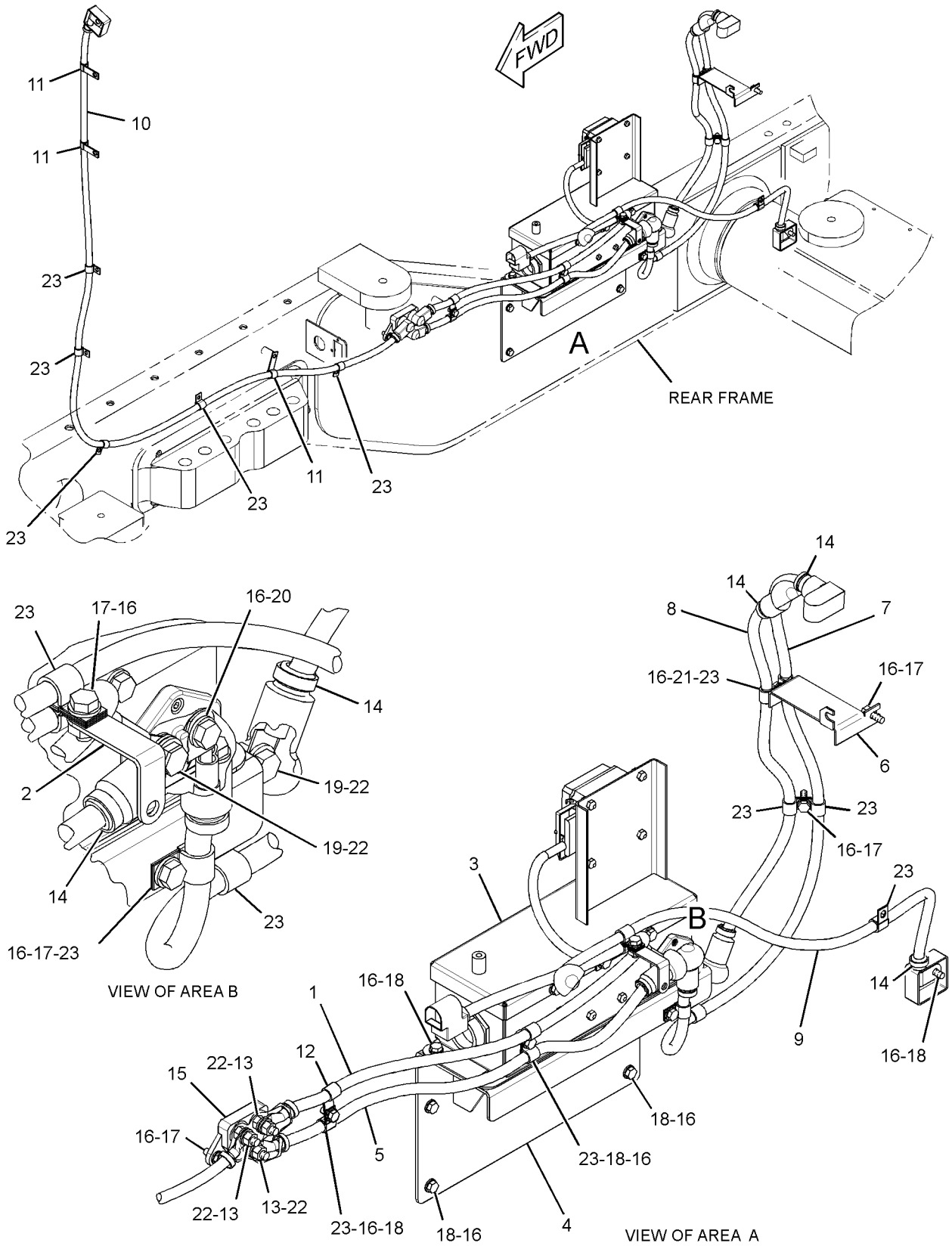

GRAPHIC #1 **<END>** g01589656

ELECTRICAL AND STARTING SYSTEM

266-8963 WIRING GP-REAR–SENSORS

S/N: B9K1-249

PART OF 259-9204 COMMON AR

SMCS-1408 **i02835775**

NOTE	REF NO	GRAPHIC REF	PART NUMBER	QTY	PART NAME 1 2 3 4 5 6 (PRODUCT LEVEL)	SEE PAGE
	1	2,3	3S-2093	3	STRAP-CABLE	
	2	3	110-8330	1	SPACER (11.3X19.05X90-MM THK)	
	3	2	114-5333	1	SWITCH AS-PRESSURE (COMPRESSOR, HIGH SIDE)	
		2	102-8802	1	KIT-RECEPTACLE (2-PIN)	
					(INCLUDES RECEPTACLE AS & WEDGE)	
		2	186-3735	2	PIN-CONNECTOR (16-GA TO 18-GA)	
E		2	9X-1386		SLEEVE (25-CM)	
	4	1	133-6934	2	SPACER (11X20X25-MM THK)	
Y	5	2	134-2252	1	SENSOR GP-TEMPERATURE (IMPLEMENT, BRAKE OIL)	319
	6	2	134-3355	1	STRAP AS	
	7	3	140-0860	1	STRAP AS-GROUND	
	8	2	149-6371	1	SWITCH AS-PRESSURE (COMPRESSOR, LOW SIDE)	
		2	102-8802	1	KIT-RECEPTACLE (2-PIN)	
					(INCLUDES RECEPTACLE AS & WEDGE)	
		2	186-3735	2	PIN-CONNECTOR (16-GA TO 18-GA)	
	9	2	*165-6365*	1	FITTING AS	
		2	7W-7381	1	FITTING-OUTLET	
		2	3J-1907	1	SEAL-O-RING	
	10	2,3	189-3158	2	SUPPRESSOR-ARC	
Y	11	2	194-6722	1	SENSOR GP-PRESSURE (ATMOSPHERIC AIR)	307
Y	12	3	198-8372	2	SENSOR GP-POSITION (ROTARY) (ARTICULATION)	305
	13	1	221-3405	1	SENSOR GP-PRESSURE (IMPLEMENT PUMP OIL)	
		1	155-2260	1	KIT-CONNECTING PLUG (3-PIN)	
					(INCLUDES PLUG AS, WEDGE & INTERFACE SEAL)	
		1	194-5226	3	WIRE AS (16-GA)	
					–OR–	
		1	194-5227	3	WIRE AS (14-GA)	
Y	14	2	237-0957	1	SENSOR GP-PRESSURE (IMPLEMENT PUMP OIL)	309
	15	3	240-7193	1	RESISTOR AS (500-OHM, 2-WATT)	
		3	102-8802	1	KIT-RECEPTACLE (2-PIN)	
					(INCLUDES RECEPTACLE AS & WEDGE)	
		3	186-3735	1	PIN-CONNECTOR (16-GA TO 18-GA)	
	16	2	269-4983	2	BRACKET AS	
	17	3	274-7494	1	PLATE AS	
	18	2	274-7495	1	PLATE AS	
	19	3	274-7498	1	HARNESS AS-SWITCH	
	20	3	301-5180	2	LINK AS	
					(EACH INCLUDES)	
		3	6F-0612	1	NUT-JAM (1/4-28-THD)	
		3	8S-7048	1	ROD END	
		3	9L-3334	1	NUT-PLATED (1/4-28-THD, LH)	
		3	036-7232	1	ROD END	
	21	3	305-2281	2	LEVER	
	22	1	307-6366	1	HARNESS AS-REAR CHASSIS	
	23	1	307-6367	1	HARNESS AS-CHASSIS	
	24	3	307-6370	1	BOX AS	
		3	7T-1099	1	LINK	
M		3	8T-3490	1	NUT-WELD (M10X1.5-THD)	
M		3	165-8718	12	NUT-WELD (M4X0.7-THD)	
	25	3	307-6371	1	COVER	
	26	3	307-6372	1	BRACKET AS	
		3	7T-1099	1	LINK	
M		3	8T-3490	4	NUT-WELD (M10X1.5-THD)	
	27	3	308-2607	1	PLATE	
	28	2	308-2737	1	HARNESS AS-ENGINE	
	29	1	308-3541	1	HARNESS AS-LIGHTING	

266-8963 **WIRING GP-REAR** ***(contd.)*** **i02835775**

NOTE	REF NO	GRAPHIC REF	PART NUMBER	QTY	PART NAME 1 2 3 4 5 6 (PRODUCT LEVEL)	SEE PAGE
	30	2,3	**096-6166**	16	WASHER-HARD (4.5X9X1-MM THK)	
M	31	3	**105-3487**	2	BOLT-SOCKET HEAD (M6X1X20-MM)	
	32	1,2,3	**130-5300**	25	CLIP	
	33	2	**130-5301**	1	CLIP	
	34	2,3	**132-5789**	4	CLIP	
	35	3	**134-2540**	1	RESISTOR AS-CONNECTION (3-PIN)	
	36	3	**139-1398**	2	CLIP	
	37	2	**147-0385**	2	CLIP	
	38	1	**186-0359**	1	CLIP	
	39	2	**1J-9671**	1	SEAL-O-RING	
	40	1,2	**1S-0994**	2	CLIP	
	41	2	**2T-3019**	1	CLIP	
	42	1,2	**3J-1907**	3	SEAL-O-RING	
	43	3	**4D-7388**	3	CLIP	
	44	2	**4D-7794**	2	CLIP	
	45	1	**4K-8864**	5	CLIP	
	46	2	**4P-7428**	1	CLIP	
	47	2,3	**4P-7581**	2	CLIP	
	48	2	**4P-7582**	1	CLIP	
	49	2,3	**4P-8134**	2	CLIP	
	50	2	**4S-4455**	4	CLIP	
	51	2	**5M-3062**	1	BOLT (3/8-16X0.75-IN)	
	52	1	**5P-4295**	2	CLIP	
	53	3	**5P-7468**	2	CLIP (SLOT)	
	54	3	**5P-7469**	2	CLIP (TAB)	
	55	2	**5P-9085**	4	CLIP	
	56	3	**5P-9297**	5	CLIP	
	57	3	**6V-0545**	2	GROMMET	
M	58	3	**6V-7357**	2	BOLT (M6X1X25-MM)	
M	59	3	**6V-8337**	10	BOLT-SOCKET HEAD (M8X1.25X35-MM)	
	60	2	**7C-4354**	1	CLIP	
	61	1,3	**7D-7233**	3	CLIP	
	62	1,2,3	**7K-1181**	24	STRAP-CABLE	
	63	2	**7N-3718**	2	CLIP	
M	64	3	**7X-2543**	1	BOLT (M10X1.5X120-MM)	
	65	1,2,3	**8M-2770**	13	CLIP	
M	66	3	**8T-3647**	2	BOLT (M8X1.25X80-MM)	
	67	1,2,3	**8T-4121**	74	WASHER-HARD (11X21X2.5-MM THK)	
M	68	2	**8T-4133**	1	NUT (M10X1.5-THD)	
M	69	1,2,3	**8T-4136**	27	BOLT (M10X1.5X25-MM)	
M	70	1,2,3	**8T-4137**	40	BOLT (M10X1.5X20-MM)	
M	71	2,3	**8T-4179**	3	BOLT (M12X1.75X20-MM)	
M	72	1	**8T-4182**	1	BOLT (M10X1.5X45-MM)	
M	73	1	**8T-4185**	1	BOLT (M10X1.5X50-MM)	
M	74	2	**8T-4190**	1	BOLT (M16X2X25-MM)	
M	75	1	**8T-4195**	1	BOLT (M10X1.5X30-MM)	
M	76	2	**8T-4196**	1	BOLT (M10X1.5X35-MM)	
	77	2,3	**8T-4223**	4	WASHER-HARD (13.5X25.5X3-MM THK)	
	78	3	**8T-4224**	2	WASHER-HARD (8.8X16X2-MM THK)	
	79	2	**8T-9384**	1	BOLT (1/2-13X0.875-IN)	
M	80	2,3	**8T-9405**	16	BOLT-SOCKET HEAD (M4X0.7X16-MM)	
	81	3	**9M-1974**	10	WASHER-HARD (8.8X16X2-MM THK)	
	82	2	**9X-7378**	2	SEAL-O-RING	
	83	3	**9X-8250**	1	CLIP	
	84	3	**9X-8256**	4	WASHER (6.6X12X2-MM THK)	
	85	2	**9X-8257**	1	WASHER (17.5X30X3.5-MM THK)	

E-ORDER BY THE CENTIMETER
M-METRIC PART
Y-SEPARATE ILLUSTRATION

266-8963 **WIRING GP-REAR** *(contd.)* **i02835775**

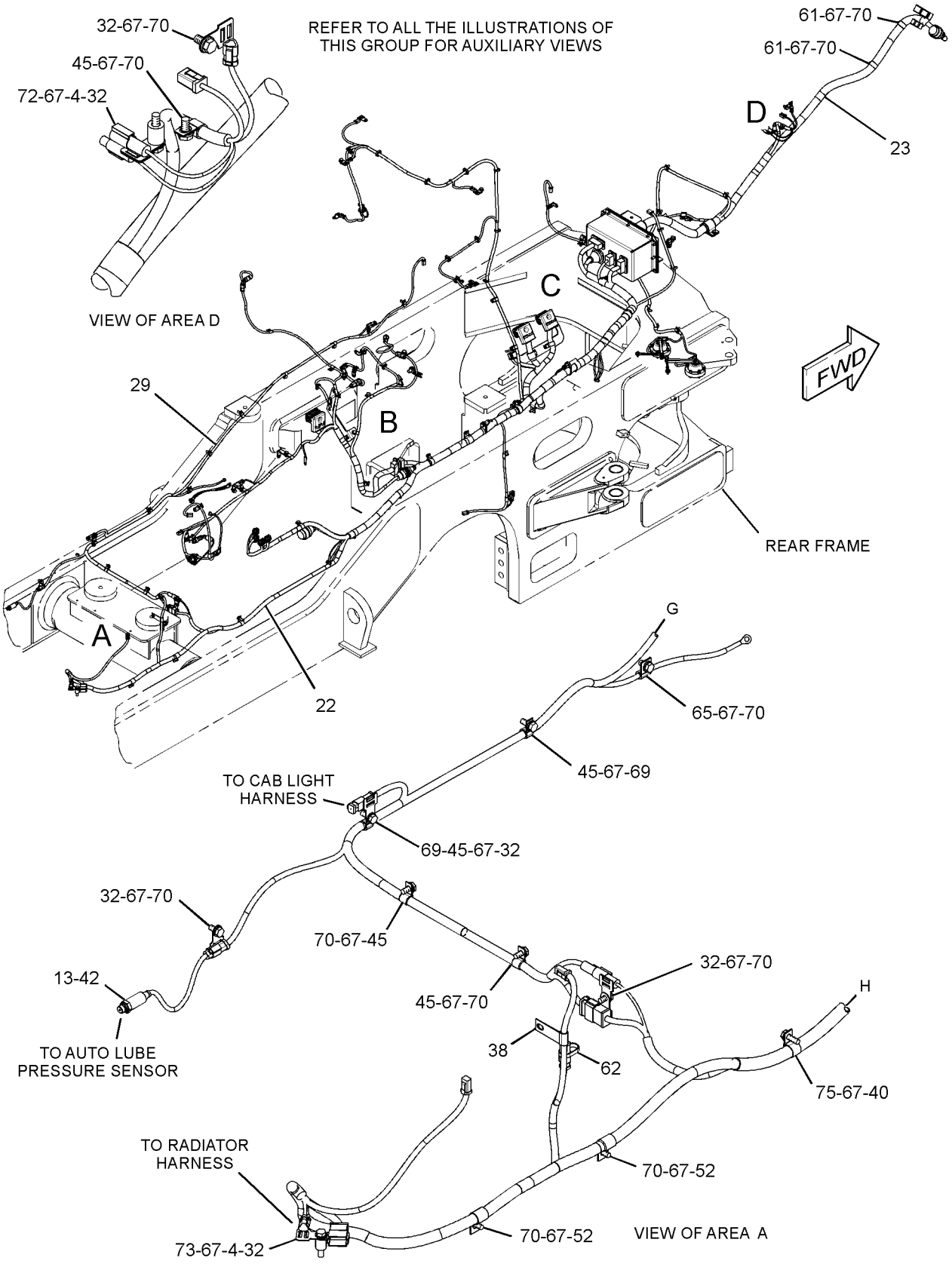

GRAPHIC #1 g01519596

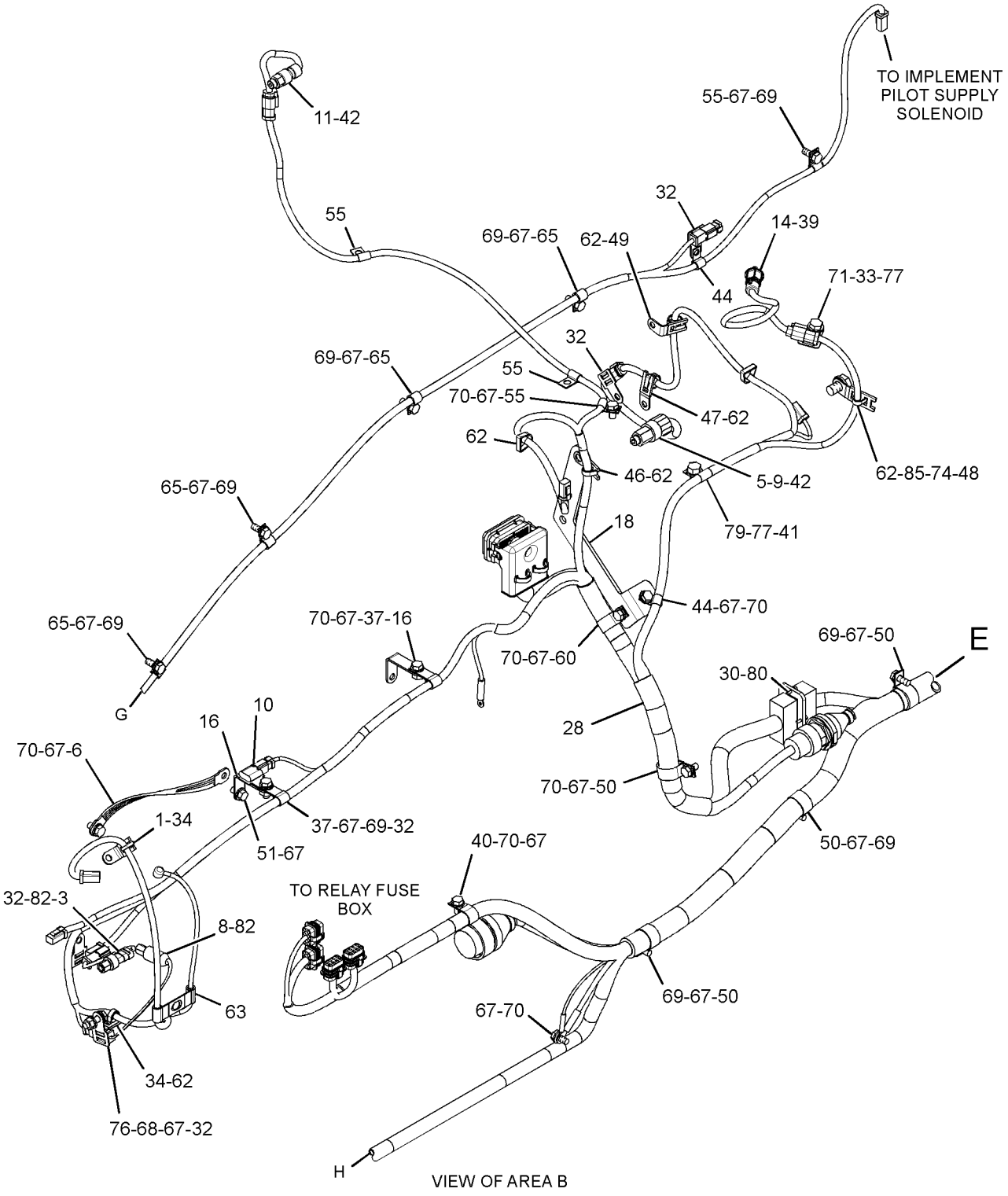

REFER TO ALL ILLUSTRATIONS OF THIS GROUP FOR AUXILIARY VIEWS

GRAPHIC #2

g01519597

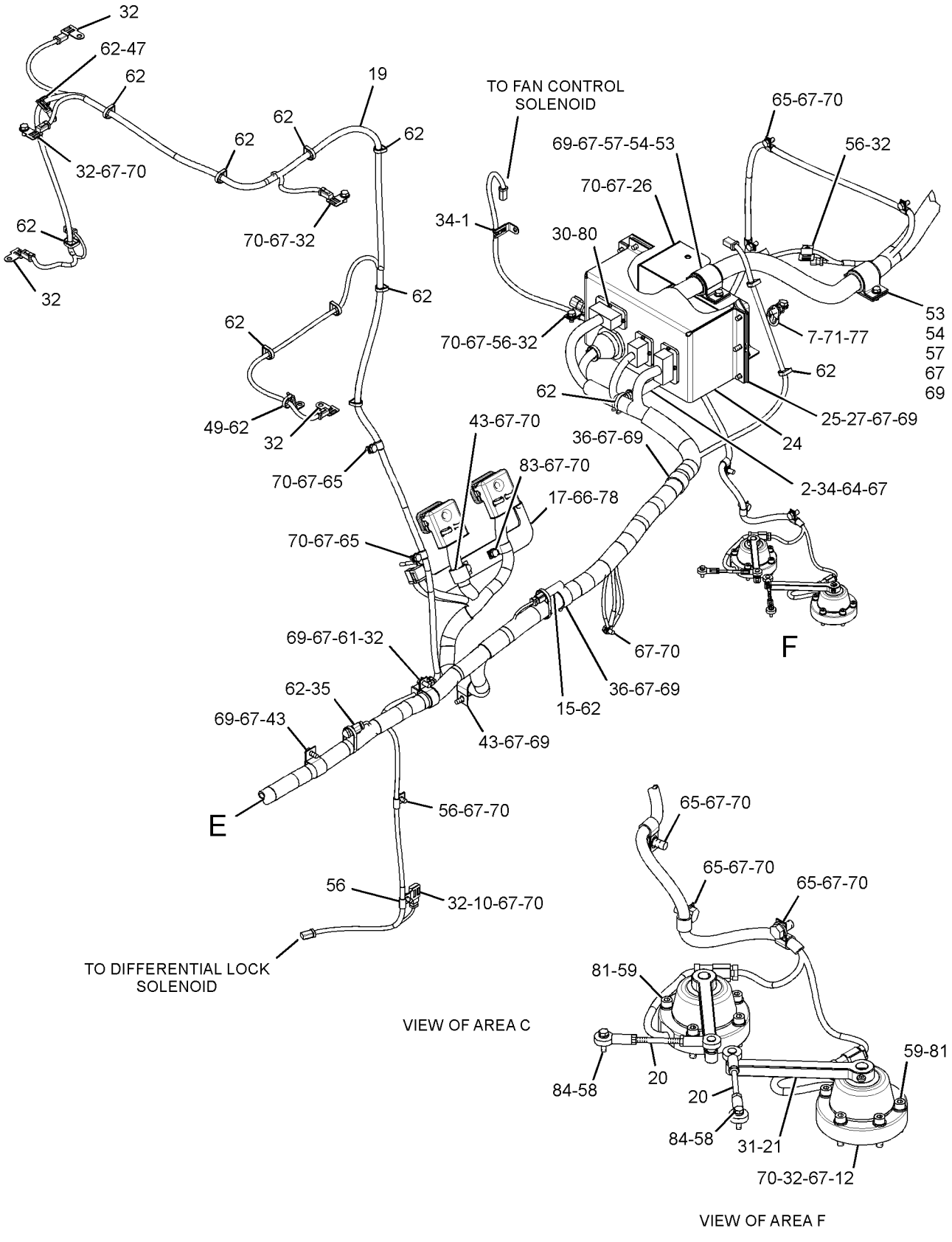

GRAPHIC #3 **<END>** g01519575

ELECTRICAL AND STARTING SYSTEM

266-8963 WIRING GP-REAR–SENSORS

S/N: B9K250-336

PART OF 259-9204 COMMON AR

SMCS-1408 **i03712948**

NOTE	REF NO	GRAPHIC REF	PART NUMBER	QTY	PART NAME 1 2 3 4 5 6 (PRODUCT LEVEL)	SEE PAGE
	1	2,3	3S-2093	3	STRAP-CABLE	
	2	3	110-8330	1	SPACER (11.3X19.05X90-MM THK)	
	3	2	114-5333	1	SWITCH AS-PRESSURE (COMPRESSOR, HIGH SIDE)	
		2	102-8802	1	KIT-RECEPTACLE (2-PIN)	
					(INCLUDES RECEPTACLE AS & WEDGE)	
		2	8T-8729	2	PIN-CONNECTOR (16-GA TO 18-GA)	
E		2	9X-1386		SLEEVE (25-CM)	
	4	1	133-6934	2	SPACER (11X20X25-MM THK)	
Y	5	2	134-2252	1	SENSOR GP-TEMPERATURE (IMPLEMENT, BRAKE OIL)	319
	6	2	134-3355	1	STRAP AS	
	7	3	140-0860	1	STRAP AS-GROUND	
	8	2	149-6371	1	SWITCH AS-PRESSURE (COMPRESSOR, LOW SIDE)	
		2	102-8802	1	KIT-RECEPTACLE (2-PIN)	
					(INCLUDES RECEPTACLE AS & WEDGE)	
		2	8T-8729	2	PIN-CONNECTOR (16-GA TO 18-GA)	
	9	2	*165-6365*	1	FITTING AS	
		2	7W-7381	1	FITTING-OUTLET	
		2	3J-1907	1	SEAL-O-RING	
	10	2,3	189-3158	2	SUPPRESSOR-ARC	
Y	11	2	194-6722	1	SENSOR GP-PRESSURE (ATMOSPHERIC AIR)	307
Y	12	3	198-8372	2	SENSOR GP-POSITION (ROTARY) (ARTICULATION)	305
	13	1	221-3405	1	SENSOR GP-PRESSURE (IMPLEMENT PUMP OIL)	
		1	155-2260	1	KIT-CONNECTING PLUG (3-PIN)	
					(INCLUDES PLUG AS, WEDGE & INTERFACE SEAL)	
		1	180-9340	3	SOCKET-CONNECTOR (14-GA TO 18-GA)	
Y	14	2	237-0957	1	SENSOR GP-PRESSURE (IMPLEMENT PUMP OIL)	309
	15	3	240-7193	1	RESISTOR AS (500-OHM, 2-WATT)	
		3	102-8802	1	KIT-RECEPTACLE (2-PIN)	
					(INCLUDES RECEPTACLE AS & WEDGE)	
		3	9X-3401	2	PIN-CONNECTOR (16-GA TO 18-GA)	
	16	2	269-4983	2	BRACKET AS	
	17	3	274-7494	1	PLATE AS	
	18	2	274-7495	1	PLATE AS	
	19	3	274-7498	1	HARNESS AS-SWITCH	
		3	8T-8730	8	SOCKET-CONNECTOR (16-GA TO 18-GA)	
		3	8T-8737	4	PLUG-SEAL	
		3	9X-3402	12	SOCKET-CONNECTOR (16-GA TO 18-GA)	
E		3	114-8843		SLEEVE-PLASTIC (120-CM)	
E		3	114-8844		SLEEVE-PLASTIC (20-CM)	
E		3	119-3662		TUBE-HEAT SHRINK (10.85-MM DIA) (7-CM)	
E		3	125-7874		TUBE-HEAT SHRINK (5.72-MM DIA) (5-CM)	
		3	155-2255	1	KIT-CONNECTING PLUG (12-PIN)	
		3	155-2270	6	KIT-CONNECTING PLUG (2-PIN)	
					(EACH KIT INCLUDES PLUG AS, WEDGE & INTERFACE SEAL)	
	20	3	301-5180	2	LINK AS	
					(EACH INCLUDES)	
		3	6F-0612	1	NUT-JAM (1/4-28-THD)	
		3	8S-7048	1	ROD END	
		3	9L-3334	1	NUT-PLATED (1/4-28-THD, LH)	
		3	036-7232	1	ROD END	
	21	3	305-2281	2	LEVER (ARTICULATION)	
	22	1	307-6366	1	HARNESS AS-REAR CHASSIS	
		1	102-8802	1	KIT-RECEPTACLE (2-PIN)	
		1	102-8803	1	KIT-RECEPTACLE (3-PIN)	

266-8963 **WIRING GP-REAR** *(contd.)* **i03712948**

NOTE	REF NO	GRAPHIC REF	PART NUMBER	QTY	PART NAME 1 2 3 4 5 6 (PRODUCT LEVEL)	SEE PAGE
		1	**102-8801**	3	KIT-RECEPTACLE (12-PIN)	
					(EACH KIT INCLUDES RECEPTACLE AS & WEDGE)	
		1	**3S-2093**	4	STRAP-CABLE	
		1	**7G-7917**	18	PLUG-SEAL	
		1	**7G-7918**	5	PLUG-SEAL	
		1	**7G-7919**	5	PLUG-SEAL	
		1	**7G-7920**	1	PLUG-SEAL	
		1	**7R-2750**	16	SEAL-CONNECTOR	
		1	**7R-2751**	9	PLUG-CONNECTOR	
		1	**8N-1517**	1	RECEPTACLE AS-CONNECTOR (25-PIN)	
		1	**8N-1518**	1	PLUG AS-CONNECTOR (25-PIN)	
		1	**8N-1521**	2	BELL AS-END	
		1	**8N-1523**	1	LOCKWASHER	
		1	**8N-1532**	1	RECEPTACLE AS-CONNECTOR (6-PIN)	
		1	**8N-1535**	1	BELL AS-END	
		1	**8N-1537**	1	LOCKWASHER	
		1	**9X-6856**	9	PIN-CONNECTOR (16-GA TO 18-GA)	
		1	**9X-6857**	6	SOCKET-CONNECTOR (16-GA TO 18-GA)	
		1	**8N-1540**	5	PIN-CONNECTOR (12-GA TO 14-GA)	
		1	**8N-1541**	1	SOCKET-CONNECTOR (12-GA TO 14-GA)	
		1	**8N-1542**	1	PIN-CONNECTOR (10-GA)	
		1	**8N-1543**	1	SOCKET-CONNECTOR (10-GA)	
		1	**8N-1544**	1	PIN-CONNECTOR (8-GA)	
		1	**8N-1545**	1	SOCKET-CONNECTOR (8-GA)	
		1	**8N-1548**	2	PIN-CONNECTOR (4-GA)	
		1	**8N-1549**	2	SOCKET-CONNECTOR (4-GA)	
		1	**8T-8729**	139	PIN-CONNECTOR (16-GA TO 18-GA)	
		1	**8T-8730**	28	SOCKET-CONNECTOR (16-GA TO 18-GA)	
		1	**8T-8737**	77	PLUG-SEAL	
		1	**9W-0844**	3	SOCKET-CONNECTOR (14-GA)	
		1	**9W-0852**	17	PIN-CONNECTOR (14-GA TO 16-GA)	
		1	**9X-0145**	1	RECEPTACLE AS-CONNECTOR (24-PIN)	
		1	**9X-1343**	2	RECEPTACLE AS-CONNECTOR (40-PIN)	
		1	**9X-3401**	1	PIN-CONNECTOR (16-GA TO 18-GA)	
		1	**9X-3402**	76	SOCKET-CONNECTOR (16-GA TO 18-GA)	
		1	**9X-6772**	3	STRAP-CABLE	
		1	**9X-7148**	1	RECEPTACLE AS-CONNECTOR (40-PIN)	
		1	**196-2412**	16	TERMINAL AS	
E		1	**114-8843**		SLEEVE-PLASTIC (320-CM)	
E		1	**114-8844**		SLEEVE-PLASTIC (180-CM)	
E		1	**114-8845**		SLEEVE-PLASTIC (20-CM)	
E		1	**119-3662**		TUBE-HEAT SHRINK (10.85-MM DIA) (59-CM)	
E		1	**125-7874**		TUBE-HEAT SHRINK (5.72-MM DIA) (60-CM)	
E		1	**125-7875**		TUBE-HEAT SHRINK (7.44-MM DIA) (45-CM)	
		1	**9X-3402**	15	SOCKET-CONNECTOR (16-GA TO 18-GA)	
		1	**126-1768**	11	SOCKET-CONNECTOR (14-GA)	
		1	**126-1774**	2	COVER-CONNECTOR	
		1	**127-5486**	1	RECEPTACLE AS-CONNECTOR (1-PIN)	
		1	**128-4123**	7	SEAL	
		1	**131-1490**	2	TERMINAL AS (6-GA TO 8-GA)	
		1	**2L-8069**	3	TERMINAL-RING (2-GA TO 10-GA, 3/8-IN SCREW)	
		1	**147-1445**	1	PLUG AS-CONNECTOR (70-PIN)	
		1	**147-1446**	1	PLUG AS-CONNECTOR (70-PIN)	
					(EACH PLUG AS INCLUDES)	
		1	**159-9322**	1	SEAL-O-RING	
		1	**155-2255**	1	KIT-CONNECTING PLUG (12-PIN)	
		1	**155-2260**	1	KIT-CONNECTING PLUG (3-PIN)	
		1	**155-2270**	7	KIT-CONNECTING PLUG (2-PIN)	
		1	**155-2271**	1	KIT-CONNECTING PLUG (4-PIN)	

266-8963 **WIRING GP-REAR** ***(contd.)*** **i03712948**

NOTE	REF NO	GRAPHIC REF	PART NUMBER	QTY	PART NAME 1 2 3 4 5 6 (PRODUCT LEVEL)	SEE PAGE
		1	**155-2274**	1	KIT-CONNECTING PLUG (6-PIN)	
		1	**196-2383**	1	KIT-CONNECTING PLUG (8-PIN)	
					(EACH KIT INCLUDES PLUG AS, WEDGE & INTERFACE SEAL)	
		1	**196-2413**	7	TERMINAL AS	
		1	**174-0503**	1	KIT-CONNECTING PLUG (3-PIN)	
					(INCLUDES PLUG AS & WEDGES)	
		1	**196-2385**	1	KIT-CONNECTING PLUG (8-PIN)	
		1	**196-2386**	1	KIT-CONNECTING PLUG (8-PIN)	
					(EACH KIT INCLUDES PLUG AS, CONNECTOR LOCK & TERMINAL ASSEMBLIES)	
	23	1	**307-6367**	1	HARNESS AS-CHASSIS	
		1	**7G-7917**	16	PLUG-SEAL	
		1	**7G-7918**	2	PLUG-SEAL	
		1	**7G-7919**	6	PLUG-SEAL	
		1	**7X-6222**	2	PLUG AS-CONNECTOR (24-PIN)	
					(EACH INCLUDES)	
		1	**3E-4367**	1	RING-RETAINING	
M		1	**3E-8558**	1	BOLT (M5X0.8X39.37-MM)	
		1	**9X-3265**	2	SEAL-CONNECTOR (24-PIN)	
		1	**8N-1518**	2	PLUG AS-CONNECTOR (25-PIN)	
		1	**8N-1521**	2	BELL AS-END	
		1	**8N-1523**	1	LOCKWASHER	
		1	**9X-6857**	16	SOCKET-CONNECTOR (16-GA TO 18-GA)	
		1	**8N-1540**	1	PIN-CONNECTOR (12-GA TO 14-GA)	
		1	**8N-1541**	7	SOCKET-CONNECTOR (12-GA TO 14-GA)	
		1	**8N-1549**	4	SOCKET-CONNECTOR (4-GA)	
		1	**8T-8730**	171	SOCKET-CONNECTOR (16-GA TO 18-GA)	
		1	**8T-8737**	19	PLUG-SEAL	
		1	**9W-0844**	22	SOCKET-CONNECTOR (14-GA)	
		1	**9X-7147**	1	PLUG AS-CONNECTOR (40-PIN)	
		1	**9X-0141**	1	PLUG AS-CONNECTOR (40-PIN)	
					(EACH PLUG AS INCLUDES)	
		1	**3E-4367**	1	RING-RETAINING	
M		1	**3E-8557**	1	BOLT (M5X0.8X39.37-MM)	
		1	**9X-3490**	2	SEAL-CONNECTOR (40-PIN)	
		1	**9X-3402**	2	SOCKET-CONNECTOR (16-GA TO 18-GA)	
		1	**9X-4391**	1	PLUG AS-CONNECTOR (70-PIN)	
		1	**3E-4367**	1	RING-RETAINING	
M		1	**3E-8557**	1	BOLT (M5X0.8X39.37-MM)	
		1	**9X-5615**	1	SEAL (INTERFACE, 70-PIN)	
		1	**9X-6772**	2	STRAP-CABLE	
E		1	**114-8843**		SLEEVE-PLASTIC (160-CM)	
E		1	**114-8844**		SLEEVE-PLASTIC (20-CM)	
E		1	**114-8845**		SLEEVE-PLASTIC (40-CM)	
E		1	**119-3662**		TUBE-HEAT SHRINK (10.85-MM DIA) (7-CM)	
E		1	**125-7874**		TUBE-HEAT SHRINK (5.72-MM DIA) (10-CM)	
		1	**9X-3402**	2	SOCKET-CONNECTOR (16-GA TO 18-GA)	
		1	**129-7163**	1	PLUG AS-CONNECTOR (1-PIN)	
		1	**129-7164**	1	RECEPTACLE AS-CONNECTOR (1-PIN)	
		1	**155-2260**	4	KIT-CONNECTING PLUG (3-PIN)	
		1	**155-2270**	1	KIT-CONNECTING PLUG (2-PIN)	
		1	**155-2271**	1	KIT-CONNECTING PLUG (4-PIN)	
					(EACH KIT INCLUDES PLUG AS, WEDGE & INTERFACE SEAL)	
	24	3	**307-6370**	1	BOX AS	
		3	**7T-1099**	1	LINK	
M		3	**8T-3490**	1	NUT-WELD (M10X1.5-THD)	
M		3	**165-8718**	12	NUT-WELD (M4X0.7-THD)	
	25	3	**307-6371**	1	COVER	

266-8963 **WIRING GP-REAR** *(contd.)* **i03712948**

NOTE	REF NO	GRAPHIC REF	PART NUMBER	QTY	PART NAME 1 2 3 4 5 6 (PRODUCT LEVEL)	SEE PAGE
	26	3	**307-6372**	1	BRACKET AS	
		3	**7T-1099**	1	LINK	
M		3	**8T-3490**	4	NUT-WELD (M10X1.5-THD)	
	27	3	**308-2607**	1	PLATE	
	28	2	**308-2737**	1	HARNESS AS-ENGINE	
		2	**102-8803**	2	KIT-RECEPTACLE (3-PIN)	
					(EACH KIT INCLUDES RECEPTACLE AS & WEDGE)	
		2	**7G-7917**	1	PLUG-SEAL	
		2	**7G-7918**	1	PLUG-SEAL	
		2	**7G-7919**	1	PLUG-SEAL	
		2	**7G-7920**	1	PLUG-SEAL	
		2	**8N-1533**	1	PLUG AS-CONNECTOR (7-PIN)	
		2	**8N-1535**	1	BELL AS-END	
		2	**8N-1541**	2	SOCKET-CONNECTOR (12-GA TO 14-GA)	
		2	**8N-1545**	1	SOCKET-CONNECTOR (8-GA)	
		2	**8T-8729**	6	PIN-CONNECTOR (16-GA TO 18-GA)	
		2	**8T-8730**	47	SOCKET-CONNECTOR (16-GA TO 18-GA)	
		2	**8T-8737**	43	PLUG-SEAL	
		2	**9W-0844**	4	SOCKET-CONNECTOR (14-GA)	
		2	**9X-0141**	1	PLUG AS-CONNECTOR (40-PIN)	
		1	**3E-4367**	1	RING-RETAINING	
M		1	**3E-8557**	1	BOLT (M5X0.8X39.37-MM)	
		1	**9X-3490**	2	SEAL-CONNECTOR (40-PIN)	
		2	**9X-3402**	25	SOCKET-CONNECTOR (16-GA TO 18-GA)	
		2	**9X-6772**	3	STRAP-CABLE	
E		2	**114-8843**		SLEEVE-PLASTIC (200-CM)	
E		2	**114-8844**		SLEEVE-PLASTIC (20-CM)	
E		2	**114-8845**		SLEEVE-PLASTIC (20-CM)	
E		2	**119-3662**		TUBE-HEAT SHRINK (10.85-MM DIA) (20-CM)	
E		2	**125-7874**		TUBE-HEAT SHRINK (5.72-MM DIA) (5-CM)	
E		2	**125-7875**		TUBE-HEAT SHRINK (7.44-MM DIA) (10-CM)	
		2	**126-1768**	8	SOCKET-CONNECTOR (14-GA)	
		2	**126-1774**	1	COVER-CONNECTOR	
		2	**131-1487**	1	TERMINAL AS (6-GA TO 8-GA)	
		2	**155-2260**	1	KIT-CONNECTING PLUG (3-PIN)	
		2	**155-2270**	7	KIT-CONNECTING PLUG (2-PIN)	
					(EACH KIT INCLUDES PLUG AS, WEDGE & INTERFACE SEAL)	
		2	**160-7689**	1	PLUG AS-CONNECTOR (70-PIN)	
	29	1	**308-3541**	1	HARNESS AS-LIGHTING	
		1	**102-8802**	2	KIT-RECEPTACLE (2-PIN)	
		1	**102-8803**	1	KIT-RECEPTACLE (3-PIN)	
					(EACH KIT INCLUDES RECEPTACLE AS & WEDGE)	
		1	**8N-1543**	1	SOCKET-CONNECTOR (10-GA)	
		1	**8T-8729**	6	PIN-CONNECTOR (16-GA TO 18-GA)	
		1	**8T-8730**	10	SOCKET-CONNECTOR (16-GA TO 18-GA)	
		1	**8T-8737**	8	PLUG-SEAL	
		1	**9X-3401**	1	PIN-CONNECTOR (16-GA TO 18-GA)	
E		1	**114-8843**		SLEEVE-PLASTIC (140-CM)	
E		1	**114-8844**		SLEEVE-PLASTIC (20-CM)	
E		1	**125-7875**		TUBE-HEAT SHRINK (7.44-MM DIA) (5-CM)	
		1	**127-5485**	1	PLUG AS-CONNECTOR (1-PIN)	
		1	**2L-8068**	1	TERMINAL-RING (10-GA TO 12-GA, 5/16-IN SCREW)	
		1	**155-2255**	1	KIT-CONNECTING PLUG (12-PIN)	
		1	**155-2270**	3	KIT-CONNECTING PLUG (2-PIN)	
					(EACH KIT INCLUDES PLUG AS, WEDGE & INTERFACE SEAL)	
	30	2,3	**096-6166**	16	WASHER-HARD (4.5X9X1-MM THK)	
M	31	3	**105-3487**	2	BOLT-SOCKET HEAD (M6X1X20-MM)	

266-8963 WIRING GP-REAR *(contd.)* i03712948

NOTE	REF NO	GRAPHIC REF	PART NUMBER	QTY	PART NAME 1 2 3 4 5 6 (PRODUCT LEVEL)	SEE PAGE
	32	1,2,3	130-5300	23	CLIP	
	33	2	130-5301	1	CLIP	
	34	2,3	132-5789	3	CLIP	
	35	3	134-2540	1	RESISTOR AS-CONNECTION (3-PIN)	
	36	3	139-1398	2	CLIP	
	37	2	147-0385	2	CLIP	
	38	1	186-0359	1	CLIP	
	39	2	1J-9671	1	SEAL-O-RING	
	40	1,2	1S-0994	2	CLIP	
	41	2	2T-3019	2	CLIP	
	42	1,2	3J-1907	3	SEAL-O-RING	
	43	3	4D-7388	3	CLIP	
	44	2	4D-7794	2	CLIP	
	45	1	4K-8864	5	CLIP	
	46	2	4P-7428	1	CLIP	
	47	2,3	4P-7581	2	CLIP	
	48	2	4P-7582	1	CLIP	
	49	2,3	4P-8134	3	CLIP	
	50	2	4S-4455	4	CLIP	
	51	2	5M-3062	1	BOLT (3/8-16X0.75-IN)	
	52	1	5P-4295	2	CLIP	
	53	3	5P-7468	2	CLIP (SLOT)	
	54	3	5P-7469	2	CLIP (TAB)	
	55	2	5P-9085	4	CLIP	
	56	1,3	5P-9297	5	CLIP	
	57	3	5P-8444	2	GROMMET	
M	58	3	6V-7357	2	BOLT (M6X1X25-MM)	
M	59	3	6V-8337	10	BOLT-SOCKET HEAD (M8X1.25X35-MM)	
	60	2	7C-4354	1	CLIP	
	61	1,3	7D-7233	2	CLIP	
	62	1,2,3	7K-1181	25	STRAP-CABLE	
	63	2	7N-3718	2	CLIP	
M	64	3	7X-2543	1	BOLT (M10X1.5X120-MM)	
	65	2,3	8M-2770	13	CLIP	
M	66	3	8T-3647	2	BOLT (M8X1.25X80-MM)	
	67	1,2,3	8T-4121	71	WASHER-HARD (11X21X2.5-MM THK)	
M	69	1,2,3	8T-4136	27	BOLT (M10X1.5X25-MM)	
M	70	1,2,3	8T-4137	40	BOLT (M10X1.5X20-MM)	
M	71	2,3	8T-4179	2	BOLT (M12X1.75X20-MM)	
M	72	1	8T-4182	1	BOLT (M10X1.5X45-MM)	
M	73	1	8T-4185	1	BOLT (M10X1.5X50-MM)	
M	74	2	8T-4190	1	BOLT (M16X2X25-MM)	
	77	2,3	8T-4223	4	WASHER-HARD (13.5X25.5X3-MM THK)	
	78	3	8T-4224	2	WASHER-HARD (8.8X16X2-MM THK)	
	79	2	8T-9384	1	BOLT (1/2-13X0.875-IN)	
M	80	2,3	8T-9405	16	BOLT-SOCKET HEAD (M4X0.7X16-MM)	
	81	3	9M-1974	10	WASHER-HARD (8.8X16X2-MM THK)	
	82	2	9X-7378	2	SEAL-O-RING	
	83	3	9X-8250	1	CLIP	
	84	3	9X-8256	4	WASHER (6.6X12X2-MM THK)	
	85	2	9X-8257	1	WASHER (17.5X30X3.5-MM THK)	
	86	2	6V-8189	1	NUT (5/16-18-THD)	
	87	2	5P-4116	2	WASHER-HARD (8.8X20.5X2-MM THK)	
	88	3	4P-7429	1	CLIP	
	89	2	6V-3265	1	CLIP	
M	90	2	6V-5684	1	BOLT (M12X1.75X45-MM)	
	91	2	5V-9221	1	SPACER (13.8X25X25-MM THK)	
	92	2	334-9565	1	HARNESS AS-SENSOR	

266-8963 **WIRING GP-REAR** ***(contd.)*** **i03712948**

NOTE	REF NO	GRAPHIC REF	PART NUMBER	QTY	PART NAME 1 2 3 4 5 6 (PRODUCT LEVEL)	SEE PAGE
		2	**102-8803**	1	KIT-RECEPTACLE (3-PIN)	
					(INCLUDES RECEPTACLE AS & WEDGE)	
		2	**9X-3401**	3	PIN-CONNECTOR (16-GA TO 18-GA)	
		2	**9X-3402**	3	SOCKET-CONNECTOR (16-GA TO 18-GA)	
E		2	**114-8843**		SLEEVE-PLASTIC (40-CM)	
		2	**155-2260**	1	KIT-CONNECTING PLUG (3-PIN)	
					(INCLUDES PLUG AS, WEDGE & INTERFACE SEAL)	

E-ORDER BY THE CENTIMETER
M-METRIC PART
Y-SEPARATE ILLUSTRATION

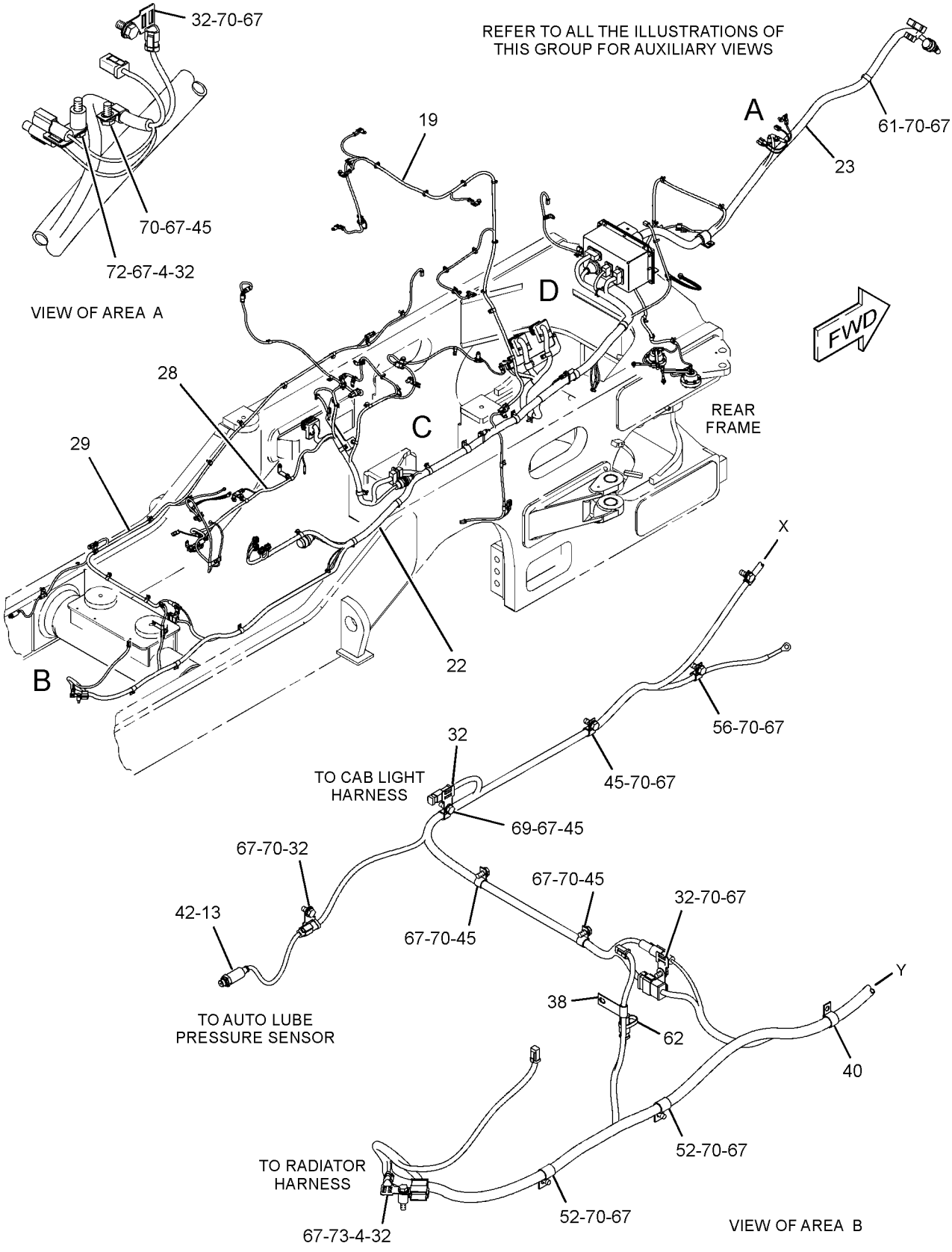

GRAPHIC #1 g01772647

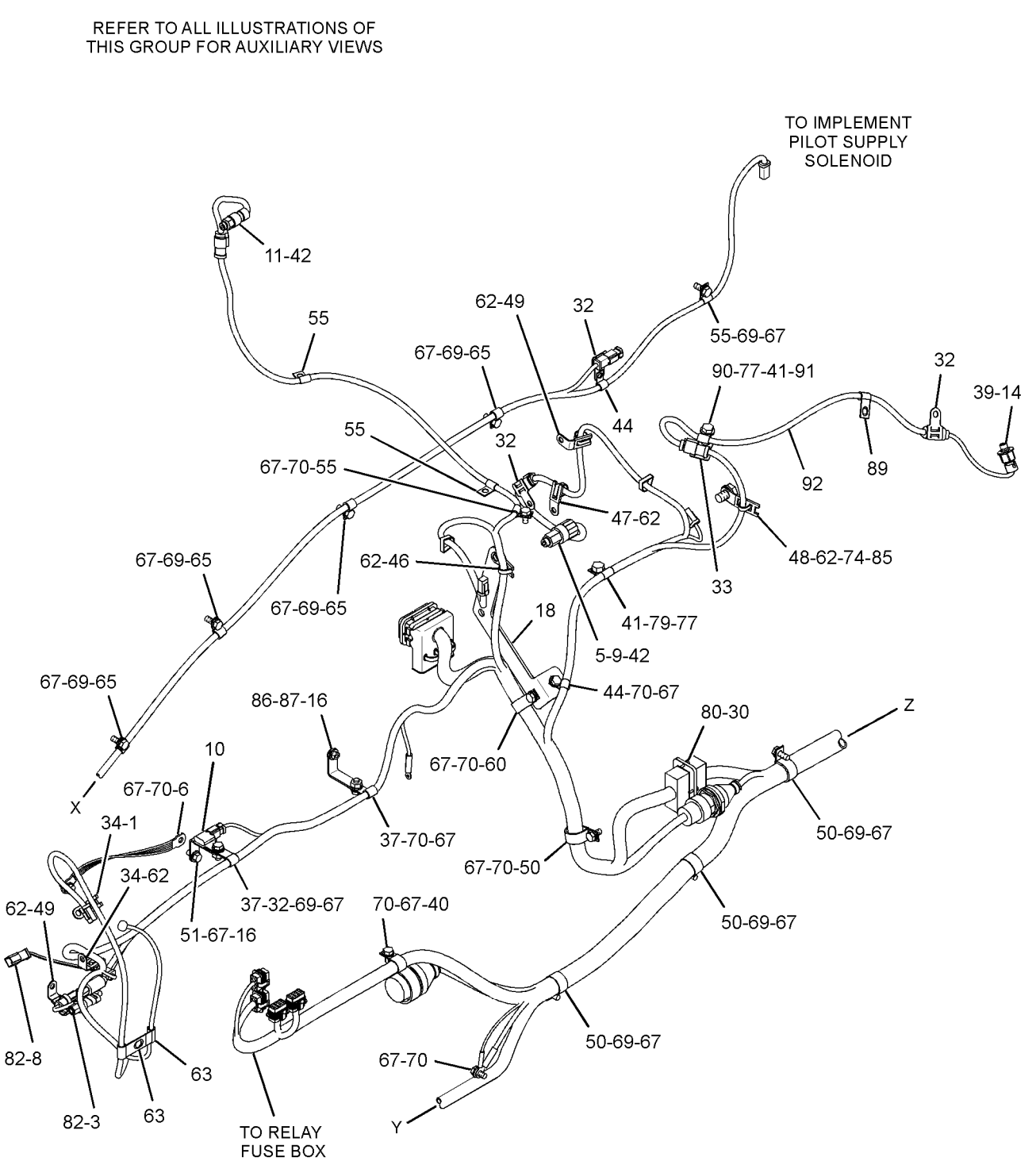

VIEW OF AREA B

GRAPHIC #2

g01999996

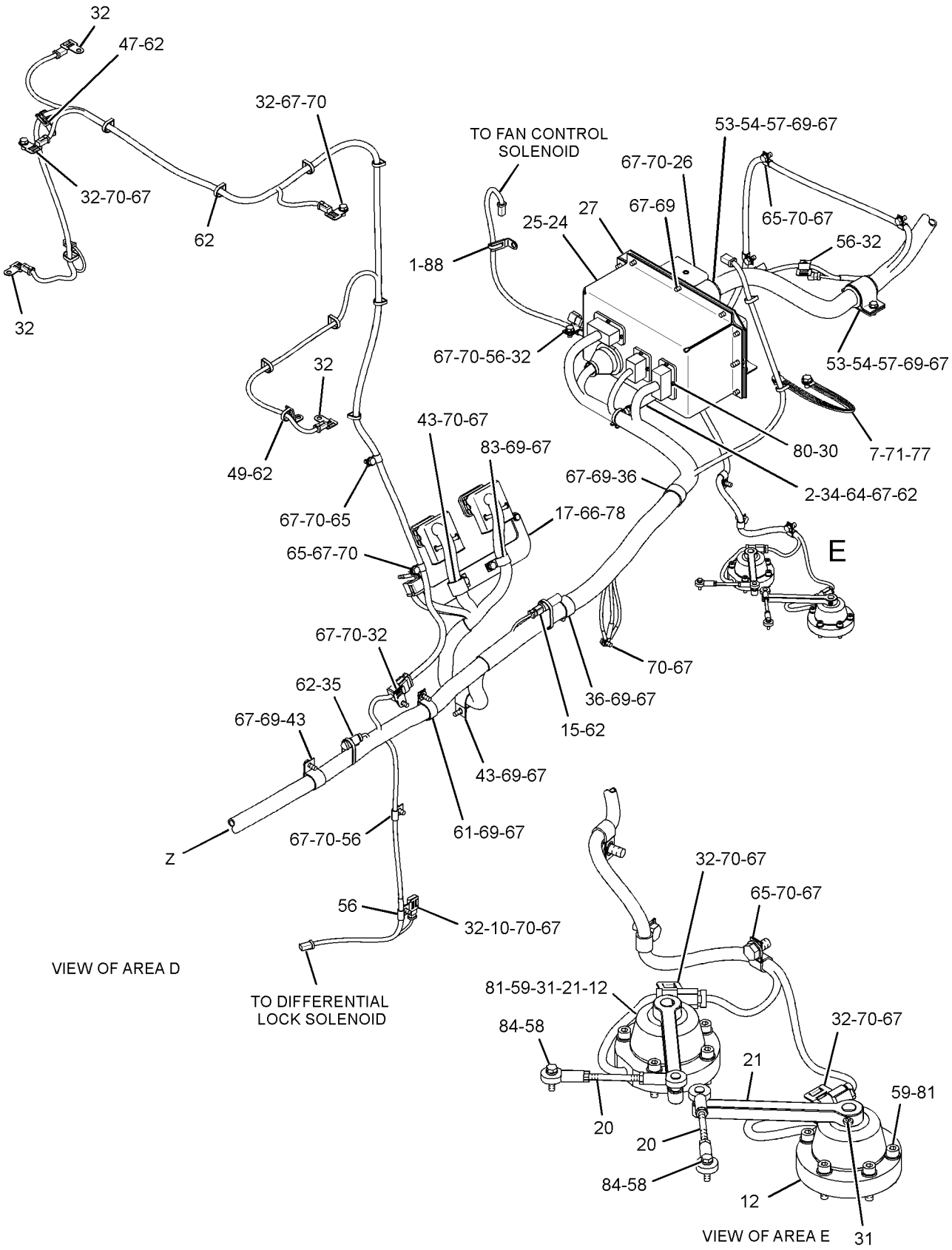

GRAPHIC #3 **<END>** g01772651

ELECTRICAL AND STARTING SYSTEM

266-8963 WIRING GP-REAR–SENSORS

S/N: B9K337-360

PART OF 259-9204 COMMON AR

SMCS-1408 **i03696715**

NOTE	REF NO	GRAPHIC REF	PART NUMBER	QTY	PART NAME 1 2 3 4 5 6 (PRODUCT LEVEL)	SEE PAGE
	1	2,3	3S-2093	3	STRAP-CABLE	
	2	3	110-8330	1	SPACER (11.3X19.05X90-MM THK)	
	3	2	114-5333	1	SWITCH AS-PRESSURE (COMPRESSOR, HIGH SIDE)	
		2	102-8802	1	KIT-RECEPTACLE (2-PIN)	
					(INCLUDES RECEPTACLE AS & WEDGE)	
		2	8T-8729	2	PIN-CONNECTOR (16-GA TO 18-GA)	
E		2	9X-1386		SLEEVE (25-CM)	
	4	1	133-6934	2	SPACER (11X20X25-MM THK)	
Y	5	2	134-2252	1	SENSOR GP-TEMPERATURE (IMPLEMENT, BRAKE OIL)	319
	6	2	134-3355	1	STRAP AS	
	7	3	140-0860	1	STRAP AS-GROUND	
	8	2	149-6371	1	SWITCH AS-PRESSURE (COMPRESSOR, LOW SIDE)	
		2	102-8802	1	KIT-RECEPTACLE (2-PIN)	
					(INCLUDES RECEPTACLE AS & WEDGE)	
		2	8T-8729	2	PIN-CONNECTOR (16-GA TO 18-GA)	
	9	2	*165-6365*	1	FITTING AS	
		2	7W-7381	1	FITTING-OUTLET	
		2	3J-1907	1	SEAL-O-RING	
	10	2,3	189-3158	2	SUPPRESSOR-ARC	
Y	11	2	194-6722	1	SENSOR GP-PRESSURE (ATMOSPHERIC AIR)	307
C	12	3	266-2338	2	SENSOR GP-POSITION (ROTARY) (ARTICULATION)	
	13	1	221-3405	1	SENSOR GP-PRESSURE (IMPLEMENT PUMP OIL)	
		1	155-2260	1	KIT-CONNECTING PLUG (3-PIN)	
					(INCLUDES PLUG AS, WEDGE & INTERFACE SEAL)	
		1	180-9340	3	SOCKET-CONNECTOR (14-GA TO 18-GA)	
Y	14	2	237-0957	1	SENSOR GP-PRESSURE (IMPLEMENT PUMP OIL)	309
	15	3	240-7193	1	RESISTOR AS (500-OHM, 2-WATT)	
		3	102-8802	1	KIT-RECEPTACLE (2-PIN)	
					(INCLUDES RECEPTACLE AS & WEDGE)	
		3	9X-3401	2	PIN-CONNECTOR (16-GA TO 18-GA)	
	16	2	269-4983	2	BRACKET AS	
	17	3	274-7494	1	PLATE AS	
	18	2	274-7495	1	PLATE AS	
	19	3	274-7498	1	HARNESS AS-SWITCH	
		3	8T-8730	8	SOCKET-CONNECTOR (16-GA TO 18-GA)	
		3	8T-8737	4	PLUG-SEAL	
		3	9X-3402	12	SOCKET-CONNECTOR (16-GA TO 18-GA)	
E		3	114-8843		SLEEVE-PLASTIC (120-CM)	
E		3	114-8844		SLEEVE-PLASTIC (20-CM)	
E		3	119-3662		TUBE-HEAT SHRINK (10.85-MM DIA) (7-CM)	
E		3	125-7874		TUBE-HEAT SHRINK (5.72-MM DIA) (5-CM)	
		3	155-2255	1	KIT-CONNECTING PLUG (12-PIN)	
		3	155-2270	6	KIT-CONNECTING PLUG (2-PIN)	
					(EACH KIT INCLUDES PLUG AS, WEDGE & INTERFACE SEAL)	
	20	3	301-5180	2	LINK AS	
					(EACH INCLUDES)	
		3	6F-0612	1	NUT-JAM (1/4-28-THD)	
		3	8S-7048	1	ROD END	
		3	9L-3334	1	NUT-PLATED (1/4-28-THD, LH)	
		3	036-7232	1	ROD END	
	21	3	305-2281	2	LEVER (ARTICULATION)	
	22	1	307-6366	1	HARNESS AS-REAR CHASSIS	
		1	102-8802	1	KIT-RECEPTACLE (2-PIN)	
		1	102-8803	1	KIT-RECEPTACLE (3-PIN)	

266-8963 **WIRING GP-REAR** ***(contd.)*** **i03696715**

NOTE	REF NO	GRAPHIC REF	PART NUMBER	QTY	PART NAME 1 2 3 4 5 6 (PRODUCT LEVEL)	SEE PAGE
		1	**102-8801**	3	KIT-RECEPTACLE (12-PIN)	
					(EACH KIT INCLUDES RECEPTACLE AS & WEDGE)	
		1	**3S-2093**	4	STRAP-CABLE	
		1	**7G-7917**	18	PLUG-SEAL	
		1	**7G-7918**	5	PLUG-SEAL	
		1	**7G-7919**	5	PLUG-SEAL	
		1	**7G-7920**	1	PLUG-SEAL	
		1	**7R-2750**	16	SEAL-CONNECTOR	
		1	**7R-2751**	9	PLUG-CONNECTOR	
		1	**8N-1517**	1	RECEPTACLE AS-CONNECTOR (25-PIN)	
		1	**8N-1518**	1	PLUG AS-CONNECTOR (25-PIN)	
		1	**8N-1521**	2	BELL AS-END	
		1	**8N-1523**	1	LOCKWASHER	
		1	**8N-1532**	1	RECEPTACLE AS-CONNECTOR (6-PIN)	
		1	**8N-1535**	1	BELL AS-END	
		1	**8N-1537**	1	LOCKWASHER	
		1	**9X-6856**	9	PIN-CONNECTOR (16-GA TO 18-GA)	
		1	**9X-6857**	6	SOCKET-CONNECTOR (16-GA TO 18-GA)	
		1	**8N-1540**	5	PIN-CONNECTOR (12-GA TO 14-GA)	
		1	**8N-1541**	1	SOCKET-CONNECTOR (12-GA TO 14-GA)	
		1	**8N-1542**	1	PIN-CONNECTOR (10-GA)	
		1	**8N-1543**	1	SOCKET-CONNECTOR (10-GA)	
		1	**8N-1544**	1	PIN-CONNECTOR (8-GA)	
		1	**8N-1545**	1	SOCKET-CONNECTOR (8-GA)	
		1	**8N-1548**	2	PIN-CONNECTOR (4-GA)	
		1	**8N-1549**	2	SOCKET-CONNECTOR (4-GA)	
		1	**8T-8729**	139	PIN-CONNECTOR (16-GA TO 18-GA)	
		1	**8T-8730**	28	SOCKET-CONNECTOR (16-GA TO 18-GA)	
		1	**8T-8737**	77	PLUG-SEAL	
		1	**9W-0844**	3	SOCKET-CONNECTOR (14-GA)	
		1	**9W-0852**	17	PIN-CONNECTOR (14-GA TO 16-GA)	
		1	**9X-0145**	1	RECEPTACLE AS-CONNECTOR (24-PIN)	
		1	**9X-1343**	2	RECEPTACLE AS-CONNECTOR (40-PIN)	
		1	**9X-3401**	1	PIN-CONNECTOR (16-GA TO 18-GA)	
		1	**9X-3402**	76	SOCKET-CONNECTOR (16-GA TO 18-GA)	
		1	**9X-6772**	3	STRAP-CABLE	
		1	**9X-7148**	1	RECEPTACLE AS-CONNECTOR (40-PIN)	
		1	**196-2412**	16	TERMINAL AS	
E		1	**114-8843**		SLEEVE-PLASTIC (320-CM)	
E		1	**114-8844**		SLEEVE-PLASTIC (180-CM)	
E		1	**114-8845**		SLEEVE-PLASTIC (20-CM)	
E		1	**119-3662**		TUBE-HEAT SHRINK (10.85-MM DIA) (59-CM)	
E		1	**125-7874**		TUBE-HEAT SHRINK (5.72-MM DIA) (60-CM)	
E		1	**125-7875**		TUBE-HEAT SHRINK (7.44-MM DIA) (45-CM)	
		1	**9X-3402**	15	SOCKET-CONNECTOR (16-GA TO 18-GA)	
		1	**126-1768**	11	SOCKET-CONNECTOR (14-GA)	
		1	**126-1774**	2	COVER-CONNECTOR	
		1	**127-5486**	1	RECEPTACLE AS-CONNECTOR (1-PIN)	
		1	**128-4123**	7	SEAL	
		1	**131-1490**	2	TERMINAL AS (6-GA TO 8-GA)	
		1	**2L-8069**	3	TERMINAL-RING (2-GA TO 10-GA, 3/8-IN SCREW)	
		1	**147-1445**	1	PLUG AS-CONNECTOR (70-PIN)	
		1	**147-1446**	1	PLUG AS-CONNECTOR (70-PIN)	
					(EACH PLUG AS INCLUDES)	
		1	**159-9322**	1	SEAL-O-RING	
		1	**155-2255**	1	KIT-CONNECTING PLUG (12-PIN)	
		1	**155-2260**	1	KIT-CONNECTING PLUG (3-PIN)	
		1	**155-2270**	7	KIT-CONNECTING PLUG (2-PIN)	
		1	**155-2271**	1	KIT-CONNECTING PLUG (4-PIN)	

266-8963 **WIRING GP-REAR** *(contd.)* **i03696715**

NOTE	REF NO	GRAPHIC REF	PART NUMBER	QTY	PART NAME 1 2 3 4 5 6 (PRODUCT LEVEL)	SEE PAGE
		1	**155-2274**	1	KIT-CONNECTING PLUG (6-PIN)	
		1	**196-2383**	1	KIT-CONNECTING PLUG (8-PIN)	
					(EACH KIT INCLUDES PLUG AS, WEDGE & INTERFACE SEAL)	
		1	**196-2413**	7	TERMINAL AS	
		1	**174-0503**	1	KIT-CONNECTING PLUG (3-PIN)	
					(INCLUDES PLUG AS & WEDGES)	
		1	**196-2385**	1	KIT-CONNECTING PLUG (8-PIN)	
		1	**196-2386**	1	KIT-CONNECTING PLUG (8-PIN)	
					(EACH KIT INCLUDES PLUG AS, CONNECTOR LOCK & TERMINAL ASSEMBLIES)	
	23	1	**307-6367**	1	HARNESS AS-CHASSIS	
		1	**7G-7917**	16	PLUG-SEAL	
		1	**7G-7918**	2	PLUG-SEAL	
		1	**7G-7919**	6	PLUG-SEAL	
		1	**7X-6222**	2	PLUG AS-CONNECTOR (24-PIN)	
					(EACH INCLUDES)	
		1	**3E-4367**	1	RING-RETAINING	
M		1	**3E-8558**	1	BOLT (M5X0.8X39.37-MM)	
		1	**9X-3265**	2	SEAL-CONNECTOR (24-PIN)	
		1	**8N-1518**	2	PLUG AS-CONNECTOR (25-PIN)	
		1	**8N-1521**	2	BELL AS-END	
		1	**8N-1523**	1	LOCKWASHER	
		1	**9X-6857**	16	SOCKET-CONNECTOR (16-GA TO 18-GA)	
		1	**8N-1540**	1	PIN-CONNECTOR (12-GA TO 14-GA)	
		1	**8N-1541**	7	SOCKET-CONNECTOR (12-GA TO 14-GA)	
		1	**8N-1549**	4	SOCKET-CONNECTOR (4-GA)	
		1	**8T-8730**	171	SOCKET-CONNECTOR (16-GA TO 18-GA)	
		1	**8T-8737**	19	PLUG-SEAL	
		1	**9W-0844**	22	SOCKET-CONNECTOR (14-GA)	
		1	**9X-7147**	1	PLUG AS-CONNECTOR (40-PIN)	
		1	**9X-0141**	1	PLUG AS-CONNECTOR (40-PIN)	
					(EACH PLUG AS INCLUDES)	
		1	**3E-4367**	1	RING-RETAINING	
M		1	**3E-8557**	1	BOLT (M5X0.8X39.37-MM)	
		1	**9X-3490**	2	SEAL-CONNECTOR (40-PIN)	
		1	**9X-3402**	2	SOCKET-CONNECTOR (16-GA TO 18-GA)	
		1	**9X-4391**	1	PLUG AS-CONNECTOR (70-PIN)	
		1	**3E-4367**	1	RING-RETAINING	
M		1	**3E-8557**	1	BOLT (M5X0.8X39.37-MM)	
		1	**9X-5615**	1	SEAL (INTERFACE, 70-PIN)	
		1	**9X-6772**	2	STRAP-CABLE	
E		1	**114-8843**		SLEEVE-PLASTIC (160-CM)	
E		1	**114-8844**		SLEEVE-PLASTIC (20-CM)	
E		1	**114-8845**		SLEEVE-PLASTIC (40-CM)	
E		1	**119-3662**		TUBE-HEAT SHRINK (10.85-MM DIA) (7-CM)	
E		1	**125-7874**		TUBE-HEAT SHRINK (5.72-MM DIA) (10-CM)	
		1	**9X-3402**	2	SOCKET-CONNECTOR (16-GA TO 18-GA)	
		1	**129-7163**	1	PLUG AS-CONNECTOR (1-PIN)	
		1	**129-7164**	1	RECEPTACLE AS-CONNECTOR (1-PIN)	
		1	**155-2260**	4	KIT-CONNECTING PLUG (3-PIN)	
		1	**155-2270**	1	KIT-CONNECTING PLUG (2-PIN)	
		1	**155-2271**	1	KIT-CONNECTING PLUG (4-PIN)	
					(EACH KIT INCLUDES PLUG AS, WEDGE & INTERFACE SEAL)	
	24	3	**307-6370**	1	BOX AS	
		3	**7T-1099**	1	LINK	
M		3	**8T-3490**	1	NUT-WELD (M10X1.5-THD)	
M		3	**165-8718**	12	NUT-WELD (M4X0.7-THD)	
	25	3	**307-6371**	1	COVER	

266-8963 **WIRING GP-REAR** ***(contd.)*** **i03696715**

NOTE	REF NO	GRAPHIC REF	PART NUMBER	QTY	PART NAME 1 2 3 4 5 6 (PRODUCT LEVEL)	SEE PAGE
	26	3	**307-6372**	1	BRACKET AS	
		3	**7T-1099**	1	LINK	
M		3	**8T-3490**	4	NUT-WELD (M10X1.5-THD)	
	27	3	**308-2607**	1	PLATE	
	28	2	**308-2737**	1	HARNESS AS-ENGINE	
		2	**102-8803**	2	KIT-RECEPTACLE (3-PIN)	
					(EACH KIT INCLUDES RECEPTACLE AS & WEDGE)	
		2	**7G-7917**	1	PLUG-SEAL	
		2	**7G-7918**	1	PLUG-SEAL	
		2	**7G-7919**	1	PLUG-SEAL	
		2	**7G-7920**	1	PLUG-SEAL	
		2	**8N-1533**	1	PLUG AS-CONNECTOR (7-PIN)	
		2	**8N-1535**	1	BELL AS-END	
		2	**8N-1541**	2	SOCKET-CONNECTOR (12-GA TO 14-GA)	
		2	**8N-1545**	1	SOCKET-CONNECTOR (8-GA)	
		2	**8T-8729**	6	PIN-CONNECTOR (16-GA TO 18-GA)	
		2	**8T-8730**	47	SOCKET-CONNECTOR (16-GA TO 18-GA)	
		2	**8T-8737**	43	PLUG-SEAL	
		2	**9W-0844**	4	SOCKET-CONNECTOR (14-GA)	
		2	**9X-0141**	1	PLUG AS-CONNECTOR (40-PIN)	
		1	**3E-4367**	1	RING-RETAINING	
M		1	**3E-8557**	1	BOLT (M5X0.8X39.37-MM)	
		1	**9X-3490**	2	SEAL-CONNECTOR (40-PIN)	
		2	**9X-3402**	25	SOCKET-CONNECTOR (16-GA TO 18-GA)	
		2	**9X-6772**	3	STRAP-CABLE	
E		2	**114-8843**		SLEEVE-PLASTIC (200-CM)	
E		2	**114-8844**		SLEEVE-PLASTIC (20-CM)	
E		2	**114-8845**		SLEEVE-PLASTIC (20-CM)	
E		2	**119-3662**		TUBE-HEAT SHRINK (10.85-MM DIA) (20-CM)	
E		2	**125-7874**		TUBE-HEAT SHRINK (5.72-MM DIA) (5-CM)	
E		2	**125-7875**		TUBE-HEAT SHRINK (7.44-MM DIA) (10-CM)	
		2	**126-1768**	8	SOCKET-CONNECTOR (14-GA)	
		2	**126-1774**	1	COVER-CONNECTOR	
		2	**131-1487**	1	TERMINAL AS (6-GA TO 8-GA)	
		2	**155-2260**	1	KIT-CONNECTING PLUG (3-PIN)	
		2	**155-2270**	7	KIT-CONNECTING PLUG (2-PIN)	
					(EACH KIT INCLUDES PLUG AS, WEDGE & INTERFACE SEAL)	
		2	**160-7689**	1	PLUG AS-CONNECTOR (70-PIN)	
	29	1	**308-3541**	1	HARNESS AS-LIGHTING	
		1	**102-8802**	2	KIT-RECEPTACLE (2-PIN)	
		1	**102-8803**	1	KIT-RECEPTACLE (3-PIN)	
					(EACH KIT INCLUDES RECEPTACLE AS & WEDGE)	
		1	**8N-1543**	1	SOCKET-CONNECTOR (10-GA)	
		1	**8T-8729**	6	PIN-CONNECTOR (16-GA TO 18-GA)	
		1	**8T-8730**	10	SOCKET-CONNECTOR (16-GA TO 18-GA)	
		1	**8T-8737**	8	PLUG-SEAL	
		1	**9X-3401**	1	PIN-CONNECTOR (16-GA TO 18-GA)	
E		1	**114-8843**		SLEEVE-PLASTIC (140-CM)	
E		1	**114-8844**		SLEEVE-PLASTIC (20-CM)	
E		1	**125-7875**		TUBE-HEAT SHRINK (7.44-MM DIA) (5-CM)	
		1	**127-5485**	1	PLUG AS-CONNECTOR (1-PIN)	
		1	**2L-8068**	1	TERMINAL-RING (10-GA TO 12-GA, 5/16-IN SCREW)	
		1	**155-2255**	1	KIT-CONNECTING PLUG (12-PIN)	
		1	**155-2270**	3	KIT-CONNECTING PLUG (2-PIN)	
					(EACH KIT INCLUDES PLUG AS, WEDGE & INTERFACE SEAL)	
	30	2,3	**096-6166**	16	WASHER-HARD (4.5X9X1-MM THK)	
M	31	3	**105-3487**	2	BOLT-SOCKET HEAD (M6X1X20-MM)	

266-8963 **WIRING GP-REAR** *(contd.)* **i03696715**

NOTE	REF NO	GRAPHIC REF	PART NUMBER	QTY	PART NAME 1 2 3 4 5 6 (PRODUCT LEVEL)	SEE PAGE
	32	1,2,3	**130-5300**	23	CLIP	
	33	2	**130-5301**	1	CLIP	
	34	2,3	**132-5789**	3	CLIP	
	35	3	**134-2540**	1	RESISTOR AS-CONNECTION (3-PIN)	
	36	3	**139-1398**	2	CLIP	
	37	2	**147-0385**	2	CLIP	
	38	1	**186-0359**	1	CLIP	
	39	2	**1J-9671**	1	SEAL-O-RING	
	40	1,2	**1S-0994**	2	CLIP	
	41	2	**2T-3019**	2	CLIP	
	42	1,2	**3J-1907**	3	SEAL-O-RING	
	43	3	**4D-7388**	3	CLIP	
	44	2	**4D-7794**	2	CLIP	
	45	1	**4K-8864**	5	CLIP	
	46	2	**4P-7428**	1	CLIP	
	47	2,3	**4P-7581**	2	CLIP	
	48	2	**4P-7582**	1	CLIP	
	49	2,3	**4P-8134**	3	CLIP	
	50	2	**4S-4455**	4	CLIP	
	51	2	**5M-3062**	1	BOLT (3/8-16X0.75-IN)	
	52	1	**5P-4295**	2	CLIP	
	53	3	**5P-7468**	2	CLIP (SLOT)	
	54	3	**5P-7469**	2	CLIP (TAB)	
	55	2	**5P-9085**	4	CLIP	
	56	1,3	**5P-9297**	5	CLIP	
	57	3	**5P-8444**	2	GROMMET	
M	58	3	**6V-7357**	2	BOLT (M6X1X25-MM)	
M	59	3	**6V-8337**	10	BOLT-SOCKET HEAD (M8X1.25X35-MM)	
	60	2	**7C-4354**	1	CLIP	
	61	1,3	**7D-7233**	2	CLIP	
	62	1,2,3	**7K-1181**	25	STRAP-CABLE	
	63	2	**7N-3718**	2	CLIP	
M	64	3	**7X-2543**	1	BOLT (M10X1.5X120-MM)	
	65	2,3	**8M-2770**	13	CLIP	
M	66	3	**8T-3647**	2	BOLT (M8X1.25X80-MM)	
	67	1,2,3	**8T-4121**	71	WASHER-HARD (11X21X2.5-MM THK)	
M	69	1,2,3	**8T-4136**	27	BOLT (M10X1.5X25-MM)	
M	70	1,2,3	**8T-4137**	40	BOLT (M10X1.5X20-MM)	
M	71	2,3	**8T-4179**	2	BOLT (M12X1.75X20-MM)	
M	72	1	**8T-4182**	1	BOLT (M10X1.5X45-MM)	
M	73	1	**8T-4185**	1	BOLT (M10X1.5X50-MM)	
M	74	2	**8T-4190**	1	BOLT (M16X2X25-MM)	
C	77	2,3	**8T-4223**	6	WASHER-HARD (13.5X25.5X3-MM THK)	
	78	3	**8T-4224**	2	WASHER-HARD (8.8X16X2-MM THK)	
	79	2	**8T-9384**	1	BOLT (1/2-13X0.875-IN)	
M	80	2,3	**8T-9405**	16	BOLT-SOCKET HEAD (M4X0.7X16-MM)	
	81	3	**9M-1974**	10	WASHER-HARD (8.8X16X2-MM THK)	
	82	2	**9X-7378**	2	SEAL-O-RING	
	83	3	**9X-8250**	1	CLIP	
	84	3	**9X-8256**	4	WASHER (6.6X12X2-MM THK)	
	85	2	**9X-8257**	1	WASHER (17.5X30X3.5-MM THK)	
	86	2	**6V-8189**	1	NUT (5/16-18-THD)	
	87	2	**5P-4116**	2	WASHER-HARD (8.8X20.5X2-MM THK)	
	88	3	**4P-7429**	1	CLIP	
	89	2	**6V-3265**	1	CLIP	
M	90	2	**6V-5684**	1	BOLT (M12X1.75X45-MM)	
	91	2	**5V-9221**	1	SPACER (13.8X25X25-MM THK)	
	92	2	**334-9565**	1	HARNESS AS-SENSOR	

266-8963 **WIRING GP-REAR** *(contd.)* **i03696715**

NOTE	REF NO	GRAPHIC REF	PART NUMBER	QTY	PART NAME 1 2 3 4 5 6 (PRODUCT LEVEL)	SEE PAGE
		2	**102-8803**	1	KIT-RECEPTACLE (3-PIN)	
					(INCLUDES RECEPTACLE AS & WEDGE)	
		2	**9X-3401**	3	PIN-CONNECTOR (16-GA TO 18-GA)	
		2	**9X-3402**	3	SOCKET-CONNECTOR (16-GA TO 18-GA)	
E		2	**114-8843**		SLEEVE-PLASTIC (40-CM)	
		2	**155-2260**	1	KIT-CONNECTING PLUG (3-PIN)	
					(INCLUDES PLUG AS, WEDGE & INTERFACE SEAL)	
CM	93	2	**8T-4956**	2	BOLT (M12X1.75X35-MM)	

C-CHANGE FROM PREVIOUS TYPE
E-ORDER BY THE CENTIMETER
M-METRIC PART
Y-SEPARATE ILLUSTRATION

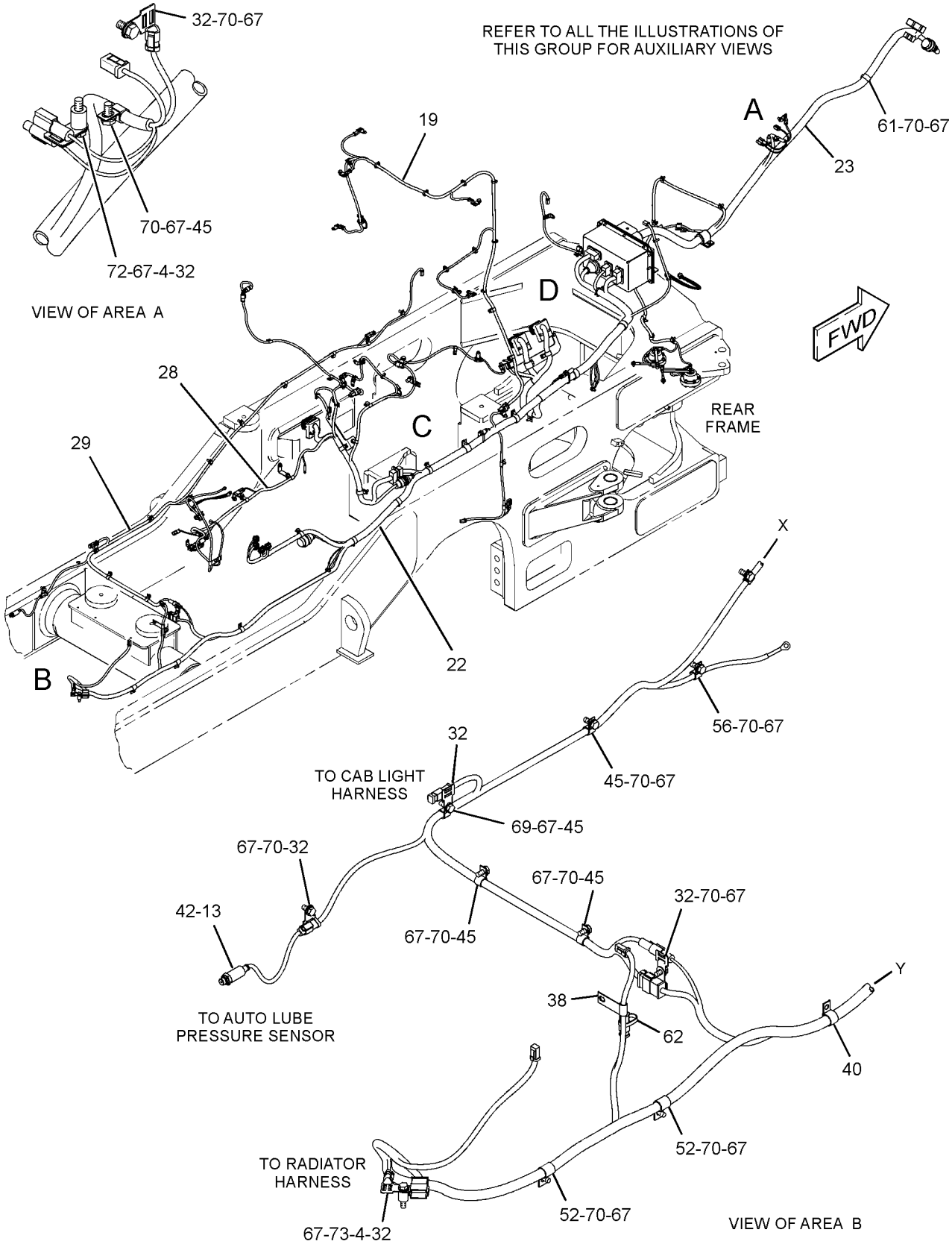

GRAPHIC #1

g01772647

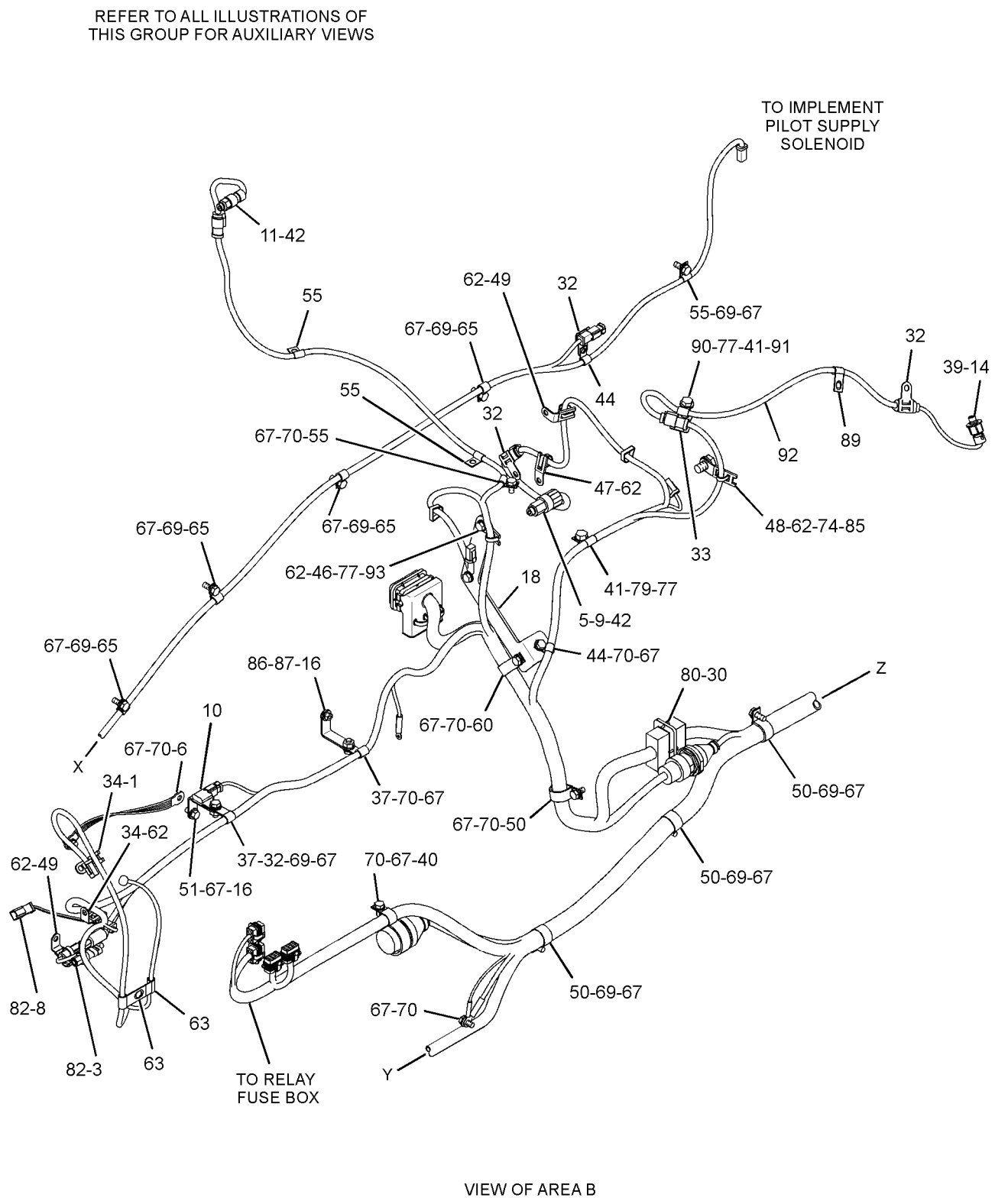

VIEW OF AREA B

GRAPHIC #2

g02000051

266-8963 **WIRING GP-REAR** *(contd.)* **i03696715**

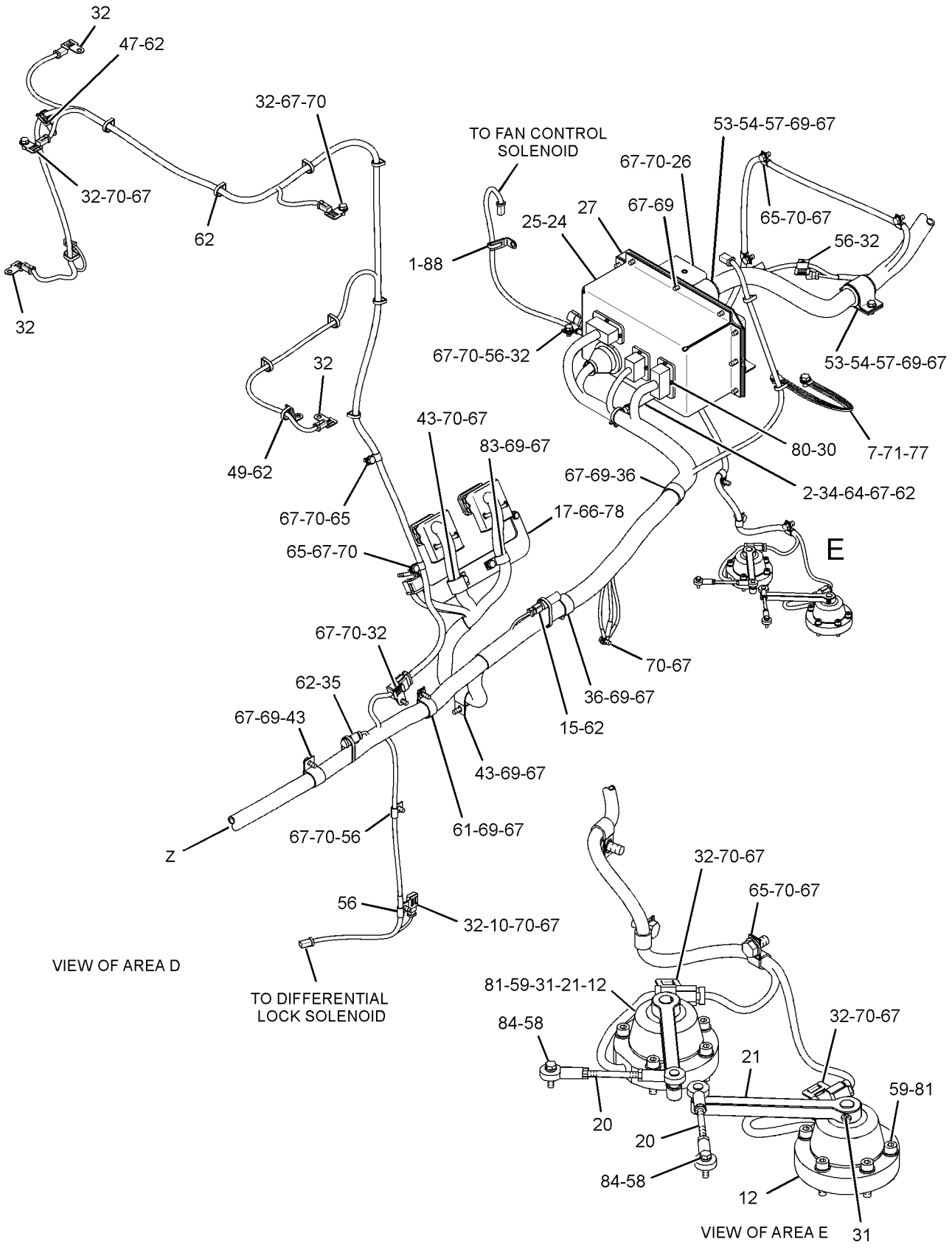

GRAPHIC #3 **<END>** g01772651

ELECTRICAL AND STARTING SYSTEM

266-8963 WIRING GP-REAR–SENSORS

S/N: B9K361-UP

PART OF 259-9204 COMMON AR

SMCS-1408 **i03926709**

NOTE	REF NO	GRAPHIC REF	PART NUMBER	QTY	PART NAME 1 2 3 4 5 6 (PRODUCT LEVEL)	SEE PAGE
	1	2,3	3S-2093	3	STRAP-CABLE	
	2	3	110-8330	1	SPACER (11.3X19.05X90-MM THK)	
	3	2	114-5333	1	SWITCH AS-PRESSURE (COMPRESSOR, HIGH SIDE)	
		2	102-8802	1	KIT-RECEPTACLE (2-PIN)	
					(INCLUDES RECEPTACLE AS & WEDGE)	
		2	8T-8729	2	PIN-CONNECTOR (16-GA TO 18-GA)	
E		2	9X-1386		SLEEVE (25-CM)	
	4	1	133-6934	2	SPACER (11X20X25-MM THK)	
Y	5	2	134-2252	1	SENSOR GP-TEMPERATURE (IMPLEMENT, BRAKE OIL)	319
	6	2	134-3355	1	STRAP AS	
	7	3	140-0860	1	STRAP AS-GROUND	
	8	2	149-6371	1	SWITCH AS-PRESSURE (COMPRESSOR, LOW SIDE)	
		2	102-8802	1	KIT-RECEPTACLE (2-PIN)	
					(INCLUDES RECEPTACLE AS & WEDGE)	
		2	8T-8729	2	PIN-CONNECTOR (16-GA TO 18-GA)	
	9	2	*165-6365*	1	FITTING AS	
		2	7W-7381	1	FITTING-OUTLET	
		2	3J-1907	1	SEAL-O-RING	
	10	2,3	189-3158	2	SUPPRESSOR-ARC	
Y	11	2	194-6722	1	SENSOR GP-PRESSURE (ATMOSPHERIC AIR)	307
	12	3	266-2338	2	SENSOR GP-POSITION (ROTARY) (ARTICULATION)	
	13	1	221-3405	1	SENSOR GP-PRESSURE (IMPLEMENT PUMP OIL)	
		1	155-2260	1	KIT-CONNECTING PLUG (3-PIN)	
					(INCLUDES PLUG AS, WEDGE & INTERFACE SEAL)	
		1	180-9340	3	SOCKET-CONNECTOR (14-GA TO 18-GA)	
C	14	2	296-5270	1	SENSOR GP-PRESSURE (IMPLEMENT PUMP OIL)	
	15	3	240-7193	1	RESISTOR AS (500-OHM, 2-WATT)	
		3	102-8802	1	KIT-RECEPTACLE (2-PIN)	
					(INCLUDES RECEPTACLE AS & WEDGE)	
		3	9X-3401	2	PIN-CONNECTOR (16-GA TO 18-GA)	
	16	2	269-4983	2	BRACKET AS	
	17	3	274-7494	1	PLATE AS	
	18	2	274-7495	1	PLATE AS	
	19	1	274-7498	1	HARNESS AS-SWITCH	
		1	8T-8730	8	SOCKET-CONNECTOR (16-GA TO 18-GA)	
		1	8T-8737	4	PLUG-SEAL	
		1	9X-3402	12	SOCKET-CONNECTOR (16-GA TO 18-GA)	
E		1	114-8843		SLEEVE-PLASTIC (120-CM)	
E		1	114-8844		SLEEVE-PLASTIC (20-CM)	
E		1	119-3662		TUBE-HEAT SHRINK (10.85-MM DIA) (7-CM)	
E		1	125-7874		TUBE-HEAT SHRINK (5.72-MM DIA) (5-CM)	
		1	155-2255	1	KIT-CONNECTING PLUG (12-PIN)	
		1	155-2270	6	KIT-CONNECTING PLUG (2-PIN)	
					(EACH KIT INCLUDES PLUG AS, WEDGE & INTERFACE SEAL)	
	20	3	301-5180	2	LINK AS	
					(EACH INCLUDES)	
		3	6F-0612	1	NUT-JAM (1/4-28-THD)	
		3	8S-7048	1	ROD END	
		3	9L-3334	1	NUT-PLATED (1/4-28-THD, LH)	
		3	036-7232	1	ROD END	
	21	3	305-2281	2	LEVER (ARTICULATION)	
C	22	1	353-3820	1	HARNESS AS-REAR CHASSIS	
		1	102-8802	1	KIT-RECEPTACLE (2-PIN)	
		1	102-8801	3	KIT-RECEPTACLE (12-PIN)	
					(EACH KIT INCLUDES RECEPTACLE AS & WEDGE)	

266-8963 **WIRING GP-REAR** *(contd.)* **i03926709**

NOTE	REF NO	GRAPHIC REF	PART NUMBER	QTY	PART NAME 1 2 3 4 5 6 (PRODUCT LEVEL)	SEE PAGE
		1	3S-2093	4	STRAP-CABLE	
		1	7G-7917	18	PLUG-SEAL	
		1	7G-7918	5	PLUG-SEAL	
		1	7G-7919	5	PLUG-SEAL	
		1	7G-7920	1	PLUG-SEAL	
		1	7R-2750	16	SEAL-CONNECTOR	
		1	7R-2751	9	PLUG-CONNECTOR	
		1	8N-1517	1	RECEPTACLE AS-CONNECTOR (25-PIN)	
		1	8N-1518	1	PLUG AS-CONNECTOR (25-PIN)	
		1	8N-1521	2	BELL AS-END	
		1	8N-1523	1	LOCKWASHER	
		1	8N-1532	1	RECEPTACLE AS-CONNECTOR (6-PIN)	
		1	8N-1535	1	BELL AS-END	
		1	8N-1537	1	LOCKWASHER	
		1	9X-6856	9	PIN-CONNECTOR (16-GA TO 18-GA)	
		1	9X-6857	6	SOCKET-CONNECTOR (16-GA TO 18-GA)	
		1	8N-1540	5	PIN-CONNECTOR (12-GA TO 14-GA)	
		1	8N-1541	1	SOCKET-CONNECTOR (12-GA TO 14-GA)	
		1	8N-1542	1	PIN-CONNECTOR (10-GA)	
		1	8N-1543	1	SOCKET-CONNECTOR (10-GA)	
		1	8N-1544	1	PIN-CONNECTOR (8-GA)	
		1	8N-1545	1	SOCKET-CONNECTOR (8-GA)	
		1	8N-1548	2	PIN-CONNECTOR (4-GA)	
		1	8N-1549	2	SOCKET-CONNECTOR (4-GA)	
		1	8T-8729	129	PIN-CONNECTOR (16-GA TO 18-GA)	
		1	8T-8730	30	SOCKET-CONNECTOR (16-GA TO 18-GA)	
		1	8T-8737	77	PLUG-SEAL	
		1	9W-0844	3	SOCKET-CONNECTOR (14-GA)	
		1	9W-0852	17	PIN-CONNECTOR (14-GA TO 16-GA)	
		1	9X-0145	1	RECEPTACLE AS-CONNECTOR (24-PIN)	
		1	9X-1343	2	RECEPTACLE AS-CONNECTOR (40-PIN)	
		1	9X-3401	8	PIN-CONNECTOR (16-GA TO 18-GA)	
		1	9X-3402	78	SOCKET-CONNECTOR (16-GA TO 18-GA)	
		1	9X-6772	3	STRAP-CABLE	
		1	9X-7148	1	RECEPTACLE AS-CONNECTOR (40-PIN)	
		1	196-2412	16	TERMINAL AS	
E		1	114-8843		SLEEVE-PLASTIC (320-CM)	
E		1	114-8844		SLEEVE-PLASTIC (180-CM)	
E		1	114-8845		SLEEVE-PLASTIC (20-CM)	
E		1	119-3662		TUBE-HEAT SHRINK (10.85-MM DIA) (59-CM)	
E		1	125-7874		TUBE-HEAT SHRINK (5.72-MM DIA) (60-CM)	
E		1	125-7875		TUBE-HEAT SHRINK (7.44-MM DIA) (45-CM)	
		1	9X-3402	14	SOCKET-CONNECTOR (16-GA TO 18-GA)	
		1	126-1768	11	SOCKET-CONNECTOR (14-GA)	
		1	126-1774	2	COVER-CONNECTOR	
		1	127-5486	1	RECEPTACLE AS-CONNECTOR (1-PIN)	
		1	128-4123	7	SEAL	
		1	131-1490	2	TERMINAL AS (6-GA TO 8-GA)	
		1	2L-8069	3	TERMINAL-RING (2-GA TO 10-GA, 3/8-IN SCREW)	
		1	147-1445	1	PLUG AS-CONNECTOR (70-PIN)	
		1	147-1446	1	PLUG AS-CONNECTOR (70-PIN)	
					(EACH PLUG AS INCLUDES)	
		1	159-9322	1	SEAL-O-RING	
		1	155-2255	1	KIT-CONNECTING PLUG (12-PIN)	
		1	155-2260	1	KIT-CONNECTING PLUG (3-PIN)	
		1	155-2270	7	KIT-CONNECTING PLUG (2-PIN)	
		1	155-2271	1	KIT-CONNECTING PLUG (4-PIN)	
		1	155-2274	1	KIT-CONNECTING PLUG (6-PIN)	

266-8963 **WIRING GP-REAR** ***(contd.)*** **i03926709**

NOTE	REF NO	GRAPHIC REF	PART NUMBER	QTY	PART NAME 1 2 3 4 5 6 (PRODUCT LEVEL)	SEE PAGE
		1	**196-2383**	1	KIT-CONNECTING PLUG (8-PIN)	
					(EACH KIT INCLUDES PLUG AS, WEDGE & INTERFACE SEAL)	
		1	**196-2413**	7	TERMINAL AS	
		1	**174-0503**	1	KIT-CONNECTING PLUG (3-PIN)	
					(INCLUDES PLUG AS & WEDGES)	
		1	**196-2385**	1	KIT-CONNECTING PLUG (8-PIN)	
		1	**196-2386**	1	KIT-CONNECTING PLUG (8-PIN)	
					(EACH KIT INCLUDES PLUG AS, CONNECTOR LOCK & TERMINAL ASSEMBLIES)	
	23	1	**307-6367**	1	HARNESS AS-CHASSIS	
		1	**7G-7917**	16	PLUG-SEAL	
		1	**7G-7918**	2	PLUG-SEAL	
		1	**7G-7919**	6	PLUG-SEAL	
		1	**7X-6222**	2	PLUG AS-CONNECTOR (24-PIN)	
					(EACH INCLUDES)	
		1	**3E-4367**	1	RING-RETAINING	
M		1	**3E-8558**	1	BOLT (M5X0.8X39.37-MM)	
		1	**9X-3265**	2	SEAL-CONNECTOR (24-PIN)	
		1	**8N-1518**	2	PLUG AS-CONNECTOR (25-PIN)	
		1	**8N-1521**	2	BELL AS-END	
		1	**8N-1523**	1	LOCKWASHER	
		1	**9X-6857**	16	SOCKET-CONNECTOR (16-GA TO 18-GA)	
		1	**8N-1540**	1	PIN-CONNECTOR (12-GA TO 14-GA)	
		1	**8N-1541**	7	SOCKET-CONNECTOR (12-GA TO 14-GA)	
		1	**8N-1549**	4	SOCKET-CONNECTOR (4-GA)	
		1	**8T-8730**	171	SOCKET-CONNECTOR (16-GA TO 18-GA)	
		1	**8T-8737**	19	PLUG-SEAL	
		1	**9W-0844**	22	SOCKET-CONNECTOR (14-GA)	
		1	**9X-7147**	1	PLUG AS-CONNECTOR (40-PIN)	
		1	**9X-0141**	1	PLUG AS-CONNECTOR (40-PIN)	
					(EACH PLUG AS INCLUDES)	
		1	**3E-4367**	1	RING-RETAINING	
M		1	**3E-8557**	1	BOLT (M5X0.8X39.37-MM)	
		1	**9X-3490**	2	SEAL-CONNECTOR (40-PIN)	
		1	**9X-3402**	2	SOCKET-CONNECTOR (16-GA TO 18-GA)	
		1	**9X-4391**	1	PLUG AS-CONNECTOR (70-PIN)	
		1	**3E-4367**	1	RING-RETAINING	
M		1	**3E-8557**	1	BOLT (M5X0.8X39.37-MM)	
		1	**9X-5615**	1	SEAL (INTERFACE, 70-PIN)	
		1	**9X-6772**	2	STRAP-CABLE	
E		1	**114-8843**		SLEEVE-PLASTIC (160-CM)	
E		1	**114-8844**		SLEEVE-PLASTIC (20-CM)	
E		1	**114-8845**		SLEEVE-PLASTIC (40-CM)	
E		1	**119-3662**		TUBE-HEAT SHRINK (10.85-MM DIA) (7-CM)	
E		1	**125-7874**		TUBE-HEAT SHRINK (5.72-MM DIA) (10-CM)	
		1	**9X-3402**	2	SOCKET-CONNECTOR (16-GA TO 18-GA)	
		1	**129-7163**	1	PLUG AS-CONNECTOR (1-PIN)	
		1	**129-7164**	1	RECEPTACLE AS-CONNECTOR (1-PIN)	
		1	**155-2260**	4	KIT-CONNECTING PLUG (3-PIN)	
		1	**155-2270**	1	KIT-CONNECTING PLUG (2-PIN)	
		1	**155-2271**	1	KIT-CONNECTING PLUG (4-PIN)	
					(EACH KIT INCLUDES PLUG AS, WEDGE & INTERFACE SEAL)	
	24	3	**307-6370**	1	BOX AS	
		3	**7T-1099**	1	LINK	
M		3	**8T-3490**	1	NUT-WELD (M10X1.5-THD)	
M		3	**165-8718**	12	NUT-WELD (M4X0.7-THD)	
	25	3	**307-6371**	1	COVER	
	26	3	**307-6372**	1	BRACKET AS	

266-8963 **WIRING GP-REAR** *(contd.)* **i03926709**

NOTE	REF NO	GRAPHIC REF	PART NUMBER	QTY	PART NAME 1 2 3 4 5 6 (PRODUCT LEVEL)	SEE PAGE
		3	**7T-1099**	1	LINK	
M		3	**8T-3490**	4	NUT-WELD (M10X1.5-THD)	
	27	3	**308-2607**	1	PLATE	
	28	1	**308-2737**	1	HARNESS AS-ENGINE	
		1	**102-8803**	2	KIT-RECEPTACLE (3-PIN)	
					(EACH KIT INCLUDES RECEPTACLE AS & WEDGE)	
		1	**7G-7917**	1	PLUG-SEAL	
		1	**7G-7918**	1	PLUG-SEAL	
		1	**7G-7919**	1	PLUG-SEAL	
		1	**7G-7920**	1	PLUG-SEAL	
		1	**8N-1533**	1	PLUG AS-CONNECTOR (7-PIN)	
		1	**8N-1535**	1	BELL AS-END	
		1	**8N-1541**	2	SOCKET-CONNECTOR (12-GA TO 14-GA)	
		1	**8N-1545**	1	SOCKET-CONNECTOR (8-GA)	
		1	**8T-8729**	6	PIN-CONNECTOR (16-GA TO 18-GA)	
		1	**8T-8730**	47	SOCKET-CONNECTOR (16-GA TO 18-GA)	
		1	**8T-8737**	43	PLUG-SEAL	
		1	**9W-0844**	4	SOCKET-CONNECTOR (14-GA)	
		1	**9X-0141**	1	PLUG AS-CONNECTOR (40-PIN)	
		1	**3E-4367**	1	RING-RETAINING	
M		1	**3E-8557**	1	BOLT (M5X0.8X39.37-MM)	
		1	**9X-3490**	2	SEAL-CONNECTOR (40-PIN)	
		1	**9X-3402**	25	SOCKET-CONNECTOR (16-GA TO 18-GA)	
		1	**9X-6772**	3	STRAP-CABLE	
E		1	**114-8843**		SLEEVE-PLASTIC (200-CM)	
E		1	**114-8844**		SLEEVE-PLASTIC (20-CM)	
E		1	**114-8845**		SLEEVE-PLASTIC (20-CM)	
E		1	**119-3662**		TUBE-HEAT SHRINK (10.85-MM DIA) (20-CM)	
E		1	**125-7874**		TUBE-HEAT SHRINK (5.72-MM DIA) (5-CM)	
E		1	**125-7875**		TUBE-HEAT SHRINK (7.44-MM DIA) (10-CM)	
		1	**126-1768**	8	SOCKET-CONNECTOR (14-GA)	
		1	**126-1774**	1	COVER-CONNECTOR	
		1	**131-1487**	1	TERMINAL AS (6-GA TO 8-GA)	
		1	**155-2260**	1	KIT-CONNECTING PLUG (3-PIN)	
		1	**155-2270**	7	KIT-CONNECTING PLUG (2-PIN)	
					(EACH KIT INCLUDES PLUG AS, WEDGE & INTERFACE SEAL)	
		1	**160-7689**	1	PLUG AS-CONNECTOR (70-PIN)	
	29	1	**308-3541**	1	HARNESS AS-LIGHTING	
		1	**102-8802**	2	KIT-RECEPTACLE (2-PIN)	
		1	**102-8803**	1	KIT-RECEPTACLE (3-PIN)	
					(EACH KIT INCLUDES RECEPTACLE AS & WEDGE)	
		1	**8N-1543**	1	SOCKET-CONNECTOR (10-GA)	
		1	**8T-8729**	6	PIN-CONNECTOR (16-GA TO 18-GA)	
		1	**8T-8730**	10	SOCKET-CONNECTOR (16-GA TO 18-GA)	
		1	**8T-8737**	8	PLUG-SEAL	
		1	**9X-3401**	1	PIN-CONNECTOR (16-GA TO 18-GA)	
E		1	**114-8843**		SLEEVE-PLASTIC (140-CM)	
E		1	**114-8844**		SLEEVE-PLASTIC (20-CM)	
E		1	**125-7875**		TUBE-HEAT SHRINK (7.44-MM DIA) (5-CM)	
		1	**127-5485**	1	PLUG AS-CONNECTOR (1-PIN)	
		1	**2L-8068**	1	TERMINAL-RING (10-GA TO 12-GA, 5/16-IN SCREW)	
		1	**155-2255**	1	KIT-CONNECTING PLUG (12-PIN)	
		1	**155-2270**	3	KIT-CONNECTING PLUG (2-PIN)	
					(EACH KIT INCLUDES PLUG AS, WEDGE & INTERFACE SEAL)	
	30	2,3	**096-6166**	16	WASHER-HARD (4.5X9X1-MM THK)	
M	31	3	**105-3487**	2	BOLT-SOCKET HEAD (M6X1X20-MM)	
C	32	1,2,3	**130-5300**	21	CLIP	

266-8963 **WIRING GP-REAR** *(contd.)* **i03926709**

NOTE	REF NO	GRAPHIC REF	PART NUMBER	QTY	PART NAME 1 2 3 4 5 6 (PRODUCT LEVEL)	SEE PAGE
	33	2	**130-5301**	1	CLIP	
	34	2,3	**132-5789**	3	CLIP	
	35	3	**134-2540**	1	RESISTOR AS-CONNECTION (3-PIN)	
	36	3	**139-1398**	2	CLIP	
	37	2	**147-0385**	2	CLIP	
	38	1	**186-0359**	1	CLIP	
	39	2	**1J-9671**	1	SEAL-O-RING	
	40	1,2	**1S-0994**	2	CLIP	
	41	2	**2T-3019**	2	CLIP	
	42	1,2	**3J-1907**	3	SEAL-O-RING	
	43	3	**4D-7388**	3	CLIP	
	44	2	**4D-7794**	2	CLIP	
	45	1	**4K-8864**	5	CLIP	
	46	2	**4P-7428**	1	CLIP	
	47	2,3	**4P-7581**	2	CLIP	
	48	2	**4P-7582**	1	CLIP	
	49	2,3	**4P-8134**	3	CLIP	
	50	2	**4S-4455**	4	CLIP	
	51	2	**5M-3062**	1	BOLT (3/8-16X0.75-IN)	
	52	1	**5P-4295**	2	CLIP	
	53	3	**5P-7468**	2	CLIP (SLOT)	
	54	3	**5P-7469**	2	CLIP (TAB)	
	55	2	**5P-9085**	4	CLIP	
	56	1,3	**5P-9297**	5	CLIP	
	57	3	**5P-8444**	2	GROMMET	
M	58	3	**6V-7357**	2	BOLT (M6X1X25-MM)	
M	59	3	**6V-8337**	10	BOLT-SOCKET HEAD (M8X1.25X35-MM)	
	60	2	**7C-4354**	1	CLIP	
	61	1,3	**7D-7233**	2	CLIP	
	62	1,2,3	**7K-1181**	25	STRAP-CABLE	
	63	2	**7N-3718**	2	CLIP	
M	64	3	**7X-2543**	1	BOLT (M10X1.5X120-MM)	
	65	2,3	**8M-2770**	13	CLIP	
M	66	3	**8T-3647**	2	BOLT (M8X1.25X80-MM)	
C	67	1,2,3	**8T-4121**	70	WASHER-HARD (11X21X2.5-MM THK)	
M	69	1,2,3	**8T-4136**	27	BOLT (M10X1.5X25-MM)	
CM	70	1,2,3	**8T-4137**	39	BOLT (M10X1.5X20-MM)	
M	71	3	**8T-4179**	2	BOLT (M12X1.75X20-MM)	
M	72	1	**8T-4182**	1	BOLT (M10X1.5X45-MM)	
M	73	1	**8T-4185**	1	BOLT (M10X1.5X50-MM)	
M	74	2	**8T-4190**	1	BOLT (M16X2X25-MM)	
	77	2,3	**8T-4223**	6	WASHER-HARD (13.5X25.5X3-MM THK)	
	78	3	**8T-4224**	2	WASHER-HARD (8.8X16X2-MM THK)	
	79	2	**8T-9384**	1	BOLT (1/2-13X0.875-IN)	
M	80	2,3	**8T-9405**	16	BOLT-SOCKET HEAD (M4X0.7X16-MM)	
	81	3	**9M-1974**	10	WASHER-HARD (8.8X16X2-MM THK)	
	82	2	**9X-7378**	2	SEAL-O-RING	
	83	3	**9X-8250**	1	CLIP	
	84	3	**9X-8256**	4	WASHER (6.6X12X2-MM THK)	
	85	2	**9X-8257**	1	WASHER (17.5X30X3.5-MM THK)	
	86	2	**6V-8189**	1	NUT (5/16-18-THD)	
	87	2	**5P-4116**	2	WASHER-HARD (8.8X20.5X2-MM THK)	
	88	3	**4P-7429**	1	CLIP	
C	89	2	**6V-3265**	2	CLIP	
M	90	2	**6V-5684**	1	BOLT (M12X1.75X45-MM)	
	91	2	**5V-9221**	1	SPACER (13.8X25X25-MM THK)	
C	92	2	**353-3819**	1	HARNESS AS-SENSOR	
		2	**9X-3402**	6	SOCKET-CONNECTOR (16-GA TO 18-GA)	
E		2	**114-8843**		SLEEVE-PLASTIC (40-CM)	

266-8963 **WIRING GP-REAR** ***(contd.)*** **i03926709**

NOTE	REF NO	GRAPHIC REF	PART NUMBER	QTY	PART NAME 1 2 3 4 5 6 (PRODUCT LEVEL)	SEE PAGE
		2	**155-2260**	1	KIT-CONNECTING PLUG (3-PIN)	
					(INCLUDES PLUG AS, WEDGE & INTERFACE SEAL)	
		2	**237-0227**	1	PLUG AS-CONNECTOR (3-PIN)	
		2	**264-7030**	1	SEAL-CONNECTOR	
M	93	2	**8T-4956**	2	BOLT (M12X1.75X35-MM)	

C-CHANGE FROM PREVIOUS TYPE
E-ORDER BY THE CENTIMETER
M-METRIC PART
Y-SEPARATE ILLUSTRATION

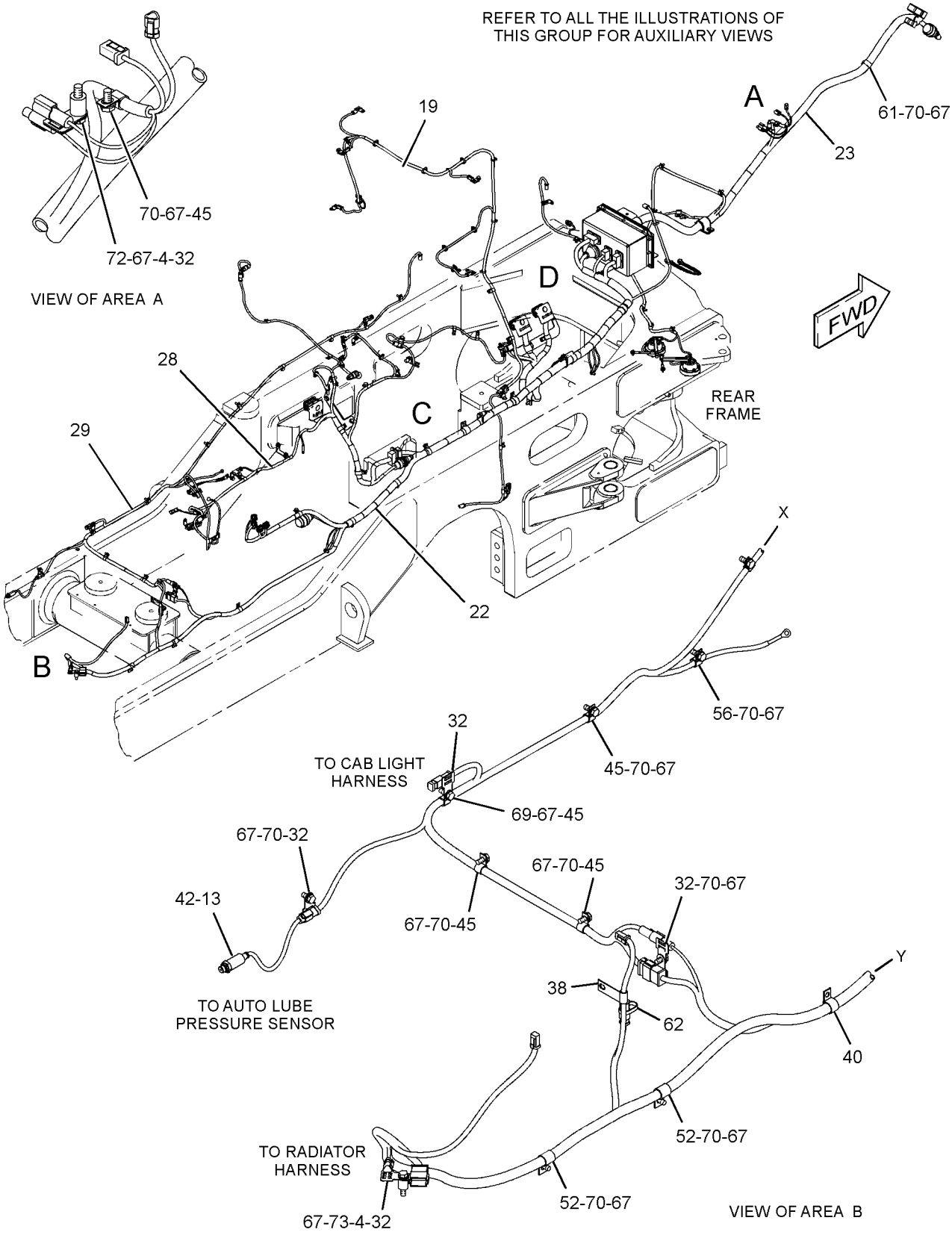

GRAPHIC #1 g02158316

REFER TO ALL ILLUSTRATIONS OF
THIS GROUP FOR AUXILIARY VIEWS

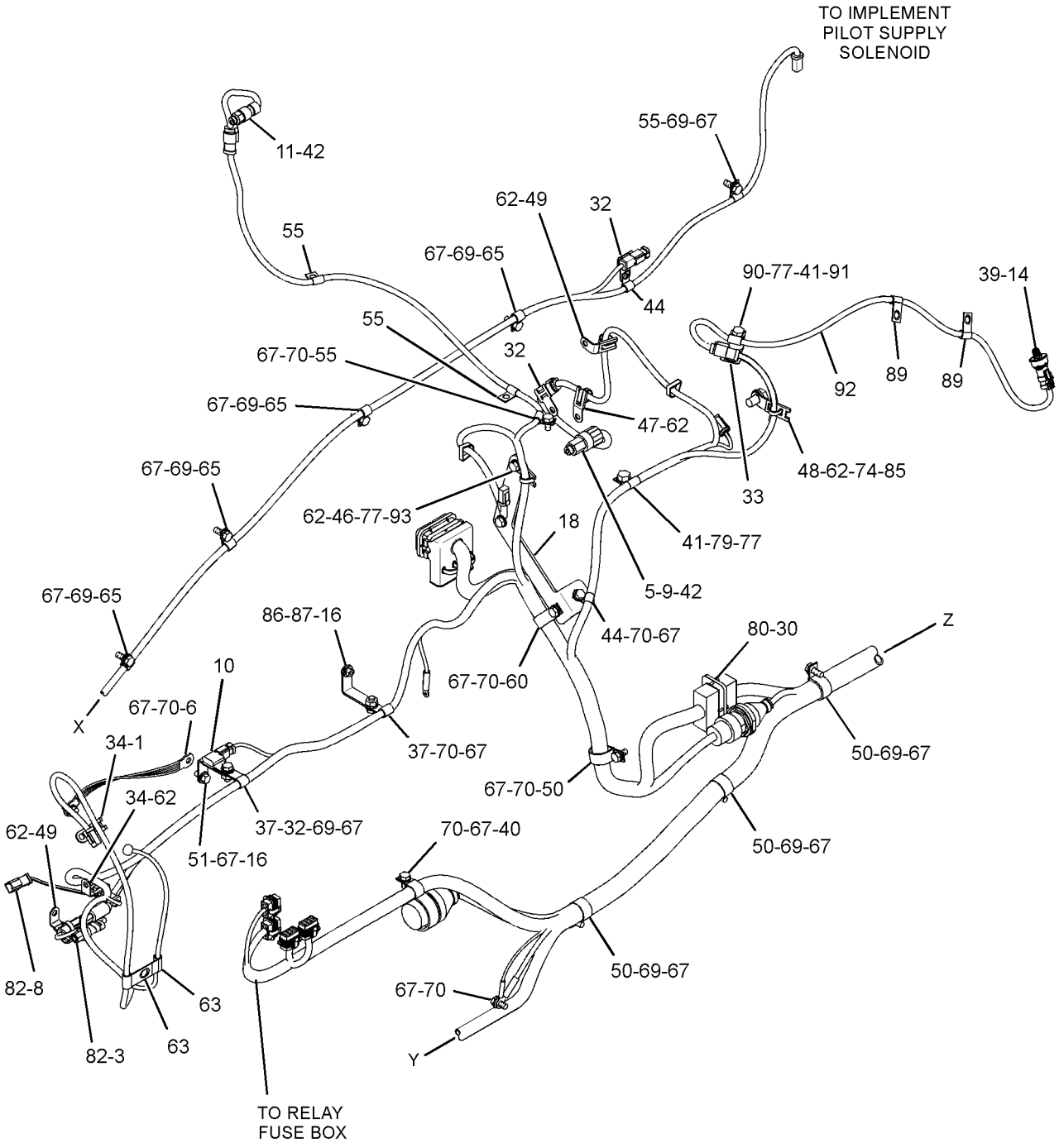

VIEW OF AREA B

GRAPHIC #2

g02158317

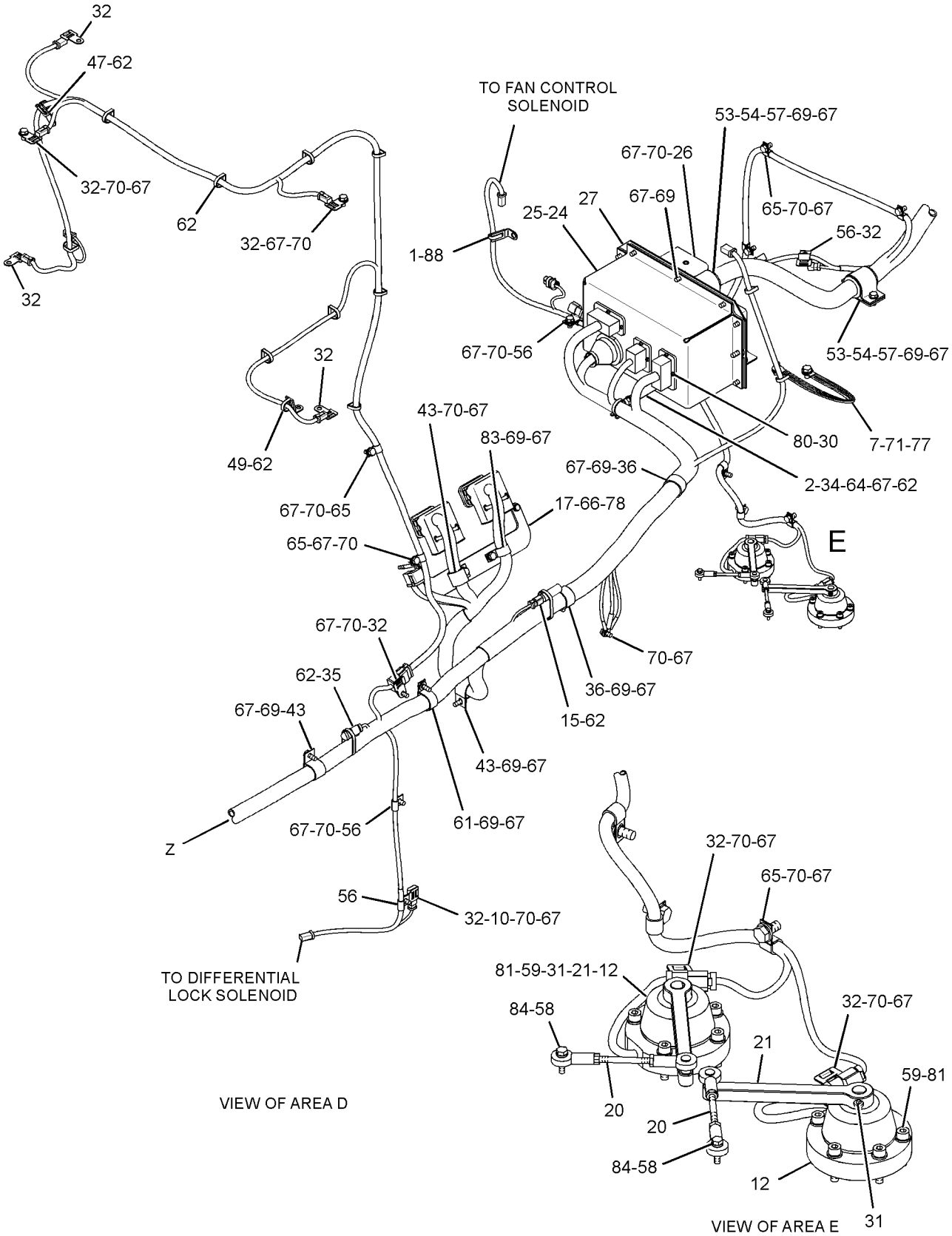

GRAPHIC #3 **<END>** g02158318

ELECTRICAL AND STARTING SYSTEM

266-8964 WIRING GP-REAR LIGHTING

S/N: B9K1-309

PART OF 259-9204 COMMON AR

SMCS-1408, 1429 **i03493411**

NOTE	REF NO	GRAPHIC REF	PART NUMBER	QTY	PART NAME 1 2 3 4 5 6 (PRODUCT LEVEL)	SEE PAGE
Y	1	1	135-0426	2	LAMP GP-SIGNAL (24-VOLT, STOP, TAIL)	232
	2	1	139-2116	1	SWITCH GP-TOGGLE (REAR LIGHTS)	
		1	6T-3631	2	NUT-HEX (15/32-32-THD)	
		1	6T-3632	1	LOCKWASHER	
		1	6T-3633	1	RING-LOCKING	
		1	186-3735	3	PIN-CONNECTOR (16-GA TO 18-GA)	
		1	102-8803	1	KIT-RECEPTACLE (3-PIN)	
					(INCLUDES RECEPTACLE AS & WEDGE)	
Y	3	1	261-1502	2	LAMP GP (24-VOLT)	220
	4	1	307-6368	1	HARNESS AS-REAR LIGHTING	
	5	1	308-3561	2	COVER AS	
	6	1	130-5300	6	CLIP	
	7	1	3E-5169	1	GUARD-SWITCH	
M	8	1	5C-2890	18	NUT (M6X1-THD)	
	9	1	7K-1181	15	STRAP-CABLE	
	10	1	8T-4121	1	WASHER-HARD (11X21X2.5-MM THK)	
M	11	1	8T-4137	1	BOLT (M10X1.5X20-MM)	
	12	1	9X-6165	18	WASHER (6.5X22X2.5-MM THK)	

M-METRIC PART
Y-SEPARATE ILLUSTRATION

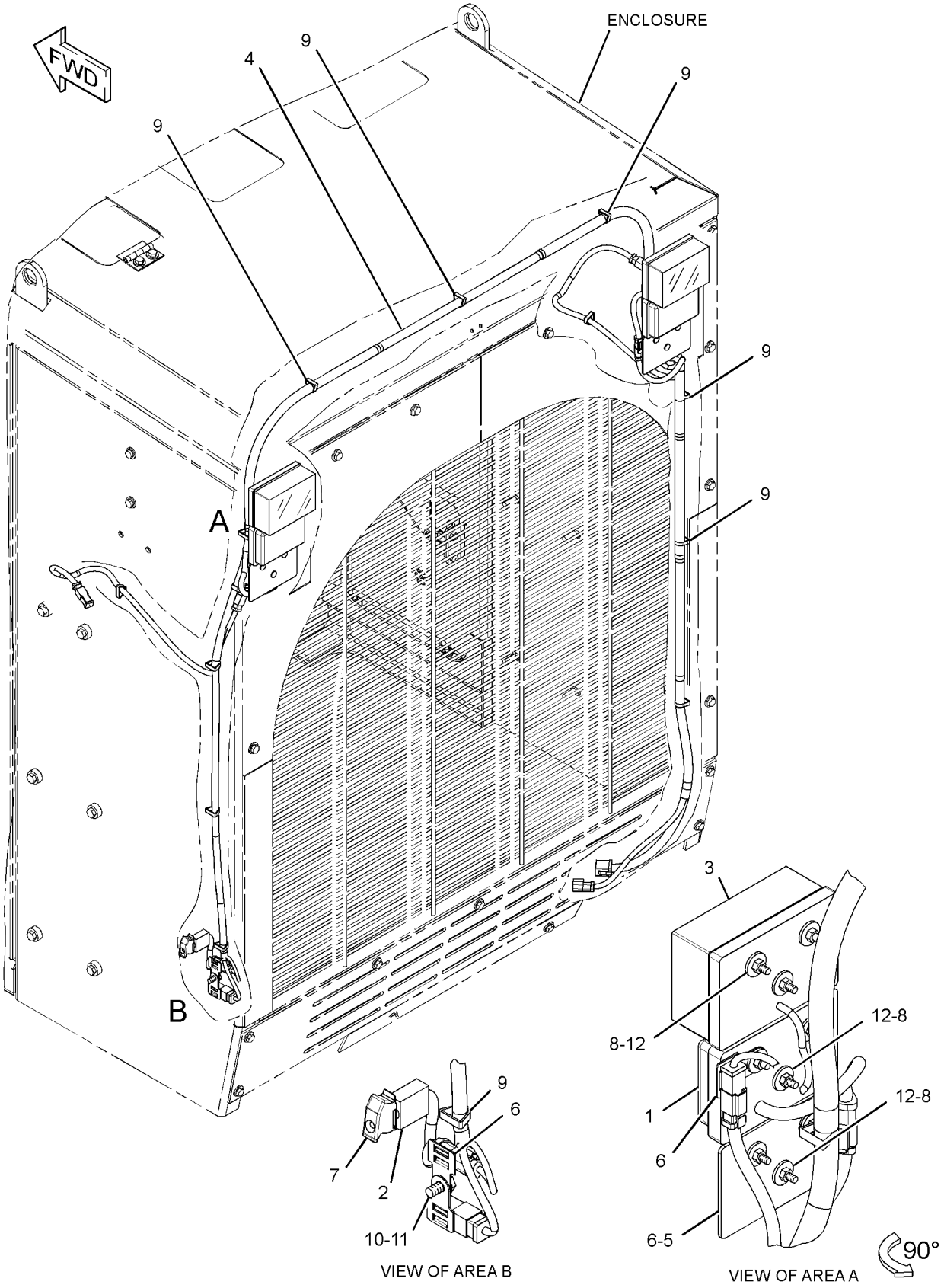

GRAPHIC #1

<END>

g01385653

ELECTRICAL AND STARTING SYSTEM

266-8964 WIRING GP-REAR LIGHTING

S/N: B9K310-UP
PART OF 259-9204 COMMON AR

SMCS-1408, 1429 **i03852472**

NOTE	REF NO	GRAPHIC REF	PART NUMBER	QTY	PART NAME 1 2 3 4 5 6 (PRODUCT LEVEL)	SEE PAGE
CY	1	1	334-8049	2	LAMP GP-SIGNAL (12-VOLT, 24-VOLT, STOP, TAIL)	237
	2	1	3E-5169	1	GUARD-SWITCH	
Y	3	1	261-1502	2	LAMP GP (24-VOLT)	220
	4	1	307-6368	1	HARNESS AS-REAR LIGHTING	
		1	102-8802	4	KIT-RECEPTACLE (2-PIN)	
		1	102-8803	1	KIT-RECEPTACLE (3-PIN)	
		1	102-8805	1	KIT-RECEPTACLE (6-PIN)	
					(EACH KIT INCLUDES RECEPTACLE AS & WEDGE)	
		1	8T-8729	3	PIN-CONNECTOR (16-GA TO 18-GA)	
		1	8T-8730	21	SOCKET-CONNECTOR (16-GA TO 18-GA)	
		1	8T-8737	18	PLUG-SEAL	
		1	9W-0844	14	SOCKET-CONNECTOR (14-GA)	
E		1	114-8843		SLEEVE-PLASTIC (200-CM)	
E		1	114-8844		SLEEVE-PLASTIC (20-CM)	
E		1	119-3662		TUBE-HEAT SHRINK (10.85-MM DIA) (13-CM)	
E		1	125-7874		TUBE-HEAT SHRINK (5.72-MM DIA) (5-CM)	
E		1	125-7875		TUBE-HEAT SHRINK (7.44-MM DIA) (10-CM)	
		1	155-2255	1	KIT-CONNECTING PLUG (12-PIN)	
		1	155-2260	3	KIT-CONNECTING PLUG (3-PIN)	
		1	155-2270	6	KIT-CONNECTING PLUG (2-PIN)	
		1	155-2274	1	KIT-CONNECTING PLUG (6-PIN)	
					(EACH KIT INCLUDES PLUG AS, WEDGE & INTERFACE SEAL)	
	5	1	308-3561	2	COVER AS	
	6	1	130-5300	6	CLIP	
	7	1	353-4515	1	SWITCH GP-TOGGLE (REAR LIGHTS)	
		1	102-8803	1	KIT-RECEPTACLE (3-PIN)	
					(INCLUDES RECEPTACLE AS & WEDGE)	
		1	8T-8729	3	PIN-CONNECTOR (16-GA TO 18-GA)	
M	8	1	5C-2890	18	NUT (M6X1-THD)	
	9	1	7K-1181	15	STRAP-CABLE	
	10	1	8T-4121	1	WASHER-HARD (11X21X2.5-MM THK)	
M	11	1	8T-4137	1	BOLT (M10X1.5X20-MM)	
	12	1	9X-6165	18	WASHER (6.5X22X2.5-MM THK)	

C-CHANGE FROM PREVIOUS TYPE
E-ORDER BY THE CENTIMETER
M-METRIC PART
Y-SEPARATE ILLUSTRATION

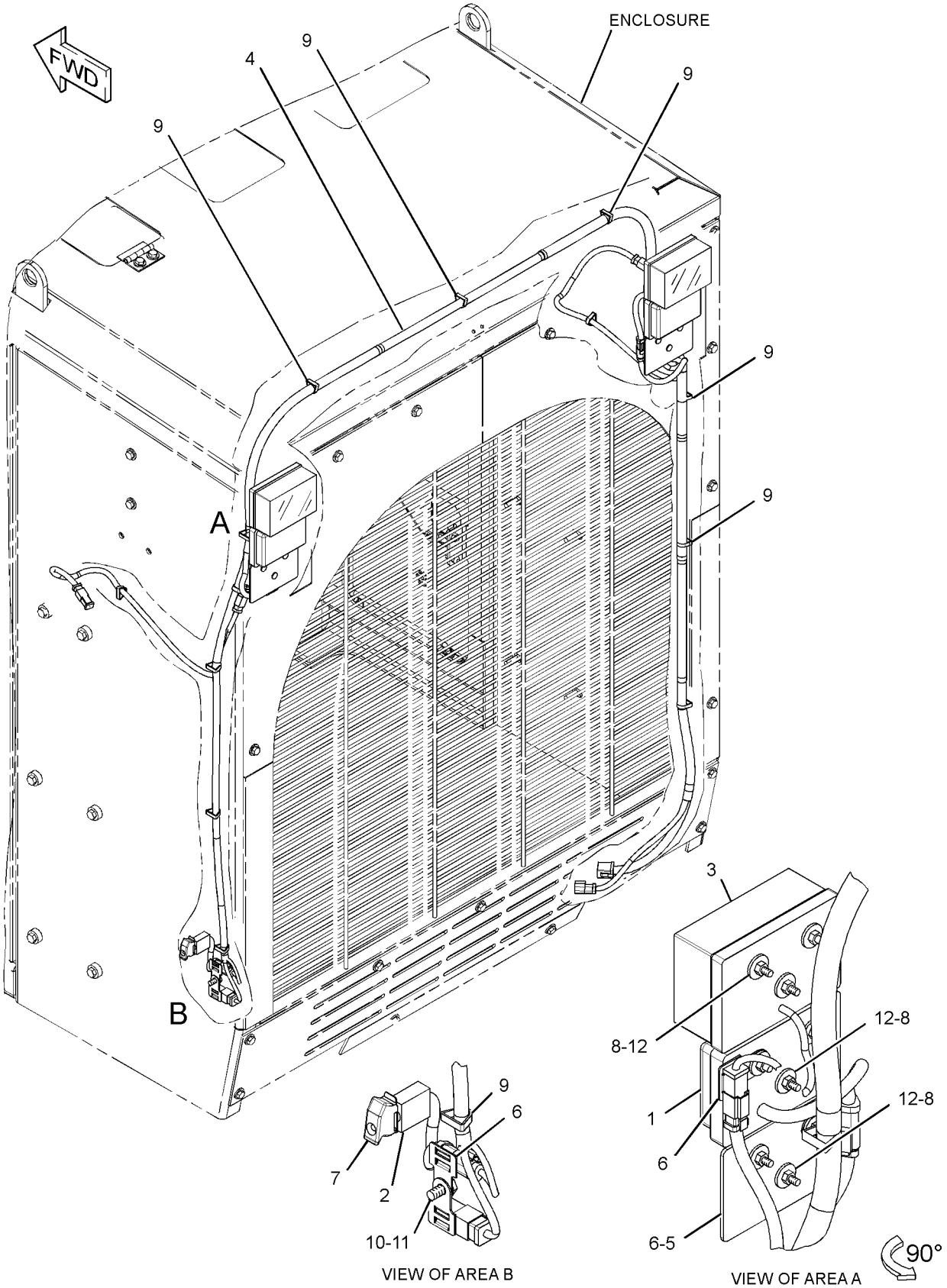

GRAPHIC #1

<END>

g01385653

POWER TRAIN

271-9315 AXLE GP-REAR

S/N: B9K1-UP

PART OF 259-9204 COMMON AR

SMCS-3278, 3282, 4068 **i02764614**

NOTE	REF NO	GRAPHIC REF	PART NUMBER	QTY	PART NAME 1 2 3 4 5 6 (PRODUCT LEVEL)	SEE PAGE
Y	1	1	*120-4408*	1	MOUNTING GP-REAR AXLE	474
Y	2	1	*120-6162*	1	FASTENER GP-TANDEM	446
Y	3	1	**165-9955**	1	FINAL DRIVE GP	444
Y	4	1	*271-9318*	1	HOUSING GP-REAR AXLE	461
Y	5	1	**273-9007**	1	DIFFERENTIAL & BEVEL GEAR GP	440

Y-SEPARATE ILLUSTRATION

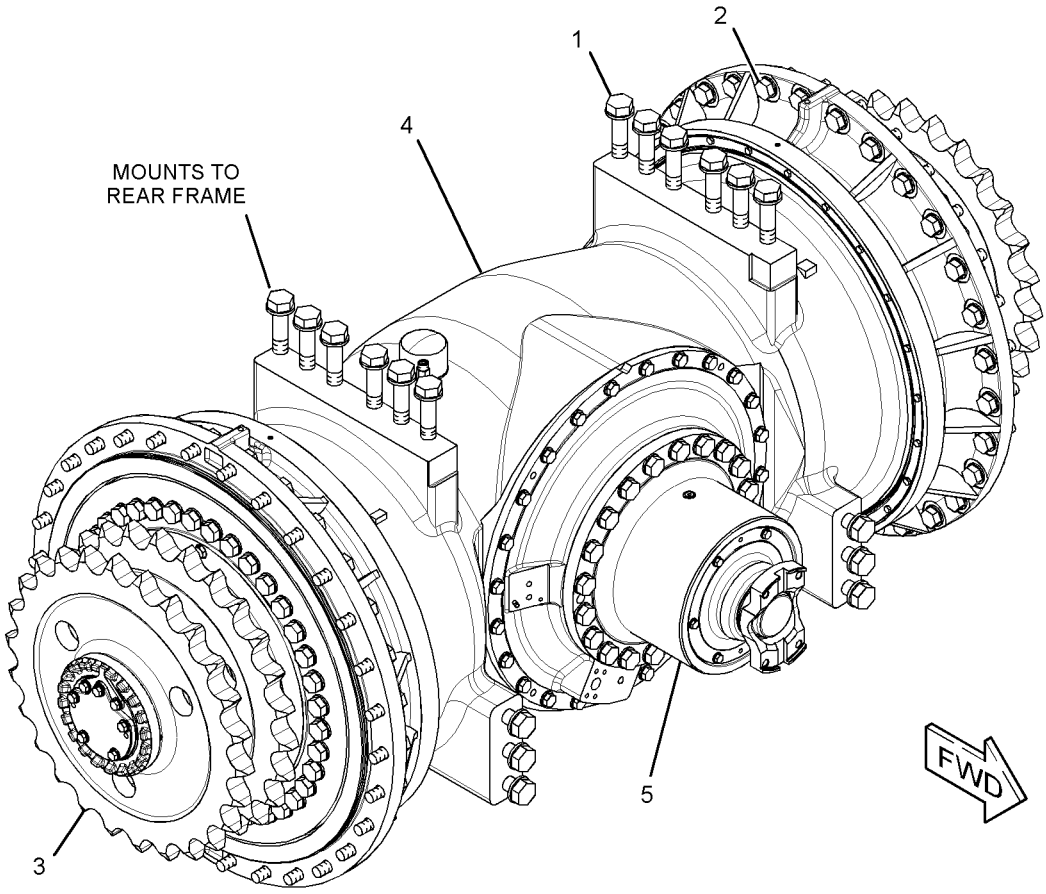

GRAPHIC #1 **<END>** g01386065

POWER TRAIN

238-1029 BASE GP-OIL FILTER

S/N: B9K1-324

PART OF 287-1512 FILTER GP-OIL

SMCS-3004, 3067 **i02721528**

NOTE	REF NO	GRAPHIC REF	PART NUMBER	QTY	PART NAME 1 2 3 4 5 6 (PRODUCT LEVEL)	SEE PAGE
	1	1	**3T-9549**	1	ADAPTER	
	2	1	**7G-4998**	1	SPOOL-BYPASS	
	3	1	**7M-1297**	1	SPRING	
	4	1	**133-2198**	1	SPRING	
Y	5	1	**164-7577**	1	SWITCH GP-BYPASS (POWER TRAIN OIL FILTER)	336
	7	1	**2S-4078**	1	SEAL-O-RING	
	8	1	**3D-2824**	1	SEAL-O-RING	
	9	1	**9S-8008**	1	PLUG-O-RING	
					PARTS SHOWN IN GRAPHIC(S) WITHOUT A REFERENCE NUMBER ARE NOT SERVICED SEPARATELY	

Y-SEPARATE ILLUSTRATION

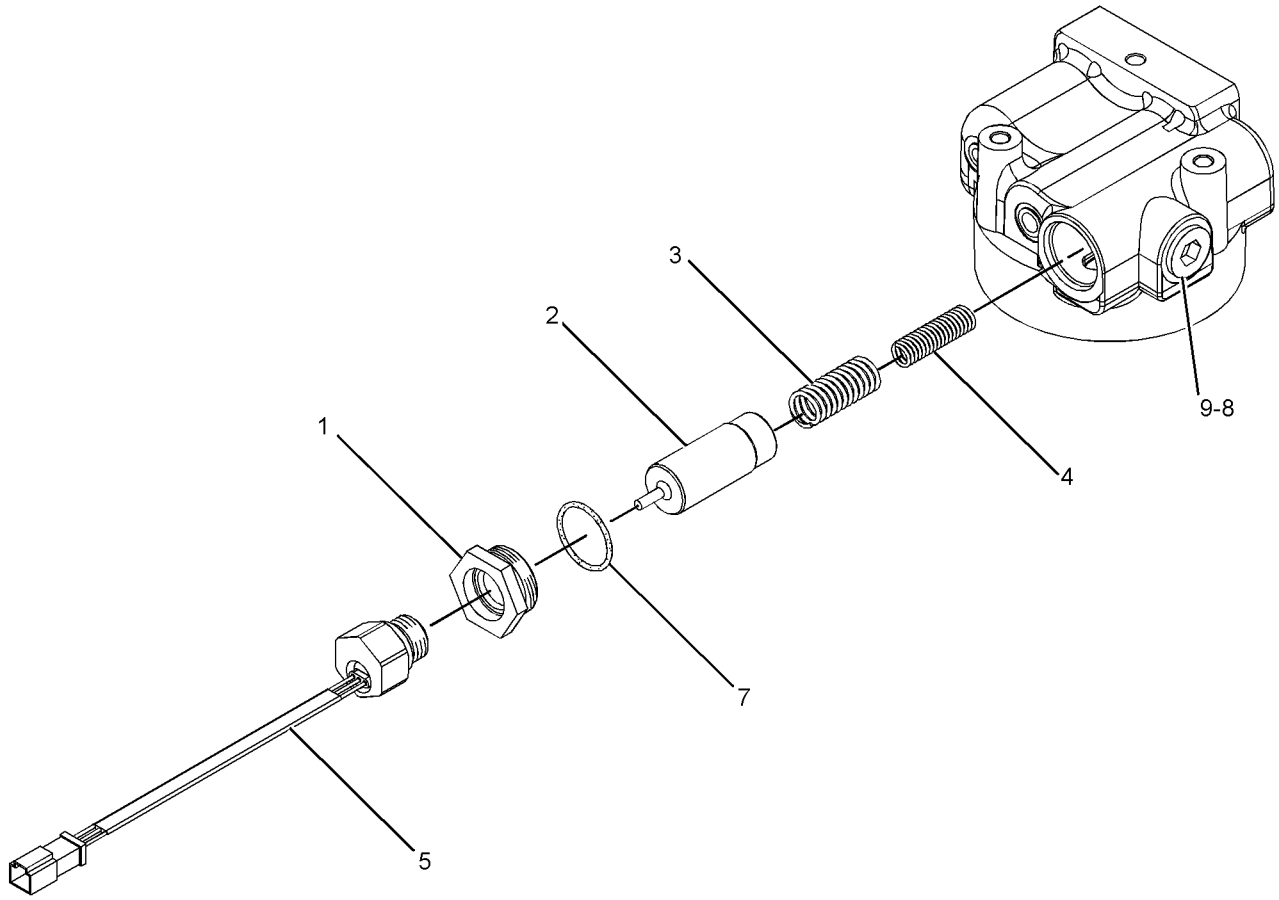

GRAPHIC #1 **<END>** g01366115

POWER TRAIN

333-9308 BASE GP-OIL FILTER—POWER TRAIN

S/N: B9K325-UP

PART OF 333-6433 FILTER GP-OIL

SMCS-3004, 3067 **i03618376**

NOTE	REF NO	GRAPHIC REF	PART NUMBER	QTY	PART NAME 1 2 3 4 5 6 (PRODUCT LEVEL)	SEE PAGE
	1	1	**3T-9549**	1	ADAPTER	
	2	1	**7G-4998**	1	SPOOL-BYPASS	
Y	3	1	**164-7577**	1	SWITCH GP-BYPASS (POWER TRAIN OIL FILTER)	336
	4	1	**334-2679**	1	SPRING	
	5	1	**334-2680**	1	SPRING	
	6	1	**5P-7815**	1	SEAL-O-RING	
	7	1	**6V-5050**	1	SEAL-O-RING	
	8	1	**9S-8008**	1	PLUG-O-RING	
					PARTS SHOWN IN GRAPHIC(S) WITHOUT A REFERENCE NUMBER ARE NOT SERVICED SEPARATELY	

Y-SEPARATE ILLUSTRATION

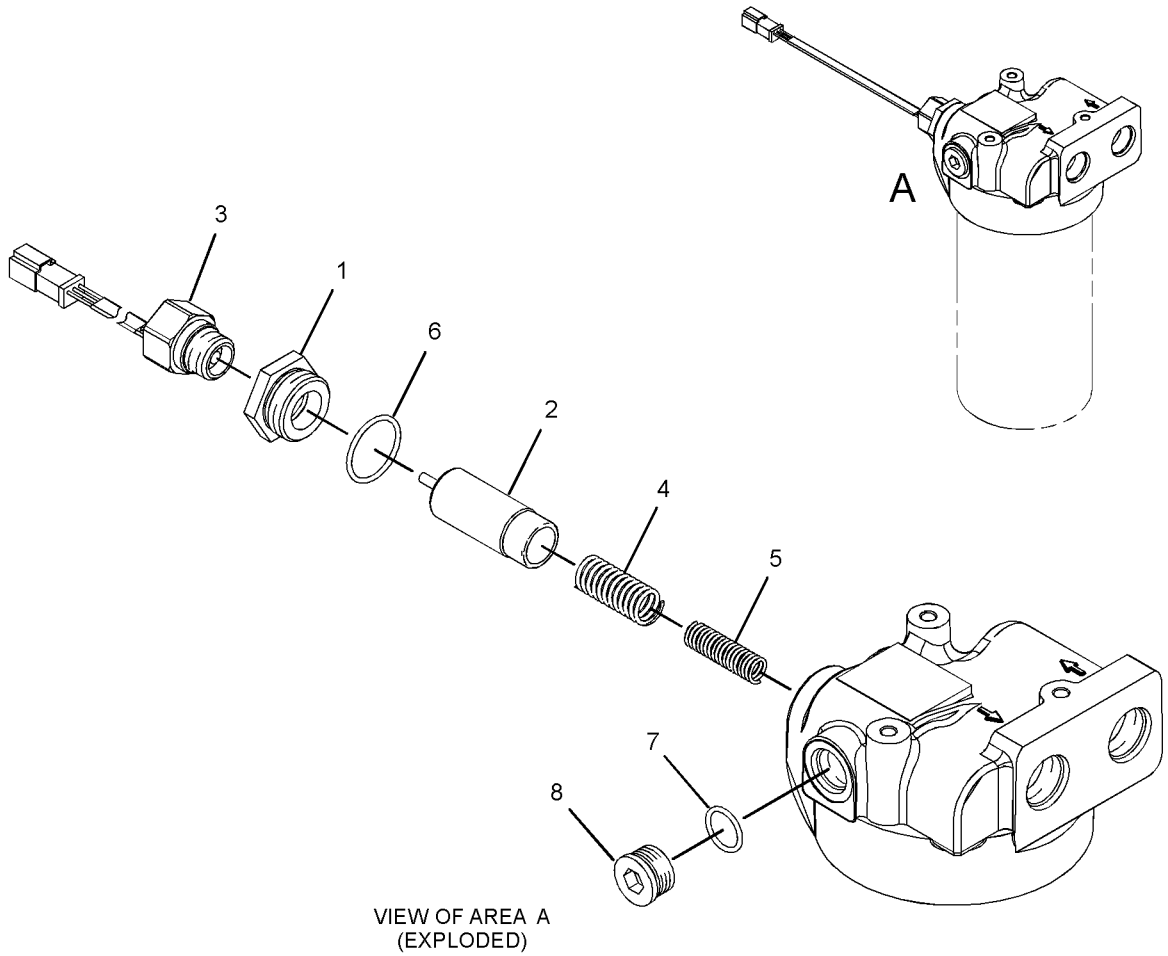

VIEW OF AREA A
(EXPLODED)

GRAPHIC #1 **<END>** g01863853

POWER TRAIN

273-8989 CARRIER GP-DIFFERENTIAL

S/N: B9K1-UP

PART OF 273-9007 DIFFERENTIAL & BEVEL GEAR GP

SMCS-3284 **i02764641**

NOTE	REF NO	GRAPHIC REF	PART NUMBER	QTY	PART NAME 1 2 3 4 5 6 (PRODUCT LEVEL)	SEE PAGE
	1	1	**7I-5005**	4	BUSHING	
	2	1	**273-8986**	1	CAP-BEARING	
	3	1	**273-8987**	1	CAP-BEARING	
	4	1	**273-8988**	1	CARRIER-DIFFERENTIAL	
M	5	1	**7X-3311**	4	BOLT (M30X3.5X200-MM)	
	6	1	**9X-8399**	4	WASHER (33X56X6-MM THK)	

M-METRIC PART

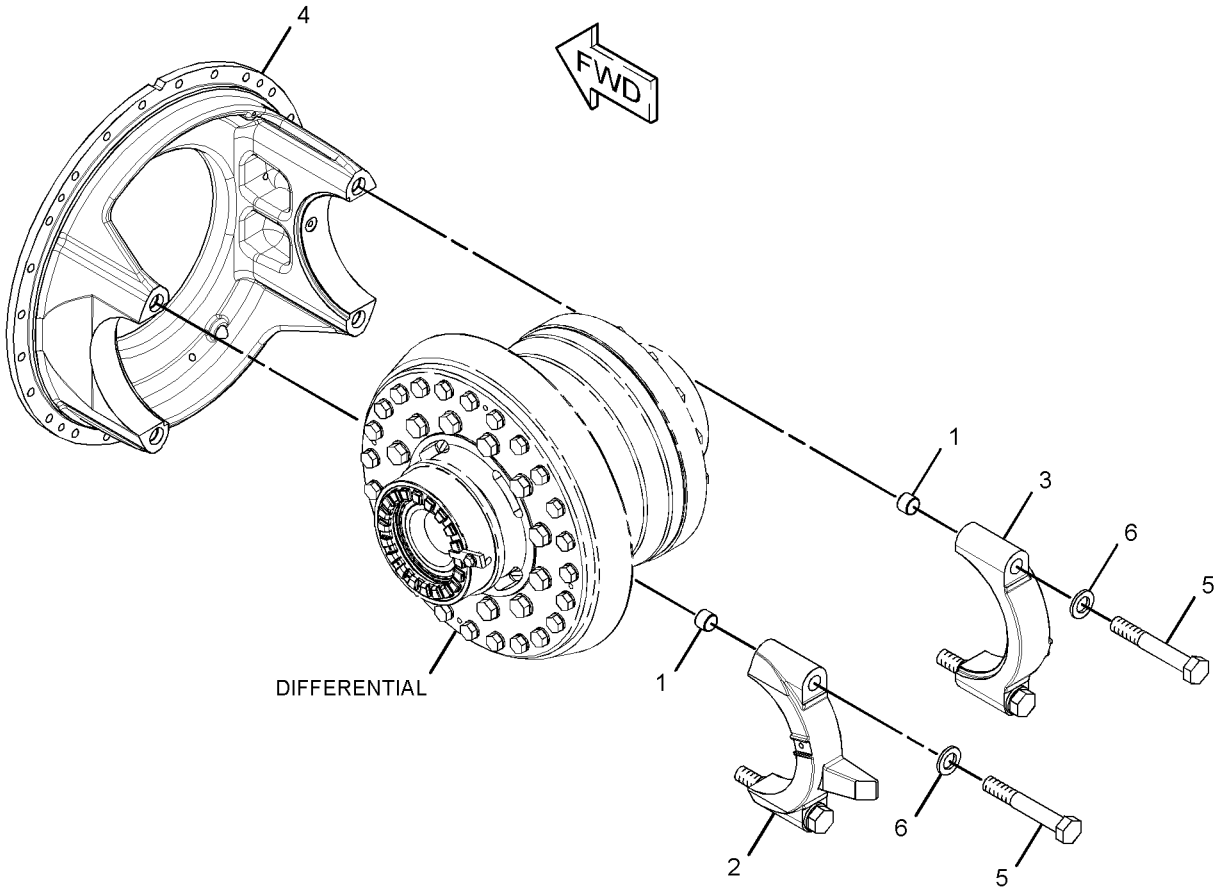

GRAPHIC #1 **<END>** g01384963

POWER TRAIN

273-9194 CASE & PARTS GP-PLANETARY

S/N: HKY1-UP

PART OF 267-5245 TRANSMISSION AR

SMCS-3030, 3064, 3160 **i02762938**

NOTE	REF NO	GRAPHIC REF	PART NUMBER	QTY	PART NAME 1 2 3 4 5 6 (PRODUCT LEVEL)	SEE PAGE
	1	1	**273-9201**	1	CASE AS-TRANSMISSION	
		1	**1A-2223**	2	DOWEL	
	2	1	**0S-1587**	2	BOLT (1/2-13X1.75-IN)	
	3	1	**5P-2587**	1	SEAL-O-RING	
	4	1	**5P-8245**	2	WASHER-HARD (13.5X25.5X3-MM THK)	
B	5	1	**1U-8846**		SEALANT-GASKET	

B-USE AS REQUIRED

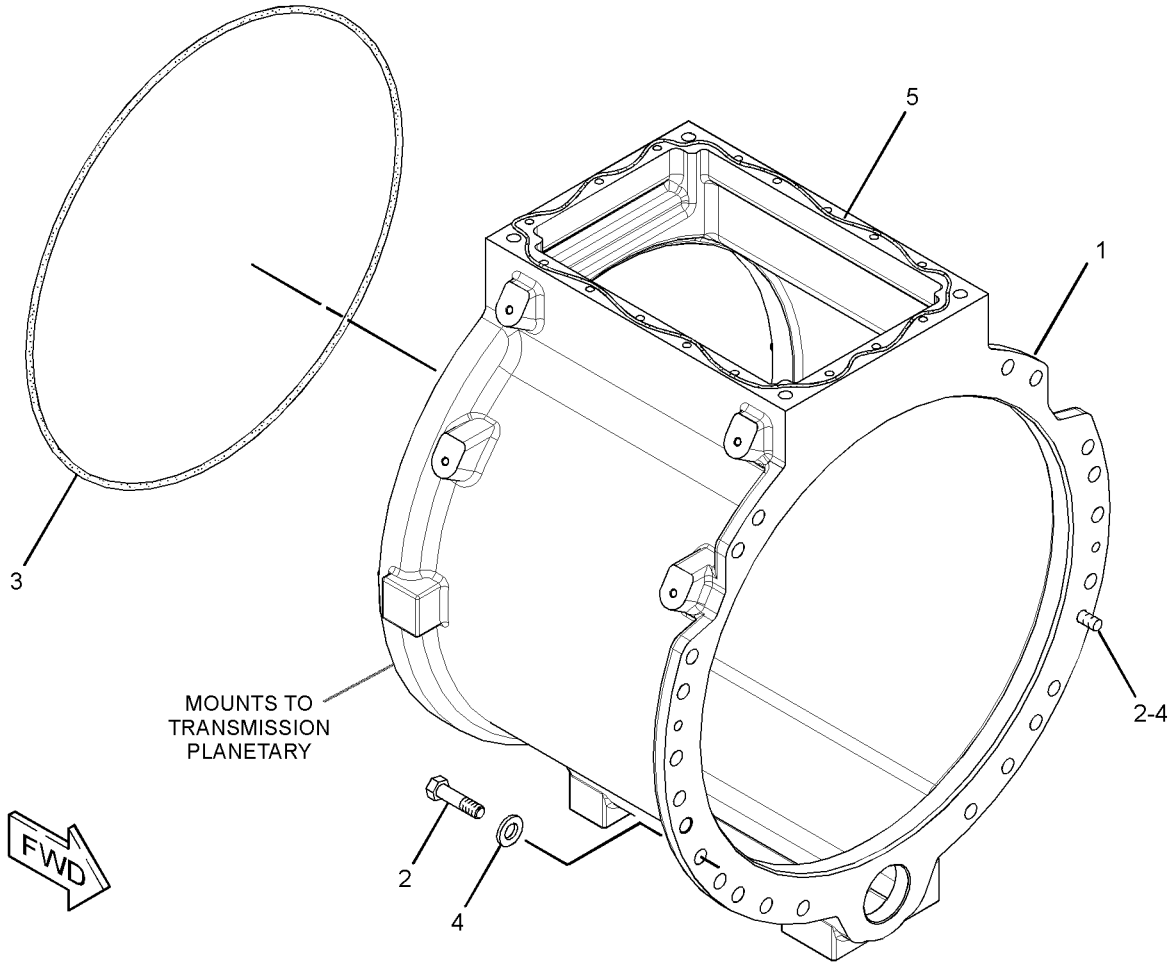

GRAPHIC #1 **<END>** g01388701

POWER TRAIN

266-9719 CHAIN GP-DRIVE–TANDEM

S/N: B9K1-UP

PART OF 259-9204 COMMON AR

SMCS-3261, 4063 **i03003738**

NOTE	REF NO	GRAPHIC REF	PART NUMBER	QTY	PART NAME 1 2 3 4 5 6 (PRODUCT LEVEL)	SEE PAGE
	1	1	**266-9720**	4	CHAIN	
					(EACH INCLUDES)	
		1	**266-9721**	1	LINK AS-CONNECTING	
		1	**305-3338**	2	PIN-SPRING	

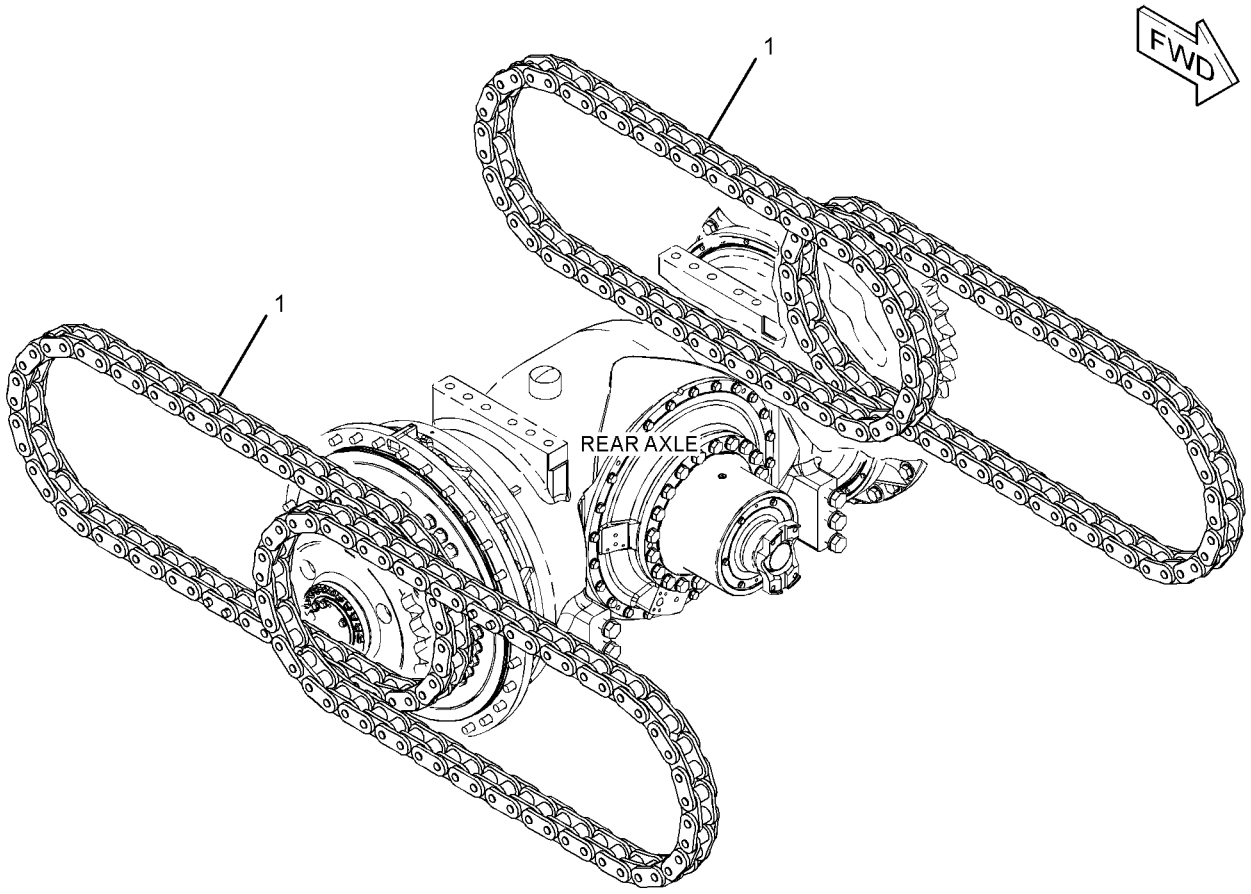

GRAPHIC #1 **<END>** g01384545

POWER TRAIN

268-0240 CONTROL GP-DIFFERENTIAL LOCK

S/N: B9K1-UP

PART OF 259-9204 COMMON AR

SMCS-3264 **i02764449**

NOTE	REF NO	GRAPHIC REF	PART NUMBER	QTY	PART NAME 1 2 3 4 5 6 (PRODUCT LEVEL)	SEE PAGE
	1	1	**6V-0852**	1	CAP-DUST	
	3	1	**124-8909**	1	ELBOW	
I	4	1	**146-5762**	1	HOSE AS	
Y	5	1	**249-1750**	1	FILTER GP-OIL (POWER TRAIN)	449
J	6	1	**266-1601**	1	VALVE GP-RELIEF (DIFFERENTIAL LOCK)	
I	7	1	**269-6579**	1	HOSE AS	
	8	1	**269-6580**	1	TUBE AS	
I	9	1	**272-1156**	1	HOSE AS	
I	10	1	**275-8366**	1	HOSE AS	
Y	11	1	**277-8874**	1	VALVE & MTG GP-SOLENOID	506
	12	1	**110-6349**	1	FITTING AS (QUICK DISCONNECT)	
	13	1	*148-8316*	1	CONNECTOR AS	
		1	**6V-8647**	1	CONNECTOR	
		1	**3J-7354**	1	SEAL-O-RING	
		1	**4J-5477**	1	SEAL-O-RING	
	14	1	*148-8318*	1	CONNECTOR AS	
		1	**6V-8634**	1	CONNECTOR	
		1	**3K-0360**	1	SEAL-O-RING	
		1	**6V-8397**	1	SEAL-O-RING	
	15	1	*148-8327*	1	CONNECTOR AS	
		1	**6V-8637**	1	CONNECTOR	
		1	**3D-2824**	1	SEAL-O-RING	
		1	**6V-9746**	1	SEAL-O-RING	
	16	1	*148-8328*	1	CONNECTOR AS	
		1	**6V-8633**	1	CONNECTOR	
		1	**3D-2824**	1	SEAL-O-RING	
		1	**6V-8398**	1	SEAL-O-RING	
	17	1	*148-8345*	1	CONNECTOR AS	
		1	**6V-8638**	1	CONNECTOR	
		1	**2M-9780**	1	SEAL-O-RING	
		1	**6V-8398**	1	SEAL-O-RING	
	18	1	*148-8353*	1	ELBOW AS	
		1	**6V-9001**	1	ELBOW	
		1	**3J-1907**	1	SEAL-O-RING	
		1	**6V-8397**	1	SEAL-O-RING	
	19	1	*148-8381*	1	ELBOW AS	
		1	**8T-5429**	1	ELBOW	
		1	**3D-2824**	1	SEAL-O-RING	
		1	**6V-8398**	1	SEAL-O-RING	
	20	1	*148-8407*	1	PLUG AS	
		1	**9S-4191**	1	PLUG-O-RING	
		1	**3J-1907**	1	SEAL-O-RING	
	21	1	*148-8428*	1	TEE AS	
		1	**6V-8782**	1	TEE	
		1	**3K-0360**	1	SEAL-O-RING	
		1	**6V-8398**	2	SEAL-O-RING	
	22	1	**198-4775**	2	WASHER-HARD (6.6X15X6-MM THK)	
	23	1	**3J-7354**	1	SEAL-O-RING	
	24	1	**4J-0520**	1	SEAL-O-RING	
	25	1	**6V-1889**	1	CLIP	
M	26	1	**7X-2534**	2	BOLT (M6X1X50-MM)	
	27	1	**8C-3206**	2	FLANGE-HALF	
	28	1	**8M-2773**	4	CLIP	
	29	1	**8M-4438**	2	SEAL-O-RING	
	30	1	**8T-4121**	11	WASHER-HARD (11X21X2.5-MM THK)	
M	31	1	**8T-4133**	1	NUT (M10X1.5-THD)	

268-0240 **CONTROL GP-DIFFERENTIAL LOCK** *(contd.)* **i02764449**

NOTE	REF NO	GRAPHIC REF	PART NUMBER	QTY	PART NAME 1 2 3 4 5 6 (PRODUCT LEVEL)	SEE PAGE
M	32	1	**8T-4136**	6	BOLT (M10X1.5X25-MM)	
M	33	1	**8T-4196**	4	BOLT (M10X1.5X35-MM)	
	34	1	**8T-4224**	2	WASHER-HARD (8.8X16X2-MM THK)	
M	35	1	**8T-6870**	2	BOLT (M8X1.25X70-MM)	
					AVAILABLE REPAIR KIT(S):	
J			**133-5545**	1	KIT-SEAL (RELIEF VALVE)	
					(INCLUDES SEAL-O-RINGS & BACK-UP RINGS)	

I-REFER TO HYDRAULIC INFORMATION SYSTEM
J-KIT MARKED J SERVICES PART(S) MARKED J
M-METRIC PART
Y-SEPARATE ILLUSTRATION

268-0240 **CONTROL GP-DIFFERENTIAL LOCK** *(contd.)* **i02764449**

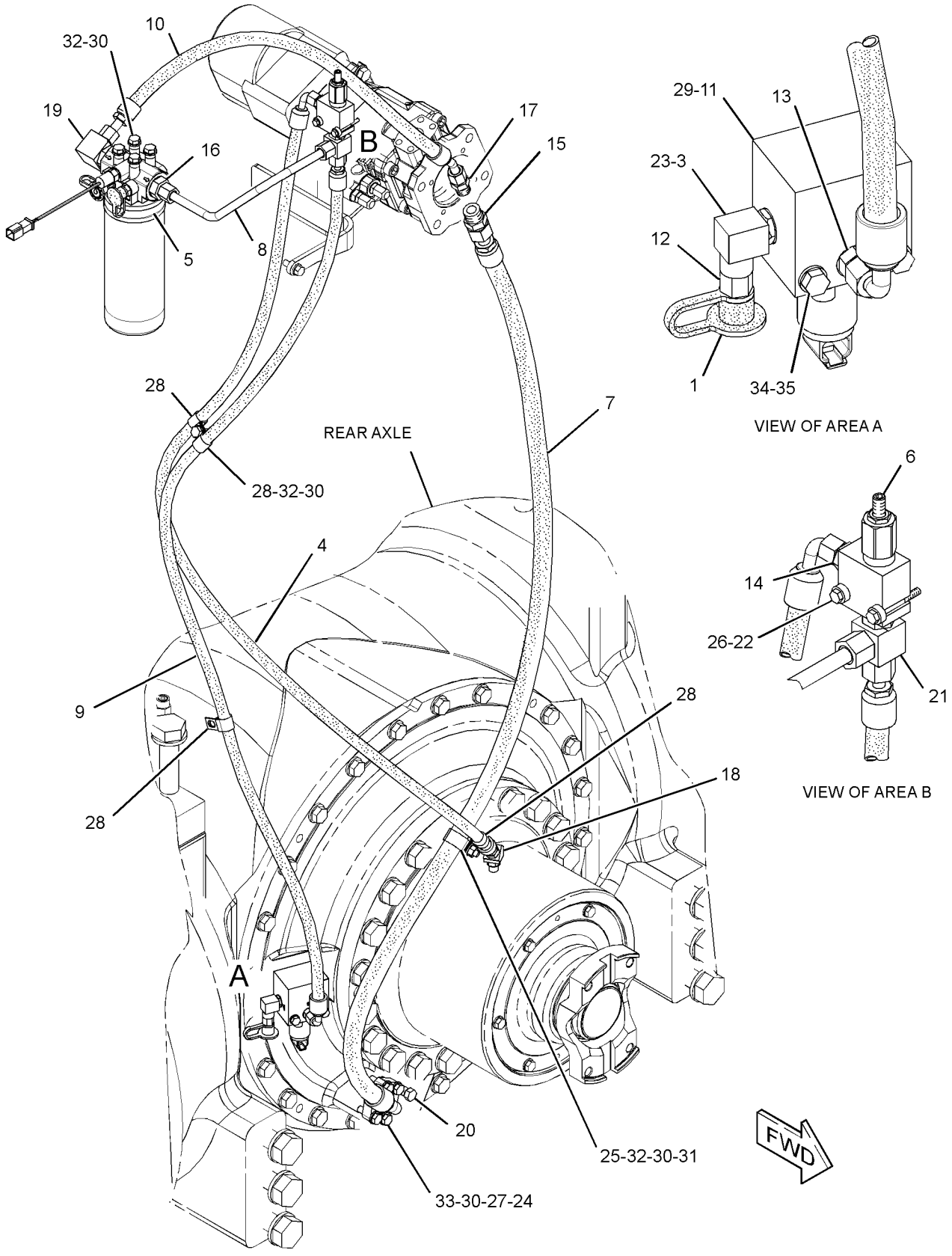

GRAPHIC #1 **<END>** g01397568

POWER TRAIN

273-9199 CONTROL GP-TRANSMISSION HYD

S/N: HKY1-UP

PART OF 267-5245 TRANSMISSION AR

SMCS-3073, 3167 **i02762957**

NOTE	REF NO	GRAPHIC REF	PART NUMBER	QTY	PART NAME 1 2 3 4 5 6 (PRODUCT LEVEL)	SEE PAGE
	1	1,2	**3S-2093**	12	STRAP-CABLE	
	2	2	**6V-0852**	6	CAP-DUST	
	3	2	**8S-0768**	6	SEAL-O-RING	
Y	4	1	**145-7028**	1	SENSOR GP-TEMPERATURE (TRANSMISSION OIL)	320
	5	1	**145-9959**	1	BRACKET AS	
	6	1,1	**164-5636**	4	SPACER	
	7	2	**231-4779**	1	COVER	
	8	2	**231-4780**	6	SLEEVE	
	9	2	**231-8900**	1	TUBE AS	
	10	2	**232-1293**	1	GASKET	
Y	11	2	**294-7362**	1	VALVE GP-MANIFOLD (TRANSMISSION)	507
Y	12	2	**244-3114**	6	VALVE GP-MODULATING (24-VOLT) (TRANSMISSION CLUTCH)	510
R	13	1	**262-1408**	1	CONTROL GP-UNPROGRAMMED (TRANSMISSION)	
	14	1	**277-4264**	1	HARNESS AS-TRANSMISSION	
	15	1,2	**130-5300**	5	CLIP	
	16	1,2	**132-5789**	11	CLIP	
	17	1	**164-3651**	1	ADAPTER	
	18	2	*164-6877*	2	ELBOW AS	
					(EACH INCLUDES)	
		2	**3J-1907**	1	SEAL-O-RING	
		2	**030-7947**	1	ELBOW	
	19	1	**3J-1907**	1	SEAL-O-RING	
	20	2	**5P-6718**	12	SEAL-O-RING	
M	21	2	**6V-3303**	4	BOLT (M16X2X60-MM)	
M	22	2	**6V-4249**	3	BOLT (M10X1.5X50-MM)	
M	23	1	**6V-5220**	4	BOLT (M8X1.25X65-MM)	
	24	2	**6V-5839**	15	WASHER (11X21X2.5-MM THK)	
M	25	2	**6V-5842**	13	BOLT (M10X1.5X40-MM)	
	26	2	**7B-1597**	1	CLIP	
	27	1	**7J-0204**	1	SEAL-O-RING	
	28	1	**8T-4121**	2	WASHER-HARD (11X21X2.5-MM THK)	
M	29	1	**8T-4137**	2	BOLT (M10X1.5X20-MM)	
	30	1	**8T-4994**	1	WASHER-HARD (20X36.5X3.5-MM THK)	
M	31	2	**8T-6869**	12	BOLT (M8X1.25X60-MM)	
	32	1	**8T-9397**	1	BOLT (3/4-10X1.25-IN)	
	33	1	**8T-9655**	8	MOUNT-ISOLATION	
	34	2	**9M-1974**	12	WASHER-HARD (8.8X16X2-MM THK)	
	35	1	**9N-0869**	4	WASHER-HARD (8.8X25.5X2-MM THK)	
	36	2	**9X-8268**	4	WASHER (17.5X30X3.5-MM THK)	

M-METRIC PART
R-REMFG PART MAY BE AVAILABLE
Y-SEPARATE ILLUSTRATION

REFER TO ALL ILLUSTRATIONS OF
THIS GROUP FOR AUXILIARY VIEWS

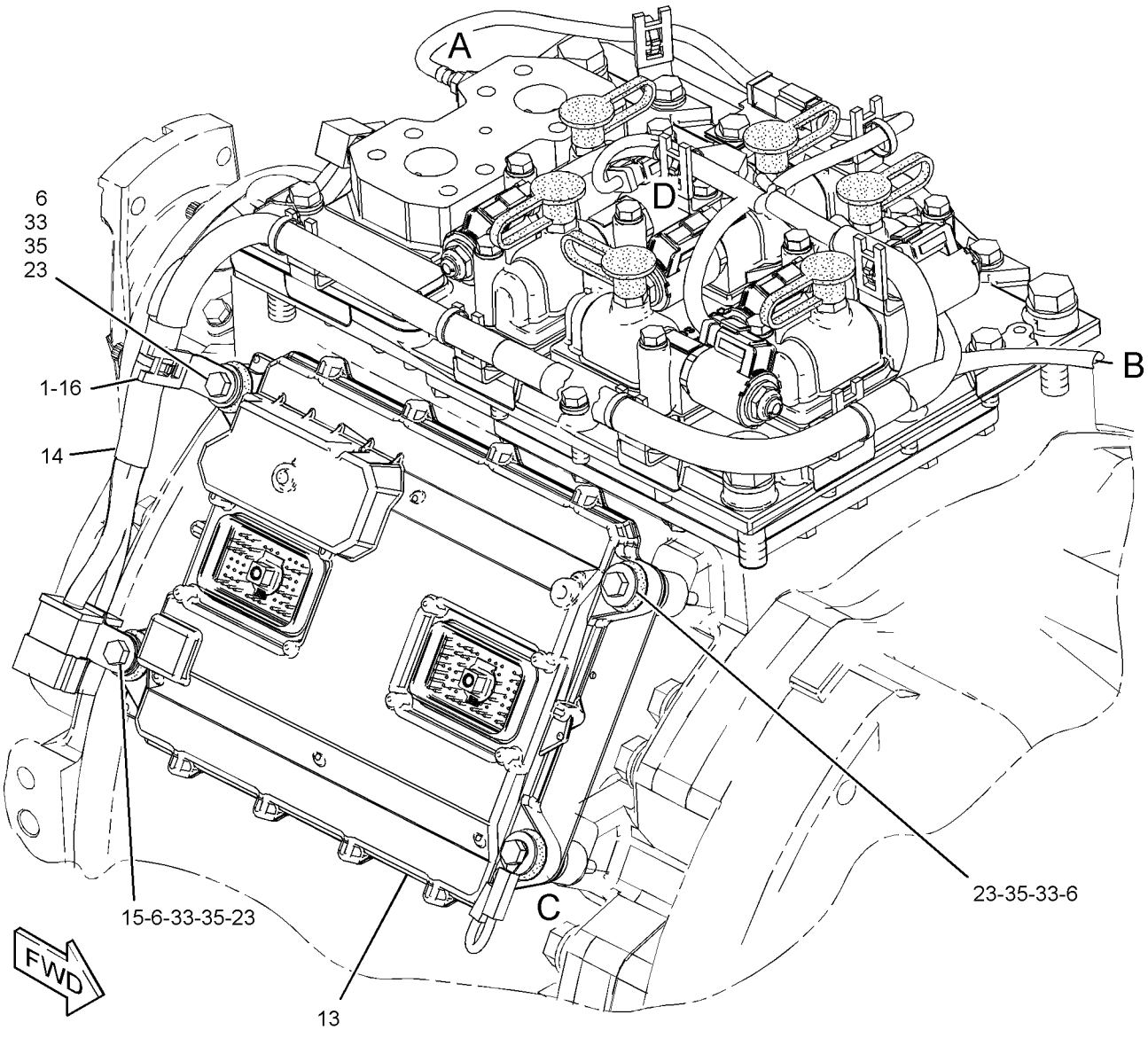

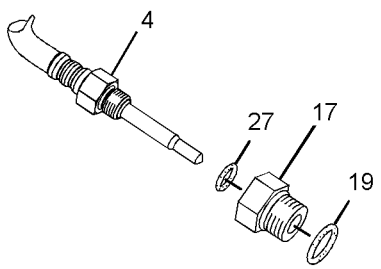

VIEW OF AREA A
(EXPLODED)

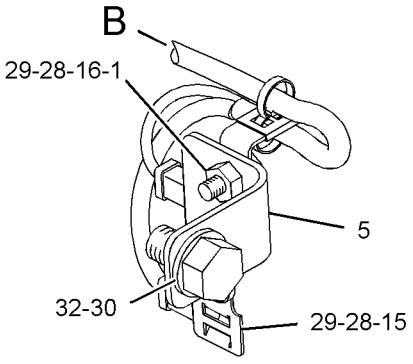

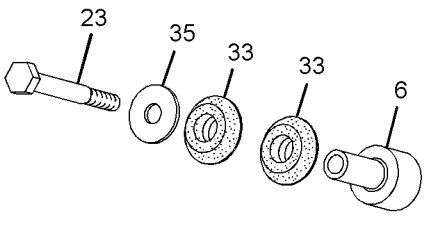

VIEW OF AREA C
(EXPLODED)

GRAPHIC #1

g01390230

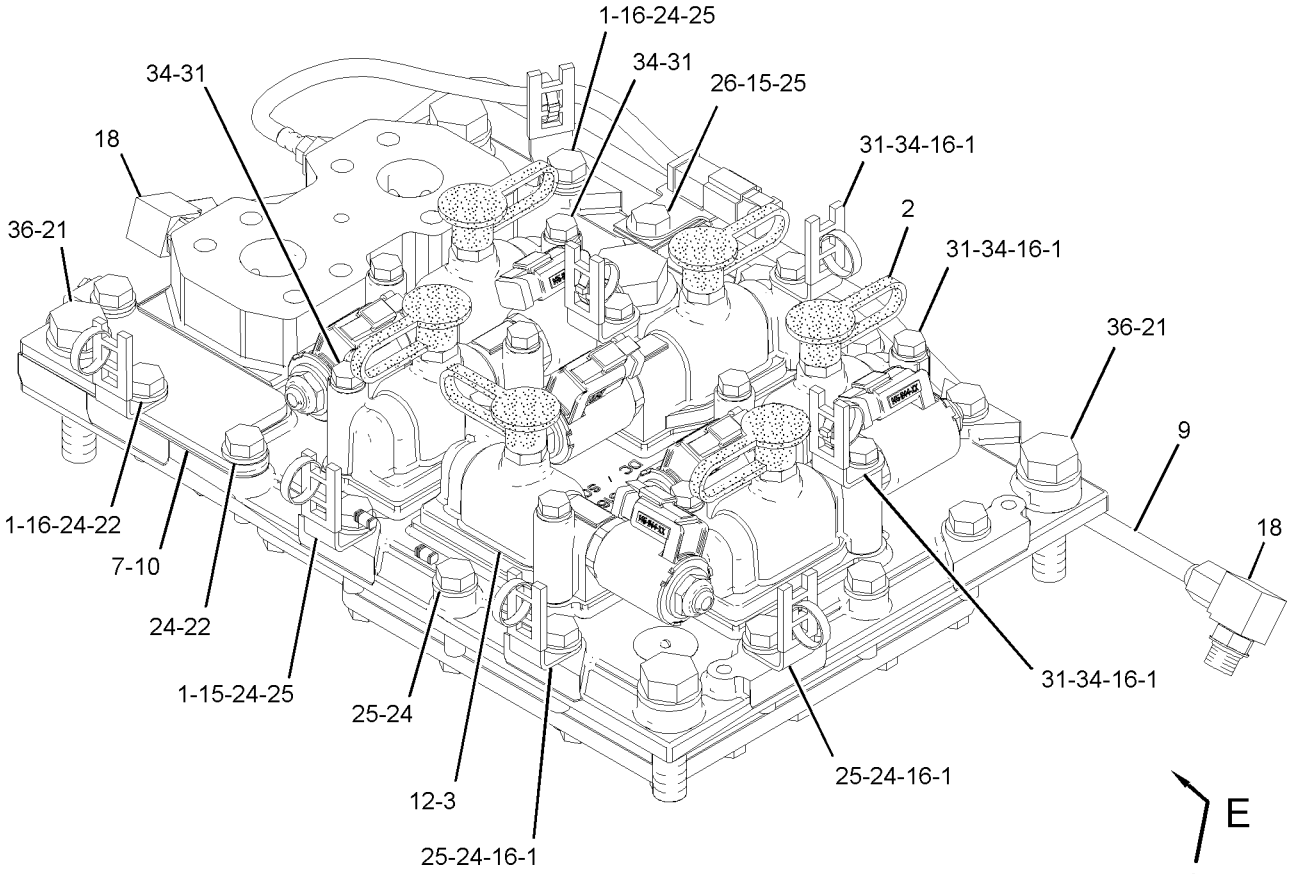

VIEW OF AREA D
(HARNESS REMOVED)

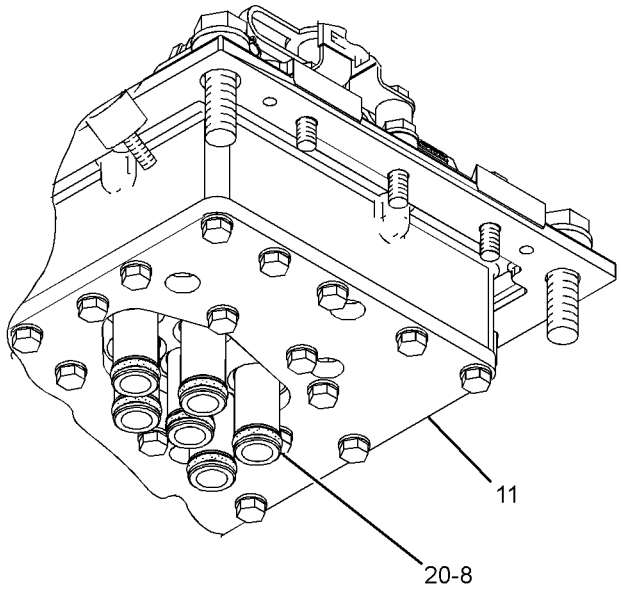

VIEW E-E

GRAPHIC #2 **<END>** g01390270

POWER TRAIN

278-9805 COVER GP-SHIPPING

S/N: HKY1-UP

PART OF 267-5245 TRANSMISSION AR

SMCS-3030, 3064 **i03592272**

NOTE	REF NO	GRAPHIC REF	PART NUMBER	QTY	PART NAME 1 2 3 4 5 6 (PRODUCT LEVEL)	SEE PAGE
	1	1	**126-1773**	2	CAP-CONNECTOR	
	3	1	**0S-0509**	2	BOLT (3/8-16X0.75-IN)	
M	4	1	**6V-3668**	2	BOLT (M12X1.75X30-MM)	
	5	1	**0S-1621**	4	BOLT (1/2-13X1-IN)	
	6	1	**0T-0102**	2	BOLT (3/8-16X0.625-IN)	
	7	1	**0T-0318**	8	BOLT (7/16-14X1-IN)	
	8	1	**1F-7958**	4	NUT-FULL (1/2-13-THD)	
	9	1	**1P-9269**	1	COVER	
	10	1	**1S-3725**	2	COVER	
	11	1	**1S-6595**	1	GASKET-OIL SUPPLY	
	12	1	**2S-4078**	1	SEAL-O-RING	
	13	1	**3F-5792**	1	SEAL-O-RING	
	14	1	**3H-0110**	1	COVER	
	15	1	**3J-3712**	1	GASKET	
	16	1	**5M-3154**	1	COVER	
	17	1	**5P-8245**	4	WASHER-HARD (13.5X25.5X3-MM THK)	
M	18	1	**6A-5591**	8	BOLT (M12X1.75X25-MM)	
	19	1	**7J-0402**	1	COVER	
	20	1	**8E-7366**	4	GASKET	
	21	1	**8E-7367**	1	GASKET	
	22	1	**8X-6166**	2	COVER	
	23	1	**9S-8010**	1	PLUG	
	24	1	**155-2255**	1	KIT-CONNECTING PLUG (12-PIN)	
					(INCLUDES PLUG AS, WEDGE, & INTERFACE SEAL)	
	25	1	**155-2274**	1	KIT-CONNECTING PLUG (6-PIN)	
					(INCLUDES PLUG AS, WEDGE, & INTERFACE SEAL)	
	26	1	**8T-8737**	18	PLUG-SEAL	

M-METRIC PART

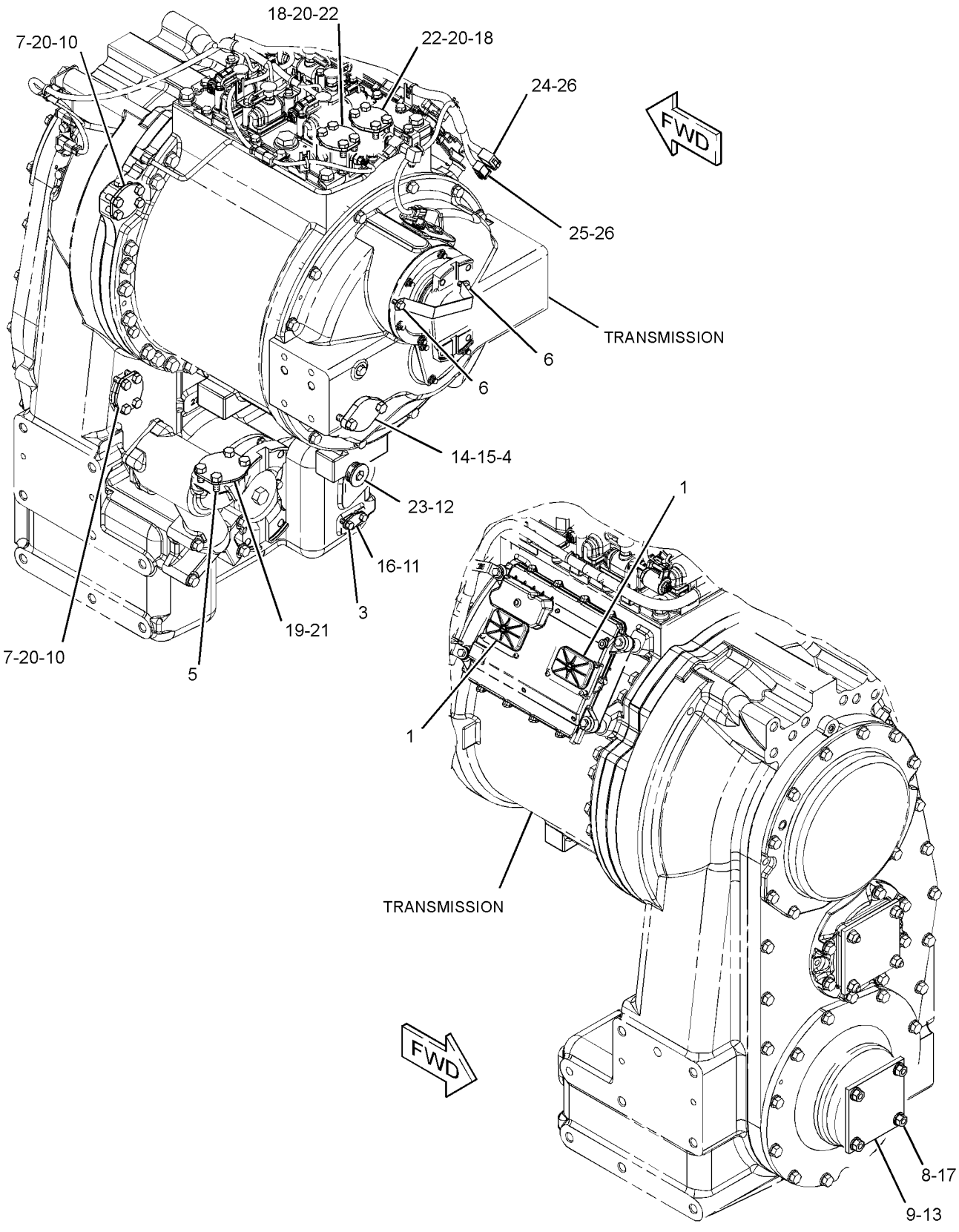

GRAPHIC #1 **<END>** g01397941

POWER TRAIN

273-9007 DIFFERENTIAL & BEVEL GEAR GP

S/N: B9K1-UP

PART OF 271-9315 AXLE GP-REAR

SMCS-3256, 3258 **i02764643**

NOTE	REF NO	GRAPHIC REF	PART NUMBER	QTY	PART NAME 1 2 3 4 5 6 (PRODUCT LEVEL)	SEE PAGE
	1	1	**2M-3340**	1	SEAL-O-RING	
	2	1	**5T-5921**	2	PLATE	
B	3	1	**7I-4999**	1	SHIM PACK (INCLUDES 20-SHIMS)	
Y	4	1	**273-8989**	1	CARRIER GP-DIFFERENTIAL	429
Y	5	1	**273-8991**	1	DIFFERENTIAL GP	442
	6	1	**274-1353**	1	TUBE AS	
Y	7	1	**275-9422**	1	PINION GP-DIFFERENTIAL	475
	8	1	*148-8378*	1	ELBOW AS	
		1	**6V-8724**	1	ELBOW	
		1	**3J-1907**	1	SEAL-O-RING	
		1	**6V-8397**	1	SEAL-O-RING	
	9	1	**198-4765**	1	WASHER-HARD (8.8X20X8-MM THK)	
	10	1	**4D-0537**	2	DOWEL	
	11	1	**5P-8245**	2	WASHER-HARD (13.5X25.5X3-MM THK)	
M	12	1	**6A-5591**	2	BOLT (M12X1.75X25-MM)	
M	13	1	**6V-3940**	1	BOLT (M8X1.25X25-MM)	
M	14	1	**7X-2576**	20	BOLT (M24X3X70-MM)	
	15	1	**8T-4167**	20	WASHER-HARD (26X44X4-MM THK)	
	16	1	**9S-4200**	1	CLIP	

B-USE AS REQUIRED
M-METRIC PART
Y-SEPARATE ILLUSTRATION

273-9007 DIFFERENTIAL & BEVEL GEAR GP *(contd.)* **i02764643**

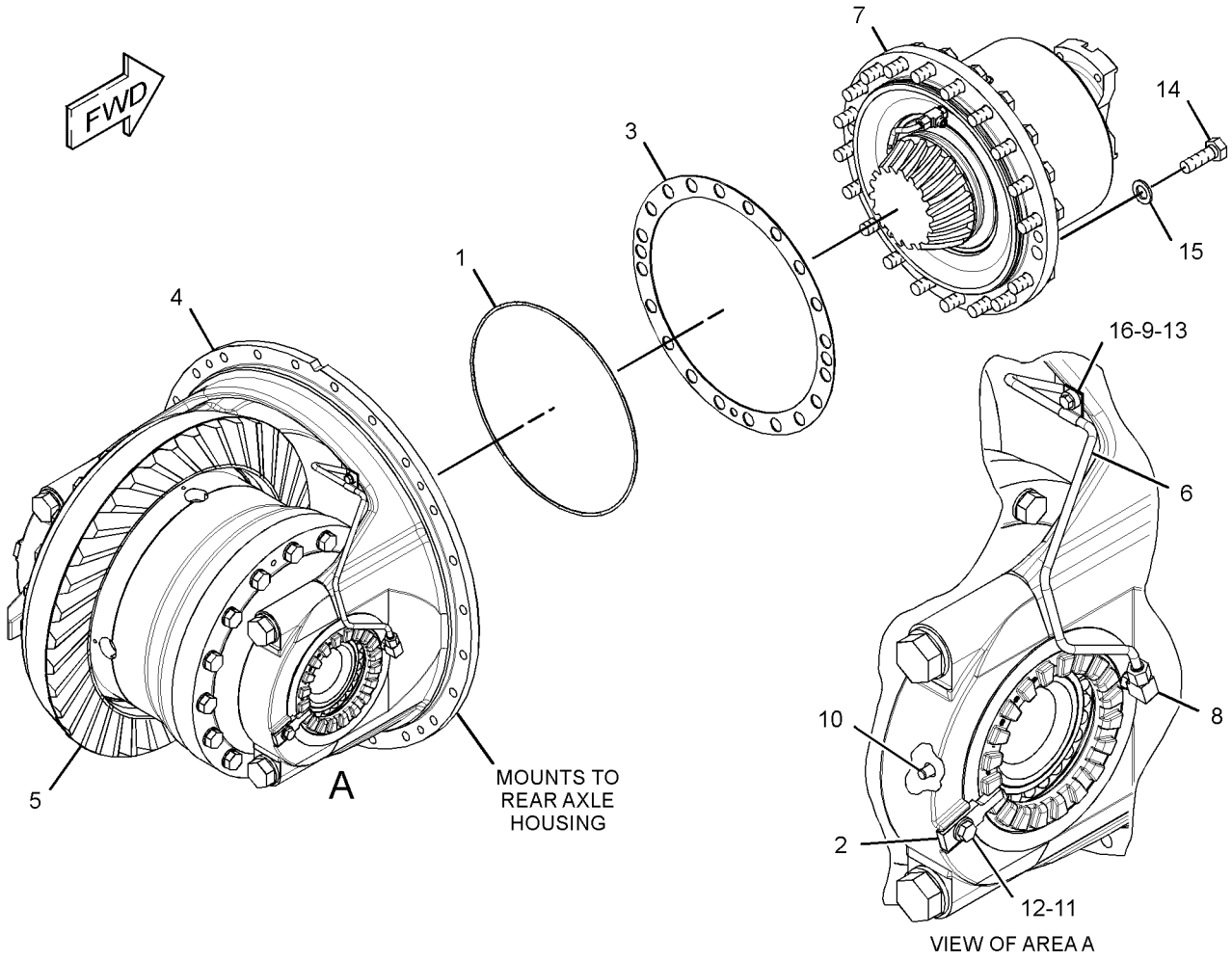

GRAPHIC #1 **<END>** g01388159

POWER TRAIN

273-8991 DIFFERENTIAL GP

S/N: B9K1-UP

PART OF 273-9007 DIFFERENTIAL & BEVEL GEAR GP

SMCS-3258 **i02765290**

NOTE	REF NO	GRAPHIC REF	PART NUMBER	QTY	PART NAME 1 2 3 4 5 6 (PRODUCT LEVEL)	SEE PAGE
	1	1	**2A-7180**	1	PISTON	
	2	1	**2D-9453**	1	CONE-BEARING	
	3	1	**4D-7534**	4	BEARING AS-ROLLER	
	4	1	**4D-7536**	4	LOCKNUT	
	5	1	**4D-7541**	4	RETAINER	
	6	1	**6G-0387**	6	DISC	
	7	1	**6G-6272**	2	RING-SEAL	
	8	1	**7I-4935**	1	SPACER (225X387.41X12-MM THK)	
	9	1	**7I-5006**	1	GEAR-DIFFERENTIAL BEVEL (24-TEETH)	
	10	1	**8W-9150**	1	GEAR-DIFFERENTIAL BEVEL (24-TEETH)	
	11	1	**8W-9151**	4	PINION-DIFFERENTIAL	
	12	1	**9D-8799**	1	RING	
	13	1	**9V-9840**	1	SPIDER	
	14	1	**2F-9064**	4	NUT (2-1/8-12-THD)	
	15	1	**116-8238**	1	GEAR-BEVEL (51-TEETH)	
	16	1	**117-0019**	6	DISC-FRICTION	
	17	1	**154-6619**	2	WASHER-THRUST (122X220X5-MM THK)	
	18	1	**273-8993**	1	CAGE AS	
		1	**2D-6642**	2	BALL	
	19	1	**273-8995**	1	RING-ADJUSTING	
	20	1	**273-8996**	1	CAGE-BEARING	
	21	1	**273-8997**	1	RING-ADJUSTING	
Y	22	1	**273-9001**	1	HOUSING AS-DIFFERENTIAL	459
	23	1	**277-5805**	1	BEARING AS-TAPERED ROLLER	
	24	1	**2S-1914**	1	SEAL-RING	
	25	1	**6B-4370**	1	CUP-BEARING	
M	26	1	**6V-3532**	24	BOLT (M20X2.5X60-MM)	
	27	1	**7G-9224**	1	RING-SEAL	
M	28	1	**8C-7562**	8	SCREW-FLAT HEAD (M8X1.25X20-MM)	
	29	1	**8T-3282**	24	WASHER-HARD (22X35X3.5-MM THK)	
	30	1	**9G-0333**	1	SEAL-RING	
M	31	1	**9X-2609**	1	SETSCREW-SOCKET (M8X1.25X8-MM)	

PARTS SHOWN IN GRAPHIC(S) WITHOUT A REFERENCE NUMBER ARE NOT SERVICED SEPARATELY

M-METRIC PART
Y-SEPARATE ILLUSTRATION

273-8991 DIFFERENTIAL GP *(contd.)* **i02765290**

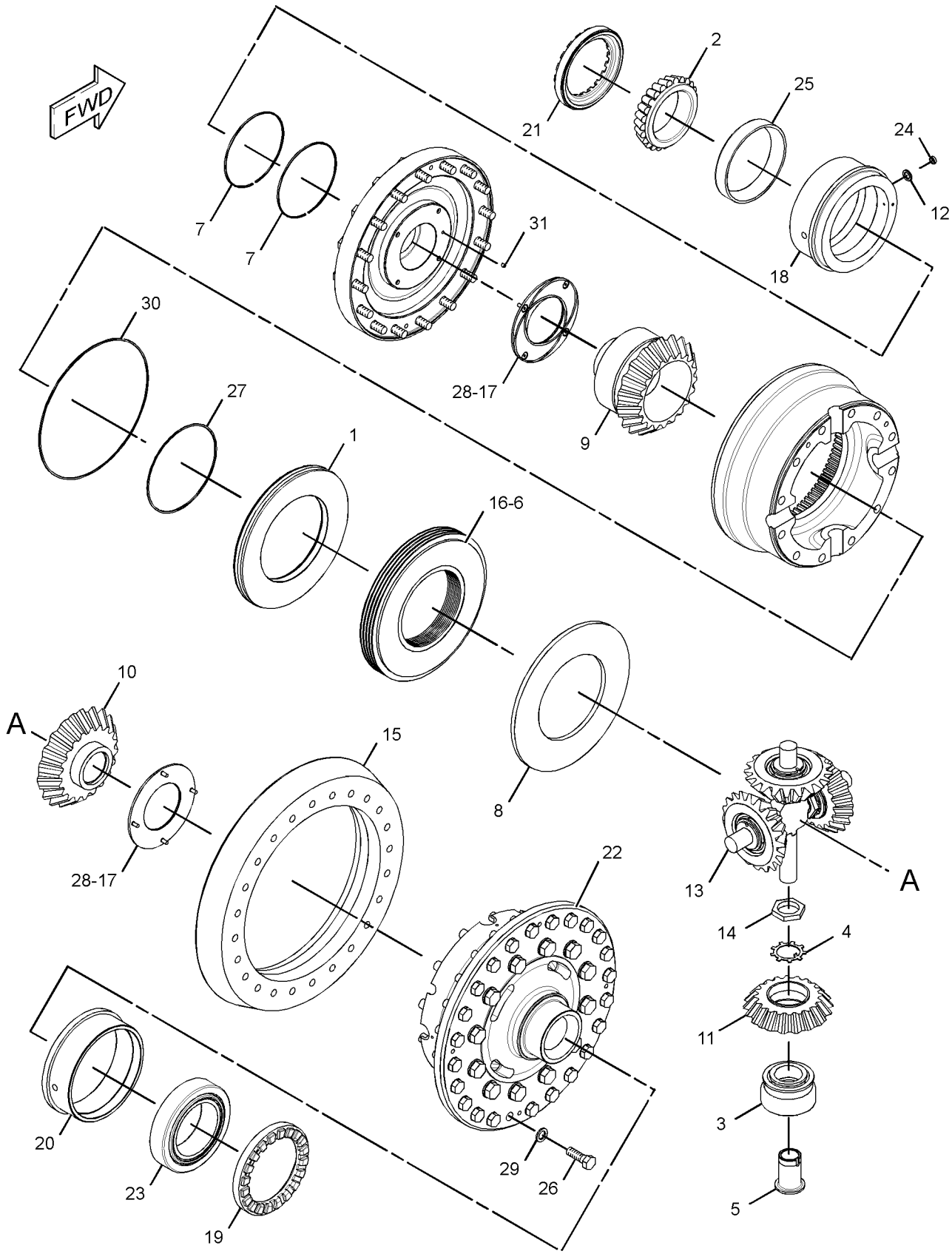

GRAPHIC #1 **<END>** g01387966

POWER TRAIN

165-9955 DRIVE GP-FINAL

S/N: B9K1-UP

PART OF 271-9315 AXLE GP-REAR

SMCS-4050 **i03654006**

NOTE	REF NO	GRAPHIC REF	PART NUMBER	QTY	PART NAME 1 2 3 4 5 6 (PRODUCT LEVEL)	SEE PAGE
	1	1	**2A-7174**	2	CARRIER-PLANETARY	
	2	1	**5D-6296**	2	CONE-BEARING	
	3	1	**5D-6792**	8	RING-RETAINING	
	4	1	**5T-7676**	8	RETAINER	
	5	1	**6Y-4119**	16	BEARING-ROLLER	
	6	1	**7D-2626**	2	GEAR-RING (76-TEETH)	
	7	1	**7I-4874**	2	RETAINER	
	8	1	**7I-4918**	4	SPROCKET	
	9	1	**331-1147**	2	WASHER-THRUST (705.86X784X6.97-MM THK)	
	10	1	**7I-4997**	2	RING-WEAR	
C	11	1	**234-4383**	2	SHAFT	
	12	1	**7I-5000**	2	RING-ADJUSTMENT	
	13	1	**7I-5001**	2	BEARING	
	14	1	**7I-5003**	4	WASHER-THRUST (86.3X115.7X10-MM THK)	
	15	1	**8S-5141**	2	SEAL-LIP TYPE	
	16	1	**8X-5699**	8	SHAFT-PLANETARY	
	17	1	**214-1121**	16	WASHER-THRUST (89.7X146X5.16-MM THK)	
	18	1	**8X-9564**	8	SPACER (97.54X128.95X26.97-MM THK)	
	19	1	**116-7527**	2	HOUSING	
	20	1	**116-8242**	2	RETAINER	
B	21	1	**116-8243**	2	SHIM PACK (INCLUDES 17-SHIMS)	
	22	1	**116-8244**	2	LOCK	
C	23	1	**5R-5927**	2	WASHER (14X65X6-MM THK)	
	24	1	**148-4467**	2	GEAR-SUN (20-TEETH)	
	25	1	**148-4468**	8	GEAR (27-TEETH)	
	26	1	**156-6398**	2	HOUSING	
	27	1	**165-9951**	6	PLATE-RETAINER	
J	28	1	**165-9954**	2	SEAL-LIP TYPE	
	29	1	**1H-6227**	2	SEAL-O-RING	
	30	1	**3D-8422**	2	SEAL-O-RING	
	31	1	**3K-0360**	4	SEAL-O-RING	
	32	1	**5D-6297**	2	CONE-BEARING	
	33	1	**5D-6298**	4	CUP-BEARING	
	34	1	**5P-8245**	30	WASHER-HARD (13.5X25.5X3-MM THK)	
M	35	1	**6V-3668**	16	BOLT (M12X1.75X30-MM)	
M	36	1	**6V-8133**	76	BOLT (M24X3X80-MM)	
	37	1	**6V-8237**	76	WASHER (26X44X4-MM THK)	
M	38	1	**6V-8675**	30	BOLT (M12X1.75X35-MM)	
C	39	1	**5P-2228**	2	BOLT (1/2-13X1-IN)	
	40	1	**9F-2247**	2	PLUG-PIPE	
	41	1	**9X-2230**	4	PLUG-DRAIN (MAGNETIC) (FINAL DRIVE)	
M	42	1	**8T-4200**	48	BOLT (M8X1.25X16-MM)	
	43	1	**328-9666**	2	WASHER-THRUST (705.86X784X6.97-MM THK)	
					AVAILABLE REPAIR KIT(S):	
J			**165-9948**	2	KIT-SEAL & SLEEVE (FINAL DRIVE)	
					(EACH INCLUDES LIP SEAL & WEAR SLEEVE)	

B-USE AS REQUIRED
C-CHANGE FROM PREVIOUS TYPE
J-KIT MARKED J SERVICES PART MARKED J
M-METRIC PART

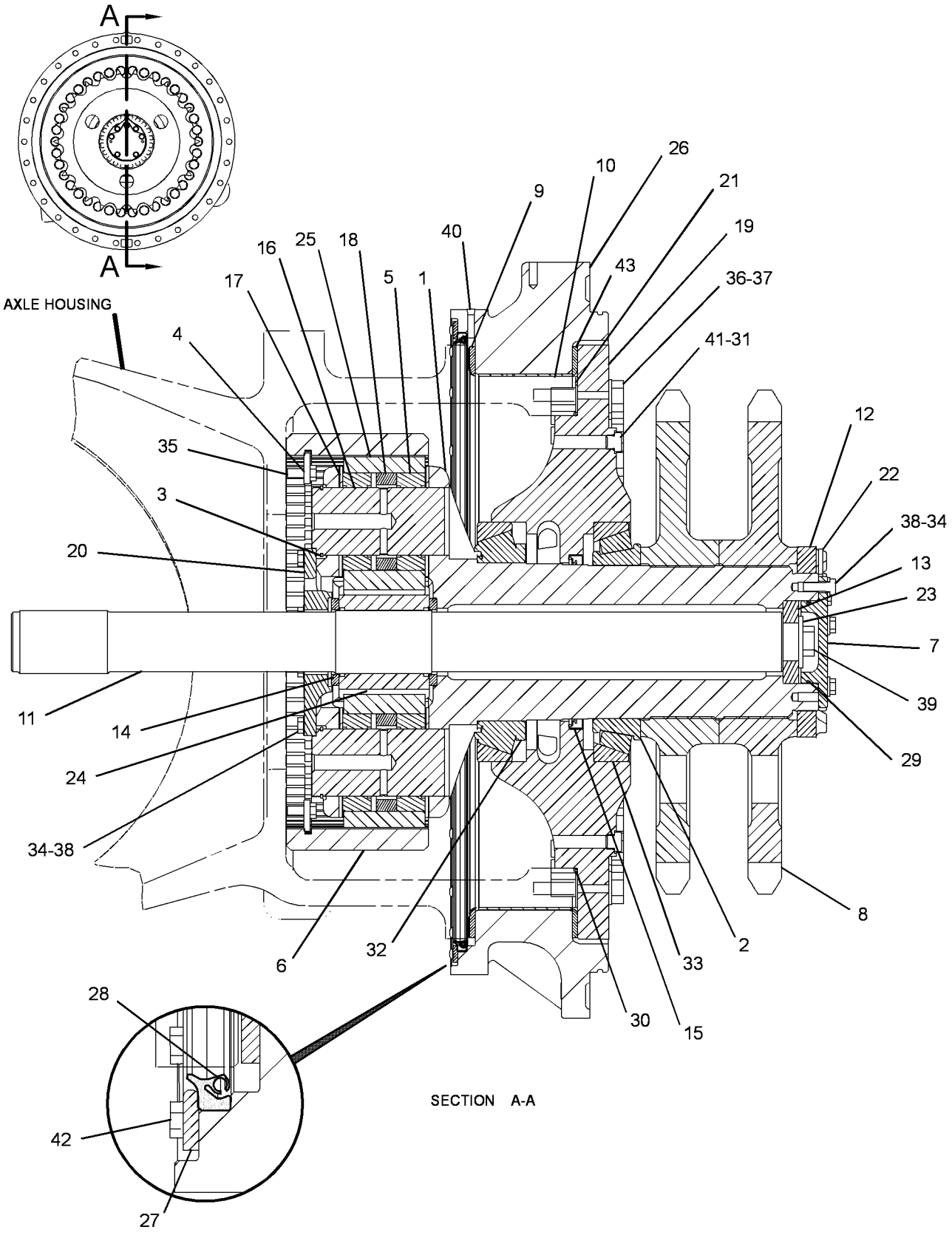

GRAPHIC #1 **<END>** g01961098

POWER TRAIN

120-6162 FASTENER GP-TANDEM

S/N: B9K1-UP

PART OF 271-9315 AXLE GP-REAR

SMCS-4062 **i00107512**

NOTE	PART NUMBER	QTY	PART NAME 1 2 3 4 5 6 (PRODUCT LEVEL)	SEE PAGE
M	**8T-0664**	60	BOLT (M24X3X70MM)	
	5P-9519	2	SEAL-O-RING (843.0MM ID)	
	6V-8237	60	WASHER (4MM THK)	

M-METRIC PART

<END>

POWER TRAIN

226-1260 FILLER GP-POWER TRAIN OIL

S/N: B9K1-UP

PART OF 259-9204 COMMON AR

SMCS-3005, 3081, 7513 **i03131020**

NOTE	REF NO	GRAPHIC REF	PART NUMBER	QTY	PART NAME 1 2 3 4 5 6 (PRODUCT LEVEL)	SEE PAGE
	1	1	**171-4766**	1	FILLER AS (POWER TRAIN OIL)	
	2	1	**271-6766**	1	FILLER AS-OIL (POWER TRAIN)	
	3	1	**273-0272**	1	BRACKET AS	
	4	1	**276-4778**	1	GAUGE AS-OIL LEVEL (DIPSTICK) (POWER TRAIN OIL)	
	5	1	**281-4103**	1	TUBE AS	
	6	1	**091-0081**	5	SPACER (10.5X20X10-MM THK)	
	7	1	**139-1398**	2	CLIP	
	8	1	**5P-7464**	1	CLIP (SLOT)	
	9	1	**1P-4578**	2	FLANGE-HALF	
	10	1	**1S-6595**	1	GASKET-OIL SUPPLY	
	11	1	**220-3246**	2	CLAMP	
	12	1	**4D-7388**	1	CLIP	
	13	1	**4D-9517**	1	CLIP	
	14	1	**4J-0522**	1	SEAL-O-RING	
	15	1	**4L-6454**	2	BOLT (3/8-16X1-IN)	
	16	1	**6V-8398**	1	SEAL-O-RING	
	17	1	**8T-4121**	2	WASHER-HARD (11X21X2.5-MM THK)	
M	18	1	**8T-4133**	1	NUT (M10X1.5-THD)	
M	19	1	**8T-4195**	4	BOLT (M10X1.5X30-MM)	
	20	1	**8T-4896**	2	WASHER-HARD (10.2X18.5X2.5-MM THK)	
	21	1	**8T-5360**	4	WASHER (12X22.5X2.5-MM THK)	
	22	1	**8T-8916**	4	BOLT (7/16-14X1.5-IN)	
E	23	1	**5P-0762**		HOSE (37-CM)	
M	24	1	**8T-4196**	1	BOLT (M10X1.5X35-MM)	
	25	1	**8T-2920**	1	GROMMET	
	26	1	**5P-7465**	1	CLIP (TAB)	

E-ORDER BY THE CENTIMETER
M-METRIC PART

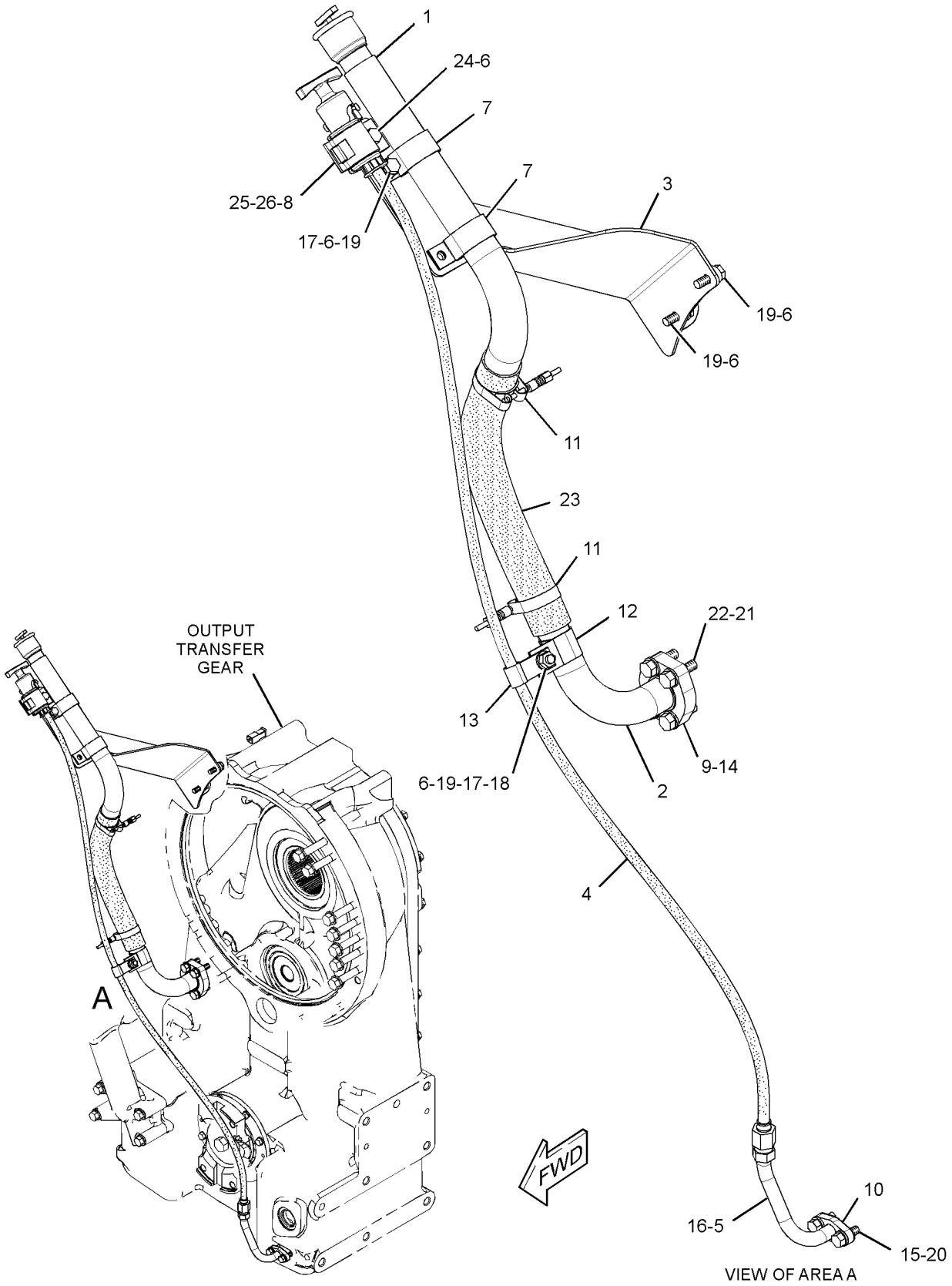

GRAPHIC #1 **<END>** g01613076

POWER TRAIN

249-1750 FILTER GP-OIL

S/N: B9K1-UP

PART OF 268-0240 CONTROL GP-DIFFERENTIAL LOCK

SMCS-3004, 3067 **i03022138**

NOTE	REF NO	GRAPHIC REF	PART NUMBER	QTY	PART NAME 1 2 3 4 5 6 (PRODUCT LEVEL)	SEE PAGE
	1	1	**5F-9144**	1	SEAL-O-RING	
	2	1	**6V-0852**	1	CAP-DUST	
	3	1	**6V-3965**	1	FITTING (QUICK DISCONNECT)	
	4	1	**8C-3446**	1	VALVE-FLUID SAMPLING (POWER TRAIN OIL)	
	5	1	**8C-3447**	1	CAP-DUST	
	6	1	**227-6744**	1	SWITCH GP-DIFF PRESSURE	
		1	**102-8802**	1	KIT-RECEPTACLE (2-PIN)	
					(KIT INCLUDES RECEPTACLE AS & WEDGE)	
		1	**186-3735**	2	PIN-CONNECTOR (16-GA TO 18-GA)	
BE		1	**9X-1813**		SLEEVE	
	7	1	**1G-8878**	1	FILTER-OIL (ADVANCED EFFICIENCY) (POWER TRAIN)	
	8	1	**3J-1907**	2	SEAL-O-RING	
	9	1	**3J-7354**	1	SEAL-O-RING	

B-USE AS REQUIRED
E-ORDER BY THE CENTIMETER

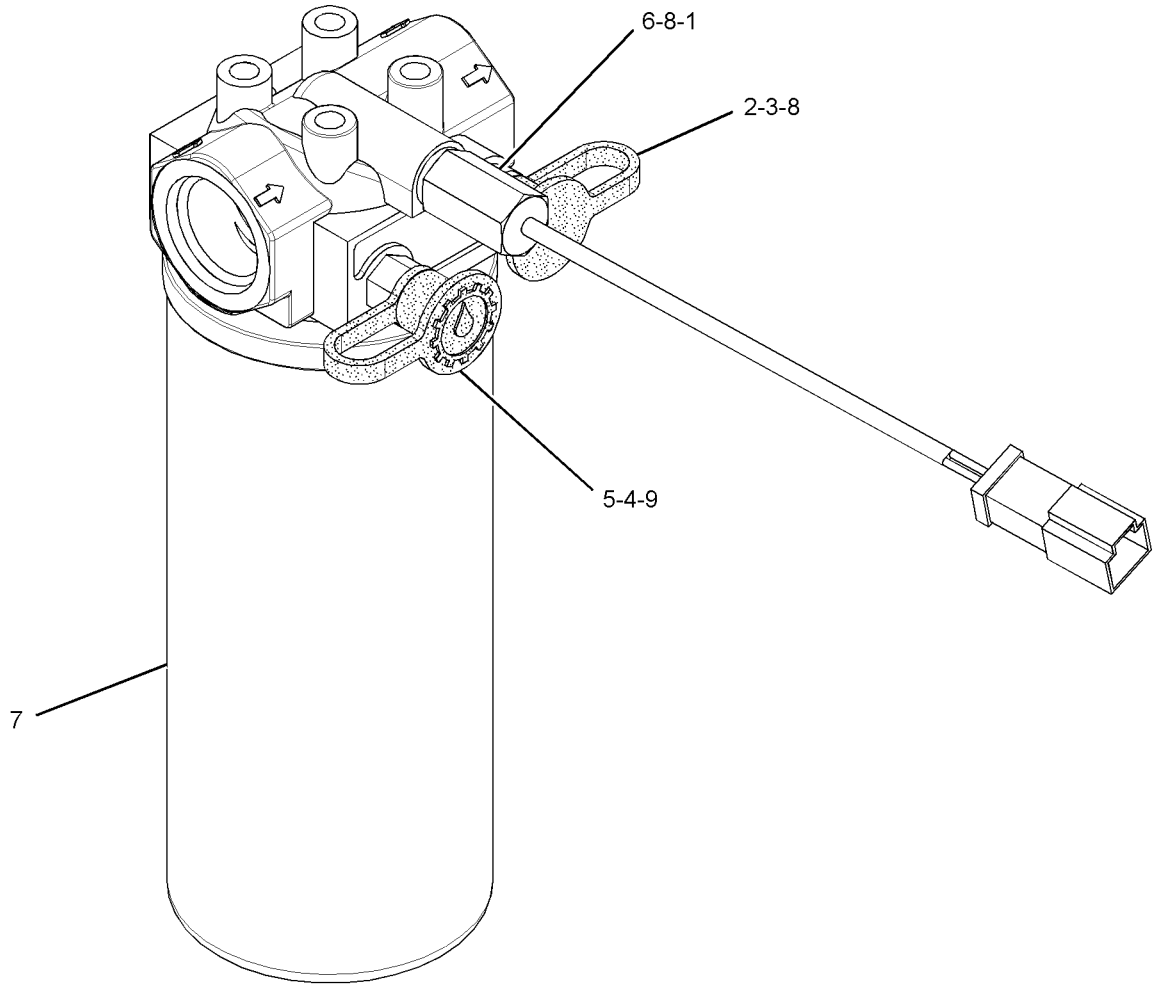

GRAPHIC #1 **<END>** g01560831

POWER TRAIN

287-1512 FILTER GP-OIL

S/N: B9K1-324

PART OF 268-0245 LINES GP-POWER TRAIN OIL

SMCS-3004, 3067 **i04040967**

NOTE	REF NO	GRAPHIC REF	PART NUMBER	QTY	PART NAME 1 2 3 4 5 6 (PRODUCT LEVEL)	SEE PAGE
	1	1	**328-3655**	1	FILTER ELEMENT AS-OIL (ADVANCED EFFICIENCY) (TRANSMISSION)	
	2	1	**6V-0852**	1	CAP-DUST	
	3	1	**8C-3447**	1	CAP-DUST	
Y	4	1	*238-1029*	1	BASE GP-OIL FILTER (TRANSMISSION)	427
	5	1	**321-5967**	1	HOUSING GP-FILTER	
		1	**3J-1907**	1	SEAL-O-RING	
		1	**9S-8004**	1	PLUG-O-RING	
	6	1	**253-5327**	1	ELBOW	
	7	1	**3J-1907**	3	SEAL-O-RING	
	8	1	**3J-7354**	2	SEAL-O-RING	
	9	1	**6V-0484**	1	ADAPTER-O-RING	
	10	1	**6V-3965**	1	FITTING (QUICK DISCONNECT)	
	11	1	**7W-7381**	1	FITTING-OUTLET	
	12	1	**8C-3446**	1	VALVE-FLUID SAMPLING (POWER TRAIN OIL)	
	13	1	**130-0229**	1	SEAL-O-RING	

Y-SEPARATE ILLUSTRATION

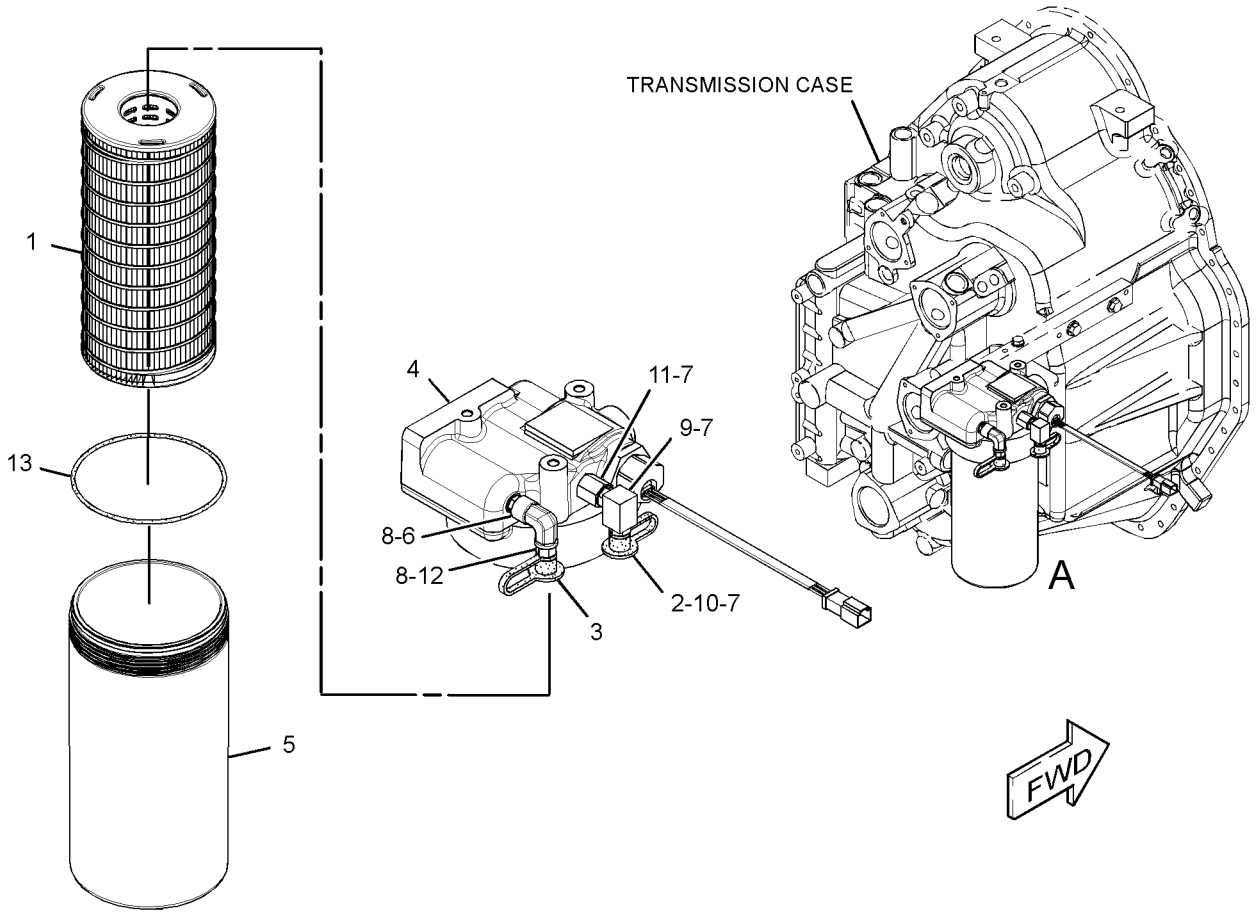

VIEW OF AREA A
(EXPLODED)

GRAPHIC #1 **<END>** g01450530

POWER TRAIN

333-6433 FILTER GP-OIL

S/N: B9K325-UP
WITH HOUSING
PART OF 268-0245 LINES GP-POWER TRAIN OIL

SMCS-3004, 3067 **i03934816**

NOTE	REF NO	GRAPHIC REF	PART NUMBER	QTY	PART NAME 1 2 3 4 5 6 (PRODUCT LEVEL)	SEE PAGE
	1	1	**6V-0852**	1	CAP-DUST	
	2	1	**8C-3447**	1	CAP-DUST	
	3	1	**253-5327**	1	ELBOW	
	4	1	**321-5967**	1	HOUSING GP-FILTER (POWER TRAIN)	
		1	**3J-1907**	1	SEAL-O-RING	
		1	**9S-8004**	1	PLUG-O-RING	
	5	1	**328-3655**	1	FILTER ELEMENT AS-OIL (ADVANCED EFFICIENCY) (POWER TRAIN)	
Y	6	1	**333-9308**	1	BASE GP-OIL FILTER (POWER TRAIN)	428
	7	1	**214-7568**	3	SEAL-O-RING	
	8	1	**3P-1932**	1	ADAPTER	
	9	1	**6V-0484**	1	ADAPTER-O-RING	
	10	1	**6V-3965**	1	FITTING (QUICK DISCONNECT)	
	11	1	**6V-5048**	2	SEAL-O-RING	
	12	1	**7W-7381**	1	FITTING-OUTLET	
	13	1	**8C-3446**	1	VALVE-FLUID SAMPLING	
	14	1	**8L-2786**	1	SEAL-O-RING	
F			**130-0229**	1	SEAL-O-RING	

F-NOT SHOWN
Y-SEPARATE ILLUSTRATION

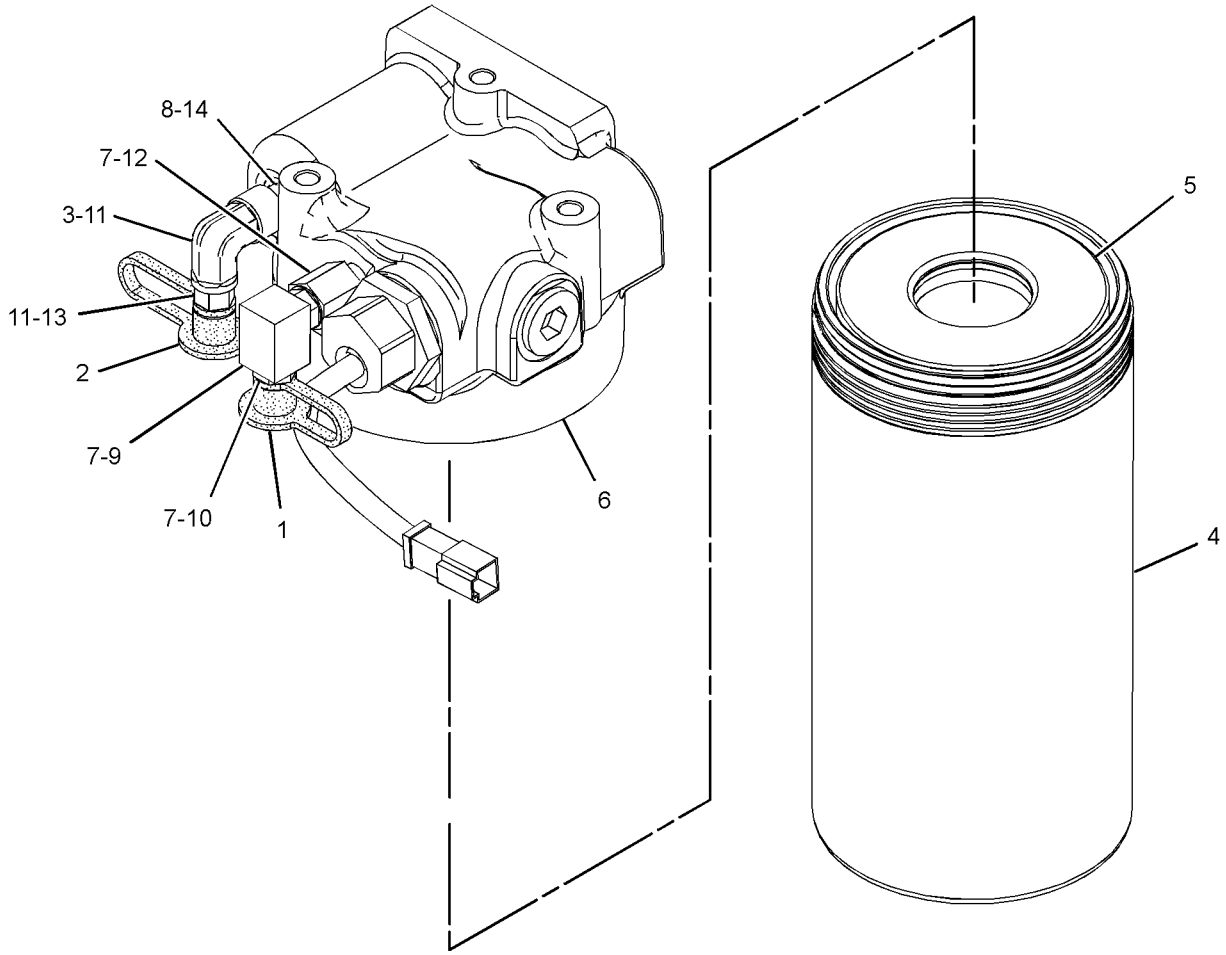

GRAPHIC #1 **<END>** g01941778

POWER TRAIN

273-9195 GEAR GP-INPUT TRANSFER

S/N: HKY1-UP

PART OF 267-5245 TRANSMISSION AR

SMCS-3159 **i03592280**

NOTE	REF NO	GRAPHIC REF	PART NUMBER	QTY	PART NAME 1 2 3 4 5 6 (PRODUCT LEVEL)	SEE PAGE
	1	1	**3L-9409**	1	CUP-BEARING	
	2	1	**3L-9410**	1	CONE-BEARING	
	3	1	**3P-6061**	1	GASKET	
B	4	1	**3P-9658**	1	SHIM PACK (INCLUDES 17-SHIMS)	
	5	1	**6V-1270**	6	BOLT-12 POINT HEAD (3/8-16X1.125-IN)	
	6	1	**9L-7494**	6	BOLT-12 POINT HEAD (3/8-16X1.25-IN)	
	7	1	**030-8539**	4	BOLT-12 POINT HEAD (3/8-16X1.125-IN)	
	8	1	**121-3173**	1	YOKE AS	
		1	**4F-8503**	1	PLUG-CUP	
	9	1	**147-8562**	1	CAGE-BEARING	
B	10	1	**147-8563**	1	SHIM PACK (INCLUDES 9-SHIMS)	
	11	1	**173-1827**	1	GEAR (29-TEETH)	
	12	1	**173-1830**	1	GEAR (32-TEETH)	
	13	1	**187-0678**	1	CAGE-BEARING	
	14	1	**191-8305**	1	SENSOR GP-SPEED (TRANSMISSION INPUT)	
	15	1	**193-2200**	1	SEAL-LIP TYPE	
	16	1	**273-9202**	1	CASE-TRANSFER	
	17	1	**0S-1585**	12	BOLT (1/2-13X1.5-IN)	
	18	1	*148-8407*	1	PLUG AS	
		1	**9S-4191**	1	PLUG-O-RING	
		1	**3J-1907**	1	SEAL-O-RING	
	19	1	**1B-3953**	1	CONE-BEARING	
	20	1	**1B-3955**	1	CUP-BEARING	
	21	1	**2K-4472**	1	SEAL-O-RING	
	22	1	**2N-0822**	1	PLATE	
	23	1	**5M-2894**	16	WASHER-HARD (10.2X18.5X2.5-MM THK)	
	24	1	**5P-8245**	12	WASHER-HARD (13.5X25.5X3-MM THK)	
	25	1	**7D-8636**	1	CONE-BEARING	
	26	1	**7D-8637**	1	CUP-BEARING	
M	27	1	**2W-9533**	1	BOLT (M8X1.25X10-MM)	
	28	1	**9M-1974**	1	WASHER-HARD (8.8X16X2-MM THK)	
	29	1	**9S-7949**	1	CUP-BEARING	
	30	1	**9S-7950**	1	CONE-BEARING	
	31	1	**117-1385**	1	SEAL-O-RING	

B-USE AS REQUIRED
M-METRIC PART

273-9195 **GEAR GP-INPUT TRANSFER** *(contd.)* **i03592280**

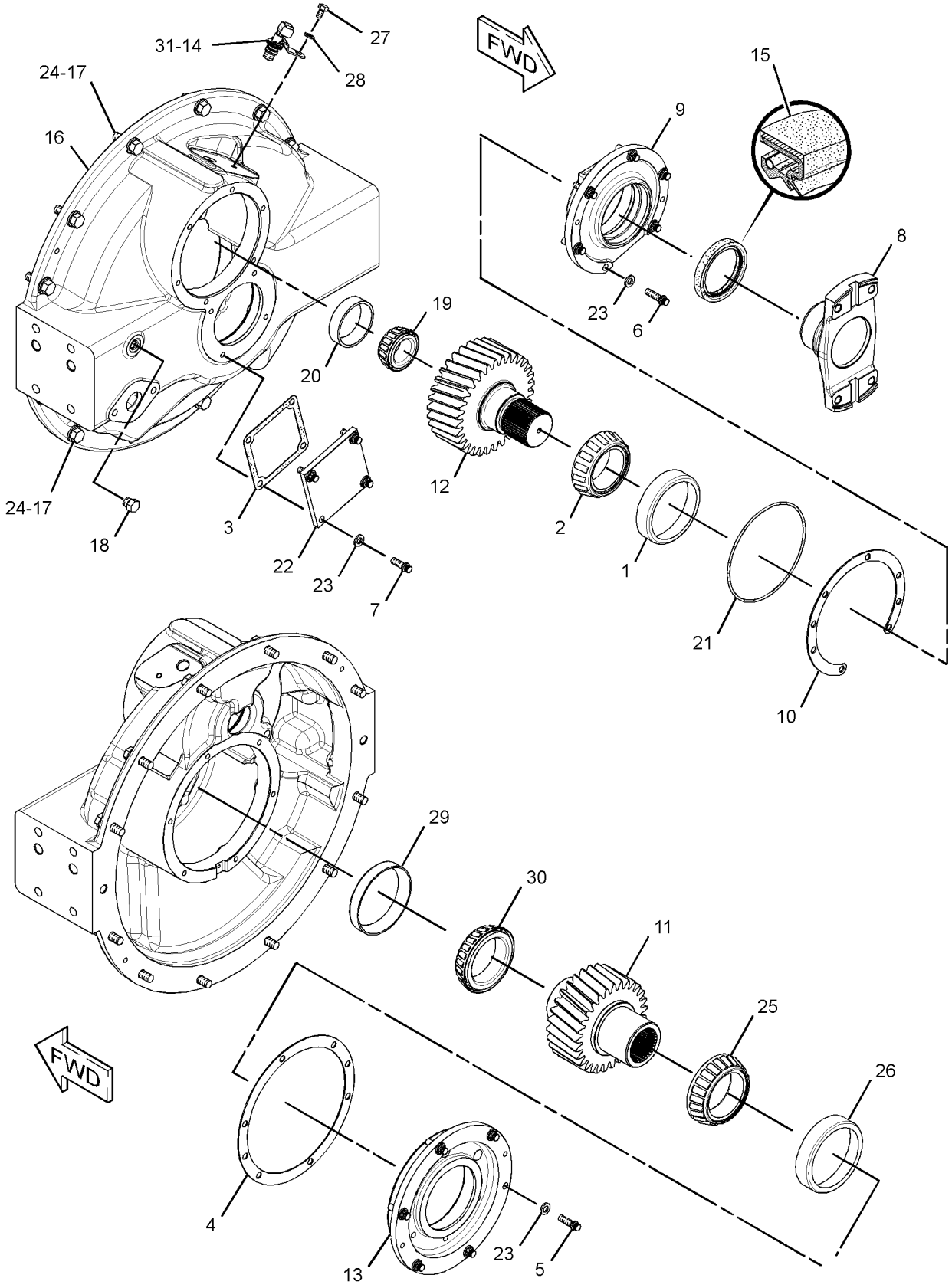

GRAPHIC #1 **<END>** g01387323

POWER TRAIN

273-9197 GEAR GP-OUTPUT TRANSFER

S/N: HKY1-UP

PART OF 267-5245 TRANSMISSION AR

SMCS-3075, 3159 **i03493420**

NOTE	REF NO	GRAPHIC REF	PART NUMBER	QTY	PART NAME 1 2 3 4 5 6 (PRODUCT LEVEL)	SEE PAGE
	1	2	**1F-7958**	4	NUT-FULL (1/2-13-THD)	
	2	2	**1P-4078**	1	SPACER (90.47X107.95X10.08-MM THK)	
	3	1	**1U-2827**	1	GUIDE-VALVE (HYDRAULIC TANK DRAIN)	
	4	2	**3T-6175**	1	GEAR (35-TEETH)	
	5	1	**4S-8598**	1	SCREEN-SUCTION (TRANSFER GEAR)	
	6	1	**4S-8603**	1	SCREEN GP-MAGNETIC (TRANSFER GEAR)	
		1	**8M-7160**	3	MAGNET	
	7	2	**5F-7404**	1	LOCKNUT-BEARING	
	8	1	**6P-4903**	1	PLATE AS	
		1	**7B-3028**	2	SCREW-DRIVE (NO 4X 3/16-IN)	
		1	**7S-2962**	1	WASHER-SPRING (52.3X82.5X9.1-MM THK)	
	9	2	**6P-4947**	1	RETAINER	
	10	2	**6V-1289**	1	LOCKWASHER-BEARING	
	11	2	**6Y-6328**	1	SHIM PACK (INCLUDES 13-SHIMS)	
	12	2	**6Y-6329**	1	SHIM PACK (INCLUDES 13-SHIMS)	
	13	2	**6Y-6848**	1	COVER	
	14	1	**7B-3039**	1	SPRING	
	15	1	**7T-7371**	1	HOUSING-SCREEN	
	16	2	**8D-5396**	1	WASHER	
	17	2	**8E-0364**	1	SHAFT-TRANSFER	
	18	1	**8E-0366**	1	CAGE-BEARING	
	19	1	**8E-0367**	1	YOKE-OUTPUT	
	20	1	**8J-8782**	1	BODY-DRAIN VALVE (HYDRAULIC TANK)	
	21	1	**8J-8783**	1	VALVE (HYDRAULIC TANK DRAIN)	
	22	1	**8T-3298**	1	SEAL-RECTANGULAR	
	23	1	**9J-7031**	1	PLUG-DRAIN	
	24	2	**123-2876**	1	GEAR-TRANSFER (30-TEETH)	
	25	1	**123-2877**	1	GEAR-TRANSFER (35-TEETH)	
	26	2	**123-2997**	1	CAGE AS-BEARING	
		2	**3D-0490**	4	STUD-TAPERLOCK (1/2-13X1.97-IN)	
	27	2	**123-5298**	1	CAGE-BEARING	
	28	2	**124-0323**	1	CAGE AS	
		2	**3D-0490**	4	STUD-TAPERLOCK (1/2-13X1.97-IN)	
	29	2	**124-0501**	2	CONE	
	30	2	**124-0502**	2	CUP-TAPERED	
	31	1,2	**124-0503**	2	CONE-SPECIAL TAPERED	
Y	32	1	**196-1185**	2	SENSOR GP-SPEED (TRANSMISSION OUTPUT)	315
	33	1	**273-9203**	1	CASE AS-TRANSFER	
		1	**0S-1594**	1	BOLT (3/8-16X1-IN)	
		1	**4D-6473**	2	DOWEL	
		1	**5M-2894**	1	WASHER-HARD (10.2X18.5X2.5-MM THK)	
		1	**8P-8837**	1	TUBE AS	
	34	1	**034-3557**	10	BOLT-LOCKING (3/8-16X1.125-IN)	
	35	1	**0S-1569**	18	BOLT (5/8-11X4-IN)	
	36	2	**0S-1587**	8	BOLT (1/2-13X1.75-IN)	
	37	1	**0S-1594**	4	BOLT (3/8-16X1-IN)	
	38	1	**117-7127**	1	SEAL-LIP TYPE	
	39	1,2	**124-0504**	2	CUP-TAPERED	
	40	1	**125-8111**	1	RETAINER	
	41	2	**1A-1460**	7	BOLT (1/2-13X2-IN)	
	42	1	**1A-3103**	1	BOLT (3/4-16X3.75-IN)	
	43	2	**1A-5822**	7	BOLT (1/2-13X2.75-IN)	
	44	1	**1D-4593**	2	BOLT (5/8-11X5.5-IN)	
	45	2	**1P-7834**	2	CUP-BEARING	
	46	2	**1P-7835**	2	CONE-BEARING	
	47	2	**1P-9269**	1	COVER	

273-9197 **GEAR GP-OUTPUT TRANSFER** *(contd.)* **i03493420**

NOTE	REF NO	GRAPHIC REF	PART NUMBER	QTY	PART NAME 1 2 3 4 5 6 (PRODUCT LEVEL)	SEE PAGE
	48	2	**2A-4639**	6	BOLT (3/8-16X1.625-IN)	
	49	1	**2H-2665**	1	SEAL-O-RING	
	50	1	**2K-4472**	1	SEAL-O-RING	
	51	2	**3F-5792**	1	SEAL-O-RING	
	52	1	**4L-9564**	1	SEAL-O-RING	
	53	1	**5F-0149**	1	SEAL-O-RING	
	54	2	**5J-1086**	1	SEAL-O-RING	
	55	1	**5M-2057**	1	SEAL-O-RING	
	56	1,2	**5M-2894**	20	WASHER-HARD (10.2X18.5X2.5-MM THK)	
	57	1	**5P-2587**	1	SEAL-O-RING	
	58	1	**5P-5167**	1	RACE-BEARING OUTER	
	59	1	**136-7813**	1	RACE-BEARING	
	60	1,2	**5P-8245**	51	WASHER-HARD (13.5X25.5X3-MM THK)	
	61	1	**5P-8247**	20	WASHER-HARD (17X32X3.5-MM THK)	
	62	2	**6H-1717**	2	BOLT (1/2-13X1.125-IN)	
	63	2	**7B-3235**	3	BOLT (1/2-13X1.375-IN)	
	64	2	**7L-2181**	1	SEAL-O-RING	
	65	2	**8H-8257**	1	SEAL-O-RING	
	66	1	**9X-8873**	8	BOLT (1/2-13X2.25-IN)	
	67	2	**9X-8874**	8	BOLT (1/2-13X3-IN)	
	68	1	**9X-8875**	4	BOLT (1/2-13X3.5-IN)	
	69	1	**3K-0360**	2	SEAL-O-RING	
B	70	1	**6V-6640**		SEALANT	

B-USE AS REQUIRED
Y-SEPARATE ILLUSTRATION

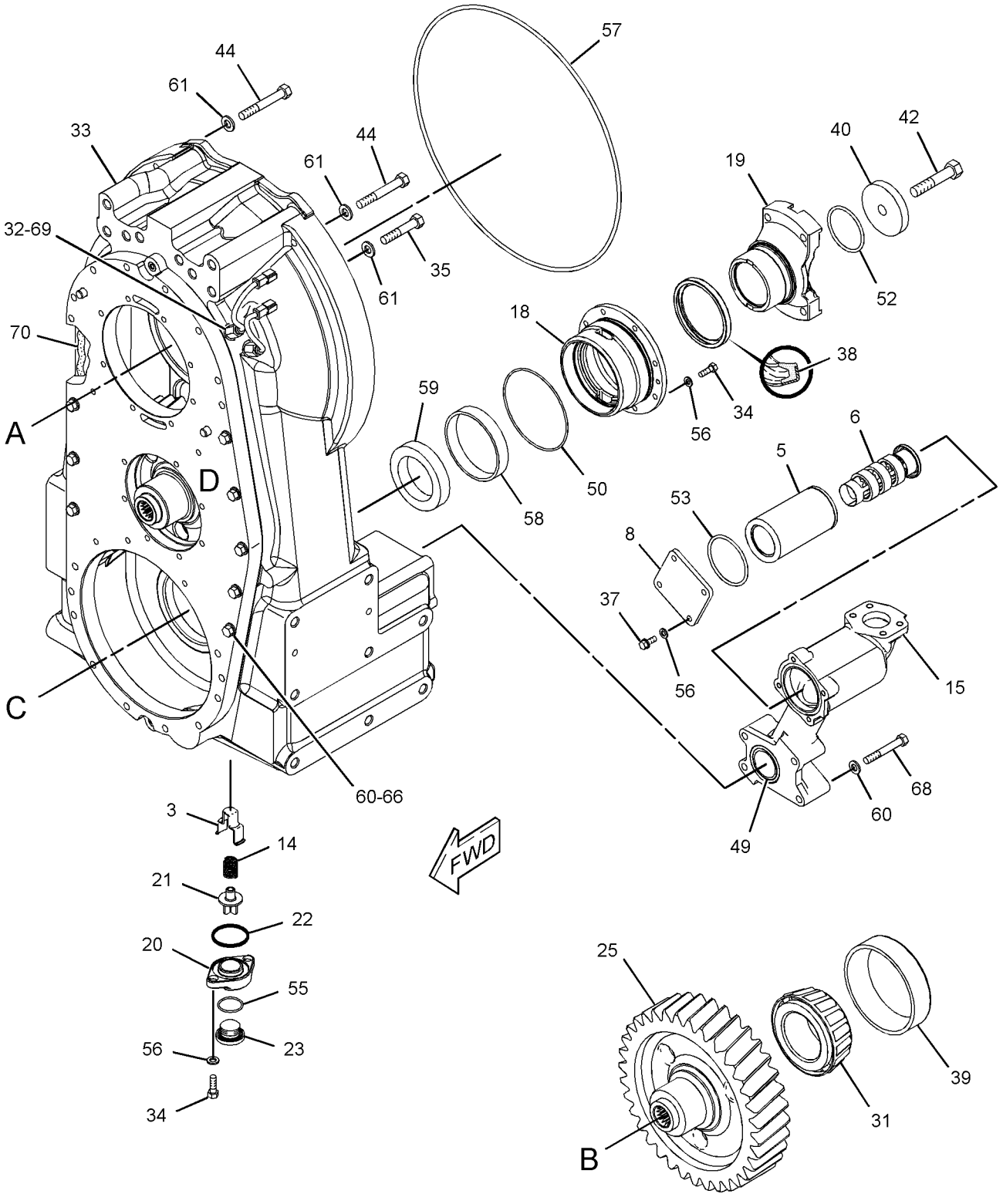

REFER TO ALL ILLUSTRATIONS OF THIS GROUP FOR AUXILIARY VIEWS

VIEW OF AREA D (EXPLODED)

GRAPHIC #1

g01390730

273-9197 **GEAR GP-OUTPUT TRANSFER** *(contd.)* **i03493420**

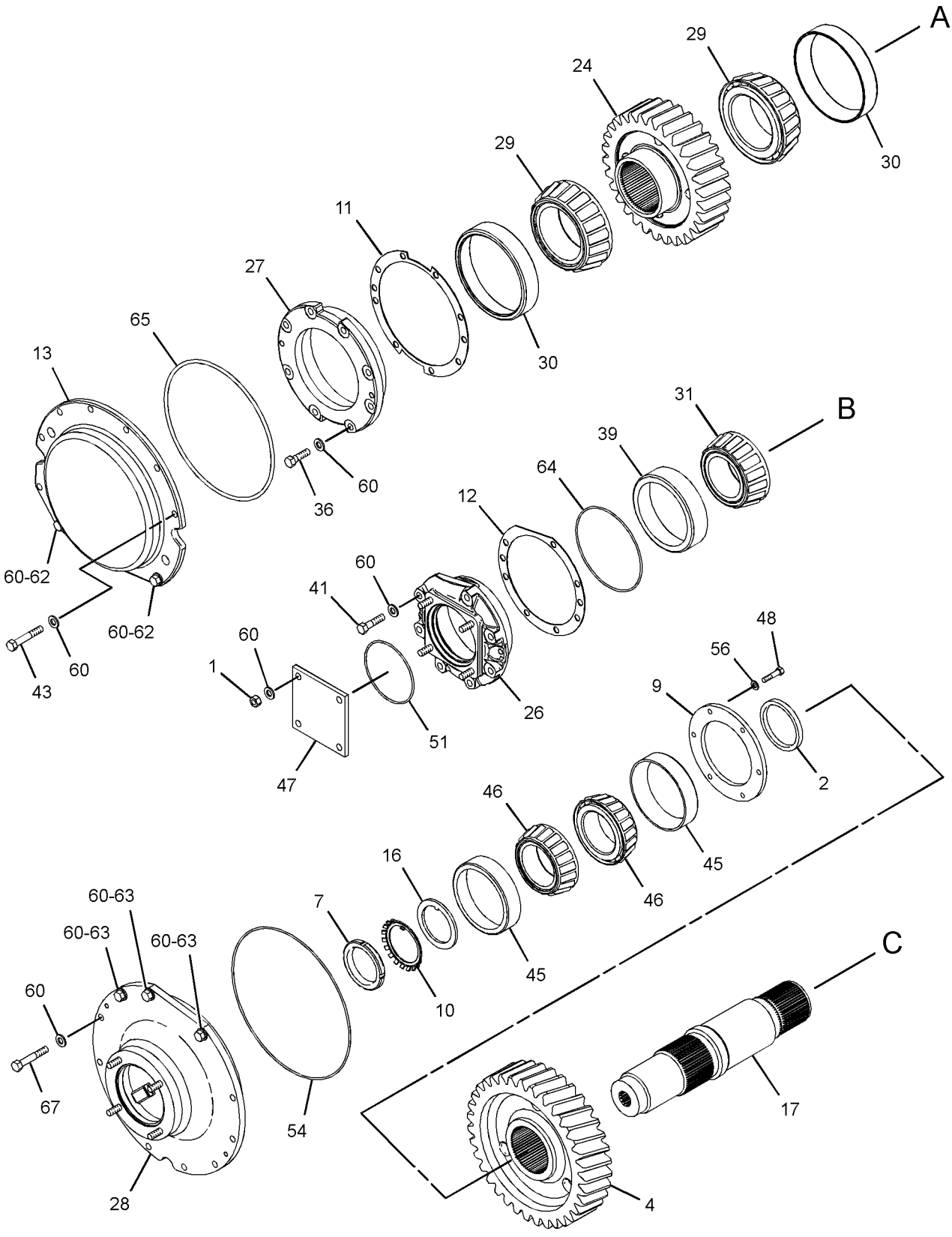

GRAPHIC #2 **<END>** g01390731

POWER TRAIN

273-9001 HOUSING AS-DIFFERENTIAL

S/N: B9K1-UP

PART OF 273-8991 DIFFERENTIAL GP

SMCS-3258 **i02764642**

NOTE	REF NO	GRAPHIC REF	PART NUMBER	QTY	PART NAME 1 2 3 4 5 6 (PRODUCT LEVEL)	SEE PAGE
	1	1	**3D-6509**	4	DOWEL	
M	2	1	**6V-3669**	16	BOLT (M20X2.5X80-MM)	
	3	1	**6V-8237**	12	WASHER (26X44X4-MM THK)	
M	4	1	**8T-0674**	12	BOLT (M24X3X180-MM)	
	5	1	**8T-3282**	16	WASHER-HARD (22X35X3.5-MM THK)	
	6	1	**9L-8951**	3	DOWEL	
					PARTS SHOWN IN GRAPHIC(S) WITHOUT A REFERENCE NUMBER ARE NOT SERVICED SEPARATELY	

M-METRIC PART

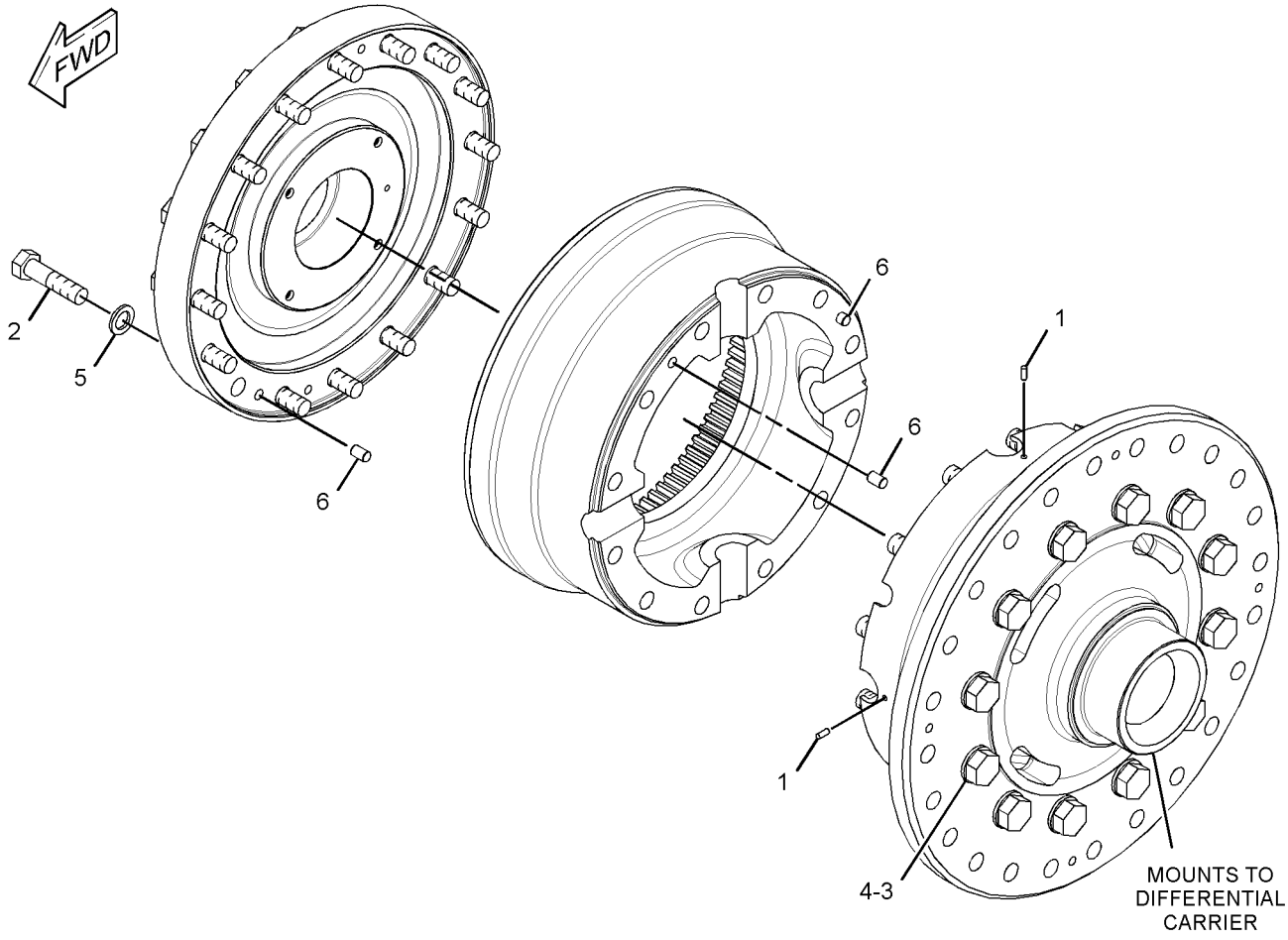

GRAPHIC #1 **<END>** g01386147

POWER TRAIN

135-8106 HOUSING GP-REAR AXLE

S/N: B9K1-UP

PART OF 271-9318 HOUSING GP-REAR AXLE

SMCS-3260 **i02770680**

NOTE	REF NO	GRAPHIC REF	PART NUMBER	QTY	PART NAME 1 2 3 4 5 6 (PRODUCT LEVEL)	SEE PAGE
	1	1	**8D-4154**	36	BOLT (3/4-16X2.75-IN)	
	2	1	**117-6500**	1	HOUSING-AXLE	
	4	1	**137-5081**	2	HUB	
	5	1	**2K-0337**	36	LOCKNUT (3/4-16-THD)	
	6	1	**5P-8248**	36	WASHER-HARD (20X36.5X3.5-MM THK)	
	7	1	**8K-0589**	4	DOWEL	
	8	1	**8T-4121**	8	WASHER-HARD (11X21X2.5-MM THK)	
M	9	1	**8T-4196**	8	BOLT (M10X1.5X35-MM)	
M	10	1	**8T-6911**	1	BOSS-WELD (M12X1.75X50-MM)	

M-METRIC PART

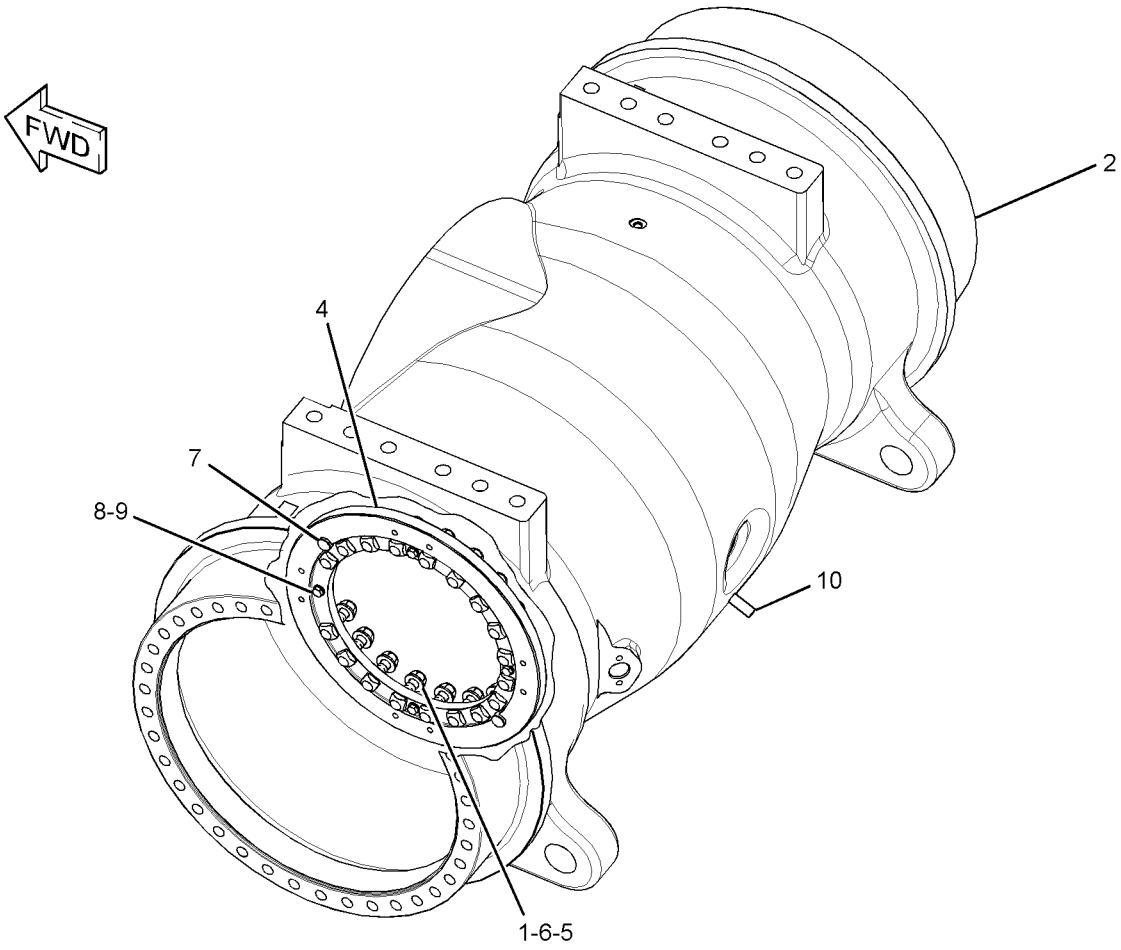

GRAPHIC #1 **<END>** g01387008

POWER TRAIN

271-9318 HOUSING GP-REAR AXLE

S/N: B9K1-UP

PART OF 271-9315 AXLE GP-REAR

SMCS-3260 **i02764835**

NOTE	REF NO	GRAPHIC REF	PART NUMBER	QTY	PART NAME 1 2 3 4 5 6 (PRODUCT LEVEL)	SEE PAGE
	1	1	**6F-4868**	1	GASKET	
	2	1	**6W-8401**	1	PIN	
	3	1	**8M-5576**	1	PLUG-MAGNETIC (REAR AXLE, OIL DRAIN)	
B	4	1	**9M-5874**	1	SHIM PACK (INCLUDES 30-SHIMS)	
Y	5	1	**135-8106**	1	HOUSING GP-REAR AXLE	460
	6	1	**248-0833**	1	DRAIN GP-ECOLOGY	
		1	**259-7138**	1	PLUG	
		1	**3S-9233**	1	SEAL-O-RING	
		1	**5L-4759**	1	SEAL-O-RING	
	7	1	**2H-3932**	1	SEAL-O-RING	
	8	1	**3J-1907**	1	SEAL-O-RING	
	9	1	**5D-7523**	1	SEAL-O-RING	
	10	1	**5P-8245**	2	WASHER-HARD (13.5X25.5X3-MM THK)	
M	11	1	**6V-8197**	2	BOLT (M12X1.75X40-MM)	
	12	1	**6V-8234**	1	PIN-SPRING	
	13	1	**7M-8485**	1	SEAL-O-RING	
	14	1	**8M-3391**	1	COVER	
	15	1	**8T-4122**	24	WASHER-HARD (17X32X3.5-MM THK)	
M	16	1	**8T-4193**	24	BOLT (M16X2X50-MM)	
	17	1	**8T-5050**	1	CONNECTOR	
	18	1	**9T-1119**	1	BREATHER (REAR AXLE)	

B-USE AS REQUIRED
M-METRIC PART
Y-SEPARATE ILLUSTRATION

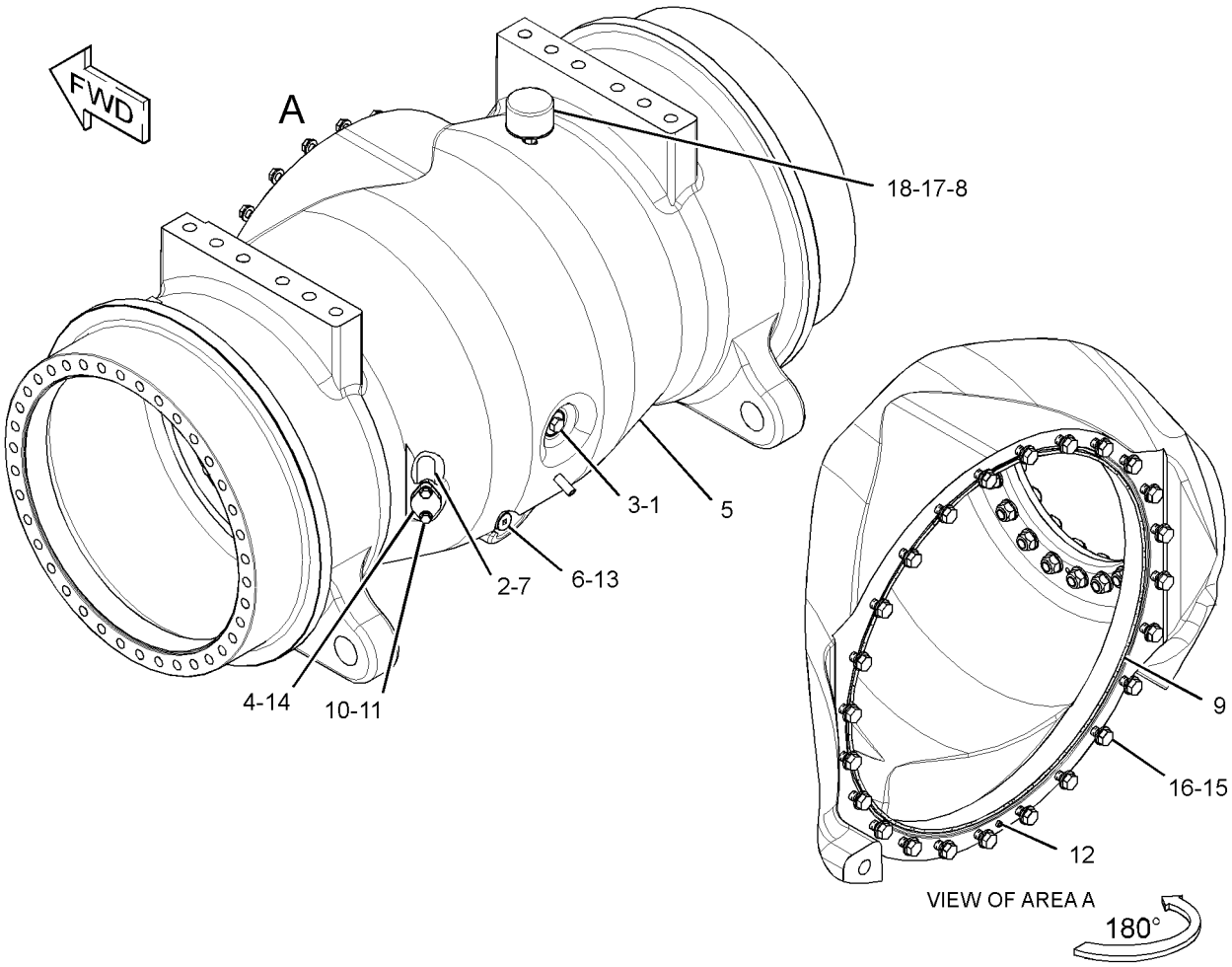

GRAPHIC #1 **<END>** g01387730

POWER TRAIN

268-0245 LINES GP-POWER TRAIN OIL

S/N: B9K1-324

PART OF 259-9204 COMMON AR

SMCS-3016 **i02995900**

NOTE	REF NO	GRAPHIC REF	PART NUMBER	QTY	PART NAME 1 2 3 4 5 6 (PRODUCT LEVEL)	SEE PAGE
	1	2	**1R-1809**	1	FILTER ELEMENT AS-OIL (ULTRA HIGH EFFICIENCY)	
	2	2	**4H-6112**	1	BREATHER (TRANSMISSION)	
	3	2	**5P-4961**	1	CLAMP-HOSE	
	4	1,2	**6V-0852**	2	CAP-DUST	
	5	2	**8S-0768**	1	SEAL-O-RING	
	6	2	**9G-9154**	1	CLIP	
	7	2	**107-6684**	1	MANIFOLD	
	8	2	*164-5597*	1	CONNECTOR AS	
		2	**8C-6868**	1	CONNECTOR	
		2	**6V-8397**	1	SEAL-O-RING	
	9	2	**210-5692**	1	BLOCK	
Y	10	2	**216-5342**	1	VALVE GP-MODULATING (24-VOLT) (TORQUE CONVERTER LOCKUP CLUTCH)	509
	11	2	**242-0407**	1	VALVE-DRAIN	
	12	2	**270-7577**	1	JUNCTION BLOCK	
I	13	1	**272-1151**	1	HOSE AS	
I	14	1	**272-1152**	1	HOSE AS	
I	15	1	**272-1153**	1	HOSE AS	
I	16	1	**275-8364**	1	HOSE AS	
I	17	1	**275-8365**	1	HOSE AS	
I	18	1	**281-2750**	1	HOSE AS	
I	19	1	**281-2751**	1	HOSE AS	
I	20	1	**282-5966**	1	HOSE AS	
	21	1	**286-1335**	1	PLATE AS	
M		1	**8T-3490**	1	NUT-WELD (M10X1.5-THD)	
Y	22	2	**287-1512**	1	FILTER GP-OIL	450
I	23	1	**307-8787**	1	HOSE AS	
	24	2	*148-8328*	1	CONNECTOR AS	
		2	**6V-8633**	1	CONNECTOR	
		2	**3D-2824**	1	SEAL-O-RING	
		2	**6V-8398**	1	SEAL-O-RING	
	25	2	*148-8333*	1	CONNECTOR AS	
		2	**8T-7927**	1	CONNECTOR	
		2	**6V-8400**	1	SEAL-O-RING	
		2	**7M-8485**	1	SEAL-O-RING	
	26	2	*148-8334*	1	CONNECTOR AS	
		2	**8T-3611**	1	CONNECTOR	
		2	**2S-4078**	1	SEAL-O-RING	
		2	**6V-8400**	1	SEAL-O-RING	
	27	2	*148-8336*	1	CONNECTOR AS	
		2	**6V-8636**	1	CONNECTOR	
		2	**3J-1907**	1	SEAL-O-RING	
		2	**6V-8397**	1	SEAL-O-RING	
	28	1,2	*148-8347*	2	ELBOW AS	
					(EACH INCLUDES)	
		1,2	**6V-9007**	1	ELBOW	
		1,2	**3D-2824**	1	SEAL-O-RING	
		1,2	**6V-9746**	1	SEAL-O-RING	
	29	2	*148-8356*	1	ELBOW AS	
		2	**6V-9009**	1	ELBOW	
		2	**2S-4078**	1	SEAL-O-RING	
		2	**6V-8400**	1	SEAL-O-RING	
	30	2	*148-8373*	1	ELBOW AS	
		2	**8C-3364**	1	ELBOW	
		2	**6V-8400**	1	SEAL-O-RING	
		2	**7M-8485**	1	SEAL-O-RING	

268-0245 **LINES GP-POWER TRAIN OIL** *(contd.)* **i02995900**

NOTE	REF NO	GRAPHIC REF	PART NUMBER	QTY	PART NAME 1 2 3 4 5 6 (PRODUCT LEVEL)	SEE PAGE
	31	1	*153-6238*	1	ELBOW AS	
		1	**6V-9006**	1	ELBOW	
		1	**2S-4078**	1	SEAL-O-RING	
		1	**6V-8400**	1	SEAL-O-RING	
	32	2	*164-5544*	1	ELBOW AS	
		2	**3E-2333**	1	ELBOW	
		2	**6V-8398**	1	SEAL-O-RING	
	33	1	*164-5567*	1	COUPLER AS-QUICK DISCONNECT (MALE)	
		1	**6V-3965**	1	FITTING (QUICK DISCONNECT)	
		1	**3J-1907**	1	SEAL-O-RING	
	34	2	*206-5123*	1	TEE AS	
		2	**206-5122**	1	TEE	
		2	**6V-8397**	1	SEAL-O-RING	
		2	**6V-8398**	1	SEAL-O-RING	
	35	1	**1P-4578**	2	FLANGE-HALF	
	36	1,2	**1P-4579**	4	FLANGE-HALF	
	37	2	**173-1437**	4	FLANGE-HALF	
	38	1	**1P-4582**	4	FLANGE-HALF	
	39	1	**3P-9847**	2	CLIP	
	40	1,2	**4J-0522**	3	SEAL-O-RING	
	41	1,2	**4J-0524**	2	SEAL-O-RING	
	42	1	**4J-0527**	2	SEAL-O-RING	
	43	2	**5P-1075**	3	WASHER-HARD (10.2X22.5X3-MM THK)	
	44	2	**5P-2955**	2	BOLT (5/16-18X2.5-IN)	
	45	2	**5P-7470**	1	CLIP (SLOT)	
	46	2	**5P-7471**	1	CLIP (TAB)	
	47	2	**5P-8182**	1	GROMMET	
	48	2	**8M-4435**	2	SEAL-O-RING	
	49	1,2	**8T-4121**	11	WASHER-HARD (11X21X2.5-MM THK)	
M	50	2	**8T-4136**	3	BOLT (M10X1.5X25-MM)	
M	51	1	**8T-4137**	2	BOLT (M10X1.5X20-MM)	
M	52	2	**8T-4172**	2	BOLT (M10X1.5X80-MM)	
M	53	2	**8T-4183**	8	BOLT (M12X1.75X40-MM)	
M	54	1	**8T-4184**	4	BOLT (M12X1.75X45-MM)	
M	55	1	**8T-4196**	4	BOLT (M10X1.5X35-MM)	
	56	1,2	**8T-4223**	25	WASHER-HARD (13.5X25.5X3-MM THK)	
	57	2	**8T-4224**	2	WASHER-HARD (8.8X16X2-MM THK)	
M	58	2	**8T-4910**	1	BOLT (M12X1.75X60-MM)	
	59	1,2	**8T-8919**	12	BOLT (1/2-13X1.75-IN)	
	60	2	**8T-9377**	3	BOLT (3/8-16X2.25-IN)	
	61	2	**8X-5489**	1	SLEEVE	
E	62	2	**9X-2023**		HOSE (65-CM)	

E-ORDER BY THE CENTIMETER
I-REFER TO HYDRAULIC INFORMATION SYSTEM
M-METRIC PART
Y-SEPARATE ILLUSTRATION

268-0245 **LINES GP-POWER TRAIN OIL** *(contd.)* **i02995900**

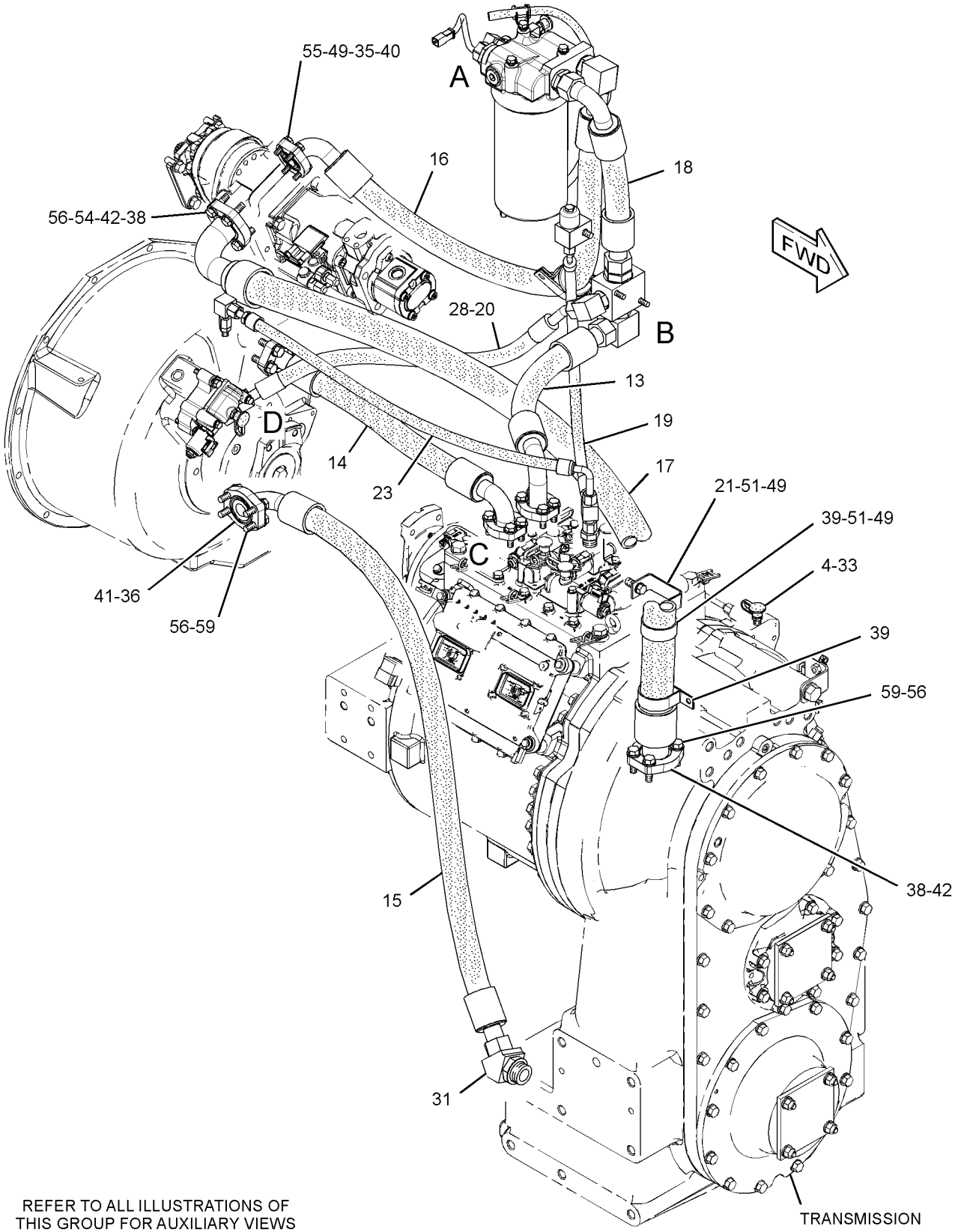

REFER TO ALL ILLUSTRATIONS OF THIS GROUP FOR AUXILIARY VIEWS

GRAPHIC #1

g01618017

268-0245 **LINES GP-POWER TRAIN OIL** *(contd.)* **i02995900**

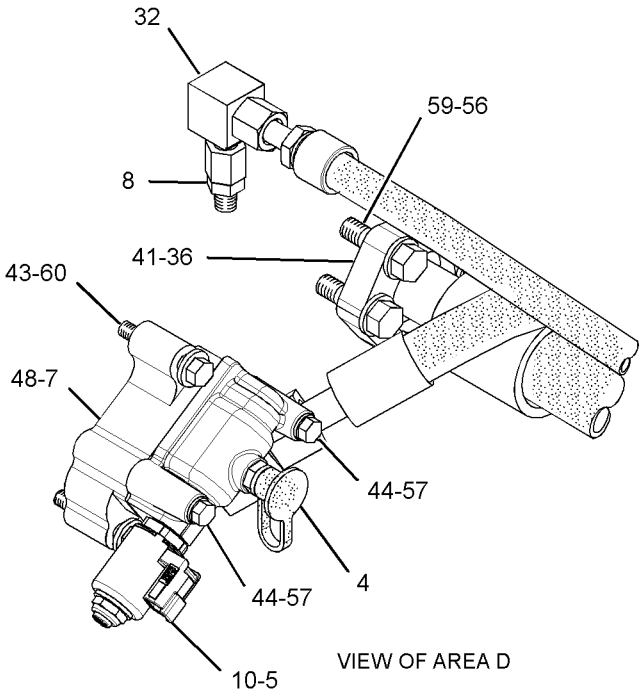

VIEW OF AREA D

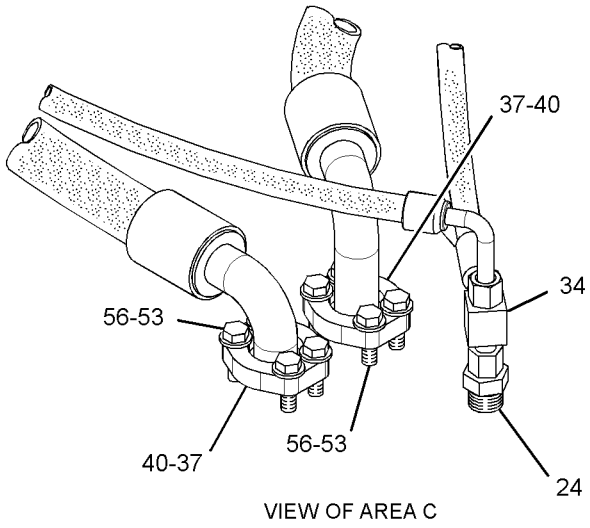

VIEW OF AREA C

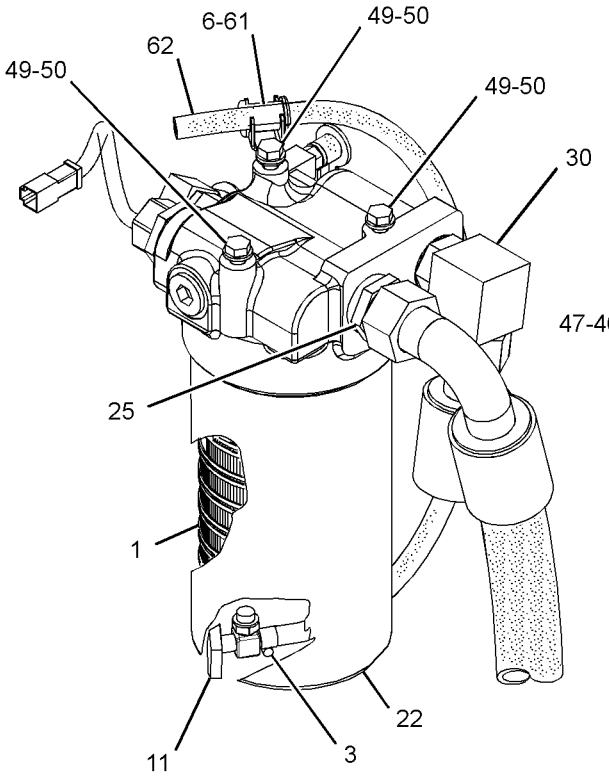

VIEW OF AREA A

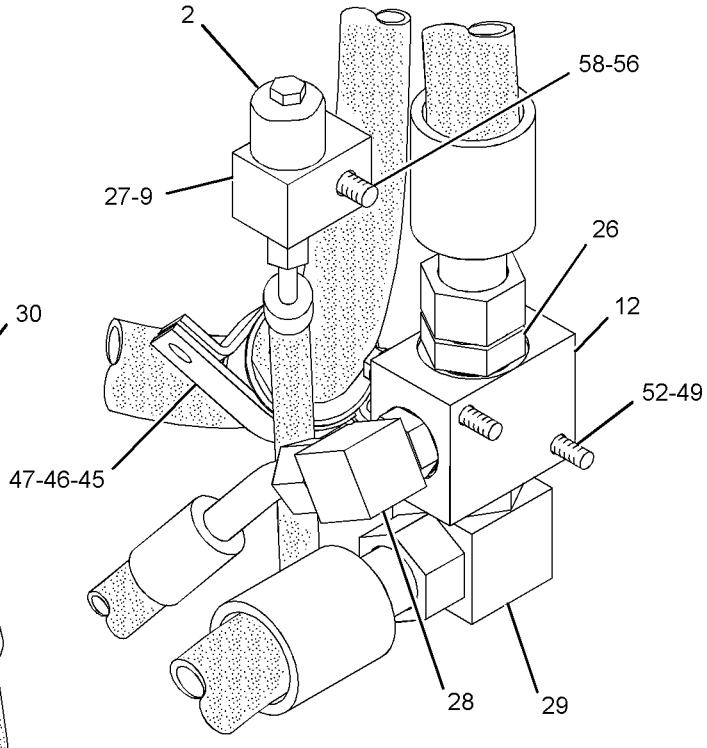

VIEW OF AREA B

GRAPHIC #2 **<END>** g01618018

POWER TRAIN

268-0245 LINES GP-POWER TRAIN OIL

S/N: B9K325-UP

PART OF 259-9204 COMMON AR

SMCS-3016 **i03539921**

NOTE	REF NO	GRAPHIC REF	PART NUMBER	QTY	PART NAME 1 2 3 4 5 6 (PRODUCT LEVEL)	SEE PAGE
C	1	2	**328-3655**	1	FILTER ELEMENT AS-OIL (ADVANCED EFFICIENCY)	
	2	2	**4H-6112**	1	BREATHER (TRANSMISSION)	
	3	2	**5P-4961**	1	CLAMP-HOSE	
	4	1,2	**6V-0852**	2	CAP-DUST	
	5	2	**8S-0768**	1	SEAL-O-RING	
	6	2	**9G-9154**	1	CLIP	
	7	2	**107-6684**	1	MANIFOLD	
	8	2	*164-5597*	1	CONNECTOR AS	
		2	**8C-6868**	1	CONNECTOR	
		2	**6V-8397**	1	SEAL-O-RING	
	9	2	**210-5692**	1	BLOCK	
Y	10	2	**216-5342**	1	VALVE GP-MODULATING (24-VOLT) (TORQUE CONVERTER LOCKUP CLUTCH)	509
	11	2	**242-0407**	1	VALVE-DRAIN	
	12	2	**270-7577**	1	JUNCTION BLOCK	
I	13	1	**272-1151**	1	HOSE AS	
I	14	1	**272-1152**	1	HOSE AS	
I	15	1	**272-1153**	1	HOSE AS	
I	16	1	**275-8364**	1	HOSE AS	
I	17	1	**275-8365**	1	HOSE AS	
I	18	1	**281-2750**	1	HOSE AS	
I	19	1	**281-2751**	1	HOSE AS	
I	20	1	**282-5966**	1	HOSE AS	
	21	1	**286-1335**	1	PLATE AS	
M		1	**8T-3490**	1	NUT-WELD (M10X1.5-THD)	
CY	22	2	**333-6433**	1	FILTER GP-OIL (TRANSMISSION)	451
I	23	1	**307-8787**	1	HOSE AS	
	24	2	*148-8328*	1	CONNECTOR AS	
		2	**6V-8633**	1	CONNECTOR	
		2	**3D-2824**	1	SEAL-O-RING	
		2	**6V-8398**	1	SEAL-O-RING	
	25	2	*148-8333*	1	CONNECTOR AS	
		2	**8T-7927**	1	CONNECTOR	
		2	**6V-8400**	1	SEAL-O-RING	
		2	**7M-8485**	1	SEAL-O-RING	
	26	2	*148-8334*	1	CONNECTOR AS	
		2	**8T-3611**	1	CONNECTOR	
		2	**2S-4078**	1	SEAL-O-RING	
		2	**6V-8400**	1	SEAL-O-RING	
	27	2	*148-8336*	1	CONNECTOR AS	
		2	**6V-8636**	1	CONNECTOR	
		2	**3J-1907**	1	SEAL-O-RING	
		2	**6V-8397**	1	SEAL-O-RING	
	28	1,2	*148-8347*	2	ELBOW AS	
					(EACH INCLUDES)	
		1,2	**6V-9007**	1	ELBOW	
		1,2	**3D-2824**	1	SEAL-O-RING	
		1,2	**6V-9746**	1	SEAL-O-RING	
	29	2	*148-8356*	1	ELBOW AS	
		2	**6V-9009**	1	ELBOW	
		2	**2S-4078**	1	SEAL-O-RING	
		2	**6V-8400**	1	SEAL-O-RING	
	30	2	*148-8373*	1	ELBOW AS	
		2	**8C-3364**	1	ELBOW	
		2	**6V-8400**	1	SEAL-O-RING	
		2	**7M-8485**	1	SEAL-O-RING	

268-0245 **LINES GP-POWER TRAIN OIL** *(contd.)* **i03539921**

NOTE	REF NO	GRAPHIC REF	PART NUMBER	QTY	PART NAME 1 2 3 4 5 6 (PRODUCT LEVEL)	SEE PAGE
	31	1	*153-6238*	1	ELBOW AS	
		1	**6V-9006**	1	ELBOW	
		1	**2S-4078**	1	SEAL-O-RING	
		1	**6V-8400**	1	SEAL-O-RING	
	32	2	*164-5544*	1	ELBOW AS	
		2	**3E-2333**	1	ELBOW	
		2	**6V-8398**	1	SEAL-O-RING	
	33	1	*164-5567*	1	COUPLER AS-QUICK DISCONNECT (MALE)	
		1	**6V-3965**	1	FITTING (QUICK DISCONNECT)	
		1	**214-7568**	1	SEAL-O-RING	
	34	2	*206-5123*	1	TEE AS	
		2	**206-5122**	1	TEE	
		2	**6V-8397**	1	SEAL-O-RING	
		2	**6V-8398**	1	SEAL-O-RING	
	35	1	**1P-4578**	2	FLANGE-HALF	
	36	1,2	**1P-4579**	4	FLANGE-HALF	
	37	2	**173-1437**	4	FLANGE-HALF	
	38	1	**1P-4582**	4	FLANGE-HALF	
	39	1	**3P-9847**	2	CLIP	
	40	1,2	**4J-0522**	3	SEAL-O-RING	
	41	1,2	**4J-0524**	2	SEAL-O-RING	
	42	1	**4J-0527**	2	SEAL-O-RING	
	43	2	**5P-1075**	3	WASHER-HARD (10.2X22.5X3-MM THK)	
	44	2	**5P-2955**	2	BOLT (5/16-18X2.5-IN)	
	45	2	**5P-7470**	1	CLIP (SLOT)	
	46	2	**5P-7471**	1	CLIP (TAB)	
	47	2	**5P-8182**	1	GROMMET	
	48	2	**8M-4435**	2	SEAL-O-RING	
	49	1,2	**8T-4121**	11	WASHER-HARD (11X21X2.5-MM THK)	
M	50	2	**8T-4136**	3	BOLT (M10X1.5X25-MM)	
M	51	1	**8T-4137**	2	BOLT (M10X1.5X20-MM)	
M	52	2	**8T-4172**	2	BOLT (M10X1.5X80-MM)	
M	53	2	**8T-4183**	8	BOLT (M12X1.75X40-MM)	
M	54	1	**8T-4184**	4	BOLT (M12X1.75X45-MM)	
M	55	1	**8T-4196**	4	BOLT (M10X1.5X35-MM)	
	56	1,2	**8T-4223**	25	WASHER-HARD (13.5X25.5X3-MM THK)	
	57	2	**8T-4224**	2	WASHER-HARD (8.8X16X2-MM THK)	
M	58	2	**8T-4910**	1	BOLT (M12X1.75X60-MM)	
	59	1,2	**8T-8919**	12	BOLT (1/2-13X1.75-IN)	
	60	2	**8T-9377**	3	BOLT (3/8-16X2.25-IN)	
	61	2	**8X-5489**	1	SLEEVE	
E	62	2	**9X-2023**		HOSE (65-CM)	

C-CHANGE FROM PREVIOUS TYPE
E-ORDER BY THE CENTIMETER
I-REFER TO HYDRAULIC INFORMATION SYSTEM
M-METRIC PART
Y-SEPARATE ILLUSTRATION

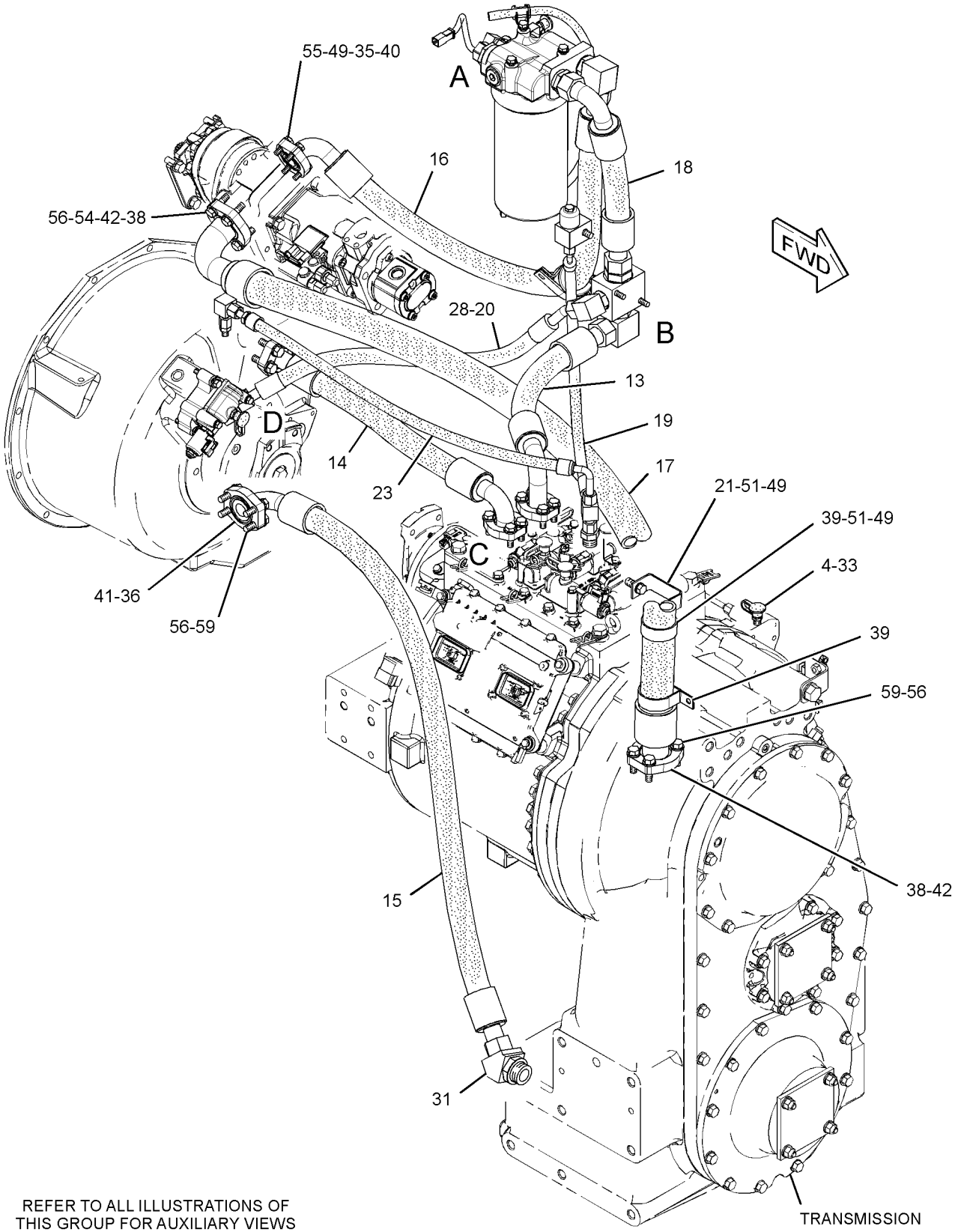

REFER TO ALL ILLUSTRATIONS OF THIS GROUP FOR AUXILIARY VIEWS

GRAPHIC #1

g01618017

268-0245 LINES GP-POWER TRAIN OIL *(contd.)* i03539921

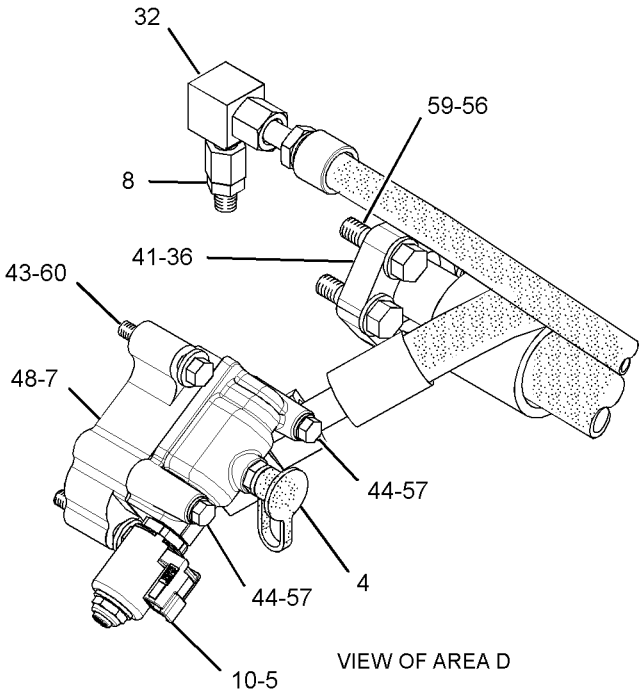

VIEW OF AREA D

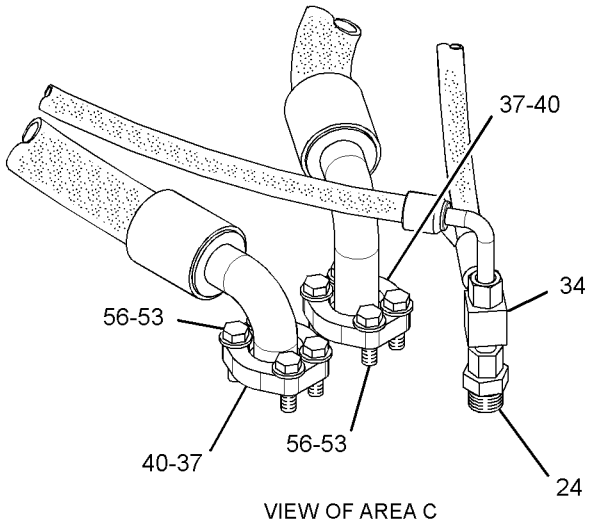

VIEW OF AREA C

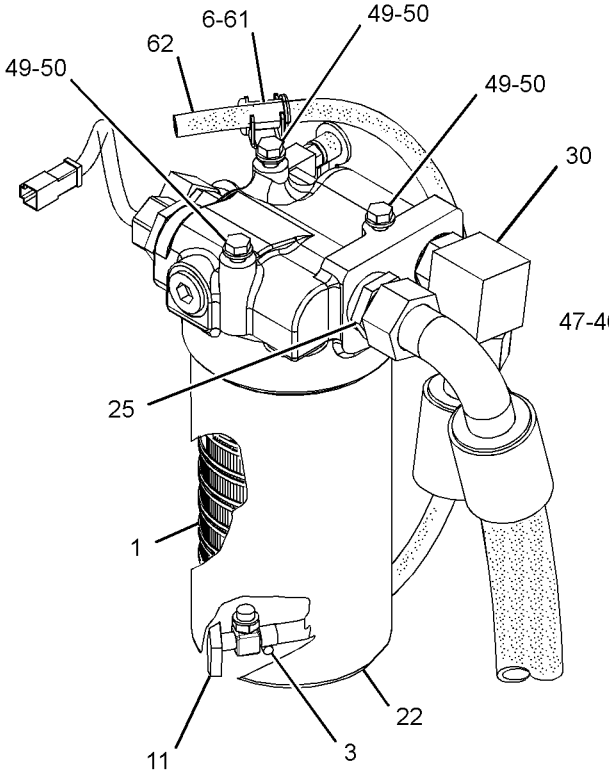

VIEW OF AREA A

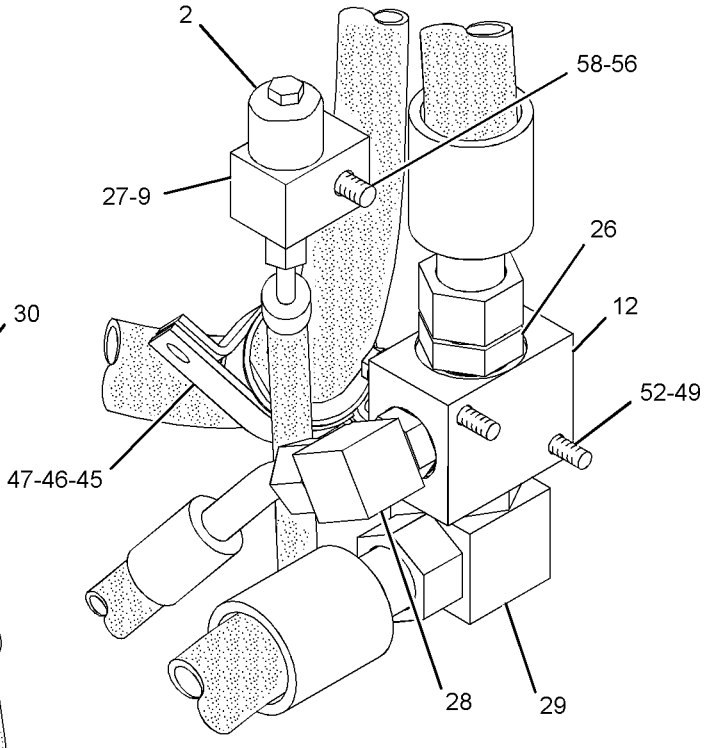

VIEW OF AREA B

GRAPHIC #2 **<END>** g01618018

POWER TRAIN

268-0246 LINES GP-TORQUE CONV COOLER

S/N: B9K1-UP

PART OF 259-9204 COMMON AR

SMCS-1375, 1376, 3103 **i02764829**

NOTE	REF NO	GRAPHIC REF	PART NUMBER	QTY	PART NAME 1 2 3 4 5 6 (PRODUCT LEVEL)	SEE PAGE
	1	1	**4V-0199**	1	SPACER	
Y	2	1	**8P-1471**	1	VALVE GP-RELIEF (TORQUE CONVERTER OUTLET)	511
I	3	1	**148-6990**	1	HOSE AS	
	4	1	**270-3344**	1	TUBE AS	
I	5	1	**286-1324**	1	HOSE AS	
	6	1	*148-8318*	2	CONNECTOR AS	
					(EACH INCLUDES)	
		1	**3K-0360**	1	SEAL-O-RING	
		1	**6V-8397**	1	SEAL-O-RING	
		1	**6V-8634**	1	CONNECTOR	
	7	1	**198-4777**	1	WASHER-HARD (11X25X10-MM THK)	
	8	1	**1P-3705**	2	SEAL-RECTANGULAR	
	9	1	**1P-3707**	1	SEAL-RECTANGULAR	
	10	1	**1P-4578**	2	FLANGE-HALF	
	11	1	**1P-4579**	2	FLANGE-HALF	
	12	1	**1P-5762**	4	FLANGE-HALF	
	13	1	**4J-0522**	1	SEAL-O-RING	
	14	1	**4J-0524**	1	SEAL-O-RING	
	15	1	**5P-7470**	1	CLIP (SLOT)	
	16	1	**5P-7471**	1	CLIP (TAB)	
	17	1	**5P-8182**	1	GROMMET	
	18	1	**6V-4365**	1	SEAL-O-RING	
	19	1	**7D-1553**	1	CLIP	
	20	1	**7X-0290**	3	BOLT (3/8-16X3.5-IN)	
	21	1	**8J-4351**	1	SEAL-O-RING	
	22	1	**8T-4121**	2	WASHER-HARD (11X21X2.5-MM THK)	
M	23	1	**8T-4133**	1	NUT (M10X1.5-THD)	
M	24	1	**8T-4184**	4	BOLT (M12X1.75X45-MM)	
M	25	1	**8T-4195**	1	BOLT (M10X1.5X30-MM)	
	26	1	**8T-4223**	12	WASHER-HARD (13.5X25.5X3-MM THK)	
	27	1	**8T-4835**	4	BOLT (1/2-13X2-IN)	
	28	1	**8T-4896**	3	WASHER-HARD (10.2X18.5X2.5-MM THK)	
	29	1	**8T-5360**	4	WASHER (12X22.5X2.5-MM THK)	
M	30	1	**8T-6868**	4	BOLT (M12X1.75X80-MM)	
	31	1	**8T-8916**	4	BOLT (7/16-14X1.5-IN)	

I-REFER TO HYDRAULIC INFORMATION SYSTEM
M-METRIC PART
Y-SEPARATE ILLUSTRATION

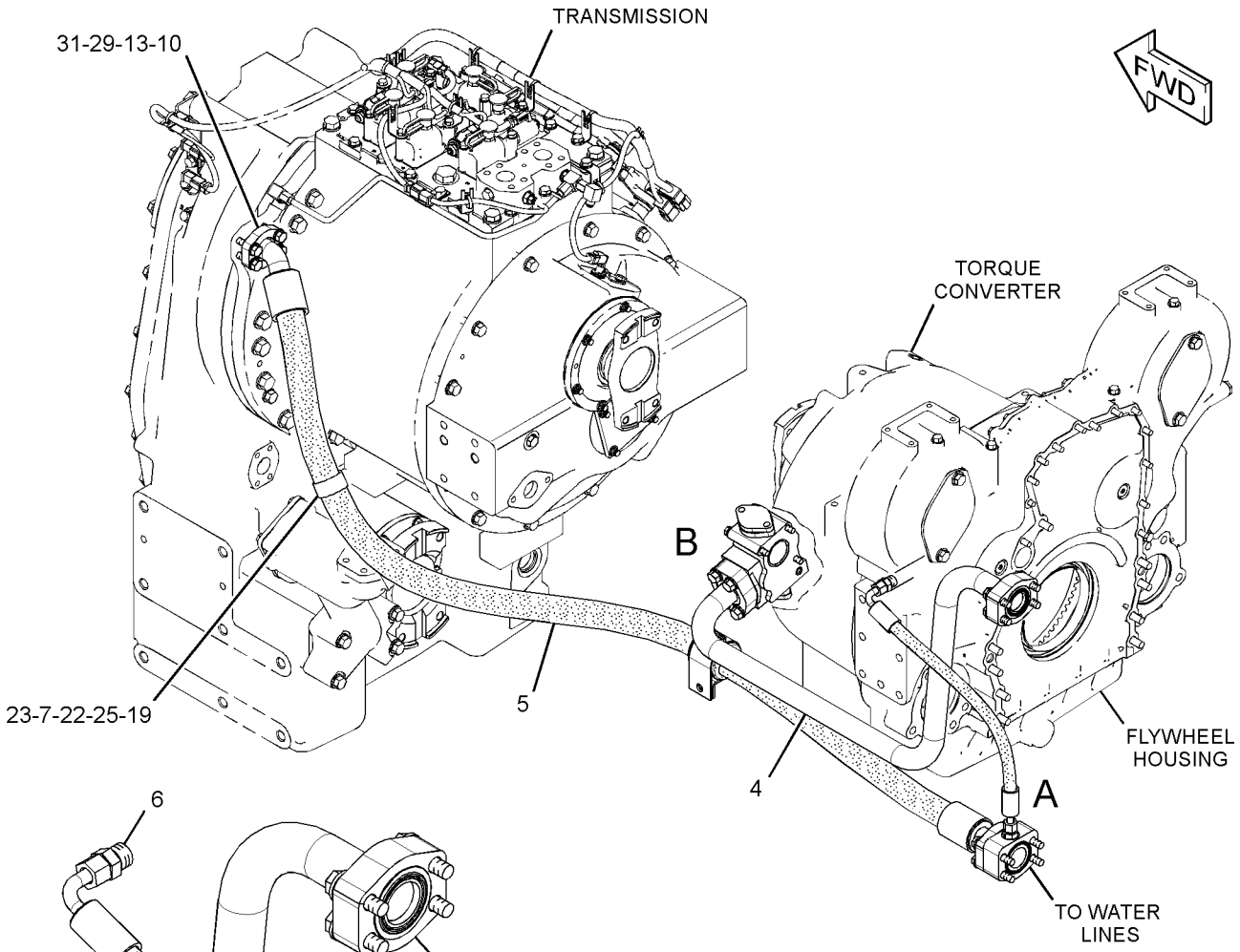

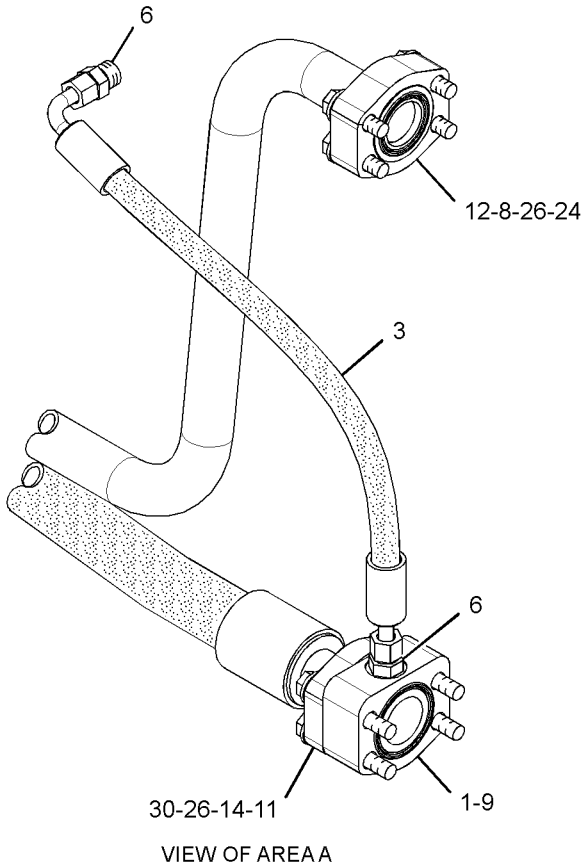

VIEW OF AREA A

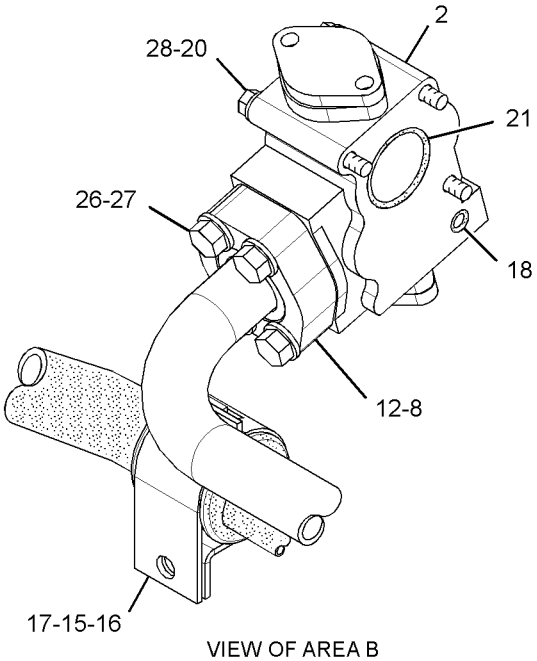

VIEW OF AREA B

GRAPHIC #1 **<END>** g01387922

POWER TRAIN

213-5268 MOTOR GP-PISTON*R

S/N: B9K1-UP

PART OF 178-7998 FAN & MOTOR GP

SMCS-4351 **i03853652**

NOTE	REF NO	GRAPHIC REF	PART NUMBER	QTY	PART NAME 1 2 3 4 5 6 (PRODUCT LEVEL)	SEE PAGE
	1	1	168-7319	1	SEAL-SHAFT	
	2	1	9S-8006	1	PLUG-O-RING	
	3	1	2M-9780	1	SEAL-O-RING	
	4	1	185-0278	1	SWASHPLATE	
Y	5	1	185-0275	1	ROTATING GP-MOTOR (HYDRAULIC FAN)	774
	6	1	192-7470	1	SEAL-O-RING	
M	7	1	095-0690	4	BOLT-SOCKET HEAD (M14X2X60-MM)	
	8	1	7Y-5267	1	RING-RETAINING	
	9	1	188-6280	1	DOWEL	
	10	1	101-2862	2	DOWEL	
	11	1	185-0295	1	BEARING	
	12	1	185-0280	1	PLATE	
	13	1	216-2515	1	SHAFT	
	14	1	185-0296	1	BEARING	
B	15	1	168-2203	1	SHIM-SHAFT	

B-USE AS REQUIRED
M-METRIC PART
Y-SEPARATE ILLUSTRATION

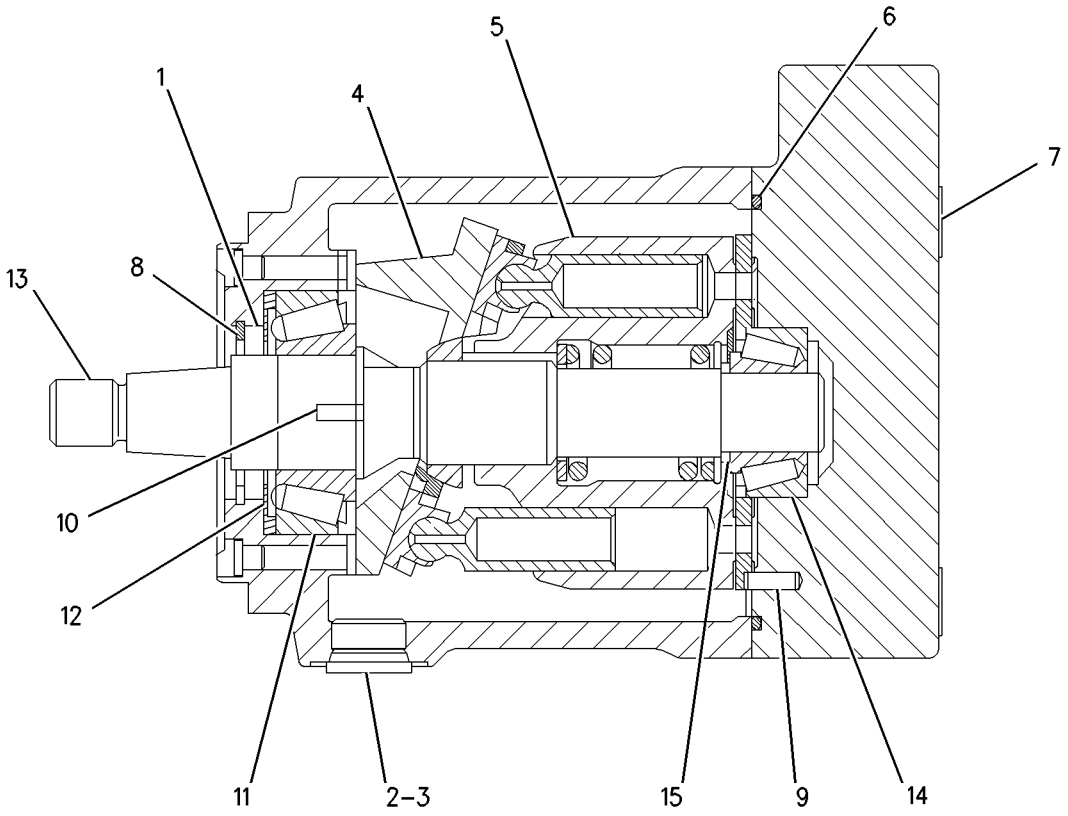

GRAPHIC #1 **<END>** g00954879

POWER TRAIN

120-4408 MOUNTING GP-REAR AXLE

S/N: B9K1-UP

PART OF 271-9315 AXLE GP-REAR

SMCS-3260, 3278 **i02764613**

NOTE	REF NO	GRAPHIC REF	PART NUMBER	QTY	PART NAME 1 2 3 4 5 6 (PRODUCT LEVEL)	SEE PAGE
M	1	1	**146-5131**	12	BOLT (M30X3.5X180-MM)	
M	2	1	**274-4642**	6	BOLT (M30X3.5X80-MM)	
	3	1	**9X-8399**	18	WASHER (33X56X6-MM THK)	

M-METRIC PART

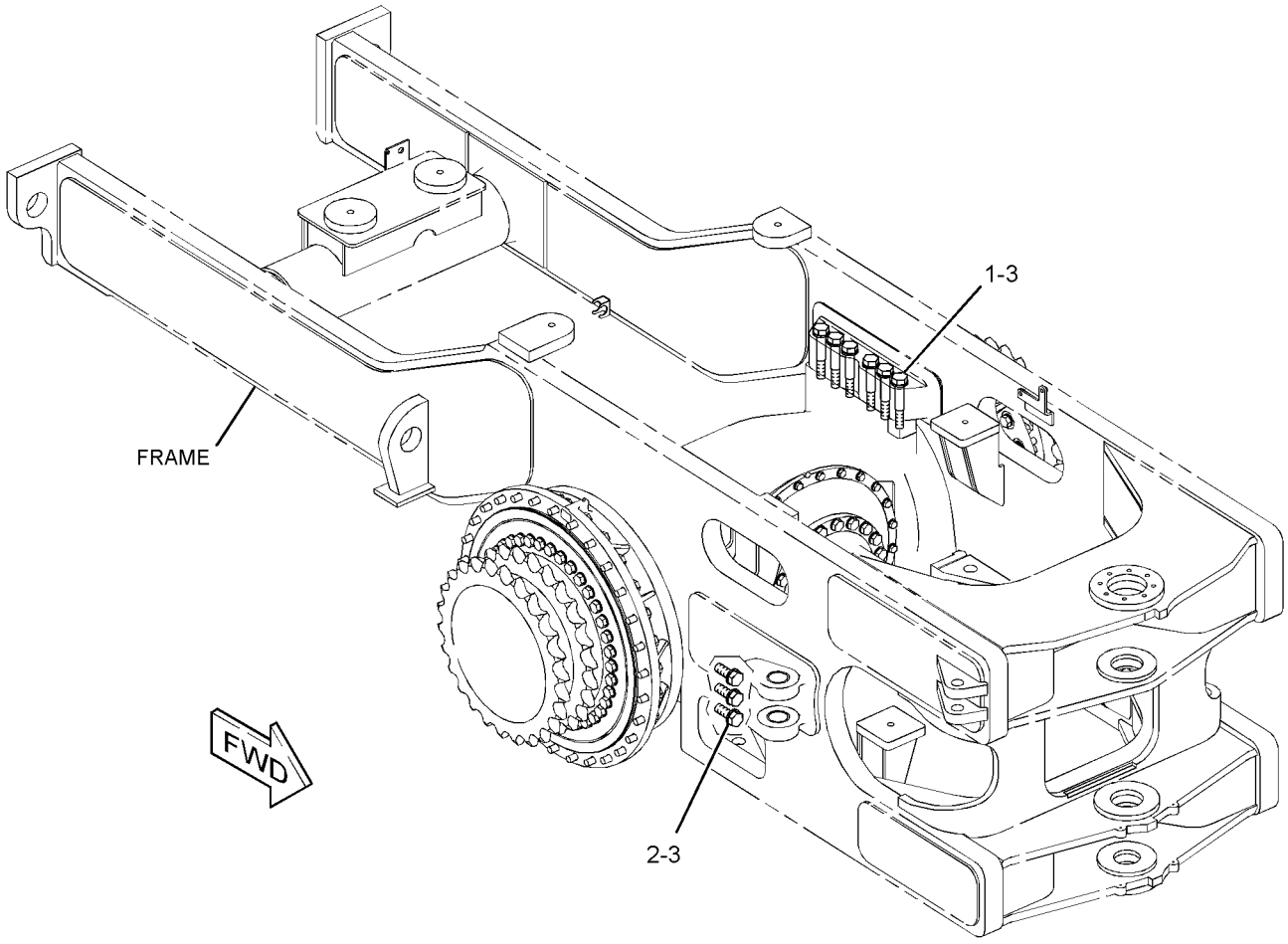

GRAPHIC #1 **<END>** g01385955

POWER TRAIN

275-9422 PINION GP-DIFFERENTIAL

S/N: B9K1-UP

PART OF 273-9007 DIFFERENTIAL & BEVEL GEAR GP

SMCS-3254 **i03493485**

NOTE	REF NO	GRAPHIC REF	PART NUMBER	QTY	PART NAME 1 2 3 4 5 6 (PRODUCT LEVEL)	SEE PAGE
	1	1	**2A-7163**	1	HOUSING-PINION	
	2	1	**2J-7137**	1	CUP-BEARING	
	3	1	**2J-7138**	1	CONE-BEARING (TAPERED ROLLER)	
	4	1	**4J-1698**	1	ORIFICE	
	5	1	**5P-7843**	1	CUP-BEARING	
	6	1	**124-9536**	1	CONE-BEARING	
	7	1	**141-8570**	1	WASHER (110.4X155.2X7-MM)	
	8	1	**154-2728**	1	SHAFT-PINION	
	9	1	**206-7885**	1	TUBE AS	
		1	**6V-8781**	1	TEE-FACE SEAL	
		1	**6V-8397**	2	SEAL-O-RING	
		1	**3J-1907**	1	SEAL-O-RING	
	10	1	**223-9743**	1	SEAL-LIP TYPE	
	11	1	**235-2642**	1	YOKE AS	
		1	**1T-2031**	1	GUARD	
		1	**2H-3928**	1	SEAL-O-RING	
		1	**117-9748**	1	RING-RETAINING	
		1	**235-3503**	1	CUP-DUST	
	12	1	**240-8754**	1	RETAINER	
	13	1	**245-3078**	1	NUT-STAKE	
	14	1	**3J-1907**	1	SEAL-O-RING	
M	15	1	**6V-4248**	6	BOLT (M10X1.5X25-MM)	
	16	1	**6V-5839**	6	WASHER (11X21X2.5-MM THK)	
	17	1	**8F-6230**	1	SEAL-O-RING	
	18	1	**9S-8004**	1	PLUG-O-RING	

M-METRIC PART

275-9422 PINION GP-DIFFERENTIAL *(contd.)* **i03493485**

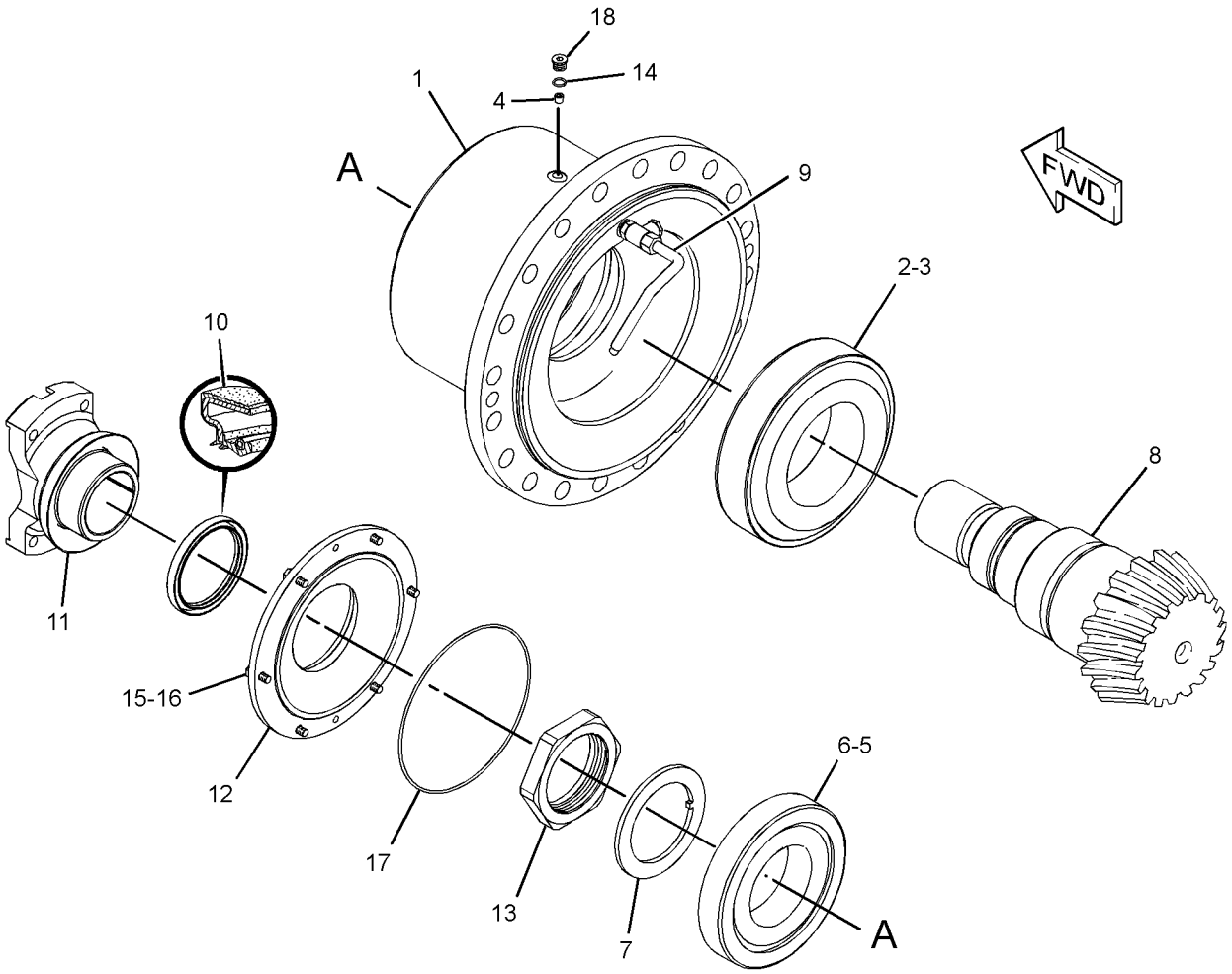

GRAPHIC #1 **<END>** g01388848

POWER TRAIN

273-9200 PLANETARY GP-TRANSMISSION

S/N: HKY1-UP

PART OF 267-5245 TRANSMISSION AR

SMCS-3160 **i02762960**

NOTE	REF NO	GRAPHIC REF	PART NUMBER	QTY	PART NAME 1 2 3 4 5 6 (PRODUCT LEVEL)	SEE PAGE
	1	1	**6T-6051**	1	MANIFOLD AS	
	1A	1	**3D-2824**	2	SEAL-O-RING	
	1B	1	**3F-3442**	1	DOWEL	
	1C	1	**6T-6052**	1	PLUG-ORIFICE	
	1D	1	**7M-8480**	4	DOWEL	
	1E	1	**9S-8008**	2	PLUG-O-RING	
		1	**3J-1907**	1	SEAL-O-RING	
		1	**9S-4191**	1	PLUG-O-RING	
	2	2	**0T-0065**	20	BOLT (3/8-16X3.5-IN)	
	3	2	**5M-2894**	20	WASHER-HARD (10.2X18.5X2.5-MM THK)	
	4	1	**5P-2587**	1	SEAL-O-RING	
	5	1	**121-3038**	1	SPACER AS	
	6	2	**6Y-5793**	2	RING-SEAL	
	7	1,2	**233-9748**	8	DISC-FRICTION	
R	8	1,2,3, 4	**3P-7447**	15	PLATE-CLUTCH	
	9	1	**9N-4273**	1	SLINGER-OIL	
	10	1	**123-0999**	1	GEAR-RING (75-TEETH)	
	11	1	**2P-5860**	18	BOLT (1/2-13X20.375-IN)	
	12	1,2	**5P-8245**	20	WASHER-HARD (13.5X25.5X3-MM THK)	
	13	1	**6Y-7993**	1	HOUSING-CLUTCH	
	14	1	**7D-1979**	1	SEAL-O-RING	
	15	1	**1P-0016**	1	RING	
	16	1	**123-0997**	1	GEAR-SUN (30-TEETH)	
	17	3	**1P-0014**	1	RING-LOCK	
	18	1	**6Y-7885**	1	CARRIER-PLANETARY	
	19	3	**6Y-9021**	1	SHAFT AS-OUTPUT	
	19A	3	**5P-0403**	2	BEARING-ROLLER	
	20	2	**8S-6212**	2	BOLT (1/2-13X13-IN)	
	21	1	**3P-3743**	1	RING-RETAINING	
	22	1	**3P-4050**	1	SPACER (2.9X3.3X0.125-IN THK)	
	23	1	**5J-5794**	2	BOLT (1/2-13X3.5-IN)	
	24	1	**6Y-8542**	5	SHAFT-PLANETARY	
	25	1	**8E-8310**	10	DISC-THRUST	
	26	1	**124-3306**	5	BEARING-CAGED	
	27	1	**110-9286**	5	GEAR-PLANETARY (22-TEETH)	
	28	1	**3P-7832**	6	DOWEL	
	29	1	**4M-5016**	12	SPRING	
	30	1	**7F-2122**	3	SEAL-O-RING	
	31	1	**1T-0414**	10	BOLT-12 POINT HEAD (5/16-18X1-IN)	
	32	2	**1P-9261**	1	SEAL-RING	
	33	2	**284-5968**	3	SPRING	
R	34	2	**3P-7489**	4	PLATE-CLUTCH	
	35	2	**234-6707**	5	DISC-FRICTION	
	36	2	**9W-8298**	6	DOWEL	
	37	2	**6P-7379**	1	HOUSING AS	
	37A	2	**8B-1312**	3	DOWEL	
	38	2	**6Y-8119**	1	GEAR-RING (90-TEETH)	
	39	2,3	**3P-2794**	3	SEAL-RING	
	40	3	**6Y-8203**	1	GEAR-SUN (48-TEETH)	
	41	2,3	**3P-2685**	3	PISTON-CLUTCH	
	42	2,3	**5P-3119**	2	RING-RETAINING	
	43	2,3	**9H-5537**	24	SPRING	
	44	3	**6Y-8202**	1	GEAR-SUN (48-TEETH)	
	45	4	**136-5083**	1	CARRIER-PLANETARY	
	46	4	**8E-4091**	4	SHAFT-PLANETARY	

273-9200 **PLANETARY GP-TRANSMISSION** *(contd.)* **i02762960**

NOTE	REF NO	GRAPHIC REF	PART NUMBER	QTY	PART NAME 1 2 3 4 5 6 (PRODUCT LEVEL)	SEE PAGE
	47	4	**6Y-8206**	4	GEAR-PLANETARY (32-TEETH)	
	48	4	**8P-4617**	1	SEAL-METAL RING	
	49	4	**164-4891**	1	PLATE AS	
	49A	4	**2D-6642**	2	BALL	
	49B	4	**7M-8479**	2	DOWEL	
	50	4	**6Y-8205**	4	GEAR-PLANETARY (29-TEETH)	
	51	4	**7H-7658**	12	SPRING	
	52	3,4	**8E-2729**	12	DISC AS-FRICTION	
	53	3	**8M-4390**	1	SEAL-O-RING	
	54	4	**1P-3958**	8	ROLLER AS-SPECIAL	
	55	4	**9W-8297**	6	DOWEL	
	56	1,2,3, 4	**3P-2793**	5	SEAL-RING	
	57	4	**9W-6099**	2	PISTON-CLUTCH	
	58	1,4	**7G-4818**	2	RING-SEAL	
	59	1,4	**3S-2708**	17	PIN-SPRING	
	60	4	**3P-3246**	4	SHAFT-PLANETARY	
	61	4	**8E-8316**	16	DISC-THRUST	
	62	1,4	**6V-0836**	2	RING-RETAINING	
	63	4	**6Y-8084**	1	CARRIER-RING	
	64	3	**7G-2928**	1	PLATE-RETAINER	
	65	3	**0S-1599**	1	BOLT (1/2-20X2.75-IN)	
	66	3	**123-0420**	1	SHAFT AS-INPUT	
	66A	3	**4B-9783**	1	BALL	
	67	4	**8K-2692**	1	RING-RETAINING	
	68	1,4	**8T-1141**	2	RING-RETAINING	
	69	4	**6Y-8083**	1	SLEEVE	
	70	1,4	**6Y-3484**	2	BALL BEARING	
	71	4	**1M-3937**	2	RING-METAL SEAL	
	72	4	**6F-0156**	1	RING-METAL SEAL	
	73	4	**8E-4086**	1	GEAR-SUN (29-TEETH)	
	74	4	**3P-3321**	1	SEAL-METAL RING	
	75	4	**108-2736**	2	RING-LOCK	
	76	4	**3T-2139**	1	HOUSING AS-CLUTCH	
	76A	4	**9S-1343**	1	PLUG-CUP	
	77	4	**6T-3720**	1	GEAR-RING (80-TEETH)	
	78	4	**8E-4088**	1	GEAR-RING (87-TEETH)	
	79	4	**8E-0330**	1	CARRIER AS	
	79A	4	**4S-8537**	1	DOWEL	
	80	4	**9F-3788**	1	RING-METAL SEAL	
	81	4	**136-1020**	1	BALL BEARING	
	82	4	**8S-9104**	1	RING-RETAINING	
	83	3	**8E-4087**	1	GEAR-RING (90-TEETH)	
	84	3	**8E-4085**	1	GEAR-SUN (26-TEETH)	
	85	4	**9G-4733**	6	TUBE	
	86	3	**3P-2414**	1	HOUSING-CLUTCH	
	87	4	**8E-4090**	6	SHAFT-PLANETARY	
	88	4	**8E-8304**	24	DISC-THRUST	
	89	3	**8J-8322**	1	RING-RETAINING	
	90	3	**6Y-8118**	1	GEAR-RING (90-TEETH)	
	91	4	**7G-2476**	6	GEAR-PLANETARY (20-TEETH)	
	92	4	**5M-6126**	6	BEARING AS-ROLLER	
	93	3	**8F-8544**	2	BOLT (3/8-16X6.25-IN)	
	94	2	**283-7701**	1	HOUSING AS-CLUTCH	
	95	3	**9M-4355**	20	DAMPER-BOLT	
	96	4	**5M-5018**	12	BEARING-ROLLER	
	97	4	**7G-2510**	6	GEAR-PLANETARY (20-TEETH)	
	98	3	**9W-3136**	2	RING-RETAINING	
	99	3	**124-3307**	1	BALL BEARING	
	100	2	**8E-0359**	1	HUB AS	

273-9200 **PLANETARY GP-TRANSMISSION** *(contd.)* **i02762960**

NOTE	REF NO	GRAPHIC REF	PART NUMBER	QTY	PART NAME 1 2 3 4 5 6 (PRODUCT LEVEL)	SEE PAGE
	101	2	**6Y-7992**	1	HOUSING-CLUTCH	
	102	2	**9M-2095**	1	RING-RETAINING	
	103	2	**3P-3304**	1	PLATE-RETAINER	
	104	2	**3P-2768**	1	PISTON-CLUTCH	
	105	2	**3P-2792**	1	SEAL-RING	
	106	2	**8E-0360**	1	HOUSING AS-CLUTCH	
	106A	2	**4S-8537**	1	DOWEL	
	106B	2	**6B-6863**	1	PIN-SPRING	
	106C	2	**6P-7705**	1	CARRIER-RING	
	107	2	**2D-8363**	1	SEAL-O-RING	
	108	4	**6V-1720**	1	PLATE-SERIAL NUMBER (TRANSMISSION)	
	109	1	**9S-4191**	1	PLUG-O-RING	
	110	1	**3J-1907**	1	SEAL-O-RING	
	111	4	**112-4511**	4	PIN-SPRING	
	112	1	**9W-7040**	1	PISTON-CLUTCH	

R-REMFG PART MAY BE AVAILABLE

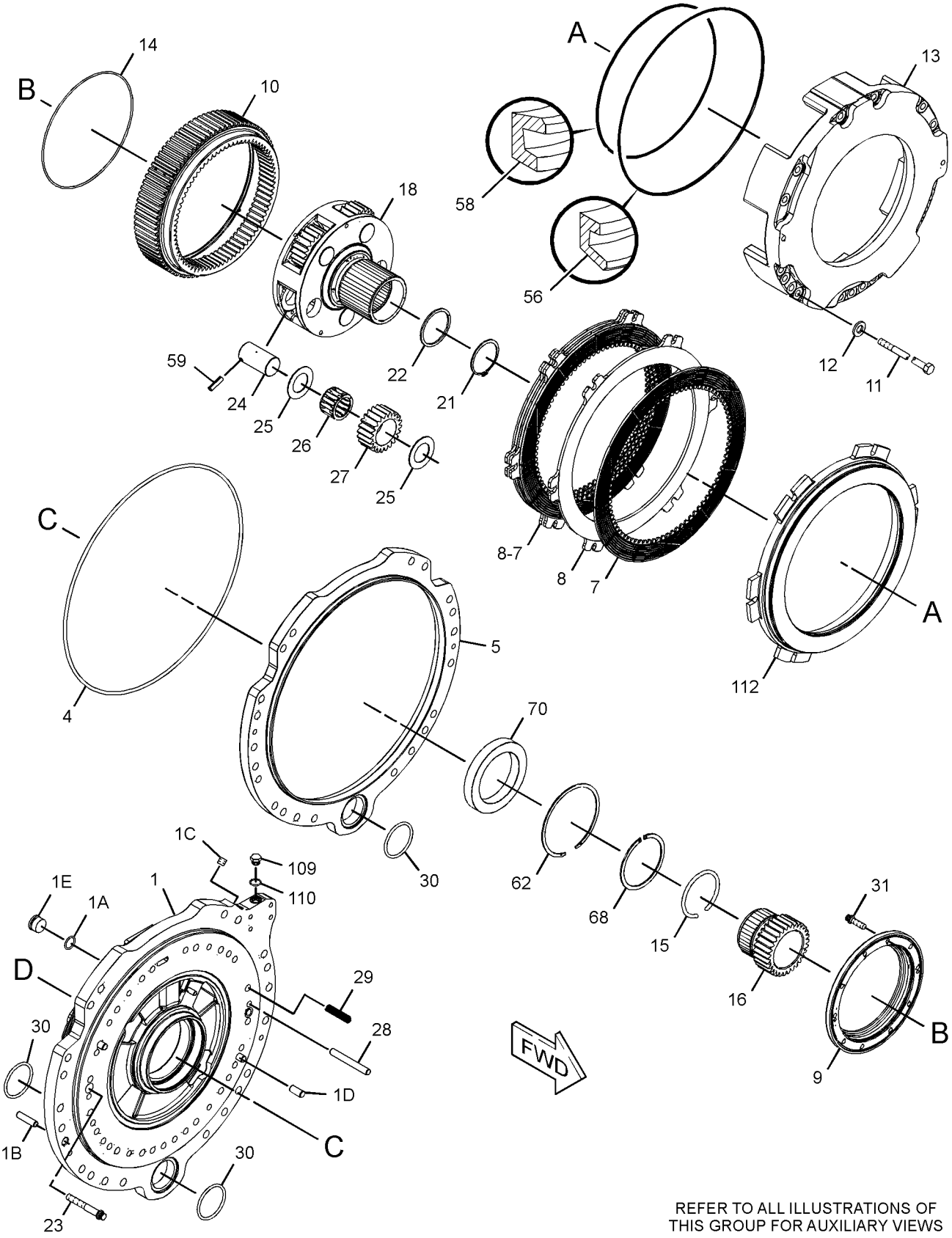

REFER TO ALL ILLUSTRATIONS OF THIS GROUP FOR AUXILIARY VIEWS

GRAPHIC #1

g01389896

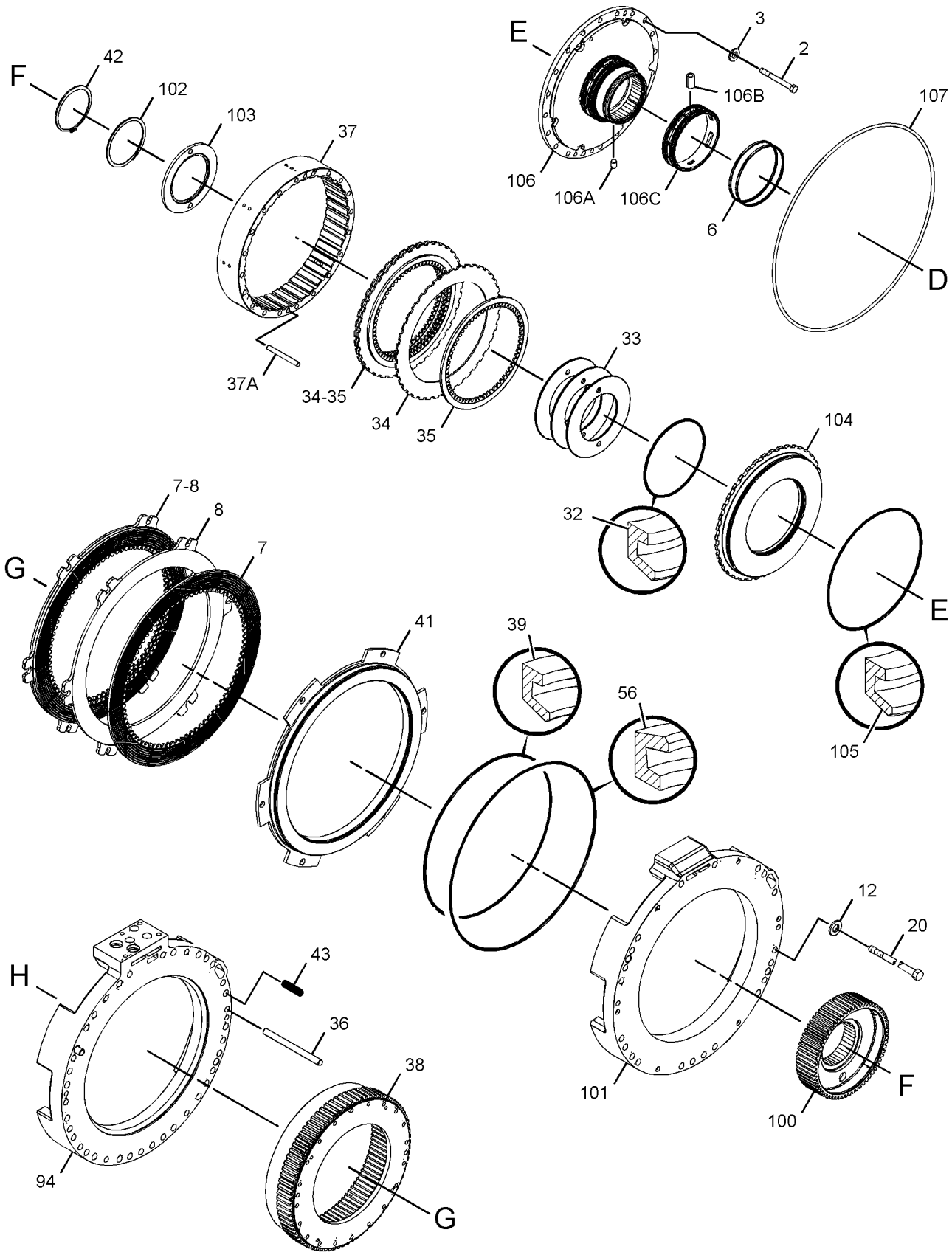

GRAPHIC #2 g01389897

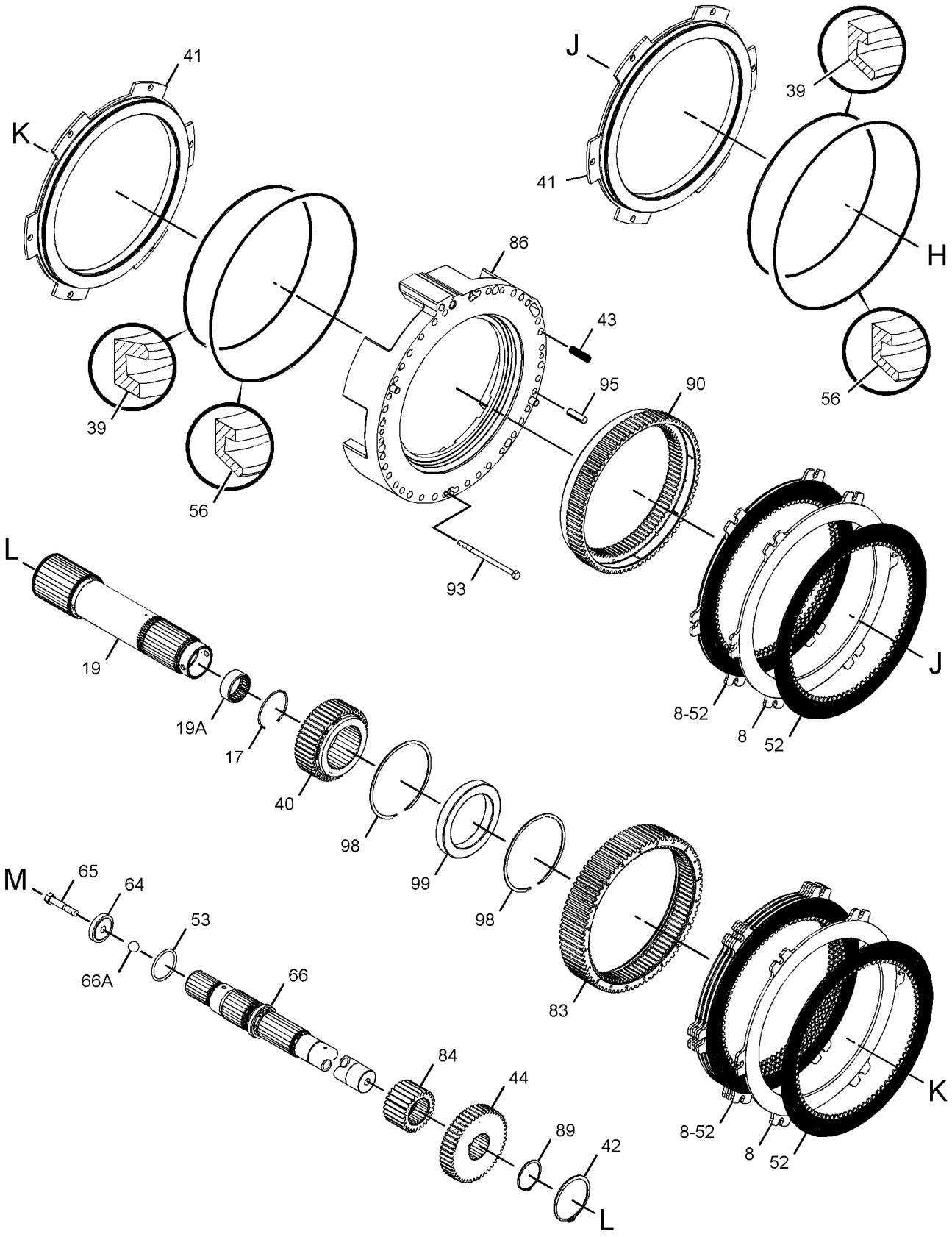

GRAPHIC #3

g01389898

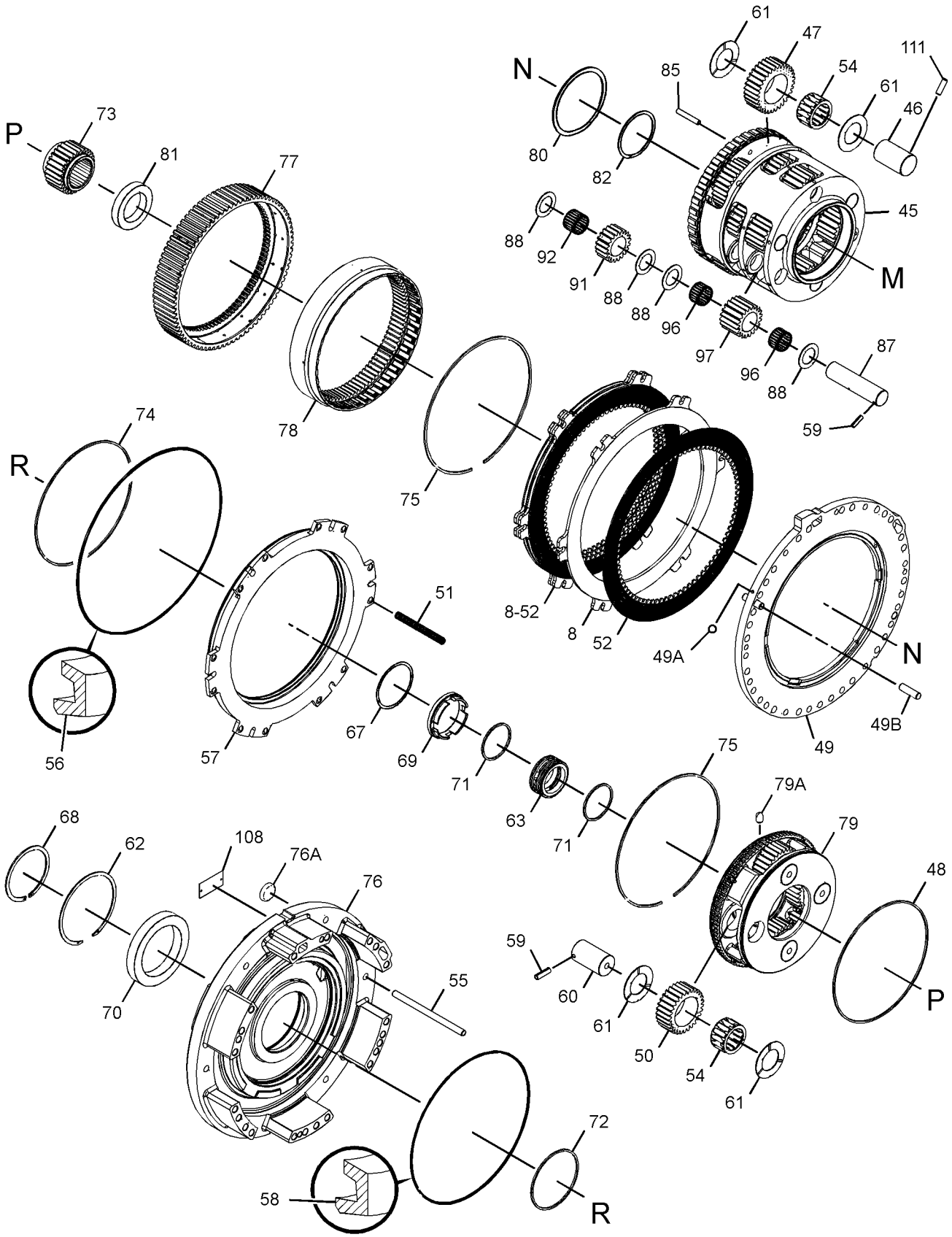

GRAPHIC #4 **<END>** g01389899

POWER TRAIN

8X-9045 SHAFT GP-DRIVE

S/N: B9K1-UP

PART OF 259-9204 COMMON AR

SMCS-3253 **i03377461**

NOTE	REF NO	GRAPHIC REF	PART NUMBER	QTY	PART NAME 1 2 3 4 5 6 (PRODUCT LEVEL)	SEE PAGE
CY	1	1	**143-2518**	1	UNIVERSAL JOINT GP	504
	2	1	**299-3434**	8	BOLT	

C-CHANGE FROM PREVIOUS TYPE
Y-SEPARATE ILLUSTRATION

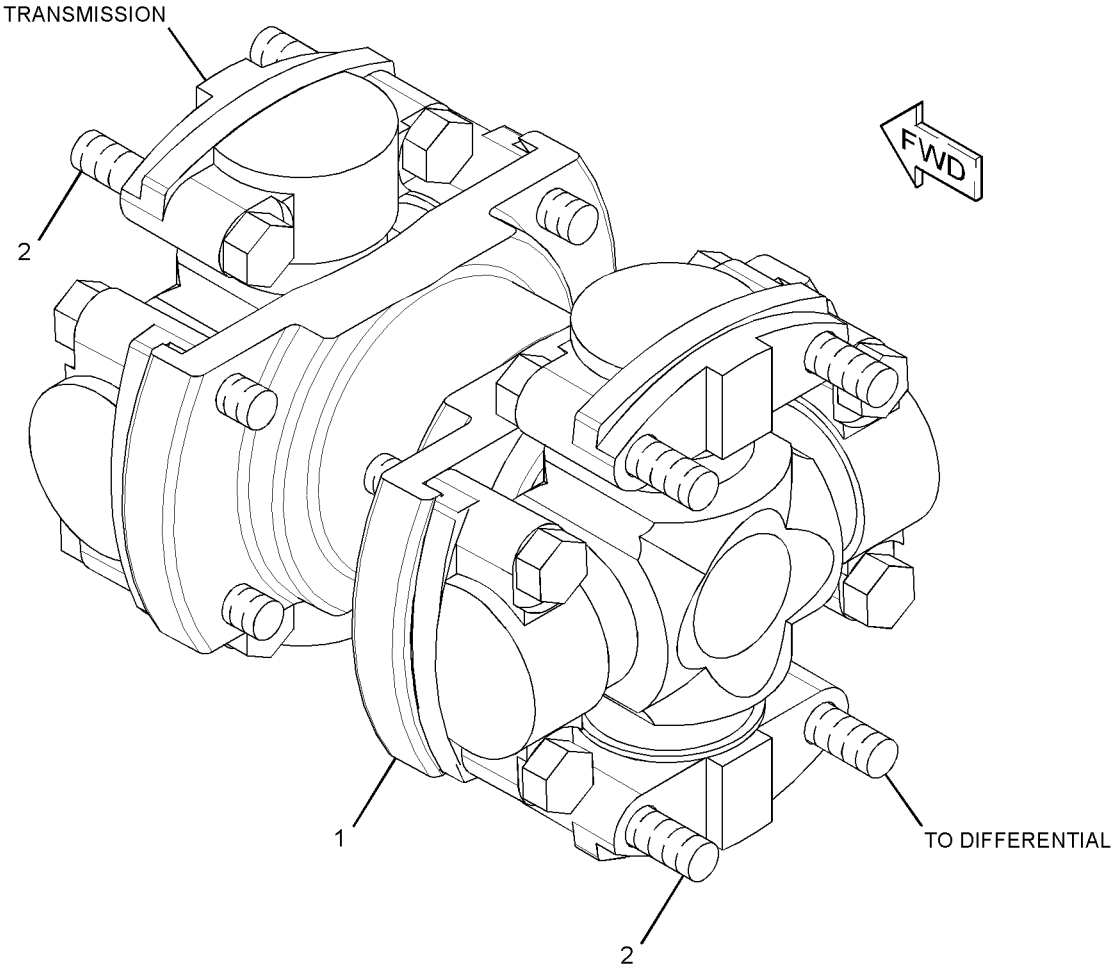

GRAPHIC #1 **<END>** g01798977

POWER TRAIN

265-4498 SHAFT GP-DRIVE

S/N: B9K1-UP

PART OF 259-9204 COMMON AR

SMCS-3253 **i03129823**

NOTE	REF NO	GRAPHIC REF	PART NUMBER	QTY	PART NAME 1 2 3 4 5 6 (PRODUCT LEVEL)	SEE PAGE
Y	1	1	**265-4499**	1	UNIVERSAL JOINT GP	505
	2	1	**299-3398**	8	BOLT	

Y-SEPARATE ILLUSTRATION

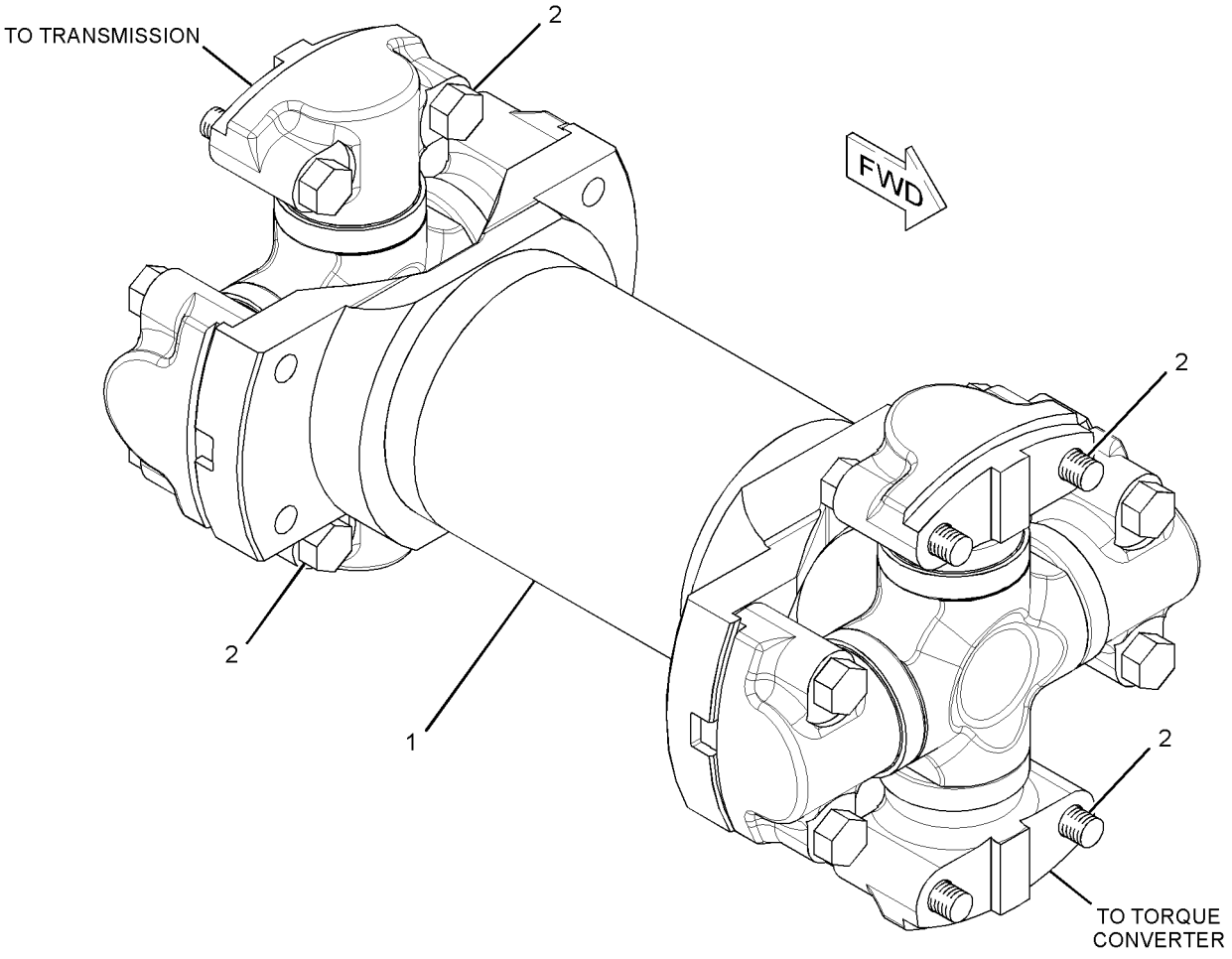

GRAPHIC #1 **<END>** g01376745

POWER TRAIN

266-9722 TANDEM & COVER GP

S/N: B9K1-UP

PART OF 259-9204 COMMON AR

SMCS-4062, 4064 **i02762797**

NOTE	REF NO	GRAPHIC REF	PART NUMBER	QTY	PART NAME 1 2 3 4 5 6 (PRODUCT LEVEL)	SEE PAGE
Y	1	1	*266-9723*	1	TANDEM & COVER GP (RH)	487
Y	2	1	*266-9724*	1	TANDEM & COVER GP (LH)	489

Y-SEPARATE ILLUSTRATION

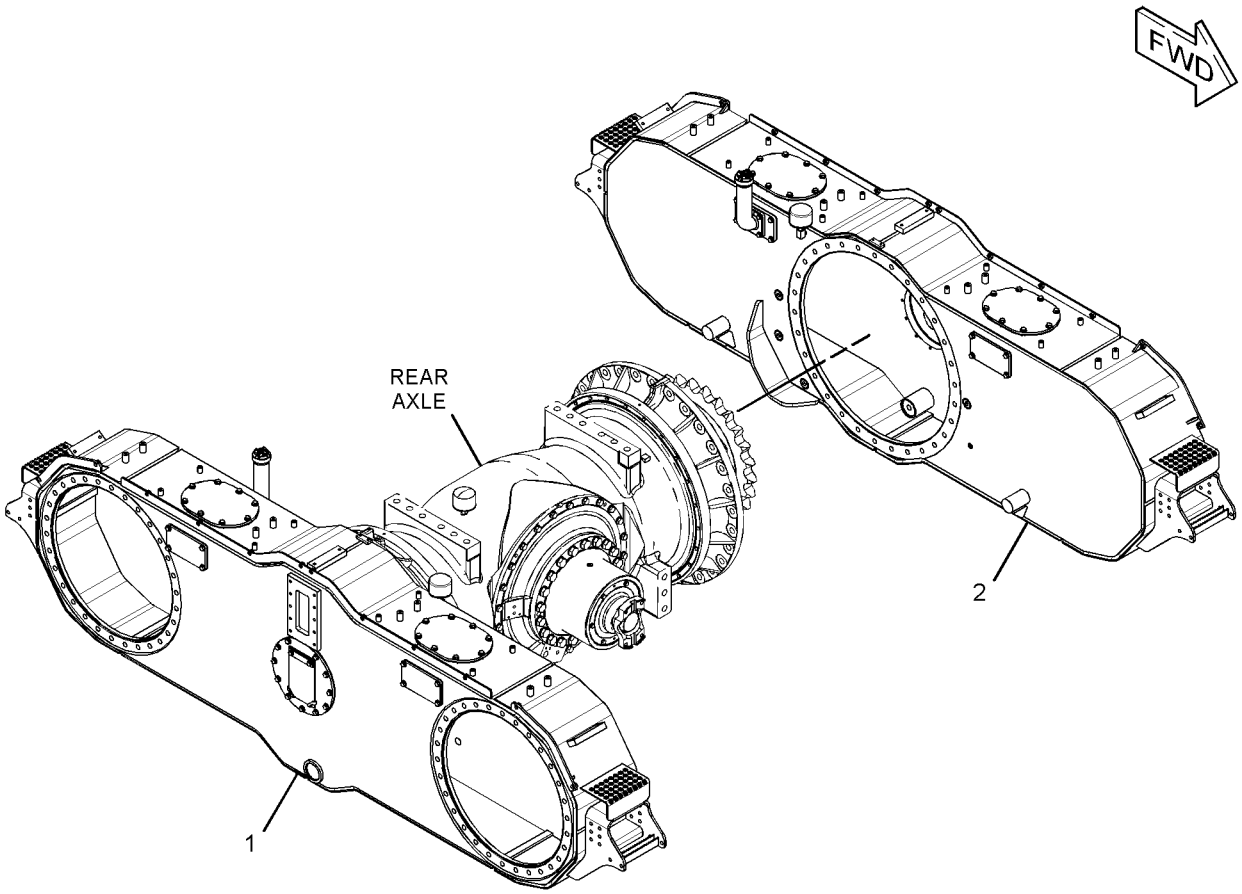

GRAPHIC #1 **<END>** g01384572

POWER TRAIN

266-9723 TANDEM & COVER GP–RH

S/N: B9K1-UP

PART OF 266-9722 TANDEM & COVER GP

SMCS-4062, 4064 **i02762801**

NOTE	REF NO	GRAPHIC REF	PART NUMBER	QTY	PART NAME 1 2 3 4 5 6 (PRODUCT LEVEL)	SEE PAGE
	1	1	**1Q-5461**	1	RECEIVER	
	2	1	**1Q-5468**	1	CAP	
	3	1	**2D-4202**	1	PLATE	
	4	1	**5P-2453**	1	PLUG-BUTTON	
	5	1	**5T-6553**	1	PLATE	
	6	1	**8W-6458**	1	GUARD	
	7	1	**9Y-9236**	1	GAUGE-SIGHT (TANDEM OIL LEVEL)	
	8	1	**120-6156**	2	COVER	
	9	1	**120-6157**	3	COVER	
	10	1	**120-6158**	4	GASKET	
	11	1	**120-6159**	2	GASKET	
	12	1	**120-6161**	1	GASKET	
	13	1	**152-2693**	1	COVER AS	
	14	1	**266-9725**	1	COVER	
	15	1	**284-7741**	1	HOUSING AS	
	16	1	**1H-5728**	1	SEAL-O-RING	
	17	1	**1U-2050**	1	FILLER	
	18	1	**3J-1907**	3	SEAL-O-RING	
	19	1	**6V-8076**	1	ELBOW	
	20	1	**7H-1447**	1	CAP-FILLER (TANDEM)	
	21	1	**7M-8485**	5	SEAL-O-RING	
	22	1	**8T-2275**	1	BALL	
	23	1	**8T-4121**	6	WASHER-HARD (11X21X2.5-MM THK)	
M	24	1	**8T-4136**	2	BOLT (M10X1.5X25-MM)	
M	25	1	**8T-4139**	39	BOLT (M12X1.75X30-MM)	
M	26	1	**8T-4195**	4	BOLT (M10X1.5X30-MM)	
	27	1	**8T-4223**	43	WASHER-HARD (13.5X25.5X3-MM THK)	
M	28	1	**8T-4956**	4	BOLT (M12X1.75X35-MM)	
	29	1	**8T-5050**	1	CONNECTOR	
	30	1	**9H-6454**	1	GASKET	
	31	1	**9S-8004**	1	PLUG-O-RING	
	32	1	**9S-9334**	4	PLUG-O-RING	
	33	1	**9T-1119**	1	BREATHER (TANDEM)	

M-METRIC PART

266-9723 **TANDEM & COVER GP** *(contd.)* **i02762801**

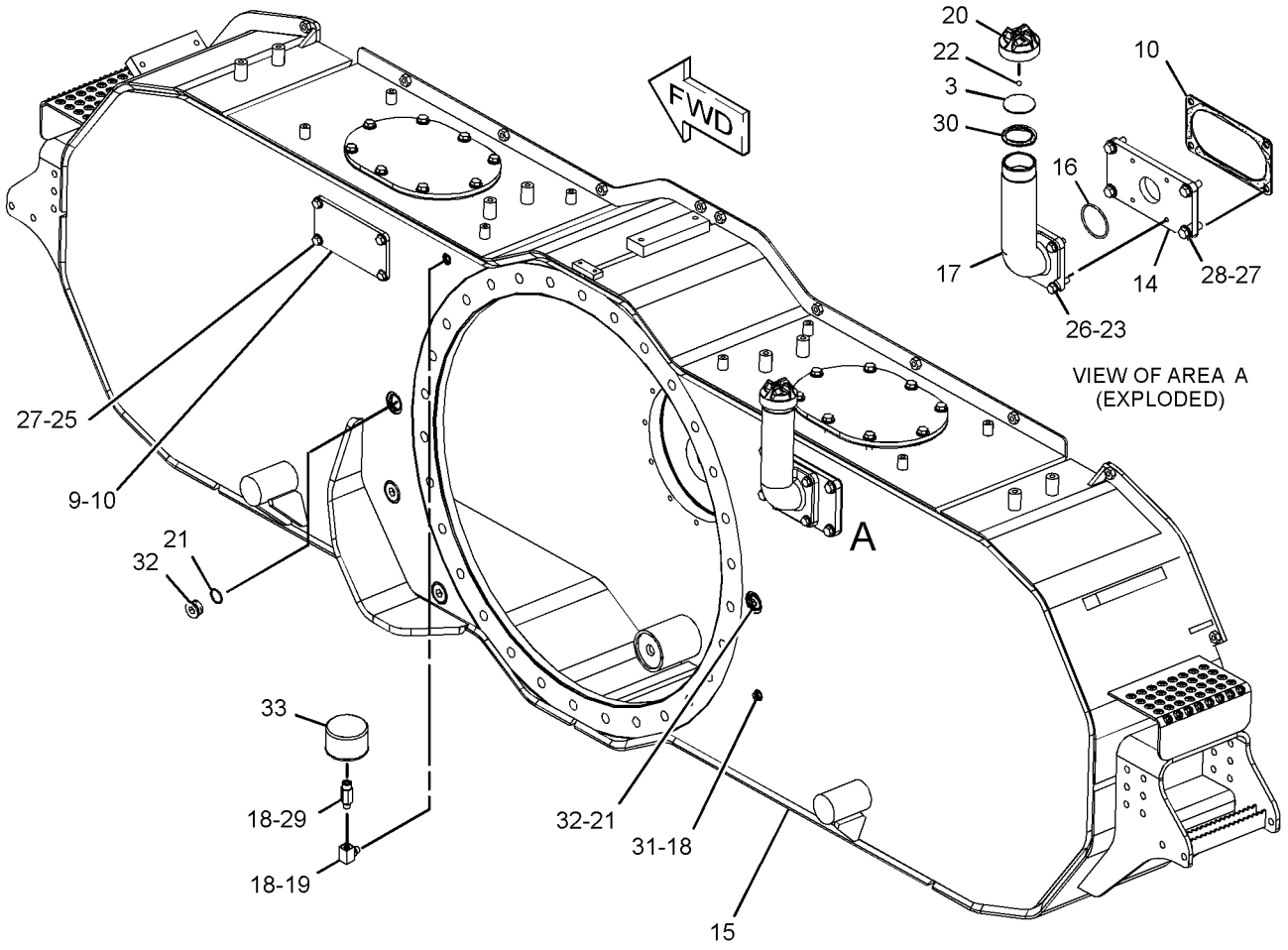

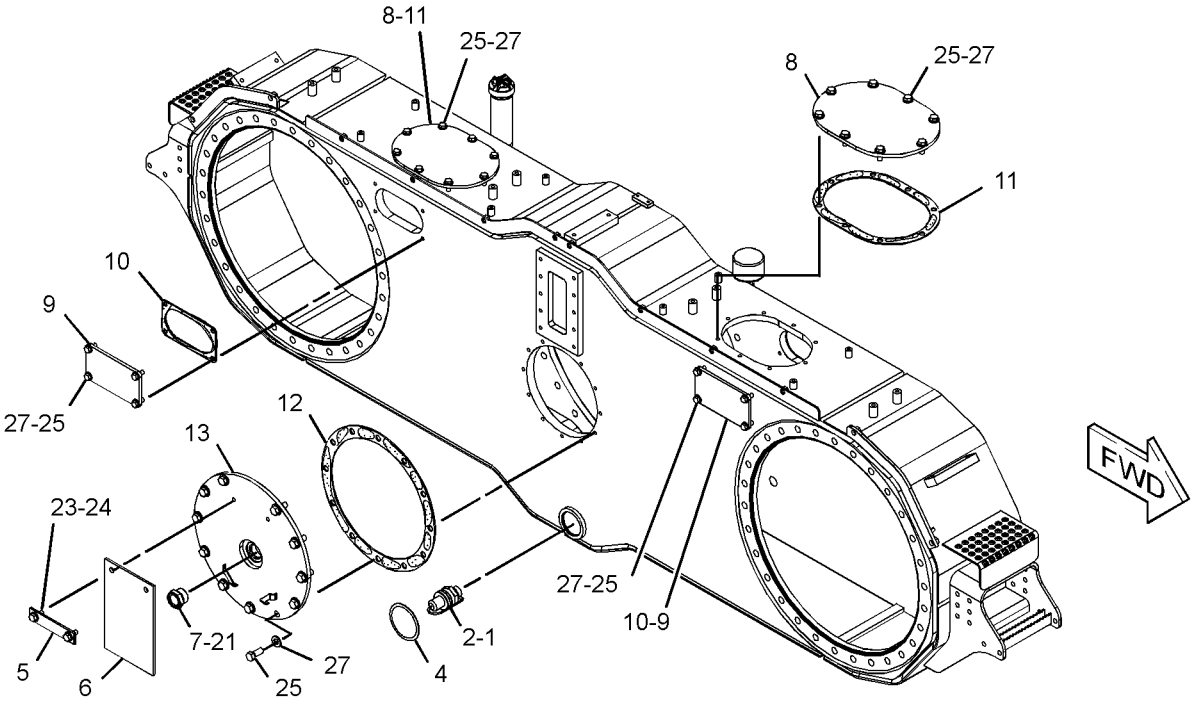

GRAPHIC #1 **<END>** g01386912

POWER TRAIN

266-9724 TANDEM & COVER GP–LH

S/N: B9K1-UP

PART OF 266-9722 TANDEM & COVER GP

SMCS-4062, 4064 **i02762802**

NOTE	REF NO	GRAPHIC REF	PART NUMBER	QTY	PART NAME 1 2 3 4 5 6 (PRODUCT LEVEL)	SEE PAGE
	1	1	**1Q-5461**	1	RECEIVER	
	2	1	**1Q-5468**	1	CAP	
	3	1	**2D-4202**	1	PLATE	
	4	1	**5P-2453**	1	PLUG-BUTTON	
	5	1	**5T-6553**	1	PLATE	
	6	1	**8W-6458**	1	GUARD	
	7	1	**9Y-9236**	1	GAUGE-SIGHT (TANDEM OIL LEVEL)	
	8	1	**120-6156**	2	COVER	
	9	1	**120-6157**	3	COVER	
	10	1	**120-6158**	4	GASKET	
	11	1	**120-6159**	2	GASKET	
	12	1	**120-6161**	1	GASKET	
	13	1	**152-2693**	1	COVER AS	
	14	1	**266-9725**	1	COVER	
	15	1	**284-7741**	1	HOUSING AS	
	16	1	**1H-5728**	1	SEAL-O-RING	
	17	1	**1U-2050**	1	FILLER	
	18	1	**3J-1907**	3	SEAL-O-RING	
	19	1	**6V-8076**	1	ELBOW	
	20	1	**7H-1447**	1	CAP-FILLER (TANDEM)	
	21	1	**7M-8485**	5	SEAL-O-RING	
	22	1	**8T-2275**	1	BALL	
	23	1	**8T-4121**	6	WASHER-HARD (11X21X2.5-MM THK)	
M	24	1	**8T-4136**	2	BOLT (M10X1.5X25-MM)	
M	25	1	**8T-4139**	39	BOLT (M12X1.75X30-MM)	
M	26	1	**8T-4195**	4	BOLT (M10X1.5X30-MM)	
	27	1	**8T-4223**	43	WASHER-HARD (13.5X25.5X3-MM THK)	
M	28	1	**8T-4956**	4	BOLT (M12X1.75X35-MM)	
	29	1	**8T-5050**	1	CONNECTOR	
	30	1	**9H-6454**	1	GASKET	
	31	1	**9S-8004**	1	PLUG-O-RING	
	32	1	**9S-9334**	4	PLUG-O-RING	
	33	1	**9T-1119**	1	BREATHER (TANDEM)	

M-METRIC PART

266-9724 **TANDEM & COVER GP** *(contd.)* **i02762802**

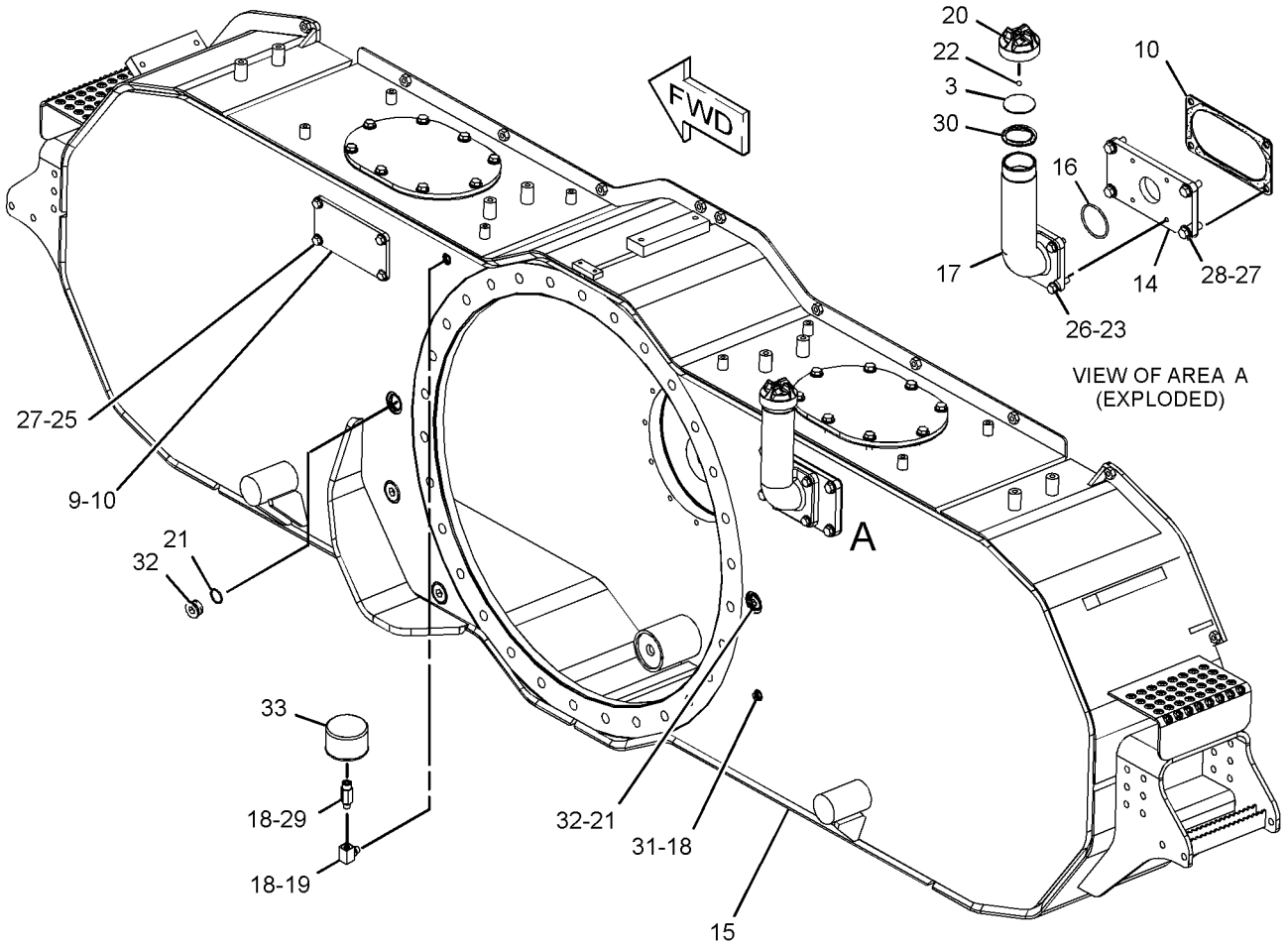

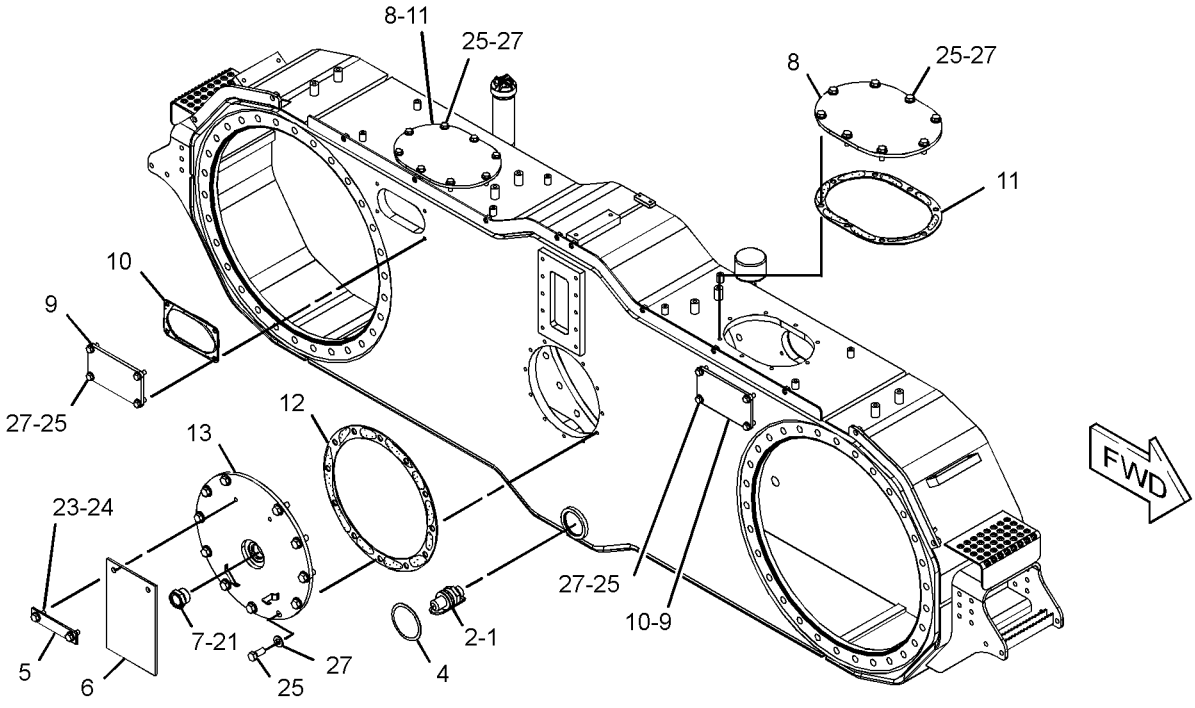

GRAPHIC #1 **<END>** g01386912

POWER TRAIN

134-3677 TIRE GP

S/N: B9K1-UP
(29.5-R29)

SMCS-4203 **i02765049**

NOTE	PART NUMBER	QTY	PART NAME 1 2 3 4 5 6 (PRODUCT LEVEL)	SEE PAGE
	134-3678	6	TIRE (29.5-R29)	

<END>

POWER TRAIN

137-1765 TIRE GP

S/N: B9K1-UP
(29.5-R29)

SMCS-4203 **i02765064**

NOTE	PART NUMBER	QTY	PART NAME 1 2 3 4 5 6 (PRODUCT LEVEL)	SEE PAGE
	137-1764	6	TIRE (29.5-R29)	

<END>

POWER TRAIN

157-6997 TIRE GP

S/N: B9K1-UP
(29.5-R29)

SMCS-4203 **i02765083**

NOTE	PART NUMBER	QTY	PART NAME 1 2 3 4 5 6 (PRODUCT LEVEL)	SEE PAGE
	154-4489	6	TIRE (29.5-R29)	

<END>

POWER TRAIN

186-4825 TIRE GP

S/N: B9K1-UP

29.5R29 * L5 RL5K 6S

SMCS-4203 **i01342320**

NOTE	PART NUMBER	QTY	PART NAME 1 2 3 4 5 6 (PRODUCT LEVEL)	SEE PAGE
			(NO SERVICED PARTS)	

<END>

POWER TRAIN

261-3020 TIRE GP

S/N: B9K1-UP
(29.5-29)

SMCS-4203 **i02223775**

NOTE	PART NUMBER	QTY	PART NAME 1 2 3 4 5 6 (PRODUCT LEVEL)	SEE PAGE
	260-8462	6	TIRE (29.5-29)	

<END>

POWER TRAIN

290-1365 TIRE GP

S/N: B9K1-UP

SMCS-4203 **i02565675**

NOTE	PART NUMBER	QTY	PART NAME 1 2 3 4 5 6 (PRODUCT LEVEL)	SEE PAGE
	285-5588	6	TIRE (29.5-R29)	

<END>

POWER TRAIN

318-6157 TIRE GP

S/N: B9K1-UP

SMCS-4203 **i02896796**

NOTE	PART NUMBER	QTY	PART NAME 1 2 3 4 5 6 (PRODUCT LEVEL)	SEE PAGE
	317-6896	6	TIRE	

<END>

POWER TRAIN

268-5675 TORQUE CONVERTER GP*R

S/N: B9K1-UP

PART OF 259-9204 COMMON AR

SMCS-3101 **i02765192**

NOTE	REF NO	GRAPHIC REF	PART NUMBER	QTY	PART NAME 1 2 3 4 5 6 (PRODUCT LEVEL)	SEE PAGE
Y	1	1	**268-5680**	1	TORQUE CONVERTER GP	500
	2	1	**294-2676**	1	HOUSING-TORQUE CONVERTER	
	3	1	**146-7311**	1	SEAL-O-RING	
	4	1	**0S-1585**	13	BOLT (1/2-13X1.5-IN)	
	5	1	**5P-8245**	13	WASHER-HARD (13.5X25.5X3-MM THK)	
	6	1	**4H-6730**	1	SEAL-O-RING	
	7	1	**9S-4185**	1	PLUG-O-RING	
	8	1	**3K-0360**	1	SEAL-O-RING	
	9	1	**146-7312**	1	SEAL-O-RING	

Y-SEPARATE ILLUSTRATION

268-5675 **TORQUE CONVERTER GP** *(contd.)* **i02765192**

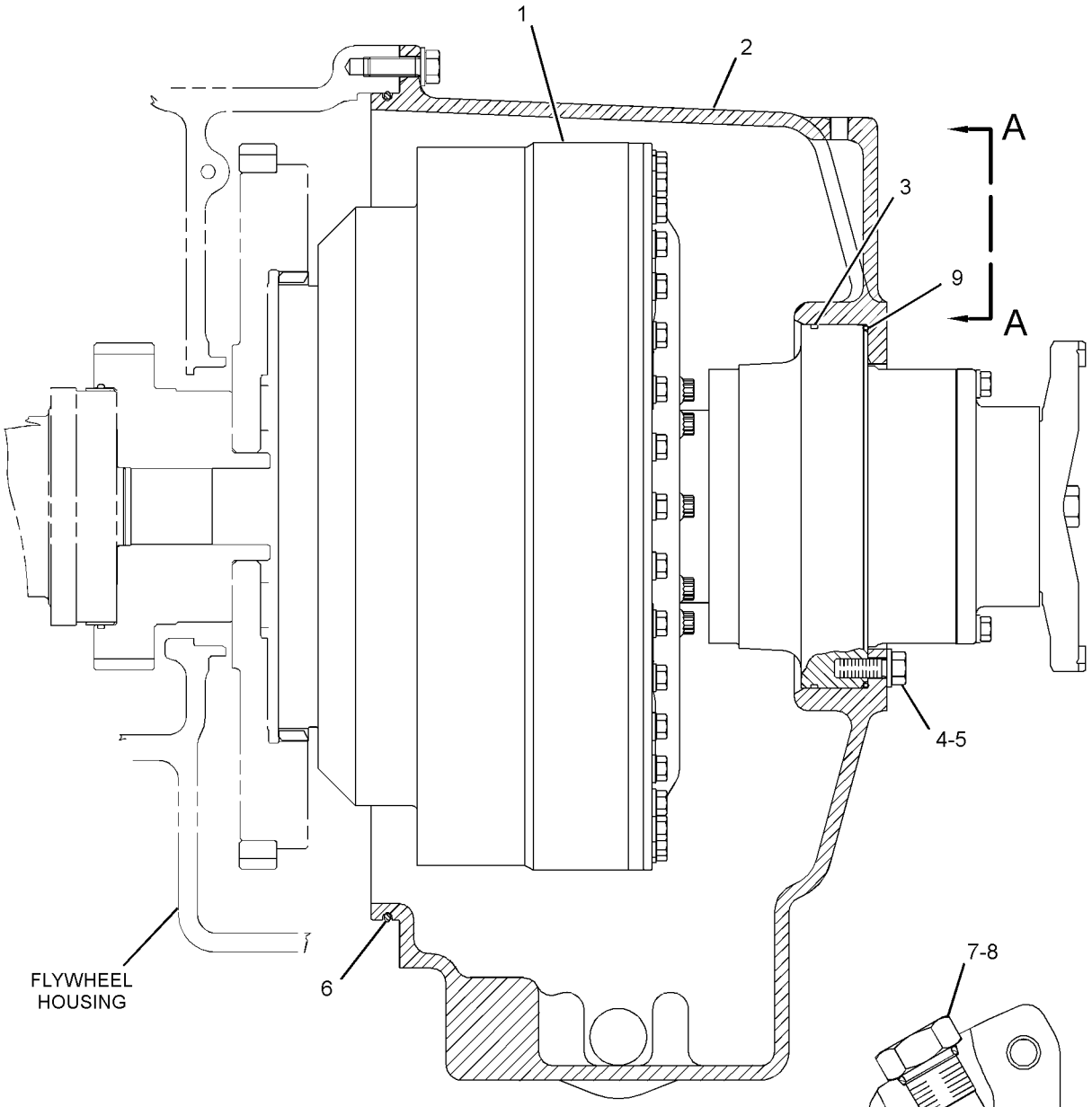

RIGHT SIDE VIEW

VIEW A-A

GRAPHIC #1 **<END>** g01390977

POWER TRAIN

268-5680 TORQUE CONVERTER GP

S/N: T9K1-UP

PART OF 268-5675 TORQUE CONVERTER GP

SMCS-3101 **i04036711**

NOTE	REF NO	GRAPHIC REF	PART NUMBER	QTY	PART NAME 1 2 3 4 5 6 (PRODUCT LEVEL)	SEE PAGE
	1	1	**265-7501**	1	HOUSING AS	
		1	**1T-0936**	1	PLUG-PIPE	
	2	1	**1T-0794**	1	RING-SEAL METAL	
	3	1	**1T-1229**	1	IMPELLER-CONVERTER	
	4	1	**1T-0867**	1	PLATE-REINFORCEMENT	
	5	1	**1T-1498**	1	PLATE-CLAMP	
	6	1	**1T-1224**	1	HUB-IMPELLER	
	7	1	**9W-3136**	1	RING-RETAINING	
	8	1	**1T-1659**	1	SLEEVE AS	
		1	**1T-1658**	1	SLEEVE-WEAR	
		1	**5S-4441**	1	DOWEL	
	9	1	**3P-2573**	1	RACE-BEARING INNER	
	10	1	**1T-0897**	2	RING-RETAINING	
	11	1	**6Y-5888**	2	RING-SEAL	
	12	1	**1T-1657**	1	CARRIER-BEARING	
	13	1	**1T-1220**	1	CARRIER-RING	
	14	1	**1L-7205**	1	BALL BEARING	
	15	1	**1T-1226**	1	RETAINER-BEARING	
	16	1	**1T-0365**	1	FLANGE-JOINT	
	17	1	**1T-0136**	1	SEAL-O-RING	
	18	1	**1T-1006**	1	RETAINER	
	19	1	**8B-5144**	1	BOLT (5/8-18X3-IN)	
B	20	1	**1T-1011**	3	SHIM (0.254-MM THK)	
B	21	1	**1T-1012**	3	SHIM (0.076-MM THK)	
	22	1	**139-5802**	1	SEAL-LIP TYPE	
	23	1	**1T-1222**	1	GASKET	
	24	1	**352-0384**	1	SHAFT-OUTPUT	
	25	1	**192-4824**	1	CARRIER AS	
		1	**192-0877**	1	BUSHING	
	26	1	**3P-2574**	1	RACE & ROLLER AS	
	27	1	**1T-1221**	1	CARRIER-RING	
	28	1	**9W-6990**	1	RING-SEAL	
	29	1	**5P-5855**	8	BOLT-12 POINT HEAD (1/2-13X1.75-IN)	
	30	1	**5F-3999**	1	SEAL-O-RING	
	31	1	**0S-1588**	44	BOLT (3/8-16X1.25-IN)	
	32	1	**5M-2894**	44	WASHER-HARD (10.2X18.5X2.5-MM THK)	
	33	1	**1T-0795**	3	RING-RETAINING	
	34	1	**1T-1423**	1	CAM-FREEWHEEL	
	35	1	**1T-0782**	1	TURBINE-CONVERTER	
	36	1	**1T-0804**	1	RING-CLAMP	
	37	1	**6P-9553**	1	PLATE-CLUTCH BACKING	
	38	1	**1T-1315**	2	PLATE-CLUTCH	
	39	1	**336-9313**	2	DISC-FRICTION	
	40	1	**7G-0141**	1	RING-SEAL	
	41	1	**1T-1426**	1	PISTON-LOCKUP CLUTCH	
	42	1	**192-0876**	1	HUB	
	43	1	**1T-1910**	2	PLATE	
	44	1	**1T-0806**	2	RETAINER-BEARING	
	45	1	**1T-0786**	2	BEARING-THRUST	
	46	1	**0L-1351**	6	BOLT (3/8-16X0.875-IN)	
	47	1	**6V-9191**	1	BALL BEARING	
	48	1	**1T-1617**	1	PLATE-RETAINER	
	49	1	**0T-0768**	2	BOLT (7/16-14X1.75-IN)	
	50	1	**1T-1499**	1	COVER	
	51	1	**1T-0895**	1	RING-RETAINING	
	52	1	**1T-1616**	1	WASHER-SPRING (54.9X86.4X6.1-MM)	

268-5680 TORQUE CONVERTER GP *(contd.)* i04036711

NOTE	REF NO	GRAPHIC REF	PART NUMBER	QTY	PART NAME 1 2 3 4 5 6 (PRODUCT LEVEL)	SEE PAGE
	53	1	1T-1356	1	RING-SEAL	
	54	1	1T-0847	1	LOCK PIN	
	55	1	1T-0807	2	RACE-THRUST BEARING	
	56	1	8M-2530	18	BOLT-12 POINT HEAD (1/2-13X1.25-IN)	
	57	1	8S-3371	1	RING-SEAL	
	58	1	148-2974	1	STATOR-CONVERTER	
	59	1	1T-0896	1	RING-RETAINING	
	60	1	1T-1410	13	ROLLER-FREEWHEEL	
	61	1	1T-0680	13	SPRING-FREEWHEEL	

B-USE AS REQUIRED

268-5680 TORQUE CONVERTER GP *(contd.)* i04036711

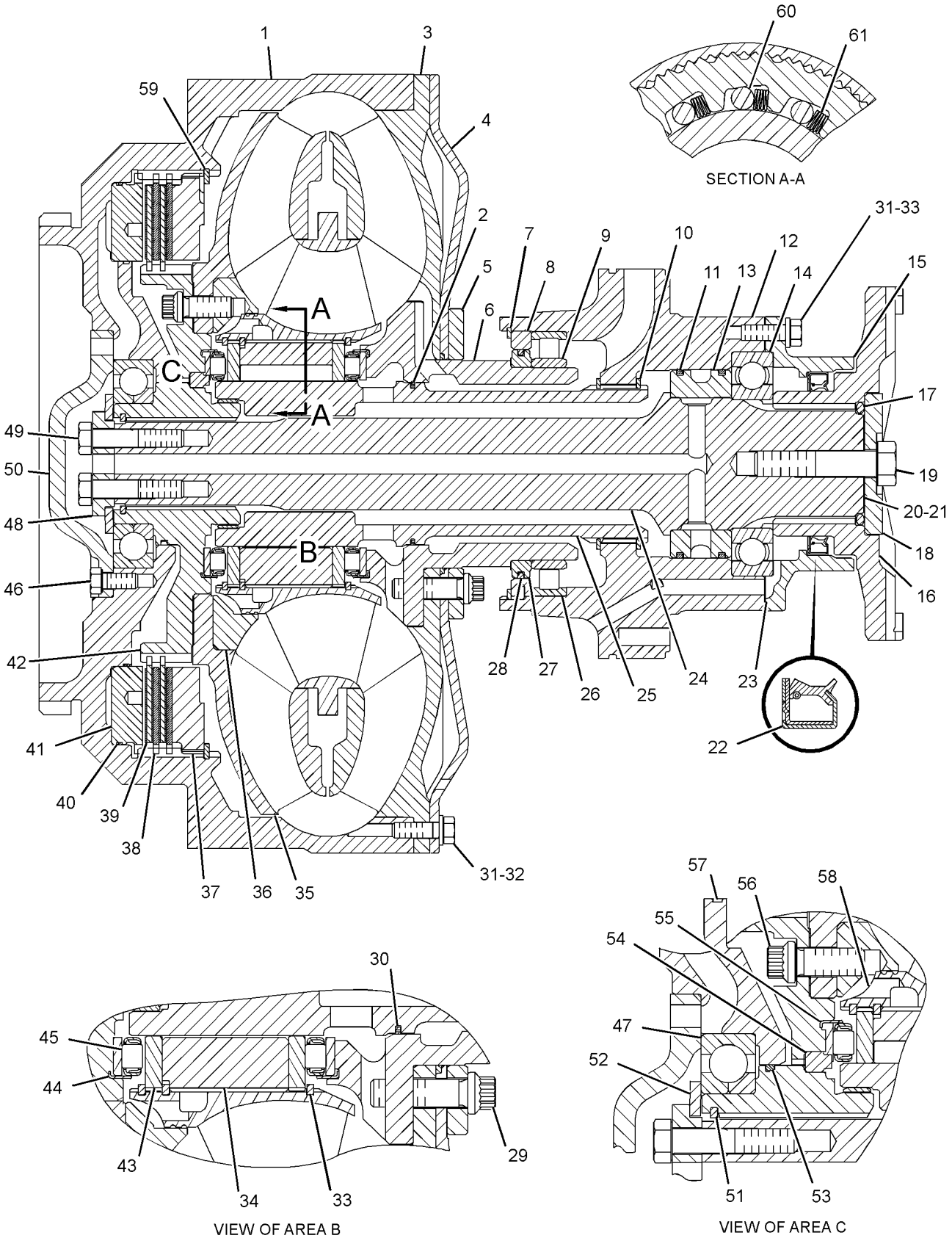

GRAPHIC #1 **<END>** g01393116

POWER TRAIN

267-5245 TRANSMISSION AR

S/N: HKY1-UP

PART OF 259-9204 COMMON AR

SMCS-3030 **i02896885**

NOTE	REF NO	GRAPHIC REF	PART NUMBER	QTY	PART NAME 1 2 3 4 5 6 (PRODUCT LEVEL)	SEE PAGE
Y	1	1	*273-9194*	1	CASE & PARTS GP-PLANETARY	430
Y	2	1	*273-9195*	1	GEAR GP-INPUT TRANSFER	453
Y	3	1	*273-9197*	1	GEAR GP-OUTPUT TRANSFER	455
Y	4	1	*273-9199*	1	CONTROL GP-TRANSMISSION HYD	435
Y	5	1	*273-9200*	1	PLANETARY GP-TRANSMISSION	477
Y	6	1	*278-9805*	1	COVER GP-SHIPPING	438
Y	7	1	*310-3221*	1	ELECTRONICS GP-POWER TRAIN	208

Y-SEPARATE ILLUSTRATION

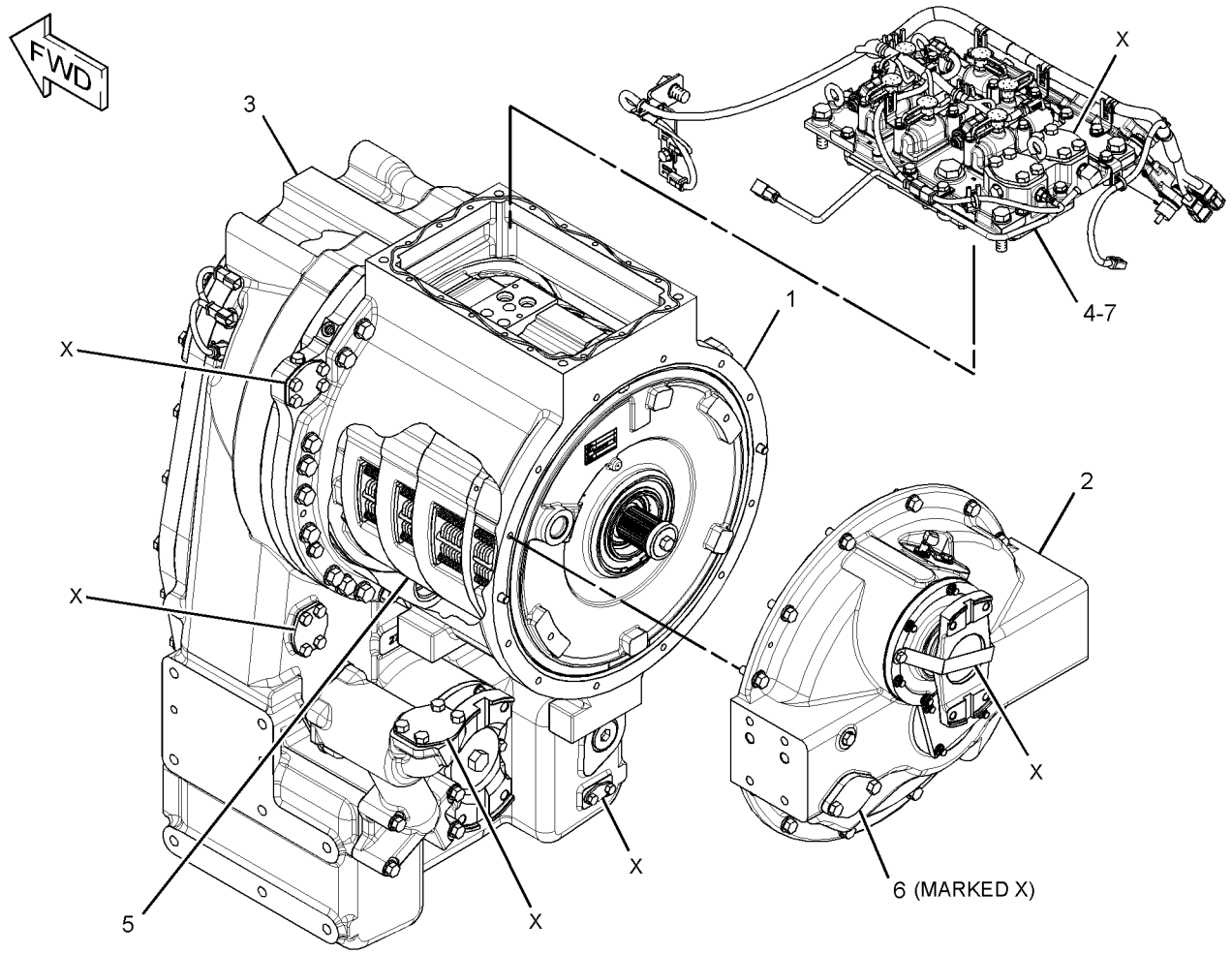

GRAPHIC #1 **<END>** g01522191

POWER TRAIN

143-2518 UNIVERSAL JOINT GP

S/N: B9K1-UP

PART OF 8X-9045 SHAFT GP-DRIVE

SMCS-3251, 3253 **i03128804**

NOTE	REF NO	GRAPHIC REF	PART NUMBER	QTY	PART NAME 1 2 3 4 5 6 (PRODUCT LEVEL)	SEE PAGE
	1	1	**299-3434**	8	BOLT	
	2	1	**106-0933**	2	SPIDER & BEARING GP	
	3	1	**143-2519**	1	SHAFT	

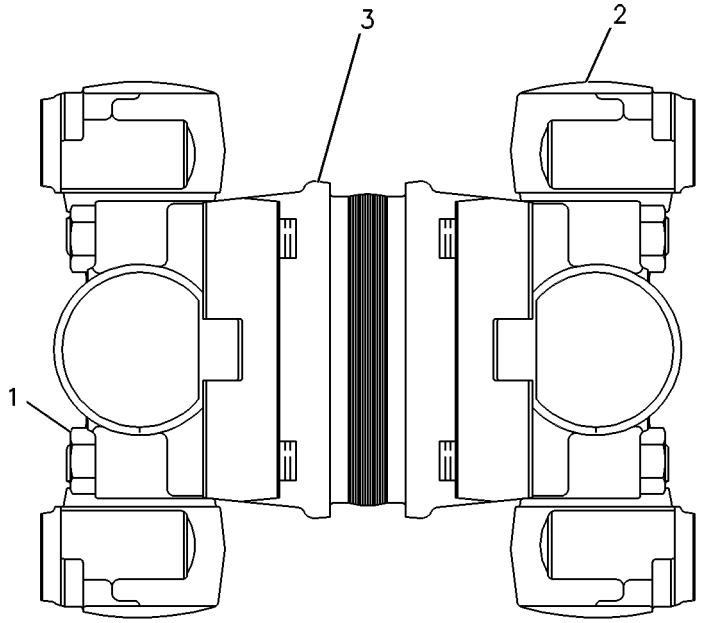

GRAPHIC #1 **<END>** g00086306

POWER TRAIN

265-4499 UNIVERSAL JOINT GP

S/N: B9K1-UP

PART OF 265-4498 SHAFT GP-DRIVE

SMCS-3251, 3253 **i03200265**

NOTE	REF NO	GRAPHIC REF	PART NUMBER	QTY	PART NAME 1 2 3 4 5 6 (PRODUCT LEVEL)	SEE PAGE
	1	1	**173-0889**	2	SPIDER & BEARING AS	
	2	1	**279-6666**	1	SHAFT AS	
	3	1	**299-3398**	8	BOLT	

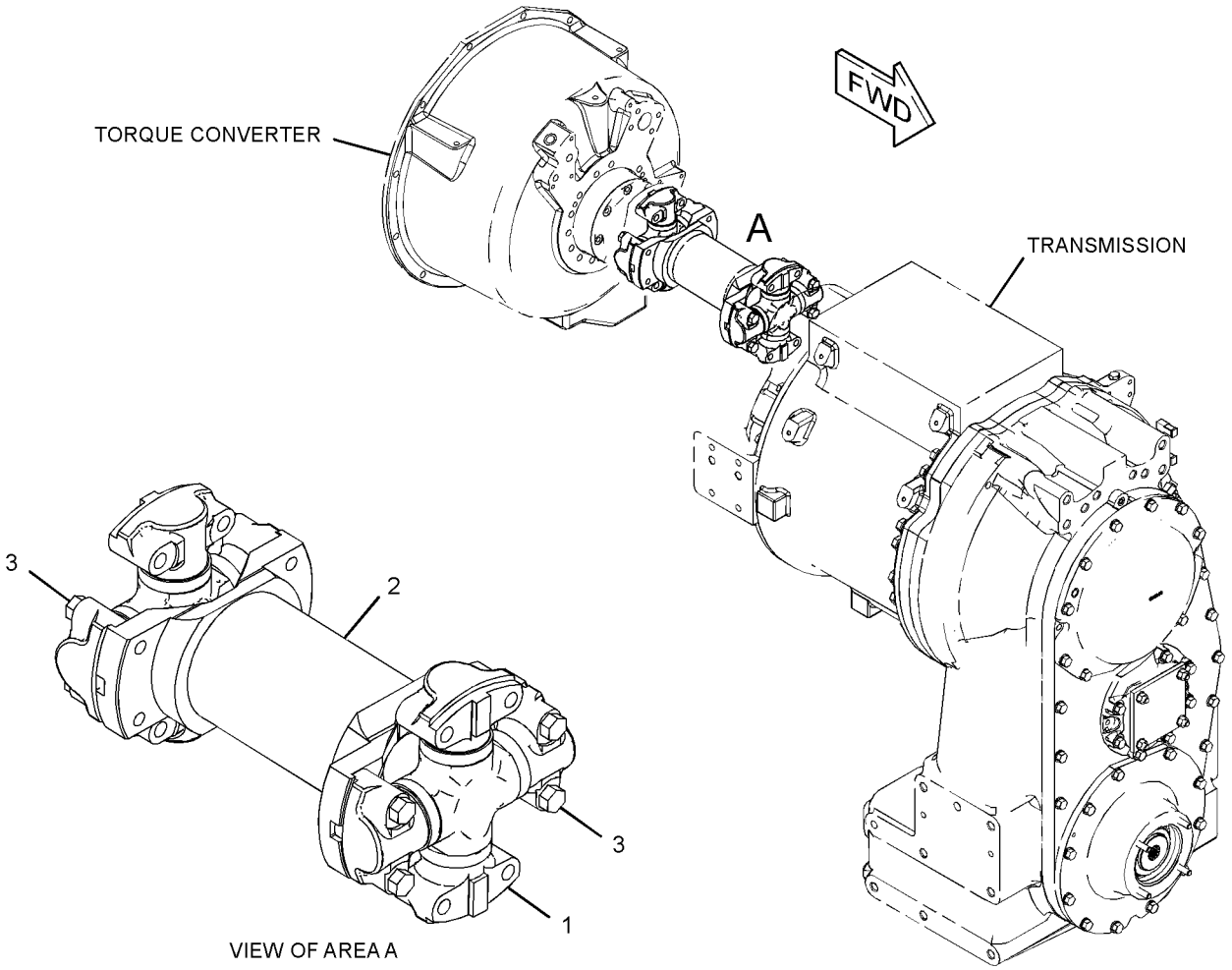

GRAPHIC #1 **<END>** g01373247

POWER TRAIN

277-8874 VALVE & MTG GP-SOLENOID–

DIFFERENTIAL LOCK SOLENOID VALVE

S/N: B9K1-UP

PART OF 268-0240 CONTROL GP-DIFFERENTIAL LOCK

SMCS-5479 **i02764546**

NOTE	REF NO	GRAPHIC REF	PART NUMBER	QTY	PART NAME 1 2 3 4 5 6 (PRODUCT LEVEL)	SEE PAGE
M	1	1	**8T-1158**	1	BOLT-SOCKET HEAD (M8X1.25X20-MM)	
	2	1	**245-1181**	1	FLANGE	
J	3	1	**252-2237**	1	VALVE GP-SOLENOID (DIFFERENTIAL LOCK)	
		1	**245-1181**	1	FLANGE	
	4	1	**277-8875**	1	MANIFOLD	
					AVAILABLE REPAIR KIT(S):	
J			**245-1912**	1	KIT-SEAL (SOLENOID VALVE)	

J-KIT MARKED J SERVICES PART(S) MARKED J
M-METRIC PART

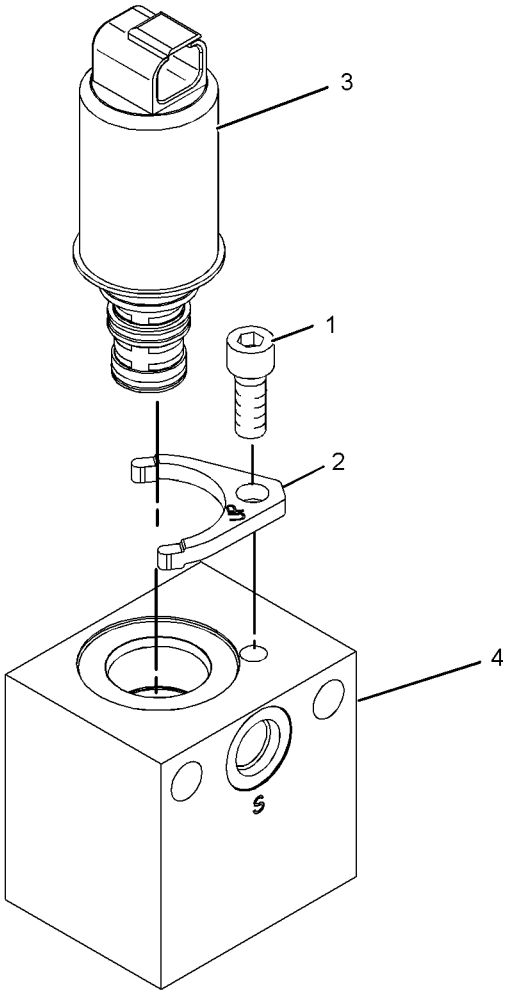

GRAPHIC #1 **<END>** g01388100

POWER TRAIN

294-7362 VALVE GP-MANIFOLD—TRANSMISSION

S/N: HKY1-UP

PART OF 273-9199 CONTROL GP-TRANSMISSION HYD

SMCS-3206 **i02910915**

NOTE	REF NO	GRAPHIC REF	PART NUMBER	QTY	PART NAME 1 2 3 4 5 6 (PRODUCT LEVEL)	SEE PAGE
	1	1	**4M-5905**	1	SCREW-ADJUSTMENT (5/16-18X1-IN)	
	2	1	**5B-3180**	1	NUT (5/16-18-THD)	
	4	1	**9W-5568**	1	SLUG	
	5	1	**133-6567**	1	SPOOL AS-RELIEF	
		1	**3D-8317**	1	RING-RETAINING	
		1	**4B-9880**	1	BALL	
		1	**4M-2381**	1	SPRING	
		1	**8M-1013**	1	RETAINER	
	6	1	**148-1928**	1	VALVE-RELIEF (TORQUE CONVERTER INLET)	
	7	1	**153-4247**	1	STOP	
	8	1	**231-4781**	1	PLATE	
	11	1	**295-1146**	1	MANIFOLD	
	12	1	**3F-4479**	1	PIN-SPRING	
M	13	1	**6V-2317**	27	BOLT (M8X1.25X30-MM)	
	14	1	**6Y-4638**	1	PLUG-HEX SOCKET (1-5/16-12-THD)	
	15	1	**7M-8485**	1	SEAL-O-RING	
	16	1	**9M-1974**	28	WASHER-HARD (8.8X16X2-MM THK)	
	17	1	**9X-4609**	1	SEAL-O-RING	
					PARTS SHOWN IN GRAPHIC(S) WITHOUT A REFERENCE NUMBER ARE NOT SERVICED SEPARATELY	

M-METRIC PART

294-7362 VALVE GP-MANIFOLD *(contd.)* i02910915

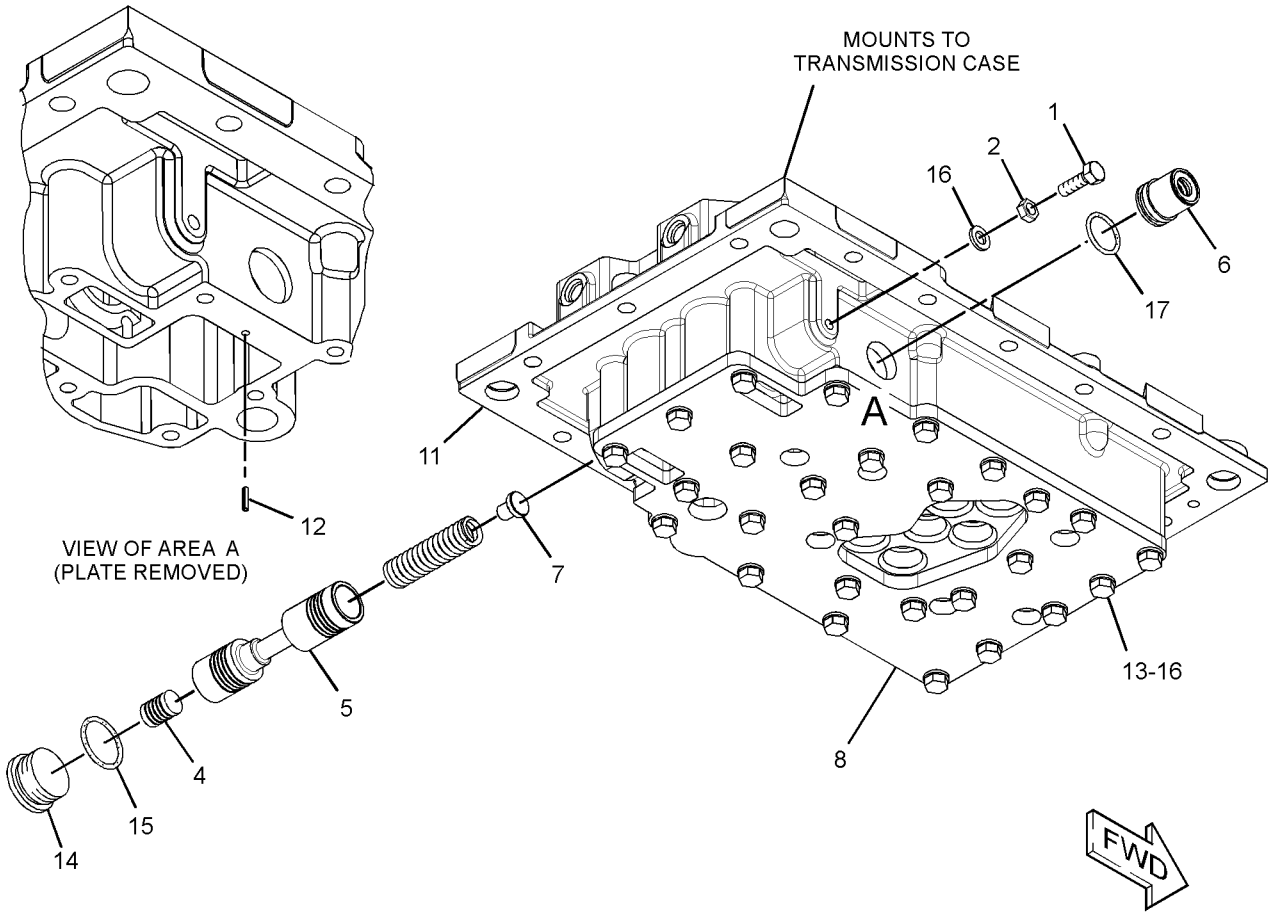

GRAPHIC #1 **<END>** g01455553

POWER TRAIN

216-5342 VALVE GP-MODULATING

S/N: B9K1-UP
24-VOLT
PART OF 268-0245 LINES GP-POWER TRAIN OIL

SMCS-3139 **i03367563**

NOTE	REF NO	GRAPHIC REF	PART NUMBER	QTY	PART NAME 1 2 3 4 5 6 (PRODUCT LEVEL)	SEE PAGE
	1	1	**6V-3965**	1	FITTING (QUICK DISCONNECT)	
	2	1	**164-2108**	1	WASHER (13.03X25.4X2.38-MM THK)	
	3	1	**218-2373**	1	NUT (1/2-28-THD)	
	5	1	**323-9531**	1	COIL AS (24-VOLT)	
	6	1	**214-7568**	1	SEAL-O-RING	

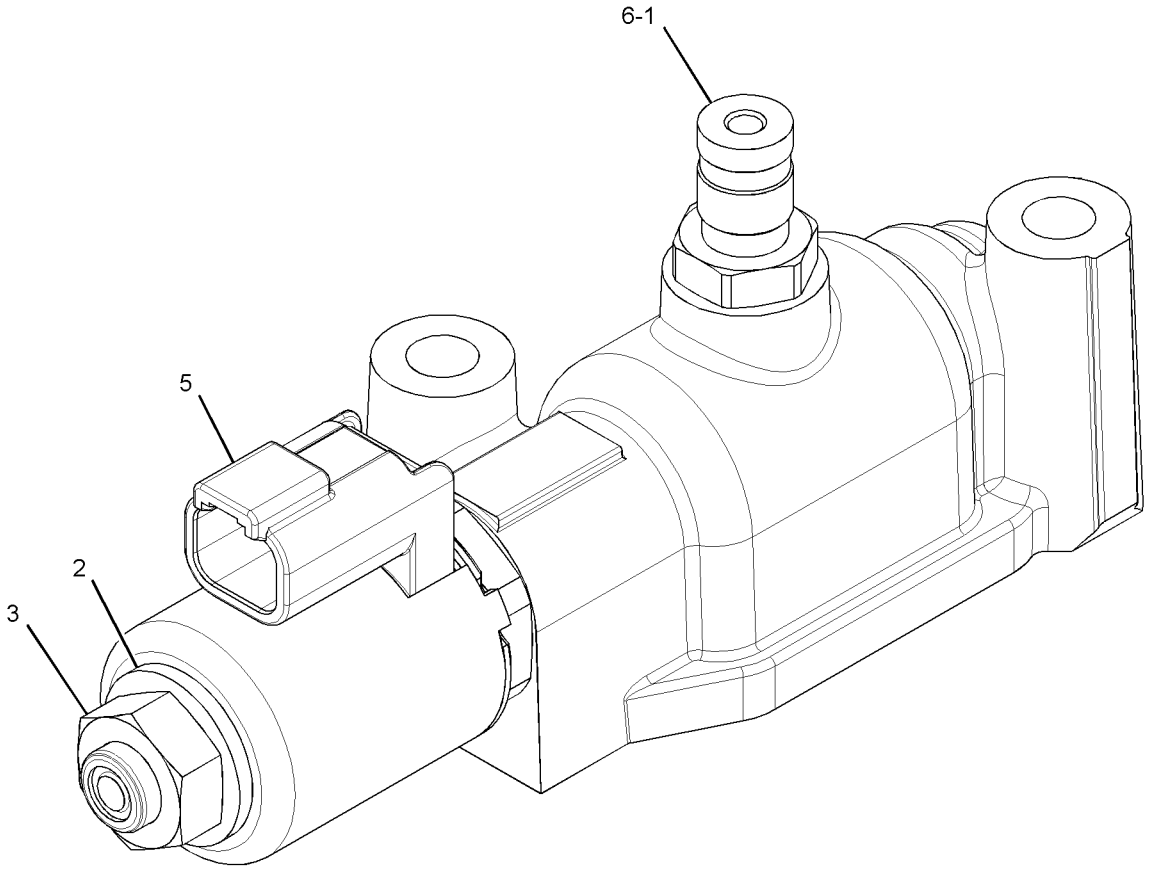

GRAPHIC #1 **<END>** g01819715

POWER TRAIN

244-3114 VALVE GP-MODULATING

S/N: HKY1-UP
24-VOLT
PART OF 273-9199 CONTROL GP-TRANSMISSION HYD

SMCS-3139 **i03435880**

NOTE	REF NO	GRAPHIC REF	PART NUMBER	QTY	PART NAME 1 2 3 4 5 6 (PRODUCT LEVEL)	SEE PAGE
	1	1	**6V-3965**	1	FITTING (QUICK DISCONNECT)	
	2	1	**323-9531**	1	COIL AS (24-VOLT)	
	3	1	**214-7568**	1	SEAL-O-RING	
	4	1	**164-2108**	1	WASHER (13.03X25.4X2.38-MM THK)	
	5	1	**218-2373**	1	NUT (1/2-28-THD)	
					PARTS SHOWN IN GRAPHIC(S) WITHOUT A REFERENCE NUMBER ARE NOT SERVICED SEPARATELY	

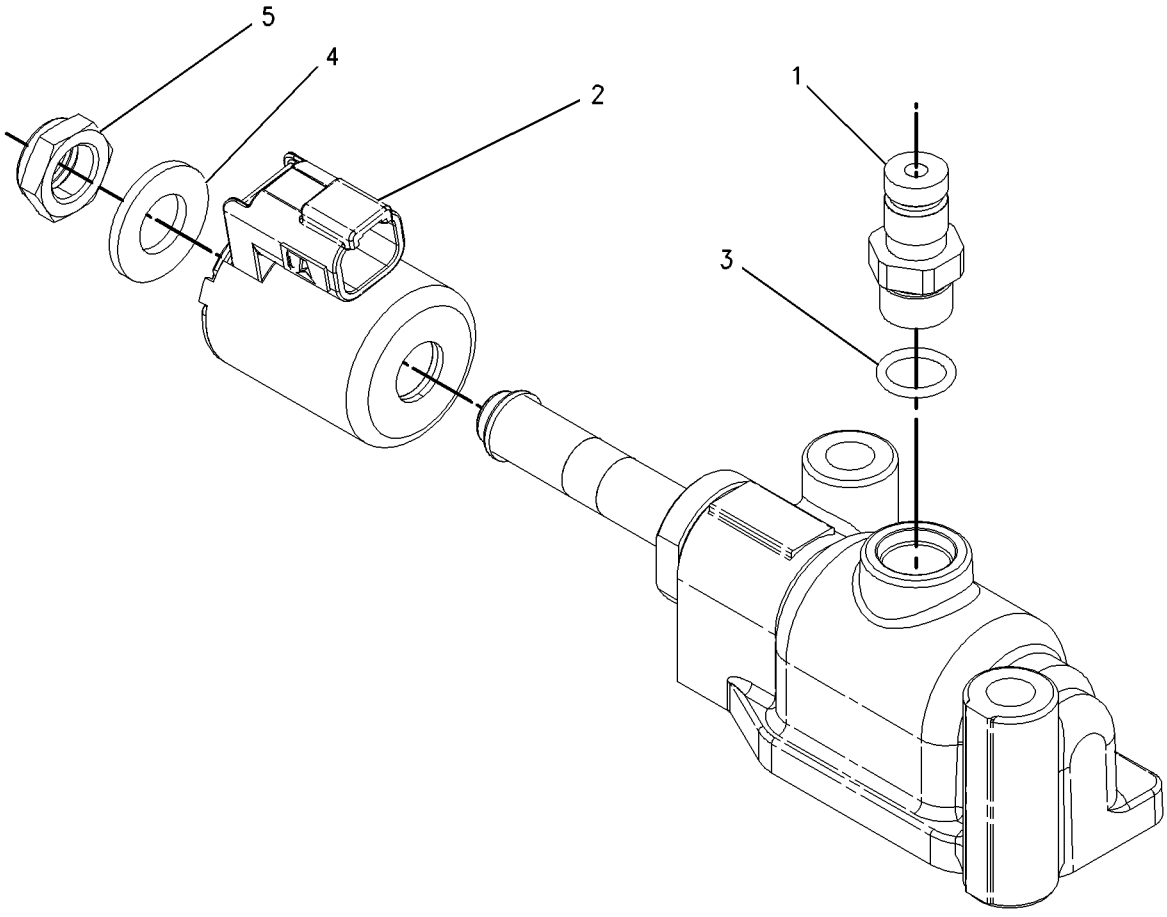

GRAPHIC #1 **<END>** g00919065

POWER TRAIN

8P-1471 VALVE GP-RELIEF

S/N: B9K1-UP

PART OF 268-0246 LINES GP-TORQUE CONV COOLER

SMCS-3133 **i01633594**

NOTE	REF NO	GRAPHIC REF	PART NUMBER	QTY	PART NAME 1 2 3 4 5 6 (PRODUCT LEVEL)	SEE PAGE
	1	1	**9S-8004**	2	PLUG-O-RING	
		1	**3J-1907**	2	SEAL-O-RING	
	2	1	**2P-4538**	1	SPOOL AS-RELIEF	
	3	1	**8M-2537**	1	RETAINER	
	4	1	**1L-3162**	1	RING-RETAINING	
	5	1	**5M-9548**	1	SPRING	
	6	1	**9M-4313**	1	POPPET	
	7	1	**8M-4986**	2	SEAL-O-RING	
	8	1	**0S-1594**	4	BOLT (3/8-16X1-IN)	
		1	**3B-4506**	4	LOCKWASHER	
	9	1	**4M-8239**	2	COVER	
	10	1	**8M-8627**	1	SPRING	
B	11	1	**5M-9622**	2	SHIM (1.6-MM THK)	
B		1	**5M-9623**	3	SHIM (0.9-MM THK)	
B		1	**5M-9624**	1	SHIM (0.25-MM THK)	
	12	1	**141-1546**	1	PLUG-PIPE	
	13	1	**7W-6534**	1	PLUG-PIPE	

B-USE AS REQUIRED

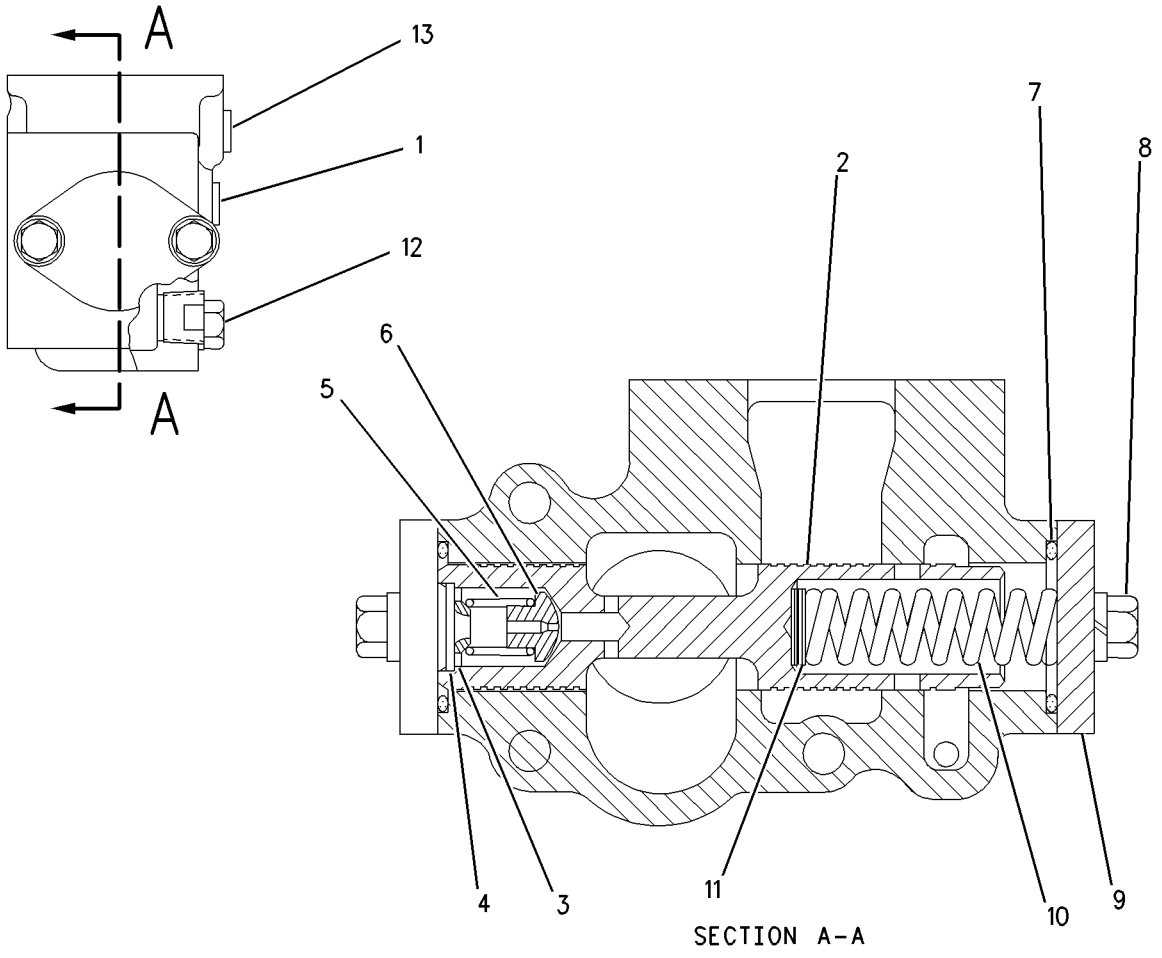

GRAPHIC #1 **<END>** g00708622

POWER TRAIN

341-7436 WHEEL & TIRE GP

S/N: B9K1-UP

SMCS-4200 **i03586601**

NOTE	PART NUMBER	QTY	PART NAME 1 2 3 4 5 6 (PRODUCT LEVEL)	SEE PAGE
Y	*252-0111*	1	WHEEL GP	515
	226-0733	1	TIRE (17.5-R25)	

Y-SEPARATE ILLUSTRATION

<END>

POWER TRAIN

271-9317 WHEEL AR

S/N: B9K1-UP

PART OF 259-9204 COMMON AR

SMCS-4208 **i02764566**

NOTE	REF NO	GRAPHIC REF	PART NUMBER	QTY	PART NAME 1 2 3 4 5 6 (PRODUCT LEVEL)	SEE PAGE
	1	1	*8X-9054*	1	MOUNTING GP-WHEEL	
		1	**6V-8237**	120	WASHER (26X44X4-MM THK)	
M		1	**7X-0851**	120	NUT (M24X3-THD)	
Y	2	1	*129-8518*	6	WHEEL GP	514

M-METRIC PART
Y-SEPARATE ILLUSTRATION

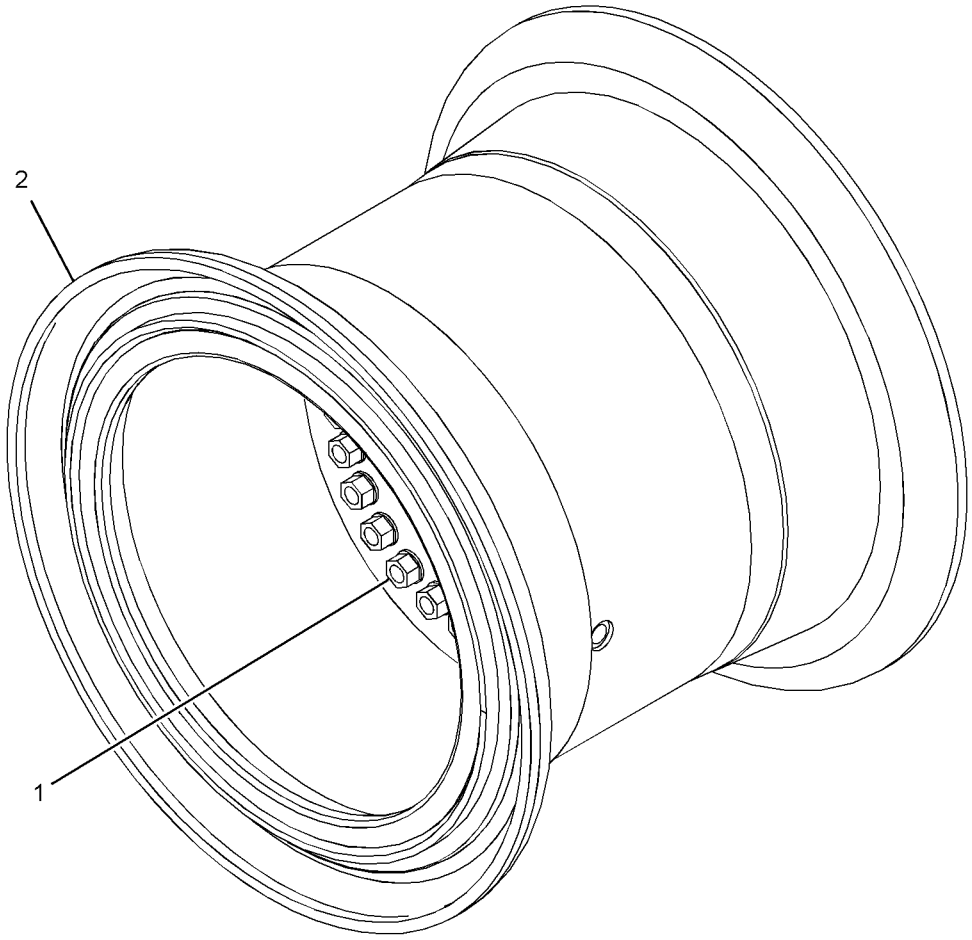

GRAPHIC #1 **<END>** g01392498

POWER TRAIN

129-8518 WHEEL GP

S/N: B9K1-UP
25 X 29
PART OF 271-9317 WHEEL AR

SMCS-4006, 4201, 4208 **i01500024**

NOTE	REF NO	GRAPHIC REF	PART NUMBER	QTY	PART NAME 1 2 3 4 5 6 (PRODUCT LEVEL)	SEE PAGE
	1	1	**124-0159**	1	RIM AS	
	2	1	**3F-9194**	2	FLANGE	
	3	1	**8W-9590**	1	BAND AS	
	4	1	**3D-5852**	1	RING-LOCK	
	5	1	**2D-2444**	1	SEAL-O-RING	
	6	1	**2G-6595**	1	VALVE GP-TIRE	
	7	1	**9K-7951**	1	CAP-VALVE (STEM)	
	8	1	**6F-3930**	1	CORE-VALVE	
	9	1	**7D-5252**	1	SPUD AS	
	10	1	**2D-2508**	1	GROMMET	
	11	1	**2D-2509**	1	LOCKNUT (11/16-16-THD)	

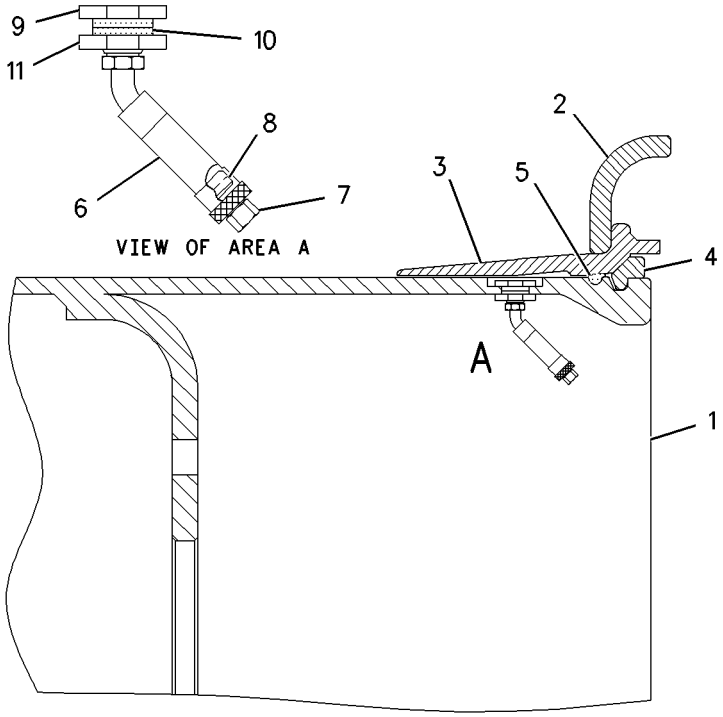

GRAPHIC #1 **<END>** g00778383

POWER TRAIN

252-0111 WHEEL GP

S/N: B9K1-UP
(13X25)
PART OF 341-7436 WHEEL & TIRE GP

SMCS-4006, 4201, 4208 **i02753847**

NOTE	PART NUMBER	QTY	PART NAME 1 2 3 4 5 6 (PRODUCT LEVEL)	SEE PAGE
	252-0100	1	RIM AS	
	2G-6595	1	VALVE GP-TIRE	
	6F-3930	1	CORE-VALVE	
	9K-7951	1	CAP-VALVE (STEM)	
	7D-5252	1	SPUD AS	
	2D-2507	1	SPUD	
	2D-2508	1	GROMMET	
	2D-2509	1	LOCKNUT (11/16-16-THD)	

<END>

FRAME AND BODY

265-4505 AXLE AR-FRONT

S/N: B9K1-UP

PART OF 259-9204 COMMON AR

SMCS-4303, 4305, 4313, 5225 **i02738772**

NOTE	REF NO	GRAPHIC REF	PART NUMBER	QTY	PART NAME 1 2 3 4 5 6 (PRODUCT LEVEL)	SEE PAGE
Y	1	1	*8X-9016*	1	CYLINDER & MTG GP-WHEEL LEAN	646
Y	2	1	*266-5908*	1	AXLE GP-FRONT	517
Y	3	1	*266-9701*	1	CYLINDER & MTG GP-STEERING	645

Y-SEPARATE ILLUSTRATION

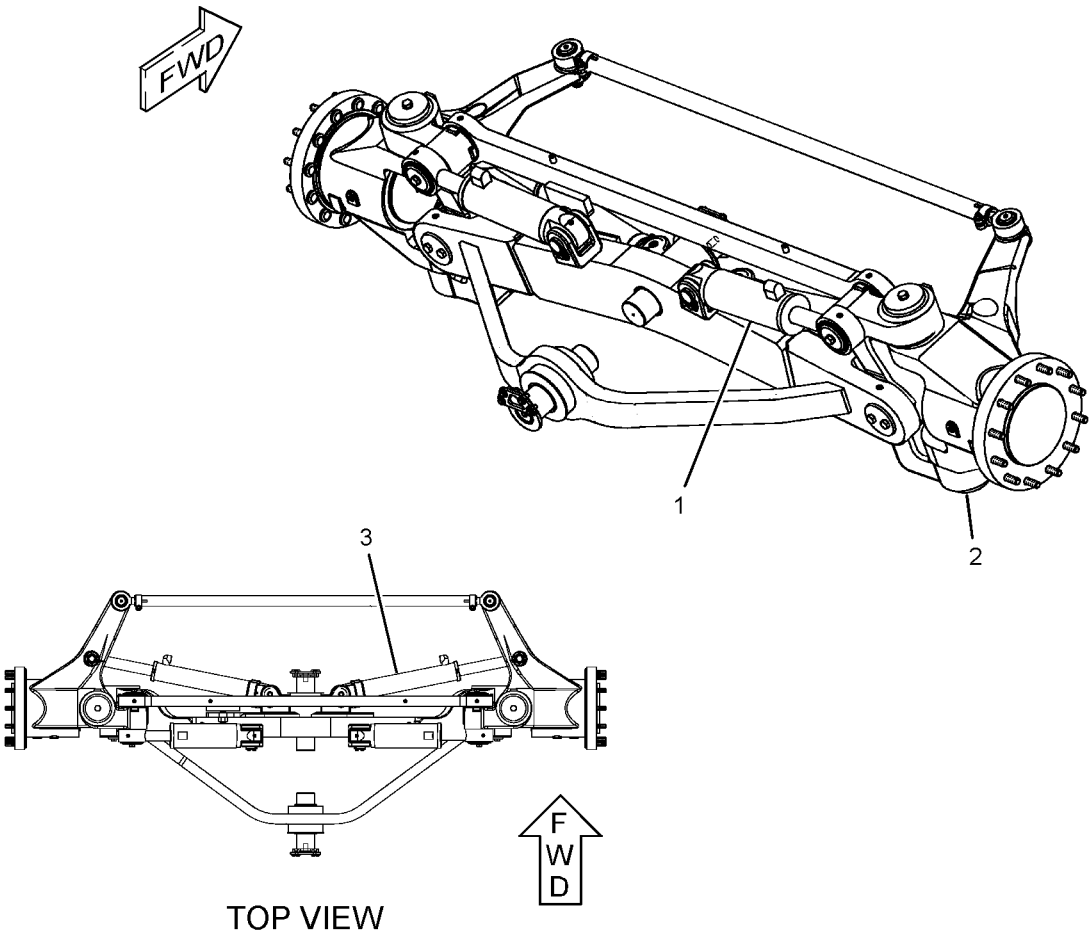

GRAPHIC #1 **<END>** g01374727

FRAME AND BODY

266-5908 AXLE GP-FRONT

S/N: B9K1-UP

PART OF 265-4505 AXLE AR-FRONT

SMCS-4305, 4313, 5225 **i02738773**

NOTE	REF NO	GRAPHIC REF	PART NUMBER	QTY	PART NAME 1 2 3 4 5 6 (PRODUCT LEVEL)	SEE PAGE
	1	1,2	**1T-0310**	4	RING-METAL SEAL	
	2	2	**2G-9491**	2	SEAL	
	3	2	**5P-7843**	2	CUP-BEARING	
	4	1,2	**5T-0504**	4	WASHER (24X150X20-MM THK)	
	5	2	**7K-9218**	2	SEAL-LIP TYPE	
	6	2	**9G-5319**	2	SEAL GP-DUO-CONE	
					(EACH INCLUDES)	
		2	**4M-0660**	2	RING-SEALING	
	7	2	**9X-4597**	4	SEAL-LIP TYPE	
	8	1	**9X-4598**	4	SEAL-LIP TYPE	
	9	2	**9X-4599**	4	SEAL-LIP TYPE	
B	10	2	**117-2149**	6	SHIM (0.127-MM THK)	
	11	1	**117-2156**	4	SEAL	
	12	1,2	**117-2176**	4	PIN	
	13	2	**117-2177**	1	HOUSING-SPINDLE (RH)	
	14	1	**117-2178**	1	HOUSING-SPINDLE (LH)	
	15	1	**117-2182**	2	WASHER-THRUST (114.85X163.5X6.25-MM THK)	
	16	1	**117-2183**	4	WASHER-THRUST (114.65X163X6-MM THK)	
	17	2	**117-2187**	2	RETAINER	
	18	1	**117-2191**	2	WASHER (111X220X5-MM THK)	
	19	2	**117-2193**	2	RETAINER	
	20	2	**124-9536**	2	CONE-BEARING (TAPERED)	
	21	2	**124-9537**	2	CONE-BEARING (TAPERED)	
	22	2	**124-9539**	2	CUP-TAPERED (ROLLER BEARING)	
	23	1	**133-8521**	1	PIN AS-FRONT	
	24	1	**133-8522**	1	PIN AS-REAR	
	25	2	**144-9799**	1	ARM AS (RH)	
	25A	2	**9X-4599**	2	SEAL-LIP TYPE	
	25B	2	**117-2171**	1	PIN	
	25C	2	**135-4299**	2	BEARING-SLEEVE	
	25D	2	**174-1525**	1	BEARING-SLEEVE	
		2	**144-9784**	1	ARM-FRONT AXLE (RH)	
	26	1	**144-9800**	1	ARM AS (LH)	
	26A	1	**9X-4599**	2	SEAL-LIP TYPE	
	26B	1	**117-2171**	1	PIN	
	26C	1	**135-4299**	2	BEARING-SLEEVE	
	26D	1	**174-1525**	1	BEARING-SLEEVE	
		1	**144-9785**	1	ARM-FRONT AXLE (LH)	
	27	1	**154-7122**	2	PLATE AS	
	28	1,2	**174-1521**	2	PIN AS	
	29	2	**174-1524**	2	PLATE	
	30	1	**266-9704**	1	AXLE AS	
	30A	1	**266-9711**	4	BEARING-SLEEVE	
	30B	1	**266-9712**	4	BEARING-SLEEVE	
	30C	1	**117-2181**	4	BEARING-SLEEVE	
Y	31	1	*266-9705*	1	LINK GP-STEERING	569
	32	1	**266-9707**	1	BAR AS	
	32A	2	**126-6917**	2	BEARING-SLEEVE	
	33	2	**266-9717**	2	COVER	
	34	2	**281-0074**	2	SPINDLE AS	
					(EACH INCLUDES)	
M		2	**8X-0274**	12	STUD-SPECIAL (M24X3-THD)	
	35	2	**1T-0132**	2	SEAL-O-RING	
	36	2	**2M-9780**	4	SEAL-O-RING	
	37	2	**5M-6667**	2	LOCKNUT (1-1/2-12-THD) (1-1/2-12-THD)	
	38	1	**5P-1076**	8	WASHER-HARD (13.5X30X4-MM THK)	

266-5908 **AXLE GP-FRONT** *(contd.)* **i02738773**

NOTE	REF NO	GRAPHIC REF	PART NUMBER	QTY	PART NAME 1 2 3 4 5 6 (PRODUCT LEVEL)	SEE PAGE
	39	1,2	**5P-7593**	4	SEAL-O-RING	
M	40	1,2	**7X-2562**	8	BOLT (M20X2.5X45-MM)	
	42	2	**7X-7731**	2	PLUG-PIPE	
M	44	2	**8T-0360**	6	BOLT (M20X2.5X90-MM)	
	45	2	**8T-3282**	6	WASHER-HARD (22X35X3.5-MM THK)	
	46	2	**8T-4121**	4	WASHER-HARD (11X21X2.5-MM THK)	
	47	1,2	**8T-4123**	6	WASHER (22X35X3.5-MM THK)	
M	48	2	**8T-4195**	4	BOLT (M10X1.5X30-MM)	
M	49	1,2	**8T-4780**	4	BOLT (M20X2.5X30-MM)	
M	50	1	**8T-4956**	8	BOLT (M12X1.75X35-MM)	
	51	2	**9S-4190**	4	PLUG-O-RING	

B-USE AS REQUIRED
M-METRIC PART
Y-SEPARATE ILLUSTRATION

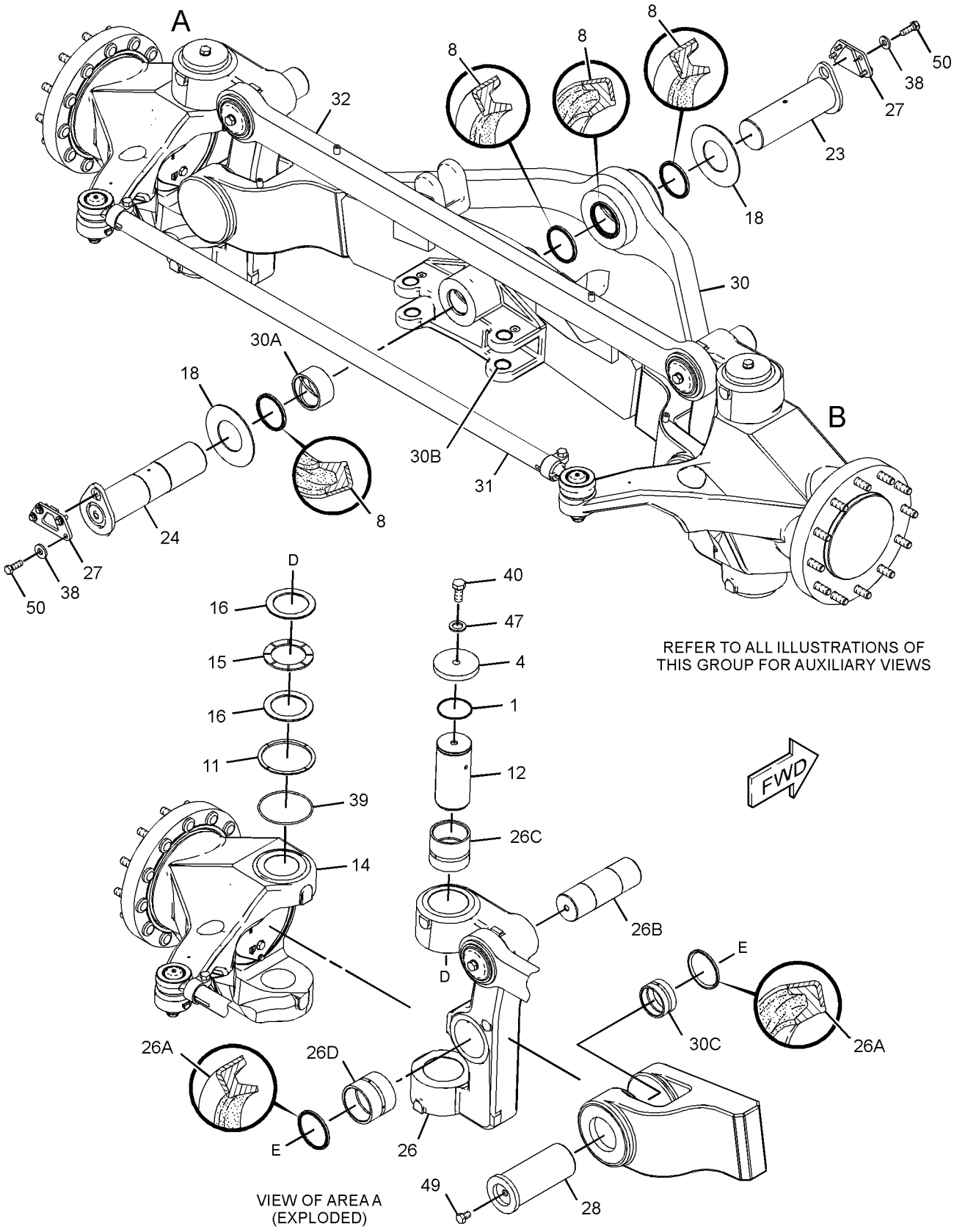

GRAPHIC #1 g01390556

266-5908 **AXLE GP-FRONT** *(contd.)* **i02738773**

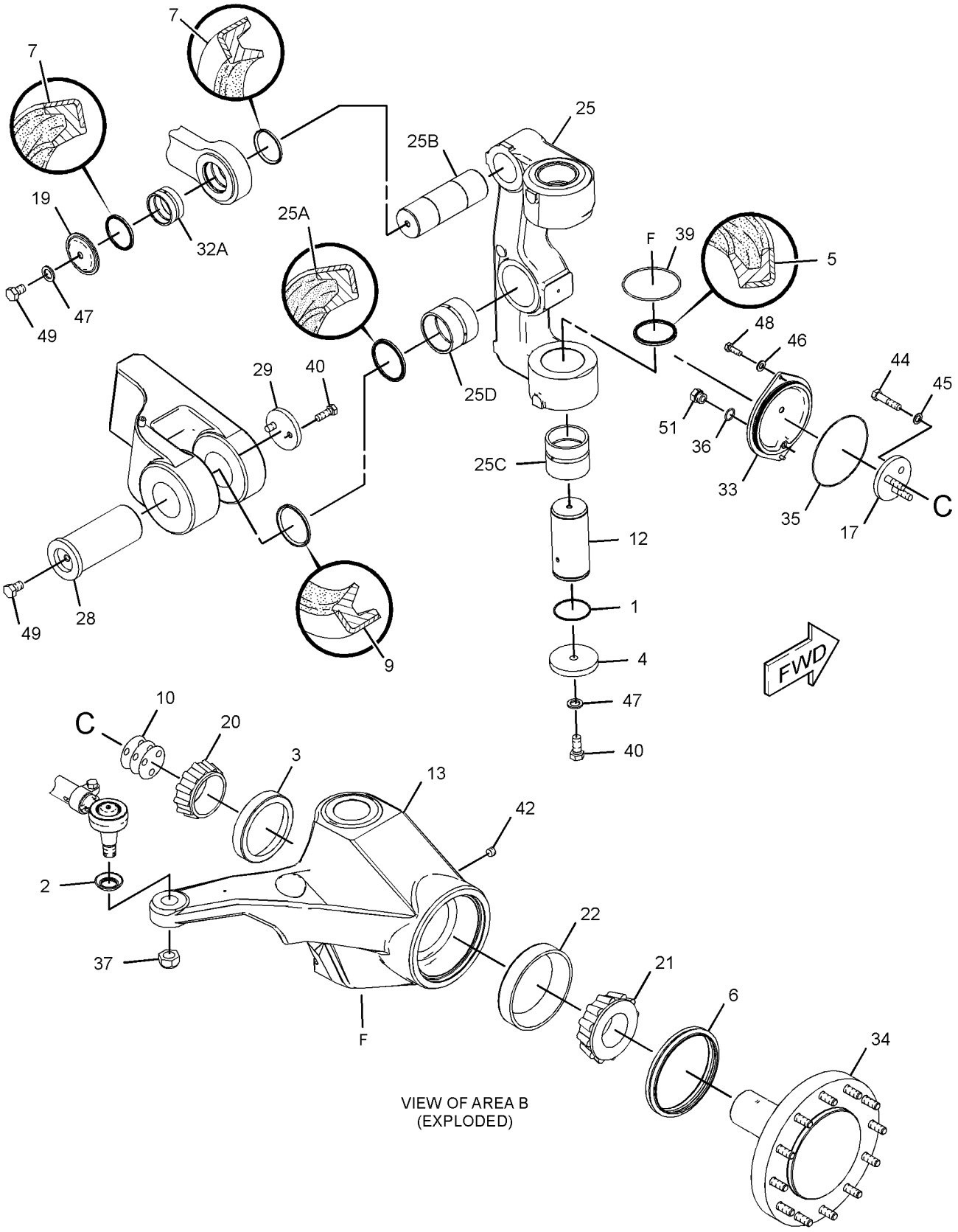

VIEW OF AREA B
(EXPLODED)

GRAPHIC #2 **<END>** g01390559

FRAME AND BODY

270-9113 COVER GP-CONTROL VALVE

S/N: B9K1-258

PART OF 259-9204 COMMON AR

SMCS-7150 **i02763352**

NOTE	REF NO	GRAPHIC REF	PART NUMBER	QTY	PART NAME 1 2 3 4 5 6 (PRODUCT LEVEL)	SEE PAGE
	1	1	**271-5643**	1	PLATE AS	
M		1	**8T-3490**	10	NUT-WELD (M10X1.5-THD)	
	2	1	**273-1112**	1	PLATE AS	
	3	1	**273-1113**	1	PLATE AS	
	4	1	**273-1114**	1	COVER	
	5	1	**273-1115**	1	COVER	
	6	1	**273-1122**	2	PLATE	
	7	1	**297-5473**	1	PLATE	
	8	1	**299-3334**	1	COVER	
	9	1	**299-3366**	1	COVER	
	10	1	**8T-4121**	66	WASHER-HARD (11X21X2.5-MM THK)	
M	11	1	**8T-4137**	26	BOLT (M10X1.5X20-MM)	
M	12	1	**8T-4195**	40	BOLT (M10X1.5X30-MM)	

M-METRIC PART

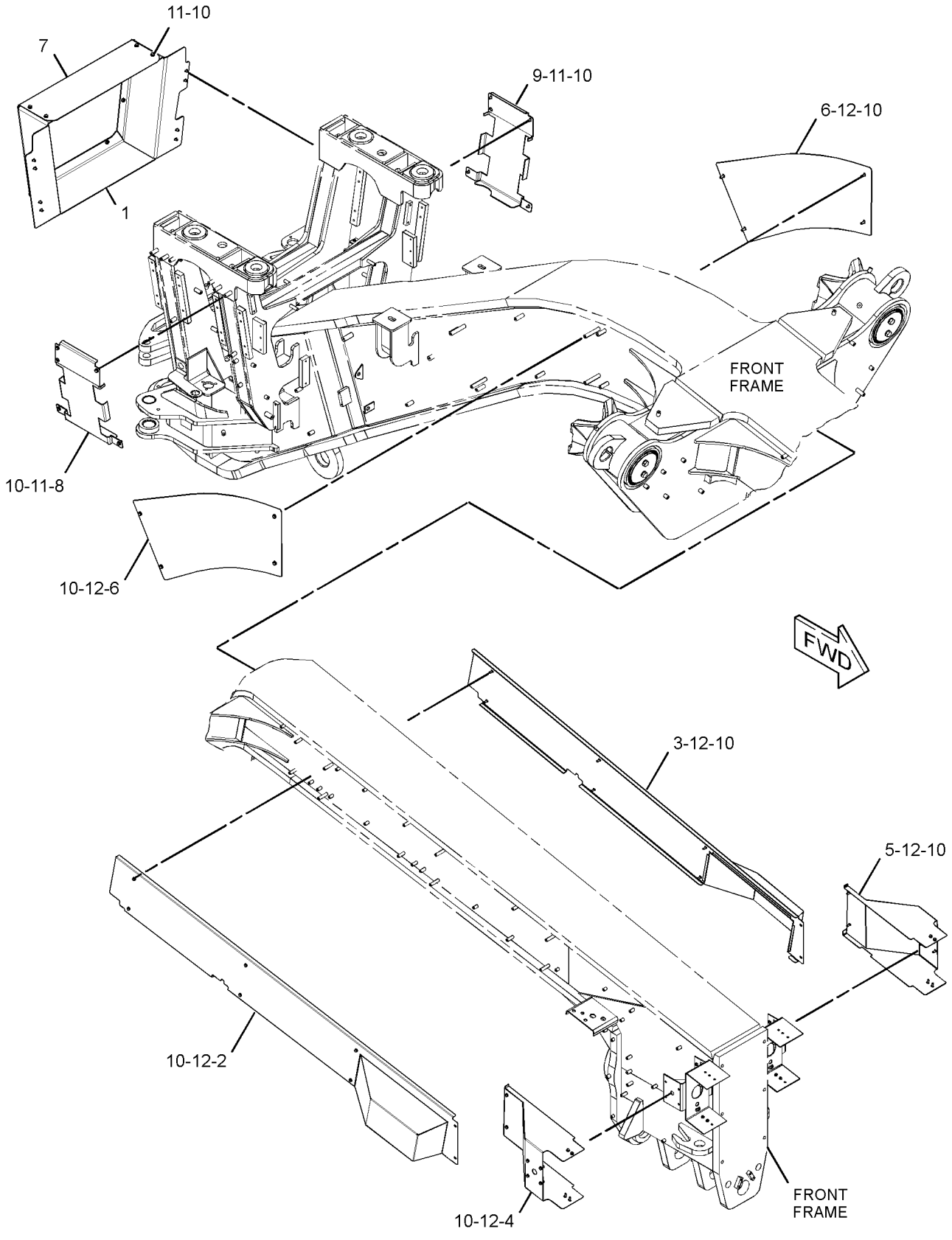

GRAPHIC #1 **<END>** g01386500

FRAME AND BODY

270-9113 COVER GP-CONTROL VALVE

S/N: B9K259-UP

PART OF 259-9204 COMMON AR

SMCS-7150 **i03193420**

NOTE	REF NO	GRAPHIC REF	PART NUMBER	QTY	PART NAME 1 2 3 4 5 6 (PRODUCT LEVEL)	SEE PAGE
	1	1	**271-5643**	1	PLATE AS	
M		1	**8T-3490**	10	NUT-WELD (M10X1.5-THD)	
	2	1	**273-1122**	2	PLATE	
	3	1	**297-5473**	1	PLATE	
	4	1	**299-3334**	1	COVER	
	5	1	**299-3366**	1	COVER	
C	6	1	**316-2322**	1	PLATE	
C	7	1	**316-2323**	1	PLATE	
C	8	1	**316-2324**	2	BRACKET AS	
					(EACH INCLUDES)	
M		1	**8T-3490**	4	NUT-WELD (M10X1.5-THD)	
C	9	1	**316-5471**	1	PLATE	
C	10	1	**316-5472**	1	PLATE	
	11	1	**8T-4121**	72	WASHER-HARD (11X21X2.5-MM THK)	
M	12	1	**8T-4136**	18	BOLT (M10X1.5X25-MM)	
M	13	1	**8T-4137**	26	BOLT (M10X1.5X20-MM)	
M	14	1	**8T-4195**	28	BOLT (M10X1.5X30-MM)	

C-CHANGE FROM PREVIOUS TYPE
M-METRIC PART

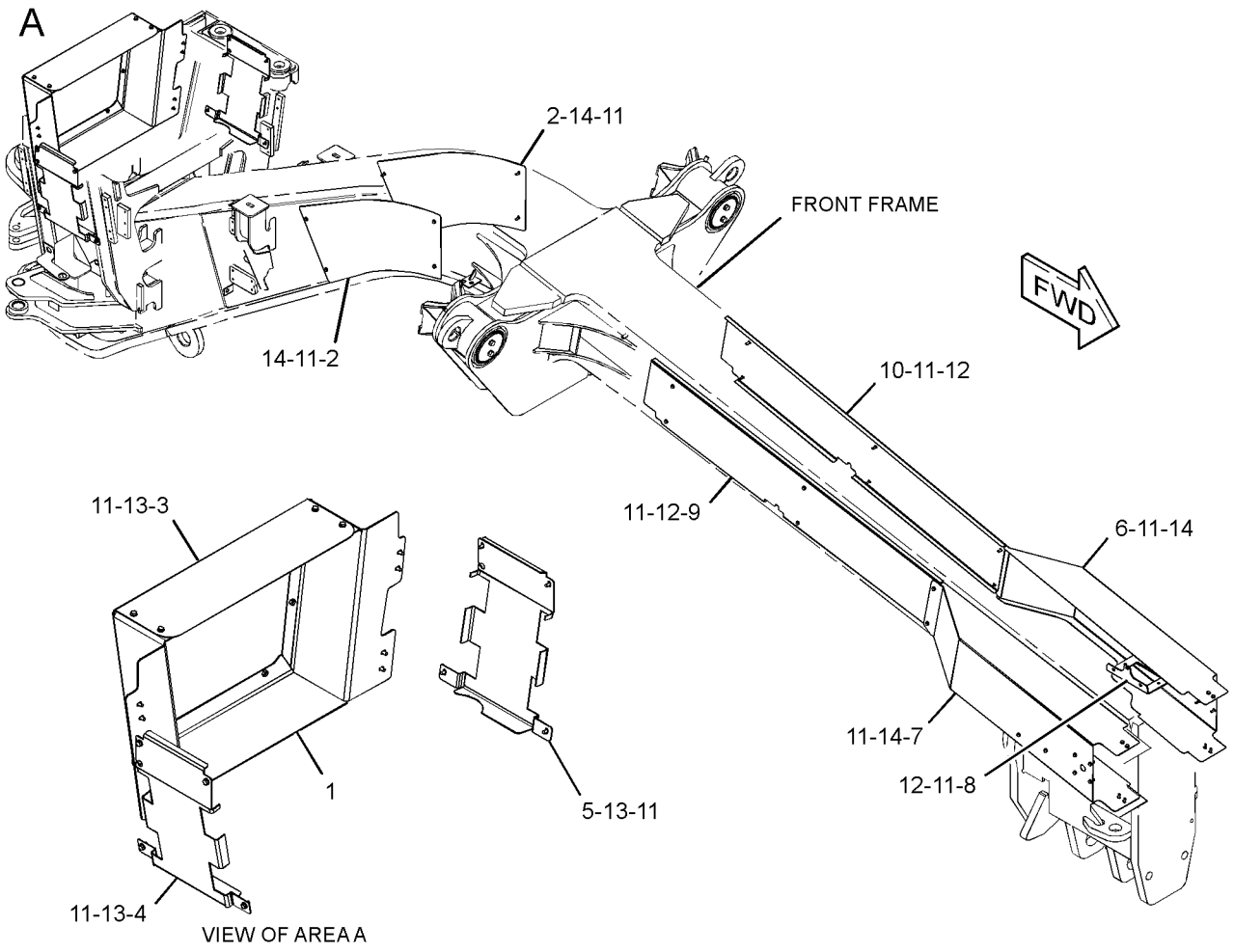

GRAPHIC #1 **<END>** g01929236

FRAME AND BODY

344-0054 COVER GP-PROTECTION

S/N: B9K1-UP

SMCS-7315, 795C **i03633168**

NOTE	REF NO	GRAPHIC REF	PART NUMBER	QTY	PART NAME 1 2 3 4 5 6 (PRODUCT LEVEL)	SEE PAGE
	1	1	**199-4318**	6	TURNBUCKLE	
	2	1	**344-0052**	1	COVER AS	
	3	1	**344-2165**	1	BRACKET	
	4	1	**344-2166**	1	BRACKET	
	5	1	**6K-3273**	12	RIVET-POP	

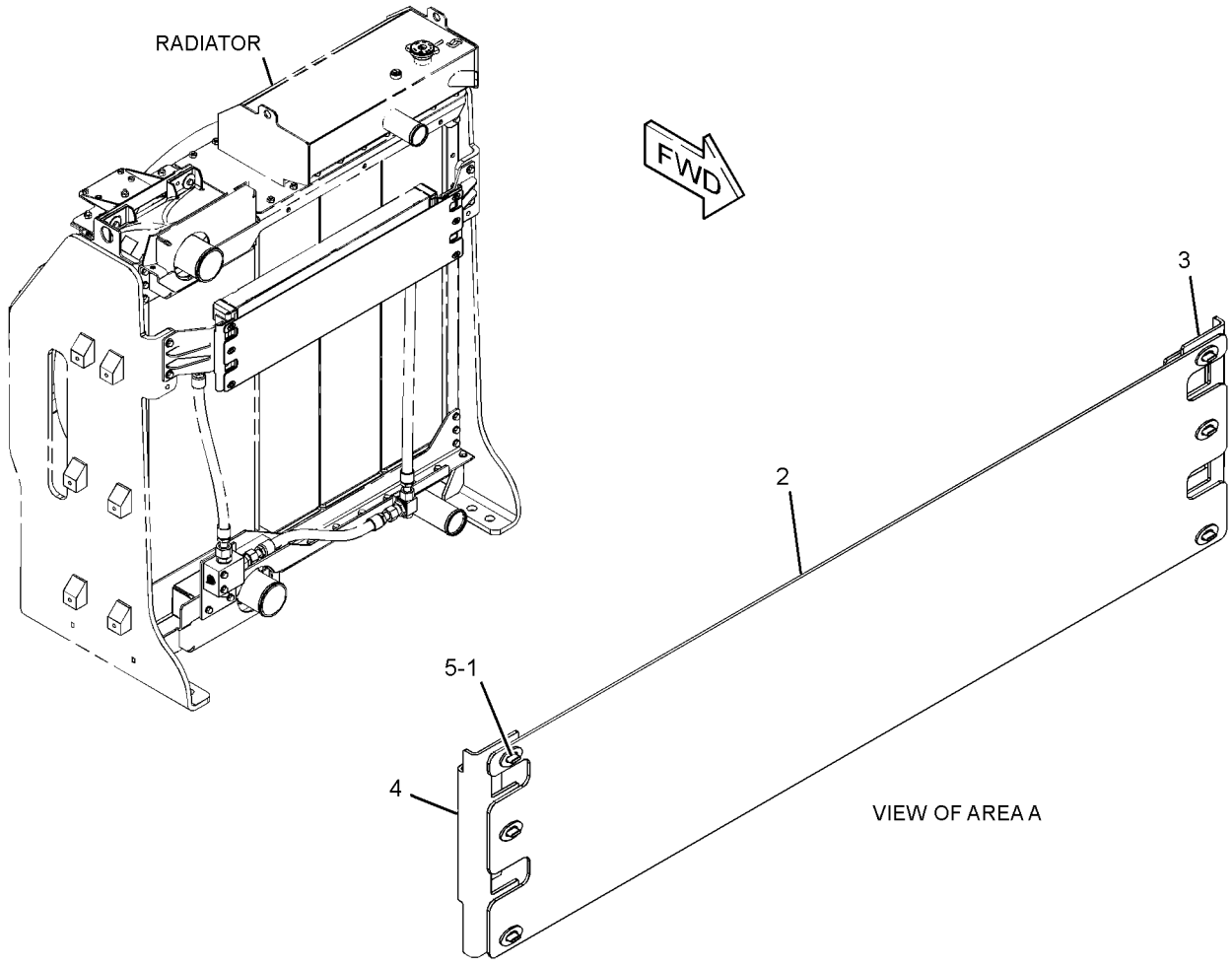

GRAPHIC #1 **<END>** g02023015

FRAME AND BODY

222-9025 ENCLOSURE AR-ENGINE–ENGINE

S/N: B9K1-UP

PART OF 259-9204 COMMON AR

SMCS-7263 **i03495243**

NOTE	REF NO	GRAPHIC REF	PART NUMBER	QTY	PART NAME 1 2 3 4 5 6 (PRODUCT LEVEL)	SEE PAGE
Y	1	1	**274-8550**	1	ENCLOSURE GP-ENGINE	526
Y	2	1	*275-0561*	1	SHIELD GP-HEAT	582
	3	1	**309-5637**	1	BLOCK	
	4	1	**309-5638**	1	BLOCK	
	5	1	**198-4778**	12	WASHER-HARD (13.5X30X12-MM THK)	
	6	1	**198-4780**	24	WASHER-HARD (17.5X32X8-MM THK)	
M	7	1	**7X-2555**	8	BOLT (M16X2X80-MM)	
M	8	1	**8T-4140**	24	BOLT (M16X2X60-MM)	
M	9	1	**8T-4194**	12	BOLT (M12X1.75X50-MM)	
	10	1	**9X-8257**	8	WASHER (17.5X30X3.5-MM THK)	

M-METRIC PART
Y-SEPARATE ILLUSTRATION

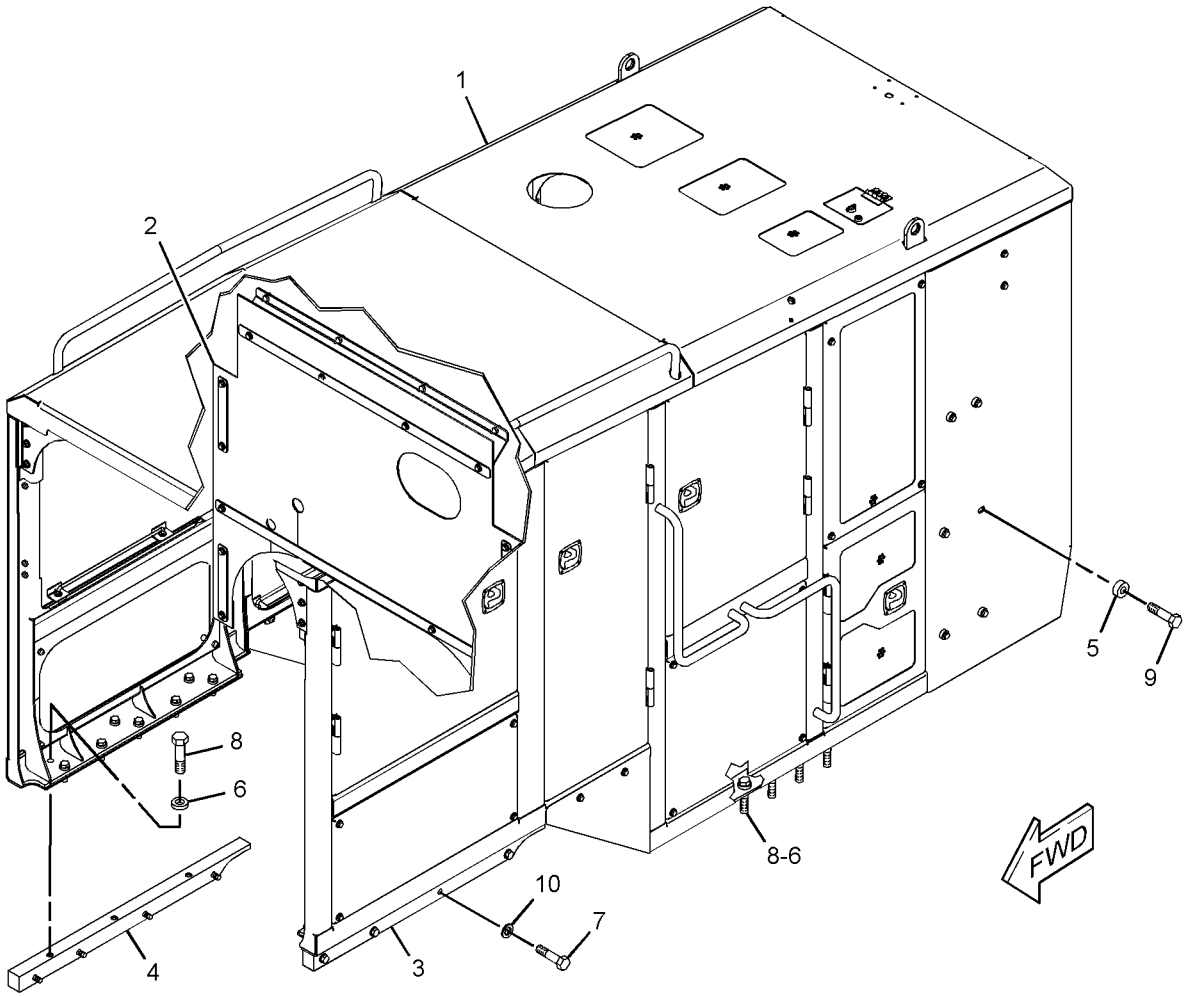

GRAPHIC #1 **<END>** g01371717

FRAME AND BODY

274-8550 ENCLOSURE GP-ENGINE

S/N: B9K1-303

PART OF 222-9025 ENCLOSURE AR-ENGINE

SMCS-7263 **i02770001**

NOTE	REF NO	GRAPHIC REF	PART NUMBER	QTY	PART NAME 1 2 3 4 5 6 (PRODUCT LEVEL)	SEE PAGE
	1	4	**7X-1387**	14	WASHER (10.26X22.22X1.9-MM THK)	
	2	1	*201-9109*	1	DOOR GP-ACCESS (BREAKERS, 24-VOLT OUTLET)	
J		1	**226-0295**	1	LOCK AS	
		1	**233-4871**	1	CAM	
		1	**203-6066**	1	LATCH AS	
		1	**219-6036**	1	DOOR AS	
		1	**1V-8284**	1	HINGE	
	3	3	**227-3101**	6	STRIKER AS	
	4	3	**227-3103**	6	PLATE	
	5	4	**245-2844**	2	ROD	
	6	2	**268-3914**	1	PLATE	
	7	2	**268-3916**	1	DOOR AS-ACCESS	
		2	**304-7620**	4	BUMPER	
	8	1	**268-3918**	1	DOOR AS-ACCESS	
		1	**304-7620**	4	BUMPER	
	9	1	**268-3924**	2	DOOR AS-ACCESS	
					(EACH INCLUDES)	
		1	**304-7620**	4	BUMPER	
	10	1	**268-3928**	1	DOOR AS-ACCESS	
		1	**304-7620**	4	BUMPER	
	11	2	**268-3930**	1	DOOR AS	
		2	**304-7620**	4	BUMPER	
	12	2	**268-3937**	1	PANEL AS	
	13	1	**268-3976**	1	HOOD AS	
	14	2	**268-3986**	1	FRAME AS	
	15	1	**268-3987**	1	FRAME AS	
	16	1,2	**268-3991**	2	PANEL AS	
	17	2	**268-8306**	1	PLATE	
	18	1	**272-2292**	1	HOOD AS	
	19	1,2	**277-0751**	6	PLATE	
	20	1,2	**277-0752**	2	PLATE	
	21	1	**277-0753**	1	DOOR AS	
	22	1,2	**277-0756**	3	HINGE AS	
	23	1	**277-0757**	1	HINGE AS	
		1	**277-0752**	1	PLATE	
	24	1,2	**277-0758**	3	HINGE AS	
					(EACH INCLUDES)	
		1,2	**277-0751**	1	PLATE	
	25	2	**277-0759**	1	HINGE AS	
	26	1,2	**277-6424**	2	DOOR AS	
					(EACH INCLUDES)	
		1,2	**304-7620**	4	BUMPER	
	27	2	**277-6616**	1	PLATE	
	28	1	**277-6637**	1	PANEL AS	
	29	3	**277-8803**	1	GRILL AS	
	30	2	**278-1600**	1	PLATE	
	31	2	**278-1602**	1	PLATE AS	
	32	1	**278-1811**	2	HANDRAIL	
	33	1	**278-1812**	2	HANDRAIL	
	34	2	**278-1813**	2	HANDRAIL	
	35	1	**280-0934**	1	DOOR AS	
J		1	**226-0295**	1	LOCK AS	
		1	**233-4871**	1	CAM	
		1	**1V-8284**	1	HINGE	
		1	**203-6066**	1	LATCH AS	
	36	2	**280-2287**	1	PLATE AS	

274-8550 **ENCLOSURE GP-ENGINE** *(contd.)* **i02770001**

NOTE	REF NO	GRAPHIC REF	PART NUMBER	QTY	PART NAME 1 2 3 4 5 6 (PRODUCT LEVEL)	SEE PAGE
	37	2	**280-2288**	1	PLATE AS	
	38	4	**282-3116**	2	ROD	
	39	4	**282-3117**	4	ROD	
	40	2	**282-3379**	1	SHIELD	
	41	2	**283-9370**	1	DOOR AS	
		2	**304-7620**	4	BUMPER	
	42	3,4	**286-8292**	8	PLATE-STRIKER	
	43	1,2	**294-2382**	8	LATCH AS	
	44	2	**294-3672**	1	PLATE	
	45	2	**294-3673**	1	PLATE AS	
	46	2	**294-3675**	1	PLATE	
	47	1	**295-2338**	1	PANEL AS	
	48	3,4	**295-3839**	8	PAWL	
	49	4	**298-6155**	1	PLATE AS	
	50	1	**305-8960**	1	PLATE	
	51	2	**305-8961**	1	PLATE	
	52	4	**3B-4615**	16	PIN-COTTER	
	53	4	**5P-8439**	16	GROMMET	
M	54	4	**7X-2544**	6	BOLT (M10X1.5X104-MM)	
	55	1,2,3,4	**7X-7729**	256	WASHER (11X25X3-MM THK)	
M	56	3,4	**8T-4133**	30	NUT (M10X1.5-THD)	
M	57	1,2,4	**8T-4136**	84	BOLT (M10X1.5X25-MM)	
M	58	1,2	**8T-4137**	40	BOLT (M10X1.5X20-MM)	
M	59	1,2,3,4	**8T-4195**	56	BOLT (M10X1.5X30-MM)	
	60	3,4	**8T-4224**	16	WASHER-HARD (8.8X16X2-MM THK)	
M	61	3,4	**8T-4908**	16	BOLT (M8X1.25X25-MM)	
M	62	1,2,3,4	**8T-5005**	40	BOLT (M10X1.5X70-MM)	

J-REQUIRES CORPORATE KEY
M-METRIC PART

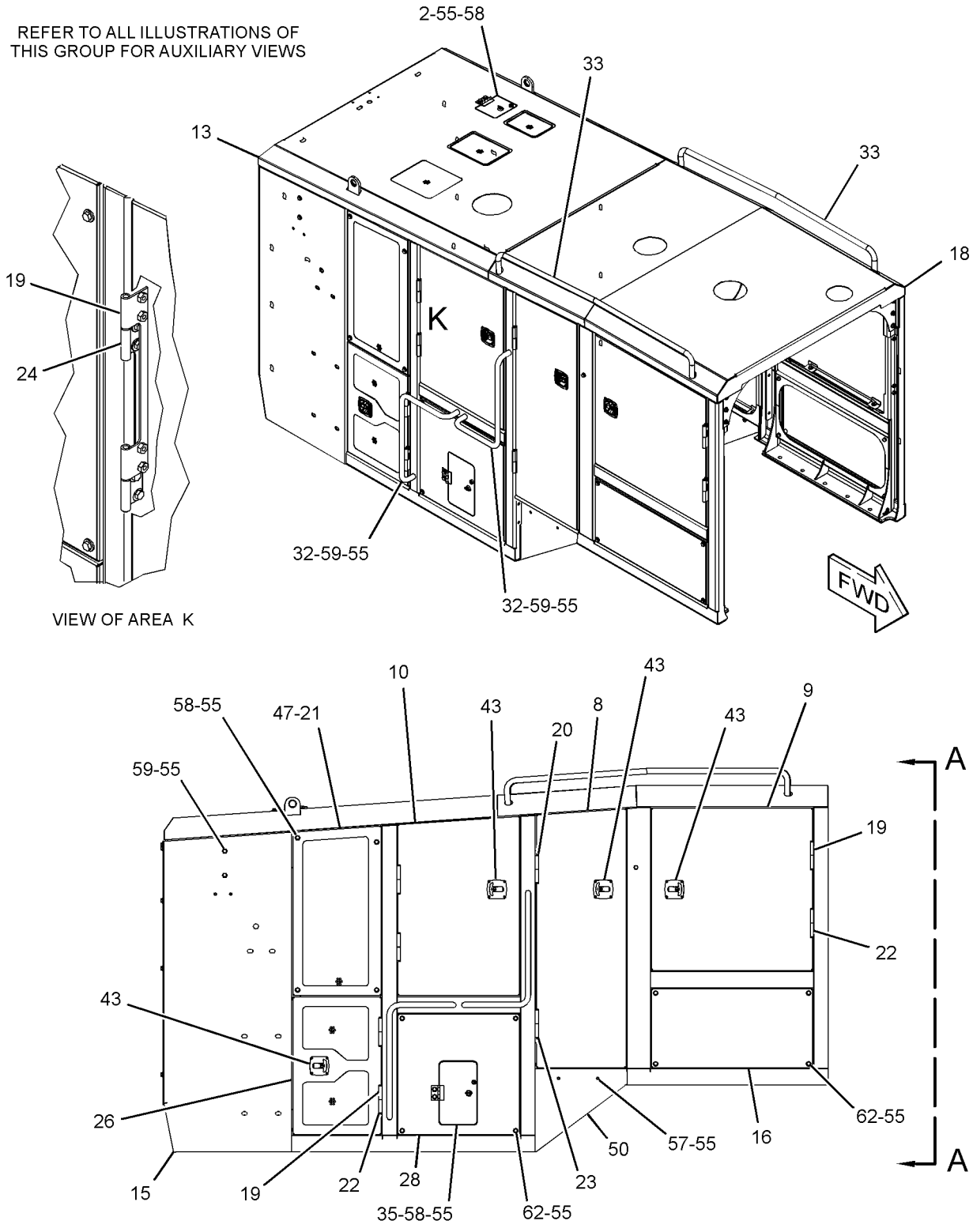

RIGHT SIDE VIEW

GRAPHIC #1

g01371997

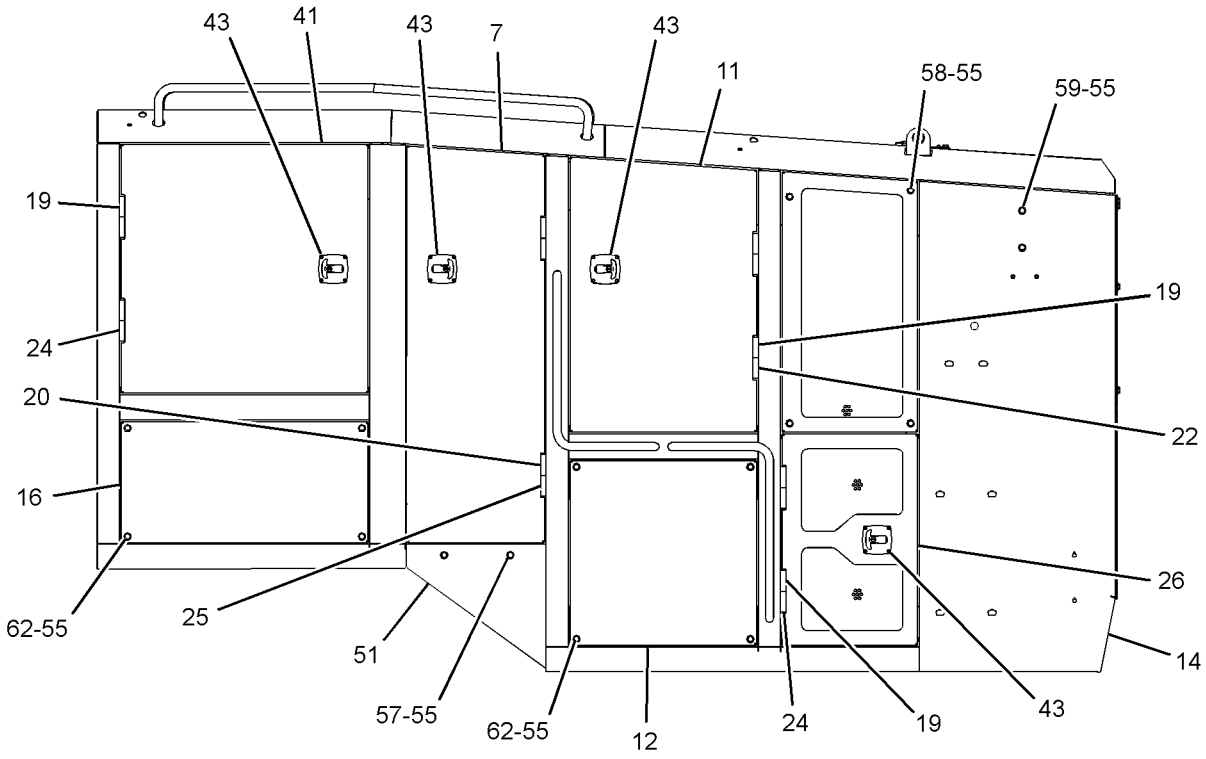

LEFT SIDE VIEW

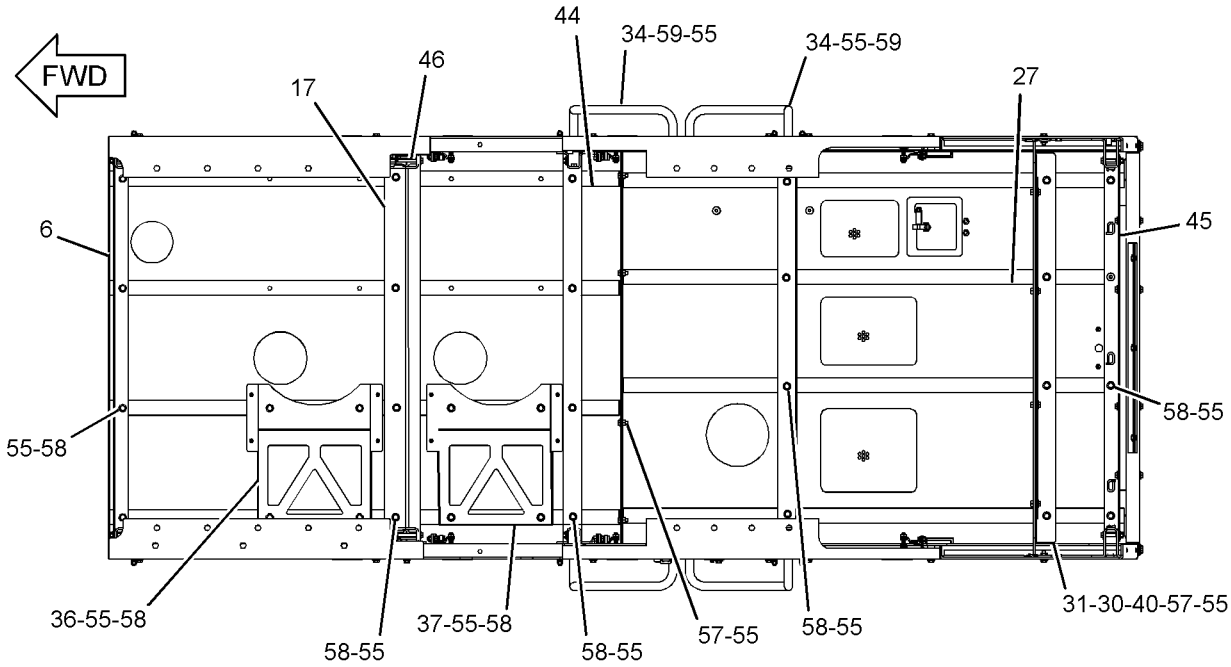

BOTTOM VIEW

GRAPHIC #2

g01371998

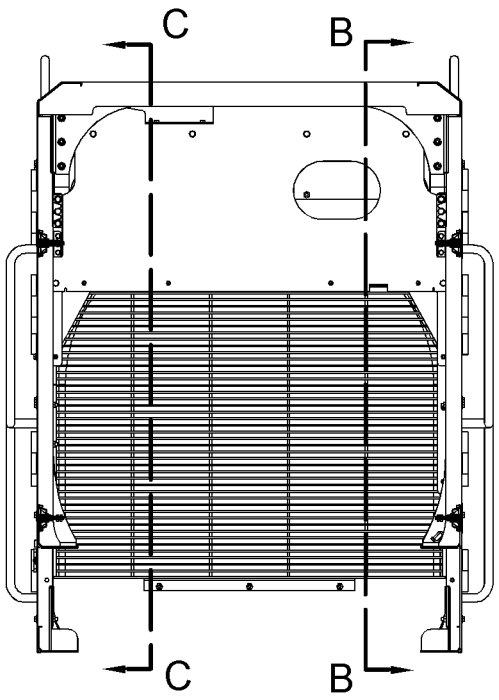

VIEW A-A

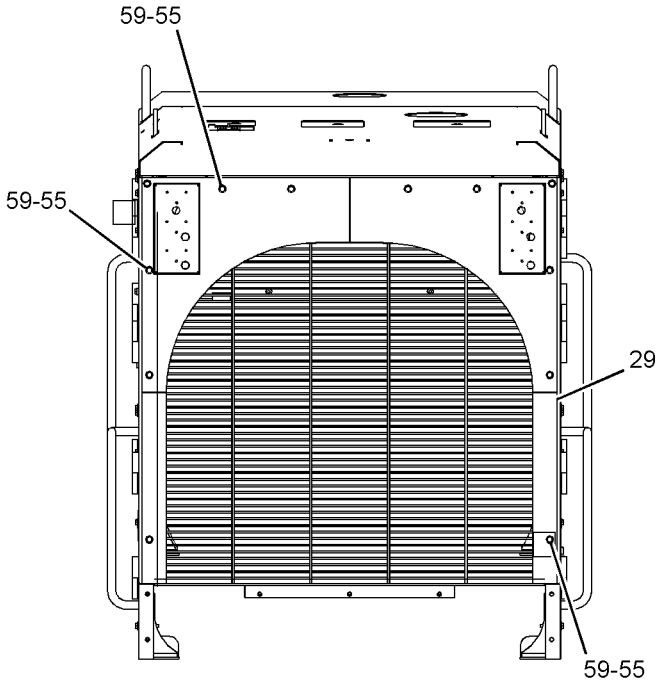

REAR VIEW

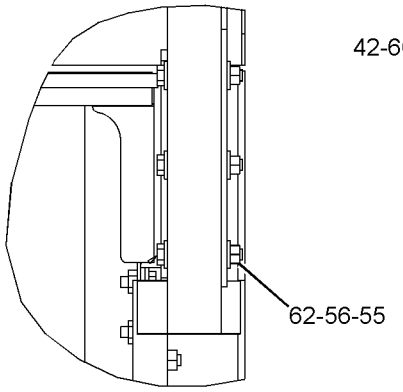

VIEW OF AREA J

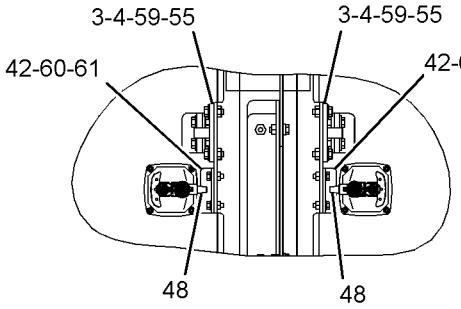

VIEW OF AREA F

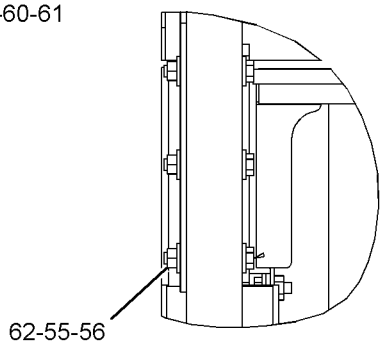

VIEW OF AREA H

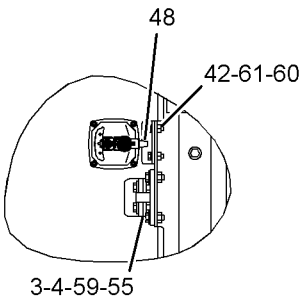

VIEW OF AREA E

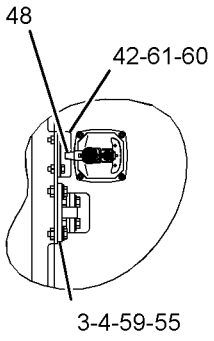

VIEW OF AREA D

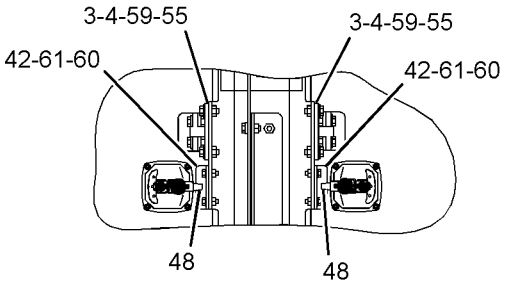

VIEW OF AREA G

GRAPHIC #3

g01371999

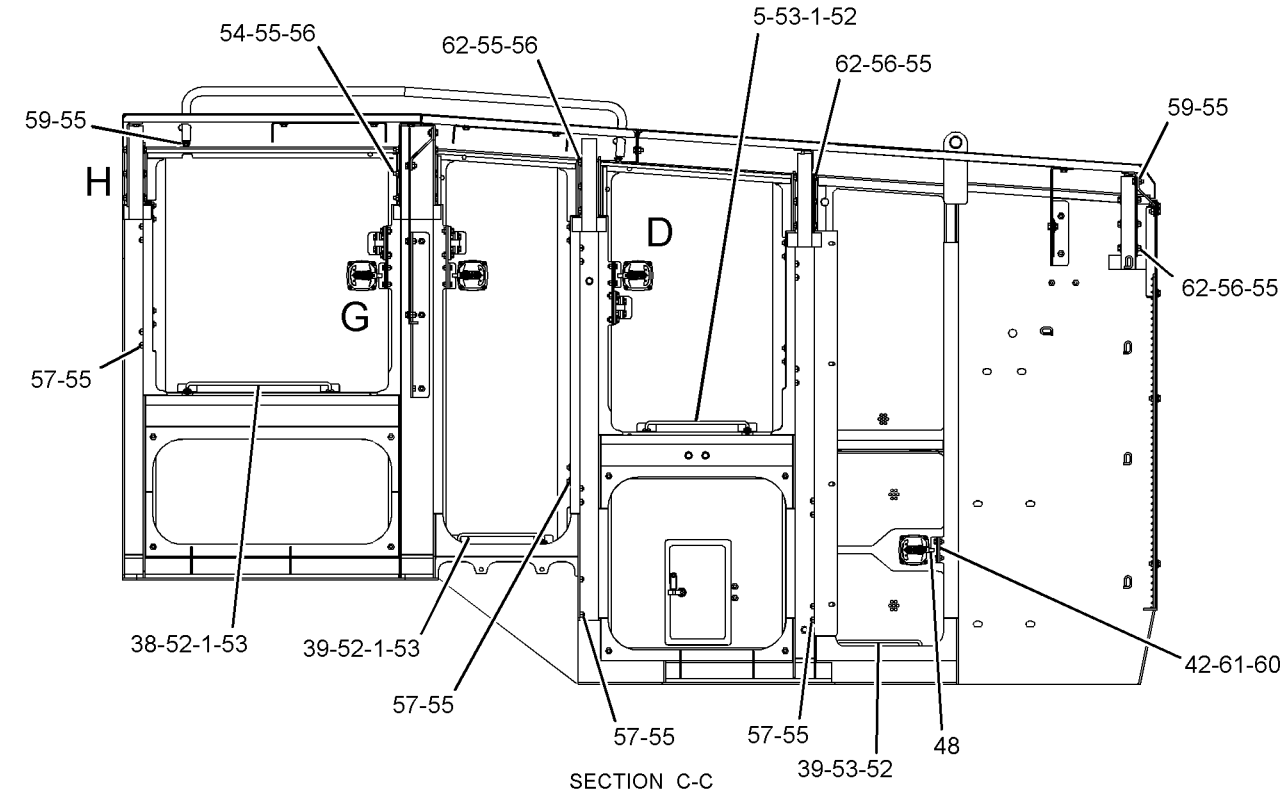

SECTION C-C

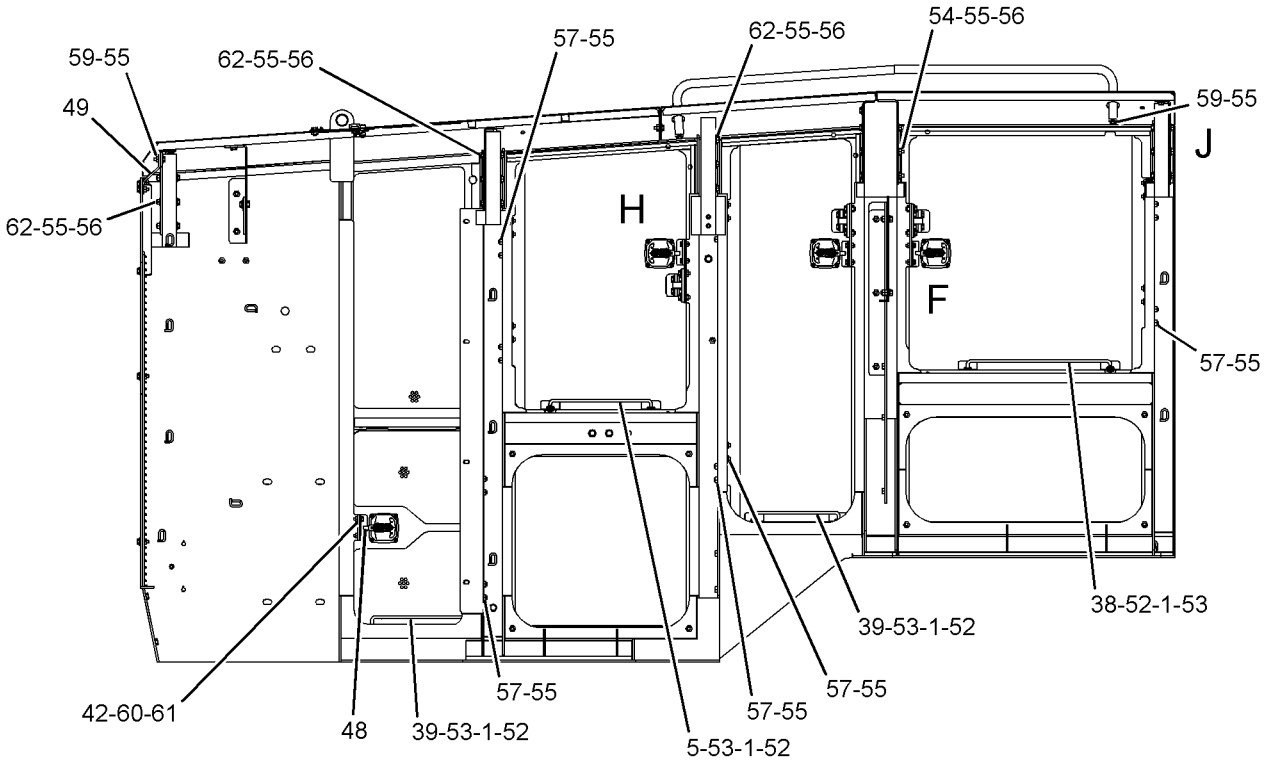

SECTION B-B

GRAPHIC #4 **<END>** g01374040

FRAME AND BODY

274-8550 ENCLOSURE GP-ENGINE

S/N: B9K304-UP

PART OF 222-9025 ENCLOSURE AR-ENGINE

SMCS-7263 **i03287041**

NOTE	REF NO	GRAPHIC REF	PART NUMBER	QTY	PART NAME 1 2 3 4 5 6 (PRODUCT LEVEL)	SEE PAGE
	1	3	**7X-1387**	14	WASHER (10.26X22.22X1.9-MM THK)	
C	2	1	*325-8651*	1	DOOR GP-ACCESS	
J		1	**275-0572**	1	LATCH AS	
		1	**319-2305**	1	CAM-LATCH	
		1	**325-8649**	1	DOOR AS	
		1	**1V-8284**	1	HINGE	
	3	4	**227-3101**	6	STRIKER AS	
	4	4	**227-3103**	6	PLATE	
	5	3	**245-2844**	2	ROD	
	6	2	**268-3914**	1	PLATE	
	7	2	**268-3916**	1	DOOR AS-ACCESS	
		2	**304-7620**	4	BUMPER	
	8	1	**268-3918**	1	DOOR AS-ACCESS	
		1	**304-7620**	4	BUMPER	
	9	1	**268-3924**	2	DOOR AS-ACCESS	
					(EACH INCLUDES)	
		1	**304-7620**	4	BUMPER	
	10	1	**268-3928**	1	DOOR AS-ACCESS	
		1	**304-7620**	4	BUMPER	
	11	2	**268-3930**	1	DOOR AS	
		2	**304-7620**	4	BUMPER	
	12	2	**268-3937**	1	PANEL AS	
	13	1	**268-3976**	1	HOOD AS	
	14	2	**268-3986**	1	FRAME AS	
	15	1	**268-3987**	1	FRAME AS	
	16	1,2	**268-3991**	2	PANEL AS	
	17	2	**268-8306**	1	PLATE	
	18	1	**272-2292**	1	HOOD AS	
	19	1,2	**277-0751**	6	PLATE	
	20	1,2	**277-0752**	2	PLATE	
	21	1	**277-0753**	1	DOOR AS	
	22	1,2	**277-0756**	3	HINGE AS	
	23	1	**277-0757**	1	HINGE AS	
		1	**277-0752**	1	PLATE	
	24	1,2	**277-0758**	3	HINGE AS	
					(EACH INCLUDES)	
		1,2	**277-0751**	1	PLATE	
	25	2	**277-0759**	1	HINGE AS	
	26	1,2	**277-6424**	2	DOOR AS	
					(EACH INCLUDES)	
		1,2	**304-7620**	4	BUMPER	
	27	2	**277-6616**	1	PLATE	
	28	1	**277-6637**	1	PANEL AS	
	29	4	**277-8803**	1	GRILL AS	
	30	2	**278-1600**	1	PLATE	
	31	2	**278-1602**	1	PLATE AS	
	32	1	**278-1811**	2	HANDRAIL	
	33	1	**278-1812**	2	HANDRAIL	
	34	2	**278-1813**	2	HANDRAIL	
C	35	1	**325-8654**	1	DOOR GP-ACCESS	
J		1	**275-0572**	1	LATCH AS	
		1	**319-2305**	1	CAM-LATCH	
		1	**325-8653**	1	DOOR AS	
		1	**1V-8284**	1	HINGE	
	36	2	**280-2287**	1	PLATE AS	
	37	2	**280-2288**	1	PLATE AS	

274-8550 **ENCLOSURE GP-ENGINE** *(contd.)* **i03287041**

NOTE	REF NO	GRAPHIC REF	PART NUMBER	QTY	PART NAME 1 2 3 4 5 6 (PRODUCT LEVEL)	SEE PAGE
	38	3	**282-3116**	2	ROD	
	39	3	**282-3117**	4	ROD	
	40	2	**282-3379**	1	SHIELD	
	41	2	**283-9370**	1	DOOR AS	
		2	**304-7620**	4	BUMPER	
	42	3,4	**286-8292**	8	PLATE-STRIKER	
CJ	43	1,2	**326-0610**	8	LATCH AS	
	44	2	**294-3672**	1	PLATE	
	45	2	**294-3673**	1	PLATE AS	
	46	2	**294-3675**	1	PLATE	
	47	1	**295-2338**	1	PANEL AS	
	48	3,4	**295-3839**	8	PAWL	
	49	3	**298-6155**	1	PLATE AS	
	50	1	**305-8960**	1	PLATE	
	51	2	**305-8961**	1	PLATE	
	52	3	**3B-4615**	16	PIN-COTTER	
	53	3	**5P-8439**	16	GROMMET	
M	54	3	**7X-2544**	6	BOLT (M10X1.5X104-MM)	
C	55	1,2,3, 4	**7X-7729**	266	WASHER (11X25X3-MM THK)	
M	56	3,4	**8T-4133**	30	NUT (M10X1.5-THD)	
M	57	1,2,3	**8T-4136**	84	BOLT (M10X1.5X25-MM)	
M	58	1,2	**8T-4137**	40	BOLT (M10X1.5X20-MM)	
M	59	1,2,3, 4	**8T-4195**	56	BOLT (M10X1.5X30-MM)	
	60	3,4	**8T-4224**	16	WASHER-HARD (8.8X16X2-MM THK)	
M	61	3,4	**8T-4908**	16	BOLT (M8X1.25X25-MM)	
M	62	1,2,3, 4	**8T-5005**	40	BOLT (M10X1.5X70-MM)	
C	63	1	**321-7342**	2	PLATE	
CM	64	1	**8T-4196**	10	BOLT (M10X1.5X35-MM)	

C-CHANGE FROM PREVIOUS TYPE
J-REQUIRES CORPORATE KEY
M-METRIC PART

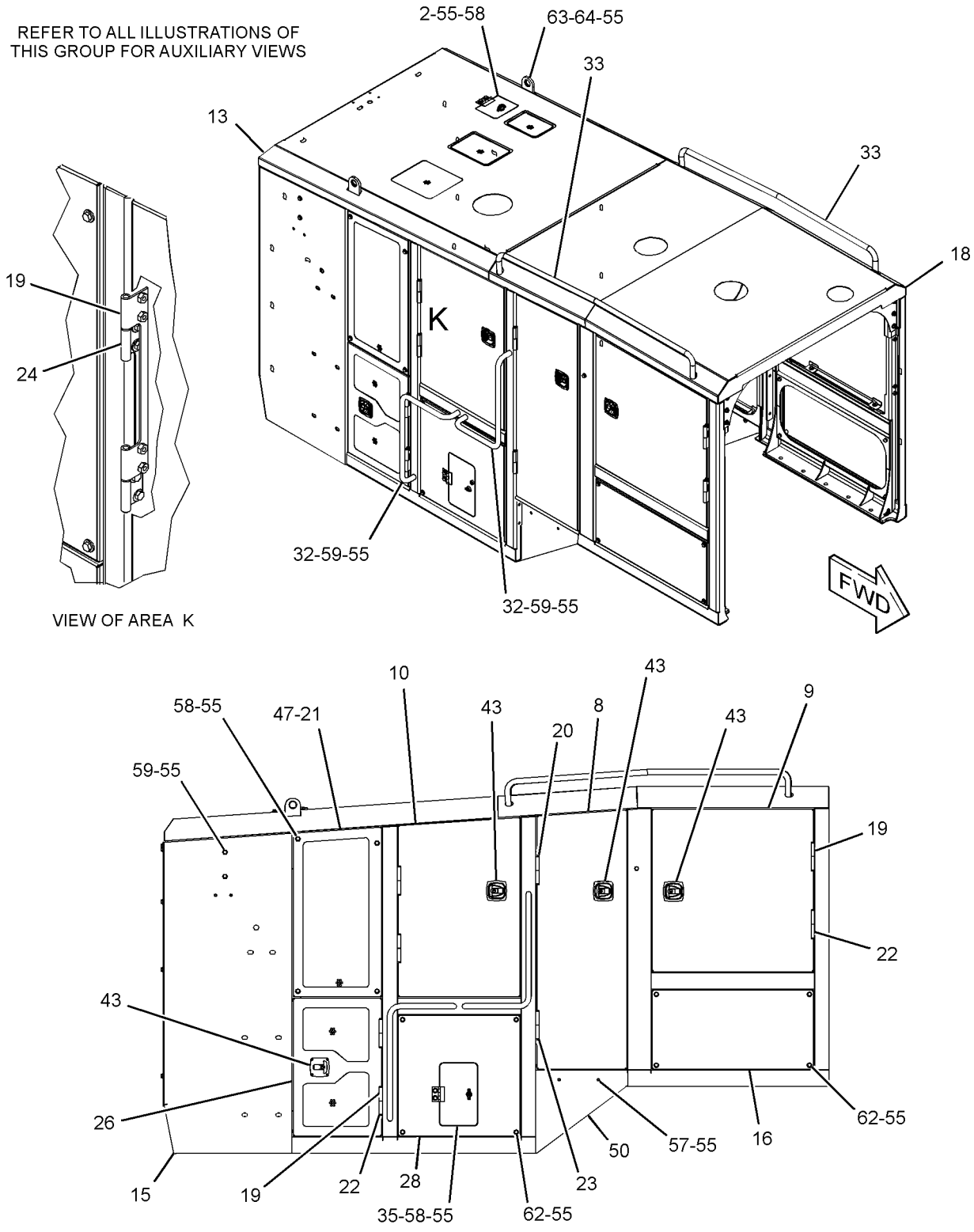

RIGHT SIDE VIEW

GRAPHIC #1

g02161737

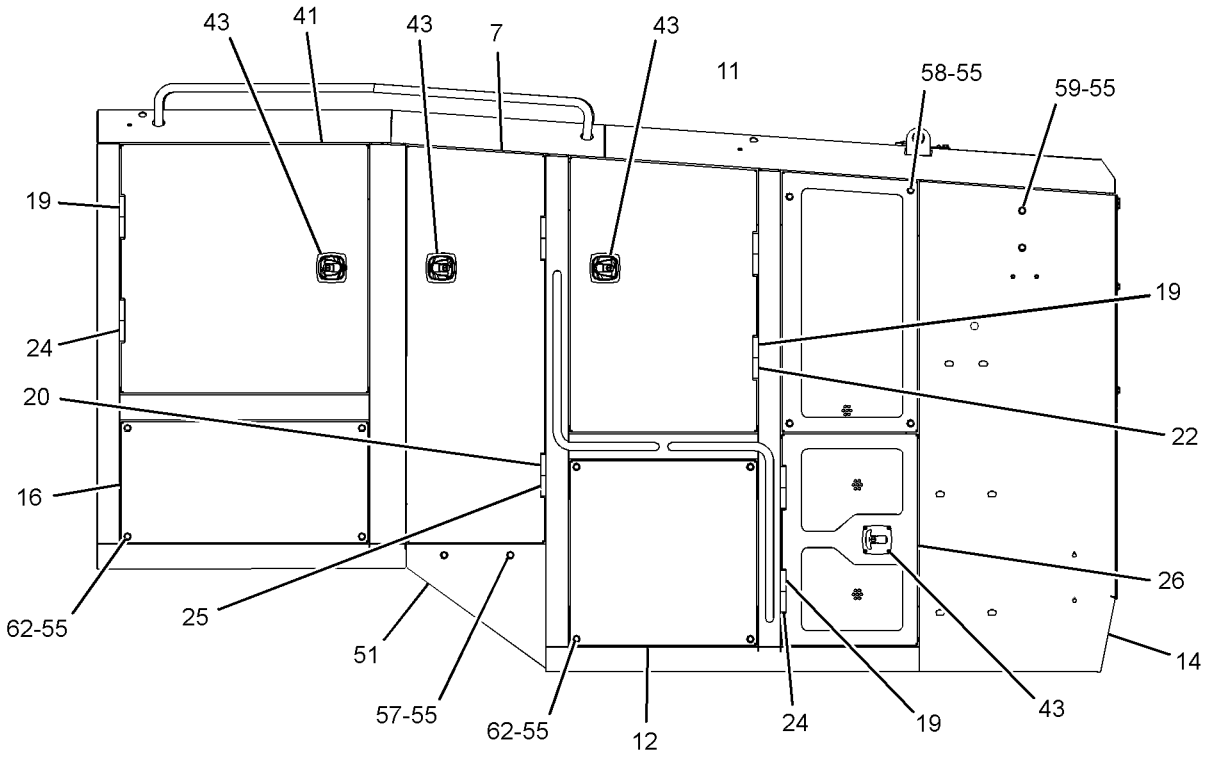

LEFT SIDE VIEW

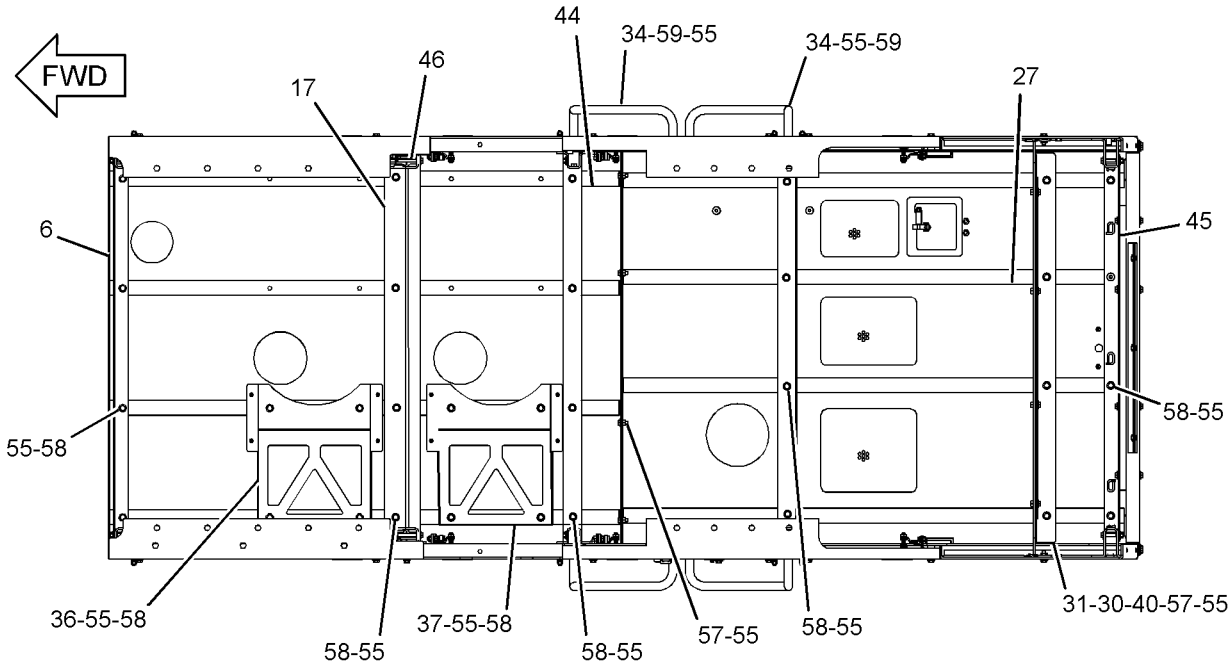

BOTTOM VIEW

GRAPHIC #2

g02161738

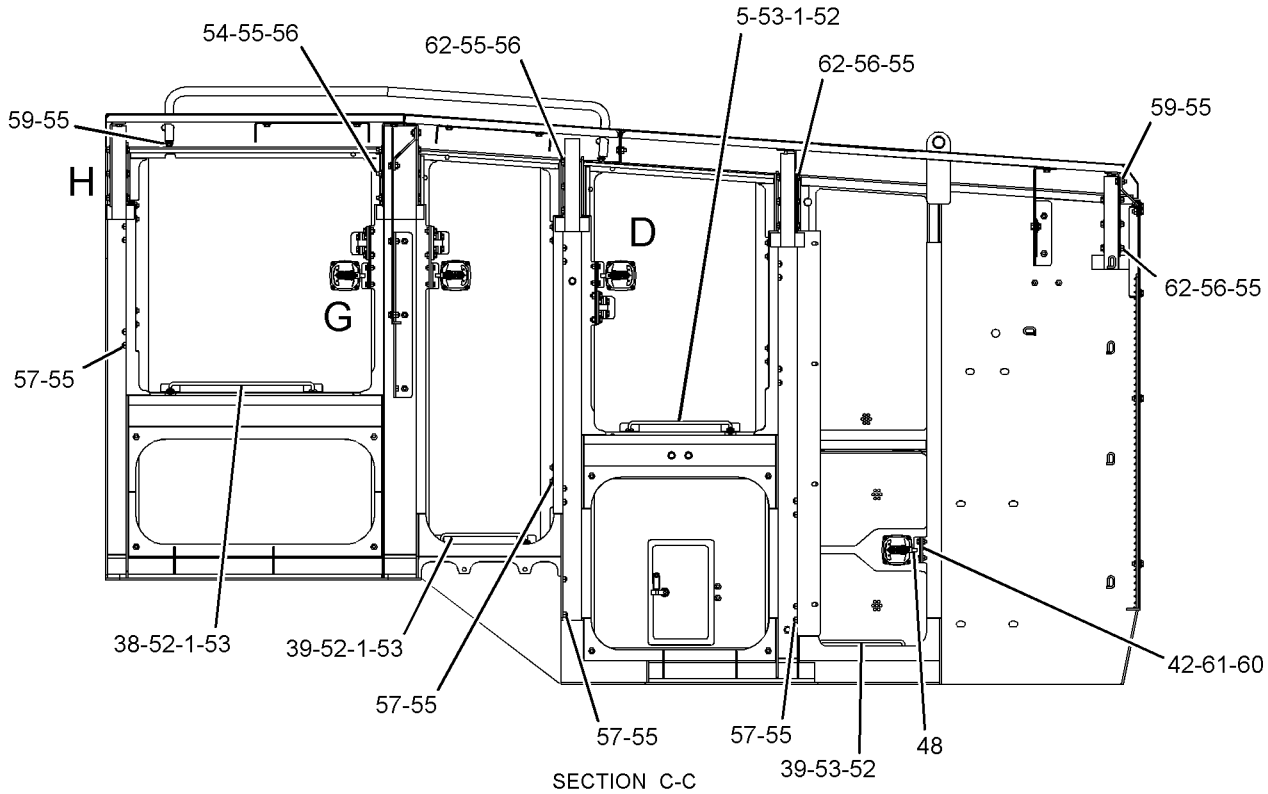

SECTION C-C

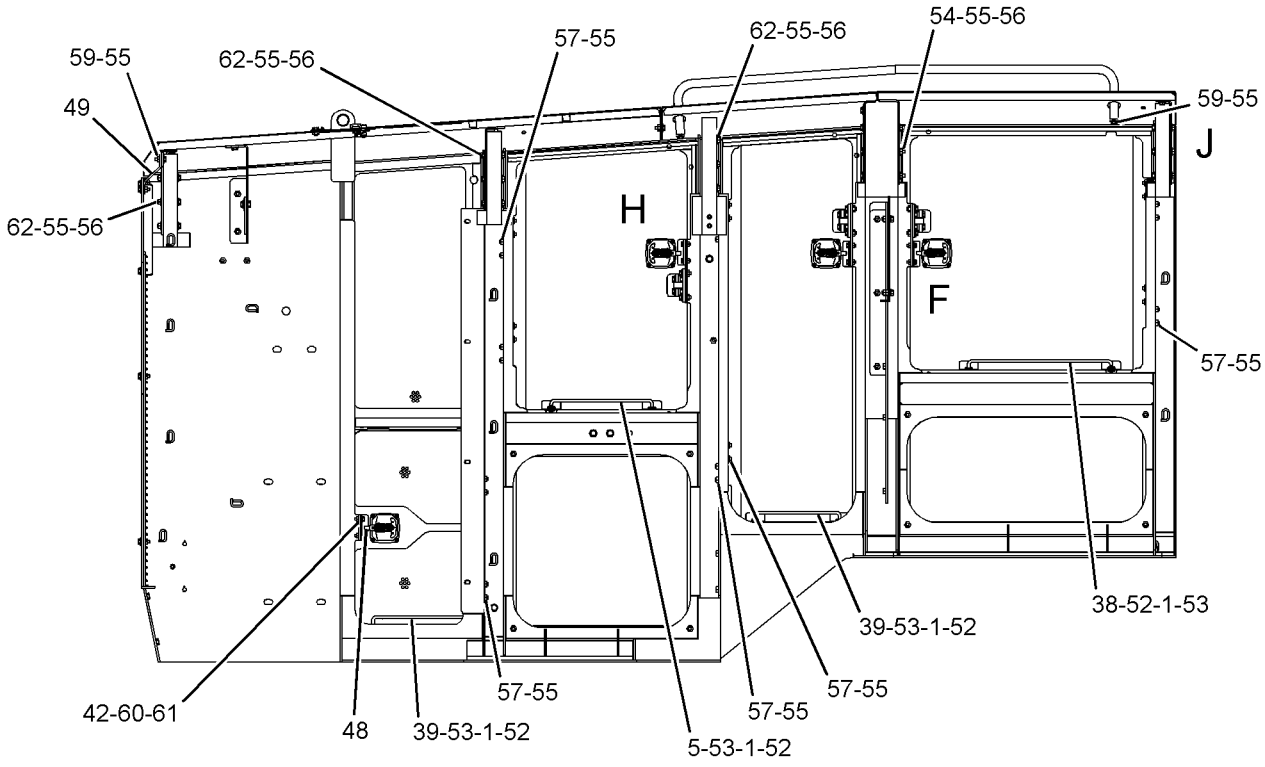

SECTION B-B

GRAPHIC #3

g02161734

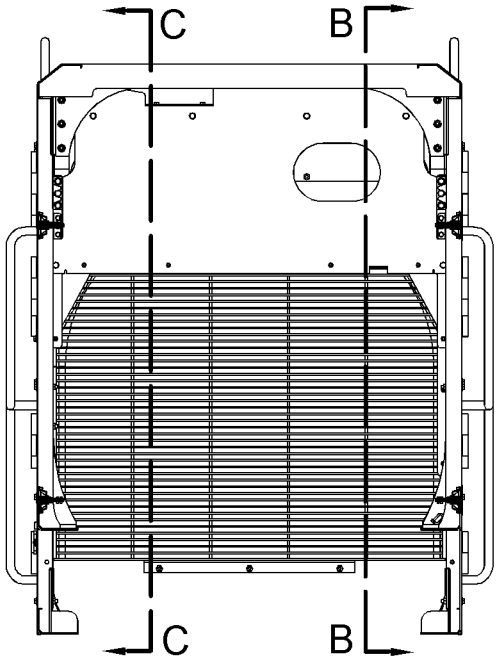

FRONT VIEW

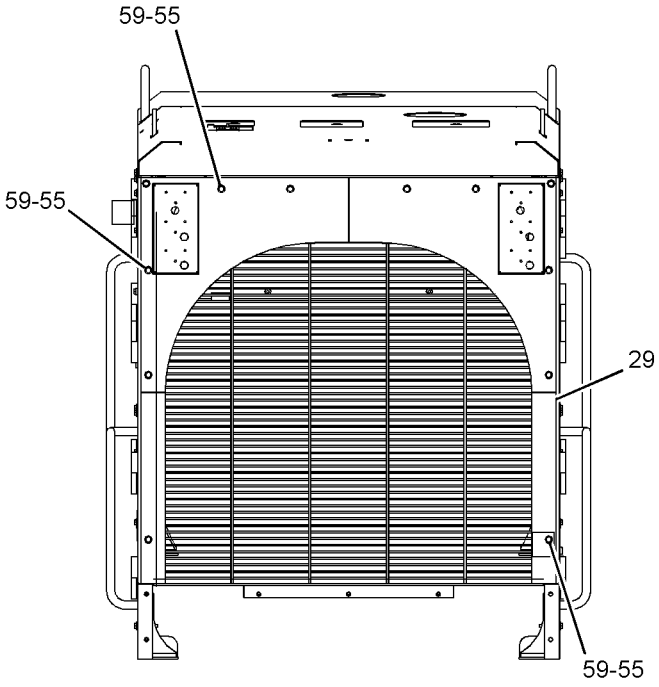

REAR VIEW

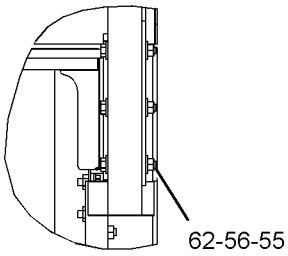

VIEW OF AREA J

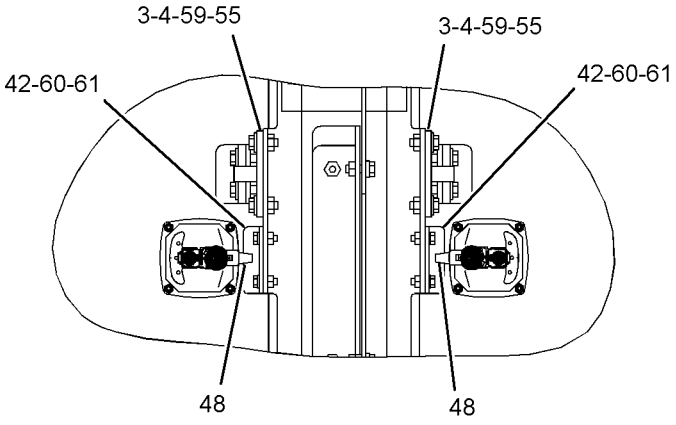

VIEW OF AREA F

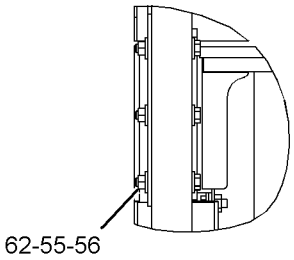

VIEW OF AREA H

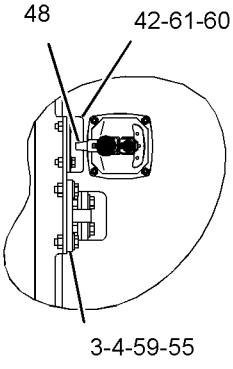

VIEW OF AREA D

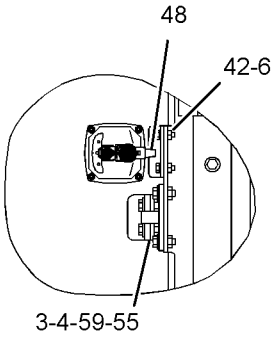

VIEW OF AREA E

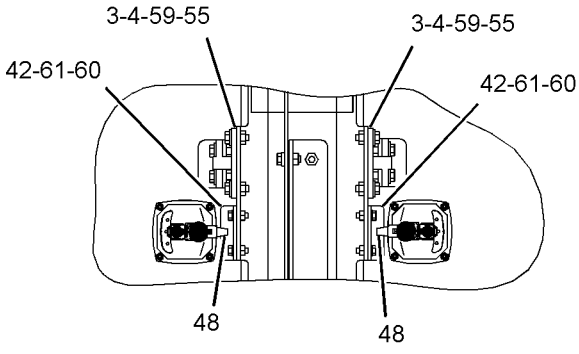

VIEW OF AREA G

GRAPHIC #4 **<END>** g02161741

FRAME AND BODY

279-5619 FASTENER GP-PLATFORM

S/N: B9K1-UP

PART OF 271-6651 PLATFORM GP-OPERATOR

SMCS-7277, 7553 **i02760116**

NOTE	REF NO	GRAPHIC REF	PART NUMBER	QTY	PART NAME 1 2 3 4 5 6 (PRODUCT LEVEL)	SEE PAGE
	1	1	**9Y-7595**	9	SPACER (13X30X14-MM THK)	
	2	1	**198-4778**	26	WASHER-HARD (13.5X30X12-MM THK)	
	3	1	**5P-1076**	9	WASHER-HARD (13.5X30X4-MM THK)	
M	4	1	**8T-4183**	34	BOLT (M12X1.75X40-MM)	
M	5	1	**8T-4184**	1	BOLT (M12X1.75X45-MM)	

M-METRIC PART

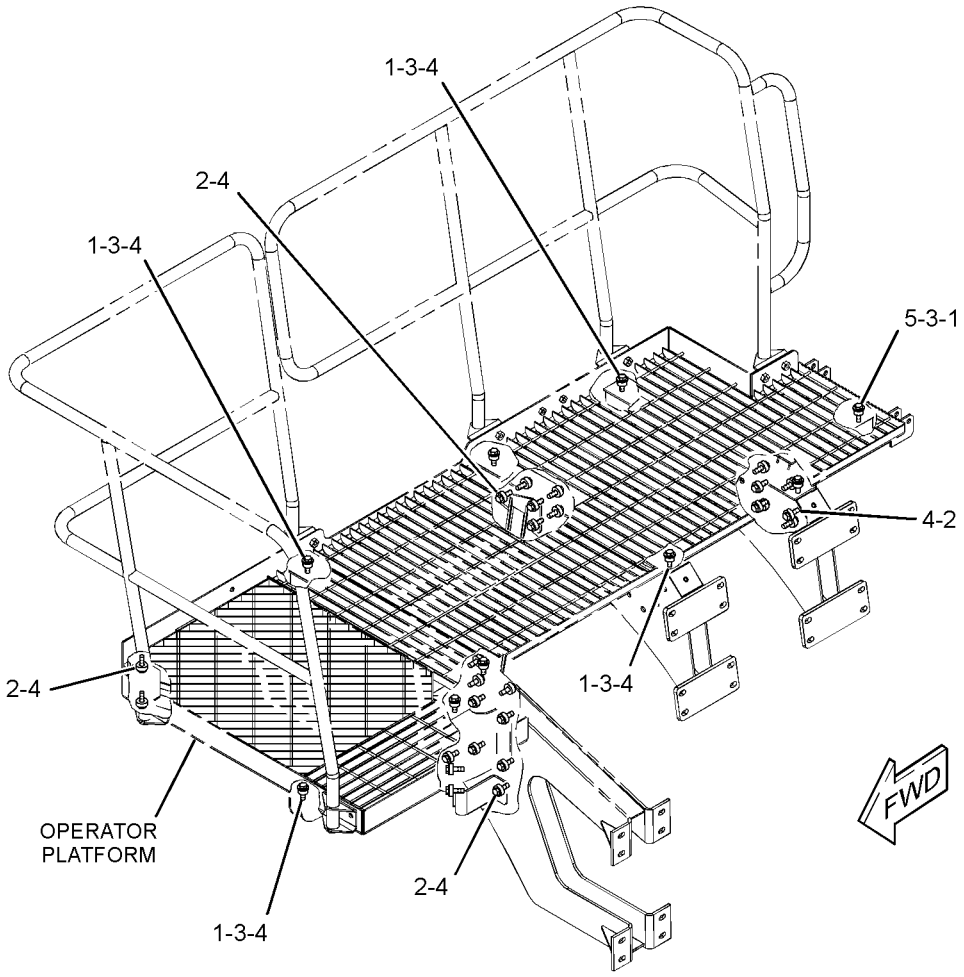

GRAPHIC #1 **<END>** g01384148

FRAME AND BODY

248-1484 FASTENER GP-SENSOR

S/N: B9K1-UP

PART OF 262-2018, 262-2019 SENSOR AR-GRADE

SMCS-5645, 7268, 7553 **i04035019**

NOTE	REF NO	GRAPHIC REF	PART NUMBER	QTY	PART NAME 1 2 3 4 5 6 (PRODUCT LEVEL)	SEE PAGE
	1	1	**8T-9389**	2	BOLT (1/2-13X2.75-IN)	
	2	1	**8T-8917**	2	BOLT (1/2-13X1.25-IN)	
	3	1	**5S-7385**	2	LOCKWASHER	
	4	1	**6V-8188**	2	NUT (1/2-13-THD)	
	5	1	**5P-1076**	2	WASHER-HARD (13.5X30X4-MM THK)	

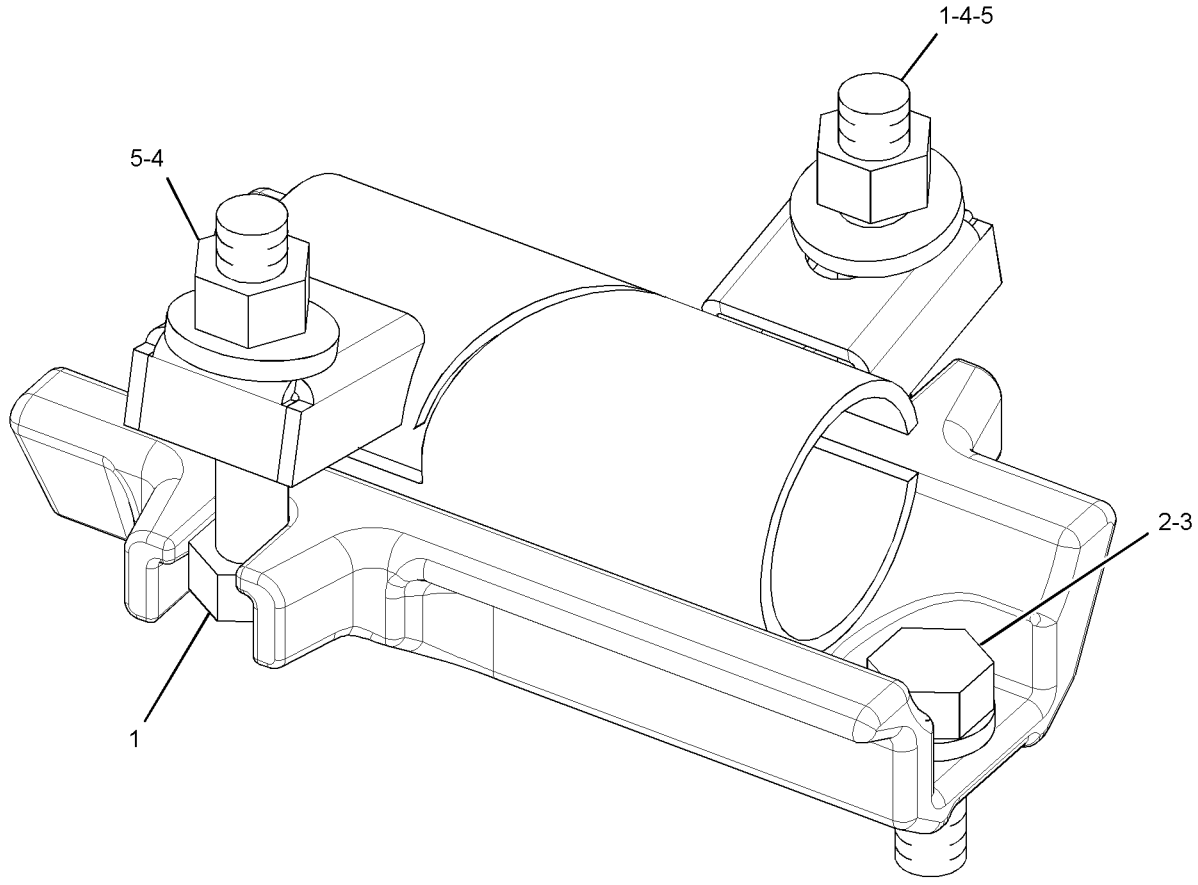

GRAPHIC #1 **<END>** g01455682

FRAME AND BODY

266-2418 FENDER & SUPPORT GP

S/N: B9K1-UP

SMCS-7252 **i02761234**

NOTE	REF NO	GRAPHIC REF	PART NUMBER	QTY	PART NAME 1 2 3 4 5 6 (PRODUCT LEVEL)	SEE PAGE
	1	1	**9R-8760**	16	PLATE	
	2	1	**148-0149**	2	TUBE AS	
	3	1	**148-0150**	2	ARM AS (LH)	
	4	1	**148-0151**	2	ARM AS (RH)	
	5	1	**148-0157**	4	HANDRAIL	
	6	1	**271-2126**	2	FENDER AS	
	7	1	**278-4725**	4	BAFFLE	
	8	1	**296-7706**	4	PLATE AS	
					(EACH INCLUDES)	
M		1	**8T-3597**	6	NUT-WELD (M12X1.75-THD)	
	9	1	**296-7707**	4	PLATE AS	
					(EACH INCLUDES)	
M		1	**8T-3597**	3	NUT-WELD (M12X1.75-THD)	
	10	1	**298-4811**	4	PLATE	
	11	1	**298-4812**	4	PLATE	
	12	1	**298-6024**	2	PLATE	
	13	1	**198-4778**	20	WASHER-HARD (13.5X30X12-MM THK)	
	14	1	**5P-1076**	144	WASHER-HARD (13.5X30X4-MM THK)	
M	15	1	**8T-4139**	60	BOLT (M12X1.75X30-MM)	
M	16	1	**8T-4183**	20	BOLT (M12X1.75X40-MM)	
M	17	1	**8T-4184**	20	BOLT (M12X1.75X45-MM)	
M	18	1	**8T-4192**	16	BOLT (M12X1.75X25-MM)	
M	19	1	**8T-4195**	8	BOLT (M10X1.5X30-MM)	
M	20	1	**8T-4244**	24	NUT (M12X1.75-THD)	
M	21	1	**8T-5041**	24	BOLT (M12X1.75X120-MM)	

QUANTITIES SHOWN ARE THOSE REQUIRED FOR BOTH LH AND RH SIDES
M-METRIC PART

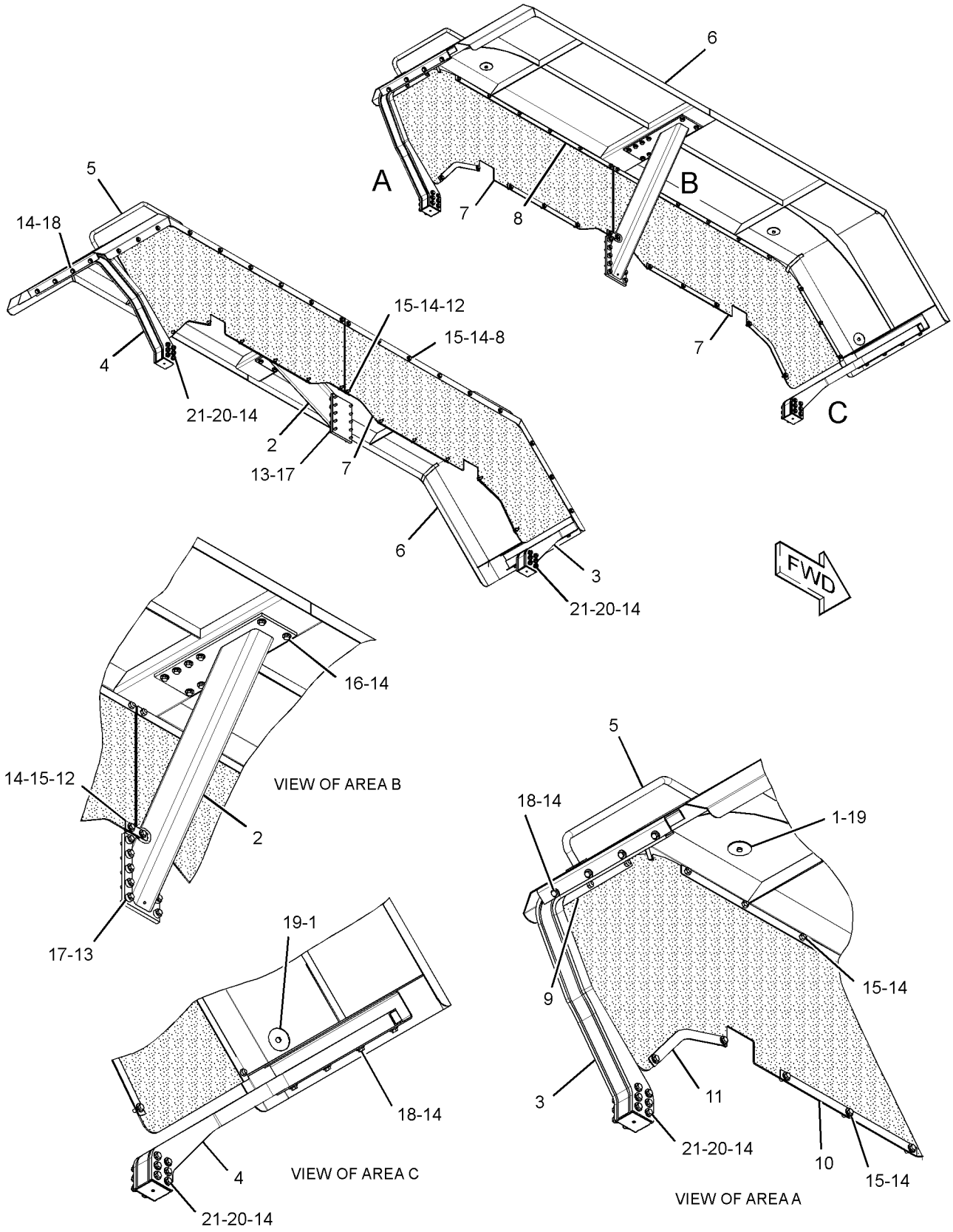

GRAPHIC #1 **<END>** g01386817

FRAME AND BODY

223-7566 FRAME GP-FRONT

S/N: B9K1-UP

PART OF 259-9204 COMMON AR

SMCS-7050, 7051 **i03555796**

NOTE	REF NO	GRAPHIC REF	PART NUMBER	QTY	PART NAME 1 2 3 4 5 6 (PRODUCT LEVEL)	SEE PAGE
	1	1	**6Y-5590**	3	DISC-THRUST	
	2	1	**6Y-5745**	3	DISC-THRUST	
B	3	1	**8X-0570**	3	SHIM PACK (INCLUDES 33-SHIMS)	
	4	1	**9X-7702**	3	SEAL-LIP TYPE	
	5	1	**128-3871**	3	RETAINER	
	6	1	**223-7518**	1	FRAME AS	
	6A	1	**7J-1335**	3	BEARING	
	6B	1	**7J-1337**	3	BEARING (6.5-IN OD)	
	6C	1	**9W-5560**	4	BEARING-SLEEVE	
	6D	1	**282-2092**	1	PLATE AS	
	7	1	**252-7770**	3	YOKE	
	8	1	**8T-4123**	6	WASHER (22X35X3.5-MM THK)	
M	9	1	**8T-6430**	6	BOLT (M20X2.5X50-MM)	
	10	1	**9X-7703**	3	SEAL-LIP TYPE	

B-USE AS REQUIRED
M-METRIC PART

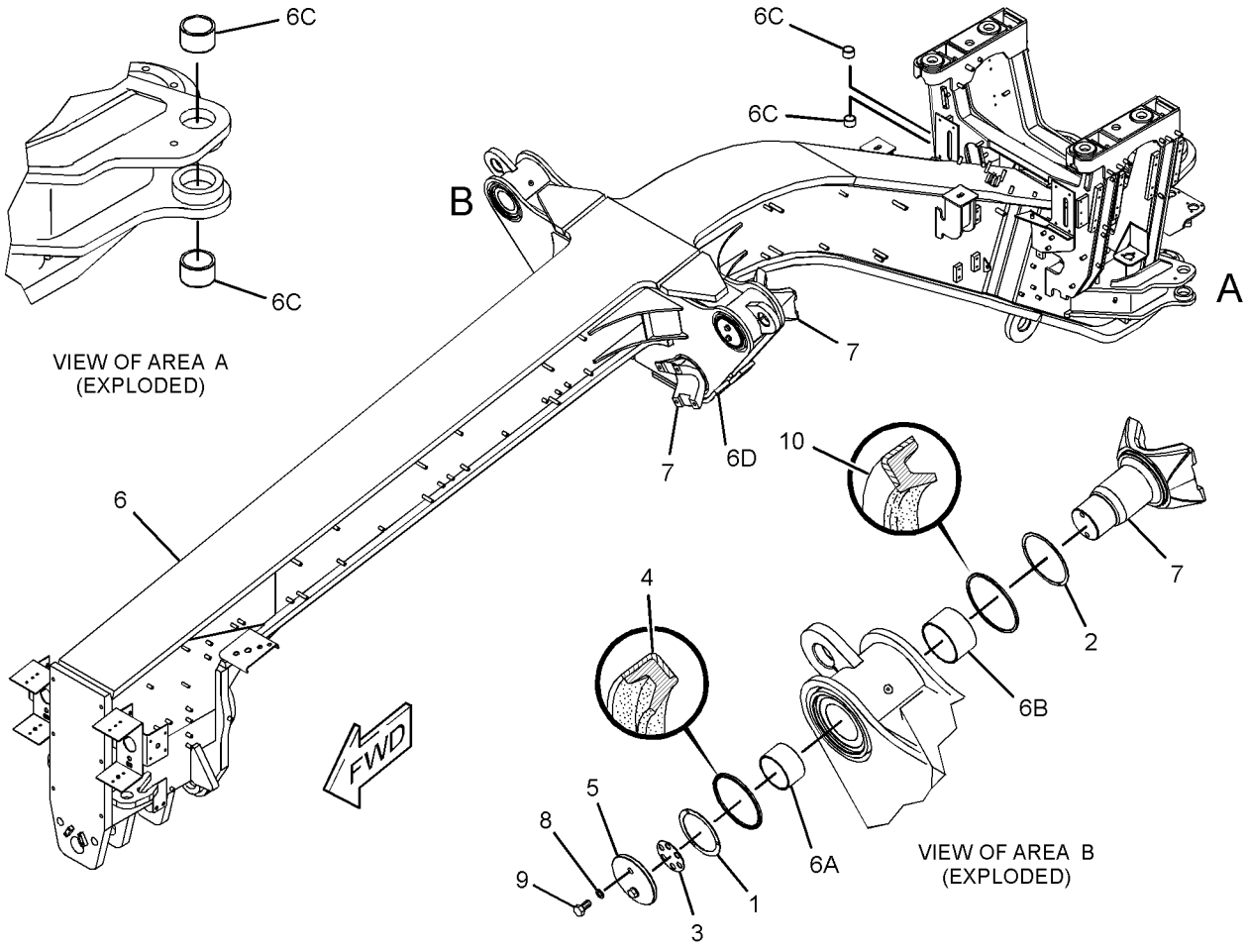

GRAPHIC #1 **<END>** g01881477

FRAME AND BODY

224-0781 FRAME GP-REAR

S/N: B9K1-UP

PART OF 259-9204 COMMON AR

SMCS-7050, 7051 **i02727942**

NOTE	REF NO	GRAPHIC REF	PART NUMBER	QTY	PART NAME 1 2 3 4 5 6 (PRODUCT LEVEL)	SEE PAGE
	1	1	**224-0782**	1	FRAME AS	
	2	1	**9W-5560**	4	BEARING-SLEEVE	

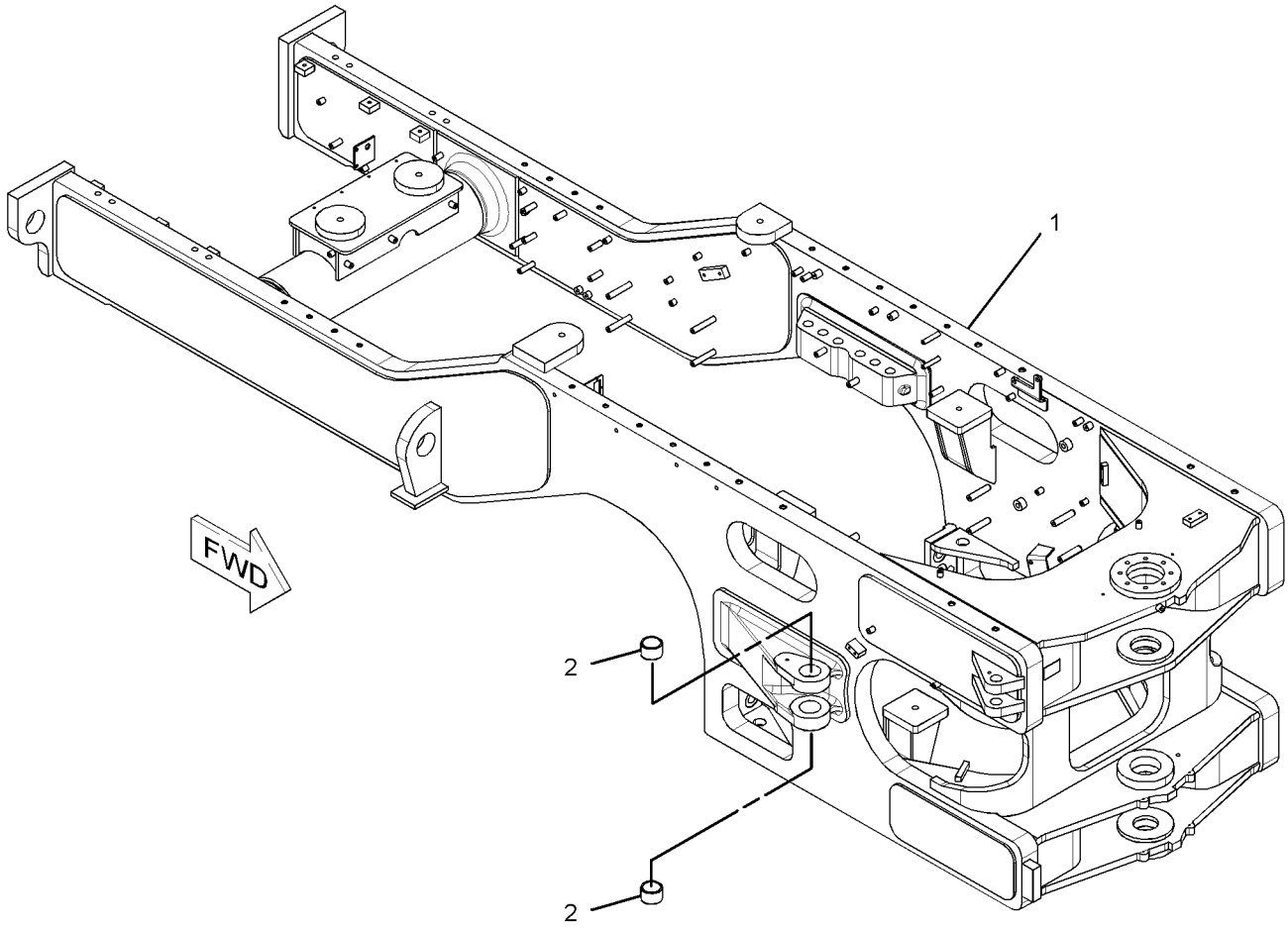

GRAPHIC #1 **<END>** g01376414

FRAME AND BODY

266-6778 GUARD GP-BOTTOM

S/N: B9K1-UP

PART OF 259-9204 COMMON AR

SMCS-7153 **i03091605**

NOTE	REF NO	GRAPHIC REF	PART NUMBER	QTY	PART NAME 1 2 3 4 5 6 (PRODUCT LEVEL)	SEE PAGE
	1	1	**263-3981**	1	SUPPORT AS	
M		1	**8T-3490**	9	NUT-WELD (M10X1.5-THD)	
	2	1	**278-3557**	2	BRACKET	
	3	1	**278-8279**	1	PLATE AS	
M		1	**8T-3490**	12	NUT-WELD (M10X1.5-THD)	
	4	1	**092-9741**	1	GROMMET	
	5	1	**198-4778**	6	WASHER-HARD (13.5X30X12-MM THK)	
	6	1	**5P-6460**	1	GROMMET	
	7	1	**7X-4743**	2	GROMMET	
	8	1	**8D-1470**	4	GROMMET	
M	9	1	**8T-4136**	14	BOLT (M10X1.5X25-MM)	
M	10	1	**8T-4183**	6	BOLT (M12X1.75X40-MM)	
	11	1	**8T-7934**	14	WASHER-HARD (11X21X5-MM THK)	

M-METRIC PART

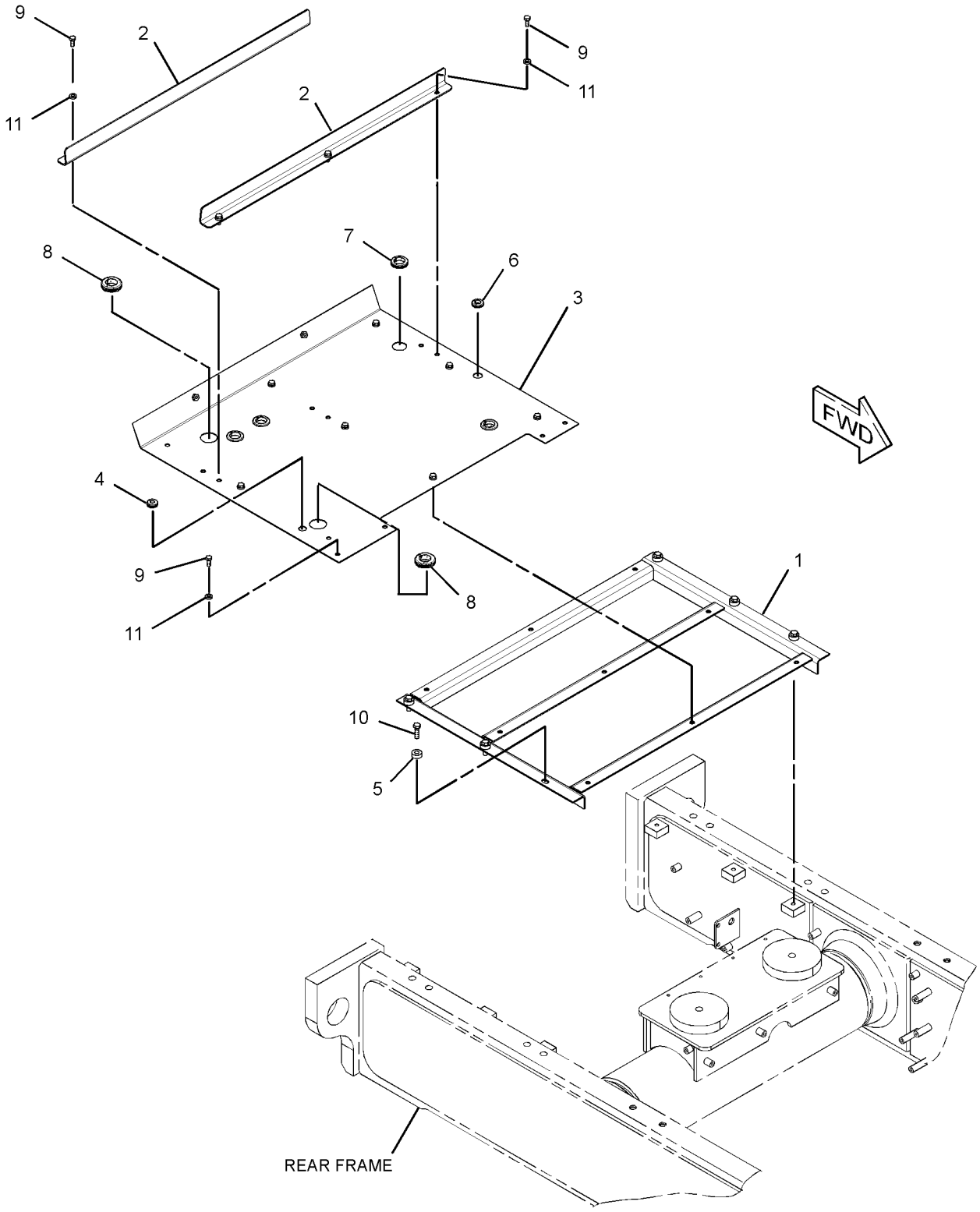

GRAPHIC #1 **<END>** g01384538

FRAME AND BODY

306-8083 GUARD GP-BOTTOM

S/N: B9K1-UP

PART OF 314-7907 CONVERSION AR-CERTIFICATION

SMCS-7153 **i02869206**

NOTE	REF NO	GRAPHIC REF	PART NUMBER	QTY	PART NAME 1 2 3 4 5 6 (PRODUCT LEVEL)	SEE PAGE
	1	1	**7D-7496**	2	PIN AS	
	2	1	**8W-6626**	2	CAP	
	3	1	**316-4374**	1	BLOCK	
	4	1	**306-8086**	1	SUPPORT AS	
	5	1	**306-8088**	1	PLATE AS	
		1	**117-8721**	10	LUG (M10X1.5-THD)	
	6	1	**8K-0530**	2	PIN-CABLE SOCKET	
	7	1	**8T-4121**	4	WASHER-HARD (11X21X2.5-MM THK)	
M	8	1	**8T-4139**	8	BOLT (M12X1.75X30-MM)	
M	9	1	**8T-4175**	4	BOLT (M16X2X90-MM)	
M	10	1	**8T-4185**	4	BOLT (M10X1.5X50-MM)	
	11	1	**8T-4223**	8	WASHER-HARD (13.5X25.5X3-MM THK)	
	12	1	**9X-8257**	4	WASHER (17.5X30X3.5-MM THK)	

M-METRIC PART

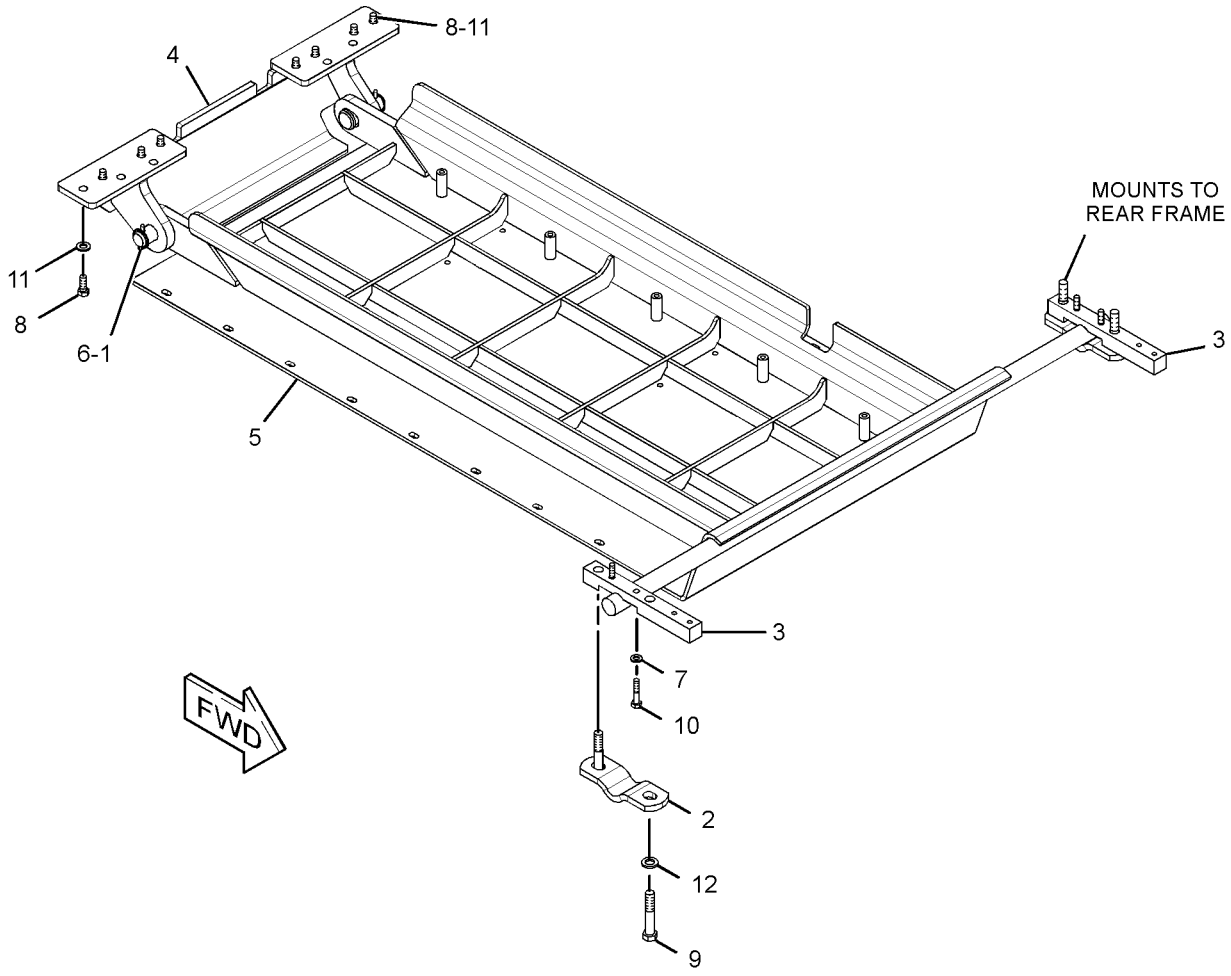

GRAPHIC #1 **<END>** g01431127

FRAME AND BODY

292-9151 GUARD GP-BRAKE

S/N: B9K1-UP
PART OF 309-5052 HANDRAIL GP
CANNOT BE USED WITH 266-2418—PAGE 540

SMCS-7166 **i02765305**

NOTE	REF NO	GRAPHIC REF	PART NUMBER	QTY	PART NAME 1 2 3 4 5 6 (PRODUCT LEVEL)	SEE PAGE
	1	1	**286-1337**	2	PLATE AS	
	2	1	**5P-1076**	12	WASHER-HARD (13.5X30X4-MM THK)	
	3	1	**8T-4121**	8	WASHER-HARD (11X21X2.5-MM THK)	
M	4	1	**8T-4183**	12	BOLT (M12X1.75X40-MM)	
M	5	1	**8T-4186**	8	BOLT (M10X1.5X40-MM)	

M-METRIC PART

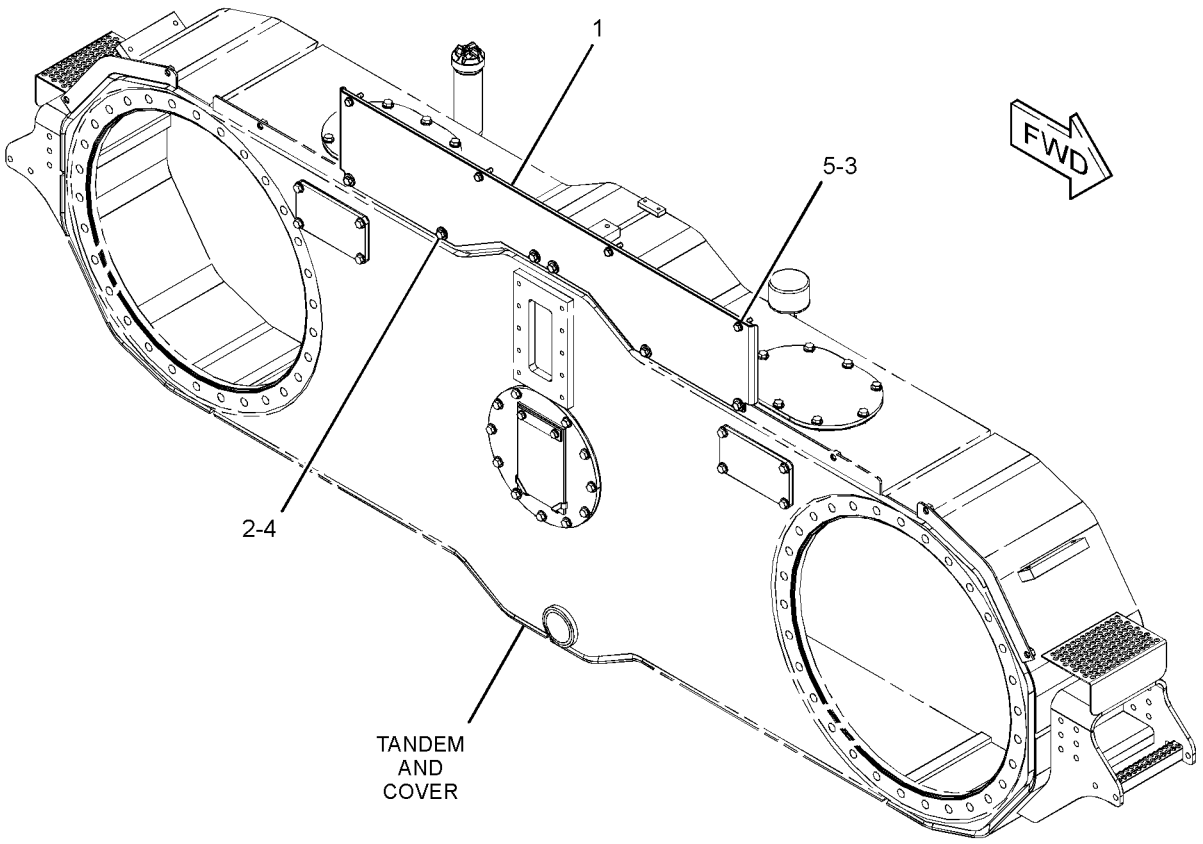

GRAPHIC #1 **<END>** g01387656

FRAME AND BODY

303-8193 GUARD GP-MUD

S/N: B9K1-UP

SMCS-4220 **i02869773**

NOTE	REF NO	GRAPHIC REF	PART NUMBER	QTY	PART NAME 1 2 3 4 5 6 (PRODUCT LEVEL)	SEE PAGE
	1	1	**303-8210**	4	BRACKET	
	2	1	**303-8212**	1	BRACKET AS	
M		1	**8T-3612**	3	NUT-WELD (M8X1.25-THD)	
C	3	1	**312-4267**	1	PLATE AS	
M		1	**8T-3490**	1	NUT-WELD (M10X1.5-THD)	
M		1	**8T-3612**	4	NUT-WELD (M8X1.25-THD)	
C	4	1	**312-4286**	1	PLATE AS	
M		1	**8T-3612**	4	NUT-WELD (M8X1.25-THD)	
C	5	1	**312-4447**	1	PLATE AS	
M		1	**8T-3612**	2	NUT-WELD (M8X1.25-THD)	
C	6	1	**312-4453**	1	PLATE AS	
M		1	**8T-3612**	2	NUT-WELD (M8X1.25-THD)	
C	7	1	**3E-4321**	1	CLIP	
	8	1	**5P-4116**	20	WASHER-HARD (8.8X20.5X2-MM THK)	
	9	1	**7X-7729**	8	WASHER (11X25X3-MM THK)	
C	10	1	**8T-4121**	1	WASHER-HARD (11X21X2.5-MM THK)	
CM	11	1	**8T-4137**	5	BOLT (M10X1.5X20-MM)	
CM	12	1	**8T-4195**	4	BOLT (M10X1.5X30-MM)	
M	13	1	**8T-4908**	20	BOLT (M8X1.25X25-MM)	

C-CHANGE FROM PREVIOUS TYPE
M-METRIC PART

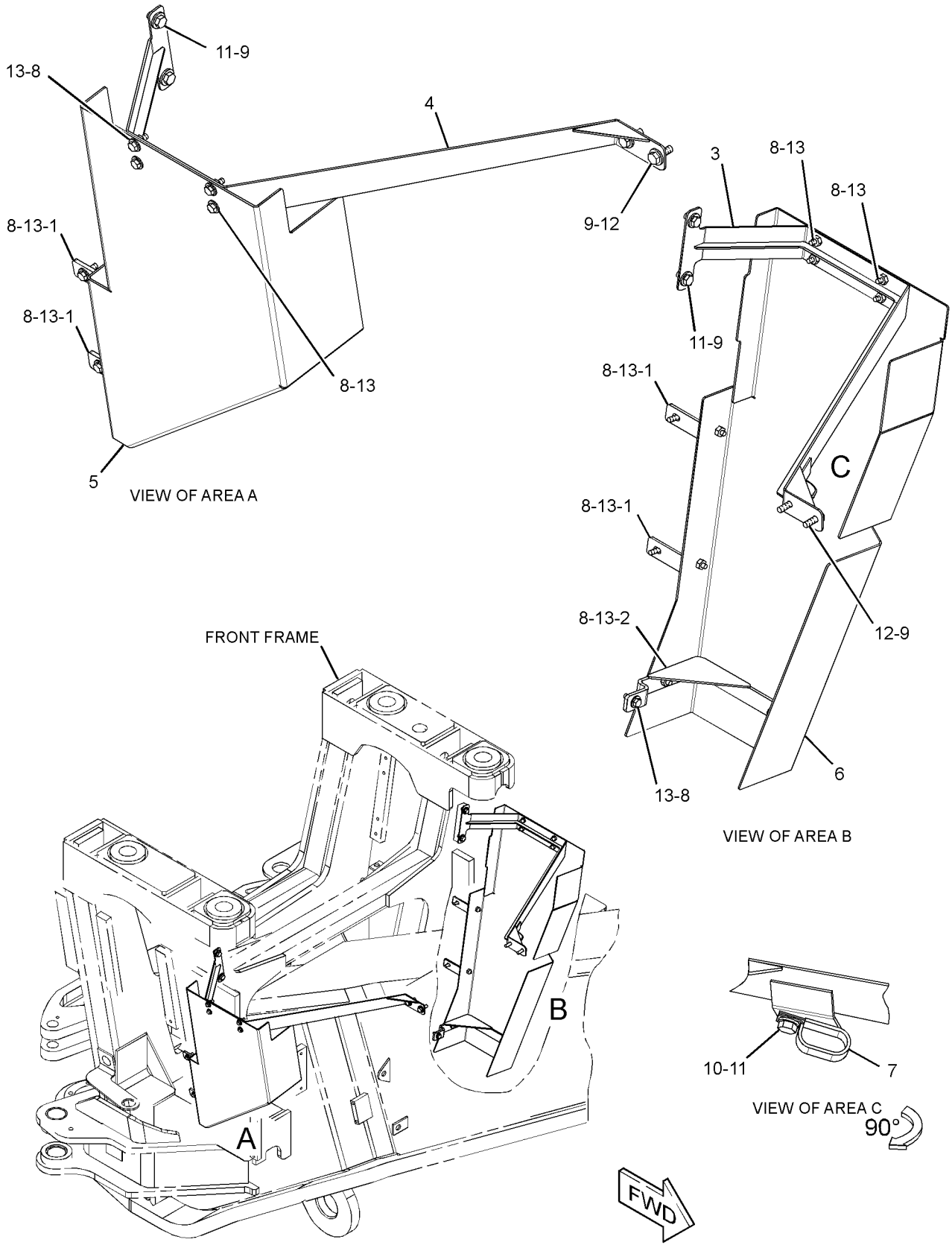

GRAPHIC #1 **<END>** g01427666

FRAME AND BODY

266-6777 GUARD GP-RADIATOR

S/N: B9K1-UP

PART OF 259-9204 COMMON AR

SMCS-7155 **i03911073**

NOTE	REF NO	GRAPHIC REF	PART NUMBER	QTY	PART NAME 1 2 3 4 5 6 (PRODUCT LEVEL)	SEE PAGE
	1	1	**266-6790**	1	SHEET AS	
M		1	**8T-3490**	47	NUT-WELD (M10X1.5-THD)	
M		1	**9R-1733**	1	BOSS (M10X1.5X66.5-MM)	
	2	1	**273-9620**	1	SHEET AS	
		1	**8G-0871**	2	HANDLE	
	3	1	**273-9626**	1	BAFFLE	
	4	1	**273-9627**	1	BAFFLE	
	5	1	**273-9628**	1	BAFFLE	
	6	1	**273-9629**	1	BAFFLE	
	7	1	**281-8987**	1	PLATE AS	
M		1	**8T-3490**	5	NUT-WELD (M10X1.5-THD)	
	8	1	**281-8988**	1	PLATE AS	
M		1	**8T-3490**	5	NUT-WELD (M10X1.5-THD)	
	9	1	**283-2574**	2	PLATE	
	10	1	**285-2373**	2	BRACKET	
	11	1	**7X-7729**	18	WASHER (11X25X3-MM THK)	
	12	1	**8T-4121**	45	WASHER-HARD (11X21X2.5-MM THK)	
M	13	1	**8T-4136**	20	BOLT (M10X1.5X25-MM)	
M	14	1	**8T-4137**	16	BOLT (M10X1.5X20-MM)	
M	15	1	**8T-4191**	5	BOLT (M10X1.5X16-MM)	
M	16	1	**8T-4196**	2	BOLT (M10X1.5X35-MM)	
M	17	1	**8T-4201**	20	BOLT-LOCKING (M10X1.5X20-MM)	
E	18	1	**112-9736**		SEAL (15-CM EACH)	
E	18A	1	**112-9736**		SEAL (114-CM)	

E-ORDER BY THE CENTIMETER
M-METRIC PART

266-6777 **GUARD GP-RADIATOR** *(contd.)* **i03911073**

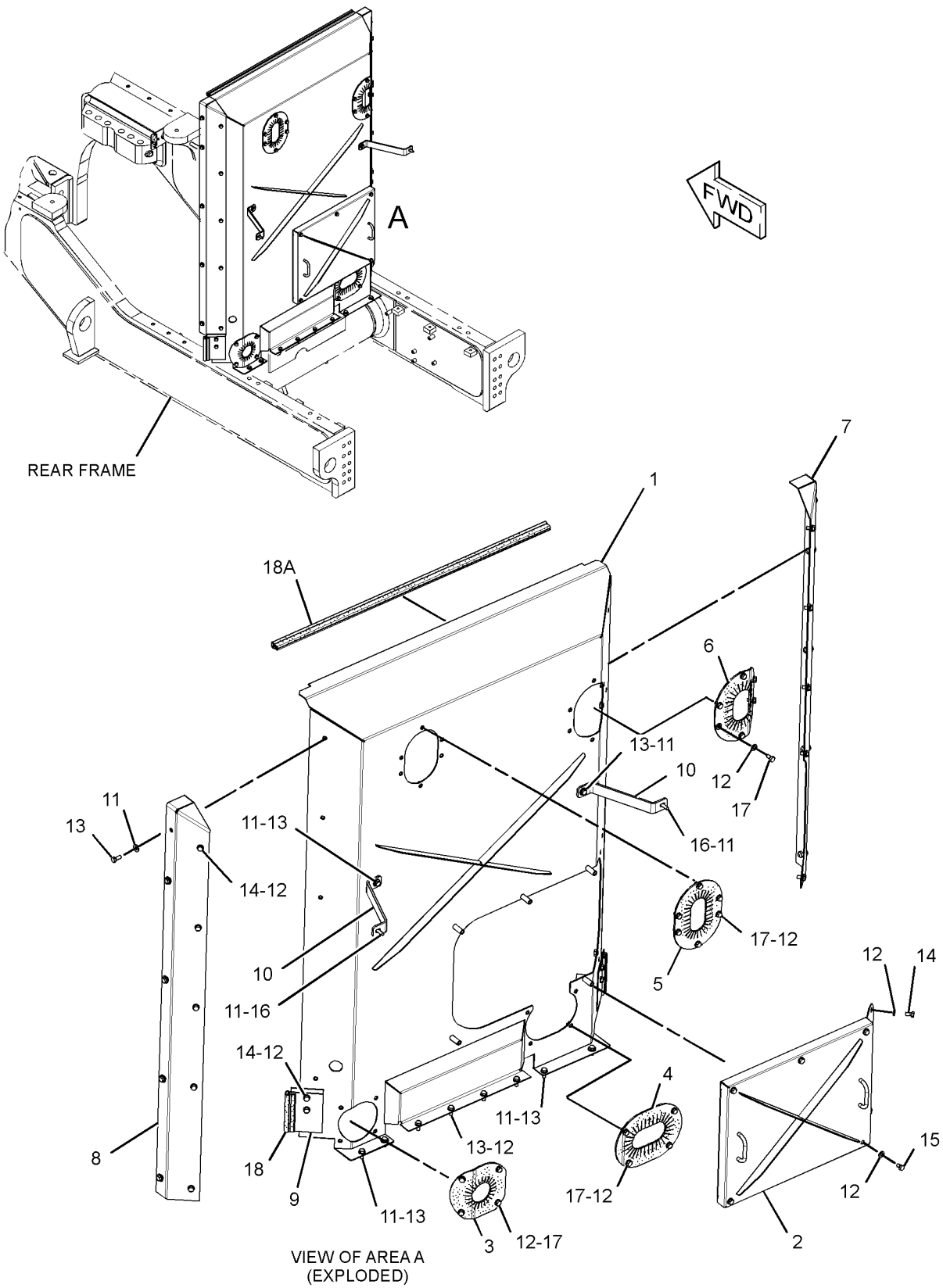

GRAPHIC #1 **<END>** g01384515

FRAME AND BODY

281-4290 GUARD GP-ROCK

S/N: B9K1-UP

PART OF 268-5760 CIRCLE GP

SMCS-7182 **i02764902**

NOTE	REF NO	GRAPHIC REF	PART NUMBER	QTY	PART NAME 1 2 3 4 5 6 (PRODUCT LEVEL)	SEE PAGE
	1	1	**281-4289**	1	PLATE AS	
	1A	1	**3G-8632**	2	BLOCK	
M	1B	1	**8T-3490**	2	NUT-WELD (M10X1.5-THD)	
M	1C	1	**8T-3597**	8	NUT-WELD (M12X1.75-THD)	
M	1D	1	**8Y-4489**	1	BOSS (M10X1.5-THD)	
M	1E	1	**9R-2672**	1	BOSS-THREADED (M10X1.5-THD)	
	1F	1	**142-4229**	4	CLAMP	
M	2	1	**8T-4183**	8	BOLT (M12X1.75X40-MM)	
	3	1	**8T-4223**	8	WASHER-HARD (13.5X25.5X3-MM THK)	

M-METRIC PART

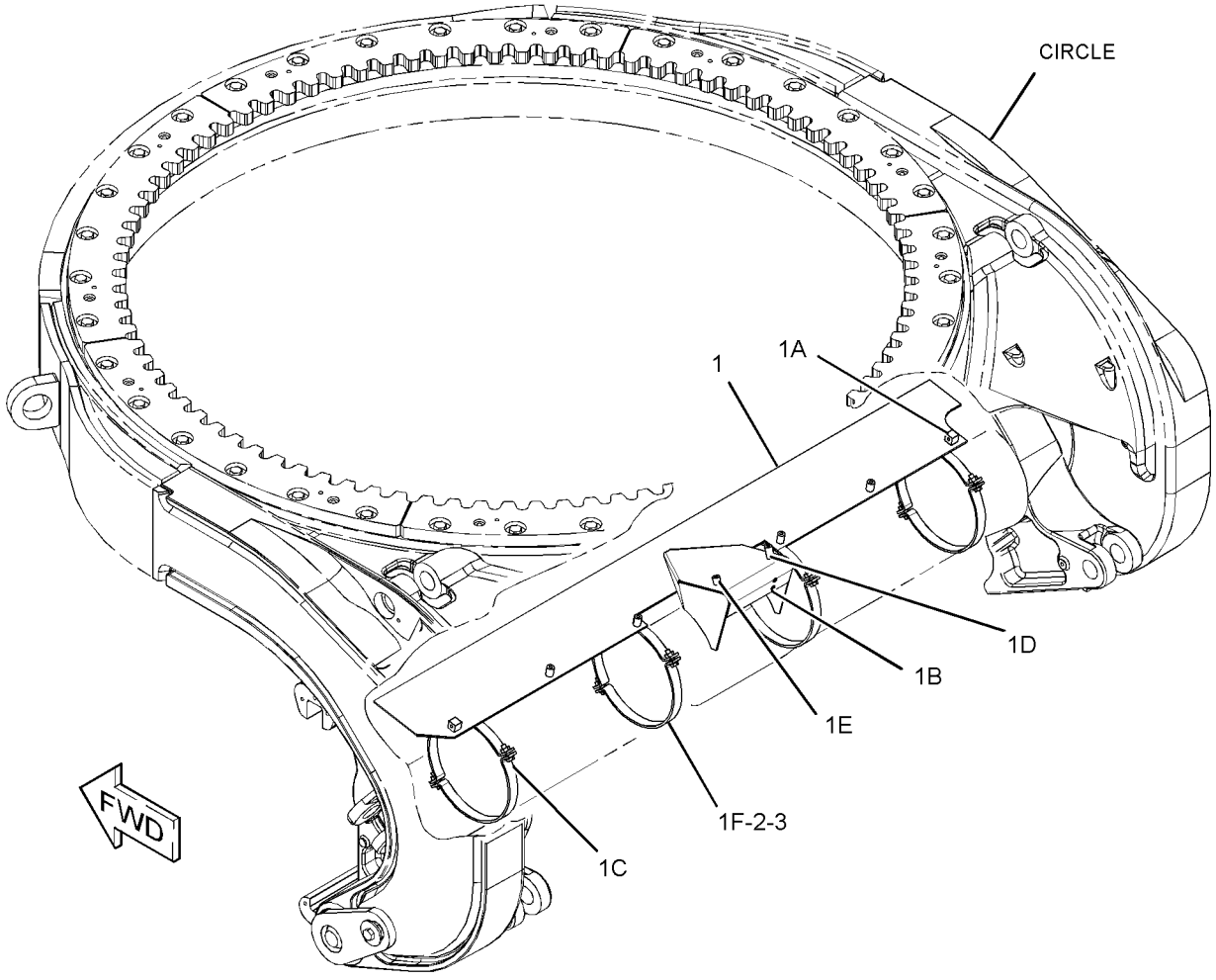

GRAPHIC #1 **<END>** g01392569

FRAME AND BODY

270-6971 HANDRAIL GP

S/N: B9K1-UP

PART OF 260-3770 PLATFORM GP

SMCS-7256 **i02758222**

NOTE	REF NO	GRAPHIC REF	PART NUMBER	QTY	PART NAME 1 2 3 4 5 6 (PRODUCT LEVEL)	SEE PAGE
	1	1	**5P-7958**	1	SLEEVE-CABLE SPLICE	
	2	1	**160-9925**	1	LANYARD	
	3	1	**270-6980**	1	HANDRAIL AS	
	4	1	**271-0767**	1	HANDRAIL AS	
	5	1	**278-4832**	1	PIN	
	6	1	**282-8888**	1	HANDRAIL AS	
	7	1	**294-1132**	2	PLATE AS	
	8	1	**310-3961**	1	HANDRAIL	
M	9	1	**5C-9553**	2	BOLT (M6X1X16-MM)	
	10	1	**9X-7345**	3	GROMMET	
	11	1	**9X-8256**	2	WASHER (6.6X12X2-MM THK)	

M-METRIC PART

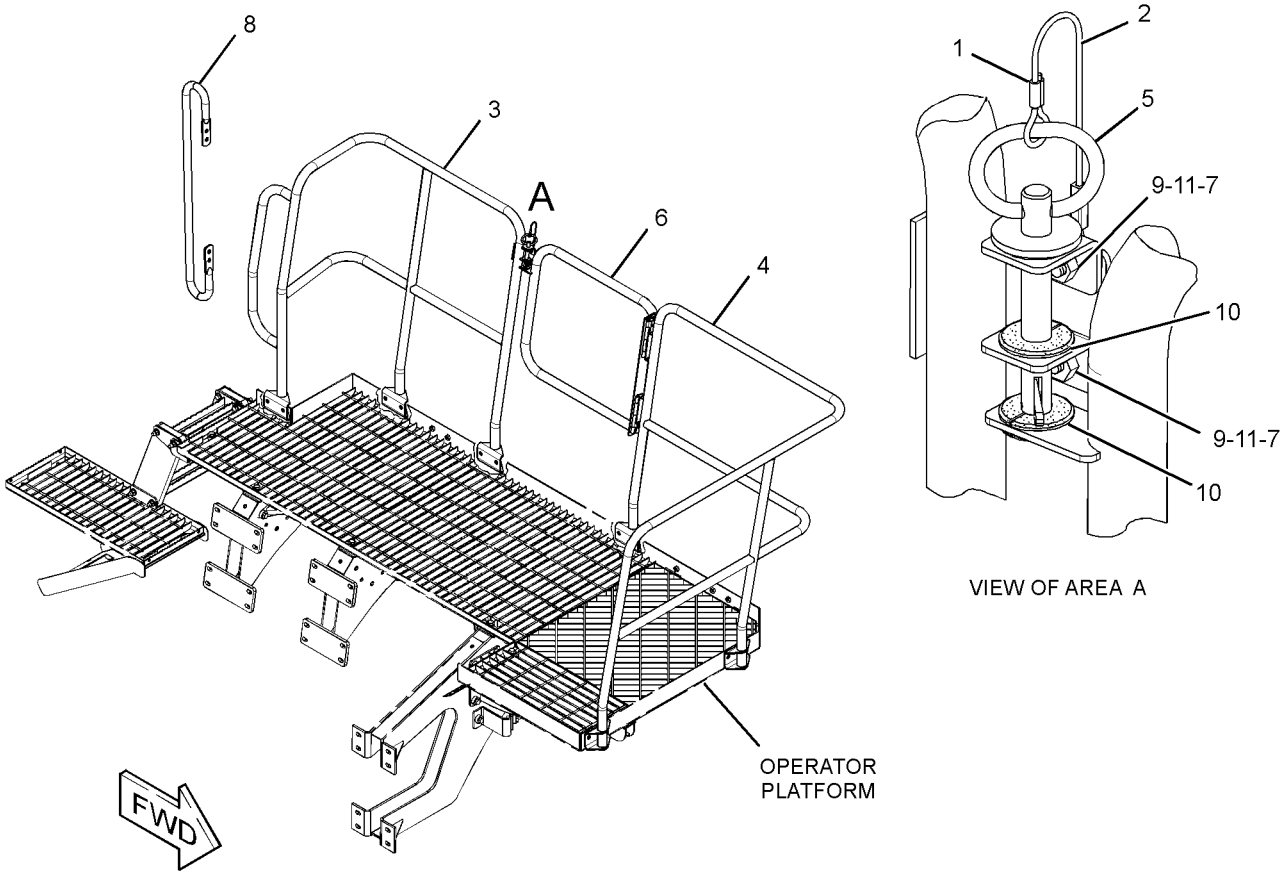

GRAPHIC #1 **<END>** g01382826

FRAME AND BODY

278-3541 HANDRAIL GP

S/N: B9K1-UP

PART OF 309-5052 HANDRAIL GP

SMCS-7256 **i02765304**

NOTE	REF NO	GRAPHIC REF	PART NUMBER	QTY	PART NAME 1 2 3 4 5 6 (PRODUCT LEVEL)	SEE PAGE
	1	1	**278-3540**	1	HANDHOLD	
	2	1	**282-4367**	1	HANDHOLD	
	3	1	**5P-1076**	8	WASHER-HARD (13.5X30X4-MM THK)	
M	4	1	**8T-4956**	4	BOLT (M12X1.75X35-MM)	

M-METRIC PART

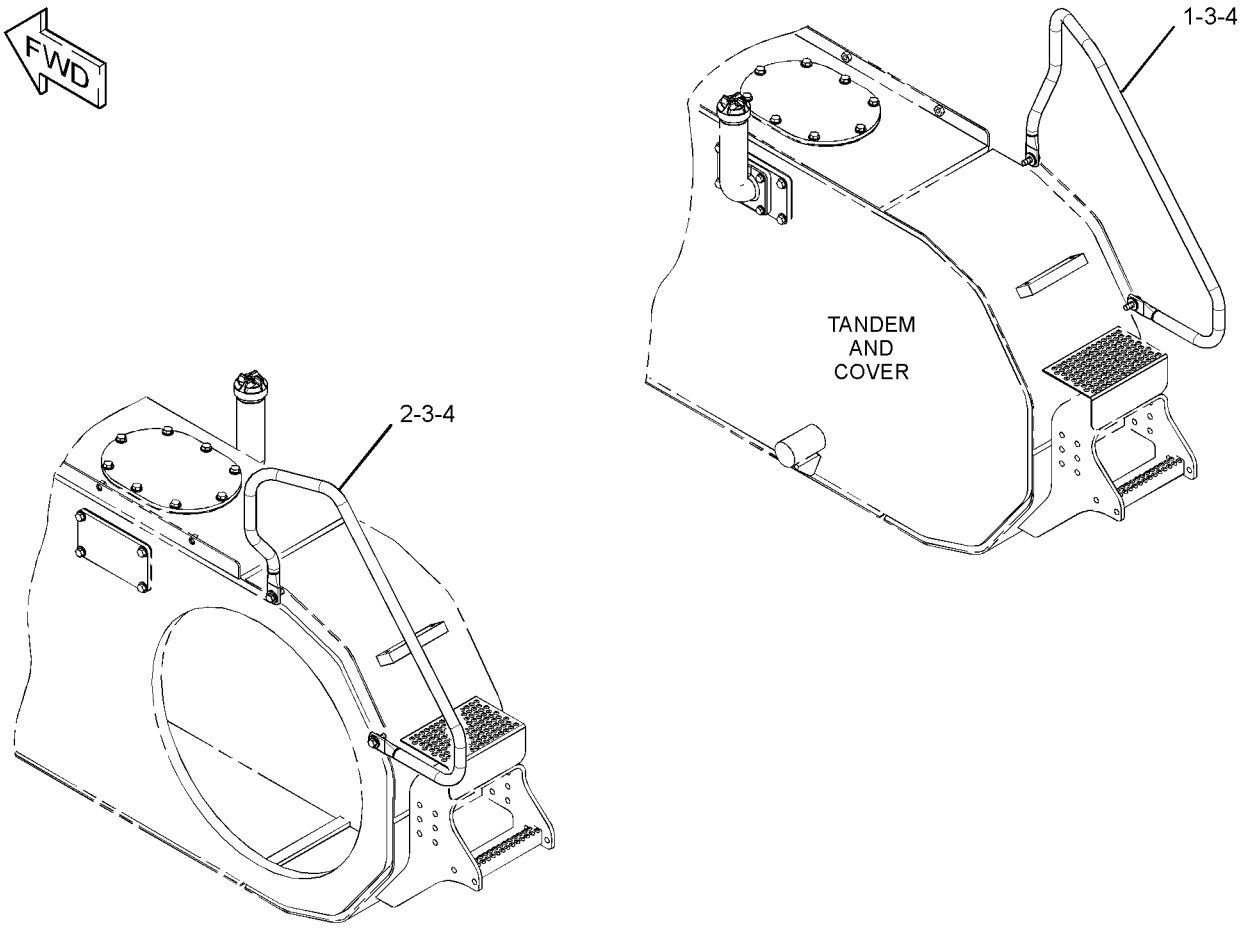

GRAPHIC #1 **<END>** g01387978

FRAME AND BODY

309-5052 HANDRAIL GP–REAR

S/N: B9K1-UP

CANNOT BE USED WITH 266-2418–PAGE 540

SMCS-7256 **i02765306**

NOTE	PART NUMBER	QTY	PART NAME 1 2 3 4 5 6 (PRODUCT LEVEL)	SEE PAGE
Y	*292-9151*	1	GUARD GP-BRAKE	547
Y	*278-3541*	1	HANDRAIL GP	554

Y-SEPARATE ILLUSTRATION

<END>

FRAME AND BODY

252-0981 HITCH GP-ARTICULATING

S/N: B9K1-275

PART OF 259-9204 COMMON AR

SMCS-7057, 7100 **i02768430**

NOTE	REF NO	GRAPHIC REF	PART NUMBER	QTY	PART NAME 1 2 3 4 5 6 (PRODUCT LEVEL)	SEE PAGE
B	1	1	**3K-6401**	1	SHIM PACK (INCLUDES 19-SHIMS)	
	2	1	**5P-2525**	2	CUP-BEARING	
	3	1	**5P-2673**	2	SEAL-LIP TYPE	
	4	1	**5P-3723**	2	CONE-BEARING	
	5	1	**6D-7690**	2	CUP-BEARING	
	6	1	**7K-9212**	2	SEAL-LIP TYPE	
	7	1	**8G-5258**	4	SPACER (17X35X20-MM THK)	
B	8	1	**9K-0721**	1	SHIM PACK (INCLUDES 20-SHIMS)	
	9	1	**9K-0726**	1	CAP	
	10	1	**9K-0805**	1	CAP	
	11	1	**117-2022**	1	PLATE	
	12	1	**117-2023**	1	SPACER (133.337X107.98X62.09-MM THK)	
	13	1	**117-2024**	1	PLATE	
B	14	1	**117-2025**	1	SHIM PACK (INCLUDES 26-SHIMS)	
B	15	1	**117-2026**	1	SHIM PACK (INCLUDES 26-SHIMS)	
	16	1	**178-9481**	1	PLATE AS	
	17	1	**223-2200**	2	CONE-BEARING (TAPERED ROLLER)	
	18	1	**231-4991**	1	PIN	
	19	1	**271-1424**	1	CAP	
	20	1	**271-1425**	1	CAP	
	22	1	**292-7996**	1	PIN AS	
	23	1	**4D-0514**	1	PLUG-PIPE	
	24	1	**7X-0583**	4	WASHER-HARD (17X45X6-MM THK)	
M	25	1	**7X-2563**	8	BOLT (M20X2.5X60-MM)	
	27	1	**8T-4123**	8	WASHER (22X35X3.5-MM THK)	
M	28	1	**8T-4140**	8	BOLT (M16X2X60-MM)	
M	29	1	**8T-4193**	4	BOLT (M16X2X50-MM)	
	31	1	**8T-4223**	18	WASHER-HARD (13.5X25.5X3-MM THK)	
M	32	1	**8T-5001**	6	BOLT (M12X1.75X130-MM)	
M	33	1	**8T-7929**	12	BOLT (M12X1.75X180-MM)	
	34	1	**9F-2247**	1	PLUG-PIPE	
	35	1	**9X-8257**	13	WASHER (17.5X30X3.5-MM THK)	
	36	1	**4T-3658**	1	TUBE	
M	37	1	**8T-4779**	1	BOLT (M16X2X35-MM)	

B-USE AS REQUIRED
M-METRIC PART

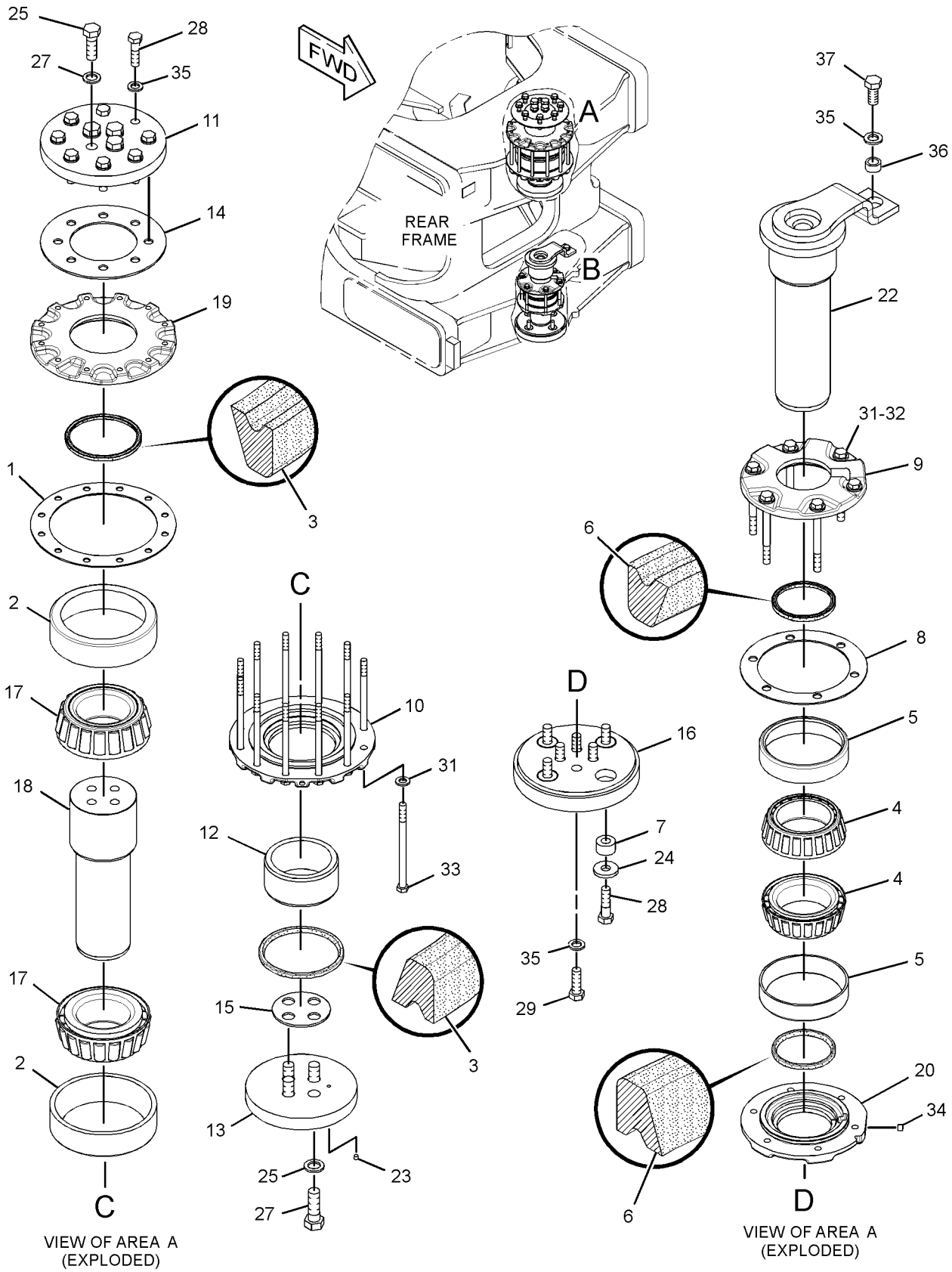

GRAPHIC #1 **<END>** g01387662

FRAME AND BODY

252-0981 HITCH GP-ARTICULATING

S/N: B9K276-UP

PART OF 259-9204 COMMON AR

SMCS-7057, 7100 **i02978337**

NOTE	REF NO	GRAPHIC REF	PART NUMBER	QTY	PART NAME 1 2 3 4 5 6 (PRODUCT LEVEL)	SEE PAGE
B	1	1	**3K-6401**	1	SHIM PACK (INCLUDES 19-SHIMS)	
	2	1	**5P-2525**	2	CUP-BEARING	
	3	1	**5P-2673**	2	SEAL-LIP TYPE	
	4	1	**5P-3723**	2	CONE-BEARING	
	5	1	**6D-7690**	2	CUP-BEARING	
	6	1	**7K-9212**	2	SEAL-LIP TYPE	
	7	1	**8G-5258**	4	SPACER (17X35X20-MM THK)	
B	8	1	**9K-0721**	1	SHIM PACK (INCLUDES 20-SHIMS)	
	9	1	**9K-0726**	1	CAP	
	10	1	**9K-0805**	1	CAP	
	11	1	**117-2022**	1	PLATE	
	12	1	**117-2023**	1	SPACER (133.337X107.98X62.09-MM THK)	
	13	1	**117-2024**	1	PLATE	
B	14	1	**117-2025**	1	SHIM PACK (INCLUDES 26-SHIMS)	
B	15	1	**117-2026**	1	SHIM PACK (INCLUDES 26-SHIMS)	
	16	1	**178-9481**	1	PLATE AS	
	17	1	**223-2200**	2	CONE-BEARING (TAPERED ROLLER)	
	18	1	**231-4991**	1	PIN	
	19	1	**271-1424**	1	CAP	
	20	1	**271-1425**	1	CAP	
	23	1	**4D-0514**	1	PLUG-PIPE	
	24	1	**7X-0583**	4	WASHER-HARD (17X45X6-MM THK)	
M	25	1	**7X-2563**	8	BOLT (M20X2.5X60-MM)	
	27	1	**8T-4123**	8	WASHER (22X35X3.5-MM THK)	
M	28	1	**8T-4140**	12	BOLT (M16X2X60-MM)	
M	29	1	**8T-4193**	4	BOLT (M16X2X50-MM)	
	31	1	**8T-4223**	18	WASHER-HARD (13.5X25.5X3-MM THK)	
M	32	1	**8T-5001**	6	BOLT (M12X1.75X130-MM)	
M	33	1	**8T-7929**	12	BOLT (M12X1.75X180-MM)	
	34	1	**9F-2247**	1	PLUG-PIPE	
C	35	1	**9X-8257**	12	WASHER (17.5X30X3.5-MM THK)	

PARTS SHOWN IN GRAPHIC(S) WITHOUT A REFERENCE NUMBER ARE NOT SERVICED SEPARATELY

B-USE AS REQUIRED
C-CHANGE FROM PREVIOUS TYPE
M-METRIC PART

252-0981 **HITCH GP-ARTICULATING** *(contd.)* **i02978337**

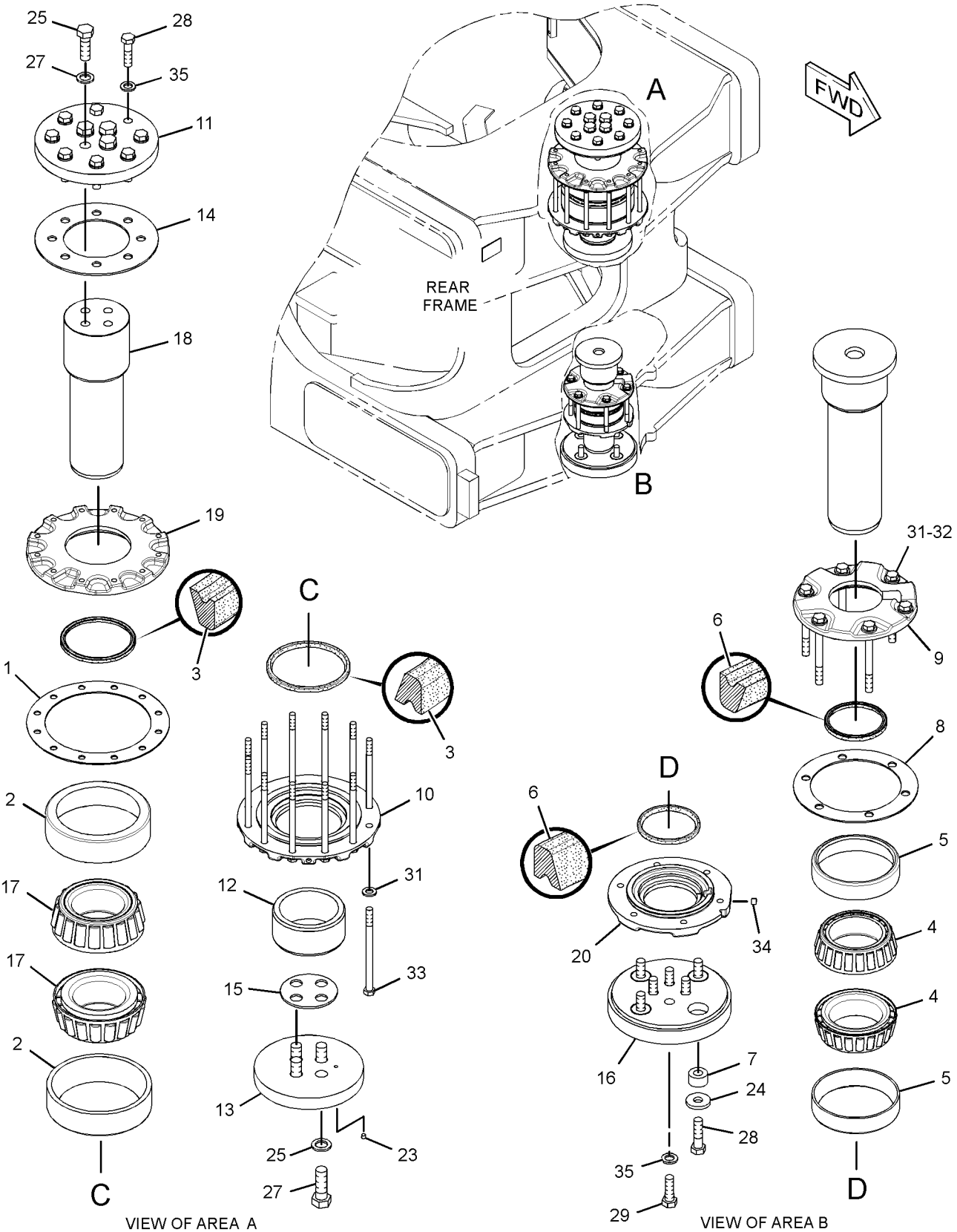

GRAPHIC #1 **<END>** g01624652

FRAME AND BODY

268-0248 LINES GP-AUTOMATIC LUBRICATION–FRONT AXLE

S/N: B9K1-UP

PART OF 268-0247 LUBRICATION AR-AUTOMATIC

SMCS-7510 **i02853479**

NOTE	REF NO	GRAPHIC REF	PART NUMBER	QTY	PART NAME 1 2 3 4 5 6 (PRODUCT LEVEL)	SEE PAGE
	1	1,2	**1S-0994**	4	CLIP	
	2	1,2	**2D-1683**	11	FITTING	
	3	1,2	**3B-8822**	4	ELBOW	
	4	1,2	**9J-7600**	4	CONNECTOR-PIPE	
	5	1,2	**287-7318**	4	ELBOW	
	6	2	**294-0691**	2	BLOCK	
	7	1	**002-0639**	1	ADAPTER-PIPE	
	8	1,2	**275-9878**	2	HOSE AS	
	9	1	**282-7909**	1	HOSE AS	
	10	2	**283-0819**	1	HOSE AS	
I	11	1,2	**283-0821**	4	HOSE AS	
	12	2	**283-0823**	1	HOSE AS	
	13	2	**286-9671**	1	HOSE AS	
	14	1	**293-4518**	1	HOSE AS	
	15	1	**293-4523**	1	HOSE AS	
	16	2	**293-4525**	1	HOSE AS	
	17	2	**294-0670**	1	HOSE AS	
	18	2	**294-0685**	1	HOSE AS	
	19	1	**296-0654**	1	HOSE AS	
	20	2	**296-0659**	1	HOSE AS	
	21	1	**309-7651**	1	HOSE AS	
	22	2	**309-7652**	1	HOSE AS	
	23	2	**309-7653**	1	HOSE AS	
	24	1	**309-7654**	1	HOSE AS	
	25	1	**309-7655**	1	HOSE AS	
	26	1	**310-5566**	1	HOSE AS	
	27	2	**310-5567**	1	HOSE AS	
	28	1	**310-5568**	1	HOSE AS	
	29	1	**310-5569**	1	HOSE AS	
	30	2	**310-5570**	1	HOSE AS	
	31	1	**310-5571**	1	HOSE AS	
	32	1	**310-5572**	1	HOSE AS	
	33	1,2	**3S-8664**	4	CLIP	
	34	1,2	**4D-6466**	4	CLIP	
	35	1,2	**5P-9085**	7	CLIP	
	36	1,2	**7D-2746**	8	ELBOW	
	37	2	**8S-6109**	2	CLIP (SLOT)	
	38	2	**8S-6110**	2	CLIP (TAB)	
	39	1,2	**8T-4121**	24	WASHER-HARD (11X21X2.5-MM THK)	
M	40	2	**8T-4133**	2	NUT (M10X1.5-THD)	
M	41	1,2	**8T-4136**	22	BOLT (M10X1.5X25-MM)	
	42	2	**8T-4224**	2	WASHER-HARD (8.8X16X2-MM THK)	
M	43	2	**8T-6912**	2	BOLT (M8X1.25X50-MM)	
	44	1,2	**9M-8406**	2	CLIP	
	45	1,2	**9X-8582**	4	CLIP	
	46	1,2	**4M-8973**	2	ELBOW	

I-REFER TO HYDRAULIC INFORMATION SYSTEM
M-METRIC PART

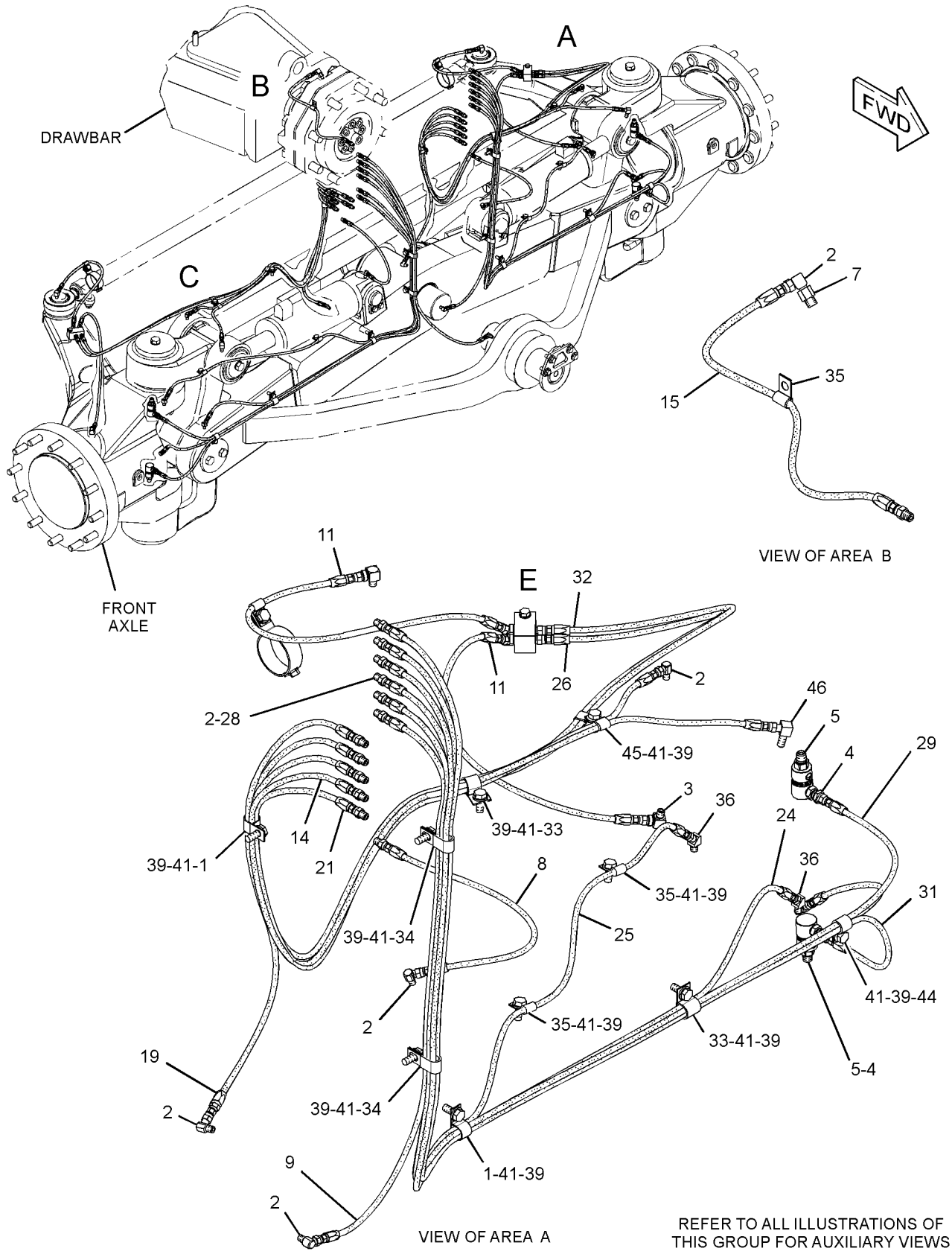

GRAPHIC #1

g01440515

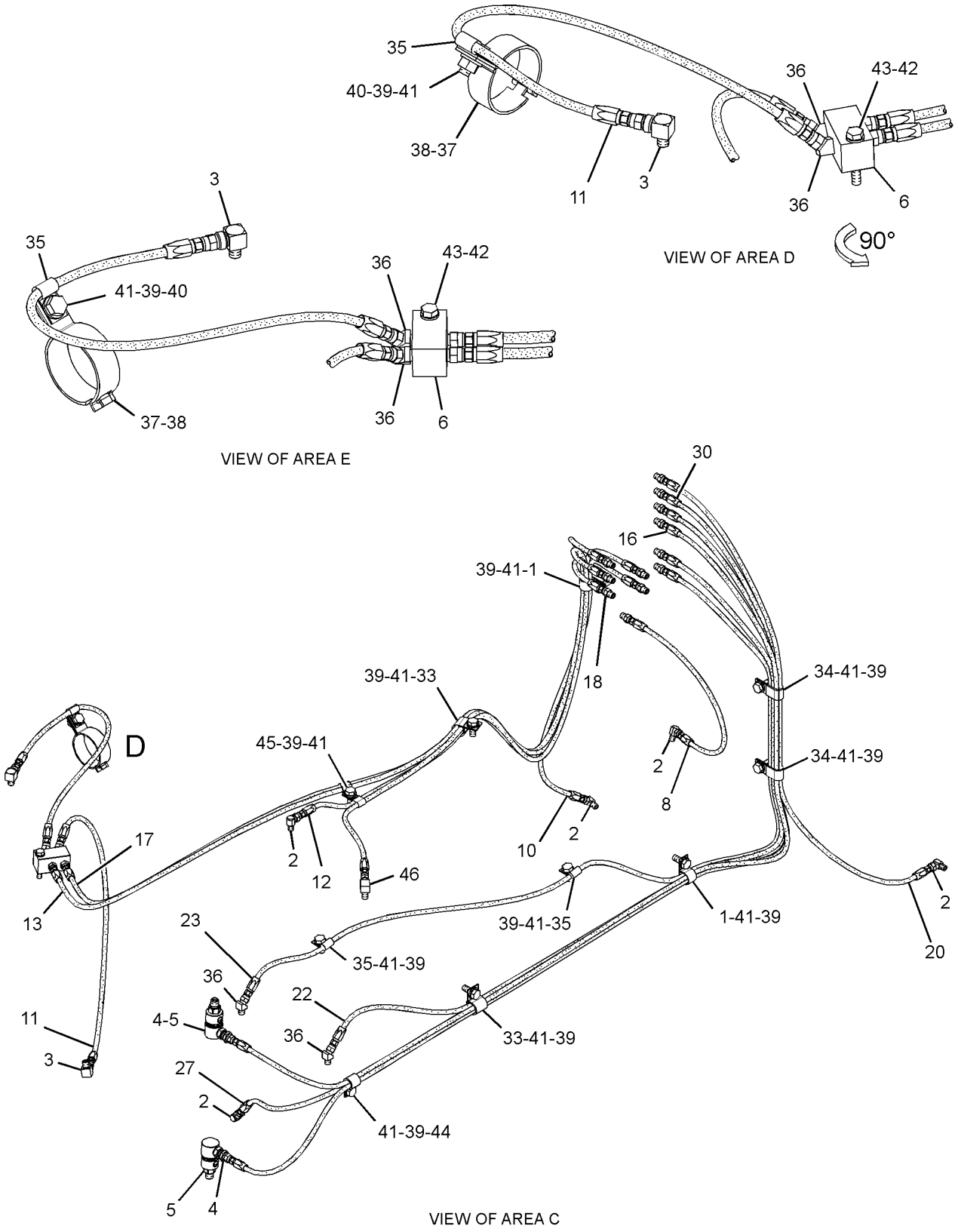

GRAPHIC #2 **<END>** g01440516

FRAME AND BODY

270-7885 LINES GP-AUTOMATIC LUBRICATION–

CSHIFT/LIFT CYL, MOLDBOARD

S/N: B9K1-UP

PART OF 268-0247 LUBRICATION AR-AUTOMATIC

SMCS-7510 **i02763011**

NOTE	REF NO	GRAPHIC REF	PART NUMBER	QTY	PART NAME 1 2 3 4 5 6 (PRODUCT LEVEL)	SEE PAGE
	1	2	**091-0081**	3	SPACER (10.5X20X10-MM THK)	
	2	1,2	**283-0820**	2	HOSE AS	
	3	2	**292-8790**	1	HOSE AS	
	4	2	**293-4524**	1	HOSE AS	
	5	1,2	**294-0677**	2	HOSE AS	
	6	2	**295-9192**	1	HOSE AS	
	7	2	**295-9194**	1	HOSE AS	
	8	2	**295-9195**	1	HOSE AS	
	9	2	**295-9196**	1	HOSE AS	
	10	2	**295-9197**	1	HOSE AS	
	11	2	**296-0652**	1	HOSE AS	
	12	2	**296-0653**	1	HOSE AS	
	13	1,2	**296-0654**	2	HOSE AS	
	14	2	**296-0655**	2	HOSE AS	
	15	2	**296-0656**	1	HOSE AS	
	16	1,2	**2D-1683**	12	FITTING	
	17	2	**3S-8664**	1	CLIP	
	18	1,2	**5P-9085**	23	CLIP	
	19	1,2,2,2	**8T-4121**	32	WASHER-HARD (11X21X2.5-MM THK)	
M	20	1,2	**8T-4137**	29	BOLT (M10X1.5X20-MM)	
M	21	2	**8T-4195**	3	BOLT (M10X1.5X30-MM)	
	22	2	**9M-8406**	3	CLIP	
	23	2	**9X-8582**	12	CLIP	

M-METRIC PART

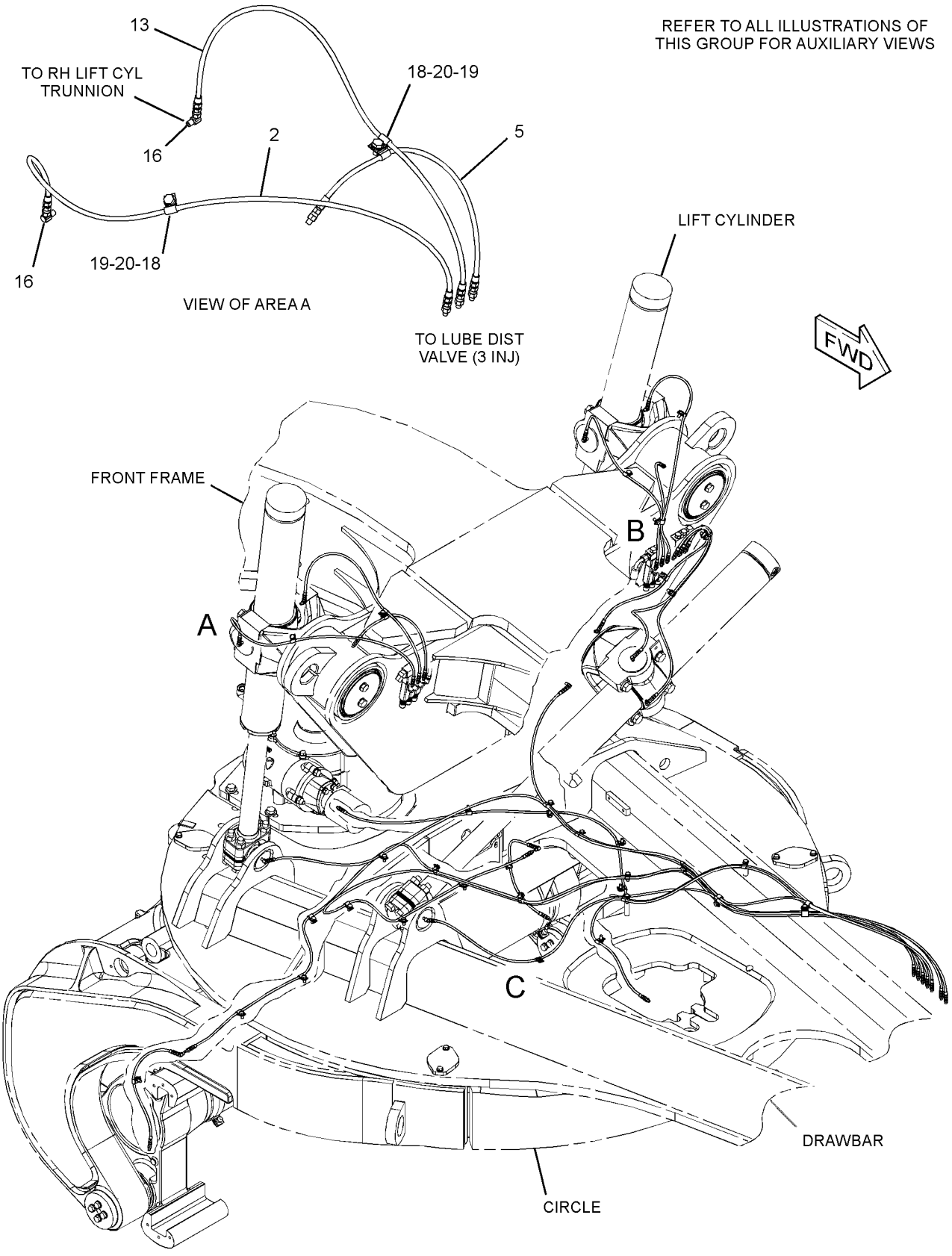

GRAPHIC #1

g01393007

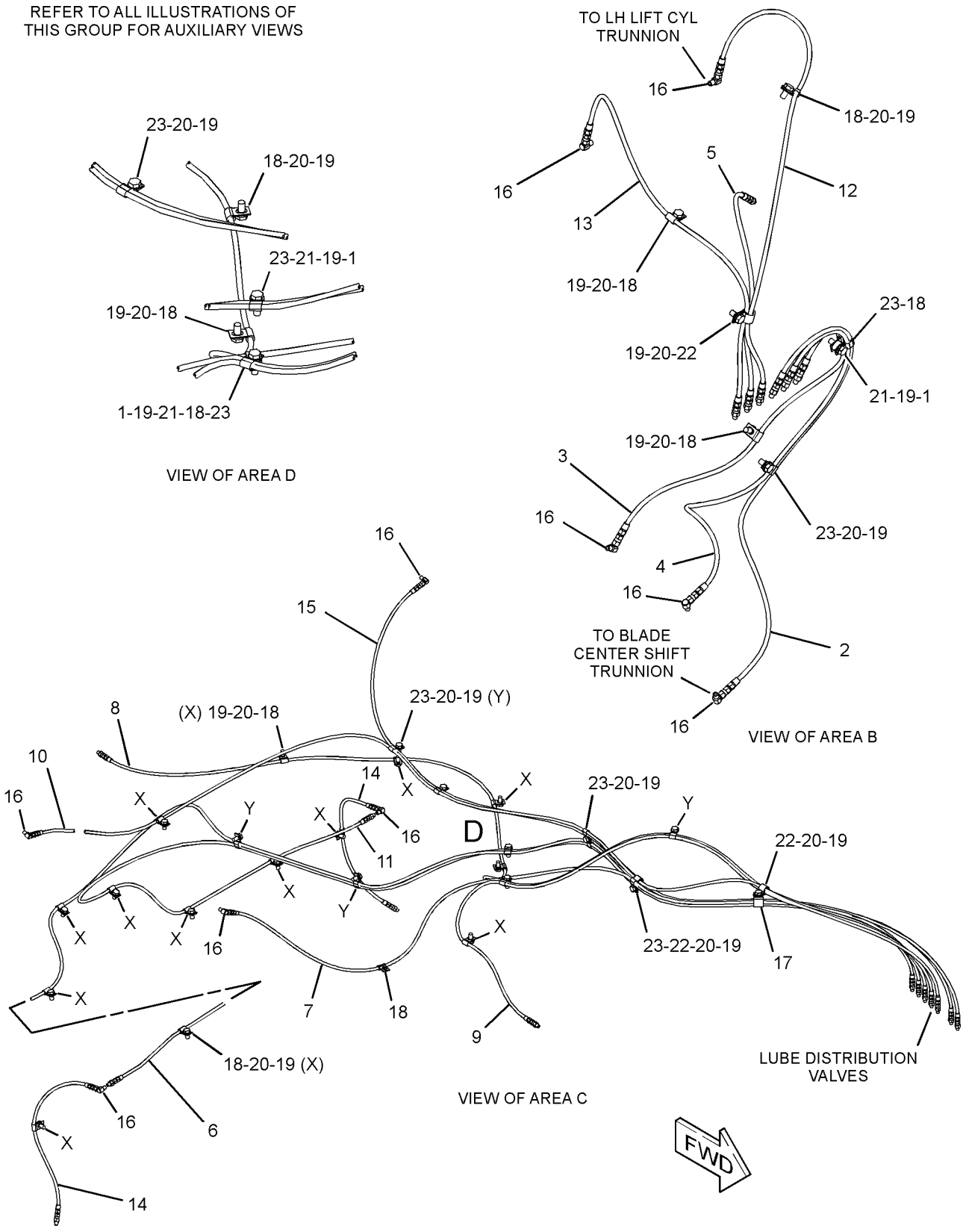

GRAPHIC #2 **<END>** g01393300

FRAME AND BODY

270-7886 LINES GP-AUTOMATIC LUBRICATION–
ART CYL, HITCH, RIPPER
S/N: B9K1-UP

PART OF 268-0247 LUBRICATION AR-AUTOMATIC

SMCS-7510 **i03399202**

NOTE	REF NO	GRAPHIC REF	PART NUMBER	QTY	PART NAME 1 2 3 4 5 6 (PRODUCT LEVEL)	SEE PAGE
	1	1	**3D-9253**	4	CONNECTOR-PIPE	
	2	2	**4M-8973**	3	ELBOW	
	3	2	**6K-6967**	1	ADAPTER-PIPE	
	4	2	**9C-5344**	1	SPACER (10.5X20X18-MM THK)	
	5	1	**274-1563**	1	HOSE AS	
	6	1	**282-5362**	1	HOSE AS	
I	7	2	**283-0821**	1	HOSE AS	
	8	1	**286-9674**	1	HOSE AS	
	9	2	**323-4118**	1	HOSE AS	
	10	2	**288-8594**	1	HOSE AS	
	11	1	**293-4524**	1	HOSE AS	
	12	1	**294-0690**	1	HOSE AS	
	13	1	**296-0654**	1	HOSE AS	
	14	2	**296-0657**	1	HOSE AS	
	15	2	**323-4117**	1	HOSE AS	
	16	2	**323-4116**	1	HOSE AS	
	17	2	**296-0660**	1	HOSE AS	
	18	2	**296-0661**	1	HOSE AS	
	19	2	**296-0662**	1	HOSE AS	
	20	2	**296-3362**	1	HOSE AS	
	21	1	**3B-7734**	4	NIPPLE-PIPE	
	22	1,2	**5P-9085**	17	CLIP	
	23	1,2	**8T-4121**	23	WASHER-HARD (11X21X2.5-MM THK)	
M	24	1,2	**8T-4137**	22	BOLT (M10X1.5X20-MM)	
M	25	2	**8T-4196**	1	BOLT (M10X1.5X35-MM)	
	26	1	**9M-8406**	1	CLIP	
	27	1,2	**9X-8582**	8	CLIP	

I-REFER TO HYDRAULIC INFORMATION SYSTEM
M-METRIC PART

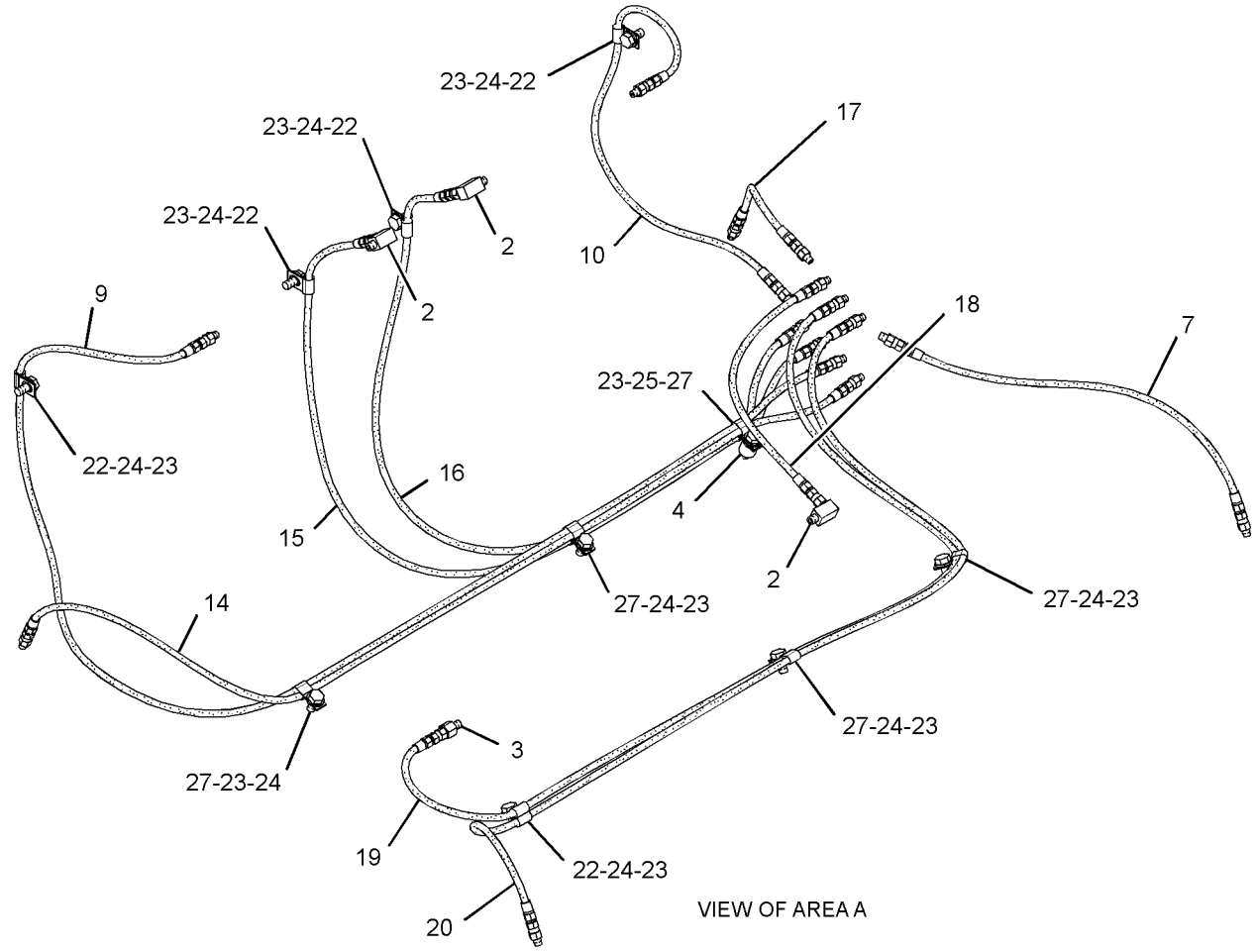

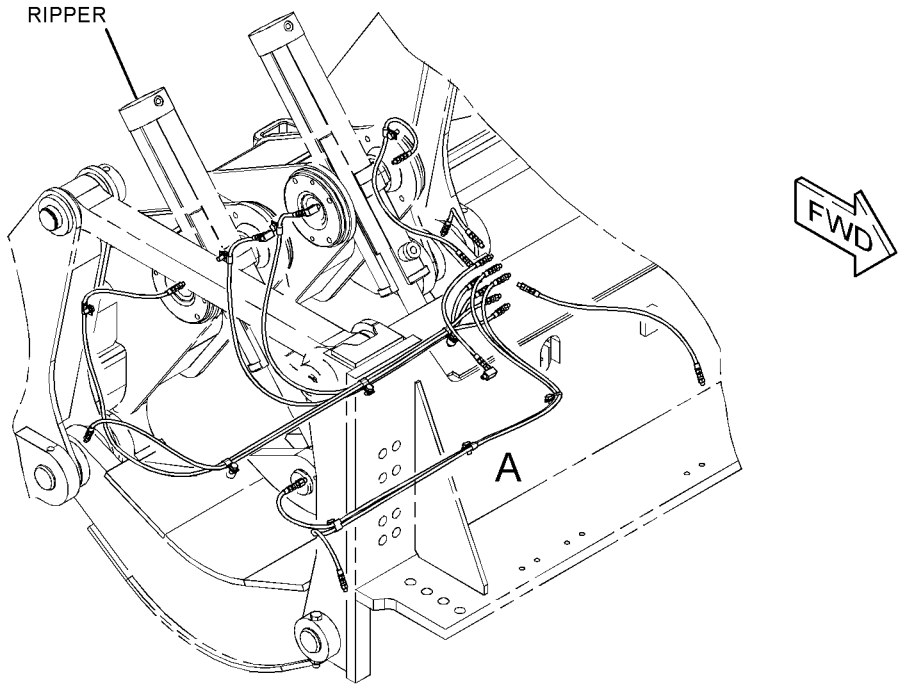

GRAPHIC #1 g01560177

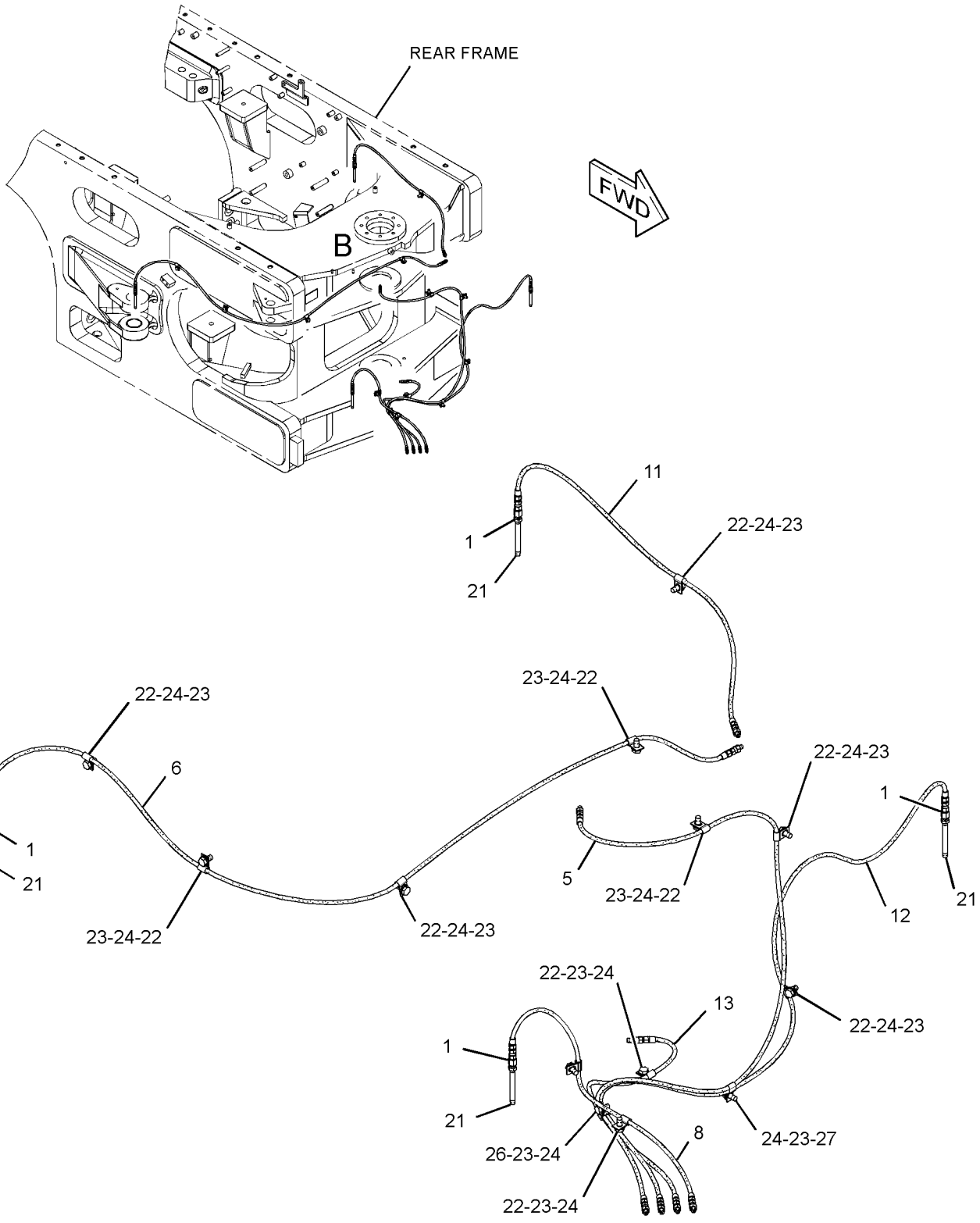

VIEW OF AREA B

GRAPHIC #2 **<END>** g01560176

FRAME AND BODY

266-9705 LINK GP-STEERING

S/N: B9K1-UP

PART OF 266-5908 AXLE GP-FRONT

SMCS-4305 **i02738774**

NOTE	REF NO	GRAPHIC REF	PART NUMBER	QTY	PART NAME 1 2 3 4 5 6 (PRODUCT LEVEL)	SEE PAGE
	1	1	**9D-3704**	1	SOCKET AS	
		1	**3S-2909**	1	RING (LOCK, INTERNAL)	
		1	**7D-5435**	1	COVER	
		1	**221-5305**	1	STUD-BALL	
		1	**274-9256**	1	RACE	
	2	1	**9D-3706**	1	SOCKET AS	
		1	**3S-2909**	1	RING (LOCK, INTERNAL)	
		1	**7D-5435**	1	COVER	
		1	**221-5305**	1	STUD-BALL	
		1	**274-9256**	1	RACE	
	3	1	**117-2164**	1	TIE ROD	
	4	1	**127-6325**	2	CLAMP AS	

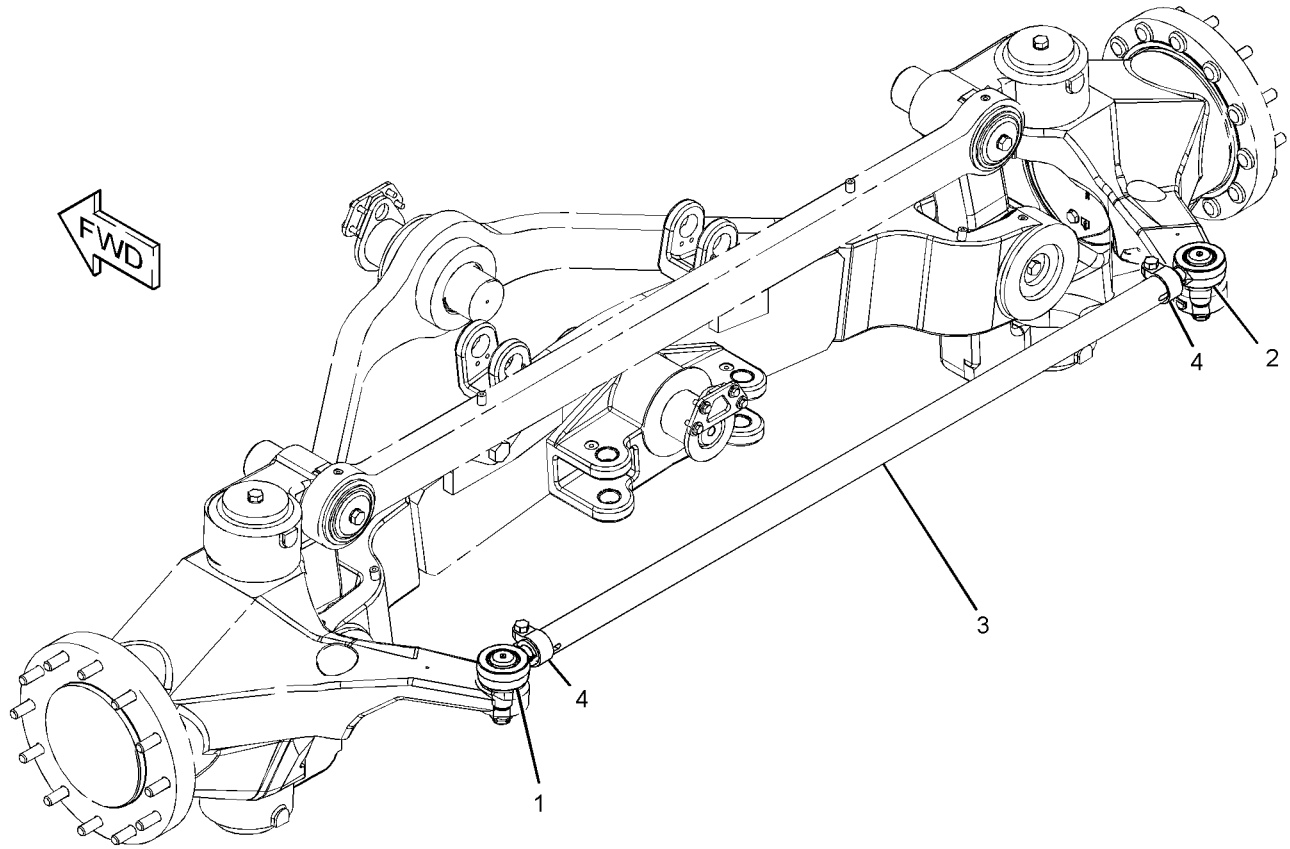

GRAPHIC #1 **<END>** g01375694

FRAME AND BODY

134-2573 LINK GP-STEERING FRAME LOCK

S/N: B9K1-UP

PART OF 259-9204 COMMON AR

SMCS-7430, 7506 **i02890517**

NOTE	REF NO	GRAPHIC REF	PART NUMBER	QTY	PART NAME 1 2 3 4 5 6 (PRODUCT LEVEL)	SEE PAGE
	1	1	**318-2594**	2	PIN AS	
					(EACH INCLUDES)	
		1	**8W-8511**	1	PLATE	
	2	1	**154-6617**	1	LINK	
	3	1	**8T-4223**	2	WASHER-HARD (13.5X25.5X3-MM THK)	
M	4	1	**8T-4956**	2	BOLT (M12X1.75X35-MM)	

M-METRIC PART

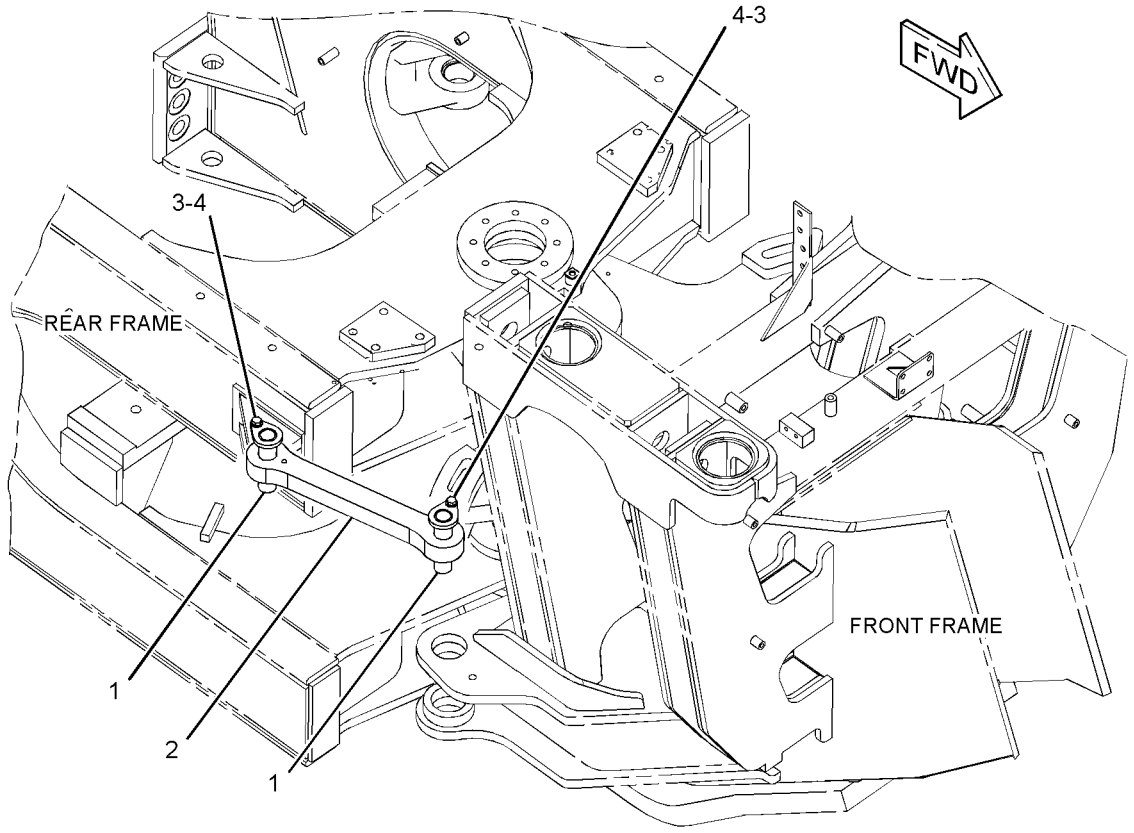

GRAPHIC #1 **<END>** g01450962

FRAME AND BODY

268-0247 LUBRICATION AR-AUTOMATIC

S/N: B9K1-UP

PART OF 259-9204 COMMON AR

SMCS-7540 **i03580141**

NOTE	REF NO	GRAPHIC REF	PART NUMBER	QTY	PART NAME 1 2 3 4 5 6 (PRODUCT LEVEL)	SEE PAGE
	1	4	**6T-5600**	2	BOSS	
I	2	4	**8X-4163**	1	HOSE AS	
	3	4	**9C-5344**	1	SPACER (10.5X20X18-MM THK)	
	4	2,4	**126-0208**	4	SPACER (10.31X17.45X50.8-MM THK)	
	5	4	**141-2102**	2	PLATE	
	6	4	*164-5586*	1	TEE AS	
		4	**7X-0871**	1	TEE	
		4	**6V-8398**	1	SEAL-O-RING	
	7	4	*164-6874*	1	FITTING AS-ELBOW	
		4	**085-7356**	1	FITTING	
		4	**3J-1907**	1	SEAL-O-RING	
Y	8	1	*268-0248*	1	LINES GP-AUTOMATIC LUBRICATION (FRONT AXLE)	560
Y	9	1	*270-7885*	1	LINES GP-AUTOMATIC LUBRICATION (CSHIFT/LIFT CYL, MOLDBOARD)	563
Y	10	4	*270-7886*	1	LINES GP-AUTOMATIC LUBRICATION (ART CYL, HITCH, RIPPER)	566
I	11	3	**278-3463**	1	HOSE AS	
I	12	2	**278-3466**	1	HOSE AS	
I	13	2	**282-7667**	1	HOSE AS	
	14	4	**282-7668**	1	PLATE	
I	15	4	**315-5718**	1	HOSE AS	
Y	16	2	**283-2119**	1	PUMP GP-LUBRICATION	579
I	17	1	**286-4223**	1	HOSE AS	
Y	18	4	*296-3363*	1	VALVE GP-LUBE DISTRIBUTION (5-INJECTOR)	599
Y	19	4	*296-3364*	1	VALVE GP-LUBE DISTRIBUTION (5-INJECTOR)	600
Y	20	4	*296-3365*	1	VALVE GP-LUBE DISTRIBUTION (2-INJECTOR)	601
Y	21	4	*296-3366*	1	VALVE GP-LUBE DISTRIBUTION (4-INJECTOR)	602
Y	22	3	*296-3367*	1	VALVE GP-LUBE DISTRIBUTION (3-INJECTOR)	603
Y	23	3	*296-3368*	1	VALVE GP-LUBE DISTRIBUTION (6-INJECTOR)	604
Y	24	2	*296-3369*	1	VALVE GP-LUBE DISTRIBUTION (2-INJECTOR)	605
Y	25	2	*296-3370*	1	VALVE GP-LUBE DISTRIBUTION (5-INJECTOR)	606
	26	2	**299-2259**	1	PLATE AS	
M		2	**8T-3612**	2	NUT-WELD (M8X1.25-THD)	
	27	2	**299-2261**	1	PLATE AS	
M		2	**8T-3612**	2	NUT-WELD (M8X1.25-THD)	
Y	28	2	*299-2262*	1	VALVE GP-LUBE DISTRIBUTION (4-INJECTOR)	607
Y	29	2	*299-2263*	1	VALVE GP-LUBE DISTRIBUTION (5-INJECTOR)	608
Y	30	2	*299-2264*	1	VALVE GP-LUBE DISTRIBUTION (4-INJECTOR)	609
Y	31	2	*299-2265*	1	VALVE GP-LUBE DISTRIBUTION (6-INJECTOR)	610
Y	32	2	*299-2266*	1	VALVE GP-LUBE DISTRIBUTION (6-INJECTOR)	611
	33	3	**299-2267**	1	PLATE	
	34	3	**299-2268**	1	PLATE	
	35	2	**299-2269**	1	PLATE	
I	36	2	**299-2272**	2	HOSE AS	
I	37	1	**300-1920**	1	HOSE AS	
I	38	4	**302-8160**	1	HOSE AS	
	39	2	**310-5573**	1	BRACKET AS	
M		2	**8T-3490**	6	NUT-WELD (M10X1.5-THD)	
	40	2	*148-8415*	2	REDUCER AS	
					(EACH INCLUDES)	
		2	**6V-8936**	1	REDUCER	
		2	**6V-8397**	1	SEAL-O-RING	
	41	2,4	*148-8427*	3	TEE AS	
					(EACH INCLUDES)	
		2,4	**8T-6895**	1	TEE-UNION	
		2,4	**6V-8398**	3	SEAL-O-RING	

268-0247 **LUBRICATION AR-AUTOMATIC** *(contd.)* **i03580141**

NOTE	REF NO	GRAPHIC REF	PART NUMBER	QTY	PART NAME 1 2 3 4 5 6 (PRODUCT LEVEL)	SEE PAGE
	42	2	*148-8433*	1	TEE AS	
		2	**6V-9836**	1	TEE-SWIVEL	
		2	**6V-8397**	2	SEAL-O-RING	
	43	3,4	*148-8454*	2	TEE AS	
					(EACH INCLUDES)	
		3,4	**6V-8789**	1	TEE	
		3,4	**6V-8398**	3	SEAL-O-RING	
	44	2	*148-8457*	1	UNION AS	
		2	**6V-8995**	1	UNION	
		2	**6V-8398**	2	SEAL-O-RING	
I	45	4	**159-0250**	1	HOSE AS	
	46	3	*169-4279*	1	CONNECTOR AS	
		3	**8C-6872**	1	CONNECTOR	
		3	**6V-8398**	1	SEAL-O-RING	
I	47	4	**179-9407**	1	HOSE AS	
I	48	2	**189-1894**	1	HOSE AS	
	49	2	**198-4778**	8	WASHER-HARD (13.5X30X12-MM THK)	
I	50	3	**237-0365**	1	HOSE AS	
I	51	2	**238-5583**	1	HOSE AS	
I	52	3	**253-0788**	1	HOSE AS	
	53	4	**3G-8047**	1	GROMMET	
	54	4	**3G-8054**	1	CLIP (TAB)	
	55	4	**3G-8057**	1	CLIP (SLOT)	
M	56	2,3,4	**5C-7261**	15	NUT (M8X1.25-THD)	
	57	3	**6V-1889**	1	CLIP	
	58	2	**6V-8397**	1	SEAL-O-RING	
	59	3	**6V-8398**	2	SEAL-O-RING	
	60	2,4	**6V-9169**	4	NUT-BULKHEAD (13/16-16-THD)	
	61	3	**6V-9837**	1	TEE-SWIVEL	
	62	2	**6V-9850**	1	ELBOW	
M	63	2,4	**7X-2541**	4	BOLT (M8X1.25X140-MM)	
	64	2,3,4	**8T-4121**	51	WASHER-HARD (11X21X2.5-MM THK)	
M	65	4	**8T-4133**	1	NUT (M10X1.5-THD)	
M	66	2,3,4	**8T-4136**	34	BOLT (M10X1.5X25-MM)	
M	67	2,3,4	**8T-4137**	15	BOLT (M10X1.5X20-MM)	
M	68	2	**8T-4183**	8	BOLT (M12X1.75X40-MM)	
	69	2,3,4	**8T-4224**	34	WASHER-HARD (8.8X16X2-MM THK)	
M	70	4	**8T-6466**	1	BOLT (M10X1.5X60-MM)	
M	71	2,3,4	**8T-6869**	15	BOLT (M8X1.25X60-MM)	
	72	2,3,4	**9X-8250**	17	CLIP	
E	73	4	**7I-1024**		GUARD-HOSE (82-CM EACH)	
	74	2	**198-4776**	4	WASHER-HARD (8.8X20X8-MM THK)	

E-ORDER BY THE CENTIMETER
I-REFER TO HYDRAULIC INFORMATION SYSTEM
M-METRIC PART
Y-SEPARATE ILLUSTRATION

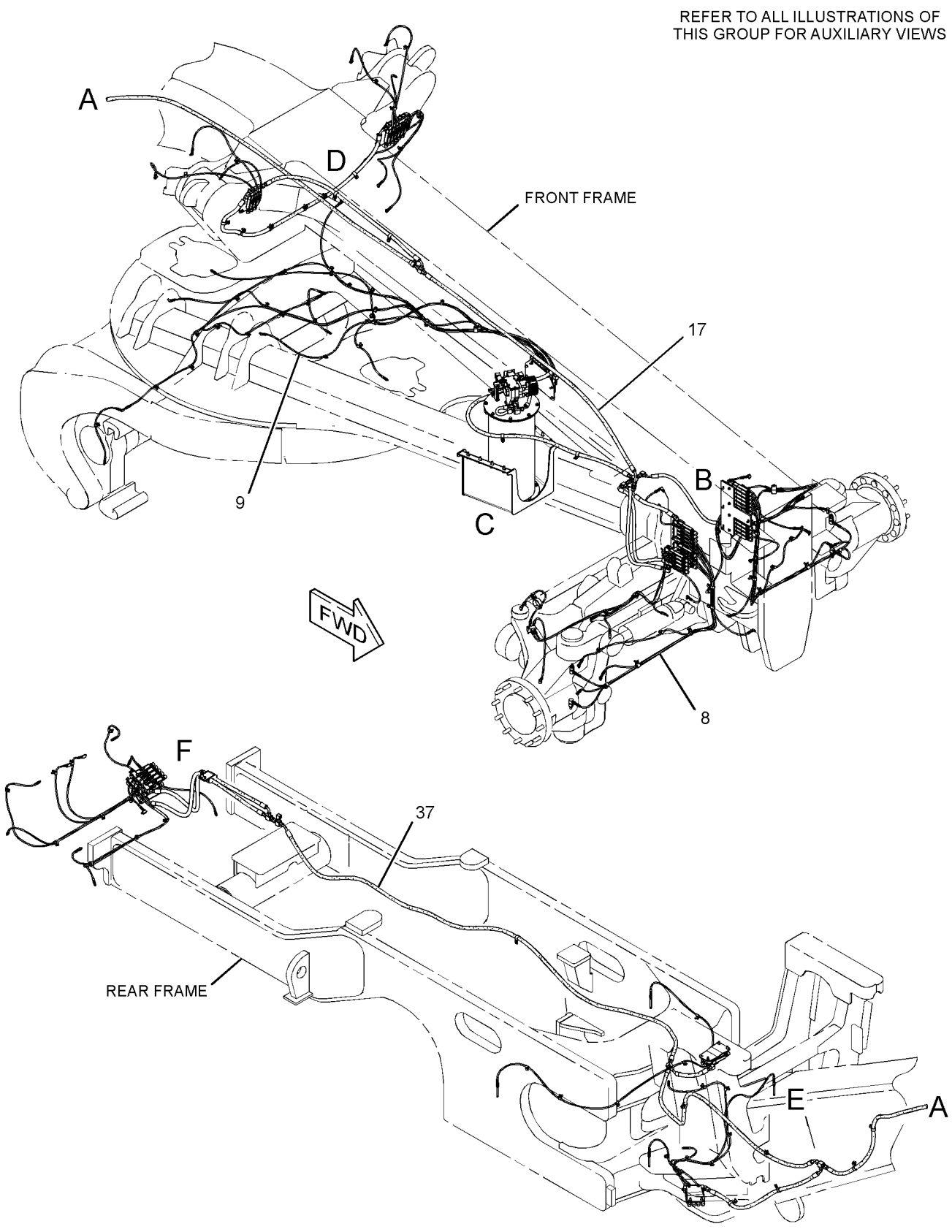

GRAPHIC #1

g01736501

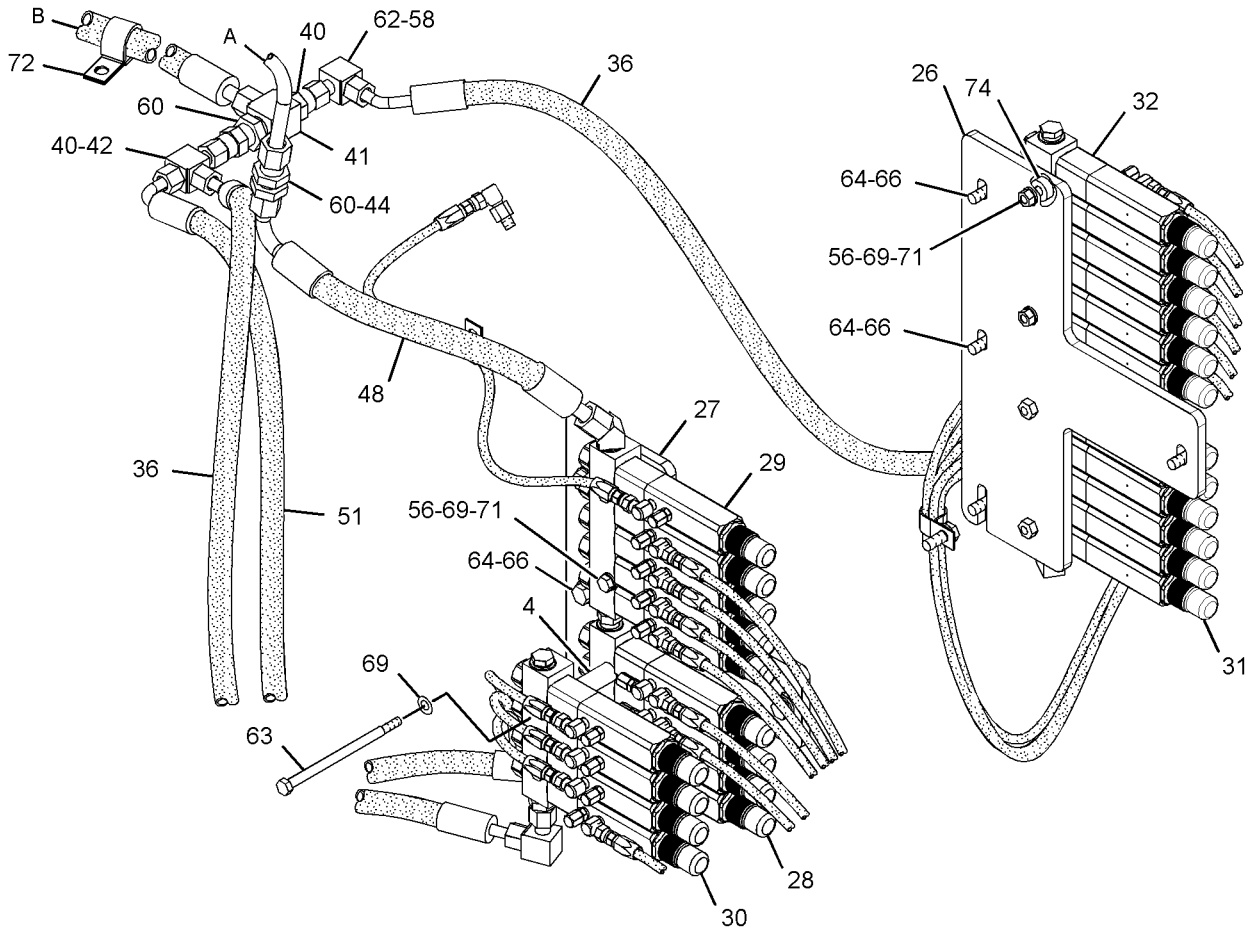

VIEW OF AREA B

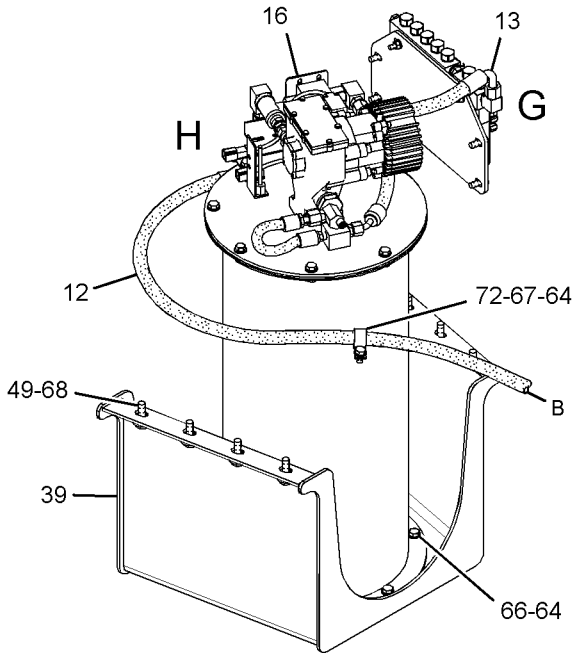

VIEW OF AREA C

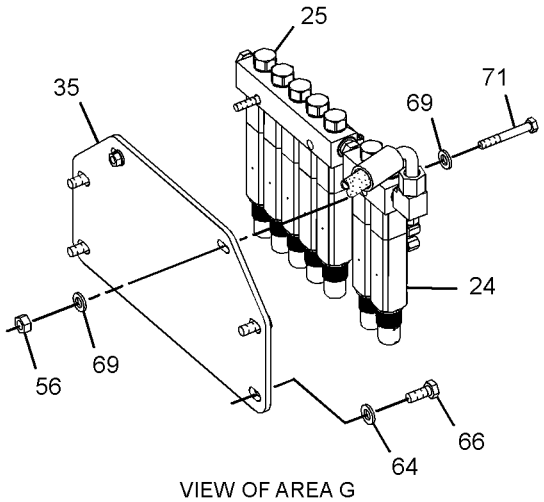

VIEW OF AREA G

GRAPHIC #2

g01736502

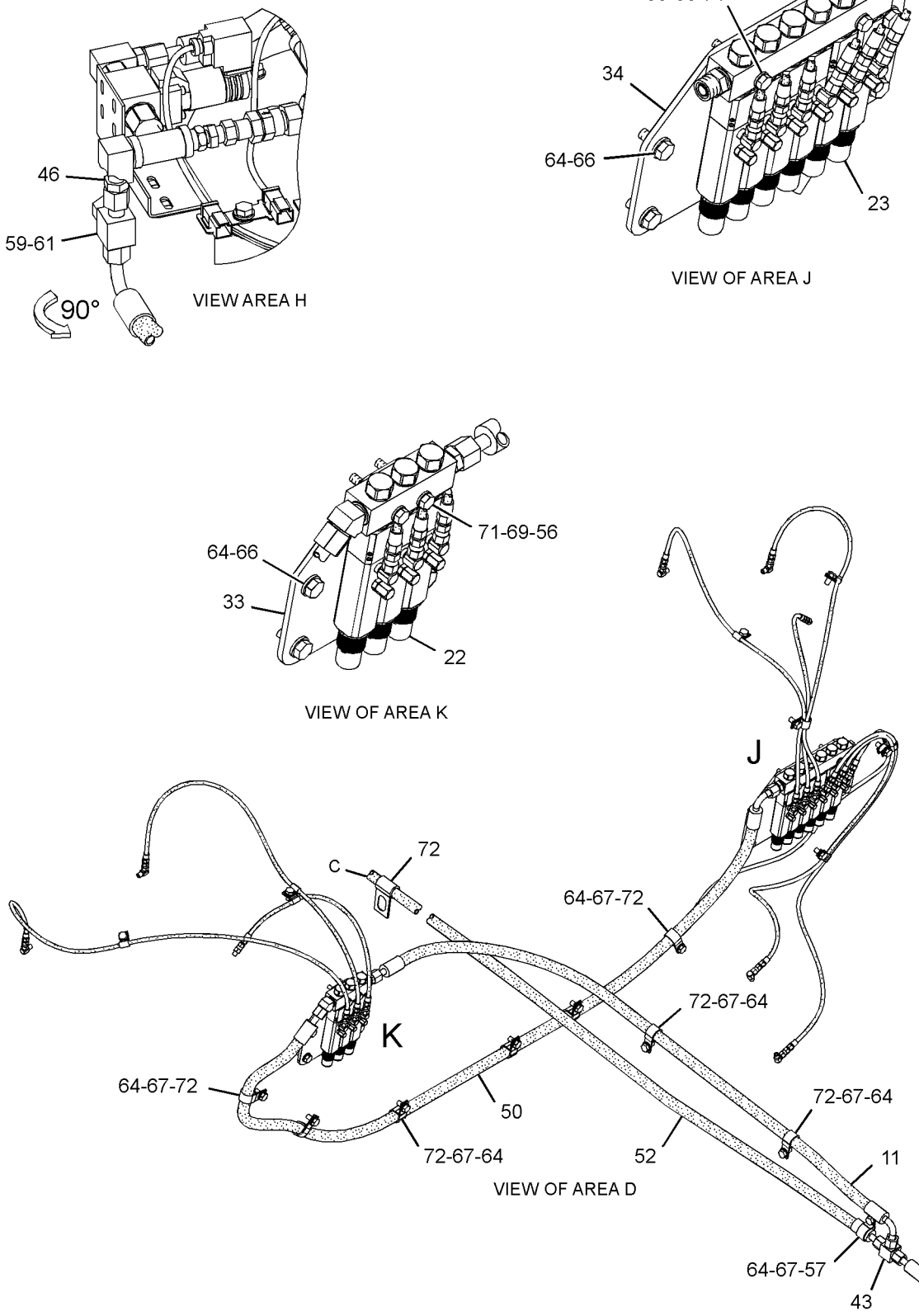

GRAPHIC #3

g01736503

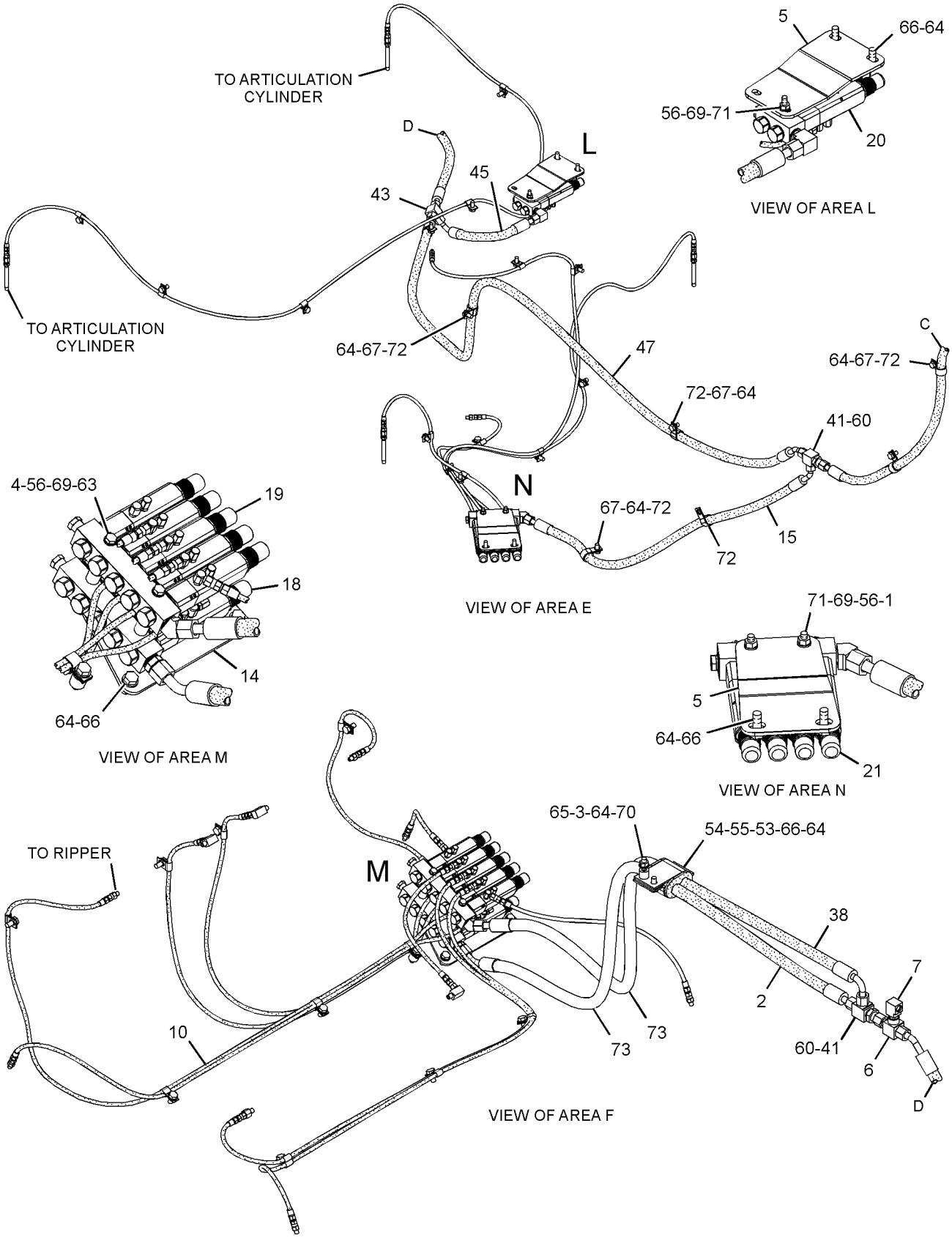

GRAPHIC #4 **<END>** g01736504

FRAME AND BODY

253-9017 MOUNTING GP-VALVE–IMPLEMENT

S/N: B9K1-UP

PART OF 259-9204 COMMON AR

SMCS-5051 **i02897146**

NOTE	REF NO	GRAPHIC REF	PART NUMBER	QTY	PART NAME 1 2 3 4 5 6 (PRODUCT LEVEL)	SEE PAGE
Y	1	1	**270-1612**	1	VALVE GP-BANK 5 (LH)	784
Y	2	1	**270-1613**	1	VALVE GP-BANK 5 (RH)	785
	4	1	**298-4754**	1	PLATE AS	
M		1	**7Y-8763**	1	BOSS (M10X1.5X25-MM)	
M		1	**9R-2613**	3	BOSS-WELD (M10X1.5X25-MM)	
M		1	**9R-3845**	2	BOSS (M12X1.75X38-MM)	
M		1	**9R-9866**	1	BOSS-THREADED (M10X1.5-THD)	
		1	**109-1645**	1	CLIP	
	5	1	**298-4756**	1	PLATE AS	
M		1	**8T-3490**	3	NUT-WELD (M10X1.5-THD)	
	6	1	**298-4758**	1	PLATE AS	
M		1	**8T-3490**	3	NUT-WELD (M10X1.5-THD)	
	7	1	**302-0980**	1	PLATE AS	
M		1	**8T-3490**	6	NUT-WELD (M10X1.5-THD)	
	8	1	**302-5365**	1	PLATE AS	
M		1	**8T-3490**	6	NUT-WELD (M10X1.5-THD)	
M		1	**9R-2613**	3	BOSS-WELD (M10X1.5X25-MM)	
	9	1	**1F-7854**	2	SPACER (11.01X19.05X49.21-MM THK)	
	10	1	**3V-0613**	7	BUMPER	
M	12	1	**8T-4172**	2	BOLT (M10X1.5X80-MM)	
M	13	1	**8T-4195**	10	BOLT (M10X1.5X30-MM)	
M	14	1	**8T-4196**	16	BOLT (M10X1.5X35-MM)	
	15	1	**8T-7934**	28	WASHER-HARD (11X21X5-MM THK)	

M-METRIC PART
Y-SEPARATE ILLUSTRATION

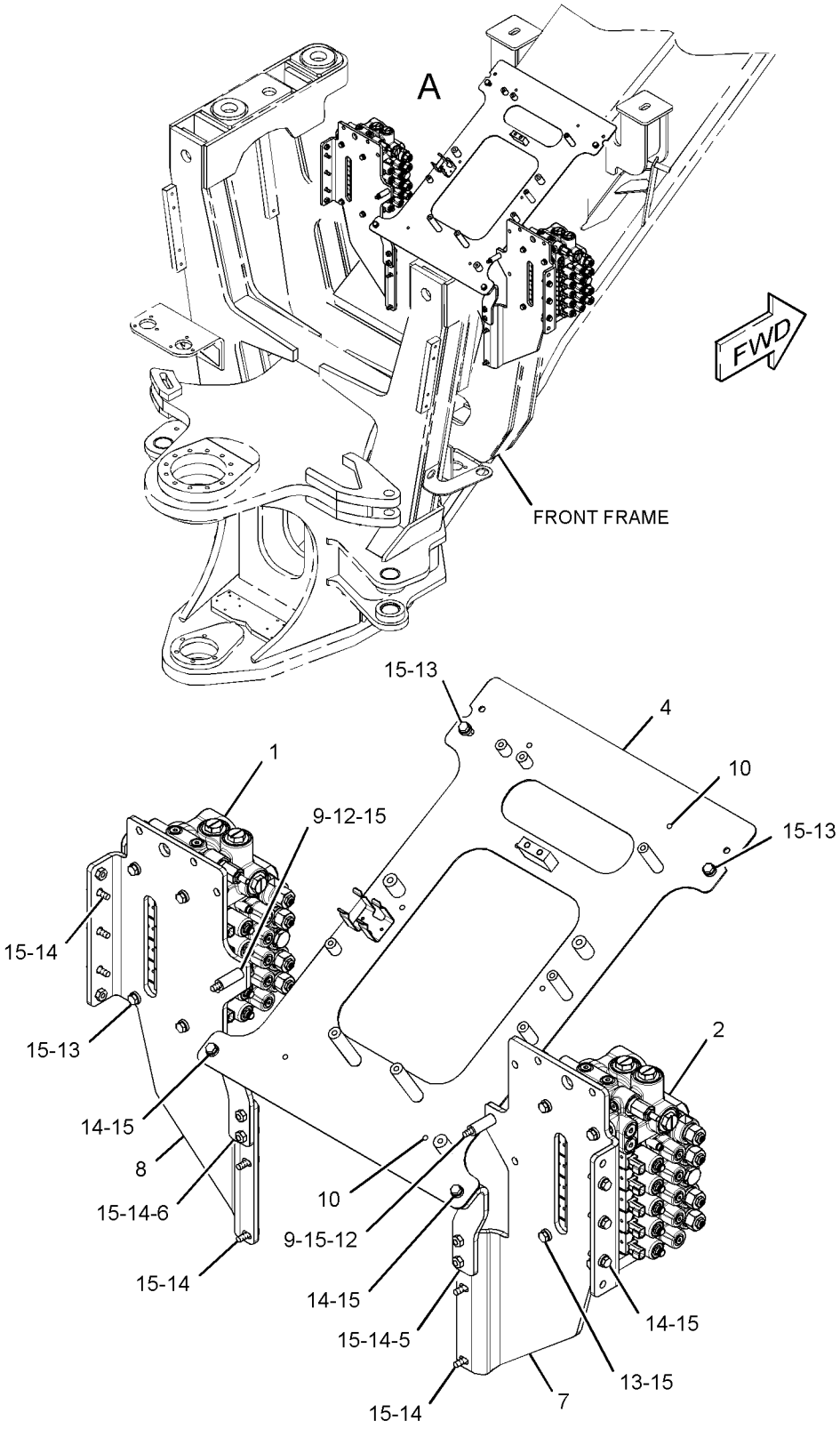

VIEW OF AREA A

GRAPHIC #1

<END>

g01445651

FRAME AND BODY

283-2119 PUMP GP-LUBRICATION

S/N: B9K1-UP

PART OF 268-0247 LUBRICATION AR-AUTOMATIC

SMCS-7516, 7540 **i03580139**

NOTE	REF NO	GRAPHIC REF	PART NUMBER	QTY	PART NAME 1 2 3 4 5 6 (PRODUCT LEVEL)	SEE PAGE
	1	1	**8C-6868**	2	CONNECTOR	
	2	1	**8X-2321**	1	VALVE GP-CHECK	
		1	**3B-1925**	1	WASHER (0.766X1X0.064-IN THK)	
		1	**7W-3556**	1	WASHER (14.27X20.57X1.5-MM THK)	
	3	1	**9X-2474**	1	ADAPTER	
	4	1	**033-2177**	1	TEE-PIPE	
	5	1	**178-8063**	1	BREATHER	
	6	1	**240-9689**	1	GASKET	
I	7	1	**304-4267**	1	HOSE AS	
	8	1	**304-4273**	2	ADAPTER	
	9	1	**304-4275**	1	PLATE	
	10	1	**304-4277**	1	SOLENOID	
	11	1	**309-7642**	1	PUMP-LUBRICATION	
	12	1	**309-7643**	1	TANK AS-LUBRICATION OIL	
	13	1	**315-5705**	1	TUBE	
	14	1	**318-5064**	1	CABLE AS	
	15	1	**318-8580**	1	FOLLOWER AS	
	16	1	**318-8581**	1	TEE	
	17	1	**318-8583**	1	BRACKET	
I	18	1	**323-1283**	1	HOSE AS	
	19	1	**114-3399**	1	NIPPLE-PIPE	
	20	1	**130-5300**	2	CLIP	
	21	1	**276-5725**	1	COVER	
	22	1	**290-2688**	1	GASKET	
	23	1	**3J-5389**	1	PLUG	
	24	1	**3P-1823**	1	ADAPTER-PIPE	
M	25	1	**5C-7261**	2	NUT (M8X1.25-THD)	
M	26	1	**5C-9553**	4	BOLT (M6X1X16-MM)	
	27	1	**5P-4116**	4	WASHER-HARD (8.8X20.5X2-MM THK)	
	28	1	**6V-8397**	2	SEAL-O-RING	
	29	1	**6V-8398**	1	SEAL-O-RING	
	30	1	**8C-6872**	1	CONNECTOR	
	31	1	**8T-2502**	8	BOLT (3/8-16X1.125-IN)	
	32	1	**8T-4121**	8	WASHER-HARD (11X21X2.5-MM THK)	
M	33	1	**8T-4908**	2	BOLT (M8X1.25X25-MM)	
	34	1	**9L-3560**	3	ELBOW	
	35	1	**9U-7102**	1	PLUG	
	36	1	**9X-8256**	4	WASHER (6.6X12X2-MM THK)	

I-REFER TO HYDRAULIC INFORMATION SYSTEM
M-METRIC PART

283-2119 PUMP GP-LUBRICATION *(contd.)* i03580139

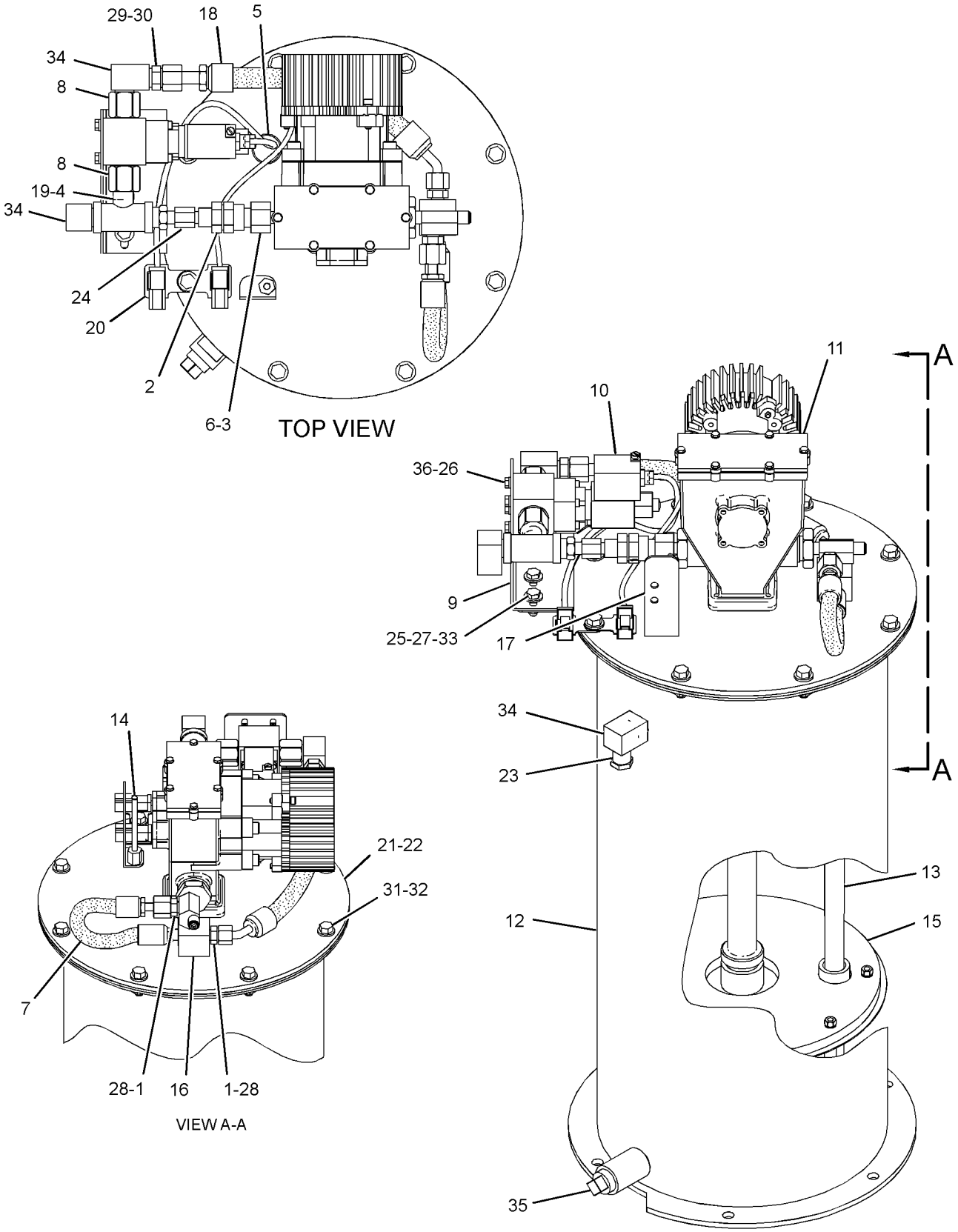

GRAPHIC #1 **<END>** g01946341

FRAME AND BODY

313-6666 REFLECTOR GP

S/N: B9K1-UP

PART OF 314-7907 CONVERSION AR-CERTIFICATION

SMCS-7430 **i02919875**

NOTE	REF NO	GRAPHIC REF	PART NUMBER	QTY	PART NAME 1 2 3 4 5 6 (PRODUCT LEVEL)	SEE PAGE
	1	1	**313-5270**	10	REFLECTOR (AMBER)	
	2	1	**313-5271**	2	REFLECTOR (RED)	

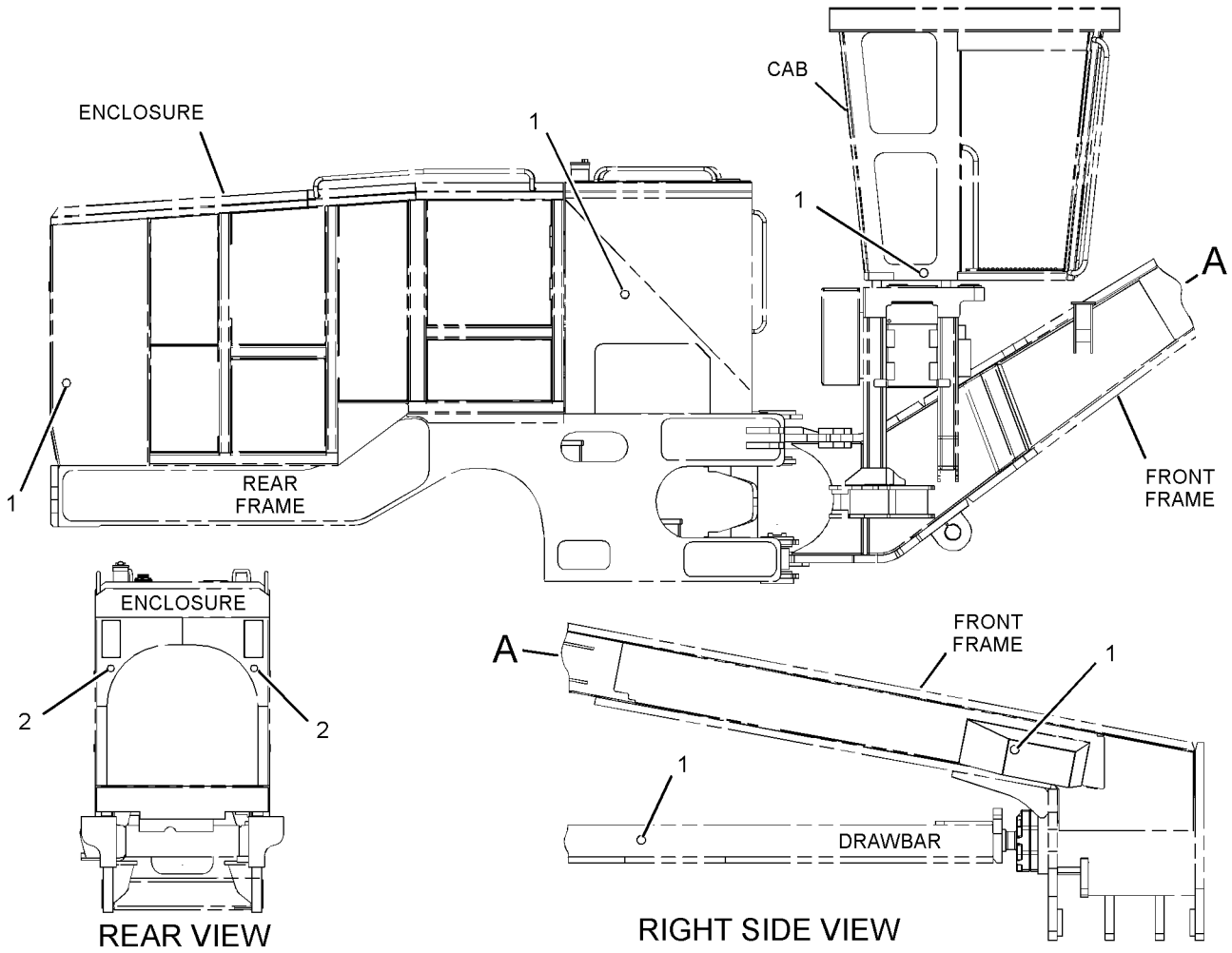

GRAPHIC #1

<END>

g01457935

FRAME AND BODY

275-0561 SHIELD GP-HEAT

S/N: B9K1-UP

PART OF 222-9025 ENCLOSURE AR-ENGINE

SMCS-1408 **i03101356**

NOTE	REF NO	GRAPHIC REF	PART NUMBER	QTY	PART NAME 1 2 3 4 5 6 (PRODUCT LEVEL)	SEE PAGE
	1	1	**275-0562**	1	SHIELD	
	2	1	**278-1598**	4	PLATE	
	3	1	**278-1599**	1	PLATE	
	4	1	**278-1600**	1	PLATE	
	5	1	**278-1603**	1	PLATE AS	
	6	1	**300-9442**	1	PLATE	
	7	1	**308-6704**	1	PLATE AS	
M		1	**8T-3490**	2	NUT-WELD (M10X1.5-THD)	
	8	1	**7X-7729**	27	WASHER (11X25X3-MM THK)	
M	9	1	**8T-4195**	29	BOLT (M10X1.5X30-MM)	
	10	1	**8T-4226**	2	WASHER-PLATED (10.5X45X3-MM THK)	

M-METRIC PART

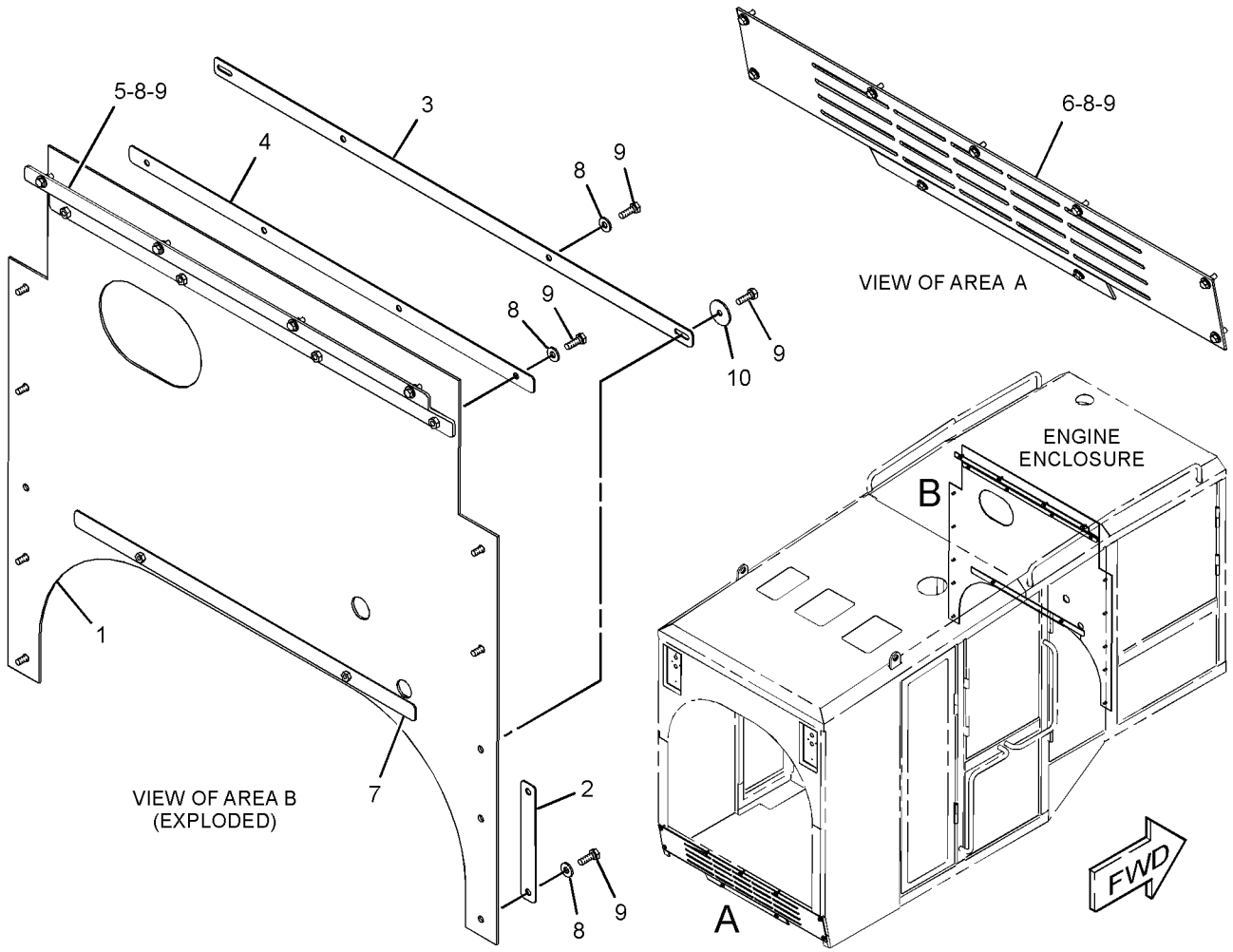

GRAPHIC #1 **<END>** g01589738

FRAME AND BODY

266-2417 STEP GP–REAR

S/N: B9K1-288

PART OF 259-9204 COMMON AR

SMCS-7254 **i02762856**

NOTE	REF NO	GRAPHIC REF	PART NUMBER	QTY	PART NAME 1 2 3 4 5 6 (PRODUCT LEVEL)	SEE PAGE
	1	1	**4V-9803**	4	PLATE	
	2	1	**270-2682**	8	BRACKET AS	
	3	1	**270-2684**	1	WALKWAY AS	
M		1	**8T-3490**	2	NUT-WELD (M10X1.5-THD)	
M		1	**8T-3597**	4	NUT-WELD (M12X1.75-THD)	
		1	**136-1122**	8	BUSHING	
	4	1	**278-2430**	2	WALKWAY AS	
	5	1	**278-2442**	1	STEP AS	
	6	1	**278-2496**	1	WALKWAY AS	
		1	**8H-6481**	1	SHAFT	
M		1	**8T-3490**	2	NUT-WELD (M10X1.5-THD)	
M		1	**8T-3597**	4	NUT-WELD (M12X1.75-THD)	
M		1	**8T-3612**	4	NUT-WELD (M8X1.25-THD)	
		1	**136-1122**	8	BUSHING	
Y	7	1	*278-8762*	2	STEP GP	590
Y	8	1	**305-2414**	2	STEP GP	591
	9	1	**109-5008**	4	BUMPER-CONICAL	
M	10	1	**4I-3124**	4	BOLT (M8X1.25X32-MM)	
	11	1	**5P-1076**	44	WASHER-HARD (13.5X30X4-MM THK)	
M	12	1	**6V-7687**	8	LOCKNUT (M12X1.75-THD)	
	13	1	**7X-7729**	4	WASHER (11X25X3-MM THK)	
M	14	1	**8T-4183**	44	BOLT (M12X1.75X40-MM)	
	15	1	**8T-4223**	16	WASHER-HARD (13.5X25.5X3-MM THK)	
M	16	1	**8T-6466**	8	BOLT (M10X1.5X60-MM)	

M-METRIC PART
Y-SEPARATE ILLUSTRATION

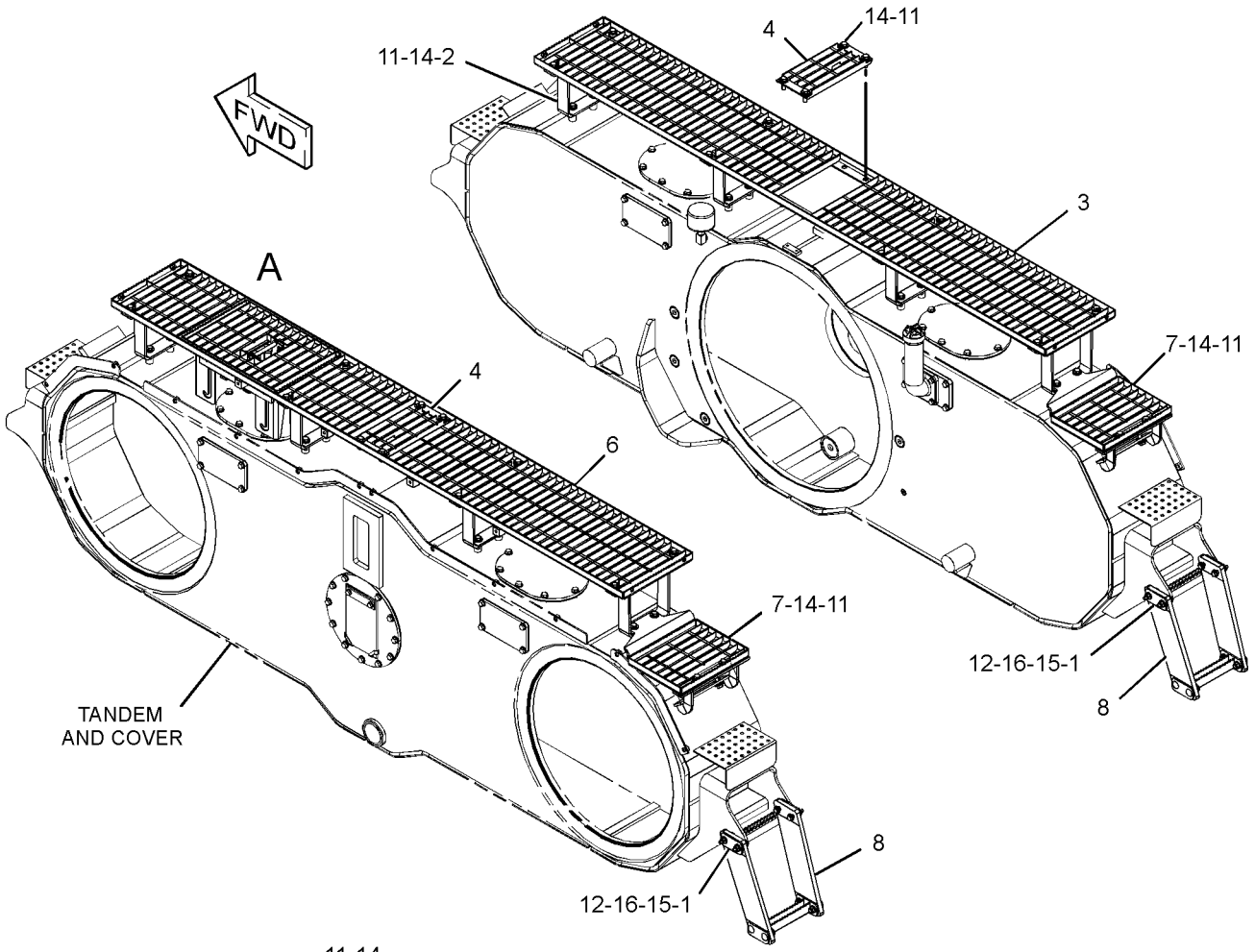

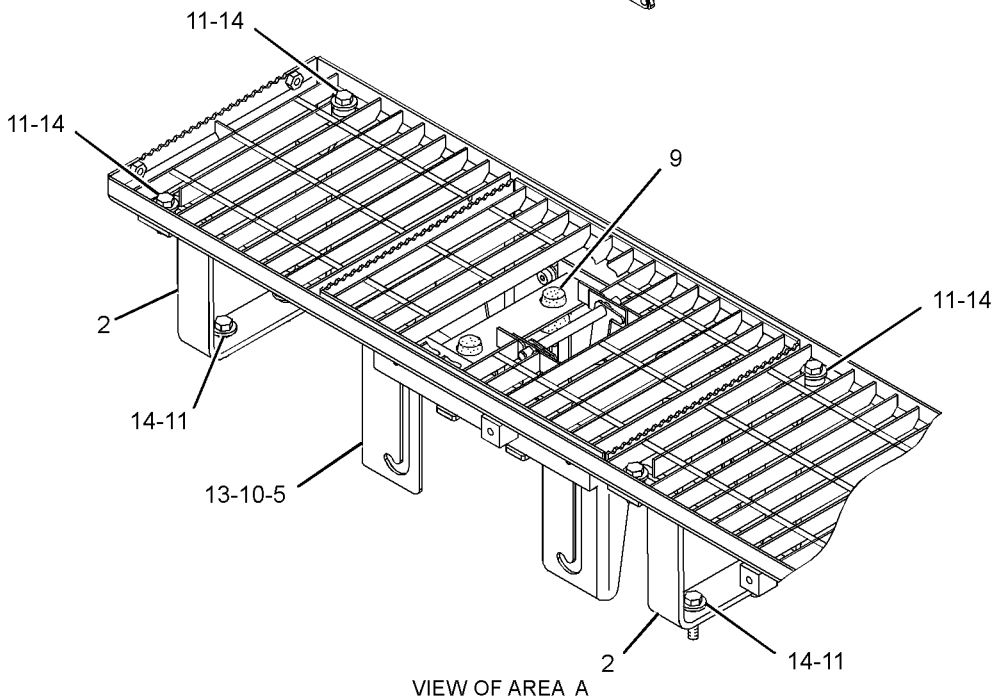

VIEW OF AREA A

GRAPHIC #1 **<END>** g01387401

FRAME AND BODY

266-2417 STEP GP–REAR

S/N: B9K289-UP

PART OF 259-9204 COMMON AR

SMCS-7254 **i03112386**

NOTE	REF NO	GRAPHIC REF	PART NUMBER	QTY	PART NAME 1 2 3 4 5 6 (PRODUCT LEVEL)	SEE PAGE
	1	1	**4V-9803**	4	PLATE	
	2	1	**270-2682**	8	BRACKET AS	
	3	1	**270-2684**	1	WALKWAY AS	
M		1	**8T-3490**	2	NUT-WELD (M10X1.5-THD)	
M		1	**8T-3597**	4	NUT-WELD (M12X1.75-THD)	
		1	**136-1122**	8	BUSHING	
	4	1	**278-2430**	2	WALKWAY AS	
	5	1	**278-2442**	1	STEP AS	
	6	1	**278-2496**	1	WALKWAY AS	
		1	**8H-6481**	1	SHAFT	
M		1	**8T-3490**	2	NUT-WELD (M10X1.5-THD)	
M		1	**8T-3597**	4	NUT-WELD (M12X1.75-THD)	
M		1	**8T-3612**	4	NUT-WELD (M8X1.25-THD)	
		1	**136-1122**	8	BUSHING	
Y	7	1	*278-8762*	2	STEP GP	590
Y	8	1	**305-2414**	2	STEP GP	591
	9	1	**109-5008**	4	BUMPER-CONICAL	
C	11	1	**5P-1076**	28	WASHER-HARD (13.5X30X4-MM THK)	
M	12	1	**6V-7687**	8	LOCKNUT (M12X1.75-THD)	
M	14	1	**8T-4183**	44	BOLT (M12X1.75X40-MM)	
	15	1	**8T-4223**	16	WASHER-HARD (13.5X25.5X3-MM THK)	
M	16	1	**8T-6466**	8	BOLT (M10X1.5X60-MM)	
CM	17	1	**8T-6912**	4	BOLT (M8X1.25X50-MM)	
C	18	1	**191-1782**	4	SPACER (8.5X12.7X38.2-MM THK)	
C	19	1	**198-4778**	16	WASHER-HARD (13.5X30X12-MM THK)	

C-CHANGE FROM PREVIOUS TYPE
M-METRIC PART
Y-SEPARATE ILLUSTRATION

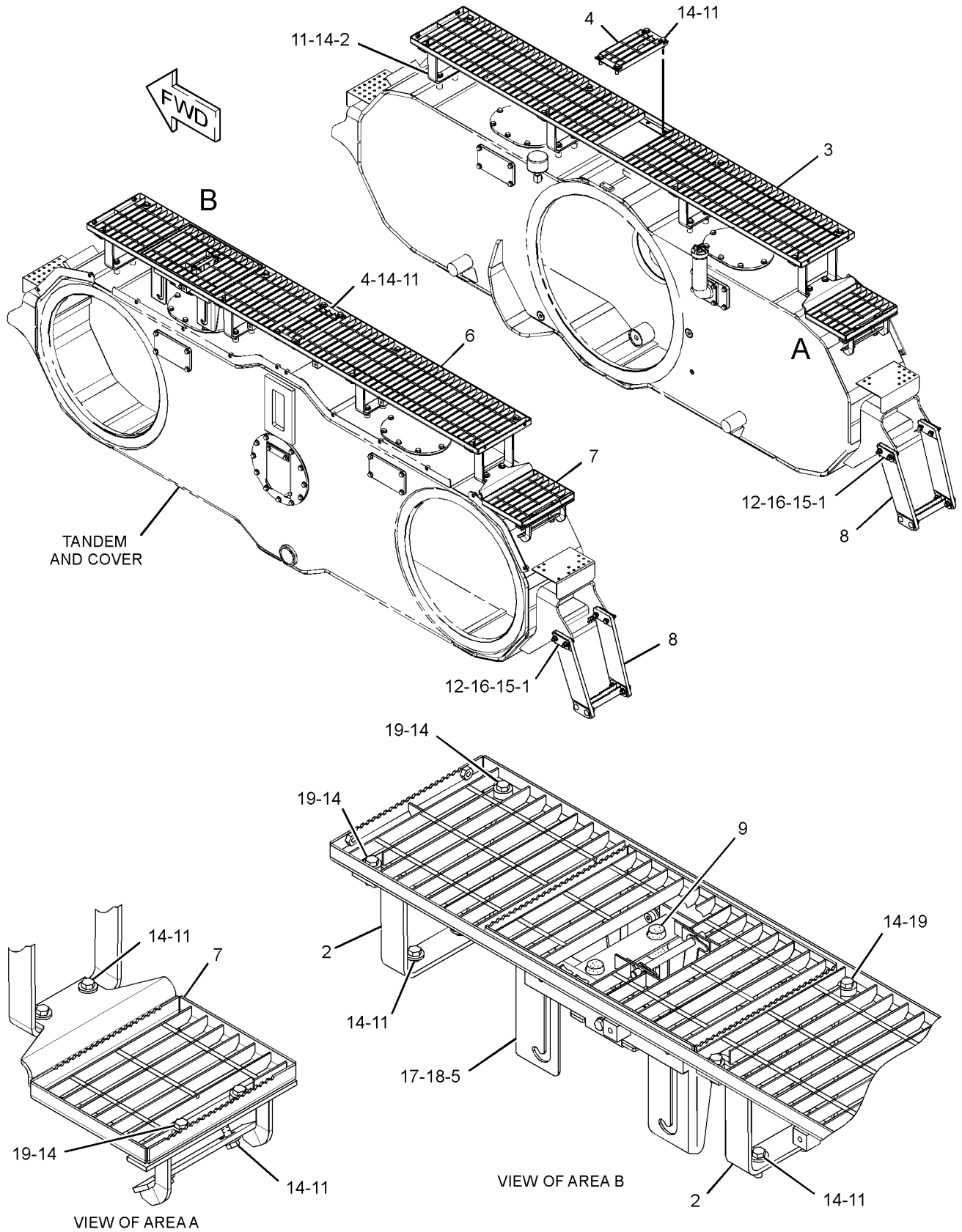

GRAPHIC #1 **<END>** g01602677

FRAME AND BODY

271-0752 STEP GP–LH

S/N: B9K1-UP

PART OF 260-3770 PLATFORM GP, 271-6651 PLATFORM GP-OPERATOR

SMCS-7254 **i02758327**

NOTE	REF NO	GRAPHIC REF	PART NUMBER	QTY	PART NAME 1 2 3 4 5 6 (PRODUCT LEVEL)	SEE PAGE
	1	1	**271-0770**	2	SUPPORT-STEP (RUBBER)	
	2	1	**271-0771**	2	STEP	
	3	1	**271-0772**	2	PLATE	
	4	1	**271-0773**	2	PLATE	
M	5	1	**6V-7687**	8	LOCKNUT (M12X1.75-THD)	
	6	1	**8T-4223**	20	WASHER-HARD (13.5X25.5X3-MM THK)	
M	7	1	**8T-4910**	6	BOLT (M12X1.75X60-MM)	
M	8	1	**8T-6868**	2	BOLT (M12X1.75X80-MM)	

M-METRIC PART

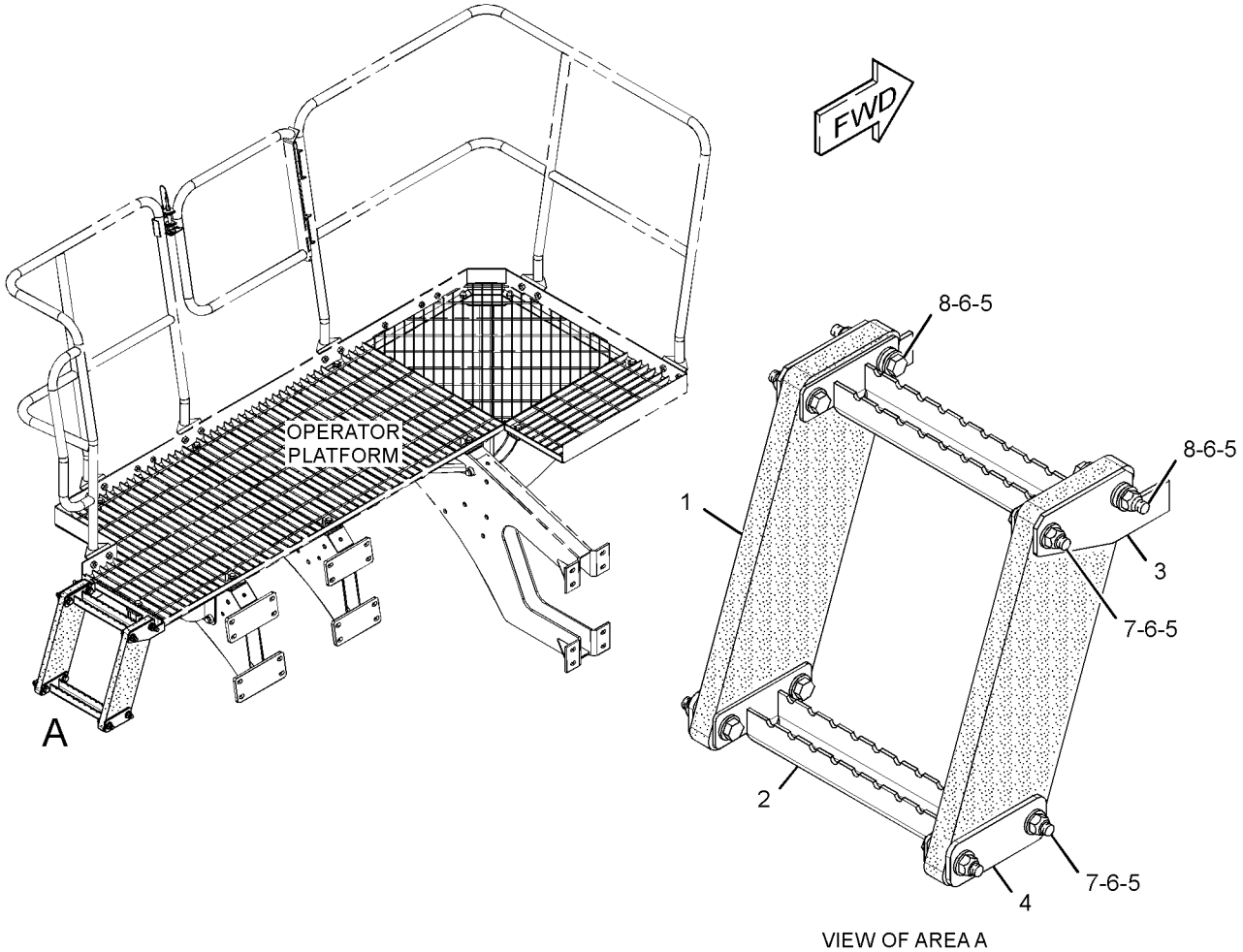

VIEW OF AREA A

GRAPHIC #1 **<END>** g01382421

FRAME AND BODY

278-7102 STEP GP

S/N: B9K1-UP

PART OF 306-5426, 306-5427 STEP GP

SMCS-7254 **i02760658**

NOTE	REF NO	GRAPHIC REF	PART NUMBER	QTY	PART NAME 1 2 3 4 5 6 (PRODUCT LEVEL)	SEE PAGE
	1	1	**1D-4689**	4	BOLT (1/2-13X1.75-IN)	
	2	1	**1D-4691**	12	BOLT-CARRIAGE (1/2-13X2.5-IN)	
	3	1	**4V-9804**	6	PLATE	
	4	1	**4V-9810**	4	STEP AS	
					(EACH INCLUDES)	
		1	**4V-9803**	2	PLATE	
	5	1	**9M-1853**	4	MOUNTING	
	6	1	**117-2129**	2	TUBE	
	7	1	**125-6857**	4	ROD END	
	8	1	**141-4043**	2	SUPPORT-STEP (RUBBER)	
	9	1	**290-3969**	8	SPACER (18.2X21.3X4-MM THK)	
	10	1	**298-6940**	1	STEP AS	
	11	1	**1K-6872**	16	LOCKNUT (1/2-13-THD)	
	12	1	**5P-1076**	8	WASHER-HARD (13.5X30X4-MM THK)	
	13	1	**6V-8181**	4	NUT-FULL (5/8-18-THD)	
	14	1	**7X-0584**	16	WASHER-HARD (13.5X20.5X2-MM THK)	
M	15	1	**7X-2555**	1	BOLT (M16X2X80-MM)	
	16	1	**8F-6437**	4	WASHER (13.5X50.8X4.76-MM THK)	
M	17	1	**8T-4132**	3	NUT (M16X2-THD)	
M	18	1	**8T-4140**	2	BOLT (M16X2X60-MM)	
M	19	1	**8T-4244**	4	NUT (M12X1.75-THD)	
M	20	1	**8T-4648**	4	BOLT (M12X1.75X70-MM)	
	21	1	**9X-8257**	2	WASHER (17.5X30X3.5-MM THK)	

M-METRIC PART

278-7102 STEP GP ***(contd.)*** **i02760658**

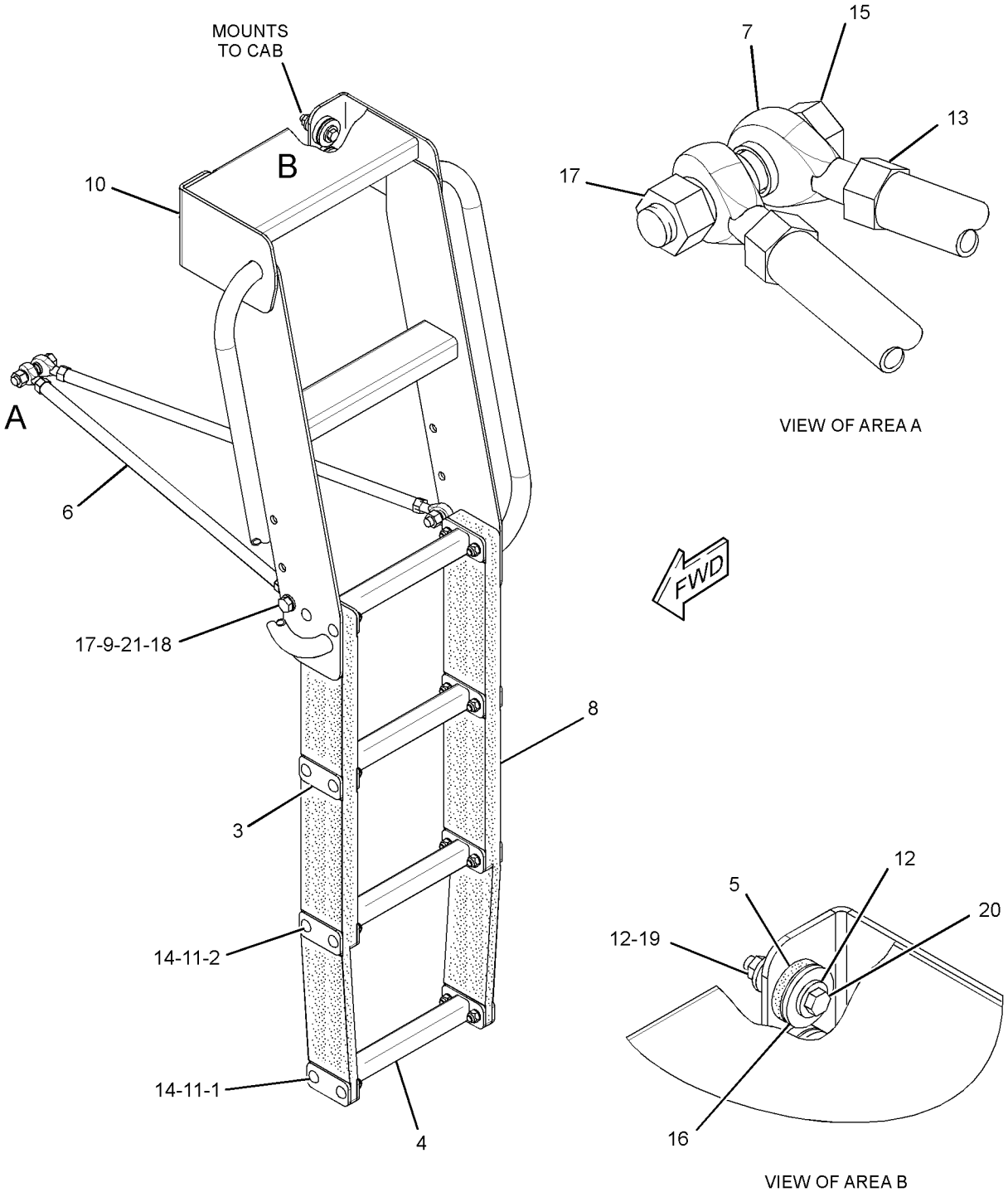

GRAPHIC #1 **<END>** g01389991

FRAME AND BODY

278-8762 STEP GP

S/N: B9K1-UP

PART OF 266-2417, 306-5426, 306-5427 STEP GP

SMCS-7254 **i03112962**

NOTE	REF NO	GRAPHIC REF	PART NUMBER	QTY	PART NAME 1 2 3 4 5 6 (PRODUCT LEVEL)	SEE PAGE
	1	1	**270-2683**	1	BRACKET AS	
M		1	**8T-3597**	2	NUT-WELD (M12X1.75-THD)	
	2	1	**271-0782**	1	WALKWAY AS	
		1	**136-1122**	2	BUSHING	
	3	1	**198-4778**	2	WASHER-HARD (13.5X30X12-MM THK)	
M	4	1	**8T-4183**	2	BOLT (M12X1.75X40-MM)	

M-METRIC PART

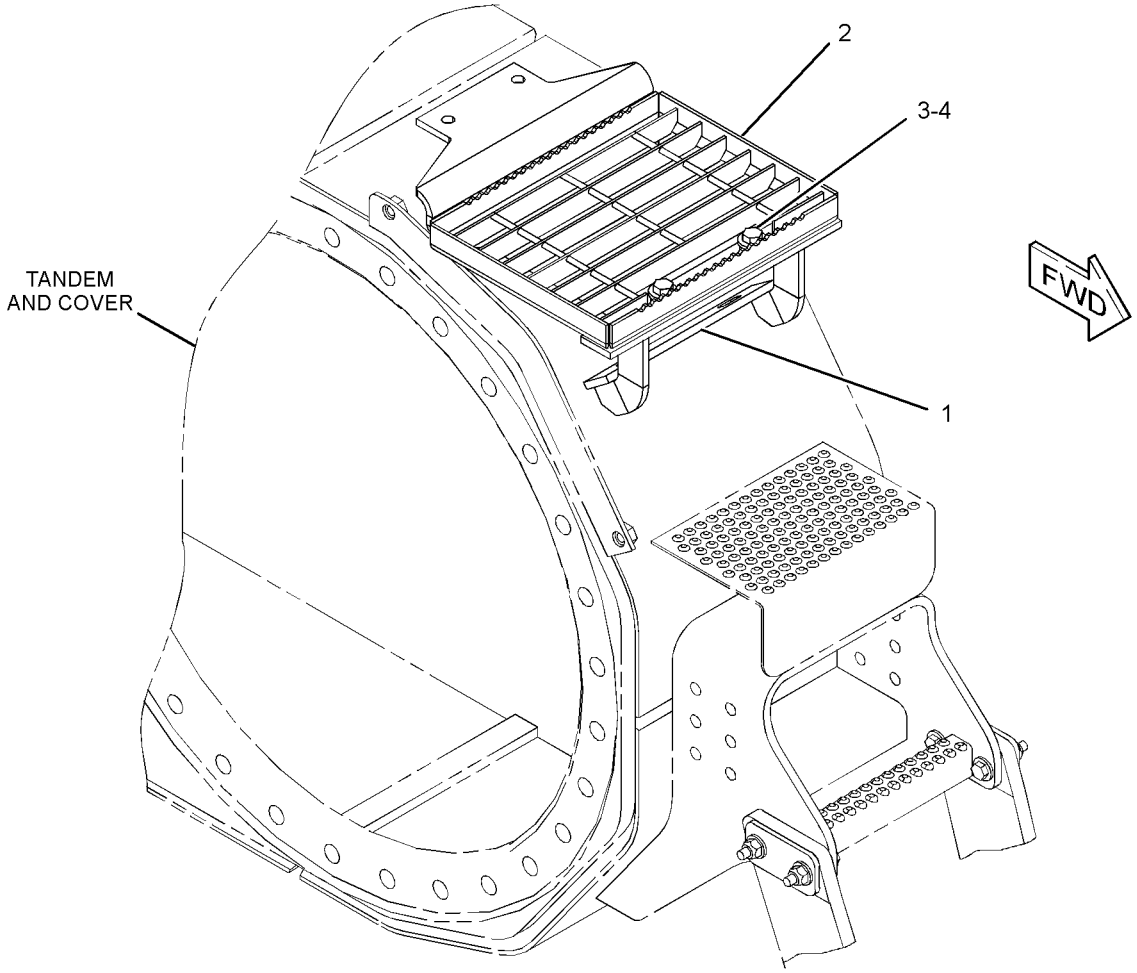

GRAPHIC #1 **<END>** g01384892

FRAME AND BODY

305-2414 STEP GP

S/N: B9K1-UP

PART OF 266-2417, 306-5426, 306-5427 STEP GP

SMCS-7254 **i02760671**

NOTE	REF NO	GRAPHIC REF	PART NUMBER	QTY	PART NAME 1 2 3 4 5 6 (PRODUCT LEVEL)	SEE PAGE
	1	1	**4V-9804**	2	PLATE	
	2	1	**294-9830**	1	STEP AS	
		1	**4V-9803**	2	PLATE	
	3	1	**305-2393**	1	SUPPORT-STEP (RUBBER, LH)	
	4	1	**305-2394**	1	SUPPORT-STEP (RUBBER, RH)	
	5	1	**1D-4689**	4	BOLT (1/2-13X1.75-IN)	
	6	1	**1K-6872**	4	LOCKNUT (1/2-13-THD)	
	7	1	**8T-4223**	4	WASHER-HARD (13.5X25.5X3-MM THK)	

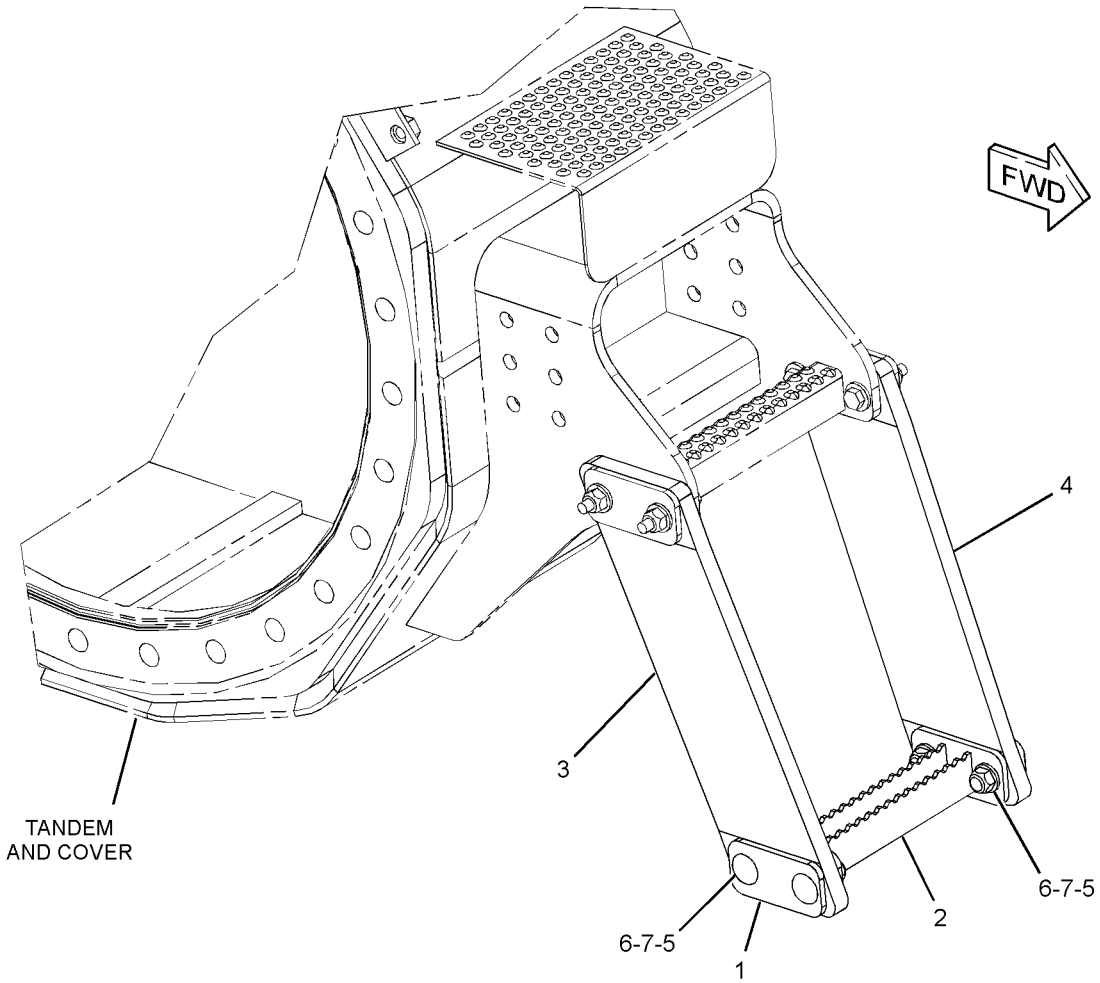

GRAPHIC #1 **<END>** g01384645

FRAME AND BODY

306-5426 STEP GP–LH

S/N: B9K1-UP

PART OF 269-2208 ACCESS GP-CAB

SMCS-7254 **i02765239**

NOTE	REF NO	GRAPHIC REF	PART NUMBER	QTY	PART NAME 1 2 3 4 5 6 (PRODUCT LEVEL)	SEE PAGE
	1	1	**4V-9803**	2	PLATE	
Y	2	1	**278-7102**	1	STEP GP	588
Y	3	1	*278-8762*	1	STEP GP	590
Y	4	1	**305-2414**	1	STEP GP	591
	5	1	**5P-1076**	2	WASHER-HARD (13.5X30X4-MM THK)	
M	6	1	**6V-7687**	4	LOCKNUT (M12X1.75-THD)	
M	7	1	**8T-4183**	2	BOLT (M12X1.75X40-MM)	
	8	1	**8T-4223**	8	WASHER-HARD (13.5X25.5X3-MM THK)	
M	9	1	**8T-6466**	4	BOLT (M10X1.5X60-MM)	

M-METRIC PART
Y-SEPARATE ILLUSTRATION

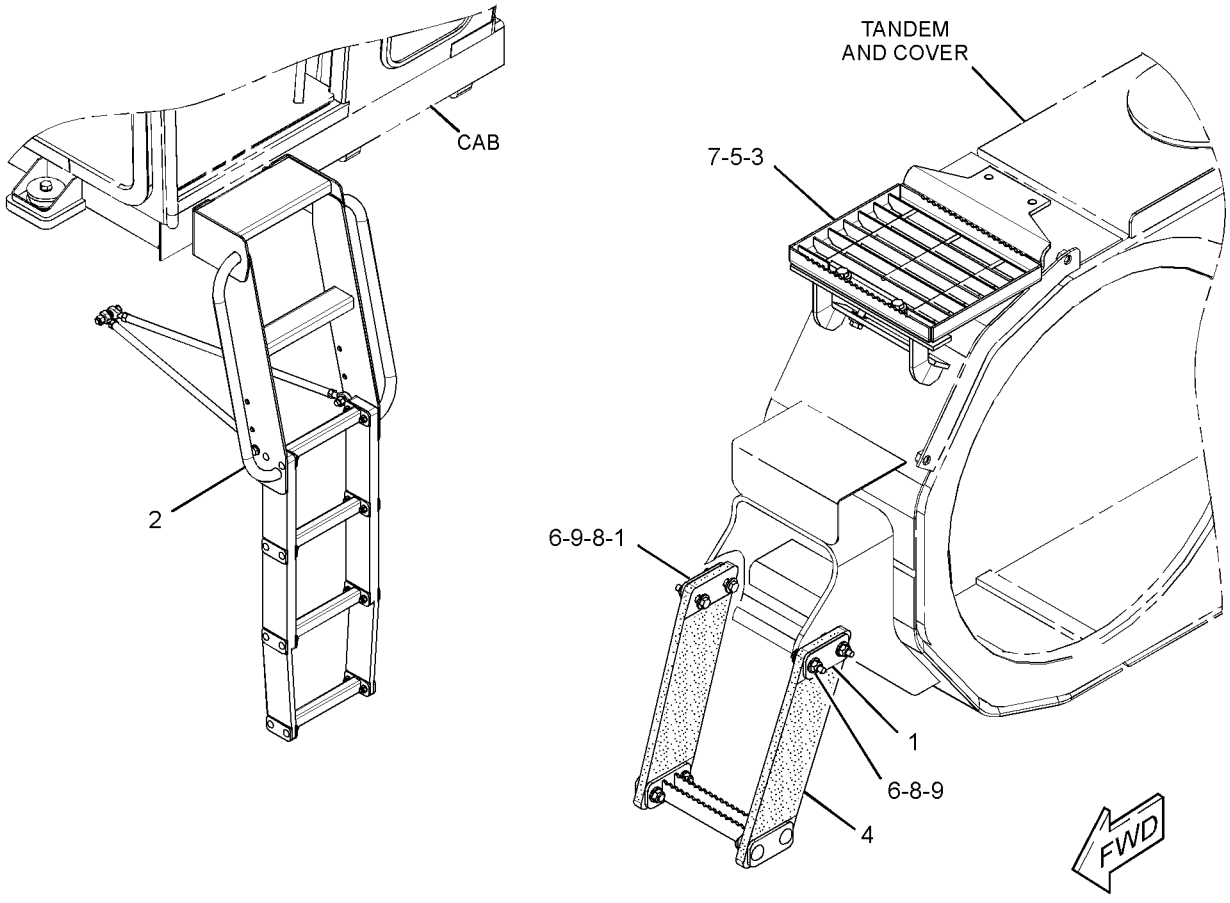

GRAPHIC #1 **<END>** g01389996

FRAME AND BODY

306-5427 STEP GP–RH

S/N: B9K1-UP

PART OF 269-2208 ACCESS GP-CAB, 269-2209 PLATFORM AR

SMCS-7254 **i02758271**

NOTE	REF NO	GRAPHIC REF	PART NUMBER	QTY	PART NAME 1 2 3 4 5 6 (PRODUCT LEVEL)	SEE PAGE
	1	1	**4V-9803**	2	PLATE	
Y	2	1	**278-7102**	1	STEP GP	588
Y	3	1	*278-8762*	1	STEP GP	590
Y	4	1	**305-2414**	1	STEP GP	591
	5	1	**5P-1076**	2	WASHER-HARD (13.5X30X4-MM THK)	
M	6	1	**6V-7687**	4	LOCKNUT (M12X1.75-THD)	
M	7	1	**8T-4183**	2	BOLT (M12X1.75X40-MM)	
	8	1	**8T-4223**	8	WASHER-HARD (13.5X25.5X3-MM THK)	
M	9	1	**8T-6466**	4	BOLT (M10X1.5X60-MM)	

M-METRIC PART
Y-SEPARATE ILLUSTRATION

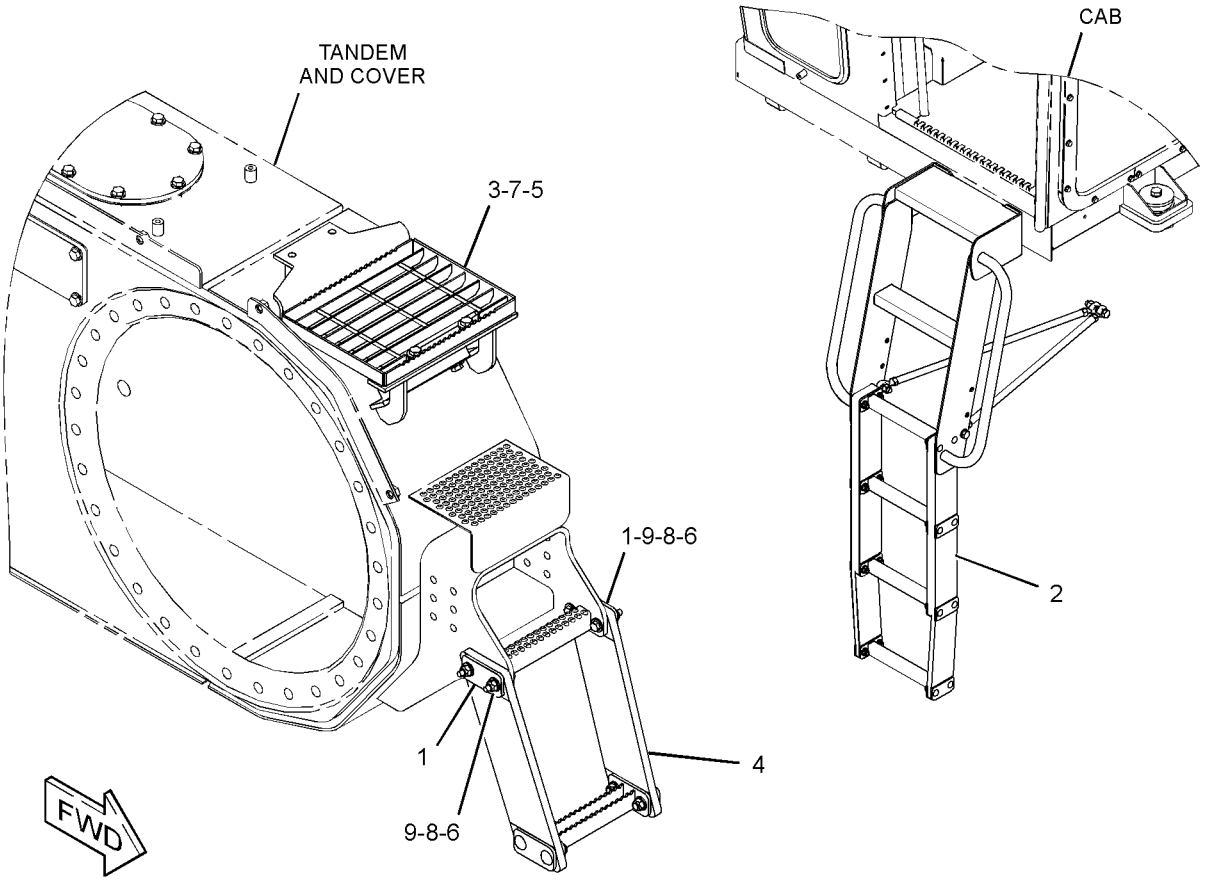

GRAPHIC #1 **<END>** g01384664

FRAME AND BODY

270-6978 SUPPORT GP-PLATFORM

S/N: B9K1-UP

PART OF 260-3770 PLATFORM GP

SMCS-7253 **i02758294**

NOTE	REF NO	GRAPHIC REF	PART NUMBER	QTY	PART NAME 1 2 3 4 5 6 (PRODUCT LEVEL)	SEE PAGE
	1	1	**277-7733**	1	PLATE AS	
M		1	**8T-3490**	5	NUT-WELD (M10X1.5-THD)	
M		1	**8T-3597**	22	NUT-WELD (M12X1.75-THD)	
	2	1	**277-7734**	1	PLATE AS	
M		1	**8T-3490**	11	NUT-WELD (M10X1.5-THD)	
M		1	**8T-3597**	10	NUT-WELD (M12X1.75-THD)	
	3	1	**277-7735**	1	PLATE AS	
M		1	**8T-3490**	11	NUT-WELD (M10X1.5-THD)	
M		1	**8T-3597**	16	NUT-WELD (M12X1.75-THD)	
	4	1	**277-8399**	1	SUPPORT AS	
M		1	**8T-3597**	2	NUT-WELD (M12X1.75-THD)	
	5	1	**277-8411**	1	CHANNEL AS	
	6	1	**277-8412**	1	CHANNEL AS	
	7	1	**279-2621**	1	SUPPORT AS	
M		1	**8T-3597**	1	NUT-WELD (M12X1.75-THD)	
	8	1	**279-6456**	1	SUPPORT AS	
	9	1	**294-7695**	1	PLATE AS	
M		1	**8T-3597**	2	NUT-WELD (M12X1.75-THD)	

M-METRIC PART

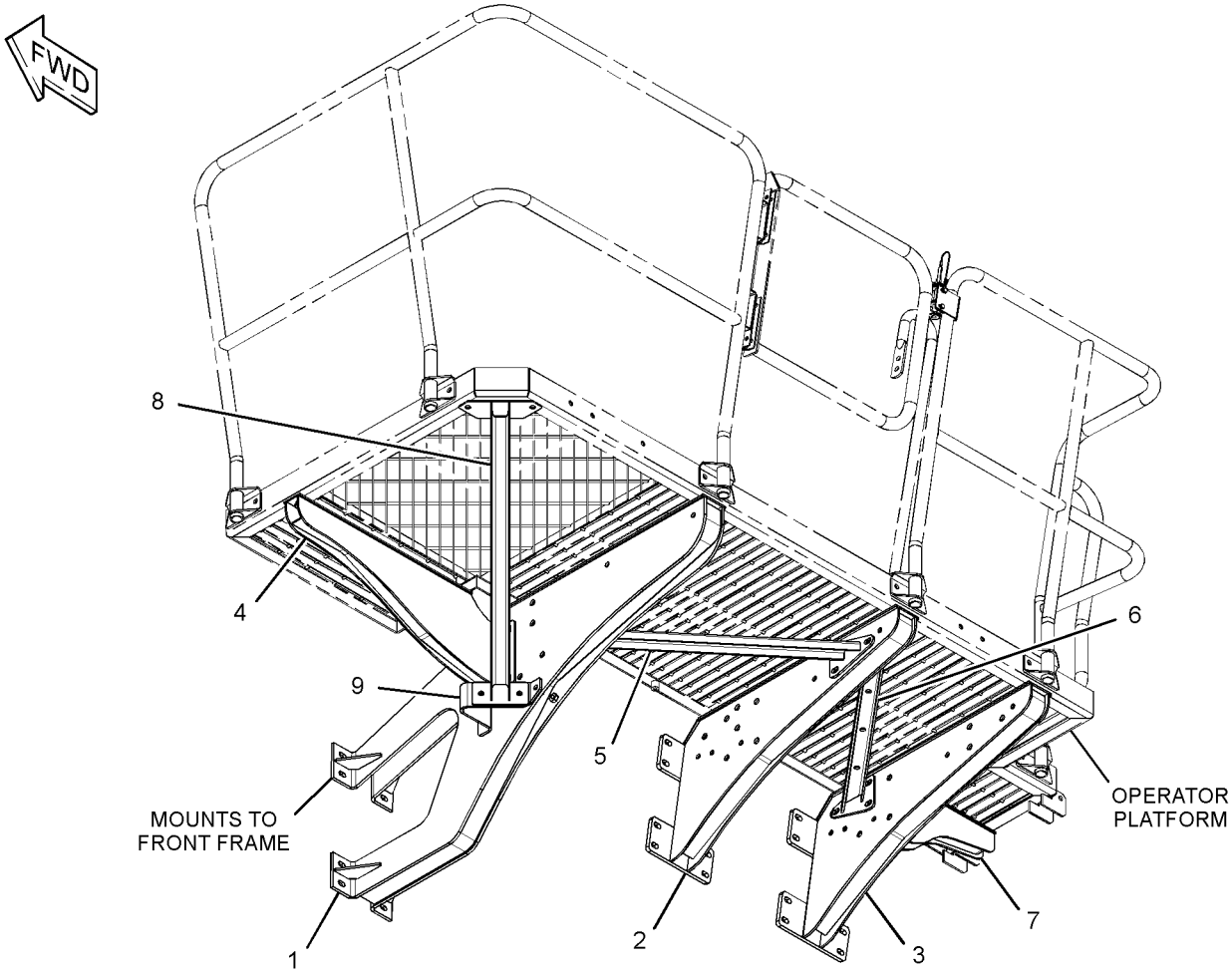

GRAPHIC #1 **<END>** g01382927

FRAME AND BODY

307-9336 SUPPRESSION GP-SOUND–REAR FRAME

S/N: B9K1-258

SMCS-1801, 7076 **i02765298**

NOTE	REF NO	GRAPHIC REF	PART NUMBER	QTY	PART NAME 1 2 3 4 5 6 (PRODUCT LEVEL)	SEE PAGE
	1	1	**306-8089**	2	PLATE AS	
					(EACH INCLUDES)	
M		1	**8T-3490**	3	NUT-WELD (M10X1.5-THD)	
		1	**117-8721**	2	LUG (M10X1.5-THD)	
	2	1	**306-8090**	1	PLATE AS	
M		1	**8T-3490**	3	NUT-WELD (M10X1.5-THD)	
		1	**117-8721**	2	LUG (M10X1.5-THD)	
	3	1	**306-8091**	1	PLATE AS	
M		1	**8T-3490**	3	NUT-WELD (M10X1.5-THD)	
		1	**117-8721**	2	LUG (M10X1.5-THD)	
	4	1	**306-8092**	1	PLATE AS	
M		1	**8T-3490**	3	NUT-WELD (M10X1.5-THD)	
		1	**117-8721**	2	LUG (M10X1.5-THD)	
	5	1	**307-9723**	10	INSULATION	
	6	1	**307-9724**	5	INSULATION	
	7	1	**308-1474**	2	INSULATION	
	8	1	**308-1475**	1	INSULATION	
	9	1	**308-7546**	1	INSULATION	
	10	1	**308-7547**	5	STRAP	
	11	1	**308-7548**	6	STRAP	
	12	1	**310-5200**	1	PLATE AS	
M		1	**8T-3490**	3	NUT-WELD (M10X1.5-THD)	
		1	**117-8721**	2	LUG (M10X1.5-THD)	
	13	1	**310-5201**	2	INSULATION	
	14	1	**5P-1076**	18	WASHER-HARD (13.5X30X4-MM THK)	
	15	1	**7X-7729**	18	WASHER (11X25X3-MM THK)	
	16	1	**8T-4121**	22	WASHER-HARD (11X21X2.5-MM THK)	
M	17	1	**8T-4136**	18	BOLT (M10X1.5X25-MM)	
M	18	1	**8T-4191**	22	BOLT (M10X1.5X16-MM)	
M	19	1	**8T-4196**	18	BOLT (M10X1.5X35-MM)	

M-METRIC PART

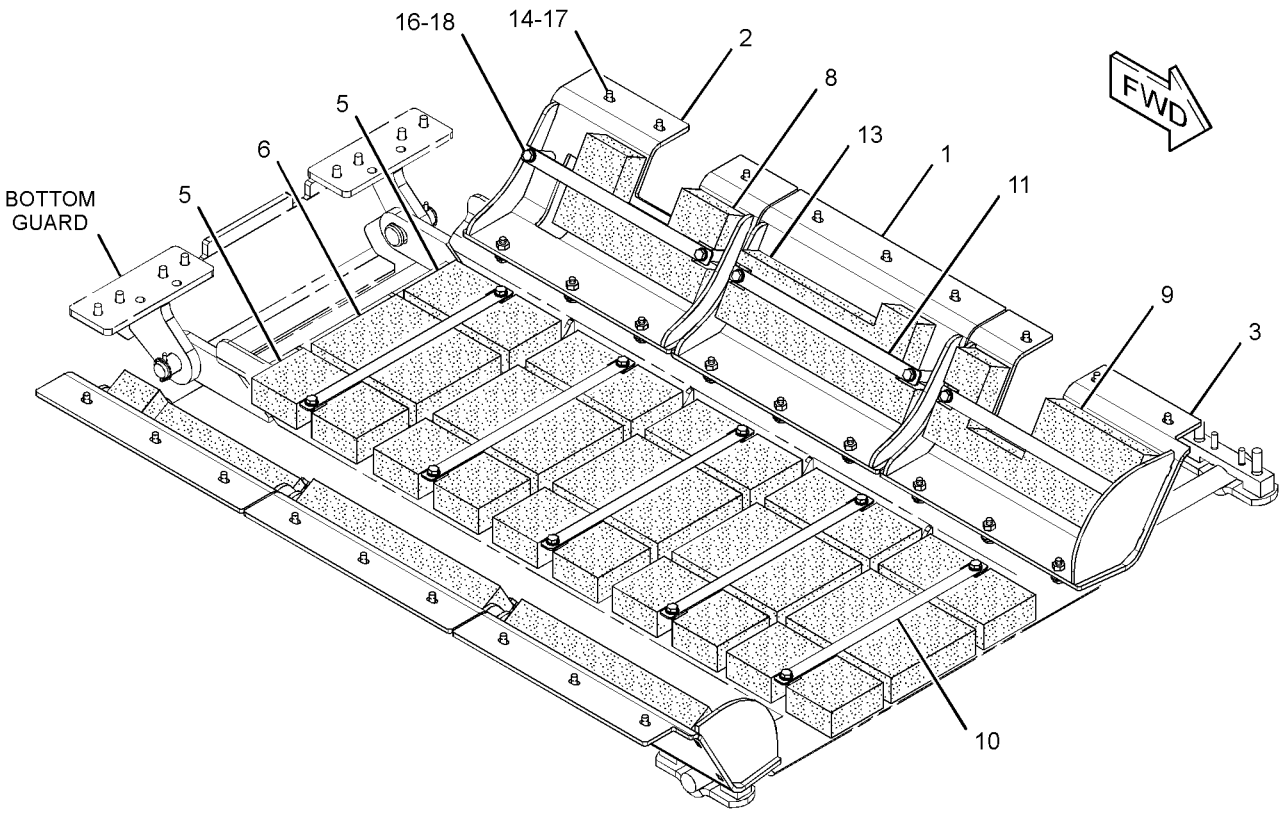

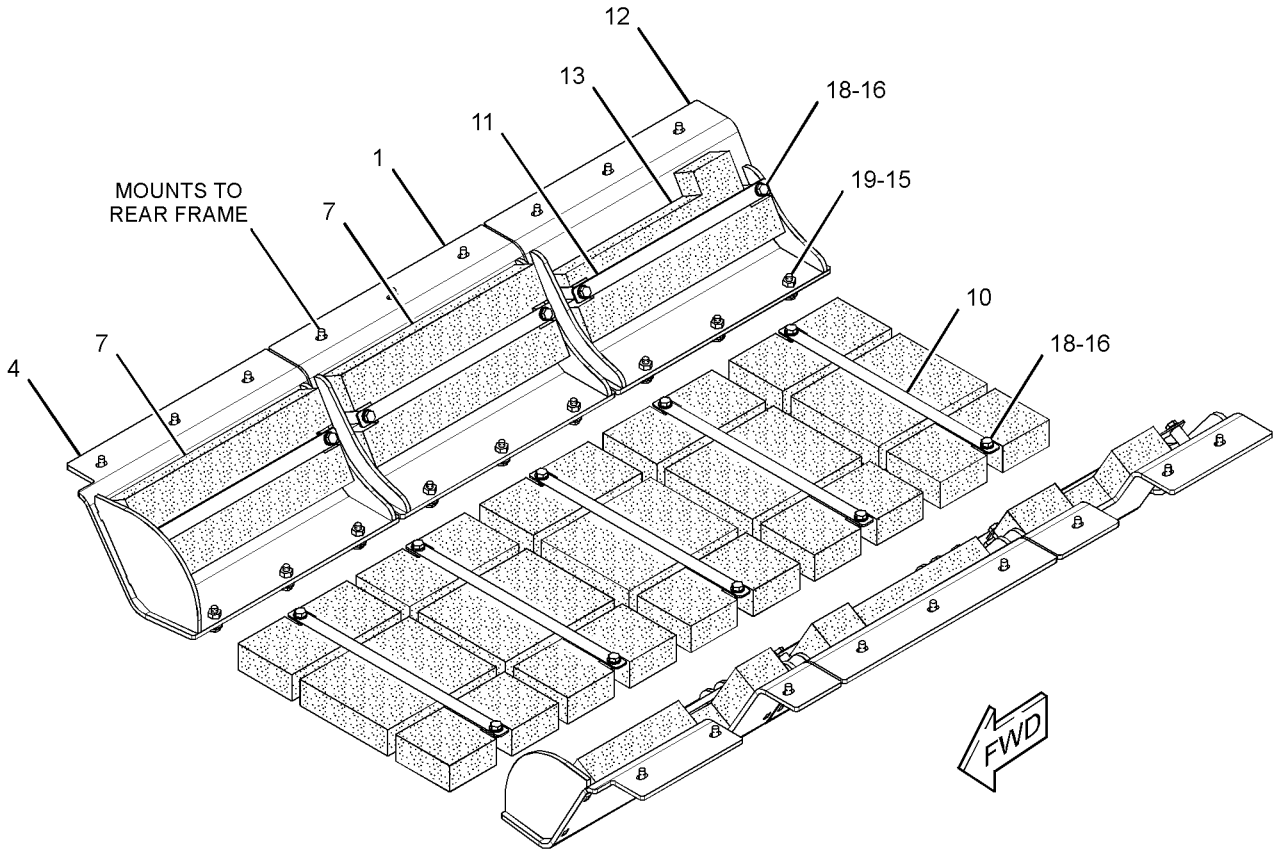

GRAPHIC #1 **<END>** g01388596

FRAME AND BODY

307-9336 SUPPRESSION GP-SOUND—REAR FRAME

S/N: B9K1-UP

PART OF 314-7907 CONVERSION AR-CERTIFICATION

SMCS-1801, 7076 **i02878229**

NOTE	REF NO	GRAPHIC REF	PART NUMBER	QTY	PART NAME 1 2 3 4 5 6 (PRODUCT LEVEL)	SEE PAGE
	1	1	**306-8089**	2	PLATE AS	
					(EACH INCLUDES)	
M		1	**8T-3490**	3	NUT-WELD (M10X1.5-THD)	
		1	**117-8721**	2	LUG (M10X1.5-THD)	
	2	1	**306-8090**	1	PLATE AS	
M		1	**8T-3490**	3	NUT-WELD (M10X1.5-THD)	
		1	**117-8721**	2	LUG (M10X1.5-THD)	
	3	1	**306-8091**	1	PLATE AS	
M		1	**8T-3490**	3	NUT-WELD (M10X1.5-THD)	
		1	**117-8721**	2	LUG (M10X1.5-THD)	
	4	1	**306-8092**	1	PLATE AS	
M		1	**8T-3490**	3	NUT-WELD (M10X1.5-THD)	
		1	**117-8721**	2	LUG (M10X1.5-THD)	
	5	1	**307-9723**	10	INSULATION	
	6	1	**307-9724**	5	INSULATION	
	7	1	**308-1474**	2	INSULATION	
	8	1	**308-1475**	1	INSULATION	
	9	1	**308-7546**	1	INSULATION	
	10	1	**308-7547**	5	STRAP	
	11	1	**308-7548**	6	STRAP	
	12	1	**310-5200**	1	PLATE AS	
M		1	**8T-3490**	3	NUT-WELD (M10X1.5-THD)	
		1	**117-8721**	2	LUG (M10X1.5-THD)	
C	13	1	**310-5201**	1	INSULATION	
	14	1	**5P-1076**	18	WASHER-HARD (13.5X30X4-MM THK)	
C	15	1	**7X-7729**	30	WASHER (11X25X3-MM THK)	
C	16	1	**8T-4121**	34	WASHER-HARD (11X21X2.5-MM THK)	
CM	17	1	**8T-4136**	22	BOLT (M10X1.5X25-MM)	
CM	18	1	**8T-4191**	34	BOLT (M10X1.5X16-MM)	
CM	19	1	**8T-4196**	26	BOLT (M10X1.5X35-MM)	
C	20	1	**315-8332**	1	PLATE AS	
		1	**117-8721**	12	LUG (M10X1.5-THD)	
C	21	1	**315-8340**	2	PLATE AS	
					(EACH INCLUDES)	
M		1	**8T-3490**	2	NUT-WELD (M10X1.5-THD)	
C	22	1	**315-8342**	6	STRAP	
C	23	1	**315-8343**	2	INSULATION	
C	24	1	**315-8345**	2	INSULATION	
C	25	1	**315-8346**	1	INSULATION	
C	26	1	**315-8347**	1	INSULATION	

C-CHANGE FROM PREVIOUS TYPE
M-METRIC PART

307-9336 **SUPPRESSION GP-SOUND** *(contd.)* **i02878229**

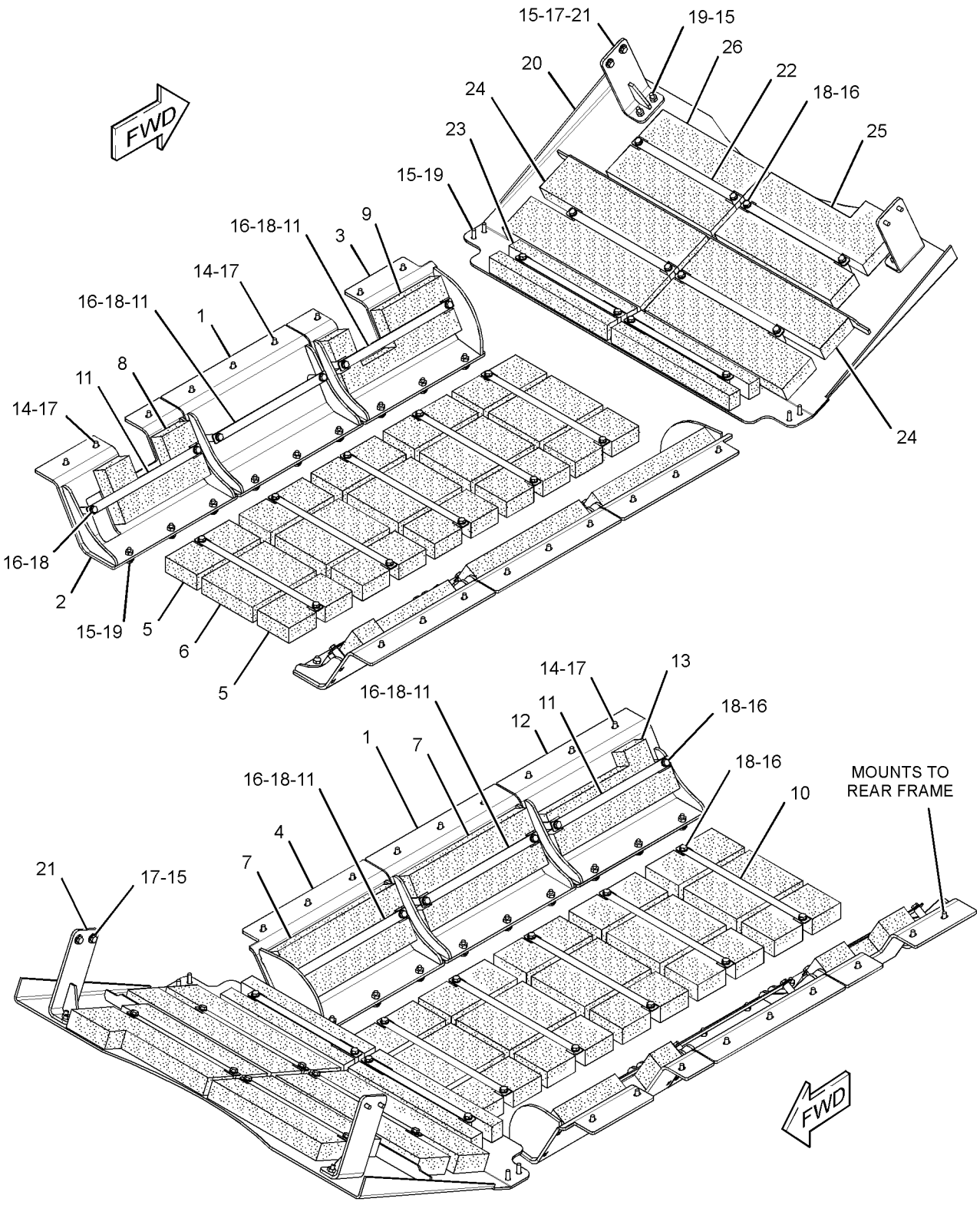

GRAPHIC #1 **<END>** g01447647

FRAME AND BODY

296-3363 VALVE GP-LUBE DISTRIBUTION–5-INJECTOR

S/N: B9K1-UP

PART OF 268-0247 LUBRICATION AR-AUTOMATIC

SMCS-7540 **i02764158**

NOTE	REF NO	GRAPHIC REF	PART NUMBER	QTY	PART NAME 1 2 3 4 5 6 (PRODUCT LEVEL)	SEE PAGE
	1	1	**2D-1683**	10	FITTING	
	2	1	**269-5353**	1	VALVE AS-LUBE DISTRIBUTION (5-INJECTOR)	
		1	**307-3245**	5	INJECTOR	
		1	**8X-1106**	5	FITTING AS-GREASE (1/8-27-THD)	
	3	1	*171-6731*	1	CONNECTOR AS	
		1	**8C-6871**	1	CONNECTOR	
		1	**6V-8398**	1	SEAL-O-RING	
	4	1	**3J-5390**	1	PLUG	

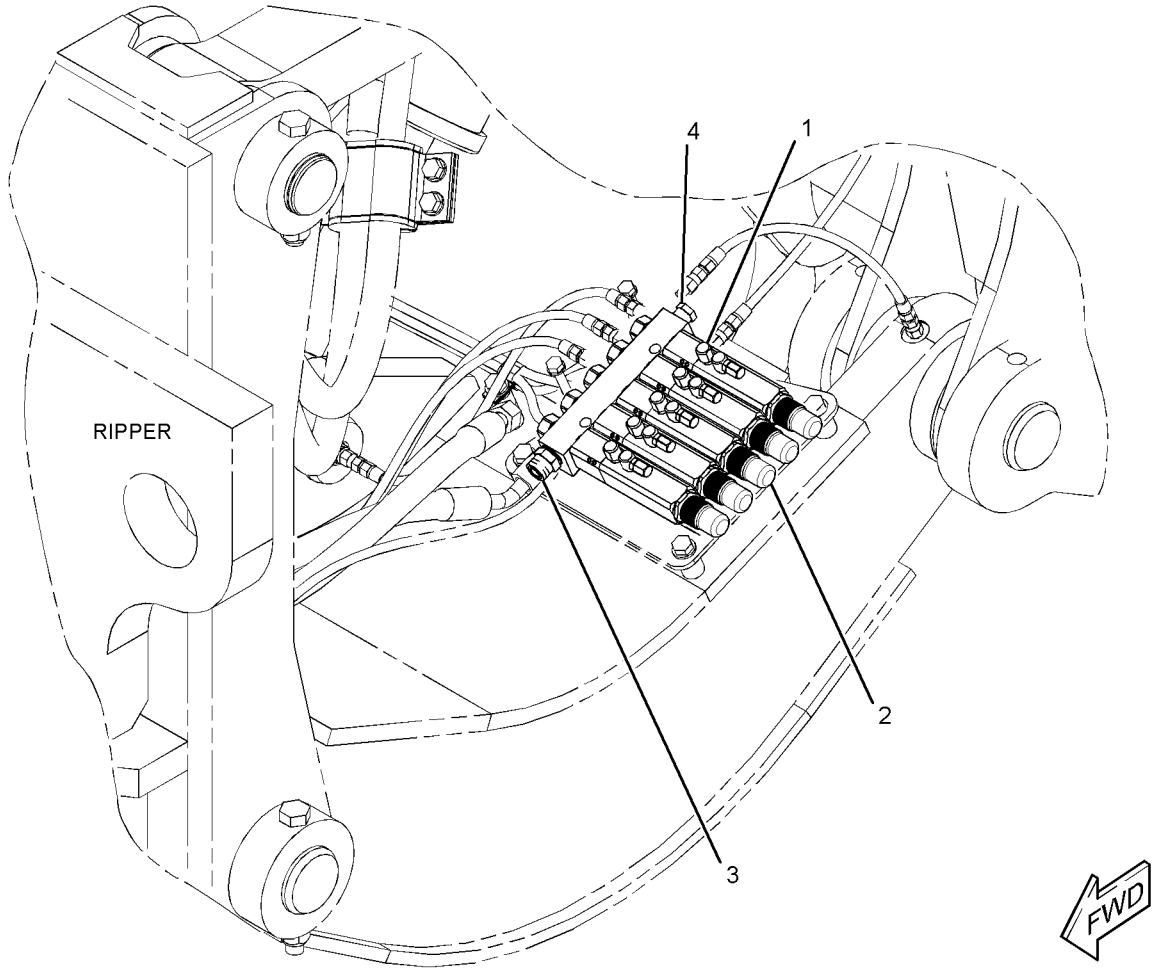

GRAPHIC #1 **<END>** g01388056

FRAME AND BODY

296-3364 VALVE GP-LUBE DISTRIBUTION–5-INJECTOR

S/N: B9K1-UP

PART OF 268-0247 LUBRICATION AR-AUTOMATIC

SMCS-7540 **i02764171**

NOTE	REF NO	GRAPHIC REF	PART NUMBER	QTY	PART NAME 1 2 3 4 5 6 (PRODUCT LEVEL)	SEE PAGE
	1	1	**2D-1683**	5	FITTING	
	2	1	**269-5353**	1	VALVE AS-LUBE DISTRIBUTION (5-INJECTOR)	
		1	**8X-1106**	5	FITTING AS-GREASE (1/8-27-THD)	
		1	**307-3245**	5	INJECTOR	
	3	1	*165-4925*	1	ELBOW AS	
		1	**2T-2171**	1	ELBOW	
		1	**6V-8398**	1	SEAL-O-RING	
	4	1	**3J-5390**	1	PLUG	

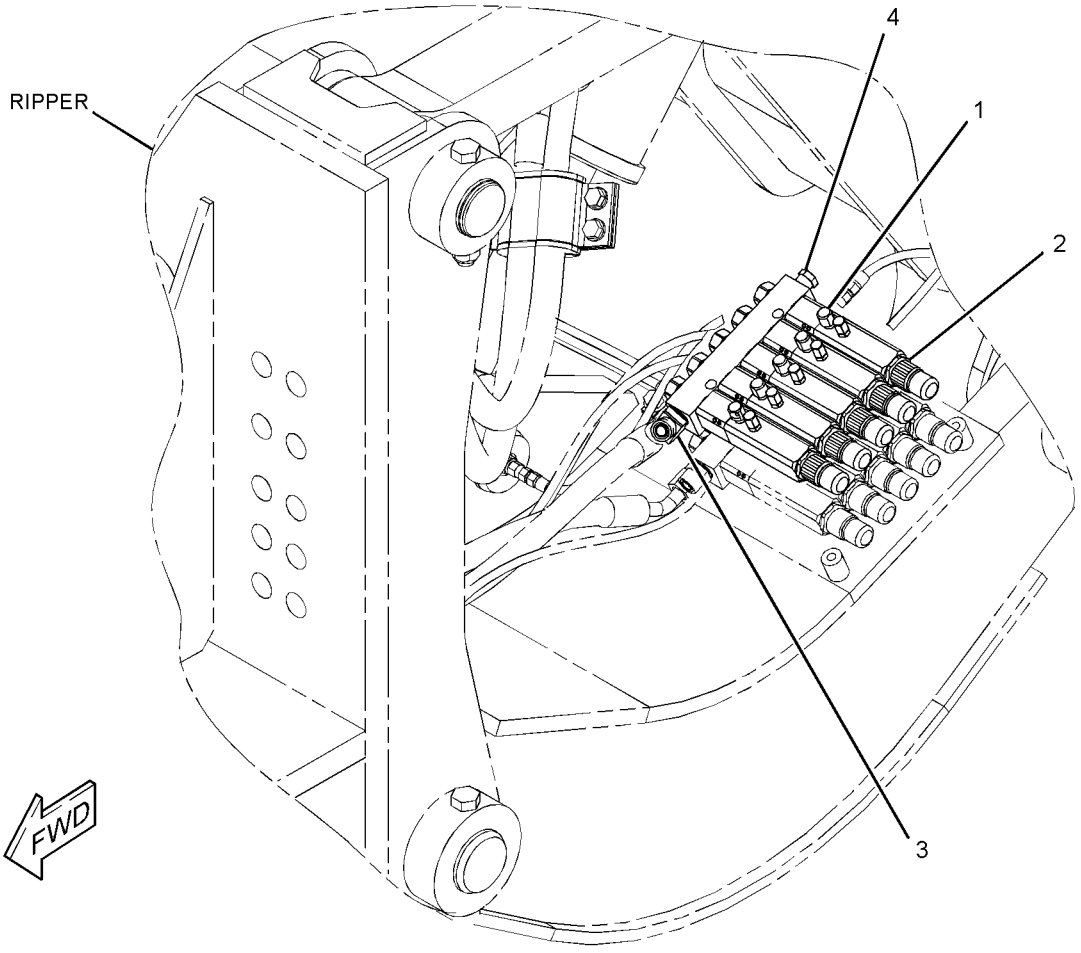

GRAPHIC #1 **<END>** g01388000

FRAME AND BODY

296-3365 VALVE GP-LUBE DISTRIBUTION–2-INJECTOR

S/N: B9K1-UP

PART OF 268-0247 LUBRICATION AR-AUTOMATIC

SMCS-7540 **i02764173**

NOTE	REF NO	GRAPHIC REF	PART NUMBER	QTY	PART NAME 1 2 3 4 5 6 (PRODUCT LEVEL)	SEE PAGE
	1	1	**2D-1683**	2	FITTING (90-DEG)	
	2	1	**269-5346**	1	INJECTOR AS-GREASE (2-INJECTOR)	
		1	**8X-1106**	2	FITTING AS-GREASE (1/8-27-THD)	
		1	**307-3245**	2	INJECTOR	
	3	1	**2T-2396**	1	ELBOW	
	4	1	**3J-5390**	1	PLUG (PIPE)	
	5	1	**6V-8398**	1	SEAL-O-RING	

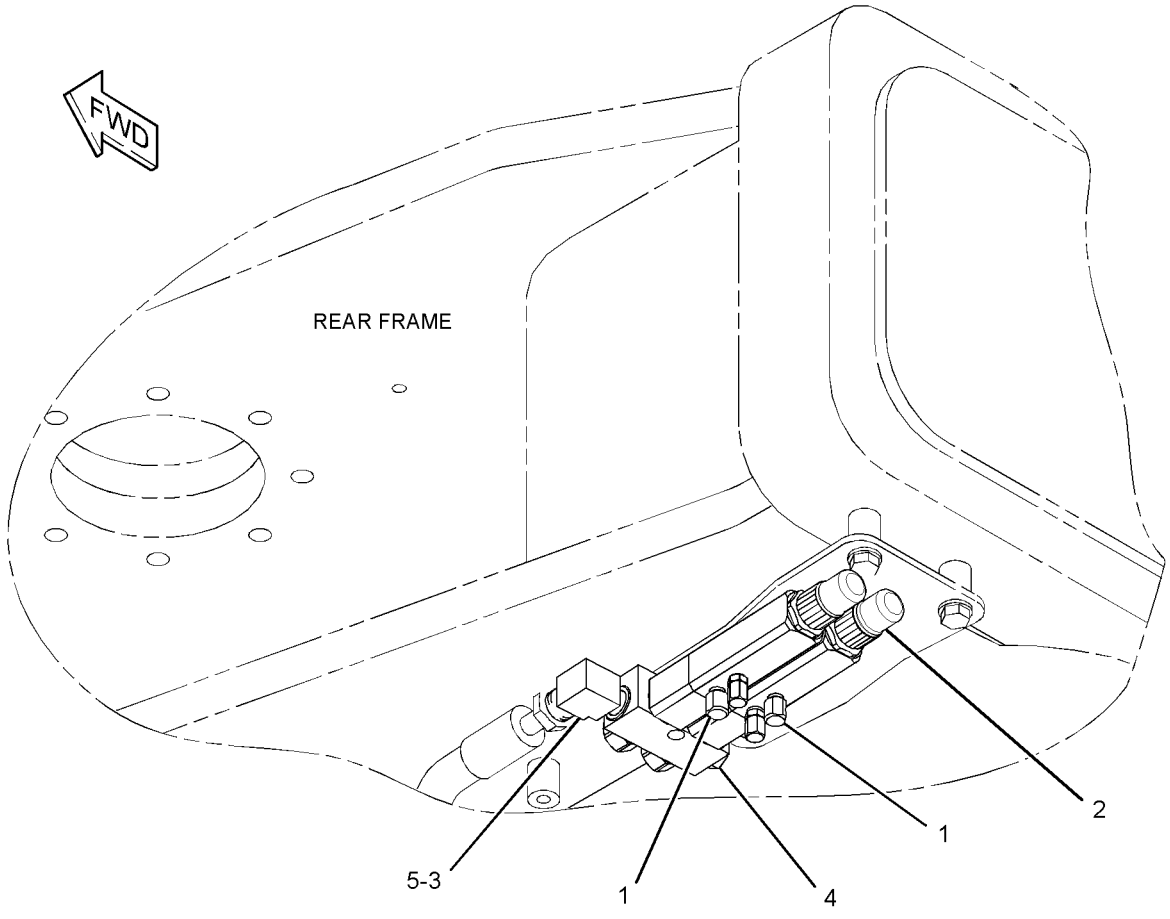

GRAPHIC #1 **<END>** g01388149

FRAME AND BODY

296-3366 VALVE GP-LUBE DISTRIBUTION–4-INJECTOR

S/N: B9K1-UP

PART OF 268-0247 LUBRICATION AR-AUTOMATIC

SMCS-7540 **i02791358**

NOTE	REF NO	GRAPHIC REF	PART NUMBER	QTY	PART NAME 1 2 3 4 5 6 (PRODUCT LEVEL)	SEE PAGE
	1	1	**2D-1683**	4	FITTING (90-DEG)	
	2	1	**269-5352**	1	VALVE AS-LUBE DISTRIBUTION (4-INJECTOR)	
		1	**8X-1106**	4	FITTING AS-GREASE (1/8-27-THD)	
		1	**307-3245**	4	INJECTOR	
	3	1	*165-4925*	1	ELBOW AS	
		1	**2T-2171**	1	ELBOW	
		1	**6V-8398**	1	SEAL-O-RING	
	4	1	**3J-5390**	1	PLUG (PIPE)	

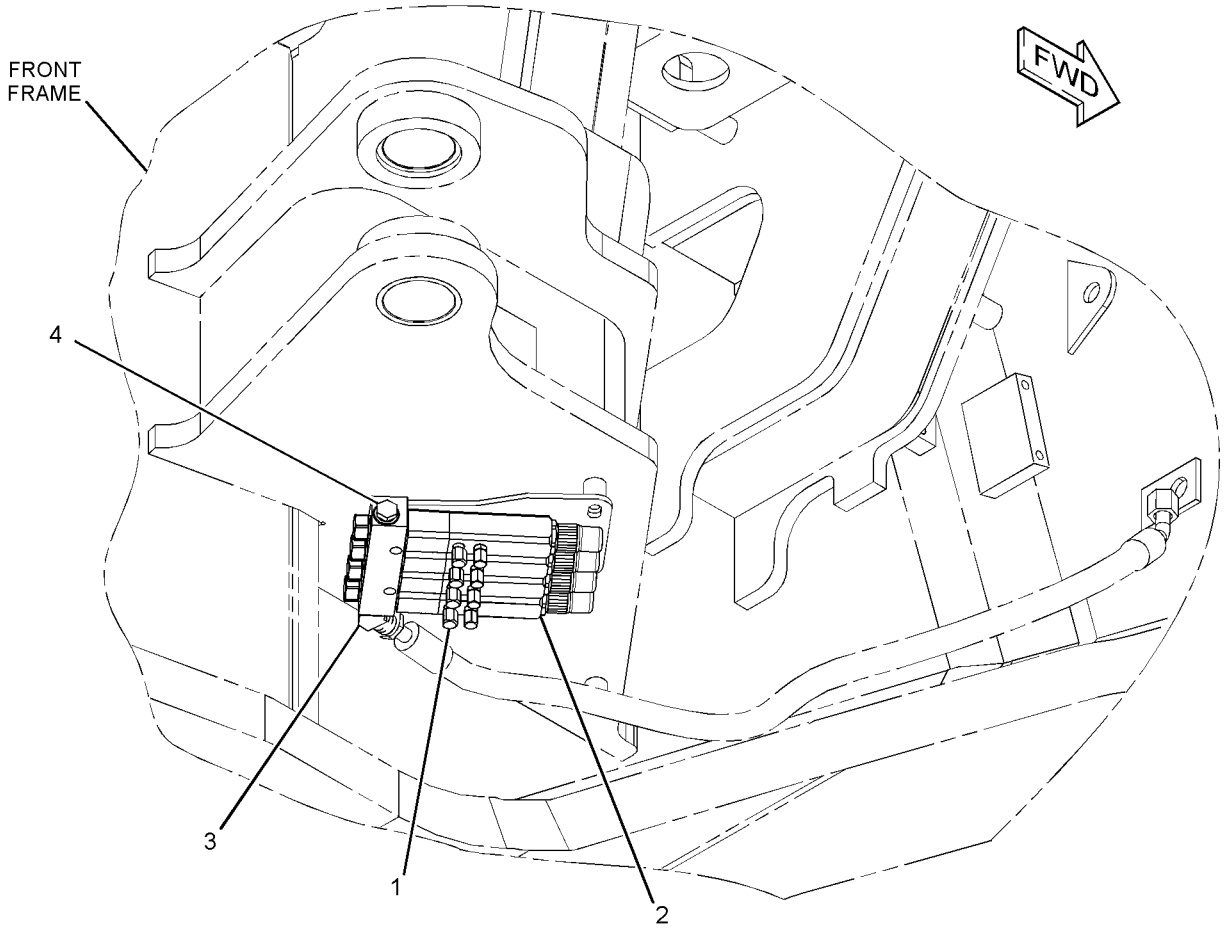

GRAPHIC #1 **<END>** g01388001

FRAME AND BODY

296-3367 VALVE GP-LUBE DISTRIBUTION–3-INJECTOR

S/N: B9K1-UP

PART OF 268-0247 LUBRICATION AR-AUTOMATIC

SMCS-7540 **i02764176**

NOTE	REF NO	GRAPHIC REF	PART NUMBER	QTY	PART NAME 1 2 3 4 5 6 (PRODUCT LEVEL)	SEE PAGE
	1	1	**2D-1683**	3	FITTING	
	2	1	**269-5348**	1	VALVE AS-LUBE DISTRIBUTION (3-INJECTOR)	
		1	**8X-1106**	3	FITTING AS-GREASE (1/8-27-THD)	
		1	**307-3245**	3	INJECTOR	
	3	1	*165-4925*	1	ELBOW AS	
		1	**2T-2171**	1	ELBOW	
		1	**6V-8398**	1	SEAL-O-RING	
	4	1	*171-6731*	1	CONNECTOR AS	
		1	**6V-8398**	1	SEAL-O-RING	
		1	**8C-6871**	1	CONNECTOR	

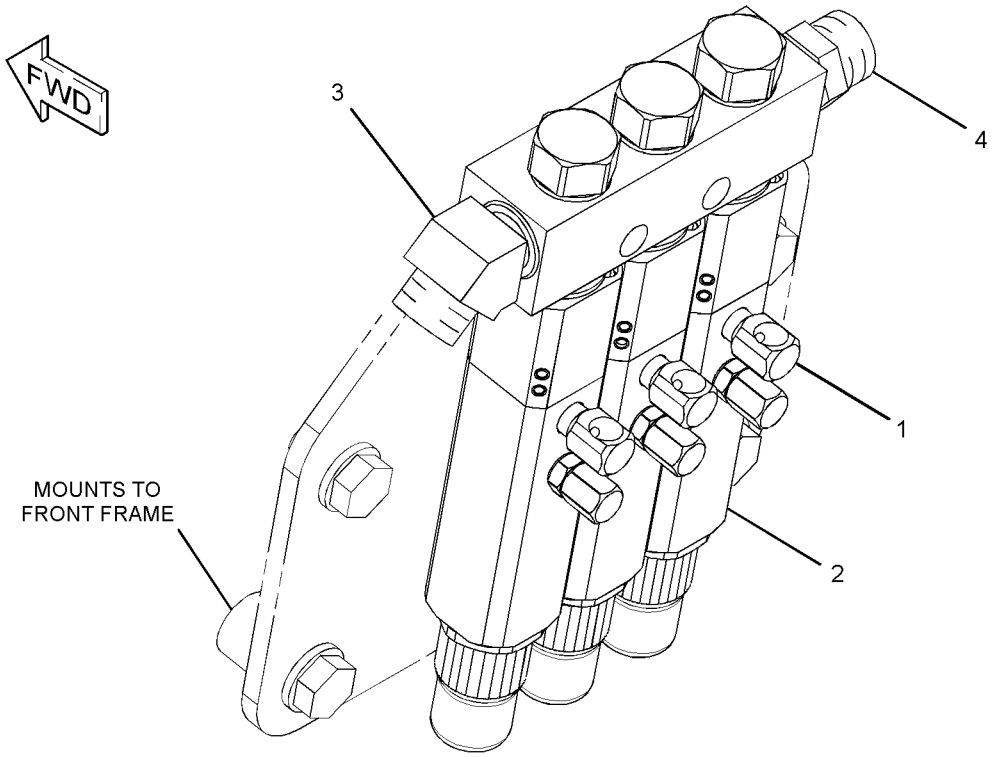

GRAPHIC #1 **<END>** g01388015

FRAME AND BODY

296-3368 VALVE GP-LUBE DISTRIBUTION–6-INJECTOR

S/N: B9K1-UP

PART OF 268-0247 LUBRICATION AR-AUTOMATIC

SMCS-7540 **i02764200**

NOTE	REF NO	GRAPHIC REF	PART NUMBER	QTY	PART NAME 1 2 3 4 5 6 (PRODUCT LEVEL)	SEE PAGE
	1	1	**2D-1683**	6	FITTING	
	2	1	**292-4086**	1	INJECTOR AS	
		1	**8X-1106**	6	FITTING AS-GREASE (1/8-27-THD)	
		1	**307-3245**	6	INJECTOR	
	3	1	*171-6731*	1	CONNECTOR AS	
		1	**6V-8398**	1	SEAL-O-RING	
		1	**8C-6871**	1	CONNECTOR	
	4	1	**3J-5390**	1	PLUG (PIPE)	

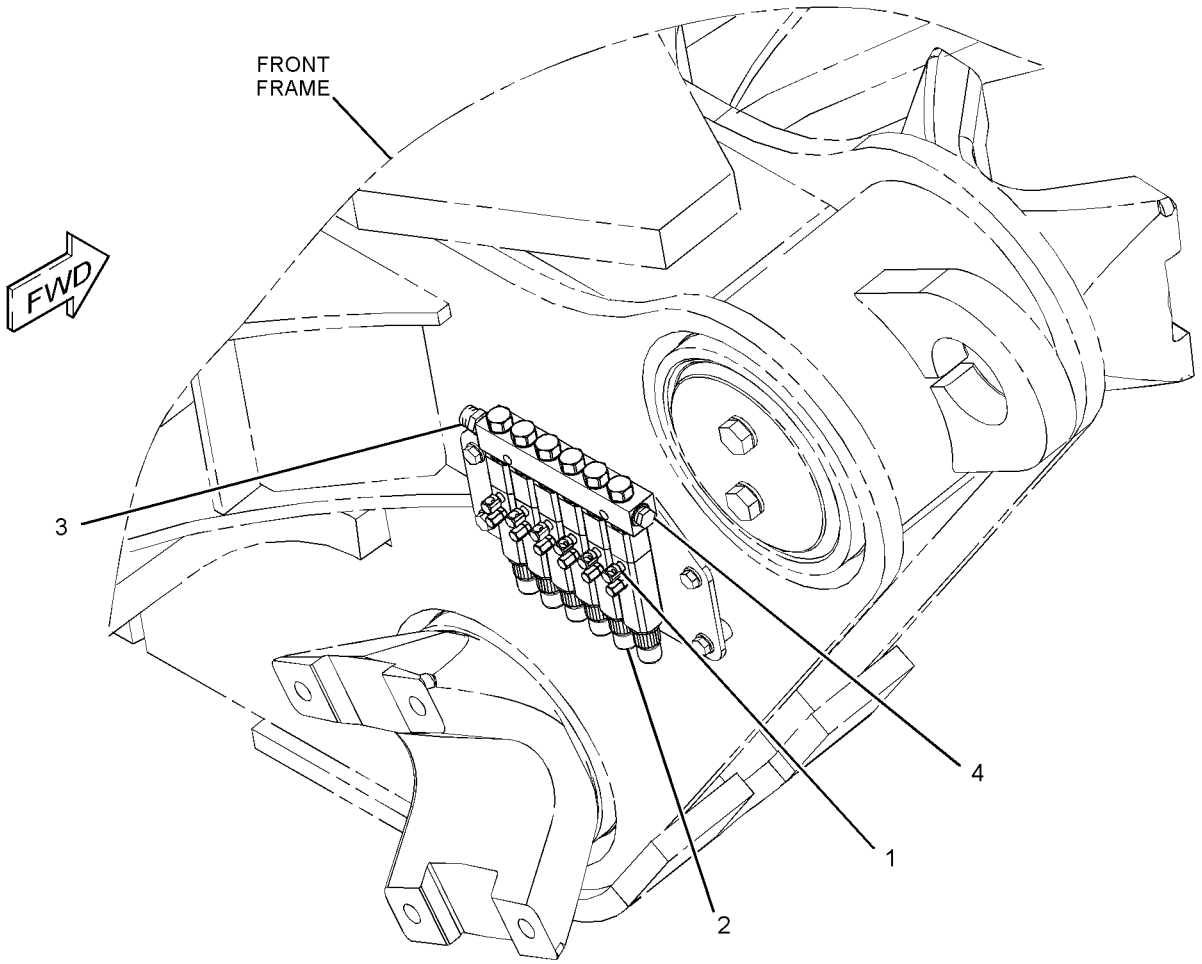

GRAPHIC #1 **<END>** g01388022

FRAME AND BODY

296-3369 VALVE GP-LUBE DISTRIBUTION–2-INJECTOR

S/N: B9K1-UP

PART OF 268-0247 LUBRICATION AR-AUTOMATIC

SMCS-7540 **i02764199**

NOTE	REF NO	GRAPHIC REF	PART NUMBER	QTY	PART NAME 1 2 3 4 5 6 (PRODUCT LEVEL)	SEE PAGE
	1	1	**2D-1683**	2	FITTING	
	2	1	**269-5346**	1	INJECTOR AS-GREASE (2-INJECTOR)	
		1	**8X-1106**	2	FITTING AS-GREASE (1/8-27-THD)	
		1	**307-3245**	2	INJECTOR	
	3	1	**2T-2396**	1	ELBOW	
	4	1	**6V-8398**	1	SEAL-O-RING	

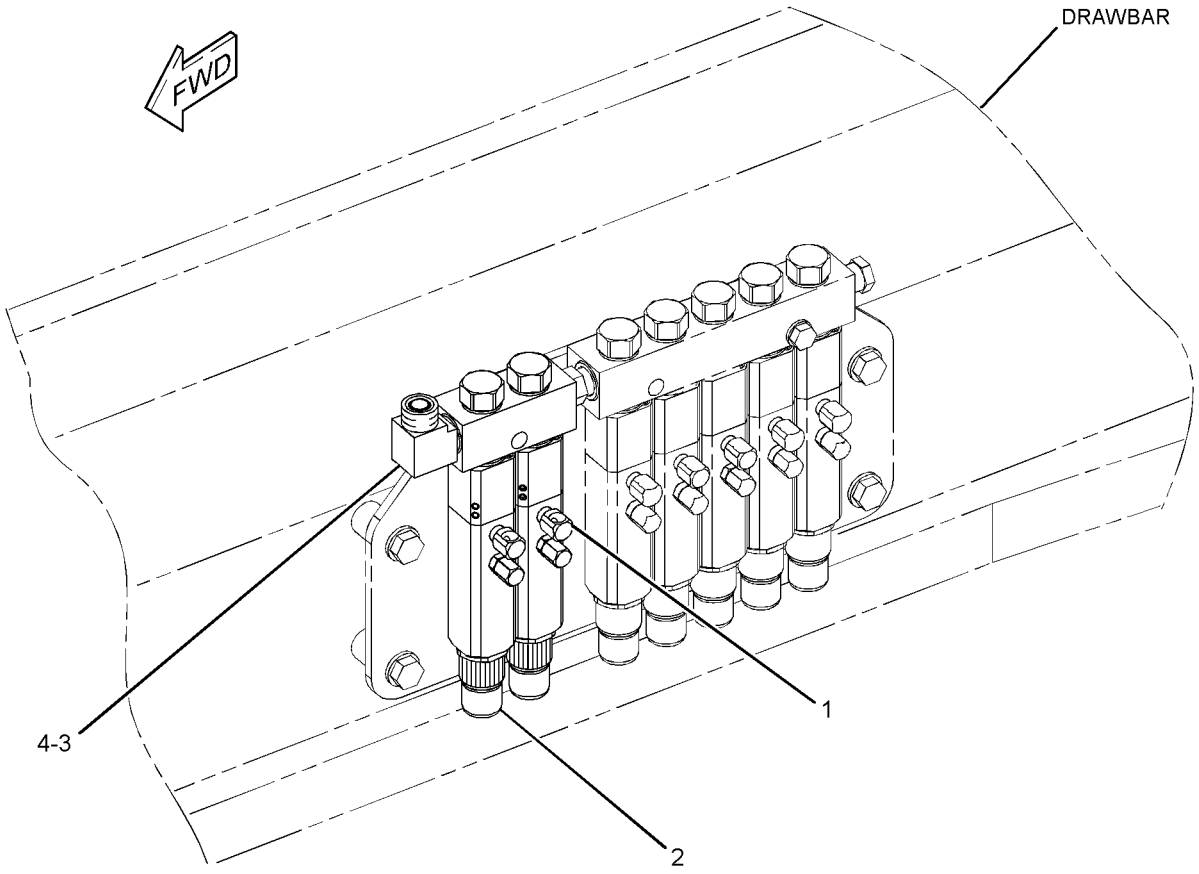

GRAPHIC #1 **<END>** g01388117

FRAME AND BODY

296-3370 VALVE GP-LUBE DISTRIBUTION–5-INJECTOR

S/N: B9K1-UP

PART OF 268-0247 LUBRICATION AR-AUTOMATIC

SMCS-7540 **i02764198**

NOTE	REF NO	GRAPHIC REF	PART NUMBER	QTY	PART NAME 1 2 3 4 5 6 (PRODUCT LEVEL)	SEE PAGE
	1	1	**2D-1683**	5	FITTING	
	2	1	**269-5353**	1	VALVE AS-LUBE DISTRIBUTION (5-INJECTOR)	
		1	**8X-1106**	5	FITTING AS-GREASE (1/8-27-THD)	
		1	**307-3245**	5	INJECTOR	
	3	1	**004-6683**	1	FITTING	
	4	1	**3J-5390**	1	PLUG	

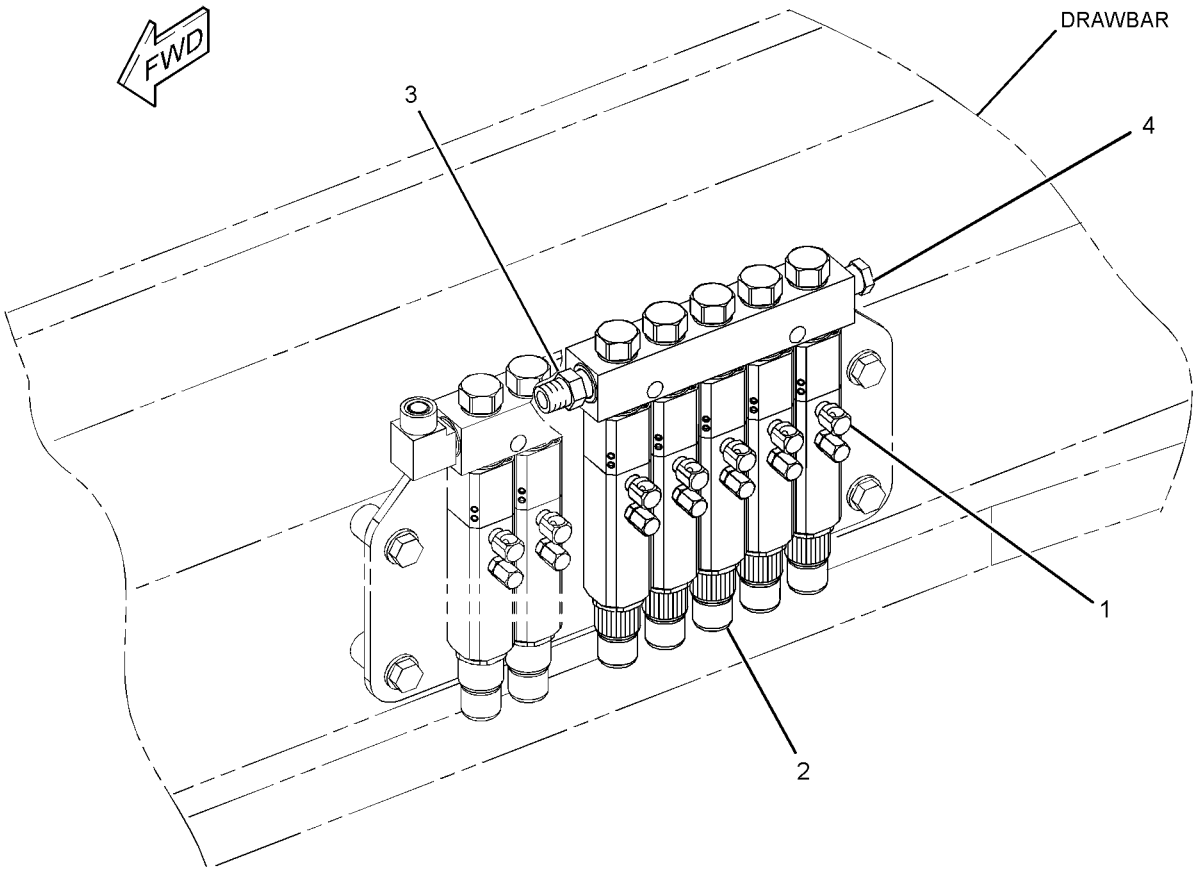

GRAPHIC #1 **<END>** g01388118

FRAME AND BODY

299-2262 VALVE GP-LUBE DISTRIBUTION–4-INJECTOR

S/N: B9K1-UP

PART OF 268-0247 LUBRICATION AR-AUTOMATIC

SMCS-7540 **i02764155**

NOTE	REF NO	GRAPHIC REF	PART NUMBER	QTY	PART NAME 1 2 3 4 5 6 (PRODUCT LEVEL)	SEE PAGE
	1	1	**2D-1683**	8	FITTING	
	2	1	**269-5352**	1	VALVE AS-LUBE DISTRIBUTION (4-INJECTOR)	
		1	**307-3245**	4	INJECTOR	
		1	**8X-1106**	4	FITTING AS-GREASE (1/8-27-THD)	
	3	1	**004-6683**	1	FITTING	
	4	1	**2T-2396**	1	ELBOW	
	5	1	**6V-8398**	1	SEAL-O-RING	

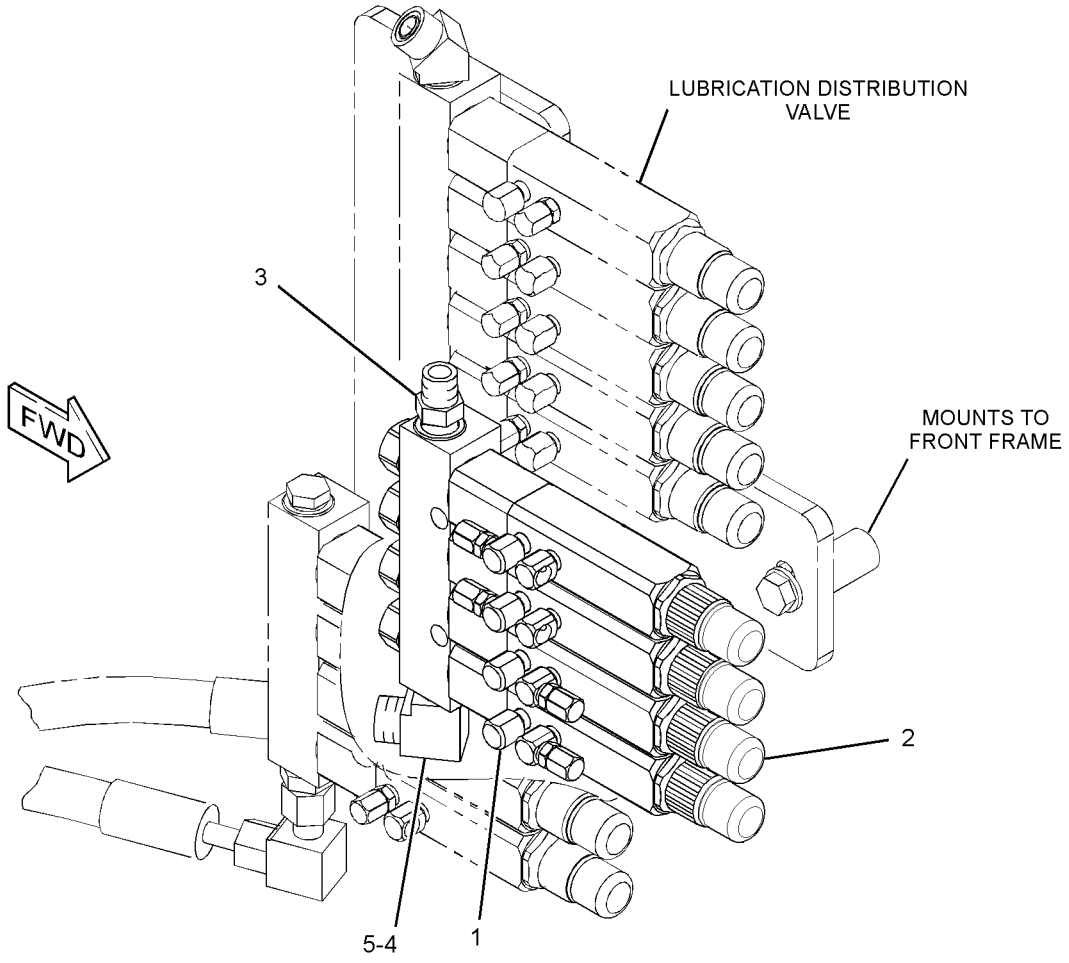

GRAPHIC #1 **<END>** g01387665

FRAME AND BODY

299-2263 VALVE GP-LUBE DISTRIBUTION–5-INJECTOR

S/N: B9K1-UP

PART OF 268-0247 LUBRICATION AR-AUTOMATIC

SMCS-7540 **i02764194**

NOTE	REF NO	GRAPHIC REF	PART NUMBER	QTY	PART NAME 1 2 3 4 5 6 (PRODUCT LEVEL)	SEE PAGE
	1	1	**2D-1683**	5	FITTING	
	2	1	**269-5353**	1	VALVE AS-LUBE DISTRIBUTION (5-INJECTOR)	
		1	**8X-1106**	5	FITTING AS-GREASE (1/8-27-THD)	
		1	**307-3245**	5	INJECTOR	
	3	1	*165-4925*	1	ELBOW AS	
		1	**2T-2171**	1	ELBOW	
		1	**6V-8398**	1	SEAL-O-RING	

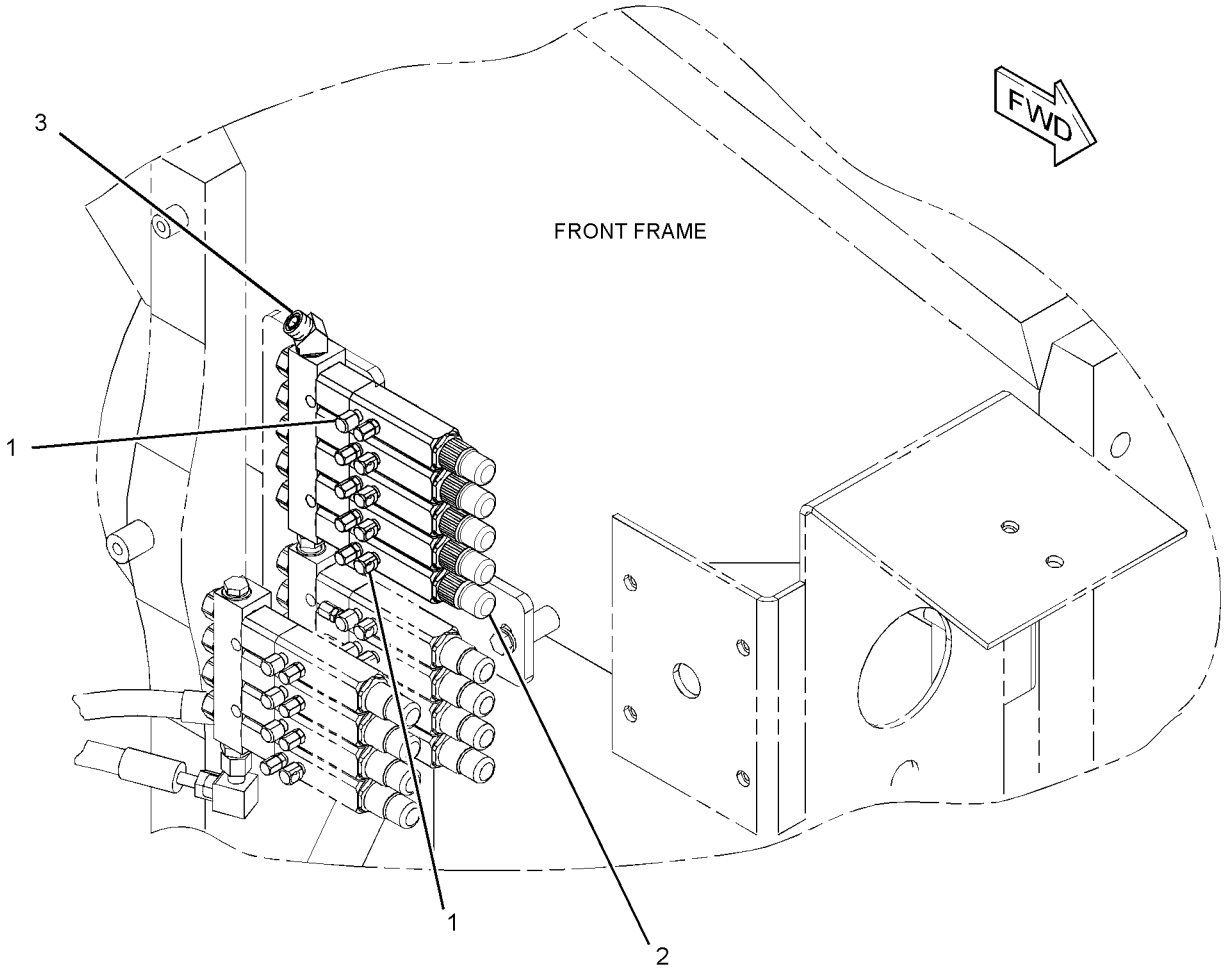

GRAPHIC #1 **<END>** g01387972

FRAME AND BODY

299-2264 VALVE GP-LUBE DISTRIBUTION–4-INJECTOR

S/N: B9K1-UP

PART OF 268-0247 LUBRICATION AR-AUTOMATIC

SMCS-7540 **i02859850**

NOTE	REF NO	GRAPHIC REF	PART NUMBER	QTY	PART NAME 1 2 3 4 5 6 (PRODUCT LEVEL)	SEE PAGE
	1	1	**2D-1683**	4	FITTING	
	2	1	**269-5352**	1	VALVE AS-LUBE DISTRIBUTION (4-INJECTOR)	
		1	**307-3245**	4	INJECTOR	
		1	**8X-1106**	4	FITTING AS-GREASE (1/8-27-THD)	
	3	1	*148-8367*	1	ELBOW AS	
		1	**6V-9850**	1	ELBOW	
		1	**6V-8397**	1	SEAL-O-RING	
	4	1	*203-2059*	1	CONNECTOR AS	
		1	**6V-8397**	1	SEAL-O-RING	
		1	**8C-6869**	1	CONNECTOR	
	5	1	**3J-5390**	1	PLUG	

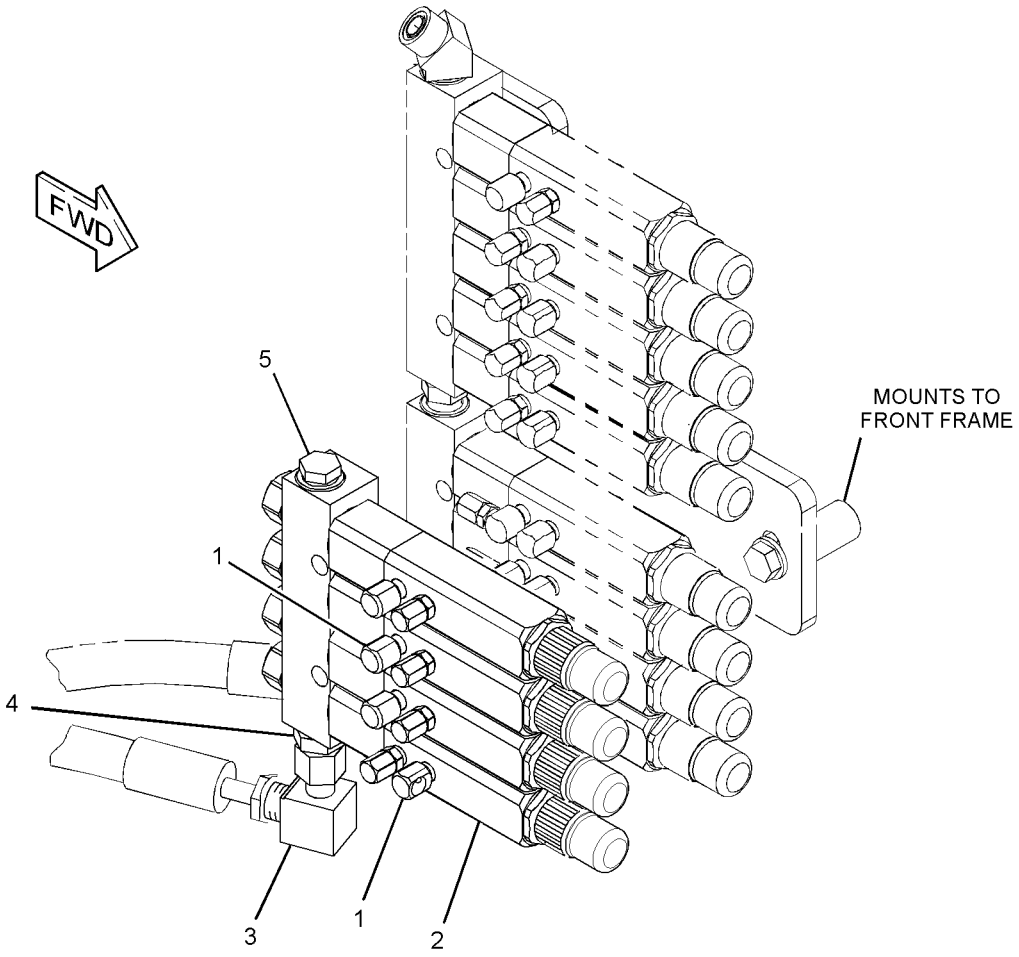

GRAPHIC #1 **<END>** g01387974

FRAME AND BODY

299-2265 VALVE GP-LUBE DISTRIBUTION–6-INJECTOR

S/N: B9K1-UP

PART OF 268-0247 LUBRICATION AR-AUTOMATIC

SMCS-7540 **i02890129**

NOTE	REF NO	GRAPHIC REF	PART NUMBER	QTY	PART NAME 1 2 3 4 5 6 (PRODUCT LEVEL)	SEE PAGE
	1	1	**2D-1683**	6	FITTING	
	2	1	**292-4086**	1	INJECTOR AS	
		1	**8X-1106**	6	FITTING AS-GREASE (1/8-27-THD)	
		1	**307-3245**	6	INJECTOR	
	3	1	*268-1543*	1	ELBOW AS	
		1	**2T-1925**	1	ELBOW	
		1	**6V-8397**	1	SEAL-O-RING	

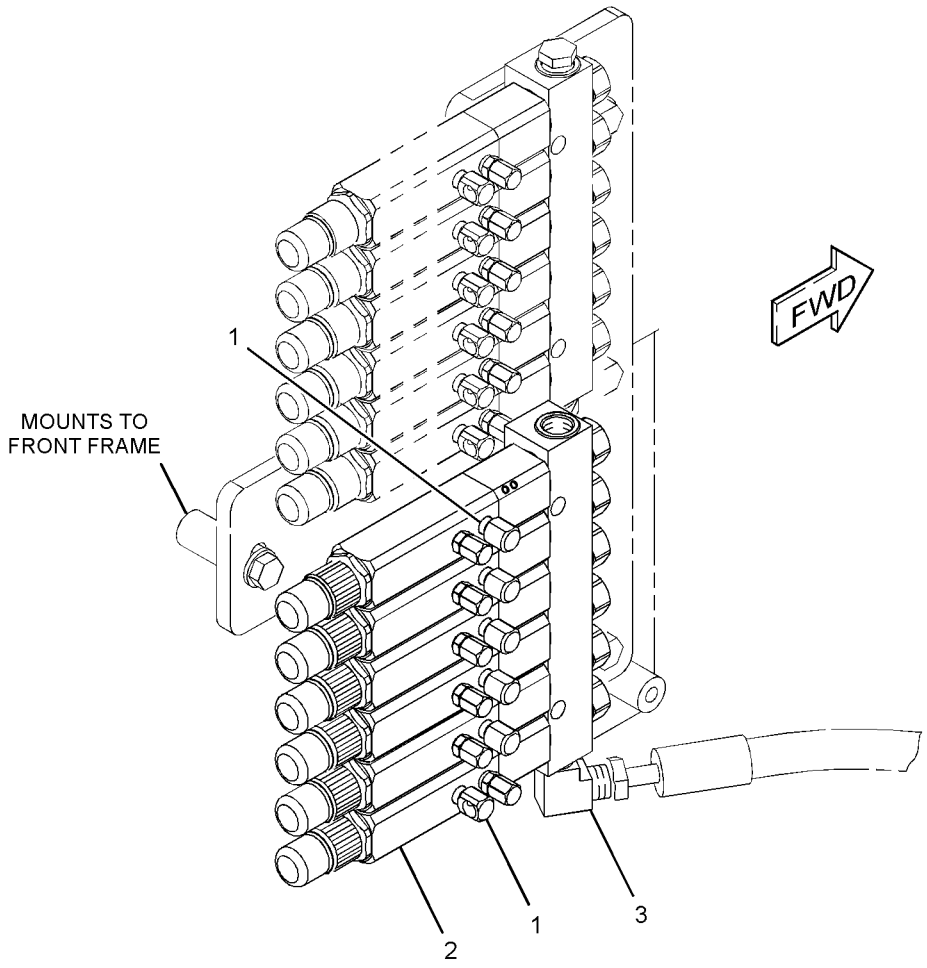

GRAPHIC #1 **<END>** g01441023

FRAME AND BODY

299-2266 VALVE GP-LUBE DISTRIBUTION–6-INJECTOR

S/N: B9K1-UP

PART OF 268-0247 LUBRICATION AR-AUTOMATIC

SMCS-7540 **i02764196**

NOTE	REF NO	GRAPHIC REF	PART NUMBER	QTY	PART NAME 1 2 3 4 5 6 (PRODUCT LEVEL)	SEE PAGE
	1	1	**2D-1683**	6	FITTING	
	2	1	**292-4086**	1	INJECTOR AS	
		1	**8X-1106**	6	FITTING AS-GREASE (1/8-27-THD)	
		1	**307-3245**	6	INJECTOR	
	3	1	**004-6683**	1	FITTING	
	4	1	**3J-5390**	1	PLUG	

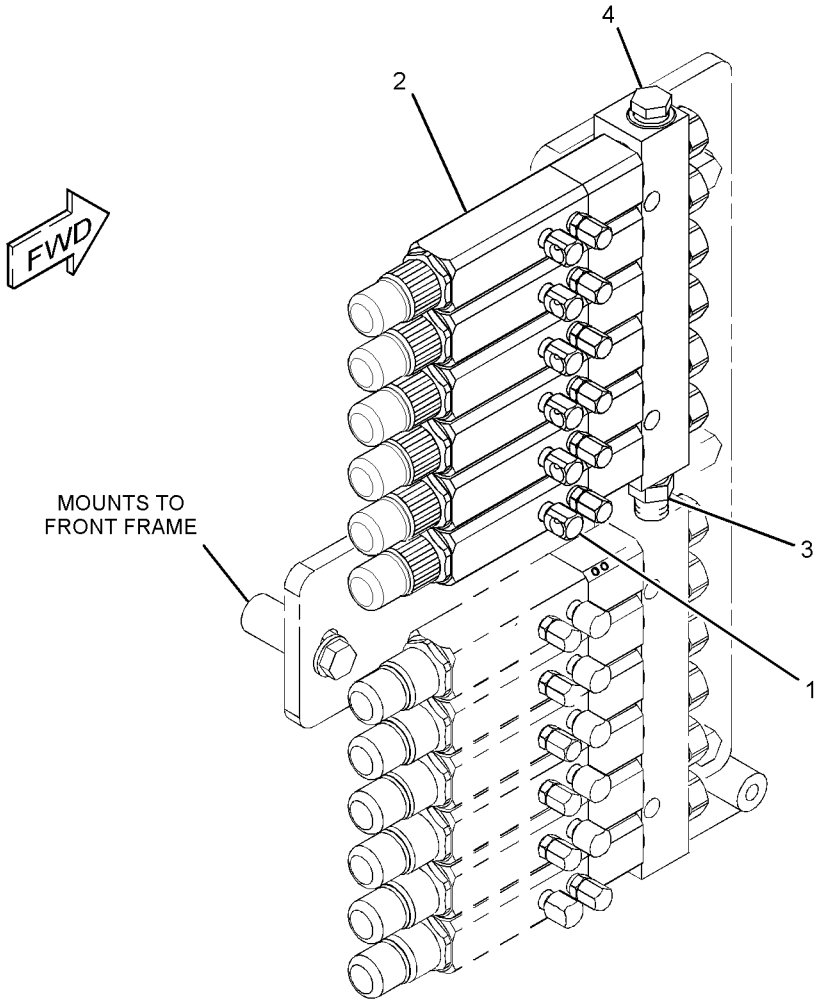

GRAPHIC #1

<END>

g01387995

BRAKING SYSTEM

219-7282 ACCUMULATOR GP-BRAKE–CHARGED

S/N: B9K1-367

PART OF 268-0239 CONTROL GP-SERVICE BRAKE

SMCS-4263, 4264 **i02308271**

NOTE	REF NO	GRAPHIC REF	PART NUMBER	QTY	PART NAME 1 2 3 4 5 6 (PRODUCT LEVEL)	SEE PAGE
	1	1	158-2306	1	VALVE-GAS	
					AVAILABLE REPAIR KIT(S):	
			170-0494	1	KIT-SEAL (BRAKE ACCUMULATOR)	
					(KIT INCLUDES ALL SEALS)	

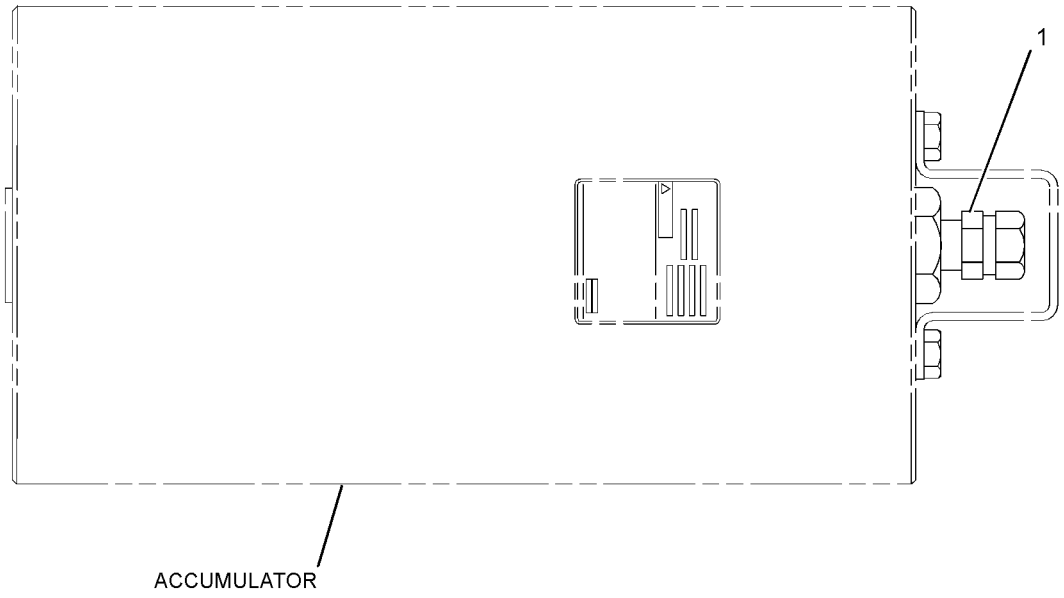

GRAPHIC #1 **<END>** g01164090

BRAKING SYSTEM

271-9321 BRAKE GP-SERVICE & PARKING—FRONT TANDEM

S/N: B9K1-UP

PART OF 273-5910 BRAKE GP-SERVICE & PARKING

SMCS-4251, 4267 **i03859129**

NOTE	REF NO	GRAPHIC REF	PART NUMBER	QTY	PART NAME 1 2 3 4 5 6 (PRODUCT LEVEL)	SEE PAGE
	1	2	5D-6296	1	CONE-BEARING	
	2	2	7I-4918	1	SPROCKET	
M	3	1	8X-0274	24	STUD-SPECIAL (M24X3-THD)	
	4	2	118-4910	1	HUB-BRAKE	
	5	2	119-3999	1	RING	
	6	1	166-8815	1	SEAL GP-FINAL DRIVE	
		1	4M-0736	2	RING-SEALING	
	7	1	271-9278	1	RETAINER AS	
		1	0S-0130	4	PIN	
	8	1	271-9283	1	HOUSING	
	9	1	118-4906	1	SPINDLE	
	10	2	118-4908	1	COVER	
	11	2	118-4909	1	SPACER (212.02X224.7X23-MM THK)	
	12	2	118-4911	1	SPACER (204X254X103.5-MM THK)	
	13	2	118-4912	1	RETAINER	
	14	1	123-7265	1	SEAL-RING	
	15	1	123-7266	1	SEAL-RING	
	16	2	123-7267	1	SEAL-RING	
	17	2	124-3520	1	SEAL-RING	
	18	1	131-5422	1	HOUSING	
	19	1	2G-5558	1	PISTON	
	20	2	2G-5593	1	PISTON	
	21	1	2G-5677	4	SPRING-GUIDE	
	22	1	2G-5681	4	SPRING	
	23	1	307-0191	18	SPRING AS	
	24	1	2H-6340	1	SEAL-O-RING	
	25	1	3J-1907	8	SEAL-O-RING	
B	26	2	4D-5642	1	SHIM PACK (INCLUDES 14-SHIMS)	
	27	1	5D-6297	1	CONE-BEARING	
	28	1,2	5D-6298	2	CUP-BEARING	
	29	2	5D-6328	1	DAMPER AS	
	30	2	5D-7523	1	SEAL-O-RING	
	31	1	5P-6266	1	SEAL-RING	
	32	1	5P-6268	1	SEAL-RING	
	33	2	5P-6270	1	SEAL-RING	
	34	1	6M-9155	4	PIN	
	35	1	6V-5839	12	WASHER (11X21X2.5-MM THK)	
	36	2	7D-7504	13	PLATE-OUTER	
M	37	2	8T-0357	8	BOLT (M16X2X70-MM)	
M	38	1	8T-0643	12	BOLT (M10X1.5X80-MM)	
M	39	2	8T-4184	6	BOLT (M12X1.75X45-MM)	
	40	2	8T-4223	6	WASHER-HARD (13.5X25.5X3-MM THK)	
	41	1	337-1943	1	SEAL-RECTANGULAR	
	42	2	9D-7987	1	SEAL	
	43	1	9S-8004	8	PLUG-O-RING	
	44	2	9W-7018	12	DISC-FRICTION	

B-USE AS REQUIRED
M-METRIC PART

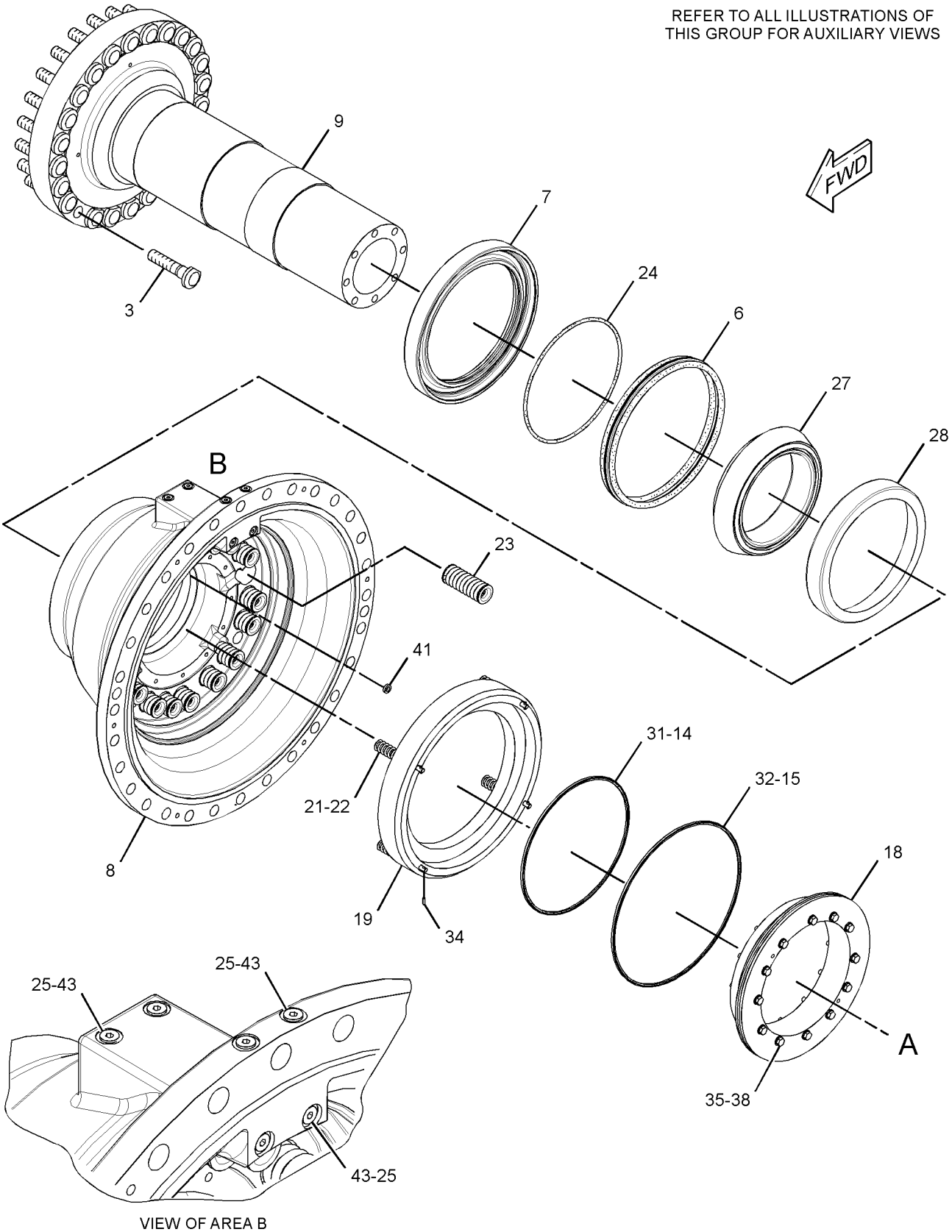

GRAPHIC #1

g01389002

271-9321 BRAKE GP-SERVICE & PARKING *(contd.)* **i03859129**

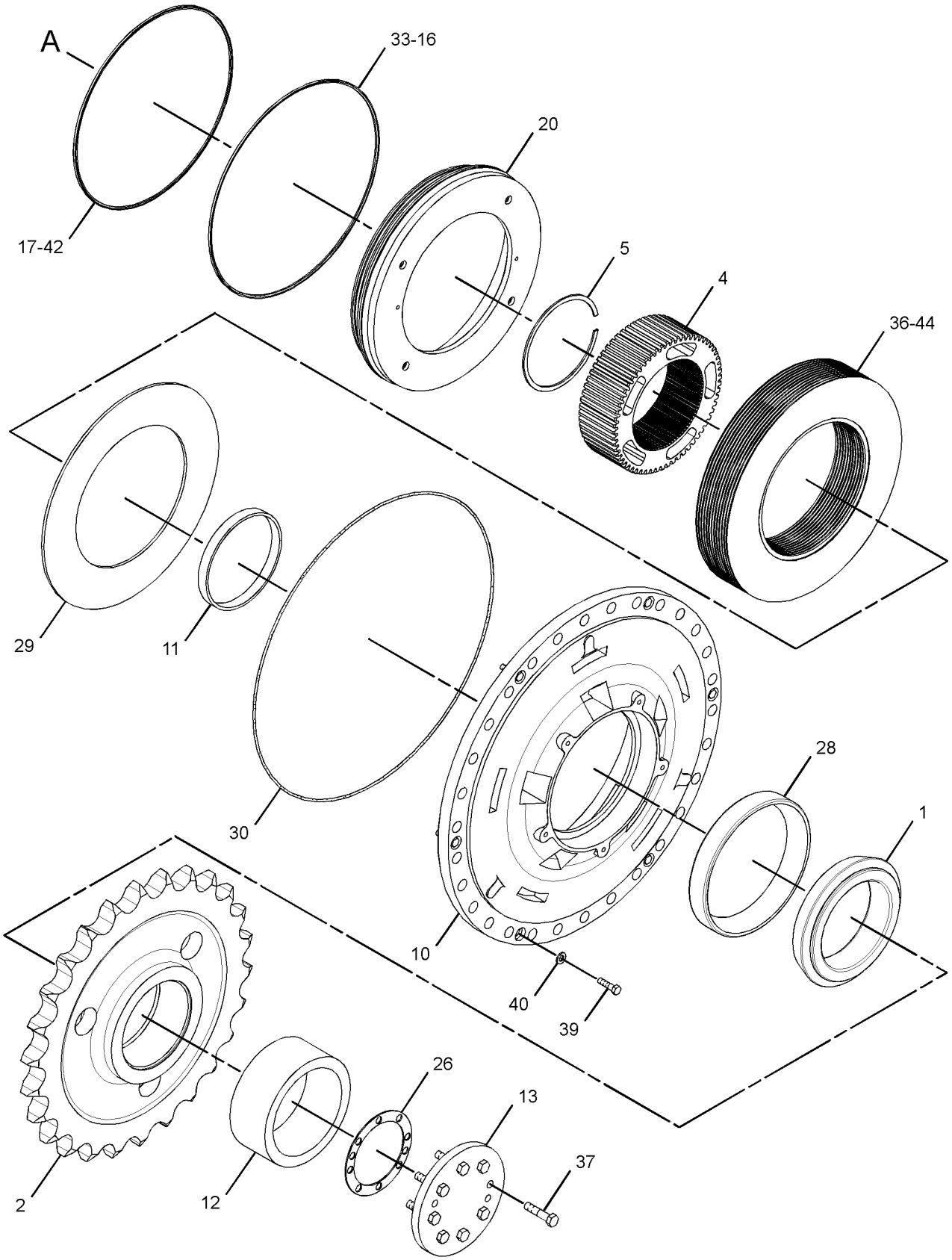

GRAPHIC #2 **<END>** g01389004

BRAKING SYSTEM

271-9322 BRAKE GP-SERVICE & PARKING—REAR TANDEM

S/N: B9K1-UP

PART OF 273-5910 BRAKE GP-SERVICE & PARKING

SMCS-4251, 4267 **i03859151**

NOTE	REF NO	GRAPHIC REF	PART NUMBER	QTY	PART NAME 1 2 3 4 5 6 (PRODUCT LEVEL)	SEE PAGE
	1	2	5D-6296	1	CONE-BEARING	
	2	2	7I-4918	1	SPROCKET	
M	3	1	8X-0274	24	STUD-SPECIAL (M24X3-THD)	
	4	2	118-4910	1	HUB-BRAKE	
	5	2	119-3999	1	RING	
	6	1	166-8815	1	SEAL GP-FINAL DRIVE	
		1	4M-0736	2	RING-SEALING	
	7	1	271-9278	1	RETAINER AS	
		1	0S-0130	4	PIN	
	8	1	271-9283	1	HOUSING	
	9	1	118-4906	1	SPINDLE	
	10	2	118-4908	1	COVER	
	11	2	118-4909	1	SPACER (212.02X224.7X23-MM THK)	
	12	2	118-4911	1	SPACER (204X254X103.5-MM THK)	
	13	2	118-4912	1	RETAINER	
	14	1	123-7265	1	SEAL-RING	
	15	1	123-7266	1	SEAL-RING	
	16	2	123-7267	1	SEAL-RING	
	17	2	124-3520	1	SEAL-RING	
	18	1	131-5422	1	HOUSING	
	19	1	2G-5558	1	PISTON	
	20	2	2G-5593	1	PISTON	
	21	1	2G-5677	4	SPRING-GUIDE	
	22	1	2G-5681	4	SPRING	
	23	1	307-0191	18	SPRING AS	
	24	1	2H-6340	1	SEAL-O-RING	
	25	1	3J-1907	8	SEAL-O-RING	
B	26	2	4D-5642	1	SHIM PACK (INCLUDES 14-SHIMS)	
	27	1	5D-6297	1	CONE-BEARING	
	28	1,2	5D-6298	2	CUP-BEARING	
	29	2	5D-6328	1	DAMPER AS	
	30	2	5D-7523	1	SEAL-O-RING	
	31	1	5P-6266	1	SEAL-RING	
	32	1	5P-6268	1	SEAL-RING	
	33	2	5P-6270	1	SEAL-RING	
	34	1	6M-9155	4	PIN	
	35	1	6V-5839	12	WASHER (11X21X2.5-MM THK)	
	36	2	7D-7504	13	PLATE-OUTER	
M	37	2	8T-0357	8	BOLT (M16X2X70-MM)	
M	38	1	8T-0643	12	BOLT (M10X1.5X80-MM)	
M	39	2	8T-4184	6	BOLT (M12X1.75X45-MM)	
	40	2	8T-4223	6	WASHER-HARD (13.5X25.5X3-MM THK)	
	41	1	337-1943	1	SEAL-RECTANGULAR	
	42	2	9D-7987	1	SEAL	
	43	1	9S-8004	8	PLUG-O-RING	
	44	2	9W-7018	12	DISC-FRICTION	

B-USE AS REQUIRED
M-METRIC PART

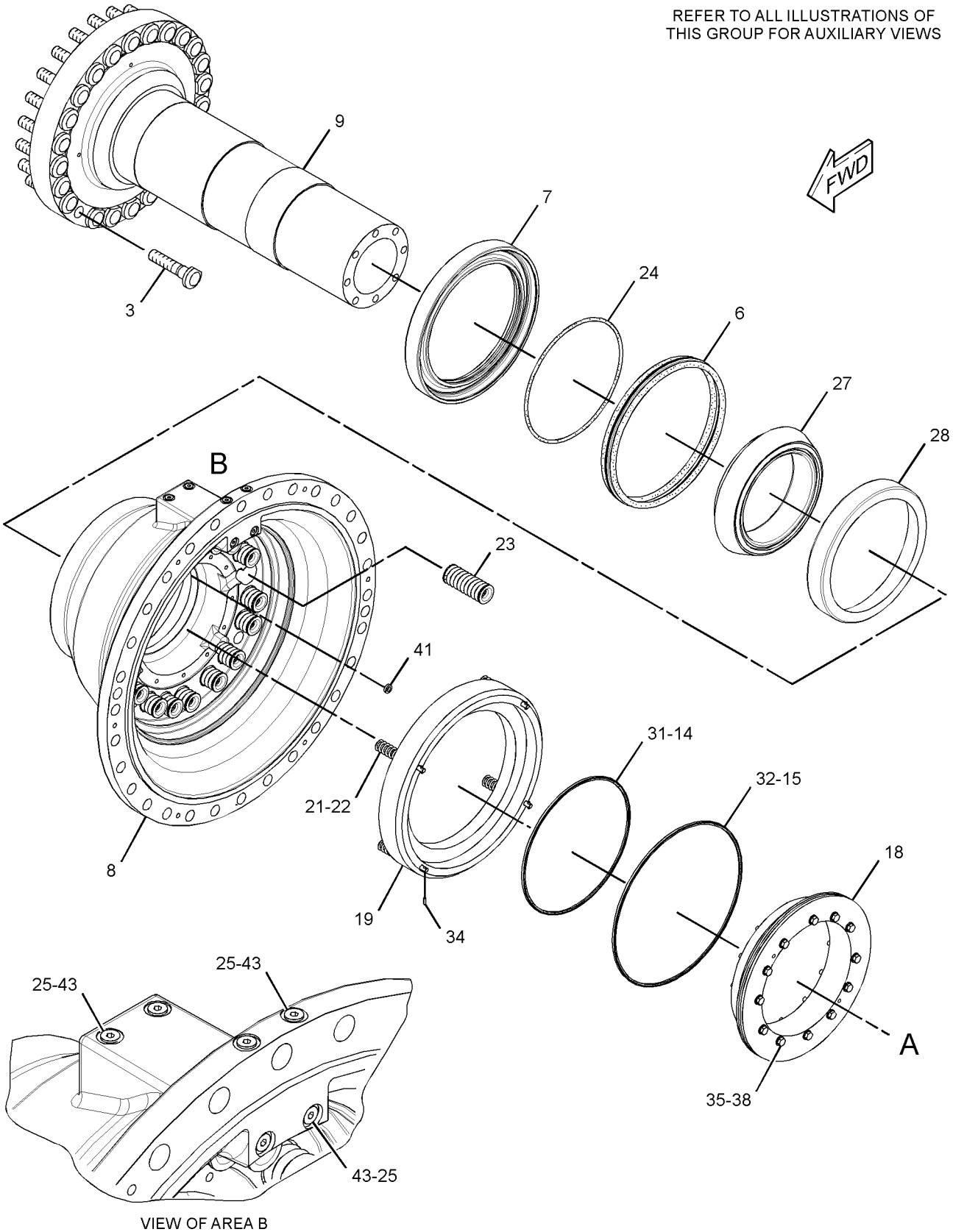

GRAPHIC #1

g01389373

271-9322 BRAKE GP-SERVICE & PARKING *(contd.)* i03859151

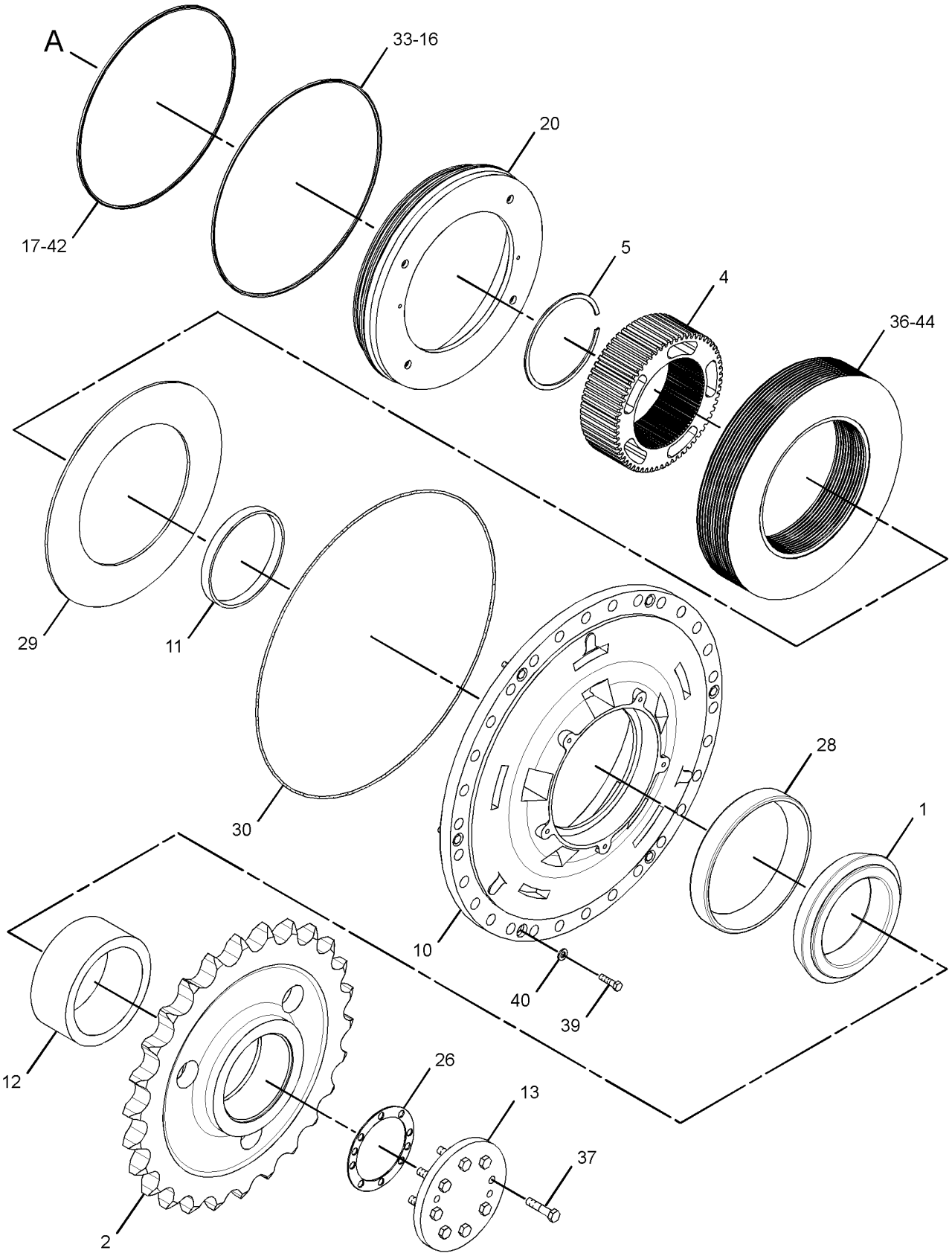

GRAPHIC #2 **<END>** g01389374

BRAKING SYSTEM

273-5910 BRAKE GP-SERVICE & PARKING–TANDEM

S/N: B9K1-UP

PART OF 259-9204 COMMON AR

SMCS-4251, 4267 **i02813678**

NOTE	REF NO	GRAPHIC REF	PART NUMBER	QTY	PART NAME 1 2 3 4 5 6 (PRODUCT LEVEL)	SEE PAGE
Y	1	1	*120-4409*	1	FASTENER GP-BRAKE	627
Y	2	1	*271-9321*	2	BRAKE GP-SERVICE & PARKING (FRONT TANDEM)	613
Y	3	1	*271-9322*	2	BRAKE GP-SERVICE & PARKING (REAR TANDEM)	616

Y-SEPARATE ILLUSTRATION

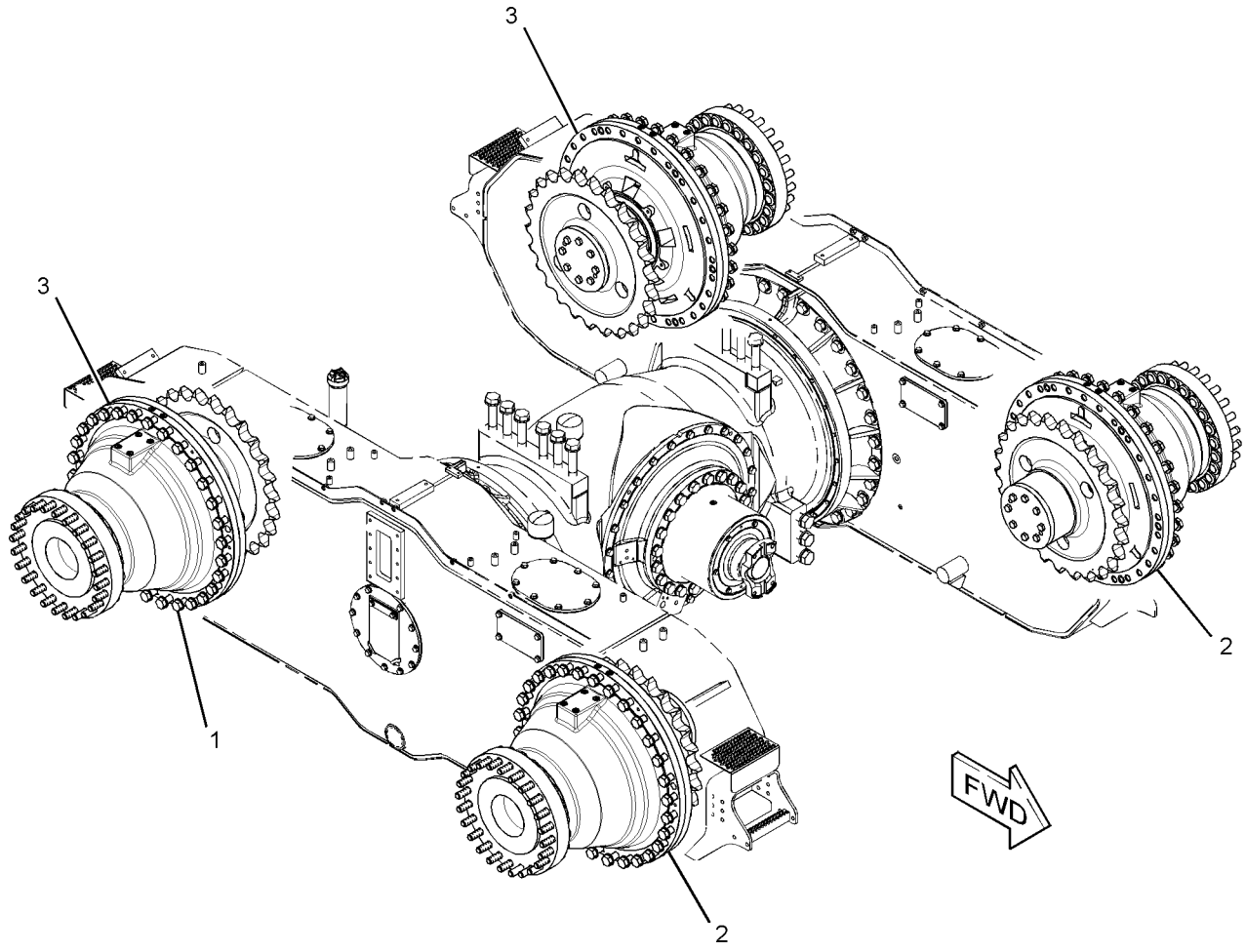

GRAPHIC #1 **<END>** g01386890

BRAKING SYSTEM

268-0239 CONTROL GP-SERVICE BRAKE

S/N: B9K1-357

PART OF 259-9204 COMMON AR

SMCS-4265, 4269 **i02899207**

NOTE	REF NO	GRAPHIC REF	PART NUMBER	QTY	PART NAME 1 2 3 4 5 6 (PRODUCT LEVEL)	SEE PAGE
Y	1	3	**2G-6535**	2	SLACK ADJUSTER GP	630
Y	2	2	**5T-1060**	1	PUMP & MOTOR GP-BRAKE RELEASE (PARKING, SECONDARY)	628
	3	2	**5T-1086**	1	PLATE	
	4	2,3	**6V-0852**	3	CAP-DUST	
I	5	2	**8R-7402**	1	HOSE AS	
	6	2,3	**9D-7198**	3	JUNCTION BLOCK	
	7	3	**126-7146**	2	TUBE AS	
	8	3	**126-7147**	2	TUBE AS	
	9	3	**126-7148**	2	TUBE AS	
	10	3	**126-7149**	2	TUBE AS	
	11	3	**129-8493**	2	BRACKET	
I	12	2	**141-4328**	1	HOSE AS	
	13	2	**148-8425**	1	TEE AS	
		2	**8T-4834**	1	TEE-SWIVEL ORIFICE	
		2	**5K-9090**	1	SEAL-O-RING	
Y	14	2	**164-7474**	1	VALVE GP-CHECK	789
Y	15	2	*219-7282*	2	ACCUMULATOR GP-BRAKE (CHARGED)	612
I	16	1	**233-9522**	1	HOSE AS	
	17	2	**268-3678**	1	SPACER (11X16X45-MM THK)	
Y	18	2	**272-0984**	1	MANIFOLD GP-CONTROL (BRAKE CHARGE, HYD FAN CONTROL)	744
	19	2	**275-8343**	1	BRACKET AS	
I	20	2	**279-8965**	1	HOSE AS	
I	21	2	**307-3239**	1	HOSE AS	
I	22	1	**279-8972**	1	HOSE AS	
	23	2	**279-8976**	1	PLATE AS	
I	24	1	**307-3240**	1	HOSE AS	
I	25	1	**280-1453**	1	HOSE AS	
I	26	2	**282-6823**	1	HOSE AS	
	27	1	**282-6834**	1	TUBE AS	
Y	28	1	**283-9560**	1	MANIFOLD GP-CONTROL (PARKING BRAKE)	746
	29	3	**285-5267**	4	PLATE	
I	30	2	**286-1325**	1	HOSE AS	
I	31	1	**307-3241**	1	HOSE AS	
I	32	2	**286-1327**	1	HOSE AS	
I	33	1	**286-3474**	1	HOSE AS	
I	34	2	**286-3475**	1	HOSE AS	
I	35	1	**286-3476**	1	HOSE AS	
	36	1	**288-3561**	2	PLATE	
J	37	1	**294-0978**	1	VALVE GP-BRAKE CONTROL	
		1	**117-7798**	1	BOOT	
		1	**117-7799**	1	KIT-SEAL (BRAKE VALVE) (INCLUDES BOOT, CUP, QUAD RING & O-RINGS)	
I	38	2	**307-3225**	1	HOSE AS	
	39	2	**307-3226**	1	BLOCK	
	40	2	**307-3227**	1	BLOCK	
	41	2	**307-3228**	1	BLOCK	
I	42	2	**307-3229**	1	HOSE AS	
I	43	2	**307-3230**	1	HOSE AS	
	44	2	**307-3231**	1	BLOCK	
	45	1	**307-3232**	2	BLOCK	
	46	1	**307-3233**	2	BLOCK	
	47	1	**307-3234**	2	BLOCK	
	48	2	**307-3235**	1	PLATE	
I	49	2	**307-3236**	1	HOSE AS	

268-0239 **CONTROL GP-SERVICE BRAKE** *(contd.)* **i02899207**

NOTE	REF NO	GRAPHIC REF	PART NUMBER	QTY	PART NAME 1 2 3 4 5 6 (PRODUCT LEVEL)	SEE PAGE
I	50	2	**307-3237**	1	HOSE AS	
I	51	2	**307-3238**	1	HOSE AS	
	52	2	**067-3045**	2	CLIP	
M	53	3	**133-7810**	4	STUD-TAPERLOCK (M10X1.5X45-MM)	
	54	2	*148-8306*	1	ADAPTER AS	
		2	**5P-5777**	1	ADAPTER-O-RING	
		2	**7M-8485**	1	SEAL-O-RING	
	55	2	*148-8315*	1	CONNECTOR AS	
		2	**6V-8642**	1	CONNECTOR	
		2	**2M-9780**	1	SEAL-O-RING	
		2	**7J-9108**	1	SEAL-O-RING	
	56	1	*148-8318*	4	CONNECTOR AS	
					(EACH INCLUDES)	
		1	**6V-8634**	1	CONNECTOR	
		1	**3K-0360**	1	SEAL-O-RING	
		1	**6V-8397**	1	SEAL-O-RING	
	57	3	*148-8328*	2	CONNECTOR AS	
					(EACH INCLUDES)	
		3	**6V-8633**	1	CONNECTOR	
		3	**3D-2824**	1	SEAL-O-RING	
		3	**6V-8398**	1	SEAL-O-RING	
	58	2	*148-8335*	1	CONNECTOR AS	
		2	**6V-8635**	1	CONNECTOR	
		2	**5K-9090**	1	SEAL-O-RING	
		2	**7M-8485**	1	SEAL-O-RING	
	59	2	*148-8336*	2	CONNECTOR AS	
					(EACH INCLUDES)	
		2	**6V-8636**	1	CONNECTOR	
		2	**3J-1907**	1	SEAL-O-RING	
		2	**6V-8397**	1	SEAL-O-RING	
	60	2,3	*148-8340*	7	CONNECTOR AS	
					(EACH INCLUDES)	
		2,3	**6V-8639**	1	CONNECTOR	
		2,3	**3K-0360**	1	SEAL-O-RING	
		2,3	**6V-8398**	1	SEAL-O-RING	
	61	2	*148-8342*	2	CONNECTOR AS	
					(EACH INCLUDES)	
		2	**6V-8632**	1	CONNECTOR	
		2	**3K-0360**	1	SEAL-O-RING	
		2	**7J-9108**	1	SEAL-O-RING	
	62	3	*148-8345*	4	CONNECTOR AS	
					(EACH INCLUDES)	
		3	**6V-8638**	1	CONNECTOR	
		3	**2M-9780**	1	SEAL-O-RING	
		3	**6V-8398**	1	SEAL-O-RING	
	63	2	*148-8347*	2	ELBOW AS	
					(EACH INCLUDES)	
		2	**6V-9007**	1	ELBOW	
		2	**3D-2824**	1	SEAL-O-RING	
		2	**6V-9746**	1	SEAL-O-RING	
	64	1	*148-8354*	2	ELBOW AS	
					(EACH INCLUDES)	
		1	**6V-9002**	1	ELBOW	
		1	**3K-0360**	1	SEAL-O-RING	
		1	**6V-8398**	1	SEAL-O-RING	
	65	2	*148-8361*	1	ELBOW AS	
		2	**6V-9200**	1	ELBOW	
		2	**3J-7354**	1	SEAL-O-RING	
		2	**6V-8397**	1	SEAL-O-RING	

268-0239 **CONTROL GP-SERVICE BRAKE** *(contd.)* **i02899207**

NOTE	REF NO	GRAPHIC REF	PART NUMBER	QTY	PART NAME 1 2 3 4 5 6 (PRODUCT LEVEL)	SEE PAGE
	66	1	*148-8364*	4	ELBOW AS	
					(EACH INCLUDES)	
		1	**6V-8625**	1	ELBOW	
		1	**3K-0360**	1	SEAL-O-RING	
		1	**6V-8398**	1	SEAL-O-RING	
	67	2	*148-8367*	2	ELBOW AS	
					(EACH INCLUDES)	
		2	**6V-9850**	1	ELBOW	
		2	**6V-8397**	1	SEAL-O-RING	
	69	2	*148-8378*	2	ELBOW AS	
					(EACH INCLUDES)	
		2	**6V-8724**	1	ELBOW	
		2	**3J-1907**	1	SEAL-O-RING	
		2	**6V-8397**	1	SEAL-O-RING	
	70	2	*148-8393*	1	ELBOW AS	
		2	**6V-9852**	1	ELBOW	
		2	**7J-9108**	1	SEAL-O-RING	
	72	2	*148-8435*	2	TEE AS	
					(EACH INCLUDES)	
		2	**6V-8781**	1	TEE-FACE SEAL	
		2	**3J-1907**	1	SEAL-O-RING	
		2	**6V-8397**	2	SEAL-O-RING	
	73	1	*148-8436*	1	TEE AS	
		1	**6V-8775**	1	TEE-FACE SEAL	
		1	**3K-0360**	1	SEAL-O-RING	
		1	**6V-8398**	2	SEAL-O-RING	
	74	1	*148-8444*	1	TEE AS-SWIVEL	
		1	**6V-9837**	1	TEE-SWIVEL	
		1	**6V-8398**	2	SEAL-O-RING	
	75	2	*148-8446*	1	TEE AS-SWIVEL	
		2	**6V-9838**	1	TEE-SWIVEL	
		2	**7J-9108**	2	SEAL-O-RING	
	76	2	**149-7738**	3	CLIP	
	77	2	*150-4037*	1	TEE AS	
		2	**6V-9844**	1	TEE-SWIVEL	
		2	**6V-8398**	2	SEAL-O-RING	
	78	2,3	*150-4043*	9	CONNECTOR AS	
					(EACH INCLUDES)	
		2,3	**6V-9873**	1	CONNECTOR	
		2,3	**3J-1907**	1	SEAL-O-RING	
		2,3	**6V-8398**	1	SEAL-O-RING	
	79	2	*150-4048*	1	ELBOW AS	
		2	**6V-8722**	1	ELBOW	
		2	**3K-0360**	1	SEAL-O-RING	
		2	**7J-9108**	1	SEAL-O-RING	
	80	2	*161-8560*	1	CONNECTOR AS	
		2	**8C-6758**	1	CONNECTOR	
		2	**3J-1907**	1	SEAL-O-RING	
		2	**7J-9108**	1	SEAL-O-RING	
	82	2,3	*164-5567*	3	COUPLER AS-QUICK DISCONNECT (MALE)	
					(EACH INCLUDES)	
		2,3	**6V-3965**	1	FITTING (QUICK DISCONNECT)	
		2,3	**214-7568**	1	SEAL-O-RING	
	83	2	*164-5598*	2	PLUG AS	
					(EACH INCLUDES)	
		2	**7M-8485**	1	SEAL-O-RING	
		2	**8J-0426**	1	PLUG	
	84	2	**1P-4582**	4	FLANGE-HALF	
	85	2	*281-5977*	1	CONNECTOR AS	

268-0239 CONTROL GP-SERVICE BRAKE *(contd.)* i02899207

NOTE	REF NO	GRAPHIC REF	PART NUMBER	QTY	PART NAME 1 2 3 4 5 6 (PRODUCT LEVEL)	SEE PAGE
		2	**6V-8642**	1	CONNECTOR	
		2	**228-7091**	1	SEAL-O-RING	
		2	**238-5081**	1	SEAL-O-RING	
	86	3	**3G-8047**	2	GROMMET	
	87	2,3	**3G-8054**	3	CLIP (TAB)	
	88	2,3	**3G-8057**	3	CLIP (SLOT)	
	89	2	**4J-0520**	1	SEAL-O-RING	
	90	2	**4J-0527**	2	SEAL-O-RING	
	92	2	**5K-5338**	2	CLIP	
	93	2	**5P-7464**	1	CLIP (SLOT)	
	94	2	**5P-7465**	1	CLIP (TAB)	
	95	3	**5P-9299**	16	CLIP	
	96	2	**5S-7379**	2	BOLT (3/8-16X0.875-IN)	
	97	1	**6D-4244**	1	CLIP	
	98	2	**6D-4246**	1	CLIP	
	99	1,3	**6D-4247**	6	CLIP	
	100	2	**6V-0974**	1	GROMMET	
	101	2	**6V-1249**	1	GROMMET	
	102	2	**7D-7233**	1	CLIP	
	103	2	**7X-0550**	4	WASHER-HARD (13.5X32X5-MM THK)	
	104	2	**8C-3206**	2	FLANGE-HALF	
	105	1,2,3	**8T-4121**	66	WASHER-HARD (11X21X2.5-MM THK)	
M	106	1,2,3	**8T-4133**	11	NUT (M10X1.5-THD)	
M	107	1,2	**8T-4136**	17	BOLT (M10X1.5X25-MM)	
M	108	2,3	**8T-4137**	24	BOLT (M10X1.5X20-MM)	
M	109	2,3	**8T-4139**	9	BOLT (M12X1.75X30-MM)	
	110	3	**8T-4167**	2	WASHER-HARD (26X44X4-MM THK)	
M	111	2	**8T-4183**	2	BOLT (M12X1.75X40-MM)	
M	112	2	**8T-4184**	8	BOLT (M12X1.75X45-MM)	
M	113	2	**8T-4186**	4	BOLT (M10X1.5X40-MM)	
M	114	2	**8T-4192**	2	BOLT (M12X1.75X25-MM)	
M	115	2,3	**8T-4195**	4	BOLT (M10X1.5X30-MM)	
M	116	2	**8T-4196**	1	BOLT (M10X1.5X35-MM)	
	117	2,3	**8T-4223**	19	WASHER-HARD (13.5X25.5X3-MM THK)	
	118	3	**8T-4224**	4	WASHER-HARD (8.8X16X2-MM THK)	
M	119	2	**8T-4244**	2	NUT (M12X1.75-THD)	
M	120	2	**8T-5005**	3	BOLT (M10X1.5X70-MM)	
M	121	1	**8T-6685**	2	BOLT (M10X1.5X110-MM)	
M	123	3	**8T-6912**	4	BOLT (M8X1.25X50-MM)	
	124	2	**8T-7934**	4	WASHER-HARD (11X21X5-MM THK)	
	125	2	**9X-8250**	5	CLIP	
M	126	2	**8T-6466**	2	BOLT (M10X1.5X60-MM)	
	127	1	*148-8374*	2	ELBOW AS	
					(EACH INCLUDES)	
		1	**3K-0360**	1	SEAL-O-RING	
		1	**6V-8397**	1	SEAL-O-RING	
		1	**6V-8723**	1	ELBOW	
	128	2	*148-8410*	1	PLUG AS	
		2	**2M-9780**	1	SEAL-O-RING	
		2	**9S-4190**	1	PLUG-O-RING	
					AVAILABLE REPAIR KIT(S):	
J			**183-4787**	1	KIT-REPAIR (BRAKE)	
					(INCLUDES PLUG, SEAL-O-RING & SPRING)	

I-REFER TO HYDRAULIC INFORMATION SYSTEM
J-KIT MARKED J SERVICES PART(S) MARKED J
M-METRIC PART
Y-SEPARATE ILLUSTRATION

268-0239 **CONTROL GP-SERVICE BRAKE** *(contd.)* **i02899207**

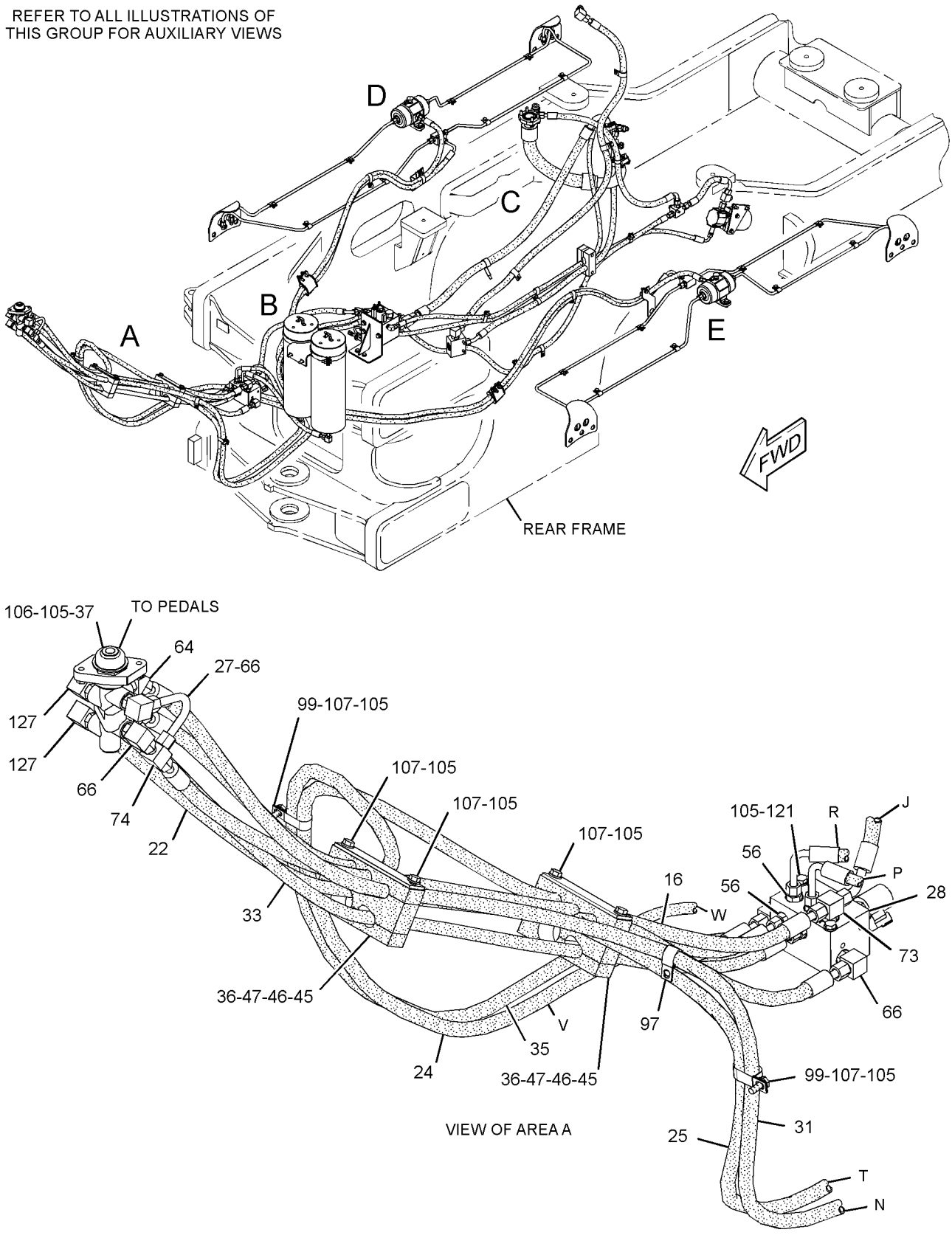

GRAPHIC #1

g01665473

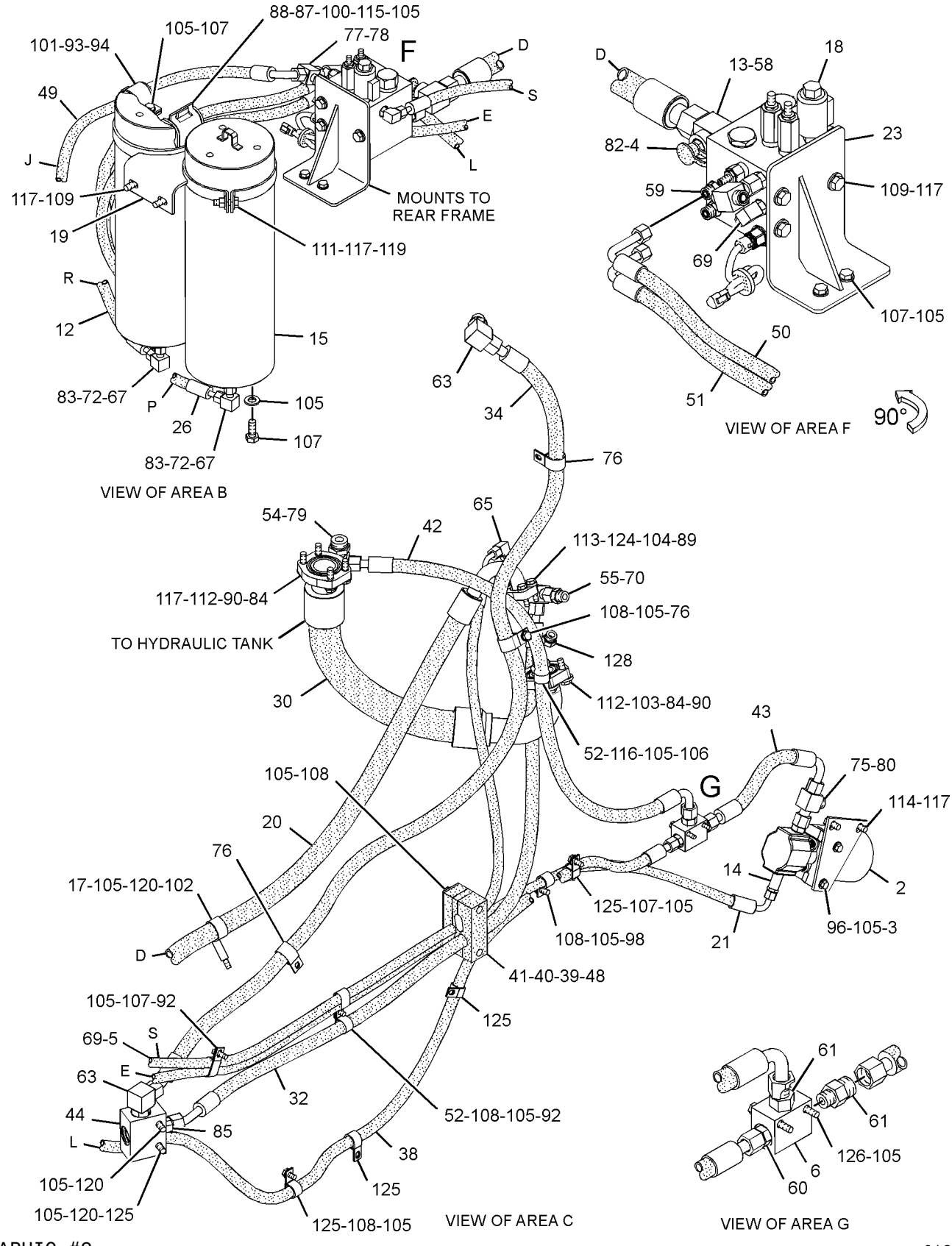

GRAPHIC #2

g01665475

268-0239 **CONTROL GP-SERVICE BRAKE** *(contd.)* **i02899207**

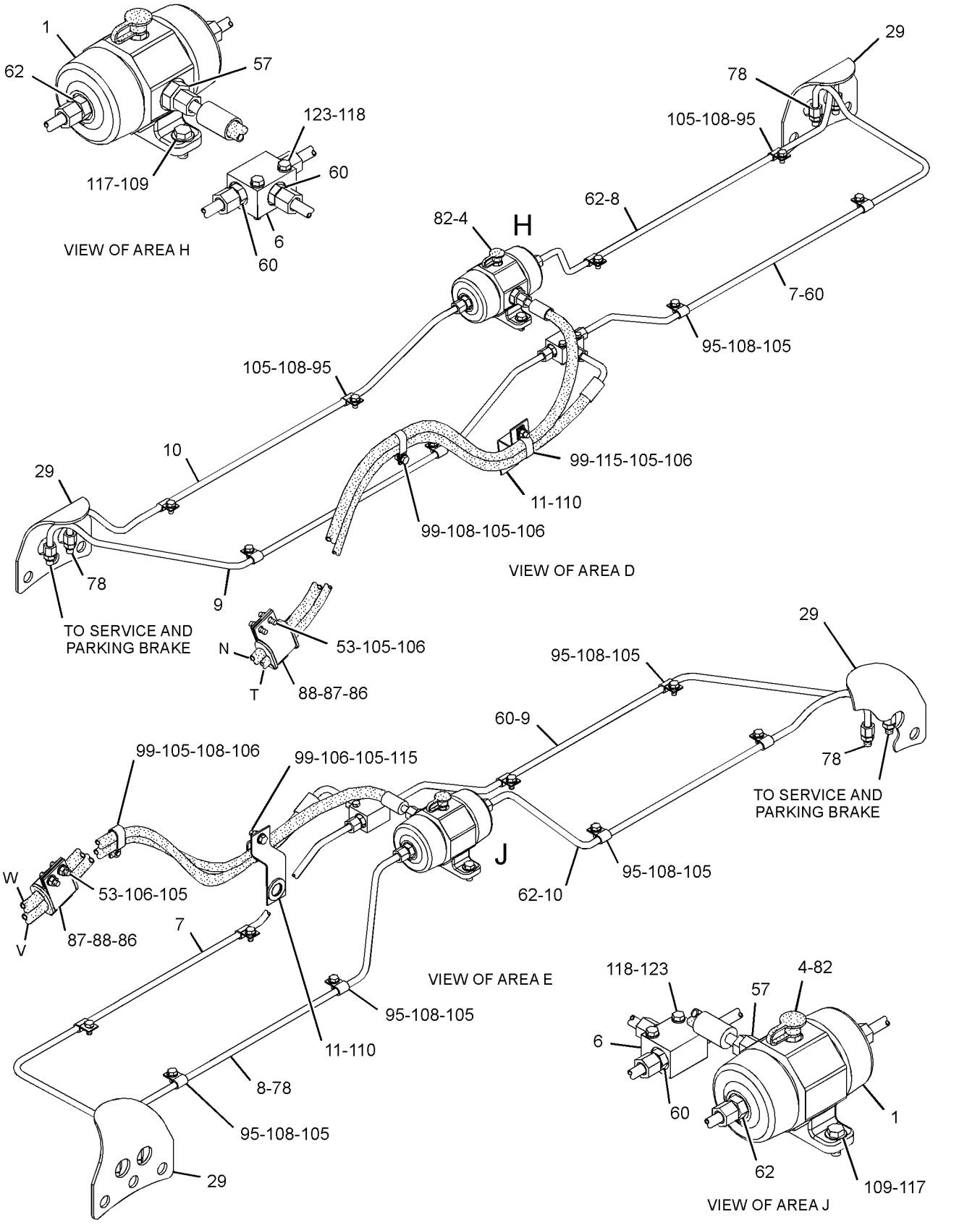

GRAPHIC #3 **<END>** g01435700

BRAKING SYSTEM

120-4409 FASTENER GP-BRAKE

S/N: B9K1-UP

PART OF 273-5910 BRAKE GP-SERVICE & PARKING

SMCS-4251 **i01313018**

NOTE	REF NO	GRAPHIC REF	PART NUMBER	QTY	PART NAME 1 2 3 4 5 6 (PRODUCT LEVEL)	SEE PAGE
	1	1	**5D-7523**	4	SEAL-O-RING	
	2	1	**6V-8237**	120	WASHER (26X44X4-MM THK)	
M	3	1	**8T-0666**	108	BOLT (M24X3X90-MM)	
M	4	1	**8T-0667**	12	BOLT (M24X3X100-MM)	

M-METRIC PART

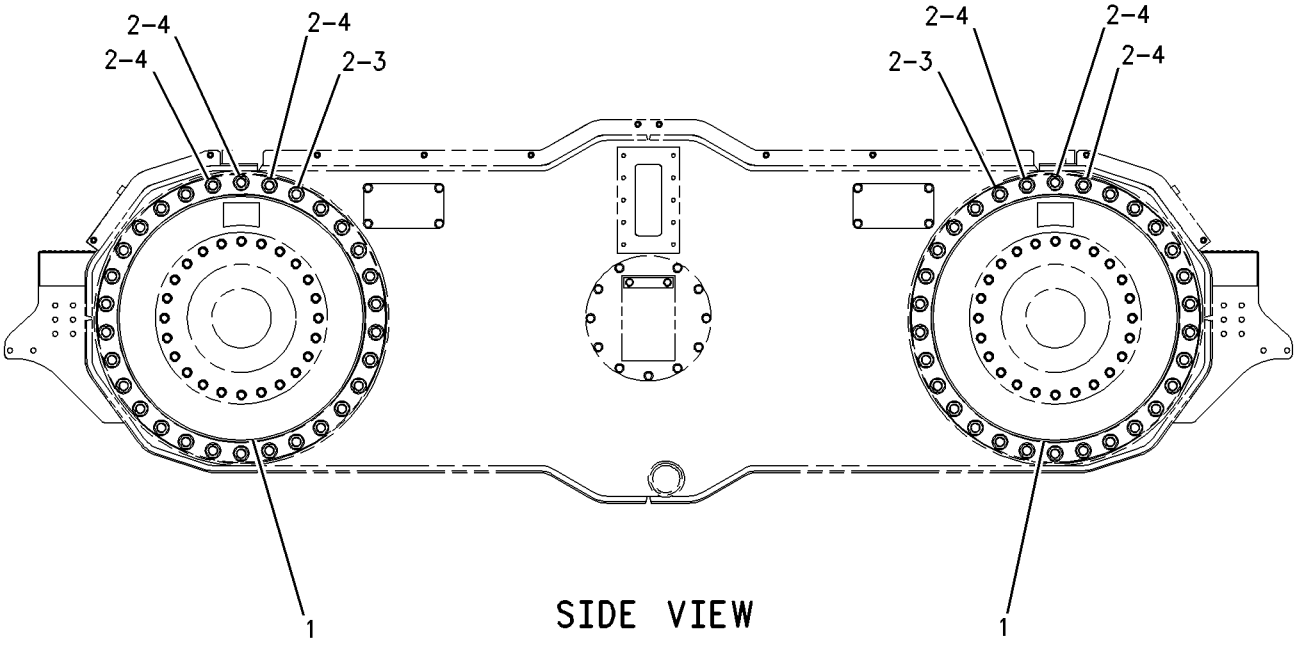

SIDE VIEW

GRAPHIC #1 **<END>** g00696996

BRAKING SYSTEM

5T-1060 PUMP & MOTOR GP-BRAKE RELEASE–

PARKING, SECONDARY

S/N: B9K1-UP

PART OF 268-0239 CONTROL GP-SERVICE BRAKE

SMCS-4354 **i01871867**

NOTE	REF NO	GRAPHIC REF	PART NUMBER	QTY	PART NAME 1 2 3 4 5 6 (PRODUCT LEVEL)	SEE PAGE
	1	1	**8C-9514**	1	MOTOR AS (ELECTRIC PUMP DRIVE)	
	2	1	**6V-8186**	2	NUT-FULL (5/16-24-THD)	
		1	**8T-4224**	2	WASHER-HARD (8.8X16X2-MM THK)	
		1	**3F-9556**	2	LOCKWASHER	
	3	1	**3B-4505**	4	LOCKWASHER	
	4	1	**1T-0416**	4	BOLT (5/16-18X0.75-IN)	
J	5	1	**8W-3221**	1	PUMP AS (PARKING BRAKE RELEASE)	
	6	1	**5P-0711**	1	SEAL-LIP TYPE	
	7	1	**8W-3593**	1	SHAFT	
	8	1	**8T-5068**	8	BOLT-12 POINT HEAD (1/4-20X1.5-IN)	
		1	**012-0380**	8	LOCKWASHER	
	9	1	**1V-8795**	1	COUPLING	
	10	1	**1V-8796**	1	GASKET	
					AVAILABLE REPAIR KIT(S):	
J			**8W-3592**	1	KIT-RELIEF VALVE (PARKING BRAKE RELEASE PUMP)	
					(INCLUDES SCREW, NUT, GASKET, BALL & SPRING)	
J			**8W-3594**	1	KIT-GASKET (PARKING BRAKE RELEASE PUMP)	
					(INCLUDES GASKETS)	

J-REPAIR KIT(S) MARKED J AVAILABLE FOR PART MARKED J

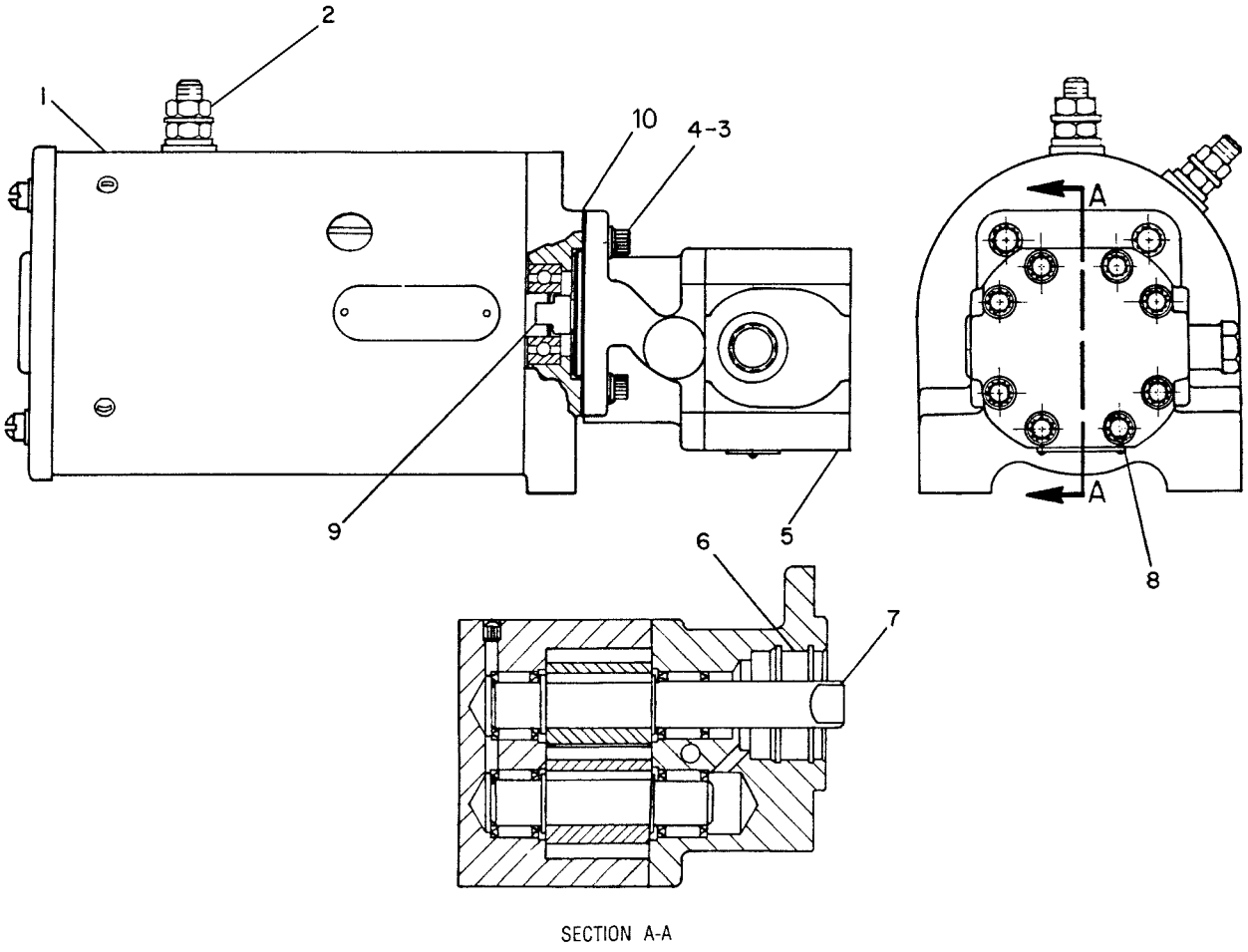

GRAPHIC #1 **<END>** g00082288

BRAKING SYSTEM

2G-6535 SLACK ADJUSTER GP

S/N: B9K1-UP

PART OF 268-0239 CONTROL GP-SERVICE BRAKE

SMCS-4261 **i01594783**

NOTE	REF NO	GRAPHIC REF	PART NUMBER	QTY	PART NAME 1 2 3 4 5 6 (PRODUCT LEVEL)	SEE PAGE
	1	1	**2G-8932**	2	HOUSING	
	2	1	**2G-7282**	1	BASE	
	3	1	**2G-1202**	2	SPRING	
	4	1	**7F-2122**	2	SEAL-O-RING	
J	5	1	**9V-3222**	2	PISTON AS	
	7	1	**2H-4145**	2	SEAL-O-RING	
					AVAILABLE REPAIR KIT(S):	
J			**9V-3225**	1	KIT-PISTON (SLACK ADJUSTER)	
					(INCLUDES RINGS, SEALS, SPRINGS, INSTRUCTIONS, & PISTON ASSEMBLY)	
J			**9C-0645**	1	KIT-PISTON (SLACK ADJUSTER)	
					(INCLUDES SEALS, RING, INSTRUCTIONS, & PISTON ASSEMBLY)	

J-KITS MARKED J SERVICES PART MARKED J

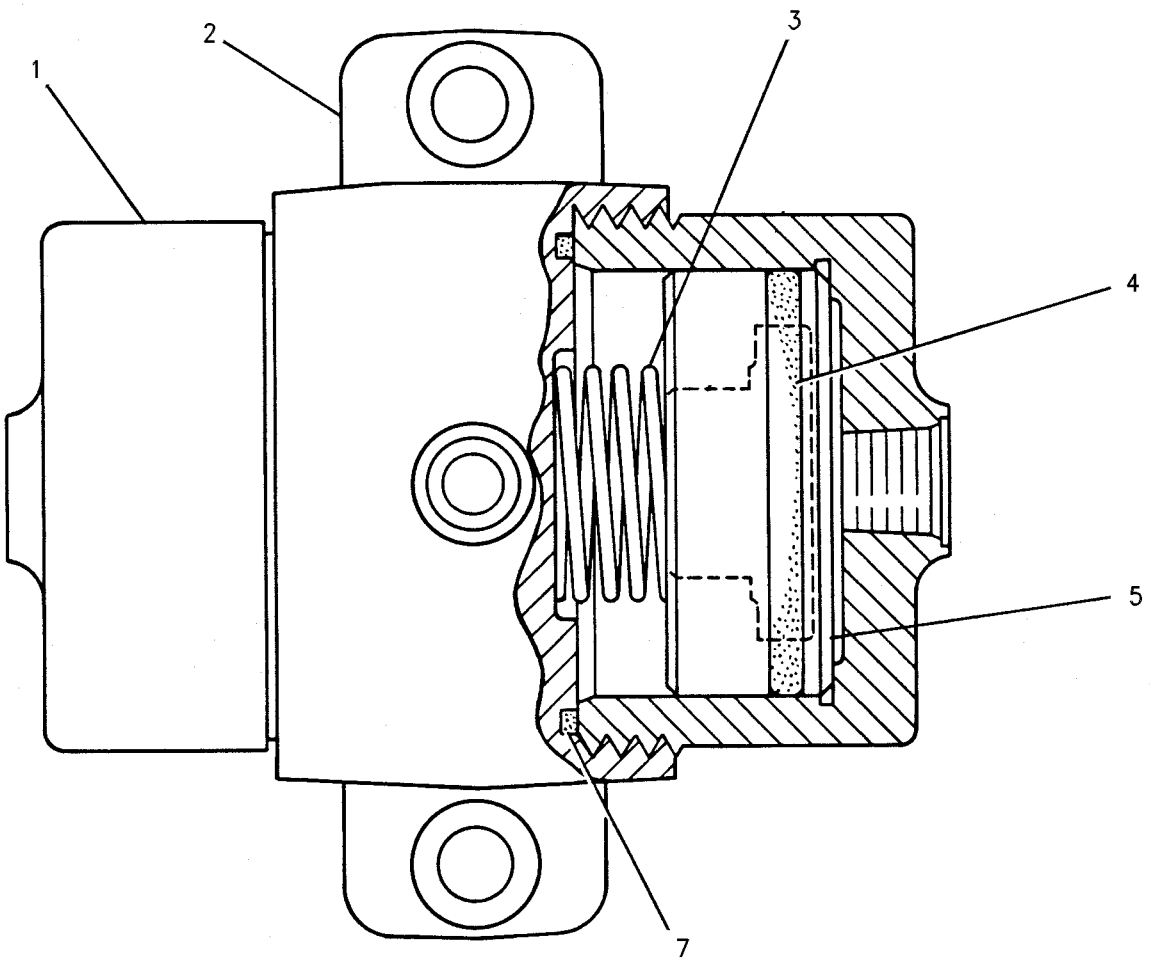

GRAPHIC #1 **<END>** g00535703

HYDRAULIC SYSTEM

270-7546 ACCUMULATOR & MTG GP-HYDRAULIC–

BLADE CUSHION

S/N: B9K1-357

PART OF 352-1941 ACCUMULATOR GP-HYDRAULIC, 259-9204 COMMON AR

SMCS-5077 **i02763344**

NOTE	REF NO	GRAPHIC REF	PART NUMBER	QTY	PART NAME 1 2 3 4 5 6 (PRODUCT LEVEL)	SEE PAGE
Y	1	1	*219-8035*	2	ACCUMULATOR GP-BLADE CUSHION (CHARGED)	632
	2	1	**0S-1629**	6	BOLT (1/2-20X1-IN)	
	3	1	**8T-4223**	6	WASHER-HARD (13.5X25.5X3-MM THK)	

Y-SEPARATE ILLUSTRATION

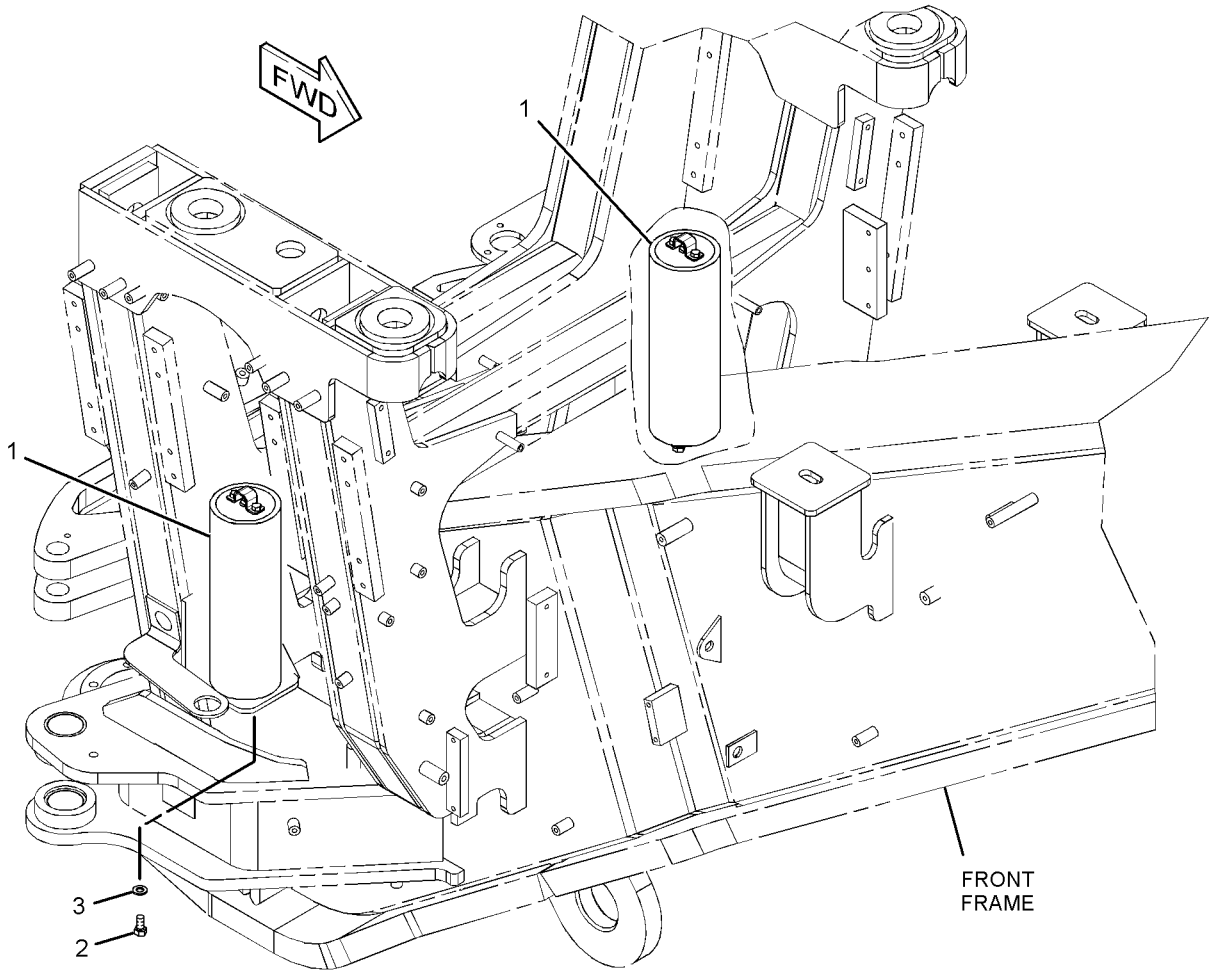

GRAPHIC #1 **<END>** g01384543

HYDRAULIC SYSTEM

219-8035 ACCUMULATOR GP-BLADE CUSHION—CHARGED

S/N: B9K1-UP

PART OF 270-7546 ACCUMULATOR & MTG GP-HYDRAULIC

FIELD REPLACEMENT ORDER 219-8064—PAGE 633

SMCS-5077 **i02619821**

NOTE	REF NO	GRAPHIC REF	PART NUMBER	QTY	PART NAME 1 2 3 4 5 6 (PRODUCT LEVEL)	SEE PAGE
	1	1	**222-2367**	1	VALVE AS-GAS (HYDRAULIC ACCUMULATOR)	
		1	**190-3850**	1	CORE	
F			**241-0037**	1	FILM-WARNING (HIGH PRESSURE, READ OMM)	
					AVAILABLE REPAIR KIT(S):	
			170-0493	1	KIT-SEAL (HYDRAULIC ACCUMULATOR)	
					(KIT INCLUDES BACKUP WASHERS, PISTON SEALS, O-RINGS, & PISTON RING)	

F-NOT SHOWN

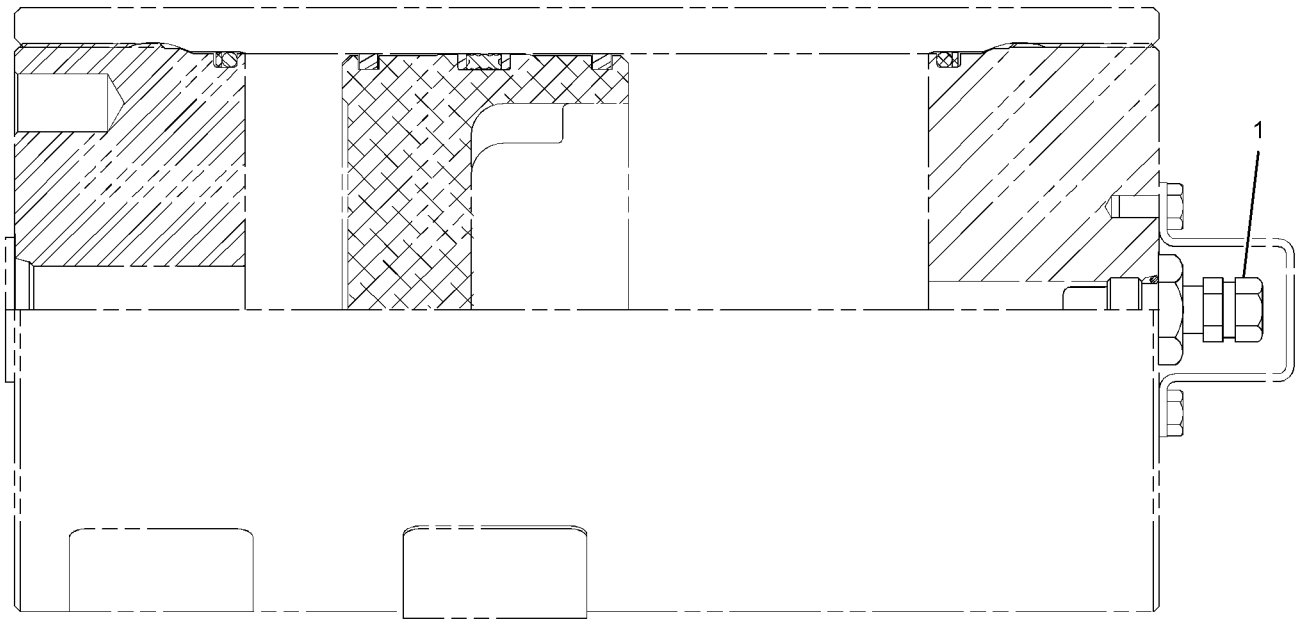

GRAPHIC #1 **<END>** g01313792

HYDRAULIC SYSTEM

219-8064 ACCUMULATOR GP-BLADE CUSHION—UNCHARGED

S/N: B9K1-UP

SMCS-5077 **i02639872**

NOTE	REF NO	GRAPHIC REF	PART NUMBER	QTY	PART NAME 1 2 3 4 5 6 (PRODUCT LEVEL)	SEE PAGE
	1	1	222-2367	1	VALVE AS-GAS	
		1	190-3850	1	CORE	
F			241-0037	1	FILM-WARNING (HIGH PRESSURE, READ OMM)	
					AVAILABLE REPAIR KIT(S):	
			170-0493	1	KIT-SEAL (HYDRAULIC ACCUMULATOR)	
					(INCLUDES SEALS, WASHERS & RINGS)	

F-NOT SHOWN

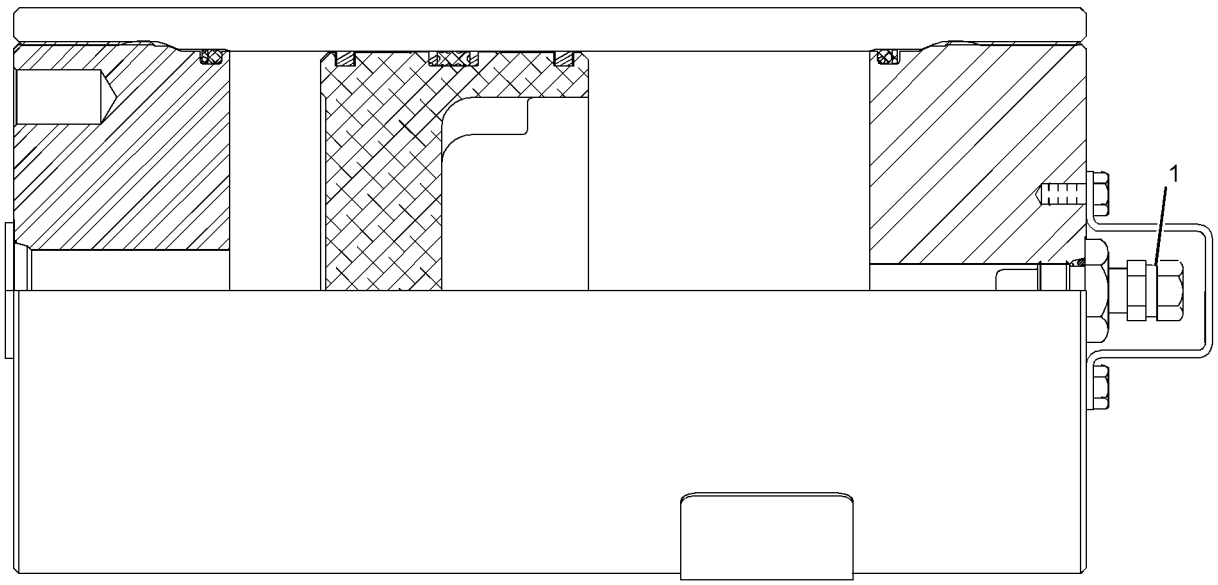

GRAPHIC #1 **<END>** g01139643

HYDRAULIC SYSTEM

352-1941 ACCUMULATOR GP-HYDRAULIC

S/N: B9K1-UP

SMCS-5077 **i03910844**

NOTE	PART NUMBER	QTY	PART NAME 1 2 3 4 5 6 (PRODUCT LEVEL)	SEE PAGE
Y	270-7546	1	ACCUMULATOR & MTG GP-HYDRAULIC (BLADE CUSHION)	631
Y	351-8344	1	ACCUMULATOR GP-BRAKE	

Y-SEPARATE ILLUSTRATION

<END>

HYDRAULIC SYSTEM

249-2304 BASE GP-OIL FILTER—POWER TRAIN

S/N: B9K1-UP

PART OF 244-0121, 287-1511, 341-2079 FILTER GP-OIL

SMCS-5068 **i02661655**

NOTE	REF NO	GRAPHIC REF	PART NUMBER	QTY	PART NAME 1 2 3 4 5 6 (PRODUCT LEVEL)	SEE PAGE
	1	1	**3T-9549**	1	ADAPTER	
	2	1	**7G-4998**	1	SPOOL-BYPASS	
	3	1	**7M-1297**	1	SPRING	
	4	1	**133-2198**	1	SPRING	
Y	5	1	**164-7577**	1	SWITCH GP-BYPASS (OIL FILTER BYPASS)	336
	6	1	**2S-4078**	1	SEAL-O-RING	
	7	1	**7M-8485**	1	SEAL-O-RING	
	8	1	**9S-9334**	1	PLUG-O-RING	

Y-SEPARATE ILLUSTRATION

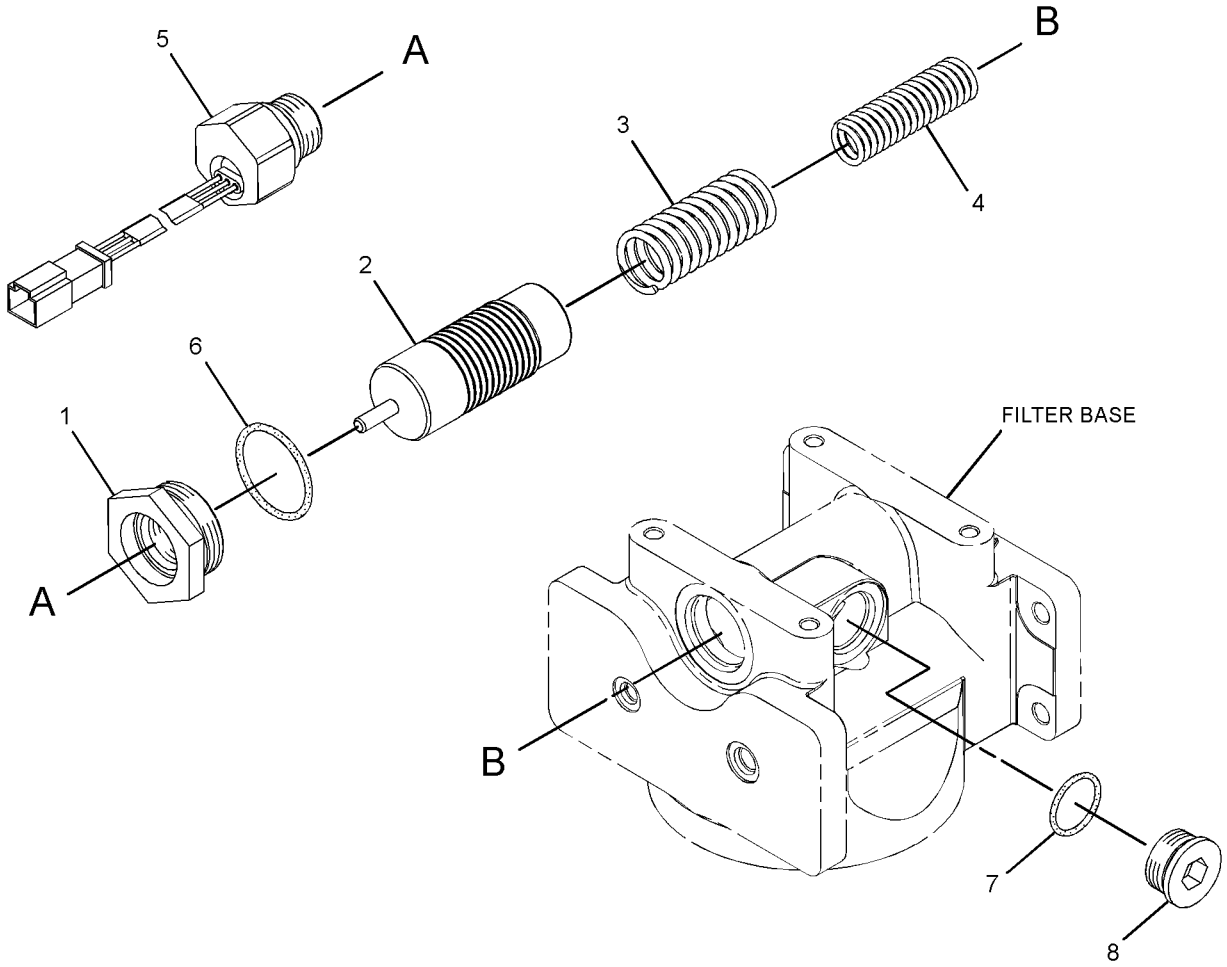

GRAPHIC #1 **<END>** g01343077

HYDRAULIC SYSTEM

342-7817 BASE GP-OIL FILTER–HYDRAULIC

S/N: B9K315-UP

PART OF 341-2079 FILTER GP-OIL

SMCS-5068 **i03714968**

NOTE	REF NO	GRAPHIC REF	PART NUMBER	QTY	PART NAME 1 2 3 4 5 6 (PRODUCT LEVEL)	SEE PAGE
	1	1	**3T-9549**	1	ADAPTER	
	2	1	**7G-4998**	1	SPOOL-BYPASS	
	3	1	**7M-1297**	1	SPRING	
	4	1	**133-2198**	1	SPRING	
Y	5	1	**164-7577**	1	SWITCH GP-BYPASS (HYDRAULIC OIL FILTER)	336
	6	1	**9S-9334**	1	PLUG-O-RING	
	7	1	**2S-4078**	1	SEAL-O-RING	
	8	1	**7M-8485**	1	SEAL-O-RING	
					PARTS SHOWN IN GRAPHIC(S) WITHOUT A REFERENCE NUMBER ARE NOT SERVICED SEPARATELY	

Y-SEPARATE ILLUSTRATION

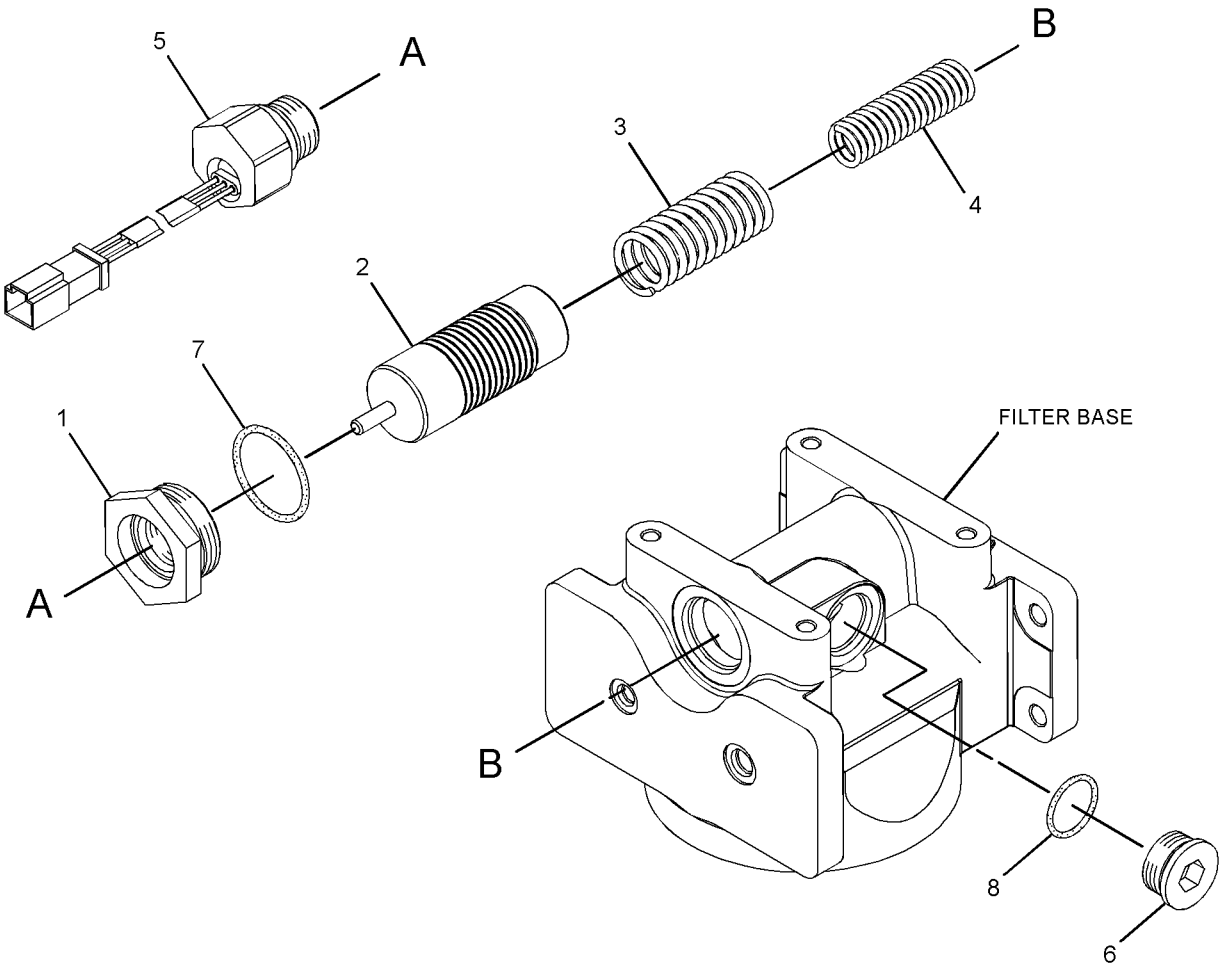

GRAPHIC #1 **<END>** g02029538

HYDRAULIC SYSTEM

253-3960 COOLER GP-HYDRAULIC OIL

S/N: B9K1-336

PART OF 220-3775 COOLING AR

SMCS-1374 **i02723755**

NOTE	REF NO	GRAPHIC REF	PART NUMBER	QTY	PART NAME 1 2 3 4 5 6 (PRODUCT LEVEL)	SEE PAGE
I	1	1	**113-7158**	1	HOSE AS	
I	2	1	**185-7387**	1	HOSE AS	
	3	1	**200-6311**	1	VALVE-CHECK	
	4	1	**239-8530**	1	CORE AS-OIL COOLER (HYDRAULIC)	
	5	1	**262-6924**	1	BLOCK	
	6	1	**263-3991**	1	PLATE AS	
	7	1	**264-4297**	1	SENSOR GP-TEMPERATURE (HYDRAULIC OIL)	
	8	1	**285-2376**	2	PLATE AS	
I	9	1	**308-3459**	1	HOSE AS	
	10	1	**114-1374**	1	SUPPORT	
	11	1	*148-8317*	1	CONNECTOR AS	
		1	**3D-2824**	1	SEAL-O-RING	
		1	**5K-9090**	1	SEAL-O-RING	
		1	**6V-8714**	1	CONNECTOR	
	12	1	*148-8339*	1	CONNECTOR AS	
		1	**6V-8716**	1	CONNECTOR	
		1	**6V-9746**	1	SEAL-O-RING	
		1	**7M-8485**	1	SEAL-O-RING	
	13	1	*148-8388*	2	ELBOW AS	
					(EACH INCLUDES)	
		1	**2M-9780**	1	SEAL-O-RING	
		1	**6V-8629**	1	ELBOW	
		1	**6V-9746**	1	SEAL-O-RING	
	14	1	*241-6207*	1	TEE AS	
		1	**6V-9746**	3	SEAL-O-RING	
		1	**132-5152**	1	TEE-UNION	
	15	1	**2H-3926**	1	LOCKWASHER	
	16	1	**2P-1293**	1	LOCKNUT (1-3/16-12-THD)	
	17	1	**3K-0360**	1	SEAL-O-RING	
	18	1	**7X-7729**	8	WASHER (11X25X3-MM THK)	
	19	1	**8T-4121**	5	WASHER-HARD (11X21X2.5-MM THK)	
M	20	1	**8T-4136**	3	BOLT (M10X1.5X25-MM)	
M	21	1	**8T-4172**	2	BOLT (M10X1.5X80-MM)	
M	22	1	**8T-4186**	4	BOLT (M10X1.5X40-MM)	
M	23	1	**8T-4195**	4	BOLT (M10X1.5X30-MM)	

I-REFER TO HYDRAULIC INFORMATION SYSTEM
M-METRIC PART

253-3960 **COOLER GP-HYDRAULIC OIL** *(contd.)* **i02723755**

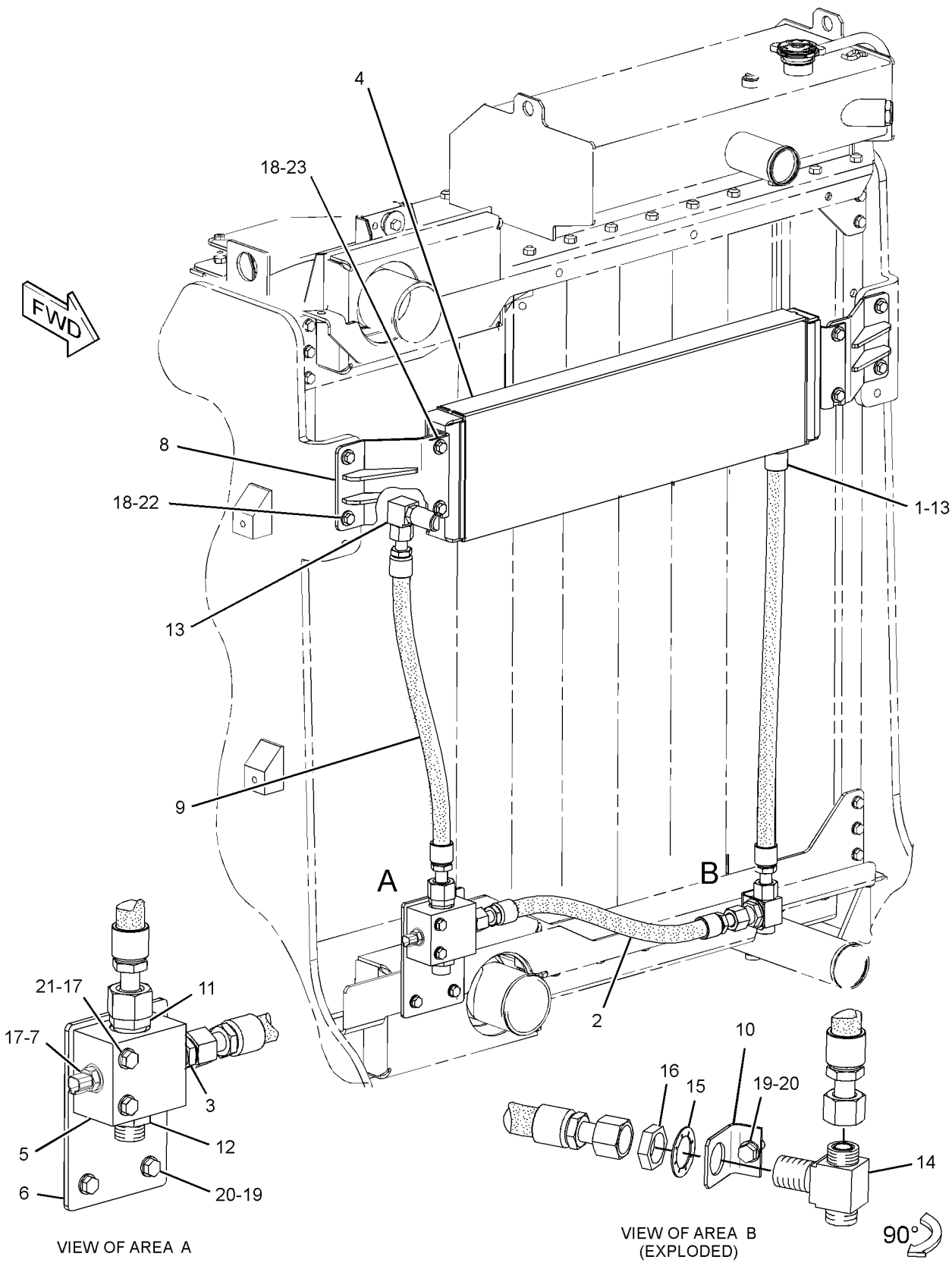

GRAPHIC #1 **<END>** g01369882

HYDRAULIC SYSTEM

253-3960 COOLER GP-HYDRAULIC OIL

S/N: B9K337-UP

PART OF 220-3775 COOLING AR

SMCS-1374 **i03885380**

NOTE	REF NO	GRAPHIC REF	PART NUMBER	QTY	PART NAME 1 2 3 4 5 6 (PRODUCT LEVEL)	SEE PAGE
I	1	1	**113-7158**	1	HOSE AS	
I	2	1	**185-7387**	1	HOSE AS	
	3	1	**200-6311**	1	VALVE-CHECK	
	4	1	**239-8530**	1	CORE AS-OIL COOLER (HYDRAULIC)	
	5	1	**291-1348**	1	BLOCK	
	6	1	**263-3991**	1	PLATE AS	
	7	1	**264-4297**	1	SENSOR GP-TEMPERATURE (HYDRAULIC OIL)	
	8	1	**285-2376**	2	PLATE AS	
I	9	1	**308-3459**	1	HOSE AS	
	10	1	**114-1374**	1	SUPPORT	
	11	1	*148-8317*	1	CONNECTOR AS	
		1	**3D-2824**	1	SEAL-O-RING	
		1	**5K-9090**	1	SEAL-O-RING	
		1	**6V-8714**	1	CONNECTOR	
	12	1	*148-8339*	1	CONNECTOR AS	
		1	**6V-8716**	1	CONNECTOR	
		1	**6V-9746**	1	SEAL-O-RING	
		1	**7M-8485**	1	SEAL-O-RING	
	13	1	*148-8388*	2	ELBOW AS	
					(EACH INCLUDES)	
		1	**2M-9780**	1	SEAL-O-RING	
		1	**6V-8629**	1	ELBOW	
		1	**6V-9746**	1	SEAL-O-RING	
	14	1	*241-6207*	1	TEE AS	
		1	**6V-9746**	3	SEAL-O-RING	
		1	**132-5152**	1	TEE-UNION	
	15	1	**2H-3926**	1	LOCKWASHER	
	16	1	**2P-1293**	1	LOCKNUT (1-3/16-12-THD)	
	17	1	**3K-0360**	1	SEAL-O-RING	
	18	1	**7X-7729**	8	WASHER (11X25X3-MM THK)	
	19	1	**8T-4121**	5	WASHER-HARD (11X21X2.5-MM THK)	
M	20	1	**8T-4136**	3	BOLT (M10X1.5X25-MM)	
M	21	1	**8T-4172**	2	BOLT (M10X1.5X80-MM)	
M	22	1	**8T-4186**	4	BOLT (M10X1.5X40-MM)	
M	23	1	**8T-4195**	4	BOLT (M10X1.5X30-MM)	
	24	1	*172-4621*	1	ADAPTER AS	
		1	**6V-0301**	1	ADAPTER	
		1	**7M-8485**	1	SEAL-O-RING	

I-REFER TO HYDRAULIC INFORMATION SYSTEM
M-METRIC PART

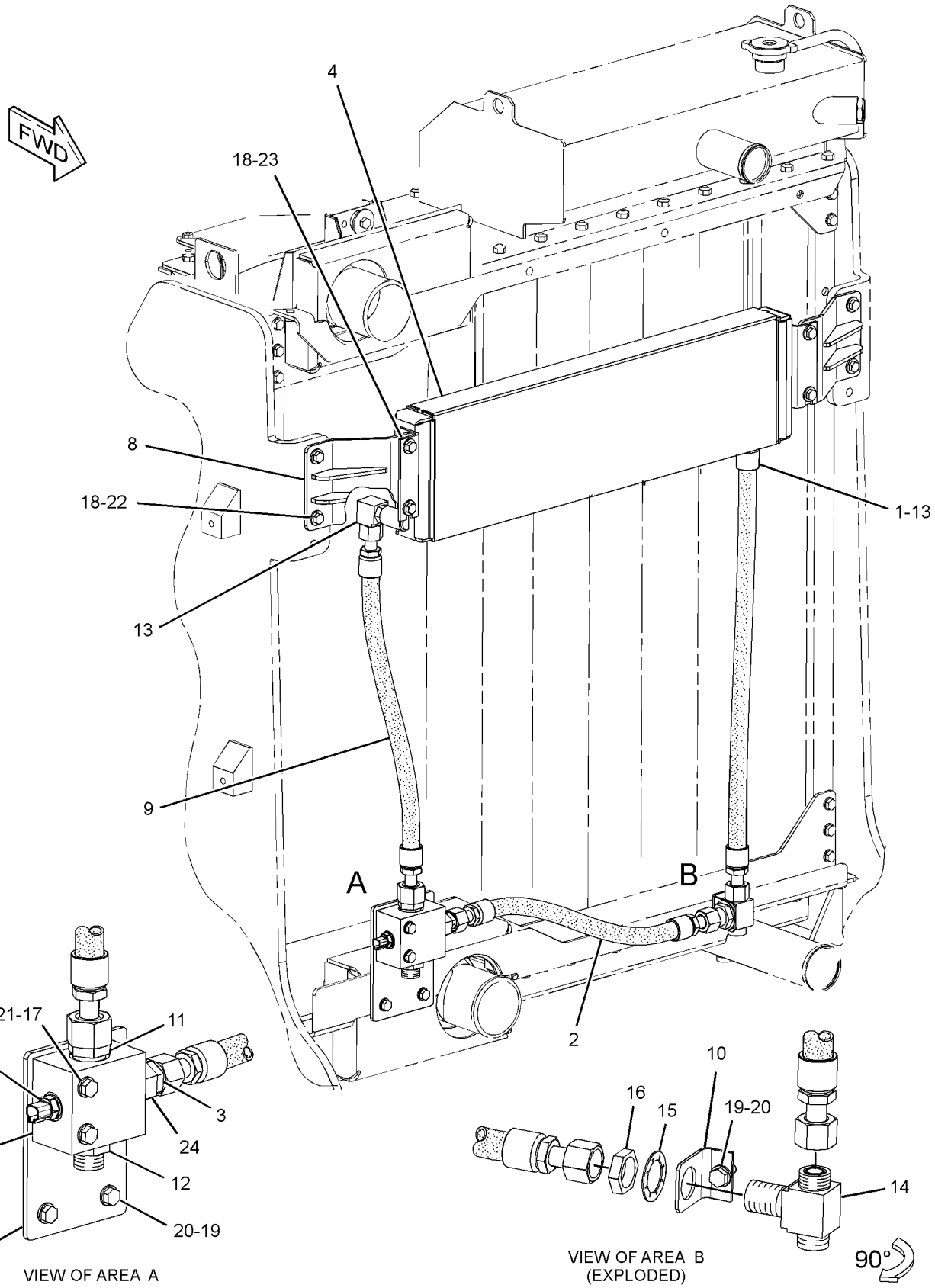

GRAPHIC #1

<END>

g02023313

HYDRAULIC SYSTEM

253-9016 CYLINDER & MTG GP-ARTICULATION

S/N: B9K1-UP

PART OF 259-9204 COMMON AR

SMCS-5265 **i04032465**

NOTE	REF NO	GRAPHIC REF	PART NUMBER	QTY	PART NAME 1 2 3 4 5 6 (PRODUCT LEVEL)	SEE PAGE
	1	1	**360-2870**	4	PIN AS	
Y	2	1	**273-1733**	2	CYLINDER GP-ARTICULATION	647
B	3	1	**5V-0353**	12	WASHER (65X133X1.6-MM THK)	
B	4	1	**5V-0354**	8	WASHER (66X133X3-MM THK)	
	5	1	**7K-9205**	8	SEAL-LIP TYPE	
	6	1	**7X-0590**	4	WASHER-HARD (13.5X44.5X6-MM THK)	
M	7	1	**8T-4183**	2	BOLT (M12X1.75X40-MM)	
	8	1	**8T-4223**	2	WASHER-HARD (13.5X25.5X3-MM THK)	
M	9	1	**8T-4244**	2	NUT (M12X1.75-THD)	
M	10	1	**8T-4910**	2	BOLT (M12X1.75X60-MM)	
	11	1	**9V-4924**	4	SPACER (13.8X28X11.5-MM THK)	

B-USE AS REQUIRED
M-METRIC PART
Y-SEPARATE ILLUSTRATION

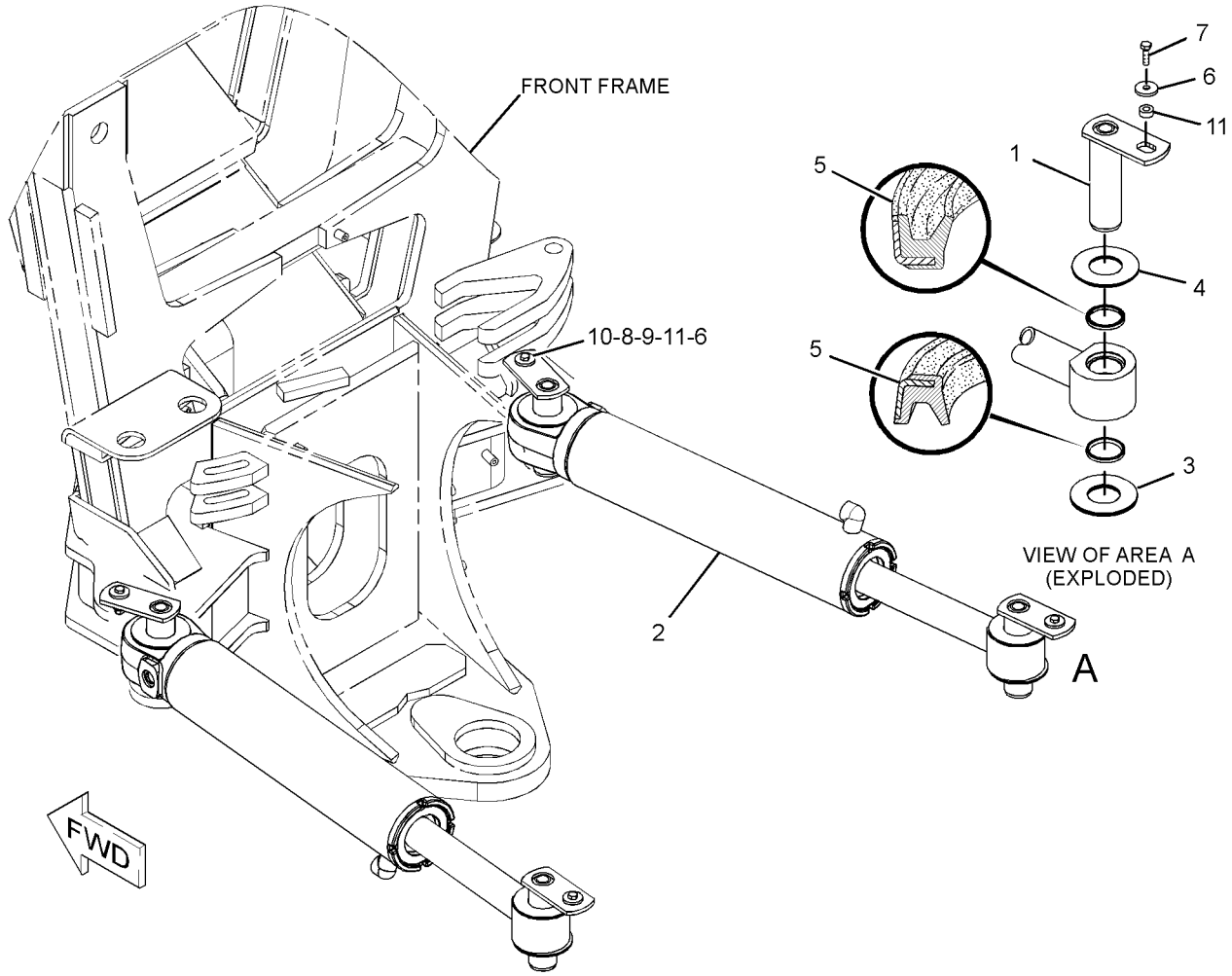

GRAPHIC #1 **<END>** g01376457

HYDRAULIC SYSTEM

140-8444 CYLINDER & MTG GP-BLADE TIP

S/N: B9K1-UP

PART OF 259-9204 COMMON AR, 321-3121 IMPLEMENT AR

SMCS-5106 **i02182740**

NOTE	REF NO	GRAPHIC REF	PART NUMBER	QTY	PART NAME 1 2 3 4 5 6 (PRODUCT LEVEL)	SEE PAGE
Y	1	1	**143-5988**	2	CYLINDER GP-BLADE TIP	648
	2	1	**5G-8574**	2	PIN AS	
	3	1	**7X-0590**	4	WASHER-HARD (13.5X44.5X6-MM THK)	
M	4	1	**8T-4956**	4	BOLT (M12X1.75X35-MM)	
C	5	1	**194-6555**	2	PIN AS	
	6	1	**9V-4924**	4	SPACER (13.8X28X11.5-MM THK)	

C-CHANGE FROM PREVIOUS TYPE
M-METRIC PART
Y-SEPARATE ILLUSTRATION

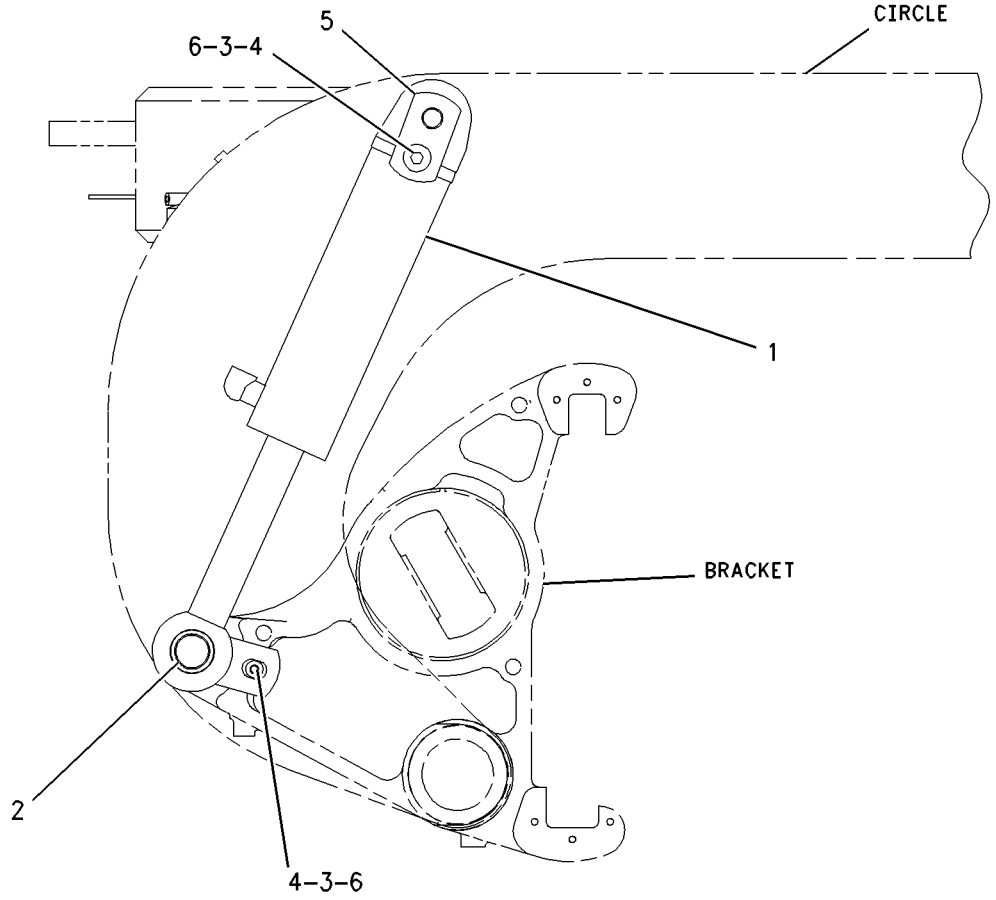

RIGHT SIDE VIEW

GRAPHIC #1 **<END>** g00751491

HYDRAULIC SYSTEM

278-0560 CYLINDER & MTG GP-CSHFT & LIFT

S/N: B9K1-UP

PART OF 259-9204 COMMON AR

SMCS-5223 **i02764492**

NOTE	REF NO	GRAPHIC REF	PART NUMBER	QTY	PART NAME 1 2 3 4 5 6 (PRODUCT LEVEL)	SEE PAGE
	1	1	**124-6417**	1	PLATE	
	2	1	**128-8808**	6	CAP AS	
					(EACH INCLUDES)	
		1	**9J-5284**	1	BEARING-SLEEVE	
Y	3	1	**276-7646**	3	CYLINDER GP-HYDRAULIC (BLADE LIFT, CENTERSHIFT)	649
	4	1	**292-9277**	11	WASHER-HARD (26X40X8-MM THK)	
M	5	1	**169-5792**	12	BOLT (M24X3X160-MM)	
	6	1	**267-3506**	2	WASHER-HARD (26X44X4-MM THK)	

M-METRIC PART
Y-SEPARATE ILLUSTRATION

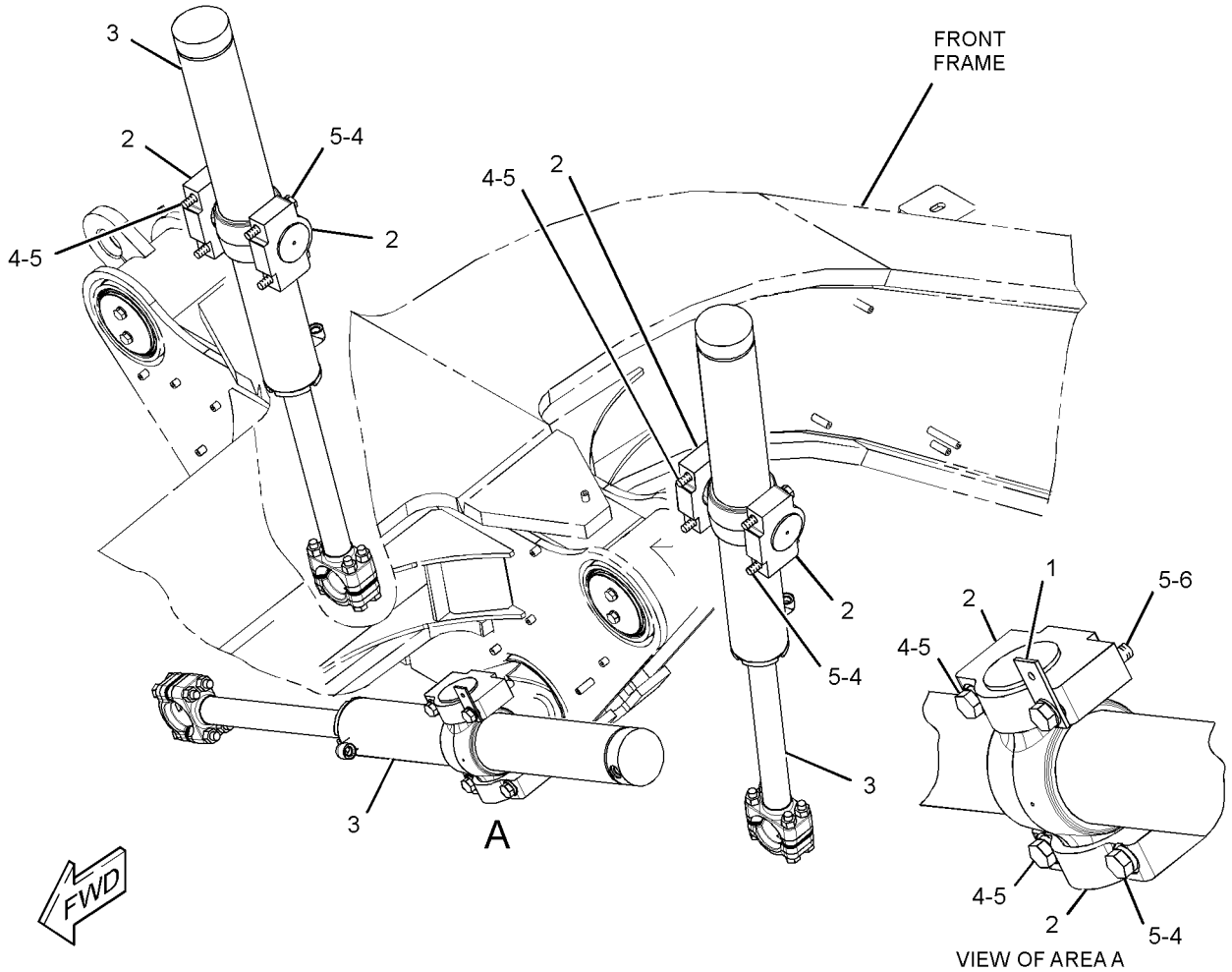

GRAPHIC #1 **<END>** g01384994

HYDRAULIC SYSTEM

140-8443 CYLINDER & MTG GP-SIDESHIFT

S/N: B9K1-UP

PART OF 259-9204 COMMON AR, 321-3121 IMPLEMENT AR

SMCS-5229 **i00699528**

NOTE	REF NO	GRAPHIC REF	PART NUMBER	QTY	PART NAME 1 2 3 4 5 6 (PRODUCT LEVEL)	SEE PAGE
	1	1	**8S-1069**	1	WASHER (0.656X1.125X0.5-IN THK)	
	2	1	**117-2190**	1	PLATE-RETAINER	
	3	1	**138-7426**	1	PIN	
Y	4	1	**141-2914**	1	CYLINDER GP-SIDESHIFT	653
M	5	1	**7X-2553**	1	BOLT (M16X2X40-MM)	
	6	1	**8G-0876**	1	PIN AS	
	7	1	**7X-0515**	1	WASHER-HARD (17X35X5-MM THK)	
M	8	1	**8T-4192**	2	BOLT (M12X1.75X25-MM)	
	9	1	**8T-4223**	2	WASHER-HARD (13.5X25.5X3-MM THK)	

M-METRIC PART
Y-SEPARATE ILLUSTRATION

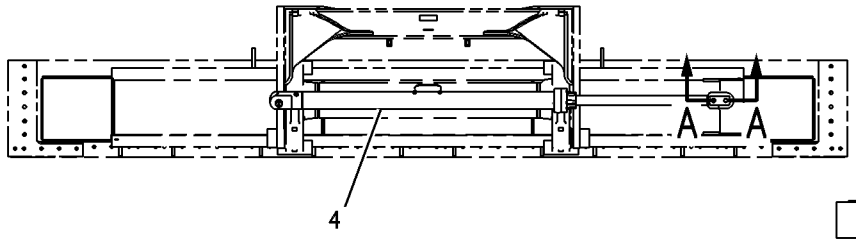

REAR VIEW

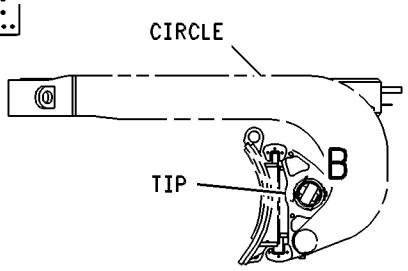

LEFT SIDE VIEW

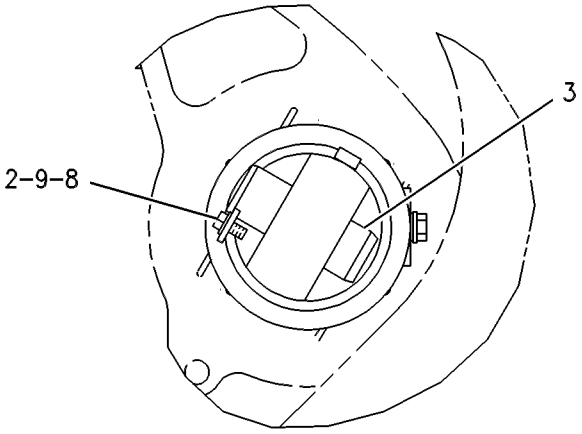

VIEW OF AREA B

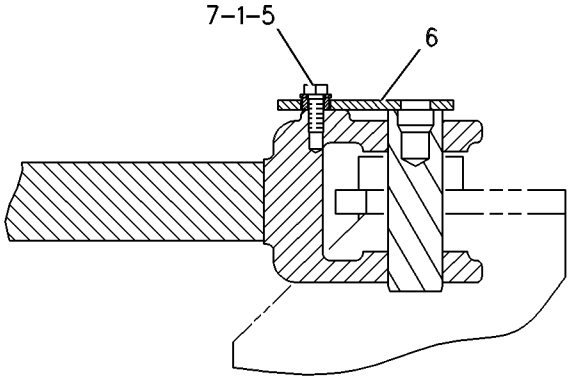

SECTION A-A

GRAPHIC #1 **<END>** g00283898

HYDRAULIC SYSTEM

266-9701 CYLINDER & MTG GP-STEERING

S/N: B9K1-UP

PART OF 265-4505 AXLE AR-FRONT

SMCS-4303 **i02738778**

NOTE	REF NO	GRAPHIC REF	PART NUMBER	QTY	PART NAME 1 2 3 4 5 6 (PRODUCT LEVEL)	SEE PAGE
	1	1	**2G-9491**	2	SEAL	
	2	1	**9R-6014**	4	TUBE	
	3	1	**3S-2909**	2	RING (LOCK, INTERNAL)	
	4	1	**274-9256**	2	RACE (SPHERICAL)	
	5	1	**221-5305**	2	STUD-BALL	
	6	1	**7D-5435**	2	COVER	
	7	1	**7X-0618**	2	WASHER-HARD (13.5X40X5-MM THK)	
	8	1	**9V-4924**	2	SPACER (13.8X28X11.5-MM THK)	
YR	9	1	**270-8686**	2	CYLINDER GP-STEERING	655
	10	1	**266-9714**	2	PIN AS	
	11	1	**5M-6667**	2	LOCKNUT	
M	12	1	**8T-4183**	2	BOLT (M12X1.75X40-MM)	

M-METRIC PART
R-REMFG PART MAY BE AVAILABLE
Y-SEPARATE ILLUSTRATION

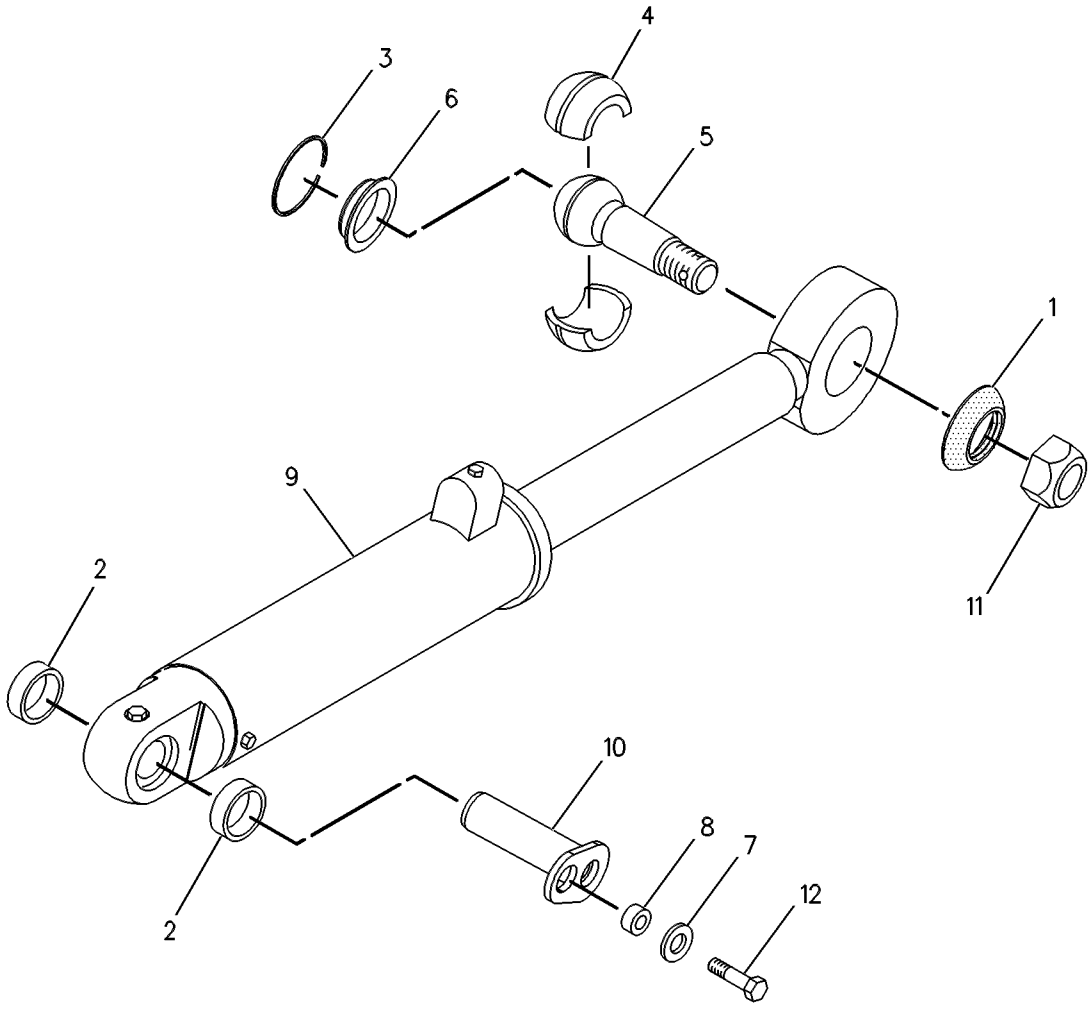

GRAPHIC #1 **<END>** g00277168

HYDRAULIC SYSTEM

8X-9016 CYLINDER & MTG GP-WHEEL LEAN

S/N: B9K1-UP

PART OF 265-4505 AXLE AR-FRONT

SMCS-5211 **i02099522**

NOTE	REF NO	GRAPHIC REF	PART NUMBER	QTY	PART NAME 1 2 3 4 5 6 (PRODUCT LEVEL)	SEE PAGE
Y	1	1	**117-0836**	2	CYLINDER GP-WHEEL LEAN	657
	2	1	**117-2190**	2	PLATE-RETAINER	
	3	1	**117-2193**	2	RETAINER	
	4	1	**138-7426**	2	PIN	
	5	1	**7K-9204**	4	SEAL-LIP TYPE	
	6	1	**8T-4123**	2	WASHER (22X35X3.5-MM THK)	
M	7	1	**8T-4192**	4	BOLT (M12X1.75X25-MM)	
	8	1	**8T-4223**	4	WASHER-HARD (13.5X25.5X3-MM THK)	
M	9	1	**8T-4780**	2	BOLT (M20X2.5X30-MM)	
	10	1	**9X-4597**	4	SEAL-LIP TYPE	

QUANTITIES SHOWN ARE THOSE REQUIRED FOR BOTH LH AND RH SIDES
M-METRIC PART
Y-SEPARATE ILLUSTRATION

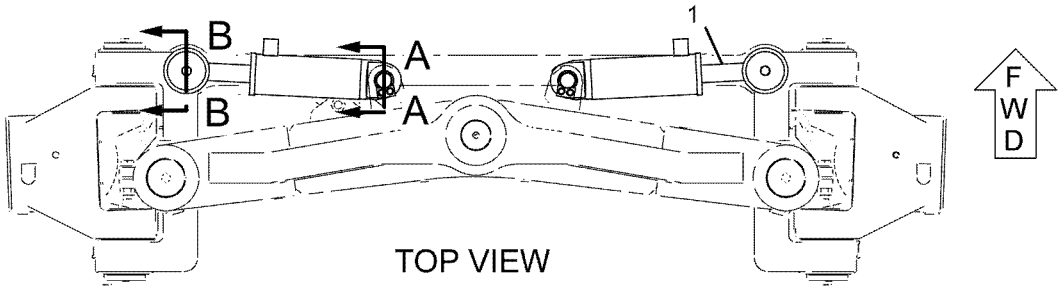

TOP VIEW

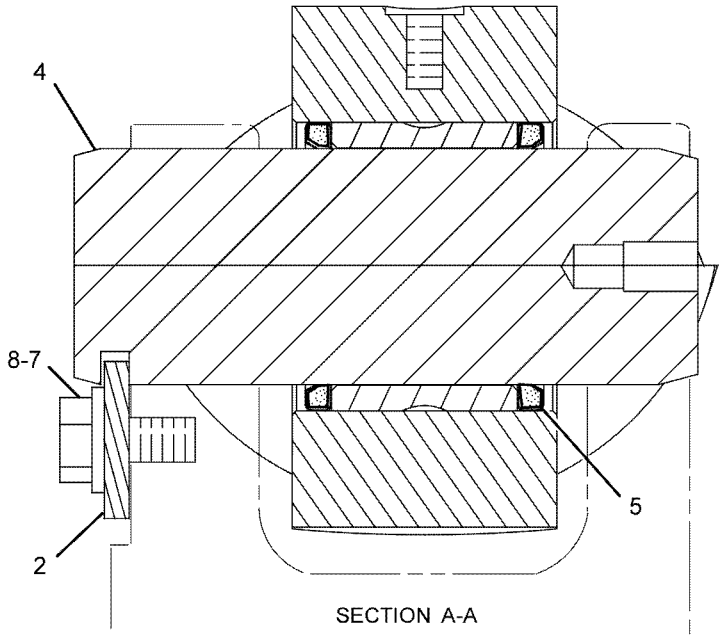

SECTION A-A

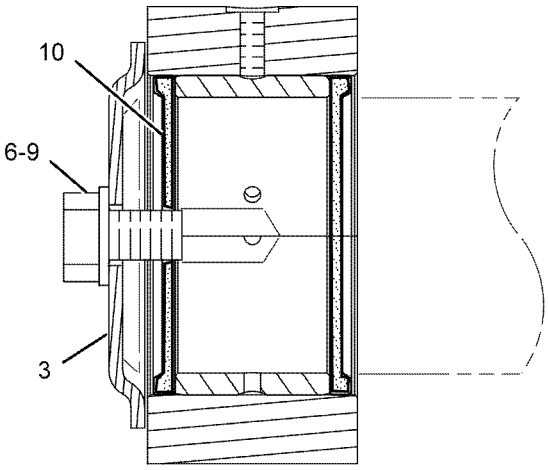

SECTION B-B

GRAPHIC #1 **<END>** g01096641

HYDRAULIC SYSTEM

273-1733 CYLINDER GP-ARTICULATION

S/N: B9K1-UP
150-MM (5.9-IN) BORE X 621.2-MM (24.5-IN) STROKE
PART OF 253-9016 CYLINDER & MTG GP-ARTICULATION

SMCS-5265 **i03602460**

NOTE	REF NO	GRAPHIC REF	PART NUMBER	QTY	PART NAME 1 2 3 4 5 6 (PRODUCT LEVEL)	SEE PAGE
	1	1	**266-9399**	1	PISTON	
	2	1	**267-0000**	1	HEAD	
	3	1	**276-3831**	1	CYLINDER AS-HYDRAULIC	
	3A	1	**3G-2791**	1	BEARING-SLEEVE	
	4	1	**276-3835**	1	ROD AS-HYDRAULIC CYLINDER	
	4A	1	**3G-2791**	1	BEARING-SLEEVE	
	5	1	**167-2184**	1	SEAL AS-BUFFER	
	6	1	**167-2318**	1	SEAL-U-CUP	
	7	1	**186-5147**	1	RING-WEAR	
	8	1	**233-0621**	1	SEAL-WIPER	
	9	1	**2D-8009**	1	SEAL-O-RING	
	10	1	**5H-3252**	1	SEAL-O-RING	
	11	1	**5J-7878**	1	NUT-SELF-LOCKING (1-7/8-12-THD)	
	12	1	**116-3589**	1	RING	
	13	1	**8T-8434**	1	RING-BACKUP	
	14	1	**9X-3601**	1	SEAL AS	

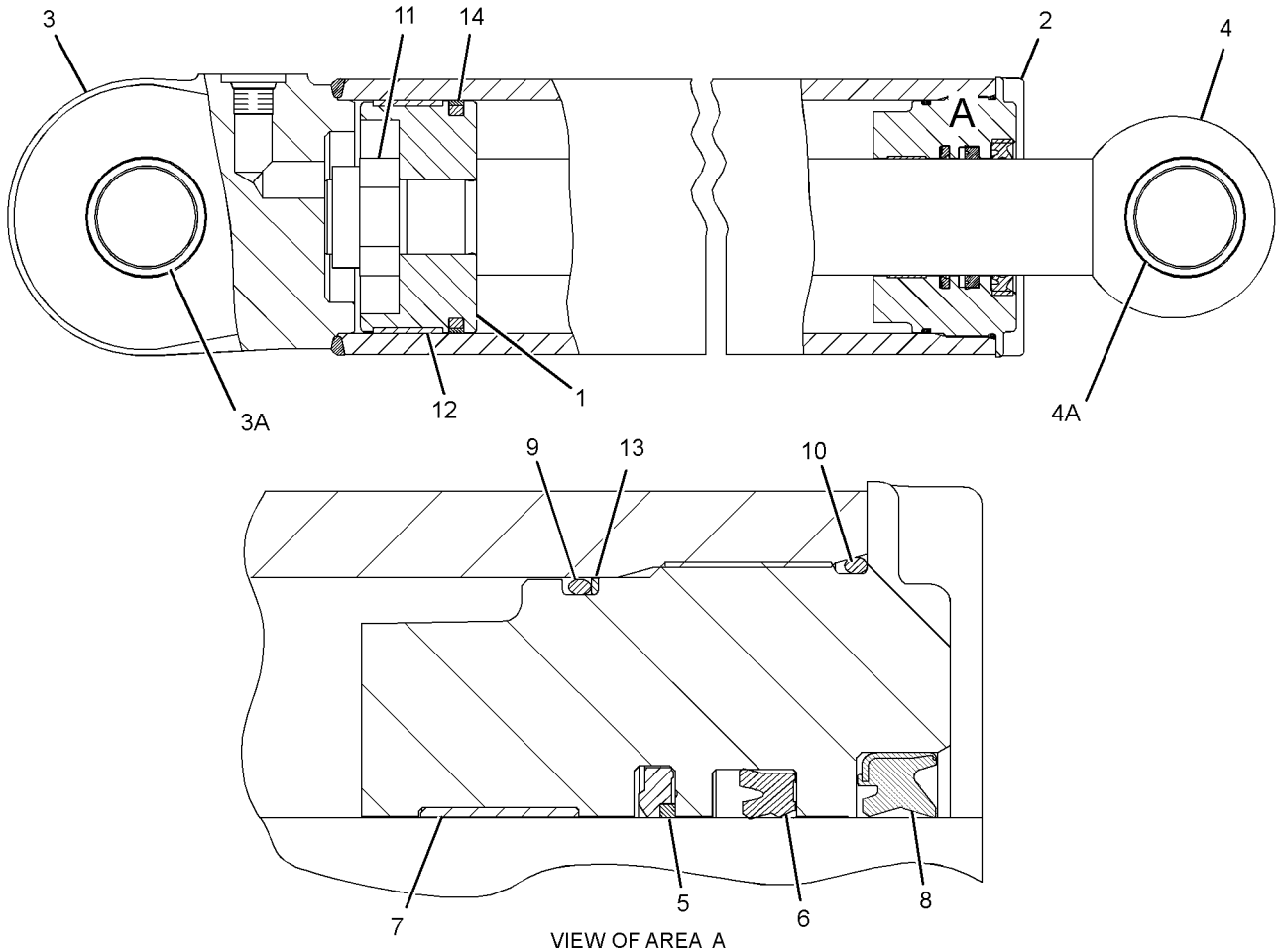

VIEW OF AREA A

GRAPHIC #1 **<END>** g01927585

HYDRAULIC SYSTEM

143-5988 CYLINDER GP-BLADE TIP

S/N: B9K1-UP
120.65 MM BORE X 294 MM STROKE
PART OF 140-8444 CYLINDER & MTG GP-BLADE TIP

SMCS-5106 **i01988574**

NOTE	REF NO	GRAPHIC REF	PART NUMBER	QTY	PART NAME 1 2 3 4 5 6 (PRODUCT LEVEL)	SEE PAGE
R	1	1	**143-5989**	1	CYLINDER AS	
	1B	1	**6E-1497**	1	BOSS	
M	2	1	**173-9682**	1	BOLT (M36X4X100-MM)	
	3	1	**7D-5238**	1	WASHER (37.5X62X6-MM THK)	
	4	1	**133-8773**	1	PISTON	
	5	1	**175-7903**	1	SEAL-O-RING	
	6	1	**2J-3961**	1	RING-BACKUP	
	7	1	**120-6679**	1	HEAD	
R	8	1	**143-5990**	1	ROD AS	
	8A	1	**118-2289**	1	BEARING-SLEEVE	
	9	1	**225-3281**	1	SEAL-WIPER	
	10	1	**167-2312**	1	SEAL-U-CUP	
	11	1	**167-2201**	1	SEAL AS-BUFFER	
	12	1	**8T-0785**	1	RING-WEAR	
	13	1	**8T-8390**	1	RING-WEAR	
	14	1	**4T-8588**	1	SEAL AS	

M-METRIC PART
R-REMFG PART MAY BE AVAILABLE

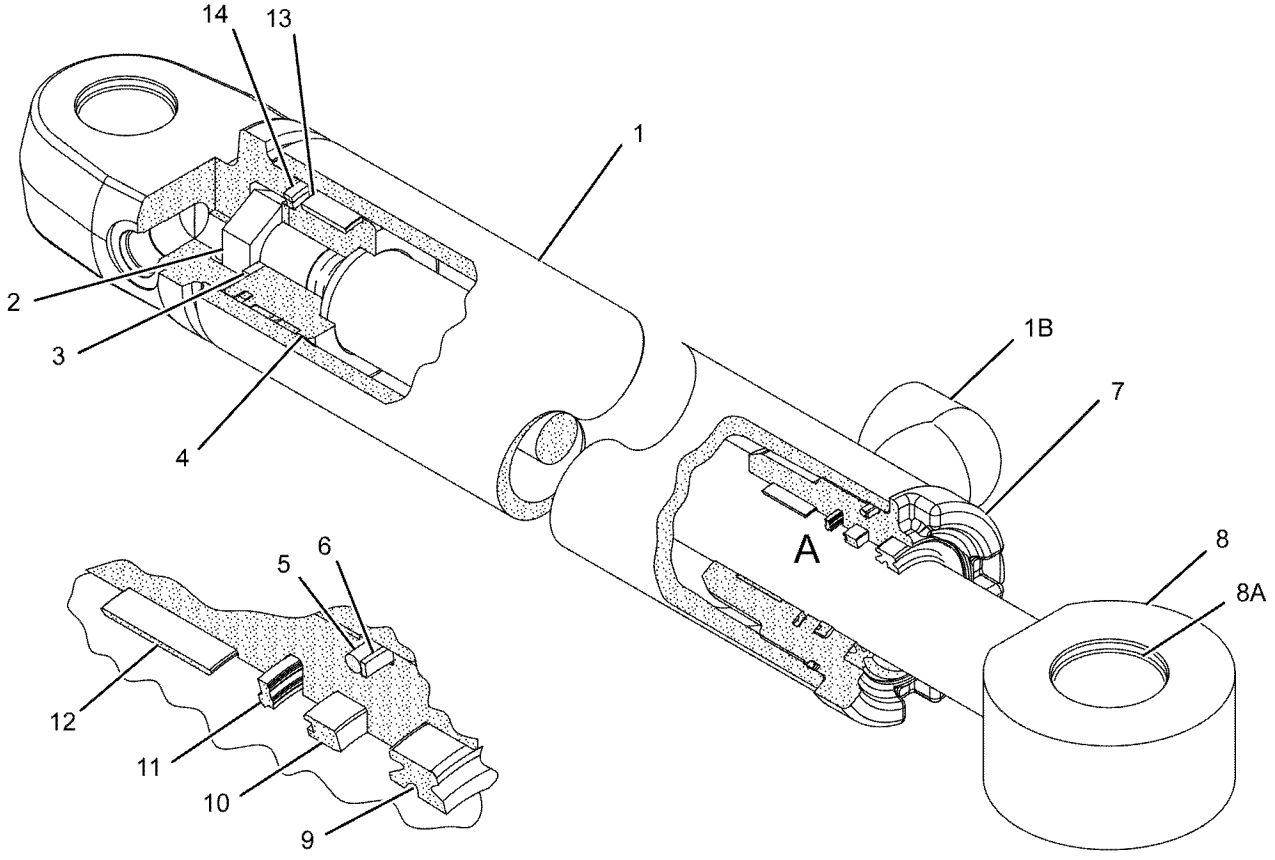

VIEW OF AREA A

GRAPHIC #1 **<END>** g01069042

HYDRAULIC SYSTEM

276-7646 CYLINDER GP-HYDRAULIC–

BLADE LIFT, CENTERSHIFT

S/N: B9K1-UP

133.4-MM (5.3-IN) BORE X 1000-MM (39.4-IN) STROKE

PART OF 278-0560 CYLINDER & MTG GP-CSHFT & LIFT

SMCS-7562 **i02764485**

NOTE	REF NO	GRAPHIC REF	PART NUMBER	QTY	PART NAME 1 2 3 4 5 6 (PRODUCT LEVEL)	SEE PAGE
	1	1	**3G-0910**	1	CAP-BEARING	
B	2	1	**3G-0911**	22	SHIM (0.8-MM THK)	
	3	1	**6E-3319**	1	PISTON	
	4	1	**6E-3326**	1	HEAD	
R	5	1	**117-8630**	1	CYLINDER AS	
	5A	1	**7J-9694**	1	BEARING-SLEEVE	
R	6	1	**117-8631**	1	ROD AS	
	7	1	**225-3284**	1	SEAL-WIPER	
	8	1	**167-2208**	1	SEAL AS-BUFFER	
	9	1	**167-2319**	1	SEAL-U-CUP	
	10	1	**175-7905**	1	SEAL-O-RING	
	11	1	**2D-0714**	1	RING-WEAR	
	12	1	**2J-7767**	1	RING-BACKUP	
	13	1	**5J-3488**	1	LOCKNUT (2-1/4-12-2B-THD)	
M	14	1	**7X-0851**	4	NUT (M24X3-THD)	
	15	1	**8C-9161**	1	RING-WEAR	
M	16	1	**8T-0672**	4	BOLT (M24X3X160-MM)	
	17	1	**8T-0763**	1	SEAL AS	

B-USE AS REQUIRED
M-METRIC PART
R-REMFG PART MAY BE AVAILABLE

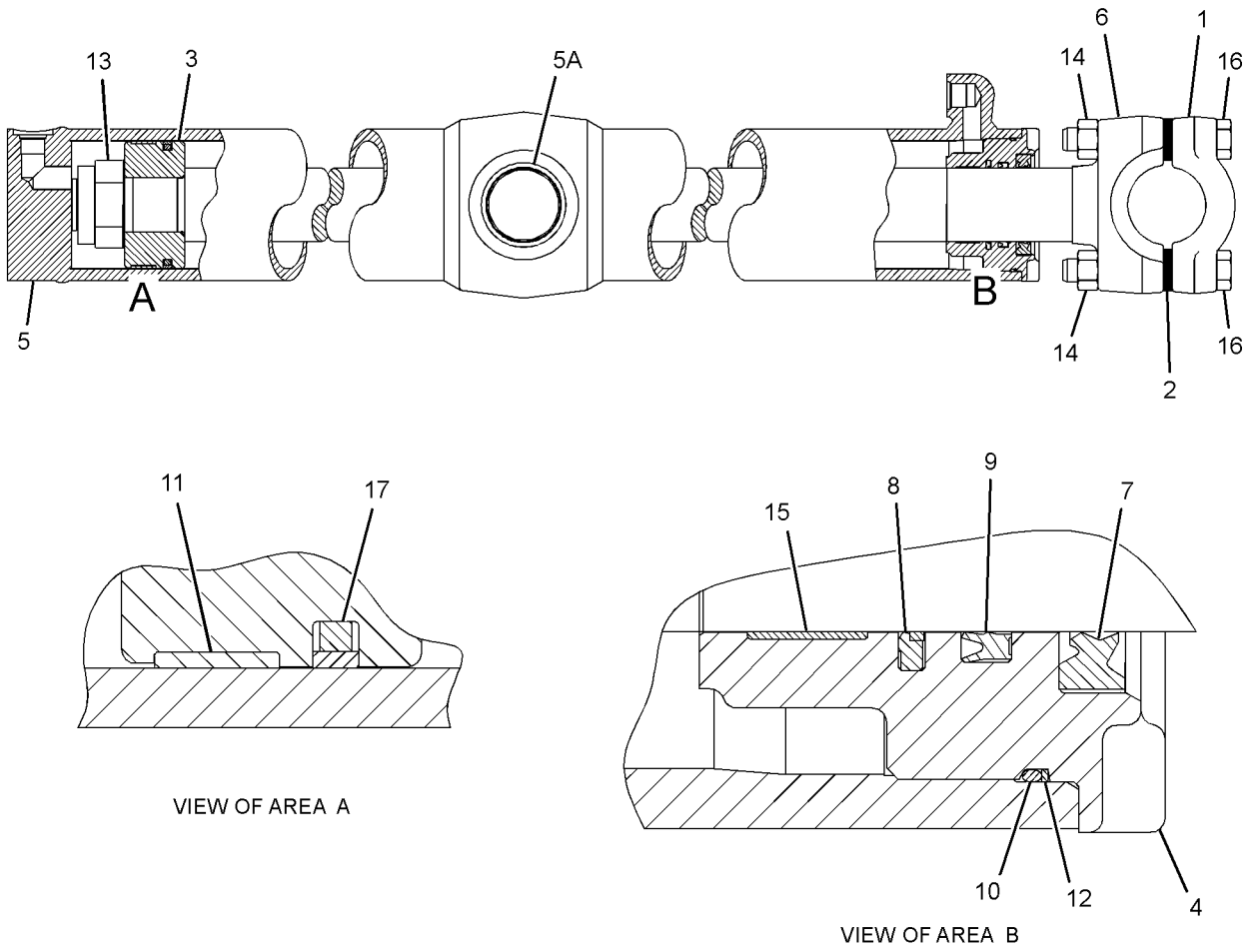

GRAPHIC #1 **<END>** g01397157

HYDRAULIC SYSTEM

113-7754 CYLINDER GP-RIPPER

S/N: B9K1-UP
101.6-MM (4-IN) BORE X 482.6-MM (19-IN) STROKE
PART OF 278-3509 RIPPER AR

SMCS-5352, 5356 **i03850350**

NOTE	REF NO	GRAPHIC REF	PART NUMBER	QTY	PART NAME 1 2 3 4 5 6 (PRODUCT LEVEL)	SEE PAGE
R	1	1	**113-7755**	1	CYLINDER AS	
	1A	1	**8J-9911**	2	BEARING-SLEEVE	
		1	**9T-8958**	1	TRUNNION	
M	2	1	**173-9683**	1	BOLT (M30X3.5X90-MM)	
	3	1	**3S-7023**	1	WASHER (34X57X6-MM THK)	
J	4	1	**5J-5402**	1	SEAL AS	
J	5	1	**6J-2797**	1	RING-WEAR	
	6	1	**9T-3133**	1	PISTON	
R	7	1	**113-7756**	1	ROD AS	
	7A	1	**8J-9910**	1	BEARING-SLEEVE	
J	8	1	**175-7900**	1	SEAL-O-RING	
J	9	1	**2K-6830**	1	RING-BACKUP	
	10	1	**6E-0775**	1	HEAD	
JLN	11	1	**4T-5613**	1	RING-WEAR	
JLN	12	1	**289-2946**	1	SEAL-U-CUP	
JLN	13	1	**289-2935**	1	SEAL AS	
JLN	14	1	**308-1845**	1	SEAL-WIPER	
					AVAILABLE REPAIR KIT(S):	
J			**185-7688**	1	KIT-SEAL (RIPPER CYLINDER)	
					(INCLUDES SEAL-O-RING & BACKUP RING)	
L			**185-7690**	1	KIT-SEAL (RIPPER CYLINDER)	
					(INCLUDES SEAL AS, WEAR RING, HEAD SEAL, & SEAL)	
N			**185-7691**	1	KIT-SEAL (RIPPER CYLINDER)	
					(INCLUDES SEAL AS, WEAR RING, HEAD SEAL, & SEAL-O-RING)	

J-KIT MARKED J INCLUDES PARTS MARKED J
L-KIT MARKED L INCLUDES PARTS MARKED L
M-METRIC PART
N-KIT MARKED N INCLUDES PARTS MARKED N
R-REMFG PART MAY BE AVAILABLE

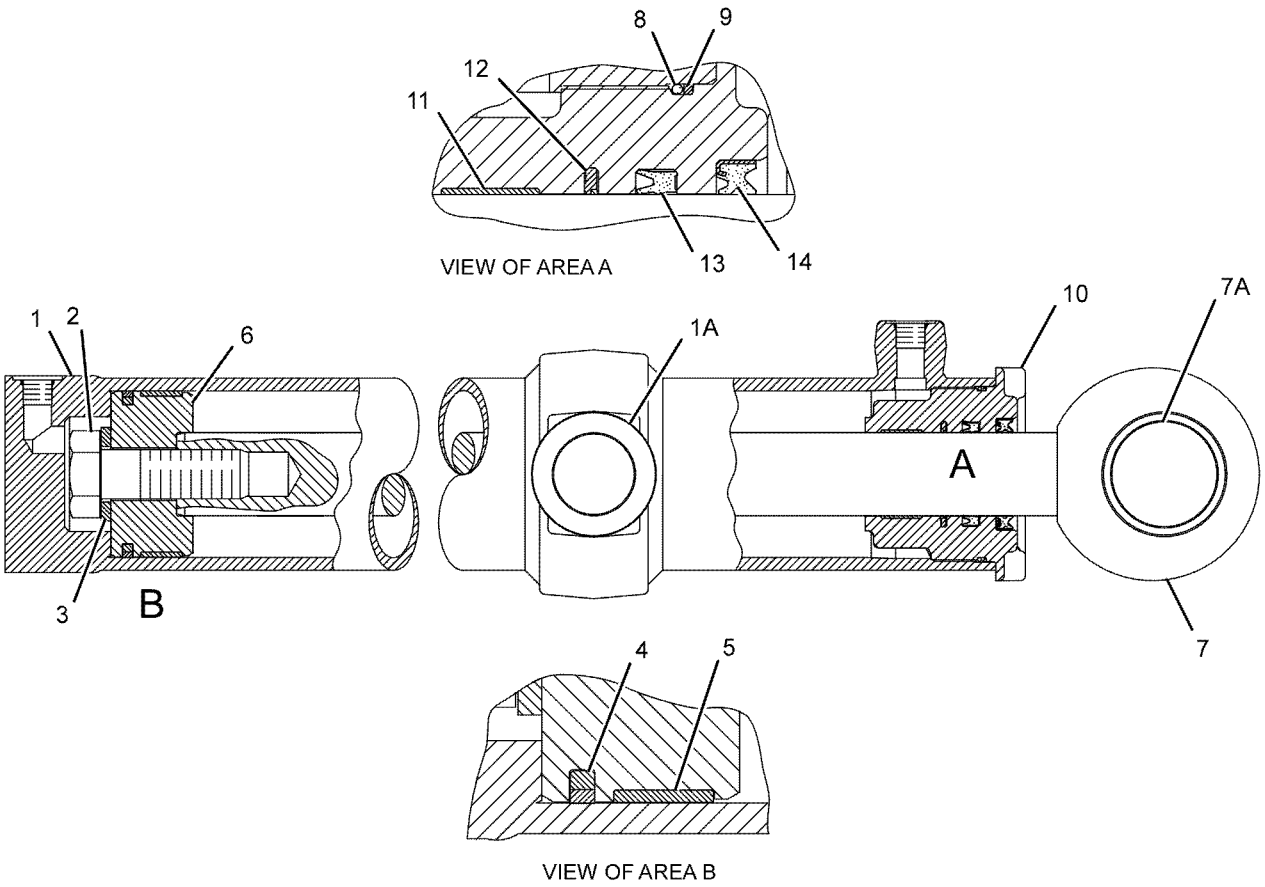

GRAPHIC #1 **<END>** g01099854

HYDRAULIC SYSTEM

141-2914 CYLINDER GP-SIDESHIFT

S/N: B9K1-UP
127 MM BORE X 2115 MM STROKE
PART OF 140-8443 CYLINDER & MTG GP-SIDESHIFT

SMCS-5229 **i04026185**

NOTE	REF NO	GRAPHIC REF	PART NUMBER	QTY	PART NAME 1 2 3 4 5 6 (PRODUCT LEVEL)	SEE PAGE
R	1	1	**141-2916**	1	CYLINDER AS	
		1	**1J-6472**	2	RING-RETAINING	
		1	**5J-1446**	1	BEARING	
	2	1	**2J-0564**	1	LOCKNUT (2-12-THD)	
J	3	1	**4J-4630**	1	RING-WEAR	
J	4	1	**9X-7264**	1	SEAL AS	
	5	1	**6E-5683**	1	PISTON	
J	6	1	**5F-3144**	1	SEAL-O-RING	
J	7	1	**2K-4096**	1	RING-BACKUP	
J	8	1	**8T-8374**	1	SEAL-HEAD	
M	9	1	**7Y-5216**	8	BOLT-SOCKET HEAD (M20X2.5X80-MM)	
	10	1	**126-5060**	1	HEAD	
R	11	1	**141-2918**	1	ROD AS	
J	12	1	**225-3285**	1	SEAL-WIPER	
J	13	1	**167-2320**	1	SEAL-U-CUP	
J	14	1	**167-2209**	1	SEAL AS-BUFFER	
J	15	1	**8C-9101**	1	RING-WEAR	
					AVAILABLE REPAIR KIT(S):	
J			**252-5105**	1	KIT-SEAL (SIDESHIFT)	

J-KIT MARKED J SERVICES PARTS MARKED J
M-METRIC PART
R-REMFG PART MAY BE AVAILABLE

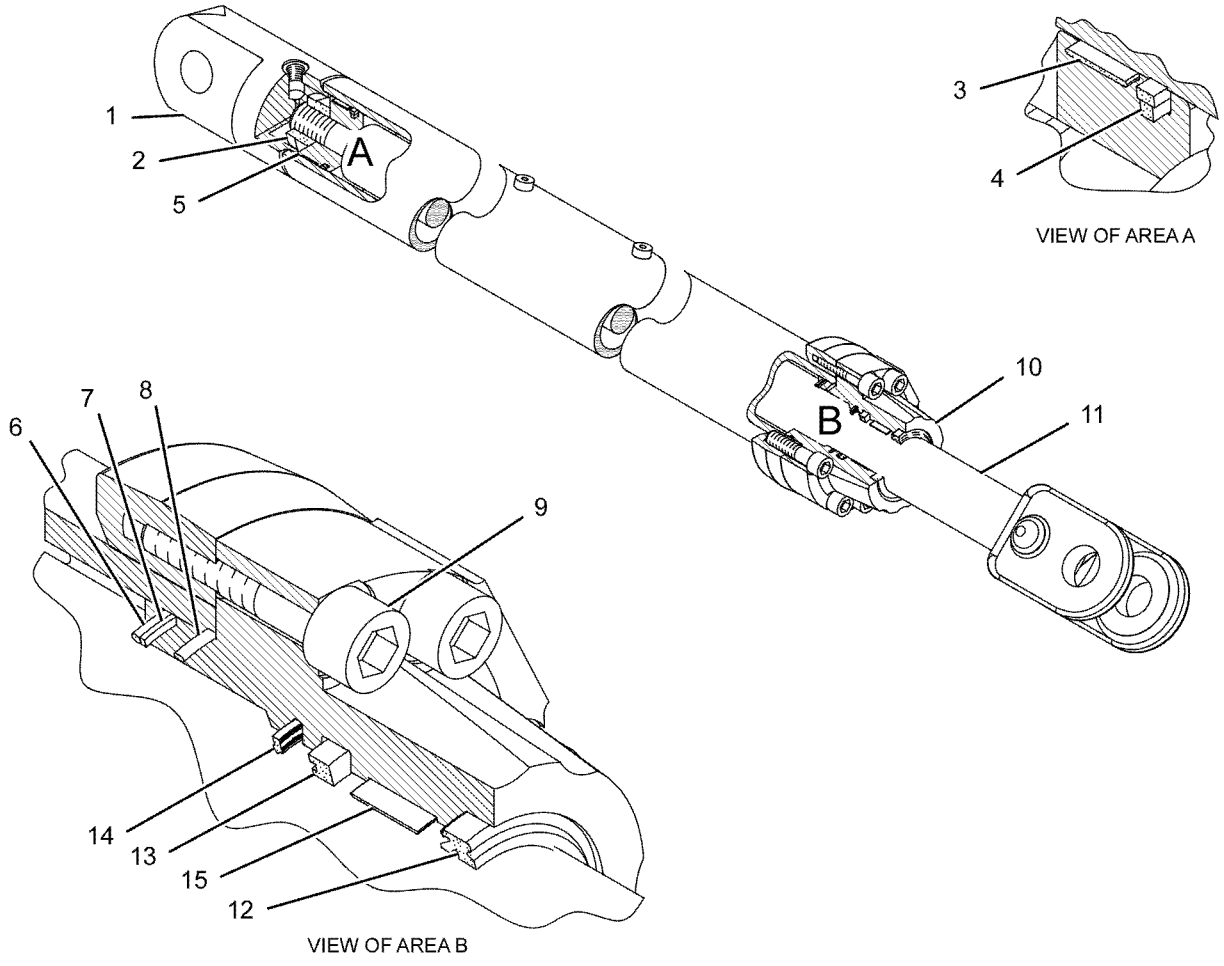

GRAPHIC #1 **<END>** g01069137

HYDRAULIC SYSTEM

270-8686 CYLINDER GP-STEERING*R

S/N: B9K1-UP
88.9-MM (3.5-IN) BORE X 445-MM (17.5-IN) STROKE
PART OF 266-9701 CYLINDER & MTG GP-STEERING

SMCS-4303 **i03543613**

NOTE	REF NO	GRAPHIC REF	PART NUMBER	QTY	PART NAME 1 2 3 4 5 6 (PRODUCT LEVEL)	SEE PAGE
	1	1	3E-3377	1	WEDGE-RECEPTACLE LOCK (4-PIN)	
	2	1	102-2244	1	GROMMET	
	3	1	187-3510	1	HEAD	
	4	1	212-0907	1	PLATE-CONNECTOR	
	5	1	217-3312	1	MAGNET	
	6	1	223-3356	1	RING-WEAR	
	7	1	246-9113	1	RETAINER	
	8	1	270-8687	1	CYLINDER AS-HYDRAULIC	
		1	2H-5549	2	RING-RETAINING	
		1	4D-4431	1	BEARING-ALIGNING	
		1	095-0879	1	PIN-SPRING	
		1	7J-0204	1	SEAL-O-RING	
		1	9S-8007	1	PLUG	
		1	291-8458	1	BOSS AS	
		1	1N-5999	1	PLUG-O-RING	
		1	7J-0204	1	SEAL-O-RING	
	9	1	270-8689	1	ROD AS-HYDRAULIC CYLINDER	
	10	1	276-1816	1	GUARD	
	11	1	280-2238	1	PISTON	
	12	1	280-2243	1	SENSOR GP-POSITION (STEERING CYLINDER)	
		1	9X-3401	3	PIN-CONNECTOR (16-GA TO 18-GA)	
	13	1	167-2201	1	SEAL AS-BUFFER	
	14	1	167-2312	1	SEAL-U-CUP	
	15	1	188-2199	1	SEAL-O-RING	
	16	1	215-1942	1	RING-BACKUP	
	17	1	6V-6707	1	SEAL-O-RING	
	18	1	2H-4145	1	SEAL-O-RING	
	19	1	102-8804	1	KIT-RECEPTACLE (4-PIN)	
					(INCLUDES RECEPTACLE AS & WEDGE)	
	20	1	3V-2431	2	WASHER (10.2X16X2-MM THK)	
	21	1	4J-9224	1	RING-BACKUP	
	22	1	4S-5565	2	BOLT (3/8-16X0.875-IN)	
	23	1	4T-8054	1	SEAL AS	
	24	1	5J-8156	1	WIPER-ROD	
	25	1	8J-4351	1	SEAL-O-RING	
	26	1	8J-6220	1	SETSCREW-HEX SOCKET (3/8-16X0.375-IN)	
	27	1	8T-0785	1	RING-WEAR	
	28	1	8T-5070	1	SETSCREW-SOCKET (3/8-16X0.5-IN)	
	29	1	8T-8737	4	PLUG-SEAL	
E	30	1	9X-1386		SLEEVE (6.1-CM)	
E	30A	1	9X-1386		SLEEVE (5.9-CM)	
	31	1	*207-8218*	2	PLUG AS	
					(EACH INCLUDES)	
		1	7J-0204	1	SEAL-O-RING	
		1	9S-8007	1	PLUG	

E-ORDER BY THE CENTIMETER

270-8686 CYLINDER GP-STEERING *(contd.)* i03543613

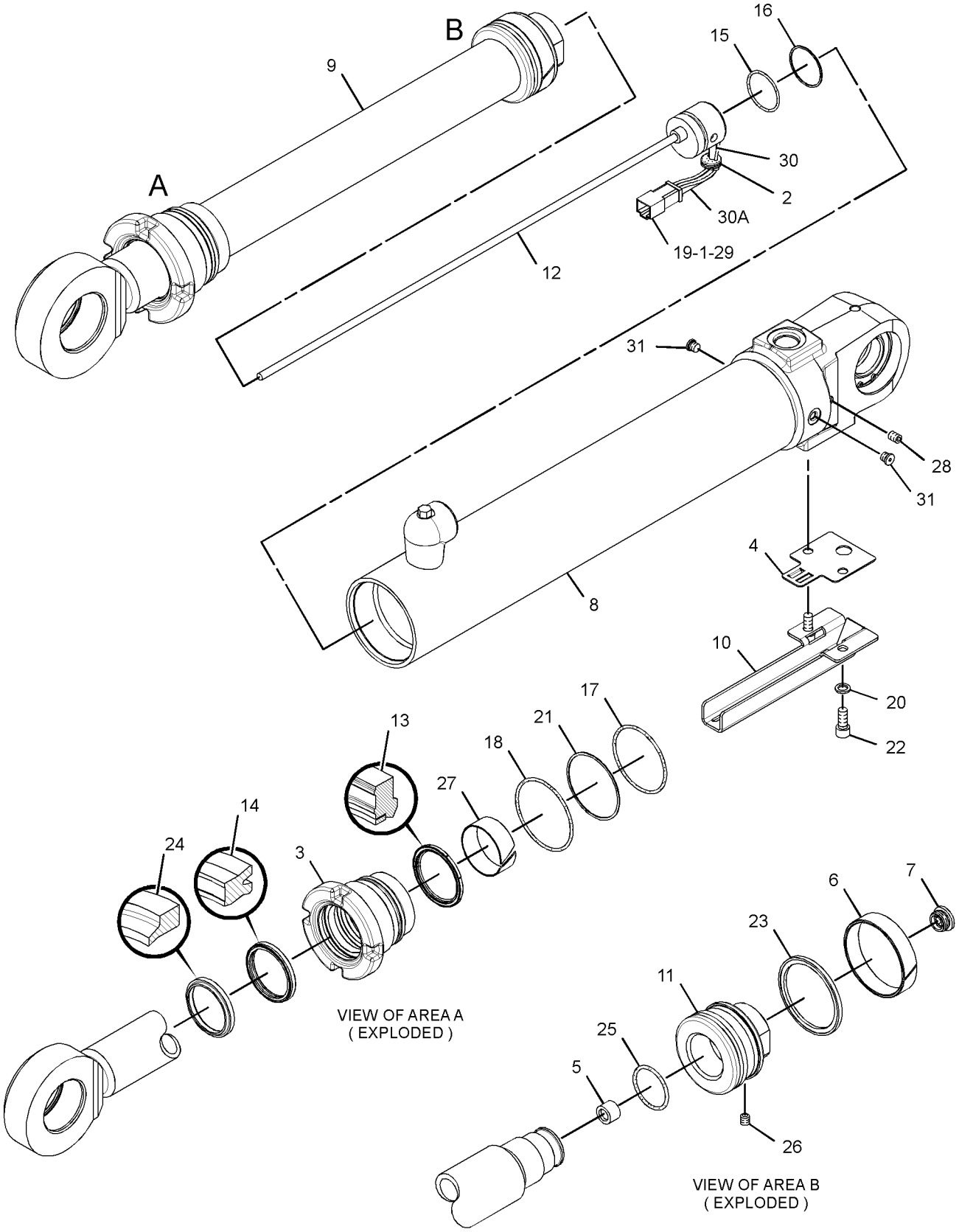

GRAPHIC #1 **<END>** g01782953

HYDRAULIC SYSTEM

117-0836 CYLINDER GP-WHEEL LEAN

S/N: B9K1-UP
120.65 MM X 243 MM STROKE
PART OF 8X-9016 CYLINDER & MTG GP-WHEEL LEAN

SMCS-5211 **i01433355**

NOTE	REF NO	GRAPHIC REF	PART NUMBER	QTY	PART NAME 1 2 3 4 5 6 (PRODUCT LEVEL)	SEE PAGE
R	1	1	**118-1951**	1	CYLINDER AS	
		1	**118-2289**	1	BEARING-SLEEVE	
M	2	1	**173-9682**	1	BOLT-HEX HEAD (M36X4X100MM)	
	3	1	**106-1017**	1	WASHER (36.7X77X6MM THK)	
	4	1	**9T-8199**	1	PISTON	
	5	1	**175-7903**	1	SEAL-O-RING	
	6	1	**2J-3961**	1	RING-BACKUP	
	7	1	**120-6679**	1	HEAD	
R	8	1	**118-1953**	1	ROD AS	
		1	**126-6917**	1	BEARING-SLEEVE	
	9	1	**167-2463**	1	SEAL-WIPER	
	10	1	**167-2312**	1	SEAL-U-CUP	
	11	1	**167-2201**	1	SEAL AS-BUFFER	
	12	1	**8T-0785**	1	RING-WEAR	
	13	1	**8T-8390**	1	RING-WEAR	
	14	1	**4T-8588**	1	SEAL AS	

M-METRIC PART
R-REMFG PART MAY BE AVAILABLE

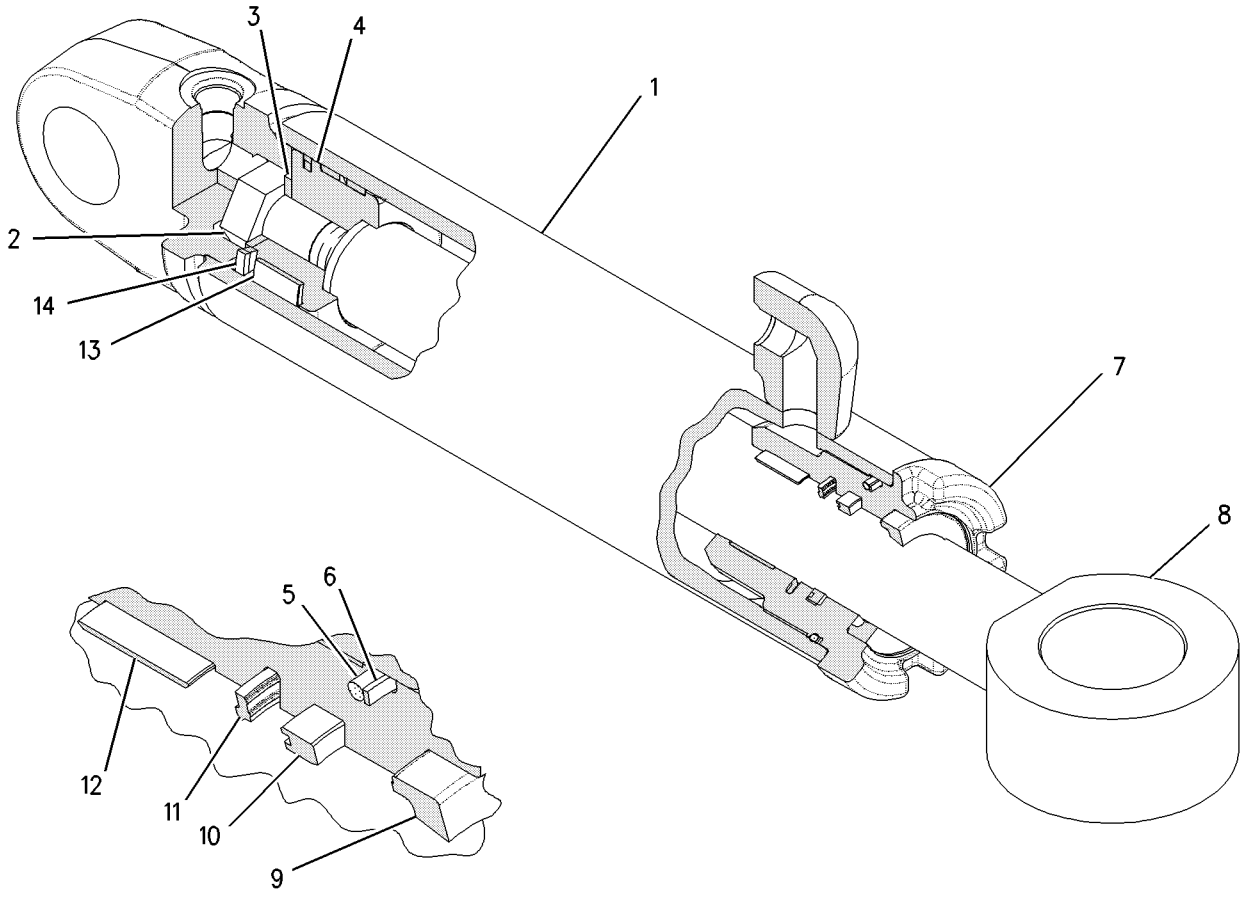

GRAPHIC #1 **<END>** g00762856

HYDRAULIC SYSTEM

252-7065 DRIVE & MTG GP-CIRCLE

S/N: B9K1-UP

PART OF 259-9204 COMMON AR, 321-3121 IMPLEMENT AR

SMCS-5207 **i02728020**

NOTE	REF NO	GRAPHIC REF	PART NUMBER	QTY	PART NAME 1 2 3 4 5 6 (PRODUCT LEVEL)	SEE PAGE
Y	1	1	*8X-9031*	1	MOTOR & MTG GP-CIRCLE DRIVE	756
	2	1	**9D-1491**	1	COUPLING	
Y	3	1	**268-5745**	1	DRIVE GP-CIRCLE	663
	4	1	**4H-6996**	1	PIN-SPRING	
M	5	1	**7X-2563**	9	BOLT (M20X2.5X60-MM)	
	6	1	**8T-5439**	9	WASHER-HARD (21.5X45X6-MM THK)	

M-METRIC PART
Y-SEPARATE ILLUSTRATION

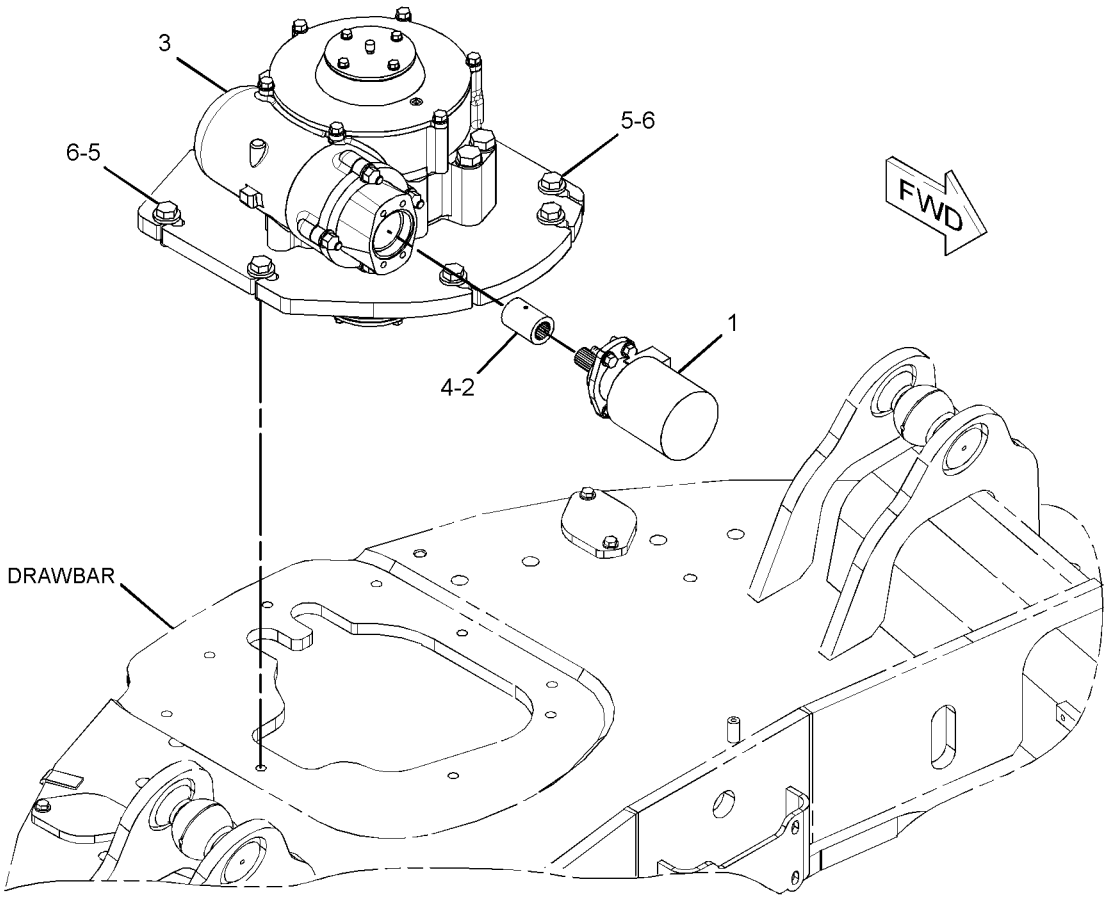

GRAPHIC #1 **<END>** g01377470

HYDRAULIC SYSTEM

265-6741 DRIVE & MTG GP-CIRCLE

S/N: B9K1-UP

PART OF 259-9204 COMMON AR, 321-3121 IMPLEMENT AR

SMCS-5207 **i02761556**

NOTE	REF NO	GRAPHIC REF	PART NUMBER	QTY	PART NAME 1 2 3 4 5 6 (PRODUCT LEVEL)	SEE PAGE
Y	1	1	*8X-9031*	1	MOTOR & MTG GP-CIRCLE DRIVE	756
	2	1	**9D-1491**	1	COUPLING	
Y	3	1	**265-6742**	1	DRIVE GP-CIRCLE	660
	4	1	**4H-6996**	1	PIN-SPRING	
M	5	1	**7X-2563**	9	BOLT (M20X2.5X60-MM)	
	6	1	**8T-5439**	9	WASHER-HARD (21.5X45X6-MM THK)	

M-METRIC PART
Y-SEPARATE ILLUSTRATION

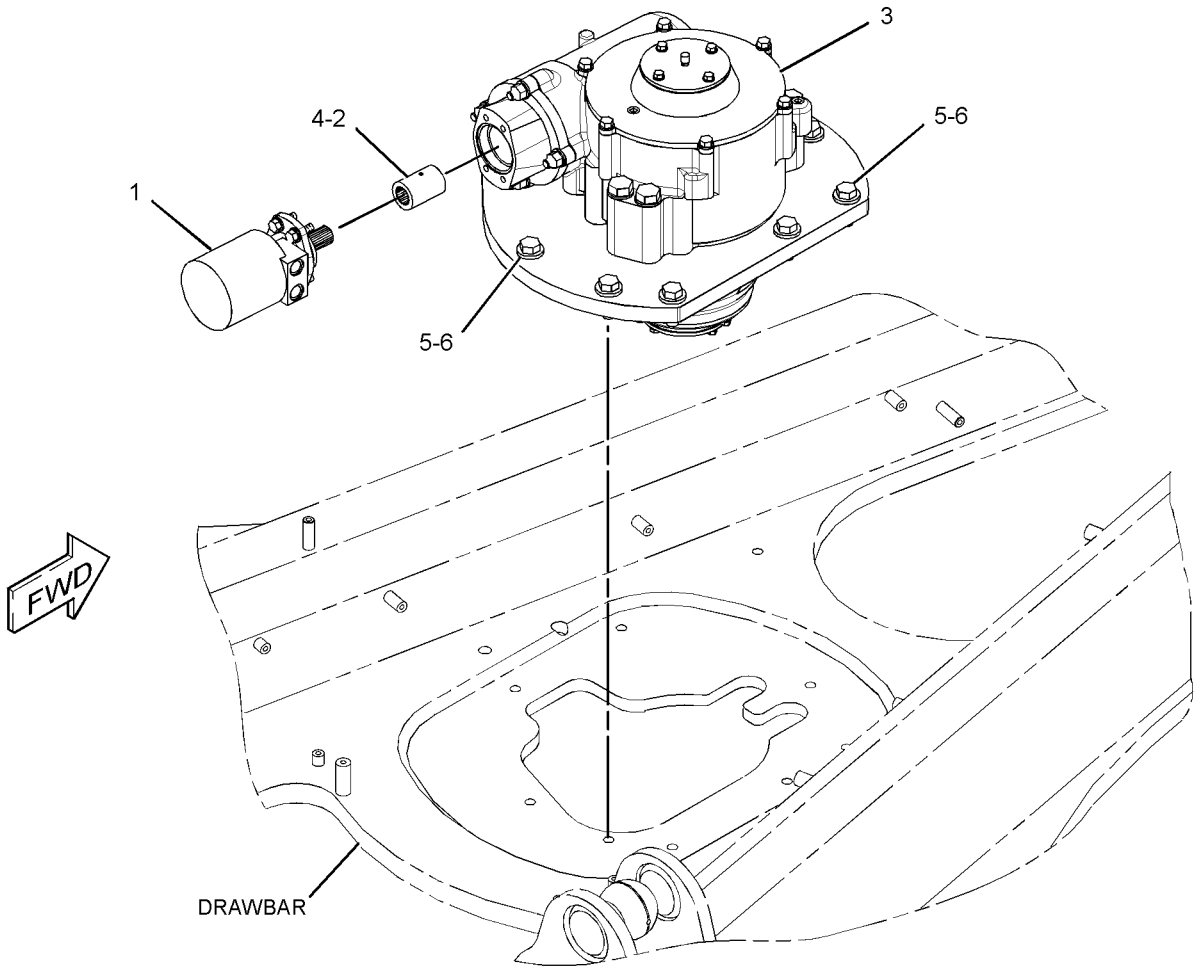

GRAPHIC #1 **<END>** g01384649

HYDRAULIC SYSTEM

265-6742 DRIVE GP-CIRCLE

S/N: B9K1-UP

PART OF 265-6741 DRIVE & MTG GP-CIRCLE

SMCS-5207 **i02761562**

NOTE	REF NO	GRAPHIC REF	PART NUMBER	QTY	PART NAME 1 2 3 4 5 6 (PRODUCT LEVEL)	SEE PAGE
	1	1	**1A-1415**	1	NUT (23/4X17/8-THD)	
	2	1	**2G-0339**	1	WASHER-SPECIAL (1.906X3.25X0.06-MM THK)	
	3	1	**2G-0478**	10	DISC-FRICTION	
	4	1	**4D-8186**	1	PLUG-PIPE	
R	5	1	**5K-5288**	2	SEAL GP-DUO-CONE	
					(EACH INCLUDES)	
		1	**5K-5129**	2	RING-SEALING	
	6	1	**5T-8059**	1	WORM-CIRCLE DRIVE	
	7	1	**5T-8060**	1	ADAPTER	
	8	1	**6G-1536**	1	SPACER (69.88X90X13-MM THK)	
	9	1	**6G-1539**	1	COVER	
B	10	1	**6G-5542**	2	SPACER (119.2X178X9.3-MM THK)	
B	11	1	**6G-5543**	6	SHIM (0.13-MM THK)	
	12	1	**6G-5544**	9	SHIM (0.25-MM THK)	
	13	1	**6G-6122**	1	SPRING-DISC	
	14	1	**6Y-7953**	11	DISC-FRICTION	
	15	1	**8D-3984**	2	CONE-BEARING	
	16	1	**8D-3986**	2	CUP-BEARING	
B	17	1	**8D-4523**	2	SHIM (0.01-MM THK)	
	18	1	**8D-7333**	1	COLLAR	
	19	1	**8W-6179**	1	WASHER-THRUST	
	20	1	**8X-4028**	1	GEAR-WORM (36-TEETH)	
	21	1	**9D-0089**	1	CAGE AS	
		1	**7J-2604**	1	BEARING-SLEEVE	
	22	1	**261-8555**	1	PINION-CIRCLE DRIVE	
	23	1	**265-6723**	1	HOUSING AS-DRIVE	
		1	**3J-2333**	2	BEARING-SLEEVE	
		1	**4D-4823**	4	STUD-TAPERLOCK (5/8-11-THD)	
		1	**292-4252**	4	STUD-TAPERLOCK (M24-THD)	
	24	1	**295-7912**	1	ADAPTER	
	25	1	**0S-1585**	7	BOLT (1/2-13X1.5-IN)	
	26	1	**0S-1594**	4	BOLT (3/8-16X1-IN)	
	27	1	**1A-2029**	4	BOLT (3/8-16X1.125-IN)	
	28	1	**267-3506**	4	WASHER-HARD (26X44X4-MM THK)	
M	29	1	**268-8262**	4	NUT (M24X3-THD)	
	30	1	**2B-7410**	2	PLUG-PIPE	
	31	1	**2D-6533**	1	SEAL-O-RING	
	32	1	**2D-8009**	1	SEAL-O-RING	
	33	1	**4K-0367**	4	NUT-FULL (5/8-11-THD)	
	34	1	**5K-7143**	2	BOLT-SELF-LOCKING (1/2-13X1.5-IN)	
	35	1	**5M-2894**	8	WASHER-HARD (10.2X18.5X2.5-MM THK)	
	36	1	**5P-8245**	9	WASHER-HARD (13.5X25.5X3-MM THK)	
	37	1	**5P-8247**	4	WASHER-HARD (17X32X3.5-MM THK)	
	38	1	**5S-7379**	4	BOLT (3/8-16X0.875-IN)	
	39	1	**6G-1541**	1	SHAFT-DRIVE PINION	
	40	1	**6G-5538**	1	COVER	
	41	1	**6G-5539**	1	GASKET	
	42	1	**6G-5547**	1	PLATE	
	43	1	**6V-8237**	4	WASHER (26X44X4-MM THK)	
B	44	1	**8D-4522**	4	SHIM (0.005-MM THK)	
	45	1	**8D-7341**	1	GASKET	
	46	1	**8D-7343**	1	WASHER-THRUST (3.12X4.62X0.09-MM THK)	
	47	1	**8D-7424**	1	SPACER (48X81X6-MM THK)	
	48	1	**8T-0336**	1	FITTING-PRESSURE RELIEF	
M	49	1	**8T-0672**	4	BOLT (M24X3X160-MM)	
	50	1	**8T-4896**	4	WASHER-HARD (10.2X18.5X2.5-MM THK)	

265-6742 DRIVE GP-CIRCLE *(contd.)* i02761562

NOTE	REF NO	GRAPHIC REF	PART NUMBER	QTY	PART NAME 1 2 3 4 5 6 (PRODUCT LEVEL)	SEE PAGE
	51	1	**9D-0088**	1	COVER	

B-USE AS REQUIRED
M-METRIC PART
R-REMFG PART MAY BE AVAILABLE

265-6742 DRIVE GP-CIRCLE *(contd.)* i02761562

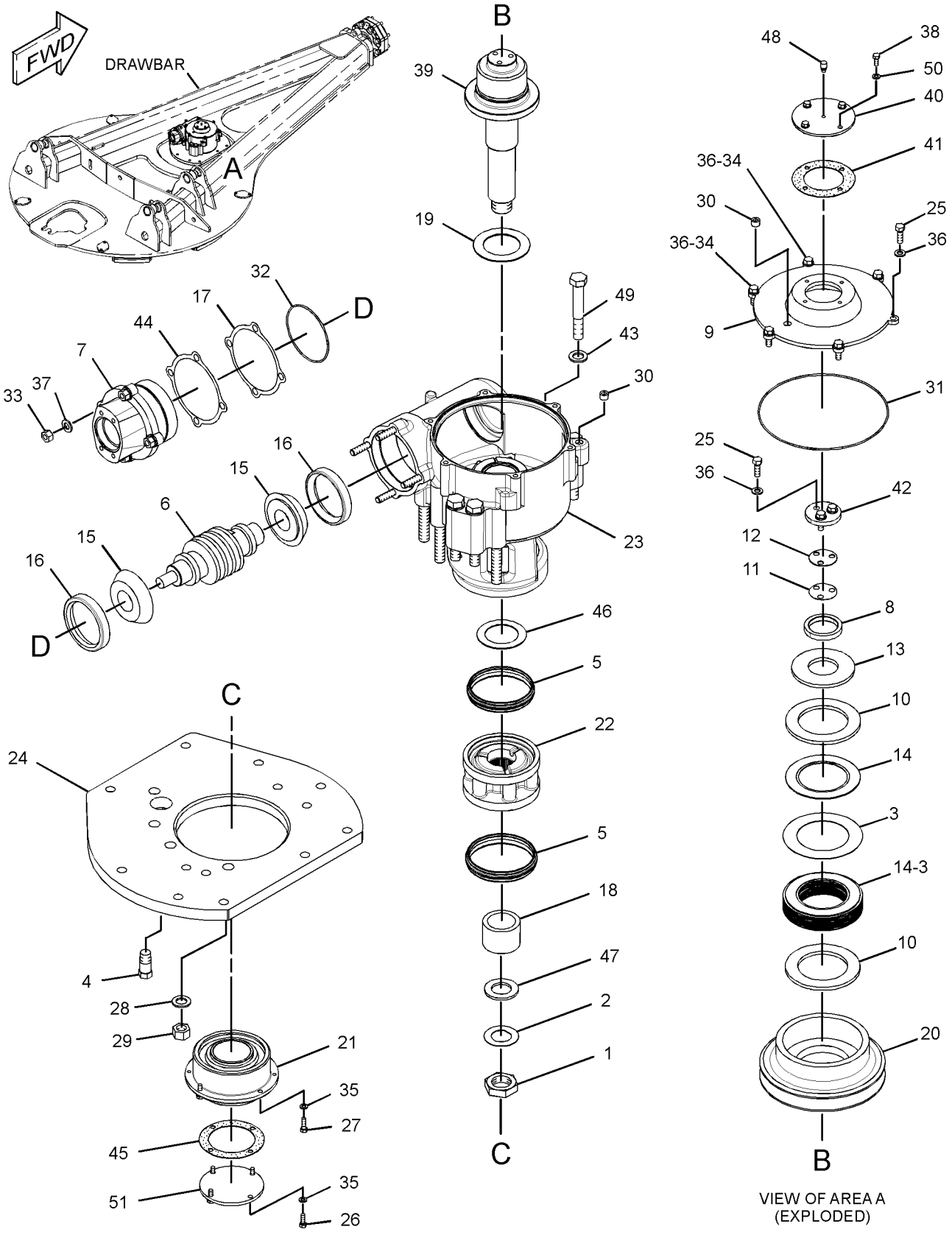

VIEW OF AREA A
(EXPLODED)

GRAPHIC #1 **<END>** g01386484

HYDRAULIC SYSTEM

268-5745 DRIVE GP-CIRCLE

S/N: B9K1-258

PART OF 252-7065 DRIVE & MTG GP-CIRCLE

SMCS-5207 **i03779630**

NOTE	REF NO	GRAPHIC REF	PART NUMBER	QTY	PART NAME 1 2 3 4 5 6 (PRODUCT LEVEL)	SEE PAGE
	1	1	1A-1415	1	NUT (1-7/8-12-THD)	
	2	1	2G-0339	1	WASHER-SPECIAL (1.906X3.25X0.06-MM THK)	
	3	1	2G-0478	10	DISC-FRICTION	
	4	1	4D-8186	1	PLUG-PIPE	
R	5	1	5K-5288	2	SEAL GP-DUO-CONE	
					(EACH INCLUDES)	
		1	5K-5129	2	RING-SEALING	
	6	1	5T-8059	1	WORM-CIRCLE DRIVE	
	7	1	5T-8060	1	ADAPTER	
	8	1	6G-1536	1	SPACER (69.88X90X13-MM THK)	
	9	1	6G-1539	1	COVER	
	10	1	6G-5542	2	SPACER (119.2X178X9.3-MM THK)	
B	11	1	6G-5543	6	SHIM (0.13-MM THK)	
B	12	1	6G-5544	9	SHIM (0.25-MM THK)	
	13	1	6G-6122	1	SPRING-DISC	
	14	1	6Y-7953	11	DISC-FRICTION	
	15	1	8D-3984	2	CONE-BEARING	
	16	1	8D-3986	2	CUP-BEARING	
B	17	1	8D-4523	2	SHIM (0.01-MM THK)	
	18	1	8D-7333	1	COLLAR	
	19	1	8W-6179	1	WASHER-THRUST	
	20	1	8X-4028	1	GEAR-WORM (36-TEETH)	
	21	1	9D-0089	1	CAGE AS	
		1	7J-2604	1	BEARING-SLEEVE	
	22	1	261-8555	1	PINION-CIRCLE DRIVE	
	23	1	265-6723	1	HOUSING AS-DRIVE	
		1	3J-2333	2	BEARING-SLEEVE	
		1	4D-4823	4	STUD-TAPERLOCK (5/8-11-THD)	
		1	292-4252	4	STUD-TAPERLOCK (M24-THD)	
	24	1	268-5744	1	ADAPTER	
	25	1	0S-1585	7	BOLT (1/2-13X1.5-IN)	
	26	1	0S-1594	4	BOLT (3/8-16X1-IN)	
	27	1	1A-2029	4	BOLT (3/8-16X1.125-IN)	
	28	1	267-3506	4	WASHER-HARD (26X44X4-MM THK)	
M	29	1	268-8262	4	NUT (M24X3-THD)	
	30	1	2B-7410	2	PLUG-PIPE	
	31	1	2D-6533	1	SEAL-O-RING	
	32	1	2D-8009	1	SEAL-O-RING	
	33	1	4K-0367	4	NUT-FULL (5/8-11-THD)	
	34	1	5K-7143	2	BOLT-SELF-LOCKING (1/2-13X1.5-IN)	
	35	1	5M-2894	8	WASHER-HARD (10.2X18.5X2.5-MM THK)	
	36	1	5P-8245	9	WASHER-HARD (13.5X25.5X3-MM THK)	
	37	1	5P-8247	4	WASHER-HARD (17X32X3.5-MM THK)	
	38	1	5S-7379	4	BOLT (3/8-16X0.875-IN)	
	39	1	6G-1541	1	SHAFT-DRIVE PINION	
	40	1	6G-5538	1	COVER	
	41	1	6G-5539	1	GASKET	
	42	1	6G-5547	1	PLATE	
	43	1	6V-8237	4	WASHER (26X44X4-MM THK)	
B	44	1	8D-4522	4	SHIM (0.005-MM THK)	
	45	1	8D-7341	1	GASKET	
	46	1	8D-7343	1	WASHER-THRUST (3.12X4.62X0.09-MM THK)	
	47	1	8D-7424	1	SPACER (48X81X6-MM THK)	
	48	1	8T-0336	1	FITTING-PRESSURE RELIEF	
M	49	1	8T-0672	4	BOLT (M24X3X160-MM)	
	50	1	8T-4896	4	WASHER-HARD (10.2X18.5X2.5-MM THK)	

268-5745 DRIVE GP-CIRCLE *(contd.)* i03779630

NOTE	REF NO	GRAPHIC REF	PART NUMBER	QTY	PART NAME 1 2 3 4 5 6 (PRODUCT LEVEL)	SEE PAGE
	51	1	**9D-0088**	1	COVER	

B-USE AS REQUIRED
M-METRIC PART
R-REMFG PART MAY BE AVAILABLE

268-5745 DRIVE GP-CIRCLE *(contd.)* i03779630

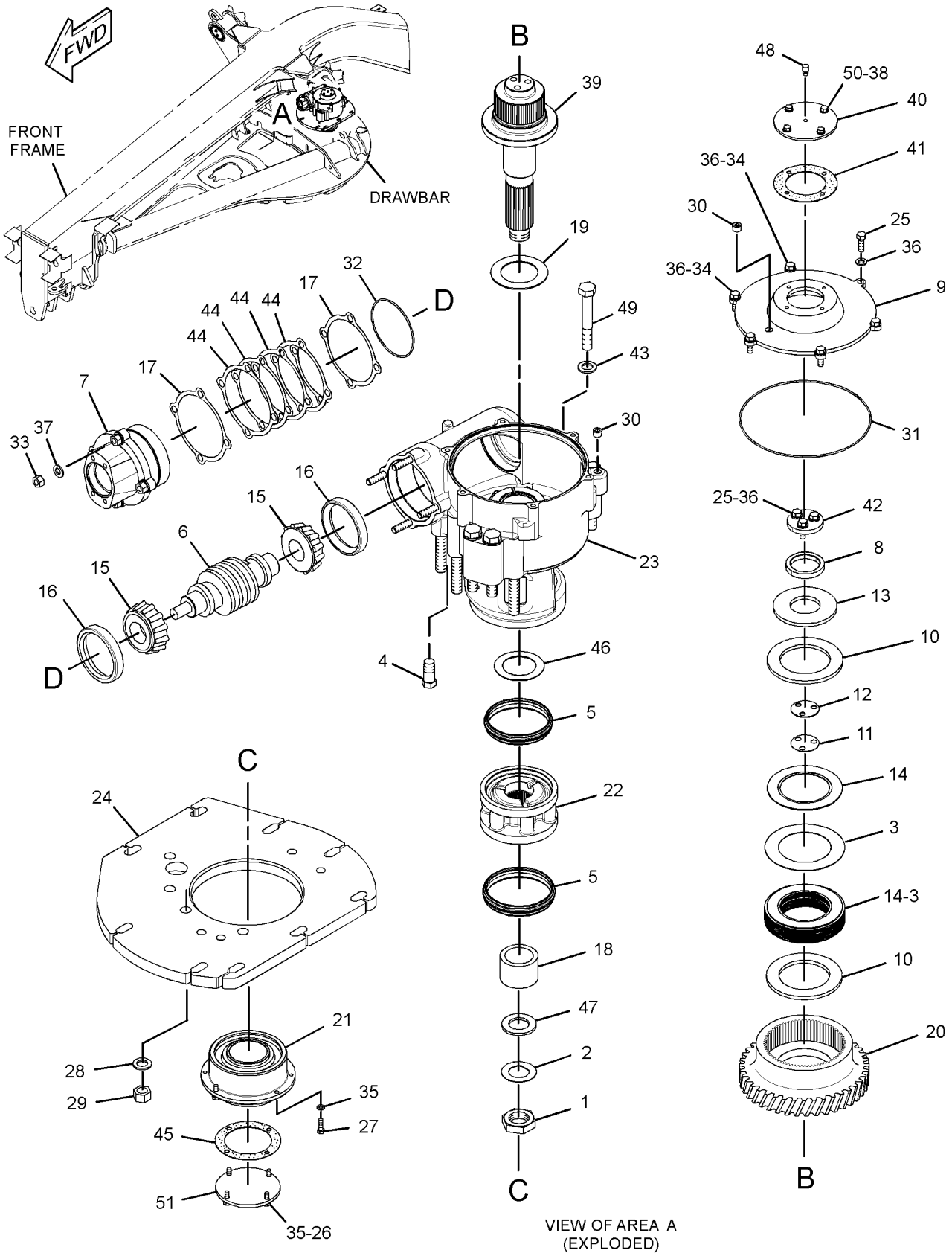

VIEW OF AREA A
(EXPLODED)

GRAPHIC #1 **<END>** g02047953

HYDRAULIC SYSTEM

268-5745 DRIVE GP-CIRCLE

S/N: B9K259-UP

PART OF 252-7065 DRIVE & MTG GP-CIRCLE

SMCS-5207 **i03903855**

NOTE	REF NO	GRAPHIC REF	PART NUMBER	QTY	PART NAME 1 2 3 4 5 6 (PRODUCT LEVEL)	SEE PAGE
	1	1	**1A-1415**	1	NUT (1-7/8-12-THD)	
	2	1	**2G-0339**	1	WASHER-SPECIAL (1.906X3.25X0.06-MM THK)	
	3	1	**2G-0478**	10	DISC-FRICTION	
	4	1	**4D-8186**	1	PLUG-PIPE	
R	5	1	**5K-5288**	2	SEAL GP-DUO-CONE	
					(EACH INCLUDES)	
		1	**5K-5129**	2	RING-SEALING	
	6	1	**5T-8059**	1	WORM-CIRCLE DRIVE	
	7	1	**5T-8060**	1	ADAPTER	
	8	1	**6G-1536**	1	SPACER (69.88X90X13-MM THK)	
	9	1	**6G-1539**	1	COVER	
	10	1	**6G-5542**	2	SPACER (119.2X178X9.3-MM THK)	
	11	1	**6G-6122**	1	SPRING-DISC	
	12	1	**6Y-7953**	11	DISC-FRICTION	
	13	1	**8D-3984**	2	CONE-BEARING	
	14	1	**8D-3986**	2	CUP-BEARING	
B	15	1	**8D-4523**	2	SHIM (0.01-MM THK)	
	16	1	**8D-7333**	1	COLLAR	
	17	1	**8W-6179**	1	WASHER-THRUST	
	18	1	**8X-4028**	1	GEAR-WORM (36-TEETH)	
	19	1	**9D-0089**	1	CAGE AS	
		1	**7J-2604**	1	BUSHING	
	20	1	**261-8555**	1	PINION-CIRCLE DRIVE	
	21	1	**265-6723**	1	HOUSING AS-DRIVE	
		1	**3J-2333**	2	BUSHING	
		1	**4D-4823**	4	STUD-TAPERLOCK (5/8-11-THD)	
		1	**292-4252**	4	STUD-TAPERLOCK (M24-THD)	
	22	1	**268-5744**	1	ADAPTER	
BC	23	1	**307-1959**	6	SHIM (0.13-MM THK)	
BC	24	1	**307-1960**	1	SHIM (0.25-MM THK)	
C	25	1	**307-1961**	1	PLATE	
BC	26	1	**307-1962**	4	SHIM (0.5-MM THK)	
C	27	1	**307-1965**	1	SHAFT-PINION DRIVE	
	28	1	**0S-1585**	4	BOLT (1/2-13X1.5-IN)	
	29	1	**0S-1594**	4	BOLT (3/8-16X1-IN)	
	30	1	**2J-3118**	4	BOLT-LOCKING (3/8-16X1.25-IN)	
	31	1	**267-3506**	4	WASHER-HARD (26X44X4-MM THK)	
M	32	1	**268-8262**	4	NUT (M24X3-THD)	
	33	1	**2B-7410**	2	PLUG-PIPE	
	34	1	**2D-6533**	1	SEAL-O-RING	
	35	1	**2D-8009**	1	SEAL-O-RING	
	36	1	**4K-0367**	4	NUT-FULL (5/8-11-THD)	
	37	1	**5K-7143**	2	BOLT-SELF-LOCKING (1/2-13X1.5-IN)	
	38	1	**5M-2894**	8	WASHER-HARD (10.2X18.5X2.5-MM THK)	
	39	1	**5P-8245**	6	WASHER-HARD (13.5X25.5X3-MM THK)	
	40	1	**5P-8247**	4	WASHER-HARD (17X32X3.5-MM THK)	
	41	1	**5S-7379**	4	BOLT (3/8-16X0.875-IN)	
	42	1	**6G-5538**	1	COVER	
	43	1	**6G-5539**	1	GASKET	
M	44	1	**6V-5686**	3	BOLT (M16X2X50-MM)	
	45	1	**6V-8237**	4	WASHER (26X44X4-MM THK)	
B	46	1	**8D-4522**	4	SHIM (0.005-MM THK)	
	47	1	**8D-5054**	3	WASHER-HARD (17X30X3-MM THK)	
	48	1	**8D-7341**	1	GASKET	
	49	1	**8D-7343**	1	WASHER-THRUST (3.12X4.62X0.09-MM THK)	
	50	1	**8D-7424**	1	SPACER (48X81X6-MM THK)	

268-5745 DRIVE GP-CIRCLE *(contd.)* i03903855

NOTE	REF NO	GRAPHIC REF	PART NUMBER	QTY	PART NAME 1 2 3 4 5 6 (PRODUCT LEVEL)	SEE PAGE
	51	1	**8T-0336**	1	FITTING-PRESSURE RELIEF	
M	52	1	**8T-0672**	4	BOLT (M24X3X160-MM)	
	53	1	**8T-4896**	4	WASHER-HARD (10.2X18.5X2.5-MM THK)	
	54	1	**9D-0088**	1	COVER	

B-USE AS REQUIRED
C-CHANGE FROM PREVIOUS TYPE
M-METRIC PART
R-REMFG PART MAY BE AVAILABLE

268-5745 DRIVE GP-CIRCLE *(contd.)* i03903855

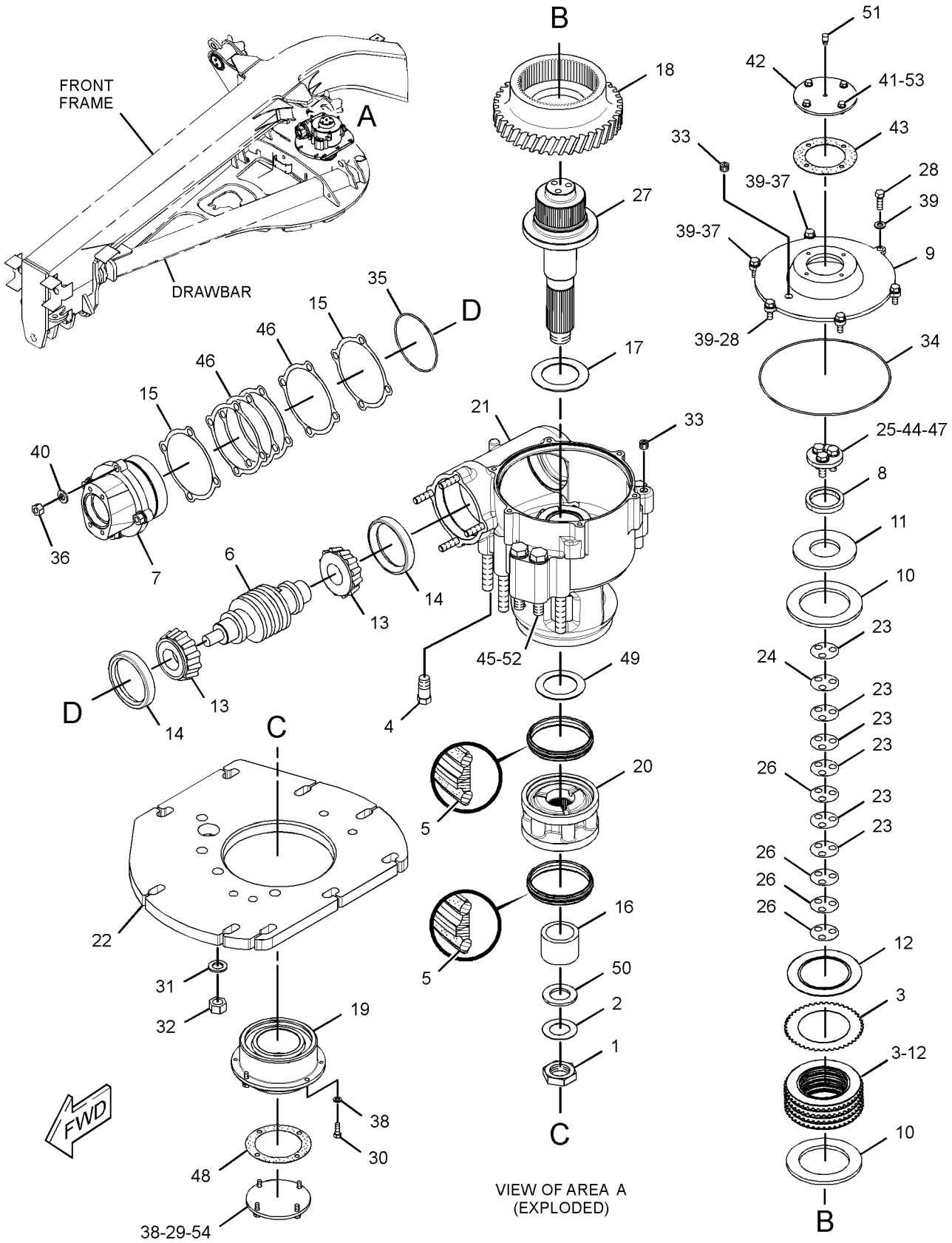

GRAPHIC #1 **<END>** g01582214

HYDRAULIC SYSTEM

271-0564 FILTER & MTG GP-HYDRAULIC

S/N: B9K1-275

PART OF 259-9204 COMMON AR

SMCS-5068 **i02765135**

NOTE	REF NO	GRAPHIC REF	PART NUMBER	QTY	PART NAME 1 2 3 4 5 6 (PRODUCT LEVEL)	SEE PAGE
	1	1	**5P-4961**	2	CLAMP-HOSE	
	4	1	**8C-3451**	2	CAP-DUST	
	5	1	**9G-9154**	2	CLIP	
	6	1	*188-2008*	1	ELBOW AS	
		1	**8T-7970**	1	ELBOW	
		1	**3D-2824**	1	SEAL-O-RING	
		1	**5K-9090**	1	SEAL-O-RING	
Y	7	1	**197-1993**	1	FILTER GP-OIL (PILOT OIL)	675
Y	7A	1	**197-1993**	1	FILTER GP-OIL (HYDRAULIC RETURN)	675
	8	1	**242-0407**	2	VALVE-DRAIN	
	9	1	**276-8238**	1	TUBE AS	
Y	10	1	**287-1511**	1	FILTER GP-OIL (HYDRAULIC) (HYDRAULIC TANK RETURN)	677
	11	1	*148-8357*	1	ELBOW AS	
		1	**6V-9008**	1	ELBOW	
		1	**5K-9090**	1	SEAL-O-RING	
		1	**7M-8485**	1	SEAL-O-RING	
	12	1	*155-3624*	2	PLUG AS	
					(EACH INCLUDES)	
		1	**9S-4182**	1	PLUG-O-RING	
		1	**3J-7354**	1	SEAL-O-RING	
Y	13	1	**244-0121**	1	FILTER GP-OIL (HYDRAULIC TANK RETURN)	676
	14	1	**4J-0524**	4	SEAL-O-RING	
	15	1	**8T-4121**	18	WASHER-HARD (11X21X2.5-MM THK)	
M	16	1	**8T-4136**	8	BOLT (M10X1.5X25-MM)	
M	17	1	**8T-4137**	2	BOLT (M10X1.5X20-MM)	
M	18	1	**8T-4182**	8	BOLT (M10X1.5X45-MM)	
	19	1	**8X-5489**	2	SLEEVE	
E	20	1	**9X-2023**		HOSE (70-CM EACH)	

E-ORDER BY THE CENTIMETER
M-METRIC PART
Y-SEPARATE ILLUSTRATION

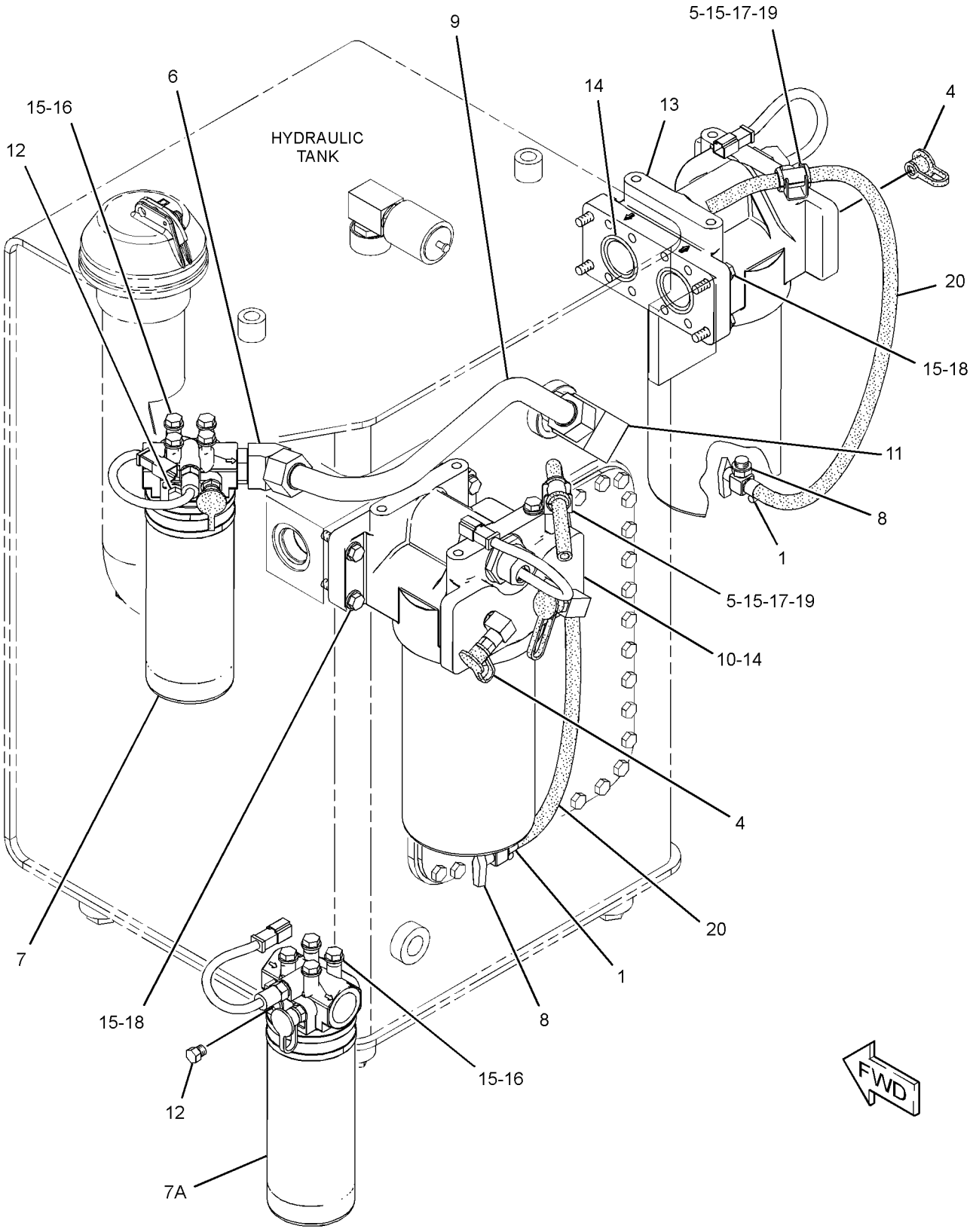

GRAPHIC #1 **<END>** g01403368

HYDRAULIC SYSTEM

271-0564 FILTER & MTG GP-HYDRAULIC

S/N: B9K276-314
PART OF 259-9204 COMMON AR

SMCS-5068 **i03415864**

NOTE	REF NO	GRAPHIC REF	PART NUMBER	QTY	PART NAME 1 2 3 4 5 6 (PRODUCT LEVEL)	SEE PAGE
	1	1	**5P-4961**	2	CLAMP-HOSE	
C	4	1	**8C-3451**	1	CAP-DUST	
	5	1	**9G-9154**	2	CLIP	
	6	1	*188-2008*	1	ELBOW AS	
		1	**8T-7970**	1	ELBOW	
		1	**3D-2824**	1	SEAL-O-RING	
		1	**5K-9090**	1	SEAL-O-RING	
Y	7	1	**197-1993**	1	FILTER GP-OIL (PILOT OIL)	675
Y	7A	1	**197-1993**	1	FILTER GP-OIL	675
	8	1	**242-0407**	2	VALVE-DRAIN	
	9	1	**276-8238**	1	TUBE AS	
	11	1	*148-8357*	1	ELBOW AS	
		1	**6V-9008**	1	ELBOW	
		1	**5K-9090**	1	SEAL-O-RING	
		1	**7M-8485**	1	SEAL-O-RING	
C	12	1	*155-3624*	3	PLUG AS	
					(EACH INCLUDES)	
		1	**9S-4182**	1	PLUG-O-RING	
		1	**3J-7354**	1	SEAL-O-RING	
CY	13	1	**244-0121**	2	FILTER GP-OIL (HYD FAN, IMPL PILOT OIL RETURN)	676
	14	1	**4J-0524**	4	SEAL-O-RING	
	15	1	**8T-4121**	18	WASHER-HARD (11X21X2.5-MM THK)	
M	16	1	**8T-4136**	8	BOLT (M10X1.5X25-MM)	
M	17	1	**8T-4137**	2	BOLT (M10X1.5X20-MM)	
M	18	1	**8T-4182**	8	BOLT (M10X1.5X45-MM)	
	19	1	**8X-5489**	2	SLEEVE	
E	20	1	**9X-2023**		HOSE (70-CM EACH)	
C	21	1	*148-8407*	1	PLUG AS	
		1	**3J-1907**	1	SEAL-O-RING	
		1	**9S-4191**	1	PLUG-O-RING	

C-CHANGE FROM PREVIOUS TYPE
E-ORDER BY THE CENTIMETER
M-METRIC PART
Y-SEPARATE ILLUSTRATION

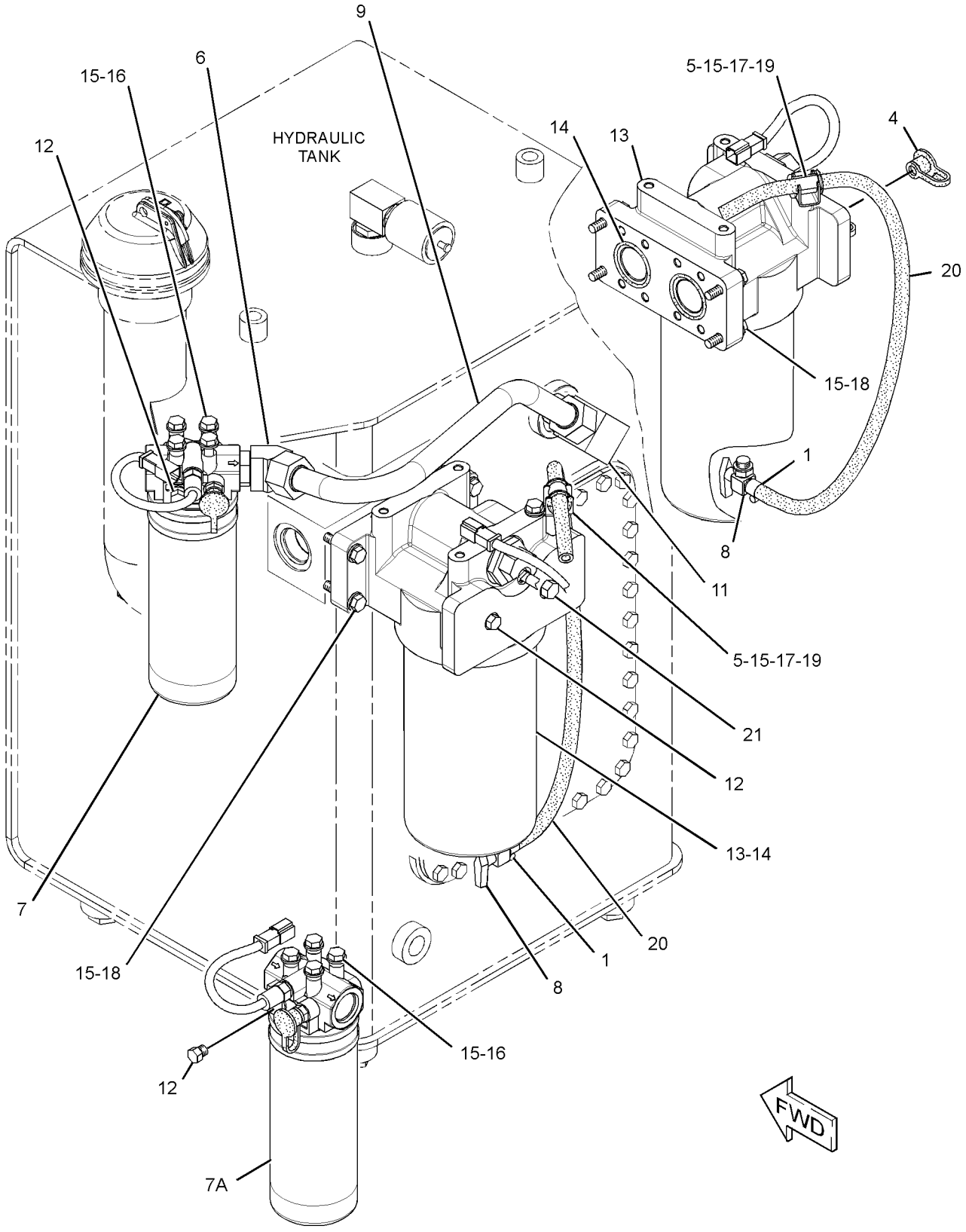

GRAPHIC #1 **<END>** g01523534

HYDRAULIC SYSTEM

271-0564 FILTER & MTG GP-HYDRAULIC

S/N: B9K315-UP

PART OF 259-9204 COMMON AR

SMCS-5068 **i03508982**

NOTE	REF NO	GRAPHIC REF	PART NUMBER	QTY	PART NAME 1 2 3 4 5 6 (PRODUCT LEVEL)	SEE PAGE
	1	1	**5P-4961**	2	CLAMP-HOSE	
	2	1	**8X-5489**	2	SLEEVE	
E	3	1	**9X-2023**		HOSE (70-CM EACH)	
	4	1	**8C-3451**	1	CAP-DUST	
	5	1	**9G-9154**	2	CLIP	
	6	1	*188-2008*	1	ELBOW AS	
		1	**8T-7970**	1	ELBOW	
		1	**3D-2824**	1	SEAL-O-RING	
		1	**5K-9090**	1	SEAL-O-RING	
Y	7	1	**197-1993**	1	FILTER GP-OIL (PILOT OIL)	675
Y	7A	1	**197-1993**	1	FILTER GP-OIL	675
	8	1	**242-0407**	2	VALVE-DRAIN	
	9	1	**276-8238**	1	TUBE AS	
	10	1	*148-8407*	1	PLUG AS	
		1	**3J-1907**	1	SEAL-O-RING	
		1	**9S-4191**	1	PLUG-O-RING	
	11	1	*148-8357*	1	ELBOW AS	
		1	**6V-9008**	1	ELBOW	
		1	**5K-9090**	1	SEAL-O-RING	
		1	**7M-8485**	1	SEAL-O-RING	
	12	1	*155-3624*	3	PLUG AS	
					(EACH INCLUDES)	
		1	**9S-4182**	1	PLUG-O-RING	
		1	**3J-7354**	1	SEAL-O-RING	
CY	13	1	**341-2079**	2	FILTER GP-OIL (HYD FAN, IMPL PILOT OIL RETURN)	678
	14	1	**4J-0524**	4	SEAL-O-RING	
	15	1	**8T-4121**	18	WASHER-HARD (11X21X2.5-MM THK)	
M	16	1	**8T-4136**	8	BOLT (M10X1.5X25-MM)	
M	17	1	**8T-4137**	2	BOLT (M10X1.5X20-MM)	
M	18	1	**8T-4182**	8	BOLT (M10X1.5X45-MM)	

C-CHANGE FROM PREVIOUS TYPE
E-ORDER BY THE CENTIMETER
M-METRIC PART
Y-SEPARATE ILLUSTRATION

271-0564 **FILTER & MTG GP-HYDRAULIC** *(contd.)* **i03508982**

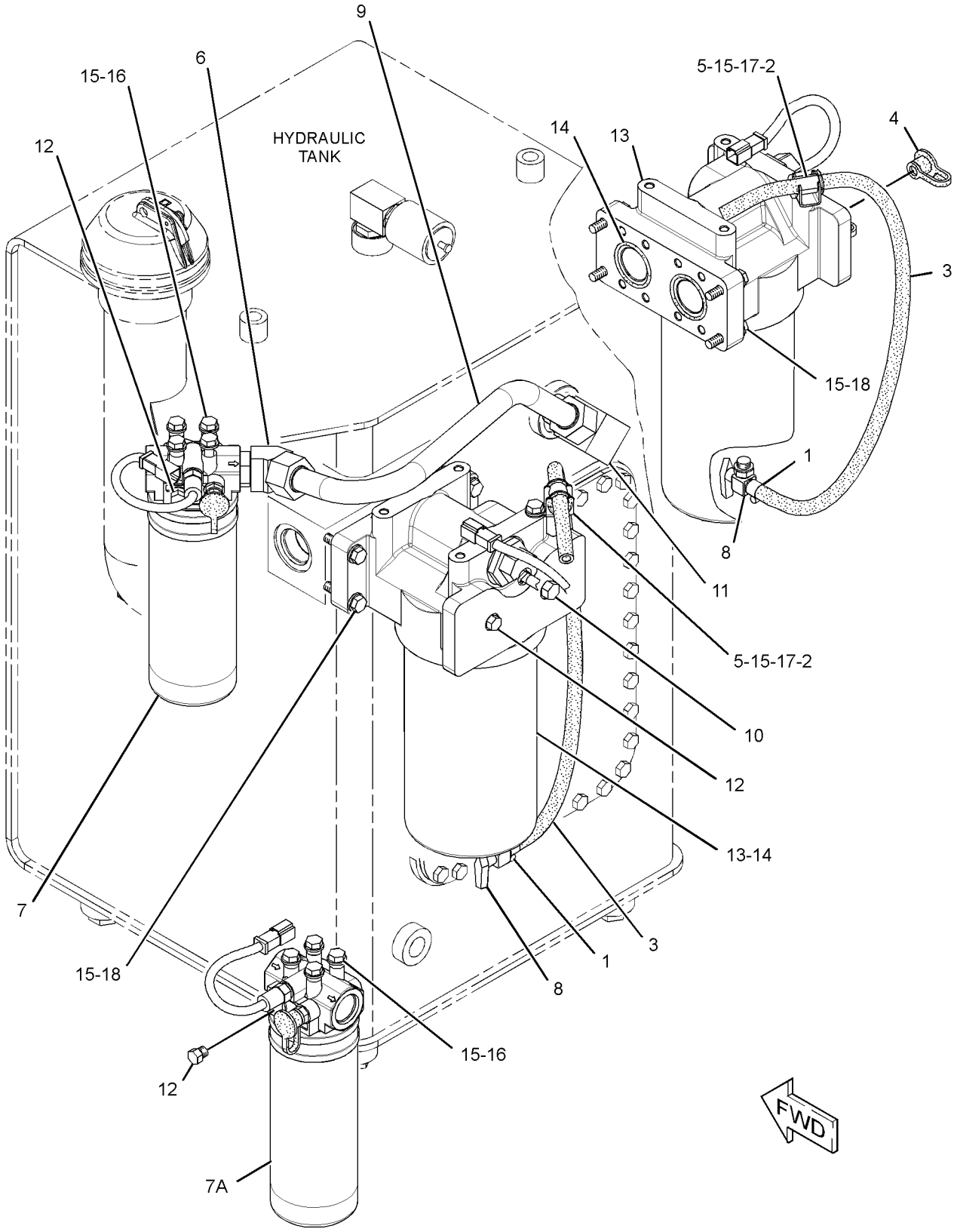

GRAPHIC #1 **<END>** g01849493

HYDRAULIC SYSTEM

197-1993 FILTER GP-OIL

S/N: B9K1-UP

PART OF 271-0564 FILTER & MTG GP-HYDRAULIC

SMCS-5068, 5093 **i02414913**

NOTE	REF NO	GRAPHIC REF	PART NUMBER	QTY	PART NAME 1 2 3 4 5 6 (PRODUCT LEVEL)	SEE PAGE
	1	1	1G-8878	1	FILTER-OIL (ADVANCED EFFICIENCY) (POWER TRAIN)	
	2	1	3J-7354	1	SEAL-O-RING	
	3	1	6V-0852	1	CAP-DUST	
	4	1	6V-3965	1	FITTING (QUICK DISCONNECT)	
	5	1	8C-3446	1	VALVE-FLUID SAMPLING	
	6	1	8C-3447	1	CAP-DUST	
	7	1	117-7773	1	SWITCH AS-PRESSURE (POWER TRAIN)	
		1	102-8802	1	KIT-RECEPTACLE (2-PIN)	
		1	3E-3365	1	WEDGE-RECEPTACLE LOCK (2-PIN)	
		1	8T-8729	2	PIN-CONNECTOR (16-GA TO 18-GA)	
		1	9X-1813	14	SLEEVE	
	8	1	3J-1907	1	SEAL-O-RING	

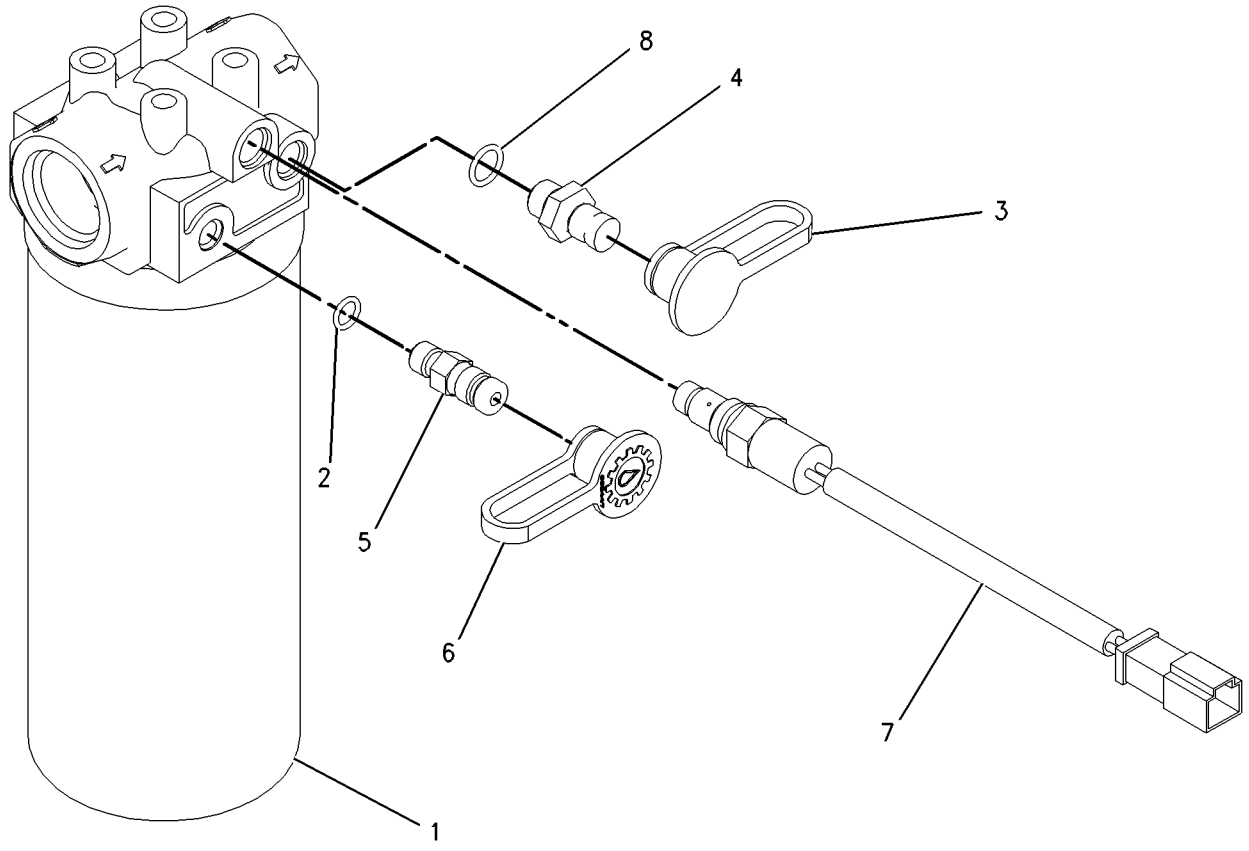

GRAPHIC #1 **<END>** g00869808

HYDRAULIC SYSTEM

244-0121 FILTER GP-OIL

S/N: B9K1-314

PART OF 271-0564 FILTER & MTG GP-HYDRAULIC

SMCS-5068, 5093 **i03901673**

NOTE	REF NO	GRAPHIC REF	PART NUMBER	QTY	PART NAME 1 2 3 4 5 6 (PRODUCT LEVEL)	SEE PAGE
	1	1	**1R-1809**	1	FILTER ELEMENT AS-OIL (ULTRA HIGH EFFICIENCY)	
		1	**130-0229**	1	SEAL-O-RING	
		1	**316-5366**	1	RING-BACKUP	
	2	1	**6V-0852**		CAP-DUST	
	3	1	**8C-3447**	1	CAP-DUST	
	4	1	**321-5967**	1	HOUSING GP-FILTER	
		1	**214-7568**	1	SEAL-O-RING	
		1	**9S-8004**	1	PLUG-O-RING	
Y	5	1	*249-2304*	1	BASE GP-OIL FILTER	635
	6	1	**3J-1907**	1	SEAL-O-RING	
	7	1	**3J-7354**	1	SEAL-O-RING	
	8	1	**6V-3965**	1	FITTING (QUICK DISCONNECT)	
	9	1	**8C-3446**	1	VALVE-FLUID SAMPLING	

Y-SEPARATE ILLUSTRATION

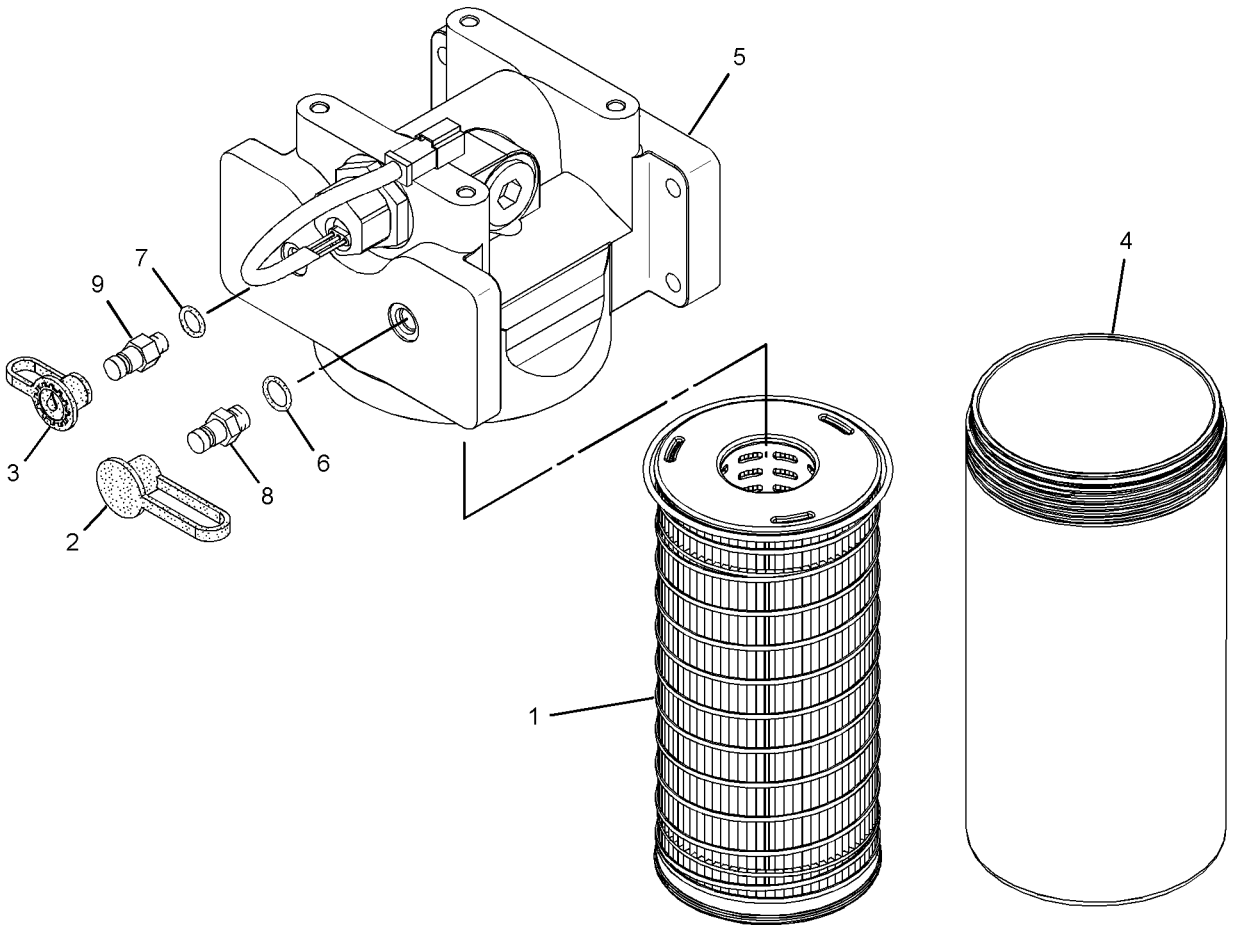

GRAPHIC #1 **<END>** g02144434

HYDRAULIC SYSTEM

287-1511 FILTER GP-OIL–TRANSMISSION

S/N: B9K1-275

PART OF 271-0564 FILTER & MTG GP-HYDRAULIC

SMCS-5068, 5093 **i02941065**

NOTE	REF NO	GRAPHIC REF	PART NUMBER	QTY	PART NAME 1 2 3 4 5 6 (PRODUCT LEVEL)	SEE PAGE
	1	1	**1R-1809**	1	FILTER ELEMENT AS-OIL (ULTRA HIGH EFFICIENCY)	
	2	1	**6V-0852**	1	CAP-DUST	
	3	1	**8C-3447**	1	CAP-DUST	
	4	1	**124-8909**	1	ELBOW	
	5	1	**321-5967**	1	HOUSING GP-FILTER	
		1	**3J-1907**	1	SEAL-O-RING	
		1	**9S-8004**	1	PLUG-O-RING	
Y	6	1	*249-2304*	1	BASE GP-OIL FILTER	635
	7	1	**3J-1907**	3	SEAL-O-RING	
	8	1	**3J-7354**	2	SEAL-O-RING	
	9	1	**6V-0484**	1	ADAPTER-O-RING	
	10	1	**6V-3965**	1	FITTING (QUICK DISCONNECT)	
	11	1	**7W-7381**	1	FITTING-OUTLET	
	12	1	**8C-3446**	1	VALVE-FLUID SAMPLING	
	13	1	**130-0229**	1	SEAL-O-RING	

Y-SEPARATE ILLUSTRATION

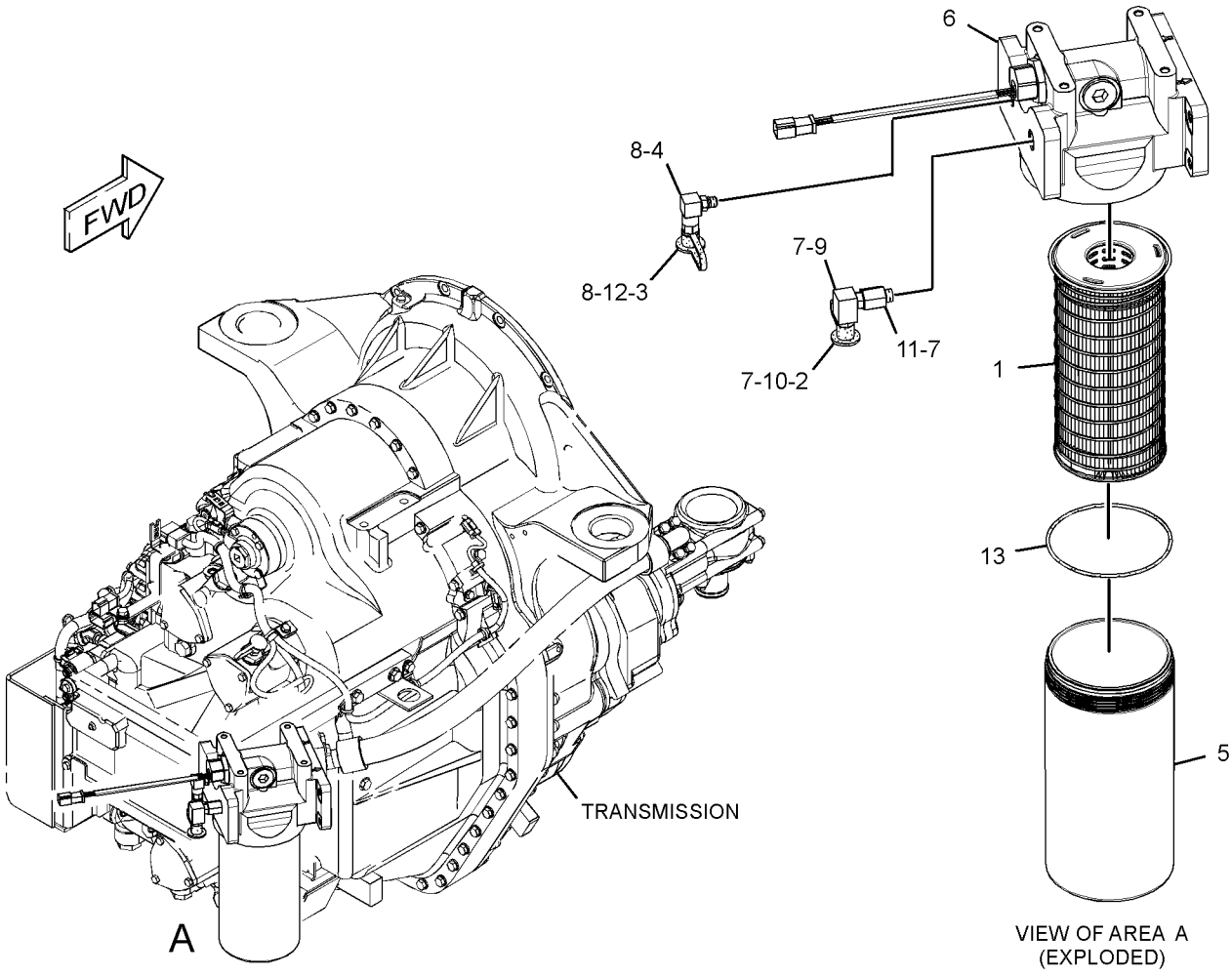

GRAPHIC #1 **<END>** g01450525

HYDRAULIC SYSTEM

341-2079 FILTER GP-OIL—TRANSMISSION

S/N: B9K315-UP
PART OF 271-0564 FILTER & MTG GP-HYDRAULIC
TYPE 1

SMCS-5068, 5093 **i03508983**

NOTE	REF NO	GRAPHIC REF	PART NUMBER	QTY	PART NAME 1 2 3 4 5 6 (PRODUCT LEVEL)	SEE PAGE
	1	1	**6V-0852**	1	CAP-DUST	
	2	1	**8C-3447**	1	CAP-DUST	
Y	3	1	**249-2304**	1	BASE GP-OIL FILTER	635
	4	1	**321-5967**	1	HOUSING GP-FILTER	
		1	**9S-8004**	1	PLUG-O-RING	
		1	**214-7568**	1	SEAL-O-RING	
	5	1	**338-3540**	1	FILTER ELEMENT-OIL (ULTRA HIGH EFFICIENCY)	
	6	1	**3J-1907**	1	SEAL-O-RING	
	7	1	**3J-7354**	1	SEAL-O-RING	
	8	1	**6V-3965**	1	FITTING (QUICK DISCONNECT)	
	9	1	**8C-3446**	1	VALVE-FLUID SAMPLING	
	10	1	**130-0229**	1	SEAL-O-RING	

Y-SEPARATE ILLUSTRATION

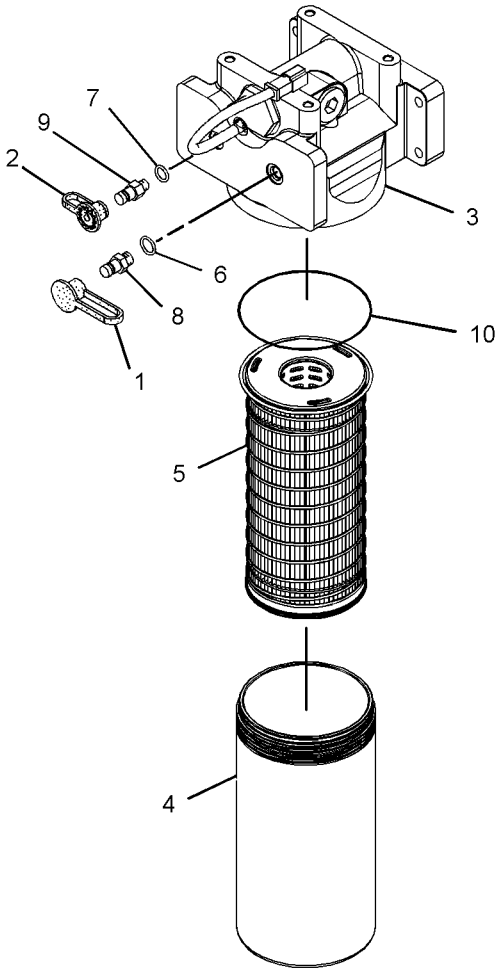

GRAPHIC #1 **<END>** g01927315

HYDRAULIC SYSTEM

341-2079 FILTER GP-OIL–TRANSMISSION

S/N: B9K315-UP
PART OF 271-0564 FILTER & MTG GP-HYDRAULIC
TYPE 2

SMCS-5068, 5093 **i03897665**

NOTE	REF NO	GRAPHIC REF	PART NUMBER	QTY	PART NAME 1 2 3 4 5 6 (PRODUCT LEVEL)	SEE PAGE
	1	1	**6V-0852**	1	CAP-DUST	
	2	1	**8C-3447**	1	CAP-DUST	
CY	3	1	**342-7817**	1	BASE GP-OIL FILTER (HYDRAULIC)	636
	4	1	**321-5967**	1	HOUSING GP-FILTER	
		1	**9S-8004**	1	PLUG-O-RING	
		1	**214-7568**	1	SEAL-O-RING	
	5	1	**338-3540**	1	FILTER ELEMENT-OIL (ULTRA HIGH EFFICIENCY)	
	6	1	**214-7568**	1	SEAL-O-RING	
	7	1	**6V-5048**	1	SEAL-O-RING	
	8	1	**6V-3965**	1	FITTING (QUICK DISCONNECT)	
	9	1	**8C-3446**	1	VALVE-FLUID SAMPLING	
	10	1	**130-0229**	1	SEAL-O-RING	
	11	1	**3P-1932**	1	ADAPTER	
	12	1	**8L-2786**	1	SEAL-O-RING	

C-CHANGE FROM PREVIOUS TYPE
Y-SEPARATE ILLUSTRATION

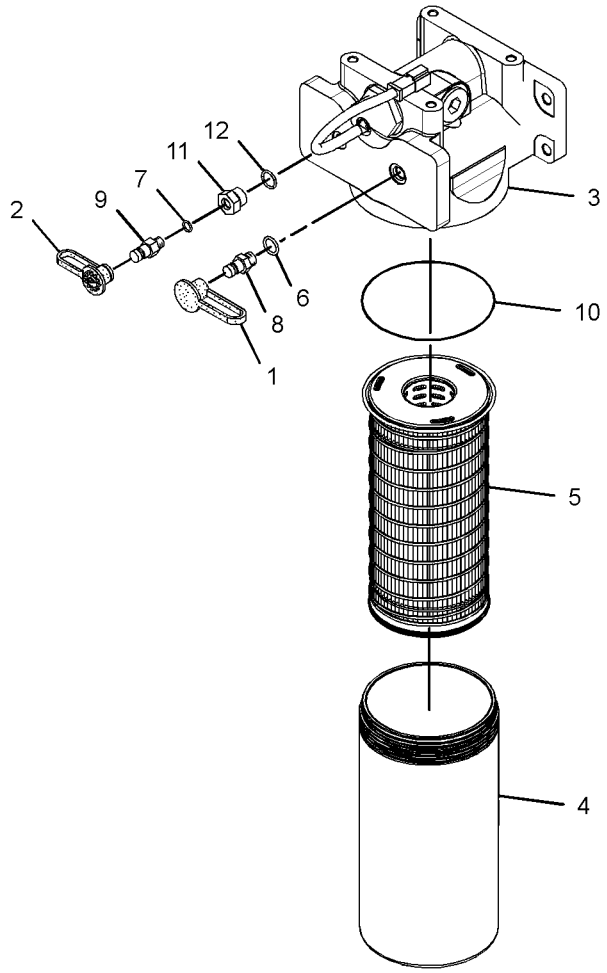

GRAPHIC #1

<END>

g02138114

HYDRAULIC SYSTEM

269-2202 FLOAT AR-BLADE

S/N: B9K1-UP

SMCS-5241 **i02760630**

NOTE	PART NUMBER	QTY	PART NAME 1 2 3 4 5 6 (PRODUCT LEVEL)	SEE PAGE
Y	*278-0561*	1	LINES GP-HYDRAULIC (BLADE FLOAT)	694
Y	*276-8498*	1	PANEL GP-CONTROL (VARIABLE BLADE FLOAT)	926
	274-7510	1	WIRING GP-SENSOR (VARIABLE BLADE FLOAT)	
	4D-9517	1	CLIP	
	7K-1181	10	STRAP-CABLE	
	274-7509	1	HARNESS AS-SOLENOID (VARIABLE BLADE FLOAT)	
	102-8805	1	KIT-RECEPTACLE (6-PIN)	
			(INCLUDES RECEPTACLE AS & WEDGE)	
	155-2270	4	KIT-CONNECTING PLUG (2-PIN)	
			(EACH INCLUDES PLUG AS, WEDGE, & INTERFACE SEAL)	

Y-SEPARATE ILLUSTRATION

<END>

HYDRAULIC SYSTEM

253-9006 LINES GP-FRONT

S/N: B9K1-UP

PART OF 259-9204 COMMON AR, 321-3121 IMPLEMENT AR

SMCS-5057 **i02911724**

NOTE	REF NO	GRAPHIC REF	PART NUMBER	QTY	PART NAME 1 2 3 4 5 6 (PRODUCT LEVEL)	SEE PAGE
	1	1	**9D-7198**	2	JUNCTION BLOCK	
	2	2	**112-9049**	1	VALVE GP-FLOW DIVIDER	
		2	**113-7003**	1	VALVE GP-FLOW DIVIDER	
I	3	2	**116-6251**	2	HOSE AS	
I	4	2	**176-5751**	2	HOSE AS	
	5	1	**270-3339**	1	TUBE AS	
	6	1	**270-3343**	1	TUBE AS	
	7	2	**270-3358**	4	BLOCK	
I	8	1	**278-1170**	1	HOSE AS	
I	9	1	**278-1171**	1	HOSE AS	
	10	1	**279-5331**	1	TUBE AS	
	11	1	**279-5332**	1	TUBE AS	
I	12	1	**282-6415**	2	HOSE AS	
I	13	1	**282-6417**	1	HOSE AS	
I	14	1	**282-6419**	1	HOSE AS	
	15	2	**283-1373**	1	GUIDE AS-HOSE	
I	16	2	**286-3444**	1	HOSE AS	
I	17	2	**286-3445**	1	HOSE AS	
I	18	2	**286-3453**	1	HOSE AS	
I	19	2	**286-3454**	1	HOSE AS	
I	20	1	**286-3455**	2	HOSE AS	
	21	1	**067-3045**	2	CLIP	
	22	1	*148-8315*	2	CONNECTOR AS	
					(EACH INCLUDES)	
		1	**6V-8642**	1	CONNECTOR	
		1	**2M-9780**	1	SEAL-O-RING	
		1	**7J-9108**	1	SEAL-O-RING	
	23	1	*148-8322*	2	CONNECTOR AS	
					(EACH INCLUDES)	
		1	**6V-8640**	1	CONNECTOR	
		1	**2M-9780**	1	SEAL-O-RING	
		1	**6V-9746**	1	SEAL-O-RING	
	24	1	*148-8328*	2	CONNECTOR AS	
					(EACH INCLUDES)	
		1	**6V-8633**	1	CONNECTOR	
		1	**3D-2824**	1	SEAL-O-RING	
		1	**6V-8398**	1	SEAL-O-RING	
	25	1,2	*148-8340*	11	CONNECTOR AS	
					(EACH INCLUDES)	
		1,2	**6V-8639**	1	CONNECTOR	
		1,2	**3K-0360**	1	SEAL-O-RING	
		1,2	**6V-8398**	1	SEAL-O-RING	
	26	2	*148-8342*	1	CONNECTOR AS	
		2	**6V-8632**	1	CONNECTOR	
		2	**3K-0360**	1	SEAL-O-RING	
		2	**7J-9108**	1	SEAL-O-RING	
	27	1,2	*148-8347*	3	ELBOW AS	
					(EACH INCLUDES)	
		1,2	**6V-9007**	1	ELBOW	
		1,2	**3D-2824**	1	SEAL-O-RING	
		1,2	**6V-9746**	1	SEAL-O-RING	
	28	2	*148-8364*	2	ELBOW AS	
					(EACH INCLUDES)	
		2	**6V-8625**	1	ELBOW	
		2	**3K-0360**	1	SEAL-O-RING	
		2	**6V-8398**	1	SEAL-O-RING	

HYDRAULIC SYSTEM

253-9006 **LINES GP-FRONT** ***(contd.)*** **i02911724**

NOTE	REF NO	GRAPHIC REF	PART NUMBER	QTY	PART NAME 1 2 3 4 5 6 (PRODUCT LEVEL)	SEE PAGE
	29	1	*148-8381*	2	ELBOW AS	
					(EACH INCLUDES)	
		1	**8T-5429**	1	ELBOW	
		1	**3D-2824**	1	SEAL-O-RING	
		1	**6V-8398**	1	SEAL-O-RING	
	30	2	*148-8382*	1	ELBOW AS	
		2	**8T-0404**	1	ELBOW	
		2	**3D-2824**	1	SEAL-O-RING	
		2	**7J-9108**	1	SEAL-O-RING	
	31	2	*148-8391*	1	ELBOW AS	
		2	**8T-8987**	1	ELBOW	
		2	**2S-4078**	1	SEAL-O-RING	
		2	**5K-9090**	1	SEAL-O-RING	
	32	1	*148-8414*	1	REDUCER AS	
		1	**6V-8943**	1	REDUCER	
		1	**7J-9108**	1	SEAL-O-RING	
Y	34	2	**260-6502**	1	SWIVEL GP (CIRCLE DRIVE)	778
	35	1	**2P-1293**	1	LOCKNUT (1-3/16-12-THD)	
	36	2	**3B-4628**	2	PIN-COTTER	
	37	1	**3E-7443**	1	TEE-UNION	
	38	1,2	**3G-8047**	8	GROMMET	
	39	1,2	**3G-8054**	8	CLIP (TAB)	
	40	1,2	**3G-8057**	8	CLIP (SLOT)	
	41	1	**5K-9090**	1	SEAL-O-RING	
	42	1,2	**5P-7464**	8	CLIP (SLOT)	
	43	1,2	**5P-7465**	8	CLIP (TAB)	
	44	1,2	**5P-7468**	6	CLIP (SLOT)	
	45	1,2	**5P-7469**	6	CLIP (TAB)	
	46	1,2	**5P-8444**	6	GROMMET	
	47	1	**5R-0939**	2	CLIP (TAB)	
	48	1	**5R-0940**	2	CLIP (SLOT)	
	49	1	**6D-4246**	1	CLIP	
	50	1,2	**6V-1249**	4	GROMMET	
	51	1,2	**6V-7359**	4	GROMMET	
	52	1	**6V-8398**	2	SEAL-O-RING	
	53	1	**6V-9746**	2	SEAL-O-RING	
	54	2	**7Y-5553**	4	STRIP	
	55	2	**8D-9092**	1	PIN	
	56	1,2	**8T-4121**	47	WASHER-HARD (11X21X2.5-MM THK)	
M	57	1,2	**8T-4133**	10	NUT (M10X1.5-THD)	
M	58	1,2	**8T-4136**	17	BOLT (M10X1.5X25-MM)	
M	59	1	**8T-4137**	5	BOLT (M10X1.5X20-MM)	
M	60	2	**8T-4172**	2	BOLT (M10X1.5X80-MM)	
M	61	2	**8T-4178**	4	BOLT (M10X1.5X90-MM)	
M	62	2	**8T-4186**	2	BOLT (M10X1.5X40-MM)	
M	63	2	**8T-4194**	1	BOLT (M12X1.75X50-MM)	
M	64	1,2	**8T-4195**	3	BOLT (M10X1.5X30-MM)	
M	65	1	**8T-4196**	2	BOLT (M10X1.5X35-MM)	
	66	2	**8T-4223**	3	WASHER-HARD (13.5X25.5X3-MM THK)	
	67	2	**8T-4994**	2	WASHER-HARD (20X36.5X3.5-MM THK)	
M	68	1	**8T-6685**	2	BOLT (M10X1.5X110-MM)	
	69	1	**9R-4764**	1	ROD	
	70	1	**5P-7462**	1	CLIP (SLOT)	
	71	1	**5P-7463**	1	CLIP (TAB)	
	72	1	**6V-0683**	1	GROMMET	
	73	2	**7X-0550**	1	WASHER-HARD (13.5X32X5-MM THK)	
M	74	2	**8T-4956**	3	BOLT (M12X1.75X35-MM)	

I-REFER TO HYDRAULIC INFORMATION SYSTEM
M-METRIC PART
Y-SEPARATE ILLUSTRATION

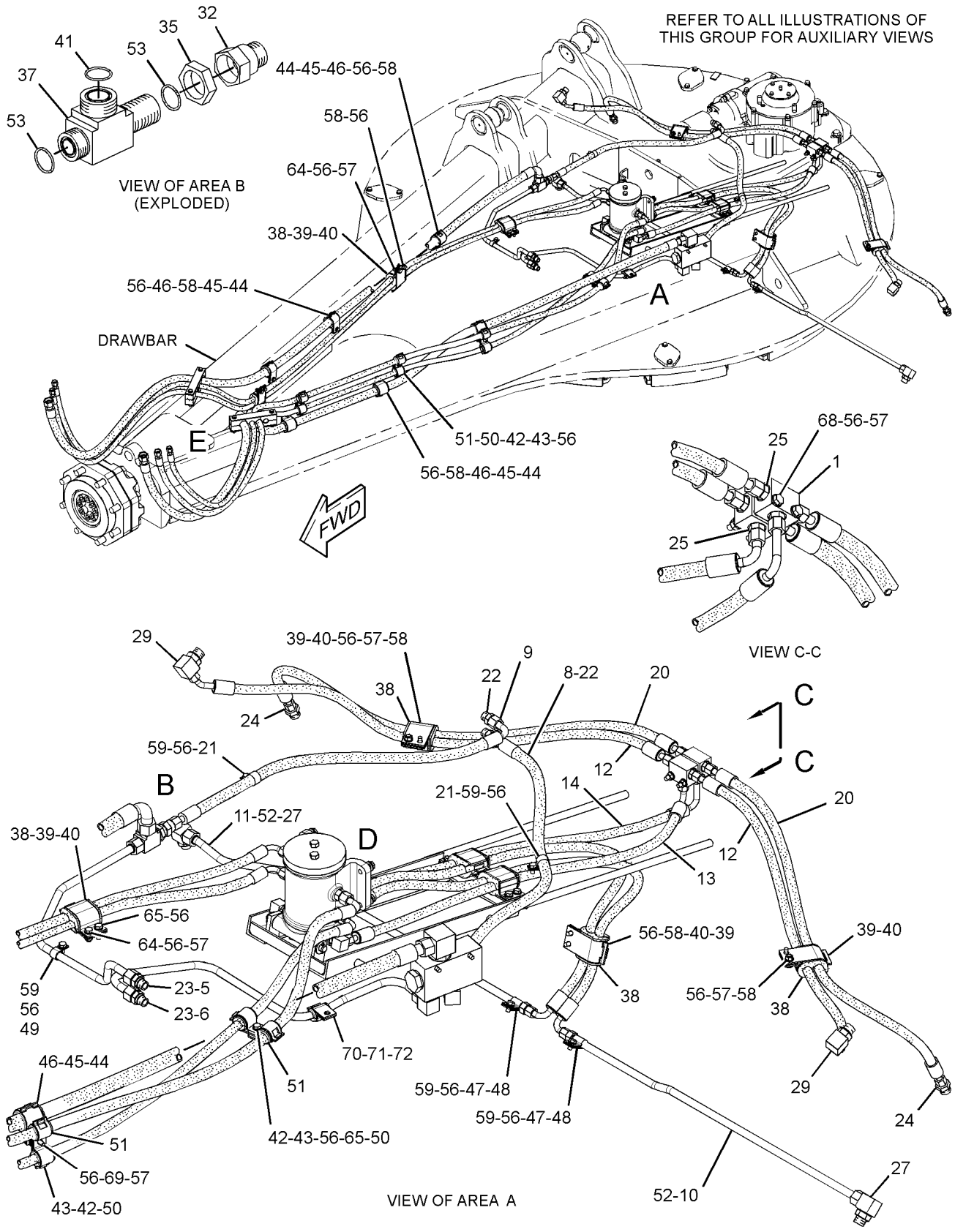

GRAPHIC #1 g01547413

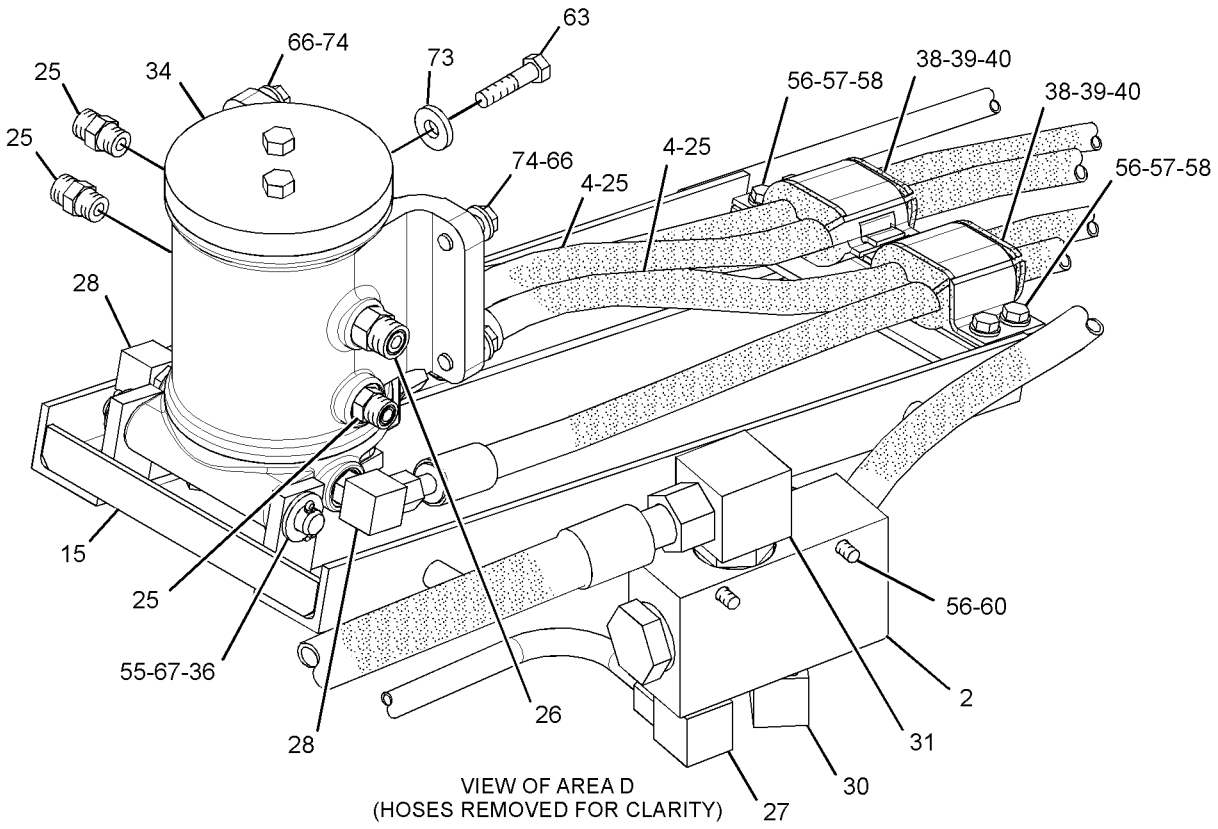

VIEW OF AREA D
(HOSES REMOVED FOR CLARITY)

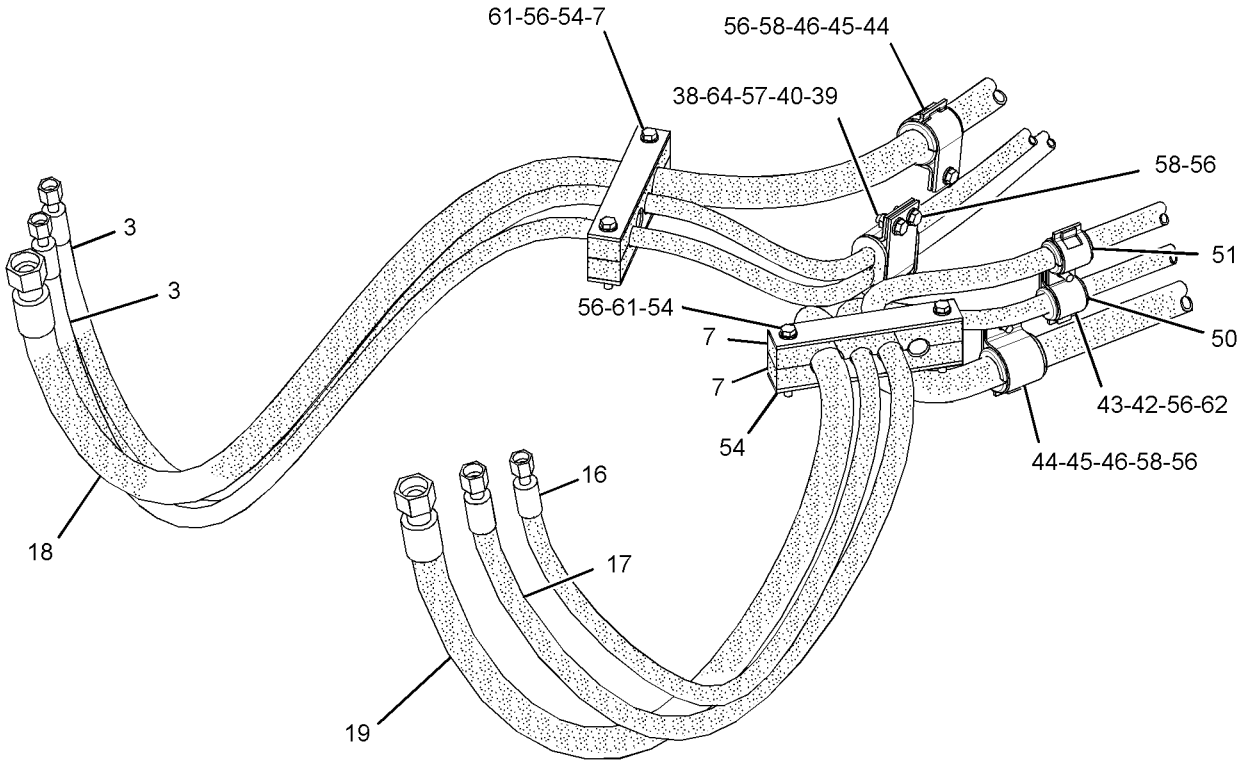

VIEW OF AREA E

GRAPHIC #2

<END>

g01547415

HYDRAULIC SYSTEM

253-9032 LINES GP-HYDRAULIC

S/N: B9K1-UP

CANNOT BE USED WITH 269-2202—PAGE 680

SMCS-5057 **i03304040**

NOTE	REF NO	GRAPHIC REF	PART NUMBER	QTY	PART NAME 1 2 3 4 5 6 (PRODUCT LEVEL)	SEE PAGE
	1	2,3	**1W-6702**	6	CLAMP	
I	2	1	**8W-4192**	1	HOSE AS	
I	3	3	**8W-5637**	2	HOSE AS	
I	4	5	**136-9312**	1	HOSE AS	
I	5	2	**105-4646**	1	HOSE AS	
I	6	1	**186-3471**	1	HOSE AS	
I	7	5	**222-1301**	1	HOSE AS	
	8	4,5	**223-2459**	3	VALVE GP-CHECK (BLADE LIFT)	
					(EACH INCLUDES)	
		4,5	**3K-0360**	1	SEAL-O-RING	
		4,5	**6V-8398**	1	SEAL-O-RING	
I	9	2	**233-9522**	1	HOSE AS	
	10	5	**243-1353**	1	SPACER (11X20X35-MM THK)	
I	11	2	**270-3327**	1	HOSE AS	
	12	3	**270-3354**	1	BLOCK	
	13	3	**270-3355**	1	BLOCK	
	14	1	**270-3356**	2	BLOCK	
	15	4	**270-7570**	3	BLOCK	
	16	5	**270-7573**	3	BLOCK	
	17	2	**270-7574**	2	BLOCK	
	18	2	**270-7575**	2	BLOCK	
	19	3,4,5	**275-8345**	8	PLATE	
	20	2	**275-8353**	1	BLOCK	
	21	2	**275-8356**	1	BLOCK	
	22	2	**275-8357**	2	BLOCK	
	23	2	**275-8358**	2	BLOCK	
	24	4	**308-8676**	1	TUBE AS	
	25	5	**308-8677**	1	TUBE AS	
I	26	1	**284-6993**	2	HOSE AS	
I	27	3	**284-6999**	2	HOSE AS	
	28	2	**284-7003**	2	PLATE	
	29	2	**284-7004**	4	PLATE	
	30	1	**284-7005**	2	PLATE	
I	31	1	**298-4730**	1	HOSE AS	
I	32	5	**298-4731**	1	HOSE AS	
I	33	3	**298-4732**	1	HOSE AS	
I	34	5	**298-4733**	1	HOSE AS	
I	35	3	**298-4734**	2	HOSE AS	
I	36	2	**298-4735**	1	HOSE AS	
I	37	2	**298-4736**	1	HOSE AS	
I	38	2	**298-4737**	2	HOSE AS	
I	39	2	**298-4738**	1	HOSE AS	
I	40	1	**298-4739**	1	HOSE AS	
I	41	1	**298-4740**	1	HOSE AS	
I	42	2	**298-4741**	2	HOSE AS	
	43	2,3,4, 5	**298-4751**	20	PLATE AS	
	44	4	**299-2343**	3	BLOCK	
	45	4	**299-2344**	3	BLOCK	
	46	5	**299-2345**	3	BLOCK	
	47	5	**299-2346**	3	BLOCK	
	48	3	**299-2347**	1	BLOCK	
	49	3	**299-2348**	1	BLOCK	
	50	3	**299-2349**	1	BLOCK	
	51	3	**299-2350**	1	BLOCK	
	52	2	**299-2351**	1	BLOCK	

253-9032 **LINES GP-HYDRAULIC** *(contd.)* **i03304040**

NOTE	REF NO	GRAPHIC REF	PART NUMBER	QTY	PART NAME 1 2 3 4 5 6 (PRODUCT LEVEL)	SEE PAGE
	53	2	**299-2352**	1	BLOCK	
	54	2	**299-2353**	1	BLOCK	
	55	2	**299-2354**	1	BLOCK	
I	56	5	**307-8793**	1	HOSE AS	
	57	5	**308-8678**	1	TUBE AS	
	58	5	**308-8679**	1	TUBE AS	
	59	2	**310-5581**	1	PLATE AS	
M		2	**8T-3490**	1	NUT-WELD (M10X1.5-THD)	
	60	2,5	**067-3045**	5	CLIP	
	61	1,5	**107-1097**	4	BAR-CLAMP	
	62	2,3	**132-7551**	6	SPACER (11X19X6-MM THK)	
	63	1	**148-6757**	2	TEE-UNION	
	64	4,5	*148-8324*	4	CONNECTOR AS	
					(EACH INCLUDES)	
		4,5	**6V-9874**	1	CONNECTOR	
		4,5	**6V-9746**	1	SEAL-O-RING	
		4,5	**3K-0360**	1	SEAL-O-RING	
	65	1,2,3,5	*148-8328*	7	CONNECTOR AS	
					(EACH INCLUDES)	
		1,2,3,5	**6V-8633**	1	CONNECTOR	
		1,2,3,5	**6V-8398**	1	SEAL-O-RING	
		1,2,3,5	**3D-2824**	1	SEAL-O-RING	
	66	4,5	*148-8340*	6	CONNECTOR AS	
					(EACH INCLUDES)	
		4,5	**6V-8639**	1	CONNECTOR	
		4,5	**6V-8398**	1	SEAL-O-RING	
		4,5	**3K-0360**	1	SEAL-O-RING	
	67	5	*148-8341*	2	CONNECTOR AS	
					(EACH INCLUDES)	
		5	**6V-8713**	1	CONNECTOR	
		5	**7J-9108**	1	SEAL-O-RING	
		5	**3D-2824**	1	SEAL-O-RING	
	68	4,5	*148-8342*	5	CONNECTOR AS	
					(EACH INCLUDES)	
		4,5	**6V-8632**	1	CONNECTOR	
		4,5	**7J-9108**	1	SEAL-O-RING	
		4,5	**3K-0360**	1	SEAL-O-RING	
	69	3	*148-8370*	2	ELBOW AS	
					(EACH INCLUDES)	
		3	**6V-9851**	1	ELBOW	
		3	**6V-8398**	1	SEAL-O-RING	
	70	2	*148-8375*	4	ELBOW AS	
					(EACH INCLUDES)	
		2	**6V-8981**	1	ELBOW	
		2	**6V-8398**	2	SEAL-O-RING	
	71	1,2,5	*148-8381*	5	ELBOW AS	
					(EACH INCLUDES)	
		1,2,5	**8T-5429**	1	ELBOW	
		1,2,5	**6V-8398**	1	SEAL-O-RING	
		1,2,5	**3D-2824**	1	SEAL-O-RING	
	72	3	*148-8382*	2	ELBOW AS	
					(EACH INCLUDES)	
		3	**8T-0404**	1	ELBOW	
		3	**7J-9108**	1	SEAL-O-RING	
		3	**3D-2824**	1	SEAL-O-RING	

253-9032 **LINES GP-HYDRAULIC** *(contd.)* **i03304040**

NOTE	REF NO	GRAPHIC REF	PART NUMBER	QTY	PART NAME 1 2 3 4 5 6 (PRODUCT LEVEL)	SEE PAGE
	73	4,5	*148-8446*	2	TEE AS-SWIVEL	
					(EACH INCLUDES)	
		4,5	**6V-9838**	1	TEE-SWIVEL	
		4,5	**7J-9108**	2	SEAL-O-RING	
	74	2,3	*148-8457*	3	UNION AS	
					(EACH INCLUDES)	
		2,3	**6V-8995**	1	UNION	
		2,3	**6V-8398**	2	SEAL-O-RING	
	75	4	*150-4037*	2	TEE AS	
					(EACH INCLUDES)	
		4	**6V-9844**	1	TEE-SWIVEL	
		4	**6V-8398**	2	SEAL-O-RING	
I	76	1	**153-5353**	1	HOSE AS	
	77	5	*153-6256*	1	ELBOW AS	
		5	**8C-7563**	1	ELBOW	
		5	**7J-9108**	1	SEAL-O-RING	
	78	2	*155-2026*	2	UNION AS	
					(EACH INCLUDES)	
		2	**6V-8998**	1	UNION	
		2	**5K-9090**	2	SEAL-O-RING	
	79	4,5	**158-4307**	2	TEE-UNION	
	80	2	*169-7409*	1	UNION AS	
		2	**6V-8996**	1	UNION	
		2	**7J-9108**	2	SEAL-O-RING	
	81	3	*190-9821*	2	ELBOW AS	
					(EACH INCLUDES)	
		3	**6V-8989**	1	ELBOW	
		3	**7J-9108**	2	SEAL-O-RING	
	82	2	**198-4778**	2	WASHER-HARD (13.5X30X12-MM THK)	
	83	5	**3E-4321**	2	CLIP	
	84	2,5	**3G-8047**	6	GROMMET	
	85	2,5	**3G-8054**	7	CLIP (TAB)	
	86	2,5	**3G-8057**	7	CLIP (SLOT)	
	87	4,5	**5K-9090**	2	SEAL-O-RING	
	88	1,2,3,5	**5P-7464**	12	CLIP (SLOT)	
	89	1,2,3,5	**5P-7465**	12	CLIP (TAB)	
	90	4,5	**6D-4246**	2	CLIP	
	91	5	**6V-0974**	1	GROMMET	
	92	1,2,3,5	**6V-1249**	9	GROMMET	
	93	5	**6V-7359**	1	GROMMET	
	94	1	**6V-8398**	4	SEAL-O-RING	
	95	1,2,3	**6V-9169**	9	NUT-BULKHEAD (13/16-16-THD)	
	96	2,3	**6V-9170**	3	NUT-BULKHEAD (1-14-THD)	
	97	2	**6V-9172**	2	NUT (1-7/16-12-THD)	
	98	4,5	**6V-9746**	4	SEAL-O-RING	
	99	1	**7J-9108**	2	SEAL-O-RING	
	100	2,3,4,5	**7X-0632**	20	WASHER-HARD (11X36X6-MM THK)	
	101	3	**8T-2920**	2	GROMMET	
	102	1,2,3,4,5	**8T-4121**	80	WASHER-HARD (11X21X2.5-MM THK)	
M	103	1,2,3,5	**8T-4133**	17	NUT (M10X1.5-THD)	
M	104	1,2,5	**8T-4136**	15	BOLT (M10X1.5X25-MM)	
M	105	4,5	**8T-4137**	2	BOLT (M10X1.5X20-MM)	
M	106	1	**8T-4183**	1	BOLT (M12X1.75X40-MM)	
M	107	1,2,3,5	**8T-4186**	5	BOLT (M10X1.5X40-MM)	

253-9032 **LINES GP-HYDRAULIC** *(contd.)* **i03304040**

NOTE	REF NO	GRAPHIC REF	PART NUMBER	QTY	PART NAME 1 2 3 4 5 6 (PRODUCT LEVEL)	SEE PAGE
M	108	1,2,3, 4,5	**8T-4195**	56	BOLT (M10X1.5X30-MM)	
M	109	2	**8T-4196**	1	BOLT (M10X1.5X35-MM)	
	110	1	**8T-4223**	1	WASHER-HARD (13.5X25.5X3-MM THK)	
M	111	2	**8T-4956**	2	BOLT (M12X1.75X35-MM)	
M	112	2,3,5	**8T-6466**	4	BOLT (M10X1.5X60-MM)	
	113	5	**9X-8250**	4	CLIP	
	114	1,5	**8T-7934**	4	WASHER-HARD (11X21X5-MM THK)	

I-REFER TO HYDRAULIC INFORMATION SYSTEM
M-METRIC PART

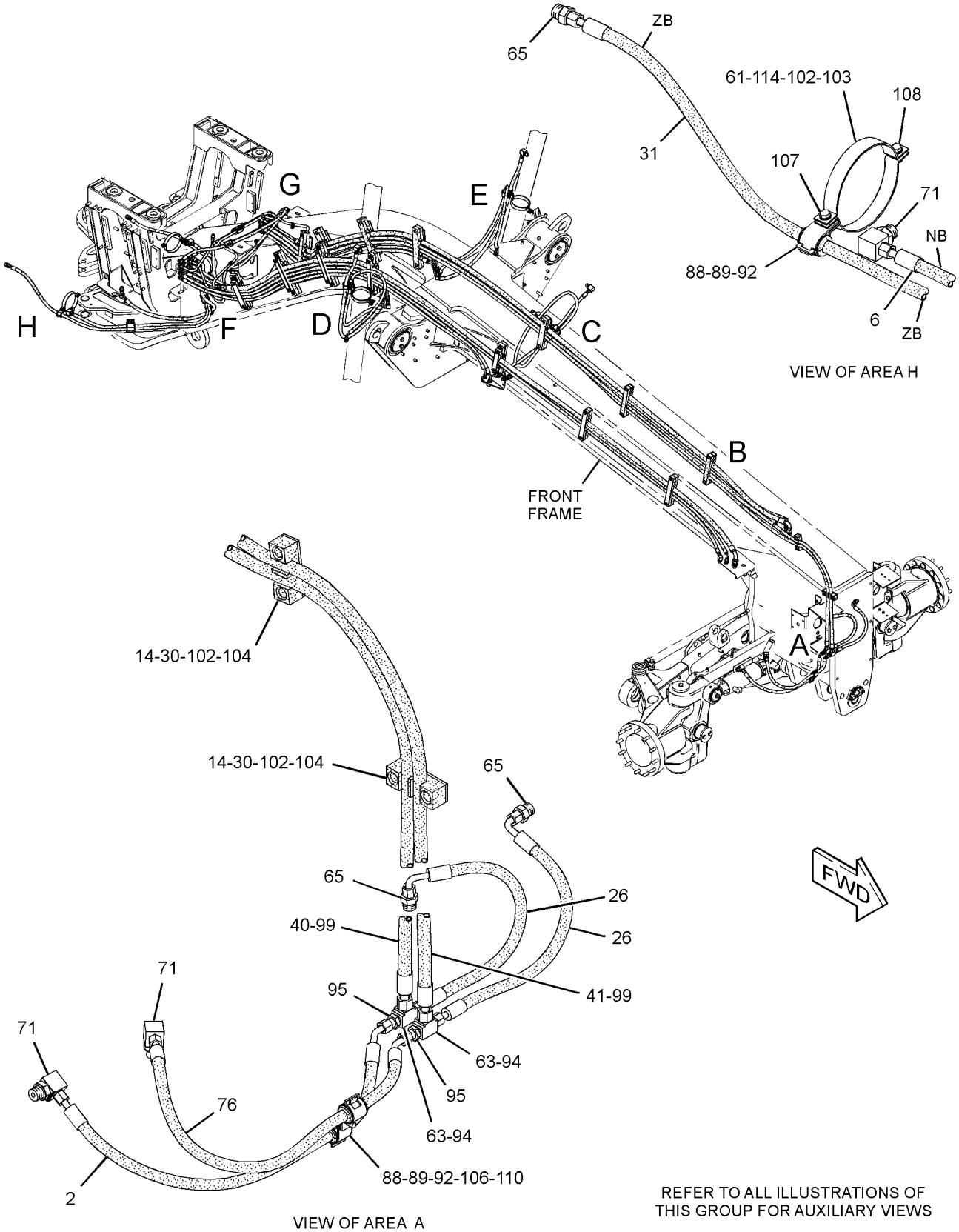

REFER TO ALL ILLUSTRATIONS OF THIS GROUP FOR AUXILIARY VIEWS

GRAPHIC #1

g01775895

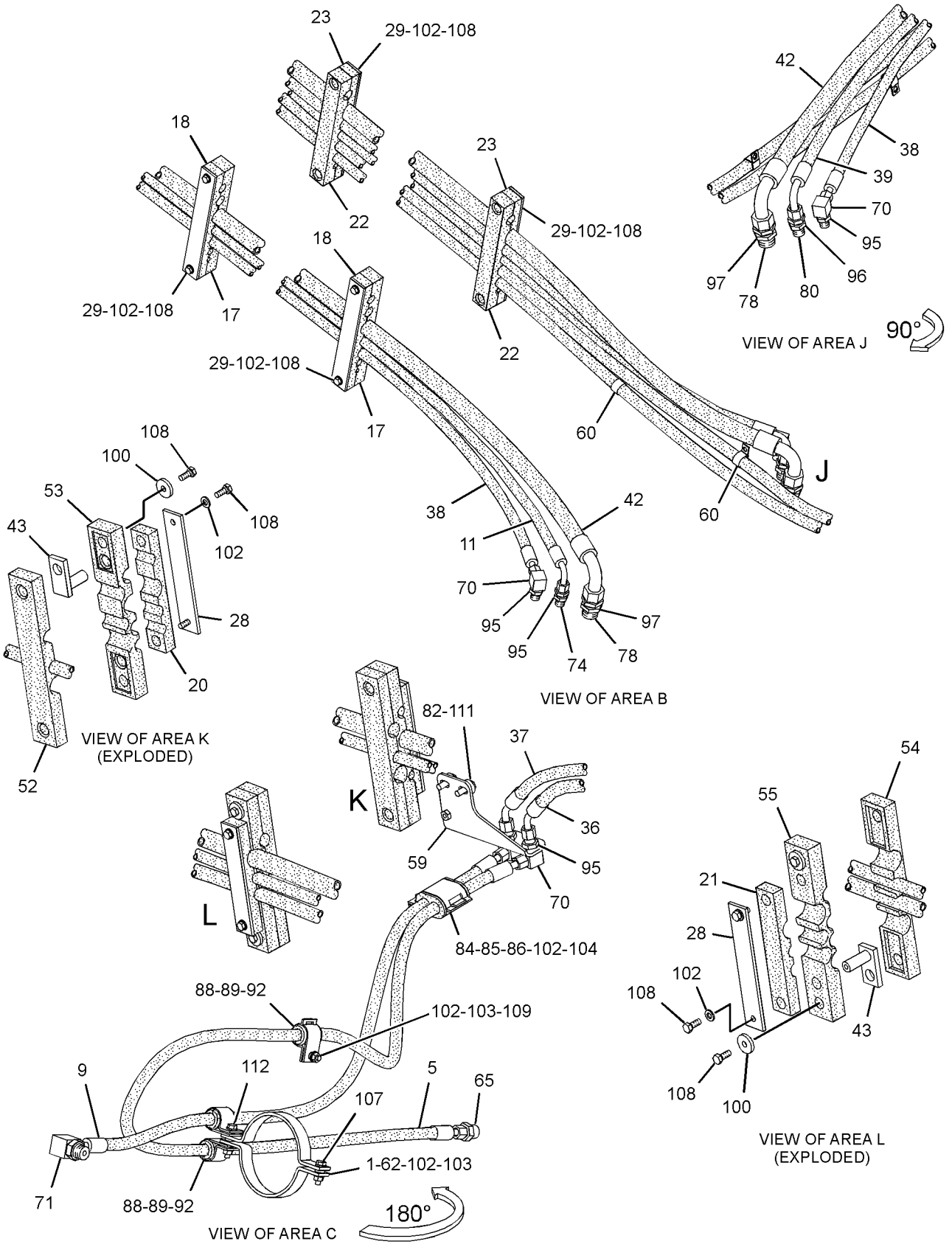

GRAPHIC #2

g01674176

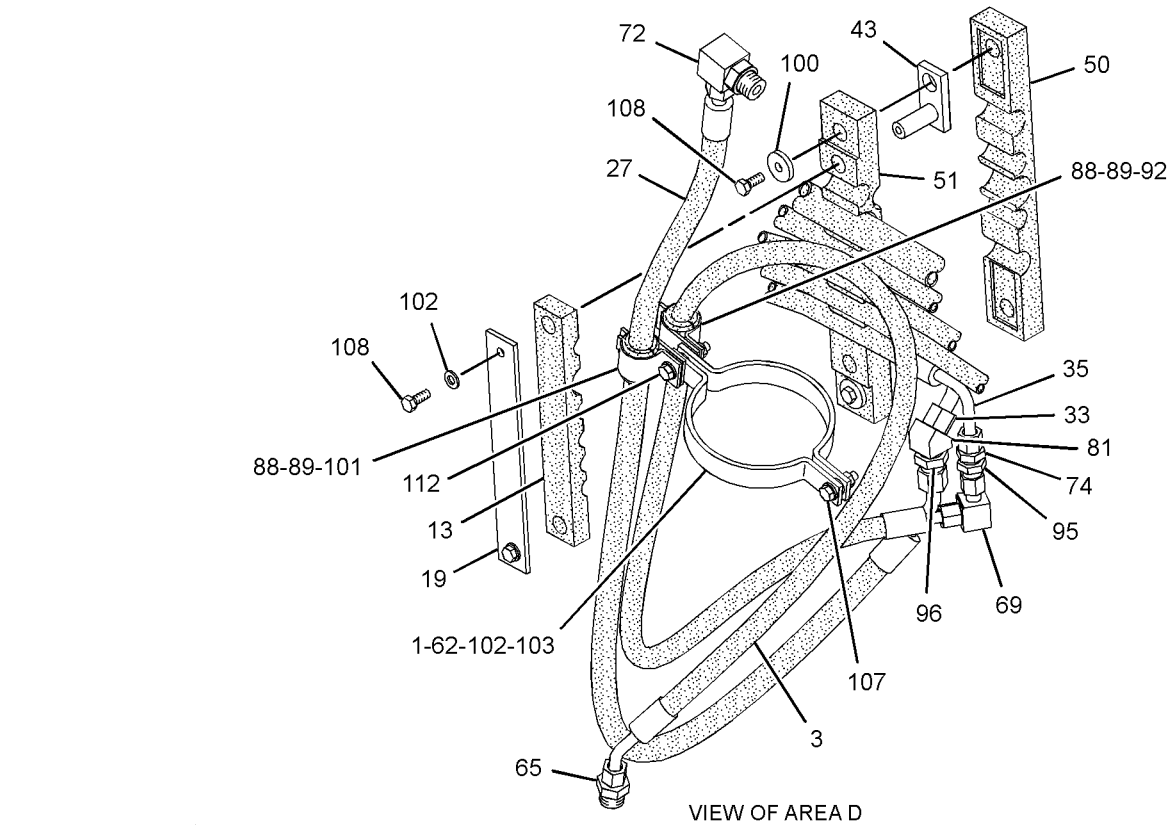

VIEW OF AREA D
(EXPLODED)

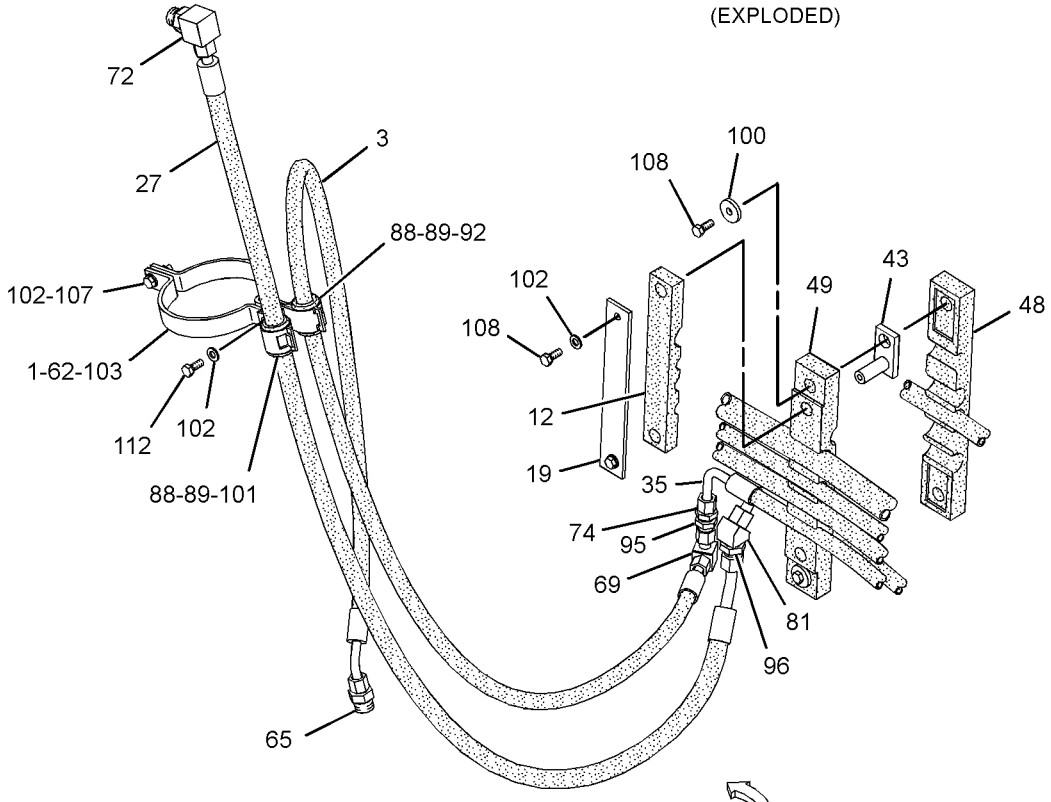

VIEW OF AREA E
(EXPLODED)

180°

GRAPHIC #3

g01674177

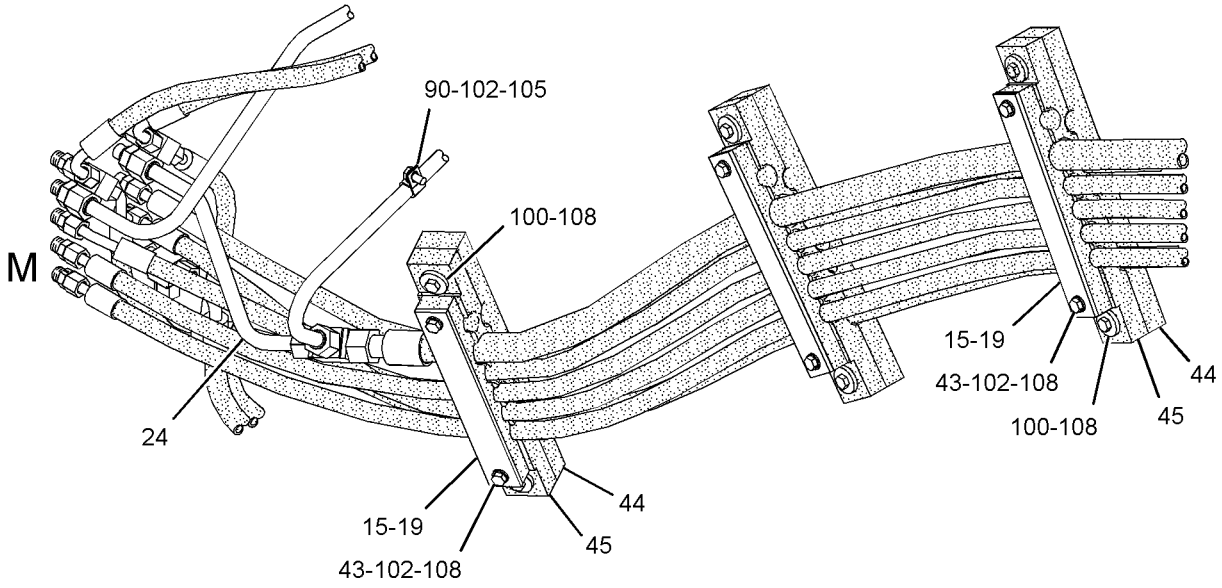

VIEW OF AREA F

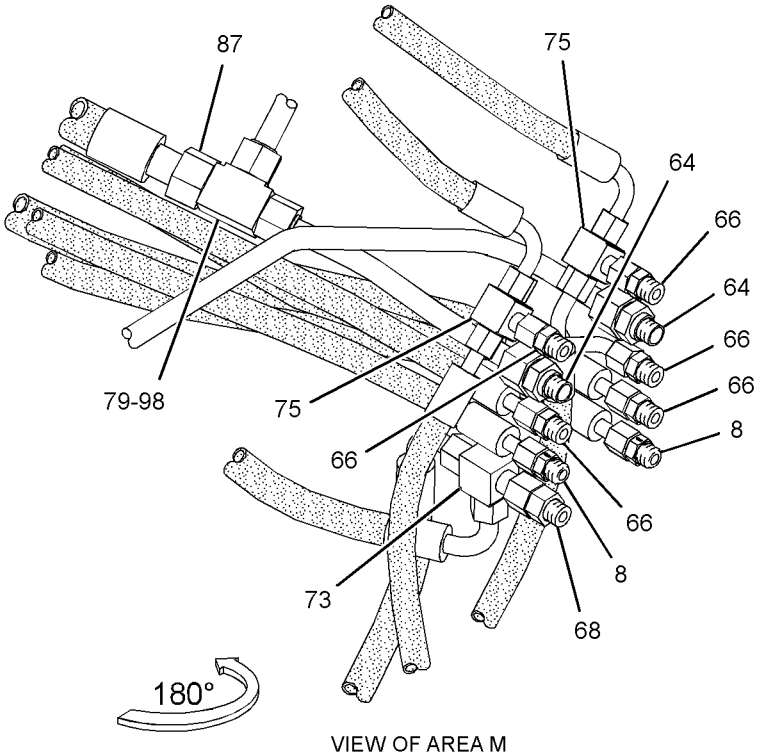

VIEW OF AREA M

GRAPHIC #4 g01674178

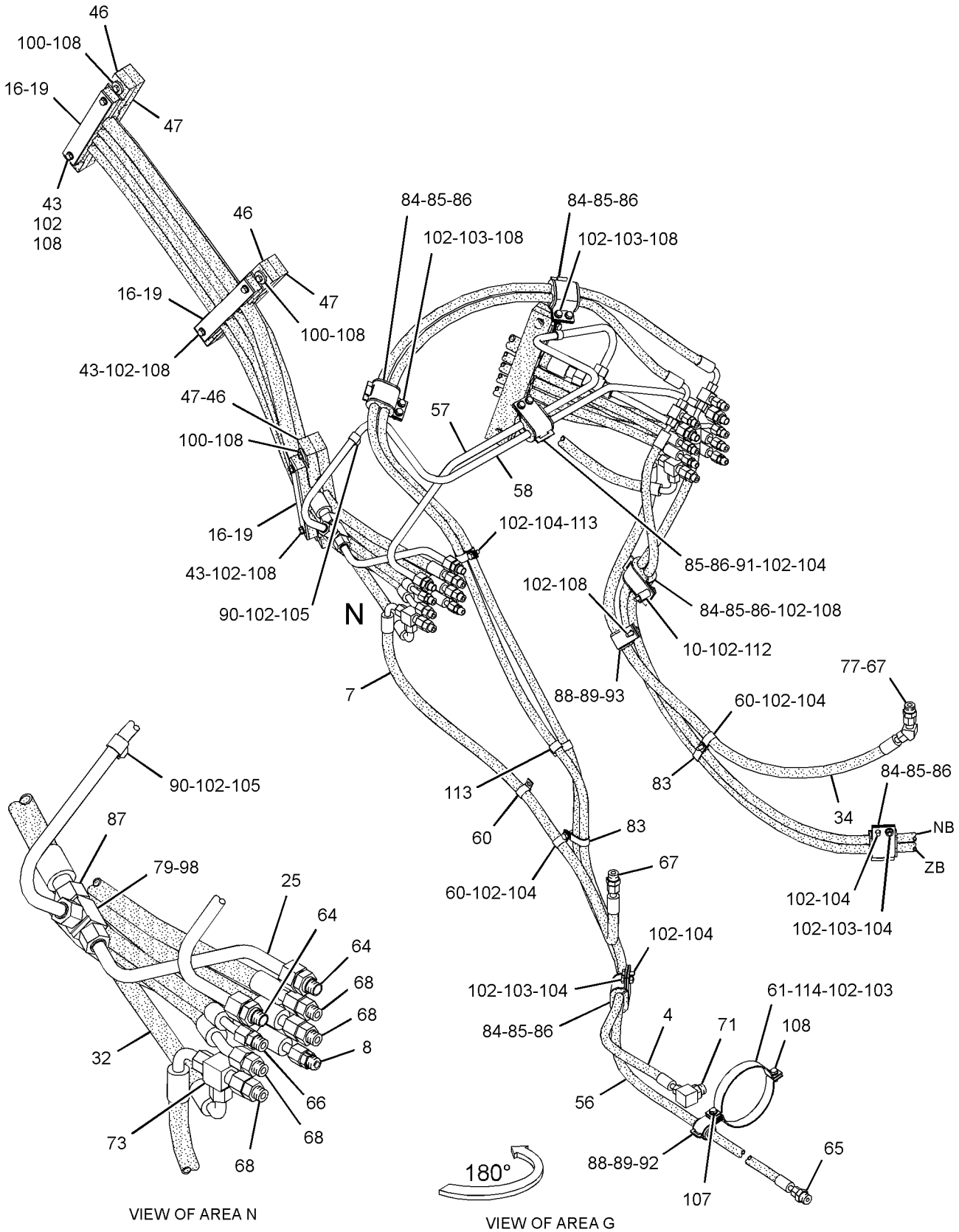

GRAPHIC #5 **<END>** g01775897

HYDRAULIC SYSTEM

278-0561 LINES GP-HYDRAULIC—BLADE FLOAT

S/N: B9K1-345

PART OF 269-2202 FLOAT AR-BLADE

SMCS-5057 **i03114000**

NOTE	REF NO	GRAPHIC REF	PART NUMBER	QTY	PART NAME 1 2 3 4 5 6 (PRODUCT LEVEL)	SEE PAGE
	1	2	**1W-6702**	6	CLAMP	
I	2	1	**8W-4192**	1	HOSE AS	
I	3	2	**8W-5637**	2	HOSE AS	
I	4	3	**9R-6698**	1	HOSE AS	
I	5	2	**105-4646**	1	HOSE AS	
I	6	3	**186-3471**	1	HOSE AS	
I	7	3	**222-1301**	1	HOSE AS	
	8	3	**223-2459**	3	VALVE GP-CHECK (BLADE LIFT)	
					(EACH INCLUDES)	
		3	**3K-0360**	1	SEAL-O-RING	
		3	**6V-8398**	1	SEAL-O-RING	
I	9	2	**233-9522**	1	HOSE AS	
	10	3	**243-1353**	1	SPACER (11X20X35-MM THK)	
I	11	1	**270-3327**	1	HOSE AS	
	12	2	**270-3354**	1	BLOCK	
	13	2	**270-3355**	1	BLOCK	
	14	1	**270-3356**	2	BLOCK	
	15	2,3	**270-7570**	3	BLOCK	
	16	2,3	**270-7573**	3	BLOCK	
	17	1	**270-7574**	2	BLOCK	
	18	1	**270-7575**	2	BLOCK	
	19	2,3	**275-8345**	8	PLATE	
	20	2	**275-8353**	1	BLOCK	
	21	2	**275-8356**	1	BLOCK	
	22	1	**275-8357**	2	BLOCK	
	23	1	**275-8358**	2	BLOCK	
	24	3	**308-8676**	1	TUBE AS	
	25	3	**308-8677**	1	TUBE AS	
Y	26	2	**279-6521**	2	VALVE GP-SOLENOID & MANIFOLD (BLADE CUSHION)	816
I	27	1	**284-6993**	2	HOSE AS	
I	28	2	**284-6999**	2	HOSE AS	
	29	2	**284-7003**	2	PLATE	
	30	1	**284-7004**	4	PLATE	
	31	1	**284-7005**	2	PLATE	
I	32	3	**298-4730**	1	HOSE AS	
I	33	2	**298-4731**	1	HOSE AS	
I	34	2	**298-4732**	1	HOSE AS	
I	35	3	**298-4733**	1	HOSE AS	
I	36	2	**298-4734**	2	HOSE AS	
I	37	2	**298-4735**	1	HOSE AS	
I	38	2	**298-4736**	1	HOSE AS	
I	39	1	**298-4737**	2	HOSE AS	
I	40	1	**298-4738**	1	HOSE AS	
I	41	1	**298-4739**	1	HOSE AS	
I	42	1	**298-4740**	1	HOSE AS	
I	43	1	**298-4741**	2	HOSE AS	
	44	2,3	**298-4751**	20	PLATE AS	
	45	2,3	**299-2343**	3	BLOCK	
	46	2,3	**299-2344**	3	BLOCK	
	47	2,3	**299-2345**	3	BLOCK	
	48	2,3	**299-2346**	3	BLOCK	
	49	2	**299-2347**	1	BLOCK	
	50	2	**299-2348**	1	BLOCK	
	51	2	**299-2349**	1	BLOCK	
	52	2	**299-2350**	1	BLOCK	
	53	2	**299-2351**	1	BLOCK	

278-0561 **LINES GP-HYDRAULIC** *(contd.)* **i03114000**

NOTE	REF NO	GRAPHIC REF	PART NUMBER	QTY	PART NAME 1 2 3 4 5 6 (PRODUCT LEVEL)	SEE PAGE
	54	2	**299-2352**	1	BLOCK	
	55	2	**299-2353**	1	BLOCK	
	56	2	**299-2354**	1	BLOCK	
I	57	3	**307-8793**	1	HOSE AS	
	58	3	**308-8678**	1	TUBE AS	
	59	3	**308-8679**	1	TUBE AS	
	60	2	**310-5581**	1	PLATE AS	
M		2	**8T-3490**	1	NUT-WELD (M10X1.5-THD)	
	61	1,3	**067-3045**	5	CLIP	
	62	3	**107-1097**	4	BAR-CLAMP	
I	63	2	**107-1484**	2	HOSE AS	
	64	2	**132-7551**	6	SPACER (11X19X6-MM THK)	
	65	1	**148-6757**	2	TEE-UNION	
	66	3	*148-8324*	4	CONNECTOR AS	
					(EACH INCLUDES)	
		3	**3K-0360**	1	SEAL-O-RING	
		3	**6V-9746**	1	SEAL-O-RING	
		3	**6V-9874**	1	CONNECTOR	
	67	1,2,3	*148-8328*	7	CONNECTOR AS	
					(EACH INCLUDES)	
		1,2,3	**3D-2824**	1	SEAL-O-RING	
		1,2,3	**6V-8398**	1	SEAL-O-RING	
		1,2,3	**6V-8633**	1	CONNECTOR	
	68	3	*148-8340*	6	CONNECTOR AS	
					(EACH INCLUDES)	
		3	**3K-0360**	1	SEAL-O-RING	
		3	**6V-8398**	1	SEAL-O-RING	
		3	**6V-8639**	1	CONNECTOR	
	69	3	*148-8341*	2	CONNECTOR AS	
					(EACH INCLUDES)	
		3	**3D-2824**	1	SEAL-O-RING	
		3	**6V-8713**	1	CONNECTOR	
		3	**7J-9108**	1	SEAL-O-RING	
	70	3	*148-8342*	5	CONNECTOR AS	
					(EACH INCLUDES)	
		3	**3K-0360**	1	SEAL-O-RING	
		3	**6V-8632**	1	CONNECTOR	
		3	**7J-9108**	1	SEAL-O-RING	
	71	2	*148-8364*	2	ELBOW AS	
					(EACH INCLUDES)	
		2	**3K-0360**	1	SEAL-O-RING	
		2	**6V-8398**	1	SEAL-O-RING	
		2	**6V-8625**	1	ELBOW	
	72	1,2	*148-8375*	4	ELBOW AS	
					(EACH INCLUDES)	
		1,2	**6V-8398**	2	SEAL-O-RING	
		1,2	**6V-8981**	1	ELBOW	
	73	1,2,3	*148-8381*	5	ELBOW AS	
					(EACH INCLUDES)	
		1,2,3	**3D-2824**	1	SEAL-O-RING	
		1,2,3	**6V-8398**	1	SEAL-O-RING	
		1,2,3	**8T-5429**	1	ELBOW	
	74	2	*148-8382*	2	ELBOW AS	
					(EACH INCLUDES)	
		2	**3D-2824**	1	SEAL-O-RING	
		2	**7J-9108**	1	SEAL-O-RING	
		2	**8T-0404**	1	ELBOW	
	75	2	*148-8411*	4	PLUG AS	
					(EACH INCLUDES)	

278-0561 LINES GP-HYDRAULIC (contd.) i03114000

NOTE	REF NO	GRAPHIC REF	PART NUMBER	QTY	PART NAME 1 2 3 4 5 6 (PRODUCT LEVEL)	SEE PAGE
		2	**3K-0360**	1	SEAL-O-RING	
		2	**9S-4185**	1	PLUG-O-RING	
	76	2	*148-8444*	2	TEE AS-SWIVEL	
					(EACH INCLUDES)	
		2	**6V-8398**	2	SEAL-O-RING	
		2	**6V-9837**	1	TEE-SWIVEL	
	77	2,3	*148-8446*	4	TEE AS-SWIVEL	
					(EACH INCLUDES)	
		2,3	**6V-9838**	1	TEE-SWIVEL	
		2,3	**7J-9108**	2	SEAL-O-RING	
	78	1,2	*148-8457*	3	UNION AS	
					(EACH INCLUDES)	
		1,2	**6V-8398**	2	SEAL-O-RING	
		1,2	**6V-8995**	1	UNION	
	79	3	*150-4037*	2	TEE AS	
					(EACH INCLUDES)	
		3	**6V-8398**	2	SEAL-O-RING	
		3	**6V-9844**	1	TEE-SWIVEL	
	80	2	*150-4048*	2	ELBOW AS	
					(EACH INCLUDES)	
		2	**3K-0360**	1	SEAL-O-RING	
		2	**6V-8722**	1	ELBOW	
		2	**7J-9108**	1	SEAL-O-RING	
I	81	1	**153-5353**	1	HOSE AS	
	82	3	*153-6256*	1	ELBOW AS	
		3	**7J-9108**	1	SEAL-O-RING	
		3	**8C-7563**	1	ELBOW	
	83	1	*155-2026*	2	UNION AS	
					(EACH INCLUDES)	
		1	**5K-9090**	2	SEAL-O-RING	
		1	**6V-8998**	1	UNION	
	84	3	**158-4307**	2	TEE-UNION	
	85	1	*169-7409*	1	UNION AS	
		1	**6V-8996**	1	UNION	
		1	**7J-9108**	2	SEAL-O-RING	
	86	2	*190-9821*	2	ELBOW AS	
					(EACH INCLUDES)	
		2	**6V-8989**	1	ELBOW	
		2	**7J-9108**	2	SEAL-O-RING	
	87	2	**198-4778**	2	WASHER-HARD (13.5X30X12-MM THK)	
	88	3	**3E-4321**	2	CLIP	
	89	2,3	**3G-8047**	6	GROMMET	
	90	2,3	**3G-8054**	7	CLIP (TAB)	
	91	2,3	**3G-8057**	7	CLIP (SLOT)	
	92	3	**5K-9090**	2	SEAL-O-RING	
	93	1,2,3	**5P-7464**	12	CLIP (SLOT)	
	94	1,2,3	**5P-7465**	12	CLIP (TAB)	
	95	3	**6D-4246**	2	CLIP	
	96	3	**6V-0974**	1	GROMMET	
	97	1,2,3	**6V-1249**	9	GROMMET	
	98	3	**6V-7359**	1	GROMMET	
	99	1	**6V-8398**	4	SEAL-O-RING	
	100	1,2	**6V-9169**	9	NUT-BULKHEAD (13/16-16-THD)	
	101	1,2	**6V-9170**	3	NUT-BULKHEAD (1-14-THD)	
	102	1	**6V-9172**	2	NUT (1-7/16-12-THD)	
	103	3	**6V-9746**	4	SEAL-O-RING	
	104	1	**7J-9108**	2	SEAL-O-RING	
	105	2,3	**7X-0632**	20	WASHER-HARD (11X36X6-MM THK)	
	106	2	**8T-2920**	2	GROMMET	

278-0561 **LINES GP-HYDRAULIC** *(contd.)* **i03114000**

NOTE	REF NO	GRAPHIC REF	PART NUMBER	QTY	PART NAME 1 2 3 4 5 6 (PRODUCT LEVEL)	SEE PAGE
	107	1,2,3	**8T-4121**	85	WASHER-HARD (11X21X2.5-MM THK)	
M	108	2,3	**8T-4133**	17	NUT (M10X1.5-THD)	
M	109	1,2,3	**8T-4136**	15	BOLT (M10X1.5X25-MM)	
M	110	3	**8T-4137**	2	BOLT (M10X1.5X20-MM)	
M	111	1	**8T-4183**	1	BOLT (M12X1.75X40-MM)	
M	112	2,3	**8T-4186**	5	BOLT (M10X1.5X40-MM)	
M	113	1,2,3	**8T-4195**	56	BOLT (M10X1.5X30-MM)	
M	114	2	**8T-4196**	1	BOLT (M10X1.5X35-MM)	
M	115	2	**8T-4198**	4	BOLT (M10X1.5X100-MM)	
	116	1	**8T-4223**	1	WASHER-HARD (13.5X25.5X3-MM THK)	
M	117	2	**8T-4956**	2	BOLT (M12X1.75X35-MM)	
M	118	2,3	**8T-6466**	4	BOLT (M10X1.5X60-MM)	
I	119	2	**9R-0974**	2	HOSE AS	
	120	3	**9X-8250**	4	CLIP	
	121	3	**8T-7934**	4	WASHER-HARD (11X21X5-MM THK)	

I-REFER TO HYDRAULIC INFORMATION SYSTEM
M-METRIC PART
Y-SEPARATE ILLUSTRATION

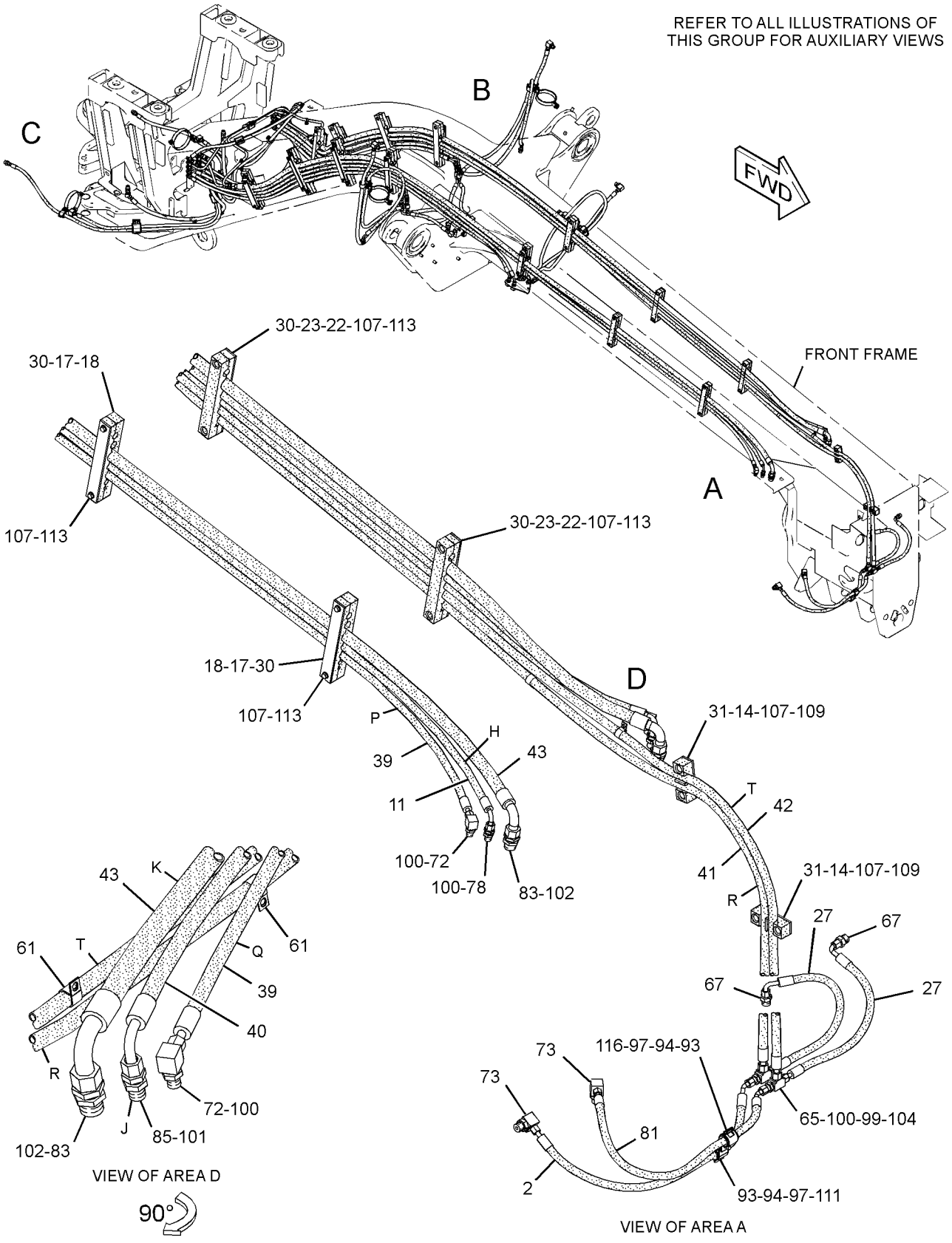

GRAPHIC #1

g01789776

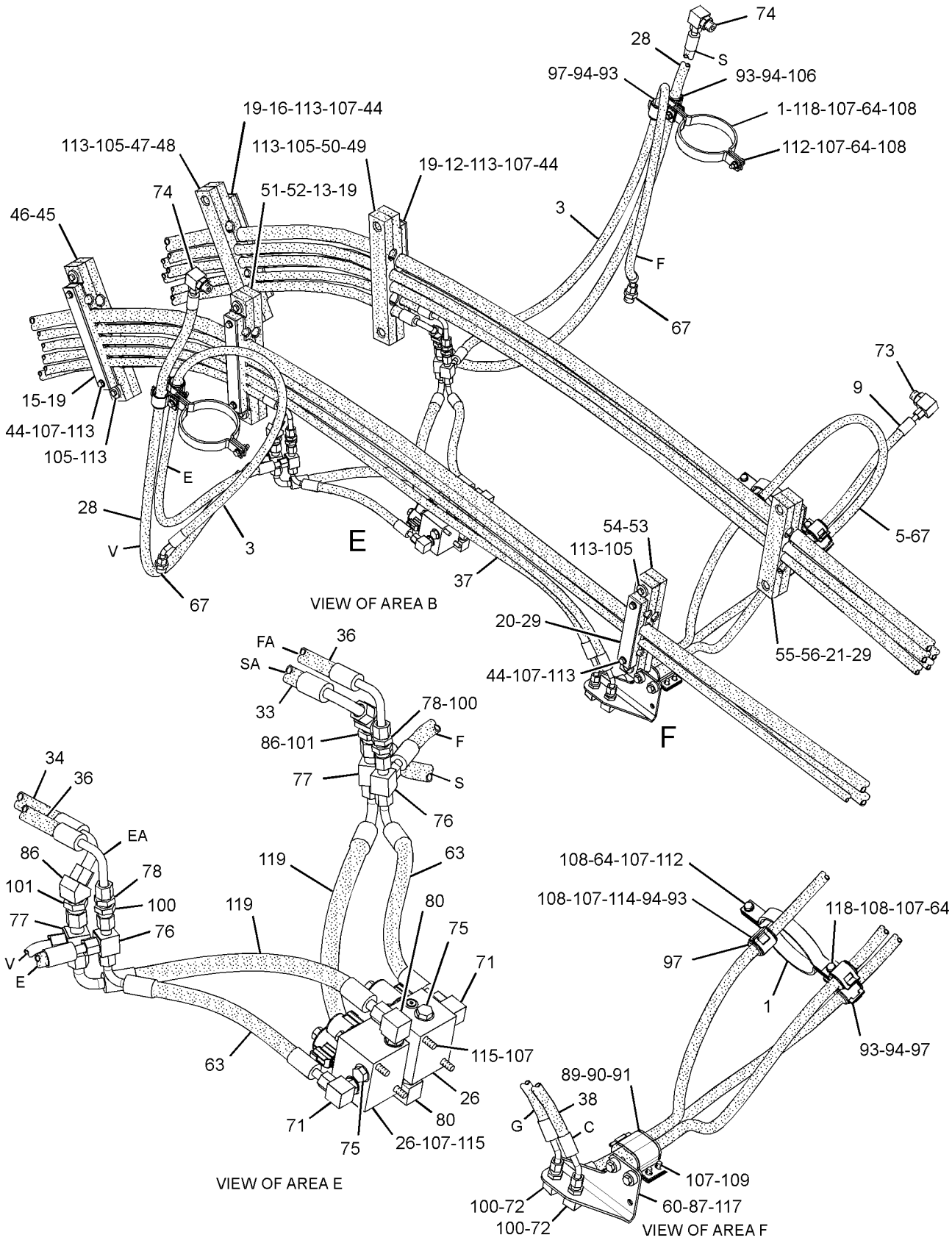

GRAPHIC #2

g01452088

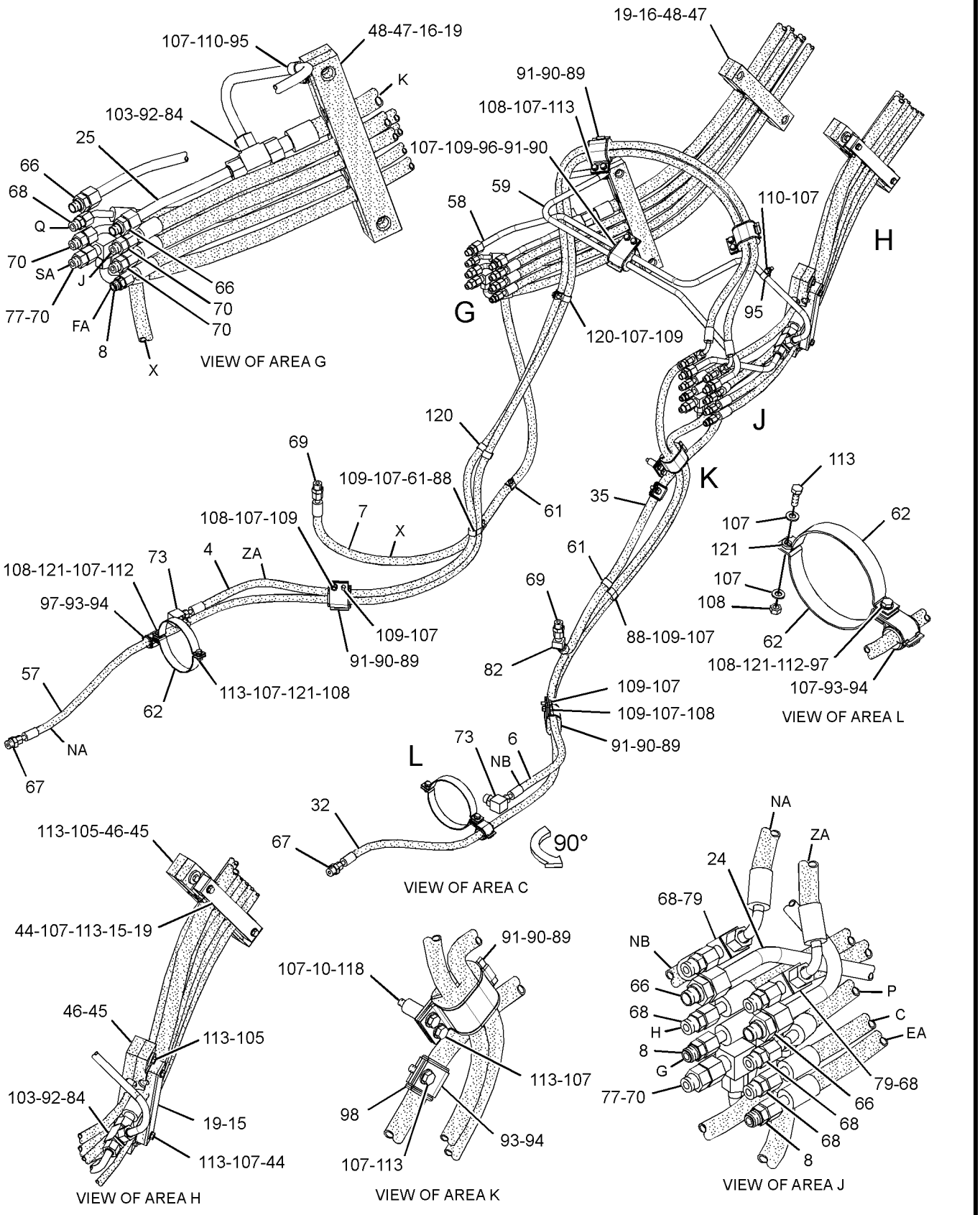

GRAPHIC #3 **<END>** g01789777

HYDRAULIC SYSTEM

268-0242 LINES GP-HYDRAULIC FAN

S/N: B9K1-UP

PART OF 259-9204 COMMON AR

SMCS-1386, 1387, 5057 **i02835796**

NOTE	REF NO	GRAPHIC REF	PART NUMBER	QTY	PART NAME 1 2 3 4 5 6 (PRODUCT LEVEL)	SEE PAGE
	1	2	**6V-0852**	1	CAP-DUST	
	2	2	**8X-5974**	1	MANIFOLD	
I	3	1	**9C-1067**	1	HOSE AS	
I	4	1	**111-4531**	1	HOSE AS	
	5	2	**151-6730**	1	SPACER (11X25X55-MM THK)	
	6	2	**172-4211**	1	SPACER (10.5X22X50.8-MM THK)	
	7	2	**193-9230**	1	VALVE GP-CHECK	
		2	**3D-2824**	1	SEAL-O-RING	
		2	**6V-9746**	1	SEAL-O-RING	
	8	2	*148-8360*	1	ELBOW AS	
		2	**6V-9182**	1	ELBOW	
		2	**6V-9746**	1	SEAL-O-RING	
		2	**7M-8485**	1	SEAL-O-RING	
I	9	1	**282-5975**	1	HOSE AS	
	10	2	**282-5980**	2	BLOCK	
	11	2	**282-5983**	2	BLOCK	
	12	2	**282-5984**	2	BLOCK	
	13	2	**282-5986**	4	PLATE	
	14	2	**282-5987**	1	BLOCK	
	15	2	**282-5988**	1	BLOCK	
	16	2	**282-5989**	1	PLATE	
	17	2	**282-5990**	2	BLOCK	
	18	2	**282-5991**	2	BLOCK	
	19	2	**282-5993**	2	BLOCK	
I	20	1	**286-3465**	1	HOSE AS	
	21	2	**307-3231**	1	BLOCK	
I	22	1	**307-3242**	1	HOSE AS	
I	23	1	**307-3243**	1	HOSE AS	
	24	2	**307-3244**	1	PLATE AS	
	25	2	*148-8339*	2	CONNECTOR AS	
					(EACH INCLUDES)	
		2	**6V-8716**	1	CONNECTOR	
		2	**6V-9746**	1	SEAL-O-RING	
		2	**7M-8485**	1	SEAL-O-RING	
	26	2	*148-8347*	3	ELBOW AS	
					(EACH INCLUDES)	
		2	**6V-9007**	1	ELBOW	
		2	**3D-2824**	1	SEAL-O-RING	
		2	**6V-9746**	1	SEAL-O-RING	
	27	2	*148-8388*	1	ELBOW AS	
		2	**6V-8629**	1	ELBOW	
		2	**2M-9780**	1	SEAL-O-RING	
		2	**6V-9746**	1	SEAL-O-RING	
	28	2	*148-8392*	1	ELBOW AS	
		2	**6V-9853**	1	ELBOW	
		2	**6V-9746**	1	SEAL-O-RING	
	29	2	**149-7738**	9	CLIP	
	30	2	*153-6237*	1	ELBOW AS	
		2	**6V-9004**	1	ELBOW	
		2	**3D-2824**	1	SEAL-O-RING	
		2	**6V-9746**	1	SEAL-O-RING	
	31	2	*164-5567*	1	COUPLER AS-QUICK DISCONNECT (MALE)	
		2	**6V-3965**	1	FITTING (QUICK DISCONNECT)	
		2	**3J-1907**	1	SEAL-O-RING	
	32	2	*164-5606*	1	CONNECTOR AS	
		2	**8T-0078**	1	CONNECTOR	

268-0242 **LINES GP-HYDRAULIC FAN** *(contd.)* **i02835796**

NOTE	REF NO	GRAPHIC REF	PART NUMBER	QTY	PART NAME 1 2 3 4 5 6 (PRODUCT LEVEL)	SEE PAGE
		2	**3D-2824**	1	SEAL-O-RING	
		2	**6V-9746**	1	SEAL-O-RING	
	33	2	**198-4777**	3	WASHER-HARD (11X25X10-MM THK)	
	34	2	**2M-9780**	1	SEAL-O-RING	
	35	2	**3D-2824**	1	SEAL-O-RING	
	36	2	**5P-1404**	1	ADAPTER-O-RING	
	37	2	**7R-0042**	1	ADAPTER	
	38	2	**8T-4121**	20	WASHER-HARD (11X21X2.5-MM THK)	
M	39	2	**8T-4133**	2	NUT (M10X1.5-THD)	
M	40	2	**8T-4136**	6	BOLT (M10X1.5X25-MM)	
M	41	2	**8T-4137**	2	BOLT (M10X1.5X20-MM)	
M	42	2	**8T-4172**	2	BOLT (M10X1.5X80-MM)	
M	43	2	**8T-4178**	1	BOLT (M10X1.5X90-MM)	
M	44	2	**8T-4195**	7	BOLT (M10X1.5X30-MM)	
M	45	2	**8T-5005**	1	BOLT (M10X1.5X70-MM)	
M	46	2	**8T-6466**	2	BOLT (M10X1.5X60-MM)	
	47	2	**9D-1829**	1	CLIP	

I-REFER TO HYDRAULIC INFORMATION SYSTEM
M-METRIC PART

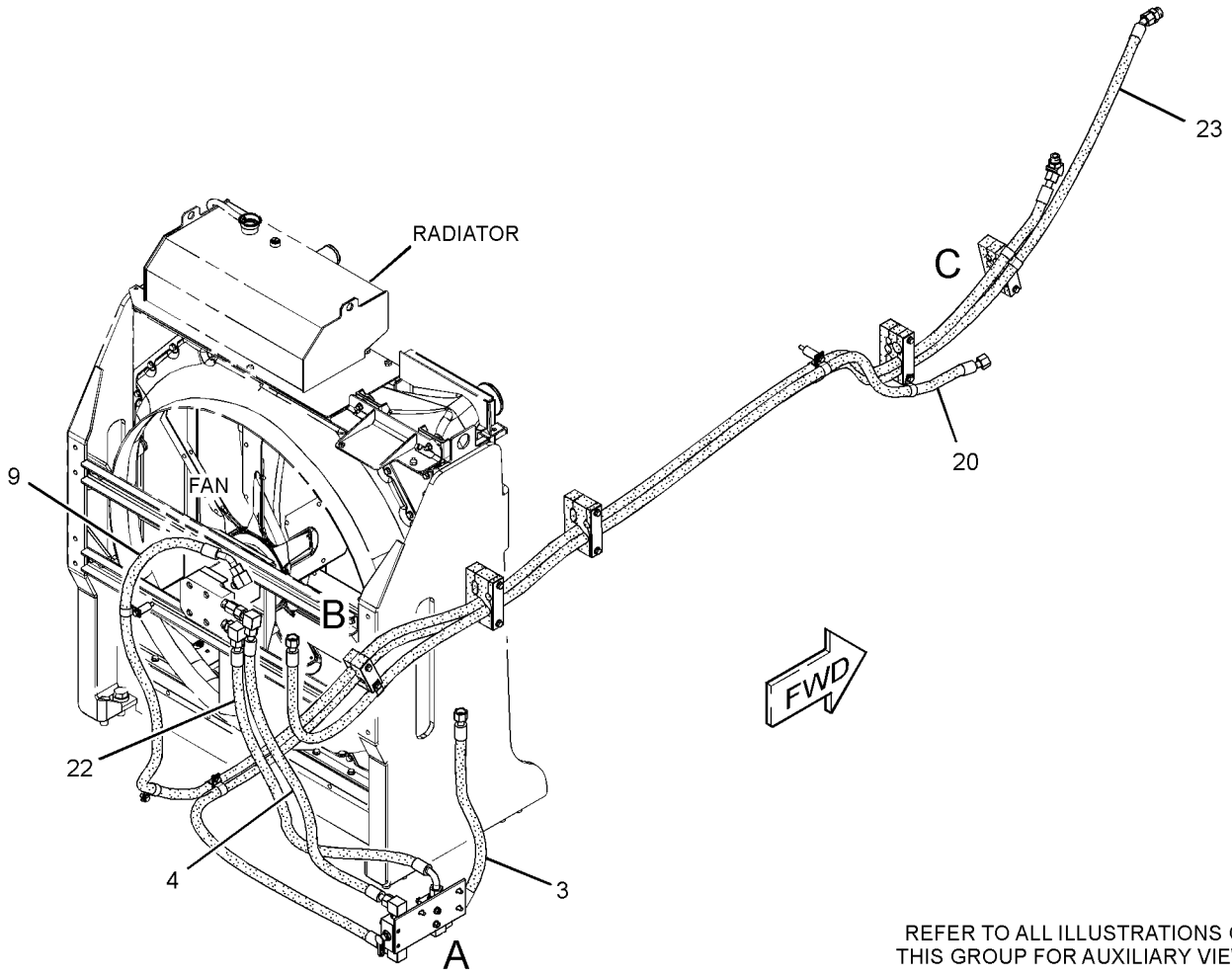

REFER TO ALL ILLUSTRATIONS OF THIS GROUP FOR AUXILIARY VIEWS

GRAPHIC #1

g01420436

268-0242 **LINES GP-HYDRAULIC FAN** *(contd.)* **i02835796**

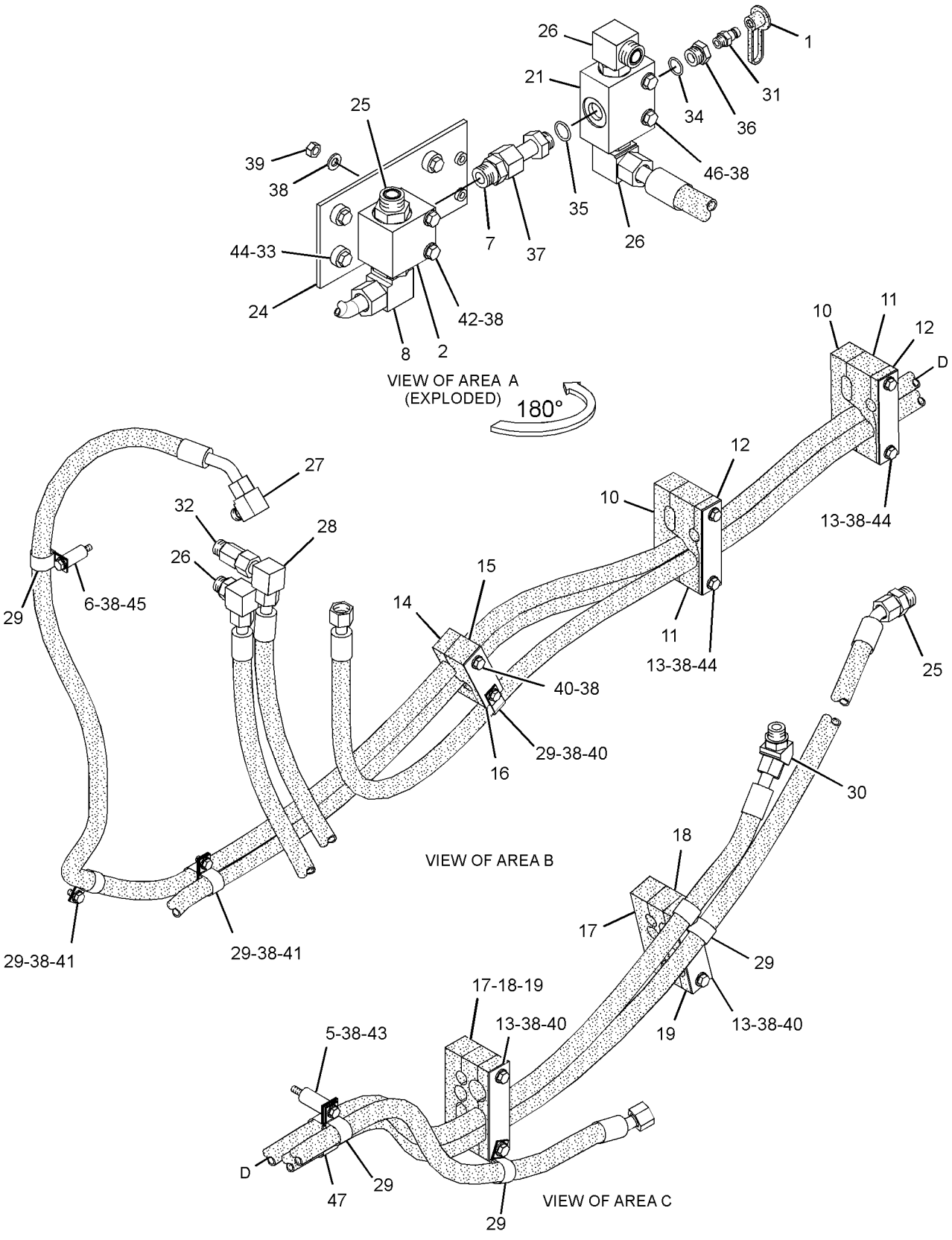

GRAPHIC #2 **<END>** g01420437

HYDRAULIC SYSTEM

268-0241 LINES GP-PUMP–IMPLEMENT

S/N: B9K250-305

PART OF 259-9204 COMMON AR

SMCS-5057 **i03640109**

NOTE	REF NO	GRAPHIC REF	PART NUMBER	QTY	PART NAME 1 2 3 4 5 6 (PRODUCT LEVEL)	SEE PAGE
	1	3	**6R-7605**	1	VALVE-SHUTTLE	
	2	4	**6V-0852**	2	CAP-DUST	
I	3	3	**8W-0119**	1	HOSE AS	
	4	3	**8X-5974**	1	MANIFOLD	
	5	1	**9D-7198**	1	JUNCTION BLOCK	
	6	1	**9M-7958**	1	CLAMP-HOSE	
I	7	4	**125-6992**	1	HOSE AS	
	8	4	**127-6299**	4	PLATE	
	9	4	**128-8813**	2	BRACKET AS	
	10	3	**133-6934**	1	SPACER (11X20X25-MM THK)	
	11	4	*148-8443*	1	TEE AS	
		4	**7X-2459**	1	TEE-O-RING	
		4	**3J-1907**	1	SEAL-O-RING	
		4	**6V-8397**	1	SEAL-O-RING	
	12	4	*150-3058*	1	TEE AS	
		4	**8C-8431**	1	TEE	
		4	**3J-1907**	1	SEAL-O-RING	
	13	4	*164-5576*	1	ADAPTER AS	
		4	**6V-8926**	1	ADAPTER	
		4	**8T-7876**	1	SEAL-O-RING	
	14	4	*168-1968*	1	TEE AS	
		4	**126-6872**	1	TEE	
		4	**3J-1907**	1	SEAL-O-RING	
		4	**6V-8397**	1	SEAL-O-RING	
I	15	2	**172-3820**	1	HOSE AS	
I	16	3	**179-1289**	1	HOSE AS	
	17	2	**193-9230**	1	VALVE GP-CHECK (HYDRAULIC FAN)	
		2	**6V-9746**	1	SEAL-O-RING	
		2	**3D-2824**	1	SEAL-O-RING	
I	18	3	**204-7386**	1	HOSE AS	
	19	1	*222-4734*	1	VALVE AS-SHUTOFF (PILOT SHUTOFF)	
		1	**4E-0754**	1	VALVE-SHUTOFF	
		1	**3K-0360**	1	SEAL-O-RING	
	20	3	*250-1418*	1	CONNECTOR AS	
		3	**089-7702**	1	CONNECTOR	
		3	**3J-1907**	1	SEAL-O-RING	
		3	**6V-8397**	1	SEAL-O-RING	
	21	3,4	*250-1420*	2	CONNECTOR AS (EACH INCLUDES)	
		3,4	**250-1419**	1	CONNECTOR	
		3,4	**3K-0360**	1	SEAL-O-RING	
		3,4	**7J-9108**	1	SEAL-O-RING	
I	22	2	**270-3334**	2	HOSE AS	
	23	2	**270-7577**	2	JUNCTION BLOCK	
	24	4	**278-0566**	1	BRACKET AS	
	25	3	**278-0567**	2	BRACKET AS	
	26	3	**278-0569**	2	PLATE	
	27	3	**278-0570**	2	BRACKET AS	
	28	3	**278-0571**	2	PLATE	
	29	4	**281-2729**	2	BLOCK	
	30	4	**281-2730**	2	BLOCK	
	31	4	**281-2731**	2	BLOCK	
	32	4	**281-2732**	2	BLOCK	
	33	4	**281-2733**	2	BLOCK	
	34	4	**281-2734**	2	BLOCK	
	35	3	**281-2735**	1	BLOCK	

268-0241 **LINES GP-PUMP** ***(contd.)*** **i03640109**

NOTE	REF NO	GRAPHIC REF	PART NUMBER	QTY	PART NAME 1 2 3 4 5 6 (PRODUCT LEVEL)	SEE PAGE
	36	3	**281-2736**	1	BLOCK	
	37	3	**281-2737**	1	BLOCK	
	38	3	**281-2738**	1	BLOCK	
	39	3	**281-2739**	1	BLOCK	
	40	3	**281-2740**	1	BLOCK	
	41	3	**281-2741**	1	BLOCK	
	42	3	**281-2742**	1	BLOCK	
	43	3	**281-2743**	1	BLOCK	
	44	3	**281-2744**	1	BLOCK	
	45	3	**281-2745**	1	BLOCK	
	46	3	**281-2746**	1	BLOCK	
I	47	4	**281-2756**	1	HOSE AS	
	48	2	*282-5994*	1	PLATE AS	
M		2	**8T-3490**	1	NUT-WELD (M10X1.5-THD)	
I	49	3	**283-9963**	1	HOSE AS	
I	50	3	**283-9964**	1	HOSE AS	
I	51	3	**283-9966**	1	HOSE AS	
I	52	2	**284-7463**	1	HOSE AS	
I	53	2	**284-7464**	1	HOSE AS	
I	54	2	**286-1328**	1	HOSE AS	
I	55	3	**286-1329**	1	HOSE AS	
I	56	2	**286-3212**	1	HOSE AS	
	57	2	**298-4727**	1	TUBE AS	
	58	2	**298-4728**	1	TUBE AS	
Y	59	2	**306-5134**	1	MANIFOLD GP-CONTROL (PILOT SHUTOFF)	747
I	60	1	**307-8781**	1	HOSE AS	
I	61	2	**307-8782**	1	HOSE AS	
I	62	3	**307-8783**	1	HOSE AS	
I	63	3	**307-8785**	1	HOSE AS	
CI	64	3	**307-8790**	1	HOSE AS	
CI	65	3	**307-8791**	1	HOSE AS	
CI	66	3	**307-8792**	1	HOSE AS	
I	67	3	**307-8794**	1	HOSE AS	
I	68	3	**315-5717**	1	HOSE AS	
C	69	2,3	**067-3045**	5	CLIP	
	70	2	*148-8323*	1	CONNECTOR AS	
		2	**6V-9875**	1	CONNECTOR	
		2	**2S-4078**	1	SEAL-O-RING	
		2	**5K-9090**	1	SEAL-O-RING	
	71	2	*148-8327*	1	CONNECTOR AS	
		2	**6V-8637**	1	CONNECTOR	
		2	**3D-2824**	1	SEAL-O-RING	
		2	**6V-9746**	1	SEAL-O-RING	
	72	3	*148-8328*	1	CONNECTOR AS	
		3	**6V-8633**	1	CONNECTOR	
		3	**3D-2824**	1	SEAL-O-RING	
		3	**6V-8398**	1	SEAL-O-RING	
	73	2	*148-8334*	4	CONNECTOR AS	
					(EACH INCLUDES)	
		2	**8T-3611**	1	CONNECTOR	
		2	**2S-4078**	1	SEAL-O-RING	
		2	**6V-8400**	1	SEAL-O-RING	
	74	3,4	*148-8335*	6	CONNECTOR AS	
					(EACH INCLUDES)	
		3,4	**6V-8635**	1	CONNECTOR	
		3,4	**5K-9090**	1	SEAL-O-RING	
		3,4	**7M-8485**	1	SEAL-O-RING	
	75	3	*148-8336*	1	CONNECTOR AS	
		3	**6V-8636**	1	CONNECTOR	

268-0241 **LINES GP-PUMP** *(contd.)* **i03640109**

NOTE	REF NO	GRAPHIC REF	PART NUMBER	QTY	PART NAME 1 2 3 4 5 6 (PRODUCT LEVEL)	SEE PAGE
		3	**3J-1907**	1	SEAL-O-RING	
		3	**6V-8397**	1	SEAL-O-RING	
	76	3,4	*148-8340*	2	CONNECTOR AS	
					(EACH INCLUDES)	
		3,4	**6V-8639**	1	CONNECTOR	
		3,4	**6V-8398**	1	SEAL-O-RING	
		3,4	**3K-0360**	1	SEAL-O-RING	
	77	2	*148-8341*	1	CONNECTOR AS	
		2	**6V-8713**	1	CONNECTOR	
		2	**3D-2824**	1	SEAL-O-RING	
		2	**7J-9108**	1	SEAL-O-RING	
	78	3	*148-8355*	2	ELBOW AS	
					(EACH INCLUDES)	
		3	**6V-9005**	1	ELBOW	
		3	**5K-9090**	1	SEAL-O-RING	
		3	**7M-8485**	1	SEAL-O-RING	
	79	2	*148-8356*	1	ELBOW AS	
		2	**6V-9009**	1	ELBOW	
		2	**2S-4078**	1	SEAL-O-RING	
		2	**6V-8400**	1	SEAL-O-RING	
	80	4	*148-8357*	1	ELBOW AS	
		4	**6V-9008**	1	ELBOW	
		4	**5K-9090**	1	SEAL-O-RING	
		4	**7M-8485**	1	SEAL-O-RING	
	81	4	*148-8364*	1	ELBOW AS	
		4	**6V-8625**	1	ELBOW	
		4	**3K-0360**	1	SEAL-O-RING	
		4	**6V-8398**	1	SEAL-O-RING	
	82	3	*148-8370*	1	ELBOW AS	
		3	**6V-9851**	1	ELBOW	
		3	**6V-8398**	1	SEAL-O-RING	
	83	3	*148-8378*	1	ELBOW AS	
		3	**6V-8724**	1	ELBOW	
		3	**3J-1907**	1	SEAL-O-RING	
		3	**6V-8397**	1	SEAL-O-RING	
	84	2	*148-8390*	1	ELBOW AS	
		2	**6V-8626**	1	ELBOW	
		2	**2M-9780**	1	SEAL-O-RING	
		2	**7J-9108**	1	SEAL-O-RING	
	85	2	*148-8391*	1	ELBOW AS	
		2	**8T-8987**	1	ELBOW	
		2	**2S-4078**	1	SEAL-O-RING	
		2	**5K-9090**	1	SEAL-O-RING	
	86	2	*148-8392*	1	ELBOW AS	
		2	**6V-9853**	1	ELBOW	
		2	**6V-9746**	1	SEAL-O-RING	
	87	1	*148-8411*	1	PLUG AS	
		1	**9S-4185**	1	PLUG-O-RING	
		1	**3K-0360**	1	SEAL-O-RING	
	88	4	*148-8414*	1	REDUCER AS	
		4	**6V-8943**	1	REDUCER	
		4	**7J-9108**	1	SEAL-O-RING	
	89	4	*148-8435*	2	TEE AS	
					(EACH INCLUDES)	
		4	**6V-8781**	1	TEE-FACE SEAL	
		4	**3J-1907**	1	SEAL-O-RING	
		4	**6V-8397**	2	SEAL-O-RING	
	90	3	*148-8444*	1	TEE AS-SWIVEL	
		3	**6V-9837**	1	TEE-SWIVEL	

268-0241 **LINES GP-PUMP** *(contd.)* **i03640109**

NOTE	REF NO	GRAPHIC REF	PART NUMBER	QTY	PART NAME 1 2 3 4 5 6 (PRODUCT LEVEL)	SEE PAGE
		3	**6V-8398**	2	SEAL-O-RING	
	91	4	*148-8446*	1	TEE AS-SWIVEL	
		4	**6V-9838**	1	TEE-SWIVEL	
		4	**7J-9108**	2	SEAL-O-RING	
	92	1	*150-4048*	1	ELBOW AS	
		1	**6V-8722**	1	ELBOW	
		1	**3K-0360**	1	SEAL-O-RING	
		1	**7J-9108**	1	SEAL-O-RING	
	93	2	*153-6232*	1	ELBOW AS	
		2	**8T-0120**	1	ELBOW	
		2	**3D-2824**	1	SEAL-O-RING	
		2	**7J-9108**	1	SEAL-O-RING	
	94	2	*153-6238*	1	ELBOW AS	
		2	**6V-9006**	1	ELBOW	
		2	**2S-4078**	1	SEAL-O-RING	
		2	**6V-8400**	1	SEAL-O-RING	
	95	2	*153-6259*	1	TEE AS	
		2	**6V-8777**	1	TEE-FACE SEAL	
		2	**3D-2824**	1	SEAL-O-RING	
		2	**6V-9746**	2	SEAL-O-RING	
	96	4	*156-4282*	1	REDUCER AS	
		4	**6V-8938**	1	REDUCER-O-RING	
		4	**6V-8397**	1	SEAL-O-RING	
	97	4	*164-5567*	2	COUPLER AS-QUICK DISCONNECT (MALE) (EACH INCLUDES)	
		4	**6V-3965**	1	FITTING (QUICK DISCONNECT)	
		4	**3J-1907**	1	SEAL-O-RING	
	98	4	*164-5594*	1	CONNECTOR AS	
		4	**8C-5723**	1	CONNECTOR	
		4	**5K-9090**	1	SEAL-O-RING	
		4	**7M-8485**	1	SEAL-O-RING	
	99	4	*164-9904*	1	TEE AS	
		4	**122-9088**	1	TEE	
		4	**2M-9780**	1	SEAL-O-RING	
		4	**6V-9746**	2	SEAL-O-RING	
	100	2	*167-1795*	1	ELBOW AS	
		2	**8T-3491**	1	ELBOW	
		2	**3D-2824**	1	SEAL-O-RING	
	101	3	**179-0469**	1	SPACER (11X20X40-MM THK)	
	102	4	**205-3079**	1	ADAPTER	
	103	4	*212-1336*	1	TEE AS	
		4	**6V-8783**	1	TEE-FACE SEAL	
		4	**2M-9780**	1	SEAL-O-RING	
		4	**7J-9108**	2	SEAL-O-RING	
	104	4	*241-6185*	1	PLUG AS	
		4	**5P-9436**	1	PLUG	
		4	**3D-2824**	1	SEAL-O-RING	
	105	4	**1P-3704**	1	SEAL-RECTANGULAR	
	106	2,4	**1P-4584**	8	FLANGE-HALF	
	107	2,3	**1S-0994**	5	CLIP	
	108	4	**3J-1907**	1	SEAL-O-RING	
	109	3	**4J-0520**	1	SEAL-O-RING	
	110	2	**4S-4455**	3	CLIP	
	111	2	**5K-9090**	2	SEAL-O-RING	
	112	4	**5P-1075**	3	WASHER-HARD (10.2X22.5X3-MM THK)	
	113	2,3	**5P-7464**	2	CLIP (SLOT)	
	114	2,3	**5P-7465**	2	CLIP (TAB)	
	115	3	**5P-7468**	4	CLIP (SLOT)	
	116	3	**5P-7469**	4	CLIP (TAB)	

268-0241 **LINES GP-PUMP** *(contd.)* **i03640109**

NOTE	REF NO	GRAPHIC REF	PART NUMBER	QTY	PART NAME 1 2 3 4 5 6 (PRODUCT LEVEL)	SEE PAGE
	117	4	**5P-8246**	4	WASHER-HARD (15.5X29X3-MM THK)	
	118	3	**5P-8444**	4	GROMMET	
	119	2	**5S-2201**	1	BOLT-SOCKET HEAD (5/8-11X1.25-IN)	
	120	2,4	**6J-2680**	4	SEAL-O-RING	
	121	4	**6V-0401**	2	FLANGE-HALF	
	122	2	**6V-5386**	1	CLIP	
	123	2,4	**6V-8555**	1	NUT-FACE SEAL (1-14-THD)	
	124	3	**6V-9168**	1	NUT (11/16-16-THD)	
	125	2	**7D-1553**	6	CLIP	
	126	2,3	**7D-7233**	2	CLIP	
	127	3	**8C-3206**	2	FLANGE-HALF	
M	128	4	**8C-6854**	4	BOLT (M14X2X50-MM)	
	129	3	**8D-7185**	8	WASHER (11.9X38.1X3-MM THK)	
	130	2	**8R-0721**	1	SPACER (11X16X35-MM THK)	
	131	3	**8T-2920**	2	GROMMET	
C	132	1,2,3, 4	**8T-4121**	68	WASHER-HARD (11X21X2.5-MM THK)	
	133	2	**8T-4122**	1	WASHER-HARD (17X32X3.5-MM THK)	
M	134	2,3	**8T-4133**	7	NUT (M10X1.5-THD)	
CM	135	2,3,4	**8T-4136**	46	BOLT (M10X1.5X25-MM)	
M	136	2,3,4	**8T-4137**	12	BOLT (M10X1.5X20-MM)	
M	137	3	**8T-4139**	3	BOLT (M12X1.75X30-MM)	
M	138	2,3	**8T-4172**	6	BOLT (M10X1.5X80-MM)	
M	139	2	**8T-4178**	2	BOLT (M10X1.5X90-MM)	
M	140	2,3	**8T-4183**	2	BOLT (M12X1.75X40-MM)	
M	141	2,4	**8T-4184**	16	BOLT (M12X1.75X45-MM)	
M	142	3	**8T-4185**	1	BOLT (M10X1.5X50-MM)	
M	143	3	**8T-4196**	8	BOLT (M10X1.5X35-MM)	
	144	4	**8T-4222**	8	WASHER-PLATED (11X32X2.5-MM THK)	
	145	2,3,4	**8T-4223**	21	WASHER-HARD (13.5X25.5X3-MM THK)	
M	146	3	**8T-5005**	1	BOLT (M10X1.5X70-MM)	
M	147	1,2	**8T-6466**	3	BOLT (M10X1.5X60-MM)	
	148	1,3	**9X-8250**	2	CLIP	
E	149	1	**136-1955**		HOSE (42-CM)	

C-CHANGE FROM PREVIOUS TYPE
E-ORDER BY THE CENTIMETER
I-REFER TO HYDRAULIC INFORMATION SYSTEM
M-METRIC PART
Y-SEPARATE ILLUSTRATION

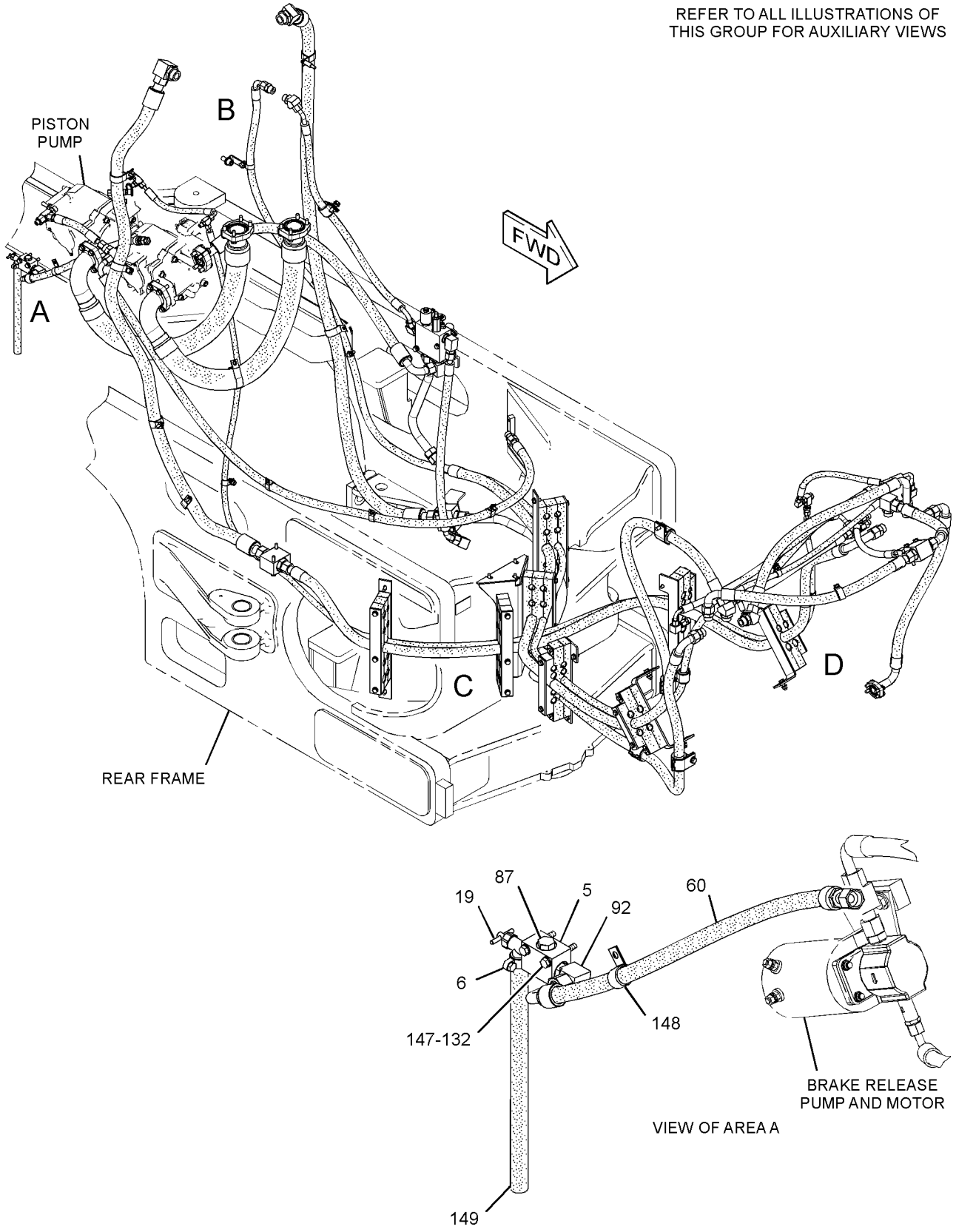

GRAPHIC #1 g01620901

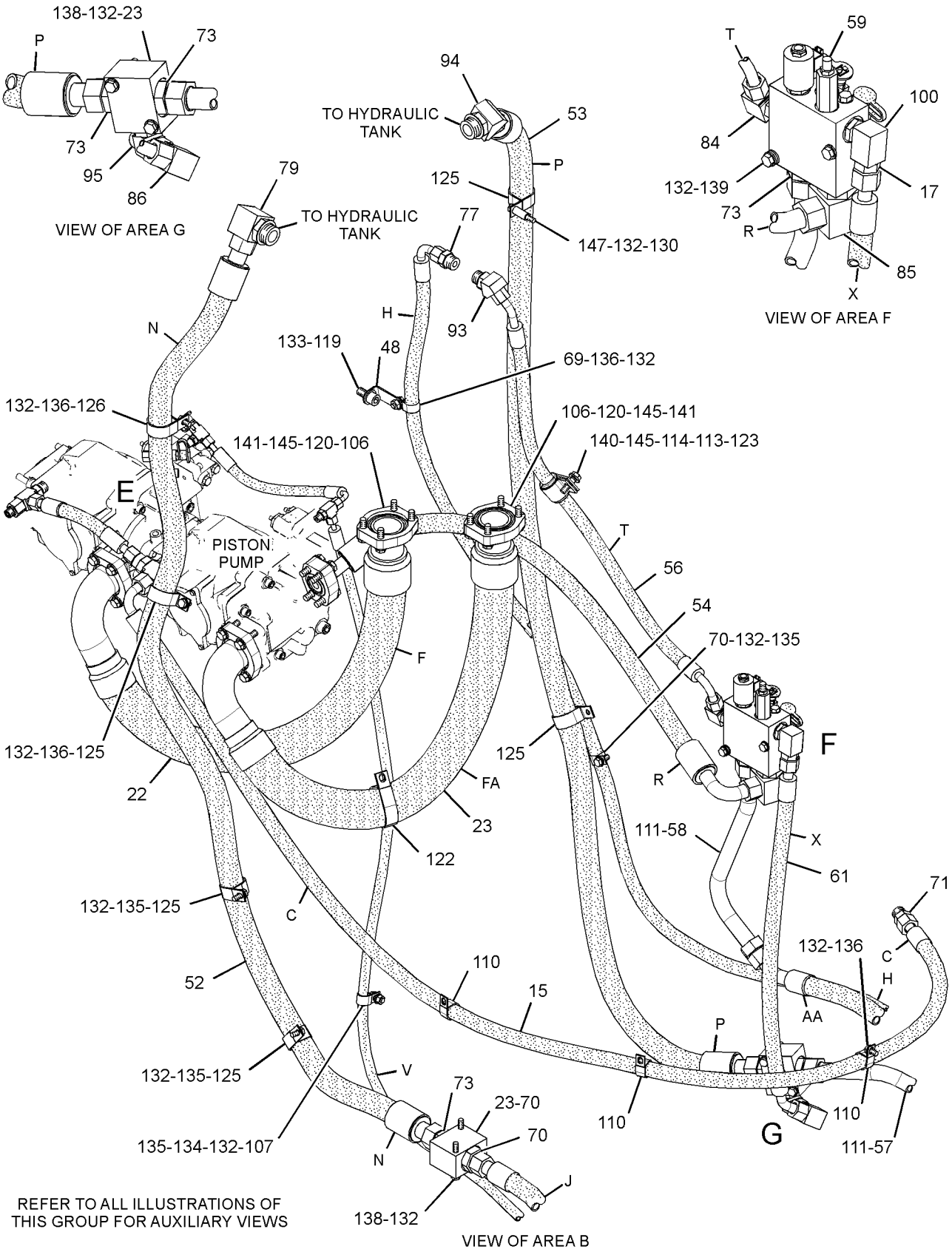

GRAPHIC #2

g01620902

268-0241 **LINES GP-PUMP** *(contd.)* **i03640109**

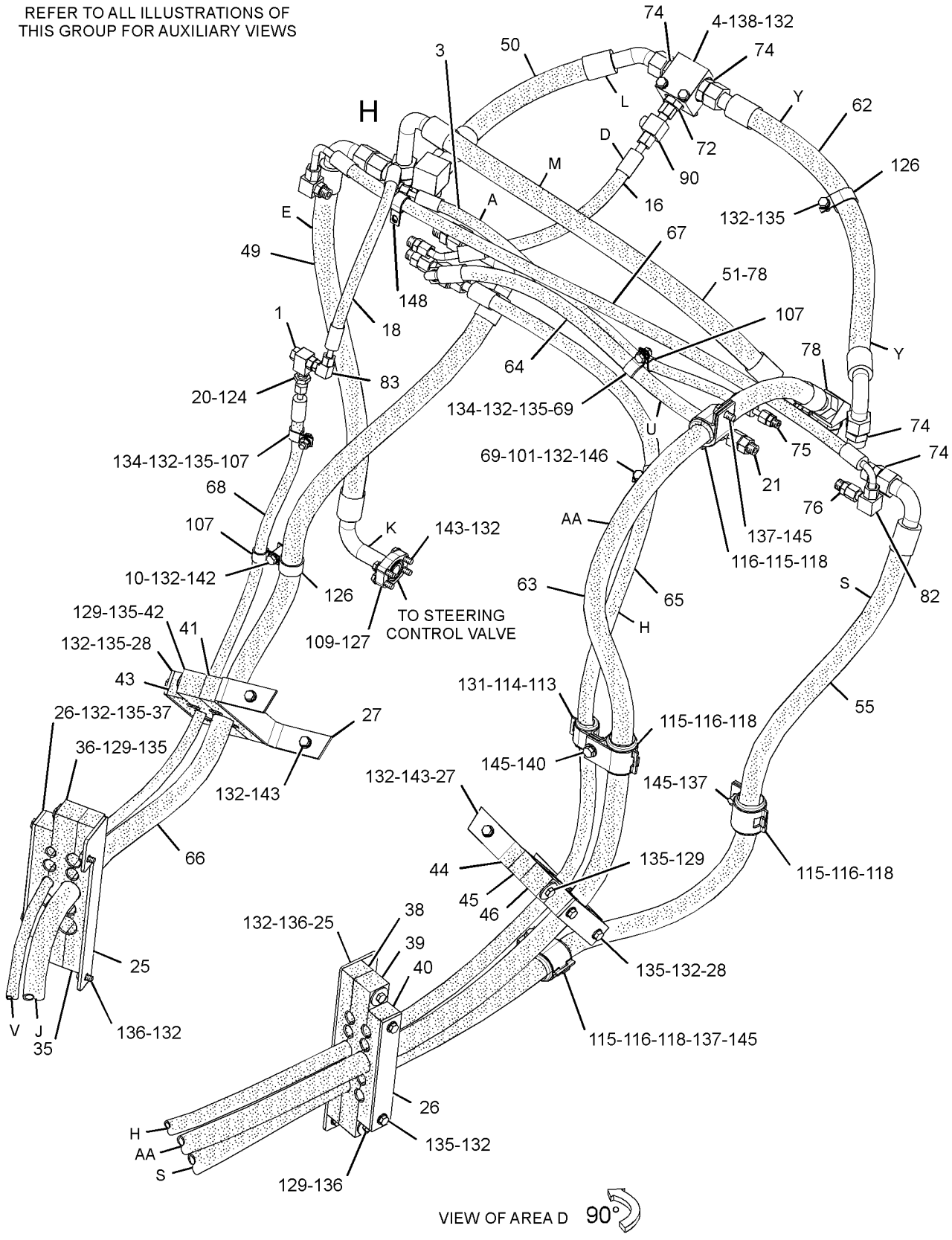

GRAPHIC #3 g01620903

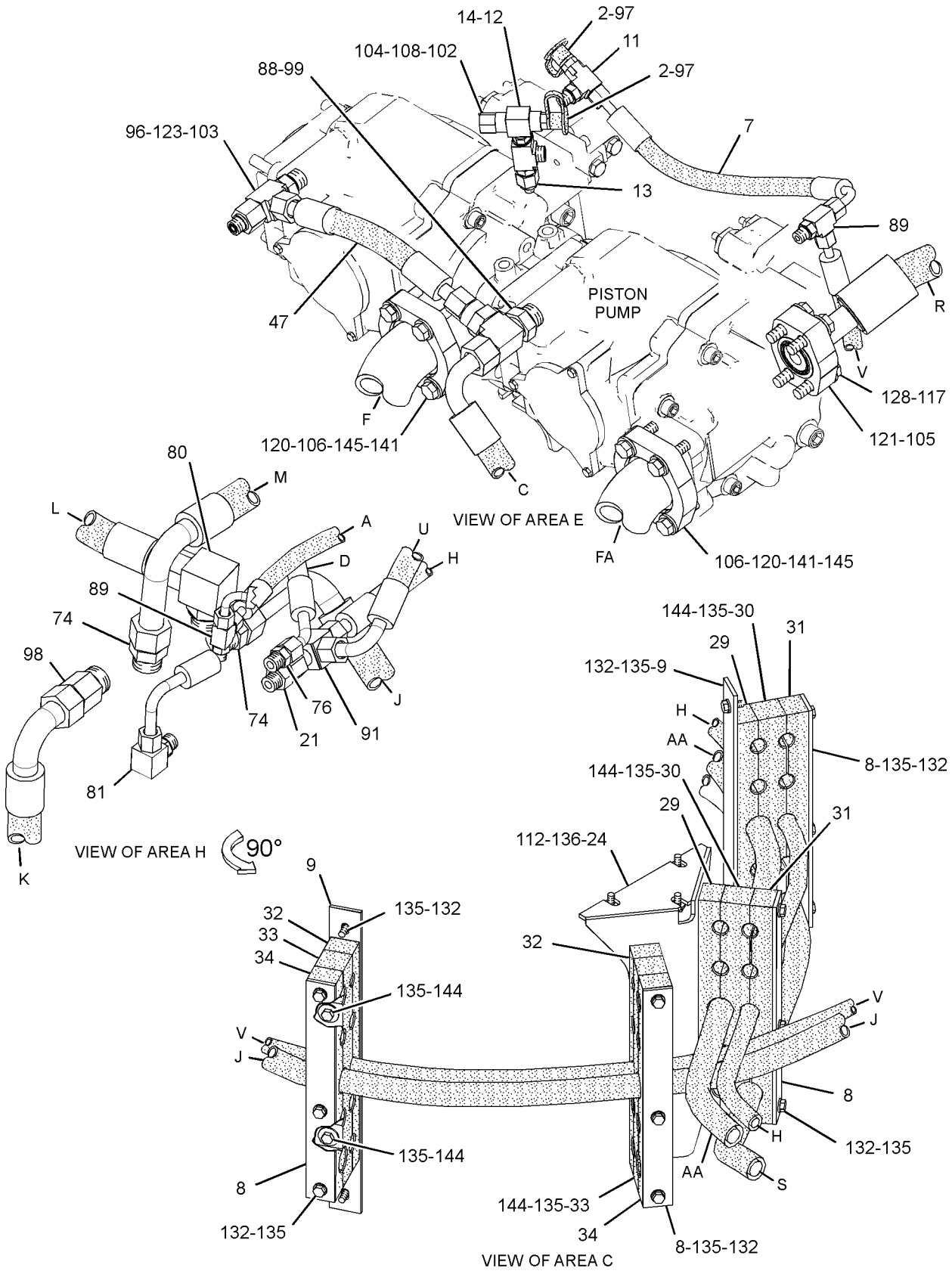

GRAPHIC #4 **<END>** g01620904

HYDRAULIC SYSTEM

268-0241 LINES GP-PUMP–IMPLEMENT

S/N: B9K1-249

PART OF 259-9204 COMMON AR

SMCS-5057 **i03984531**

NOTE	REF NO	GRAPHIC REF	PART NUMBER	QTY	PART NAME 1 2 3 4 5 6 (PRODUCT LEVEL)	SEE PAGE
	1	3	**6R-7605**	1	VALVE-SHUTTLE	
	2	4	**6V-0852**	2	CAP-DUST	
I	3	3	**323-4119**	1	HOSE AS	
	4	3	**8X-5974**	1	MANIFOLD	
	5	1	**9D-7198**	1	JUNCTION BLOCK	
	6	1	**9M-7958**	1	CLAMP-HOSE	
I	7	4	**323-4121**	1	HOSE AS	
	8	4	**127-6299**	4	PLATE	
	9	4	**128-8813**	2	BRACKET AS	
	10	3,4	**133-6934**	1	SPACER (11X20X25-MM THK)	
	11	4	*148-8443*	1	TEE AS	
		4	**7X-2459**	1	TEE-O-RING	
		4	**3J-1907**	1	SEAL-O-RING	
		4	**6V-8397**	1	SEAL-O-RING	
	14	4	**327-5880**	1	ADAPTER	
I	15	2	**172-3820**	1	HOSE AS	
I	16	3	**179-1289**	1	HOSE AS	
	17	2	**193-9230**	1	VALVE GP-CHECK (HYDRAULIC FAN)	
		2	**6V-9746**	1	SEAL-O-RING	
		2	**3D-2824**	1	SEAL-O-RING	
I	18	3	**323-4120**	1	HOSE AS	
	19	1	**222-4734**	1	VALVE AS-SHUTOFF (PILOT SHUTOFF)	
		1	**4E-0754**	1	VALVE-SHUTOFF	
		1	**3K-0360**	1	SEAL-O-RING	
	20	3	*250-1418*	1	CONNECTOR AS	
		3	**089-7702**	1	CONNECTOR	
		3	**3J-1907**	1	SEAL-O-RING	
		3	**6V-8397**	1	SEAL-O-RING	
	21	3,4	*250-1420*	2	CONNECTOR AS	
					(EACH INCLUDES)	
		3,4	**250-1419**	1	CONNECTOR	
		3,4	**3K-0360**	1	SEAL-O-RING	
		3,4	**7J-9108**	1	SEAL-O-RING	
I	22	2	**270-3334**	2	HOSE AS	
	23	2	**270-7577**	2	JUNCTION BLOCK	
	24	4	**278-0566**	1	BRACKET AS	
	25	3	**278-0567**	2	BRACKET AS	
	26	3	**278-0569**	2	PLATE	
	27	3	**278-0570**	2	BRACKET AS	
	28	3	**278-0571**	2	PLATE	
	29	4	**281-2729**	2	BLOCK	
	30	4	**281-2730**	2	BLOCK	
	31	4	**281-2731**	2	BLOCK	
	32	4	**345-3760**	2	BLOCK	
	33	4	**345-3761**	2	BLOCK	
	34	4	**281-2734**	2	BLOCK	
	35	3	**281-2735**	1	BLOCK	
	36	3	**345-3762**	1	BLOCK	
	37	3	**345-3763**	1	BLOCK	
	38	3	**281-2738**	1	BLOCK	
	39	3	**281-2739**	1	BLOCK	
	40	3	**281-2740**	1	BLOCK	
	41	3	**281-2741**	1	BLOCK	
	42	3	**345-3764**	1	BLOCK	
	43	3	**345-3765**	1	BLOCK	
	44	3	**281-2744**	1	BLOCK	

268-0241 **LINES GP-PUMP** *(contd.)* **i03984531**

NOTE	REF NO	GRAPHIC REF	PART NUMBER	QTY	PART NAME 1 2 3 4 5 6 (PRODUCT LEVEL)	SEE PAGE
	45	3	**281-2745**	1	BLOCK	
	46	3	**281-2746**	1	BLOCK	
I	47	4	**281-2756**	1	HOSE AS	
	48	2	*282-5994*	1	PLATE AS	
M		2	**8T-3490**	1	NUT-WELD (M10X1.5-THD)	
I	49	3	**283-9963**	1	HOSE AS	
I	50	3	**283-9964**	1	HOSE AS	
I	51	3	**283-9966**	1	HOSE AS	
I	52	2	**284-7463**	1	HOSE AS	
I	53	2	**284-7464**	1	HOSE AS	
I	54	2	**286-1328**	1	HOSE AS	
I	55	3	**286-1329**	1	HOSE AS	
I	56	2	**286-3212**	1	HOSE AS	
	57	2	**298-4727**	1	TUBE AS	
	58	2	**298-4728**	1	TUBE AS	
Y	59	2	**306-5134**	1	MANIFOLD GP-CONTROL (PILOT SHUTOFF)	747
I	60	1	**307-8781**	1	HOSE AS	
I	61	2	**307-8782**	1	HOSE AS	
I	62	3	**307-8783**	1	HOSE AS	
I	63	3	**307-8785**	1	HOSE AS	
I	64	3	**307-8790**	1	HOSE AS	
I	65	3	**307-8791**	1	HOSE AS	
I	66	3	**307-8792**	1	HOSE AS	
I	67	3	**307-8794**	1	HOSE AS	
I	68	3	**323-4122**	1	HOSE AS	
	69	2,3	**067-3045**	5	CLIP	
	70	2	*148-8323*	1	CONNECTOR AS	
		2	**6V-9875**	1	CONNECTOR	
		2	**2S-4078**	1	SEAL-O-RING	
		2	**5K-9090**	1	SEAL-O-RING	
	71	2	*148-8327*	1	CONNECTOR AS	
		2	**6V-8637**	1	CONNECTOR	
		2	**3D-2824**	1	SEAL-O-RING	
		2	**6V-9746**	1	SEAL-O-RING	
	72	3	*148-8328*	1	CONNECTOR AS	
		3	**6V-8633**	1	CONNECTOR	
		3	**3D-2824**	1	SEAL-O-RING	
		3	**6V-8398**	1	SEAL-O-RING	
	73	2	*148-8334*	4	CONNECTOR AS	
					(EACH INCLUDES)	
		2	**8T-3611**	1	CONNECTOR	
		2	**2S-4078**	1	SEAL-O-RING	
		2	**6V-8400**	1	SEAL-O-RING	
	74	3,4	*148-8335*	6	CONNECTOR AS	
					(EACH INCLUDES)	
		3,4	**6V-8635**	1	CONNECTOR	
		3,4	**5K-9090**	1	SEAL-O-RING	
		3,4	**7M-8485**	1	SEAL-O-RING	
	75	3	*148-8336*	1	CONNECTOR AS	
		3	**6V-8636**	1	CONNECTOR	
		3	**3J-1907**	1	SEAL-O-RING	
		3	**6V-8397**	1	SEAL-O-RING	
	76	3,4	*148-8340*	2	CONNECTOR AS	
					(EACH INCLUDES)	
		3,4	**6V-8639**	1	CONNECTOR	
		3,4	**6V-8398**	1	SEAL-O-RING	
		3,4	**3K-0360**	1	SEAL-O-RING	
	77	2	*148-8341*	1	CONNECTOR AS	
		2	**6V-8713**	1	CONNECTOR	

268-0241 **LINES GP-PUMP** *(contd.)* **i03984531**

NOTE	REF NO	GRAPHIC REF	PART NUMBER	QTY	PART NAME 1 2 3 4 5 6 (PRODUCT LEVEL)	SEE PAGE
		2	**3D-2824**	1	SEAL-O-RING	
		2	**7J-9108**	1	SEAL-O-RING	
	78	3	*148-8355*	2	ELBOW AS	
					(EACH INCLUDES)	
		3	**6V-9005**	1	ELBOW	
		3	**5K-9090**	1	SEAL-O-RING	
		3	**7M-8485**	1	SEAL-O-RING	
	79	2	*148-8356*	1	ELBOW AS	
		2	**6V-9009**	1	ELBOW	
		2	**2S-4078**	1	SEAL-O-RING	
		2	**6V-8400**	1	SEAL-O-RING	
	80	4	*148-8357*	1	ELBOW AS	
		4	**6V-9008**	1	ELBOW	
		4	**5K-9090**	1	SEAL-O-RING	
		4	**7M-8485**	1	SEAL-O-RING	
	81	4	*148-8364*	1	ELBOW AS	
		4	**6V-8625**	1	ELBOW	
		4	**3K-0360**	1	SEAL-O-RING	
		4	**6V-8398**	1	SEAL-O-RING	
	82	3	*148-8370*	1	ELBOW AS	
		3	**6V-9851**	1	ELBOW	
		3	**6V-8398**	1	SEAL-O-RING	
	83	3	*148-8378*	1	ELBOW AS	
		3	**6V-8724**	1	ELBOW	
		3	**3J-1907**	1	SEAL-O-RING	
		3	**6V-8397**	1	SEAL-O-RING	
	84	2	*148-8390*	1	ELBOW AS	
		2	**6V-8626**	1	ELBOW	
		2	**2M-9780**	1	SEAL-O-RING	
		2	**7J-9108**	1	SEAL-O-RING	
	85	2	*148-8391*	1	ELBOW AS	
		2	**8T-8987**	1	ELBOW	
		2	**2S-4078**	1	SEAL-O-RING	
		2	**5K-9090**	1	SEAL-O-RING	
	86	2	*148-8392*	1	ELBOW AS	
		2	**6V-9853**	1	ELBOW	
		2	**6V-9746**	1	SEAL-O-RING	
	87	1	*148-8411*	1	PLUG AS	
		1	**9S-4185**	1	PLUG-O-RING	
		1	**3K-0360**	1	SEAL-O-RING	
	88	4	*148-8414*	1	REDUCER AS	
		4	**6V-8943**	1	REDUCER	
		4	**7J-9108**	1	SEAL-O-RING	
	89	4	*148-8435*	2	TEE AS	
					(EACH INCLUDES)	
		4	**6V-8781**	1	TEE-FACE SEAL	
		4	**3J-1907**	1	SEAL-O-RING	
		4	**6V-8397**	2	SEAL-O-RING	
	90	3	*148-8444*	1	TEE AS-SWIVEL	
		3	**6V-9837**	1	TEE-SWIVEL	
		3	**6V-8398**	2	SEAL-O-RING	
	91	4	*148-8446*	1	TEE AS-SWIVEL	
		4	**6V-9838**	1	TEE-SWIVEL	
		4	**7J-9108**	2	SEAL-O-RING	
	92	1	*150-4048*	1	ELBOW AS	
		1	**6V-8722**	1	ELBOW	
		1	**3K-0360**	1	SEAL-O-RING	
		1	**7J-9108**	1	SEAL-O-RING	
	93	2	*153-6232*	1	ELBOW AS	

268-0241 **LINES GP-PUMP** *(contd.)* **i03984531**

NOTE	REF NO	GRAPHIC REF	PART NUMBER	QTY	PART NAME 1 2 3 4 5 6 (PRODUCT LEVEL)	SEE PAGE
		2	**8T-0120**	1	ELBOW	
		2	**3D-2824**	1	SEAL-O-RING	
		2	**7J-9108**	1	SEAL-O-RING	
	94	2	*153-6238*	1	ELBOW AS	
		2	**6V-9006**	1	ELBOW	
		2	**2S-4078**	1	SEAL-O-RING	
		2	**6V-8400**	1	SEAL-O-RING	
	95	2	*153-6259*	1	TEE AS	
		2	**6V-8777**	1	TEE-FACE SEAL	
		2	**3D-2824**	1	SEAL-O-RING	
		2	**6V-9746**	2	SEAL-O-RING	
	96	4	*156-4282*	1	REDUCER AS	
		4	**6V-8938**	1	REDUCER-O-RING	
		4	**6V-8397**	1	SEAL-O-RING	
	97	4	*164-5567*	2	COUPLER AS-QUICK DISCONNECT (MALE) (EACH INCLUDES)	
		4	**6V-3965**	1	FITTING (QUICK DISCONNECT)	
		4	**214-7568**	1	SEAL-O-RING	
	98	4	*164-5594*	1	CONNECTOR AS	
		4	**8C-5723**	1	CONNECTOR	
		4	**5K-9090**	1	SEAL-O-RING	
		4	**7M-8485**	1	SEAL-O-RING	
	99	4	*164-9904*	1	TEE AS	
		4	**122-9088**	1	TEE	
		4	**2M-9780**	1	SEAL-O-RING	
		4	**6V-9746**	2	SEAL-O-RING	
	100	2	*167-1795*	1	ELBOW AS	
		2	**8T-3491**	1	ELBOW	
		2	**3D-2824**	1	SEAL-O-RING	
	101	3	**179-0469**	1	SPACER (11X20X40-MM THK)	
	102	4	*149-5452*	1	UNION AS	
		4	**6V-8397**	2	SEAL-O-RING	
		4	**6V-8994**	1	UNION	
	103	4	*212-1336*	1	TEE AS	
		4	**6V-8783**	1	TEE-FACE SEAL	
		4	**2M-9780**	1	SEAL-O-RING	
		4	**7J-9108**	2	SEAL-O-RING	
	104	2	*241-6185*	1	PLUG AS	
		2	**5P-9436**	1	PLUG	
		2	**3D-2824**	1	SEAL-O-RING	
	105	4	**1P-3704**	1	SEAL-RECTANGULAR	
	106	2,4	**1P-4584**	8	FLANGE-HALF	
	107	2,3	**8M-2770**	5	CLIP	
	108	4	**3J-1907**	1	SEAL-O-RING	
	109	3	**4J-0520**	1	SEAL-O-RING	
	110	2	**4S-4455**	3	CLIP	
	111	2	**5K-9090**	2	SEAL-O-RING	
	112	4	**5P-1075**	3	WASHER-HARD (10.2X22.5X3-MM THK)	
	113	2,3	**5P-7464**	2	CLIP (SLOT)	
	114	2,3	**5P-7465**	2	CLIP (TAB)	
	115	3	**5P-7468**	4	CLIP (SLOT)	
	116	3	**5P-7469**	4	CLIP (TAB)	
	117	4	**5P-8246**	4	WASHER-HARD (15.5X29X3-MM THK)	
	118	3	**5P-8444**	4	GROMMET	
	119	2	**5S-2201**	1	BOLT-SOCKET HEAD (5/8-11X1.25-IN)	
	120	2,4	**6J-2680**	4	SEAL-O-RING	
	121	4	**6V-0401**	2	FLANGE-HALF	
C	122	2	**122-3608**	2	CLIP	
	123	2,4	**6V-8555**	1	NUT-FACE SEAL (1-14-THD)	

268-0241 **LINES GP-PUMP** *(contd.)* **i03984531**

NOTE	REF NO	GRAPHIC REF	PART NUMBER	QTY	PART NAME 1 2 3 4 5 6 (PRODUCT LEVEL)	SEE PAGE
	124	3,4	**6V-9168**	2	NUT (11/16-16-THD)	
	125	2	**7D-1553**	6	CLIP	
	126	3	**7D-7233**	2	CLIP	
	127	3	**8C-3206**	2	FLANGE-HALF	
M	128	4	**8C-6854**	4	BOLT (M14X2X50-MM)	
	129	3	**8D-7185**	8	WASHER (11.9X38.1X3-MM THK)	
	130	2	**8R-0721**	1	SPACER (11X16X35-MM THK)	
	131	3	**8T-2920**	2	GROMMET	
C	132	1,2,3, 4	**8T-4121**	70	WASHER-HARD (11X21X2.5-MM THK)	
	133	2	**8T-4122**	1	WASHER-HARD (17X32X3.5-MM THK)	
CM	134	2,3	**8T-4133**	8	NUT (M10X1.5-THD)	
CM	135	2,3,4	**8T-4136**	45	BOLT (M10X1.5X25-MM)	
M	136	2,3,4	**8T-4137**	12	BOLT (M10X1.5X20-MM)	
M	137	3	**8T-4139**	3	BOLT (M12X1.75X30-MM)	
M	138	2,3	**8T-4172**	6	BOLT (M10X1.5X80-MM)	
M	139	2	**8T-4178**	2	BOLT (M10X1.5X90-MM)	
M	140	2,3	**8T-4183**	2	BOLT (M12X1.75X40-MM)	
M	141	2,4	**8T-4184**	16	BOLT (M12X1.75X45-MM)	
M	142	3	**8T-4185**	1	BOLT (M10X1.5X50-MM)	
M	143	3	**8T-4196**	8	BOLT (M10X1.5X35-MM)	
	144	4	**8T-4222**	8	WASHER-PLATED (11X32X2.5-MM THK)	
	145	2,3,4	**8T-4223**	21	WASHER-HARD (13.5X25.5X3-MM THK)	
M	146	3	**8T-5005**	1	BOLT (M10X1.5X70-MM)	
M	147	1,2	**8T-6466**	3	BOLT (M10X1.5X60-MM)	
	148	1,3	**9X-8250**	2	CLIP	
E	149	1	**136-1955**		HOSE (42-CM)	
CM	150	2	**8T-4195**	2	BOLT (M10X1.5X30-MM)	
C	151	2	**5T-6553**	1	PLATE	
I	152	4	**334-5504**	1	HOSE AS	
	153	4	*148-8439*	1	TEE AS	
		4	**3J-1907**	1	SEAL-O-RING	
		4	**6V-8397**	2	SEAL-O-RING	
		4	**6V-8774**	1	TEE	
	154	4	**6V-8367**	2	LOCKWASHER	
	155	4	**5I-4376**	1	FITTING	

C-CHANGE FROM PREVIOUS TYPE
E-ORDER BY THE CENTIMETER
I-REFER TO HYDRAULIC INFORMATION SYSTEM
M-METRIC PART
Y-SEPARATE ILLUSTRATION

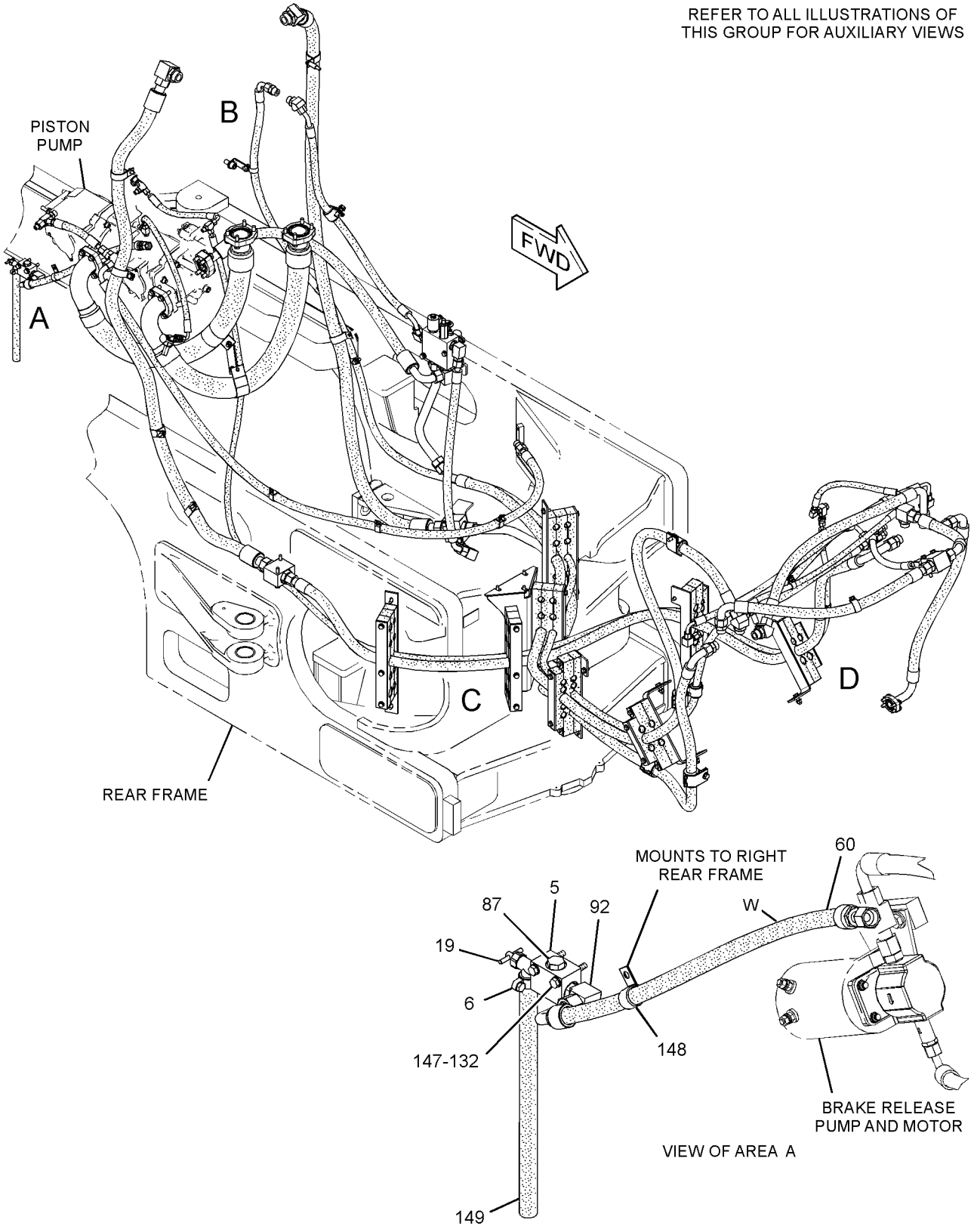

GRAPHIC #1

g02164400

268-0241 **LINES GP-PUMP** *(contd.)* **i03984531**

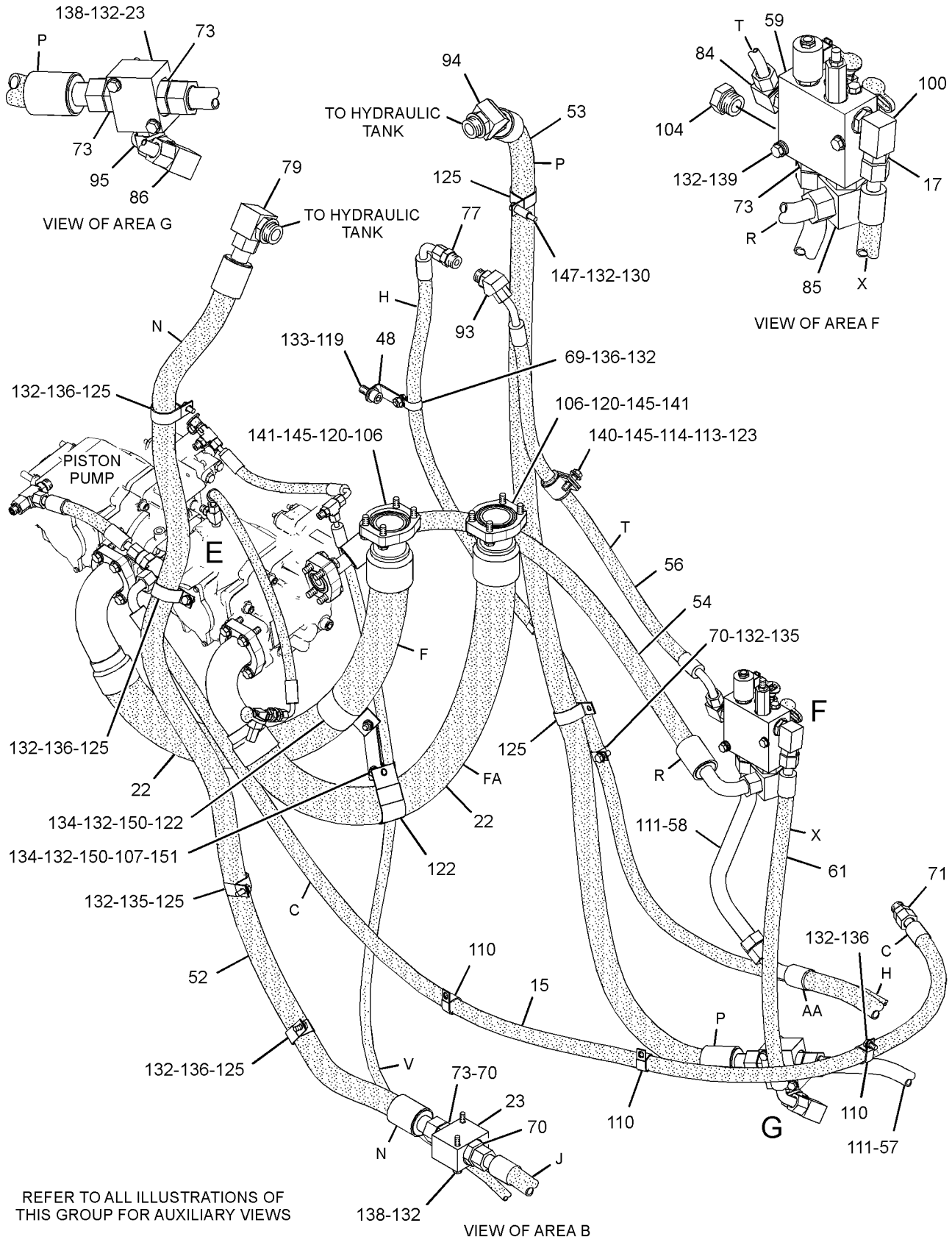

GRAPHIC #2 g02164401

268-0241 LINES GP-PUMP *(contd.)* i03984531

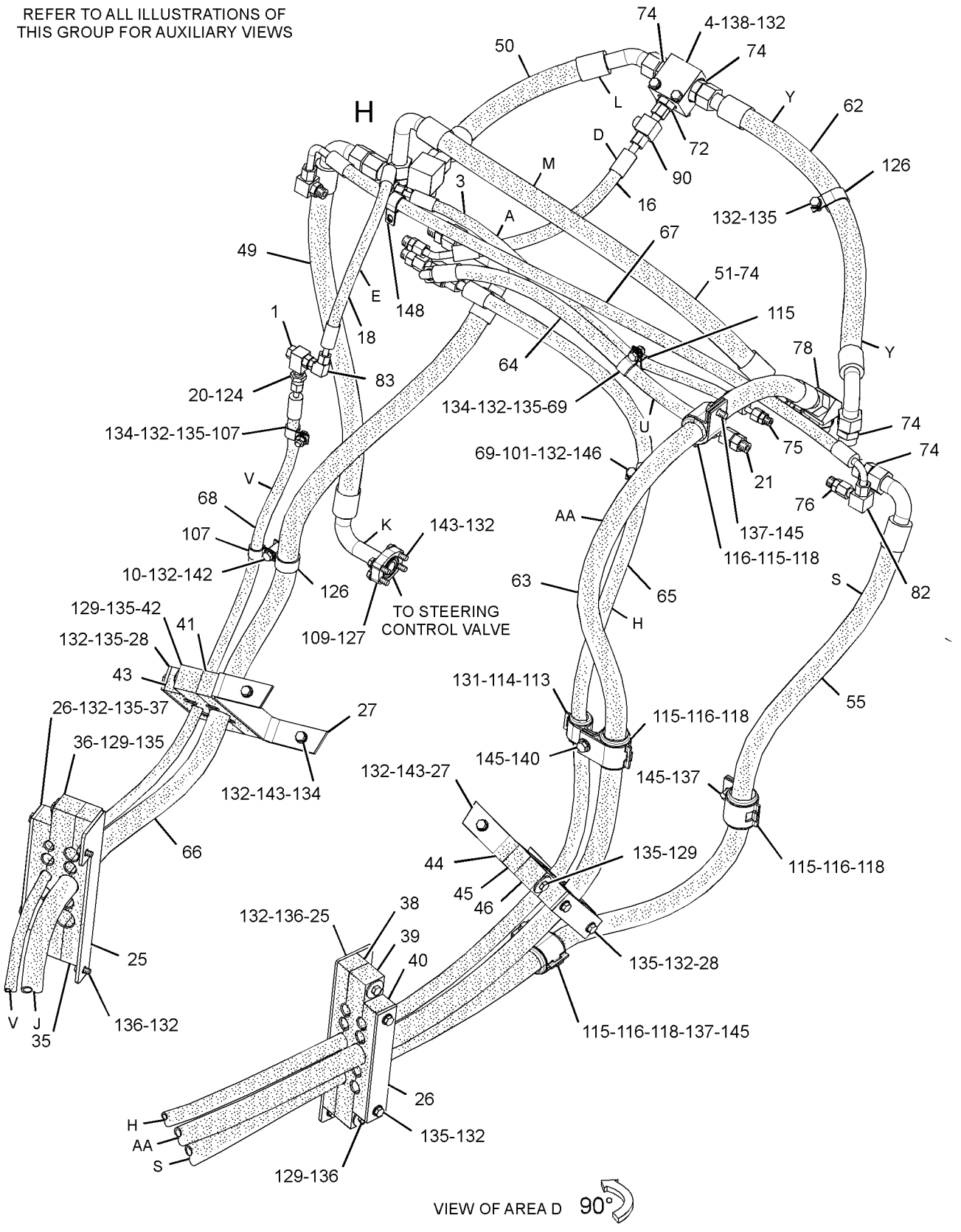

GRAPHIC #3 g02164402

268-0241 **LINES GP-PUMP** *(contd.)* **i03984531**

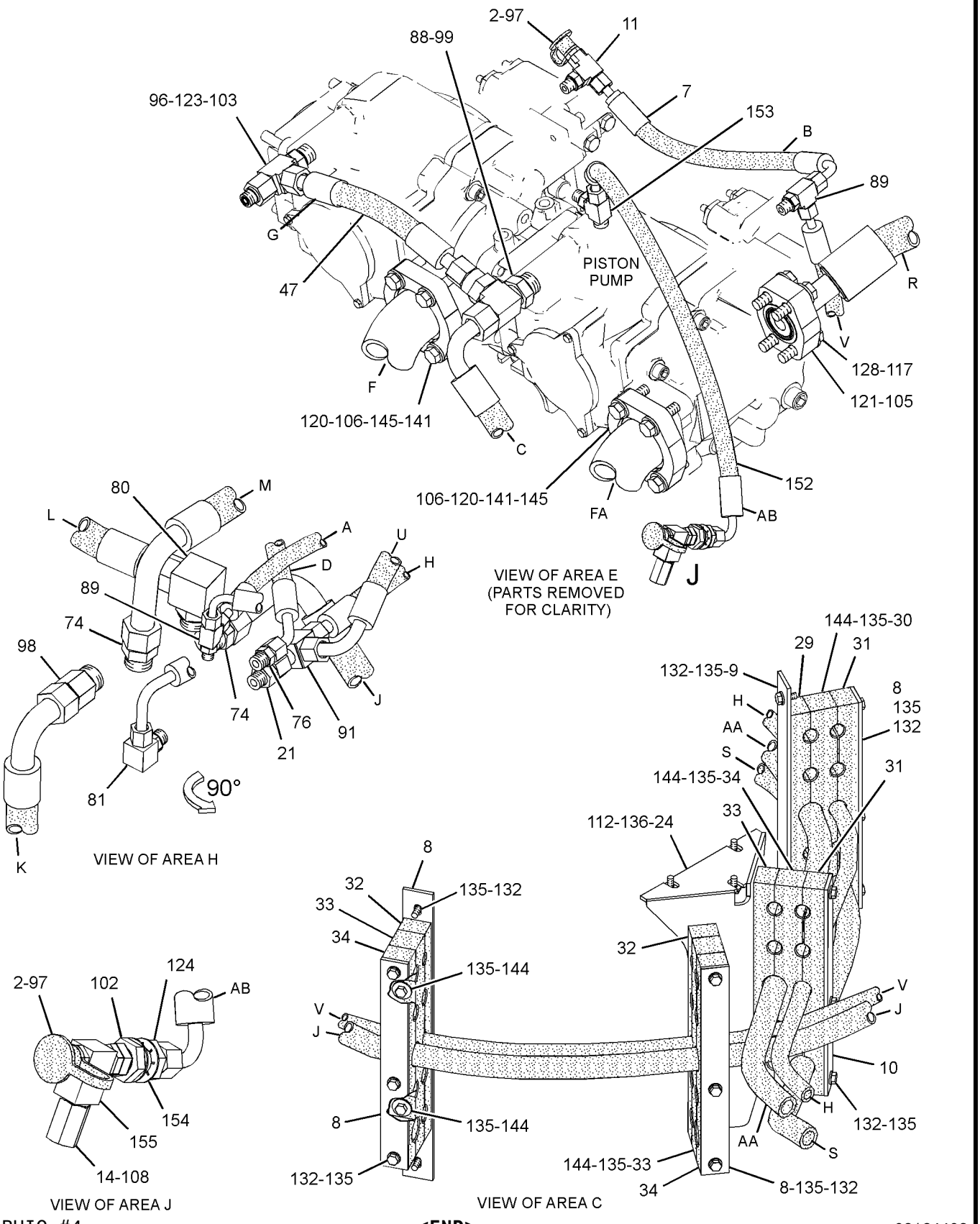

GRAPHIC #4 **<END>** g02164403

HYDRAULIC SYSTEM

268-0241 LINES GP-PUMP–IMPLEMENT

S/N: B9K306-UP

PART OF 259-9204 COMMON AR

SMCS-5057 **i03629504**

NOTE	REF NO	GRAPHIC REF	PART NUMBER	QTY	PART NAME 1 2 3 4 5 6 (PRODUCT LEVEL)	SEE PAGE
	1	3	**6R-7605**	1	VALVE-SHUTTLE	
	2	4	**6V-0852**	2	CAP-DUST	
I	3	3	**323-4119**	1	HOSE AS	
	4	3	**8X-5974**	1	MANIFOLD	
	5	1	**9D-7198**	1	JUNCTION BLOCK	
	6	1	**9M-7958**	1	CLAMP-HOSE	
I	7	4	**323-4121**	1	HOSE AS	
	8	4	**127-6299**	4	PLATE	
	9	4	**128-8813**	2	BRACKET AS	
	10	3,4	**133-6934**	1	SPACER (11X20X25-MM THK)	
	11	4	*148-8443*	1	TEE AS	
		4	**7X-2459**	1	TEE-O-RING	
		4	**3J-1907**	1	SEAL-O-RING	
		4	**6V-8397**	1	SEAL-O-RING	
	14	4	**327-5880**	1	ADAPTER	
I	15	2	**172-3820**	1	HOSE AS	
I	16	3	**179-1289**	1	HOSE AS	
	17	2	**193-9230**	1	VALVE GP-CHECK (HYDRAULIC FAN)	
		2	**6V-9746**	1	SEAL-O-RING	
		2	**3D-2824**	1	SEAL-O-RING	
I	18	3	**323-4120**	1	HOSE AS	
	19	1	**222-4734**	1	VALVE AS-SHUTOFF (PILOT SHUTOFF)	
		1	**4E-0754**	1	VALVE-SHUTOFF	
		1	**3K-0360**	1	SEAL-O-RING	
	20	3	*250-1418*	1	CONNECTOR AS	
		3	**089-7702**	1	CONNECTOR	
		3	**3J-1907**	1	SEAL-O-RING	
		3	**6V-8397**	1	SEAL-O-RING	
	21	3,4	*250-1420*	2	CONNECTOR AS	
					(EACH INCLUDES)	
		3,4	**250-1419**	1	CONNECTOR	
		3,4	**3K-0360**	1	SEAL-O-RING	
		3,4	**7J-9108**	1	SEAL-O-RING	
I	22	2	**270-3334**	2	HOSE AS	
	23	2	**270-7577**	2	JUNCTION BLOCK	
	24	4	**278-0566**	1	BRACKET AS	
	25	3	**278-0567**	2	BRACKET AS	
	26	3	**278-0569**	2	PLATE	
	27	3	**278-0570**	2	BRACKET AS	
	28	3	**278-0571**	2	PLATE	
	29	4	**281-2729**	2	BLOCK	
	30	4	**281-2730**	2	BLOCK	
	31	4	**281-2731**	2	BLOCK	
	32	4	**345-3760**	2	BLOCK	
	33	4	**345-3761**	2	BLOCK	
	34	4	**281-2734**	2	BLOCK	
	35	3	**281-2735**	1	BLOCK	
	36	3	**345-3762**	1	BLOCK	
	37	3	**345-3763**	1	BLOCK	
	38	3	**281-2738**	1	BLOCK	
	39	3	**281-2739**	1	BLOCK	
	40	3	**281-2740**	1	BLOCK	
	41	3	**281-2741**	1	BLOCK	
	42	3	**345-3764**	1	BLOCK	
	43	3	**345-3765**	1	BLOCK	
	44	3	**281-2744**	1	BLOCK	

268-0241 **LINES GP-PUMP** *(contd.)* **i03629504**

NOTE	REF NO	GRAPHIC REF	PART NUMBER	QTY	PART NAME 1 2 3 4 5 6 (PRODUCT LEVEL)	SEE PAGE
	45	3	**281-2745**	1	BLOCK	
	46	3	**281-2746**	1	BLOCK	
I	47	4	**281-2756**	1	HOSE AS	
	48	2	*282-5994*	1	PLATE AS	
M		2	**8T-3490**	1	NUT-WELD (M10X1.5-THD)	
I	49	3	**283-9963**	1	HOSE AS	
I	50	3	**283-9964**	1	HOSE AS	
I	51	3	**283-9966**	1	HOSE AS	
I	52	2	**284-7463**	1	HOSE AS	
I	53	2	**284-7464**	1	HOSE AS	
I	54	2	**286-1328**	1	HOSE AS	
I	55	3	**286-1329**	1	HOSE AS	
I	56	2	**286-3212**	1	HOSE AS	
	57	2	**298-4727**	1	TUBE AS	
	58	2	**298-4728**	1	TUBE AS	
Y	59	2	**306-5134**	1	MANIFOLD GP-CONTROL (PILOT SHUTOFF)	747
I	60	1	**307-8781**	1	HOSE AS	
I	61	2	**307-8782**	1	HOSE AS	
I	62	3	**307-8783**	1	HOSE AS	
I	63	3	**307-8785**	1	HOSE AS	
I	64	3	**307-8790**	1	HOSE AS	
I	65	3	**307-8791**	1	HOSE AS	
I	66	3	**307-8792**	1	HOSE AS	
I	67	3	**307-8794**	1	HOSE AS	
I	68	3	**323-4122**	1	HOSE AS	
	69	2,3	**067-3045**	5	CLIP	
	70	2	*148-8323*	1	CONNECTOR AS	
		2	**6V-9875**	1	CONNECTOR	
		2	**2S-4078**	1	SEAL-O-RING	
		2	**5K-9090**	1	SEAL-O-RING	
	71	2	*148-8327*	1	CONNECTOR AS	
		2	**6V-8637**	1	CONNECTOR	
		2	**3D-2824**	1	SEAL-O-RING	
		2	**6V-9746**	1	SEAL-O-RING	
	72	3	*148-8328*	1	CONNECTOR AS	
		3	**6V-8633**	1	CONNECTOR	
		3	**3D-2824**	1	SEAL-O-RING	
		3	**6V-8398**	1	SEAL-O-RING	
	73	2	*148-8334*	4	CONNECTOR AS	
					(EACH INCLUDES)	
		2	**8T-3611**	1	CONNECTOR	
		2	**2S-4078**	1	SEAL-O-RING	
		2	**6V-8400**	1	SEAL-O-RING	
	74	3,4	*148-8335*	6	CONNECTOR AS	
					(EACH INCLUDES)	
		3,4	**6V-8635**	1	CONNECTOR	
		3,4	**5K-9090**	1	SEAL-O-RING	
		3,4	**7M-8485**	1	SEAL-O-RING	
	75	3	*148-8336*	1	CONNECTOR AS	
		3	**6V-8636**	1	CONNECTOR	
		3	**3J-1907**	1	SEAL-O-RING	
		3	**6V-8397**	1	SEAL-O-RING	
	76	3,4	*148-8340*	2	CONNECTOR AS	
					(EACH INCLUDES)	
		3,4	**6V-8639**	1	CONNECTOR	
		3,4	**6V-8398**	1	SEAL-O-RING	
		3,4	**3K-0360**	1	SEAL-O-RING	
	77	2	*148-8341*	1	CONNECTOR AS	
		2	**6V-8713**	1	CONNECTOR	

268-0241 **LINES GP-PUMP** *(contd.)* **i03629504**

NOTE	REF NO	GRAPHIC REF	PART NUMBER	QTY	PART NAME 1 2 3 4 5 6 (PRODUCT LEVEL)	SEE PAGE
		2	**3D-2824**	1	SEAL-O-RING	
		2	**7J-9108**	1	SEAL-O-RING	
	78	3	*148-8355*	2	ELBOW AS	
					(EACH INCLUDES)	
		3	**6V-9005**	1	ELBOW	
		3	**5K-9090**	1	SEAL-O-RING	
		3	**7M-8485**	1	SEAL-O-RING	
	79	2	*148-8356*	1	ELBOW AS	
		2	**6V-9009**	1	ELBOW	
		2	**2S-4078**	1	SEAL-O-RING	
		2	**6V-8400**	1	SEAL-O-RING	
	80	4	*148-8357*	1	ELBOW AS	
		4	**6V-9008**	1	ELBOW	
		4	**5K-9090**	1	SEAL-O-RING	
		4	**7M-8485**	1	SEAL-O-RING	
	81	4	*148-8364*	1	ELBOW AS	
		4	**6V-8625**	1	ELBOW	
		4	**3K-0360**	1	SEAL-O-RING	
		4	**6V-8398**	1	SEAL-O-RING	
	82	3	*148-8370*	1	ELBOW AS	
		3	**6V-9851**	1	ELBOW	
		3	**6V-8398**	1	SEAL-O-RING	
	83	3	*148-8378*	1	ELBOW AS	
		3	**6V-8724**	1	ELBOW	
		3	**3J-1907**	1	SEAL-O-RING	
		3	**6V-8397**	1	SEAL-O-RING	
	84	2	*148-8390*	1	ELBOW AS	
		2	**6V-8626**	1	ELBOW	
		2	**2M-9780**	1	SEAL-O-RING	
		2	**7J-9108**	1	SEAL-O-RING	
	85	2	*148-8391*	1	ELBOW AS	
		2	**8T-8987**	1	ELBOW	
		2	**2S-4078**	1	SEAL-O-RING	
		2	**5K-9090**	1	SEAL-O-RING	
	86	2	*148-8392*	1	ELBOW AS	
		2	**6V-9853**	1	ELBOW	
		2	**6V-9746**	1	SEAL-O-RING	
	87	1	*148-8411*	1	PLUG AS	
		1	**9S-4185**	1	PLUG-O-RING	
		1	**3K-0360**	1	SEAL-O-RING	
	88	4	*148-8414*	1	REDUCER AS	
		4	**6V-8943**	1	REDUCER	
		4	**7J-9108**	1	SEAL-O-RING	
	89	4	*148-8435*	2	TEE AS	
					(EACH INCLUDES)	
		4	**6V-8781**	1	TEE-FACE SEAL	
		4	**3J-1907**	1	SEAL-O-RING	
		4	**6V-8397**	2	SEAL-O-RING	
	90	3	*148-8444*	1	TEE AS-SWIVEL	
		3	**6V-9837**	1	TEE-SWIVEL	
		3	**6V-8398**	2	SEAL-O-RING	
	91	4	*148-8446*	1	TEE AS-SWIVEL	
		4	**6V-9838**	1	TEE-SWIVEL	
		4	**7J-9108**	2	SEAL-O-RING	
	92	1	*150-4048*	1	ELBOW AS	
		1	**6V-8722**	1	ELBOW	
		1	**3K-0360**	1	SEAL-O-RING	
		1	**7J-9108**	1	SEAL-O-RING	
	93	2	*153-6232*	1	ELBOW AS	

268-0241 **LINES GP-PUMP** *(contd.)* **i03629504**

NOTE	REF NO	GRAPHIC REF	PART NUMBER	QTY	PART NAME 1 2 3 4 5 6 (PRODUCT LEVEL)	SEE PAGE
		2	**8T-0120**	1	ELBOW	
		2	**3D-2824**	1	SEAL-O-RING	
		2	**7J-9108**	1	SEAL-O-RING	
	94	2	*153-6238*	1	ELBOW AS	
		2	**6V-9006**	1	ELBOW	
		2	**2S-4078**	1	SEAL-O-RING	
		2	**6V-8400**	1	SEAL-O-RING	
	95	2	*153-6259*	1	TEE AS	
		2	**6V-8777**	1	TEE-FACE SEAL	
		2	**3D-2824**	1	SEAL-O-RING	
		2	**6V-9746**	2	SEAL-O-RING	
	96	4	*156-4282*	1	REDUCER AS	
		4	**6V-8938**	1	REDUCER-O-RING	
		4	**6V-8397**	1	SEAL-O-RING	
	97	4	*164-5567*	2	COUPLER AS-QUICK DISCONNECT (MALE) (EACH INCLUDES)	
		4	**6V-3965**	1	FITTING (QUICK DISCONNECT)	
		4	**214-7568**	1	SEAL-O-RING	
	98	4	*164-5594*	1	CONNECTOR AS	
		4	**8C-5723**	1	CONNECTOR	
		4	**5K-9090**	1	SEAL-O-RING	
		4	**7M-8485**	1	SEAL-O-RING	
	99	4	*164-9904*	1	TEE AS	
		4	**122-9088**	1	TEE	
		4	**2M-9780**	1	SEAL-O-RING	
		4	**6V-9746**	2	SEAL-O-RING	
	100	2	*167-1795*	1	ELBOW AS	
		2	**8T-3491**	1	ELBOW	
		2	**3D-2824**	1	SEAL-O-RING	
	101	3	**179-0469**	1	SPACER (11X20X40-MM THK)	
	102	4	*149-5452*	1	UNION AS	
		4	**6V-8397**	2	SEAL-O-RING	
		4	**6V-8994**	1	UNION	
	103	4	*212-1336*	1	TEE AS	
		4	**6V-8783**	1	TEE-FACE SEAL	
		4	**2M-9780**	1	SEAL-O-RING	
		4	**7J-9108**	2	SEAL-O-RING	
	104	2	*241-6185*	1	PLUG AS	
		2	**5P-9436**	1	PLUG	
		2	**3D-2824**	1	SEAL-O-RING	
	105	4	**1P-3704**	1	SEAL-RECTANGULAR	
	106	2,4	**1P-4584**	8	FLANGE-HALF	
	107	2,3	**8M-2770**	5	CLIP	
	108	4	**3J-1907**	1	SEAL-O-RING	
	109	3	**4J-0520**	1	SEAL-O-RING	
	110	2	**4S-4455**	3	CLIP	
	111	2	**5K-9090**	2	SEAL-O-RING	
	112	4	**5P-1075**	3	WASHER-HARD (10.2X22.5X3-MM THK)	
	113	2,3	**5P-7464**	2	CLIP (SLOT)	
	114	2,3	**5P-7465**	2	CLIP (TAB)	
	115	3	**5P-7468**	4	CLIP (SLOT)	
	116	3	**5P-7469**	4	CLIP (TAB)	
	117	4	**5P-8246**	4	WASHER-HARD (15.5X29X3-MM THK)	
	118	3	**5P-8444**	4	GROMMET	
	119	2	**5S-2201**	1	BOLT-SOCKET HEAD (5/8-11X1.25-IN)	
	120	2,4	**6J-2680**	4	SEAL-O-RING	
	121	4	**6V-0401**	2	FLANGE-HALF	
C	122	2	**122-3608**	2	CLIP	
	123	2,4	**6V-8555**	1	NUT-FACE SEAL (1-14-THD)	

268-0241 **LINES GP-PUMP** *(contd.)* **i03629504**

NOTE	REF NO	GRAPHIC REF	PART NUMBER	QTY	PART NAME 1 2 3 4 5 6 (PRODUCT LEVEL)	SEE PAGE
	124	3,4	**6V-9168**	2	NUT (11/16-16-THD)	
	125	2	**7D-1553**	6	CLIP	
	126	3	**7D-7233**	2	CLIP	
	127	3	**8C-3206**	2	FLANGE-HALF	
M	128	4	**8C-6854**	4	BOLT (M14X2X50-MM)	
	129	3	**8D-7185**	8	WASHER (11.9X38.1X3-MM THK)	
	130	2	**8R-0721**	1	SPACER (11X16X35-MM THK)	
	131	3	**8T-2920**	2	GROMMET	
C	132	1,2,3, 4	**8T-4121**	70	WASHER-HARD (11X21X2.5-MM THK)	
	133	2	**8T-4122**	1	WASHER-HARD (17X32X3.5-MM THK)	
CM	134	2,3	**8T-4133**	8	NUT (M10X1.5-THD)	
CM	135	2,3,4	**8T-4136**	45	BOLT (M10X1.5X25-MM)	
M	136	2,3,4	**8T-4137**	12	BOLT (M10X1.5X20-MM)	
M	137	3	**8T-4139**	3	BOLT (M12X1.75X30-MM)	
M	138	2,3	**8T-4172**	6	BOLT (M10X1.5X80-MM)	
M	139	2	**8T-4178**	2	BOLT (M10X1.5X90-MM)	
M	140	2,3	**8T-4183**	2	BOLT (M12X1.75X40-MM)	
M	141	2,4	**8T-4184**	16	BOLT (M12X1.75X45-MM)	
M	142	3	**8T-4185**	1	BOLT (M10X1.5X50-MM)	
M	143	3	**8T-4196**	8	BOLT (M10X1.5X35-MM)	
	144	4	**8T-4222**	8	WASHER-PLATED (11X32X2.5-MM THK)	
	145	2,3,4	**8T-4223**	21	WASHER-HARD (13.5X25.5X3-MM THK)	
M	146	3	**8T-5005**	1	BOLT (M10X1.5X70-MM)	
M	147	1,2	**8T-6466**	3	BOLT (M10X1.5X60-MM)	
	148	1,3	**9X-8250**	2	CLIP	
E	149	1	**136-1955**		HOSE (42-CM)	
CM	150	2	**8T-4195**	2	BOLT (M10X1.5X30-MM)	
C	151	2	**5T-6553**	1	PLATE	
I	152	4	**334-5504**	1	HOSE AS	
	153	4	*148-8439*	1	TEE AS	
		4	**3J-1907**	1	SEAL-O-RING	
		4	**6V-8397**	2	SEAL-O-RING	
		4	**6V-8774**	1	TEE	
	154	4	**6V-8367**	2	LOCKWASHER	
	155	4	**5I-4376**	1	FITTING	

C-CHANGE FROM PREVIOUS TYPE
E-ORDER BY THE CENTIMETER
I-REFER TO HYDRAULIC INFORMATION SYSTEM
M-METRIC PART
Y-SEPARATE ILLUSTRATION

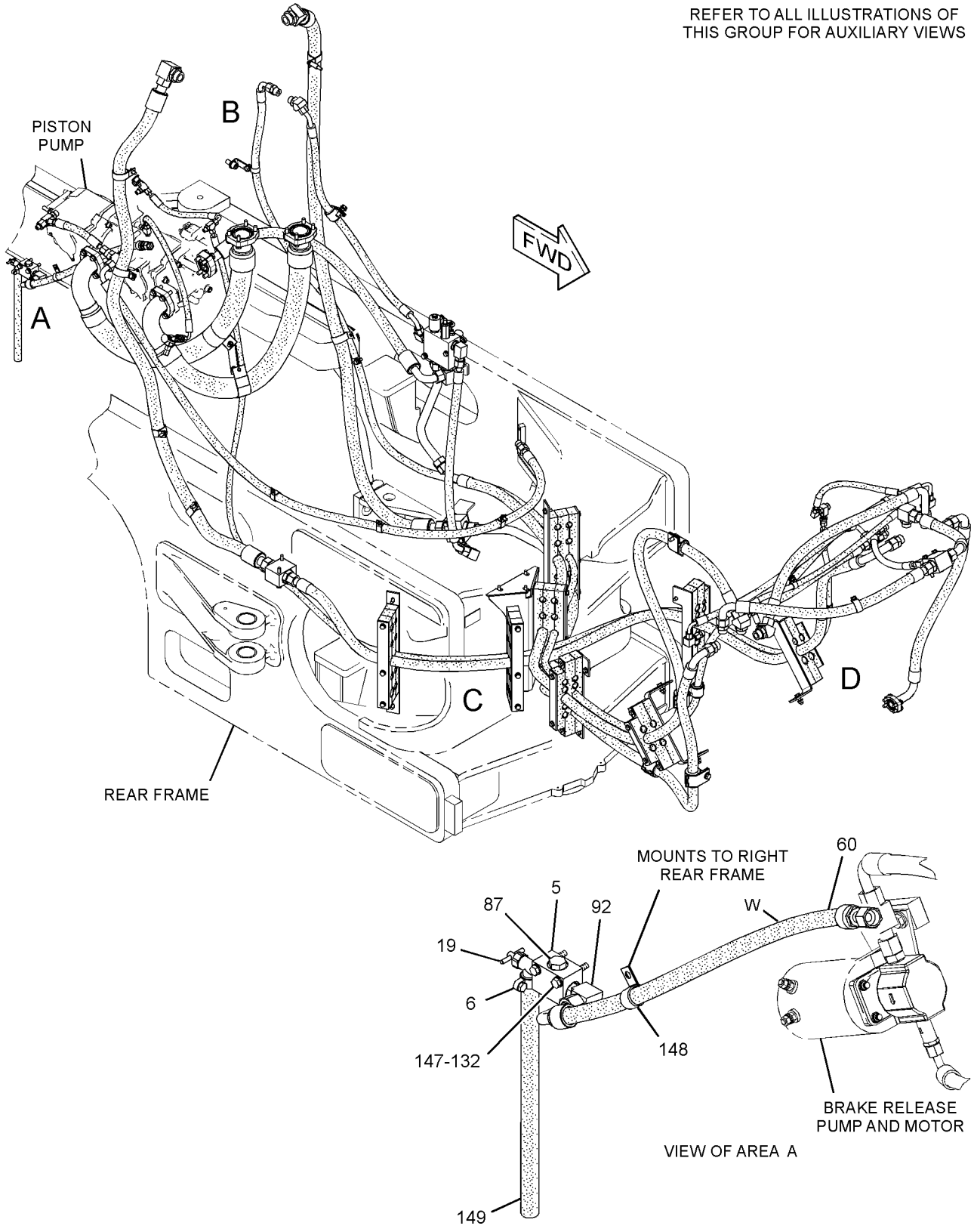

GRAPHIC #1 g01952782

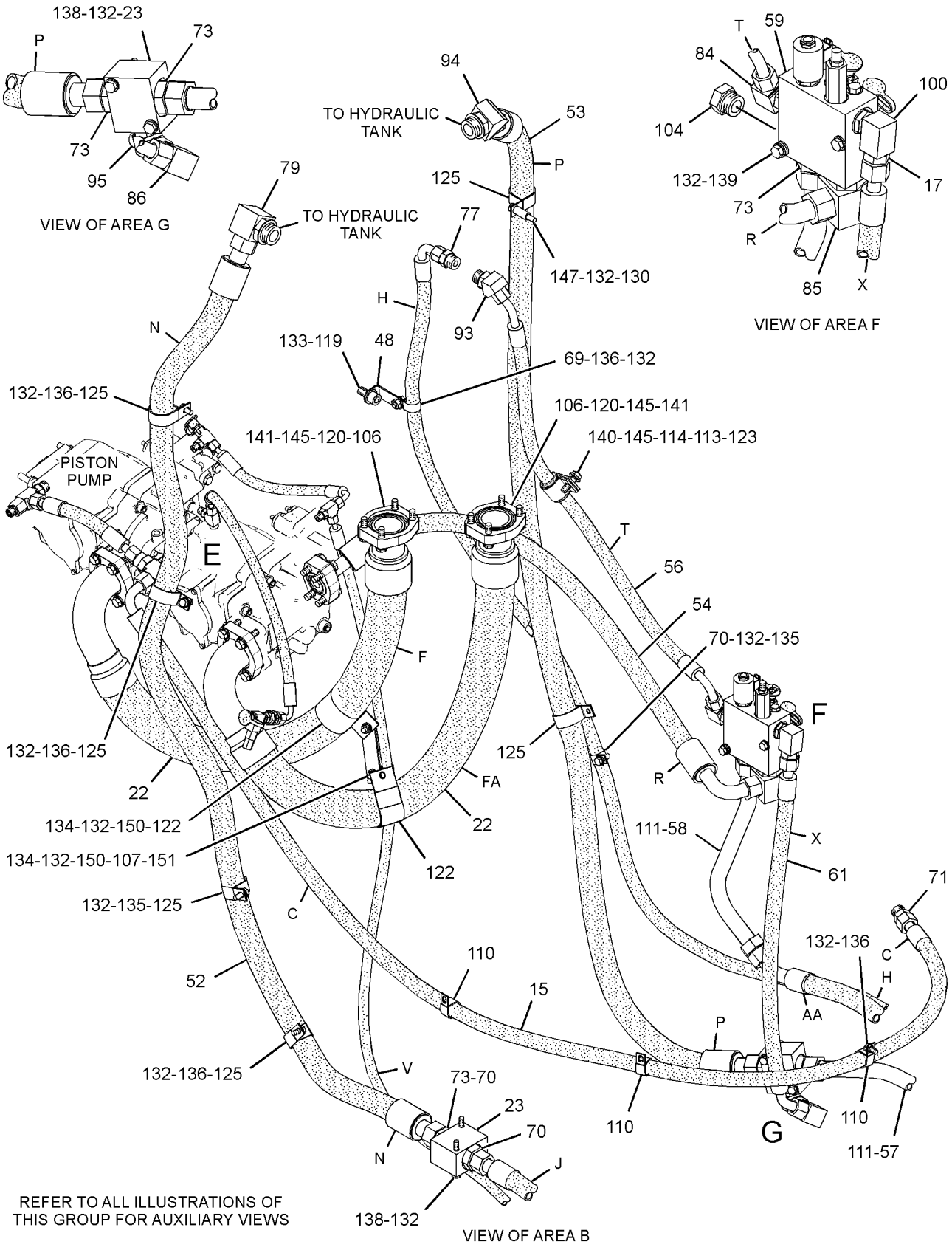

GRAPHIC #2

g01952783

268-0241 **LINES GP-PUMP** *(contd.)* **i03629504**

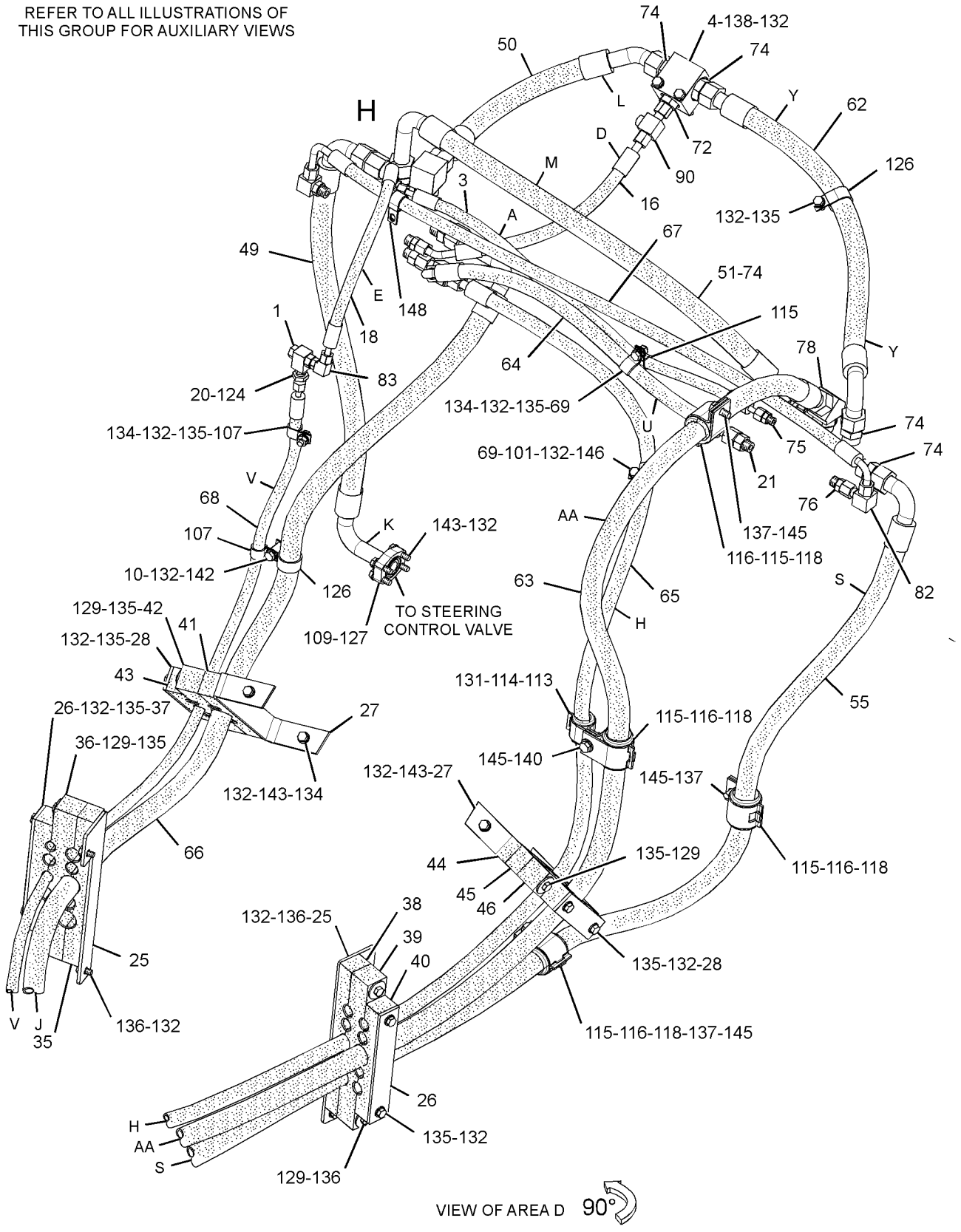

GRAPHIC #3 g02161669

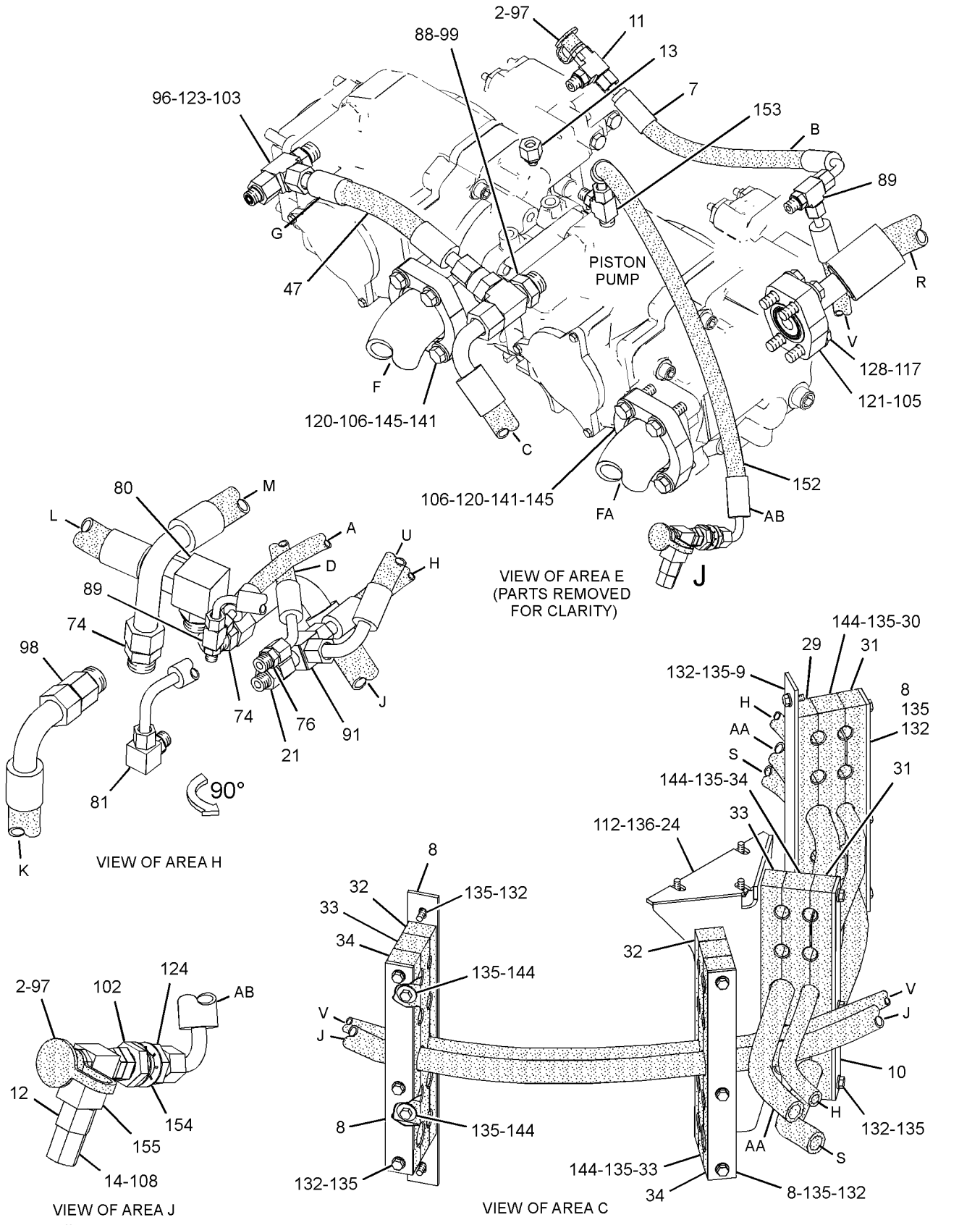

GRAPHIC #4 **<END>** g01952844

HYDRAULIC SYSTEM

125-5737 LINES GP-RIPPER

S/N: B9K1-UP

PART OF 278-3509 RIPPER AR

SMCS-5057 **i03493721**

NOTE	REF NO	GRAPHIC REF	PART NUMBER	QTY	PART NAME 1 2 3 4 5 6 (PRODUCT LEVEL)	SEE PAGE
I	1	1	**8E-0083**	1	HOSE AS	
I	2	1	**8W-6843**	1	HOSE AS	
I	3	1	**226-5558**	1	HOSE AS	
I	4	1	**226-5559**	1	HOSE AS	
	5	1	*148-8346*	2	ELBOW AS	
					(EACH INCLUDES)	
		1	**3K-0360**	1	SEAL-O-RING	
		1	**6V-8398**	1	SEAL-O-RING	
		1	**8T-1686**	1	ELBOW	
	6	1	*148-8364*	2	ELBOW AS	
					(EACH INCLUDES)	
		1	**3K-0360**	1	SEAL-O-RING	
		1	**6V-8398**	1	SEAL-O-RING	
		1	**6V-8625**	1	ELBOW	
	7	1	**3G-8047**	5	GROMMET	
	8	1	**3G-8054**	5	CLIP (TAB)	
	9	1	**3G-8057**	5	CLIP (SLOT)	
	10	1	**8T-4121**	17	WASHER-HARD (11X21X2.5-MM THK)	
M	11	1	**8T-4133**	7	NUT (M10X1.5-THD)	
M	12	1	**8T-4136**	9	BOLT (M10X1.5X25-MM)	
M	13	1	**8T-4196**	1	BOLT (M10X1.5X35-MM)	

I-REFER TO HYDRAULIC INFORMATION SYSTEM
M-METRIC PART

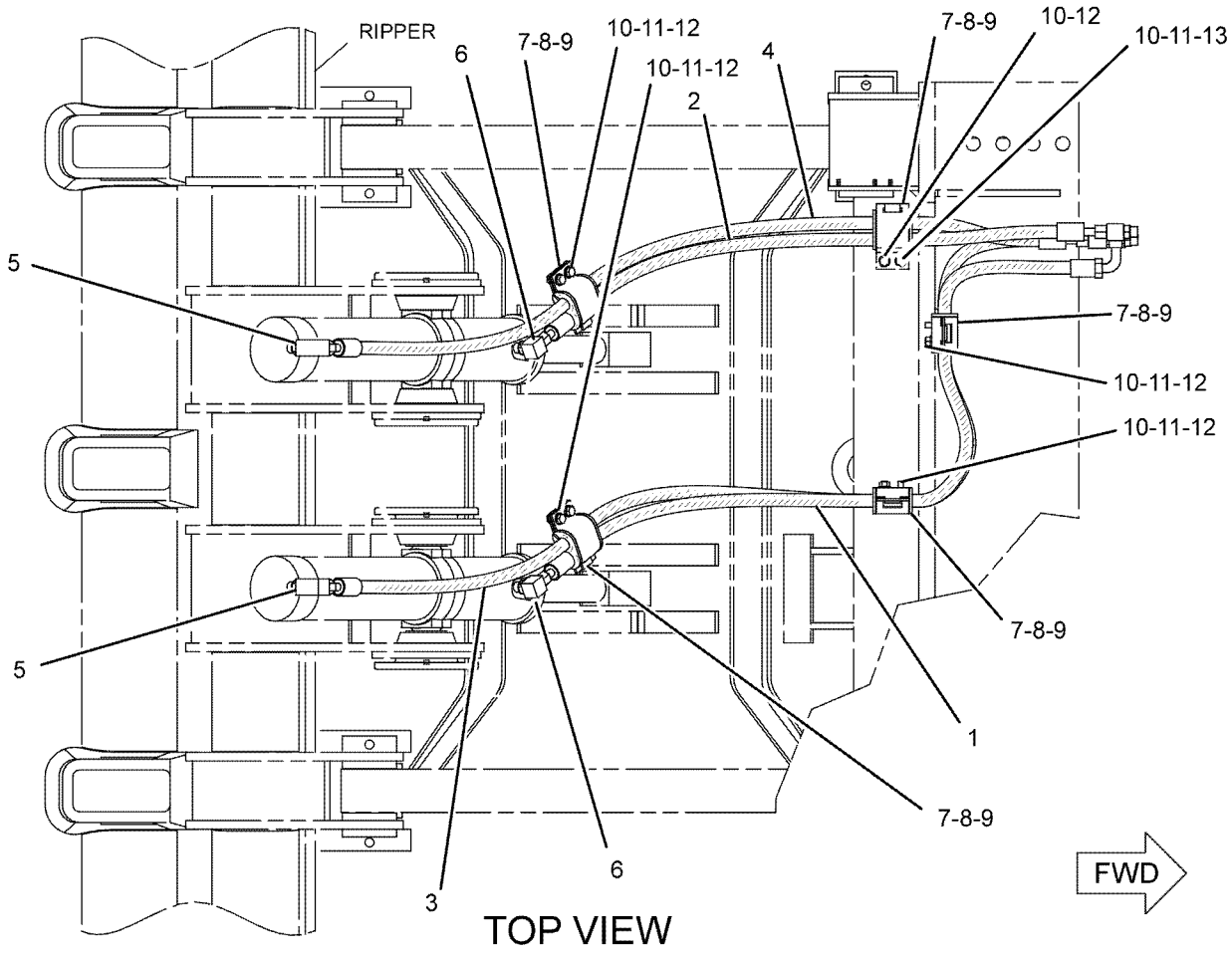

TOP VIEW

GRAPHIC #1 **<END>** g01023652

HYDRAULIC SYSTEM

226-1742 LINES GP-RIPPER

S/N: B9K1-UP

PART OF 259-9204 COMMON AR

SMCS-5057 **i02831624**

NOTE	REF NO	GRAPHIC REF	PART NUMBER	QTY	PART NAME 1 2 3 4 5 6 (PRODUCT LEVEL)	SEE PAGE
	1	1	**126-0208**	1	SPACER (10.31X17.45X50.8-MM THK)	
J	2	1	**140-0357**	1	VALVE GP-SEQUENCE (RIPPER CYLINDER)	
	3	1	**202-8650**	1	CONNECTOR	
I	4	1	**273-1757**	1	HOSE AS	
I	5	1	**282-5963**	1	HOSE AS	
I	6	1	**307-8786**	1	HOSE AS	
	7	1	**308-8674**	1	TUBE AS	
	8	1	**308-8675**	1	TUBE AS	
	9	1	*148-8342*	2	CONNECTOR AS	
					(EACH INCLUDES)	
		1	**6V-8632**	1	CONNECTOR	
		1	**3K-0360**	1	SEAL-O-RING	
		1	**7J-9108**	1	SEAL-O-RING	
	10	1	*148-8359*	1	ELBOW AS	
		1	**6V-9877**	1	ELBOW	
		1	**3K-0360**	1	SEAL-O-RING	
		1	**6V-9746**	1	SEAL-O-RING	
	11	1	*148-8378*	1	ELBOW AS	
		1	**6V-8724**	1	ELBOW	
		1	**3J-1907**	1	SEAL-O-RING	
		1	**6V-8397**	1	SEAL-O-RING	
	12	1	*148-8414*	1	REDUCER AS	
		1	**6V-8943**	1	REDUCER	
		1	**7J-9108**	1	SEAL-O-RING	
	13	1	*148-8428*	1	TEE AS	
		1	**6V-8782**	1	TEE	
		1	**3K-0360**	1	SEAL-O-RING	
		1	**6V-8398**	2	SEAL-O-RING	
	14	1	*148-8446*	1	TEE AS-SWIVEL	
		1	**6V-9838**	1	TEE-SWIVEL	
		1	**7J-9108**	2	SEAL-O-RING	
	15	1	*150-4048*	1	ELBOW AS	
		1	**6V-8722**	1	ELBOW	
		1	**3K-0360**	1	SEAL-O-RING	
		1	**7J-9108**	1	SEAL-O-RING	
	16	1	**205-8125**	7	CLIP	
	17	1	**1S-0994**	5	CLIP	
	18	1	**3K-0360**	1	SEAL-O-RING	
	19	1	**6D-4246**	1	CLIP	
	20	1	**6V-9746**	1	SEAL-O-RING	
	21	1	**6V-9830**	2	CAP AS	
	22	1	**6V-9831**	2	CAP AS	
	23	1	**7J-9108**	2	SEAL-O-RING	
	24	1	**8T-4121**	8	WASHER-HARD (11X21X2.5-MM THK)	
M	25	1	**8T-4133**	2	NUT (M10X1.5-THD)	
M	26	1	**8T-4137**	3	BOLT (M10X1.5X20-MM)	
M	27	1	**8T-4172**	1	BOLT (M10X1.5X80-MM)	
M	28	1	**8T-4178**	2	BOLT (M10X1.5X90-MM)	
	29	1	**9M-8406**	1	CLIP	
					AVAILABLE REPAIR KIT(S):	
J			**6E-3579**		KIT-SEAL (SEQUENCE VALVE)	

I-REFER TO HYDRAULIC INFORMATION SYSTEM
J-(KIT MARKED J SERVICES PART(S) MARKED J)
M-METRIC PART

226-1742 **LINES GP-RIPPER** *(contd.)* **i02831624**

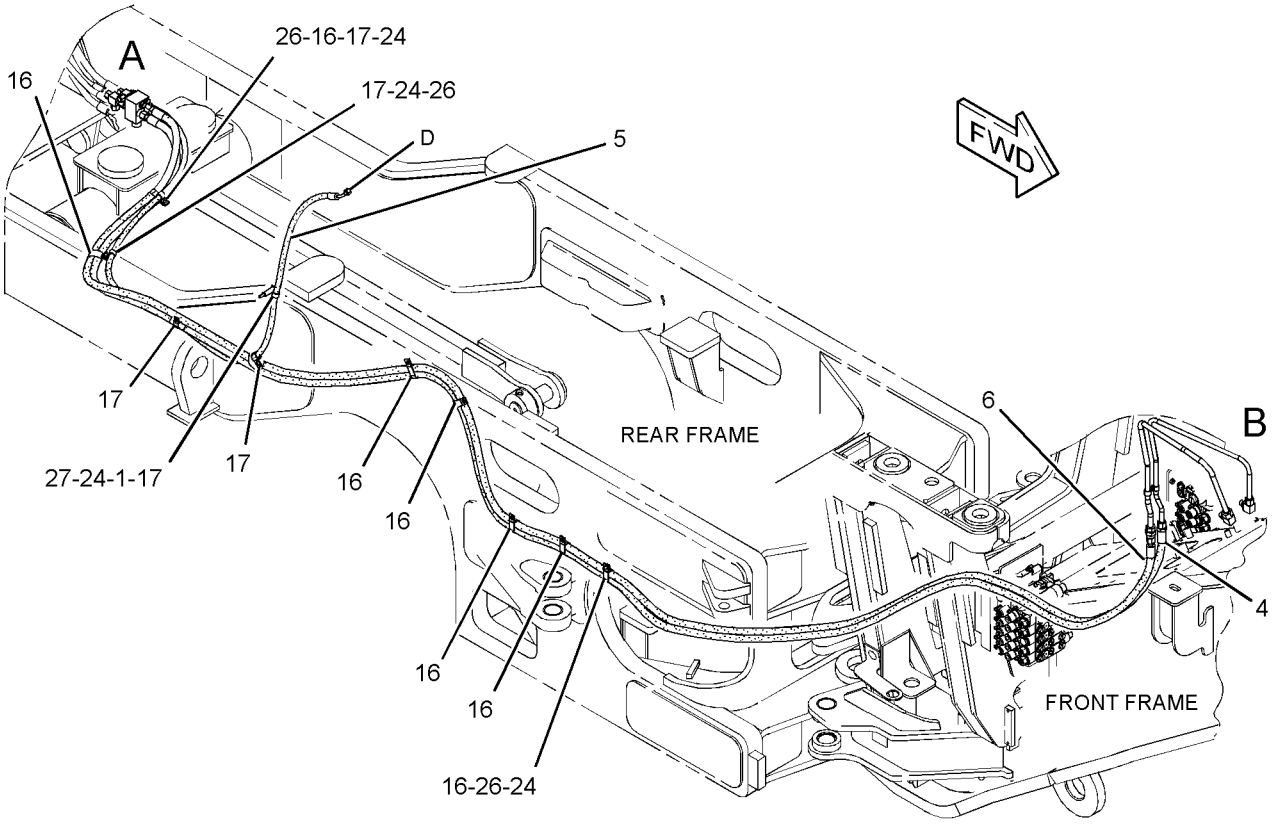

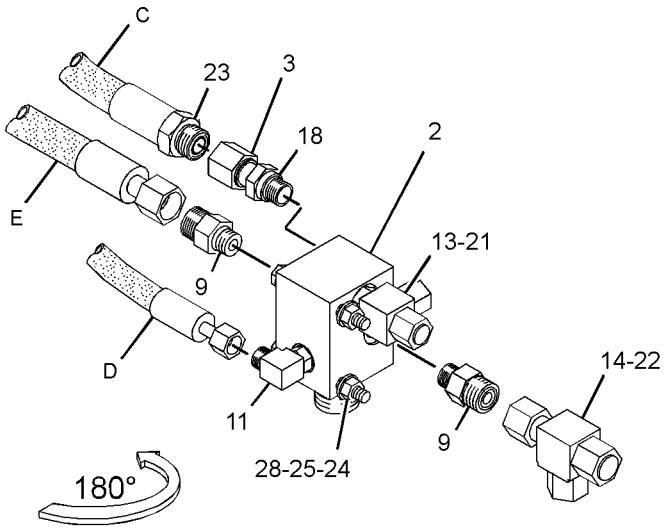

VIEW OF AREA A
(EXPLODED)

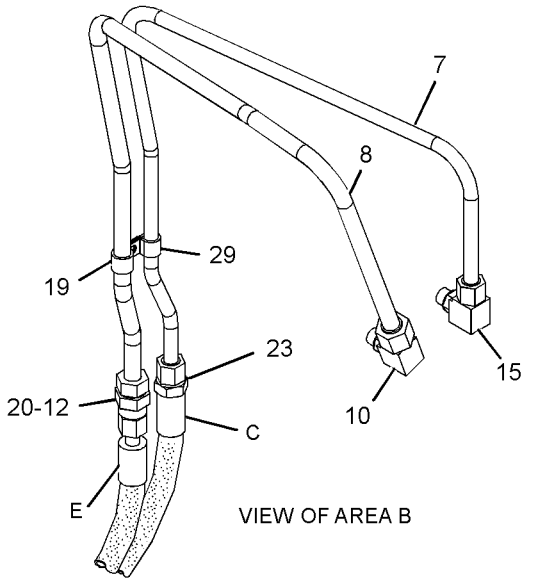

VIEW OF AREA B

GRAPHIC #1 **<END>** g01420001

HYDRAULIC SYSTEM

268-0244 LINES GP-SECONDARY STEERING

S/N: B9K1-UP

PART OF 259-9204 COMMON AR

SMCS-4304 **i03367842**

NOTE	REF NO	GRAPHIC REF	PART NUMBER	QTY	PART NAME 1 2 3 4 5 6 (PRODUCT LEVEL)	SEE PAGE
I	1	1	**8W-9802**	1	HOSE AS	
Y	2	1	**117-5099**	1	VALVE GP-UNLOADING (SECONDARY STEERING)	820
I	3	1	**246-7846**	1	HOSE AS	
I	4	1	**270-3333**	1	HOSE AS	
I	5	1	**335-9194**	1	HOSE AS	
	6	1	*148-8440*	1	TEE AS	
		1	**3D-2824**	1	SEAL-O-RING	
		1	**6V-9746**	1	SEAL-O-RING	
		1	**8C-0569**	1	TEE-O-RING	
	7	1	*148-8347*	2	ELBOW AS	
					(EACH INCLUDES)	
		1	**6V-9007**	1	ELBOW	
		1	**3D-2824**	1	SEAL-O-RING	
		1	**6V-9746**	1	SEAL-O-RING	
	8	1	*148-8353*	1	ELBOW AS	
		1	**6V-9001**	1	ELBOW	
		1	**3J-1907**	1	SEAL-O-RING	
		1	**6V-8397**	1	SEAL-O-RING	
	9	1	*153-6237*	1	ELBOW AS	
		1	**6V-9004**	1	ELBOW	
		1	**3D-2824**	1	SEAL-O-RING	
		1	**6V-9746**	1	SEAL-O-RING	
	10	1	**1P-4579**	4	FLANGE-HALF	
	11	1	**1S-0994**	1	CLIP	
	12	1	**4J-0520**	1	SEAL-O-RING	
	13	1	**4J-0524**	2	SEAL-O-RING	
	14	1	**5P-2369**	1	CLIP	
	15	1	**5P-7470**	2	CLIP (SLOT)	
	16	1	**5P-7471**	2	CLIP (TAB)	
	17	1	**6V-1875**	2	GROMMET	
	18	1	**8T-4121**	6	WASHER-HARD (11X21X2.5-MM THK)	
M	19	1	**8T-4133**	1	NUT (M10X1.5-THD)	
M	20	1	**8T-4136**	1	BOLT (M10X1.5X25-MM)	
M	22	1	**8T-4172**	4	BOLT (M10X1.5X80-MM)	
M	23	1	**8T-4183**	10	BOLT (M12X1.75X40-MM)	
	24	1	**8T-4223**	10	WASHER-HARD (13.5X25.5X3-MM THK)	
	25	1	**6V-0852**	1	CAP-DUST	
	26	1	*164-5567*	1	COUPLER AS-QUICK DISCONNECT (MALE)	
		1	**214-7568**	1	SEAL-O-RING	
		1	**6V-3965**	1	FITTING (QUICK DISCONNECT)	

I-REFER TO HYDRAULIC INFORMATION SYSTEM
M-METRIC PART
Y-SEPARATE ILLUSTRATION

268-0244 **LINES GP-SECONDARY STEERING** *(contd.)* **i03367842**

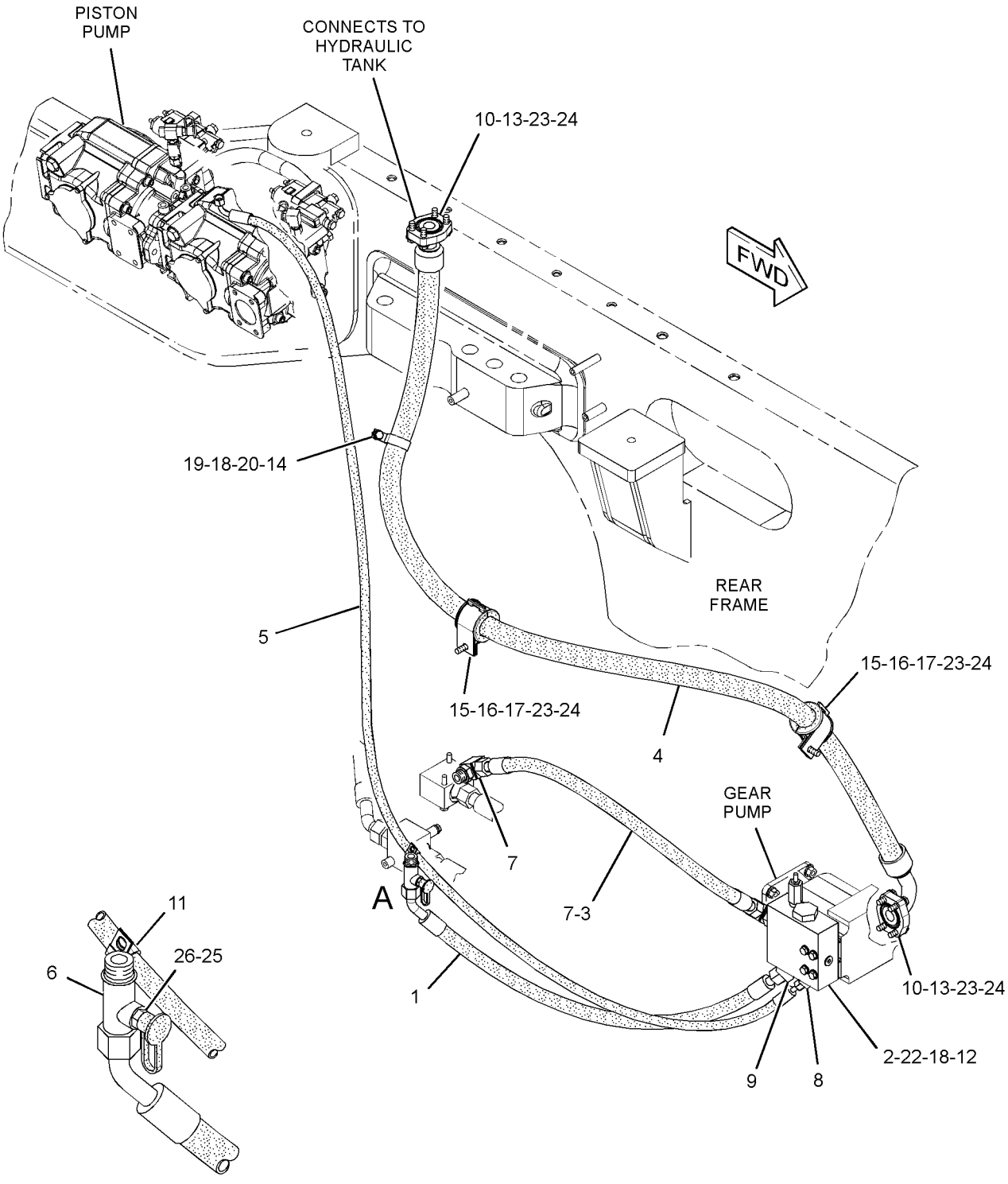

VIEW OF AREA A

GRAPHIC #1 **<END>** g01934214

HYDRAULIC SYSTEM

344-1108 LINES GP-STEERING

S/N: B9K336-UP

PART OF 259-9204 COMMON AR

SMCS-4304 **i03630168**

NOTE	REF NO	GRAPHIC REF	PART NUMBER	QTY	PART NAME 1 2 3 4 5 6 (PRODUCT LEVEL)	SEE PAGE
M	1	3	**8T-3653**	4	BOLT (M14X2X80-MM)	
	2	2	**133-6934**	1	SPACER (11X20X25-MM THK)	
	3	1	*150-4039*	1	TEE AS	
		1	**127-2141**	1	TEE-SWIVEL-ORFS	
		1	**7J-9108**	1	SEAL-O-RING	
Y	4	2	**254-3415**	1	MANIFOLD GP-CONTROL (STEERING)	743
	5	3	**255-3631**	1	VALVE GP-CHECK	
	6	3	**269-5923**	1	TUBE AS	
	7	3	**269-5925**	1	TUBE AS	
	8	3	**269-5926**	1	TUBE AS	
	9	3	**270-7577**	1	JUNCTION BLOCK	
	10	2	**275-8348**	1	PLATE	
I	11	1	**275-8363**	1	HOSE AS	
I	12	2	**283-9956**	1	HOSE AS	
	13	2	**298-4726**	1	TUBE AS	
I	14	1	**298-4742**	1	HOSE AS	
I	15	1	**298-4743**	1	HOSE AS	
I	16	1	**298-4745**	2	HOSE AS	
I	17	1	**298-4746**	2	HOSE AS	
	18	2,3	**298-4760**	1	PLATE	
Y	19	3	**308-0937**	1	VALVE GP-STEERING	817
	20	3	*309-5127*	2	ELBOW AS	
					(EACH INCLUDES)	
		3	**152-3411**	1	ELBOW	
		3	**6V-8397**	1	SEAL-O-RING	
I	21	3	**315-5716**	1	HOSE AS	
	22	3	**335-6606**	1	ADAPTER	
	23	3	*341-0118*	1	CONNECTOR AS	
		3	**341-0117**	1	CONNECTOR	
		3	**6V-8397**	1	SEAL-O-RING	
		3	**8T-7877**	1	SEAL-O-RING	
	24	3	**344-1182**	1	TUBE AS	
I	25	3	**344-1989**	1	HOSE AS	
I	26	3	**344-2003**	1	HOSE AS	
I	27	3	**344-2174**	1	HOSE AS	
	28	3	**344-2744**	1	PLATE AS	
	29	3	*345-3920*	1	CONNECTOR AS	
		3	**345-3919**	1	CONNECTOR	
		3	**3K-0360**	1	SEAL-O-RING	
		3	**6V-8398**	1	SEAL-O-RING	
	30	3	**067-3045**	2	CLIP	
	31	1	*148-8313*	1	ADAPTER AS	
		1	**5P-6944**	1	ADAPTER	
		1	**3K-0360**	1	SEAL-O-RING	
	32	3	*148-8318*	4	CONNECTOR AS	
					(EACH INCLUDES)	
		3	**6V-8634**	1	CONNECTOR	
		3	**3K-0360**	1	SEAL-O-RING	
		3	**6V-8397**	1	SEAL-O-RING	
	33	3	*148-8323*	1	CONNECTOR AS	
		3	**6V-9875**	1	CONNECTOR	
		3	**2S-4078**	1	SEAL-O-RING	
		3	**5K-9090**	1	SEAL-O-RING	
	34	1	*148-8328*	2	CONNECTOR AS	
					(EACH INCLUDES)	
		1	**6V-8633**	1	CONNECTOR	

HYDRAULIC SYSTEM

344-1108 **LINES GP-STEERING** *(contd.)* **i03630168**

NOTE	REF NO	GRAPHIC REF	PART NUMBER	QTY	PART NAME 1 2 3 4 5 6 (PRODUCT LEVEL)	SEE PAGE
		1	**3D-2824**	1	SEAL-O-RING	
		1	**6V-8398**	1	SEAL-O-RING	
	35	3	*148-8336*	2	CONNECTOR AS	
					(EACH INCLUDES)	
		3	**6V-8636**	1	CONNECTOR	
		3	**3J-1907**	1	SEAL-O-RING	
		3	**6V-8397**	1	SEAL-O-RING	
	36	2	*148-8340*	1	CONNECTOR AS	
		2	**6V-8639**	1	CONNECTOR	
		2	**3K-0360**	1	SEAL-O-RING	
		2	**6V-8398**	1	SEAL-O-RING	
	37	1	*148-8341*	2	CONNECTOR AS	
					(EACH INCLUDES)	
		1	**6V-8713**	1	CONNECTOR	
		1	**3D-2824**	1	SEAL-O-RING	
		1	**7J-9108**	1	SEAL-O-RING	
	38	3	*148-8342*	1	CONNECTOR AS	
		3	**6V-8632**	1	CONNECTOR	
		3	**3K-0360**	1	SEAL-O-RING	
		3	**7J-9108**	1	SEAL-O-RING	
	39	2	*148-8361*	1	ELBOW AS	
		2	**6V-9200**	1	ELBOW	
		2	**3J-7354**	1	SEAL-O-RING	
		2	**6V-8397**	1	SEAL-O-RING	
	40	3	*148-8367*	2	ELBOW AS	
					(EACH INCLUDES)	
		3	**6V-9850**	1	ELBOW	
		3	**6V-8397**	1	SEAL-O-RING	
	41	3	*148-8374*	1	ELBOW AS	
		3	**6V-8723**	1	ELBOW	
		3	**3K-0360**	1	SEAL-O-RING	
		3	**6V-8397**	1	SEAL-O-RING	
	42	2,3	*148-8378*	3	ELBOW AS	
					(EACH INCLUDES)	
		2,3	**6V-8724**	1	ELBOW	
		2,3	**3J-1907**	1	SEAL-O-RING	
		2,3	**6V-8397**	1	SEAL-O-RING	
	43	1,3	*148-8393*	3	ELBOW AS	
					(EACH INCLUDES)	
		1,3	**6V-9852**	1	ELBOW	
		1,3	**7J-9108**	1	SEAL-O-RING	
	44	1	*148-8416*	2	REDUCER AS	
					(EACH INCLUDES)	
		1	**6V-8939**	1	REDUCER-O-RING	
		1	**6V-8398**	1	SEAL-O-RING	
	45	2	*148-8444*	1	TEE AS-SWIVEL	
		2	**6V-9837**	1	TEE-SWIVEL	
		2	**6V-8398**	2	SEAL-O-RING	
	46	3	*150-3028*	1	ELBOW AS	
		3	**6V-9343**	1	ELBOW	
		3	**3D-2824**	1	SEAL-O-RING	
		3	**6V-8397**	1	SEAL-O-RING	
	47	3	*150-4048*	1	ELBOW AS	
		3	**6V-8722**	1	ELBOW	
		3	**3K-0360**	1	SEAL-O-RING	
		3	**7J-9108**	1	SEAL-O-RING	
	48	3	*164-4058*	1	REDUCER AS	
		3	**6V-8948**	1	REDUCER	
		3	**5K-9090**	1	SEAL-O-RING	

344-1108 **LINES GP-STEERING** *(contd.)* **i03630168**

NOTE	REF NO	GRAPHIC REF	PART NUMBER	QTY	PART NAME 1 2 3 4 5 6 (PRODUCT LEVEL)	SEE PAGE
	49	1	*164-6860*	2	TEE AS	
					(EACH INCLUDES)	
		1	**6V-9350**	1	TEE-BULKHEAD	
		1	**7J-9108**	3	SEAL-O-RING	
	50	3	**185-4026**	1	VALVE GP-CHECK	
	51	3	**1P-3704**	2	SEAL-RECTANGULAR	
Y	52	3	**345-4472**	1	VALVE GP-PRESSURE REDUCING	808
	53	2	**4I-7889**	1	SPACER (11X25X45-MM THK)	
	54	3	**4J-0520**	1	SEAL-O-RING	
	55	1,2	**5P-7464**	8	CLIP (SLOT)	
	56	1,2	**5P-7465**	8	CLIP (TAB)	
	57	2	**5P-7468**	1	CLIP (SLOT)	
	58	2	**5P-7469**	1	CLIP (TAB)	
	59	3	**5P-8246**	4	WASHER-HARD (15.5X29X3-MM THK)	
	60	2	**5P-8444**	1	GROMMET	
	61	3	**6V-0401**	2	FLANGE-HALF	
	62	1	**6V-1249**	2	GROMMET	
	63	1,2	**6V-7359**	6	GROMMET	
	64	1	**6V-8555**	2	NUT-FACE SEAL (1-14-THD)	
	65	1	**6V-9170**	2	NUT-BULKHEAD (1-14-THD)	
	66	3	**7D-7233**	1	CLIP	
M	67	2	**7X-2536**	3	BOLT (M8X1.25X14-MM)	
	68	3	**7X-7729**	2	WASHER (11X25X3-MM THK)	
	69	3	**8C-3206**	2	FLANGE-HALF	
	70	2,3	**8T-4121**	18	WASHER-HARD (11X21X2.5-MM THK)	
M	71	3	**8T-4133**	1	NUT (M10X1.5-THD)	
M	72	3	**8T-4136**	1	BOLT (M10X1.5X25-MM)	
M	73	2	**8T-4139**	3	BOLT (M12X1.75X30-MM)	
M	74	3	**8T-4172**	1	BOLT (M10X1.5X80-MM)	
M	75	1	**8T-4183**	3	BOLT (M12X1.75X40-MM)	
M	76	2	**8T-4185**	1	BOLT (M10X1.5X50-MM)	
M	77	2,3	**8T-4195**	5	BOLT (M10X1.5X30-MM)	
M	78	3	**8T-4196**	4	BOLT (M10X1.5X35-MM)	
	79	1,2	**8T-4223**	6	WASHER-HARD (13.5X25.5X3-MM THK)	
	80	2	**8T-4224**	3	WASHER-HARD (8.8X16X2-MM THK)	
M	81	3	**8T-5005**	1	BOLT (M10X1.5X70-MM)	
M	82	2,3	**8T-6466**	6	BOLT (M10X1.5X60-MM)	
	83	2	**9X-8250**	2	CLIP	

I-REFER TO HYDRAULIC INFORMATION SYSTEM
M-METRIC PART
Y-SEPARATE ILLUSTRATION

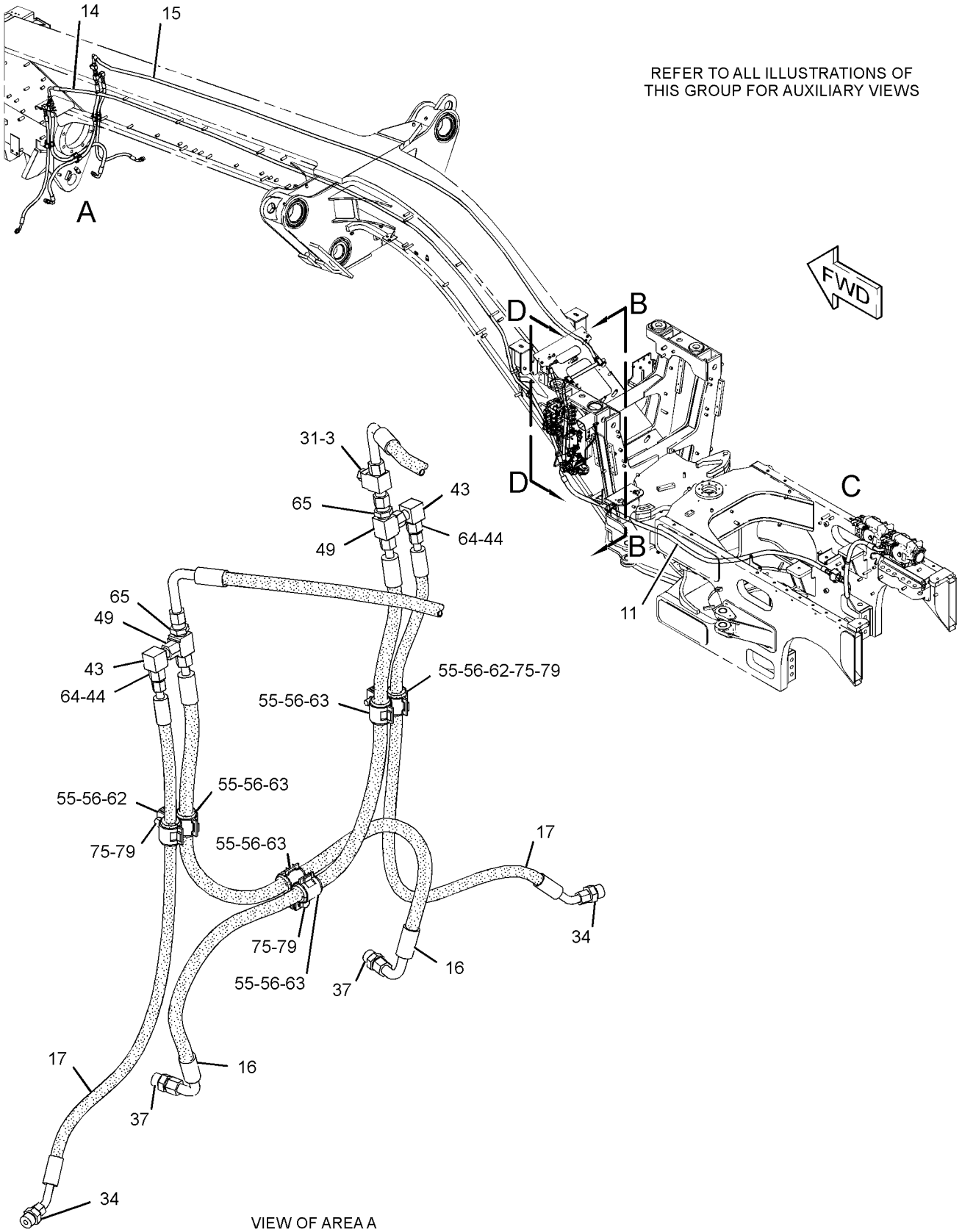

GRAPHIC #1

g02047118

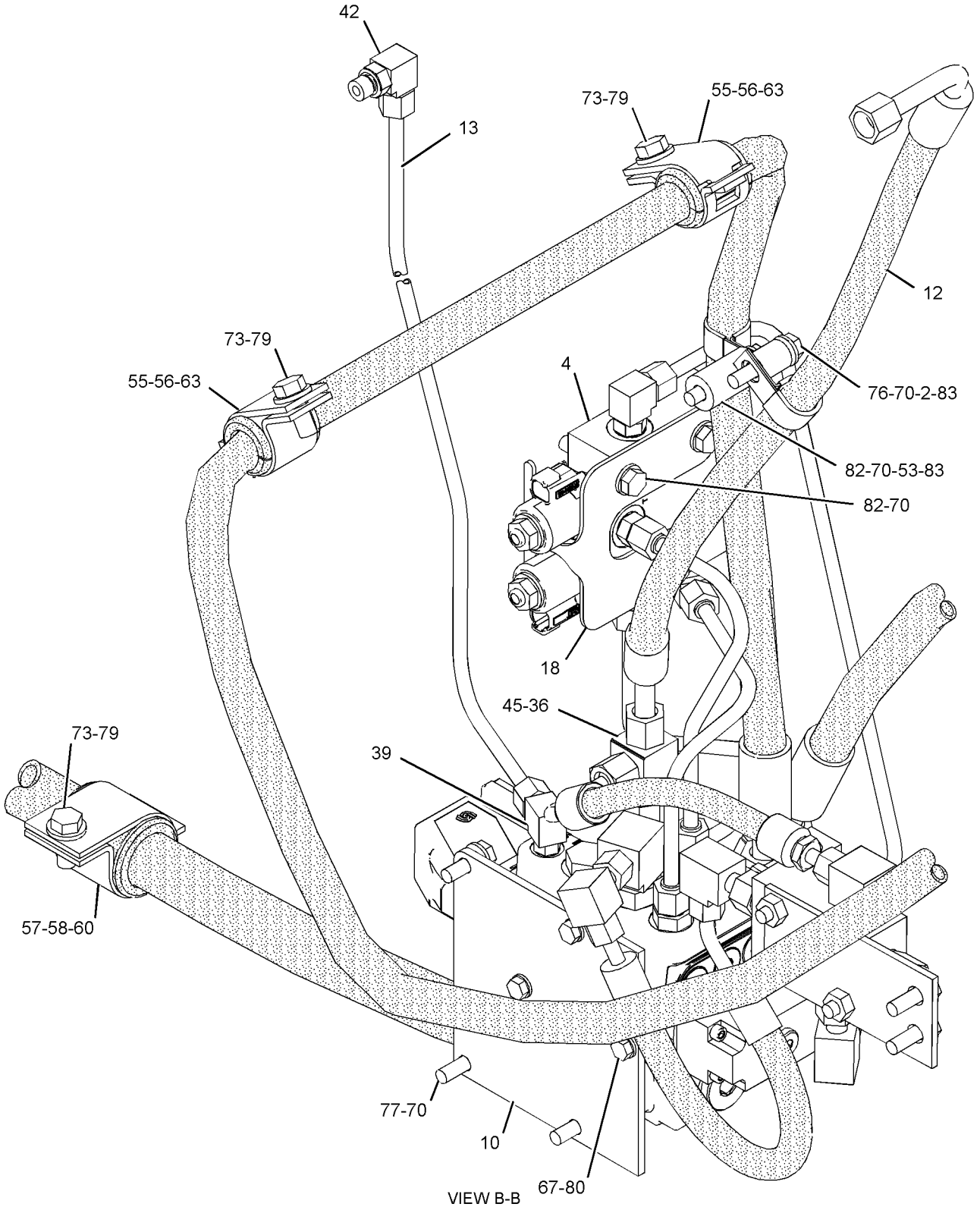

GRAPHIC #2

g02047121

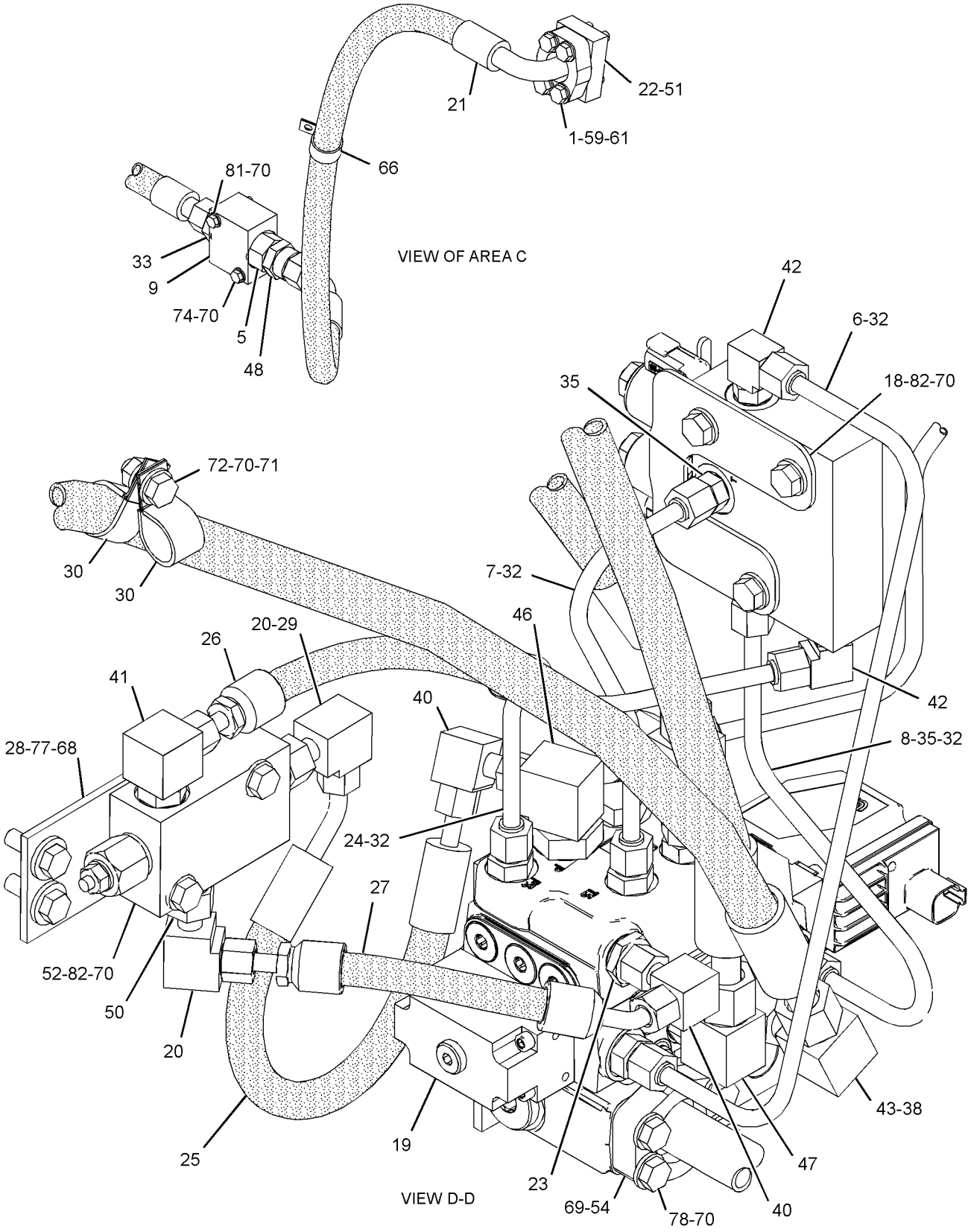

GRAPHIC #3 **<END>** g02047122

HYDRAULIC SYSTEM

254-3415 MANIFOLD GP-CONTROL–STEERING

S/N: B9K1-UP

PART OF 253-9005 CONTROL GP-STEERING, 344-1108 LINES GP-STEERING

SMCS-5051, 5069, 5264, 5467, 5479 **i03697017**

NOTE	REF NO	GRAPHIC REF	PART NUMBER	QTY	PART NAME 1 2 3 4 5 6 (PRODUCT LEVEL)	SEE PAGE
	2	1	**6E-5066**	1	SCREEN (CONTROL MANIFOLD)	
	3	1	**254-3413**	1	MANIFOLD AS	
		1	**124-1555**	1	PLUG	
J	4	1	**310-7060**	2	VALVE GP-SOLENOID (STEERING)	
					(EACH INCLUDES)	
		1	**164-2108**	1	WASHER (13.03X25.4X2.38-MM THK)	
		1	**218-2373**	1	NUT (1/2-28-THD)	
		1	**323-9533**	1	COIL AS	
					AVAILABLE REPAIR KIT(S):	
J			**108-2148**	1	KIT-SEAL (SOLENOID VALVE)	
					(INCLUDES SEALS)	

J-KIT MARKED J SERVICES PARTS MARKED J

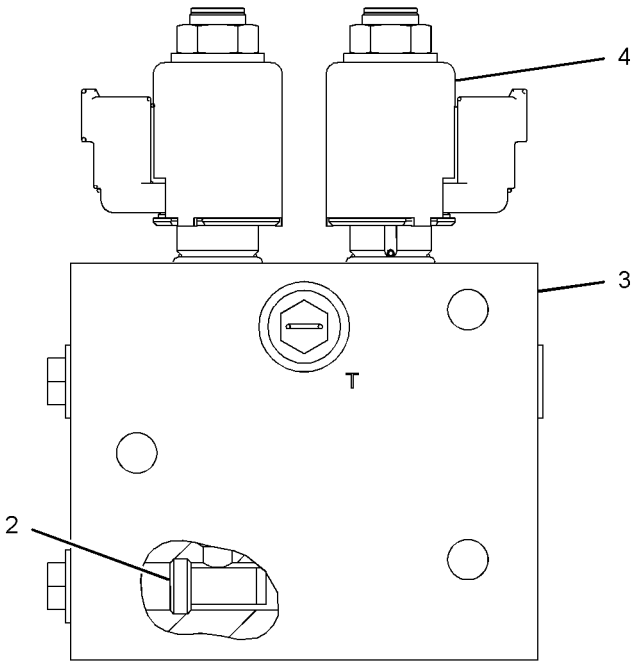

FRONT VIEW

GRAPHIC #1 **<END>** g01107180

HYDRAULIC SYSTEM

272-0984 MANIFOLD GP-CONTROL–
BRAKE CHARGE, HYD FAN CONTROL
S/N: B9K1-360

PART OF 268-0239 CONTROL GP-SERVICE BRAKE

SMCS-5051, 5069, 5264, 5467, 5479 **i02813704**

NOTE	REF NO	GRAPHIC REF	PART NUMBER	QTY	PART NAME 1 2 3 4 5 6 (PRODUCT LEVEL)	SEE PAGE
Y	1	1	**290-6436**	1	VALVE GP-DIVERTER (BRAKE CHARGING)	806
J	2	1	**239-0618**	1	VALVE GP-SHUTTLE (HYDRAULIC FAN)	
N		1	**3H-0442**	1	SEAL-O-RING	
	3	1	**6E-5066**	1	SCREEN (CONTROL MANIFOLD)	
	4	1	**282-5393**	1	PLUG-ORIFICE	
Y	5	1	**189-8627**	1	VALVE GP-SOLENOID (HYDRAULIC FAN)	814
Y	6	1	**158-9956**	1	VALVE GP-CHECK (BRAKE, HYDRAULIC FAN)	788
	7	1	**290-6176**	1	PLUG-ORIFICE	
H	8	1	**282-5396**	1	KIT-VALVE (BRAKE ACCUMULATOR)	
					(INCLUDES SEAL-O-RINGS & BACK-UP-RINGS)	
S	9	1	**245-8355**	1	VALVE GP-RELIEF (BRAKE ACCUMULATOR)	
P		1	**2M-9780**	1	SEAL-O-RING	
P		1	**161-6149**	1	SEAL-O-RING	
P		1	**161-6161**	2	RING-BACKUP	
Y	10	1	**257-8414**	1	VALVE GP-SHUTTLE (BRAKE ACCUMULATOR)	813
Y	11	1	**237-0957**	1	SENSOR GP-PRESSURE (BRAKE ACCUMULATOR)	309
L	12	1	**178-9037**	1	VALVE GP-DIVERTER (REVERSING FAN)	
T		1	**4K-1388**	1	SEAL-O-RING	
	13	1	**9S-8001**	13	PLUG-O-RING	
	14	1	**9S-8002**	1	PLUG-O-RING	
	15	1	**9S-8004**	1	PLUG-O-RING	
	16	1	**4J-7533**	13	SEAL-O-RING	
	17	1	**3J-7354**	1	SEAL-O-RING	
	18	1	**3J-1907**	1	SEAL-O-RING	
	19	1	**1J-9671**	1	SEAL-O-RING	
					AVAILABLE REPAIR KIT(S):	
JN			**239-5195**	1	KIT-SEAL (SHUTTLE VALVE)	
					(INCLUDES SEAL-O-RINGS & BACK-UP-RINGS)	
PS			**133-5545**	1	KIT-SEAL (RELIEF VALVE)	
					(INCLUDES SEAL-O-RINGS & BACK-UP-RINGS)	
H			**200-6282**	1	KIT-SEAL (DIVERTER VALVE)	
					(INCLUDES SEAL-O-RINGS & BACK-UP-RINGS)	
LT			**188-6298**	1	KIT-SEAL (DIVERTER VALVE)	
					(INCLUDES SEAL-O-RINGS & BACK-UP RINGS)	

H-KIT MARKED H SERVICES PART(S) MARKED H
J-KIT MARKED J SERVICES PART(S) MARKED J
L-KIT MARKED L SERVICES PART(S) MARKED L
N-KIT MARKED N INCLUDES PART(S) MARKED N
P-KIT MARKED P INCLUDES PART(S) MARKED P
S-KIT MARKED S SERVICES PART(S) MARKED S
T-KIT MARKED T INCLUDES PART(S) MARKED T
Y-SEPARATE ILLUSTRATION

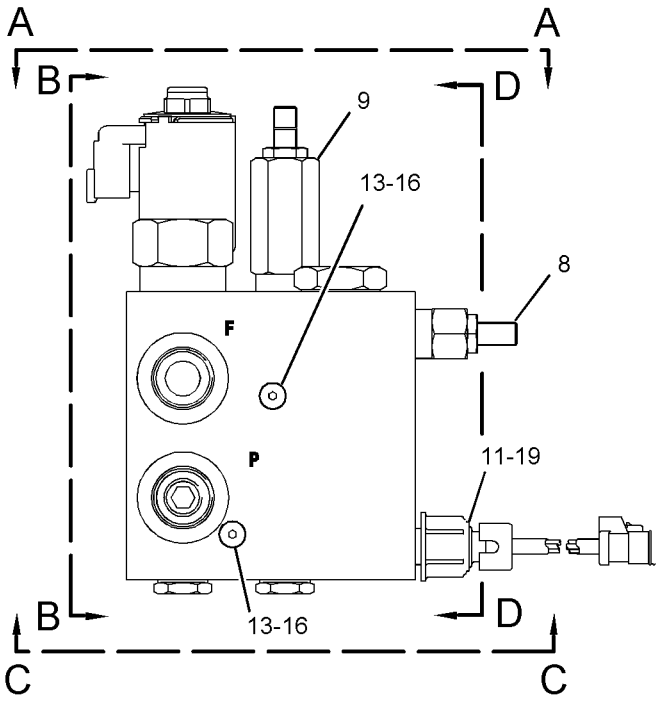

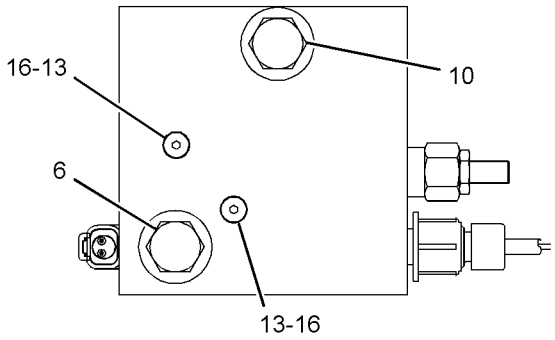

VIEW C-C

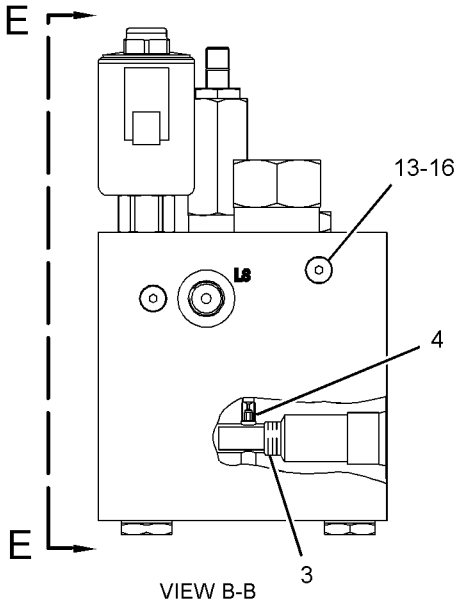

VIEW B-B

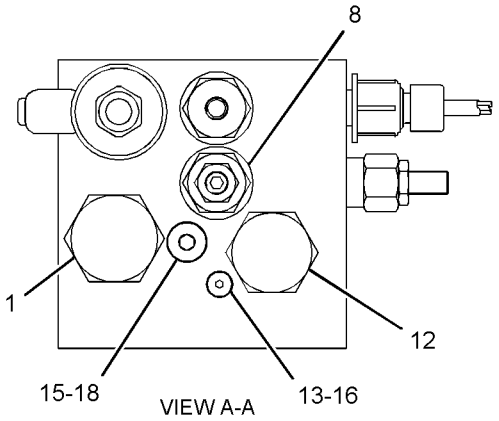

VIEW A-A

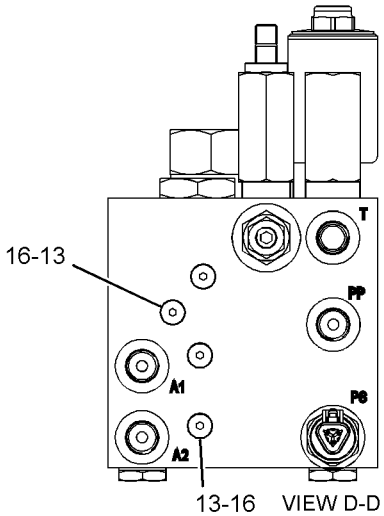

VIEW D-D

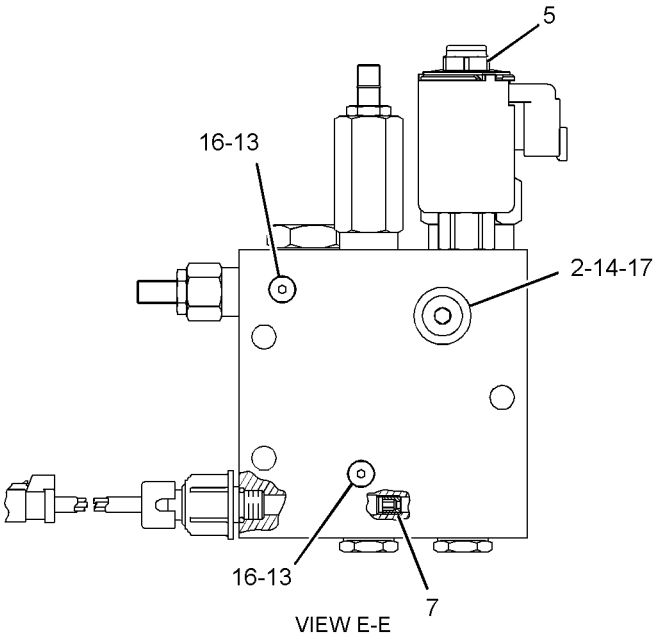

VIEW E-E

GRAPHIC #1 **<END>** g01394594

HYDRAULIC SYSTEM

283-9560 MANIFOLD GP-CONTROL—PARKING BRAKE

S/N: B9K1-UP

PART OF 268-0239 CONTROL GP-SERVICE BRAKE

SMCS-5051, 5069, 5264, 5467, 5479 **i04032483**

NOTE	REF NO	GRAPHIC REF	PART NUMBER	QTY	PART NAME 1 2 3 4 5 6 (PRODUCT LEVEL)	SEE PAGE
	1	1	**226-5738**	2	VALVE GP-CHECK (PARKING BRAKE OIL)	
					(EACH INCLUDES)	
		1	**2M-9780**	1	SEAL-O-RING	
		1	**4K-2039**	1	SEAL-O-RING	
		1	**7X-4776**	1	RING-BACKUP	
	2	1	**229-1537**	1	SWITCH AS-PRESSURE (PARKING BRAKE)	
		1	**3K-0360**	1	SEAL-O-RING	
		1	**3E-3371**	1	WEDGE-RECEPTACLE LOCK (3-PIN)	
		1	**102-8803**	1	KIT-RECEPTACLE (3-PIN)	
					(INCLUDES RECEPTACLE AS & WEDGE)	
		1	**186-3735**	3	PIN-CONNECTOR (16-GA TO 18-GA)	
E		1	**9X-1813**		SLEEVE (15-CM)	
	3	1	**283-9561**	1	VALVE GP-SOLENOID (PARKING BRAKE)	
		1	**156-5970**	1	NUT (1/2-20-THD)	
		1	**362-6151**	1	COIL AS	
	4	1	**283-9562**	1	VALVE GP-PRESSURE REDUCING (PARKING BRAKE)	

E-ORDER BY THE CENTIMETER

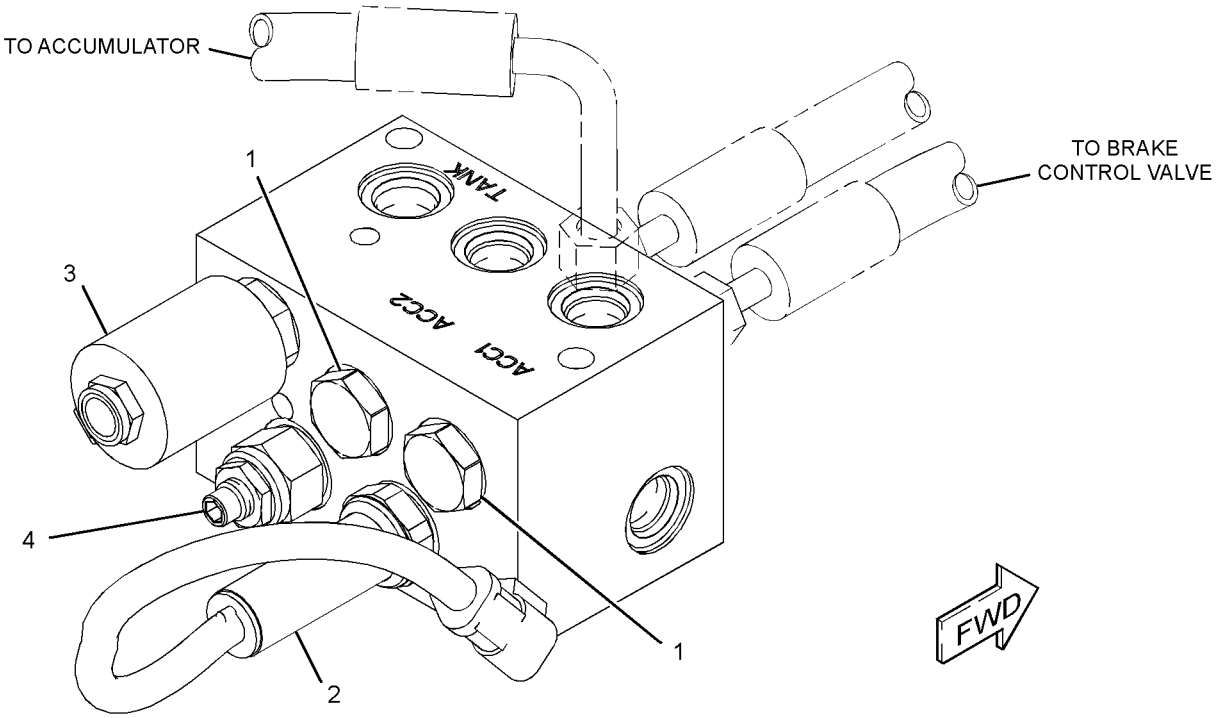

GRAPHIC #1 **<END>** g01398475

HYDRAULIC SYSTEM

306-5134 MANIFOLD GP-CONTROL—PILOT SHUTOFF

S/N: B9K1-UP

PART OF 268-0241 LINES GP-PUMP

SMCS-5051, 5069, 5264, 5467, 5479 **i03301100**

NOTE	REF NO	GRAPHIC REF	PART NUMBER	QTY	PART NAME 1 2 3 4 5 6 (PRODUCT LEVEL)	SEE PAGE
	1	1	**9S-8003**	2	PLUG	
Y	2	1	**133-5330**	1	VALVE GP-RELIEF (MAIN)	812
Y	3	1	**252-8038**	1	VALVE GP-PRESSURE REDUCING (PILOT)	807
	4	1	**252-0741**	1	VALVE GP-SOLENOID (IMPLEMENT PILOT OIL)	
		1	**156-5970**	1	NUT (1/2-20-THD)	
		1	**252-0745**	1	COIL AS	
	5	1	**6V-0852**	2	CAP-DUST	
	6	1	**6V-3965**	2	FITTING (QUICK DISCONNECT)	
	7	1	**3J-1907**	4	SEAL-O-RING	
	8	1	**6V-0484**	2	ADAPTER-O-RING	
	9	1	**8C-3446**	1	VALVE-FLUID SAMPLING (IMPLEMENT)	
	10	1	**126-8440**	2	SEAL-O-RING	
	11	1	**151-5145**	1	ELBOW	
	12	1	**1J-9671**	2	SEAL-O-RING	
	13	1	**8C-3451**	1	CAP-DUST	

Y-SEPARATE ILLUSTRATION

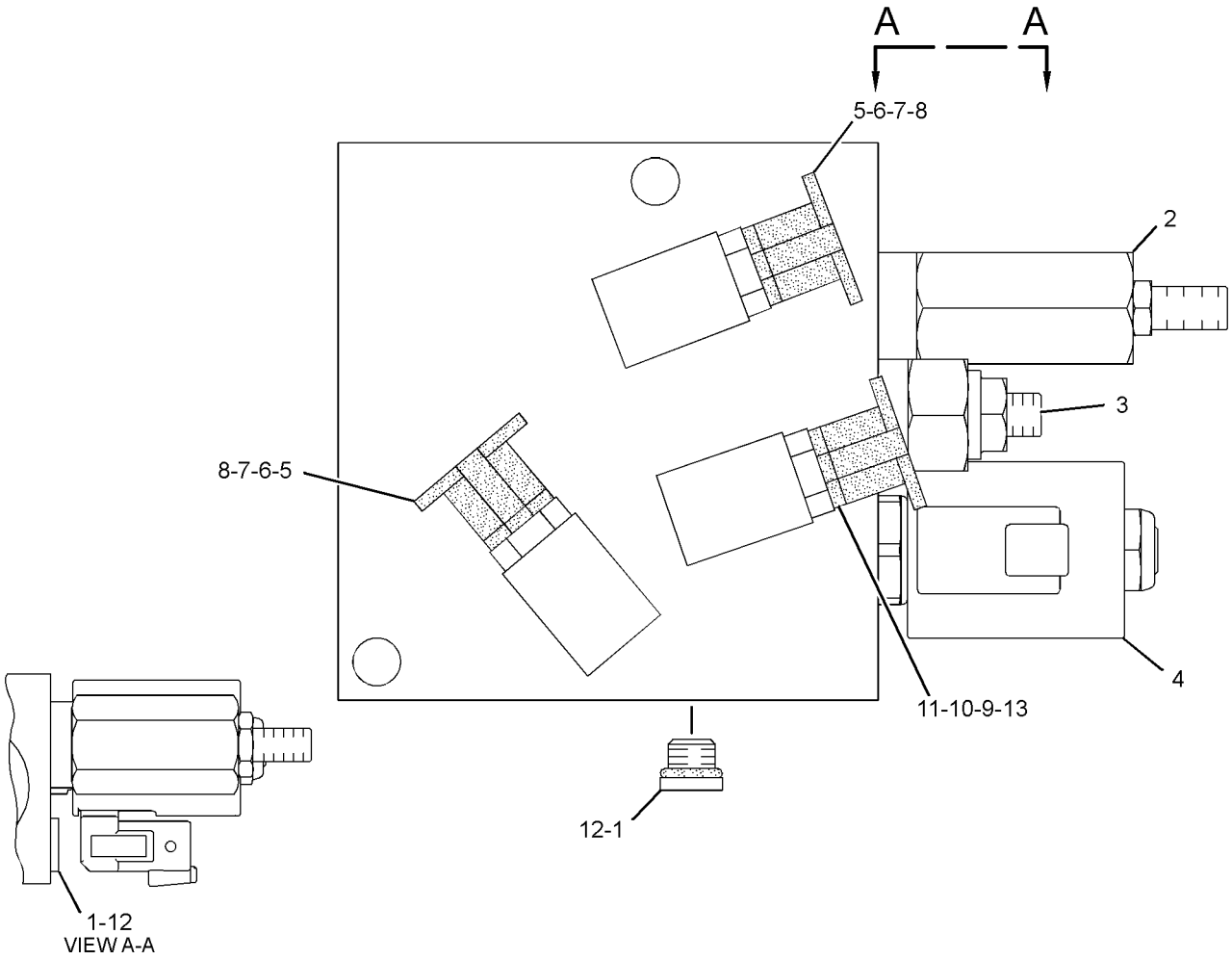

GRAPHIC #1 **<END>** g01933074

HYDRAULIC SYSTEM

353-2606 MANIFOLD GP-CONTROL

S/N: B9K358-UP

SMCS-5051, 5069, 5264, 5467, 5479 **i03903423**

NOTE	REF NO	GRAPHIC REF	PART NUMBER	QTY	PART NAME 1 2 3 4 5 6 (PRODUCT LEVEL)	SEE PAGE
Y	1	1	**290-6436**	1	VALVE GP-DIVERTER (BRAKE CHARGING)	806
J	2	1	**239-0618**	1	VALVE GP-SHUTTLE (HYDRAULIC FAN)	
N		1	**3H-0442**	1	SEAL-O-RING	
	3	1	**6E-5066**	1	SCREEN (CONTROL MANIFOLD)	
	4	1	**282-5393**	1	PLUG-ORIFICE	
Y	5	1	**189-8627**	1	VALVE GP-SOLENOID (HYDRAULIC FAN)	814
Y	6	1	**158-9956**	1	VALVE GP-CHECK (BRAKE, HYDRAULIC FAN)	788
	7	1	**290-6176**	1	PLUG-ORIFICE	
H	8	1	**282-5396**	1	KIT-VALVE (BRAKE ACCUMULATOR)	
					(INCLUDES SEAL-O-RINGS & BACK-UP-RINGS)	
S	9	1	**245-8355**	1	VALVE GP-RELIEF (BRAKE ACCUMULATOR)	
P		1	**2M-9780**	1	SEAL-O-RING	
P		1	**161-6149**	1	SEAL-O-RING	
P		1	**161-6161**	2	RING-BACKUP	
Y	10	1	**257-8414**	1	VALVE GP-SHUTTLE (BRAKE ACCUMULATOR)	813
Y	11	1	**237-0957**	1	SENSOR GP-PRESSURE (BRAKE ACCUMULATOR)	309
L	12	1	**178-9037**	1	VALVE GP-DIVERTER (REVERSING FAN)	
T		1	**4K-1388**	1	SEAL-O-RING	
	13	1	**9S-8001**	13	PLUG-O-RING	
	14	1	**9S-8002**	1	PLUG-O-RING	
	15	1	**9S-8004**	1	PLUG-O-RING	
	16	1	**4J-7533**	13	SEAL-O-RING	
	17	1	**3J-7354**	1	SEAL-O-RING	
	18	1	**3J-1907**	1	SEAL-O-RING	
	19	1	**1J-9671**	1	SEAL-O-RING	
					AVAILABLE REPAIR KIT(S):	
JN			**239-5195**	1	KIT-SEAL (SHUTTLE VALVE)	
					(INCLUDES SEAL-O-RINGS & BACK-UP-RINGS)	
PS			**133-5545**	1	KIT-SEAL (RELIEF VALVE)	
					(INCLUDES SEAL-O-RINGS & BACK-UP-RINGS)	
H			**200-6282**	1	KIT-SEAL (DIVERTER VALVE)	
					(INCLUDES SEAL-O-RINGS & BACK-UP-RINGS)	
LT			**188-6298**	1	KIT-SEAL (DIVERTER VALVE)	
					(INCLUDES SEAL-O-RINGS & BACK-UP RINGS)	

H-KIT MARKED H SERVICES PART(S) MARKED H
J-KIT MARKED J SERVICES PART(S) MARKED J
L-KIT MARKED L SERVICES PART(S) MARKED L
N-KIT MARKED N INCLUDES PART(S) MARKED N
P-KIT MARKED P INCLUDES PART(S) MARKED P
S-KIT MARKED S SERVICES PART(S) MARKED S
T-KIT MARKED T INCLUDES PART(S) MARKED T
Y-SEPARATE ILLUSTRATION

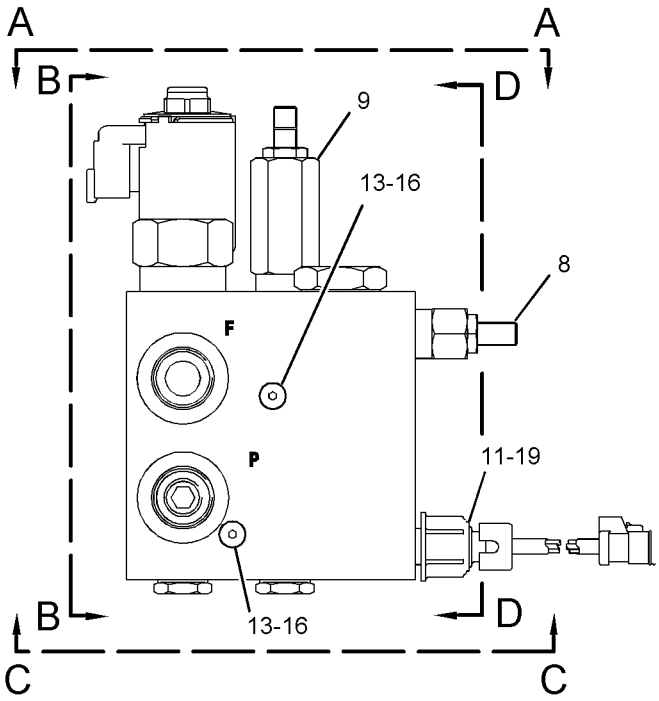

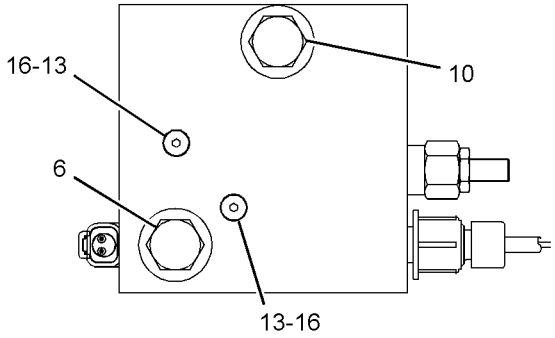

VIEW C-C

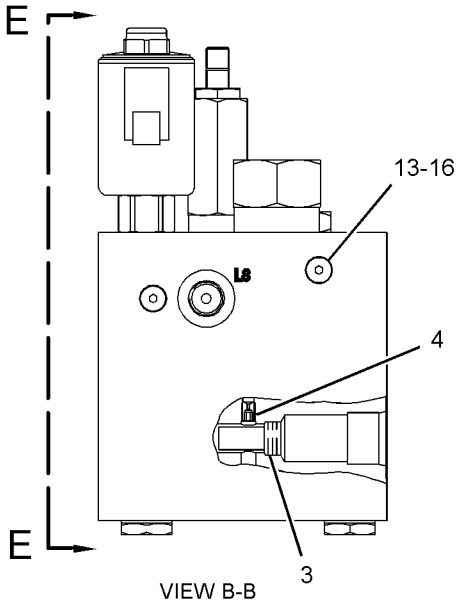

VIEW B-B

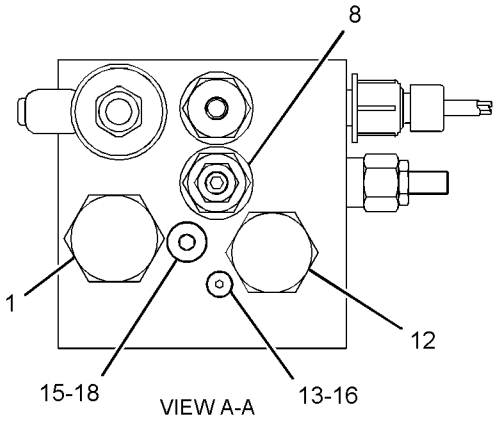

VIEW A-A

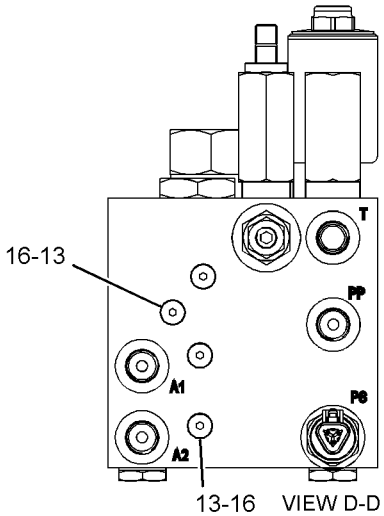

VIEW D-D

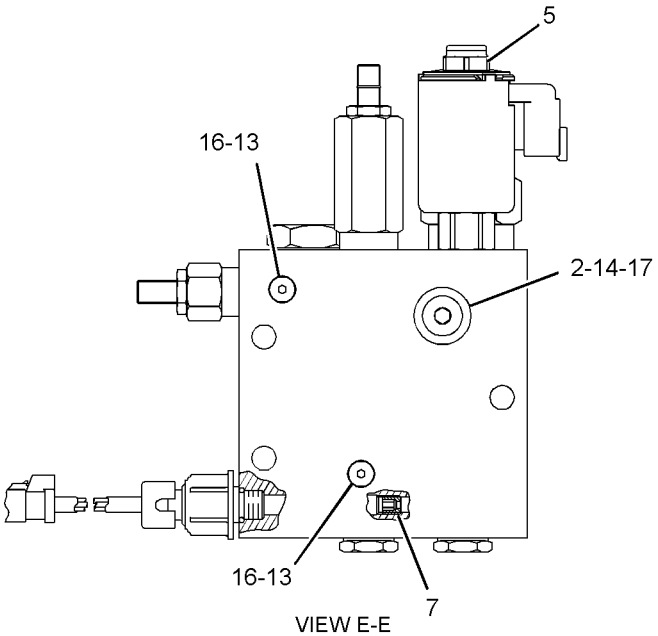

VIEW E-E

GRAPHIC #1 **<END>** g01394594

HYDRAULIC SYSTEM

292-2034 MANIFOLD GP-VALVE–INLET

S/N: B9K310-328

PART OF 270-1613 VALVE GP-BANK 5

SMCS-5264 **i04036915**

NOTE	REF NO	GRAPHIC REF	PART NUMBER	QTY	PART NAME 1 2 3 4 5 6 (PRODUCT LEVEL)	SEE PAGE
	1	1	**096-3831**	1	ORIFICE	
H	3	1	**361-3059**	1	VALVE GP-RELIEF (MAIN)	
	4	1	**259-0310**	1	MANIFOLD-INLET	
	6	1	*148-8407*	3	PLUG AS	
					(EACH INCLUDES)	
		1	**9S-4191**	1	PLUG-O-RING	
		1	**3J-1907**	1	SEAL-O-RING	
	7	1	*148-8411*	4	PLUG AS	
					(EACH INCLUDES)	
		1	**9S-4185**	1	PLUG-O-RING	
		1	**3K-0360**	1	SEAL-O-RING	
	8	1	*173-3993*	4	PLUG AS	
					(EACH INCLUDES)	
		1	**9S-8001**	1	PLUG-O-RING	
		1	**4J-7533**	1	SEAL-O-RING	
	9	1	*183-7263*	1	PLUG AS	
		1	**9S-8002**	1	PLUG-O-RING	
		1	**3J-7354**	1	SEAL-O-RING	
					AVAILABLE REPAIR KIT(S):	
H			**133-5545**	1	KIT-SEAL (RELIEF VALVE)	

H-KIT MARKED H SERVICES PART(S) MARKED H

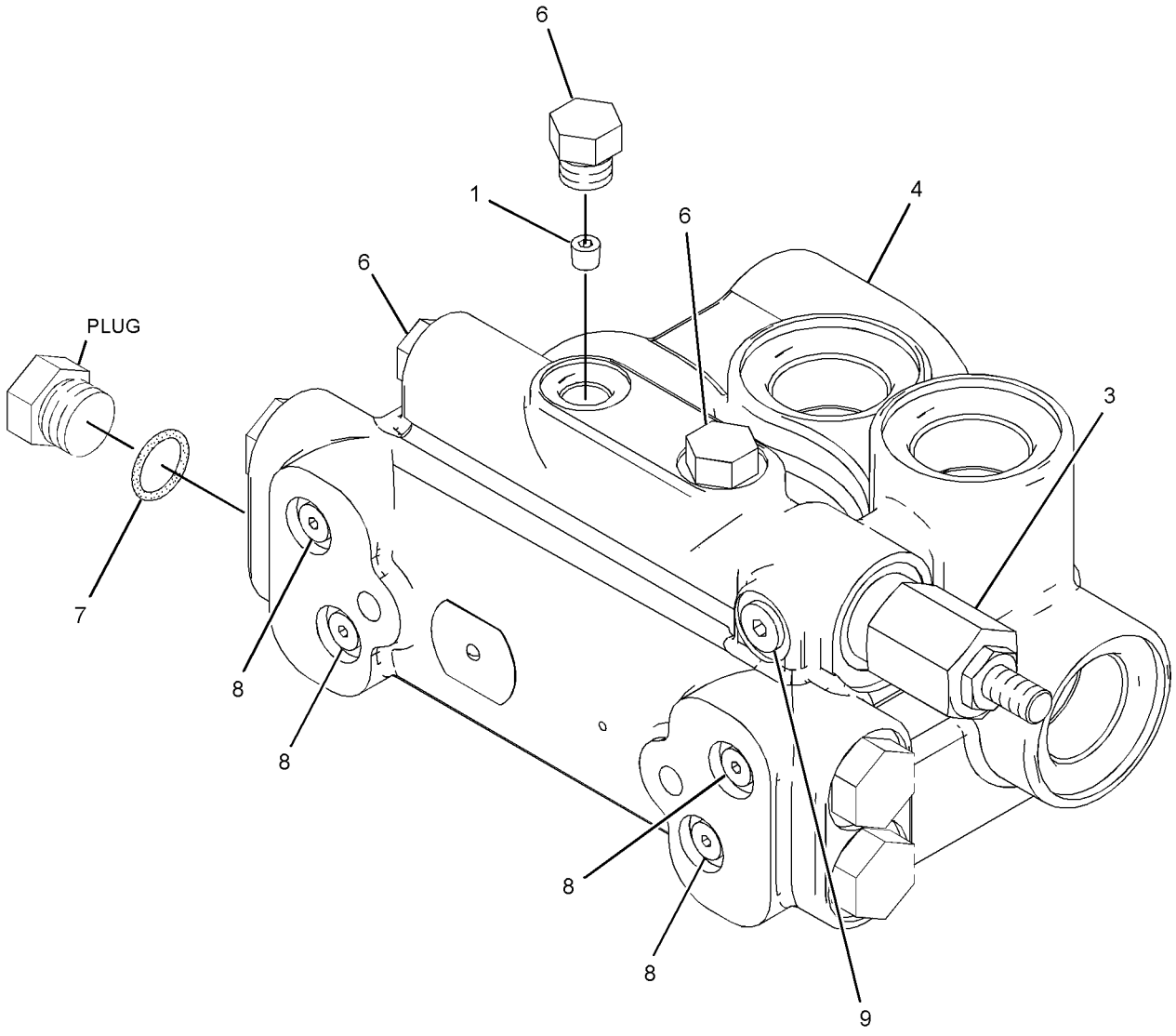

GRAPHIC #1 **<END>** g02239161

HYDRAULIC SYSTEM

292-2035 MANIFOLD GP-VALVE–INLET

S/N: B9K1-UP

PART OF 270-1612 VALVE GP-BANK 5

SMCS-5264 **i03310330**

NOTE	REF NO	GRAPHIC REF	PART NUMBER	QTY	PART NAME 1 2 3 4 5 6 (PRODUCT LEVEL)	SEE PAGE
	1	1	*183-7263*	1	PLUG AS	
		1	**9S-8002**	1	PLUG-O-RING	
		1	**3J-7354**	1	SEAL-O-RING	
J	2	1	**179-0125**	1	PLUG AS	
		1	**2M-9780**	1	SEAL-O-RING	
		1	**161-6149**	1	SEAL-O-RING	
		1	**161-6161**	2	RING-BACKUP	
	3	1	**259-0310**	1	MANIFOLD-INLET	
	4	1	*173-3993*	4	PLUG AS	
					(EACH INCLUDES)	
		1	**9S-8001**	1	PLUG-O-RING	
		1	**4J-7533**	1	SEAL-O-RING	
	5	1	**301-4568**	1	ORIFICE	
	6	1	*148-8407*	3	PLUG AS	
					(EACH INCLUDES)	
		1	**9S-4191**	1	PLUG-O-RING	
		1	**3J-1907**	1	SEAL-O-RING	
	7	1	*148-8411*	4	PLUG AS	
					(EACH INCLUDES)	
		1	**9S-4185**	1	PLUG-O-RING	
		1	**3K-0360**	1	SEAL-O-RING	
					AVAILABLE REPAIR KIT(S):	
J			**133-5545**	1	KIT-SEAL (RELIEF VALVE)	
					(INCLUDES SEALS & RINGS)	

J-(KIT MARKED J SERVICE PART MARKED J)

292-2035 MANIFOLD GP-VALVE *(contd.)* **i03310330**

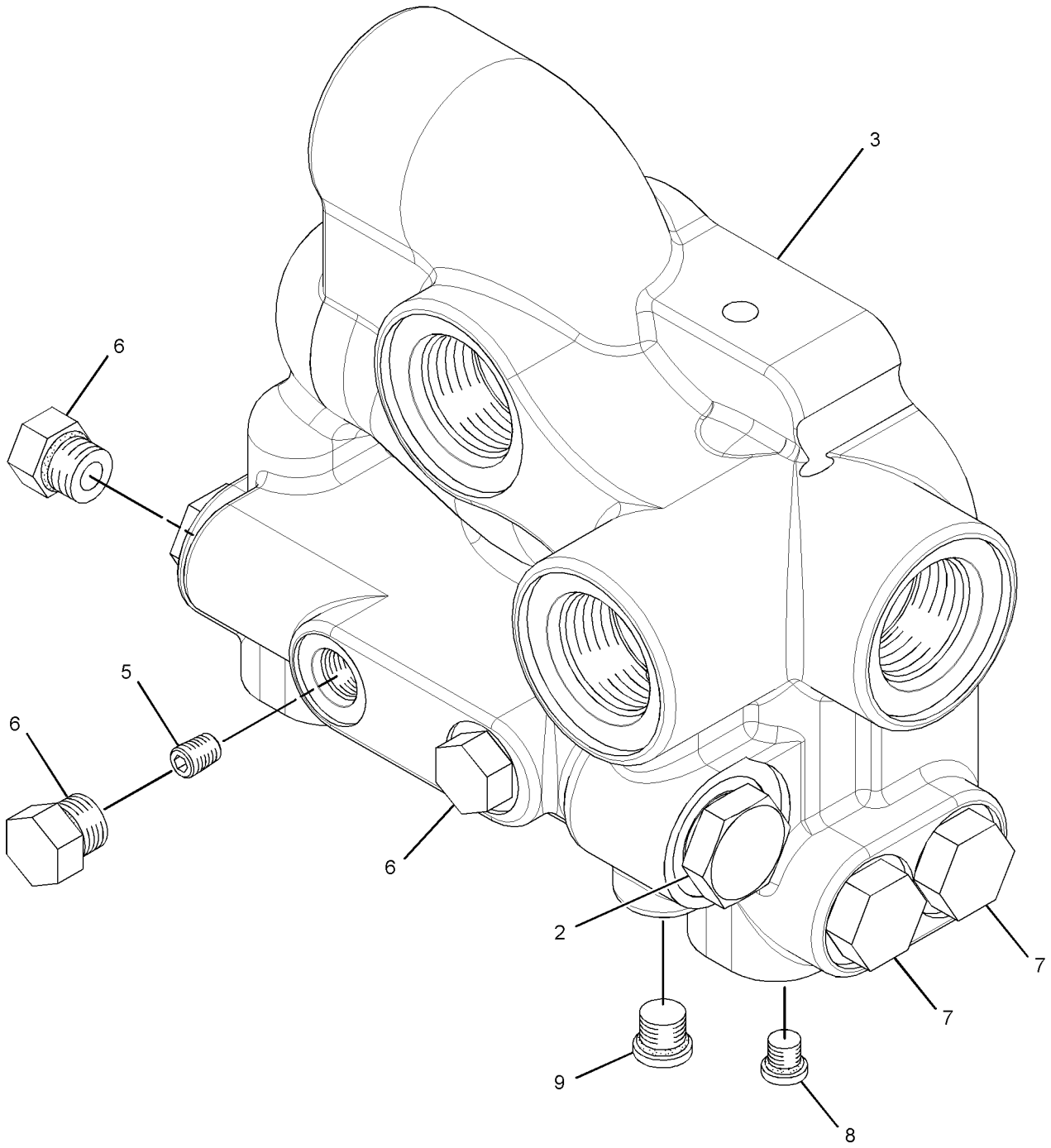

GRAPHIC #1 **<END>** g01375362

HYDRAULIC SYSTEM

302-5693 MANIFOLD GP-VALVE–INLET

S/N: B9K1-309, 329-UP

PART OF 270-1613 VALVE GP-BANK 5

SMCS-5264 **i02735041**

NOTE	REF NO	GRAPHIC REF	PART NUMBER	QTY	PART NAME 1 2 3 4 5 6 (PRODUCT LEVEL)	SEE PAGE
J	2	1	**243-5210**	1	VALVE GP-RELIEF (IMPLEMENT PILOT PRESSURE)	
H		1	**2M-9780**	1	SEAL-O-RING	
H		1	**161-6149**	1	SEAL-O-RING	
H		1	**161-6161**	2	RING-BACKUP	
	3	1	**259-0310**	1	MANIFOLD-INLET	
	4	1	**301-4568**	1	ORIFICE	
	6	1	*148-8407*	3	PLUG AS	
					(EACH INCLUDES)	
		1	**9S-4191**	1	PLUG-O-RING	
		1	**3J-1907**	1	SEAL-O-RING	
	7	1	*148-8411*	4	PLUG AS	
					(EACH INCLUDES)	
		1	**9S-4185**	1	PLUG-O-RING	
		1	**3K-0360**	1	SEAL-O-RING	
	8	1	*173-3993*	4	PLUG AS	
					(EACH INCLUDES)	
		1	**9S-8001**	1	PLUG-O-RING	
		1	**4J-7533**	1	SEAL-O-RING	
	9	1	*183-7263*	1	PLUG AS	
		1	**9S-8002**	1	PLUG-O-RING	
		1	**3J-7354**	1	SEAL-O-RING	
					AVAILABLE REPAIR KIT(S):	
HJ			**133-5545**	1	KIT-SEAL (RELIEF VALVE)	
					(INCLUDES SEAL-O-RINGS & RING-BACKUPS)	

H-KIT MARKED J INCLUDES PART(S) MARKED H
J-KIT MARKED J SERVICES PART(S) MARKED J

302-5693 MANIFOLD GP-VALVE *(contd.)* **i02735041**

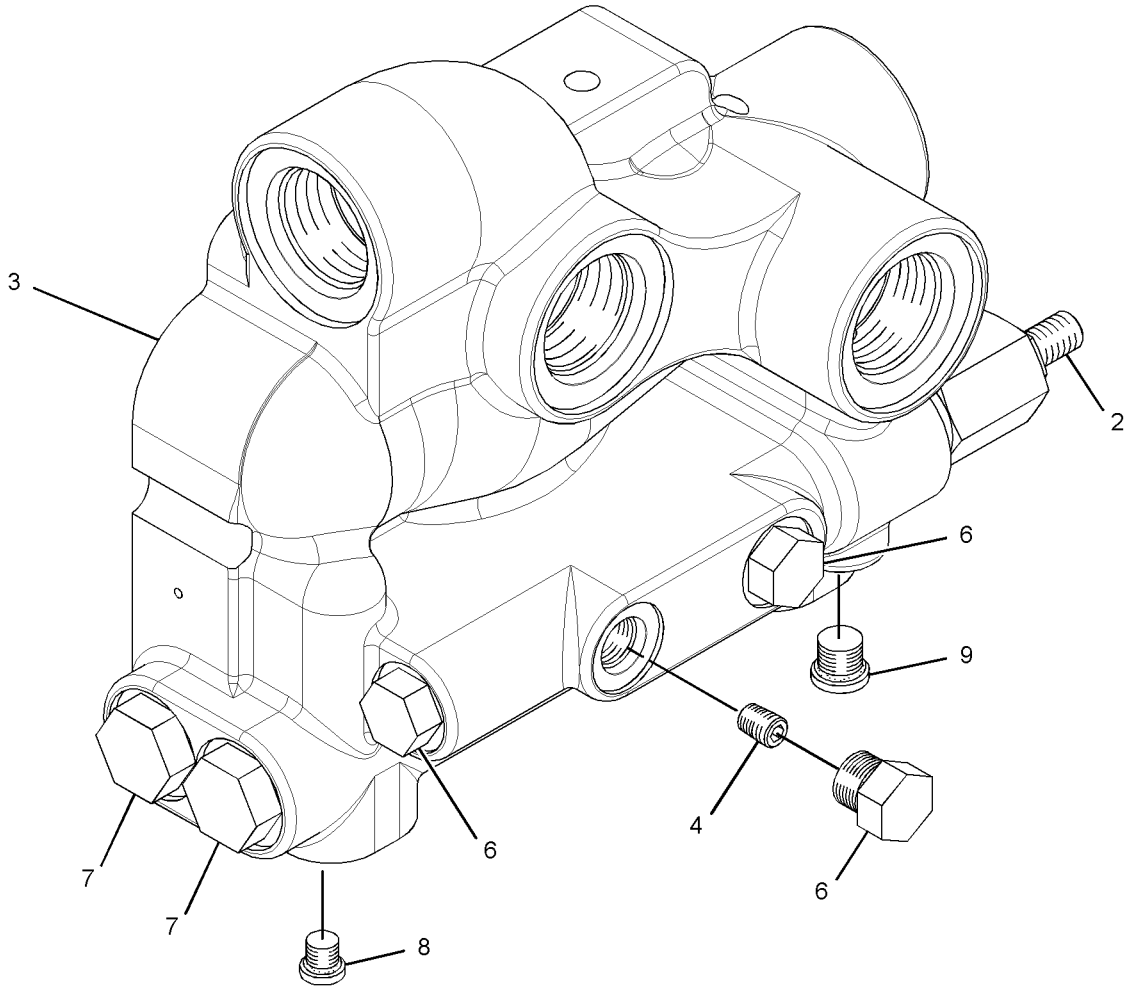

GRAPHIC #1 **<END>** g01375327

HYDRAULIC SYSTEM

8X-9031 MOTOR & MTG GP-CIRCLE DRIVE

S/N: B9K1-352

PART OF 252-7065, 265-6741 DRIVE & MTG GP-CIRCLE

SMCS-5082, 5207 **i00110745**

NOTE	REF NO	GRAPHIC REF	PART NUMBER	QTY	PART NAME 1 2 3 4 5 6 (PRODUCT LEVEL)	SEE PAGE
Y	1	1	**121-9270**	1	MOTOR GP-GEROTOR	758
	2	1	**8T-4223**	4	WASHER-HARD (13.5X25.5X3-MM THK)	
	3	1	**5P-2566**	4	BOLT (1/2-13X1.5-IN)	
	4	1	**2H-3931**	1	SEAL-O-RING	

Y-SEPARATE ILLUSTRATION

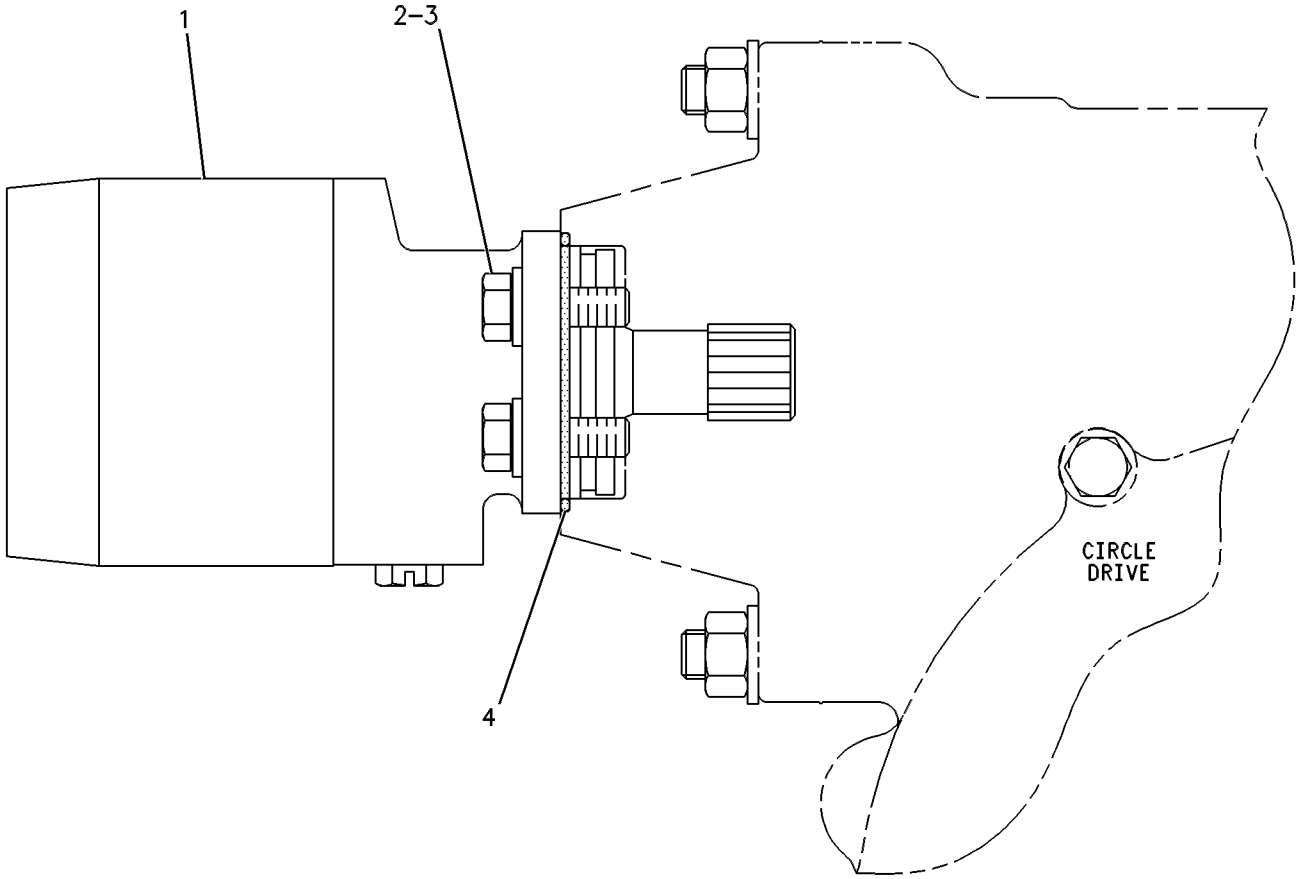

GRAPHIC #1 **<END>** g00086508

HYDRAULIC SYSTEM

8X-9031 MOTOR & MTG GP-CIRCLE DRIVE

S/N: B9K353-UP

PART OF 252-7065, 265-6741 DRIVE & MTG GP-CIRCLE

SMCS-5082, 5207 **i03852649**

NOTE	REF NO	GRAPHIC REF	PART NUMBER	QTY	PART NAME 1 2 3 4 5 6 (PRODUCT LEVEL)	SEE PAGE
CJ	1	1	**341-7667**	1	MOTOR GP-GEROTOR	
		1	**122-8505**	7	BOLT (3/8-24X3.8-IN)	
	2	1	**8T-4223**	4	WASHER-HARD (13.5X25.5X3-MM THK)	
	3	1	**5P-2566**	4	BOLT (1/2-13X1.5-IN)	
	4	1	**2H-3931**	1	SEAL-O-RING	
					AVAILABLE REPAIR KIT(S):	
J			**9T-9072**	1	KIT-SEAL (MOTOR)	
					(INCLUDES SEALS, BACKUP RING, SHIM & GREASE PACK)	

C-CHANGE FROM PREVIOUS TYPE
J-KIT MARKED J SERVICES PARTS MARKED J

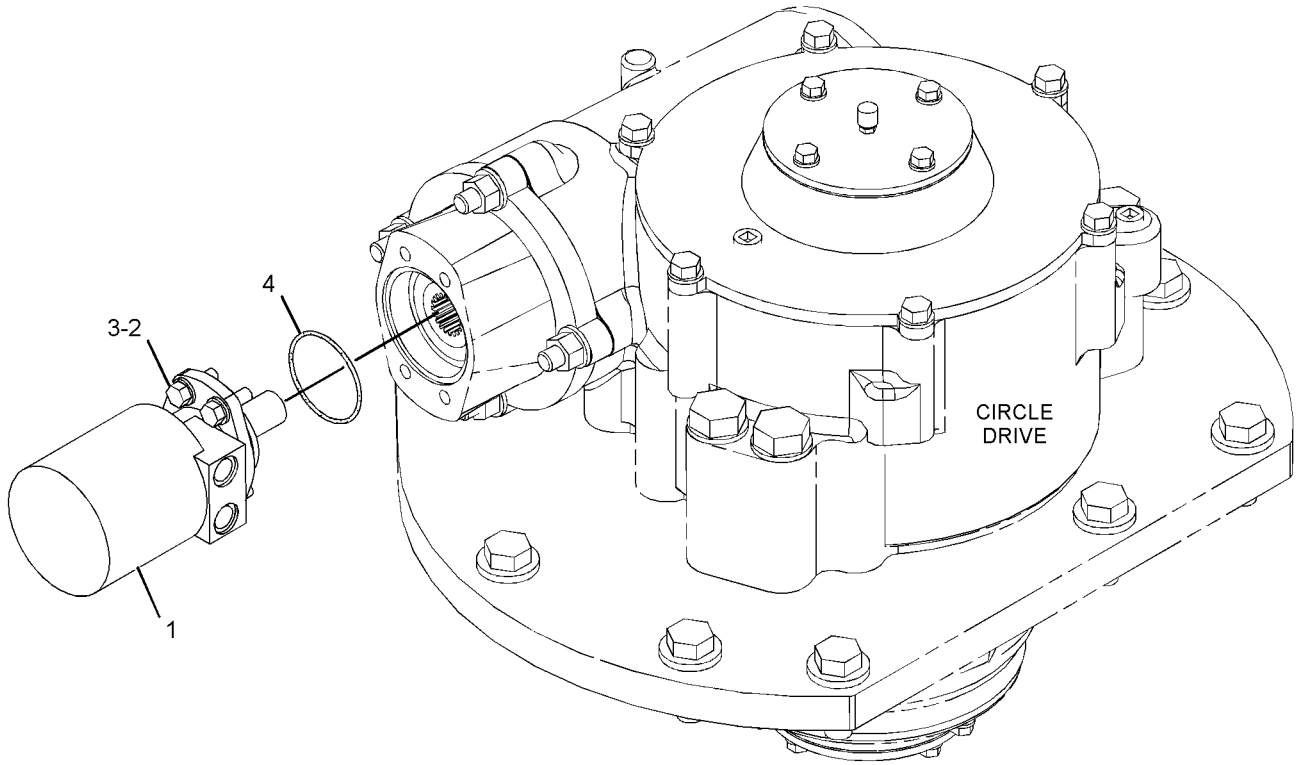

GRAPHIC #1 **<END>** g02104633

HYDRAULIC SYSTEM

121-9270 MOTOR GP-GEROTOR

S/N: B9K1-352

PART OF 8X-9031 MOTOR & MTG GP-CIRCLE DRIVE

SMCS-5082 **i03453481**

NOTE	REF NO	GRAPHIC REF	PART NUMBER	QTY	PART NAME 1 2 3 4 5 6 (PRODUCT LEVEL)	SEE PAGE
	1	1	**7X-4733**	1	SEAL-LIP TYPE	
	2	1	**9T-8070**	1	HOUSING AS	
	3	1	**6Y-2934**	1	BEARING-ROLLER	
	4	1	**6Y-2933**	2	RING-THRUST	
	5	1	**6Y-2932**	1	BEARING-THRUST	
	6	1	**8T-1698**	1	BEARING AS-NEEDLE	
	7	1	**9T-9071**	1	SHIM	
	8	1	**9T-8058**	1	BACKUP	
	9	1	**9T-8059**	1	SEAL	
	10	1	**9T-8057**	1	SHAFT	
	11	1	**6Y-2935**	1	BEARING	
	12	1	**9T-8053**	5	SEAL	
	13	1	**122-8503**	1	LINK-DRIVE	
	14	1	**9T-8061**	1	PLATE	
	15	1	**122-8504**	1	KIT-GEROTOR	
	16	1	**9T-8065**	1	MANIFOLD	
	17	1	**9J-4963**	1	RING	
	18	1	**9T-8069**	1	PLATE AS	
	19	1	**9T-8067**	1	COVER	
	20	1	**122-8505**	7	BOLT (3/8-24X3.8-IN)	
					AVAILABLE REPAIR KIT(S):	
			9T-9072	1	KIT-SEAL (MOTOR)	
					(INCLUDES RING,SEALS,SHIM,GREASE PACK)	

121-9270 MOTOR GP-GEROTOR *(contd.)* **i03453481**

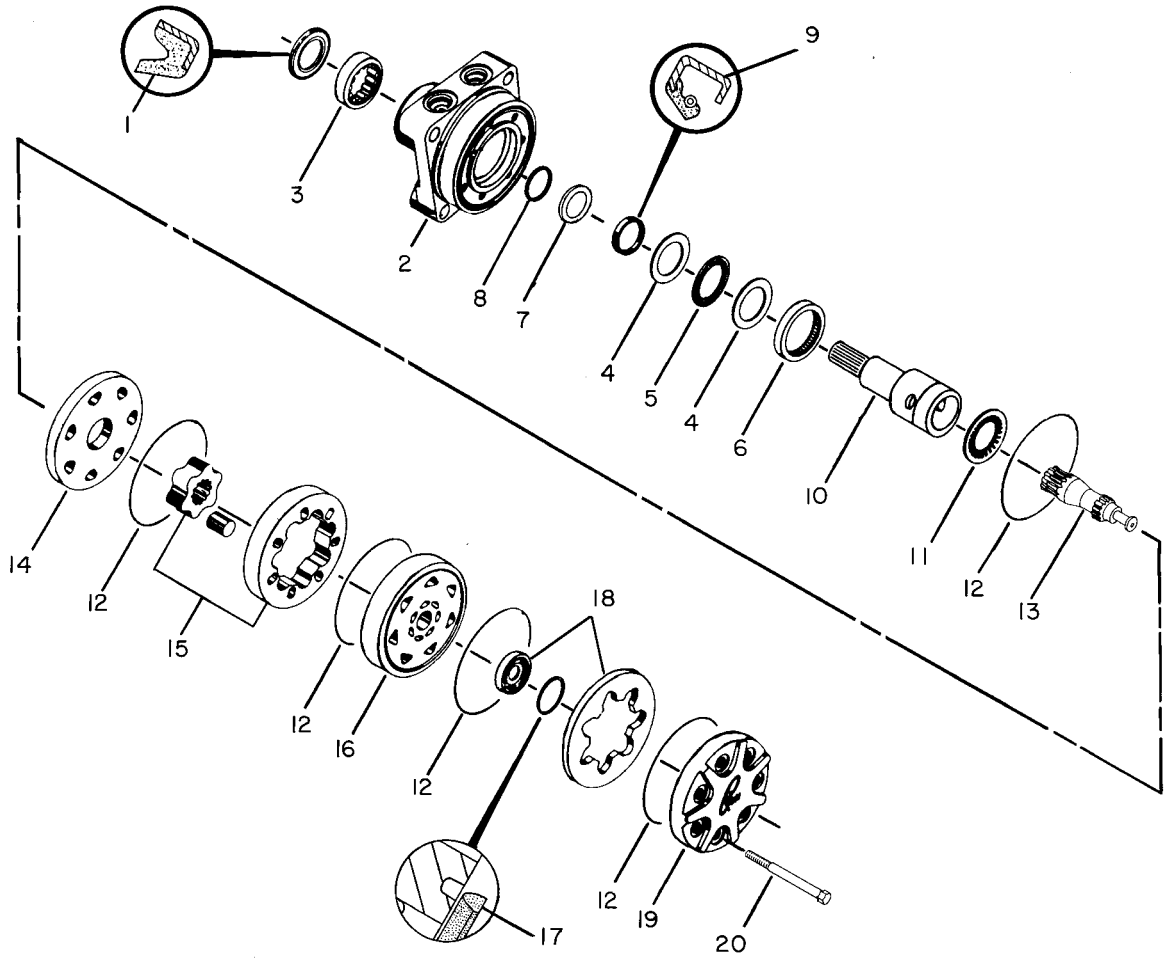

GRAPHIC #1 **<END>** g00082184

HYDRAULIC SYSTEM

268-0238 PUMP & MTG GP-PISTON–IMPLEMENT, STEERING

S/N: B9K1-UP

PART OF 259-9204 COMMON AR

SMCS-5070 **i02763316**

NOTE	REF NO	GRAPHIC REF	PART NUMBER	QTY	PART NAME 1 2 3 4 5 6 (PRODUCT LEVEL)	SEE PAGE
Y	1	1	**268-4763**	1	PUMP GP-PISTON (IMPLEMENT, STEERING) (IMPLEMENT, STEERING)	765
	2	1	**286-1333**	1	PLATE AS	
	3	1	**5P-2566**	4	BOLT (1/2-13X1.5-IN)	
M	4	1	**8T-4192**	2	BOLT (M12X1.75X25-MM)	
	5	1	**8T-4223**	6	WASHER-HARD (13.5X25.5X3-MM THK)	
	6	1	**9X-7371**	1	SEAL-O-RING	

M-METRIC PART
Y-SEPARATE ILLUSTRATION

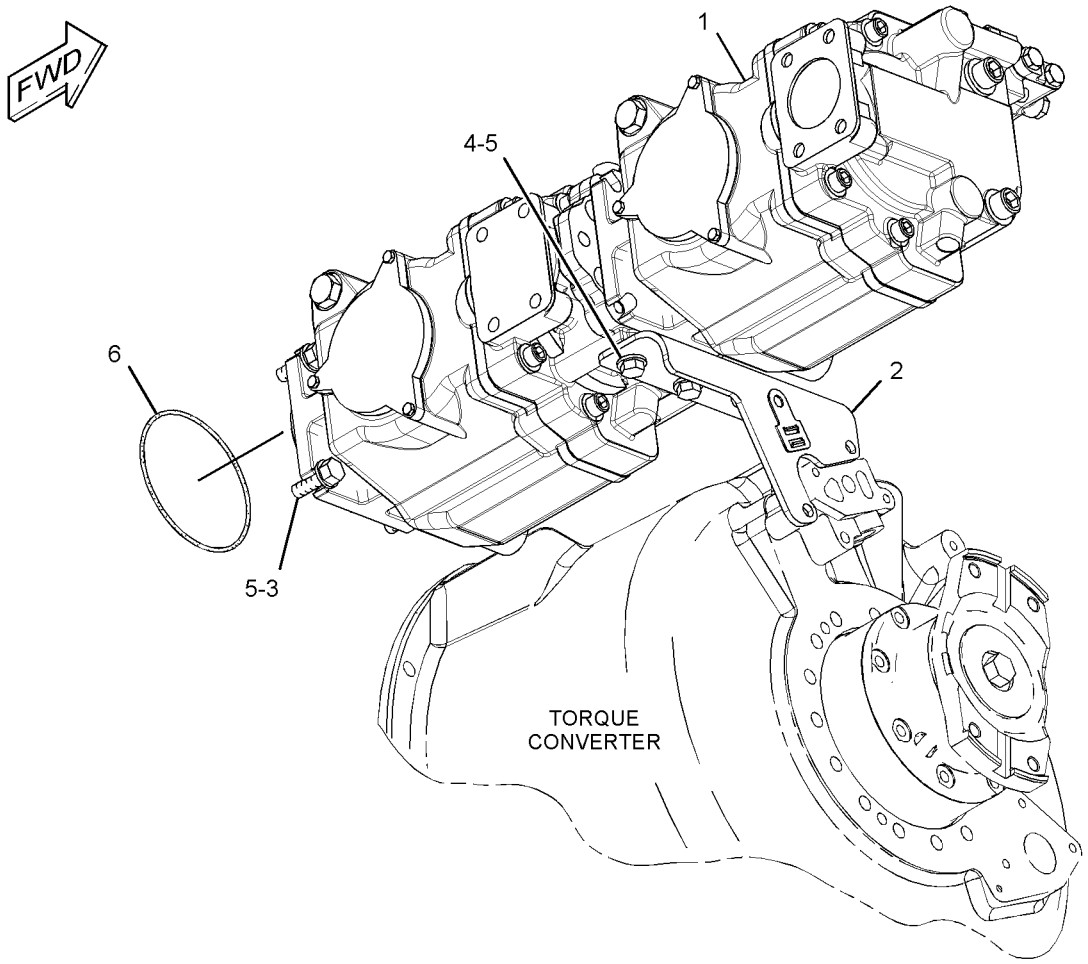

GRAPHIC #1 **<END>** g01388025

HYDRAULIC SYSTEM

268-0237 PUMP & MTG GP-PISTON & GEAR–
BRAKE, DIFFERENTIAL LOCK, HYDRAULIC FAN, TRANSMISSION CHARGE
S/N: B9K1-UP
PART OF 259-9204 COMMON AR

SMCS-507G **i02861942**

NOTE	REF NO	GRAPHIC REF	PART NUMBER	QTY	PART NAME 1 2 3 4 5 6 (PRODUCT LEVEL)	SEE PAGE
Y	1	1	**270-2720**	1	PUMP GP-PISTON & GEAR (BRAKE, DIFF LOCK, HYD FAN)	773
J	2	1	**270-2721**	1	PUMP GP-GEAR (TRANSMISSION CHARGE)	
		1	**292-5258**	1	COUPLING	
	3	1	**284-7010**	1	BRACKET AS	
	4	1	**5P-2566**	7	BOLT (1/2-13X1.5-IN)	
	5	1	**5S-7382**	1	BOLT (3/8-16X1.375-IN)	
	6	1	**8T-4223**	8	WASHER-HARD (13.5X25.5X3-MM THK)	
	7	1	**198-4777**	1	WASHER-HARD (11X25X10-MM THK)	
	9	1	**8T-8919**	2	BOLT (1/2-13X1.75-IN)	
	10	1	**9X-7371**	1	SEAL-O-RING	
	11	1	**198-4778**	1	WASHER-HARD (13.5X30X12-MM THK)	
	12	1	**117-8801**	1	SEAL-O-RING	
					AVAILABLE REPAIR KIT(S):	
J			**292-5257**	1	KIT-SEAL (GEAR PUMP)	
					(INCLUDES INNER SHAFT SEAL, RETAINING RING, SHAFT SEAL, SEAL-O-RINGS, E-RINGS, & RETAINER E-RINGS)	

J-KIT MARKED J SERVICES PART(S) MARKED J
Y-SEPARATE ILLUSTRATION

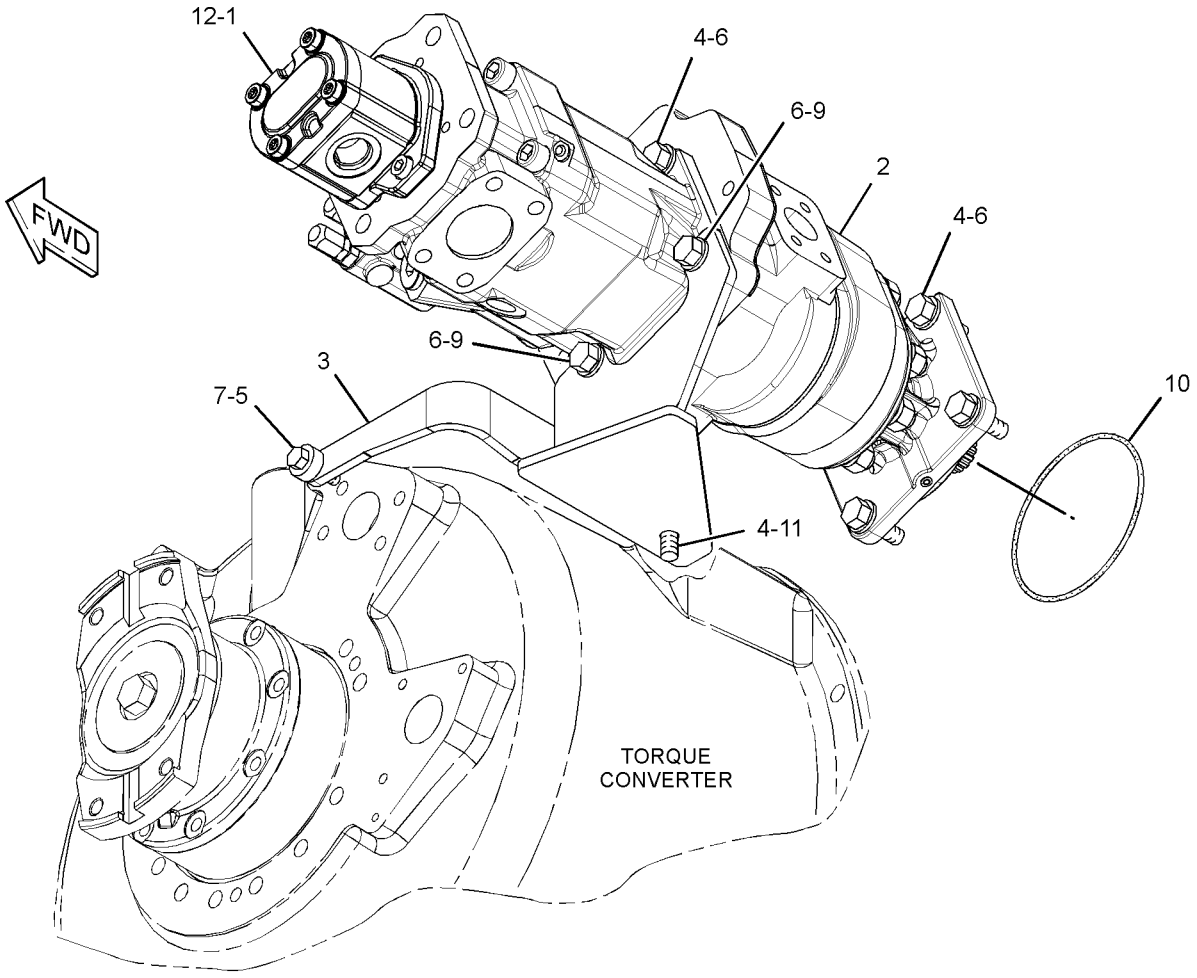

GRAPHIC #1 **<END>** g01430571

HYDRAULIC SYSTEM

117-5098 PUMP GP-GEAR

S/N: B9K1-UP

PART OF 124-7636 PUMP GP-GEAR

SMCS-4306 **i03016876**

NOTE	REF NO	GRAPHIC REF	PART NUMBER	QTY	PART NAME 1 2 3 4 5 6 (PRODUCT LEVEL)	SEE PAGE
	1	1	**142-2135**	1	GEAR-DRIVE	
	2	1	**142-2131**	1	FLANGE AS	
					(INCLUDES BUSHINGS)	
J	3	1	**139-3213**	2	SEAL	
J	4	1	**008-3214**	1	RING-RETAINING (INTERNAL)	
	5	1	**142-2136**	1	GEAR-IDLER	
	6	1	**4T-9300**	1	BUSHING-TERMINAL	
	7	1	**4T-9301**	1	BUSHING-TERMINAL	
	8	1	**6J-2386**	2	DOWEL	
	9	1	**142-2132**	1	BODY AS (INCLS BUSHINGS)	
	10	1	**107-2884**	2	PLATE-ISOLATION	
	11	1	**142-2133**	1	SPACER	
	12	1	**107-2889**	2	SPACER	
	13	1	**142-2134**	1	BODY	
	14	1	**1B-2886**	6	BOLT (1/2-13X3.75-IN)	
	15	1	**142-2137**	1	PLUG	
J	16	1	**077-3790**	4	SEAL	
	17	1	**4T-9298**	2	BUSHING-TERMINAL	
	18	1	**077-4643**	2	PLATE-ISOLATION	
J	19	1	**6E-2943**	1	PLUG	
	20	1	**9F-2247**	2	PLUG-PIPE	
	21	1	**0S-1595**	8	BOLT (1/2-13X1.25-IN)	
J	22	1	**9X-7722**	1	SEAL-O-RING	
	23	1	**6R-3966**	2	PLATE-PRESSURE	
	24	1	**107-2891**	2	PISTON	
	25	1	**107-2893**	2	SPRING	
	26	1	**107-2887**	2	PISTON	
	27	1	**107-2888**	2	SPRING	
					AVAILABLE REPAIR KIT(S):	
J			**142-2138**	1	KIT-SEAL	

J-KITS MARKED J INCLUDE PARTS MARKED J

117-5098 PUMP GP-GEAR *(contd.)* **i03016876**

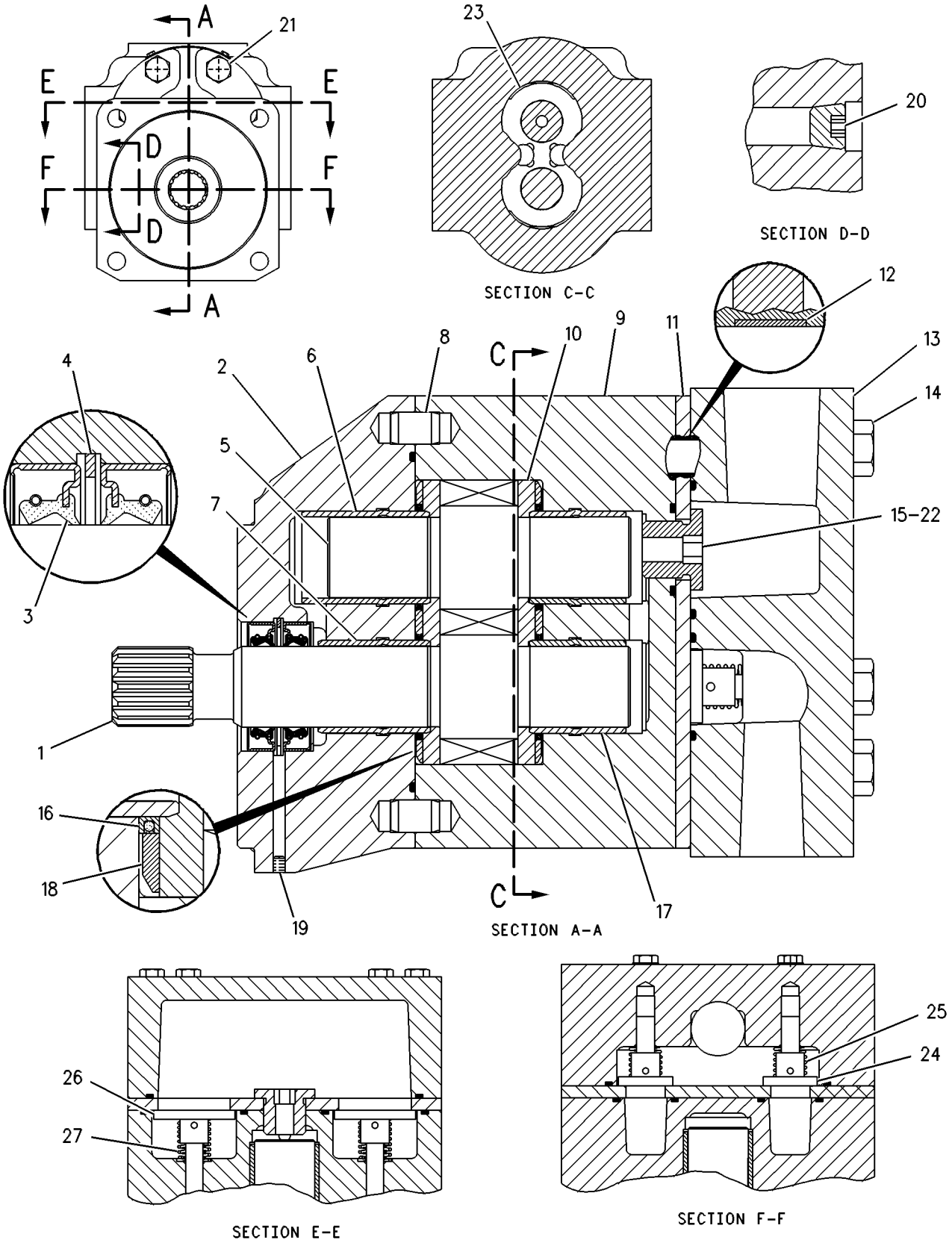

GRAPHIC #1 **<END>** g00278126

HYDRAULIC SYSTEM

124-7636 PUMP GP-GEAR

S/N: B9K1-UP

PART OF 259-9204 COMMON AR

SMCS-4306 **i00552901**

NOTE	REF NO	GRAPHIC REF	PART NUMBER	QTY	PART NAME 1 2 3 4 5 6 (PRODUCT LEVEL)	SEE PAGE
	1	1	**3F-5792**	1	SEAL-O-RING	
Y	2	1	**117-5098**	1	PUMP GP-GEAR	762
	3	1	**6V-8188**	4	NUT (1/2-13-THD)	
	4	1	**8T-4223**	4	WASHER-HARD (13.5X25.5X3-MM THK)	

Y-SEPARATE ILLUSTRATION

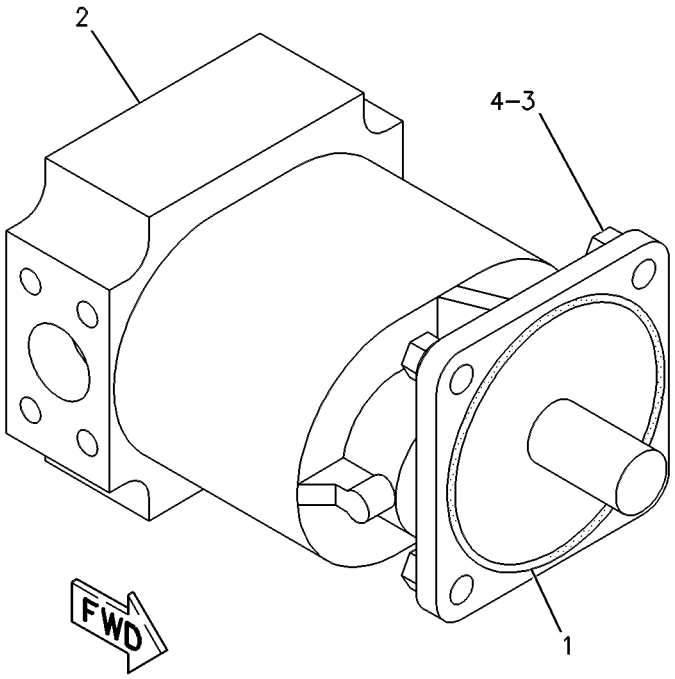

GRAPHIC #1 **<END>** g00086444

HYDRAULIC SYSTEM

268-4763 PUMP GP-PISTON–IMPLEMENT, STEERING

S/N: B9K1-UP

PART OF 268-0238 PUMP & MTG GP-PISTON

SMCS-5070 **i02763317**

NOTE	REF NO	GRAPHIC REF	PART NUMBER	QTY	PART NAME 1 2 3 4 5 6 (PRODUCT LEVEL)	SEE PAGE
Y	1	1	**268-6690**	1	PUMP GP-PISTON (STEERING) (STEERING)	766
Y	2	1	**268-6691**	1	PUMP GP-PISTON (IMPLEMENT) (IMPLEMENT)	768
	3	1	**271-6846**	1	COUPLING	
M	4	1	**8T-0343**	4	BOLT-SOCKET HEAD (M12X1.75X55-MM)	
	5	1	**117-8801**	1	SEAL-O-RING	

M-METRIC PART
Y-SEPARATE ILLUSTRATION

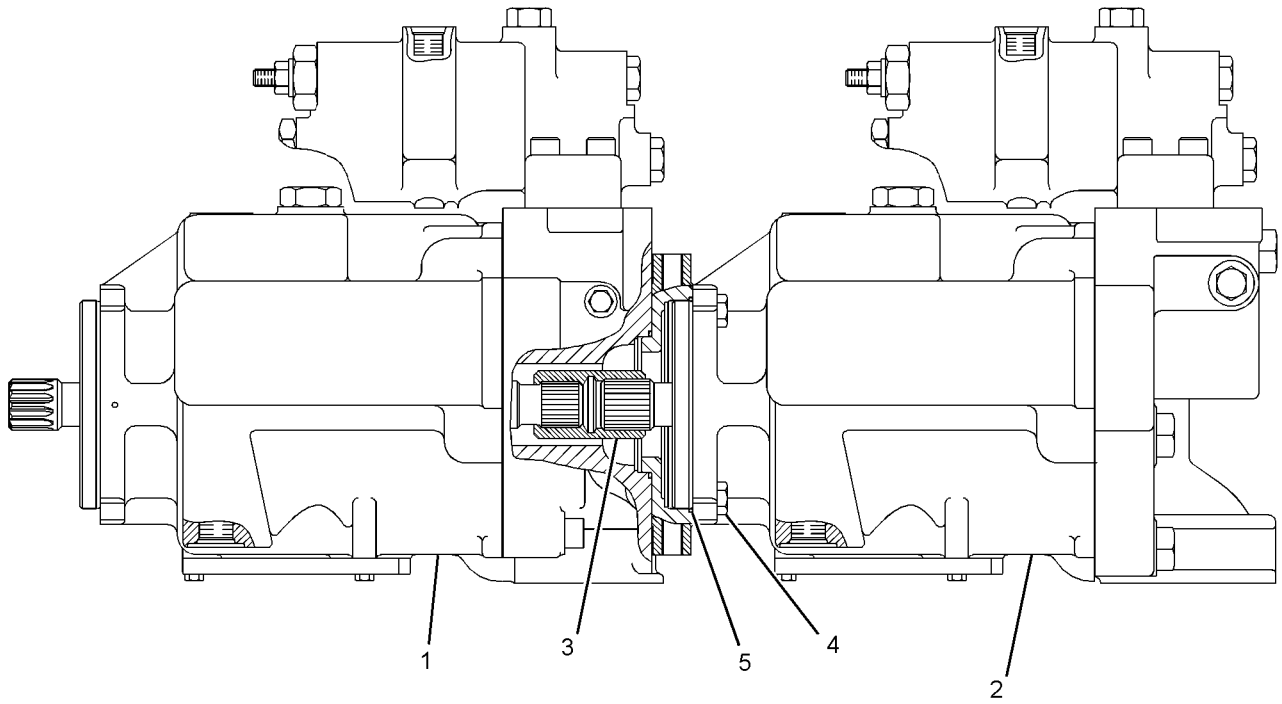

GRAPHIC #1 **<END>** g01388140

HYDRAULIC SYSTEM

268-6690 PUMP GP-PISTON–STEERING*R

S/N: B9K1-UP

PART OF 268-4763 PUMP GP-PISTON

SMCS-5070 **i02763320**

NOTE	REF NO	GRAPHIC REF	PART NUMBER	QTY	PART NAME 1 2 3 4 5 6 (PRODUCT LEVEL)	SEE PAGE
	1	1	**271-6817**	1	SHAFT-DRIVE	
	2	1	**6E-4237**	1	BEARING	
	3	1	**6E-4224**	1	PLUG-SWASHPLATE	
	4	1	**033-6036**	1	SEAL-O-RING	
	5	1	**9S-4190**	1	PLUG-O-RING	
	6	1	**9T-1699**	1	SPRING	
	7	1	**9T-1710**	1	POPPET	
	8	1	**9T-1636**	1	SEAT	
	9	1	**6E-4227**	1	COVER	
M	10	1	**6V-8837**	3	BOLT (M6X1X16-MM)	
	11	1	**4F-4097**	1	SEAL-O-RING	
	12	1	**6E-4236**	1	BEARING	
M	13	1	**3E-4302**	2	SCREW-FLAT HEAD (M4X0.7X10-MM)	
	14	1	**8T-5039**	3	SEAL-O-RING	
	15	1	**095-0888**	2	PIN-SPRING	
M	16	1	**8T-0343**	4	BOLT-SOCKET HEAD (M12X1.75X55-MM)	
M	17	1	**095-0705**	2	BOLT-SOCKET HEAD (M16X2X100-MM)	
Y	18	1	**104-3122**	1	VALVE GP-PUMP CONTROL (PRESSURE, FLOW COMPENSATOR) (IMPLEMENT, STEERING)	810
	19	1	**7K-8877**	1	CONE-BEARING	
M	20	1	**6V-8337**	4	BOLT-SOCKET HEAD (M8X1.25X35-MM)	
	21	1	**033-6027**	1	SEAL-O-RING	
	22	1	**7K-8876**	1	CUP-BEARING	
	23	1	**6E-4213**	1	KIT-BIAS PISTON (HYDRAULIC PISTON PUMP) (INCLUDES SPRING, ROD, PISTON, & PACKING)	
	24	1	**6E-4214**	1	SPRING-BIAS	
Y	25	1	**6E-4216**	1	ROTATING GP-PUMP (IMPLEMENT, STEERING)	775
	26	1	**6E-4225**	1	GASKET	
	27	1	**7L-9061**	2	SEAL-O-RING	
	28	1	**3E-7417**	2	PLUG	
	29	1	**8T-7876**	2	SEAL-O-RING	
	30	1	**6E-4233**	1	PLATE-VALVE-RH	
	31	1	**005-0471**	1	CONE-BEARING	
	32	1	**005-0469**	1	CUP-BEARING	
B	33	1	**103-6282**	1	SHIM PACK (INCLUDES 17-SHIMS)	
	34	1	**9T-1652**	1	PIN	
	35	1	**6E-4215**	1	KIT-PISTON (HYDRAULIC PISTON PUMP) (INCLUDES PACKING, ROD, & PISTON)	
Y	36	1	**184-1527**	1	SWASHPLATE GP	777
	37	1	**6L-8797**	2	RING-RETAINING	
	38	1	**9X-7547**	2	SEAL-LIP TYPE	

B-USE AS REQUIRED
M-METRIC PART
Y-SEPARATE ILLUSTRATION

268-6690 PUMP GP-PISTON *(contd.)* **i02763320**

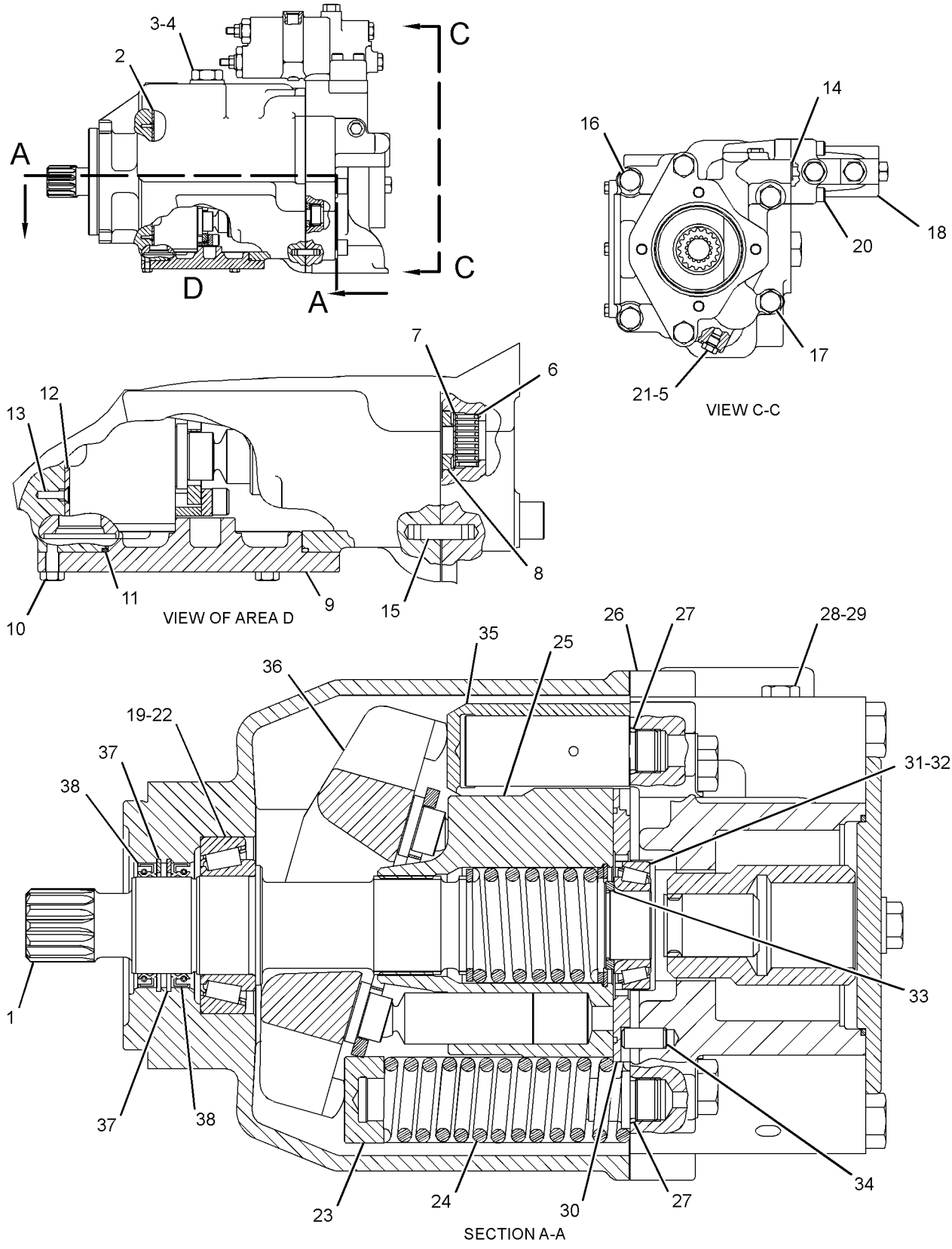

GRAPHIC #1 **<END>** g01390600

HYDRAULIC SYSTEM

268-6691 PUMP GP-PISTON–IMPLEMENT*R

S/N: B9K1-UP

PART OF 268-4763 PUMP GP-PISTON

SMCS-5070 **i03022558**

NOTE	REF NO	GRAPHIC REF	PART NUMBER	QTY	PART NAME 1 2 3 4 5 6 (PRODUCT LEVEL)	SEE PAGE
	1	2	**6E-4232**	1	SHAFT	
	2	1	**6E-4237**	1	BEARING	
	3	1	**6E-4224**	1	PLUG-SWASHPLATE	
	4	1	**033-6036**	1	SEAL-O-RING	
	5	1	**9S-4190**	1	PLUG-O-RING	
	6	1	**9T-1699**	1	SPRING	
	7	1	**9T-1710**	1	POPPET	
	8	1	**9T-1636**	1	SEAT	
	9	1	**6E-4227**	1	COVER	
M	10	1	**6V-8837**	3	BOLT (M6X1X16-MM)	
	11	1	**4F-4097**	1	SEAL-O-RING	
	12	1	**6E-4236**	1	BEARING	
M	13	1	**3E-4302**	2	SCREW-FLAT HEAD (M4X0.7X10-MM)	
	14	1	**8T-5039**	3	SEAL-O-RING	
	15	1	**095-0888**	2	PIN-SPRING	
M	16	1	**8T-0343**	4	BOLT-SOCKET HEAD (M12X1.75X55-MM)	
M	17	1	**095-0705**	2	BOLT-SOCKET HEAD (M16X2X100-MM)	
Y	18	1	**104-3122**	1	VALVE GP-PUMP CONTROL (PRESSURE, FLOW COMPENSATOR) (IMPLEMENT, STEERING)	810
	19	2	**7K-8877**	1	CONE-BEARING	
M	20	1	**6V-8337**	4	BOLT-SOCKET HEAD (M8X1.25X35-MM)	
	21	1	**033-6027**	1	SEAL-O-RING	
	22	2	**7K-8876**	1	CUP-BEARING	
	23	2	**6E-4213**	1	KIT-BIAS PISTON (HYDRAULIC PISTON PUMP) (INCLUDES SPRING, ROD, PISTON & PACKING)	
	24	2	**6E-4214**	1	SPRING-BIAS	
Y	25	2	**6E-4216**	1	ROTATING GP-PUMP (IMPLEMENT, STEERING)	775
	26	2	**6E-4225**	1	GASKET	
	27	2	**7L-9061**	2	SEAL-O-RING	
	28	2	**3E-7417**	2	PLUG	
	29	2	**8T-7876**	2	SEAL-O-RING	
	30	2	**6E-4233**	1	PLATE-VALVE-RH	
	31	2	**005-0471**	1	CONE-BEARING	
	32	2	**005-0469**	1	CUP-BEARING	
B	33	2	**103-6282**	1	SHIM PACK (INCLUDES 17-SHIMS)	
	34	2	**9T-1652**	1	PIN	
	35	2	**6E-4215**	1	KIT-PISTON (HYDRAULIC PISTON PUMP) (INCLUDES PACKING, ROD & PISTON)	
Y	36	2	**184-1527**	1	SWASHPLATE GP	777

B-USE AS REQUIRED
M-METRIC PART
Y-SEPARATE ILLUSTRATION

268-6691 PUMP GP-PISTON *(contd.)* **i03022558**

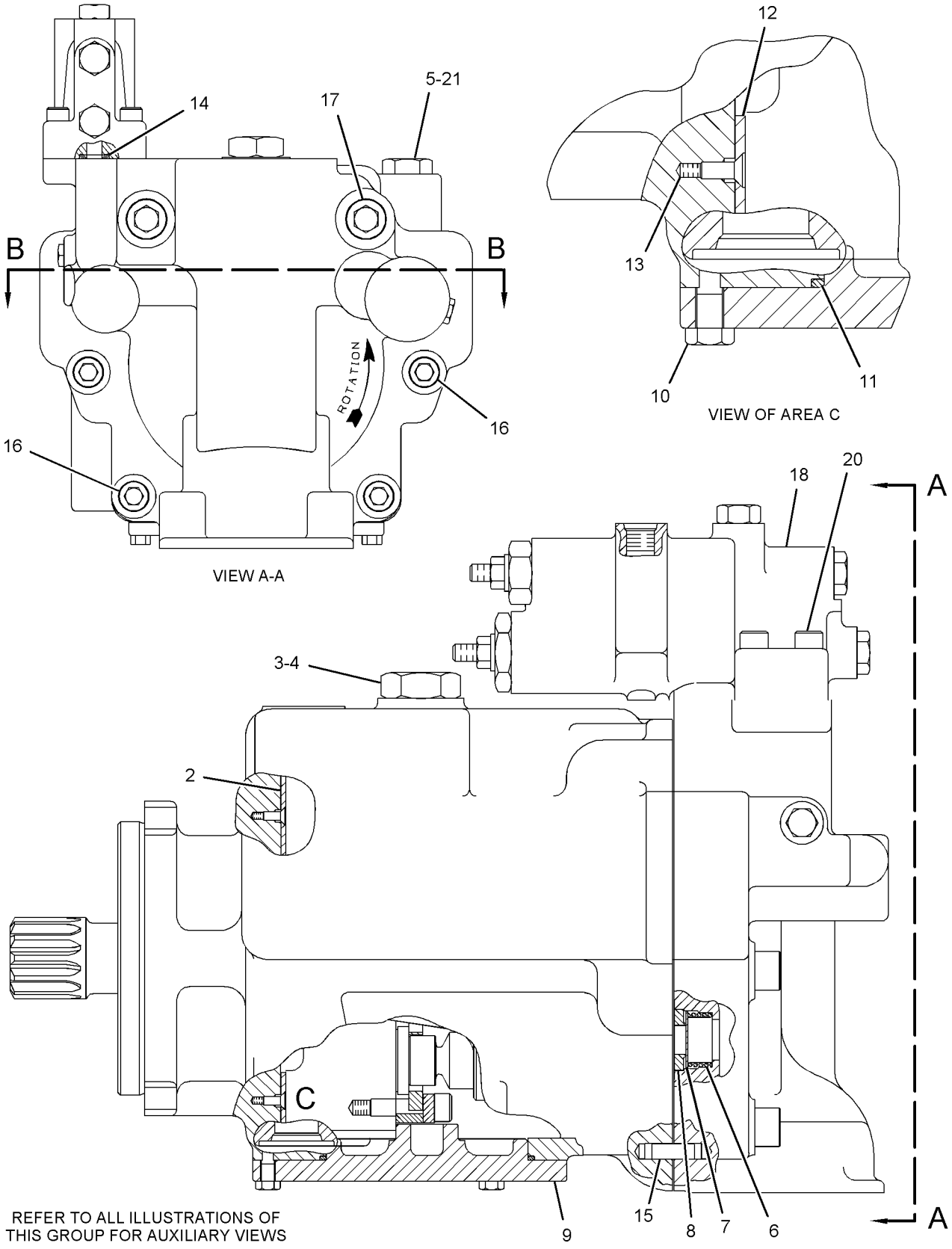

GRAPHIC #1

g01630633

268-6691 PUMP GP-PISTON *(contd.)* **i03022558**

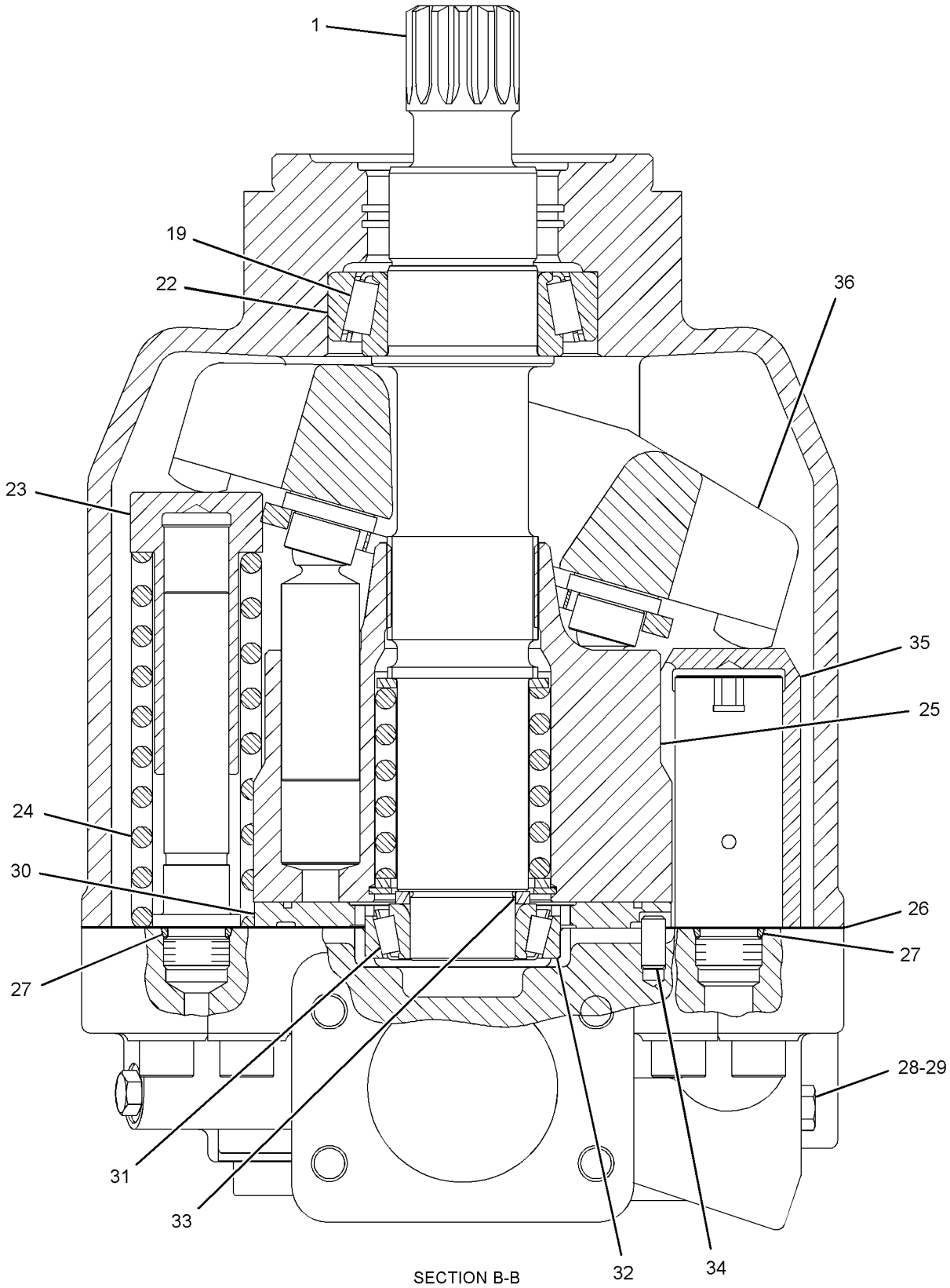

SECTION B-B

GRAPHIC #2 **<END>** g01630634

HYDRAULIC SYSTEM

291-0061 PUMP GP-PISTON–BRAKE, HYDRAULIC FAN

S/N: B9K1-UP
FRONT
PART OF 270-2720 PUMP GP-PISTON & GEAR

SMCS-5070 **i02813708**

NOTE	REF NO	GRAPHIC REF	PART NUMBER	QTY	PART NAME 1 2 3 4 5 6 (PRODUCT LEVEL)	SEE PAGE
	1	1	**180-6213**	1	RING-RETAINING	
	2	1	**168-7319**	1	SEAL-SHAFT	
M	3	1	**6R-7943**	2	SCREW (M5X0.8X15-MM)	
	4	1	**168-2197**	1	SPRING	
	5	1	**168-2198**	1	LINK-CONTROL	
	6	1	**174-9994**	1	PISTON-CONTROL	
	7	1	**8T-7525**	1	SEAL-O-RING	
	8	1	**168-2200**	1	PLUG-CONTROL	
	9	1	**185-0296**	1	BEARING	
	10	1	**168-7316**	1	HEAD-PUMP	
M	11	1	**8T-2503**	4	BOLT-SOCKET HEAD (M14X2X35-MM)	
	12	1	**9X-8979**	1	DOWEL	
	13	1	**192-7470**	1	SEAL-O-RING	
	14	1	**168-2203**	1	SHIM-SHAFT	
Y	15	1	**279-2486**	1	ROTATING GP-PUMP	776
	16	1	**279-2488**	1	SWASHPLATE-PUMP	
	17	1	**292-6912**	1	COUPLING	
	18	1	**185-0295**	1	BEARING	
	19	1	**177-0344**	1	SEAL-O-RING	
	20	1	**190-6507**	1	STOP	
	21	1	**292-6913**	1	SHAFT-DRIVE	
	22	1	**120-4394**	2	PLUG-BREAK OFF	
	23	1	**168-3504**	2	SEAL	
	24	1	**9S-8006**	1	PLUG-O-RING	
	25	1	**2M-9780**	1	SEAL-O-RING	
Y	26	1	**285-5240**	1	VALVE GP-PUMP CONTROL (PRESSURE, FLOW COMPENSATOR) (PRESSURE, FLOW COMPENSATOR)	811
	27	1	**235-2407**	1	BEARING-CRADLE (LH)	
	28	1	**235-2408**	1	BEARING-CRADLE (RH)	

M-METRIC PART
Y-SEPARATE ILLUSTRATION

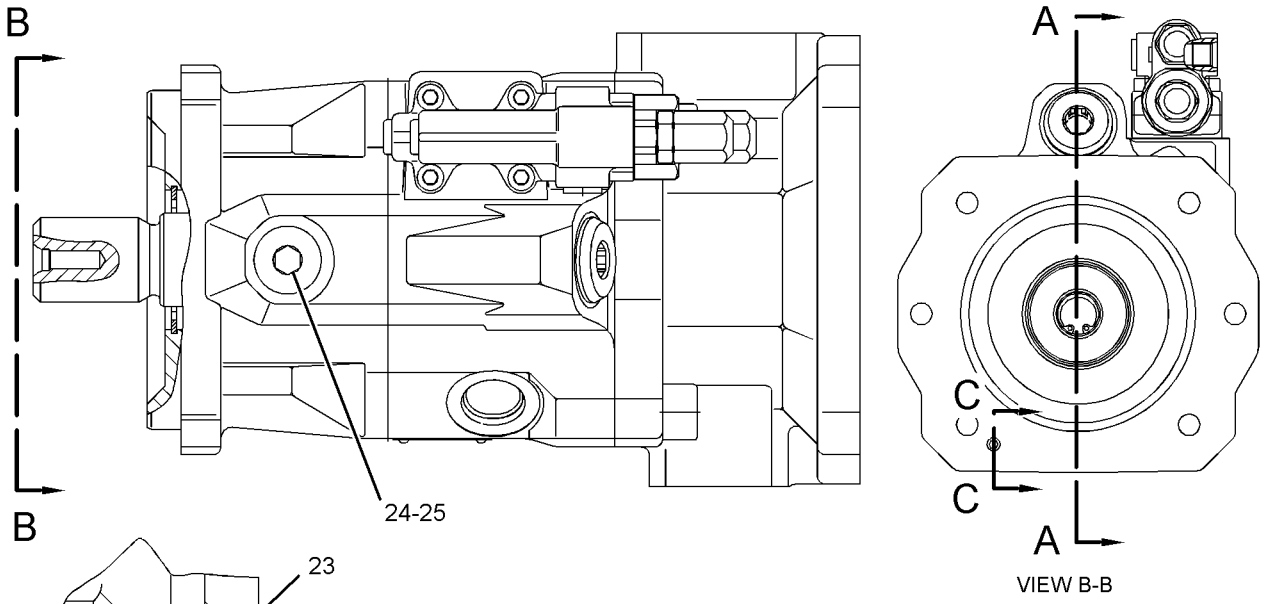

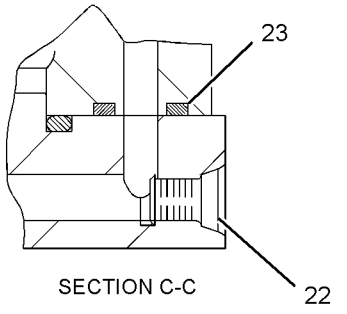

GRAPHIC #1 **<END>** g01388411

HYDRAULIC SYSTEM

270-2720 PUMP GP-PISTON & GEAR–
BRAKE, DIFFERENTIAL LOCK, HYDRAULIC FAN
S/N: B9K1-UP

PART OF 268-0237 PUMP & MTG GP-PISTON & GEAR

SMCS-507G **i02763322**

NOTE	REF NO	GRAPHIC REF	PART NUMBER	QTY	PART NAME 1 2 3 4 5 6 (PRODUCT LEVEL)	SEE PAGE
Y	1	1	**291-0061**	1	PUMP GP-PISTON (BRAKE, HYDRAULIC FAN) (FRONT)	771
J	2	1	**276-2968**	1	PUMP GP-GEAR (DIFFERENTIAL LOCK) (REAR)	
	3	1	**235-2405**	1	COUPLER	
	4	1	**177-0344**	1	SEAL-O-RING	
M	5	1	**8T-0271**	2	BOLT-SOCKET HEAD (M10X1.5X35-MM)	
	6	1	**276-5621**	2	WASHER (10.5X21X2-MM THK)	
					AVAILABLE REPAIR KIT(S):	
J			**284-3798**		KIT-SEAL (GEAR PUMP)	
					(INCLUDES SHAFT SEALS, RETAINING RINGS, E-RINGS & O-RINGS)	

J-KIT MARKED J SERVICES PART(S) MARKED J
M-METRIC PART
Y-SEPARATE ILLUSTRATION

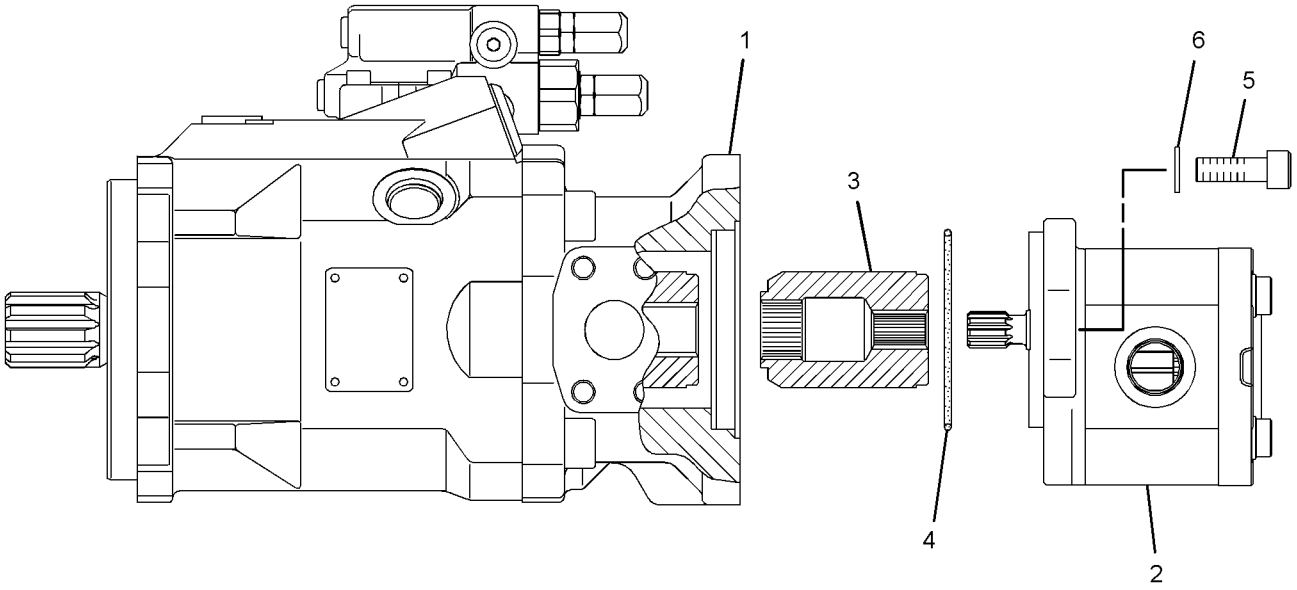

GRAPHIC #1 **<END>** g01392490

HYDRAULIC SYSTEM

185-0275 ROTATING GP-MOTOR

S/N: B9K1-UP

PART OF 213-5268 MOTOR GP-PISTON

SMCS-1386, 5058 **i02023021**

NOTE	REF NO	GRAPHIC REF	PART NUMBER	QTY	PART NAME 1 2 3 4 5 6 (PRODUCT LEVEL)	SEE PAGE
	1	1	**168-3379**	3	PIN	
	2	1	**168-3382**	1	WASHER (42-MM ODX2.7-MM THK)	
	3	1	**185-0292**	1	SPRING	
	4	1	**6V-7723**	1	RING-RETAINING	
	5	1	**185-0287**	1	PLATE-VALVE	
	6	1	**185-0289**	1	BARREL	
	7	1	**168-3384**	9	PISTON AS-PUMP	
	8	1	**168-3378**	1	BEARING-SPHERICAL	
	9	1	**168-3385**	1	PLATE-RETRACTION	

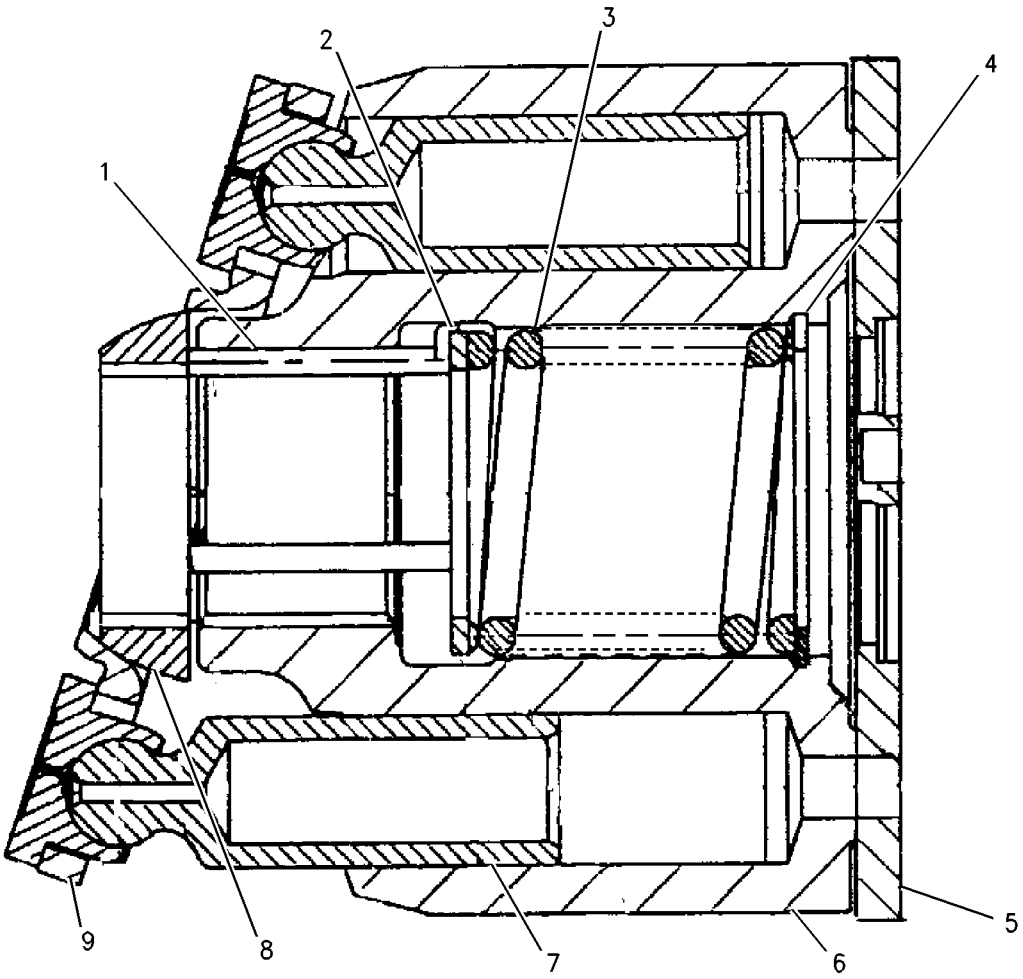

GRAPHIC #1 **<END>** g00790134

HYDRAULIC SYSTEM

6E-4216 ROTATING GP-PUMP

S/N: B9K1-UP

PART OF 268-6690, 268-6691 PUMP GP-PISTON

SMCS-5070 **i02351999**

NOTE	REF NO	GRAPHIC REF	PART NUMBER	QTY	PART NAME 1 2 3 4 5 6 (PRODUCT LEVEL)	SEE PAGE
	1	1	**9T-4906**	1	RING-RETAINING	
	2	1	**6E-4219**	1	GUIDE	
M	3	1	**6V-5192**	4	BOLT-SOCKET HEAD (M8X1.25X30-MM)	
	4	1	**6E-4218**	2	PLATE-SPACER	
	5	1	**6E-4217**	2	PLATE-LIMITER	
	6	1	**9T-8452**	9	PISTON	
	7	1	**9T-8445**	1	GUIDE	
	8	1	**9T-8446**	1	SPRING	
	9	1	**9T-8448**	1	BARREL	
	10	1	**9T-8450**	1	PLATE-RETAINING	

M-METRIC PART

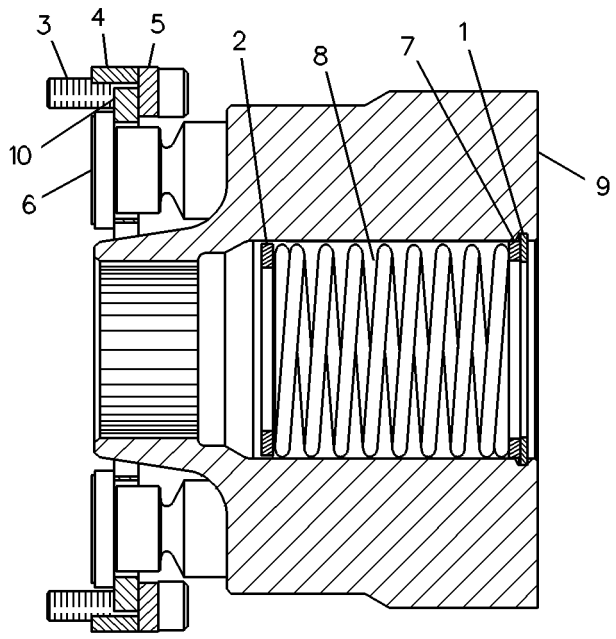

GRAPHIC #1 **<END>** g00083062

HYDRAULIC SYSTEM

279-2486 ROTATING GP-PUMP–BRAKE, HYDRAULIC FAN

S/N: B9K1-UP

PART OF 291-0061 PUMP GP-PISTON

SMCS-5070 **i02832629**

NOTE	REF NO	GRAPHIC REF	PART NUMBER	QTY	PART NAME 1 2 3 4 5 6 (PRODUCT LEVEL)	SEE PAGE
	1	1	**168-3384**	9	PISTON AS-PUMP	
	2	1	**197-2851**	1	BARREL	
	3	1	**279-2491**	1	PLATE-PORT	
	4	1	**168-3385**	1	PLATE-RETRACTION	
	5	1	**168-3378**	1	BEARING-SPHERICAL	
	6	1	**168-3381**	1	SPRING	
	7	1	**168-3379**	3	PIN	
	8	1	**6V-7723**	1	RING-RETAINING	
	9	1	**168-3382**	1	WASHER (42-MM ODX2.7-MM THK)	

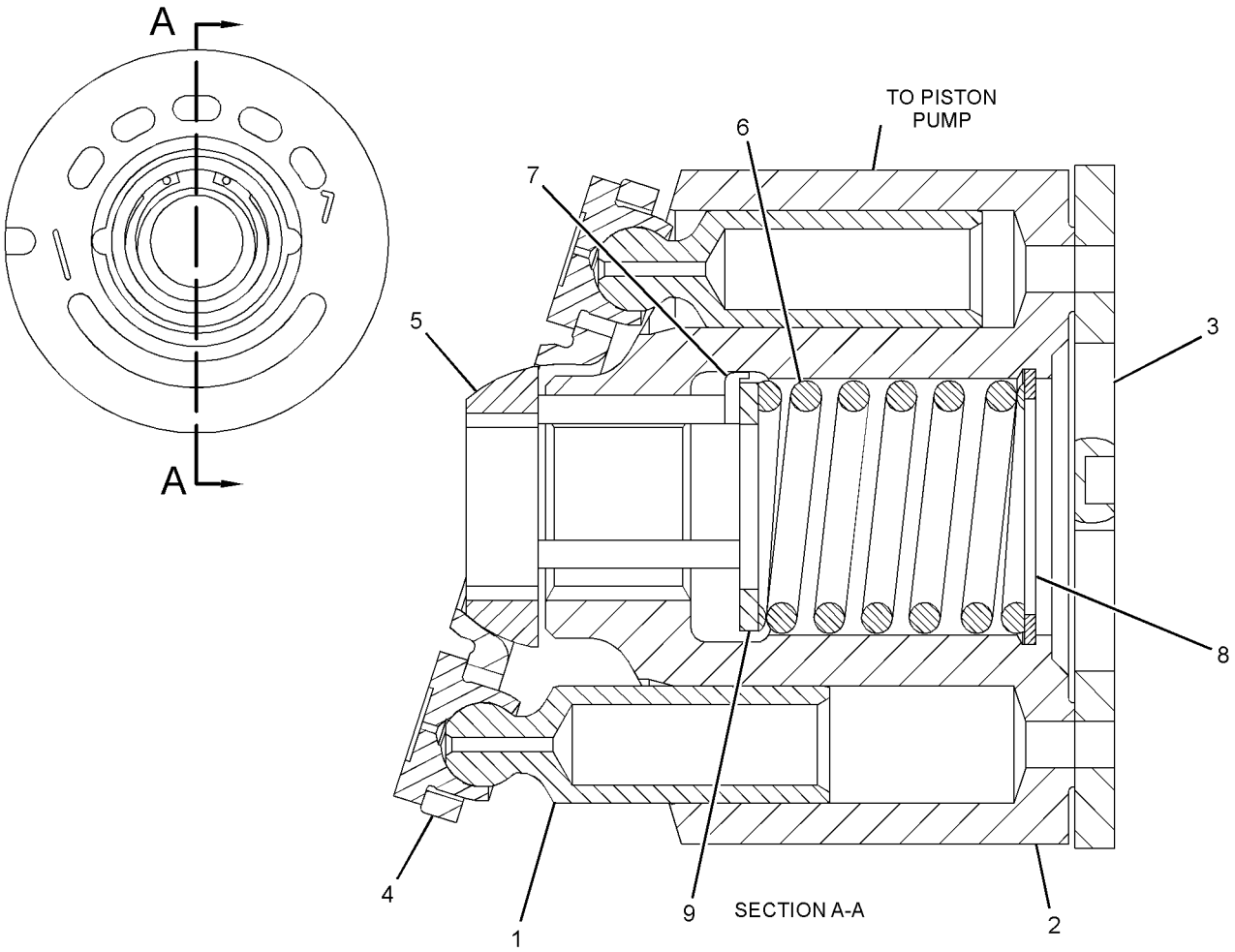

GRAPHIC #1 **<END>** g01355552

HYDRAULIC SYSTEM

184-1527 SWASHPLATE GP

S/N: B9K1-UP

PART OF 268-6690, 268-6691 PUMP GP-PISTON

SMCS-5070 **i01247539**

NOTE	PART NUMBER	QTY	PART NAME 1 2 3 4 5 6 (PRODUCT LEVEL)	SEE PAGE
	1H-3937	2	PIN	
	167-1801	2	STOP-SWASHPLATE	

<END>

HYDRAULIC SYSTEM

260-6502 SWIVEL GP—CIRCLE DRIVE

S/N: B9K1-UP

PART OF 253-9006 LINES GP-FRONT

SMCS-5060 **i02348806**

NOTE	REF NO	GRAPHIC REF	PART NUMBER	QTY	PART NAME 1 2 3 4 5 6 (PRODUCT LEVEL)	SEE PAGE
B	1	1	**5J-1246**	6	SHIM (0.13-MM THK)	
	2	1	**8J-2331**	7	SEAL	
	3	1	**173-1008**	1	ROTOR	
	4	1	**173-1009**	1	RETAINER	
	5	1	**223-0580**	1	COVER	
	7	1	**260-6501**	1	BODY	
	8	1	**173-1007**	2	SEAL	
	9	1	**1P-3700**	4	SEAL-RECTANGULAR	
	10	1	**2H-3928**	7	SEAL-O-RING	
	11	1	**4J-9964**	2	SEAL	
	12	1	**5P-2566**	6	BOLT (1/2-13X1.5-IN)	
	13	1	**8T-4223**	4	WASHER-HARD (13.5X25.5X3-MM THK)	

B-USE AS REQUIRED

260-6502 **SWIVEL GP** *(contd.)* **i02348806**

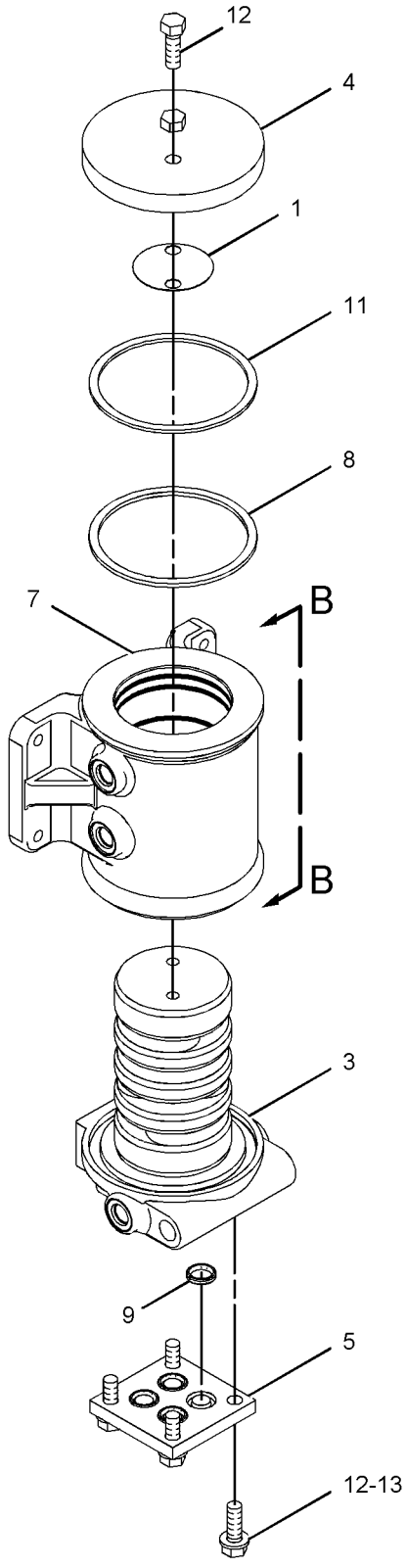

VIEW OF AREA A

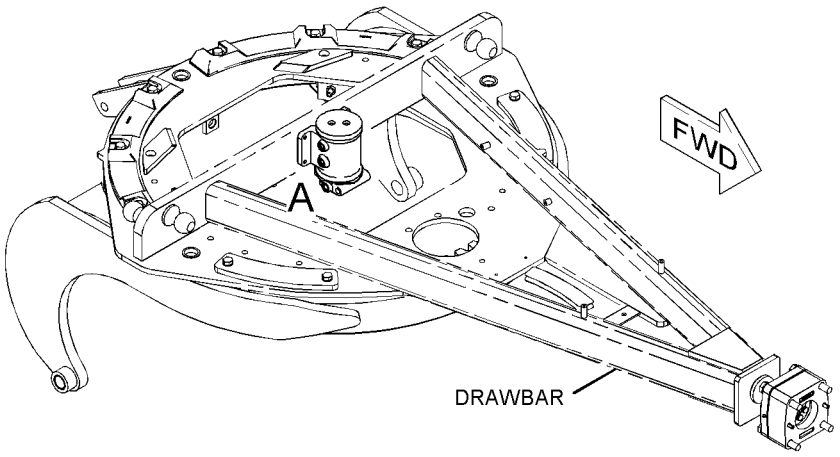

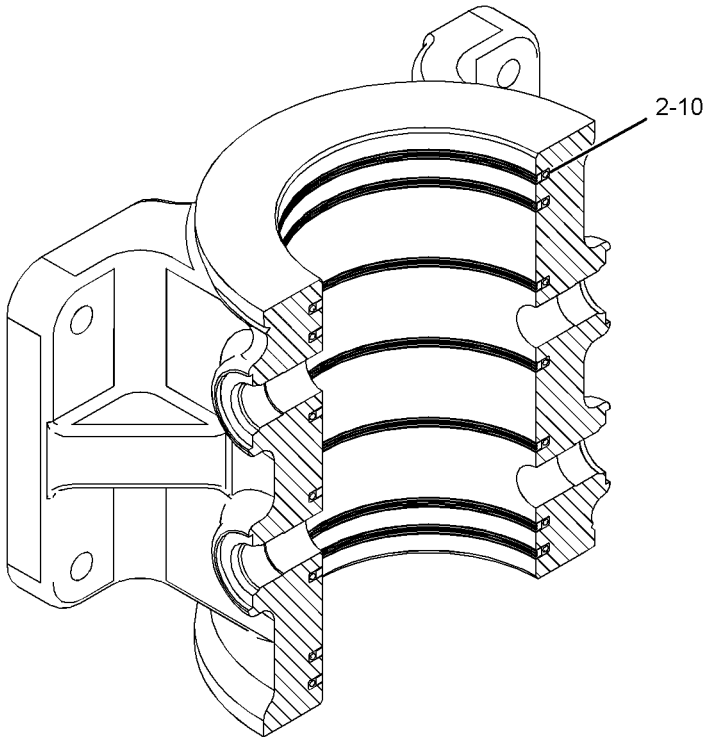

SECTION B-B

GRAPHIC #1 **<END>** g01142114

HYDRAULIC SYSTEM

226-1744 TANK & MTG GP-HYDRAULIC—HYDRAULIC

S/N: B9K1-UP

PART OF 259-9204 COMMON AR

SMCS-4332, 5056, 5068 **i03062981**

NOTE	REF NO	GRAPHIC REF	PART NUMBER	QTY	PART NAME 1 2 3 4 5 6 (PRODUCT LEVEL)	SEE PAGE
	1	1	**117-9152**	1	VALVE-BREAKER RELIEF (HYDRAULIC TANK)	
	2	1	*185-2245*	1	ADAPTER AS	
		1	**157-8510**	1	ADAPTER	
		1	**6V-9746**	1	SEAL-O-RING	
Y	3	1	*286-2964*	1	TANK GP-HYDRAULIC	781
	4	1	**294-8197**	4	SPACER (22X50X25-MM THK)	
I	5	1	**307-8788**	1	HOSE AS	
	6	1	*148-8347*	1	ELBOW AS	
		1	**6V-9007**	1	ELBOW	
		1	**3D-2824**	1	SEAL-O-RING	
		1	**6V-9746**	1	SEAL-O-RING	
	7	1	**3D-2824**	1	SEAL-O-RING	
	8	1	**067-3045**	1	CLIP	
M	9	1	**8T-4187**	4	BOLT (M20X2.5X80-MM)	

I-REFER TO HYDRAULIC INFORMATION SYSTEM
M-METRIC PART
Y-SEPARATE ILLUSTRATION

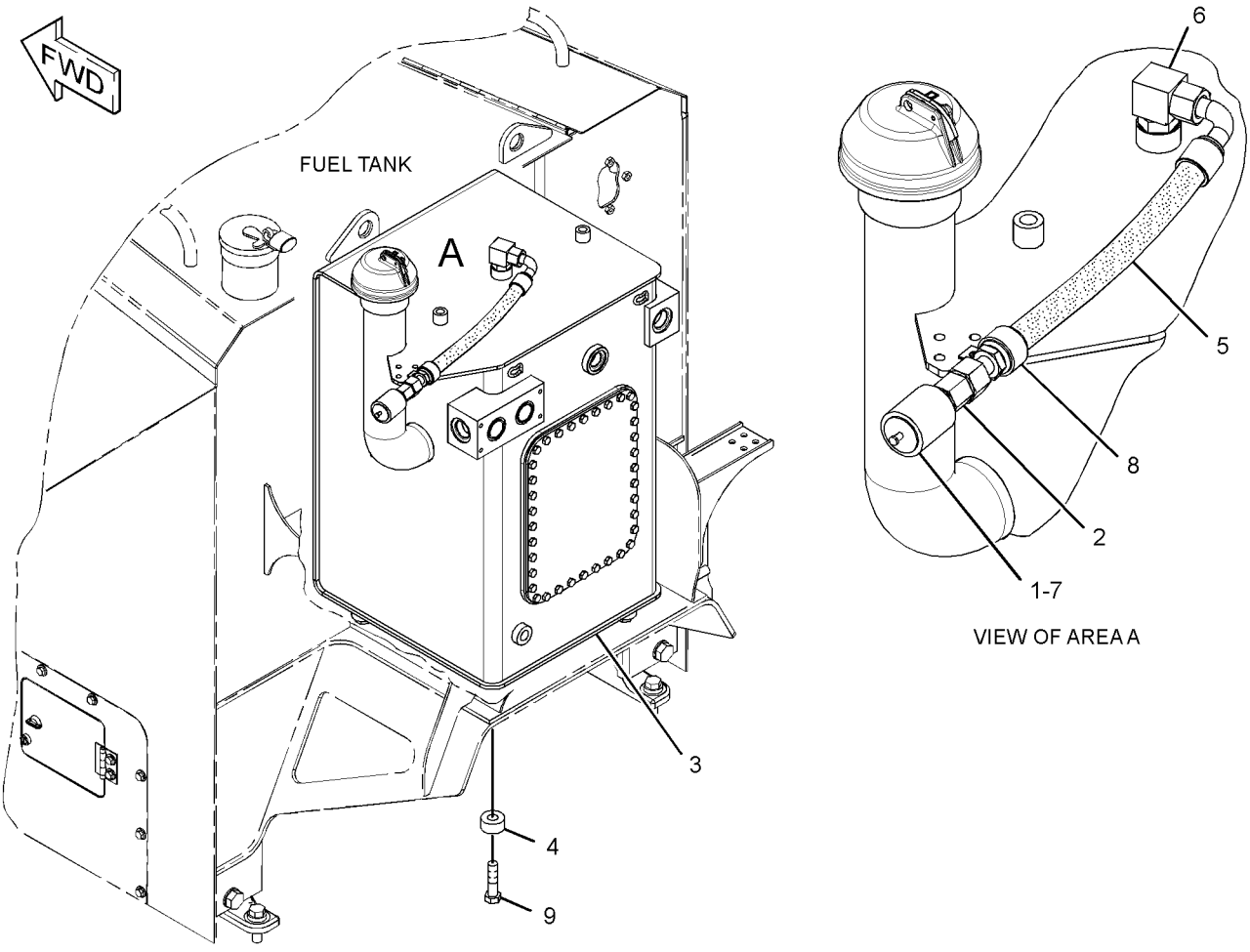

GRAPHIC #1 **<END>** g01384654

HYDRAULIC SYSTEM

286-2964 TANK GP-HYDRAULIC

S/N: B9K1-UP
200-LITER (26.4-US GAL)
PART OF 226-1744 TANK & MTG GP-HYDRAULIC

SMCS-4332, 5056, 5068 **i02903231**

NOTE	REF NO	GRAPHIC REF	PART NUMBER	QTY	PART NAME 1 2 3 4 5 6 (PRODUCT LEVEL)	SEE PAGE
	1	2	**1U-2827**	1	GUIDE-VALVE	
	2	1	**3D-6678**	1	STRAINER (HYDRAULIC TANK FILL)	
	3	1	**4J-3754**	1	CAP-FILLER (HYDRAULIC TANK)	
	4	1	**4J-3816**	1	PLATE	
	5	1	**5D-1901**	1	WASHER (106.5X126.5X2.5-MM THK)	
	6	1	**6E-1752**	2	SCREEN (HYDRAULIC TANK)	
	7	1	**7B-2805**	1	RING-LOCK	
	8	2	**7B-3039**	1	SPRING	
	9	2	**8J-8782**	1	BODY-DRAIN VALVE (HYDRAULIC TANK)	
	10	2	**8J-8783**	1	VALVE	
	11	2	**8T-3298**	1	SEAL-RECTANGULAR	
	12	2	**9J-7031**	1	PLUG-DRAIN (HYDRAULIC TANK OIL)	
	13	1	**9M-7394**	1	LEVER	
	14	1	**9M-8808**	1	SPRING	
	15	1	**116-4681**	1	COVER-HYDRAULIC CAP	
	16	1	**245-9740**	1	GASKET	
	17	1	**253-1702**	1	COVER	
	18	1	**260-8636**	1	GAUGE-LIQUID LEVEL (SIGHT GLASS) (HYDRAULIC OIL)	
	19	1	**286-2965**	1	TANK AS-HYDRAULIC	
	20	1	**1L-5072**	1	DOWEL	
	21	1	**1M-8649**	1	RING-RETAINING	
	22	2	**1P-4579**	2	FLANGE-HALF	
	23	2	**1P-4582**	2	FLANGE-HALF	
	24	2	**1P-4584**	4	FLANGE-HALF	
	25	1	**4J-3815**	1	GASKET	
	26	2	**5M-2057**	1	SEAL-O-RING	
M	27	1	**6V-7732**	6	BOLT (M10X1.5X25-MM)	
M	28	2	**6V-7744**	2	LOCKNUT (M10X1.5-THD)	
	29	1	**8T-2275**	1	BALL	
	30	2	**8T-4121**	2	WASHER-HARD (11X21X2.5-MM THK)	
M	31	1	**8T-4137**	36	BOLT (M10X1.5X20-MM)	
M	32	2	**8T-4184**	8	BOLT (M12X1.75X45-MM)	
	33	2	**8T-4223**	16	WASHER-HARD (13.5X25.5X3-MM THK)	
M	34	2	**8T-4956**	8	BOLT (M12X1.75X35-MM)	

M-METRIC PART

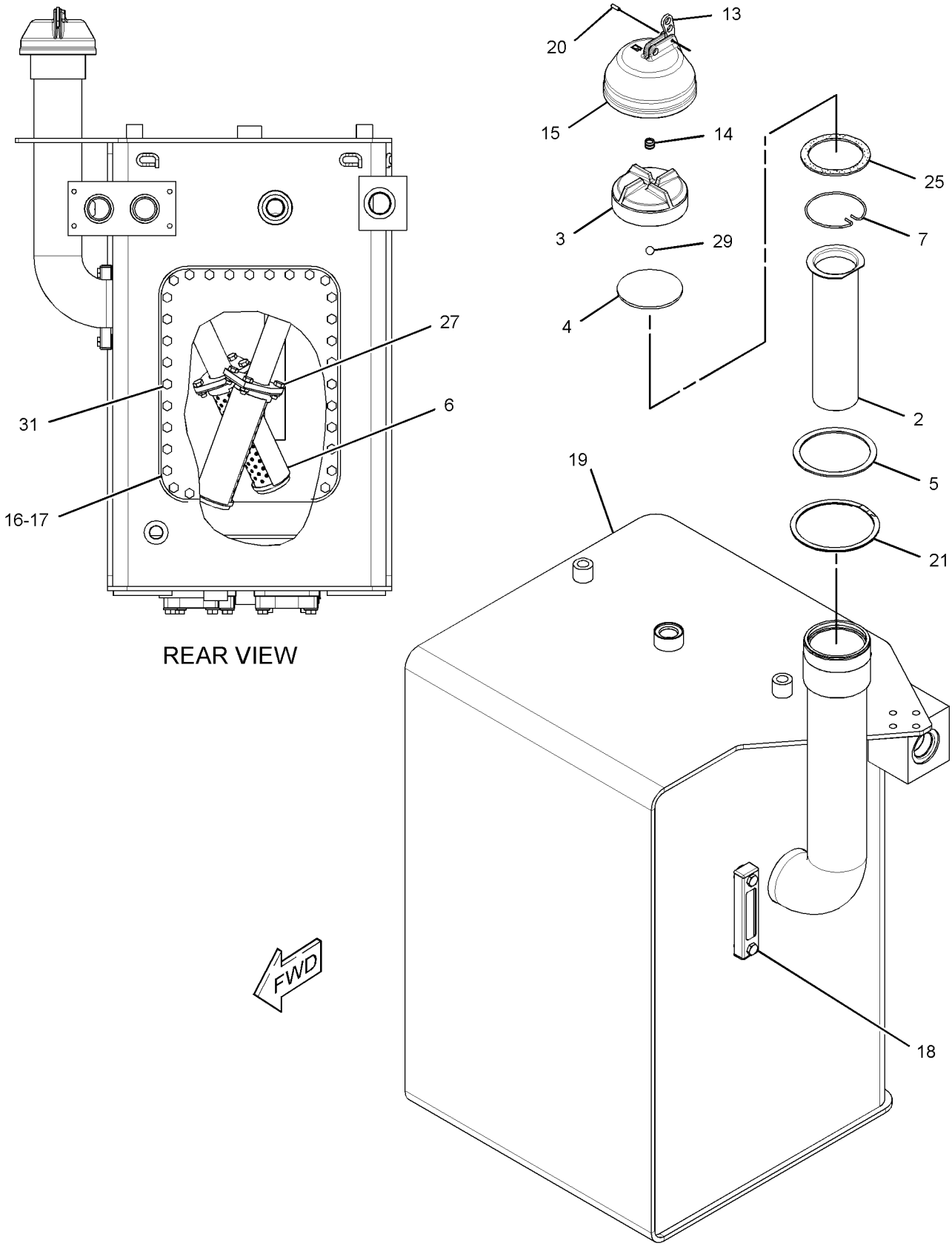

GRAPHIC #1

g01379103

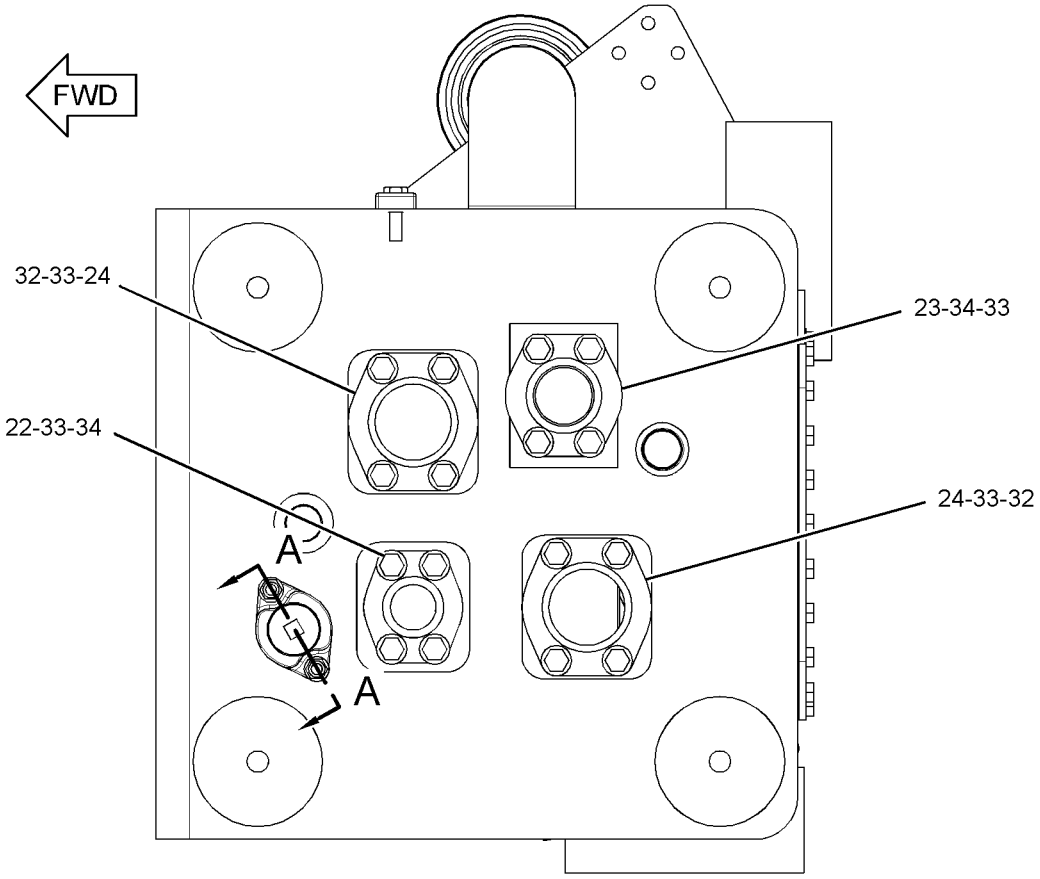

BOTTOM VIEW

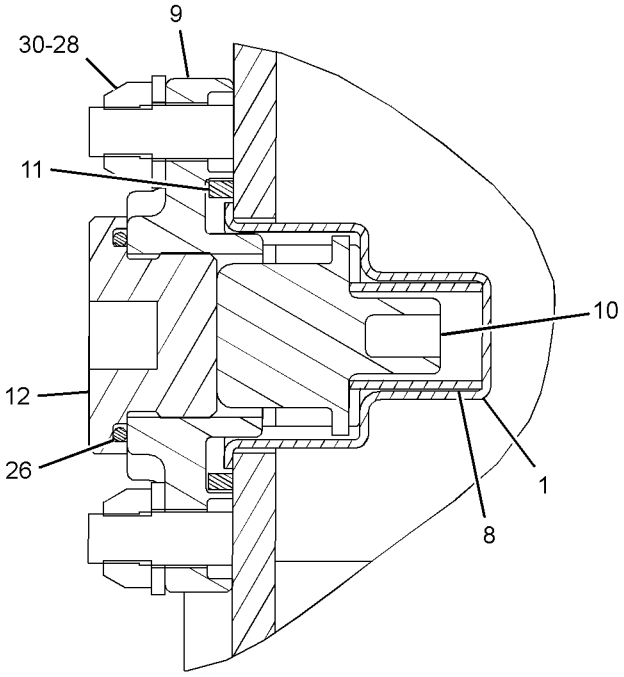

SECTION A-A

GRAPHIC #2 **<END>** g01379112

HYDRAULIC SYSTEM

270-1612 VALVE GP-BANK 5—LH

S/N: B9K1-UP

PART OF 253-9017 MOUNTING GP-VALVE

SMCS-5051 **i02813714**

NOTE	REF NO	GRAPHIC REF	PART NUMBER	QTY	PART NAME 1 2 3 4 5 6 (PRODUCT LEVEL)	SEE PAGE
	2	1	**243-3662**	6	SEAL-INTEGRAL	
	3	1	**248-6174**	4	ROD	
	4	1	**273-1871**	1	COVER	
Y	5	1	**276-3652**	1	VALVE GP-CONTROL (RIPPER)	790
Y	6	1	**276-3653**	1	VALVE GP-CONTROL (CIRCLE DRIVE)	792
Y	7	1	**276-3654**	1	VALVE GP-CONTROL (SIDESHIFT)	794
Y	8	1	**276-3655**	1	VALVE GP-CONTROL (BLADE LIFT)	796
Y	9	1	**276-3656**	1	VALVE GP-CONTROL (WHEEL LEAN)	798
Y	11	1	**292-2035**	1	MANIFOLD GP-VALVE (LEFT)	752
	12	1	*292-9221*	1	PLUG AS	
		1	**292-9220**	1	PLUG	
		1	**294-8055**	1	SEAL-O-RING	
	13	1	*148-8411*	10	PLUG AS	
					(EACH INCLUDES)	
		1	**9S-4185**	1	PLUG-O-RING	
		1	**3K-0360**	1	SEAL-O-RING	
	14	1	**8T-4121**	4	WASHER-HARD (11X21X2.5-MM THK)	
M	15	1	**8T-4133**	4	NUT (M10X1.5-THD)	

M-METRIC PART
Y-SEPARATE ILLUSTRATION

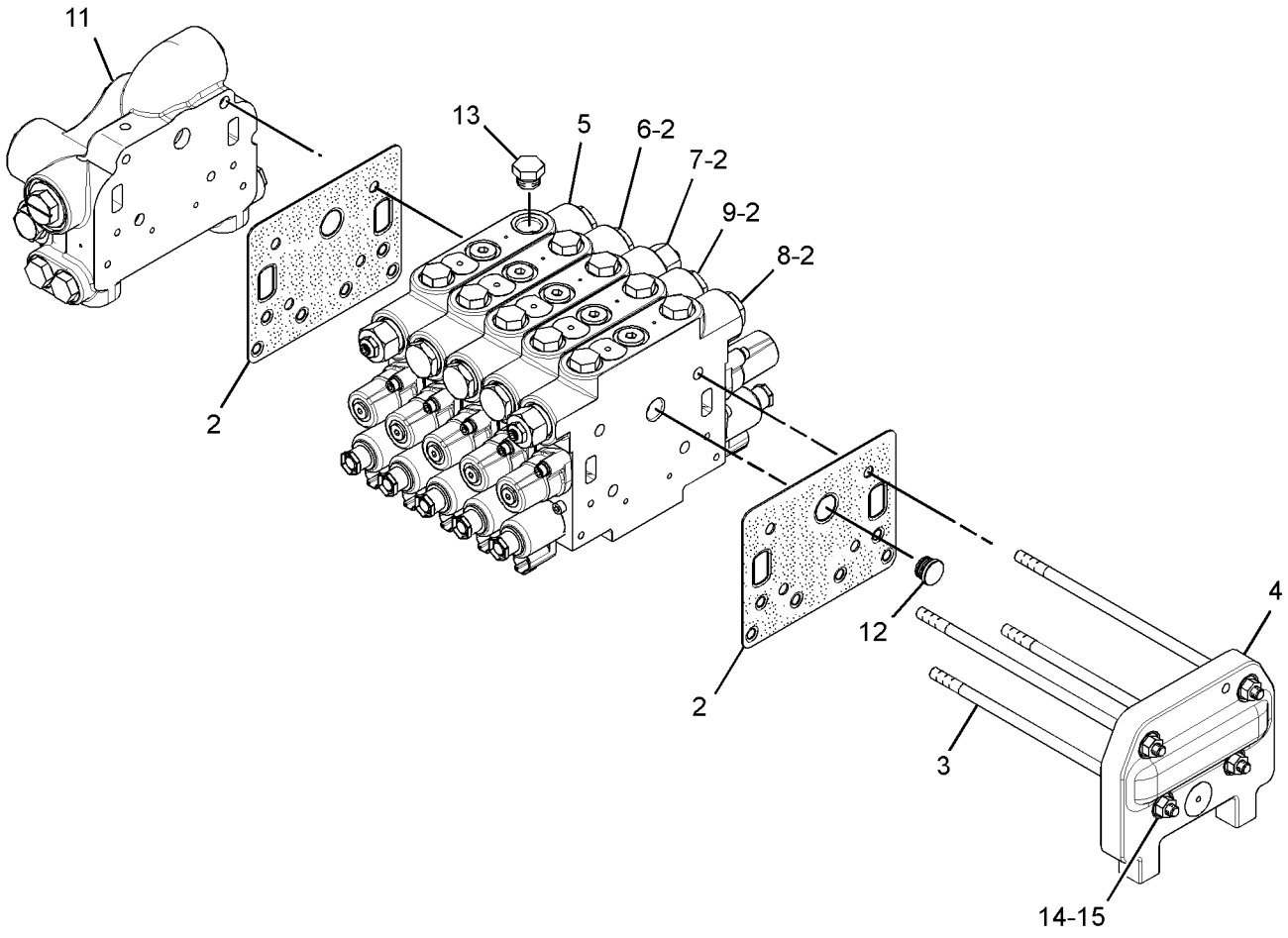

GRAPHIC #1 **<END>** g01378957

HYDRAULIC SYSTEM

270-1613 VALVE GP-BANK 5–RH

S/N: B9K1-309

PART OF 253-9017 MOUNTING GP-VALVE

SMCS-5051 **i02735045**

NOTE	REF NO	GRAPHIC REF	PART NUMBER	QTY	PART NAME 1 2 3 4 5 6 (PRODUCT LEVEL)	SEE PAGE
	2	1	**243-3662**	6	SEAL-INTEGRAL	
	3	1	**248-6174**	4	ROD	
	4	1	**273-1871**	1	COVER	
Y	5	1	**276-3653**	1	VALVE GP-CONTROL (CIRCLE DRIVE)	792
Y	6	1	**276-3655**	1	VALVE GP-CONTROL (BLADE LIFT)	796
Y	7	1	**276-3657**	1	VALVE GP-CONTROL (ARTICULATION)	800
Y	8	1	**276-3659**	1	VALVE GP-CONTROL (BLADE TIP)	802
Y	9	1	**276-3661**	1	VALVE GP-CONTROL (CENTERSHIFT)	804
	11	1	*292-9221*	1	PLUG AS	
		1	**292-9220**	1	PLUG	
		1	**294-8055**	1	SEAL-O-RING	
Y	12	1	**302-5693**	1	MANIFOLD GP-VALVE (INLET)	754
	13	1	*148-8411*	10	PLUG AS	
					(EACH INCLUDES)	
		1	**9S-4185**	1	PLUG-O-RING	
		1	**3K-0360**	1	SEAL-O-RING	
	14	1	**8T-4121**	4	WASHER-HARD (11X21X2.5-MM THK)	
M	15	1	**8T-4133**	4	NUT (M10X1.5-THD)	

M-METRIC PART
Y-SEPARATE ILLUSTRATION

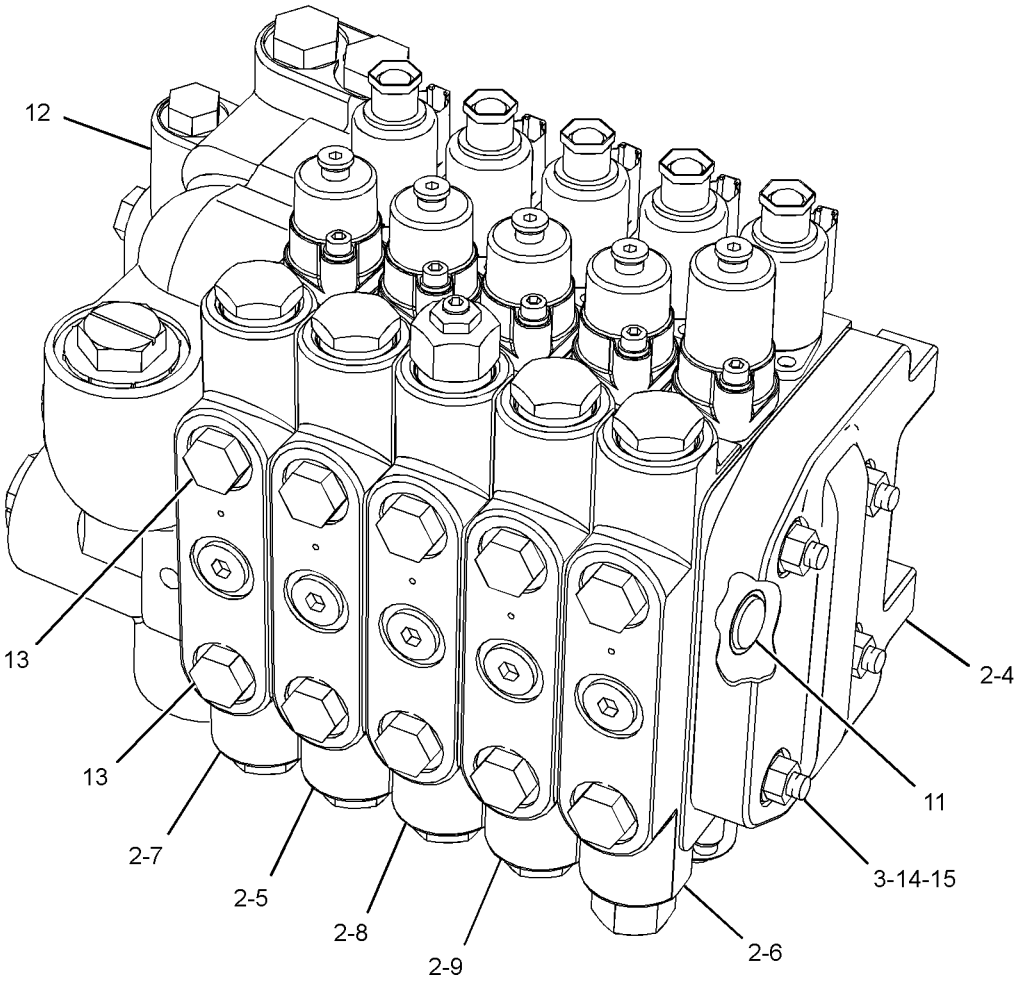

GRAPHIC #1 **<END>** g01376674

HYDRAULIC SYSTEM

270-1613 VALVE GP-BANK 5–RH

S/N: B9K310-328

PART OF 253-9017 MOUNTING GP-VALVE

SMCS-5051 **i03394500**

NOTE	REF NO	GRAPHIC REF	PART NUMBER	QTY	PART NAME 1 2 3 4 5 6 (PRODUCT LEVEL)	SEE PAGE
	2	1	**243-3662**	6	SEAL-INTEGRAL	
	3	1	**248-6174**	4	ROD	
	4	1	**273-1871**	1	COVER	
Y	5	1	**276-3653**	1	VALVE GP-CONTROL (CIRCLE DRIVE)	792
Y	6	1	**276-3655**	1	VALVE GP-CONTROL (BLADE LIFT)	796
Y	7	1	**276-3657**	1	VALVE GP-CONTROL (ARTICULATION)	800
Y	8	1	**276-3659**	1	VALVE GP-CONTROL (BLADE TIP)	802
Y	9	1	**276-3661**	1	VALVE GP-CONTROL (CENTERSHIFT)	804
	11	1	*292-9221*	1	PLUG AS	
		1	**292-9220**	1	PLUG	
		1	**294-8055**	1	SEAL-O-RING	
Y	12	1	**292-2034**	1	MANIFOLD GP-VALVE	750
	13	1	*148-8411*	10	PLUG AS	
					(EACH INCLUDES)	
		1	**9S-4185**	1	PLUG-O-RING	
		1	**3K-0360**	1	SEAL-O-RING	
	14	1	**8T-4121**	4	WASHER-HARD (11X21X2.5-MM THK)	
M	15	1	**8T-4133**	4	NUT (M10X1.5-THD)	

M-METRIC PART
Y-SEPARATE ILLUSTRATION

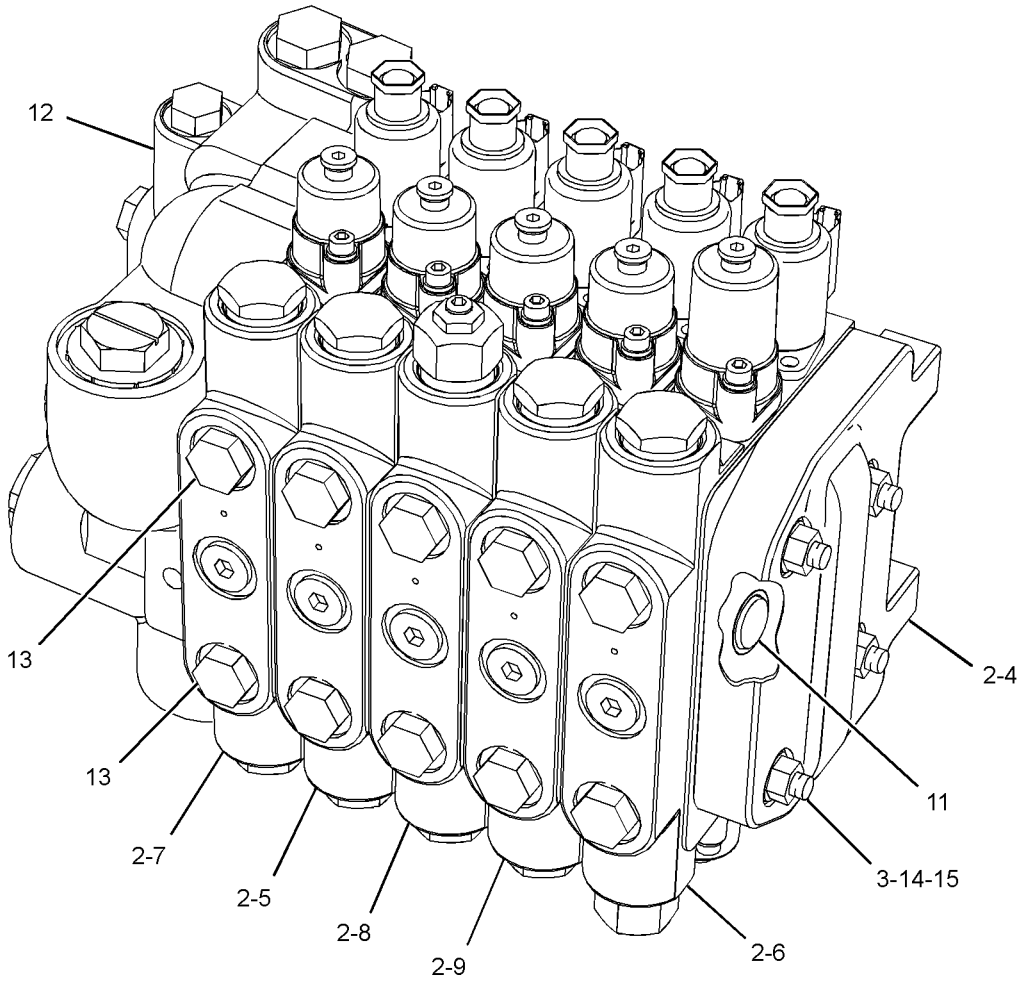

GRAPHIC #1 **<END>** g01376674

HYDRAULIC SYSTEM

270-1613 VALVE GP-BANK 5–RH

S/N: B9K329-UP

PART OF 253-9017 MOUNTING GP-VALVE

SMCS-5051 **i03545626**

NOTE	REF NO	GRAPHIC REF	PART NUMBER	QTY	PART NAME 1 2 3 4 5 6 (PRODUCT LEVEL)	SEE PAGE
	2	1	**243-3662**	6	SEAL-INTEGRAL	
	3	1	**248-6174**	4	ROD	
	4	1	**273-1871**	1	COVER	
Y	5	1	**276-3653**	1	VALVE GP-CONTROL (CIRCLE DRIVE)	792
Y	6	1	**276-3655**	1	VALVE GP-CONTROL (BLADE LIFT)	796
Y	7	1	**276-3657**	1	VALVE GP-CONTROL (ARTICULATION)	800
Y	8	1	**276-3659**	1	VALVE GP-CONTROL (BLADE TIP)	802
Y	9	1	**276-3661**	1	VALVE GP-CONTROL (CENTERSHIFT)	804
	11	1	*292-9221*	1	PLUG AS	
		1	**292-9220**	1	PLUG	
		1	**294-8055**	1	SEAL-O-RING	
CY	12	1	**302-5693**	1	MANIFOLD GP-VALVE (INLET)	754
	13	1	*148-8411*	10	PLUG AS	
					(EACH INCLUDES)	
		1	**9S-4185**	1	PLUG-O-RING	
		1	**3K-0360**	1	SEAL-O-RING	
	14	1	**8T-4121**	4	WASHER-HARD (11X21X2.5-MM THK)	
M	15	1	**8T-4133**	4	NUT (M10X1.5-THD)	

C-CHANGE FROM PREVIOUS TYPE
M-METRIC PART
Y-SEPARATE ILLUSTRATION

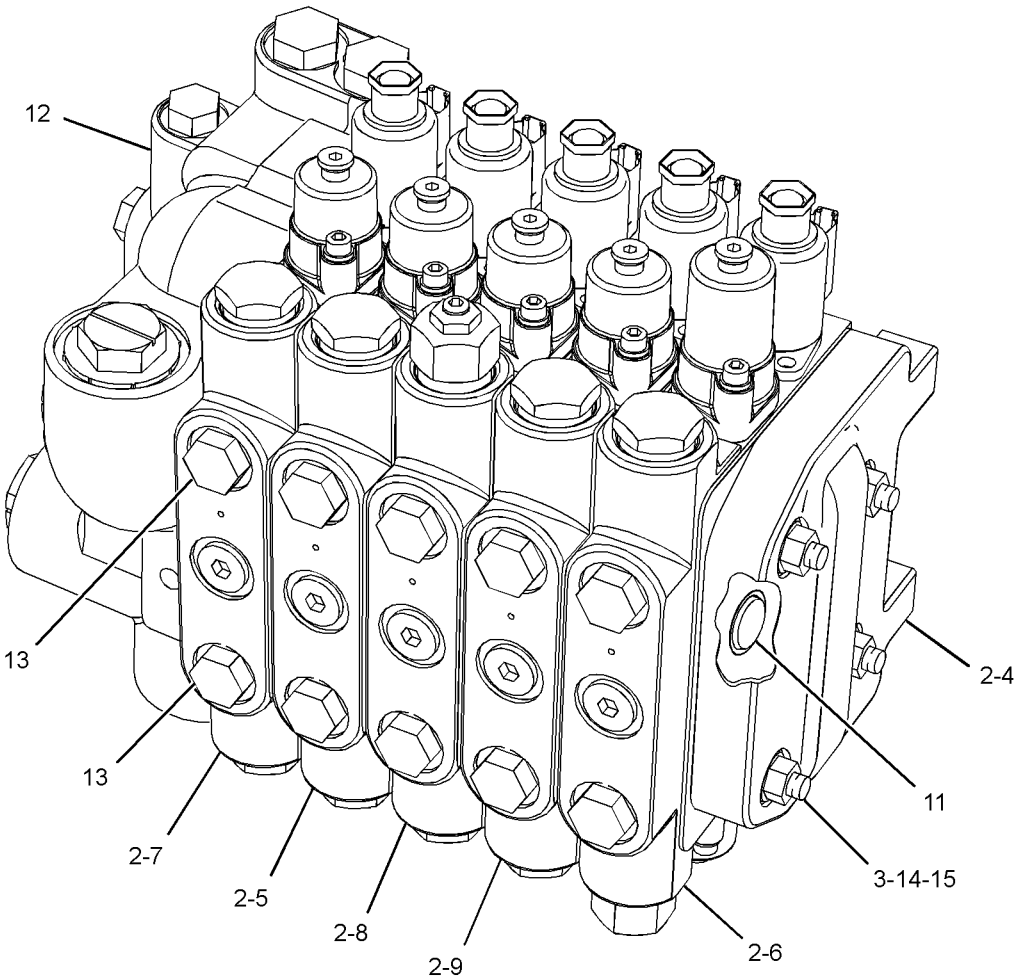

GRAPHIC #1 **<END>** g01376674

HYDRAULIC SYSTEM

158-9956 VALVE GP-CHECK

S/N: B9K1-UP

PART OF 272-0984, 353-2606 MANIFOLD GP-CONTROL

SMCS-5067 **i01950824**

NOTE	REF NO	GRAPHIC REF	PART NUMBER	QTY	PART NAME 1 2 3 4 5 6 (PRODUCT LEVEL)	SEE PAGE
	1	1	3K-0360	1	SEAL-O-RING	
	2	1	161-6154	1	SEAL-O-RING	
	3	1	6E-0381	1	RING-BACKUP	

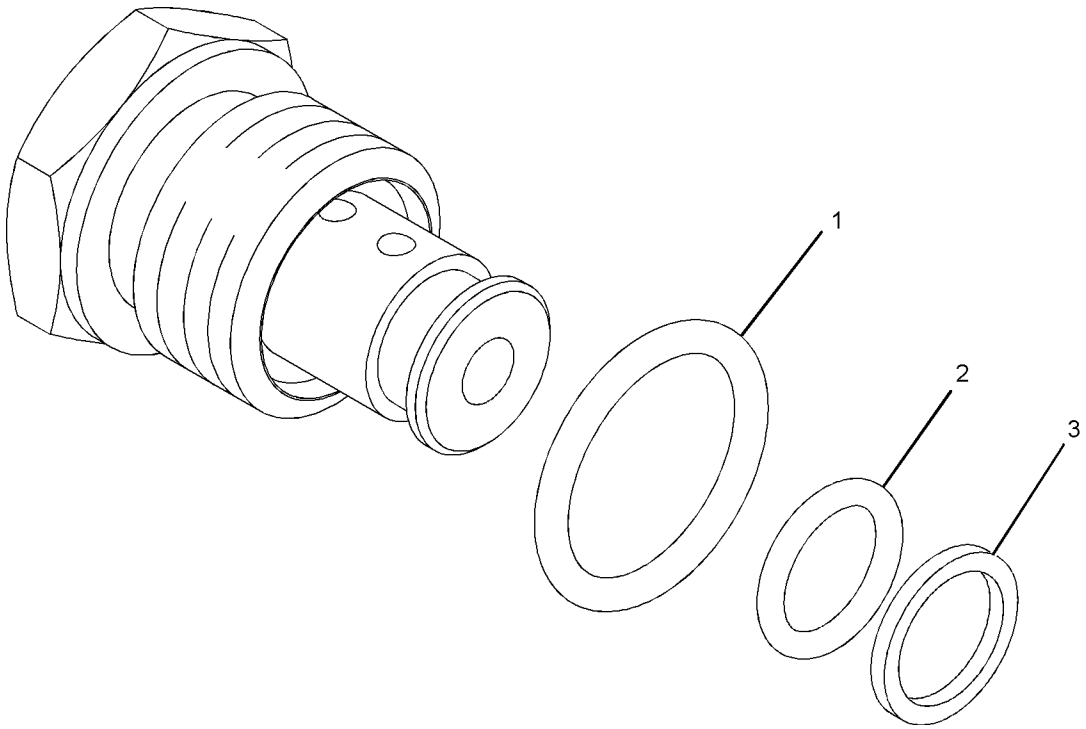

GRAPHIC #1 **<END>** g01016882

HYDRAULIC SYSTEM

164-7474 VALVE GP-CHECK

S/N: B9K1-UP

PART OF 268-0239 CONTROL GP-SERVICE BRAKE

SMCS-5067 **i03526302**

NOTE	PART NUMBER	QTY	PART NAME 1 2 3 4 5 6 (PRODUCT LEVEL)	SEE PAGE
	9T-3096	1	VALVE GP-CHECK (STEERING)	
	3J-1907	1	SEAL-O-RING	
	6V-8397	1	SEAL-O-RING	

<END>

HYDRAULIC SYSTEM

276-3652 VALVE GP-CONTROL–RIPPER

S/N: B9K1-UP

PART OF 270-1612 VALVE GP-BANK 5

SMCS-5051 **i03888131**

NOTE	REF NO	GRAPHIC REF	PART NUMBER	QTY	PART NAME 1 2 3 4 5 6 (PRODUCT LEVEL)	SEE PAGE
M	1	1	**8T-0267**	2	BOLT-SOCKET HEAD (M6X1X12-MM)	
	2	1	**6E-3007**	1	SPRING	
	3	1	**148-2557**	6	PLUG	
	4	1	**106-3659**	1	PISTON	
M	5	1	**136-4192**	4	BOLT (M6X1X35-MM)	
	6	1	**212-4961**	1	SPRING	
	7	1	**242-9264**	1	PLUG-ORIFICE	
	9	1	**244-2579**	1	PLUG	
	10	1	**318-3115**	1	VALVE GP-CHECK (RIPPER)	
	11	1	**318-3040**	1	VALVE GP-CHECK & RELIEF (LINE, RIPPER)	
					(EACH VALVE GP-CHECK INCLUDES)	
J		1	**9X-7745**	1	SEAL-O-RING	
J		1	**6V-5326**	1	SEAL-O-RING	
J		1	**6V-6580**	1	SEAL-O-RING	
	12	1	**251-1668**	2	COVER-SPRING	
	14	1	**272-5226**	1	STEM	
Y	16	1	**278-1799**	2	VALVE GP-SOLENOID (RIPPER)	815
	17	1	**284-3555**	2	SPRING	
	18	1	**284-4601**	2	RETAINER	
	19	1	**284-4602**	2	RETAINER	
	20	1	*148-8395*	1	PLUG AS	
		1	**9S-8005**	1	PLUG-O-RING	
		1	**3K-0360**	1	SEAL-O-RING	
	21	1	*183-7263*	3	PLUG AS	
					(EACH INCLUDES)	
		1	**9S-8002**	1	PLUG-O-RING	
		1	**3J-7354**	1	SEAL-O-RING	
	22	1	**3K-0360**	1	SEAL-O-RING	
	23	1	**3S-9233**	2	SEAL-O-RING	
	24	1	**4J-7533**	1	SEAL-O-RING	
	25	1	**5B-9318**	1	BALL	
					PARTS SHOWN IN GRAPHIC(S) WITHOUT A REFERENCE NUMBER ARE NOT SERVICED SEPARATELY	
					AVAILABLE REPAIR KIT(S):	
J			**325-2588**	1	KIT-SEAL (RIPPER)	
					(INCLUDES SEAL-O-RINGS & RING BACKUPS)	

J-KIT MARKED J SERVICES PARTS MARKED J
M-METRIC PART
Y-SEPARATE ILLUSTRATION

276-3652 VALVE GP-CONTROL *(contd.)* **i03888131**

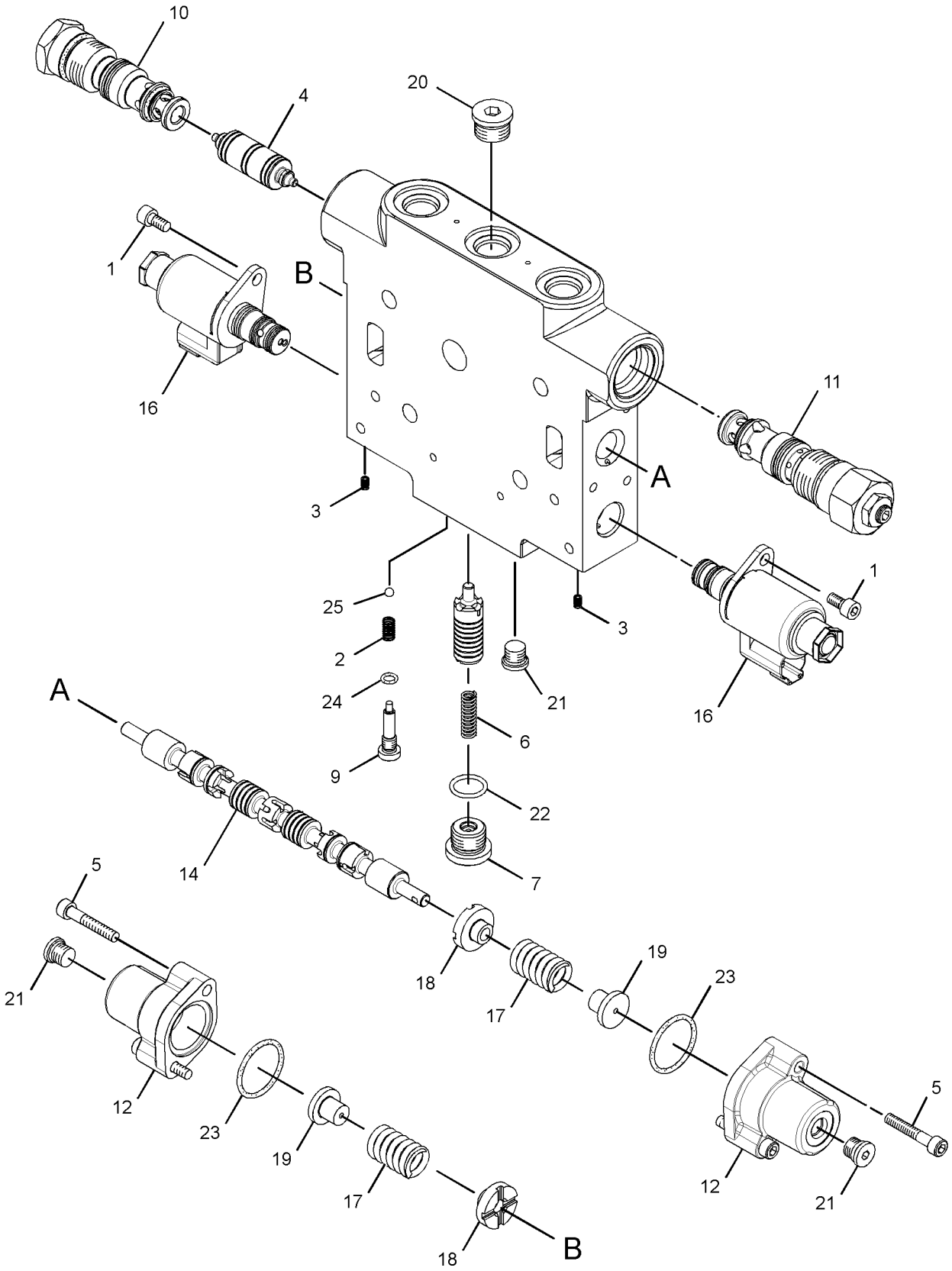

GRAPHIC #1 **<END>** g01647527

HYDRAULIC SYSTEM

276-3653 VALVE GP-CONTROL—CIRCLE DRIVE

S/N: B9K1-UP

PART OF 270-1612, 270-1613 VALVE GP-BANK 5

SMCS-5051 **i03888137**

NOTE	REF NO	GRAPHIC REF	PART NUMBER	QTY	PART NAME 1 2 3 4 5 6 (PRODUCT LEVEL)	SEE PAGE
M	1	1	**8T-0267**	2	BOLT-SOCKET HEAD (M6X1X12-MM)	
	2	1	**6E-3007**	1	SPRING	
	3	1	**6L-9716**	1	PLUG-PIPE	
	4	1	**148-2557**	6	PLUG	
	5	1	**106-3659**	1	PISTON	
M	6	1	**136-4192**	4	BOLT (M6X1X35-MM)	
	7	1	**212-4961**	1	SPRING	
	8	1	**242-9264**	1	PLUG-ORIFICE	
	10	1	**244-2579**	1	PLUG	
	11	1	**318-3115**	2	VALVE GP-CHECK (CIRCLE DRIVE)	
					(EACH INCLUDES)	
J		1	**9X-7745**	1	SEAL-O-RING	
J		1	**6V-5326**	1	SEAL-O-RING	
J		1	**6V-6580**	1	SEAL-O-RING	
	12	1	**251-1668**	2	COVER-SPRING	
	14	1	**272-5227**	1	STEM	
Y	16	1	**278-1799**	2	VALVE GP-SOLENOID (CIRCLE DRIVE)	815
	17	1	**284-3555**	2	SPRING	
	18	1	**284-4601**	2	RETAINER	
	19	1	**284-4602**	2	RETAINER	
	20	1	*148-8395*	1	PLUG AS	
		1	**9S-8005**	1	PLUG-O-RING	
		1	**3K-0360**	1	SEAL-O-RING	
	21	1	*183-7263*	3	PLUG AS	
					(EACH INCLUDES)	
		1	**9S-8002**	1	PLUG-O-RING	
		1	**3J-7354**	1	SEAL-O-RING	
	22	1	**3K-0360**	1	SEAL-O-RING	
	23	1	**3S-9233**	2	SEAL-O-RING	
	24	1	**4J-7533**	1	SEAL-O-RING	
	25	1	**5B-9318**	1	BALL	
					PARTS SHOWN IN GRAPHIC(S) WITHOUT A REFERENCE NUMBER ARE NOT SERVICED SEPARATELY	
					AVAILABLE REPAIR KIT(S):	
J			**325-2588**	1	KIT-SEAL (CIRCLE DRIVE)	
					(INCLUDES SEAL-O-RINGS & RING BACKUPS)	

J-(KIT MARKED J SERVICES PARTS MARKED J)
M-METRIC PART
Y-SEPARATE ILLUSTRATION

276-3653 VALVE GP-CONTROL *(contd.)* **i03888137**

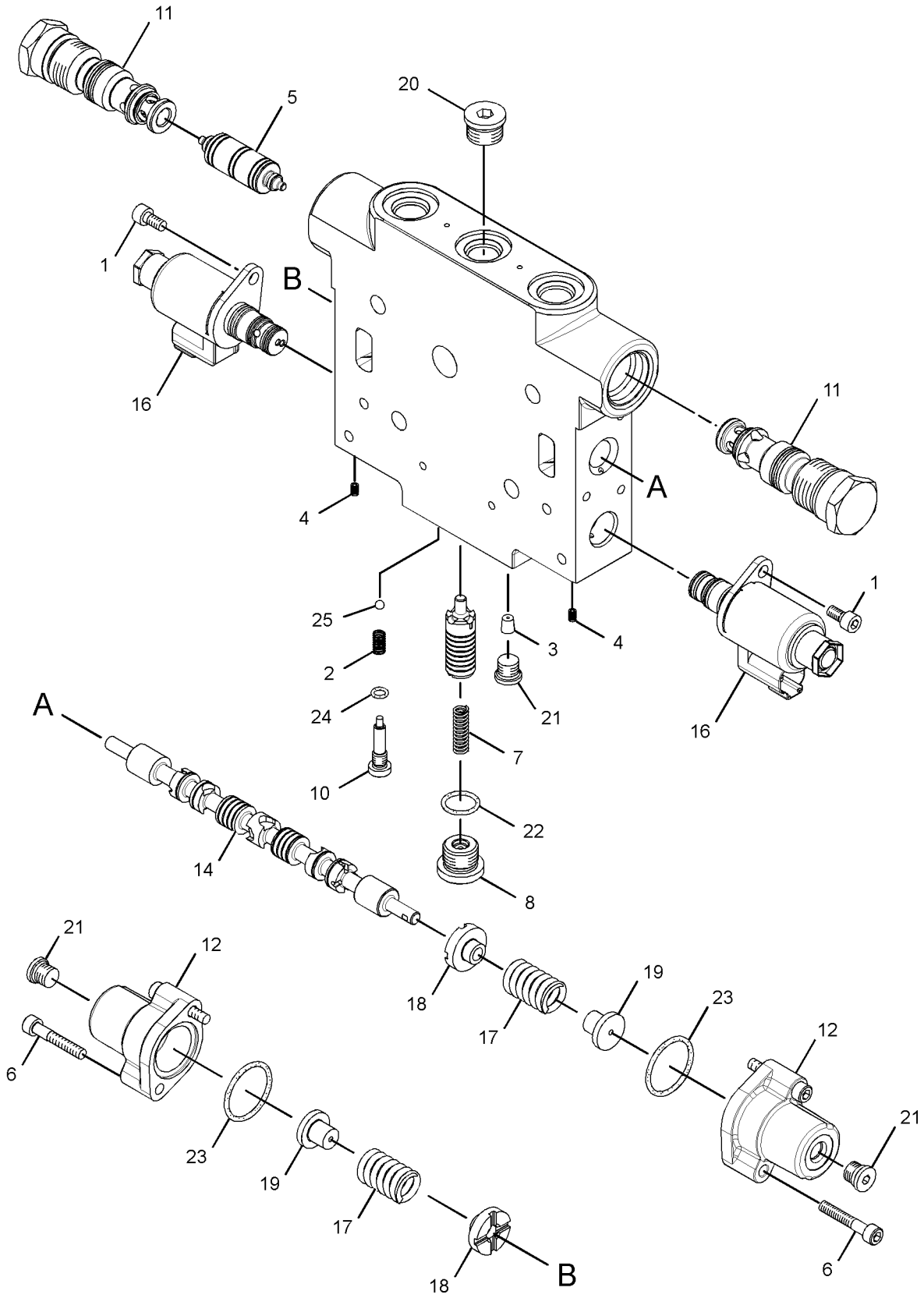

GRAPHIC #1 **<END>** g01645347

HYDRAULIC SYSTEM

276-3654 VALVE GP-CONTROL–SIDESHIFT

S/N: B9K1-UP

PART OF 270-1612 VALVE GP-BANK 5

SMCS-5051 **i03166203**

NOTE	REF NO	GRAPHIC REF	PART NUMBER	QTY	PART NAME 1 2 3 4 5 6 (PRODUCT LEVEL)	SEE PAGE
M	1	1	**8T-0267**	2	BOLT-SOCKET HEAD (M6X1X12-MM)	
	2	1	**6E-3007**	1	SPRING	
	3	1	**148-2557**	6	PLUG	
	4	1	**106-3659**	1	PISTON	
M	5	1	**136-4192**	4	BOLT (M6X1X35-MM)	
	6	1	**212-4961**	1	SPRING	
	7	1	**242-9264**	1	PLUG-ORIFICE	
	9	1	**244-2579**	1	PLUG	
	10	1	**245-9923**	1	VALVE GP-CHECK (SIDESHIFT)	
	11	1	**246-1567**	1	VALVE GP-CHECK & RELIEF (LINE, BLADE SIDESHIFT)	
					(EACH VALVE GP-CHECK INCLUDES)	
J		1	**9X-7745**	1	SEAL-O-RING	
J		1	**6V-5326**	1	SEAL-O-RING	
J		1	**6V-6580**	1	SEAL-O-RING	
	12	1	**251-1668**	2	COVER-SPRING	
	14	1	**272-5228**	1	STEM	
Y	16	1	**278-1799**	2	VALVE GP-SOLENOID (SIDESHIFT)	815
	17	1	**284-3555**	2	SPRING	
	18	1	**284-4601**	2	RETAINER	
	19	1	**284-4602**	2	RETAINER	
	20	1	*148-8395*	1	PLUG AS	
		1	**9S-8005**	1	PLUG-O-RING	
		1	**3K-0360**	1	SEAL-O-RING	
	21	1	*183-7263*	3	PLUG AS	
					(EACH INCLUDES)	
		1	**9S-8002**	1	PLUG-O-RING	
		1	**3J-7354**	1	SEAL-O-RING	
	22	1	**3K-0360**	1	SEAL-O-RING	
	23	1	**3S-9233**	2	SEAL-O-RING	
	24	1	**4J-7533**	1	SEAL-O-RING	
	25	1	**5B-9318**	1	BALL	
					PARTS SHOWN IN GRAPHIC(S) WITHOUT A REFERENCE NUMBER ARE NOT SERVICED SEPARATELY	
					AVAILABLE REPAIR KIT(S):	
J			**248-6887**	1	KIT-SEAL (CHECK VALVE) (SIDESHIFT)	
					(INCLUDES SEAL-O-RINGS & RING BACKUP)	

J-KIT MARKED J SERVICES PARTS MARKED J
M-METRIC PART
Y-SEPARATE ILLUSTRATION

276-3654 VALVE GP-CONTROL *(contd.)* **i03166203**

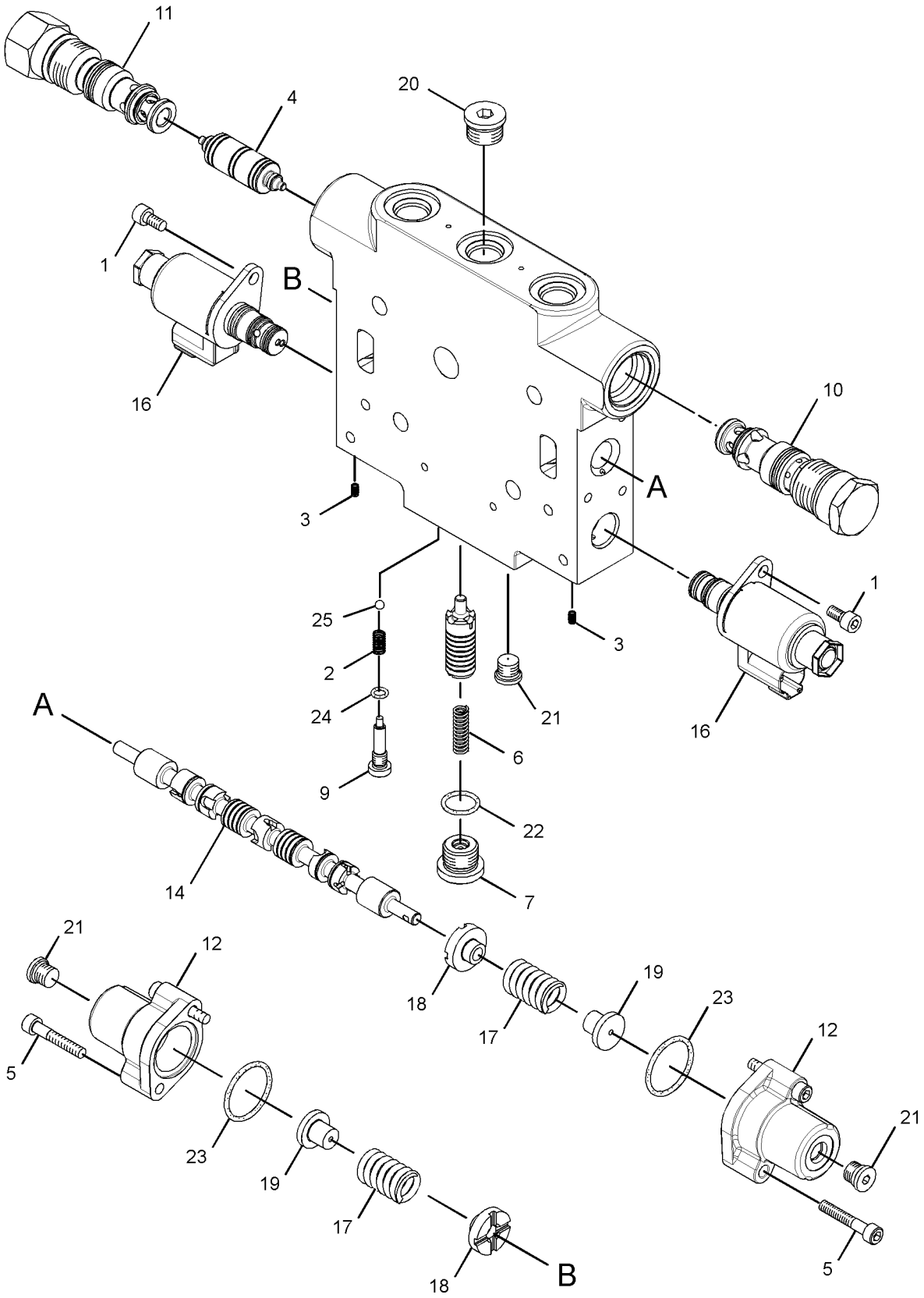

GRAPHIC #1 **<END>** g01645361

HYDRAULIC SYSTEM

276-3655 VALVE GP-CONTROL—BLADE LIFT

S/N: B9K1-UP

PART OF 270-1612, 270-1613 VALVE GP-BANK 5

SMCS-5051 **i03888149**

NOTE	REF NO	GRAPHIC REF	PART NUMBER	QTY	PART NAME 1 2 3 4 5 6 (PRODUCT LEVEL)	SEE PAGE
M	1	1	**8T-0267**	2	BOLT-SOCKET HEAD (M6X1X12-MM)	
	2	1	**6E-3007**	1	SPRING	
	3	1	**148-2557**	6	PLUG	
	4	1	**106-3660**	2	PISTON	
	5	1	**212-4961**	1	SPRING	
	6	1	**242-9264**	1	PLUG-ORIFICE	
	7	1	**243-2965**	1	SPOOL	
	8	1	**244-2579**	1	PLUG	
J	9	1	**318-3115**	1	VALVE GP-CHECK (BLADE LIFT)	
J	10	1	**318-3052**	1	VALVE GP-CHECK & RELIEF (LINE, LIFT)	
					(EACH VALVE GP-CHECK INCLUDES)	
H		1	**9X-7745**	1	SEAL-O-RING	
H		1	**6V-5326**	1	SEAL-O-RING	
H		1	**6V-6580**	1	SEAL-O-RING	
	11	1	**251-1668**	1	COVER-SPRING	
	12	1	**251-1669**	1	COVER-SPRING	
Y	15	1	**278-1799**	2	VALVE GP-SOLENOID (BLADE LIFT)	815
	16	1	**284-3555**	1	SPRING	
	17	1	**284-3556**	1	SPRING	
	18	1	**284-4601**	2	RETAINER	
	19	1	**284-4602**	2	RETAINER	
	20	1	**306-7130**	1	STEM	
M	21	1	**136-4192**	4	BOLT (M6X1X35-MM)	
	22	1	*148-8395*	1	PLUG AS	
		1	**9S-8005**	1	PLUG-O-RING	
		1	**3K-0360**	1	SEAL-O-RING	
	23	1	*183-7263*	3	PLUG AS	
					(EACH INCLUDES)	
		1	**9S-8002**	1	PLUG-O-RING	
		1	**3J-7354**	1	SEAL-O-RING	
	24	1	**3K-0360**	1	SEAL-O-RING	
	25	1	**3S-9233**	2	SEAL-O-RING	
	26	1	**4J-7533**	1	SEAL-O-RING	
	27	1	**5B-9318**	1	BALL	
					PARTS SHOWN IN GRAPHIC(S) WITHOUT A REFERENCE NUMBER ARE NOT SERVICED SEPARATELY	
					AVAILABLE REPAIR KIT(S):	
HJ			**325-2588**	1	KIT-SEAL	
					(INCLUDES SEAL-O-RINGS & RING BACKUPS)	

H-KIT MARKED H INCLUDES PART(S) MARKED H
J-KIT MARKED J SERVICES PART(S) MARKED J
M-METRIC PART
Y-SEPARATE ILLUSTRATION

276-3655 VALVE GP-CONTROL *(contd.)* **i03888149**

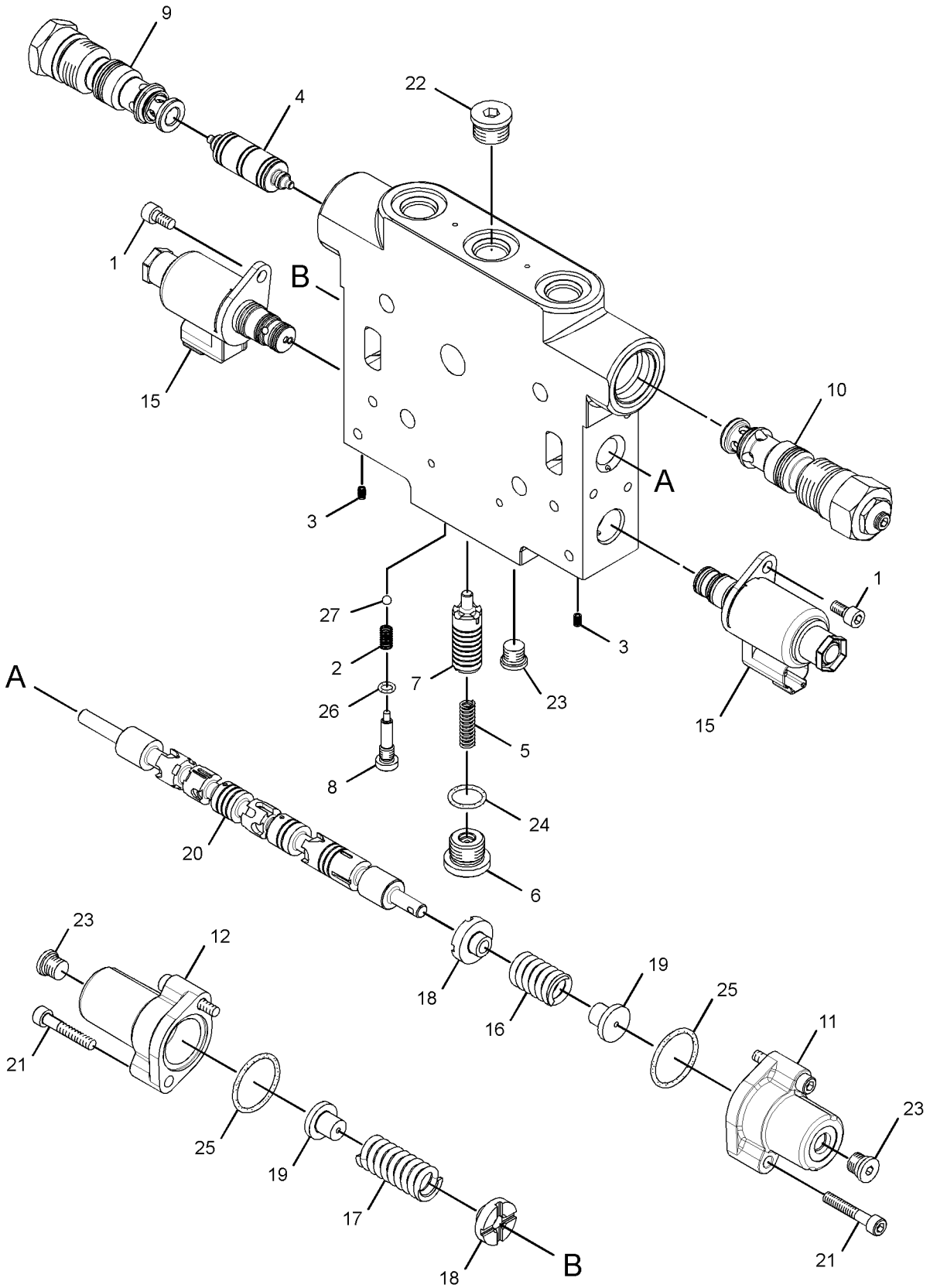

GRAPHIC #1 **<END>** g01645363

HYDRAULIC SYSTEM

276-3656 VALVE GP-CONTROL—WHEEL LEAN

S/N: B9K1-UP

PART OF 270-1612 VALVE GP-BANK 5

SMCS-5051 **i03889775**

NOTE	REF NO	GRAPHIC REF	PART NUMBER	QTY	PART NAME 1 2 3 4 5 6 (PRODUCT LEVEL)	SEE PAGE
M	1	1	**8T-0267**	2	BOLT-SOCKET HEAD (M6X1X12-MM)	
	2	1	**6E-3007**	1	SPRING	
	3	1	**148-2557**	6	PLUG	
	4	1	**106-3659**	1	PISTON	
M	5	1	**136-4192**	4	BOLT (M6X1X35-MM)	
	6	1	**212-4961**	1	SPRING	
	7	1	**242-9264**	1	PLUG-ORIFICE	
	9	1	**244-2579**	1	PLUG	
	10	1	**318-3115**	2	VALVE GP-CHECK (WHEEL LEAN)	
					(EACH INCLUDES)	
J		1	**9X-7745**	1	SEAL-O-RING	
J		1	**6V-5326**	1	SEAL-O-RING	
J		1	**6V-6580**	1	SEAL-O-RING	
	11	1	**251-1668**	2	COVER-SPRING	
	13	1	**272-5230**	1	STEM	
Y	15	1	**278-1799**	2	VALVE GP-SOLENOID (WHEEL LEAN)	815
	16	1	**284-3555**	2	SPRING	
	17	1	**284-4601**	2	RETAINER	
	18	1	**284-4602**	2	RETAINER	
	19	1	*148-8395*	1	PLUG AS	
		1	**9S-8005**	1	PLUG-O-RING	
		1	**3K-0360**	1	SEAL-O-RING	
	20	1	*183-7263*	3	PLUG AS	
					(EACH INCLUDES)	
		1	**9S-8002**	1	PLUG-O-RING	
		1	**3J-7354**	1	SEAL-O-RING	
	21	1	**3K-0360**	1	SEAL-O-RING	
	22	1	**3S-9233**	2	SEAL-O-RING	
	23	1	**4J-7533**	1	SEAL-O-RING	
	24	1	**5B-9318**	1	BALL	
					AVAILABLE REPAIR KIT(S):	
J			**325-2588**	1	KIT-SEAL (WHEEL LEAN)	
					(INCLUDES BACK UP RINGS & SEAL-O-RINGS)	

J-KIT MARKED J SERVICES PARTS MARKED J
M-METRIC PART
Y-SEPARATE ILLUSTRATION

276-3656 VALVE GP-CONTROL *(contd.)* **i03889775**

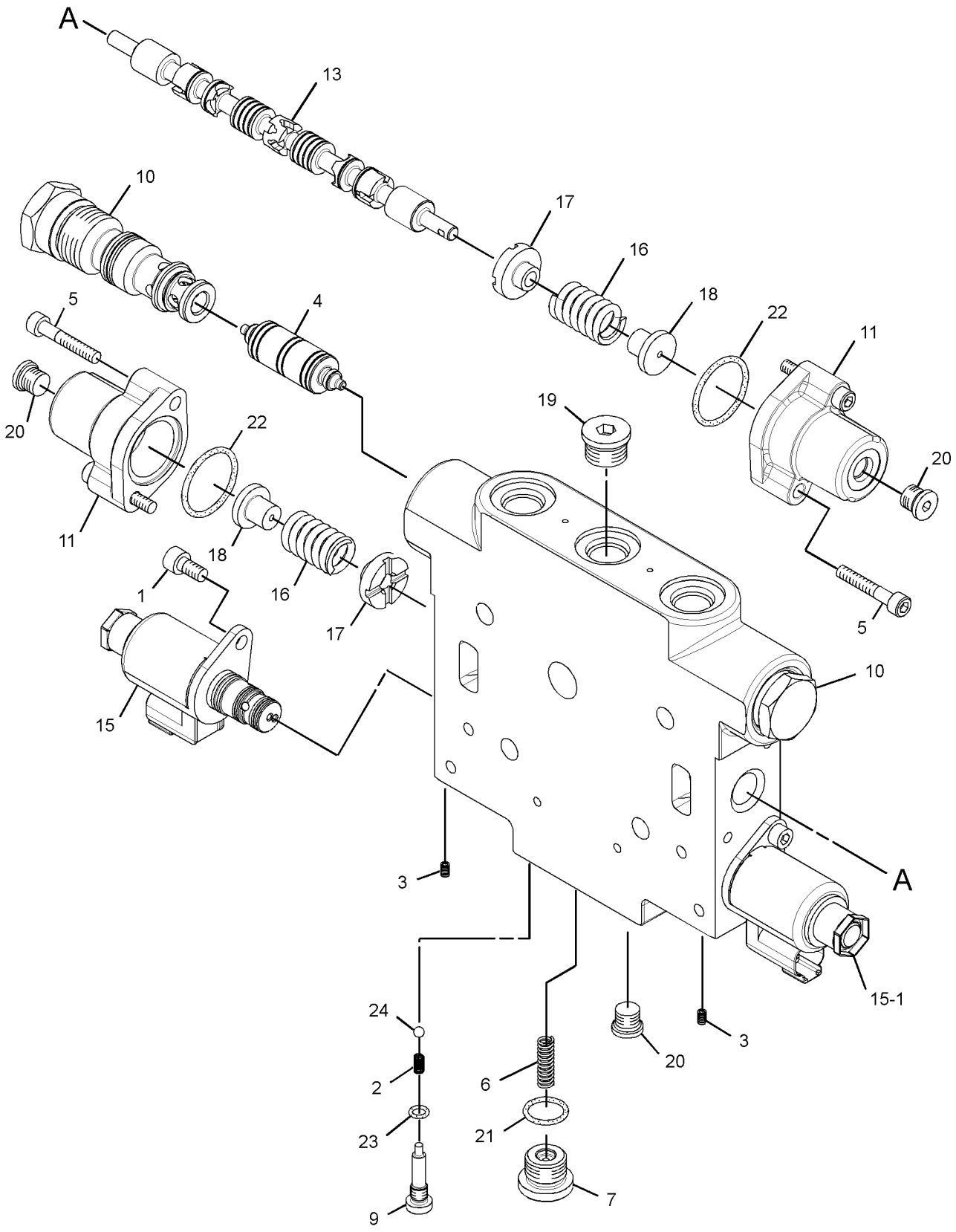

GRAPHIC #1 **<END>** g01645429

HYDRAULIC SYSTEM

276-3657 VALVE GP-CONTROL—ARTICULATION

S/N: B9K1-UP

PART OF 270-1613 VALVE GP-BANK 5

SMCS-5051 **i03891837**

NOTE	REF NO	GRAPHIC REF	PART NUMBER	QTY	PART NAME 1 2 3 4 5 6 (PRODUCT LEVEL)	SEE PAGE
M	1	1	**8T-0267**	2	BOLT-SOCKET HEAD (M6X1X12-MM)	
	2	1	**6E-3007**	1	SPRING	
	3	1	**148-2557**	6	PLUG	
	4	1	**106-3659**	1	PISTON	
M	5	1	**136-4192**	4	BOLT (M6X1X35-MM)	
	6	1	**212-4961**	1	SPRING	
	7	1	**242-9264**	1	PLUG-ORIFICE	
	9	1	**244-2579**	1	PLUG	
	10	1	**321-6908**	2	VALVE GP-CHECK (ARTICULATION)	
					(EACH INCLUDES)	
J		1	**9X-7745**	1	SEAL-O-RING	
J		1	**6V-5326**	1	SEAL-O-RING	
J		1	**6V-6580**	1	SEAL-O-RING	
	11	1	**251-1668**	2	COVER-SPRING	
	13	1	**272-5231**	1	STEM	
Y	15	1	**278-1799**	2	VALVE GP-SOLENOID (ARTICULATION)	815
	16	1	**284-3555**	2	SPRING	
	17	1	**284-4601**	2	RETAINER	
	18	1	**284-4602**	2	RETAINER	
	19	1	*148-8395*	1	PLUG AS	
		1	**9S-8005**	1	PLUG-O-RING	
		1	**3K-0360**	1	SEAL-O-RING	
	20	1	*183-7263*	3	PLUG AS	
					(EACH INCLUDES)	
		1	**9S-8002**	1	PLUG-O-RING	
		1	**3J-7354**	1	SEAL-O-RING	
	21	1	**3K-0360**	1	SEAL-O-RING	
	22	1	**3S-9233**	2	SEAL-O-RING	
	23	1	**4J-7533**	1	SEAL-O-RING	
	24	1	**5B-9318**	1	BALL	
					PARTS SHOWN IN GRAPHIC(S) WITHOUT A REFERENCE NUMBER ARE NOT SERVICED SEPARATELY	
					AVAILABLE REPAIR KIT(S):	
J			**248-6887**	1	KIT-SEAL (CHECK VALVE) (ARTICULATION)	
					(INCLUDES SEAL-O-RINGS & RING BACKUP)	

J-(KIT MARKED J SERVICES PARTS MARKED J)
M-METRIC PART
Y-SEPARATE ILLUSTRATION

276-3657 VALVE GP-CONTROL *(contd.)* **i03891837**

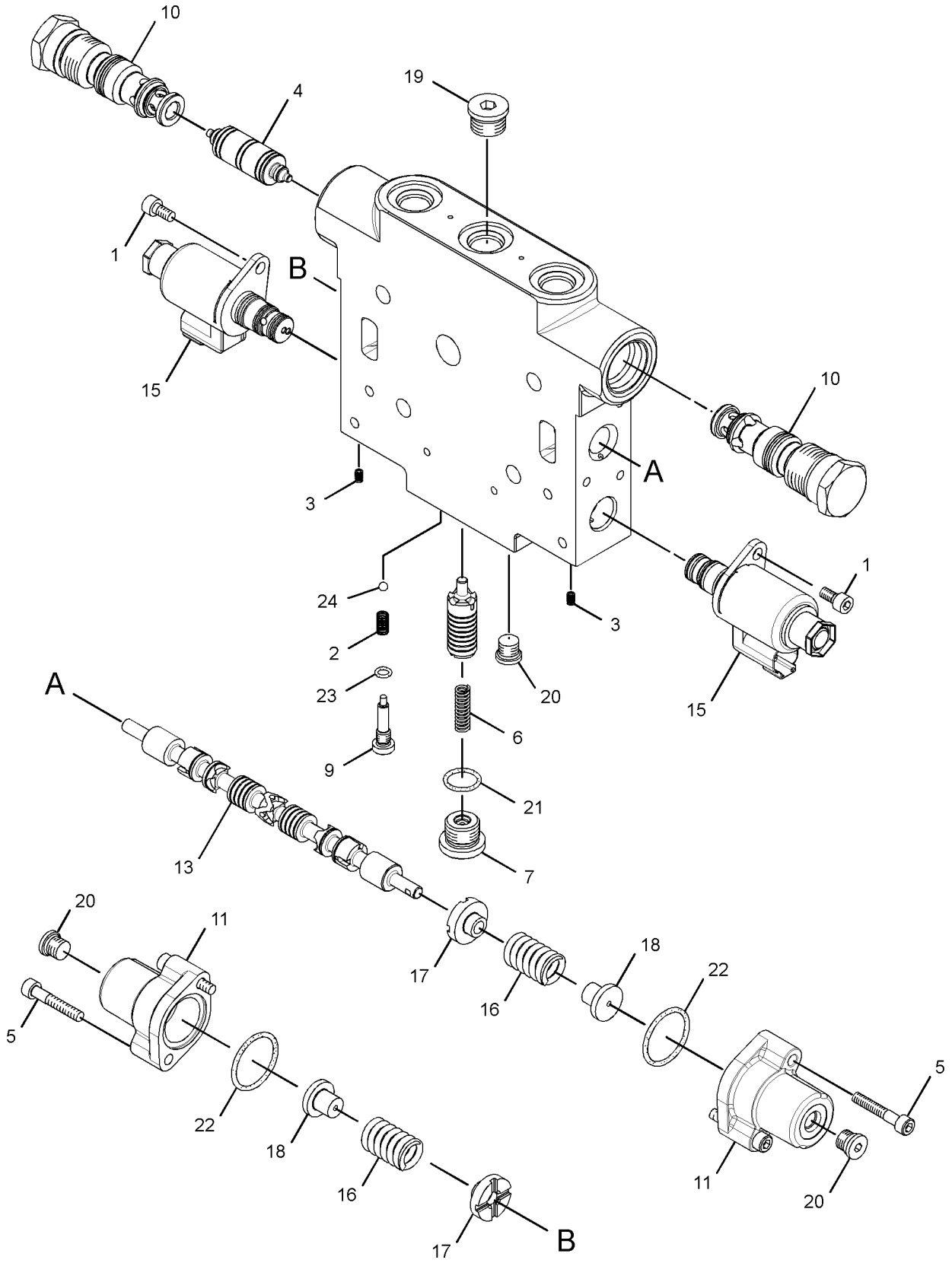

GRAPHIC #1 **<END>** g01647535

HYDRAULIC SYSTEM

276-3659 VALVE GP-CONTROL–BLADE TIP

S/N: B9K1-UP

PART OF 270-1613 VALVE GP-BANK 5

SMCS-5051 **i03172542**

NOTE	REF NO	GRAPHIC REF	PART NUMBER	QTY	PART NAME 1 2 3 4 5 6 (PRODUCT LEVEL)	SEE PAGE
M	1	1	**8T-0267**	2	BOLT-SOCKET HEAD (M6X1X12-MM)	
	2	1	**6E-3007**	1	SPRING	
	3	1	**148-2557**	6	PLUG	
	4	1	**106-3659**	1	PISTON	
M	5	1	**136-4192**	4	BOLT (M6X1X35-MM)	
	6	1	**212-4961**	1	SPRING	
	7	1	**242-9264**	1	PLUG-ORIFICE	
	9	1	**244-2579**	1	PLUG	
	10	1	**245-9923**	1	VALVE GP-CHECK (BLADE TIP)	
	11	1	**246-1567**	1	VALVE GP-CHECK & RELIEF (LINE, BLADE TIP)	
					(EACH VALVE GP-CHECK INCLUDES)	
J		1	**3K-0360**	1	SEAL-O-RING	
J		1	**6V-5326**	1	SEAL-O-RING	
J		1	**6V-6580**	1	SEAL-O-RING	
	12	1	**251-1668**	2	COVER-SPRING	
	14	1	**272-5232**	1	STEM	
Y	16	1	**278-1799**	2	VALVE GP-SOLENOID (BLADE TIP)	815
	17	1	**284-3555**	2	SPRING	
	18	1	**284-4601**	2	RETAINER	
	19	1	**284-4602**	2	RETAINER	
	20	1	*148-8395*	1	PLUG AS	
		1	**9S-8005**	1	PLUG-O-RING	
		1	**3K-0360**	1	SEAL-O-RING	
	21	1	*183-7263*	3	PLUG AS	
					(EACH INCLUDES)	
		1	**9S-8002**	1	PLUG-O-RING	
		1	**3J-7354**	1	SEAL-O-RING	
	22	1	**3K-0360**	1	SEAL-O-RING	
	23	1	**3S-9233**	2	SEAL-O-RING	
	24	1	**4J-7533**	1	SEAL-O-RING	
	25	1	**5B-9318**	1	BALL	
					PARTS SHOWN IN GRAPHIC(S) WITHOUT A REFERENCE NUMBER ARE NOT SERVICED SEPARATELY	
					AVAILABLE REPAIR KIT(S):	
J			**248-6887**	1	KIT-SEAL (CHECK VALVE) (BLADE TIP)	
					(INCLUDES SEAL-O-RINGS & RING BACKUP)	

J-(KIT MARKED J SERVICES PARTS MARKED J)
M-METRIC PART
Y-SEPARATE ILLUSTRATION

276-3659 VALVE GP-CONTROL *(contd.)* **i03172542**

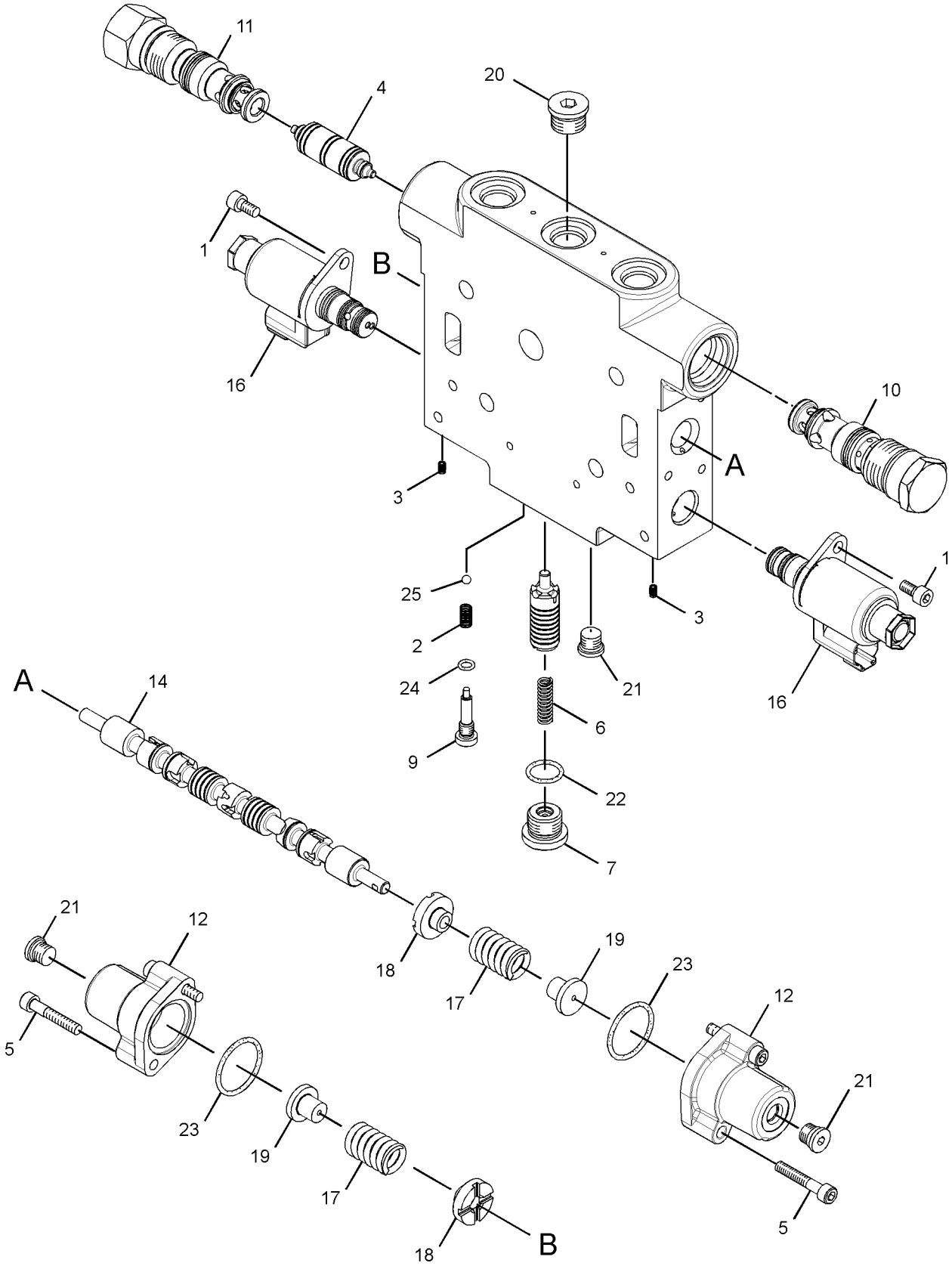

GRAPHIC #1 **<END>** g01647515

HYDRAULIC SYSTEM

276-3661 VALVE GP-CONTROL–CENTERSHIFT

S/N: B9K1-UP

PART OF 270-1613 VALVE GP-BANK 5

SMCS-5051 **i03163944**

NOTE	REF NO	GRAPHIC REF	PART NUMBER	QTY	PART NAME 1 2 3 4 5 6 (PRODUCT LEVEL)	SEE PAGE
M	1	1	**8T-0267**	2	BOLT-SOCKET HEAD (M6X1X12-MM)	
	2	1	**6E-3007**	1	SPRING	
	3	1	**148-2557**	6	PLUG	
	4	1	**106-3659**	1	PISTON	
M	5	1	**136-4192**	4	BOLT (M6X1X35-MM)	
	6	1	**212-4961**	1	SPRING	
	7	1	**242-9264**	1	PLUG-ORIFICE	
	9	1	**244-2579**	1	PLUG	
J	10	1	**245-9923**	2	VALVE GP-CHECK (CENTERSHIFT)	
					(EACH INCLUDES)	
J		1	**9X-7745**	1	SEAL-O-RING	
J		1	**6V-5326**	1	SEAL-O-RING	
J		1	**6V-6580**	1	SEAL-O-RING	
	11	1	**251-1668**	2	COVER-SPRING	
	13	1	**272-5233**	1	STEM	
Y	15	1	**278-1799**	2	VALVE GP-SOLENOID (CENTERSHIFT)	815
	16	1	**284-3555**	2	SPRING	
	17	1	**284-4601**	2	RETAINER	
	18	1	**284-4602**	2	RETAINER	
	19	1	*148-8395*	1	PLUG AS	
		1	**3K-0360**	1	SEAL-O-RING	
		1	**9S-8005**	1	PLUG-O-RING	
	20	1	*183-7263*	3	PLUG AS	
					(EACH INCLUDES)	
		1	**3J-7354**	1	SEAL-O-RING	
		1	**9S-8002**	1	PLUG-O-RING	
	21	1	**3K-0360**	1	SEAL-O-RING	
	22	1	**3S-9233**	2	SEAL-O-RING	
	23	1	**4J-7533**	1	SEAL-O-RING	
	24	1	**5B-9318**	1	BALL	
					PARTS SHOWN IN GRAPHIC(S) WITHOUT A REFERENCE NUMBER ARE NOT SERVICED SEPARATELY	
					AVAILABLE REPAIR KIT(S):	
J			**248-6887**	1	KIT-SEAL (CHECK VALVE) (CENTERSHIFT)	
					(INCLUDES RING BACKUP)	

J-(KIT MARKED J SERVICES PART(S) MARKED J)
M-METRIC PART
Y-SEPARATE ILLUSTRATION

276-3661 VALVE GP-CONTROL *(contd.)* **i03163944**

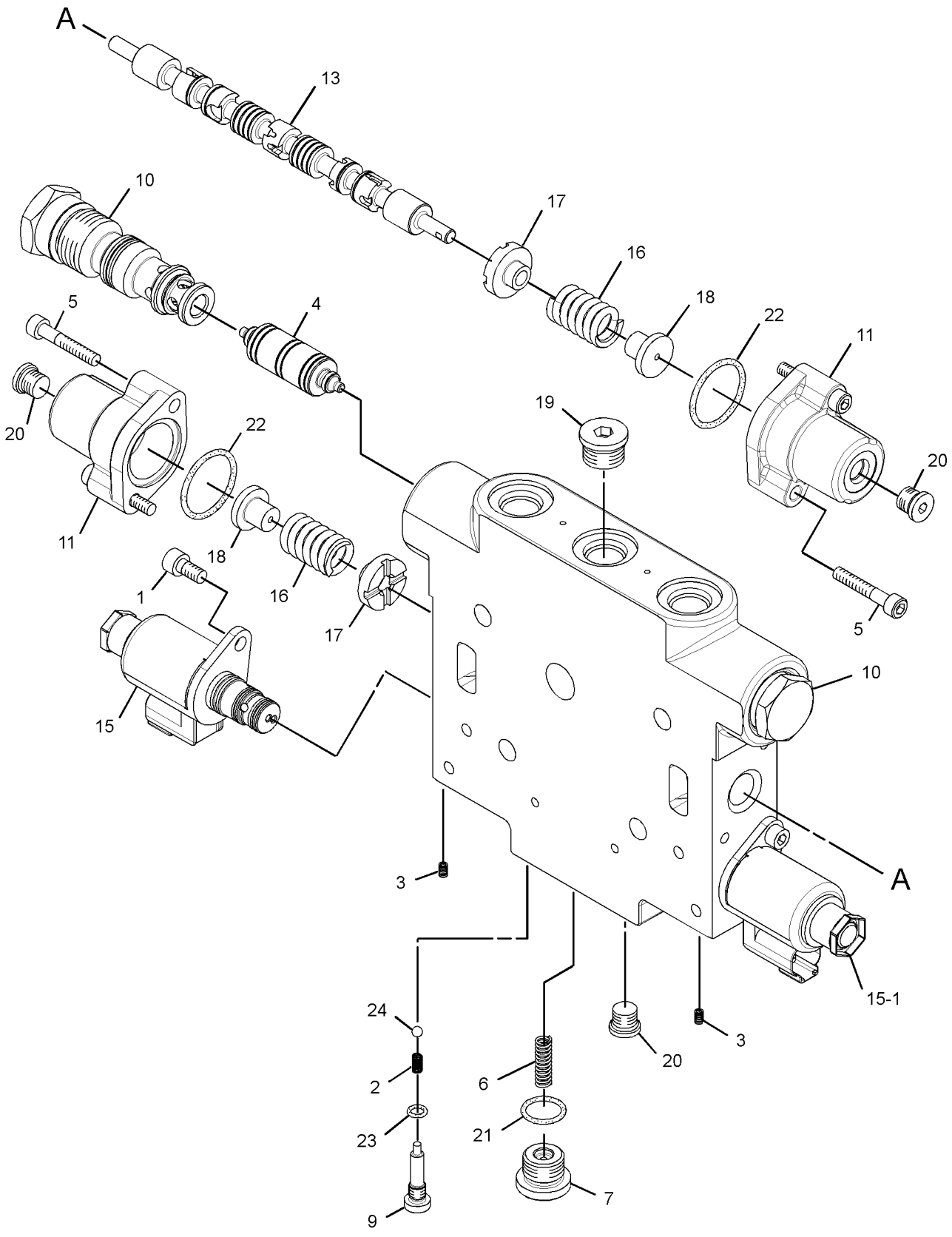

GRAPHIC #1 **<END>** g01646113

HYDRAULIC SYSTEM

290-6436 VALVE GP-DIVERTER—BRAKE CHARGING

S/N: B9K1-UP

PART OF 272-0984, 353-2606 MANIFOLD GP-CONTROL

SMCS-5066 **i02764261**

NOTE	REF NO	GRAPHIC REF	PART NUMBER	QTY	PART NAME 1 2 3 4 5 6 (PRODUCT LEVEL)	SEE PAGE
J	1	1	**2M-9780**	1	SEAL-O-RING	
J	2	1	**6V-5142**	1	SEAL-O-RING	
J	3	1	**169-1617**	2	RING-BACKUP	
J	4	1	**095-1751**	1	SEAL-O-RING	
J	5	1	**169-1616**	2	RING-BACKUP	
					AVAILABLE REPAIR KIT(S):	
J			**200-6282**	1	KIT-SEAL (DIVERTER VALVE)	
					(INCLUDES SEAL-O-RINGS & RING-BACKUPS)	

J-KIT MARKED J SERVICES PART(S) MARKED J

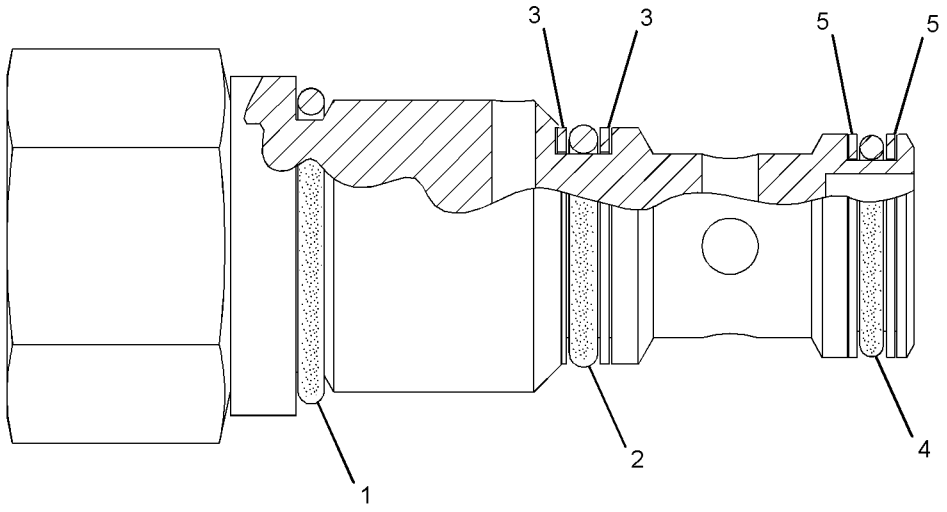

GRAPHIC #1 **<END>** g01388213

HYDRAULIC SYSTEM

252-8038 VALVE GP-PRESSURE REDUCING

S/N: B9K1-UP

PART OF 306-5134 MANIFOLD GP-CONTROL

SMCS-5117 **i02148309**

NOTE	REF NO	GRAPHIC REF	PART NUMBER	QTY	PART NAME 1 2 3 4 5 6 (PRODUCT LEVEL)	SEE PAGE
	1	1	**2M-9780**	1	SEAL-O-RING	
	2	1	**6V-3505**	1	RING-BACKUP	
	3	1	**8C-3132**	1	SEAL-O-RING	
	4	1	**6E-0410**	1	SEAL-O-RING	
	5	1	**5P-2199**	1	RING-BACKUP	

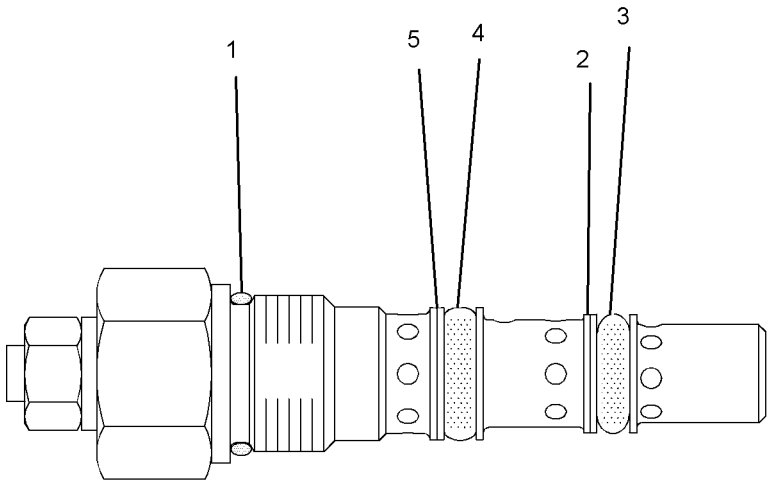

GRAPHIC #1 **<END>** g01089904

HYDRAULIC SYSTEM

345-4472 VALVE GP-PRESSURE REDUCING

S/N: B9K336-UP

PART OF 344-1108 LINES GP-STEERING

SMCS-5117 **i03631357**

NOTE	REF NO	GRAPHIC REF	PART NUMBER	QTY	PART NAME 1 2 3 4 5 6 (PRODUCT LEVEL)	SEE PAGE
Y	1	1	**345-6946**	1	VALVE GP-PRESSURE REDUCING (IMPLEMENT PILOT OIL)	809

Y-SEPARATE ILLUSTRATION

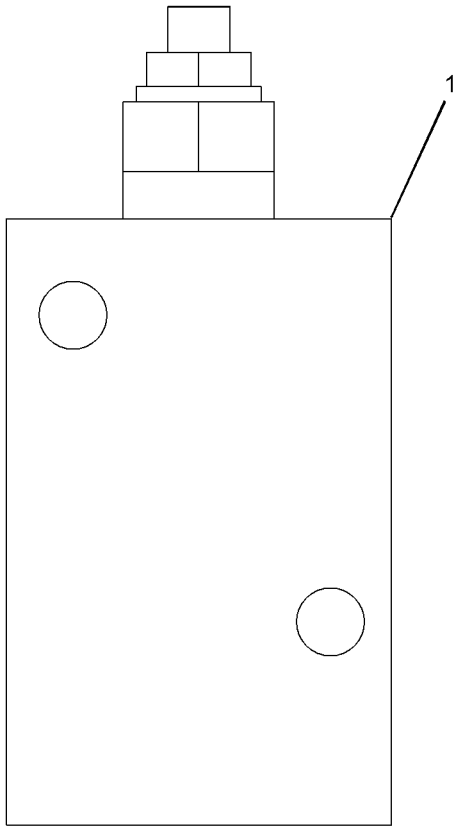

GRAPHIC #1 **<END>** g01950293

HYDRAULIC SYSTEM

345-6946 VALVE GP-PRESSURE REDUCING

S/N: B9K336-UP

PART OF 345-4472 VALVE GP-PRESSURE REDUCING

SMCS-5117 **i03634356**

NOTE	REF NO	GRAPHIC REF	PART NUMBER	QTY	PART NAME 1 2 3 4 5 6 (PRODUCT LEVEL)	SEE PAGE
	1	1	2M-9780	1	SEAL-O-RING	
	2	1	6V-3505	1	RING-BACKUP	
	3	1	8C-3132	1	SEAL-O-RING	
	4	1	6E-0410	1	SEAL-O-RING	
	5	1	5P-2199	1	RING-BACKUP	

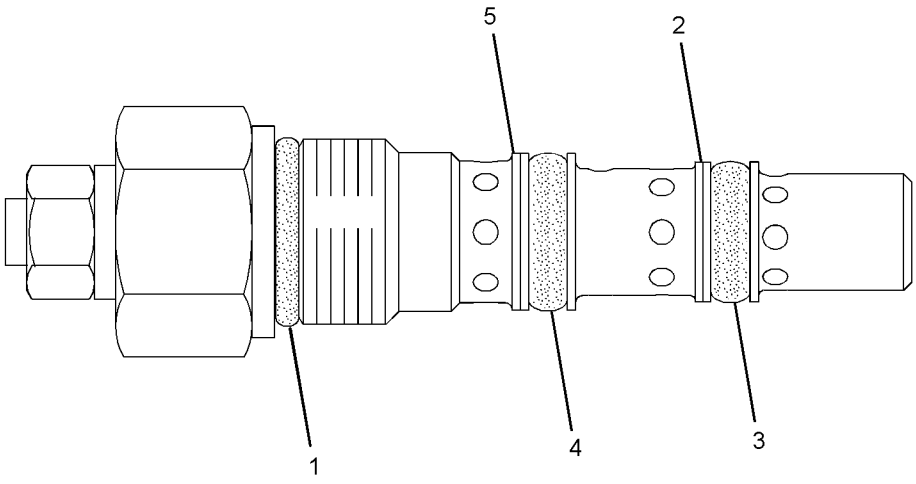

GRAPHIC #1 **<END>** g01950269

HYDRAULIC SYSTEM

104-3122 VALVE GP-PUMP CONTROL–
PRESSURE, FLOW COMPENSATOR
S/N: B9K1-UP

PART OF 268-6690, 268-6691 PUMP GP-PISTON

SMCS-5455 **i03287292**

NOTE	REF NO	GRAPHIC REF	PART NUMBER	QTY	PART NAME 1 2 3 4 5 6 (PRODUCT LEVEL)	SEE PAGE
	1	1	9X-7680	1	SEAL-O-RING	
	2	1	9S-4191	1	PLUG-O-RING	
	3	1	3J-1907	3	SEAL-O-RING	
	4	1	9T-2186	2	PLUG	
	5	1	6E-4230	2	GUIDE-SPRING	
	6	1	6E-4228	1	SPRING	
	7	1	6E-6140	1	PLUG-COMPENSATOR	
	8	1	033-6036	1	SEAL-O-RING	
	9	1	6E-6141	2	LOCKNUT-SEALING	
M	10	1	129-7632	2	SETSCREW-SOCKET (M8X1.25X45-MM)	
	11	1	6E-6142	1	PLUG-MARGIN	
	12	1	033-6027	1	SEAL-O-RING	
	13	1	9T-7750	1	SPRING	
	14	1	108-4816	1	PIN-SPRING STOP	
	15	1	9T-1857	2	GUIDE	
	16	1	6E-6420	1	VALVE-NEEDLE	
	17	1	6E-6419	1	RING	

M-METRIC PART

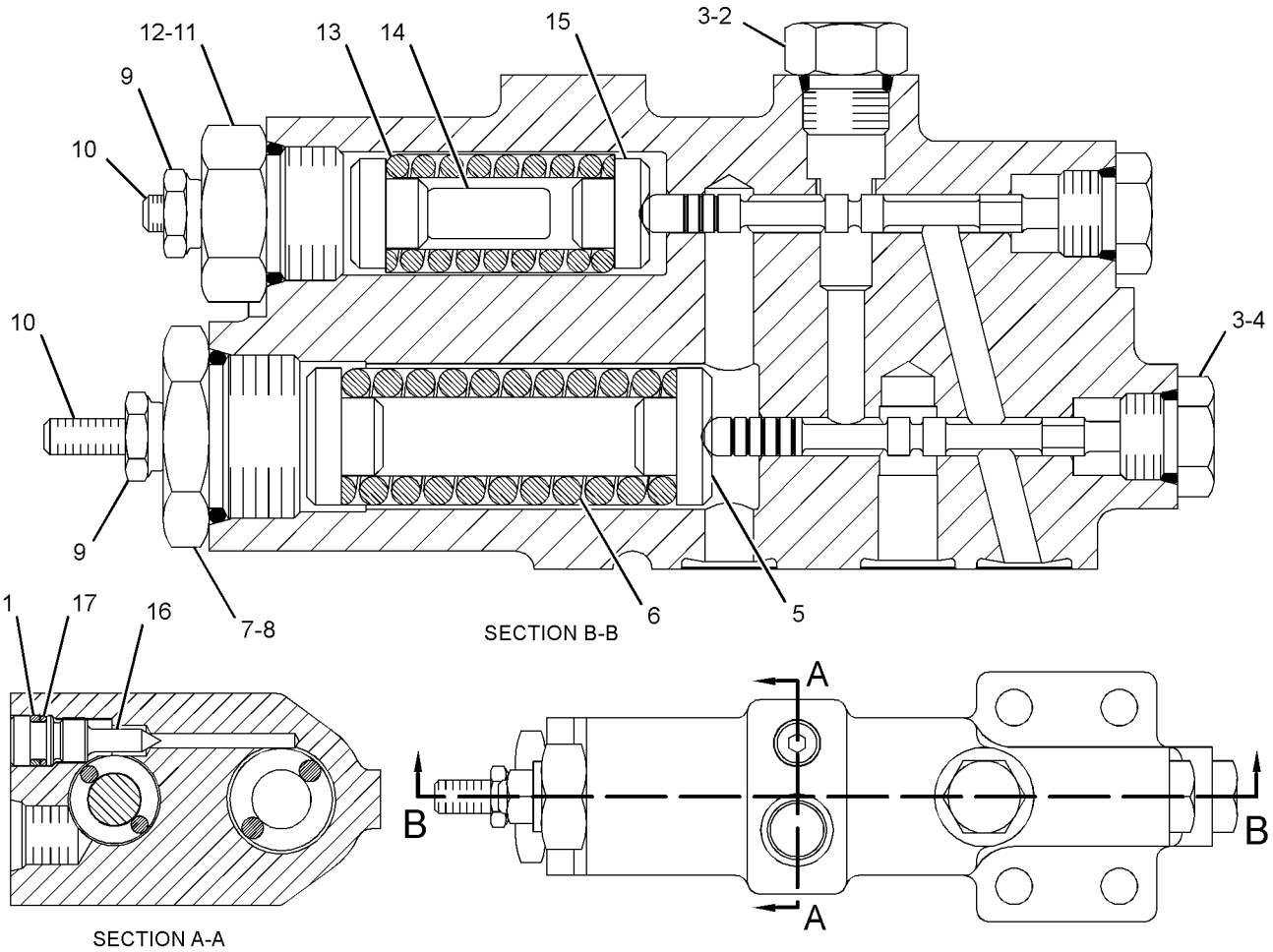

GRAPHIC #1 **<END>** g01677533

HYDRAULIC SYSTEM

285-5240 VALVE GP-PUMP CONTROL–
PRESSURE, FLOW COMPENSATOR
S/N: B9K1-UP
PART OF 291-0061 PUMP GP-PISTON

SMCS-5455 **i02645891**

NOTE	REF NO	GRAPHIC REF	PART NUMBER	QTY	PART NAME 1 2 3 4 5 6 (PRODUCT LEVEL)	SEE PAGE
M	1	1	**8T-8442**	4	BOLT-SOCKET HEAD (M6X1X30-MM)	
	2	1	**280-7870**	1	GASKET	
J	3	1	**6E-6528**	2	SEAL	
	4	1	**9S-8002**	1	PLUG-O-RING	
	5	1	**3J-7354**	1	SEAL-O-RING	
J	6	1	**033-6043**	1	SEAL-O-RING	
J	7	1	**6V-6339**	1	SEAL-O-RING	
					AVAILABLE REPAIR KIT(S):	
J			**293-8350**	1	KIT-SEAL (FLOW COMPENSATOR)	
					(INCLUDES SEAL-O-RINGS & BACK-UP RINGS)	

J-KIT MARKED J SERVICES PARTS MARKED J
M-METRIC PART

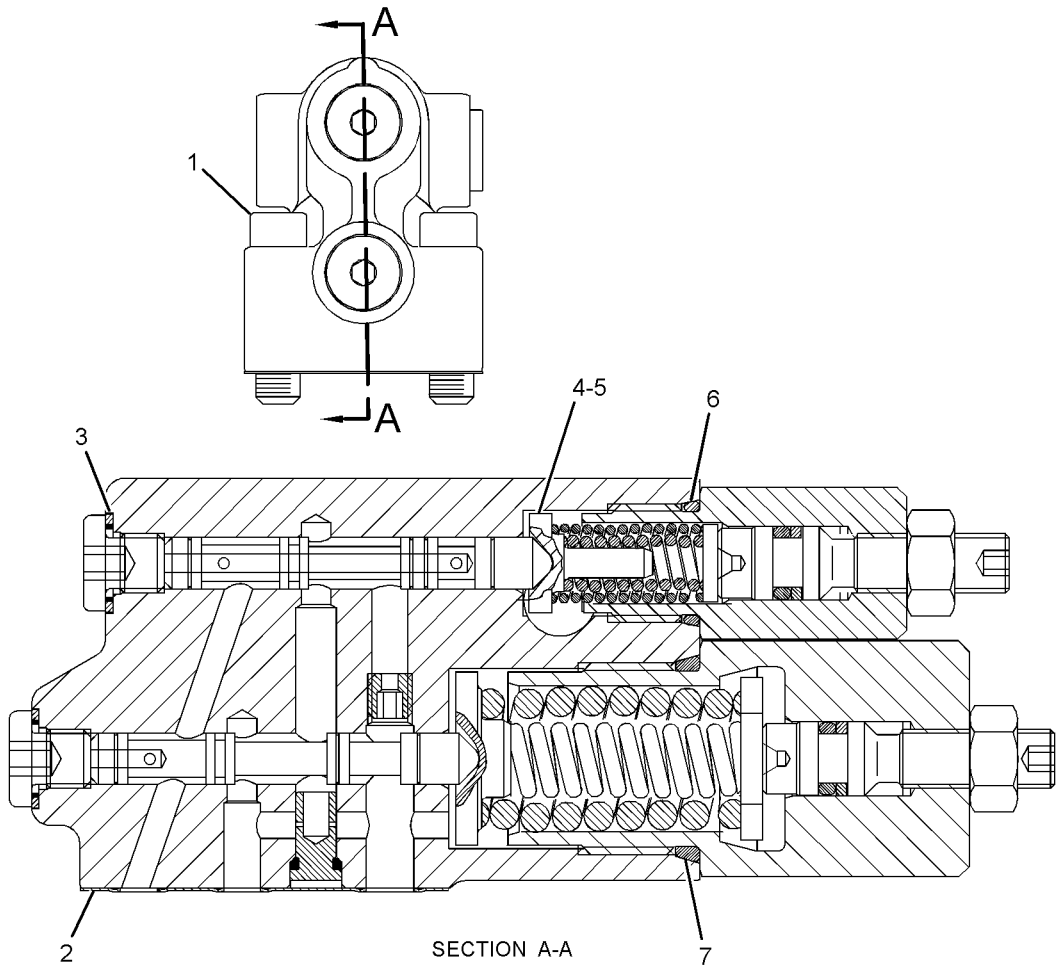

GRAPHIC #1 **<END>** g01297140

HYDRAULIC SYSTEM

133-5330 VALVE GP-RELIEF

S/N: B9K1-UP

PART OF 306-5134 MANIFOLD GP-CONTROL

SMCS-4322, 5069, 5072, 5117 **i02783578**

NOTE	REF NO	GRAPHIC REF	PART NUMBER	QTY	PART NAME 1 2 3 4 5 6 (PRODUCT LEVEL)	SEE PAGE
J	1	1	**161-6149**	1	SEAL-O-RING	
J	2	1	**161-6161**	2	RING-BACKUP	
J	3	1	**2M-9780**	1	SEAL-O-RING	
					AVAILABLE REPAIR KIT(S):	
J			**133-5545**	1	KIT-SEAL (RELIEF VALVE)	
					(INCLUDES SEAL RINGS & BACK-UP RING)	

J-KIT MARKED J INCLUDES PART(S) MARKED J

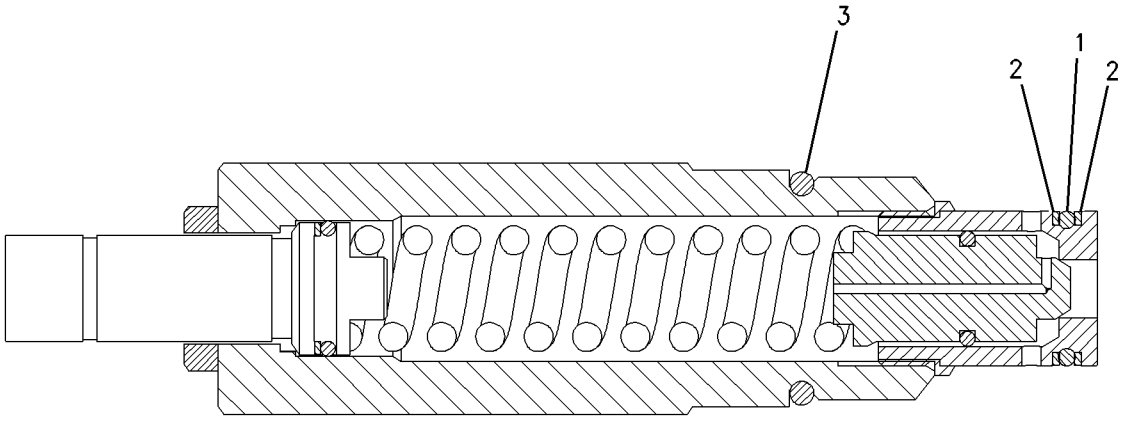

GRAPHIC #1 **<END>** g00705020

HYDRAULIC SYSTEM

257-8414 VALVE GP-SHUTTLE

S/N: B9K1-UP
PART OF 272-0984, 353-2606 MANIFOLD GP-CONTROL
FIELD REPLACEMENT FOR 213-4555 VALVE GP-SHUTTLE

SMCS-5079 **i02179242**

NOTE	REF NO	GRAPHIC REF	PART NUMBER	QTY	PART NAME 1 2 3 4 5 6 (PRODUCT LEVEL)	SEE PAGE
	1	1	**3K-0360**	1	SEAL-O-RING	
	2	1	**161-6149**	1	SEAL-O-RING	
	3	1	**095-1750**	1	SEAL-O-RING	
	4	1	**161-6161**	1	RING-BACKUP	
	5	1	**187-0541**	1	RING-BACKUP	

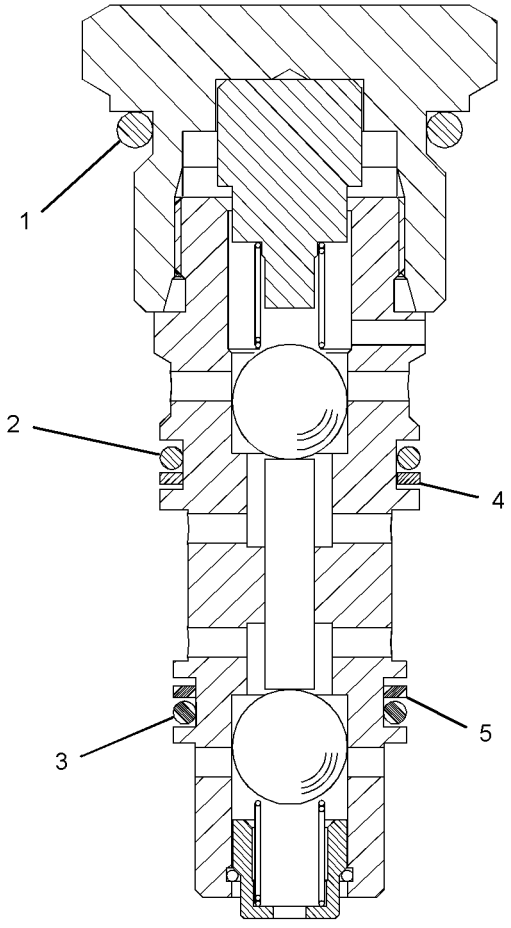

GRAPHIC #1 **<END>** g01104191

HYDRAULIC SYSTEM

189-8627 VALVE GP-SOLENOID

S/N: B9K1-UP
24-VOLT
PART OF 272-0984, 353-2606 MANIFOLD GP-CONTROL

SMCS-5479 **i03621222**

NOTE	REF NO	GRAPHIC REF	PART NUMBER	QTY	PART NAME 1 2 3 4 5 6 (PRODUCT LEVEL)	SEE PAGE
	1	1	**312-8629**	1	COIL AS	
	2	1	**191-9247**	1	WASHER (19.15X31.65X2.36-MM THK)	
	3	1	**198-2914**	1	NUT (3/4-32-THD)	
					PARTS SHOWN IN GRAPHIC(S) WITHOUT A REFERENCE NUMBER ARE NOT SERVICED SEPARATELY	

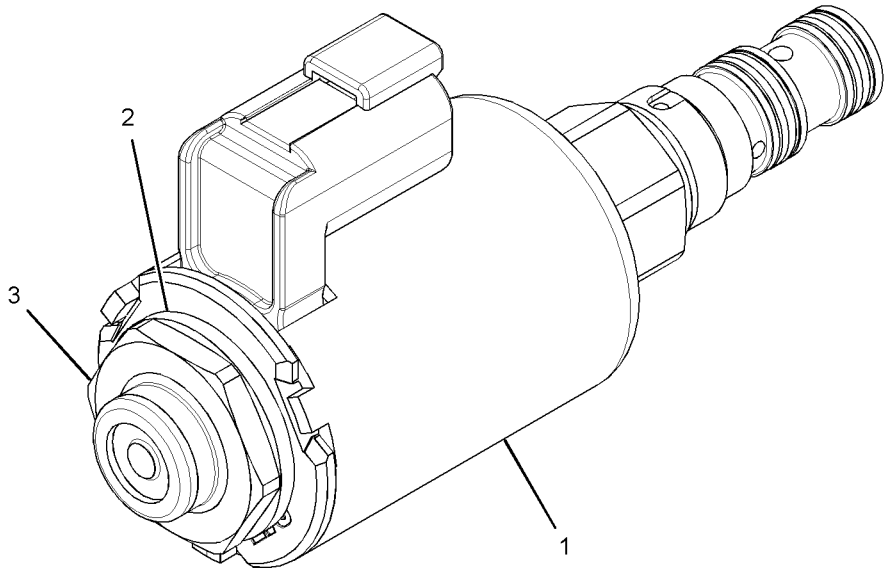

GRAPHIC #1 **<END>** g01947439

HYDRAULIC SYSTEM

278-1799 VALVE GP-SOLENOID

S/N: B9K1-UP

PART OF 276-3652, 276-3653, 276-3654, 276-3655, 276-3656, 276-3657, 276-3659, 276-3661 VALVE GP-CONTROL

SMCS-5479 **i02558898**

NOTE	REF NO	GRAPHIC REF	PART NUMBER	QTY	PART NAME 1 2 3 4 5 6 (PRODUCT LEVEL)	SEE PAGE
	1	1	8C-6711	1	NUT-RETAINER (1/2-20-THD)	
	2	1	226-9622	1	COIL AS-SOLENOID (24-VOLT)	
	3	1	4K-2039	1	SEAL-O-RING	
	4	1	5L-4758	1	SEAL-O-RING	
	5	1	6F-4855	1	SEAL-O-RING	

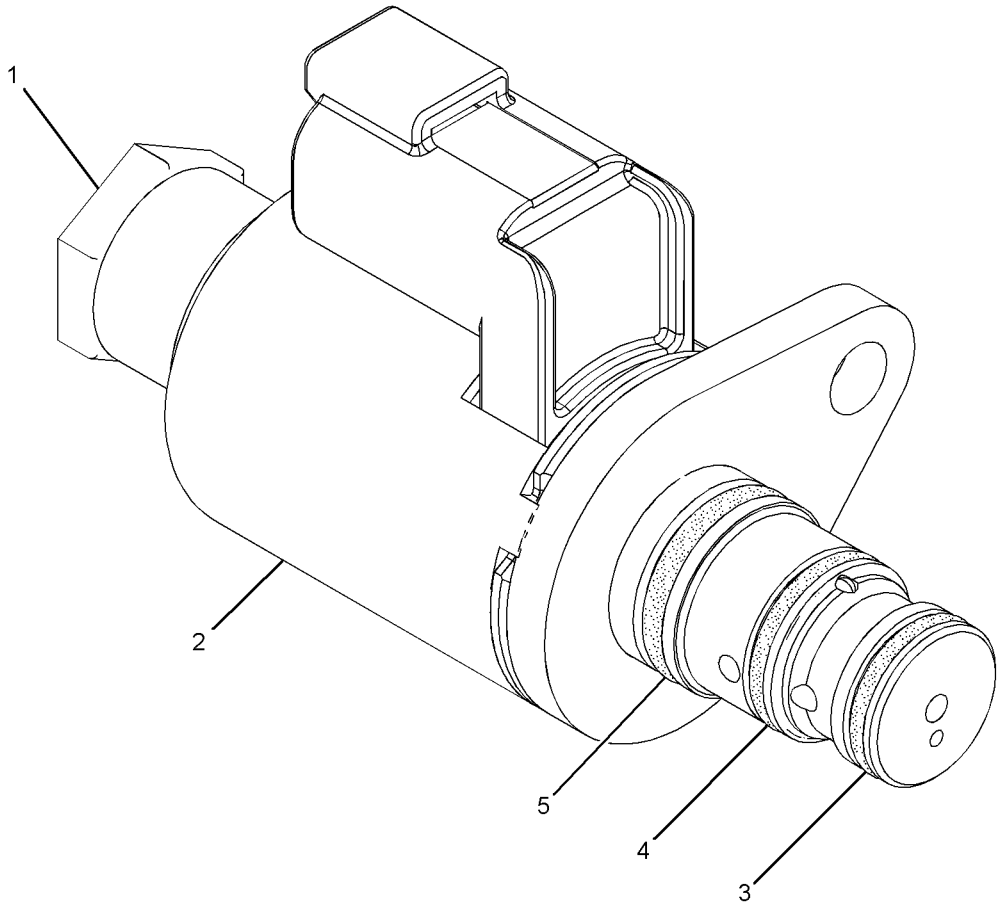

GRAPHIC #1 **<END>** g01281815

HYDRAULIC SYSTEM

279-6521 VALVE GP-SOLENOID & MANIFOLD

S/N: B9K1-UP

PART OF 278-0561 LINES GP-HYDRAULIC

SMCS-5264, 5479 **i03809530**

NOTE	REF NO	GRAPHIC REF	PART NUMBER	QTY	PART NAME 1 2 3 4 5 6 (PRODUCT LEVEL)	SEE PAGE
	1	1	**263-1392**	1	VALVE GP-CHECK	
	2	1	**283-9570**	1	VALVE GP-SOLENOID (BLADE CUSHION)	
		1	**3K-0360**	1	SEAL-O-RING	
		1	**030-6121**	1	RING-BACKUP	
		1	**161-6154**	1	SEAL-O-RING	
		1	**187-8191**	1	COIL AS	
	3	1	**283-9557**	1	VALVE GP-SOLENOID (BLADE CUSHION)	
		1	**250-6148**	1	COIL AS (24-VOLT)	

PARTS SHOWN IN GRAPHIC(S) WITHOUT A REFERENCE NUMBER ARE NOT SERVICED SEPARATELY

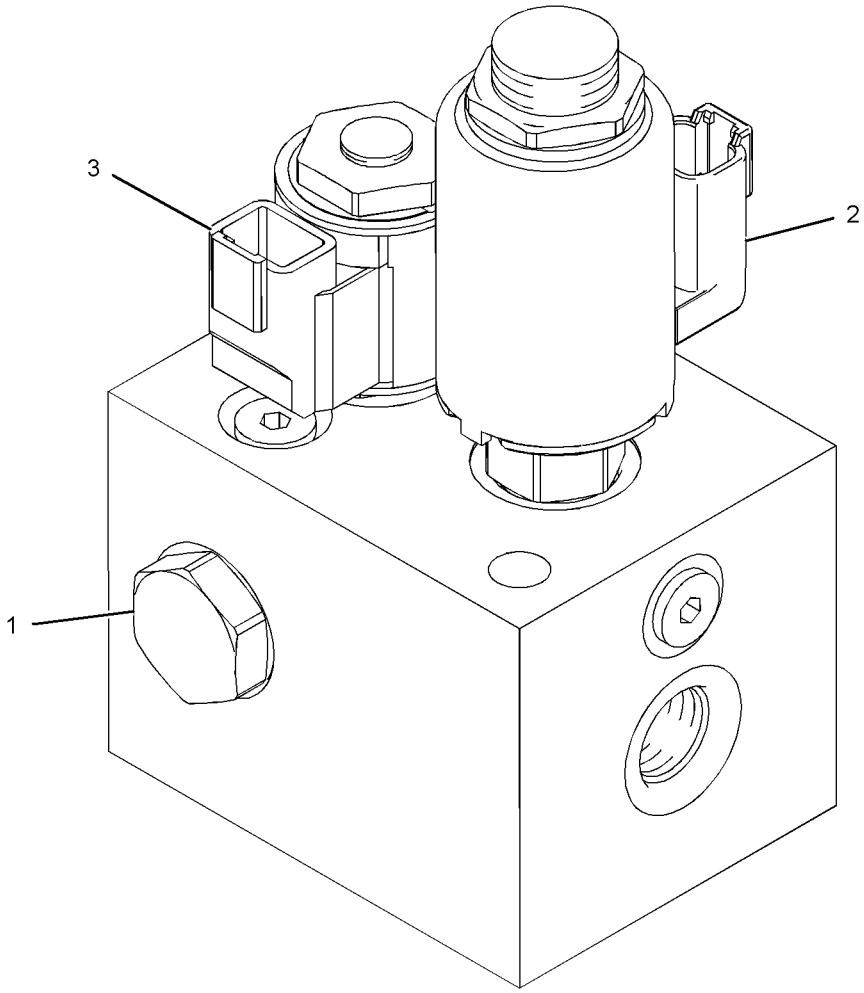

GRAPHIC #1 **<END>** g02064335

HYDRAULIC SYSTEM

308-0937 VALVE GP-STEERING

S/N: B9K1-UP

PART OF 253-9005 CONTROL GP-STEERING, 344-1108 LINES GP-STEERING

SMCS-1130, 4307, 4322 **i02732398**

NOTE	REF NO	GRAPHIC REF	PART NUMBER	QTY	PART NAME 1 2 3 4 5 6 (PRODUCT LEVEL)	SEE PAGE
	1	1	**192-7507**	1	SEAL-O-RING	
	2	1,2	**9T-4057**	5	SEAL-O-RING	
	3	1,2	**8T-7877**	8	SEAL-O-RING	
	4	1,2	**192-7510**	3	SEAL-O-RING	
	5	2	**5L-4758**	1	SEAL-O-RING	
	6	1	**192-7508**	2	SEAL-O-RING	
	7	1,2	**301-5165**	1	KIT-SEAL (BANK VALVE)	
					(INCLUDES O-RINGS)	
	8	1,2	**301-5166**	1	KIT-SEAL (BANK VALVE)	
					(INCLUDES O-RINGS)	
	9	2	**301-5167**	1	KIT-SEAL (BANK VALVE)	
					(INCLUDES O-RINGS & FILTER)	
	10	2	**308-0938**	1	VALVE GP-ACTUATOR (STEERING)	
M		2	**1R-5396**	4	BOLT (M6X1X35-MM)	
	11	1	**301-6821**	2	VALVE GP-RELIEF (STEERING PILOT PRESSURE)	
					PARTS SHOWN IN GRAPHIC(S) WITHOUT A REFERENCE NUMBER ARE NOT SERVICED SEPARATELY	

M-METRIC PART

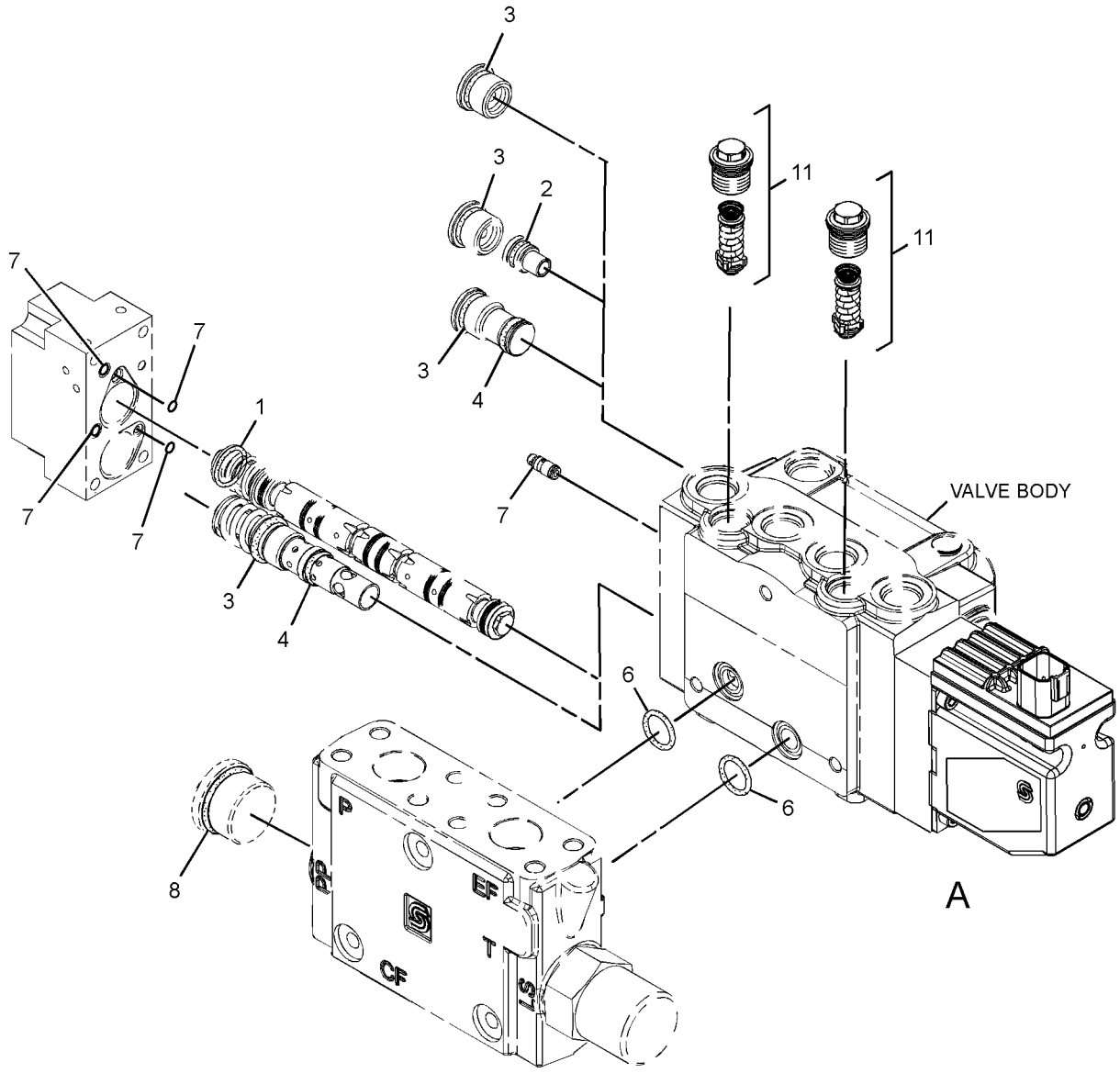

REFER TO ALL ILLUSTRATIONS OF
THIS GROUP FOR AUXILIARY VIEWS

GRAPHIC #1

g01376225

308-0937 VALVE GP-STEERING *(contd.)* **i02732398**

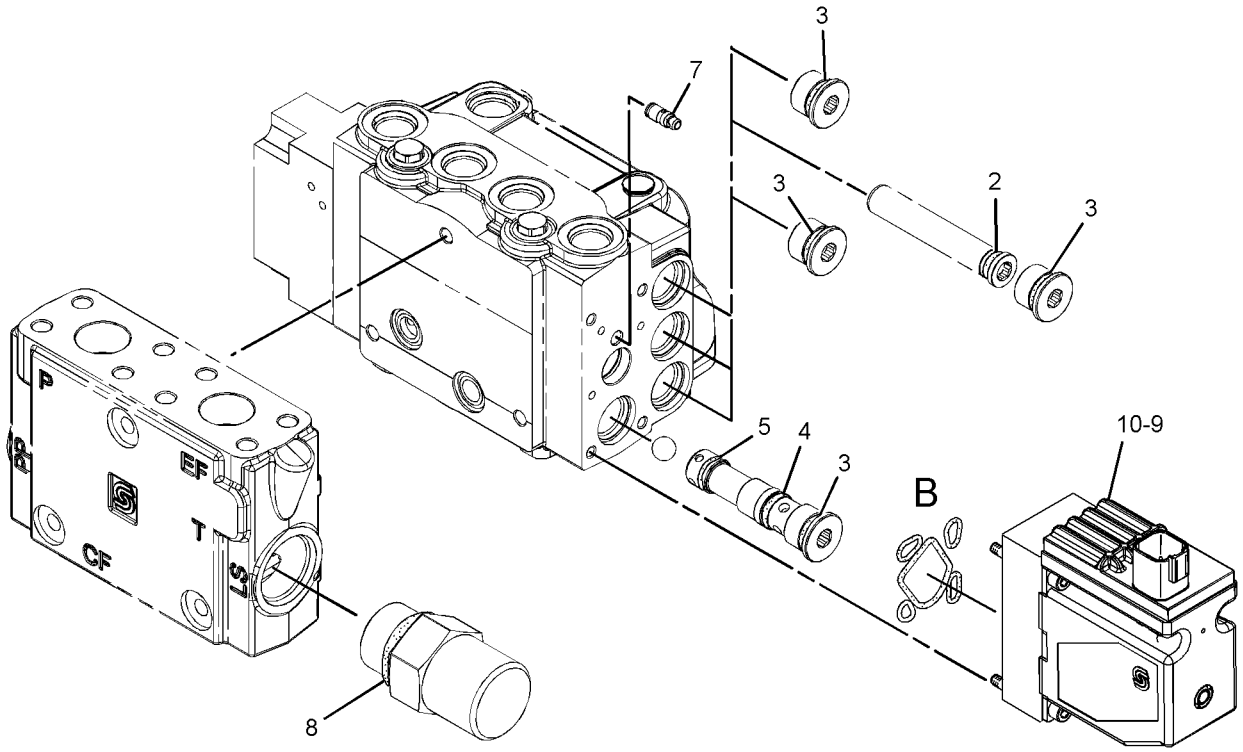

VIEW OF AREA A
(EXPLODED)

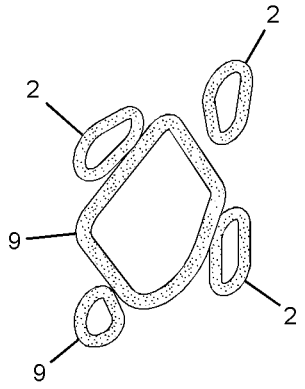

VIEW OF AREA B

GRAPHIC #2 **<END>** g01376227

HYDRAULIC SYSTEM

117-5099 VALVE GP-UNLOADING

S/N: B9K1-UP

PART OF 268-0244 LINES GP-SECONDARY STEERING

SMCS-5059, 505U **i01371460**

NOTE	REF NO	GRAPHIC REF	PART NUMBER	QTY	PART NAME 1 2 3 4 5 6 (PRODUCT LEVEL)	SEE PAGE
	1	1	9T-6630	1	VALVE GP-CHECK (HYDRAULIC OIL)	
		1	2M-9780	1	SEAL-O-RING	
		1	4M-6582	1	SEAL-O-RING	
		1	5P-2199	1	RING-BACKUP	
	2	1	137-8400	1	VALVE GP-UNLOADING	
		1	2M-9780	1	SEAL-O-RING	
		1	161-6149	1	SEAL-O-RING	
		1	161-6161	1	RING-BACKUP	
J	3	1	104-7845	1	VALVE GP-DIVERTER	
	4	1	4J-0520	1	SEAL-O-RING	
	5	1	9S-8001	1	PLUG-O-RING	
		1	4J-7533	1	SEAL-O-RING	
	6	1	9S-8005	1	PLUG-O-RING	
		1	3K-0360	1	SEAL-O-RING	
					AVAILABLE REPAIR KIT(S):	
J			2U-7354	1	KIT-SEAL (DIVERTER VALVE) (INCLUDES SEALS & RINGS)	

J-REPAIR KIT(S) MARKED J AVAILABLE FOR PART MARKED J

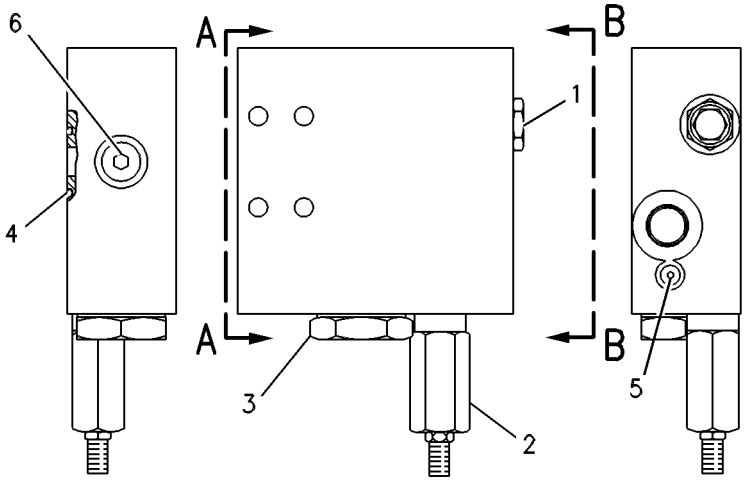

VIEW A-A VIEW B-B

GRAPHIC #1 **<END>** g00273542

IMPLEMENTS

268-5760 CIRCLE GP

S/N: B9K1-UP

PART OF 259-9204 COMMON AR, 321-3121 IMPLEMENT AR

SMCS-6152, 6154, 6155 **i02765047**

NOTE	REF NO	GRAPHIC REF	PART NUMBER	QTY	PART NAME 1 2 3 4 5 6 (PRODUCT LEVEL)	SEE PAGE
	1	1	**9X-4597**	4	SEAL-LIP TYPE	
	2	1	**138-7435**	2	SPACER (117X162X4.6-MM THK)	
B	3	1	**138-7436**	2	SHIM PACK (INCLUDES 26-SHIMS)	
	4	1	**140-8448**	4	PLATE	
	5	1	**140-8466**	6	SEGMENT	
	6	1	**194-3857**	2	PIN	
	7	1	**268-5759**	12	PIN	
	8	1	**277-2120**	1	CIRCLE AS	
	9	1	**277-2122**	1	BRACKET AS	
M		1	**9R-2613**	2	BOSS-WELD (M10X1.5X25-MM)	
		1	**198-7214**	1	PLATE	
Y	10	1	*281-4290*	1	GUARD GP-ROCK	552
	11	1	**087-5379**	2	BEARING-SLEEVE	
M	12	1	**6V-9667**	36	BOLT (M20X2.5X100-MM)	
M	13	1	**8T-4140**	16	BOLT (M16X2X60-MM)	
	14	1	**9X-8257**	16	WASHER (17.5X30X3.5-MM THK)	

B-USE AS REQUIRED
M-METRIC PART
Y-SEPARATE ILLUSTRATION

268-5760 **CIRCLE GP** *(contd.)* **i02765047**

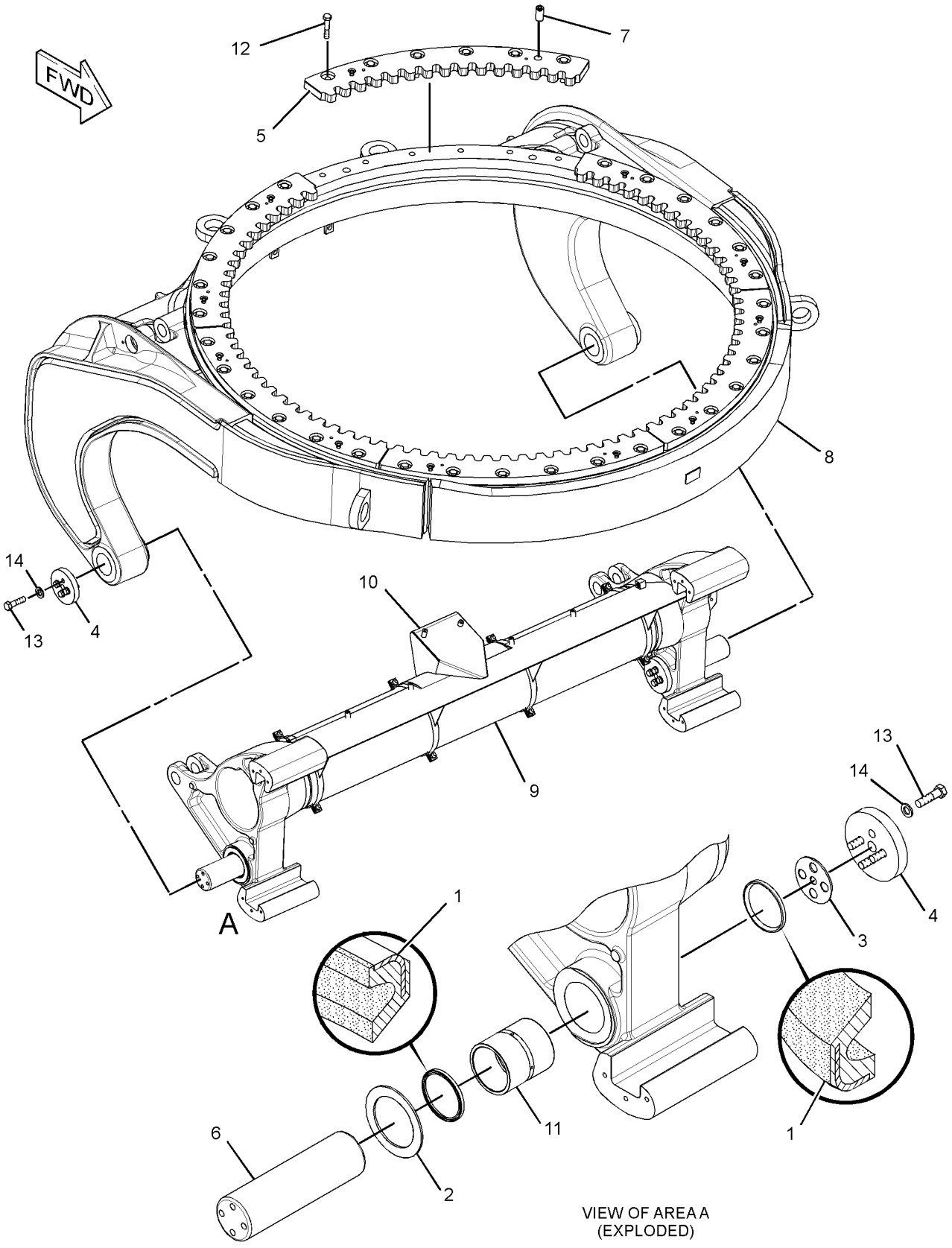

VIEW OF AREA A
(EXPLODED)

GRAPHIC #1 **<END>** g01391999

IMPLEMENTS

265-6740 DRAWBAR GP

S/N: B9K1-UP

PART OF 259-9204 COMMON AR, 321-3121 IMPLEMENT AR

SMCS-6153 **i03199336**

NOTE	REF NO	GRAPHIC REF	PART NUMBER	QTY	PART NAME 1 2 3 4 5 6 (PRODUCT LEVEL)	SEE PAGE
	1	1	**4D-8318**	16	SETSCREW-SQUARE HEAD (1-8X3-IN)	
	2	1	**6G-4524**	16	STRIP-WEAR	
B	3	1	**117-2242**	1	SHIM PACK (INCLUDES 8-SHIMS)	
	4	1	**117-2244**	8	STRIP-WEAR	
	5	1	**117-2245**	1	CAP	
	6	1	**117-2246**	1	ADAPTER	
	7	1	**243-6690**	1	BALL	
	8	1	**265-6739**	1	DRAWBAR AS	
		1	**8W-1040**	1	LUG (6-MM THK)	
B	9	1	**275-0511**	136	SHIM (0.8-MM THK)	
B	10	1	**275-0512**	32	SHIM (0.25-MM THK)	
	11	1	**319-2227**	8	SHOE-CIRCLE GUIDE	
	12	1	**1D-6306**	16	NUT (1-8-THD)	
	13	1	**5D-4661**	24	WASHER-HARD (28X52.5X8-MM THK)	
M	14	1	**8C-3236**	8	BOLT (M30X3.5X160-MM)	
M	15	1	**8C-8729**	2	BOLT-SOCKET HEAD (M12X1.75X80-MM)	
	16	1	**8P-1438**	4	COVER	
M	17	1	**8T-0674**	24	BOLT (M24X3X180-MM)	
M	18	1	**8T-4183**	8	BOLT (M12X1.75X40-MM)	
	19	1	**8T-4223**	8	WASHER-HARD (13.5X25.5X3-MM THK)	
	20	1	**9X-8399**	8	WASHER (33X56X6-MM THK)	
M	21	1	**9X-8480**	8	BOLT (M24X3X110-MM)	

B-USE AS REQUIRED
M-METRIC PART

265-6740 **DRAWBAR GP** *(contd.)* **i03199336**

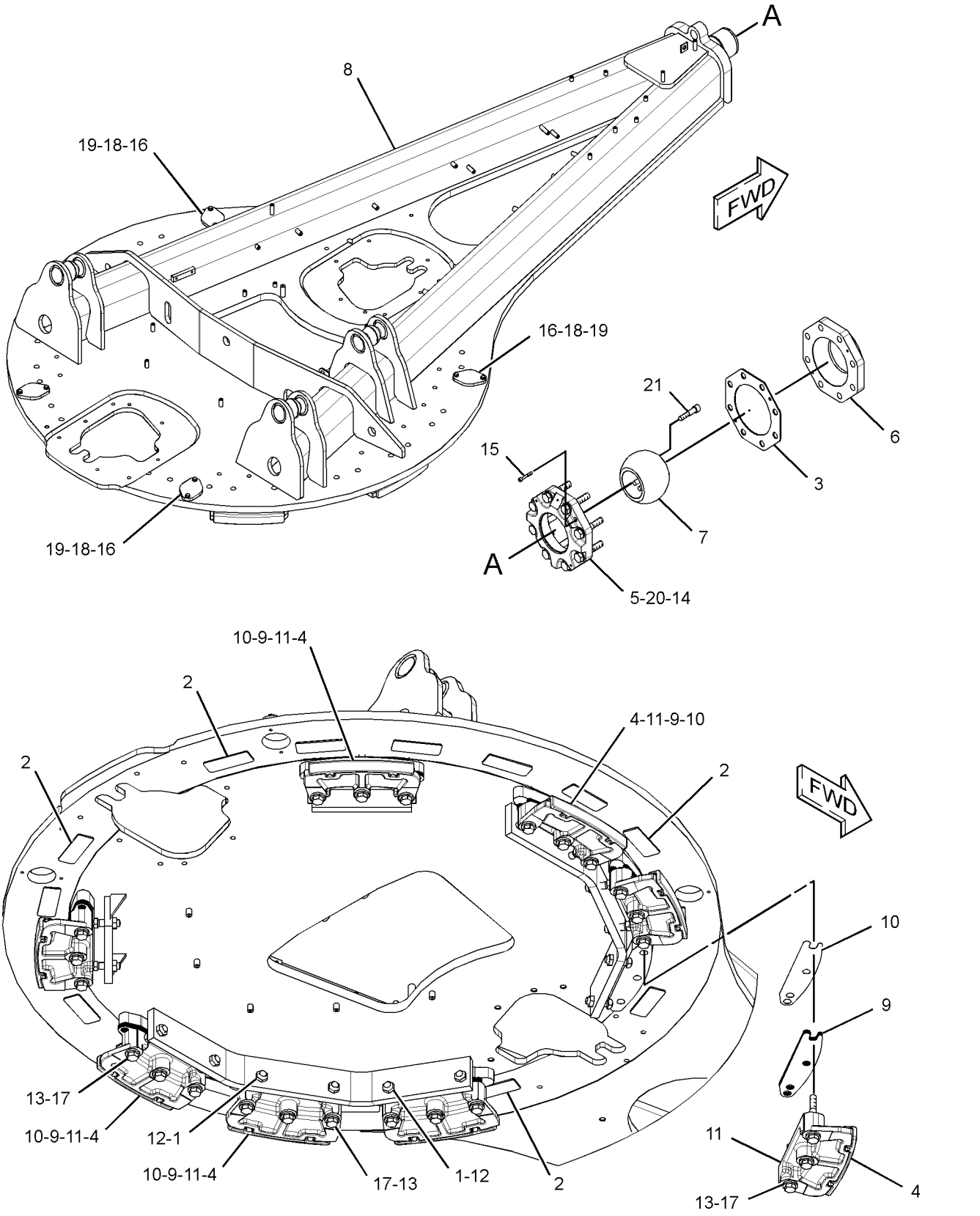

GRAPHIC #1 **<END>** g01384634

IMPLEMENTS

321-3121 IMPLEMENT AR

S/N: B9K1-UP

SMCS-6000 **i03091779**

NOTE	PART NUMBER	QTY	PART NAME 1 2 3 4 5 6 (PRODUCT LEVEL)	SEE PAGE
Y	*268-5760*	1	CIRCLE GP	821
Y	*140-8444*	1	CYLINDER & MTG GP-BLADE TIP	642
Y	*140-8443*	1	CYLINDER & MTG GP-SIDESHIFT	644
Y	*265-6740*	1	DRAWBAR GP	823
Y	*252-7065*	1	DRIVE & MTG GP-CIRCLE	658
Y	*265-6741*	1	DRIVE & MTG GP-CIRCLE	659
Y	*109-3113*	1	EDGE GP-CUTTING	969
Y	*253-9006*	1	LINES GP-FRONT	681
Y	**140-8440**	1	MOLDBOARD AS	826
Y	*140-8451*	1	MOUNTING GP-BLADE	984

Y-SEPARATE ILLUSTRATION

<END>

IMPLEMENTS

140-8440 MOLDBOARD AS

S/N: B9K1-UP

PART OF 178-4096 ADAPTER GP, 259-9204 COMMON AR, 321-3121 IMPLEMENT AR

SMCS-6151, 6174 **i03110142**

NOTE	REF NO	GRAPHIC REF	PART NUMBER	QTY	PART NAME 1 2 3 4 5 6 (PRODUCT LEVEL)	SEE PAGE
	1	1	**139-2404**	1	PLATE-WEAR	
	2	1	**140-8438**	1	RAIL-TOP	
	3	1	**140-8439**	1	RAIL-BOTTOM	
	4	1	**140-8450**	1	BRACKET AS	

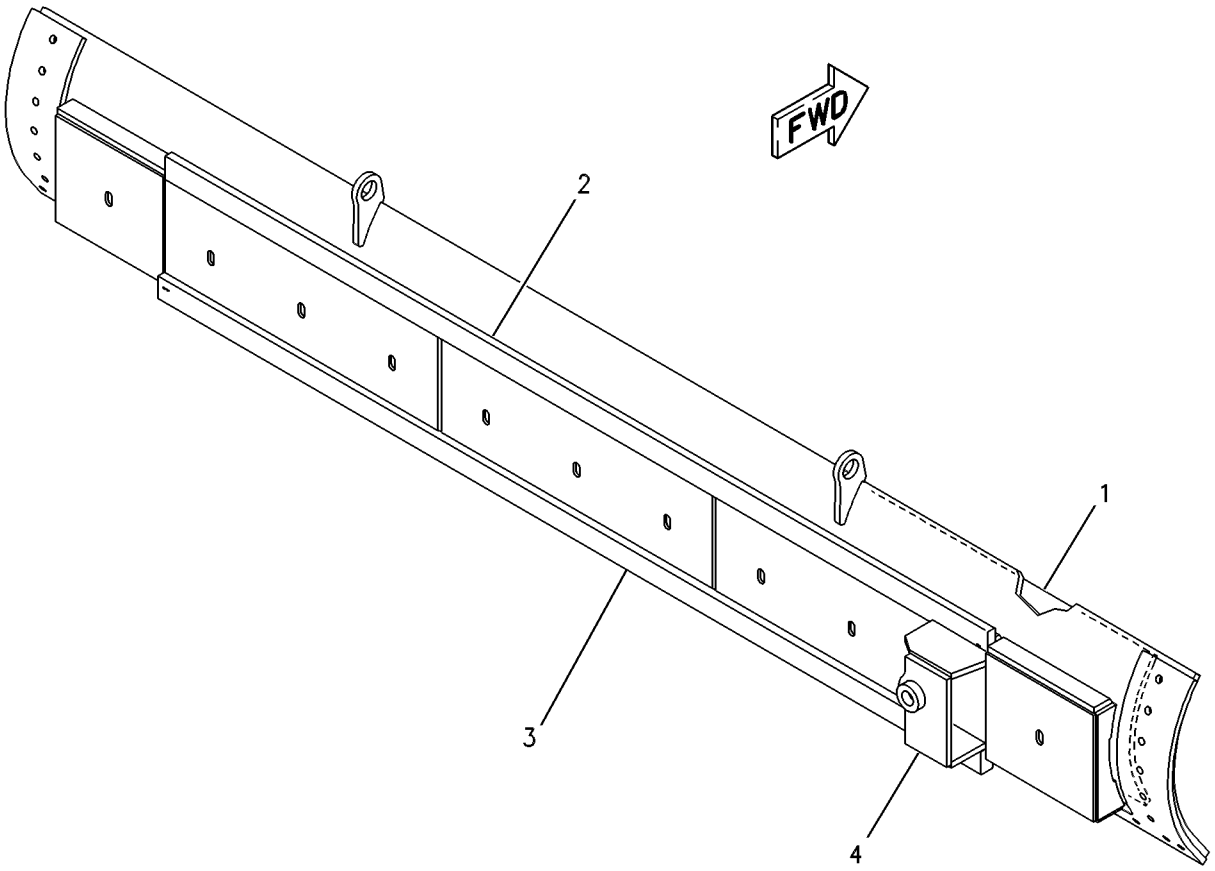

GRAPHIC #1 **<END>** g00277560

IMPLEMENTS

135-8283 PLATE GP-PUSH

S/N: B9K1-UP

SMCS-6077 **i00543411**

NOTE	REF NO	GRAPHIC REF	PART NUMBER	QTY	PART NAME 1 2 3 4 5 6 (PRODUCT LEVEL)	SEE PAGE
	1	1	**135-8284**	1	PLATE AS	
M	2	1	**7X-2575**	6	BOLT (M24X3X60MM)	
	3	1	**8T-4167**	6	WASHER (4.0MM THK)	

M-METRIC PART

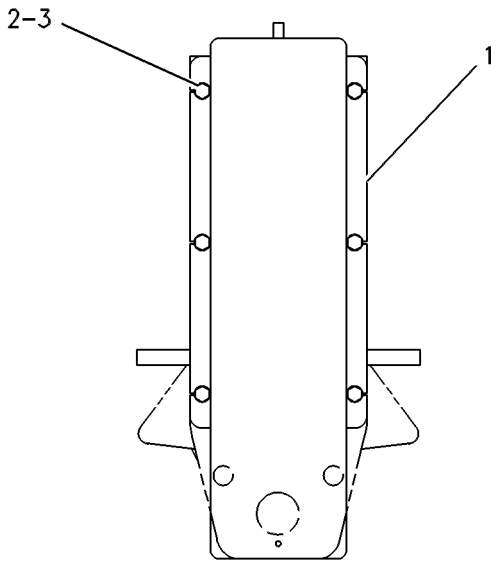

FRONT VIEW

GRAPHIC #1 **<END>** g00267425

OPERATOR STATION

269-2208 ACCESS GP-CAB

S/N: B9K1-UP

SMCS-7254, 7308 **i02758387**

NOTE	PART NUMBER	QTY	PART NAME 1 2 3 4 5 6 (PRODUCT LEVEL)	SEE PAGE
Y	*266-7032*	1	DOOR GP-CAB (LH)	882
Y	*266-7031*	1	DOOR GP-CAB (RH)	876
Y	*306-5426*	1	STEP GP (LH)	592
Y	*306-5427*	1	STEP GP (RH)	593

Y-SEPARATE ILLUSTRATION

<END>

OPERATOR STATION

173-1028 ADJUSTER GP-SEAT

S/N: B9K1-UP

PART OF 244-5002 SEAT GP

SMCS-7321 **i03396461**

NOTE	REF NO	GRAPHIC REF	PART NUMBER	QTY	PART NAME 1 2 3 4 5 6 (PRODUCT LEVEL)	SEE PAGE
	1	1	**4V-8256**	4	SPRING	
	2	1	**117-4492**	1	ROD	
	3	1	**136-1544**	1	LATCH AS (LH)	
	4	1	**156-5545**	1	LATCH AS (RH)	
	5	1	**164-4531**	1	ROD	
	6	1	**170-1112**	1	PLATE AS	
	7	1	**170-1114**	1	HANDLE (SLIDE ADJUSTMENT)	
	8	1	**170-1115**	1	HANDLE (TILT ADJUSTMENT)	
	9	1	**132-0338**	2	WASHER-PLASTIC (13X31.7X0.8-MM THK)	
	10	1	**2K-4973**	2	LOCKNUT (3/8-16-THD)	
	11	1	**7X-0608**	2	WASHER-HARD (10.2X16X2-MM THK)	

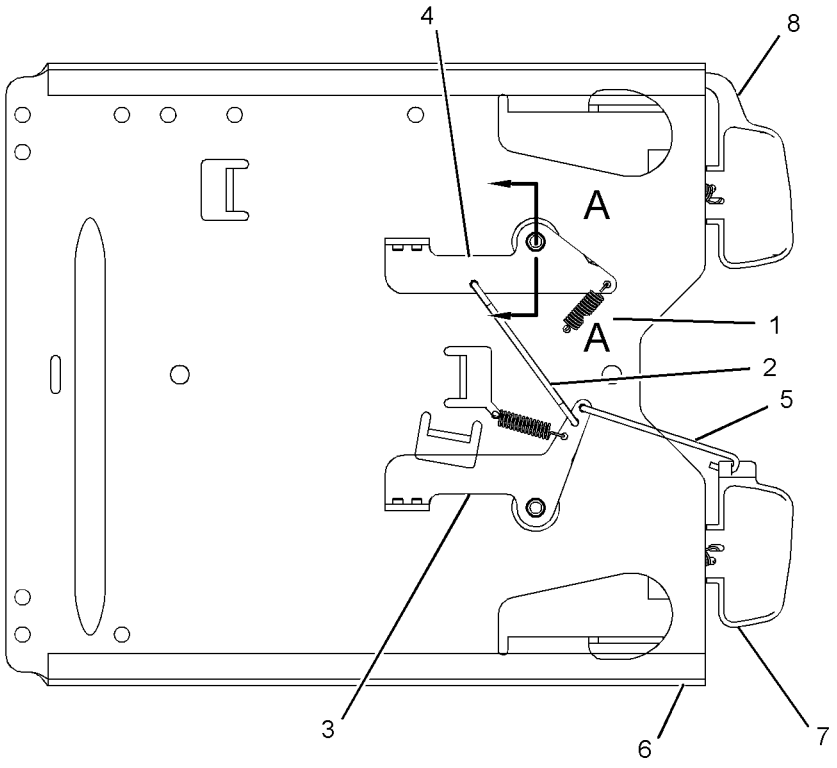

BOTTOM VIEW

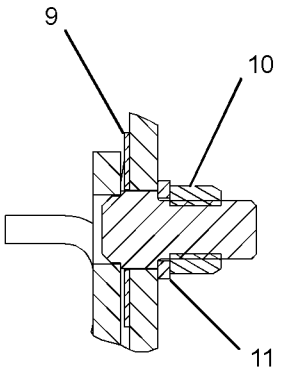

SECTION A-A

GRAPHIC #1 **<END>** g01191495

OPERATOR STATION

237-3970 AIR COMPRESSOR GP-SEAT

S/N: B9K1-UP

FOR OPTIONAL FIELD REPLACEMENT ORDER 211-5358 CONDUIT (100-CM) & 5P-6010 TUBE (1-M), PROVIDES HEAVY DUTY SEAT COMPRESSOR

PART OF 256-8768 SUSPENSION GP-SEAT

SMCS-731S, 7324 **i02012095**

NOTE	REF NO	GRAPHIC REF	PART NUMBER	QTY	PART NAME 1 2 3 4 5 6 (PRODUCT LEVEL)	SEE PAGE
					(NO SERVICED PARTS)	

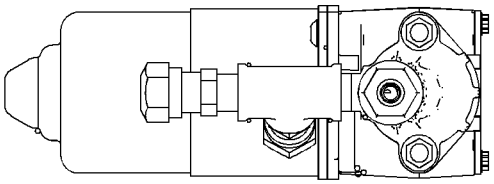

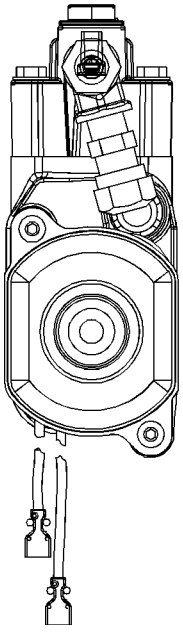

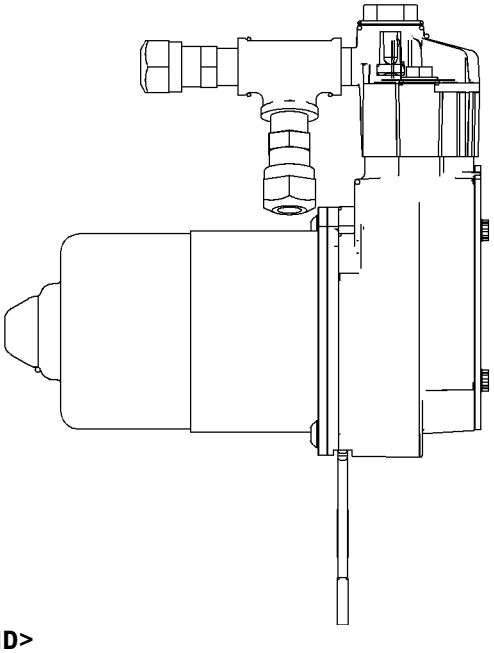

GRAPHIC #1

<END>

g01040576

OPERATOR STATION

277-0711 AIR CONDITIONER & HEATER GP

S/N: B9K1-UP
PART OF 265-6597 AIR CONDITIONER & MOUNTING GP
TYPE 1

SMCS-7304, 7320 **i03188451**

NOTE	REF NO	GRAPHIC REF	PART NUMBER	QTY	PART NAME 1 2 3 4 5 6 (PRODUCT LEVEL)	SEE PAGE
	1	1	**3S-2093**	1	STRAP-CABLE	
	2	1	**9X-2185**	4	SCREW (8-15X0.44-IN)	
	3	1	**131-3093**	1	BUSHING	
	4	1	**156-8315**	3	SCREW-PAN HEAD (10-16X0.5-IN)	
	5	1	**241-7691**	1	HARNESS AS-HEATER & AIR COND (POWER)	
		1	**102-8803**	1	KIT-RECEPTACLE (3-PIN)	
					(INCLUDES RECEPTACLE AS & WEDGE)	
	6	1	**245-1596**	1	ACTUATOR	
	7	1	**248-6772**	8	SCREW-MACHINE (8-16X7.75-IN)	
	8	1	**262-0494**	2	CLAMP	
Y	9	1	**265-6600**	1	HEATER GP-CAB	900
	10	1	**265-6602**	1	COVER AS	
	11	1	**267-3973**	1	GASKET	
	12	1	**267-3997**	1	TUBE	
	13	1	**268-8769**	1	VALVE AS-WATER	
	14	1	**275-6692**	1	TUBE	
Y	15	1	**277-9668**	1	CONDENSER & ACCUMULATOR GP (REFRIGERANT)	845
	16	1	**283-0592**	1	BRACKET AS	
	17	1	**4D-2297**	2	SEAL-O-RING	
	18	1	**4P-8134**	1	CLIP	
M	19	1	**5C-9553**	4	BOLT (M6X1X16-MM)	
	20	1	**5P-1076**	6	WASHER-HARD (13.5X30X4-MM THK)	
	21	1	**5P-4116**	6	WASHER-HARD (8.8X20.5X2-MM THK)	
	22	1	**8T-4121**	1	WASHER-HARD (11X21X2.5-MM THK)	
M	23	1	**8T-4137**	1	BOLT (M10X1.5X20-MM)	
M	24	1	**8T-4139**	6	BOLT (M12X1.75X30-MM)	
M	25	1	**8T-4189**	6	BOLT (M8X1.25X20-MM)	
	26	1	**9X-8256**	4	WASHER (6.6X12X2-MM THK)	
E	27	1	**5P-0767**		HOSE (5-CM)	
D	28	1	**5P-5637**		SEAL (0.3-M EACH)	
D	28A	1	**5P-5637**		SEAL (0.12-M EACH)	
					AVAILABLE REPAIR KIT(S):	
			283-0596	1	KIT-TUBE	
					(INCLUDES TUBING & COUPLINGS)	

D-ORDER BY THE METER
E-ORDER BY THE CENTIMETER
M-METRIC PART
Y-SEPARATE ILLUSTRATION

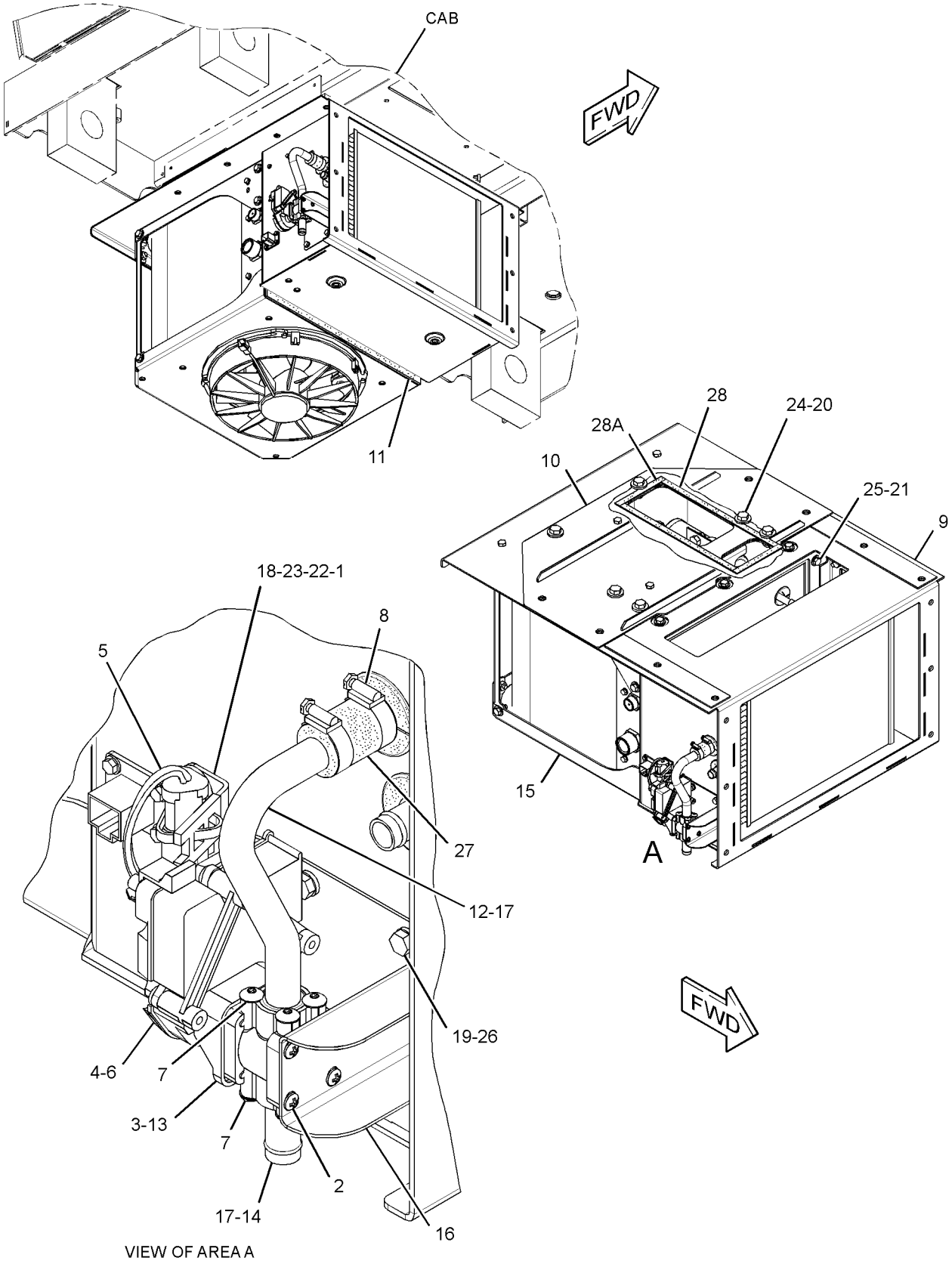

VIEW OF AREA A

GRAPHIC #1 **<END>** g01400679

OPERATOR STATION

277-0711 AIR CONDITIONER & HEATER GP

S/N: B9K1-UP
PART OF 265-6597 AIR CONDITIONER & MOUNTING GP
TYPE 2

SMCS-7304, 7320 **i03188453**

NOTE	REF NO	GRAPHIC REF	PART NUMBER	QTY	PART NAME 1 2 3 4 5 6 (PRODUCT LEVEL)	SEE PAGE
	1	1	**3S-2093**	1	STRAP-CABLE	
	2	1	**9X-2185**	4	SCREW (8-15X0.44-IN)	
	3	1	**131-3093**	1	BUSHING	
	4	1	**156-8315**	3	SCREW-PAN HEAD (10-16X0.5-IN)	
	5	1	**241-7691**	1	HARNESS AS-HEATER & AIR COND (POWER)	
		1	**102-8803**	1	KIT-RECEPTACLE (3-PIN)	
					(INCLUDES RECEPTACLE AS & WEDGE)	
	6	1	**245-1596**	1	ACTUATOR	
	7	1	**248-6772**	8	SCREW-MACHINE (8-16X7.75-IN)	
	8	1	**262-0494**	2	CLAMP	
Y	9	1	**265-6600**	1	HEATER GP-CAB	900
	10	1	**265-6602**	1	COVER AS	
	11	1	**267-3973**	1	GASKET	
	12	1	**267-3997**	1	TUBE	
	13	1	**268-8769**	1	VALVE AS-WATER	
	14	1	**275-6692**	1	TUBE	
Y	15	1	**277-9668**	1	CONDENSER & ACCUMULATOR GP (REFRIGERANT)	845
	16	1	**283-0592**	1	BRACKET AS	
	17	1	**4D-2297**	2	SEAL-O-RING	
	18	1	**4P-8134**	1	CLIP	
M	19	1	**5C-9553**	4	BOLT (M6X1X16-MM)	
	20	1	**5P-1076**	6	WASHER-HARD (13.5X30X4-MM THK)	
	21	1	**5P-4116**	6	WASHER-HARD (8.8X20.5X2-MM THK)	
	22	1	**8T-4121**	1	WASHER-HARD (11X21X2.5-MM THK)	
M	23	1	**8T-4137**	1	BOLT (M10X1.5X20-MM)	
M	24	1	**8T-4139**	6	BOLT (M12X1.75X30-MM)	
CM	25	1	**5C-7261**	6	NUT (M8X1.25-THD)	
	26	1	**9X-8256**	4	WASHER (6.6X12X2-MM THK)	
CE	27	1	**5P-0767**		HOSE (7-CM)	
CD	28	1	**5P-5637**		SEAL (0.3-M EACH)	
CD	28A	1	**5P-5637**		SEAL (0.12-M EACH)	
					AVAILABLE REPAIR KIT(S):	
			283-0596	1	KIT-TUBE	
					(INCLUDES TUBING & COUPLINGS)	

C-CHANGE FROM PREVIOUS TYPE
D-ORDER BY THE METER
E-ORDER BY THE CENTIMETER
M-METRIC PART
Y-SEPARATE ILLUSTRATION

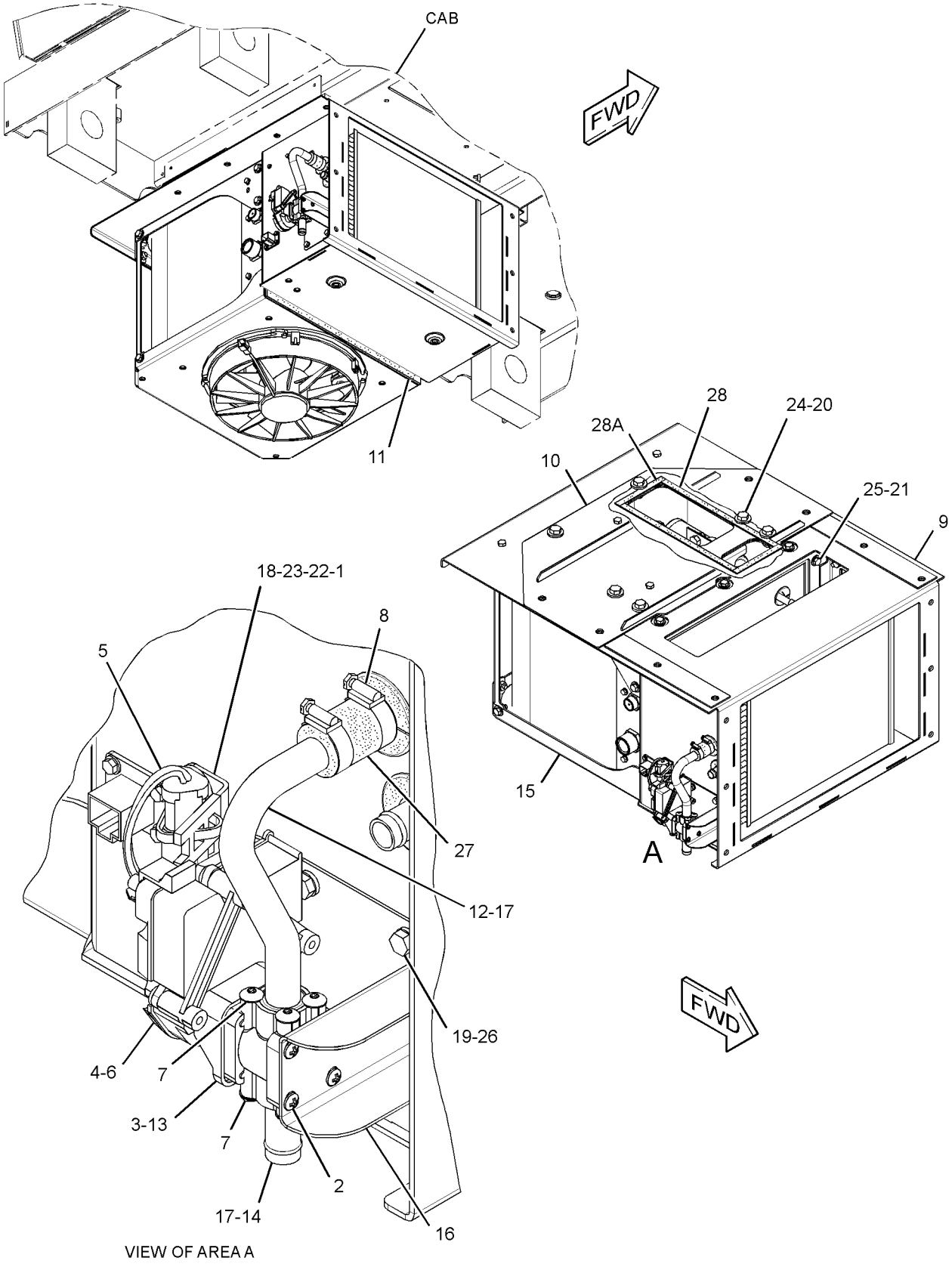

VIEW OF AREA A

GRAPHIC #1 **<END>** g01400679

OPERATOR STATION

265-6597 AIR CONDITIONER & MOUNTING GP

S/N: B9K1-347

PART OF 265-6595 AIR CONDITIONER AR

SMCS-7320 **i02761932**

NOTE	REF NO	GRAPHIC REF	PART NUMBER	QTY	PART NAME 1 2 3 4 5 6 (PRODUCT LEVEL)	SEE PAGE
	1	1	**277-0710**	1	GASKET	
Y	2	1	**277-0711**	1	AIR CONDITIONER & HEATER GP	831
	3	1	**277-0712**	1	GASKET	
	4	1	**278-1158**	1	PLATE	
	5	1	**293-9070**	1	GUARD	
	6	1	**295-8407**	1	FAN AS	
		1	**8N-1540**	1	PIN-CONNECTOR (12-GA TO 14-GA)	
		1	**8N-1541**	1	SOCKET-CONNECTOR (12-GA TO 14-GA)	
		1	**129-7163**	1	PLUG AS-CONNECTOR (1-PIN)	
		1	**129-7164**	1	RECEPTACLE AS-CONNECTOR (1-PIN)	
	7	1	**7X-7729**	8	WASHER (11X25X3-MM THK)	
	8	1	**8T-4121**	4	WASHER-HARD (11X21X2.5-MM THK)	
M	9	1	**8T-4137**	4	BOLT (M10X1.5X20-MM)	
M	10	1	**8T-4185**	8	BOLT (M10X1.5X50-MM)	
M	11	1	**8T-4971**	4	BOLT (M6X1X30-MM)	
	12	1	**9X-8256**	4	WASHER (6.6X12X2-MM THK)	

M-METRIC PART
Y-SEPARATE ILLUSTRATION

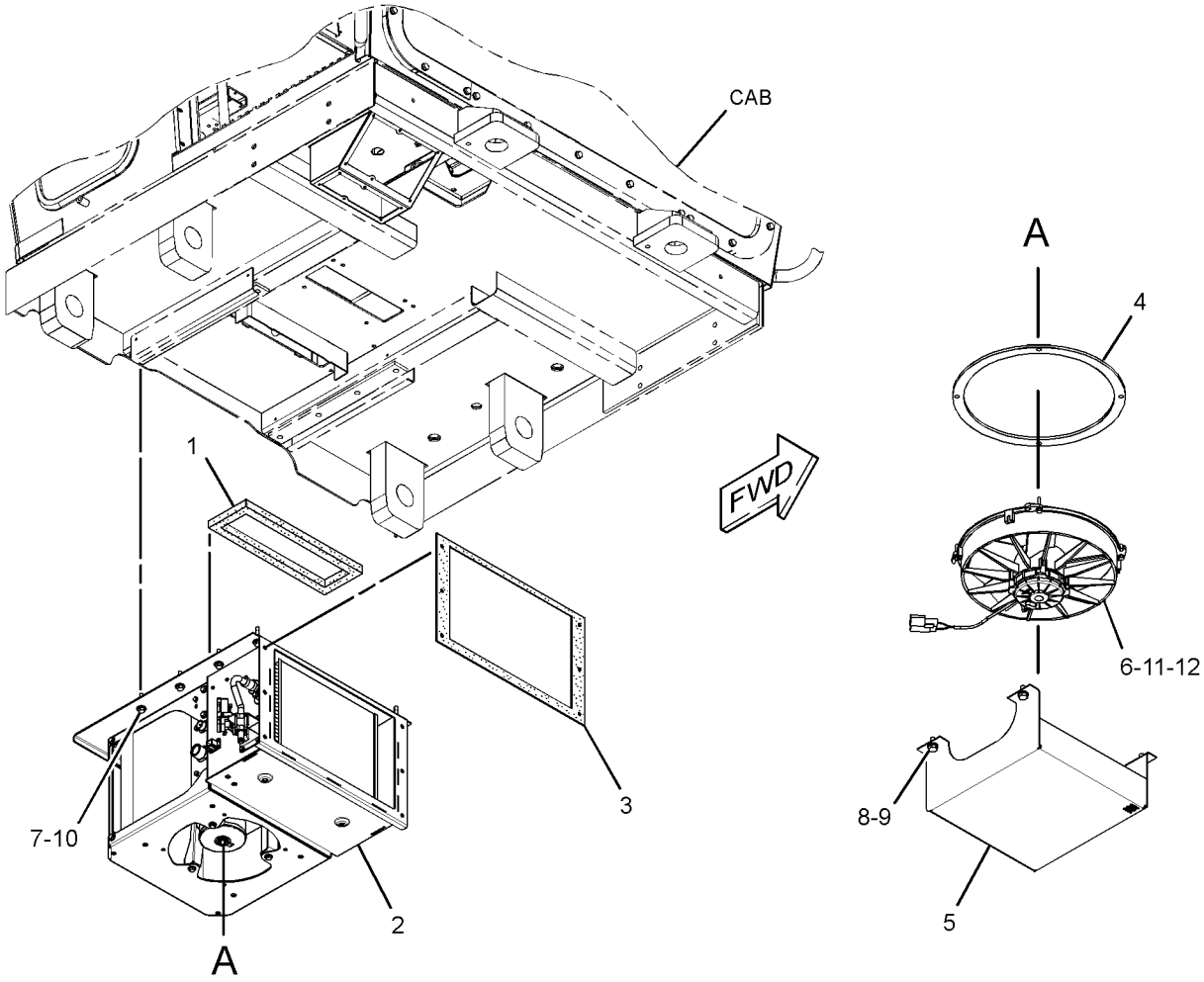

GRAPHIC #1 **<END>** g01384499

OPERATOR STATION

265-6597 AIR CONDITIONER & MOUNTING GP

S/N: B9K348-UP

PART OF 265-6595 AIR CONDITIONER AR

SMCS-7320 **i03790053**

NOTE	REF NO	GRAPHIC REF	PART NUMBER	QTY	PART NAME 1 2 3 4 5 6 (PRODUCT LEVEL)	SEE PAGE
	1	1	**277-0710**	1	GASKET	
Y	2	1	**277-0711**	1	AIR CONDITIONER & HEATER GP	831
	3	1	**277-0712**	1	GASKET	
	5	1	**293-9070**	1	GUARD	
	6	1	**295-8407**	1	FAN AS	
		1	**8N-1540**	1	PIN-CONNECTOR (12-GA TO 14-GA)	
		1	**8N-1541**	1	SOCKET-CONNECTOR (12-GA TO 14-GA)	
		1	**129-7163**	1	PLUG AS-CONNECTOR (1-PIN)	
		1	**129-7164**	1	RECEPTACLE AS-CONNECTOR (1-PIN)	
	7	1	**7X-7729**	8	WASHER (11X25X3-MM THK)	
	8	1	**8T-4121**	4	WASHER-HARD (11X21X2.5-MM THK)	
M	9	1	**8T-4137**	4	BOLT (M10X1.5X20-MM)	
M	10	1	**8T-4185**	8	BOLT (M10X1.5X50-MM)	
CM	11	1	**6V-7357**	4	BOLT (M6X1X25-MM)	
	12	1	**9X-8256**	4	WASHER (6.6X12X2-MM THK)	

C-CHANGE FROM PREVIOUS TYPE
M-METRIC PART
Y-SEPARATE ILLUSTRATION

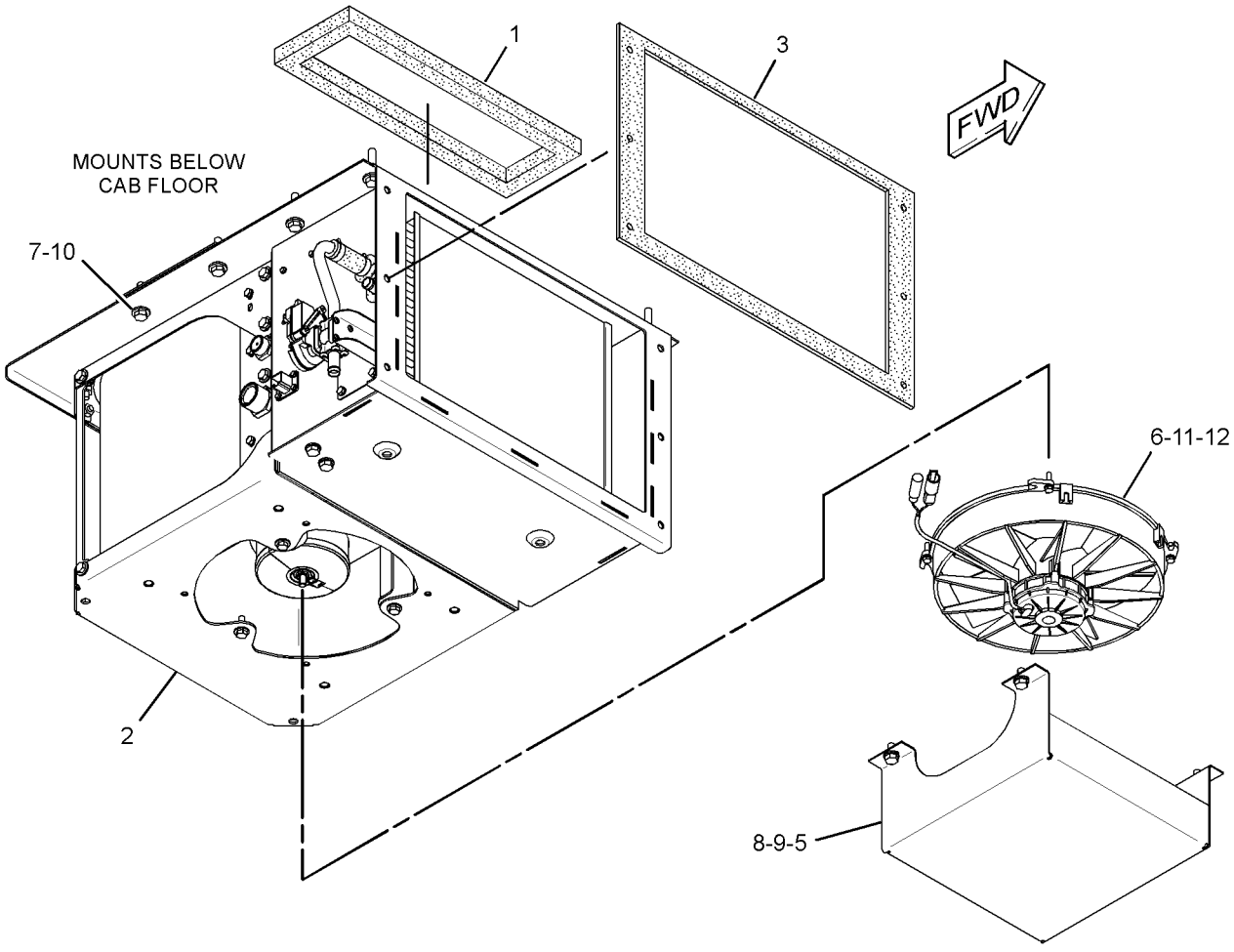

GRAPHIC #1 **<END>** g02112944

OPERATOR STATION

265-6595 AIR CONDITIONER AR

S/N: B9K1-UP

PART OF 266-7000 CAB AR

SMCS-7320 **i02761625**

NOTE	REF NO	GRAPHIC REF	PART NUMBER	QTY	PART NAME 1 2 3 4 5 6 (PRODUCT LEVEL)	SEE PAGE
	1	1	**170-4057**	4	INSERT-THREADED	
Y	2	1	*233-3291*	1	CONTROL GP-AIR & TEMPERATURE	850
Y	3	1	*265-6596*	1	BLOWER & MTG GP-CAB (AIR CONDITIONER, HEATER FAN)	840
Y	4	1	*265-6597*	1	AIR CONDITIONER & MOUNTING GP	835
Y	5	1	*275-5230*	1	AIR CLEANER GP (CAB AIR PRECLEANER)	144
Y	6	1	*286-5675*	1	DUCT & FILTER GP-CAB AIR	893

Y-SEPARATE ILLUSTRATION

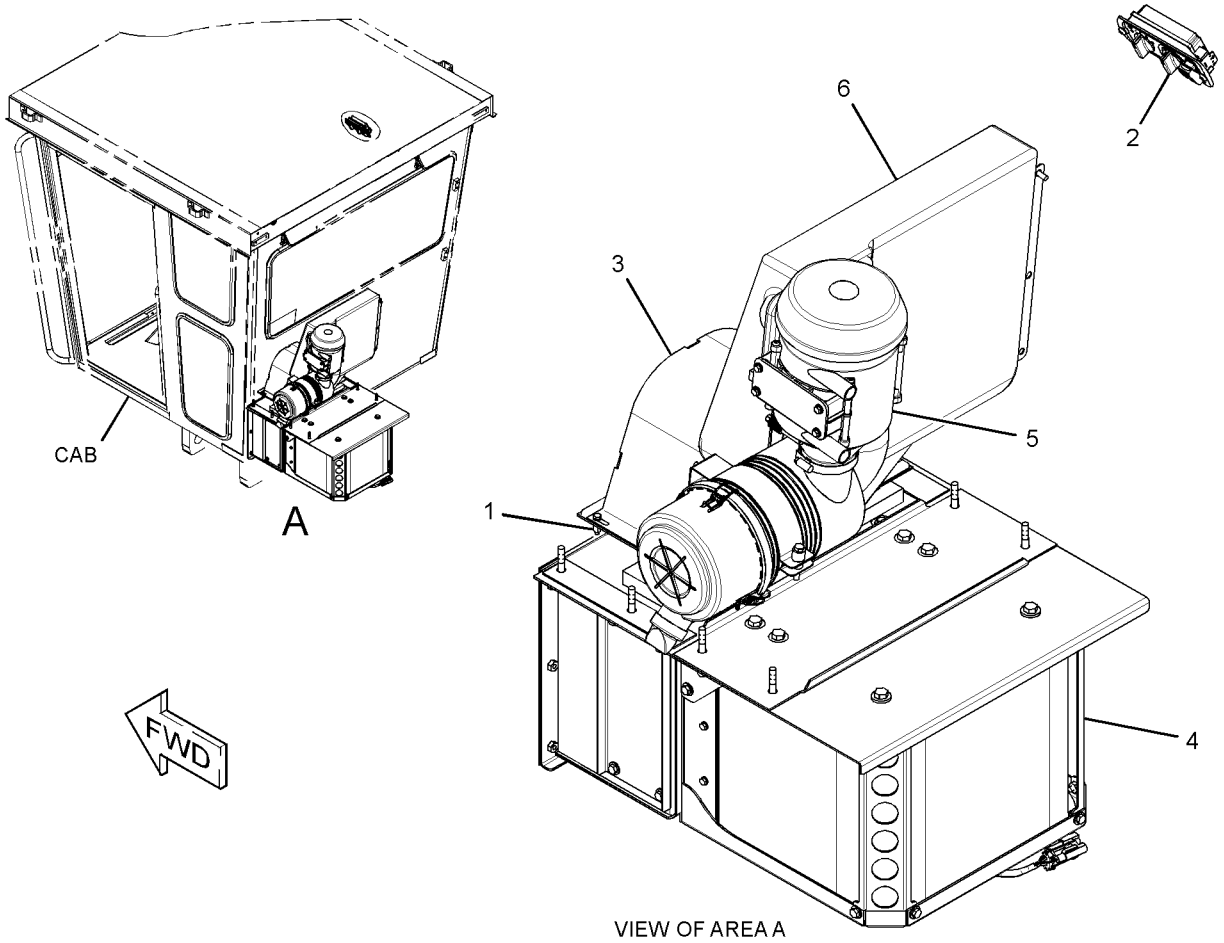

GRAPHIC #1 **<END>** g01386149

OPERATOR STATION

292-0609 ARMREST GP–RH

S/N: B9K1-UP

PART OF 309-5955 CONTROL & MTG GP-JOYSTICK, 342-8961 SUPPORT GP-CONTROL

SMCS-7307 **i03001760**

NOTE	REF NO	GRAPHIC REF	PART NUMBER	QTY	PART NAME 1 2 3 4 5 6 (PRODUCT LEVEL)	SEE PAGE
	1	1	**233-3278**	1	BRACKET AS (RH)	
M		1	**6V-9632**	2	NUT-WELD (M6X1-THD)	
	2	1	**253-8868**	1	PIN-SPRING	
	3	1	**283-7980**	1	CUSHION AS	
M	4	1	**3E-8020**	4	SCREW-TRUSS HEAD (M6X1X25-MM)	
	5	1	**122-7666**	1	SPRING	
	6	1	**8C-8430**	1	SETSCREW-SOCKET (NO 10X0.95-IN)	
	7	1	**292-0611**	2	BUSHING	
	8	1	**292-0612**	1	BUSHING	
	9	1	**292-0614**	1	ROD	
	10	1	**292-0618**	1	KNOB	

M-METRIC PART

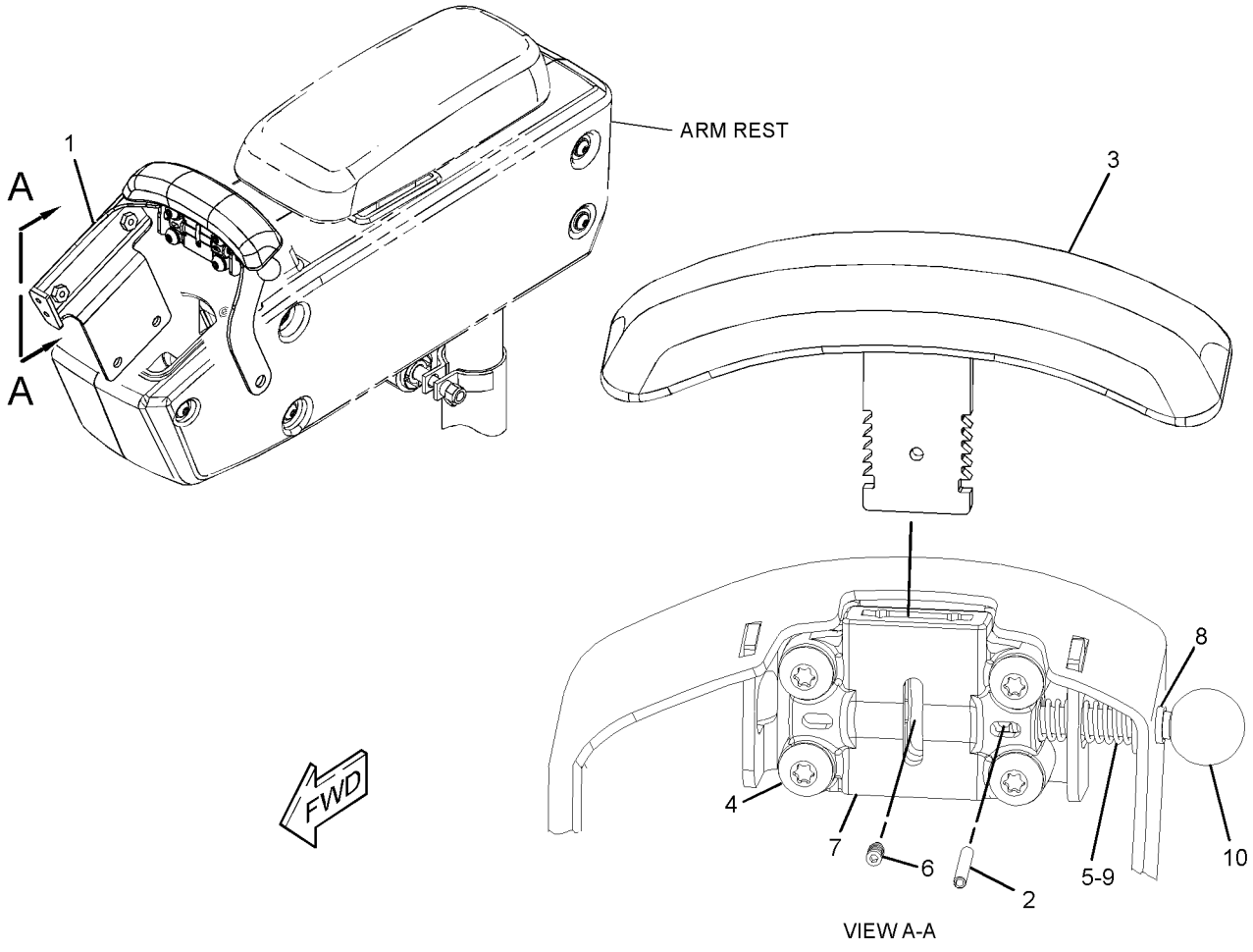

GRAPHIC #1 **<END>** g01391688

OPERATOR STATION

292-0617 ARMREST GP–LH

S/N: B9K1-UP

PART OF 309-5955 CONTROL & MTG GP-JOYSTICK, 342-8961 SUPPORT GP-CONTROL

SMCS-7307 **i03001749**

NOTE	REF NO	GRAPHIC REF	PART NUMBER	QTY	PART NAME 1 2 3 4 5 6 (PRODUCT LEVEL)	SEE PAGE
	1	1	**233-3277**	1	BRACKET AS (LH)	
M		1	**6V-9632**	2	NUT-WELD (M6X1-THD)	
	2	1	**253-8868**	1	PIN-SPRING	
	3	1	**283-7980**	1	CUSHION AS	
M	4	1	**3E-8020**	4	SCREW-TRUSS HEAD (M6X1X25-MM)	
	5	1	**8C-8430**	1	SETSCREW-SOCKET (NO 10X0.95-IN)	
	6	1	**122-7666**	1	SPRING	
	7	1	**292-0611**	2	BUSHING	
	8	1	**292-0612**	1	BUSHING	
	9	1	**292-0614**	1	ROD	
	10	1	**292-0618**	1	KNOB	

M-METRIC PART

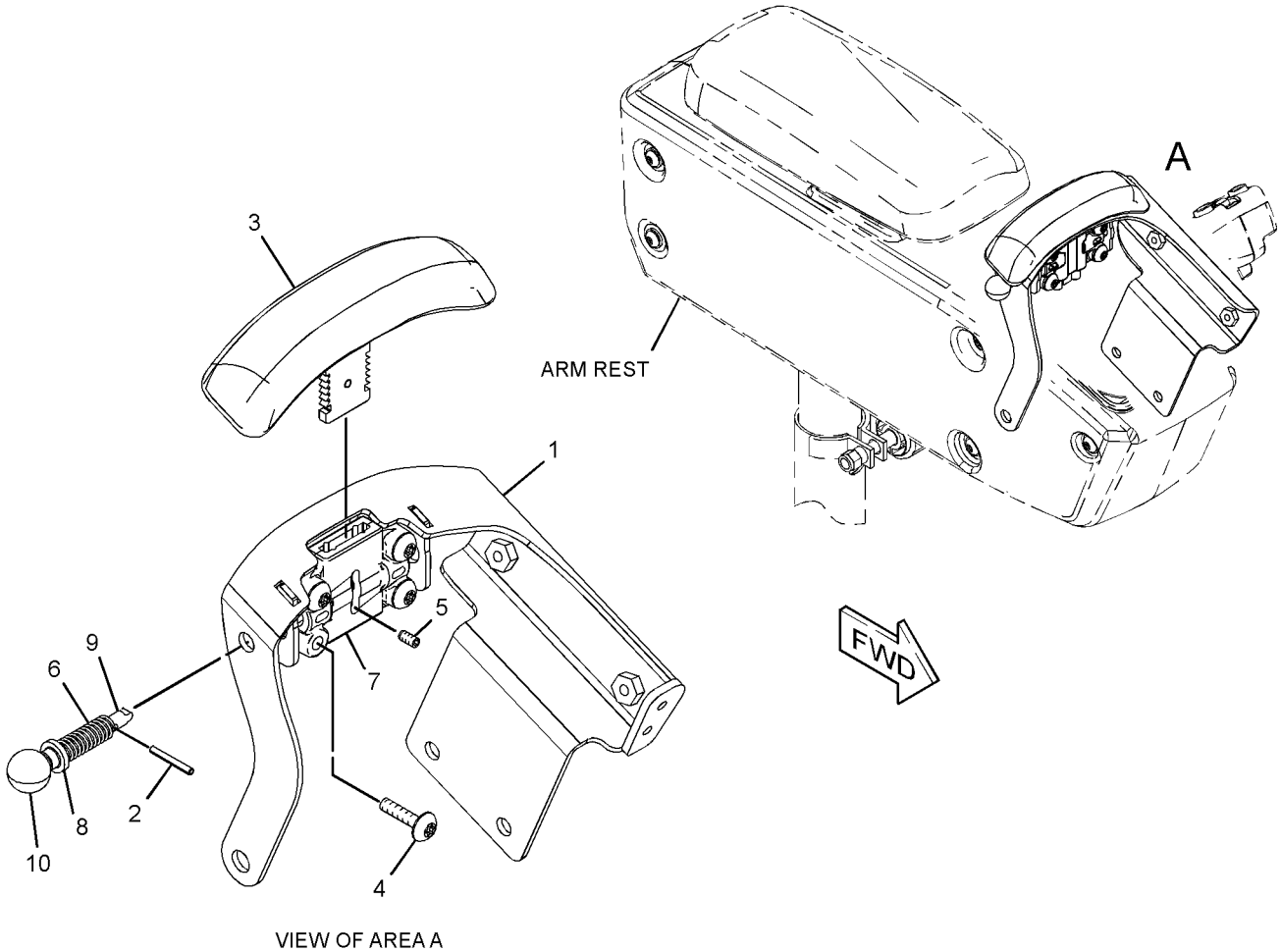

VIEW OF AREA A

GRAPHIC #1 **<END>** g01523630

OPERATOR STATION

265-6596 BLOWER & MTG GP-CAB

S/N: B9K1-UP

PART OF 265-6595 AIR CONDITIONER AR

SMCS-7316 **i02761624**

NOTE	REF NO	GRAPHIC REF	PART NUMBER	QTY	PART NAME 1 2 3 4 5 6 (PRODUCT LEVEL)	SEE PAGE
Y	1	1	**265-6603**	1	BLOWER GP-CAB (AIR CONDITIONER, HEATER FAN)	841
	2	1	**265-6604**	1	GASKET	
	3	1	**277-0709**	2	GASKET	
M	4	1	**8T-4971**	4	BOLT (M6X1X30-MM)	
	5	1	**9X-8256**	4	WASHER (6.6X12X2-MM THK)	

M-METRIC PART
Y-SEPARATE ILLUSTRATION

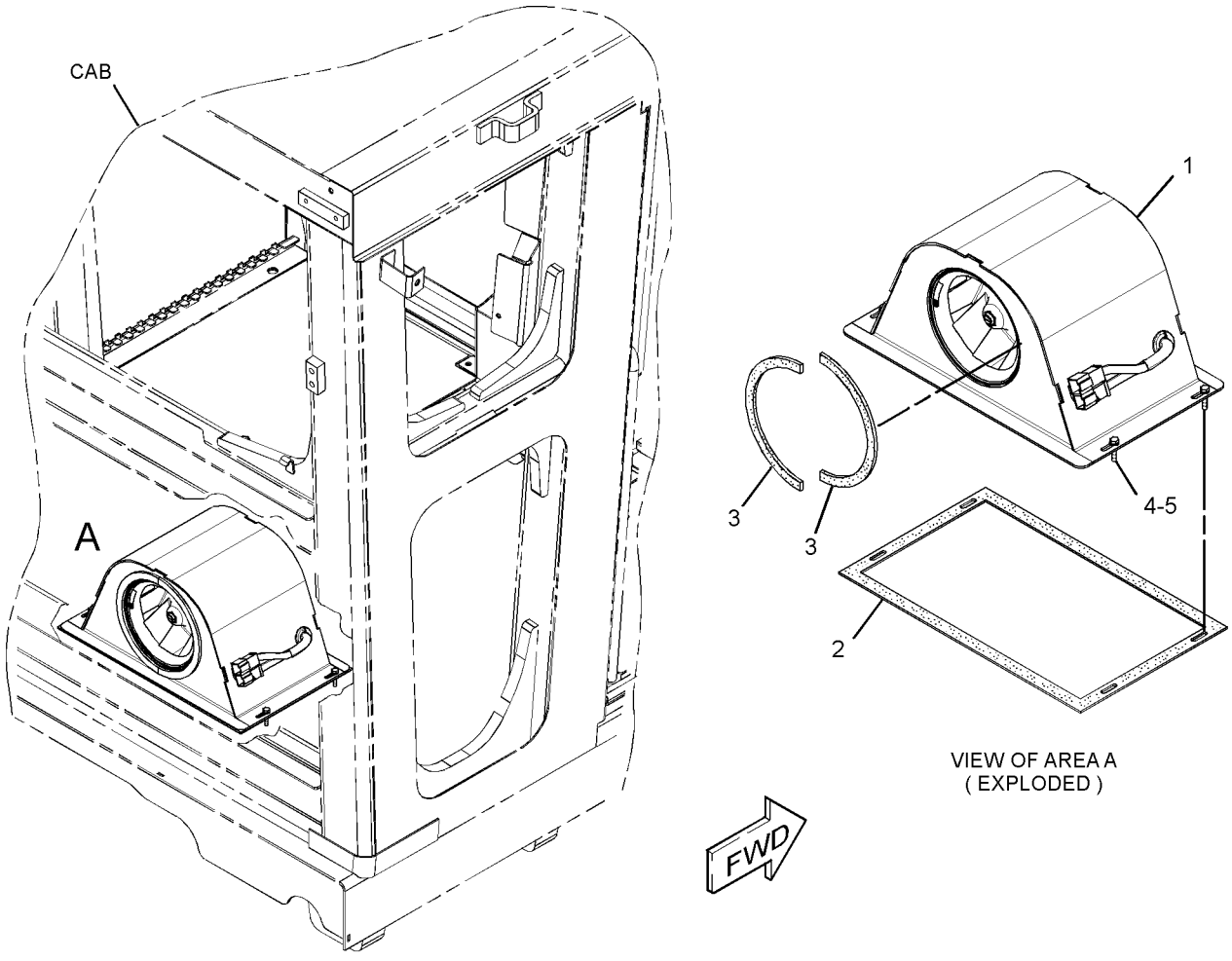

VIEW OF AREA A
(EXPLODED)

GRAPHIC #1 **<END>** g01384195

OPERATOR STATION

265-6603 BLOWER GP-CAB—AIR CONDITIONER, HEATER FAN

S/N: B9K1-UP

PART OF 265-6596 BLOWER & MTG GP-CAB

SMCS-7316 **i03867531**

NOTE	REF NO	GRAPHIC REF	PART NUMBER	QTY	PART NAME 1 2 3 4 5 6 (PRODUCT LEVEL)	SEE PAGE
	1	1	**3S-2093**	2	STRAP-CABLE	
	2	1	**125-9740**	1	RESISTOR	
	3	1	**136-6505**	2	INSULATION	
	4	1	**324-6125**	1	FAN & MOTOR AS (24-VOLT, A/C, HEATER)	
	5	1	**263-9466**	1	PLATE	
	6	1	**263-9479**	1	PLATE	
	7	1	**265-6605**	1	CASE AS	
	8	1	**281-1665**	1	HARNESS AS-MOTOR	
		1	**8T-8737**	1	PLUG-SEAL	
		1	**9W-0852**	3	PIN-CONNECTOR (14-GA TO 16-GA)	
E		1	**119-3662**		TUBE-HEAT SHRINK (10.85-MM DIA) (7-CM)	
		1	**5P-5618**	1	TERMINAL-BLADE (10-GA TO 12-GA)	
		1	**5P-4571**	3	TERMINAL-BLADE (14-GA TO 16-GA)	
		1	**2L-8067**	2	TERMINAL-RING (10-GA TO 12-GA, 1/4-IN SCREW)	
		1	**102-8804**	1	KIT-RECEPTACLE (4-PIN)	
		1	**177-9645**	1	KIT-RECEPTACLE (2-PIN)	
					(EACH KIT INCLUDES RECEPTACLE AS & WEDGE)	
M	9	1	**129-3178**	1	LOCKNUT (M6X1-THD)	
	10	1	**132-5789**	1	CLIP	
M	11	1	**141-9784**	1	BOLT (M6X1X190-MM)	
	12	1	**6K-8180**	1	GROMMET	
	13	1	**6V-1668**	2	WASHER (6.5X29.1X3-MM THK)	
	14	1	**7X-7729**	4	WASHER (11X25X3-MM THK)	
M	15	1	**8T-4136**	4	BOLT (M10X1.5X25-MM)	
	16	1	**8T-4205**	2	WASHER-HARD (7.2X14.5X2-MM THK)	

E-ORDER BY THE CENTIMETER
M-METRIC PART

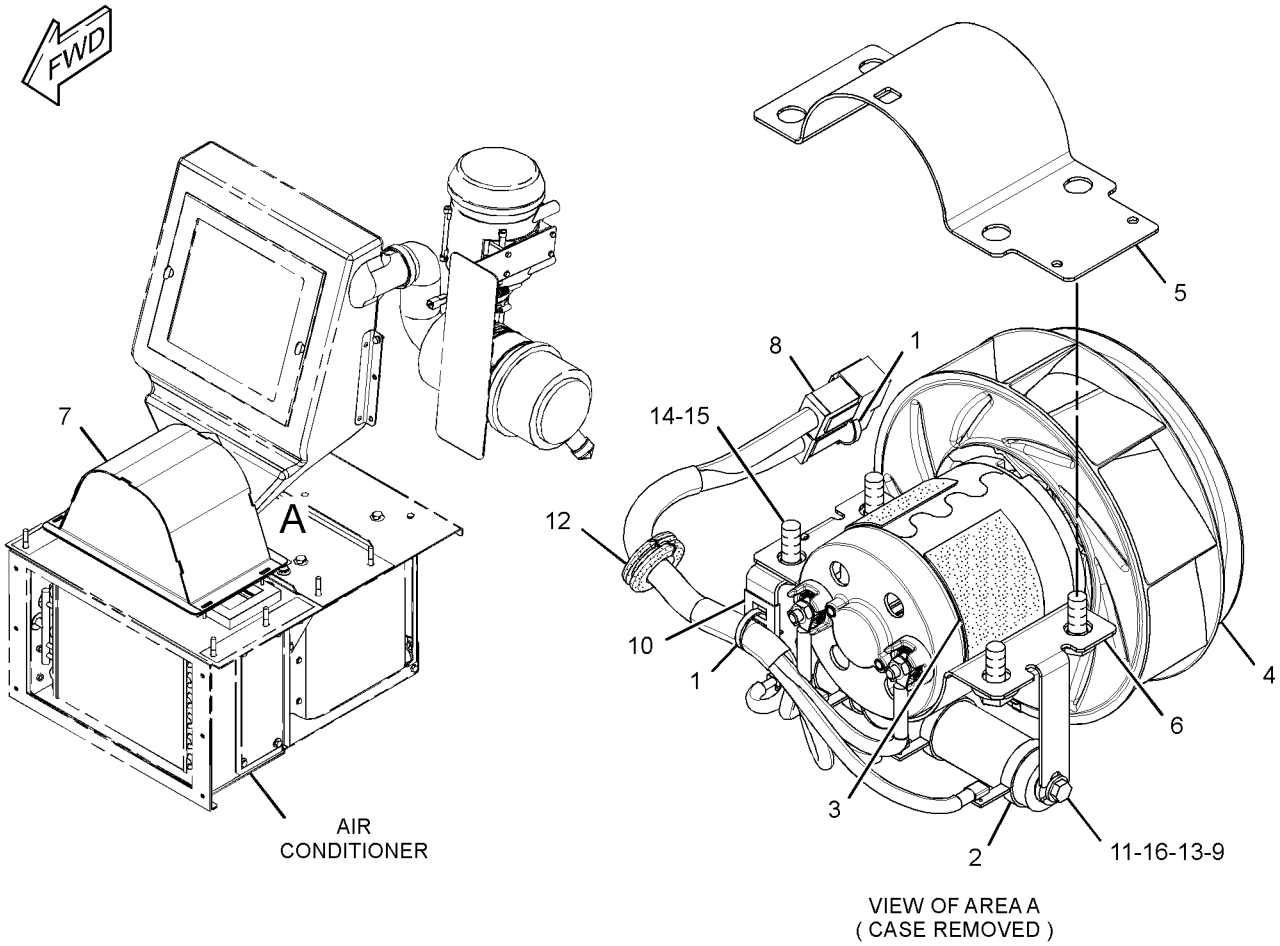

GRAPHIC #1 **<END>** g01390548

OPERATOR STATION

266-7000 CAB AR

S/N: B9K1-UP

PART OF 259-9204 COMMON AR

SMCS-7301 **i03848934**

NOTE	PART NUMBER	QTY	PART NAME 1 2 3 4 5 6 (PRODUCT LEVEL)	SEE PAGE
Y	*265-6595*	1	AIR CONDITIONER AR	837
Y	*299-9146*	1	CONTROL GP-IMPLEMENT	193
Y	*233-3135*	1	CONVERTER GP-ELECTRICAL	197
Y	*250-9257*	1	ELECTRONICS GP-IMPLEMENT (IMPLEMENT 1)	199
Y	*250-9258*	1	ELECTRONICS GP-IMPLEMENT (IMPLEMENT 2)	200
Y	*266-7004*	1	PANEL GP-INSTRUMENT	930
Y	*266-7005*	1	DUCT GP-CAB AIR (CAB AIR)	894
Y	*266-7008*	1	FAN GP-CIRCULATING	897
Y	*309-2877*	1	FOOTREST GP	899
Y	*266-7042*	1	INSTALLATION GP-RADIO	904
Y	*266-7007*	1	LINER GP-CAB	905
Y	**309-0917**	1	MIRROR GP-REAR VIEW (INTERIOR)	913
Y	*308-2084*	1	MOUNTING GP-PEDAL	915
Y	*8X-8994*	1	MOUNTING GP-PLATFORM	916
Y	*266-7002*	1	PLATFORM GP-OPERATOR	934
Y	*266-7001*	1	ROPS GP	946
Y	*266-7013*	1	TRIM GP-CAB	961
Y	*8X-8967*	1	WINDOW GP-CAB	965
Y	*8X-8971*	1	WIPER & WASHER GP-WINDOW	966
Y	*266-7006*	1	WIRING GP-CAB	353
			S/N: B9K1-341	
Y	**352-1647**	1	WIRING GP-CAB	
			S/N: B9K342-UP	
Y	*266-7026*	1	WIRING GP-GRADE CONTROL	381
	322-5126	1	PLATE GP-MOUNTING	
	8T-4121	3	WASHER-HARD (11X21X2.5-MM THK)	
M	**8T-4137**	3	BOLT (M10X1.5X20-MM)	
	322-5071	1	PLATE AS	
	323-1692	1	SUPPORT GP-LIGHT	
	8T-4121	3	WASHER-HARD (11X21X2.5-MM THK)	
M	**8T-4137**	3	BOLT (M10X1.5X20-MM)	
	144-4107	2	FASTENER	

M-METRIC PART
Y-SEPARATE ILLUSTRATION

<END>

OPERATOR STATION

218-0324 COMPRESSOR GP-REFRIGERANT

S/N: B9K1-UP

PART OF 253-3988 DRIVE GP-ACCESSORY

SMCS-1802 **i02930106**

NOTE	REF NO	GRAPHIC REF	PART NUMBER	QTY	PART NAME 1 2 3 4 5 6 (PRODUCT LEVEL)	SEE PAGE
	1	1	**102-8802**	1	KIT-RECEPTACLE (2-PIN)	
					(INCLUDES RECEPTACLE AS & WEDGE)	
	2	1	**314-4018**	1	VALVE AS-PRESSURE RELIEF (REFRIGERANT COMPRESSOR)	
		1	**9X-7378**	1	SEAL-O-RING	
	3	1	**7T-4532**	1	PLUG AS	
	4	1	**9X-7385**	2	SEAL-O-RING	
	6	1	**180-9339**	2	PIN-CONNECTOR (14-GA TO 18-GA)	

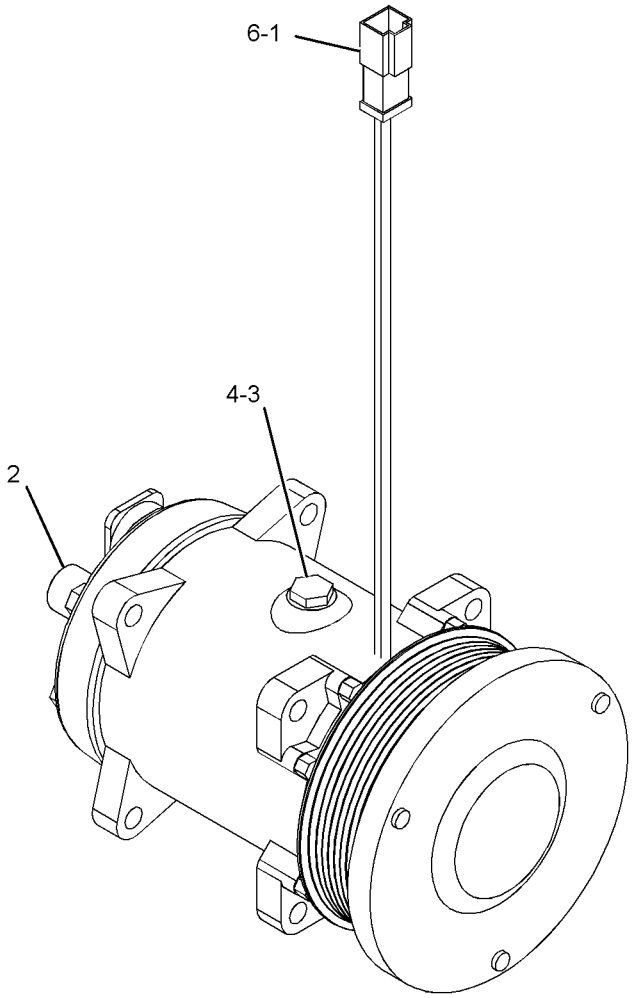

GRAPHIC #1 **<END>** g01455552

OPERATOR STATION

277-9668 CONDENSER & ACCUMULATOR GP–REFRIGERANT

S/N: B9K1-UP

PART OF 277-0711 AIR CONDITIONER & HEATER GP

SMCS-1805, 7320 **i02928072**

NOTE	REF NO	GRAPHIC REF	PART NUMBER	QTY	PART NAME 1 2 3 4 5 6 (PRODUCT LEVEL)	SEE PAGE
	1	1	**5P-3928**	1	COUPLING AS-REFRIGERANT (SELF SEALING)	
		1	**107-4395**	1	VALVE AS	
		1	**107-4396**	1	GASKET	
	2	1	**5P-4106**	1	NUT (1-7/16-16-THD)	
	3	1	**6U-5219**	2	U-CLAMP AS	
					(EACH INCLUDES)	
		1	**5P-1075**	2	WASHER-HARD (10.2X22.5X3-MM THK)	
		1	**6V-8801**	2	NUT (3/8-16-THD)	
	4	1	**7K-3176**	1	COUPLING AS-REFRIGERANT (SELF SEALING)	
		1	**107-4393**	1	VALVE AS	
		1	**107-4394**	1	GASKET	
	5	1	**7K-3304**	1	NUT-JAM (1-20-THD)	
	6	1	**249-8509**	2	GASKET	
	7	1	**252-5295**	2	PLATE AS	
	8	1	**252-5298**	1	SUPPORT	
	9	1	**265-7984**	1	COIL AS-CONDENSER	
	10	1	**273-0942**	1	ACCUMULATOR-REFRIGERANT	
	13	1	**277-9669**	1	CASE AS	
	14	1	**277-9670**	1	COVER AS	
	15	1	**278-0196**	1	BRACKET AS	
	16	1	**283-4237**	1	DRYER-REFRIGERANT (IN-LINE)	
		1	**3E-0068**	1	TUBE AS-REFRIGERANT ORIFICE	
	17	1	**162-9112**	1	GROMMET-SPLIT	
	18	1	**3P-9847**	1	CLIP	
	19	1	**3V-4791**	1	GROMMET	
	20	1	**5P-4116**	24	WASHER-HARD (8.8X20.5X2-MM THK)	
	21	1	**8T-4121**	1	WASHER-HARD (11X21X2.5-MM THK)	
M	22	1	**8T-4189**	8	BOLT (M8X1.25X20-MM)	
M	23	1	**8T-4195**	1	BOLT (M10X1.5X30-MM)	
M	24	1	**8T-4908**	16	BOLT (M8X1.25X25-MM)	
M	25	1	**8T-4970**	6	BOLT (M6X1X14-MM)	
	26	1	**9X-7381**	1	SEAL-O-RING	
	28	1	**9X-7383**	1	SEAL-O-RING	
	29	1	**9X-7384**	1	SEAL-O-RING	
	30	1	**9X-8256**	6	WASHER (6.6X12X2-MM THK)	
D	31	1	**5P-7070**		INSULATION-STRIP (1.9-M)	
D	31A	1	**5P-7070**		INSULATION-STRIP (0.5-M EACH)	
D	31B	1	**5P-7070**		INSULATION-STRIP (1.1-M)	
D	31C	1	**5P-7070**		INSULATION-STRIP (1.3-M)	
					AVAILABLE REPAIR KIT(S):	
			317-1491	1	KIT-TUBE (HVAC)	

D-ORDER BY THE METER
M-METRIC PART

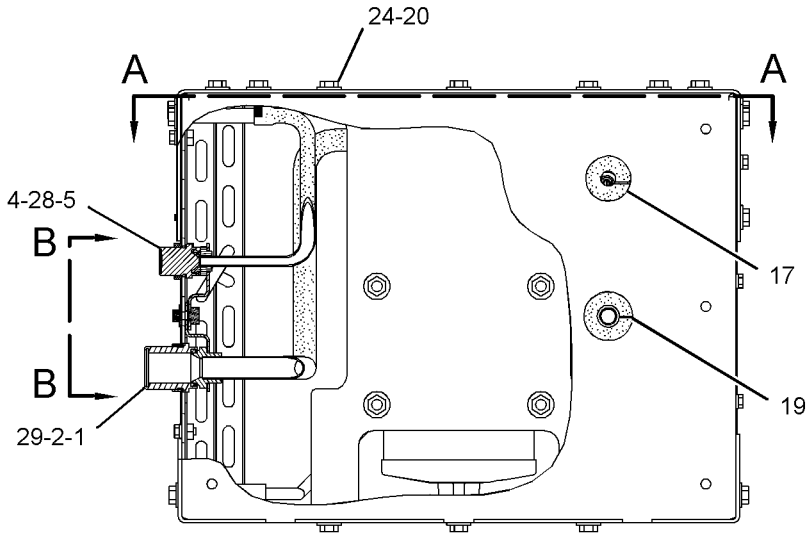

FRONT VIEW

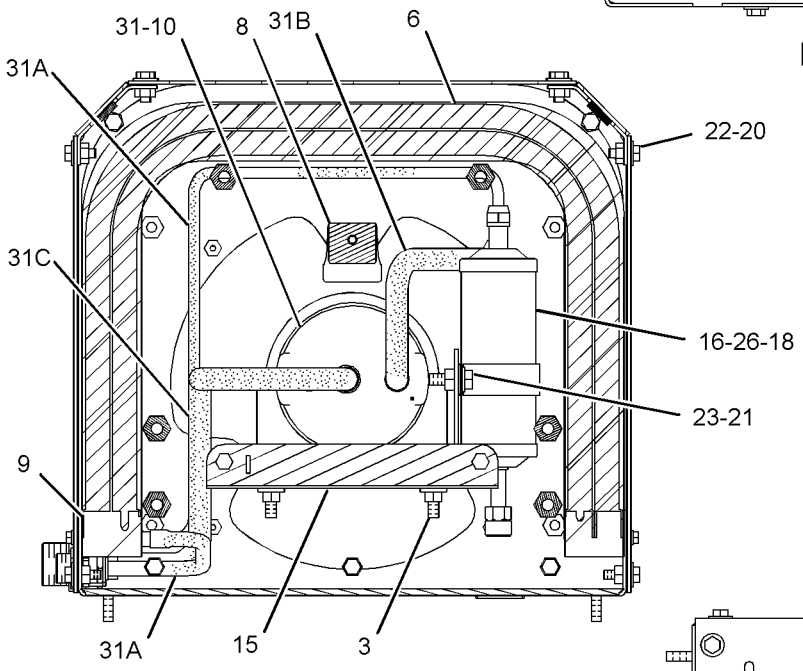

SECTION A-A

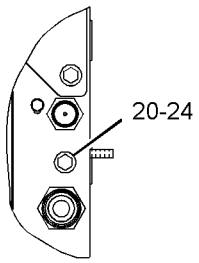

VIEW B-B

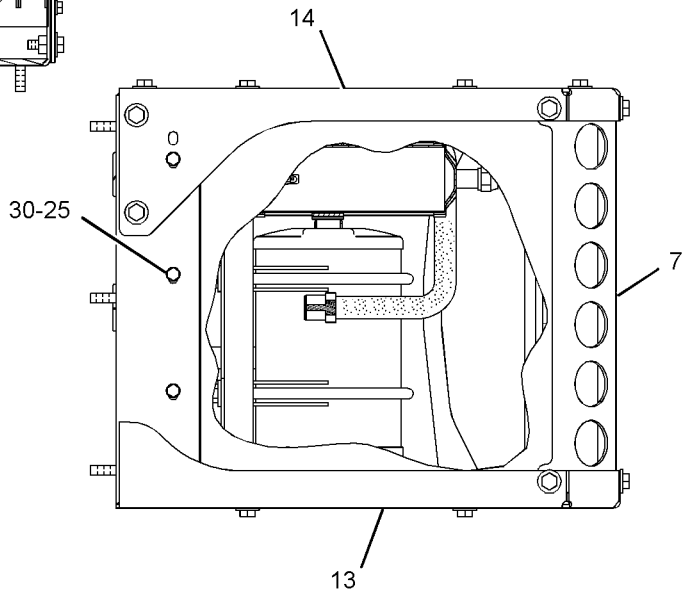

LEFT SIDE VIEW

GRAPHIC #1 **<END>** g01550378

OPERATOR STATION

309-5955 CONTROL & MTG GP-JOYSTICK–OPERATOR PLATFORM

S/N: B9K1-340

PART OF 266-7002 PLATFORM GP-OPERATOR

SMCS-5063, 5705 **i03543604**

NOTE	REF NO	GRAPHIC REF	PART NUMBER	QTY	PART NAME 1 2 3 4 5 6 (PRODUCT LEVEL)	SEE PAGE
	1	1	**102-8802**	1	KIT-RECEPTACLE (2-PIN)	
					(INCLUDES RECEPTACLE AS & WEDGE)	
	2	1	**140-5945**	1	FILM-IDENTIFICATION (HORN)	
	3	1	**170-1821**	1	SWITCH AS-PUSH BUTTON (HORN)	
		1	**6F-0253**	1	LOCKWASHER	
		1	**186-3735**	2	PIN-CONNECTOR (16-GA TO 18-GA)	
		1	**172-3511**	1	NUT (5/8-24-THD)	
Y	4	1	*233-3224*	1	SUPPORT GP-CONTROL (JOYSTICK, LH)	953
Y	5	1	*233-3225*	1	SUPPORT GP-CONTROL (JOYSTICK, RH)	955
B	6	1	**228-6089**	1	PLUG (ROCKER SWITCH)	
	7	1	**251-2247**	2	GROMMET	
	8	1	**251-2272**	1	COVER	
	9	1	**251-2273**	1	COVER	
	10	1	**251-2274**	1	COVER	
	11	1	**251-2275**	1	COVER	
	12	1	**280-7477**	1	FILM-INSTRUCTION (OPERATOR CONSOLE, LH)	
	13	1	**280-7478**	1	FILM-INSTRUCTION (OPERATOR CONSOLE, RH)	
Y	14	1	*292-0609*	1	ARMREST GP (RH)	838
Y	15	1	*292-0617*	1	ARMREST GP (LH)	839
	16	1	**297-4147**	1	COVER (LH)	
	17	1	**297-4148**	1	COVER (RH)	
	18	1	**307-9737**	1	HARNESS AS-CONTROL (LH)	
		1	**102-8801**	2	KIT-RECEPTACLE (12-PIN)	
					(INCLUDES RECEPTACLE AS & WEDGE)	
		1	**186-3735**	21	PIN-CONNECTOR (16-GA TO 18-GA)	
		1	**186-3736**	21	SOCKET-CONNECTOR (16-GA TO 18-GA)	
		1	**8T-8737**	10	PLUG-SEAL	
		1	**155-2255**	1	KIT-CONNECTING PLUG (12-PIN)	
					(INCLUDES PLUG AS, WEDGE & INTERFACE SEAL)	
		1	**155-2256**	1	KIT-CONNECTING PLUG (12-PIN)	
					(INCLUDES PLUG AS, WEDGE & INTERFACE SEAL)	
		1	**155-2258**	2	WEDGE-PLUG LOCK (12-PIN)	
		1	**155-2271**	2	KIT-CONNECTING PLUG (4-PIN)	
					(INCLUDES PLUG AS, WEDGE & INTERFACE SEAL)	
		1	**190-7614**	1	KIT-RECEPTACLE (12-PIN)	
					(INCLUDES RECEPTACLE AS & WEDGE)	
	19	1	**307-9738**	1	HARNESS AS-CONTROL (RH)	
		1	**102-8801**	2	KIT-RECEPTACLE (12-PIN)	
					(INCLUDES RECEPTACLE AS & WEDGE)	
		1	**186-3735**	21	PIN-CONNECTOR (16-GA TO 18-GA)	
		1	**186-3736**	21	SOCKET-CONNECTOR (16-GA TO 18-GA)	
		1	**8T-8737**	10	PLUG-SEAL	
		1	**155-2255**	1	KIT-CONNECTING PLUG (12-PIN)	
					(INCLUDES PLUG AS, WEDGE & INTERFACE SEAL)	
		1	**155-2256**	1	KIT-CONNECTING PLUG (12-PIN)	
					(INCLUDES PLUG AS, WEDGE & INTERFACE SEAL)	
		1	**155-2258**	2	WEDGE-PLUG LOCK (12-PIN)	
		1	**155-2270**	1	KIT-CONNECTING PLUG (2-PIN)	
					(INCLUDES PLUG AS, WEDGE & INTERFACE SEAL)	
		1	**185-1860**	7	SEAL-WIRE	
		1	**190-7614**	1	KIT-RECEPTACLE (12-PIN)	
					(INCLUDES RECEPTACLE AS & WEDGE)	
		1	**235-4123**	7	TERMINAL (18-GA TO 20-GA)	

309-5955 **CONTROL & MTG GP-JOYSTICK** *(contd.)* **i03543604**

NOTE	REF NO	GRAPHIC REF	PART NUMBER	QTY	PART NAME 1 2 3 4 5 6 (PRODUCT LEVEL)	SEE PAGE
		1	**245-7434**	1	KIT-CONNECTING PLUG (10-PIN)	
					(INCLUDES PLUG AS, WEDGE & INTERFACE SEAL)	
Y	20	1	**308-5203**	1	CONTROL GP-JOYSTICK (RH)	851
Y	21	1	**308-5204**	1	CONTROL GP-JOYSTICK (LH)	852
	22	1	**6V-5839**	8	WASHER (11X21X2.5-MM THK)	
M	23	1	**9X-2546**	8	BOLT (M6X1X20-MM)	
	24	1	**114-6658**	20	WASHER (6.5X17X1-MM THK)	
M	25	1	**8T-4196**	8	BOLT (M10X1.5X35-MM)	
M	26	1	**8T-4200**	6	BOLT (M8X1.25X16-MM)	
	27	1	**8T-4224**	6	WASHER-HARD (8.8X16X2-MM THK)	
M	28	1	**9X-2044**	20	SCREW-TRUSS HEAD (M6X1X16-MM)	
E	29	1	**116-8376**		SEAL (17-CM EACH)	
E	29A	1	**116-8376**		SEAL (5.5-CM EACH)	
	30	1	**312-1714**	1	FILM-INSTRUCTION (ADJUSTMENT CONTROL)	
M	31	1	**9X-2045**	4	SCREW-TRUSS HEAD (M6X1X20-MM)	

B-USE AS REQUIRED
E-ORDER BY THE CENTIMETER
M-METRIC PART
Y-SEPARATE ILLUSTRATION

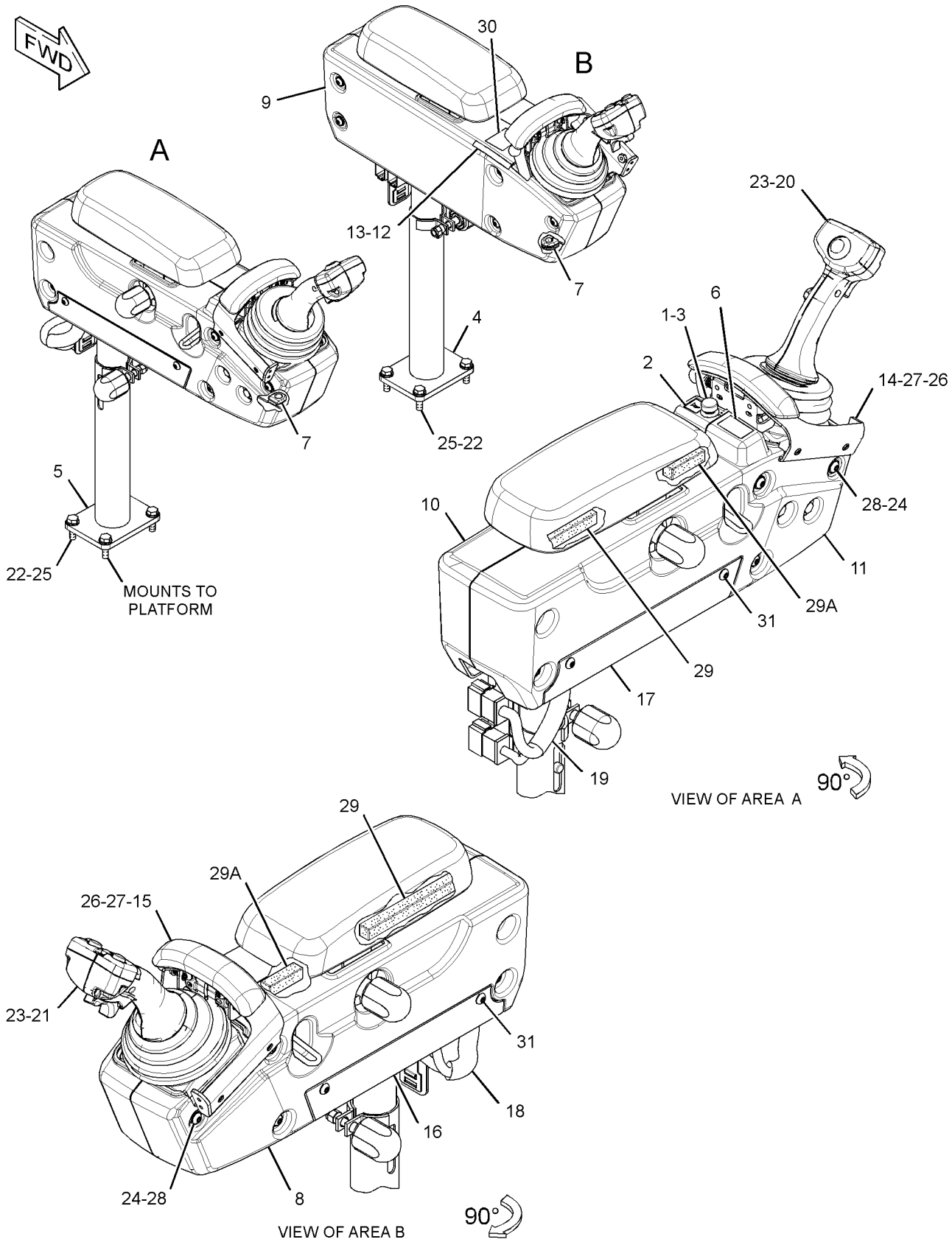

GRAPHIC #1 **<END>** g01918173

OPERATOR STATION

233-3291 CONTROL GP-AIR & TEMPERATURE

S/N: B9K1-UP

PART OF 265-6595 AIR CONDITIONER AR

SMCS-7451 **i02566122**

NOTE	REF NO	GRAPHIC REF	PART NUMBER	QTY	PART NAME 1 2 3 4 5 6 (PRODUCT LEVEL)	SEE PAGE
	1	1	**248-4220**	1	PANEL AS (AIR CONDITIONER, HEATER CONT)	
	1A	1	**271-7312**	1	KNOB (TEMPERATURE CONTROL)	
	1B	1	**285-7415**	1	KNOB (BLOWER FAN SPEED)	
	2	1	**251-1196**	1	SWITCH AS-ROCKER (AIR CONDITIONER ON, OFF)	
M	3	1	**9X-2045**	2	SCREW-TRUSS HEAD (M6X1X20-MM)	

M-METRIC PART

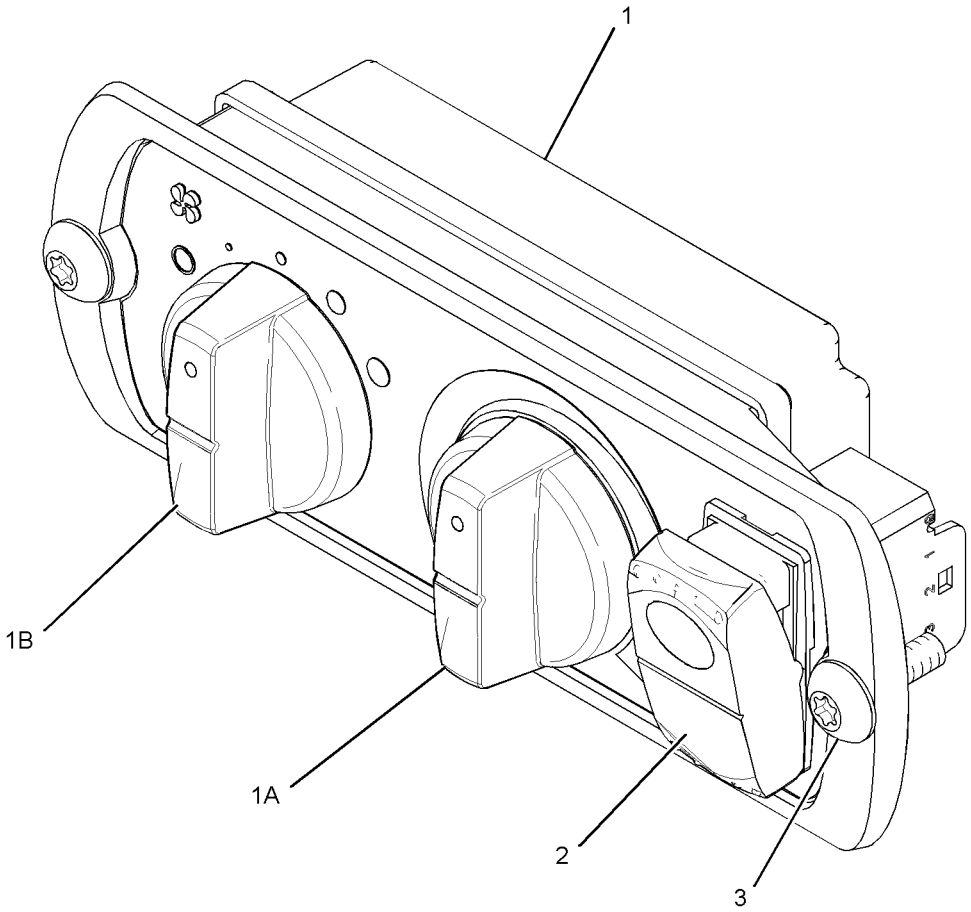

GRAPHIC #1 **<END>** g01323364

OPERATOR STATION

308-5203 CONTROL GP-JOYSTICK–RH

S/N: B9K1-UP

PART OF 309-5955 CONTROL & MTG GP-JOYSTICK

FIELD REPLACEMENT ORDER 356-3609–PAGE 854

SMCS-3168, 4343, 5063, 5705 **i03829089**

NOTE	REF NO	GRAPHIC REF	PART NUMBER	QTY	PART NAME 1 2 3 4 5 6 (PRODUCT LEVEL)	SEE PAGE
	1	1	**169-0705**	9	SEAL	
	2	1	**174-3091**	1	KIT-RECEPTACLE (12-PIN)	
					(INCLUDES RECEPTACLE AS & WEDGE)	
	3	1	**247-0733**	1	BOOT	
	4	1	**9X-3401**	15	PIN-CONNECTOR (16-GA TO 18-GA)	
	5	1	**8T-8737**	9	PLUG-SEAL	
	6	1	**271-2811**	1	KIT-RECEPTACLE (12-PIN)	
					(INCLUDES RECEPTACLE AS & WEDGE)	

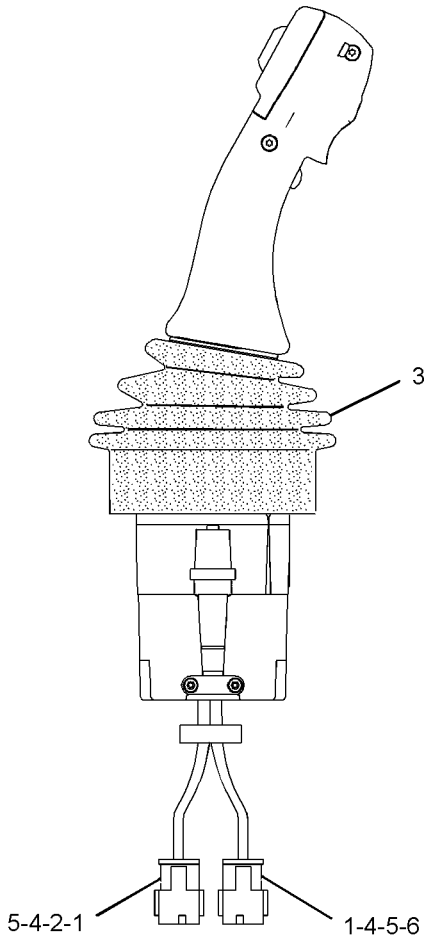

RIGHT SIDE VIEW

GRAPHIC #1

<END>

g02071482

OPERATOR STATION

308-5204 CONTROL GP-JOYSTICK–LH

S/N: B9K1-UP
PART OF 309-5955 CONTROL & MTG GP-JOYSTICK
FIELD REPLACEMENT ORDER 356-3607–PAGE 853

SMCS-3168, 4343, 5063, 5705 **i03767511**

NOTE	REF NO	GRAPHIC REF	PART NUMBER	QTY	PART NAME 1 2 3 4 5 6 (PRODUCT LEVEL)	SEE PAGE
	1	1	**169-0705**	5	SEAL	
	2	1	**174-3091**	1	KIT-RECEPTACLE (12-PIN)	
					(INCLUDES RECEPTACLE AS & WEDGE)	
	3	1	**247-0733**	1	BOOT	
	4	1	**9X-3401**	23	PIN-CONNECTOR (16-GA TO 18-GA)	
	5	1	**8T-8737**	5	PLUG-SEAL	
	6	1	**271-2811**	1	KIT-RECEPTACLE (12-PIN)	
	7	1	**151-9274**	1	KIT-RECEPTACLE (4-PIN)	
					(EACH KIT INCLUDES RECEPTACLE AS & WEDGE)	
	8	1	**342-9971**	1	SWITCH AS (FORWARD, NEUTRAL, REVERSE)	

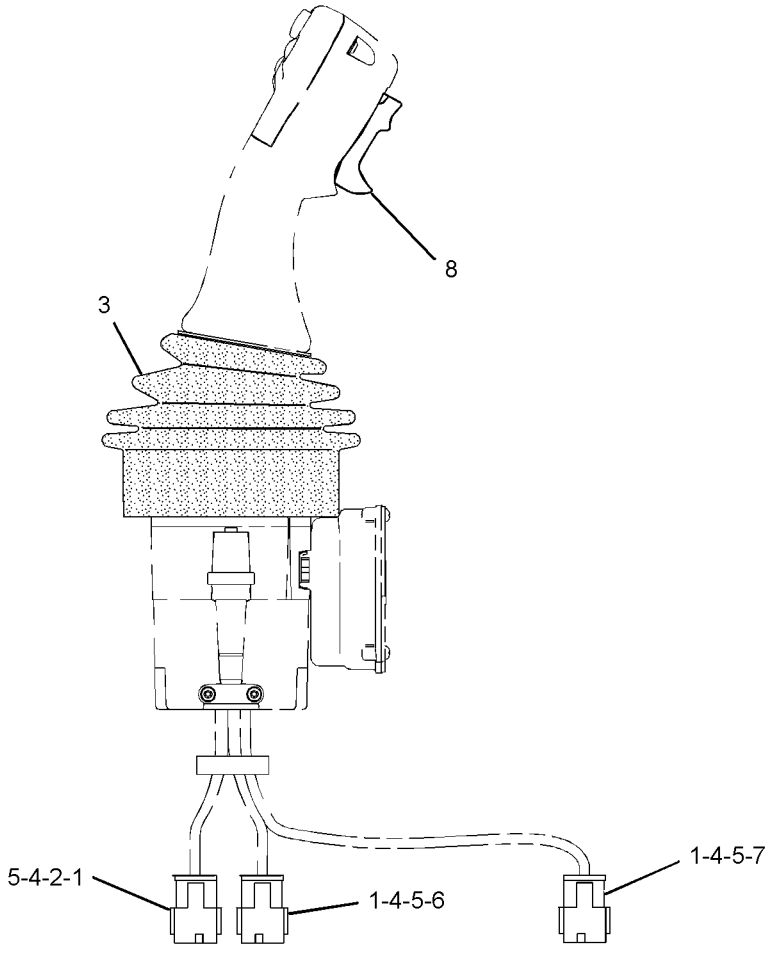

GRAPHIC #1 **<END>** g02031514

OPERATOR STATION

356-3607 CONTROL GP-JOYSTICK–LH

S/N: B9K1-UP

SMCS-3168, 4343, 5063, 5705 **i03814130**

NOTE	REF NO	GRAPHIC REF	PART NUMBER	QTY	PART NAME 1 2 3 4 5 6 (PRODUCT LEVEL)	SEE PAGE
	1	1	**169-0705**	5	SEAL	
	2	1	**174-3091**	1	KIT-RECEPTACLE (12-PIN)	
					(INCLUDES RECEPTACLE AS & WEDGE)	
	3	1	**247-0733**	1	BOOT	
	4	1	**9X-3401**	23	PIN-CONNECTOR (16-GA TO 18-GA)	
	5	1	**8T-8737**	5	PLUG-SEAL	
	6	1	**271-2811**	1	KIT-RECEPTACLE (12-PIN)	
	7	1	**151-9274**	1	KIT-RECEPTACLE (4-PIN)	
					(EACH KIT INCLUDES RECEPTACLE AS & WEDGE)	
	8	1	**342-9971**	1	SWITCH AS (FORWARD, NEUTRAL, REVERSE)	

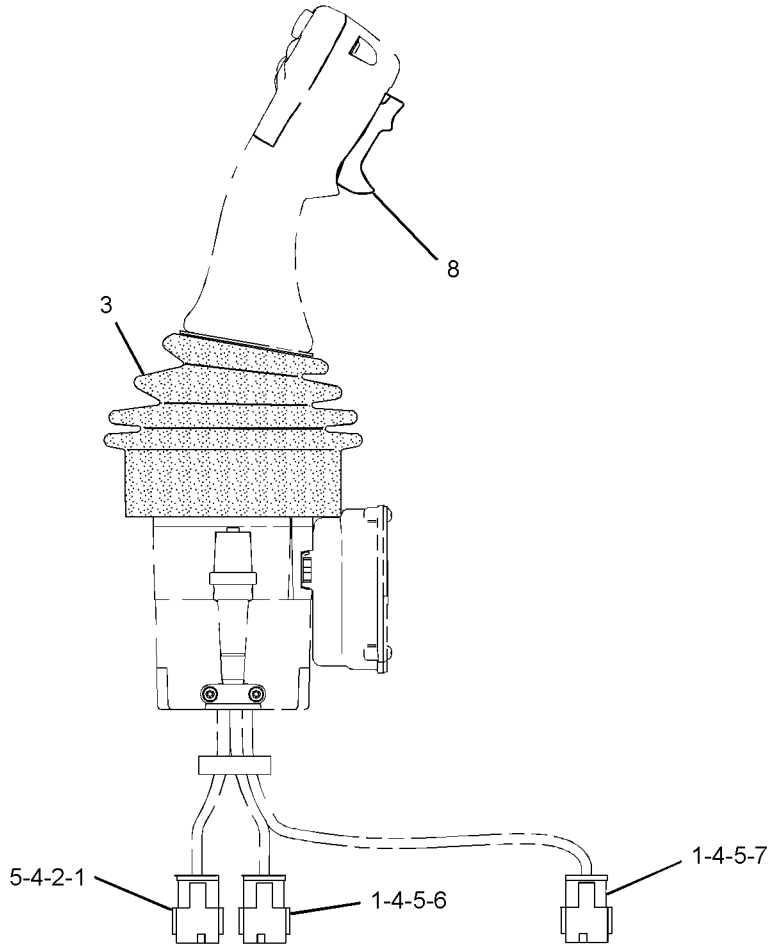

GRAPHIC #1 **<END>** g02031514

OPERATOR STATION

356-3609 CONTROL GP-JOYSTICK–RH

S/N: B9K1-UP

SMCS-3168, 4343, 5063, 5705 **i03814180**

NOTE	REF NO	GRAPHIC REF	PART NUMBER	QTY	PART NAME 1 2 3 4 5 6 (PRODUCT LEVEL)	SEE PAGE
	1	1	**169-0705**	9	SEAL	
	2	1	**174-3091**	1	KIT-RECEPTACLE (12-PIN)	
					(INCLUDES RECEPTACLE AS & WEDGE)	
	3	1	**247-0733**	1	BOOT	
	4	1	**9X-3401**	15	PIN-CONNECTOR (16-GA TO 18-GA)	
	5	1	**8T-8737**	9	PLUG-SEAL	
	6	1	**271-2811**	1	KIT-RECEPTACLE (12-PIN)	
					(INCLUDES RECEPTACLE AS & WEDGE)	

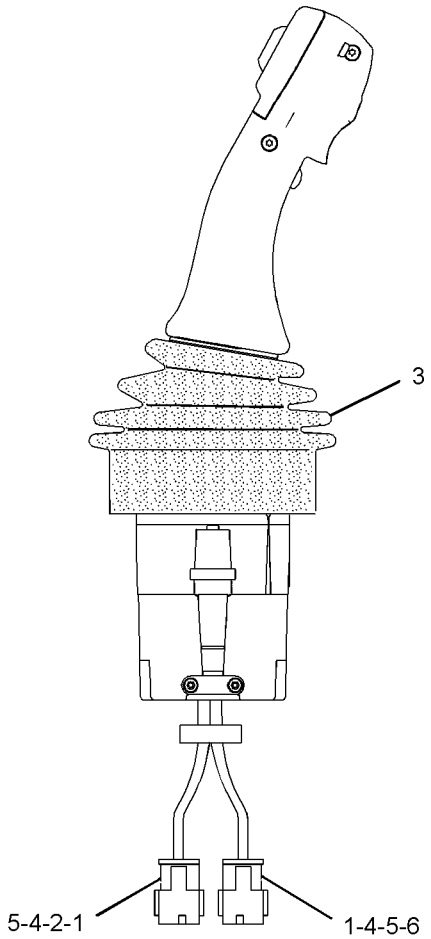

RIGHT SIDE VIEW

GRAPHIC #1

<END>

g02071482

OPERATOR STATION

253-9005 CONTROL GP-STEERING

S/N: B9K1-305

PART OF 259-9204 COMMON AR

SMCS-4309, 4310, 4338, 4343 **i02861436**

NOTE	REF NO	GRAPHIC REF	PART NUMBER	QTY	PART NAME 1 2 3 4 5 6 (PRODUCT LEVEL)	SEE PAGE
	1	1,2	**133-6934**	2	SPACER (11X20X25-MM THK)	
Y	2	2	**254-3415**	1	MANIFOLD GP-CONTROL (STEERING)	743
	3	1	**255-3631**	1	VALVE GP-CHECK (STEERING LINES PRESSURE)	
		1	**2S-4078**	1	SEAL-O-RING	
		1	**6V-8400**	1	SEAL-O-RING	
	4	1	**269-5923**	1	TUBE AS	
	5	2	**269-5924**	1	TUBE AS	
	6	1	**269-5925**	1	TUBE AS	
	7	1	**269-5926**	1	TUBE AS	
	8	1	**270-7577**	1	JUNCTION BLOCK	
	9	2	**275-8348**	1	PLATE	
I	10	1	**275-8363**	1	HOSE AS	
I	11	1	**283-9956**	1	HOSE AS	
	12	1	**298-4726**	1	TUBE AS	
I	13	2	**298-4742**	1	HOSE AS	
I	14	2	**298-4743**	1	HOSE AS	
I	15	2	**298-4745**	2	HOSE AS	
I	16	2	**298-4746**	2	HOSE AS	
	17	2	**298-4760**	1	PLATE	
Y	18	1	**308-0937**	1	VALVE GP-STEERING	817
I	19	1	**315-5716**	1	HOSE AS	
	20	1	**067-3045**	2	CLIP	
	21	1	**129-8493**	1	BRACKET	
	22	1,2	*148-8318*	4	CONNECTOR AS	
					(EACH INCLUDES)	
		1,2	**6V-8634**	1	CONNECTOR	
		1,2	**3K-0360**	1	SEAL-O-RING	
		1,2	**6V-8397**	1	SEAL-O-RING	
	23	1	*148-8323*	1	CONNECTOR AS	
		1	**6V-9875**	1	CONNECTOR	
		1	**2S-4078**	1	SEAL-O-RING	
		1	**5K-9090**	1	SEAL-O-RING	
	24	2	*148-8328*	2	CONNECTOR AS	
					(EACH INCLUDES)	
		2	**6V-8633**	1	CONNECTOR	
		2	**3D-2824**	1	SEAL-O-RING	
		2	**6V-8398**	1	SEAL-O-RING	
	25	1,2	*148-8336*	3	CONNECTOR AS	
					(EACH INCLUDES)	
		1,2	**6V-8636**	1	CONNECTOR	
		1,2	**3J-1907**	1	SEAL-O-RING	
		1,2	**6V-8397**	1	SEAL-O-RING	
	26	2	*148-8340*	1	CONNECTOR AS	
		2	**6V-8639**	1	CONNECTOR	
		2	**3K-0360**	1	SEAL-O-RING	
		2	**6V-8398**	1	SEAL-O-RING	
	27	2	*148-8341*	2	CONNECTOR AS	
					(EACH INCLUDES)	
		2	**6V-8713**	1	CONNECTOR	
		2	**3D-2824**	1	SEAL-O-RING	
		2	**7J-9108**	1	SEAL-O-RING	
	28	1	*148-8342*	1	CONNECTOR AS	
		1	**6V-8632**	1	CONNECTOR	
		1	**3K-0360**	1	SEAL-O-RING	
		1	**7J-9108**	1	SEAL-O-RING	
	29	2	*148-8361*	1	ELBOW AS	

253-9005 **CONTROL GP-STEERING** *(contd.)* **i02861436**

NOTE	REF NO	GRAPHIC REF	PART NUMBER	QTY	PART NAME 1 2 3 4 5 6 (PRODUCT LEVEL)	SEE PAGE
		2	**6V-9200**	1	ELBOW	
		2	**3J-7354**	1	SEAL-O-RING	
		2	**6V-8397**	1	SEAL-O-RING	
	30	1,2	*148-8378*	2	ELBOW AS	
					(EACH INCLUDES)	
		1,2	**6V-8724**	1	ELBOW	
		1,2	**3J-1907**	1	SEAL-O-RING	
		1,2	**6V-8397**	1	SEAL-O-RING	
	31	1,2	*148-8393*	3	ELBOW AS	
					(EACH INCLUDES)	
		1,2	**6V-9852**	1	ELBOW	
		1,2	**7J-9108**	1	SEAL-O-RING	
	32	2	*148-8416*	2	REDUCER AS	
					(EACH INCLUDES)	
		2	**6V-8939**	1	REDUCER-O-RING	
		2	**6V-8398**	1	SEAL-O-RING	
	33	1	*150-4048*	1	ELBOW AS	
		1	**6V-8722**	1	ELBOW	
		1	**3K-0360**	1	SEAL-O-RING	
		1	**7J-9108**	1	SEAL-O-RING	
	34	1	*164-4058*	1	REDUCER AS	
		1	**6V-8948**	1	REDUCER	
		1	**5K-9090**	1	SEAL-O-RING	
	35	2	*164-6860*	2	TEE AS	
					(EACH INCLUDES)	
		2	**6V-9350**	1	TEE-BULKHEAD	
		2	**7J-9108**	3	SEAL-O-RING	
	36	1	**1P-3704**	1	SEAL-RECTANGULAR	
	37	1	**4J-0520**	1	SEAL-O-RING	
	38	1,2	**5P-7464**	8	CLIP (SLOT)	
	39	1,2	**5P-7465**	8	CLIP (TAB)	
	40	1	**5P-7468**	1	CLIP (SLOT)	
	41	1	**5P-7469**	1	CLIP (TAB)	
	42	1	**5P-8246**	4	WASHER-HARD (15.5X29X3-MM THK)	
	43	1	**5P-8444**	1	GROMMET	
	44	1	**6V-0401**	2	FLANGE-HALF	
	45	2	**6V-1249**	2	GROMMET	
	46	1,2	**6V-7359**	6	GROMMET	
	47	2	**6V-8555**	2	NUT-FACE SEAL (1-14-THD)	
	48	2	**6V-9170**	2	NUT-BULKHEAD (1-14-THD)	
	49	1	**7D-7233**	1	CLIP	
M	50	2	**7X-2536**	3	BOLT (M8X1.25X14-MM)	
	51	1	**8C-3206**	2	FLANGE-HALF	
M	52	1	**8C-6854**	4	BOLT (M14X2X50-MM)	
	53	1,2	**8T-4121**	17	WASHER-HARD (11X21X2.5-MM THK)	
M	54	1	**8T-4133**	2	NUT (M10X1.5-THD)	
M	55	1	**8T-4136**	1	BOLT (M10X1.5X25-MM)	
M	56	1	**8T-4139**	3	BOLT (M12X1.75X30-MM)	
M	57	1	**8T-4172**	1	BOLT (M10X1.5X80-MM)	
M	58	1	**8T-4182**	1	BOLT (M10X1.5X45-MM)	
M	59	2	**8T-4183**	3	BOLT (M12X1.75X40-MM)	
M	60	2	**8T-4185**	1	BOLT (M10X1.5X50-MM)	
M	61	2	**8T-4195**	3	BOLT (M10X1.5X30-MM)	
M	62	1	**8T-4196**	4	BOLT (M10X1.5X35-MM)	
	63	1,2	**8T-4223**	6	WASHER-HARD (13.5X25.5X3-MM THK)	
	64	2	**8T-4224**	3	WASHER-HARD (8.8X16X2-MM THK)	
M	65	1	**8T-5005**	1	BOLT (M10X1.5X70-MM)	
M	66	2	**8T-6466**	3	BOLT (M10X1.5X60-MM)	
	67	2	**9X-8250**	1	CLIP	

I-REFER TO HYDRAULIC INFORMATION SYSTEM
M-METRIC PART
Y-SEPARATE ILLUSTRATION

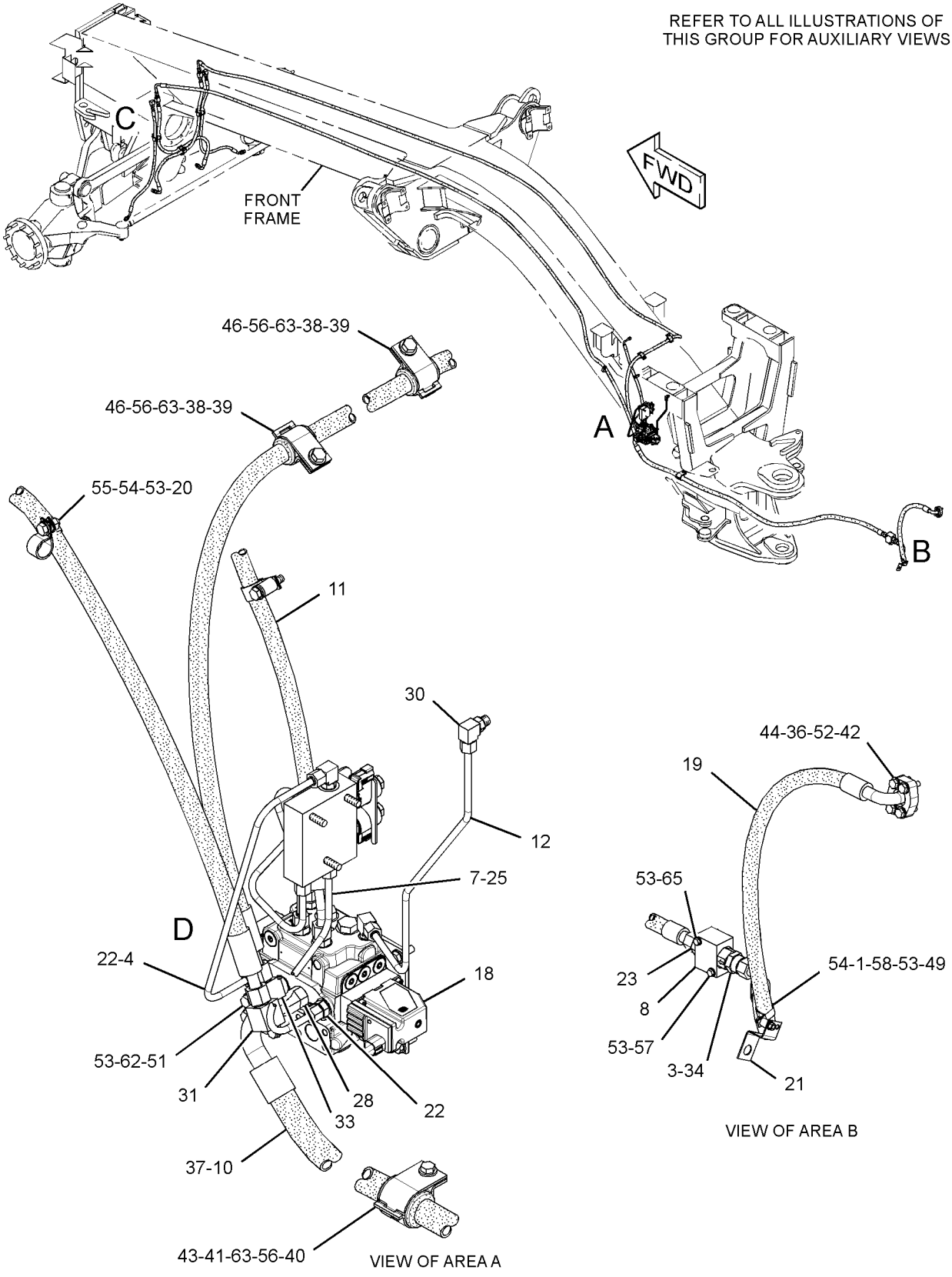

GRAPHIC #1

g01443684

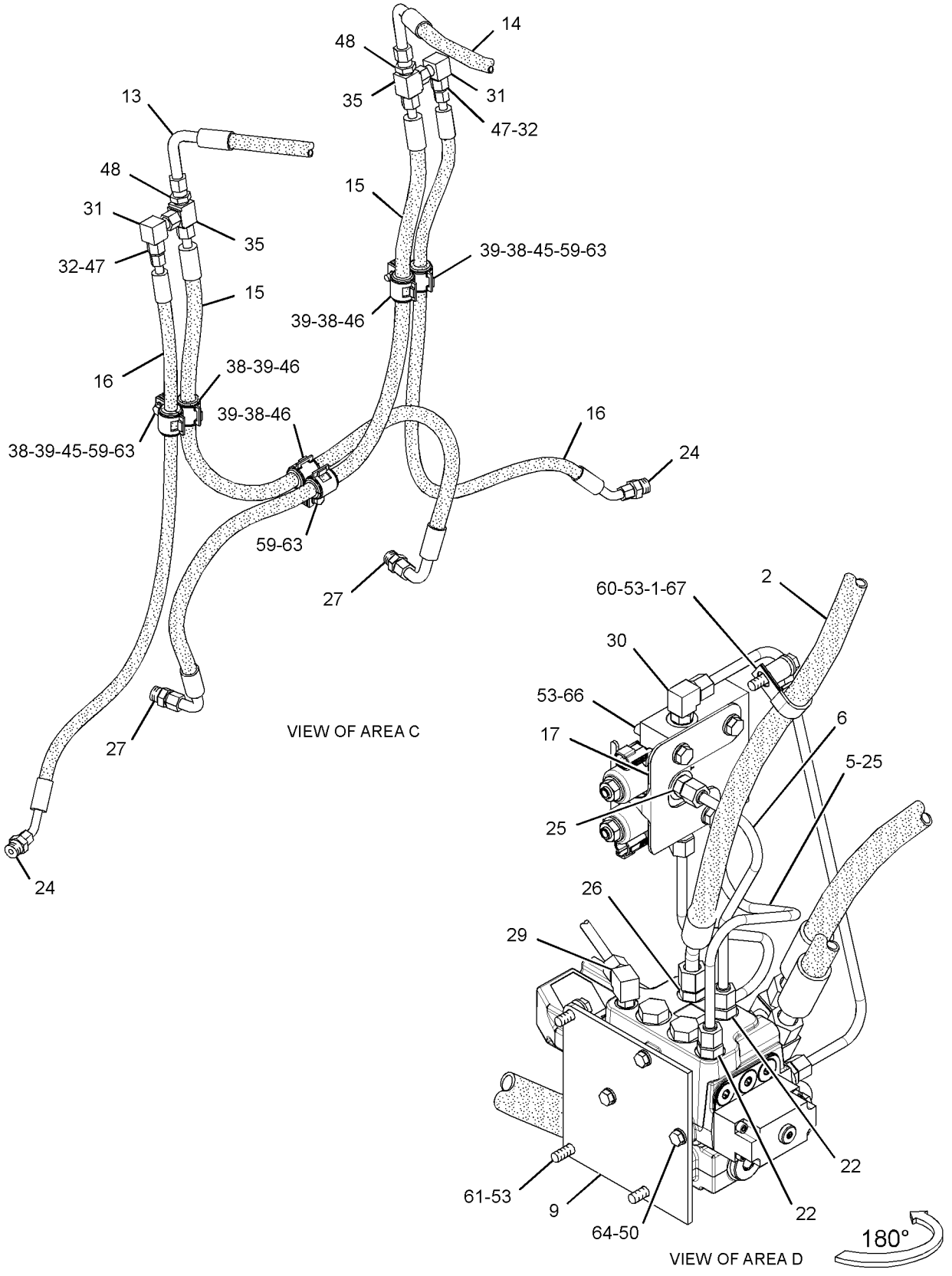

GRAPHIC #2 **<END>** g01443685

OPERATOR STATION

253-9005 CONTROL GP-STEERING

S/N: B9K306-335

PART OF 259-9204 COMMON AR

SMCS-4309, 4310, 4338, 4343 **i03317201**

NOTE	REF NO	GRAPHIC REF	PART NUMBER	QTY	PART NAME 1 2 3 4 5 6 (PRODUCT LEVEL)	SEE PAGE
C	1	2	**133-6934**	1	SPACER (11X20X25-MM THK)	
Y	2	2	**254-3415**	1	MANIFOLD GP-CONTROL (STEERING)	743
	3	1	**255-3631**	1	VALVE GP-CHECK (STEERING LINES PRESSURE)	
		1	**2S-4078**	1	SEAL-O-RING	
		1	**6V-8400**	1	SEAL-O-RING	
	4	1	**269-5923**	1	TUBE AS	
	5	2	**269-5924**	1	TUBE AS	
	6	2	**269-5925**	1	TUBE AS	
	7	1	**269-5926**	1	TUBE AS	
	8	1	**270-7577**	1	JUNCTION BLOCK	
	9	2	**275-8348**	1	PLATE	
I	10	1	**275-8363**	1	HOSE AS	
I	11	1	**283-9956**	1	HOSE AS	
	12	1	**298-4726**	1	TUBE AS	
I	13	2	**298-4742**	1	HOSE AS	
I	14	2	**298-4743**	1	HOSE AS	
I	15	2	**298-4745**	2	HOSE AS	
I	16	2	**298-4746**	2	HOSE AS	
	17	2	**298-4760**	1	PLATE	
Y	18	1	**308-0937**	1	VALVE GP-STEERING	817
I	19	1	**315-5716**	1	HOSE AS	
	20	1	**067-3045**	2	CLIP	
	22	1,2	*148-8318*	4	CONNECTOR AS	
					(EACH INCLUDES)	
		1,2	**6V-8634**	1	CONNECTOR	
		1,2	**3K-0360**	1	SEAL-O-RING	
		1,2	**6V-8397**	1	SEAL-O-RING	
	23	1	*148-8323*	1	CONNECTOR AS	
		1	**6V-9875**	1	CONNECTOR	
		1	**2S-4078**	1	SEAL-O-RING	
		1	**5K-9090**	1	SEAL-O-RING	
	24	2	*148-8328*	2	CONNECTOR AS	
					(EACH INCLUDES)	
		2	**6V-8633**	1	CONNECTOR	
		2	**3D-2824**	1	SEAL-O-RING	
		2	**6V-8398**	1	SEAL-O-RING	
	25	1,2	*148-8336*	3	CONNECTOR AS	
					(EACH INCLUDES)	
		1,2	**6V-8636**	1	CONNECTOR	
		1,2	**3J-1907**	1	SEAL-O-RING	
		1,2	**6V-8397**	1	SEAL-O-RING	
	26	2	*148-8340*	1	CONNECTOR AS	
		2	**6V-8639**	1	CONNECTOR	
		2	**3K-0360**	1	SEAL-O-RING	
		2	**6V-8398**	1	SEAL-O-RING	
	27	2	*148-8341*	2	CONNECTOR AS	
					(EACH INCLUDES)	
		2	**6V-8713**	1	CONNECTOR	
		2	**3D-2824**	1	SEAL-O-RING	
		2	**7J-9108**	1	SEAL-O-RING	
	28	1	*148-8342*	1	CONNECTOR AS	
		1	**6V-8632**	1	CONNECTOR	
		1	**3K-0360**	1	SEAL-O-RING	
		1	**7J-9108**	1	SEAL-O-RING	
	29	2	*148-8361*	1	ELBOW AS	
		2	**6V-9200**	1	ELBOW	

OPERATOR STATION

253-9005 **CONTROL GP-STEERING** *(contd.)* **i03317201**

NOTE	REF NO	GRAPHIC REF	PART NUMBER	QTY	PART NAME 1 2 3 4 5 6 (PRODUCT LEVEL)	SEE PAGE
		2	**3J-7354**	1	SEAL-O-RING	
		2	**6V-8397**	1	SEAL-O-RING	
	30	1,2	*148-8378*	2	ELBOW AS	
					(EACH INCLUDES)	
		1,2	**6V-8724**	1	ELBOW	
		1,2	**3J-1907**	1	SEAL-O-RING	
		1,2	**6V-8397**	1	SEAL-O-RING	
	31	1,2	*148-8393*	3	ELBOW AS	
					(EACH INCLUDES)	
		1,2	**6V-9852**	1	ELBOW	
		1,2	**7J-9108**	1	SEAL-O-RING	
	32	2	*148-8416*	2	REDUCER AS	
					(EACH INCLUDES)	
		2	**6V-8939**	1	REDUCER-O-RING	
		2	**6V-8398**	1	SEAL-O-RING	
	33	1	*150-4048*	1	ELBOW AS	
		1	**6V-8722**	1	ELBOW	
		1	**3K-0360**	1	SEAL-O-RING	
		1	**7J-9108**	1	SEAL-O-RING	
	34	1	*164-4058*	1	REDUCER AS	
		1	**6V-8948**	1	REDUCER	
		1	**5K-9090**	1	SEAL-O-RING	
	35	2	*164-6860*	2	TEE AS	
					(EACH INCLUDES)	
		2	**6V-9350**	1	TEE-BULKHEAD	
		2	**7J-9108**	3	SEAL-O-RING	
	36	1	**1P-3704**	2	SEAL-RECTANGULAR	
	37	1	**4J-0520**	1	SEAL-O-RING	
	38	1,2	**5P-7464**	8	CLIP (SLOT)	
	39	1,2	**5P-7465**	8	CLIP (TAB)	
	40	1	**5P-7468**	1	CLIP (SLOT)	
	41	1	**5P-7469**	1	CLIP (TAB)	
	42	1	**5P-8246**	4	WASHER-HARD (15.5X29X3-MM THK)	
	43	1	**5P-8444**	1	GROMMET	
	44	1	**6V-0401**	2	FLANGE-HALF	
	45	2	**6V-1249**	2	GROMMET	
	46	1,2	**6V-7359**	6	GROMMET	
	47	2	**6V-8555**	2	NUT-FACE SEAL (1-14-THD)	
	48	2	**6V-9170**	2	NUT-BULKHEAD (1-14-THD)	
	49	1	**7D-7233**	1	CLIP	
M	50	2	**7X-2536**	3	BOLT (M8X1.25X14-MM)	
	51	1	**8C-3206**	2	FLANGE-HALF	
M	52	1	**8T-3653**	4	BOLT (M14X2X80-MM)	
C	53	1,2	**8T-4121**	15	WASHER-HARD (11X21X2.5-MM THK)	
CM	54	1	**8T-4133**	1	NUT (M10X1.5-THD)	
M	55	1	**8T-4136**	1	BOLT (M10X1.5X25-MM)	
M	56	1	**8T-4139**	3	BOLT (M12X1.75X30-MM)	
M	57	1	**8T-4172**	1	BOLT (M10X1.5X80-MM)	
M	59	2	**8T-4183**	3	BOLT (M12X1.75X40-MM)	
M	60	2	**8T-4185**	1	BOLT (M10X1.5X50-MM)	
M	61	2	**8T-4195**	3	BOLT (M10X1.5X30-MM)	
M	62	1	**8T-4196**	4	BOLT (M10X1.5X35-MM)	
	63	1,2	**8T-4223**	6	WASHER-HARD (13.5X25.5X3-MM THK)	
	64	2	**8T-4224**	3	WASHER-HARD (8.8X16X2-MM THK)	
M	65	1	**8T-5005**	1	BOLT (M10X1.5X70-MM)	
M	66	2	**8T-6466**	3	BOLT (M10X1.5X60-MM)	
	67	2	**9X-8250**	1	CLIP	
	68	1	**335-6606**	1	ADAPTER	

C-CHANGE FROM PREVIOUS TYPE
I-REFER TO HYDRAULIC INFORMATION SYSTEM
M-METRIC PART
Y-SEPARATE ILLUSTRATION

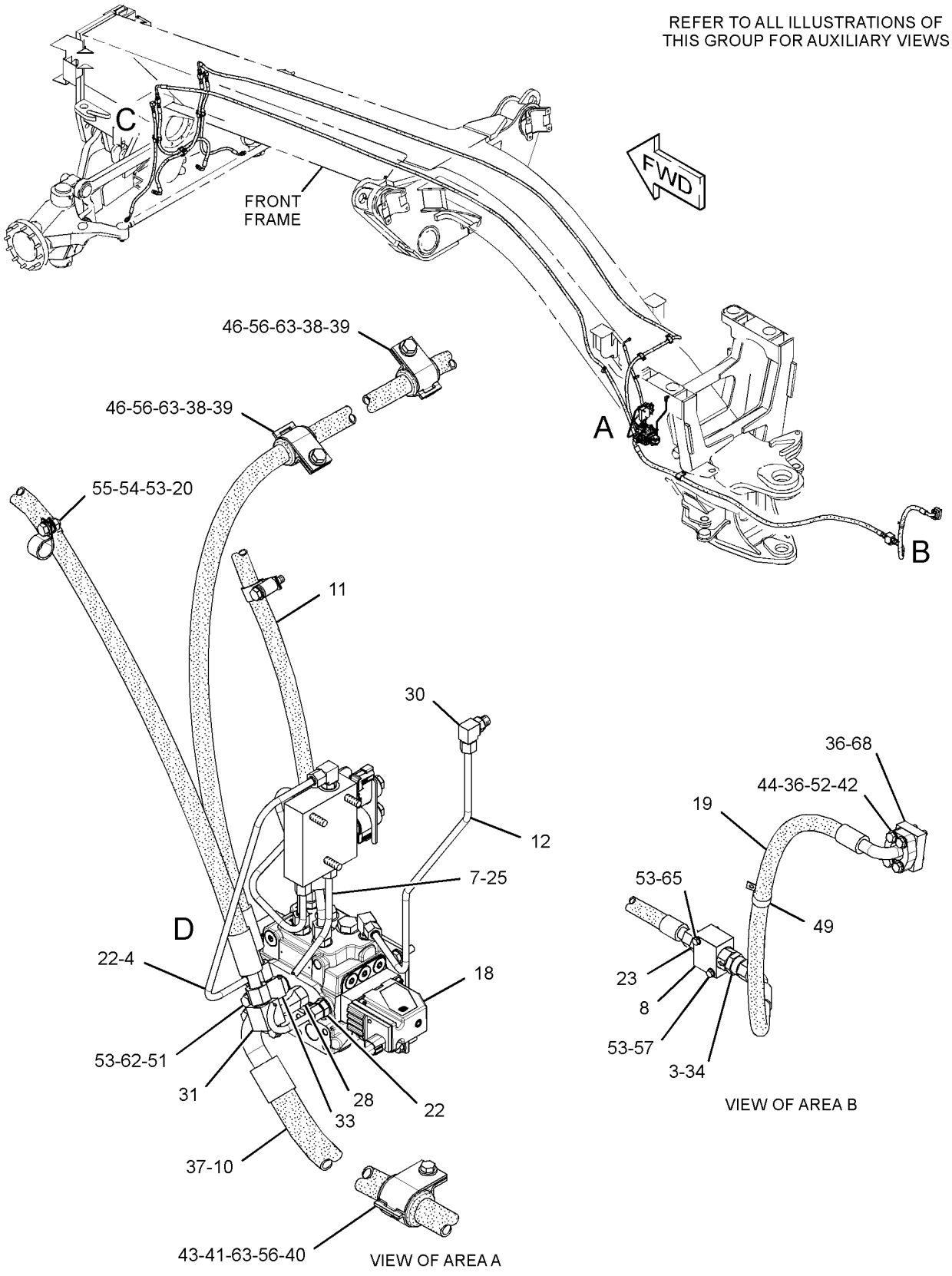

GRAPHIC #1 g01931134

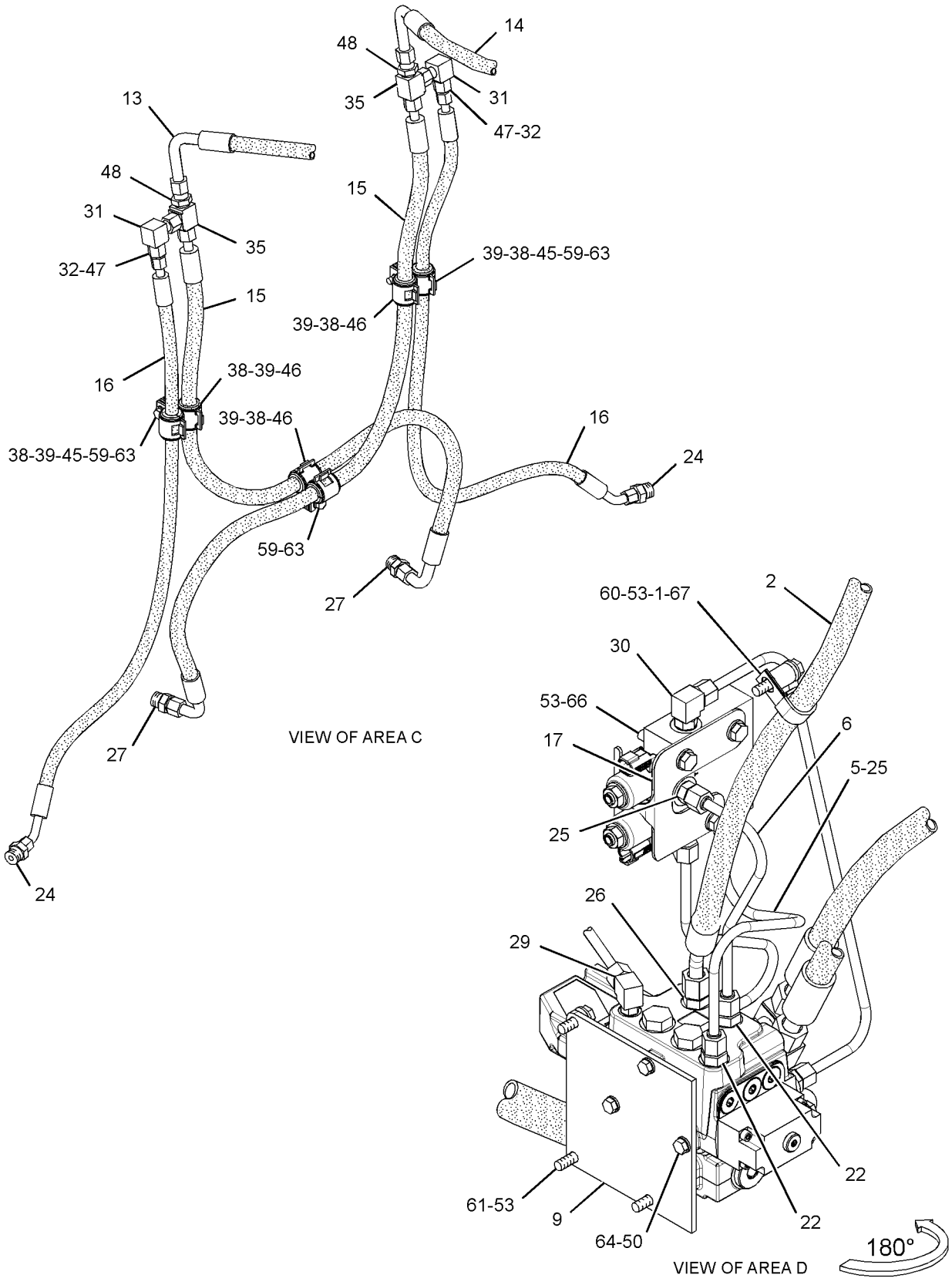

GRAPHIC #2 **<END>** g01443685

OPERATOR STATION

266-7015 COVER GP-PLATFORM

S/N: B9K1-341

PART OF 266-7002 PLATFORM GP-OPERATOR

SMCS-7253, 7301 **i02762019**

NOTE	REF NO	GRAPHIC REF	PART NUMBER	QTY	PART NAME 1 2 3 4 5 6 (PRODUCT LEVEL)	SEE PAGE
	1	1	**114-6658**	6	WASHER (6.5X17X1-MM THK)	
	2	1	**139-6039**	6	NUT-RETAINER (U-TYPE)	
	3	1	**282-0809**	1	PLATE AS	
		1	**130-5300**	1	CLIP	
		1	**169-5414**	1	CLIP	
M		1	**6V-9632**	2	NUT-WELD (M6X1-THD)	
	4	1	**283-0769**	1	PLATE	
	5	1	**283-0771**	1	PLATE	
	6	1	**283-0772**	1	PLATE AS	
M		1	**6V-9632**	1	NUT-WELD (M6X1-THD)	
		1	**7T-1099**	8	LINK	
M		1	**8T-3612**	4	NUT-WELD (M8X1.25-THD)	
	7	1	**283-7967**	1	PLATE	
	8	1	**283-7974**	1	PLATE	
	9	1	**286-5677**	1	PLATE AS	
	10	1	**294-0996**	1	PLATE	
	11	1	**309-4100**	1	PLATE AS	
	12	1	**309-7011**	1	PLATE AS	
	13	1	**117-8929**	3	WASHER (6.6X22X2-MM THK)	
M	14	1	**127-2170**	18	SCREW-TRUSS HEAD (M8X1.25X20-MM)	
	15	1	**195-0936**	2	INSERT-THREADED (M6X1-THD)	
M	16	1	**195-0937**	18	INSERT-THREADED (M8X1.25-THD)	
	17	1	**216-7352**	8	SCREW-TRUSS HEAD (M8X1.25X30-MM)	
	18	1	**7X-7729**	6	WASHER (11X25X3-MM THK)	
M	19	1	**8T-4136**	4	BOLT (M10X1.5X25-MM)	
	20	1	**9N-0869**	24	WASHER-HARD (8.8X25.5X2-MM THK)	
M	21	1	**9X-2044**	6	SCREW-TRUSS HEAD (M6X1X16-MM)	
M	22	1	**9X-2045**	3	SCREW-TRUSS HEAD (M6X1X20-MM)	

M-METRIC PART

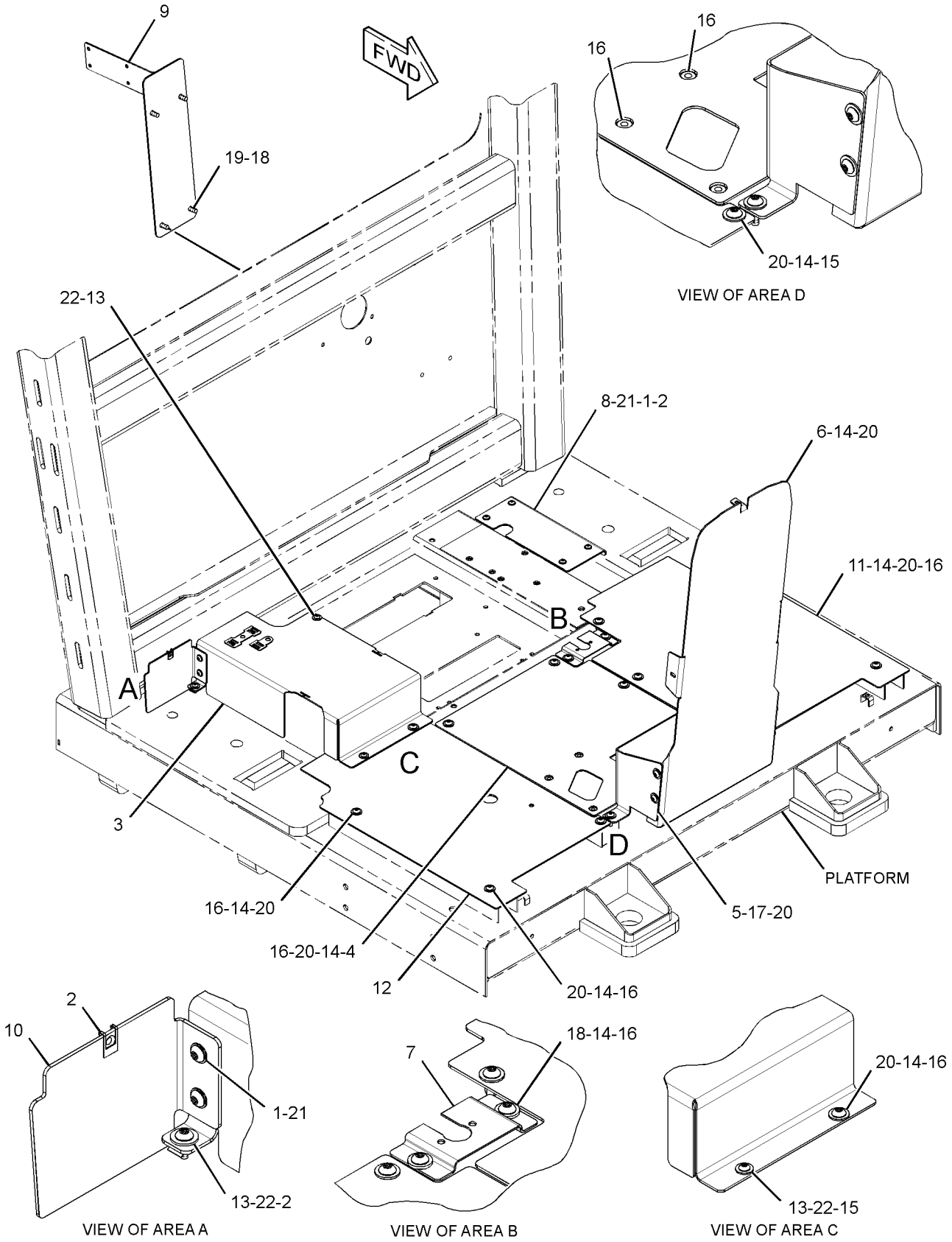

GRAPHIC #1

<END>

g01390500

OPERATOR STATION

266-7015 COVER GP-PLATFORM

S/N: B9K342-UP

PART OF 266-7002 PLATFORM GP-OPERATOR

SMCS-7253, 7301 **i03895539**

NOTE	REF NO	GRAPHIC REF	PART NUMBER	QTY	PART NAME 1 2 3 4 5 6 (PRODUCT LEVEL)	SEE PAGE
	1	1	**114-6658**	6	WASHER (6.5X17X1-MM THK)	
	2	1	**139-6039**	6	NUT-RETAINER (U-TYPE)	
	3	1	**282-0809**	1	PLATE AS	
		1	**130-5300**	1	CLIP	
		1	**169-5414**	1	CLIP	
M		1	**6V-9632**	2	NUT-WELD (M6X1-THD)	
	4	1	**283-0769**	1	PLATE	
	5	1	**283-0771**	1	PLATE	
	6	1	**283-0772**	1	PLATE AS	
M		1	**6V-9632**	1	NUT-WELD (M6X1-THD)	
		1	**7T-1099**	8	LINK	
M		1	**8T-3612**	4	NUT-WELD (M8X1.25-THD)	
	8	1	**283-7974**	1	PLATE	
	9	1	**286-5677**	1	PLATE AS	
	10	1	**294-0996**	1	PLATE	
	11	1	**309-4100**	1	PLATE AS	
	12	1	**309-7011**	1	PLATE AS	
	13	1	**117-8929**	3	WASHER (6.6X22X2-MM THK)	
CM	14	1	**127-2170**	20	SCREW-TRUSS HEAD (M8X1.25X20-MM)	
	15	1	**195-0936**	2	INSERT-THREADED (M6X1-THD)	
CM	16	1	**195-0937**	16	INSERT-THREADED (M8X1.25-THD)	
	17	1	**216-7352**	8	SCREW-TRUSS HEAD (M8X1.25X30-MM)	
	20	1	**9N-0869**	28	WASHER-HARD (8.8X25.5X2-MM THK)	
M	21	1	**9X-2044**	6	SCREW-TRUSS HEAD (M6X1X16-MM)	
M	22	1	**9X-2045**	3	SCREW-TRUSS HEAD (M6X1X20-MM)	

C-CHANGE FROM PREVIOUS TYPE
M-METRIC PART

266-7015 **COVER GP-PLATFORM** *(contd.)* **i03895539**

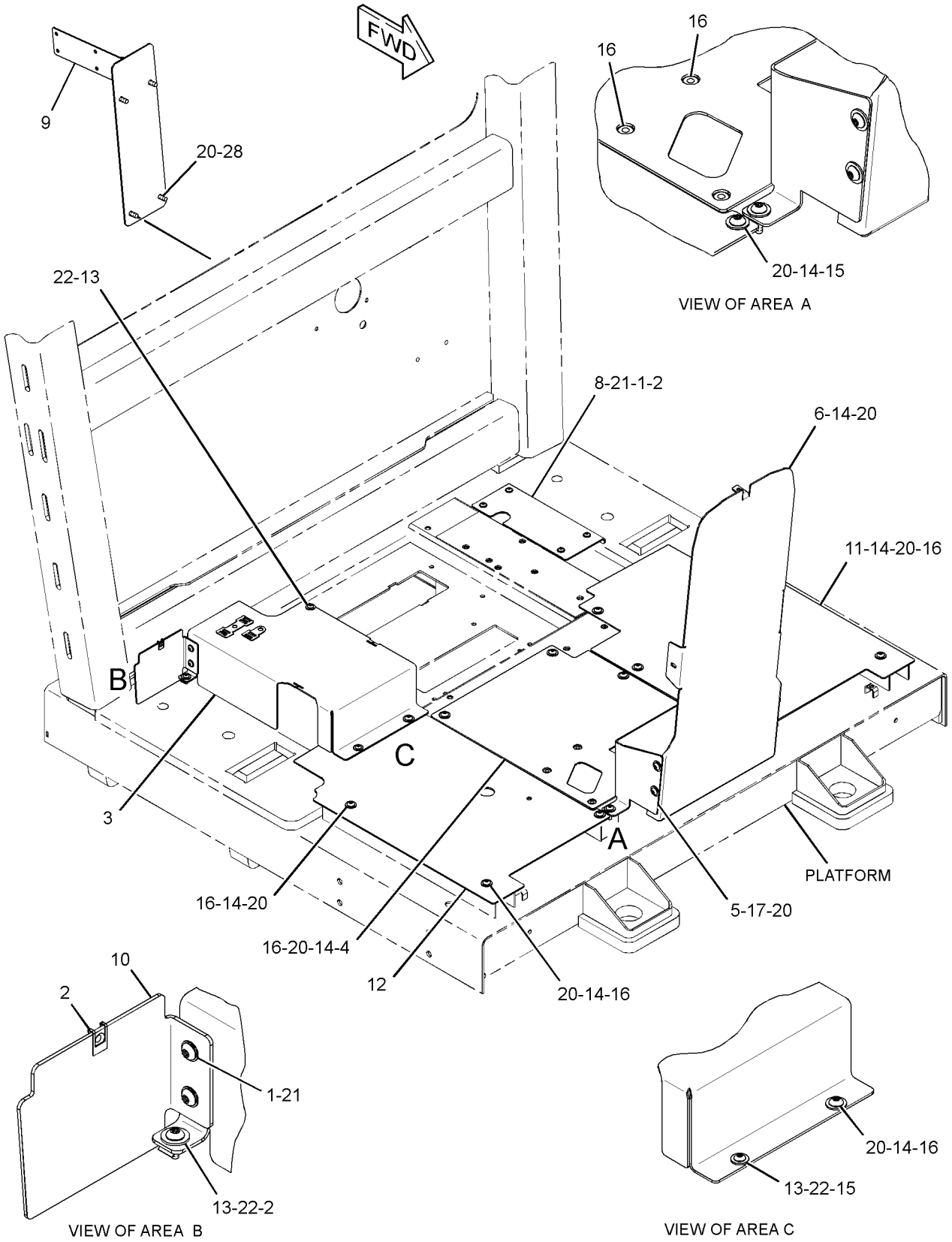

GRAPHIC #1 **<END>** g02204095

OPERATOR STATION

252-1805 CUSHION GP-ARM

S/N: B9K1-UP

PART OF 233-3224, 233-3225 SUPPORT GP-CONTROL

SMCS-7307 **i02748414**

NOTE	REF NO	GRAPHIC REF	PART NUMBER	QTY	PART NAME 1 2 3 4 5 6 (PRODUCT LEVEL)	SEE PAGE
	1	1	**233-3245**	1	PLATE	
	2	1	**233-3272**	1	CUSHION AS	
M	3	1	**5C-9553**	2	BOLT (M6X1X16-MM)	
	4	1	**9X-8256**	2	WASHER (6.6X12X2-MM THK)	

M-METRIC PART

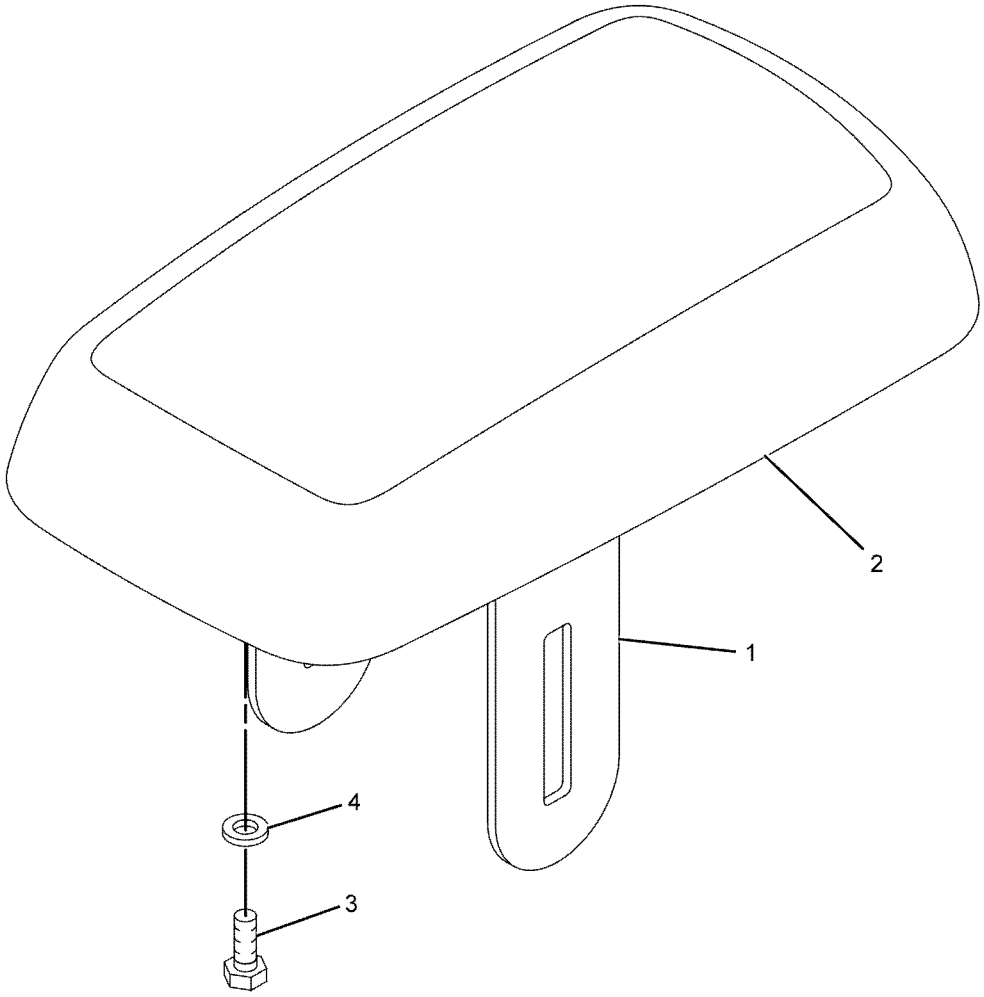

GRAPHIC #1 **<END>** g01109286

OPERATOR STATION

292-7975 DISPLAY AR-MONITOR–CD700

S/N: B9K1-UP

FOR USE WITH M SERIES MOTOR GRADER

SMCS-7490 **i04035054**

NOTE	PART NUMBER	QTY	PART NAME 1 2 3 4 5 6 (PRODUCT LEVEL)	SEE PAGE
Y	*286-0134*	1	DISPLAY GP-MONITOR (CD700)	873
Y	**286-9124**	3	DISPLAY GP-MONITOR (LIGHT BAR)	874
Y	*253-1964*	1	WIRING GP-MONITOR (CD700)	384

Y-SEPARATE ILLUSTRATION

<END>

OPERATOR STATION

292-7980 DISPLAY AR-MONITOR—CD610

S/N: B9K1-UP

FOR USE WITH M SERIES MOTOR GRADER

SMCS-7490 **i03245379**

NOTE	PART NUMBER	QTY	PART NAME 1 2 3 4 5 6 (PRODUCT LEVEL)	SEE PAGE
Y	**292-0309**	1	DISPLAY GP-MONITOR (CD610)	875
Y	**253-1967**	1	WIRING GP-MONITOR (CD610)	386

Y-SEPARATE ILLUSTRATION

<END>

OPERATOR STATION

266-7027 DISPLAY GP-CAMERA—WORK AREA VISUAL SYSTEM

S/N: B9K1-UP

PART OF 278-1867 CAMERA AR

SMCS-7347 **i02760691**

NOTE	REF NO	GRAPHIC REF	PART NUMBER	QTY	PART NAME 1 2 3 4 5 6 (PRODUCT LEVEL)	SEE PAGE
	1	1	**3S-2093**	15	STRAP-CABLE	
M	2	1	**096-5968**	4	BOLT-SOCKET HEAD (M5X0.8X8-MM)	
	3	1	**114-6658**	4	WASHER (6.5X17X1-MM THK)	
	4	1	**251-4243**	1	CONNECTOR GP-ELECTRONIC (WORK AREA VISUAL SYSTEM)	
	5	1	**282-0812**	1	PLATE AS	
	6	1	**261-3224**	1	MODULE GP-DISPLAY (WORK AREA VISUAL SYSTEM)	
		1	**8T-8737**	1	PLUG-SEAL	
		1	**102-8805**	1	KIT-RECEPTACLE (6-PIN)	
					(INCLUDES RECEPTACLE AS & WEDGE)	
		1	**186-3735**	5	PIN-CONNECTOR (16-GA TO 18-GA)	
		1	**280-2691**	1	CABLE AS	
	7	1	**266-2116**	1	CABLE-COMMUNICATION	
	8	1	**4B-4274**	4	WASHER (5.5X13X1.2-MM THK)	
M	9	1	**9X-2045**	4	SCREW-TRUSS HEAD (M6X1X20-MM)	

M-METRIC PART

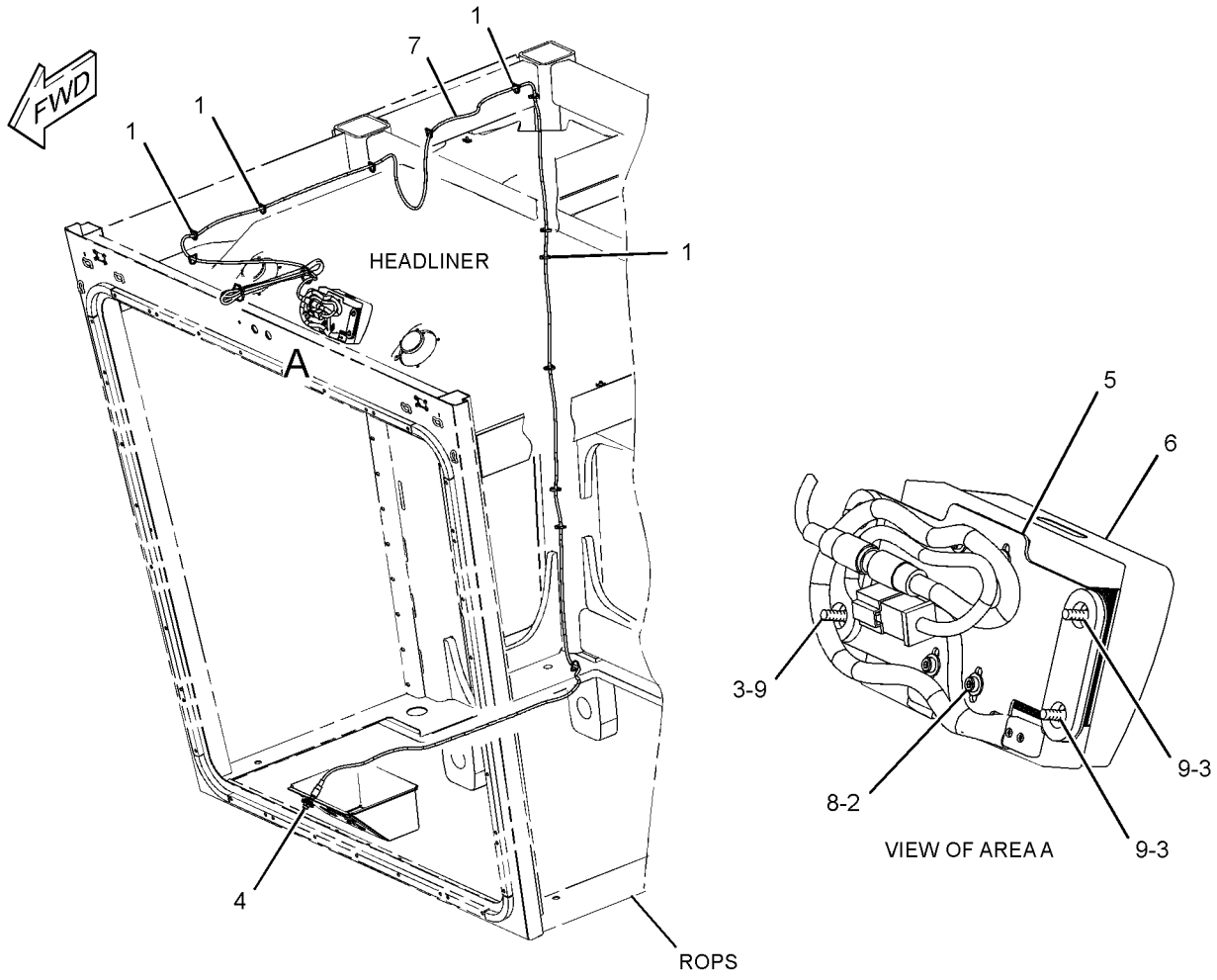

GRAPHIC #1 **<END>** g01384957

OPERATOR STATION

286-0134 DISPLAY GP-MONITOR–CD700C

S/N: B9K1-UP

PART OF 292-7975 DISPLAY AR-MONITOR

SMCS-7490 **i04036776**

NOTE	PART NUMBER	QTY	PART NAME 1 2 3 4 5 6 (PRODUCT LEVEL)	SEE PAGE
R	**244-1716**	1	DISPLAY GP-MONITOR (CD700C)	
	283-4426	1	CARD AS-MEMORY (FLASH)	
	194-8031	1	ADAPTER (COMPACT)	
M	**8T-4171**	6	BOLT (M6X1X12-MM)	
	292-0311	1	CASE-CARRYING	
M	**8T-0285**	6	SCREW-MACHINE (M4X0.7X12-MM)	
	9X-8256	6	WASHER (6.6X12X2-MM THK)	
	096-6166	6	WASHER-HARD (4.5X9X1-MM THK)	

M-METRIC PART
R-REMFG PART MAY BE AVAILABLE

<END>

OPERATOR STATION

286-9124 DISPLAY GP-MONITOR—LIGHT BAR

S/N: B9K1-UP

PART OF 292-7975 DISPLAY AR-MONITOR

SMCS-7490 **i02618892**

NOTE	REF NO	GRAPHIC REF	PART NUMBER	QTY	PART NAME 1 2 3 4 5 6 (PRODUCT LEVEL)	SEE PAGE
	1	1	230-5009	1	RECEPTACLE AS-CONNECTOR (4-PIN)	
	2	1	9X-3402	3	SOCKET-CONNECTOR (16-GA TO 18-GA)	
	3	1	8T-8737	1	PLUG-SEAL	

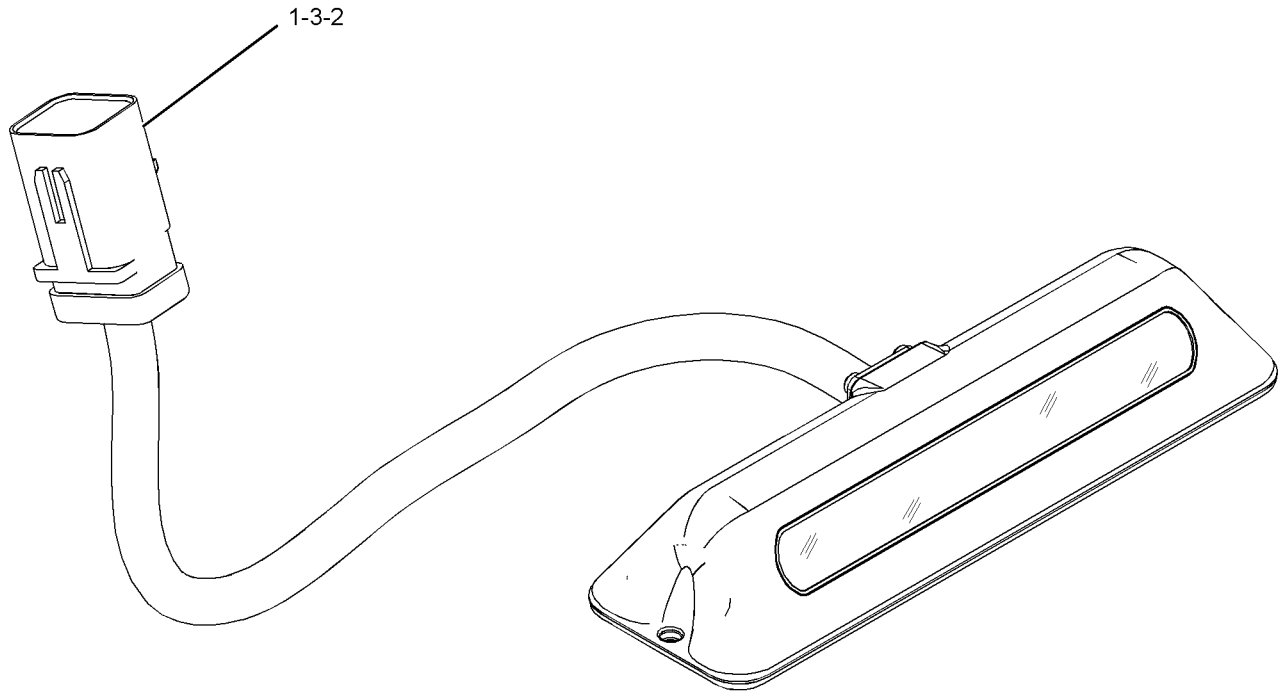

GRAPHIC #1 **<END>** g01313338

OPERATOR STATION

292-0309 DISPLAY GP-MONITOR—CD610

S/N: B9K1-UP

PART OF 292-7980 DISPLAY AR-MONITOR

SMCS-7490 **i04025329**

NOTE	PART NUMBER	QTY	PART NAME 1 2 3 4 5 6 (PRODUCT LEVEL)	SEE PAGE
	283-9530	1	DISPLAY GP-MONITOR (CD610)	
	346-4372	1	SOFTWARE	
M	**7X-2619**	6	BOLT (M6X1X10-MM)	
	292-0311	1	CASE-CARRYING	
	8T-4205	6	WASHER-HARD (7.2X14.5X2-MM THK)	

M-METRIC PART

<END>

OPERATOR STATION

266-7031 DOOR GP-CAB—RH

S/N: B9K1-331

PART OF 269-2208 ACCESS GP-CAB, 269-2209 PLATFORM AR

SMCS-7308 **i03395101**

NOTE	REF NO	GRAPHIC REF	PART NUMBER	QTY	PART NAME 1 2 3 4 5 6 (PRODUCT LEVEL)	SEE PAGE
B	1	1	4J-3915	4	SHIM (1.52-MM THK)	
	2	1	5T-7486	1	RETAINER-SPRING	
	3	1	6D-6581	14	RIVET-POP	
	4	1	6V-2773	2	PLUG	
	5	1	6V-7636	4	PIN AS-SPRING	
	6	1	8X-4066	1	HINGE	
	8	1	8X-4262	1	COVER (RH)	
	11	1	8Y-4398	1	LINK-CONNECTING	
	12	1	8Y-4620	1	LINK-CONNECTING	
	13	1	8Y-4801	1	LOCK AS-CYLINDER	
		1	226-0295	1	LOCK AS	
		1	226-0342	1	CAM	
	14	1	8Y-6385	1	SHIELD-STRIKER	
M	15	1	9X-2546	4	BOLT (M6X1X20-MM)	
	16	1	106-6553	2	BUMPER-CONICAL	
	17	1	107-9641	1	PLATE AS	
	18	1	108-5950	1	LATCH AS-RH	
	19	1	108-5952	1	LINK (RH)	
	20	1	114-9190	1	SEAL	
	21	1	117-1963	1	PLATE AS	
	22	1	128-0037	1	KNOB-BALL	
	23	1	199-2677	1	LINK (RELEASE)	
	24	1	199-2712	1	HANDLE	
	25	1	282-8470	1	DOOR AS-ACCESS (RH)	
M		1	6V-9632	10	NUT-WELD (M6X1-THD)	
M		1	8T-3490	2	NUT-WELD (M10X1.5-THD)	
	26	1	282-9436	1	SPACER	
	27	1	282-9437	1	PLATE	
	28	1	8Y-4400	1	LATCH AS-DOOR	
	29	1	296-4298	1	HANDLE AS-DOOR (OUTSIDE)	
	30	1	296-4303	1	HANDLE AS-DOOR (INSIDE)	
	31	1	1H-3338	1	LOCKWASHER (EXTERNAL TOOTH)	
	32	1	230-8993	2	SCREW-FLAT HEAD (M6X1X12-MM)	
	33	1	321-5918	1	PLUG-BUTTON	
M	34	1	8C-8454	14	SCREW-MACHINE (M6X1X20-MM)	
	35	1	8T-4121	4	WASHER-HARD (11X21X2.5-MM THK)	
M	36	1	8T-4133	2	NUT (M10X1.5-THD)	
M	37	1	8T-4137	4	BOLT (M10X1.5X20-MM)	
	38	1	8T-4157	1	STRIKER AS	
		1	8T-4158	1	WASHER-SPECIAL (CONICAL)	
M	39	1	8T-4181	6	BOLT (M6X1X20-MM)	
M	40	1	8X-4245	1	BOSS (M6X1X18-MM)	
M	41	1	9X-2042	7	SCREW-TRUSS HEAD (M6X1X12-MM)	
M	42	1	9X-2045	4	SCREW-TRUSS HEAD (M6X1X20-MM)	
	43	1	9X-8256	2	WASHER (6.6X12X2-MM THK)	
D	44	1	5P-5969		SEAL (1.5-M)	
D	45	1	5P-5768		SEAL (2.4-M)	
D	45A	1	5P-5768		SEAL (2.8-M)	
E	46	1	122-2228		SEAL (172-CM)	
E	47	1	178-8894		SEAL (340-CM)	
	48	1	308-2025	1	COVER (RH)	
	49	1	308-7592	1	GLASS	
	50	1	308-7593	1	GLASS	

B-USE AS REQUIRED
D-ORDER BY THE METER
E-ORDER BY THE CENTIMETER
M-METRIC PART

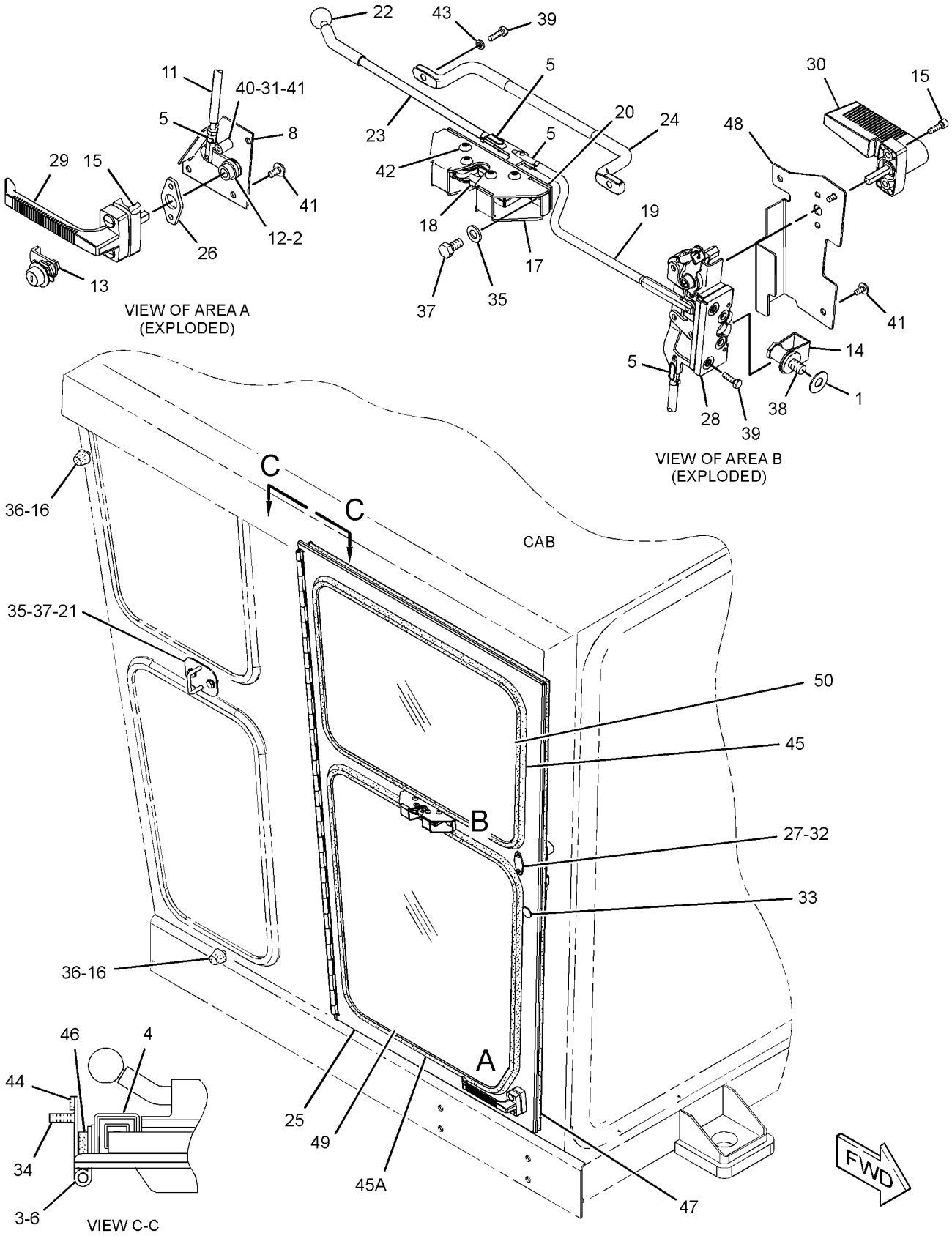

GRAPHIC #1 **<END>** g01571127

OPERATOR STATION

266-7031 DOOR GP-CAB–RH

S/N: B9K332-UP

PART OF 269-2208 ACCESS GP-CAB, 269-2209 PLATFORM AR

SMCS-7308 **i03611880**

NOTE	REF NO	GRAPHIC REF	PART NUMBER	QTY	PART NAME 1 2 3 4 5 6 (PRODUCT LEVEL)	SEE PAGE
B	1	1	**4J-3915**	4	SHIM (1.52-MM THK)	
	2	1	**5T-7486**	1	RETAINER-SPRING	
	3	1	**6D-6581**	14	RIVET-POP	
C	4	1	**6V-2773**	2	PLUG	
	5	1	**6V-7636**	4	PIN AS-SPRING	
	6	1	**8X-4066**	1	HINGE	
	8	1	**8X-4262**	1	COVER (RH)	
	11	1	**8Y-4398**	1	LINK-CONNECTING	
	12	1	**8Y-4620**	1	LINK-CONNECTING	
	13	1	*8Y-4801*	1	LOCK AS-CYLINDER	
		1	**226-0295**	1	LOCK AS	
		1	**226-0342**	1	CAM	
	14	1	**8Y-6385**	1	SHIELD-STRIKER	
M	15	1	**9X-2546**	4	BOLT (M6X1X20-MM)	
	16	1	**106-6553**	2	BUMPER-CONICAL	
	17	1	**107-9641**	1	PLATE AS	
	18	1	**108-5950**	1	LATCH AS-RH	
	19	1	**108-5952**	1	LINK (RH)	
	20	1	**114-9190**	1	SEAL	
	21	1	**117-1963**	1	PLATE AS	
	22	1	**128-0037**	1	KNOB-BALL	
	23	1	**199-2677**	1	LINK (RELEASE)	
	24	1	**199-2712**	1	HANDLE	
	25	1	**282-8470**	1	DOOR AS-ACCESS (RH)	
M		1	**6V-9632**	10	NUT-WELD (M6X1-THD)	
M		1	**8T-3490**	2	NUT-WELD (M10X1.5-THD)	
	27	1	**282-9437**	1	PLATE	
	28	1	**8Y-4400**	1	LATCH AS-DOOR	
	29	1	**296-4298**	1	HANDLE AS-DOOR (OUTSIDE)	
		1	**3V-4694**	2	PLUG-BUTTON	
	30	1	**296-4303**	1	HANDLE AS-DOOR (INSIDE)	
	31	1	**1H-3338**	1	LOCKWASHER (EXTERNAL TOOTH)	
	32	1	**230-8993**	2	SCREW-FLAT HEAD (M6X1X12-MM)	
C	33	1	**321-5918**	1	PLUG-BUTTON	
M	34	1	**8C-8454**	14	SCREW-MACHINE (M6X1X20-MM)	
	35	1	**8T-4121**	4	WASHER-HARD (11X21X2.5-MM THK)	
M	36	1	**8T-4133**	2	NUT (M10X1.5-THD)	
M	37	1	**8T-4137**	4	BOLT (M10X1.5X20-MM)	
	38	1	**8T-4157**	1	STRIKER AS	
		1	**8T-4158**	1	WASHER-SPECIAL (CONICAL)	
M	39	1	**8T-4181**	6	BOLT (M6X1X20-MM)	
M	40	1	**8X-4245**	1	BOSS (M6X1X18-MM)	
M	41	1	**9X-2042**	7	SCREW-TRUSS HEAD (M6X1X12-MM)	
M	42	1	**9X-2045**	4	SCREW-TRUSS HEAD (M6X1X20-MM)	
	43	1	**9X-8256**	2	WASHER (6.6X12X2-MM THK)	
CD	44	1	**5P-5969**		SEAL (3-M)	
CD	45	1	**5P-5768**		SEAL (2.6-M)	
CD	45A	1	**5P-5768**		SEAL (2.9-M)	
E	46	1	**122-2228**		SEAL (150-CM)	
E	47	1	**178-8894**		SEAL (320-CM)	
	48	1	**308-2025**	1	COVER (RH)	
	49	1	**308-7592**	1	GLASS (LOWER)	
	50	1	**308-7593**	1	GLASS (UPPER)	

B-USE AS REQUIRED
C-CHANGE FROM PREVIOUS TYPE
D-ORDER BY THE METER
E-ORDER BY THE CENTIMETER
M-METRIC PART

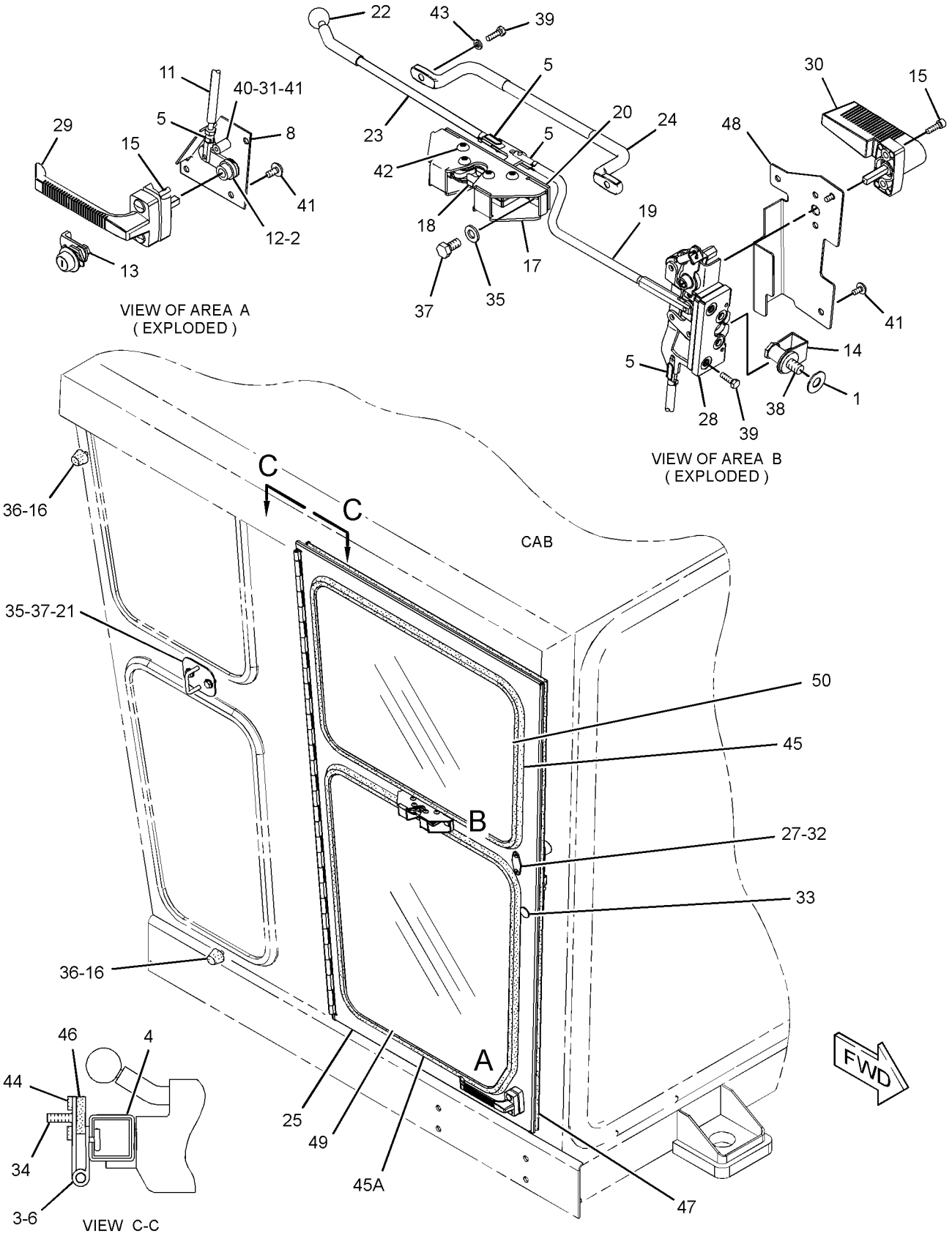

GRAPHIC #1 **<END>** g01944035

OPERATOR STATION

266-7032 DOOR GP-CAB—LH

S/N: B9K1-331

PART OF 269-2208 ACCESS GP-CAB

SMCS-7308 **i03395080**

NOTE	REF NO	GRAPHIC REF	PART NUMBER	QTY	PART NAME 1 2 3 4 5 6 (PRODUCT LEVEL)	SEE PAGE
	1	1	199-2677	1	LINK (RELEASE)	
B	2	1	4J-3915	4	SHIM (1.52-MM THK)	
	3	1	5T-7486	1	RETAINER-SPRING	
	4	1	6D-6581	14	RIVET-POP	
	5	1	6V-2773	2	PLUG	
	6	1	6V-7636	4	PIN AS-SPRING	
	7	1	8X-4066	1	HINGE	
	8	1	308-2030	1	COVER (LH)	
	9	1	8X-4263	1	COVER (LH)	
	10	1	308-7593	1	GLASS	
	11	1	308-7592	1	GLASS (LP)	
	12	1	8Y-4398	1	LINK-CONNECTING	
	13	1	8Y-4620	1	LINK-CONNECTING	
	14	1	8Y-4801	1	LOCK AS-CYLINDER	
		1	226-0295	1	LOCK AS	
		1	226-0342	1	CAM	
	15	1	8Y-6385	1	SHIELD-STRIKER	
M	16	1	9X-2546	4	BOLT (M6X1X20-MM)	
	17	1	106-6553	2	BUMPER-CONICAL	
	18	1	107-9641	1	PLATE AS	
	19	1	108-5949	1	LATCH AS (LH)	
	20	1	108-5951	1	LINK (LH)	
	21	1	114-9190	1	SEAL	
	22	1	117-1963	1	PLATE AS	
	23	1	128-0037	1	KNOB-BALL	
	24	1	199-2712	1	HANDLE (GRAB)	
	25	1	282-8469	1	DOOR AS-ACCESS (LH)	
M		1	6V-9632	10	NUT-WELD (M6X1-THD)	
M		1	8T-3490	2	NUT-WELD (M10X1.5-THD)	
	26	1	282-9436	1	SPACER	
	27	1	282-9437	1	PLATE	
	28	1	8Y-4399	1	LATCH AS-DOOR	
	29	1	296-4298	1	HANDLE AS-DOOR (OUTSIDE)	
	30	1	296-4303	1	HANDLE AS-DOOR (INSIDE)	
	31	1	1H-3338	1	LOCKWASHER (EXTERNAL TOOTH)	
	32	1	230-8993	2	SCREW-FLAT HEAD (M6X1X12-MM)	
	33	1	321-5918	1	PLUG-BUTTON	
M	34	1	8C-8454	14	SCREW-MACHINE (M6X1X20-MM)	
	35	1	8T-4121	4	WASHER-HARD (11X21X2.5-MM THK)	
M	36	1	8T-4133	2	NUT (M10X1.5-THD)	
M	37	1	8T-4137	4	BOLT (M10X1.5X20-MM)	
	38	1	8T-4157	1	STRIKER AS	
		1	8T-4158	1	WASHER-SPECIAL (CONICAL)	
M	39	1	8T-4181	6	BOLT (M6X1X20-MM)	
M	40	1	8X-4245	1	BOSS (M6X1X18-MM)	
M	41	1	9X-2042	7	SCREW-TRUSS HEAD (M6X1X12-MM)	
M	42	1	9X-2045	4	SCREW-TRUSS HEAD (M6X1X20-MM)	
	43	1	9X-8256	2	WASHER (6.6X12X2-MM THK)	
D	44	1	5P-5969		SEAL (1.5-M)	
D	45	1	5P-5768		SEAL (2.4-M)	
D	45A	1	5P-5768		SEAL (2.8-M)	
E	46	1	122-2228		SEAL (172-CM)	
E	47	1	178-8894		SEAL (340-CM)	

B-USE AS REQUIRED
D-ORDER BY THE METER
E-ORDER BY THE CENTIMETER
M-METRIC PART

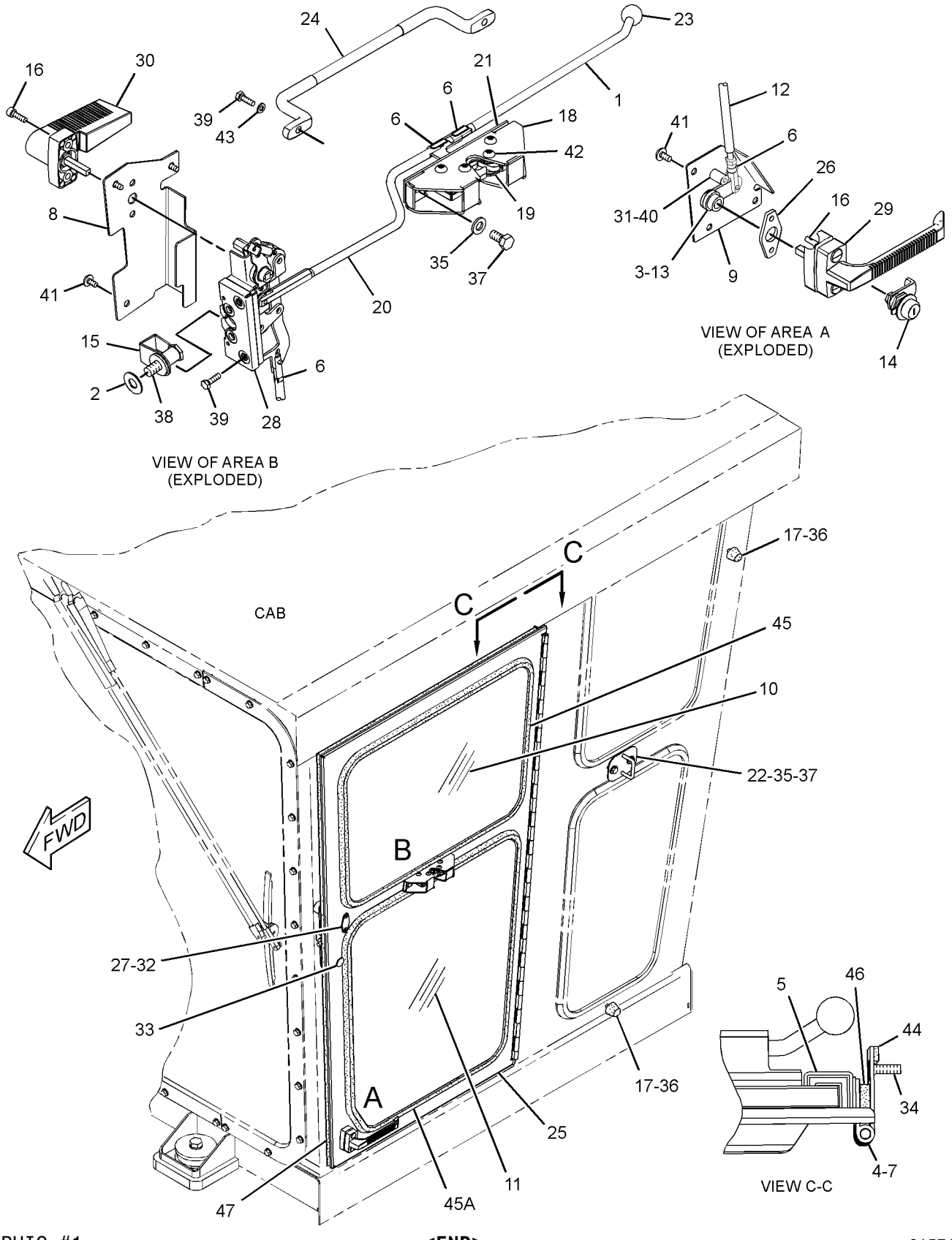

GRAPHIC #1 **<END>** g01571128

OPERATOR STATION

266-7032 DOOR GP-CAB–LH

S/N: B9K332-UP

PART OF 269-2208 ACCESS GP-CAB

SMCS-7308 **i03611861**

NOTE	REF NO	GRAPHIC REF	PART NUMBER	QTY	PART NAME 1 2 3 4 5 6 (PRODUCT LEVEL)	SEE PAGE
	1	1	199-2677	1	LINK (RELEASE)	
B	2	1	4J-3915	4	SHIM (1.52-MM THK)	
	3	1	5T-7486	1	RETAINER-SPRING	
	4	1	6D-6581	14	RIVET-POP	
C	5	1	6V-2773	2	PLUG	
	6	1	6V-7636	4	PIN AS-SPRING	
	7	1	8X-4066	1	HINGE	
	8	1	308-2030	1	COVER (LH)	
	9	1	8X-4263	1	COVER (LH)	
	10	1	308-7593	1	GLASS (UPPER)	
	11	1	308-7592	1	GLASS (LOWER)	
	12	1	8Y-4398	1	LINK-CONNECTING	
	13	1	8Y-4620	1	LINK-CONNECTING	
	14	1	8Y-4801	1	LOCK AS-CYLINDER	
		1	226-0295	1	LOCK AS	
		1	226-0342	1	CAM	
	15	1	8Y-6385	1	SHIELD-STRIKER	
M	16	1	9X-2546	4	BOLT (M6X1X20-MM)	
	17	1	106-6553	2	BUMPER-CONICAL	
	18	1	107-9641	1	PLATE AS	
	19	1	108-5949	1	LATCH AS (LH)	
	20	1	108-5951	1	LINK (LH)	
	21	1	114-9190	1	SEAL	
	22	1	117-1963	1	PLATE AS	
	23	1	128-0037	1	KNOB-BALL	
	24	1	199-2712	1	HANDLE (GRAB)	
	25	1	282-8469	1	DOOR AS-ACCESS (LH)	
M		1	6V-9632	10	NUT-WELD (M6X1-THD)	
M		1	8T-3490	2	NUT-WELD (M10X1.5-THD)	
	27	1	282-9437	1	PLATE	
	28	1	8Y-4399	1	LATCH AS-DOOR	
	29	1	296-4298	1	HANDLE AS-DOOR (OUTSIDE)	
		1	3V-4694	2	PLUG-BUTTON	
	30	1	296-4303	1	HANDLE AS-DOOR (INSIDE)	
	31	1	1H-3338	1	LOCKWASHER (EXTERNAL TOOTH)	
	32	1	230-8993	2	SCREW-FLAT HEAD (M6X1X12-MM)	
C	33	1	321-5918	1	PLUG-BUTTON	
M	34	1	8C-8454	14	SCREW-MACHINE (M6X1X20-MM)	
	35	1	8T-4121	4	WASHER-HARD (11X21X2.5-MM THK)	
M	36	1	8T-4133	2	NUT (M10X1.5-THD)	
M	37	1	8T-4137	4	BOLT (M10X1.5X20-MM)	
	38	1	8T-4157	1	STRIKER AS	
		1	8T-4158	1	WASHER-SPECIAL (CONICAL)	
M	39	1	8T-4181	6	BOLT (M6X1X20-MM)	
M	40	1	8X-4245	1	BOSS (M6X1X18-MM)	
M	41	1	9X-2042	7	SCREW-TRUSS HEAD (M6X1X12-MM)	
M	42	1	9X-2045	4	SCREW-TRUSS HEAD (M6X1X20-MM)	
	43	1	9X-8256	2	WASHER (6.6X12X2-MM THK)	
CD	44	1	5P-5969		SEAL (3-M)	
CD	45	1	5P-5768		SEAL (2.6-M)	
D	45A	1	5P-5768		SEAL (2.9-M)	
E	46	1	122-2228		SEAL (150-CM)	
E	47	1	178-8894		SEAL (320-CM)	

B-USE AS REQUIRED
C-CHANGE FROM PREVIOUS TYPE
D-ORDER BY THE METER
E-ORDER BY THE CENTIMETER
M-METRIC PART

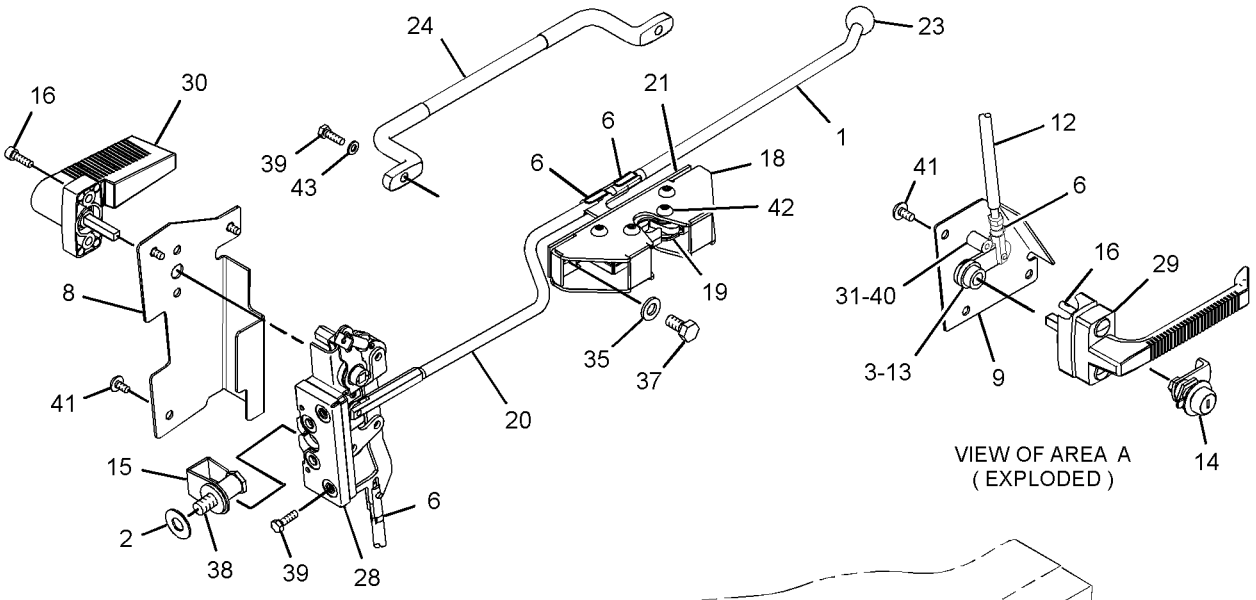

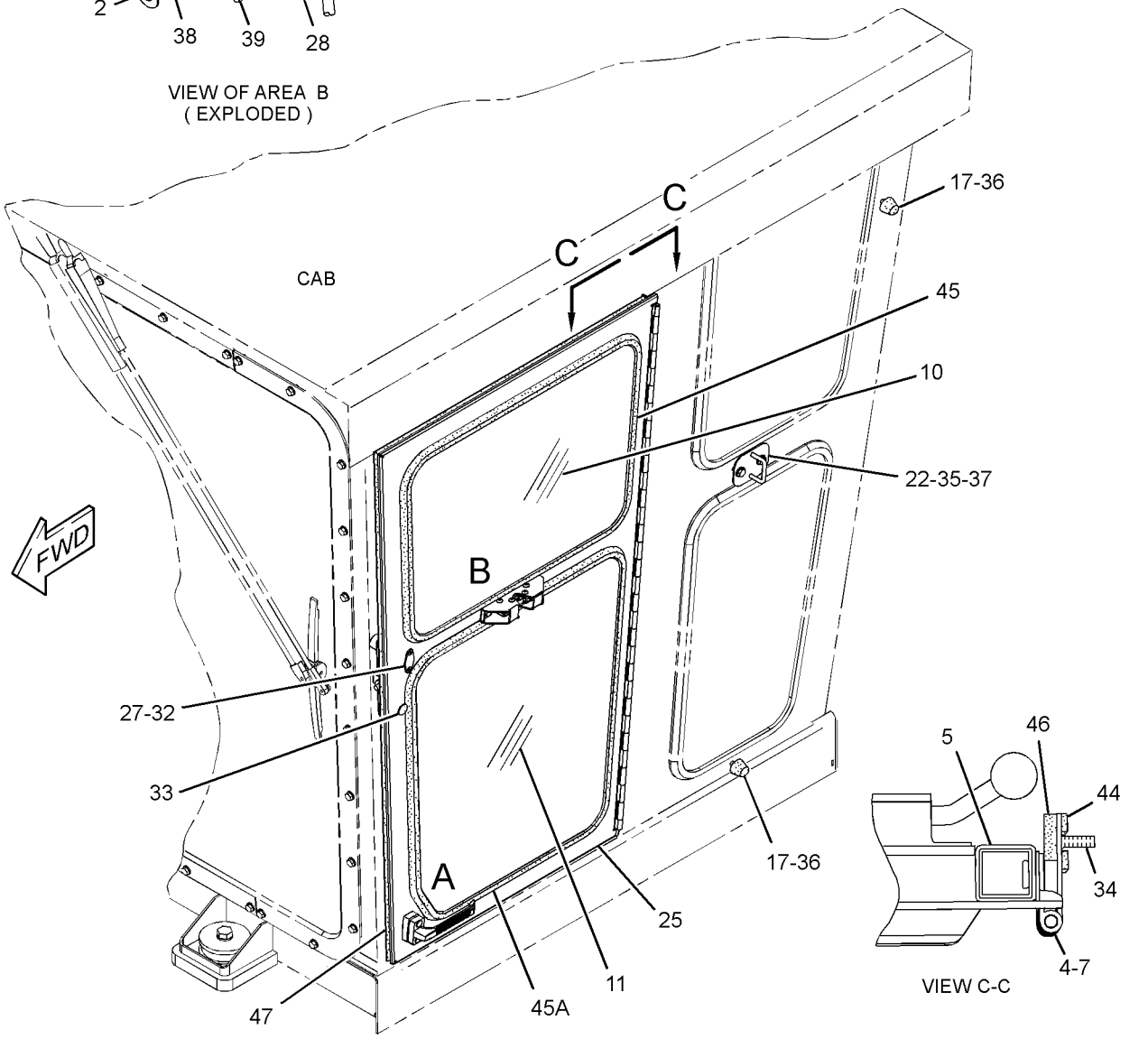

GRAPHIC #1 **<END>** g01943985

OPERATOR STATION

266-7033 DOOR GP-CAB—LH

S/N: B9K1-UP

PART OF 269-2207, 269-2209 PLATFORM AR

SMCS-7308 **i03400781**

NOTE	REF NO	GRAPHIC REF	PART NUMBER	QTY	PART NAME 1 2 3 4 5 6 (PRODUCT LEVEL)	SEE PAGE
	1	1	**199-2677**	1	LINK (RELEASE)	
B	2	1	**4J-3915**	4	SHIM (1.52-MM THK)	
	3	1	**6D-6581**	14	RIVET-POP	
	4	1	**6V-2773**	2	PLUG	
	5	1	**6V-7636**	1	PIN AS-SPRING	
	6	1	**8X-4066**	1	HINGE	
	7	1	**8X-4263**	1	COVER (LH)	
	8	1	**8Y-6385**	1	SHIELD-STRIKER	
M	9	1	**9X-2546**	4	BOLT (M6X1X20-MM)	
	10	1	**106-6553**	2	BUMPER-CONICAL	
	11	1	**107-9641**	1	PLATE AS	
	12	1	**108-5949**	1	LATCH AS (LH)	
	14	1	**114-9190**	1	SEAL	
	15	1	**117-1963**	1	PLATE AS	
	16	1	**128-0037**	1	KNOB-BALL	
	17	1	**199-2712**	1	HANDLE	
	18	1	**226-0295**	1	LOCK AS	
	19	1	**282-8469**	1	DOOR AS-ACCESS (LH)	
M		1	**6V-9632**	10	NUT-WELD (M6X1-THD)	
M		1	**8T-3490**	2	NUT-WELD (M10X1.5-THD)	
	20	1	**282-9437**	1	PLATE	
	21	1	**296-4298**	1	HANDLE AS-DOOR (OUTSIDE)	
	22	1	**296-4303**	1	HANDLE AS-DOOR (INSIDE)	
	23	1	**304-3897**	1	LATCH AS	
	24	1	**304-3898**	1	PAWL	
	25	1	**308-2030**	1	COVER (LH)	
	26	1	**308-7592**	1	GLASS (LOWER)	
	27	1	**308-7593**	1	GLASS (UPPER)	
	28	1	**230-8993**	2	SCREW-FLAT HEAD (M6X1X12-MM)	
M	29	1	**129-3178**	1	LOCKNUT (M6X1-THD)	
M	30	1	**8C-8454**	14	SCREW-MACHINE (M6X1X20-MM)	
	31	1	**8T-4121**	4	WASHER-HARD (11X21X2.5-MM THK)	
M	32	1	**8T-4133**	2	NUT (M10X1.5-THD)	
M	33	1	**8T-4137**	4	BOLT (M10X1.5X20-MM)	
	34	1	**8T-4157**	1	STRIKER AS	
		1	**8T-4158**	1	WASHER-SPECIAL (CONICAL)	
M	35	1	**8T-4181**	6	BOLT (M6X1X20-MM)	
M	36	1	**9X-2042**	7	SCREW-TRUSS HEAD (M6X1X12-MM)	
M	37	1	**9X-2045**	4	SCREW-TRUSS HEAD (M6X1X20-MM)	
	38	1	**9X-8256**	2	WASHER (6.6X12X2-MM THK)	
D	39	1	**5P-5969**		SEAL (1.5-M EACH)	
D	40	1	**5P-5768**		SEAL (2.5-M)	
D	40A	1	**5P-5768**		SEAL (2.8-M)	
E	41	1	**122-2228**		SEAL (150-CM)	
E	42	1	**178-8894**		SEAL (320-CM)	
	43	1	**321-5918**	1	PLUG-BUTTON	

B-USE AS REQUIRED
D-ORDER BY THE METER
E-ORDER BY THE CENTIMETER
M-METRIC PART

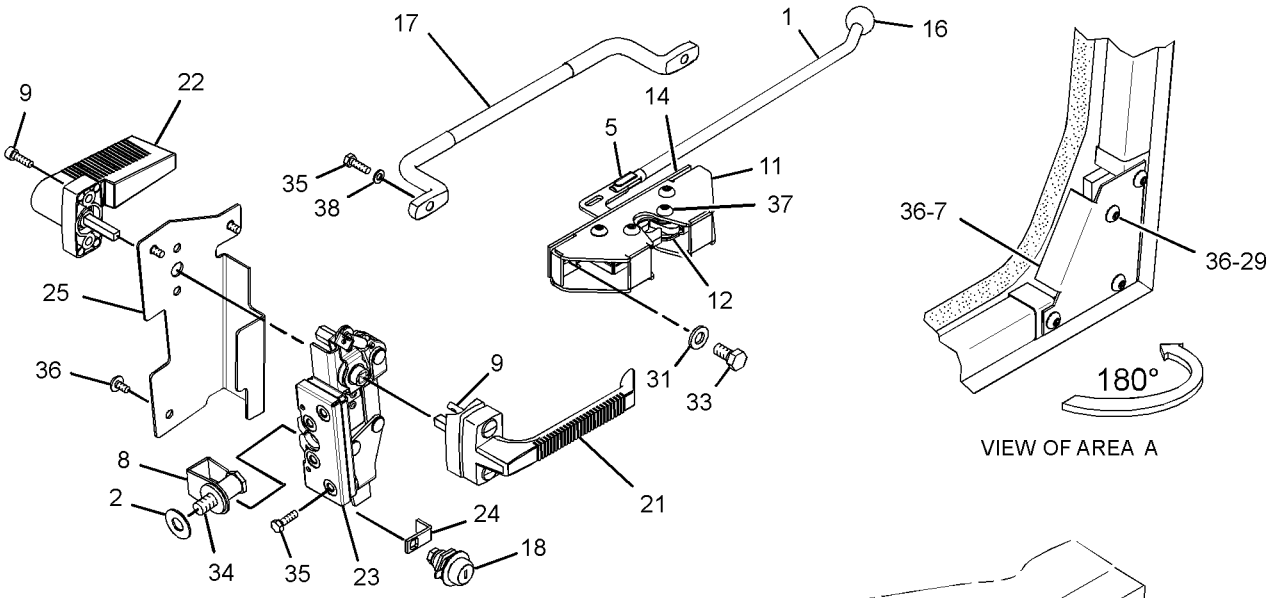

VIEW OF AREA A

VIEW OF AREA B
(EXPLODED)

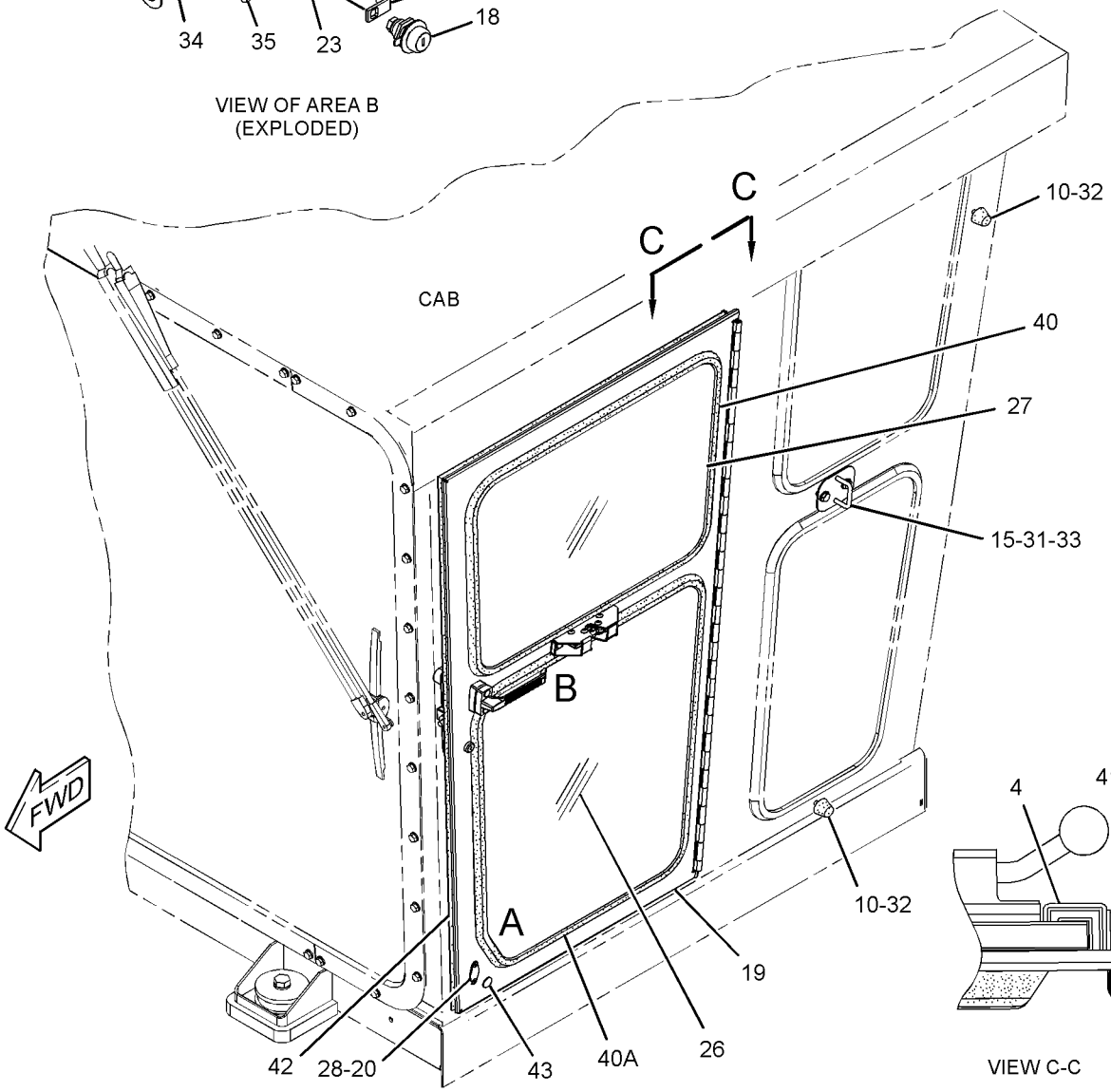

VIEW C-C

GRAPHIC #1 **<END>** g01943272

OPERATOR STATION

280-0528 DOOR GP-CAB—RH

S/N: B9K1-UP

PART OF 269-2207 PLATFORM AR

SMCS-7308 **i03611800**

NOTE	REF NO	GRAPHIC REF	PART NUMBER	QTY	PART NAME 1 2 3 4 5 6 (PRODUCT LEVEL)	SEE PAGE
B	1	2	4J-3915	4	SHIM (1.52-MM THK)	
	2	2	6D-6581	14	RIVET-POP	
	3	2	6V-2773	2	PLUG	
	4	2	6V-7636	1	PIN AS-SPRING	
	5	1	8X-4066	1	HINGE	
	6	2	8X-4262	1	COVER (RH)	
	7	2	8Y-6385	1	SHIELD-STRIKER	
M	8	1,2	9X-2546	4	BOLT (M6X1X20-MM)	
	9	1	106-6553	2	BUMPER-CONICAL	
	10	1	107-9641	1	PLATE AS	
	11	1	108-5950	1	LATCH AS-RH	
	12	2	114-9190	1	SEAL	
	13	1	117-1963	1	PLATE AS	
	14	2	128-0037	1	KNOB-BALL	
	15	2	199-2677	1	LINK (RELEASE)	
	16	2	199-2712	1	HANDLE	
	17	1	226-0295	1	LOCK AS	
	18	1	282-8470	1	DOOR AS-ACCESS (RH)	
M		1	6V-9632	10	NUT-WELD (M6X1-THD)	
M		1	8T-3490	2	NUT-WELD (M10X1.5-THD)	
M	19	1	129-3178	1	LOCKNUT (M6X1-THD)	
	20	1	282-9437	1	PLATE	
	21	1	296-4298	1	HANDLE AS-DOOR (OUTSIDE)	
		1	3V-4694	2	PLUG-BUTTON	
	22	2	296-4303	1	HANDLE AS-DOOR (INSIDE)	
	23	2	304-3896	1	LATCH AS	
	24	1	304-3898	1	PAWL	
	25	2	308-2025	1	COVER (RH)	
	26	1	308-7592	1	GLASS	
	27	1	308-7593	1	GLASS	
	28	1	230-8993	2	SCREW-FLAT HEAD (M6X1X12-MM)	
	29	1	321-5918	1	PLUG-BUTTON	
M	30	2	8C-8454	14	SCREW-MACHINE (M6X1X20-MM)	
	31	1	8T-4121	4	WASHER-HARD (11X21X2.5-MM THK)	
M	32	1	8T-4133	2	NUT (M10X1.5-THD)	
M	33	1	8T-4137	4	BOLT (M10X1.5X20-MM)	
	34	2	8T-4157	1	STRIKER AS	
		2	8T-4158	1	WASHER-SPECIAL (CONICAL)	
M	35	2	8T-4181	6	BOLT (M6X1X20-MM)	
M	36	1,2	9X-2042	7	SCREW-TRUSS HEAD (M6X1X12-MM)	
M	37	1	9X-2045	4	SCREW-TRUSS HEAD (M6X1X20-MM)	
	38	2	9X-8256	2	WASHER (6.6X12X2-MM THK)	
D	39	2	5P-5969		SEAL (3-M)	
D	40	1	5P-5768		SEAL (2.9-M)	
D	40A	1	5P-5768		SEAL (2.6-M)	
E	41	2	122-2228		SEAL (150-CM)	
E	42	1	178-8894		SEAL (320-CM)	

B-USE AS REQUIRED
D-ORDER BY THE METER
E-ORDER BY THE CENTIMETER
M-METRIC PART

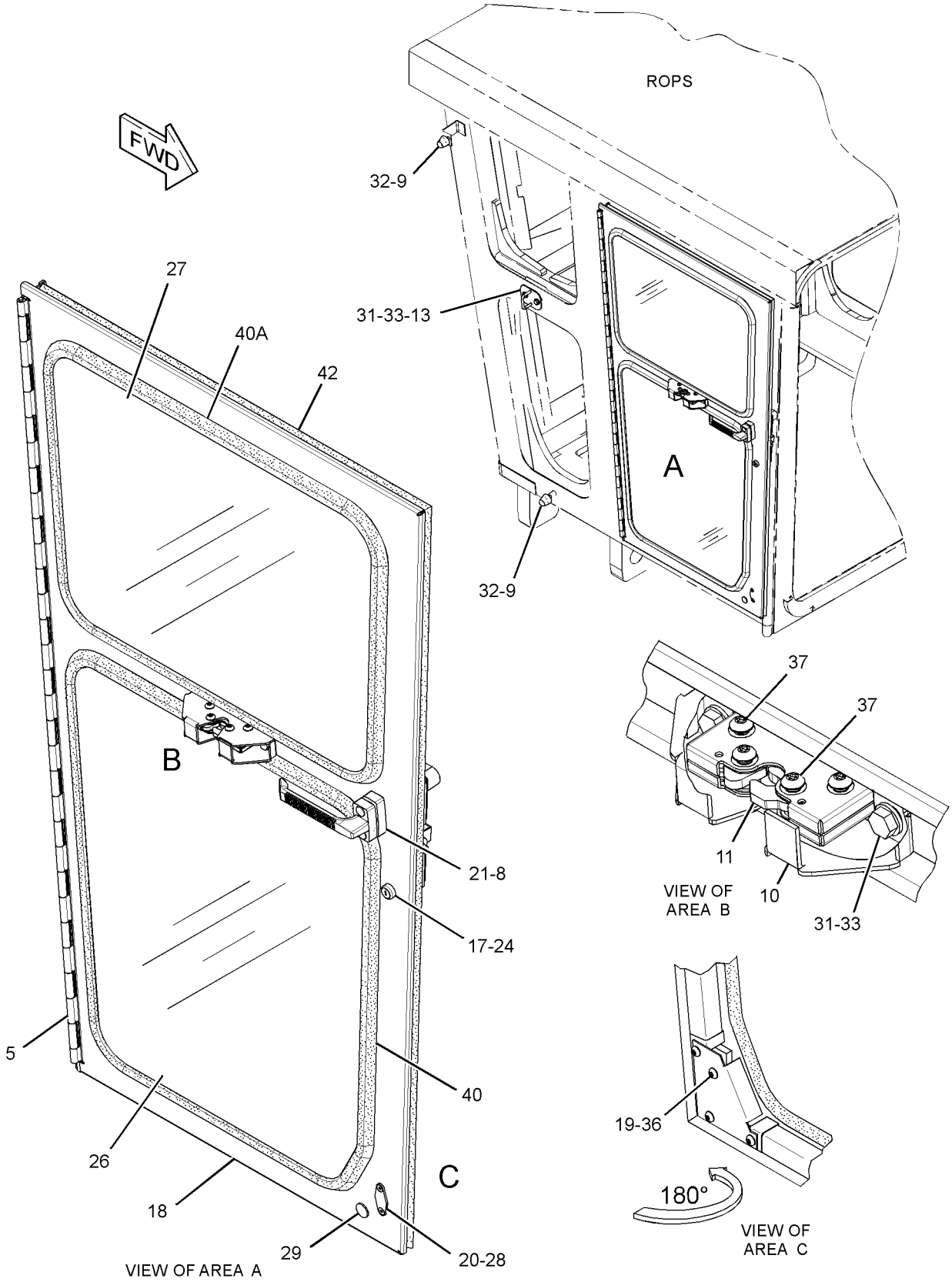

GRAPHIC #1

g01933733

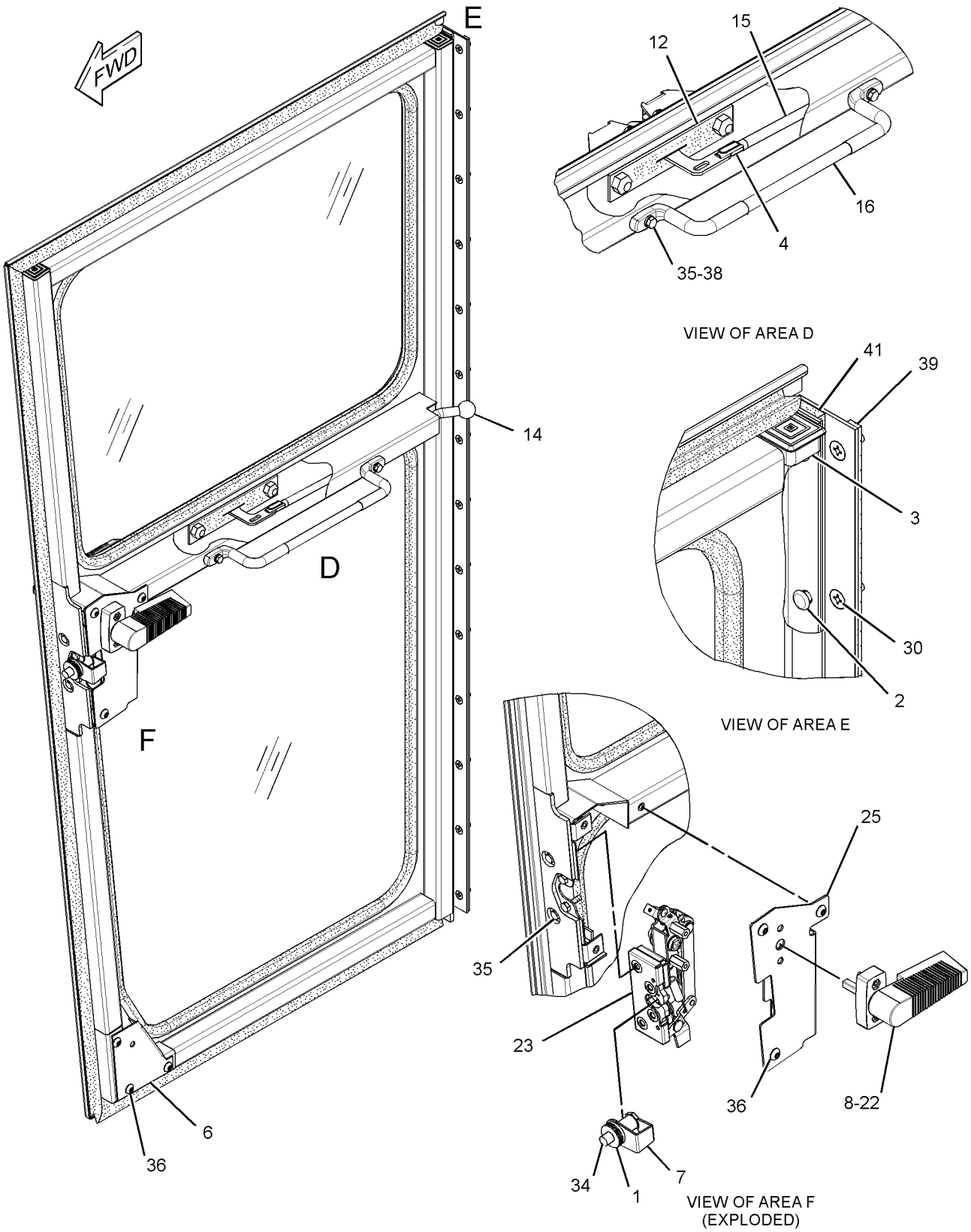

GRAPHIC #2 **<END>** g01391918

OPERATOR STATION

286-5675 DUCT & FILTER GP-CAB AIR

S/N: B9K1-UP

PART OF 265-6595 AIR CONDITIONER AR

SMCS-7337, 7342, 734D **i02761941**

NOTE	REF NO	GRAPHIC REF	PART NUMBER	QTY	PART NAME 1 2 3 4 5 6 (PRODUCT LEVEL)	SEE PAGE
	1	1	7T-7358	1	FILTER ELEMENT AS-CAB AIR (CAB AIR)	
	2	1	9X-8122	1	PLATE AS	
		1	7K-4199	2	THUMBSCREW	
		1	8R-1778	1	COVER-FILTER	
		1	131-5492	2	RETAINER-CAPTIVE	
	3	1	280-0985	1	DUCT AS	
		1	4B-4274	5	WASHER (5.5X13X1.2-MM THK)	
		1	6C-3680	5	RIVET-POP	
		1	7K-4201	2	NUT-SPEED	
	4	1	286-5674	1	GASKET	
	5	1	117-8929	3	WASHER (6.6X22X2-MM THK)	
	6	1	5P-4116	2	WASHER-HARD (8.8X20.5X2-MM THK)	
M	7	1	8T-4189	2	BOLT (M8X1.25X20-MM)	
M	8	1	9X-2044	1	SCREW-TRUSS HEAD (M6X1X16-MM)	
M	9	1	9X-2046	2	SCREW-TRUSS HEAD (M6X1X35-MM)	

M-METRIC PART

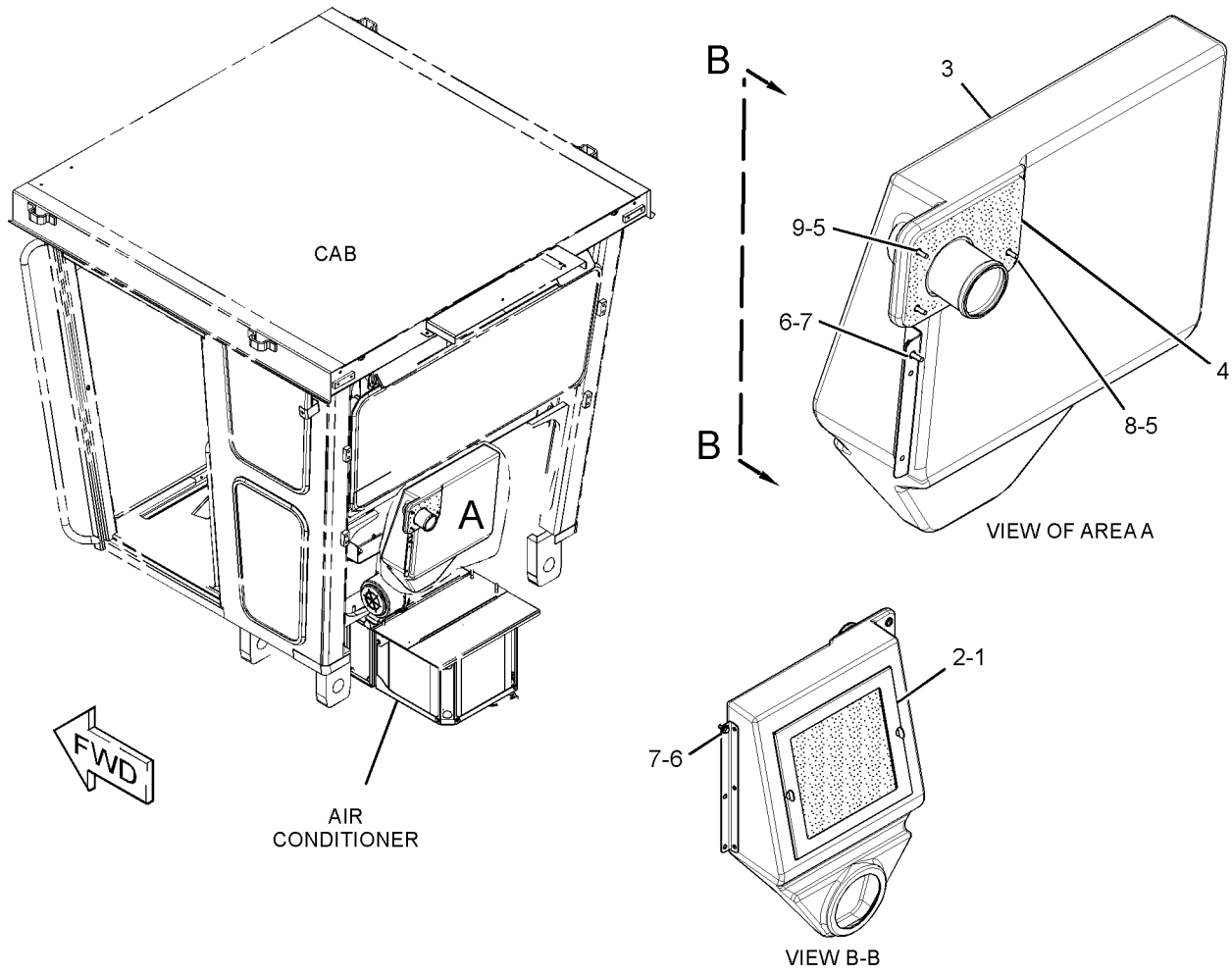

GRAPHIC #1 **<END>** g01385659

OPERATOR STATION

266-7005 DUCT GP-CAB AIR—CAB AIR

S/N: B9K1-UP

PART OF 266-7000 CAB AR

SMCS-734D **i03744696**

NOTE	REF NO	GRAPHIC REF	PART NUMBER	QTY	PART NAME 1 2 3 4 5 6 (PRODUCT LEVEL)	SEE PAGE
	1	1	**114-6658**	7	WASHER (6.5X17X1-MM THK)	
	2	1	**139-6039**	6	NUT-RETAINER (U-TYPE)	
	3	1	**164-8473**	2	LOUVER AS	
	4	1	**170-4057**	7	INSERT-THREADED	
	5	1	**171-4047**	7	LOUVER AS-VENT	
	6	1	**218-0666**	2	LOUVER AS	
	7	1	**265-6598**	1	DUCT	
	8	1	**266-7035**	1	COVER (RH)	
	9	1	**266-7039**	2	DUCT	
	10	1	**278-0588**	1	DUCT AS	
	11	1	**278-0589**	1	COVER	
	12	1	**282-0816**	1	DUCT AS	
	13	1	**283-7968**	1	DUCT	
	15	1	**286-5680**	2	GASKET	
	16	1	**117-8929**	18	WASHER (6.6X22X2-MM THK)	
	17	1	**118-5619**	14	SCREW-FLAT HEAD (6-20X1-IN)	
	18	1	**195-0936**	4	INSERT-THREADED (M6X1-THD)	
M	19	1	**7X-0818**	6	BOLT (M8X1.25X45-MM)	
	20	1	**9N-0869**	6	WASHER-HARD (8.8X25.5X2-MM THK)	
M	21	1	**9X-2044**	13	SCREW-TRUSS HEAD (M6X1X16-MM)	
M	22	1	**9X-2046**	5	SCREW-TRUSS HEAD (M6X1X35-MM)	
M	23	1	**9X-2480**	7	BOLT (M6X1X45-MM)	
E	24	1	**219-4361**		TUBING (FLEX) (31-CM EACH)	
D	25	1	**5P-5969**		SEAL (1.6-M)	
D	25A	1	**5P-5969**		SEAL (0.4-M EACH)	
	26	1	**253-2417**	1	LOUVER AS	

D-ORDER BY THE METER
E-ORDER BY THE CENTIMETER
M-METRIC PART

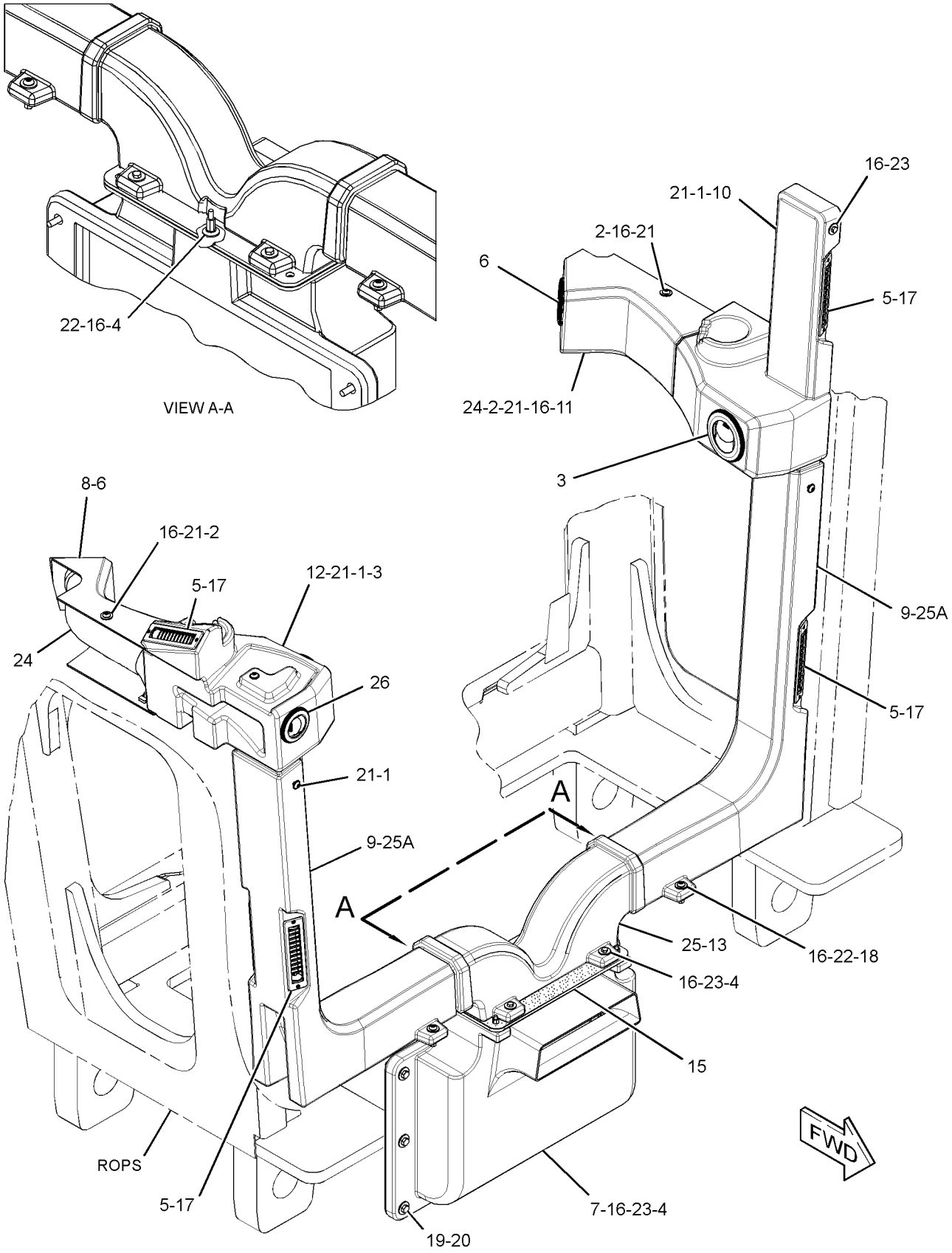

GRAPHIC #1 **<END>** g02062615

OPERATOR STATION

170-4820 FAN GP-CIRCULATING

S/N: B9K1-UP
24-VOLT
PART OF 266-7008 FAN GP-CIRCULATING

SMCS-7316 **i03904294**

NOTE	REF NO	GRAPHIC REF	PART NUMBER	QTY	PART NAME 1 2 3 4 5 6 (PRODUCT LEVEL)	SEE PAGE
	1	1	**1M-1230**	2	NUT & LOCK AS (10-32-THD)	
	2	1	**3D-8747**	1	BRACKET	
	3	1	**3D-8748**	1	FAN AS (4-BLADE)	
	4	1	**3D-8749**	1	GUARD	
	5	1	**3T-6774**	1	GROMMET	
	6	1	**9X-9689**	1	BASE-FAN	
Y	7	1	**170-5335**	1	MOTOR GP-ELECTRIC (24-VDC, CIRCULATING FAN)	269
	8	1	**1B-2713**	1	BOLT (1/4-20X1.75-IN)	
	9	1	**2D-6235**	1	LOCKNUT (1/4-20-THD)	
	10	1	**3D-8752**	1	LOCKNUT (5/16-24-THD)	
	11	1	**5P-0537**	4	WASHER-HARD (7.2X14.5X2-MM THK)	
	12	1	**6G-5987**	1	BRACKET	
	13	1	**7L-8316**	1	SETSCREW-SOCKET (10-32X2.54-IN)	
	14	1	**7T-0582**	1	BOLT	
	15	1	**9M-1974**	2	WASHER-HARD (8.8X16X2-MM THK)	

Y-SEPARATE ILLUSTRATION

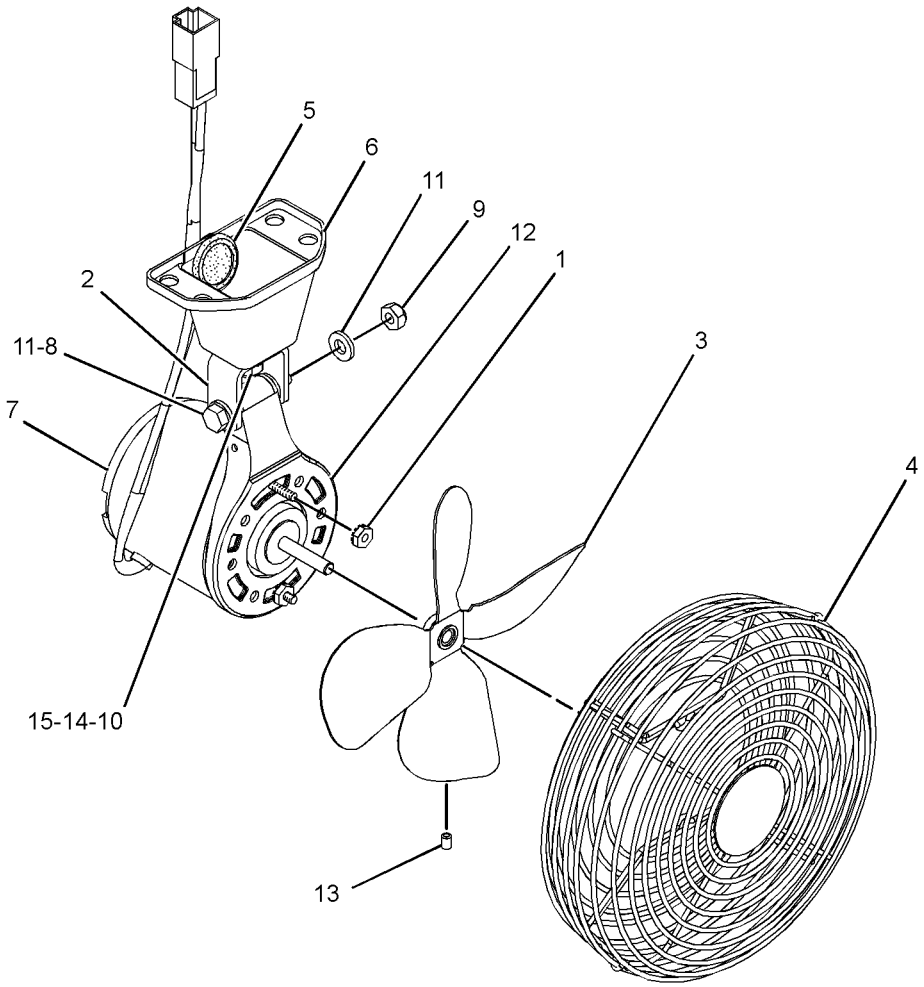

GRAPHIC #1 **<END>** g01256496

OPERATOR STATION

266-7008 FAN GP-CIRCULATING

S/N: B9K1-UP

PART OF 266-7000 CAB AR

SMCS-7316 **i02762400**

NOTE	REF NO	GRAPHIC REF	PART NUMBER	QTY	PART NAME 1 2 3 4 5 6 (PRODUCT LEVEL)	SEE PAGE
	1	1	**7T-4003**	2	RESISTOR	
	2	1	**115-6807**	1	PLATE	
Y	3	1	**170-4820**	2	FAN GP-CIRCULATING	896
M	4	1	**9X-1046**	4	SCREW (M4X0.7X18-MM)	
M	5	1	**9X-2046**	8	SCREW-TRUSS HEAD (M6X1X35-MM)	

M-METRIC PART
Y-SEPARATE ILLUSTRATION

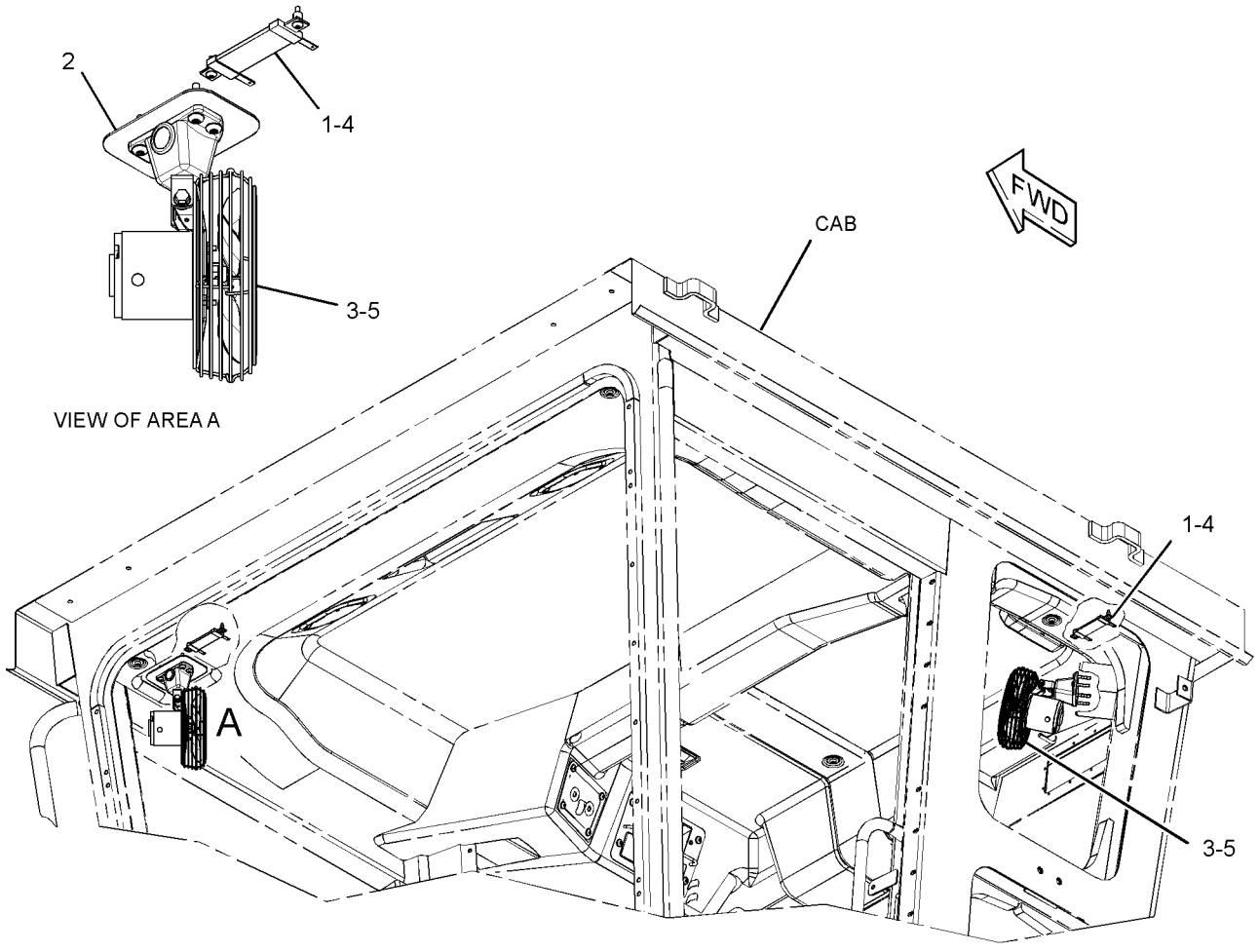

GRAPHIC #1 **<END>** g01385627

OPERATOR STATION

308-0857 FILTER GP-CAB AIR—HIGH EFFICIENCY

S/N: B9K1-UP

PART OF 275-5230 AIR CLEANER GP

SMCS-7342 **i03450240**

NOTE	REF NO	GRAPHIC REF	PART NUMBER	QTY	PART NAME 1 2 3 4 5 6 (PRODUCT LEVEL)	SEE PAGE
	1	1	**151-8366**	1	VALVE	
	2	1	**231-0167**	1	FILTER ELEMENT AS-AIR (PRIMARY)	
	3	1	**322-4979**	1	COVER AS	
F		1	**326-7963**	1	FILTER ELEMENT-CAB AIR (ULTRA HIGH EFFICIENCY, CARBON)	

F-NOT SHOWN

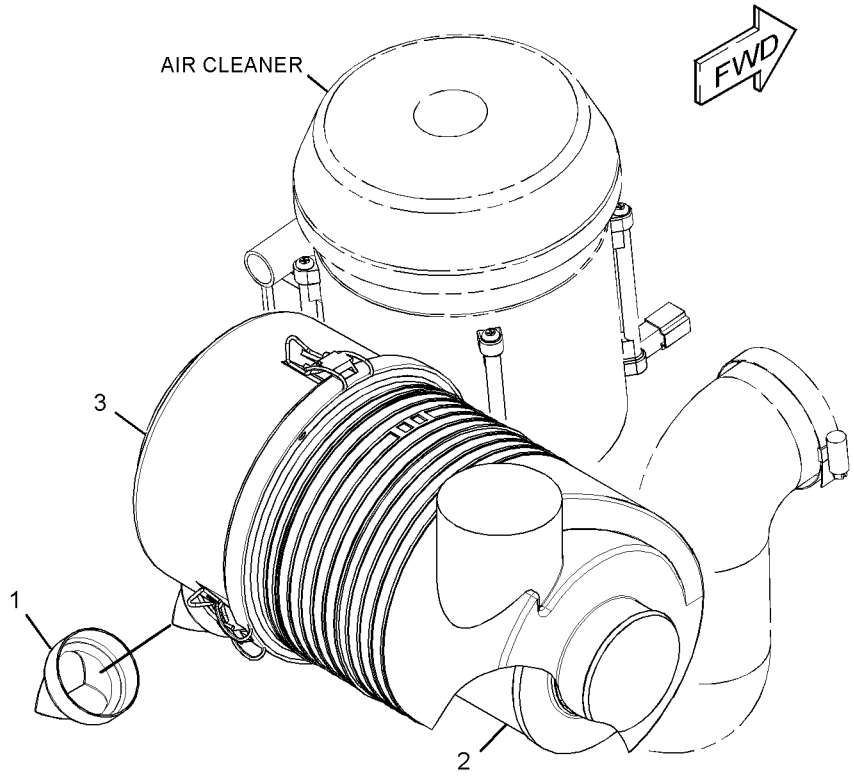

GRAPHIC #1 **<END>** g01724396

OPERATOR STATION

309-2877 FOOTREST GP

S/N: B9K1-UP

PART OF 266-7000 CAB AR

SMCS-0635 **i02762578**

NOTE	REF NO	GRAPHIC REF	PART NUMBER	QTY	PART NAME 1 2 3 4 5 6 (PRODUCT LEVEL)	SEE PAGE
	1	1	**233-6313**	1	SUPPORT	
	2	1	**7X-7729**	2	WASHER (11X25X3-MM THK)	
M	3	1	**8T-4136**	2	BOLT (M10X1.5X25-MM)	

M-METRIC PART

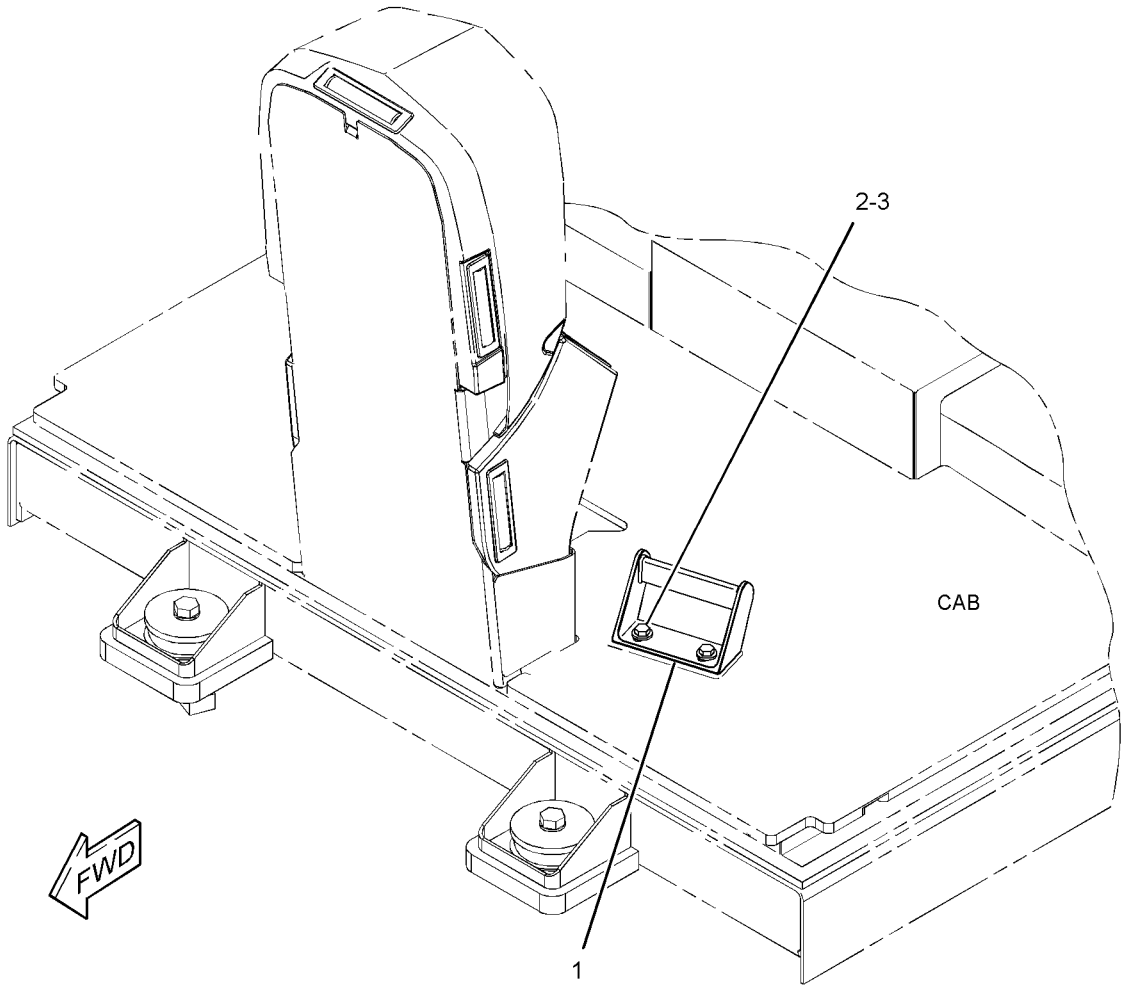

GRAPHIC #1 **<END>** g01384332

OPERATOR STATION

265-6600 HEATER GP-CAB

S/N: B9K1-UP

PART OF 277-0711 AIR CONDITIONER & HEATER GP

SMCS-7304 **i02761933**

NOTE	REF NO	GRAPHIC REF	PART NUMBER	QTY	PART NAME 1 2 3 4 5 6 (PRODUCT LEVEL)	SEE PAGE
	1	1	3E-5464	1	THERMOSTAT (HVAC) (THERMOSTAT)	
	2	1	265-6599	1	COVER	
	3	1	265-6601	1	ENCLOSURE AS	
	4	1	267-3963	1	COIL AS-HEATER	
	5	1	267-3964	1	GASKET	
	6	1	274-5818	1	COIL AS-EVAPORATOR	
	7	1	289-0783	1	HARNESS AS-SWITCH (HEATER)	
		1	197-7565	1	KIT-RECEPTACLE (4-PIN)	
					(INCLUDES RECEPTACLE AS & WEDGE)	
	8	1	096-6166	10	WASHER-HARD (4.5X9X1-MM THK)	
	9	1	179-5856	4	LOCKNUT	
	10	1	3V-4791	2	GROMMET	
	11	1	5P-4116	4	WASHER-HARD (8.8X20.5X2-MM THK)	
M	12	1	6V-7357	4	BOLT (M6X1X25-MM)	
M	13	1	8T-4189	4	BOLT (M8X1.25X20-MM)	
	14	1	8T-6631	6	SCREW-MACHINE (8-32X0.5-IN)	
	15	1	9X-8256	4	WASHER (6.6X12X2-MM THK)	
D	16	1	5P-5637		SEAL (0.7-M)	

D-ORDER BY THE METER
M-METRIC PART

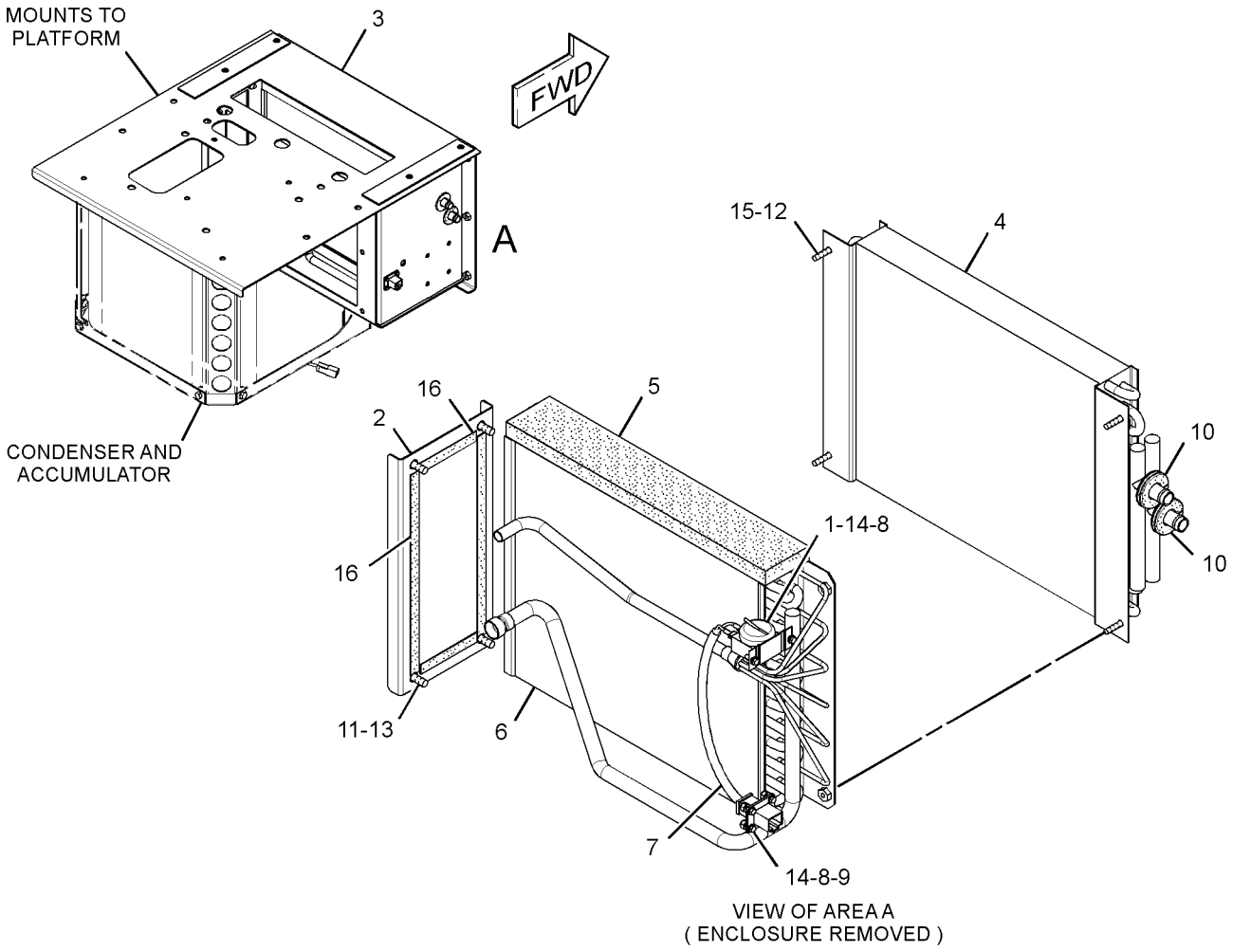

GRAPHIC #1 **<END>** g01390991

OPERATOR STATION

319-1640 HORN GP-AIR

S/N: B9K1-UP

CANNOT BE USED WITH 319-1639—PAGE 902

SMCS-7402 **i03196058**

NOTE	REF NO	GRAPHIC REF	PART NUMBER	QTY	PART NAME 1 2 3 4 5 6 (PRODUCT LEVEL)	SEE PAGE
	1	1	**146-5804**	2	HORN AS	
					(EACH INCLUDES)	
		1	**102-8802**	1	KIT-RECEPTACLE (2-PIN)	
					(INCLUDES RECEPTACLE AS & WEDGE)	
		1	**186-3735**	1	PIN-CONNECTOR (16-GA TO 18-GA)	
	2	1	**319-1638**	2	HARNESS AS-ALARM	
	3	1	**130-5300**	4	CLIP	
	4	1	**4D-7794**	4	CLIP	
	5	1	**4P-8134**	2	CLIP	
	6	1	**7K-1181**	2	STRAP-CABLE	
	7	1	**8T-4121**	4	WASHER-HARD (11X21X2.5-MM THK)	
M	8	1	**8T-4136**	4	BOLT (M10X1.5X25-MM)	

M-METRIC PART

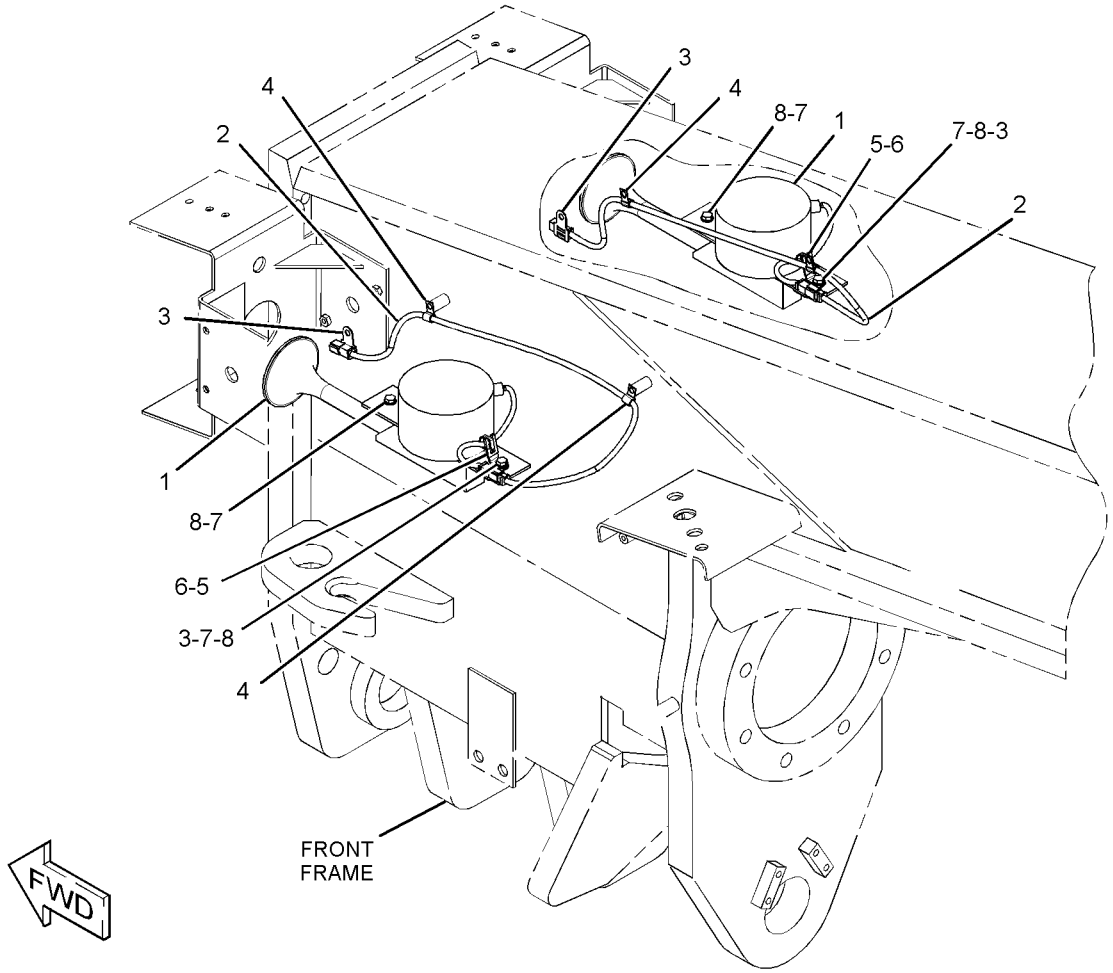

GRAPHIC #1 **<END>** g01644014

OPERATOR STATION

319-1639 HORN GP-ELECTRIC

S/N: B9K1-UP

CANNOT BE USED WITH 319-1640—PAGE 901

SMCS-7402 **i03196064**

NOTE	REF NO	GRAPHIC REF	PART NUMBER	QTY	PART NAME 1 2 3 4 5 6 (PRODUCT LEVEL)	SEE PAGE
	1	1	**174-7875**	2	HORN AS (24-VOLT, HIGH TONE)	
	2	1	**8T-4121**	1	WASHER-HARD (11X21X2.5-MM THK)	
M	3	1	**8T-4136**	1	BOLT (M10X1.5X25-MM)	

M-METRIC PART

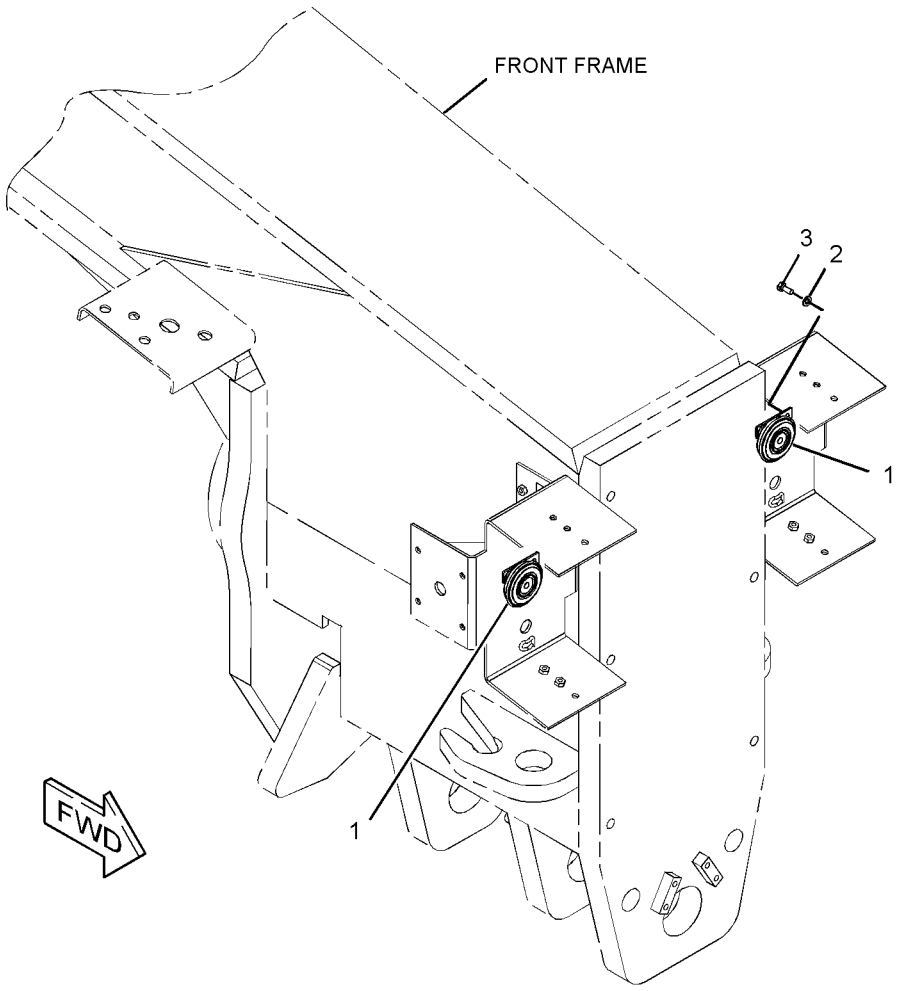

GRAPHIC #1 **<END>** g01644015

OPERATOR STATION

266-7028 INSTALLATION GP-RADIO—SATELLITE ANTENNA

S/N: B9K1-UP

SMCS-7338 **i02765131**

NOTE	REF NO	GRAPHIC REF	PART NUMBER	QTY	PART NAME 1 2 3 4 5 6 (PRODUCT LEVEL)	SEE PAGE
	1	1	**3S-2093**	3	STRAP-CABLE	
	2	1	**284-9055**	1	ANTENNA AS	
	3	1	**5P-8525**	1	GROMMET	
M	4	1	**8T-0335**	2	BOLT (M5X0.8X40-MM)	
	5	1	**9X-8256**	2	WASHER (6.6X12X2-MM THK)	

M-METRIC PART

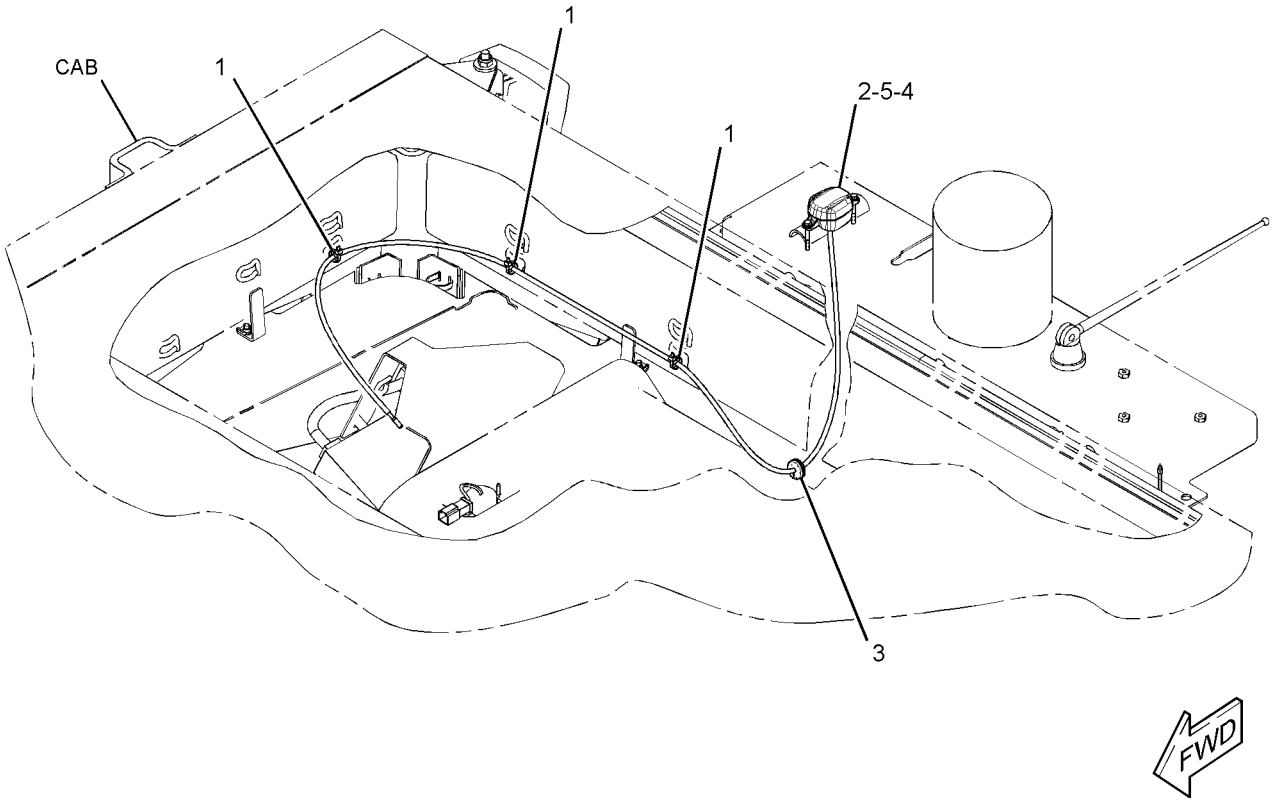

GRAPHIC #1 **<END>** g01384997

OPERATOR STATION

266-7042 INSTALLATION GP-RADIO

S/N: B9K1-UP

PART OF 266-7000 CAB AR

SMCS-7338 **i03419220**

NOTE	REF NO	GRAPHIC REF	PART NUMBER	QTY	PART NAME 1 2 3 4 5 6 (PRODUCT LEVEL)	SEE PAGE
	1	1	**8E-1118**	1	ANTENNA AS	
	2	1	**5P-8525**	1	GROMMET	
	3	1	**7K-1181**	4	STRAP-CABLE	
	4	1	**9W-3073**	1	CABLE AS-COAXIAL	

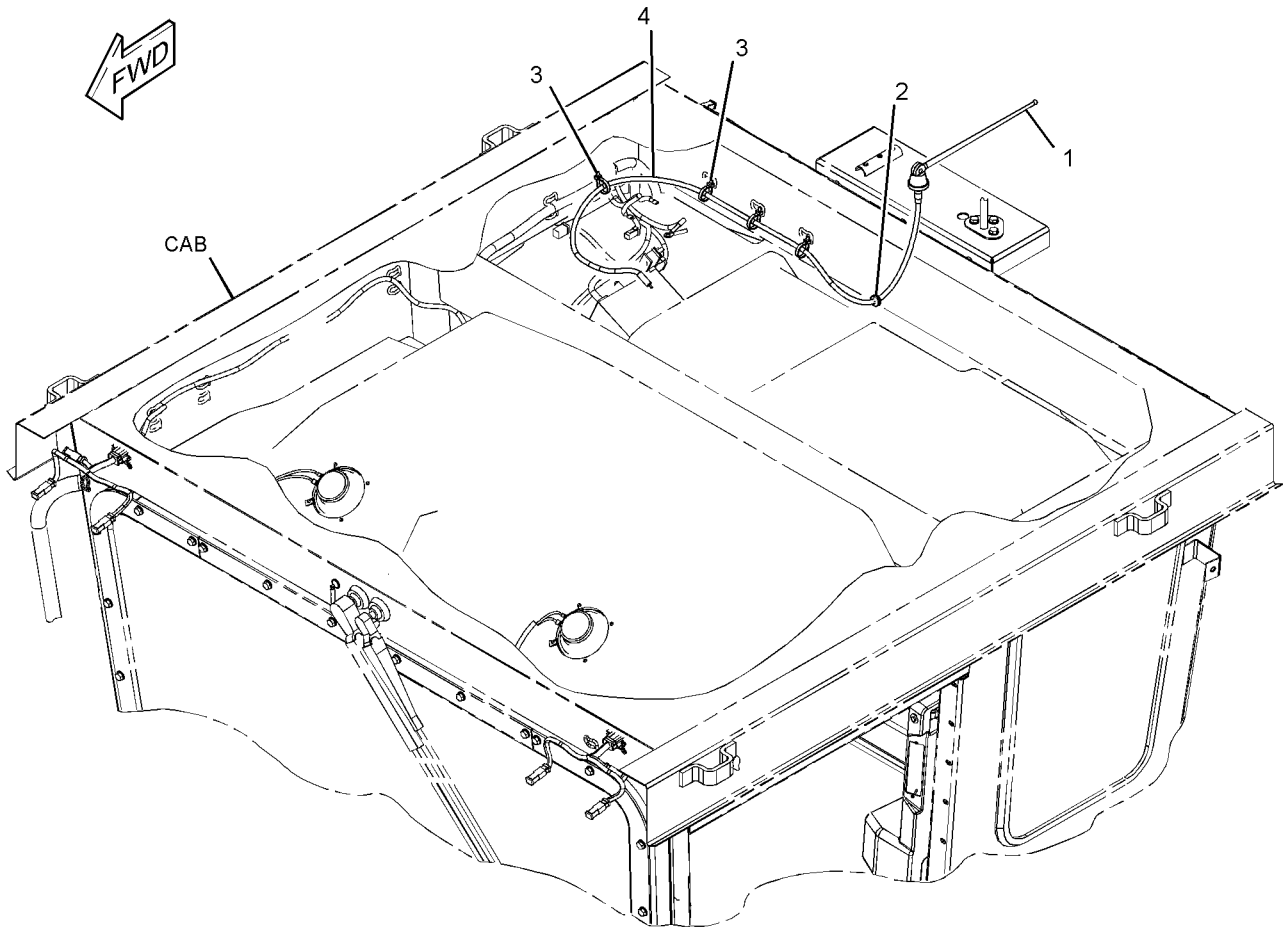

GRAPHIC #1 **<END>** g01587618

OPERATOR STATION

266-7007 LINER GP-CAB

S/N: B9K1-UP

PART OF 266-7000 CAB AR

SMCS-7329 **i03493820**

NOTE	REF NO	GRAPHIC REF	PART NUMBER	QTY	PART NAME 1 2 3 4 5 6 (PRODUCT LEVEL)	SEE PAGE
Y	1	1	**3E-6389**	1	LAMP GP-DOME (24-VOLT) (CAB)	221
	2	1	**5T-1625**	1	PLATE AS	
	3	1	**6T-7695**	2	SPEAKER AS-RADIO	
	4	1	**9F-8125**	3	LOCKWASHER (EXTERNAL TOOTH)	
	5	1	**9U-8263**	1	COVER	
	6	1	**101-0003**	2	FASTENER	
	7	1	**101-3055**	2	COVER-SPEAKER	
	8	1	**139-6039**	20	NUT-RETAINER (U-TYPE)	
	9	1	**249-4097**	1	PLATE AS	
	10	1	**250-8335**	2	LAMP AS (24-VOLT)	
					(EACH INCLUDES)	
		1	**102-8802**	1	KIT-RECEPTACLE (2-PIN)	
					(INCLUDES RECEPTACLE AS & WEDGE)	
		1	**186-3735**	2	PIN-CONNECTOR (16-GA TO 18-GA)	
	11	1	**274-2408**	1	LINER AS-CAB	
	12	1	**276-9618**	1	PLATE	
	13	1	**276-9619**	1	PLATE	
	14	1	**301-9571**	1	FILM-IDENTIFICATION (WINDOW WIPER CONTROLS)	
	15	1	**302-2138**	1	LINER AS-CAB	
	16	1	**302-2139**	1	LINER AS-CAB	
	17	1	**302-2140**	1	COVER AS	
	18	1	**114-6658**	8	WASHER (6.5X17X1-MM THK)	
	19	1	**033-4814**	3	SCREW (10-32X1-IN)	
	20	1	**101-2867**	22	WASHER-HARD (7.2X25X2-MM THK)	
	21	1	**323-0201**	8	SCREW	
	22	1	**9K-5635**	4	SCREW-TAPPING (8-18X1-IN)	
M	23	1	**9X-2045**	30	SCREW-TRUSS HEAD (M6X1X20-MM)	

M-METRIC PART
Y-SEPARATE ILLUSTRATION

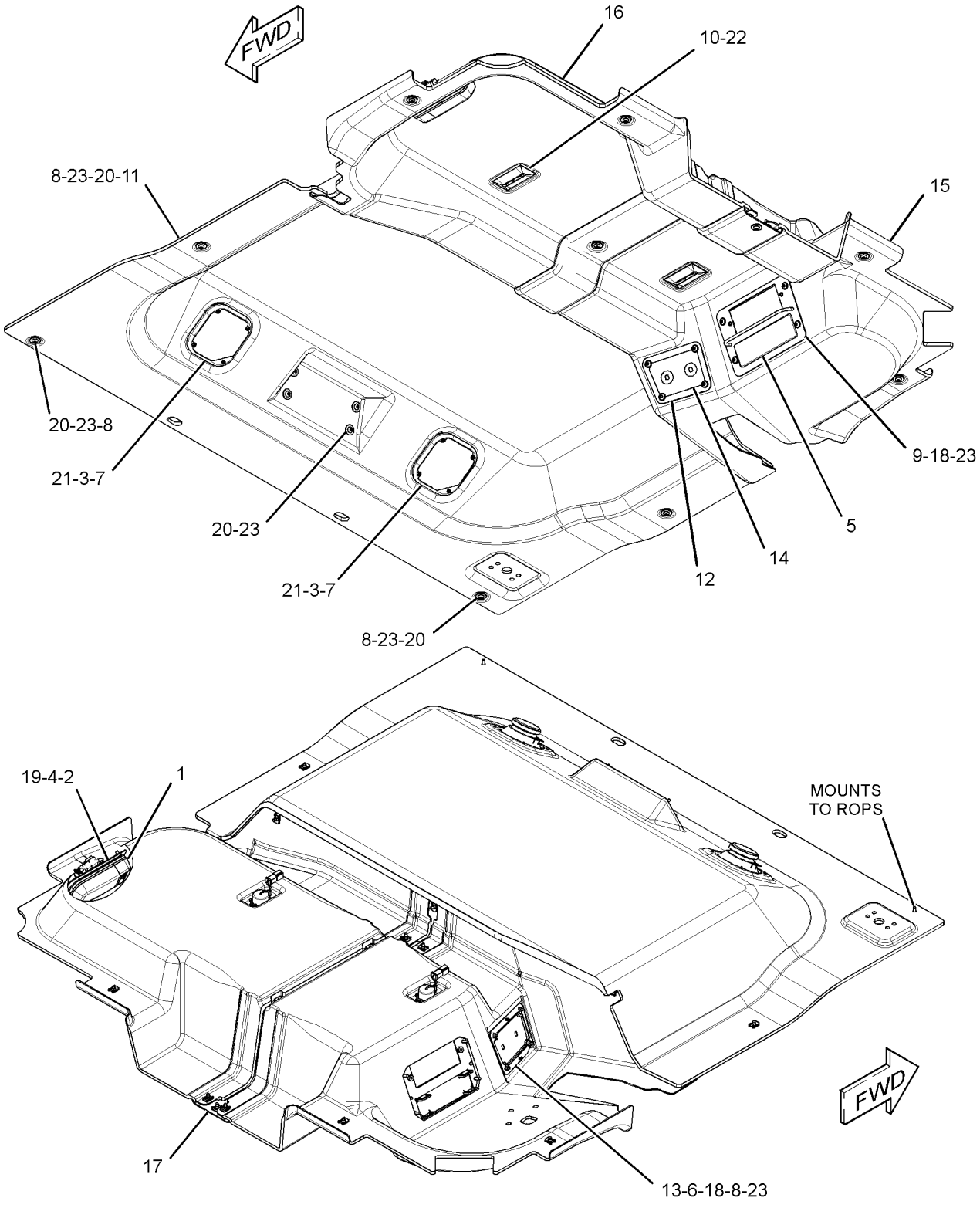

GRAPHIC #1 **<END>** g01391939

OPERATOR STATION

271-9306 LINES GP-AIR CONDITIONER

S/N: B9K1-UP

PART OF 259-9204 COMMON AR

SMCS-1808, 7320 **i02961542**

NOTE	REF NO	GRAPHIC REF	PART NUMBER	QTY	PART NAME 1 2 3 4 5 6 (PRODUCT LEVEL)	SEE PAGE
	1	1	**1P-6356**	1	PLATE	
	2	1	**5D-1026**	2	CLAMP-BAND	
	3	1	**5P-3929**	1	COUPLING AS-REFRIGERANT	
		1	**107-4397**	1	VALVE AS	
		1	**8F-9206**	1	SEAL-O-RING	
	4	1	**202-8695**	1	FITTING AS-AIR CONDITIONER	
		1	**3E-4051**	1	CAP-SEAL (REFRIGERANT, LOW SIDE)	
		1	**3E-4057**	1	VALVE AS	
		1	**172-4880**	1	CAP-SEAL	
		1	**180-7180**	1	CORE-VALVE	
	5	1	**248-2923**	2	FITTING-DRAIN	
	6	1	**277-7575**	2	BRACKET AS	
	7	1	**277-7576**	2	BLOCK	
	8	1	**282-5969**	2	BLOCK	
	9	1	**282-5970**	2	PLATE	
I	10	1	**307-8795**	1	HOSE AS	
I	11	1	**310-5578**	1	HOSE AS	
M	12	1	**085-8091**	1	BOLT (M10X1.5X55-MM)	
	13	1	**3E-4053**	1	FITTING AS-AIR CONDITIONER	
		1	**3E-4052**	1	CAP-SEAL (HIGH SIDE CHARGE PORT)	
		1	**3E-4058**	1	VALVE AS	
	14	1	**5P-1075**	1	WASHER-HARD (10.2X22.5X3-MM THK)	
	15	1	**5P-3948**	1	COUPLING AS-REFRIGERANT	
		1	**107-4399**	1	VALVE AS	
		1	**7F-8607**	1	SEAL-O-RING	
	16	1	**6D-4246**	6	CLIP	
	17	1	**6V-1889**	7	CLIP	
	18	1	**8T-4121**	17	WASHER-HARD (11X21X2.5-MM THK)	
M	19	1	**8T-4136**	8	BOLT (M10X1.5X25-MM)	
M	20	1	**8T-4137**	4	BOLT (M10X1.5X20-MM)	
M	21	1	**8T-4195**	4	BOLT (M10X1.5X30-MM)	
	22	1	**9M-8406**	4	CLIP	
	23	1	**9X-7381**	1	SEAL-O-RING	
	24	1	**9X-7382**	1	SEAL-O-RING	
	25	1	**9X-7383**	2	SEAL-O-RING	
	26	1	**9X-7384**	1	SEAL-O-RING	
	27	1	**9X-7385**	2	SEAL-O-RING	
H	28	1	**267-8575**		TUBE (6.4-DM)	
H	28A	1	**267-8575**		TUBE (9.2-DM)	
M	29	1	**8T-4185**	1	BOLT (M10X1.5X50-MM)	
	30	1	**133-6934**	1	SPACER (11X20X25-MM THK)	
	31	1	**320-9999**	1	ADAPTER	

H-ORDER BY THE DECIMETER
I-REFER TO HYDRAULIC INFORMATION SYSTEM
M-METRIC PART

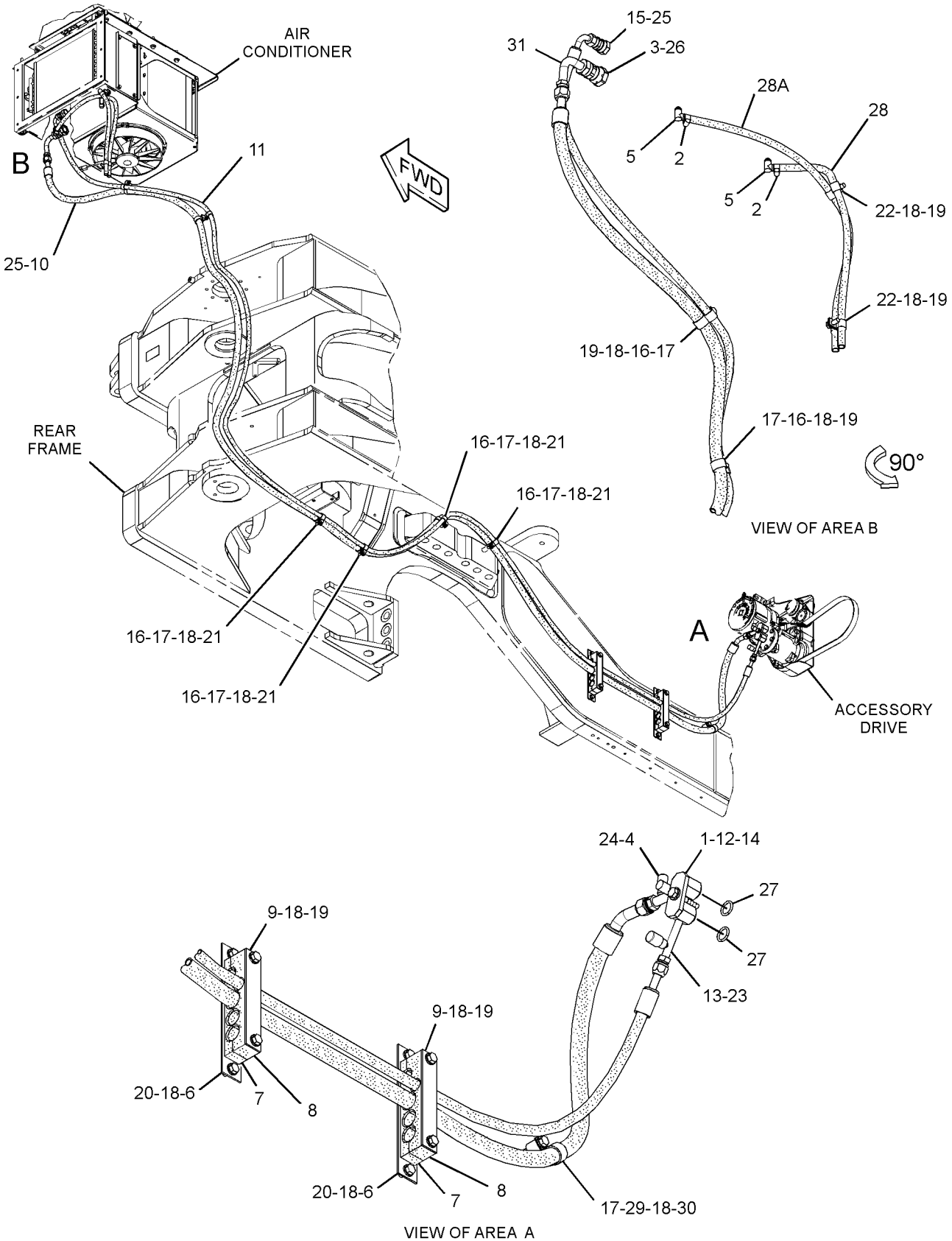

GRAPHIC #1

<END>

g01502612

OPERATOR STATION

268-0243 LINES GP-HEATER

S/N: B9K1-UP

PART OF 259-9204 COMMON AR

SMCS-1812, 7304 **i03310333**

NOTE	REF NO	GRAPHIC REF	PART NUMBER	QTY	PART NAME 1 2 3 4 5 6 (PRODUCT LEVEL)	SEE PAGE
	1	1	**8F-8151**	2	VALVE-SHUTOFF	
	2	1	**9X-2488**	4	CLAMP-HOSE	
	3	1	**3E-4321**	4	CLIP	
	4	1	**5P-4116**	1	WASHER-HARD (8.8X20.5X2-MM THK)	
	5	1	**6B-4661**	2	BUSHING-REDUCER	
	6	1	**8T-4121**	1	WASHER-HARD (11X21X2.5-MM THK)	
M	7	1	**8T-4137**	1	BOLT (M10X1.5X20-MM)	
M	8	1	**8T-4189**	1	BOLT (M8X1.25X20-MM)	
E	9	1	**5P-0767**		HOSE (707-CM)	
E	9A	1	**5P-0767**		HOSE (664-CM)	
G	10	1	**160-2252**		SLEEVE-ABRASION (1-IN)	

E-ORDER BY THE CENTIMETER
G-ORDER BY THE INCH
M-METRIC PART

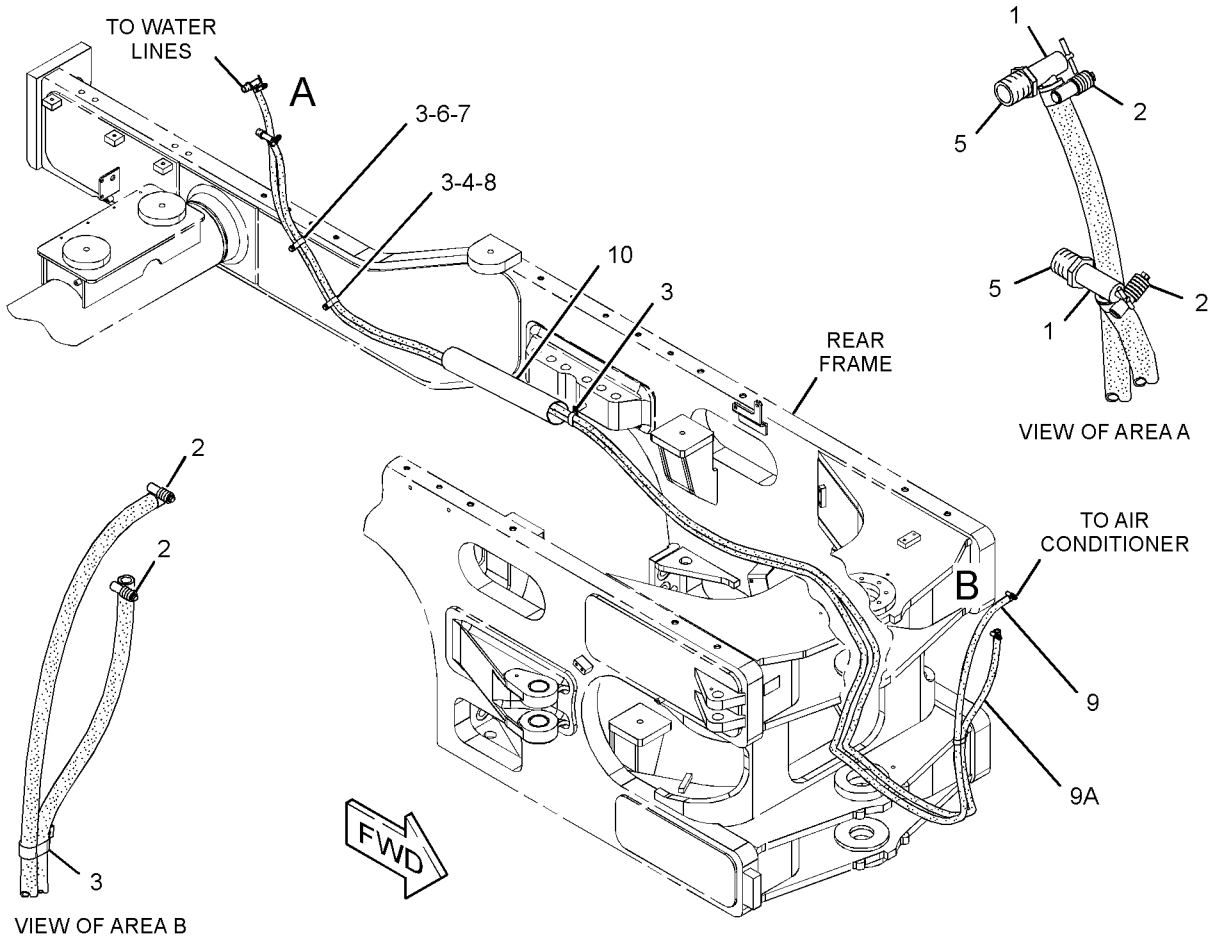

GRAPHIC #1 **<END>** g01927234

OPERATOR STATION

138-0727 MIRROR GP-REAR VIEW

S/N: B9K1-UP

SMCS-7319 **i00645724**

NOTE	REF NO	GRAPHIC REF	PART NUMBER	QTY	PART NAME 1 2 3 4 5 6 (PRODUCT LEVEL)	SEE PAGE
M	1	1	**8T-4133**	8	NUT (M10X1.5-THD)	
M	2	1	**8T-4137**	8	BOLT (M10X1.5X20-MM)	
	3	1	**8T-4121**	24	WASHER-HARD (11X21X2.5-MM THK)	
	4	1	**6G-8831**	4	CLAMP	
	5	1	**5P-6879**	2	MIRROR	
	6	1	**113-8218**	2	ARM	
	7	1	**123-4586**	4	BLOCK	
	8	1	**123-4587**	4	BRACKET	
M	9	1	**8T-4182**	8	BOLT (M10X1.5X45-MM)	
M	10	1	**8T-4186**	4	BOLT (M10X1.5X40-MM)	
M	11	1	**6V-7744**	4	LOCKNUT (M10X1.5-THD)	
B	12	1	**9C-5928**	8	SPACER (10X19X5.15-MM THK)	

B-USE AS REQUIRED
M-METRIC PART

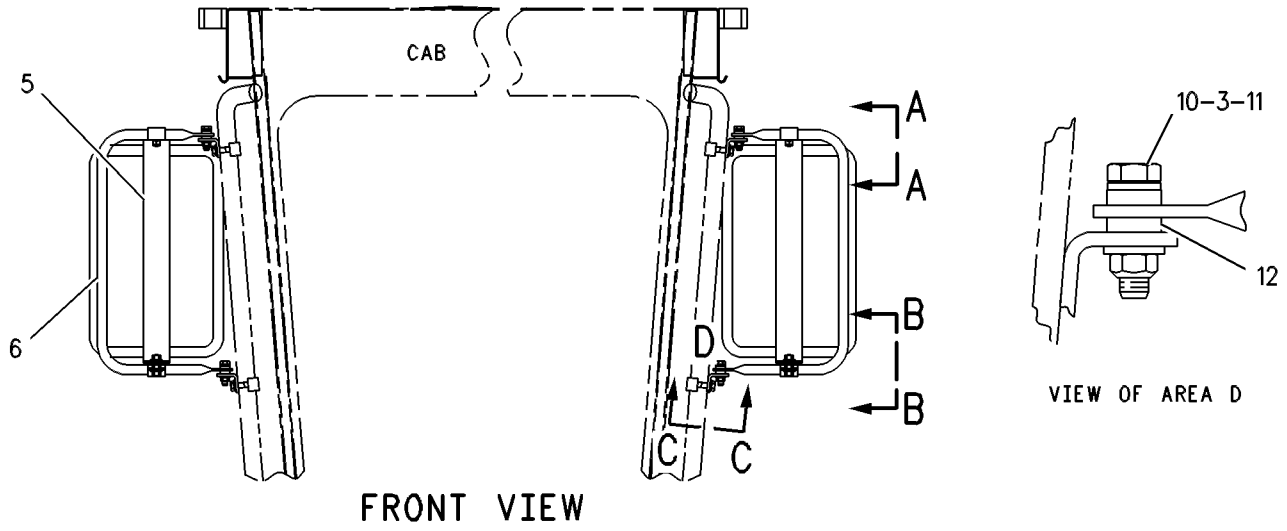

FRONT VIEW

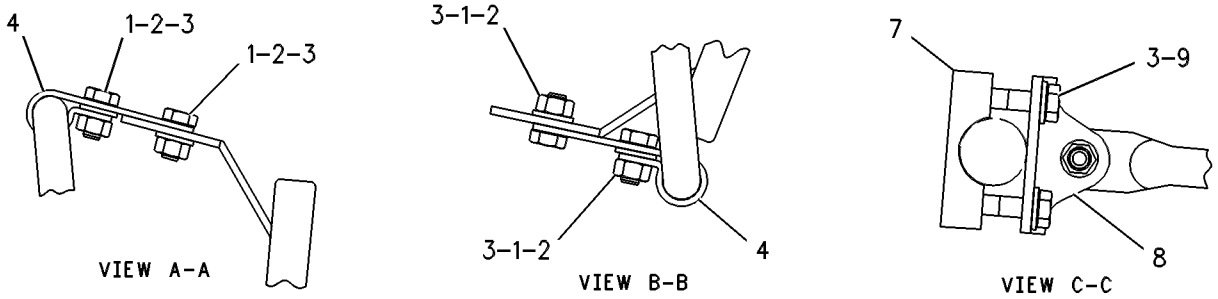

GRAPHIC #1 **<END>** g00283968

OPERATOR STATION

266-7009 MIRROR GP-REAR VIEW—EXTERIOR, HEATED

S/N: B9K1-UP

SMCS-7319 **i03409827**

NOTE	REF NO	GRAPHIC REF	PART NUMBER	QTY	PART NAME 1 2 3 4 5 6 (PRODUCT LEVEL)	SEE PAGE
	1	1	**3S-2093**	14	STRAP-CABLE	
	2	1	**113-8218**	2	ARM	
	3	1	**123-4586**	4	BLOCK	
	4	1	**123-4587**	4	BRACKET	
	5	1	**202-8649**	2	MIRROR AS (HEATED)	
					(EACH INCLUDES)	
		1	**200-1173**	1	MIRROR AS (HEATED)	
		1	**102-8802**	1	KIT-RECEPTACLE (2-PIN)	
					(INCLUDES RECEPTACLE AS & WEDGE)	
		1	**186-3735**	2	PIN-CONNECTOR (16-GA TO 18-GA)	
	6	1	**236-4630**	1	SWITCH AS-ROCKER (HEATED MIRRORS)	
	7	1	**297-0760**	1	RELAY AS (24-VDC, 20-AMPERE) (HEATED MIRRORS)	
	8	1	**6G-8831**	4	CLAMP	
M	9	1	**6V-7744**	4	LOCKNUT (M10X1.5-THD)	
	10	1	**8T-4121**	24	WASHER-HARD (11X21X2.5-MM THK)	
M	11	1	**8T-4133**	8	NUT (M10X1.5-THD)	
M	12	1	**8T-4137**	8	BOLT (M10X1.5X20-MM)	
M	13	1	**8T-4182**	8	BOLT (M10X1.5X45-MM)	
M	14	1	**8T-4186**	4	BOLT (M10X1.5X40-MM)	
	15	1	**9C-5928**	8	SPACER (10X19X5.15-MM THK)	
M	16	1	**9X-2044**	1	SCREW-TRUSS HEAD (M6X1X16-MM)	

M-METRIC PART

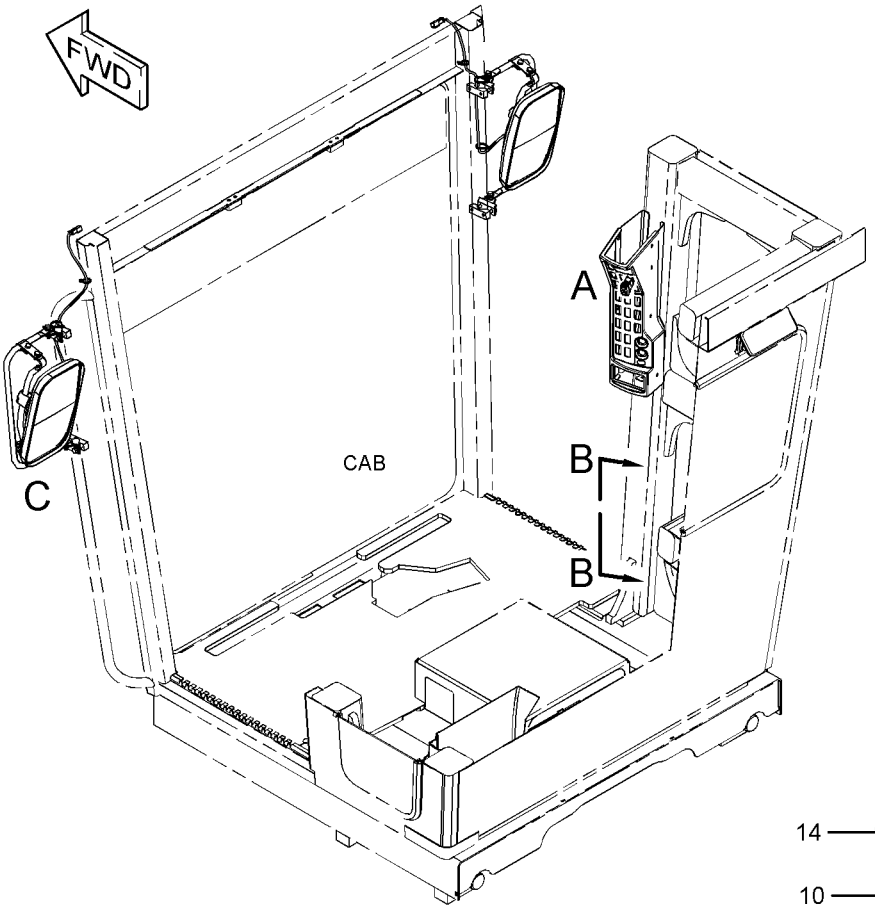

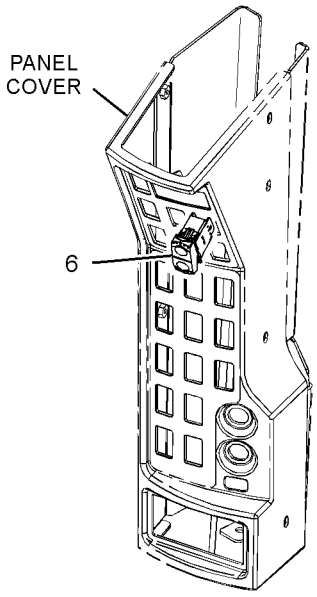

VIEW OF AREA A

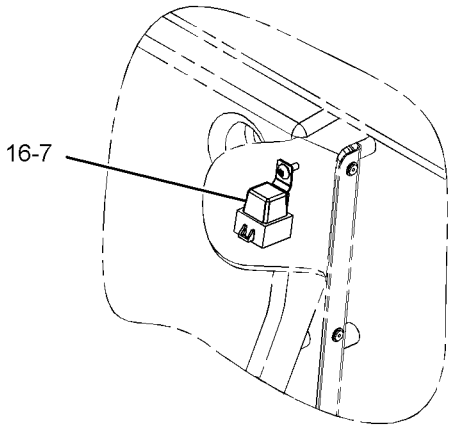

VIEW B-B

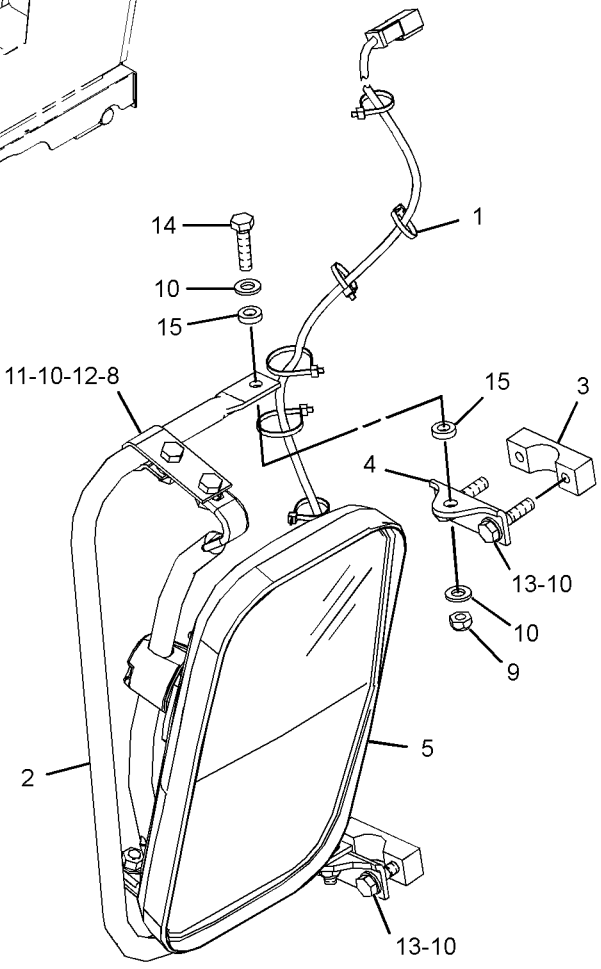

VIEW OF AREA C

GRAPHIC #1 **<END>** g01934093

OPERATOR STATION

309-0917 MIRROR GP-REAR VIEW–INTERIOR

S/N: B9K1-UP

PART OF 266-7000 CAB AR

SMCS-7319 **i02938306**

NOTE	REF NO	GRAPHIC REF	PART NUMBER	QTY	PART NAME 1 2 3 4 5 6 (PRODUCT LEVEL)	SEE PAGE
	1	1	**8Y-4512**	1	MIRROR	
	2	1	**9P-9388**	2	KNOB (MIRROR ADJUSTMENT)	
	3	1	**309-0918**	1	ANGLE AS (LH)	
	4	1	**309-0919**	1	ANGLE AS (RH)	
	5	1	**1D-4683**	2	BOLT-CARRIAGE (3/8-16X1-IN)	
M	6	1	**6V-5192**	4	BOLT-SOCKET HEAD (M8X1.25X30-MM)	
	7	1	**198-1725**	4	WASHER-HARD (8.8X25.5X2-M THK)	
	8	1	**271-2360**	2	WASHER-HARD (15X22X2.5-MM THK)	

M-METRIC PART

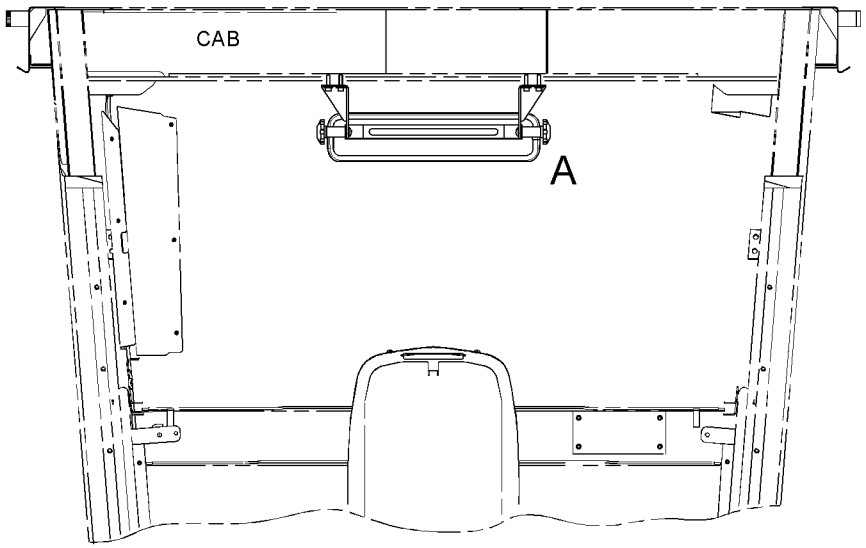

FRONT VIEW

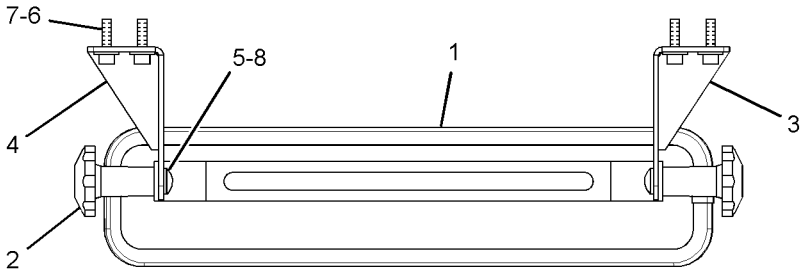

VIEW OF AREA A

GRAPHIC #1

<END>

g01413781

OPERATOR STATION

299-0881 MOUNTING GP-CONTROL—WITH ENCLOSURE

S/N: B9K1-UP

PART OF 299-9146 CONTROL GP-IMPLEMENT

SMCS-5063 **i02980293**

NOTE	REF NO	GRAPHIC REF	PART NUMBER	QTY	PART NAME 1 2 3 4 5 6 (PRODUCT LEVEL)	SEE PAGE
	1	1	**251-2247**	1	GROMMET	
	2	1	**281-0387**	1	PLATE	
	3	1	**281-0390**	1	GRIP	
	4	1	**299-1030**	1	ENCLOSURE AS	
M	5	1	**225-3109**	2	SCREW-TRUSS HEAD (M4X0.7X14-MM)	
M	6	1	**9X-2043**	2	SCREW-TRUSS HEAD (M6X1X14-MM)	
E	7	1	**282-0808**		SLEEVE (31-CM)	

E-ORDER BY THE CENTIMETER
M-METRIC PART

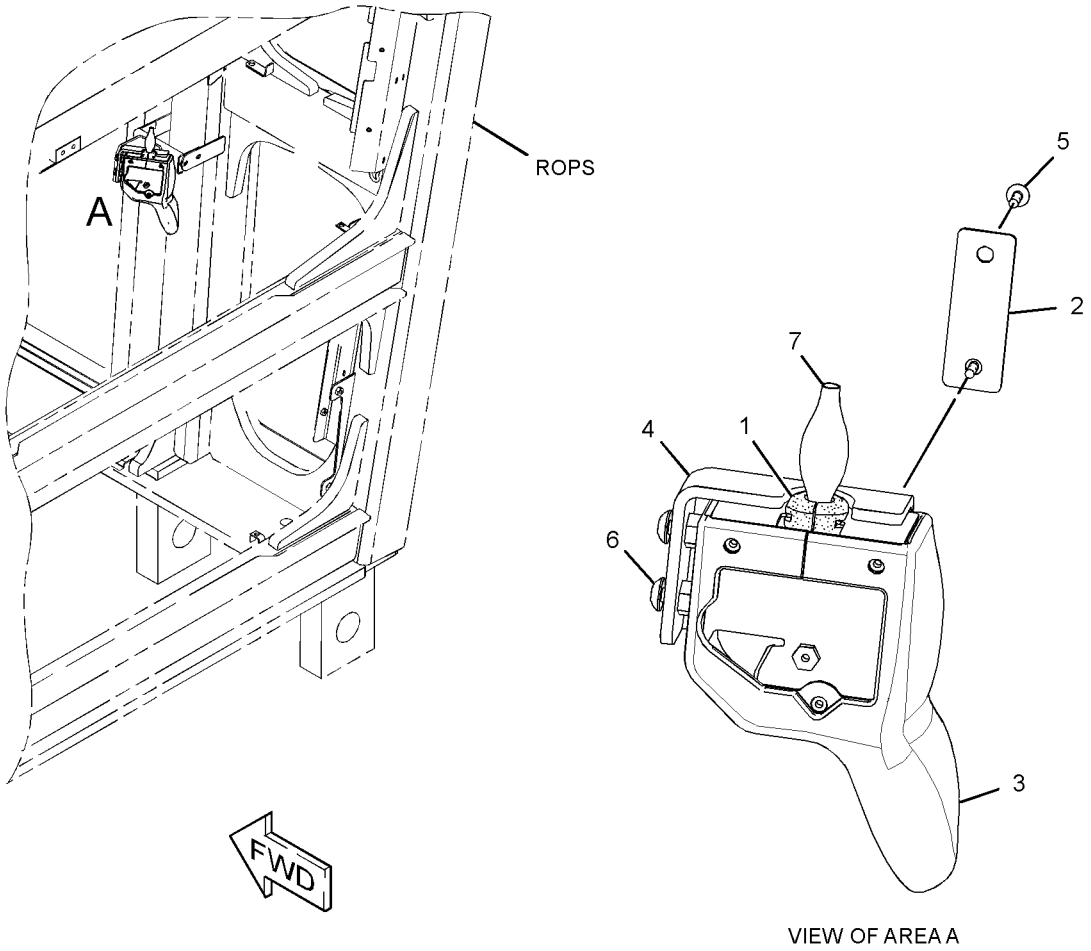

VIEW OF AREA A

GRAPHIC #1 **<END>** g01523875

OPERATOR STATION

308-2084 MOUNTING GP-PEDAL

S/N: B9K1-UP

PART OF 266-7000 CAB AR

SMCS-1265, 3191, 4269 **i02762591**

NOTE	REF NO	GRAPHIC REF	PART NUMBER	QTY	PART NAME 1 2 3 4 5 6 (PRODUCT LEVEL)	SEE PAGE
	1	1	**308-1431**	1	PEDAL GP-BRAKE, TMSN & GOV	
	2	1	**1T-0738**	5	WASHER (8.4X19X1.83-MM THK)	
	3	1	**287-6692**	4	SCREW-TRUSS HEAD (M8X1.25X35-MM)	
M	4	1	**7Y-9099**	1	SCREW-TRUSS HEAD (M8X1.25X25-MM)	

M-METRIC PART

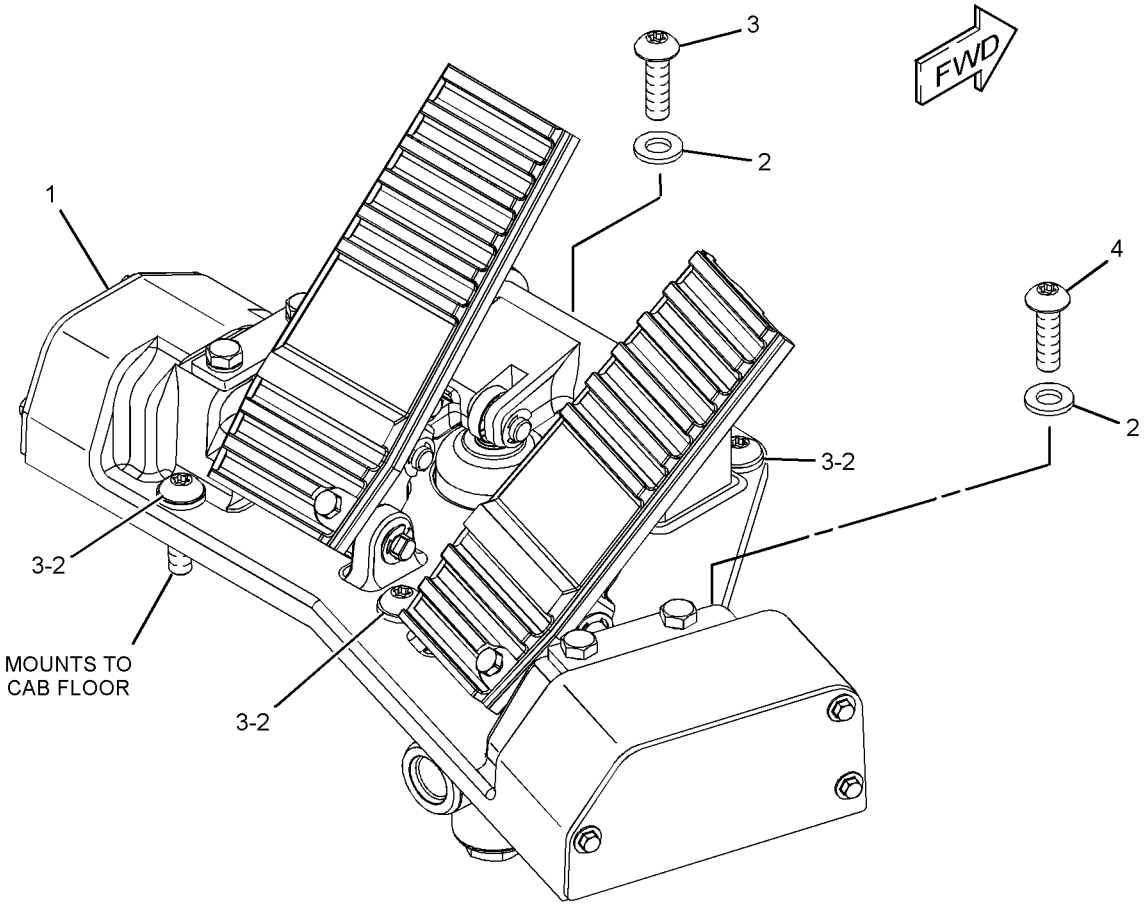

GRAPHIC #1 **<END>** g01384287

OPERATOR STATION

8X-8994 MOUNTING GP-PLATFORM

S/N: B9K1-UP

PART OF 266-7000 CAB AR

SMCS-7253 **i02835439**

NOTE	REF NO	GRAPHIC REF	PART NUMBER	QTY	PART NAME 1 2 3 4 5 6 (PRODUCT LEVEL)	SEE PAGE
	1	1	**125-6875**	4	WASHER (21X130X3-MM THK)	
	2	1	**137-6617**	12	MOUNT AS	
	3	1	**137-6627**	6	SLEEVE	
	4	1	**140-8465**	2	PLATE	
	5	1	**2J-8937**	4	PIN	
	6	1	**3B-4627**	4	PIN-COTTER	
	7	1	**4F-0255**	4	PIN	
M	8	1	**7X-2488**	4	BOLT (M20X2.5X160-MM)	
M	9	1	**8C-8478**	2	BOLT (M20X2.5X140-MM)	
	10	1	**8T-4123**	10	WASHER (22X35X3.5-MM THK)	
M	11	1	**8T-4131**	6	NUT (M20X2.5-THD)	
	12	1	**9W-6584**	6	WASHER (20.5X114X10-MM THK)	
M	13	1	**8T-4132**	2	NUT (M16X2-THD)	
M	14	1	**8T-4141**	2	BOLT (M20X2.5X70-MM)	
M	15	1	**8T-4175**	2	BOLT (M16X2X90-MM)	
	16	1	**8T-5439**	4	WASHER-HARD (21.5X45X6-MM THK)	
	17	1	**9X-8257**	4	WASHER (17.5X30X3.5-MM THK)	

M-METRIC PART

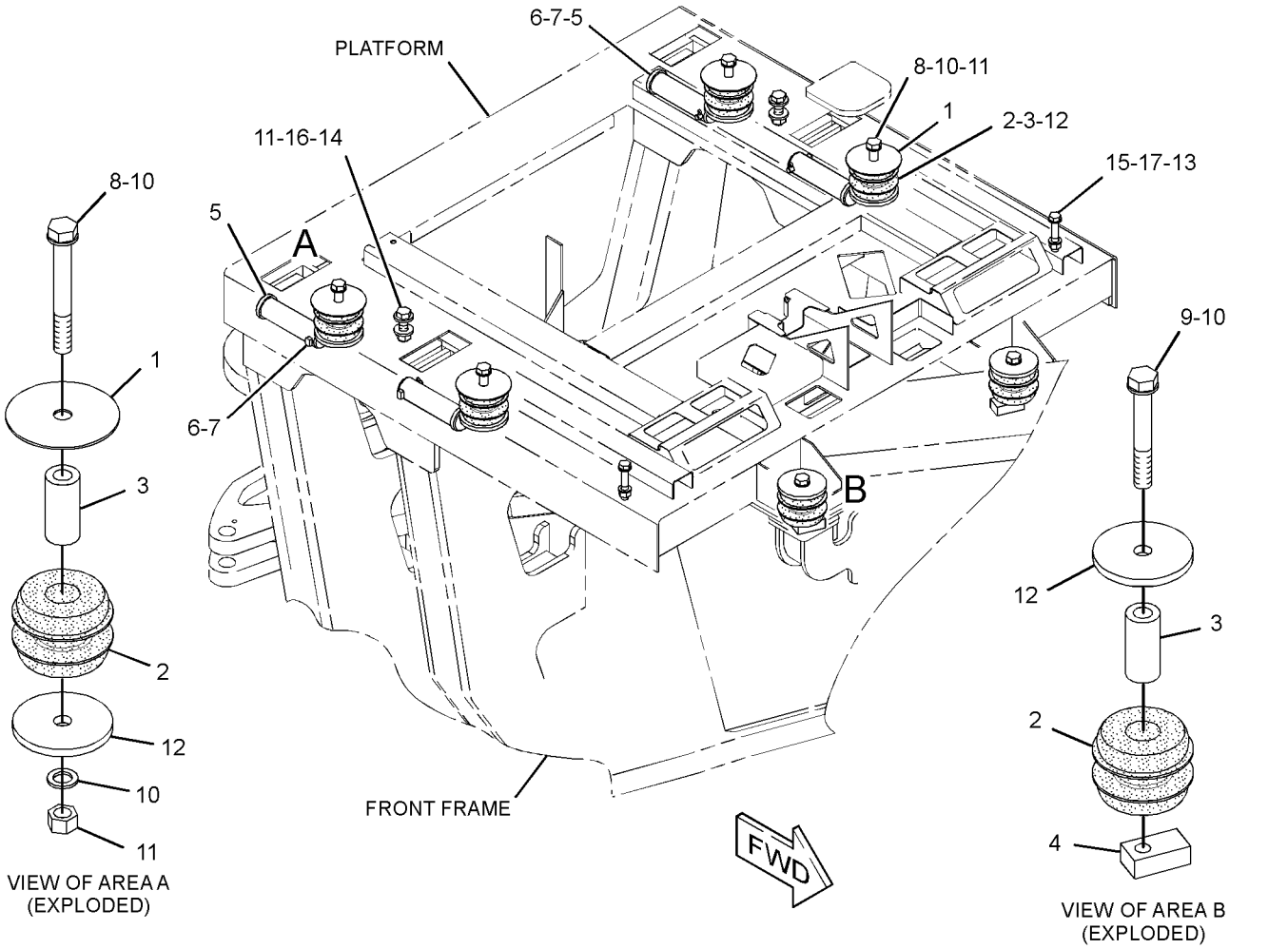

GRAPHIC #1 **<END>** g01437813

OPERATOR STATION

278-1613 MOUNTING GP-PLATFORM

S/N: B9K1-UP

PART OF 271-6651 PLATFORM GP-OPERATOR

SMCS-7253 **i02762154**

NOTE	REF NO	GRAPHIC REF	PART NUMBER	QTY	PART NAME 1 2 3 4 5 6 (PRODUCT LEVEL)	SEE PAGE
	1	1	**277-7733**	1	PLATE AS	
M		1	**8T-3597**	22	NUT-WELD (M12X1.75-THD)	
M		1	**8T-3490**	5	NUT-WELD (M10X1.5-THD)	
	2	1	**277-7734**	1	PLATE AS	
M		1	**8T-3597**	10	NUT-WELD (M12X1.75-THD)	
M		1	**8T-3490**	11	NUT-WELD (M10X1.5-THD)	
	3	1	**277-7735**	1	PLATE AS	
M		1	**8T-3597**	16	NUT-WELD (M12X1.75-THD)	
M		1	**8T-3490**	11	NUT-WELD (M10X1.5-THD)	
	4	1	**277-8399**	1	SUPPORT AS	
M		1	**8T-3597**	2	NUT-WELD (M12X1.75-THD)	
	5	1	**277-8411**	1	CHANNEL AS	
	6	1	**277-8412**	1	CHANNEL AS	
	7	1	**279-2621**	1	SUPPORT AS	
M		1	**8T-3597**	1	NUT-WELD (M12X1.75-THD)	
	8	1	**279-6456**	1	SUPPORT AS	
	9	1	**280-1420**	1	PLATE AS	
M		1	**8T-3597**	2	NUT-WELD (M12X1.75-THD)	

M-METRIC PART

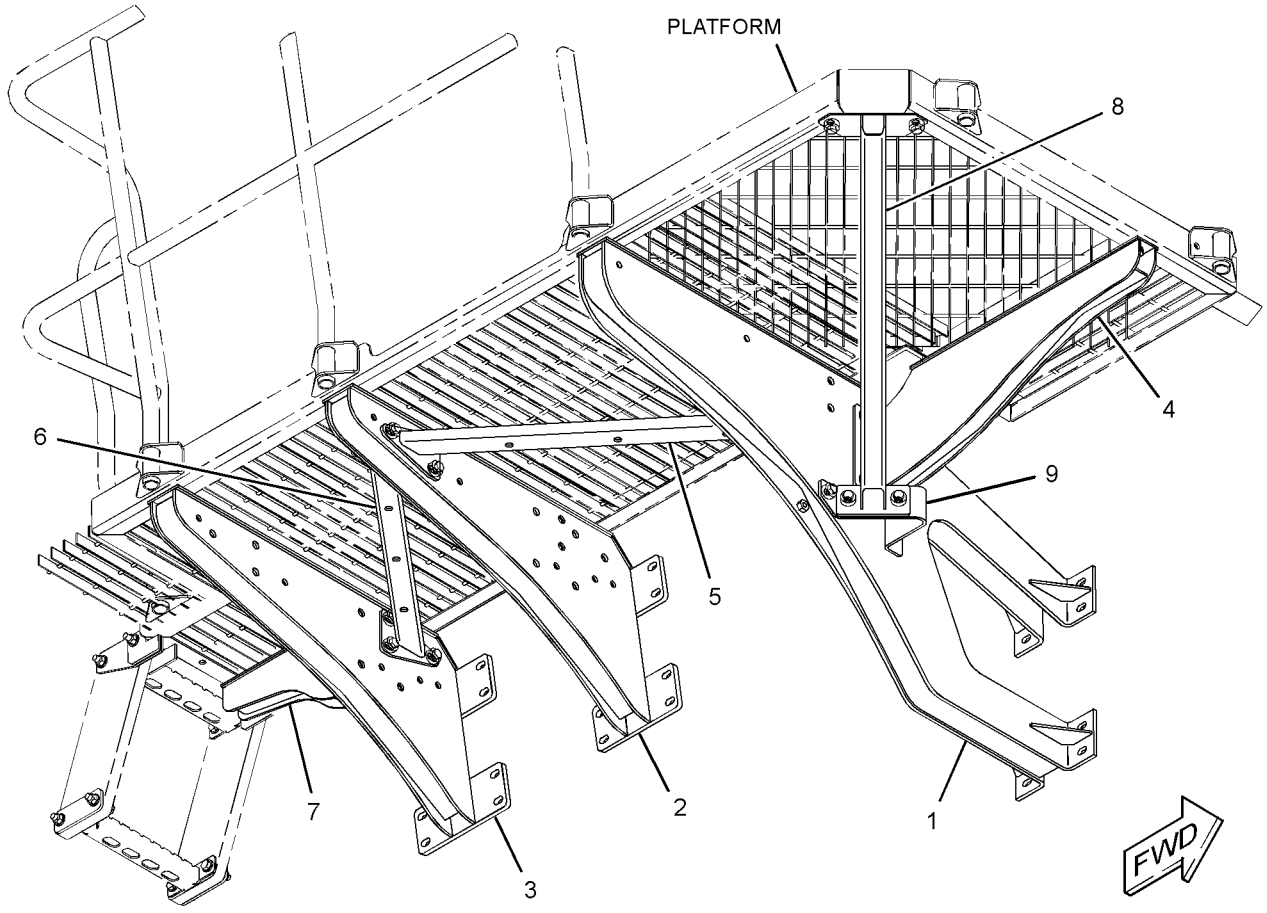

GRAPHIC #1 **<END>** g01384820

OPERATOR STATION

279-5036 MOUNTING GP-PLATFORM—LH

S/N: B9K1-UP

PART OF 260-3770 PLATFORM GP

SMCS-7253 **i02758313**

NOTE	REF NO	GRAPHIC REF	PART NUMBER	QTY	PART NAME 1 2 3 4 5 6 (PRODUCT LEVEL)	SEE PAGE
	1	1	**9Y-7595**	9	SPACER (13X30X14-MM THK)	
	2	1	**198-4778**	26	WASHER-HARD (13.5X30X12-MM THK)	
	3	1	**5P-1076**	9	WASHER-HARD (13.5X30X4-MM THK)	
M	4	1	**8T-4183**	26	BOLT (M12X1.75X40-MM)	
M	5	1	**8T-4184**	9	BOLT (M12X1.75X45-MM)	

M-METRIC PART

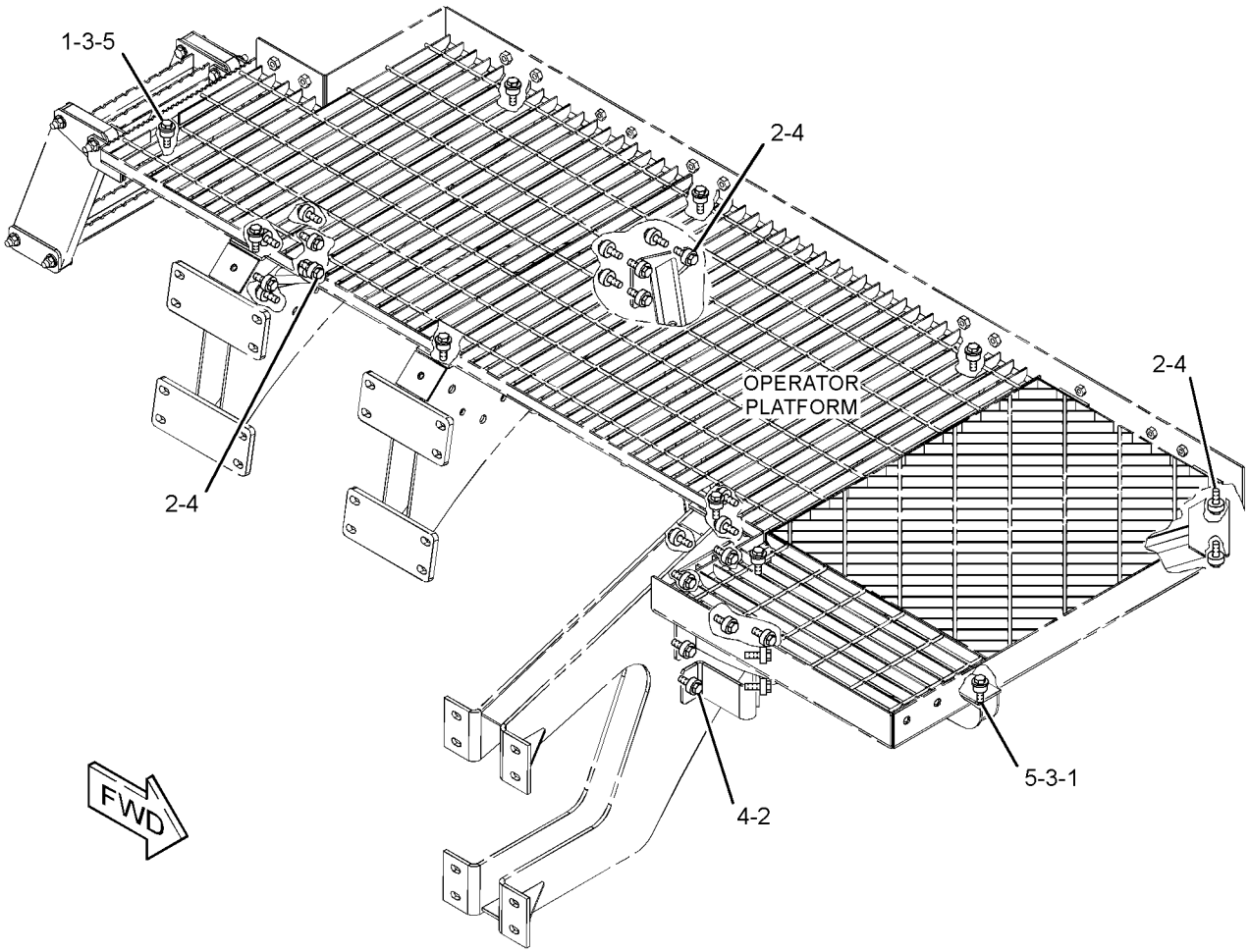

GRAPHIC #1 **<END>** g01383275

OPERATOR STATION

294-9295 MOUNTING GP-PLATFORM–LH

S/N: B9K1-UP

PART OF 269-2207, 269-2209 PLATFORM AR

SMCS-7253 **i02758265**

NOTE	REF NO	GRAPHIC REF	PART NUMBER	QTY	PART NAME 1 2 3 4 5 6 (PRODUCT LEVEL)	SEE PAGE
	1	1	**9Y-7595**	2	SPACER (13X30X14-MM THK)	
	2	1	**198-4777**	2	WASHER-HARD (11X25X10-MM THK)	
	3	1	**198-4778**	26	WASHER-HARD (13.5X30X12-MM THK)	
	4	1	**5P-1076**	2	WASHER-HARD (13.5X30X4-MM THK)	
M	5	1	**8T-4139**	2	BOLT (M12X1.75X30-MM)	
M	6	1	**8T-4183**	10	BOLT (M12X1.75X40-MM)	
M	7	1	**8T-4184**	16	BOLT (M12X1.75X45-MM)	
M	8	1	**8T-4192**	16	BOLT (M12X1.75X25-MM)	
M	9	1	**8T-4195**	2	BOLT (M10X1.5X30-MM)	
	10	1	**8T-4223**	16	WASHER-HARD (13.5X25.5X3-MM THK)	

M-METRIC PART

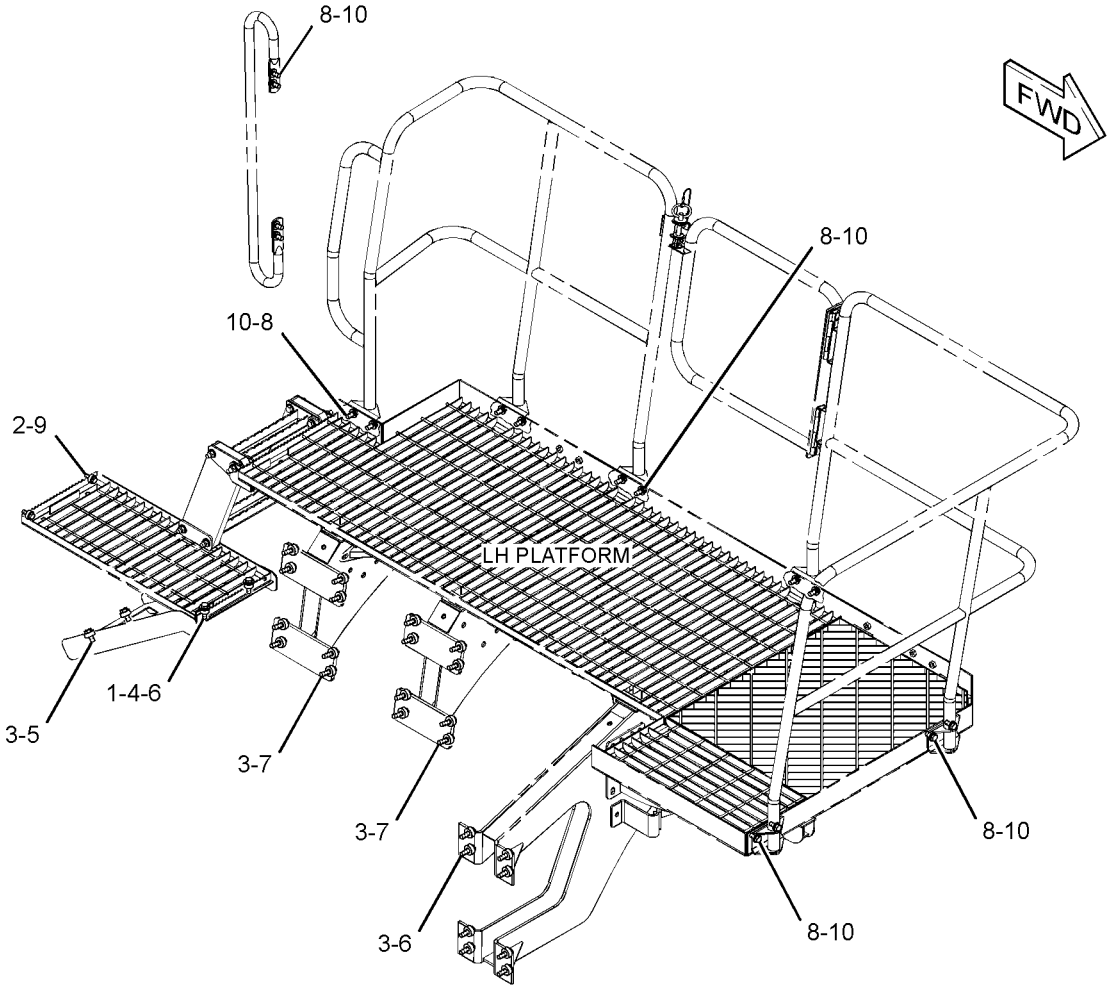

GRAPHIC #1 **<END>** g01382765

OPERATOR STATION

294-9296 MOUNTING GP-PLATFORM—RH

S/N: B9K1-UP

PART OF 269-2207 PLATFORM AR

SMCS-7253 **i02760483**

NOTE	REF NO	GRAPHIC REF	PART NUMBER	QTY	PART NAME 1 2 3 4 5 6 (PRODUCT LEVEL)	SEE PAGE
	1	1	**9Y-7595**	2	SPACER (13X30X14-MM THK)	
	2	1	**198-4777**	2	WASHER-HARD (11X25X10-MM THK)	
	3	1	**198-4778**	26	WASHER-HARD (13.5X30X12-MM THK)	
	4	1	**5H-2095**	4	CLAMP-TUBE	
	5	1	**5P-1076**	2	WASHER-HARD (13.5X30X4-MM THK)	
	6	1	**8T-4121**	4	WASHER-HARD (11X21X2.5-MM THK)	
M	7	1	**8T-4133**	2	NUT (M10X1.5-THD)	
M	8	1	**8T-4183**	12	BOLT (M12X1.75X40-MM)	
M	9	1	**8T-4184**	16	BOLT (M12X1.75X45-MM)	
M	10	1	**8T-4185**	2	BOLT (M10X1.5X50-MM)	
M	11	1	**8T-4192**	16	BOLT (M12X1.75X25-MM)	
M	12	1	**8T-4195**	2	BOLT (M10X1.5X30-MM)	
	13	1	**8T-4223**	16	WASHER-HARD (13.5X25.5X3-MM THK)	

M-METRIC PART

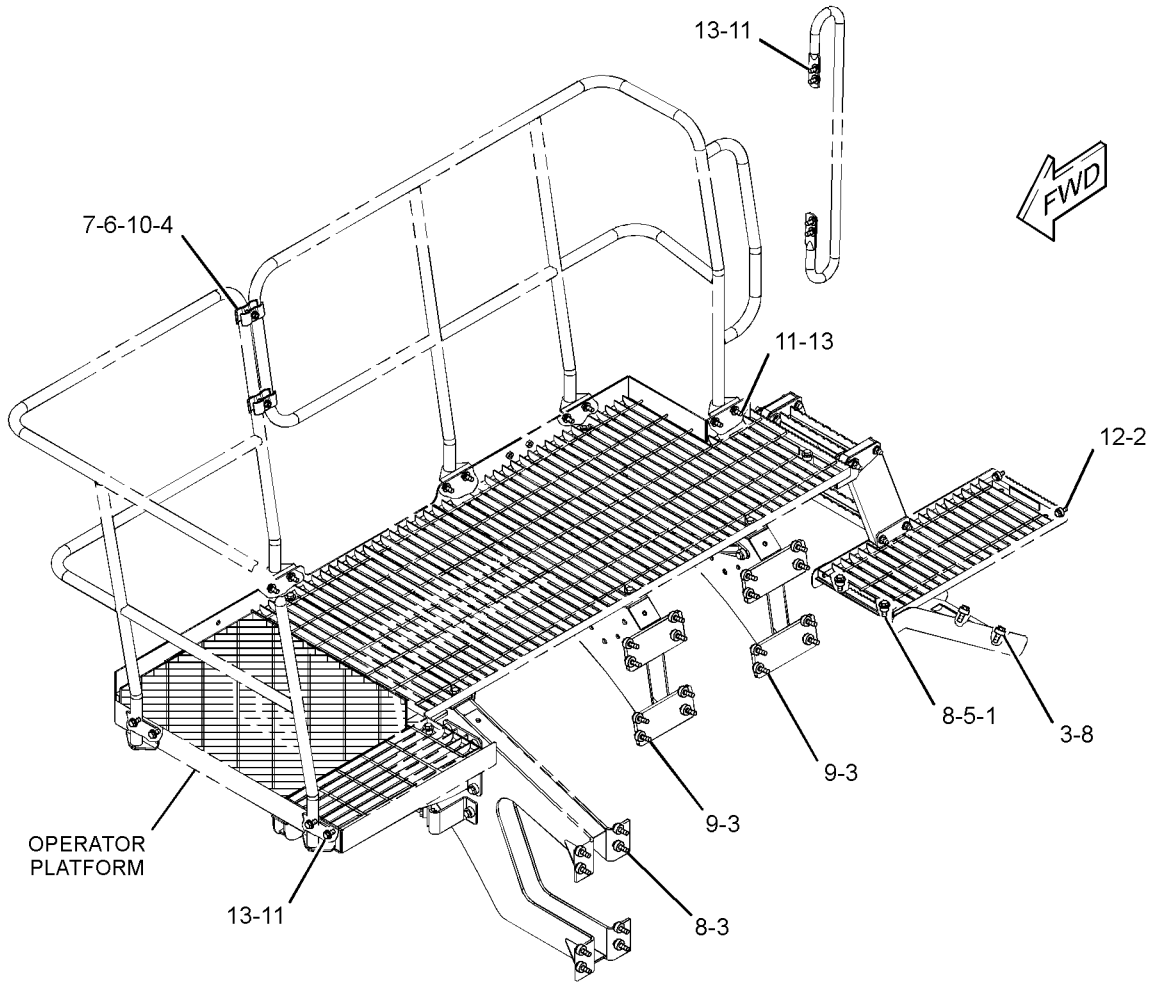

GRAPHIC #1 **<END>** g01384121

OPERATOR STATION

292-6402 PAN GP-BACKREST–LUMBAR

S/N: B9K1-UP

PART OF 292-9237 PAN GP-BACKREST

SMCS-7312 **i03095783**

NOTE	REF NO	GRAPHIC REF	PART NUMBER	QTY	PART NAME 1 2 3 4 5 6 (PRODUCT LEVEL)	SEE PAGE
	1	1	**5P-7957**	1	LANYARD	
	2	1	**136-1543**	1	PLATE AS-LUMBAR	
	3	1	**173-2052**	1	RETAINER	
	4	1	**178-7907**	1	HOLDER	
	5	1	**261-5694**	1	PAN AS-BACKREST	
	6	1	**322-3161**	1	SPRING	
	7	1	**4K-9429**	8	RIVET-POP	

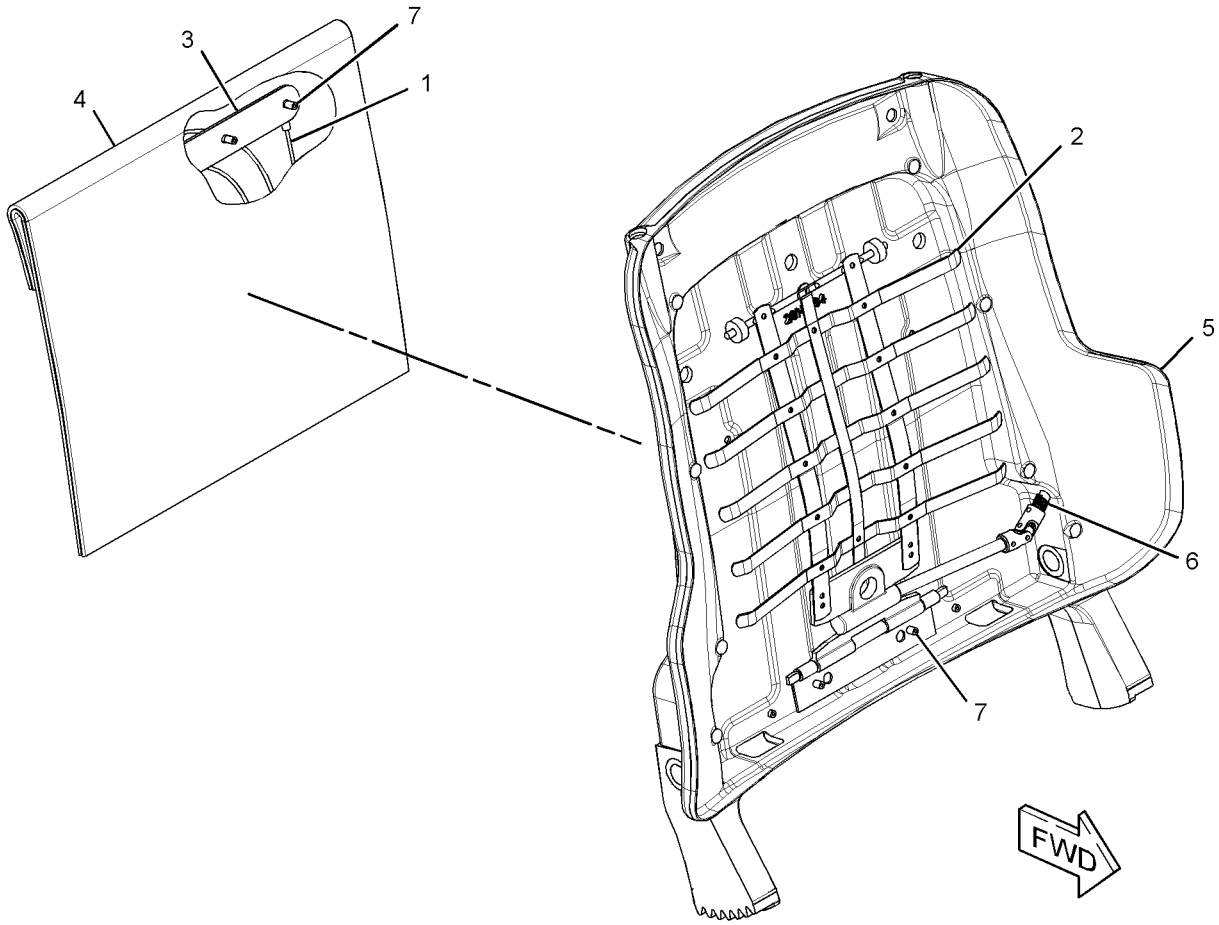

GRAPHIC #1 **<END>** g01577333

OPERATOR STATION

292-9237 PAN GP-BACKREST–LUMBAR

S/N: B9K1-UP

PART OF 244-5002 SEAT GP

SMCS-7312 **i02649684**

NOTE	REF NO	GRAPHIC REF	PART NUMBER	QTY	PART NAME 1 2 3 4 5 6 (PRODUCT LEVEL)	SEE PAGE
	1	1	164-4883	1	KNOB-LUMBAR	
	2	1	250-4628	3	PLUG	
	3	1	292-6097	1	CUSHION AS-BACK	
Y	4	1	292-6402	1	PAN GP-BACKREST (LUMBAR)	921
	5	1	5P-0537	2	WASHER-HARD (7.2X14.5X2-MM THK)	
	6	1	6V-8969	2	SCREW-BUTTON HEAD (1/4-20X0.5-IN)	
	7	1	8T-7566	1	PIN-SPRING	

Y-SEPARATE ILLUSTRATION

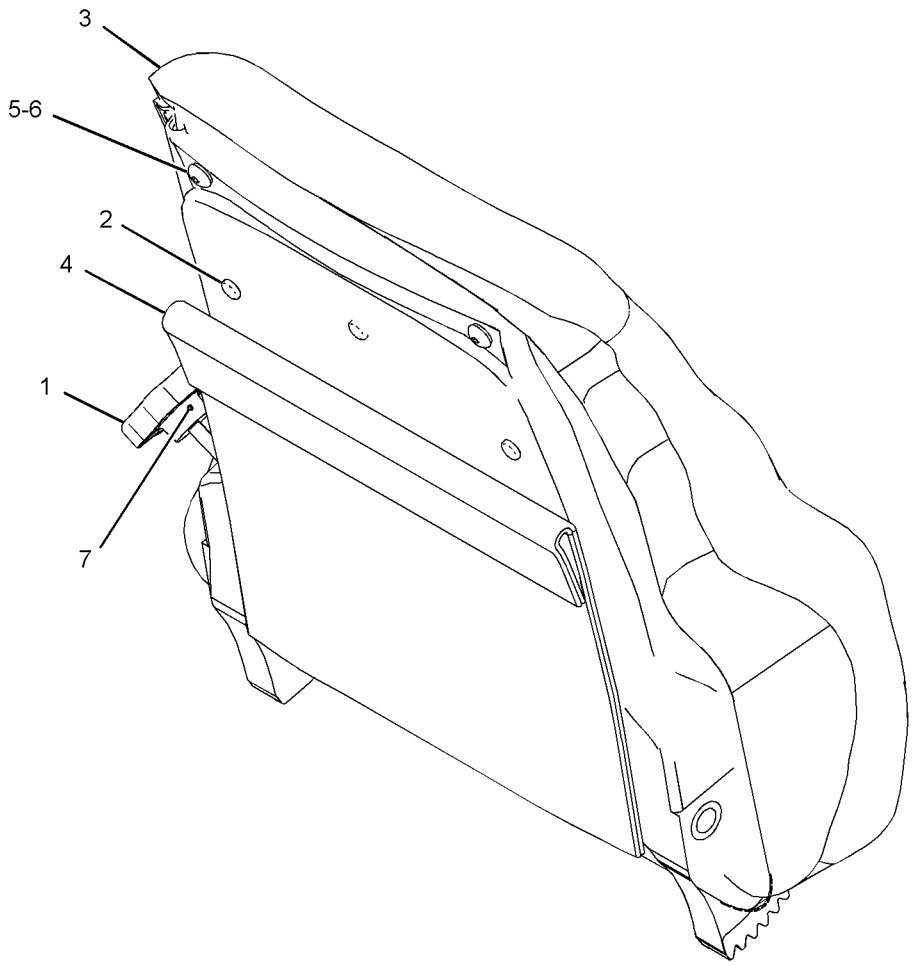

GRAPHIC #1 **<END>** g01336870

OPERATOR STATION

243-6737 PAN GP-SEAT–LUMBAR

S/N: B9K1-UP

PART OF 244-5002 SEAT GP

SMCS-7312 **i02793187**

NOTE	REF NO	GRAPHIC REF	PART NUMBER	QTY	PART NAME 1 2 3 4 5 6 (PRODUCT LEVEL)	SEE PAGE
	1	1	**3S-2093**	2	STRAP-CABLE	
	2	1	**8T-9082**	5	RIVET-POP	
	3	1	**216-0814**	1	SWITCH AS-LIMIT (SEAT ADJUSTMENT)	
	4	1	**266-9281**	2	CLIP	
	5	1	**285-2372**	1	HARNESS AS-SWITCH	
		1	**102-8803**	1	KIT-RECEPTACLE (3-PIN)	
					(INCLUDES RECEPTACLE AS & WEDGE)	

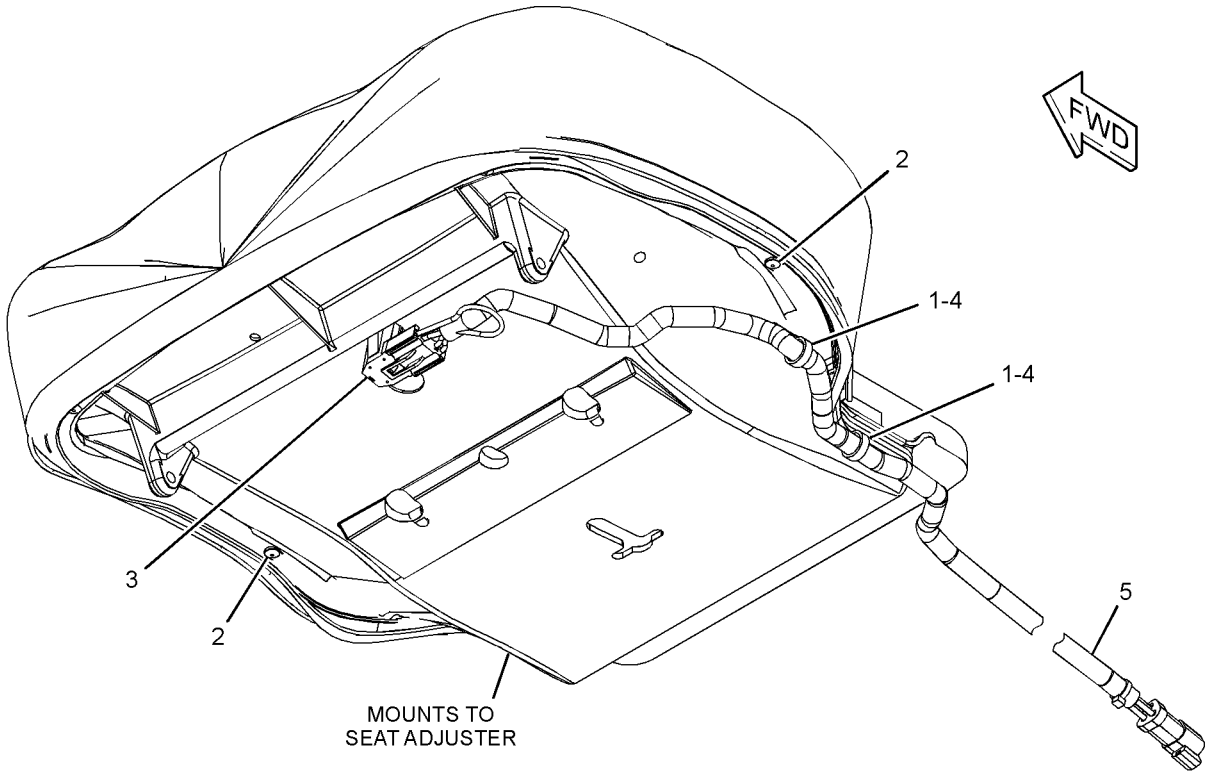

GRAPHIC #1 **<END>** g01338841

OPERATOR STATION

282-9485 PANEL GP-CAB

S/N: B9K1-UP
PART OF 266-7006 WIRING GP-CAB
TYPE 1

SMCS-7301 **i02762199**

NOTE	REF NO	GRAPHIC REF	PART NUMBER	QTY	PART NAME 1 2 3 4 5 6 (PRODUCT LEVEL)	SEE PAGE
	1	1	**224-1940**	1	KNOB	
	2	1	**253-3485**	1	PLATE	
	3	1	**286-0317**	1	PANEL AS-FUSE	
M		1	**8T-3612**	1	NUT-WELD (M8X1.25-THD)	
	4	1	**286-0318**	1	FILM-IDENTIFICATION (FUSE)	
	5	1	**286-0319**	1	FILM-IDENTIFICATION (FUSE PANEL)	
M	6	1	**6V-9189**	1	LOCKNUT (M8X1.25-THD)	
M	7	1	**9X-2043**	2	SCREW-TRUSS HEAD (M6X1X14-MM)	

M-METRIC PART

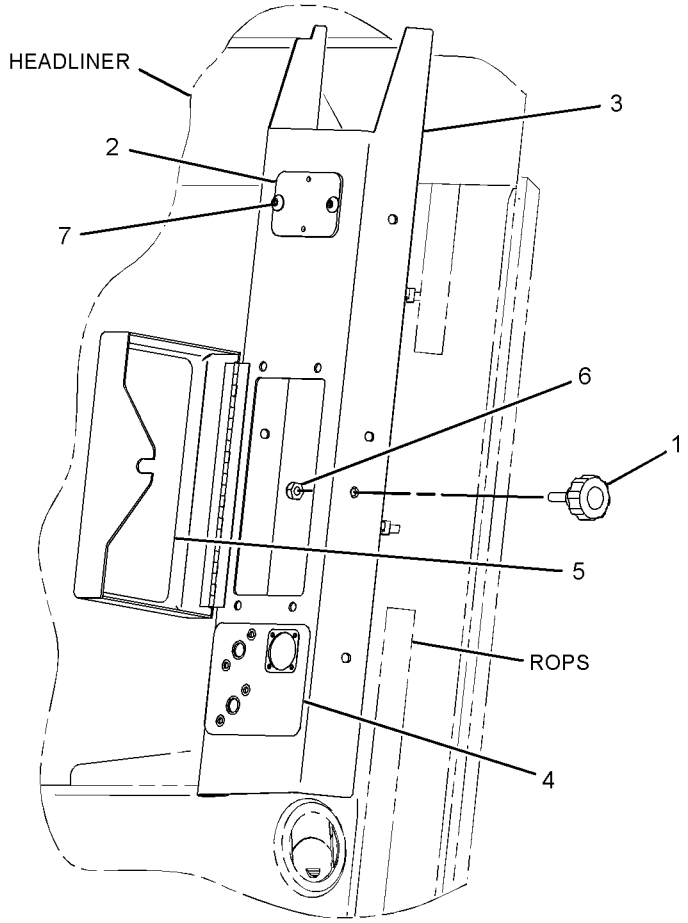

RIGHT SIDE VIEW
(INSIDE CAB)

GRAPHIC #1

<END>

g01388538

OPERATOR STATION

282-9485 PANEL GP-CAB

S/N: B9K1-UP
PART OF 266-7006 WIRING GP-CAB
TYPE 2

SMCS-7301 **i02902069**

NOTE	REF NO	GRAPHIC REF	PART NUMBER	QTY	PART NAME 1 2 3 4 5 6 (PRODUCT LEVEL)	SEE PAGE
	1	1	**224-1940**	1	KNOB	
	3	1	**286-0317**	1	PANEL AS-FUSE	
M		1	**8T-3612**	1	NUT-WELD (M8X1.25-THD)	
	4	1	**286-0318**	1	FILM-IDENTIFICATION (FUSE)	
	5	1	**286-0319**	1	FILM-IDENTIFICATION (FUSE PANEL)	
M	6	1	**6V-9189**	1	LOCKNUT (M8X1.25-THD)	

M-METRIC PART

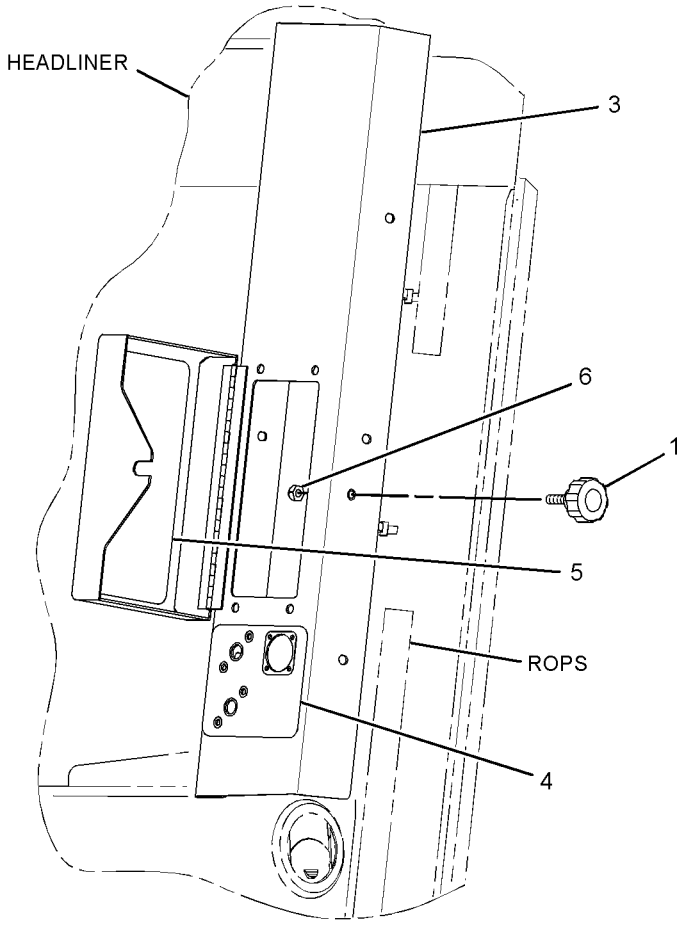

RIGHT SIDE VIEW
(INSIDE CAB)

GRAPHIC #1 **<END>** g01521158

OPERATOR STATION

276-8498 PANEL GP-CONTROL—VARIABLE BLADE FLOAT

S/N: B9K1-UP

PART OF 269-2202 FLOAT AR-BLADE

SMCS-7332, 7451 **i03893550**

NOTE	REF NO	GRAPHIC REF	PART NUMBER	QTY	PART NAME 1 2 3 4 5 6 (PRODUCT LEVEL)	SEE PAGE
	1	1	**110-6109**	2	KNOB-CONTROL (VARIABLE BLADE FLOAT)	
	2	1	**114-6658**	8	WASHER (6.5X17X1-MM THK)	
Y	3	1	**276-8491**	1	SENSOR & MTG GP-POSITION (VARIABLE BLADE FLOAT)	297
	4	1	**297-4157**	1	PANEL-COVER	
	5	1	**276-8495**	1	PLATE AS	
M		1	**6V-9632**	7	NUT-WELD (M6X1-THD)	
	6	1	**297-4158**	1	PLATE	
	7	1	**276-8500**	1	FILM-IDENTIFICATION (VARIABLE BLADE FLOAT)	
	8	1	**278-4210**	1	SWITCH AS-ROCKER (VARIABLE BLADE FLOAT)	
M	9	1	**7X-2533**	3	BOLT (M6X1X35-MM)	
M	10	1	**9X-2043**	4	SCREW-TRUSS HEAD (M6X1X14-MM)	
M	11	1	**9X-2044**	4	SCREW-TRUSS HEAD (M6X1X16-MM)	
	12	1	**250-2299**	1	LAMP AS-LED (24-VOLT, GREEN)	
	13	1	**102-8802**	1	KIT-RECEPTACLE (2-PIN) (INCLUDES RECEPTACLE AS & WEDGE)	
	14	1	**9X-8256**	3	WASHER (6.6X12X2-MM THK)	

M-METRIC PART
Y-SEPARATE ILLUSTRATION

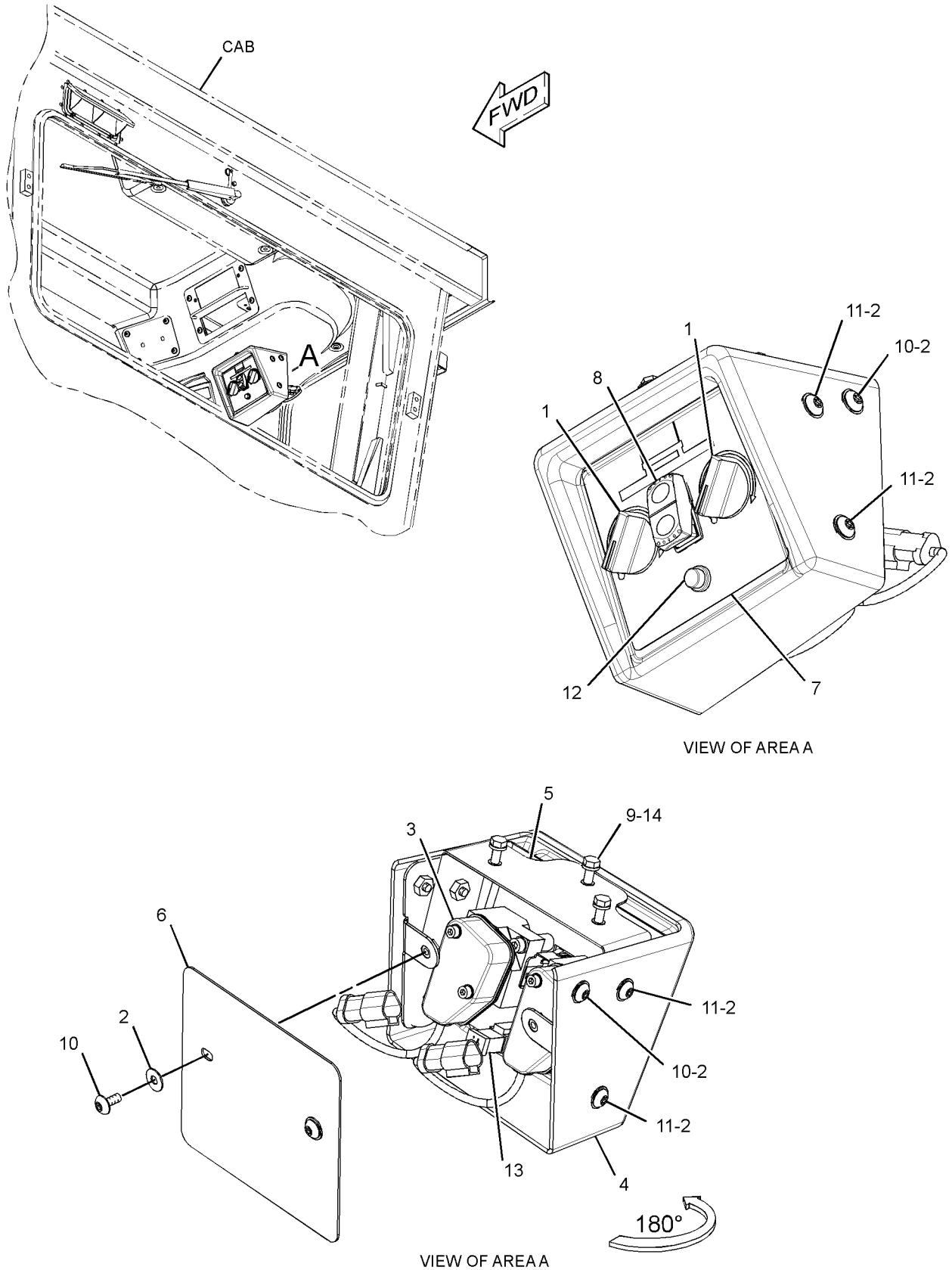

GRAPHIC #1 **<END>** g02218353

OPERATOR STATION

314-3323 PANEL GP-CONTROL–ACCUGRADE, LH

S/N: B9K1-UP

PART OF 285-2042 GRADE CONTROL GP

SMCS-7332, 7451 **i03002421**

NOTE	REF NO	GRAPHIC REF	PART NUMBER	QTY	PART NAME 1 2 3 4 5 6 (PRODUCT LEVEL)	SEE PAGE
	1	1	**249-5483**	1	SWITCH AS-ROCKER (24-VOLT) (BLADE OFFSET, LH)	
	1A	1	**249-5483**	1	SWITCH AS-ROCKER (24-VOLT) (BLADE OFFSET, RH)	
	2	1	**302-9089**	1	BRACKET AS (LH)	
		1	**7T-1099**	1	LINK	
M		1	**159-9539**	2	NUT-WELD (M6X1-THD)	
	3	1	**302-9090**	1	COVER	
	4	1	**307-0016**	1	FILM-IDENTIFICATION (PANEL SWITCHES)	
	5	1	**253-1789**	1	SWITCH AS-PUSH BUTTON (AUTO/MANUAL SIDESHIFT)	
		1	**3E-3371**	1	WEDGE-RECEPTACLE LOCK (3-PIN)	
		1	**6F-0253**	1	LOCKWASHER	
		1	**102-8803**	1	KIT-RECEPTACLE (3-PIN) (INCLUDES RECEPTACLE AS & WEDGE)	
		1	**172-3511**	1	NUT (5/8-24-THD)	
		1	**186-3735**	1	PIN-CONNECTOR (16-GA TO 18-GA)	
M	6	1	**5C-9553**	2	BOLT (M6X1X16-MM)	
M	7	1	**9X-2044**	2	SCREW-TRUSS HEAD (M6X1X16-MM)	
	8	1	**9X-8256**	4	WASHER (6.6X12X2-MM THK)	

M-METRIC PART

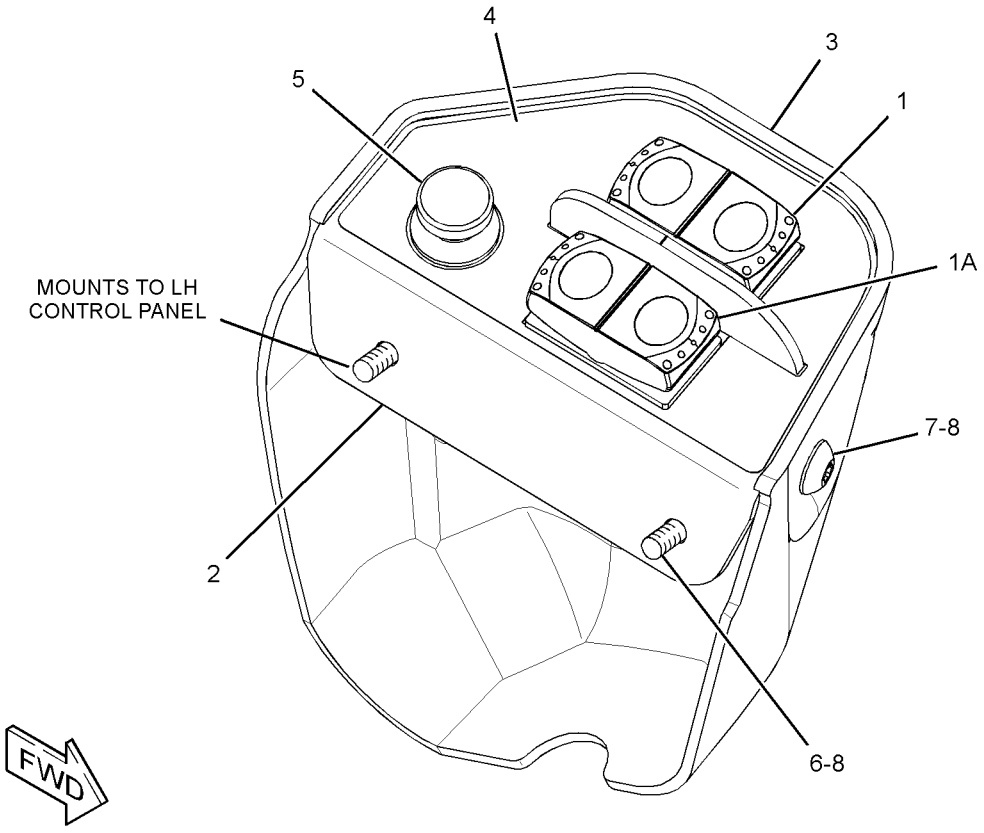

GRAPHIC #1 **<END>** g01525433

OPERATOR STATION

319-1617 PANEL GP-CONTROL–ACCUGRADE

S/N: B9K1-UP

PART OF 285-2042 GRADE CONTROL GP

SMCS-7332, 7451 **i04040349**

NOTE	REF NO	GRAPHIC REF	PART NUMBER	QTY	PART NAME 1 2 3 4 5 6 (PRODUCT LEVEL)	SEE PAGE
	1	1	**251-2247**	2	GROMMET	
	2	1	**302-9088**	2	BRACKET AS	
	3	1	**306-9214**	1	FILM-INSTRUCTION (BLADE CONTROL, LH)	
	4	1	**306-9215**	1	FILM-INSTRUCTION (BLADE CONTROL, RH)	
	5	1	**307-0150**	2	BRACKET AS	
	6	1	**311-4911**	1	HARNESS AS-SWITCH (GRADE CONTROL)	
	7	1	**321-9712**	1	HARNESS AS-PANEL	
	8	1	**253-1789**	2	SWITCH AS-PUSH BUTTON (BLADE CONTROL)	
					(EACH INCLUDES)	
		1	**6F-0253**	1	LOCKWASHER	
		1	**102-8803**	1	KIT-RECEPTACLE (3-PIN)	
					(INCLUDES RECEPTACLE AS & WEDGE)	
		1	**172-3511**	1	NUT (5/8-24-THD)	
		1	**186-3735**	3	PIN-CONNECTOR (16-GA TO 18-GA)	
M	9	1	**8C-7581**	6	SCREW-MACHINE (M4X0.7X8-MM)	
M	10	1	**9X-2042**	4	SCREW-TRUSS HEAD (M6X1X12-MM)	

M-METRIC PART

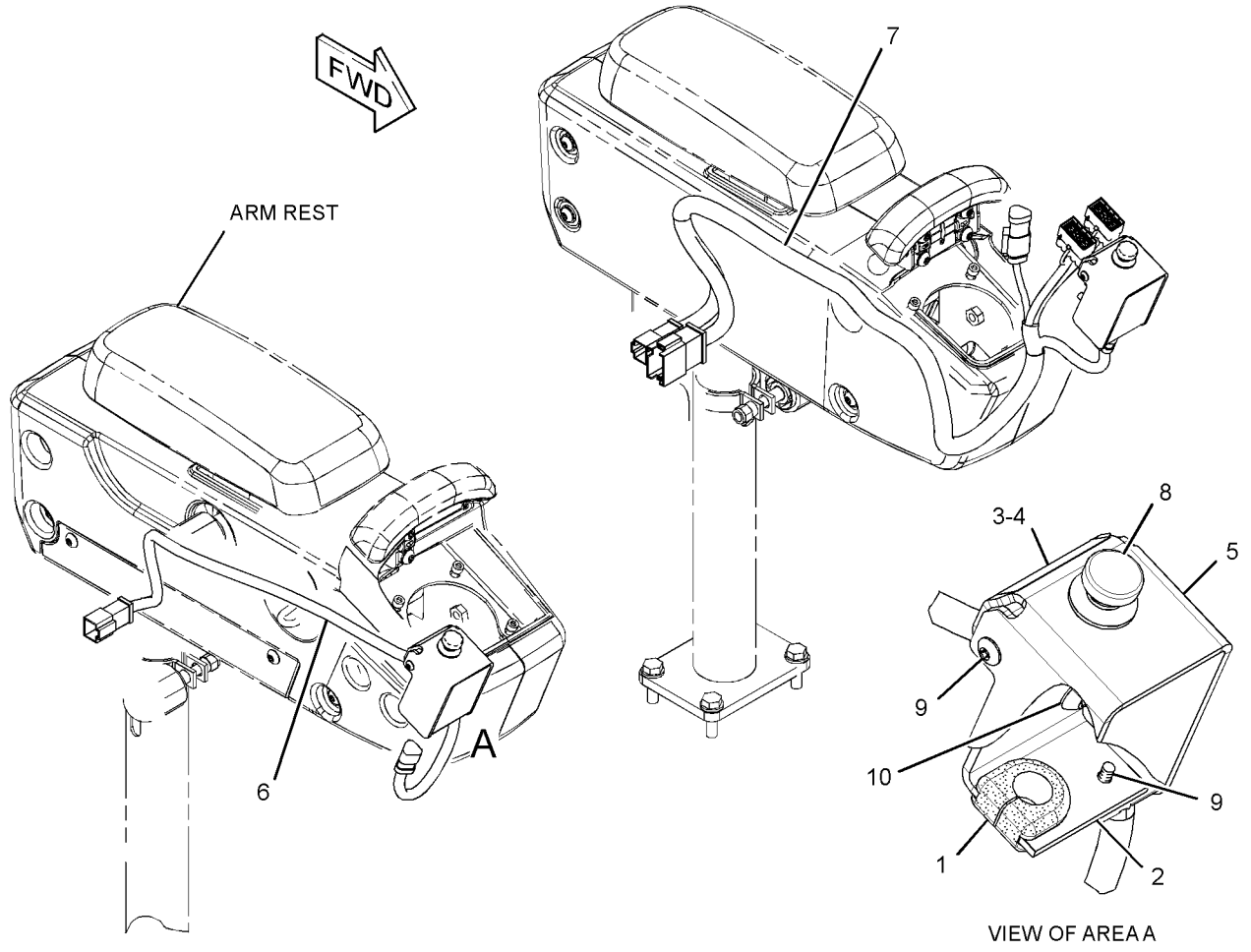

VIEW OF AREA A

GRAPHIC #1 **<END>** g01523161

OPERATOR STATION

266-7004 PANEL GP-INSTRUMENT

S/N: B9K1-UP

PART OF 266-7000 CAB AR

SMCS-7450, 7451 **i03496500**

NOTE	REF NO	GRAPHIC REF	PART NUMBER	QTY	PART NAME 1 2 3 4 5 6 (PRODUCT LEVEL)	SEE PAGE
	1	1	**092-4924**	1	PLUG-BUTTON	
	2	1	**114-6658**	12	WASHER (6.5X17X1-MM THK)	
	3	1	**139-6039**	4	NUT-RETAINER (U-TYPE)	
	4	1	**171-4047**	7	LOUVER AS-VENT	
	5	1	**8Y-6388**	4	LOUVER AS-VENT	
	6	1	**252-1826**	1	FILM-IDENTIFICATION (DASH, RH)	
	7	1	**266-7019**	1	PANEL AS-INSTRUMENT	
	8	1	**266-7024**	1	PLENUM AS	
	9	1	**266-7038**	1	DUCT	
	10	1	**278-0590**	1	DUCT AS	
	11	1	**282-0818**	1	DUCT	
	12	1	**283-7965**	1	PLATE	
	13	1	**286-5683**	4	GASKET	
	14	1	**289-3345**	1	FILM-IDENTIFICATION (TORQUE CONVERTER LOCK)	
	15	1	**117-8929**	7	WASHER (6.6X22X2-MM THK)	
	16	1	**118-5619**	22	SCREW-FLAT HEAD (6-20X1-IN)	
M	17	1	**9X-2043**	15	SCREW-TRUSS HEAD (M6X1X14-MM)	
M	18	1	**9X-2480**	4	BOLT (M6X1X45-MM)	
D	19	1	**5P-5637**		SEAL (0.1-EACH)	

D-ORDER BY THE METER
M-METRIC PART

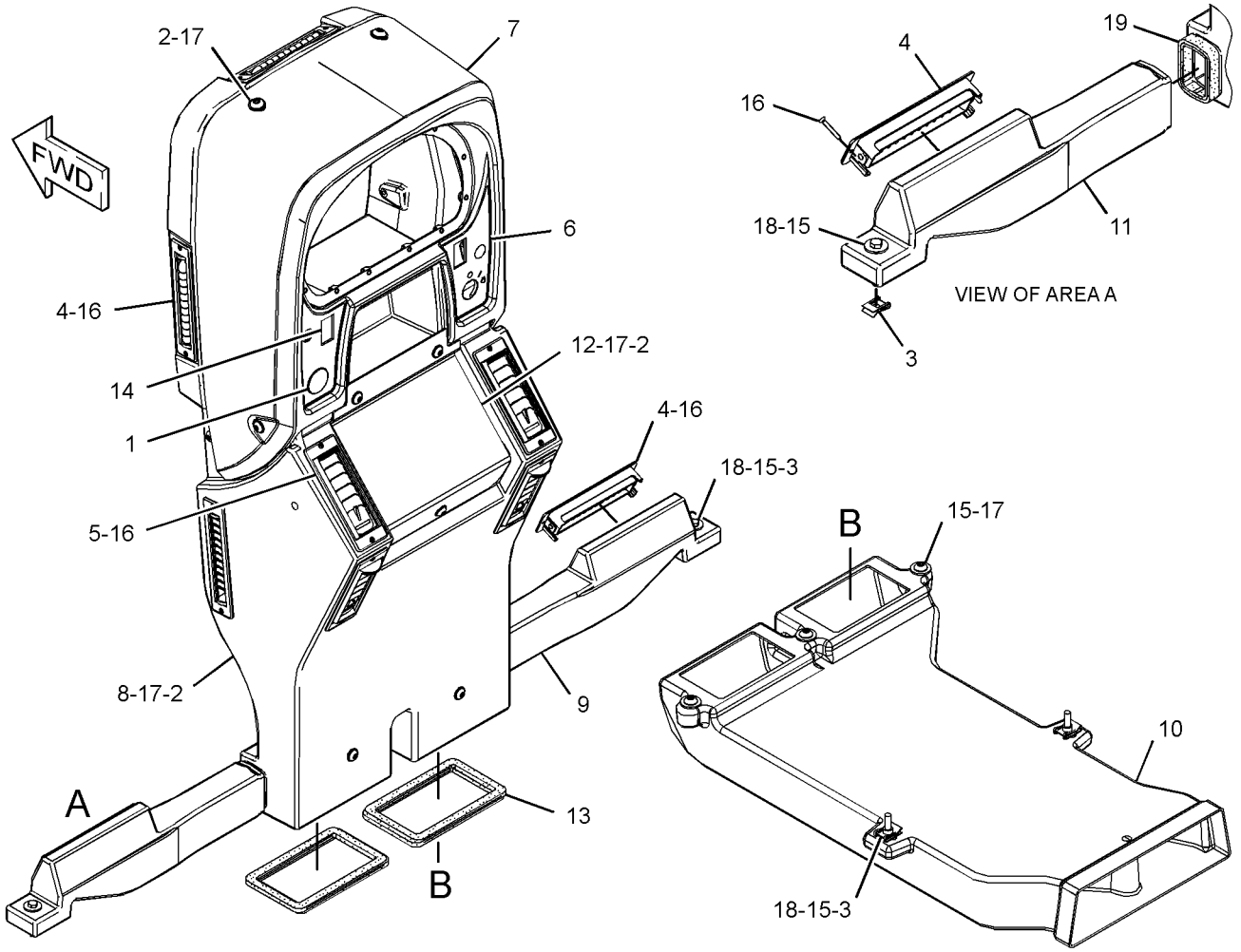

GRAPHIC #1 **<END>** g01843853

OPERATOR STATION

269-2207 PLATFORM AR–DUAL

S/N: B9K1-UP

SMCS-7253 **i02760086**

NOTE	PART NUMBER	QTY	PART NAME 1 2 3 4 5 6 (PRODUCT LEVEL)	SEE PAGE
Y	*266-7033*	1	DOOR GP-CAB (LH)	888
Y	*280-0528*	1	DOOR GP-CAB (RH)	890
Y	*266-8960*	1	LIGHTING GP-FLOOD (ENGINE ENCLOSURE, LH)	243
Y	*294-9295*	1	MOUNTING GP-PLATFORM (LH)	919
Y	*294-9296*	1	MOUNTING GP-PLATFORM (RH)	920
Y	*260-3770*	1	PLATFORM GP (LH)	933
Y	*271-6651*	1	PLATFORM GP-OPERATOR	937
Y	*281-1668*	1	SWITCH GP-ROCKER (ACCESS LIGHTS)	345

Y-SEPARATE ILLUSTRATION

<END>

OPERATOR STATION

269-2209 PLATFORM AR

S/N: B9K1-UP

SMCS-7253 **i02757960**

NOTE	PART NUMBER	QTY	PART NAME 1 2 3 4 5 6 (PRODUCT LEVEL)	SEE PAGE
Y	*266-7033*	1	DOOR GP-CAB (LH)	888
Y	*266-7031*	1	DOOR GP-CAB (RH)	876
Y	*266-8960*	1	LIGHTING GP-FLOOD (ENGINE ENCLOSURE, LH)	243
Y	*294-9295*	1	MOUNTING GP-PLATFORM (LH)	919
Y	*260-3770*	1	PLATFORM GP (LH)	933
Y	*306-5427*	1	STEP GP (RH)	593
Y	*281-1668*	1	SWITCH GP-ROCKER (ACCESS LIGHTS)	345

Y-SEPARATE ILLUSTRATION

<END>

OPERATOR STATION

260-3770 PLATFORM GP–LH

S/N: B9K1-UP

PART OF 269-2207, 269-2209 PLATFORM AR

SMCS-7253 **i02758063**

NOTE	REF NO	GRAPHIC REF	PART NUMBER	QTY	PART NAME 1 2 3 4 5 6 (PRODUCT LEVEL)	SEE PAGE
	1	1	**242-5054**	1	FILM-WARNING (NO STEP)	
Y	2	1	*270-6971*	1	HANDRAIL GP	553
Y	3	1	*270-6978*	1	SUPPORT GP-PLATFORM	594
Y	4	1	**271-0751**	1	PLATFORM GP-OPERATOR	936
Y	5	1	*271-0752*	1	STEP GP	587
	6	1	**272-5594**	1	WALKWAY AS	
M		1	**8T-3597**	2	NUT-WELD (M12X1.75-THD)	
	7	1	**279-2588**	1	PLATE AS	
M		1	**8T-3597**	2	NUT-WELD (M12X1.75-THD)	
Y	8	1	*279-5036*	1	MOUNTING GP-PLATFORM	918

M-METRIC PART
Y-SEPARATE ILLUSTRATION

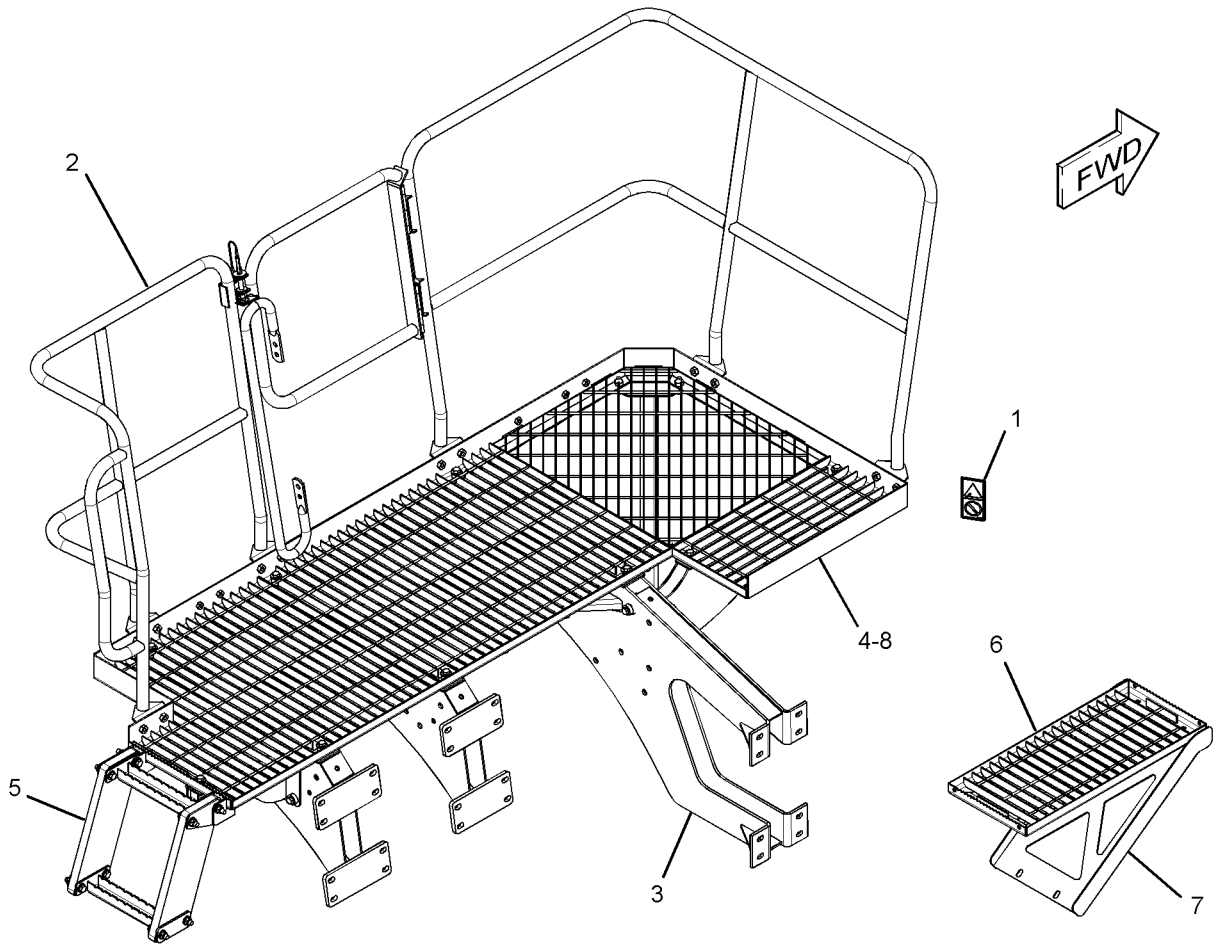

GRAPHIC #1 **<END>** g01382779

OPERATOR STATION

266-7002 PLATFORM GP-OPERATOR

S/N: B9K1-341

PART OF 266-7000 CAB AR

SMCS-7253 **i02762010**

NOTE	REF NO	GRAPHIC REF	PART NUMBER	QTY	PART NAME 1 2 3 4 5 6 (PRODUCT LEVEL)	SEE PAGE
	1	1	**266-7012**	1	PLATFORM AS	
Y	2	1	**266-7015**	1	COVER GP-PLATFORM	865
	3	1	**282-0821**	1	SUPPORT AS	
M		1	**6V-9632**	1	NUT-WELD (M6X1-THD)	
M		1	**8T-3490**	4	NUT-WELD (M10X1.5-THD)	
Y	4	1	**309-5955**	1	CONTROL & MTG GP-JOYSTICK (OPERATOR PLATFORM)	847
	5	1	**8T-4121**	6	WASHER-HARD (11X21X2.5-MM THK)	
M	6	1	**8T-4195**	6	BOLT (M10X1.5X30-MM)	
D	7	1	**6V-0505**		SEAL (7.4-M)	

D-ORDER BY THE METER
M-METRIC PART
Y-SEPARATE ILLUSTRATION

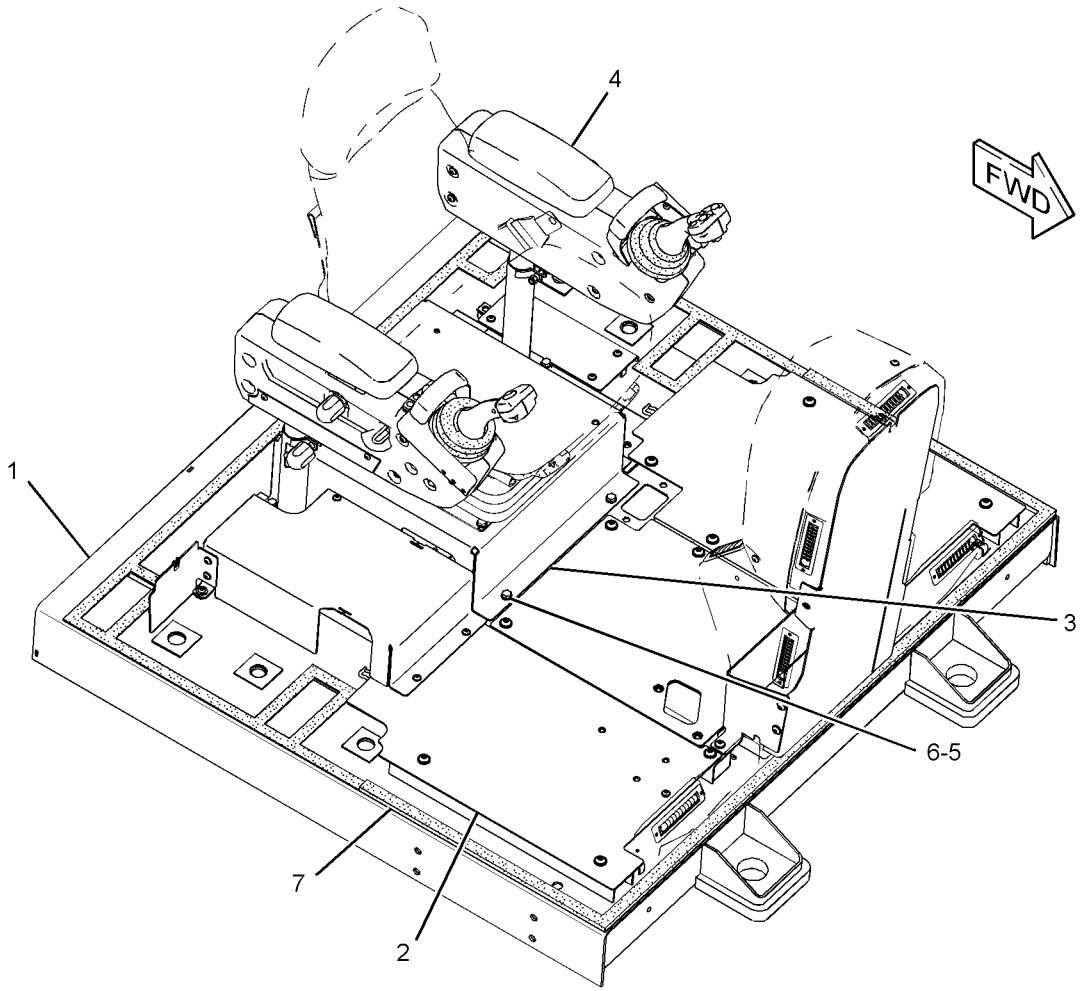

GRAPHIC #1 **<END>** g01385655

OPERATOR STATION

266-7002 PLATFORM GP-OPERATOR

S/N: B9K342-UP

PART OF 266-7000 CAB AR

SMCS-7253 **i03879715**

NOTE	REF NO	GRAPHIC REF	PART NUMBER	QTY	PART NAME 1 2 3 4 5 6 (PRODUCT LEVEL)	SEE PAGE
	1	1	**266-7012**	1	PLATFORM AS	
Y	2	1	**266-7015**	1	COVER GP-PLATFORM	865
	3	1	**282-0821**	1	SUPPORT AS	
M		1	**6V-9632**	1	NUT-WELD (M6X1-THD)	
M		1	**8T-3490**	4	NUT-WELD (M10X1.5-THD)	
CY	4	1	**342-8961**	1	SUPPORT GP-CONTROL	957
	5	1	**8T-4121**	6	WASHER-HARD (11X21X2.5-MM THK)	
M	6	1	**8T-4195**	6	BOLT (M10X1.5X30-MM)	
D	7	1	**6V-0505**		SEAL (7.4-M)	

C-CHANGE FROM PREVIOUS TYPE
D-ORDER BY THE METER
M-METRIC PART
Y-SEPARATE ILLUSTRATION

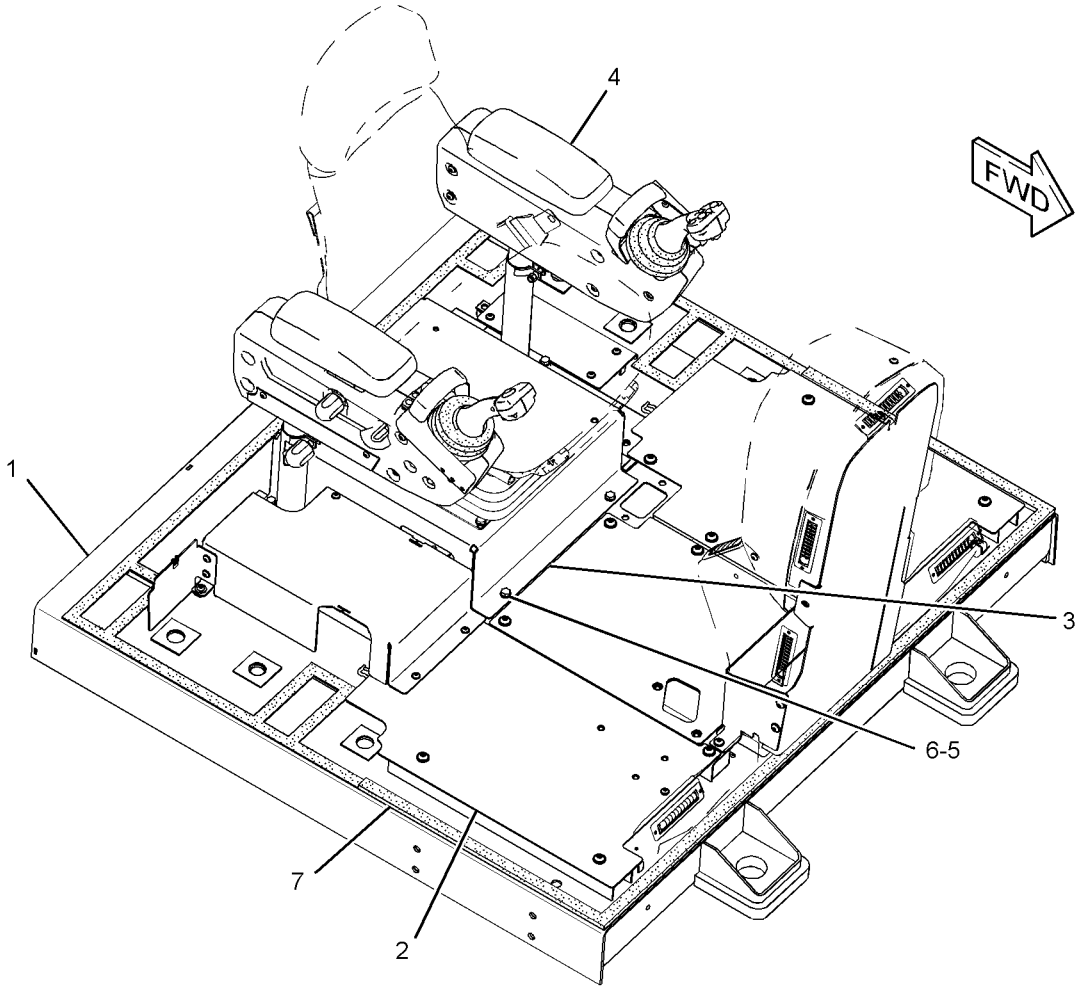

GRAPHIC #1 **<END>** g01385655

OPERATOR STATION

271-0751 PLATFORM GP-OPERATOR

S/N: B9K1-UP

PART OF 260-3770 PLATFORM GP

SMCS-7253 **i02758308**

NOTE	REF NO	GRAPHIC REF	PART NUMBER	QTY	PART NAME 1 2 3 4 5 6 (PRODUCT LEVEL)	SEE PAGE
	1	1	**271-0804**	1	GRATING	
	2	1	**271-0806**	1	GRATING	
	3	1	**278-1140**	1	GRATING	
	4	1	**284-0658**	1	PLATFORM AS	
M	5	1	**8T-3490**	5	NUT-WELD (M10X1.5-THD)	
M	6	1	**8T-3597**	14	NUT-WELD (M12X1.75-THD)	

M-METRIC PART

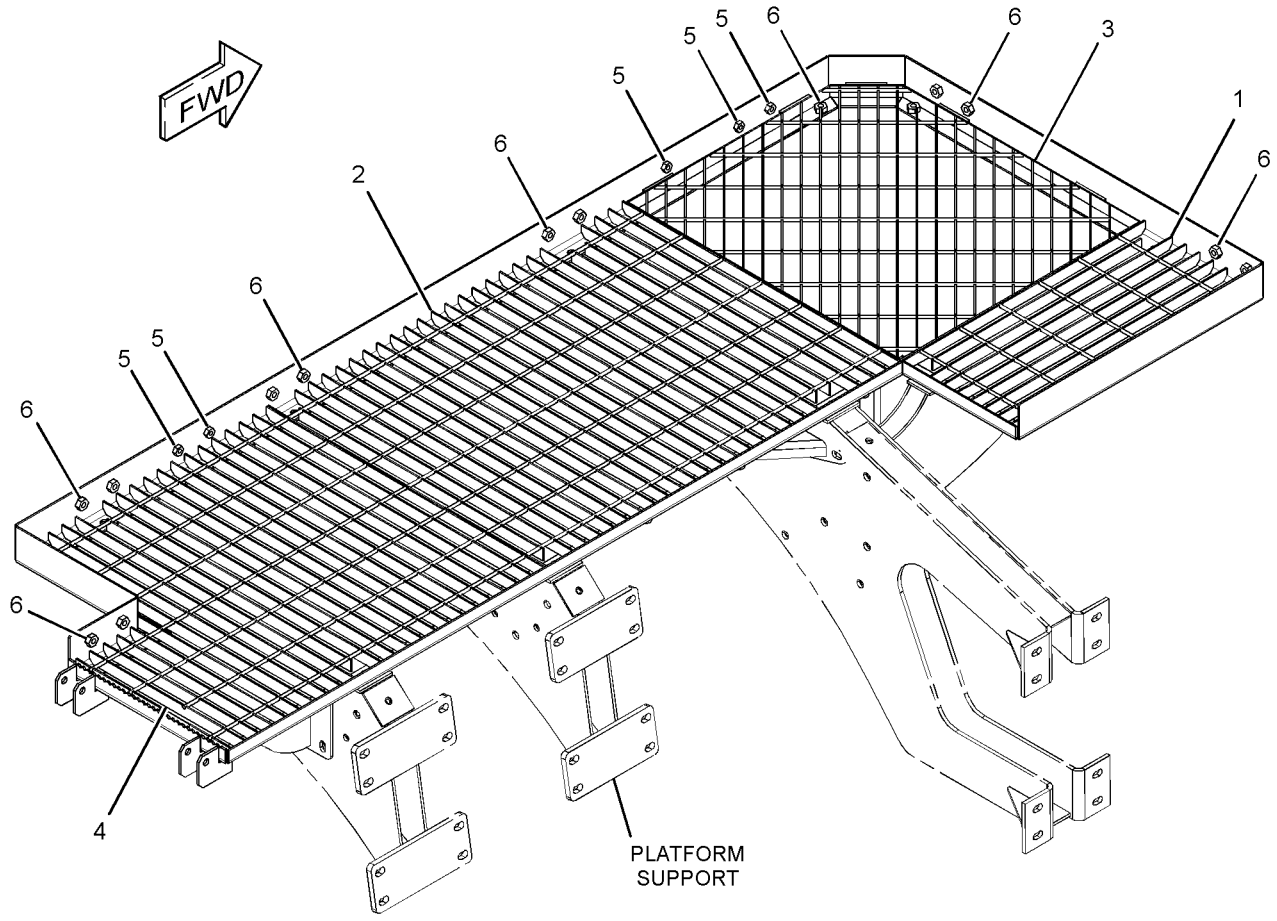

GRAPHIC #1 **<END>** g01383676

OPERATOR STATION

271-6651 PLATFORM GP-OPERATOR

S/N: B9K1-UP

PART OF 269-2207 PLATFORM AR

SMCS-7253 **i02760129**

NOTE	REF NO	GRAPHIC REF	PART NUMBER	QTY	PART NAME 1 2 3 4 5 6 (PRODUCT LEVEL)	SEE PAGE
	1	1	**242-5054**	1	FILM-WARNING (NO STEP)	
Y	2	1	*271-0752*	1	STEP GP	587
	3	1	*271-7552*	1	HANDRAIL GP	
		1	**278-9734**	1	HANDRAIL AS	
		1	**278-9736**	1	HANDRAIL AS	
		1	**310-3961**	1	HANDRAIL	
	4	1	**271-7553**	1	PLATFORM AS	
M		1	**8T-3490**	2	NUT-WELD (M10X1.5-THD)	
M		1	**8T-3597**	14	NUT-WELD (M12X1.75-THD)	
	5	1	**272-5594**	1	WALKWAY AS	
Y	6	1	*278-1613*	1	MOUNTING GP-PLATFORM	917
	7	1	**279-2588**	1	PLATE AS	
M		1	**8T-3597**	2	NUT-WELD (M12X1.75-THD)	
Y	8	1	*279-5619*	1	FASTENER GP-PLATFORM	538

M-METRIC PART
Y-SEPARATE ILLUSTRATION

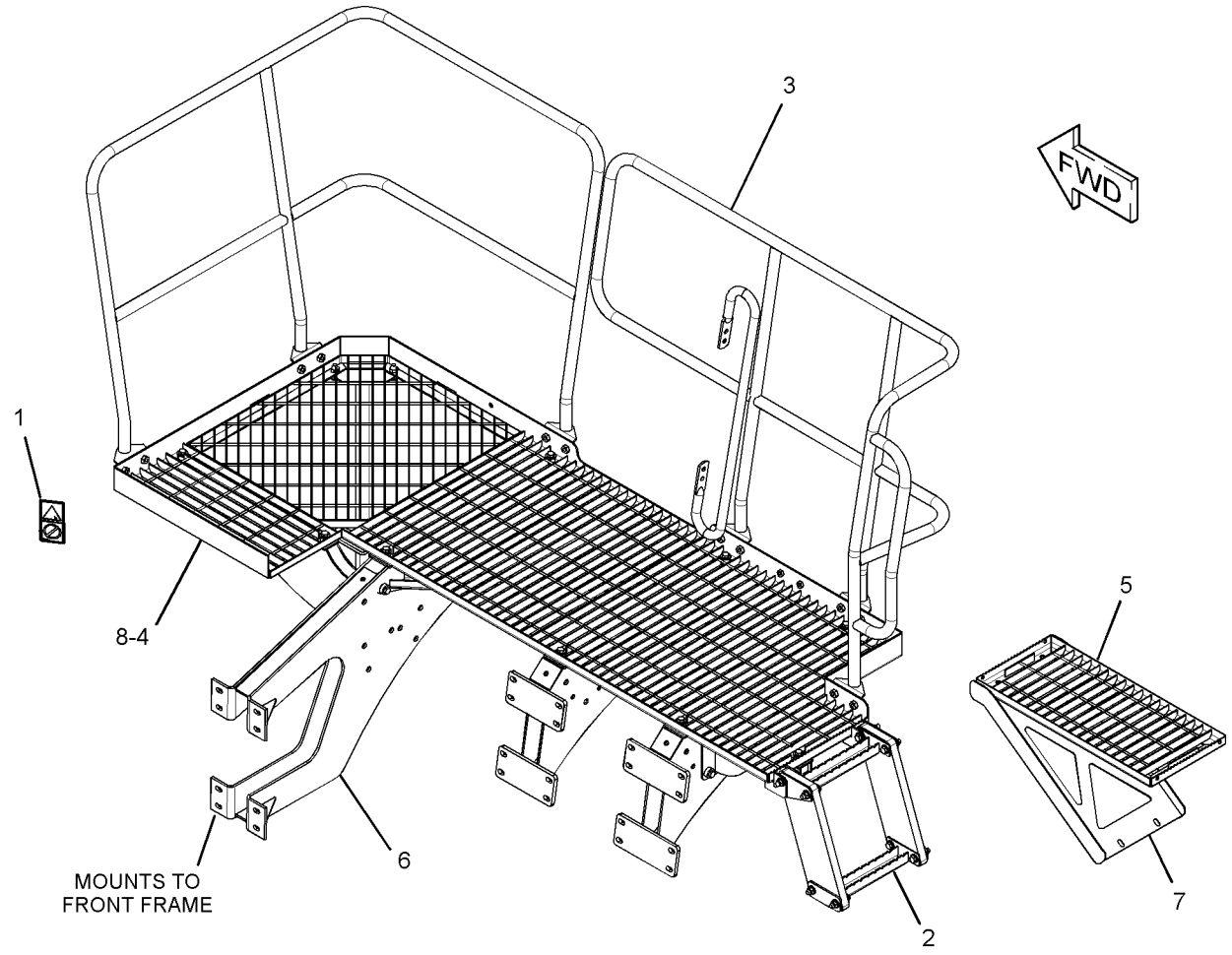

GRAPHIC #1 **<END>** g01383725

OPERATOR STATION

233-3123 RADIO GP–AM/FM/WB

S/N: B9K1-UP

CANNOT BE USED WITH 294-0989–PAGE 941, 294-0990–PAGE 942, 294-0991–PAGE 943

SMCS-7338 **i03572366**

NOTE	REF NO	GRAPHIC REF	PART NUMBER	QTY	PART NAME 1 2 3 4 5 6 (PRODUCT LEVEL)	SEE PAGE
	1	1	**136-5490**	1	BUSHING (RADIO MOUNT)	
	2	1	**200-5728**	1	HARNESS AS-RADIO	
		1	**172-8037**	1	CONNECTOR (RADIO)	
		1	**186-3735**	7	PIN-CONNECTOR (16-GA TO 18-GA)	
		1	**8T-8737**	1	PLUG-SEAL	
		1	**160-3518**	1	KIT-RECEPTACLE (8-PIN)	
					(INCLUDES RECEPTACLE AS & WEDGE)	
Y	3	1	**331-5292**	1	RADIO GP (AM/FM/WB)	944

Y-SEPARATE ILLUSTRATION

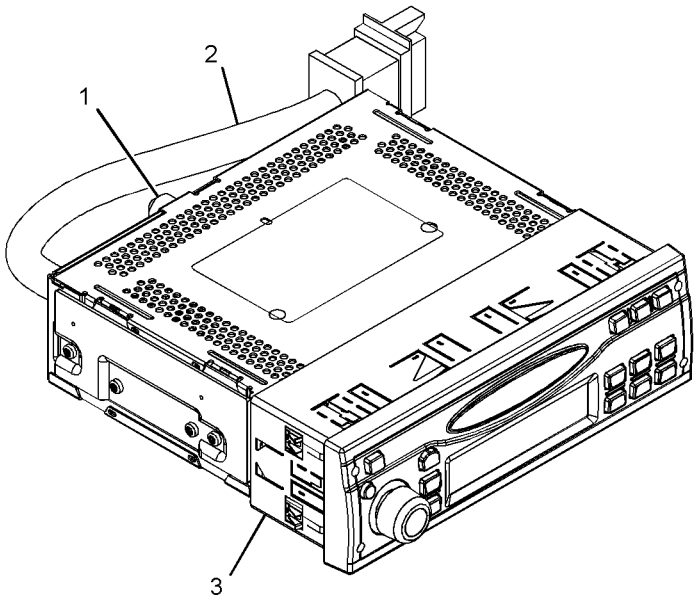

GRAPHIC #1 **<END>** g01813816

OPERATOR STATION

284-8953 RADIO GP–AM/FM/WB/CD PLAYER

S/N: B9K1-UP

PART OF 294-0989 RADIO GP

SMCS-7338 **i03426820**

NOTE	REF NO	GRAPHIC REF	PART NUMBER	QTY	PART NAME 1 2 3 4 5 6 (PRODUCT LEVEL)	SEE PAGE
	1	1	192-7054	1	SLEEVE	

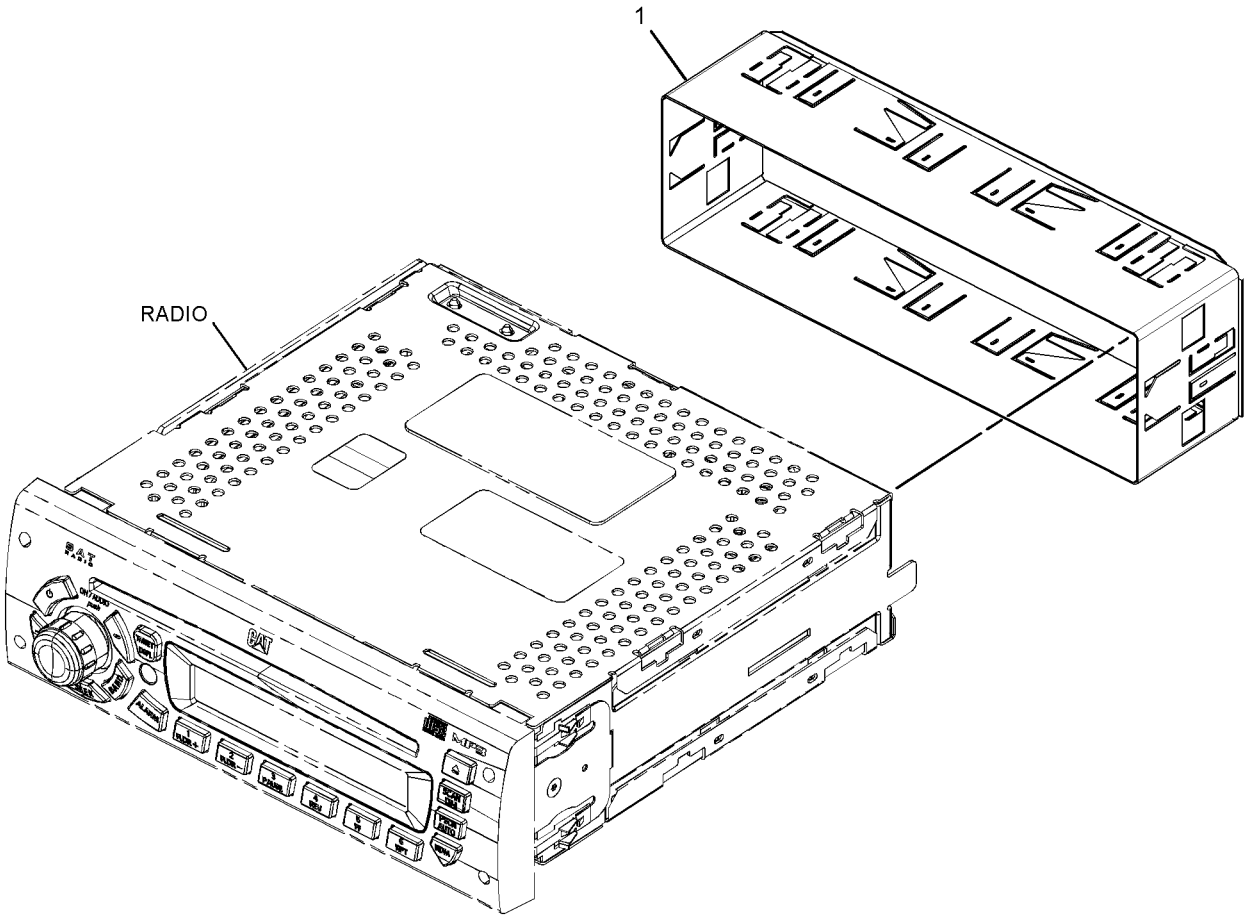

GRAPHIC #1 **<END>** g01821613

OPERATOR STATION

284-8955 RADIO GP–AM/FM/WB/SIRIUS/ CD PLAYER

S/N: B9K1-UP

PART OF 294-0991 RADIO GP

SMCS-7338 **i03466743**

NOTE	REF NO	GRAPHIC REF	PART NUMBER	QTY	PART NAME 1 2 3 4 5 6 (PRODUCT LEVEL)	SEE PAGE
	1	1	192-7054	1	SLEEVE	

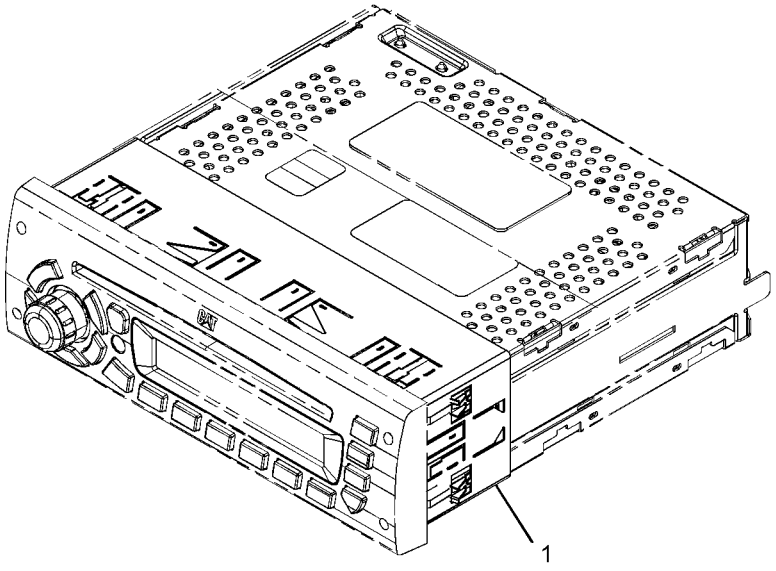

GRAPHIC #1 **<END>** g01813795

OPERATOR STATION

294-0989 RADIO GP–AM/FM/WB/CD PLAYER

S/N: B9K1-UP

CANNOT BE USED WITH 233-3123–PAGE 938, 294-0990–PAGE 942, 294-0991–PAGE 943

SMCS-7338 **i02909100**

NOTE	REF NO	GRAPHIC REF	PART NUMBER	QTY	PART NAME 1 2 3 4 5 6 (PRODUCT LEVEL)	SEE PAGE
	1	1	**136-5490**	1	BUSHING (RADIO MOUNT)	
CY	2	1	**284-8953**	1	RADIO GP (AM/FM/WB/CD PLAYER)	939
	3	1	**200-5728**	1	HARNESS AS-RADIO	
		1	**160-3518**	1	KIT-RECEPTACLE (8-PIN)	
					(INCLUDES RECEPTACLE AS & WEDGE)	

C-CHANGE FROM PREVIOUS TYPE
Y-SEPARATE ILLUSTRATION

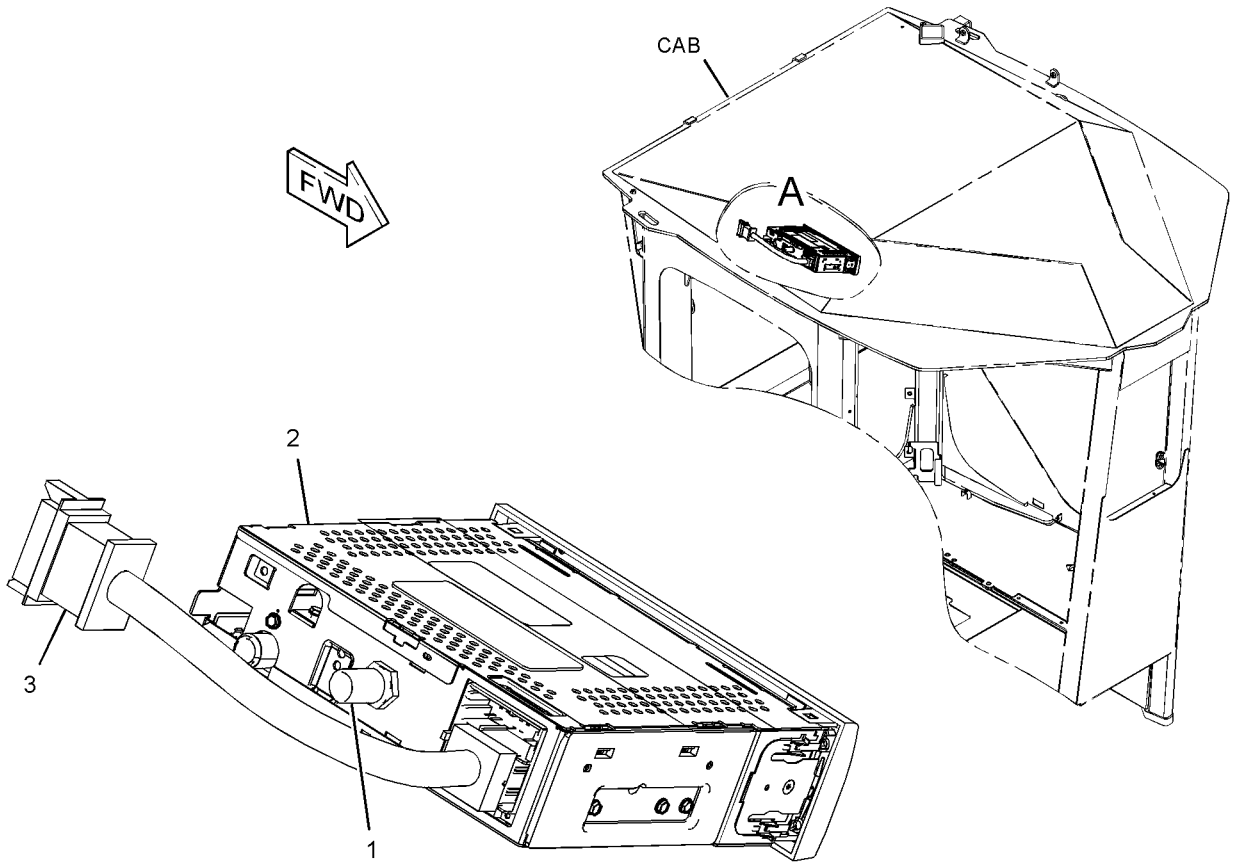

VIEW OF AREA A

GRAPHIC #1 **<END>** g01405744

OPERATOR STATION

294-0990 RADIO GP–AM/FM/WB/XM/CD PLAYER

S/N: B9K1-UP

CANNOT BE USED WITH 233-3123–PAGE 938, 294-0989–PAGE 941, 294-0991–PAGE 943

SMCS-7338 **i02567882**

NOTE	REF NO	GRAPHIC REF	PART NUMBER	QTY	PART NAME 1 2 3 4 5 6 (PRODUCT LEVEL)	SEE PAGE
	1	1	**136-5490**	1	BUSHING (RADIO MOUNT)	
	2	1	**200-5728**	1	HARNESS AS-RADIO	
		1	**160-3518**	1	KIT-RECEPTACLE (8-PIN)	
					(INCLUDES RECEPTACLE AS & WEDGE)	
	3	1	**284-8954**	1	RADIO GP (AM/FM/WB/XM/ CD PLAYER)	
		1	**142-9681**	1	KNOB-SELECT	
		1	**192-7054**	1	SLEEVE	

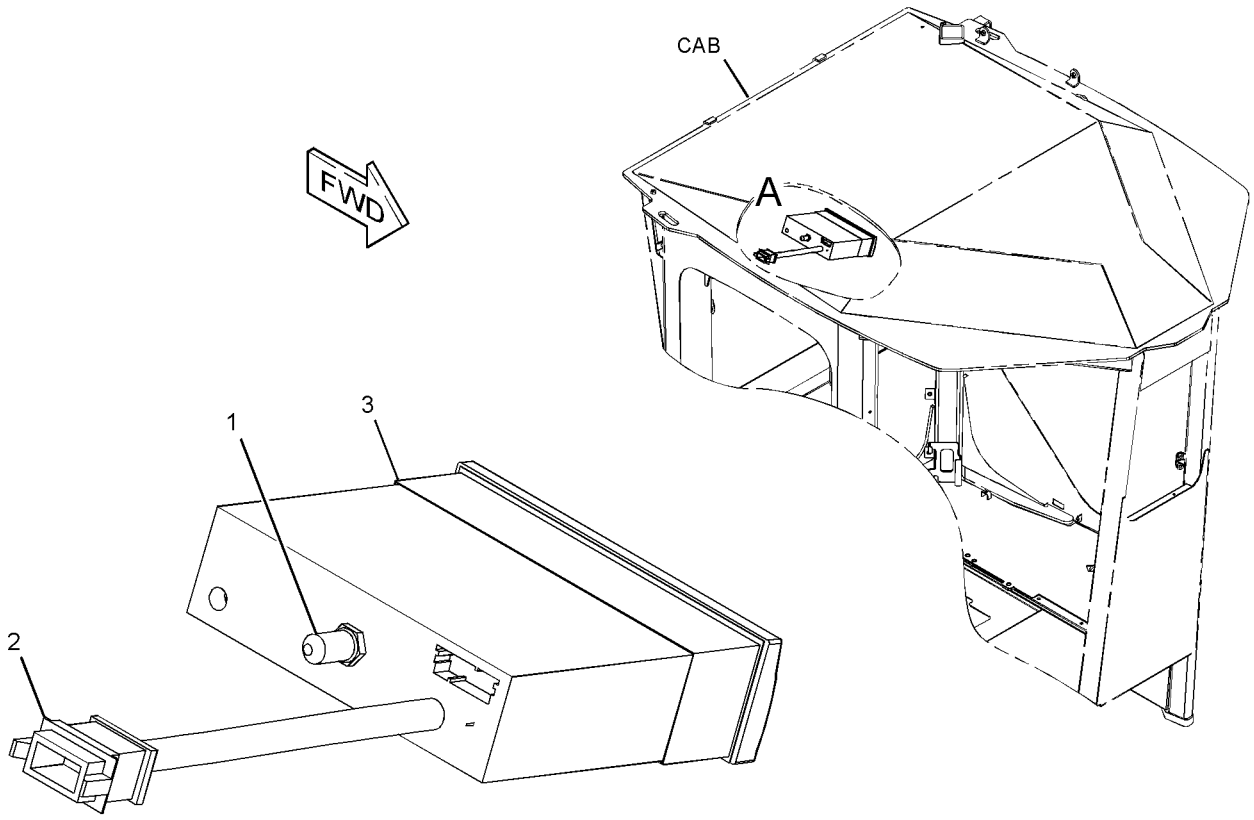

VIEW OF AREA A

GRAPHIC #1 **<END>** g01287887

OPERATOR STATION

294-0991 RADIO GP–AM/FM/WB/SIRIUS/CD PLAYER

S/N: B9K1-UP

CANNOT BE USED WITH 233-3123–PAGE 938, 294-0989–PAGE 941, 294-0990–PAGE 942

SMCS-7338 **i02651631**

NOTE	REF NO	GRAPHIC REF	PART NUMBER	QTY	PART NAME 1 2 3 4 5 6 (PRODUCT LEVEL)	SEE PAGE
	1	1	**136-5490**	1	BUSHING (RADIO MOUNT)	
	2	1	**200-5728**	1	HARNESS AS-RADIO	
		1	**160-3518**	1	KIT-RECEPTACLE (8-PIN)	
					(INCLUDES RECEPTACLE AS & WEDGE)	
Y	3	1	**284-8955**	1	RADIO GP (AM/FM/WB/SIRIUS/CD PLAYER)	940

Y-SEPARATE ILLUSTRATION

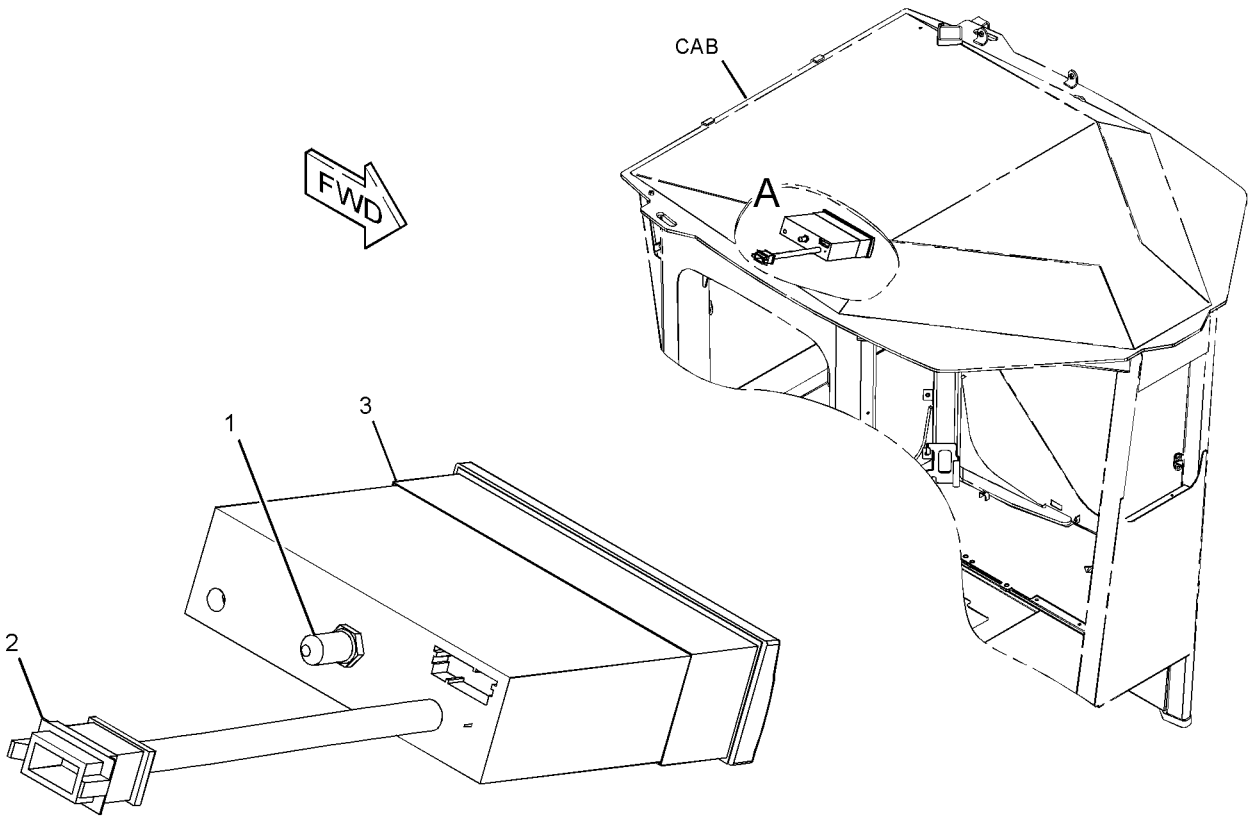

VIEW OF AREA A

GRAPHIC #1 **<END>** g01287793

OPERATOR STATION

331-5292 RADIO GP–AM, FM

S/N: B9K1-UP
PART OF 233-3123 RADIO GP
FOR USE WITH INSTALLATION GP-RADIO

SMCS-7338 **i03466464**

NOTE	REF NO	GRAPHIC REF	PART NUMBER	QTY	PART NAME 1 2 3 4 5 6 (PRODUCT LEVEL)	SEE PAGE
	1	1	192-7054	1	SLEEVE	

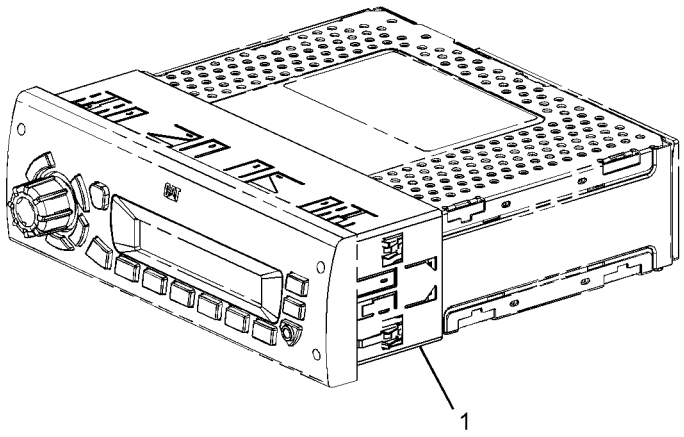

GRAPHIC #1 **<END>** g01813076

OPERATOR STATION

210-2270 RECLINER GP-SEAT

S/N: B9K1-UP

PART OF 244-5002 SEAT GP

SMCS-7312 **i02709288**

NOTE	REF NO	GRAPHIC REF	PART NUMBER	QTY	PART NAME 1 2 3 4 5 6 (PRODUCT LEVEL)	SEE PAGE
	1	1	**177-1862**	1	BRACKET (SEAT BELT)	
	2	1	**210-2262**	1	BRACKET AS	
	3	1	**210-2263**	1	BRACKET AS	
	4	1	**210-2266**	1	GEAR-LOCK (14-TEETH)	
	5	1	**293-2911**	1	SHAFT AS	
		1	**2L-5893**	2	PIN-SPRING	
		1	**170-8590**	1	SPRING	
	6	1	**217-7933**	1	LATCH	
	7	1	**236-5197**	1	SPRING	
	8	1	**031-0214**	1	BOLT-LOCKING (1/4-20X0.5-IN)	
	9	1	**101-2867**	1	WASHER-HARD (7.2X25X2-MM THK)	
	10	1	**4M-6425**	1	BOLT (5/16-18X1-IN)	
	11	1	**5M-2894**	1	WASHER-HARD (10.2X18.5X2.5-MM THK)	
	12	1	**5S-7383**	1	BOLT (3/8-16X1.75-IN)	
	13	1	**8T-4224**	1	WASHER-HARD (8.8X16X2-MM THK)	

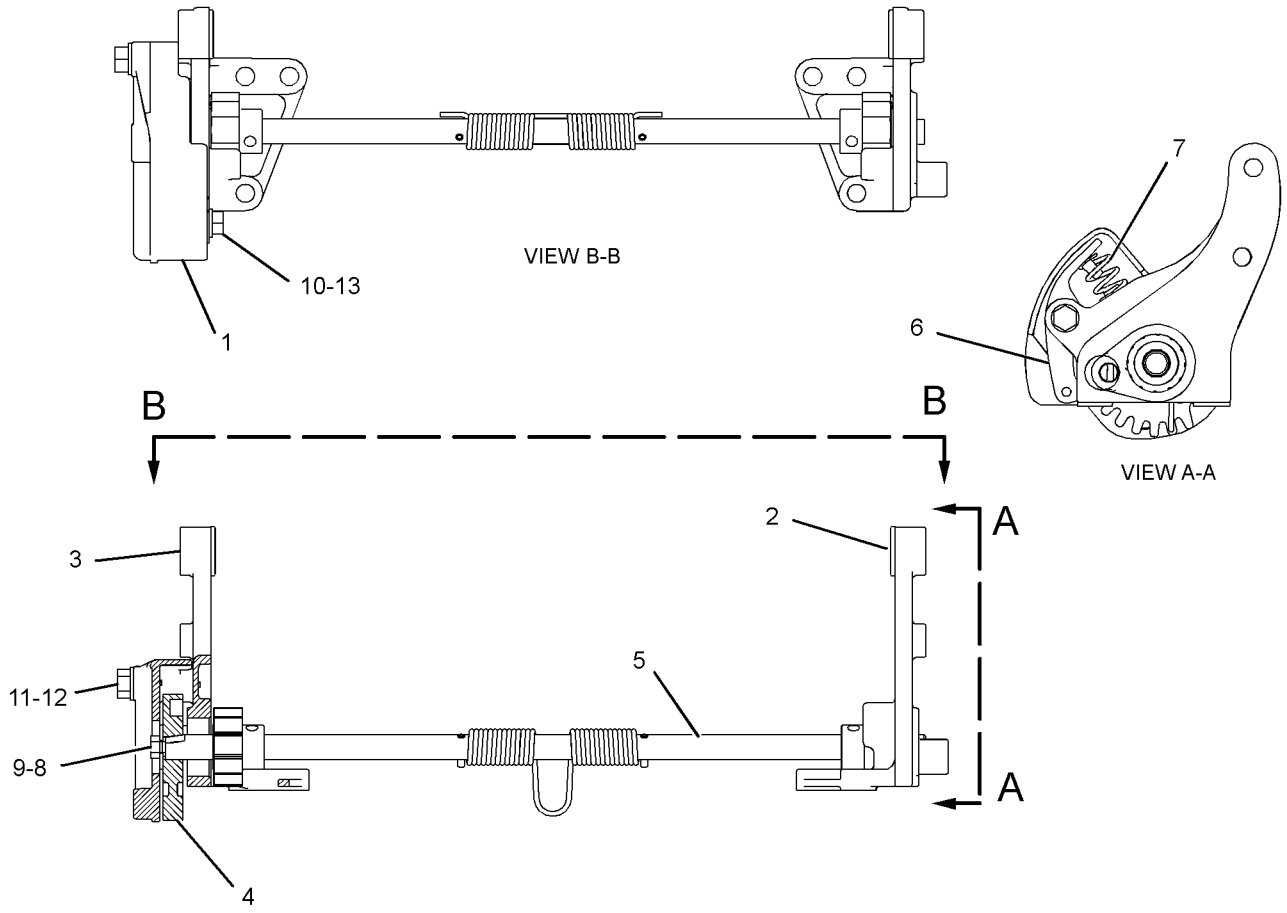

GRAPHIC #1 **<END>** g01296294

OPERATOR STATION

266-7001 ROPS GP

S/N: B9K1-UP

PART OF 266-7000 CAB AR

SMCS-7177, 7323 **i02761935**

NOTE	PART NUMBER	QTY	PART NAME 1 2 3 4 5 6 (PRODUCT LEVEL)	SEE PAGE
	159-3759	2	FILM-INSTRUCTION (DO NOT DRILL, WELD ROPS)	
	266-7011	1	ROPS AS	

<END>

OPERATOR STATION

266-7025 SCREEN GP-SUN

S/N: B9K1-UP

SMCS-7165 **i02760939**

NOTE	REF NO	GRAPHIC REF	PART NUMBER	QTY	PART NAME 1 2 3 4 5 6 (PRODUCT LEVEL)	SEE PAGE
	1	1	**137-5503**	1	SCREEN GP-SUN	
	2	1	**286-1226**	1	PLATE AS	
M		1	**6V-9632**	4	NUT-WELD (M6X1-THD)	
M	3	1	**5C-9553**	4	BOLT (M6X1X16-MM)	
M	4	1	**8T-4200**	2	BOLT (M8X1.25X16-MM)	
	5	1	**8T-4224**	2	WASHER-HARD (8.8X16X2-MM THK)	
	6	1	**9X-8256**	4	WASHER (6.6X12X2-MM THK)	
D	7	1	**6V-5163**		SEAL (0.2-M)	

D-ORDER BY THE METER
M-METRIC PART

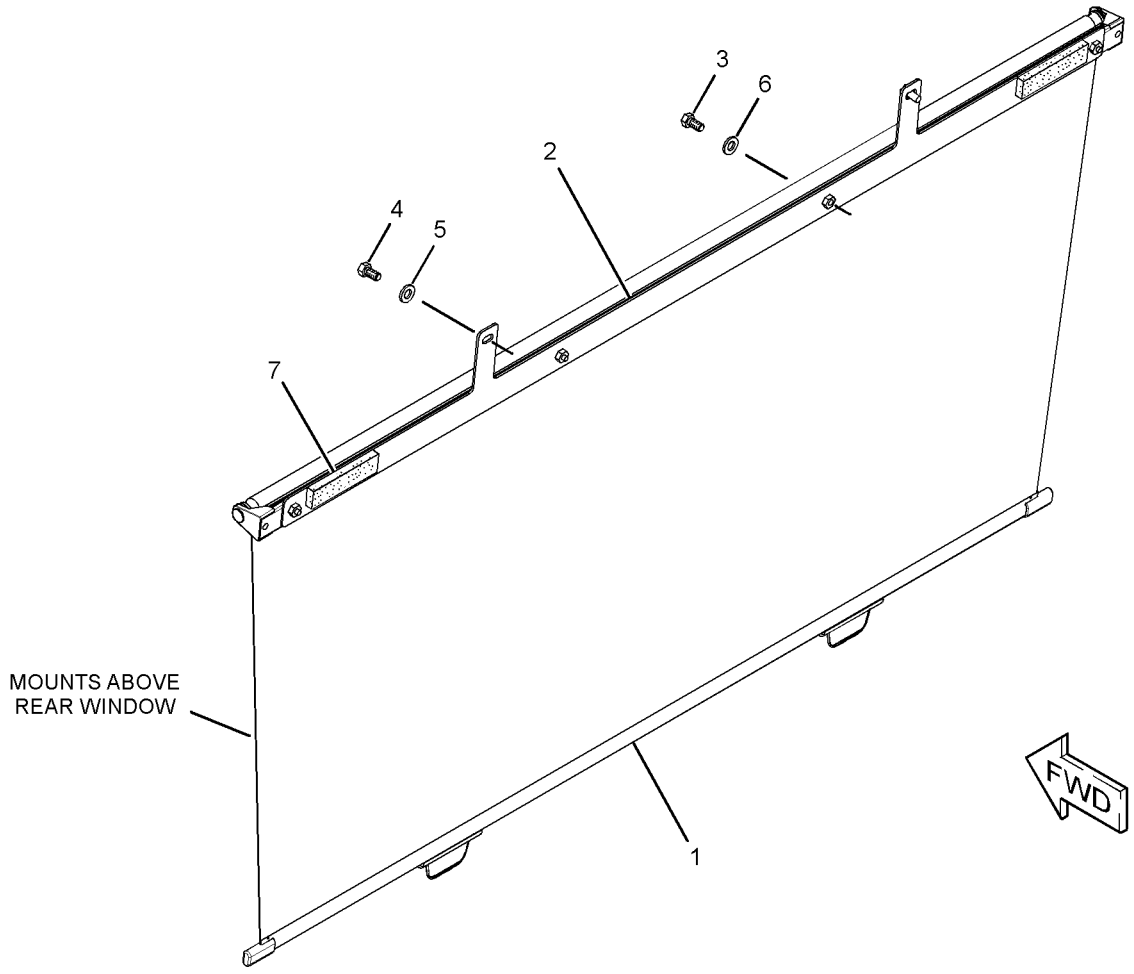

GRAPHIC #1 **<END>** g01387055

OPERATOR STATION

233-3150 SEAT & MOUNTING GP

S/N: B9K1-UP

SMCS-7312 **i04036143**

NOTE	PART NUMBER	QTY	PART NAME 1 2 3 4 5 6 (PRODUCT LEVEL)	SEE PAGE
Y	*238-6683*	1	SEAT GP-SUSPENSION	952
M	**8T-4136**	4	BOLT (M10X1.5X25-MM)	
	8T-4121	4	WASHER-HARD (11X21X2.5-MM THK)	

M-METRIC PART
Y-SEPARATE ILLUSTRATION

<END>

OPERATOR STATION

244-5001 SEAT GP–CLOTH

S/N: B9K1-UP

PART OF 238-6683 SEAT GP-SUSPENSION

SMCS-7312 **i02790340**

NOTE	REF NO	GRAPHIC REF	PART NUMBER	QTY	PART NAME 1 2 3 4 5 6 (PRODUCT LEVEL)	SEE PAGE
	1	1	**177-4937**	1	SPACER (11.7X19.8X20.3-MM THK)	
	2	1	**222-0345**	1	SEAT BELT GP (RETRACTABLE)	
	2A	1	**0T-0244**	1	BOLT (7/16-20X1.25-IN)	
	2B	1	**205-6388**	1	BOLT (7/16-20X1.75-IN)	
	3	1	**229-1494**	1	EXTENSION GP-BACKREST (CLOTH)	
Y	4	1	**244-5002**	1	SEAT GP (CLOTH)	950

Y-SEPARATE ILLUSTRATION

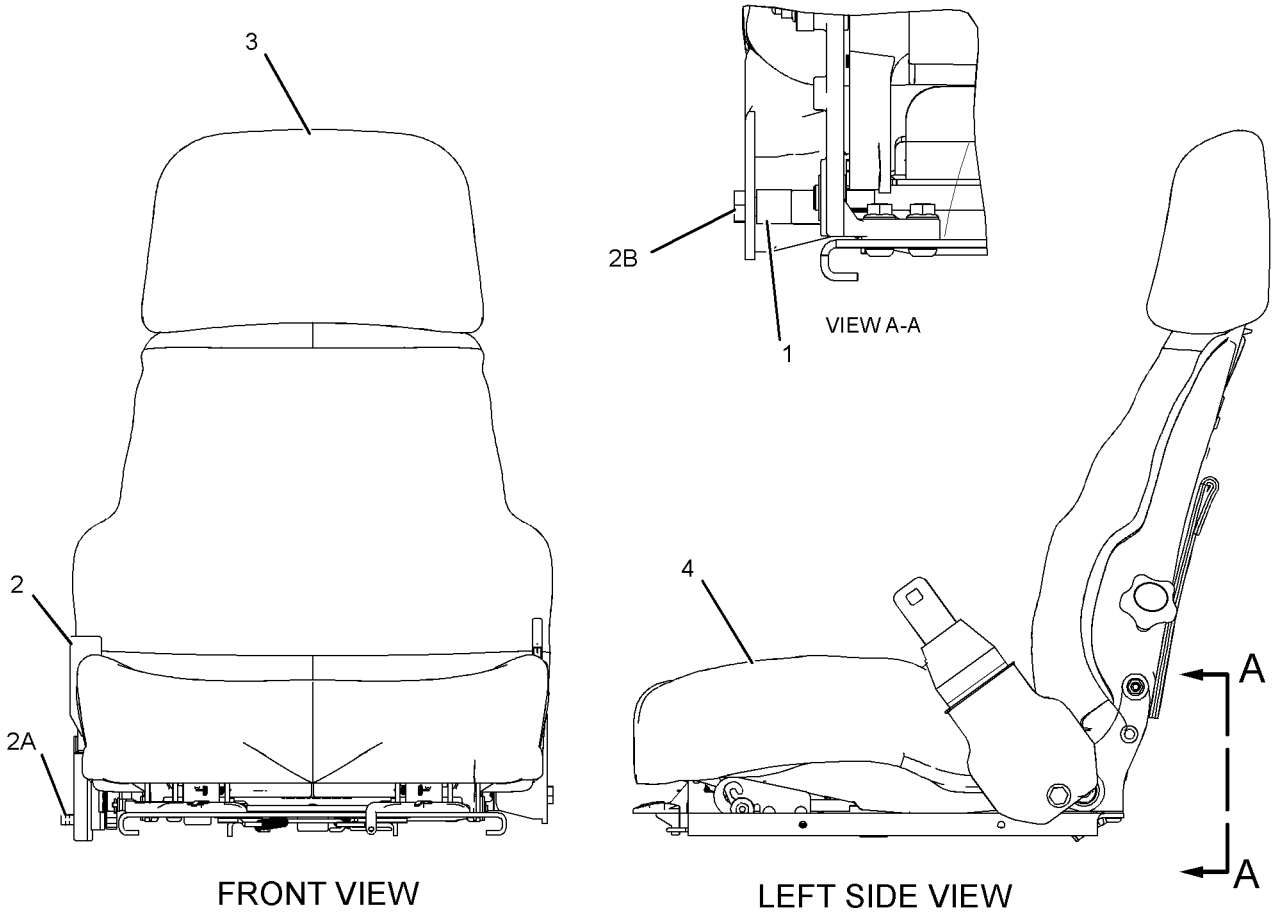

GRAPHIC #1 **<END>** g01393999

OPERATOR STATION

244-5002 SEAT GP–CLOTH

S/N: B9K1-UP

PART OF 244-5001 SEAT GP

SMCS-7312 **i03818555**

NOTE	REF NO	GRAPHIC REF	PART NUMBER	QTY	PART NAME 1 2 3 4 5 6 (PRODUCT LEVEL)	SEE PAGE
	1	1	**294-5042**	2	SPACER (11.1X19.5X9.67-MM THK)	
	2	1	**143-1288**	8	LOCKNUT-FLANGE (3/8-16-THD)	
	3	1	**171-6682**	1	BAR	
	4	1	**172-2416**	2	PIN	
Y	5	1	*173-1028*	1	ADJUSTER GP-SEAT	829
	6	1	**177-1863**	2	BOLT-PIVOT (3/8-16X2.89-IN)	
Y	7	1	*292-9237*	1	PAN GP-BACKREST (CLOTH, LUMBAR)	922
	8	1	**184-2298**	1	ROD	
	9	1	**184-2299**	4	WASHER (7X25.4X2.54-MM THK)	
Y	10	1	*210-2270*	1	RECLINER GP-SEAT (CLOTH)	945
Y	11	1	**243-6737**	1	PAN GP-SEAT	923
	12	1	**095-0843**	2	PIN-COTTER	
	13	1	**171-1230**	6	SCREW-BUTTON HEAD (3/8-16X1-IN)	
	14	1	**5V-1496**	2	RETAINER	
	15	1	**6V-7646**	2	WASHER-HARD (7.2X25X2-MM THK)	
	16	1	**8T-0328**	1	WASHER-HARD (5.5X10X1-MM THK)	
	17	1	**8T-4205**	1	WASHER-HARD (7.2X14.5X2-MM THK)	

Y-SEPARATE ILLUSTRATION

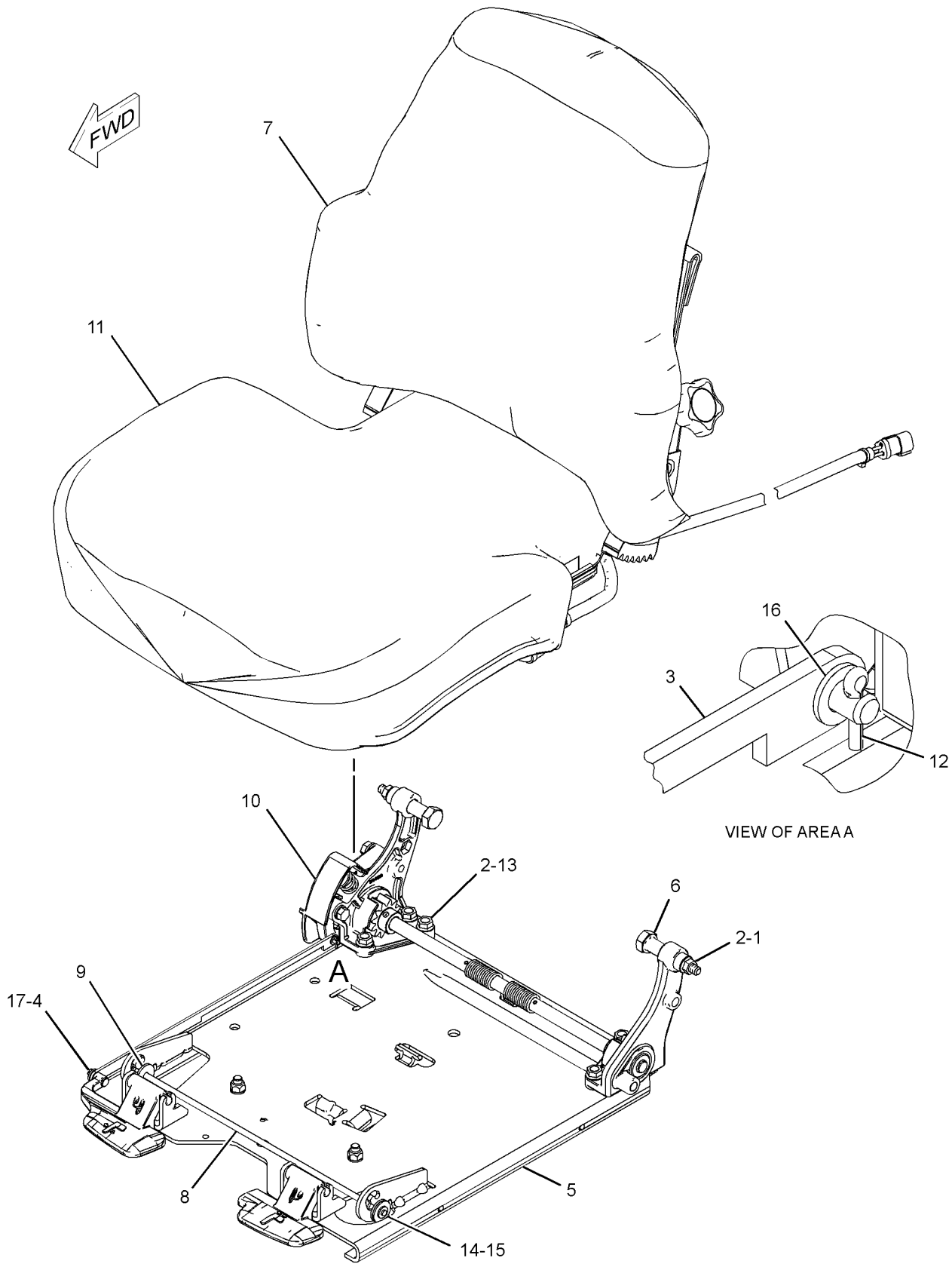

GRAPHIC #1 **<END>** g01336772

OPERATOR STATION

238-6683 SEAT GP-SUSPENSION

S/N: B9K1-UP

PART OF 233-3150 SEAT & MOUNTING GP

SMCS-7312 **i02785026**

NOTE	REF NO	GRAPHIC REF	PART NUMBER	QTY	PART NAME 1 2 3 4 5 6 (PRODUCT LEVEL)	SEE PAGE
JZ	1	1		4	BLOCK-SLIDER	
J	2	1	**173-5787**	4	SETSCREW (1/4-20-THD)	
Y	3	1	**256-8768**	1	SUSPENSION GP-SEAT (AIR, HEATED)	959
J	4	1	**203-7703**	2	WASHER-HARD (10.2X22.22X2.38-MM THK)	
Y	5	1	*244-5001*	1	SEAT GP (CLOTH)	949
J	6	1	**4F-4879**	1	BOLT (3/8-16X0.5-IN)	
					AVAILABLE REPAIR KIT(S):	
J			**173-7035**	1	KIT-SLIDER BLOCK (SUSPENSION SEAT)	
					(INCLUDES WASHERS, BOLT, BLOCK SLIDERS & SETSCREWS)	

J-KIT MARKED J SERVICES PARTS MARKED J
Y-SEPARATE ILLUSTRATION
Z-NOT SERVICED SEPARATELY

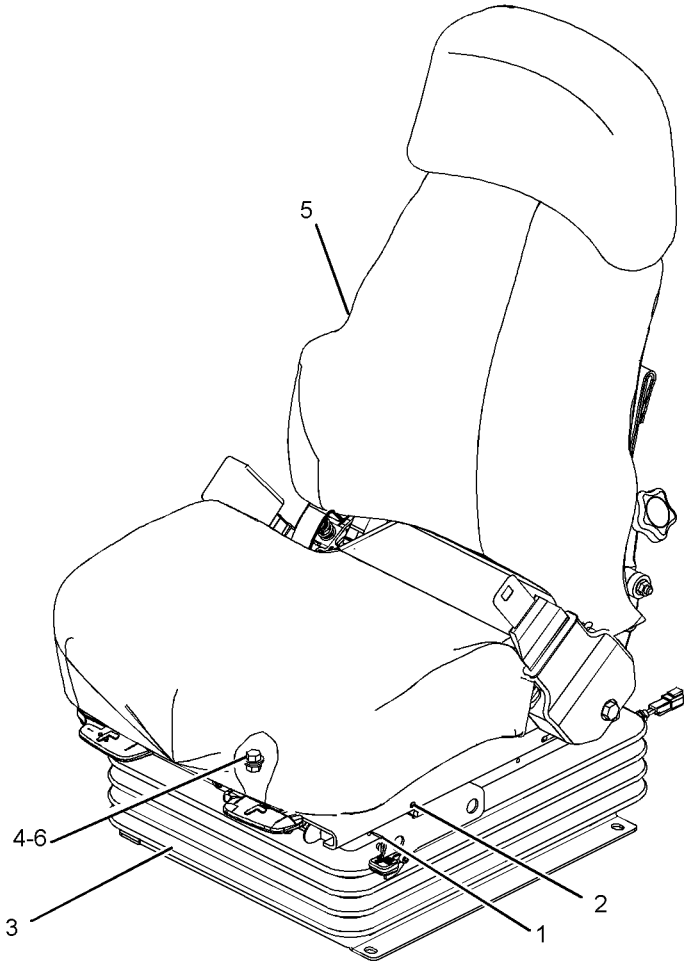

GRAPHIC #1 **<END>** g01110094

OPERATOR STATION

233-3224 SUPPORT GP-CONTROL—JOYSTICK, LH

S/N: B9K1-UP

PART OF 309-5955 CONTROL & MTG GP-JOYSTICK, 342-8961 SUPPORT GP-CONTROL

SMCS-4343, 6150 **i04003673**

NOTE	REF NO	GRAPHIC REF	PART NUMBER	QTY	PART NAME 1 2 3 4 5 6 (PRODUCT LEVEL)	SEE PAGE
	1	1	**8X-1386**	1	SPACER (12.2X23X22-MM THK)	
	2	1	**4E-8722**	10	NUT (RETAINER)	
	3	1	**233-3227**	1	SUPPORT AS (LH)	
	4	1	**233-3248**	2	BUSHING	
	5	1	**233-3252**	1	SHAFT AS	
	6	1	**360-6938**	1	SUPPORT AS (LH)	
		1	**3K-6060**	1	LOCKNUT (3/8-16-THD)	
		1	**4B-4280**	1	WASHER (13.5X27X2.5-MM THK)	
		1	**241-3720**	1	FILM-WARNING (RECOIL SPRING)	
		1	**295-2275**	1	KNOB AS (HEIGHT ADJUSTMENT)	
Y	7	1	**252-1805**	1	CUSHION GP-ARM	869
	8	1	**252-1807**	1	SUPPORT AS (LH)	
		1	**3G-0622**	2	RING-RETAINING	
M		1	**9X-2044**	2	SCREW-TRUSS HEAD (M6X1X16-MM)	
		1	**7X-0605**	2	WASHER-HARD (13X28X1.6-MM THK)	
		1	**114-6658**	2	WASHER (6.5X17X1-MM THK)	
		1	**294-1001**	1	PLATE AS	
M		1	**6V-9632**	2	NUT-WELD (M6X1-THD)	
	9	1	**253-3482**	1	KNOB AS (ARMREST ADJUSTMENT)	
	10	1	**253-3483**	1	PLATE AS	
	11	1	**253-3484**	2	WASHER (13X46X3.5-MM THK)	
	12	1	**272-8329**	1	BRACKET	
	13	1	**308-4358**	1	PLATE AS	
		1	**130-5300**	4	CLIP	
M	14	1	**5C-9553**	2	BOLT (M6X1X16-MM)	
	15	1	**7J-5925**	1	PIN-COTTER	
	16	1	**7X-0578**	2	WASHER-HARD (10.2X32X2.5-MM THK)	
	17	1	**8T-4224**	7	WASHER-HARD (8.8X16X2-MM THK)	
M	18	1	**8T-4908**	7	BOLT (M8X1.25X25-MM)	
M	19	1	**9X-2043**	2	SCREW-TRUSS HEAD (M6X1X14-MM)	
	20	1	**9X-8256**	2	WASHER (6.6X12X2-MM THK)	
D	21	1	**8T-6936**		SEAL (0.1-M EACH)	

D-ORDER BY THE METER
M-METRIC PART
Y-SEPARATE ILLUSTRATION

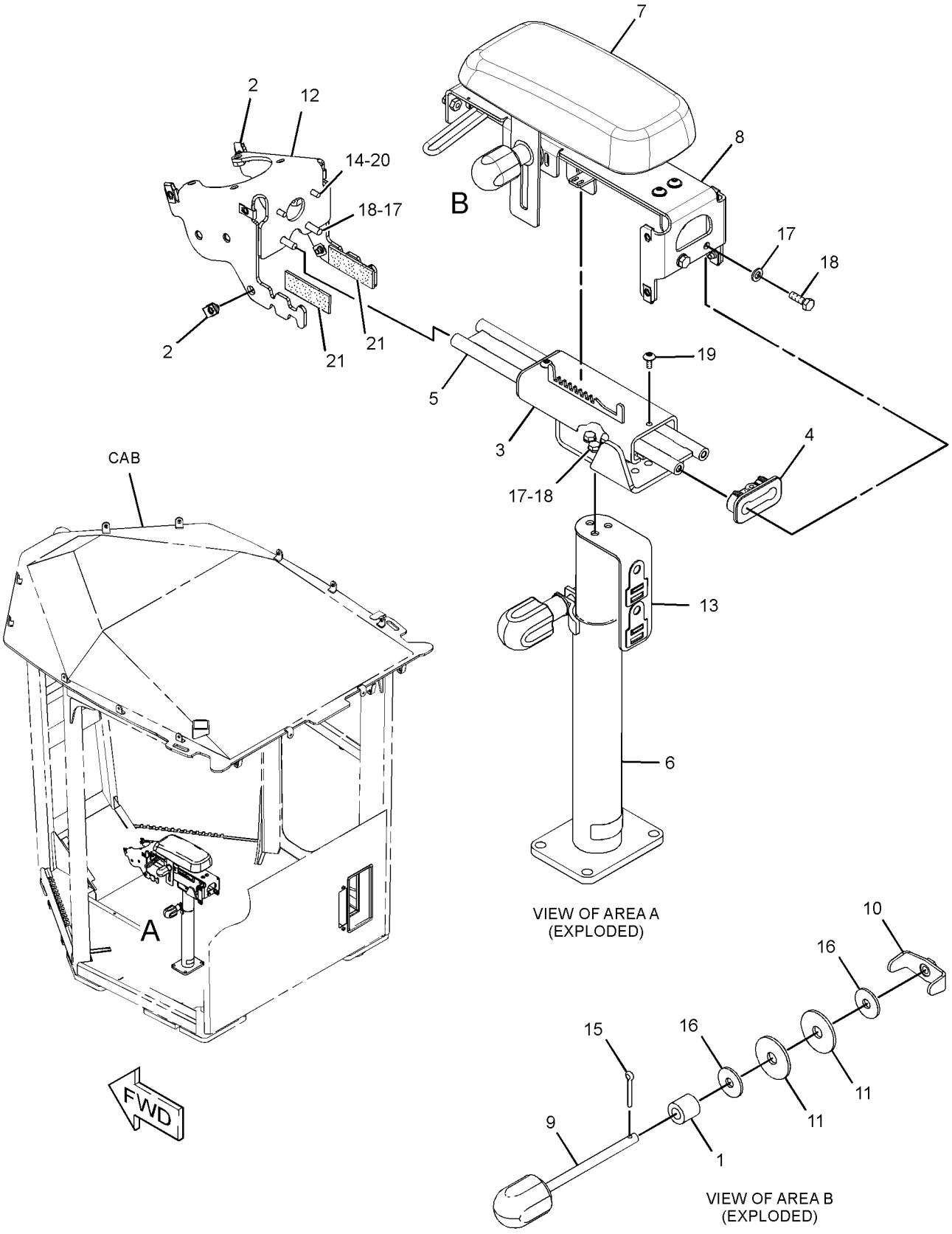

GRAPHIC #1 **<END>** g02219293

OPERATOR STATION

233-3225 SUPPORT GP-CONTROL—JOYSTICK, RH

S/N: B9K1-UP

PART OF 309-5955 CONTROL & MTG GP-JOYSTICK, 342-8961 SUPPORT GP-CONTROL

SMCS-4343, 6150 **i04004010**

NOTE	REF NO	GRAPHIC REF	PART NUMBER	QTY	PART NAME 1 2 3 4 5 6 (PRODUCT LEVEL)	SEE PAGE
	1	1	**8X-1386**	1	SPACER (12.2X23X22-MM THK)	
	2	1	**4E-8722**	10	NUT (RETAINER) (M6-THD)	
	3	1	**233-3226**	1	SUPPORT AS (RH)	
	4	1	**233-3248**	2	BUSHING	
	5	1	**233-3252**	1	SHAFT AS	
	6	1	**360-6937**	1	SUPPORT AS (RH)	
	6A	1	**3K-6060**	1	LOCKNUT (3/8-16-THD)	
	6B	1	**4B-4280**	1	WASHER (13.5X27X2.5-MM THK)	
	6C	1	**241-3720**	1	FILM-WARNING (RECOIL SPRING)	
	6D	1	**295-2275**	1	KNOB AS (HYDRAULIC CONTROL SUPPORT)	
	7	1	**233-3275**	1	BRACKET	
Y	8	1	**252-1805**	1	CUSHION GP-ARM	869
	9	1	**252-1808**	1	SUPPORT AS (RH)	
	9A	1	**3G-0622**	2	RING-RETAINING	
	9B	1	**7X-0605**	2	WASHER-HARD (13X28X1.6-MM THK)	
M	9C	1	**9X-2044**	2	SCREW-TRUSS HEAD (M6X1X16-MM)	
	9D	1	**114-6658**	2	WASHER (6.5X17X1-MM THK)	
	9E	1	**294-1001**	1	PLATE AS	
M		1	**6V-9632**	2	NUT-WELD (M6X1-THD)	
	10	1	**253-3482**	1	KNOB AS (ARMREST ADJUSTMENT)	
	11	1	**253-3483**	1	PLATE AS	
	12	1	**253-3484**	2	WASHER (13X46X3.5-MM THK)	
M	13	1	**5C-9553**	2	BOLT (M6X1X16-MM)	
	14	1	**7J-5925**	1	PIN-COTTER	
	15	1	**7X-0578**	2	WASHER-HARD (10.2X32X2.5-MM THK)	
	16	1	**8T-4224**	7	WASHER-HARD (8.8X16X2-MM THK)	
M	17	1	**8T-4908**	7	BOLT (M8X1.25X25-MM)	
M	18	1	**9X-2043**	2	SCREW-TRUSS HEAD (M6X1X14-MM)	
	19	1	**9X-8256**	2	WASHER (6.6X12X2-MM THK)	
	20	1	**308-4358**	1	PLATE AS	
		1	**130-5300**	4	CLIP	
D	21	1	**8T-6936**		SEAL (0.1-M EACH)	

D-ORDER BY THE METER
M-METRIC PART
Y-SEPARATE ILLUSTRATION

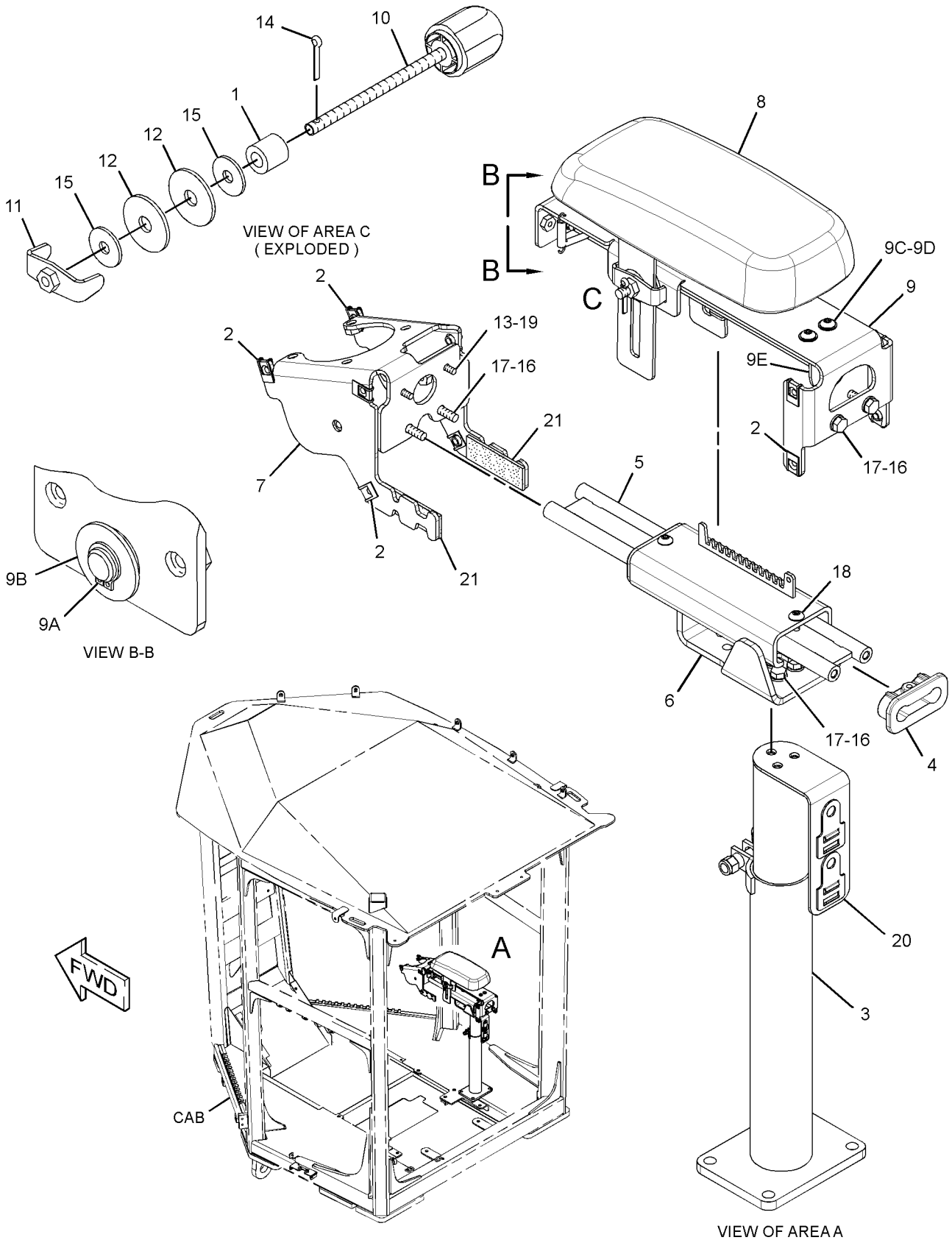

GRAPHIC #1 **<END>** g01426560

OPERATOR STATION

342-8961 SUPPORT GP-CONTROL—OPERATOR PLATFORM

S/N: B9K341-UP

PART OF 266-7002 PLATFORM GP-OPERATOR

SMCS-4343, 6150 **i03655405**

NOTE	REF NO	GRAPHIC REF	PART NUMBER	QTY	PART NAME 1 2 3 4 5 6 (PRODUCT LEVEL)	SEE PAGE
	1	1	**140-5945**	1	FILM-IDENTIFICATION (HORN)	
Y	2	1	*233-3224*	1	SUPPORT GP-CONTROL (JOYSTICK, LH)	953
Y	3	1	*233-3225*	1	SUPPORT GP-CONTROL (JOYSTICK, RH)	955
	4	1	**251-2247**	2	GROMMET	
	5	1	**251-2272**	1	COVER	
	6	1	**251-2273**	1	COVER	
	7	1	**251-2274**	1	COVER	
	8	1	**251-2275**	1	COVER	
	9	1	**280-7477**	1	FILM-INSTRUCTION (OPERATOR CONSOLE, LH)	
	10	1	**280-7478**	1	FILM-INSTRUCTION (OPERATOR CONSOLE, RH)	
Y	11	1	*292-0609*	1	ARMREST GP (RH)	838
Y	12	1	*292-0617*	1	ARMREST GP (LH)	839
	13	1	**297-4147**	1	COVER (LH)	
	14	1	**297-4148**	1	COVER (RH)	
	15	1	**312-1714**	1	FILM-INSTRUCTION (ADJUSTMENT CONTROL)	
	16	1	**114-6658**	20	WASHER (6.5X17X1-MM THK)	
	17	1	**6V-5839**	8	WASHER (11X21X2.5-MM THK)	
M	18	1	**8T-4196**	8	BOLT (M10X1.5X35-MM)	
M	19	1	**8T-4200**	6	BOLT (M8X1.25X16-MM)	
	20	1	**8T-4224**	6	WASHER-HARD (8.8X16X2-MM THK)	
M	21	1	**9X-2044**	20	SCREW-TRUSS HEAD (M6X1X16-MM)	
M	22	1	**9X-2045**	4	SCREW-TRUSS HEAD (M6X1X20-MM)	
E	23	1	**116-8376**		SEAL (6-CM EACH)	
E	23A	1	**116-8376**		SEAL (17-CM EACH)	

E-ORDER BY THE CENTIMETER
M-METRIC PART
Y-SEPARATE ILLUSTRATION

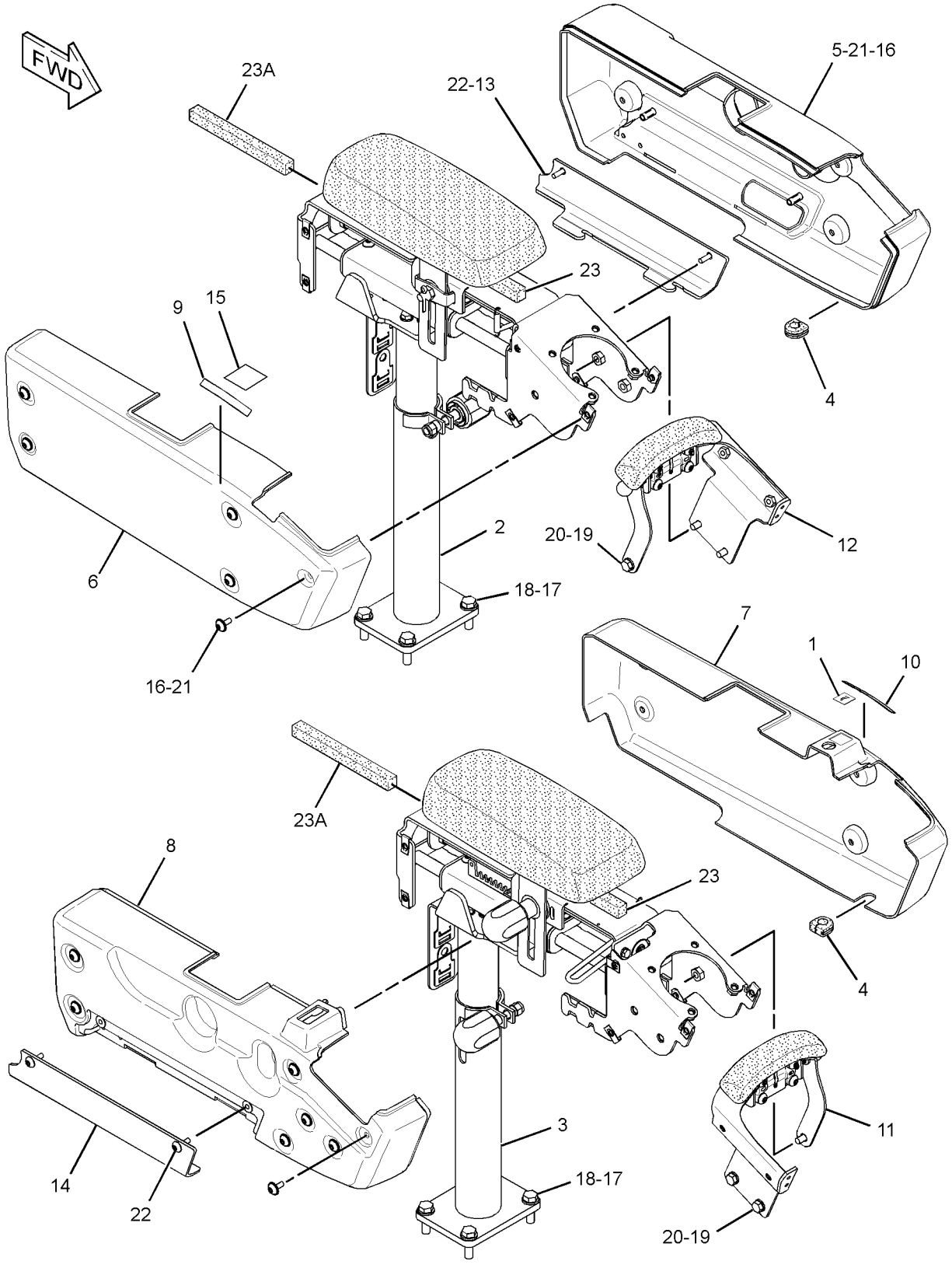

GRAPHIC #1 **<END>** g02028870

OPERATOR STATION

256-8768 SUSPENSION GP-SEAT—AIR, HEATED

S/N: B9K1-UP

PART OF 238-6683 SEAT GP-SUSPENSION

SMCS-7324 **i03185402**

NOTE	REF NO	GRAPHIC REF	PART NUMBER	QTY	PART NAME 1 2 3 4 5 6 (PRODUCT LEVEL)	SEE PAGE
	1	1	3P-9900	5	WASHER (10.5X30X3-MM THK)	
	2	1	4B-4278	2	WASHER (10.2X20.5X1.6-MM THK)	
	3	1	4V-8577	12	BEARING	
	4	1	8L-8413	1	STRAP-CABLE	
	5	1	101-0003	26	FASTENER	
	6	1	145-0326	1	FILM-INSTRUCTION (SEAT ADJUSTMENT)	
	7	1	164-1234	1	PLATE	
	8	1	169-7380	1	BOLT-SOCKET HEAD (3/8-16X0.375-IN)	
	9	1	186-5107	2	SCREW-DRIVE (NO 8-16X1.25-IN)	
	10	1	192-7752	4	SHAFT AS	
	11	1	192-7755	1	HOUSING AS (LOWER)	
	12	1	192-7760	1	SHAFT	
	13	1	192-7767	1	SCISSORS AS	
	14	1	192-7783	1	TOGGLE AS (WIDE)	
	15	1	192-7787	1	TOGGLE AS (NARROW)	
	16	1	192-7790	1	HOUSING AS (UPPER)	
	17	1	192-7795	1	BOOT	
	18	1	192-7805	1	HARNESS AS-VALVE (SEAT AIR COMPRESSOR)	
		1	102-8802	1	KIT-RECEPTACLE (2-PIN)	
		1	102-8802	1	KIT-RECEPTACLE (2-PIN)	
					(EACH KIT INCLUDES RECEPTACLE AS AND WEDGE)	
	19	1	192-7810	1	SPRING AS-AIR	
		1	5P-4423	1	ELBOW	
	20	1	192-7812	1	BOLT-SPECIAL	
	21	1	192-7820	3	BUMPER	
	22	1	192-7822	1	SHAFT	
	23	1	237-3943	1	BRACKET	
Y	24	1	237-3970	1	AIR COMPRESSOR GP-SEAT	830
	25	1	108-4311	1	SCREW-MACHINE (3/8-16X0.75-IN)	
	26	1	2K-4973	8	LOCKNUT (3/8-16-THD)	
	27	1	3J-4818	1	LOCKWASHER	
M	28	1	5C-2890	3	NUT (M6X1-THD)	
D	29	1	5P-6010		TUBE (0.257-M)	
D	29A	1	5P-6010		TUBE (0.356-M)	
	30	1	8T-9371	1	BOLT (3/8-16X0.5-IN)	
E	31	1	211-5358		CONDUIT-FLEXIBLE (26.7-CM)	
E	31A	1	211-5358		CONDUIT-FLEXIBLE (35.6-CM)	
					AVAILABLE REPAIR KIT(S):	
			192-7799	1	KIT-AIR VALVE (SEAT)	
					(INCLUDES KNOB ASSEMBLY)	
			212-7779	1	KIT-SHOCK ABSORBER (SUSPENSION SEAT) (SEAT)	
					(INCLUDES, LOCKNUTS, BALL, LOCKWASHER, STRAP, SPRING, CLAMP, ADJUSTERS, BOLTS, BEARINGS, WASHERS, SHOCK ABSORBER,	
					BRACKETS, KIT, CABLE ASSEMBLY & KNOB)	
			213-5170	1	KIT-INDICATOR (SEAT ADJUSTMENT) (SEAT)	
					(INCLUDES BOLTS, NUTS, ROD, ARM & HOUSING)	
			211-9294	1	KIT-TETHER (SEAT)	
					(INCLUDES TETHER)	

D-ORDER BY THE METER
E-ORDER BY THE CENTIMETER
M-METRIC PART
Y-SEPARATE ILLUSTRATION

256-8768 SUSPENSION GP-SEAT *(contd.)* i03185402

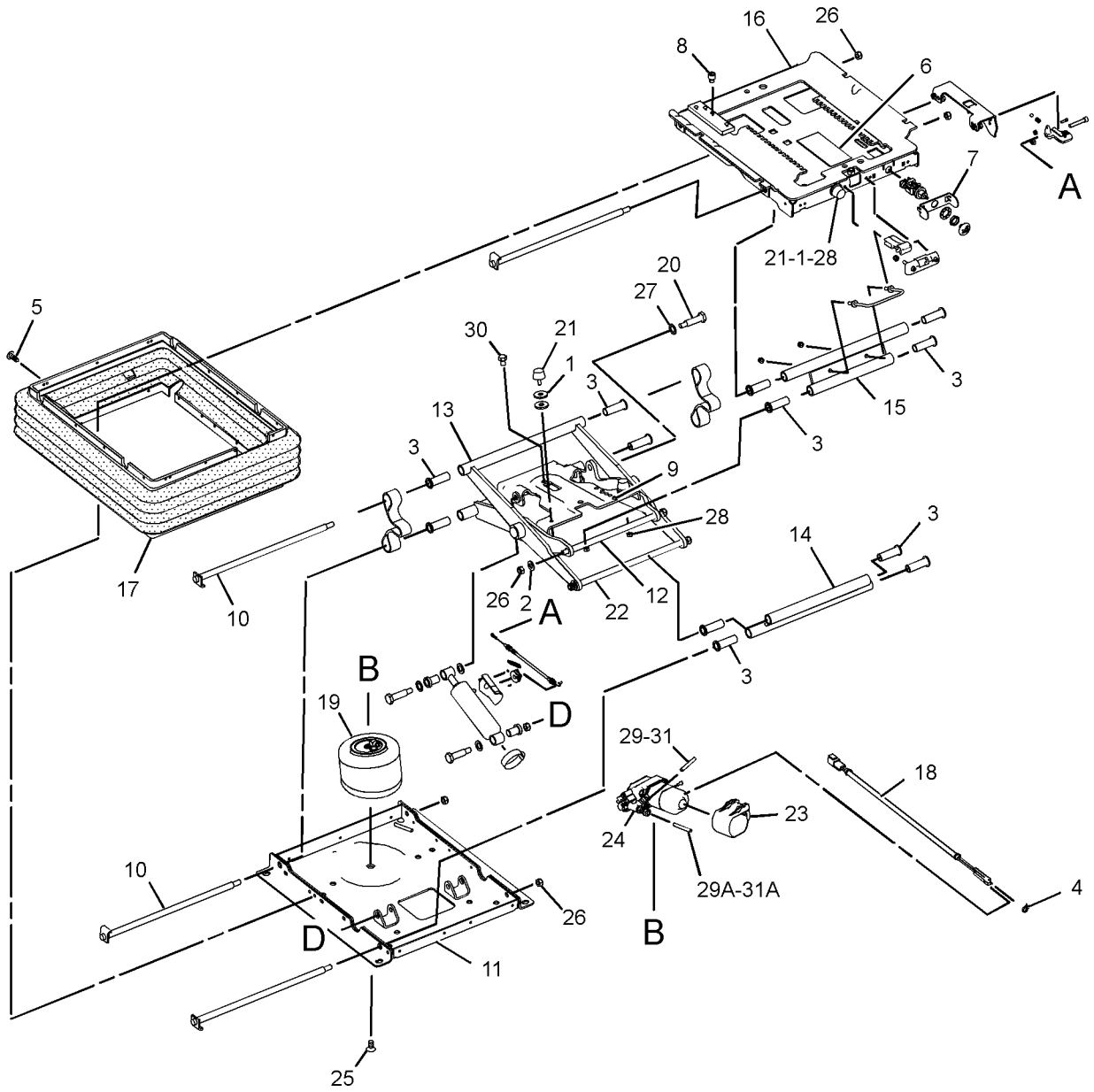

GRAPHIC #1 **<END>** g01636382

OPERATOR STATION

266-7013 TRIM GP-CAB

S/N: B9K1-341

PART OF 266-7000 CAB AR

SMCS-7329 **i02978280**

NOTE	REF NO	GRAPHIC REF	PART NUMBER	QTY	PART NAME 1 2 3 4 5 6 (PRODUCT LEVEL)	SEE PAGE
	1	1	**3G-3265**	24	RIVET	
	2	1	**6G-2395**	2	DOOR GP (AIR VENTED)	
					(EACH INCLUDES)	
		1	**6G-7222**	2	ROLLER	
	3	1	**6G-2396**	2	GASKET	
	4	1	**139-6039**	1	NUT-RETAINER (U-TYPE)	
	5	1	**278-1094**	1	COVER	
	6	1	**278-1096**	1	COVER	
	7	1	**283-7962**	1	FLOOR MAT	
	8	1	**297-4160**	1	COVER AS-PANEL (SWITCH)	
		1	**297-4161**	1	FILM-IDENTIFICATION (LOWER)	
		1	**297-4162**	1	FILM-IDENTIFICATION (UPPER)	
	9	1	**114-6658**	19	WASHER (6.5X17X1-MM THK)	
	10	1	**7G-4824**	1	STRAP	
	11	1	**8E-7791**	1	STRAP	
M	12	1	**9X-2044**	18	SCREW-TRUSS HEAD (M6X1X16-MM)	
M	13	1	**9X-2045**	1	SCREW-TRUSS HEAD (M6X1X20-MM)	

M-METRIC PART

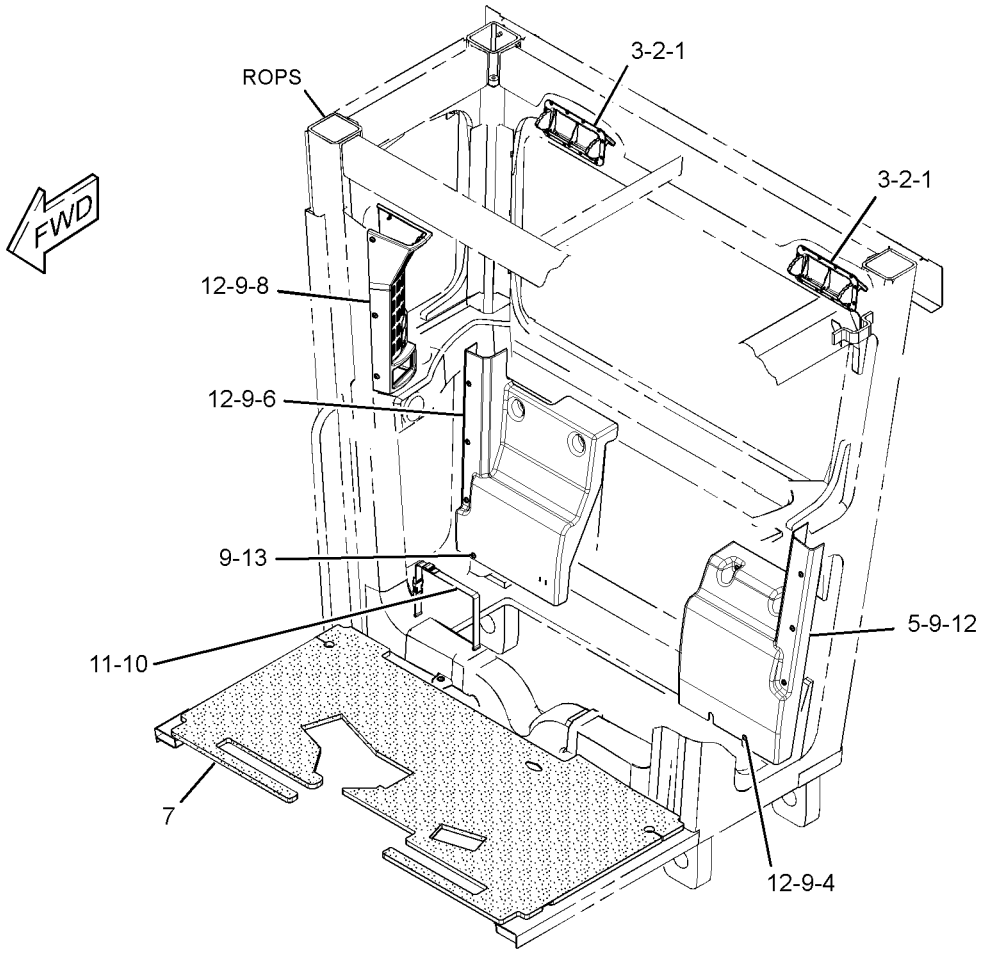

GRAPHIC #1 **<END>** g01523874

OPERATOR STATION

266-7013 TRIM GP-CAB

S/N: B9K342-UP

PART OF 266-7000 CAB AR

SMCS-7329 **i03896245**

NOTE	REF NO	GRAPHIC REF	PART NUMBER	QTY	PART NAME 1 2 3 4 5 6 (PRODUCT LEVEL)	SEE PAGE
	1	1	**3G-3265**	24	RIVET	
	2	1	**6G-2395**	2	DOOR GP (AIR VENTED)	
					(EACH INCLUDES)	
		1	**6G-7222**	2	ROLLER	
	3	1	**6G-2396**	2	GASKET	
	4	1	**139-6039**	1	NUT-RETAINER (U-TYPE)	
	5	1	**278-1094**	1	COVER	
	6	1	**278-1096**	1	COVER	
	7	1	**354-8345**	1	FLOOR MAT	
	8	1	**297-4160**	1	COVER AS-PANEL (SWITCH)	
		1	**297-4161**	1	FILM-IDENTIFICATION (LOWER)	
		1	**297-4162**	1	FILM-IDENTIFICATION (UPPER)	
	9	1	**114-6658**	19	WASHER (6.5X17X1-MM THK)	
	10	1	**7G-4824**	1	STRAP	
	11	1	**8E-7791**	1	STRAP	
M	12	1	**9X-2044**	18	SCREW-TRUSS HEAD (M6X1X16-MM)	
M	13	1	**9X-2045**	1	SCREW-TRUSS HEAD (M6X1X20-MM)	

M-METRIC PART

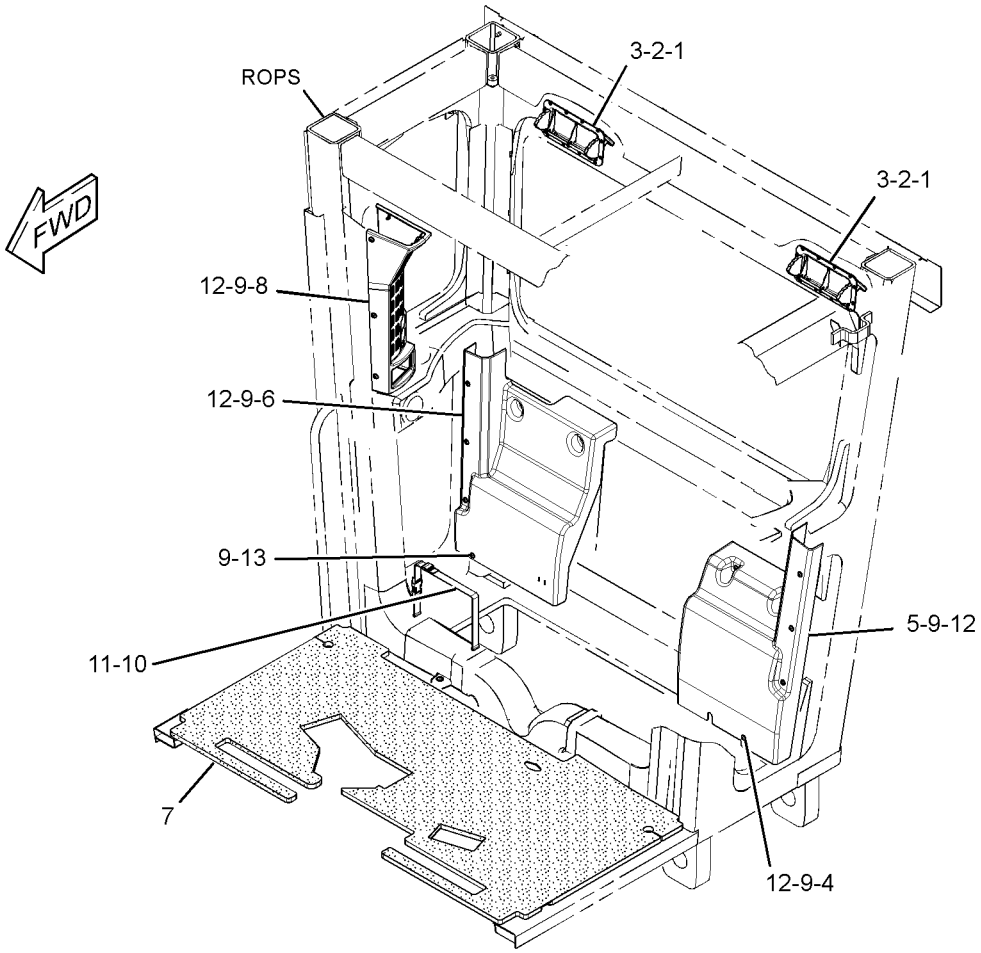

GRAPHIC #1 **<END>** g01523874

OPERATOR STATION

284-6992 WASHER GP-WINDOW

S/N: B9K1-UP

PART OF 259-9204 COMMON AR

SMCS-7306 **i03339599**

NOTE	REF NO	GRAPHIC REF	PART NUMBER	QTY	PART NAME 1 2 3 4 5 6 (PRODUCT LEVEL)	SEE PAGE
	1	1	**7Y-3474**	2	VALVE AS-CHECK (WINDOW WASHER)	
	2	1	**127-0833**	2	TANK AS-WINDOW WASHER	
					(EACH INCLUDES)	
		1	**7T-8891**	1	PUMP AS-WASHER	
		1	**8E-8292**	1	CAP-VENTED (WINDOW WASHER RESERVOIR)	
		1	**8E-8293**	1	GROMMET	
	3	1	**301-4168**	1	PLATE AS	
M		1	**9R-2613**	2	BOSS-WELD (M10X1.5X25-MM)	
M		1	**9R-2672**	2	BOSS-THREADED (M10X1.5-THD)	
	4	1	**310-5580**	1	PLATE AS	
M		1	**8T-3490**	1	NUT-WELD (M10X1.5-THD)	
M		1	**8T-3734**	1	BOSS-WELD (M10X1.5X40-MM)	
M	5	1	**131-3540**	6	LOCKNUT (M8X1.25-THD)	
M	6	1	**7X-2537**	6	BOLT (M8X1.25X35-MM)	
	7	1	**8T-4121**	6	WASHER-HARD (11X21X2.5-MM THK)	
M	8	1	**8T-4137**	6	BOLT (M10X1.5X20-MM)	
	9	1	**8T-4224**	12	WASHER-HARD (8.8X16X2-MM THK)	
	10	1	**9X-8582**	5	CLIP	
E	11	1	**144-0195**		HOSE (12-CM EACH)	
E	11A	1	**144-0195**		HOSE (230-CM)	
E	11B	1	**144-0195**		HOSE (240-CM)	

E-ORDER BY THE CENTIMETER
M-METRIC PART

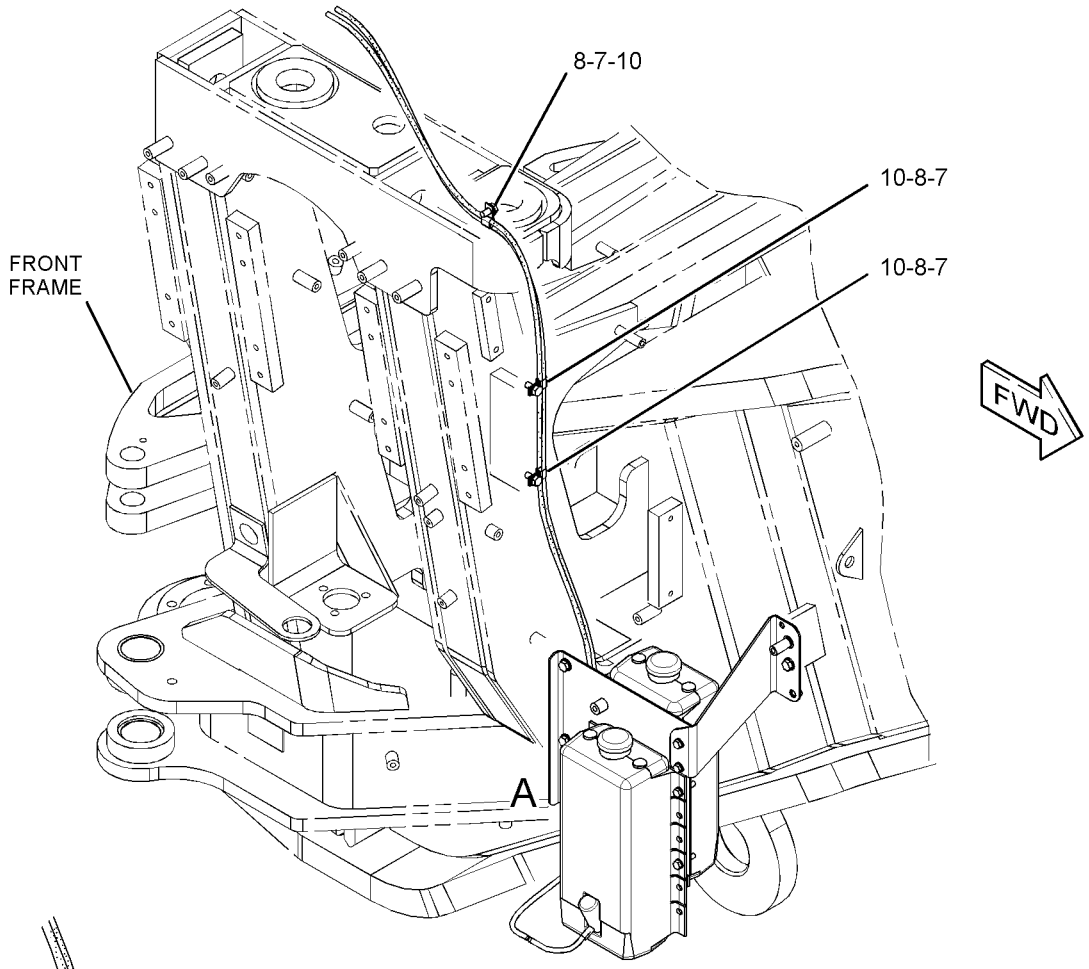

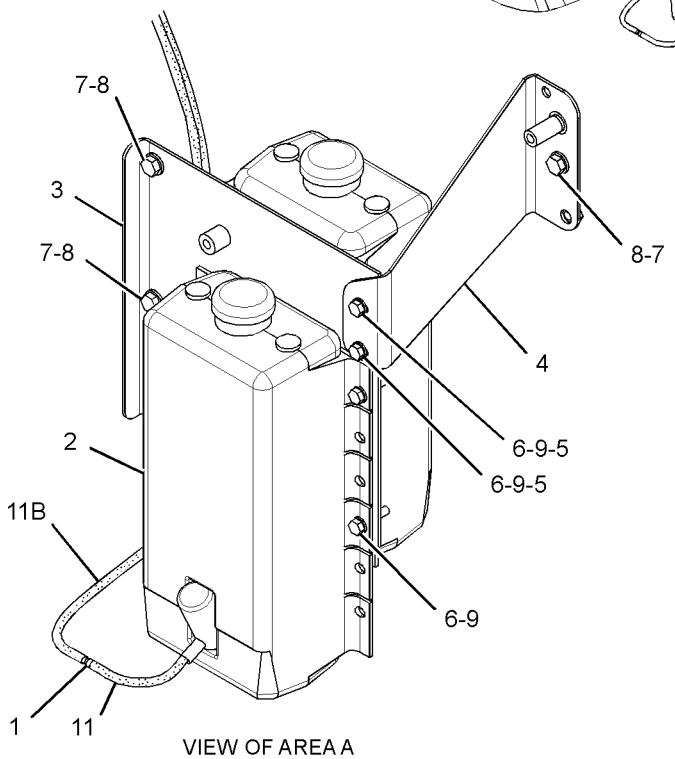

VIEW OF AREA A

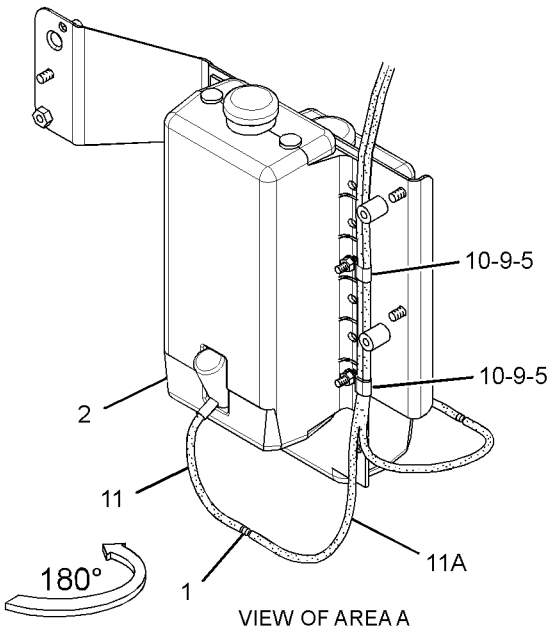

VIEW OF AREA A

GRAPHIC #1 **<END>** g01386077

OPERATOR STATION

8X-8967 WINDOW GP-CAB

S/N: B9K1-UP

PART OF 266-7000 CAB AR

SMCS-7310 **i03504298**

NOTE	REF NO	GRAPHIC REF	PART NUMBER	QTY	PART NAME 1 2 3 4 5 6 (PRODUCT LEVEL)	SEE PAGE
	1	1	**119-0782**	1	GLASS (10-MM THK)	
	2	1	**117-2093**	1	GLASS (5-MM THK)	
	3	1	**117-2094**	2	GLASS (TOP/SIDE)	
	4	1	**117-2095**	2	GLASS (BOTTOM/SIDE)	
	5	1	**117-3169**	1	FILM-WINDOW	
	6	1	**137-1282**	2	RETAINER	
	7	1	**137-1283**	1	RETAINER	
	8	1	**137-1284**	1	RETAINER	
E	10	1	**122-8341**		SEAL (587-CM)	
M	11	1	**8T-4137**	35	BOLT (M10X1.5X20-MM)	
		1	**8T-4121**	35	WASHER-HARD (11X21X2.5-MM THK)	
BD	12	1	**5P-5768**		SEAL	

B-USE AS REQUIRED
D-ORDER BY THE METER
E-ORDER BY THE CENTIMETER
M-METRIC PART

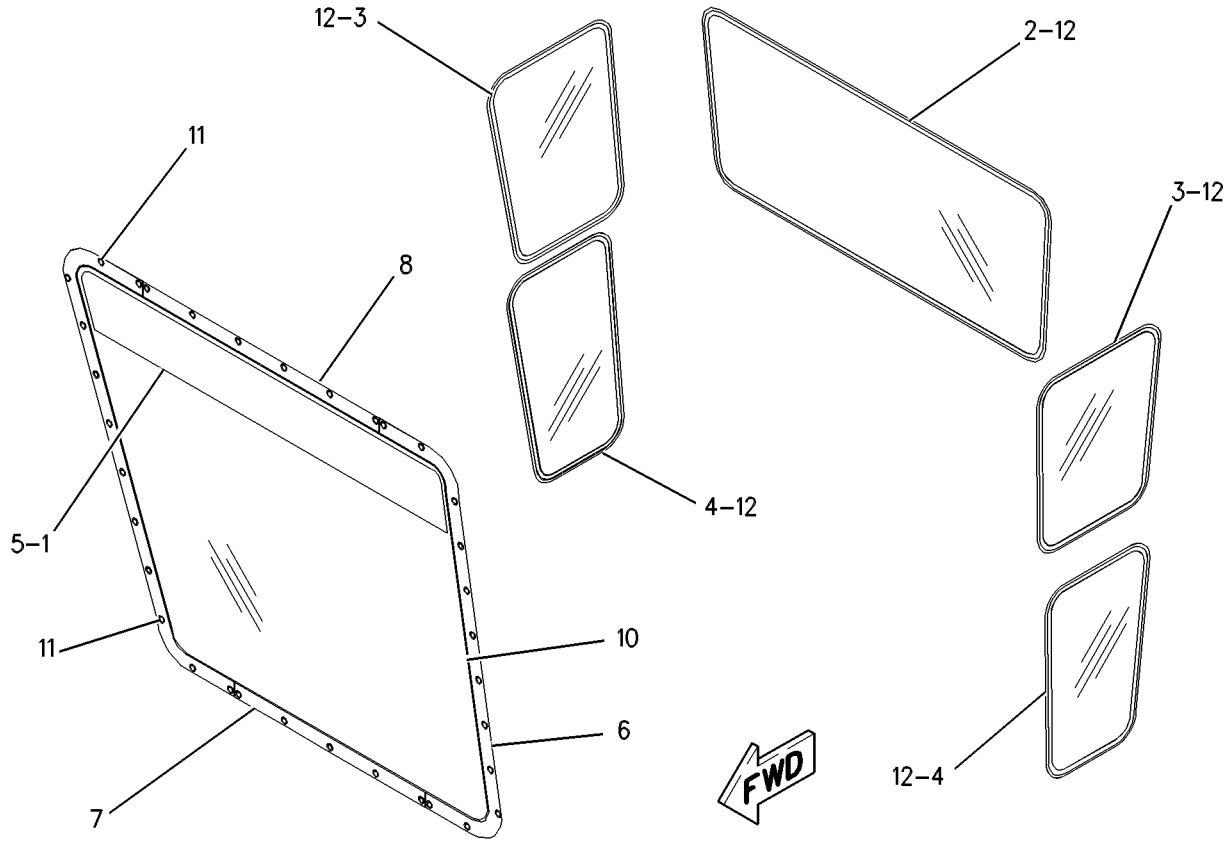

GRAPHIC #1 **<END>** g00337726

OPERATOR STATION

8X-8971 WIPER & WASHER GP-WINDOW

S/N: B9K1-UP

PART OF 266-7000 CAB AR

SMCS-7305, 7306 **i03494021**

NOTE	REF NO	GRAPHIC REF	PART NUMBER	QTY	PART NAME 1 2 3 4 5 6 (PRODUCT LEVEL)	SEE PAGE
	1	1	**3S-2093**	2	STRAP-CABLE	
	2	1	**4B-4283**	1	WASHER (20.6X37.5X3.5-MM THK)	
	3	1	**6V-5851**	1	BLADE AS-WIPER (400-MM)	
	4	1	**8T-5400**	4	CONNECTOR AS	
J	5	1	**118-7135**	1	MOTOR GP-WINDOW WIPER	
		1	**8T-8729**	5	PIN-CONNECTOR (16-GA TO 18-GA)	
		1	**8T-8737**	1	PLUG-SEAL	
J	6	1	**127-6507**	1	MOTOR AS	
	7	1	**8T-8729**	5	PIN-CONNECTOR (16-GA TO 18-GA)	
	8	1	**8T-8737**	1	PLUG-SEAL	
	9	1	**3F-9556**	1	LOCKWASHER	
M	10	1	**5C-7261**	1	NUT (M8X1.25-THD)	
	11	1	**5P-4115**	8	WASHER-HARD (7.2X19X2-MM THK)	
M	12	1	**8T-4138**	2	BOLT (M6X1X20-MM)	
	13	1	**9X-8256**	2	WASHER (6.6X12X2-MM THK)	
D	14	1	**5P-5992**		HOSE (0.43-M)	
	15	1	**127-6509**	1	ARM AS	
	16	1	**134-0297**	1	BLADE AS-WIPER (1180-MM)	
	17	1	**138-0721**	2	SHEET AS	
					(EACH INCLUDES)	
M	17A	1	**6V-9632**	4	NUT-WELD (M6X1-THD)	
M	18	1	**5C-9553**	8	BOLT (M6X1X16-MM)	
D	19	1	**5P-5992**		HOSE (0.32-M)	
	20	1	**8Y-9676**	1	ARM AS-WIPER	
	21	1	**1V-3593**	10	CLIP	
					AVAILABLE REPAIR KIT(S):	
J			**102-8805**	1	KIT-RECEPTACLE (6-PIN)	
					(INCLUDES RECEPTACLE AS & WEDGE)	

D-ORDER BY THE METER
J-KIT MARKED J AVAILABLE FOR PARTS MARKED J
M-METRIC PART

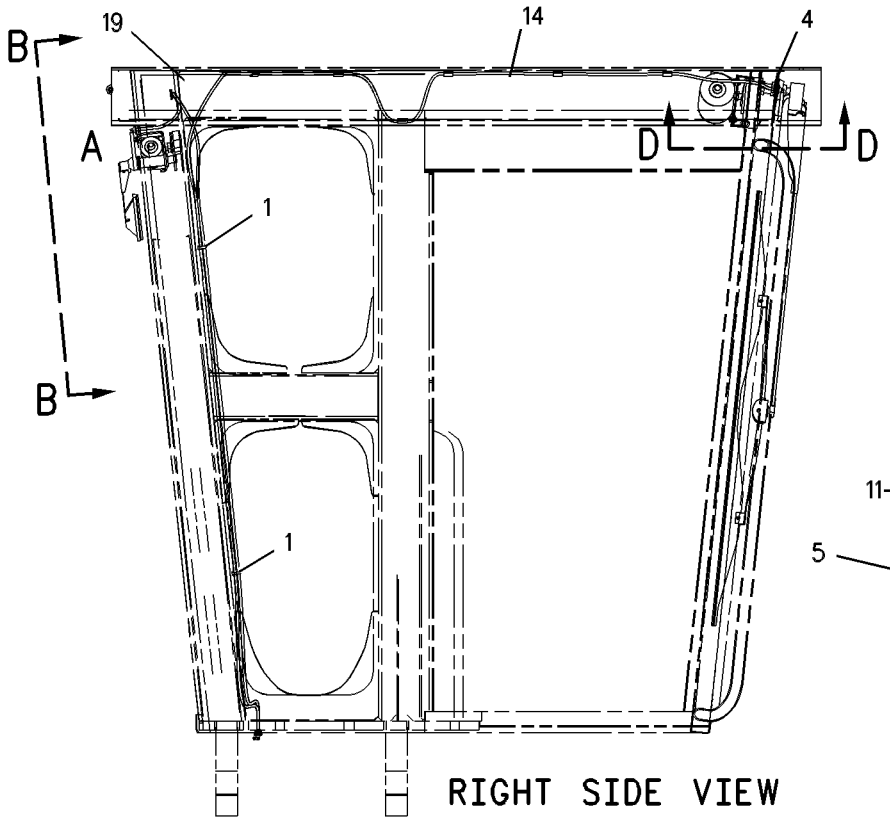

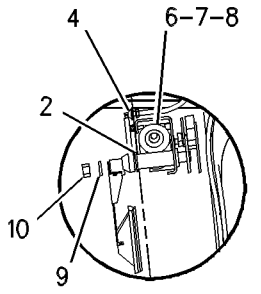

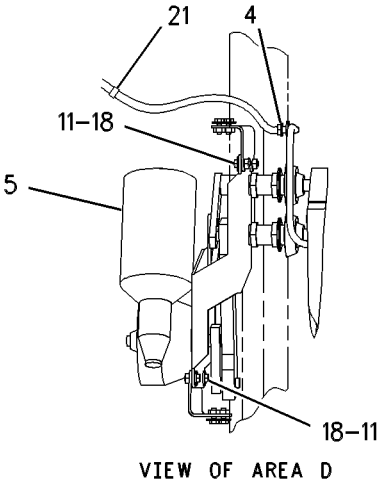

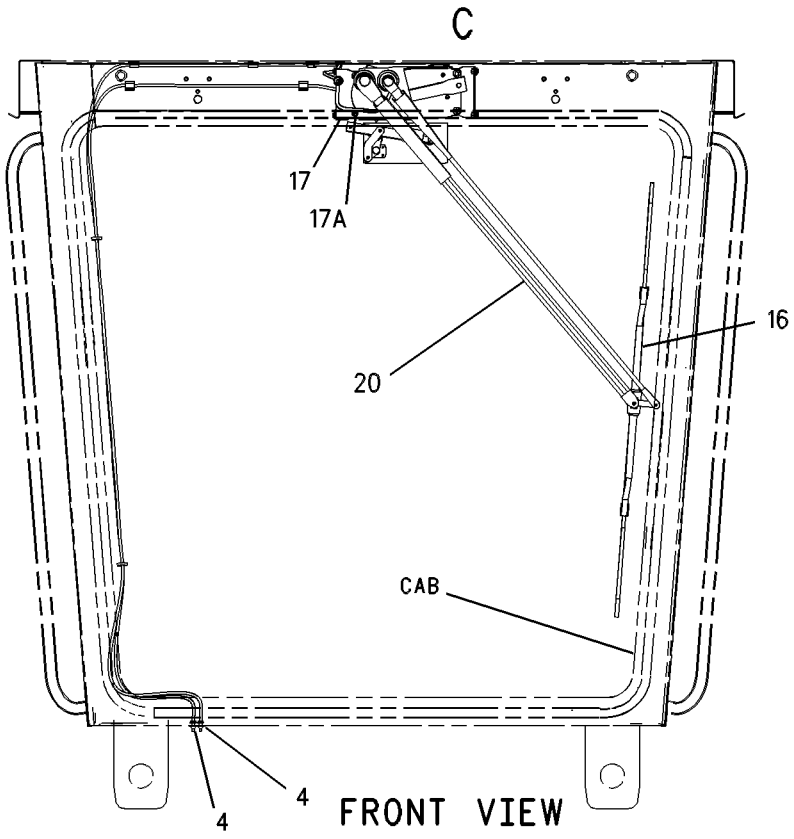

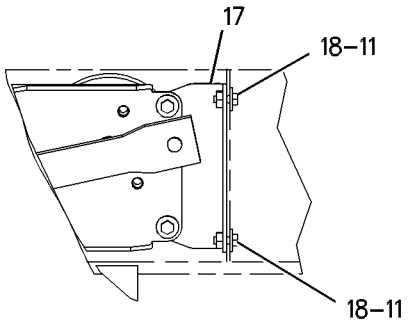

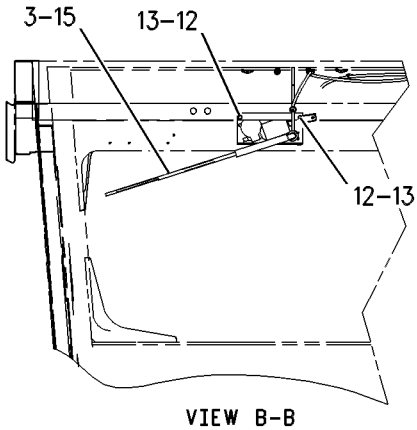

GRAPHIC #1 **<END>** g00516577

WORK TOOLS

178-4096 ADAPTER GP–(24H)

S/N: B9K1-UP

SMCS-6803, 6814 **i03877584**

NOTE	REF NO	GRAPHIC REF	PART NUMBER	QTY	PART NAME 1 2 3 4 5 6 (PRODUCT LEVEL)	SEE PAGE
Y	1	1	**140-8440**	1	MOLDBOARD AS	826
	2	1	**357-9643**	80	BIT AS	
					(EACH INCLUDES)	
		1	**265-6626**	1	RING	
	3	1	**178-4095**	8	ADAPTER-BIT	
	4	1	**1J-3527**	10	BOLT-PLOW (1-8X4.5-IN)	
	5	1	**2J-3507**	54	NUT-FULL (1-8-THD)	
	6	1	**4J-9058**	44	BOLT-PLOW (1-8X3.25-IN)	
	7	1	**5P-8250**	54	WASHER (28X49X5-MM THK)	

Y-SEPARATE ILLUSTRATION

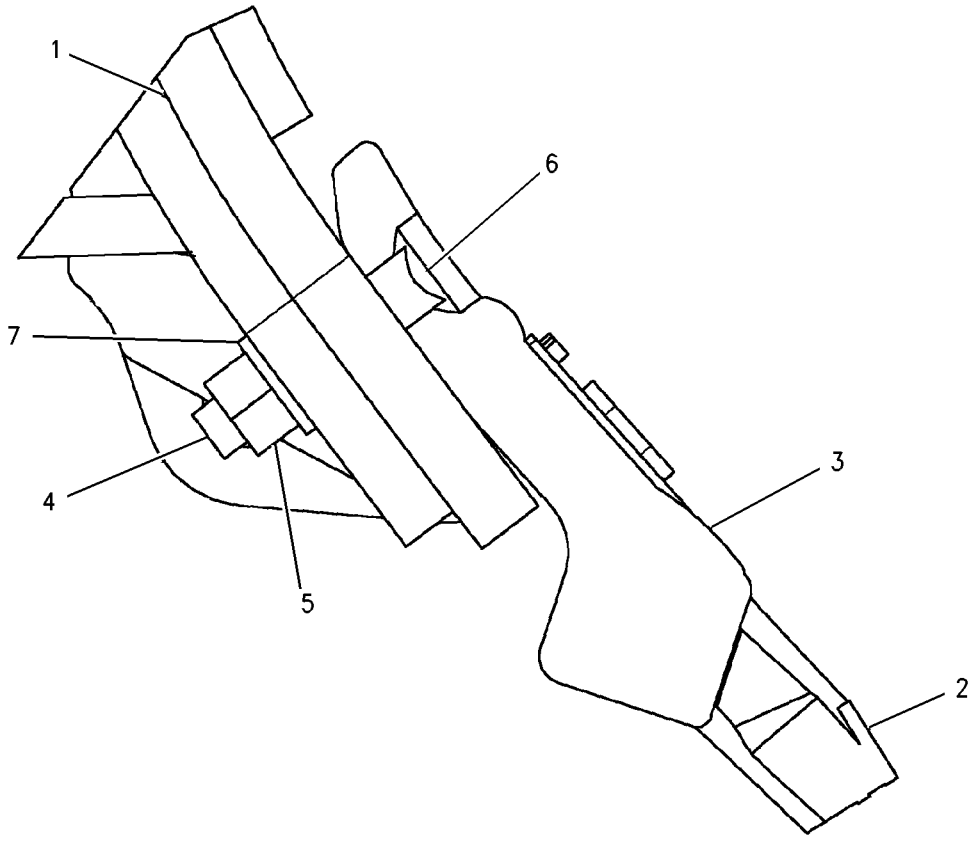

GRAPHIC #1 **<END>** g00666173

WORK TOOLS

109-3113 EDGE GP-CUTTING

S/N: B9K1-UP
13 IN WIDE X 28 MM THICK
PART OF 321-3121 IMPLEMENT AR

SMCS-6801 **i00602737**

NOTE	PART NUMBER	QTY	PART NAME 1 2 3 4 5 6 (PRODUCT LEVEL)	SEE PAGE
	109-3118	2	BIT	
	1J-3527	22	BOLT-PLOW (1-8X4.5 IN)	
	4J-9058	44	BOLT-PLOW (1-8X3.25 IN)	
	109-3117	6	EDGE-CUTTING	
	2J-3507	66	NUT-FULL (1-8 THD)	
	5P-8250	66	WASHER (5.0MM THK)	

<END>

WORK TOOLS

109-3114 EDGE GP-CUTTING

S/N: B9K1-UP

13 IN WIDE X 45 MM THICK

SMCS-6801 **i00602797**

NOTE	PART NUMBER	QTY	PART NAME 1 2 3 4 5 6 (PRODUCT LEVEL)	SEE PAGE
	109-3118	2	BIT	
	1J-3527	22	BOLT-PLOW (1-8X4.5 IN)	
	4J-9058	44	BOLT-PLOW (1-8X3.25 IN)	
	109-3116	6	EDGE-CUTTING	
	2J-3507	66	NUT-FULL (1-8 THD)	
	5P-8250	66	WASHER (5.0MM THK)	

<END>

WORK TOOLS

135-9691 EDGE GP-CUTTING

S/N: B9K1-UP

16 IN WIDE X 28.5 MM THICK

SMCS-6801 **i00902446**

NOTE	PART NUMBER	QTY	PART NAME 1 2 3 4 5 6 (PRODUCT LEVEL)	SEE PAGE
	109-3118	2	BIT	
	1J-3527	22	BOLT-PLOW (1-8X4.5 IN)	
	4J-9058	44	BOLT-PLOW (1-8X3.25 IN)	
	135-9690	6	EDGE-CUTTING	
	2J-3507	66	NUT-FULL (1-8 THD)	
	5P-8250	66	WASHER (5.0MM THK)	

<END>

WORK TOOLS

138-6442 EDGE GP-CUTTING

S/N: B9K1-UP

16 IN WIDE X 45 MM THICK

SMCS-6801 **i00602862**

NOTE	PART NUMBER	QTY	PART NAME 1 2 3 4 5 6 (PRODUCT LEVEL)	SEE PAGE
	109-3118	2	BIT	
	1J-3527	22	BOLT-PLOW (1-8X4.5 IN)	
	4J-9058	44	BOLT-PLOW (1-8X3.25 IN)	
	138-6440	6	EDGE-CUTTING	
	2J-3507	66	NUT-FULL (1-8 THD)	
	5P-8250	66	WASHER (5.0MM THK)	

<END>

WORK TOOLS

195-7271 EDGE GP-CUTTING

S/N: B9K1-UP
1216MM X 45MM THK

SMCS-6801 **i01660982**

NOTE	PART NUMBER	QTY	PART NAME 1 2 3 4 5 6 (PRODUCT LEVEL)	SEE PAGE
			(NO SERVICED PARTS)	

<END>

WORK TOOLS

222-7544 EDGE GP-CUTTING

S/N: B9K1-UP
SERRATED

SMCS-6801 **i01900205**

NOTE	PART NUMBER	QTY	PART NAME 1 2 3 4 5 6 (PRODUCT LEVEL)	SEE PAGE
	208-8870	3	EDGE-CUTTING (4FT)	

<END>

WORK TOOLS

132-1019 EDGE-CUTTING

S/N: B9K1-UP
13 IN WIDE X 60 MM THICK

SMCS-6801 **i00645723**

NOTE	REF NO	GRAPHIC REF	PART NUMBER	QTY	PART NAME 1 2 3 4 5 6 (PRODUCT LEVEL)	SEE PAGE
					(INDIVIDUAL PARTS ARE NOT SERVICED SEPARATELY)	

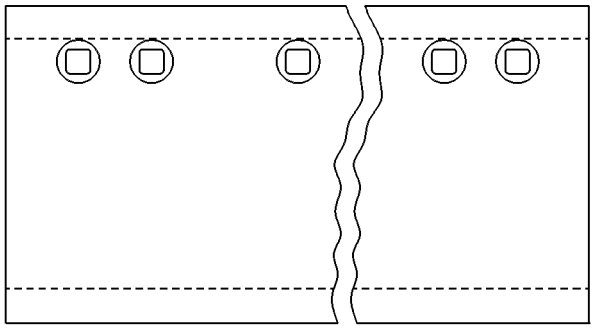

GRAPHIC #1 **<END>** g00284140

WORK TOOLS

132-4753 EDGE-CUTTING

S/N: B9K1-UP

13 IN WIDE X 60 MM THICK SERRATED EDGE

SMCS-6801 **i00553755**

NOTE	REF NO	GRAPHIC REF	PART NUMBER	QTY	PART NAME 1 2 3 4 5 6 (PRODUCT LEVEL)	SEE PAGE
					(INDIVIDUAL PARTS ARE NOT SERVICED SEPARATELY)	

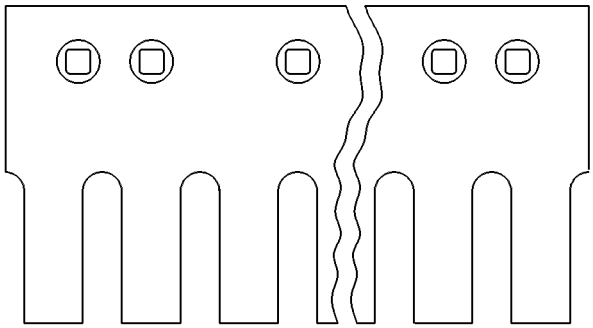

GRAPHIC #1 **<END>** g00273363

WORK TOOLS

135-9349 EDGE-CUTTING

S/N: B9K1-UP
16 IN WIDE X 60 MM THICK

SMCS-6801 **i00883774**

NOTE	REF NO	GRAPHIC REF	PART NUMBER	QTY	PART NAME 1 2 3 4 5 6 (PRODUCT LEVEL)	SEE PAGE
					NO SERVICEABLE PARTS	

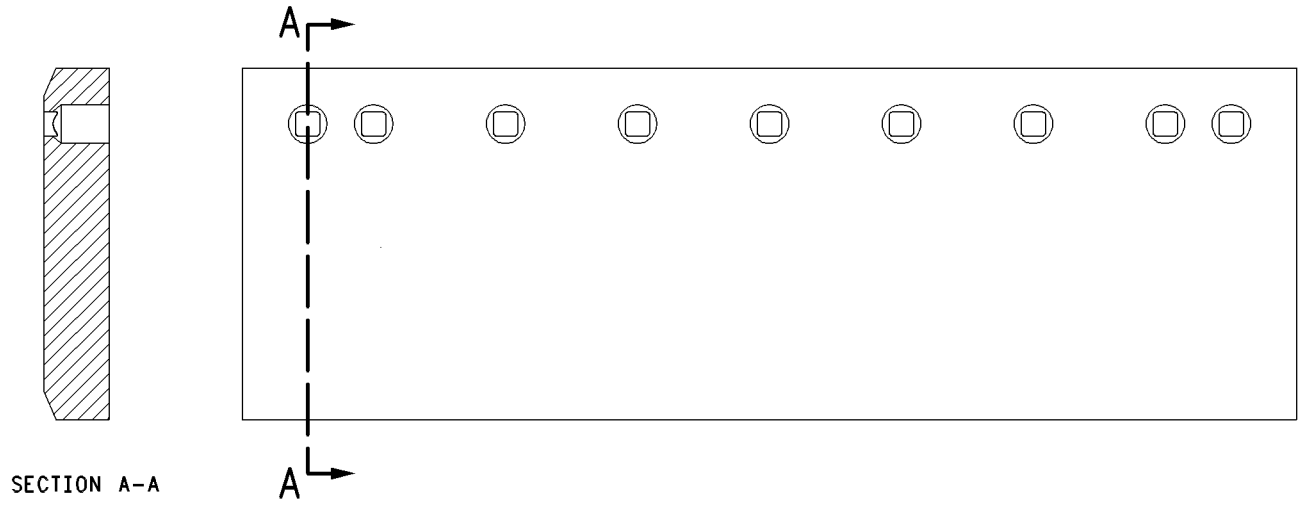

SECTION A-A

GRAPHIC #1 **<END>** g00451986

WORK TOOLS

135-9576 EDGE-CUTTING

S/N: B9K1-UP
16 IN WIDE X 75 MM THICK

SMCS-6801 **i00883808**

NOTE	REF NO	GRAPHIC REF	PART NUMBER	QTY	PART NAME 1 2 3 4 5 6 (PRODUCT LEVEL)	SEE PAGE
					NO SERVICEABLE PARTS	

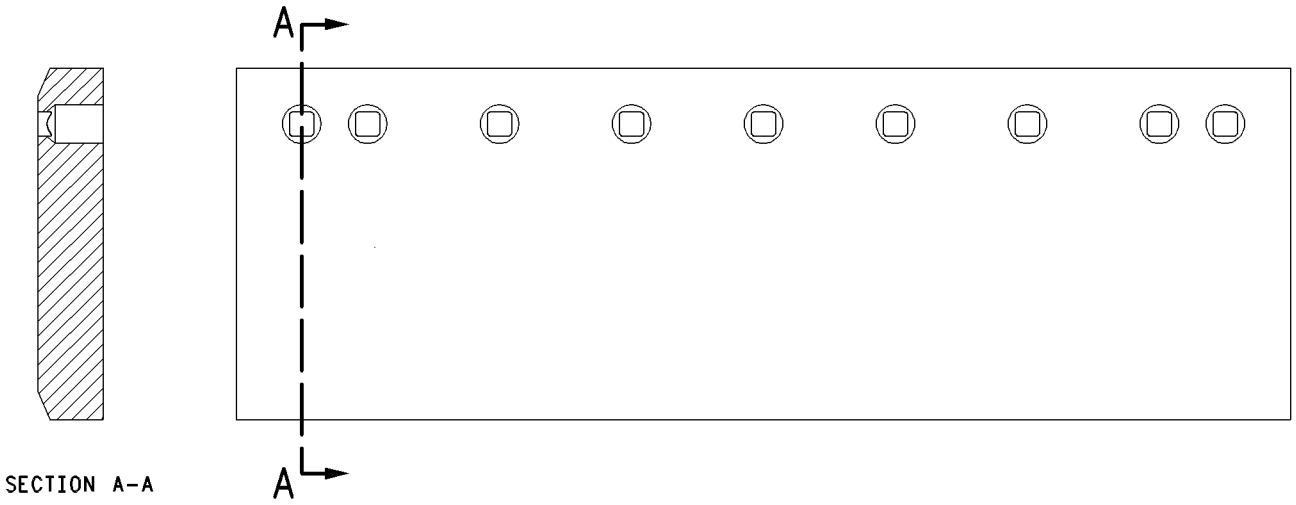

SECTION A-A

GRAPHIC #1 **<END>** g00452172

WORK TOOLS

178-4107 EDGE-CUTTING

S/N: B9K1-UP
LEAN MATERIAL

SMCS-6801 **i01612698**

NOTE	PART NUMBER	QTY	PART NAME 1 2 3 4 5 6 (PRODUCT LEVEL)	SEE PAGE
	178-4106	3	EDGE-CUTTING	

<END>

WORK TOOLS

208-8870 EDGE-CUTTING

S/N: B9K1-UP

SMCS-6801 **i03199361**

NOTE	REF NO	GRAPHIC REF	PART NUMBER	QTY	PART NAME 1 2 3 4 5 6 (PRODUCT LEVEL)	SEE PAGE
					(NO SERVICED PARTS)	

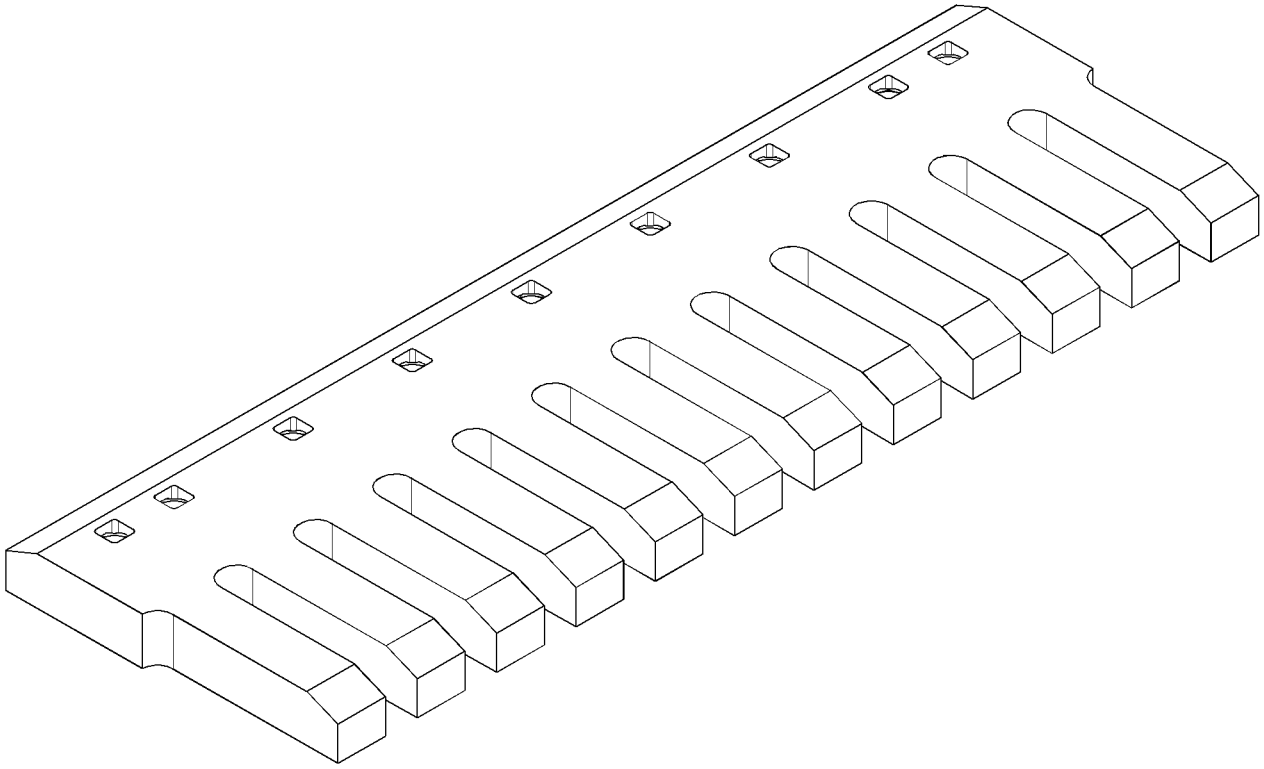

GRAPHIC #1 **<END>** g01643576

WORK TOOLS

349-8438 EDGE-CUTTING

S/N: B9K1-UP

PART OF 353-5494 EDGE-CUTTING

SMCS-6801 **i03689349**

NOTE	REF NO	GRAPHIC REF	PART NUMBER	QTY	PART NAME 1 2 3 4 5 6 (PRODUCT LEVEL)	SEE PAGE
	1	1	178-4106	1	EDGE-CUTTING	

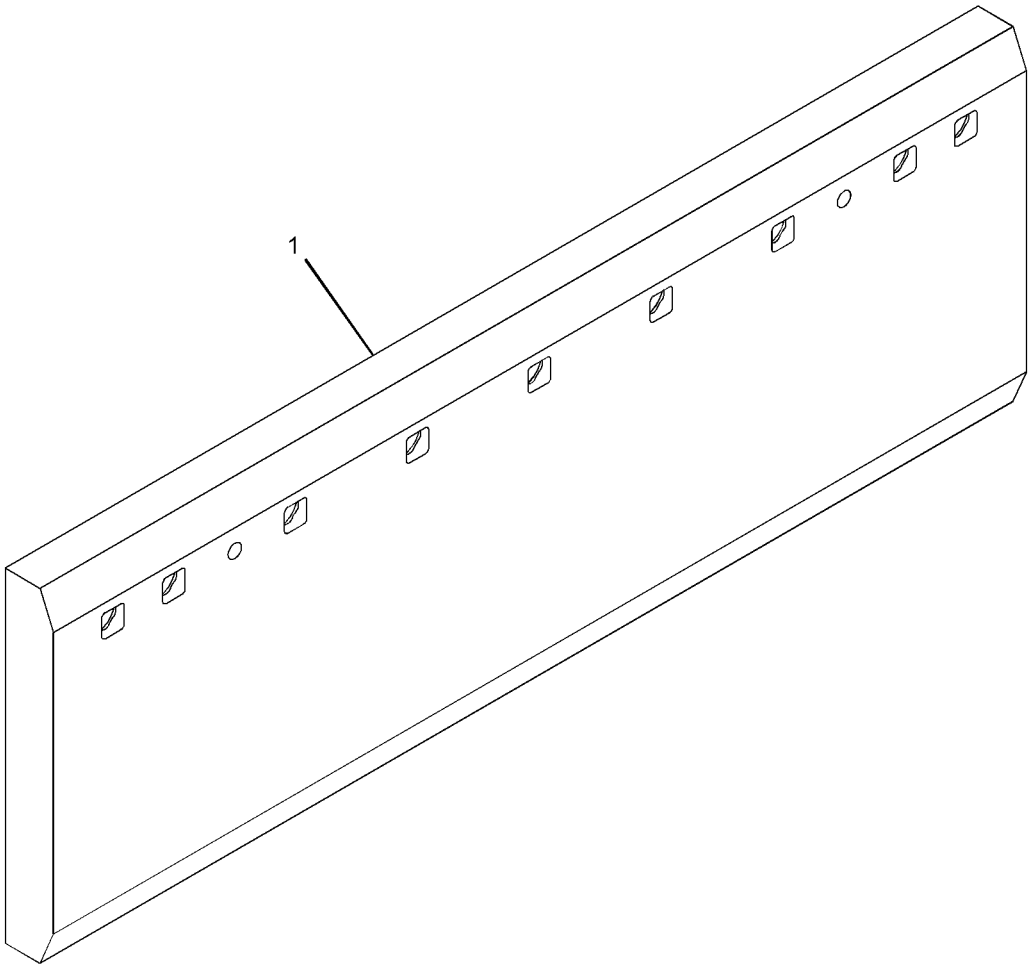

GRAPHIC #1 **<END>** g02101014

WORK TOOLS

349-8440 EDGE-CUTTING

S/N: B9K1-UP

SMCS-6801 **i03689351**

NOTE	REF NO	GRAPHIC REF	PART NUMBER	QTY	PART NAME 1 2 3 4 5 6 (PRODUCT LEVEL)	SEE PAGE
	1	1	208-8870	1	EDGE-CUTTING	

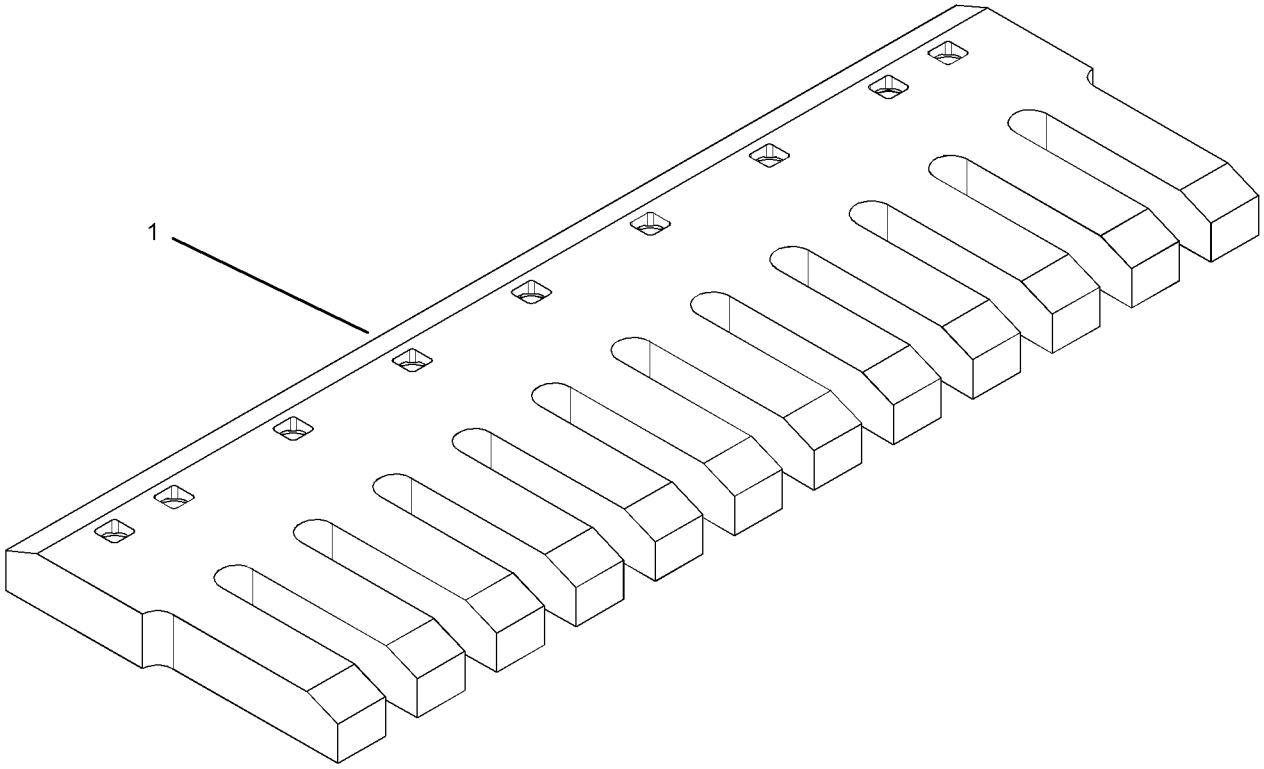

GRAPHIC #1 **<END>** g01996353

WORK TOOLS

353-5494 EDGE-CUTTING

S/N: B9K1-UP
4-FT

SMCS-6801 **i03794645**

NOTE	REF NO	GRAPHIC REF	PART NUMBER	QTY	PART NAME 1 2 3 4 5 6 (PRODUCT LEVEL)	SEE PAGE
Y	1	1	349-8438	1	EDGE-CUTTING	981

Y-SEPARATE ILLUSTRATION

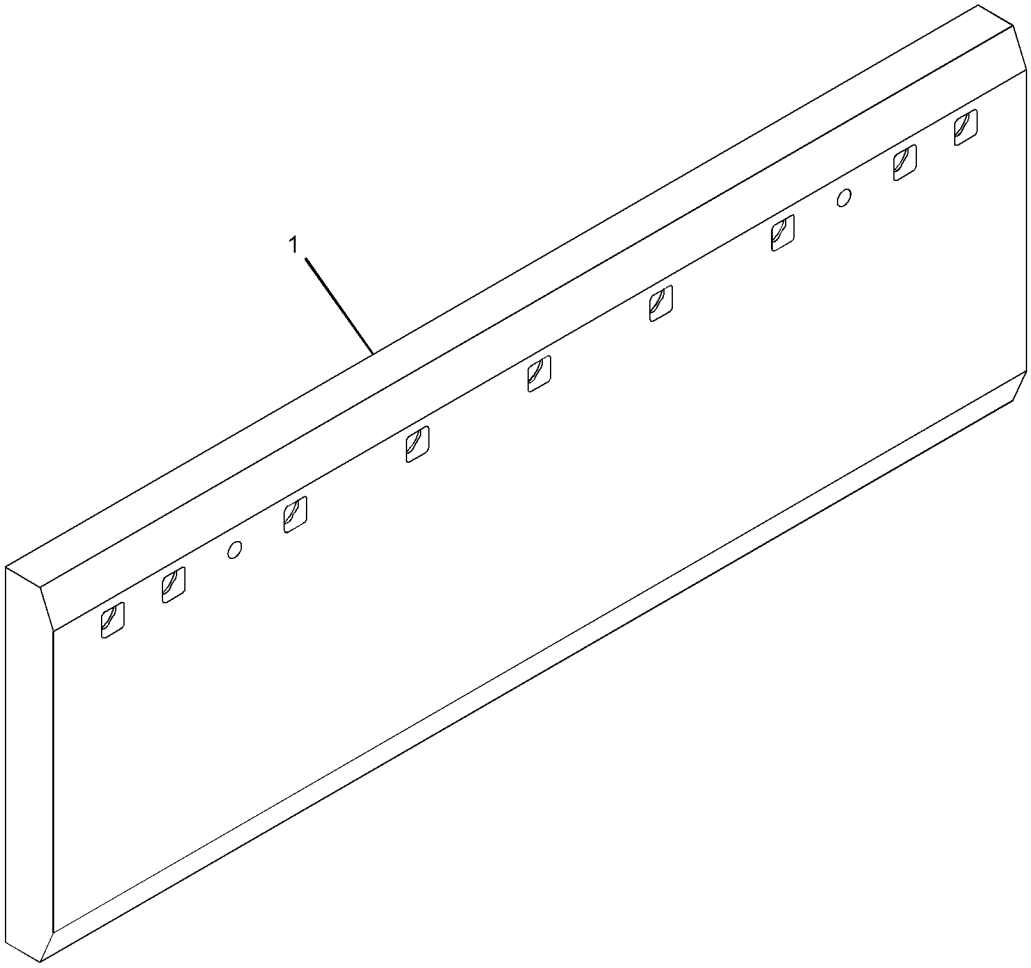

GRAPHIC #1 **<END>** g02101014

WORK TOOLS

140-8451 MOUNTING GP-BLADE

S/N: B9K1-UP

PART OF 259-9204 COMMON AR, 321-3121 IMPLEMENT AR

SMCS-6151 **i00677340**

NOTE	REF NO	GRAPHIC REF	PART NUMBER	QTY	PART NAME 1 2 3 4 5 6 (PRODUCT LEVEL)	SEE PAGE
	1	1	**140-8441**	2	STRIP-WEAR	
	2	1	**140-8442**	2	STRIP-WEAR	
	3	1	**140-8452**	4	PLATE	
	4	1	**140-8453**	4	PLATE	
B	5	1	**140-8454**	6	SHIM	
B	6	1	**140-8455**	6	SHIM	
	7	1	**8T-4223**	24	WASHER-HARD (13.5X25.5X3-MM THK)	
M	8	1	**8T-4139**	24	BOLT (M12X1.75X30-MM)	

B-USE AS REQUIRED
M-METRIC PART

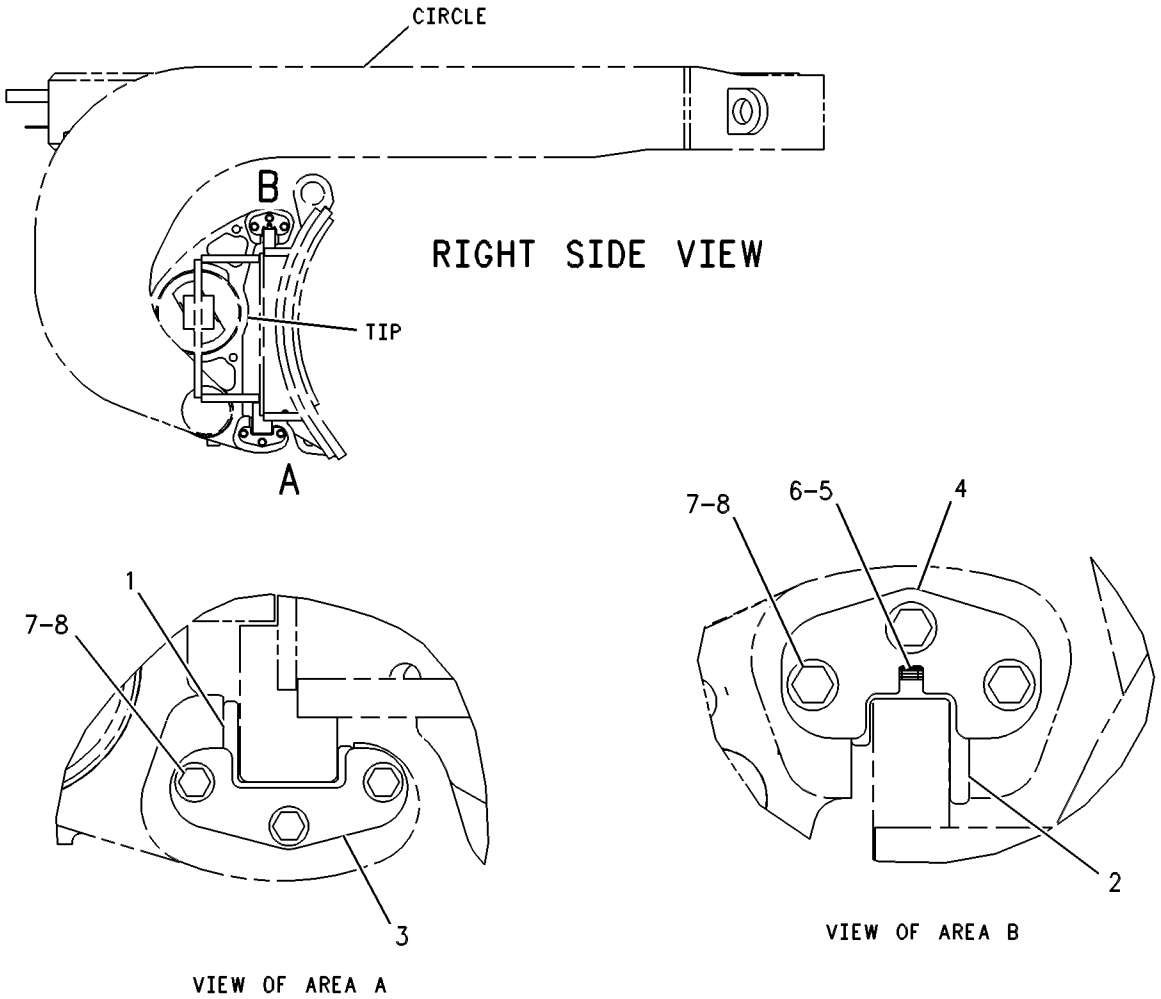

GRAPHIC #1 **<END>** g00283971

WORK TOOLS

278-3510 MOUNTING GP-RIPPER

S/N: B9K1-UP

PART OF 278-3509 RIPPER AR

SMCS-6324 **i02764258**

NOTE	REF NO	GRAPHIC REF	PART NUMBER	QTY	PART NAME 1 2 3 4 5 6 (PRODUCT LEVEL)	SEE PAGE
	1	1	**3R-3602**	2	SPACER (0.531X1.125X0.25-IN THK)	
	2	1	**8J-9607**	4	PIN	
	3	1	**126-3080**	2	LINK AS	
	4	1	**133-7130**	2	CAM AS	
	5	1	**133-7132**	2	PLATE	
	6	1	**138-5769**	2	PIN	
	7	1	**278-3511**	1	PLATE AS	
		1	**2K-6279**	2	BOSS	
		1	**3V-8621**	2	BOSS	
	8	1	**6K-0715**	2	PIN	
M	9	1	**6V-7687**	2	LOCKNUT (M12X1.75-THD)	
M	10	1	**7X-2557**	4	BOLT (M16X2X140-MM)	
M	11	1	**8T-4174**	2	BOLT (M16X2X120-MM)	
M	12	1	**8T-4184**	4	BOLT (M12X1.75X45-MM)	
	13	1	**8T-4223**	4	WASHER-HARD (13.5X25.5X3-MM THK)	
M	14	1	**8T-4778**	6	LOCKNUT (M16X2-THD)	
M	15	1	**8T-5092**	2	BOLT (M12X1.75X150-MM)	

M-METRIC PART

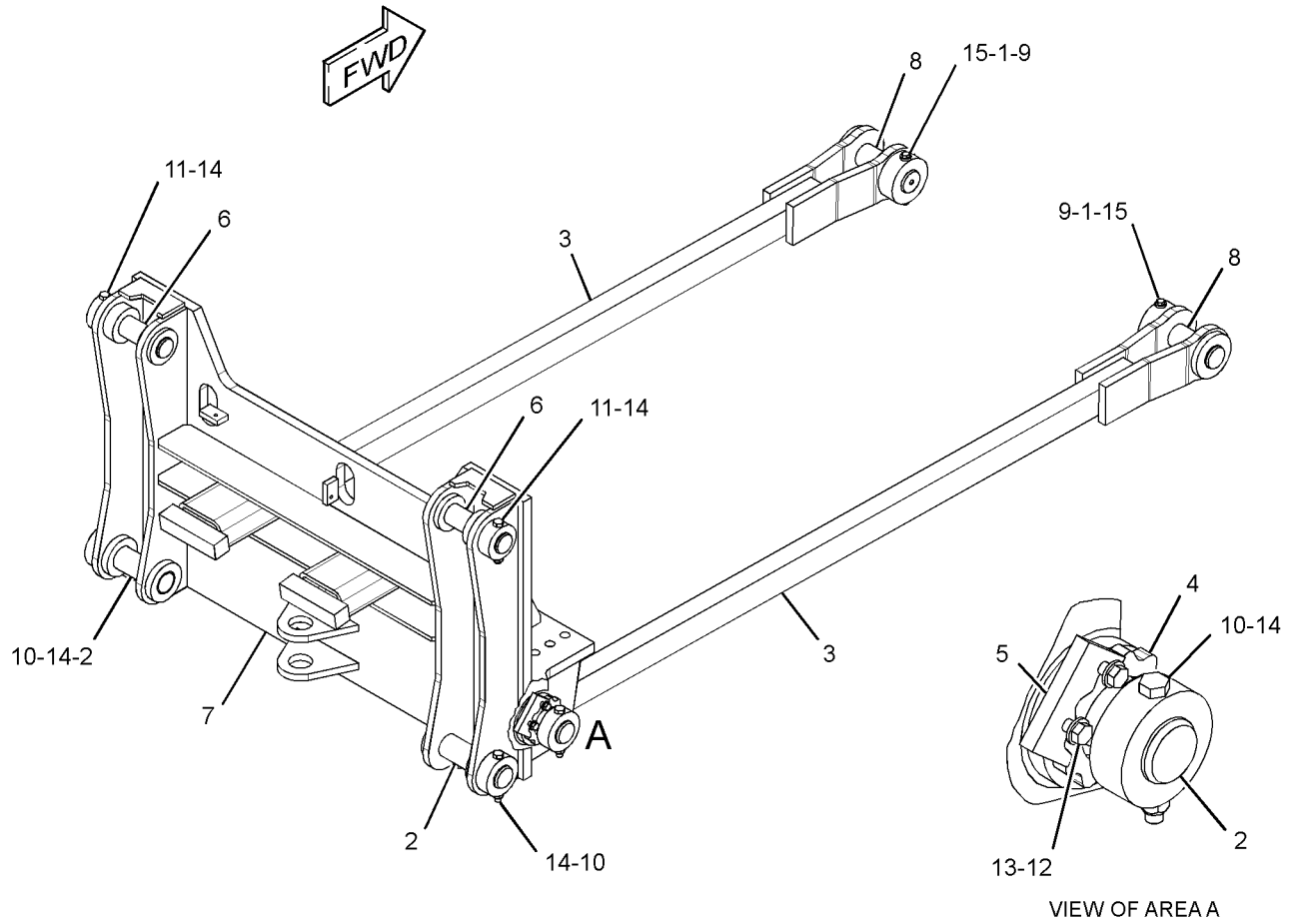

VIEW OF AREA A

GRAPHIC #1 **<END>** g01388032

WORK TOOLS

278-3509 RIPPER AR

S/N: B9K1-UP

PART OF 259-9204 COMMON AR

SMCS-6325 **i02764383**

NOTE	REF NO	GRAPHIC REF	PART NUMBER	QTY	PART NAME 1 2 3 4 5 6 (PRODUCT LEVEL)	SEE PAGE
Y	1	1	**113-7754**	2	CYLINDER GP-RIPPER	651
Y	2	1	*125-5737*	1	LINES GP-RIPPER	731
Y	3	1	*125-5739*	1	RIPPER GP	987
Y	4	1	*278-3510*	1	MOUNTING GP-RIPPER	985

Y-SEPARATE ILLUSTRATION

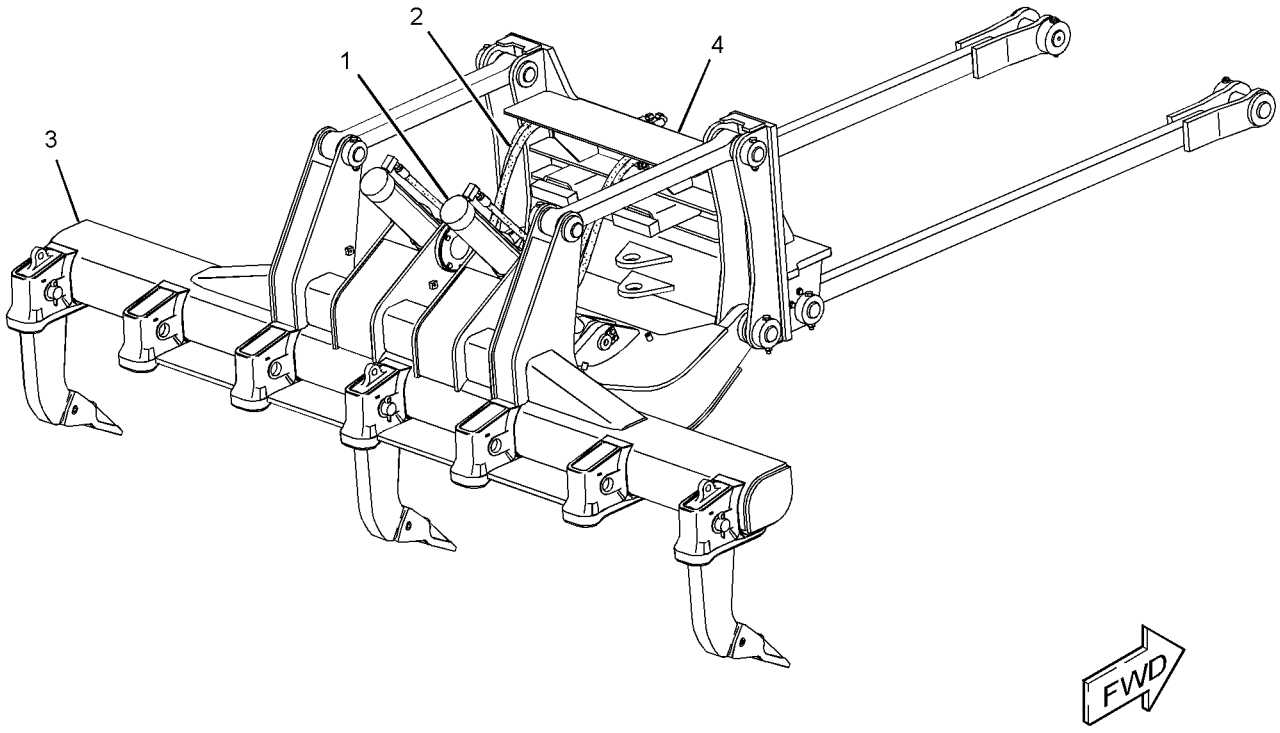

GRAPHIC #1 **<END>** g01384646

WORK TOOLS

125-5739 RIPPER GP

S/N: B9K1-UP

PART OF 278-3509 RIPPER AR

SMCS-6325 **i01064246**

NOTE	REF NO	GRAPHIC REF	PART NUMBER	QTY	PART NAME 1 2 3 4 5 6 (PRODUCT LEVEL)	SEE PAGE
	1	1	**2K-0703**	2	BAR	
	2	1	**6H-3615**	6	PLUG-PROTECTION (1/8-27 THD)	
	3	1	**3K-8510**	2	PIN	
	4	1	**4K-3004**	4	BEARING-TRUNNION SUPPLEMENTARY	
CY	5	1	*136-8310*	3	TOOTH GP-RIPPER	989
	6	1	**9D-6584**	8	SEAL-LIP TYPE	
	7	1	**127-1655**	1	FRAME & BEARING AS	
	8	1	**3B-8489**	4	FITTING-GREASE	
	9	1	**9W-0099**	4	BUSHING	
	10	1	**3V-2024**	8	BOSS	
	11	1	**8P-9770**	1	PLATE	
M	12	1	**8T-4192**	4	BOLT (M12X1.75X25-MM)	
M	13	1	**8T-4910**	16	BOLT (M12X1.75X60-MM)	
M	14	1	**8T-4174**	2	BOLT (M16X2X120-MM)	
M	15	1	**8T-6385**	2	BOLT (M16X2X180-MM)	
	16	1	**8J-9607**	2	PIN	
	17	1	**8J-9608**	2	PIN	
	18	1	**127-2120**	1	CARRIAGE AS	
	19	1	**5K-7748**	7	HOLDER-BIT	
	20	1	**128-3320**	2	LINK AS	
					(EACH INCLUDES)	
	21	1	**3G-2582**	2	BEARING	
M	22	1	**6V-7687**	16	LOCKNUT (M12X1.75-THD)	
M	23	1	**8T-4778**	4	LOCKNUT (M16X2-THD)	

C-CHANGE FROM PREVIOUS TYPE
M-METRIC PART
Y-SEPARATE ILLUSTRATION

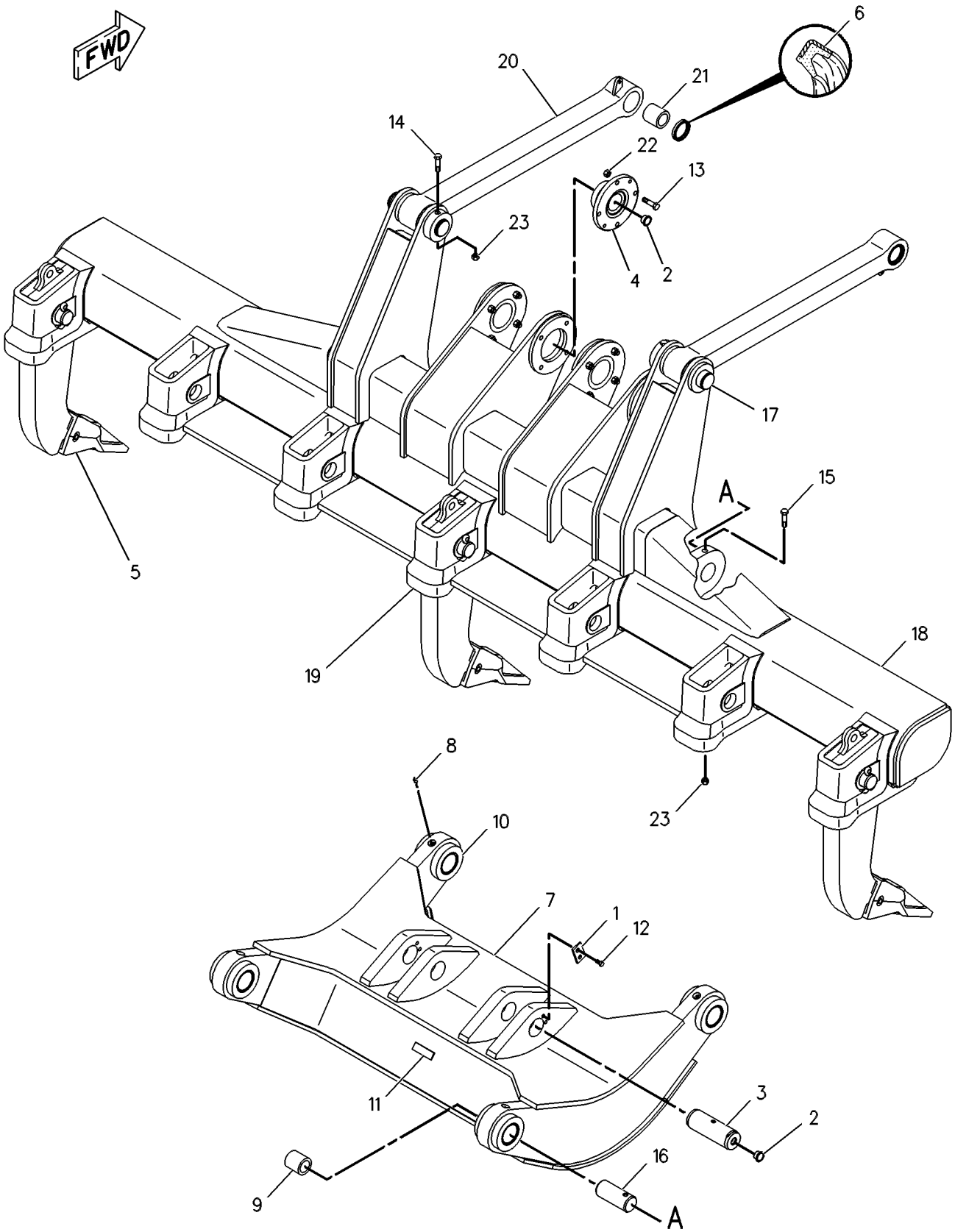

GRAPHIC #1 **<END>** g00088638

WORK TOOLS

136-8310 TOOTH GP-RIPPER

S/N: B9K1-UP
HEAVY DUTY SPIRAL RETAINER
PART OF 125-5739 RIPPER GP

SMCS-6808 **i01034124**

NOTE	PART NUMBER	QTY	PART NAME 1 2 3 4 5 6 (PRODUCT LEVEL)	SEE PAGE
	3B-5325	2	PIN-COTTER	
	8J-2190	1	PIN	
	114-0358	1	PIN	
	114-0359	1	RETAINER AS	
	138-0797	1	SHANK-RIPPER	
	6Y-0359	1	TIP-RIPPER	

<END>

SERVICE EQUIPMENT AND SUPPLIES

278-1485 FILM GP

S/N: B9K1-UP

PART OF 269-2203, 298-5640 PLATE & FILM GP

SMCS-0375, 7000, 7405, 7557 **i02765434**

NOTE	REF NO	GRAPHIC REF	PART NUMBER	QTY	PART NAME 1 2 3 4 5 6 (PRODUCT LEVEL)	SEE PAGE
	1	1	253-0861	2	FILM-INFORMATION (CAT POWER, ACERT TECHNOLOGY)	
	2	1	281-2006	1	FILM-STRIPE (CATERPILLAR, GRILL, REAR)	
	3	1	281-2007	1	FILM-IDENTIFICATION (CAT, HOOD, LH)	
	4	1	281-2008	1	FILM-IDENTIFICATION (CAT, HOOD, RH)	
	5	1	281-2855	2	FILM-IDENTIFICATION (24M, HOOD, RH)	

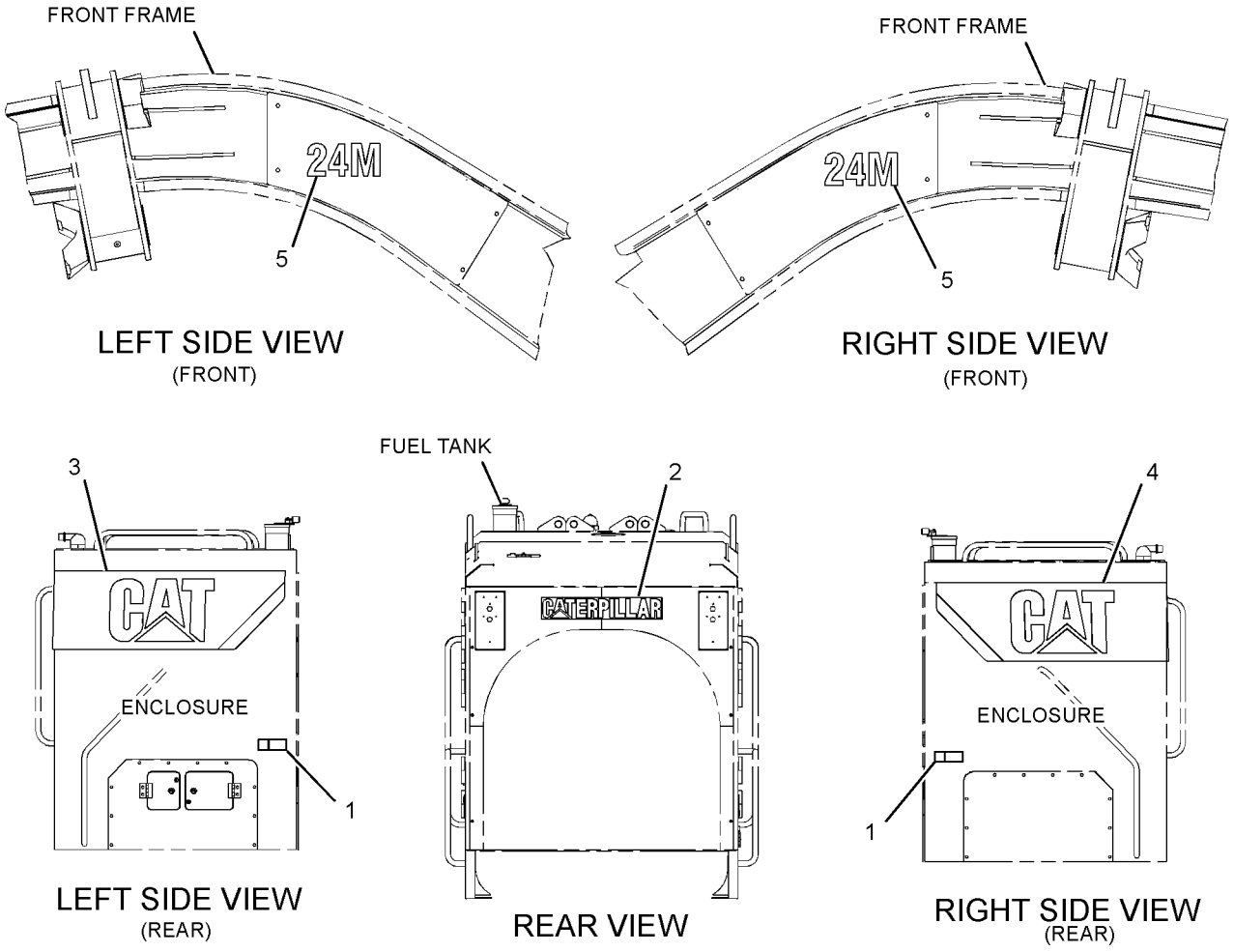

GRAPHIC #1

<END>

g01387342

SERVICE EQUIPMENT AND SUPPLIES

289-3344 FILM GP–ENGLISH

S/N: B9K1-UP

PART OF 309-8777 PLATE & FILM GP

SMCS-0375, 7000, 7405, 7557 **i02980615**

NOTE	REF NO	GRAPHIC REF	PART NUMBER	QTY	PART NAME 1 2 3 4 5 6 (PRODUCT LEVEL)	SEE PAGE
	1	1	**219-0302**	1	FILM-WARNING (NO WELD, NO DRILL, READ OMM)	
	2	1	**225-3305**	1	FILM-WARNING (UNIVERSAL, READ OMM, U.S.)	
	3	1	**227-7390**	1	FILM-WARNING (SEAT BELT)	
	4	1	**230-1340**	1	FILM-WARNING (PRODUCT LINK RADIO, U.S.)	
	5	1	**289-3342**	1	FILM-CERTIFICATION (OPS, READ OMM)	
	6	1	**307-0047**	1	FILM-INFORMATION (PRODUCT LINK, READ OMM)	

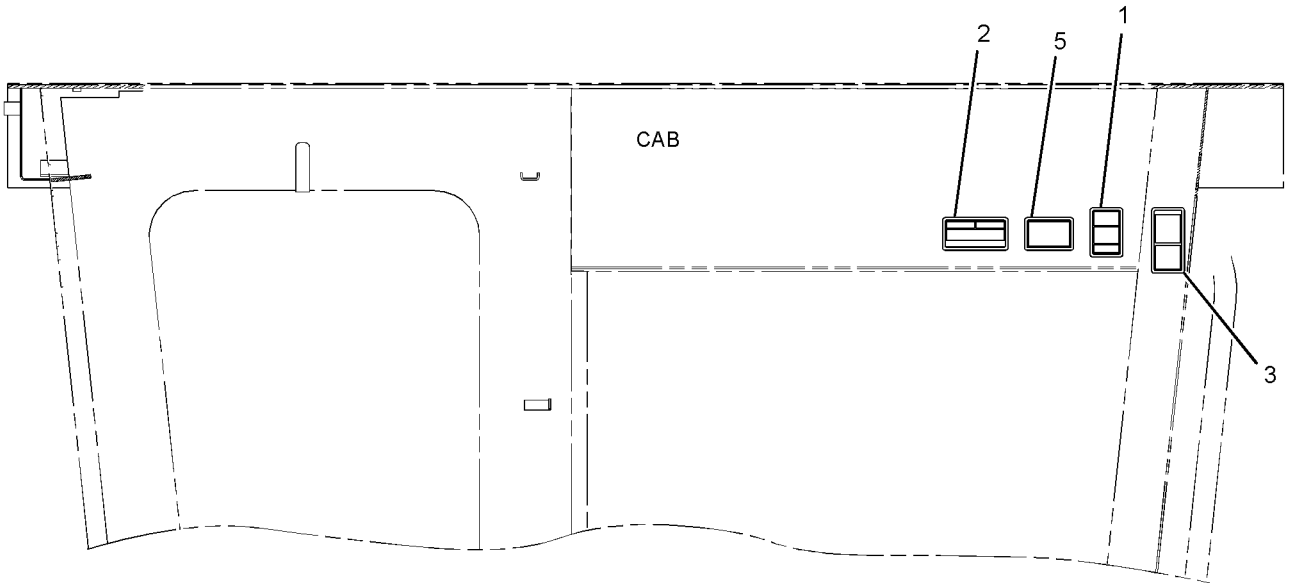

RIGHT SIDE VIEW

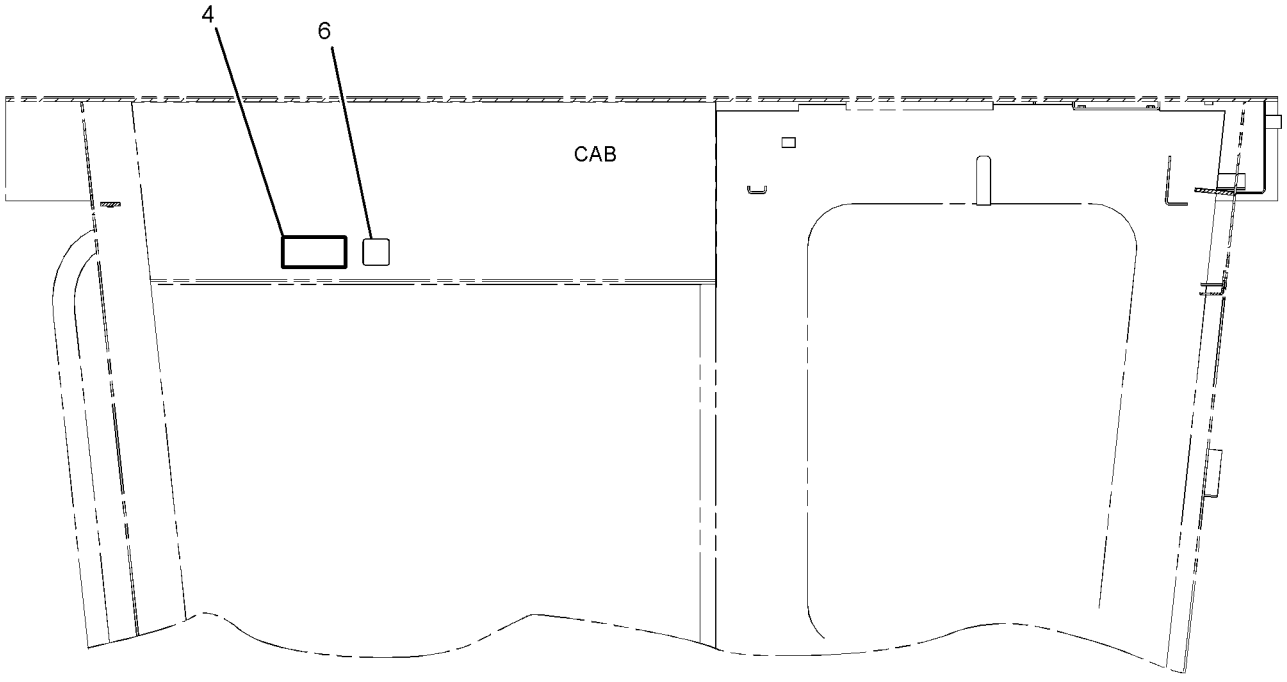

LEFT SIDE VIEW

GRAPHIC #1 **<END>** g01628107

SERVICE EQUIPMENT AND SUPPLIES

294-1000 FILM GP-INTERNATIONAL

S/N: B9K1-UP

PART OF 302-5137, 309-8778, 309-8779, 309-8780, 309-8781, 309-8782, 309-8783, 309-8784, 309-8786, 309-8787, 309-8788, 309-8789, 309-8790, 309-8791, 309-8792, 309-8793, 309-8794, 309-8795, 309-8796 PLATE & FILM GP

SMCS-7557 **i03113152**

NOTE	REF NO	GRAPHIC REF	PART NUMBER	QTY	PART NAME 1 2 3 4 5 6 (PRODUCT LEVEL)	SEE PAGE
	1	1	219-0302	1	FILM-WARNING (NO WELD, NO DRILL, READ OMM)	
	2	1	224-0554	1	FILM-WARNING (UNIVERSAL, READ OMM, INTL)	
	3	1	227-7391	1	FILM-WARNING (SEAT BELT, INTERNATIONAL)	
	4	1	230-1341	1	FILM-WARNING (PRODUCT LINK RADIO, INTL)	
	5	1	289-3342	1	FILM-CERTIFICATION (OPS, READ OMM)	
	6	1	307-0047	1	FILM-INFORMATION (PRODUCT LINK, READ OMM)	

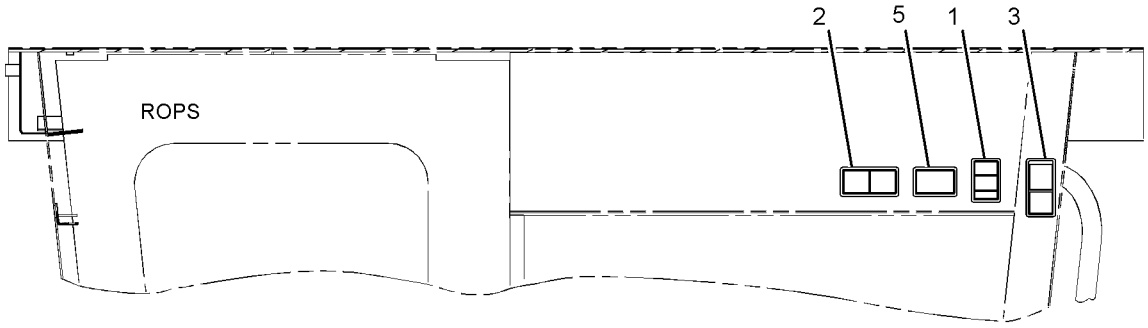

RIGHT SIDE VIEW
(UPPER OPERATOR'S COMPARTMENT)

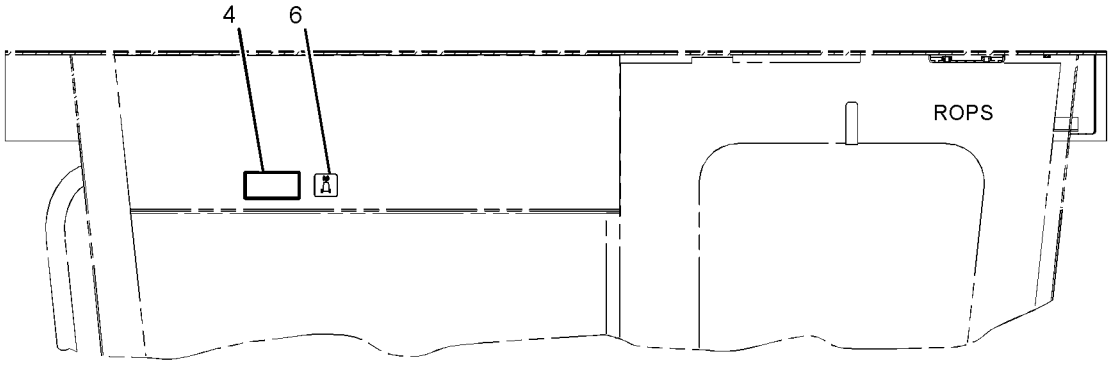

LEFT SIDE VIEW
(UPPER OPERATOR'S COMPARTMENT)

GRAPHIC #1 **<END>** g01757275

SERVICE EQUIPMENT AND SUPPLIES

269-2203 PLATE & FILM GP

S/N: B9K1-UP

PART OF 309-8777 PLATE & FILM GP

SMCS-7405, 7557 **i03543615**

NOTE	REF NO	GRAPHIC REF	PART NUMBER	QTY	PART NAME 1 2 3 4 5 6 (PRODUCT LEVEL)	SEE PAGE
	1	2	**5P-1174**	1	FILM-IDENTIFICATION (TRANSMISSION OIL FILL CAP)	
	2	2	**5P-1175**	1	FILM-IDENTIFICATION (ENGINE OIL FILL)	
	3	1,2,3	**8T-7038**	4	FILM-WARNING (DO NOT LIFT)	
	4	2	**8C-5897**	1	FILM-IDENTIFICATION (SIGHT GAUGE)	
	5	3	**159-3590**	1	FILM-IDENTIFICATION (WATER SEPARATOR)	
	6	2	**109-0361**	1	FILM-INSTRUCTION (ENGINE SHUTDOWN)	
	7	1	**114-0066**	1	PLATE-INSTRUCTION (READ SERVICE MANUAL)	
	8	1	**324-2656**	1	FILM-FUSE PANEL	
	9	4	**129-7680**	1	FILM-INSTRUCTION (HYDRAULIC TANK OIL DRAIN)	
	10	1	**134-7258**	1	FILM-INFORMATION (EXTENDED LIFE COOLANT,READ OMM)	
	12	1	**146-6747**	1	FILM-INFORMATION (24-VOLT)	
	14	4	**190-5386**	2	FILM-STRIPE (ROUND RED REFLECTIVE)	
	15	2	**225-4150**	1	PLATE-SERVICE INFORMATION (MACHINE)	
	16	1,2	**226-1242**	2	FILM-WARNING (CRUSH HAZARD, STAY BACK, U.S.)	
	17	1	**226-1275**	1	FILM-WARNING (CRUSH HAZARD, READ OMM, U.S.)	
	22	2	**239-6989**	1	PLATE-SERIAL NUMBER (MACHINE)	
	23	3	**248-5245**	2	FILM-INFORMATION (LIFT EYE, TIE-DOWN LOCATION)	
	25	2	**249-8575**	1	FILM-WARNING (NO DRILL, WELD, READ OMM)	
	26	2	**252-2156**	2	FILM-INSTRUCTION (LIFT EYE LOCATION)	
	27	1,2,3, 4	**252-2157**	12	FILM-INFORMATION (TIE-DOWN)	
	28	4	**261-4377**	1	FILM-IDENTIFICATION (FILL, DRAIN)	
	29	1	**263-6901**	1	FILM-WARNING (HOT FLUID)	
Y	31	1	*278-1485*	1	FILM GP	990
	32	1	**290-6002**	1	FILM-IDENTIFICATION (FUSE PANEL)	
	33	3	**297-0948**	1	FILM-IDENTIFICATION (LUBRICATION DISTRIBUTION)	
	34	3	**297-0949**	1	FILM-IDENTIFICATION (LUBRICATION DISTRIBUTION)	
	35	3	**297-0950**	1	FILM-IDENTIFICATION (LUBRICATION DISTRIBUTION)	
	36	3	**297-0951**	1	FILM-IDENTIFICATION (LUBRICATION DISTRIBUTION)	
	37	4	**297-1501**	1	FILM-IDENTIFICATION (LUBRICATION DISTRIBUTION)	
	38	4	**297-1502**	1	FILM-IDENTIFICATION (LUBRICATION DISTRIBUTION)	
	39	4	**297-1503**	1	FILM-IDENTIFICATION (LUBRICATION DISTRIBUTION)	
	40	4	**297-1840**	1	FILM-IDENTIFICATION (LUBRICATION DISTRIBUTION)	
	41	4	**319-0734**	1	FILM-IDENTIFICATION (LUBRICATION POINTS)	
	42	2	**246-2641**	1	PADLOCK GP	
		2	**5P-8500**	1	KEY	
	43	1,2	**239-4990**	4	FILM-WARNING (HIGH PRESSURE CYLINDER)	
E	47	3	**117-9978**		FILM-STRIPE (RED) (11-CM EACH)	
E	47A	3	**117-9978**		FILM-STRIPE (RED) (20-CM EACH)	
E	47B	3	**117-9978**		FILM-STRIPE (RED) (16.3-CM)	
	48	2,3	**329-5706**	2	FILM-WARNING (COLD START, READ OMM)	
	49	3	**329-5707**	1	FILM-IDENTIFICATION (OIL GRADE, READ OMM)	
AF			**3N-3790**	1	PLATE-SERIAL NUMBER (ENGINE)	
					(ON CAST PAD ON UPPER LEFT HAND SIDE OF BLOCK WITH DRIVE SCREWS)	

A-NOT PART OF THIS GROUP
E-ORDER BY THE CENTIMETER
F-NOT SHOWN
Y-SEPARATE ILLUSTRATION

REFER TO ALL ILLUSTRATIONS OF
THIS GROUP FOR AUXILIARY VIEWS

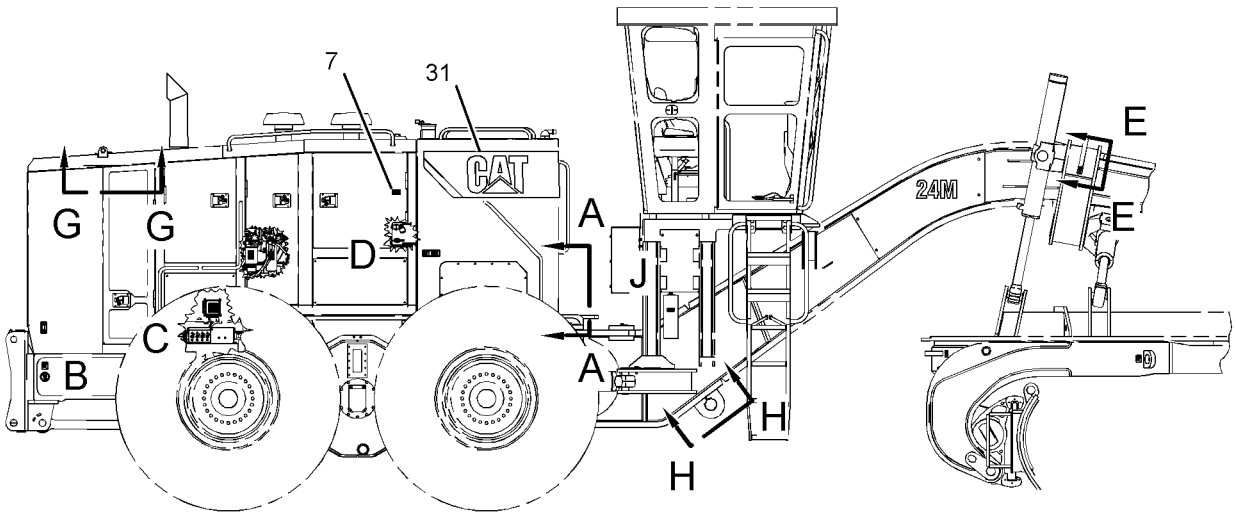

LEFT SIDE VIEW

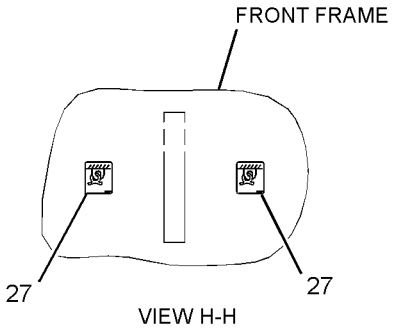

VIEW H-H

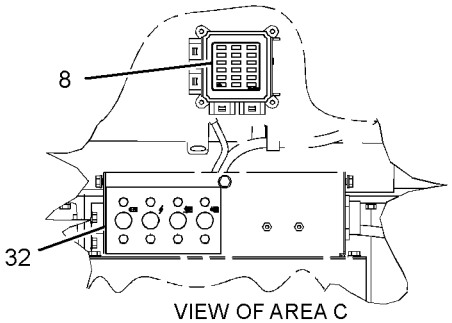

VIEW OF AREA C

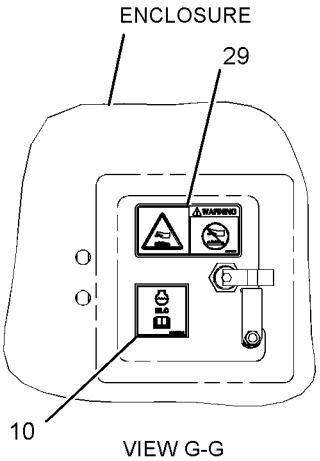

VIEW G-G

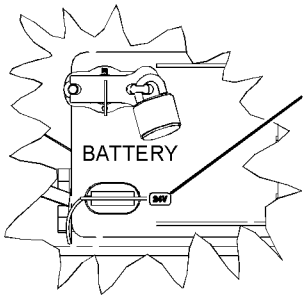

VIEW OF AREA D

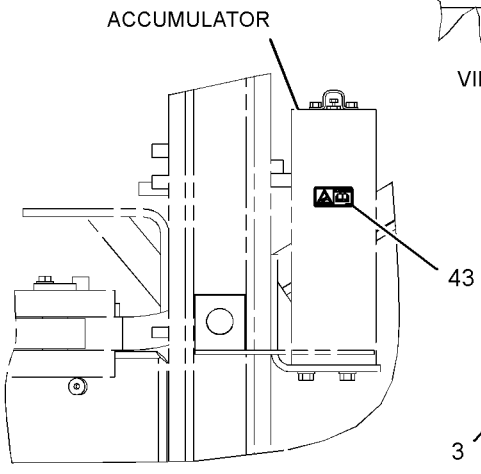

VIEW OF AREA J

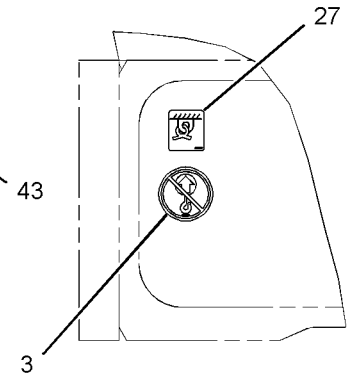

VIEW OF AREA B

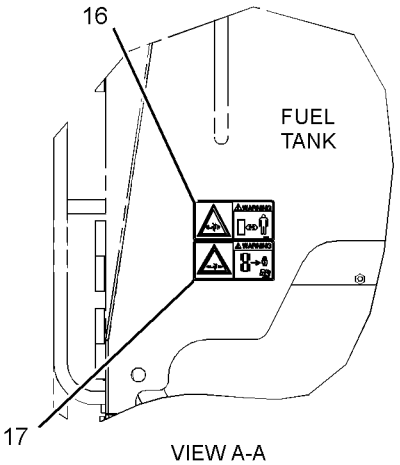

VIEW A-A

GRAPHIC #1

g01922514

REFER TO ALL ILLUSTRATIONS OF
THIS GROUP FOR AUXILIARY VIEWS

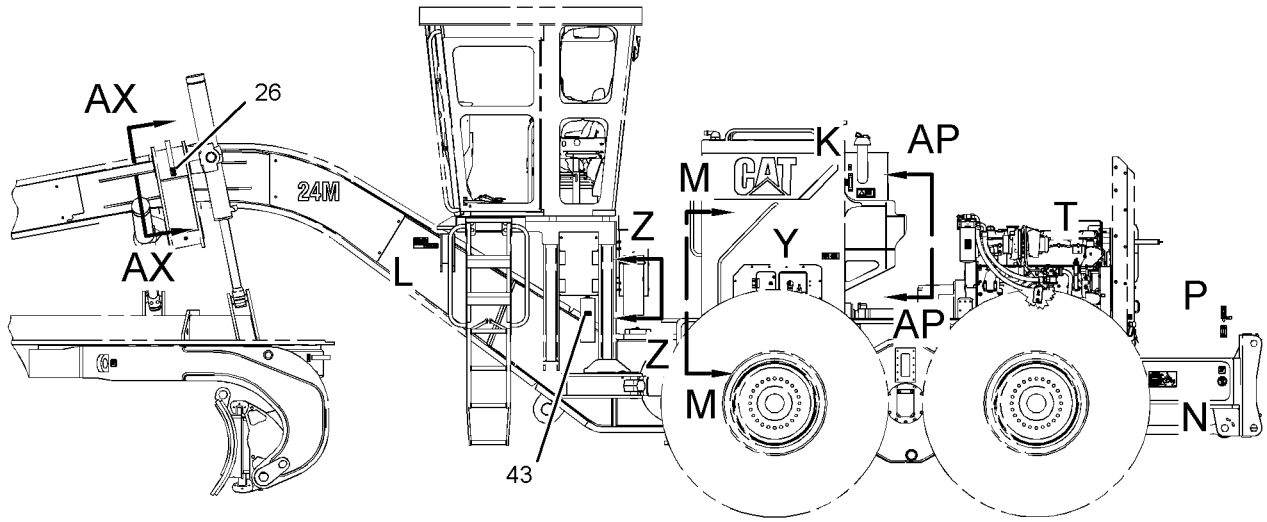

RIGHT SIDE VIEW

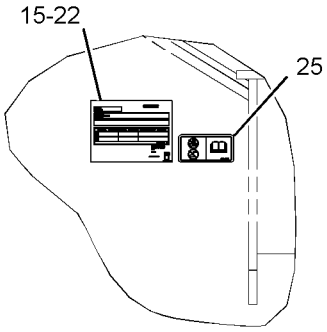

VIEW OF AREA L

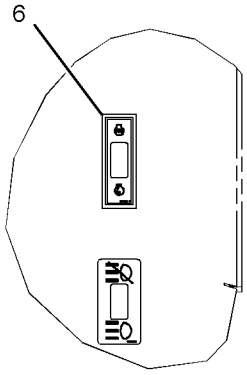

VIEW OF AREA P

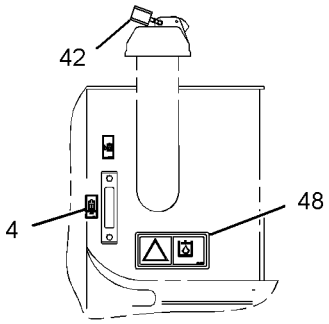

VIEW OF AREA K

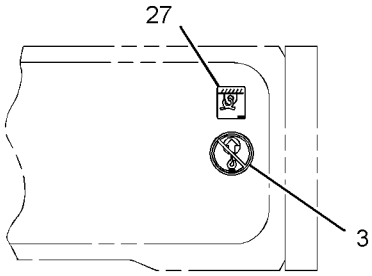

VIEW OF AREA N

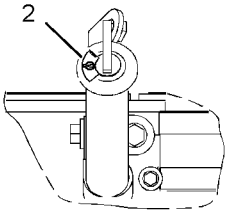

VIEW OF AREA T

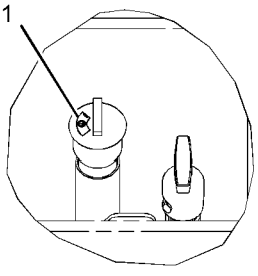

VIEW OF AREA Y

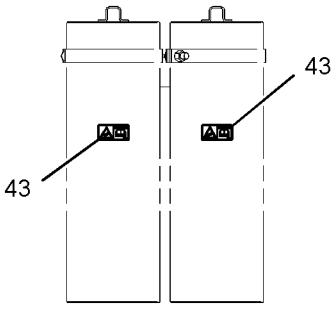

VIEW Z-Z

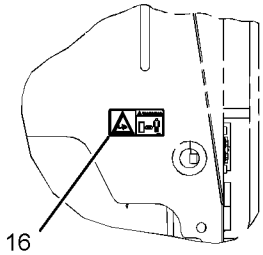

VIEW M-M

GRAPHIC #2

g01786933

REFER TO ALL ILLUSTRATIONS OF
THIS GROUP FOR AUXILIARY VIEWS

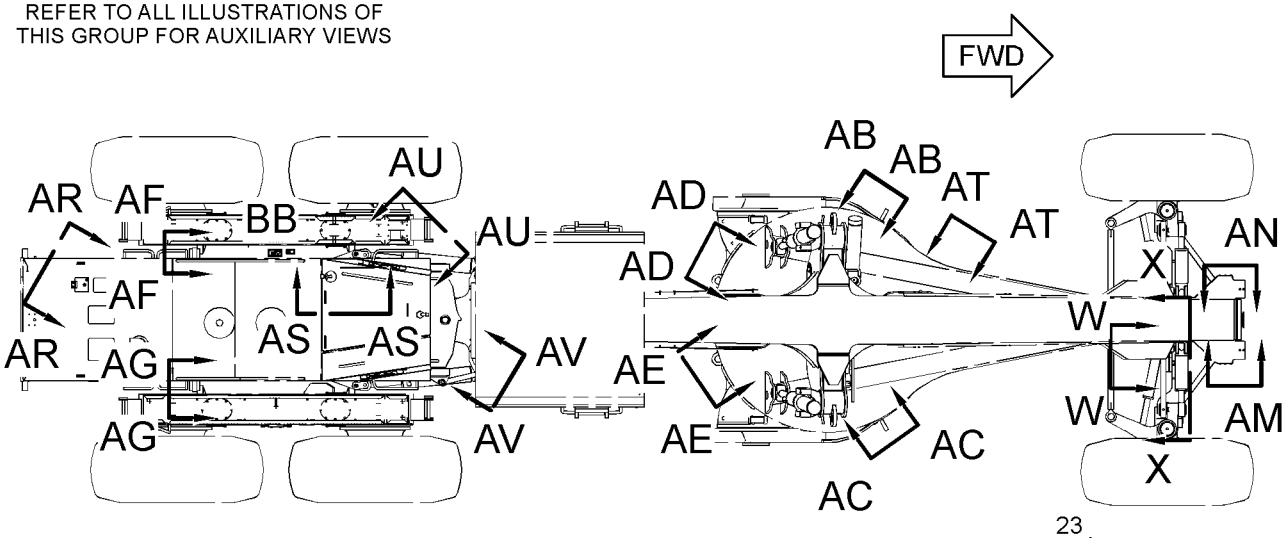

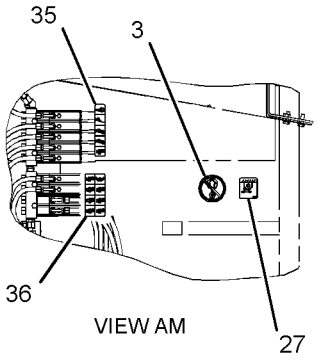

VIEW AM

TOP VIEW

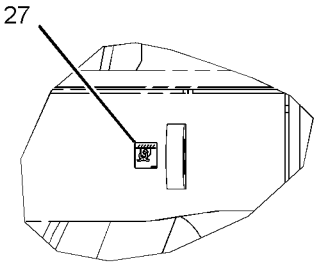

VIEW AC-AC

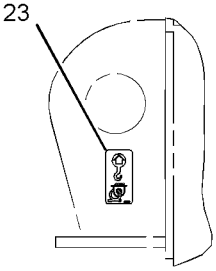

VIEW AF-AF

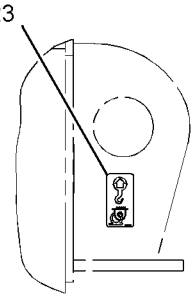

VIEW AG-AG

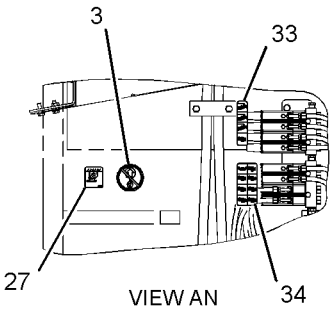

VIEW AN

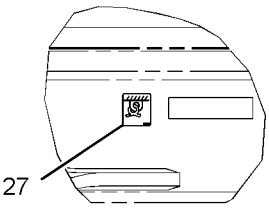

VIEW AD-AD

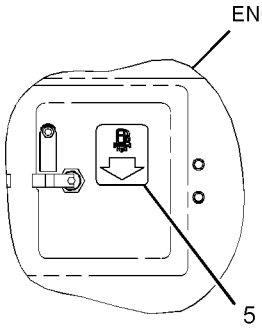

VIEW AS-AS

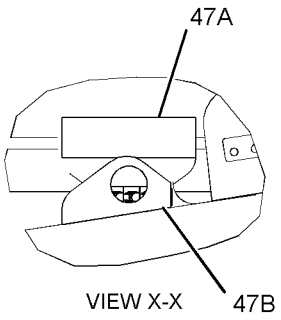

VIEW X-X

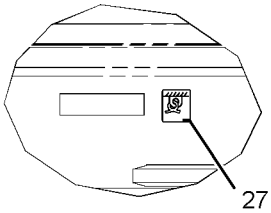

VIEW AE-AE

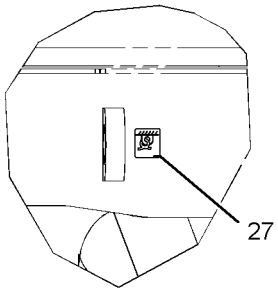

VIEW AB-AB

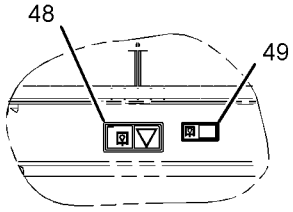

VIEW OF AREA BB

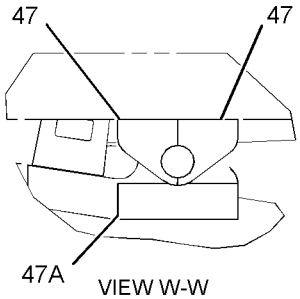

VIEW W-W

GRAPHIC #3

g01786934

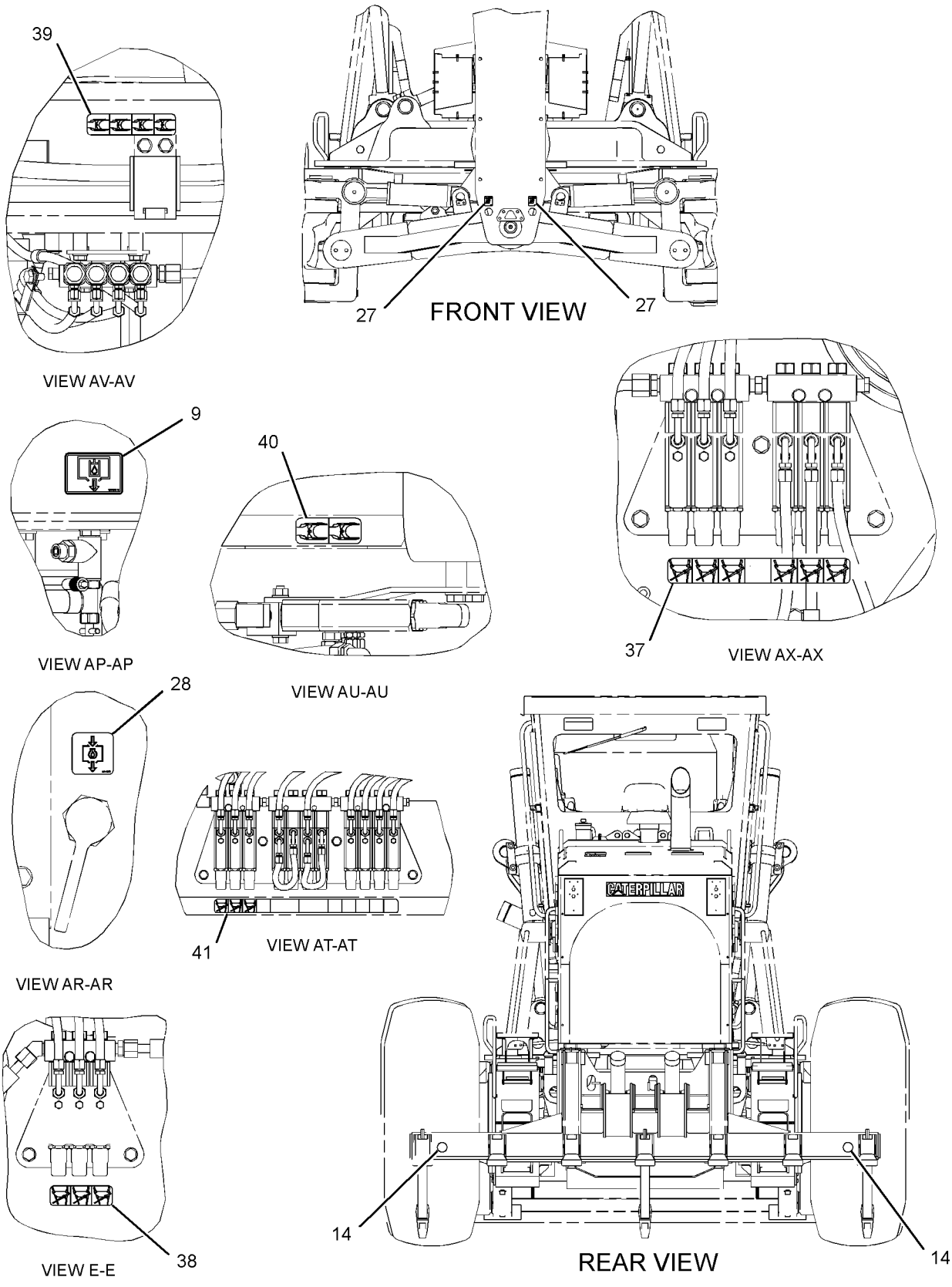

GRAPHIC #4 **<END>** g01663716

SERVICE EQUIPMENT AND SUPPLIES

298-5640 PLATE & FILM GP

S/N: B9K1-UP

PART OF 302-5137, 309-8778, 309-8779, 309-8780, 309-8781, 309-8782, 309-8783, 309-8784, 309-8786, 309-8787, 309-8788, 309-8789, 309-8790, 309-8791, 309-8792, 309-8793, 309-8794, 309-8795, 309-8796 PLATE & FILM GP

SMCS-7405, 7557 **i03543606**

NOTE	REF NO	GRAPHIC REF	PART NUMBER	QTY	PART NAME 1 2 3 4 5 6 (PRODUCT LEVEL)	SEE PAGE
	1	2	**5P-1174**	1	FILM-IDENTIFICATION (TRANSMISSION OIL FILL CAP)	
	2	2	**5P-1175**	1	FILM-IDENTIFICATION (ENGINE OIL FILL)	
	3	1,2,4	**8T-7038**	4	FILM-WARNING (DO NOT LIFT)	
	4	2	**8C-5897**	1	FILM-IDENTIFICATION (SIGHT GAUGE)	
	6	2	**109-0361**	1	FILM-INSTRUCTION (ENGINE SHUTDOWN)	
	7	1	**114-0066**	1	PLATE-INSTRUCTION (READ SERVICE MANUAL)	
	9	2	**129-7680**	1	FILM-INSTRUCTION (HYDRAULIC TANK OIL DRAIN)	
	10	1	**134-7258**	1	FILM-INFORMATION (EXTENDED LIFE COOLANT,READ OMM)	
	12	1	**146-6747**	1	FILM-INFORMATION (24-VOLT)	
	13	5	**159-3590**	1	FILM-IDENTIFICATION (WATER SEPARATOR)	
	14	5	**190-5386**	2	FILM-STRIPE (ROUND RED REFLECTIVE)	
	15	2	**225-4150**	1	PLATE-SERVICE INFORMATION (MACHINE)	
	16	1,2	**226-1240**	2	FILM-WARNING (CRUSH HAZARD, STAY BACK, INTL)	
	17	1	**226-1274**	1	FILM-WARNING (CRUSH HAZARD, READ OMM, INTL)	
	22	1,2	**239-4991**	4	FILM-WARNING (HIGH PRESSURE CYLINDER)	
	23	2	**239-6989**	1	PLATE-SERIAL NUMBER (MACHINE)	
	24	4	**248-5245**	2	FILM-INFORMATION (LIFT EYE, TIE-DOWN LOCATION)	
	26	2	**249-8575**	1	FILM-WARNING (NO DRILL, WELD, READ OMM)	
	27	1,2	**252-2156**	2	FILM-INSTRUCTION (LIFT EYE LOCATION)	
	28	1,2,4, 5	**252-2157**	12	FILM-INFORMATION (TIE-DOWN)	
	29	5	**261-4377**	1	FILM-IDENTIFICATION (FILL, DRAIN)	
	30	1	**263-6902**	1	FILM-WARNING (HOT FLUID)	
Y	32	1	*278-1485*	1	FILM GP	990
	33	1	**290-6002**	1	FILM-IDENTIFICATION (FUSE PANEL)	
	34	4	**297-0948**	1	FILM-IDENTIFICATION (LUBRICATION DISTRIBUTION)	
	35	4	**297-0949**	1	FILM-IDENTIFICATION (LUBRICATION DISTRIBUTION)	
	36	4	**297-0950**	1	FILM-IDENTIFICATION (LUBRICATION DISTRIBUTION)	
	37	4	**297-0951**	1	FILM-IDENTIFICATION (LUBRICATION DISTRIBUTION)	
	38	2	**297-1501**	1	FILM-IDENTIFICATION (LUBRICATION DISTRIBUTION)	
	39	1	**297-1502**	1	FILM-IDENTIFICATION (LUBRICATION DISTRIBUTION)	
	40	5	**297-1503**	1	FILM-IDENTIFICATION (LUBRICATION DISTRIBUTION)	
	41	5	**297-1840**	1	FILM-IDENTIFICATION (LUBRICATION DISTRIBUTION)	
	42	5	**319-0734**	1	FILM-IDENTIFICATION (LUBRICATION POINTS)	
	43	2	**246-2641**	1	PADLOCK GP	
		2	**5P-8500**	1	KEY	
	44	1	**324-2656**	1	FILM-FUSE PANEL	
E	47	4	**117-9978**		FILM-STRIPE (RED) (80-CM)	
	48	2,3	**329-5706**	2	FILM-WARNING (COLD START, READ OMM)	
	49	3	**329-5707**	1	FILM-IDENTIFICATION (OIL GRADE, READ OMM)	
AF			**3N-3790**	1	PLATE-SERIAL NUMBER (ENGINE)	
					(ON LOWER RH REAR CORNER OF CYLINDER BLOCK)	

A-NOT PART OF THIS GROUP
E-ORDER BY THE CENTIMETER
F-NOT SHOWN
Y-SEPARATE ILLUSTRATION

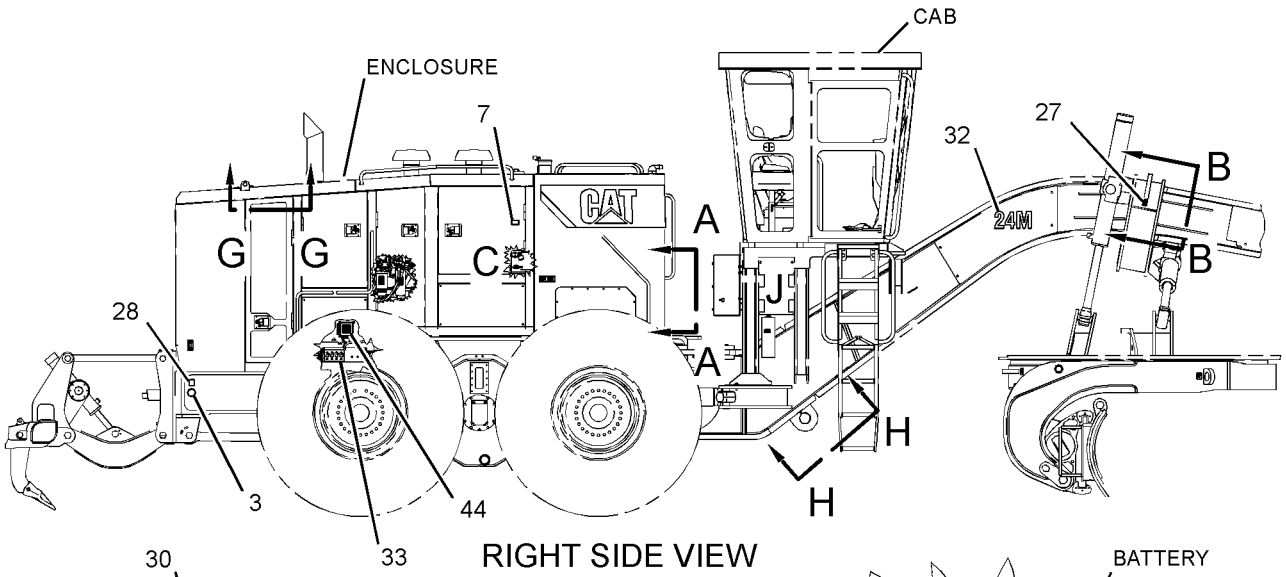

RIGHT SIDE VIEW

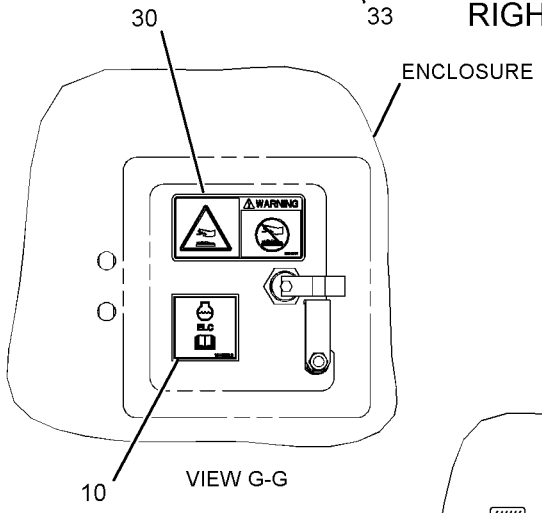

VIEW G-G

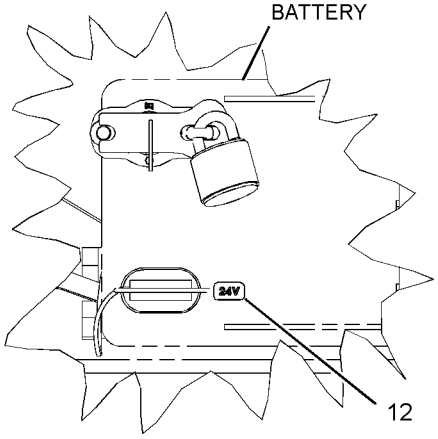

VIEW OF AREA C

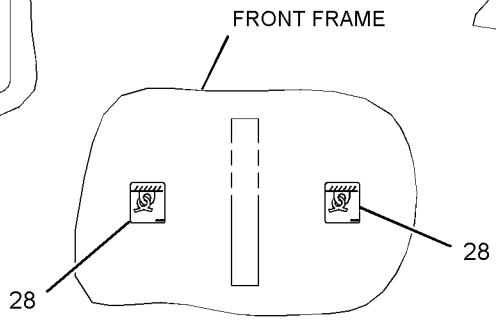

VIEW H-H

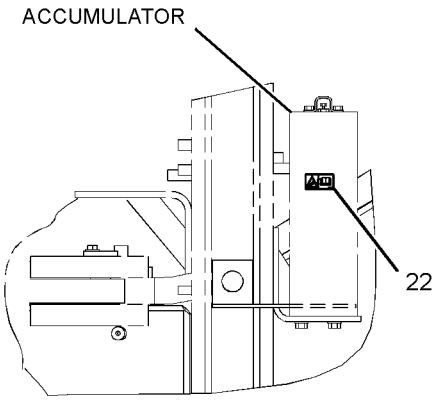

VIEW OF AREA J

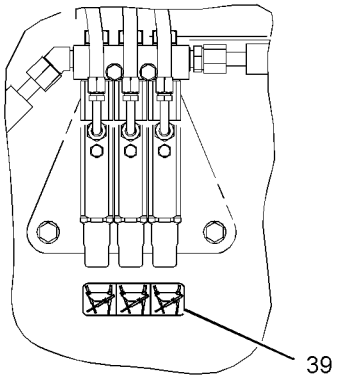

VIEW B-B

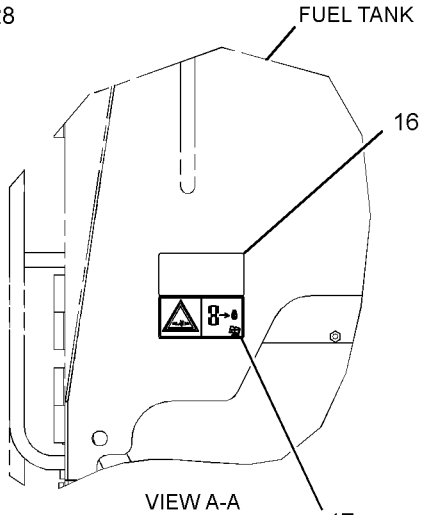

VIEW A-A

GRAPHIC #1

g01922735

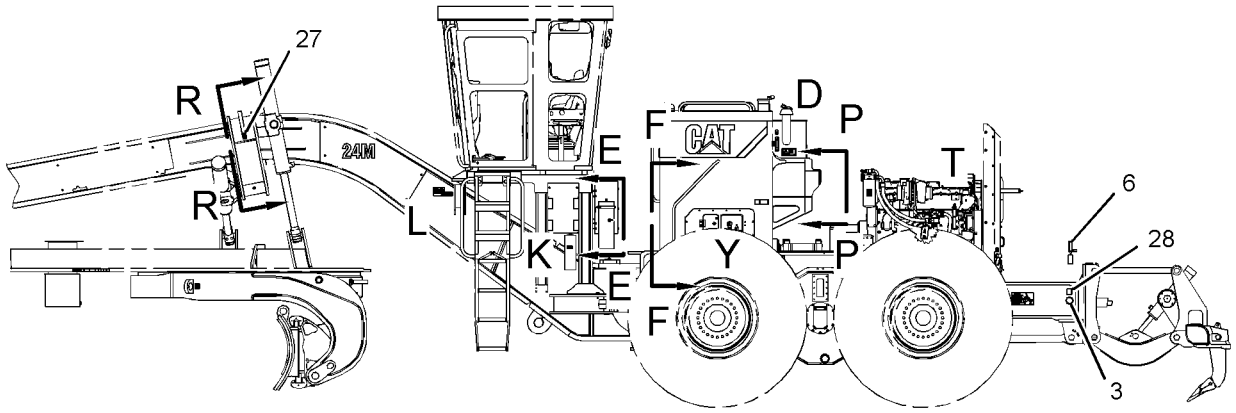

LEFT SIDE VIEW

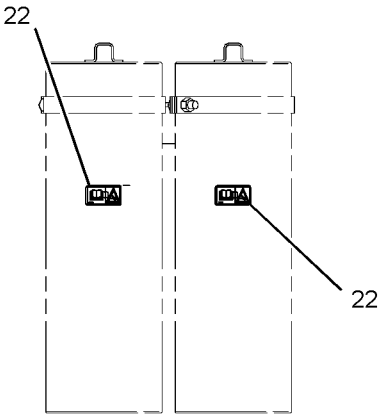

VIEW E-E

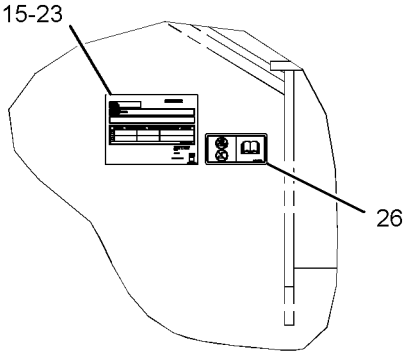

VIEW OF AREA L

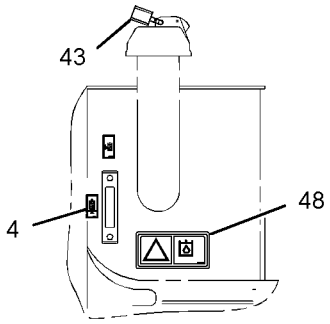

VIEW OF AREA D

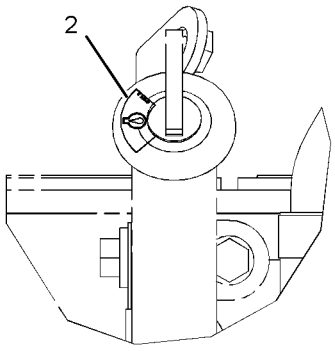

VIEW OF AREA T

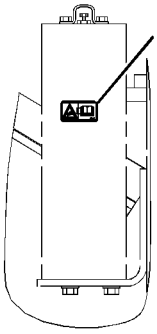

VIEW OF AREA K

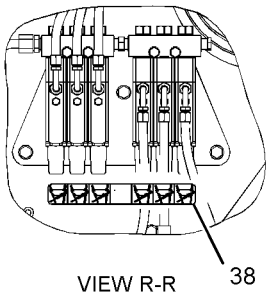

VIEW R-R

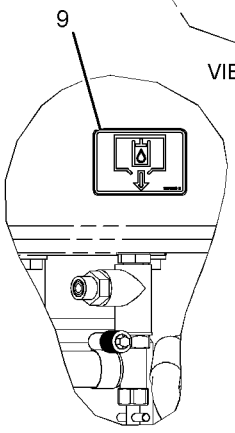

VIEW P-P

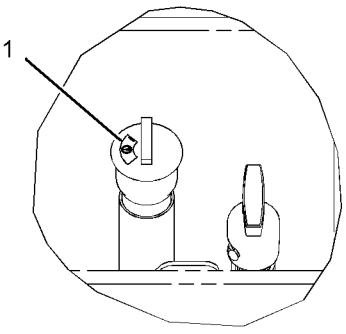

VIEW OF AREA Y

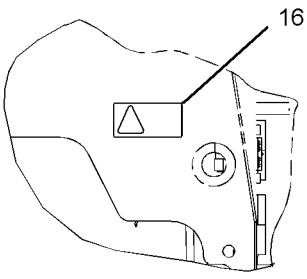

VIEW F-F

GRAPHIC #2

g01788559

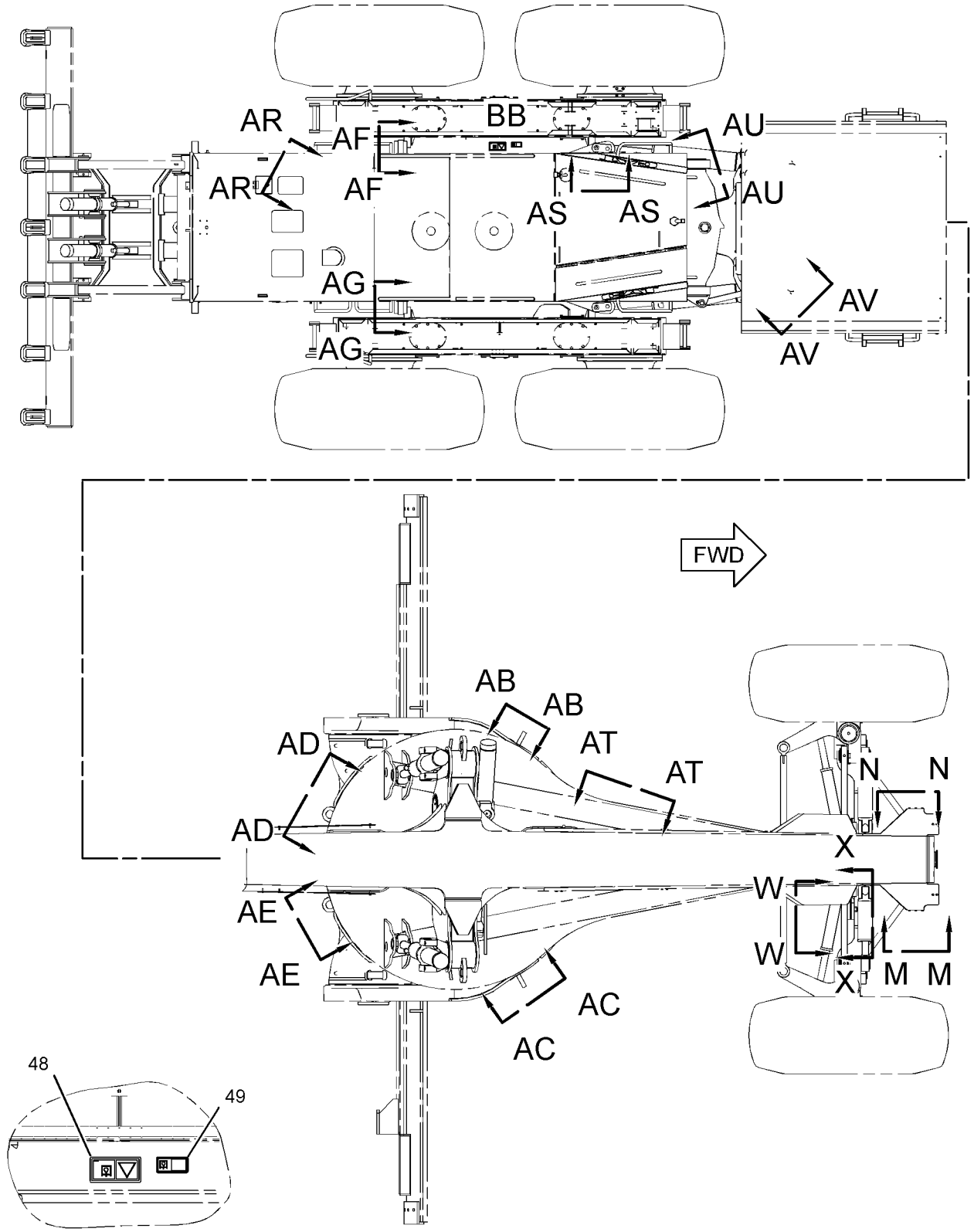

VIEW OF AREA BB

TOP VIEW

REFER TO ALL ILLUSTRATIONS OF THIS GROUP FOR AUXILIARY VIEWS

GRAPHIC #3

g01788560

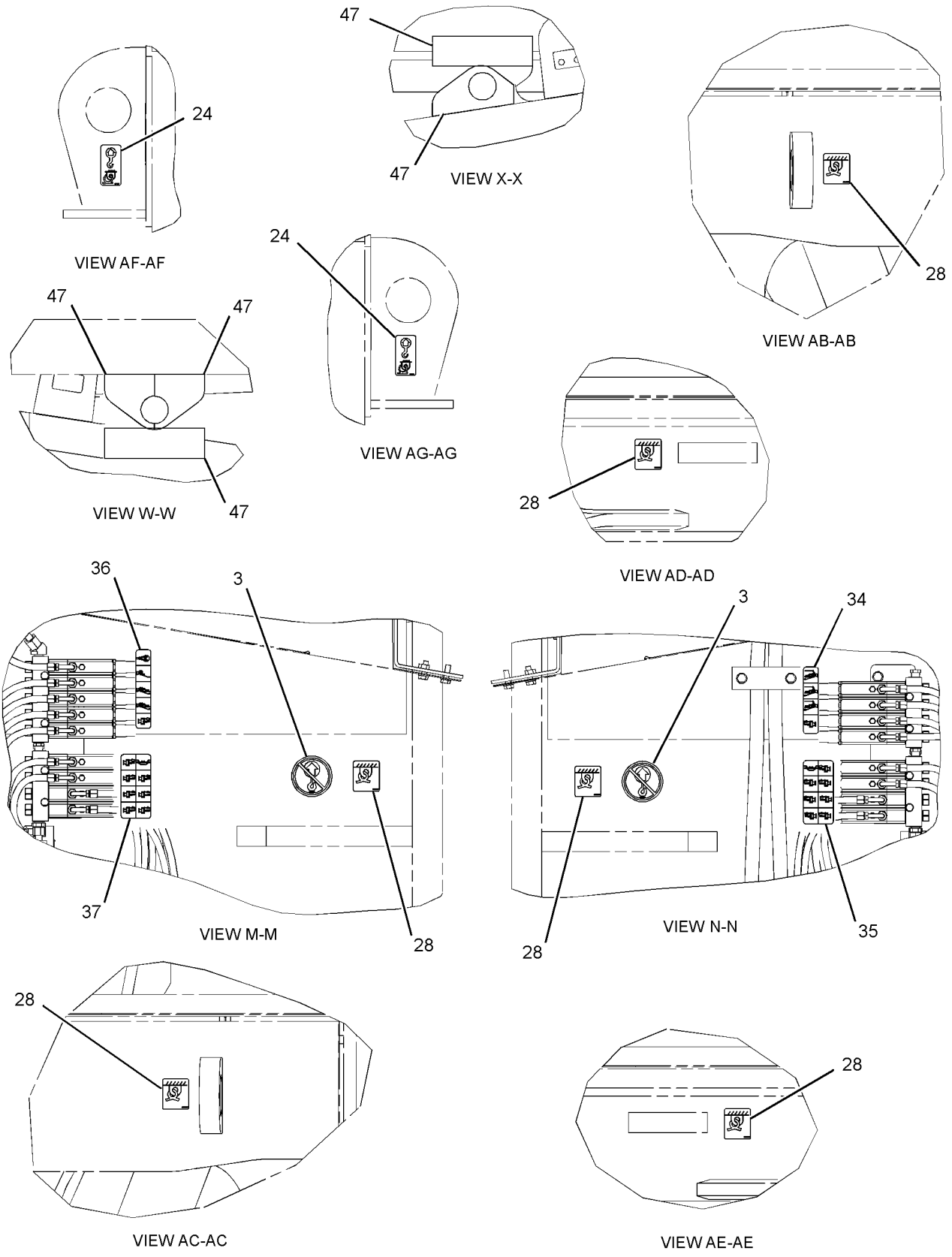

GRAPHIC #4

g01444112

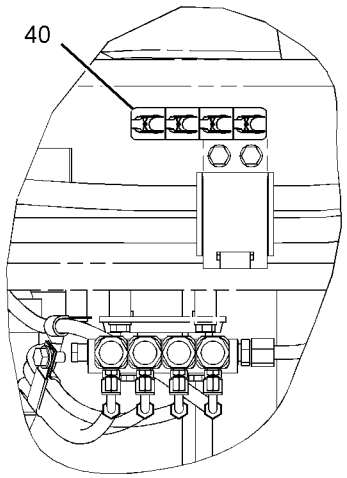

VIEW AV-AV

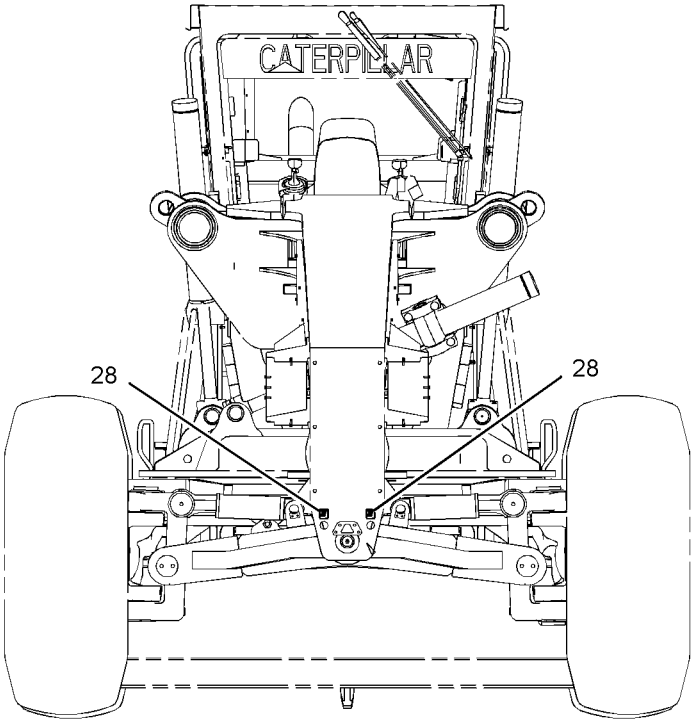

FRONT VIEW

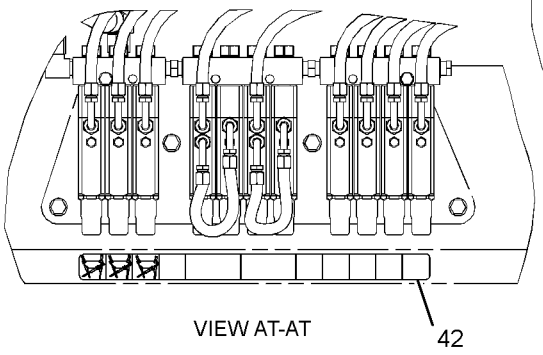

VIEW AT-AT

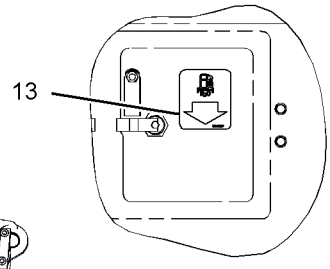

VIEW AS-AS

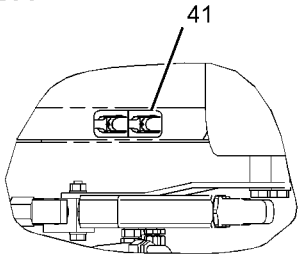

VIEW AU-AU

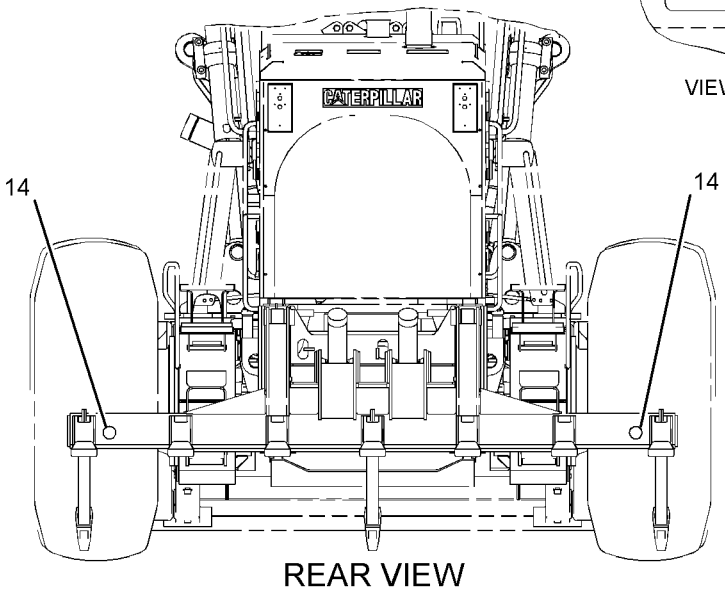

REAR VIEW

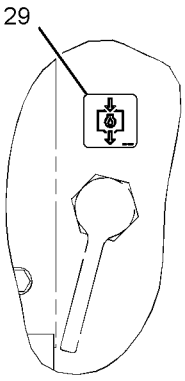

VIEW AR-AR

GRAPHIC #5 **<END>** g01444113

SERVICE EQUIPMENT AND SUPPLIES

302-5137 PLATE & FILM GP

S/N: B9K1-UP

SMCS-7405, 7557 **i03879817**

NOTE	PART NUMBER	QTY	PART NAME 1 2 3 4 5 6 (PRODUCT LEVEL)	SEE PAGE
Y	*250-9254*	1	ELECTRONICS GP-MONITOR	202
Y	*294-1000*	1	FILM GP-INTERNATIONAL	993
Y	*298-5640*	1	PLATE & FILM GP	1000

Y-SEPARATE ILLUSTRATION

<END>

SERVICE EQUIPMENT AND SUPPLIES

309-8777 PLATE & FILM GP—ENGLISH, WITH MONITOR SOFTWARE

S/N: B9K1-UP

SMCS-7405, 7557 **i02813751**

NOTE	PART NUMBER	QTY	PART NAME 1 2 3 4 5 6 (PRODUCT LEVEL)	SEE PAGE
Y	*250-9254*	1	ELECTRONICS GP-MONITOR	202
Y	*289-3344*	1	FILM GP (ENGLISH)	991
Y	*269-2203*	1	PLATE & FILM GP	994

Y-SEPARATE ILLUSTRATION

<END>

SERVICE EQUIPMENT AND SUPPLIES

309-8778 PLATE & FILM GP—PORTUGESE, WITH MONITOR SFWR

S/N: B9K1-UP

SMCS-7405, 7557 **i02798435**

NOTE	PART NUMBER	QTY	PART NAME 1 2 3 4 5 6 (PRODUCT LEVEL)	SEE PAGE
Y	*250-9254*	1	ELECTRONICS GP-MONITOR	202
Y	*294-1000*	1	FILM GP-INTERNATIONAL	993
Y	*298-5640*	1	PLATE & FILM GP	1000

Y-SEPARATE ILLUSTRATION

<END>

SERVICE EQUIPMENT AND SUPPLIES

309-8779 PLATE & FILM GP–SPANISH, WITH MONITOR SOFTWARE

S/N: B9K1-UP

SMCS-7405, 7557 **i02798443**

NOTE	PART NUMBER	QTY	PART NAME 1 2 3 4 5 6 (PRODUCT LEVEL)	SEE PAGE
Y	*250-9254*	1	ELECTRONICS GP-MONITOR	202
Y	*294-1000*	1	FILM GP-INTERNATIONAL	993
Y	*298-5640*	1	PLATE & FILM GP	1000

Y-SEPARATE ILLUSTRATION

<END>

SERVICE EQUIPMENT AND SUPPLIES

309-8780 PLATE & FILM GP—FRENCH, WITH MONITOR SOFTWARE

S/N: B9K1-UP

SMCS-7405, 7557 **i02798446**

NOTE	PART NUMBER	QTY	PART NAME 1 2 3 4 5 6 (PRODUCT LEVEL)	SEE PAGE
Y	*250-9254*	1	ELECTRONICS GP-MONITOR	202
Y	*294-1000*	1	FILM GP-INTERNATIONAL	993
Y	*298-5640*	1	PLATE & FILM GP	1000

Y-SEPARATE ILLUSTRATION

<END>

SERVICE EQUIPMENT AND SUPPLIES

309-8781 PLATE & FILM GP–GERMAN, WITH MONITOR SOFTWARE

S/N: B9K1-UP

SMCS-7405, 7557 **i02798481**

NOTE	PART NUMBER	QTY	PART NAME 1 2 3 4 5 6 (PRODUCT LEVEL)	SEE PAGE
Y	*250-9254*	1	ELECTRONICS GP-MONITOR	202
Y	*294-1000*	1	FILM GP-INTERNATIONAL	993
Y	*298-5640*	1	PLATE & FILM GP	1000

Y-SEPARATE ILLUSTRATION

<END>

SERVICE EQUIPMENT AND SUPPLIES

309-8782 PLATE & FILM GP–DUTCH, WITH MONITOR SOFTWARE

S/N: B9K1-UP

SMCS-7405, 7557 **i02798491**

NOTE	PART NUMBER	QTY	PART NAME 1 2 3 4 5 6 (PRODUCT LEVEL)	SEE PAGE
Y	*250-9254*	1	ELECTRONICS GP-MONITOR	202
Y	*294-1000*	1	FILM GP-INTERNATIONAL	993
Y	*298-5640*	1	PLATE & FILM GP	1000

Y-SEPARATE ILLUSTRATION

<END>

SERVICE EQUIPMENT AND SUPPLIES

309-8783 PLATE & FILM GP—DANISH, WITH MONITOR SOFTWARE

S/N: B9K1-UP

SMCS-7405, 7557 **i02798507**

NOTE	PART NUMBER	QTY	PART NAME 1 2 3 4 5 6 (PRODUCT LEVEL)	SEE PAGE
Y	*302-0359*	1	ELECTRONICS GP-MONITOR	204
Y	*294-1000*	1	FILM GP-INTERNATIONAL	993
Y	*298-5640*	1	PLATE & FILM GP	1000

Y-SEPARATE ILLUSTRATION

<END>

SERVICE EQUIPMENT AND SUPPLIES

309-8784 PLATE & FILM GP–SWEDISH, WITH MONITOR SOFTWARE

S/N: B9K1-UP

SMCS-7405, 7557 **i02798524**

NOTE	PART NUMBER	QTY	PART NAME 1 2 3 4 5 6 (PRODUCT LEVEL)	SEE PAGE
Y	*302-0359*	1	ELECTRONICS GP-MONITOR	204
Y	*294-1000*	1	FILM GP-INTERNATIONAL	993
Y	*298-5640*	1	PLATE & FILM GP	1000

Y-SEPARATE ILLUSTRATION

<END>

SERVICE EQUIPMENT AND SUPPLIES

309-8786 PLATE & FILM GP—NORWEGIAN, WITH MONITOR SFWR

S/N: B9K1-UP

SMCS-7405, 7557 **i02798527**

NOTE	PART NUMBER	QTY	PART NAME 1 2 3 4 5 6 (PRODUCT LEVEL)	SEE PAGE
Y	*302-0359*	1	ELECTRONICS GP-MONITOR	204
Y	*294-1000*	1	FILM GP-INTERNATIONAL	993
Y	*298-5640*	1	PLATE & FILM GP	1000

Y-SEPARATE ILLUSTRATION

<END>

SERVICE EQUIPMENT AND SUPPLIES

309-8787 PLATE & FILM GP–ITALIAN, WITH MONITOR SOFTWARE

S/N: B9K1-UP

SMCS-7405, 7557 **i02798534**

NOTE	PART NUMBER	QTY	PART NAME 1 2 3 4 5 6 (PRODUCT LEVEL)	SEE PAGE
Y	*302-0360*	1	ELECTRONICS GP-MONITOR	205
Y	*294-1000*	1	FILM GP-INTERNATIONAL	993
Y	*298-5640*	1	PLATE & FILM GP	1000

Y-SEPARATE ILLUSTRATION

<END>

SERVICE EQUIPMENT AND SUPPLIES

309-8788 PLATE & FILM GP—GREEK, WITH MONITOR SOFTWARE

S/N: B9K1-UP

SMCS-7405, 7557 **i02798535**

NOTE	PART NUMBER	QTY	PART NAME 1 2 3 4 5 6 (PRODUCT LEVEL)	SEE PAGE
Y	*302-0360*	1	ELECTRONICS GP-MONITOR	205
Y	*294-1000*	1	FILM GP-INTERNATIONAL	993
Y	*298-5640*	1	PLATE & FILM GP	1000

Y-SEPARATE ILLUSTRATION

<END>

SERVICE EQUIPMENT AND SUPPLIES

309-8789 PLATE & FILM GP—HEBREW, WITH MONITOR SOFTWARE

S/N: B9K1-UP

SMCS-7405, 7557 **i02798573**

NOTE	PART NUMBER	QTY	PART NAME 1 2 3 4 5 6 (PRODUCT LEVEL)	SEE PAGE
Y	*302-0360*	1	ELECTRONICS GP-MONITOR	205
Y	*294-1000*	1	FILM GP-INTERNATIONAL	993
Y	*298-5640*	1	PLATE & FILM GP	1000

Y-SEPARATE ILLUSTRATION

<END>

SERVICE EQUIPMENT AND SUPPLIES

309-8790 PLATE & FILM GP–TURKISH, WITH MONITOR SOFTWARE

S/N: B9K1-UP

SMCS-7405, 7557 **i02798574**

NOTE	PART NUMBER	QTY	PART NAME 1 2 3 4 5 6 (PRODUCT LEVEL)	SEE PAGE
Y	*302-0360*	1	ELECTRONICS GP-MONITOR	205
Y	*294-1000*	1	FILM GP-INTERNATIONAL	993
Y	*298-5640*	1	PLATE & FILM GP	1000

Y-SEPARATE ILLUSTRATION

<END>

SERVICE EQUIPMENT AND SUPPLIES

309-8791 PLATE & FILM GP–RUSSIAN, WITH MONITOR SOFTWARE

S/N: B9K1-UP

SMCS-7405, 7557 **i02798580**

NOTE	PART NUMBER	QTY	PART NAME 1 2 3 4 5 6 (PRODUCT LEVEL)	SEE PAGE
Y	*302-0361*	1	ELECTRONICS GP-MONITOR	206
Y	*294-1000*	1	FILM GP-INTERNATIONAL	993
Y	*298-5640*	1	PLATE & FILM GP	1000

Y-SEPARATE ILLUSTRATION

<END>

SERVICE EQUIPMENT AND SUPPLIES

309-8792 PLATE & FILM GP—ARABIC, WITH MONITOR SOFTWARE

S/N: B9K1-UP

SMCS-7405, 7557 **i02798589**

NOTE	PART NUMBER	QTY	PART NAME 1 2 3 4 5 6 (PRODUCT LEVEL)	SEE PAGE
Y	*302-0361*	1	ELECTRONICS GP-MONITOR	206
Y	*294-1000*	1	FILM GP-INTERNATIONAL	993
Y	*298-5640*	1	PLATE & FILM GP	1000

Y-SEPARATE ILLUSTRATION

<END>

SERVICE EQUIPMENT AND SUPPLIES

309-8793 PLATE & FILM GP—CHINESE, WITH MONITOR SOFTWARE

S/N: B9K1-UP

SMCS-7405, 7557 **i02798604**

NOTE	PART NUMBER	QTY	PART NAME 1 2 3 4 5 6 (PRODUCT LEVEL)	SEE PAGE
Y	*302-0361*	1	ELECTRONICS GP-MONITOR	206
Y	*294-1000*	1	FILM GP-INTERNATIONAL	993
Y	*298-5640*	1	PLATE & FILM GP	1000

Y-SEPARATE ILLUSTRATION

<END>

SERVICE EQUIPMENT AND SUPPLIES

309-8794 PLATE & FILM GP–ROMANIAN, WITH MONITOR SFWR

S/N: B9K1-UP

SMCS-7405, 7557 **i02798605**

NOTE	PART NUMBER	QTY	PART NAME 1 2 3 4 5 6 (PRODUCT LEVEL)	SEE PAGE
Y	*302-0362*	1	ELECTRONICS GP-MONITOR	207
Y	*294-1000*	1	FILM GP-INTERNATIONAL	993
Y	*298-5640*	1	PLATE & FILM GP	1000

Y-SEPARATE ILLUSTRATION

<END>

SERVICE EQUIPMENT AND SUPPLIES

309-8795 PLATE & FILM GP–SLOVENIAN, WITH MONITOR SFWR

S/N: B9K1-UP

SMCS-7405, 7557 **i02798606**

NOTE	PART NUMBER	QTY	PART NAME 1 2 3 4 5 6 (PRODUCT LEVEL)	SEE PAGE
Y	*302-0362*	1	ELECTRONICS GP-MONITOR	207
Y	*294-1000*	1	FILM GP-INTERNATIONAL	993
Y	*298-5640*	1	PLATE & FILM GP	1000

Y-SEPARATE ILLUSTRATION

<END>

SERVICE EQUIPMENT AND SUPPLIES

309-8796 PLATE & FILM GP–FINNISH, WITH MONITOR SOFTWARE

S/N: B9K1-UP

SMCS-7405, 7557 **i02798611**

NOTE	PART NUMBER	QTY	PART NAME 1 2 3 4 5 6 (PRODUCT LEVEL)	SEE PAGE
Y	*302-0359*	1	ELECTRONICS GP-MONITOR	204
Y	*294-1000*	1	FILM GP-INTERNATIONAL	993
Y	*298-5640*	1	PLATE & FILM GP	1000

Y-SEPARATE ILLUSTRATION

<END>

PART NUMBER INDEX

Part	Page
0	
0L-1143	112
0L-1178	83
0L-1351	85
	87
	89
	127
	500
0L-2070	75
	127
0S-0130	613
	616
0S-0509	113
	119
	366
	368
	438
0S-0699	167
0S-1569	455
0S-1571	67
	123
	153
	164
0S-1576	366
	368
0S-1585	57
	85
	453
	498
	660
	663
	666
0S-1587	430
	455
0S-1588	30
	75
	93
	94
	113
	116
	120
	127
	500
0S-1590	59
	112
	116
0S-1591	85
	87
	89
	91
	123
	127
	131
	135
	148
	302
0S-1594	20
	23
	24
	62
	77
	91
	94
	116
0S-1595	78
	87
	89
	91
	762
0S-1597	329
	333
0S-1599	478
0S-1602	65
0S-1608	82
	127
0S-1619	160
	162
	164
0S-1621	438
0S-1629	631
0T-0055	30
	75
	94
0T-0065	127
	477
0T-0102	438
0T-0244	949
0T-0318	438
0T-0573	82
	164
0T-0768	500
1	
1A-1135	135
1A-1415	660
	663
	666
1A-1460	455
1A-2029	85
	87
	89
	91
	127
	660
	663
1A-2223	83
	430
1A-3103	455
1A-3203	57
1A-4273	366
	368
1A-5183	30
	162
1A-5822	455
1A-5964	94
	160
1B-2578	314
1B-2713	896
1B-2790	127
1B-2886	762
1B-3867	14
1B-3953	453
1B-3955	453
1B-7182	135
1B-8705	67
1C-2251	148
1D-4566	127
1D-4593	455
1D-4683	913
1D-4689	588
	591
1D-4691	588
1D-5117	388
1D-6306	823
1F-0750	113
1F-7854	577
1F-7958	29
	63
	438
	455
1G-8878	449
	675
1H-1023	329
	333
1H-2629	329
	333
1H-3338	339
	340
	876
	879
	882
	885
1H-3937	777
1H-4393	354
	361
1H-5728	487
	489
1H-6227	444
1H-8128	172
	176
1H-8647	14
1J-3527	968
	969
	970
	971
	972
1J-6472	653
1J-9671	72
	176
	391
	399
	408
	417
	744
	747
	748
1K-6872	588
	591
1L-3162	511
1L-5072	781
1L-7205	500
1M-0644	124
1M-1230	896
1M-3937	478
1M-4986	328
1M-6119	183
	186
1M-6120	183
	186
1M-6718	297
1M-8649	781
1M-9968	330
	334
1M-9971	329
	333
1N-5999	655
1P-0014	477
1P-0016	477
1P-0810	376
1P-1669	140
1P-3700	778
1P-3704	707
	716
	725
	739
	856
	861
1P-3705	471
1P-3707	170
	471
1P-3958	478
1P-4078	455
1P-4578	447
	464
	468
	471
1P-4579	464
	468
	471
	735
	781
1P-4582	464
	468
	622
	781
1P-4584	707
	716
	725
	781
1P-5762	471
1P-6356	907
1P-7009	183
	186
1P-7346	67
1P-7834	455
1P-7835	455
1P-9261	477
1P-9269	438
	455
1Q-5461	487
	489
1Q-5468	487
	489
1R-0762	155
1R-1808	116
1R-1809	463
	676

► **PRIMARY REFERENCE**

PART NUMBER INDEX

Part	Page
	677
1R-5396	817
1S-0994	158
	391
	399
	408
	417
	560
	707
	733
	735
1S-2342	353
	358
1S-3725	438
1S-4295	151
1S-6595	438
	447
1S-7251	183
	186
	388
1S-7252	183
	186
1S-7446	329
	333
1S-9540	43
	45
	47
	49
1T-0132	517
1T-0136	500
1T-0310	517
1T-0365	500
1T-0414	477
1T-0416	628
1T-0680	501
1T-0720	274
1T-0738	915
1T-0765	167
1T-0782	500
1T-0786	500
1T-0794	500
1T-0795	500
1T-0804	500
1T-0806	500
1T-0807	501
1T-0808	329
	333
1T-0847	501
1T-0867	500
1T-0895	500
1T-0896	501
1T-0897	500
1T-0936	500
1T-1006	500
1T-1011	500
1T-1012	500
1T-1220	500
1T-1221	500
1T-1222	500
1T-1224	500
1T-1226	500
1T-1229	500
1T-1315	500
1T-1356	501
1T-1410	501
1T-1423	500
1T-1426	500
1T-1498	500
1T-1499	500
1T-1616	500
1T-1617	500
1T-1657	500
1T-1658	500
1T-1659	500
1T-1910	500
1T-2031	475
1U-2050	487
	489
1U-2827	455
	781
1U-8846	430
1V-3593	966
1V-8284	172
	176
	526
	532
1V-8795	628
1V-8796	628
1W-3136	72
1W-6137	120
1W-6448	302
1W-6702	685
	694
1W-7238	124
1W-7239	124
2	
2A-4429	53
2A-4639	456
2A-7163	475
2A-7174	444
2A-7180	442
2B-2695	27
2B-7410	660
	663
	666
2D-0714	649
2D-1683	560
	563
	599
	600
	601
	602
	603
	604
	605
	606
	607
	608
	609
	610
	611
2D-2444	514
2D-2507	515
2D-2508	514
	515
2D-2509	514
	515
2D-4202	487
	489
2D-6235	896
2D-6392	329
	333
2D-6533	660
	663
	666
2D-6642	442
	478
2D-8009	647
	660
	663
	666
2D-8363	479
2D-9453	442
2F-6678	330
	334
2F-9064	442
2G-0339	660
	663
	666
2G-0478	660
	663
	666
2G-1202	630
2G-5558	613
	616
2G-5593	613
	616
2G-5677	613
	616
2G-5681	613
	616
2G-6535	620
	▶630
2G-6595	514
	515
2G-7282	630
2G-8932	630
2G-9491	517
	645
2H-2665	456
2H-3429	329
	333
2H-3755	302
2H-3920	346
	347
2H-3922	337
2H-3926	637
	639
2H-3928	475
	778
2H-3931	756
	757
2H-3932	461
2H-4145	630
	655
2H-5549	655
2H-6340	613
	616
2J-0564	653
2J-3118	67
	666
2J-3507	968
	969
	970
	971
	972
2J-3961	648
	657
2J-7137	475
2J-7138	475
2J-7767	649
2J-8163	329
	333
2J-8937	916
2K-0337	460
2K-0703	987
2K-4096	653
2K-4472	453
	456
2K-4973	85
	87
	89
	91
	829
	959
2K-6279	985
2K-6830	651
2L-5893	945
2L-6679	329
	333
2L-8067	841
2L-8068	398
	407
	416
2L-8069	377
	396
	405
	414
2M-3340	440
2M-9780	123
	153
	432
	473
	517
	621
	623
	637
	639
	681
	701
	702
	706
	707
	715
	716
	724
	725
	744
	746
	748
	752
	754
	771
	806
	807
	809
	812

▶ **PRIMARY REFERENCE**

PART NUMBER INDEX

Part	Page
	820
2N-0822	453
2N-2765	151
2N-2766	147
	151
2N-3350	120
2P-1293	637
	639
	682
2P-1974	82
2P-2772	72
2P-3204	85
2P-3205	87
	89
	91
	124
2P-3760	116
	120
2P-3761	116
	120
2P-4301	116
2P-4304	114
	116
2P-4305	116
2P-4538	511
2P-5860	477
2P-7214	160
	162
	164
2R-6806	155
	160
	162
	164
	166
2S-0795	127
2S-1914	442
2S-2760	124
2S-4078	427
	438
	463
	464
	467
	468
	635
	636
	682
	705
	706
	707
	714
	715
	716
	723
	724
	725
	737
	855
	860
2S-7905	124
2T-1925	610
2T-2171	600
	602
	603
	608
2T-2396	601
	605
	607
2T-3019	391
	399
	408
	417
2U-7354	820
2V-2043	122
2W-2072	70
2W-9533	453
	51
3B-0623	51
3B-0645	123
3B-1915	366
	368
3B-1925	579
3B-4505	628
3B-4506	511
3B-4508	272
3B-4512	211
	271
	272
	290
3B-4610	384
3B-4615	527
	533
3B-4627	916
3B-4628	682
3B-4631	170
3B-5325	989
3B-7734	566
3B-8489	987
3B-8822	560
3D-0490	455
3D-2824	133
	336
	427
	432
	463
	467
	477
	621
	637
	639
	669
	671
	673
	681
	682
	686
	695
	701
	702
	704
	705
	706
	707
	713
	714
	715
	716
3D-5852	722
3D-6509	723
3D-6678	724
3D-8317	725
3D-8422	735
3D-8747	738
3D-8748	780
3D-8749	855
3D-8752	860
3D-9253	514
3E-0068	459
3E-0155	781
	507
3E-2333	444
	896
3E-3365	896
	896
3E-3371	896
	566
	845
3E-3377	▶346
	353
3E-3383	464
3E-3389	468
3E-4051	315
3E-4052	675
3E-4053	305
3E-4057	306
3E-4058	746
3E-4302	928
	304
3E-4321	655
	243
	346
3E-4352	907
3E-4367	907
	907
	907
	766
	768
	548
	687
	696
	909
3E-5169	127
	359
3E-5239	377
	397
3E-5464	398
3E-6286	406
3E-6328	407
	415
3E-6389	305
	306
	746
	928
	304
	655
	243
	346
	907
	907
	907
	907
	766
	768
	548
	687
	696
	909
	127
	359
	377
	397
	398
	406
	407
	415
	306
	746
	928
	304
	655
	243
	346
	907
	907
	907
	907
	766
	768
	548
	687
	696
	909
	127
	359
	377
	397
	398
	406
	407
	415
	306
	416
	422
	424
	353
	358
	381
	900
	377
	▶182
	353
	358
	▶221
	905
3E-6753	234
	235
3E-6772	55
3E-6790	120
3E-7401	125
3E-7404	150
3E-7417	766
	768
3E-7424	142
3E-7426	172
	176
3E-7443	682
3E-7753	172
	176
3E-7771	330
	334
3E-8020	838
	839
3E-8044	74
3E-8048	305
3E-8557	377
	397
	398
	406
	407
	415
	416
3E-8558	359
	397
	406
	415
3E-9861	291
	292
3F-3442	477
3F-4479	507
3F-5792	438
	456
	764
3F-9194	514
3F-9556	341
	628
	966
3G-0622	953
	955
3G-0910	649
3G-0911	649
3G-2582	987
3G-2791	647
3G-3265	961
	962
3G-8047	572
	623
	682
	687
	696
	731
3G-8054	572
	623
	682
	687
	696
	731
3G-8057	572
	623

3

► **PRIMARY REFERENCE**

PART NUMBER INDEX

Part	Page
	682
	687
	696
	731
3G-8632	552
3H-0110	438
3H-0442	744
	748
3J-1907	114
	116
	155
	157
	160
	162
	164
	377
	390
	391
	395
	399
	404
	408
	413
	417
	432
	435
	440
	449
	450
	451
	453
	461
	463
	464
	467
	475
	477
	479
	487
	489
	511
	571
	613
	616
	621
	622
	671
	673
	675
	676
	677
	678
	701
	704
	706
	707
	713
	714
	715
	716
	717
	722
	723
	724
	725
	726
	733
	735
	738
	744
	747
	748
	750
	752
	754
	789
	810
	855
	856
	860
	861
3J-2333	660
	663
	666
3J-3712	438
3J-4818	959
3J-5389	579
3J-5390	599
	600
	601
	602
	604
	606
	609
	611
3J-7354	72
	114
	116
	127
	145
	146
	432
	449
	450
	621
	669
	671
	673
	675
	676
	677
	678
	738
	744
	748
	750
	752
	754
	790
	792
	794
	796
	798
	800
	802
	804
	811
	856
	861
3K-0360	72
	125
	127
	133
	158
	160
	162
	164
	172
	176
	432
	444
	456
	471
	498
	621
	622
	623
	637
	639
	681
	685
	686
	694
	695
	696
	704
	706
	707
	713
	714
	715
	722
	723
	724
	731
	733
	737
	738
	746
	750
	752
	754
	784
	785
	786
	787
	788
	790
	792
	794
	796
	798
	800
	802
	804
	813
	816
	820
	855
	856
	860
	861
3K-6060	953
	955
3K-6401	556
	558
3K-8510	987
3L-3380	329
	333
3L-9409	453
3L-9410	453
3N-3763	330
	333
3N-3790	994
	1000
3P-1155	302
3P-1323	40
3P-1823	579
3P-1932	127
	155
	451
	679
3P-2414	478
3P-2573	500
3P-2574	500
3P-2685	477
3P-2768	479
3P-2792	479
3P-2793	478
3P-2794	477
3P-3246	478
3P-3304	479
3P-3321	478
3P-3743	477
3P-4050	477
3P-6061	453
3P-7447	477
3P-7489	477
3P-7832	477
3P-9658	453
3P-9847	464
	468
	845
3P-9900	959
3R-3602	985
3R-8797	329
	333
3R-8801	330
	334
3S-1307	274
3S-2093	15
	17
	18
	155
	158
	213
	215
	216
	217
	218
	275
	279
	282
	353
	358
	366
	368
	370
	373
	376

PART NUMBER INDEX

Part	Page
	390
	395
	396
	404
	405
	413
	414
	435
	831
	833
	841
	872
	903
	911
	923
	966
3S-2708	478
3S-2909	569
	645
3S-7023	651
3S-8664	560
	563
3S-9233	461
	790
	792
	794
	796
	798
	800
	802
	804
3S-9557	354
	361
3S-9643	127
3T-0849	297
3T-2139	478
3T-3418	329
	333
3T-3422	329
	333
3T-3423	329
	330
	333
	334
3T-3424	329
	330
	333
	334
3T-3434	329
	333
3T-4709	329
	333
3T-4710	329
	333
3T-6175	455
3T-6774	896
3T-9494	329
	330
	333
	334
3T-9524	330
	333
3T-9525	329
	333
3T-9549	427
	428
	635
	636
3V-0613	577
3V-2024	987
3V-2431	655
3V-4694	879
	885
	890
3V-4791	845
	900
3V-8621	985
4	
4B-2049	330
	334
4B-4274	275
	279
	282
	872
	893
4B-4278	959
4B-4280	953
	955
4B-4283	966
4B-9782	101
	105
	107
4B-9783	478
4B-9880	507
4D-0514	556
	558
4D-0537	440
4D-1248	183
	186
	388
4D-2297	831
	833
4D-3704	65
4D-4431	655
4D-4823	660
	663
	666
4D-5642	613
	616
4D-5980	170
4D-6466	560
4D-6473	455
4D-7388	326
	391
	399
	408
	417
	447
4D-7534	442
4D-7536	442
4D-7541	442
4D-7733	162
4D-7735	370
	373
	377
4D-7794	249
	253
	352
	370
	373
	377
	382
	391
	399
	408
	417
	901
4D-8148	83
4D-8186	660
	663
	666
4D-8318	823
4D-9517	382
	447
	680
4E-0754	704
	713
	722
4E-1063	170
4E-8722	953
	955
4F-0255	916
4F-0411	127
4F-2294	342
4F-4097	766
	768
4F-4879	952
4F-6024	70
4F-7957	14
	15
	17
	18
	19
4F-8503	453
4H-3001	361
4H-6112	463
	467
4H-6730	498
4H-6996	658
	659
4I-3124	583
4I-7889	739
4J-0520	432
	623
	707
	716
	725
	735
	739
	820
	856
	861
4J-0522	447
	464
	468
	471
4J-0524	464
	468
	471
	669
	671
	673
	735
4J-0527	464
	468
	623
4J-1698	475
4J-3754	781
4J-3815	781
4J-3816	781
4J-3915	876
	879
	882
	885
	888
	890
4J-4630	653
4J-5477	432
4J-7533	744
	748
	750
	752
	754
	790
	792
	794
	796
	798
	800
	802
	804
	820
4J-9058	968
	969
	970
	971
	972
4J-9224	655
4J-9964	778
4K-0367	660
	663
	666
4K-1388	172
	176
	744
	748
4K-2039	746
	815
4K-3004	987
4K-8302	382
4K-8864	391
	399
	408
	417
4K-9429	921
4L-2729	330
	334
4L-6454	447
4L-7125	384
	386
4L-9564	456
4M-0189	72
4M-0660	517
4M-0736	613
	616
4M-1827	329
4M-1828	329

► **PRIMARY REFERENCE**

PART NUMBER INDEX

Part	Page
4M-1831	329
	333
4M-1853	329
	333
4M-1854	329
	333
4M-1896	330
	334
4M-2381	507
4M-5016	477
4M-5905	507
4M-6425	272
	945
4M-6480	25
4M-6582	820
4M-8239	511
4M-8973	560
	566
4N-0683	43
	45
	47
	49
	110
4N-0684	37
	70
4N-0699	23
4N-0826	120
4N-1059	328
4N-1114	26
4N-1151	85
	89
4N-1156	127
4N-1199	127
4N-1216	120
4N-1650	43
	45
	47
	49
4N-2481	4
	6
	▶112
4N-2514	65
4N-8150	116
	120
4P-0489	142
4P-0519	87
	122
4P-2383	136
4P-6846	4
	6
	▶62
4P-7373	85
	87
	89
	91
4P-7428	370
	373
	377
	391
	399
	408
	417
4P-7429	366
	368
	399
	408
4P-7581	155
	258
	260
	366
	368
	370
	373
	377
	382
	391
	399
	408
	417
4P-7582	391
	399
	408
	417
4P-8134	218
	354
	361
	366
	368
	391
	399
	408
	417
4P-9853	122
4S-1962	370
	373
	377
4S-4455	391
	399
	408
	417
	707
	716
	725
4S-5565	655
4S-8537	478
	479
4S-8598	455
4S-8603	455
4T-3658	556
4T-5613	651
4T-8054	655
4T-8588	648
	657
4T-9298	762
4T-9300	762
4T-9301	762
4V-0199	471
4V-8256	829
4V-8577	959
4V-9803	583
	585
	588
	591
4V-9804	588
4V-9810	588
4W-5698	37
4W-5699	37
4W-5700	37
4W-5701	37
4W-9890	23
	591
5A-3604	183
	186
5B-2638	127
5B-3180	507
5B-5821	70
5B-9318	790
	792
	794
	796
	798
	800
	802
	804
5C-2890	234
	235
	299
	339
	340
	422
	424
	959
5C-7261	244
	246
	248
	250
	252
	256
	262
	275
	279
	282
	326
	384
	572
	579
	833
	966
5C-9553	144
	275
	279
	282
	354
	553
	579
	831
	833
	869
	928
	947
	953
	955
	966
5D-1026	125
	133
5D-1901	781
5D-4661	823
5D-6296	444
	613
	616
5D-6297	444
	613
	616
5D-6298	444
	613
	616
5D-6328	613
	616
5D-6792	444
5D-7523	461
	613
	616
	627
5D-9629	275
	279
	282
5E-8771	67
5F-0149	456
5F-3144	653
5F-3999	500
5F-7404	455
5F-7667	164
5F-9144	157
	449
5G-8574	642
5H-1504	55
5H-2095	920
5H-3252	647
5H-6734	172
	176
5I-4376	717
	726
5J-1086	456
5J-1246	778
5J-1446	653
5J-3488	649
5J-5314	329
	333
5J-5402	651
5J-5793	72
5J-5794	72
	477
5J-7878	647
5J-8156	655
5K-5129	660
	663
	666
5K-5288	660
	663
	666
5K-5338	160
	623
5K-7143	660
	663
	666
5K-7748	987
5K-9090	114
	122
	172

5

▶ PRIMARY REFERENCE

PART NUMBER INDEX

Part	Page	Part	Page	Part	Page	Part	Page
	176		455		592		408
	620		456		593		417
	621		477		595		548
	637		500		597		579
	639		660		831		831
	669		663		833		833
	671		666		918		845
	673		945		919		893
	682	5M-3034	329		920		900
	687		333	5P-1174	994		909
	696	5M-3062	391		1000	5P-4142	67
	705		399	5P-1175	994	5P-4255	75
	706		408		1000	5P-4295	391
	707		417	5P-1251	133		399
	714	5M-3154	438	5P-1259	265		408
	715	5M-5018	478	5P-1404	702		417
	716	5M-6126	478	5P-1442	173	5P-4423	959
	723	5M-6667	517		177	5P-4571	377
	724		645	5P-1471	265		841
	725	5M-9548	511	5P-2199	807	5P-4961	125
	737	5M-9622	511		809		463
	738	5M-9623	511		820		467
	855	5M-9624	511	5P-2228	444		669
	856	5N-5536	285	5P-2369	118		671
	860	5P-0403	477		735		673
	861	5P-0537	15	5P-2453	487	5P-5110	376
5L-3708	192		17		489		377
5L-4758	815		18	5P-2525	556	5P-5167	456
	817		19		558	5P-5618	841
5L-4759	461		239	5P-2566	756	5P-5623	352
5M-2057	456		896		757	5P-5630	325
	781		922		760	5P-5637	831
5M-2894	20	5P-0597	142		761		833
	23		265		778		900
	24	5P-0711	628	5P-2587	430		930
	30	5P-0746	328		456	5P-5677	218
	59	5P-0762	447		477	5P-5678	15
	62	5P-0767	125	5P-2618	172	5P-5768	876
	75		831		176		879
	77		833	5P-2673	556		882
	82		909		558		885
	85	5P-0840	43	5P-2955	464		888
	87		45		468		890
	89		47	5P-3119	477		965
	91		49	5P-3454	275	5P-5777	621
	94		55		279	5P-5846	87
	112	5P-1075	314		282		91
	113		464	5P-3723	556	5P-5855	500
	116		468		558	5P-5969	876
	119		707	5P-3928	845		879
	120		716	5P-3929	907		882
	123		725	5P-3948	907		885
	124		845	5P-4106	845		888
	127		907	5P-4115	349		890
	148	5P-1076	258		966		894
	153		260	5P-4116	71	5P-5992	966
	160		517		142	5P-6010	959
	162		538		149	5P-6266	613
	164		539		183		616
	167		540		186	5P-6268	613
	274		547		352		616
	302		554		354	5P-6270	613
	366		583		361		616
	368		585		384	5P-6298	329
	453		588		399		333

► **PRIMARY REFERENCE**

PART NUMBER INDEX

Part	Page
5P-6419	384
5P-6460	544
5P-6718	435
5P-6879	910
5P-6944	737
5P-7070	845
5P-7462	682
5P-7463	682
5P-7464	447
	623
	682
	687
	696
	707
	716
	725
	739
	856
	861
5P-7465	447
	623
	682
	687
	696
	707
	716
	725
	739
	856
	861
5P-7468	391
	399
	408
	417
	682
	707
	716
	725
	739
	856
	861
5P-7469	391
	399
	408
	417
	682
	707
	716
	725
	739
	856
	861
5P-7470	464
	468
	471
	735
5P-7471	464
	468
	471
	735
5P-7593	518
5P-7657	384
	386
5P-7701	85
	89
5P-7815	428
5P-7843	475
	517
5P-7957	921
5P-7958	2
	553
5P-8068	87
	91
	120
	122
5P-8182	464
	468
	471
5P-8245	29
	63
	72
	78
	110
	430
	438
	440
	444
	453
	456
	461
	477
	498
	660
	663
	666
5P-8246	708
	716
	725
	739
	856
	861
5P-8247	83
	191
	366
	368
	456
	660
	663
	666
5P-8248	83
	460
5P-8250	968
	969
	970
	971
	972
5P-8347	227
5P-8439	213
	217
	240
	247
	354
	527
	533
5P-8444	399
	408
	417
	682
	708
	716
	725
	739
	856
	861
5P-8500	2
	170
	184
	186
	994
	1000
5P-8525	215
	216
	354
	361
	903
	904
5P-8939	164
5P-9085	370
	373
	377
	391
	399
	408
	417
	560
	563
	566
5P-9297	391
	399
	408
	417
5P-9299	172
	177
	275
	279
	282
	623
5P-9436	707
	716
	725
5P-9519	446
5R-0939	682
5R-0940	682
5R-5927	444
5S-0581	135
5S-2201	708
	716
	725
5S-4441	500
5S-7349	384
5S-7379	623
	660
	663
	666
5S-7382	761
5S-7383	155
	945
5S-7385	539
5T-0504	517
5T-1060	620
	▶628
5T-1086	620
5T-1625	905
5T-5921	440
5T-6553	487
	725
	739
	856
5T-7486	861
	876
	879
	882
	885
5T-7676	444
5T-8059	660
	663
	666
5T-8060	660
	663
	666
5V-0353	641
5V-0354	641
5V-1496	950
5V-9221	399
	408
	417
5W-1437	272
6A-5591	72
	438
	440
6B-4370	442
6B-4661	909
6B-6863	479
6B-8193	384
6B-9081	87
6C-3680	893
6D-3479	382
6D-3534	87
6D-4244	133
	370
	373
	377
	623
6D-4246	162
	326
	370
	373
	377
	623
	682
	687
	696
	733
	907
6D-4247	623
6D-6581	876
	879
	882
	885
	888
	890
6D-7690	556
	558
6E-0381	788
6E-0410	807
	809
6E-0775	651

6

▶ **PRIMARY REFERENCE**

PART NUMBER INDEX

Part	Page	Part	Page	Part	Page	Part	Page
6E-1497	648	6G-1536	660		725		856
6E-1752	781		663	6J-2797	651		861
6E-2943	762		666	6K-0715	985	6V-0484	450
6E-3007	790	6G-1539	660	6K-3273	524		451
	792		663	6K-6967	566		677
	794		666	6K-8178	388		747
	796	6G-1541	660	6K-8180	841	6V-0505	934
	798		663	6L-8550	149		935
	800	6G-2395	961	6L-8797	766	6V-0545	391
	802		962	6L-9716	792	6V-0683	682
	804	6G-2396	961	6M-9155	613	6V-0836	478
6E-3319	649		962		616	6V-0852	155
6E-3326	649	6G-4524	823	6N-1709	29		432
6E-3579	733	6G-5538	660	6N-1931	124		435
6E-4213	766		663	6N-3279	329		449
	768		666		333		450
6E-4214	766	6G-5539	660	6N-3826	329		451
	768		663		333		463
6E-4215	766		666	6N-7654	57		467
	768	6G-5542	660	6P-4903	455		620
6E-4216	766		663	6P-4947	455		675
	768		666	6P-7379	477		676
	▶775	6G-5543	660	6P-7705	479		677
6E-4217	775		663	6P-9553	500		678
6E-4218	775	6G-5544	660	6P-9592	274		679
6E-4219	775		663	6R-3966	762		701
6E-4224	766	6G-5547	660	6R-7605	704		704
	768		663		713		713
6E-4225	766	6G-5987	896		722		722
	768	6G-6122	660	6R-7943	771		735
6E-4227	766		663	6S-1066	370		747
	768		666		373	6V-0974	623
6E-4228	810	6G-6272	442		377		687
6E-4230	810	6G-7222	961	6S-8620	172		696
6E-4232	768		962		176	6V-1197	21
6E-4233	766	6G-8831	910	6T-0363	329		22
	768		911		333	6V-1249	623
6E-4236	766	6H-1717	456	6T-0371	329		682
	768	6H-3615	987		333		687
6E-4237	766	6I-0213	168	6T-0372	329		696
	768	6I-0901	101		333		739
6E-5066	743	6I-0928	53	6T-3631	243		856
	744	6I-1055	43		422		861
	748		45	6T-3632	243	6V-1270	453
6E-5683	653		47		422	6V-1289	455
6E-6140	810		49	6T-3633	243	6V-1322	329
6E-6141	810	6I-1418	192		422		333
6E-6142	810		358	6T-3644	354	6V-1668	841
6E-6419	810	6I-1458	81		361	6V-1720	479
6E-6420	810	6I-3623	67	6T-3720	478	6V-1875	735
6E-6528	811	6I-3624	67	6T-5600	571	6V-1889	432
6F-0156	478	6I-3625	67	6T-6051	477		572
6F-0253	847	6I-3638	4	6T-6052	477		907
	928		6	6T-6969	243	6V-1970	2
	929		▶59	6T-7695	905	6V-2317	507
6F-0612	390	6I-4025	55	6U-5219	845	6V-2369	275
	395	6I-4421	43	6V-0128	15		279
	404		45		17		282
	413		47		18	6V-2492	133
6F-3930	514		49		19	6V-2499	137
	515	6I-4575	14	6V-0301	639		141
6F-4855	815	6I-4582	67	6V-0401	708	6V-2686	325
6F-4868	461	6J-2386	762		716	6V-2722	183
6F-7045	337	6J-2680	708		725		186
6G-0387	442		716		739	6V-2773	876

▶ **PRIMARY REFERENCE**

PART NUMBER INDEX

Part	Page	Part	Page	Part	Page	Part	Page
	879	6V-5049	155	6V-7359	682		768
	882		302		687	6V-8367	717
	885	6V-5050	428		696		726
	888	6V-5051	172		739	6V-8369	346
	890		177		856		347
6V-3251	99	6V-5064	127		861	6V-8376	361
6V-3265	399	6V-5065	98	6V-7636	876	6V-8378	341
	408	6V-5142	806		879	6V-8397	125
	417	6V-5163	947		882		155
6V-3303	435	6V-5192	775		885		158
6V-3378	142		913		888		432
6V-3505	807	6V-5220	435		890		440
	809	6V-5326	790	6V-7646	950		463
6V-3532	442		792	6V-7687	583		464
6V-3582	144		794		585		467
	150		796		587		468
6V-3668	438		798		592		471
	444		800		593		475
6V-3669	459		802		985		571
6V-3677	67		804		987		572
6V-3683	274	6V-5386	708	6V-7723	774		579
6V-3830	85	6V-5684	399		776		609
	87		408	6V-7732	781		610
	89		417	6V-7744	781		621
	91	6V-5686	666		910		622
	122	6V-5839	25		911		623
6V-3884	361		72	6V-8076	487		704
6V-3908	114		160		489		706
6V-3940	440		162	6V-8133	444		707
6V-3964	192		164	6V-8181	588		713
6V-3965	155		435	6V-8185	349		714
	449		475	6V-8186	341		715
	450		613		628		716
	451		616	6V-8187	275		717
	464		848		279		722
	468		957		282		723
	509	6V-5842	435	6V-8188	272		724
	510	6V-5851	966		330		725
	622	6V-6317	160		334		726
	675		162		388		733
	676		164		539		735
	677	6V-6339	811		764		737
	678	6V-6580	790	6V-8189	399		738
	679		792		408		789
	701		794		417		855
	707		796	6V-8197	461		856
	716		798	6V-8225	239		860
	725		800		275		861
	735		802		279	6V-8398	153
	747		804		365		158
6V-4248	25	6V-6609	97	6V-8234	461		172
	72		99	6V-8237	2		176
	475		160		444		432
6V-4249	435		162		446		447
6V-4292	133		166		459		463
6V-4298	285		324		513		464
6V-4365	471	6V-6640	456		627		467
6V-4429	26	6V-6707	655		660		468
6V-4589	45	6V-6923	181		663		571
	49	6V-7357	391		666		572
	343		399	6V-8337	391		579
6V-5048	155		408		399		599
	302		417		408		600
	451		836		417		601
	679		900		766		602

PART NUMBER INDEX

Part	Page	Part	Page	Part	Page	Part	Page
	603		639		860		725
	604		701	6V-8640	681	6V-8939	738
	605	6V-8632	621	6V-8642	621		856
	607		681		623		861
	608		686		681	6V-8943	682
	621		695	6V-8647	432		706
	622		733	6V-8675	444		715
	681		738	6V-8713	686		724
	682		855		695		733
	685		860		706	6V-8948	738
	686	6V-8633	432		714		856
	687		463		723		861
	694		467		738	6V-8969	922
	695		621		855	6V-8981	686
	696		681		860		695
	705		686	6V-8714	637	6V-8989	687
	706		695		639		696
	707		705	6V-8716	637	6V-8994	716
	714		714		639		725
	715		723		701	6V-8995	572
	723		737	6V-8722	622		687
	724		855		696		696
	731		860		707	6V-8996	687
	733	6V-8634	158		715		696
	737		432		724	6V-8998	687
	738		471		733		696
	855		621		738	6V-9001	432
	856		737		856		735
	860		855		861	6V-9002	621
	861		860	6V-8723	623	6V-9003	123
6V-8400	172	6V-8635	114		738	6V-9004	701
	176		122	6V-8724	440		735
	463		621		622	6V-9005	706
	464		705		706		715
	467		714		715		724
	468		723		724	6V-9006	464
	705	6V-8636	155		733		468
	706		463		738		707
	707		467		856		716
	714		621		861		725
	715		705	6V-8774	717	6V-9007	463
	716		714		726		467
	723		723	6V-8775	622		621
	724		738	6V-8777	707		681
	725		855		716		701
	855		860		725		735
	860	6V-8637	432	6V-8781	475		780
6V-8523	125		705		622	6V-9008	114
6V-8555	708		714		706		669
	716		723		715		671
	725	6V-8638	153		724		673
	739		432	6V-8782	432		706
	856		621		733		715
	861	6V-8639	158	6V-8783	707		724
6V-8625	622		172		716	6V-9009	463
	681		176		725		467
	695		621	6V-8789	572		706
	706		681	6V-8801	191		715
	715		686		845		724
	724		695	6V-8837	766	6V-9168	125
	731		706		768		708
6V-8626	706		714	6V-8926	704		717
	715		723	6V-8936	571		726
	724		738	6V-8938	707	6V-9169	572
6V-8629	637		855		716		687

► **PRIMARY REFERENCE**

PART NUMBER INDEX

Part	Page
	696
6V-9170	687
	696
	739
	856
	861
6V-9172	172
	177
	687
	696
6V-9182	701
6V-9189	224
	226
	227
	230
	231
	924
	925
6V-9191	500
6V-9200	621
	738
	856
	860
6V-9343	738
6V-9350	739
	856
	861
6V-9632	193
	275
	279
	282
	297
	361
	384
	838
	839
	865
	867
	876
	879
	882
	885
	888
	890
	926
	934
	935
	947
	953
	955
	966
6V-9667	821
6V-9746	432
	463
	467
	621
	637
	639
	681
	682
	686
	687
	695
	696
	701
	702
	704
	705
	706
	707
	713
	714
	715
	716
	722
	723
	724
	725
	733
	735
	780
6V-9830	733
6V-9831	733
6V-9833	172
	177
6V-9836	572
6V-9837	572
	622
	696
	706
	715
	724
	738
6V-9838	622
	687
	696
	707
	715
	724
	733
6V-9844	622
	687
	696
6V-9850	572
	609
	622
	738
6V-9851	686
	706
	715
	724
6V-9852	622
	738
	856
	861
6V-9853	701
	706
	715
	724
6V-9873	622
6V-9874	686
	695
6V-9875	705
	714
	723
	737
	855
	860
6V-9877	733
6W-8401	461
6Y-0359	989
6Y-2932	758
6Y-2933	758
6Y-2934	758
6Y-2935	758
6Y-3484	478
6Y-4119	444
6Y-4638	507
6Y-5590	542
6Y-5745	542
6Y-5793	477
6Y-5888	500
6Y-6328	455
6Y-6329	455
6Y-6815	326
6Y-6848	455
6Y-7885	477
6Y-7953	660
	663
	666
6Y-7992	479
6Y-7993	477
6Y-8083	478
6Y-8084	478
6Y-8118	478
6Y-8119	477
6Y-8202	477
6Y-8203	477
6Y-8205	478
6Y-8206	478
6Y-8542	477
6Y-9021	477
6Y-9980	83
7	
7B-1597	435
7B-2805	781
7B-3028	455
7B-3039	455
	781
7B-3235	456
7C-1445	27
7C-4354	391
	399
	408
	417
7C-4355	113
7D-1553	471
	708
	717
	726
7D-1979	477
7D-2626	444
7D-2746	560
7D-5238	648
7D-5252	514
	515
7D-5435	569
	645
7D-7233	114
	133
	391
	399
	408
	417
	623
	708
	717
	726
	739
	856
	861
7D-7496	546
7D-7504	613
	616
7D-8636	453
7D-8637	453
7E-1397	149
7E-3509	149
7E-4761	125
7E-6508	15
	17
	18
	19
7E-6513	19
7F-2122	477
	630
7F-3488	329
	333
7F-3525	329
	333
7F-8607	907
7G-0141	500
7G-2476	478
7G-2510	478
7G-2928	478
7G-4818	478
7G-4824	961
	962
7G-4998	427
	428
	635
	636
7G-7917	359
	396
	397
	398
	405
	406
	407
	414
	415
	416
7G-7918	359
	396
	397
	398
	405
	406
	407
	414
	415
	416
7G-7919	359
	396
	397
	398
	405

PART NUMBER INDEX

Part	Page
	406
	407
	414
	415
	416
7G-7920	396
	398
	405
	407
	414
	416
7G-9224	442
7H-1447	487
	489
7H-7658	478
7I-1024	572
7I-2272	285
7I-4874	444
7I-4918	444
	613
	616
7I-4935	442
7I-4997	444
7I-4999	440
7I-5000	444
7I-5001	444
7I-5003	444
7I-5005	429
7I-5006	442
7J-0204	435
	655
7J-0402	438
7J-1335	542
7J-1337	542
7J-2604	660
	663
	666
7J-5925	953
	955
7J-9108	123
	621
	622
	681
	682
	686
	687
	695
	696
	704
	706
	707
	713
	715
	716
	722
	724
	725
	733
	737
	738
	739
	855
	856
	860
	861
7J-9694	649
7K-1181	184
	186
	234
	235
	240
	243
	258
	260
	354
	361
	365
	370
	373
	376
	381
	382
	384
	388
	391
	399
	408
	417
	422
	424
	680
	901
	904
7K-3176	845
7K-3304	845
7K-4199	893
7K-4201	893
7K-8876	766
	768
7K-8877	766
	768
7K-9204	646
7K-9205	641
7K-9212	556
	558
7K-9218	517
7L-2181	456
7L-2894	329
	333
7L-8316	896
7L-9061	766
	768
7M-0324	329
	333
7M-0325	330
	333
7M-0326	329
	333
7M-0327	329
	333
7M-1297	427
	635
	636
7M-4672	349
7M-8479	478
7M-8480	477
7M-8485	114
	122
	133
	140
	326
	461
	463
	467
	487
	489
	507
	621
	622
	635
	636
	637
	639
	669
	671
	673
	701
	705
	706
	707
	714
	715
	716
	723
	724
	725
7M-8651	330
	333
7N-0296	325
7N-0452	62
7N-0718	183
	186
	▶337
7N-2059	325
7N-2156	124
7N-3718	391
	399
	408
	417
7N-9801	351
7N-9943	221
7R-0042	702
7R-2750	396
	405
	414
7R-2751	359
	396
	405
	414
7S-1912	326
7S-2962	455
7S-3916	160
	162
	164
7S-3919	160
	162
	164
7S-5005	37
7T-0020	221
7T-0094	359
7T-0582	896
7T-1099	148
	153
	384
	390
	397
	398
	406
	407
	415
	416
	865
	867
	928
7T-3974	329
	333
7T-4003	897
7T-4532	844
7T-6799	353
	358
7T-7358	893
7T-7371	455
7T-8891	963
7T-9123	330
7T-9302	346
	348
7U-4892	354
	361
7V-6571	160
	162
	164
7W-3556	579
7W-6534	511
7W-7381	390
	395
	404
	413
	450
	451
	677
7W-7536	160
7X-0290	471
7X-0343	189
	211
	271
	290
7X-0345	100
	349
7X-0347	291
	292
7X-0366	189
	211
	271
	290
7X-0515	644
7X-0550	623
	682
7X-0562	330
	334
7X-0575	149
7X-0578	953
	955
7X-0579	153
7X-0583	556
	558
7X-0584	588
7X-0590	641
	642
7X-0605	953
	955

► **PRIMARY REFERENCE**

PART NUMBER INDEX

Part	Page
7X-0608	275
	279
	282
	829
7X-0618	645
7X-0620	285
7X-0632	687
	696
7X-0818	894
7X-0851	513
	649
7X-0871	571
7X-1387	526
	532
7X-2459	704
	713
	722
7X-2488	916
7X-2533	926
7X-2534	432
7X-2536	739
	856
	861
7X-2537	384
	963
7X-2539	153
7X-2541	572
7X-2543	391
	399
	408
	417
7X-2544	527
	533
7X-2546	184
	186
7X-2548	275
	279
	282
7X-2553	644
7X-2555	525
	588
7X-2557	985
7X-2562	518
7X-2563	556
	558
	658
	659
7X-2575	827
7X-2576	125
	440
7X-2619	875
7X-3311	429
7X-3349	326
7X-3373	329
	333
7X-4733	758
7X-4743	544
7X-4776	746
7X-6222	359
	397
	406
	415
7X-6315	198
	213
	217
7X-6412	326
7X-6413	326
7X-6414	326
7X-7700	172
	176
7X-7729	20
	71
	145
	146
	172
	177
	326
	527
	533
	548
	550
	582
	583
	595
	597
	637
	639
	739
	835
	836
	841
	865
	899
7X-7731	127
	518
7Y-3474	963
7Y-5216	653
7Y-5267	473
7Y-5553	682
7Y-8763	577
7Y-9099	915

8

Part	Page
8B-1312	477
8B-5144	500
8C-0569	735
8C-3089	145
	146
	329
	333
8C-3132	807
	809
8C-3206	432
	623
	708
	717
	726
	739
	856
	861
8C-3236	823
8C-3290	83
8C-3364	463
	467
8C-3445	114
8C-3446	114
	449
	450
	451
	675
	676
	677
	678
	679
	747
8C-3447	449
	450
	451
	675
	676
	677
	678
	679
8C-3451	669
	671
	673
	747
8C-3681	133
8C-5230	120
8C-5607	213
	215
	216
	217
	218
	349
	384
8C-5608	215
	216
	218
	349
	384
8C-5723	707
	716
	725
8C-5897	994
	1000
8C-5917	183
	186
8C-5918	183
	186
8C-6354	359
8C-6358	388
8C-6515	114
8C-6711	815
8C-6712	114
8C-6758	622
8C-6854	708
	717
	726
	856
8C-6868	463
	467
	579
8C-6869	609
8C-6871	599
	603
	604
8C-6872	572
	579
8C-6875	122
8C-6959	158
8C-7507	285
8C-7508	285
8C-7562	442
8C-7563	687
	696
8C-7581	929
8C-8430	838
	839
8C-8431	704
8C-8454	876
	879
	882
	885
	888
	890
8C-8478	916
8C-8580	275
	279
	282
8C-8729	823
8C-8988	125
8C-9101	653
8C-9161	649
8C-9514	628
8C-9660	329
	333
8D-1470	544
8D-3984	660
	663
	666
8D-3986	660
	663
	666
8D-4154	460
8D-4522	660
	663
	666
8D-4523	660
	663
	666
8D-5054	666
8D-5396	455
8D-5529	122
8D-7185	708
	717
	726
8D-7333	660
	663
	666
8D-7341	660
	663
	666
8D-7343	660
	663
	666
8D-7424	660
	663
	666
8D-9092	682
8D-9671	326
8E-0083	731
8E-0330	478
8E-0359	478
8E-0360	479
8E-0364	455
8E-0366	455
8E-0367	455

PART NUMBER INDEX

Part	Page	Part	Page	Part	Page	Part	Page
8E-1118	904		679		405		414
8E-2729	478	8L-7593	326		406		416
8E-4085	478	8L-8413	64		414	8N-1548	359
8E-4086	478		959		415		396
8E-4087	478	8M-1013	507	8N-1522	359		405
8E-4088	478	8M-2530	501	8N-1523	354		414
8E-4090	478	8M-2537	511		361	8N-1549	396
8E-4091	477	8M-2770	370		396		397
8E-7366	438		373		397		405
8E-7367	438		377		405		406
8E-7791	961		382		406		414
	962		391		414		415
8E-8292	963		399		415	8P-1438	823
8E-8293	963		408	8N-1532	396	8P-1471	471
8E-8304	478		417		405		►511
8E-8310	477		716		414	8P-4617	478
8E-8316	478		725	8N-1533	398	8P-8837	455
8F-1434	330	8M-2772	246		407	8P-9770	987
	334		247		416	8R-0721	708
	341		254	8N-1535	396		717
8F-6230	475		256		398		726
8F-6437	588		370		405	8R-1778	893
8F-7219	157		373		407	8R-1803	294
8F-8151	909		377		414		295
8F-8544	478	8M-2773	125		416		349
8F-8804	110		158	8N-1537	396	8R-7402	620
8F-9206	907		160		405	8S-0768	435
8G-0871	550		162		414		463
8G-0876	644		173	8N-1540	359		467
8G-5258	556		177		396	8S-1069	644
	558		366		397	8S-2634	183
8H-3127	15		368		405		186
	17		370		406	8S-3020	183
8H-5303	337		373		414		186
8H-5306	337		377		415		275
8H-6481	583		432		835		279
	585	8M-2784	370		836		282
8H-8257	456		373	8N-1541	396	8S-3371	501
8J-0426	622		377		397	8S-5141	444
8J-2190	989	8M-3391	461		398	8S-6109	560
8J-2331	778	8M-4390	478		405	8S-6110	560
8J-4351	274	8M-4435	464		406	8S-6212	477
	471		468		407	8S-6511	124
	655	8M-4438	432		414	8S-7048	390
8J-6030	148	8M-4986	511		415		395
	153	8M-5576	461		416		404
8J-6220	655	8M-7160	455		835		413
8J-8322	478	8M-8489	124		836	8S-9089	127
8J-8782	455	8M-8627	511	8N-1542	396	8S-9094	43
	781	8N-0869	183		405	8S-9104	478
8J-8783	455		186		414	8S-9191	168
	781		388	8N-1543	359	8T-0078	701
8J-9607	985	8N-1517	359		396	8T-0120	707
	987		396		398		716
8J-9608	987		405		405		725
8J-9910	651		414		407	8T-0267	790
8J-9911	651	8N-1518	396		414		792
8K-0530	546		397		416		794
8K-0589	460		405	8N-1544	396		796
8K-2692	478		406		405		798
8L-2777	101		414		414		800
	103		415	8N-1545	396		802
	104	8N-1521	359		398		804
8L-2786	155		396		405	8T-0271	773
	451		397		407	8T-0285	873

► **PRIMARY REFERENCE**

PART NUMBER INDEX

Part	Page
8T-0328	196
	197
	276
	280
	282
	297
	330
	334
	950
8T-0335	903
8T-0336	660
	663
	667
8T-0343	765
	766
	768
8T-0357	613
	616
8T-0360	518
8T-0389	225
	258
8T-0404	682
	686
	695
8T-0643	72
	613
	616
8T-0664	446
8T-0666	627
8T-0667	627
8T-0672	649
	660
	663
	667
8T-0674	459
	823
8T-0722	129
8T-0763	649
8T-0785	648
	655
	657
8T-1117	133
8T-1141	478
8T-1158	506
8T-1159	184
	186
8T-1686	731
8T-1698	758
8T-1889	164
8T-1890	164
8T-2275	487
	489
	781
8T-2353	155
8T-2502	579
8T-2503	771
8T-2920	447
	687
	696
	708
	717
	726
8T-2947	213
	215
	216
	217
8T-3282	442
	459
	518
8T-3298	455
	781
8T-3490	71
	148
	153
	158
	244
	246
	248
	250
	252
	256
	262
	265
	275
	279
	282
	384
	386
	388
	390
	397
	398
	406
	407
	415
	416
	463
	467
	521
	523
	544
	548
	550
	552
	571
	577
	582
	583
	585
	594
	595
	597
	686
	695
	705
	714
	723
	876
	879
	882
	885
	888
	890
	917
	934
	935
	936
	937
	963
8T-3491	707
	716
	725
8T-3519	388
8T-3597	265
	540
	552
	583
	585
	590
	594
	917
	933
	936
	937
8T-3611	463
	467
	705
	714
	723
8T-3612	20
	153
	279
	282
	353
	360
	548
	571
	583
	585
	865
	867
	924
	925
8T-3647	391
	399
	408
	417
8T-3653	737
	861
8T-3734	963
8T-4121	58
	114
	125
	129
	133
	137
	141
	142
	158
	173
	177
	184
	186
	225
	227
	234
	235
	243
	244
	245
	246
	247
	248
	249
	250
	251
	252
	253
	254
	256
	258
	260
	262
	264
	265
	276
	280
	283
	325
	354
	370
	373
	377
	382
	386
	388
	391
	399
	408
	417
	422
	424
	432
	435
	447
	460
	464
	468
	471
	487
	489
	518
	521
	523
	546
	547
	548
	550
	560
	563
	566
	572
	579
	595
	597
	623
	637
	639
	669
	671
	673
	682
	687
	697
	702
	708
	717
	726
	731
	733

► **PRIMARY REFERENCE**

PART NUMBER INDEX

Part	Page	Part	Page	Part	Page	Part	Page
	735		560		433		424
	739		572		464		435
	781		623		468		464
	784		682		487		468
	785		687		489		521
	786		697		523		523
	787		702		527		527
	831		708		533		533
	833		717		544		548
	835		726		550		550
	836		731		560		563
	843		733		572		566
	845		735		595		572
	856		739		597		623
	861		784		623		669
	876		785		637		671
	879		786		639		673
	882		787		669		682
	885		856		671		687
	888		861		673		697
	890		876		682		702
	901		879		687		708
	902		882		697		717
	907		885		702		726
	909		888		708		733
	910		890		717		781
	911		910		726		831
	920		911		731		833
	934		920		735		835
	935	8T-4136	114		739		836
	948		125		841		843
	963		129		856		876
	965		133		861		879
8T-4122	189		137		865		882
	211		158		899		885
	271		173		901		888
	290		177		902		890
	291		184		907		907
	292		187		948		909
	461		244	8T-4137	71		910
	708		245		125		911
	717		246		133		963
	726		247		173		965
8T-4123	83		248		177	8T-4138	213
	129		249		184		215
	518		250		187		216
	542		251		246		217
	556		252		247		276
	558		253		254		280
	646		254		256		283
	916		256		258		365
8T-4131	129		262		260		966
	916		265		264	8T-4139	487
8T-4132	588		276		326		489
	916		280		354		540
8T-4133	114		283		370		546
	141		325		373		623
	158		370		377		708
	265		373		382		717
	391		377		388		726
	432		388		391		739
	447		391		399		831
	471		399		408		833
	527		408		417		856
	533		417		422		861

► **PRIMARY REFERENCE**

PART NUMBER INDEX

Part	Page
	919
	984
8T-4140	525
	556
	558
	588
	821
8T-4141	170
	916
8T-4157	876
	879
	882
	885
	888
	890
8T-4158	876
	879
	882
	885
	888
	890
8T-4167	83
	440
	623
	827
8T-4171	354
	361
	381
	386
	873
8T-4172	58
	464
	468
	577
	637
	639
	682
	702
	708
	717
	726
	733
	735
	739
	856
	861
8T-4174	985
	987
8T-4175	546
	916
8T-4178	682
	702
	708
	717
	726
	733
8T-4179	184
	187
	354
	361
	370
	373
	377
	388
	391
	399
	408
	417
8T-4181	876
	879
	882
	885
	888
	890
8T-4182	223
	391
	399
	408
	417
	669
	671
	673
	856
	910
	911
8T-4183	83
	265
	464
	468
	538
	540
	544
	547
	552
	572
	583
	585
	590
	592
	593
	623
	641
	645
	687
	697
	708
	717
	726
	735
	739
	823
	856
	861
	918
	919
	920
8T-4184	464
	468
	471
	538
	540
	613
	616
	623
	708
	717
	726
	781
	918
	919
	920
	985
8T-4185	142
	173
	177
	391
	399
	408
	417
	546
	708
	717
	726
	739
	835
	836
	856
	861
	907
	920
8T-4186	145
	146
	234
	235
	265
	547
	623
	637
	639
	682
	687
	697
	910
	911
8T-4187	780
8T-4189	280
	283
	325
	326
	352
	354
	361
	831
	845
	893
	900
	909
8T-4190	391
	399
	408
	417
8T-4191	125
	173
	177
	276
	280
	283
	388
	550
	595
	597
8T-4192	326
	540
	623
	644
	646
	760
	919
	920
	987
8T-4193	83
	461
	556
	558
8T-4194	525
	682
8T-4195	129
	133
	137
	141
	158
	173
	177
	258
	260
	265
	388
	391
	447
	471
	487
	489
	518
	521
	523
	527
	533
	540
	548
	563
	577
	582
	623
	637
	639
	682
	688
	697
	702
	717
	726
	739
	845
	856
	861
	907
	919
	920
	934
	935
8T-4196	114
	129
	142
	391
	433
	447
	460
	464
	468
	533

► PRIMARY REFERENCE

PART NUMBER INDEX

Part	Page	Part	Page	Part	Page	Part	Page
	550		417		433		641
	566		464		464		987
	577		468		468	8T-4956	129
	595		471		527		409
	597		487		533		418
	623		489		560		487
	682		546		572		489
	688		552		623		518
	697		556		628		554
	708		558		739		570
	717		570		848		642
	726		583		856		682
	731		585		861		688
	739		587		945		697
	848		591		947		781
	856		592		953	8T-4970	845
	861		593		955	8T-4971	835
	957		613		957		840
8T-4198	697		616		963	8T-4983	127
8T-4200	144		623	8T-4226	141	8T-4994	189
	444		631		582		211
	848		641	8T-4244	58		271
	947		644		270		290
	957		646		382		435
8T-4201	550		682		540		682
8T-4205	144		688		588	8T-5001	556
	234		697		623		558
	235		708		641	8T-5005	527
	275		717	8T-4647	285		533
	279		726	8T-4648	270		623
	282		735		588		702
	329		739	8T-4778	985		708
	333		756		987		717
	384		757	8T-4779	556		726
	386		760	8T-4780	518		739
	841		761		646		856
	875		764	8T-4834	620		861
	950		778	8T-4835	58	8T-5039	766
8T-4222	708		781		471		768
	717		823	8T-4896	145	8T-5041	540
	726		856		146	8T-5050	461
8T-4223	58		861		155		487
	83		919		191		489
	129		920		366	8T-5068	628
	149		984		368	8T-5070	655
	170		985		447	8T-5092	985
	184	8T-4224	144		471	8T-5360	447
	187		244		660		471
	265		246		663	8T-5400	966
	270		248		667	8T-5410	297
	276		250	8T-4908	71	8T-5429	432
	280		252		326		682
	283		256		384		686
	326		262		527		695
	354		280		533	8T-5436	58
	361		283		548	8T-5439	658
	366		325		579		659
	370		326		845		916
	373		354		953	8T-6381	83
	377		361		955	8T-6385	987
	382		384	8T-4910	149	8T-6430	542
	388		391		170	8T-6466	141
	391		399		464		572
	399		408		468		583
	408		417		587		585

► **PRIMARY REFERENCE**

PART NUMBER INDEX

Part	Page
	592
	593
	623
	688
	697
	702
	708
	717
	726
	739
	856
	861
8T-6631	900
8T-6685	71
	623
	682
8T-6699	297
8T-6757	51
8T-6767	127
8T-6868	471
	587
8T-6869	153
	224
	226
	230
	231
	244
	246
	248
	250
	252
	256
	262
	435
	572
8T-6870	433
8T-6895	571
8T-6911	460
8T-6912	223
	354
	361
	560
	585
	623
8T-6936	953
	955
8T-7038	994
	1000
8T-7062	12
	13
8T-7525	771
8T-7547	149
8T-7566	297
	922
8T-7852	384
8T-7876	704
	766
	768
8T-7877	737
	817
8T-7927	463
	467
8T-7929	556
	558
8T-7930	58
8T-7934	58
	146
	544
	577
	623
	688
	697
8T-7963	223
8T-7970	669
	671
	673
8T-8374	653
8T-8390	648
	657
8T-8434	647
8T-8442	811
8T-8729	238
	242
	341
	351
	376
	377
	395
	396
	398
	404
	405
	407
	413
	414
	416
	424
	675
	966
8T-8730	376
	377
	395
	396
	397
	398
	404
	405
	406
	407
	413
	414
	415
	416
	424
8T-8737	19
	155
	193
	346
	347
	359
	360
	366
	368
	376
	377
	395
	396
	397
	398
	404
	405
	406
	407
	413
	414
	415
	416
	424
8T-8827	388
8T-8874	275
	279
	282
	285
8T-8916	447
	471
8T-8917	539
8T-8919	464
	468
	761
8T-8987	682
	706
	715
	724
8T-9082	923
8T-9368	349
8T-9371	959
8T-9377	464
	468
8T-9383	272
8T-9384	391
	399
	408
	417
8T-9388	294
	295
8T-9389	539
8T-9397	435
8T-9405	354
	361
	381
	391
	399
	408
	417
8T-9527	59
8T-9655	153
	192
	353
	358
	435
8T-9756	183
	186
8W-0119	704
8W-1040	823
8W-3221	628
8W-3592	628
8W-3593	628
8W-3594	628
8W-4192	685
	694
8W-5637	685
	694
8W-6179	660
	663
	666
8W-6458	487
	489
8W-6626	546
8W-6843	731
8W-8511	570
8W-9150	442
8W-9151	442
8W-9590	514
8W-9802	735
8X-0274	517
	613
	616
8X-0570	542
8X-1106	599
	600
	601
	602
	603
	604
	605
	606
	607
	608
	609
	610
	611
8X-1386	953
	955
8X-2321	579
8X-4028	660
	663
	666
8X-4066	876
	879
	882
	885
	888
	890
8X-4163	571
8X-4245	876
	879
	882
	885
8X-4262	876
	879
	890
8X-4263	882
	885
	888
8X-4575	265
8X-5489	382
	464
	468

► **PRIMARY REFERENCE**

PART NUMBER INDEX

Part	Page
	669
	671
	673
8X-5699	444
8X-5804	326
8X-5974	701
	704
	713
	722
8X-6166	438
8X-7174	285
8X-8932	83
8X-8937	83
8X-8967	843
	▶965
8X-8971	843
	▶966
8X-8994	843
	▶916
8X-9016	516
	▶646
8X-9031	658
	659
	▶756
	▶757
8X-9045	2
	▶484
8X-9053	2
8X-9054	513
8X-9564	444
8Y-4398	876
	879
	882
	885
8Y-4399	882
	885
8Y-4400	876
	879
8Y-4489	552
8Y-4512	913
8Y-4620	876
	879
	882
	885
8Y-4801	876
	879
	882
	885
8Y-6385	876
	879
	882
	885
	888
	890
8Y-6388	930
8Y-9676	966

9

Part	Page
9B-0453	272
9B-7233	361
9B-7237	145
	146
9C-0645	630
9C-1067	701
9C-5344	566
	571
9C-5928	910
	911
9D-0088	661
	664
	667
9D-0089	660
	663
	666
9D-0630	170
9D-1491	658
	659
9D-1829	702
9D-3704	569
9D-3706	569
9D-6196	265
9D-6197	265
9D-6584	987
9D-7198	620
	681
	704
	713
	722
9D-7987	613
	616
9D-8799	442
9F-2247	444
	556
	558
	762
9F-3788	478
9F-5599	329
	333
9F-5644	275
	276
	279
	280
	282
	283
	337
9F-8125	905
9G-0002	183
	186
	388
9G-0004	183
	186
	388
9G-0005	183
	186
9G-0333	442
9G-1307	365
9G-2758	183
	186
9G-4101	329
	330
	333
	334
9G-4344	275
	279
	282
9G-4733	478
9G-5319	517
9G-8909	183
	186
	388
9G-9154	382
	463
	467
	669
	671
	673
9H-1031	38
	40
9H-3757	329
	333
9H-5537	477
9H-6454	487
	489
9J-4963	758
9J-5284	643
9J-7031	455
	781
9J-7600	560
9K-0721	556
	558
9K-0726	556
	558
9K-0805	556
	558
9K-5635	905
9K-7951	514
	515
9L-3334	390
	395
	404
	413
9L-3560	579
9L-5854	39
	41
	42
	50
9L-7494	453
9L-8439	113
9L-8925	15
	17
	18
	19
9L-8951	459
9M-0164	118
9M-0853	116
	120
9M-1853	588
9M-1974	27
	192
	302
	391
	399
	408
	417
	435
	453
	507
	896
9M-2095	479
9M-3786	136
9M-4313	511
9M-4355	478
9M-5874	461
9M-6527	135
9M-7394	781
9M-7609	329
9M-7783	191
9M-7958	704
	713
	722
9M-8406	164
	184
	187
	370
	373
	377
	388
	560
	563
	566
	733
	907
9M-8808	781
9N-0720	142
9N-0869	192
	435
	865
	867
	894
9N-1941	149
9N-2038	152
9N-3167	85
	87
	89
	91
9N-4273	477
9P-7121	172
	176
9P-9388	913
9R-0974	697
9R-1733	550
9R-2613	577
	821
	963
9R-2672	388
	552
	963
9R-2821	275
	279
	282
9R-3845	577
9R-4764	682
9R-5008	145
9R-6014	645
9R-6698	694
9R-8760	540
9R-9866	577
9S-1343	478
9S-1362	211
	271
	290
9S-2544	329
	333
9S-4167	155
9S-4181	114
9S-4182	72
	669
	671

▶ **PRIMARY REFERENCE**

PART NUMBER INDEX

Part	Page
	673
9S-4185	72
	172
	176
	498
	696
	706
	715
	724
	750
	752
	754
	784
	785
	786
	787
9S-4190	518
	623
	766
	768
9S-4191	432
	453
	477
	479
	671
	673
	750
	752
	754
	810
9S-4200	440
9S-7949	453
9S-7950	453
9S-8001	744
	748
	750
	752
	754
	820
9S-8002	29
	97
	116
	127
	145
	146
	274
	744
	748
	750
	752
	754
	790
	792
	794
	796
	798
	800
	802
	804
	811
9S-8003	72
	120
	747
9S-8004	55
	99
	116
	157
	450
	451
	475
	487
	489
	511
	613
	616
	676
	677
	678
	679
	744
	748
9S-8005	72
	97
	99
	127
	155
	160
	162
	166
	790
	792
	794
	796
	798
	800
	802
	804
	820
9S-8006	45
	47
	49
	97
	99
	116
	153
	473
	771
9S-8007	655
9S-8008	427
	428
	477
9S-8010	98
	438
9S-8752	59
	67
	75
	82
	94
	116
	160
	162
	164
	167
9S-9334	85
	87
	89
	91
	127
	487
	489
	635
	636
9T-1119	461
	487
	489
9T-1636	766
	768
9T-1652	766
	768
9T-1699	766
	768
9T-1710	766
	768
9T-1857	810
9T-2186	810
9T-3096	789
9T-3133	651
9T-4057	817
9T-4906	775
9T-6630	820
9T-7750	810
9T-8053	758
9T-8057	758
9T-8058	758
9T-8059	758
9T-8061	758
9T-8065	758
9T-8067	758
9T-8069	758
9T-8070	758
9T-8199	657
9T-8445	775
9T-8446	775
9T-8448	775
9T-8450	775
9T-8452	775
9T-8958	651
9T-9071	758
9T-9072	757
	758
9U-7102	579
9U-8263	905
9V-3222	630
9V-3225	630
9V-4924	641
	642
	645
9V-9840	442
9W-0099	987
9W-0335	354
	361
9W-0844	359
	360
	376
	377
	396
	397
	398
	405
	406
	407
	414
	424
9W-0852	150
	269
	346
	359
	376
	396
	405
	414
	841
9W-1951	359
9W-3073	904
9W-3136	478
	500
9W-3797	326
9W-5560	542
	543
9W-5568	507
9W-6099	478
9W-6582	83
9W-6584	83
	916
9W-6990	500
9W-7018	613
	616
9W-7040	479
9W-7385	83
9W-7388	83
9W-8297	478
9W-8298	477
9W-9930	83
9W-9940	83
9X-0141	397
	398
	406
	407
	415
	416
9X-0145	359
	396
	405
	414
9X-0196	377
9X-0258	326
9X-0259	285
	326
9X-0262	302
9X-1046	354
	361
9X-1054	359
9X-1343	396
	405
	414
9X-1386	242
	319
	390
	395
	404
	413
	655
9X-1813	305
	307
	308
	309

PART NUMBER INDEX

Part	Page	Part	Page	Part	Page	Part	Page
	312		905		409		415
	315		957		413		416
	316		961		414	9X-6856	359
	336		962		415		396
	339	9X-2046	210		416		405
	340		893		417		414
	343		894		874	9X-6857	396
	352		897	9X-3463	223		397
	449	9X-2133	133		225		405
	675	9X-2185	831		228		406
	746		833		229		414
9X-2023	464	9X-2205	173	9X-3490	397		415
	468		177		398	9X-7147	397
	669	9X-2230	444		406		406
	671	9X-2474	579		407		415
	673	9X-2480	894		415	9X-7148	396
9X-2026	354		930		416		405
	361	9X-2488	909	9X-3601	647		414
9X-2032	285	9X-2537	299	9X-4244	225	9X-7264	653
	360	9X-2546	848	9X-4391	377	9X-7317	168
	361		876		397	9X-7345	243
	384		879		406		250
9X-2038	14		882		415		251
9X-2042	876		885	9X-4493	220		553
	879		888	9X-4597	517	9X-7371	760
	882		890		646		761
	885	9X-2609	442		821	9X-7378	391
	888	9X-3265	359	9X-4598	517		399
	890		397	9X-4599	517		408
	929		406	9X-4609	507		417
9X-2043	210		415	9X-5615	377		844
	914	9X-3401	15		397	9X-7381	845
	924		155		406		907
	926		193		415	9X-7382	907
	930		305	9X-6165	213	9X-7383	845
	953		368		215		907
	955		377		216	9X-7384	845
9X-2044	193		395		217		907
	354		396		218	9X-7385	844
	361		398		349		907
	848		400		384	9X-7430	51
	865		404		422	9X-7547	766
	867		405		424	9X-7680	810
	893		407	9X-6458	30	9X-7702	542
	894		409		67	9X-7703	542
	911		413		85	9X-7722	762
	926		414		87	9X-7737	343
	928		416		89	9X-7745	790
	953		655		91		792
	955		851		93		794
	957		852		94		796
	961		853		113		798
	962		854		127		800
9X-2045	384	9X-3402	359		164		804
	848		376	9X-6654	150	9X-7849	239
	850		377	9X-6772	213	9X-8122	893
	865		395		359	9X-8139	239
	867		396		386	9X-8250	370
	872		397		396		373
	876		398		397		377
	879		400		398		391
	882		404		405		399
	885		405		406		408
	888		406		407		417
	890		407		414		572

► **PRIMARY REFERENCE**

PART NUMBER INDEX

Part	Page
	623
	688
	697
	708
	717
	726
	739
	856
	861
9X-8256	213
	215
	216
	217
	276
	280
	283
	297
	299
	354
	360
	365
	381
	391
	399
	408
	417
	553
	579
	831
	833
	835
	836
	840
	845
	869
	873
	876
	879
	882
	885
	888
	890
	900
	903
	926
	928
	947
	953
	955
	966
9X-8257	83
	391
	399
	408
	417
	525
	546
	556
	558
	588
	821
	916
9X-8260	172
	176
9X-8268	26
	435
9X-8399	429
	474
	823
9X-8402	370
	373
	377
9X-8480	823
9X-8582	560
	563
	566
	963
9X-8600	172
	176
9X-8872	66
9X-8873	127
	456
9X-8874	456
9X-8875	456
9X-8876	122
9X-8979	771
9X-9120	388
9X-9365	244
	246
	248
	250
	252
	256
9X-9689	896
9X-9751	326
9X-9752	326
9X-9753	326
9X-9825	275
	279
	282
9Y-1792	124
9Y-4104	127
9Y-6089	26
	332
9Y-7595	538
	918
	919
	920
9Y-7770	110
9Y-9236	133
	140
	487
	489
0	
002-0639	560
003-7764	125
004-6683	606
	607
	611
005-0469	766
	768
005-0471	766
	768
005-4173	153
005-4362	155
008-3214	762
012-0380	339
014-0816	348
030-1707	328
030-1709	388
030-6121	816
030-7947	160
	162
	164
	435
030-8188	155
030-8539	453
031-0214	945
031-3185	67
031-4155	28
033-2177	579
033-4814	905
033-6027	766
	768
	810
033-6033	181
033-6036	766
	768
	810
033-6042	160
	162
033-6043	811
033-8248	133
	158
	370
	373
	377
034-3557	455
036-7232	390
	395
	404
036-9821	413
045-4065	329
	330
	334
061-6665	299
061-8639	101
	102
	106
061-9455	27
067-2551	183
	186
067-3045	621
	681
	686
	695
	705
	714
	723
	737
	780
	855
	860
069-4269	133
077-3790	762
077-4643	762
085-7356	571
085-8091	907
087-5379	821
089-7702	704
	340
	628
091-0081	348
	328
091-4537	388
092-4924	816
092-9741	160
095-0690	473
095-0705	766
	435
095-0742	360
095-0817	386
095-0843	950
095-0879	655
095-0888	766
	579
095-1750	813
095-1751	806
096-3831	750
096-4836	314
096-5968	872
096-6166	354
	768
	810
	160
	162
	811
	133
	158
	370
	373
	377
099-3649	142
	455
	390
1	
	404
100-3098	413
100-5072	329
100-5218	330
	334
100-5219	299
	101
100-7399	102
	106
	27
	183
101-0003	186
	621
101-2862	681
101-2867	686
	695
101-3055	705
101-3120	714
	723
101-3125	737
	780
101-8468	855
102-2244	860
102-5828	133
102-5829	762
102-5861	762
102-8801	571
	907
	821
	704
	713
	722
091-0081	447
	563
091-4537	297
092-4924	930
092-9741	544
095-0690	473
095-0705	766
	768
095-0742	360
095-0817	386
095-0843	950
095-0879	655
095-0888	766
	768
095-1750	813
095-1751	806
096-3831	750
096-4836	314
096-5968	872
096-6166	354
	361
	381
	384
	391
	398
	407
	416
	873
	900
	142
	30
	168
	15
	17
	15
	17
	43
	45
	47
	49
	905
	959
	473
	905
	945
	905
	148
	153
	145
	146
	67
	655
	114
	114
	67
	15
	18
	19
	213

► **PRIMARY REFERENCE**

PART NUMBER INDEX

Part	Page	Part	Page	Part	Page	Part	Page
	358		319	106-3659	790	109-0072	85
	384		358		792		89
	386		366		794	109-0077	127
	396		368		798		136
	405		395		800	109-0078	85
	413		398		802		89
	847		400		804	109-0361	994
102-8802	150		404	106-3660	796		1000
	182		407	106-5673	55	109-0897	172
	218		409	106-6553	876		176
	220		416		879	109-1645	577
	223		422		882	109-1657	10
	233		424		885		▶64
	236		746		888	109-2373	4
	238		831		890		6
	239		833	107-0583	67		▶131
	241		923	107-1097	686	109-3113	825
	242		928		695		▶969
	246		929	107-1484	695	109-3114	▶970
	247	102-8804	304	107-2884	762	109-3116	970
	254		353	107-2887	762	109-3117	969
	256		358	107-2888	762	109-3118	969
	269		376	107-2889	762		970
	315		377	107-2891	762		971
	316		384	107-2893	762		972
	320		655	107-4393	845	109-4203	145
	336		841	107-4394	845		146
	339	102-8805	218	107-4395	845	109-5008	583
	340		243	107-4396	845		585
	341		358	107-4397	907	109-5839	87
	351		376	107-4399	907		122
	352		424	107-5769	167	109-5840	87
	353		680	107-5851	223		122
	358		872	107-5852	223	109-9985	77
	360		966	107-5853	223	110-4344	78
	366	102-8806	155	107-6684	463	110-6109	926
	368		346		467	110-6349	432
	370		347	107-6736	4	110-7563	▶238
	373		358		6		240
	376	102-9089	21		▶23	110-7886	346
	377		22	107-9641	876	110-7887	353
	390	103-0126	66		879		358
	395	103-0213	359		882	110-8330	160
	398	103-6282	766		885		162
	404		768		888		390
	407	103-8134	15		890		395
	413		17	108-2148	743		404
	416		18	108-2736	478		413
	424		19	108-3612	147	110-8826	122
	449	104-3122	766	108-4311	959	110-8827	122
	675		768	108-4816	810	110-9286	477
	844		▶810	108-5949	882	111-2088	4
	847	104-3173	265		885		6
	901	104-6202	366		888		▶77
	905		368	108-5950	876	111-2355	4
	911	104-7845	820		879		6
	926	105-3487	391		890		▶78
	959		398	108-5951	882	111-4531	701
102-8803	155		407		885	112-0858	297
	221		416	108-5952	876	112-4511	479
	232	105-4646	685		879	112-9049	681
	237		694	108-7930	135	112-9217	67
	305	106-0933	504	108-9382	4	112-9736	550
	306	106-1017	657		6	113-0580	376
	312	106-1792	147		▶63	113-0693	294

▶ **PRIMARY REFERENCE**

PART NUMBER INDEX

Part	Page	Part	Page	Part	Page	Part	Page
	295		415		879		893
	349		416		882		894
113-5304	120		417		885		930
113-7003	681		424		888	117-9081	340
113-7158	637	114-8844	377		890	117-9152	780
	639		395	117-2022	556	117-9748	475
113-7754	▶651		396		558	117-9978	994
	986		397	117-2023	556		1000
113-7755	651		398		558	118-1951	657
113-7756	651		404	117-2024	556	118-1953	657
113-8218	910		405		558	118-2289	648
	911		406	117-2025	556		657
113-8373	275		407		558	118-3534	275
	279		413	117-2026	556		279
	282		414		558		282
113-8490	353		415	117-2093	965		▶338
	358		416	117-2094	965	118-4728	160
113-8491	353		424	117-2095	965		162
	358	114-8845	376	117-2129	588		164
113-8492	353		377	117-2149	517	118-4906	613
	358		396	117-2156	517		616
114-0066	994		397	117-2164	569	118-4908	613
	1000		398	117-2171	517		616
114-0358	989		405	117-2176	517	118-4909	613
114-0359	989		406	117-2177	517		616
114-1374	637		407	117-2178	517	118-4910	613
	639		414	117-2181	517		616
114-3399	579		415	117-2182	517	118-4911	613
114-5333	390		416	117-2183	517		616
	395	114-9190	876	117-2187	517	118-4912	613
	404		879	117-2190	644		616
	413		882		646	118-5068	119
114-6658	193		885	117-2191	517	118-5618	160
	210		888	117-2193	517	118-5619	894
	361		890		646		930
	384	115-0617	244	117-2231	170	118-7135	966
	848		246	117-2242	823	119-0036	21
	865		248	117-2244	823		22
	867		252	117-2245	823	119-0782	965
	872		256	117-2246	823	119-3662	15
	894		262	117-2311	197		305
	905	115-1499	285		353		359
	926	115-2365	85		358		376
	930		87	117-3169	965		377
	953		89	117-4492	829		395
	955		91	117-5098	▶762		396
	957	115-6807	897		764		397
	961	115-7087	152	117-5099	735		398
	962	116-3589	647		▶820		404
114-8843	360	116-4681	781	117-6500	460		405
	368	116-6251	681	117-7127	455		406
	376	116-7527	444	117-7773	675		407
	377	116-8238	442	117-7798	620		413
	395	116-8242	444	117-7799	620		414
	396	116-8243	444	117-8630	649		415
	397	116-8244	444	117-8631	649		416
	398	116-8376	848	117-8721	546		424
	400		957		595		841
	404	117-0019	442		597	119-3999	613
	405	117-0218	29	117-8801	67		616
	406	117-0219	29		761	119-5708	370
	407	117-0836	646		765		373
	409		▶657	117-8929	384		377
	413	117-1385	453		865	120-4394	771
	414	117-1963	876		867	120-4408	426

▶ **PRIMARY REFERENCE**

PART NUMBER INDEX

Part	Page
	▶474
120-4409	619
	▶627
120-5281	137
120-6156	487
	489
120-6157	487
	489
120-6158	487
	489
120-6159	487
	489
120-6161	487
	489
120-6162	426
	▶446
120-6679	648
	657
120-9027	224
	226
	227
	230
	231
120-9847	4
	6
	▶27
121-3038	477
121-3173	453
121-3307	141
121-9270	756
	▶758
122-0447	51
122-1472	15
	17
	18
	19
122-2228	876
	879
	882
	885
	888
	890
122-2271	285
122-3608	716
	725
122-3772	136
122-4026	149
122-7375	51
122-7666	838
	839
122-8341	965
122-8503	758
122-8504	758
122-8505	757
	758
122-8612	51
122-9088	707
	716
	725
123-0420	478
123-0997	477
123-0999	477
123-2876	455
123-2877	455
123-2997	455
123-3202	15
	17
	18
	19
123-4106	285
123-4586	910
	911
123-4587	910
	911
123-5298	455
123-7265	613
	616
123-7266	613
	616
123-7267	613
	616
124-0159	514
124-0323	455
124-0501	455
124-0502	455
124-0503	455
124-0504	455
124-1555	743
124-1854	55
124-1855	55
124-2463	170
124-3306	477
124-3307	478
124-3520	613
	616
124-3548	353
	358
124-6417	643
124-6524	142
124-7636	2
	▶764
124-8909	432
	677
124-9325	172
	176
	▶304
124-9536	475
	517
124-9537	517
124-9539	517
125-0434	127
125-0915	149
125-2117	2
125-5737	▶731
	986
125-5739	986
	▶987
125-6535	330
	334
125-6536	330
125-6537	330
	334
125-6857	588
125-6875	916
125-6992	704
125-7874	18
	359
	376
	377
	395
	396
	397
	398
	404
	405
	406
	407
	413
	414
	415
	416
	424
125-7875	15
	18
	359
	368
	376
	377
	396
	398
	405
	407
	414
	416
	424
125-8111	455
125-9740	841
126-0208	571
	733
126-1756	67
126-1757	96
126-1767	15
	155
	368
126-1768	359
	396
	398
	405
	407
	414
	416
126-1773	438
126-1774	359
	386
	396
	398
	405
	407
	414
	416
126-2702	123
126-3080	985
126-4935	24
	127
126-5060	653
126-6872	704
126-6917	517
	657
126-7146	620
126-7147	620
126-7148	620
126-7149	620
126-7574	198
	213
	217
126-7631	4
	6
	▶191
126-8440	747
126-8449	191
127-0785	155
127-0833	963
127-0929	145
	146
127-1655	987
127-2120	987
127-2141	737
127-2170	865
	867
127-3008	297
127-4838	297
127-5485	398
	407
	416
127-5486	396
	405
	414
127-6299	704
	713
	722
127-6325	569
127-6356	124
127-6507	966
127-6509	966
127-8158	238
128-0037	876
	879
	882
	885
	888
	890
128-0317	135
128-3320	987
128-3871	542
128-4123	396
	405
	414
128-5016	359
128-6157	353
	358
128-8423	137
128-8808	643
128-8813	704
	713
	722
129-3178	841
	888
	890
129-5427	96
129-5428	96
129-7163	397
	406
	415
	835
	836
129-7164	397
	406
	415
	835
	836

▶ **PRIMARY REFERENCE**

PART NUMBER INDEX

Part	Page
129-7632	810
129-7680	994
	1000
129-8493	620
	855
129-8518	513
	▶514
129-9907	135
130-0229	450
	451
	676
	677
	678
	679
130-4698	67
130-4701	67
130-5300	234
	235
	246
	247
	254
	256
	275
	279
	282
	352
	354
	361
	370
	373
	377
	382
	384
	386
	391
	399
	408
	416
	422
	424
	435
	579
	865
	867
	901
	953
	955
130-5301	370
	373
	377
	391
	399
	408
	417
131-1487	398
	407
	416
131-1490	396
	405
	414
131-3093	831
	833
131-3540	963
131-5422	613
	616
131-5492	893
131-7123	67
132-0111	218
132-0338	829
132-1019	▶975
132-1806	187
132-4753	▶976
132-5152	637
	639
132-5789	366
	368
	391
	399
	408
	417
	435
	841
132-7551	162
	251
	263
	686
	695
132-9770	302
133-0125	127
133-0261	316
133-2198	427
	635
	636
133-3359	147
133-5330	747
	▶812
133-5545	433
	744
	748
	750
	752
	754
	812
133-6517	326
133-6567	507
133-6934	390
	395
	404
	413
	704
	713
	722
	737
	855
	860
	907
133-7130	985
133-7132	985
133-7810	621
133-8521	517
133-8522	517
133-8773	648
133-9116	167
133-9229	145
	146
	265
133-9640	164
133-9906	14
133-9907	▶14
	59
134-0297	966
134-2252	▶319
	390
	395
	404
	413
134-2540	354
	361
	381
	382
	391
	399
	408
	417
134-2573	1
	▶570
134-3355	370
	373
	376
	390
	395
	404
	413
134-3677	▶491
134-3678	491
134-4126	198
	213
	217
134-7258	994
	1000
135-0426	▶232
	422
135-4299	517
135-4928	135
135-8106	▶460
	461
135-8283	▶827
135-8284	827
135-9349	▶977
135-9576	▶978
135-9690	971
135-9691	▶971
136-1020	478
136-1107	135
136-1122	583
	585
	590
136-1543	921
136-1544	829
136-1955	708
	717
	726
136-3742	135
136-4183	70
136-4192	790
	792
	794
	796
	798
	800
	802
	804
136-5083	477
136-5490	938
	941
	942
	943
136-6505	841
136-7227	116
136-7813	456
136-8310	987
	▶989
136-9312	685
137-1282	965
137-1283	965
137-1284	965
137-1764	492
137-1765	▶492
137-5081	460
137-5503	947
137-6617	916
137-6627	916
137-6645	317
	323
	324
137-7331	127
137-8400	820
138-0721	966
138-0727	▶910
138-0797	989
138-5769	985
138-6440	972
138-6442	▶972
138-6744	135
138-7426	644
	646
138-7435	821
138-7436	821
139-1398	391
	399
	408
	417
	447
139-2116	422
139-2404	826
139-3213	762
139-3550	127
139-5802	500
139-6039	865
	867
	894
	905
	930
	961
	962
139-8660	223
140-0357	733
140-0860	390
	395
	404
	413
140-1088	244
	246
	248
	250
	252
	256
	262
140-5945	847
	957

▶ **PRIMARY REFERENCE**

PART NUMBER INDEX

Part	Page	Part	Page	Part	Page	Part	Page
140-7480	384	144-0195	963	148-8313	737	148-8340	158
140-8438	826	144-1636	343	148-8315	621		172
140-8439	826	144-4107	843		681		176
140-8440	2	144-9784	517	148-8316	432		621
	825	144-9785	517	148-8317	637		681
	▶826	144-9799	517		639		686
	968	144-9800	517	148-8318	158		695
140-8441	984	145-0326	959		432		706
140-8442	984	145-3849	24		471		714
140-8443	1	145-7028	▶320		621		723
	▶644		435		737		738
	825	145-9283	127		855		855
140-8444	1	145-9959	435		860		860
	▶642	146-5131	474	148-8322	681	148-8341	686
	825	146-5762	432	148-8323	705		695
140-8448	821	146-5804	901		714		706
140-8450	826	146-6747	994		723		714
140-8451	1		1000		737		723
	825	146-7311	498		855		738
	▶984	146-7312	498		860		855
140-8452	984	147-0192	127	148-8324	686		860
140-8453	984	147-0319	▶222		695	148-8342	621
140-8454	984		244	148-8327	432		681
140-8455	984		246		705		686
140-8465	916		248		714		695
140-8466	821		250		723		733
140-9746	4		252	148-8328	432		738
	6		256		463		855
	▶24	147-0385	391		467		860
141-1546	511		399		621	148-8345	153
141-2102	571		408		681		432
141-2914	644		417		686		621
	▶653	147-1380	353		695	148-8346	731
141-2916	653		358		705	148-8347	463
141-2918	653	147-1444	386		714		467
141-4043	588	147-1445	359		723		621
141-4328	620		396		737		681
141-8570	475		405		855		701
141-9784	841		414		860		735
142-2131	762	147-1446	359	148-8333	463		780
142-2132	762		396		467	148-8353	432
142-2133	762		405	148-8334	463		735
142-2134	762		414		467	148-8354	621
142-2135	762	147-8562	453		705	148-8355	706
142-2136	762	147-8563	453		714		715
142-2137	762	148-0149	540		723		724
142-2138	762	148-0150	540	148-8335	114	148-8356	463
142-2329	43	148-0151	540		122		467
	45	148-0157	540		621		706
	47	148-1928	507		705		715
	49	148-2557	790		714		724
142-2527	297		792		723	148-8357	114
142-4229	552		794	148-8336	155		669
142-5867	109		796		463		671
142-5868	108		798		467		673
142-9681	942		800		621		706
143-1288	950		802		705		715
143-2518	484		804		714		724
	▶504	148-2974	501		723	148-8359	733
143-2519	504	148-4467	444		738	148-8360	701
143-5988	642	148-4468	444		855	148-8361	621
	▶648	148-6757	686		860		738
143-5989	648		695	148-8339	637		855
143-5990	648	148-6990	471		639		860
143-9393	127	148-8306	621		701	148-8364	622

▶ **PRIMARY REFERENCE**

PART NUMBER INDEX

Part	Page
	681
	695
	706
	715
	724
	731
148-8367	609
	622
	738
148-8370	686
	706
	715
	724
148-8371	125
148-8373	463
	467
148-8374	623
	738
148-8375	686
	695
148-8378	440
	622
	706
	715
	724
	733
	738
	856
	861
148-8381	432
	682
	686
	695
148-8382	682
	686
	695
148-8386	172
	176
148-8388	637
	639
	701
148-8390	706
	715
	724
148-8391	682
	706
	715
	724
148-8392	701
	706
	715
	724
148-8393	622
	738
	856
	861
148-8395	72
	790
	792
	794
	796
	798
	800
	802
	804
148-8407	432
	453
	671
	673
	750
	752
	754
148-8410	623
148-8411	72
	172
	176
	695
	706
	715
	724
	733
	738
	856
	861
148-8414	682
	706
	715
	724
	733
	738
148-8415	571
148-8416	738
	856
	861
148-8425	620
148-8427	571
148-8428	432
	733
148-8433	572
148-8435	622
	706
	715
	724
148-8436	622
148-8439	717
	726
148-8440	735
148-8443	704
	713
	722
148-8444	622
	696
	706
	715
	724
	738
148-8446	622
	687
	696
	707
	715
	724
	733
148-8454	572
148-8457	572
	687
	696
149-5268	63
149-5452	716
	725
149-6371	390
	395
	404
	413
149-7378	31
	33
	34
	36
149-7738	622
	701
149-8142	172
	176
149-9110	67
150-1916	147
150-2557	31
150-3026	133
150-3028	738
150-3058	704
150-3135	▶31
	32
150-4037	622
	687
	696
150-4039	737
150-4043	622
150-4048	622
	696
	707
	715
	724
	733
	738
	856
	861
150-4279	4
	7
	▶167
151-5145	747
151-5925	95
151-5966	67
151-6730	701
151-8366	898
151-8754	227
151-9274	852
	853
152-2693	487
	489
152-3411	737
153-1256	135
153-4247	507
153-5043	320
	321
153-5353	687
	696
153-5720	183
	186
153-6232	707
	715
	724
153-6237	701
	735
153-6238	464
	468
	707
	716
	725
153-6247	122
153-6251	172
	176
153-6256	687
	696
153-6259	707
	716
	725
153-7024	53
153-9023	135
154-2728	475
154-4489	493
154-6617	570
154-6619	442
154-7116	144
154-7122	517
154-9023	127
154-9025	132
155-0696	192
155-0698	192
155-0809	39
	41
	42
	50
155-0810	39
	41
155-2026	687
	696
155-2255	213
	359
	366
	368
	377
	384
	386
	395
	396
	398
	404
	405
	407
	413
	414
	416
	424
	438
	847
155-2256	359
	847
155-2258	847
155-2260	307
	308
	309
	359
	366
	390
	395
	396
	397
	398
	400
	404

▶ **PRIMARY REFERENCE**

PART NUMBER INDEX

Part	Page	Part	Page	Part	Page	Part	Page
	405	155-2793	39		414	164-4531	829
	406		41	159-9362	4	164-4883	922
	407		42		6	164-4891	478
	409		50		▶118	164-5544	464
	413	155-3504	123	159-9539	928		468
	414	155-3624	72	159-9584	123	164-5567	464
	415		669	160-2252	909		468
	416		671	160-3518	938		622
	418		673		941		701
	424	155-5619	72		942		707
155-2265	218	155-7319	160		943		716
	359		162	160-7271	28		725
	360		164	160-7689	398		735
	366	155-9524	75		407	164-5576	704
	368	156-4282	707		416	164-5586	571
155-2269	366		716	160-7690	213	164-5594	707
155-2270	218		725	160-9925	553		716
	243	156-5545	829	161-0018	132		725
	246	156-5970	746	161-1827	119	164-5596	114
	247		747	161-3128	353	164-5597	463
	254	156-6398	444		358		467
	256	156-8315	831	161-3509	▶229	164-5598	622
	316		833		262	164-5606	701
	321	157-0305	▶228	161-3565	127	164-5619	153
	342		262	161-4113	4	164-5636	435
	359	157-0670	127		7	164-6860	739
	360		132		▶124		856
	366	157-6997	▶493	161-5718	135		861
	368	157-8510	780	161-5719	▶135	164-6874	571
	376	158-0249	228		136	164-6877	160
	377	158-0250	222	161-6149	744		162
	386		228		748		164
	395		229		752		435
	396	158-0252	222		754	164-7474	620
	397		228		812		▶789
	398		229		813	164-7556	225
	404	158-2306	612		820	164-7577	▶336
	405	158-3416	67	161-6154	788		427
	406	158-4307	687		816		428
	407		696	161-6161	744		635
	413	158-8881	96		748		636
	414	158-9956	744		752	164-8473	894
	415		748		754	164-9904	707
	416		▶788		812		716
	424	159-0250	572		813		725
	680	159-1533	67		820	165-0699	223
	847	159-3590	994	161-6622	118	165-3930	72
155-2271	359		1000	161-6958	152	165-3932	72
	360	159-3759	946	161-6963	152	165-4925	600
	376	159-6159	4	161-7419	192		602
	377		6	161-8560	622		603
	396		▶28	162-2077	229		608
	397	159-8049	183	162-2177	142	165-6170	119
	405		186	162-9112	845	165-6365	390
	406		275	163-2478	53		395
	414		279	163-5455	172		404
	415		282	164-1234	959		413
	847		388	164-2108	509	165-8718	390
155-2274	359	159-8050	183		510		397
	376		186		743		406
	397		388	164-3651	435		415
	406	159-8524	67	164-4058	738	165-9948	444
	414	159-9322	359		856	165-9951	444
	424		396		861	165-9954	444
	438		405	164-4180	114	165-9955	426

▶ **PRIMARY REFERENCE**

PART NUMBER INDEX

Part	Page
	▶444
166-2904	51
166-5229	359
166-6693	274
166-8815	613
	616
166-9144	75
167-1795	707
	716
	725
167-1801	777
167-2184	647
167-2201	648
	655
	657
167-2208	649
167-2209	653
167-2312	648
	655
	657
167-2318	647
167-2319	649
167-2320	653
167-2463	657
167-8081	38
	40
167-8083	38
167-8130	57
167-8610	384
167-8712	210
	386
167-8713	210
	386
167-8714	386
167-8987	384
168-0300	160
	162
	166
168-1968	704
168-2197	771
168-2198	771
168-2200	771
168-2203	473
	771
168-3378	774
	776
168-3379	774
	776
168-3381	776
168-3382	774
	776
168-3384	774
	776
168-3385	774
	776
168-3504	771
168-7316	771
168-7319	473
	771
168-8974	160
	162
	164
169-0705	851
	852
	853
	854
169-1616	806
169-1617	806
169-2876	197
169-4279	572
169-5414	370
	373
	376
	865
	867
169-5792	643
169-7380	959
169-7409	687
	696
170-0493	632
	633
170-0494	612
170-1112	829
170-1114	829
170-1115	829
170-1757	4
	7
	▶100
170-1821	847
170-2512	243
170-4057	837
	894
170-4673	127
170-4820	▶896
	897
170-5335	▶269
	896
170-6888	353
	358
170-8590	945
171-1230	950
171-2210	275
	279
171-2215	275
	279
	282
171-4047	894
	930
171-4766	447
171-5349	315
171-6682	950
171-6731	599
	603
	604
172-1482	305
172-2416	950
172-3511	847
	928
	929
172-3820	704
	713
	722
172-4211	701
172-4621	639
172-4848	100
172-4863	275
	279
	282
172-4880	907
172-8037	938
173-0889	505
173-1007	778
173-1008	778
173-1009	778
173-1028	▶829
	950
173-1437	464
	468
173-1827	453
173-1830	453
173-1957	93
173-2052	921
173-3993	750
	752
	754
173-5787	952
173-7035	952
173-9682	648
	657
173-9683	651
174-0503	397
	406
	415
174-1521	517
174-1524	517
174-1525	517
174-3091	851
	852
	853
	854
174-3874	4
	6
	▶93
174-5907	370
	373
	377
174-5986	4
	7
	▶136
174-7875	370
	902
174-8131	196
	197
	354
	361
174-9570	▶157
	169
174-9994	771
175-1366	28
175-1367	28
175-2308	338
	▶339
175-2309	338
	▶340
175-3721	72
175-7900	651
175-7903	648
	657
175-7905	649
176-0780	▶223
	258
176-5751	681
177-0344	771
	773
177-1862	945
177-1863	950
177-4152	15
177-4937	949
177-9085	125
	▶141
177-9645	841
177-9648	359
177-9656	359
177-9853	370
178-3586	370
178-4095	968
178-4096	▶968
178-4106	979
	981
178-4107	▶979
178-7907	921
178-7998	125
	▶129
178-8063	579
178-8894	876
	879
	882
	885
	888
	890
178-9037	744
	748
178-9481	556
	558
179-0125	752
179-0469	707
	716
	725
179-1289	704
	713
	722
179-5856	900
179-9407	572
180-6213	771
180-7180	907
180-7350	95
180-9339	18
	19
	312
	316
	844
180-9340	307
	308
	316
	321
	395
	404
	413
180-9900	353
	358
183-3407	55
	99
183-4787	623
183-7263	127
	145
	146
	750
	752
	754

▶ **PRIMARY REFERENCE**

PART NUMBER INDEX

Part	Page
	790
	792
	794
	796
	798
	800
	802
	804
184-1527	766
	768
	▶777
184-2298	950
184-2299	950
184-2420	125
184-2509	125
184-3579	196
185-0275	473
	▶774
185-0278	473
185-0280	473
185-0287	774
185-0289	774
185-0292	774
185-0295	473
	771
185-0296	473
	771
185-1860	847
185-1861	359
185-2245	780
185-4026	739
185-6393	328
185-7387	637
	639
185-7688	651
185-7690	651
185-7691	651
186-0359	299
	382
	391
	399
	408
	417
186-1667	155
186-2001	53
186-3471	685
	694
186-3735	182
	218
	220
	221
	223
	232
	233
	236
	237
	239
	241
	243
	304
	306
	315
	319
	320
	336
186-3736	342
	359
	360
	847
186-4825	▶494
186-5107	959
186-5147	647
187-0541	813
187-0678	453
187-1328	6
	▶32
187-3510	655
187-5420	74
187-6237	127
187-8191	816
187-8979	67
187-8981	37
188-0210	87
	91
188-1754	4
	6
	▶82
188-1755	82
188-2008	669
	671
	673
188-2199	655
188-6280	473
188-6298	744
	748
188-8849	222
	228
	229
189-0852	316
189-1894	572
189-3158	354
	361
	390
	395
	404
	413
189-4918	37
	339
	340
	346
	347
	352
	353
	358
	359
	370
	373
	376
	390
	422
	449
	746
	847
	872
	901
	905
	911
	928
	929
	938
	342
	359
	360
	847
	▶494
	959
	647
	813
	453
	6
	▶32
	655
	74
	127
	816
	67
	37
	87
	91
	4
	6
	▶82
	82
	669
	671
	673
	655
	473
	744
	748
	222
	228
	229
	316
	572
	354
	361
	390
	395
	404
	413
	37
189-6123	70
189-8627	744
	748
	▶814
190-0009	10
	▶79
190-1106	114
190-3848	388
190-3850	632
	633
190-5386	994
	1000
190-6507	771
190-7614	384
	847
190-8970	169
190-8977	153
	▶169
190-9821	687
	696
191-1782	153
	585
191-1783	153
191-6587	▶321
	376
191-8303	317
191-8305	453
191-9247	814
192-0876	500
192-0877	500
192-4151	101
	102
	106
192-4824	500
192-7054	939
	940
	942
	944
192-7470	473
	771
192-7507	817
192-7508	817
192-7510	817
192-7752	959
192-7755	959
192-7760	959
192-7767	959
192-7783	959
192-7787	959
192-7790	959
192-7795	959
192-7799	959
192-7805	959
192-7810	959
192-7812	959
192-7820	959
192-7822	959
193-2200	453
193-7404	160
	162
	164
	▶166
193-9230	701
	704
	713
	722
194-0431	160
	162
	164
194-3857	821
194-4254	359
194-5226	368
	390
194-5227	368
	390
194-6555	642
194-6722	▶307
	310
	390
	395
	404
	413
194-6725	▶308
	311
194-8031	873
195-0936	865
	867
	894
195-0937	865
	867
195-7271	▶973
196-1185	▶315
	455
196-2383	397
	406
	415
196-2385	397
	406
	415
196-2386	397
	406
	415
196-2412	396
	405
	414
196-2413	397
	406
	415
196-5069	101
	102
	106
196-5070	101
	102
	106
197-1488	113
197-1993	669
	671
	673
	▶675
197-2851	776
197-4971	67
197-6453	370
	373
	376
197-7565	359
	900
198-0315	238
198-0316	238
198-1725	913
198-2914	814

▶ **PRIMARY REFERENCE**

PART NUMBER INDEX

Part	Page
198-4765	440
198-4769	170
198-4771	125
198-4775	432
198-4776	572
198-4777	114
	125
	158
	471
	702
	761
	919
	920
198-4778	525
	538
	540
	544
	572
	585
	590
	687
	696
	761
	918
	919
	920
198-4780	525
198-5389	218
198-6068	123
198-7214	821
198-8372	▶305
	390
	395
199-2677	876
	879
	882
	885
	888
	890
199-2712	876
	879
	882
	885
	888
	890
199-3368	▶233
	234
199-4318	524
199-9800	183
	186
199-9985	176
2	
200-1173	911
200-5728	938
	941
	942
	943
200-6282	744
	748
	806
200-6311	637
	639
201-4340	45
	49
201-6617	▶316
	318
201-9109	526
202-5397	359
202-6614	225
202-8649	911
202-8650	733
202-8695	907
203-0147	120
203-2059	609
203-2075	160
	162
	164
203-6066	172
	176
	526
203-7703	952
203-8824	101
204-0813	384
204-7386	704
204-9316	▶66
	67
205-0826	218
205-3079	707
205-3239	3
205-6388	949
205-7047	384
205-8125	733
205-8257	218
206-1345	366
	368
206-4198	70
206-5017	164
206-5122	464
	468
206-5123	464
	468
206-5162	218
206-7885	475
207-0449	9
	10
	11
	▶67
207-5271	218
207-8128	118
207-8211	70
207-8213	70
207-8218	655
208-1574	172
	176
208-4617	275
	388
208-7448	145
208-8870	974
	▶980
	982
209-0381	197
209-3569	28
209-4579	132
209-5104	150
209-5582	▶341
	353
	358
209-6638	224
	226
	230
	231
209-8423	7
	▶328
209-8621	70
209-8622	72
209-8624	70
209-9770	70
210-2262	945
210-2263	945
210-2266	945
210-2270	▶945
	950
210-5692	463
	467
210-8422	▶224
	245
	247
	249
	251
	253
	254
210-8425	▶230
	263
210-8426	▶231
	263
210-9246	113
	123
211-3122	53
211-5358	959
211-6807	368
211-9294	959
212-0907	655
212-1336	707
	716
	725
212-4961	790
	792
	794
	796
	798
	800
	802
	804
212-7779	959
213-3217	95
213-5170	959
213-5268	129
	▶473
213-9100	352
214-1121	444
214-2484	302
	▶317
214-7566	29
	97
	274
	311
	313
214-7567	120
214-7568	55
	99
	155
	164
	166
	310
	451
	468
	509
	510
	622
	676
	678
	679
	716
	725
	735
215-1942	655
215-7486	▶4
216-0814	923
216-2515	473
216-4983	132
216-5342	463
	467
	▶509
216-5540	4
	6
	▶25
216-5582	51
216-7352	865
	867
217-0751	51
217-0752	51
217-3312	655
217-5900	25
217-7933	945
217-8938	58
217-8947	145
	146
217-9060	127
218-0324	58
	▶844
218-0404	218
218-0666	894
218-2373	509
	510
	743
219-0302	991
	993
219-2392	297
	▶306
219-4361	894
219-4443	4
	6
	▶120
219-4458	95
219-6036	526
219-6314	218
219-7184	4
219-7282	▶612
	620
219-8035	631
	▶632
219-8064	▶633
220-0771	328
	332
220-1441	9
	10
	11

▶ **PRIMARY REFERENCE**

PART NUMBER INDEX

Part	Page
	▶95
220-3246	447
220-3775	1
	▶125
220-3808	1
	▶170
220-6368	4
	6
	▶72
220-6390	4
	6
	▶26
220-8217	72
220-8678	157
221-1764	4
	6
	▶119
221-1870	119
221-3405	390
	395
	404
	413
221-5305	569
	645
222-0345	949
222-1301	685
	694
222-2367	632
	633
222-4734	704
	713
	722
222-7544	▶974
222-7890	353
	358
222-9025	1
	▶525
222-9151	384
223-0580	778
223-2200	556
	558
223-2459	685
	694
223-3356	655
223-4296	213
	217
223-4591	172
223-4903	72
223-5814	120
223-7518	542
223-7566	1
	▶542
223-8985	137
223-9159	95
223-9732	9
	10
	11
	▶37
223-9743	475
224-0554	993
224-0781	1
	▶543
224-0782	543
224-1940	924
	925
224-3245	95
224-3246	95
224-5122	55
225-0998	4
	6
	▶147
225-1144	33
225-1148	▶33
	35
225-3109	914
225-3281	648
225-3284	649
225-3285	653
225-3305	991
225-4150	994
	1000
226-0295	172
	176
	526
	876
	879
	882
	885
	888
	890
226-0342	876
	879
	882
	885
226-0733	512
226-1240	1000
226-1242	994
226-1260	1
	▶447
226-1274	1000
226-1275	994
226-1742	1
	▶733
226-1744	2
	▶780
226-2333	211
	▶267
	268
	290
226-4911	265
226-5558	731
226-5559	731
226-5561	51
226-5738	746
226-9622	815
227-1204	43
	45
	47
	49
227-3101	526
	532
227-3103	526
	532
227-3704	57
227-3705	4
	6
	▶57
227-4002	366
227-6744	449
227-7390	991
227-7391	993
227-9980	4
	6
	▶94
228-4947	317
	318
228-6089	353
	358
	847
228-7091	623
229-1472	70
229-1494	949
229-1537	746
229-2580	353
	358
229-6259	95
229-8568	▶38
	39
229-9969	224
229-9970	230
229-9971	227
	231
229-9974	224
	226
	227
230-0104	4
	6
	▶30
230-1340	213
	991
230-1341	217
	993
230-1434	325
230-2569	95
230-3728	168
230-3775	168
230-4011	155
	343
	360
230-4012	155
	360
230-4013	360
230-5008	384
230-5009	874
230-5010	360
230-5011	360
230-5378	4
	6
	▶99
230-5379	4
	6
	▶97
230-7201	85
	89
	91
230-8993	876
	879
	882
	885
	888
	890
230-9446	60
	61
230-9447	60
	61
231-0049	211
	271
	290
231-0167	898
231-1973	4
	7
	▶302
231-4779	435
231-4780	435
231-4781	507
231-4991	556
	558
231-8900	435
232-1293	435
232-1693	192
232-3235	95
232-3236	95
233-0621	647
233-0891	192
233-3123	▶938
233-3134	▶196
233-3135	▶197
	843
233-3150	▶948
233-3224	847
	▶953
	957
233-3225	847
	▶955
	957
233-3226	955
233-3227	953
233-3245	869
233-3248	953
	955
233-3252	953
	955
233-3272	869
233-3275	955
233-3277	839
233-3278	838
233-3291	837
	▶850
233-4871	172
	176
	526
233-6216	7
	▶366
233-6313	899
233-6742	155
	▶180
233-7245	9
	▶12
233-9522	620
	685
	694
233-9748	477
234-4325	▶225
	243
234-4383	444
234-5002	15
234-5005	9
	11

▶ **PRIMARY REFERENCE**

PART NUMBER INDEX

Part	Page
	▶15
	▶17
	▶18
234-5013	155
	▶322
234-6707	477
234-7730	225
234-7731	225
234-7935	9
	10
	▶21
234-8937	72
234-9505	12
	13
234-9508	12
	13
234-9970	211
	268
	▶272
	290
235-0320	150
235-1088	12
	13
235-1089	12
	13
235-1402	9
	10
	11
	▶168
235-1587	124
235-2405	773
235-2407	771
235-2408	771
235-2642	475
235-2974	9
235-3503	475
235-3595	155
235-3937	▶239
235-4123	847
235-4587	289
	290
235-5021	4
	7
	▶110
235-8159	127
235-8781	4
	6
	▶29
236-2340	183
	186
236-2356	382
236-4545	325
236-4611	353
	358
236-4615	353
	358
236-4616	353
	358
236-4630	911
236-5197	945
236-5605	53
236-5958	61
237-0227	418
237-0365	572
237-0957	▶309
	390
	395
	404
	744
	748
237-1962	328
	▶329
	332
237-3943	959
237-3970	▶830
	959
237-4132	272
237-4133	272
237-4134	272
237-4135	272
237-7252	272
237-7552	270
237-9310	155
237-9736	353
238-0251	176
238-1029	▶427
	450
238-2319	360
238-2707	95
238-5078	28
238-5080	97
	99
	322
	323
238-5081	47
	97
	180
	623
238-5084	87
	91
238-5583	572
238-6683	948
	▶952
238-8813	218
239-0618	744
	748
239-1134	325
	▶351
239-2395	302
	▶310
239-2396	155
	302
	▶311
239-3478	▶312
	313
239-4106	36
239-4111	▶34
	35
239-4113	4
	6
	▶35
239-4990	994
239-4991	1000
239-5195	744
	748
239-5674	302
	▶313
239-5928	302
	▶318
239-5929	366
	368
239-6304	127
239-6989	994
	1000
239-7352	360
239-7353	360
239-8530	637
	639
239-9624	12
	▶60
240-7193	370
	373
	376
	390
	395
	404
	413
240-8754	475
240-9689	579
241-0037	632
	633
241-0478	▶74
	75
241-3720	953
	955
241-5934	6
	▶9
241-6185	707
	716
	725
241-6186	302
241-6207	637
	639
241-7691	831
	833
241-8368	275
	279
	282
	▶342
241-9265	149
242-0407	463
	467
	669
	671
	673
242-3282	218
242-3360	152
242-5054	933
	937
242-9264	790
	792
	794
	796
	798
	800
	802
	804
242-9537	31
	33
	34
	36
242-9964	215
	216
243-0774	345
243-1159	31
	33
	34
	36
243-1352	245
	247
	249
	251
	253
	254
243-1353	685
	694
243-1560	4
	6
	▶192
243-2965	796
243-3250	382
243-3662	784
	785
	786
	787
243-5210	754
243-5786	4
	6
	▶75
243-6690	823
243-6718	37
243-6737	▶923
	950
244-0121	669
	671
	▶676
244-1714	296
244-1715	314
244-1716	873
244-1719	350
244-2579	790
	792
	794
	796
	798
	800
	802
	804
244-2710	297
244-2711	297
244-3114	435
	▶510
244-5001	▶949
	952
244-5002	949
	▶950
244-5929	129
245-1181	506
245-1596	831
	833
245-1912	506
245-2844	526
	532
245-3078	475
245-3816	142
245-3818	142
245-3819	142
245-4747	267
245-7434	360
	848

▶ **PRIMARY REFERENCE**

PART NUMBER INDEX

Part	Page	Part	Page	Part	Page	Part	Page
245-8334	384		802	251-0077	386		295
245-8355	744		804	251-1196	850		349
	748	249-0313	58	251-1197	353	253-0616	168
245-8842	183	249-1750	432		358	253-0788	572
	186		▶449	251-1668	790	253-0861	990
	388	249-2304	▶635		792	253-1702	781
245-9740	781		676		794	253-1752	37
245-9923	794		677		796	253-1789	928
	802		678		798		929
	804	249-4097	905		800	253-1963	384
246-1112	70	249-4099	297		802	253-1964	▶384
246-1567	794	249-5479	353		804		870
	802		358	251-1669	796	253-1967	▶386
246-2641	170	249-5480	353	251-2247	847		871
	183		358		914	253-2111	275
	186	249-5482	358		929		279
	994	249-5483	928		957		282
	1000	249-5486	353	251-2272	847	253-2417	894
246-3513	326		358		957	253-3482	953
246-4311	353	249-5493	353	251-2273	847		955
	358		358		957	253-3483	953
246-4617	142	249-7734	116	251-2274	847		955
246-5659	95	249-7789	▶296		957	253-3484	953
246-6036	123		299	251-2275	847		955
246-7846	735	249-7792	300		957	253-3485	924
246-9113	655		301	251-4160	365	253-3960	125
247-0733	851		▶314	251-4162	365		▶637
	852	249-8509	845	251-4243	365		▶639
	853	249-8575	994		872	253-3988	1
	854		1000	251-8248	365		▶58
247-5556	325	250-0466	43	251-9571	386	253-3990	1
247-9908	53		45	252-0100	515		▶145
248-0833	461		47	252-0111	512		▶146
248-1484	300		49		▶515	253-3991	1
	301	250-1418	704	252-0741	747		▶83
	▶539		713	252-0745	747	253-3992	1
248-1487	314		722	252-0981	1		▶132
248-1488	314	250-1419	704		▶556	253-3993	1
248-1493	300		713		▶558		▶142
	301		722	252-1805	▶869	253-3994	2
248-1496	211	250-1420	704		953		▶149
	271		713		955	253-3995	1
	290		722	252-1807	953		▶158
248-1497	314	250-2172	296	252-1808	955	253-3997	2
248-1502	291	250-2299	353	252-1826	930		▶325
	292		358	252-2156	994	253-3999	1
248-1503	189		926		1000		▶122
	211	250-3010	353	252-2157	994	253-5327	450
	271	250-4628	922		1000		451
	290	250-6148	816	252-2237	506	253-7461	384
248-2284	386	250-8335	905	252-5105	653	253-8766	39
248-2923	907	250-9254	▶202	252-5190	384		41
248-4220	850		1007	252-5295	845	253-8868	838
248-5245	994		1008	252-5298	845		839
	1000		1009	252-5806	176	253-8967	272
248-5358	384		1010	252-7065	1	253-8969	272
248-5513	127		1011		▶658	253-8981	272
248-6174	784		1012		825	253-9005	1
	785		1013	252-7770	542		▶855
	786	250-9257	▶199	252-8038	747		▶860
	787		843		▶807	253-9006	1
248-6772	831	250-9258	▶200	252-8744	189		▶681
	833		843		270		825
248-6887	794	250-9378	60		350	253-9016	1
	800		61	252-9628	294		▶641

▶ **PRIMARY REFERENCE**

PART NUMBER INDEX

Part	Page
253-9017	1
	▶577
253-9032	▶685
254-3413	743
254-3415	737
	▶743
	855
	860
254-9136	189
255-0746	123
255-0939	294
	295
255-0941	296
255-3482	382
255-3631	737
	855
	860
256-2907	▶349
	350
256-4579	267
256-4580	267
256-4581	267
256-4582	267
256-5719	267
256-5720	267
256-5721	267
256-5722	267
256-5732	267
256-6453	322
256-8768	952
	▶959
257-8414	744
	748
	▶813
258-4524	152
258-8721	101
	103
	104
259-0310	750
	752
	754
259-7138	461
259-8357	116
259-9204	▶1
260-0266	4
	6
	▶274
260-3770	931
	932
	▶933
260-6478	267
260-6480	267
260-6501	778
260-6502	682
	▶778
260-8462	495
260-8636	781
261-0052	▶39
	43
261-0140	275
	279
	282
261-0191	9
	11
	▶43
	▶45
	▶47
261-1502	▶220
	422
	424
261-3020	▶495
261-3223	365
261-3224	872
261-3429	51
261-3430	51
261-4377	994
	1000
261-5694	921
261-8555	660
	663
	666
261-9391	213
	215
	216
	217
262-0494	831
	833
262-0498	142
262-0569	142
262-1079	4
	7
	▶151
262-1408	354
	435
262-1421	▶198
	215
	216
262-2017	▶299
262-2018	▶300
262-2019	▶301
262-2878	192
262-6924	637
262-9967	4
	6
	▶123
263-1392	816
263-3981	544
263-3991	637
	639
263-4920	51
263-5055	▶53
	55
263-6901	994
263-6902	1000
263-7310	4
	6
	▶113
263-7313	113
263-7760	▶6
	8
263-9088	213
	215
	217
	▶287
263-9466	841
263-9479	841
264-2006	83
264-3171	349
264-3643	382
264-4297	323
	324
	637
	639
264-5346	220
264-5732	368
264-7029	155
	343
264-7030	360
	418
264-7032	360
265-4498	2
	▶485
265-4499	485
	▶505
265-4505	1
	▶516
265-6595	▶837
	843
265-6596	837
	▶840
265-6597	▶835
	▶836
	837
265-6598	894
265-6599	900
265-6600	831
	833
	▶900
265-6601	900
265-6602	831
	833
265-6603	840
	▶841
265-6604	840
265-6605	841
265-6626	968
265-6723	660
	663
	666
265-6739	823
265-6740	1
	▶823
	825
265-6741	1
	▶659
	825
265-6742	659
	▶660
265-7501	500
265-7594	145
265-7595	145
265-7984	845
266-1601	432
266-2116	872
266-2338	404
	413
266-2417	2
	▶583
	▶585
266-2418	▶540
266-2861	213
	217
266-3699	9
	11
	▶80
	▶81
266-5908	516
	▶517
266-6777	1
	▶550
266-6778	1
	▶544
266-6785	137
266-6786	137
266-6787	137
266-6789	129
266-6790	550
266-6800	129
266-6812	149
266-6821	114
266-7000	1
	▶843
266-7001	843
	▶946
266-7002	843
	▶934
	▶935
266-7004	843
	▶930
266-7005	843
	▶894
266-7006	▶353
	▶358
	843
266-7007	843
	▶905
266-7008	843
	▶897
266-7009	▶911
266-7011	946
266-7012	934
	935
266-7013	843
	▶961
	▶962
266-7015	▶865
	▶867
	934
	935
266-7019	930
266-7024	930
266-7025	▶947
266-7026	▶381
	843
266-7027	190
	▶872
266-7028	▶903
266-7029	▶213
	▶215
	▶216
266-7031	828
	▶876
	▶879
	932
266-7032	828
	▶882
	▶885
266-7033	▶888
	931
	932

▶ **PRIMARY REFERENCE**

PART NUMBER INDEX

Part	Page
266-7035	894
266-7038	930
266-7039	894
266-7040	▶218
266-7042	843
	▶904
266-8804	125
266-8956	2
	▶370
	▶373
	▶376
266-8960	▶243
	931
	932
266-8961	209
	▶382
266-8962	2
	▶388
266-8963	2
	▶390
	▶395
	▶404
	▶413
266-8964	2
	▶422
	▶424
266-8965	2
	▶352
266-8966	▶234
	▶235
266-8967	▶244
266-8968	▶245
266-8969	▶246
266-8970	▶247
266-8971	▶248
266-8972	▶249
266-8973	▶262
266-8974	▶263
266-8976	▶250
266-8977	▶251
266-8979	▶252
266-8980	▶253
266-8986	1
	▶183
	▶186
266-9281	923
266-9399	647
266-9701	516
	▶645
266-9704	517
266-9705	517
	▶569
266-9707	517
266-9711	517
266-9712	517
266-9714	645
266-9717	517
266-9719	1
	▶431
266-9720	431
266-9721	431
266-9722	2
	▶486
266-9723	486
	▶487
266-9724	486
	▶489
266-9725	487
	489
267-0000	647
267-1430	172
267-3506	643
	660
	663
	666
267-3963	900
267-3964	900
267-3973	831
	833
267-3997	831
	833
267-4631	▶40
	41
	42
	50
267-5245	1
	▶503
267-5504	190
	▶365
267-5505	▶326
267-8575	907
268-0237	2
	▶761
268-0238	2
	▶760
268-0239	▶620
268-0240	1
	▶432
268-0241	1
	▶704
	▶713
	▶722
268-0242	1
	▶701
268-0243	1
	▶909
268-0244	1
	▶735
268-0245	1
	▶463
	▶467
268-0246	1
	▶471
268-0247	1
	▶571
268-0248	▶560
	571
268-1543	610
268-2960	152
268-3678	620
268-3908	111
268-3914	526
	532
268-3916	526
	532
268-3918	526
	532
268-3924	526
	532
268-3928	526
	532
268-3930	526
	532
268-3937	526
	532
268-3976	526
	532
268-3986	526
	532
268-3987	526
	532
268-3991	526
	532
268-3992	111
268-3993	111
268-4763	760
	▶765
268-5675	2
	▶498
268-5680	498
	▶500
268-5744	663
	666
268-5745	658
	▶663
	▶666
268-5759	821
268-5760	1
	▶821
	825
268-6690	765
	▶766
268-6691	765
	▶768
268-8250	111
268-8252	111
268-8262	660
	663
	666
268-8282	111
268-8284	111
268-8306	526
	532
268-8769	831
	833
269-0173	172
	176
269-2202	▶680
269-2203	▶994
	1008
269-2207	▶931
269-2208	▶828
269-2209	▶932
269-2210	▶209
269-3277	296
269-3303	296
269-3304	296
269-3379	275
	279
	282
269-3380	275
	279
	282
269-3381	388
269-3383	183
269-4983	388
	390
	395
	404
	413
269-5346	601
	605
269-5348	603
269-5352	602
	607
	609
269-5353	599
	600
	606
	608
269-5923	737
	855
	860
269-5924	855
	860
269-5925	737
	855
	860
269-5926	737
	855
	860
269-6348	34
269-6579	432
269-6580	432
269-6650	125
269-8788	123
269-9423	71
270-1612	577
	▶784
270-1613	577
	▶785
	▶786
	▶787
270-2682	583
	585
270-2683	590
270-2684	583
	585
270-2720	761
	▶773
270-2721	761
270-3327	685
	694
270-3333	735
270-3334	704
	713
	722
270-3339	681
270-3343	681
270-3344	471
270-3354	685
	694
270-3355	685
	694
270-3356	685
	694
270-3358	681
270-4321	352
270-4326	275

▶ **PRIMARY REFERENCE**

PART NUMBER INDEX

Part	Page
	279
270-4327	275
	279
	282
270-4329	275
	279
	282
270-4330	▶275
	▶279
	▶282
	388
270-4332	388
270-4333	183
	186
270-4334	275
270-5321	275
270-6971	▶553
	933
270-6978	▶594
	933
270-6980	553
270-7546	▶631
	634
270-7570	685
	694
270-7573	685
	694
270-7574	685
	694
270-7575	685
	694
270-7577	463
	467
	704
	713
	722
	737
	855
	860
270-7885	▶563
	571
270-7886	▶566
	571
270-8390	141
270-8686	645
	▶655
270-8687	655
270-8689	655
270-9113	1
	▶521
	▶523
271-0564	1
	▶669
	▶671
	▶673
271-0751	933
	▶936
271-0752	▶587
	933
	937
271-0767	553
271-0770	587
271-0771	587
271-0772	587
271-0773	587
271-0782	590
271-0804	936
271-0806	936
271-1424	556
	558
271-1425	556
	558
271-2126	540
271-2360	913
271-2811	851
	852
	853
	854
271-2945	141
271-5643	521
	523
271-6373	291
	292
271-6651	931
	▶937
271-6766	447
271-6817	766
271-6846	765
271-7312	850
271-7552	937
271-7553	937
271-8691	142
271-9278	613
	616
271-9283	613
	616
271-9306	1
	▶907
271-9315	1
	▶426
271-9317	1
	▶513
271-9318	426
	▶461
271-9321	▶613
	619
271-9322	▶616
	619
272-0390	17
	18
	19
272-0984	620
	▶744
272-1151	463
	467
272-1152	463
	467
272-1153	463
	467
272-1156	432
272-1777	234
	235
272-2286	▶189
	291
	292
272-2292	526
	532
272-3261	382
272-5226	790
272-5227	792
272-5228	794
272-5230	798
272-5231	800
272-5232	802
272-5233	804
272-5438	137
272-5561	1
	▶114
272-5594	933
	937
272-5997	3
	▶111
272-8019	▶285
	326
272-8329	953
272-9800	239
273-0272	447
273-0942	845
273-1112	521
273-1113	521
273-1114	521
273-1115	521
273-1122	521
	523
273-1719	384
273-1733	641
	▶647
273-1757	733
273-1871	784
	785
	786
	787
273-2606	326
273-2608	326
273-2610	326
273-2612	326
273-3219	58
273-3968	172
273-5910	2
	▶619
273-5924	384
273-6559	65
273-6561	4
	6
	▶65
273-7356	▶254
273-7357	▶256
273-8986	429
273-8987	429
273-8988	429
273-8989	▶429
	440
273-8991	440
	▶442
273-8993	442
273-8995	442
273-8996	442
273-8997	442
273-9001	442
	▶459
273-9007	426
	▶440
273-9194	▶430
	503
273-9195	▶453
	503
273-9197	▶455
	503
273-9199	▶435
	503
273-9200	▶477
	503
273-9201	430
273-9202	453
273-9203	455
273-9620	550
273-9623	137
273-9626	550
273-9627	550
273-9628	550
273-9629	550
274-1353	440
274-1563	566
274-1682	129
274-1687	137
274-1689	137
274-1701	142
274-1707	145
	146
274-1953	9
	10
	11
	▶55
274-2408	905
274-4313	172
	176
274-4315	172
	176
274-4317	172
	176
274-4491	101
	103
	104
274-4642	474
274-5818	900
274-7395	302
	▶323
274-7396	302
	▶324
274-7486	388
274-7487	388
274-7488	388
274-7489	388
274-7492	275
	279
	282
274-7494	390
	395
	404
	413
274-7495	390
	395
	404
	413
274-7498	390
	395
	404
	413
274-7499	275
	279

▶ PRIMARY REFERENCE

PART NUMBER INDEX

Part	Page
	282
274-7500	183
	186
274-7505	246
	247
	254
	256
274-7508	388
274-7509	680
274-7510	680
274-7831	141
274-8115	243
274-8359	95
274-8550	525
	▶526
	▶532
274-9256	569
	645
274-9991	127
274-9994	4
	6
	▶127
275-0511	823
275-0512	823
275-0561	525
	▶582
275-0562	582
275-0568	149
275-0572	532
275-0604	170
	▶172
	▶176
275-1253	155
	▶343
275-2152	71
	265
275-2192	58
	▶71
275-3376	350
275-3378	349
275-4012	349
275-4040	285
275-4261	85
	87
	89
	91
275-5230	▶144
	837
275-6692	831
	833
275-7662	148
275-7663	153
275-7664	4
	6
	▶153
275-7666	4
	6
	▶160
	▶162
	▶164
275-7667	153
	▶155
275-7668	4
	6
	▶148
275-7741	▶347
	348
275-7764	▶348
	361
275-8343	620
275-8345	685
	694
275-8348	737
	855
	860
275-8353	685
	694
275-8356	685
	694
275-8357	685
	694
275-8358	685
	694
275-8363	737
	855
	860
275-8364	463
	467
275-8365	463
	467
275-8366	432
275-8486	132
275-8969	▶194
	361
275-8970	▶195
275-9422	440
	▶475
275-9650	▶203
	353
	358
275-9878	560
276-0764	293
	350
276-1430	▶8
276-1816	655
276-2386	125
	▶137
276-2968	773
276-3652	784
	▶790
276-3653	784
	785
	786
	787
	▶792
276-3654	784
	▶794
276-3655	784
	785
	786
	787
	▶796
276-3656	784
	▶798
276-3657	785
	786
	787
	▶800
276-3659	785
	786
	787
	▶802
276-3661	785
	786
	787
	▶804
276-3831	647
276-3835	647
276-4132	101
276-4778	447
276-5317	101
	103
	104
276-5621	773
276-5725	579
276-6146	296
276-7646	643
	▶649
276-8238	669
	671
	673
276-8491	▶297
	926
276-8492	297
276-8495	926
276-8498	680
	▶926
276-8500	926
276-8827	382
276-9617	297
276-9618	905
276-9619	905
277-0467	▶226
	260
277-0709	840
277-0710	835
	836
277-0711	▶831
	▶833
	835
	836
277-0712	835
	836
277-0742	172
	176
277-0751	526
	532
277-0752	526
	532
277-0753	526
	532
277-0756	526
	532
277-0757	526
	532
277-0758	526
	532
277-0759	526
	532
277-2120	821
277-2122	821
277-3071	172
	176
277-3082	226
277-4264	435
277-4844	176
277-5805	442
277-6424	526
	532
277-6616	526
	532
277-6637	526
	532
277-7224	141
277-7575	907
277-7576	907
277-7733	594
	917
277-7734	594
	917
277-7735	594
	917
277-8399	594
	917
277-8411	594
	917
277-8412	594
	917
277-8461	6
	▶85
	▶87
277-8803	526
	532
277-8874	432
	▶506
277-8875	506
277-9668	831
	833
	▶845
277-9669	845
277-9670	845
278-0095	4
	6
	▶70
278-0196	845
278-0560	1
	▶643
278-0561	680
	▶694
278-0566	704
	713
	722
278-0567	704
	713
	722
278-0569	704
	713
	722
278-0570	704
	713
	722
278-0571	704
	713
	722
278-0588	894
278-0589	894
278-0590	930
278-0685	8
	▶344
278-1094	961

▶ **PRIMARY REFERENCE**

PART NUMBER INDEX

Part	Page
	962
278-1096	961
	962
278-1140	936
278-1158	835
278-1170	681
278-1171	681
278-1363	101
	102
278-1365	106
278-1485	▶990
	994
	1000
278-1598	582
278-1599	582
278-1600	526
	532
	582
278-1602	526
	532
278-1603	582
278-1613	▶917
	937
278-1799	790
	792
	794
	796
	798
	800
	802
	804
	▶815
278-1811	526
	532
278-1812	526
	532
278-1813	526
	532
278-1867	▶190
278-1938	81
	▶101
278-2430	583
	585
278-2442	583
	585
278-2496	583
	585
278-3463	571
278-3466	571
278-3509	1
	▶986
278-3510	▶985
	986
278-3511	985
278-3540	554
278-3541	▶554
	555
278-3557	544
278-4210	926
278-4725	540
278-4832	553
278-5662	10
	▶19
278-7102	▶588
	592
	593
278-8040	344
278-8279	544
278-8762	583
	585
	▶590
	592
	593
278-9734	937
278-9736	937
278-9805	▶438
	503
278-9897	111
279-2486	771
	▶776
279-2488	771
279-2491	776
279-2588	933
	937
279-2621	594
	917
279-5036	▶918
	933
279-5331	681
279-5332	681
279-5619	▶538
	937
279-6456	594
	917
279-6521	694
	▶816
279-6666	505
279-8965	620
279-8972	620
279-8976	620
280-0528	▶890
	931
280-0934	526
280-0985	893
280-1420	917
280-1453	620
280-2238	655
280-2243	655
280-2287	526
	532
280-2288	527
	532
280-2691	872
280-3172	129
280-3175	129
280-3627	129
280-3979	51
280-4304	137
280-4305	137
280-7477	847
	957
280-7478	847
	957
280-7870	811
281-0074	517
281-0387	914
281-0390	914
281-0431	193
281-0570	85
	87
	89
	91
281-1113	132
281-1640	▶51
	53
281-1658	353
	358
281-1663	381
281-1665	841
281-1668	▶345
	931
	932
281-2006	990
281-2007	990
281-2008	990
281-2691	285
281-2692	285
281-2693	285
281-2725	180
	▶181
281-2729	704
	713
	722
281-2730	704
	713
	722
281-2731	704
	713
	722
281-2732	704
281-2733	704
281-2734	704
	713
	722
281-2735	704
	713
	722
281-2736	705
281-2737	705
281-2738	705
	713
	722
281-2739	705
	713
	722
281-2740	705
	713
	722
281-2741	705
	713
	722
281-2742	705
281-2743	705
281-2744	705
	713
	722
281-2745	705
	714
	723
281-2746	705
	714
	723
281-2750	463
	467
281-2751	463
	467
281-2756	705
	714
	723
281-2855	990
281-4103	447
281-4289	552
281-4290	▶552
	821
281-5977	622
281-8261	55
281-8314	172
	176
281-8315	172
	176
281-8987	550
281-8988	550
282-0804	353
	360
282-0806	353
	360
282-0808	914
282-0809	865
	867
282-0810	▶258
282-0811	▶260
282-0812	872
282-0816	894
282-0818	930
282-0821	934
	935
282-2092	542
282-2614	122
282-3116	527
	533
282-3117	527
	533
282-3379	527
	533
282-3649	114
282-3650	158
282-3731	12
	13
282-3783	353
	360
282-3784	353
	360
282-4337	353
	360
282-4339	353
	360
282-4367	554
282-5362	566
282-5393	744
	748
282-5396	744
	748
282-5963	733
282-5966	463
	467
282-5969	907
282-5970	907
282-5975	701
282-5980	701
282-5983	701

▶ **PRIMARY REFERENCE**

PART NUMBER INDEX

Part	Page
282-5984	701
282-5986	701
282-5987	701
282-5988	701
282-5989	701
282-5990	701
282-5991	701
282-5993	701
282-5994	705
	714
	723
282-6415	681
282-6417	681
282-6419	681
282-6823	620
282-6834	620
282-7667	571
282-7668	571
282-7909	560
282-8469	882
	885
	888
282-8470	876
	879
	890
282-8888	553
282-9429	158
282-9436	876
	882
282-9437	876
	879
	882
	885
	888
	890
282-9485	353
	360
	▶924
	▶925
283-0116	158
283-0592	831
	833
283-0596	831
	833
283-0756	▶240
283-0769	865
	867
283-0771	865
	867
283-0772	865
	867
283-0774	144
	▶150
283-0775	150
283-0776	144
283-0819	560
283-0820	563
283-0821	560
	566
283-0823	560
283-1102	258
	260
283-1103	258
	260
283-1373	681
283-1626	365
283-2119	571
	▶579
283-2574	550
283-4237	845
283-4426	873
283-7168	111
283-7701	478
283-7962	961
283-7965	930
283-7966	210
283-7967	865
283-7968	894
283-7974	865
	867
283-7980	838
	839
283-8657	279
	282
283-9370	527
	533
283-9530	210
	875
283-9557	816
283-9560	620
	▶746
283-9561	746
283-9562	746
283-9570	816
283-9956	737
	855
	860
283-9963	705
	714
	723
283-9964	705
	714
	723
283-9966	705
	714
	723
284-0658	936
284-3555	790
	792
	794
	796
	798
	800
	802
	804
284-3556	796
284-3620	353
	360
284-3757	▶241
284-3798	773
284-4601	790
	792
	794
	796
	798
	800
	802
	804
284-4602	790
	792
	794
284-5170	296
284-5968	477
284-6972	354
	360
284-6992	2
	▶963
284-6993	685
	694
284-6999	685
	694
284-7003	685
	694
284-7004	685
	694
284-7005	685
	694
284-7010	761
284-7463	705
	714
	723
284-7464	705
	714
	723
284-7741	487
	489
284-8868	370
	373
	376
284-8869	370
	373
	376
284-8953	▶939
	941
284-8954	942
284-8955	▶940
	943
284-9055	903
285-1133	213
	217
285-2042	209
	▶212
285-2290	210
285-2372	923
285-2373	550
285-2376	637
	639
285-5240	771
	▶811
285-5267	620
285-5269	114
285-5588	496
285-7415	850
286-0134	870
	▶873
286-0277	193
286-0317	924
	925
286-0318	924
	925
286-0319	924
	925
286-0320	354
	360
286-0321	354
	360
286-0322	354
	360
286-0323	354
	360
286-1226	947
286-1324	471
286-1325	620
286-1327	620
286-1328	705
	714
	723
286-1329	705
	714
	723
286-1333	760
286-1335	463
	467
286-1337	547
286-1777	1
	▶133
286-1778	133
286-2964	780
	▶781
286-2965	781
286-3017	294
	295
286-3212	705
	714
	723
286-3444	681
286-3445	681
286-3453	681
286-3454	681
286-3455	681
286-3465	701
286-3474	620
286-3475	620
286-3476	620
286-4223	571
286-5674	893
286-5675	837
	▶893
286-5677	865
	867
286-5680	894
286-5683	930
286-8292	527
	533
286-9124	870
	▶874
286-9671	560
286-9674	566
287-1511	669
	▶677
287-1512	▶450
	463
287-6692	915
287-7318	560
288-1023	366

▶ **PRIMARY REFERENCE**

PART NUMBER INDEX

Part	Page
	368
288-1426	123
288-3561	620
288-4881	51
288-4882	51
288-4883	51
288-4884	51
288-7324	368
288-8594	566
289-0783	900
289-2935	651
289-2946	651
289-3342	991
	993
289-3344	▶991
	1008
289-3345	930
289-8215	17
	18
	19
289-8449	294
	295
	349
290-1365	▶496
290-2688	579
290-3969	588
290-6002	275
	279
	282
	994
	1000
290-6176	744
	748
290-6436	744
	748
	▶806
290-8119	▶227
290-8159	227
290-8160	227
290-8996	227
291-0061	▶771
	773
291-1106	▶210
291-1348	639
291-1915	349
291-8458	655
292-0281	▶268
	289
292-0285	289
	290
	▶293
292-0291	292
	▶294
292-0292	291
	▶295
292-0301	▶289
292-0302	268
	▶270
	290
292-0309	871
	▶875
292-0310	▶290
292-0311	873
	875
292-0609	▶838
	847
	957
292-0611	838
	839
292-0612	838
	839
292-0614	838
	839
292-0617	▶839
	847
	957
292-0618	838
	839
292-0908	▶271
	289
292-2034	▶750
	786
292-2035	▶752
	784
292-4057	4
	6
	▶116
292-4086	604
	610
	611
292-4252	660
	663
	666
292-4905	265
292-5257	761
292-5258	761
292-6097	922
292-6402	▶921
	922
292-6912	771
292-6913	771
292-7971	▶291
292-7972	▶292
292-7975	▶870
292-7980	▶871
292-7996	556
292-8790	563
292-9151	▶547
	555
292-9220	784
	785
	786
	787
292-9221	784
	785
	786
	787
292-9237	▶922
	950
292-9277	643
293-2911	945
293-4518	560
293-4523	560
293-4524	563
	566
293-4525	560
293-6463	183
293-6465	382
293-8350	811
293-9070	835
	836
294-0670	560
294-0677	563
294-0685	560
294-0690	566
294-0691	560
294-0978	620
294-0989	▶941
294-0990	▶942
294-0991	▶943
294-0996	865
	867
294-1000	▶993
	1007
	1009
	1010
	1011
	1012
	1013
	1014
	1015
	1016
	1017
	1018
	1019
	1020
	1021
	1022
	1023
	1024
	1025
	1026
294-1001	953
	955
294-1132	553
294-2382	527
294-2676	498
294-3075	12
	13
294-3076	12
	13
294-3342	133
	140
294-3672	527
	533
294-3673	527
	533
294-3675	527
	533
294-5042	950
294-7362	435
	▶507
294-7695	594
294-8055	784
	785
	786
	787
294-8197	780
294-9295	▶919
	931
	932
294-9296	▶920
	931
294-9830	591
295-1146	507
295-2275	953
	955
295-2338	527
	533
295-3839	527
	533
295-7912	660
295-8369	384
295-8370	384
295-8381	384
295-8407	835
	836
295-8930	267
295-8963	386
295-9192	563
295-9194	563
295-9195	563
295-9196	563
295-9197	563
295-9880	211
	▶350
296-0652	563
296-0653	563
296-0654	560
	563
	566
296-0655	563
296-0656	563
296-0657	566
296-0659	560
296-0660	566
296-0661	566
296-0662	566
296-1067	384
296-3362	566
296-3363	571
	▶599
296-3364	571
	▶600
296-3365	571
	▶601
296-3366	571
	▶602
296-3367	571
	▶603
296-3368	571
	▶604
296-3369	571
	▶605
296-3370	571
	▶606
296-4298	876
	879
	882
	885
	888
	890
296-4303	876
	879
	882
	885
	888
	890
296-4922	386
296-5270	413

▶ PRIMARY REFERENCE

PART NUMBER INDEX

Part	Page
296-7636	151
	▶152
296-7706	540
296-7707	540
296-7759	224
	226
	230
	231
297-0760	911
297-0948	994
	1000
297-0949	994
	1000
297-0950	994
	1000
297-0951	994
	1000
297-1501	994
	1000
297-1502	994
	1000
297-1503	994
	1000
297-1813	28
297-1840	994
	1000
297-3207	10
	11
	▶49
297-4147	847
	957
297-4148	847
	957
297-4157	926
297-4158	926
297-4160	961
	962
297-4161	961
	962
297-4162	961
	962
297-4267	49
	▶50
297-5473	521
	523
298-4726	737
	855
	860
298-4727	705
	714
	723
298-4728	705
	714
	723
298-4730	685
	694
298-4731	685
	694
298-4732	685
	694
298-4733	685
	694
298-4734	685
	694
298-4735	685
	694
298-4736	685
	694
298-4737	685
	694
298-4738	685
	694
298-4739	685
	694
298-4740	685
	694
298-4741	685
	694
298-4742	737
	855
	860
298-4743	737
	855
	860
298-4745	737
	855
	860
298-4746	737
	855
	860
298-4751	685
	694
298-4754	577
298-4756	577
298-4758	577
298-4760	737
	855
	860
298-4811	540
298-4812	540
298-5640	▶1000
	1007
	1009
	1010
	1011
	1012
	1013
	1014
	1015
	1016
	1017
	1018
	1019
	1020
	1021
	1022
	1023
	1024
	1025
	1026
298-6011	201
298-6024	540
298-6155	527
	533
298-6172	71
298-6940	588
299-0457	234
	235
299-0458	234
	235
299-0878	193
299-0881	193
	▶914
299-1030	914
299-2259	571
299-2261	571
299-2262	571
	▶607
299-2263	571
	▶608
299-2264	571
	▶609
299-2265	571
	▶610
299-2266	571
	▶611
299-2267	571
299-2268	571
299-2269	571
299-2272	571
299-2343	685
	694
299-2344	685
	694
299-2345	685
	694
299-2346	685
	694
299-2347	685
	694
299-2348	685
	694
299-2349	685
	694
299-2350	685
	694
299-2351	685
	694
299-2352	686
	695
299-2353	686
	695
299-2354	686
	695
299-3334	521
	523
299-3366	521
	523
299-3398	485
	505
299-3434	484
	504
299-9146	▶193
	843
300-1706	137
	▶140
300-1707	140
300-1920	571
300-7909	384
300-8571	71
300-9442	582
301-0589	215
	216
301-3018	▶41
	45
301-4168	963
301-4568	752
	754
301-5165	817
301-5166	817
301-5167	817
301-5180	390
	395
	404
	413
301-5352	▶102
	107
301-6821	817
301-9278	152
301-9571	905
302-0359	▶204
	1014
	1015
	1016
	1026
302-0360	▶205
	1017
	1018
	1019
	1020
302-0361	▶206
	1021
	1022
	1023
302-0362	▶207
	1024
	1025
302-0980	577
302-2138	905
302-2139	905
302-2140	905
302-5137	▶1007
302-5365	577
302-5693	▶754
	785
	787
302-8160	571
302-9088	929
302-9089	928
302-9090	928
303-2246	▶201
303-8193	▶548
303-8210	548
303-8212	548
304-3896	890
304-3897	888
304-3898	888
	890
304-4267	579
304-4273	579
304-4275	579
304-4277	579
304-5235	354
	361
304-5687	194
	195

3

▶ PRIMARY REFERENCE

PART NUMBER INDEX

Part	Page
304-7620	526
	527
	532
	533
304-9553	12
	13
305-2281	390
	395
	404
	413
305-2393	591
305-2394	591
305-2414	583
	585
	▶591
	592
	593
305-3338	431
305-8960	527
	533
305-8961	527
	533
305-9196	45
	47
	49
	▶98
306-3998	329
306-5134	705
	714
	723
	▶747
306-5426	▶592
	828
306-5427	▶593
	828
	932
306-7130	796
306-8083	3
	▶546
306-8086	546
306-8088	546
306-8089	595
	597
306-8090	595
	597
306-8091	595
	597
306-8092	595
	597
306-8156	332
306-9214	929
306-9215	929
307-0016	928
307-0047	213
	217
	991
	993
307-0150	929
307-0191	613
	616
307-1610	17
307-1959	666
307-1960	666
307-1961	666
307-1962	666
307-1965	666
307-2671	29
	97
	274
307-2673	97
	99
307-3225	620
307-3226	620
307-3227	620
307-3228	620
307-3229	620
307-3230	620
307-3231	620
	701
307-3232	620
307-3233	620
307-3234	620
307-3235	620
307-3236	620
307-3237	621
307-3238	621
307-3239	620
307-3240	620
307-3241	620
307-3242	701
307-3243	701
307-3244	701
307-3245	599
	600
	601
	602
	603
	604
	605
	606
	607
	608
	609
	610
	611
307-6366	390
	395
	404
307-6367	390
	397
	406
	415
307-6368	422
	424
307-6369	183
	186
307-6370	390
	397
	406
	415
307-6371	390
	397
	406
	415
307-6372	390
	398
	407
	415
307-6582	370
	373
307-6583	370
	373
	376
307-7409	4
	6
	▶89
	▶91
307-7515	183
	186
307-7517	183
	186
307-7629	388
307-8322	105
	107
307-8781	705
	714
	723
307-8782	705
	714
	723
307-8783	705
	714
	723
307-8785	705
	714
	723
307-8786	733
307-8787	463
	467
307-8788	780
307-8790	705
	714
	723
307-8791	705
	714
	723
307-8792	705
	714
	723
307-8793	686
	695
307-8794	705
	714
	723
307-8795	907
307-9336	3
	▶595
	▶597
307-9723	595
	597
307-9724	595
	597
307-9737	847
307-9738	847
308-0415	176
308-0857	144
	▶898
308-0937	737
	▶817
	855
	860
308-0938	817
308-1431	915
308-1474	595
	597
308-1475	595
	597
308-1845	651
308-2025	876
	879
	890
308-2030	882
	885
	888
308-2084	843
	▶915
308-2607	390
	398
	407
	416
308-2737	390
	398
	407
	416
308-3459	637
	639
308-3541	390
	398
	407
	416
308-3561	422
	424
308-3869	203
308-4358	953
	955
308-5203	848
	▶851
308-5204	848
	▶852
308-6601	20
308-6602	4
	6
	▶20
308-6704	582
308-6784	4
	7
	▶332
308-7546	595
	597
308-7547	595
	597
308-7548	595
	597
308-7592	876
	879
	882
	885
	888
	890
308-7593	876
	879
	882
	885
	888
	890
308-8674	733
308-8675	733
308-8676	685
	694
308-8677	685

▶ PRIMARY REFERENCE

PART NUMBER INDEX

Part	Page	Part	Page	Part	Page	Part	Page
	694	310-5200	595	315-8343	597		888
308-8678	686		597	315-8345	597		890
	695	310-5201	595	315-8346	597	321-5967	450
308-8679	686		597	315-8347	597		451
	695	310-5324	354	316-2322	523		676
308-9222	370		361	316-2323	523		677
	373	310-5566	560	316-2324	523		678
	376	310-5567	560	316-3531	6		679
309-0917	843	310-5568	560		▶11	321-6908	800
	▶913	310-5569	560	316-4374	546	321-7342	533
309-0918	913	310-5570	560	316-5366	676	321-8642	120
309-0919	913	310-5571	560	316-5471	523	321-9712	929
309-2877	843	310-5572	560	316-5472	523	322-1126	42
	▶899	310-5573	571	316-6864	167		50
309-4100	865	310-5578	907	316-9819	162	322-3161	921
	867	310-5580	963		164	322-4979	898
309-5052	▶555	310-5581	686	317-1491	845	322-5071	843
309-5127	737		695	317-6526	▶211	322-5126	843
309-5131	47	310-7060	743	317-6896	497	322-8542	11
	97	310-7612	22	317-8766	37		▶13
309-5637	525	310-7718	142	318-0825	162	323-0201	905
309-5638	525	310-8511	142		164	323-1283	579
309-5955	▶847	310-8512	142	318-2082	330	323-1685	215
	934	310-8881	170	318-2594	570		216
309-6919	265	311-4911	929	318-3040	790	323-1692	264
309-7011	865	311-7845	142	318-3052	796		843
	867	312-1714	848	318-3115	790	323-2128	282
309-7558	149		957		792	323-4116	566
309-7642	579	312-2688	155		796	323-4117	566
309-7643	579	312-4267	548		798	323-4118	566
309-7651	560	312-4286	548	318-5064	579	323-4119	713
309-7652	560	312-4447	548	318-6157	▶497		722
309-7653	560	312-4453	548	318-8580	579	323-4120	713
309-7654	560	312-8629	814	318-8581	579		722
309-7655	560	313-2152	361	318-8583	579	323-4121	713
309-8579	1	313-5270	581	319-0734	994		722
	▶265	313-5271	581		1000	323-4122	714
309-8777	▶1008	313-6666	3	319-0785	72		723
309-8778	▶1009		▶581		▶108	323-8451	▶42
309-8779	▶1010	313-6836	▶217	319-1617	212		47
309-8780	▶1011	313-9200	279		▶929	323-9531	509
309-8781	▶1012		282	319-1638	901		510
309-8782	▶1013	313-9614	166	319-1639	▶902	323-9533	743
309-8783	▶1014	314-3323	212	319-1640	▶901	324-2656	994
309-8784	▶1015		▶928	319-2227	823		1000
309-8786	▶1016	314-4018	844	319-2305	532	324-2694	299
309-8787	▶1017	314-7907	▶3	319-6234	87	324-6125	841
309-8788	▶1018	314-8601	4		91	324-6804	94
309-8789	▶1019		▶10	319-7401	37	325-2588	790
309-8790	▶1020	314-9614	11		▶109		792
309-8791	▶1021		▶22	320-2690	243		796
309-8792	▶1022	315-0498	4	320-2794	▶103		798
309-8793	▶1023		7		107	325-7655	176
309-8794	▶1024		▶368	320-2795	103	325-7656	176
309-8795	▶1025	315-3166	279	320-2796	▶104	325-7668	170
309-8796	▶1026		282		105	325-8649	532
309-9898	149	315-5705	579		107	325-8651	532
310-1968	172	315-5716	737	320-2797	104	325-8653	532
	176		855	320-9999	907	325-8654	532
310-2393	215		860	321-3121	▶825	326-0610	533
	216	315-5717	705	321-3374	150	326-1644	157
310-3221	▶208	315-5718	571	321-5918	876	326-4512	18
	503	315-8332	597		879		19
310-3961	553	315-8340	597		882	326-7963	898
	937	315-8342	597		885	327-5880	713

▶ **PRIMARY REFERENCE**

PART NUMBER INDEX

Part	Page	Part	Page	Part	Page	Part	Page
	722	341-7667	757		99		
328-3655	450	342-7817	▶636		166		
	451		679	353-5494	▶983		
	467	342-8961	935	353-9979	75		
328-4236	79		▶957		▶96		
	▶105	342-9559	293	354-5656	146		
328-4238	105	342-9971	852	354-5657	146		
	▶106		853	354-8345	962		
328-4242	80	343-5527	157	355-5105	198		
	▶107	343-9866	19	355-9764	198		
328-9666	444	344-0052	524	356-3607	▶853		
329-4511	95	344-0054	▶524	356-3609	▶854		
329-5706	994	344-1108	1	356-5212	64		
	1000		▶737	356-7515	242		
329-5707	994	344-1182	737	357-9643	968		
	1000	344-1989	737	358-4889	351		
329-6659	176	344-2003	737	358-4931	193		
330-1919	13	344-2165	524	358-6192	208		
	▶61	344-2166	524	358-6193	208		
331-1147	444	344-2174	737	358-7810	199		
331-1592	▶264	344-2744	737	358-7811	199		
331-5292	938	345-3760	713	360-2870	641		
	▶944		722	360-6937	955		
332-7298	21	345-3761	713	360-6938	953		
333-6433	▶451		722	360-7545	202		
	467	345-3762	713	360-7546	202		
333-9308	▶428		722	360-7547	204		
	451	345-3763	713	360-7548	204		
334-2679	428		722	360-7549	205		
334-2680	428	345-3764	713	360-7550	205		
334-5410	235		722	360-7551	206		
	▶236	345-3765	713	360-7552	206		
334-5504	717		722	360-7553	207		
	726	345-3919	737	360-7554	207		
334-6832	96	345-3920	737	361-3059	750		
334-8049	▶237	345-4472	739	362-6151	746		
	424		▶808				
334-9565	399	345-6946	808				
	408		▶809				
335-6606	737	346-4372	875				
	861	346-4791	146				
335-9194	735	347-1356	377				
336-3545	216	348-7743	79				
	▶288		80				
336-3566	216	348-7891	58				
	287	349-6967	200				
	288	349-6988	200				
336-7235	222	349-8438	▶981				
336-9313	500		983				
337-1943	613	349-8440	▶982				
	616	351-8344	634				
338-1132	▶242	351-8347	1				
	264	351-9918	222				
338-3453	333	352-0384	500				
338-3454	▶333	352-1647	843				
338-3540	678	352-1941	▶634				
	679	352-2826	18				
341-0117	737	353-2606	▶748				
341-0118	737	353-2794	294				
341-2079	673		295				
	▶678	353-3819	417				
	▶679	353-3820	413				
341-6804	32	353-4515	424				
	▶36	353-5125	99				
341-7436	▶512	353-5126	97				

▶ **PRIMARY REFERENCE**



© 2010 CATERPILLAR
ALL RIGHTS
RESERVED

CAT, CATERPILLAR, THEIR RESPECTIVE LOGOS, “CATERPILLAR YELLOW” AND THE POWER EDGE TRADE DRESS, AS WELL AS CORPORATE AND PRODUCT IDENTITY USED HEREIN, ARE TRADEMARKS OF CATERPILLAR AND MAY NOT BE USED WITHOUT PERMISSION.

PRINTED IN
U.S.A.