CATERPILLAR®

SEBP3271-08
August 2002

RUTHZIL TRATOR COMERCIAL DE PEÇAS LTDA 11 97083-6812 ROLANDO

Parts Manual



See "General Information" for New Parts Manual Features.

236, 246, 252, 262 Skid Steer Loader

4YZ4000-Up (Machine)
5SZ4000-Up (Machine)
CED1-Up (Machine)
FDG1-Up (Machine)
3NW12500-Up (Engine)

Powered By 3034 Engine

Product and Dealer Information

Note: For product identification plate locations, see the section “Product Identification Information” in the Operation and Maintenance Manual.

Delivery Date: _____

Product Information

Model: _____

Product Identification Number: _____

Engine Serial Number: _____

Transmission Serial Number: _____

Generator Serial Number: _____

Attachment Serial Numbers: _____

Attachment Information: _____

Customer Equipment Number: _____

Dealer Equipment Number: _____

Dealer Information

Name: _____ Branch: _____

Address: _____

_____

_____

	Dealer Contact	Phone Number	Hours
Sales:	_____	_____	_____
Parts:	_____	_____	_____
Service:	_____	_____	_____

Informations produit et concessionnaire

Nota: Voir l'emplacement de la plaque signalétique du produit au chapitre "Informations produit" du guide d'utilisation et d'entretien.

Date de livraison: _____

Informations produit

Modèle: _____

Numéro d'identification produit: _____

Numéro de série du moteur: _____

Numéro de série de la boîte de vitesses: _____

Numéro de série de l'alternateur: _____

Numéros de série d'équipement: _____

Informations sur l'équipement: _____

Numéro matériel client: _____

Numéro matériel concessionnaire: _____

Informations concessionnaire

Nom: _____ Agence: _____

Adresse: _____

_____

_____

	Contact concessionnaire	Numéro de téléphone	Heures
Ventes:			
Pièces:			
Service:			

Información del Producto/Distribuidor

Nota: Para saber la ubicación de las placas de identificación del producto, ver la sección “Información sobre identificación del producto” en el Manual de Operación y Mantenimiento.

Fecha de entrega: _____

Información del producto

Modelo: _____

Número de identificación del producto: _____

Número de serie del motor: _____

Número de serie de la transmisión: _____

Número de serie del generador: _____

Números de serie de los accesorios: _____

Información sobre los accesorios: _____

Número del equipo del cliente: _____

Número del equipo del distribuidor: _____

Información del distribuidor

Nombre: _____ Sucursal: _____

Dirección: _____

_____

_____

	Comunicación con el distribuidor	Número de teléfono	Horas
Ventas:	_____	_____	_____
Piezas:	_____	_____	_____
Servicio:	_____	_____	_____

Informações Sobre Produto e Revendedor

Nota: Para localizações da placa de identificação do produto, consulte a seção, “Informações Sobre Identificação do Produto” no Manual de Operação e Manutenção.

Data de Entrega: _____

Informações Sobre o Produto

Modelo: _____

Número de Identificação do Produto: _____

Número de Série do Motor: _____

Número de Série da Transmissão: _____

Número de Série do Gerador: _____

Números de Série de Acessórios: _____

Informações Sobre Acessórios: _____

Número do Equipamento do Cliente: _____

Número do Equipamento do Revendedor: _____

Informações Sobre o Revendedor

Nome: _____ Filial: _____

Endereço: _____

_____

_____

	Contato do Revendedor	Telefone	Horas
Vendas:	_____	_____	_____
Peças:	_____	_____	_____
Serviço:	_____	_____	_____

Produkt- und Händlerinformation

Anmerkung: Für die Lage der Produkt-Identnummer und Seriennummern siehe Abschnitt "Produkt-Identinformation" im Betriebs- und Wartungshandbuch.

Lieferdatum: _____

Produkt-Identinformation

Modell: _____

Produkt-Identnummer: _____

Seriennummer des Motors: _____

Seriennummer des Getriebes: _____

Seriennummer des Generators: _____

Seriennummern der Arbeitsgeräte: _____

Arbeitsgeräteinformation: _____

Kundennummer: _____

Händlernummer: _____

Händlerinformation

Name: _____ Niederlassung: _____

Adresse: _____

_____

_____

	Kontaktperson beim Händler	Telefon	Dienststunden
Verkauf:	_____	_____	_____
Ersatzteile:	_____	_____	_____
Service:	_____	_____	_____

Informazioni sul prodotto e sul concessionario

Nota: Per le ubicazioni della targhetta informativa sul prodotto, vedere la sezione “Informazioni sull’identificazione del prodotto” nel Manuale di funzionamento e manutenzione.

Data di Consegna: _____

Informazioni sul prodotto

Modello: _____

Numero di identificazione del prodotto: _____

Numero di serie del motore: _____

Numero di serie della trasmissione: _____

Numero di serie del generatore: _____

Numeri di serie dell’attrezzatura: _____

Informazioni sull’attrezzatura: _____

Numero di riferimento cliente: _____

Numero di riferimento concessionario: _____

Informazioni sul concessionario

Nome: _____ Filiale: _____

Indirizzo: _____

_____

_____

	Persona da contattare	Numero telefonico	Orario
Vendite:	_____	_____	_____
Ricambi:	_____	_____	_____
Servizio:	_____	_____	_____

TABLE OF CONTENTS

Name	Page
GENERAL INFORMATION	A22
REPAIR ALTERNATIVES	A45
SUPPLEMENTAL COOLANT ADDITIVES	A51
MAINTENANCE PARTS	A57
INDEX	A87
MACHINE ARRANGEMENT	1
CHASSIS AR	1
COMMON AR	3
ENGINE ARRANGEMENT	5
ENGINE AR-PRIMARY	5
INSTALLATION AR-ENGINE	7
BASIC ENGINE	11
CAMSHAFT GP	11
COVER GP-FRONT HOUSING	13
COVER GP-VALVE MECHANISM	14
CRANKSHAFT GP	18
CYLINDER BLOCK GP	19
CYLINDER HEAD GP	24
DRAIN GP-ENGINE OIL	28
FASTENER GP-ENGINE	29
FLYWHEEL GP	31
HOUSING GP-FLYWHEEL	32
HOUSING GP-FRONT	34
LIFTING GP-ENGINE	38
MOUNTING GP-ALTERNATOR	39
MOUNTING GP-ENGINE	40
MOUNTING GP-STARTING MOTOR	41
PAN GP-OIL	42
PISTON & ROD GP	46
PLUG GP-CYLINDER BLOCK	49
PULLEY GP-CRANKSHAFT	50
VALVE MECHANISM GP	51
LUBRICATION SYSTEM	53
FILTER GP-ENGINE OIL	53
PUMP GP-ENGINE OIL	54
COOLING SYSTEM	56
CONNECTION GP-WATER	56
COOLER GP-FLTR BASE & ENG OIL	59
FAN GP-BLOWER	60
PLUG GP-WATER LINES	64
PUMP GP-WATER	65
RADIATOR & HYD OIL COOLER GP	68
RADIATOR & OIL COOLER MTG GP	82
AIR INLET AND EXHAUST SYSTEM	95
AIR CLEANER GP	95
LINES GP-AIR	98
MANIFOLD GP-EXHAUST	102
MANIFOLD GP-INLET	103
MOUNTING GP-MUFFLER	104
MUFFLER GP	105
TURBOCHARGER GP	112
FUEL SYSTEM	120
CONTROL GP-GOVERNOR	120
FILTER & LINES GP-FUEL	124
FILTER GP-FUEL	126
FITTING GP-FUEL LINES	127
GOVERNOR GP	128
LINES GP-FUEL	132
PUMP GP-FUEL INJECTION	136
SEPARATOR GP-WATER	140
ELECTRICAL AND STARTING SYSTEM	141
ALTERNATOR GP-CHARGING	141
BATTERY GP	142
CONTROL GP-INTERLOCK	144
COVER GP-FUSE PANEL	145
ELECTRONICS GP-WORK TOOL	146
GLOW PLUG GP	147
HEATER GP-JACKET WATER	148
LAMP GP-FLOOD	149
LAMP GP-HEAD & SIGNAL	152
LAMP GP-PANEL ILLUMINATION	154
LAMP GP-SIGNAL	155
LAMP GP-STOP & TAIL	156
LAMP GP-WARNING BEACON	157
LIGHTING AR-STOP & FLOOD	158
LIGHTING GP-FRONT	159
LIGHTING GP-REAR	160
LIGHTING GP-ROADING	162
LIGHTING GP-WARNING BEACON	169
MODULE GP-WARNING INDICATOR	170
SERVICE GP-WORK TOOL	171
SOLENOID GP-SHUTOFF	172
STARTING MOTOR GP-ELECTRIC	174
SWITCH GP-PRESSURE	175
SWITCH GP-TEMPERATURE	177
WARNING GP-BACKUP	178
WIRING GP-AIR CONDITIONER	179
WIRING GP-CAB	180
WIRING GP-CHASSIS	184
WIRING GP-COUPLER	190
WIRING GP-ENGINE	192
WIRING GP-REAR LIGHTING	194
WIRING GP-WORK TOOL	196
POWER TRAIN	204
AXLE GP	204

TABLE OF CONTENTS

Name	Page
CONTROL GP-PARKING BRAKE	206
DRIVE CONTROL AR-HYDROSTATIC	222
DRIVE GP-TANDEM	226
FILTER & MTG GP-HYDRAULIC	228
FILTER GP-OIL	229
LINES GP-HYDRAULIC FILTER	230
LINES GP-HYDROSTATIC	234
MANIFOLD GP-RETURN	240
MOTOR & MTG GP-PISTON	242
MOTOR GP-PISTON	246
MOUNTING GP-PUMP	250
POWER TRAIN AR	251
PUMP GP-PISTON	252
VALVE & MTG GP-SOLENOID	258
VALVE GP-SOLENOID	263
WHEEL & TIRE AR	264
WHEEL & TIRE GP	270
FRAME AND BODY	271
BUMPER GP-REAR	271
CONVERSION AR-ROADING	272
CONVERSION GP-ROADING	277
COUNTERWEIGHT GP	280
ENCLOSURE GP-ENGINE	286
FRAME GP-BLADE	294
FRAME GP-LOADER	296
LIFTING GP-MACHINE	302
MOUNTING GP-ROADING LIGHTS	308
PANEL GP-SIDE	310
SUPPRESSION GP-SOUND	312
HYDRAULIC SYSTEM	314
ACCUMULATOR & MTG GP-HYDRAULIC	314
CONTROL GP-HANDLE	315
CONTROL GP-PILOT OPERATED HYD	320
CYLINDER & MTG GP-BLADE	345
CYLINDER & MTG GP-GRAPPLE	346
CYLINDER GP-BUCKET	348
CYLINDER GP-COUPLER	349
CYLINDER GP-GRAPPLE	350
CYLINDER GP-LIFT	352
CYLINDER GP-TILT	355
HYDRAULIC AR	357
LINES GP-AUXILIARY HYDRAULIC	361
LINES GP-BUCKET	366
LINES GP-CONNECTING	374
LINES GP-COUPLER	376
LINES GP-GRAPPLE	384
LINES GP-HYDRAULIC FAN	388
LINES GP-HYDRAULIC OIL COOLER	392
LINES GP-LIFT CYLINDER	400
LINES GP-PILOT	408
LINES GP-PUMP	414
LINES GP-TILT CYLINDER	418
LINES GP-WORK TOOL	428
MOTOR & MTG GP-HYDRAULIC FAN	432
MOTOR GP-GEAR	435
MOUNTING GP-CYLINDER	440
PLUG GP-PILOT VALVE	441
PUMP & MTG GP-WORK TOOL	442
PUMP GP-GEAR	443
TANK & MTG GP-HYDRAULIC	444
TANK GP-HYDRAULIC	447
VALVE & MTG GP-CONTROL	449
VALVE & MTG GP-DIVERTER	454
VALVE & MTG GP-SOLENOID	456
VALVE GP-BANK 2	458
VALVE GP-CONTROL	460
VALVE GP-DIVERTER	475
VALVE GP-MODULATING	476
VALVE GP-PILOT	477
VALVE GP-RELIEF	487
VALVE GP-SOLENOID	491
IMPLEMENTS	492
CONTROL GP-WORK TOOL	492
GUIDE GP-LINES	499
WORK TOOLS	500
ARM GP-MATERIAL HANDLING	500
BLADE AR	502
BLADE GP	503
BUCKET AR-DIRT	505
BUCKET AR-GENERAL PURPOSE	508
BUCKET AR-GRAPPLE	511
BUCKET AR-LIGHT MATERIAL	518
BUCKET AR-MULTIPURPOSE	519
BUCKET AS-DIRT	523
BUCKET AS-GENERAL PURPOSE	525
BUCKET GP-GRAPPLE	527
BUCKET GP-MULTIPURPOSE	530
BUCKET GP-UTILITY	534
CARRIAGE AS-FORK	535
CONVERSION AR-QUICK COUPLER	536
COUPLER AR-QUICK	536
COUPLER GP-QUICK	538
COVER GP-LINES	542
EDGE GP-CUTTING	543
FORK AR-GRAPPLE	550
FORK GP-GRAPPLE	552
FORK GP-PALLET	555
FORK GP-UTILITY	556
GRAPPLE GP-UTILITY	560
HANDLE & PIN GP-COUPLER	563
HANDLE GP-COUPLER	565
KIT-ROADING PLATE & MOUNTING	567
KIT-SNOW REMOVAL CONVERSION	569
LINK GP-COUPLER	571

TABLE OF CONTENTS

Name	Page
LOCK GP-QUICK COUPLER	572
PUMP GP-DIAPHRAGM	573
SPRING GP-BLADE	574
STEP GP-MATERIAL HANDLING ARM	575
STRAINER GP-WATER	577
TANK & MTG GP-WATER	578
TANK GP-WATER	581
TOOTH GP-UNI	584
OPERATOR STATION	585
AIR CONDITIONER & MOUNTING GP	585
AIR CONDITIONER GP	585
ARMREST & MOUNTING GP	586
ARMREST GP	588
BOX GP-STORAGE	590
CANOPY GP-ROPS	591
COMPRESSOR & MTG GP-REFRIG	592
COMPRESSOR GP-REFRIGERANT	594
CONDENSER & MTG GP-REFRIGERANT	595
COVER GP-CAB	596
COVER GP-CONSOLE	597
DOOR & MTG GP-CAB	600
DOOR GP-CAB	612
DUCT & CONTROL GP	616
DUCT GP-DEFROST	617
FILTER GP-CAB AIR	618
FLOOR MAT	619
GAUGE & WARNING GP	620
GUARD GP-ROPS/FOPS	622
HEADLINER-CAB	623
HEATER & MTG GP-CAB	624
HEATER GP-CAB	632
HORN GP-ELECTRIC	635
INSTALLATION AR	637
KIT-CAB DOOR & MOUNTING	640
LINER GP-CAB	644
LINES GP-AIR CONDITIONER	646
LINES GP-HEATER	647
MIRROR & MTG GP-REAR VIEW	651
MOTOR GP-WINDOW WIPER	652
MOUNTING GP-ROPS	653
OPERATOR AR-CANOPY	654
PANEL AR-INSTRUMENT	654
PANEL GP-INSTRUMENT	656
PEDAL GP-GOVERNOR	660
PLATFORM GP-OPERATOR	663
SEAL GP-CAB	664
SEAT & MOUNTING GP	667
SEAT BELT GP	670
SEAT GP-SUSPENSION	676
SPRING GP-GAS	679
VISOR GP-CAB	680
WINDOW GP-CAB	682

Name	Page
SERVICE EQUIPMENT AND SUPPLIES	696
BOTTLE GP-FLUID SAMPLING	696
FILM GP	697
KIT-MAINTENANCE	704
MOUNTING GP-REGISTRATION	705
PLATE & FILM GP	706
PART NUMBER INDEX	B1

TABLE DES MATIÈRES

Désignation	Page
GÉNÉRALITÉS	A25
OPTIONS DE RÉPARATION	A46
ADDITIFS POUR LIQUIDE DE REFROIDISSEMENT	A52
PIÈCES DE RECHANGE	A61
INDEX	A96
MACHINE COMPLÈTE	1
VERSION DE CHASSIS	1
VERSION NORMALE	3
MOTEUR COMPLET	5
MOTEUR (VERSION PRINCIPALE)	5
MONTAGE DE MOTEUR (VERSION)	7
MOTEUR DE BASE	11
ARBRE A CAMES (ASS)	11
COUVERCLE DE CARTER AV (ASS)	13
CACHE-SOUPAPES (ASS)	14
VILEBREQUIN (ASS)	18
BLOC-CYLINDRES (ASS)	19
CULASSE (ASS)	24
VIDANGE-HUILE DE MOTEUR (ASS)	28
BOULONNERIE - MOTEUR (ASS)	29
VOLANT MOTEUR (ASS)	31
CARTER DE VOLANT (ASS)	32
CARTER AV (ASS)	34
OEILLETONS DE LEVAGE MOTEUR (ASS)	38
MONTAGE D'ALTERNATEUR (ASS)	39
MONTAGE DE MOTEUR (ASS)	40
DÉMARREUR - MONTAGE (ASS)	41
HUILE MOTEUR - CARTER (ASS)	42
PISTON ET BIELLE (ASS)	46
BOUCHON - BLOC-CYLINDRES	49
VILEBREQUIN - POULIE (ASS)	50
CULBUTERIE (ASS)	51
CIRCUIT DE GRAISSAGE	53
FILTRE À HUILE MOTEUR (ASS)	53
POMPE A HUILE MOTEUR (ASS)	54
CIRCUIT DE REFROIDISSEMENT	56
RACCORD D'EAU (ASS)	56
SUPPORT DE FILTRE ET REFROIDISSEUR D'HUILE MOTEUR	59
VENTILATEUR SOUFFLANT (ASS)	60
BOUCHON DES CANALISATIONS D'EAU (ASS)	64
POMPE A EAU (ASS)	65
RADIATEUR ET REFROIDISSEUR D'HUILE HYDRAULIQUE (ASS)	68
RADIATEUR ET REFROIDISSEUR D'HUILE-MONTAGE (ASS)	82
CIRCUIT D'ADMISSION D'AIR ET D'ÉCHAPPEMENT	95
FILTRE A AIR (ASS)	95
CANALISATIONS D'AIR (ASS)	98
COLLECTEUR D'ÉCHAPPEMENT (ASS)	102
COLLECTEUR D'ADMISSION (ASS)	103
MONTAGE DE SILENCIEUX (ASS)	104
SILENCIEUX (ASS)	105
TURBOCOMPRESSEUR (ASS)	112
CIRCUIT DE CARBURANT	120
COMMANDE DE RÉGULATEUR (ASS)	120
FILTRE ET CANALISATIONS DE CARBURANT (ASS)	124
FILTRE A CARBURANT (ASS)	126
RACCORD - CANALISATIONS DE CARBURANT (ASS)	127
REGULATEUR (ASS)	128
CANALISATIONS DE CARBURANT (ASS)	132
POMPE D'INJECTION DE CARBURANT (ASS)	136
SÉPARATEUR D'EAU (ASS)	140
CIRCUIT ÉLECTRIQUE ET DE DÉMARRAGE	141
ALTERNATEUR DE CHARGE (ASS)	141
BATTERIE (ASS)	142
COMMANDE D'INTERVERROUILLAGE (ASS)	144
COUVERCLE - PANNEAU DE FUSIBLES (ASS)	145
ÉLECTRONIQUE DE L'OUTIL DE TRAVAIL (ASS)	146
BOUGIE DE PRÉCHAUFFAGE (ASS)	147
EAU DES CHEMISES - RECHAUFFEUR (ASS)	148
LAMPE - PHARE (ASS)	149
LAMPE - PHARE ET CLIGNOTANT	152
LAMPE - ÉCLAIRAGE TABLEAU (ASS)	154
LAMPE - CLIGNOTANT DE DIRECTION (ASS)	155
FEUX ARRIÈRE ET FEUX D'ARRÊT	156
LAMPE - GYROPHARE (ASS)	157
ECLAIRAGE - ARRÊT ET PROJECTEURS (VERSION)	158
ECLAIRAGE AV (ASS)	159
ECLAIRAGE AR (ASS)	160
ÉCLAIRAGE - FEUX DE ROUTE (ASS)	162

TABLE DES MATIÈRES

Désignation	Page
ÉCLAIRAGE - GYROPHARE (ASS)	169
MODULE - TÉMOIN (ASS)	170
ENTRETIEN DE L'OUTIL DE TRAVAIL (ASS)	171
SOLÉNOÏDE D'ARRÊT (ASS)	172
DÉMARREUR ÉLECTRIQUE (ASS)	174
MANOCONTACT	175
BOUTON DE TEMPÉRATURE	177
AVERTISSEUR DE RECUL (ASS)	178
CABLAGE - CLIMATISEUR (ASS)	179
CABLAGE DE CABINE (ASS)	180
CABLAGE DE CHASSIS (ASS)	184
CÂBLAGE-COUPLEUR (ASS)	190
CABLAGE DE MOTEUR (ASS)	192
CABLAGE D'ECLAIRAGE ARRIERE (ASS)	194
CÂBLAGE - OUTIL DE TRAVAIL (ASS)	196
TRANSMISSION	204
ESSIEU (ASS)	204
COMMANDE DE FREIN DE STATIONNEMENT (ASS)	206
VERSION DE COMMANDE D'ENTRAINEMENT-HYDROSTATIQUE	222
ENTRAINEMENT EN TANDEM (ASS)	226
FILTRE À HUILE HYDRAULIQUE ET MONTAGE (ASS)	228
FILTRE A HUILE (ASS)	229
CANALISATIONS DE FILTRE HYDRAULIQUE	230
CANALISATIONS HYDROSTATIQUES (ASS)	234
COLLECTEUR-RETOUR (ASS)	240
MOTEUR ET MONTAGE - PISTON (ASS)	242
GROUPE DE MOTEUR A PISTONS	246
MONTAGE DE POMPE (ASS)	250
TRANSMISSION (VERSION)	251
POMPE A PISTONS (ASS)	252
SOUPAPE ET MONTAGE - SOLÉNOÏDE	258
SOUPAPE - SOLÉNOÏDE (ASS)	263
ROUE ET PNEU (VERSION)	264
ROUE ET PNEU (ASS)	270
CHÂSSIS ET BENNE	271
PARE-CHOCS AR (ASS)	271
VERSION DE TRANSFORMATION POUR DÉPLACEMENT ROUTIER	272
GROUPE DE TRANSFORMATION - DÉPLACEMENT ROUTIER	277
CONTREPOIDS (ASS)	280
CARENAGE DE MOTEUR (ASS)	286
BÂTI DE LAME (ASS)	294
BATI - CHARGEUSE (ASS)	296
MACHINE DE LEVAGE	302
MONTAGE DE FEUX DE DÉPLACEMENT SUR ROUTE (ASS)	308
PANNEAU LATERAL (ASS)	310
INSONORISATION (ASS)	312
CIRCUIT HYDRAULIQUE	314
ACCUMULATEUR ET MONTAGE - HYDRAULIQUE (ASS)	314
COMMANDE DE POIGNÉE (ASS)	315
COMMANDE HYDRAULIQUE PILOTE (ASS)	320
VÉRIN ET MONTAGE DE LAME (ASS)	345
VÉRIN ET MONTAGE DE PINCE (ASS)	346
VERIN DE GODET (ASS)	348
VÉRIN DE COUPLEUR (ASS)	349
PINCE - VÉRIN (ASS)	350
VÉRIN DE LEVAGE (ASS)	352
VÉRIN D'INCLINAISON (ASS)	355
VERSION HYDRAULIQUE	357
CANALISATIONS HYDRAULIQUES AUXILIAIRES (ASS)	361
ECLAIRAGE DE GODET (ASS)	366
CANALISATIONS - BRANCHEMENT (ASS)	374
CANALISATIONS DE COUPLEUR (ASS)	376
PINCE - CANALISATIONS (ASS)	384
CANALISATIONS HYDRAULIQUES DE VENTILATEUR (ASS)	388
CANALISATIONS DE REFROIDISSEUR D'HUILE HYDR. (ASS)	392
CANALISATIONS DE VÉRIN DE LEVAGE (ASS)	400
CANALISATIONS A COMMANDE PILOTE (ASS)	408
CANALISATIONS DE POMPE (ASS)	414
CANALISATIONS DU VÉRIN D'INCLINAISON (ASS)	418
CANALISATIONS - OUTIL DE TRAVAIL (ASS)	428
MOTEUR ET MONTAGE DE VENTILATEUR HYDRAULIQUE (ASS)	432
MOTEUR À ENGRENAGES (ASS)	435
MONTAGE DE VÉRIN (ASS)	440
BOUCHON DE SOUPAPE PILOTE (ASS)	441
POMPE ET MONTAGE - OUTIL DE TRAVAIL (ASS)	442
POMPE A ENGRENAGES (ASS)	443
RÉSERVOIR HYDRAULIQUE ET MONTAGE (ASS)	444
RÉSERVOIR HYDRAULIQUE (ASS)	447
DISTRIBUTEUR ET MONTAGE (ASS)	449

TABLE DES MATIÈRES

Désignation	Page
SOUPAPE DE DÉRIVATION ET MONTAGE	454
SOUPAPE ET MONTAGE - SOLÉNOÏDE	456
DISTRIBUTEUR DOUBLE ÉLÉMENT (ASS)	458
DISTRIBUTEUR (ASS)	460
SOUPAPE DE DERIVATION (ASS)	475
SOUPAPE DE MODULATION (ASS)	476
SOUPAPE PILOTE (ASS)	477
CLAPET DE DECHARGE (ASS)	487
SOUPAPE - SOLÉNOÏDE (ASS)	491
ÉQUIPEMENTS	492
COMMANDE - OUTIL DE TRAVAIL (ASS)	492
GUIDE - CANALISATIONS (ASS)	499
OUTILS DE TRAVAIL	500
BRAS DE MANUTENTION (ASS)	500
LAME (VERSION)	502
LAME (ASS)	503
GODET - SALETÉ (VERSION)	505
GODET NORMAL (VERSION)	508
GODET - PINCE (VERSION)	511
GODET - MATÉRIAUX MEUBLES (VERSION)	518
GODET TOUS-TRAVAUX (VERSION)	519
GODET - SALETÉ (ENS)	523
GODET NORMAL (ENS)	525
GODET - PINCE (ASS)	527
GODET TOUS-TRAVAUX (ASS)	530
GODET POUR TRAVAUX DE SERVITUDE (ASS)	534
TABLIER DE FOURCHE (ENS)	535
VERSION DE TRANSFORMATION - COUPLEUR EXPRESS	536
COUPLEUR EXPRESS (VERSION)	536
COUPLEUR EXPRESS (ASS)	538
COUVERCLE-CANALISATIONS (ASS)	542
LAME DE COUPE (ASS)	543
FOURCHE - PINCE (VERSION)	550
FOURCHE - PINCE (ASS)	552
FOURCHE PALLETTE (ASS)	555
FOURCHE-RÉSEAU PUBLIC (ASS)	556
PINCE-RÉSEAU PUBLIC (ASS)	560
POIGNÉE ET AXE DE COUPLEUR (ASS)	563
POIGNÉE DE COUPLEUR (ASS)	565
KIT DE PLAQUE DE DÉPLACEMENT ROUTIER ET MONTAGE	567
KIT DE TRANSFORMATION D'ENLÈVEMENT DE LA NEIGE	569
BIELLE DE COUPLEUR (ASS)	571
VERROUILLAGE DE COUPLEUR EXPRESS (ASS)	572
POMPE - DIAPHRAGME (ASS)	573
RESSORT DE LAME (ASS)	574
MARCHEPIED-BRAS DE MANUTENTION (ASS)	575
TAMIS D'EAU (ASS)	577
RÉSERVOIR D'EAU ET MONTAGE (ASS)	578
RÉSERVOIR D'EAU (ASS)	581
DENT MONOBLOC (ASS)	584
POSTE DE CONDUITE	585
CLIMATISEUR ET MONTAGE (ASS)	585
CLIMATISEUR (ASS)	585
ACCOUDOIR ET MONTAGE (ASS)	586
ACCOUDOIR (ASS)	588
COFFRE DE RANGEMENT (ASS)	590
TOÎT ROPS (ASS)	591
COMPRESSEUR ET MONTAGE - RÉFRIGÉRANT (ASS)	592
COMPRESSEUR DE REFRIGERANT (ASS)	594
CONDENSATEUR ET MONTAGE (RÉFRIGÉRANT)	595
COUVERCLE - CABINE (ASS)	596
COUVERCLE DE LA CONSOLE (ASS)	597
PORTE DE CABINE ET MONTAGE (ASS)	600
PORTIÈRE DE CABINE (ASS)	612
CONDUIT ET COMMANDE (ASS)	616
GAINE DU DÉGIVREUR (ASS)	617
FILTRE À AIR DE CABINE (ASS)	618
TAPIS DE PLANCHER	619
INDICATEURS ET TÉMOINS LUMINEUX (ASS)	620
PROTECTION DE ROPS/FOPS (ASS)	622
CAPITONNAGE	623
CHAUFFAGE ET MONTAGE - CABINE (ASS)	624
CHAUFFAGE DE CABINE (ASS)	632
KLAXON ÉLECTRIQUE (ASS)	635
MONTAGE (VERSION)	637
KIT DE PORTE DE CABINE ET MONTAGE	640
CABINE - REVÊTEMENT (ASS)	644
CANALISATIONS DE CLIMATISEUR (ASS)	646
CANALISATIONS DE CHAUFFAGE (ASS)	647
RÉTROVISEUR ET MONTAGE (ASS)	651
MOTEUR D'ESSUIE-GLACE (ASS)	652
MONTAGE DU TOIT ROPS (ASS)	653
CABINE AVEC PAVILLON (VERSION)	654
VERSION DE TABLEAU DE BORD	654

TABLE DES MATIÈRES

Désignation	Page
TABLEAU DE BORD (ASS)	656
RÉGULATEUR - PÉDALE (ASS)	660
PLATE-FORME DE CABINE	663
JOINT DE CABINE (ASS)	664
SIÈGE ET MONTAGE (ASS)	667
CEINTURE DE SECURITE (ASS)	670
SIÈGE AVEC SUSPENSION (ASS)	676
RESSORT-GAZ (ASS)	679
RETROVISEUR - CABINE (ASS)	680
VITRE DE CABINE (ASS)	682
MATÉRIEL ET FOURNITURES D'ENTRETIEN	696
FLACON - PRÉLÈVEMENT DE LIQUIDE (ASS)	696
PLAQUE SIGNALÉTIQUE (ASS)	697
KIT D'ENTRETIEN	704
MONTAGE - IMMATRICULATION (ASS)	705
PLAQUES SIGNALETIQUES ET AUTOCOLLANTS (ASS)	706
INDEX DE NUMÉROS DE PIÈCES	B1

CONTENIDO

Nombre	Página
INFORMACIÓN GENERAL	A29
ALTERNATIVAS DE REPARACIÓN	A47
ADITIVOS DE REFRIGERANTE SUPLEMENTARIOS	A53
PIEZAS DE MANTENIMIENTO	A67
INDICE	A105
CONFIGURACION DE LA MAQUINA	1
CHASIS (CONFIG)	1
CONFIGURACIÓN COMÚN	3
CONFIGURACION DE MOTOR	5
MOTOR PRIMARIO (CONFIG)	5
CONFIGURACIÓN DE INSTALACIÓN DEL MOTOR	7
MOTOR BASICO	11
ÁRBOL DE LEVAS (GR)	11
TAPA DE LA CAJA DELANTERA (GR)	13
TAPA DEL MECANISMO DE VÁLVULAS (GR)	14
CIGÜEÑAL (GR)	18
BLOQUE MOTOR (GR)	19
CULATA DE CILINDROS (GR)	24
DRENAJE DEL ACEITE DE MOTOR	28
TORNILLERÍA DEL MOTOR (GR)	29
VOLANTE (GR)	31
VOLANTE - CAJA DE (GR)	32
CAJA DELANTERA (GR)	34
CÁNCAMOS DE LEVANTAMIENTO DEL MOTOR (GR)	38
MONTAJE DEL ALTERNADOR (GR)	39
MONTAJE DEL MOTOR (GR)	40
MONTAJE DE MOTOR DE ARRANQUE (GR)	41
CÁRTER - COLECTOR DEL (GR)	42
PISTÓN Y BIELA (GR)	46
TAPÓN DEL BLOQUE MOTOR (GR)	49
CIGÜEÑAL - POLEA DE (GR)	50
MECANISMO DE VÁLVULAS (GR)	51
SISTEMA DE LUBRICACION	53
FILTRO DE ACEITE DEL MOTOR (GR)	53
BOMBA DE ACEITE DEL MOTOR (GR)	54
SISTEMA DE ENFRIAMIENTO	56
AGUA - CONEXIÓN DE (GR)	56
ENFRIADOR DE ACEITE DEL MOTOR Y BASE DEL FILTRO	59
SOPLADOR - VENTILADOR (GR)	60
TAPÓN DE LAS TUBERÍAS DE AGUA (GR)	64
BOMBA DE AGUA (GR)	65
RADIADOR Y ENFRIADOR DE ACEITE HIDRÁULICO (GR)	68
MONTAJE DE RADIADOR Y ENFRIAMIENTO DE ACEITE (GR)	82
SISTEMA DE ESCAPE Y ADMISION DE AIRE	95
FILTRO DE AIRE (GR)	95
AIRE - TUBERÍAS DE (GR)	98
MÚLTIPLE DE ESCAPE (GR)	102
MÚLTIPLE DE ADMISIÓN (GR)	103
MONTAJE DEL SILENCIADOR (GR)	104
SILENCIADOR (GR)	105
TURBOCOMPRESOR (GR)	112
SISTEMA DE COMBUSTIBLE	120
CONTROL DE REGULADOR (GR)	120
FILTRO Y TUBERÍAS DE COMBUSTIBLE (GR)	124
FILTRO DE COMBUSTIBLE (GR)	126
CONEXIÓN DE ENGRASE DE LAS TUBERÍAS DE COMBUSTIBLE	127
REGULADOR (GR)	128
TUBERÍAS DE COMBUSTIBLE (GR)	132
BOMBA DE INYECCIÓN DE COMBUSTIBLE (GR)	136
SEPARADOR DE AGUA (GR)	140
SISTEMA DE ARRANQUE ELECTRICO	141
CARGA - ALTERNADOR DE (GR)	141
BATERÍA (GR)	142
CONTROL DE TRABA (GR)	144
CUBIERTO DEL PANEL DE FUSIBLES (GR)	145
ELECTRONICA DE HERRAMIENTAS (GR)	146
BUJÍA INCANDESCENTE (GR)	147
AGUA DE LAS CAMISAS - CALENTADOR DEL (GR)	148
REFLECTOR (GR)	149
LÁMPARA DE LUZ DELANTERA Y DE SEÑAL (GR)	152
LÁMPARA DE ILUMINACIÓN DEL PANEL (GR)	154
LUZ DE SEÑAL DE GIRO (GR)	155
LUCES DE PARADA Y COLA (GR)	156
LÁMPARA DE BALIZA DE ADVERTENCIA (GR)	157
LUCES DE PARADA Y REFLECTORES (CONFIG)	158
LUCES DELANTERAS (GR)	159
LUCES TRASERAS (GR)	160

CONTENIDO

Nombre	Página
LUCES DE DESPLAZAMIENTO (GR)	162
LUZ DE BALIZA (GR)	169
MÓDULO INDICADOR DE ADVERTENCIA (GR)	170
SERVICIO DE HERRAMIENTA (GR)	171
SOLENOIDE DE CORTE	172
MOTOR DE ARRANQUE ELÉCTRICO (GR)	174
INTERRUPTOR DE PRESIÓN (GR)	175
INTERRUPTOR PARA LA TEMPERATURA (GR)	177
RETROCESO - ALARMA DE (GR)	178
CABLES DEL ACONDICIONADOR DE AIRE (GR)	179
CABLES DE LA CABINA (GR)	180
CABLES DEL CHASIS (GR)	184
ALAMBRADO DE ACOPLADOR (GR)	190
CABLES DEL MOTOR (GR)	192
ALAMBRADO DE LUCES TRASERAS (GR)	194
CABLES DE LA HERRAMIENTA DE TRABAJO (GR)	196
TREN DE FUERZA	204
EJE (GR)	204
CONTROL DEL FRENO DE ESTACIONAMIENTO	206
CONTROL DE MANDO HIDROSTATICO (CONFIG)	222
MANDO TANDEM (GR)	226
FILTRO DE ACEITE HIDRÁULICO Y MONTAJE (GR)	228
FILTRO DE ACEITE (GR)	229
TUBERIAS DEL FILTRO HIDRAULICO (GR)	230
TUBERÍAS HIDROSTÁTICAS (GR)	234
RETORNO EN EL MULTIPLE(GR)	240
MONTAJE DE GRUPO DE PISTONES	242
PISTONES DEL MOTOR (GR)	246
MONTAJE DE LA BOMBA (GR)	250
TREN DE FUERZA (CONFIG)	251
BOMBA DE PISTONES (GR)	252
VALVULA DE SOLENOIDE Y MONTAJE (GR	258
VÁLVULA DE SOLENOIDE (GR)	263
RUEDA Y LLANTA (CONFIG)	264
RUEDA Y NEUMÁTICO (GR)	270
BASTIDOR Y CAJA	271
PARAGOLPES TRASERO (GR)	271
CONFIGURACIÓN DE TRANSFORMACIÓN PARA CARRETERA	272
CONVERSION PARA DESPLAZAMIENTO POR CARRETERA (GR)	277
CONTRAPESO (GR)	280
COMPARTIMIENTO DEL MOTOR (GR)	286
BASTIDOR DE HOJA (GR)	294
BASTIDOR DEL CARGADOR (GR)	296
LEVANTAMIENTO DE LA MÁQUINA (GR)	302
MONTAJE DE LUCES DE DESPLAZAMIENTO POR CARRETERA (GR)	308
PANEL LATERAL (GR)	310
INSONORIZADOR (GR)	312
SISTEMA HIDRAULICO	314
ACUMULADOR HIDRAULICO Y MONTAJE (GR)	314
CONTROL DE MANIJA (GR)	315
CONTROL HIDRÁULICO DE OPERACIÓN PILOTO (GR)	320
CILINDRO Y MONTAJE DE LA HOJA (GR)	345
MONTAJE DEL CILINDRO DEL GARFIO (GR)	346
CILINDRO DE CUCHARÓN (GR)	348
CILINDRO DEL ACOPLADOR (GR)	349
CILINDRO DE GARFIO (GR)	350
CILINDRO DE LEVANTAMIENTO (GR)	352
INCLINACIÓN HORIZONTAL - CILINDRO DE (GR)	355
HIDRÁULICA (CONFIG)	357
TUBERÍAS HIDRÁULICAS AUXILIARES (GR)	361
TUBERÍAS DEL CUCHARÓN (GR)	366
TUBERIAS DE CONEXION (GR)	374
ACOPLADOR - TUBERÍAS DE (GR)	376
TUBERÍAS DEL GARFIO (GR)	384
TUBERÍAS HIDRÁULICAS DEL VENTILADOR (GR)	388
TUBERÍAS DEL ENFRIADOR DE ACEITE HIDRÁULICO (GR)	392
CILINDRO DE LEVANTAMIENTO - TUBERÍAS DEL (GR)	400
TUBERÍAS CON SERVOMANDO (GR)	408
BOMBA - TUBERÍAS DE (GR)	414
TUBERÍAS DEL CILINDRO DE INCLINACIÓN (GR)	418
TUBERIAS DE LA HERRAMIENTA DE TRABAJO	428
MOTOR Y MONTAJE DE VENTILADOR HIDRAULICO (GR)	432
MOTOR DE ENGRANAJES (GR)	435
MONTAJE DE CILINDRO (GR)	440
TAPON DE LA VALVULA PILOTO (GR)	441
BOMBA Y MONTAJE DE LA HERRAMIENTA DE TRABAJO (GR)	442
BOMBA DE ENGRANAJES (GR)	443
TANQUE HIDRÁULICO Y MONTAJE (GR)	444

CONTENIDO

Nombre	Página
TANQUE HIDRÁULICO (GR)	447
VÁLVULA DE CONTROL Y MONTAJE (GR)	449
VÁLVULA DE DERIVACIÓN Y MONTAJE (GR)	454
VALVULA DE SOLENOIDE Y MONTAJE (GR	456
VÁLVULAS HIDRÁULICAS - GRUPO DE 2	458
VÁLVULA DE CONTROL (GR)	460
VÁLVULA DE DERIVACIÓN (GR)	475
VÁLVULA DE MODULACIÓN (GR)	476
VÁLVULA PILOTO (GR)	477
VÁLVULA DE ALIVIO (GR)	487
VÁLVULA DE SOLENOIDE (GR)	491
IMPLEMENTOS	492
CONTROL DE LA HERRAMIENTA DE TRABAJO (GR)	492
TUBERIAS DE LA GUIA (GR)	499
HERRAMIENTAS	500
AGUILÓN TELESCÓPICO (GR)	500
HOJA (CONFIG)	502
HOJA (GR)	503
CUCHARON PARA TIERRA (CONF)	505
CUCHARÓN DE USO GENERAL (CONFIG)	508
CUCHARON DE GARFIO (CONF)	511
CUCHARÓN PARA MATERIALES LIVIANOS (CONFIG)	518
CUCHARÓN DE USO MÚLTIPLE (CONFIG)	519
CUCHARON PARA TIERRA (CONJ)	523
CUCHARÓN DE USO GENERAL (CONJ)	525
CUCHARON DE GARFIO (GR)	527
CUCHARÓN DE USO MÚLTIPLE (GR)	530
CUCHARÓN UTILITARIO (GR)	534
PORTAHORQUILLAS (CONJ)	535
CONFIG. DE CONVERSIÓN DEL ACOPLAMIENTO RÁPIDO	536
ACOPLADOR RÁPIDO (CONFIG)	536
ACOPLADOR RÁPIDO (GR)	538
TAPA DE TUBERIAS (GR)	542
CUCHILLA (GR)	543
HORQUILLA DE GARFIO (CONF)	550
HORQUILLA DE GARFIO (GR)	552
HORQUILLA PARA TARIMAS (GR)	555
HORQUILLA DE UTILIDAD (GR)	556
GARFIO DE UTILIDAD (GR)	560
GRUPO DE MANIJA Y PIN-ACOPLADOR	563
ACOPLADOR DE MANIJA	565
JUEGO-PLACA DE DESPLAZAMIENTO Y MONTAJE	567
JUEGO-CONVERSION PARA REMOCION DE NIEVE	569
GRUPO DE ESLABON, ACOPLADOR	571
TRABA-ACOPLADOR RAPIDO (GR)	572
BOMBA DEL DIAFRAGMA (GR)	573
RESORTE DE HOJA (GR)	574
ESCALON DE BRAZO DE MANEJO DE MATERIALES (GR)	575
COLADOR DEL AGUA (GR)	577
MONTAJE DEL TANQUE DE AGUA (GR)	578
TANQUE DEL AGUA (GR)	581
DIENTE DE UNA PIEZA (UNI-TOOTH) (GR)	584
ESTACION DEL OPERADOR	585
ACONDICIONADOR DE AIRE Y MONTAJE (GR)	585
ACONDICIONADOR DE AIRE (GR)	585
POSABRAZOS Y MONTAJE (GR)	586
POSABRAZOS (GR)	588
CAJA DE ALMACENAMIENTO	590
TOLDO ROPS (GR)	591
COMPRESOR DE REFRIGERANTE Y GRUPO DE MONTAJE	592
COMPRESOR DE REFRIGERANTE (GR)	594
CONDENSADOR DEL REFRIGERANTE Y MONTAJE (GR)	595
TAPA DE LA CABINA (GR)	596
TAPA DE LA CONSOLA (GR)	597
PUERTA Y MONTAJE DE CABINA (GR)	600
PUERTA DE CABINA	612
CONDUCTO Y CONTROL (GR)	616
CONDUCTO DEL DESEMPAÑADOR (GR)	617
FILTRO DE AIRE DE LA CABINA (GR)	618
ALFOMBRILLA DEL PISO	619
INDICADORES Y ADVERTENCIA (GR)	620
PROTECTOR DE ROPS/FOPS	622
REVESTIMIENTO DEL TECHO DE LA CABINA	623
CALEFACCIÓN Y MONTAJE DE LA CABINA (GR)	624
CALEFACCIÓN DE LA CABINA (GR)	632
BOCINA ELÉCTRICA (GR)	635
INSTALACIÓN (CONFIG)	637
JUEGO, PUERTA DE CABINA Y MONTAJE	640
REVESTIMIENTO DE LA CABINA (GR)	644
TUBERÍAS DE ACONDICIONADOR DE AIRE (GR)	646

CONTENIDO

Nombre	Página	Nombre	Página
TUBERÍAS DE LA CALEFACCIÓN (GR)	647		
RETROVISOR Y MONTAJE (GR)	651		
MOTOR-LIMPIAPARABRISAS (GR)	652		
MONTAJE DE LA ESTRUCTURA ROPS (GR)	653		
CABINA DEL OPERADOR CON TECHO TIPO TOLDO (CONFIG)	654		
TABLERO DE INSTRUMENTOS (CONFIG)	654		
TABLERO DE INSTRUMENTOS (GR)	656		
REGULADOR - PEDAL DEL (GR)	660		
PLATAFORMA DE LA CABINA	663		
SELLO DE CABINA (GR)	664		
ASIENTO Y MONTAJE (GR)	667		
CINTURÓN DE SEGURIDAD (GR)	670		
SUSPENSIÓN - ASIENTO CON (GR)	676		
RESORTE DE GAS (GR)	679		
VISERA (GR)	680		
VENTANA DE LA CABINA (GR)	682		
EQUIPO DE SERVICIO Y SUMINISTROS	696		
RECIPIENTE PARA EL FLUIDO DE MUESTREO	696		
ETIQUETA DE ADVERTENCIA (GR)	697		
JUEGO DE MANTENIMIENTO	704		
MONTAJE-REGISTRO (GR)	705		
CALCOMANÍAS Y PLACAS DE IDENTIFICACIÓN (GR)	706		
INDICE DE NUMEROS DE PIEZA	B1		

ÍNDICE

Designação	Página
INFORMAÇÃO GERAL	A33
ALTERNATIVAS DE REPARO	A48
ADITIVOS SUPLEMENTARES DO LÍQUIDO ARREFECEDOR	A54
PEÇAS DE MANUTENÇÃO	A72
ÍNDICE	A114
ARRANJO DA MÁQUINA	1
CHASSI	1
ARRANJO BÁSICO	3
ARRANJO DO MOTOR	5
MOTOR PRIMÁRIO	5
GRUPO DE INSTALAÇÃO - MOTOR	7
MOTOR BÁSICO	11
EIXO-COMANDO DE VÁLVULA	11
TAMPA - CAIXA DIANTEIRA	13
TAMPA - MECANISMO DAS VÁLVULAS	14
VIRABREQUIM	18
BLOCO DO MOTOR	19
CABEÇOTE DO MOTOR	24
DRENO - ÓLEO DO MOTOR	28
FIXADORES - MOTOR	29
VOLANTE DO MOTOR	31
CAIXA DO VOLANTE DO MOTOR	32
CAIXA DIANTEIRA	34
LEVANTAMENTO DO MOTOR	38
MONTAGEM - ALTERNADOR	39
MONTAGEM - MOTOR	40
MONTAGEM - MOTOR DE ARRANQUE	41
CÁRTER DO ÓLEO DO MOTOR	42
PISTÃO E BIELA	46
BUJÃO DO BLOCO DO CILINDRO	49
POLIA DO VIRABREQUIM	50
MECANISMO DAS VÁLVULAS	51
SISTEMA DE LUBRIFICAÇÃO	53
FILTRO - ÓLEO DO MOTOR	53
BOMBA DE ÓLEO - MOTOR	54
SISTEMA DE ARREFECIMENTO	56
CONEXÃO - TUBO D'ÁGUA	56
ARREFECEDOR DE ÓLEO DO MOTOR E BASE DO FILTRO	59
VENTILADOR DE SOPRO	60
BUJÃO - TUBULAÇÕES DE ÁGUA	64
BOMBA DE ÁGUA	65
RADIADOR E ARREFECEDOR DO ÓLEO HIDRÁULICO	68
RADIADOR E ARREFECEDOR DE ÓLEO - MONTAGEM	82
SISTEMA DE ADMISSÃO DE AR E DE ESCAPE	95
PURIFICADOR DE AR	95
TUBOS - AR	98
COLETOR DE ESCAPE	102
COLETOR DE ADMISSÃO	103
MONTAGEM - SILENCIADOR	104
SILENCIADOR	105
TURBOALIMENTADOR	112
SISTEMA DE COMBUSTÍVEL	120
CONTROLE DO GOVERNADOR	120
FILTRO E TUBOS - COMBUSTÍVEL	124
FILTRO - COMBUSTÍVEL	126
CONEXÃO - TUBOS DE COMBUSTÍVEL	127
GOVERNADOR	128
TUBOS - COMBUSTÍVEL	132
BOMBA DE INJEÇÃO DO COMBUSTÍVEL	136
SEPARADOR DE ÁGUA	140
SISTEMA ELÉTRICO E DE PARTIDA	141
ALTERNADOR DE CORRENTE	141
BATERIA	142
CONTROLE DE TRAVAMENTO	144
TAMPA DO PAINEL DO FUSÍVEL	145
SISTEMA ELETRÔNICO-FERRAMENTA DE TRABALHO	146
VELA DE AQUECIMENTO; VELA INCANDESCENTE	147
AQUECEDOR DA ÁGUA DO MOTOR	148
LÂMPADA - FAROL	149
LÂMPADA DIANTEIRA E DE SINAL	152
LÂMPADA - ILUMINAÇÃO DO PAINEL	154
LÂMPADA - SINALIZAÇÃO	155
LUZ TRASEIRA E DE FREIO	156
LUZ GIRATÓRIA DE ALARME	157
ILUMINAÇÃO - FREIOS E FARÓIS	158
ILUMINAÇÃO - DIANTEIRA	159
ILUMINAÇÃO - TRASEIRA	160
ILUMINAÇÃO - RODOVIÁRIA	162
SIST. DE ILUMINAÇÃO - PISCA-PISCA GIRATÓRIO DE ADVERTÊNCIA	169
MÓDULO - INDICADOR DE ALARME	170
GR. DE SERVIÇO- FERRAMENTA DE TRABALHO	171
SOLENÓIDE DE PARADA	172
MOTOR ELÉTRICO DE PARTIDA	174
INTERRUPTOR - PRESSÃO	175

ÍNDICE

Designação	Página
INTERRUPTOR - TEMPERATURA	177
ALARME DE MARCHA À RÉ	178
CABOS/FIOS ELÉTRICOS - AR CONDICIONADO	179
CABOS/FIOS ELÉTRICOS - CABINE	180
CABOS/FIOS ELÉTRICOS - CHASSI	184
CABOS/FIOS ELÉTRICOS - ACOPLADOR	190
CABOS/FIOS ELÉTRICOS - MOTOR	192
CABOS E FIOS ELÉTRICOS-LUZES TRASEIRAS	194
CABOS/FIOS ELÉTRICOS - FERRAMENTAS DE TRABALHO	196
TREM DE FORÇA	204
EIXO	204
CONTROLE DO FREIO DE ESTACIONAMENTO	206
CONTROLE DO COMANDO-HIDROSTÁTICO	222
COMANDO DO TANDEM	226
FILTRO HIDRÁULICO E MONTAGEM	228
FILTRO - ÓLEO	229
TUBOS - FILTRO HIDRÁULICO	230
TUBOS - SISTEMA HIDROSTÁTICO	234
COLETOR - RETORNO	240
MOTOR HIDRÁULICO E MONTAGEM	242
MOTOR - PISTÃO	246
MONTAGEM - BOMBA	250
TREM DE FORÇA	251
BOMBA DE PISTÃO	252
VALVULA DO SOLENOIDE E MONTAGEM	258
VÁLVULA SOLENÓIDE	263
RODA E PNEU	264
CHASSI E CARROCERIA	271
PÁRA-CHOQUE TRASEIRO	271
GRUPO DE CONVERSÃO - ARRANJO RODOVIÁRIO	272
GR. DE CONVERSÃO - OPERAÇÃO RODOVIÁRIA	277
CONTRAPESO	280
COBERTURA DO MOTOR	286
ARMAÇÃO - LÂMINA	294
CHASSI DIANTEIRO	296
LEVANTAMENTO DA MÁQUINA	302
MONTAGEM - LUZES PARA ILUMINAÇÃO RODOVIÁRIA	308
PAINEL LATERAL	310
REDUÇÃO DE RUÍDO	312
SISTEMA HIDRÁULICO	314
ACUMULADOR HIDRÁULICO E MONTAGEM	314
CONTROLE-CABO	315
CONTROLE HIDRÁULICO DE OPERAÇÃO PILOTO	320
CILINDRO DA LÂMINA E MONTAGEM	345
CILINDRO E MONTAGEM - PINÇA	346
CILINDRO DA CAÇAMBA	348
CILINDRO - ACOPLADOR	349
CILINDRO DA GARRA	350
CILINDRO DE LEVANTAMENTO	352
CILINDRO DE INCLINAÇÃO	355
COMANDO HIDRÁULICO	357
TUBOS HIDRÁULICOS AUXILIARES	361
TUBOS - CAÇAMBA	366
TUBOS DE CONEXÃO	374
TUBOS - ACOPLADOR	376
TUBOS - GARRA	384
TUBOS - VENTILADOR HIDRÁULICOS	388
TUBOS - ARREFECEDOR DE ÓLEO HIDRÁULICO	392
TUBOS - CILINDRO DE LEVANTAMENTO	400
TUBOS - CIRCUITO PILOTO	408
TUBOS - BOMBA	414
TUBOS - CILINDRO DE INCLINAÇÃO	418
TUBOS - FERRAMENTA DE TRABALHO	428
MOTOR E MONTAGEM - VENTILADOR HIDRÁULICO	432
MOTOR - ENGRENAGENS	435
MONTAGEM - CILINDRO	440
BUJÃO DA VÁLVULA PILOTO	441
BOMBA DA FERRAMENTA DE TRABALHO E MONTAGEM	442
BOMBA DE ENGRENAGENS	443
TANQUE DE ÓLEO HIDRÁULICO E MONTAGEM	444
TANQUE HIDRÁULICO	447
VÁLVULA DE CONTROLE E MONTAGEM	449
VÁLVULA DESVIADORA E MONTAGEM	454
VALVULA DO SOLENOIDE E MONTAGEM	456
GRUPO DE VÁLVULAS DE CONTROLE - DUPLO	458
VÁLVULA DE CONTROLE	460
VÁLVULA DESVIADORA	475
VÁLVULA DE MODULAÇÃO	476
VÁLVULA DE CONTROLE PILOTO	477
VÁLVULA DE ALÍVIO	487
VÁLVULA SOLENÓIDE	491

ÍNDICE

Designação	Página
ACESSÓRIOS	492
CONTROLE DA FERRAMENTA DE TRABALHO	492
GUIA - TUBOS	499
FERRAMENTAS DE TRABALHO	500
BRAÇO - MANIPULADOR DE MATERIAIS	500
LÂMINA	502
CAÇAMBA PARA TERRA	505
CAÇAMBA - PARA APLICAÇAO GERAL	508
CAÇAMBA - GARRA	511
CAÇAMBA PARA MATERIAL LEVE	518
CAÇAMBA DE MÚLTIPLAS APLICAÇÕES	519
CAÇAMBA PARA TERRA	523
CAÇAMBA PARA APLICAÇÃO GERAL	525
CAÇAMBA - GARRA	527
CAÇAMBA DE MÚLTIPLAS APLICAÇÕES	530
CAÇAMBA PARA SERVIÇOS GERAIS	534
SUPORTE - GARFO	535
GRUPO DE CONVERSÃO - ACOPLADOR RÁPIDO	536
ACOPLADOR RÁPIDO	536
TAMPA - TUBULAÇÕES	542
BORDA CORTANTE	543
GARFO DA GARRA	550
GARFO DE PALETAS	555
GARFO - SERVIÇOS PÚBLICOS	556
GARRA - SERVIÇOS PÚBLICOS	560
ALÇA E PINO - ACOPLADOR	563
ALÇA - ACOPLADOR	565
JOGO-PLACA DE RODAGEM E MONTAGEM	567
JOGO-CONVERSÃO DE REMOÇÃO DE NEVE	569
ARTICULAÇÃO - ACOPLADOR	571
TRAVA - ACOPLADOR RÁPIDO	572
BOMBA DE DIAFRAGMA	573
MOLA - LÂMINA	574
DEGRAU - BRAÇO DE MANIPULAÇÃO DE MATERIAIS	575
TELA FILTRANTE - ÁGUA	577
TANQUE DE ÁGUA E MONTAGEM	578
TANQUE DE ÁGUA	581
UNI-DENTE	584
POSTO DO OPERADOR	585
CONDICIONADOR DE AR E MONTAGEM	585
CONDICIONADOR DE AR	585
ENCOSTO DO BRAÇO E MONTAGEM	586
BRAÇO DO ASSENTO	588
CAIXA DE ARMAZENAMENTO	590
TOLDO - ESTRUTURA ROPS	591
COMPRESSOR DE REFRIGERANTE E MONTAGEM	592
COMPRESSOR DE REFRIGERANTE	594
CONDENSADOR DO REFRIGERANTE E MONTAGEM	595
TAMPA - CABINE	596
TAMPA - CONSOLO	597
PORTA E MONTAGEM-CABINA	600
PORTA DA CABINE	612
DUCTO E CONTROLE	616
DUCTO DO DESEMBAÇADOR	617
FILTRO - AR DA CABINE	618
TAPETE	619
INDICADOR E ALARME	620
PROTETOR - ROPS/FOPS	622
PROJETOR SUPERIOR DA CABINE	623
AQUECEDOR DA CABINE E MONTAGEM	624
AQUECEDOR DA CABINE	632
BUZINA ELÉTRICA	635
INSTALAÇÃO - ARRANJO	637
JOGO - PORTA DA CABINE E MONTAGEM	640
REVESTIMENTO DA CABINE	644
TUBOS - AR CONDICIONADO	646
TUBOS - AQUECEDOR	647
ESPELHO RETROVISOR E MONTAGEM	651
MOTOR - LIMPADOR DO VIDRO	652
MONTAGEM - ESTRUTURA ROPS	653
CABINE - TOLDO	654
PAINEL DE INSTRUMENTOS	654
PEDAL DO GOVERNADOR	660
PLATAFORMA DO OPERADOR	663
RETENTOR-CABINE	664
ASSENTO E MONTAGEM	667
CINTO DE SEGURANÇA	670
ASSENTO COM SUSPENSÃO	676
MOLA A GÁS	679
PÁRA-SOL DA CABINE	680
JANELA DA CABINE	682
EQUIPAMENTO DE SERVIÇO E SUPRIMENTOS	696
FRASCO - AMOSTRA DE FLUIDOS	696
DECALQUE	697
JOGO DE MANUTENÇÃO	704
MONTAGEM DA PLACA DE REGISTRO	705
PLACA E DECALQUE	706
ÍNDICE DE NÚMERO DE PEÇA	B1

INHALTSVERZEICHNIS

Bezeichnung	Seite
ALLGEMEINE HINWEISE	A37
REPARATURALTERNATIVEN	A49
KÜHLMITTELZUSATZ	A55
WARTUNGSTEILE	A77
STICHWORTVERZEICHNIS	A123
MASCHINE	1
FAHRGESTELL	1
GRUNDAUSFÜHRUNG	3
MOTOR	5
MOTORAUSFÜHRUNG	5
MOTOR-EINBAUSATZ	7
MOTOR - GRUNDAUSFÜHRUNG	11
NOCKENWELLE	11
STIRNRADGEHÄUSEDECKEL	13
VENTILDECKEL	14
KURBELWELLE	18
MOTORBLOCK	19
ZYLINDERKOPF	24
MOTORÖLABLASS	28
MOTOR-HALTETEILE	29
SCHWUNGRAD	31
SCHWUNGRADGEHÄUSE	32
STIRNRADGEHÄUSE	34
MOTORHUBÖSE	38
DREHSTROMGENERATOR - BEFESTIGUNG	39
MOTORAUFLAGER	40
STARTERMOTORAUFHÄNGUNG	41
ÖLWANNE	42
PLEUELSTANGE UND KOLBEN	46
ZYLINDERBLOCKSCHRAUBE	49
KURBELWELLEN-RIEMENSCHEIBE	50
VENTILSTEUERUNG	51
SCHMIERSYSTEM	53
ÖLFILTER	53
SCHMIERPUMPE	54
KÜHLSYSTEM	56
KÜHLWASSERANSCHLUSS	56
MOTORÖLKÜHLER UND FILTER-SOCKEL	59
DRUCKLÜFTER	60
WASSERLEITUNGSSTOPFEN	64
KÜHLWASSERPUMPE	65
KÜHLER UND HYDRAULIKÖLKÜHLER	68
KÜHLER U. ÖLKÜHLERBEFESTIGUNG	82
LUFTANSAUG- UND ABGASSYSTEM	95
LUFTREINIGER	95
DRUCKLUFTLEITUNGEN	98
AUSPUFFKRÜMMER	102
ANSAUGKRÜMMER	103
SCHALLDÄMPFERSTÜTZEN	104
SCHALLDÄMPFER	105
TURBOLADER	112
KRAFTSTOFFSYSTEM	120
REGLERSTEUERUNG	120
KRAFTSTOFFILTER UND LEITUNGEN	124
KRAFTSTOFFILTER	126
ANSCHLUSSSTÜCK (KRAFTSTOFFLEITUNGEN)	127
REGLER	128
KRAFTSTOFFLEITUNGEN	132
KRAFTSTOFFEINSPRITZPUMPE	136
WASSERABSCHEIDER	140
ELEKTRISCHE ANLAGE UND STARTSYSTEM	141
DREHSTROMGENERATOR	141
BATTERIE	142
VERRIEGELUNGSSTEUERUNG	144
SICHERUNGSTAFEL - ABDECKUNG	145
ARBEITSGERÄTEELEKTRONIK	146
GLÜHKERZE	147
UMLAUFKÜHLWASSERHEIZUNG	148
ARBEITSLEUCHTEN	149
SCHEINWERFER U. RICHTUNGSLEUCHTE	152
INSTRUMENTENTAFELLEUCHTE	154
BLINKLEUCHTE	155
BREMS- UND RÜCKLEUCHTE	156
RUNDUM-KENNLEUCHTE	157
BREMS- U. ARBEITSLEUCHTEN	158
FRONTBELEUCHTUNG	159
HECKBELEUCHTUNG	160
BELEUCHTUNGSANLAGE (STRASSENAUSRÜSTUNG)	162
RUNDUM-KENNLEUCHTE	169
WARNANZEIGEMODUL	170
SERVICEWERKZEUG	171
ABSTELLMAGNETSPULE	172
STARTERMOTOR	174
DRUCKSCHALTER	175

* ÜBERSETZUNG ZUM ZEITPUNKT DER DRUCKLEGUNG NICHT VORHANDEN

INHALTSVERZEICHNIS

Bezeichnung	Seite
TEMPERATURSCHALTER	177
RÜCKFAHRWARNHORN	178
KLIMAANLAGENVERDRAHTUNG	179
FAHRERHAUSVERDRAHTUNG	180
FAHRGESTELLVERDRAHTUNG	184
SCHNELLWECHSELEINRICHTUNG - VERDRAHTUNG	190
MOTORVERDRAHTUNG	192
HECKBELEUCHTUNGSVERDRAHTUNG	194
ARBEITSGERÄT - VERDRAHTUNG	196
KRAFTSÜBERTRAGUNG	204
ACHSE	204
FESTSTELLBREMSGESTÄNGE	206
ANTRIEBSSTEUERUNG, HYDROSTATISCH	222
TANDEMANTRIEB	226
HYDRAULIKFILTER UND BEFESTIGUNGSTEILE	228
ÖLFILTER	229
HYDRAULIKFILTERLEITUNGEN	230
HYDROSTATIKLEITUNGEN	234
RÜCKLAUFVENTIL - VERTEILER	240
KOLBENMOTOR UND BEFESTIGUNG	242
KOLBENMOTOR	246
PUMPENAUFHÄNGUNG	250
KRAFTÜBERTRAGUNG	251
KOLBENPUMPE	252
SOLENOIDVENTIL U. BEFESTIGUNGSTEILE	258
MAGNETVENTIL	263
RAD UND REIFEN	264
RAHMEN UND FAHRGESTELL	271
HECKSTOSSSTANGE	271
UMBAUSATZ - FÜR STRASSENVERKEHR	272
STRASSENFAHRT - UMRÜSTSATZ	277
GEGENGEWICHT	280
MOTORVERKLEIDUNG	286
*FRAME GP-BLADE	294
LADERRAHMEN	296
MASCHINENHUBÖSE	302
BELEUCHTUNG FÜR STRASSENFAHRT - BEFESTIGUNG	308
SEITENVERKLEIDUNG	310
SCHALLDÄMPFUNG	312
HYDRAULIKSYSTEM	314
HYDRAULIKDRUCKSPEICHER U. BEFESTIGUNG	314
STEUERHEBEL	315
HYDRAULIKBEDIENUNG (MIT VORSTEUERUNG)	320
SCHILDZYLINDER U. BEFESTIGUNGSTEILE	345
GREIFERZYLINDER U. -BEFESTIGUNG	346
SCHAUFELZYLINDER	348
SCHNELLWECHSELANSCHLUSSZYLINDER	349
GREIFERZYLINDER	350
HUBZYLINDER	352
KIPPZYLINDER	355
HYDRAULIKSYSTEM	357
ZUSATZHYDRAULIKLEITUNGEN	361
SCHAUFELLEITUNGEN	366
ANSCHLUSSLEITUNGEN	374
ANSCHLUSSKUPPLUNGSLEITUNGEN	376
GREIFERLEITUNGEN	384
HYDRAULIKLÜFTERLEITUNGEN	388
HYDRAULIKÖLKÜHLERLEITUNGEN	392
HUBZYLINDERLEITUNGEN	400
VORSTEUERLEITUNGEN	408
HYDRAULIKPUMPE UND LEITUNGEN	414
NEIGEZYLINDERLEITUNGEN	418
ARBEITSGERÄT - LEITUNGEN	428
HYDRAULIKKÜHLERMOTOR U. BEFESTIGUNG	432
MOTORANTRIEB	435
ZYLINDERAUFHÄNGUNG	440
VORSTEUERVENTILSTOPFEN	441
ARBEITSGERÄTEPUMPE U. BEFESTIGUNG	442
ZAHNRADPUMPE	443
HYDRAULIKTANK UND BEFESTIGUNGSTEILE	444
HYDRAULIKTANK	447
STEUERVENTIL UND BEFESTIGUNGSTEILE	449
VERTEILERVENTIL U. BEFESTIGUNGSTEILE	454
SOLENOIDVENTIL U. BEFESTIGUNGSTEILE	456
VENTILSATZ (2-VENTIL)	458
STEUERVENTIL	460
UMLEITVENTIL	475
MODULATORVENTIL	476
VORSTEUERVENTIL	477
ÜBERDRUCKVENTIL	487
MAGNETVENTIL	491

* ÜBERSETZUNG ZUM ZEITPUNKT DER DRUCKLEGUNG NICHT VORHANDEN

INHALTSVERZEICHNIS

Bezeichnung	Seite
ARBEITSGERÄTE	492
ARBEITSGERÄTESTEUERUNG	492
LEITUNGSFÜHRUNG	499
ARBEITSGERÄTE	500
TRAGARM	500
SCHILD	502
ERDSCHAUFEL	505
KOMBISCHAUFEL	508
GREIFERSCHAUFEL	511
LEICHTGUTSCHAUFEL	518
KOMBISCHAUFEL	519
ERDSCHAUFEL	523
UNIVERSALSCHAUFEL	525
GREIEFERSCHAUFEL	527
KOMBISCHAUFEL	530
MEHRZWECKSCHAUFEL	534
GABELTRÄGER	535
SCHNELLWECHSELEINRICHTUNGS-UMBAUSATZ	536
SCHNELLWECHSELVORRICHTUNG	536
SCHNELLWECHSELEINRICHTUNG	538
LEITUNGSABDECKUNG	542
SCHNEIDMESSER	543
GREIFERGABEL	550
PALETTENGABEL	555
MEHRZWECKGABEL	556
MEHRZWECKGREIFER	560
GRIFF U. BOLZEN - ANSCHLUSS	563
ANSCHLUSSGRIFF	565
STRASSENFAHRTSCHILD UND BEFESTIGUNG	567
SCHNEERÄUM-UMRÜSTSATZ	569
VERBINDUNG - SCHNELLWECHSELEIN-RICHTUNG	571
SCHNELLWECHSELEINRICHTUNGSSPER-RE	572
MEMBRANPUMPE	573
SCHILDFEDERN	574
TRAGARMSTUFE	575
WASSERSIEBEINSATZ	577
WASSERTANK U. BEFESTIGUNGSTEI-LE	578
WASSERTANK	581
UNIVERSAL-ZAHNSPITZE	584
FAHRERHAUS	585
KLIMAANLAGE UND AUFHÄNGUNG	585
KLIMAANLAGE	585
ARNLEHNE U. BEFESTIGUNG	586
ARMLEHNE	588
VERSTAUKASTEN	590
ÜBERROLLSCHUTZ - OFFENES FAHRERHAUS	591
KÄLTEMITTELKOMPRESSOR U. BEFESTIGUNG	592
KÄLTEMITTELKOMPRESSOR	594
KÄLTEMITTELKONDENSATOR U. BEFESTIGUNGSTEILE	595
FAHRERHAUSABDECKUNG	596
STEUERKONSOLENABDECKUNG	597
FAHRERHAUSTÜR U. BEFESTIGUNG	600
FAHRERHAUSTÜR	612
LUFTKANAL UND REGULIERUNG	616
ENTFROSTERKANAL	617
FAHRERHAUSLUFTFILTER	618
FUSSMATTE	619
WARNANZEIGENSATZ	620
VERKLEIDUNG - ÜBERROLLSCHUTZ/ STEINSCHLAGSCHUTZ	622
KOPFLEISTE - FAHRERHAUS	623
FAHRERHAUSHEIZUNG U. BEFESTI-GUNGSTEILE	624
FAHRERHAUSHEIZUNG	632
WARNHORN, ELEKTR.	635
EINBAUSATZ	637
FAHRERHAUSTÜR U. BEFESTIGUNG	640
FAHRERHAUSAUSKLEIDUNG	644
KLIMAANLAGENLEITUNGEN	646
HEIZUNGSLEITUNGEN	647
RÜCKSPIEGEL U. BEFESTIGUNG	651
SCHEIBENWISCHERMOTOR	652
ÜBERROLLSCHUTZAUFLAGER	653
FAHRERHAUSDACH	654
INSTRUMENTENTAFEL	654
GASPEDAL	660
FAHRERPLATTFORM	663
FAHERHAUSDICHTUNG	664
FAHRERSITZ UND UNTERBAU	667
SICHERHEITSGURT	670
SCHWINGSITZ	676
GASFEDERGRUPPE	679
FAHRERHAUS, SONNENBLENDE	680
FAHRERHAUSFENSTER	682
WARTUNGSAUSRÜSTUNG UND -ZUBEHÖR	696
PROBEENTNAHMEFLASCHE	696
AUFKLEBER	697
WARTUNGSSATZ	704
TYPENSCHILDBEFESTIGUNG	705
SCHILD UND AUFKLEBER	706
ERSATZTEILNUMMERNINDEX	B1

* ÜBERSETZUNG ZUM ZEITPUNKT DER DRUCKLEGUNG NICHT VORHANDEN

INDICE

Nome	Pagina
INFORMAZIONI GENERALI	A41
ALTERNATIVE DI RIPARAZIONE	A50
ADDITIVI SUPPLEMENTARI PER LIQ. DI RAFFREDDAMENTO	A56
RICAMBI PER MANUTENZIONE	A82
INDICE	A132
CONFIGURAZIONE DELLA MACCHINA	1
TEALIO - CONFIG	1
COMUNE - CONFIG	3
CONFIGURAZIONE DEL MOTORE	5
MOTORE PRINCIPALE	5
MONTAGGIO - MOTORE	7
MOTORE BASE	11
ALBERO A CAMME - GR	11
COPERCHIO SCATOLA ANTERIORE - GR	13
COPERCHIO MECCANISMO VALVOLE - GR	14
ALBERO MOTORE - GR	18
MONOBLOCCO - GR	19
TESTA CILINDRO - GR	24
SCARICO DELL'OLIO MOTORE - GR	28
FERMO DEL MOTORE	29
VOLANO - GR	31
SCATOLA VOLANO - GR	32
SCATOLA ANTERIORE - GR	34
SOLLEVAMENTO MOTORE - GR	38
MONTAGGIO -ALTERNATORE	39
MONTAGGIO MOTORE - GR	40
MONTAGGIO MOTORINO D'AVVIAMENTO - GR	41
COPPA OLIO - GR	42
PISTONE E BIELLA - GR	46
TAPPO - MONOBLOCCO	49
PULEGGIA ALBERO MOTORE - GR	50
MECCANISMO VALVOLA - GR	51
SISTEMA DI LUBRIFICAZIONE	53
FILTRO OLIO MOTORE	53
POMPA OLIO MOTORE - GR	54
SISTEMA DI RAFFREDDAMENTO	56
RACCORDO ACQUA	56
SCAMBIATORE DI CALORE OLIO MOTORE E BASE FILTRO - GR	59
VENTOLA DELL'ARIAZIONE	60
TAPPO DELLE TUBAZIONI DELL'ACQUA	64
POMPA ACQUA - GR	65
RADIATORE E SCAMBIATORE D'OLIO	68
RADIATORE E SCAMBIATORE DI CALORE DELL'OLIO MONTAGGIO - GR	82
SISTEMA ARIA D'ASPIRAZIONE E SCARICO	95
FILTRO ARIA - GR	95
TUBAZIONI ARIA - GR	98
COLLETTORE SCARICO - GR	102
COLLETTORE ASPIRAZIONE - GR	103
MONTAGGIO SILENZIATORE - GR	104
MARMITTA - GR	105
TURBOCOMPRESSORE - GR	112
IMPIANTO ALIMENTAZIONE CARBURANTE	120
CONTROLLO REGOLATORE - GR	120
FILTRO E TUBAZIONI DEL CARBURANTE	124
FILTRO-CARBURANTE	126
RACCORDO DELL TUBAZIONI DEL CARBURANTE	127
REGOLATORE	128
TUBAZIONI CARBURANTE - GR	132
POMPA INIEZIONE CARBURANTE - GR	136
SEPARATORE DELL'ACQUA	140
SISTEMA ELETTRICO E D'AVVIAMENTO	141
ALTERNATORE DI CARICA - GR	141
BATTERIA	142
COMANDO INTEBLOCCO - GR	144
COPERCHIO PANNELLO FUSIBILI - GR	145
ELETTRONICA ATTREZZATURA - GR	146
CANDELETTA DI PRERISCALDAMENTO	147
RISCALDATORE DELL'ACQUA DI CAMICIA	148
LUCI DI LAVORO - GR	149
FANALE ANTERIORE E SEGNALE DI DIREZIONE - GR	152
LAMPADA D'ILLUMINAZIONE PANNELLO - GR	154
LAMPADA - SEGNALE	155
LAMPADA D'ARRESTO E DI CODA - GR	156
LAMPADA FARO ROTANTE - GR	157

* TRADUZIONE NON DISPONIBILE A TEMPO DELLA PUBBLICAZIONE

INDICE

Nome	Pagina
LUCI D'ARRESTO E DI LAVORO - CONFIG	158
LUCI ANTERIORI - GR	159
LUCI POSTERIORI - GR	160
LUCI STRADALI	162
LUCI FARO ROTANTE - GR	169
MODULO INDICATORE D'AVVERTENZA - GR	170
SERVIZIO ATTREZZATURA -GR	171
SOLENOIDE DI ARRESTO	172
MOTORINO AVVIAMENTO ELETTRICO - GR	174
PRESSOSTATO - GR	175
INTERRUTTORE DELLA TEMPERATURA	177
ALLARME DI RETROMARCIA - GR	178
CABLAGGIO DEL CONDIZIONATORE D'ARIA	179
CABLAGGIO - CABINA	180
CABLAGGIO DEL TELAIO - GP	184
CABLAGGIO DELL'ATTACCO - GR	190
CABLAGGIO DEL MOTORE	192
CABLAGGIO LUCI POSTERIORI - GR	194
CABLAGGIO DELL'ATTREZZATURA - GR	196
APPARATO PROPULSORE	204
ASSALE GR	204
COMANDO DEL FRENO DI PARCHEGGIO	206
COMANDO TRASMISSIONE IDROSTATICA - CONFIG	222
ALBERO A TANDEM - GR	226
FILTRO IDRAULICO E MONTAGGIO - GR	228
FILTRO DELL'OLIO	229
TUBAZIONI FILTRO IRDAULICO - GR	230
TUBAZIONI IDROSTATICHE - GR	234
COLLETTORE DI RITORNO - GR	240
MOTORE E MONTAGGIO PISTONI - GP	242
MOTORE IDRAULICO A PISTONE	246
MONTAGGIO POMPA - GR	250
TRASMISSIONE	251
POMPA A PISTONE	252
VALVOLA SOLENOIDE E MONTAGGIO- GR	258
VALVOLA A SOLENOIDE - GR	263
RUOTA E PNEUMATICO - CONFIG	264
RUOTA E PNEUMATICO - GR	270
TELAIO E CARROZZERIA	271
PARAURTI POSTERIORE - GR	271
CONVERSIONE MESSA SU STRADA - CONFIG	272
CONVERSIONE MESSA SU STRADA - GR	277
CONTRAPPESO - GR	280
COMPARTIMENTO - MOTORE	286
TELAIO LAMA - GR	294
TELAIO CARICATORE - GR	296
DISPOSITIVO SOLLEVAMENTO MACCHINA - GR	302
MONTAGGIO LUCI STRADALI - GR	308
PANNELLO LATERALE - GR	310
INSONORIZZAZIONE	312
SISTEMA IDRAULICO	314
ACCUMULATORE IDRAULICO E MONTAGGIO - GR	314
COMANDO A MANIGLIA - GR	315
COMANDO IDRAULICO AZIONATO DA CIRCUITO PILOTA - GR	320
CILINDRO E MONTAGGIO DELLA LAMA	345
CILINDRO E MONTAGGIO RAFFIO - GR	346
CILINDRO BENNA - GR	348
CILINDRO DELL'ATTACCO - GP	349
CILINDRO DEL RAFFIO	350
CILINDRO DI SOLLEVAMENTO	352
CILINDRO D'INCLINAZIONE	355
COMANDO IDRAULICO	357
TUBAZIONI IMPIANTO IDRAULICO AUSILIARIO - GR	361
TUBAZIONI DELLA BENNA	366
TUBAZIONI DI COLLEGAMENTO - GR	374
TUBAZIONI DEL RACCORDO - GR	376
TUBAZIONI DEL RAFFIO	384
TUBAZIONI VENTOLA IDRAULICA - GR	388
TUBAZIONI DELLO SCAMBIATORE DI CALORE DELL'OLIO IDRAULICO	392
TUBAZIONI CILINDRO DI SOLLEVAMENTO - GR	400
TUBAZIONI CIRCUITO PILOTA - GR	408
TUBAZIONI POMPA - GR	414
TUBAZIONI CILINDRO D'INCLINAZIONE - GR	418
TUBAZIONI ATTREZZATURA - GR	428
MOTORE E MONTAGGIO VENTOLA IDRAULICA - GR	432
MOTORE AD INGRANAGGI - GR	435
MONTAGGIO - CILINDRO	440
TAPPO VALVOLA PILOTA - GR	441

* TRADUZIONE NON DISPONIBILE A TEMPO DELLA PUBBLICAZIONE

INDICE

Nome	Pagina
POMPA E MONTAGGIO DELL'ATTREZZATURA - GR	442
POMPA AD INGRANAGGI	443
SERBATOIO E GRUPPO MONTAGGIO-IDRAULICO	444
SERBATOIO IDRAULICO	447
VALVOLA DI COMANDO E MONTAGGIO	449
VALVOLA DI DISTRIBUZIONE E MONTAGGIO - GR	454
VALVOLA SOLENOIDE E MONTAGGIO-GR	456
VALVOLA 2 DEL BANCO - GR	458
VALVOLA DI CONTROLLO - GR	460
VALVOLA DI DISTRIBUZIONE - GR	475
VALVOLA MODULATRICE	476
VALVOLA PILOTA - GR	477
VALVOLA LIMITATRICE DI PRESSIONE - GR	487
VALVOLA A SOLENOIDE - GR	491
ATTREZATURA	492
COMANDO ATTREZZATURA - GR	492
GUIDA TUBAZIONI - GR	499
ATTREZZATURA	500
BRACCIO MOVIMENTAZIONE MATERIALE - GR	500
LAMA	502
BENNA TERRICCIO - CONFIG	505
BENNA PER USO GENERALE - CONFIG	508
BENNA A RAFFIO - CONFIG	511
BENNA PER MATERIALE LEGGERO - CONFIG	518
BENNA MULTIUSO - CONFIG	519
BENNA TERRICCIO	523
BENNA PER USO GENERALE	525
BENNA A RAFFIO - GR	527
BENNA MULTIUSO - GR	530
TELAIO FORCA	535
CONVERSIONE DELL'ATTACCO RAPIDO - CONFIG	536
ATTACCO RAPIDO - CONFIGURAZIONE	536
ATTACCO RAPIDO - GR	538
COPERTURA TUBAZIONI - GR	542
TAGLIENTE	543
FORCA RAFFIO - CONFIG	550
FORCA RAFFIO - GR	552
FORCA PALLET - GR	555
FORCA MULTIUSO - GR	556
RAFFIO MULTIUSO - GR	560
MANIGLIA E PERNO DELL'ATTACCO - GR	563
MANIGLIA DELL'ATTACCO - GR	565
KIT - TARGA DI CIRCOLAZIONE STRADALE E MONTAGGIO	567
KIT - CONVERSIONE RIMOZIONE NEVE	569
BRACCIO DELL'ATTACCO - GR	571
BLOCCO PER L'ATTACCO RAPIDO - GR	572
POMPA A DIAFRAMMA - GR	573
MOLLA DELLA LAMA -GR	574
GRADINO DEL BRACCIO MOVIMENTAZIONE MATERIALE	575
FILTRO A RETE DELL'ACQUA - GR	577
SERBATOIO E GRUPPO MONTAGGIO-ACQUA	578
SERBATOIO DELL'ACQUA - GR	581
MONODENTE	584
POSTAZIONE DELL'OPERATORE	585
ARIA CONDIZIONATA E GRUPPO DI MONTAGGIO	585
ARIA CONDIZIONATA - GR	585
BRACCIOLO E MONTAGGIO - GR	586
BRACCIOLO	588
CONTENITORE PORTAOGGETTI - GR	590
TETTUCCIO ROPS - GR	591
COMPRESSORE DEL REFRIGERANTE E MONTANTE	592
COMPRESSORE DEL REFRIGERANTE	594
CONDENSATORE E GRUPPO DI MONTAGGIO-REFRIGERANTE	595
COPERTURA CABINA - GR	596
COPERCHIO CONSOLE - GR	597
PORTIERA E MONTAGGIO CABINA - GR	600
PORTIERA CABINA - GR	612
*DUCT & CONTROL GP	616
CONDOTTO SBRINATORE - GR	617
FILTRO - ARIA CABINA	618
TAPPETO	619
INDICATORE E ALLARME - GR	620
PROTEZIONE ROPS/FOPS - GR	622
RIVESTIMENTO CABINA	623
RISCALDAMENTO DELLA CABINA E MONTAGGIO	624
RISCALDAMENTO CABINA - GR	632
AVVISATORE ACUSTICO-ELETTRICO	635
DISPOSIZIONE DI INSTALLAZIONE	637

* TRADUZIONE NON DISPONIBILE A TEMPO DELLA PUBBLICAZIONE

INDICE

Nome	Pagina
KIT - PORTA DELLA CABINA E MONTAGGIO	640
CAMICIA DELLA CABINA	644
TUBAZIONI CONDIZIONATORE D'ARIA - GR	646
GRUPPO TUBAZIONI-RISCALDAMENTO	647
SPECCHIO RETROVISORE E BULLONERIA - GR	651
MOTORINO DEL TERGICRISTALLO	652
MONTAGGIO ROPS - GR	653
TETTUCCIO POSTAZIONE OPERATOR - CONFIG	654
QUADRO STRUMENTI - CONFIG	654
QUADRO STRUMENTI	656
PEDALE DEL REGOLATORE	660
PIATTAFORMA - OPERATORE	663
TENUTA CABINA - GR	664
SEDILE E MONTAGGIO	667
CINTURA DI SICUREZZA - GR	670
SEDILE - MOLLE	676
MOLLA A GAS	679
PARASOLE CABINA - GP	680
FINESTRINO DELLA CABINA	682
ATTREZZATURA E FORNITURE DI MANUTENZIONE	696
FLACONE DI CAMPIONATURA FLUIDI - GR	696
DECALCOMANIA - GR	697
KIT - MANUTENZIONE	704
BULLONERIA DI REGOLAZIONE - GR	705
TARGHETTE E DECALCOMANIA - GR	706
INDICE DEI CODICI RICAMBI	B1

* TRADUZIONE NON DISPONIBILE A TEMPO DELLA PUBBLICAZIONE

GENERAL INFORMATION

1. MACHINE IDENTIFICATION

Caterpillar machines are identified by Product Identification Numbers (PIN). Some components included in a machine may be identified by Serial Numbers (S/N). Typical components that will be serialized include engines, transmissions, bulldozers, and rippers. The machine and engine are further identified by arrangement numbers and in some cases modification numbers. These numbers are shown on the product identification plate(s) and on the master plate in the operator's compartment.

Caterpillar dealers need all of these numbers to determine accurate parts identification.

SIS ***New Feature***

Effective First Quarter 2001 the Caterpillar Product Identification Number (PIN) will change from 8 to 17 characters. In an effort to provide uniform equipment identification, Caterpillar and other construction equipment manufacturers are moving to comply with the latest version of the product identification numbering standard. Non-road machine PINs are defined by ISO 10261. The new PIN format will apply to all Caterpillar machines and generator sets. The PIN plates and frame marking will display the 17 character PIN. The new format will look like the following:

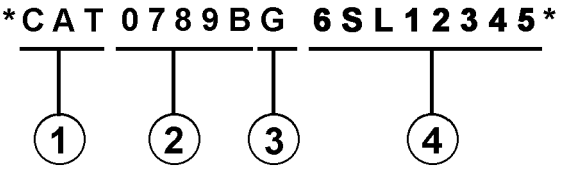

Where:

1. Caterpillar's World Manufacturing Code (characters 1-3)

2. Machine Descriptor (characters 4-8)

3. Check Character (character 9)

4. Machine Indicator Section (MIS) or Product Sequence Number (characters 10-17). These were previously referred to as the Serial Number.

Machines and generator sets produced before First Quarter 2001 will maintain their 8 character PIN format.

Components such as engines, transmissions, axles, etc. and work tools will continue to use an 8 character Serial Number (S/N).

2. ORDERING PARTS

⚠ WARNING

When replacement parts are required for this product Caterpillar recommends using Caterpillar replacement parts or parts with equivalent specifications including, but not limited to, physical dimensions, type, strength and material.

Failure to heed this warning can lead to premature failures, product damage, personal injury or death.

Quality Caterpillar replacement parts are available from Caterpillar dealers throughout the world. Their parts inventories are up to date and include all parts normally required to protect your investment in Caterpillar machines. Dealers may offer repair kits or remanufactured parts to allow selection of the most effective repair alternative for a particular situation. When ordering parts, your order should specify the quantity, part number, part name, and the serial number/product identification number of the machine for which the parts are needed.

3. PARTS MANUAL ORGANIZATION

Product information in this manual is presented as "information elements" that represent all of the components for the specific model. Engine Arrangement and Seat Group are examples of information elements. The information elements are organized alphabetically by part name and secondarily by part number within each major section of the manual.

4. TABLE OF CONTENTS

SIS ***New Feature***

A table of contents (TOC) is found at the beginning of the manual. The TOC lists each section of the manual with a complete list of all information elements organized as they appear in the manual. Page numbers are provided for quick reference to detailed parts identification illustrations and serviceable consist lists.

5. MAINTENANCE PARTS INDEX

The Maintenance Parts Index, located near the beginning of the manual, references most frequently used maintenance part numbers, providing description, quantity, usage and page number. This information is organized alphabetically by part description.

6. INDEX

The index located near the front of the manual is an alphabetical listing of all information elements included in the manual. Page numbers are provided for quick reference to detailed parts identification illustrations and serviceable consist lists.

7. PART NUMBER INDEX

A numerical index listing all part numbers and the corresponding page number(s) appears at the back of the manual.

8. CAPTIONS

Captions located at the top of each page of an information element identify the part number and part name along with additional descriptive information. PIN and S/N information found in each caption should be used to select correct information for a specific machine. Field replacement options, identification of optional attachment components, and where used ("part of") information is also provided.

SIS ***New Feature***

The first line of a caption is shown in larger type font to indicate the beginning of an information element. Captions for additional pages that may be required to illustrate an information element will be shown in standard type font and will include the term *(contd.)* .

9. NON-SERVICED PARTS

SIS ***New Feature***

In some instances it is necessary to display non-serviced parts that are a link to a lower level serviceable consist lists. These non-serviced part numbers are shown in *italic* type indicating that they are not available.

10. PARTS LIST REFERENCE NUMBERS

SIS ***New Feature***

Numbers shown in the Ref No column correspond to numbers used in the associated graphic(s). An alphabetic suffix may be added to a reference number to identify lower level consist items. Numbers shown in the Graphic Ref column refer to the graphic number identifier displayed in the lower left corner of each illustration. The Graphic Ref number may be used in combination with the item Ref No to determine the correct part number. There may be intentional omission of a Ref No in a consist list as information is updated to reflect the latest serviceable part numbers.

11. INDENTED PART NAMES

When a part name is indented in a parts list, it is part of (included in) the group or assembly under which it is indented.

12. ILLUSTRATION REFERENCE LETTERS

When necessary, illustrations contain reference letters (A, B, C etc.) that are intended to track lines and harnesses from one point to another. They are also used to show where to reconnect illustrations that have been separated.

13. ABBREVIATIONS AND SYMBOLS

O.D. – Outside Diameter
I.D. – Inside Diameter
A – Not Part Of This Group
B – Use As Required
C – Change From Previous Type
D – Order By The Meter
E – Order By The Centimeter
F – Not Shown
G – Order By The Inch
I – See Hose Fabrication Guide
M – Metric Part
R – Remfg Part May Be Available
Y – Separate Illustration
Z – Not Serviced Separately

NOTE:

Continuing improvement and advancement of product design may cause changes to your machine which may not be included in this publication. Whenever a question arises regarding your Caterpillar product or this publication, please consult your Caterpillar dealer for the latest available information.

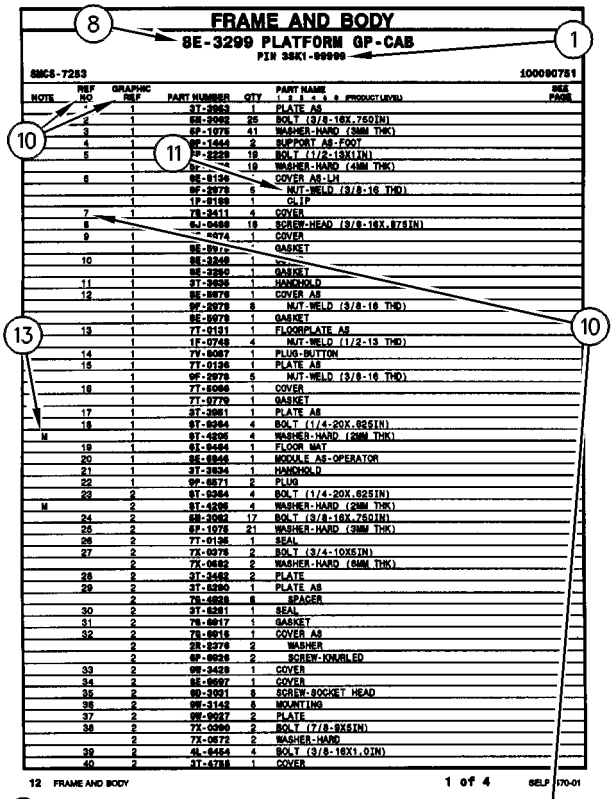
FRAME AND BODY
8E-3299 PLATFORM GP-CAB
PIN 38K1-99999
SMCS-7283
100090751
1 of 4
SELP4570-01

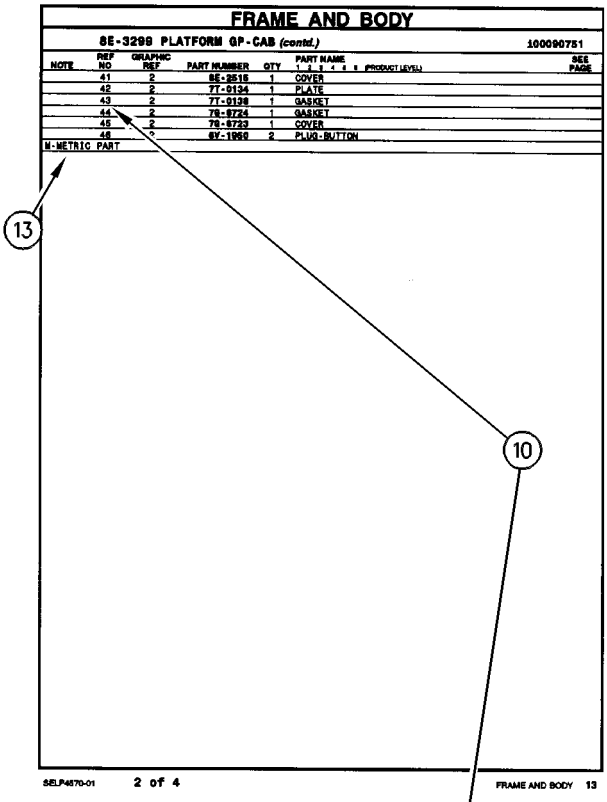
FRAME AND BODY
8E-3299 PLATFORM GP-CAB (contd.)
100090751
2 of 4
SELP4570-01

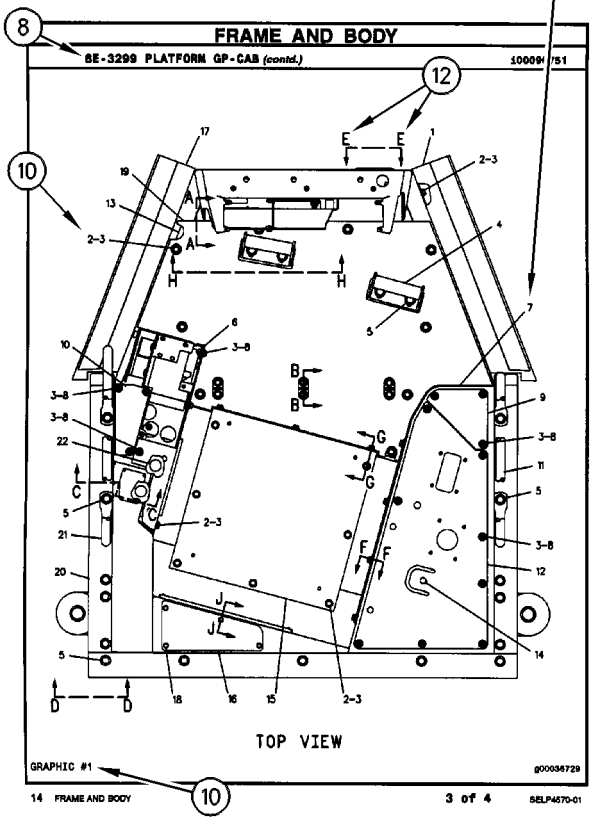
FRAME AND BODY
8E-3299 PLATFORM GP-CAB (contd.)
TOP VIEW
GRAPHIC #1
g00036729
3 of 4
SELP4570-01

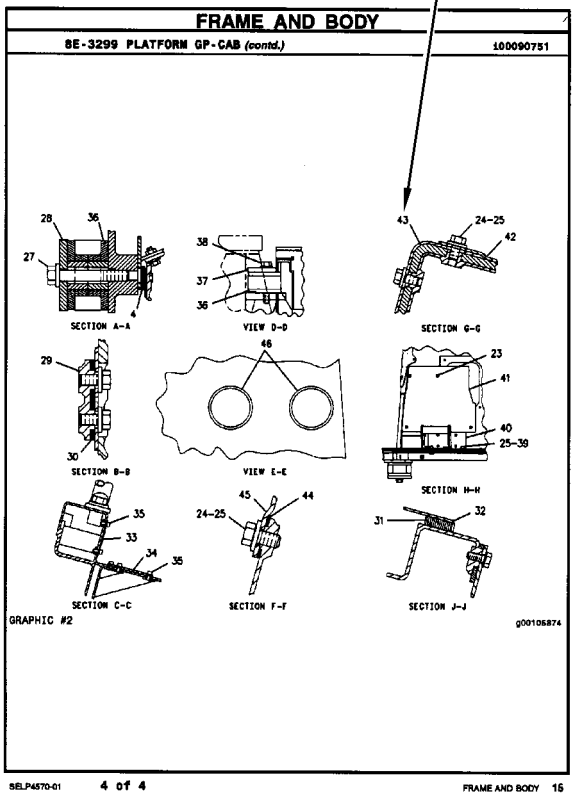
FRAME AND BODY
8E-3299 PLATFORM GP-CAB (contd.)
100090751
SECTION A-A
VIEW D-D
SECTION G-G
SECTION B-B
VIEW E-E
SECTION H-H
SECTION C-C
SECTION F-F
SECTION J-J
GRAPHIC #2
g00105874
4 of 4
SELP4570-01

1. IDENTIFICATION DE LA MACHINE

Toutes les machines Caterpillar portent un numéro d'identification (PIN). Certains composants des machines peuvent porter des numéros de série (S/N). En général, parmi les composants qui portent des numéros de série il y a les moteurs, les transmissions, les bulldozers et les rippers. En plus, la machine et le moteur peuvent recevoir des numéros de version, et dans certains cas, de modification. Ces numéros figurent sur les plaques de numéro de série et sur la plaque signalétique principale qui se trouve dans le poste de conduite.

Les concessionnaires Caterpillar doivent connaître tous ces numéros pour identifier correctement les pièces.

SIS *Nouvelle Caractéristique*

À partir du premier trimestre 2001, le numéro d'identification produit (PIN) Caterpillar passe de 8 à 17 caractères. Afin de permettre une identification uniforme des matériels, Caterpillar et d'autres constructeurs de machines de travaux publics s'efforcent de se conformer à la norme la plus récente portant sur les numéros d'identification des produits. Les numéros d'identification (PIN) de machines de chantier sont définis par la norme ISO 10261. Le nouveau format du numéro d'identification est valable pour toutes les machines et tous les groupes électrogènes Caterpillar. Le numéro d'identification produit (PIN) figurant sur la plaque et sur le châssis se composera de 17 caractères. Le nouveau format ressemblera à ceci:

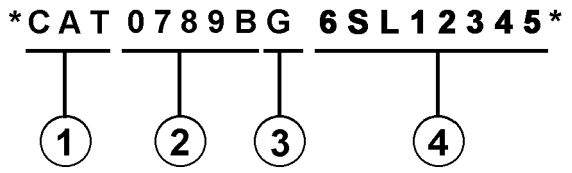

Il se décomposera de la façon suivante:

1. Code international de fabrication de Caterpillar (caractères 1 à 3)

2. Descriptif de la machine (caractères 4 à 8)

3. Contrôle (caractère 9)

4. Indicateur machine (MIS) ou numéro de séquence produit (caractères 10 à 17). Ceux-ci étaient auparavant désignés sous le terme de numéro de série.

Les machines et les groupes électrogènes construits avant le premier trimestre 2001 garderont le format à 8 caractères du numéro d'identification produit (PIN).

Les organes tels que les moteurs, les boîtes de vitesses, les essieux, etc., continueront d'être désignés par un numéro de série (S/N) à 8 caractères.

2. COMMANDE DE PIÈCES

⚠ DANGER

Lorsqu'il faut remplacer des pièces de rechange pour ce produit Caterpillar recommande d'utiliser les pièces de rechange Caterpillar ou les pièces qui ont des spécifications équivalentes dont les dimensions physiques, le type, la force et le matériau. Ces équivalences ne se limitent pas à l'énoncé précédent.

L'inobservation de cette mise en garde peut entraîner des défaillances prématurées, des dommages au produit, des blessures ou même la mort.

Les concessionnaires Caterpillar fournissent dans le monde entier des pièces de rechange de qualité Caterpillar. Leurs stocks de pièces sont constamment réapprovisionnés et comptent toutes les pièces nécessaires pour assurer la bonne marche de vos machines Caterpillar. Certains concessionnaires proposent également des kits de réparation ou des pièces rénovées, ce qui permet de choisir la solution la plus économique dans une situation donnée. Lors des commandes de pièces, mentionner la quantité, le numéro et la désignation des pièces ainsi que le numéro de série ou le numéro d'identification (PIN) de la machine pour laquelle ces pièces sont requises.

3. ORGANISATION DU CATALOGUE DE PIÈCES

Les renseignements sur les produits sont présentés sous forme de "Information element" (élément d'information) représentant tous les composants d'un modèle donné. "Engine Arrangement" (version de moteur) et "Seat Group" (assemblage de siège)" sont des exemples d'éléments d'information. Les éléments d'information sont classés par ordre alphabétique par la désignation standard des pièces et par numéros de pièces dans chaque partie importante du manuel.

4. TABLE DES MATIÈRES

Nouvelle Caractéristique

La table des matières se trouve au début du manuel. La table des matières fournit la liste de tous les chapitres du manuel avec une liste complète de tous les éléments d'information classés par ordre d'apparition dans le manuel. Les numéros de page sont fournis afin que l'utilisateur puisse trouver rapidement les illustrations détaillées concernant l'identification des pièces et les listes des pièces d'entretien.

5. INDEX DES PIÈCES D'ENTRETIEN

La rubrique "Index des pièces d'entretien" qui se trouve au début du manuel renvoie aux pièces d'entretien les plus fréquemment utilisées en précisant la désignation, la quantité, là où la pièce est utilisée et le numéro de page. Ces pièces sont classés par ordre alphabétique.

6. INDEX

L'index qui se trouve vers le début du manuel est une liste alphabétique de tous les éléments d'information du manuel. Les numéros de page sont fournis afin que l'utilisateur puisse trouver rapidement les illustrations détaillées concernant l'identification des pièces et les listes des pièces d'entretien.

7. INDEX DES NUMÉROS DE PIÈCES

Une liste numérique de tous les numéros de pièces et des pages correspondantes se trouve à la fin du manuel.

8. LÉGENDES

Les légendes qui se trouvent en haut de chaque page de chaque élément d'information fournissent le numéro de pièce, la désignation ainsi que des renseignements supplémentaires sur les pièces. Les renseignements concernant les numéros de série (S/N) qui se trouvent dans chaque légende doivent être utilisés pour sélectionner les informations correctes pour un moteur donné. Les informations concernant les options de remplacement sur le chantier, l'identification des composants des équipements offerts en option et les lieux d'application sont aussi fournies.

Nouvelle Caractéristique

Les lettres de la première ligne d'une légende sont présentées en police plus grande afin d'indiquer le début d'une unité d'information. Les légendes qui pourraient être requises pour des pages supplémentaires afin d'illustrer une unité d'information seront présentées en police standard et comprendront le terme (à suivre).

9. PIÈCES NON FOURNIES

Nouvelle Caractéristique

Dans certains cas, il est nécessaire d'indiquer les pièces non fournies qui sont en aval de la liste des pièces d'entretien. Les numéros des pièces non fournies dans la liste des pièces et les légendes seront en italique pour signaler qu'ils ne sont pas disponibles.

10. NUMÉROS DE RÉFÉRENCE DE LA LISTE DES PIÈCES

Nouvelle Caractéristique

Les numéros indiqués dans la colonne des numéros de références correspondent aux numéros utilisés dans les illustrations auxquelles ils sont associés. Un suffixe alphabétique peut être ajouté à un numéro de référence pour identifier la liste des articles en aval. Les numéros indiqués dans la colonne de référence de l'illustration renvoient à l'identification du numéro affiché dans le coin inférieur gauche de chaque illustration. Le numéro de référence de l'illustration pourrait être utilisé avec le numéro de référence de l'article pour déterminer le numéro de pièce correct. Il peut y avoir une omission intentionnelle d'un numéro de référence dans une liste de pièces suite à la mise à jour des informations en vue de refléter les numéros de pièces les plus récentes.

11. DÉSIGNATIONS DE PIÈCES EN RETRAIT

Lorsqu'une désignation de pièce est en retrait, cela veut dire que l'article en regard fait partie de l'ensemble sous lequel il figure.

12. LETTRES DE RÉFÉRENCE DES ILLUSTRATIONS

Quand cela est nécessaire, les illustrations comportent des lettres de référence (A, B, C, etc.) pour montrer le trajet des canalisations et faisceaux de câbles d'un point à l'autre. Elles sont utilisées également pour indiquer où relier les illustrations séparées auparavant.

13. ABRÉVIATIONS ET SYMBOLES

O.D. – Diamètre extérieur
I.D. – Diamètre intérieur
A – Ne fait pas partie de ce groupe
B – Utiliser selon besoin
C – Modification
D – Commander par mètre
E – Commander par centimètre
F – Non représenté
G – Commander par pouce
I – Voir "Hose Fabrication Guide"
M – Pièce métrique
R – Pièce rénovée éventuellement disponible
Y – Illustration séparée
Z – Non fourni séparément

NOTA:

En raison du progrès technique et des améliorations continuelles apportées au matériel, votre machine comporte peut-être des modifications qui n'apparaissent pas dans la présente publication. En cas de doute sur un détail de votre machine Caterpillar ou sur le texte de la présente publication, adressez-vous à votre concessionnaire Caterpillar.

FRAME AND BODY

8E-3299 PLATFORM GP-CAB

PIN 38K1-99999

SMCS-7283 — 100090751

NOTE	REF NO	GRAPHIC REF	PART NUMBER	QTY	PART NAME (1 2 3 4 5 6 PRODUCT LEVEL)	SEE PAGE
	1	1	3T-3953	1	PLATE AS	
	2	1	5B-3062	25	BOLT (3/8-16X.750IN)	
	3	1	6P-1075	41	WASHER-HARD (9MM THK)	
	4	1	9P-1444	2	SUPPORT AS-FOOT	
	5	1	5P-2329	19	BOLT (1/2-13X1IN)	
		1	5P-[illegible]	19	WASHER-HARD (4MM THK)	
	6	1	8E-8134	1	COVER AS-LH	
		1	9P-2979	5	NUT-WELD (3/8-16 THD)	
		1	1P-8188	1	CLIP	
	7	1	7S-3411	4	COVER	
	8		5J-0468	19	SCREW-HEAD (3/8-16X.875IN)	
	9	1	[illegible]-4674	1	COVER	
		1	8E-8972	[illegible]	GASKET	
	10	1	8E-3248	1	[illegible]	
		1	8E-3250	1	GASKET	
	11	1	3T-3939	1	HANDHOLD	
	12	1	8E-8978	1	COVER AS	
		1	9P-2978	8	NUT-WELD (3/8-16 THD)	
		1	8E-8978	1	GASKET	
	13	1	7T-0131	1	FLOORPLATE AS	
		1	1P-0748	4	NUT-WELD (1/2-13 THD)	
	14	1	7Y-8087	1	PLUG-BUTTON	
	15	1	7T-0136	1	PLATE AS	
		1	9P-2979	5	NUT-WELD (3/8-16 THD)	
	16	1	7T-8098	1	COVER	
		1	7T-0779	1	GASKET	
	17	1	3T-3951	1	PLATE AS	
	18	1	9T-9364	4	BOLT (1/4-20X.625IN)	
M		1	9T-4205	4	WASHER-HARD (2MM THK)	
	19	1	9X-9464	1	FLOOR MAT	
	20	1	8E-8946	1	MODULE AS-OPERATOR	
	21	1	3T-3934	1	HANDHOLD	
	22	1	9P-8871	2	PLUG	
	23	2	9T-9364	4	BOLT (1/4-20X.625IN)	
M		2	9T-4205	4	WASHER-HARD (2MM THK)	
	24	2	5B-3062	17	BOLT (3/8-16X.750IN)	
	25	2	6P-1075	21	WASHER-HARD (9MM THK)	
	26	2	7T-0136	1	SEAL	
	27	2	7X-0378	2	BOLT (3/4-10X5IN)	
		2	7X-0682	2	WASHER-HARD (6MM THK)	
	28	2	3T-3482	2	PLATE	
	29	2	3T-8290	1	PLATE AS	
		2	7S-4888	6	SPACER	
	30	2	3T-8281	1	SEAL	
	31	2	7S-8017	1	GASKET	
	32	2	7S-8016	1	COVER AS	
		2	2R-2376	2	WASHER	
		2	6P-8026	2	SCREW-KNURLED	
	33	2	9W-3429	1	COVER	
	34	2	8E-8937	1	COVER	
	35	2	9D-3931	8	SCREW-SOCKET HEAD	
	36	2	9W-3142	8	MOUNTING	
	37	2	9W-9027	2	PLATE	
	38	2	7X-0360	2	BOLT (7/8-9X6IN)	
		2	7X-0672	2	WASHER-HARD	
	39	2	9L-4454	4	BOLT (3/8-16X1.0IN)	
	40	2	3T-4788	1	COVER	

12 FRAME AND BODY — 1 of 4 — SELP4570-01

FRAME AND BODY

8E-3299 PLATFORM GP-CAB (contd.)

100090751

NOTE	REF NO	GRAPHIC REF	PART NUMBER	QTY	PART NAME (1 2 3 4 5 6 PRODUCT LEVEL)	SEE PAGE
	41	2	8E-2515	1	COVER	
	42	2	7T-0134	1	PLATE	
	43	2	7T-0138	1	GASKET	
	44	2	7S-8724	1	GASKET	
	45	2	7S-8723	1	COVER	
	46	[illegible]	6V-1958	2	PLUG-BUTTON	
M-METRIC PART						

SELP4570-01 — 2 of 4 — FRAME AND BODY 13

FRAME AND BODY

8E-3299 PLATFORM GP-CAB (contd.)

100090751

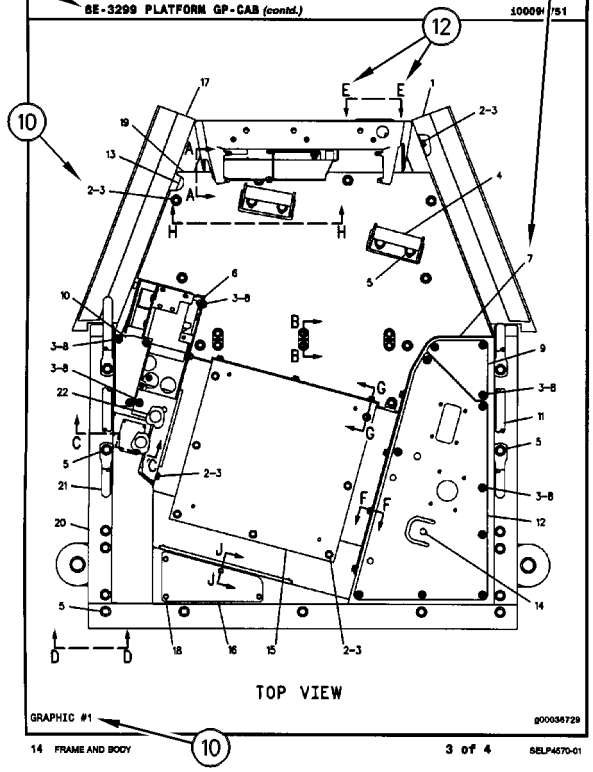

GRAPHIC #1 — g00036729

14 FRAME AND BODY — 3 of 4 — SELP4570-01

FRAME AND BODY

8E-3299 PLATFORM GP-CAB (contd.)

100090751

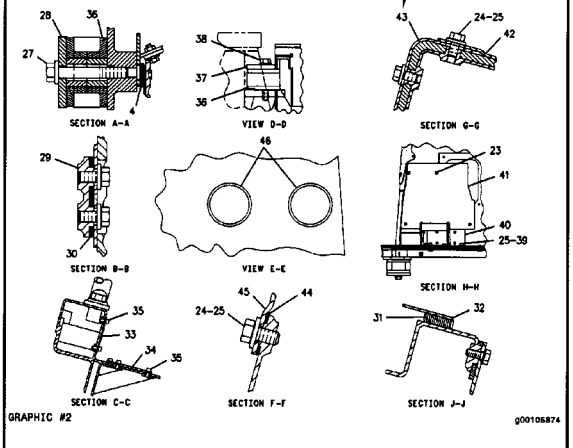

GRAPHIC #2 — g00105874

SELP4570-01 — 4 of 4 — FRAME AND BODY 16

1. MÁQUINAS

Las máquinas Caterpillar se identifican con Números de Identificación del Producto (PIN). Algunos componentes incluídos en la máquina pueden estar identificados con Números de Serie (N/S). Los componentes que tienen típicamente esta identificación incluyen motores, transmisiones, hojas topadoras y desgarradores. La máquina y el motor se identifican además con Números de Configuración y en algunos casos, Números de Modificación. Estos números están en las placas de identificación del producto o en la placa principal en la cabina del operador.

Los distribuidores Caterpillar necesitan estos números para identificar con exactitud los números de piezas de repuesto.

SIS *Nueva Característica*

A partir del primer trimestre del 2001, el Número de Identificación de Producto (PIN) de Caterpillar cambiará de 8 a 17 caracteres. Para hacer más uniforme el método de identificación de equipos, Caterpillar y otros fabricantes de equipo de construcción han tomado medidas para cumplir con la versión más reciente de la norma de numeración de identificación de productos. Los Números de Identificación de Producto para máquinas que no se operan en carreteras son definidos por la norma ISO 10261. El nuevo formato PIN corresponderá a todas las máquinas y grupos electrógenos Caterpillar. Las placas y los caracteres PIN estampados en el bastidor mostrarán el PIN de 17 caracteres. El nuevo formato tendrá la apariencia siguiente:

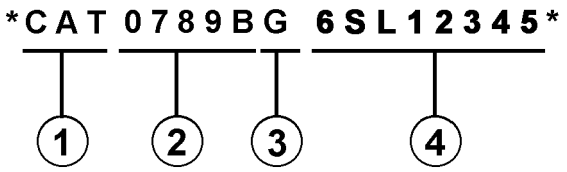

Significado de los caracteres:

1. Código de Fabricación Mundial de Caterpillar (caracteres 1-3)

2. Sección Descriptor de la Máquina (caracteres 4-8)

3. Carácter de Verificación (carácter 9)

4. Sección Indicador de la Máquina (MIS) o Número de Secuencia de Producto (caracteres 10-17). Anteriormente, estos caracteres constituían el Número de Serie.

Las máquinas y grupos electrógenos producidos antes del primer semestre del 2001 mantendrán su formato PIN de 8 caracteres.

Los componentes como motores, transmisiones, ejes, herramientas de trabajo, etc., continuarán usando un Número de Serie (S/N) de 8 caracteres.

2. COMO PEDIR REPUESTOS

⚠ ADVERTENCIA

Cuando se necesiten piezas de repuesto para este producto, Caterpillar recomienda usar piezas de repuesto Caterpillar o piezas que tengan especificaciones equivalentes incluyendo, pero sin estar limitadas a, dimensiones físicas, tipo, fortaleza y material.

El no hacer caso de esta advertencia puede llevar a fallas prematuras, daños al producto y lesiones graves o mortales.

Las piezas de repuesto Caterpillar de calidad están a la disposición de los distribuidores Caterpillar en todo el mundo. Sus existencias actualizadas incluyen todas las piezas normalmente requeridas para proteger su inversión en máquinas Caterpillar. Los distribuidores pueden tener juegos de reparación o piezas remanufacturadas para permitir la selección de la mejor alternativa de reparación en un caso en particular. Al pedir piezas de repuesto, especifique en su pedido la cantidad, el número de pieza, el nombre de la pieza y el número de serie/número de identificación del producto, de la máquina para la cual se necesitan estas piezas.

3. ORGANIZACION DEL MANUAL DE PIEZAS

La información sobre el producto, se presenta en este manual, como "elementos de información" que representan todos los componentes de un modelo específico. Las configuraciones de motores y los grupos de asientos son ejemplos de elementos de información. Los elementos de información están organizados primeramente por nombres de piezas en orden alfabético y en segundo lugar, por el número de pieza dentro de cada sección principal del manual.

4. CONTENIDO

Nueva Característica

La página de Contenido se encuentra al principio del manual. El Contenido indica cada sección del manual con una lista completa de todos los elementos de información organizados en el orden que aparecen en el manual. Los números de página proporcionan una referencia rápida a las ilustraciones detalladas de identificación de piezas y a las listas de componentes de repuesto de dichas piezas.

5. ÍNDICE DE PIEZAS DE MANTENIMIENTO

Al principio de este catálogo se encuentra un índice de los números de piezas utilizadas más frecuentemente para el mantenimiento, que incluye descripción, cantidad necesaria, lugar de utilización y número de página. Esta información está organizada alfabéticamente, por descripción de la pieza.

6. ÍNDICE

El Índice, ubicado cerca del principio del manual, es una lista en orden alfabético de todos los elementos de información incluídos en el manual. Los números de página proporcionan una referencia rápida a las ilustraciones detalladas de identificación de piezas y a las listas de componentes de repuesto de dichas piezas.

7. INDICE NUMÉRICO DE PIEZAS

Un índice numérico de piezas con el correspondiente número de página aparece al final de este catálogo.

8. TÍTULOS

Los títulos ubicados en la parte superior de cada página de elementos de información identifican el número y el nombre de la pieza junto con información descriptiva adicional para ayudar al usuario a determinar las piezas necesarias para una máquina en particular. También se suministra información sobre las opciones de reparación en el campo, la identificación de componentes de accesorios optativos y el lugar de ubicación de la pieza ("es parte de").

Nueva Característica

La primera línea del título se muestra con un tipo de letra más grande para indicar el comienzo de un elemento de información. Si se requieren páginas adicionales para ilustrar un elemento de información, los títulos se muestran con un tipo de letra normal y la continuación se indica entre paréntesis.

9. PIEZAS QUE NO SE SUMINISTRAN COMO REPUESTO

Nueva Característica

En algunos casos es necesario indicar piezas que no se suministran como repuesto pero que pueden estar conectadas a listas de componentes de otras piezas de repuesto. En tal caso, dichas piezas se muestran en cursiva para indicar que no son piezas disponibles.

10. NÚMEROS DE REFERENCIA

Nueva Característica

Los números en la columna de No. de Referencia corresponden a los números indicados en la ilustración que pertenece a ese número de pieza. Los números que tienen un sufijo alfabético identifican artículos de las listas de componentes de piezas. Los números en la columna de Referencia de la ilustración se identifican en la esquina inferior izquierda de cada ilustración. Para determinar el número de pieza correcto se puede utilizar tanto el No. de Referencia de la ilustración como el No. de Referencia del artículo. A medida que se actualiza la información para indicar los más recientes números de piezas de repuesto, puede omitirse intencionalmente un No. de Referencia en una lista de componentes de piezas.

11. NOMBRES DE PIEZA SANGRADOS

Cuando el nombre de una pieza está sangrado en una lista, significa que esta pieza forma parte del grupo o conjunto del renglón inmediatamente superior.

12. LETRAS DE REFERENCIA DE ILUSTRACIONES

Las ilustraciones contienen algunas veces letras de referencia (A, B, C etc.) cuyo propósito es seguir el trayecto de líneas y mazos de cables de un punto a otro. También se utilizan para mostrar dónde volver a unir ilustraciones que se habían separado.

13. ABREVIATURAS Y SIMBOLOS

O.D. – Diámetro exterior
I.D. – Diámetro interior
A – No es pieza de este grupo
B – Utilizado según la demanda
C – Indica cambio
D – Se pide por metro
E – Se pide por centímetro
F – No se muestra
G – Se pide por pulgada
I – Ver "Hose Fabrication Guide"
M – Pieza métrica
R – Puede estar disponible como pieza remanufacturada
Y – Ilustración separada
Z – No se suministra por separado

NOTA:

Las contínuas mejoras y adelantos en diseño podrían originar cambios a su máquina que no se incluyen en esta publicación. Cuando tenga alguna pregunta acerca de su producto Caterpillar o de esta publicación, consulte al distribuidor Caterpillar para obtener la información más reciente.

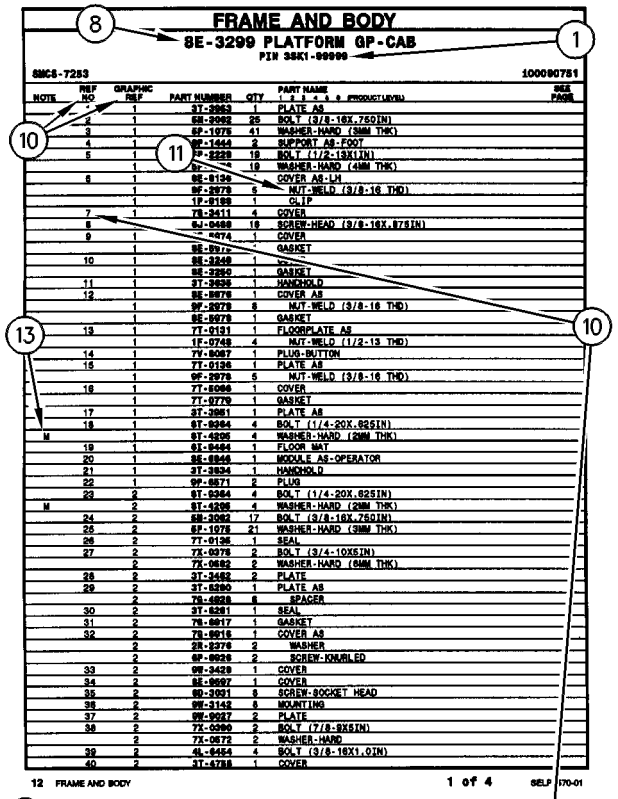

FRAME AND BODY

8E-3299 PLATFORM GP-CAB

PIN 38K1-99999

SMCS-7283 100090751

NOTE	REF NO	GRAPHIC REF	PART NUMBER	QTY	PART NAME 1 2 3 4 5 6 (PRODUCT LEVEL)	SEE PAGE
	1	1	3T-3953	1	PLATE AS	
	2	1	5B-3062	25	BOLT (3/8-16X.750IN)	
	3	1	6P-1075	41	WASHER-HARD (9MM THK)	
	4	1	9F-1444	2	SUPPORT AS-FOOT	
	5	1	7P-2229	19	BOLT (1/2-13X1IN)	
		1	6P-[illegible]	19	WASHER-HARD (4MM THK)	
	6	1	8E-8194	1	COVER AS-LH	
		1	9F-2979	5	NUT-WELD (3/8-16 THD)	
		1	1P-8199	1	CLIP	
	7	1	7S-2411	4	COVER	
	8		5J-0468	19	SCREW-HEAD (3/8-16X.875IN)	
	9	1	[illegible]-4674	1	COVER	
		1	8E-8972	1	GASKET	
	10	1	8E-3248	1	[illegible]	
		1	8E-3250	1	GASKET	
	11	1	3T-3939	1	HANDHOLD	
	12	1	8E-8978	1	COVER AS	
		1	9F-2978	8	NUT-WELD (3/8-16 THD)	
		1	8E-8978	1	GASKET	
	13	1	7T-0131	1	FLOORPLATE AS	
		1	1F-0748	4	NUT-WELD (1/2-13 THD)	
	14	1	7V-8067	1	PLUG-BUTTON	
	15	1	7T-0136	1	PLATE AS	
		1	9F-2979	5	NUT-WELD (3/8-16 THD)	
	16	1	7T-8066	1	COVER	
		1	7T-0779	1	GASKET	
	17	1	3T-3951	1	PLATE AS	
	18	1	6T-8364	4	BOLT (1/4-20X.625IN)	
M		1	9T-4205	4	WASHER-HARD (2MM THK)	
	19	1	8S-8464	1	FLOOR MAT	
	20	1	8E-8946	1	MODULE AS-OPERATOR	
	21	1	3T-3934	1	HANDHOLD	
	22	1	9P-8871	2	PLUG	
	23	2	6T-8364	4	BOLT (1/4-20X.625IN)	
M		2	9T-4205	4	WASHER-HARD (2MM THK)	
	24	2	5B-3062	17	BOLT (3/8-16X.750IN)	
	25	2	6P-1075	21	WASHER-HARD (9MM THK)	
	26	2	7T-0136	1	SEAL	
	27	2	7X-0378	2	BOLT (3/4-10X5IN)	
		2	7X-0682	2	WASHER-HARD (6MM THK)	
	28	2	3T-3482	2	PLATE	
	29	2	3T-8290	1	PLATE AS	
		2	7S-4838	6	SPACER	
	30	2	3T-8291	1	SEAL	
	31	2	7S-8817	1	GASKET	
	32	2	7S-8916	1	COVER AS	
		2	2R-2376	2	WASHER	
		2	6P-8826	2	SCREW-KNURLED	
	33	2	9W-3429	1	COVER	
	34	2	8E-8897	1	COVER	
	35	2	9D-3091	8	SCREW-SOCKET HEAD	
	36	2	9W-3142	8	MOUNTING	
	37	2	9W-9027	2	PLATE	
	38	2	7X-0360	2	BOLT (7/8-9X6IN)	
		2	7X-0672	2	WASHER-HARD	
	39	2	9L-4454	4	BOLT (3/8-16X1.0IN)	
	40	2	3T-4788	1	COVER	

12 FRAME AND BODY 1 of 4 SELP4570-01

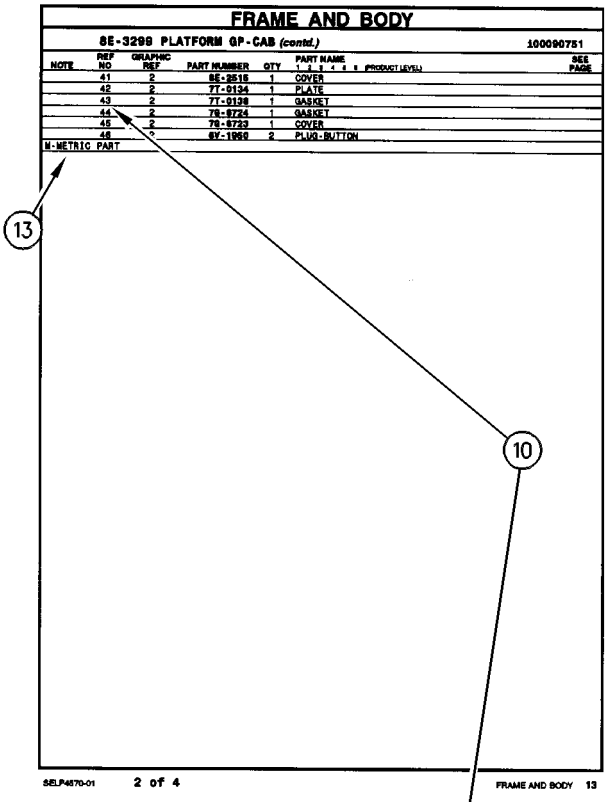

FRAME AND BODY

8E-3299 PLATFORM GP-CAB (contd.) 100090751

NOTE	REF NO	GRAPHIC REF	PART NUMBER	QTY	PART NAME 1 2 3 4 5 6 (PRODUCT LEVEL)	SEE PAGE
	41	2	8E-2515	1	COVER	
	42	2	7T-0134	1	PLATE	
	43	2	7T-0138	1	GASKET	
	44	2	7S-8724	1	GASKET	
	45	2	7S-8723	1	COVER	
	46	[illegible]	6V-1958	2	PLUG-BUTTON	
M-METRIC PART						

SELP4570-01 2 of 4 FRAME AND BODY 13

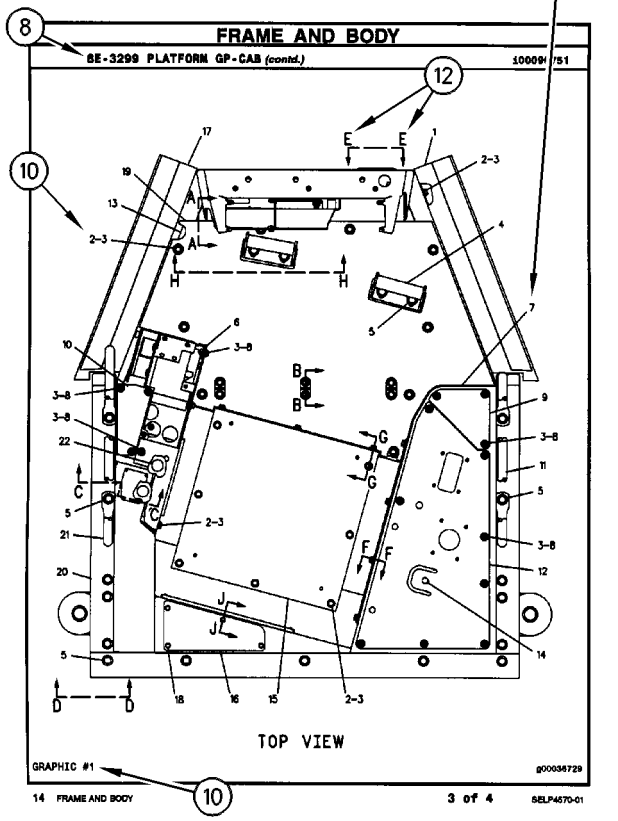

FRAME AND BODY

8E-3299 PLATFORM GP-CAB (contd.) 100090751

TOP VIEW

GRAPHIC #1 g00036729

14 FRAME AND BODY 3 of 4 SELP4570-01

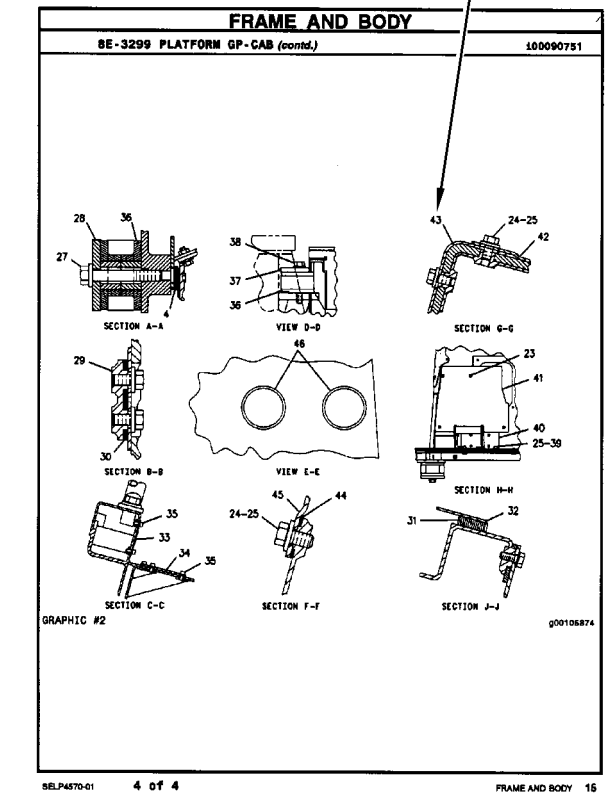

FRAME AND BODY

8E-3299 PLATFORM GP-CAB (contd.) 100090751

SECTION A-A VIEW D-D SECTION G-G

SECTION B-B VIEW E-E SECTION H-H

SECTION C-C SECTION F-F SECTION J-J

GRAPHIC #2 g00105874

SELP4570-01 4 of 4 FRAME AND BODY 16

INFORMAÇÃO GERAL

1. IDENTIFICAÇÃO DA MÁQUINA

As máquinas Caterpillar são identificadas pelos Números de Informação do Produto (PIN). Alguns componentes incluídos numa máquina podem ser identificados por Números de Série (S/N). Componentes típicos que serão enumerados com números de série incluem motores, transmissões, lâminas e ríperes. Além do número de série, a máquina e o motor são ainda identificados por números de arranjo e, em alguns casos, números de modificações. Tais números encontram-se na(s) placa(s) de identificação do produto e na placa mestre no compartimento do operador.

Novidades

A partir do primeiro trimestre de 2001 o Número de Identificação de Produto da Caterpillar (PIN) vai mudar de 8 para 17 caracteres. Esforçando-se para fornecer uma identificação uniforme de equipamentos, a Caterpillar e outros fabricantes de equipamento de construção estão mudando para atender a versão mais atualizada do padrão de identificação de produtos. Os números de PIN para produtos de aplicações não rodoviárias são definidos pela ISO 10261. O novo formato de número PIN será adotado em todas as máquinas e grupos geradores Caterpillar. As placas e as marcações do chassi mostrarão os 17 dígitos de PIN. O novo formato terá a seguinte disposição:

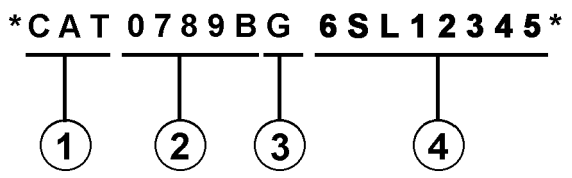

Onde:

1. Código de Fabricação Mundial da Caterpillar (dígitos 1-3)

2. Descrição da Máquina (dígitos 4-8)

3. Dígito de Verificação (dígito 9)

4. Seção de Indicador da Máquina (MIS) ou Número de Seqüência de Produto (dígitos 10-17). Estes eram anteriormente chamados de Número de Série.

Máquinas e grupos geradores produzidos antes do primeiro trimestre de 2001 manterão o formato de 8 caracteres de PIN.

Componentes como motores, transmissões, eixos, ferramentas de trabalho, etc. continuarão a usar Número de Série (S/N) com oito caracteres.

2. COMO OBTER PEÇAS

⚠ CUIDADO

Quando peças de substituição são exigidas para este produto, a Caterpillar recomenda a utilização de peças de substituição Caterpillar ou peças com as especificações equivalentes incluindo, mas não limitadas, à dimensões físicas, tipos, resistência e materiais.

A inobservância desta advertência poderá resultar em falhas prematuras, danos ao produto, ferimentos ou morte.

As Peças de Reposição de Qualidade Caterpillar encontram-se disponíveis nos revendedores Caterpillar no mundo inteiro. Seus estoques de peças são atualizados e incluem todas as peças normalmente necessárias para proteger seu investimento em máquinas Caterpillar. Alguns revendedores podem oferecer jogos de reparo ou peças de troca/remanufaturadas disponíveis como uma opção da alternativa de reparo mais eficaz para uma situação específica. Ao encomendar peças, seu pedido deve especificar a quantidade, o número e o nome da peça e o número de série/número de identificação do produto referentes à máquina para a qual as peças se destinam.

3. ORGANIZAÇÃO DO MANUAL DE PEÇAS

A informação do produto neste manual é apresentada em forma de "elementos de informação" que representam todos os componentes para o modelo específico. Arranjo de Motor e Grupo de Assento são exemplos de elementos de informação. Os elementos de informação são organizados em ordem alfabética por nome de peça ou secundariamente, por número de peça incluído em cada seção principal do manual.

4. LISTA DE CONTEÚDOS

Novidades

A Lista de Conteúdos (TOC) se encontra no princípio do manual. A Lista de Conteúdos (TOC) relaciona em cada seção do manual uma lista completa com todos os elementos de informação organizados conforme aparecem no manual. Números de página são fornecidos para que se tenha referência rápida de ilustrações de peças detalhadas e listas de conteúdos que podem receber serviço de manutenção.

5. ÍNDICE DE PEÇAS DE MANUTENÇÃO

O Índice de Peças de Manutenção, localizado perto do princípio do manual, faz referência aos números de peça de manutenção usados com maior frequência, fornecendo uma descrição, a quantidade, o uso e o número de página. Esta informação é organizada com a descrição da peça em ordem alfabética.

6. ÍNDICE

O Índice localizado perto do princípio do manual, consiste de uma lista em ordem alfabética de todos os elementos de informação incluídos no manual. Números de página são fornecidos para que se tenha referência rápida de ilustrações de peças detalhadas e listas de conteúdos que podem receber serviço de manutenção.

7. ÍNDICE DE NÚMERO DE PEÇA

Um índice numérico relacionando todos os números de peça e a(s) página(s) correspondentes, aparece no final do manual.

8. LEGENDAS

As legendas localizadas na parte de cima de cada página de um elemento de informação identifica o número de peça e o nome da peça, juntamente com informação descritiva adicional. Informações sobre o Número de Informação do Produto (PIN) e o Número de Série (S/N) encontradas em cada legenda devem ser usadas para selecionar a informação correta sobre uma máquina específica. Opções de substituição no campo, identificação de componentes de acessórios opcionais e informações sobre onde são utilizados ("parte de") são também fornecidas.

SIS ***Novidades***

A primeira linha de uma legenda é indicada em tipo maior para indicar o princípio de um elemento de informação. Legendas para páginas adicionais que podem ser necessárias para ilustrar um elemento de informação serão apresentadas em tipo padrão e incluirão o termo *(continua)* .

9. NÃO DISPONÍVEL SEPARADAMENTE

SIS ***Novidades***

Em alguns casos, é necessário mostrar peças não disponíveis separadamente que têm uma ligação com listas de conteúdos de nível inferior que podem receber serviço de manutenção. Os números de peça destes componentes não disponíveis aparecerão em *itálico* , a fim de indicar que não estão disponíveis.

10. NÙMEROS DE REFERÊNCIA À LISTA DE PEÇAS

SIS ***Novidades***

Os números indicados na coluna Ref No (No. de Referência) correspondem-se aos números usados no(s) gráfico(s) correspondente(s). Um sufixo com letras pode ser acrescentado a um número de referência para identificar itens de conteúdo de nível inferior. Os números indicados na coluna Graphic Ref (Referência de Gráfico) referem-se ao identificador de número de gráfico presente no canto esquerdo inferior de cada ilustração. O número de Referência de Gráfico pode ser usado em combinação com o item Ref No para determinar-se o número de peça correto. Poderá haver omissão intencional de um número de referência (Ref No) de uma lista de conteúdos uma vez que as informações são atualizadas para refletir os números de peça mais recentes que podem receber serviço de manutenção.

11. NOMES DE PEÇAS DESALINHADOS

Quando um nome de peça encontra-se desalinhado numa lista de peças, significa que tal item faz parte do (está incluído no) grupo ou conjunto sob o qual está relacionado.

12. LETRAS DE REFERÊNCIA NAS ILUSTRAÇÕES

Quando necessário, as ilustrações contêm letras de referência (A, B, C, etc.) que são utilizadas para seguir tubulações e cabos elétricos de um ponto a outro. Também foram utilizadas para indicar onde se pode reconectar as ilustrações que foram separadas.

13. ABREVIAÇÕES E SÍMBOLOS

O.D. – "Outside Diameter" (Diâmetro Externo)
I.D. – "Inside Diameter" (Diâmetro Interno)
A – Não faz parte deste grupo
B – Use conforme necessário
C – Indica modificação
D – Vendido por metro
E – Vendido por centímetro
F – Não ilustrado
G – Vendido por polegada
I – Consulte o seu revendedor quanto a mangueira
M – Peça métrica
R – Peça remanufaturada pode estar disponível; consulte o seu revendedor Cat
Y – Ilustração separada
Z – Não disponível separadamente

NOTA:

Os contínuos aperfeiçoamentos e avanços no projeto do produto podem ocasionar modificações em sua máquina que talvez ainda não estejam incluídas nesta publicação. Sempre que surgirem dúvidas quanto a um produto Caterpillar ou quanto à presente publicação, consulte o seu revendedor Caterpillar para obter as informações mais recentes disponíveis.

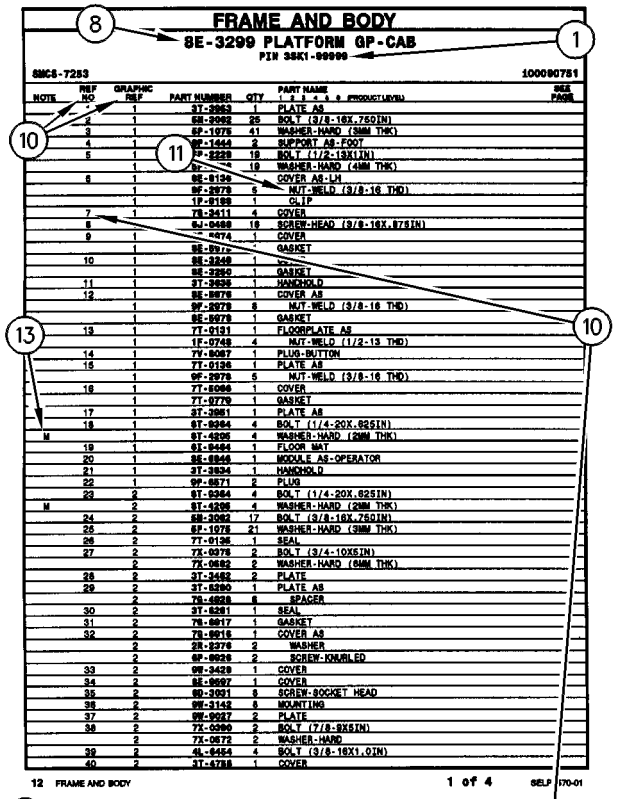

FRAME AND BODY

8E-3299 PLATFORM GP-CAB

PIN 38K1-99999

SMCS-7283 100090751

NOTE	REF NO	GRAPHIC REF	PART NUMBER	QTY	PART NAME 1 2 3 4 5 6 (PRODUCT LEVEL)	SEE PAGE
	1	1	3T-3953	1	PLATE AS	
	2	1	6B-3062	25	BOLT (3/8-16X.750IN)	
	3	1	6P-1075	41	WASHER-HARD (9MM THK)	
	4	1	9F-1444	2	SUPPORT AS-FOOT	
	5	1	7P-2229	19	BOLT (1/2-13X1IN)	
		1	6P-[illegible]	19	WASHER-HARD (4MM THK)	
	6	1	8E-8134	1	COVER AS-LH	
		1	9F-2979	5	NUT-WELD (3/8-16 THD)	
		1	1P-8188	1	CLIP	
	7	1	7S-2411	4	COVER	
	8		6J-0468	19	SCREW-HEAD (3/8-16X.875IN)	
	9	1	[illegible]-4674	1	COVER	
		1	8E-8972	1	GASKET	
	10	1	8E-3248	1	[illegible]	
		1	8E-3250	1	GASKET	
	11	1	3T-3939	1	HANDHOLD	
	12	1	8E-8978	1	COVER AS	
		1	9F-2978	8	NUT-WELD (3/8-16 THD)	
		1	8E-8978	1	GASKET	
	13	1	7T-0131	1	FLOORPLATE AS	
		1	1F-0748	4	NUT-WELD (1/2-13 THD)	
	14	1	7V-8087	1	PLUG-BUTTON	
	15	1	7T-0136	1	PLATE AS	
		1	9F-2979	5	NUT-WELD (3/8-16 THD)	
	16	1	7T-8098	1	COVER	
		1	7T-0779	1	GASKET	
	17	1	3T-3951	1	PLATE AS	
	18	1	6T-8364	4	BOLT (1/4-20X.625IN)	
M		1	9T-4205	4	WASHER-HARD (2MM THK)	
	19	1	8X-8464	1	FLOOR MAT	
	20	1	8E-8946	1	MODULE AS-OPERATOR	
	21	1	3T-3934	1	HANDHOLD	
	22	1	9P-8871	2	PLUG	
	23	2	6T-8364	4	BOLT (1/4-20X.625IN)	
M		2	9T-4205	4	WASHER-HARD (2MM THK)	
	24	2	6B-3062	17	BOLT (3/8-16X.750IN)	
	25	2	6P-1075	21	WASHER-HARD (9MM THK)	
	26	2	7T-0126	1	SEAL	
	27	2	7X-0378	2	BOLT (3/4-10X5IN)	
		2	7X-0682	2	WASHER-HARD (6MM THK)	
	28	2	3T-3482	2	PLATE	
	29	2	3T-8290	1	PLATE AS	
		2	7S-4888	6	SPACER	
	30	2	3T-8291	1	SEAL	
	31	2	7S-8817	1	GASKET	
	32	2	7S-8916	1	COVER AS	
		2	2R-2376	2	WASHER	
		2	6P-8826	2	SCREW-KNURLED	
	33	2	9W-3429	1	COVER	
	34	2	8E-8897	1	COVER	
	35	2	9D-3991	8	SCREW-SOCKET HEAD	
	36	2	9W-3142	8	MOUNTING	
	37	2	9W-9027	2	PLATE	
	38	2	7X-0390	2	BOLT (7/8-9X6IN)	
		2	7X-0672	2	WASHER-HARD	
	39	2	4L-4454	4	BOLT (3/8-16X1.0IN)	
	40	2	3T-4788	1	COVER	

12 FRAME AND BODY 1 of 4 SELP4570-01

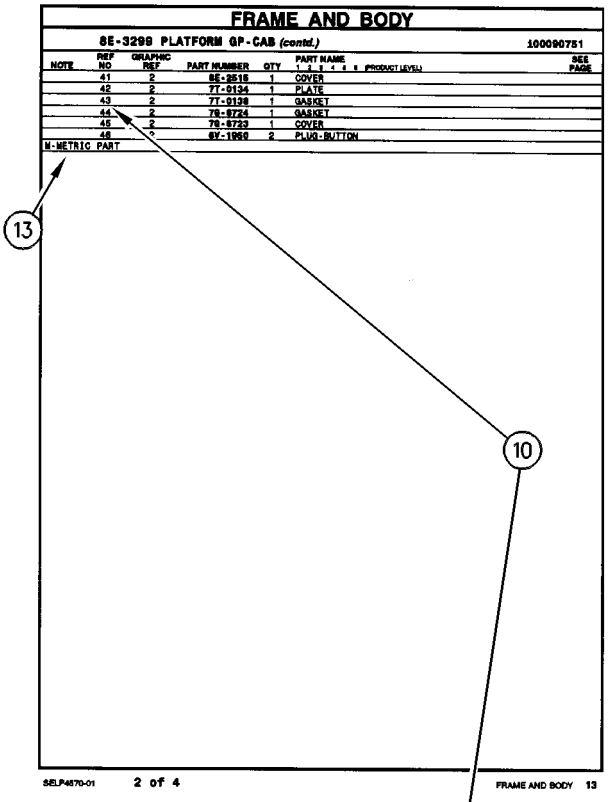

FRAME AND BODY

8E-3299 PLATFORM GP-CAB (contd.) 100090751

NOTE	REF NO	GRAPHIC REF	PART NUMBER	QTY	PART NAME 1 2 3 4 5 6 (PRODUCT LEVEL)	SEE PAGE
	41	2	8E-2515	1	COVER	
	42	2	7T-0134	1	PLATE	
	43	2	7T-0138	1	GASKET	
	44	2	7S-8724	1	GASKET	
	45	2	7S-8723	1	COVER	
	46	[illegible]	6V-1958	2	PLUG-BUTTON	
M-METRIC PART						

SELP4570-01 2 of 4 FRAME AND BODY 13

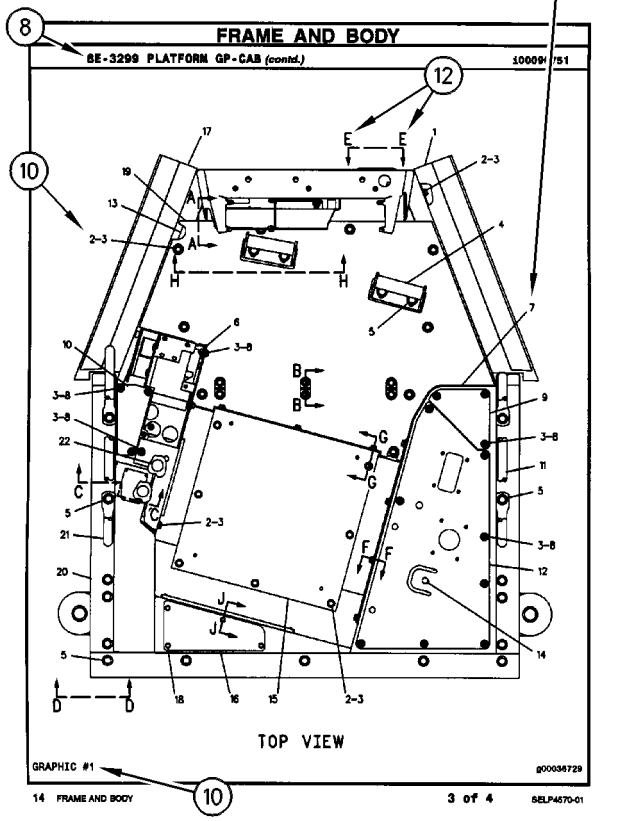

FRAME AND BODY

8E-3299 PLATFORM GP-CAB (contd.) 100090751

TOP VIEW

GRAPHIC #1 g00036729

14 FRAME AND BODY 3 of 4 SELP4570-01

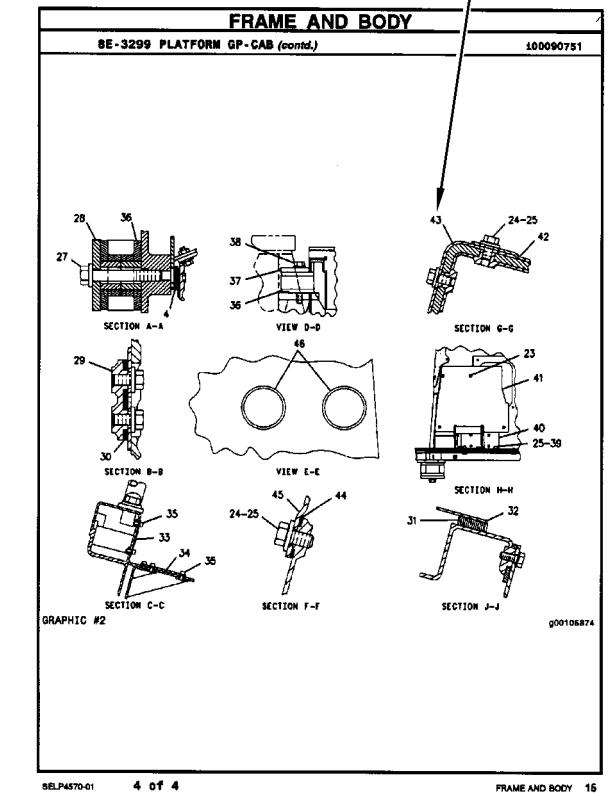

FRAME AND BODY

8E-3299 PLATFORM GP-CAB (contd.) 100090751

SECTION A-A VIEW D-D SECTION G-G

SECTION B-B VIEW E-E SECTION H-H

SECTION C-C SECTION F-F SECTION J-J

GRAPHIC #2 g00105874

SELP4570-01 4 of 4 FRAME AND BODY 16

ALLGEMEINE HINWEISE

1. MASCHINENKENNZEICHNUNG

Caterpillar-Maschinen sind mit PRODUCT IDENTIFICATION NUMBERS (PIN) (Produkt-Identnummern) gekennzeichnet. Einige Baugruppen, z.B. Motoren, Getriebe, Planierschilde und Aufreißer, sind mit SERIAL NUMBERS (S/N) (Seriennummern) gekennzeichnet. An der Maschine und am Motor befinden sich außerdem ARRANGEMENT NUMBERS (Ausrüstungsnummern) sowie in einigen Fällen MODIFICATION NUMBERS (Änderungsnummern). Sie befinden sich auf den PIN-Schildern und auf dem Typenschild im Fahrerhaus.

Bei Ersatzteilbestellungen müssen dem Händler alle diese Nummern zur Verfügung gestellt werden.

SIS ***Neu im Parts Manual***

Vom ersten Quartal 2001 ab wird die Caterpillar Produkt-Identnummer (PIN) von 8 auf 17 Zeichen geändert. Um zur Standardisierung der Produkt-Identnummer beizutragen, sind Caterpillar und andere Baumaschinenhersteller bestrebt, die aktuellste Norm zur Produkt-Identnummerierung einzuführen. Produkt-Identnummern für Baumaschinen sind durch ISO 10261 definiert. Das neue Format der Produkt-Identnummern gilt für alle Caterpillar-Maschinen und -Stromaggregate. Die Produkt-Identschilder und -Identrahmenmarkierung enthalten die aus 17 Zeichen bestehende Identnummer. Das neue Format hat folgende Abschnitte:

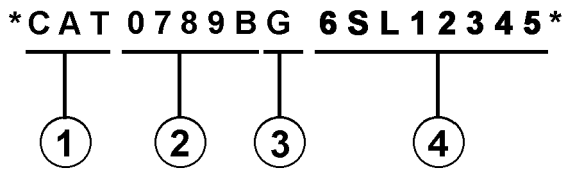

Abschnitte:

1. Caterpillars weltweiter Herstellungscode (Zeichen 1-3)

2. Modell (Zeichen 4-8)

3. Kontrollzeichen (Zeichen 9)

4. Maschinenspezifische Kennung (MIS) oder Produktsequenznummer (Zeichen 10-17). Diese wurde früher als Seriennummer bezeichnet.

Für vor dem ersten Quartal 2001 hergestellte Maschinen und Stromaggregate wird das aus 8 Zeichen bestehende PIN-Format beibehalten.

Bauteile wie z.B. Motoren, Getriebe, Achsen sowie Arbeitsgeräte werden weiterhin eine aus 8 Zeichen bestehende Seriennummer (S/N) aufweisen.

2. BESTELLEN VON ERSATZTEILEN

⚠ WARNUNG

Wenn für diese Maschine Ersatzteile benötigt werden, empfiehlt Caterpillar, ausschließlich Caterpillar-Ersatzteile oder solche zu verwenden, die die gleichen technischen Merkmale hinsichtlich Typ, Festigkeit, Werkzeugeigenschaften und die gleichen Maße aufweisen.

Bei Nichtbeachtung dieser Warnung besteht Verletzungs- oder sogar Lebensgefahr! Ferner kann Nichtbeachtung vorzeitige Ausfälle der Teile und Beschädigung der Maschine zur Folge haben.

Original Caterpillar-Ersatzteile können weltweit bei jedem Caterpillar-Händlern bestellt werden. Die umfangreichen Händlerlager enthalten normalerweise alle Teile, die Sie für Ihre Caterpillar-Maschine benötigen. Einige Händler bieten Reparatursätze, Austausch- oder werküberholte Teile an, so daß Sie eine Auswahl unter verschiedenen Reparaturmöglichkeiten treffen können. Ihre Bestellung muß folgende Angaben enthalten: Anzahl der benötigten Teile, Bestellnummer, Bezeichnung des Teils, Serien-Nr./Produkt-Ident-Nr., Ausrüstungs-Nr. und Änderungs-Nr. der Maschine, für die diese Teile benötigt werden.

3. AUFBAU DES PARTS MANUAL

Die Produktinformationen für alle Komponenten eines bestimmten Modells sind in INFORMATION ELEMENTS (Informationseinheiten) gegliedert. ENGINE ARRANGEMENT (Motorausführung) und SEAT GROUP (Fahrersitz) sind Beispiele für solche Informationseinheiten. Sie sind innerhalb jeder Gruppe alphabetisch, entsprechend der Ersatzteilbezeichnung, und zusätzlich numerisch, entsprechend der Ersatzteilnummer, geordnet.

4. INHALTSVERZEICHNIS

SIS ***Neu im Parts Manual***

Das Inhaltsverzeichnis befindet sich am Anfang des Buches. Im Inhaltsverzeichnis werden die einzelnen Abschnitte des Buches aufgeführt. Die Abschnitte enthalten eine vollständige Aufstellung aller Informationseinheiten. Diese sind entsprechend ihrem Erscheinen im Buch geordnet. Das Inhaltsverzeichnis enthält Seitenangaben für Schnellverweise auf detaillierte Abbildungen und Teillisten.

5. INDEX FÜR WARTUNGSTEILE

Der Index für Wartungsteile vorn im Buch enthält die Bestellnummern, Seitenangaben, Mengenangaben und Informationen über den Einsatzbereich für die am häufigsten benötigten Ersatzteile. Die Angaben sind alphabetisch entsprechend der Teilebezeichnung geordnet.

6. INDEX

Der Index vorn im Buch enthält eine alphabetische Liste aller Informationseinheiten. Er enthält Seitenangaben für Schnellverweise auf detaillierte Abbildungen und Teillisten.

7. INDEX FÜR BESTELLNUMMERN

Hinten im Buch befindet sich ein numerischer Index, mit allen Bestellnummern und dem Hinweis auf die Seite, auf der sich die betreffende Abbildung befindet.

8. ÜBERSCHRIFTEN

Die Überschriften, die sich oben auf den Seiten der Informationseinheiten befinden, enthalten Bestellnummern, Ersatzteilbezeichnungen und zusätzliche beschreibende Informationen. Produkt-Ident- und Seriennummern in den Überschriften sollten zur Auswahl der richtigen Informationen für die betreffende Maschine verwendet werden. Die Überschriften enthalten außerdem Informationen über möglichen Außendienstersatz, mögliche Baugerätekomponenten und die Baugruppe, zu der das Teil gehört.

SIS ***Neu im Parts Manual***

Die erste Zeile einer Überschrift erscheint in einer größeren Schriftart, um den Anfang einer Informationseinheit zu kennzeichnen. Überschriften für zusätzliche Seiten, die zur Erläuterung einer Informationseinheit notwendig sind, erscheinen in normaler Schriftart und enthalten den Begriff "(contd.)".

9. NICHT EINZELN LIEFERBARE TEILE

SIS ***Neu im Parts Manual***

In einigen Fällen ist es notwendig nicht lieferbare Teile, die selbst mit einer eigenen Teilliste im Buch vertreten sind, aufzuführen. Die Bestellnummern dieser nicht einzeln lieferbaren Teile erscheinen kursiv, wodurch angezeigt wird, daß sie nur in Verbindung mit anderen Teilen lieferbar sind.

10. REFERENZNUMMER FÜR ERSATZTEILE

SIS ***Neu im Parts Manual***

Die Zahlen, die in der Spalte "Ref No" aufgeführt sind, stimmen mit den Zahlen in den beigefügten Abbildungen überein. Ein Buchstaben-Suffix kann zu einer Referenznummer hinzugefügt werden, um zu kennzeichnen, daß das Teil mit einer eigenen Teilliste im Buch aufgeführt ist. Die in der Spalte "Graphic Ref" angeführten Zahlen verweisen auf die Identifikationsnummer der Abbildung, die sich in der linken unteren Ecke der Abbildung befindet. Diese Nummer kann zusammen mit der Referenznummer des Teils angegeben werden, um die richtige Ersatzteilnummer zu ermitteln. Referenznummern können absichtlich weggelassen werden, da die Nummern der lieferbaren Ersatzteile ständig aktualisiert werden.

11. EINGERÜCKTE BEZEICHNUNGEN

Wenn eine Bezeichnung eingerückt ist, wird dadurch angezeigt, daß das Teil zu einer Baugruppe gehört, unter deren Bezeichnung es eingerückt ist.

12. REFERENZBUCHSTABEN

Falls erforderlich sind in den Abbildungen Referenzbuchstaben enthalten (z.B. A, B, C, usw.), die Leitungen und Kabelbäume von einem Punkt zum anderen verfolgen. Außerdem geben sie die Stelle an, an der getrennte Abbildungen fortgesetzt werden.

13. ABKÜRZUNGEN UND SYMBOLE

O.D. – Außendurchmesser
I.D. – Innendurchmesser
A – kein Teil dieser Gruppe
B – nach Bedarf verwenden
C – Hinweis auf eine Änderung
D – in Meter-Länge bestellen
E – in Zentimeter-Länge bestellen
F – nicht gezeigt
G – in Zoll-Länge bestellen
I – siehe "Hose Fabrication Guide"
M – metrisches Teil
R – werküberholtes Teil unter Umständen lieferbar
Y – separate Abbildung
Z – nicht einzeln lieferbar

ANMERKUNG:

Ständig vorgenommene Verbesserungen und Weiterentwicklungen an Ihrer Maschine können Änderungen verursachen, die in der vorliegenden Ausgabe noch nicht berücksichtigt sind. Fragen zu Ihrer Caterpillar-Maschine oder diesem Ersatzteilbuch beantwortet Ihr Caterpillar-Händler.

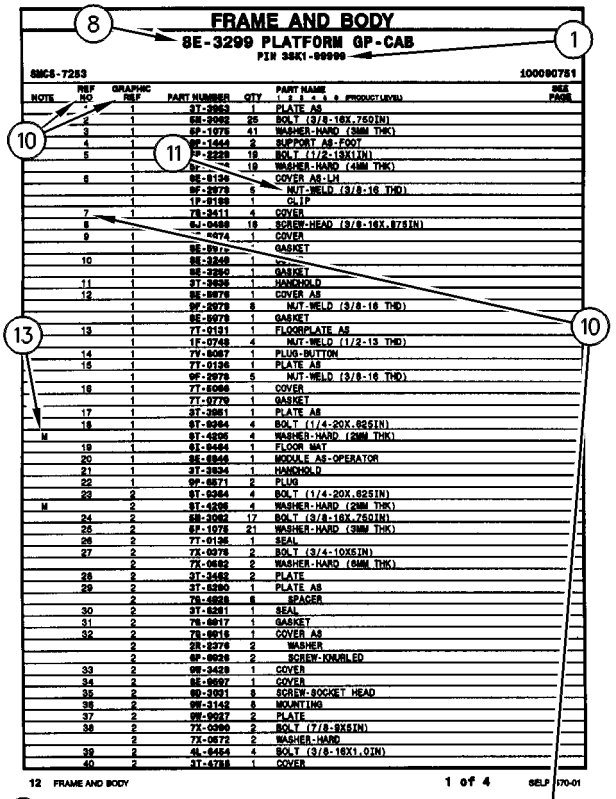

FRAME AND BODY

8E-3299 PLATFORM GP-CAB

PIN 38K1-99999

SMCS-7283 100090751

NOTE	REF NO	GRAPHIC REF	PART NUMBER	QTY	PART NAME 1 2 3 4 5 6 (PRODUCT LEVEL)	SEE PAGE
	1	1	3T-3953	1	PLATE AS	
	2	1	6B-3062	25	BOLT (3/8-16X.750IN)	
	3	1	6P-1075	41	WASHER-HARD (9MM THK)	
	4	1	9F-1444	2	SUPPORT AS-FOOT	
	5	1	7P-2229	19	BOLT (1/2-13X1IN)	
		1	6P-[illegible]	19	WASHER-HARD (4MM THK)	
	6	1	8E-8194	1	COVER AS-LH	
		1	9F-2979	5	NUT-WELD (3/8-16 THD)	
		1	1P-8199	1	CLIP	
	7	1	7S-2411	4	COVER	
	8		6J-0468	19	SCREW-HEAD (3/8-16X.875IN)	
	9	1	[illegible]-4674	1	COVER	
		1	8E-8972	1	GASKET	
	10	1	8E-3248	1	[illegible]	
		1	8E-3250	1	GASKET	
	11	1	3T-3939	1	HANDHOLD	
	12	1	8E-8978	1	COVER AS	
		1	9F-2978	8	NUT-WELD (3/8-16 THD)	
		1	8E-8978	1	GASKET	
	13	1	7T-0131	1	FLOORPLATE AS	
		1	1F-0748	4	NUT-WELD (1/2-13 THD)	
	14	1	7V-8087	1	PLUG-BUTTON	
	15	1	7T-0136	1	PLATE AS	
		1	9F-2979	5	NUT-WELD (3/8-16 THD)	
	16	1	7T-8098	1	COVER	
		1	7T-0779	1	GASKET	
	17	1	3T-3951	1	PLATE AS	
	18	1	6T-8364	4	BOLT (1/4-20X.625IN)	
M		1	6T-4205	4	WASHER-HARD (2MM THK)	
	19	1	6J-8464	1	FLOOR MAT	
	20	1	8E-8946	1	MODULE AS-OPERATOR	
	21	1	3T-3934	1	HANDHOLD	
	22	1	9P-8871	2	PLUG	
	23	2	6T-8364	4	BOLT (1/4-20X.625IN)	
M		2	6T-4205	4	WASHER-HARD (2MM THK)	
	24	2	6B-3062	17	BOLT (3/8-16X.750IN)	
	25	2	6P-1075	21	WASHER-HARD (9MM THK)	
	26	2	7T-0136	1	SEAL	
	27	2	7X-0378	2	BOLT (3/4-10X5IN)	
		2	7X-0682	2	WASHER-HARD (6MM THK)	
	28	2	3T-3482	2	PLATE	
	29	2	3T-8290	1	PLATE AS	
		2	7S-4888	6	SPACER	
	30	2	3T-8291	1	SEAL	
	31	2	7S-8817	1	GASKET	
	32	2	7S-8916	1	COVER AS	
		2	2R-2376	2	WASHER	
		2	6P-8826	2	SCREW-KNURLED	
	33	2	9W-3429	1	COVER	
	34	2	8E-8897	1	COVER	
	35	2	9D-3931	8	SCREW-SOCKET HEAD	
	36	2	9W-3142	8	MOUNTING	
	37	2	9W-9027	2	PLATE	
	38	2	7X-0360	2	BOLT (7/8-9X6IN)	
		2	7X-0672	2	WASHER-HARD	
	39	2	6L-6454	4	BOLT (3/8-16X1.0IN)	
	40	2	3T-4788	1	COVER	

12 FRAME AND BODY 1 of 4 SELP4570-01

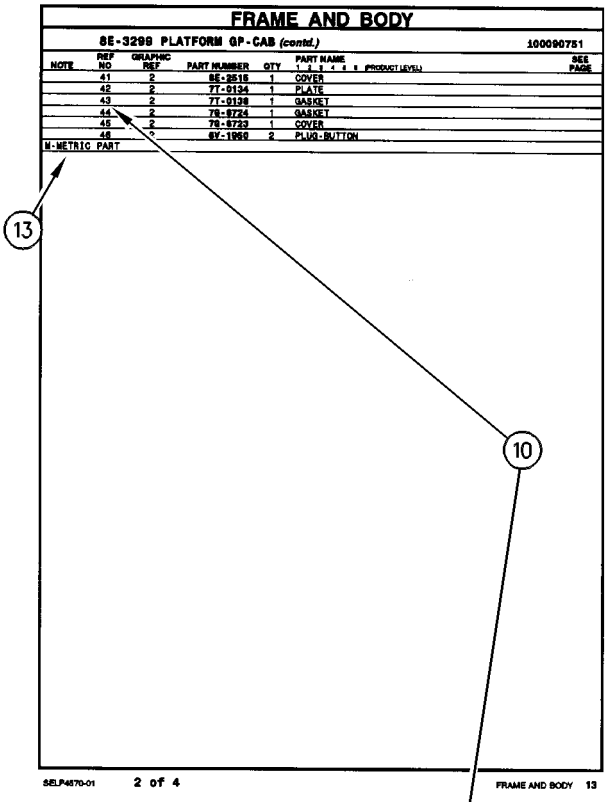

FRAME AND BODY

8E-3299 PLATFORM GP-CAB (contd.) 100090751

NOTE	REF NO	GRAPHIC REF	PART NUMBER	QTY	PART NAME 1 2 3 4 5 6 (PRODUCT LEVEL)	SEE PAGE
	41	2	8E-2515	1	COVER	
	42	2	7T-0134	1	PLATE	
	43	2	7T-0138	1	GASKET	
	44	2	7S-8724	1	GASKET	
	45	2	7S-8723	1	COVER	
	46	[illegible]	6V-1958	2	PLUG-BUTTON	
M-METRIC PART						

SELP4570-01 2 of 4 FRAME AND BODY 13

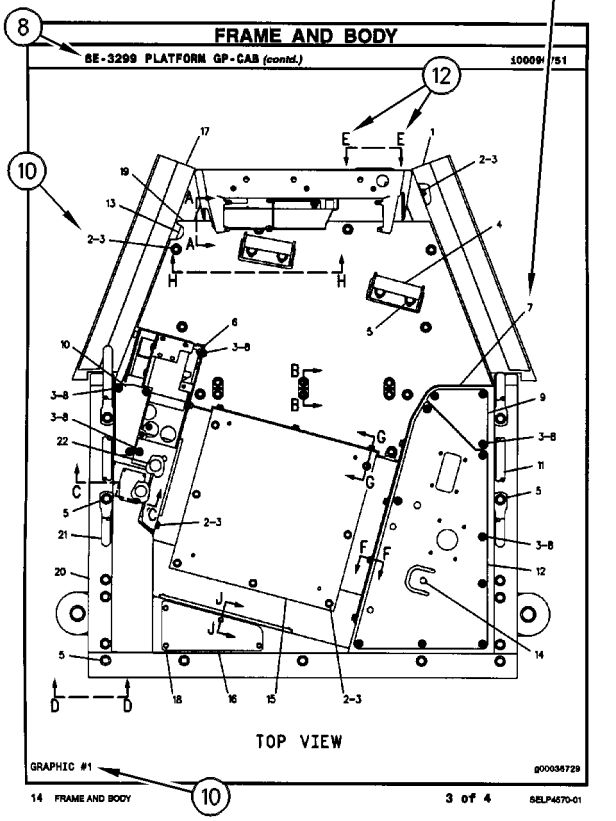

FRAME AND BODY

8E-3299 PLATFORM GP-CAB (contd.) 100090751

TOP VIEW

GRAPHIC #1 g00036729

14 FRAME AND BODY 3 of 4 SELP4570-01

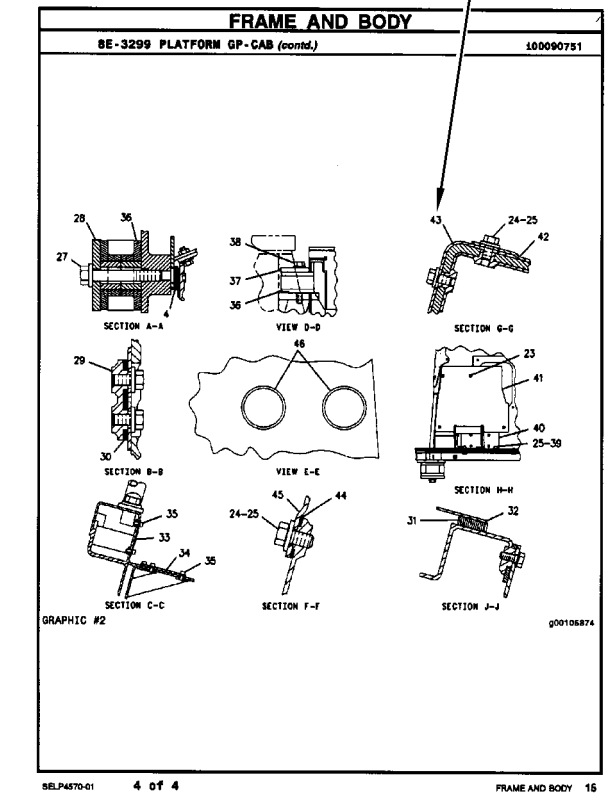

FRAME AND BODY

8E-3299 PLATFORM GP-CAB (contd.) 100090751

SECTION A-A

VIEW D-D

SECTION G-G

SECTION B-B

VIEW E-E

SECTION H-H

SECTION C-C

SECTION F-F

SECTION J-J

GRAPHIC #2 g00105874

SELP4570-01 4 of 4 FRAME AND BODY 16

1. IDENTIFICAZIONE DELLA MACCHINA

Le macchine Caterpillar sono identificate dal numero di informazione del prodotto (PIN). Certi componenti inclusi nella macchina possono essere identificati dal numero di serie (S/N). I componenti che normalmente hanno un numero di serie sono i motori, le trasmissioni, le lame ed i ripper. La macchina ed il motore sono anche identificati dai numeri di configurazione (arrangement) ed in qualche caso dai numeri di modifica. Questi numeri sono riportati sulla targhetta di identificazione del prodotto e nella targhetta principale nel compartimento operatore.

I concessionari Caterpillar necessitano di tutti questi numeri per assicurare l'accurata identificazione delle parti di ricambio.

A partire dal primo trimestre del 2001, il Numero di Identificazione del Prodotto Caterpillar (PIN) passerà da 8 a 17 caratteri. Nell'impegno diretto ad offrire una modalità comune di identificazione delle apparecchiature, la Caterpillar ed altri produttori di macchinari da costruzione si stanno attivando per uniformarsi all'ultima versione dello standard di numerazione per la identificazione dei prodotti. I PIN delle macchine per movimento terra sono definiti nello standard ISO 10261. Il nuovo formato del PIN verrà usato per tutte le macchine e tutti i gruppi elettrogeni Caterpillar. Le targhette con il PIN e le stampigliature sui telai riporteranno il PIN a 17 caratteri. Il nuovo formato si presenta come segue:

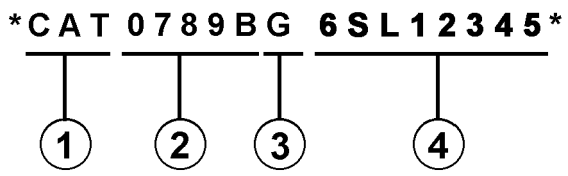

Dove:

1. è l'identificativo mondiale della produzione Caterpillar (caratteri 1-3)

2. è il descrittivo della macchina (caratteri 4-8)

3. è un carattere di controllo (character 9)

4. è la Sezione di Identificazione della Macchina (MIS) o il numero sequenziale del prodotto (caratteri 10-17). Questi caratteri costituivano in precedenza il Numero di Serie.

Le macchine ed i gruppi elettrogeni prodotti prima del primo trimestre 2001 avranno ancora il PIN nel formato ad 8 caratteri.

Gli altri componenti quali motori, trasmissioni, assali, ecc., e le attrezzature, continueranno ad usare un Numero di Serie (S/N) ad 8 caratteri.

2. ORDINAZIONE DEI RICAMBI

⚠ ATTENZIONE

Quando servono ricambi per questo prodotto, la Caterpillar raccomanda di usare ricambi originali Caterpillar o ricambi con specifiche equivalenti che comprendono, ma non si limitano a, dimensioni fisiche, tipo, resistenza e materiale.

La mancata osservanza di questa avvertenza può comportare guasti prematuri, danni al prodotto, lesioni personali o la morte.

I ricambi originali della Caterpillar sono disponibili presso i concessionari Caterpillar in tutto il mondo. I magazzini ricambi dei concessionari sono sempre aggiornati e sono provvisti di tutti i ricambi di normale consumo necessari a proteggere l'investimento fatto nelle macchine Caterpillar. Alcuni concessionari offrono anche kit di riparazione o ricambi revisionati in modo che sia possibile selezionare l'alternativa di riparazione più adatta alla particolare situazione. Nell'ordinare i ricambi occorre indicare la quantità, il numero di riferimento, la descrizione ed il numero di serie/numero di identificazione del prodotto della macchina di cui si necessitano i ricambi.

3. ORGANIZZAZIONE DEL MANUALE DEI RICAMBI

Le informazioni sul prodotto in questo manuale sono presentate come "elementi di informazione" che rappresentano tutti i componenti per il modello specifico. La configurazione (arrangement) del motore ed il Gruppo sedile sono esempi degli elementi di informazione. Gli elementi di informazione sono organizzati in ordine alfabetico per descrizione e successivamente per numero di riferimento all'interno di ciascuna sezione principale del manuale.

4. TABELLA DEI CONTENUTI

SIS *Novità*

Un indice (TOC) si trova all'inizio del manuale. Questo indice riporta ciascuna sezione del manuale con una lista completa di tutti gli elementi di informazione organizzati come appaiono nel manuale. I numeri delle pagine sono indicati per un rapido rilevamento delle illustrazioni di identificazione dettagliata delle parti e delle liste delle parti fornite.

5. INDICE DELLE PARTI DI MANUTENZIONE

L'indice delle parti di manutenzione, situato all'inizio del manuale, indica i numeri di riferimento delle parti di manutenzione più usate, le descrizioni, la quantità, l'uso ed il numero di pagina. Queste informazioni sono organizzate in ordine alfabetico per descrizione delle parti.

6. INDICE

L'indice situato vicino alla parte frontale del manuale è una lista in ordine alfabetico di tutti gli elementi di informazione inclusi in questo manuale. I numeri di pagina sono previsti per una ricerca rapida delle illustrazioni di identificazione dei ricambi e delle liste delle parti fornite.

7. INDICE DEI NUMERI DI RIFERIMENTO

Nella parte posteriore del manuale dei ricambi è riportato un indice numerico che include tutti i numeri di riferimento ed i corrispondenti numeri di pagina.

8. TITOLI

I titoli situati nella parte alta di ciascuna pagina dell'elemento di informazione identifica il numero di riferimento e la descrizione insieme alle informazioni descrittive addizionali. Le informazioni relative al PIN ed al S/N trovate in ciascun titolo devono essere usate per selezionare la corretta informazione per una macchina specifica. Sono anche indicate le opzioni di sostituzione, le identificazioni dei componenti degli accessori a richiesta e le informazioni di dove usati ("parte di").

SIS *Novità*

La prima linea di un titolo è riportata in caratteri più larghi per indicare l'inizio di un elemento di informazione. I titoli per le pagine addizionali, che possono essere necessarie per illustrare un elemento di informazione, saranno portati con caratteri standard ed includeranno il termine (continua).

9. RICAMBI NON FORNITI

SIS *Novità*

In certi casi è necessario riportare i ricambi non forniti che sono collegati ad una lista di livello inferiore di parti fornite. Questi numeri di riferimento di parti non fornite sono indicati in lettere italiche che significa che essi non sono disponibili.

10. NUMERI DI RIFERIMENTO DELLE LISTE DELLE PARTI

SIS *Novità*

I numeri mostrati nella colonna Numero di riferimento corrispondono ai numeri usati nei grafici associati. Un suffisso alfabetico può essere aggiunto ad un numero di riferimento per identificare dei componenti di livello inferiore. I numeri mostrati nella colonna Riferimento Grafico si riferiscono a degli identificatori del numero di grafico riportato all'angolo in basso a sinistra di ciascuna illustrazione. Il numero di riferimento del grafico può essere usato insieme con il numero di riferimento del componente per determinare il corretto numero di riferimento. Ci potrebbero essere delle omissioni intenzionali del Numero di riferimento in una lista poichè le informazioni sono aggiornate per riflettere i numeri di riferimento aggiornati delle parti fornibili.

11. DESCRIZIONE DEL COMPONENTE LATERALE

Quando una descrizione è riportata lateralmente in una lista, essa indica che è parte di (inclusa in) un gruppo sotto il quale è posta lateralmente.

12. LETTERE DI RIFERIMENTO DELLE ILLUSTRAZIONI

Quando necessario, le illustrazioni contengono delle lettere di riferimento (A, B, C, ecc.) che sono usate per collegare un punto ad un altro. Esse sono anche usate per mostrare dove ricollegare le illustrazioni che sono state separate.

13. ABBREVIAZIONI E SIMBOLI

O.D. – Diametro esterno
I.D. – Diametro interno
A – Non fa parte di questo gruppo
B – Usato come richiesto
C – Cambiato rispetto al tipo precedente
D – Ordinare a metro
E – Ordinare in centimetro
F – Non mostrato
G – Ordinare in pollici
I – Vedere la guida di costruzione dei tubi
M – Parte metrica
R – Potrebbe essere disponibile un componente revisionato
Y – Illustrazione separata
Z – Non fornito separatamente

NOTA

Il continuo miglioramento del disegno del prodotto può causare delle variazioni della vostra macchina che non sono incluse in questa pubblicazione. Ogni volta che esiste un dubbio relativamente alla macchina o a questa pubblicazione, rivolgersi al concessionario Caterpillar per le informazioni più aggiornate disponibili.

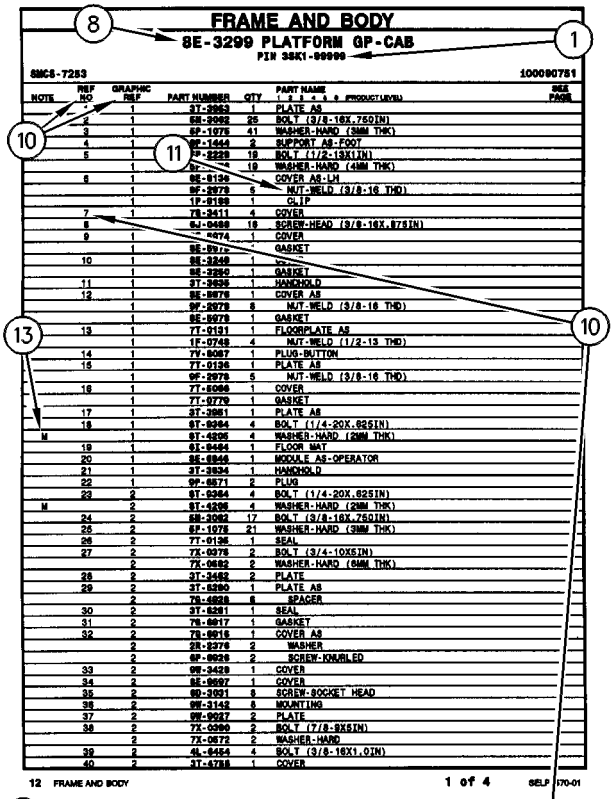
FRAME AND BODY
8E-3299 PLATFORM GP-CAB
PIN 38K1-99999
SMCS-7283
100090751
NOTE REF NO GRAPHIC REF PART NUMBER QTY PART NAME SEE PAGE
1 1 3T-3953 1 PLATE AS
2 1 6B-3062 25 BOLT (3/8-16X.750IN)
3 1 6P-1075 41 WASHER-HARD (9MM THK)
4 1 9F-1444 2 SUPPORT AS-FOOT
5 1 7P-2229 19 BOLT (1/2-13X1IN)
19 WASHER-HARD (4MM THK)
6 1 8E-8134 COVER AS-LH
1 9F-2979 6 NUT-WELD (3/8-16 THD)
1 1P-8199 1 CLIP
7 1 7S-2411 4 COVER
8 6J-0468 19 SCREW-HEAD (3/8-16X.875IN)
9 1 4674 1 COVER
1 GASKET
10 1 8E-3248 1
8E-3250 1 GASKET
11 1 3T-3939 1 HANDHOLD
12 1 8E-8078 1 COVER AS
1 9F-2978 8 NUT-WELD (3/8-16 THD)
1 8E-8078 1 GASKET
13 1 7T-0131 1 FLOORPLATE AS
1 1F-0748 4 NUT-WELD (1/2-13 THD)
14 1 7V-8067 1 PLUG-BUTTON
15 1 7T-0136 1 PLATE AS
1 9F-2979 5 NUT-WELD (3/8-16 THD)
16 1 7T-8066 1 COVER
1 7T-0779 1 GASKET
17 1 3T-3951 1 PLATE AS
18 1 6T-8364 4 BOLT (1/4-20X.625IN)
M 1 6T-4205 4 WASHER-HARD (2MM THK)
19 1 6I-8464 1 FLOOR MAT
20 1 8E-8046 1 MODULE AS-OPERATOR
21 1 3T-3934 1 HANDHOLD
22 1 9P-8571 2 PLUG
23 2 6T-8364 4 BOLT (1/4-20X.625IN)
M 2 6T-4205 4 WASHER-HARD (2MM THK)
24 2 6B-3062 17 BOLT (3/8-16X.750IN)
25 2 6P-1075 21 WASHER-HARD (9MM THK)
26 2 7T-0135 1 SEAL
27 2 7X-0378 2 BOLT (3/4-10X5IN)
2 7X-0682 2 WASHER-HARD (6MM THK)
28 2 3T-3482 2 PLATE
29 2 3T-8290 1 PLATE AS
2 7S-4838 6 SPACER
30 2 3T-8281 1 SEAL
31 2 7S-8017 1 GASKET
32 2 7S-8016 1 COVER AS
2 2R-2376 2 WASHER
2 6P-8026 2 SCREW-KNURLED
33 2 9W-3429 1 COVER
34 2 8E-8097 1 COVER
35 2 6D-3091 8 SCREW-SOCKET HEAD
36 2 9W-3142 8 MOUNTING
37 2 9W-9027 2 PLATE
38 2 7X-0390 2 BOLT (7/8-9X5IN)
2 7X-0672 2 WASHER-HARD
39 2 6L-4454 4 BOLT (3/8-16X1.0IN)
40 2 3T-4788 1 COVER
8
1
10
11
13
10
12 FRAME AND BODY
1 of 4
SELP4570-01

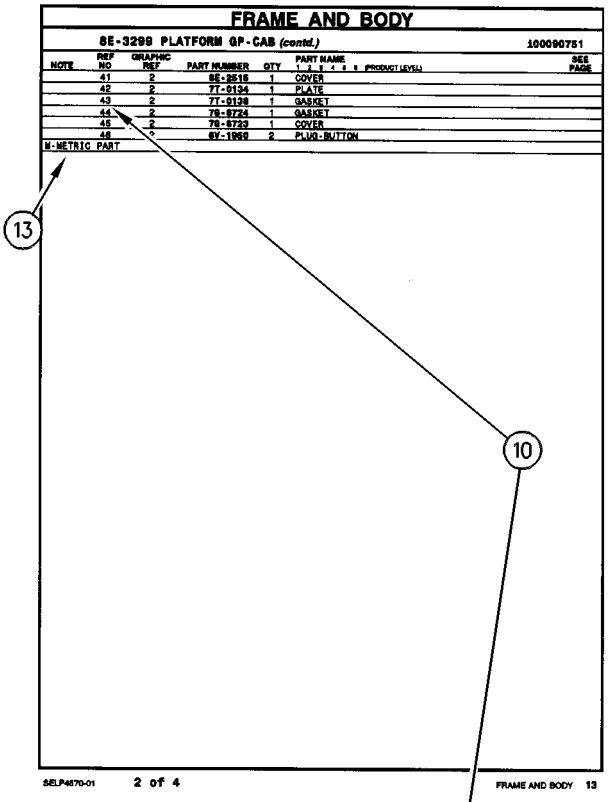
FRAME AND BODY
8E-3299 PLATFORM GP-CAB (contd.)
100090751
NOTE REF NO GRAPHIC REF PART NUMBER QTY PART NAME SEE PAGE
41 2 8E-2515 1 COVER
42 2 7T-0134 1 PLATE
43 2 7T-0138 1 GASKET
44 2 7S-8724 1 GASKET
45 2 7S-8723 1 COVER
46 6V-1958 2 PLUG-BUTTON
M-METRIC PART
13
10
SELP4570-01
2 of 4
FRAME AND BODY 13

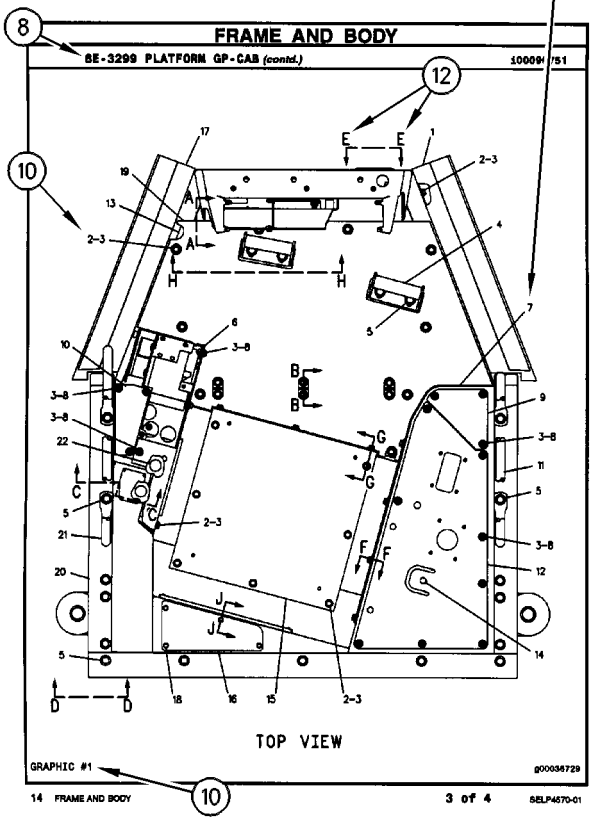
FRAME AND BODY
8E-3299 PLATFORM GP-CAB (contd.)
100090751
8
12
10
TOP VIEW
GRAPHIC #1
g00036729
10
14 FRAME AND BODY
3 of 4
SELP4570-01

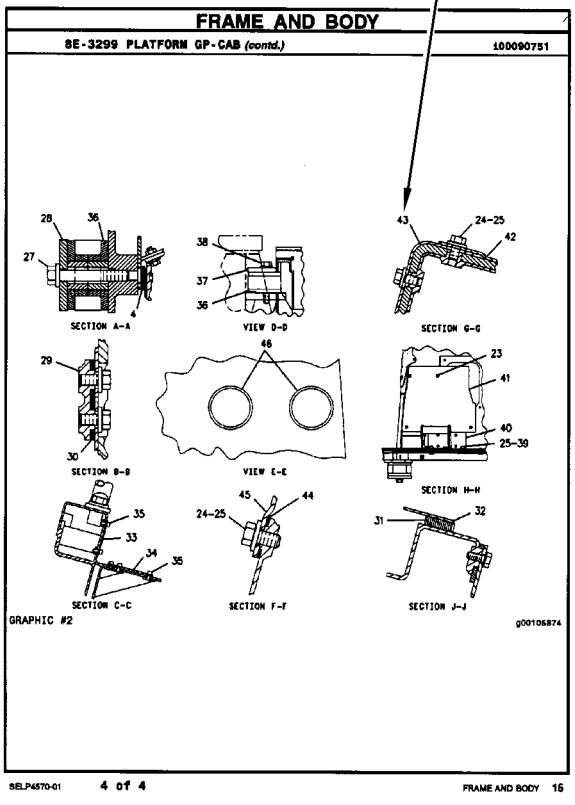
FRAME AND BODY
8E-3299 PLATFORM GP-CAB (contd.)
100090751
SECTION A-A
VIEW D-D
SECTION G-G
SECTION B-B
VIEW E-E
SECTION H-H
SECTION C-C
SECTION F-F
SECTION J-J
GRAPHIC #2
g00105874
SELP4570-01
4 of 4
FRAME AND BODY 16

REMANUFACTURED COMPONENTS

As an option when making repairs consider Caterpillar Remanufactured Components. Components that are available through the Caterpillar Remanufactured Program are identified three ways in the parts book:

- with the letter R in the note field of the parts list
- with an R* at the beginning of the first line of the caption
- with an *R at the end of the first line of the caption

Typical components included in the Remanufacturing Program include:

ALTERNATORS
CONNECTING RODS
CRANKSHAFTS - UNDERSIZE
CRANKSHAFTS - UPGRADE TO NEW
CYLINDER HEADS
ELECTRONIC CONTROL MODULES (ECM)
ELECTRONIC SENSORS
FUEL INJECTORS
FUEL NOZZLES
FUEL PUMPS
GOVERNORS
OIL PUMPS
PISTONS
SHORT BLOCKS
STARTERS
TURBOCHARGERS - COMPLETE
TURBOCHARGER CARTRIDGES
WATER PUMPS

Caterpillar Remanufactured engines for many engine arrangements are also available.

OPTIONS DE RÉPARATION

COMPOSANTS RÉNOVÉS

Comme option de réparation, considérer les composants rénovés Caterpillar. Les composants disponibles dans le cadre du programme Caterpillar de composants rénovés sont identifiés de trois façons dans le catalogue de pièces:

- avec la lettre "R" dans l'espace note de la liste des pièces
- avec R* au début de la première ligne des légendes
- avec *R à la fin de la première ligne des légendes

Les composants suivants figurent parmi les composants typiques du programme de rénovation:

ALTERNATEURS
BIELLES
VILEBREQUINS - SOUS-DIMENSIONNÉS
VILEBREQUINS - REMIS À NEUF
CULASSES
MODULES DE COMMANDE ÉLECTRONIQUE (ECM)
CAPTEURS ÉLECTRONIQUES
INJECTEURS
TÊTES D'INJECTEURS
POMPES À CARBURANT
RÉGULATEURS
POMPES À HUILE
PISTONS
BLOCS EMBIELLÉS
DÉMARREURS
TURBOCOMPRESSEURS - COMPLETS
CARTOUCHES DE TURBOCOMPRESSEUR
POMPES À EAU

Des moteurs rénovés sont aussi disponibles pour plusieurs versions de moteur.

COMPONENTES REMANUFACTURADOS

Al hacer reparaciones, tenga en cuenta la opción de Componentes Remanufacturados Caterpillar. Los componentes que están disponibles por medio del programa de Productos Remanufacturados Caterpillar se identifican de tres maneras en el manual de piezas:

- con la letra R en el espacio de Nota de la lista de piezas
- con una R* al comienzo de la primera línea de la leyenda
- con una *R al final de la primera línea de la leyenda

Los componentes que se incluyen típicamente en el Programa de Productos Remanufacturados son:

ALTERNADORES
BIELAS
CIGÜEÑALES - BAJOMEDIDA
CIGÜEÑALES - REMANUFACTURADOS A NUEVO
CULATAS
MÓDULOS DE CONTROL ELECTRÓNICO (ECM)
SENSORES ELECTRONICOS
INYECTORES
BOQUILLAS
BOMBAS DE COMBUSTIBLE
REGULADORES
BOMBAS DE ACEITE
PISTONES
MONOBLOQUES
MOTORES DE ARRANQUE
TURBOCOMPRESORES - COMPLETOS
NÚCLEOS DE TURBOCOMPRESOR
BOMBAS DE AGUA

También hay disponibles motores Remanufacturados Caterpillar para muchas de las configuraciones de motores.

COMPONENTES REMANUFATURADOS

Considere o uso de Componentes Remanufaturados Caterpillar ao efetuar reparos. Os componentes disponíveis através do Programa de Remanufatura Caterpillar são identificados de três formas no manual de peças:

- com um R na área da nota da lista de peças
- com um R* no princípio da primeira linha da legenda
- com um *R no final da primeira linha da legenda

Os componentes típicos que constam no Programa de Remanufatura incluem:

ALTERNADORES
BIELAS
VIRABREQUINS - SUBMEDIDAS
VIRABREQUINS - ATUALIZAÇÃO
CABEÇOTES
MÓDULOS DE CONTROLE ELETRÔNICO (ECM)
SENSORES ELETRÔNICOS
INJETORES DE COMBUSTÍVEL
BICOS DE ABASTECIMENTO DE COMBUSTÍVEL
BOMBAS DE COMBUSTÍVEL
GOVERNADORES
BOMBAS DE ÓLEO
PISTÕES
BLOCOS BÁSICOS DO MOTOR
MOTORES DE PARTIDA
TURBOALIMENTADORES - COMPLETOS
CARTUCHOS DE TURBOALIMENTADORES
BOMBAS D'ÁGUA

Motores Remanufaturados Caterpillar também encontram-se disponíveis para diversos arranjos de motor.

WERKÜBERHOLTE AT-PRODUKTE

Bei Reparaturen sollten werküberholte AT-Produkte von Caterpillar in Betracht gezogen werden. Die durch das AT-Programm von Caterpillar erhältlichen Teile sind im Parts Book auf drei verschiedene Arten gekennzeichnet:

- mit dem Buchstaben R in der Spalte NOTE der Ersatzteilliste
- mit einem R* am Anfang der ersten Zeile der Überschrift
- mit einem *R am Ende der ersten Zeile der Überschrift

Das AT-Programm umfaßt u.a. folgende Produkte:

DREHSTROMGENERATOREN
PLEUELSTANGEN
KURBELWELLEN - MIT UNTERMASS
KURBELWELLEN - MIT ORIGINALMASS
ZYLINDERKÖPFE
ELEKTRONISCHE STEUEREINHEITEN (EMC)
ELEKTRONISCHE SENSOREN
PUMPENDÜSEN
EINSPRITZDÜSEN
KRAFTSTOFFPUMPEN
DREHZAHLREGLER
ÖLPUMPEN
KOLBEN
TEILMOTOREN
ANLASSER
TURBOLADER - KOMPLETT
TURBOLADERLAUFZEUGE
KÜHLWASSERPUMPEN

Viele Motoren können durch werküberholte AT-Motoren von Caterpillar ersetzt werden.

ALTERNATIVE DI RIPARAZIONE

COMPONENTI RICOSTRUITI

Come opzione di riparazione, considerare i componenti Caterpillar rifabbricati. I componenti disponibili tramite il programma di ricostruzione Caterpillar sono contrassegnati in tre modi diversi nel libro dei ricambi:

- mediante la lettera R nel settore delle note dell'elenco dei ricambi
- mediante la lettera R* all'inizio della prima riga della leggenda
- mediante la lettera *R alla fine della prima riga della leggenda

Tra i componenti tipici inclusi nel programma di rifabbricazione ci sono:

ALTERNATORI
BIELLE
ALBERI A GOMITO - MINORATI
ALBERI A GOMITO - RIPRISTINATI A NUOVO
TESTATE MOTORE
MODULI DI COMANDO ELETTRONICI (ECM)
SENSORI ELETTRONICI
INIETTORI DI COMBUSTIBILE
UGELLI PER COMBUSTIBILE
POMPE PER COMBUSTIBILE
REGOLATORI
POMPE OLIO
PISTONI
MONOBLOCCHI CORTI
MOTORINI DI AVVIAMENTO
TURBOCOMPRESSORI - COMPLETI
CARTUCCE DI TURBOCOMPRESSORI
POMPE ACQUA

I motori Caterpillar rifabbricati sono ora disponibili per molte versioni di motori.

SUPPLEMENTAL COOLANT ADDITIVES

CUSTOMER BENEFITS:

Protects against cavitation, foam, erosion, corrosion, and scale buildup in cooling systems.

- Provides measured coolant conditioner.

DESCRIPTION:

Additives deplete from the coolant with normal operation. For this reason, Supplemental Coolant Additives (SCA) must be added to all heavy duty coolants at regular intervals. In addition, when not using a fully formulated, pre-charged antifreeze, like Caterpillar's DEAC, an initial charge of SCA must be added to the cooling system. The amount of SCA added to the system is dependent on the capacity of the system.

The SCA for initial fill is provided as a liquid. SCA's for maintenance intervals are available in liquid form and as a spin-on element. (No Spin-on available for 3600 Family of Engines)

NOTE:

The amount of SCA added at initial fill is not the same as the amount added at maintenance intervals.

The coolant additive elements can be used with any ethylene or propylene glycol type antifreeze which meets ASTM D4985 or ASTM D5345 Specifications.

NOTE:

For use with standard heavy duty coolant only, not for use with Extended Life Coolant.

PARTS NEEDED:

Cooling System Capacity		Liquid SCA at Initial Fill	Liquid SCA at Maintenance*	Spin-on SCA Maintenance Element*
Liters	Gallons			
22-30	(6-8)	3P-2044 (1)	6V-3542 (1)	111-2370 (1)
30-38	(8-10)	3P-2044 (1) 6V-3542 (1)	111-2372 (1)	111-2369 (1)
38-49	(10-13)	3P-2044 (1) 8T-1589 (1)	111-2372 (1)	111-2369 (1)
49-64	(13-17)	3P-2044 (2)	8T-1589 (1)	9N-3368 (1)
64-83	(17-22)	3P-2044 (2) 8T-1589 (1)	111-2372 (1) 6V-3542 (1)	111-2371 (1)
83-114	(22-30)	3P-2044 (3) 8T-1589 (1)	3P-2044 (1)	9N-3718 (1)
114-163	(30-43)	3P-2044 (5)	3P-2044 (1) 6V-3542 (1)	111-2371 (2)
163-242	(43-64)	3P-2044 (8)	3P-2044 (2)	9N-3718 (2)

** Normal maintenance period is 250 hrs. See your Operation and Maintenance Manual for complete coolant maintenance instructions.*

( ) Indicates quantity required.

ADDITIFS POUR LIQUIDE DE REFROIDISSEMENT

AVANTAGES POUR LE CLIENT

L'additif protège contre la cavitation, la mousse, l'érosion, la corrosion et l'accumulation de dépôts dans le circuit de refroidissement.

- L'additif complémentaire fournit une quantité mesurée d'additif.

DESCRIPTION:

Les additifs s'épuisent pendant l'utilisation du moteur. C'est pourquoi l'on doit ajouter de l'additif au liquide de refroidissement/antigel pour moteurs diesel à intervalles réguliers. En plus, si l'on n'utilise pas de l'antigel entièrement formulé et pré-chargé comme le liquide de refroidissement/antigel Caterpillar pour moteurs diesel, une quantité initiale d'additif doit être ajoutée au circuit de refroidissement. La quantité d'additif à ajouter au circuit dépend de la contenance du circuit.

L'additif pour le remplissage initial est fourni sous forme liquide. L'additif pour l'entretien ultérieur est disponible sous forme liquide et sous forme d'élément à visser. (Il n'y a pas d'élément à visser pour les moteurs de la famille 3600).

NOTA:

La quantité d'additif à ajouter au remplissage initial diffère de la quantité à ajouter aux intervalles d'entretien.

Les éléments d'additif peuvent être utilisés avec tout antigel de type éthylène ou propylène-glycol conforme à la norme ASTM D4985 ou ASTM D5345.

NOTA:

A utiliser uniquement avec du liquide de refroidissement pour moteurs diesel et non avec le liquide de refroidissement longue durée.

PIÈCES NÉCESSAIRES:

Contenance du circuit de refroidissement		Additif liquide au remplissage initial	Additif liquide aux intervalles d'entretien*	Elément d'additif à visser aux intervalles d'entretien*
Litres	Gallons U.S.			
22-30	(6-8)	3P-2044 (1)	6V-3542 (1)	111-2370 (1)
30-38	(8-10)	3P-2044 (1) 6V-3542 (1)	111-2372 (1)	111-2369 (1)
38-49	(10-13)	3P-2044 (1) 8T-1589 (1)	111-2372 (1)	111-2369 (1)
49-64	(13-17)	3P-2044 (2)	8T-1589 (1)	9N-3368 (1)
64-83	(17-22)	3P-2044 (2) 8T-1589 (1)	111-2372 (1) 6V-3542 (1)	111-2371 (1)
83-114	(22-30)	3P-2044 (3) 8T-1589 (1)	3P-2044 (1)	9N-3718 (1)
114-163	(30-43)	3P-2044 (5)	3P-2044 (1) 6V-3542 (1)	111-2371 (2)
163-242	(43-64)	3P-2044 (8)	3P-2044 (2)	9N-3718 (2)

** L'intervalle d'entretien normal est de 250 heures-service. Voir le Guide d'utilisation et d'entretien pour de plus amples renseignements concernant l'entretien du circuit de refroidissement.*

( ) Indique la quantité exigée.

ADITIVOS DE REFRIGERANTE SUPLEMENTARIOS

VENTAJAS PARA EL USUARIO:

Protegen contra la cavitación, la formación de espuma, la corrosión y la acumulación de escamas en los sistemas de enfriamiento.

- Suministra un acondicionador dosificado de refrigerante.

DESCRIPCIÓN:

Los aditivos en el refrigerante se agotan con la operación normal. Por esta razón, se debe agregar Aditivo de refrigerante suplementario (SCA) a todos los refrigerantes para servicio pesado, a intervalos regulares. Además, cuando no se usa un anticongelante de precarga completo, tal como el DEAC de Caterpillar, es necesario agregar una cantidad de aditivo de refrigerante suplementario inicial al sistema de enfriamiento. La cantidad de aditivo que se debe agregar depende de la capacidad del sistema.

El SCA de llenado inicial es líquido. El que se usa para el mantenimiento está disponible tanto en líquido como en un elemento enroscable. (No hay elemento enroscable disponible para la Familia de Motores 3600).

NOTA:

La cantidad de aditivo de llenado inicial no es la misma que se agrega en los intervalos de mantenimiento.

Los elementos de aditivo de refrigerante se pueden usar con cualquier anticongelante de tipo glicol etilénico o propílico que esté de acuerdo con las especificaciones de las normas ASTM D4985 o ASTM D5345.

NOTA:

Se debe utilizar únicamente con refrigerante estándar para servicio pesado; no se debe usar con Refrigerante de Larga Duración.

PIEZAS NECESARIAS:

Capacidad del Sistema de Enfriamiento		SCA líquido de llenado inicial	SCA líquido de mantenimiento*	Elemento de mantenimiento enroscable*
litros	gal EE.UU.			
22-30	6-8	3P-2044 (1)	6V-3542 (1)	111-2370 (1)
30-38	8-10	3P-2044 (1) 6V-3542 (1)	111-2372 (1)	111-2369 (1)
38-49	10-13	3P-2044 (1) 8T-1589 (1)	111-2372 (1)	111-2369 (1)
49-64	13-17	3P-2044 (2)	8T-1589 (1)	9N-3368 (1)
64-83	17-22	3P-2044 (2) 8T-1589 (1)	111-2372 (1) 6V-3542 (1)	111-2371 (1)
83-114	22-30	3P-2044 (3) 8T-1589 (1)	3P-2044 (1)	9N-3718 (1)
114-163	30-43	3P-2044 (5)	3P-2044 (1) 6V-3542 (1)	111-2371 (2)
163-242	43-64	3P-2044 (8)	3P-2044 (2)	9N-3718 (2)

** El período normal de mantenimiento es de 250 horas. Para ver las instrucciones completas sobre el mantenimiento del refrigerante, consulte el Manual de Operación y Mantenimiento.*

( ) Indica la cantidad necesaria.

ADITIVOS SUPLEMENTARES DO LÍQUIDO ARREFECEDOR

BENEFÍCIOS PARA O CLIENTE:

Protege contra cavitação, espuma, erosão, corrosão e acúmulo de crostas nos sistemas de arrefecimento.

- Fornece uma quantidade pré-determinada de condicionador de arrefecimento.

DESCRIÇÃO:

Com a operação normal, os aditivos se esgotam do líquido arrefecedor. Por isso, Aditivos Suplementares do Líquido Arrefecedor (SCA) devem ser acrescentados a todos os líquidos arrefecedores para serviço pesado em intervalos regulares. Além disso, quando um anticongelante pré-carregado, totalmente formulado não for usado, como o DEAC Caterpillar, uma carga inicial de SCA deve ser acrescentada ao sistema de arrefecimento. A quantidade de SCA acrescentada ao sistema depende da capacidade do sistema.

O SCA para abastecimento inicial é fornecido em forma de líquido. Os aditivos suplementares (SCA) para intervalos de manutenção estão à disposição em forma líquida e como um elemento com roscas. (Exceto os Motores da Família 3600)

NOTA:

A quantidade de SCA adicionada no abastecimento inicial não é a mesma que a acrescentada nos intervalos de manutenção.

Os elementos do aditivo do líquido arrefecedor podem ser usados com qualquer tipo de anticongelante etileno ou propileno que satisfaz as Especificações ASTM D4985 ou ASTM D5345.

NOTA:

Para uso apenas com líquido arrefecedor para serviço pesado padrão, não deve ser usado com Líquido Arrefecedor de Vida Longa.

PEÇAS NECESSÁRIAS:

Capacidade do Sistema de Arrefecimento		Líquido SCA Durante Abastecimento Inicial	Líquido SCA Durante Manutenção*	Elemento de Manutenção de SCA com Roscas*
Litros	Galões			
22-30	6-8	3P-2044 (1)	6V-3542 (1)	111-2370 (1)
30-38	8-10	3P-2044 (1) 6V-3542 (1)	111-2372 (1)	111-2369 (1)
38-49	10-13	3P-2044 (1) 8T-1589 (1)	111-2372 (1)	111-2369 (1)
49-64	13-17	3P-2044 (2)	8T-1589 (1)	9N-3368 (1)
64-83	17-22	3P-2044 (2) 8T-1589 (1)	111-2372 (1) 6V-3542 (1)	111-2371 (1)
83-114	22-30	3P-2044 (3) 8T-1589 (1)	3P-2044 (1)	9N-3718 (1)
114-163	30-43	3P-2044 (5)	3P-2044 (1) 6V-3542 (1)	111-2371 (2)
163-242	43-64	3P-2044 (8)	3P-2044 (2)	9N-3718 (2)

** O período normal de manutenção é de 250 horas. Consulte o Manual de Operação e Manutenção para obter instruções completas quanto à manutenção do líquido arrefecedor.*

( ) Indica a quantidade exigida.

KÜHLMITTELZUSATZ

VORTEILE FÜR DEN KUNDEN:

Schutz gegen Kavitation, Schaumbildung, Erosion, Korrosion und Kesselsteinbildung in Kühlsystemen.

- Richtig dosierter Kühlmittelzusatz

BESCHREIBUNG:

Additive erschöpfen sich während des Motorbetriebs. Deshalb muß allen HD-Kühlmitteln regelmäßig Kühlmittelzusatz beigefügt werden. Wenn bei Erstfüllung kein vollwertiges Fertigkühlmittel, wie das Frostschutz- und Kühlmittel für Dieselmotoren von Caterpiller (DEAC), verwendet wird, muß bei Erstfüllung Kühlmittelzusatz beigefügt werden. Wieviel Kühlmittelzusatz beigefügt werden muß, hängt vom Inhalt des Kühlsystems ab.

Für Erstfüllung ist Kühlmittelzusatz nur in flüssiger Form erhältlich. Für Wartungsintervalle ist Kühlmittelzusatz in flüssiger Form und als Zusatzelement erhältlich. (Für die Motorbaureihe 3600 sind keine Zusatzelemente erhältlich.)

ANMERKUNG:

Die Kühlmittelmenge bei Erstfüllung ist nicht die gleiche Menge, die bei Wartungsintervallen beigefügt werden muß.

Die Kühlmittelzusatzelemente können mit allen Frostschutzmitteln auf Ethylen- oder Propylenglykolbasis verwendet werden, die den Standards nach ASTM D4985 oder ASTM D5345 entsprechen.

ANMERKUNG:

Den Kühlmittelzusatz nicht mit Langzeitkühlmittel (ELC) von Caterpillar verwenden. Der Kühlmittelzusatz ist nur für HD-Kühlmittel bestimmt.

TEILEBEZEICHNUNG:

Kühlsysteminhalt		Kühlmittelzusatz bei Erstfüllung	Flüssiger Kühlmittelzusatz bei Wartung*	Kühlmittelzusatzelement bei Wartung*
Liter	US-Gall.			
22-30	(6-8)	3P-2044 (1)	6V-3542 (1)	111-2370 (1)
30-38	(8-10)	3P-2044 (1) 6V-3542 (1)	111-2372 (1)	111-2369 (1)
38-49	(10-13)	3P-2044 (1) 8T-1589 (1)	111-2372 (1)	111-2369 (1)
49-64	(13-17)	3P-2044 (2)	8T-1589 (1)	9N-3368 (1)
64-83	(17-22)	3P-2044 (2) 8T-1589 (1)	111-2372 (1) 6V-3542 (1)	111-2371 (1)
83-114	(22-30)	3P-2044 (3) 8T-1589 (1)	3P-2044 (1)	9N-3718 (1)
114-163	(30-43)	3P-2044 (5)	3P-2044 (1) 6V-3542 (1)	111-2371 (2)
163-242	(43-64)	3P-2044 (8)	3P-2044 (2)	9N-3718 (2)

** Der normale Wartungsintervall beträgt 250 Betriebsstunden. Für vollständige Anweisungen zur Wartung des Kühlsystems, siehe Betriebs- und Wartungshandbuch.*

( ) Erforderliche Anzahl

ADDITIVI SUPPLEMENTARI PER LIQ. DI RAFFREDDAMENTO

VANTAGGI PER IL CLIENTE

Protegge contro la cavitazione, la schiuma, la corrosione e l'accumulo di scorie negli impianti di raffreddamento.

- Fornisce un inibitore del liquido di raffreddamento dosato.

DESCRIZIONE

Gli additivi nel liquido di raffreddamento si esauriscono con il normale uso. Perciò gli additivi supplementari del liquido di raffreddamento (supplemental coolant additives - SCA) devono essere aggiunti a tutti i liquidi di raffreddamento per impieghi gravosi ad intervalli regolari. Inoltre, se non si utilizza un antigelo a piena formula e precaricato, come l'antigelo Caterpillar DEAC, occorre aggiungere una carica iniziale di SCA all'impianto di raffreddamento. La quantità di SCA da aggiungere all'impianto dipende dalla capienza dell'impianto stesso.

Il prodotto SCA per il riempimento iniziale viene fornito in forma liquida e come elemento per la manutenzione periodica (elemento avvitabile non disponibile per i motori serie 3600).

NOTA:

La quantità iniziale di SCA al riempimento iniziale non è la stessa aggiunta durante la manutenzione periodica.

Gli elementi di additivo del liquido di raffreddamento possono essere utilizzati con qualsiasi tipo di antigelo al glicole di etilene o di propilene che sia conforme alle specifiche ASTM D4985 o ASTM D5345.

NOTA:

Da utilizzare solamente con liquido di raffreddamento per impieghi gravosi standard. Non deve essere utilizzato con il liquido di raffreddamento a lunga durata (Extended Life Coolant).

QUANTITÀ OCCORRENTI

Capacità del circuito di raffreddamento		SCA liquido - riempimento iniziale	SCA liquido alla manutenzione*	Elemento SCA di manutenzione*
Litri	Galloni			
22-30	(6-8)	3P-2044 (1)	6V-3542 (1)	111-2370 (1)
30-38	(8-10)	3P-2044 (1) 6V-3542 (1)	111-2372 (1)	111-2369 (1)
38-49	(10-13)	3P-2044 (1) 8T-1589 (1)	111-2372 (1)	111-2369 (1)
49-64	(13-17)	3P-2044 (2)	8T-1589 (1)	9N-3368 (1)
64-83	(17-22)	3P-2044 (2) 8T-1589 (1)	111-2372 (1) 6V-3542 (1)	111-2371 (1)
83-114	(22-30)	3P-2044 (3) 8T-1589 (1)	3P-2044 (1)	9N-3718 (1)
114-163	(30-43)	3P-2044 (5)	3P-2044 (1) 6V-3542 (1)	111-2371 (2)
163-242	(43-64)	3P-2044 (8)	3P-2044 (2)	9N-3718 (2)

** L'intervallo normale di manutenzione è ogni 250 ore. Consultare il manuale d'uso e manutenzione (Operation and Maintenance Manual) per le complete istruzioni sulla manutenzione riguardanti il liquido di raffreddamento.*

( ) Indica la quantità necessaria.

MAINTENANCE PARTS

DESCRIPTION	PART NUMBER	QTY	WHERE USED	PAGE
AIR INLET AND EXHAUST SYSTEM				
ELEMENT AS (PRIMARY)	134-8726	1	AIR CLEANER GP	97
ELEMENT AS (SECONDARY)	140-2334	1	AIR CLEANER GP	97
ELEMENT-MAIN (PRIMARY)	110-6326	1	AIR CLEANER GP	95
ELEMENT (SECONDARY)	110-6331	1	AIR CLEANER GP	95
FILTER ELEMENT AS-AIR (PRIMARY)	110-6326	1	AIR CLEANER GP	96
FILTER ELEMENT AS-AIR (SECONDARY)	110-6331	1	AIR CLEANER GP	96
VALVE-VACUATOR	112-9717	1	AIR CLEANER GP	95
		1	AIR CLEANER GP	97
BASIC ENGINE				
CAP-DUST	8C-3445	1	DRAIN GP-ENGINE OIL	28
CAP-OIL	170-7666	1	COVER GP-VALVE MECHANISM	14
		1	COVER GP-VALVE MECHANISM	16
GASKET	6I-0512	1	HOUSING GP-FRONT	36
GASKET-VALVE COVER	159-0082	1	COVER GP-VALVE MECHANISM	14
		1	COVER GP-VALVE MECHANISM	16
HOSE (FUMES DISPOSAL)	153-0104	1	COVER GP-VALVE MECHANISM	14
VALVE-DRAIN	170-7614	1	PAN GP-OIL	44
COOLING SYSTEM				
CAP AS-RADIATOR	036-1865	1	RADIATOR & HYD OIL COOLER GP	78
	126-5027	1	RADIATOR & HYD OIL COOLER GP	68
		1	RADIATOR & HYD OIL COOLER GP	70
		1	RADIATOR & HYD OIL COOLER GP	72
		1	RADIATOR & HYD OIL COOLER GP	74
		1	RADIATOR & HYD OIL COOLER GP	76
CAP-VENTED	169-6715	1	RADIATOR & OIL COOLER MTG GP	82
		1	RADIATOR & OIL COOLER MTG GP	84
		1	RADIATOR & OIL COOLER MTG GP	88
			RADIATOR & OIL COOLER MTG GP	92
FILTER AS-ENGINE OIL	7W-2327	1	COOLER GP-FLTR BASE & ENG OIL	59
GASKET	198-8555	1	CONNECTION GP-WATER	56
		1	CONNECTION GP-WATER	58
HOSE	142-8867	1	RADIATOR & HYD OIL COOLER GP	80
		1	RADIATOR & OIL COOLER MTG GP	86
		1	RADIATOR & OIL COOLER MTG GP	88
REGULATOR-WATER TEMPERATURE	4W-8063	1	PUMP GP-WATER	65
		1	PUMP GP-WATER	66

MAINTENANCE PARTS

DESCRIPTION	PART NUMBER	QTY	WHERE USED	PAGE
ELECTRICAL AND STARTING SYSTEM				
BATTERY (12 VOLT)	153-5656	1	BATTERY GP	142
BATTERY (12 VOLT)(WET)	115-2422	1	BATTERY GP	143
BELT-DRIVE	9X-8139	1	LAMP GP-WARNING BEACON	157
CIRCUIT BREAKER AS (30 AMP)	147-1773	1	WIRING GP-CHASSIS	184
FUSE (10 AMP)	113-8490	1	WARNING GP-BACKUP	178
		9	WIRING GP-CAB	180
FUSE (15 AMP)	113-8491	1	WIRING GP-AIR CONDITIONER	179
		2	WIRING GP-CAB	180
		2	WIRING GP-WORK TOOL	196
		2	WIRING GP-WORK TOOL	198
		2	WIRING GP-WORK TOOL	200
		2	WIRING GP-WORK TOOL	202
LAMP GP-HEAD & SIGNAL	3E-7584	2	LIGHTING GP-ROADING	162
		2	LIGHTING GP-ROADING	166
LAMP-HEAD (12 VOLT/60-55 WATT)	9W-3324	1	LAMP GP-HEAD & SIGNAL	152
LAMP (12 VOLT) (1.12 WATT)	189-3610	2	LAMP GP-PANEL ILLUMINATION	154
LAMP (12 VOLT/21 WATT)	5G-3244	1	LAMP GP-HEAD & SIGNAL	152
LAMP (12 VOLT)(21 WATT) (TURN)	9W-3326	1	LAMP GP-SIGNAL	155
LAMP (12 VOLT/4 WATT)	100-3246	1	LAMP GP-HEAD & SIGNAL	152
LAMP (12 VOLT)(55 WATT)	9W-0607	1	LAMP GP-FLOOD	149
		1	LAMP GP-FLOOD	150
LAMP (12 VOLT/55 WATT)	9X-8118	1	LAMP GP-WARNING BEACON	157
LAMP (12VOLT)(21/5 WATT)	084-4348	1	LAMP GP-STOP & TAIL	156
LAMP (12VOLT)(21/5 WATT) (STOP AND TAIL)	084-4348	1	LAMP GP-SIGNAL	155
LENS	146-2438	1	LAMP GP-SIGNAL	155
	165-4895	1	LAMP GP-STOP & TAIL	156
LENS (AMBER)	9X-8121	1	LAMP GP-WARNING BEACON	157
	100-3250	1	LAMP GP-HEAD & SIGNAL	152
LENS AS	100-3248	1	LAMP GP-HEAD & SIGNAL	152
PLUG-GLOW	177-7559	4	GLOW PLUG GP	147
PULLER-MINIFUSE	116-7471	1	COVER GP-FUSE PANEL	145
REFLECTOR	9R-1499	2	LIGHTING GP-REAR	160
RELAY AS	146-4323	2	WIRING GP-CAB	180
		2	WIRING GP-WORK TOOL	196
		2	WIRING GP-WORK TOOL	198
		2	WIRING GP-WORK TOOL	200
		2	WIRING GP-WORK TOOL	202
V-BELT	5L-3834	1	ALTERNATOR GP-CHARGING	141
FRAME AND BODY				
BREATHER	9G-5127	2	FRAME GP-LOADER	298
		2	FRAME GP-LOADER	300
	124-2831	2	FRAME GP-LOADER	296
FITTING-GREASE	3B-8488	2	FRAME GP-LOADER	298
FITTING-GREASE (1/8-27 THD)	3B-8489	1	FRAME GP-BLADE	294
PLUG-MAGNETIC	3S-9182	5	FRAME GP-LOADER	296
		5	FRAME GP-LOADER	298
		5	FRAME GP-LOADER	300
REFLECTOR	9R-1499	2	MOUNTING GP-ROADING LIGHTS	308

MAINTENANCE PARTS

DESCRIPTION	PART NUMBER	QTY	WHERE USED	PAGE
FUEL SYSTEM				
CAP AS-FUEL	142-8828	1	LINES GP-FUEL	132
		1	LINES GP-FUEL	134
FILTER ELEMENT AS-FUEL	159-6102	1	FILTER GP-FUEL	126
FILTER ELEMENT-WATER	131-1812	1	SEPARATOR GP-WATER	140
FILTER GP-FUEL	138-3096	1	FILTER & LINES GP-FUEL	124
GASKET	121-3221	1	FILTER & LINES GP-FUEL	124
SEAL (FUEL FILTER)	101-3743	1	FILTER GP-FUEL	126
HYDRAULIC SYSTEM				
CAP AS-HYDRAULIC	142-8937	1	TANK GP-HYDRAULIC	447
		1	TANK GP-HYDRAULIC	448
CAP-DUST	6V-0852	1	LINES GP-PILOT	412
		1	LINES GP-PUMP	414
		1	LINES GP-PUMP	416
FITTING-GREASE	3B-8489	1	CYLINDER & MTG GP-BLADE	345
		2	CYLINDER & MTG GP-GRAPPLE	346
FITTING-GREASE (1/8-27 THD)	3B-8489	1	CYLINDER GP-BUCKET	348
		1	CYLINDER GP-GRAPPLE	350
		1	CYLINDER GP-GRAPPLE	351
		1	CYLINDER GP-TILT	355
		1	CYLINDER GP-TILT	356
		2	MOUNTING GP-CYLINDER	440
KIT-SEAL	107-7491	1	VALVE GP-BANK 2	458
SEAL-O-RING (19.18MM ID)	2M-9780	1	LINES GP-GRAPPLE	384
IMPLEMENTS				
FITTING-GREASE (1/8-27 THD)	3B-8488	2	CONTROL GP-WORK TOOL	492
	3B-8489	10	CONTROL GP-WORK TOOL	492
FITTING-GREASE ((1/8-27 THD)	3B-8489	10	CONTROL GP-WORK TOOL	496
LUBRICATION SYSTEM				
FILTER AS-ENGINE OIL	7W-2327	1	FILTER GP-ENGINE OIL	53
OPERATOR STATION				
BLADE AS-WIPER	161-7524	1	DOOR GP-CAB	612
		1	DOOR GP-CAB	614
CAP AS (AIR CONDITIONER)	3E-4051	1	COMPRESSOR & MTG GP-REFRIG	592
	3E-4052	1	COMPRESSOR & MTG GP-REFRIG	592
FILTER	142-9291	1	FILTER GP-CAB AIR	618
FUSE (10 AMP)	113-8490	1	HORN GP-ELECTRIC	635
		1	HORN GP-ELECTRIC	636
FUSE (20 AMP)	113-8492	1	HEATER & MTG GP-CAB	624
		1	HEATER & MTG GP-CAB	625
		1	HEATER & MTG GP-CAB	626
		1	HEATER & MTG GP-CAB	628
		1	HEATER & MTG GP-CAB	629
		1	HEATER & MTG GP-CAB	630
LAMP GP-DOME	084-4277	1	GAUGE & WARNING GP	621
LAMP (12 VOLT)	7X-9065	1	GAUGE & WARNING GP	621
LAMP (12 VOLT)(10 WATT)	6R-7490	1	GAUGE & WARNING GP	621
RELAY AS	115-1615	1	HEATER GP-CAB	632
V-BELT	2P-6818	1	COMPRESSOR & MTG GP-REFRIG	592

MAINTENANCE PARTS

DESCRIPTION	PART NUMBER	QTY	WHERE USED	PAGE
POWER TRAIN				
CAP-DUST	6V-0852	5	LINES GP-HYDROSTATIC	234
		5	LINES GP-HYDROSTATIC	236
	8C-3451	1	FILTER GP-OIL	229
FILTER AS-OIL	1G-8878	1	FILTER GP-OIL	229
FILTER GP-OIL	191-9784	1	FILTER & MTG GP-HYDRAULIC	228
SERVICE EQUIPMENT AND SUPPLIES				
CONTAINER AS	4C-4600	2	KIT-MAINTENANCE	704
ELEMENT AS	163-4465	1	KIT-MAINTENANCE	704
FILTER AS-ENGINE OIL	7W-2327	1	KIT-MAINTENANCE	704
FILTER AS-OIL	1G-8878	1	KIT-MAINTENANCE	704
FILTER ELEMENT AS-FUEL	159-6102	1	KIT-MAINTENANCE	704
LAMP (12 VOLTS)	7M-9957	1	MOUNTING GP-REGISTRATION	705
WORK TOOLS				
FITTING-GREASE	3B-8489	2	BLADE GP	503
		2	BLADE GP	504
		2	BUCKET GP-MULTIPURPOSE	532
		2	BUCKET GP-MULTIPURPOSE	533
FITTING-GREASE (1/8-27 THD)	3B-8489	4	BUCKET GP-GRAPPLE	527
		4	BUCKET GP-GRAPPLE	528
		4	BUCKET GP-GRAPPLE	529
		2	BUCKET GP-MULTIPURPOSE	530
		2	BUCKET GP-MULTIPURPOSE	531
		4	FORK GP-GRAPPLE	552
		4	FORK GP-GRAPPLE	553
FITTING-STRAIGHT	3B-8491	2	COUPLER GP-QUICK	538
SCREEN	119-1414	1	STRAINER GP-WATER	577

PIÈCES DE RECHANGE

DESCRIPTION	NUMÉRO DE PIECÈS	QTÉ	DOMAINE D'APPLICATION	PAGE
CHÂSSIS ET BENNE				
BOUCHON AIMANTÉ	3S-9182	5	BATI - CHARGEUSE (ASS)	296
		5	BATI - CHARGEUSE (ASS)	298
		5	BATI - CHARGEUSE (ASS)	300
GRAISSEUR	3B-8488	2	BATI - CHARGEUSE (ASS)	298
GRAISSEUR (FILET 1/8-27)	3B-8489	1	BÂTI DE LAME (ASS)	294
RÉFLECTEUR	9R-1499	2	MONTAGE DE FEUX DE DÉPLACEMENT SUR ROUTE (ASS)	308
RENIFLARD	9G-5127	2	BATI - CHARGEUSE (ASS)	298
		2	BATI - CHARGEUSE (ASS)	300
	124-2831	2	BATI - CHARGEUSE (ASS)	296
CIRCUIT D'ADMISSION D'AIR ET D'ÉCHAPPEMENT				
ÉLÉMENT DE FILTRE À AIR (ENS) (PRINCIPAL)	110-6326	1	FILTRE A AIR (ASS)	96
ÉLÉMENT DE FILTRE À AIR (ENS) (SECONDAIRE)	110-6331	1	FILTRE A AIR (ASS)	96
ELEMENT (ENS) (AUXILIAIRE)	140-2334	1	FILTRE A AIR (ASS)	97
ELEMENT (ENS) (PRINCIPAL)	134-8726	1	FILTRE A AIR (ASS)	97
ÉLÉMENT PRINCIPAL (PRINCIPAL)	110-6326	1	FILTRE A AIR (ASS)	95
ÉLÉMENT (SECONDAIRE)	110-6331	1	FILTRE A AIR (ASS)	95
SOUPAPE DE PURIFICATION	112-9717	1	FILTRE A AIR (ASS)	97
		1	FILTRE A AIR (ASS)	95
CIRCUIT DE CARBURANT				
BOUCHON DE CARBURANT (ENS)	142-8828	1	CANALISATIONS DE CARBURANT (ASS)	132
		1	CANALISATIONS DE CARBURANT (ASS)	134
BOURRELET D'ÉTANCHÉITÉ (FILTRE À CARBURANT)	101-3743	1	FILTRE A CARBURANT (ASS)	126
ÉLÉMENT DE FILTRE À EAU	131-1812	1	SÉPARATEUR D'EAU (ASS)	140
ÉLÉMENT DE FILTRE (ENS)-CARBURANT	159-6102	1	FILTRE A CARBURANT (ASS)	126
FILTRE A CARBURANT (ASS)	138-3096	1	FILTRE ET CANALISATIONS DE CARBURANT (ASS)	124
JOINT PLAT	121-3221	1	FILTRE ET CANALISATIONS DE CARBURANT (ASS)	124
CIRCUIT DE GRAISSAGE				
FILTRE A HUILE MOTEUR (ENS)	7W-2327	1	FILTRE À HUILE MOTEUR (ASS)	53

PIÈCES DE RECHANGE

DESCRIPTION	NUMÉRO DE PIECÈS	QTÉ	DOMAINE D'APPLICATION	PAGE
CIRCUIT DE REFROIDISSEMENT				
BOUCHON À ÉVENT	169-6715	1	RADIATEUR ET REFROIDISSEUR D'HUILE-MONTAGE (ASS)	82
		1	RADIATEUR ET REFROIDISSEUR D'HUILE-MONTAGE (ASS)	84
		1	RADIATEUR ET REFROIDISSEUR D'HUILE-MONTAGE (ASS)	88
			RADIATEUR ET REFROIDISSEUR D'HUILE-MONTAGE (ASS)	92
BOUCHON DE RADIATEUR (ENS)	036-1865	1	RADIATEUR ET REFROIDISSEUR D'HUILE HYDRAULIQUE (ASS)	78
	126-5027	1	RADIATEUR ET REFROIDISSEUR D'HUILE HYDRAULIQUE (ASS)	68
		1	RADIATEUR ET REFROIDISSEUR D'HUILE HYDRAULIQUE (ASS)	70
		1	RADIATEUR ET REFROIDISSEUR D'HUILE HYDRAULIQUE (ASS)	72
		1	RADIATEUR ET REFROIDISSEUR D'HUILE HYDRAULIQUE (ASS)	74
		1	RADIATEUR ET REFROIDISSEUR D'HUILE HYDRAULIQUE (ASS)	76
FILTRE A HUILE MOTEUR (ENS)	7W-2327	1	SUPPORT DE FILTRE ET REFROIDISSEUR D'HUILE MOTEUR	59
FLEXIBLE	142-8867	1	RADIATEUR ET REFROIDISSEUR D'HUILE HYDRAULIQUE (ASS)	80
		1	RADIATEUR ET REFROIDISSEUR D'HUILE-MONTAGE (ASS)	86
		1	RADIATEUR ET REFROIDISSEUR D'HUILE-MONTAGE (ASS)	88
JOINT PLAT	198-8555	1	RACCORD D'EAU (ASS)	56
		1	RACCORD D'EAU (ASS)	58
THERMOSTAT-TEMPÉRATURE D'EAU	4W-8063	1	POMPE A EAU (ASS)	65
		1	POMPE A EAU (ASS)	66

PIÈCES DE RECHANGE

DESCRIPTION	NUMÉRO DE PIECÈS	QTÉ	DOMAINE D'APPLICATION	PAGE
CIRCUIT ÉLECTRIQUE ET DE DÉMARRAGE				
AMPOULE (12 VOLTS) (1,12 WATT)	189-3610	2	LAMPE - ÉCLAIRAGE TABLEAU (ASS)	154
AMPOULE (12 VOLTS/ 21 WATTS)	5G-3244	1	LAMPE - PHARE ET CLIGNOTANT	152
AMPOULE (12 VOLTS/ 4 WATTS)	100-3246	1	LAMPE - PHARE ET CLIGNOTANT	152
AMPOULE (12 VOLTS)(21 WATTS) (CLIGNOTANT)	9W-3326	1	LAMPE - CLIGNOTANT DE DIRECTION (ASS)	155
AMPOULE (12 VOLTS)(21/5 WATTS)	084-4348	1	FEUX ARRIÈRE ET FEUX D'ARRÊT	156
AMPOULE (12 VOLTS)(21/5 WATTS) (STOP ET ARRIÈRE)	084-4348	1	LAMPE - CLIGNOTANT DE DIRECTION (ASS)	155
AMPOULE (12 VOLTS)(55 WATTS)	9W-0607	1	LAMPE - PHARE (ASS)	149
		1	LAMPE - PHARE (ASS)	150
AMPOULE (12 VOLTS/55 WATTS)	9X-8118	1	LAMPE - GYROPHARE (ASS)	157
BATTERIE (12 VOLTS)	153-5656	1	BATTERIE (ASS)	142
BATTERIE (12 VOLTS)(HUMIDE)	115-2422	1	BATTERIE (ASS)	143
BOUGIE DE PRÉCHAUFFAGE	177-7559	4	BOUGIE DE PRÉCHAUFFAGE (ASS)	147
COURROIE TRAPEZOIDALE	5L-3834	1	ALTERNATEUR DE CHARGE (ASS)	141
DISJONCTEUR (ENS) (30A)	147-1773	1	CABLAGE DE CHASSIS (ASS)	184
ENTRAÎNEMENT POUR COURROIE	9X-8139	1	LAMPE - GYROPHARE (ASS)	157
EXTRACTEUR DE MINI-FUSIBLE	116-7471	1	COUVERCLE - PANNEAU DE FUSIBLES (ASS)	145
FUSIBLE (10A)	113-8490	1	AVERTISSEUR DE RECUL (ASS)	178
		9	CABLAGE DE CABINE (ASS)	180
FUSIBLE (15A)	113-8491	1	CABLAGE - CLIMATISEUR (ASS)	179
		2	CABLAGE DE CABINE (ASS)	180
		2	CÂBLAGE - OUTIL DE TRAVAIL (ASS)	196
		2	CÂBLAGE - OUTIL DE TRAVAIL (ASS)	198
		2	CÂBLAGE - OUTIL DE TRAVAIL (ASS)	200
		2	CÂBLAGE - OUTIL DE TRAVAIL (ASS)	202
LAMPE - FEUX AV (12 VOLTS/ 60-55 WATTS)	9W-3324	1	LAMPE - PHARE ET CLIGNOTANT	152
LAMPE - PHARE ET CLIGNOTANT	3E-7584	2	ÉCLAIRAGE - FEUX DE ROUTE (ASS)	162
		2	ÉCLAIRAGE - FEUX DE ROUTE (ASS)	166
LENTILLE	146-2438	1	LAMPE - CLIGNOTANT DE DIRECTION (ASS)	155
	165-4895	1	FEUX ARRIÈRE ET FEUX D'ARRÊT	156
LENTILLE (ENS)	100-3248	1	LAMPE - PHARE ET CLIGNOTANT	152
LENTILLE (JAUNE)	9X-8121	1	LAMPE - GYROPHARE (ASS)	157
	100-3250	1	LAMPE - PHARE ET CLIGNOTANT	152
RÉFLECTEUR	9R-1499	2	ECLAIRAGE AR (ASS)	160
RELAIS (ENS)	146-4323	2	CÂBLAGE - OUTIL DE TRAVAIL (ASS)	196
		2	CÂBLAGE - OUTIL DE TRAVAIL (ASS)	198
		2	CÂBLAGE - OUTIL DE TRAVAIL (ASS)	200
		2	CÂBLAGE - OUTIL DE TRAVAIL (ASS)	202
		2	CABLAGE DE CABINE (ASS)	180

PIÈCES DE RECHANGE

DESCRIPTION	NUMÉRO DE PIECÈS	QTÉ	DOMAINE D'APPLICATION	PAGE
CIRCUIT HYDRAULIQUE				
BOUCHON HYDRAULIQUE (ENS)	142-8937	1	RÉSERVOIR HYDRAULIQUE (ASS)	447
		1	RÉSERVOIR HYDRAULIQUE (ASS)	448
GRAISSEUR	3B-8489	1	VÉRIN ET MONTAGE DE LAME (ASS)	345
		2	VÉRIN ET MONTAGE DE PINCE (ASS)	346
GRAISSEUR (FILET 1/8-27)	3B-8489	2	MONTAGE DE VÉRIN (ASS)	440
		1	PINCE - VÉRIN (ASS)	350
		1	PINCE - VÉRIN (ASS)	351
		1	VERIN DE GODET (ASS)	348
		1	VÉRIN D'INCLINAISON (ASS)	355
		1	VÉRIN D'INCLINAISON (ASS)	356
JOINT TORIQUE (DIA INT 19,18MM)	2M-9780	1	PINCE - CANALISATIONS (ASS)	384
KIT DE JOINTS	107-7491	1	DISTRIBUTEUR DOUBLE ÉLÉMENT (ASS)	458
PARE-POUSSIERE	6V-0852	1	CANALISATIONS A COMMANDE PILOTE (ASS)	412
		1	CANALISATIONS DE POMPE (ASS)	414
		1	CANALISATIONS DE POMPE (ASS)	416
ÉQUIPEMENTS				
GRAISSEUR (FILET 1/8-27)	3B-8488	2	COMMANDE - OUTIL DE TRAVAIL (ASS)	492
	3B-8489	10	COMMANDE - OUTIL DE TRAVAIL (ASS)	492
GRAISSEUR ((1/8-27 TRD)	3B-8489	10	COMMANDE - OUTIL DE TRAVAIL (ASS)	496
MATÉRIEL ET FOURNITURES D'ENTRETIEN				
AMPOULE (12 VOLTS)	7M-9957	1	MONTAGE - IMMATRICULATION (ASS)	705
ÉLÉMENT DE FILTRE (ENS)-CARBURANT	159-6102	1	KIT D'ENTRETIEN	704
ELEMENT (ENS)	163-4465	1	KIT D'ENTRETIEN	704
FILTRE À HUILE (ENS)	1G-8878	1	KIT D'ENTRETIEN	704
FILTRE A HUILE MOTEUR (ENS)	7W-2327	1	KIT D'ENTRETIEN	704
VERSION DE CONTAINER	4C-4600	2	KIT D'ENTRETIEN	704
MOTEUR DE BASE				
BOUCHON D'HUILE	170-7666	1	CACHE-SOUPAPES (ASS)	14
		1	CACHE-SOUPAPES (ASS)	16
FLEXIBLE (ÉVACUATION DES GAZ DE CARTER)	153-0104	1	CACHE-SOUPAPES (ASS)	14
JOINT-CACHE-SOUPAPES	159-0082	1	CACHE-SOUPAPES (ASS)	14
		1	CACHE-SOUPAPES (ASS)	16
JOINT PLAT	6I-0512	1	CARTER AV (ASS)	36
PARE-POUSSIERE	8C-3445	1	VIDANGE-HUILE DE MOTEUR (ASS)	28
SOUPAPE DE VIDANGE	170-7614	1	HUILE MOTEUR - CARTER (ASS)	44

PIÈCES DE RECHANGE

DESCRIPTION	NUMÉRO DE PIECÈS	QTÉ	DOMAINE D'APPLICATION	PAGE
OUTILS DE TRAVAIL				
ÉCRAN	119-1414	1	TAMIS D'EAU (ASS)	577
GRAISSEUR	3B-8489	2	GODET TOUS-TRAVAUX (ASS)	532
		2	GODET TOUS-TRAVAUX (ASS)	533
		2	LAME (ASS)	503
		2	LAME (ASS)	504
GRAISSEUR (FILET 1/8-27)	3B-8489	4	FOURCHE - PINCE (ASS)	552
		4	FOURCHE - PINCE (ASS)	553
		4	GODET - PINCE (ASS)	527
		4	GODET - PINCE (ASS)	528
		4	GODET - PINCE (ASS)	529
		2	GODET TOUS-TRAVAUX (ASS)	530
		2	GODET TOUS-TRAVAUX (ASS)	531
RACCORD DROIT	3B-8491	2	COUPLEUR EXPRESS (ASS)	538
POSTE DE CONDUITE				
AMPOULE (12 VOLTS)	7X-9065	1	INDICATEURS ET TÉMOINS LUMINEUX (ASS)	621
AMPOULE (12 VOLTS)(10 WATTS)	6R-7490	1	INDICATEURS ET TÉMOINS LUMINEUX (ASS)	621
BALAI D'ESSUIE-GLACE (ENS)	161-7524	1	PORTIÈRE DE CABINE (ASS)	612
		1	PORTIÈRE DE CABINE (ASS)	614
CHAPEAU (ENS) (CLIMATISEUR)	3E-4051	1	COMPRESSEUR ET MONTAGE - RÉFRIGÉRANT (ASS)	592
	3E-4052	1	COMPRESSEUR ET MONTAGE - RÉFRIGÉRANT (ASS)	592
COURROIE TRAPEZOIDALE	2P-6818	1	COMPRESSEUR ET MONTAGE - RÉFRIGÉRANT (ASS)	592
FILTRE	142-9291	1	FILTRE À AIR DE CABINE (ASS)	618
FUSIBLE (10A)	113-8490	1	KLAXON ÉLECTRIQUE (ASS)	635
		1	KLAXON ÉLECTRIQUE (ASS)	636
FUSIBLE (20 A)	113-8492	1	CHAUFFAGE ET MONTAGE - CABINE (ASS)	624
		1	CHAUFFAGE ET MONTAGE - CABINE (ASS)	625
		1	CHAUFFAGE ET MONTAGE - CABINE (ASS)	626
		1	CHAUFFAGE ET MONTAGE - CABINE (ASS)	628
		1	CHAUFFAGE ET MONTAGE - CABINE (ASS)	629
		1	CHAUFFAGE ET MONTAGE - CABINE (ASS)	630
PLAFONNIER (ASS)	084-4277	1	INDICATEURS ET TÉMOINS LUMINEUX (ASS)	621
RELAIS (ENS)	115-1615	1	CHAUFFAGE DE CABINE (ASS)	632

PIÈCES DE RECHANGE

DESCRIPTION	NUMÉRO DE PIECÈS	QTÉ	DOMAINE D'APPLICATION	PAGE
TRANSMISSION				
FILTRE A HUILE (ASS)	191-9784	1	FILTRE À HUILE HYDRAULIQUE ET MONTAGE (ASS)	228
FILTRE À HUILE (ENS)	1G-8878	1	FILTRE A HUILE (ASS)	229
PARE-POUSSIERE	6V-0852	5	CANALISATIONS HYDROSTATIQUES (ASS)	234
		5	CANALISATIONS HYDROSTATIQUES (ASS)	236
	8C-3451	1	FILTRE A HUILE (ASS)	229

PIEZAS DE MANTENIMIENTO

DESCRIPCION	NUMERO DE PIEZA	CANT	SE UTILIZA EN	PAGINA
BASTIDOR Y CAJA				
CONEXIÓN DE ENGRASE	3B-8488	2	BASTIDOR DEL CARGADOR (GR)	298
CONEXIÓN DE ENGRASE (ROSCA DE 1/8-27)	3B-8489	1	BASTIDOR DE HOJA (GR)	294
REFLECTOR	9R-1499	2	MONTAJE DE LUCES DE DESPLAZAMIENTO POR CARRETERA (GR)	308
RESPIRADERO	9G-5127	2	BASTIDOR DEL CARGADOR (GR)	298
		2	BASTIDOR DEL CARGADOR (GR)	300
	124-2831	2	BASTIDOR DEL CARGADOR (GR)	296
TAPÓN MAGNÉTICO	3S-9182	5	BASTIDOR DEL CARGADOR (GR)	296
		5	BASTIDOR DEL CARGADOR (GR)	298
		5	BASTIDOR DEL CARGADOR (GR)	300
EQUIPO DE SERVICIO Y SUMINISTROS				
ELEMENTO (CONJ)	163-4465	1	JUEGO DE MANTENIMIENTO	704
ELEMENTO DE FILTRO DE COMBUSTIBLE (CONJ)	159-6102	1	JUEGO DE MANTENIMIENTO	704
FILTRO DE ACEITE (CONJ)	1G-8878	1	JUEGO DE MANTENIMIENTO	704
FILTRO DE ACEITE DEL MOTOR (CONJ)	7W-2327	1	JUEGO DE MANTENIMIENTO	704
LÁMPARA (12 VOLTIOS)	7M-9957	1	MONTAJE-REGISTRO (GR)	705
RECIPIENTE (CONJ)	4C-4600	2	JUEGO DE MANTENIMIENTO	704
ESTACION DEL OPERADOR				
CORREA TRAPEZOIDAL	2P-6818	1	COMPRESOR DE REFRIGERANTE Y GRUPO DE MONTAJE	592
FILTRO	142-9291	1	FILTRO DE AIRE DE LA CABINA (GR)	618
FUSIBLE (10 A)	113-8490	1	BOCINA ELÉCTRICA (GR)	635
		1	BOCINA ELÉCTRICA (GR)	636
FUSIBLE (20 A)	113-8492	1	CALEFACCIÓN Y MONTAJE DE LA CABINA (GR)	624
		1	CALEFACCIÓN Y MONTAJE DE LA CABINA (GR)	625
		1	CALEFACCIÓN Y MONTAJE DE LA CABINA (GR)	626
		1	CALEFACCIÓN Y MONTAJE DE LA CABINA (GR)	628
		1	CALEFACCIÓN Y MONTAJE DE LA CABINA (GR)	629
		1	CALEFACCIÓN Y MONTAJE DE LA CABINA (GR)	630
HOJA DE LIMPIAPARABRISAS (CONJ)	161-7524	1	PUERTA DE CABINA	612
		1	PUERTA DE CABINA	614
LÁMPARA DEL TECHO (GR)	084-4277	1	INDICADORES Y ADVERTENCIA (GR)	621
LÁMPARA (12 VOLTIOS)	7X-9065	1	INDICADORES Y ADVERTENCIA (GR)	621
LÁMPARA (12 VOLTIOS)(10 VATIOS)	6R-7490	1	INDICADORES Y ADVERTENCIA (GR)	621
RELÉ (CONJ)	115-1615	1	CALEFACCIÓN DE LA CABINA (GR)	632
TAPÓN (CONJ) (ACONDICIONADOR DE AIRE)	3E-4051	1	COMPRESOR DE REFRIGERANTE Y GRUPO DE MONTAJE	592
	3E-4052	1	COMPRESOR DE REFRIGERANTE Y GRUPO DE MONTAJE	592

PIEZAS DE MANTENIMIENTO

DESCRIPCION	NUMERO DE PIEZA	CANT	SE UTILIZA EN	PAGINA
HERRAMIENTAS				
CONEXIÓN DE ENGRASE	3B-8489	2	CUCHARÓN DE USO MÚLTIPLE (GR)	532
		2	CUCHARÓN DE USO MÚLTIPLE (GR)	533
		2	HOJA (GR)	503
		2	HOJA (GR)	504
CONEXIÓN DE ENGRASE (ROSCA DE 1/8-27)	3B-8489	4	CUCHARON DE GARFIO (GR)	527
		4	CUCHARON DE GARFIO (GR)	528
		4	CUCHARON DE GARFIO (GR)	529
		2	CUCHARÓN DE USO MÚLTIPLE (GR)	530
		2	CUCHARÓN DE USO MÚLTIPLE (GR)	531
		4	HORQUILLA DE GARFIO (GR)	552
		4	HORQUILLA DE GARFIO (GR)	553
CONEXION-RECTA	3B-8491	2	ACOPLADOR RÁPIDO (GR)	538
REJILLA	119-1414	1	COLADOR DEL AGUA (GR)	577
IMPLEMENTOS				
CONEXIÓN DE ENGRASE (ROSCA DE 1/8-27)	3B-8488	2	CONTROL DE LA HERRAMIENTA DE TRABAJO (GR)	492
	3B-8489	10	CONTROL DE LA HERRAMIENTA DE TRABAJO (GR)	492
		10	CONTROL DE LA HERRAMIENTA DE TRABAJO (GR)	496
MOTOR BASICO				
EMPAQUETADURA	6I-0512	1	CAJA DELANTERA (GR)	36
EMPAQUETADURA PARA CUBIERTA DE VÁLVULA	159-0082	1	TAPA DEL MECANISMO DE VÁLVULAS (GR)	14
		1	TAPA DEL MECANISMO DE VÁLVULAS (GR)	16
MANGUERA (ELIMINACION DE GASES)	153-0104	1	TAPA DEL MECANISMO DE VÁLVULAS (GR)	14
TAPA-ACEITE	170-7666	1	TAPA DEL MECANISMO DE VÁLVULAS (GR)	14
		1	TAPA DEL MECANISMO DE VÁLVULAS (GR)	16
TAPA CONTRA EL POLVO	8C-3445	1	DRENAJE DEL ACEITE DE MOTOR	28
VÁLVULA DE DRENAJE	170-7614	1	CÁRTER - COLECTOR DEL (GR)	44
SISTEMA DE ARRANQUE ELECTRICO				
BATERÍA (12 VOLTIOS)	153-5656	1	BATERÍA (GR)	142
BATERÍA (12 VOLTIOS)(HUMEDA)	115-2422	1	BATERÍA (GR)	143
BUJIA INCANDESCENTE	177-7559	4	BUJÍA INCANDESCENTE (GR)	147
CORREA TRAPEZOIDAL	5L-3834	1	CARGA - ALTERNADOR DE (GR)	141
CRISTAL	146-2438	1	LUZ DE SEÑAL DE GIRO (GR)	155
	165-4895	1	LUCES DE PARADA Y COLA (GR)	156
CRISTAL (AMBAR)	9X-8121	1	LÁMPARA DE BALIZA DE ADVERTENCIA (GR)	157
	100-3250	1	LÁMPARA DE LUZ DELANTERA Y DE SEÑAL (GR)	152
DISYUNTOR (CONJ) (30 A)	147-1773	1	CABLES DEL CHASIS (GR)	184
EXTRACTOR DE MINIFUSIBLES	116-7471	1	CUBIERTO DEL PANEL DE FUSIBLES (GR)	145
FUSIBLE (10 A)	113-8490	9	CABLES DE LA CABINA (GR)	180

PIEZAS DE MANTENIMIENTO

DESCRIPCION	NUMERO DE PIEZA	CANT	SE UTILIZA EN	PAGINA
		1	RETROCESO - ALARMA DE (GR)	178
FUSIBLE (15 A)	113-8491	2	CABLES DE LA CABINA (GR)	180
		2	CABLES DE LA HERRAMIENTA DE TRABAJO (GR)	196
		2	CABLES DE LA HERRAMIENTA DE TRABAJO (GR)	198
		2	CABLES DE LA HERRAMIENTA DE TRABAJO (GR)	200
		2	CABLES DE LA HERRAMIENTA DE TRABAJO (GR)	202
		1	CABLES DEL ACONDICIONADOR DE AIRE (GR)	179
LÁMPARA DE FARO DELANTERO (12 VOLTIOS/60-55 VATIOS)	9W-3324	1	LÁMPARA DE LUZ DELANTERA Y DE SEÑAL (GR)	152
LÁMPARA DE LUZ DELANTERA Y DE SEÑAL (GR)	3E-7584	2	LUCES DE DESPLAZAMIENTO (GR)	162
		2	LUCES DE DESPLAZAMIENTO (GR)	166
LÁMPARA (12 VOLTIOS) (1.12 VATIOS)	189-3610	2	LÁMPARA DE ILUMINACIÓN DEL PANEL (GR)	154
LÁMPARA (12 VOLTIOS, 21 VATIOS) (DE GIRO)	9W-3326	1	LUZ DE SEÑAL DE GIRO (GR)	155
LÁMPARA (12 VOLTIOS, 21/5 VATIOS)	084-4348	1	LUCES DE PARADA Y COLA (GR)	156
LÁMPARA (12 VOLTIOS, 21/5 VATIOS) (PARADA Y COLA)	084-4348	1	LUZ DE SEÑAL DE GIRO (GR)	155
LÁMPARA (12 VOLTIOS/21 VATIOS)	5G-3244	1	LÁMPARA DE LUZ DELANTERA Y DE SEÑAL (GR)	152
LÁMPARA (12 VOLTIOS/4 VATIOS)	100-3246	1	LÁMPARA DE LUZ DELANTERA Y DE SEÑAL (GR)	152
LÁMPARA (12 VOLTIOS)(55 VATIOS)	9W-0607	1	REFLECTOR (GR)	149
		1	REFLECTOR (GR)	150
LÁMPARA (12 VOLTIOS/55 VATIOS)	9X-8118	1	LÁMPARA DE BALIZA DE ADVERTENCIA (GR)	157
MANDO DE CORREA	9X-8139	1	LÁMPARA DE BALIZA DE ADVERTENCIA (GR)	157
REFLECTOR	9R-1499	2	LUCES TRASERAS (GR)	160
RELÉ (CONJ)	146-4323	2	CABLES DE LA CABINA (GR)	180
		2	CABLES DE LA HERRAMIENTA DE TRABAJO (GR)	196
		2	CABLES DE LA HERRAMIENTA DE TRABAJO (GR)	198
		2	CABLES DE LA HERRAMIENTA DE TRABAJO (GR)	200
		2	CABLES DE LA HERRAMIENTA DE TRABAJO (GR)	202
VIDRIO (CONJ)	100-3248	1	LÁMPARA DE LUZ DELANTERA Y DE SEÑAL (GR)	152

PIEZAS DE MANTENIMIENTO

DESCRIPCION	NUMERO DE PIEZA	CANT	SE UTILIZA EN	PAGINA
SISTEMA DE COMBUSTIBLE				
ELEMENTO DE FILTRO DE AGUA	131-1812	1	SEPARADOR DE AGUA (GR)	140
ELEMENTO DE FILTRO DE COMBUSTIBLE (CONJ)	159-6102	1	FILTRO DE COMBUSTIBLE (GR)	126
EMPAQUETADURA	121-3221	1	FILTRO Y TUBERÍAS DE COMBUSTIBLE (GR)	124
FILTRO DE COMBUSTIBLE (GR)	138-3096	1	FILTRO Y TUBERÍAS DE COMBUSTIBLE (GR)	124
SELLO (FILTRO DE COMBUSTIBLE)	101-3743	1	FILTRO DE COMBUSTIBLE (GR)	126
TAPA DEL COMBUSTIBLE(CONJ)	142-8828	1	TUBERÍAS DE COMBUSTIBLE (GR)	132
		1	TUBERÍAS DE COMBUSTIBLE (GR)	134
SISTEMA DE ENFRIAMIENTO				
EMPAQUETADURA	198-8555	1	AGUA - CONEXIÓN DE (GR)	56
		1	AGUA - CONEXIÓN DE (GR)	58
FILTRO DE ACEITE DEL MOTOR (CONJ)	7W-2327	1	ENFRIADOR DE ACEITE DEL MOTOR Y BASE DEL FILTRO	59
MANGUERA	142-8867	1	MONTAJE DE RADIADOR Y ENFRIAMIENTO DE ACEITE (GR)	86
		1	MONTAJE DE RADIADOR Y ENFRIAMIENTO DE ACEITE (GR)	88
		1	RADIADOR Y ENFRIADOR DE ACEITE HIDRÁULICO (GR)	80
REGULADOR DE TEMPERATURA DEL AGUA	4W-8063	1	BOMBA DE AGUA (GR)	65
		1	BOMBA DE AGUA (GR)	66
TAPA CON RESPIRADERO	169-6715	1	MONTAJE DE RADIADOR Y ENFRIAMIENTO DE ACEITE (GR)	82
		1	MONTAJE DE RADIADOR Y ENFRIAMIENTO DE ACEITE (GR)	84
		1	MONTAJE DE RADIADOR Y ENFRIAMIENTO DE ACEITE (GR)	88
			MONTAJE DE RADIADOR Y ENFRIAMIENTO DE ACEITE (GR)	92
TAPA DE RADIADOR (CONJ)	036-1865	1	RADIADOR Y ENFRIADOR DE ACEITE HIDRÁULICO (GR)	78
	126-5027	1	RADIADOR Y ENFRIADOR DE ACEITE HIDRÁULICO (GR)	68
		1	RADIADOR Y ENFRIADOR DE ACEITE HIDRÁULICO (GR)	70
		1	RADIADOR Y ENFRIADOR DE ACEITE HIDRÁULICO (GR)	72
		1	RADIADOR Y ENFRIADOR DE ACEITE HIDRÁULICO (GR)	74
		1	RADIADOR Y ENFRIADOR DE ACEITE HIDRÁULICO (GR)	76

PIEZAS DE MANTENIMIENTO

DESCRIPCION	NUMERO DE PIEZA	CANT	SE UTILIZA EN	PAGINA
SISTEMA DE ESCAPE Y ADMISION DE AIRE				
ELEMENTO (CONJ) (PRIMARIO)	134-8726	1	FILTRO DE AIRE (GR)	97
ELEMENTO (CONJ) (SECUNDARIO(A))	140-2334	1	FILTRO DE AIRE (GR)	97
ELEMENTO DEL FILTRO DE AIRE (CONJ) (PRIMARIO)	110-6326	1	FILTRO DE AIRE (GR)	96
ELEMENTO DEL FILTRO DE AIRE (CONJ) (SECUNDARIO)	110-6331	1	FILTRO DE AIRE (GR)	96
ELEMENTO PRINCIPAL (PRIMARIO)	110-6326	1	FILTRO DE AIRE (GR)	95
ELEMENTO (SECUNDARIO)	110-6331	1	FILTRO DE AIRE (GR)	95
VALVULA DE PURGA	112-9717	1	FILTRO DE AIRE (GR)	95
		1	FILTRO DE AIRE (GR)	97
SISTEMA DE LUBRICACION				
FILTRO DE ACEITE DEL MOTOR (CONJ)	7W-2327	1	FILTRO DE ACEITE DEL MOTOR (GR)	53
SISTEMA HIDRAULICO				
CONEXIÓN DE ENGRASE	3B-8489	1	CILINDRO Y MONTAJE DE LA HOJA (GR)	345
		2	MONTAJE DEL CILINDRO DEL GARFIO (GR)	346
CONEXIÓN DE ENGRASE (ROSCA DE 1/8-27)	3B-8489	1	CILINDRO DE CUCHARÓN (GR)	348
		1	CILINDRO DE GARFIO (GR)	350
		1	CILINDRO DE GARFIO (GR)	351
		1	INCLINACIÓN HORIZONTAL - CILINDRO DE (GR)	355
		1	INCLINACIÓN HORIZONTAL - CILINDRO DE (GR)	356
		2	MONTAJE DE CILINDRO (GR)	440
JUEGO DE SELLOS	107-7491	1	VÁLVULAS HIDRÁULICAS - GRUPO DE 2	458
SELLO ANULAR (19,18 MM DIAMETRO INTERIOR)	2M-9780	1	TUBERÍAS DEL GARFIO (GR)	384
TAPA CONTRA EL POLVO	6V-0852	1	BOMBA - TUBERÍAS DE (GR)	414
		1	BOMBA - TUBERÍAS DE (GR)	416
		1	TUBERÍAS CON SERVOMANDO (GR)	412
TAPA HIDRAULICA (CONJ)	142-8937	1	TANQUE HIDRÁULICO (GR)	447
		1	TANQUE HIDRÁULICO (GR)	448
TREN DE FUERZA				
FILTRO DE ACEITE (CONJ)	1G-8878	1	FILTRO DE ACEITE (GR)	229
FILTRO DE ACEITE (GR)	191-9784	1	FILTRO DE ACEITE HIDRÁULICO Y MONTAJE (GR)	228
TAPA CONTRA EL POLVO	6V-0852	5	TUBERÍAS HIDROSTÁTICAS (GR)	234
		5	TUBERÍAS HIDROSTÁTICAS (GR)	236
	8C-3451	1	FILTRO DE ACEITE (GR)	229

PEÇAS DE MANUTENÇÃO

DESCRIÇÃO	NÚMERO DE PEÇA	QUANT	UTILIZADA EM	PÁGINA
ACESSÓRIOS				
GRAXEIRA ((ROSCA DE 1/8-27)	3B-8489	10	CONTROLE DA FERRAMENTA DE TRABALHO	496
GRAXEIRA (ROSCA 1/8-27 POL)	3B-8488	2	CONTROLE DA FERRAMENTA DE TRABALHO	492
	3B-8489	10	CONTROLE DA FERRAMENTA DE TRABALHO	492
CHASSI E CARROCERIA				
BUJÃO MAGNÉTICO	3S-9182	5	CHASSI DIANTEIRO	296
		5	CHASSI DIANTEIRO	298
		5	CHASSI DIANTEIRO	300
GRAXEIRA	3B-8488	2	CHASSI DIANTEIRO	298
GRAXEIRA (ROSCA 1/8-27 POL)	3B-8489	1	ARMAÇÃO - LÂMINA	294
REFLETOR	9R-1499	2	MONTAGEM - LUZES PARA ILUMINAÇÃO RODOVIÁRIA	308
RESPIRO	9G-5127	2	CHASSI DIANTEIRO	298
		2	CHASSI DIANTEIRO	300
	124-2831	2	CHASSI DIANTEIRO	296
EQUIPAMENTO DE SERVIÇO E SUPRIMENTOS				
ELEMENTO	163-4465	1	JOGO DE MANUTENÇÃO	704
ELEMENTO - FILTRO DE COMBUSTÍVEL	159-6102	1	JOGO DE MANUTENÇÃO	704
FILTRO - ÓLEO	1G-8878	1	JOGO DE MANUTENÇÃO	704
FILTRO - ÓLEO DO MOTOR	7W-2327	1	JOGO DE MANUTENÇÃO	704
LÂMPADA (12 VOLTS)	7M-9957	1	MONTAGEM DA PLACA DE REGISTRO	705
RECIPIENTE	4C-4600	2	JOGO DE MANUTENÇÃO	704
FERRAMENTAS DE TRABALHO				
CONEXÃO - RETA	3B-8491	2	ACOPLADOR RÁPIDO	538
GRAXEIRA	3B-8489	2	CAÇAMBA DE MÚLTIPLAS APLICAÇÕES	532
		2	CAÇAMBA DE MÚLTIPLAS APLICAÇÕES	533
		2	LÂMINA	503
		2	LÂMINA	504
GRAXEIRA (ROSCA 1/8-27 POL)	3B-8489	4	CAÇAMBA - GARRA	527
		4	CAÇAMBA - GARRA	528
		4	CAÇAMBA - GARRA	529
		2	CAÇAMBA DE MÚLTIPLAS APLICAÇÕES	530
		2	CAÇAMBA DE MÚLTIPLAS APLICAÇÕES	531
		4	GARFO DA GARRA	552
		4	GARFO DA GARRA	553
TELA FILTRANTE	119-1414	1	TELA FILTRANTE - ÁGUA	577

PEÇAS DE MANUTENÇÃO

DESCRIÇÃO	NÚMERO DE PEÇA	QUANT	UTILIZADA EM	PÁGINA
MOTOR BÁSICO				
JUNTA	6I-0512	1	CAIXA DIANTEIRA	36
JUNTA - TAMPA DA VÁLVULA	159-0082	1	TAMPA - MECANISMO DAS VÁLVULAS	14
		1	TAMPA - MECANISMO DAS VÁLVULAS	16
MANGUEIRA (ELIMINAÇÃO DE VAPORES)	153-0104	1	TAMPA - MECANISMO DAS VÁLVULAS	14
TAMPA CONTRA POEIRA	8C-3445	1	DRENO - ÓLEO DO MOTOR	28
TAMPA-ÓLEO	170-7666	1	TAMPA - MECANISMO DAS VÁLVULAS	14
		1	TAMPA - MECANISMO DAS VÁLVULAS	16
VÁLVULA DE DRENAGEM	170-7614	1	CÁRTER DO ÓLEO DO MOTOR	44
POSTO DO OPERADOR				
CORREIA EM V	2P-6818	1	COMPRESSOR DE REFRIGERANTE E MONTAGEM	592
FILTRO	142-9291	1	FILTRO - AR DA CABINE	618
FUSÍVEL (10 A)	113-8490	1	BUZINA ELÉTRICA	635
		1	BUZINA ELÉTRICA	636
FUSÍVEL (20 A)	113-8492	1	AQUECEDOR DA CABINE E MONTAGEM	624
		1	AQUECEDOR DA CABINE E MONTAGEM	625
		1	AQUECEDOR DA CABINE E MONTAGEM	626
		1	AQUECEDOR DA CABINE E MONTAGEM	628
		1	AQUECEDOR DA CABINE E MONTAGEM	629
		1	AQUECEDOR DA CABINE E MONTAGEM	630
LÂMINA DO LIMPADOR DE PÁRA-BRISA	161-7524	1	PORTA DA CABINE	612
		1	PORTA DA CABINE	614
LÂMPADA - TETO	084-4277	1	INDICADOR E ALARME	621
LÂMPADA (12 V)	7X-9065	1	INDICADOR E ALARME	621
LÂMPADA (12 VOLT)(10 WATT)	6R-7490	1	INDICADOR E ALARME	621
RELÉ (CONJ)	115-1615	1	AQUECEDOR DA CABINE	632
TAMPA (CONDICIONADOR DE AR)	3E-4051	1	COMPRESSOR DE REFRIGERANTE E MONTAGEM	592
	3E-4052	1	COMPRESSOR DE REFRIGERANTE E MONTAGEM	592
SISTEMA DE ADMISSÃO DE AR E DE ESCAPE				
ELEMENTO DO FILTRO DE AR (PRIMÁRIO)	110-6326	1	PURIFICADOR DE AR	96
ELEMENTO DO FILTRO DE AR (SECUNDÁRIO)	110-6331	1	PURIFICADOR DE AR	96
ELEMENTO (PRIMÁRIO)	134-8726	1	PURIFICADOR DE AR	97
ELEMENTO PRINCIPAL (PRIMÁRIO)	110-6326	1	PURIFICADOR DE AR	95
ELEMENTO (SECUNDÁRIO)	110-6331	1	PURIFICADOR DE AR	95
	140-2334	1	PURIFICADOR DE AR	97
VÁLVULA PURIFICADORA	112-9717	1	PURIFICADOR DE AR	95
		1	PURIFICADOR DE AR	97

PEÇAS DE MANUTENÇÃO

DESCRIÇÃO	NÚMERO DE PEÇA	QUANT	UTILIZADA EM	PÁGINA
SISTEMA DE ARREFECIMENTO				
FILTRO - ÓLEO DO MOTOR	7W-2327	1	ARREFECEDOR DE ÓLEO DO MOTOR E BASE DO FILTRO	59
JUNTA	198-8555	1	CONEXÃO - TUBO D'ÁGUA	56
		1	CONEXÃO - TUBO D'ÁGUA	58
MANGUEIRA	142-8867	1	RADIADOR E ARREFECEDOR DE ÓLEO - MONTAGEM	86
		1	RADIADOR E ARREFECEDOR DE ÓLEO - MONTAGEM	88
		1	RADIADOR E ARREFECEDOR DO ÓLEO HIDRÁULICO	80
REGULADOR DE TEMPERATURA DA ÁGUA	4W-8063	1	BOMBA DE ÁGUA	65
		1	BOMBA DE ÁGUA	66
TAMPA - RADIADOR	036-1865	1	RADIADOR E ARREFECEDOR DO ÓLEO HIDRÁULICO	78
	126-5027	1	RADIADOR E ARREFECEDOR DO ÓLEO HIDRÁULICO	68
		1	RADIADOR E ARREFECEDOR DO ÓLEO HIDRÁULICO	70
		1	RADIADOR E ARREFECEDOR DO ÓLEO HIDRÁULICO	72
		1	RADIADOR E ARREFECEDOR DO ÓLEO HIDRÁULICO	74
		1	RADIADOR E ARREFECEDOR DO ÓLEO HIDRÁULICO	76
TAMPA COM RESPIRO	169-6715	1	RADIADOR E ARREFECEDOR DE ÓLEO - MONTAGEM	82
		1	RADIADOR E ARREFECEDOR DE ÓLEO - MONTAGEM	84
		1	RADIADOR E ARREFECEDOR DE ÓLEO - MONTAGEM	88
			RADIADOR E ARREFECEDOR DE ÓLEO - MONTAGEM	92
SISTEMA DE COMBUSTÍVEL				
ELEMENTO - FILTRO DE COMBUSTÍVEL	159-6102	1	FILTRO - COMBUSTÍVEL	126
ELEMENTO FILTRANTE-ÁGUA	131-1812	1	SEPARADOR DE ÁGUA	140
FILTRO - COMBUSTÍVEL	138-3096	1	FILTRO E TUBOS - COMBUSTÍVEL	124
JUNTA	121-3221	1	FILTRO E TUBOS - COMBUSTÍVEL	124
RETENTOR (FILTRO DE COMBUSTÍVEL)	101-3743	1	FILTRO - COMBUSTÍVEL	126
TAMPA - TANQUE DE COMBUSTÍVEL	142-8828	1	TUBOS - COMBUSTÍVEL	132
		1	TUBOS - COMBUSTÍVEL	134
SISTEMA DE LUBRIFICAÇÃO				
FILTRO - ÓLEO DO MOTOR	7W-2327	1	FILTRO - ÓLEO DO MOTOR	53
SISTEMA ELÉTRICO E DE PARTIDA				
BATERIA (12 V)	153-5656	1	BATERIA	142
BATERIA (12 VOLT)(ÚMIDO)	115-2422	1	BATERIA	143
CORREIA DE COMANDO	9X-8139	1	LUZ GIRATÓRIA DE ALARME	157
CORREIA EM V	5L-3834	1	ALTERNADOR DE CORRENTE	141
DISJUNTOR AUTOMÁTICO DE CIRCUITO (30 A)	147-1773	1	CABOS/FIOS ELÉTRICOS - CHASSI	184

PEÇAS DE MANUTENÇÃO

DESCRIÇÃO	NÚMERO DE PEÇA	QUANT	UTILIZADA EM	PÁGINA
FAROL DIANTEIRO (12 VOLTS/60-55 WATTS)	9W-3324	1	LÂMPADA DIANTEIRA E DE SINAL	152
FUSÍVEL (10 A)	113-8490	1	ALARME DE MARCHA À RÉ	178
		9	CABOS/FIOS ELÉTRICOS - CABINE	180
FUSÍVEL (15 A)	113-8491	1	CABOS/FIOS ELÉTRICOS - AR CONDICIONADO	179
		2	CABOS/FIOS ELÉTRICOS - CABINE	180
		2	CABOS/FIOS ELÉTRICOS - FERRAMENTAS DE TRABALHO	196
		2	CABOS/FIOS ELÉTRICOS - FERRAMENTAS DE TRABALHO	198
		2	CABOS/FIOS ELÉTRICOS - FERRAMENTAS DE TRABALHO	200
		2	CABOS/FIOS ELÉTRICOS - FERRAMENTAS DE TRABALHO	202
LÂMPADA DIANTEIRA E DE SINAL	3E-7584	2	ILUMINAÇÃO - RODOVIÁRIA	162
		2	ILUMINAÇÃO - RODOVIÁRIA	166
LÂMPADA (12 V) (1,12 WATTS)	189-3610	2	LÂMPADA - ILUMINAÇÃO DO PAINEL	154
LÂMPADA (12 VOLTS - 55 WATTS)	9W-0607	1	LÂMPADA - FAROL	149
		1	LÂMPADA - FAROL	150
LÂMPADA (12 VOLTS/21 WATTS)	5G-3244	1	LÂMPADA DIANTEIRA E DE SINAL	152
LÂMPADA (12 VOLTS)(21 WATTS) (VIRADA)	9W-3326	1	LÂMPADA - SINALIZAÇÃO	155
LÂMPADA (12 VOLTS)(21/5 WATTS)	084-4348	1	LUZ TRASEIRA E DE FREIO	156
LÂMPADA (12 VOLTS)(21/5 WATTS) (PARADA E TRASEIRA)	084-4348	1	LÂMPADA - SINALIZAÇÃO	155
LÂMPADA (12 VOLTS/4 WATTS)	100-3246	1	LÂMPADA DIANTEIRA E DE SINAL	152
LÂMPADA (12 VOLTS/55 WATTS)	9X-8118	1	LUZ GIRATÓRIA DE ALARME	157
LENTE	100-3248	1	LÂMPADA DIANTEIRA E DE SINAL	152
	146-2438	1	LÂMPADA - SINALIZAÇÃO	155
	165-4895	1	LUZ TRASEIRA E DE FREIO	156
LENTE (ÂMBER)	9X-8121	1	LUZ GIRATÓRIA DE ALARME	157
	100-3250	1	LÂMPADA DIANTEIRA E DE SINAL	152
REFLETOR	9R-1499	2	ILUMINAÇÃO - TRASEIRA	160
RELÉ (CONJ)	146-4323	2	CABOS/FIOS ELÉTRICOS - CABINE	180
		2	CABOS/FIOS ELÉTRICOS - FERRAMENTAS DE TRABALHO	196
		2	CABOS/FIOS ELÉTRICOS - FERRAMENTAS DE TRABALHO	198
		2	CABOS/FIOS ELÉTRICOS - FERRAMENTAS DE TRABALHO	200
		2	CABOS/FIOS ELÉTRICOS - FERRAMENTAS DE TRABALHO	202
SACADOR - MINIFUSÍVEL	116-7471	1	TAMPA DO PAINEL DO FUSÍVEL	145
VELA DE AQUECIMENTO	177-7559	4	VELA DE AQUECIMENTO; VELA INCANDESCENTE	147

PEÇAS DE MANUTENÇÃO

DESCRIÇÃO	NÚMERO DE PEÇA	QUANT	UTILIZADA EM	PÁGINA
SISTEMA HIDRÁULICO				
GRAXEIRA	3B-8489	1	CILINDRO DA LÂMINA E MONTAGEM	345
		2	CILINDRO E MONTAGEM - PINÇA	346
GRAXEIRA (ROSCA 1/8-27 POL)	3B-8489	1	CILINDRO DA CAÇAMBA	348
		1	CILINDRO DA GARRA	350
		1	CILINDRO DA GARRA	351
		1	CILINDRO DE INCLINAÇÃO	355
		1	CILINDRO DE INCLINAÇÃO	356
		2	MONTAGEM - CILINDRO	440
JOGO DE RETENTOR	107-7491	1	GRUPO DE VÁLVULAS DE CONTROLE - DUPLO	458
RETENTOR DE ANEL-O (19,18MM ID)	2M-9780	1	TUBOS - GARRA	384
TAMPA - HIDRÁULICO	142-8937	1	TANQUE HIDRÁULICO	447
		1	TANQUE HIDRÁULICO	448
TAMPA CONTRA POEIRA	6V-0852	1	TUBOS - BOMBA	414
		1	TUBOS - BOMBA	416
		1	TUBOS - CIRCUITO PILOTO	412
TREM DE FORÇA				
FILTRO - ÓLEO	1G-8878	1	FILTRO - ÓLEO	229
	191-9784	1	FILTRO HIDRÁULICO E MONTAGEM	228
TAMPA CONTRA POEIRA	6V-0852	5	TUBOS - SISTEMA HIDROSTÁTICO	234
		5	TUBOS - SISTEMA HIDROSTÁTICO	236
	8C-3451	1	FILTRO - ÓLEO	229

WARTUNGSTEILE

BESCHREIBUNG	ERSATZTEIL-NUMMER	MENGE	VERWENDET IN	SEITE
ARBEITSGERÄTE				
ANSCHLUSSTÜCK - GERADE	3B-8491	2	SCHNELLWECHSELEINRICHTUNG	538
SCHMIERNIPPEL	3B-8489	2	KOMBISCHAUFEL	532
		2	KOMBISCHAUFEL	533
		2	SCHILD	503
		2	SCHILD	504
SCHMIERNIPPEL ((STÄRKE 1/8-27)	3B-8489	10	ARBEITSGERÄTESTEUERUNG	496
SCHMIERNIPPEL (1/8-27-GEWINDE)	3B-8489	4	GREIFERGABEL	552
		4	GREIFERGABEL	553
	3B-8488	2	ARBEITSGERÄTESTEUERUNG	492
	3B-8489	10	ARBEITSGERÄTESTEUERUNG	492
		4	GREIEFERSCHAUFEL	527
		4	GREIEFERSCHAUFEL	528
		4	GREIEFERSCHAUFEL	529
		2	KOMBISCHAUFEL	530
		2	KOMBISCHAUFEL	531
SCREEN	119-1414	1	WASSERSIEBEINSATZ	577

* ÜBERSETZUNG ZUM ZEITPUNKT DER DRUCKLEGUNG NICHT VORHANDEN

WARTUNGSTEILE

BESCHREIBUNG	ERSATZTEIL-NUMMER	MENGE	VERWENDET IN	SEITE
ELEKTRISCHE ANLAGE UND STARTSYSTEM				
ABDECKGLAS	100-3248	1	SCHEINWERFER U. RICHTUNGSLEUCHTE	152
	146-2438	1	BLINKLEUCHTE	155
	165-4895	1	BREMS- UND RÜCKLEUCHTE	156
ABDECKGLAS (GELB)	100-3250	1	SCHEINWERFER U. RICHTUNGSLEUCHTE	152
	9X-8121	1	RUNDUM-KENNLEUCHTE	157
BATTERIE (12 V)	153-5656	1	BATTERIE	142
BATTERIE (12 V)(NASS)	115-2422	1	BATTERIE	143
GLÜHKERZE	177-7559	4	GLÜHKERZE	147
KEILRIEMEN	5L-3834	1	DREHSTROMGENERATOR	141
LAUFBAND UND ANTRIEB	9X-8139	1	RUNDUM-KENNLEUCHTE	157
LEUCHTE (12 V) (*1.12 WATT)	189-3610	2	INSTRUMENTENTAFELLEUCHTE	154
LEUCHTE (12 V/21 W)	5G-3244	1	SCHEINWERFER U. RICHTUNGSLEUCHTE	152
LEUCHTE (12 V)(21 W) (RECHTS- U. LINKSWENDUNG)	9W-3326	1	BLINKLEUCHTE	155
LEUCHTE (12 V)(21/5 W)	084-4348	1	BREMS- UND RÜCKLEUCHTE	156
LEUCHTE (12 V)(21/5 W) (BREMS- U. HECKLEUCHTE)	084-4348	1	BLINKLEUCHTE	155
LEUCHTE (12 V/4 W)	100-3246	1	SCHEINWERFER U. RICHTUNGSLEUCHTE	152
LEUCHTE (12 V)(55 W)	9W-0607	1	ARBEITSLEUCHTEN	149
		1	ARBEITSLEUCHTEN	150
LEUCHTE (12V/55W)	9X-8118	1	RUNDUM-KENNLEUCHTE	157
MINISICHERUNGSZIEHER	116-7471	1	SICHERUNGSTAFEL - ABDECKUNG	145
REFLEKTOR	9R-1499	2	HECKBELEUCHTUNG	160
RELAIS	146-4323	2	ARBEITSGERÄT - VERDRAHTUNG	196
		2	ARBEITSGERÄT - VERDRAHTUNG	198
		2	ARBEITSGERÄT - VERDRAHTUNG	200
		2	ARBEITSGERÄT - VERDRAHTUNG	202
		2	FAHRERHAUSVERDRAHTUNG	180
SCHEINWERFER U. RICHTUNGSLEUCHTE	3E-7584	2	BELEUCHTUNGSANLAGE (STRASSENAUSRÜSTUNG)	162
		2	BELEUCHTUNGSANLAGE (STRASSENAUSRÜSTUNG)	166
SCHEINWERFER (12 V/60-55 W)	9W-3324	1	SCHEINWERFER U. RICHTUNGSLEUCHTE	152
SICHERUNG (10 A)	113-8490	9	FAHRERHAUSVERDRAHTUNG	180
		1	RÜCKFAHRWARNHORN	178
SICHERUNG (15 A)	113-8491	2	ARBEITSGERÄT - VERDRAHTUNG	196
		2	ARBEITSGERÄT - VERDRAHTUNG	198
		2	ARBEITSGERÄT - VERDRAHTUNG	200
		2	ARBEITSGERÄT - VERDRAHTUNG	202
		2	FAHRERHAUSVERDRAHTUNG	180
		1	KLIMAANLAGENVERDRAHTUNG	179
UNTERBRECHER (30 A)	147-1773	1	FAHRGESTELLVERDRAHTUNG	184

* ÜBERSETZUNG ZUM ZEITPUNKT DER DRUCKLEGUNG NICHT VORHANDEN

WARTUNGSTEILE

BESCHREIBUNG	ERSATZTEIL-NUMMER	MENGE	VERWENDET IN	SEITE
FAHRERHAUS				
FAHRERHAUSBELEUCHTUNG	084-4277	1	WARNANZEIGENSATZ	621
FILTER	142-9291	1	FAHRERHAUSLUFTFILTER	618
KAPPE (KLIMAANLAGE)	3E-4051	1	KÄLTEMITTELKOMPRESSOR U. BEFESTIGUNG	592
	3E-4052	1	KÄLTEMITTELKOMPRESSOR U. BEFESTIGUNG	592
KEILRIEMEN	2P-6818	1	KÄLTEMITTELKOMPRESSOR U. BEFESTIGUNG	592
LEUCHTE (12 V)	7X-9065	1	WARNANZEIGENSATZ	621
LEUCHTE (12 V)(10 W)	6R-7490	1	WARNANZEIGENSATZ	621
RELAIS	115-1615	1	FAHRERHAUSHEIZUNG	632
SCHEIBENWISCHERBLATT	161-7524	1	FAHRERHAUSTÜR	612
		1	FAHRERHAUSTÜR	614
SICHERUNG (10 A)	113-8490	1	WARNHORN, ELEKTR.	635
		1	WARNHORN, ELEKTR.	636
SICHERUNG (20 A)	113-8492	1	FAHRERHAUSHEIZUNG U. BEFESTIGUNGSTEILE	624
		1	FAHRERHAUSHEIZUNG U. BEFESTIGUNGSTEILE	625
		1	FAHRERHAUSHEIZUNG U. BEFESTIGUNGSTEILE	626
		1	FAHRERHAUSHEIZUNG U. BEFESTIGUNGSTEILE	628
		1	FAHRERHAUSHEIZUNG U. BEFESTIGUNGSTEILE	629
		1	FAHRERHAUSHEIZUNG U. BEFESTIGUNGSTEILE	630
HYDRAULIKSYSTEM				
DICHTUNGSSATZ	107-7491	1	VENTILSATZ (2-VENTIL)	458
HYDRAULIKÖL-TANKKAPPE	142-8937	1	HYDRAULIKTANK	447
		1	HYDRAULIKTANK	448
O-RING-DICHTUNG (19,18 MM ID)	2M-9780	1	GREIFERLEITUNGEN	384
SCHMIERNIPPEL	3B-8489	2	GREIFERZYLINDER U. -BEFESTIGUNG	346
		1	SCHILDZYLINDER U. BEFESTIGUNGSTEILE	345
SCHMIERNIPPEL (1/8-27-GEWINDE)	3B-8489	2	ZYLINDERAUFHÄNGUNG	440
		1	GREIFERZYLINDER	350
		1	GREIFERZYLINDER	351
		1	KIPPZYLINDER	355
		1	KIPPZYLINDER	356
		1	SCHAUFELZYLINDER	348
STAUBKAPPE	6V-0852	1	HYDRAULIKPUMPE UND LEITUNGEN	414
		1	HYDRAULIKPUMPE UND LEITUNGEN	416
		1	VORSTEUERLEITUNGEN	412

* ÜBERSETZUNG ZUM ZEITPUNKT DER DRUCKLEGUNG NICHT VORHANDEN

WARTUNGSTEILE

BESCHREIBUNG	ERSATZTEIL-NUMMER	MENGE	VERWENDET IN	SEITE
KRAFTSTOFFSYSTEM				
DICHTUNG	121-3221	1	KRAFTSTOFFILTER UND LEITUNGEN	124
DICHTUNG (KRAFTSTOFFILTER)	101-3743	1	KRAFTSTOFFILTER	126
KRAFTSTOFFFILTEREINSATZ	159-6102	1	KRAFTSTOFFILTER	126
KRAFTSTOFFILTER	138-3096	1	KRAFTSTOFFILTER UND LEITUNGEN	124
TANKKAPPE	142-8828	1	KRAFTSTOFFLEITUNGEN	132
		1	KRAFTSTOFFLEITUNGEN	134
WASSERFILTERELEMENT	131-1812	1	WASSERABSCHEIDER	140
KRAFTSÜBERTRAGUNG				
ÖLFILTER	1G-8878	1	ÖLFILTER	229
	191-9784	1	HYDRAULIKFILTER UND BEFESTIGUNGSTEILE	228
STAUBKAPPE	6V-0852	5	HYDROSTATIKLEITUNGEN	234
		5	HYDROSTATIKLEITUNGEN	236
	8C-3451	1	ÖLFILTER	229
KÜHLSYSTEM				
DICHTUNG	198-8555	1	KÜHLWASSERANSCHLUSS	56
		1	KÜHLWASSERANSCHLUSS	58
KAPPE MIT ENTLÜFTER	169-6715	1	KÜHLER U. ÖLKÜHLERBEFESTIGUNG	82
		1	KÜHLER U. ÖLKÜHLERBEFESTIGUNG	84
		1	KÜHLER U. ÖLKÜHLERBEFESTIGUNG	88
			KÜHLER U. ÖLKÜHLERBEFESTIGUNG	92
KÜHLERKAPPE	036-1865	1	KÜHLER UND HYDRAULIKÖLKÜHLER	78
	126-5027	1	KÜHLER UND HYDRAULIKÖLKÜHLER	68
		1	KÜHLER UND HYDRAULIKÖLKÜHLER	70
		1	KÜHLER UND HYDRAULIKÖLKÜHLER	72
		1	KÜHLER UND HYDRAULIKÖLKÜHLER	74
		1	KÜHLER UND HYDRAULIKÖLKÜHLER	76
ÖLFILTER	7W-2327	1	MOTORÖLKÜHLER UND FILTERSOCKEL	59
SCHLAUCHLEITUNG	142-8867	1	KÜHLER U. ÖLKÜHLERBEFESTIGUNG	86
		1	KÜHLER U. ÖLKÜHLERBEFESTIGUNG	88
		1	KÜHLER UND HYDRAULIKÖLKÜHLER	80
WASSERTEMPERATURREGLER	4W-8063	1	KÜHLWASSERPUMPE	65
		1	KÜHLWASSERPUMPE	66
LUFTANSAUG- UND ABGASSYSTEM				
ELEMENT (AUSFALLSCHUTZ)	140-2334	1	LUFTREINIGER	97
ELEMENT (HAUPTELEMENT)	134-8726	1	LUFTREINIGER	97
ELEMENT (SICHERHEITSELEMENT)	110-6331	1	LUFTREINIGER	95
ENTLEERUNGSVENTIL	112-9717	1	LUFTREINIGER	95
		1	LUFTREINIGER	97
HAUPTELEMENT (HAUPTELEMENT)	110-6326	1	LUFTREINIGER	95
LUFTFILTER (HAUPTELEMENT)	110-6326	1	LUFTREINIGER	96
LUFTFILTER (SICHERHEITSELEMENT)	110-6331	1	LUFTREINIGER	96

* ÜBERSETZUNG ZUM ZEITPUNKT DER DRUCKLEGUNG NICHT VORHANDEN

WARTUNGSTEILE

BESCHREIBUNG	ERSATZTEIL-NUMMER	MENGE	VERWENDET IN	SEITE
MOTOR - GRUNDAUSFÜHRUNG				
ABLASSVENTIL	170-7614	1	ÖLWANNE	44
DICHTUNG	6I-0512	1	STIRNRADGEHÄUSE	36
ÖLKAPPE	170-7666	1	VENTILDECKEL	14
		1	VENTILDECKEL	16
SCHLAUCHLEITUNG (ENTDUNSTER)	153-0104	1	VENTILDECKEL	14
STAUBKAPPE	8C-3445	1	MOTORÖLABLASS	28
VENTILDECKELDICHTUNG	159-0082	1	VENTILDECKEL	14
		1	VENTILDECKEL	16
RAHMEN UND FAHRGESTELL				
ENTLÜFTER	9G-5127	2	LADERRAHMEN	298
		2	LADERRAHMEN	300
	124-2831	2	LADERRAHMEN	296
MAGNETSTOPFEN	3S-9182	5	LADERRAHMEN	296
		5	LADERRAHMEN	298
		5	LADERRAHMEN	300
REFLEKTOR	9R-1499	2	BELEUCHTUNG FÜR STRASSENFAHRT - BEFESTIGUNG	308
SCHMIERNIPPEL	3B-8488	2	LADERRAHMEN	298
SCHMIERNIPPEL (1/8-27-GEWINDE)	3B-8489	1	*FRAME GP-BLADE	294
SCHMIERSYSTEM				
ÖLFILTER	7W-2327	1	ÖLFILTER	53
WARTUNGSAUSRÜSTUNG UND -ZUBEHÖR				
BEHÄLTER	4C-4600	2	WARTUNGSSATZ	704
ELEMENT	163-4465	1	WARTUNGSSATZ	704
KRAFTSTOFFFILTEREINSATZ	159-6102	1	WARTUNGSSATZ	704
LEUCHTE (12 V)	7M-9957	1	TYPENSCHILDBEFESTIGUNG	705
ÖLFILTER	1G-8878	1	WARTUNGSSATZ	704
	7W-2327	1	WARTUNGSSATZ	704

* ÜBERSETZUNG ZUM ZEITPUNKT DER DRUCKLEGUNG NICHT VORHANDEN

RICAMBI PER MANUTENZIONE

DESCRIZIONE	NUMERO DEL RICAMBIO	QTÀ	DOVE USATI	PAGINA
APPARATO PROPULSORE				
FILTRO DELL'OLIO	1G-8878	1	FILTRO DELL'OLIO	229
	191-9784	1	FILTRO IDRAULICO E MONTAGGIO - GR	228
TAPPO ANTIPOLVERE	6V-0852	5	TUBAZIONI IDROSTATICHE - GR	234
		5	TUBAZIONI IDROSTATICHE - GR	236
	8C-3451	1	FILTRO DELL'OLIO	229
ATTREZATURA				
INGRASSATORE (FILETTATURA 1/8-27)	3B-8488	2	COMANDO ATTREZZATURA - GR	492
	3B-8489	10	COMANDO ATTREZZATURA - GR	492
INGRASSATORE ((FILETTATURA 1/8-27)	3B-8489	10	COMANDO ATTREZZATURA - GR	496
ATTREZZATURA				
INGRASSATORE	3B-8489	2	BENNA MULTIUSO - GR	532
		2	BENNA MULTIUSO - GR	533
		2	LAMA	503
		2	LAMA	504
INGRASSATORE (FILETTATURA 1/8-27)	3B-8489	4	BENNA A RAFFIO - GR	527
		4	BENNA A RAFFIO - GR	528
		4	BENNA A RAFFIO - GR	529
		2	BENNA MULTIUSO - GR	530
		2	BENNA MULTIUSO - GR	531
		4	FORCA RAFFIO - GR	552
		4	FORCA RAFFIO - GR	553
RACCORDO DIRITTO	3B-8491	2	ATTACCO RAPIDO - GR	538
RETINA	119-1414	1	FILTRO A RETE DELL'ACQUA - GR	577
ATTREZZATURA E FORNITURE DI MANUTENZIONE				
CONTENITORE	4C-4600	2	KIT - MANUTENZIONE	704
ELEMENTO	163-4465	1	KIT - MANUTENZIONE	704
ELEMENTO FILTRANTE DEL CARBURANTE	159-6102	1	KIT - MANUTENZIONE	704
FILTRO DELL'OLIO	1G-8878	1	KIT - MANUTENZIONE	704
FILTRO-OLIO MOTORE	7W-2327	1	KIT - MANUTENZIONE	704
LAMPADA (12 VOLT)	7M-9957	1	BULLONERIA DI REGOLAZIONE - GR	705
IMPIANTO ALIMENTAZIONE CARBURANTE				
ELEMENTO FILTRANTE DEL CARBURANTE	159-6102	1	FILTRO-CARBURANTE	126
ELEMENTO FILTRANTE DELL'ACQUA	131-1812	1	SEPARATORE DELL'ACQUA	140
FILTRO-CARBURANTE	138-3096	1	FILTRO E TUBAZIONI DEL CARBURANTE	124
GUARNIZIONE	121-3221	1	FILTRO E TUBAZIONI DEL CARBURANTE	124
TAPPO DEL SERBATOIO CARBURANTE	142-8828	1	TUBAZIONI CARBURANTE - GR	132
		1	TUBAZIONI CARBURANTE - GR	134
TENUTA (FILTRO DEL CARBURANTE)	101-3743	1	FILTRO-CARBURANTE	126

* TRADUZIONE NON DISPONIBILE A TEMPO DELLA PUBBLICAZIONE

RICAMBI PER MANUTENZIONE

DESCRIZIONE	NUMERO DEL RICAMBIO	QTÀ	DOVE USATI	PAGINA
MOTORE BASE				
GUARNIZIONE	6I-0512	1	SCATOLA ANTERIORE - GR	36
GUARNIZIONE COPERCHIO VALVOLE	159-0082	1	COPERCHIO MECCANISMO VALVOLE - GR	14
		1	COPERCHIO MECCANISMO VALVOLE - GR	16
TAPPO ANTIPOLVERE	8C-3445	1	SCARICO DELL'OLIO MOTORE - GR	28
TAPPO DELL'OLIO	170-7666	1	COPERCHIO MECCANISMO VALVOLE - GR	14
		1	COPERCHIO MECCANISMO VALVOLE - GR	16
TUBO FLESSIBILE (SCARICO FUMI)	153-0104	1	COPERCHIO MECCANISMO VALVOLE - GR	14
VALVOLA DI SCARICO	170-7614	1	COPPA OLIO - GR	44
POSTAZIONE DELL'OPERATORE				
CINGHIA A V	2P-6818	1	COMPRESSORE DEL REFRIGERANTE E MONTANTE	592
FILTRO	142-9291	1	FILTRO - ARIA CABINA	618
FUSIBILE (10 A)	113-8490	1	AVVISATORE ACUSTICO-ELETTRICO	635
		1	AVVISATORE ACUSTICO-ELETTRICO	636
FUSIBILE (20 A)	113-8492	1	RISCALDAMENTO DELLA CABINA E MONTAGGIO	624
		1	RISCALDAMENTO DELLA CABINA E MONTAGGIO	625
		1	RISCALDAMENTO DELLA CABINA E MONTAGGIO	626
		1	RISCALDAMENTO DELLA CABINA E MONTAGGIO	628
		1	RISCALDAMENTO DELLA CABINA E MONTAGGIO	629
		1	RISCALDAMENTO DELLA CABINA E MONTAGGIO	630
LAMPADA (12 VOLT)	7X-9065	1	INDICATORE E ALLARME - GR	621
LAMPADA (12 VOLT)(10 WATT)	6R-7490	1	INDICATORE E ALLARME - GR	621
LUCE INTERNA	084-4277	1	INDICATORE E ALLARME - GR	621
RELÈ	115-1615	1	RISCALDAMENTO CABINA - GR	632
SPAZZOLA - TERGICRISTALLO	161-7524	1	PORTIERA CABINA - GR	612
		1	PORTIERA CABINA - GR	614
TAPPO (CONDIZIONATORE D'ARIA)	3E-4051	1	COMPRESSORE DEL REFRIGERANTE E MONTANTE	592
	3E-4052	1	COMPRESSORE DEL REFRIGERANTE E MONTANTE	592

* TRADUZIONE NON DISPONIBILE A TEMPO DELLA PUBBLICAZIONE

RICAMBI PER MANUTENZIONE

DESCRIZIONE	NUMERO DEL RICAMBIO	QTÀ	DOVE USATI	PAGINA
SISTEMA ARIA D'ASPIRAZIONE E SCARICO				
CARTUCCIA FILTRANTE-PRINCIPALE (PRIMARIO)	110-6326	1	FILTRO ARIA - GR	95
CARTUCCIA FILTRANTE (SECONDARIO)	110-6331	1	FILTRO ARIA - GR	95
ELEMENTO DEL FILTRO DELL'ARIA (PRIMARIO)	110-6326	1	FILTRO ARIA - GR	96
ELEMENTO DEL FILTRO DELL'ARIA (SECONDARIO)	110-6331	1	FILTRO ARIA - GR	96
ELEMENTO (PRIMARIO)	134-8726	1	FILTRO ARIA - GR	97
ELEMENTO (SECONDARIO)	140-2334	1	FILTRO ARIA - GR	97
VALVOLA DI SCARICO	112-9717	1	FILTRO ARIA - GR	95
		1	FILTRO ARIA - GR	97
SISTEMA DI LUBRIFICAZIONE				
FILTRO-OLIO MOTORE	7W-2327	1	FILTRO OLIO MOTORE	53
SISTEMA DI RAFFREDDAMENTO				
FILTRO-OLIO MOTORE	7W-2327	1	SCAMBIATORE DI CALORE OLIO MOTORE E BASE FILTRO - GR	59
GUARNIZIONE	198-8555	1	RACCORDO ACQUA	56
		1	RACCORDO ACQUA	58
REGOLATORE DELLA TEMPERATURA DELL'ACQUA	4W-8063	1	POMPA ACQUA - GR	65
		1	POMPA ACQUA - GR	66
TAPPO A SFIATO	169-6715	1	RADIATORE E SCAMBIATORE DI CALORE DELL'OLIO MONTAGGIO - GR	82
		1	RADIATORE E SCAMBIATORE DI CALORE DELL'OLIO MONTAGGIO - GR	84
		1	RADIATORE E SCAMBIATORE DI CALORE DELL'OLIO MONTAGGIO - GR	88
			RADIATORE E SCAMBIATORE DI CALORE DELL'OLIO MONTAGGIO - GR	92
TAPPO DEL RADIATORE	036-1865	1	RADIATORE E SCAMBIATORE D'OLIO	78
	126-5027	1	RADIATORE E SCAMBIATORE D'OLIO	68
		1	RADIATORE E SCAMBIATORE D'OLIO	70
		1	RADIATORE E SCAMBIATORE D'OLIO	72
		1	RADIATORE E SCAMBIATORE D'OLIO	74
		1	RADIATORE E SCAMBIATORE D'OLIO	76
TUBO FLESSIBILE	142-8867	1	RADIATORE E SCAMBIATORE DI CALORE DELL'OLIO MONTAGGIO - GR	86
		1	RADIATORE E SCAMBIATORE DI CALORE DELL'OLIO MONTAGGIO - GR	88
		1	RADIATORE E SCAMBIATORE D'OLIO	80
SISTEMA ELETTRICO E D'AVVIAMENTO				
BATTERIA (12 VOLT)	153-5656	1	BATTERIA	142
BATTERIA (12 VOLT)(BAGNATO)	115-2422	1	BATTERIA	143
CANDELETTA DI PRERISCALDAMENTO	177-7559	4	CANDELETTA DI PRERISCALDAMENTO	147
CATARIFRANGENTE	9R-1499	2	LUCI POSTERIORI - GR	160
CINGHIA A V	5L-3834	1	ALTERNATORE DI CARICA - GR	141

* TRADUZIONE NON DISPONIBILE A TEMPO DELLA PUBBLICAZIONE

RICAMBI PER MANUTENZIONE

DESCRIZIONE	NUMERO DEL RICAMBIO	QTÀ	DOVE USATI	PAGINA
CINGHIA DI COMANDO	9X-8139	1	LAMPADA FARO ROTANTE - GR	157
ESTRATTORE FUSIBILI	116-7471	1	COPERCHIO PANNELLO FUSIBILI - GR	145
FANALE ANTERIORE E SEGNALE DI DIREZIONE - GR	3E-7584	2	LUCI STRADALI	162
		2	LUCI STRADALI	166
FANALE ANTERIORE (*12 VOLT/60-55 WATT)	9W-3324	1	FANALE ANTERIORE E SEGNALE DI DIREZIONE - GR	152
FUSIBILE (10 A)	113-8490	1	ALLARME DI RETROMARCIA - GR	178
		9	CABLAGGIO - CABINA	180
FUSIBILE (15 A)	113-8491	2	CABLAGGIO - CABINA	180
		1	CABLAGGIO DEL CONDIZIONATORE D'ARIA	179
		2	CABLAGGIO DELL'ATTREZZATURA - GR	196
		2	CABLAGGIO DELL'ATTREZZATURA - GR	198
		2	CABLAGGIO DELL'ATTREZZATURA - GR	200
		2	CABLAGGIO DELL'ATTREZZATURA - GR	202
INTERRUTTORE DI CIRCUITO (30 A)	147-1773	1	CABLAGGIO DEL TELAIO - GP	184
LAMPADA (12 VOLT) (*1.12 WATT)	189-3610	2	LAMPADA D'ILLUMINAZIONE PANNELLO - GR	154
LAMPADA (*12 VOLT/21 WATT)	5G-3244	1	FANALE ANTERIORE E SEGNALE DI DIREZIONE - GR	152
LAMPADA (*12 VOLT)(21 WATT) (SVOLTA)	9W-3326	1	LAMPADA - SEGNALE	155
LAMPADA (*12 VOLT/4 WATT)	100-3246	1	FANALE ANTERIORE E SEGNALE DI DIREZIONE - GR	152
LAMPADA (12 VOLT)(55 WATT)	9W-0607	1	LUCI DI LAVORO - GR	149
		1	LUCI DI LAVORO - GR	150
LAMPADA (*12 VOLT/55 WATT)	9X-8118	1	LAMPADA FARO ROTANTE - GR	157
LAMPADA (12VOLT)(21/5 WATT)	084-4348	1	LAMPADA D'ARRESTO E DI CODA - GR	156
LAMPADA (12VOLT)(21/5 WATT) (ARRESTO E POSTERIORI)	084-4348	1	LAMPADA - SEGNALE	155
LENTE	100-3248	1	FANALE ANTERIORE E SEGNALE DI DIREZIONE - GR	152
	146-2438	1	LAMPADA - SEGNALE	155
	165-4895	1	LAMPADA D'ARRESTO E DI CODA - GR	156
LENTE (*AMBER)	9X-8121	1	LAMPADA FARO ROTANTE - GR	157
	100-3250	1	FANALE ANTERIORE E SEGNALE DI DIREZIONE - GR	152
RELÈ	146-4323	2	CABLAGGIO - CABINA	180
		2	CABLAGGIO DELL'ATTREZZATURA - GR	196
		2	CABLAGGIO DELL'ATTREZZATURA - GR	198
		2	CABLAGGIO DELL'ATTREZZATURA - GR	200

* TRADUZIONE NON DISPONIBILE A TEMPO DELLA PUBBLICAZIONE

RICAMBI PER MANUTENZIONE

DESCRIZIONE	NUMERO DEL RICAMBIO	QTÀ	DOVE USATI	PAGINA
		2	CABLAGGIO DELL'ATTREZZATURA - GR	202
SISTEMA IDRAULICO				
GUARNIZIONE AD ANELLO (19,18MM DI)	2M-9780	1	TUBAZIONI DEL RAFFIO	384
INGRASSATORE	3B-8489	1	CILINDRO E MONTAGGIO DELLA LAMA	345
		2	CILINDRO E MONTAGGIO RAFFIO - GR	346
INGRASSATORE (FILETTATURA 1/8-27)	3B-8489	1	CILINDRO BENNA - GR	348
		1	CILINDRO DEL RAFFIO	350
		1	CILINDRO DEL RAFFIO	351
		1	CILINDRO D'INCLINAZIONE	355
		1	CILINDRO D'INCLINAZIONE	356
		2	MONTAGGIO - CILINDRO	440
KIT - TENUTA	107-7491	1	VALVOLA 2 DEL BANCO - GR	458
TAPPO ANTIPOLVERE	6V-0852	1	TUBAZIONI CIRCUITO PILOTA - GR	412
		1	TUBAZIONI POMPA - GR	414
		1	TUBAZIONI POMPA - GR	416
TAPPO SERBATOIO IDRAULICO	142-8937	1	SERBATOIO IDRAULICO	447
		1	SERBATOIO IDRAULICO	448
TELAIO E CARROZZERIA				
CATARIFRANGENTE	9R-1499	2	MONTAGGIO LUCI STRADALI - GR	308
INGRASSATORE	3B-8488	2	TELAIO CARICATORE - GR	298
INGRASSATORE (FILETTATURA 1/8-27)	3B-8489	1	TELAIO LAMA - GR	294
SFIATATOIO	9G-5127	2	TELAIO CARICATORE - GR	298
		2	TELAIO CARICATORE - GR	300
	124-2831	2	TELAIO CARICATORE - GR	296
TAPPO MAGNETICO	3S-9182	5	TELAIO CARICATORE - GR	296
		5	TELAIO CARICATORE - GR	298
		5	TELAIO CARICATORE - GR	300

* TRADUZIONE NON DISPONIBILE A TEMPO DELLA PUBBLICAZIONE

INDEX

Name	Page
A	
ACCUMULATOR & MTG GP-HYDRAULIC	314
AIR CLEANER GP	95
	96
	97
AIR CONDITIONER & MOUNTING GP	585
AIR CONDITIONER GP	585
ALTERNATOR GP-CHARGING	141
ARM GP-MATERIAL HANDLING	500
	501
ARMREST & MOUNTING GP	586
ARMREST GP	588
AXLE GP	204
B	
BATTERY GP	142
	143
BATTERY (12 VOLT)	142
BATTERY (12 VOLT)(WET)	143
BELT-DRIVE	157
BLADE AR	502
BLADE AS-WIPER	612
	614
BLADE GP	503
	504
BOTTLE GP-FLUID SAMPLING	696
BOX GP-STORAGE	590
BREATHER	296
	298
	300
BUCKET AR-DIRT	505
	506
	507
BUCKET AR-GENERAL PURPOSE	508
	509
	510
	511
BUCKET AR-GRAPPLE	511
	512
	513
	514
	515
	516
	517
BUCKET AR-LIGHT MATERIAL	518
BUCKET AR-MULTIPURPOSE	519
	520
	521
	522
BUCKET AS-DIRT	523
	524
BUCKET AS-GENERAL PURPOSE	525
	526
BUCKET GP-GRAPPLE	527
	528
	529
BUCKET GP-MULTIPURPOSE	530
	531
	532
	533
BUCKET GP-UTILITY	534
BUMPER GP-REAR	271
C	
CAMSHAFT GP	11
	12
CANOPY GP-ROPS	591
CAP AS (AIR CONDITIONER)	592
CAP AS-FUEL	132
	134
CAP AS-HYDRAULIC	447
	448
CAP AS-RADIATOR	68
	70
	72
	74
	76
	78
CAP-DUST	28
	229
	234
	236
	412
	414
	416
CAP-OIL	14
	16
CAP-VENTED	82
	84
	88
	92
CARRIAGE AS-FORK	535
CHASSIS AR	1
	2
	3
CIRCUIT BREAKER AS (30 AMP)	184
COMMON AR	3
	4
COMPRESSOR & MTG GP-REFRIG	592
COMPRESSOR GP-REFRIGERANT	594
CONDENSER & MTG GP-REFRIGERANT	595
CONNECTION GP-WATER	56
	57
	58
CONTAINER AS	704
CONTROL GP-GOVERNOR	120
	122

INDEX

Name	Page
CONTROL GP-HANDLE	315
	316
	317
	318
	319
CONTROL GP-INTERLOCK	144
CONTROL GP-PARKING BRAKE	206
	208
	210
	212
	214
	216
	218
	220
CONTROL GP-PILOT OPERATED HYD	320
	321
	322
	323
	324
	325
	326
	327
	328
	329
	330
	331
	332
	333
	334
	335
	336
	337
	338
	339
	340
	341
	342
	343
	344
CONTROL GP-WORK TOOL	492
	496
CONVERSION AR-QUICK COUPLER	536
CONVERSION AR-ROADING	272
	273
	274
	275
	276
CONVERSION GP-ROADING	277
	278
COOLER GP-FLTR BASE & ENG OIL	59
COUNTERWEIGHT GP	280
	281
	282
	283
	284
COUPLER AR-QUICK	536
	537
COUPLER GP-QUICK	538
	540
	541
COVER GP-CAB	596
COVER GP-CONSOLE	597
	598
COVER GP-FRONT HOUSING	13
COVER GP-FUSE PANEL	145
COVER GP-LINES	542
COVER GP-VALVE MECHANISM	14
	16
CRANKSHAFT GP	18
CYLINDER & MTG GP-BLADE	345
CYLINDER & MTG GP-GRAPPLE	346
	347
CYLINDER BLOCK GP	19
	20
	21
	22
CYLINDER GP-BUCKET	348
CYLINDER GP-COUPLER	349
CYLINDER GP-GRAPPLE	350
	351
CYLINDER GP-LIFT	352
	353
	354
CYLINDER GP-TILT	355
	356
CYLINDER HEAD GP	24
	25
	26
	27

D

DOOR & MTG GP-CAB	600
	604
	606
	610
DOOR GP-CAB	612
	614
DRAIN GP-ENGINE OIL	28
DRIVE CONTROL AR-HYDROSTATIC	222
	223
	224
	225
DRIVE GP-TANDEM	226
	227
DUCT & CONTROL GP	616
DUCT GP-DEFROST	617

INDEX

Name	Page
E	
EDGE GP-CUTTING	543, 544, 545, 546, 547, 548, 549
ELECTRONICS GP-WORK TOOL	146
ELEMENT AS	704
ELEMENT AS (PRIMARY)	97
ELEMENT AS (SECONDARY)	97
ELEMENT-MAIN (PRIMARY)	95
ELEMENT (SECONDARY)	95
ENCLOSURE GP-ENGINE	286, 288, 290, 292
ENGINE AR-PRIMARY	5, 6
F	
FAN GP-BLOWER	60, 61, 62, 63
FASTENER GP-ENGINE	29, 30
FILM GP	697, 698, 699, 700, 702
FILM-IDENTIFICATION (GROUP & SEQUENCE NO.)	634
FILM-INSTRUCTION (ALTERNATE EXIT)	612, 614, 690, 694, 695
FILM-NOTICE	278
FILTER	618
FILTER & LINES GP-FUEL	124
FILTER & MTG GP-HYDRAULIC	228
FILTER AS-ENGINE OIL	53, 59, 704
FILTER AS-OIL	229, 704
FILTER BASE & ENG OIL COOLER	59
FILTER ELEMENT AS-AIR (PRIMARY)	96
FILTER ELEMENT AS-AIR (SECONDARY)	96
FILTER ELEMENT AS-FUEL	126
FILTER ELEMENT-WATER	140
FILTER GP-CAB AIR	618
FILTER GP-ENGINE OIL	53
FILTER GP-FUEL	124, 126
FILTER GP-OIL	228, 229
FITTING GP-FUEL LINES	127
FITTING-GREASE	298, 345, 346, 503, 504, 532, 533
FITTING-GREASE (1/8-27 THD)	294, 348, 350, 351, 355, 356, 440, 492, 527, 528, 529, 530, 531, 552, 553
FITTING-GREASE ((1/8-27 THD)	496
FITTING-STRAIGHT	538
FLASHER AS-SIGNAL	162, 166
FLOOR MAT	619
FLYWHEEL GP	31
FORK AR-GRAPPLE	550, 551
FORK GP-GRAPPLE	552, 553, 554
FORK GP-PALLET	555
FORK GP-UTILITY	556, 557, 558
FRAME GP-BLADE	294
FRAME GP-LOADER	296, 298, 300
FUSE (10 AMP)	178, 180, 635, 636
FUSE (15 AMP)	179

INDEX

Name	Page
	180
	196
	198
	200
	202
FUSE (20 AMP)	624
	625
	626
	628
	629
	630

G

GASKET	36
	56
	58
	124
GASKET-VALVE COVER	14
	16
GAUGE & WARNING GP–LH	620
GAUGE & WARNING GP–RH	621
GLOW PLUG GP	147
GOVERNOR GP	128
	130
GRAPPLE GP-UTILITY	560
	562
GUARD GP-ROPS/FOPS	622
GUIDE GP-LINES	499

H

HANDLE & PIN GP-COUPLER–LH	563
HANDLE & PIN GP-COUPLER–RH	564
HANDLE GP-COUPLER–LH	565
HANDLE GP-COUPLER–RH	566
HEADLINER-CAB	623
HEATER & MTG GP-CAB	624
	625
	626
	628
	629
	630
HEATER GP-CAB	632
	634
HEATER GP-JACKET WATER	148
HORN GP-ELECTRIC	635
	636
	637
HOSE	80
	86
	88
HOSE (FUMES DISPOSAL)	14
HOUSING GP-FLYWHEEL	32
HOUSING GP-FRONT	34
	36
HYDRAULIC AR	357
	358
	359
	360
	361

I

INSTALLATION AR–AIR CONDITIONER	638
INSTALLATION AR–HEATER	638
INSTALLATION AR–WITHOUT HEATER	637
INSTALLATION AR-ENGINE	7
	8
	9
	10

K

KIT-CAB DOOR & MOUNTING	640
	642
KIT-CONNECTING PLUG (12 PIN)	180
	184
KIT-CONNECTING PLUG (2 PIN)	179
	180
	184
	188
	194
	582
	637
KIT-CONNECTING PLUG (3 PIN)	162
	166
	180
	184
	600
	606
KIT-CONNECTING PLUG (4 PIN)	162
	166
	179
	180
	184
	190
KIT-CONNECTING PLUG (6 PIN)	162
	166
	179
	184
KIT-CONNECTING PLUG (8 PIN)	180
	184
	188
	582
KIT-FUEL PUMP	124
KIT-MAINTENANCE	704
KIT-RECEPTACLE (12 PIN)	170
	184
KIT-RECEPTACLE (12 PIN)	184

INDEX

Name	Page
KIT-RECEPTACLE (2 PIN)	162
	166
	178
	184
	188
	263
	296
	298
	300
	466
	482
	485
	637
	646
KIT-RECEPTACLE (2 PIN)	176
KIT-RECEPTACLE (3 PIN)	162
	180
	194
	447
	448
	596
	600
	604
	606
	610
KIT-RECEPTACLE (4 PIN)	154
	156
	162
	166
	180
	184
	308
	475
	491
	652
KIT-RECEPTACLE (4 PIN)	155
KIT-RECEPTACLE (6 PIN)	152
	162
	166
	179
	180
	184
	190
	315
	316
	656
KIT-RECEPTACLE (8 PIN)	180
	184
	188
	196
	198
	200
	202
	317
	318
	319
	582
KIT-ROADING PLATE & MOUNTING	567
	568
KIT-SEAL	260
	458
	491
KIT-SNOW REMOVAL CONVERSION	569
	570
KIT-WATER BASE	140
KNOB	680

L

LAMP GP-DOME	621
LAMP GP-FLOOD	149
	150
LAMP GP-HEAD & SIGNAL	152
	162
	166
LAMP GP-PANEL ILLUMINATION	154
LAMP GP-SIGNAL	155
LAMP GP-STOP & TAIL	156
LAMP GP-WARNING BEACON	157
LAMP-HEAD (12 VOLT/60-55 WATT)	152
LAMP (12 VOLT)	621
LAMP (12 VOLT) (1.12 WATT)	154
LAMP (12 VOLTS)	705
LAMP (12 VOLT)(10 WATT)	621
LAMP (12 VOLT/21 WATT)	152
LAMP (12 VOLT)(21 WATT) (TURN)	155
LAMP (12 VOLT/4 WATT)	152
LAMP (12 VOLT)(55 WATT)	149
	150
LAMP (12 VOLT/55 WATT)	157
LAMP (12VOLT)(21/5 WATT)	156
LAMP (12VOLT)(21/5 WATT) (STOP AND TAIL)	155
LENS	155
	156
LENS (AMBER)	152
	157
LENS AS	152
LIFTING GP-ENGINE	38
LIFTING GP-MACHINE	302
	303
	304
	305
	306
LIGHTING AR-STOP & FLOOD	158
LIGHTING GP-FRONT–WORKING	159
LIGHTING GP-REAR	160
LIGHTING GP-REAR–WORKING	161
LIGHTING GP-ROADING	162
	166

INDEX

Name	Page
LIGHTING GP-WARNING BEACON	169
LINE GP	696
LINER GP-CAB	644
LINES GP-AIR	98
	99
	100
	101
LINES GP-AIR CONDITIONER	646
LINES GP-AUXILIARY HYDRAULIC	361
	362
	364
	365
LINES GP-BUCKET	366
	368
	370
	372
LINES GP-CONNECTING	374
LINES GP-COUPLER	376
	380
LINES GP-FUEL	132
	134
LINES GP-GRAPPLE	384
	386
LINES GP-HEATER	647
	648
	649
	650
LINES GP-HYDRAULIC FAN	388
	389
	390
	391
LINES GP-HYDRAULIC FILTER	230
	232
LINES GP-HYDRAULIC OIL COOLER	392
	393
	394
	395
	396
	397
	398
LINES GP-HYDROSTATIC	234
	236
LINES GP-LIFT CYLINDER	400
	402
	404
	406
LINES GP-PILOT	408
	410
	412
LINES GP-PUMP	414
	416
LINES GP-TILT CYLINDER	418
	420
	424
	426
LINES GP-WORK TOOL	428
	430
LINK GP-COUPLER	571
LOCK GP-QUICK COUPLER	572

M

MANIFOLD GP-EXHAUST	102
MANIFOLD GP-INLET	103
MANIFOLD GP-RETURN	240
MIRROR & MTG GP-REAR VIEW	651
MODULE GP-WARNING INDICATOR	170
MOTOR & MTG GP-HYDRAULIC FAN	432
	433
	434
MOTOR & MTG GP-PISTON	242
	244
	245
MOTOR & MTG GP-PISTON–TWO SPEED	243
MOTOR GP-GEAR	436
	437
	438
	439
MOTOR GP-GEAR–FAN	435
MOTOR GP-PISTON	246
	249
MOTOR GP-PISTON–TWO SPEED	248
MOTOR GP-WINDOW WIPER	652
MOUNTING GP-ALTERNATOR	39
MOUNTING GP-CYLINDER	440
MOUNTING GP-ENGINE	40
MOUNTING GP-MUFFLER	104
MOUNTING GP-PUMP	250
MOUNTING GP-REGISTRATION	705
MOUNTING GP-ROADING LIGHTS	308
MOUNTING GP-ROPS	653
MOUNTING GP-STARTING MOTOR	41
MUFFLER GP	105
	106
	107
	108
	109
	110

O

OPERATOR AR-CANOPY	654

P

PAN GP-OIL	42
	44
PANEL AR-INSTRUMENT	654
PANEL GP-INSTRUMENT	656
	659

INDEX

Name	Page
PANEL GP-SIDE	310
	311
PEDAL GP-GOVERNOR	660
	661
	662
PISTON & ROD GP	46
	47
	48
PLATE & FILM GP	708
	718
	720
	722
	724
	726
	728
	730
PLATE & FILM GP–ARABIC	709
PLATE & FILM GP–CHINESE	709
PLATE & FILM GP–CZECHOSLOVAKIAN	710
PLATE & FILM GP–DANISH	710
PLATE & FILM GP–DUTCH	710
PLATE & FILM GP–ENGLISH	706
PLATE & FILM GP–FINNISH	711
PLATE & FILM GP–FRENCH	711
PLATE & FILM GP–GERMAN	712
PLATE & FILM GP–GREEK	712
PLATE & FILM GP–HEBREW	731
PLATE & FILM GP–HUNGARIAN	721
PLATE & FILM GP–ICELANDIC	713
PLATE & FILM GP–INDONESIAN	713
PLATE & FILM GP–ITALIAN	714
PLATE & FILM GP–JAPANESE	714
PLATE & FILM GP–KOREAN	721
	731
PLATE & FILM GP–NORWEGIAN	715
PLATE & FILM GP–POLISH	715
PLATE & FILM GP–PORTUGUESE	716
PLATE & FILM GP–RUSSIAN	716
PLATE & FILM GP–SPANISH	707
PLATE & FILM GP–SWEDISH	717
PLATE & FILM GP–TURKISH	717
PLATFORM GP-OPERATOR	663
PLUG-GLOW	147
PLUG GP-CYLINDER BLOCK	49
PLUG GP-PILOT VALVE	441
PLUG GP-WATER LINES	64
PLUG-MAGNETIC	296
	298
	300
POWER TRAIN AR	251
PULLER-MINIFUSE	145
PULLEY GP-CRANKSHAFT	50
PUMP & MTG GP-WORK TOOL	442
PUMP GP-DIAPHRAGM	573
PUMP GP-ENGINE OIL	54
	55
PUMP GP-FUEL INJECTION	136
	138
PUMP GP-GEAR	443
PUMP GP-PISTON	252
	254
	256
PUMP GP-WATER	65
	66

R

RADIATOR & HYD OIL COOLER GP	68
	70
	72
	74
	76
	78
	80
RADIATOR & OIL COOLER MTG GP	82
	84
	86
	88
	92
REFLECTOR	160
	308
REGULATOR-WATER TEMPERATURE	65
	66
RELAY AS	180
	196
	198
	200
	202
	632
RELAY AS (12 VOLT)	184
	194

S

SCREEN	577
SEAL (FUEL FILTER)	126
SEAL GP-CAB	664
	665
	666
SEAL-O-RING	424
SEAL-O-RING (19.18MM ID)	384
SEAT & MOUNTING GP	667
	668
	669
SEAT BELT GP	670
	671
	672
	673
	674
	675

INDEX

Name	Page
SEAT GP-SUSPENSION	676
	678
SEPARATOR GP-WATER	140
SERVICE GP-WORK TOOL	171
SOFTWARE GP-WORK TOOL	146
SOLENOID GP-SHUTOFF	172
	173
SPRING GP-BLADE	574
SPRING GP-GAS	679
STARTING MOTOR GP-ELECTRIC	174
STEP GP-MATERIAL HANDLING ARM	575
	576
STRAINER GP-WATER	577
SUN VISOR	680
	681
SUPPRESSION GP-SOUND	312
SWITCH AS-KEY START	620
SWITCH AS-PRESSURE	229
	592
	646
SWITCH AS-3 POSITION (HEATER FAN)	632
SWITCH GP-PRESSURE	176
SWITCH GP-PRESSURE–OIL	175
SWITCH GP-TEMPERATURE–WATER	177
SWITCH-PRESSURE (OIL)	175
T	
TANK & MTG GP-HYDRAULIC	444
	445
	446
TANK & MTG GP-WATER	578
TANK GP-HYDRAULIC	447
	448
TANK GP-WATER	581
	582
TOOTH GP-UNI	584
TURBOCHARGER GP	112
	116
V	
V-BELT	141
	592
VALVE & MTG GP-CONTROL	449
	450
	451
	452
	453
VALVE & MTG GP-DIVERTER	454
	455
VALVE & MTG GP-SOLENOID	258
	260
	262
	456
VALVE AS-FLUID SAMPLING	229
VALVE-DRAIN	44
VALVE GP-BANK 2	458
VALVE GP-CONTROL	460
	462
	465
	466
	468
	472
VALVE GP-DIVERTER	475
VALVE GP-MODULATING	476
VALVE GP-PILOT	477
	478
	479
	480
	481
	482
	483
	484
	485
	486
VALVE GP-RELIEF	487
	488
	489
	490
VALVE GP-SOLENOID	263
	491
VALVE MECHANISM GP	51
	52
VALVE-SHUTOFF	240
	626
	647
	648
	649
	650
VALVE-VACUATOR	95
	97
VISOR GP-CAB	680
	681
W	
WARNING GP-BACKUP	178
WHEEL & TIRE AR	264
	265
	266
	267
	268
	269
	270
WHEEL & TIRE GP	270
WINDOW GP-CAB	682
	688
	690
	692

INDEX

Name	Page	Name	Page
	693		
	694		
	695		
WINDOW GP-CAB–LH	686		
WINDOW GP-CAB–RH	684		
WIRING GP-AIR CONDITIONER	179		
WIRING GP-CAB	180		
WIRING GP-CHASSIS	184		
	188		
WIRING GP-COUPLER	190		
WIRING GP-ENGINE	192		
WIRING GP-REAR LIGHTING	194		
WIRING GP-WORK TOOL	196		
	198		
	200		
	202		

INDEX

Désignation	Page

A

ACCOUDOIR (ASS)	588
ACCOUDOIR ET MONTAGE (ASS)	586
ACCUMULATEUR ET MONTAGE - HYDRAULIQUE (ASS)	314
ALTERNATEUR DE CHARGE (ASS)	141
AMPOULE (12 VOLTS)	621
	705
AMPOULE (12 VOLTS) (1,12 WATT)	154
AMPOULE (12 VOLTS/ 21 WATTS)	152
AMPOULE (12 VOLTS/ 4 WATTS)	152
AMPOULE (12 VOLTS)(10 WATTS)	621
AMPOULE (12 VOLTS)(21 WATTS) (CLIGNOTANT)	155
AMPOULE (12 VOLTS)(21/5 WATTS)	156
AMPOULE (12 VOLTS)(21/5 WATTS) (STOP ET ARRIÈRE)	155
AMPOULE (12 VOLTS)(55 WATTS)	149
	150
AMPOULE (12 VOLTS/55 WATTS)	157
ARBRE A CAMES (ASS)	11
	12
AUTOCOLLANT D'IDENTIFICATION (ASSEMBLAGE ET NO DE SÉQUENCE)	634
AVERTISSEUR DE RECUL (ASS)	178

B

BALAI D'ESSUIE-GLACE (ENS)	612
	614
BATI - CHARGEUSE (ASS)	296
BATI - CHARGEUSE (ASS)	298
	300
BÂTI DE LAME (ASS)	294
BATTERIE (ASS)	142
	143
BATTERIE (12 VOLTS)	142
BATTERIE (12 VOLTS)(HUMIDE)	143
BIELLE DE COUPLEUR (ASS)	571
BLOC-CYLINDRES (ASS)	19
	20
	21
	22
BOUCHON - BLOC-CYLINDRES	49
BOUCHON À ÉVENT	82
	84
	88
	92
BOUCHON AIMANTÉ	296
	298
	300
BOUCHON DE CARBURANT (ENS)	132
	134
BOUCHON DE RADIATEUR (ENS)	68
	70
	72
	74
	76
	78
BOUCHON DE SOUPAPE PILOTE (ASS)	441
BOUCHON DES CANALISATIONS D'EAU (ASS)	64
BOUCHON D'HUILE	14
	16
BOUCHON HYDRAULIQUE (ENS)	447
	448
BOUGIE DE PRÉCHAUFFAGE	147
BOUGIE DE PRÉCHAUFFAGE (ASS)	147
BOULONNERIE - MOTEUR (ASS)	29
	30
BOURRELET D'ÉTANCHÉITÉ (FILTRE À CARBURANT)	126
BOUTON	680
BOUTON DE TEMPÉRATURE	177
BRAS DE MANUTENTION (ASS)	500
	501

C

CABINE - REVÊTEMENT (ASS)	644
CABINE AVEC PAVILLON (VERSION)	654
CABLAGE - CLIMATISEUR (ASS)	179
CÂBLAGE - OUTIL DE TRAVAIL (ASS)	196
	198
	200
	202
CÂBLAGE-COUPLEUR (ASS)	190
CABLAGE DE CABINE (ASS)	180
CABLAGE DE CHASSIS (ASS)	184
	188
CABLAGE DE MOTEUR (ASS)	192
CABLAGE D'ECLAIRAGE ARRIERE (ASS)	194
CACHE-SOUPAPES (ASS)	14
	16
CANALISATION (ASS)	696
CANALISATIONS - BRANCHEMENT (ASS)	374
CANALISATIONS - OUTIL DE TRAVAIL (ASS)	428
	430
CANALISATIONS A COMMANDE PILOTE (ASS)	408
	410
	412
CANALISATIONS D'AIR (ASS)	98
	99
	100
	101
CANALISATIONS DE CARBURANT (ASS)	132
CANALISATIONS DE CARBURANT (ASS)	134
CANALISATIONS DE CHAUFFAGE (ASS)	647

INDEX

Désignation	Page
	648
	649
	650
CANALISATIONS DE CLIMATISEUR (ASS)	646
CANALISATIONS DE COUPLEUR (ASS)	376
	380
CANALISATIONS DE FILTRE HYDRAULIQUE	230
	232
CANALISATIONS DE POMPE (ASS)	414
	416
CANALISATIONS DE REFROIDISSEUR D'HUILE HYDR. (ASS)	392
	393
	394
	395
	396
	397
	398
CANALISATIONS DE VÉRIN DE LEVAGE (ASS)	400
	402
	404
	406
CANALISATIONS DU VÉRIN D'INCLINAISON (ASS)	418
	420
	424
	426
CANALISATIONS HYDRAULIQUES AUXILIAIRES (ASS)	361
	362
	364
	365
CANALISATIONS HYDRAULIQUES DE VENTILATEUR (ASS)	388
	389
	390
	391
CANALISATIONS HYDROSTATIQUES (ASS)	234
	236
CAPITONNAGE	623
CARENAGE DE MOTEUR (ASS)	286
	288
	290
	292
CARTER AV (ASS)	34
	36
CARTER DE VOLANT (ASS)	32
CEINTURE DE SECURITE (ASS)	670
	671
	672
	673
	674
	675
CHAPEAU (ENS) (CLIMATISEUR)	592
CHAUFFAGE DE CABINE (ASS)	632
	634
CHAUFFAGE ET MONTAGE - CABINE (ASS)	624
	625
	626
	628
	629
	630
CLAPET DE DECHARGE (ASS)	487
	488
	489
	490
CLIGNOTANT (ENS)	162
	166
CLIMATISEUR (ASS)	585
CLIMATISEUR ET MONTAGE (ASS)	585
COFFRE DE RANGEMENT (ASS)	590
COLLECTEUR D'ADMISSION (ASS)	103
COLLECTEUR D'ÉCHAPPEMENT (ASS)	102
COLLECTEUR-RETOUR (ASS)	240
COMMANDE - OUTIL DE TRAVAIL (ASS)	492
	496
COMMANDE DE FREIN DE STATIONNEMENT (ASS)	206
	208
	210
	212
	214
	216
	218
	220
COMMANDE DE POIGNÉE (ASS)	315
	316
	317
	318
	319
COMMANDE DE RÉGULATEUR (ASS)	120
	122
COMMANDE D'INTERVERROUILLAGE (ASS)	144
COMMANDE HYDRAULIQUE PILOTE (ASS)	320
	321
	322
	323
	324
	325
	326
	327
	328
	329
	330
	331
	332
	333
	334

INDEX

Désignation	Page
	335
	336
	337
	338
	339
	340
	341
	342
	343
	344
COMPRESSEUR DE REFRIGERANT (ASS)	594
COMPRESSEUR ET MONTAGE - RÉFRIGÉRANT (ASS)	592
CONDENSATEUR ET MONTAGE (RÉFRIGÉRANT)	595
CONDUIT ET COMMANDE (ASS)	616
CONTACTEUR DE DÉMARRAGE À CLÉ (ENS)	620
CONTREPOIDS (ASS)	280
	281
	282
	283
	284
COUPLEUR EXPRESS (ASS)	538
	540
	541
COUPLEUR EXPRESS (VERSION)	536
	537
COURROIE TRAPEZOIDALE	141
	592
COUVERCLE - CABINE (ASS)	596
COUVERCLE - PANNEAU DE FUSIBLES (ASS)	145
COUVERCLE-CANALISATIONS (ASS)	542
COUVERCLE DE CARTER AV (ASS)	13
COUVERCLE DE LA CONSOLE (ASS)	597
	598
CULASSE (ASS)	24
	25
	26
	27
CULBUTERIE (ASS)	51
	52

D

DÉMARREUR - MONTAGE (ASS)	41
DÉMARREUR ÉLECTRIQUE (ASS)	174
DENT MONOBLOC (ASS)	584
DISJONCTEUR (ENS) (30A)	184
DISTRIBUTEUR (ASS)	460
	462
	465
	466
	468
	472
DISTRIBUTEUR DOUBLE ÉLÉMENT (ASS)	458
DISTRIBUTEUR ET MONTAGE (ASS)	449
	450
	451
	452
	453

E

EAU DES CHEMISES - RECHAUFFEUR (ASS)	148
ECLAIRAGE - ARRÊT ET PROJECTEURS (VERSION)	158
ÉCLAIRAGE - FEUX DE ROUTE (ASS)	162
	166
ÉCLAIRAGE - GYROPHARE (ASS)	169
ECLAIRAGE AR (ASS)	160
	161
ECLAIRAGE AV (ASS)	159
ECLAIRAGE DE GODET (ASS)	366
	368
	370
	372
ÉCRAN	577
ÉLECTRONIQUE DE L'OUTIL DE TRAVAIL (ASS)	146
ÉLÉMENT DE FILTRE À AIR (ENS) (PRINCIPAL)	96
ÉLÉMENT DE FILTRE À AIR (ENS) (SECONDAIRE)	96
ÉLÉMENT DE FILTRE À EAU	140
ÉLÉMENT DE FILTRE (ENS)-CARBURANT	126
ÉLÉMENT DE FILTRE (ENS)-CARBURANT	704
ELEMENT (ENS)	704
ELEMENT (ENS) (AUXILIAIRE)	97
ELEMENT (ENS) (PRINCIPAL)	97
ÉLÉMENT PRINCIPAL (PRINCIPAL)	95
ÉLÉMENT (SECONDAIRE)	95
ENTRAINEMENT EN TANDEM (ASS)	226
	227
ENTRAÎNEMENT POUR COURROIE	157
ENTRETIEN DE L'OUTIL DE TRAVAIL (ASS)	171
ESSIEU (ASS)	204
EXTRACTEUR DE MINI-FUSIBLE	145

F

FEUX ARRIÈRE ET FEUX D'ARRÊT	156
FILTRE	618
FILTRE A AIR (ASS)	95
	96
	97
FILTRE À AIR DE CABINE (ASS)	618
FILTRE A CARBURANT (ASS)	124

INDEX

Désignation	Page
	126
FILTRE A HUILE (ASS)	228
	229
FILTRE À HUILE (ENS)	229
	704
FILTRE À HUILE HYDRAULIQUE ET MONTAGE (ASS)	228
FILTRE À HUILE MOTEUR (ASS)	53
FILTRE A HUILE MOTEUR (ENS)	59
	704
FILTRE A HUILE MOTEUR (ENS)	53
FILTRE ET CANALISATIONS DE CARBURANT (ASS)	124
FLACON - PRÉLÈVEMENT DE LIQUIDE (ASS)	696
FLEXIBLE	80
	86
	88
FLEXIBLE (ÉVACUATION DES GAZ DE CARTER)	14
FOURCHE - PINCE (ASS)	552
	553
	554
FOURCHE - PINCE (VERSION)	550
	551
FOURCHE PALLETTE (ASS)	555
FOURCHE-RÉSEAU PUBLIC (ASS)	556
	557
	558
FUSIBLE (10A)	178
	180
	635
	636
FUSIBLE (15A)	179
	180
	196
	198
	200
	202
FUSIBLE (20 A)	624
	625
	626
	628
	629
	630

G

GAINE DU DÉGIVREUR (ASS)	617
GODET - MATÉRIAUX MEUBLES (VERSION)	518
GODET - PINCE (ASS)	528
	529
GODET - PINCE (ASS)	527
GODET - PINCE (VERSION)	511
	512
	513
	514
	515
	516
	517
GODET - SALETÉ (ENS)	523
	524
GODET - SALETÉ (VERSION)	505
	506
	507
GODET NORMAL (ENS)	525
	526
GODET NORMAL (VERSION)	508
	509
	510
	511
GODET POUR TRAVAUX DE SERVITUDE (ASS)	534
GODET TOUS-TRAVAUX (ASS)	530
	531
	532
	533
GODET TOUS-TRAVAUX (VERSION)	519
	520
	521
	522
GRAISSEUR	298
	345
	346
	503
	504
	532
	533
GRAISSEUR (FILET 1/8-27)	348
	355
	356
	440
	492
GRAISSEUR (FILET 1/8-27)	552
	553
GRAISSEUR (FILET 1/8-27)	350
	351
GRAISSEUR (FILET 1/8-27)	527
	528
	529
GRAISSEUR (FILET 1/8-27)	294
	530
	531
GRAISSEUR ((1/8-27 TRD)	496
GROUPE DE MOTEUR A PISTONS	246
	248
	249
GROUPE DE TRANSFORMATION - DÉPLACEMENT ROUTIER	277
	278

INDEX

Désignation	Page
GUIDE - CANALISATIONS (ASS)	499
H	
HUILE MOTEUR - CARTER (ASS)	42
	44
I	
INDICATEURS ET TÉMOINS LUMINEUX (ASS)	620
	621
INSONORISATION (ASS)	312
INTERRUPTEUR - 3 POSITIONS (ENS) (VENTILATEUR DE CHAUFFAGE)	632
J	
JOINT-CACHE-SOUPAPES	14
	16
JOINT DE CABINE (ASS)	664
	665
	666
JOINT PLAT	36
	56
	58
	124
JOINT TORIQUE	424
JOINT TORIQUE (DIA INT 19,18MM)	384
K	
KIT DE BOUGIE (12 BROCHES)	180
	184
KIT DE BOUGIE (2 BROCHES)	179
	180
	184
	188
	194
	582
	637
KIT DE BOUGIE (2 BROCHES)	184
KIT DE BOUGIE (3 BROCHES)	162
	166
	180
	184
	600
	606
KIT DE BOUGIE (4 BROCHES)	162
	166
	179
	180
	184
	190
KIT DE BOUGIE (4 BROCHES)	184
KIT DE BOUGIE (6 BROCHES)	162
	166
	179
	184
KIT DE BOUGIE (8 BROCHES)	180
	184
	188
	582
KIT DE JOINTS	260
	458
	491
KIT DE PLAQUE DE DÉPLACEMENT ROUTIER ET MONTAGE	567
	568
KIT DE POMPE À CARBURANT	124
KIT DE PORTE DE CABINE ET MONTAGE	640
	642
KIT DE PRISE FEMELLE (12 BROCHES)	170
	184
KIT DE PRISE FEMELLE (12 BROCHES)	184
KIT DE PRISE FEMELLE (2 BROCHES)	176
	178
	184
	188
	296
	298
	300
	466
	637
	646
KIT DE PRISE FEMELLE (2 BROCHES)	162
	166
KIT DE PRISE FEMELLE (2 BROCHES)	184
	263
KIT DE PRISE FEMELLE (2 BROCHES)	482
	485
KIT DE PRISE FEMELLE (3 BROCHES)	180
	194
	596
	600
	604
	606
	610
KIT DE PRISE FEMELLE (3 BROCHES)	162
KIT DE PRISE FEMELLE (3 BROCHES)	447
	448
KIT DE PRISE FEMELLE (4 BROCHES)	180
	184
	308
	475
	652
KIT DE PRISE FEMELLE (4 BROCHES)	154
	162
	166
KIT DE PRISE FEMELLE (4 BROCHES)	155

INDEX

Désignation	Page
	156
	491
KIT DE PRISE FEMELLE (6 BROCHES)	152
	179
	180
	184
	190
	656
KIT DE PRISE FEMELLE (6 BROCHES)	162
	166
KIT DE PRISE FEMELLE (6 BROCHES)	315
	316
KIT DE PRISE FEMELLE (8 BROCHES)	180
	184
	188
	196
	198
	200
	202
	582
KIT DE PRISE FEMELLE (8 BROCHES)	317
	318
	319
KIT DE TRANSFORMATION D'ENLÈVEMENT DE LA NEIGE	569
	570
KIT D'ENTRETIEN	704
KLAXON ÉLECTRIQUE (ASS)	635
	636
	637

L

LAME (ASS)	503
	504
LAME DE COUPE (ASS)	543
	544
	545
	546
	547
	548
	549
LAME (VERSION)	502
LAMPE - CLIGNOTANT DE DIRECTION (ASS)	155
LAMPE - ÉCLAIRAGE TABLEAU (ASS)	154
LAMPE - FEUX AV (12 VOLTS/ 60-55 WATTS)	152
LAMPE - GYROPHARE (ASS)	157
LAMPE - PHARE (ASS)	149
LAMPE - PHARE (ASS)	150
LAMPE - PHARE ET CLIGNOTANT	152
	162
	166
LENTILLE	155
	156
LENTILLE (ENS)	152
LENTILLE (JAUNE)	157
LENTILLE (JAUNE)	152
LOGICIEL (ASS)-OUTIL DE TRAVAIL	146

M

MACHINE DE LEVAGE	302
	303
	304
	305
	306
MANOCONTACT	175
	176
MANOCONTACT (ENS)	229
	592
	646
MANOCONTACT (HUILE)	175
MARCHEPIED-BRAS DE MANUTENTION (ASS)	575
	576
MODULE - TÉMOIN (ASS)	170
MONTAGE - IMMATRICULATION (ASS)	705
MONTAGE D'ALTERNATEUR (ASS)	39
MONTAGE DE FEUX DE DÉPLACEMENT SUR ROUTE (ASS)	308
MONTAGE DE MOTEUR (ASS)	40
MONTAGE DE MOTEUR (VERSION)	7
	8
	9
	10
MONTAGE DE POMPE (ASS)	250
MONTAGE DE SILENCIEUX (ASS)	104
MONTAGE DE VÉRIN (ASS)	440
MONTAGE DU TOIT ROPS (ASS)	653
MONTAGE (VERSION)	637
	638
MOTEUR À ENGRENAGES (ASS)	435
	436
	437
	438
	439
MOTEUR D'ESSUIE-GLACE (ASS)	652
MOTEUR ET MONTAGE - PISTON (ASS)	242
	243
	244
	245
MOTEUR ET MONTAGE DE VENTILATEUR HYDRAULIQUE (ASS)	432
	433
	434
MOTEUR (VERSION PRINCIPALE)	5
	6

INDEX

Désignation	Page
O	
OEILLETONS DE LEVAGE MOTEUR (ASS)	38
P	
PANNEAU LATERAL (ASS)	310
	311
PARE-CHOCS AR (ASS)	271
PARE-POUSSIERE	28
	229
	234
	236
	412
	414
	416
PARE-SOLEIL	680
	681
PINCE - CANALISATIONS (ASS)	384
PINCE - CANALISATIONS (ASS)	386
PINCE - VÉRIN (ASS)	350
	351
PINCE-RÉSEAU PUBLIC (ASS)	560
	562
PISTON ET BIELLE (ASS)	46
	47
	48
PLAFONNIER (ASS)	621
PLAQUE SIGNALÉTIQUE (ASS)	697
	698
	699
	700
	702
PLAQUE SIGNALÉTIQUE (REMARQUE)	278
PLAQUES SIGNALETIQUES ET AUTOCOLLANTS (ASS)	706
	707
	708
	709
	710
	711
	712
	713
	714
	715
	716
	717
	718
	720
	721
	722
	724
	726
	728
	730
	731
PLATE-FORME DE CABINE	663
POIGNÉE DE COUPLEUR (ASS)	565
	566
POIGNÉE ET AXE DE COUPLEUR (ASS)	563
	564
POMPE - DIAPHRAGME (ASS)	573
POMPE A EAU (ASS)	65
	66
POMPE A ENGRENAGES (ASS)	443
POMPE A HUILE MOTEUR (ASS)	54
	55
POMPE A PISTONS (ASS)	252
	254
	256
POMPE D'INJECTION DE CARBURANT (ASS)	136
	138
POMPE ET MONTAGE - OUTIL DE TRAVAIL (ASS)	442
PORTE DE CABINE ET MONTAGE (ASS)	600
	604
	606
	610
PORTIÈRE DE CABINE (ASS)	612
	614
PROTECTION DE ROPS/FOPS (ASS)	622
R	
RACCORD - CANALISATIONS DE CARBURANT (ASS)	127
RACCORD D'EAU (ASS)	56
	57
	58
RACCORD DROIT	538
RADIATEUR ET REFROIDISSEUR D'HUILE HYDRAULIQUE (ASS)	68
	70
	72
	74
	76
	78
	80
RADIATEUR ET REFROIDISSEUR D'HUILE-MONTAGE (ASS)	82
	84
	86
	88
	92
RÉFLECTEUR	160
	308
REFROIDISSEUR HUILE MOTEUR ET SUPPORT DE FILTRE	59
RÉGULATEUR - PÉDALE (ASS)	660

INDEX

Désignation	Page
	661
	662
REGULATEUR (ASS)	128
	130
RELAIS (ENS)	180
	196
	198
	200
	202
	632
RELAIS (ENS) (12 VOLTS)	194
RELAIS (ENS) (12 VOLTS)	184
RENIFLARD	296
	298
	300
RÉSERVOIR D'EAU (ASS)	581
	582
RÉSERVOIR D'EAU ET MONTAGE (ASS)	578
RÉSERVOIR HYDRAULIQUE (ASS)	447
RÉSERVOIR HYDRAULIQUE (ASS)	448
RÉSERVOIR HYDRAULIQUE ET MONTAGE (ASS)	444
	445
	446
RESSORT DE LAME (ASS)	574
RESSORT-GAZ (ASS)	679
RETROVISEUR - CABINE (ASS)	680
	681
RÉTROVISEUR ET MONTAGE (ASS)	651
ROBINET-ÉCHANTILLON DE LIQUIDE (ENS)	229
ROTATION DE LA ROUE DU VENTILATEUR SOUFFLANT (ISSUE DE SECOURS)	612
	614
	690
	694
	695
ROUE ET PNEU (ASS)	270
ROUE ET PNEU (VERSION)	264
	265
	266
	267
	268
	269
	270

S

SÉPARATEUR D'EAU (ASS)	140
SIÈGE AVEC SUSPENSION (ASS)	676
	678
SIÈGE ET MONTAGE (ASS)	667
	668
	669
SILENCIEUX (ASS)	105
	106
	107
	108
	109
	110
SOLÉNOÏDE D'ARRÊT (ASS)	172
	173
SOUPAPE - SOLÉNOÏDE (ASS)	263
SOUPAPE - SOLÉNOÏDE (ASS)	491
SOUPAPE D'ARRÊT	240
	626
	647
	648
	649
	650
SOUPAPE DE DERIVATION (ASS)	475
SOUPAPE DE DÉRIVATION ET MONTAGE	454
	455
SOUPAPE DE MODULATION (ASS)	476
SOUPAPE DE PURIFICATION	95
	97
SOUPAPE DE VIDANGE	44
SOUPAPE ET MONTAGE - SOLÉNOÏDE	258
	260
	262
	456
SOUPAPE PILOTE (ASS)	477
	478
	479
	480
	481
	482
	483
	484
	485
	486
SUPPORT DE FILTRE ET REFROIDISSEUR D'HUILE MOTEUR	59
SUPPORT DE SÉPARATEUR D'EAU	140

T

TABLEAU DE BORD (ASS)	656
	659
TABLIER DE FOURCHE (ENS)	535
TAMIS D'EAU (ASS)	577
TAPIS DE PLANCHER	619
THERMOSTAT-TEMPÉRATURE D'EAU	65
	66
TOÎT ROPS (ASS)	591
TRANSMISSION (VERSION)	251
TURBOCOMPRESSEUR (ASS)	112
	116

INDEX

Désignation	Page
V	
VENTILATEUR SOUFFLANT (ASS)	60 61 62 63
VÉRIN DE COUPLEUR (ASS)	349
VERIN DE GODET (ASS)	348
VÉRIN DE LEVAGE (ASS)	352 353 354
VÉRIN D'INCLINAISON (ASS)	355 356
VÉRIN ET MONTAGE DE LAME (ASS)	345
VÉRIN ET MONTAGE DE PINCE (ASS)	346 347
VERROUILLAGE DE COUPLEUR EXPRESS (ASS)	572
VERSION DE CHASSIS	1 2 3
VERSION DE COMMANDE D'ENTRAINEMENT-HYDROSTATIQUE	222 223 224 225
VERSION DE CONTAINER	704
VERSION DE TABLEAU DE BORD	654
VERSION DE TRANSFORMATION - COUPLEUR EXPRESS	536
VERSION DE TRANSFORMATION POUR DÉPLACEMENT ROUTIER	272 273 274 275 276
VERSION HYDRAULIQUE	357 358 359 360 361
VERSION NORMALE	3 4
VIDANGE-HUILE DE MOTEUR (ASS)	28
VILEBREQUIN - POULIE (ASS)	50
VILEBREQUIN (ASS)	18
VITRE DE CABINE (ASS)	682 684 686 688 690 692 693 694 695
VOLANT MOTEUR (ASS)	31

INDICE

Nombre	Página

A

ACONDICIONADOR DE AIRE (GR) 585
ACONDICIONADOR DE AIRE Y MONTAJE (GR) 585
ACOPLADOR - TUBERÍAS DE (GR) 376 380
ACOPLADOR DE MANIJA 565 566
ACOPLADOR RÁPIDO (CONFIG) 536 537
ACOPLADOR RÁPIDO (GR) 538 540 541
ACUMULADOR HIDRAULICO Y MONTAJE (GR) 314
AGUA - CONEXIÓN DE (GR) 56 57 58
AGUA DE LAS CAMISAS - CALENTADOR DEL (GR) 148
AGUILÓN TELESCÓPICO (GR) 500 501
AIRE - TUBERÍAS DE (GR) 98 99 100 101
ALAMBRADO DE ACOPLADOR (GR) 190
ALAMBRADO DE LUCES TRASERAS (GR) 194
ALFOMBRILLA DEL PISO 619
ÁRBOL DE LEVAS (GR) 11 12
ASIENTO Y MONTAJE (GR) 667 668 669

B

BASE DEL FILTRO Y ACEITE REFRIGERANTE DE MOTOR 59
BASTIDOR DE HOJA (GR) 294
BASTIDOR DEL CARGADOR (GR) 296
BASTIDOR DEL CARGADOR (GR) 298 300
BATERÍA (GR) 142 143
BATERÍA (12 VOLTIOS) 142
BATERÍA (12 VOLTIOS)(HUMEDA) 143
BLOQUE MOTOR (GR) 19 20 21 22
BOCINA ELÉCTRICA (GR) 635 636 637
BOMBA - TUBERÍAS DE (GR) 414 416
BOMBA DE ACEITE DEL MOTOR (GR) 54 55
BOMBA DE AGUA (GR) 65 66
BOMBA DE ENGRANAJES (GR) 443
BOMBA DE INYECCIÓN DE COMBUSTIBLE (GR) 136 138
BOMBA DE PISTONES (GR) 252 254 256
BOMBA DEL DIAFRAGMA (GR) 573
BOMBA Y MONTAJE DE LA HERRAMIENTA DE TRABAJO (GR) 442
BUJIA INCANDESCENTE 147
BUJÍA INCANDESCENTE (GR) 147

C

CABINA DEL OPERADOR CON TECHO TIPO TOLDO (CONFIG) 654
CABLES DE LA CABINA (GR) 180
CABLES DE LA HERRAMIENTA DE TRABAJO (GR) 196 198 200 202
CABLES DEL ACONDICIONADOR DE AIRE (GR) 179
CABLES DEL CHASIS (GR) 184 188
CABLES DEL MOTOR (GR) 192
CAJA DE ALMACENAMIENTO 590
CAJA DELANTERA (GR) 34 36
CALCOMANÍA DE ADVERTENCIA 278
CALCOMANÍA DE ADVERTENCIA (SALIDA ALTERNATIVA) 612
CALCOMANÍA DE ADVERTENCIA (SALIDA ALTERNATIVA) 614
CALCOMANÍA DE ADVERTENCIA (SALIDA ALTERNATIVA) 690 694 695
CALCOMANÍA DE IDENTIFICACIÓN (NUMERO DE GRUPO Y SECUENCIA) 634
CALCOMANÍAS Y PLACAS DE IDENTIFICACIÓN (GR) 706 707 708 709 710 711

INDICE

Nombre	Página
	712
	713
	714
	715
	716
	717
	718
	720
	721
	722
	724
	726
	728
	730
	731
CALEFACCIÓN DE LA CABINA (GR)	632
	634
CALEFACCIÓN Y MONTAJE DE LA CABINA (GR)	624
	625
	626
	628
	629
	630
CÁNCAMOS DE LEVANTAMIENTO DEL MOTOR (GR)	38
CARGA - ALTERNADOR DE (GR)	141
CÁRTER - COLECTOR DEL (GR)	42
	44
CHASIS (CONFIG)	1
	2
	3
CIGÜEÑAL - POLEA DE (GR)	50
CIGÜEÑAL (GR)	18
CILINDRO DE CUCHARÓN (GR)	348
CILINDRO DE GARFIO (GR)	350
	351
CILINDRO DE LEVANTAMIENTO - TUBERÍAS DEL (GR)	400
	402
	404
	406
CILINDRO DE LEVANTAMIENTO (GR)	352
	353
	354
CILINDRO DEL ACOPLADOR (GR)	349
CILINDRO Y MONTAJE DE LA HOJA (GR)	345
CINTURÓN DE SEGURIDAD (GR)	670
	671
	672
	673
	674
	675
COLADOR DEL AGUA (GR)	577
COMPARTIMIENTO DEL MOTOR (GR)	286
	288
	290
	292
COMPRESOR DE REFRIGERANTE (GR)	594
COMPRESOR DE REFRIGERANTE Y GRUPO DE MONTAJE	592
CONDENSADOR DEL REFRIGERANTE Y MONTAJE (GR)	595
CONDUCTO DEL DESEMPAÑADOR (GR)	617
CONDUCTO Y CONTROL (GR)	616
CONEXIÓN DE ENGRASE	298
	345
	346
	503
	504
	532
	533
CONEXIÓN DE ENGRASE DE LAS TUBERÍAS DE COMBUSTIBLE	127
CONEXIÓN DE ENGRASE (ROSCA DE 1/8-27)	294
	348
	440
	530
	531
	552
	553
CONEXIÓN DE ENGRASE (ROSCA DE 1/8-27)	355
	356
	492
	496
CONEXIÓN DE ENGRASE (ROSCA DE 1/8-27)	350
	351
	527
	528
	529
CONEXION-RECTA	538
CONFIG. DE CONVERSIÓN DEL ACOPLAMIENTO RÁPIDO	536
CONFIGURACIÓN COMÚN	3
	4
CONFIGURACIÓN DE INSTALACIÓN DEL MOTOR	7
	8
	9
	10
CONFIGURACIÓN DE TRANSFORMACIÓN PARA CARRETERA	272
	273
	274
	275
	276

INDICE

Nombre	Página
CONMUTADOR DE 3 POSICIONES (CONJ) (VENTILADOR CALENTADOR)	632
CONTRAPESO (GR)	280
	281
	282
	283
	284
CONTROL DE LA HERRAMIENTA DE TRABAJO (GR)	496
CONTROL DE LA HERRAMIENTA DE TRABAJO (GR)	492
CONTROL DE MANDO HIDROSTATICO (CONFIG)	222
	223
	224
	225
CONTROL DE MANIJA (GR)	315
CONTROL DE MANIJA (GR)	316
	317
	318
	319
CONTROL DE REGULADOR (GR)	120
	122
CONTROL DE TRABA (GR)	144
CONTROL DEL FRENO DE ESTACIONAMIENTO	206
	208
	210
	212
	214
	216
	218
	220
CONTROL HIDRÁULICO DE OPERACIÓN PILOTO (GR)	320
	321
	322
	323
	324
	325
	326
	327
	328
	329
	330
	331
	332
	333
	334
	335
	336
	337
	338
	339
	340
	341
	342
	343
	344
CONVERSION PARA DESPLAZAMIENTO POR CARRETERA (GR)	277
	278
CORREA TRAPEZOIDAL	141
	592
CRISTAL	155
	156
CRISTAL (AMBAR)	152
	157
CUBIERTO DEL PANEL DE FUSIBLES (GR)	145
CUCHARON DE GARFIO (CONF)	511
	512
	513
	514
	515
	516
	517
CUCHARON DE GARFIO (GR)	527
	528
	529
CUCHARÓN DE USO GENERAL (CONFIG)	508
	509
	510
	511
CUCHARÓN DE USO GENERAL (CONJ)	525
	526
CUCHARÓN DE USO MÚLTIPLE (CONFIG)	519
	520
	521
	522
CUCHARÓN DE USO MÚLTIPLE (GR)	530
	531
	532
	533
CUCHARÓN PARA MATERIALES LIVIANOS (CONFIG)	518
CUCHARON PARA TIERRA (CONF)	505
	506
	507
CUCHARON PARA TIERRA (CONJ)	523
	524
CUCHARÓN UTILITARIO (GR)	534
CUCHILLA (GR)	543
	544
	545
	546
	547
	548
	549
CULATA DE CILINDROS (GR)	24
	25

INDICE

Nombre	Página
	26
	27
D	
DIENTE DE UNA PIEZA (UNI-TOOTH) (GR)	584
DISYUNTOR (CONJ) (30 A)	184
DRENAJE DEL ACEITE DE MOTOR	28
E	
EJE (GR)	204
ELECTRONICA DE HERRAMIENTAS (GR)	146
ELEMENTO (CONJ)	704
ELEMENTO (CONJ) (PRIMARIO)	97
ELEMENTO (CONJ) (SECUNDARIO(A))	97
ELEMENTO DE FILTRO DE AGUA	140
ELEMENTO DE FILTRO DE COMBUSTIBLE (CONJ)	126
ELEMENTO DE FILTRO DE COMBUSTIBLE (CONJ)	704
ELEMENTO DEL FILTRO DE AIRE (CONJ) (PRIMARIO)	96
ELEMENTO DEL FILTRO DE AIRE (CONJ) (SECUNDARIO)	96
ELEMENTO PRINCIPAL (PRIMARIO)	95
ELEMENTO (SECUNDARIO)	95
EMPAQUETADURA	36
	56
	58
	124
EMPAQUETADURA PARA CUBIERTA DE VÁLVULA	14
	16
ENFRIADOR DE ACEITE DEL MOTOR Y BASE DEL FILTRO	59
ESCALON DE BRAZO DE MANEJO DE MATERIALES (GR)	575
	576
ETIQUETA DE ADVERTENCIA (GR)	697
	698
	699
	700
	702
EXTRACTOR DE MINIFUSIBLES	145
F	
FILTRO	618
FILTRO DE ACEITE (CONJ)	229
	704
FILTRO DE ACEITE DEL MOTOR (CONJ)	59
	704
FILTRO DE ACEITE DEL MOTOR (CONJ)	53
FILTRO DE ACEITE DEL MOTOR (GR)	53
FILTRO DE ACEITE (GR)	228
	229
FILTRO DE ACEITE HIDRÁULICO Y MONTAJE (GR)	228
FILTRO DE AIRE DE LA CABINA (GR)	618
FILTRO DE AIRE (GR)	95
	96
	97
FILTRO DE COMBUSTIBLE (GR)	124
	126
FILTRO Y TUBERÍAS DE COMBUSTIBLE (GR)	124
FUSIBLE (10 A)	178
	180
	635
	636
FUSIBLE (15 A)	179
	180
	196
	198
	200
	202
FUSIBLE (20 A)	624
	625
	626
	628
	629
	630
G	
GARFIO DE UTILIDAD (GR)	560
	562
GRUPO DE ESLABON, ACOPLADOR	571
GRUPO DE MANIJA Y PIN-ACOPLADOR	563
	564
H	
HIDRÁULICA (CONFIG)	357
	358
	359
	360
	361
HOJA (CONFIG)	502
HOJA DE LIMPIAPARABRISAS (CONJ)	612
	614
HOJA (GR)	503
	504
HORQUILLA DE GARFIO (CONF)	550
	551
HORQUILLA DE GARFIO (GR)	552
	553
	554
HORQUILLA DE UTILIDAD (GR)	556

INDICE

Nombre	Página
	557
	558
HORQUILLA PARA TARIMAS (GR)	555

I

INCLINACIÓN HORIZONTAL - CILINDRO DE (GR)	355
	356
INDICADORES Y ADVERTENCIA (GR)	620
	621
INSONORIZADOR (GR)	312
INSTALACIÓN (CONFIG)	637
	638
INTERRUPTOR DE ARRANQUE CON LLAVE (CONJ)	620
INTERRUPTOR DE PRESIÓN (ACEITE)	175
INTERRUPTOR DE PRESIÓN (CONJ)	229
	592
	646
INTERRUPTOR DE PRESIÓN (GR)	175
	176
INTERRUPTOR PARA LA TEMPERATURA (GR)	177

J

JUEGO-CONVERSION PARA REMOCION DE NIEVE	569
	570
JUEGO DE BASE DEL SEPARADOR DE AGUA	140
JUEGO DE BOMBA DE COMBUSTIBLE	124
JUEGO DE ENCHUFE (12 CLAVIJAS)	180
	184
JUEGO DE ENCHUFE (2 CLAVIJAS)	179
	180
	184
	188
	194
	582
	637
JUEGO DE ENCHUFE (3 CLAVIJAS)	162
	166
	180
	184
	600
	606
JUEGO DE ENCHUFE (4 CLAVIJAS)	162
	166
	179
	180
	184
	190
JUEGO DE ENCHUFE (6 CLAVIJAS)	162
	166
	179
	184
JUEGO DE ENCHUFE (8 CLAVIJAS)	180
	184
	188
	582
JUEGO DE MANTENIMIENTO	704
JUEGO DE RECEPTÁCULO (12 CLAVIJAS)	170
JUEGO DE RECEPTÁCULO (12 CLAVIJAS)	184
JUEGO DE RECEPTÁCULO (2 CLAVIJAS)	162
	166
	184
	188
	263
	466
	482
	485
	637
	646
JUEGO DE RECEPTÁCULO (2 CLAVIJAS)	178
JUEGO DE RECEPTÁCULO (2 CLAVIJAS)	176
JUEGO DE RECEPTÁCULO (2 CLAVIJAS)	296
	298
	300
JUEGO DE RECEPTÁCULO (3 CLAVIJAS)	162
	180
	596
	600
	604
	606
	610
JUEGO DE RECEPTÁCULO (3 CLAVIJAS)	194
	447
	448
JUEGO DE RECEPTÁCULO (4 CLAVIJAS)	154
	162
	166
	180
	184
	308
	475
	491
	652
JUEGO DE RECEPTÁCULO (4 CLAVIJAS)	180
JUEGO DE RECEPTÁCULO (4 CLAVIJAS)	155
	156
JUEGO DE RECEPTÁCULO (6 CLAVIJAS)	152
	162
	166
	179
	180
	184
	190
JUEGO DE RECEPTÁCULO (6 CLAVIJAS)	315

INDICE

Nombre	Página
	316
JUEGO DE RECEPTÁCULO (6 CLAVIJAS)	656
JUEGO DE RECEPTÁCULO (8 CLAVIJAS)	180
	184
	188
	196
	198
	200
	202
JUEGO DE RECEPTÁCULO (8 CLAVIJAS)	317
	318
	319
JUEGO DE RECEPTÁCULO (8 CLAVIJAS)	582
JUEGO DE SELLOS	260
	458
	491
JUEGO-PLACA DE DESPLAZAMIENTO Y MONTAJE	567
	568
JUEGO, PUERTA DE CABINA Y MONTAJE	640
	642

L

LÁMPARA DE BALIZA DE ADVERTENCIA (GR)	157
LÁMPARA DE FARO DELANTERO (12 VOLTIOS/60-55 VATIOS)	152
LÁMPARA DE ILUMINACIÓN DEL PANEL (GR)	154
LÁMPARA DE LUZ DELANTERA Y DE SEÑAL (GR)	152
	162
	166
LÁMPARA DEL TECHO (GR)	621
LÁMPARA (12 VOLTIOS)	621
	705
LÁMPARA (12 VOLTIOS) (1.12 VATIOS)	154
LÁMPARA (12 VOLTIOS, 21 VATIOS) (DE GIRO)	155
LÁMPARA (12 VOLTIOS, 21/5 VATIOS)	156
LÁMPARA (12 VOLTIOS, 21/5 VATIOS) (PARADA Y COLA)	155
LÁMPARA (12 VOLTIOS)(10 VATIOS)	621
LÁMPARA (12 VOLTIOS/21 VATIOS)	152
LÁMPARA (12 VOLTIOS/4 VATIOS)	152
LÁMPARA (12 VOLTIOS)(55 VATIOS)	149
	150
LÁMPARA (12 VOLTIOS/55 VATIOS)	157
LEVANTAMIENTO DE LA MÁQUINA (GR)	302
	303
	304
	305
	306
LUCES DE DESPLAZAMIENTO (GR)	162
	166
LUCES DE PARADA Y COLA (GR)	156
LUCES DE PARADA Y REFLECTORES (CONFIG)	158
LUCES DELANTERAS (GR)	159
LUCES TRASERAS (GR)	160
	161
LUZ DE BALIZA (GR)	169
LUZ DE SEÑAL DE GIRO (GR)	155

M

MANDO DE CORREA	157
MANDO TANDEM (GR)	226
	227
MANGUERA	80
	86
	88
MANGUERA (ELIMINACION DE GASES)	14
MECANISMO DE VÁLVULAS (GR)	51
	52
MÓDULO INDICADOR DE ADVERTENCIA (GR)	170
MONTAJE DE CILINDRO (GR)	440
MONTAJE DE GRUPO DE PISTONES	242
	243
	244
	245
MONTAJE DE LA BOMBA (GR)	250
MONTAJE DE LA ESTRUCTURA ROPS (GR)	653
MONTAJE DE LUCES DE DESPLAZAMIENTO POR CARRETERA (GR)	308
MONTAJE DE MOTOR DE ARRANQUE (GR)	41
MONTAJE DE RADIADOR Y ENFRIAMIENTO DE ACEITE (GR)	82
	84
	86
	88
	92
MONTAJE DEL ALTERNADOR (GR)	39
MONTAJE DEL CILINDRO DEL GARFIO (GR)	346
	347
MONTAJE DEL MOTOR (GR)	40
MONTAJE DEL SILENCIADOR (GR)	104
MONTAJE DEL TANQUE DE AGUA (GR)	578
MONTAJE-REGISTRO (GR)	705
MOTOR DE ARRANQUE ELÉCTRICO (GR)	174
MOTOR DE ENGRANAJES (GR)	435
	436
	437
	438
	439
MOTOR-LIMPIAPARABRISAS (GR)	652
MOTOR PRIMARIO (CONFIG)	5
	6

INDICE

Nombre	Página
MOTOR Y MONTAJE DE VENTILADOR HIDRAULICO (GR)	432 433 434
MÚLTIPLE DE ADMISIÓN (GR)	103
MÚLTIPLE DE ESCAPE (GR)	102

P

PANEL LATERAL (GR)	310 311
PARAGOLPES TRASERO (GR)	271
PERILLA	680
PISTÓN Y BIELA (GR)	46 47 48
PISTONES DEL MOTOR (GR)	246 248 249
PLATAFORMA DE LA CABINA	663
PORTAHORQUILLAS (CONJ)	535
POSABRAZOS (GR)	588
POSABRAZOS Y MONTAJE (GR)	586
PROTECTOR DE ROPS/FOPS	622
PUERTA DE CABINA	612 614
PUERTA Y MONTAJE DE CABINA (GR)	600 604 606 610

R

RADIADOR Y ENFRIADOR DE ACEITE HIDRÁULICO (GR)	68 70 72 74 76 78 80
RECIPIENTE (CONJ)	704
RECIPIENTE PARA EL FLUIDO DE MUESTREO	696
REFLECTOR	160 308
REFLECTOR (GR)	149 150
REGULADOR - PEDAL DEL (GR)	660 661 662
REGULADOR DE TEMPERATURA DEL AGUA	65 66
REGULADOR (GR)	128 130
REJILLA	577
RELÉ (CONJ)	180 196 198 200 202 632
RELÉ (CONJ) (12 VOLTIOS)	184 194
RESORTE DE GAS (GR)	679
RESORTE DE HOJA (GR)	574
RESPIRADERO	296 298 300
RETORNO EN EL MULTIPLE(GR)	240
RETROCESO - ALARMA DE (GR)	178
RETROVISOR Y MONTAJE (GR)	651
REVESTIMIENTO DE LA CABINA (GR)	644
REVESTIMIENTO DEL TECHO DE LA CABINA	623
RUEDA Y LLANTA (CONFIG)	264 265 266 267 268 269 270
RUEDA Y NEUMÁTICO (GR)	270

S

SELLO ANULAR	424
SELLO ANULAR (19,18 MM DIAMETRO INTERIOR)	384
SELLO DE CABINA (GR)	664 665 666
SELLO (FILTRO DE COMBUSTIBLE)	126
SEÑAL DESTELLADOR (CONJ)	162 166
SEPARADOR DE AGUA (GR)	140
SERVICIO DE HERRAMIENTA (GR)	171
SILENCIADOR (GR)	105 106 107 108 109 110
SOFTWARE DE HERRAMIENTA (GR)	146
SOLENOIDE DE CORTE	172 173
SOPLADOR - VENTILADOR (GR)	60 61 62

INDICE

Nombre	Página
	63
SUSPENSIÓN - ASIENTO CON (GR)	676
	678

T

TABLERO DE INSTRUMENTOS (CONFIG)	654
TABLERO DE INSTRUMENTOS (GR)	656
	659
TANQUE DEL AGUA (GR)	581
	582
TANQUE HIDRÁULICO (GR)	447
TANQUE HIDRÁULICO (GR)	448
TANQUE HIDRÁULICO Y MONTAJE (GR)	444
	445
	446
TAPA-ACEITE	14
	16
TAPA CON RESPIRADERO	82
	84
	88
	92
TAPA CONTRA EL POLVO	28
	229
	234
	236
	412
	414
	416
TAPA DE LA CABINA (GR)	596
TAPA DE LA CAJA DELANTERA (GR)	13
TAPA DE LA CONSOLA (GR)	597
	598
TAPA DE RADIADOR (CONJ)	68
	70
	72
	74
	76
	78
TAPA DE TUBERIAS (GR)	542
TAPA DEL COMBUSTIBLE(CONJ)	132
	134
TAPA DEL MECANISMO DE VÁLVULAS (GR)	16
TAPA DEL MECANISMO DE VÁLVULAS (GR)	14
TAPA HIDRAULICA (CONJ)	447
TAPA HIDRAULICA (CONJ)	448
TAPÓN (CONJ) (ACONDICIONADOR DE AIRE)	592
TAPON DE LA VALVULA PILOTO (GR)	441
TAPÓN DE LAS TUBERÍAS DE AGUA (GR)	64
TAPÓN DEL BLOQUE MOTOR (GR)	49
TAPÓN MAGNÉTICO	296
	298
	300
TOLDO ROPS (GR)	591
TORNILLERÍA DEL MOTOR (GR)	29
	30
TRABA-ACOPLADOR RAPIDO (GR)	572
TREN DE FUERZA (CONFIG)	251
TUBERIA (GR)	696
TUBERÍAS CON SERVOMANDO (GR)	408
	410
	412
TUBERÍAS DE ACONDICIONADOR DE AIRE (GR)	646
TUBERÍAS DE COMBUSTIBLE (GR)	132
	134
TUBERIAS DE CONEXION (GR)	374
TUBERÍAS DE LA CALEFACCIÓN (GR)	647
	648
	649
	650
TUBERIAS DE LA GUIA (GR)	499
TUBERIAS DE LA HERRAMIENTA DE TRABAJO	428
	430
TUBERÍAS DEL CILINDRO DE INCLINACIÓN (GR)	418
	420
	424
	426
TUBERÍAS DEL CUCHARÓN (GR)	366
	368
	370
	372
TUBERÍAS DEL ENFRIADOR DE ACEITE HIDRÁULICO (GR)	392
	393
	394
	395
	396
	397
	398
TUBERIAS DEL FILTRO HIDRAULICO (GR)	230
	232
TUBERÍAS DEL GARFIO (GR)	384
	386
TUBERÍAS HIDRÁULICAS AUXILIARES (GR)	361
	362
	364
	365
TUBERÍAS HIDRÁULICAS DEL VENTILADOR (GR)	388
	389
	390
	391
TUBERÍAS HIDROSTÁTICAS (GR)	234
	236
TURBOCOMPRESOR (GR)	112
	116

INDICE

Nombre	Página
V	
VÁLVULA DE ALIVIO (GR)	487
	488
	489
	490
VÁLVULA DE CONTROL (GR)	460
	462
	465
	466
	468
	472
VÁLVULA DE CONTROL Y MONTAJE (GR)	449
	450
	451
	452
	453
VÁLVULA DE CORTE	240
	626
	647
	648
	649
	650
VÁLVULA DE DERIVACIÓN (GR)	475
VÁLVULA DE DERIVACIÓN Y MONTAJE (GR)	454
	455
VÁLVULA DE DRENAJE	44
VÁLVULA DE MODULACIÓN (GR)	476
VALVULA DE MUESTRA DE FLUIDO (CONJ)	229
VALVULA DE PURGA	95
	97
VÁLVULA DE SOLENOIDE (GR)	263
	491
VALVULA DE SOLENOIDE Y MONTAJE (GR	258
	260
	262
	456
VÁLVULA PILOTO (GR)	477
	478
	479
	480
	481
	482
	483
	484
	485
	486
VÁLVULAS HIDRÁULICAS - GRUPO DE 2	458
VENTANA DE LA CABINA (GR)	682
	684
	686
	688
	690
	692
	693
	694
	695
VIDRIO (CONJ)	152
VISERA	680
	681
VISERA (GR)	680
	681
VOLANTE - CAJA DE (GR)	32
VOLANTE (GR)	31

ÍNDICE

Designação	Página

A

ACOPLADOR RÁPIDO	536 537 538 540 541
ACUMULADOR HIDRÁULICO E MONTAGEM	314
ALARME DE MARCHA À RÉ	178
ALÇA - ACOPLADOR	565 566
ALÇA E PINO - ACOPLADOR	563 564
ALTERNADOR DE CORRENTE	141
AQUECEDOR DA ÁGUA DO MOTOR	148
AQUECEDOR DA CABINE	632 634
AQUECEDOR DA CABINE E MONTAGEM	624 625 626 628 629 630
ARMAÇÃO - LÂMINA	294
ARRANJO BÁSICO	3 4
ARREFECEDOR DE ÓLEO DO MOTOR E BASE DO FILTRO	59
ARTICULAÇÃO - ACOPLADOR	571
ASSENTO COM SUSPENSÃO	676 678
ASSENTO E MONTAGEM	667 668 669

B

BATERIA	142 143
BATERIA (12 V)	142
BATERIA (12 VOLT)(ÚMIDO)	143
BLOCO DO MOTOR	19 20 21 22
BOMBA DA FERRAMENTA DE TRABALHO E MONTAGEM	442
BOMBA DE ÁGUA	65 66
BOMBA DE DIAFRAGMA	573
BOMBA DE ENGRENAGENS	443
BOMBA DE INJEÇÃO DO COMBUSTÍVEL	136 138
BOMBA DE ÓLEO - MOTOR	54 55
BOMBA DE PISTÃO	252 254 256
BORDA CORTANTE	543 544 545 546 547 548 549
BRAÇO - MANIPULADOR DE MATERIAIS	500 501
BRAÇO DO ASSENTO	588
BUJÃO - TUBULAÇÕES DE ÁGUA	64
BUJÃO DA VÁLVULA PILOTO	441
BUJÃO DO BLOCO DO CILINDRO	49
BUJÃO MAGNÉTICO	296 298 300
BUZINA ELÉTRICA	635 636 637

C

CABEÇOTE DO MOTOR	24 25 26 27
CABINE - TOLDO	654
CABOS E FIOS ELÉTRICOS-LUZES TRASEIRAS	194
CABOS/FIOS ELÉTRICOS - ACOPLADOR	190
CABOS/FIOS ELÉTRICOS - AR CONDICIONADO	179
CABOS/FIOS ELÉTRICOS - CABINE	180
CABOS/FIOS ELÉTRICOS - CHASSI	184 188
CABOS/FIOS ELÉTRICOS - FERRAMENTAS DE TRABALHO	196 198 200 202
CABOS/FIOS ELÉTRICOS - MOTOR	192
CAÇAMBA - GARRA	511 512 513 514 515 516 517 527 528 529
CAÇAMBA - PARA APLICAÇAO GERAL	508

ÍNDICE

Designação	Página
	509
	510
	511
CAÇAMBA DE MÚLTIPLAS APLICAÇÕES	519
	520
	521
	522
	530
	531
	532
	533
CAÇAMBA PARA APLICAÇÃO GERAL	525
	526
CAÇAMBA PARA MATERIAL LEVE	518
CAÇAMBA PARA SERVIÇOS GERAIS	534
CAÇAMBA PARA TERRA	505
	506
	507
	523
	524
CAIXA DE ARMAZENAMENTO	590
CAIXA DIANTEIRA	34
	36
CAIXA DO VOLANTE DO MOTOR	32
CÁRTER DO ÓLEO DO MOTOR	42
	44
CHASSI	1
	2
	3
CHASSI DIANTEIRO	296
	298
	300
CHAVE INTERRUPTORA DE PARTIDA	620
CILINDRO - ACOPLADOR	349
CILINDRO DA CAÇAMBA	348
CILINDRO DA GARRA	350
	351
CILINDRO DA LÂMINA E MONTAGEM	345
CILINDRO DE INCLINAÇÃO	355
	356
CILINDRO DE LEVANTAMENTO	352
	353
	354
CILINDRO E MONTAGEM - PINÇA	346
	347
CINTO DE SEGURANÇA	670
	671
	672
	673
	674
	675
COBERTURA DO MOTOR	286
	288
	290
	292
COLETOR - RETORNO	240
COLETOR DE ADMISSÃO	103
COLETOR DE ESCAPE	102
COMANDO DO TANDEM	226
	227
COMANDO HIDRÁULICO	357
	358
	359
	360
	361
COMPRESSOR DE REFRIGERANTE	594
COMPRESSOR DE REFRIGERANTE E MONTAGEM	592
CONDENSADOR DO REFRIGERANTE E MONTAGEM	595
CONDICIONADOR DE AR	585
CONDICIONADOR DE AR E MONTAGEM	585
CONEXÃO - RETA	538
CONEXÃO - TUBO D'ÁGUA	56
	57
	58
CONEXÃO - TUBOS DE COMBUSTÍVEL	127
CONTRAPESO	280
	281
	282
	283
	284
CONTROLE-CABO	315
	316
	317
	318
	319
CONTROLE DA FERRAMENTA DE TRABALHO	492
	496
CONTROLE DE TRAVAMENTO	144
CONTROLE DO COMANDO-HIDROSTÁTICO	222
	223
	224
	225
CONTROLE DO FREIO DE ESTACIONAMENTO	206
	208
	210
	212
	214
	216
	218
	220
CONTROLE DO GOVERNADOR	120
	122
CONTROLE HIDRÁULICO DE OPERAÇÃO PILOTO	320
	321
	322

ÍNDICE

Designação	Página
	323
	324
	325
	326
	327
	328
	329
	330
	331
	332
	333
	334
	335
	336
	337
	338
	339
	340
	341
	342
	343
	344
CORREIA DE COMANDO	157
CORREIA EM V	141
	592

D

DECALQUE	697
	698
	699
	700
	702
DECALQUE - AVISO	278
DECALQUE - IDENTIFICAÇÃO (NO. DE SEQÜÊNCIA E GRUPO)	634
DECALQUE - INSTRUÇÃO (SAÍDA DE EMERGÊNCIA)	614
	690
	694
	695
DECALQUE - INSTRUÇÃO (SAÍDA DE EMERGÊNCIA)	612
DEGRAU - BRAÇO DE MANIPULAÇÃO DE MATERIAIS	575
	576
DISJUNTOR AUTOMÁTICO DE CIRCUITO (30 A)	184
DRENO - ÓLEO DO MOTOR	28
DUCTO DO DESEMBAÇADOR	617
DUCTO E CONTROLE	616

E

EIXO	204
EIXO-COMANDO DE VÁLVULA	11
	12
ELEMENTO	704
ELEMENTO - FILTRO DE COMBUSTÍVEL	126
	704
ELEMENTO DO FILTRO DE AR (PRIMÁRIO)	96
ELEMENTO DO FILTRO DE AR (SECUNDÁRIO)	96
ELEMENTO FILTRANTE-ÁGUA	140
ELEMENTO (PRIMÁRIO)	97
ELEMENTO PRINCIPAL (PRIMÁRIO)	95
ELEMENTO (SECUNDÁRIO)	95
	97
ENCOSTO DO BRAÇO E MONTAGEM	586
ESPELHO RETROVISOR E MONTAGEM	651

F

FAROL DIANTEIRO (12 VOLTS/60-55 WATTS)	152
FILTRO	618
FILTRO - AR DA CABINE	618
FILTRO - COMBUSTÍVEL	124
	126
FILTRO - ÓLEO	228
	229
	704
FILTRO - ÓLEO DO MOTOR	53
	59
	704
FILTRO E TUBOS - COMBUSTÍVEL	124
FILTRO HIDRÁULICO E MONTAGEM	228
FIXADORES - MOTOR	29
	30
FRASCO - AMOSTRA DE FLUIDOS	696
FUSÍVEL (10 A)	178
	180
	635
	636
FUSÍVEL (15 A)	179
	180
	196
	198
	200
	202
FUSÍVEL (20 A)	624
	625
	626
	628
	629
	630

G

GARFO - SERVIÇOS PÚBLICOS	556
	557

ÍNDICE

Designação	Página
	558
GARFO DA GARRA	550
	551
	552
	553
	554
GARFO DE PALETAS	555
GARRA - SERVIÇOS PÚBLICOS	560
	562
GOVERNADOR	128
	130
GR. DE CONVERSÃO - OPERAÇÃO RODOVIÁRIA	277
	278
GR. DE SERVIÇO- FERRAMENTA DE TRABALHO	171
GRAXEIRA	298
	345
	346
	503
	504
	532
	533
GRAXEIRA ((ROSCA DE 1/8-27)	496
GRAXEIRA (ROSCA 1/8-27 POL)	294
	348
	350
	351
	355
	356
	440
	492
	527
	528
	529
	530
	531
	552
	553
GRUPO DE CONVERSÃO - ACOPLADOR RÁPIDO	536
GRUPO DE CONVERSÃO - ARRANJO RODOVIÁRIO	272
	273
	274
	275
	276
GRUPO DE INSTALAÇÃO - MOTOR	7
	8
	9
	10
GRUPO DE VÁLVULAS DE CONTROLE - DUPLO	458
GUIA - TUBOS	499

I

ILUMINAÇÃO - DIANTEIRA	159
ILUMINAÇÃO - FREIOS E FARÓIS	158
ILUMINAÇÃO - RODOVIÁRIA	162
	166
ILUMINAÇÃO - TRASEIRA	160
	161
INDICADOR E ALARME	620
	621
INSTALAÇÃO - ARRANJO	637
	638
INTERRUPTOR - PRESSÃO	175
	176
	229
	592
	646
INTERRUPTOR - PRESSÃO (ÓLEO)	175
INTERRUPTOR - TEMPERATURA	177
INTERRUPTOR - 3 POSIÇÕES (VENTILADOR DO AQUECEDOR)	632

J

JANELA DA CABINE	682
	684
	686
	688
	690
	692
	693
	694
	695
JOGO - BOMBA DE COMBUSTÍVEL	124
JOGO - PORTA DA CABINE E MONTAGEM	640
	642
JOGO-CONVERSÃO DE REMOÇÃO DE NEVE	569
	570
JOGO DE BASE DO SEPARADOR DE ÁGUA	140
JOGO DE MANUTENÇÃO	704
JOGO DE RECEPTÁCULO (12 PINOS)	170
	184
JOGO DE RECEPTÁCULO (12 PINOS)	184
JOGO DE RECEPTÁCULO (2 PINOS)	166
	184
	188
	263
	466
	482
	485
	637
	646
JOGO DE RECEPTÁCULO (2 PINOS)	162
	176

ÍNDICE

Designação	Página
	178
	296
	298
	300
JOGO DE RECEPTÁCULO (3 PINOS)	162
	180
	194
	447
	448
	596
	600
	604
	606
	610
JOGO DE RECEPTÁCULO (4 PINOS)	154
	155
	156
	162
	166
	180
	184
	308
	475
	491
	652
JOGO DE RECEPTÁCULO (4 PINOS)	162
JOGO DE RECEPTÁCULO (6 PINOS)	152
	166
	179
	180
	184
	190
	315
	316
	656
JOGO DE RECEPTÁCULO (6 PINOS)	162
JOGO DE RECEPTÁCULO (8 PINOS)	180
	184
	188
	196
	198
	200
	202
	317
	318
	319
	582
JOGO DE RETENTOR	260
	458
	491
JOGO DE TOMADA DE CONEXÃO (12 PINOS)	184
JOGO DE TOMADA DE CONEXÃO (12 PINOS)	180
JOGO DE TOMADA DE CONEXÃO (2 PINOS)	179
	180
	184
	188
	194
	582
	637
JOGO DE TOMADA DE CONEXÃO (3 PINOS)	162
	166
	180
	184
	600
	606
JOGO DE TOMADA DE CONEXÃO (4 PINOS)	162
	166
	179
	180
	184
	190
JOGO DE TOMADA DE CONEXÃO (6 PINOS)	162
	166
	179
	184
JOGO DE TOMADA DE CONEXÃO (8 PINOS)	180
	184
	188
	582
JOGO-PLACA DE RODAGEM E MONTAGEM	567
	568
JUNTA	36
	56
	58
	124
JUNTA - TAMPA DA VÁLVULA	14
	16

L

LÂMINA	502
	503
	504
LÂMINA DO LIMPADOR DE PÁRA-BRISA	612
	614
LÂMPADA - FAROL	149
	150
LÂMPADA - ILUMINAÇÃO DO PAINEL	154
LÂMPADA - SINALIZAÇÃO	155
LÂMPADA - TETO	621
LÂMPADA DIANTEIRA E DE SINAL	152
	162
	166
LÂMPADA (12 V)	621
LÂMPADA (12 V) (1,12 WATTS)	154
LÂMPADA (12 VOLTS)	705
LÂMPADA (12 VOLTS - 55 WATTS)	149
	150

ÍNDICE

Designação	Página
LÂMPADA (12 VOLTS/21 WATTS)	152
LÂMPADA (12 VOLTS)(21 WATTS) (VIRADA)	155
LÂMPADA (12 VOLTS)(21/5 WATTS)	156
LÂMPADA (12 VOLTS)(21/5 WATTS) (PARADA E TRASEIRA)	155
LÂMPADA (12 VOLTS/4 WATTS)	152
LÂMPADA (12 VOLTS/55 WATTS)	157
LÂMPADA (12 VOLT)(10 WATT)	621
LENTE	152
	155
	156
LENTE (ÂMBER)	152
	157
LEVANTAMENTO DA MÁQUINA	302
	303
	304
	305
	306
LEVANTAMENTO DO MOTOR	38
LUZ GIRATÓRIA DE ALARME	157
LUZ TRASEIRA E DE FREIO	156

M

MAÇANETA	680
MANGUEIRA	80
	86
	88
MANGUEIRA (ELIMINAÇÃO DE VAPORES)	14
MECANISMO DAS VÁLVULAS	51
	52
MÓDULO - INDICADOR DE ALARME	170
MOLA - LÂMINA	574
MOLA A GÁS	679
MONTAGEM - ALTERNADOR	39
MONTAGEM - BOMBA	250
MONTAGEM - CILINDRO	440
MONTAGEM - ESTRUTURA ROPS	653
MONTAGEM - LUZES PARA ILUMINAÇÃO RODOVIÁRIA	308
MONTAGEM - MOTOR	40
MONTAGEM - MOTOR DE ARRANQUE	41
MONTAGEM - SILENCIADOR	104
MONTAGEM DA PLACA DE REGISTRO	705
MOTOR - ENGRENAGENS	435
	436
	437
	438
	439
MOTOR - LIMPADOR DO VIDRO	652
MOTOR - PISTÃO	246
	248
	249
MOTOR E MONTAGEM - VENTILADOR HIDRÁULICO	432
	433
	434
MOTOR ELÉTRICO DE PARTIDA	174
MOTOR HIDRÁULICO E MONTAGEM	242
	243
	244
	245
MOTOR PRIMÁRIO	5
	6

P

PAINEL DE INSTRUMENTOS	654
	656
	659
PAINEL LATERAL	310
	311
PÁRA-CHOQUE TRASEIRO	271
PÁRA-SOL	680
	681
PÁRA-SOL DA CABINE	680
	681
PEDAL DO GOVERNADOR	660
	661
	662
PISCA-PISCA-SINALIZAÇÃO	162
	166
PISTÃO E BIELA	46
	47
	48
PLACA E DECALQUE	706
	707
	708
	709
	710
	711
	712
	713
	714
	715
	716
	717
	718
	720
	721
	722
	724
	726
	728
	730
	731
PLATAFORMA DO OPERADOR	663
POLIA DO VIRABREQUIM	50
PORTA DA CABINE	612
	614

ÍNDICE

Designação	Página
PORTA E MONTAGEM-CABINA	600
	604
	606
	610
PROJETOR SUPERIOR DA CABINE	623
PROTETOR - ROPS/FOPS	622
PURIFICADOR DE AR	95
	96
	97
R	
RADIADOR E ARREFECEDOR DE ÓLEO - MONTAGEM	82
	84
	86
	88
	92
RADIADOR E ARREFECEDOR DO ÓLEO HIDRÁULICO	68
	70
	72
	74
	76
	78
	80
RECIPIENTE	704
REDUÇÃO DE RUÍDO	312
REFLETOR	160
	308
REGULADOR DE TEMPERATURA DA ÁGUA	65
	66
RELÉ (CONJ)	180
	196
	198
	200
	202
	632
RELÉ (CONJ) (12 V)	184
	194
RESPIRO	296
	298
	300
RETENTOR-CABINE	664
	665
	666
RETENTOR DE ANEL-O	424
RETENTOR DE ANEL-O (19,18MM ID)	384
RETENTOR (FILTRO DE COMBUSTÍVEL)	126
REVESTIMENTO DA CABINE	644
RODA E PNEU	264
	265
	266
	267
	268
	269
	270
S	
SACADOR - MINIFUSÍVEL	145
SEPARADOR DE ÁGUA	140
SILENCIADOR	105
	106
	107
	108
	109
	110
SIST. DE ILUMINAÇÃO - PISCA-PISCA GIRATÓRIO DE ADVERTÊNCIA	169
SISTEMA ELETRÔNICO-FERRAMENTA DE TRABALHO	146
SOFTWARE-FERRAMENTA DE TRABALHO	146
SOLENÓIDE DE PARADA	172
	173
SUPORTE - GARFO	535
T	
TAMPA - CABINE	596
TAMPA - CAIXA DIANTEIRA	13
TAMPA - CONSOLO	597
	598
TAMPA - HIDRÁULICO	447
	448
TAMPA - MECANISMO DAS VÁLVULAS	14
	16
TAMPA - RADIADOR	68
	70
	72
	74
	76
	78
TAMPA - TANQUE DE COMBUSTÍVEL	132
	134
TAMPA - TUBULAÇÕES	542
TAMPA COM RESPIRO	82
	84
	88
	92
TAMPA (CONDICIONADOR DE AR)	592
TAMPA CONTRA POEIRA	28
	229
	234
	236
	412
	414
	416
TAMPA DO PAINEL DO FUSÍVEL	145
TAMPA-ÓLEO	14

ÍNDICE

Designação	Página
	16
TANQUE DE ÁGUA	581
	582
TANQUE DE ÁGUA E MONTAGEM	578
TANQUE DE ÓLEO HIDRÁULICO E MONTAGEM	444
	445
	446
TANQUE HIDRÁULICO	447
	448
TAPETE	619
TELA FILTRANTE	577
TELA FILTRANTE - ÁGUA	577
TOLDO - ESTRUTURA ROPS	591
TRAVA - ACOPLADOR RÁPIDO	572
TREM DE FORÇA	251
TUBOS - ACOPLADOR	376
	380
TUBOS - AQUECEDOR	647
	648
	649
	650
TUBOS - AR	98
	99
	100
	101
TUBOS - AR CONDICIONADO	646
TUBOS - ARREFECEDOR DE ÓLEO HIDRÁULICO	392
	393
	394
	395
	396
	397
	398
TUBOS - BOMBA	414
	416
TUBOS - CAÇAMBA	366
	368
	370
	372
TUBOS - CILINDRO DE INCLINAÇÃO	418
	420
	424
	426
TUBOS - CILINDRO DE LEVANTAMENTO	400
	402
	404
	406
TUBOS - CIRCUITO PILOTO	408
	410
	412
TUBOS - COMBUSTÍVEL	132
	134
TUBOS - FERRAMENTA DE TRABALHO	428
	430
TUBOS - FILTRO HIDRÁULICO	230
	232
TUBOS - GARRA	384
	386
TUBOS - SISTEMA HIDROSTÁTICO	234
	236
TUBOS - VENTILADOR HIDRÁULICOS	388
	389
	390
	391
TUBOS DE CONEXÃO	374
TUBOS HIDRÁULICOS AUXILIARES	361
	362
	364
	365
TUBULAÇÃO	696
TURBOALIMENTADOR	112
	116

U

UNI-DENTE	584

V

VÁLVULA - AMOSTRA DE FLUIDOS	229
VÁLVULA DE ALÍVIO	487
	488
	489
	490
VÁLVULA DE CONTROLE	460
	462
	465
	466
	468
	472
VÁLVULA DE CONTROLE E MONTAGEM	449
	450
	451
	452
	453
VÁLVULA DE CONTROLE PILOTO	477
	478
	479
	480
	481
	482
	483
	484
	485
	486
VÁLVULA DE DRENAGEM	44
VÁLVULA DE MODULAÇÃO	476
VÁLVULA DE PARADA	240

ÍNDICE

Designação	Página
	626
	647
	648
	649
	650
VÁLVULA DESVIADORA	475
VÁLVULA DESVIADORA E MONTAGEM	454
	455
VALVULA DO SOLENOIDE E MONTAGEM	258
	260
	262
	456
VÁLVULA PURIFICADORA	95
	97
VÁLVULA SOLENÓIDE	263
	491
VELA DE AQUECIMENTO	147
VELA DE AQUECIMENTO; VELA INCANDESCENTE	147
VENTILADOR DE SOPRO	60
	61
	62
	63
VIRABREQUIM	18
VOLANTE DO MOTOR	31

STICHWORTVERZEICHNIS

Bezeichnung	Seite
A	
ABDECKGLAS	152, 155, 156
ABDECKGLAS (GELB)	152, 157
ABLASSVENTIL	44
ABSPERRVENTIL	240, 626, 647, 648, 649, 650
ABSTELLMAGNETSPULE	172, 173
ACHSE	204
ANSAUGKRÜMMER	103
ANSCHLUSSGRIFF	565, 566
ANSCHLUSSKUPPLUNGSLEITUNGEN	376, 380
ANSCHLUSSLEITUNGEN	374
ANSCHLUSSSTÜCK (KRAFTSTOFFLEITUNGEN)	127
ANSCHLUSSTÜCK - GERADE	538
ANTRIEBSSTEUERUNG, HYDROSTATISCH	222, 223, 224, 225
ARBEITSGERÄT - LEITUNGEN	428, 430
ARBEITSGERÄT - VERDRAHTUNG	196, 198, 200, 202
ARBEITSGERÄTEELEKTRONIK	146
ARBEITSGERÄTEPUMPE U. BEFESTIGUNG	442
ARBEITSGERÄTESTEUERUNG	492, 496
ARBEITSLEUCHTEN	149, 150
ARMLEHNE	588
ARNLEHNE U. BEFESTIGUNG	586
AUFKLEBER	278, 697, 698, 699, 700, 702
AUSPUFFKRÜMMER	102
B	
BATTERIE	142, 143
BATTERIE (12 V)	142
BATTERIE (12 V)(NASS)	143
BEHÄLTER	704
BELEUCHTUNG FÜR STRASSENFAHRT - BEFESTIGUNG	308
BELEUCHTUNGSANLAGE (STRASSENAUSRÜSTUNG)	162, 166
BLINKLEUCHTE	155
BREMS- U. ARBEITSLEUCHTEN	158
BREMS- UND RÜCKLEUCHTE	156
D	
DICHTUNG	36, 56, 58, 124
DICHTUNG (KRAFTSTOFFILTER)	126
DICHTUNGSSATZ	260, 458, 491
DREHSTROMGENERATOR	141
DREHSTROMGENERATOR - BEFESTIGUNG	39
DREIWEGESCHALTER (HEIZGEBLÄSE)	632
DRUCKLÜFTER	60, 61, 62, 63
DRUCKLUFTLEITUNGEN	98, 99, 100, 101
DRUCKSCHALTER	175, 176, 229, 592, 646
DRUCKSCHALTER (ÖL)	175
E	
EINBAUSATZ	637, 638
ELEMENT	704
ELEMENT (AUSFALLSCHUTZ)	97
ELEMENT (HAUPTELEMENT)	97
ELEMENT (SICHERHEITSELEMENT)	95
ENTFROSTERKANAL	617
ENTLEERUNGSVENTIL	95

* ÜBERSETZUNG ZUM ZEITPUNKT DER DRUCKLEGUNG NICHT VORHANDEN

STICHWORTVERZEICHNIS

Bezeichnung	Seite
	97
ENTLÜFTER	296
	298
	300
ERDSCHAUFEL	505
	506
	507
	523
	524

F

FAHERHAUSDICHTUNG	664
	665
	666
FAHRERHAUS, SONNENBLENDE	680
	681
FAHRERHAUSABDECKUNG	596
FAHRERHAUSAUSKLEIDUNG	644
FAHRERHAUSBELEUCHTUNG	621
FAHRERHAUSDACH	654
FAHRERHAUSFENSTER	682
	684
	686
	688
	690
	692
	693
	694
	695
FAHRERHAUSHEIZUNG	632
	634
FAHRERHAUSHEIZUNG U. BEFESTIGUNGS-TEILE	624
	625
	626
	628
	629
	630
FAHRERHAUSLUFTFILTER	618
FAHRERHAUSTÜR	612
	614
FAHRERHAUSTÜR U. BEFESTIGUNG	600
	604
	606
	610
	640
	642
FAHRERHAUSVERDRAHTUNG	180
FAHRERPLATTFORM	663
FAHRERSITZ UND UNTERBAU	667
	668
	669
FAHRGESTELL	1
	2
	3
FAHRGESTELLVERDRAHTUNG	184
	188
FESTSTELLBREMSGESTÄNGE	206
	208
	210
	212
	214
	216
	218
	220
FILTER	618
FILTERSOCKEL U. MOTORÖLKÜHLER	59
*FRAME GP-BLADE	294
FRONTBELEUCHTUNG	159
FUSSMATTE	619

G

GABELTRÄGER	535
GASFEDERGRUPPE	679
GASPEDAL	660
	661
	662
GEGENGEWICHT	280
	281
	282
	283
	284
GLÜHKERZE	147
GREIEFERSCHAUFEL	527
	528
	529
GREIFERGABEL	550
	551
	552
	553
	554
GREIFERLEITUNGEN	384
	386
GREIFERSCHAUFEL	511
	512
	513
	514
	515
	516
	517
GREIFERZYLINDER	350
	351
GREIFERZYLINDER U. -BEFESTIGUNG	346
	347

* ÜBERSETZUNG ZUM ZEITPUNKT DER DRUCKLEGUNG NICHT VORHANDEN

STICHWORTVERZEICHNIS

Bezeichnung	Seite
GRIFF U. BOLZEN - ANSCHLUSS	563 564
GRUNDAUSFÜHRUNG	3 4

H

HAUPTELEMENT (HAUPTELEMENT)	95
HECKBELEUCHTUNG	160 161
HECKBELEUCHTUNGSVERDRAHTUNG	194
HECKSTOSSSTANGE	271
HEIZUNGSLEITUNGEN	647 648 649 650
HUBZYLINDER	352 353 354
HUBZYLINDERLEITUNGEN	400 402 404 406
HYDRAULIKBEDIENUNG (MIT VORSTEUERUNG)	320 321 322 323 324 325 326 327 328 329 330 331 332 333 334 335 336 337 338 339 340 341 342 343 344
HYDRAULIKDRUCKSPEICHER U. BEFESTIGUNG	314
HYDRAULIKFILTER UND BEFESTIGUNGSTEILE	228
HYDRAULIKFILTERLEITUNGEN	230 232
HYDRAULIKKÜHLERMOTOR U. BEFESTIGUNG	432 433 434
HYDRAULIKLÜFTERLEITUNGEN	388 389 390 391
HYDRAULIKÖL-TANKKAPPE	447 448
HYDRAULIKÖLKÜHLERLEITUNGEN	392 393 394 395 396 397 398
HYDRAULIKPUMPE UND LEITUNGEN	414 416
HYDRAULIKSYSTEM	357 358 359 360 361
HYDRAULIKTANK	447 448
HYDRAULIKTANK UND BEFESTIGUNGSTEILE	444 445 446
HYDROSTATIKLEITUNGEN	234 236

I

IDENTIFIZIERUNGS-AUFKLEBER (GRUPPEN- U. SEQUENZNR.)	634
INSTRUKTIONS-AUFKLEBER (NOTAUSGANG)	612 614 690 694 695
INSTRUMENTENTAFEL	654 656 659
INSTRUMENTENTAFELLEUCHTE	154

K

KÄLTEMITTELKOMPRESSOR	594

* ÜBERSETZUNG ZUM ZEITPUNKT DER DRUCKLEGUNG NICHT VORHANDEN

STICHWORTVERZEICHNIS

Bezeichnung	Seite
KÄLTEMITTELKOMPRESSOR U. BEFESTIGUNG	592
KÄLTEMITTELKONDENSATOR U. BEFESTIGUNGSTEILE	595
KAPPE (KLIMAANLAGE)	592
KAPPE MIT ENTLÜFTER	82
	84
	88
	92
KEILRIEMEN	141
	592
KIPPZYLINDER	355
	356
KLIMAANLAGE	585
KLIMAANLAGE UND AUFHÄNGUNG	585
KLIMAANLAGENLEITUNGEN	646
KLIMAANLAGENVERDRAHTUNG	179
KNOPF	680
KOLBENMOTOR	246
	248
	249
KOLBENMOTOR UND BEFESTIGUNG	242
	243
	244
	245
KOLBENPUMPE	252
	254
	256
KOMBISCHAUFEL	508
	509
	510
	511
	519
	520
	521
	522
	530
	531
	532
	533
KOPFLEISTE - FAHRERHAUS	623
KRAFTSTOFFEINSPRITZPUMPE	136
	138
KRAFTSTOFFFILTEREINSATZ	126
	704
KRAFTSTOFFILTER	124
	126
KRAFTSTOFFILTER UND LEITUNGEN	124
KRAFTSTOFFLEITUNGEN	132
	134
KRAFTSTOFFPUMPEN-EINBAUSATZ	124
KRAFTÜBERTRAGUNG	251
KÜHLER U. ÖLKÜHLERBEFESTIGUNG	82
	84
	86
	88
	92
KÜHLER UND HYDRAULIKÖLKÜHLER	68
	70
	72
	74
	76
	78
	80
KÜHLERKAPPE	68
	70
	72
	74
	76
	78
KÜHLWASSERANSCHLUSS	56
	57
	58
KÜHLWASSERPUMPE	65
	66
KURBELWELLE	18
KURBELWELLEN-RIEMENSCHEIBE	50

L

LADERRAHMEN	296
	298
	300
LAUFBAND UND ANTRIEB	157
LEICHTGUTSCHAUFEL	518
LEITUNGEN	696
LEITUNGSABDECKUNG	542
LEITUNGSFÜHRUNG	499
LEUCHTE (12 V)	621
	705
LEUCHTE (12 V) (*1.12 WATT)	154
LEUCHTE (12 V)(10 W)	621
LEUCHTE (12 V/21 W)	152
LEUCHTE (12 V)(21 W) (RECHTS- U. LINKSWENDUNG)	155
LEUCHTE (12 V)(21/5 W)	156
LEUCHTE (12 V)(21/5 W) (BREMS- U. HECKLEUCHTE)	155
LEUCHTE (12 V/4 W)	152
LEUCHTE (12 V)(55 W)	149
	150
LEUCHTE (12V/55W)	157
LUFTFILTER (HAUPTELEMENT)	96
LUFTFILTER (SICHERHEITSELEMENT)	96
LUFTKANAL UND REGULIERUNG	616
LUFTREINIGER	95

* ÜBERSETZUNG ZUM ZEITPUNKT DER DRUCKLEGUNG NICHT VORHANDEN

STICHWORTVERZEICHNIS

Bezeichnung	Seite
	96
	97
M	
MAGNETSTOPFEN	296
	298
	300
MAGNETVENTIL	263
	491
MASCHINENHUBÖSE	302
	303
	304
	305
	306
MEHRZWECKGABEL	556
	557
	558
MEHRZWECKGREIFER	560
	562
MEHRZWECKSCHAUFEL	534
MEMBRANPUMPE	573
MINISICHERUNGSZIEHER	145
MODULATORVENTIL	476
MOTOR-EINBAUSATZ	7
	8
	9
	10
MOTOR-HALTETEILE	29
	30
MOTORANTRIEB	435
	436
	437
	438
	439
MOTORAUFLAGER	40
MOTORAUSFÜHRUNG	5
	6
MOTORBLOCK	19
	20
	21
	22
MOTORHUBÖSE	38
MOTORÖLABLASS	28
MOTORÖLKÜHLER UND FILTERSOCKEL	59
MOTORVERDRAHTUNG	192
MOTORVERKLEIDUNG	286
	288
	290
	292

Bezeichnung	Seite
N	
NEIGEZYLINDERLEITUNGEN	418
	420
	424
	426
NOCKENWELLE	11
	12
O	
O-RING-DICHTUNG	424
O-RING-DICHTUNG (19,18 MM ID)	384
ÖLFILTER	53
	59
	228
	229
	704
ÖLKAPPE	14
	16
ÖLWANNE	42
	44
P	
PALETTENGABEL	555
PLEUELSTANGE UND KOLBEN	46
	47
	48
PROBEENTNAHMEFLASCHE	696
PROBEENTNAHMEVENTIL F. WARTUNGS-FL.	229
PUMPENAUFHÄNGUNG	250
R	
RAD UND REIFEN	264
	265
	266
	267
	268
	269
	270
REFLEKTOR	160
	308
REGLER	128
	130
REGLERSTEUERUNG	120
	122
RELAIS	180
	196
	198
	200
	202

* ÜBERSETZUNG ZUM ZEITPUNKT DER DRUCKLEGUNG NICHT VORHANDEN

STICHWORTVERZEICHNIS

Bezeichnung	Seite
	632
RELAIS (12 V)	184
	194
RÜCKFAHRWARNHORN	178
RÜCKLAUFVENTIL - VERTEILER	240
RÜCKSPIEGEL U. BEFESTIGUNG	651
RUNDUM-KENNLEUCHTE	157
	169

S

SCHALLDÄMPFER	105
	106
	107
	108
	109
	110
SCHALLDÄMPFERSTÜTZEN	104
SCHALLDÄMPFUNG	312
SCHAUFELLEITUNGEN	366
	368
	370
	372
SCHAUFELZYLINDER	348
SCHEIBENWISCHERBLATT	612
	614
SCHEIBENWISCHERMOTOR	652
SCHEINWERFER U. RICHTUNGSLEUCHTE	152
	162
	166
SCHEINWERFER (12 V/60-55 W)	152
SCHILD	502
	503
	504
SCHILD UND AUFKLEBER	706
	707
	708
	709
	710
	711
	712
	713
	714
	715
	716
	717
	718
	720
	721
	722
	724
	726
	728
	730
	731
SCHILDFEDERN	574
SCHILDZYLINDER U. BEFESTIGUNGSTEILE	345
SCHLAUCHLEITUNG	80
	86
	88
SCHLAUCHLEITUNG (ENTDUNSTER)	14
SCHMIERNIPPEL	298
	345
	346
	503
	504
	532
	533
SCHMIERNIPPEL ((STÄRKE 1/8-27)	496
SCHMIERNIPPEL (1/8-27-GEWINDE)	294
	350
	351
	355
	356
	440
	492
	552
	553
SCHMIERNIPPEL (1/8-27-GEWINDE)	527
	528
	529
	530
	531
SCHMIERNIPPEL (1/8-27-GEWINDE)	348
SCHMIERPUMPE	54
	55
SCHNEERÄUM-UMRÜSTSATZ	569
	570
SCHNEIDMESSER	543
	544
	545
	546
	547
	548
	549
SCHNELLWECHSELANSCHLUSSZYLINDER	349
SCHNELLWECHSELEINRICHTUNG	538
	540
	541
SCHNELLWECHSELEINRICHTUNG - VERDRAHTUNG	190
SCHNELLWECHSELEINRICHTUNGS-UMBAUSATZ	536
SCHNELLWECHSELEINRICHTUNGSSPER-RE	572
SCHNELLWECHSELVORRICHTUNG	536

* ÜBERSETZUNG ZUM ZEITPUNKT DER DRUCKLEGUNG NICHT VORHANDEN

STICHWORTVERZEICHNIS

Bezeichnung	Seite
	537
SCHWINGSITZ	676
	678
SCHWUNGRAD	31
SCHWUNGRADGEHÄUSE	32
SCREEN	577
SEITENVERKLEIDUNG	310
	311
SENSORANSCHLUSSSATZ (12POLIG)	180
	184
SENSORANSCHLUSSSATZ (2POLIG)	179
	180
	184
	188
	194
	582
	637
SENSORANSCHLUSSSATZ (3POLIG)	162
	166
	180
	184
	600
	606
SENSORANSCHLUSSSATZ (4 POLIG)	162
	166
	179
	190
SENSORANSCHLUSSSATZ (4 POLIG)	180
	184
SENSORANSCHLUSSSATZ (6POLIG)	162
	166
	179
	184
SENSORANSCHLUSSSATZ (8POLIG)	180
	184
	188
	582
SERVICEWERKZEUG	171
SICHERHEITSGURT	670
	671
	672
	673
	674
	675
SICHERUNG (10 A)	178
	180
	635
	636
SICHERUNG (15 A)	179
	180
	196
	198
	200
	202
SICHERUNG (20 A)	624
	625
	626
	628
	629
	630
SICHERUNGSTAFEL - ABDECKUNG	145
SIGNALBLINKER	162
	166
SOFTWARE - ARBEITSGERÄT	146
SOLENOIDVENTIL U. BEFESTIGUNGSTEILE	258
	260
	262
	456
SONNENBLENDE	680
	681
STARTERMOTOR	174
STARTERMOTORAUFHÄNGUNG	41
STARTSCHLÜSSELSCHALTER	620
STAUBKAPPE	28
	229
	234
	236
	412
	414
	416
STECKDOSEN - EINBAUSATZ (12POLIG)	170
	184
STECKDOSEN - EINBAUSATZ (2POLIG)	162
	166
	176
	178
	184
	188
	263
	466
	482
	485
	637
	646
STECKDOSEN - EINBAUSATZ (2POLIG)	296
	298
	300
STECKDOSEN - EINBAUSATZ (3POLIG)	162
	180
	194
	447
	448
	600
	604
	606
	610

* ÜBERSETZUNG ZUM ZEITPUNKT DER DRUCKLEGUNG NICHT VORHANDEN

STICHWORTVERZEICHNIS

Bezeichnung	Seite
STECKDOSEN - EINBAUSATZ (3POLIG)	596
STECKDOSEN - EINBAUSATZ (4 POLIG)	155
	156
	308
STECKDOSEN - EINBAUSATZ (4 POLIG)	154
	162
	166
	180
	184
	475
	491
	652
STECKDOSEN - EINBAUSATZ (6POLIG)	152
	162
	166
	179
	180
	184
	190
	315
	316
	656
STECKDOSEN - EINBAUSATZ (8POLIG)	180
	184
	188
	196
	198
	200
	202
	317
	318
	319
	582
STEUERHEBEL	315
	316
	317
	318
	319
STEUERKONSOLENABDECKUNG	597
	598
STEUERVENTIL	460
	462
	465
	466
	468
	472
STEUERVENTIL UND BEFESTIGUNGSTEILE	449
	450
	451
	452
	453
STIRNRADGEHÄUSE	34
	36
STIRNRADGEHÄUSEDECKEL	13
STRASSENFAHRT - UMRÜSTSATZ	277
	278
STRASSENFAHRTSCHILD UND BEFESTIGUNG	567
	568

T

TANDEMANTRIEB	226
	227
TANKKAPPE	132
	134
TEMPERATURSCHALTER	177
TRAGARM	500
	501
TRAGARMSTUFE	575
	576
TURBOLADER	112
	116
TYPENSCHILDBEFESTIGUNG	705

U

ÜBERDRUCKVENTIL	487
	488
	489
	490
ÜBERROLLSCHUTZ - OFFENES FAHRERHAUS	591
ÜBERROLLSCHUTZAUFLAGER	653
UMBAUSATZ - FÜR STRASSENVERKEHR	272
	273
	274
	275
	276
UMLAUFKÜHLWASSERHEIZUNG	148
UMLEITVENTIL	475
UNIVERSAL-ZAHNSPITZE	584
UNIVERSALSCHAUFEL	525
	526
UNTERBRECHER (30 A)	184

V

VENTILDECKEL	14
	16
VENTILDECKELDICHTUNG	14
	16
VENTILSATZ (2-VENTIL)	458
VENTILSTEUERUNG	51
	52

* ÜBERSETZUNG ZUM ZEITPUNKT DER DRUCKLEGUNG NICHT VORHANDEN

STICHWORTVERZEICHNIS

Bezeichnung	Seite
VERBINDUNG - SCHNELLWECHSELEINRICHTUNG	571
VERKLEIDUNG - ÜBERROLLSCHUTZ/ STEINSCHLAGSCHUTZ	622
VERRIEGELUNGSSTEUERUNG	144
VERSTAUKASTEN	590
VERTEILERVENTIL U. BEFESTIGUNGSTEILE	454
	455
VORSTEUERLEITUNGEN	408
	410
	412
VORSTEUERVENTIL	477
	478
	479
	480
	481
	482
	483
	484
	485
	486
VORSTEUERVENTILSTOPFEN	441

W

Bezeichnung	Seite
WARNANZEIGEMODUL	170
WARNANZEIGENSATZ	620
	621
WARNHORN, ELEKTR.	635
WARNHORN, ELEKTR.	636
	637
WARTUNGSSATZ	704
WASSERABSCHEIDER	140
WASSERABSCHEIDER - EINBAUSATZ	140
WASSERFILTERELEMENT	140
WASSERLEITUNGSSTOPFEN	64
WASSERSIEBEINSATZ	577
WASSERTANK	581
	582
WASSERTANK U. BEFESTIGUNGSTEILE	578
WASSERTEMPERATURREGLER	65
	66

Z

Bezeichnung	Seite
ZAHNRADPUMPE	443
ZUSATZHYDRAULIKLEITUNGEN	361
	362
	364
	365
ZYLINDERAUFHÄNGUNG	440
ZYLINDERBLOCKSCHRAUBE	49
ZYLINDERKOPF	24
	25
	26
	27

* ÜBERSETZUNG ZUM ZEITPUNKT DER DRUCKLEGUNG NICHT VORHANDEN

INDICE

Nome	Pagina
A	
ACCUMULATORE IDRAULICO E MONTAGGIO - GR	314
ALBERO A CAMME - GR	11
	12
ALBERO A TANDEM - GR	226
	227
ALBERO MOTORE - GR	18
ALLARME DI RETROMARCIA - GR	178
ALTERNATORE DI CARICA - GR	141
ARIA CONDIZIONATA - GR	585
ARIA CONDIZIONATA E GRUPPO DI MONTAGGIO	585
ASSALE GR	204
ATTACCO RAPIDO - CONFIGURAZIONE	536
	537
ATTACCO RAPIDO - GR	538
	540
	541
AVVISATORE ACUSTICO-ELETTRICO	635
	636
	637
B	
BATTERIA	142
	143
BATTERIA (12 VOLT)	142
BATTERIA (12 VOLT)(BAGNATO)	143
BENNA A RAFFIO - CONFIG	511
	512
	513
	514
	515
	516
	517
BENNA A RAFFIO - GR	527
	528
	529
BENNA MULTIUSO - CONFIG	519
	520
	521
	522
BENNA MULTIUSO - GR	530
	531
	532
	533
	534
BENNA PER MATERIALE LEGGERO - CONFIG	518
BENNA PER USO GENERALE	525
	526
BENNA PER USO GENERALE - CONFIG	508
	509
	510
	511
BENNA TERRICCIO	523
	524
BENNA TERRICCIO - CONFIG	505
	506
	507
BLOCCO PER L'ATTACCO RAPIDO - GR	572
BRACCIO DELL'ATTACCO - GR	571
BRACCIO MOVIMENTAZIONE MATERIALE - GR	500
	501
BRACCIOLO	588
BRACCIOLO E MONTAGGIO - GR	586
BULLONERIA DI REGOLAZIONE - GR	705
C	
CABLAGGIO - CABINA	180
CABLAGGIO DEL CONDIZIONATORE D'ARIA	179
CABLAGGIO DEL MOTORE	192
CABLAGGIO DEL TELAIO - GP	184
	188
CABLAGGIO DELL'ATTACCO - GR	190
CABLAGGIO DELL'ATTREZZATURA - GR	196
	198
	200
	202
CABLAGGIO LUCI POSTERIORI - GR	194
CAMICIA DELLA CABINA	644
CANDELETTA DI PRERISCALDAMENTO	147
CARTUCCIA FILTRANTE-PRINCIPALE (PRIMARIO)	95
CARTUCCIA FILTRANTE (SECONDARIO)	95
CATARIFRANGENTE	160
	308
CILINDRO BENNA - GR	348
CILINDRO DEL RAFFIO	350
	351
CILINDRO DELL'ATTACCO - GP	349
CILINDRO DI SOLLEVAMENTO	352
	353
	354
CILINDRO D'INCLINAZIONE	355
	356
CILINDRO E MONTAGGIO DELLA LAMA	345
CILINDRO E MONTAGGIO RAFFIO - GR	346
	347
CINGHIA A V	141
	592
CINGHIA DI COMANDO	157

* TRADUZIONE NON DISPONIBILE A TEMPO DELLA PUBBLICAZIONE

INDICE

Nome	Pagina
CINTURA DI SICUREZZA - GR	670
	671
	672
	673
	674
	675
COLLETTORE ASPIRAZIONE - GR	103
COLLETTORE DI RITORNO - GR	240
COLLETTORE SCARICO - GR	102
COMANDO A MANIGLIA - GR	315
	316
	317
	318
	319
COMANDO ATTREZZATURA - GR	492
	496
COMANDO DEL FRENO DI PARCHEGGIO	206
	208
	210
	212
	214
	216
	218
	220
COMANDO IDRAULICO	357
	358
	359
	360
	361
COMANDO IDRAULICO AZIONATO DA CIRCUITO PILOTA - GR	320
	321
	322
	323
	324
	325
	326
	327
	328
	329
	330
	331
	332
	333
	334
	335
	336
	337
	338
	339
	340
	341
	342
	343
	344
COMANDO INTEBLOCCO - GR	144
COMANDO TRASMISSIONE IDROSTATICA - CONFIG	222
	223
	224
	225
COMPARTIMENTO - MOTORE	286
	288
	290
	292
COMPRESSORE DEL REFRIGERANTE	594
COMPRESSORE DEL REFRIGERANTE E MONTANTE	592
COMUNE - CONFIG	3
	4
CONDENSATORE E GRUPPO DI MONTAGGIO-REFRIGERANTE	595
CONDOTTO SBRINATORE - GR	617
CONTENITORE	704
CONTENITORE PORTAOGGETTI - GR	590
CONTRAPPESO - GR	280
	281
	282
	283
	284
CONTROLLO REGOLATORE - GR	120
	122
CONVERSIONE DELL'ATTACCO RAPIDO - CONFIG	536
CONVERSIONE MESSA SU STRADA - CONFIG	272
	273
	274
	275
	276
CONVERSIONE MESSA SU STRADA - GR	277
	278
COPERCHIO CONSOLE - GR	597
	598
COPERCHIO MECCANISMO VALVOLE - GR	14
	16
COPERCHIO PANNELLO FUSIBILI - GR	145
COPERCHIO SCATOLA ANTERIORE - GR	13
COPERTURA CABINA - GR	596
COPERTURA TUBAZIONI - GR	542
COPPA OLIO - GR	42
	44

D

DECALCOMANIA - GR	697

* TRADUZIONE NON DISPONIBILE A TEMPO DELLA PUBBLICAZIONE

INDICE

Nome	Pagina
	698
	699
	700
	702
DECALCOMANIE-IDENTIFICAZIONE (NO. GRUPPO E SEQUENZA)	634
DECALCOMANIE-ISTRUZIONI (USCITA ALTERNATIVA)	614
	690
	694
	695
DECALCOMANIE-ISTRUZIONI (USCITA ALTERNATIVA)	612
DISPOSITIVO SOLLEVAMENTO MACCHINA - GR	302
	303
	304
	305
	306
DISPOSIZIONE DI INSTALLAZIONE	637
	638
*DUCT & CONTROL GP	616

E

ELEMENTO	704
ELEMENTO DEL FILTRO DELL'ARIA (PRIMARIO)	96
ELEMENTO DEL FILTRO DELL'ARIA (SECONDARIO)	96
ELEMENTO FILTRANTE DEL CARBURANTE	126
	704
ELEMENTO FILTRANTE DELL'ACQUA	140
ELEMENTO (PRIMARIO)	97
ELEMENTO (SECONDARIO)	97
ELETTRONICA ATTREZZATURA - GR	146
ESTRATTORE FUSIBILI	145
ETICHETTA D'AVVERTENZA	278

F

FANALE ANTERIORE E SEGNALE DI DIREZIONE - GR	152
	162
	166
FANALE ANTERIORE (*12 VOLT/60-55 WATT)	152
FERMO DEL MOTORE	29
	30
FILTRO	618
FILTRO - ARIA CABINA	618
FILTRO A RETE DELL'ACQUA - GR	577
FILTRO ARIA - GR	95
	96
	97
FILTRO-CARBURANTE	124
	126
FILTRO DELL'OLIO	228
	229
	704
FILTRO E TUBAZIONI DEL CARBURANTE	124
FILTRO IDRAULICO E MONTAGGIO - GR	228
FILTRO OLIO MOTORE	53
FILTRO-OLIO MOTORE	53
	59
	704
FINESTRINO DELLA CABINA	682
	684
	686
	688
	690
	692
	693
	694
	695
FLACONE DI CAMPIONATURA FLUIDI - GR	696
FORCA MULTIUSO - GR	556
	557
	558
FORCA PALLET - GR	555
FORCA RAFFIO - CONFIG	550
	551
FORCA RAFFIO - GR	552
	553
	554
FUSIBILE (10 A)	178
	180
	635
	636
FUSIBILE (15 A)	179
	180
	196
	198
	200
	202
FUSIBILE (20 A)	624
	625
	626
	628
	629
	630

G

GRADINO DEL BRACCIO MOVIMENTAZIONE MATERIALE	575

* TRADUZIONE NON DISPONIBILE A TEMPO DELLA PUBBLICAZIONE

INDICE

Nome	Pagina
	576
GRUPPO TUBAZIONI-RISCALDAMENTO	647
	648
	649
	650
GUARNIZIONE	36
	56
	58
	124
GUARNIZIONE AD ANELLO	424
GUARNIZIONE AD ANELLO (19,18MM DI)	384
GUARNIZIONE COPERCHIO VALVOLE	14
	16
GUIDA TUBAZIONI - GR	499

I

INDICATORE E ALLARME - GR	620
	621
INGRASSATORE	298
	345
	346
	503
	504
	532
	533
INGRASSATORE (FILETTATURA 1/8-27)	294
	348
	350
	351
	355
	356
	440
	492
	527
	528
	529
	530
	531
	552
	553
INGRASSATORE ((FILETTATURA 1/8-27)	496
INSONORIZZAZIONE	312
INTERRUTTORE - PRESSIONE	229
	592
	646
INTERRUTTORE A PRESSIONE (OLIO)	175
INTERRUTTORE A TRE POSIZIONI (VENTOLA DEL RISCALDAMENTO)	632
INTERRUTTORE D'AVVIAMENTO A CHIAVE	620
INTERRUTTORE DELLA TEMPERATURA	177
INTERRUTTORE DI CIRCUITO (30 A)	184

K

KIT - BASE DELL'ACQUA	140
KIT - CONVERSIONE RIMOZIONE NEVE	569
	570
KIT - MANUTENZIONE	704
KIT - POMPA CARBURANTE	124
KIT - PORTA DELLA CABINA E MONTAGGIO	640
	642
KIT - TAPPO CONNETTORE (12 TERMINALI)	180
	184
KIT - TAPPO CONNETTORE (2 TERMINALI)	179
	180
	184
	188
	194
	582
	637
KIT - TAPPO CONNETTORE (3 TERMINALI)	162
	166
	180
	184
	600
	606
KIT - TAPPO CONNETTORE (4 TERMINALI)	162
	166
	179
	180
	184
	190
KIT - TAPPO CONNETTORE (6 TERMINALI)	162
	166
	179
	184
KIT - TAPPO CONNETTORE (8 TERMINALI)	180
	184
	188
	582
KIT - TARGA DI CIRCOLAZIONE STRADALE E MONTAGGIO	567
	568
KIT - TENUTA	260
	458
	491
KIT-PRESA (12 TERMINALI)	170
KIT-PRESA (12 TERMINALI)	184
KIT-PRESA (12 TERMINALI)	184
KIT-PRESA (2 TERMINALI)	162
	166
	176
	184
	188
	263
	296

* TRADUZIONE NON DISPONIBILE A TEMPO DELLA PUBBLICAZIONE

INDICE

Nome	Pagina
	298
	300
	466
	482
	485
	637
	646
KIT-PRESA (2 TERMINALI)	178
KIT-PRESA (3 TERMINALI)	162
	180
	194
	447
	448
	596
	600
	604
	606
	610
KIT-PRESA (4 TERMINALI)	162
	166
	180
	184
	308
	475
	491
	652
KIT-PRESA (4 TERMINALI)	155
	156
KIT-PRESA (4 TERMINALI)	154
KIT-PRESA (4 TERMINALI)	180
KIT-PRESA (6 TERMINALI)	152
	162
	166
	180
	184
	190
	315
	316
	656
KIT-PRESA (6 TERMINALI)	179
KIT-PRESA (8 TERMINALI)	180
	184
	188
	196
	198
	200
	202
	317
	318
	319
	582
KIT-PRESA (8 TERMINALI)	198
	200

L

Nome	Pagina
LAMA	502
	503
	504
LAMPADA - SEGNALE	155
LAMPADA D'ARRESTO E DI CODA - GR	156
LAMPADA D'ILLUMINAZIONE PANNELLO - GR	154
LAMPADA FARO ROTANTE - GR	157
LAMPADA (12 VOLT)	621
	705
LAMPADA (12 VOLT) (*1.12 WATT)	154
LAMPADA (12 VOLT)(10 WATT)	621
LAMPADA (*12 VOLT/21 WATT)	152
LAMPADA (*12 VOLT)(21 WATT) (SVOLTA)	155
LAMPADA (*12 VOLT/4 WATT)	152
LAMPADA (12 VOLT)(55 WATT)	149
	150
LAMPADA (*12 VOLT/55 WATT)	157
LAMPADA (12VOLT)(21/5 WATT)	156
LAMPADA (12VOLT)(21/5 WATT) (ARRESTO E POSTERIORI)	155
LAMPEGGIATORE	162
	166
LENTE	152
	155
	156
LENTE (*AMBER)	152
	157
LUCE INTERNA	621
LUCI ANTERIORI - GR	159
LUCI D'ARRESTO E DI LAVORO - CONFIG	158
LUCI DI LAVORO - GR	149
	150
LUCI FARO ROTANTE - GR	169
LUCI POSTERIORI - GR	160
	161
LUCI STRADALI	162
	166

M

Nome	Pagina
MANIGLIA DELL'ATTACCO - GR	565
	566
MANIGLIA E PERNO DELL'ATTACCO - GR	563
	564
MARMITTA - GR	105
	106
	107
	108
	109
	110
MECCANISMO VALVOLA - GR	51

* TRADUZIONE NON DISPONIBILE A TEMPO DELLA PUBBLICAZIONE

INDICE

Nome	Pagina
	52
MODULO INDICATORE D'AVVERTENZA - GR	170
MOLLA A GAS	679
MOLLA DELLA LAMA -GR	574
MONOBLOCCO - GR	19
	20
	21
	22
MONODENTE	584
MONTAGGIO - CILINDRO	440
MONTAGGIO - MOTORE	7
	8
	9
	10
MONTAGGIO -ALTERNATORE	39
MONTAGGIO LUCI STRADALI - GR	308
MONTAGGIO MOTORE - GR	40
MONTAGGIO MOTORINO D'AVVIAMENTO - GR	41
MONTAGGIO POMPA - GR	250
MONTAGGIO ROPS - GR	653
MONTAGGIO SILENZIATORE - GR	104
MOTORE AD INGRANAGGI - GR	435
	436
	437
	438
	439
MOTORE E MONTAGGIO PISTONI - GP	242
	243
	244
	245
MOTORE E MONTAGGIO VENTOLA IDRAULICA - GR	432
	433
	434
MOTORE IDRAULICO A PISTONE	246
	248
	249
MOTORE PRINCIPALE	5
	6
MOTORINO AVVIAMENTO ELETTRICO - GR	174
MOTORINO DEL TERGICRISTALLO	652

P

PANNELLO LATERALE - GR	310
	311
PARASOLE	680
	681
PARASOLE CABINA - GP	680
	681
PARAURTI POSTERIORE - GR	271
PEDALE DEL REGOLATORE	660
	661
	662
PIATTAFORMA - OPERATORE	663
PISTONE E BIELLA - GR	46
	47
	48
POMELLO	680
POMPA A DIAFRAMMA - GR	573
POMPA A PISTONE	252
	254
	256
POMPA ACQUA - GR	65
	66
POMPA AD INGRANAGGI	443
POMPA E MONTAGGIO DELL'ATTREZZATURA - GR	442
POMPA INIEZIONE CARBURANTE - GR	136
	138
POMPA OLIO MOTORE - GR	54
	55
PORTIERA CABINA - GR	612
	614
PORTIERA E MONTAGGIO CABINA - GR	600
	604
	606
	610
PRESSOSTATO - GR	175
	176
PROTEZIONE ROPS/FOPS - GR	622
PULEGGIA ALBERO MOTORE - GR	50

Q

QUADRO STRUMENTI	656
	659
QUADRO STRUMENTI - CONFIG	654

R

RACCORDO ACQUA	56
	57
	58
RACCORDO DELL TUBAZIONI DEL CARBURANTE	127
RACCORDO DIRITTO	538
RADIATORE E SCAMBIATORE DI CALORE DELL'OLIO MONTAGGIO - GR	82
	84
	86
	88
	92
RADIATORE E SCAMBIATORE D'OLIO	68

* TRADUZIONE NON DISPONIBILE A TEMPO DELLA PUBBLICAZIONE

INDICE

Nome	Pagina
	70
	72
	74
	76
	78
	80
RAFFIO MULTIUSO - GR	560
	562
REGOLATORE	128
	130
REGOLATORE DELLA TEMPERATURA DELL'ACQUA	65
	66
RELÈ	180
	196
	198
	200
	202
	632
RELÈ (12 VOLT)	184
	194
RETINA	577
RISCALDAMENTO CABINA - GR	632
	634
RISCALDAMENTO DELLA CABINA E MONTAGGIO	624
	625
	626
	628
	629
	630
RISCALDATORE DELL'ACQUA DI CAMICIA	148
RIVESTIMENTO CABINA	623
RUOTA E PNEUMATICO - CONFIG	264
	265
	266
	267
	268
	269
	270
RUOTA E PNEUMATICO - GR	270

S

Nome	Pagina
SCAMBIATORE DI CALORE OLIO MOTORE E BASE FILTRO	59
SCAMBIATORE DI CALORE OLIO MOTORE E BASE FILTRO - GR	59
SCARICO DELL'OLIO MOTORE - GR	28
SCATOLA ANTERIORE - GR	34
	36
SCATOLA VOLANO - GR	32
SEDILE - MOLLE	676
	678
SEDILE E MONTAGGIO	667
	668
	669
SEPARATORE DELL'ACQUA	140
SERBATOIO DELL'ACQUA - GR	581
	582
SERBATOIO E GRUPPO MONTAGGIO-ACQUA	578
SERBATOIO E GRUPPO MONTAGGIO-IDRAULICO	444
	445
	446
SERBATOIO IDRAULICO	447
	448
SERVIZIO ATTREZZATURA -GR	171
SFIATATOIO	296
	298
	300
SOFTWARE ATTREZZATURA - GR	146
SOLENOIDE DI ARRESTO	172
	173
SOLLEVAMENTO MOTORE - GR	38
SPAZZOLA - TERGICRISTALLO	612
	614
SPECCHIO RETROVISORE E BULLONERIA - GR	651

T

Nome	Pagina
TAGLIENTE	543
	544
	545
	546
	547
	548
	549
TAPPETO	619
TAPPO - MONOBLOCCO	49
TAPPO A SFIATO	82
	84
	88
	92
TAPPO ANTIPOLVERE	28
	229
	234
	236
	412
	414
	416
TAPPO (CONDIZIONATORE D'ARIA)	592
TAPPO DEL RADIATORE	68
	70

* TRADUZIONE NON DISPONIBILE A TEMPO DELLA PUBBLICAZIONE

INDICE

Nome	Pagina
	72
	74
	76
	78
TAPPO DEL SERBATOIO CARBURANTE	132
	134
TAPPO DELLE TUBAZIONI DELL'ACQUA	64
TAPPO DELL'OLIO	14
	16
TAPPO MAGNETICO	296
	298
	300
TAPPO SERBATOIO IDRAULICO	447
	448
TAPPO VALVOLA PILOTA - GR	441
TARGHETTE E DECALCOMANIA - GR	706
	707
	708
	709
	710
	711
	712
	713
	714
	715
	716
	717
	718
	720
	721
	722
	724
	726
	728
	730
	731
TEALIO - CONFIG	1
	2
	3
TELAIO CARICATORE - GR	296
	298
	300
TELAIO FORCA	535
TELAIO LAMA - GR	294
TENUTA CABINA - GR	664
	665
	666
TENUTA (FILTRO DEL CARBURANTE)	126
TESTA CILINDRO - GR	24
	25
	26
	27

Nome	Pagina
TETTUCCIO POSTAZIONE OPERATOR - CONFIG	654
TETTUCCIO ROPS - GR	591
TRASMISSIONE	251
TUBAZIONE - GR	696
TUBAZIONI ARIA - GR	98
	99
	100
	101
TUBAZIONI ATTREZZATURA - GR	428
	430
TUBAZIONI CARBURANTE - GR	132
	134
TUBAZIONI CILINDRO DI SOLLEVAMENTO - GR	400
	402
	404
	406
TUBAZIONI CILINDRO D'INCLINAZIONE - GR	418
	420
	424
	426
TUBAZIONI CIRCUITO PILOTA - GR	408
	410
	412
TUBAZIONI CONDIZIONATORE D'ARIA - GR	646
TUBAZIONI DEL RACCORDO - GR	376
	380
TUBAZIONI DEL RAFFIO	384
	386
TUBAZIONI DELLA BENNA	366
	368
	370
	372
TUBAZIONI DELLO SCAMBIATORE DI CALORE DELL'OLIO IDRAULICO	392
	393
	394
	395
	396
	397
	398
TUBAZIONI DI COLLEGAMENTO - GR	374
TUBAZIONI FILTRO IRDAULICO - GR	230
	232
TUBAZIONI IDROSTATICHE - GR	234
	236
TUBAZIONI IMPIANTO IDRAULICO AUSILIARIO - GR	361
	362
	364
	365

* TRADUZIONE NON DISPONIBILE A TEMPO DELLA PUBBLICAZIONE

INDICE

Nome	Pagina
TUBAZIONI POMPA - GR	414
	416
TUBAZIONI VENTOLA IDRAULICA - GR	388
	389
	390
	391
TUBO FLESSIBILE	80
	86
	88
TUBO FLESSIBILE (SCARICO FUMI)	14
TURBOCOMPRESSORE - GR	112
	116
V	
VALVOLA A SOLENOIDE - GR	263
	491
VALVOLA-ARRESTO	240
	626
	647
	648
	649
	650
VALVOLA DI CAMPIONATURA	229
VALVOLA DI COMANDO E MONTAGGIO	449
	450
	451
	452
	453
VALVOLA DI CONTROLLO - GR	460
	462
	465
	466
	468
	472
VALVOLA DI DISTRIBUZIONE - GR	475
VALVOLA DI DISTRIBUZIONE E MONTAGGIO - GR	454
	455
VALVOLA DI SCARICO	44
	95
	97
VALVOLA LIMITATRICE DI PRESSIONE - GR	487
	488
	489
	490
VALVOLA MODULATRICE	476
VALVOLA PILOTA - GR	477
	478
	479
	480
	481
	482
	483
	484
	485
	486
VALVOLA SOLENOIDE E MONTAGGIO- GR	258
	260
	262
	456
VALVOLA 2 DEL BANCO - GR	458
VENTOLA DELL'ARIAZIONE	60
	61
	62
	63
VOLANO - GR	31

* TRADUZIONE NON DISPONIBILE A TEMPO DELLA PUBBLICAZIONE

MACHINE ARRANGEMENT

190-7953 CHASSIS AR

S/N: CED1-UP

PART OF 190-8000 COMMON AR

SMCS-7000 **i01798796**

NOTE	PART NUMBER	QTY	PART NAME 1 2 3 4 5 6 (PRODUCT LEVEL)	SEE PAGE
Y	*154-4000*	1	BUMPER GP-REAR	271
Y	*192-2657*	1	CONTROL GP-GOVERNOR	120
			S/N: CED1-402	
Y	*215-3980*	1	CONTROL GP-GOVERNOR	122
			S/N: CED403-UP	
Y	*190-7999*	1	CONTROL GP-WORK TOOL	492
Y	*142-9080*	1	COUPLER GP-QUICK	
Y	*191-9750*	1	ENCLOSURE GP-ENGINE	290
Y	*190-7975*	1	FRAME GP-LOADER	298
Y	*150-8621*	1	GUIDE GP-LINES	499
Y	*191-9755*	1	LINES GP-FUEL	134
Y	*142-9354*	1	MOUNTING GP-ROPS	653
Y	*197-4899*	1	OPERATOR AR-CANOPY	654
Y	*192-2666*	1	PLATFORM GP-OPERATOR	663
Y	*177-3403*	1	SPRING GP-GAS	679
Y	*195-6723*	1	WINDOW GP-CAB (TOP & REAR)	694
Y	*193-8375*	1	WIRING GP-CAB	180
Y	*190-8001*	1	WIRING GP-CHASSIS	184
Y	*197-6900*	1	WIRING GP-ENGINE	192

Y-SEPARATE ILLUSTRATION

<END>

195-6710 CHASSIS AR

S/N: FDG1-UP

PART OF 195-6700 COMMON AR

SMCS-7000 **i01798798**

NOTE	PART NUMBER	QTY	PART NAME 1 2 3 4 5 6 (PRODUCT LEVEL)	SEE PAGE
Y	*154-4000*	1	BUMPER GP-REAR	271
Y	*192-2657*	1	CONTROL GP-GOVERNOR	120
			S/N: FDG1-403	
Y	*215-3980*	1	CONTROL GP-GOVERNOR	122
			S/N: FDG404-UP	
Y	*190-7999*	1	CONTROL GP-WORK TOOL	492
Y	*191-9764*	1	ENCLOSURE GP-ENGINE	292
Y	*190-7975*	1	FRAME GP-LOADER	298
Y	*150-8621*	1	GUIDE GP-LINES	499
Y	*191-9755*	1	LINES GP-FUEL	134
Y	*142-9354*	1	MOUNTING GP-ROPS	653
Y	*197-4899*	1	OPERATOR AR-CANOPY	654
Y	*192-2666*	1	PLATFORM GP-OPERATOR	663
Y	*177-3403*	1	SPRING GP-GAS	679
Y	*195-6723*	1	WINDOW GP-CAB (TOP & REAR)	694
Y	*193-8375*	1	WIRING GP-CAB	180
Y	*190-8001*	1	WIRING GP-CHASSIS	184
Y	*197-6900*	1	WIRING GP-ENGINE	192

Y-SEPARATE ILLUSTRATION

<END>

MACHINE ARRANGEMENT

195-6761 CHASSIS AR

S/N: 4YZ4000-UP

PART OF 180-3000 COMMON AR

SMCS-7000 **i01798784**

NOTE	PART NUMBER	QTY	PART NAME 1 2 3 4 5 6 (PRODUCT LEVEL)	SEE PAGE
Y	*154-4000*	1	BUMPER GP-REAR	271
Y	*192-2657*	1	CONTROL GP-GOVERNOR	120
			S/N: 4YZ4000-4580	
Y	*215-3980*	1	CONTROL GP-GOVERNOR	122
			S/N: 4YZ4581-UP	
Y	*195-6799*	1	CONTROL GP-WORK TOOL	496
Y	*154-3991*	1	ENCLOSURE GP-ENGINE	288
Y	*195-6775*	1	FRAME GP-LOADER	300
			S/N: 4YZ4000-4010, 4025-UP	
Y	*142-9075*	1	FRAME GP-LOADER	296
			S/N: 4YZ4011-4024	
Y	*150-8621*	1	GUIDE GP-LINES	499
Y	*142-8843*	1	LINES GP-FUEL	132
Y	*142-9354*	1	MOUNTING GP-ROPS	653
Y	*191-9799*	1	OPERATOR AR-CANOPY	654
Y	*192-2666*	1	PLATFORM GP-OPERATOR	663
Y	*177-3403*	1	SPRING GP-GAS	679
Y	*193-8375*	1	WIRING GP-CAB	180
Y	*190-8001*	1	WIRING GP-CHASSIS	184
Y	*197-6900*	1	WIRING GP-ENGINE	192

Y-SEPARATE ILLUSTRATION

<END>

MACHINE ARRANGEMENT

195-6763 CHASSIS AR

S/N: 5SZ4000-UP

PART OF 197-4900 COMMON AR

SMCS-7000 **i01798788**

NOTE	PART NUMBER	QTY	PART NAME 1 2 3 4 5 6 (PRODUCT LEVEL)	SEE PAGE
Y	*154-4000*	1	BUMPER GP-REAR	271
Y	*192-2657*	1	CONTROL GP-GOVERNOR	120
			S/N: 5SZ4000-4920	
Y	*215-3980*	1	CONTROL GP-GOVERNOR	122
			S/N: 5SZ4921-UP	
Y	*195-6799*	1	CONTROL GP-WORK TOOL	496
Y	*142-9103*	1	ENCLOSURE GP-ENGINE	286
Y	*195-6775*	1	FRAME GP-LOADER	300
			S/N: 5SZ4000-4029, 4080-UP	
Y	*142-9075*	1	FRAME GP-LOADER	296
			S/N: 5SZ4030-4079	
Y	*150-8621*	1	GUIDE GP-LINES	499
Y	*142-8843*	1	LINES GP-FUEL	132
Y	*142-9354*	1	MOUNTING GP-ROPS	653
Y	*191-9799*	1	OPERATOR AR-CANOPY	654
Y	*192-2666*	1	PLATFORM GP-OPERATOR	663
Y	*177-3403*	1	SPRING GP-GAS	679
Y	*193-8375*	1	WIRING GP-CAB	180
Y	*190-8001*	1	WIRING GP-CHASSIS	184
Y	*197-6900*	1	WIRING GP-ENGINE	192

Y-SEPARATE ILLUSTRATION

<END>

180-3000 COMMON AR

S/N: 4YZ4000-UP

SMCS-7000 **i01798756**

NOTE	PART NUMBER	QTY	PART NAME 1 2 3 4 5 6 (PRODUCT LEVEL)	SEE PAGE
Y	*195-6761*	1	CHASSIS AR	2
Y	**147-1233**	1	ENGINE AR-PRIMARY	5
Y	*166-8835*	1	FILM GP	697
Y	*195-6762*	1	HYDRAULIC AR	359
Y	*195-6765*	1	PLATE & FILM GP	724
Y	*195-6760*	1	POWER TRAIN AR	251

Y-SEPARATE ILLUSTRATION

<END>

MACHINE ARRANGEMENT

190-8000 COMMON AR

S/N: CED1-UP

SMCS-7000 **i01798518**

NOTE	PART NUMBER	QTY	PART NAME 1 2 3 4 5 6 (PRODUCT LEVEL)	SEE PAGE
Y	*190-7953*	1	CHASSIS AR	1
Y	**147-1234**	1	ENGINE AR-PRIMARY	6
Y	*190-7955*	1	FILM GP	699
Y	*190-7952*	1	HYDRAULIC AR	357
Y	*191-9765*	1	INSTALLATION AR-ENGINE	9
Y	*190-7954*	1	PLATE & FILM GP	718
Y	*190-7951*	1	POWER TRAIN AR	251

Y-SEPARATE ILLUSTRATION

<END>

195-6700 COMMON AR

S/N: FDG1-UP

SMCS-7000 **i01443188**

NOTE	PART NUMBER	QTY	PART NAME 1 2 3 4 5 6 (PRODUCT LEVEL)	SEE PAGE
Y	*195-6710*	1	CHASSIS AR	1
Y	**147-1233**	1	ENGINE AR-PRIMARY	5
Y	*195-6702*	1	FILM GP	702
Y	*195-6705*	1	HYDRAULIC AR	358
Y	*192-2620*	1	INSTALLATION AR-ENGINE	10
Y	*190-7954*	1	PLATE & FILM GP	718
Y	*190-7951*	1	POWER TRAIN AR	251

Y-SEPARATE ILLUSTRATION

<END>

197-4900 COMMON AR

S/N: 5SZ4000-UP

SMCS-7000 **i01798530**

NOTE	PART NUMBER	QTY	PART NAME 1 2 3 4 5 6 (PRODUCT LEVEL)	SEE PAGE
Y	*195-6763*	1	CHASSIS AR	3
Y	*154-4050*	1	COUNTERWEIGHT GP	280
Y	**147-1234**	1	ENGINE AR-PRIMARY	6
Y	*166-8836*	1	FILM GP	698
Y	*195-6764*	1	HYDRAULIC AR	360
Y	*195-6765*	1	PLATE & FILM GP	724
Y	*195-6760*	1	POWER TRAIN AR	251

Y-SEPARATE ILLUSTRATION

<END>

ENGINE ARRANGEMENT

147-1233 ENGINE AR-PRIMARY

S/N: 3NW12500-UP
47KW
PART OF 180-3000, 195-6700 COMMON AR

SMCS-1000 **i01607439**

NOTE	PART NUMBER	QTY	PART NAME 1 2 3 4 5 6 (PRODUCT LEVEL)	SEE PAGE
Y	*171-2824*	1	CAMSHAFT GP	11
Y	*164-8388*	1	SWITCH GP-TEMPERATURE	177
Y	*164-7622*	1	CONNECTION GP-WATER	56
Y	*164-7623*	1	COVER GP-FRONT HOUSING	13
Y	*171-2792*	1	CYLINDER BLOCK GP	20
Y	*171-2803*	1	CYLINDER HEAD GP	25
Y	*153-0115*	1	COVER GP-VALVE MECHANISM	14
Y	*166-3759*	1	FASTENER GP-ENGINE	29
Y	*164-7629*	1	FILTER & LINES GP-FUEL	124
Y	*164-7616*	1	FILTER GP-ENGINE OIL	53
Y	*153-0077*	1	FLYWHEEL GP	31
Y	*153-0524*	1	GLOW PLUG GP	147
Y	*171-2929*	1	GOVERNOR GP	128
Y	*153-1014*	1	HOUSING GP-FLYWHEEL	32
Y	*171-2823*	1	HOUSING GP-FRONT	34
Y	*153-0561*	1	LIFTING GP-ENGINE	38
Y	*153-1006*	1	FITTING GP-FUEL LINES	127
Y	*165-4961*	1	MANIFOLD GP-EXHAUST	102
Y	*164-7624*	1	MANIFOLD GP-INLET	103
Y	*153-1176*	1	MOUNTING GP-ALTERNATOR	39
Y	*164-7613*	1	MOUNTING GP-STARTING MOTOR	41
Y	*202-3185*	1	PAN GP-OIL	44
Y	*137-6391*	1	PISTON & ROD GP	46
Y	*153-0693*	1	PLUG GP-CYLINDER BLOCK	49
Y	*153-0319*	1	PULLEY GP-CRANKSHAFT	50
Y	*171-3957*	1	PUMP GP-FUEL INJECTION	138
Y	*171-2948*	1	PUMP GP-ENGINE OIL	54
Y	*153-0165*	1	PUMP GP-WATER	65
Y	*153-0564*	1	SOLENOID GP-SHUTOFF	172
Y	*171-4613*	1	SWITCH GP-PRESSURE (OIL)	175
Y	*171-2808*	1	VALVE MECHANISM GP	51
			AVAILABLE REPAIR KIT(S):	
	173-1339	1	KIT-GASKET (BOTTOM)	
	153-1217	1	KIT-GASKET (TOP)	

Y-SEPARATE ILLUSTRATION

ENGINE ARRANGEMENT

147-1234 ENGINE AR-PRIMARY

S/N: 3NW12500-UP
60KW
PART OF 190-8000, 197-4900 COMMON AR

SMCS-1000 **i01749944**

NOTE	PART NUMBER	QTY	PART NAME 1 2 3 4 5 6 (PRODUCT LEVEL)	SEE PAGE
Y	*172-6740*	1	CAMSHAFT GP	12
Y	*164-7622*	1	CONNECTION GP-WATER	56
Y	*173-0410*	1	COOLER GP-FLTR BASE & ENG OIL	59
Y	*164-7623*	1	COVER GP-FRONT HOUSING	13
Y	*195-9243*	1	COVER GP-VALVE MECHANISM	16
Y	*173-1252*	1	CRANKSHAFT GP	18
Y	*170-6666*	1	CYLINDER BLOCK GP	19
Y	*172-6705*	1	CYLINDER HEAD GP	27
Y	*166-3759*	1	FASTENER GP-ENGINE	29
			S/N: 3NW12500-22523	
Y	*215-3488*	1	FASTENER GP-ENGINE	30
			S/N: 3NW22524-UP	
Y	*164-7629*	1	FILTER & LINES GP-FUEL	124
Y	*153-1006*	1	FITTING GP-FUEL LINES	127
Y	*153-0077*	1	FLYWHEEL GP	31
Y	*153-0524*	1	GLOW PLUG GP	147
Y	*173-0122*	1	GOVERNOR GP	130
Y	*153-1014*	1	HOUSING GP-FLYWHEEL	32
Y	*172-6739*	1	HOUSING GP-FRONT	36
Y	*153-0561*	1	LIFTING GP-ENGINE	38
Y	*153-1176*	1	MOUNTING GP-ALTERNATOR	39
Y	*164-7613*	1	MOUNTING GP-STARTING MOTOR	41
Y	*202-0950*	1	PAN GP-OIL	42
Y	*173-1253*	1	PISTON & ROD GP	47
Y	*153-0693*	1	PLUG GP-CYLINDER BLOCK	49
Y	*164-7633*	1	PLUG GP-WATER LINES	64
Y	*153-0319*	1	PULLEY GP-CRANKSHAFT	50
Y	*173-0140*	1	PUMP GP-ENGINE OIL	55
Y	*170-7498*	1	PUMP GP-FUEL INJECTION	136
Y	*173-1281*	1	PUMP GP-WATER	66
Y	*164-8388*	1	SWITCH GP-TEMPERATURE	177
Y	*173-1338*	1	SOLENOID GP-SHUTOFF	173
Y	*171-4613*	1	SWITCH GP-PRESSURE (OIL)	175
Y	*173-0424*	1	TURBOCHARGER GP	112
			S/N: 3NW12500-18474	
Y	*220-5943*	1	TURBOCHARGER GP	116
			S/N: 3NW18475-UP	
Y	*172-6711*	1	VALVE MECHANISM GP	52
			AVAILABLE GASKET KIT(S):	
	173-1339	1	KIT-GASKET (BOTTOM)	
	173-1340	1	KIT-GASKET (TOP)	

Y-SEPARATE ILLUSTRATION

ENGINE ARRANGEMENT

142-9101 INSTALLATION AR-ENGINE

S/N: 4YZ4000-UP

PART OF 166-2567, 175-4242, 175-4244, 188-3310 CONVERSION AR-ROADING AN ATTACHMENT

SMCS-1000 **i01500587**

NOTE	PART NUMBER	QTY	PART NAME 1 2 3 4 5 6 (PRODUCT LEVEL)	SEE PAGE
Y	*183-7126*	1	AIR CLEANER GP	96
Y	*142-9108*	1	ALTERNATOR GP-CHARGING	141
Y	*152-4858*	1	DRAIN GP-ENGINE OIL	28
Y	*183-7127*	1	LINES GP-AIR	99
Y	*142-8850*	1	MOUNTING GP-ENGINE	40
Y	*142-9003*	1	MUFFLER GP	107
Y	*192-2601*	1	RADIATOR & OIL COOLER MTG GP	88
Y	*154-3995*	1	STARTING MOTOR GP-ELECTRIC	174

Y-SEPARATE ILLUSTRATION

ENGINE ARRANGEMENT

183-7125 INSTALLATION AR-ENGINE

S/N: 5SZ4000-UP

PART OF 188-3306, 188-3307, 188-3308, 188-3311 CONVERSION AR-ROADING AN ATTACHMENT

SMCS-1000 **i01790444**

NOTE	PART NUMBER	QTY	PART NAME 1 2 3 4 5 6 (PRODUCT LEVEL)	SEE PAGE
Y	*183-7126*	1	AIR CLEANER GP	96
Y	*142-9108*	1	ALTERNATOR GP-CHARGING	141
			S/N: 5SZ4000-7170	
Y	*152-4858*	1	DRAIN GP-ENGINE OIL	28
Y	*152-4895*	1	LINES GP-AIR	98
Y	*142-8850*	1	MOUNTING GP-ENGINE	40
Y	*159-5787*	1	MUFFLER GP	108
Y	*192-2603*	1	RADIATOR & OIL COOLER MTG GP	92
			S/N: 5SZ4000-7170	
Y	*187-3216*	1	RADIATOR & OIL COOLER MTG GP	84
			S/N: 5SZ7171-UP	
Y	*154-3995*	1	STARTING MOTOR GP-ELECTRIC	174

Y-SEPARATE ILLUSTRATION

ENGINE ARRANGEMENT

191-9765 INSTALLATION AR-ENGINE

S/N: CED1-UP

PART OF 190-8000 COMMON AR

SMCS-1000 **i01493138**

NOTE	PART NUMBER	QTY	PART NAME 1 2 3 4 5 6 (PRODUCT LEVEL)	SEE PAGE
Y	*152-4893*	1	AIR CLEANER GP	95
Y	*142-9108*	1	ALTERNATOR GP-CHARGING	141
Y	*152-4858*	1	DRAIN GP-ENGINE OIL	28
Y	*192-2615*	1	LINES GP-AIR	100
Y	*142-8850*	1	MOUNTING GP-ENGINE	40
Y	*191-9777*	1	MUFFLER GP	109
Y	*187-3216*	1	RADIATOR & OIL COOLER MTG GP	84
Y	*154-3995*	1	STARTING MOTOR GP-ELECTRIC	174

Y-SEPARATE ILLUSTRATION

ENGINE ARRANGEMENT

192-2620 INSTALLATION AR-ENGINE

S/N: FDG1-UP

PART OF 195-6700 COMMON AR

SMCS-1000 **i01790415**

NOTE	PART NUMBER	QTY	PART NAME 1 2 3 4 5 6 (PRODUCT LEVEL)	SEE PAGE
Y	*192-2617*	1	AIR CLEANER GP	97
Y	*142-9108*	1	ALTERNATOR GP-CHARGING	141
Y	*152-4858*	1	DRAIN GP-ENGINE OIL	28
Y	*192-2618*	1	LINES GP-AIR	101
			S/N: FDG1-571	
Y	*142-8850*	1	MOUNTING GP-ENGINE	40
Y	*192-2612*	1	MOUNTING GP-MUFFLER	104
Y	*191-9775*	1	RADIATOR & OIL COOLER MTG GP	86
			S/N: FDG1-571	
Y	*210-0837*	1	RADIATOR & HYD OIL COOLER GP	80
			S/N: FDG572-UP	
Y	*154-3995*	1	STARTING MOTOR GP-ELECTRIC	174

Y-SEPARATE ILLUSTRATION

BASIC ENGINE

171-2824 CAMSHAFT GP

S/N: 3NW12500-UP

PART OF 147-1233 ENGINE AR-PRIMARY

SMCS-1210, 1211, 1212 **i01793354**

NOTE	REF NO	GRAPHIC REF	PART NUMBER	QTY	PART NAME 1 2 3 4 5 6 (PRODUCT LEVEL)	SEE PAGE
	1	1	**100-4841**	2	BOLT (M6X1.0X10MM)	
	2	1	**152-6866**	1	GEAR AS-IDLER (59 TEETH)	
	3	1	**152-6867**	2	BUSHING	
	4	1	**152-6868**	2	WASHER (32X50X2.4)	
	5	1	**152-6869**	1	SEAL-O-RING	
	6	1	**173-9855**	1	CAMSHAFT AS	
	7	1	**152-6862**	1	PLUG	
	9	1	**152-6864**	1	KEY-WOODRUFF	
	10	1	**164-7606**	1	PLATE	
F		1	**152-6560**	1	BUSHING	

F-NOT SHOWN

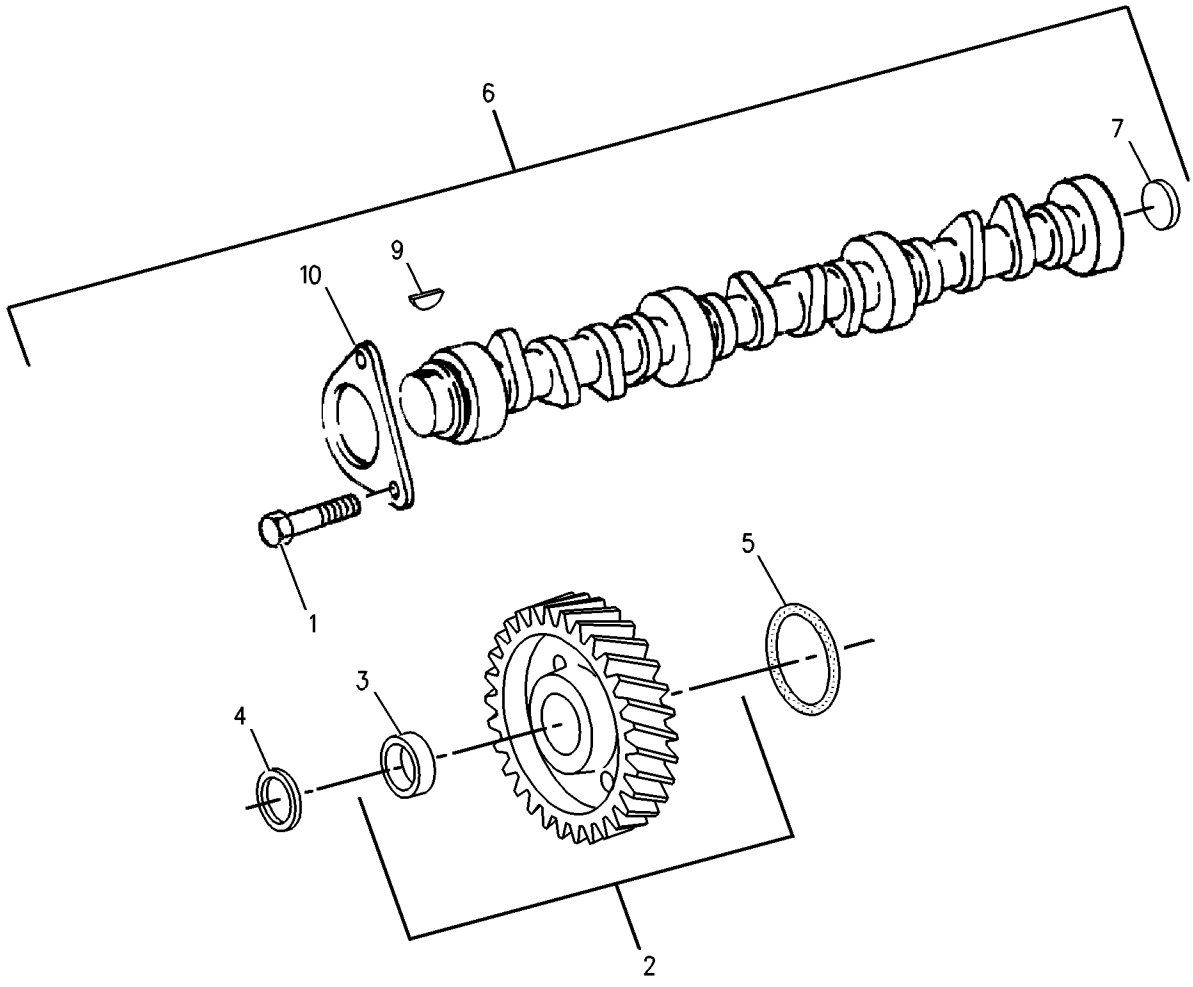

GRAPHIC #1 g00917419

BASIC ENGINE

172-6740 CAMSHAFT GP

S/N: 3NW12500-UP

PART OF 147-1234 ENGINE AR-PRIMARY

SMCS-1210, 1211, 1212 **i01350463**

NOTE	REF NO	GRAPHIC REF	PART NUMBER	QTY	PART NAME 1 2 3 4 5 6 (PRODUCT LEVEL)	SEE PAGE
	1	1	**100-4841**	2	BOLT (M6X1.0X10MM)	
	2	1	**152-6866**	1	GEAR-IDLER (59 TEETH)	
	3	1	**152-6867**	2	BUSHING	
	4	1	**188-4513**	1	CAMSHAFT AS	
	5	1	**152-6868**	1	WASHER (32X50X2.4)	
	6	1	**152-6869**	1	SEAL-O-RING	

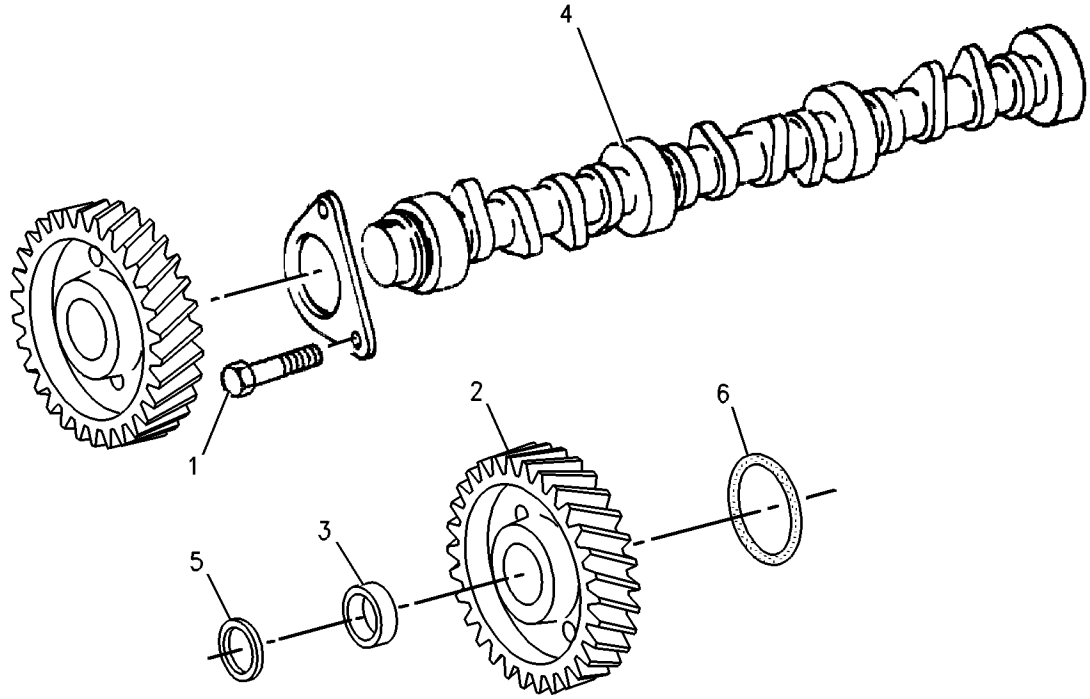

GRAPHIC #1 g00712762

BASIC ENGINE

164-7623 COVER GP-FRONT HOUSING

S/N: 3NW12500-UP

PART OF 147-1233, 147-1234 ENGINE AR-PRIMARY

SMCS-1166 **i01465461**

NOTE	REF NO	GRAPHIC REF	PART NUMBER	QTY	PART NAME 1 2 3 4 5 6 (PRODUCT LEVEL)	SEE PAGE
	1	1	**6I-0291**	2	NUT (M8X1.25)	
	2	1	**103-5687**	2	BOLT (M10X1.5X85MM)	
	3	1	**6I-0594**	2	NUT (M10X1.5)	
	4	1	**100-4463**	2	BOLT (M10X1.5X80MM)	

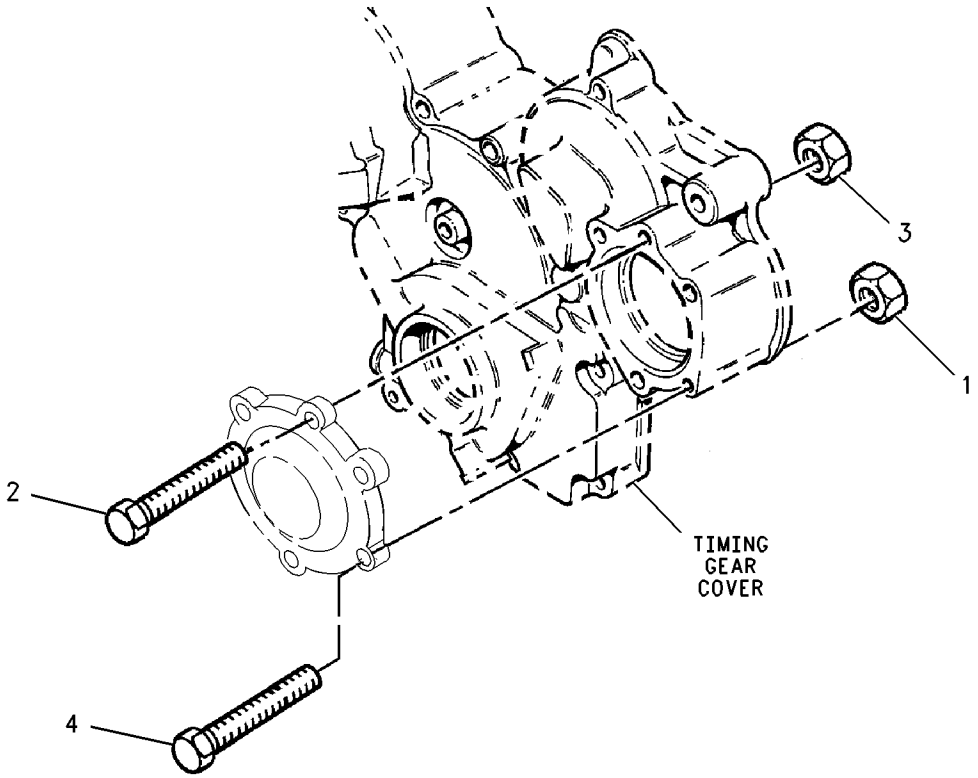

GRAPHIC #1 g00731638

BASIC ENGINE

153-0115 COVER GP-VALVE MECHANISM

S/N: 3NW12500-UP

PART OF 147-1233 ENGINE AR-PRIMARY

SMCS-1107 **i01520202**

NOTE	REF NO	GRAPHIC REF	PART NUMBER	QTY	PART NAME 1 2 3 4 5 6 (PRODUCT LEVEL)	SEE PAGE
	1	1	**4B-4281**	3	WASHER (16.8X33X2.5MM THK)	
	2	1	**067-6006**	1	PLUG	
	3	1	**5D-1026**	2	CLAMP-HOSE	
	4	1	**101-3675**	3	SEAL	
	5	1	**153-0104**	1	HOSE (FUMES DISPOSAL)	
	6	1	**153-0105**	1	SPRING	
	7	1	**153-0106**	1	PLATE	
	8	1	**180-2428**	1	DIAPHRAGM	
	9	1	**153-0108**	1	COVER	
	10	1	**170-7666**	1	CAP-OIL	
	11	1	**153-0112**	3	NUT	
	12	1	**153-0117**	4	BOLT (4X10)	
	13	1	**195-9244**	1	COVER-VALVE	
	14	1	**159-0082**	1	GASKET-VALVE COVER	

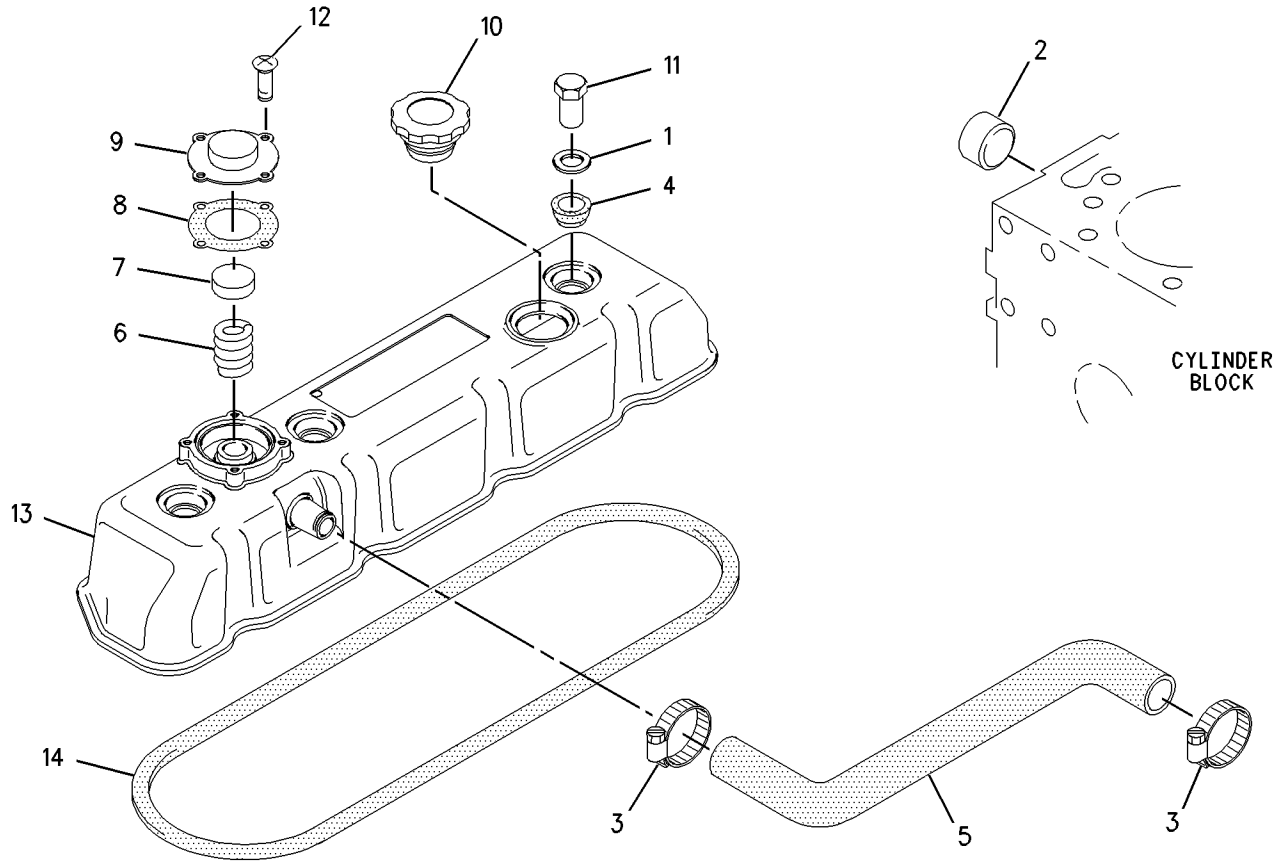

GRAPHIC #1 g00792510

MEMORANDA

195-9243 COVER GP-VALVE MECHANISM

S/N: 3NW12500-UP

PART OF 147-1234 ENGINE AR-PRIMARY

SMCS-1107 **i01455968**

NOTE	REF NO	GRAPHIC REF	PART NUMBER	QTY	PART NAME 1 2 3 4 5 6 (PRODUCT LEVEL)	SEE PAGE
	1	1	**195-9244**	1	COVER-VALVE	
	2	1	**159-0082**	1	GASKET-VALVE COVER	
	3	1	**4B-4281**	3	WASHER (16.8X33X2.5MM THK)	
	4	1	**5D-1026**	8	CLAMP-HOSE	
	5	1	**101-3675**	3	SEAL	
	6	1	**153-0112**	3	NUT	
	7	1	**195-9245**	4	SCREW	
	8	1	**170-7666**	1	CAP-OIL	
	9	1	**6I-0839**	1	BOLT (M8X1.25X70MM)	
	10	1	**146-2698**	1	BRACKET AS	
	11	1	**146-2701**	1	ADAPTER	
	12	1	**5C-1809**	1	SPACER	
	13	1	**170-7667**	1	PLATE	
	14	1	**170-7668**	1	GASKET-PLATE	
	15	1	**170-7669**	2	HOSE	
	16	1	**170-7675**	1	VALVE	
	17	1	**170-7677**	1	TUBE-AIR	
	17A	1	**195-9246**	1	CLIP	
	18	1	**195-9248**	1	ADAPTER-HOSE	
	19	1	**195-9253**	1	WASHER	
	20	1	**6I-4200**	1	BOLT (M10X1.5X16MM)	
	21	1	**067-6006**	2	PLUG	
	22	1	**195-9254**	1	CONNECTION AS	
	22A	1	**170-7682**	1	SEAL-O-RING	
	23	1	**192-8754**	1	HOSE-BREATHER	
	24	1	**192-8755**	1	CLIP	
	25	1	**146-7810**	1	TUBE-AIR	
	26	1	**195-9255**	1	DEFLECTOR AS	
	27	1	**103-5705**	1	BOLT (M8X1.25X110MM)	

195-9243 **COVER GP-VALVE MECHANISM** *(contd.)* **i01455968**

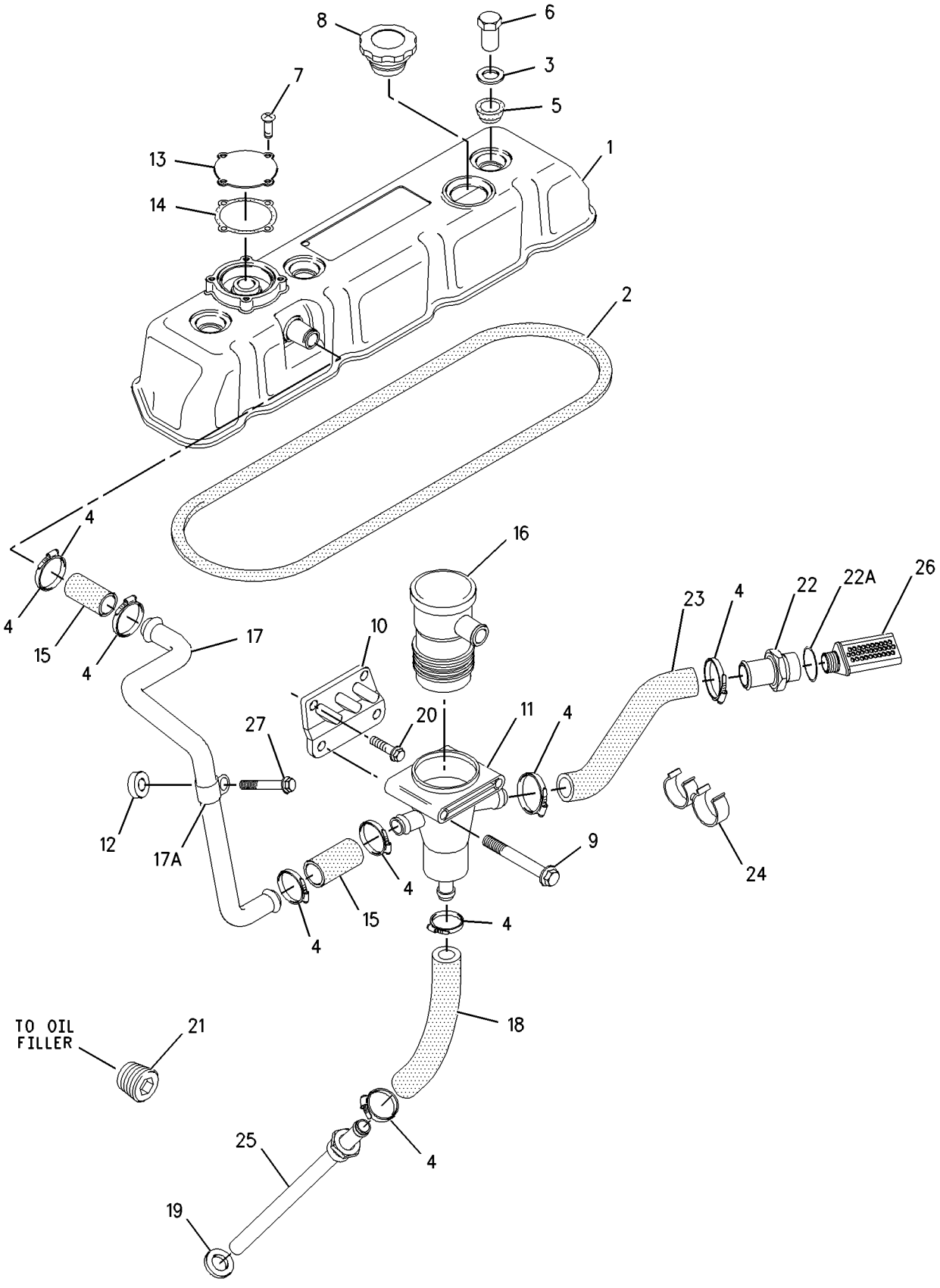

GRAPHIC #1 g00765805

BASIC ENGINE

173-1252 CRANKSHAFT GP

S/N: 3NW12500-UP

PART OF 147-1234 ENGINE AR-PRIMARY

SMCS-1202 **i01349673**

NOTE	REF NO	GRAPHIC REF	PART NUMBER	QTY	PART NAME 1 2 3 4 5 6 (PRODUCT LEVEL)	SEE PAGE
	1	1	**173-1280**	1	CRANKSHAFT GP	
	2	1	**1B-8736**	1	KEY-WOODRUFF	
	3	1	**152-6791**	1	KIT-BEARING	
	4	1	**152-6799**	2	WASHER-THRUST	
	5	1	**152-6801**	1	GEAR-CRANKSHAFT (30 TEETH)	
	6	1	**173-1272**	1	KIT-BEARING	
	7	1	**188-8545**	1	KIT-OIL SEAL	

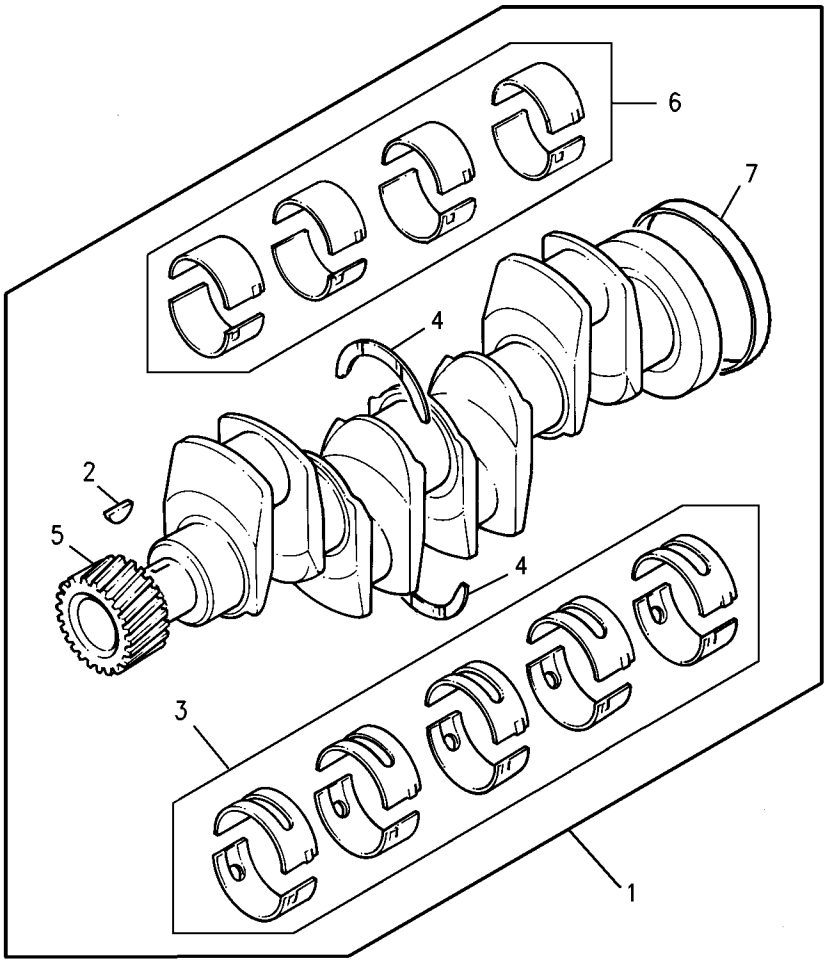

GRAPHIC #1 g00684956

BASIC ENGINE

170-6666 CYLINDER BLOCK GP

S/N: 3NW12500-UP

PART OF 147-1234 ENGINE AR-PRIMARY

SMCS-1201 **i01504894**

NOTE	REF NO	GRAPHIC REF	PART NUMBER	QTY	PART NAME 1 2 3 4 5 6 (PRODUCT LEVEL)	SEE PAGE
	1	1	**6I-1074**	4	VALVE AS	
					(EACH INCLUDES)	
	2	1	**6I-0686**	1	SPRING	
	3	1	**6I-1075**	1	BALL	
	4	1	**6I-1076**	1	RETAINER	
	5	1	**152-6555**	2	DOWEL	
	7	1	**142-7267**	4	JET AS-PISTON COOLING	
					(EACH INCLUDES)	
	8	1	**148-7549**	1	DOWEL	
	9	1	**170-6669**	1	PLUG	
	10	1	**152-6556**	1	SEAL	
Y	11	1	**205-5491**	1	CYLINDER BLOCK GP	22

Y-SEPARATE ILLUSTRATION

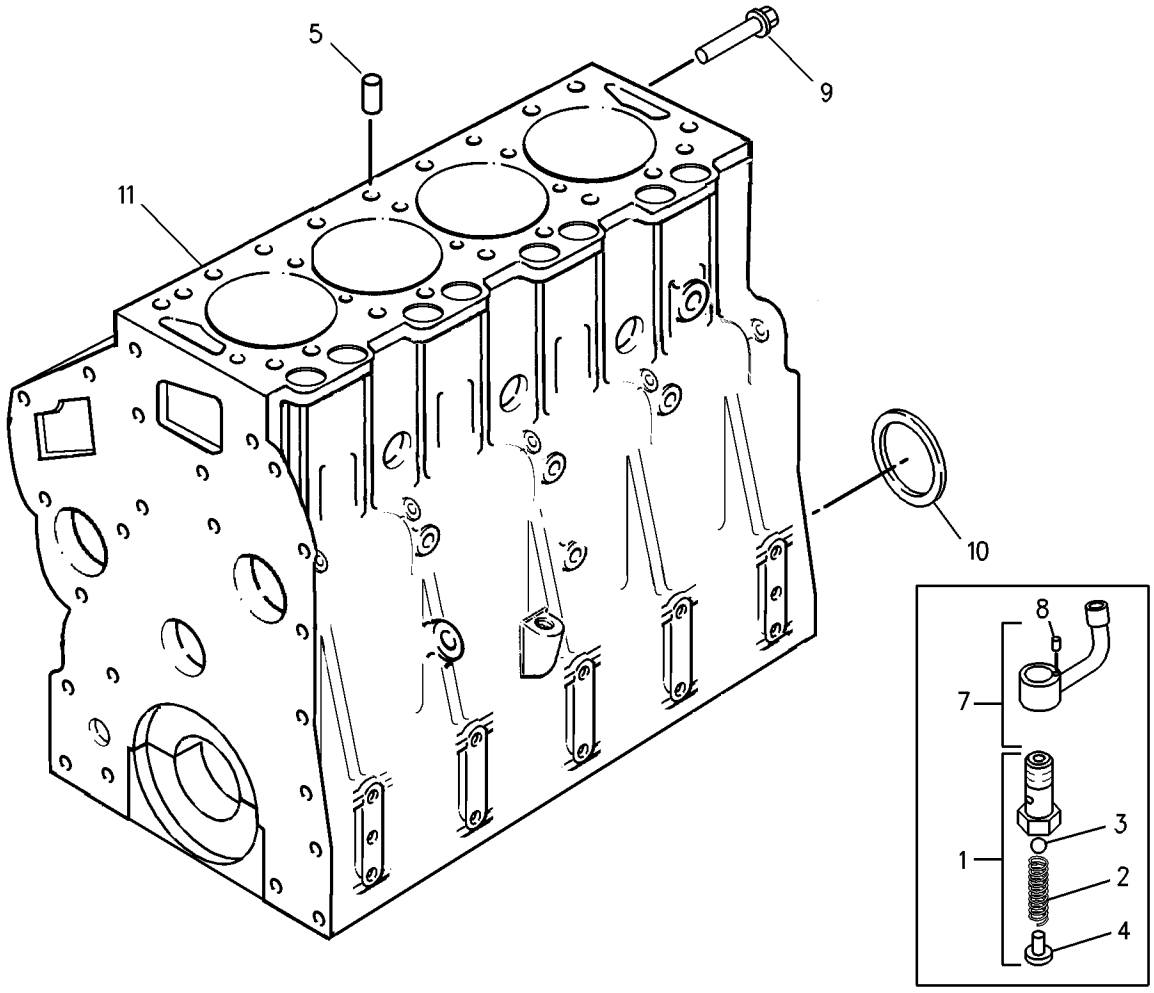

GRAPHIC #1 g00712424

BASIC ENGINE

171-2792 CYLINDER BLOCK GP

S/N: 3NW12500-UP

PART OF 147-1233 ENGINE AR-PRIMARY

SMCS-1201 **i01504898**

NOTE	REF NO	GRAPHIC REF	PART NUMBER	QTY	PART NAME 1 2 3 4 5 6 (PRODUCT LEVEL)	SEE PAGE
Y	1	1	**205-5490**	1	CYLINDER BLOCK GP	21
	2	1	**152-6555**	2	DOWEL	
	3	1	**152-6556**	1	SEAL	

Y-SEPARATE ILLUSTRATION

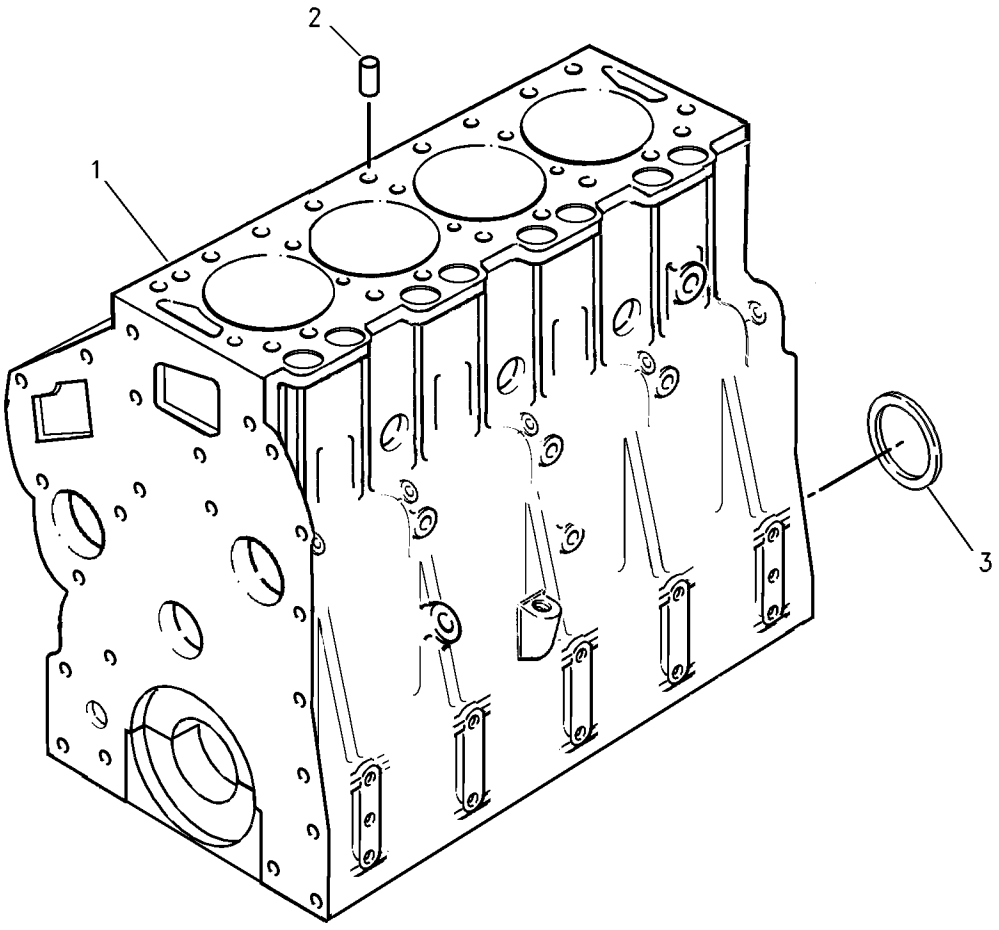

GRAPHIC #1 g00587353

BASIC ENGINE

205-5490 CYLINDER BLOCK GP

S/N: 3NW12500-UP

PART OF 171-2792 CYLINDER BLOCK GP

SMCS-1201 **i01504900**

NOTE	REF NO	GRAPHIC REF	PART NUMBER	QTY	PART NAME 1 2 3 4 5 6 (PRODUCT LEVEL)	SEE PAGE
	1	1	**1N-3762**	1	PLUG-CUP	
	2	1	**1W-8438**	1	WASHER	
	3	1	**9F-2247**	11	PLUG-PIPE	
	4	1	**9Y-5015**	4	PLUG-FREEZE	
	5	1	**067-6006**	2	PLUG	
	6	1	**067-6007**	1	PLUG	
	7	1	**067-9509**	2	PLUG	
	8	1	**069-1124**	1	PLUG	
	9	1	**118-9145**	1	CONNECTOR	
	10	1	**152-6557**	2	SEAL	
	11	1	**152-6558**	10	BOLT	
	12	1	**152-6559**	1	SHAFT	
	13	1	**152-6561**	4	SEAL	
	14	1	**153-0562**	1	ADAPTER	
	15	1	**175-4921**	1	BUSHING	
	16	1	**188-5102**	3	PLUG	

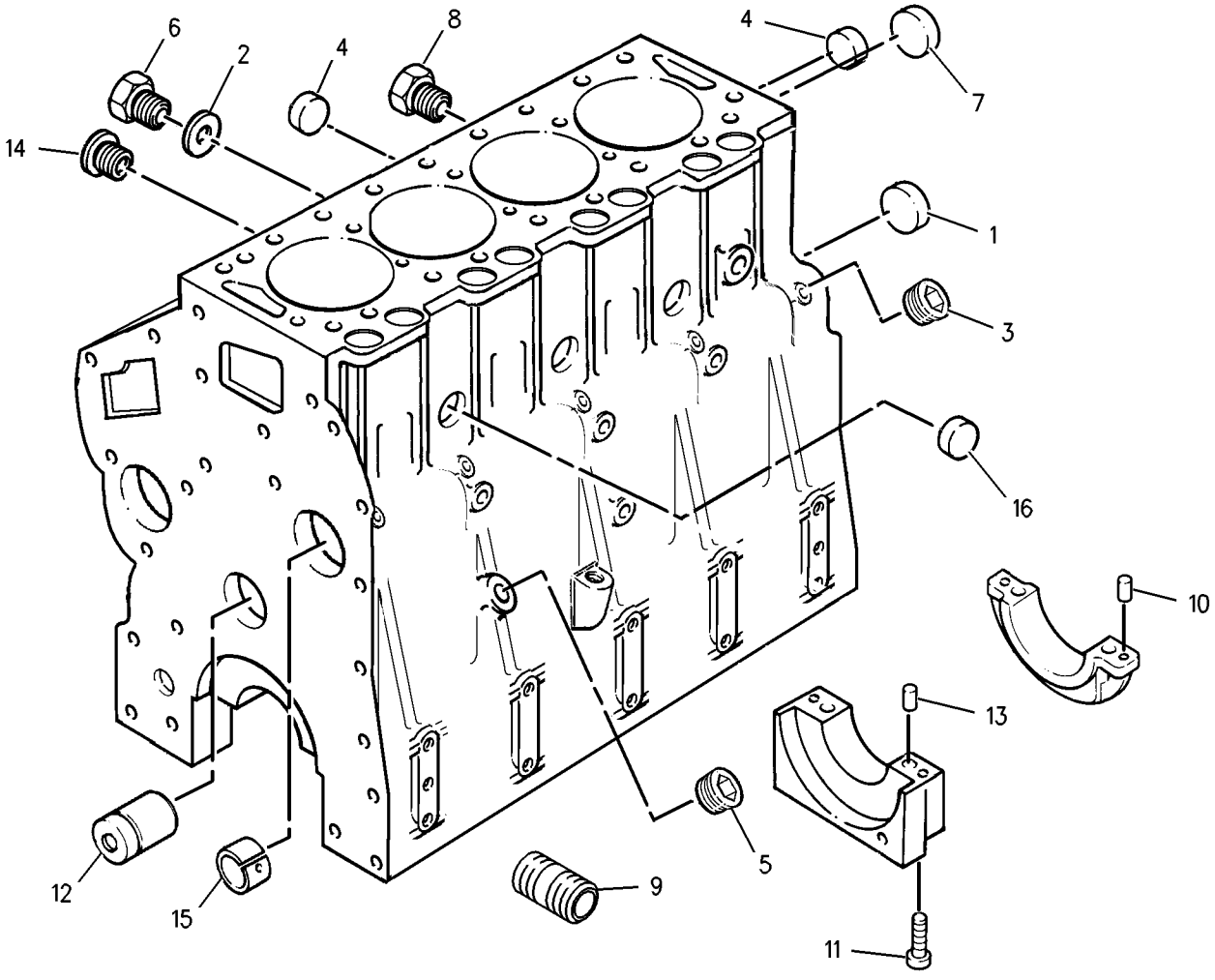

GRAPHIC #1 g00781206

205-5491 CYLINDER BLOCK GP

S/N: 3NW12500-UP

PART OF 170-6666 CYLINDER BLOCK GP

SMCS-1201 **i01504901**

NOTE	REF NO	GRAPHIC REF	PART NUMBER	QTY	PART NAME 1 2 3 4 5 6 (PRODUCT LEVEL)	SEE PAGE
	1	1	**1N-3762**	1	PLUG-CUP	
	2	1	**1W-8438**	1	WASHER	
	3	1	**6I-1074**	4	VALVE AS	
					(EACH INCLUDES)	
	4	1	**6I-0686**	1	SPRING	
	5	1	**6I-1075**	1	BALL	
	6	1	**6I-1076**		RETAINER	
	7	1	**9F-2247**	1	PLUG-PIPE	
	8	1	**9Y-5015**	3	PLUG-FREEZE	
	10	1	**067-6007**	1	PLUG	
	11	1	**067-9509**	2	PLUG	
	12	1	**069-1124**	1	PLUG	
	14	1	**142-7267**	4	JET AS-PISTON COOLING	
	16	1	**152-6557**	2	SEAL	
	17	1	**152-6558**	10	BOLT	
	18	1	**152-6559**	1	SHAFT	
	19	1	**152-6561**	4	SEAL	
	20	1	**153-0562**	1	ADAPTER	
	21	1	**067-6006**	1	PLUG	
	22	1	**118-9145**	1	CONNECTOR	
	23	1	**175-4921**	1	BUSHING	
	24	1	**188-5102**	3	PLUG	
F		1	**173-0418**	1	ADAPTER	

F-NOT SHOWN

205-5491 CYLINDER BLOCK GP *(contd.)* i01504901

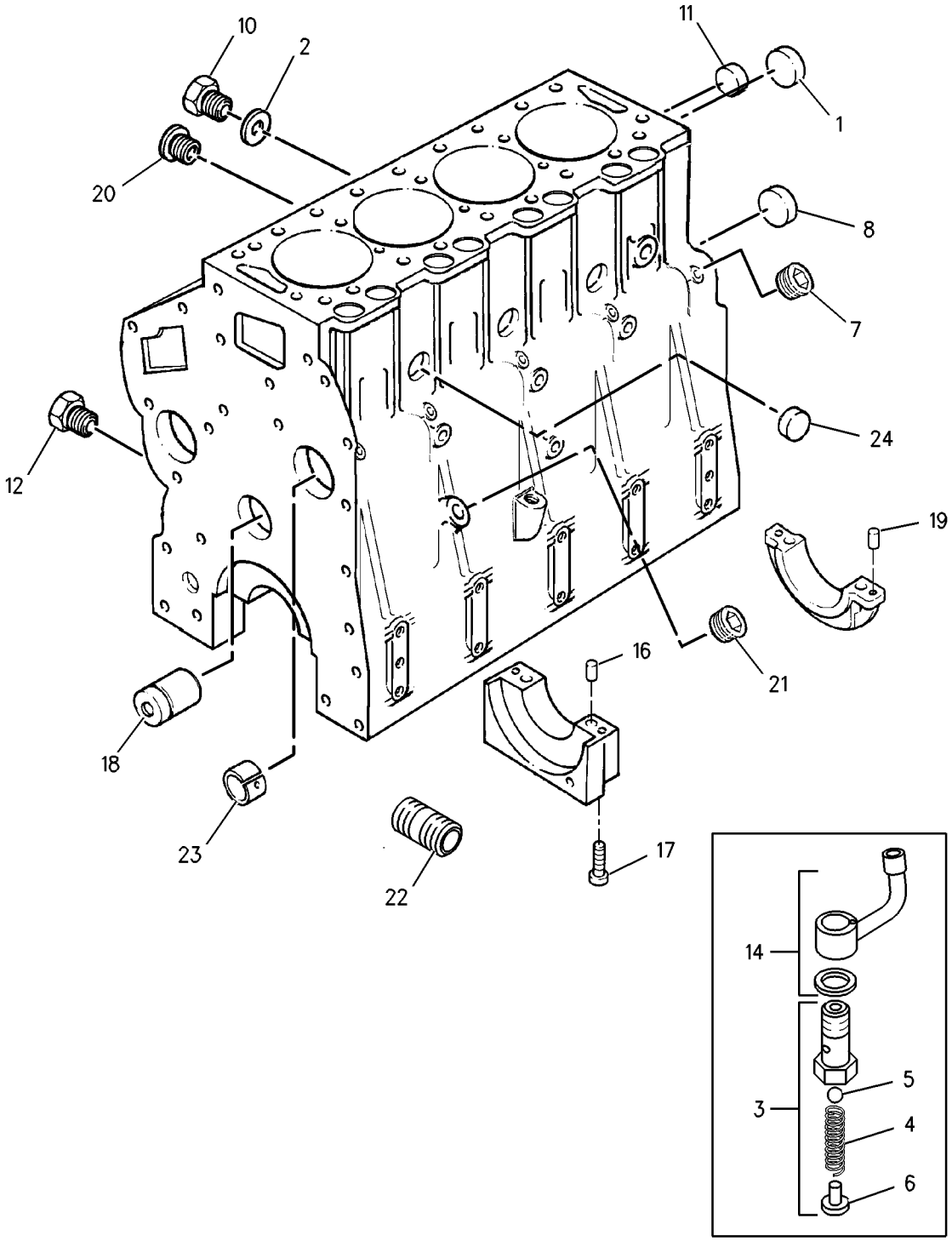

GRAPHIC #1 g00781323

164-7597 CYLINDER HEAD GP

S/N: 3NW12500-UP

PART OF 171-2803 CYLINDER HEAD GP

SMCS-1100, 1101, 1103, 1104, 1105, 1108, 1109, 1115, 1117, 1121, 1124, 1125

i01469137

NOTE	REF NO	GRAPHIC REF	PART NUMBER	QTY	PART NAME 1 2 3 4 5 6 (PRODUCT LEVEL)	SEE PAGE
	1	1	**7W-2501**	1	PLUG	
	2	1	**152-9857**	4	VALVE-EXHAUST	
	3	1	**152-9858**	8	SPRING	
	4	1	**152-9859**	8	CAP	
	5	1	**152-9860**	16	COTTER	
	6	1	**188-8633**	8	GUIDE-VALVE	
	7	1	**192-6335**	8	SEAL-GUIDE	
	8	1	**188-8636**	4	INSERT-EXHAUST	
	9	1	**188-8637**	4	INSERT-INLET	
	10	1	**188-9044**	4	VALVE-INLET	
	11	1	**2B-0858**	4	PLUG-PIPE	
	12	1	**9Y-5015**	2	PLUG-FREEZE	

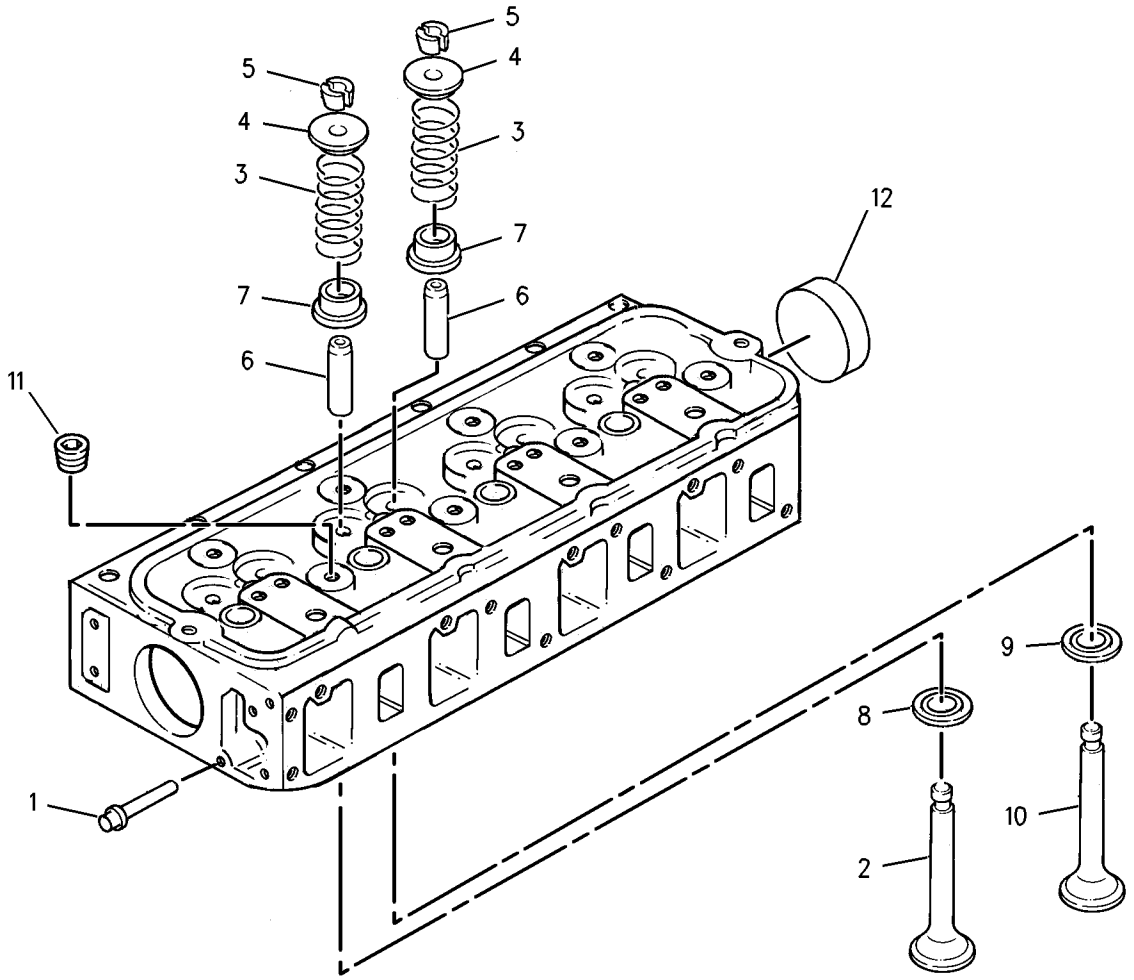

GRAPHIC #1

g00686609

BASIC ENGINE

171-2803 CYLINDER HEAD GP

S/N: 3NW12500-UP

PART OF 147-1233 ENGINE AR-PRIMARY

SMCS-1100, 1101, 1103, 1104, 1105, 1108, 1109, 1115, 1117, 1121, 1124, 1125

i01330104

NOTE	REF NO	GRAPHIC REF	PART NUMBER	QTY	PART NAME 1 2 3 4 5 6 (PRODUCT LEVEL)	SEE PAGE
Y	1	1	**164-7597**	1	CYLINDER HEAD GP	24
	2	1	**152-9864**	1	GASKET-CYLINDER HEAD	
	3	1	**152-9863**	4	BOLT	
	4	1	**152-9862**	14	BOLT	

Y-SEPARATE ILLUSTRATION

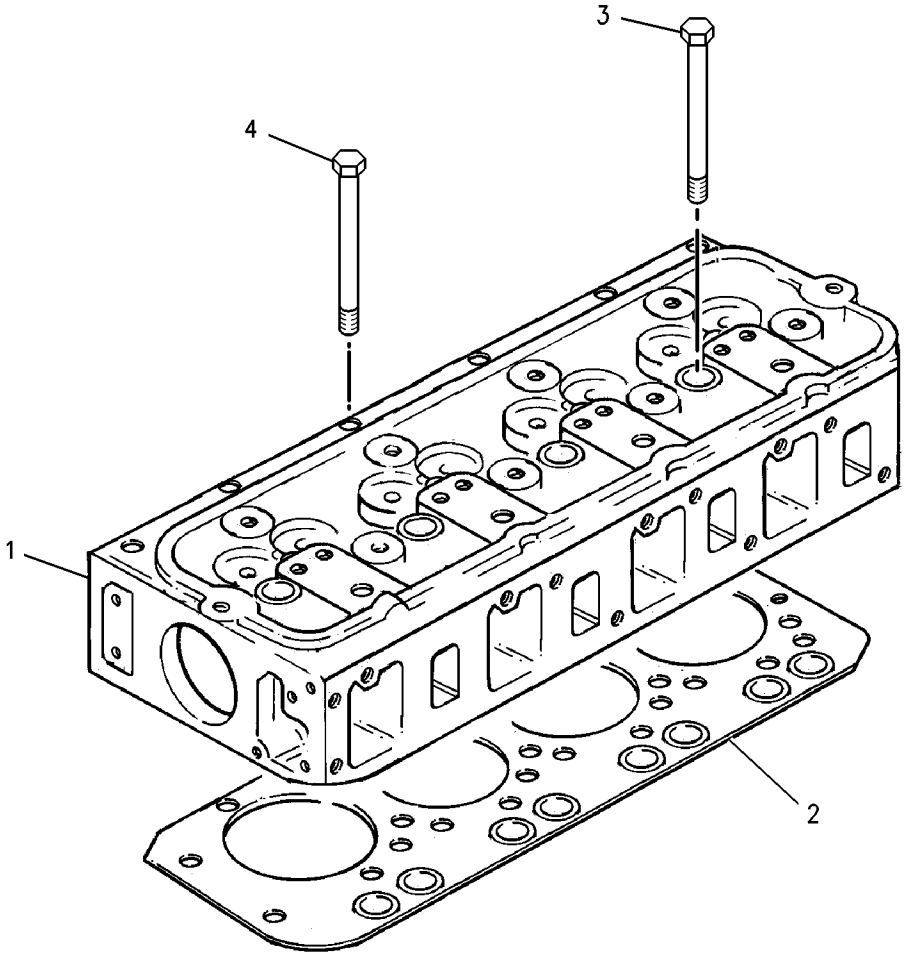

GRAPHIC #1

g00705000

172-6704 CYLINDER HEAD GP

S/N: 3NW12500-UP

PART OF 172-6705 CYLINDER HEAD GP

SMCS-1100, 1101, 1103, 1104, 1105, 1108, 1109, 1115, 1117, 1121, 1124, 1125

i01381138

NOTE	REF NO	GRAPHIC REF	PART NUMBER	QTY	PART NAME 1 2 3 4 5 6 (PRODUCT LEVEL)	SEE PAGE
	1	1	**7W-2501**	1	PLUG	
	2	1	**152-9857**	4	VALVE-EXHAUST	
	3	1	**152-9858**	8	SPRING	
	4	1	**152-9859**	8	CAP	
	5	1	**152-9860**	16	COTTER	
	6	1	**188-8633**	8	GUIDE-EXHAUST VALVE	
	7	1	**192-6335**	8	SEAL-GUIDE	
	8	1	**188-8636**	4	INSERT-EXHAUST	
	9	1	**188-8637**	4	INSERT-INLET	
	10	1	**188-8640**	4	VALVE-INLET	
	11	1	**2B-0858**	4	PLUG-PIPE (1/2-14 NPTF)	
	12	1	**9Y-5015**	2	PLUG-FREEZE	

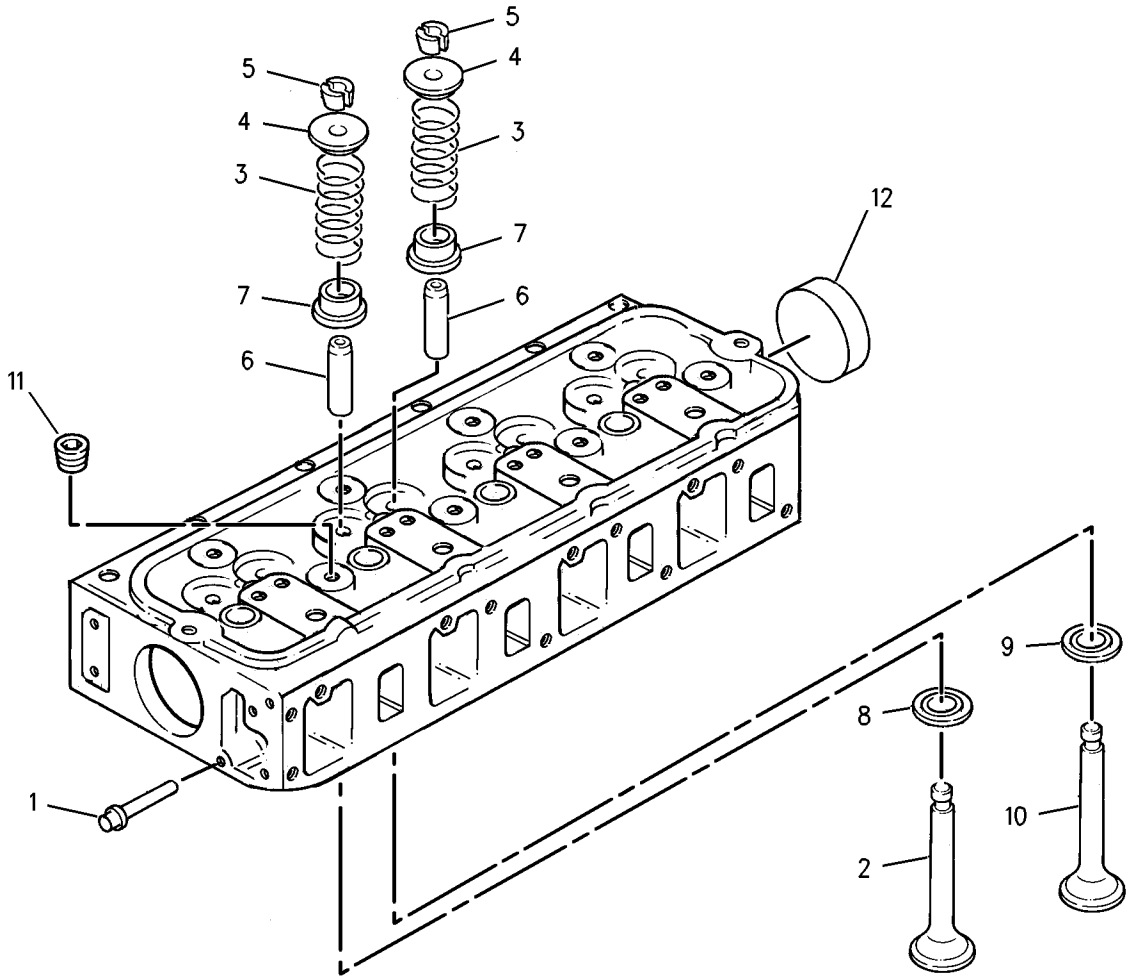

GRAPHIC #1

g00687678

172-6705 CYLINDER HEAD GP

S/N: 3NW12500-UP

PART OF 147-1234 ENGINE AR-PRIMARY

SMCS-1100, 1101, 1103, 1104, 1105, 1108, 1109, 1115, 1117, 1121, 1124, 1125

i01350234

NOTE	REF NO	GRAPHIC REF	PART NUMBER	QTY	PART NAME 1 2 3 4 5 6 (PRODUCT LEVEL)	SEE PAGE
Y	1	1	**172-6704**	1	CYLINDER HEAD GP	26
	2	1	**152-9862**	14	BOLT	
	3	1	**152-9863**	4	BOLT	
	4	1	**152-9864**	1	GASKET-CYLINDER HEAD	

Y-SEPARATE ILLUSTRATION

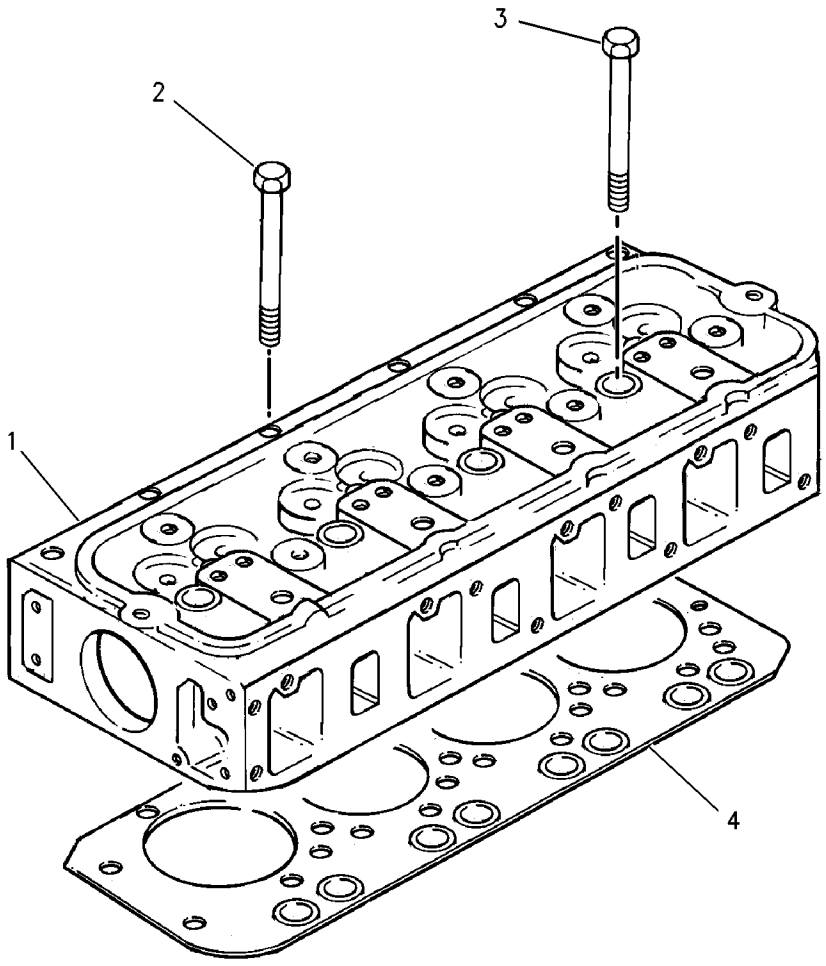

GRAPHIC #1

g00426758

152-4858 DRAIN GP-ENGINE OIL

S/N: CED1-UP; FDG1-UP; 4YZ4000-UP; 5SZ4000-UP
PART OF 142-9101, 183-7125, 191-9765, 192-2620 INSTALLATION AR-ENGINE
ALSO AN ATTACHMENT

SMCS-1302 **i01456120**

NOTE	REF NO	GRAPHIC REF	PART NUMBER	QTY	PART NAME 1 2 3 4 5 6 (PRODUCT LEVEL)	SEE PAGE
	1	1	**5D-1026**	1	CLAMP-HOSE	
	2	1	**5P-3422**	1	TEE-PIPE	
	3	1	**6N-2944**	1	PLUG	
	4	1	**8C-3445**	1	CAP-DUST	
	5	1	**159-8336**	1	VALVE-SAMPLING	
BE	6	1	**5P-1517**		HOSE (42CM)	

B-USE AS REQUIRED
E-ORDER BY THE CENTIMETER

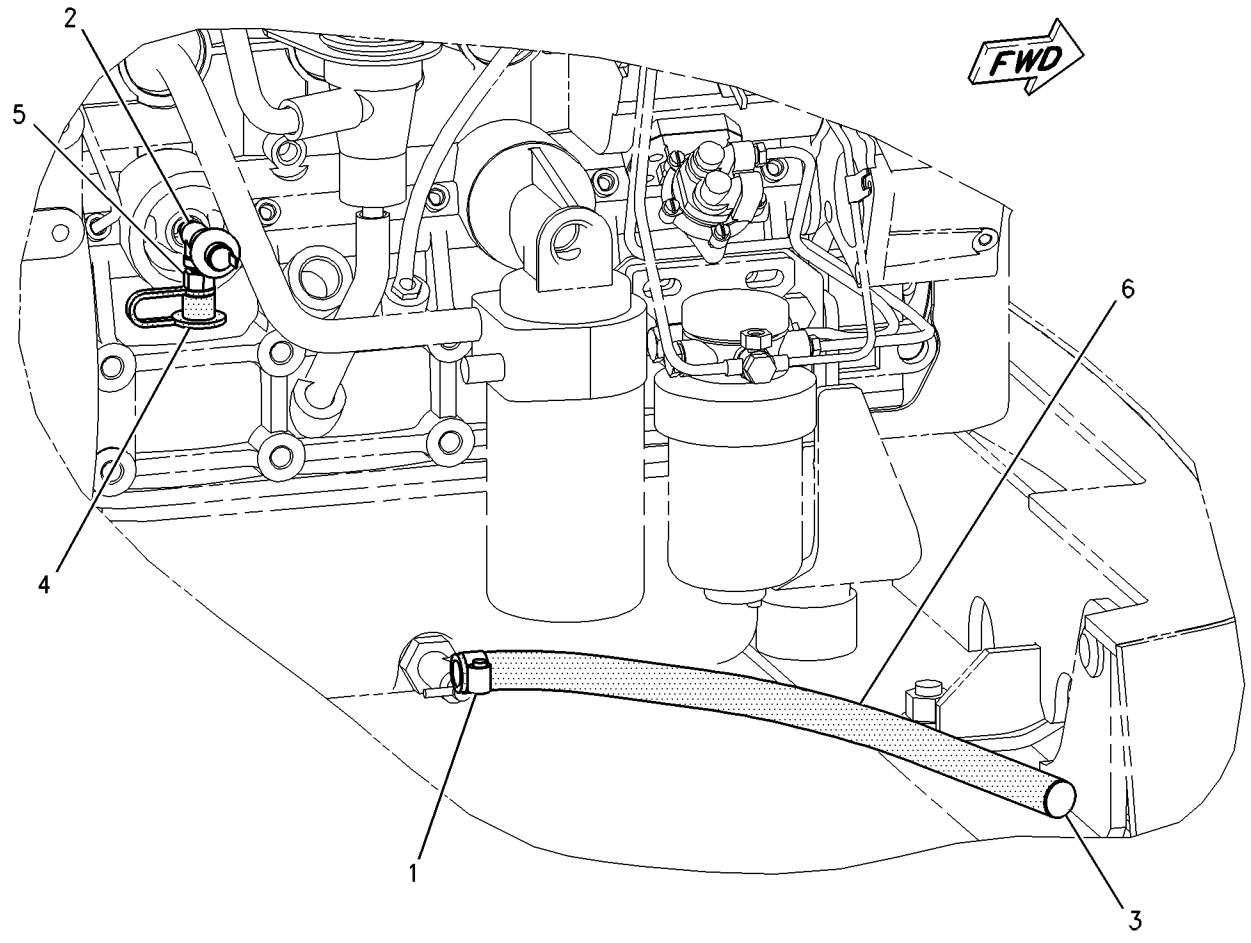

GRAPHIC #1 g00761853

BASIC ENGINE

166-3759 FASTENER GP-ENGINE

S/N: 3NW12500-UP

PART OF 147-1233, 147-1234 ENGINE AR-PRIMARY

SMCS-1000 **i01117543**

NOTE	REF NO	GRAPHIC REF	PART NUMBER	QTY	PART NAME 1 2 3 4 5 6 (PRODUCT LEVEL)	SEE PAGE
	1	1	**166-3760**	2	CLIP	
					1 CLIP MOUNTS TO TOP REAR OF INLET MANIFOLD, HORIZONTALLY FORWARD	
					(ON TOP OF BREATHER TUBE IF USED), SECURING THE WIRING HARNESS.	
					1 CLIP MOUNTS ON BOTTOM REARMOST OF THE INLET MANIFOLD BOLTS.(15% REARWARD FROM VERTICAL)	

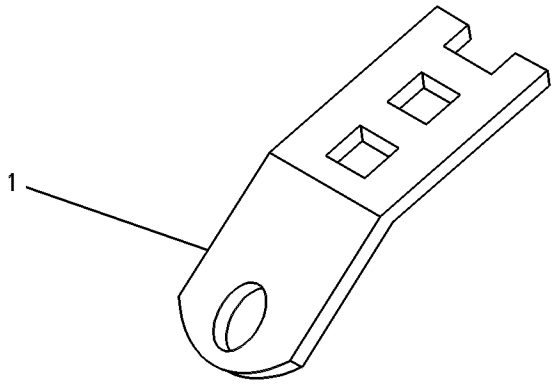

GRAPHIC #1 g00562121

215-3488 FASTENER GP-ENGINE

S/N: 3NW22524-UP

PART OF 147-1234 ENGINE AR-PRIMARY

SMCS-1000 **i01691284**

NOTE	REF NO	GRAPHIC REF	PART NUMBER	QTY	PART NAME 1 2 3 4 5 6 (PRODUCT LEVEL)	SEE PAGE
	1	1	**4P-7581**	2	CLIP	
					1 CLIP MOUNTS TO THE TOP REAR OF INLET MANIFOLD BOLT IN HORIZONTALLY FORWARD (ON TOP OF BREATHER TUBE CLIP IF USED)	
					POSITION, SECURING THE WIRING HARNESS	
					1 CLIP MOUNTS TO THE BOTTOM SECOND FROM THE REAR INLET MANIFOLD BOLT, POINTING DOWN FROM HORIZONTAL AT 45 DEGREES	
					TOWARD FRONT	
	2	1	**4P-8134**	2	CLIP	
					1 CLIP EACH IN FRONT 2 TOP INDUCTION MANIFOLD BOLTS, POINTING UPWARD 90 DEGREES FROM HORIZONTAL	

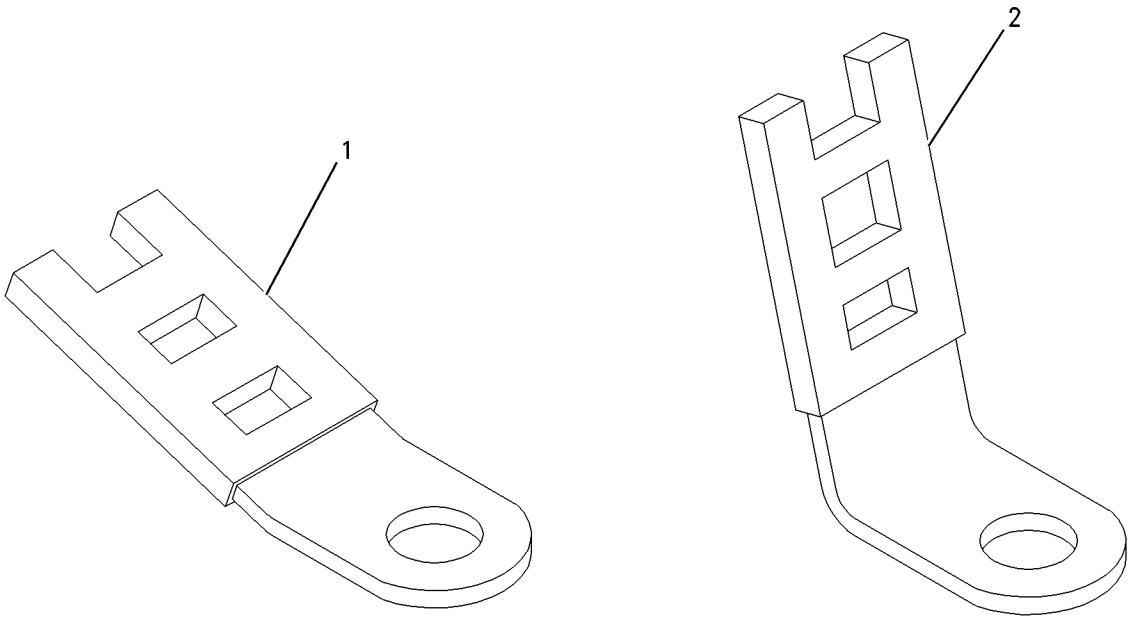

GRAPHIC #1 g00906816

153-0077 FLYWHEEL GP

S/N: 3NW12500-UP

PART OF 147-1233, 147-1234 ENGINE AR-PRIMARY

SMCS-1156, 1158 **i01465561**

NOTE	REF NO	GRAPHIC REF	PART NUMBER	QTY	PART NAME 1 2 3 4 5 6 (PRODUCT LEVEL)	SEE PAGE
	1	1	**153-0072**	1	FLYWHEEL AS	
	1A	1	**032-8139**	1	GEAR-STARTER (112 TEETH)	
	2	1	**153-0073**	8	BOLT	

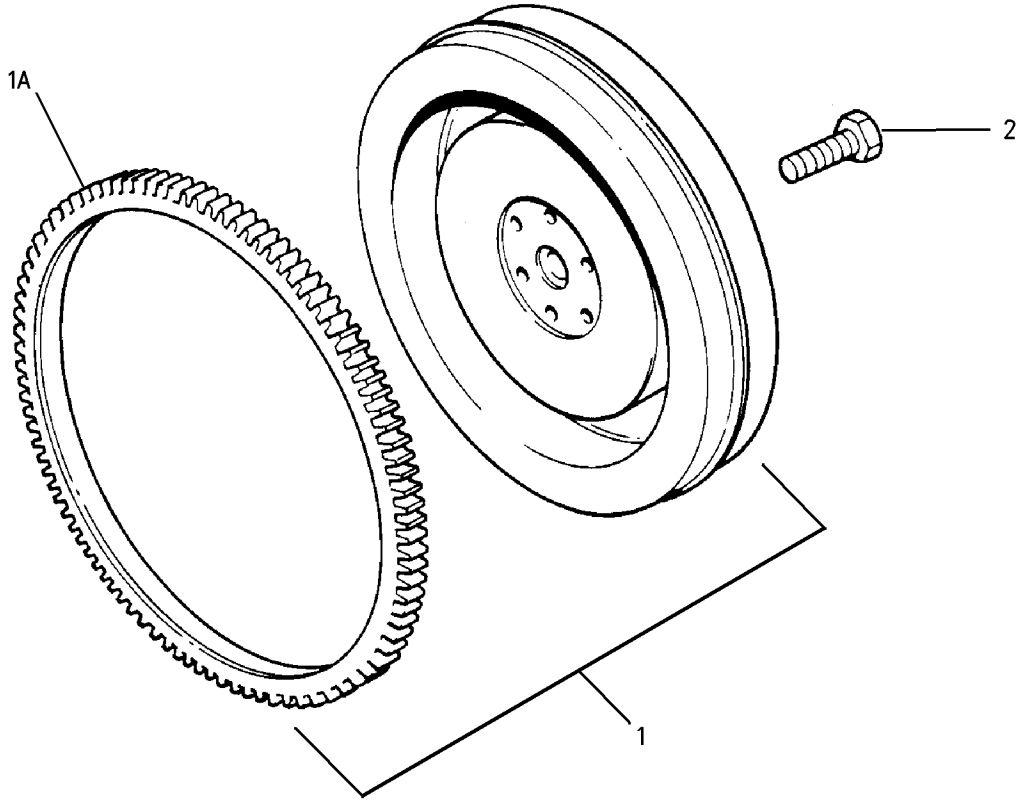

GRAPHIC #1 g00712172

BASIC ENGINE

153-1014 HOUSING GP-FLYWHEEL

S/N: 3NW12500-UP

PART OF 147-1233, 147-1234 ENGINE AR-PRIMARY

SMCS-1157 **i01465576**

NOTE	REF NO	GRAPHIC REF	PART NUMBER	QTY	PART NAME 1 2 3 4 5 6 (PRODUCT LEVEL)	SEE PAGE
	1	1	**6I-0423**	8	BOLT (M12X1.75X30MM)	
	2	1	**163-1627**	1	HOUSING-FLYWHEEL	
	3	1	**153-1013**	2	DOWEL	
	4	1	**6I-0631**	2	BOLT (M6X1.0X12MM)	
	5	1	**102-1957**	1	PLATE	

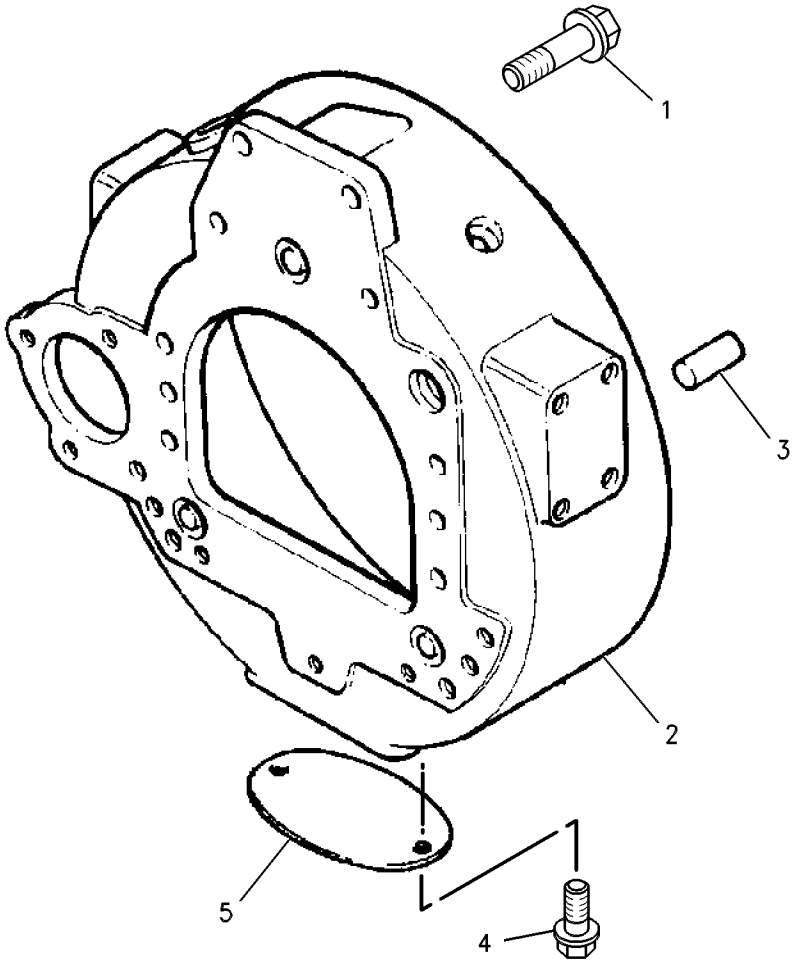

GRAPHIC #1 g00547979

MEMORANDA

BASIC ENGINE

171-2823 HOUSING GP-FRONT

S/N: 3NW12500-UP

PART OF 147-1233 ENGINE AR-PRIMARY

SMCS-1151, 1160, 1162, 1166, 3108 **i01465583**

NOTE	REF NO	GRAPHIC REF	PART NUMBER	QTY	PART NAME 1 2 3 4 5 6 (PRODUCT LEVEL)	SEE PAGE
	1	1	**195-3786**	1	PLATE	
	2	1	**6I-0217**	7	BOLT (M8X1.25X20MM)	
	3	1	**6I-0254**	1	BOLT (M8X1.25X30MM)	
	4	1	**6I-0291**	2	NUT (M8X1.25)	
	5	1	**6I-0512**	1	GASKET	
	6	1	**6I-0839**	5	BOLT (M8X1.25X70MM)	
	7	1	**6I-4037**	1	PLATE	
	8	1	**6I-4374**	1	BOLT	
	10	1	**101-3805**	1	BOLT (M8X1.25X90MM)	
	11	1	**112-2370**	2	STUD	
	12	1	**124-3815**	4	BOLT (M8X16X1.25MM)	
	13	1	**152-6730**	1	BOLT (M8X1.25X120MM)	
	14	1	**195-3709**	1	GASKET	
	15	1	**152-6738**	1	GASKET-HOUSING	
	16	1	**152-6739**	1	SEAL	
	17	1	**152-6743**	2	DOWEL	
	18	1	**195-3710**	1	HOUSING AS-FRONT	
	18A	1	**152-6740**	1	PLUG	
	18B	1	**152-6735**	1	SLEEVE	
	19	1	**101-3691**	2	PLUG	
F		1	**178-5019**	1	PLUG	
F		1	**7W-4724**	1	WASHER-SEAL	
F		1	**100-3751**	1	BOLT (M8X1.25X65MM)	

F-NOT SHOWN

171-2823 **HOUSING GP-FRONT** *(contd.)* **i01465583**

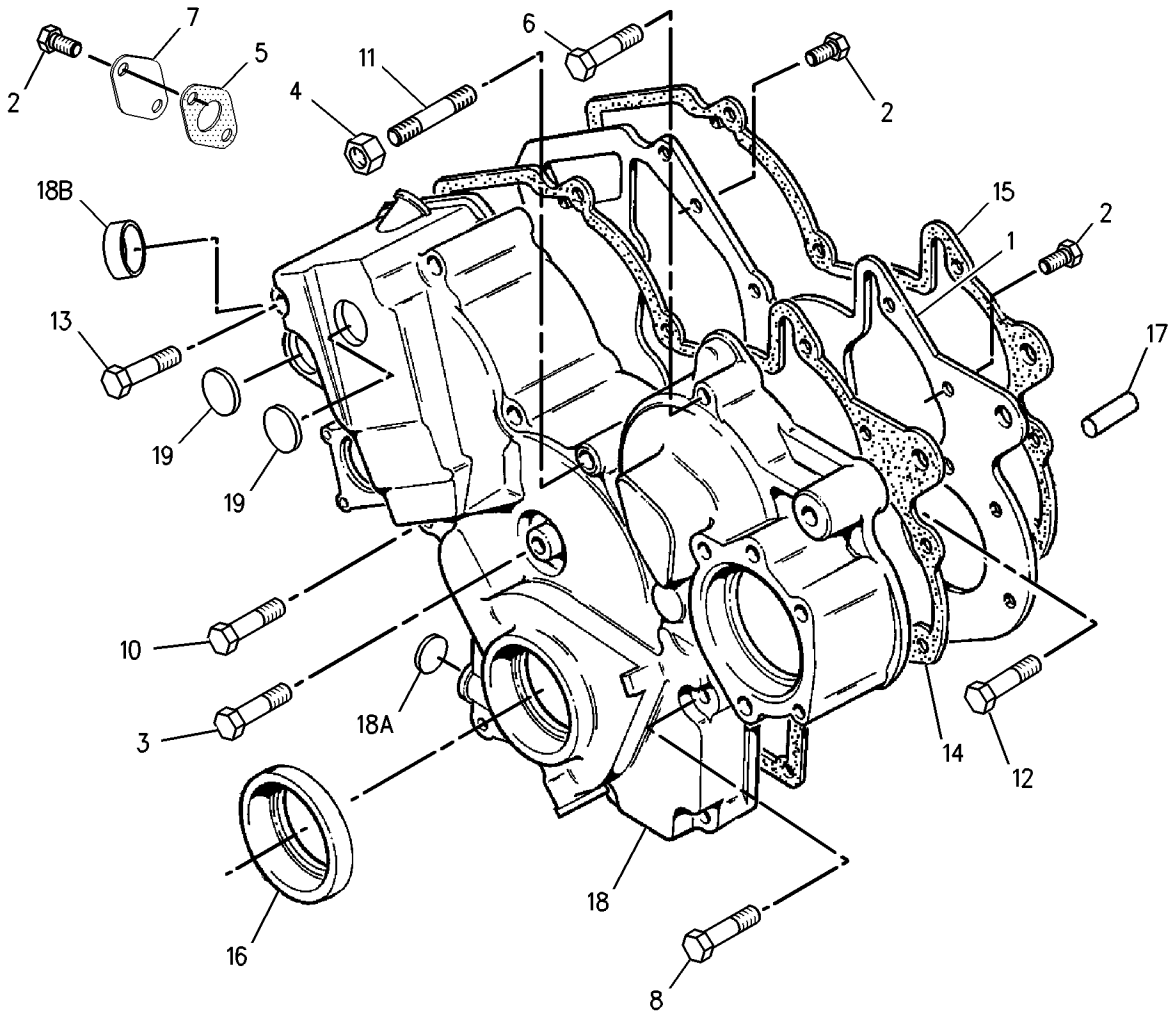

GRAPHIC #1 g00731987

BASIC ENGINE

172-6739 HOUSING GP-FRONT

S/N: 3NW12500-UP

PART OF 147-1234 ENGINE AR-PRIMARY

SMCS-1151, 1160, 1162, 1166, 3108 **i01375628**

NOTE	REF NO	GRAPHIC REF	PART NUMBER	QTY	PART NAME 1 2 3 4 5 6 (PRODUCT LEVEL)	SEE PAGE
	1	1	**195-3786**	1	PLATE	
	2	1	**6I-0217**	7	BOLT (M8X1.25X20MM)	
	3	1	**6I-0254**	1	BOLT (M8X1.25X30MM)	
	4	1	**6I-0291**	2	NUT (M8X1.25)	
	5	1	**6I-0512**	1	GASKET	
	6	1	**6I-0839**	3	BOLT (M8X1.25X70MM)	
	7	1	**6I-4037**	1	PLATE	
	8	1	**6I-4374**	1	BOLT	
	10	1	**100-3753**	2	STUD	
	11	1	**101-3805**	1	BOLT (M8X1.25X90MM)	
	12	1	**124-3815**	4	BOLT (M6X1.0X12MM)	
	13	1	**152-6730**	1	BOLT	
	14	1	**195-3709**	1	GASKET	
	15	1	**152-6738**	1	GASKET-HOUSING	
	16	1	**152-6739**	1	SEAL	
	18	1	**152-6743**	2	DOWEL	
	19	1	**195-3710**	1	HOUSING AS-FRONT	
	20	1	**152-6740**	1	PLUG	
	21	1	**152-6735**	1	SLEEVE	
	22	1	**101-3691**	2	PLUG	
F		1	**7W-4724**	1	WASHER-SEAL	
F		1	**178-5019**	1	PLUG	
F		1	**100-3751**	1	BOLT (M8X1.25X65MM)	

F-NOT SHOWN

172-6739 **HOUSING GP-FRONT** *(contd.)* **i01375628**

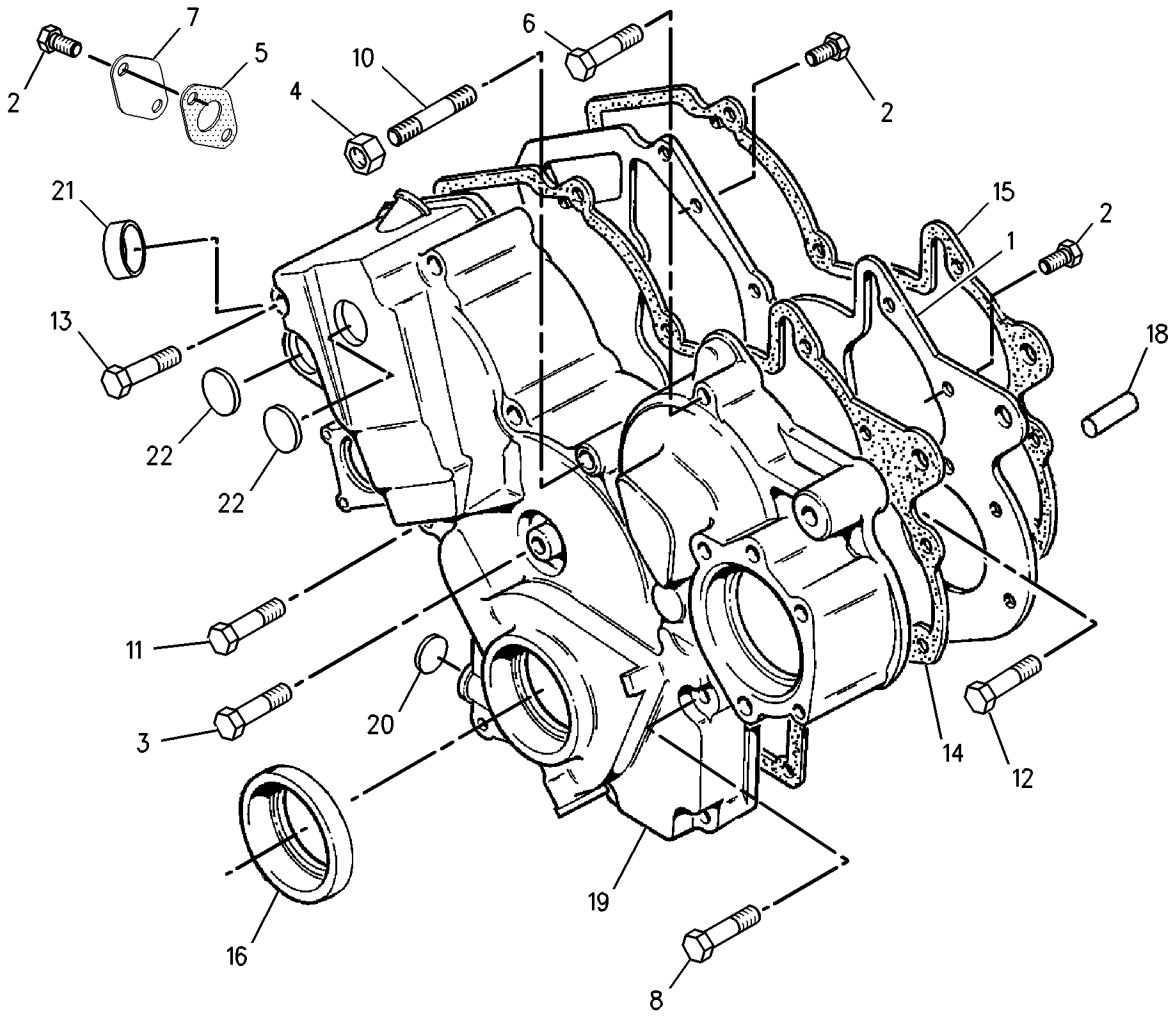

GRAPHIC #1 g00731976

153-0561 LIFTING GP-ENGINE

S/N: 3NW12500-UP

PART OF 147-1233, 147-1234 ENGINE AR-PRIMARY

SMCS-1122 **i01465591**

NOTE	REF NO	GRAPHIC REF	PART NUMBER	QTY	PART NAME 1 2 3 4 5 6 (PRODUCT LEVEL)	SEE PAGE
	1	1	**100-4458**	4	BOLT (M8X1.25X14MM)	
	2	1	**153-0563**	2	PLATE	

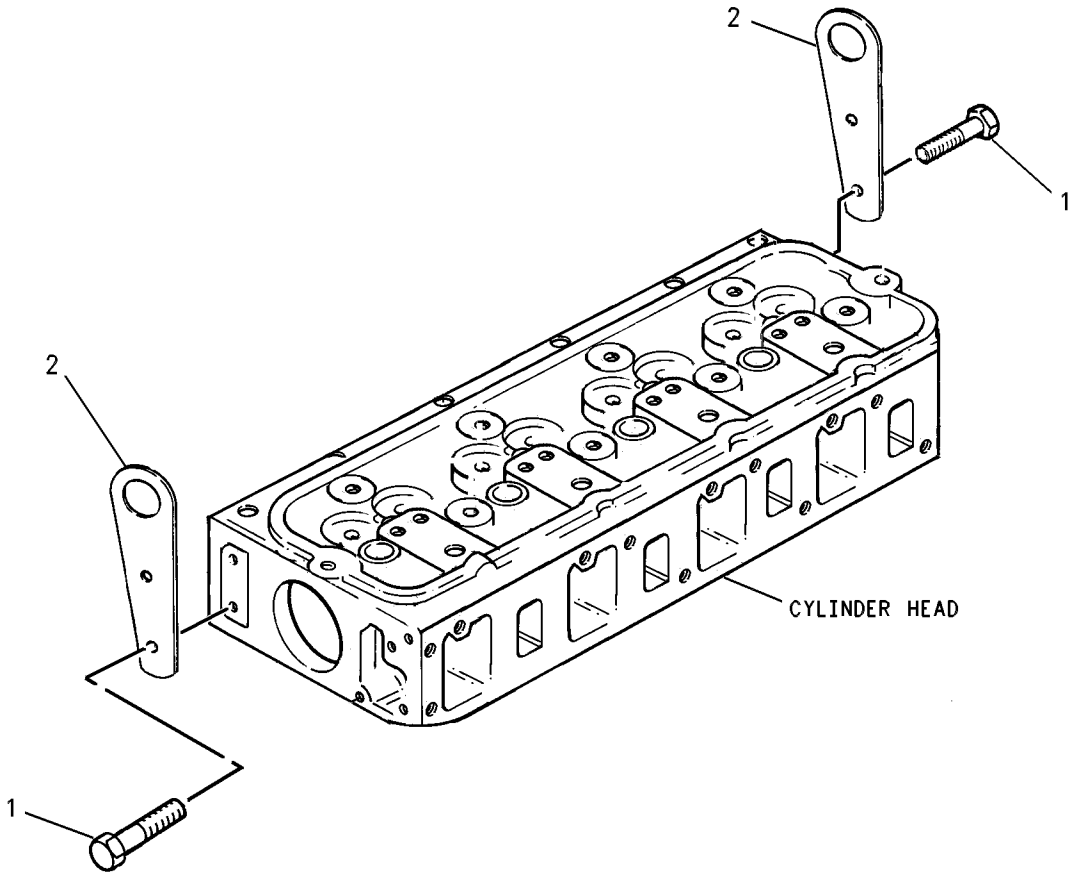

GRAPHIC #1 g00420478

153-1176 MOUNTING GP-ALTERNATOR

S/N: 3NW12500-UP

PART OF 147-1233, 147-1234 ENGINE AR-PRIMARY

SMCS-1405 **i01465592**

NOTE	REF NO	GRAPHIC REF	PART NUMBER	QTY	PART NAME 1 2 3 4 5 6 (PRODUCT LEVEL)	SEE PAGE
	1	1	**6I-0454**	1	BOLT (M10X1.5X70MM)	

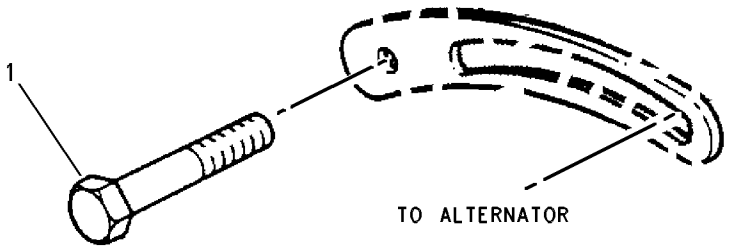

GRAPHIC #1 g00560981

142-8850 MOUNTING GP-ENGINE

S/N: CED1-UP; FDG1-UP; 4YZ4000-UP; 5SZ4000-UP
PART OF 142-9101, 183-7125, 191-9765, 192-2620 INSTALLATION AR-ENGINE
ALSO AN ATTACHMENT

SMCS-1152, 1153, 1154 **i01670588**

NOTE	REF NO	GRAPHIC REF	PART NUMBER	QTY	PART NAME 1 2 3 4 5 6 (PRODUCT LEVEL)	SEE PAGE
	1	1	**9W-6226**	1	SLEEVE	
	2	1	**9W-8096**	2	MOUNT	
	3	1	**142-8853**	1	BRACKET AS	
	4	1	**142-8854**	2	BRACKET AS	
	5	1	**152-5878**	2	MOUNT AS	
	6	1	**165-7095**	2	WASHER	
M	7	1	**129-3180**	1	LOCKNUT (M12X1.75 THD)	
	8	1	**5P-1076**	2	WASHER-HARD (13.5X30X4MM THK)	
	9	1	**8T-4122**	2	WASHER-HARD (17X32X3.5MM THK)	
M	10	1	**8T-4132**	2	NUT (M16X2 THD)	
M	11	1	**8T-4139**	4	BOLT (M12X1.75X30MM)	
M	12	1	**7X-2556**	2	BOLT (M16X2X100MM)	
M	13	1	**8T-4192**	8	BOLT (M12X1.75X25MM)	
	14	1	**8T-4223**	12	WASHER-HARD (13.5X25.5X3MM THK)	
M	15	1	**8T-5041**	1	BOLT (M12X1.75X120MM)	

M-METRIC PART

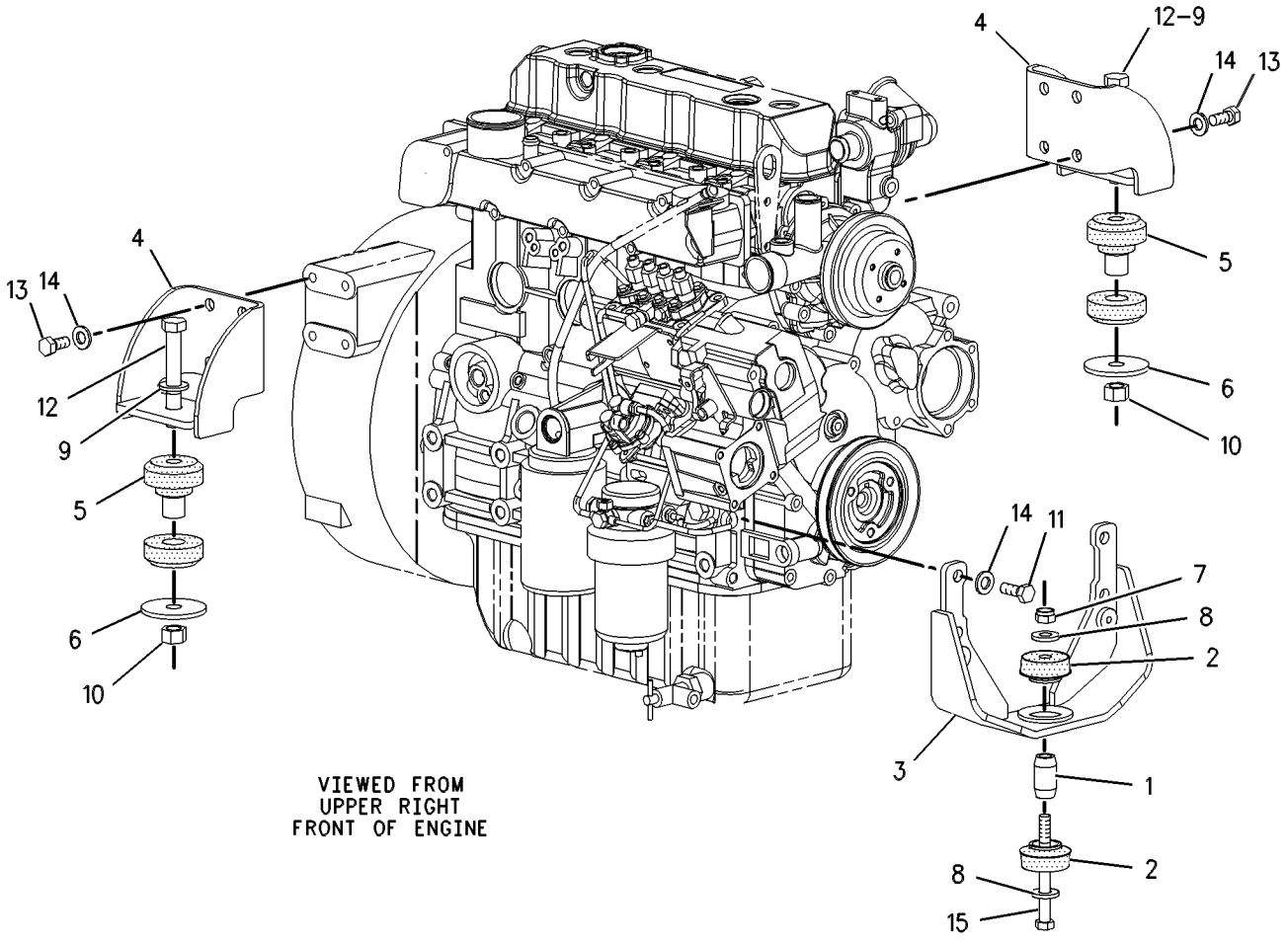

GRAPHIC #1 g00558844

164-7613 MOUNTING GP-STARTING MOTOR

S/N: 3NW12500-UP

PART OF 147-1233, 147-1234 ENGINE AR-PRIMARY

SMCS-1453 **i01250594**

NOTE	REF NO	GRAPHIC REF	PART NUMBER	QTY	PART NAME 1 2 3 4 5 6 (PRODUCT LEVEL)	SEE PAGE
	1	1	**6I-0364**	3	STUD	

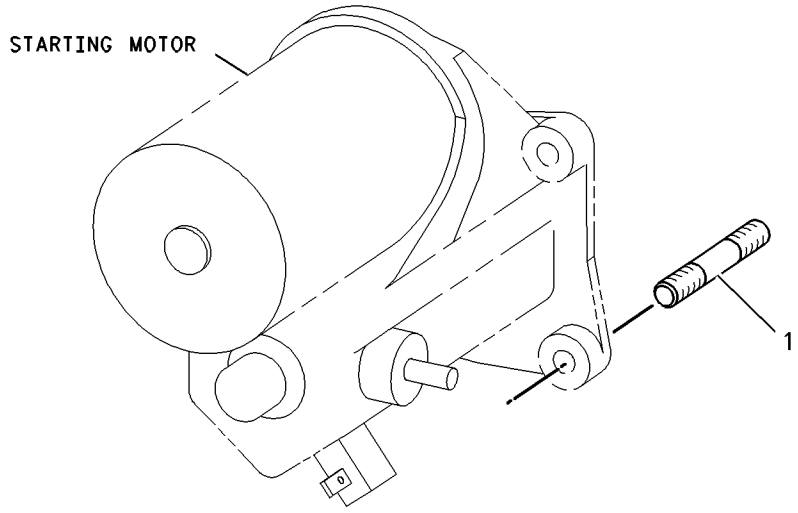

GRAPHIC #1 g00666136

BASIC ENGINE

202-0950 PAN GP-OIL

S/N: 3NW12500-UP

PART OF 147-1234 ENGINE AR-PRIMARY

SMCS-1302 **i01469791**

NOTE	REF NO	GRAPHIC REF	PART NUMBER	QTY	PART NAME 1 2 3 4 5 6 (PRODUCT LEVEL)	SEE PAGE
	1	1	**6I-0217**	1	BOLT (M8X1.25X20MM)	
	2	1	**6I-0289**	1	PLUG	
	3	1	**6I-1064**	1	SEAL-O-RING	
	4	1	**6I-1497**	1	SEAL	
	5	1	**7W-2632**	1	WASHER (1.6MM THK)	
	6	1	**101-3771**	1	BOLT	
	7	1	**114-4363**	1	BOLT (M8X1.25X12MM)	
	8	1	**153-0083**	1	CLIP	
	9	1	**153-0084**	1	TUBE AS	
	10	1	**170-7611**	1	TUBE AS-GAUGE	
	11	1	**6I-4079**	1	NUT	
	12	1	**170-7612**	1	GAUGE-OIL LEVEL	
	13	1	**170-7614**	1	VALVE-DRAIN	
	14	1	**170-7615**	1	SEAL-O-RING	
	15	1	**202-0919**	1	PAN-OIL	
	16	1	**202-0920**	1	GASKET	
	17	1	**202-0921**	24	BOLT	

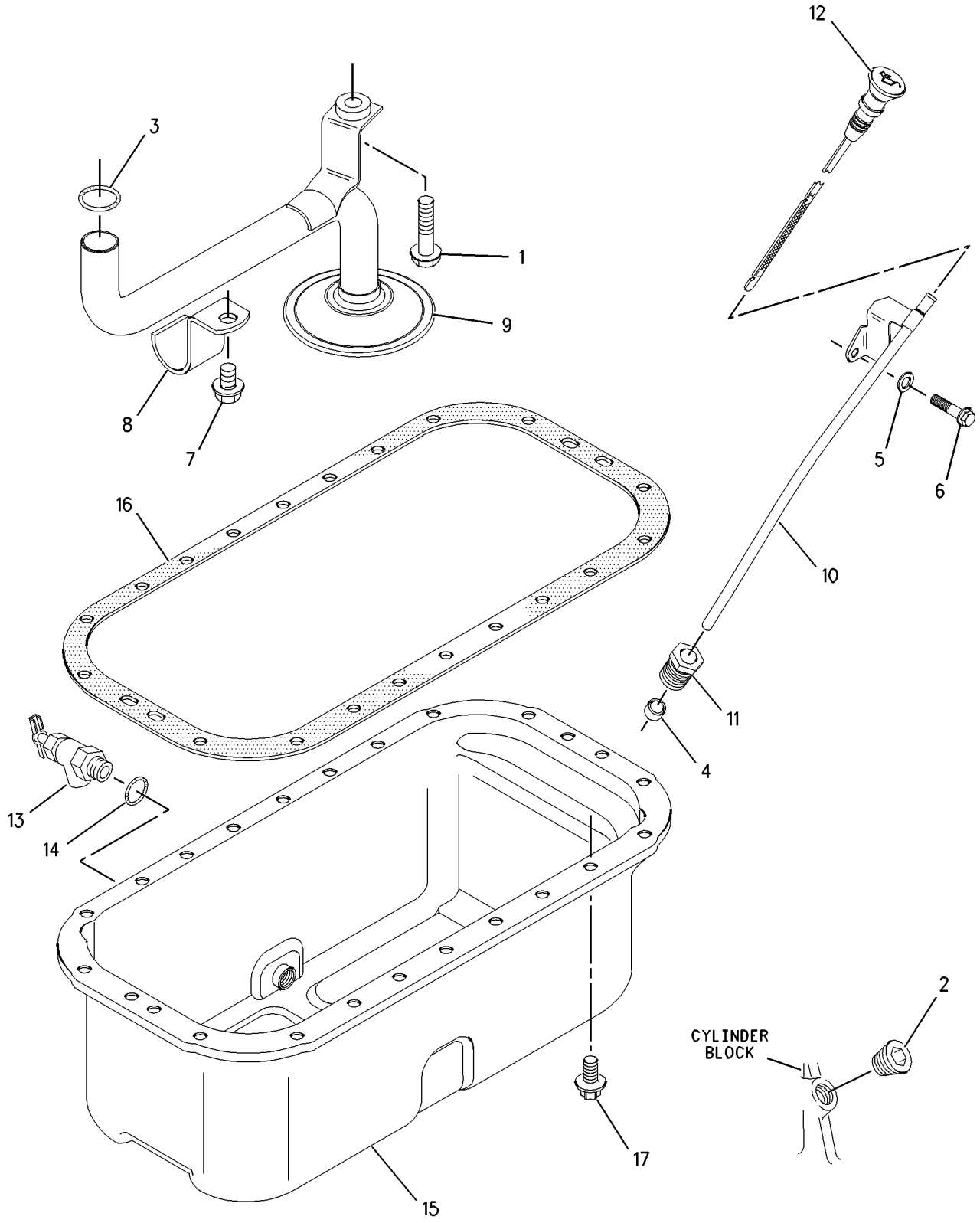

GRAPHIC #1 g00770673

BASIC ENGINE

202-3185 PAN GP-OIL

S/N: 3NW12500-UP

PART OF 147-1233 ENGINE AR-PRIMARY

SMCS-1302 **i01472754**

NOTE	REF NO	GRAPHIC REF	PART NUMBER	QTY	PART NAME 1 2 3 4 5 6 (PRODUCT LEVEL)	SEE PAGE
	1	1	**6I-0217**	1	BOLT (M8X1.25X20MM)	
	2	1	**6I-0289**	1	PLUG	
	3	1	**6I-1064**	1	SEAL-O-RING	
	4	1	**6I-1497**	1	SEAL	
	5	1	**7W-2632**	1	WASHER (1.6MM THK)	
	6	1	**101-3771**	1	BOLT	
	7	1	**114-4363**	1	BOLT (M8X1.25X12MM)	
	8	1	**153-0083**	1	CLIP	
	9	1	**153-0084**	1	TUBE AS	
	10	1	**170-7611**	1	TUBE AS-GAUGE	
	11	1	**6I-4079**	1	NUT	
	12	1	**170-7612**	1	GAUGE-OIL LEVEL	
	13	1	**170-7614**	1	VALVE-DRAIN	
	14	1	**170-7615**	1	SEAL-O-RING	
	15	1	**202-0919**	1	PAN-OIL	
	16	1	**202-0920**	1	GASKET	
	17	1	**202-0921**	24	BOLT	

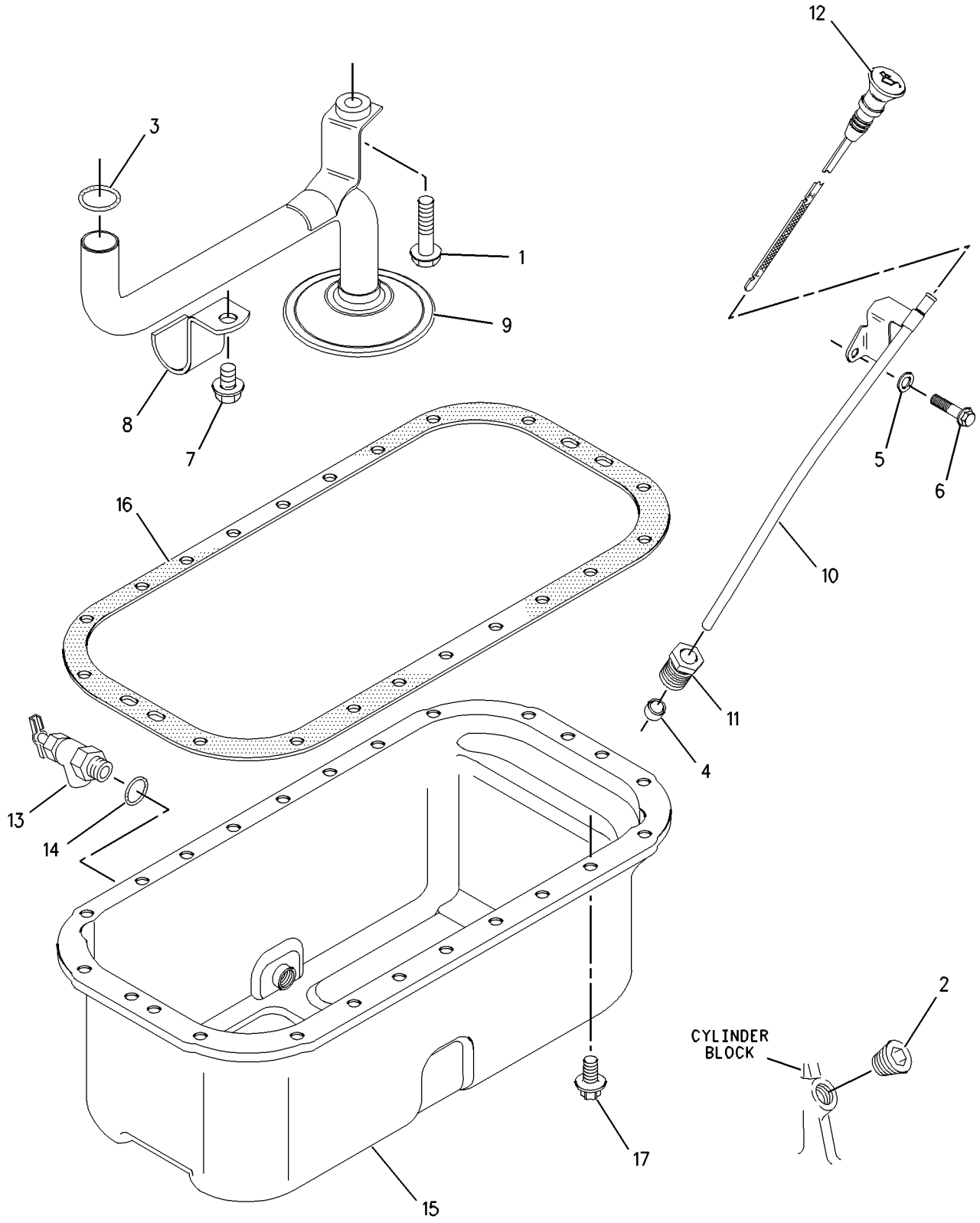

GRAPHIC #1 g00770673

137-6391 PISTON & ROD GP

S/N: 3NW12500-UP
17.5:1 RATIO
PART OF 147-1233 ENGINE AR-PRIMARY

SMCS-1225 **i01574585**

NOTE	REF NO	GRAPHIC REF	PART NUMBER	QTY	PART NAME 1 2 3 4 5 6 (PRODUCT LEVEL)	SEE PAGE
	1	1	**190-8377**	1	PISTON AS	
	2	1	**153-1029**	4	KIT-PISTON RING	
J	3	1	**201-9884**	4	ROD AS-CONNECTING (B)	
					—OR—	
J		1	**201-9885**	4	ROD AS-CONNECTING (D)	
					—OR—	
J		1	**201-9886**	4	ROD AS-CONNECTING (F)	
					(EACH ROD AS INCLUDES)	
	4	1	**201-9887**	2	BOLT	
	5	1	**188-8543**	1	BUSHING	

J-ENSURE THAT CORRECT ROD LENGTH IS FITTED

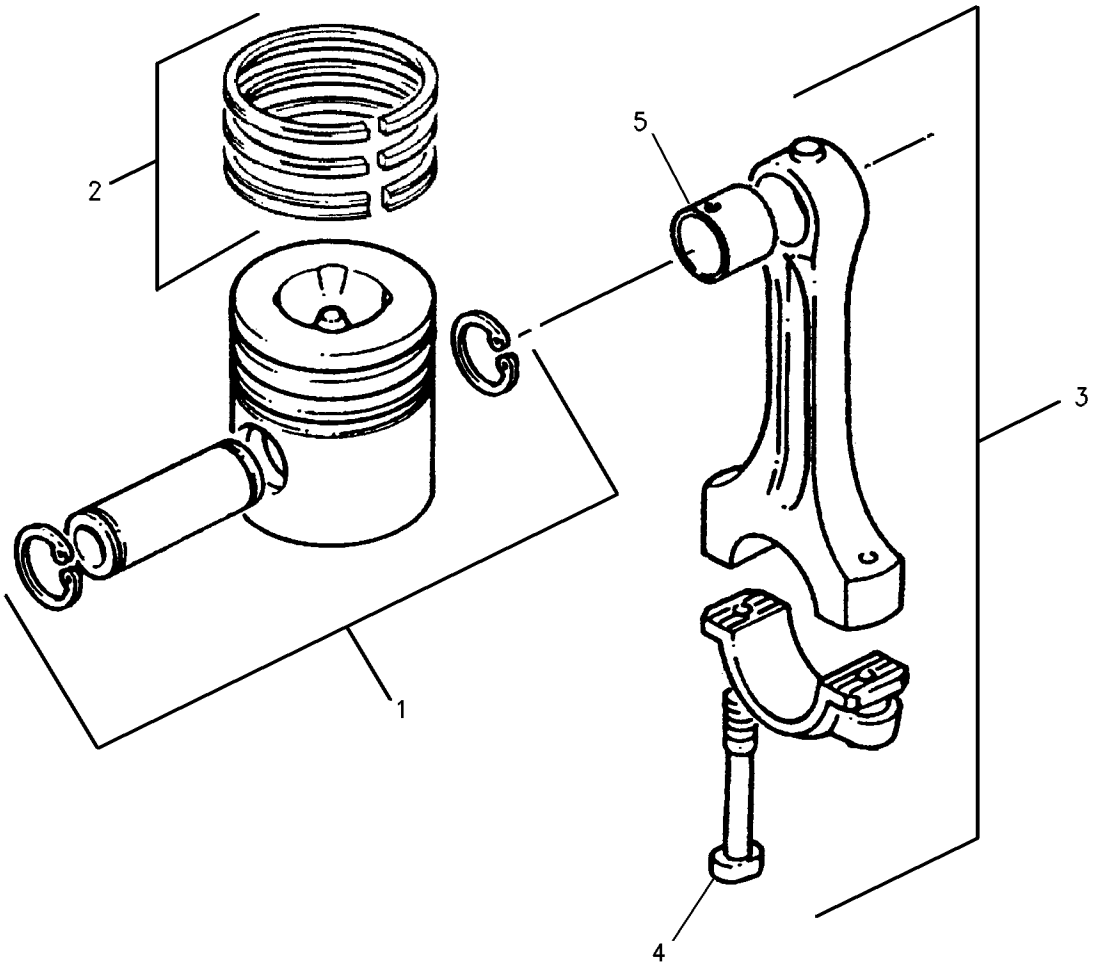

GRAPHIC #1 g00765077

BASIC ENGINE

173-1253 PISTON & ROD GP

S/N: 3NW12500-14283

PART OF 147-1234 ENGINE AR-PRIMARY

SMCS-1225 **i01500449**

NOTE	REF NO	GRAPHIC REF	PART NUMBER	QTY	PART NAME 1 2 3 4 5 6 (PRODUCT LEVEL)	SEE PAGE
J	1	1	**164-7590**	4	ROD AS (B)	
					–OR–	
J		1	**164-7591**	4	ROD AS (D)	
					–OR–	
J		1	**164-7592**	4	ROD AS (F)	
					(EACH ROD AS INCLUDES)	
	2	1	**188-8541**	2	NUT	
	3	1	**188-8543**	1	BUSHING	
	4	1	**153-1029**	4	KIT-PISTON RING	
	5	1	**173-1263**	4	PISTON AS	
					(EACH INCLUDES)	
	6	1	**188-8544**	2	CLIP	

J-ENSURE CORRECT ROD HEIGHT IS FITTED

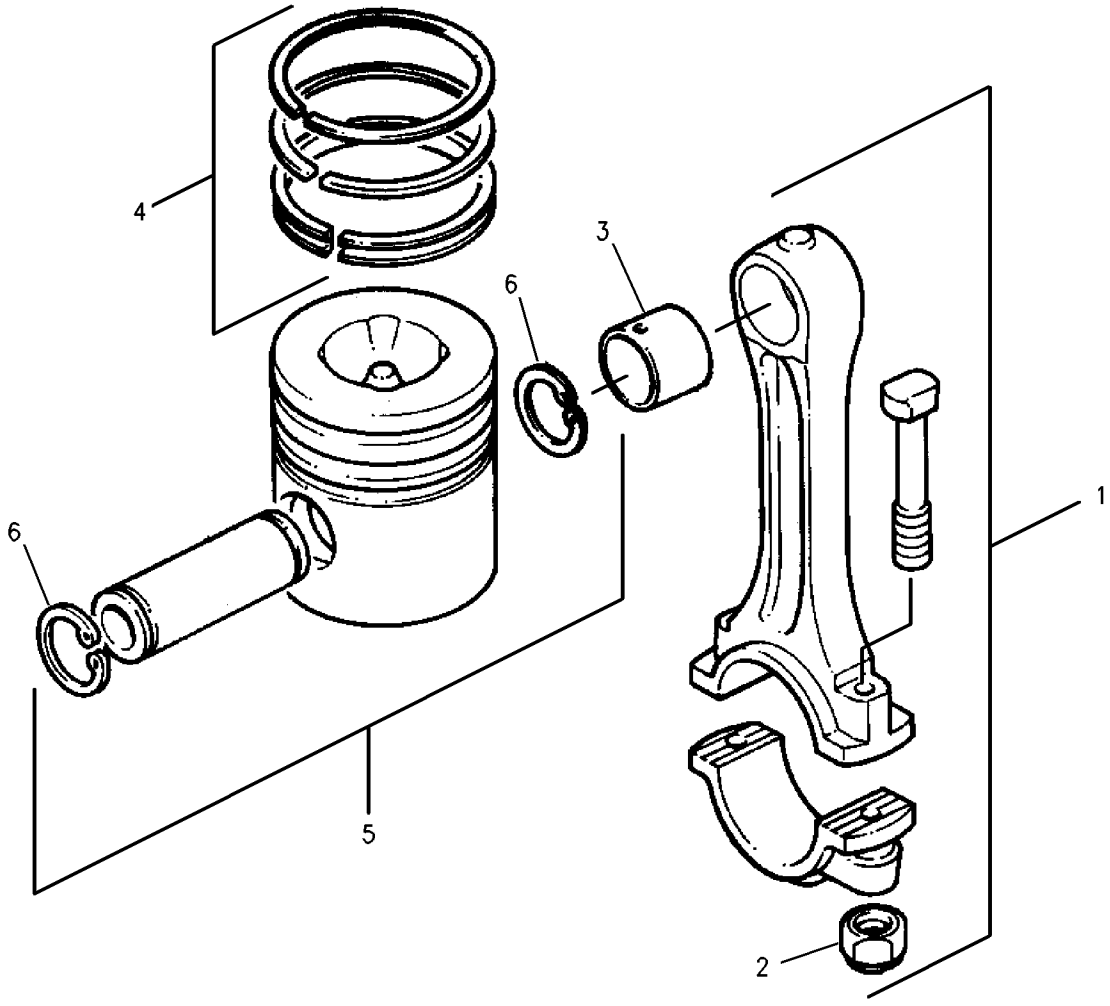

GRAPHIC #1 g00712845

173-1253 PISTON & ROD GP

S/N: 3NW14284-UP

PART OF 147-1234 ENGINE AR-PRIMARY

SMCS-1225 **i01790878**

NOTE	REF NO	GRAPHIC REF	PART NUMBER	QTY	PART NAME 1 2 3 4 5 6 (PRODUCT LEVEL)	SEE PAGE
	1	1	**173-1263**	4	PISTON AS	
					(EACH INCLUDES)	
	1A	1	**188-8544**	2	CLIP	
	2	1	**153-1029**	4	KIT-PISTON RING	
J	3	1	**201-9884**	4	ROD AS-CONNECTING (B)	
					—OR—	
J		1	**201-9885**	4	ROD AS-CONNECTING (D)	
					—OR—	
J		1	**201-9886**	4	ROD AS-CONNECTING (F)	
					(EACH ROD AS INCLUDES)	
	4	1	**201-9887**	2	BOLT	
	5	1	**188-8543**	1	BUSHING	

J-ENSURE CORRECT ROD HEIGHT IS FITTED

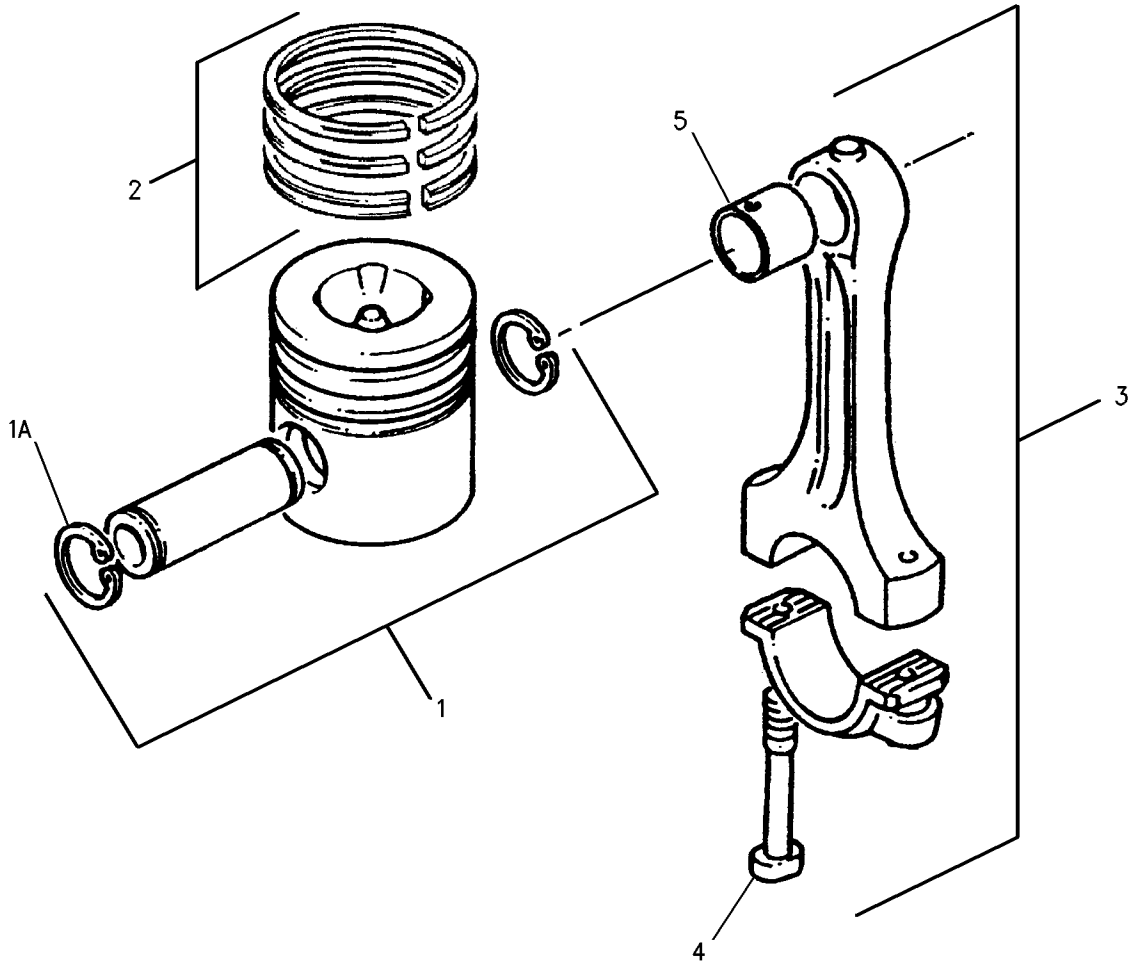

GRAPHIC #1 g00818200

BASIC ENGINE

153-0693 PLUG GP-CYLINDER BLOCK

S/N: 3NW12500-UP

PART OF 147-1233, 147-1234 ENGINE AR-PRIMARY

SMCS-1201 **i01471923**

NOTE	REF NO	GRAPHIC REF	PART NUMBER	QTY	PART NAME 1 2 3 4 5 6 (PRODUCT LEVEL)	SEE PAGE
	1	1	**069-1124**	1	PLUG	

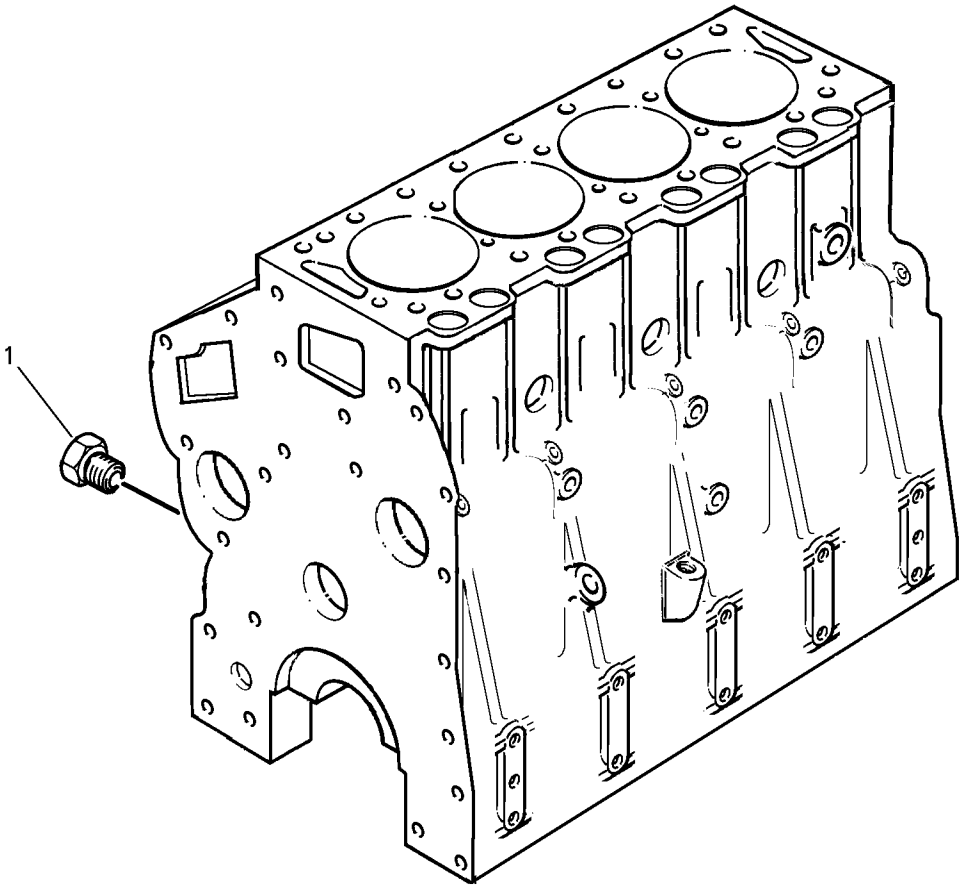

GRAPHIC #1 g00557449

BASIC ENGINE

153-0319 PULLEY GP-CRANKSHAFT

S/N: 3NW12500-UP

PART OF 147-1233, 147-1234 ENGINE AR-PRIMARY

SMCS-1205 **i01349647**

NOTE	REF NO	GRAPHIC REF	PART NUMBER	QTY	PART NAME 1 2 3 4 5 6 (PRODUCT LEVEL)	SEE PAGE
	1	1	**1B-8736**	1	KEY-WOODRUFF	
	2	1	**153-0314**	1	WASHER	
	3	1	**153-0317**	1	SCREW	
	4	1	**188-1052**	1	PULLEY-CRANKSHAFT	

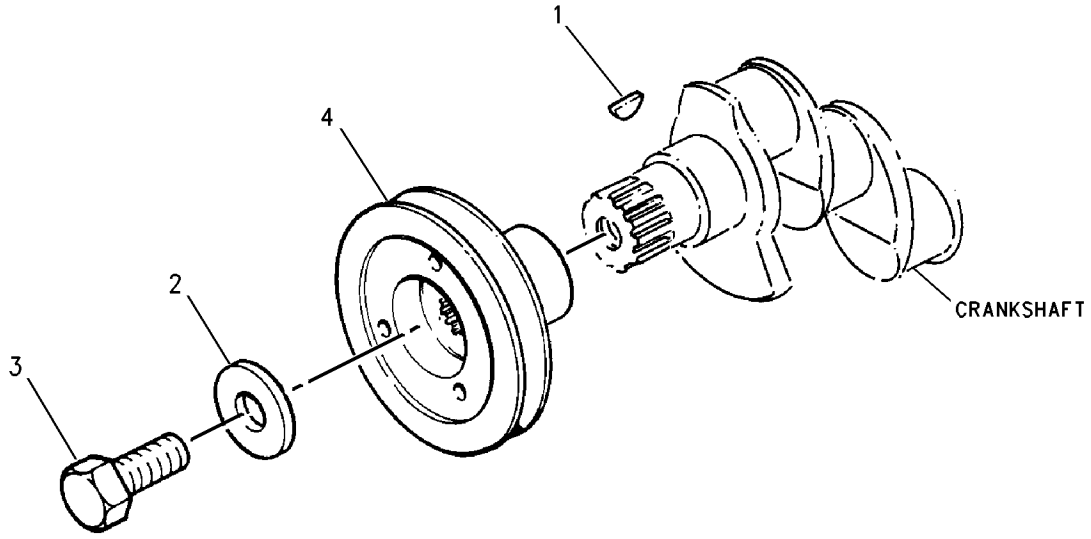

GRAPHIC #1 g00712414

BASIC ENGINE

171-2808 VALVE MECHANISM GP

S/N: 3NW12500-UP

PART OF 147-1233 ENGINE AR-PRIMARY

SMCS-1102, 1112, 1121, 1123, 1208, 1209 **i01423846**

NOTE	REF NO	GRAPHIC REF	PART NUMBER	QTY	PART NAME 1 2 3 4 5 6 (PRODUCT LEVEL)	SEE PAGE
	1	1	**6I-0291**	4	NUT (M8X1.25)	
	2	1	**152-6572**	1	ROCKER ARM AS	
	3	1	**152-6573**	1	SHAFT AS-ROCKER	
	4	1	**032-8062**	2	PLUG	
	5	1	**152-6574**	1	PIN	
	6	1	**152-6576**	3	SPRING	
	7	1	**152-6577**	8	BOLT	
	8	1	**152-6579**	2	SPACER	
	9	1	**152-6580**	2	CLIP	
	10	1	**152-6605**	8	LEVER AS	
	11	1	**191-9288**	4	BRACKET	
	12	1	**191-9289**	4	BRACKET	
	13	1	**152-6578**	8	NUT	
	14	1	**152-6581**	8	BOLT (M6X1.0X55MM)	
	15	1	**152-6582**	3	PLATE AS	
	16	1	**152-6584**	8	PUSHROD	
	17	1	**176-0633**	8	TAPPET	

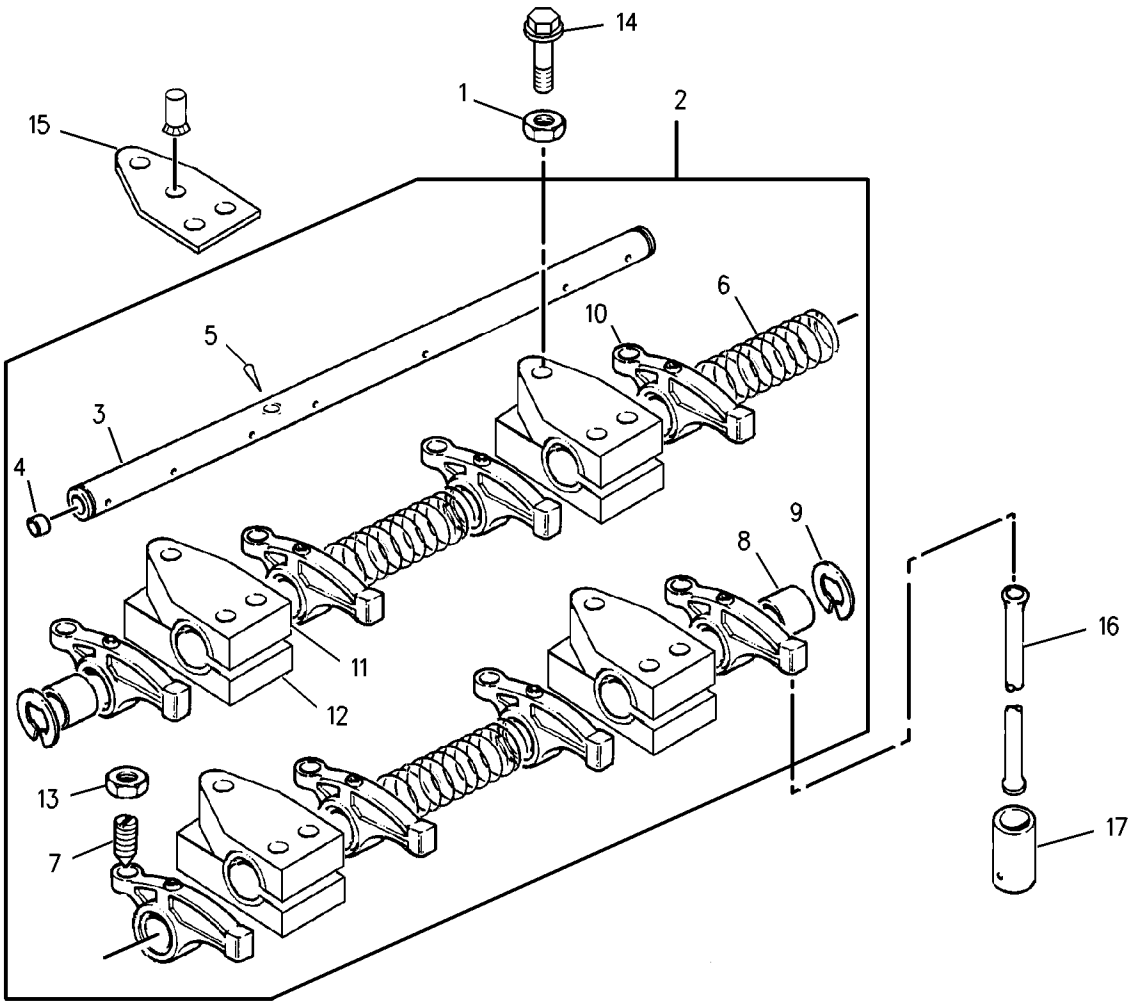

GRAPHIC #1 g00747444

172-6711 VALVE MECHANISM GP

S/N: 3NW12500-UP

PART OF 147-1234 ENGINE AR-PRIMARY

SMCS-1102, 1112, 1121, 1123, 1208, 1209 **i01441829**

NOTE	REF NO	GRAPHIC REF	PART NUMBER	QTY	PART NAME 1 2 3 4 5 6 (PRODUCT LEVEL)	SEE PAGE
	1	1	**6I-0291**	4	NUT (M8X1.25)	
	2	1	**152-6572**	1	ROCKER ARM AS	
	3	1	**152-6573**	1	SHAFT AS-ROCKER	
	4	1	**032-8062**	2	PLUG	
	5	1	**152-6574**	1	PIN	
	6	1	**152-6576**	3	SPRING	
	7	1	**152-6577**	8	BOLT	
	8	1	**152-6579**	2	SPACER	
	9	1	**152-6580**	2	CLIP	
	10	1	**152-6605**	8	LEVER AS	
	11	1	**191-9288**	4	BRACKET	
	12	1	**191-9289**	4	BRACKET	
	13	1	**152-6578**	8	NUT	
	14	1	**152-6581**	8	BOLT (M6X1.0X55MM)	
	15	1	**152-6582**	3	PLATE AS	
	16	1	**152-6584**	8	PUSHROD	
	17	1	**176-0633**	8	TAPPET	

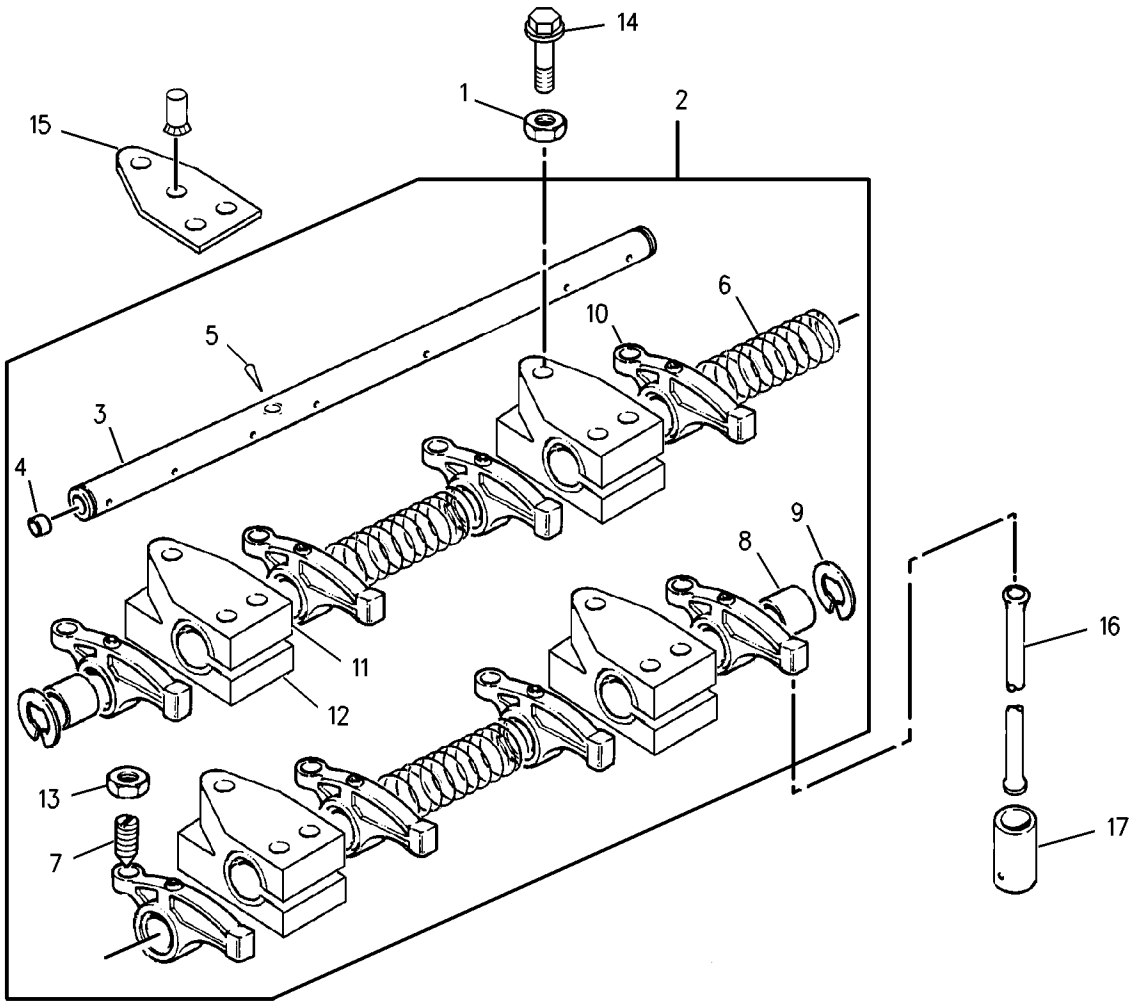

GRAPHIC #1 g00712439

164-7616 FILTER GP-ENGINE OIL

S/N: 3NW12500-UP

PART OF 147-1233 ENGINE AR-PRIMARY

SMCS-1308 **i01493721**

NOTE	REF NO	GRAPHIC REF	PART NUMBER	QTY	PART NAME 1 2 3 4 5 6 (PRODUCT LEVEL)	SEE PAGE
	1	1	**6I-1200**	1	SEAL-O-RING	
	2	1	**7W-2327**	1	FILTER AS-ENGINE OIL	
	3	1	**118-9145**	1	CONNECTOR	
	4	1	**204-2097**	1	HEAD AS-OIL FILTER	
	5	1	**164-7619**	1	SEAL-O-RING	
	6	1	**164-7620**	1	SEAL-O-RING	
	7	1	**164-7621**	1	BOLT	

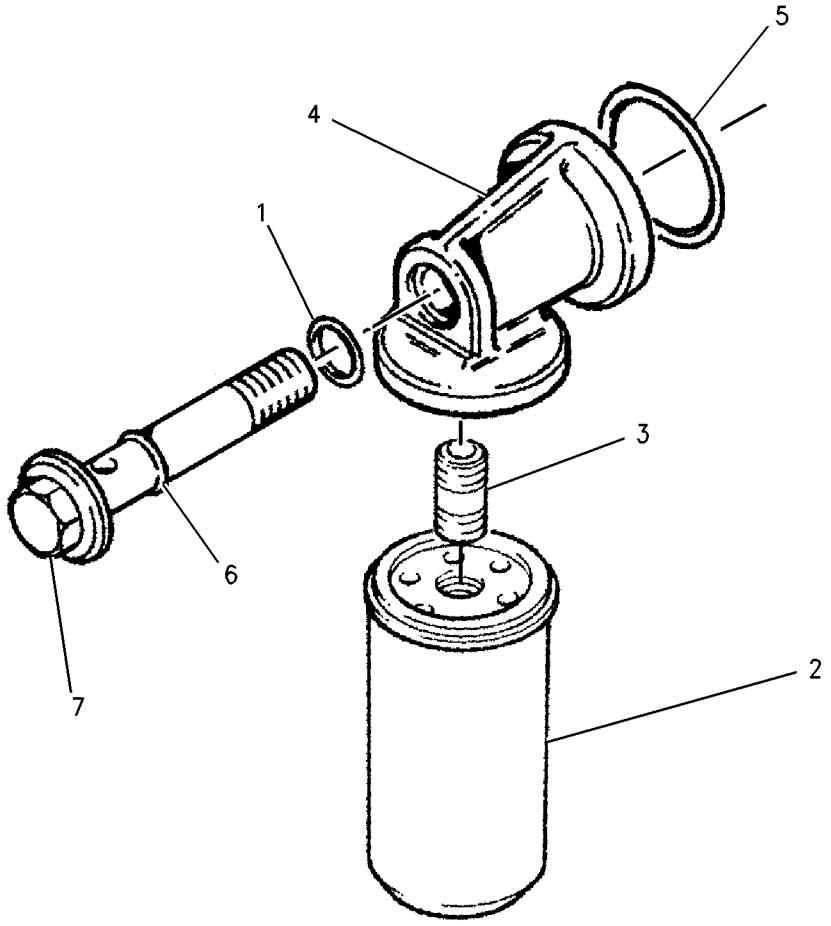

GRAPHIC #1 g00713911

171-2948 PUMP GP-ENGINE OIL

S/N: 3NW12500-UP

PART OF 147-1233 ENGINE AR-PRIMARY

SMCS-1304 **i01454341**

NOTE	REF NO	GRAPHIC REF	PART NUMBER	QTY	PART NAME 1 2 3 4 5 6 (PRODUCT LEVEL)	SEE PAGE
	2	1	**153-0983**	3	BOLT (M6X1.0X25MM)	
	3	1	**153-0985**	1	SEAL-O-RING	
	4	1	**153-0988**	1	VALVE AS	
	5	1	**153-0989**	1	PLUNGER	
	6	1	**153-0991**	1	SPRING	
	7	1	**153-0992**	1	CLIP	
	8	1	**188-9071**	1	PUMP AS-OIL	

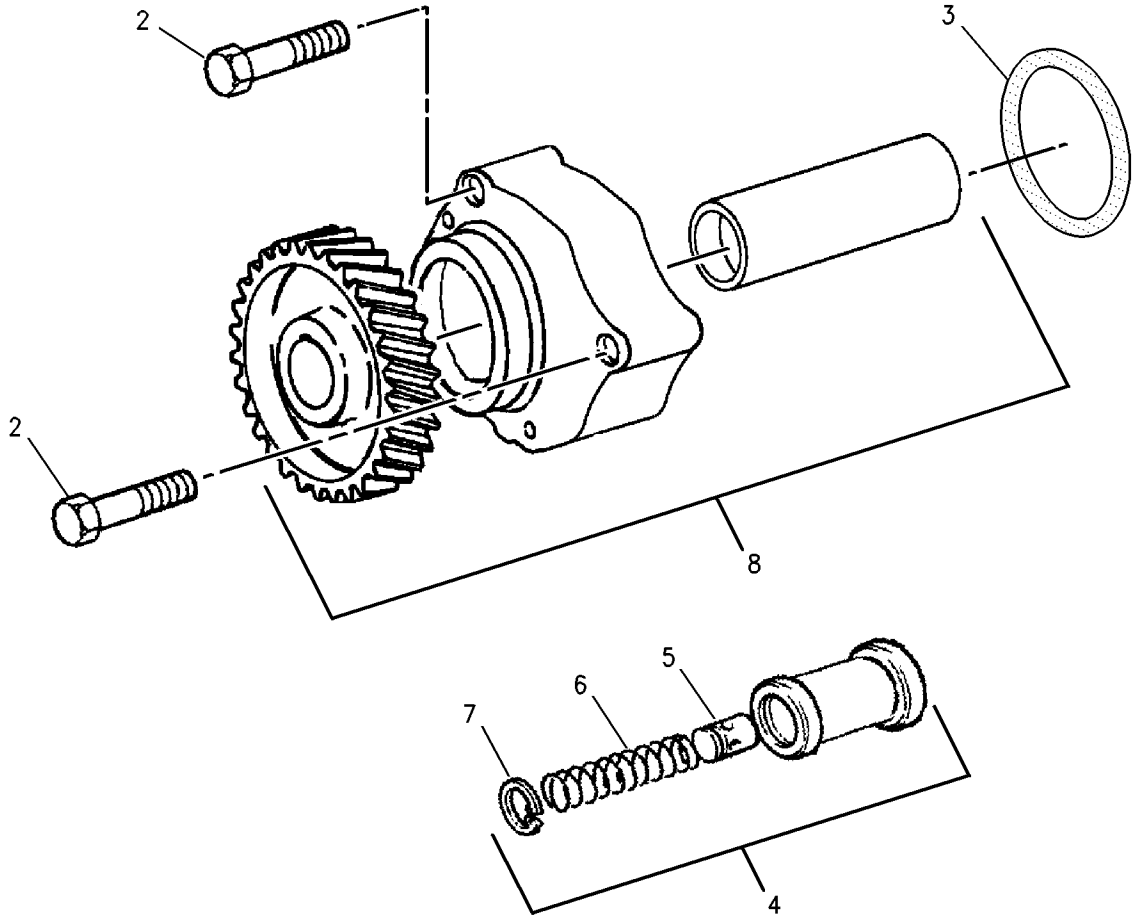

GRAPHIC #1 g00760832

LUBRICATION SYSTEM

173-0140 PUMP GP-ENGINE OIL

S/N: 3NW12500-UP

PART OF 147-1234 ENGINE AR-PRIMARY

SMCS-1304 **i01349728**

NOTE	REF NO	GRAPHIC REF	PART NUMBER	QTY	PART NAME 1 2 3 4 5 6 (PRODUCT LEVEL)	SEE PAGE
	1	1	**153-0982**	2	DOWEL	
	2	1	**153-0983**	3	BOLT (M6X1.0X25MM)	
	3	1	**153-0988**	1	VALVE AS	
	4	1	**153-0989**	1	PLUNGER	
	5	1	**153-0991**	1	SPRING	
	6	1	**153-0992**	1	CLIP	
	7	1	**173-0141**	1	PUMP AS-OIL	
	8	1	**173-0142**	1	SEAL-O-RING	

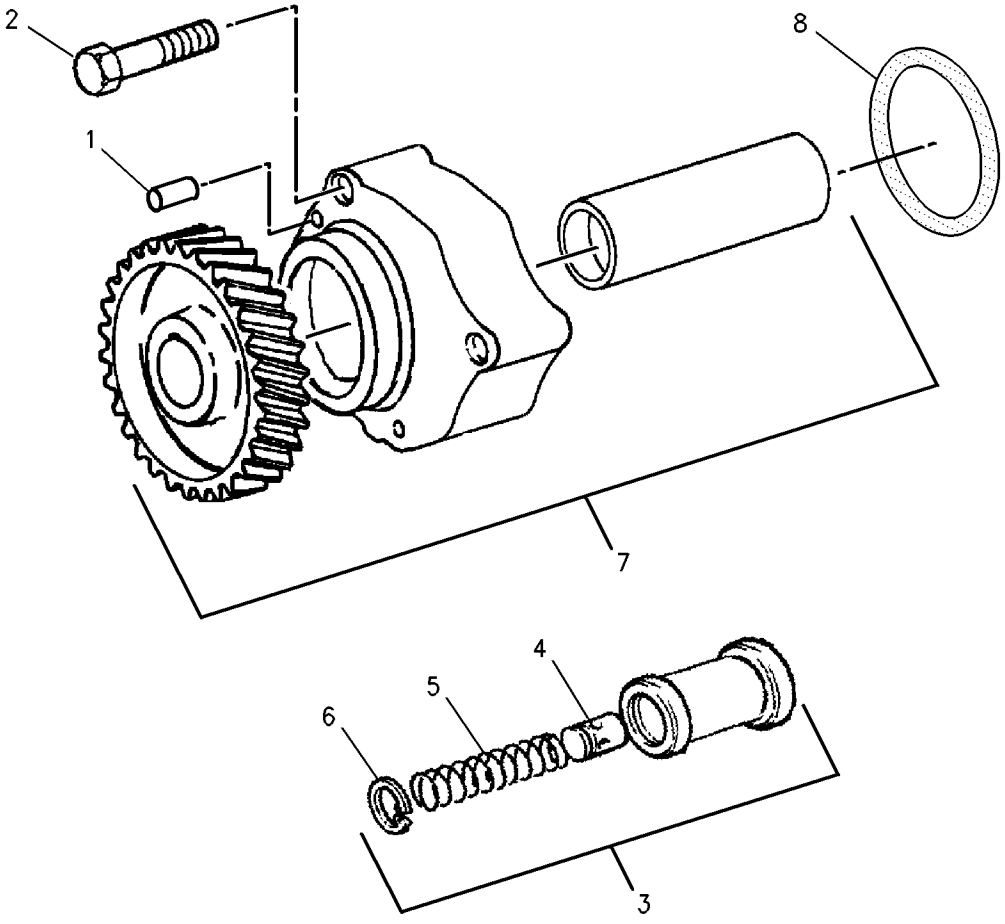

GRAPHIC #1 g00690722

164-7622 CONNECTION GP-WATER

S/N: 3NW12500-14939

PART OF 147-1233, 147-1234 ENGINE AR-PRIMARY

SMCS-1380 **i01588984**

NOTE	REF NO	GRAPHIC REF	PART NUMBER	QTY	PART NAME 1 2 3 4 5 6 (PRODUCT LEVEL)	SEE PAGE
	1	1	**171-1187**	1	CONNECTOR	
	2	1	**123-2899**	2	BOLT (M10X1.5X40MM)	
	3	1	**198-8555**	1	GASKET	

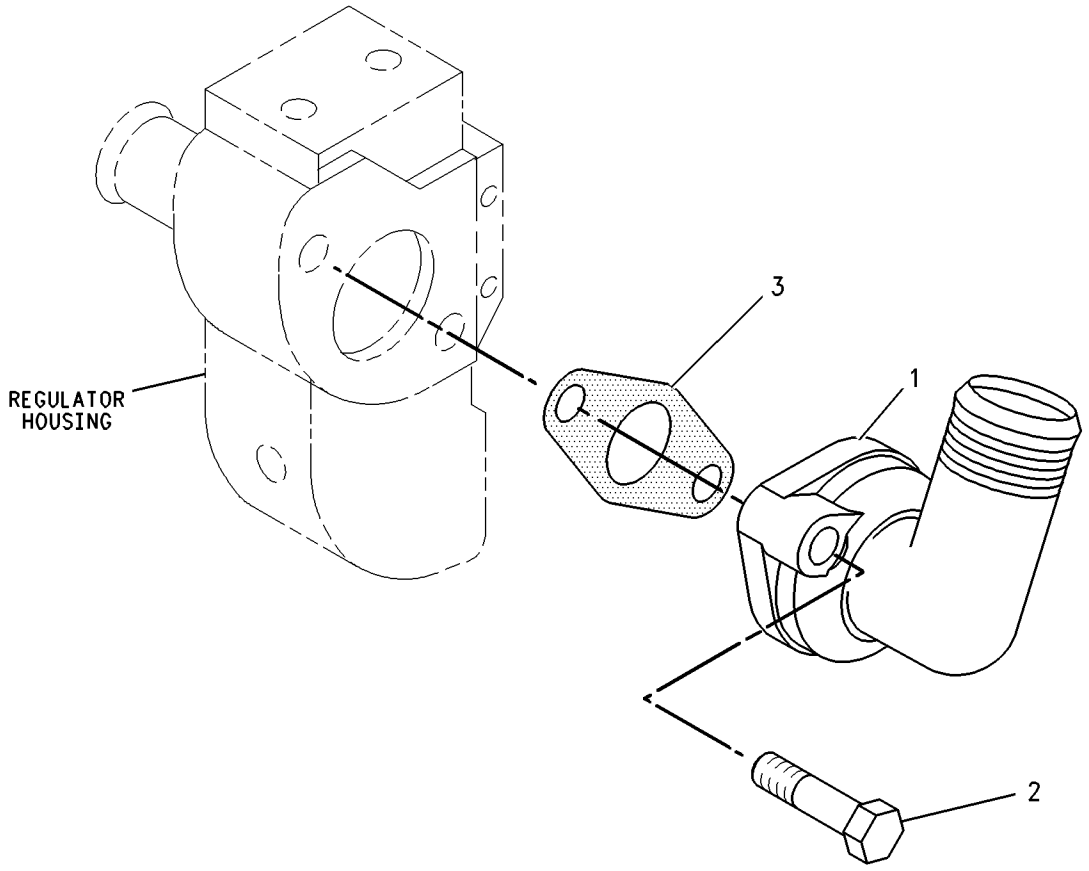

GRAPHIC #1 g00823942

COOLING SYSTEM

164-7622 CONNECTION GP-WATER

S/N: 3NW14940-UP
PART OF 147-1233, 147-1234 ENGINE AR-PRIMARY
TYPE 1

SMCS-1380 **i01510216**

NOTE	REF NO	GRAPHIC REF	PART NUMBER	QTY	PART NAME 1 2 3 4 5 6 (PRODUCT LEVEL)	SEE PAGE
	1	1	**203-4740**	1	CONNECTION AS	
	1A	1	**203-4743**	1	SEAL	
	2	1	**123-2899**	2	BOLT (M10X1.5X40MM)	

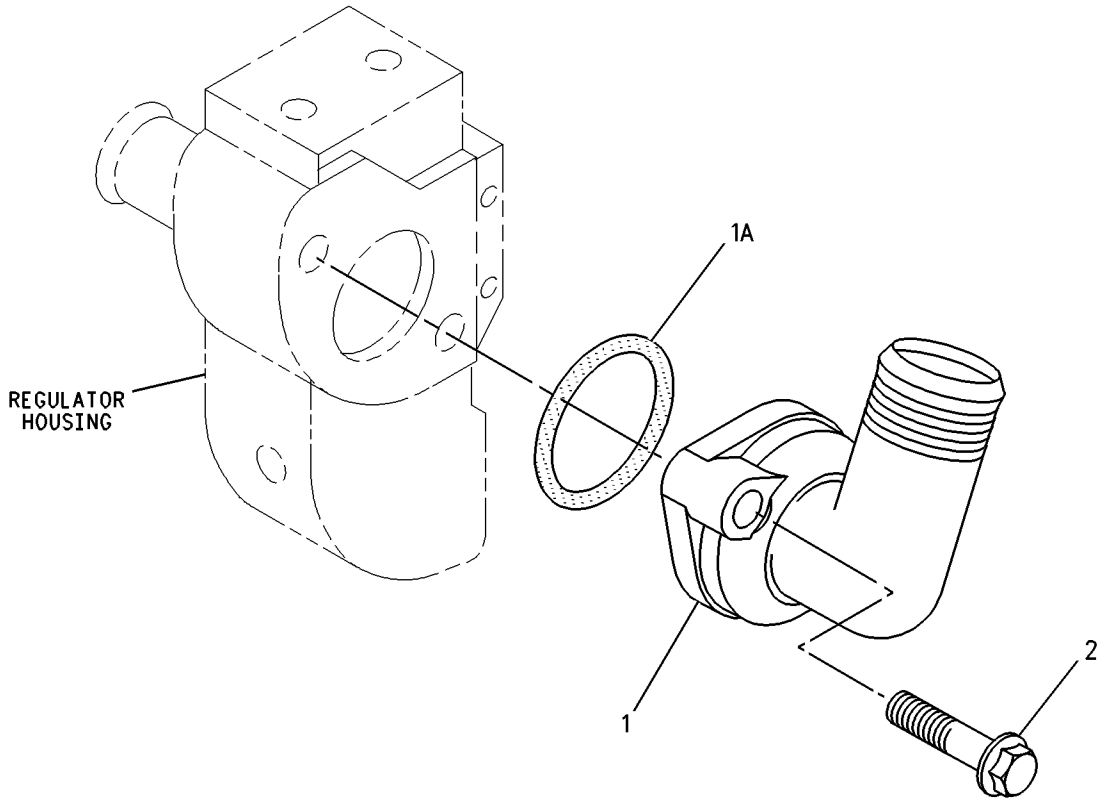

GRAPHIC #1 g00773503

164-7622 CONNECTION GP-WATER

S/N: 3NW14940-UP
PART OF 147-1233, 147-1234 ENGINE AR-PRIMARY
TYPE 2

SMCS-1380 **i01588985**

NOTE	REF NO	GRAPHIC REF	PART NUMBER	QTY	PART NAME 1 2 3 4 5 6 (PRODUCT LEVEL)	SEE PAGE
	1	1	**171-1187**	1	CONNECTOR	
	2	1	**123-2899**	2	BOLT (M10X1.5X40MM)	
	3	1	**198-8555**	1	GASKET	

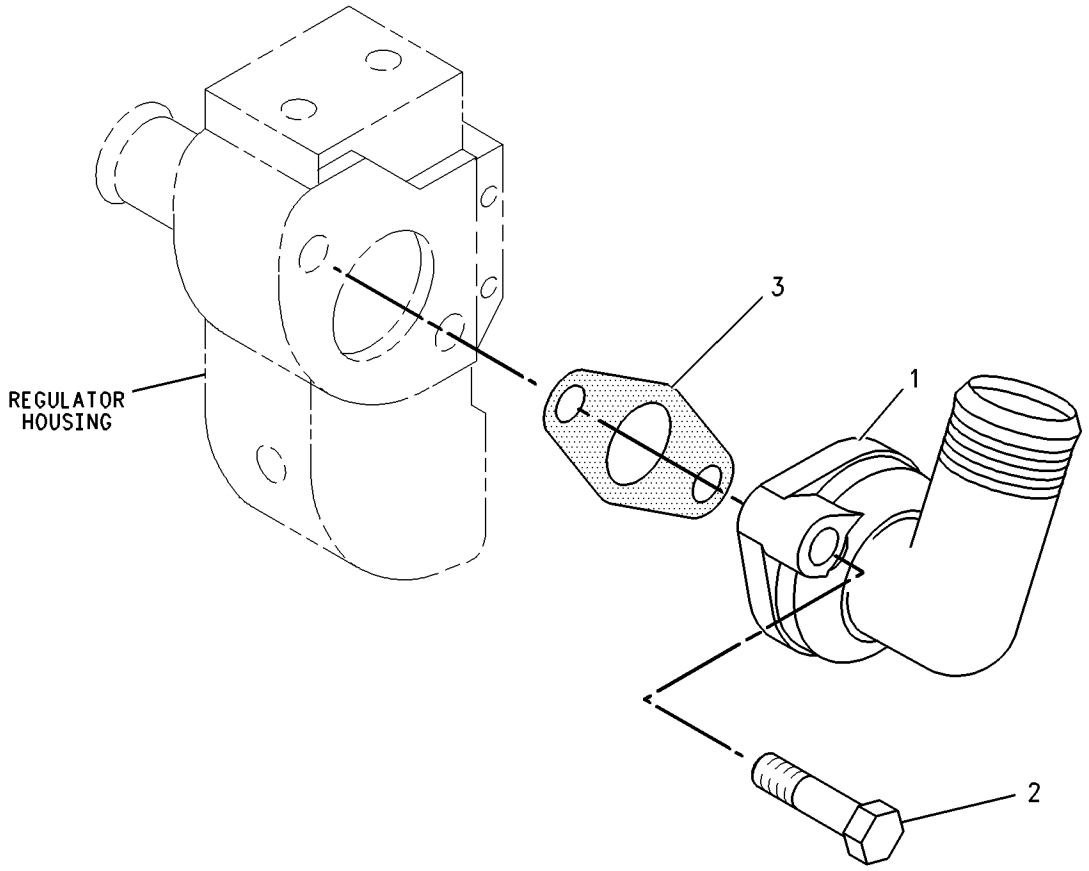

GRAPHIC #1 g00823942

173-0410 COOLER GP-FLTR BASE & ENG OIL

S/N: 3NW12500-UP

PART OF 147-1234 ENGINE AR-PRIMARY

SMCS-1306, 1314, 1378 **i01778558**

NOTE	REF NO	GRAPHIC REF	PART NUMBER	QTY	PART NAME 1 2 3 4 5 6 (PRODUCT LEVEL)	SEE PAGE
	1	1	**7W-2327**	1	FILTER AS-ENGINE OIL	
	2	1	**5D-1026**	4	CLAMP-HOSE	
	3	1	**204-2097**	1	HEAD AS-OIL FILTER	
	3A	1	**118-9145**	1	CONNECTOR	
	4	1	**164-7621**	1	BOLT	
	5	1	**173-0411**	1	SEAL-O-RING	
	6	1	**173-0412**	1	SEAL-O-RING	
	7	1	**173-0413**	1	COOLER AS-OIL	
	8	1	**6I-2604**	1	GASKET	
	9	1	**173-0414**	1	SEAL-O-RING	
	10	1	**173-0415**	1	CONNECTION	
	11	1	**173-0416**	1	HOSE	
	12	1	**173-0417**	1	HOSE	

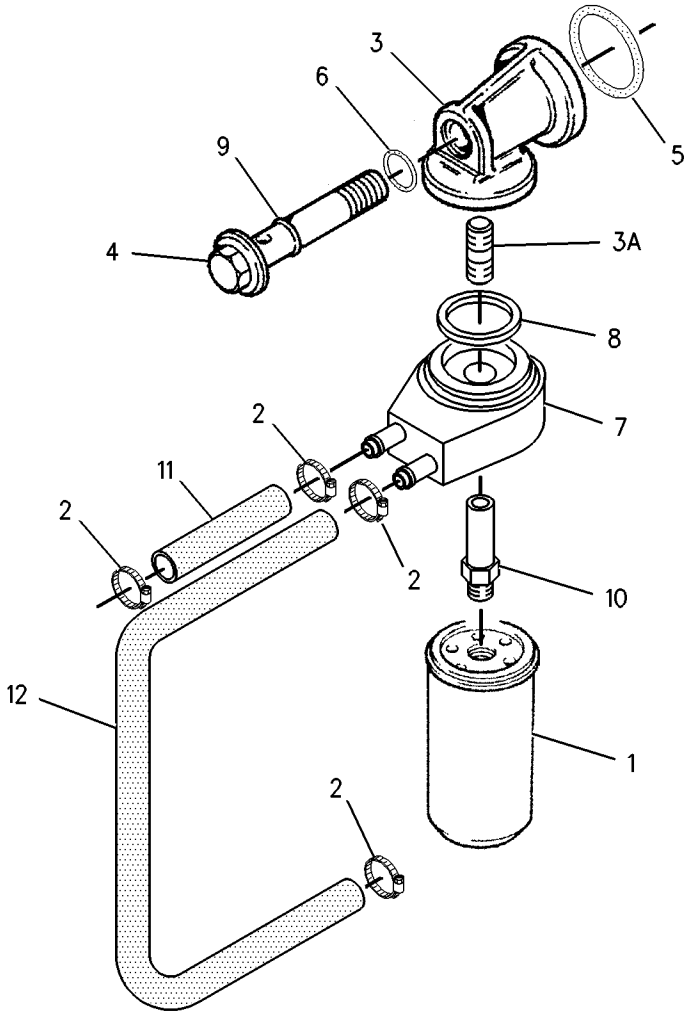

GRAPHIC #1 g00909456

COOLING SYSTEM

142-8864 FAN GP-BLOWER

S/N: FDG1-UP; 4YZ4000-UP
PART OF 165-4910, 192-2602 RADIATOR & HYD OIL COOLER GP
ALSO AN ATTACHMENT

SMCS-1356, 1360 **i01793199**

NOTE	REF NO	GRAPHIC REF	PART NUMBER	QTY	PART NAME 1 2 3 4 5 6 (PRODUCT LEVEL)	SEE PAGE
	1	1	**142-8865**	1	FAN AS	
	2	1	**142-8870**	1	ADAPTER	
	3	1	**8T-4224**	4	WASHER-HARD (8.8X16X2MM THK)	
M	4	1	**8T-4908**	4	BOLT (M8X1.25X25MM)	

M-METRIC PART

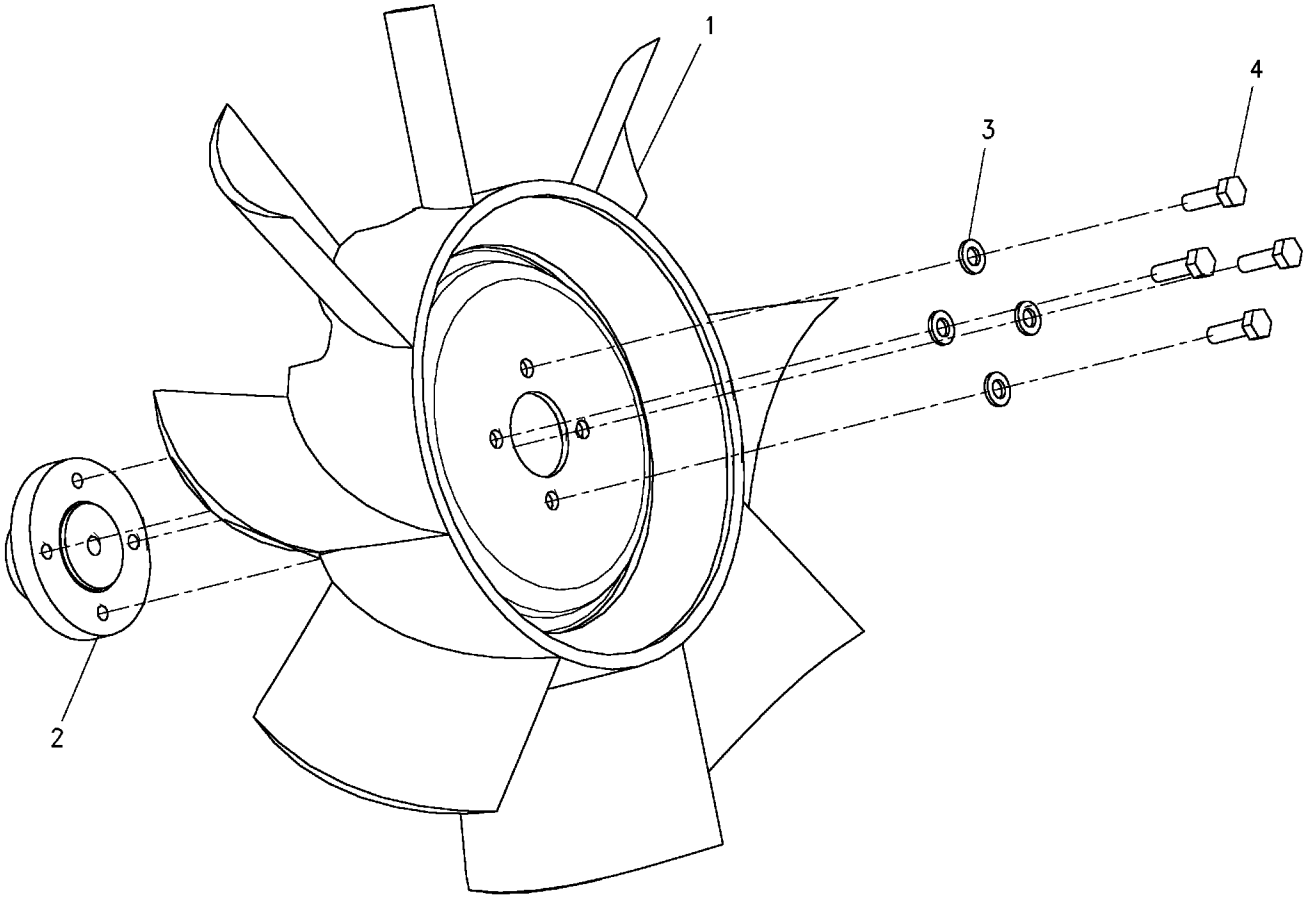

GRAPHIC #1 g00917240

COOLING SYSTEM

142-8873 FAN GP-BLOWER

S/N: CED1-UP; 5SZ4000-UP
PART OF 142-8878, 192-2604 RADIATOR & HYD OIL COOLER GP
ALSO AN ATTACHMENT

SMCS-1356, 1360 **i01793216**

NOTE	REF NO	GRAPHIC REF	PART NUMBER	QTY	PART NAME 1 2 3 4 5 6 (PRODUCT LEVEL)	SEE PAGE
	1	1	**142-8839**	1	FAN AS	
	2	1	**142-8870**	1	ADAPTER	
	3	1	**8T-4224**	4	WASHER-HARD (8.8X16X2MM THK)	
M	4	1	**8T-4908**	4	BOLT (M8X1.25X25MM)	

M-METRIC PART

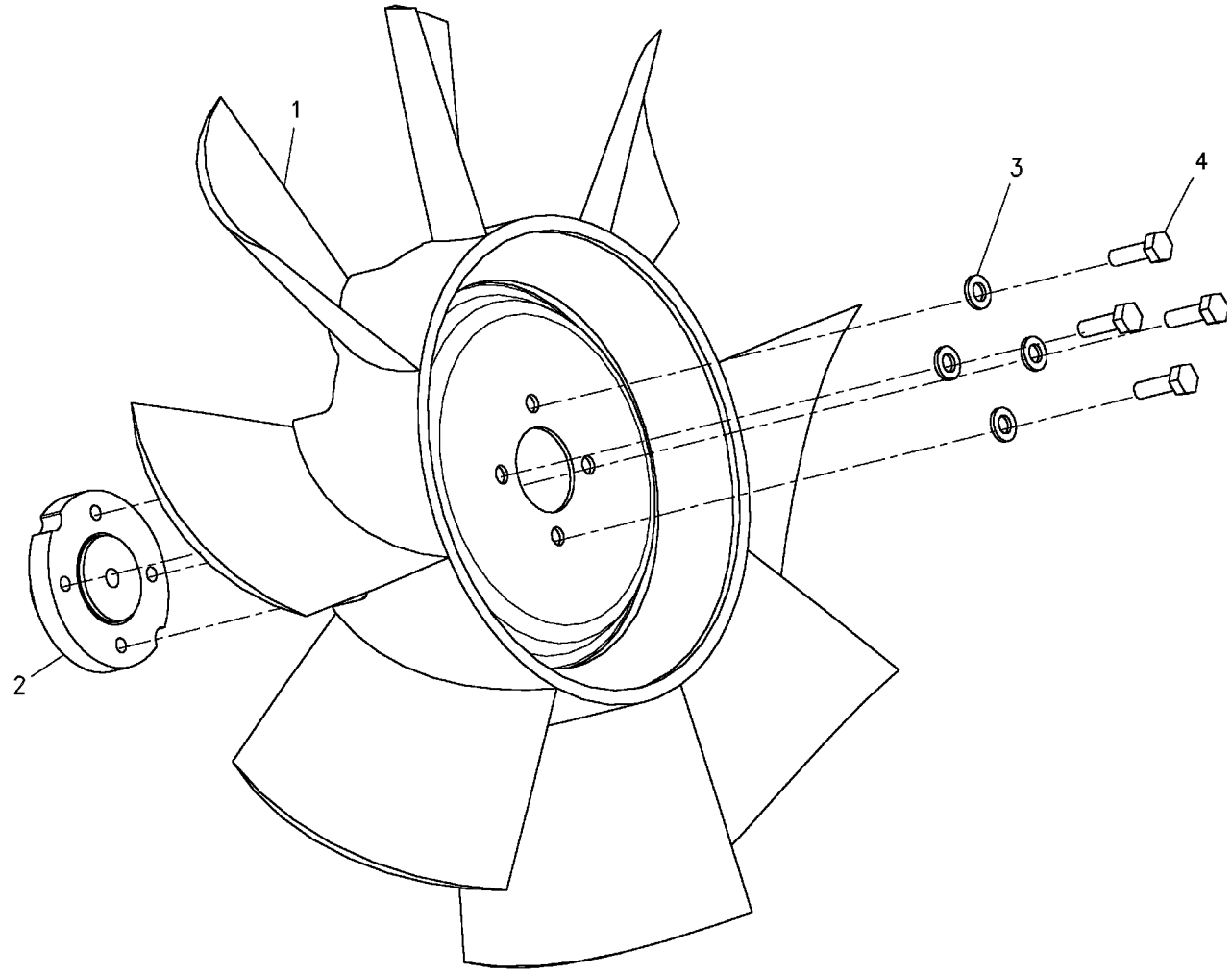

GRAPHIC #1 g00917279

COOLING SYSTEM

202-9014 FAN GP-BLOWER

S/N: FDG572-UP

PART OF 201-7803 RADIATOR & HYD OIL COOLER GP

SMCS-1356, 1360 **i01565148**

NOTE	REF NO	GRAPHIC REF	PART NUMBER	QTY	PART NAME 1 2 3 4 5 6 (PRODUCT LEVEL)	SEE PAGE
	1	1	**205-2325**	1	ADAPTER	
	2	1	**205-3727**	1	FAN AS	
	3	1	**8T-4224**	4	WASHER-HARD (8.8X16X2MM THK)	
M	4	1	**8T-4908**	4	BOLT (M8X1.25X25MM)	

M-METRIC PART

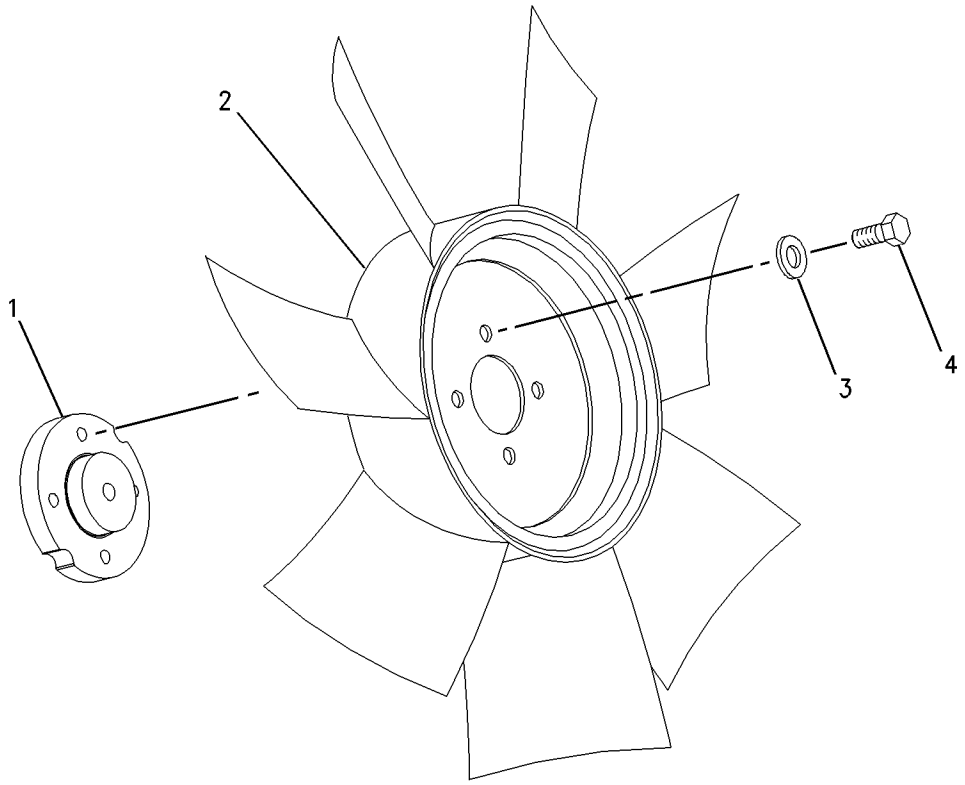

GRAPHIC #1 g00828169

COOLING SYSTEM

209-6429 FAN GP-BLOWER

S/N: CED1-UP; 5SZ4000-UP
PART OF 142-8878 RADIATOR & HYD OIL COOLER GP
ALSO AN ATTACHMENT

SMCS-1356, 1360 **i01793221**

NOTE	REF NO	GRAPHIC REF	PART NUMBER	QTY	PART NAME 1 2 3 4 5 6 (PRODUCT LEVEL)	SEE PAGE
	1	1	**203-4827**	1	FAN AS	
	2	1	**205-2325**	1	ADAPTER	
	3	1	**8T-4224**	4	WASHER-HARD (8.8X16X2MM THK)	
M	4	1	**8T-4908**	4	BOLT (M8X1.25X25MM)	

M-METRIC PART

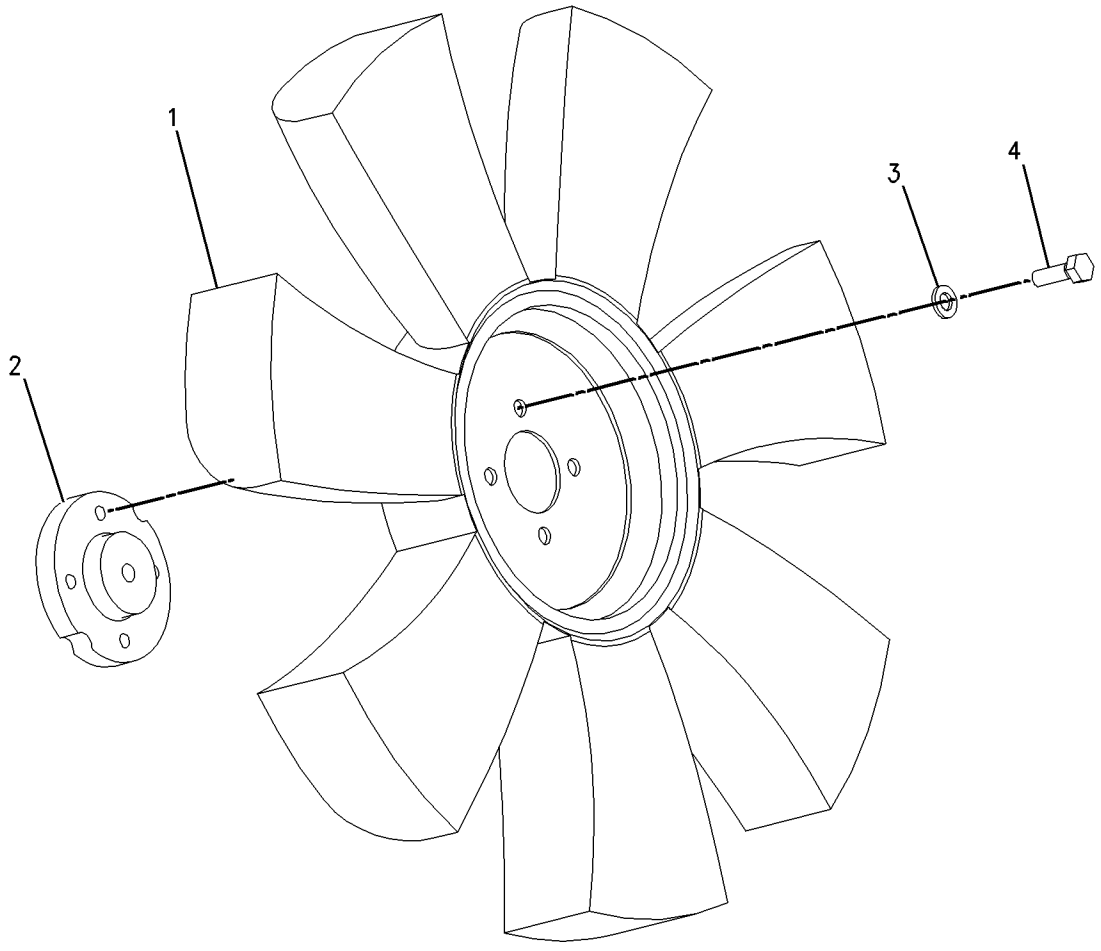

GRAPHIC #1 g00917284

COOLING SYSTEM

164-7633 PLUG GP-WATER LINES

S/N: 3NW12500-UP

PART OF 147-1234 ENGINE AR-PRIMARY

SMCS-1393 **i01082708**

NOTE	REF NO	GRAPHIC REF	PART NUMBER	QTY	PART NAME 1 2 3 4 5 6 (PRODUCT LEVEL)	SEE PAGE
	1	1	**7M-7410**	1	PLUG	

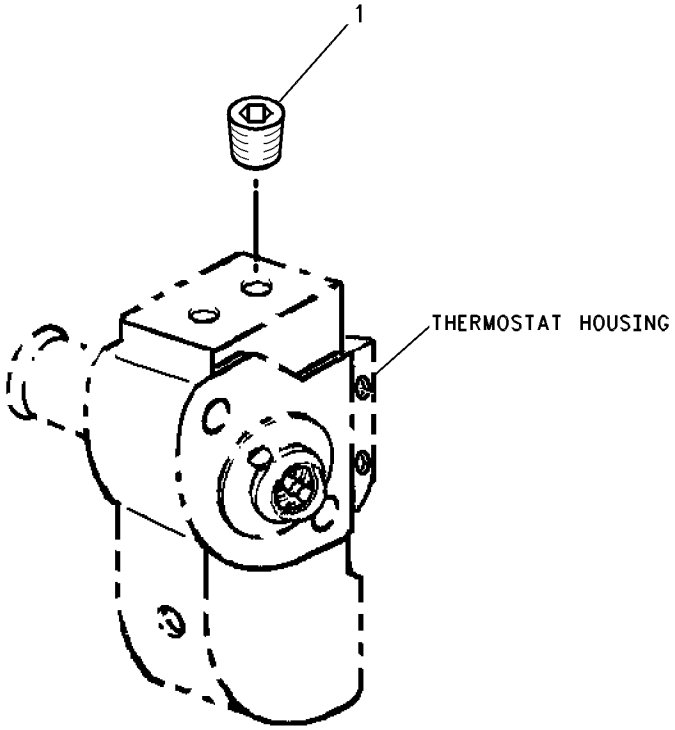

GRAPHIC #1 g00558658

COOLING SYSTEM

153-0165 PUMP GP-WATER

S/N: 3NW12500-UP

PART OF 147-1233 ENGINE AR-PRIMARY

SMCS-1361 **i01349468**

NOTE	REF NO	GRAPHIC REF	PART NUMBER	QTY	PART NAME 1 2 3 4 5 6 (PRODUCT LEVEL)	SEE PAGE
	1	1	**4W-8063**	1	REGULATOR-WATER TEMPERATURE	
	2	1	**6I-0291**	6	NUT	
	3	1	**6I-0631**	4	BOLT (M6X1.0X12MM)	
	4	1	**100-3753**	4	STUD	
	5	1	**124-3815**	1	BOLT (M6X1.0X12MM)	
	6	1	**127-2836**	2	CLAMP-HOSE	
	7	1	**153-0160**	1	GASKET-HOUSING	
	8	1	**173-1284**	1	HOUSING-REGULATOR	
	9	1	**153-0164**	1	PUMP GP-WATER	
	9A	1	**153-0178**	1	SEAL-O-RING	
	9B	1	**153-0177**	1	SEAL-O-RING	
	10	1	**153-0176**	1	HOSE	
	12	1	**153-0162**	1	SPACER	
	13	1	**153-0163**	1	PULLEY	
	14	1	**178-2452**	1	GASKET-WATER PUMP	

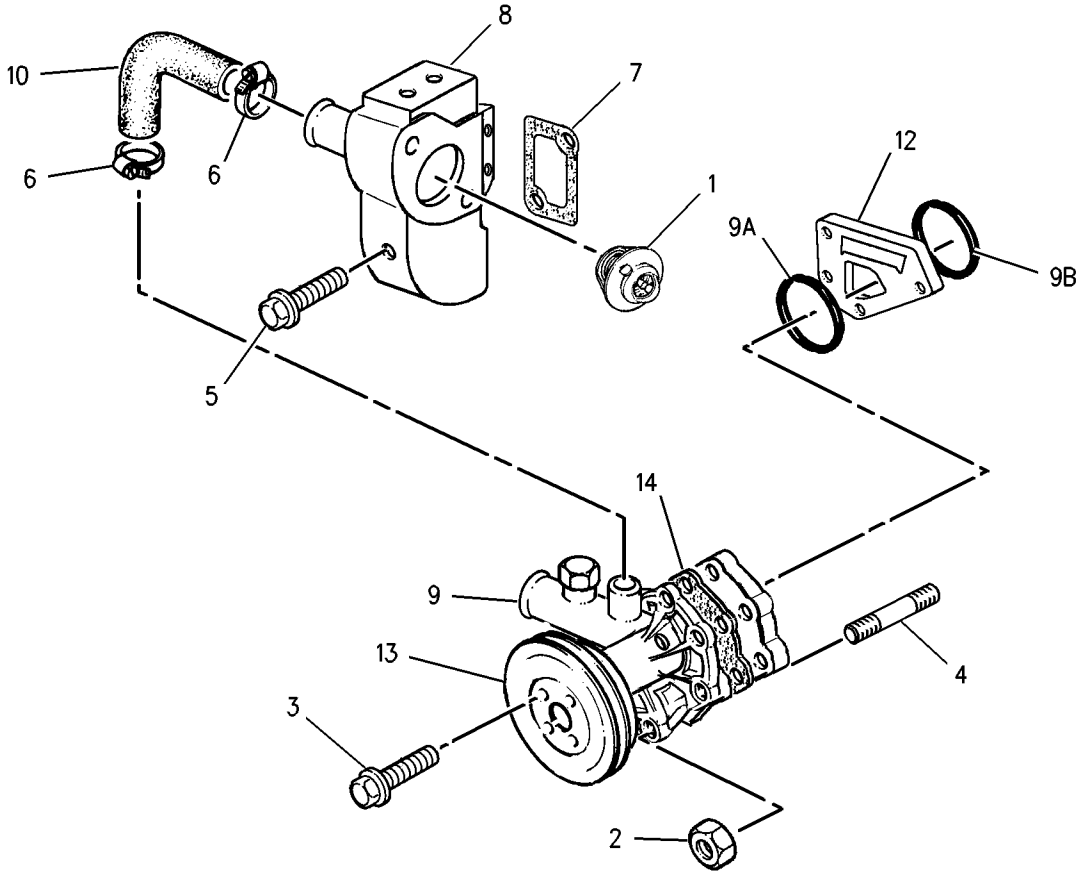

GRAPHIC #1 g00712354

COOLING SYSTEM

173-1281 PUMP GP-WATER

S/N: 3NW12500-UP

PART OF 147-1234 ENGINE AR-PRIMARY

SMCS-1361 **i01349321**

NOTE	REF NO	GRAPHIC REF	PART NUMBER	QTY	PART NAME 1 2 3 4 5 6 (PRODUCT LEVEL)	SEE PAGE
	1	1	**4W-8063**	1	REGULATOR-WATER TEMPERATURE	
	2	1	**6I-0291**	4	NUT	
	3	1	**6I-0631**	4	BOLT (M6X1.0X12MM)	
	5	1	**100-3753**	4	STUD	
	6	1	**124-3815**	1	BOLT (M6X1.0X12MM)	
	7	1	**127-2836**	2	CLAMP-HOSE	
	8	1	**153-0160**	1	GASKET-HOUSING	
	9	1	**153-0176**	1	HOSE	
	10	1	**173-1282**	1	PUMP GP-WATER	
	11	1	**153-0177**	1	SEAL-O-RING	
	12	1	**153-0178**	1	SEAL-O-RING	
	13	1	**173-1284**	1	HOUSING-REGULATOR	
	14	1	**153-0163**	1	PULLEY	
	15	1	**153-0162**	1	SPACER	

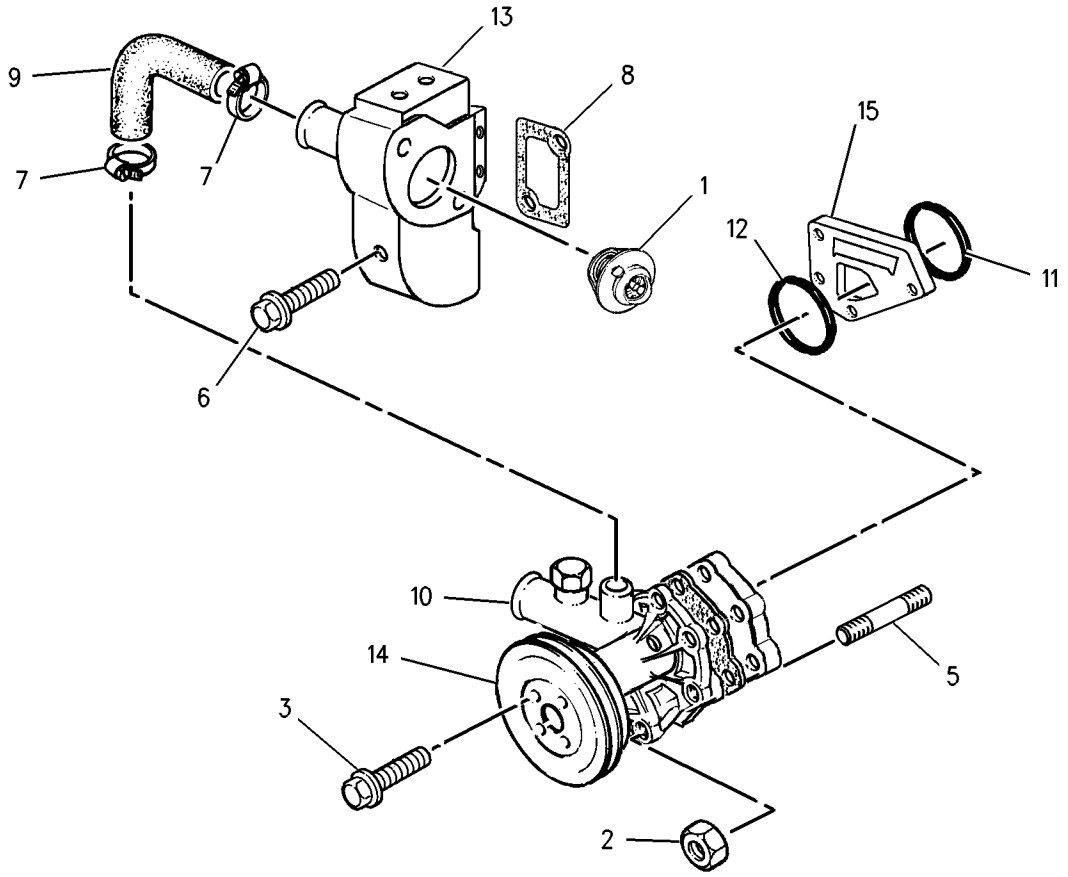

GRAPHIC #1 g00712389

MEMORANDA

142-8878 RADIATOR & HYD OIL COOLER GP

S/N: CED1-UP; 5SZ4000-UP
PART OF 142-8877, 187-3216 RADIATOR & OIL COOLER MTG GP
ALSO AN ATTACHMENT
TYPE 1

SMCS-1351, 1356, 1386 **i01675770**

NOTE	REF NO	GRAPHIC REF	PART NUMBER	QTY	PART NAME 1 2 3 4 5 6 (PRODUCT LEVEL)	SEE PAGE
	1	1	**1Q-6031**	1	GAUGE-SIGHT	
	2	1	**069-4080**	1	FITTING-COUPLING	
	3	1	**126-5027**	1	CAP AS-RADIATOR	
	4	1	**142-8871**	1	SHROUD AS	
	5	1	**142-8872**	1	GUARD AS-FAN	
Y	6	1	**142-8873**	1	FAN GP-BLOWER	61
	7	1	**142-8879**	1	RADIATOR & HYD OIL COOLER AS	
	8	1	**7M-7410**	1	PLUG (3/8-18 NPTF)	
	9	1	**7X-7729**	10	WASHER (11X25X3MM THK)	
	10	1	**8T-4121**	4	WASHER-HARD (11X21X2.5MM THK)	
M	11	1	**8T-4133**	5	NUT (M10X1.5 THD)	
M	12	1	**8T-4196**	9	BOLT (M10X1.5X35MM)	

M-METRIC PART
Y-SEPARATE ILLUSTRATION

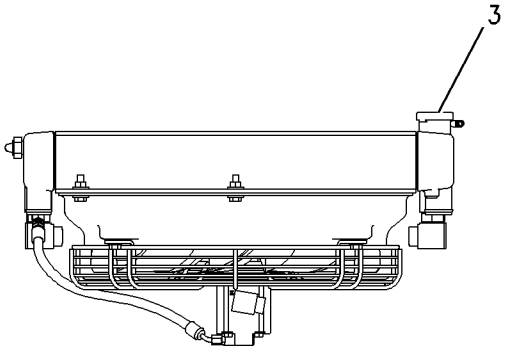

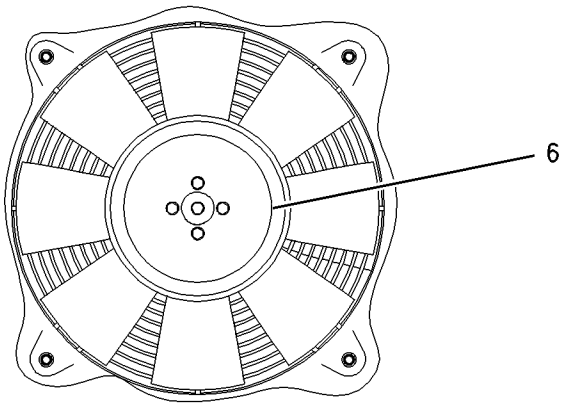

VIEW B-B

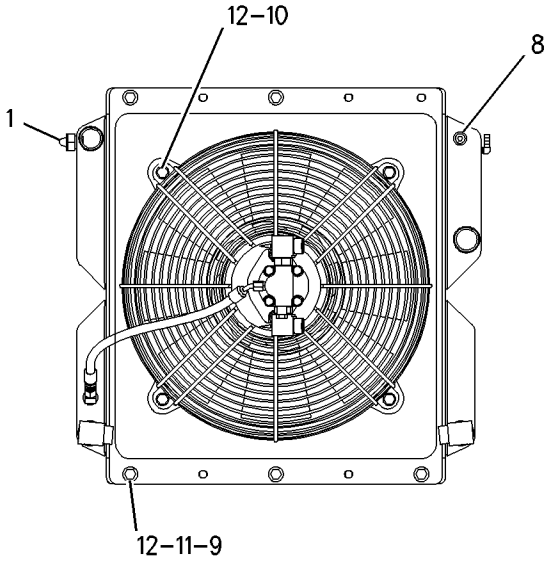

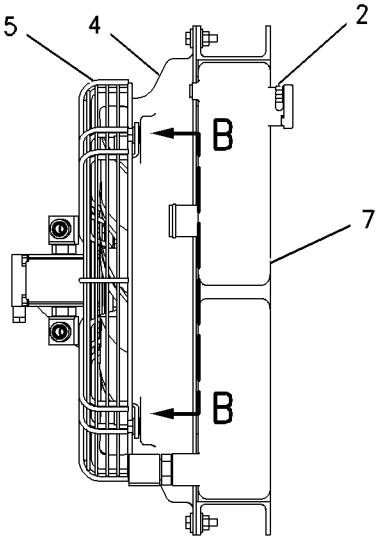

GRAPHIC #1

g00865251

142-8878 RADIATOR & HYD OIL COOLER GP

S/N: CED1-UP; 5SZ4000-UP
PART OF 142-8877, 187-3216 RADIATOR & OIL COOLER MTG GP
ALSO AN ATTACHMENT
TYPE 2

SMCS-1351, 1356, 1386 **i01697247**

NOTE	REF NO	GRAPHIC REF	PART NUMBER	QTY	PART NAME 1 2 3 4 5 6 (PRODUCT LEVEL)	SEE PAGE
	1	1	**207-6154**	1	GAUGE-SIGHT	
	2	1	**069-4080**	1	FITTING-COUPLING	
	3	1	**126-5027**	1	CAP AS-RADIATOR	
	4	1	**209-6270**	1	SHROUD AS	
	5	1	**142-8872**	1	GUARD AS-FAN	
Y	6	1	*209-6429*	1	FAN GP-BLOWER	63
	7	1	**142-8879**	1	RADIATOR & HYD OIL COOLER AS	
	8	1	**7M-7410**	1	PLUG (3/8-18 NPTF)	
	9	1	**7X-7729**	10	WASHER (11X25X3MM THK)	
	10	1	**8T-4121**	4	WASHER-HARD (11X21X2.5MM THK)	
M	11	1	**8T-4133**	5	NUT (M10X1.5 THD)	
M	12	1	**8T-4196**	9	BOLT (M10X1.5X35MM)	

M-METRIC PART
Y-SEPARATE ILLUSTRATION

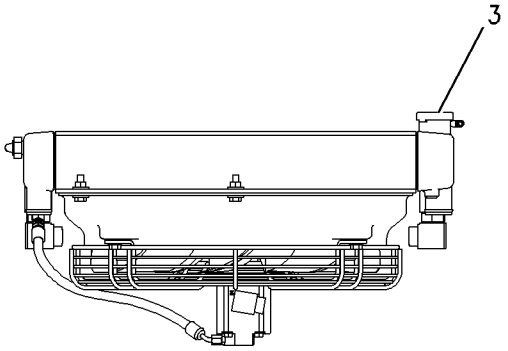

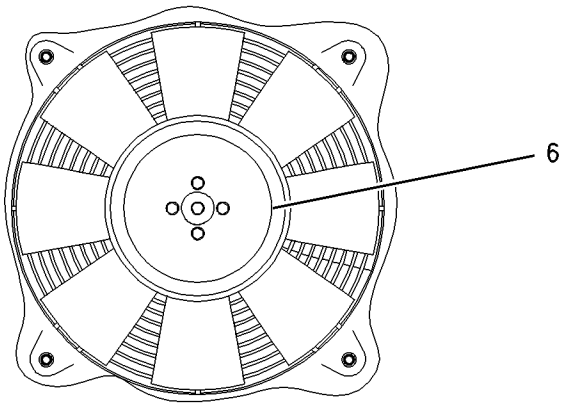

VIEW B-B

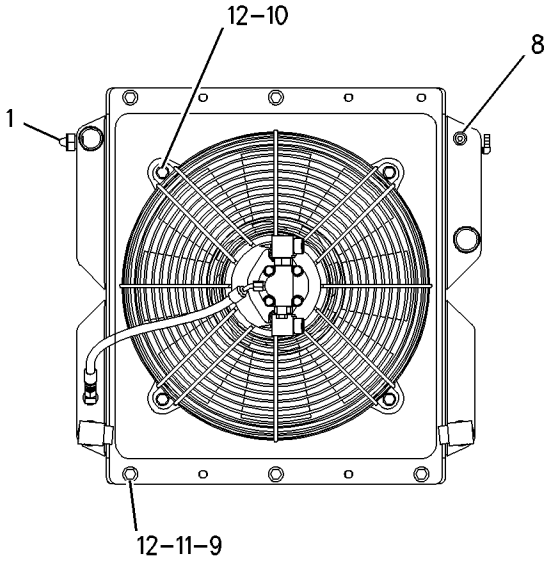

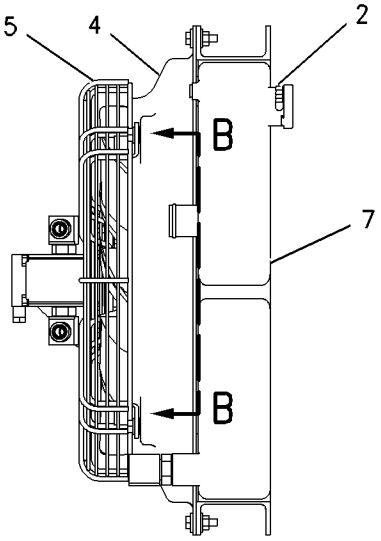

GRAPHIC #1

g00865251

COOLING SYSTEM

165-4910 RADIATOR & HYD OIL COOLER GP

S/N: FDG1-571

PART OF 191-9775 RADIATOR & OIL COOLER MTG GP

SMCS-1351, 1356, 1386 **i01793229**

NOTE	REF NO	GRAPHIC REF	PART NUMBER	QTY	PART NAME 1 2 3 4 5 6 (PRODUCT LEVEL)	SEE PAGE
	1	1	**1Q-6031**	1	GAUGE-SIGHT	
	2	1	**6V-0394**	1	CONNECTOR-PORT	
	3	1	**069-4080**	1	FITTING-COUPLING	
	4	1	**126-5027**	1	CAP AS-RADIATOR	
	5	1	**142-8861**	1	RADIATOR & HYD OIL COOLER AS	
	6	1	**142-8862**	1	SHROUD AS	
	7	1	**142-8863**	1	GUARD AS-FAN	
Y	8	1	*142-8864*	1	FAN GP-BLOWER	60
I	9	1	**142-8969**	1	HOSE AS	
Y	10	1	**152-4888**	1	MOTOR GP-GEAR	435
	11	1	*148-8347*	2	ELBOW GP	
					(EACH INCLUDES)	
		1	**3D-2824**	2	SEAL-O-RING	
		1	**6V-9007**	2	ELBOW	
		1	**6V-9746**	2	SEAL-O-RING	
	12	1	*148-8385*	1	ELBOW GP	
		1	**3J-7354**	1	SEAL-O-RING	
		1	**4J-5477**	1	SEAL-O-RING	
		1	**6V-9000**	1	ELBOW	
	13	1	*148-8390*	2	ELBOW GP	
					(EACH INCLUDES)	
		1	**2M-9780**	2	SEAL-O-RING	
		1	**6V-8626**	2	ELBOW	
		1	**7J-9108**	2	SEAL-O-RING	
	14	1	**4J-7533**	1	SEAL-O-RING	
	15	1	**7M-7410**	1	PLUG (3/8-18 NPTF)	
	16	1	**7X-7729**	10	WASHER (11X25X3MM THK)	
	17	1	**8T-4121**	6	WASHER-HARD (11X21X2.5MM THK)	
M	18	1	**8T-4133**	5	NUT (M10X1.5 THD)	
M	19	1	**8T-4196**	11	BOLT (M10X1.5X35MM)	
	20	1	**8T-4224**	1	WASHER-HARD (8.8X16X2MM THK)	
M	21	1	**8T-7547**	1	BOLT (M8X1.25X30MM)	

I-SEE HOSE FABRICATION GUIDE
M-METRIC PART
Y-SEPARATE ILLUSTRATION

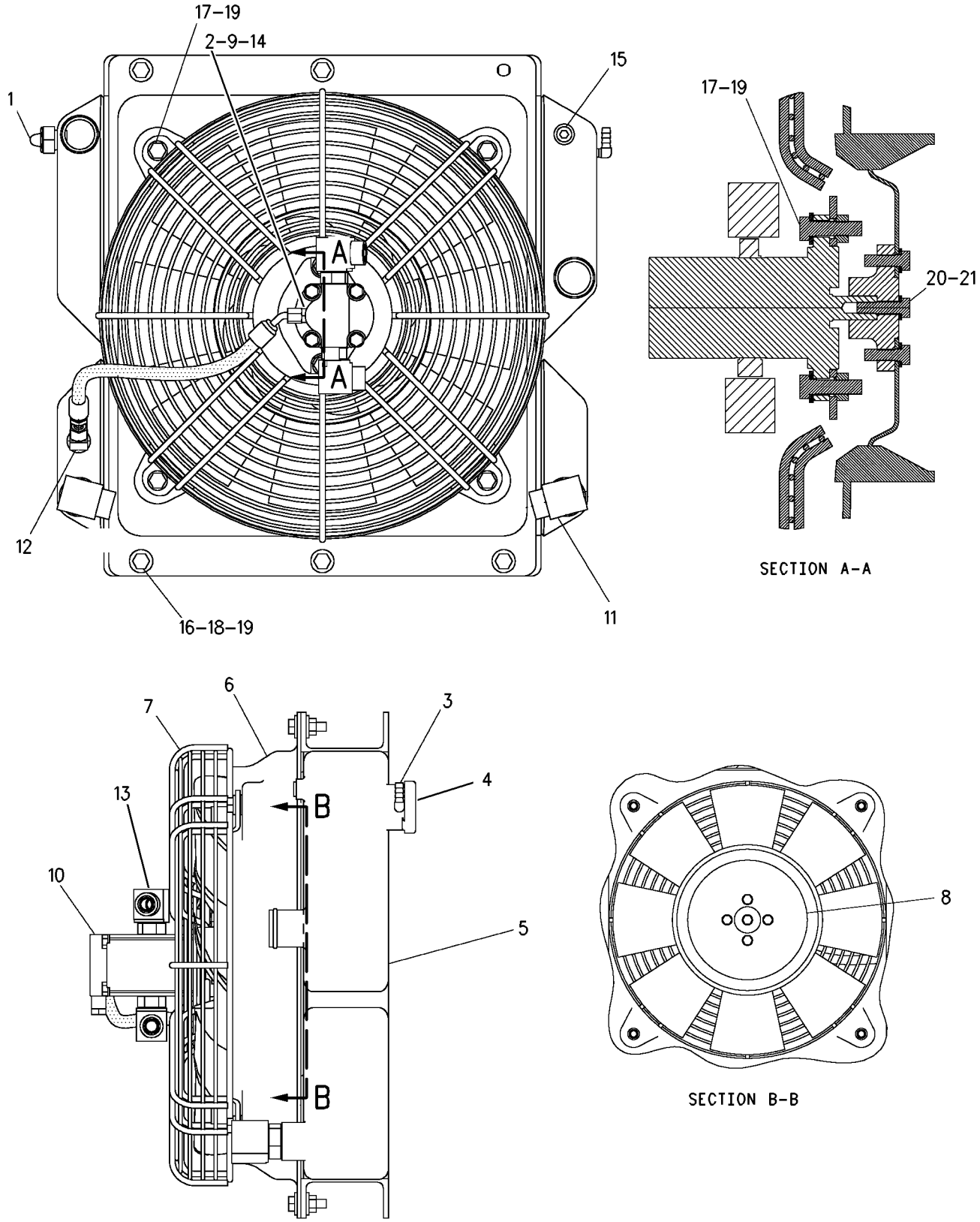

GRAPHIC #1

g00917302

COOLING SYSTEM

192-2602 RADIATOR & HYD OIL COOLER GP

S/N: 4YZ4000-UP

PART OF 192-2601 RADIATOR & OIL COOLER MTG GP

AN ATTACHMENT

SMCS-1351, 1356, 1386 **i01454330**

NOTE	REF NO	GRAPHIC REF	PART NUMBER	QTY	PART NAME 1 2 3 4 5 6 (PRODUCT LEVEL)	SEE PAGE
	1	1	**1Q-6031**	1	GAUGE-SIGHT	
	2	1	**6V-0394**	1	CONNECTOR-PORT	
	3	1	**069-4080**	1	FITTING-COUPLING	
	4	1	**126-5027**	1	CAP AS-RADIATOR	
	5	1	**142-8861**	1	RADIATOR & HYD OIL COOLER AS	
	6	1	**142-8862**	1	SHROUD AS	
	7	1	**142-8863**	1	GUARD AS-FAN	
Y	8	1	*142-8864*	1	FAN GP-BLOWER	60
	9	1	**142-8969**	1	HOSE AS	
Y	10	1	**188-0128**	1	MOTOR GP-GEAR (FAN)	437
	11	1	*148-8347*	2	ELBOW GP	
					(EACH INCLUDES)	
		1	**3D-2824**	1	SEAL-O-RING	
		1	**6V-9007**	1	ELBOW	
		1	**6V-9746**	1	SEAL-O-RING	
	12	1	*148-8385*	1	ELBOW GP	
		1	**3J-7354**	1	SEAL-O-RING	
		1	**4J-5477**	1	SEAL-O-RING	
		1	**6V-9000**	1	ELBOW	
	13	1	*148-8390*	2	ELBOW GP	
					(EACH INCLUDES)	
		1	**2M-9780**	1	SEAL-O-RING	
		1	**6V-8626**	1	ELBOW	
		1	**7J-9108**	1	SEAL-O-RING	
	14	1	**4J-7533**	1	SEAL-O-RING	
	15	1	**7M-7410**	1	PLUG (3/8-18 NPTF)	
	16	1	**7X-7729**	10	WASHER (11X25X3MM THK)	
	17	1	**8T-4121**	6	WASHER-HARD (11X21X2.5MM THK)	
M	18	1	**8T-4133**	5	NUT (M10X1.5 THD)	
M	19	1	**8T-4196**	11	BOLT (M10X1.5X35MM)	
	20	1	**8T-4224**	1	WASHER-HARD (8.8X16X2MM THK)	
M	21	1	**8T-7547**	1	BOLT (M8X1.25X30MM)	

M-METRIC PART
Y-SEPARATE ILLUSTRATION

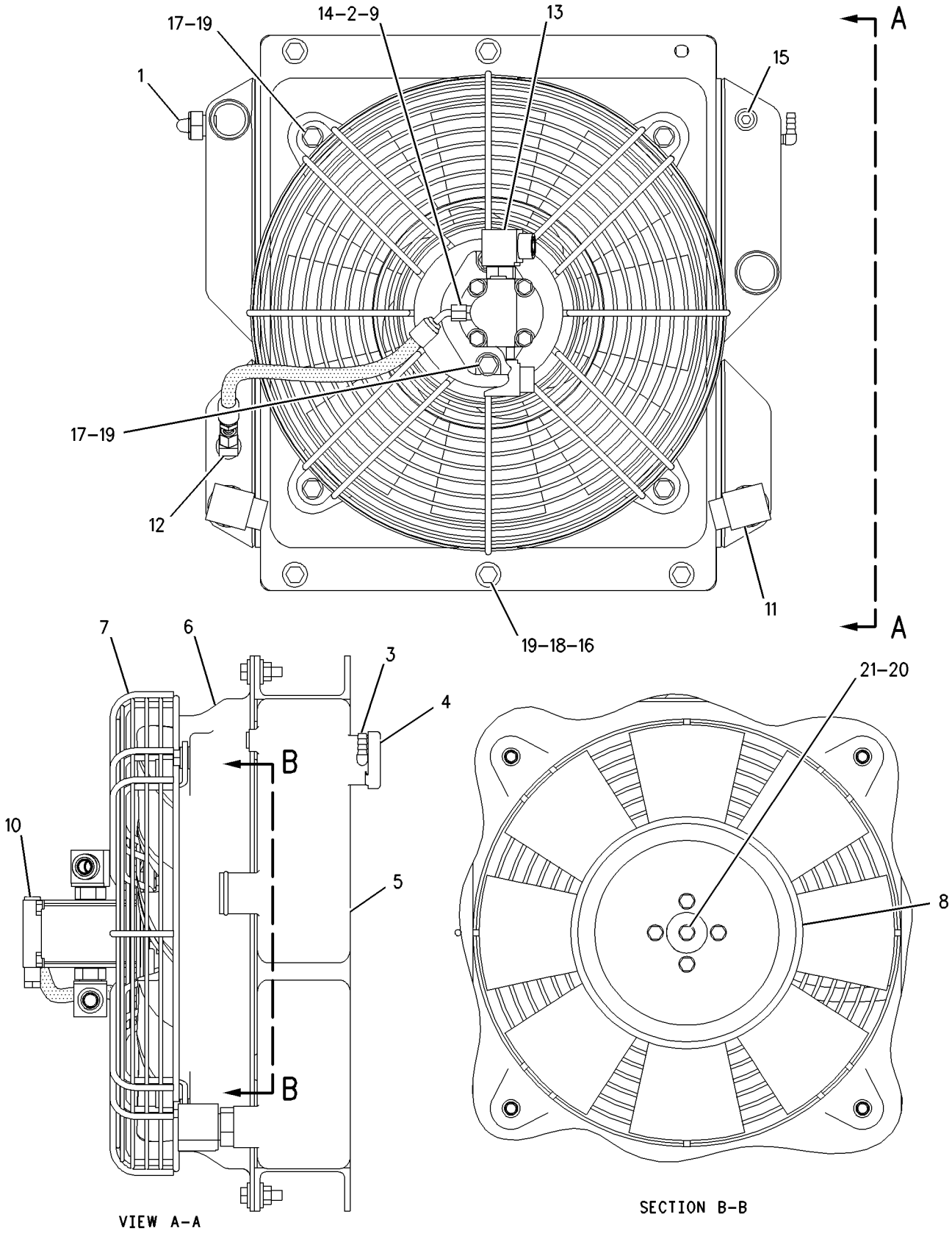

GRAPHIC #1

g00762124

COOLING SYSTEM

192-2604 RADIATOR & HYD OIL COOLER GP

S/N: 5SZ4000-UP
PART OF 192-2603 RADIATOR & OIL COOLER MTG GP
AN ATTACHMENT

SMCS-1351, 1356, 1386 **i01454296**

NOTE	REF NO	GRAPHIC REF	PART NUMBER	QTY	PART NAME 1 2 3 4 5 6 (PRODUCT LEVEL)	SEE PAGE
	1	1	**1Q-6031**	1	GAUGE-SIGHT	
	2	1	**6V-0394**	1	CONNECTOR-PORT	
	3	1	**069-4080**	1	FITTING-COUPLING	
	4	1	**126-5027**	1	CAP AS-RADIATOR	
	5	1	**142-8871**	1	SHROUD AS	
	6	1	**142-8872**	1	GUARD AS-FAN	
Y	7	1	*142-8873*	1	FAN GP-BLOWER	61
	8	1	**142-8879**	1	RADIATOR & HYD OIL COOLER AS	
	9	1	**154-4019**	1	HOSE AS	
Y	10	1	**185-9948**	1	MOTOR GP-GEAR	436
	11	1	*148-8347*	2	ELBOW GP	
					(EACH INCLUDES)	
		1	**3D-2824**	1	SEAL-O-RING	
		1	**6V-9007**	1	ELBOW	
		1	**6V-9746**	1	SEAL-O-RING	
	12	1	*148-8385*	1	ELBOW GP	
		1	**3J-7354**	1	SEAL-O-RING	
		1	**4J-5477**	1	SEAL-O-RING	
		1	**6V-9000**	1	ELBOW	
	13	1	*148-8390*	2	ELBOW GP	
					(EACH INCLUDES)	
		1	**2M-9780**	1	SEAL-O-RING	
		1	**6V-8626**	1	ELBOW	
		1	**7J-9108**	1	SEAL-O-RING	
	14	1	**4J-7533**	1	SEAL-O-RING	
	15	1	**7M-7410**	1	PLUG (3/8-18 NPTF)	
	16	1	**7X-7729**	10	WASHER (11X25X3MM THK)	
	17	1	**8T-4121**	6	WASHER-HARD (11X21X2.5MM THK)	
M	18	1	**8T-4133**	5	NUT (M10X1.5 THD)	
M	19	1	**8T-4196**	11	BOLT (M10X1.5X35MM)	
	20	1	**8T-4224**	1	WASHER-HARD (8.8X16X2MM THK)	
M	21	1	**8T-7547**	1	BOLT (M8X1.25X30MM)	

M-METRIC PART
Y-SEPARATE ILLUSTRATION

192-2604 **RADIATOR & HYD OIL COOLER GP** *(contd.)* **i01454296**

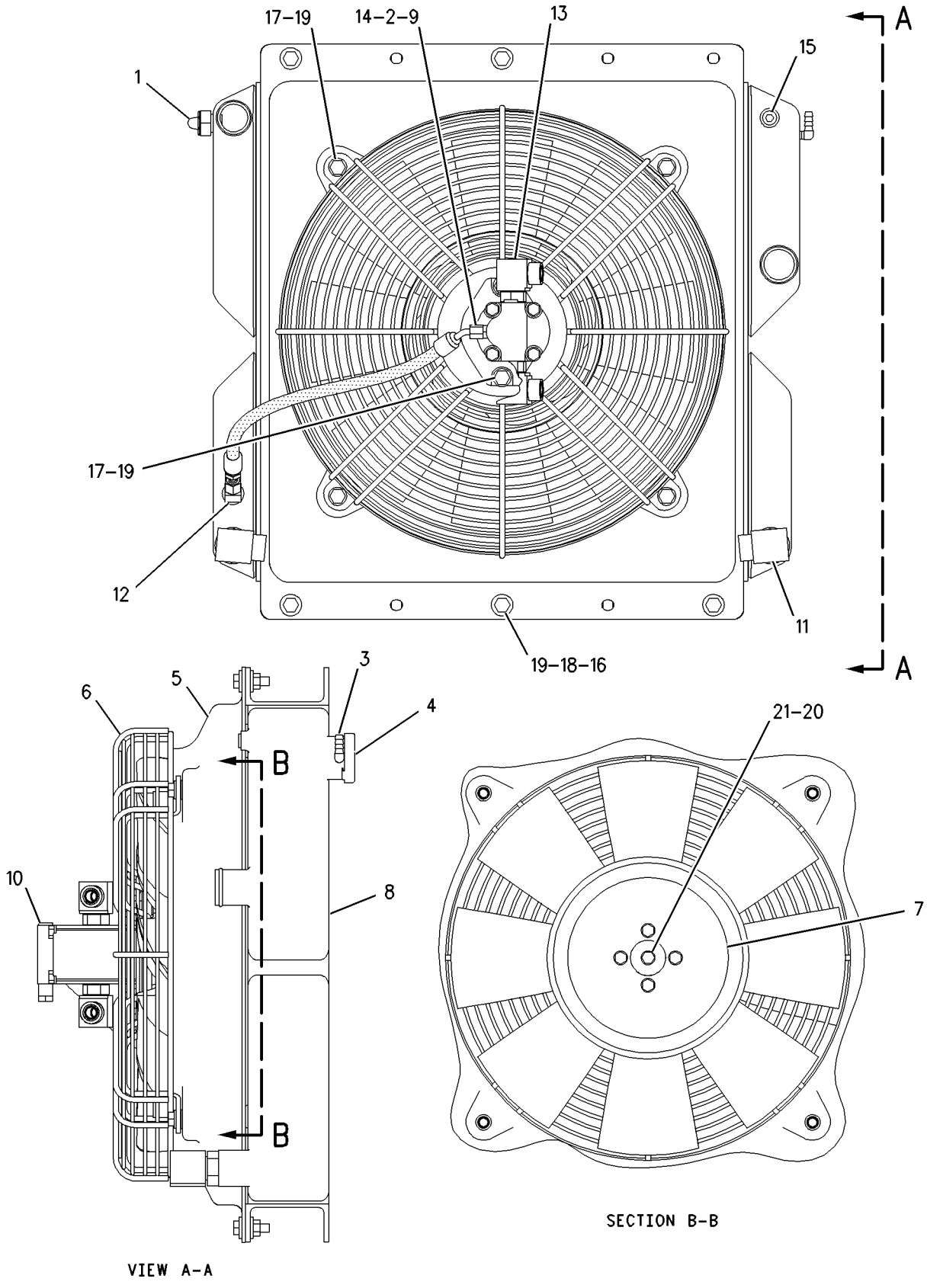

GRAPHIC #1 g00762102

201-7803 RADIATOR & HYD OIL COOLER GP

S/N: FDG572-UP

PART OF 210-0837 RADIATOR & HYD OIL COOLER GP

SMCS-1351, 1356, 1386 **i01678528**

NOTE	REF NO	GRAPHIC REF	PART NUMBER	QTY	PART NAME 1 2 3 4 5 6 (PRODUCT LEVEL)	SEE PAGE
	1	1	**036-1865**	1	CAP AS-RADIATOR	
	2	1	**069-4080**	1	FITTING-COUPLING	
	3	1	**142-8861**	1	RADIATOR & HYD OIL COOLER AS	
	4	1	**202-9013**	1	SHROUD AS	
Y	5	1	*202-9014*	1	FAN GP-BLOWER	62
	6	1	**207-6154**	1	GAUGE-SIGHT	
	7	1	**208-4704**	1	GUARD AS-FAN	
	8	1	**7M-7410**	1	PLUG (3/8-18 NPTF)	
	9	1	**7X-7729**	10	WASHER (11X25X3MM THK)	
	10	1	**8T-4121**	4	WASHER-HARD (11X21X2.5MM THK)	
M	11	1	**8T-4133**	5	NUT (M10X1.5 THD)	
M	12	1	**8T-4196**	9	BOLT (M10X1.5X35MM)	

M-METRIC PART
Y-SEPARATE ILLUSTRATION

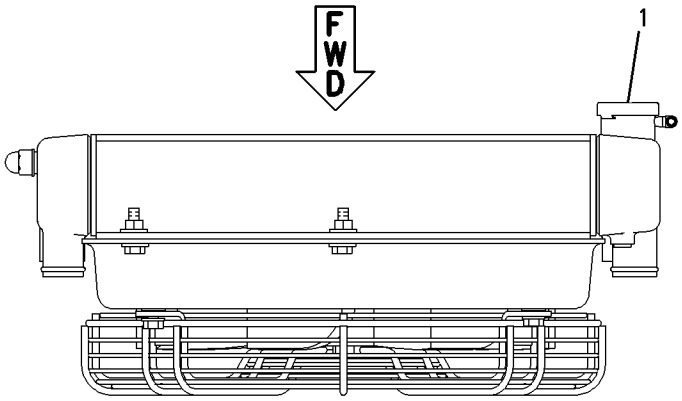

TOP VIEW

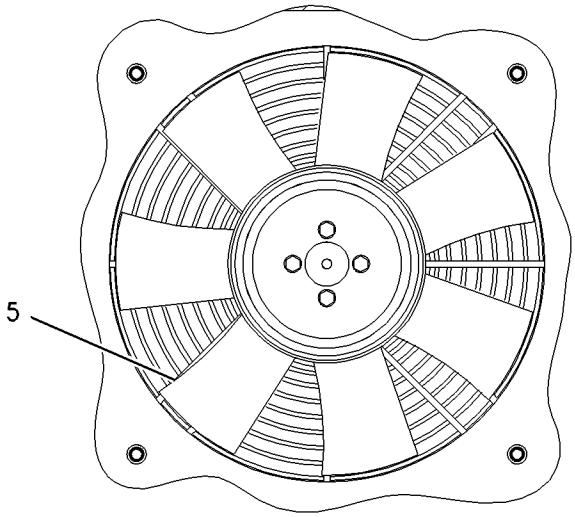

SECTION A-A

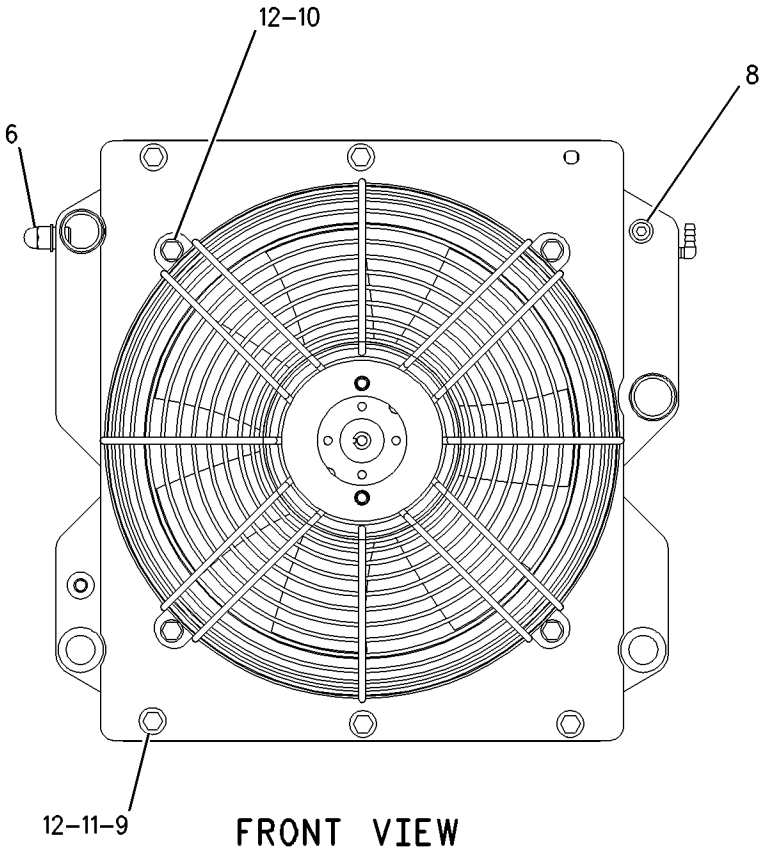

FRONT VIEW

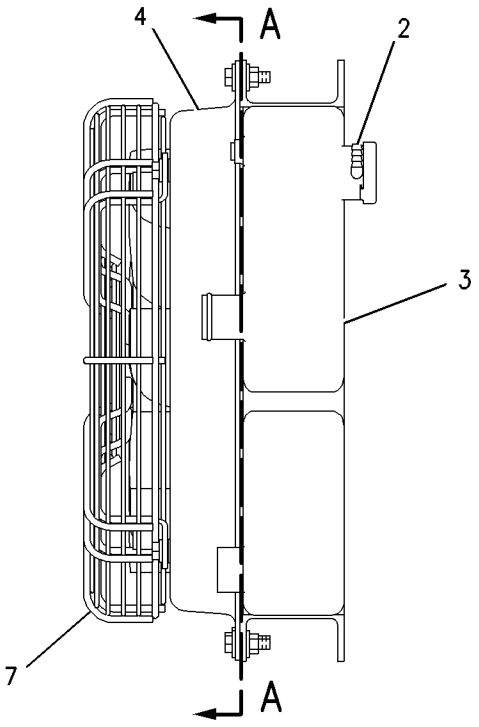

LEFT SIDE VIEW

GRAPHIC #1

g00866562

210-0837 RADIATOR & HYD OIL COOLER GP

S/N: FDG572-UP

PART OF 192-2620 INSTALLATION AR-ENGINE

SMCS-1351, 1356, 1386 **i01743019**

NOTE	REF NO	GRAPHIC REF	PART NUMBER	QTY	PART NAME 1 2 3 4 5 6 (PRODUCT LEVEL)	SEE PAGE
	1	1	**8T-4983**	1	CLAMP-HOSE	
	2	1	**124-6264**	3	CLAMP-HOSE	
	3	1	**142-8833**	1	SPACER	
	4	1	**142-8866**	1	RECOVERY GP-COOLANT	
	5	1	**142-8867**	1	HOSE	
	6	1	**142-9182**	1	HOSE	
Y	7	1	*201-7803*	1	RADIATOR & HYD OIL COOLER GP	78
	8	1	**1P-4278**	2	CLAMP-HOSE	
	9	1	**4K-8864**	5	CLIP	
	10	1	**5P-1075**	1	WASHER-HARD (10.2X22.5X3MM THK)	
	11	1	**5P-7470**	1	CLIP (SLOT)	
	12	1	**5P-7471**	1	CLIP (TAB)	
	13	1	**5P-7703**	1	GROMMET	
	14	1	**7X-7729**	14	WASHER (11X25X3MM THK)	
	15	1	**8T-4121**	2	WASHER-HARD (11X21X2.5MM THK)	
M	16	1	**8T-4133**	7	NUT (M10X1.5 THD)	
M	17	1	**8T-4137**	2	BOLT (M10X1.5X20MM)	
M	18	1	**8T-4196**	1	BOLT (M10X1.5X35MM)	
	19	1	**8T-4224**	2	WASHER-HARD (8.8X16X2MM THK)	
M	20	1	**8T-5091**	2	BOLT (M8X1.25X20MM)	
M	21	1	**8T-6466**	6	BOLT (M10X1.50X60MM)	
M	22	1	**9X-2125**	1	BOLT-LOCKING (M10X1.5X25MM)	
E	23	1	**5P-1420**		HOSE (236CM)	

E-ORDER BY THE CENTIMETER
M-METRIC PART
Y-SEPARATE ILLUSTRATION

210-0837 **RADIATOR & HYD OIL COOLER GP** *(contd.)* **i01743019**

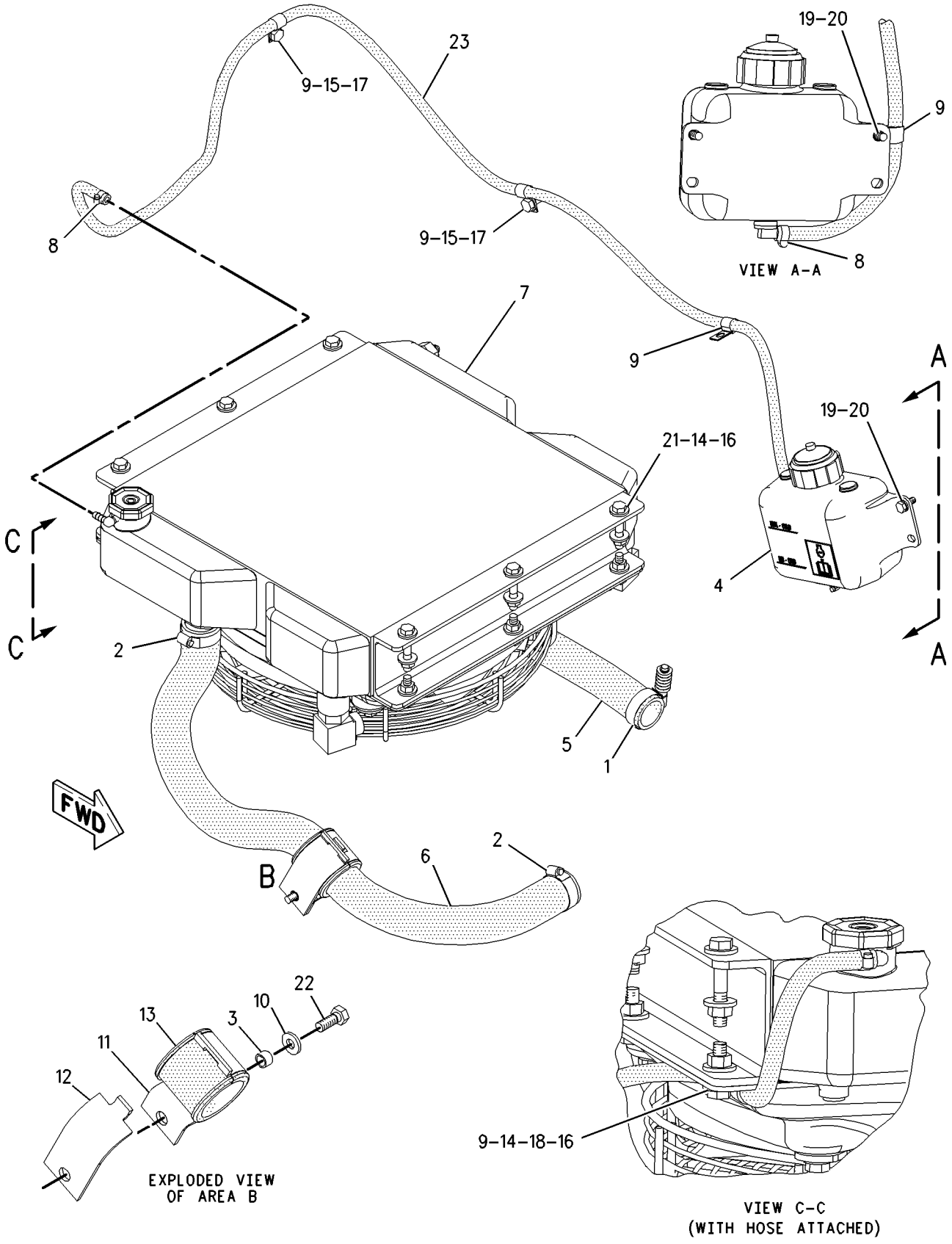

GRAPHIC #1 g00828597

COOLING SYSTEM

142-8877 RADIATOR & OIL COOLER MTG GP

S/N: 5SZ4000-UP
PART OF 183-7125 INSTALLATION AR-ENGINE
AN ATTACHMENT

SMCS-1351, 1354 **i01583884**

NOTE	REF NO	GRAPHIC REF	PART NUMBER	QTY	PART NAME 1 2 3 4 5 6 (PRODUCT LEVEL)	SEE PAGE
	1	1	**8T-4983**	1	CLAMP-HOSE	
	2	1	**124-6264**	3	CLAMP-HOSE	
	3	1	**142-8833**	1	SPACER	
	4	1	**142-8866**	1	RECOVERY GP-COOLANT	
		1	**169-6715**	1	CAP-VENTED	
Y	5	1	*142-8878*	1	RADIATOR & HYD OIL COOLER GP	68
	6	1	**142-9102**	1	BRACKET	
	7	1	**142-9181**	1	HOSE	
	8	1	**142-9182**	1	HOSE	
	9	1	**1P-4278**	2	CLAMP-HOSE	
	10	1	**4K-8864**	5	CLIP	
	11	1	**5P-1075**	1	WASHER-HARD (10.2X22.5X3MM THK)	
	12	1	**5P-7470**	1	CLIP (SLOT)	
	13	1	**5P-7471**	1	CLIP (TAB)	
	14	1	**5P-7703**	1	GROMMET	
	15	1	**6V-1572**	1	CLIP (SLOT)	
	16	1	**6V-1573**	1	CLIP (TAB)	
	17	1	**6V-1875**	1	GROMMET	
	18	1	**7X-7729**	14	WASHER (11X25X3MM THK)	
	19	1	**8T-4121**	4	WASHER-HARD (11X21X2.5MM THK)	
M	20	1	**8T-4133**	8	NUT (M10X1.5 THD)	
M	21	1	**8T-4137**	2	BOLT (M10X1.5X20MM)	
M	22	1	**8T-4195**	1	BOLT (M10X1.5X30MM)	
M	23	1	**8T-4196**	1	BOLT (M10X1.5X35MM)	
M	24	1	**8T-4200**	2	BOLT (M8X1.25X16MM)	
	25	1	**8T-4224**	4	WASHER-HARD (8.8X16X2MM THK)	
M	26	1	**8T-5091**	2	BOLT (M8X1.25X20MM)	
M	27	1	**8T-5005**	1	BOLT (M10X1.50X70MM)	
M	28	1	**8T-6466**	5	BOLT (M10X1.50X60MM)	
M	29	1	**9X-2125**	1	BOLT-LOCKING (M10X1.5X25MM)	
E	30	1	**5P-1420**		HOSE (226CM)	

E-ORDER BY THE CENTIMETER
M-METRIC PART
Y-SEPARATE ILLUSTRATION

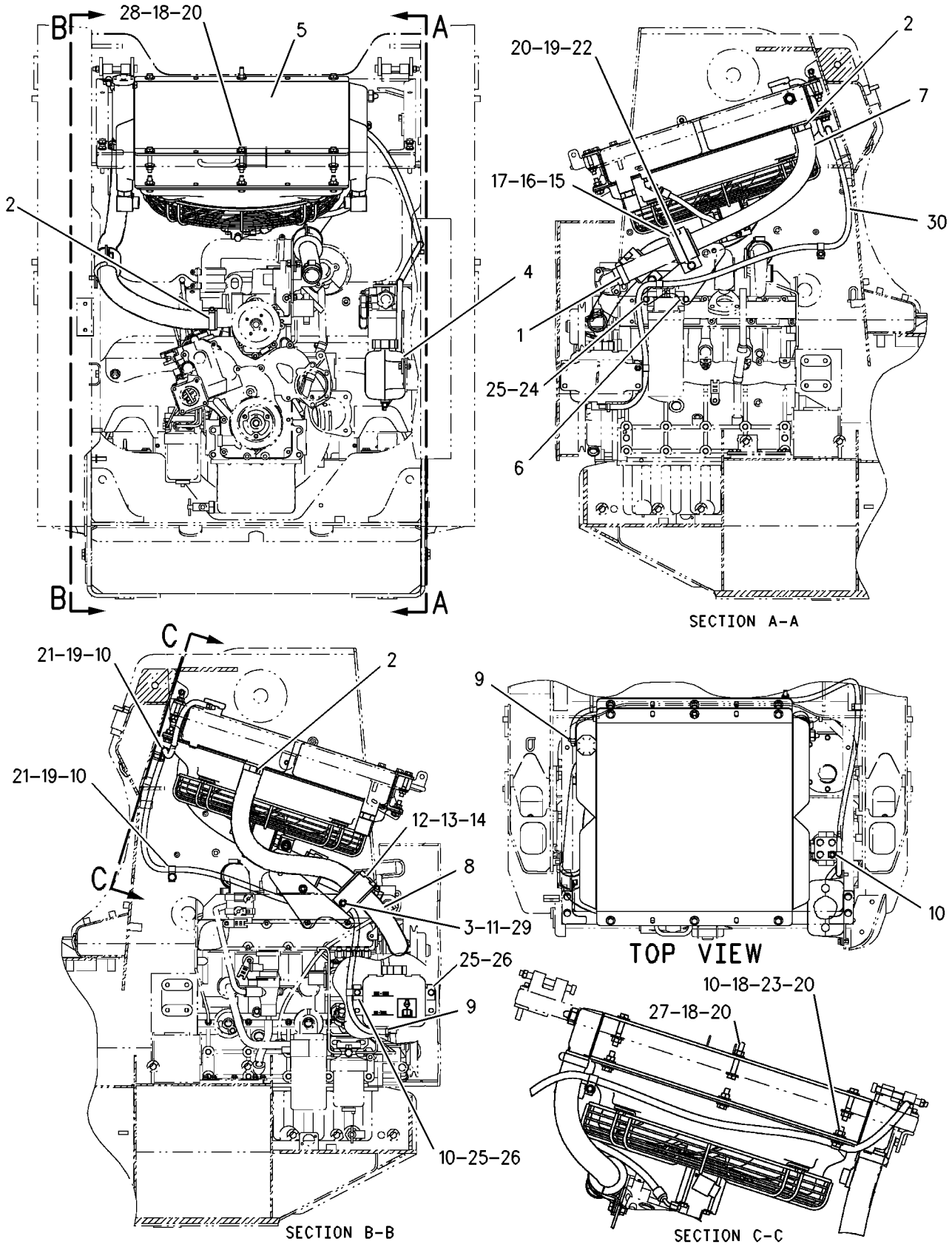

GRAPHIC #1 g00786530

COOLING SYSTEM

187-3216 RADIATOR & OIL COOLER MTG GP

S/N: CED1-UP; 5SZ7171-UP
PART OF 183-7125, 191-9765 INSTALLATION AR-ENGINE
ALSO AN ATTACHMENT

SMCS-1351, 1354 **i01583891**

NOTE	REF NO	GRAPHIC REF	PART NUMBER	QTY	PART NAME 1 2 3 4 5 6 (PRODUCT LEVEL)	SEE PAGE
	1	1	**124-6264**	3	CLAMP-HOSE	
	2	1	**142-8833**	1	SPACER	
	3	1	**142-8866**	1	RECOVERY GP-COOLANT	
	3A	1	**169-6715**	1	CAP-VENTED	
Y	4	1	*142-8878*	1	RADIATOR & HYD OIL COOLER GP	68
	5	1	**142-9102**	1	BRACKET	
	6	1	**142-9181**	1	HOSE	
	7	1	**142-9182**	1	HOSE	
	8	1	**1P-4278**	2	CLAMP-HOSE	
	9	1	**4K-8864**	5	CLIP	
	10	1	**5P-1075**	1	WASHER-HARD (10.2X22.5X3MM THK)	
	11	1	**5P-7470**	1	CLIP (SLOT)	
	12	1	**5P-7471**	1	CLIP (TAB)	
	13	1	**5P-7703**	1	GROMMET	
	14	1	**6V-1572**	1	CLIP (SLOT)	
	15	1	**6V-1573**	1	CLIP (TAB)	
	16	1	**6V-1875**	1	GROMMET	
	17	1	**7X-7729**	14	WASHER (11X25X3MM THK)	
	18	1	**8T-4121**	4	WASHER-HARD (11X21X2.5MM THK)	
M	19	1	**8T-4133**	8	NUT (M10X1.5 THD)	
M	20	1	**8T-4137**	2	BOLT (M10X1.5X20MM)	
M	21	1	**8T-4195**	1	BOLT (M10X1.5X30MM)	
M	22	1	**8T-4196**	1	BOLT (M10X1.5X35MM)	
M	23	1	**8T-4200**	2	BOLT (M8X1.25X16MM)	
	24	1	**8T-4224**	4	WASHER-HARD (8.8X16X2MM THK)	
M	25	1	**8T-5005**	1	BOLT (M10X1.50X70MM)	
M	26	1	**8T-5091**	2	BOLT (M8X1.25X20MM)	
M	27	1	**8T-6466**	5	BOLT (M10X1.50X60MM)	
M	28	1	**9X-2125**	1	BOLT-LOCKING (M10X1.5X25MM)	
E	29	1	**5P-1420**		HOSE (236 CM)	
	30	1	**8T-4983**	1	CLAMP-HOSE	

E-ORDER BY THE CENTIMETER
M-METRIC PART
Y-SEPARATE ILLUSTRATION

187-3216 **RADIATOR & OIL COOLER MTG GP** *(contd.)* **i01583891**

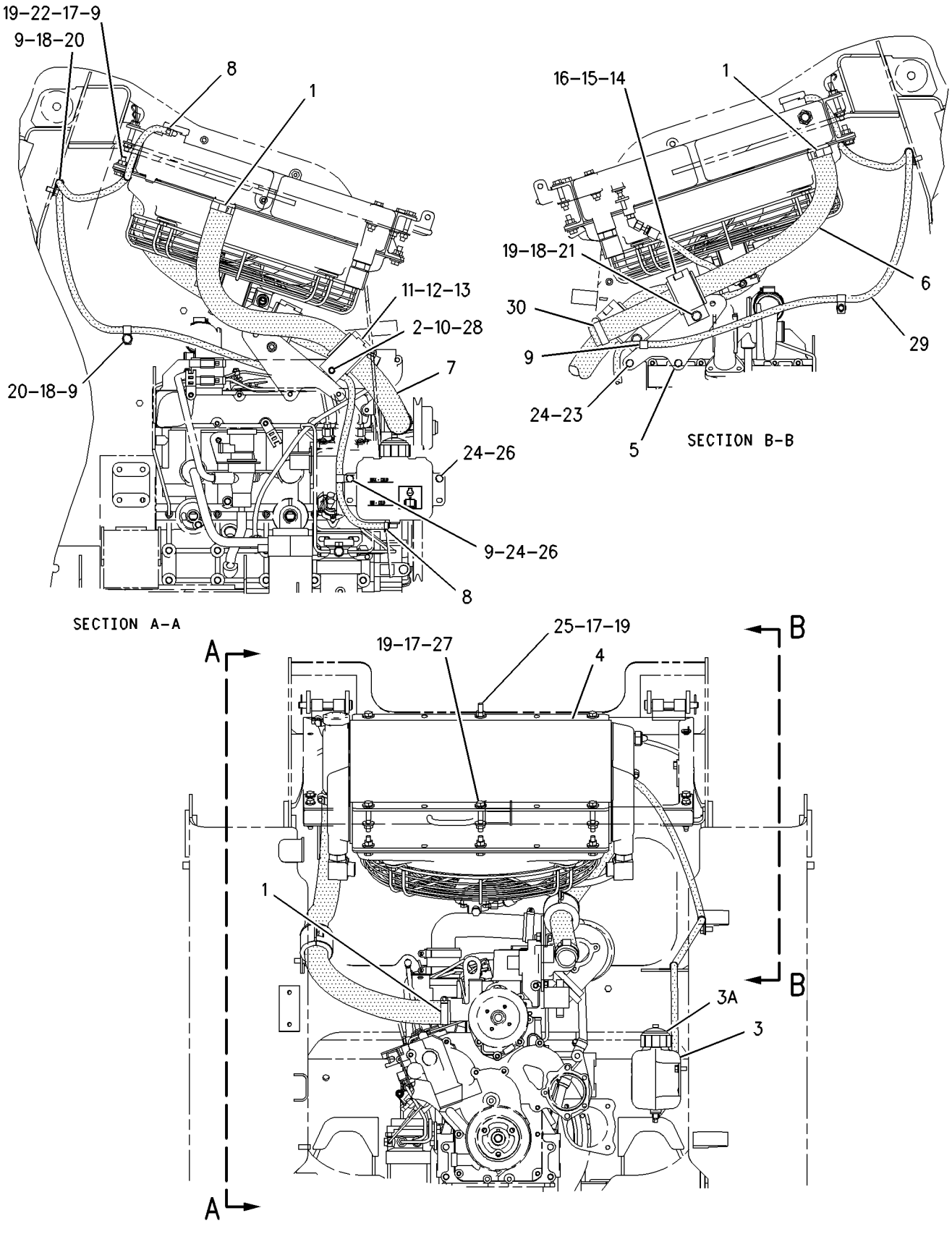

GRAPHIC #1 g00798382

COOLING SYSTEM

191-9775 RADIATOR & OIL COOLER MTG GP

S/N: FDG1-571

PART OF 192-2620 INSTALLATION AR-ENGINE

SMCS-1351, 1354 **i01583894**

NOTE	REF NO	GRAPHIC REF	PART NUMBER	QTY	PART NAME 1 2 3 4 5 6 (PRODUCT LEVEL)	SEE PAGE
	1	1	**124-6264**	3	CLAMP-HOSE	
B	2	1	**142-8833**	1	SPACER	
	3	1	**142-8866**	1	RECOVERY GP-COOLANT	
	4	1	**142-8867**	1	HOSE	
	5	1	**142-9182**	1	HOSE	
Y	6	1	*165-4910*	1	RADIATOR & HYD OIL COOLER GP	72
	7	1	**1P-4278**	2	CLAMP-HOSE	
	8	1	**4K-8864**	5	CLIP	
	9	1	**5P-1075**	1	WASHER-HARD (10.2X22.5X3MM THK)	
	10	1	**5P-7470**	1	CLIP (SLOT)	
	11	1	**5P-7471**	1	CLIP (TAB)	
	12	1	**5P-7703**	1	GROMMET	
	13	1	**7X-7729**	14	WASHER (11X25X3MM THK)	
	14	1	**8T-4121**	2	WASHER-HARD (11X21X2.5MM THK)	
M	15	1	**8T-4133**	7	NUT (M10X1.5 THD)	
M	16	1	**8T-4137**	2	BOLT (M10X1.5X20MM)	
M	17	1	**8T-4196**	1	BOLT (M10X1.5X35MM)	
	18	1	**8T-4224**	2	WASHER-HARD (8.8X16X2MM THK)	
M	19	1	**8T-5091**	2	BOLT (M8X1.25X20MM)	
M	20	1	**8T-6466**	6	BOLT (M10X1.50X60MM)	
M	21	1	**9X-2125**	1	BOLT-LOCKING (M10X1.5X25MM)	
E	22	1	**5P-1420**		HOSE (236CM)	
	23	1	**8T-4983**	1	CLAMP-HOSE	

B-USE AS REQUIRED
E-ORDER BY THE CENTIMETER
M-METRIC PART
Y-SEPARATE ILLUSTRATION

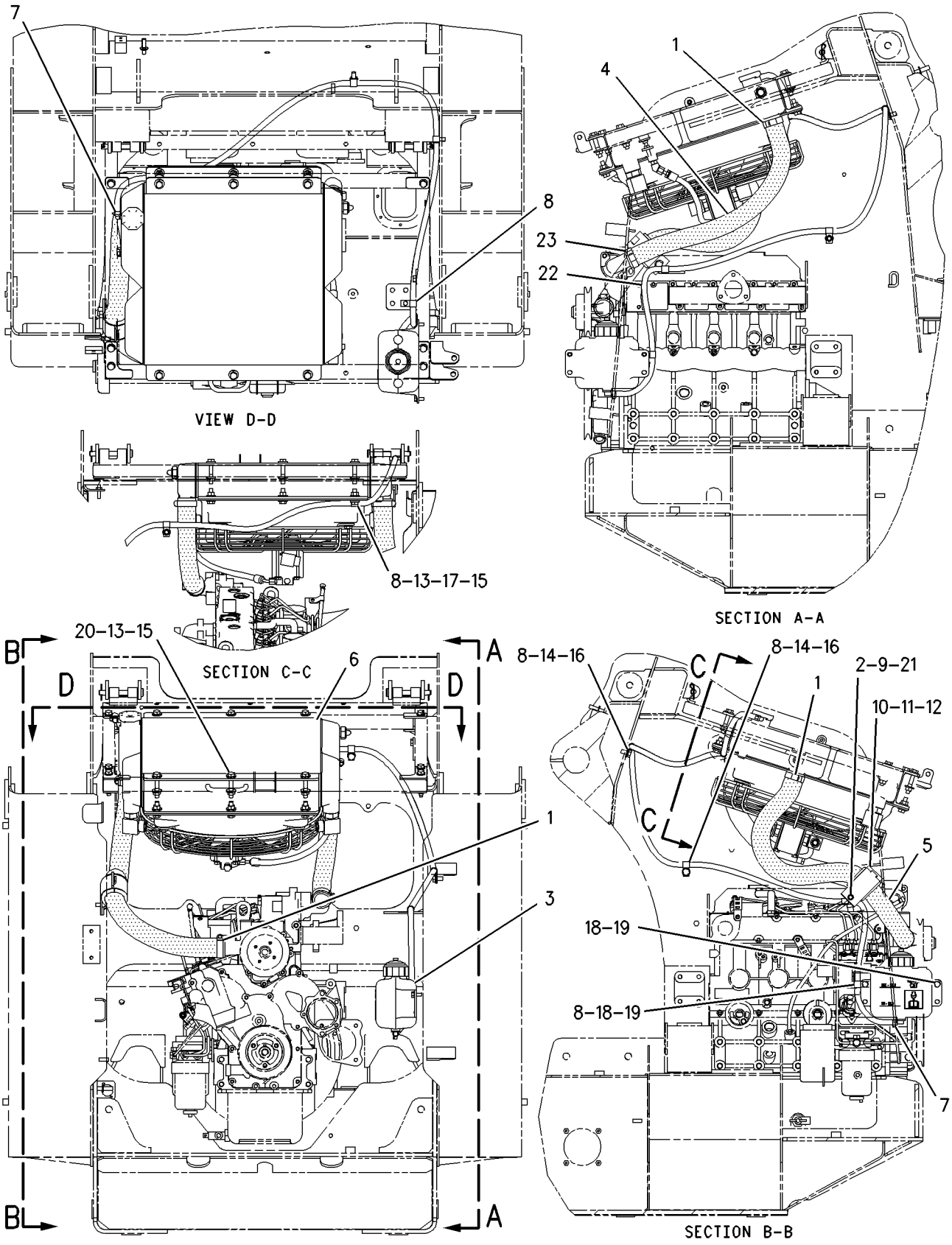

GRAPHIC #1

g00787208

192-2601 RADIATOR & OIL COOLER MTG GP

S/N: 4YZ4000-UP
PART OF 142-9101 INSTALLATION AR-ENGINE
AN ATTACHMENT

SMCS-1351, 1354 **i01583895**

NOTE	REF NO	GRAPHIC REF	PART NUMBER	QTY	PART NAME 1 2 3 4 5 6 (PRODUCT LEVEL)	SEE PAGE
	1	1,2	**124-6264**	4	CLAMP-HOSE	
	2	2	**142-8833**	1	SPACER	
	3	1	**142-8866**	1	RECOVERY GP-COOLANT	
	3A	1	**169-6715**	1	CAP-VENTED	
	4	2	**142-8867**	1	HOSE	
	5	2	**142-9182**	1	HOSE	
Y	6	1	**192-2602**	1	RADIATOR & HYD OIL COOLER GP	74
	7	2	**1P-4278**	2	CLAMP-HOSE	
	8	1,2	**4K-8864**	5	CLIP	
	9	2	**5P-1075**	1	WASHER-HARD (10.2X22.5X3MM THK)	
	10	2	**5P-7470**	1	CLIP (SLOT)	
	11	2	**5P-7471**	1	CLIP (TAB)	
	12	2	**5P-7703**	1	GROMMET	
	13	1	**7X-7729**	14	WASHER (11X25X3MM THK)	
	14	2	**8T-4121**	2	WASHER-HARD (11X21X2.5MM THK)	
M	15	1	**8T-4133**	7	NUT (M10X1.5 THD)	
M	16	2	**8T-4137**	2	BOLT (M10X1.5X20MM)	
M	17	1	**8T-4196**	1	BOLT (M10X1.5X35MM)	
	18	2	**8T-4224**	2	WASHER-HARD (8.8X16X2MM THK)	
M	19	2	**8T-5091**	2	BOLT (M8X1.25X20MM)	
M	20	1	**8T-6466**	6	BOLT (M10X1.50X60MM)	
M	21	2	**9X-2125**	1	BOLT-LOCKING (M10X1.5X25MM)	
E	22	2	**5P-1420**		HOSE (226CM)	

E-ORDER BY THE CENTIMETER
M-METRIC PART
Y-SEPARATE ILLUSTRATION

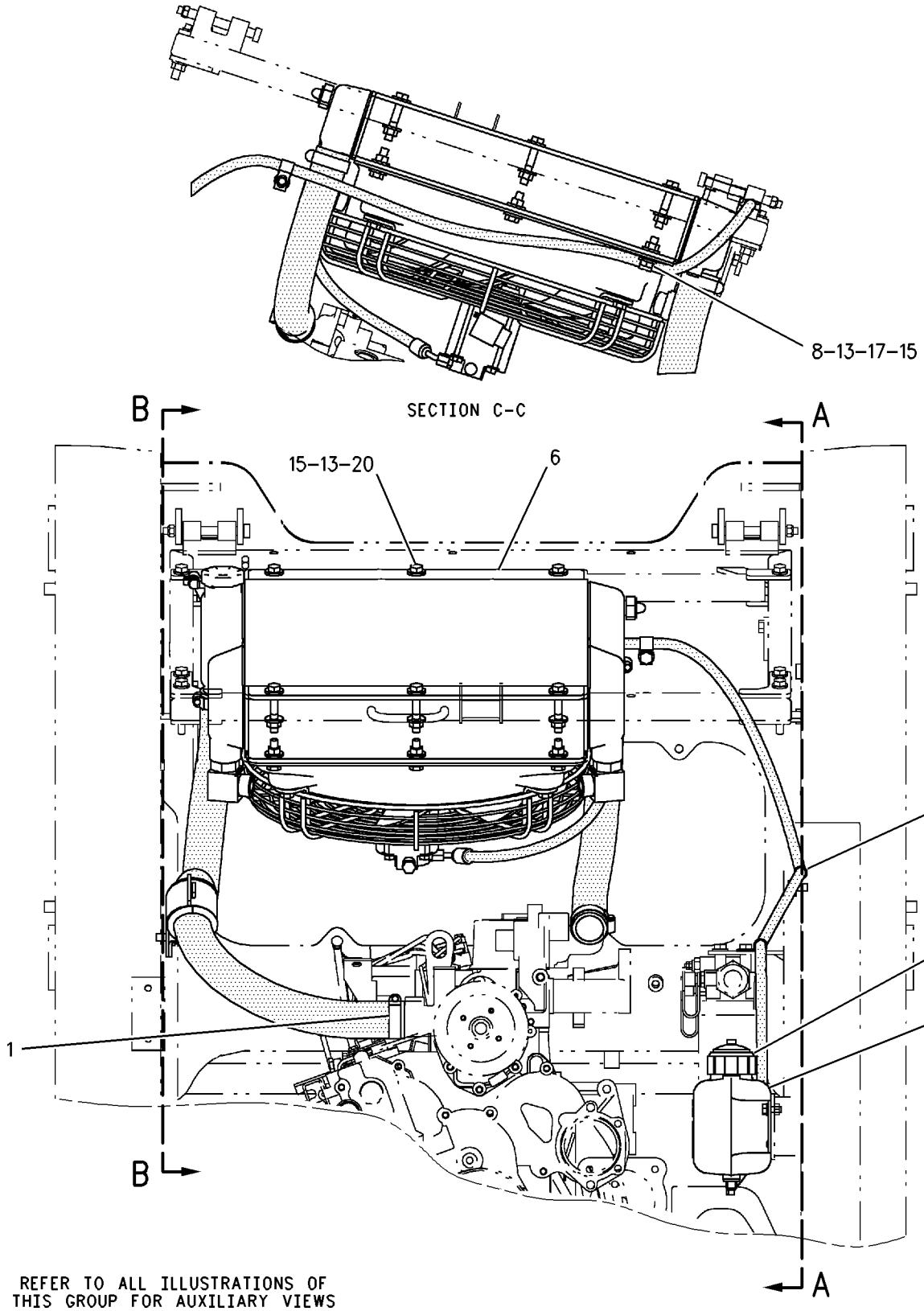

GRAPHIC #1 g00762611

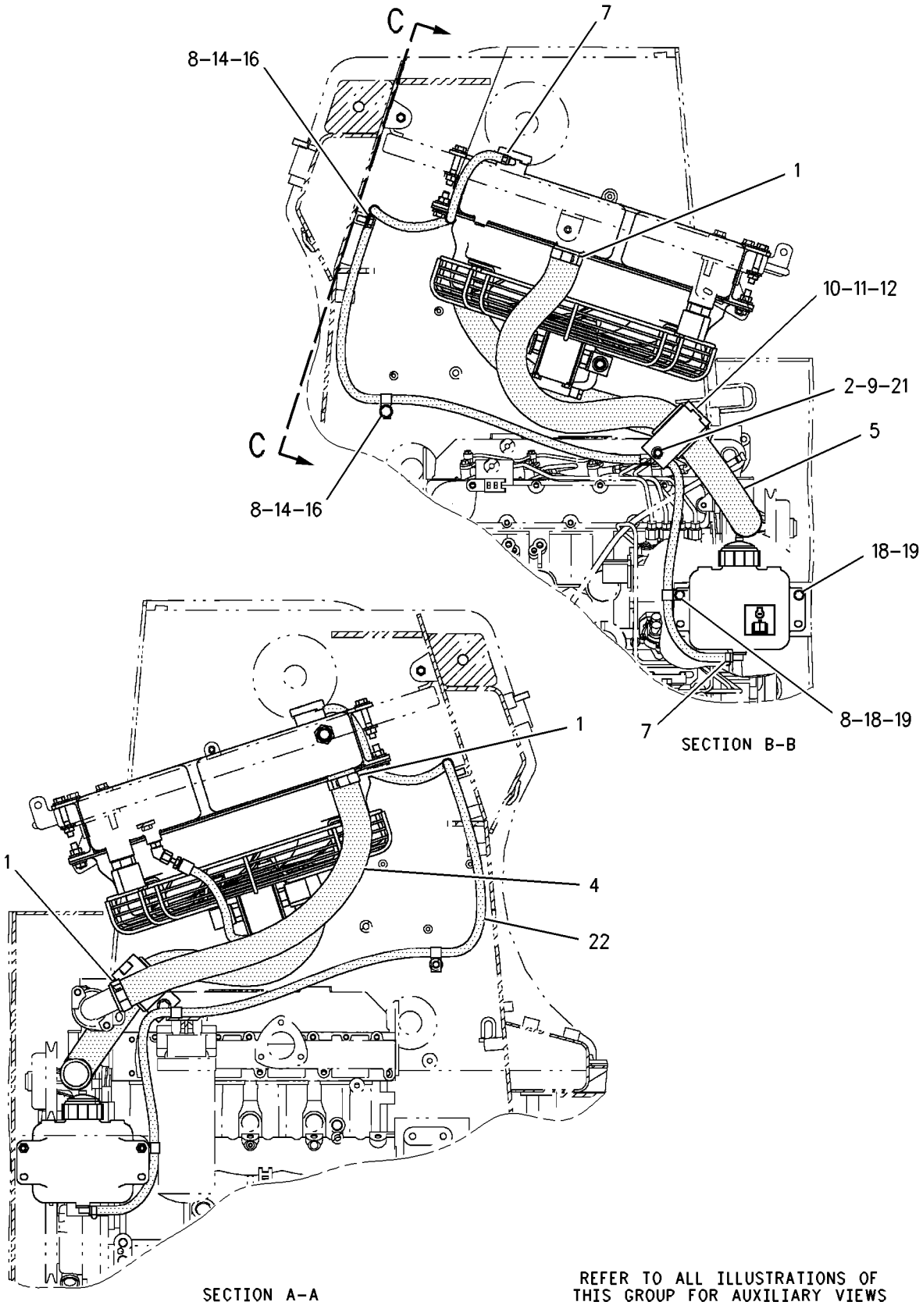

GRAPHIC #2 g00762612

MEMORANDA

COOLING SYSTEM

192-2603 RADIATOR & OIL COOLER MTG GP

S/N: 5SZ4000-7069
PART OF 183-7125 INSTALLATION AR-ENGINE
AN ATTACHMENT

SMCS-1351, 1354 **i01583899**

NOTE	REF NO	GRAPHIC REF	PART NUMBER	QTY	PART NAME 1 2 3 4 5 6 (PRODUCT LEVEL)	SEE PAGE
	1	1,2	**124-6264**	4	CLAMP-HOSE	
	2	2	**142-8833**	1	SPACER	
	3	1	**142-8866**	1	RECOVERY GP-COOLANT	
	3A	1	**169-6715**		CAP-VENTED	
	4	2	**142-9102**	1	BRACKET	
	5	2	**142-9181**	1	HOSE	
	6	2	**142-9182**	1	HOSE	
Y	7	1	*192-2604*	1	RADIATOR & HYD OIL COOLER GP	76
	8	2	**1P-4278**	2	CLAMP-HOSE	
	9	1,2	**4K-8864**	5	CLIP	
	10	2	**5P-1075**	1	WASHER-HARD (10.2X22.5X3MM THK)	
	11	2	**5P-7470**	1	CLIP (SLOT)	
	12	2	**5P-7471**	1	CLIP (TAB)	
	13	2	**5P-7703**	1	GROMMET	
	14	2	**6V-1572**	1	CLIP (SLOT)	
	15	2	**6V-1573**	1	CLIP (TAB)	
	16	2	**6V-1875**	1	GROMMET	
	17	1	**7X-7729**	14	WASHER (11X25X3MM THK)	
	18	2	**8T-4121**	4	WASHER-HARD (11X21X2.5MM THK)	
M	19	1,2	**8T-4133**	8	NUT (M10X1.5 THD)	
M	20	2	**8T-4137**	2	BOLT (M10X1.5X20MM)	
M	21	2	**8T-4195**	1	BOLT (M10X1.5X30MM)	
M	22	1	**8T-4196**	1	BOLT (M10X1.5X35MM)	
M	23	2	**8T-4200**	2	BOLT (M8X1.25X16MM)	
	24	2	**8T-4224**	4	WASHER-HARD (8.8X16X2MM THK)	
M	25	1	**8T-5005**	1	BOLT (M10X1.50X70MM)	
M	26	2	**8T-5091**	2	BOLT (M8X1.25X20MM)	
M	27	1	**8T-6466**	5	BOLT (M10X1.50X60MM)	
M	28	2	**9X-2125**	1	BOLT-LOCKING (M10X1.5X25MM)	
E	29	2	**5P-1420**		HOSE (226CM)	

E-ORDER BY THE CENTIMETER
M-METRIC PART
Y-SEPARATE ILLUSTRATION

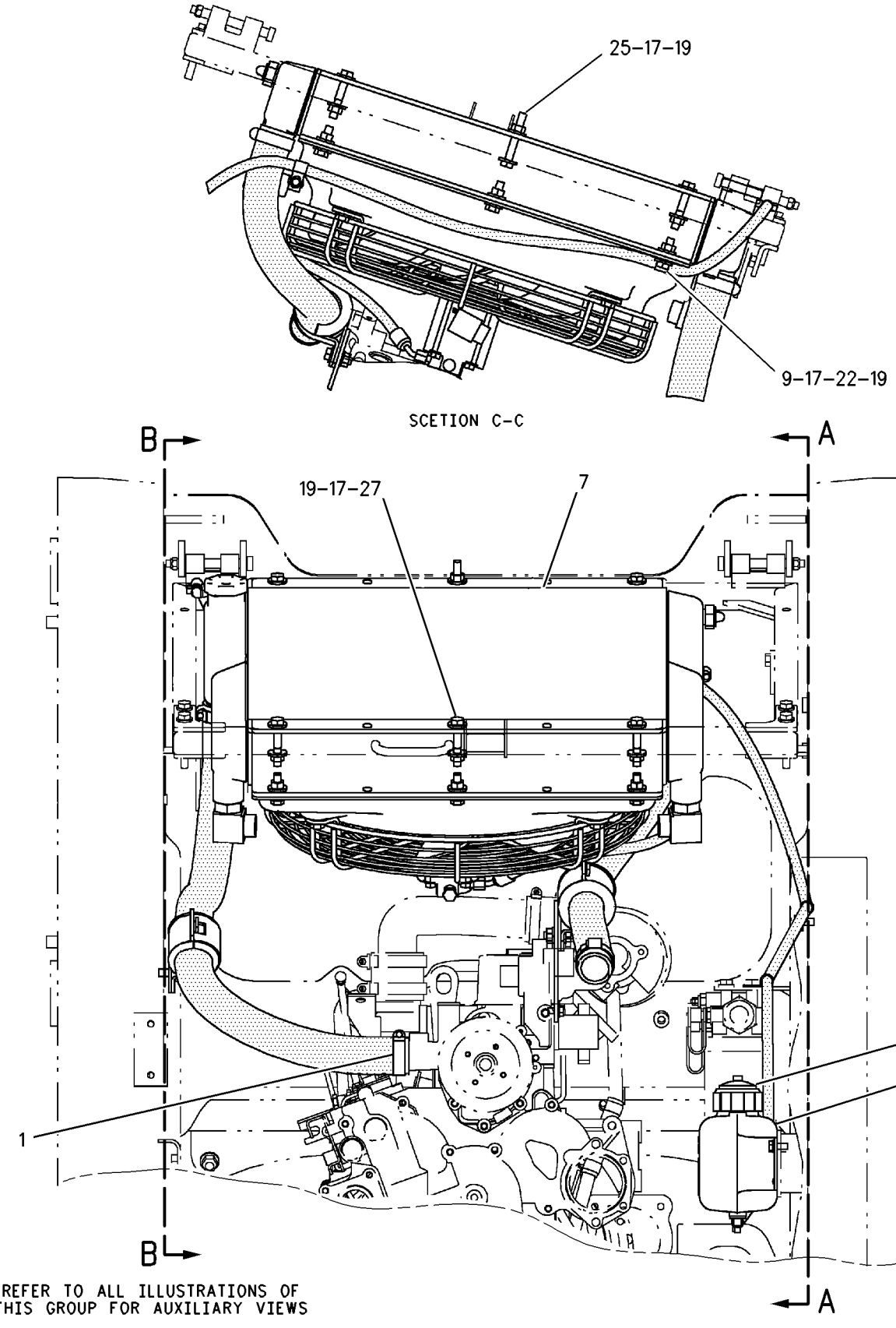

GRAPHIC #1 g00762489

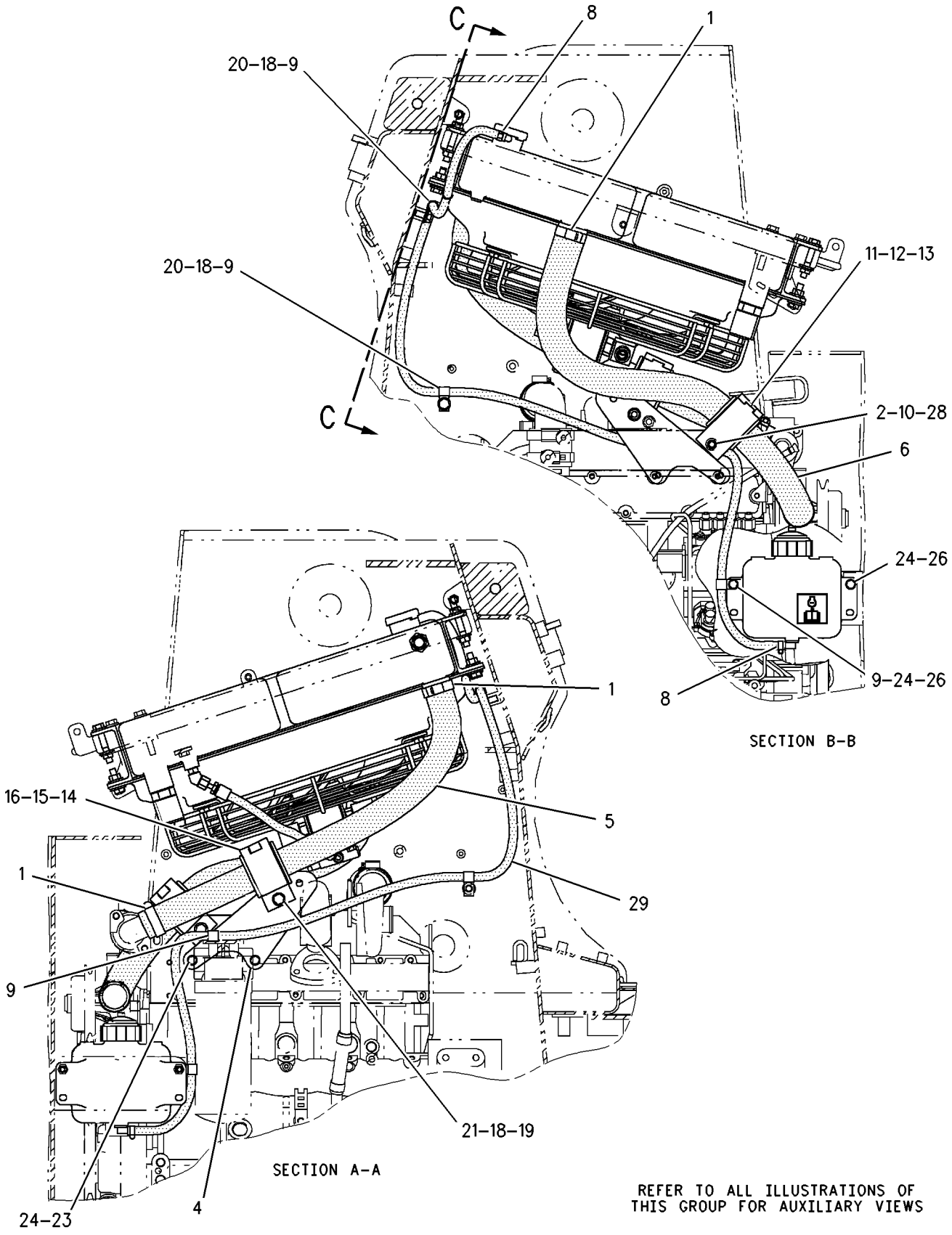

GRAPHIC #2

g00762490

AIR INLET AND EXHAUST SYSTEM

152-4893 AIR CLEANER GP

S/N: CED1-UP

PART OF 191-9765 INSTALLATION AR-ENGINE

SMCS-1051 **i01391411**

NOTE	REF NO	GRAPHIC REF	PART NUMBER	QTY	PART NAME 1 2 3 4 5 6 (PRODUCT LEVEL)	SEE PAGE
	1	1	*152-4899*	1	AIR CLEANER GP	
		1	**142-8842**	1	AIR CLEANER GP	
	2	1	**112-9717**	1	VALVE-VACUATOR	
	3	1	**110-6326**	1	ELEMENT-MAIN (PRIMARY)	
	4	1	**110-6331**	1	ELEMENT (SECONDARY)	
	5	1	**152-4898**	1	BAND-MOUNTING	
	6	1	**5P-4116**	2	WASHER-HARD (8.8X20.5X2MM THK)	
M	7	1	**8T-4908**	2	BOLT (M8X1.25X25MM)	

M-METRIC PART

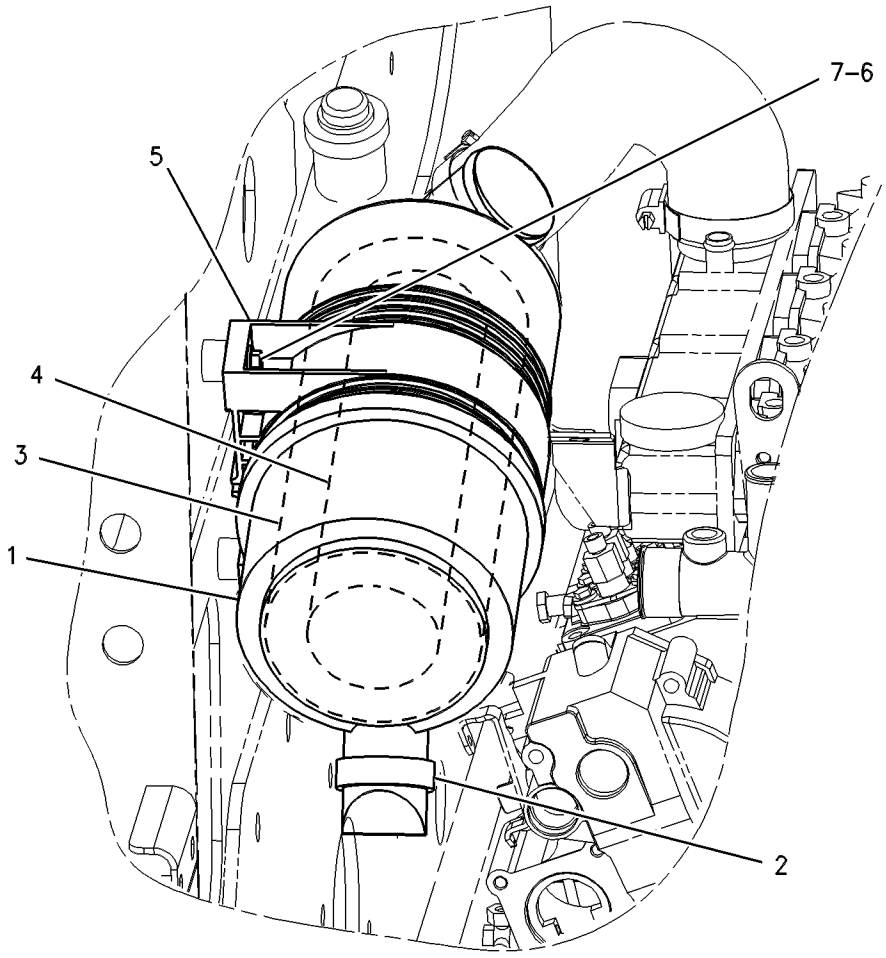

GRAPHIC #1 g00559501

AIR INLET AND EXHAUST SYSTEM

183-7126 AIR CLEANER GP

S/N: 4YZ4000-UP; 5SZ4000-UP
PART OF 142-9101, 183-7125 INSTALLATION AR-ENGINE
AN ATTACHMENT

SMCS-1051 **i01454300**

NOTE	REF NO	GRAPHIC REF	PART NUMBER	QTY	PART NAME 1 2 3 4 5 6 (PRODUCT LEVEL)	SEE PAGE
	1	1	**5P-4116**	2	WASHER-HARD (8.8X20.5X2MM THK)	
M	2	1	**8T-4908**	2	BOLT (M8X1.25X25MM)	
	3	1	*142-8703*	1	AIR CLEANER GP	
	4	1	**142-8704**	1	AIR CLEANER AS	
	4A	1	**110-6326**	1	FILTER ELEMENT AS-AIR (PRIMARY)	
	4B	1	**110-6331**	1	FILTER ELEMENT AS-AIR (SECONDARY)	
	4C	1	**112-9717**	1	VALVE-VACUATOR	
	5	1	**152-4898**	1	BAND-MOUNTING	

M-METRIC PART

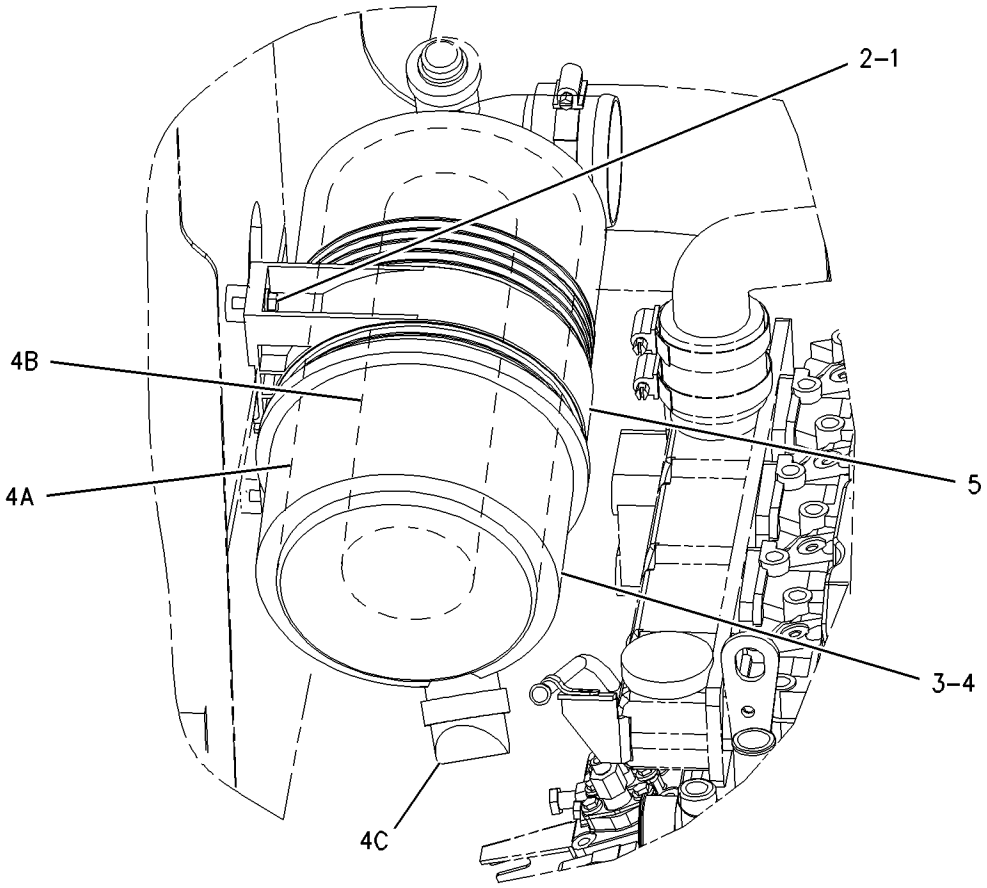

GRAPHIC #1 g00761727

AIR INLET AND EXHAUST SYSTEM

192-2617 AIR CLEANER GP

S/N: FDG1-UP

PART OF 192-2620 INSTALLATION AR-ENGINE

SMCS-1051 **i01486197**

NOTE	REF NO	GRAPHIC REF	PART NUMBER	QTY	PART NAME 1 2 3 4 5 6 (PRODUCT LEVEL)	SEE PAGE
	1	1	*152-4897*	1	AIR CLEANER GP	
		1	**140-2331**	1	AIR CLEANER GP	
	2	1	**112-9717**	1	VALVE-VACUATOR	
	3	1	**134-8726**	1	ELEMENT AS (PRIMARY)	
	4	1	**140-2334**	1	ELEMENT AS (SECONDARY)	
	5	1	**152-4891**	1	BAND-MOUNTING	
	6	1	**5P-4116**	2	WASHER (2MM THK)	
M	7	1	**8T-4908**	2	BOLT (M8X1.25X25MM)	

M-METRIC PART

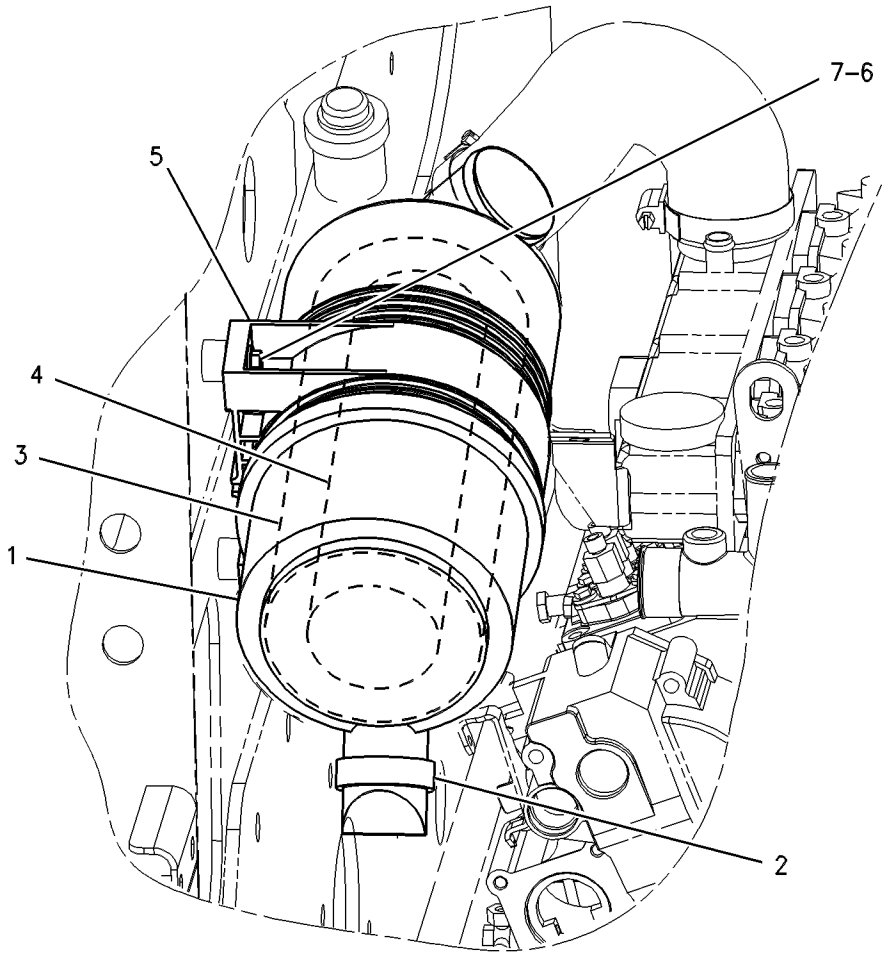

GRAPHIC #1 g00559501

AIR INLET AND EXHAUST SYSTEM

152-4895 LINES GP-AIR

S/N: CED1-UP; 5SZ4000-UP

PART OF 220-8104 INSTALLATION AR, 183-7125 INSTALLATION AR-ENGINE AN ATTACHMENT

SMCS-1071, 7452 **i01113972**

NOTE	REF NO	GRAPHIC REF	PART NUMBER	QTY	PART NAME 1 2 3 4 5 6 (PRODUCT LEVEL)	SEE PAGE
	1	1	**2S-3440**	2	CLAMP-HOSE	
	2	1	**5P-0597**	2	CLAMP (HOSE)	
	3	1	**5P-1717**	2	CLAMP-HOSE	
	4	1	**142-8819**	1	ELBOW AS-INLET	
	5	1	**150-5030**	1	INDICATOR-AIR	
	6	1	**154-3989**	1	BRACKET	
	7	1	**154-3996**	1	HOSE	
	8	1	**154-3997**	1	HOSE	
	9	1	**154-3998**	1	HOSE	
	10	1	**169-6713**	1	ADAPTER AS	
M	11	1	**6V-8210**	1	BOLT (M8X1.25X16 MM)	
	12	1	**8T-4224**	1	WASHER-HARD (2MM THK)	

M-METRIC PART

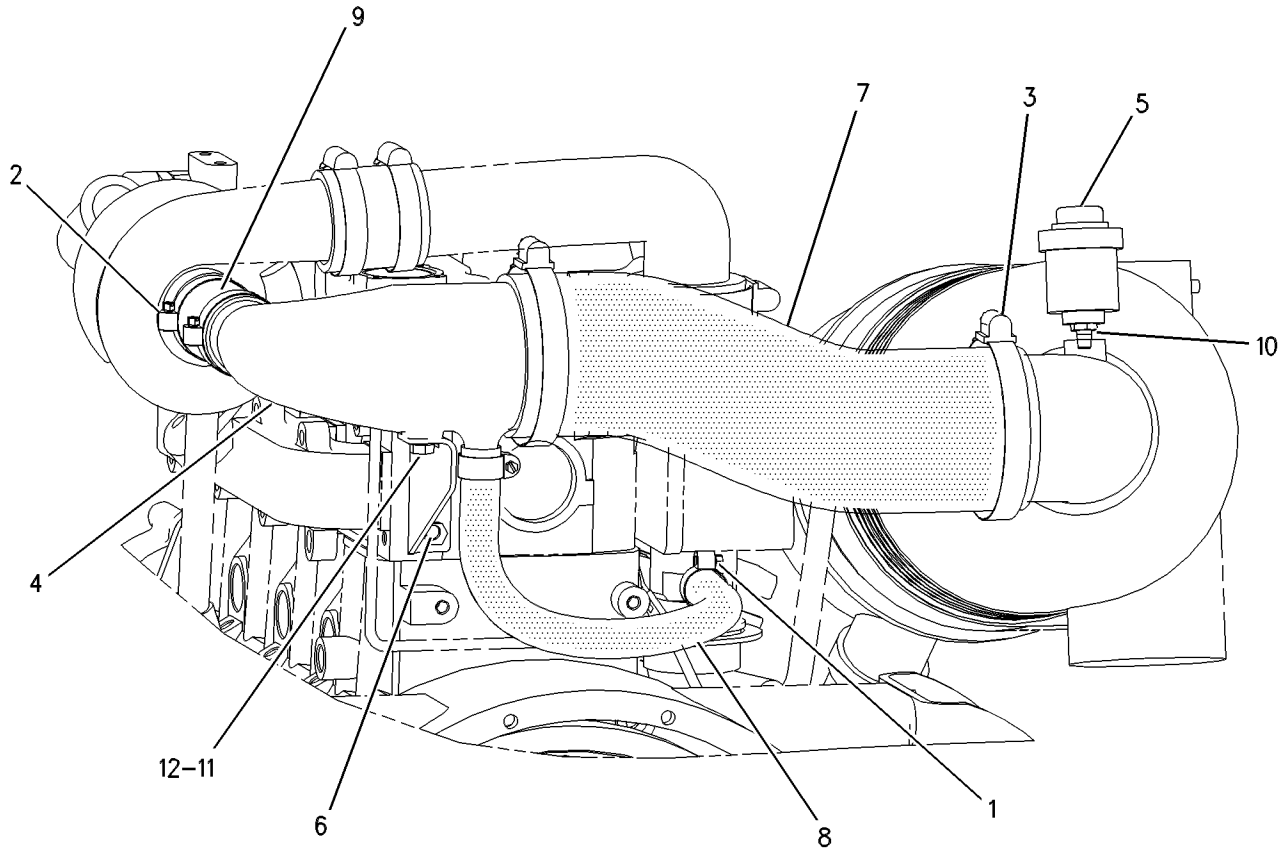

GRAPHIC #1 g00598947

AIR INLET AND EXHAUST SYSTEM

183-7127 LINES GP-AIR

S/N: 4YZ4000-UP
PART OF 142-9101 INSTALLATION AR-ENGINE
AN ATTACHMENT

SMCS-1071, 7452 **i01454309**

NOTE	REF NO	GRAPHIC REF	PART NUMBER	QTY	PART NAME 1 2 3 4 5 6 (PRODUCT LEVEL)	SEE PAGE
	1	1	**5P-1717**	1	CLAMP-HOSE	
	2	1	**5P-4868**	1	CLAMP (HOSE)	
	3	1	**150-5030**	1	INDICATOR-AIR	
	4	1	**159-5774**	1	HOSE	
	5	1	**169-6713**	1	ADAPTER AS	
	6	1	**7J-0204**	1	SEAL-O-RING	

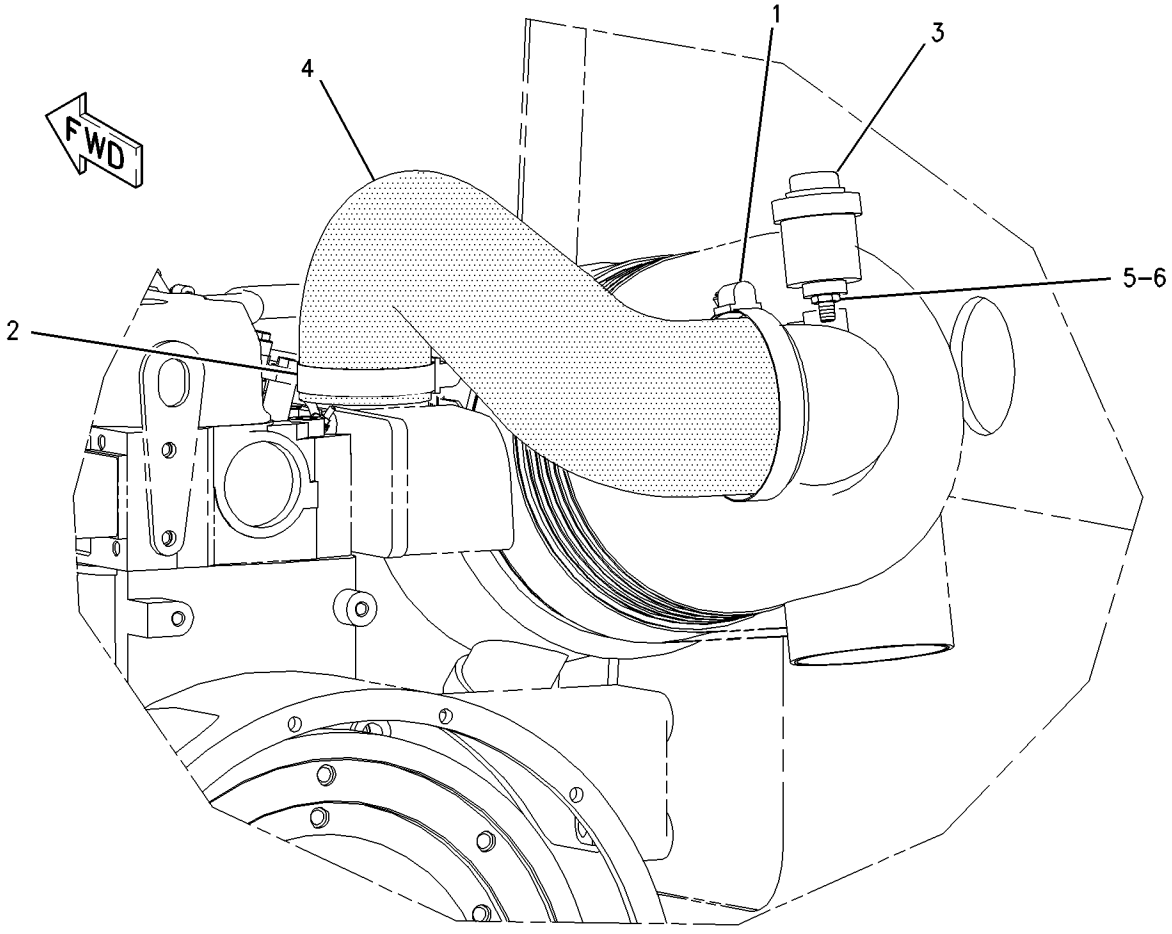

GRAPHIC #1 g00761608

AIR INLET AND EXHAUST SYSTEM

192-2615 LINES GP-AIR

S/N: CED1-UP

PART OF 191-9765 INSTALLATION AR-ENGINE

SMCS-1071, 7452 **i01493149**

NOTE	REF NO	GRAPHIC REF	PART NUMBER	QTY	PART NAME 1 2 3 4 5 6 (PRODUCT LEVEL)	SEE PAGE
	1	1	**2S-3440**	2	CLAMP-HOSE	
	2	1	**5P-0597**	2	CLAMP-HOSE	
	3	1	**5P-1717**	2	CLAMP-HOSE	
	4	1	**142-8819**	1	ELBOW AS-INLET	
	5	1	**150-5030**	1	INDICATOR-AIR	
	6	1	**154-3989**	1	BRACKET	
	7	1	**154-3997**	1	HOSE	
	8	1	**154-3998**	1	HOSE	
	9	1	**169-6713**	1	ADAPTER AS	
		1	**7J-0204**	1	SEAL-O-RING	
	10	1	**192-2616**	1	HOSE	
M	11	1	**6V-8210**	1	BOLT (M8X1.25X16 MM)	
	12	1	**8T-4224**	1	WASHER-HARD (8.8X16X2MM THK)	

M-METRIC PART

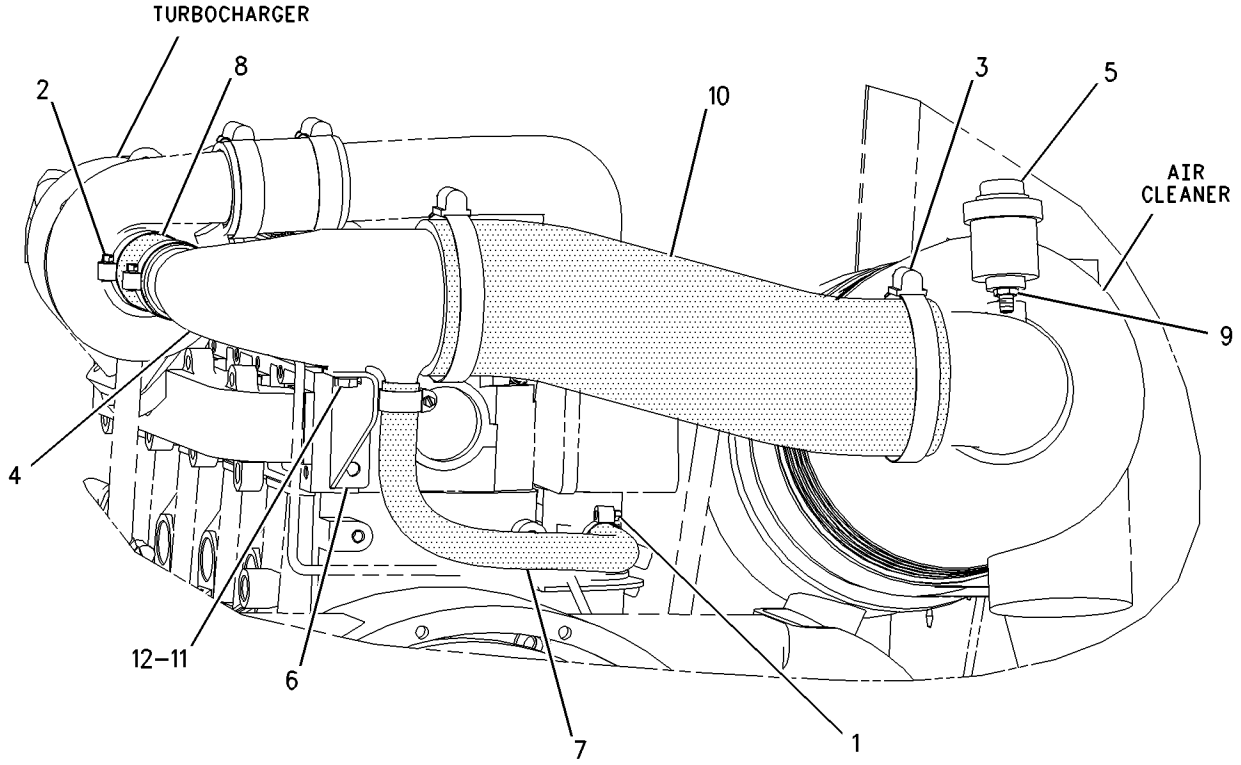

GRAPHIC #1 g00775635

AIR INLET AND EXHAUST SYSTEM

192-2618 LINES GP-AIR

S/N: FDG1-571

PART OF 192-2620 INSTALLATION AR-ENGINE

SMCS-1071, 7452 **i01474453**

NOTE	REF NO	GRAPHIC REF	PART NUMBER	QTY	PART NAME 1 2 3 4 5 6 (PRODUCT LEVEL)	SEE PAGE
	1	1	**5P-4868**	2	CLAMP (HOSE)	
	2	1	**150-5030**	1	INDICATOR-AIR	
	3	1	**169-6713**	1	ADAPTER AS	
		1	**7J-0204**	1	SEAL-O-RING	
	4	1	**192-2619**	1	HOSE	

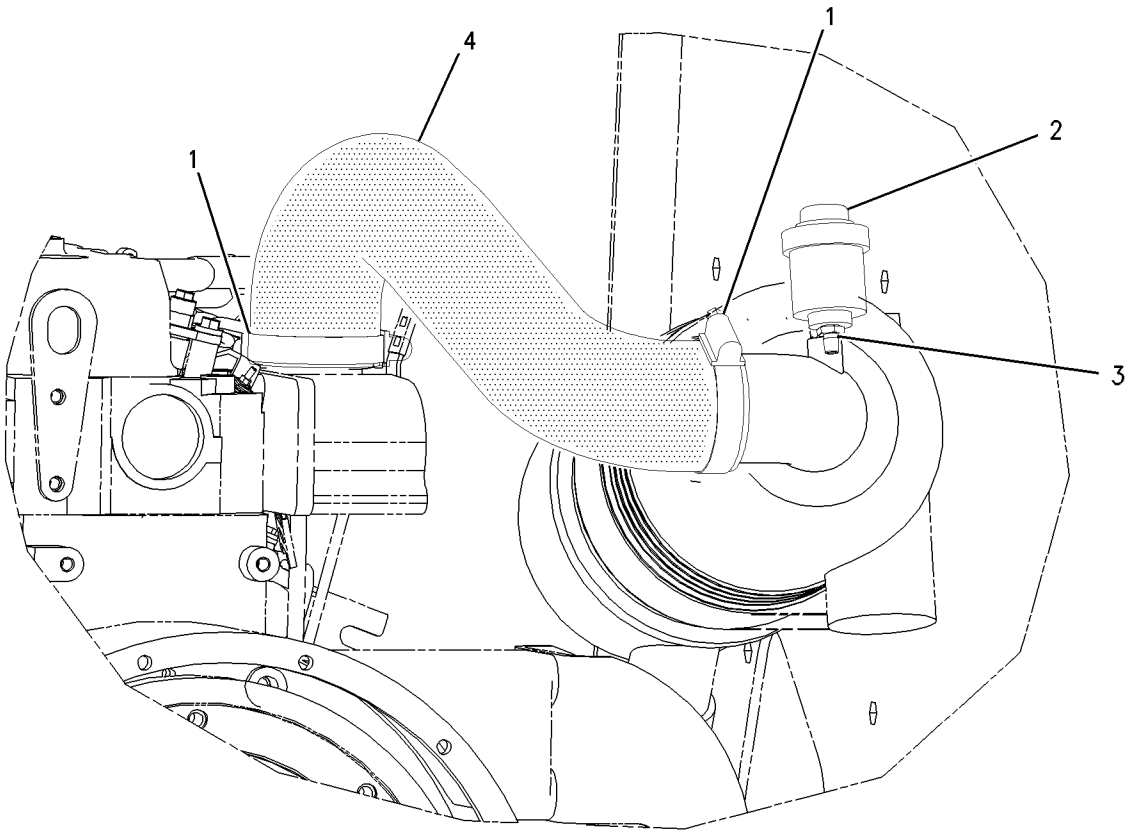

GRAPHIC #1 g00768387

AIR INLET AND EXHAUST SYSTEM

165-4961 MANIFOLD GP-EXHAUST

S/N: 3NW12500-UP

PART OF 147-1233 ENGINE AR-PRIMARY

SMCS-1059 **i01412193**

NOTE	REF NO	GRAPHIC REF	PART NUMBER	QTY	PART NAME 1 2 3 4 5 6 (PRODUCT LEVEL)	SEE PAGE
	1	1	**173-0427**	1	GASKET-EXHAUST	
	2	1	**164-7627**	1	MANIFOLD-EXHAUST	
	3	1	**164-7628**	8	BOLT	

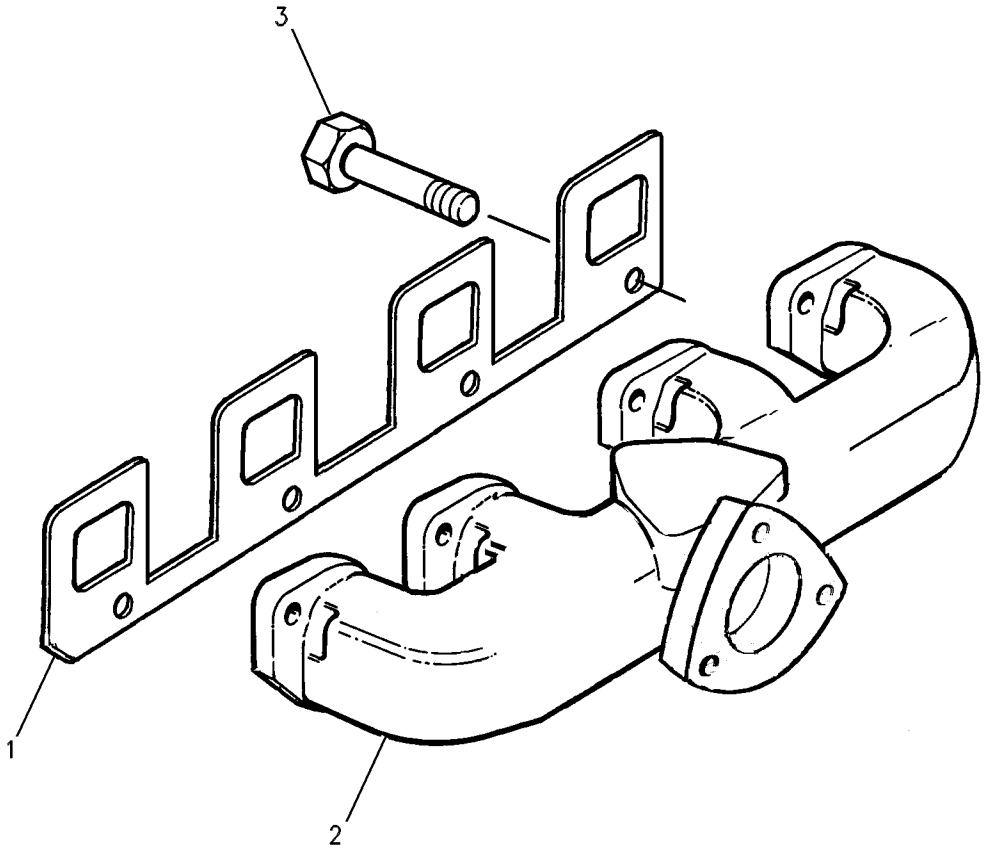

GRAPHIC #1 g00561443

AIR INLET AND EXHAUST SYSTEM

164-7624 MANIFOLD GP-INLET

S/N: 3NW12500-UP

PART OF 147-1233 ENGINE AR-PRIMARY

SMCS-1058 **i01783213**

NOTE	REF NO	GRAPHIC REF	PART NUMBER	QTY	PART NAME 1 2 3 4 5 6 (PRODUCT LEVEL)	SEE PAGE
	1	1	**6I-0293**	5	BOLT (M8X1.25X80MM)	
	2	1	**6I-4709**	2	BOLT (M8X1.25X100MM)	
	3	1	**153-0405**	1	GASKET-MANIFOLD	
	4	1	**164-7625**	1	MANIFOLD AS-INLET	
	5	1	**1N-3762**	1	PLUG-CUP	

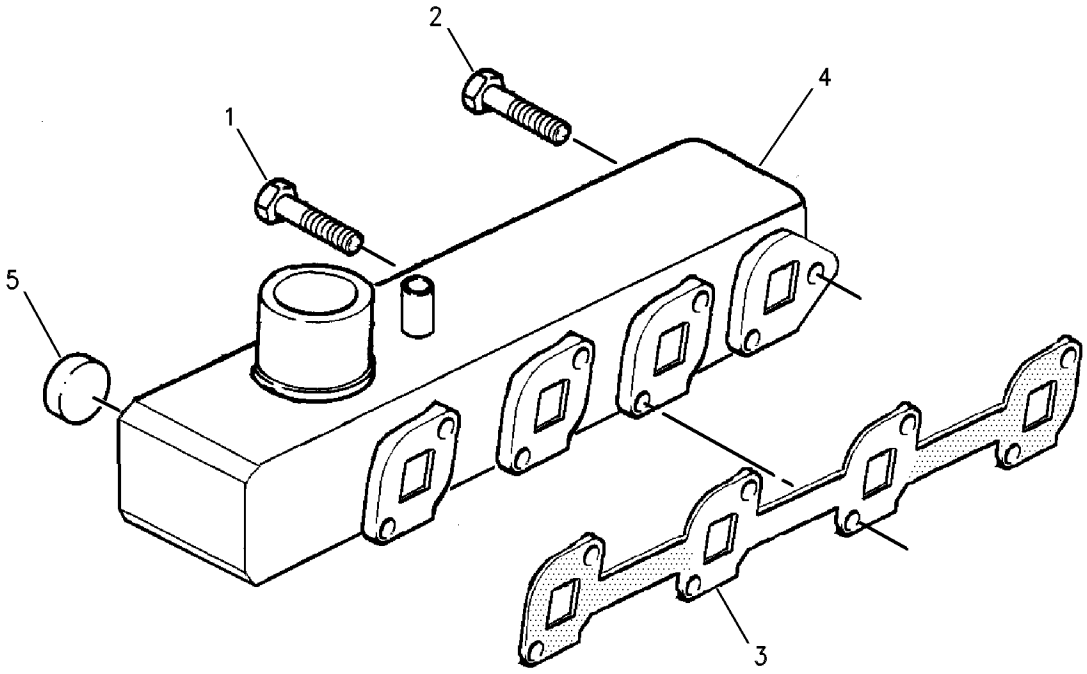

GRAPHIC #1 g00561410

AIR INLET AND EXHAUST SYSTEM

192-2612 MOUNTING GP-MUFFLER

S/N: FDG1-UP

PART OF 192-2620 INSTALLATION AR-ENGINE

SMCS-1062 **i01479658**

NOTE	REF NO	GRAPHIC REF	PART NUMBER	QTY	PART NAME 1 2 3 4 5 6 (PRODUCT LEVEL)	SEE PAGE
	1	1	**140-2349**	1	GASKET	
	2	1	*192-2613*	1	MUFFLER GP	
		1	**192-2614**	1	MUFFLER AS	
	2A	1	**142-8816**	1	ELBOW AS-EXHAUST	
	2B	1	**142-8818**	1	CLAMP-BENT BOLT	
	3	1	**195-0938**	3	INSERT-THREADED	
	4	1	**5P-4116**	3	WASHER-HARD (8.8X20.5X2MM THK)	
	5	1	**8T-4121**	3	WASHER-HARD (11X21X2.5MM THK)	
M	6	1	**8T-4195**	3	BOLT (M10X1.5X30MM)	
M	7	1	**8T-4908**	3	BOLT (M8X1.25X25MM)	

M-METRIC PART

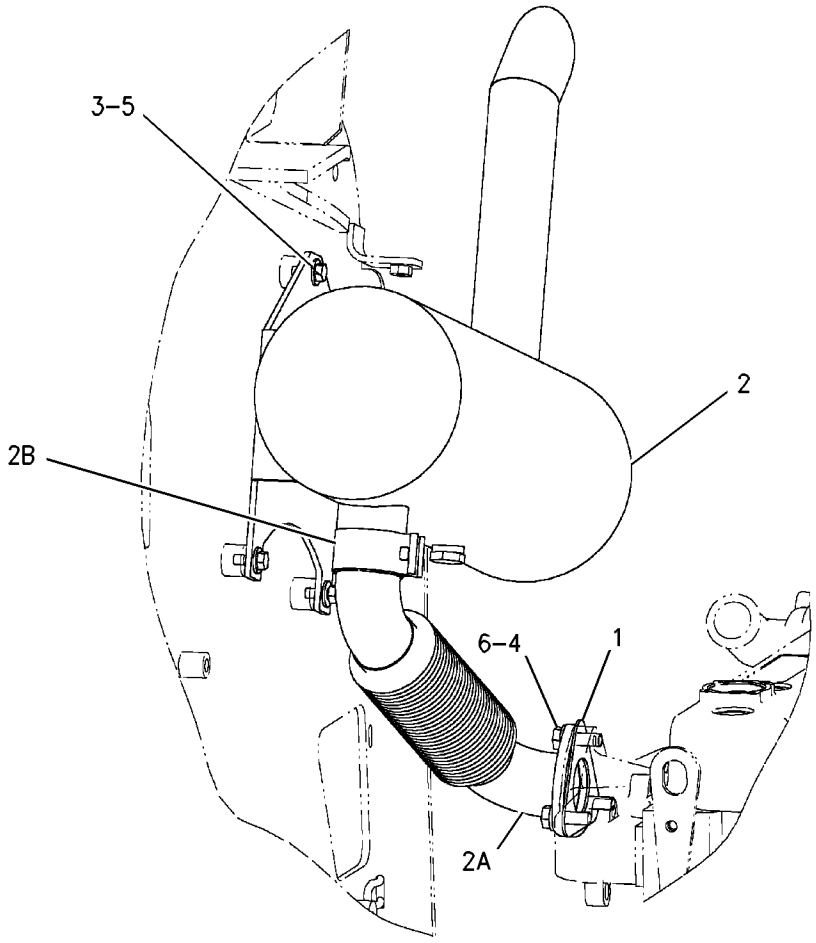

GRAPHIC #1 g00770494

AIR INLET AND EXHAUST SYSTEM

142-8815 MUFFLER GP

S/N: 5SZ4000-UP
PART OF 159-5787 MUFFLER GP
AN ATTACHMENT

SMCS-1062 **i01113086**

NOTE	REF NO	GRAPHIC REF	PART NUMBER	QTY	PART NAME 1 2 3 4 5 6 (PRODUCT LEVEL)	SEE PAGE
	1	1	**142-8818**	1	CLAMP-BENT BOLT	
	2	1	**142-8820**	1	MUFFLER AS	
	3	1	**142-8825**	1	ELBOW AS-EXHAUST	

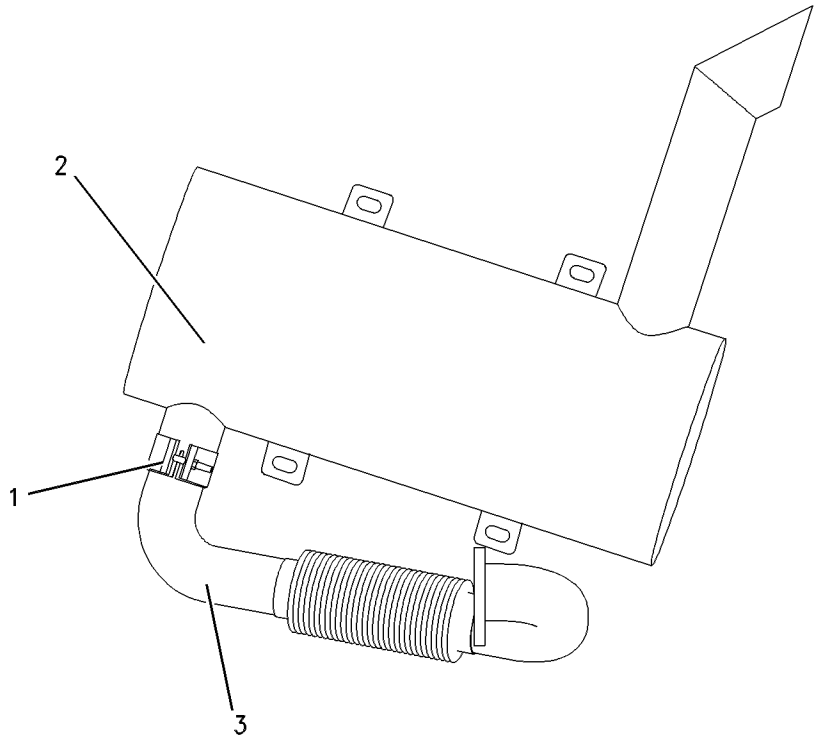

GRAPHIC #1 g00594558

AIR INLET AND EXHAUST SYSTEM

142-8844 MUFFLER GP

S/N: 4YZ4000-UP
PART OF 142-9003 MUFFLER GP
AN ATTACHMENT

SMCS-1062 **i01125781**

NOTE	REF NO	GRAPHIC REF	PART NUMBER	QTY	PART NAME 1 2 3 4 5 6 (PRODUCT LEVEL)	SEE PAGE
	1	1	**142-8816**	1	ELBOW AS-EXHAUST	
	2	1	**142-8818**	1	CLAMP-BENT BOLT	
	3	1	**142-8845**	1	MUFFLER AS	

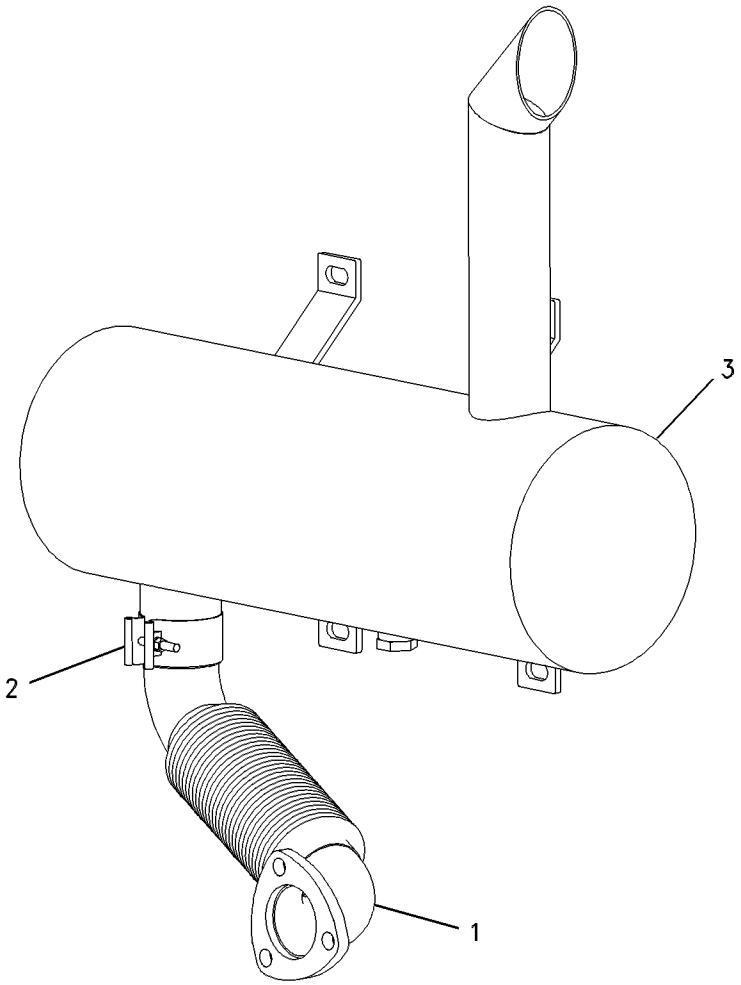

GRAPHIC #1 g00597095

AIR INLET AND EXHAUST SYSTEM

142-9003 MUFFLER GP

S/N: 4YZ4000-UP
PART OF 142-9101 INSTALLATION AR-ENGINE
AN ATTACHMENT

SMCS-1062 **i01125797**

NOTE	REF NO	GRAPHIC REF	PART NUMBER	QTY	PART NAME 1 2 3 4 5 6 (PRODUCT LEVEL)	SEE PAGE
	1	1	**140-2349**	1	GASKET	
Y	2	1	*142-8844*	1	MUFFLER GP	106
	3	1	**8T-4121**	7	WASHER (2.5MM THK)	
M	4	1	**8T-4137**	4	BOLT (M10X1.50X20MM)	
M	5	1	**8T-4195**	3	BOLT (M10X1.50X30MM)	

M-METRIC PART
Y-SEPARATE ILLUSTRATION

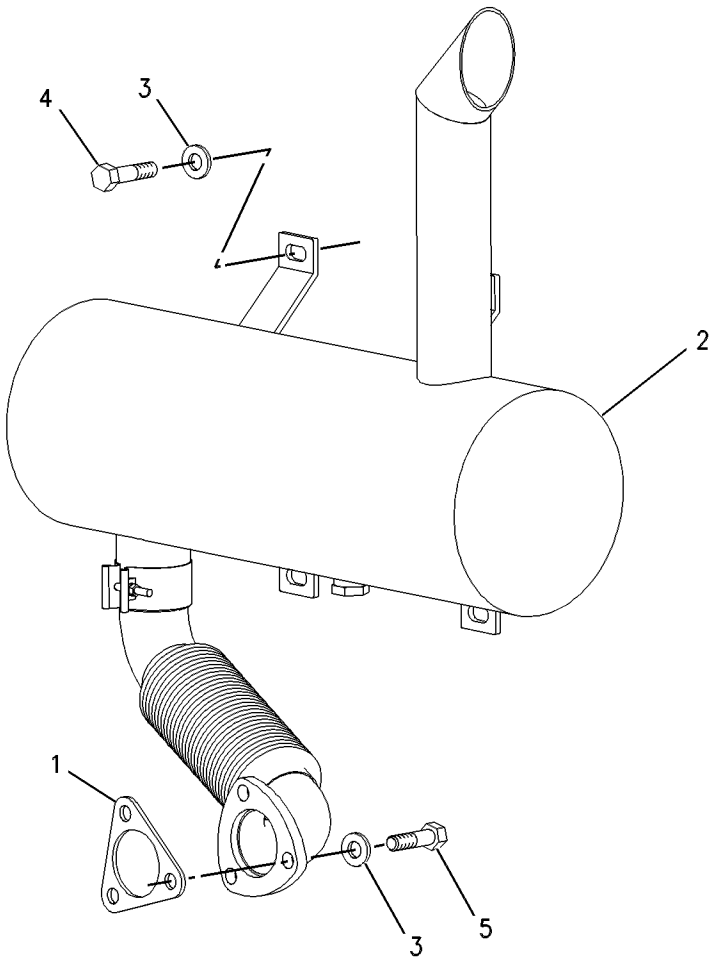

GRAPHIC #1 g00598735

AIR INLET AND EXHAUST SYSTEM

159-5787 MUFFLER GP

S/N: 5SZ4000-UP
PART OF 183-7125 INSTALLATION AR-ENGINE
AN ATTACHMENT

SMCS-1062 **i01125574**

NOTE	REF NO	GRAPHIC REF	PART NUMBER	QTY	PART NAME 1 2 3 4 5 6 (PRODUCT LEVEL)	SEE PAGE
	1	1	**140-2349**	1	GASKET	
Y	2	1	*142-8815*	1	MUFFLER GP	105
	3	1	**5P-4116**	3	WASHER (2MM THK)	
	4	1	**8T-4121**	4	WASHER (2.5MM THK)	
M	5	1	**8T-4137**	4	BOLT (M10X1.50X20MM)	
M	6	1	**8T-4908**	3	BOLT (M8X1.25X25MM)	

M-METRIC PART
Y-SEPARATE ILLUSTRATION

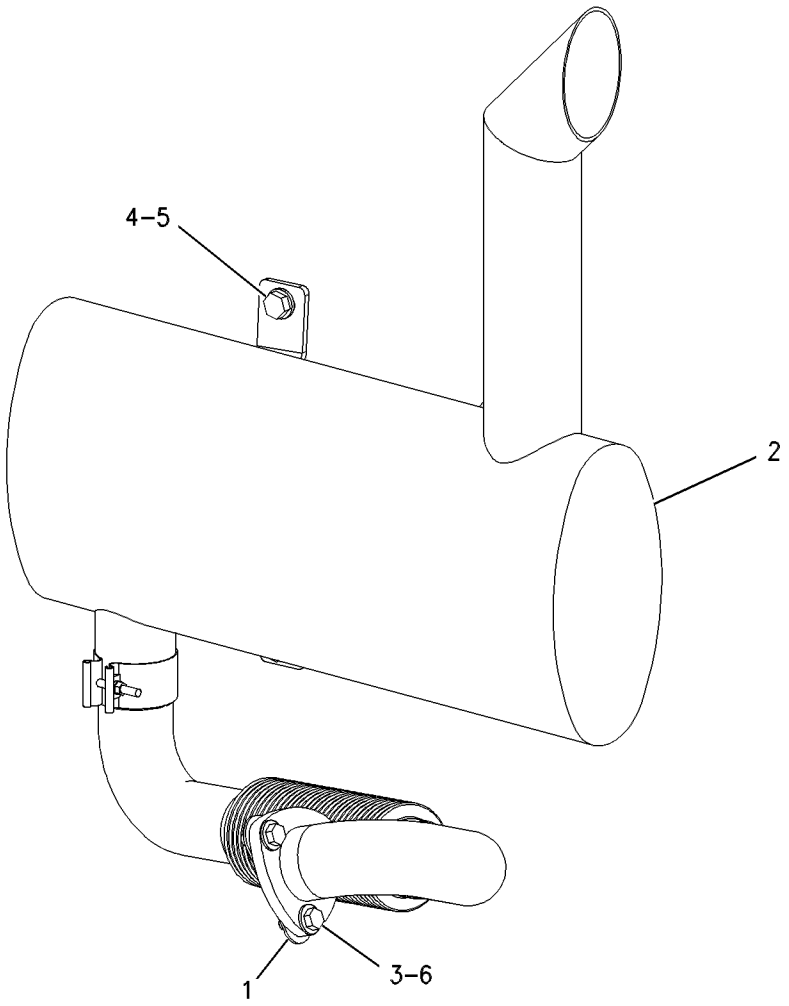

GRAPHIC #1 g00596840

AIR INLET AND EXHAUST SYSTEM

191-9777 MUFFLER GP

S/N: CED1-UP

PART OF 191-9765 INSTALLATION AR-ENGINE

SMCS-1062 **i01493147**

NOTE	REF NO	GRAPHIC REF	PART NUMBER	QTY	PART NAME 1 2 3 4 5 6 (PRODUCT LEVEL)	SEE PAGE
	1	1	**140-2349**	1	GASKET	
Y	2	1	*191-9778*	1	MUFFLER GP	110
	3	1	**5P-4116**	6	WASHER-HARD (8.8X20.5X2MM THK)	
M	4	1	**8T-4189**	3	BOLT (M8X1.25X20MM)	
M	5	1	**8T-4908**	3	BOLT (M8X1.25X25MM)	

M-METRIC PART
Y-SEPARATE ILLUSTRATION

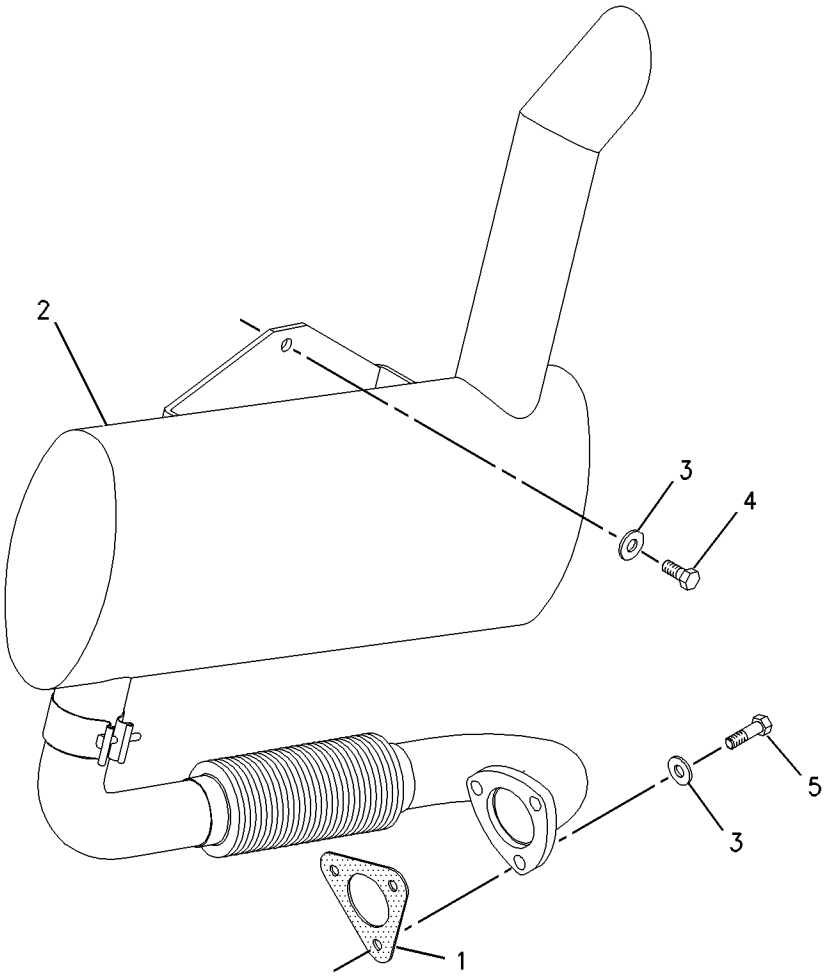

GRAPHIC #1 g00775592

AIR INLET AND EXHAUST SYSTEM

191-9778 MUFFLER GP

S/N: CED1-UP

PART OF 191-9777 MUFFLER GP

SMCS-1062 **i01493186**

NOTE	REF NO	GRAPHIC REF	PART NUMBER	QTY	PART NAME 1 2 3 4 5 6 (PRODUCT LEVEL)	SEE PAGE
	1	1	**142-8818**	1	CLAMP-BENT BOLT	
	2	1	**142-8825**	1	ELBOW AS-EXHAUST	
	3	1	**191-9779**	1	MUFFLER AS	

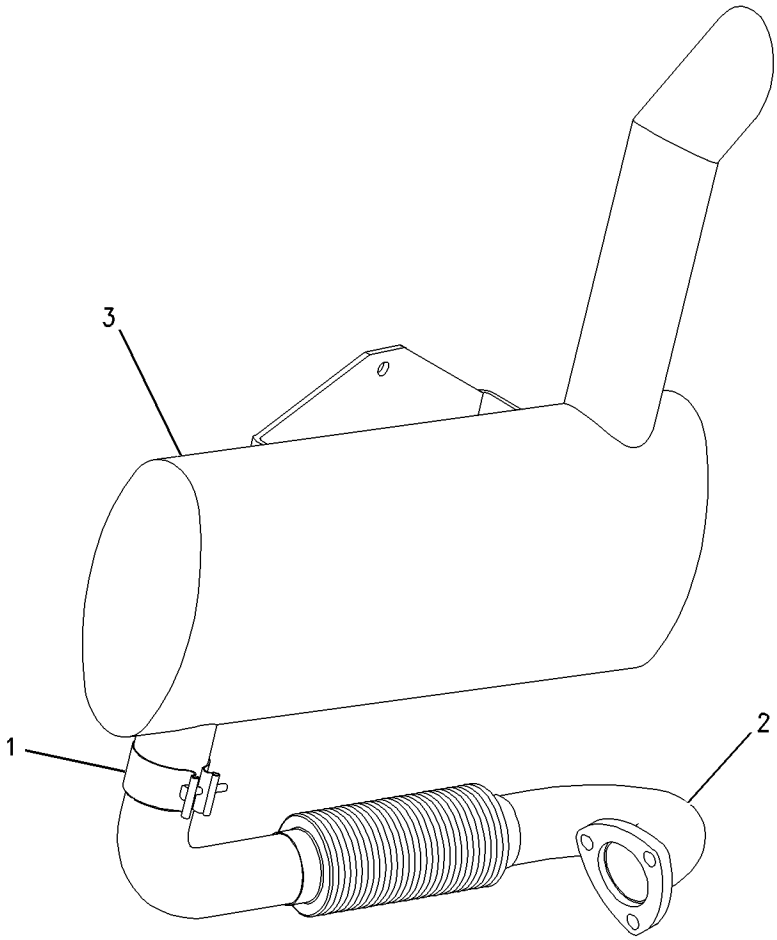

GRAPHIC #1 g00775542

MEMORANDA

AIR INLET AND EXHAUST SYSTEM

173-0424 TURBOCHARGER GP

S/N: 3NW12500-18474

PART OF 147-1234 ENGINE AR-PRIMARY

SMCS-1052, 1053 **i01456605**

NOTE	REF NO	GRAPHIC REF	PART NUMBER	QTY	PART NAME 1 2 3 4 5 6 (PRODUCT LEVEL)	SEE PAGE
	1	2	**6I-0293**	5	BOLT (M8X1.25X80MM)	
	2	2	**6I-4709**	1	BOLT	
	3	2	**100-4454**	3	NUT	
	4	1	**5D-1026**	2	CLAMP-HOSE	
	5	1	**064-3058**	2	CLAMP-HOSE	
	6	1	**103-6714**	2	CLIP	
	7	2	**114-2583**	6	STUD	
	8	1	**114-4363**	1	BOLT	
	9	1	**124-3809**	1	UNION	
	10	1	**143-4534**	1	HOSE	
	11	2	**153-0405**	1	GASKET-MANIFOLD	
	12	2	**164-7628**	8	BOLT	
	13	2	**173-0425**	1	MANIFOLD AS-INLET	
	14	2	**1N-3762**	1	PLUG-CUP	
	15	2	**173-0426**	1	MANIFOLD-EXHAUST	
	16	2	**173-0427**	1	GASKET-EXHAUST	
	17	2	**173-0428**	1	GASKET	
	18	1	**173-0429**	1	TUBE-AIR	
	19	1	**173-0430**	1	HOSE	
	20	1	**173-0431**	1	HOSE	
	21	1	**173-0432**	1	TUBE AS-OIL	
	24	1	**105-2425**	1	CLIP	
	26	1	**173-0433**	1	UNION	
	27	1	**138-8330**	1	TUBE AS-OIL	
	29	1	**173-0436**	1	TUBE AS-OIL	
	32	1	**173-0442**	1	TURBOCHARGER GP	

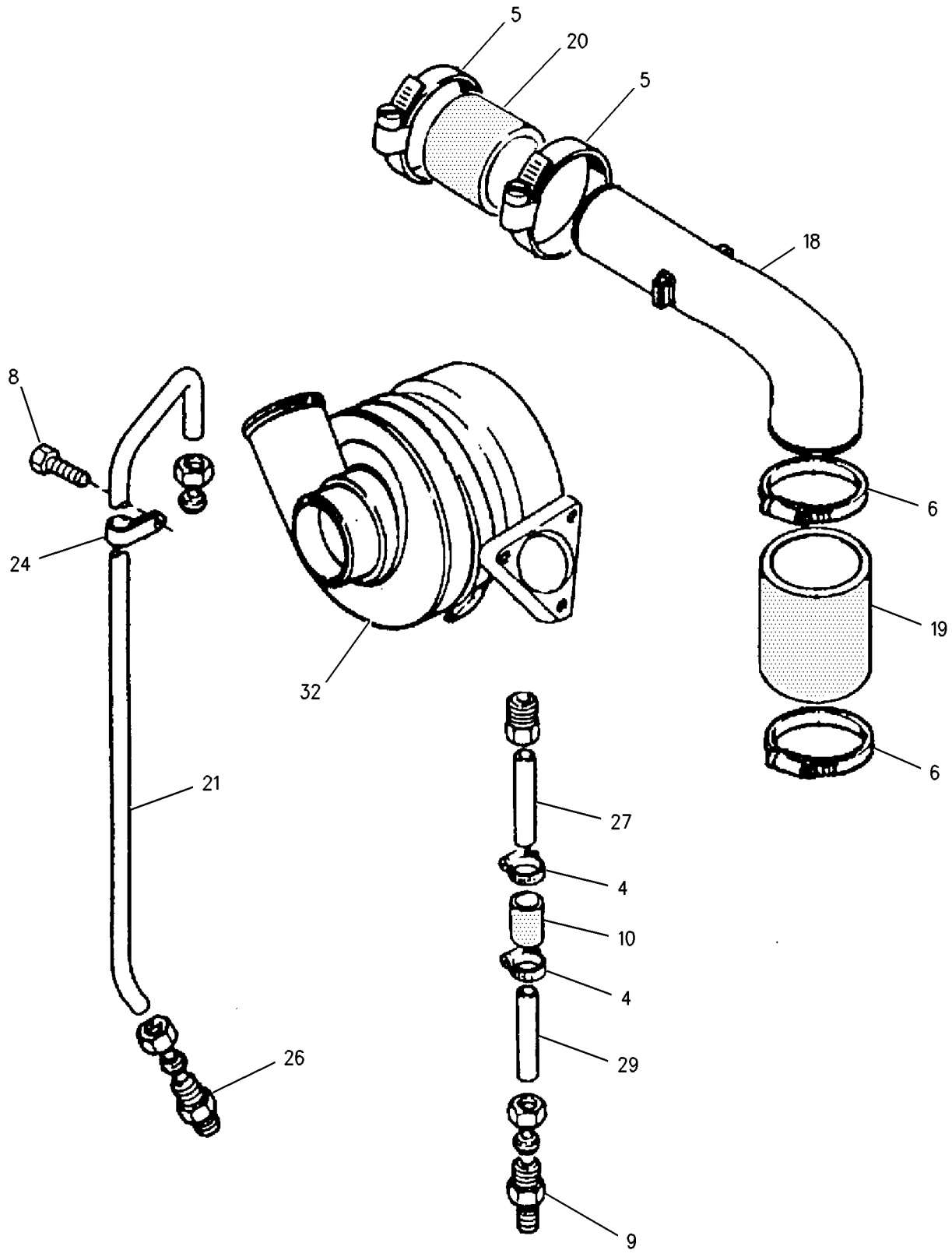

GRAPHIC #1 g00655233

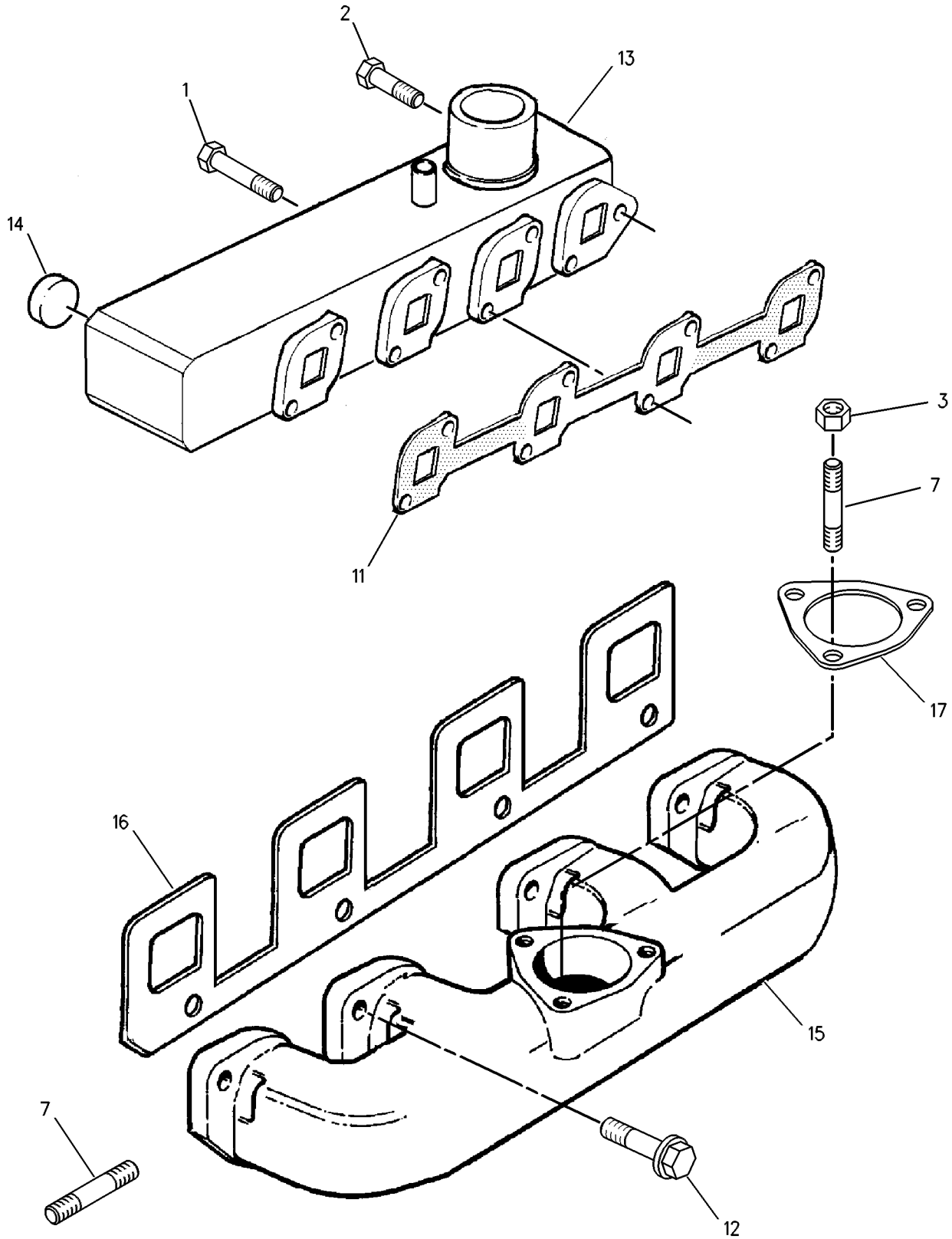

GRAPHIC #2 g00598101

MEMORANDA

AIR INLET AND EXHAUST SYSTEM

220-5943 TURBOCHARGER GP

S/N: 3NW18475-UP

PART OF 147-1234 ENGINE AR-PRIMARY

SMCS-1052, 1053 **i01693707**

NOTE	REF NO	GRAPHIC REF	PART NUMBER	QTY	PART NAME 1 2 3 4 5 6 (PRODUCT LEVEL)	SEE PAGE
	1	2	**6I-0293**	5	BOLT (M8X1.25X80MM)	
	2	2	**6I-4709**	1	BOLT (M8X1.25X100MM)	
	3	2	**100-4454**	3	NUT	
	4	1	**5D-1026**	2	CLAMP-HOSE	
	5	1	**064-3058**	2	CLAMP-HOSE	
	6	1	**103-6714**	2	CLIP	
	7	1	**114-4363**	1	BOLT (M8X1.25X12MM)	
	8	1	**124-3809**	1	UNION	
	9	1	**138-8330**	1	TUBE AS-OIL	
	10	1	**143-4534**	1	HOSE	
	11	2	**153-0405**	1	GASKET-MANIFOLD	
	12	2	**164-7628**	8	BOLT	
	13	2	**173-0425**	1	MANIFOLD AS-INLET	
	13A	2	**1N-3762**	1	PLUG-CUP	
	14	2	**173-0426**	1	MANIFOLD-EXHAUST	
	15	2	**173-0427**	1	GASKET-EXHAUST	
	16	2	**173-0428**	1	GASKET	
	17	1	**173-0429**	1	TUBE-AIR	
	18	1	**173-0430**	1	HOSE	
	19	1	**173-0431**	1	HOSE	
	20	1	**173-0432**	1	TUBE AS-OIL	
	20A	1	**105-2425**	1	CLIP	
	21	1	**173-0433**	1	UNION	
	22	1	**173-0436**	1	TUBE AS-OIL	
	23	1	**173-0442**	1	TURBOCHARGER GP	

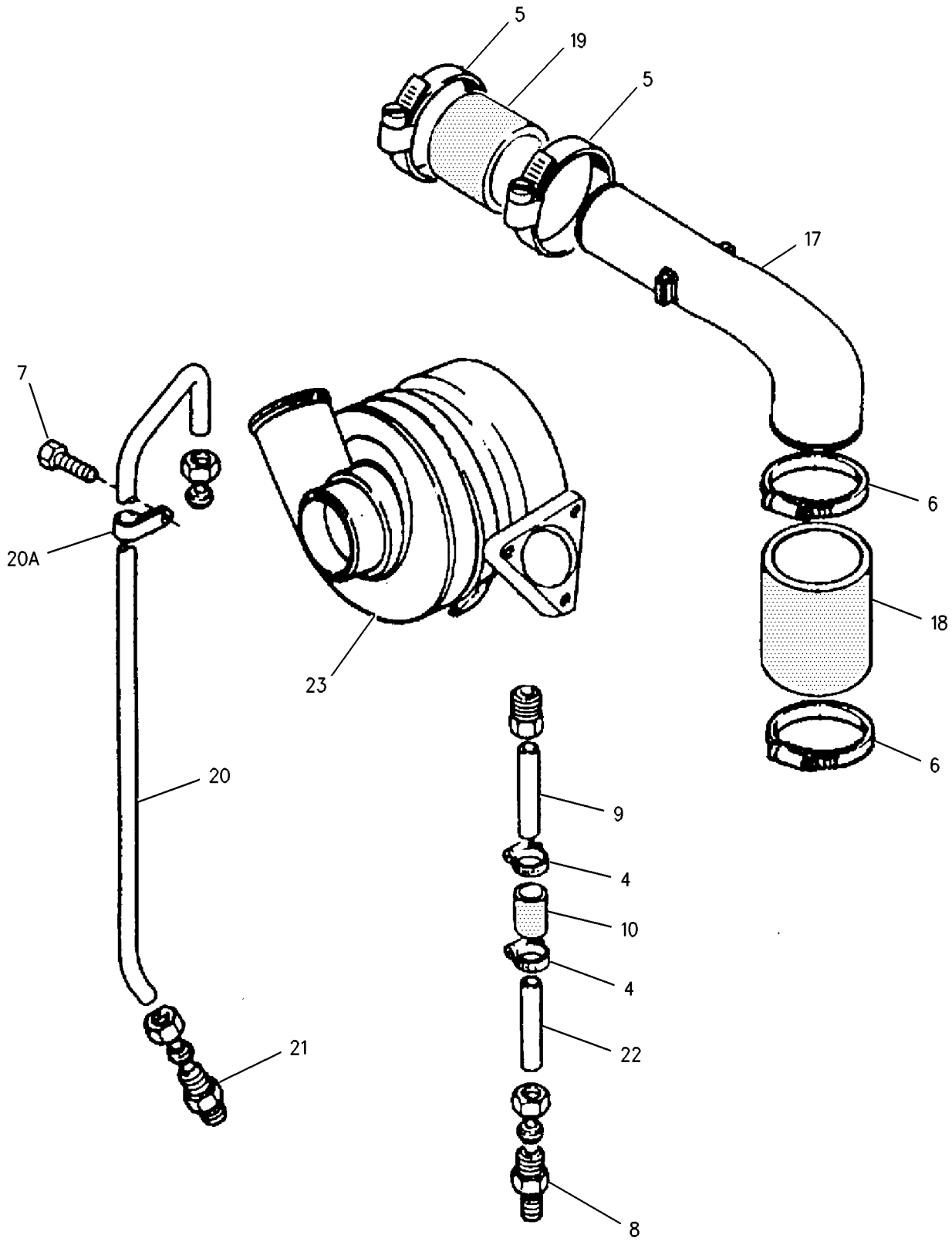

GRAPHIC #1 g00897256

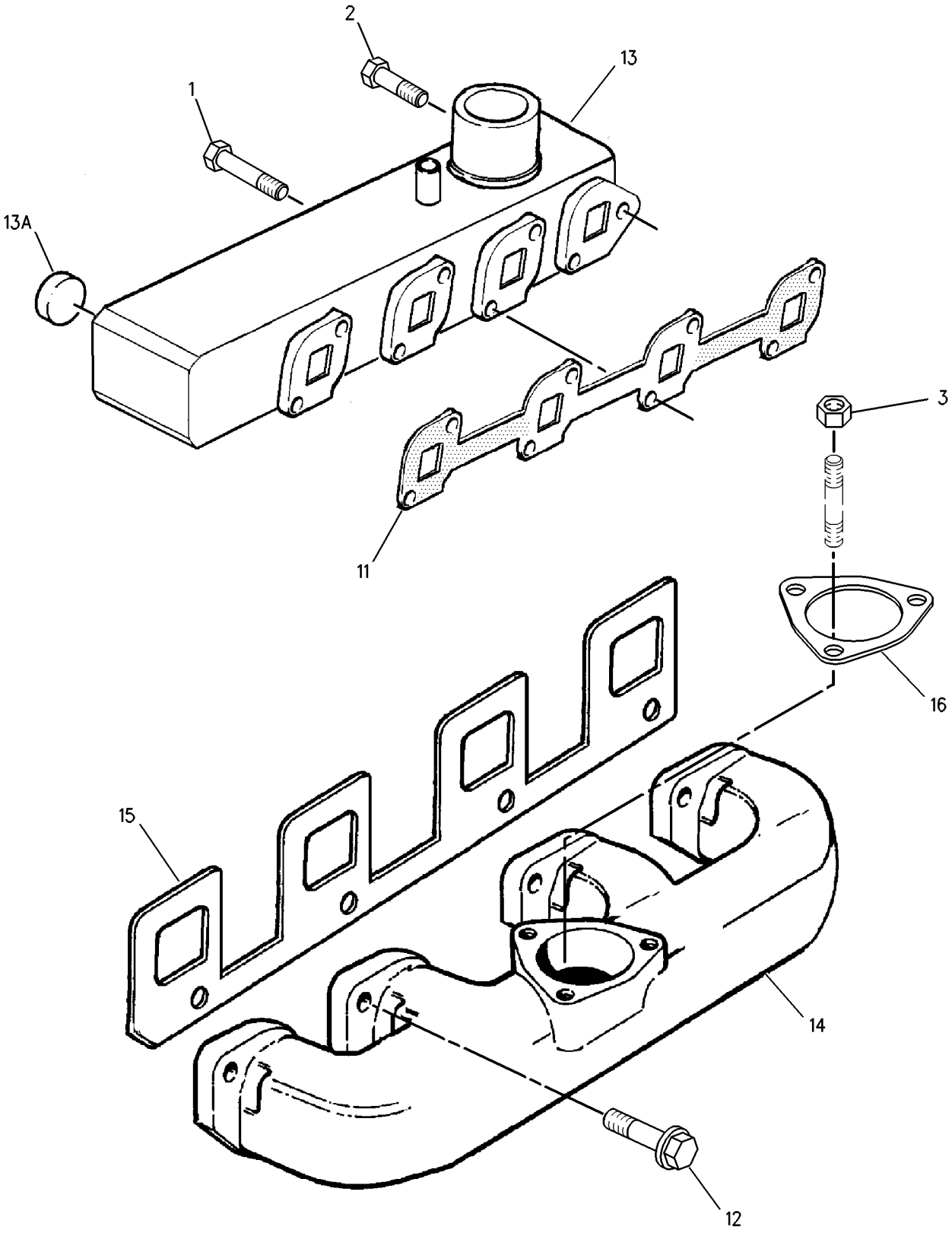

GRAPHIC #2 g00897258

MEMORANDA

192-2657 CONTROL GP-GOVERNOR

S/N: CED1-402; FDG1-403; 4YZ4000-4580; 5SZ4000-4920
PART OF 190-7953, 195-6710, 195-6761, 195-6763 CHASSIS AR

SMCS-1265, 1276 **i01761871**

NOTE	REF NO	GRAPHIC REF	PART NUMBER	QTY	PART NAME 1 2 3 4 5 6 (PRODUCT LEVEL)	SEE PAGE
	1	1	**192-2660**	1	BRACKET AS	
Y	2	1	**192-2664**	1	PEDAL GP-GOVERNOR	661
M	3	1	**5C-2890**	4	NUT (M6X1 THD)	
M	4	1	**5C-7261**	2	NUT (M8X1.25 THD)	
	5	1	**5P-4116**	4	WASHER-HARD (8.8X20.5X2MM THK)	
M	6	1	**8C-6802**	4	SCREW-FLAT HEAD	
M	7	1	**8T-4138**	3	BOLT (M6X1X20MM)	
	8	1	**8T-4205**	7	WASHER-HARD (7.2X14.5X2MM THK)	
M	9	1	**8T-4908**	2	BOLT (M8X1.25X25MM)	
	10	1	**8T-3984**	1	KNOB	

M-METRIC PART
Y-SEPARATE ILLUSTRATION

192-2657 **CONTROL GP-GOVERNOR** ***(contd.)*** **i01761871**

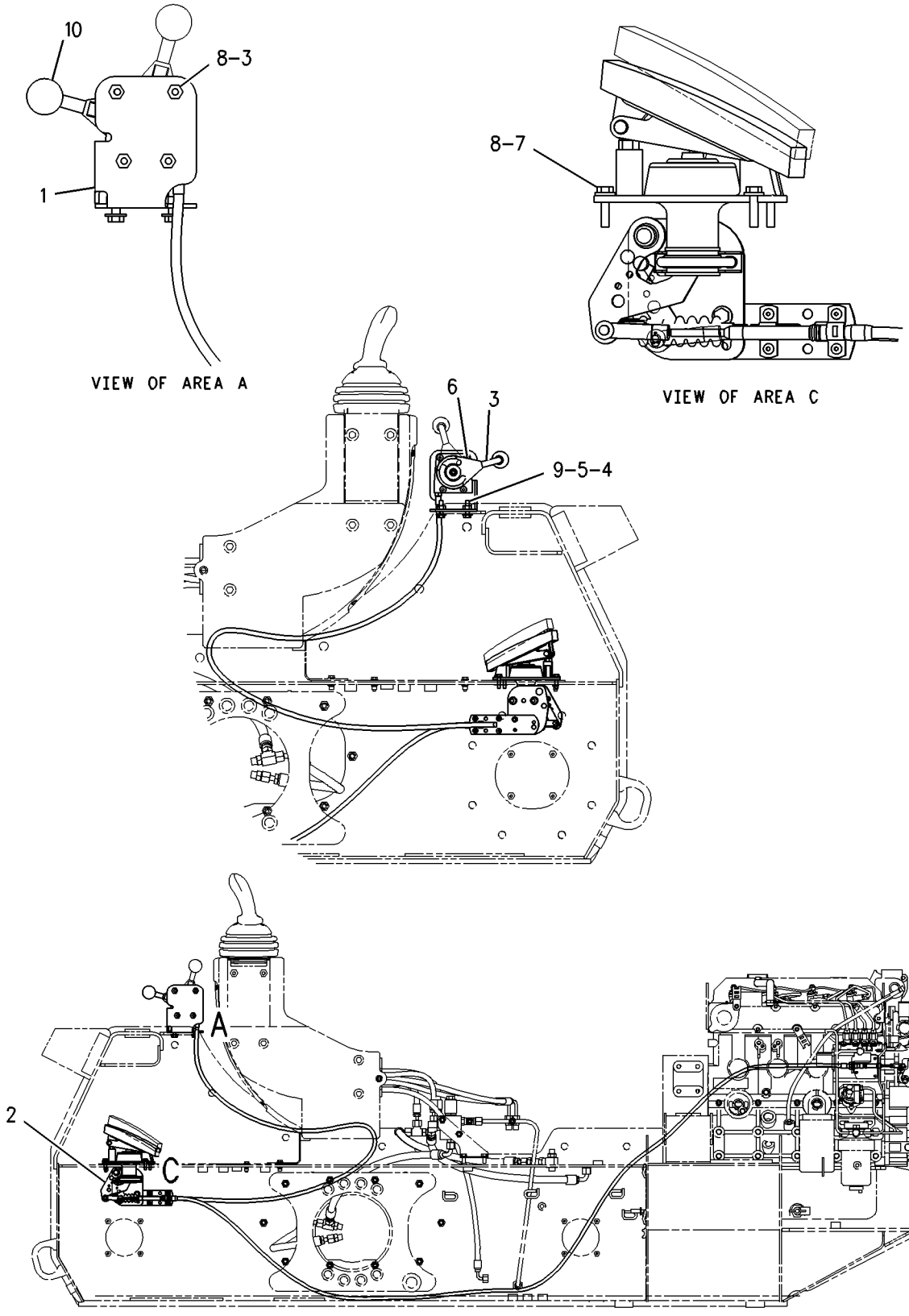

GRAPHIC #1 g00775833

FUEL SYSTEM

215-3980 CONTROL GP-GOVERNOR

S/N: CED403-UP; FDG404-UP; 4YZ4581-UP; 5SZ4921-UP

PART OF 190-7953, 195-6710, 195-6761, 195-6763 CHASSIS AR

SMCS-1265, 1276 **i01653322**

NOTE	REF NO	GRAPHIC REF	PART NUMBER	QTY	PART NAME 1 2 3 4 5 6 (PRODUCT LEVEL)	SEE PAGE
	1	1	**192-2660**	1	BRACKET AS	
Y	2	1	**215-3981**	1	PEDAL GP-GOVERNOR	662
M	3	1	**5C-2890**	4	NUT (M6X1 THD)	
M	4	1	**5C-7261**	2	NUT (M8X1.25 THD)	
	5	1	**5P-4116**	4	WASHER-HARD (8.8X20.5X2MM THK)	
M	6	1	**8C-6802**	4	SCREW-FLAT HEAD	
M	7	1	**8T-4138**	3	BOLT (M6X1X20MM)	
	8	1	**8T-4205**	7	WASHER-HARD (7.2X14.5X2MM THK)	
M	9	1	**8T-4908**	2	BOLT (M8X1.25X25MM)	
	10	1	**8T-3984**	1	KNOB	

M-METRIC PART
Y-SEPARATE ILLUSTRATION

215-3980 **CONTROL GP-GOVERNOR** ***(contd.)*** **i01653322**

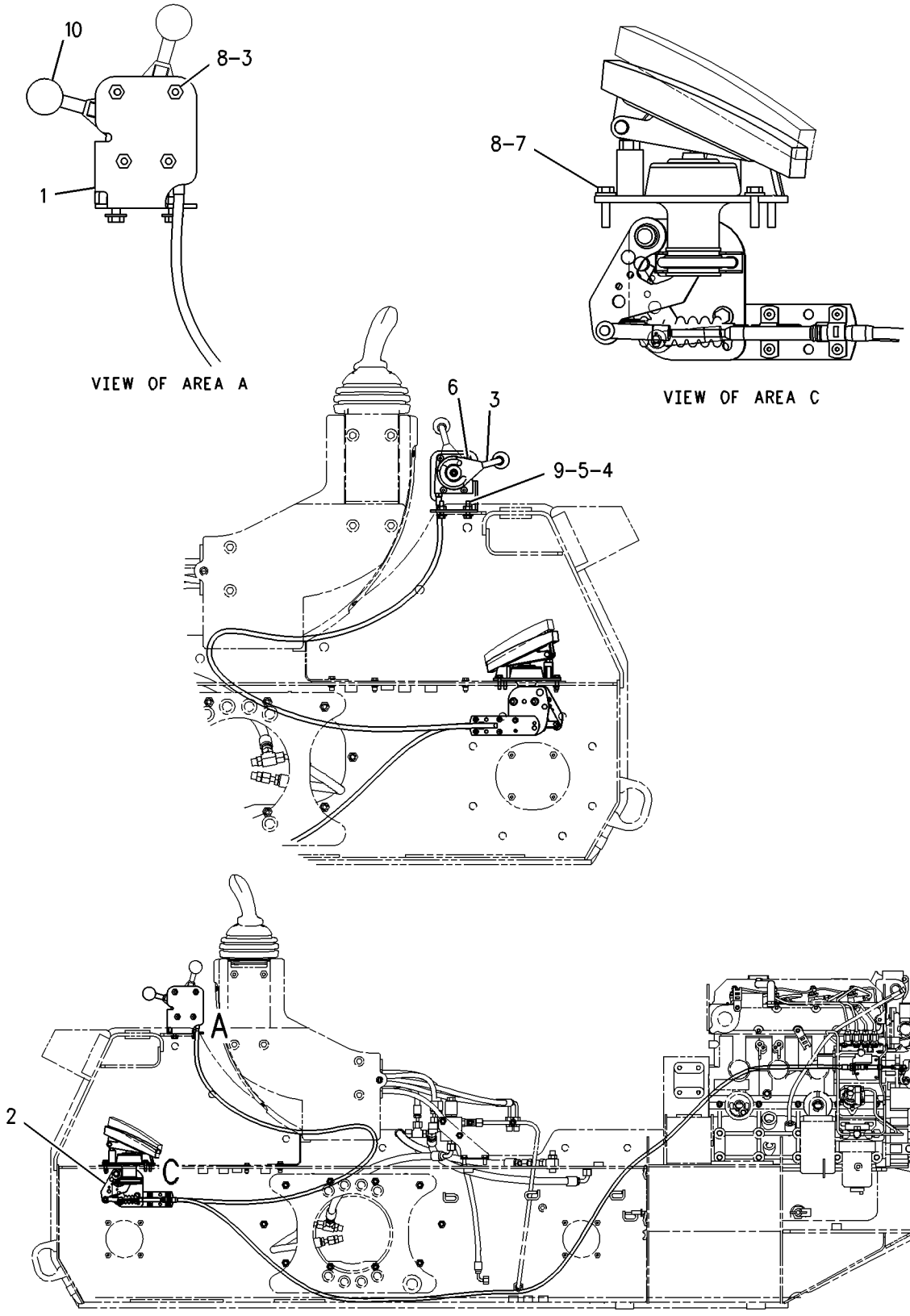

GRAPHIC #1 g00775833

164-7629 FILTER & LINES GP-FUEL

S/N: 3NW12500-UP

PART OF 147-1233, 147-1234 ENGINE AR-PRIMARY

SMCS-1261, 1274 **i01375532**

NOTE	REF NO	GRAPHIC REF	PART NUMBER	QTY	PART NAME 1 2 3 4 5 6 (PRODUCT LEVEL)	SEE PAGE
	1	1	**2W-8076**	1	CONNECTOR	
	2	1	**6I-0654**	2	BOLT (M10X1.5X25MM)	
	3	1	**032-8100**	2	WASHER (.064MM THK)	
	4	1	**033-7849**	2	PLUG	
	5	1	**101-3906**	1	BOLT	
	6	1	**101-3907**	2	WASHER	
	7	1	**067-6998**	3	NUT	
	8	1	**032-8047**	2	FERRULE	
	9	1	**105-2423**	1	CONNECTOR	
	10	1	**111-8222**	4	BOLT	
	11	1	**171-1845**	1	BRACKET	
	12	1	**127-8167**	2	CLIP	
Y	13	1	**138-3096**	1	FILTER GP-FUEL	126
	15	1	**153-0488**	1	PUMP AS-FUEL TRANSFER	
	16	1	**121-3221**	1	GASKET	
	17	1	**153-0507**	1	CONNECTION	
	18	1	**153-0508**	1	WASHER	
	19	1	**067-6999**	3	FERRULE	
	20	1	**164-7630**	3	BOLT	
	21	1	**171-1840**	1	TUBE AS	
	22	1	**171-1841**	1	TUBE AS	
	23	1	**171-1842**	1	TUBE AS	
	24	1	**195-3758**	1	TUBE AS	
	26	1	**035-8014**	2	NUT	
					AVAILABLE REPAIR KIT(S):	
			121-7034	1	KIT-FUEL PUMP	

Y-SEPARATE ILLUSTRATION

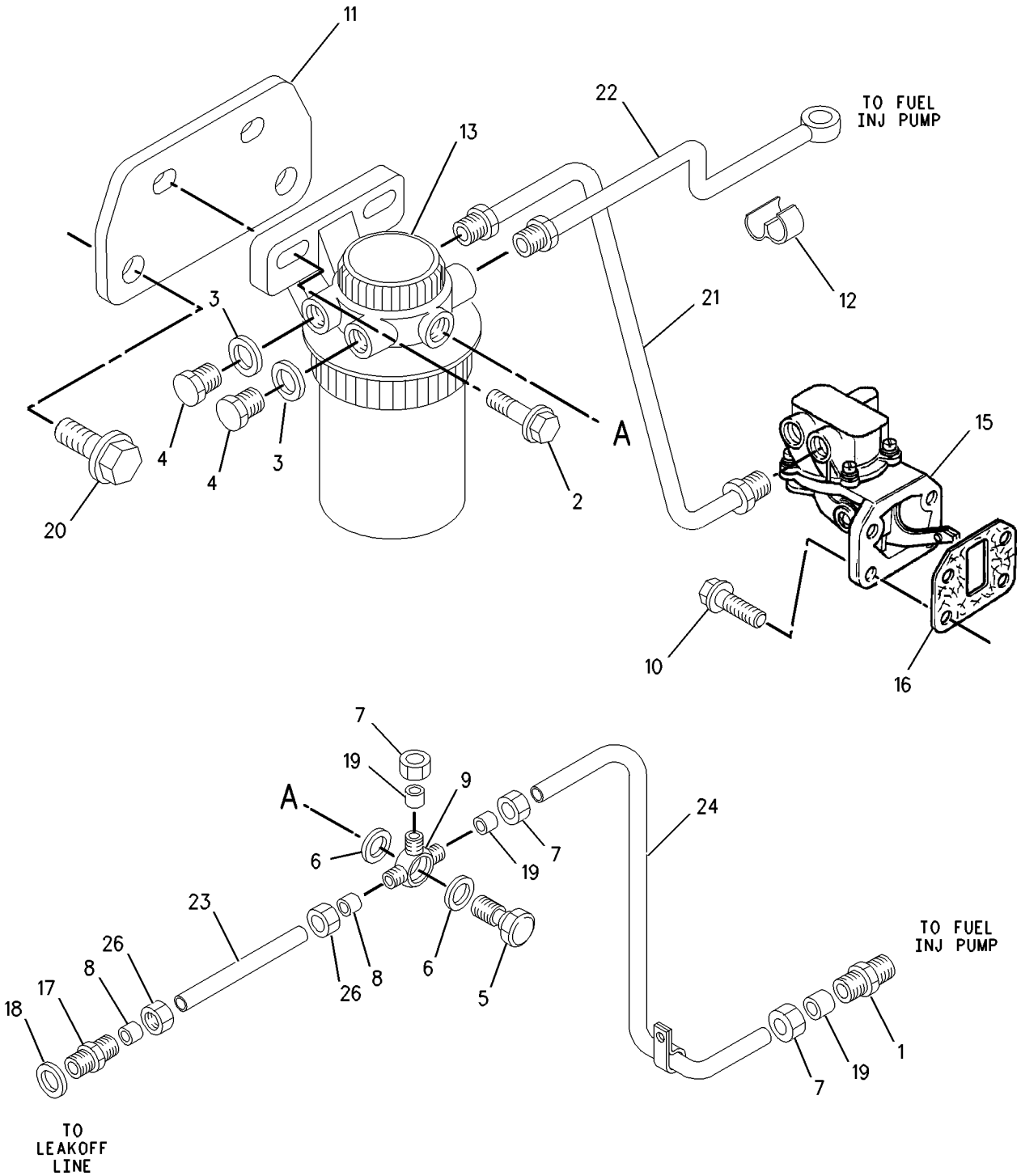

GRAPHIC #1 g00731717

138-3096 FILTER GP-FUEL

S/N: 3NW12500-UP

PART OF 164-7629 FILTER & LINES GP-FUEL

SMCS-1261, 1262 **i01611160**

NOTE	REF NO	GRAPHIC REF	PART NUMBER	QTY	PART NAME 1 2 3 4 5 6 (PRODUCT LEVEL)	SEE PAGE
	1	1	**101-3739**	1	NUT	
	2	1	**101-3740**	1	CAP	
	3	1	**101-3741**	1	SEAL (PLUNGER)	
	4	1	**101-3742**	1	PLUG	
	5	1	**101-3743**	1	SEAL (FUEL FILTER)	
	6	1	**118-8118**	1	RING-RETAINING	
	7	1	**159-6102**	1	FILTER ELEMENT AS-FUEL	

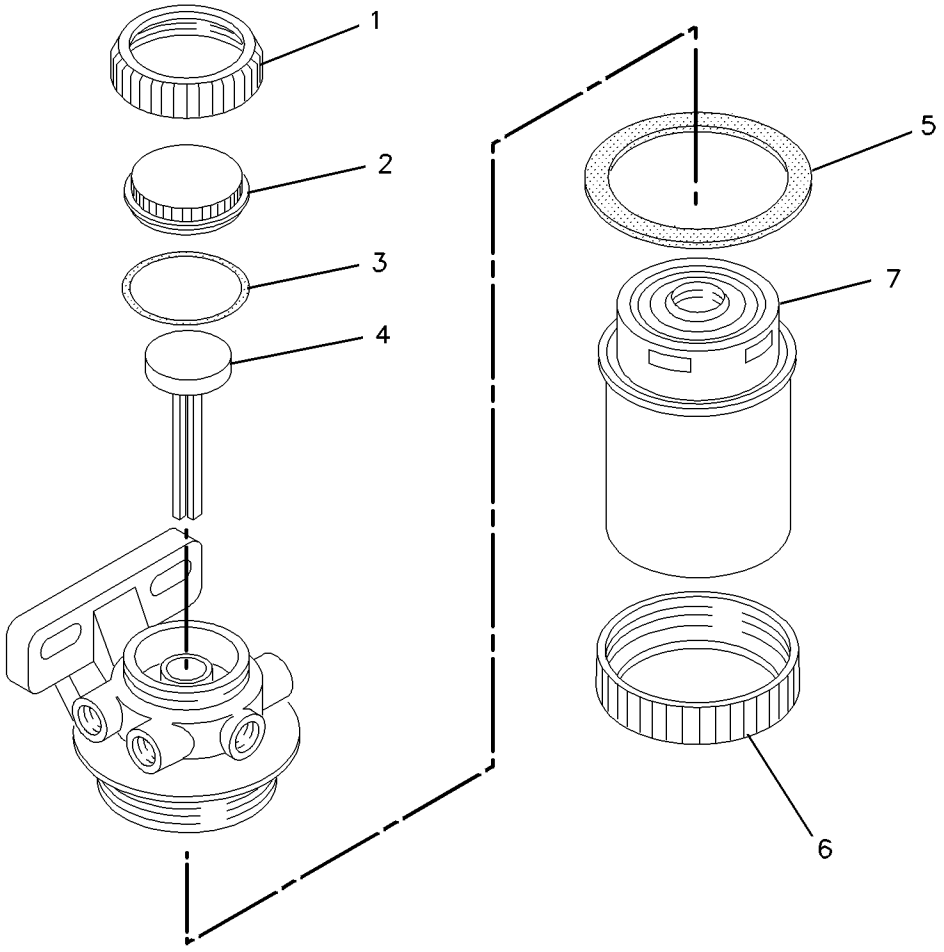

GRAPHIC #1 g00693633

153-1006 FITTING GP-FUEL LINES

S/N: 3NW12500-UP

PART OF 147-1233, 147-1234 ENGINE AR-PRIMARY

SMCS-1256 **i01068141**

NOTE	REF NO	GRAPHIC REF	PART NUMBER	QTY	PART NAME 1 2 3 4 5 6 (PRODUCT LEVEL)	SEE PAGE
	1	1	**067-6268**	1	NUT-FUEL LINE	
	2	1	**067-6269**	1	FITTING	

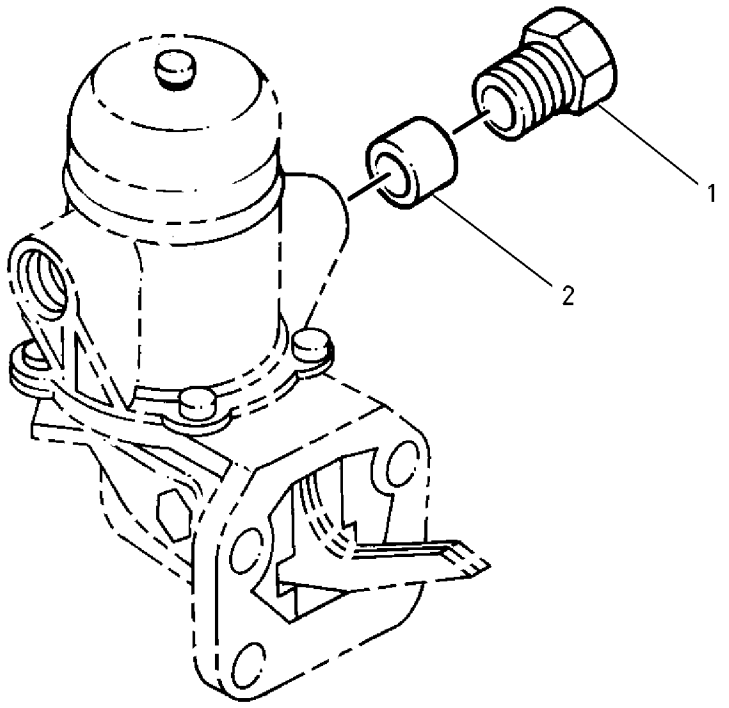

GRAPHIC #1 g00432718

FUEL SYSTEM

171-2929 GOVERNOR GP

S/N: 3NW12500-UP

PART OF 147-1233 ENGINE AR-PRIMARY

SMCS-1264, 1287 **i01515557**

NOTE	REF NO	GRAPHIC REF	PART NUMBER	QTY	PART NAME 1 2 3 4 5 6 (PRODUCT LEVEL)	SEE PAGE
	1	1	**6I-0631**	1	BOLT (M6X1.0X12MM)	
	2	1	**100-4845**	4	BOLT (M5X0.8X10MM)	
	3	1	**130-1841**	1	WASHER	
	4	1	**133-5512**	3	NUT	
	5	1	**158-7896**	1	CLIP	
	6	1	**158-7897**	1	ARM	
	7	1	**158-7898**	1	PIN	
	8	1	**158-7899**	2	PIN	
	9	1	**158-7900**	1	PIN	
	10	1	**205-7644**	1	WASHER-SEAL	
	11	1	**158-7902**	1	BOLT (11/16X1-12X3/4IN)	
	12	1	**158-7903**	1	ARM	
	13	1	**158-7905**	1	PLATE	
	14	1	**158-7906**	1	WEIGHT	
	15	1	**158-7909**	1	SLIDER	
	16	1	**158-7911**	1	BEARING	
	17	1	**158-7916**	3	WASHER	
	18	1	**158-7912**	1	BALL BEARING	
	20	1	**158-7921**	1	NUT	
	21	1	**158-7922**	1	SPRING	
	22	1	**158-7923**	1	ARM	
	23	1	**158-7924**	1	SHAFT	
	24	1	**158-7926**	1	SEAL-O-RING	
	25	1	**158-7933**	1	WASHER	
	26	1	**158-7934**	1	BOLT	
	27	1	**162-2213**	1	CAP	
	28	1	**158-7936**	1	BOLT	
	29	1	**158-7940**	1	SPRING	
	30	1	**158-7946**	1	LINK	
	31	1	**158-7947**	1	SPRING	
	32	1	**137-6390**	1	PROTECTION GP-FUEL SYSTEM	
	33	1	**158-7950**	2	PIN	
	34	1	**158-7951**	2	SPRING	
	35	1	**201-8964**	1	CAMSHAFT	
	37	1	**162-2210**	1	BOLT	
	38	1	**162-2215**	1	RING	

171-2929 **GOVERNOR GP** *(contd.)* **i01515557**

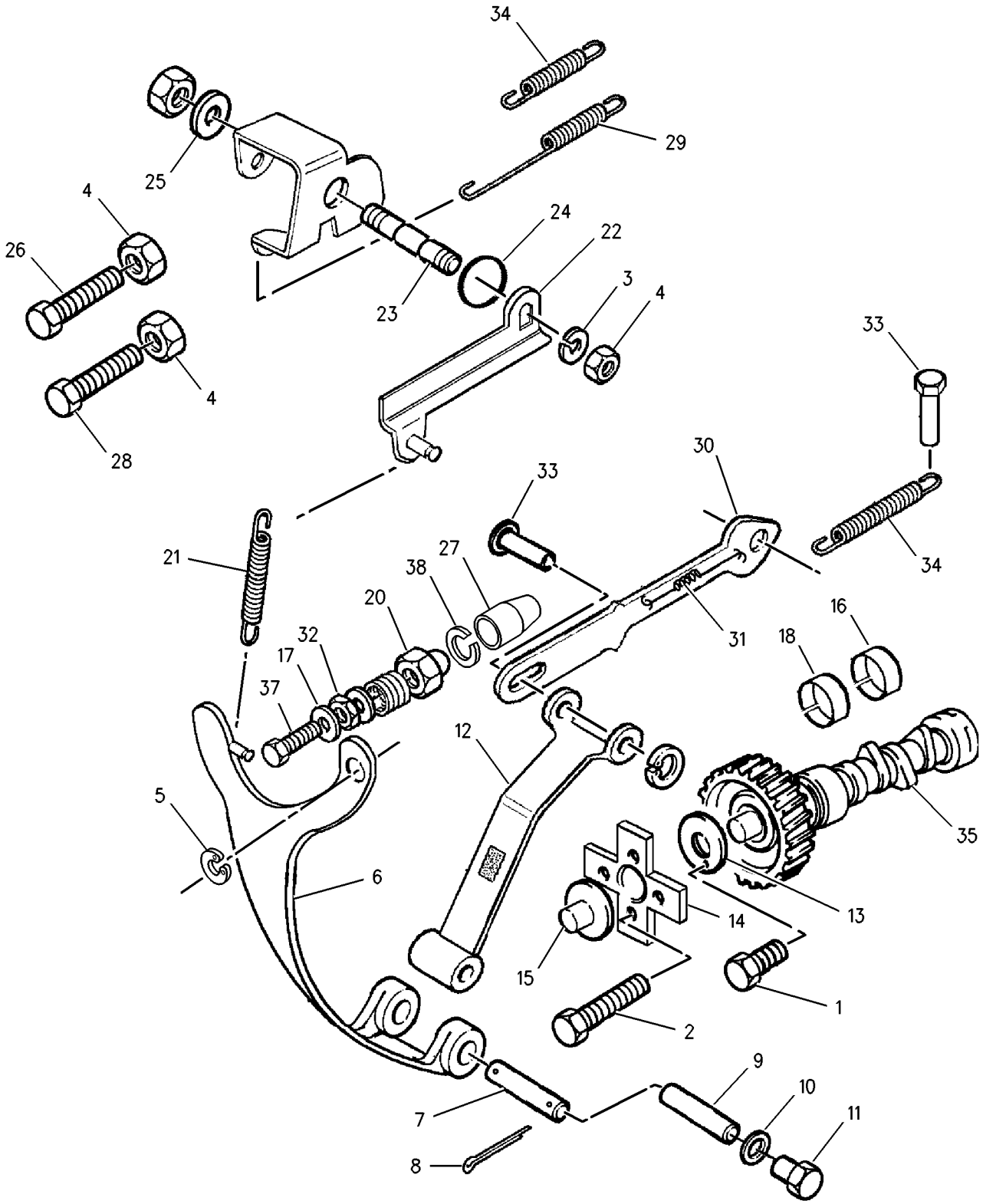

GRAPHIC #1 g00762047

FUEL SYSTEM

173-0122 GOVERNOR GP

S/N: 3NW12500-UP

PART OF 147-1234 ENGINE AR-PRIMARY

SMCS-1264, 1287 **i01746019**

NOTE	REF NO	GRAPHIC REF	PART NUMBER	QTY	PART NAME 1 2 3 4 5 6 (PRODUCT LEVEL)	SEE PAGE
	1	1	**6I-0631**	1	BOLT (M6X1.0X12MM)	
	2	1	**100-4845**	4	BOLT (M5X0.8X10MM)	
	3	1	**130-1841**	1	WASHER	
	4	1	**133-5512**	3	NUT	
	5	1	**137-6390**	1	PROTECTION GP-FUEL SYSTEM	
	6	1	**139-5511**	1	CAP	
	7	1	**162-2207**	1	NUT	
	8	1	**173-0128**	1	PLUG	
	9	1	**158-7896**	1	CLIP	
	10	1	**158-7897**	1	ARM	
	11	1	**158-7898**	1	PIN	
	12	1	**158-7899**	2	PIN	
	13	1	**158-7900**	1	PIN	
	14	1	**205-7644**	1	WASHER	
	15	1	**158-7902**	1	BOLT (11/16X1-12X3/4 IN)	
	16	1	**158-7903**	1	ARM	
	17	1	**158-7905**	1	PLATE	
	18	1	**158-7906**	1	WEIGHT	
	19	1	**158-7909**	1	SLIDER	
	20	1	**158-7940**	1	SPRING	
	21	1	**158-7921**	1	NUT	
	22	1	**158-7922**	1	SPRING	
	23	1	**158-7923**	1	ARM	
	24	1	**158-7924**	1	SHAFT	
	25	1	**158-7926**	1	SEAL-O-RING	
	26	1	**158-7934**	1	BOLT	
	27	1	**158-7936**	1	BOLT	
	28	1	**158-7946**	1	LINK	
	29	1	**158-7947**	1	SPRING	
	30	1	**158-7948**	1	PIN	
	31	1	**158-7950**	1	PIN	
	32	1	**158-7951**	1	SPRING	
	33	1	**158-7933**	1	WASHER	
	34	1	**207-5959**	1	BOLT	
	35	1	**199-5741**	1	CAP	
	36	1	**173-0127**	1	SPRING	
	37	1	**201-8965**	1	CAMSHAFT	
	37A	1	**152-6864**	1	KEY-WOODRUFF	
	37B	1	**158-7911**	1	BEARING	
	37C	1	**158-7912**	1	BALL BEARING	
	38	1	**173-0125**	1	SPRING	

173-0122 **GOVERNOR GP** *(contd.)* **i01746019**

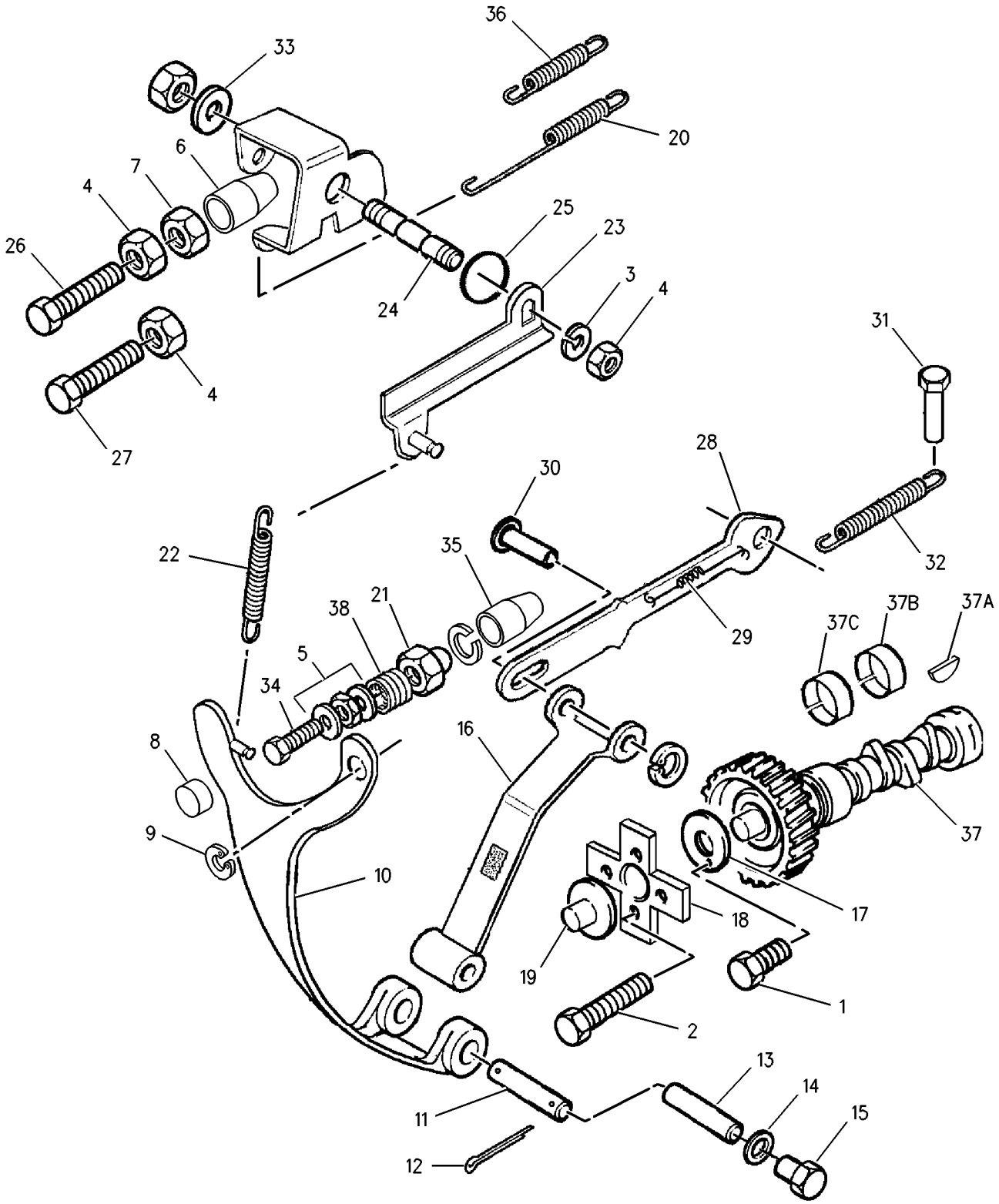

GRAPHIC #1 g00893806

FUEL SYSTEM

142-8843 LINES GP-FUEL

S/N: 4YZ4000-UP; 5SZ4000-UP
PART OF 195-6761, 195-6763 CHASSIS AR

SMCS-1261, 1274 **i01585112**

NOTE	REF NO	GRAPHIC REF	PART NUMBER	QTY	PART NAME 1 2 3 4 5 6 (PRODUCT LEVEL)	SEE PAGE
	1	1	**3E-7404**	1	CLAMP-HOSE	
	2	1	**4H-2494**	3	SLEEVE-FITTING	
	3	1	**5P-4961**	2	CLAMP-HOSE	
	4	1	**9X-2038**	2	WASHER (7X19X2MM THK)	
	5	1	**032-8100**	1	WASHER (.064MM THK)	
	6	1	**033-7849**	2	PLUG	
	7	1	**116-4808**	1	TUBE	
CY	8	1	**130-7092**	1	SEPARATOR GP-WATER	140
	9	1	**142-8827**	1	GUARD AS	
	10	1	**142-8828**	1	CAP AS-FUEL	
	11	1	**152-4892**	1	HOSE	
	12	1	**159-5786**	3	TUBE AS	
	13	1	**1P-4278**	6	CLAMP-HOSE	
	14	1	**8F-8513**	1	CLIP	
	15	1	**5P-0597**	1	CLAMP-HOSE	
	16	1	**8T-4121**	4	WASHER-HARD (11X21X2.5MM THK)	
M	17	1	**8T-4138**	2	BOLT (M6X1X20MM)	
M	18	1	**8T-4196**	2	BOLT (M10X1.5X35MM)	
E	19	1	**5P-1442**		HOSE (125CM)	
E	20	1	**5P-6442**		HOSE (107CM)	
M	21	1	**8T-4133**	2	NUT (M10X1.5 THD)	

C-CHANGE FROM PREVIOUS TYPE
E-ORDER BY THE CENTIMETER
M-METRIC PART
Y-SEPARATE ILLUSTRATION

142-8843 **LINES GP-FUEL** ***(contd.)*** **i01585112**

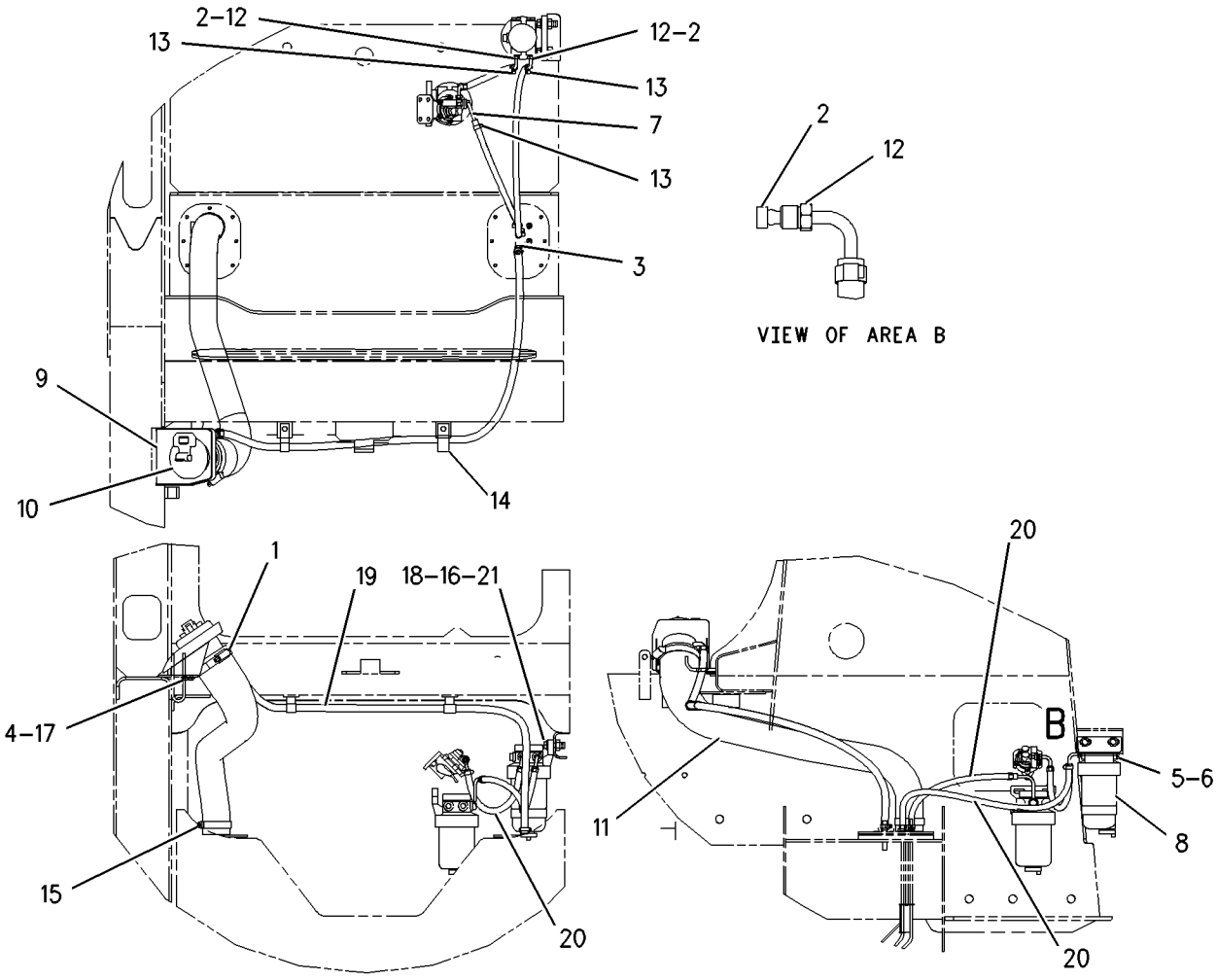

GRAPHIC #1

g00762975

FUEL SYSTEM

191-9755 LINES GP-FUEL

S/N: CED1-UP; FDG1-UP

PART OF 190-7953, 195-6710 CHASSIS AR

SMCS-1261, 1274 **i01464284**

NOTE	REF NO	GRAPHIC REF	PART NUMBER	QTY	PART NAME 1 2 3 4 5 6 (PRODUCT LEVEL)	SEE PAGE
	1	1	**3E-7404**	1	CLAMP-HOSE	
	2	1	**4H-2494**	3	SLEEVE-FITTING	
	3	1	**5P-4961**	2	CLAMP-HOSE	
	4	1	**9X-2038**	2	WASHER (7X19X2MM THK)	
	5	1	**032-8100**	2	WASHER (.064MM THK)	
	6	1	**033-7849**	2	PLUG	
	7	1	**116-4808**	1	TUBE	
Y	8	1	**130-7092**	1	SEPARATOR GP-WATER	140
	9	1	**142-8827**	1	GUARD AS	
	10	1	**142-8828**	1	CAP AS-FUEL	
	11	1	**159-5786**	3	TUBE AS	
	12	1	**191-9776**	1	HOSE	
	13	1	**1P-4278**	6	CLAMP-HOSE	
	14	1	**5P-0597**	1	CLAMP-HOSE	
	15	1	**8F-8513**	1	CLIP (LOOP)	
	16	1	**8T-4121**	4	WASHER-HARD (11X21X2.5MM THK)	
M	17	1	**8T-4133**	2	NUT (M10X1.5 THD)	
M	18	1	**8T-4138**	2	BOLT (M6X1X20MM)	
M	19	1	**8T-4196**	2	BOLT (M10X1.5X35MM)	
E	20	1	**5P-1442**		HOSE (135CM)	
E	21	1	**5P-6442**		HOSE (53CM)	
	22	1	**5P-6442**		HOSE (35CM)	
	23	1	**5P-6442**		HOSE (19CM)	

E-ORDER BY THE CENTIMETER
M-METRIC PART
Y-SEPARATE ILLUSTRATION

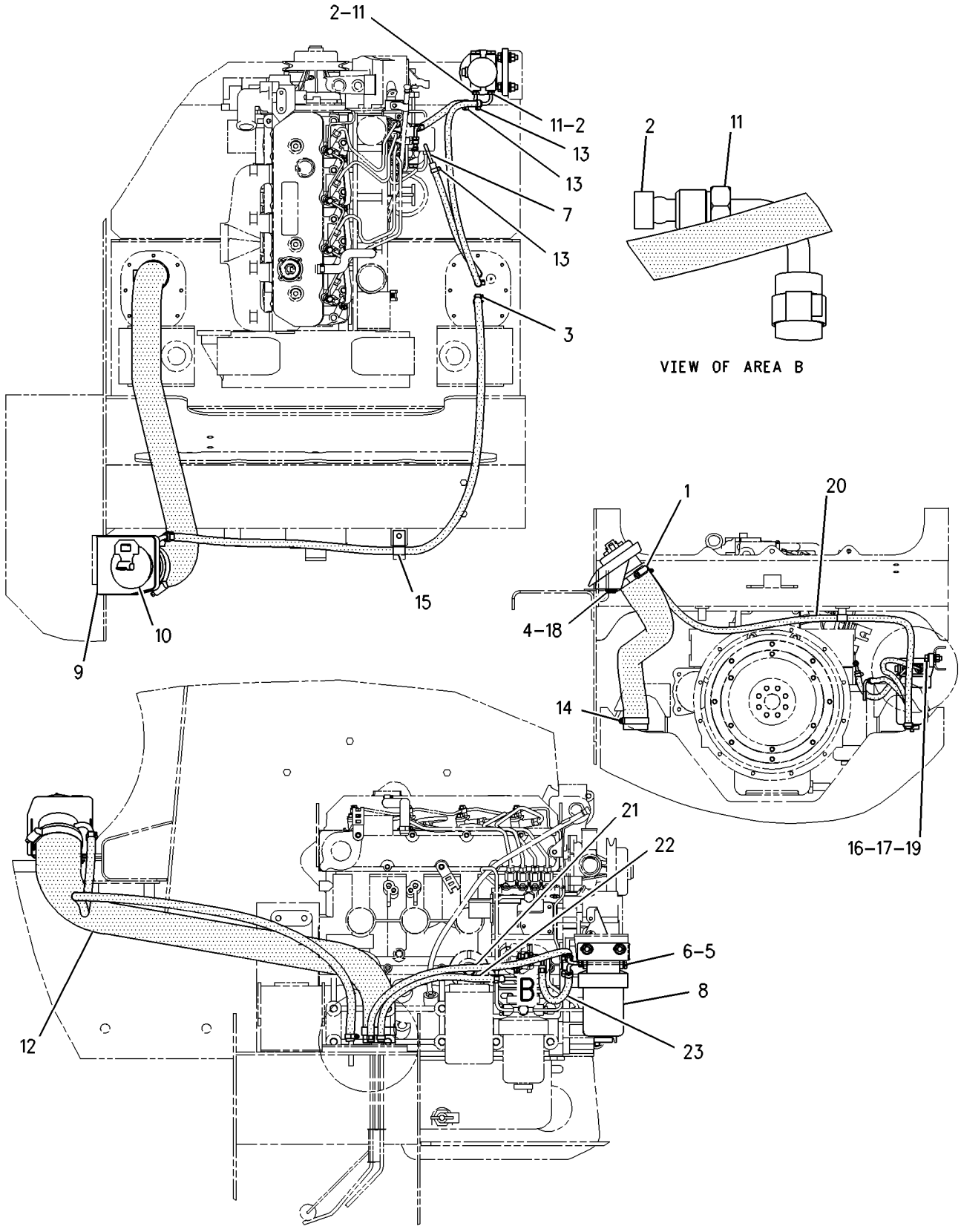

GRAPHIC #1 g00768119

170-7498 PUMP GP-FUEL INJECTION

S/N: 3NW12500-UP

PART OF 147-1234 ENGINE AR-PRIMARY

SMCS-1251 **i01491102**

NOTE	REF NO	GRAPHIC REF	PART NUMBER	QTY	PART NAME 1 2 3 4 5 6 (PRODUCT LEVEL)	SEE PAGE
	1	1	**6I-0291**	2	NUT (M8X1.25)	
	2	1	**6I-0572**	4	BOLT (M8X1.25.20MM)	
	3	1	**6I-0631**	4	BOLT (M6X1.0X12MM)	
	4	1	**6I-0840**	2	STUD (M8X20MM)	
	5	1	**067-6998**	1	NUT	
	6	1	**067-6999**	1	FERRULE	
	7	1	**124-3533**	2	DOWEL	
	8	1	**140-8713**	2	CLIP	
	9	1	**140-8714**	1	CLIP	
	10	1	**140-8718**	4	WASHER-SEATING	
	11	1	**170-7500**	4	INJECTOR AS-FUEL	
	12	1	**147-3043**	1	GASKET	
	13	1	**147-3046**	4	SEAL-O-RING	
	14	1	**147-3047**	4	CLAMP	
	15	1	**153-1022**	4	SPACER	
	16	1	**153-1153**	1	TUBE AS-FUEL INJECTION (CYL. NO.1)	
	17	1	**153-1154**	1	TUBE AS-FUEL INJECTION (CYL. NO.2)	
	18	1	**153-1155**	1	TUBE AS-FUEL INJECTION (CYL. NO.3)	
	19	1	**153-1156**	1	TUBE AS-FUEL INJECTION (CYL. NO.4)	
	20	1	**192-5845**	1	KIT-SHIM	
	21	1	**160-8657**	1	LINE-FUEL (LEAK OFF)	
	22	1	**170-7499**	1	PUMP GP-FUEL INJECTION	
	22A	1	**146-0006**	1	SCREW-PURGE	
	22B	1	**146-0018**	1	GASKET	
	22C	1	**196-0975**	1	BOLT-BANJO	
	22D	1	**196-0982**	2	GASKET	
	23	1	**146-9303**	1	COVER	
	24	1	**153-1023**	1	NUT	
	25	1	**158-7931**	1	LEVER	
	27	1	**173-0125**	1	SPRING	
	28	1	**178-6226**	1	ADJUSTER AS	

170-7498 **PUMP GP-FUEL INJECTION** *(contd.)* **i01491102**

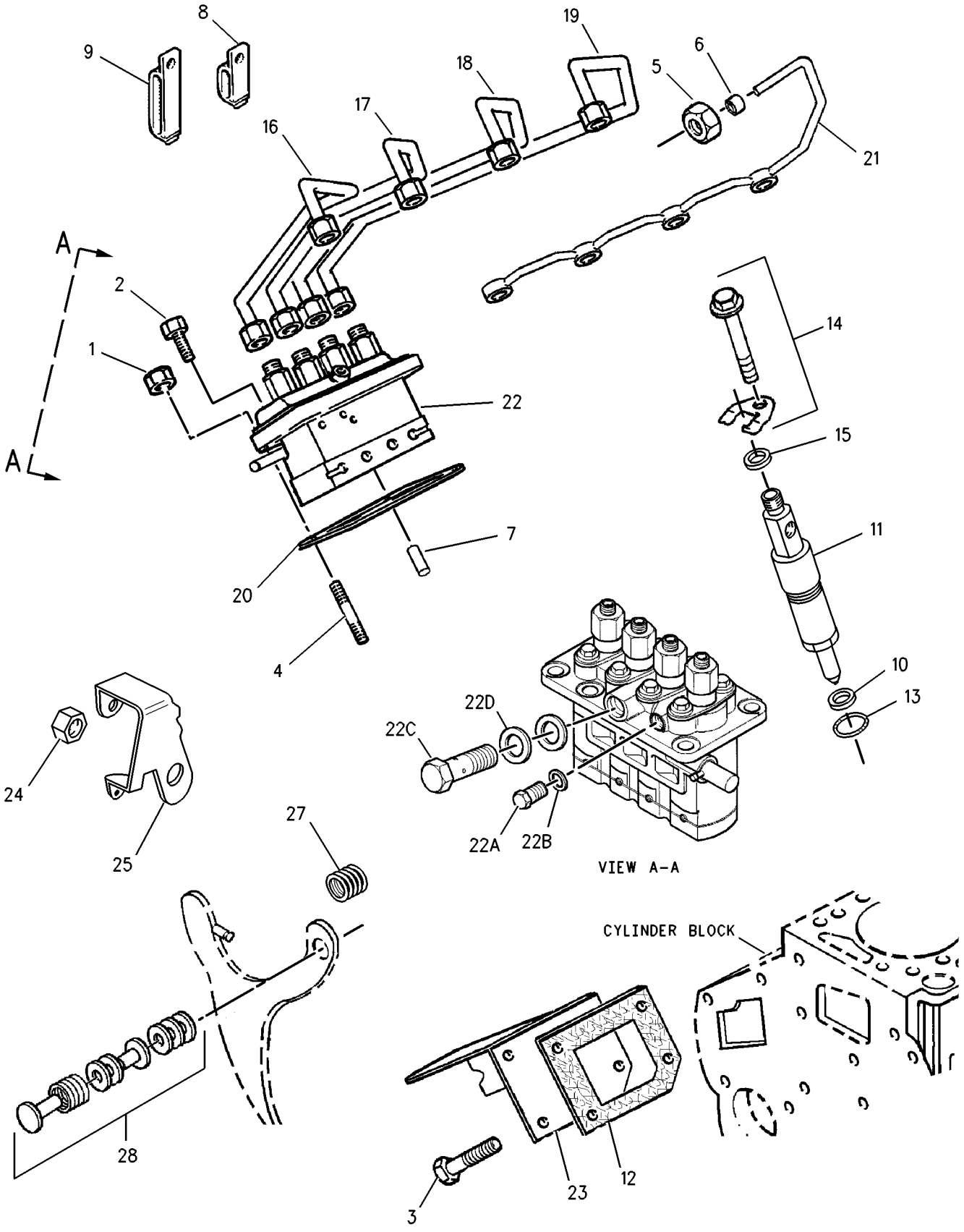

GRAPHIC #1 g00774500

171-3957 PUMP GP-FUEL INJECTION

S/N: 3NW12500-UP

PART OF 147-1233 ENGINE AR-PRIMARY

SMCS-1251 **i01674177**

NOTE	REF NO	GRAPHIC REF	PART NUMBER	QTY	PART NAME 1 2 3 4 5 6 (PRODUCT LEVEL)	SEE PAGE
	1	1	**6I-0291**	2	NUT (M8X1.25)	
	2	1	**6I-0572**	4	BOLT (M8X1.25.20MM)	
	3	1	**6I-0631**	4	BOLT (M6X1.0X12MM)	
	4	1	**6I-0840**	2	STUD (M8X20MM)	
	5	1	**067-6998**	1	NUT	
	6	1	**067-6999**	1	FERRULE	
	7	1	**124-3533**	2	DOWEL	
	8	1	**140-8713**	2	CLIP	
	9	1	**140-8714**	1	CLIP	
	10	1	**140-8718**	4	WASHER-SEATING	
	11	1	**147-2991**	4	INJECTOR AS-FUEL	
					(EACH INCLUDES)	
	11A	1	**147-2994**	1	BOLT	
	11B	1	**147-2995**	1	WASHER	
	12	1	**147-3043**	1	GASKET	
	13	1	**147-3046**	4	SEAL-O-RING	
	14	1	**147-3047**	1	CLAMP	
	15	1	**153-1022**	4	SPACER	
	17	1	**153-1153**	1	TUBE AS-FUEL INJECTION (CYL. NO.1)	
	18	1	**153-1154**	1	TUBE AS-FUEL INJECTION (CYL. NO.2)	
	19	1	**153-1155**	1	TUBE AS-FUEL INJECTION (CYL. NO.3)	
	20	1	**153-1156**	1	TUBE AS-FUEL INJECTION (CYL. NO.4)	
	23	1	**192-5845**	1	KIT-SHIM	
	24	1	**160-8657**	1	LINE-FUEL (LEAK OFF)	
	25	1	**164-7610**	1	PUMP GP-FUEL INJECTION	
	26	1	**146-0006**	1	SCREW-PURGE	
	27	1	**146-0018**	1	GASKET	
	28	1	**196-0975**	1	BOLT-BANJO	
	29	1	**196-0982**	2	GASKET	
	30	1	**146-9303**	1	COVER	
	31	1	**153-1023**	1	NUT	
	32	1	**158-7931**	1	LEVER	

171-3957 **PUMP GP-FUEL INJECTION** *(contd.)* **i01674177**

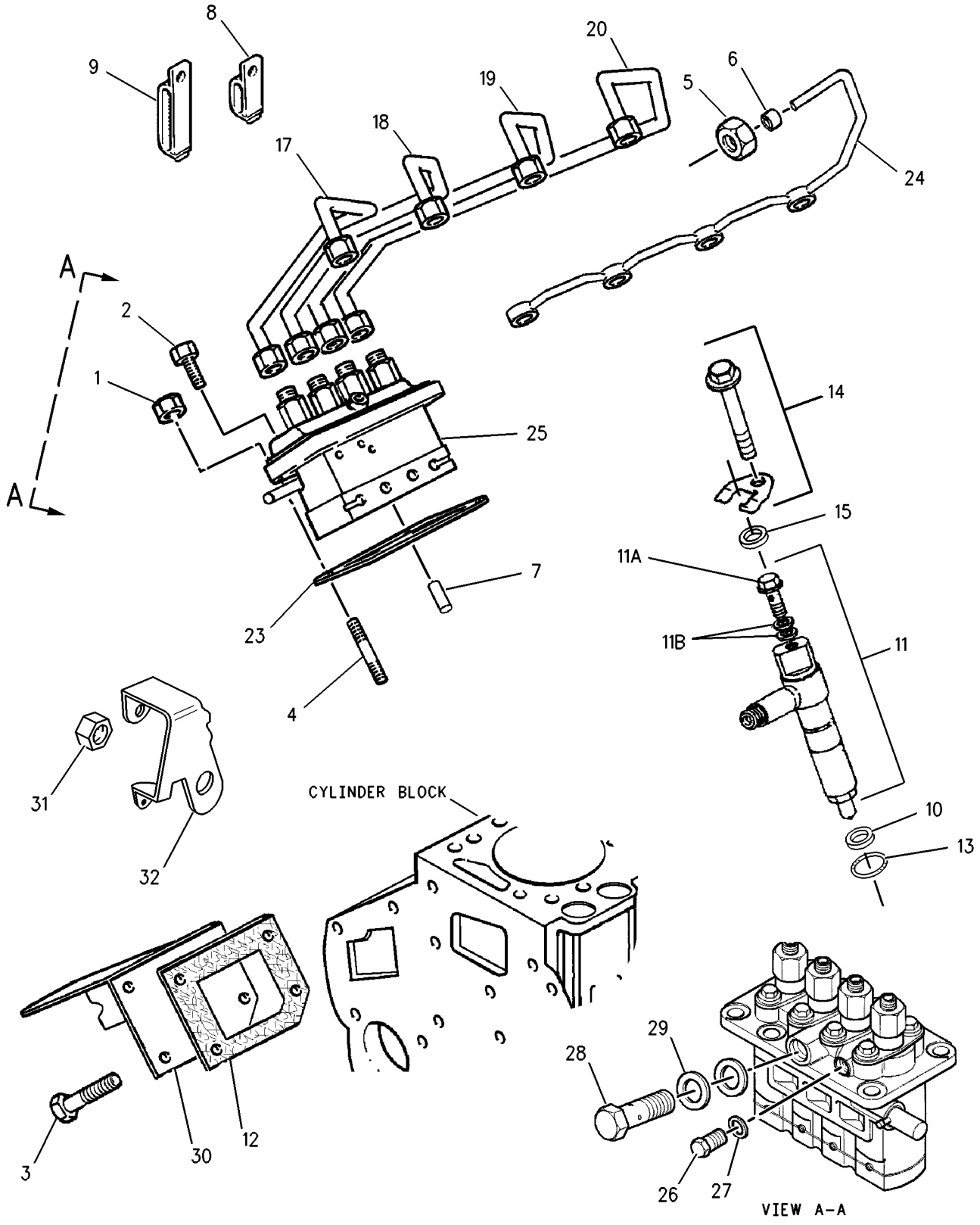

GRAPHIC #1 g00867019

130-7092 SEPARATOR GP-WATER

S/N: CED1-UP; FDG1-UP; 4YZ4000-UP; 5SZ4000-UP
PART OF 142-8843, 191-9755 LINES GP-FUEL

SMCS-1263 **i01450195**

NOTE	REF NO	GRAPHIC REF	PART NUMBER	QTY	PART NAME 1 2 3 4 5 6 (PRODUCT LEVEL)	SEE PAGE
	1	1	**118-8118**	1	RING-RETAINING	
	2	1	**118-8119**	1	NUT	
	3	1	**131-1812**	1	FILTER ELEMENT-WATER	
					AVAILABLE REPAIR KIT(S):	
			121-4480	1	KIT-WATER BASE	

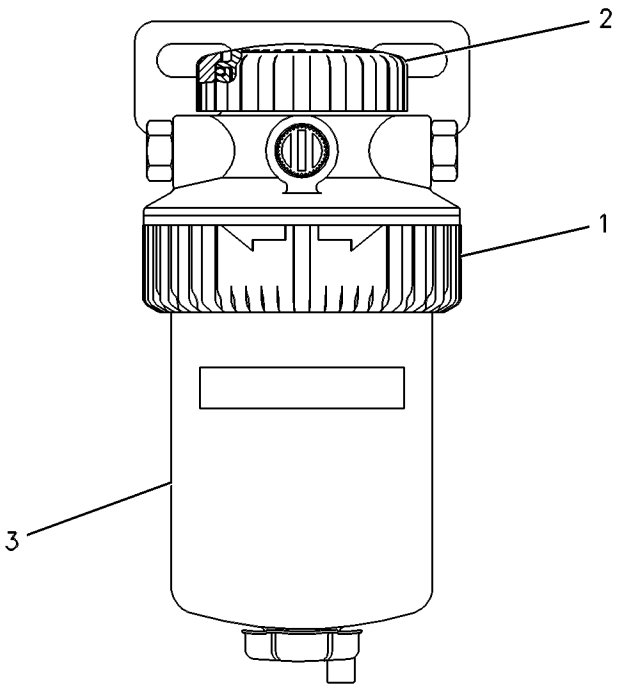

GRAPHIC #1 g00259641

142-9108 ALTERNATOR GP-CHARGING

S/N: CED1-UP; FDG1-UP; 4YZ4000-UP; 5SZ4000-UP
PART OF 220-8098, 220-8104 INSTALLATION AR, 142-9101, 183-7125, 191-9765, 192-2620 INSTALLATION AR-ENGINE
ALSO AN ATTACHMENT

SMCS-1405, 1410, 1425 **i01791045**

NOTE	REF NO	GRAPHIC REF	PART NUMBER	QTY	PART NAME 1 2 3 4 5 6 (PRODUCT LEVEL)	SEE PAGE
	1	1	**4P-8134**	1	CLIP	
	2	1	**5L-3834**	1	V-BELT	
M	3	1	**101-7399**	1	BOLT-HEX SOCKET (M10X1.5X120MM)	
M	4	1	**105-3479**	1	BOLT-HEX SOCKET (M10X1.5X90MM)	
	5	1	**106-4159**	1	SPACER (13.5MM THK)	
R	6	1	**144-9954**	1	ALTERNATOR GP-CHARGING	
	7	1	**144-9960**	1	STRAP	
	8	1	**5P-4116**	1	WASHER-HARD (8.8X20.5X2MM THK)	
B	9	1	**7C-6921**	1	SPACER (11X20X22.8MM THK) (22.8 THIK)	
	10	1	**8T-4121**	3	WASHER-HARD (11X21X2.5MM THK)	
M	11	1	**8T-4133**	1	NUT (M10X1.5 THD)	
M	12	1	**8T-4189**	1	BOLT (M8X1.25X20MM)	

B-USE AS REQUIRED
M-METRIC PART
R-REMFG PART MAY BE AVAILABLE

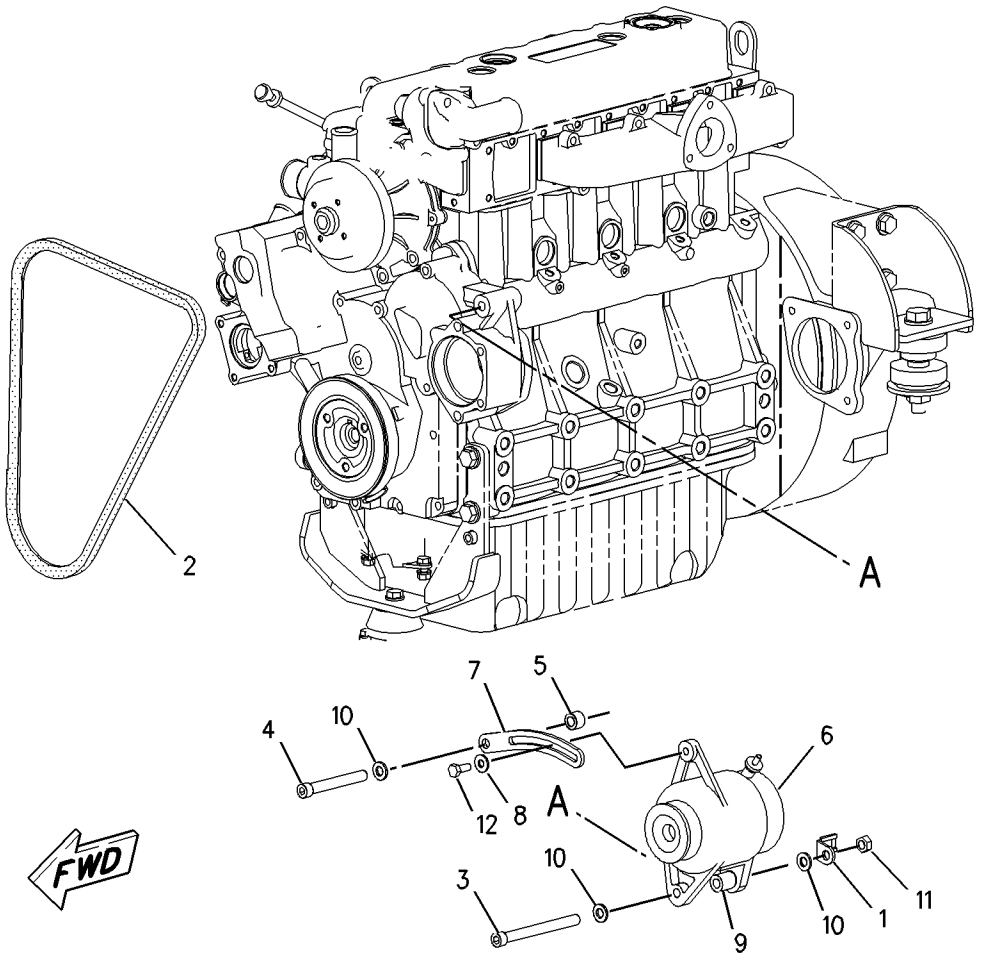

GRAPHIC #1 g00916688

142-7496 BATTERY GP

S/N: CED1-UP; FDG1-UP; 4YZ4000-UP; 5SZ4000-UP
STANDARD
CANNOT BE USED WITH 142-7520—PAGE 143
AN ATTACHMENT

SMCS-1401 **i01755323**

NOTE	REF NO	GRAPHIC REF	PART NUMBER	QTY	PART NAME 1 2 3 4 5 6 (PRODUCT LEVEL)	SEE PAGE
	1	1	**153-5656**	1	BATTERY (12 VOLT)	
	2	1	**193-8329**	1	CLAMP	
	3	1	**5P-4116**	2	WASHER-HARD (8.8X20.5X2MM THK)	
M	4	1	**8T-4189**	1	BOLT (M8X1.25X20MM)	
M	5	1	**8T-6912**	1	BOLT (M8X1.25X50MM)	

M-METRIC PART

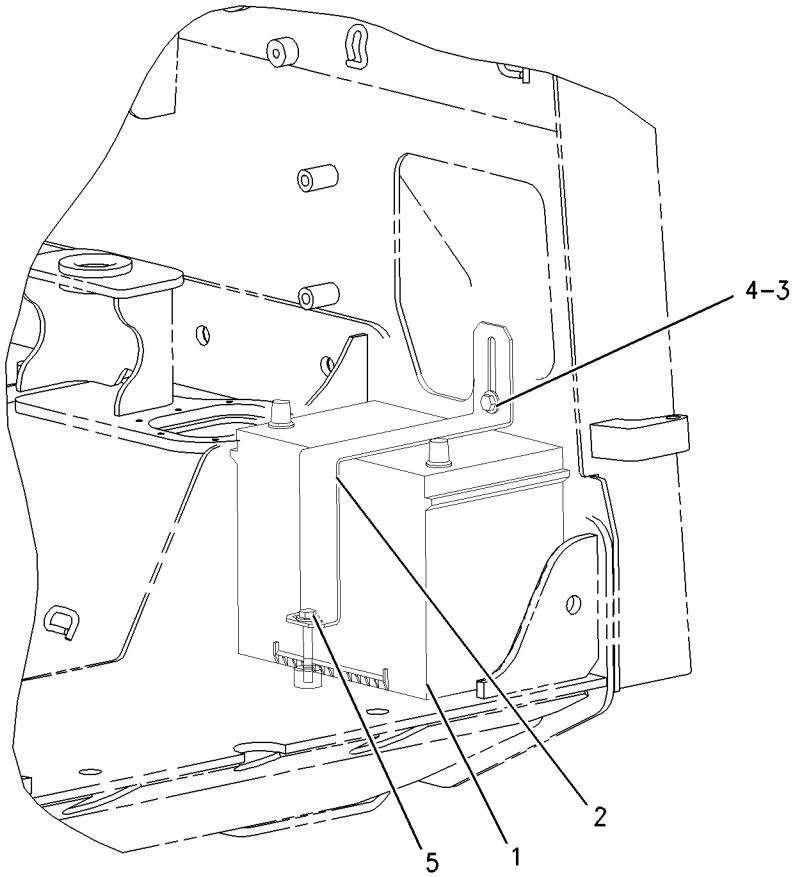

GRAPHIC #1 g00898058

142-7520 BATTERY GP

S/N: CED1-UP; FDG1-UP; 4YZ4000-UP; 5SZ4000-UP
HEAVY DUTY
CANNOT BE USED WITH 142-7496—PAGE 142
AN ATTACHMENT

SMCS-1401 **i01481581**

NOTE	REF NO	GRAPHIC REF	PART NUMBER	QTY	PART NAME 1 2 3 4 5 6 (PRODUCT LEVEL)	SEE PAGE
	1	1	**193-8329**	1	CLAMP-BATTERY	
	2	1	**115-2422**	1	BATTERY (12 VOLT)(WET)	
	3	1	**5P-4116**	2	WASHER-HARD (8.8X20.5X2MM THK)	
M	4	1	**8T-4189**	1	BOLT (M8X1.25X20MM)	
M	5	1	**8T-6870**	1	BOLT (M8X1.25X70MM)	

M-METRIC PART

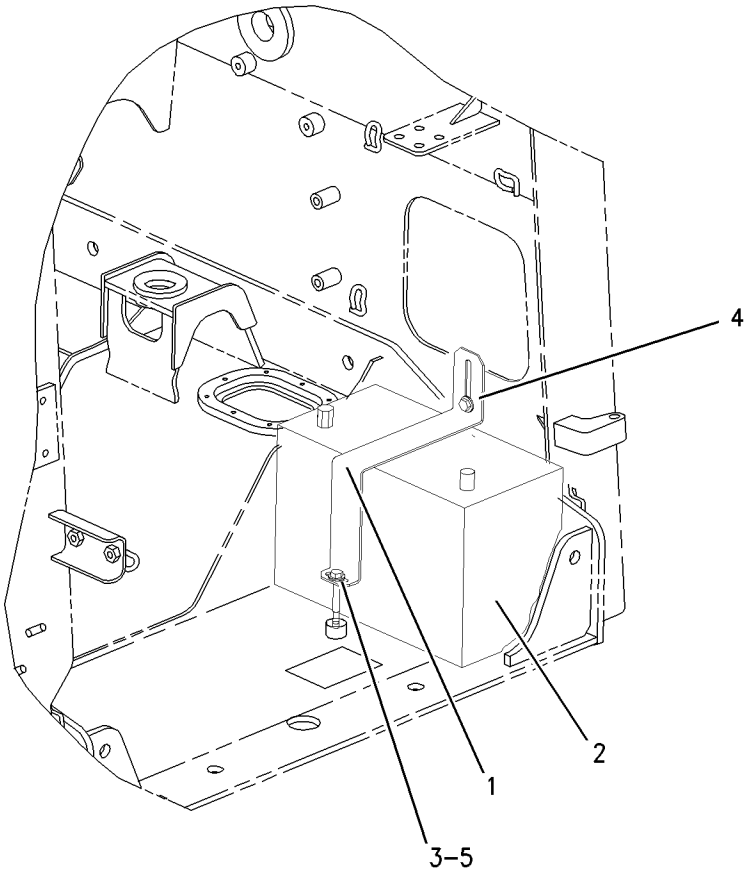

GRAPHIC #1 g00771314

154-4233 CONTROL GP-INTERLOCK

S/N: CED1-UP; FDG1-UP; 4YZ4000-UP; 5SZ4000-UP
PART OF 193-8375 WIRING GP-CAB

SMCS-7630 **i01698898**

NOTE	REF NO	GRAPHIC REF	PART NUMBER	QTY	PART NAME 1 2 3 4 5 6 (PRODUCT LEVEL)	SEE PAGE
	1	1	**7X-6315**	1	STRAP AS	
	2	1	**184-2472**	1	SCREW-PAN HEAD (LUBRICATED)	
	3	1	**134-4126**	1	WASHER (4.52X8.28X.76MM THK)	

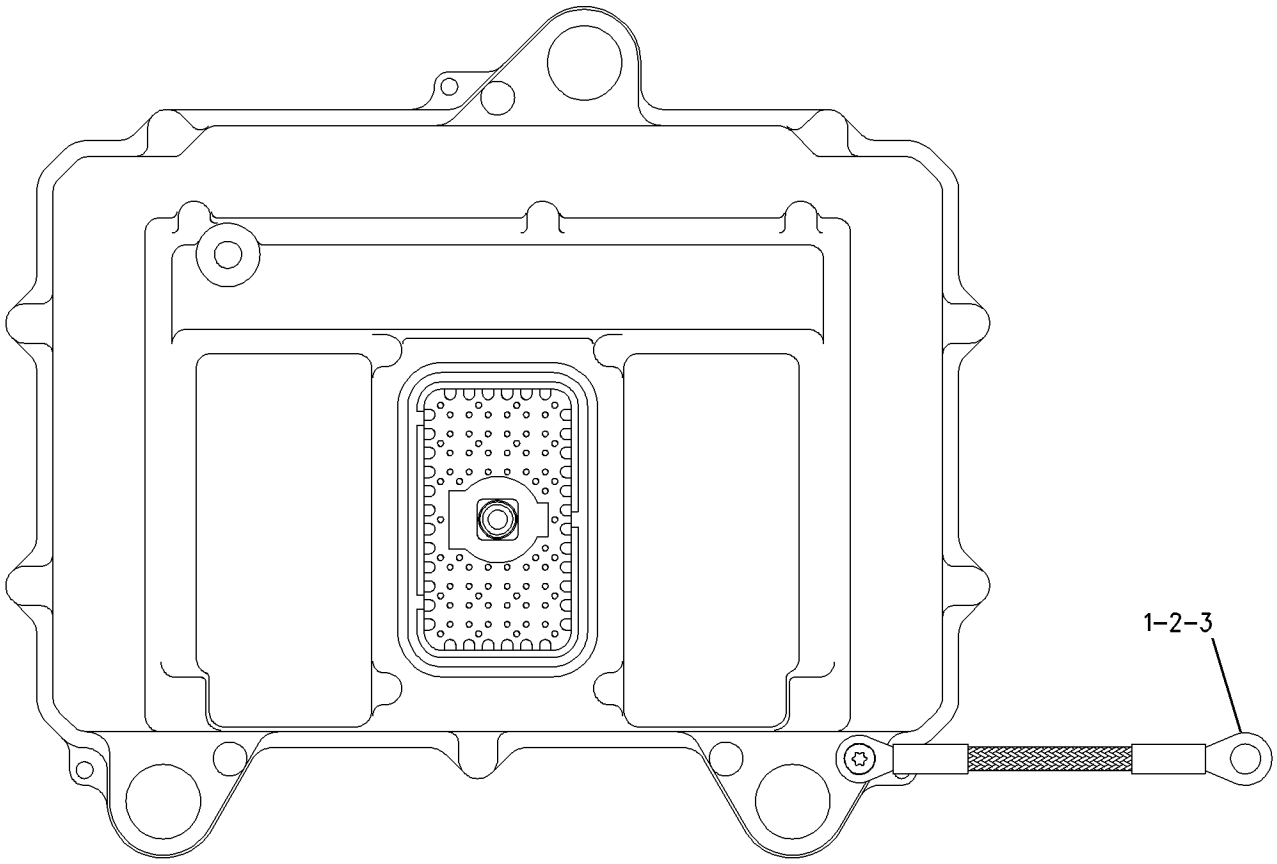

GRAPHIC #1 g00843169

193-8374 COVER GP-FUSE PANEL

S/N: CED1-UP; FDG1-UP; 4YZ4000-UP; 5SZ4000-UP

PART OF 193-8375 WIRING GP-CAB

SMCS-1417 **i01519206**

NOTE	REF NO	GRAPHIC REF	PART NUMBER	QTY	PART NAME 1 2 3 4 5 6 (PRODUCT LEVEL)	SEE PAGE
	1	1	**116-7471**	1	PULLER-MINIFUSE	
	2	1	**117-3789**	4	RETAINER-STUD	
	3	1	**142-9113**	1	COVER	
	4	1	**160-1737**	4	STUD-SLOTTED	
	5	1	**197-6893**	1	FILM (FUSE AND RELAY)	
E	6	1	**103-2543**		SEAL (3CM)	

E-ORDER BY THE CENTIMETER

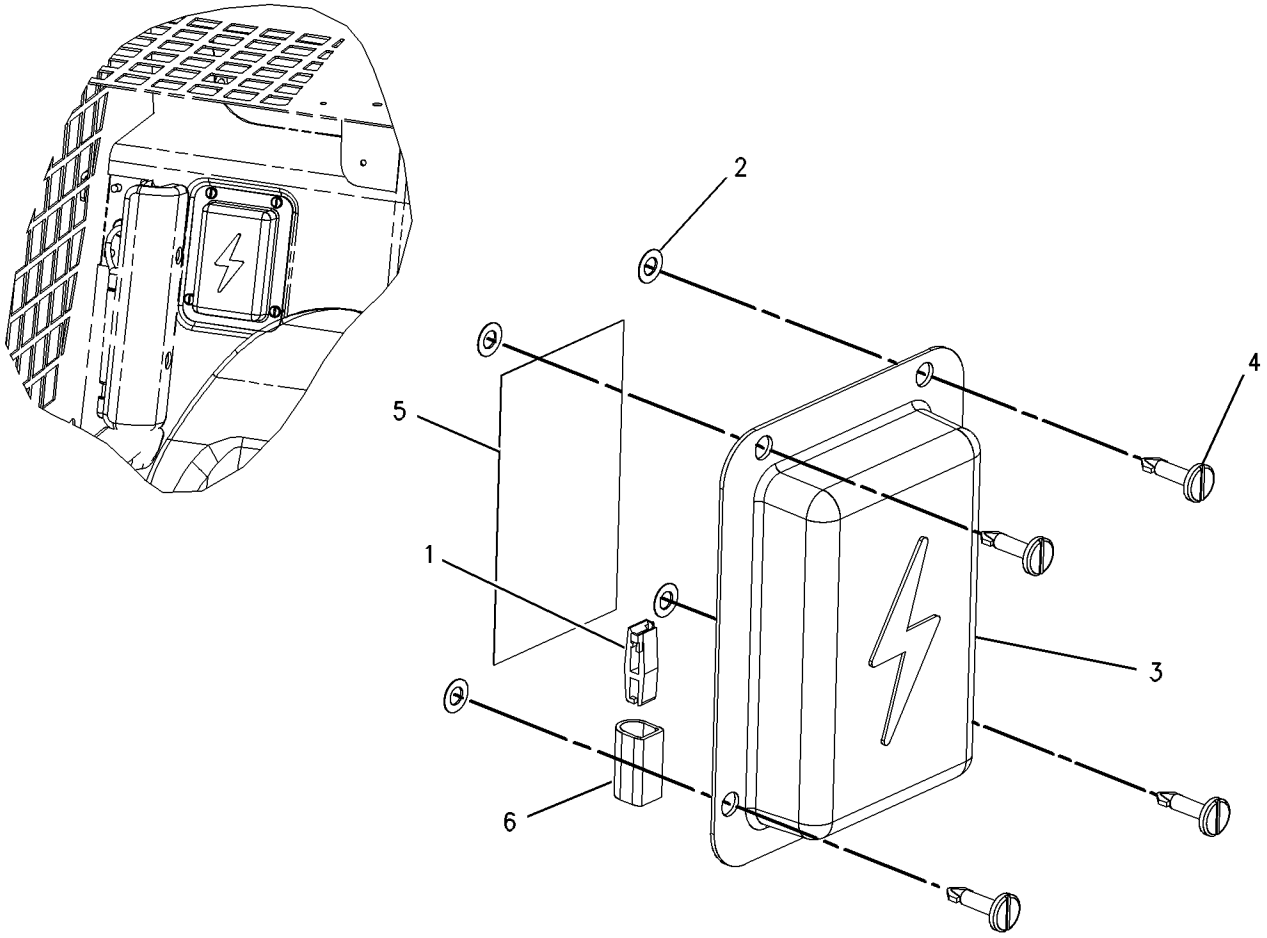

GRAPHIC #1 g00755842

178-2254 ELECTRONICS GP-WORK TOOL

S/N: CED1-UP; FDG1-UP; 4YZ4000-UP; 5SZ4000-UP

PART OF 190-8001 WIRING GP-CHASSIS

SMCS-7610 **i01788764**

NOTE	PART NUMBER	QTY	PART NAME 1 2 3 4 5 6 (PRODUCT LEVEL)	SEE PAGE
	216-0658	1	CONTROL GP-IMPLEMENT	
	7X-6315	1	STRAP AS-GROUND	
	120-4897	1	SCREW-PAN HEAD (NO.8-32X9.52)	
	134-4126	1	WASHER (4.52X8.28X.76MM THK)	
	218-8327	1	SOFTWARE GP-IMPLEMENT	

<END>

153-0524 GLOW PLUG GP

S/N: 3NW12500-UP

PART OF 147-1233, 147-1234 ENGINE AR-PRIMARY

SMCS-1412 **i01349346**

NOTE	REF NO	GRAPHIC REF	PART NUMBER	QTY	PART NAME 1 2 3 4 5 6 (PRODUCT LEVEL)	SEE PAGE
	1	1	**177-7559**	4	PLUG-GLOW	
	2	1	**166-3758**	3	CABLE	

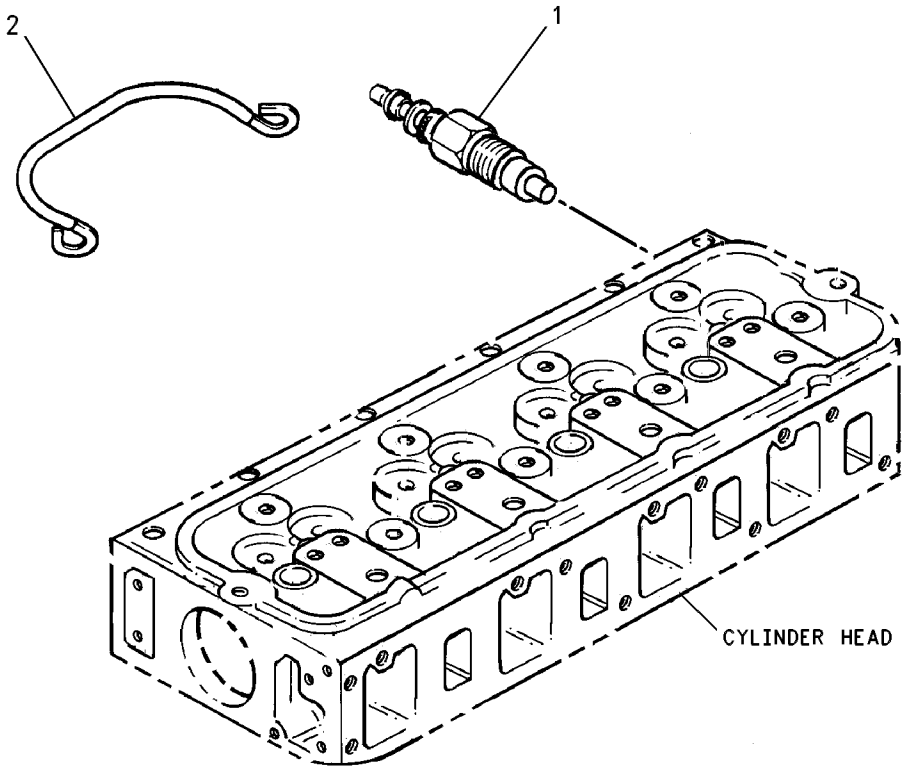

GRAPHIC #1 g00596526

168-7575 HEATER GP-JACKET WATER

S/N: CED1-UP; FDG1-UP; 4YZ4000-UP; 5SZ4000-UP
AN ATTACHMENT

SMCS-1383 **i01355396**

NOTE	REF NO	GRAPHIC REF	PART NUMBER	QTY	PART NAME 1 2 3 4 5 6 (PRODUCT LEVEL)	SEE PAGE
	1	1	**3S-2093**	1	STRAP-CABLE	
	2	1	**159-6108**	1	CORD AS-HEATER	
	3	1	**168-7574**	1	ELEMENT AS	
		1	**6F-0711**	1	SEAL-O-RING (40.87MM ID)	

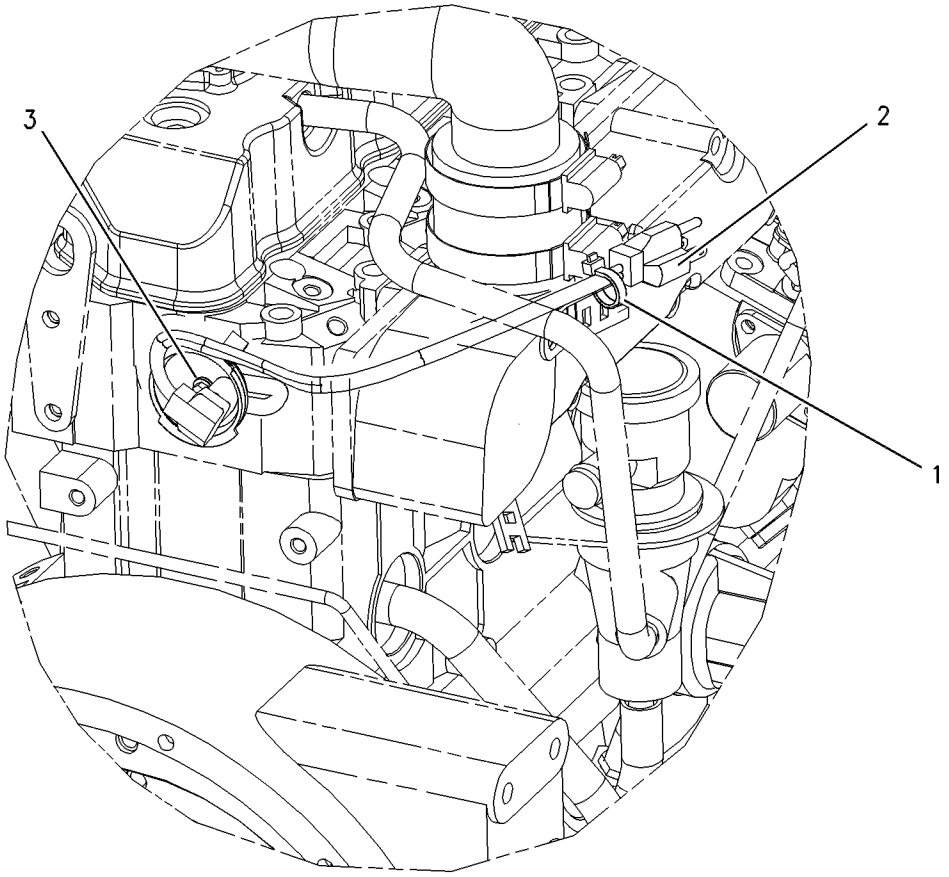

GRAPHIC #1 g00559646

142-8637 LAMP GP-FLOOD

S/N: CED1-UP; FDG1-UP; 4YZ4000-UP; 5SZ4000-UP
12 VOLT. SUSPENDED
PART OF 142-8650 LIGHTING GP-FRONT
AN ATTACHMENT

SMCS-1434 **i01410357**

NOTE	REF NO	GRAPHIC REF	PART NUMBER	QTY	PART NAME 1 2 3 4 5 6 (PRODUCT LEVEL)	SEE PAGE
	1	1	**9W-0607**	1	LAMP (12 VOLT)(55 WATT)	
M	2	1	**6V-9189**	2	LOCKNUT (M8X1.25 THD)	
M	3	1	**8C-5748**	1	BOLT (M8X1.25X55MM)	
M	4	1	**3E-9854**	1	BOLT (M8X1.25X20MM)	
	5	1	**8T-4224**	1	WASHER-HARD (8.8X16X2MM THK)	

M-METRIC PART

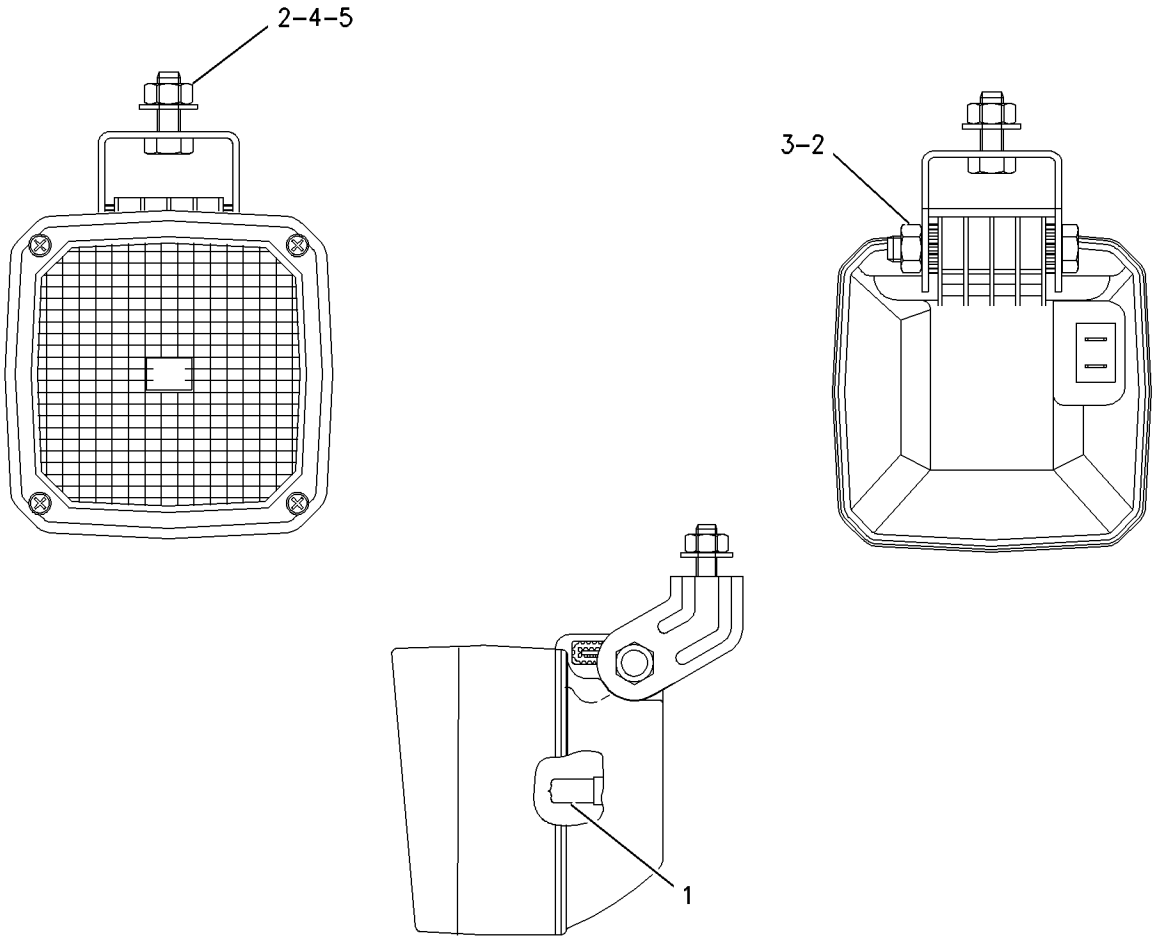

GRAPHIC #1 g00742958

168-6410 LAMP GP-FL00D

S/N: CED1-UP; FDG1-UP; 4YZ4000-UP; 5SZ4000-UP
12 VOLT. VERTICAL
PART OF 195-6722 LIGHTING GP-REAR
AN ATTACHMENT

SMCS-1434 **i01416886**

NOTE	REF NO	GRAPHIC REF	PART NUMBER	QTY	PART NAME 1 2 3 4 5 6 (PRODUCT LEVEL)	SEE PAGE
	1	1	**9W-0607**	1	LAMP (12 VOLT)(55 WATT)	
M	2	1	**6V-9189**	2	LOCKNUT (M8X1.25 THD)	
M	3	1	**8C-5748**	1	BOLT (M8X1.25X55MM)	
M	4	1	**3E-9854**	1	BOLT (M8X1.25X20MM)	
	5	1	**8T-4224**	1	WASHER-HARD (8.8X16X2MM THK)	

M-METRIC PART

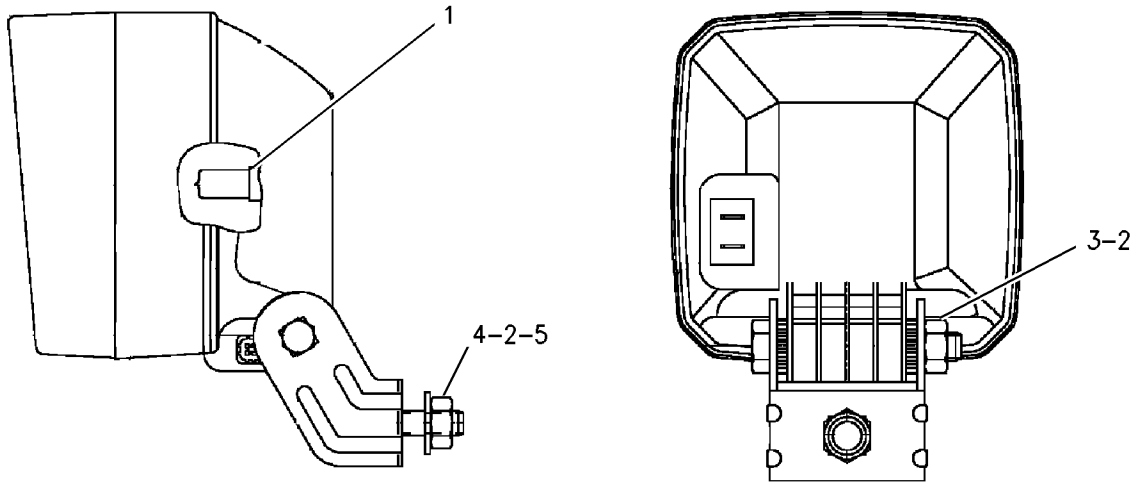

GRAPHIC #1 g00744532

MEMORANDA

3E-7584 LAMP GP-HEAD & SIGNAL

S/N: 4YZ4000-UP; 5SZ4000-UP
12 VOLT. HIGH/LOW, TURN
PART OF 203-4331, 203-4332 LIGHTING GP-ROADING
AN ATTACHMENT

SMCS-1429, 1430 **i01798076**

NOTE	REF NO	GRAPHIC REF	PART NUMBER	QTY	PART NAME 1 2 3 4 5 6 (PRODUCT LEVEL)	SEE PAGE
	1	1	**9X-4244**	4	SCREW	
	2	1	**100-3251**	2	SCREW-LENS	
	3	1	**9X-9865**	1	SEAL	
	4	1	**100-3248**	1	LENS AS	
	5	1	**9W-3324**	1	LAMP-HEAD (12 VOLT/60-55 WATT)	
	6	1	**100-3247**	1	BODY AS-LAMP	
M	7	1	**8T-5005**	1	BOLT (M10X1.50X70MM)	
M	8	1	**8T-0389**	1	LOCKNUT (M10X1.5 THD)	
	9	1	**100-3253**	1	SPACER-SPHERICAL	
	10	1	**100-3254**	1	SPACER-SPHERICAL	
	11	1	**100-3255**	1	WASHER	
J	12	1	**102-8805**	1	KIT-RECEPTACLE (6 PIN)	
	13	1	**8T-8729**	5	PIN-CONNECTOR	
J	14	1	**3E-3383**	1	WEDGE-RECEPTACLE LOCK	
	15	1	**8T-8737**	1	PLUG-SEAL	
	16	1	**100-3246**	1	LAMP (12 VOLT/4 WATT)	
	17	1	**5G-3244**	1	LAMP (12 VOLT/21 WATT)	
	18	1	**100-3250**	1	LENS (AMBER)	

J-KIT MARKED J INCLUDES PART(S) MARKED J
M-METRIC PART

3E-7584 LAMP GP-HEAD & SIGNAL *(contd.)* **i01798076**

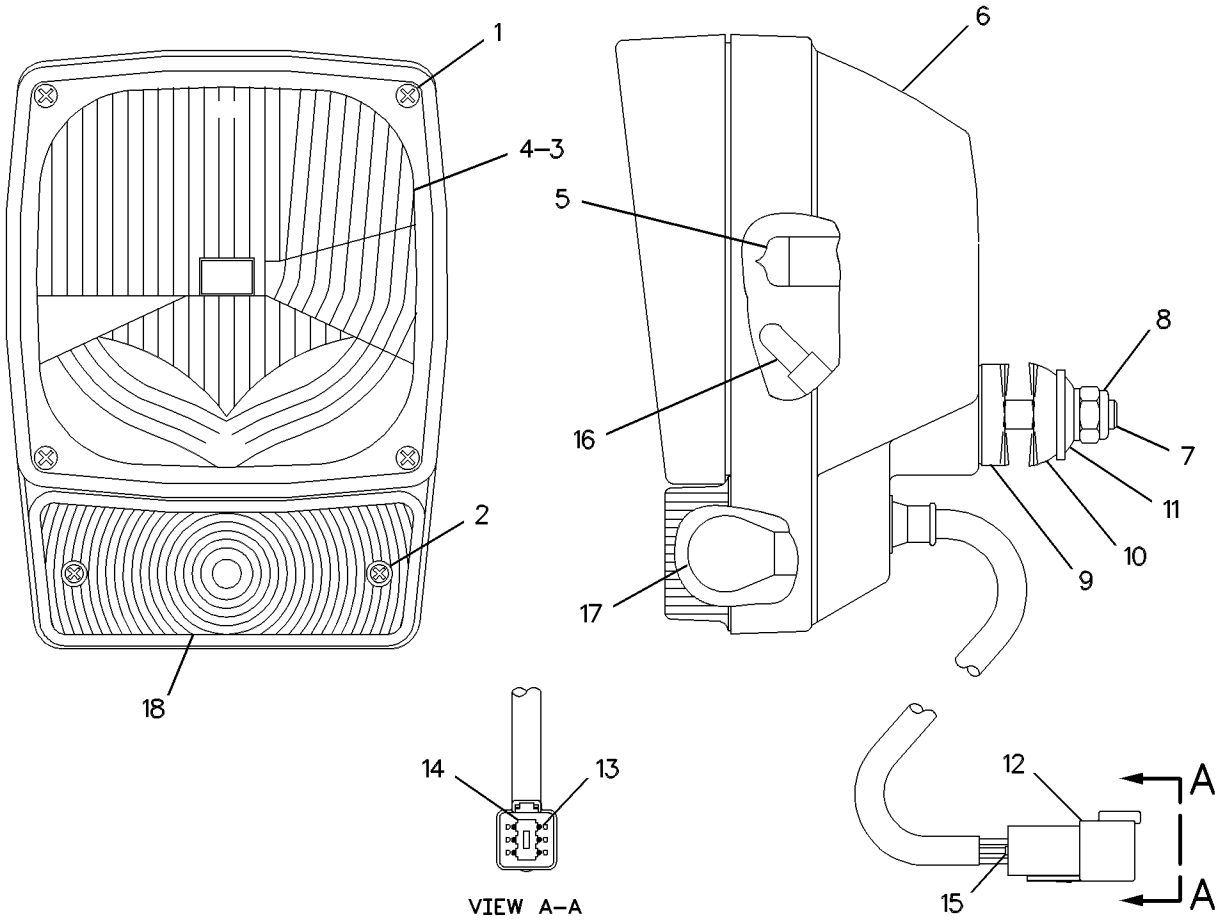

GRAPHIC #1 g00460921

144-9933 LAMP GP-PANEL ILLUMINATION

S/N: CED1-UP; FDG1-UP; 4YZ4000-UP; 5SZ4000-UP
12 VOLT. BACKLIGHT
PART OF 197-6898 GAUGE & WARNING GP
AN ATTACHMENT

SMCS-1429, 7451 **i01793316**

NOTE	REF NO	GRAPHIC REF	PART NUMBER	QTY	PART NAME 1 2 3 4 5 6 (PRODUCT LEVEL)	SEE PAGE
	1	1	**102-8804**	1	KIT-RECEPTACLE (4 PIN)	
	2	1	**189-3610**	2	LAMP (12 VOLT) (1.12 WATT)	

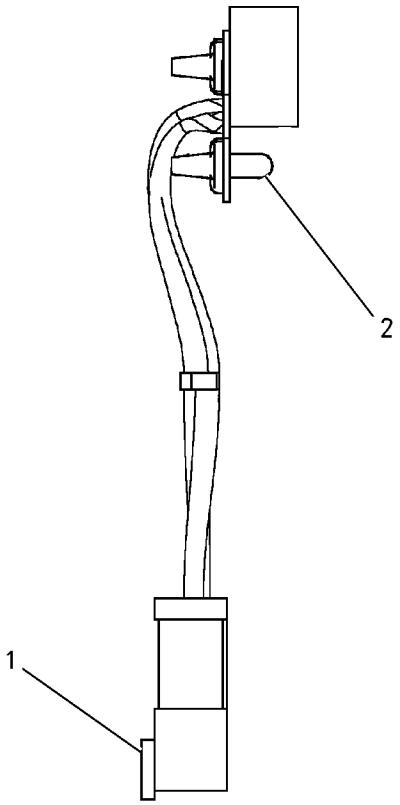

GRAPHIC #1 g00771348

142-8634 LAMP GP-SIGNAL

S/N: 4YZ4000-UP; 5SZ4000-UP
STOP, TAIL, TURN
PART OF 203-4331, 203-4332 LIGHTING GP-ROADING
AN ATTACHMENT

SMCS-1429, 1430, 1432 **i01793324**

NOTE	REF NO	GRAPHIC REF	PART NUMBER	QTY	PART NAME 1 2 3 4 5 6 (PRODUCT LEVEL)	SEE PAGE
	1	1	**9W-3326**	1	LAMP (12 VOLT)(21 WATT) (TURN)	
	2	1	**084-4348**	1	LAMP (12VOLT)(21/5 WATT) (STOP AND TAIL)	
	3	1	**102-8804**	1	KIT-RECEPTACLE (4 PIN)	
					(INCLUDES RECEPTACLE AS AND WEDGE)	
	4	1	**146-2438**	1	LENS	
M	5	1	**5C-2890**	2	NUT (M6X1 THD)	
	6	1	**1H-3244**	2	LOCKWASHER	
	7	1	**186-3735**	4	PIN-CONNECTOR	
	8	1	**3E-3377**	1	WEDGE-RECEPTACLE LOCK	

M-METRIC PART

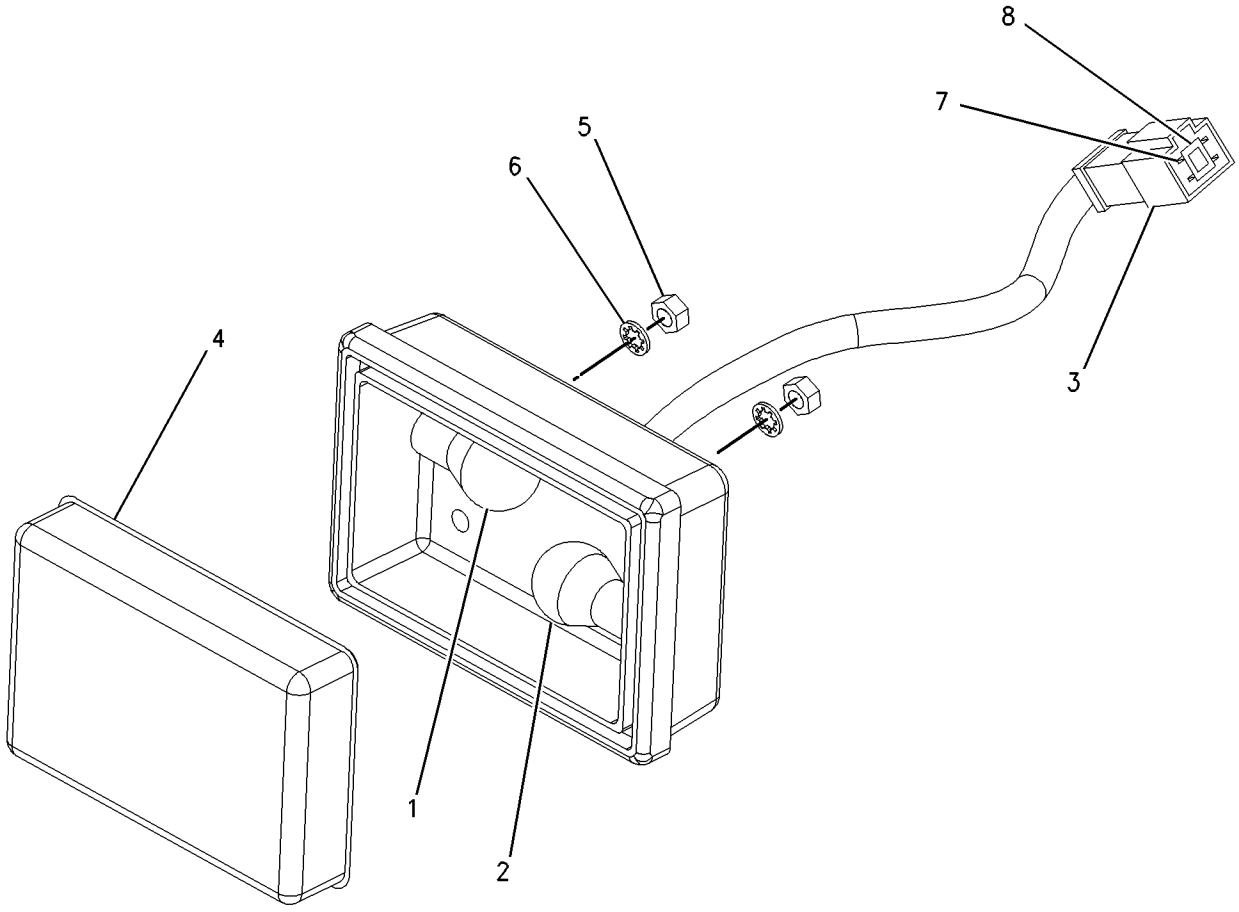

GRAPHIC #1 g00917379

142-7503 LAMP GP-STOP & TAIL

S/N: CED1-UP; FDG1-UP; 4YZ4000-UP; 5SZ4000-UP
PART OF 142-8652 LIGHTING GP-REAR
AN ATTACHMENT

SMCS-1432 **i01793314**

NOTE	REF NO	GRAPHIC REF	PART NUMBER	QTY	PART NAME 1 2 3 4 5 6 (PRODUCT LEVEL)	SEE PAGE
	1	1	**084-4348**	1	LAMP (12VOLT)(21/5 WATT)	
	2	1	**102-8804**	1	KIT-RECEPTACLE (4 PIN)	
	3	1	**165-4895**	1	LENS	
M	4	1	**5C-2890**	2	NUT (M6X1 THD)	
	5	1	**8T-0087**	2	LOCKWASHER	

M-METRIC PART

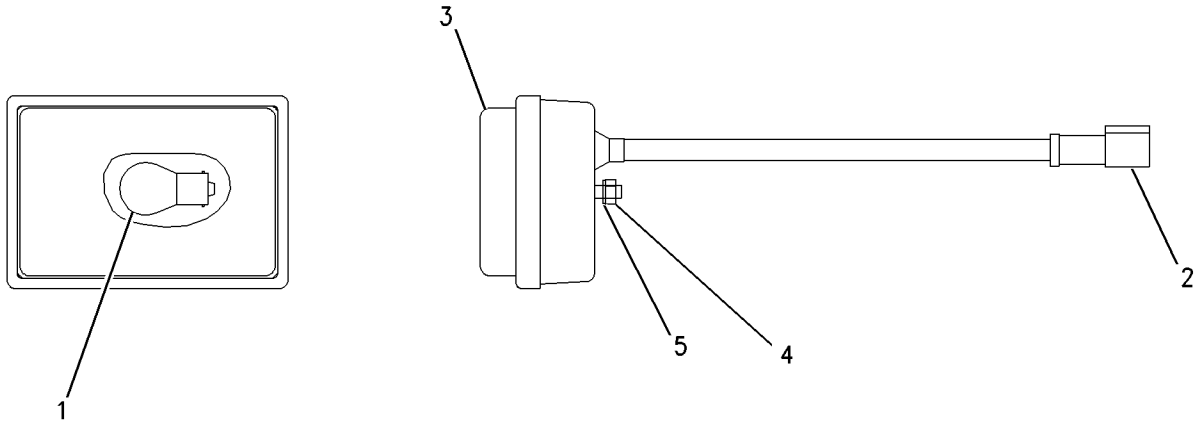

GRAPHIC #1 g00669668

128-6985 LAMP GP-WARNING BEACON

S/N: CED1-UP; FDG1-UP; 4YZ4000-UP; 5SZ4000-UP
12 VOLT. MAGNETICALLY MOUNTED
PART OF 173-3017 CONVERSION GP-ROADING, 142-8653 LIGHTING GP-WARNING BEACON AN ATTACHMENT

SMCS-1431 **i01799081**

NOTE	REF NO	GRAPHIC REF	PART NUMBER	QTY	PART NAME 1 2 3 4 5 6 (PRODUCT LEVEL)	SEE PAGE
	1	1	**9X-8121**	1	LENS (AMBER)	
	2	1	**9X-8118**	1	LAMP (12 VOLT/55 WATT)	
	3	1	**9X-8139**	1	BELT-DRIVE	
	4	1	**9R-7958**	1	CORD AS	
	5	1	**9R-7942**	1	PLUG AS	

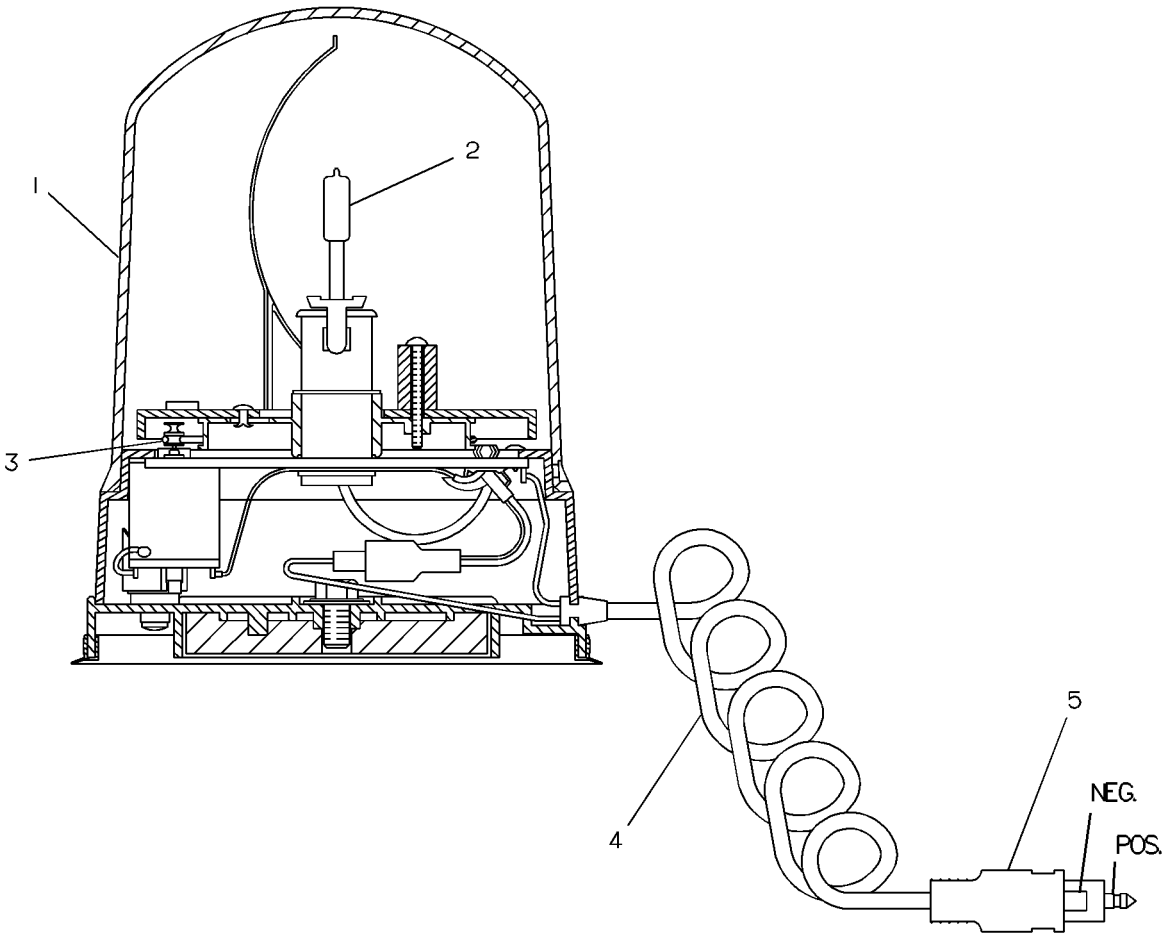

GRAPHIC #1 g00130921

169-6689 LIGHTING AR-STOP & FLOOD

S/N: CED1-UP; FDG1-UP; 4YZ4000-UP; 5SZ4000-UP

AN ATTACHMENT

SMCS-1432, 1434 **i01580129**

NOTE	PART NUMBER	QTY	PART NAME 1 2 3 4 5 6 (PRODUCT LEVEL)	SEE PAGE
Y	*142-8650*	1	LIGHTING GP-FRONT	159
Y	*142-8652*	1	LIGHTING GP-REAR	160

Y-SEPARATE ILLUSTRATION

<END>

142-8650 LIGHTING GP-FRONT–WORKING

S/N: CED1-UP; FDG1-UP; 4YZ4000-UP; 5SZ4000-UP
PART OF 169-6689 LIGHTING AR-STOP & FLOOD
AN ATTACHMENT

SMCS-1429, 1434 **i01301764**

NOTE	REF NO	GRAPHIC REF	PART NUMBER	QTY	PART NAME 1 2 3 4 5 6 (PRODUCT LEVEL)	SEE PAGE
Y	1	1	**142-8637**	2	LAMP GP-FLOOD	149
	2	1	**9D-8508**	2	GROMMET	

Y-SEPARATE ILLUSTRATION

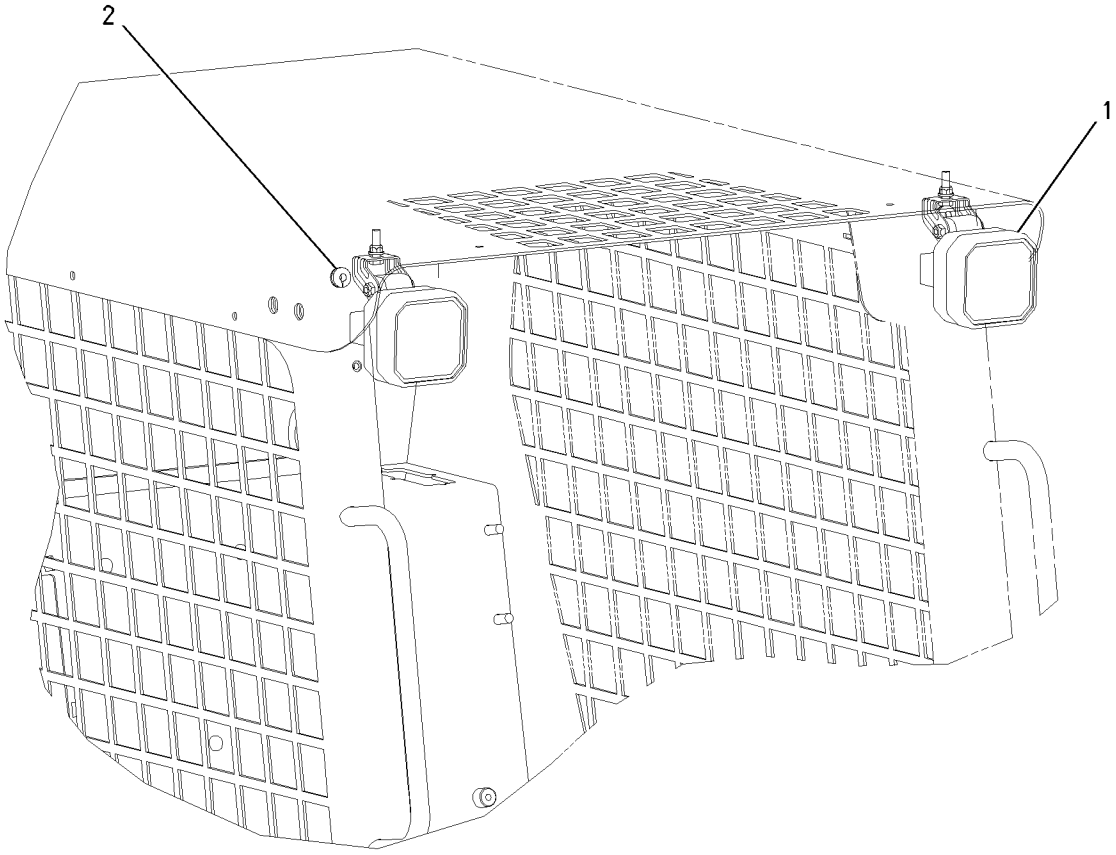

GRAPHIC #1 g00694974

142-8652 LIGHTING GP-REAR

S/N: CED1-UP; FDG1-UP; 4YZ4000-UP; 5SZ4000-UP
PART OF 169-6689 LIGHTING AR-STOP & FLOOD
AN ATTACHMENT

SMCS-1429, 1434 **i01580076**

NOTE	REF NO	GRAPHIC REF	PART NUMBER	QTY	PART NAME 1 2 3 4 5 6 (PRODUCT LEVEL)	SEE PAGE
	1	1	**3S-2093**	2	STRAP-CABLE	
	2	1	**9R-1499**	2	REFLECTOR	
Y	3	1	**142-7503**	2	LAMP GP-STOP & TAIL	156
	4	1	**4P-7581**	2	CLIP	
	5	1	**8T-4205**	4	WASHER-HARD (7.2X14.5X2MM THK)	

Y-SEPARATE ILLUSTRATION

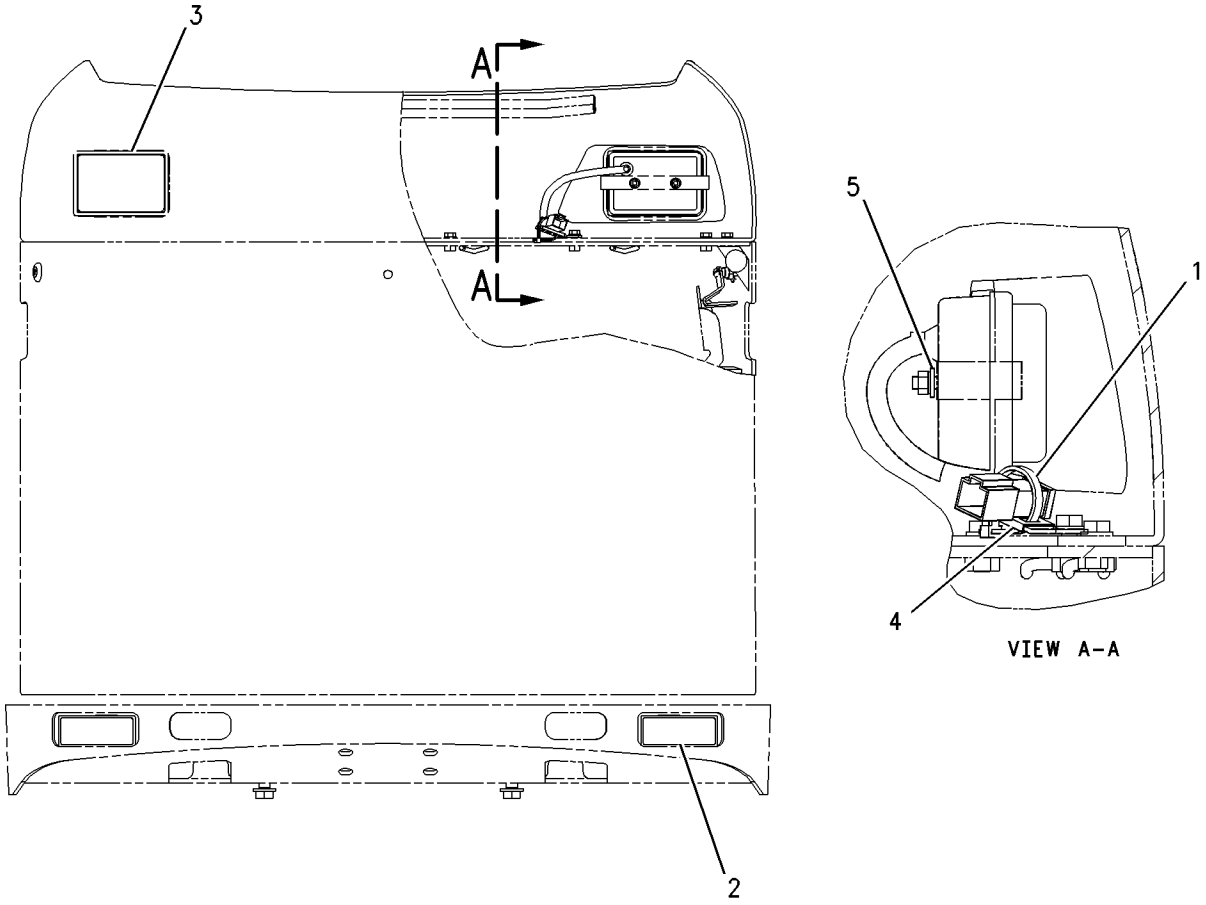

GRAPHIC #1 g00771277

195-6722 LIGHTING GP-REAR—WORKING

S/N: CED1-UP; FDG1-UP; 4YZ4000-UP; 5SZ4000-UP

AN ATTACHMENT

SMCS-1429, 1434 **i01682917**

NOTE	REF NO	GRAPHIC REF	PART NUMBER	QTY	PART NAME 1 2 3 4 5 6 (PRODUCT LEVEL)	SEE PAGE
	1	1	**142-9326**	1	SWITCH AS (REAR WORKING LAMP)	
Y	2	1	**168-6410**	2	LAMP GP-FLOOD	150
	3	1	**195-0937**	2	INSERT-THREADED	
	4	1	**9D-8508**	2	GROMMET	

Y-SEPARATE ILLUSTRATION

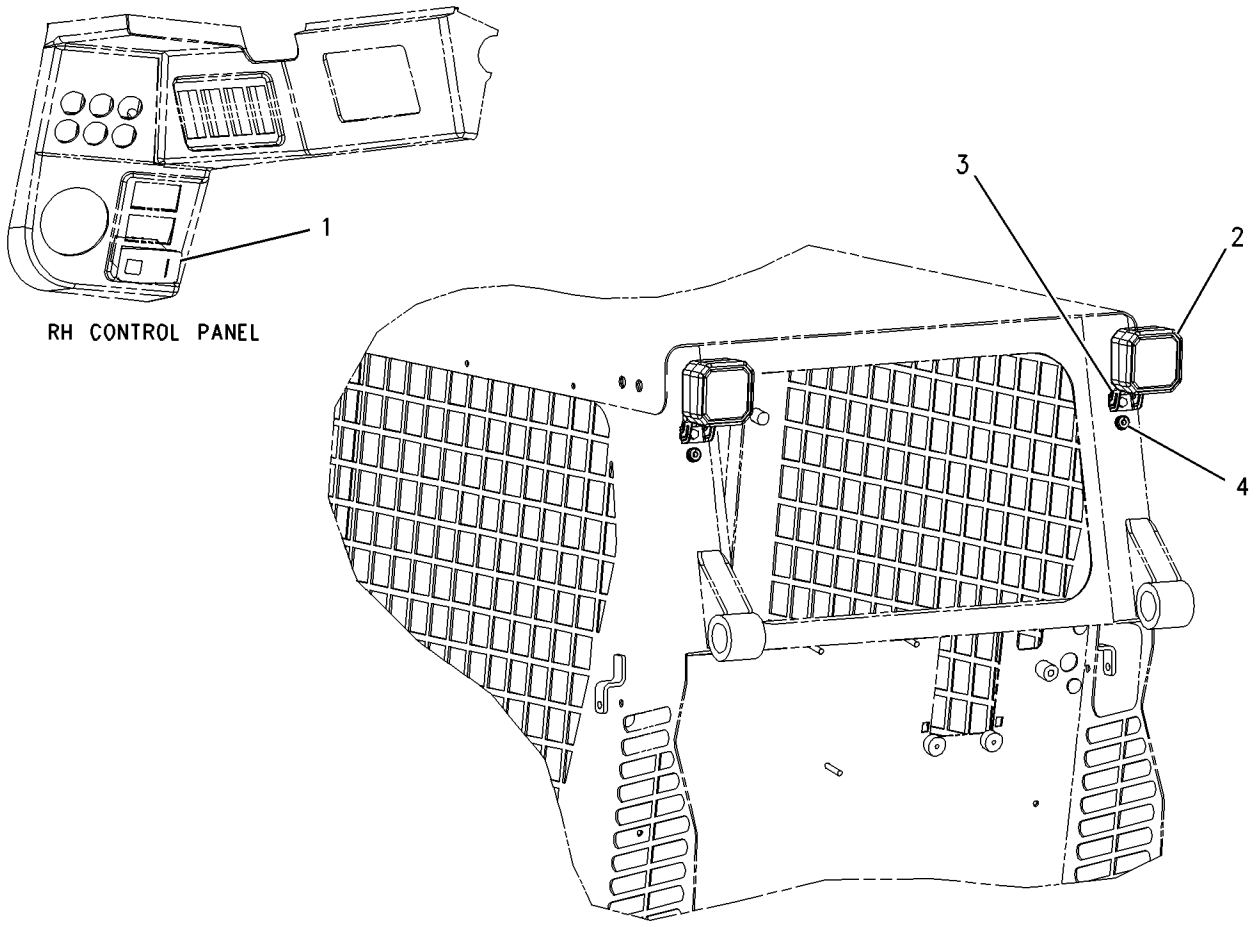

GRAPHIC #1 g00867631

203-4331 LIGHTING GP-ROADING

S/N: 4YZ4000-UP; 5SZ4000-UP
NON REGISTRATION
PART OF 166-2567, 188-3308 CONVERSION AR-ROADING
AN ATTACHMENT

SMCS-1429 **i01762612**

NOTE	REF NO	GRAPHIC REF	PART NUMBER	QTY	PART NAME 1 2 3 4 5 6 (PRODUCT LEVEL)	SEE PAGE
Y	1	1	**3E-7584**	2	LAMP GP-HEAD & SIGNAL	152
	2	1,2	**3S-2093**	17	STRAP-CABLE	
	3	2	**7T-4848**	1	FLASHER AS-SIGNAL	
	4	1	**8W-8909**	2	SLEEVE	
Y	5	2	**142-8634**	2	LAMP GP-SIGNAL	155
	6	1	**173-7798**	1	HARNESS AS-LIGHTING	
		1	**102-8802**	1	KIT-RECEPTACLE (2 PIN)	
		1	**102-8804**	1	KIT-RECEPTACLE (4 PIN)	
		1	**102-8805**	1	KIT-RECEPTACLE (6 PIN)	
		1	**155-2260**	1	KIT-CONNECTING PLUG (3 PIN)	
		1	**155-2274**	1	KIT-CONNECTING PLUG (6 PIN)	
	7	2	**183-7117**	2	HARNESS AS-REAR LIGHTING	
		1	**102-8804**	1	KIT-RECEPTACLE (4 PIN)	
		1	**155-2271**	1	KIT-CONNECTING PLUG (4 PIN)	
Y	8	2	*203-4330*	1	PANEL GP-INSTRUMENT	659
	9	2	**102-8803**	1	KIT-RECEPTACLE (3 PIN)	
	10	1	**8T-1887**	2	CLIP (SLOT)	
	11	1	**8T-1888**	2	CLIP (TAB)	
	12	2	**8T-8737**	3	PLUG-SEAL	

Y-SEPARATE ILLUSTRATION

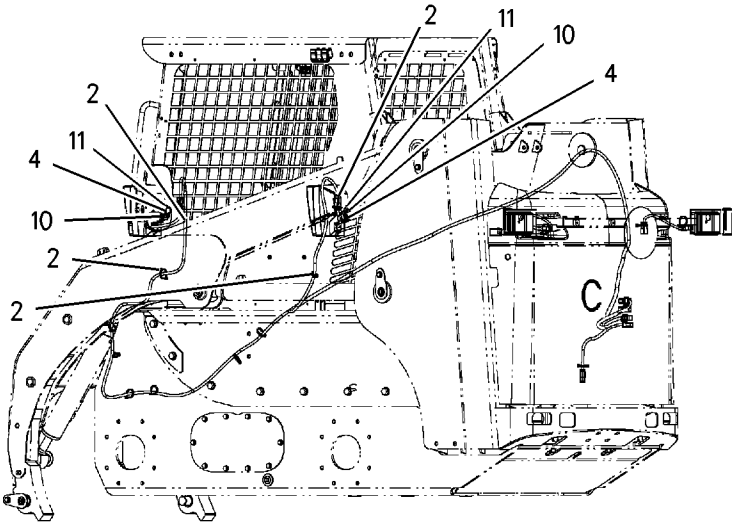

LEFT SIDE VIEW

REFER TO ALL ILLUSTRATIONS OF THIS GROUP FOR AUXILIARY VIEWS

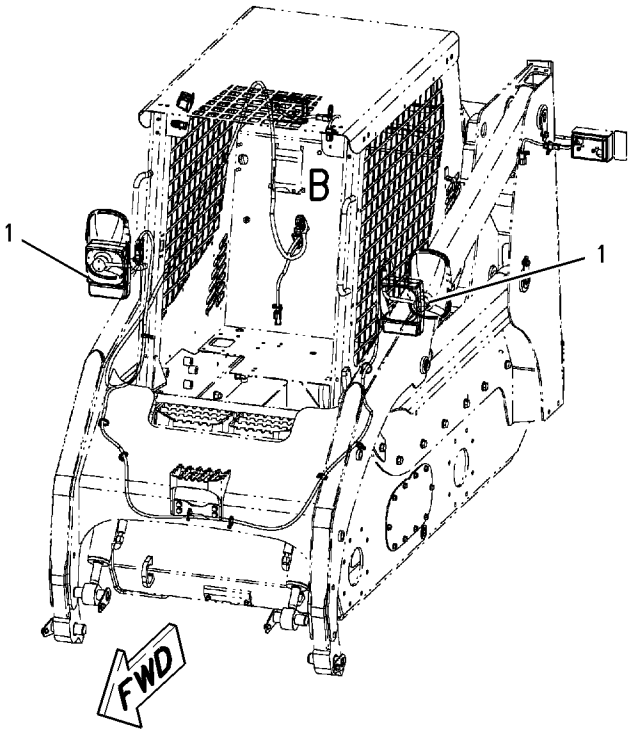

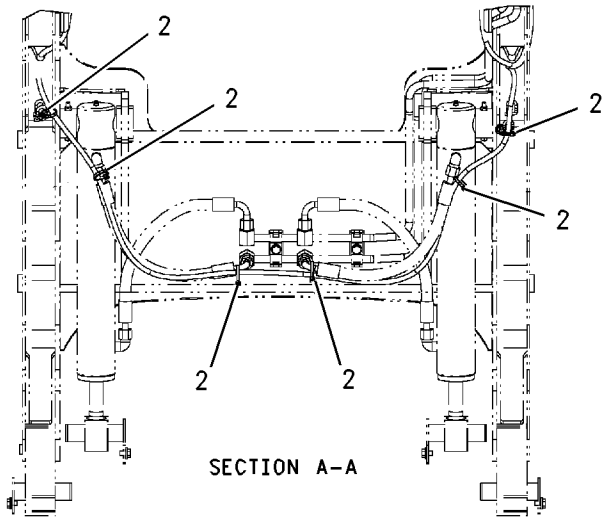

SECTION A-A

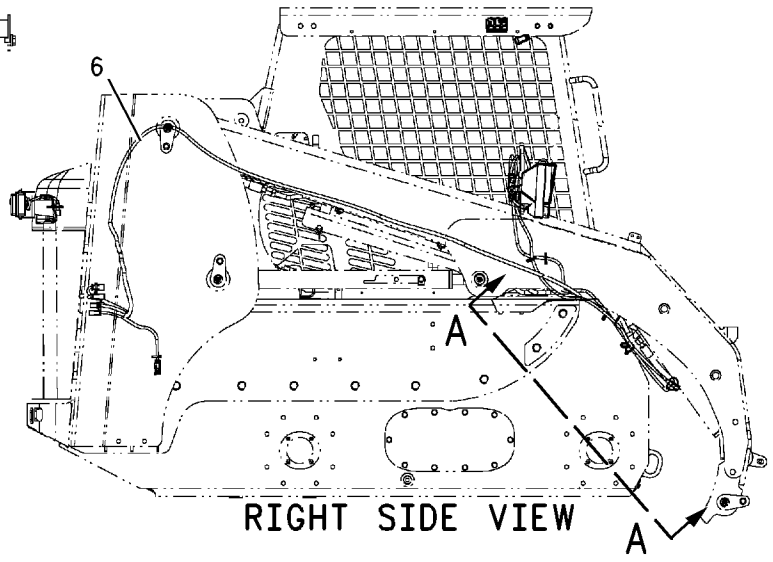

RIGHT SIDE VIEW

GRAPHIC #1

g00901757

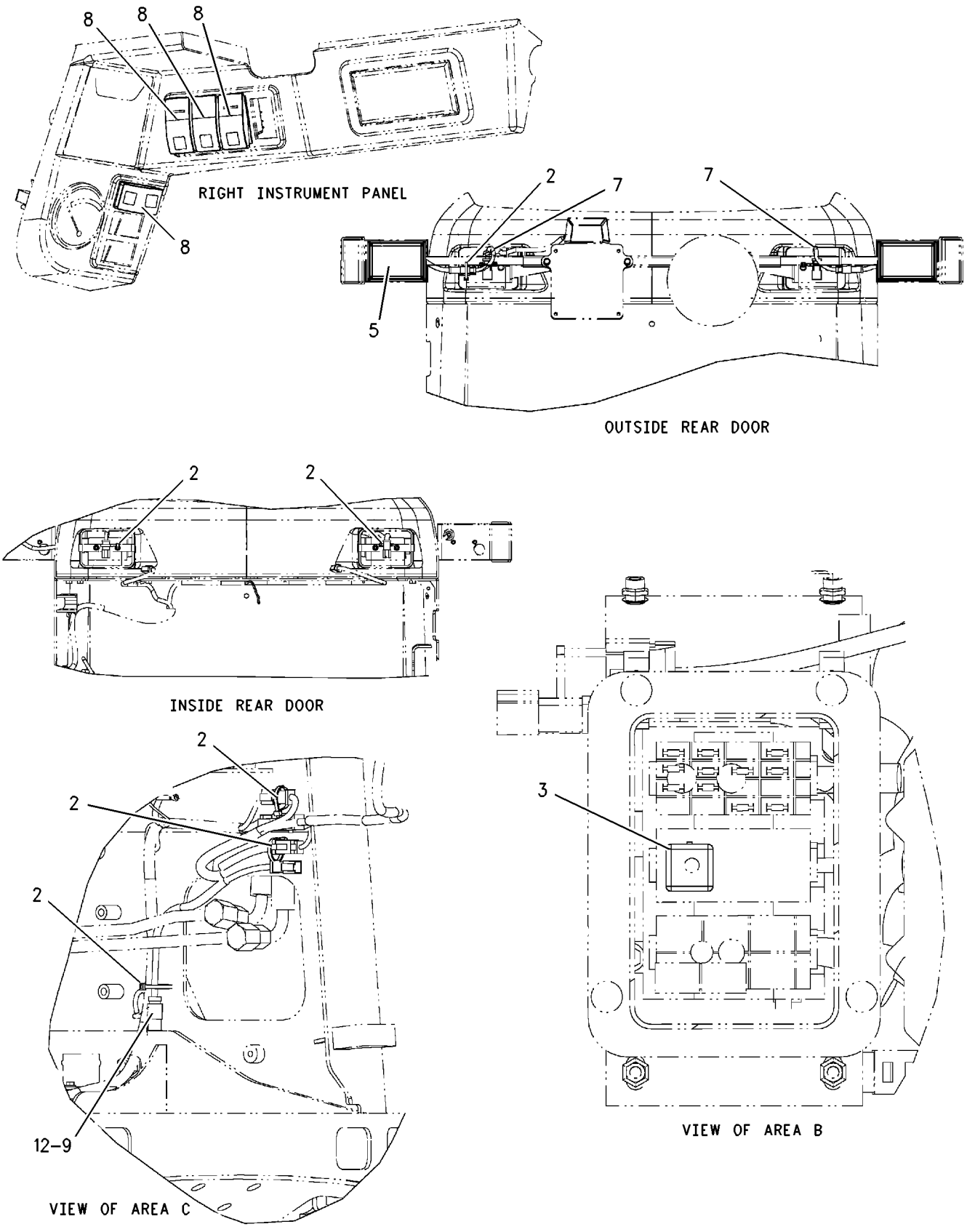

GRAPHIC #2

g00901767

MEMORANDA

203-4332 LIGHTING GP-ROADING

S/N: 4YZ4000-UP; 5SZ4000-UP
REGISTRATION
PART OF 175-4242, 188-3307 CONVERSION AR-ROADING
AN ATTACHMENT

SMCS-1429 **i01762649**

NOTE	REF NO	GRAPHIC REF	PART NUMBER	QTY	PART NAME 1 2 3 4 5 6 (PRODUCT LEVEL)	SEE PAGE
Y	1	1	**3E-7584**	2	LAMP GP-HEAD & SIGNAL	152
	2	1,2	**3S-2093**	19	STRAP-CABLE	
	3	2	**7T-4848**	1	FLASHER AS-SIGNAL	
	4	1	**8W-8909**	2	SLEEVE	
Y	5	2	**142-8634**	2	LAMP GP-SIGNAL	155
Y	6	1	*173-3021*	1	MOUNTING GP-REGISTRATION	705
	7	1	**173-7798**	1	HARNESS AS-LIGHTING	
		1	**102-8802**	1	KIT-RECEPTACLE (2 PIN)	
		1	**102-8804**	1	KIT-RECEPTACLE (4 PIN)	
		1	**102-8805**	1	KIT-RECEPTACLE (6 PIN)	
		1	**155-2260**	1	KIT-CONNECTING PLUG (3 PIN)	
		1	**155-2274**	1	KIT-CONNECTING PLUG (6 PIN)	
	8	2	**183-7117**	1	HARNESS AS-REAR LIGHTING	
		2	**102-8804**	1	KIT-RECEPTACLE (4 PIN)	
		2	**155-2271**	1	KIT-CONNECTING PLUG (4 PIN)	
	9	2	**186-0239**	1	HARNESS AS-REAR LIGHTING	
		2	**102-8804**	1	KIT-RECEPTACLE (4 PIN)	
		2	**155-2271**	1	KIT-CONNECTING PLUG (4 PIN)	
Y	10	2	*203-4330*	1	PANEL GP-INSTRUMENT	659
	11	1	**8T-1887**	2	CLIP (SLOT)	
	12	1	**8T-1888**	2	CLIP (TAB)	

Y-SEPARATE ILLUSTRATION

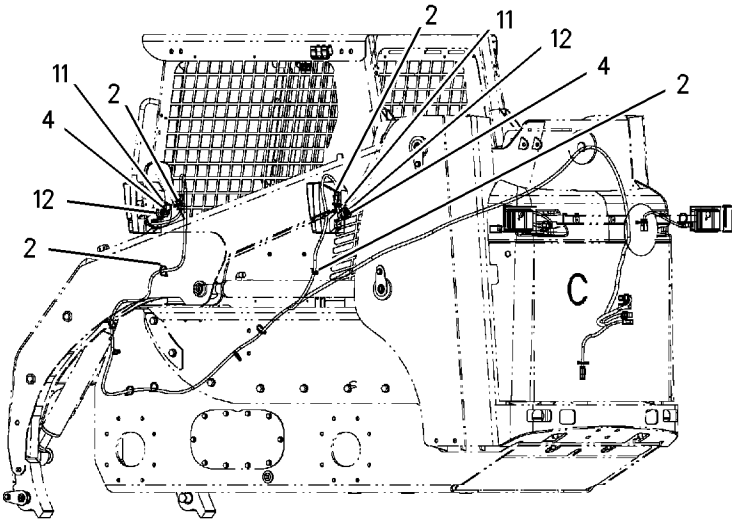

LEFT SIDE VIEW

REFER TO ALL ILLUSTRATIONS OF THIS GROUP FOR AUXILIARY VIEWS

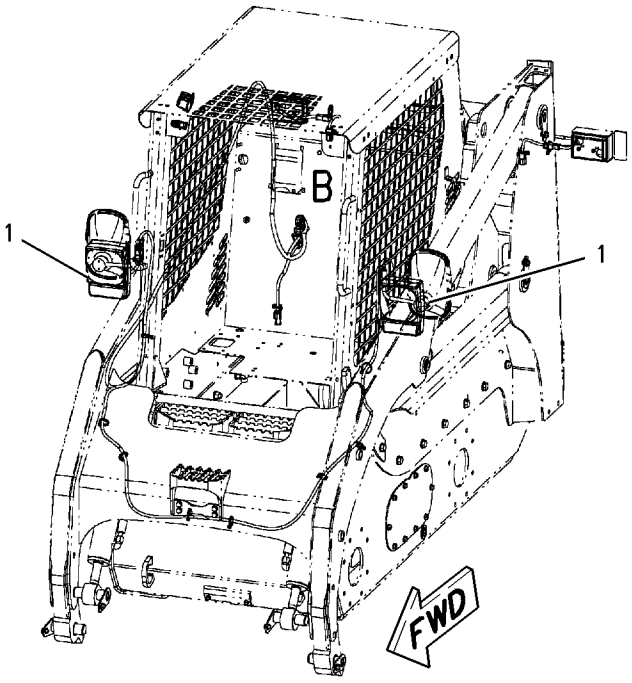

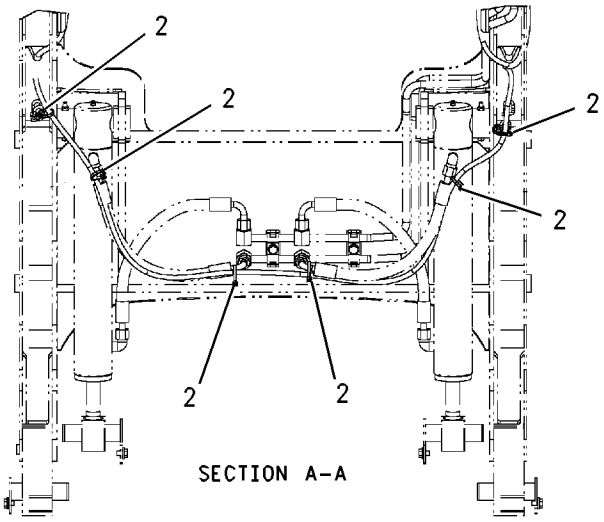

SECTION A-A

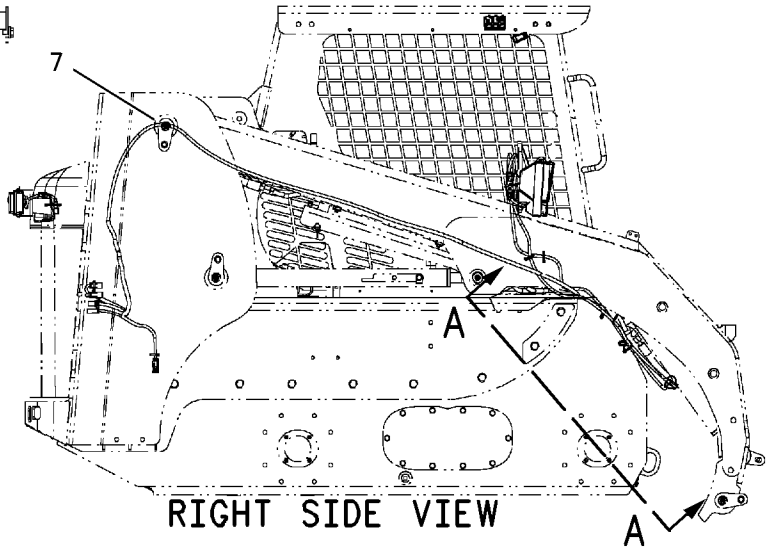

RIGHT SIDE VIEW

GRAPHIC #1

g00901774

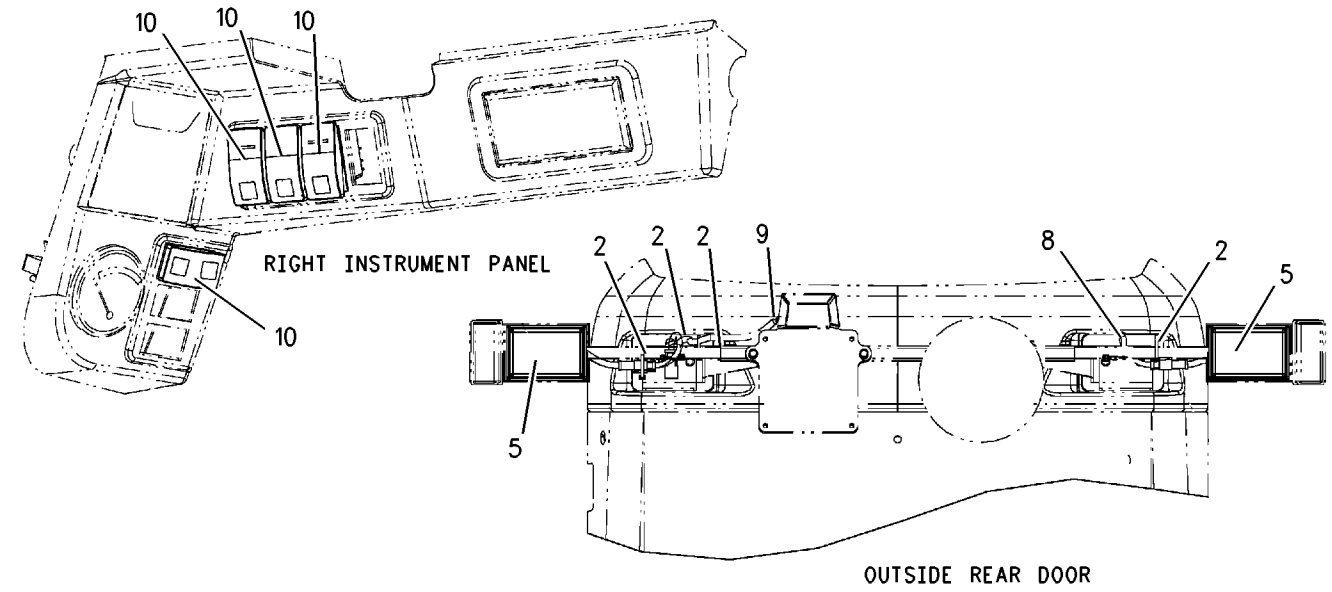

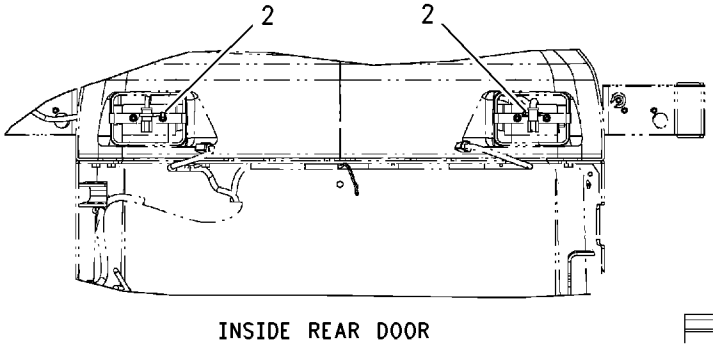

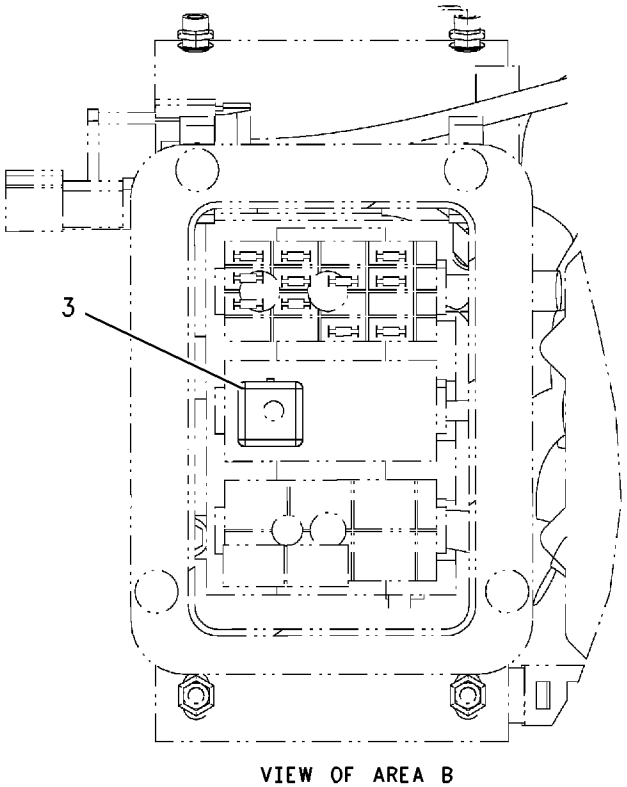

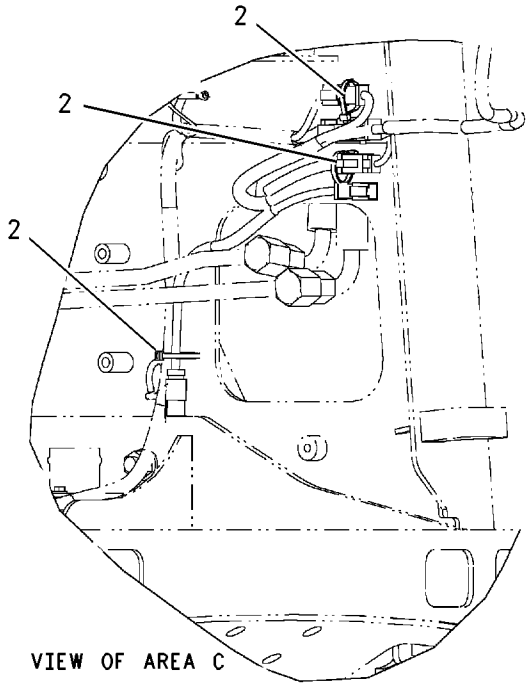

GRAPHIC #2 g00901788

142-8653 LIGHTING GP-WARNING BEACON

S/N: CED1-UP; FDG1-UP; 4YZ4000-UP; 5SZ4000-UP
AN ATTACHMENT

SMCS-1431 **i01682774**

NOTE	REF NO	GRAPHIC REF	PART NUMBER	QTY	PART NAME 1 2 3 4 5 6 (PRODUCT LEVEL)	SEE PAGE
Y	1	1	**128-6985**	1	LAMP GP-WARNING BEACON	157
	2	1	**142-9327**	1	SWITCH AS (BEACON)	

Y-SEPARATE ILLUSTRATION

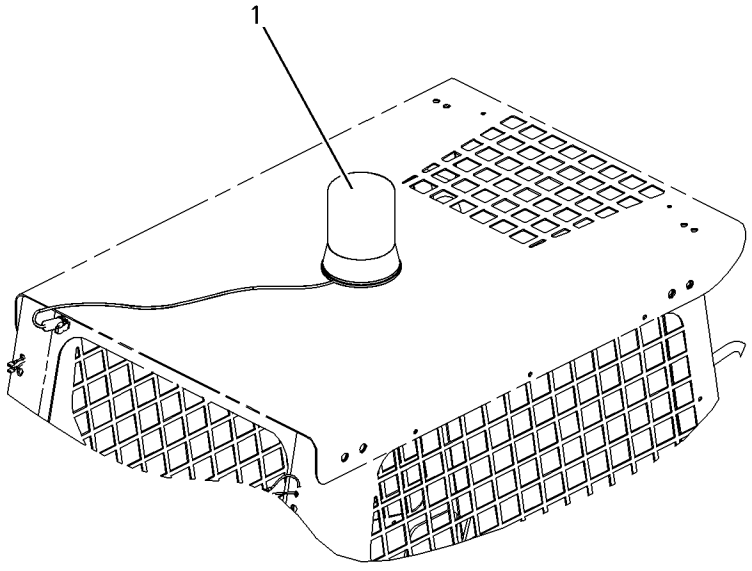

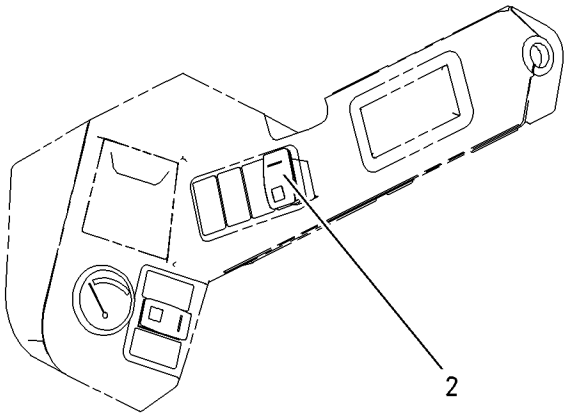

RH CONTROL PANEL

GRAPHIC #1 g00867567

144-9930 MODULE GP-WARNING INDICATOR

S/N: CED1-UP; FDG1-UP; 4YZ4000-UP; 5SZ4000-UP
12 VOLT. WITH ALARM
PART OF 197-6898 GAUGE & WARNING GP
AN ATTACHMENT

SMCS-7407, 7431 **i01772138**

NOTE	REF NO	GRAPHIC REF	PART NUMBER	QTY	PART NAME 1 2 3 4 5 6 (PRODUCT LEVEL)	SEE PAGE
	1	1	**144-9934**	1	GASKET	
	2	1	**102-8801**	1	KIT-RECEPTACLE (12 PIN)	

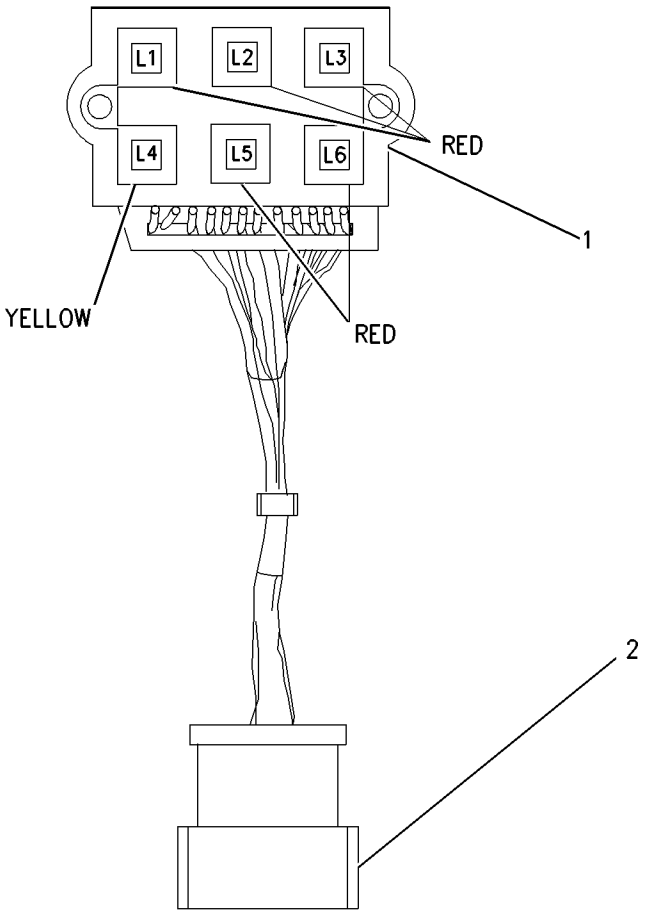

GRAPHIC #1 g00906109

207-1612 SERVICE GP-WORK TOOL

S/N: CED1-UP; FDG1-UP; 4YZ4000-UP; 5SZ4000-UP

AN ATTACHMENT

SMCS-7610 **i01537096**

NOTE	REF NO	GRAPHIC REF	PART NUMBER	QTY	PART NAME 1 2 3 4 5 6 (PRODUCT LEVEL)	SEE PAGE
	1	1	**192-1590**	1	CONTROL GP-UNPROGRAMMED	
	1A	1	**7X-6315**	1	STRAP-GROUNDING	
	1B	1	**120-4897**	1	SCREW-PAN HEAD (NO.8-32X9.52)	
	1C	1	**134-4126**	1	WASHER (4.52X8.28X.76MM THK)	
	2	1	**207-1611**	1	SOFTWARE GP-WORK TOOL (AUXILIARY HYDRAULIC)	

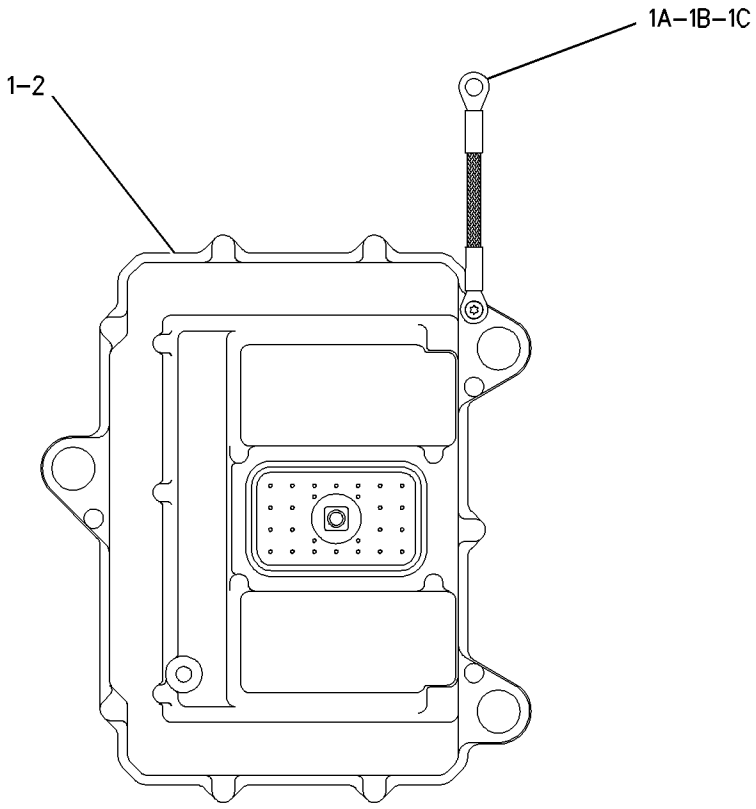

GRAPHIC #1 g00798447

ELECTRICAL AND STARTING SYSTEM

153-0564 SOLENOID GP-SHUTOFF

S/N: 3NW12500-UP

PART OF 147-1233 ENGINE AR-PRIMARY

SMCS-1259 **i01710567**

NOTE	REF NO	GRAPHIC REF	PART NUMBER	QTY	PART NAME 1 2 3 4 5 6 (PRODUCT LEVEL)	SEE PAGE
	1	1	**6I-0846**	2	BOLT (M6X1.0X14MM)	
	2	1	**172-7209**	1	SOLENOID AS	
	3	1	**153-0566**	1	GASKET	

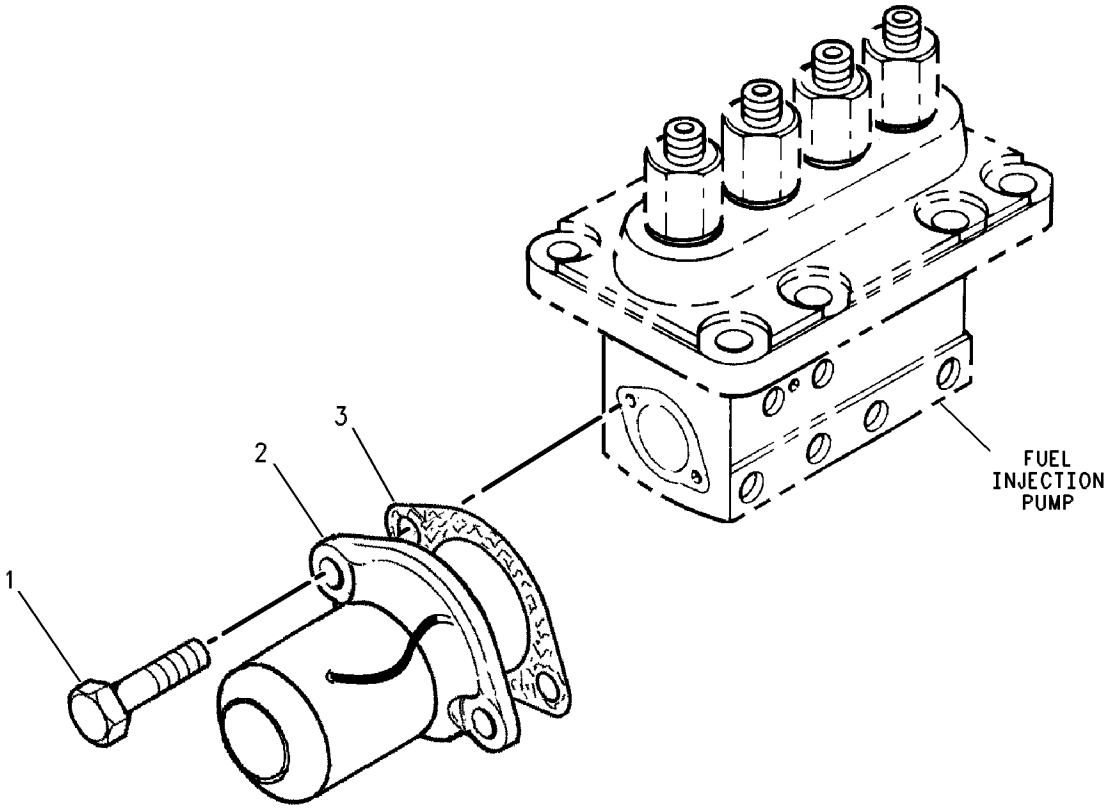

GRAPHIC #1 g00557819

173-1338 SOLENOID GP-SHUTOFF

S/N: 3NW12500-UP

PART OF 147-1234 ENGINE AR-PRIMARY

SMCS-1259 **i01717896**

NOTE	REF NO	GRAPHIC REF	PART NUMBER	QTY	PART NAME 1 2 3 4 5 6 (PRODUCT LEVEL)	SEE PAGE
	1	1	**6I-0846**	2	BOLT (M6X1.0X14MM)	
	2	1	**153-0566**	1	GASKET	
	3	1	**172-7209**	1	SOLENOID AS (SHUTOFF)	

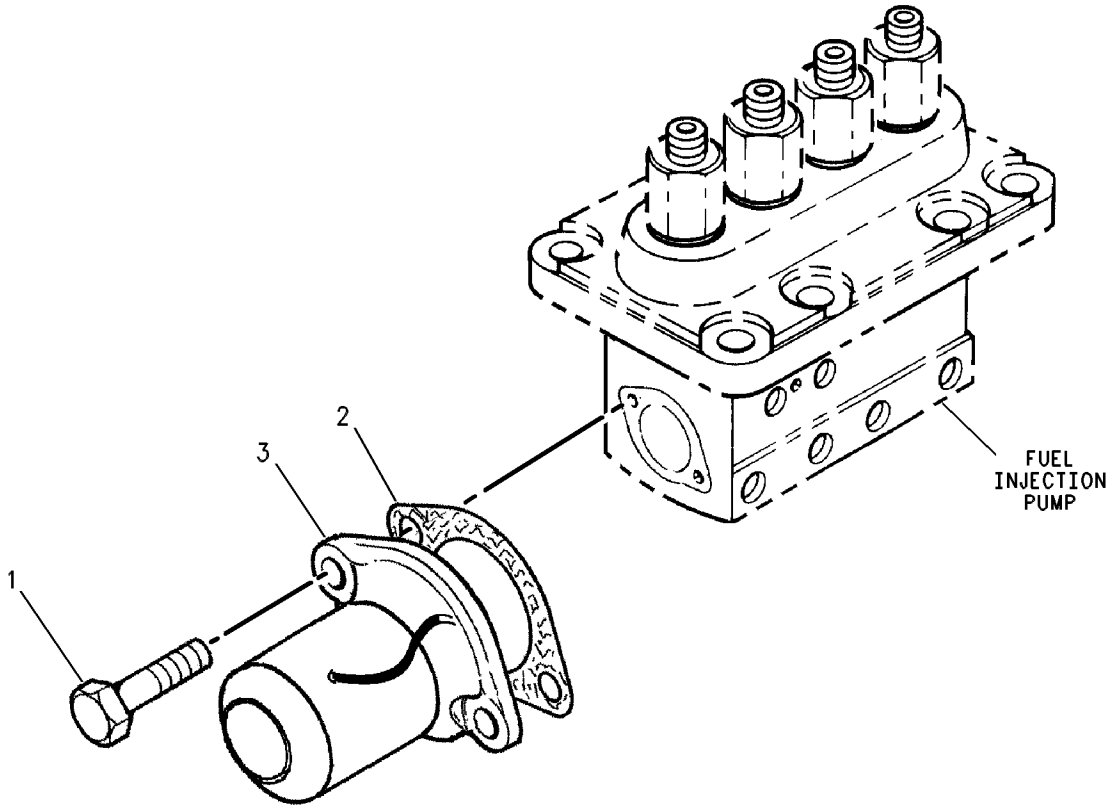

GRAPHIC #1 g00598444

154-3995 STARTING MOTOR GP-ELECTRIC

S/N: CED1-UP; FDG1-UP; 4YZ4000-UP; 5SZ4000-UP
PART OF 142-9101, 183-7125, 191-9765, 192-2620 INSTALLATION AR-ENGINE
ALSO AN ATTACHMENT

SMCS-1453, 1454, 1465, 1467 **i01067947**

NOTE	REF NO	GRAPHIC REF	PART NUMBER	QTY	PART NAME 1 2 3 4 5 6 (PRODUCT LEVEL)	SEE PAGE
	1	1	**144-9955**	1	STARTING MOTOR GP-ELECTRIC	
	2	1	**4P-8134**	1	CLIP (10.5MM ID)	
	3	1	**8T-4121**	2	WASHER (2.5MM THK)	
M	4	1	**8T-4133**	3	NUT (M10X1.50 THD)	

M-METRIC PART

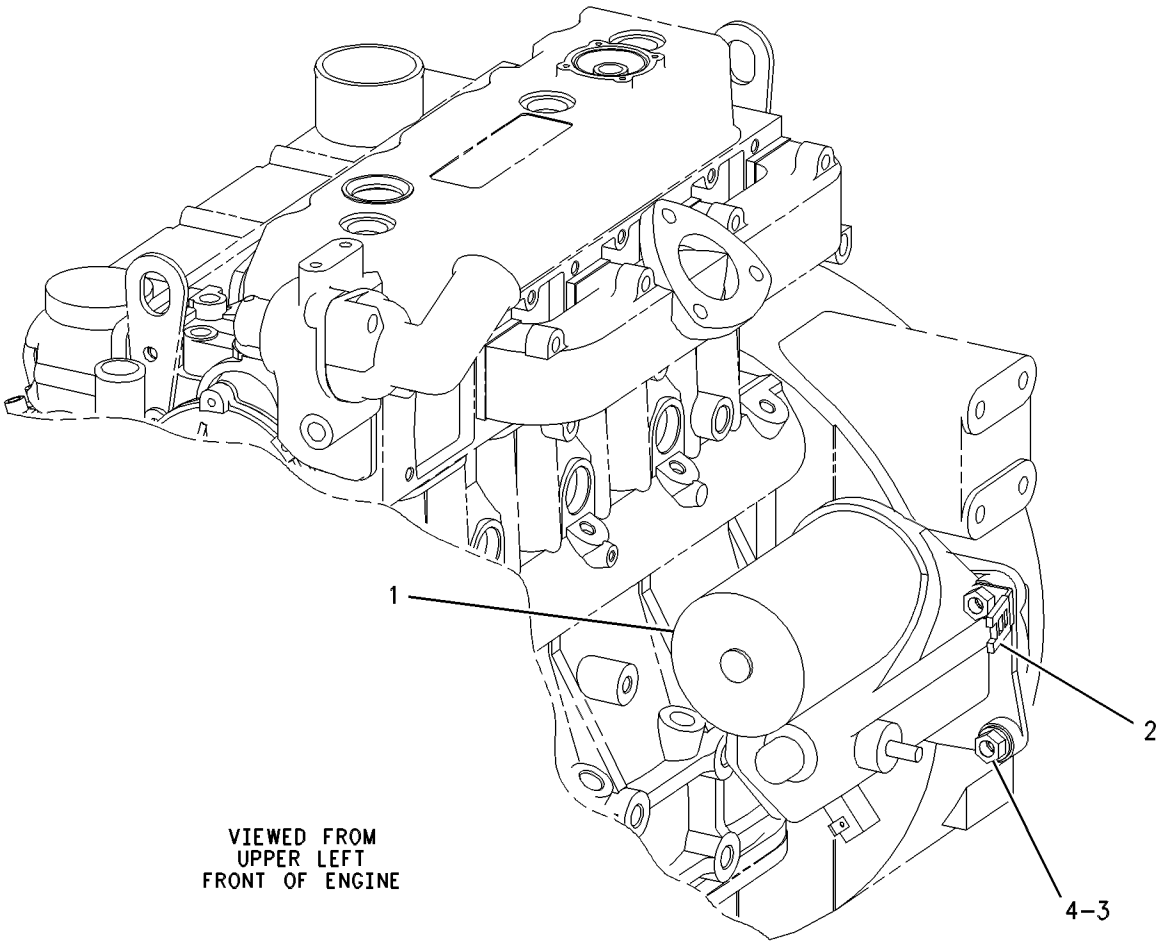

GRAPHIC #1 g00558796

171-4613 SWITCH GP-PRESSURE–OIL

S/N: 3NW12500-UP

PART OF 147-1233, 147-1234 ENGINE AR-PRIMARY

SMCS-1435, 7400 **i01148698**

NOTE	REF NO	GRAPHIC REF	PART NUMBER	QTY	PART NAME 1 2 3 4 5 6 (PRODUCT LEVEL)	SEE PAGE
	1	1	**1W-8438**	1	WASHER	
	2	1	**7W-1238**	1	SWITCH-PRESSURE (OIL)	
	3	1	**067-6007**	1	PLUG	
	4	1	**153-0562**	1	ADAPTER	

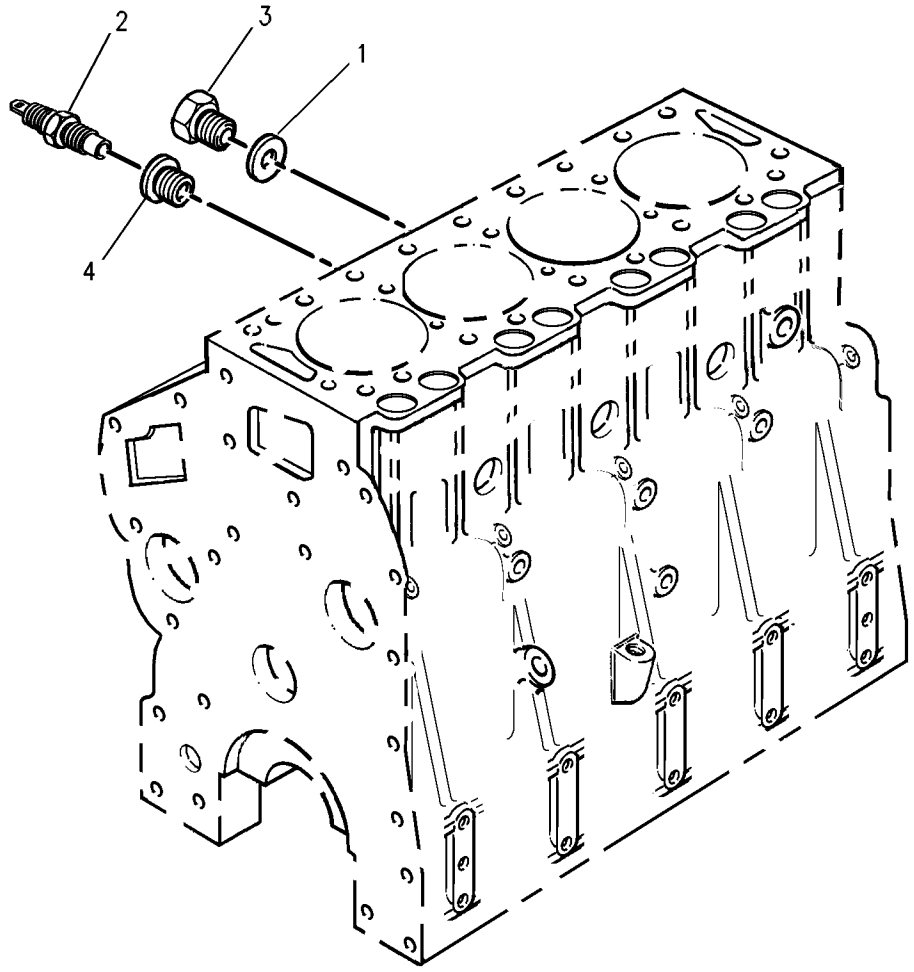

GRAPHIC #1 g00588848

184-1564 SWITCH GP-PRESSURE

S/N: 4YZ4000-UP; 5SZ4000-UP
BRAKE LIGHT
PART OF 192-2694 WIRING GP-REAR LIGHTING
AN ATTACHMENT

SMCS-1435, 7400 **i01627605**

NOTE	REF NO	GRAPHIC REF	PART NUMBER	QTY	PART NAME 1 2 3 4 5 6 (PRODUCT LEVEL)	SEE PAGE
	1	1	**9X-1813**		SLEEVE (19CM)	
	2	1	**102-8802**	1	KIT-RECEPTACLE (2 PIN)	
		1	**3E-3365**	1	WEDGE-RECEPTACLE LOCK (2 PIN)	
	3	1	**8T-8729**	2	PIN-CONNECTOR	
	4	1	**3E-3365**	1	WEDGE-RECEPTACLE LOCK (2 PIN)	
	5	1	**3J-1907**	1	SEAL-O-RING	

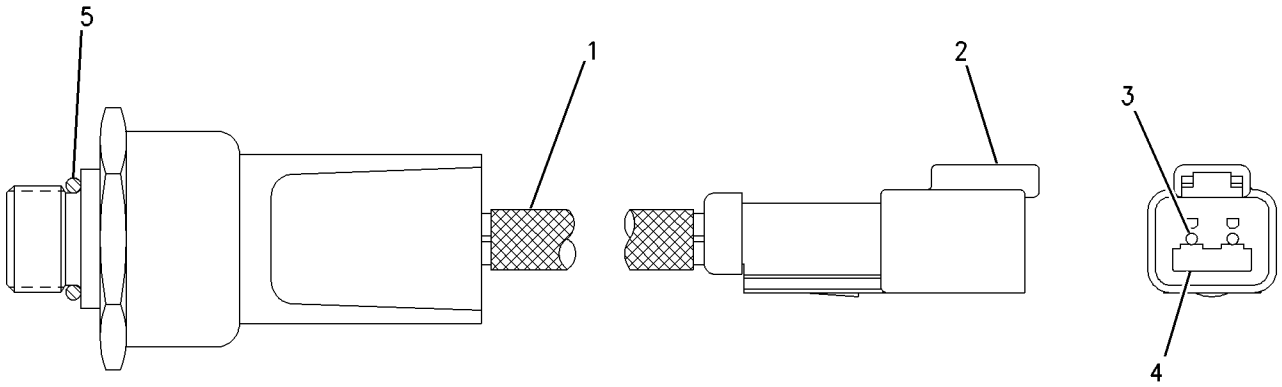

GRAPHIC #1 g00788762

164-8388 SWITCH GP-TEMPERATURE–WATER

S/N: 3NW12500-UP

PART OF 147-1233, 147-1234 ENGINE AR-PRIMARY

SMCS-7400, 7417 **i01585574**

NOTE	REF NO	GRAPHIC REF	PART NUMBER	QTY	PART NAME 1 2 3 4 5 6 (PRODUCT LEVEL)	SEE PAGE
	1	1	**159-1752**	1	SWITCH-WATER TEMPERATURE	
	2	1	**067-6045**	1	WASHER (5/8)	

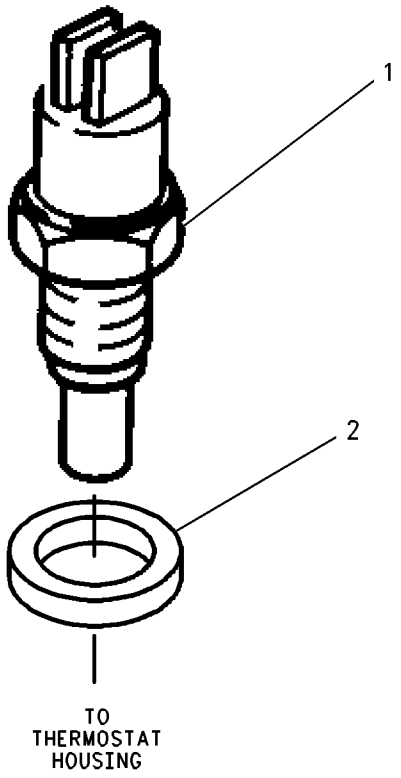

GRAPHIC #1 g00824381

142-8656 WARNING GP-BACKUP

S/N: CED1-UP; FDG1-UP; 4YZ4000-UP; 5SZ4000-UP

AN ATTACHMENT

SMCS-7406 **i01762665**

NOTE	REF NO	GRAPHIC REF	PART NUMBER	QTY	PART NAME 1 2 3 4 5 6 (PRODUCT LEVEL)	SEE PAGE
	1	1	**113-8490**	1	FUSE (10 AMP)	
C	2	1	**192-0836**	1	SWITCH GP-PRESSURE (BACKUP ALARM)	
		1	**102-8802**	1	KIT-RECEPTACLE (2 PIN)	
		1	**3E-3365**	1	WEDGE-RECEPTACLE LOCK (2 PIN)	
		1	**3J-1907**	1	SEAL-O-RING	
		1	**8T-8729**	1	PIN-CONNECTOR	
	3	1	**161-2539**	1	ALARM (BACKUP)	
M	4	1	**6V-7357**	2	BOLT (M6X1.0X25MM)	
	5	1	**8T-4205**	2	WASHER-HARD (7.2X14.5X2MM THK)	

C-CHANGE FROM PREVIOUS TYPE
M-METRIC PART

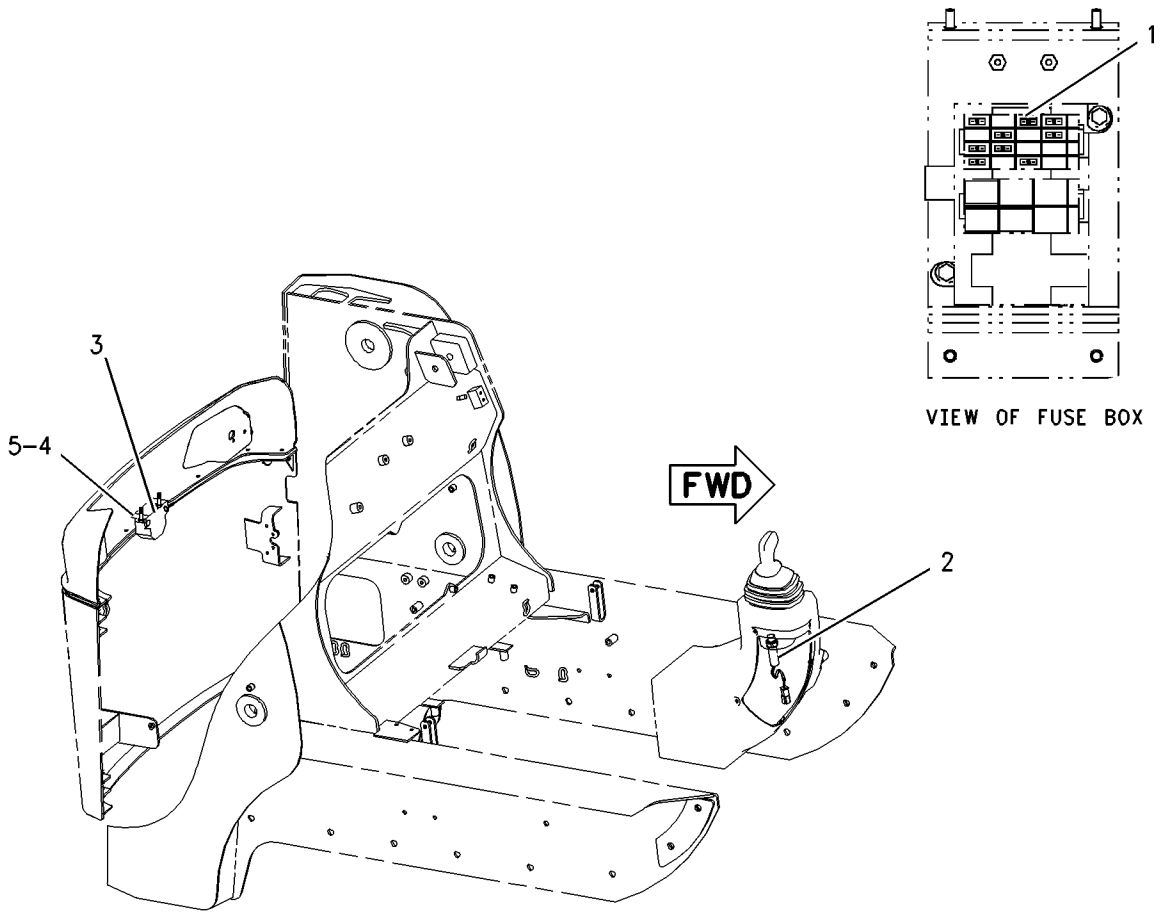

GRAPHIC #1 g00901796

220-5526 WIRING GP-AIR CONDITIONER

S/N: CED1-UP
PART OF 220-8110 INSTALLATION AR
AN ATTACHMENT

SMCS-1408, 7320 **i01778348**

NOTE	PART NUMBER	QTY	PART NAME 1 2 3 4 5 6 (PRODUCT LEVEL)	SEE PAGE
	3S-2093	24	STRAP-CABLE	
	113-8491	1	FUSE (15 AMP)	
	220-5527	1	HARNESS AS	
	102-8805	1	KIT-RECEPTACLE (6 PIN)	
	155-2271	1	KIT-CONNECTING PLUG (4 PIN)	
	220-5528	1	HARNESS AS	
	155-2270	1	KIT-CONNECTING PLUG (2 PIN)	
	155-2274	1	KIT-CONNECTING PLUG (6 PIN)	

<END>

193-8375 WIRING GP-CAB

S/N: CED1-UP; FDG1-UP; 4YZ4000-UP; 5SZ4000-UP
PART OF 190-7953, 195-6710, 195-6761, 195-6763 CHASSIS AR

SMCS-1408, 7301 **i01755479**

NOTE	REF NO	GRAPHIC REF	PART NUMBER	QTY	PART NAME 1 2 3 4 5 6 (PRODUCT LEVEL)	SEE PAGE
	1	1,2	**3S-2093**	16	STRAP-CABLE	
	2	1	**4B-4863**	2	WASHER (4.7X11X1.2MM THK)	
	3	2	**6I-1418**	3	SPACER (8.2X12.7X28.7MM THK)	
	4	1	**7G-1060**	1	STRAP AS-GROUND	
	5	1,2	**8T-8737**	13	PLUG-SEAL	
	6	2	**8T-9655**	6	MOUNT (ISOLATION)	
	7	2	**9R-7941**	1	RECEPTACLE AS-POWER (24 VOLTS)	
	8	2	**113-8490**	9	FUSE (10 AMP)	
	9	2	**113-8491**	2	FUSE (15 AMP)	
	10	1	**128-4249**	1	LOCKWASHER	
	11	2	**143-1974**	4	RECEPTACLE	
	12	2	**146-4323**	2	RELAY AS	
Y	13	2	**154-4233**	1	CONTROL GP-INTERLOCK	144
	14	2	**188-0131**	1	BRACKET AS	
	15	2	**190-8002**	1	HARNESS AS-CAB (INTERLOCK)	
		2	**102-8804**	1	KIT-RECEPTACLE (4 PIN)	
		2	**155-2255**	2	KIT-CONNECTING PLUG (12 PIN)	
		2	**155-2265**	1	KIT-CONNECTING PLUG (8 PIN)	
		2	**155-2260**	2	KIT-CONNECTING PLUG (3 PIN)	
		2	**155-2270**	1	KIT-CONNECTING PLUG (2 PIN)	
		2	**155-2271**	1	KIT-CONNECTING PLUG (4 PIN)	
Y	16	2	*193-8374*	1	COVER GP-FUSE PANEL	145
	17	1	**211-0052**	1	NUT	
M	18	2	**111-4627**	4	SCREW-MACHINE (M6X1.0X30MM)	
	19	1,2	**195-0936**	8	INSERT-THREADED (M6X1)	
	20	2	**102-8803**	1	KIT-RECEPTACLE (3 PIN)	
	21	1	**102-8804**	1	KIT-RECEPTACLE (4 PIN)	
	22	1	**102-8805**	1	KIT-RECEPTACLE (6 PIN)	
	23	1	**102-8806**	1	KIT-RECEPTACLE (8 PIN)	
	24	2	**4P-7581**	1	CLIP	
	25	1	**4P-8134**	2	CLIP	
M	26	2	**5C-7261**	3	NUT (M8X1.25 THD)	
M	27	1	**5C-8312**	2	NUT (M4X0.7 THD)	
M	28	2	**5C-9553**	6	BOLT (M6X1X16MM)	
	29	2	**7G-7053**	1	GROMMET	
	30	2	**7X-0579**	1	WASHER-HARD (8.8X25.5X2MM THK)	
	31	1	**8T-4121**	2	WASHER-HARD (11X21X2.5MM THK)	
M	32	1	**8T-4133**	1	NUT (M10X1.5 THD)	
	33	2	**8T-4205**	2	WASHER-HARD (7.2X14.5X2MM THK)	
M	34	1	**9X-1046**	2	SCREW (M4X0.7X18MM)	
M	35	2	**9X-2042**	6	SCREW-TRUSS HEAD (M6X1X12MM)	
	36	2	**9X-6165**	4	WASHER (6.5X22X2.5MM THK)	
E	37	2	**9X-2092**		STRIP-EDGE (21CM)	

E-ORDER BY THE CENTIMETER
M-METRIC PART
Y-SEPARATE ILLUSTRATION

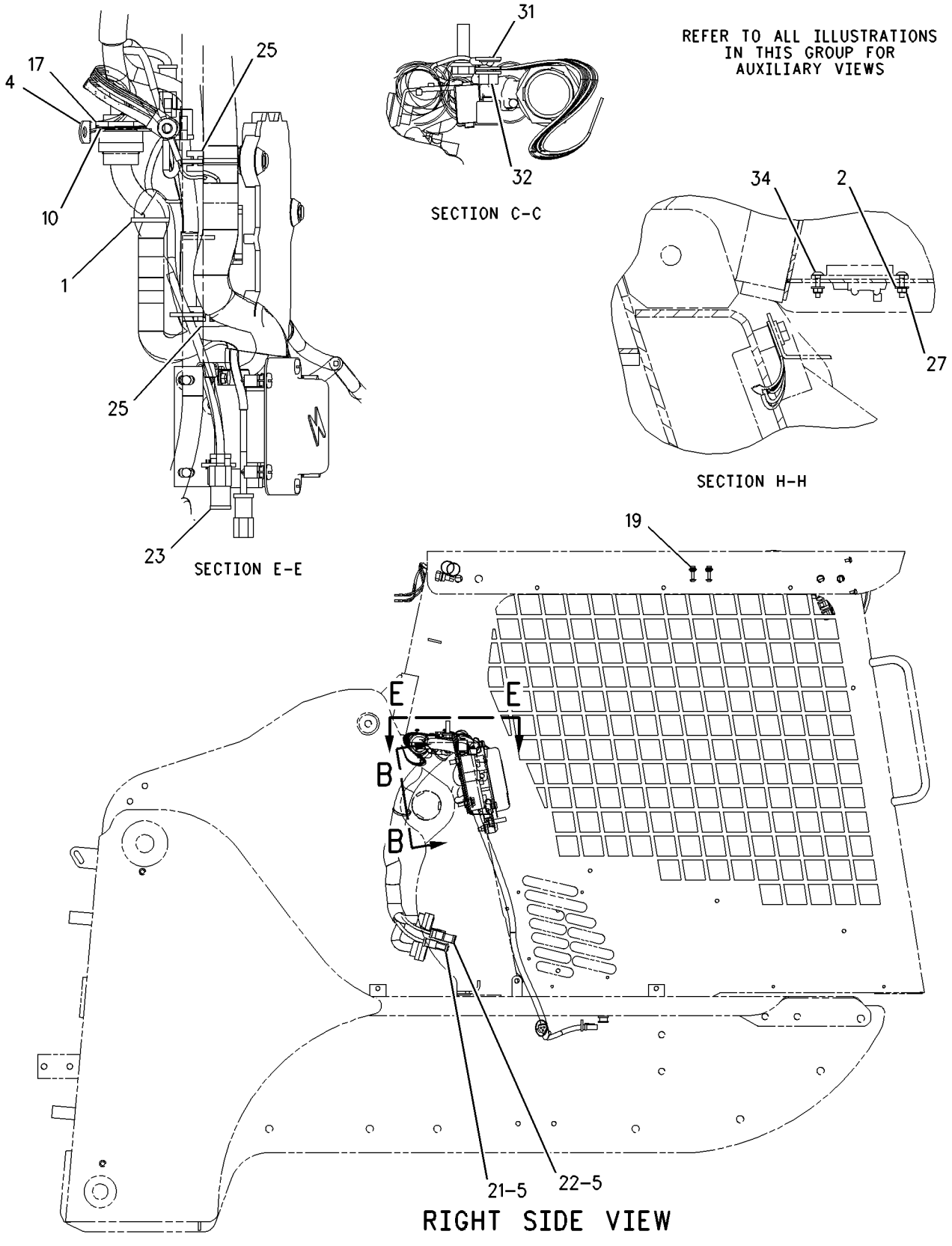

GRAPHIC #1 g00844141

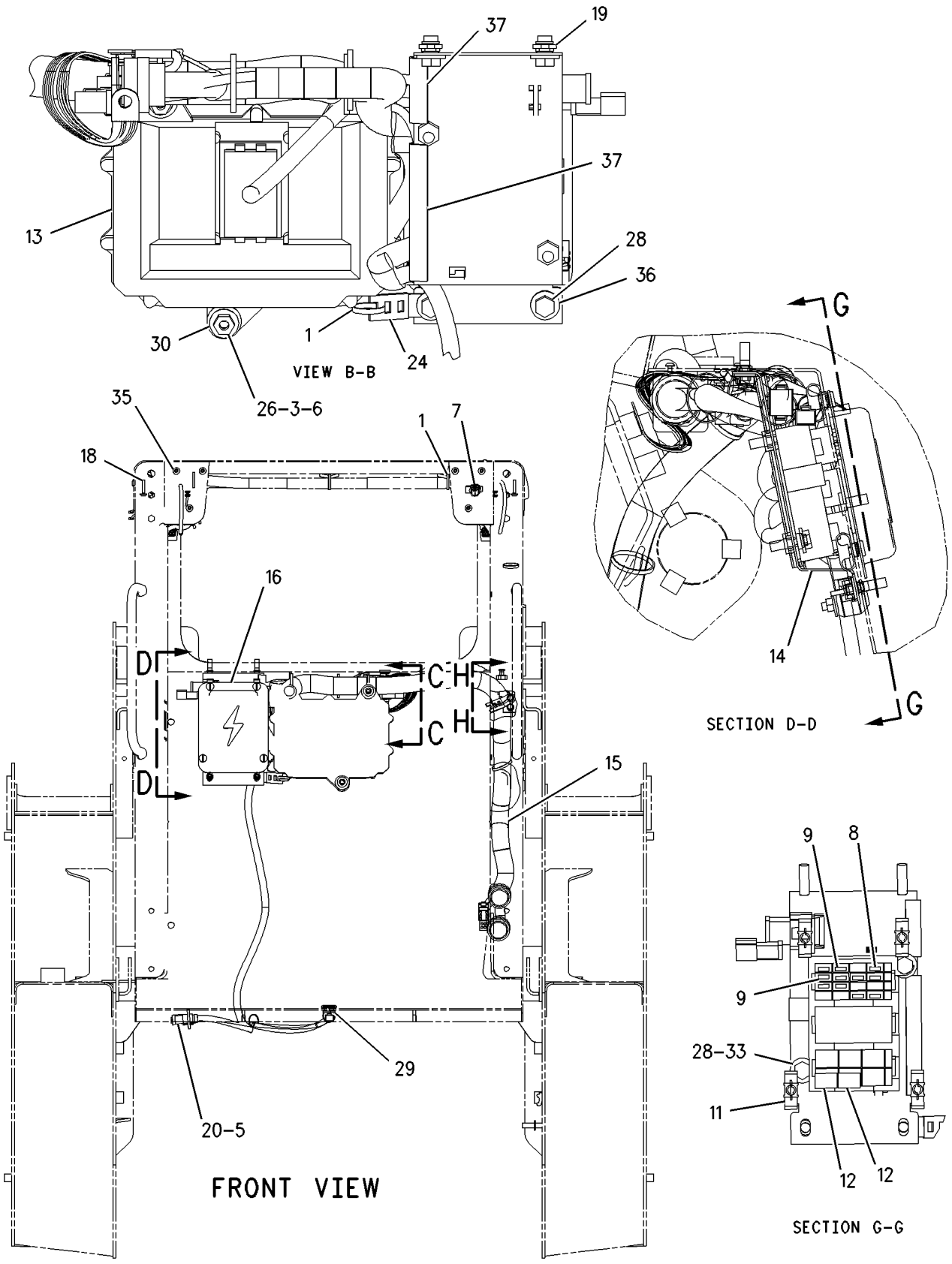

GRAPHIC #2

g00844142

MEMORANDA

ELECTRICAL AND STARTING SYSTEM

190-8001 WIRING GP-CHASSIS

S/N: CED1-UP; FDG1-UP; 4YZ4000-UP; 5SZ4000-UP

PART OF 190-7953, 195-6710, 195-6761, 195-6763 CHASSIS AR

SMCS-1408, 7051 **i01746323**

NOTE	REF NO	GRAPHIC REF	PART NUMBER	QTY	PART NAME 1 2 3 4 5 6 (PRODUCT LEVEL)	SEE PAGE
	1	1	**6I-1418**	3	SPACER (8.2X12.7X28.7MM THK)	
	2	2	**7D-5473**	2	BOLT-SOCKET HEAD (8-32X.75 IN)	
	3	2	**8C-6354**	1	CAP-RECEPTACLE	
	4	1	**8M-4963**	1	STRAP AS-GROUND	
	5	1	**8T-9655**	6	MOUNT (ISOLATION)	
	6	2	**115-1615**	6	RELAY AS (12 VOLT)	
	7	2	**128-4249**	2	LOCKWASHER	
	8	1	**142-7513**	1	CABLE AS-POWER	
		1	**1S-7251**	1	TERMINAL-RING (FOR 1/2 IN BOLT)	
		1	**3S-6050**	1	TERMINAL AS-BATTERY (NEGATIVE)	
		1	**1M-6119**	1	BOLT-BATTERY TERMINAL (5/16-18X1.375 IN)	
		1	**1M-6120**	1	NUT-BATTERY TERMINAL (5/16-18 THD)	
		1	**5P-0761**		CABLE (00GA)(RED) (30CM)	
		1	**8N-0869**	1	COVER-TERMINAL (RED)	
		1	**8N-1725**	1	COVER-TERMINAL (RED)	
		1	**8L-8413**	1	STRAP-CABLE	
	9	2	**142-8640**	1	HARNESS AS-REAR LIGHTING	
		2	**155-2270**	1	KIT-CONNECTING PLUG (2 PIN)	
		2	**102-8809**	1	KIT-CONNECTING PLUG (4 PIN)	
		2	**102-8805**	1	KIT-RECEPTACLE (6 PIN)	
	10	2	**147-1773**	1	CIRCUIT BREAKER AS (30 AMP)	
		2	**6V-8378**	2	NUT (10-32 THD)	
		2	**8F-1434**	2	LOCKWASHER	
		2	**8T-0328**	2	WASHER-HARD (5.5X10X1MM THK)	
	11	1	**167-7801**	2	RESISTOR AS	
		1	**102-8802**	1	KIT-RECEPTACLE (2 PIN)	
Y	12	1	**178-2254**	1	ELECTRONICS GP-WORK TOOL (AUXILIARY HYDRAULIC)	146
	13	1	**190-8006**	1	HARNESS AS-PLATFORM	
		1	**102-8801**	1	KIT-RECEPTACLE (12 PIN)	
		1	**155-2255**	1	KIT-CONNECTING PLUG (12 PIN)	
		1	**155-2265**	1	KIT-CONNECTING PLUG (8 PIN)	
		1	**155-2260**	1	KIT-CONNECTING PLUG (3 PIN)	
		1	**155-2270**	1	KIT-CONNECTING PLUG (2 PIN)	
		1	**155-2271**	1	KIT-CONNECTING PLUG (4 PIN)	
		1	**155-2274**	1	KIT-CONNECTING PLUG (6 PIN)	
		1	**177-9648**	1	KIT-CONNECTING PLUG (2 PIN)	
	14	2	**190-8008**	1	HARNESS AS-OPERATOR CONTROLS (LH JOYSTICK)	
		2	**102-8801**	1	KIT-RECEPTACLE (12 PIN)	
		2	**155-2265**	1	KIT-CONNECTING PLUG (8 PIN)	
		2	**155-2270**	1	KIT-CONNECTING PLUG (2 PIN)	
	15	2	**190-8009**	1	HARNESS AS-OPERATOR CONTROLS (RH JOYSTICK)	
		2	**102-8805**	1	KIT-RECEPTACLE (6 PIN)	
		2	**155-2270**	1	KIT-CONNECTING PLUG (2 PIN)	
		2	**155-2274**	1	KIT-CONNECTING PLUG (6 PIN)	
	16	2	**193-8378**	1	BRACKET AS	
	17	2	**197-6897**	1	WIRE AS	
		2	**2L-8067**	1	TERMINAL-INSULATED (10-12 GA) (6.35MM)	
	18	2	**202-0602**	1	PLATE	
	19	2	**211-0052**	2	NUT	
B	20	1,2	**102-8802**	6	KIT-RECEPTACLE (2 PIN)	
B	21	1	**102-8804**	2	KIT-RECEPTACLE (4 PIN)	
B	22	1	**102-8806**	1	KIT-RECEPTACLE (8 PIN)	
	23	1,2	**3S-2093**	31	STRAP-CABLE	
	24	2	**4B-4863**	2	WASHER (4.7X11X1.2MM THK)	
	25	1,2	**4P-8134**	2	CLIP	
M	26	2	**5C-9553**	7	BOLT (M6X1X16MM)	

190-8001 **WIRING GP-CHASSIS** ***(contd.)*** **i01746323**

NOTE	REF NO	GRAPHIC REF	PART NUMBER	QTY	PART NAME 1 2 3 4 5 6 (PRODUCT LEVEL)	SEE PAGE
	27	1	**7X-0579**	3	WASHER-HARD (8.8X25.5X2MM THK)	
M	28	1	**7X-0818**	3	BOLT (M8X1.25X45MM)	
	29	2	**8C-8558**	4	SCREW-LOCK	
	30	1	**8T-4121**	3	WASHER-HARD (11X21X2.5MM THK)	
M	31	1	**8T-4133**	3	NUT (M10X1.5 THD)	
M	32	2	**8T-4200**	2	BOLT (M8X1.25X16MM)	
	33	2	**8T-4205**	7	WASHER-HARD (7.2X14.5X2MM THK)	
	34	2	**8T-4224**	2	WASHER-HARD (8.8X16X2MM THK)	
F			**8T-8737**	28	PLUG-SEAL	

B-USE AS REQUIRED
F-NOT SHOWN
M-METRIC PART
Y-SEPARATE ILLUSTRATION

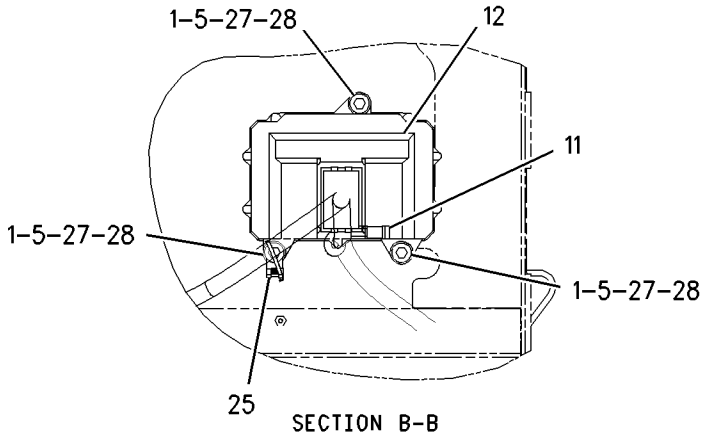

SECTION B-B

REFER TO ALL ILLUSTRATIONS
IN THIS GROUP FOR
AUXILIARY VIEWS

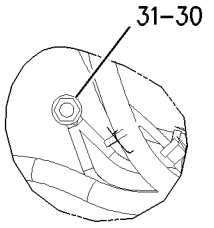

VIEW OF AREA A

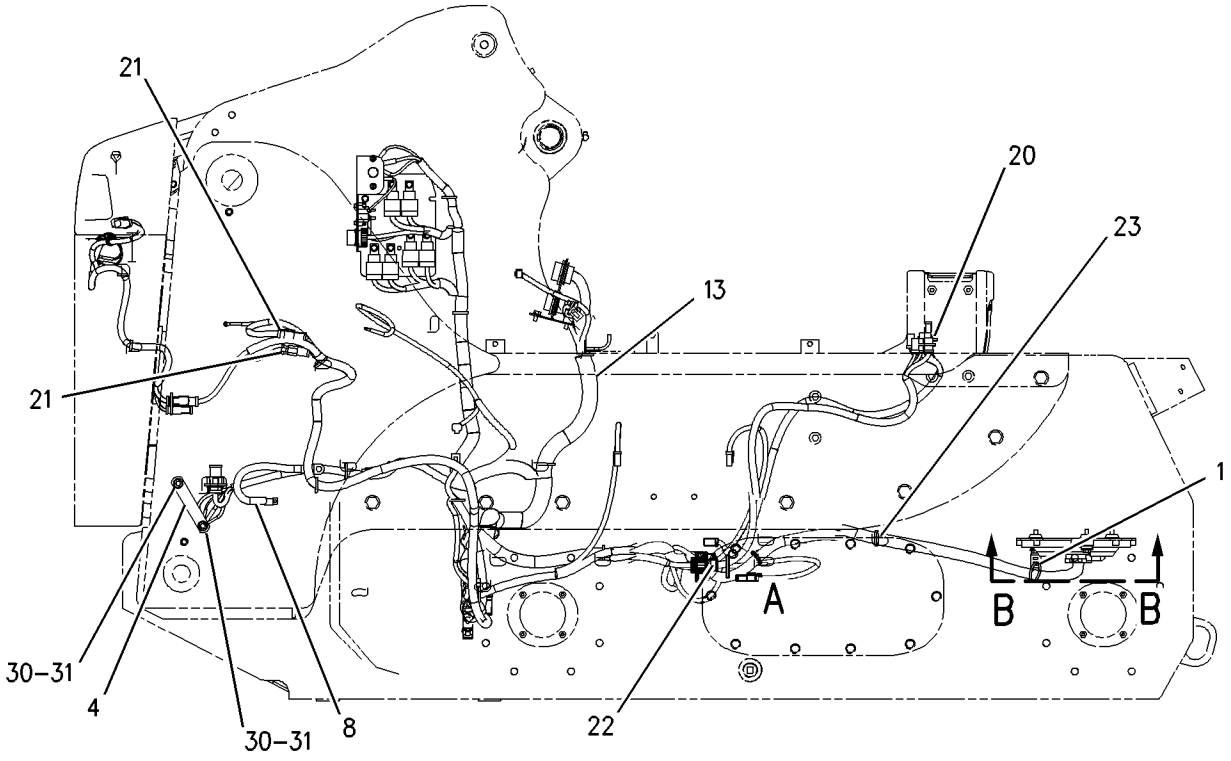

RIGHT SIDE VIEW

GRAPHIC #1 g00894919

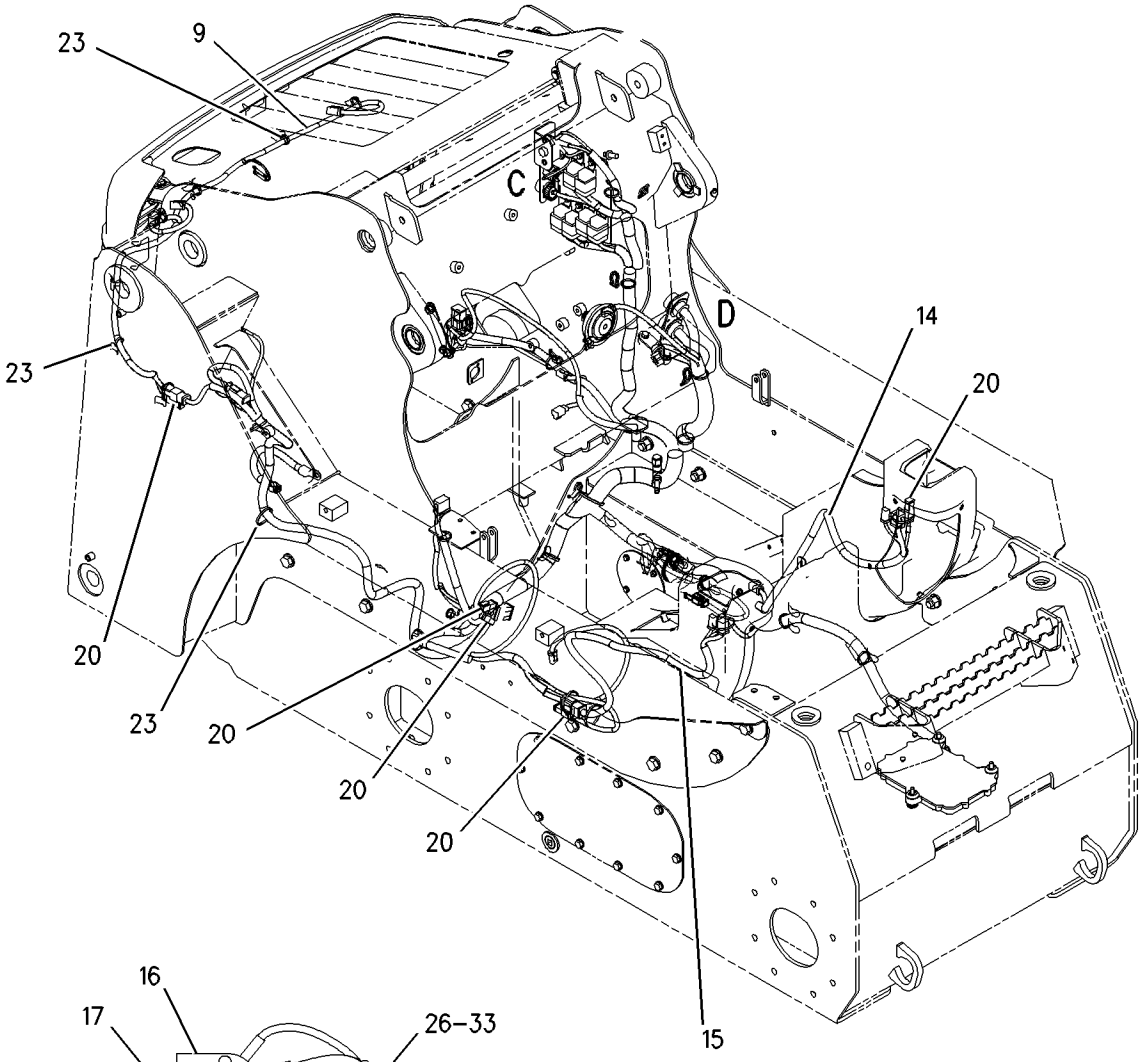

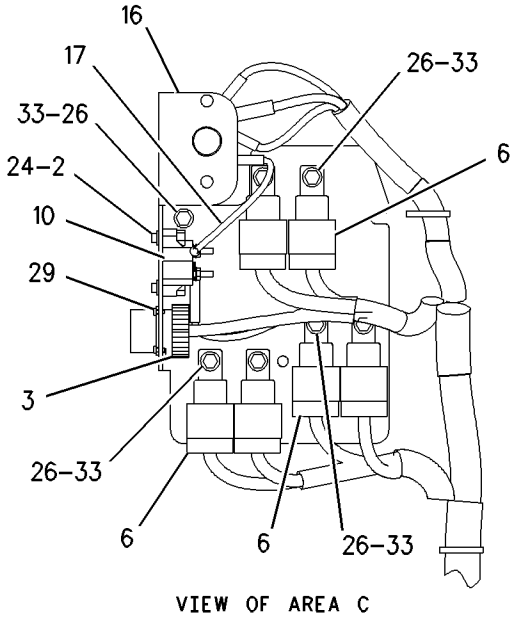

VIEW OF AREA C

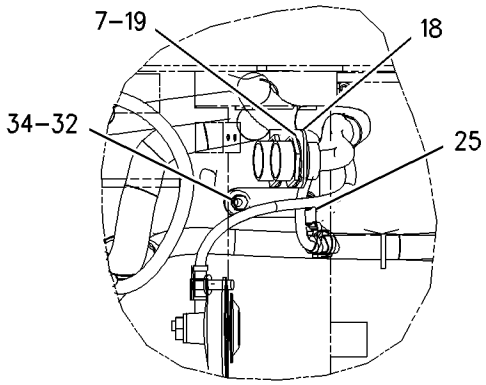

VIEW OF AREA D

GRAPHIC #2

g00894920

216-6153 WIRING GP-CHASSIS

S/N: CED1-UP; FDG1-UP; 4YZ4000-UP; 5SZ4000-UP
REAR AUXILIARY
PART OF 216-6176 CONTROL GP-PILOT OPERATED HYD, 220-8167, 220-8170, 223-8386, 223-8387 LINES GP-AUXILIARY HYDRAULIC
AN ATTACHMENT

SMCS-1408, 7051 **i01718774**

NOTE	REF NO	GRAPHIC REF	PART NUMBER	QTY	PART NAME 1 2 3 4 5 6 (PRODUCT LEVEL)	SEE PAGE
	1	1	**3S-2093**	3	STRAP-CABLE	
	2	1	**8T-8737**	8	PLUG-SEAL	
	3	1	**106-8704**	1	SUPPRESSOR AS-ARC	
		1	**102-8802**	1	KIT-RECEPTACLE (2 PIN)	
		1	**186-3735**	1	PIN-CONNECTOR	
	4	1	**212-6524**	1	HARNESS AS	
		1	**102-8802**	1	KIT-RECEPTACLE (2 PIN)	
		1	**102-8806**	1	KIT-RECEPTACLE (8 PIN)	
		1	**155-2265**	1	KIT-CONNECTING PLUG (8 PIN)	
		1	**155-2270**	1	KIT-CONNECTING PLUG (2 PIN)	
	5	1	**102-8806**	1	KIT-RECEPTACLE (8 PIN)	
		1	**3E-3389**	1	WEDGE-RECEPTACLE LOCK	

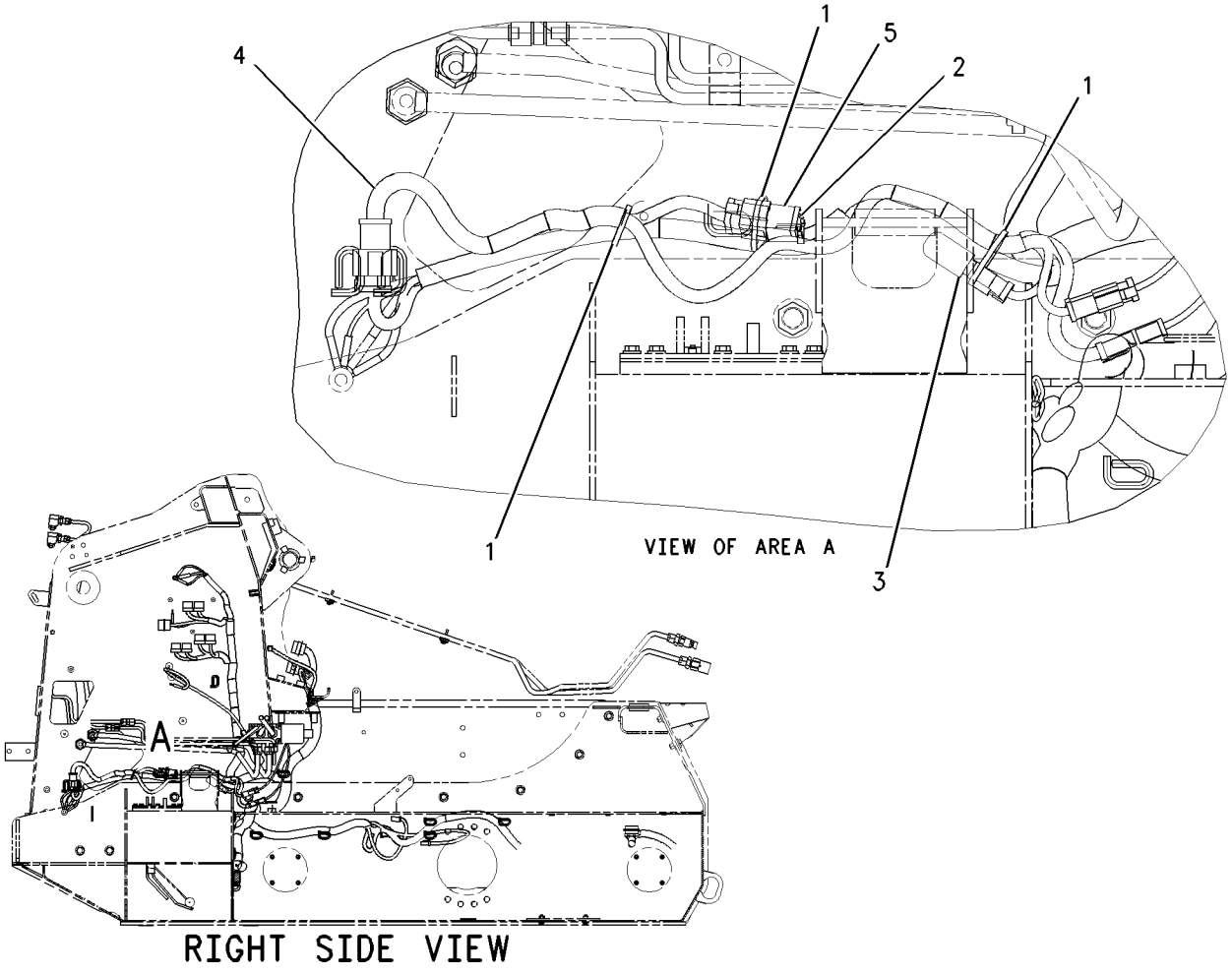

GRAPHIC #1 g00884261

MEMORANDA

212-6520 WIRING GP-COUPLER

S/N: CED1-UP; FDG1-UP; 4YZ4000-UP; 5SZ4000-UP
PART OF 219-4354 CONVERSION AR-QUICK COUPLER, 212-4158, 212-4159, 219-4355
COUPLER AR-QUICK
AN ATTACHMENT

SMCS-1408 **i01797239**

NOTE	REF NO	GRAPHIC REF	PART NUMBER	QTY	PART NAME 1 2 3 4 5 6 (PRODUCT LEVEL)	SEE PAGE
	1	1	**212-6521**	1	SWITCH GP-ROCKER (HYD COUPLER)	
		1	**111-7899**	1	GASKET	
	2	1	**212-6522**	1	HARNESS AS-COUPLER	
		1	**102-8805**	1	KIT-RECEPTACLE (6 PIN)	
		1	**155-2271**	1	KIT-CONNECTING PLUG (4 PIN)	

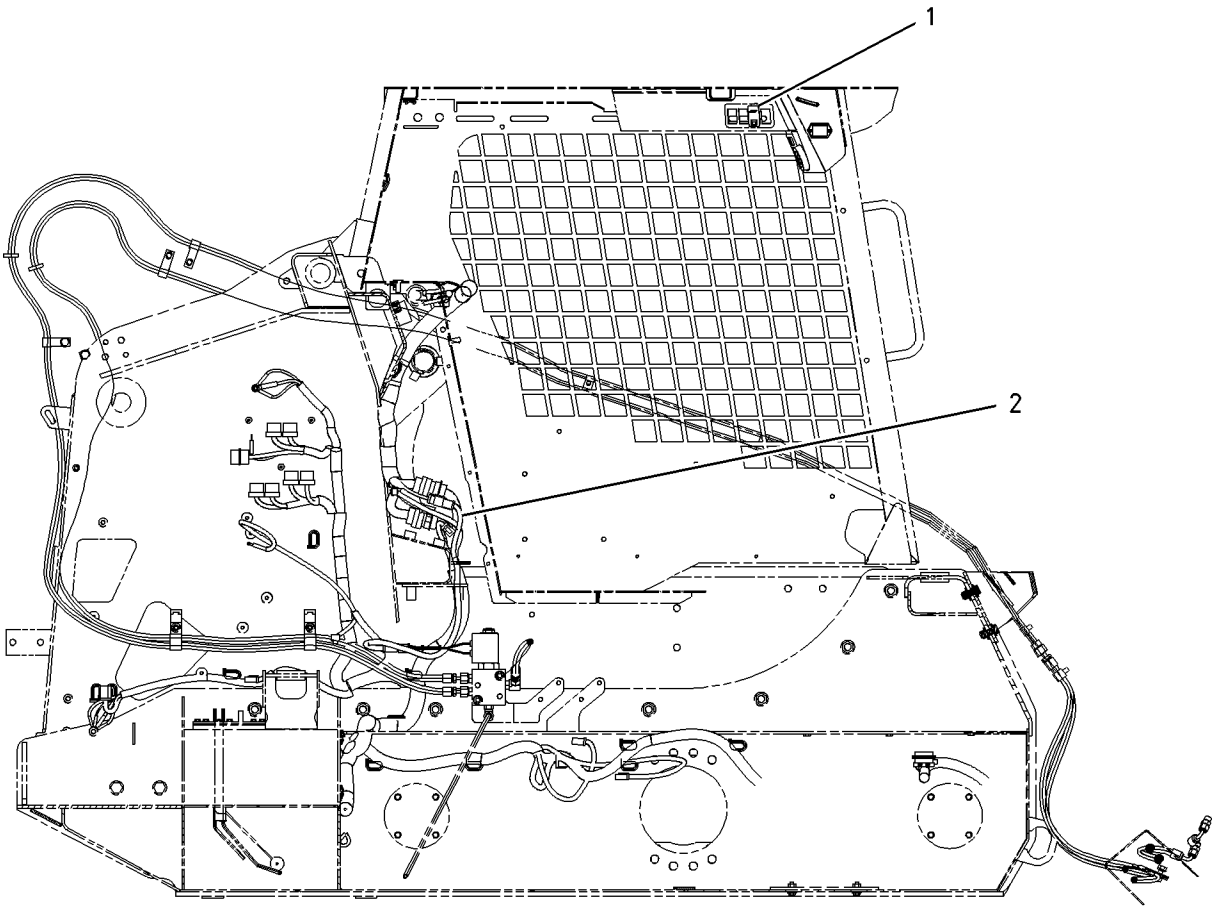

RIGHT SIDE VIEW
SKID STEER LOADER

GRAPHIC #1 g00920358

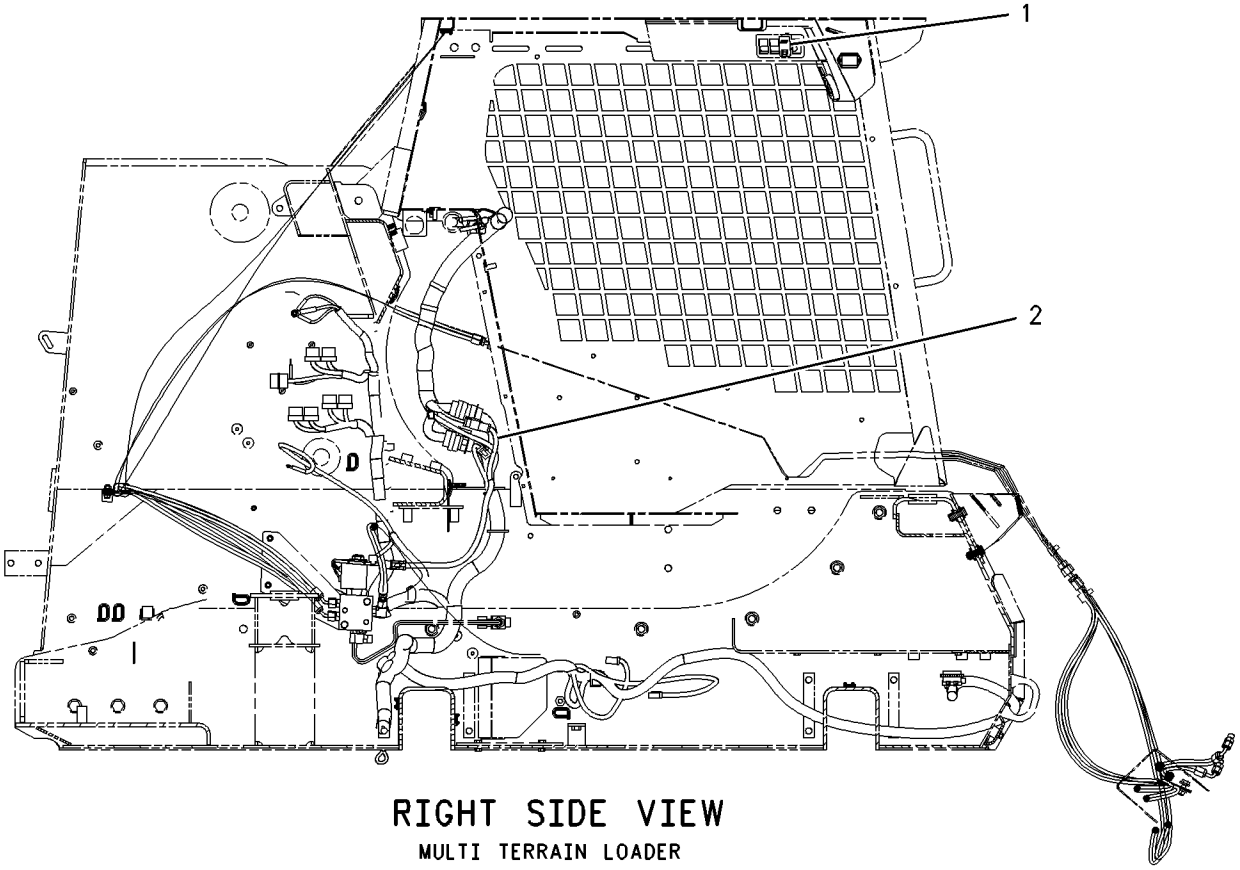

RIGHT SIDE VIEW
MULTI TERRAIN LOADER

GRAPHIC #2 g00920359

197-6900 WIRING GP-ENGINE

S/N: CED1-UP; FDG1-UP; 4YZ4000-UP; 5SZ4000-UP
PART OF 190-7953, 195-6710, 195-6761, 195-6763 CHASSIS AR

SMCS-1000, 1408, 1420 **i01762669**

NOTE	REF NO	GRAPHIC REF	PART NUMBER	QTY	PART NAME 1 2 3 4 5 6 (PRODUCT LEVEL)	SEE PAGE
B	1	1	**3S-2093**	7	STRAP-CABLE	
	2	1	**4P-8134**	2	CLIP	
	3	1	**7G-1060**	1	STRAP AS-GROUND	
	4	1	**142-7517**	1	CABLE AS-GROUND	
	5	1	**142-8833**	2	SPACER	
	6	1	**197-6901**	1	HARNESS AS-ENGINE	
	7	1	**115-3073**	1	CLIP AS-CONNECTING	
	8	1	**4P-7581**	1	CLIP	
M	9	1	**7X-2621**	1	BOLT (M10X1.50X12MM)	
	10	1	**8T-4121**	1	WASHER-HARD (11X21X2.5MM THK)	
M	11	1	**8T-4133**	1	NUT (M10X1.5 THD)	
	12	1	**8T-4224**	2	WASHER-HARD (8.8X16X2MM THK)	
M	13	1	**8T-4908**	2	BOLT (M8X1.25X25MM)	

B-USE AS REQUIRED
M-METRIC PART

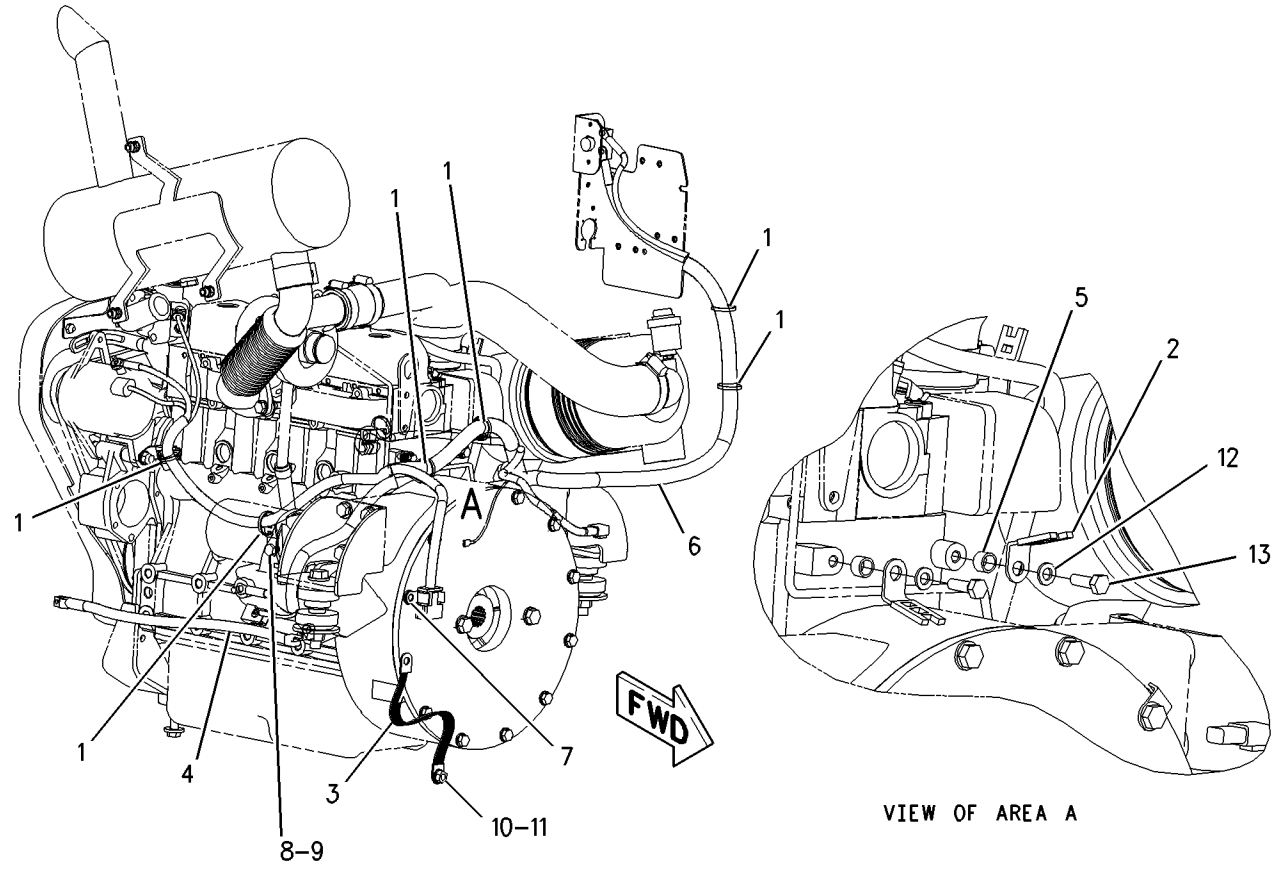

GRAPHIC #1 g00901799

MEMORANDA

192-2694 WIRING GP-REAR LIGHTING

S/N: 4YZ4000-UP; 5SZ4000-UP
PART OF 175-4242, 188-3307 CONVERSION AR-ROADING
AN ATTACHMENT

SMCS-1408, 1429 **i01762717**

NOTE	REF NO	GRAPHIC REF	PART NUMBER	QTY	PART NAME 1 2 3 4 5 6 (PRODUCT LEVEL)	SEE PAGE
	1	1	**3S-2093**	7	STRAP-CABLE	
	2	1	**115-1615**	1	RELAY AS (12 VOLT)	
	3	1	*166-2033*	2	TEE GP	
		1	**4J-5477**	1	SEAL-O-RING	
		1	**7X-2444**	1	TEE-SWIVEL	
	4	1	**180-3008**	1	HARNESS AS-REAR LIGHTING	
		1	**102-8803**	1	KIT-RECEPTACLE (3 PIN)	
		1	**155-2270**	1	KIT-CONNECTING PLUG (2 PIN)	
Y	5	1	**184-1564**	2	SWITCH GP-PRESSURE	176

Y-SEPARATE ILLUSTRATION

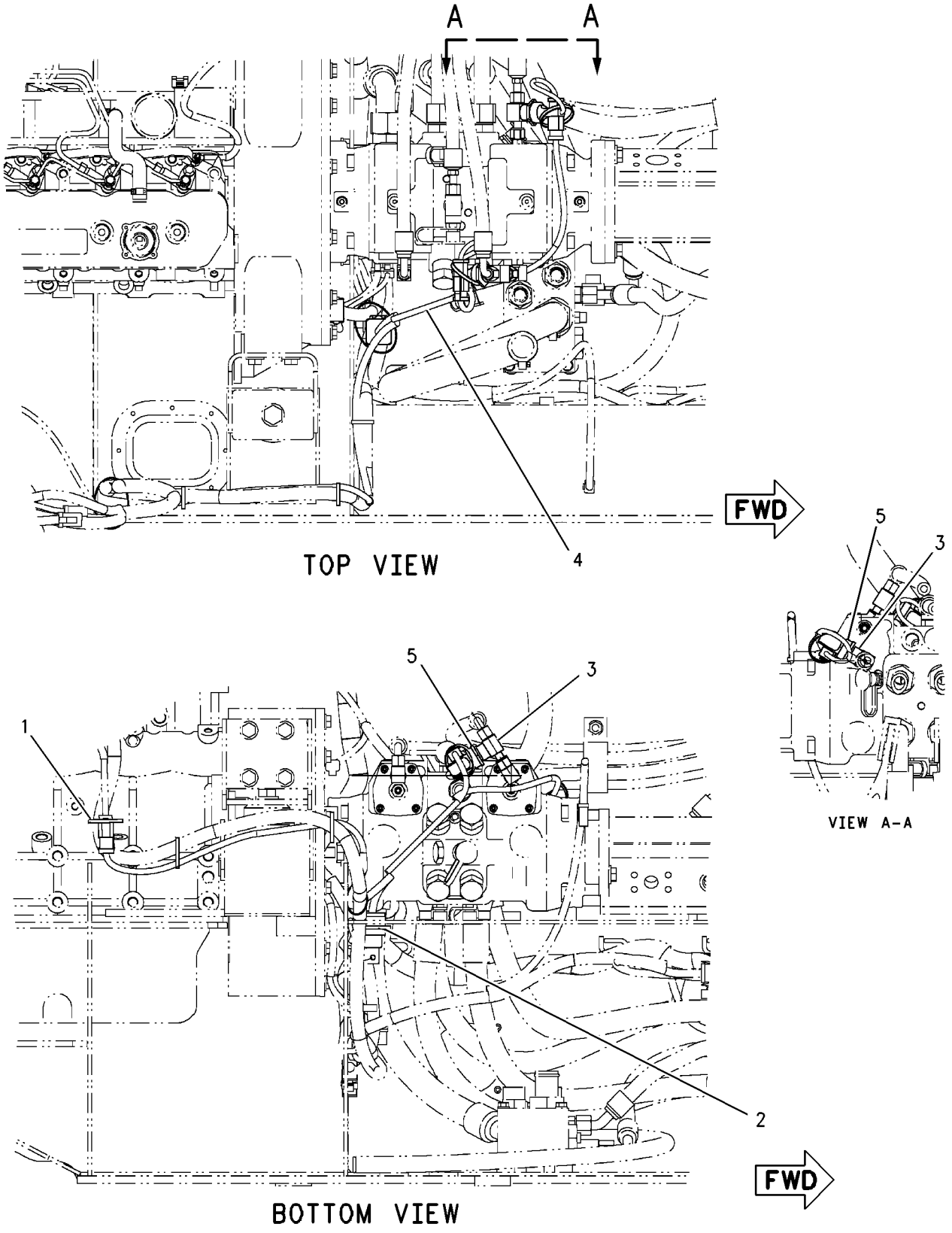

GRAPHIC #1

g00901822

187-1258 WIRING GP-WORK TOOL

S/N: 4YZ4000-UP; 5SZ4000-UP
KIT-WORK TOOL WIRING
FIELD INSTALLATION

SMCS-1408 **i01793364**

NOTE	REF NO	GRAPHIC REF	PART NUMBER	QTY	PART NAME 1 2 3 4 5 6 (PRODUCT LEVEL)	SEE PAGE
	1	1	**3S-2093**	4	STRAP-CABLE	
	2	1	**8T-8737**	3	PLUG-SEAL	
	3	1	**102-8806**	1	KIT-RECEPTACLE (8 PIN)	
	4	1	**105-3542**	1	DIODE GP	
		1	**102-8806**	1	KIT-RECEPTACLE (8 PIN)	
		1	**3E-3389**	1	WEDGE-RECEPTACLE LOCK	
		1	**7X-8831**	1	DIODE	
		1	**9G-3695**	1	PLUG (GROMMET SEALING)	
	5	1	**110-8760**	1	STRAP	
	6	1	**113-8491**	2	FUSE (15 AMP)	
	7	1	**142-8633**	1	SWITCH GP-ROCKER (WORK TOOL)	
		1	**111-7899**	1	GASKET	
	8	1	**142-9184**	1	BRACKET	
	9	1	**142-9333**	1	HARNESS AS-WORK TOOL	
		1	**1S-9593**	1	STRAP-CABLE	
		1	**7T-0093**	5	PIN-CONNECTOR	
		1	**9G-3695**	3	PLUG (GROMMET SEALING)	
		1	**144-1636**	5	PIN-CONNECTOR	
		1	**156-1458**	1	COVER	
		1	**156-1460**	1	RECEPTACLE (8 PIN)	
	10	1	**146-4323**	2	RELAY AS	
	11	1	**159-9495**	1	NUT (1/2X18 THD)	
	12	1	**159-9496**	1	LOCKWASHER	
	13	1	**193-8339**	1	PLATE	
Y	14	1	**204-1396**	1	CONTROL GP-HANDLE	318
M	15	1	**5C-7261**	2	NUT (M8X1.25 THD)	
	16	1	**8T-0255**	1	PIN-SPRING	
	17	1	**8T-4121**	2	WASHER-HARD (11X21X2.5MM THK)	
M	18	1	**8T-4191**	2	BOLT (M10X1.5X16MM)	
	19	1	**8T-4224**	4	WASHER-HARD (8.8X16X2MM THK)	
M	20	1	**8T-4908**	2	BOLT (M8X1.25X25MM)	

M-METRIC PART
Y-SEPARATE ILLUSTRATION

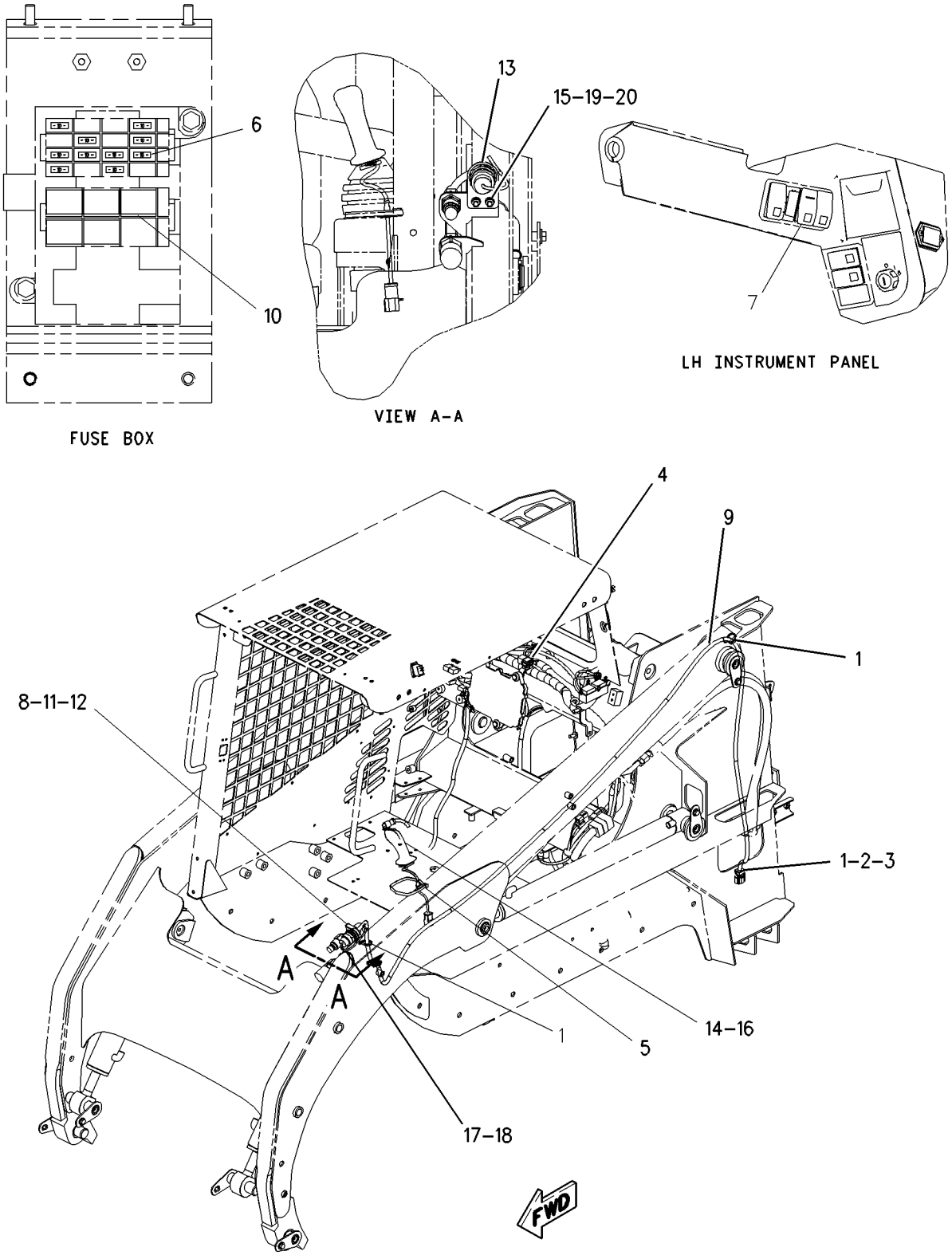

GRAPHIC #1 g00917422

193-8353 WIRING GP-WORK TOOL

S/N: 4YZ4000-UP; 5SZ4000-UP

PART OF 191-2909, 191-9683, 191-9796 CONTROL GP-PILOT OPERATED HYD

AN ATTACHMENT

SMCS-1408 **i01793415**

NOTE	REF NO	GRAPHIC REF	PART NUMBER	QTY	PART NAME 1 2 3 4 5 6 (PRODUCT LEVEL)	SEE PAGE
	1	1	**3E-3389**	1	WEDGE-RECEPTACLE LOCK	
	2	1	**3S-2093**	5	STRAP-CABLE	
	3	1	**8T-8737**	3	PLUG-SEAL	
	4	1	**105-3542**	1	DIODE GP	
J		1	**102-8806**	1	KIT-RECEPTACLE (8 PIN)	
J		1	**3E-3389**	1	WEDGE-RECEPTACLE LOCK	
		1	**7X-8831**	1	DIODE	
		1	**9G-3695**	1	PLUG (GROMMET SEALING)	
	5	1	**113-8491**	2	FUSE (15 AMP)	
	6	1	**142-8633**	1	SWITCH GP-ROCKER (WORK TOOL)	
		1	**111-7899**	1	GASKET	
	7	1	**142-9333**	1	HARNESS AS-WORK TOOL	
		1	**1S-9593**	1	STRAP-CABLE	
		1	**7T-0093**	5	PIN-CONNECTOR	
		1	**9G-3695**	3	PLUG (GROMMET SEALING)	
		1	**144-1636**	5	PIN-CONNECTOR	
		1	**156-1458**	1	COVER	
		1	**156-1460**	1	RECEPTACLE (8 PIN)	
	8	1	**146-4323**	2	RELAY AS	
	9	1	**159-9495**	1	NUT (1/2X18 THD)	
	10	1	**159-9496**	1	LOCKWASHER	
	11	1	**193-8339**	1	PLATE	
	12	1	**102-8806**	1	KIT-RECEPTACLE (8 PIN)	
M	13	1	**5C-7261**	2	NUT (M8X1.25 THD)	
	14	1	**8T-4224**	4	WASHER-HARD (8.8X16X2MM THK)	
M	15	1	**8T-4908**	2	BOLT (M8X1.25X25MM)	

J-KIT MARKED J INLCUDES PART(S) MARKED J
M-METRIC PART

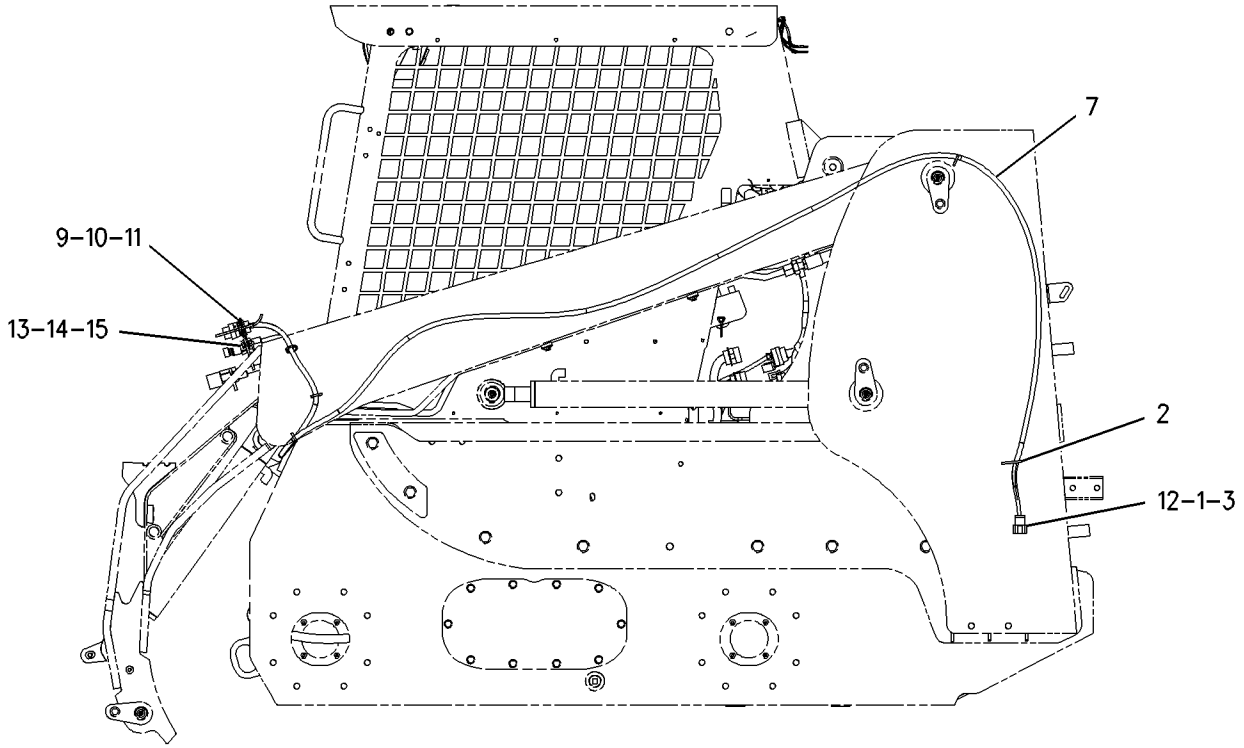

LEFT SIDE VIEW

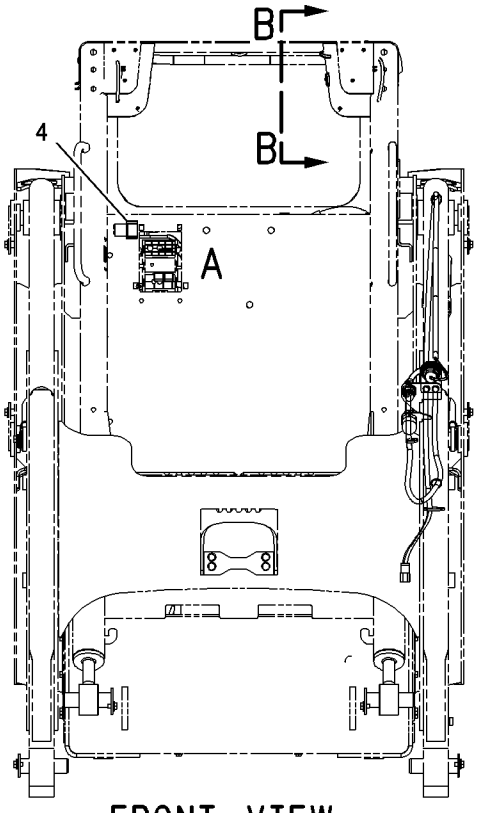

FRONT VIEW

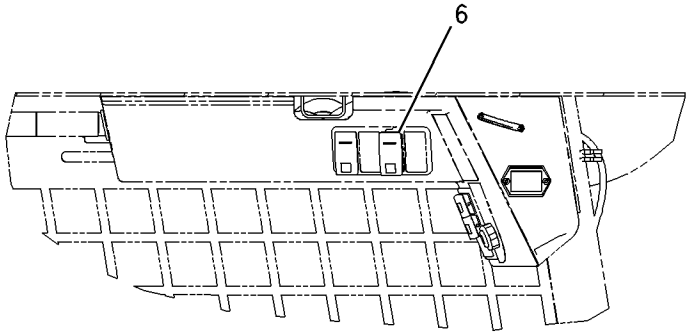

VIEW B-B

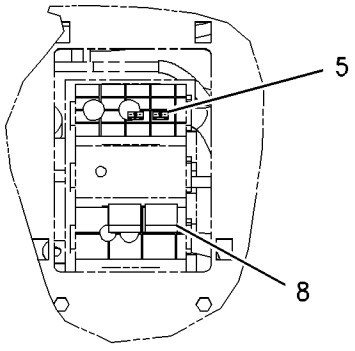

VIEW OF AREA A

GRAPHIC #1 g00917458

193-8379 WIRING GP-WORK TOOL

S/N: CED1-UP; FDG1-UP
PART OF 191-9746, 191-9797 CONTROL GP-PILOT OPERATED HYD
AN ATTACHMENT

SMCS-1408 **i01793434**

NOTE	REF NO	GRAPHIC REF	PART NUMBER	QTY	PART NAME 1 2 3 4 5 6 (PRODUCT LEVEL)	SEE PAGE
	1	1	**3E-3389**	1	WEDGE-RECEPTACLE LOCK	
	2	1	**3S-2093**	4	STRAP-CABLE	
	3	1	**8T-8737**	3	PLUG-SEAL	
	4	1	**105-3542**	1	DIODE GP	
		1	**102-8806**	1	KIT-RECEPTACLE (8 PIN)	
		1	**3E-3389**	1	WEDGE-RECEPTACLE LOCK	
		1	**7X-8831**	1	DIODE	
		1	**9G-3695**	1	PLUG (GROMMET SEALING)	
	5	1	**113-8491**	2	FUSE (15 AMP)	
	6	1	**142-8633**	1	SWITCH GP-ROCKER (WORKTOOL)	
		1	**111-7899**	1	GASKET	
	7	1	**146-4323**	2	RELAY AS	
	8	1	**159-9495**	1	NUT (1/2X18 THD)	
	9	1	**159-9496**	1	LOCKWASHER	
	10	1	**193-8339**	1	PLATE	
	11	1	**197-7639**	1	HARNESS AS-WORK TOOL	
		1	**7T-0093**	7	PIN-CONNECTOR	
		1	**8T-8737**	1	PLUG-SEAL	
		1	**144-1636**	7	PIN-CONNECTOR	
		1	**156-1458**	1	COVER	
		1	**156-1460**	1	RECEPTACLE (8 PIN)	
		1	**3E-3386**	1	WEDGE-PLUG LOCK	
		1	**7T-0093**	7	PIN-CONNECTOR	
		1	**8T-8737**	1	PLUG-SEAL	
	12	1	**102-8806**	1	KIT-RECEPTACLE (8 PIN)	
M	13	1	**5C-7261**	2	NUT (M8X1.25 THD)	
	14	1	**8T-4224**	2	WASHER-HARD (8.8X16X2MM THK)	
M	15	1	**8T-4908**	2	BOLT (M8X1.25X25MM)	

M-METRIC PART

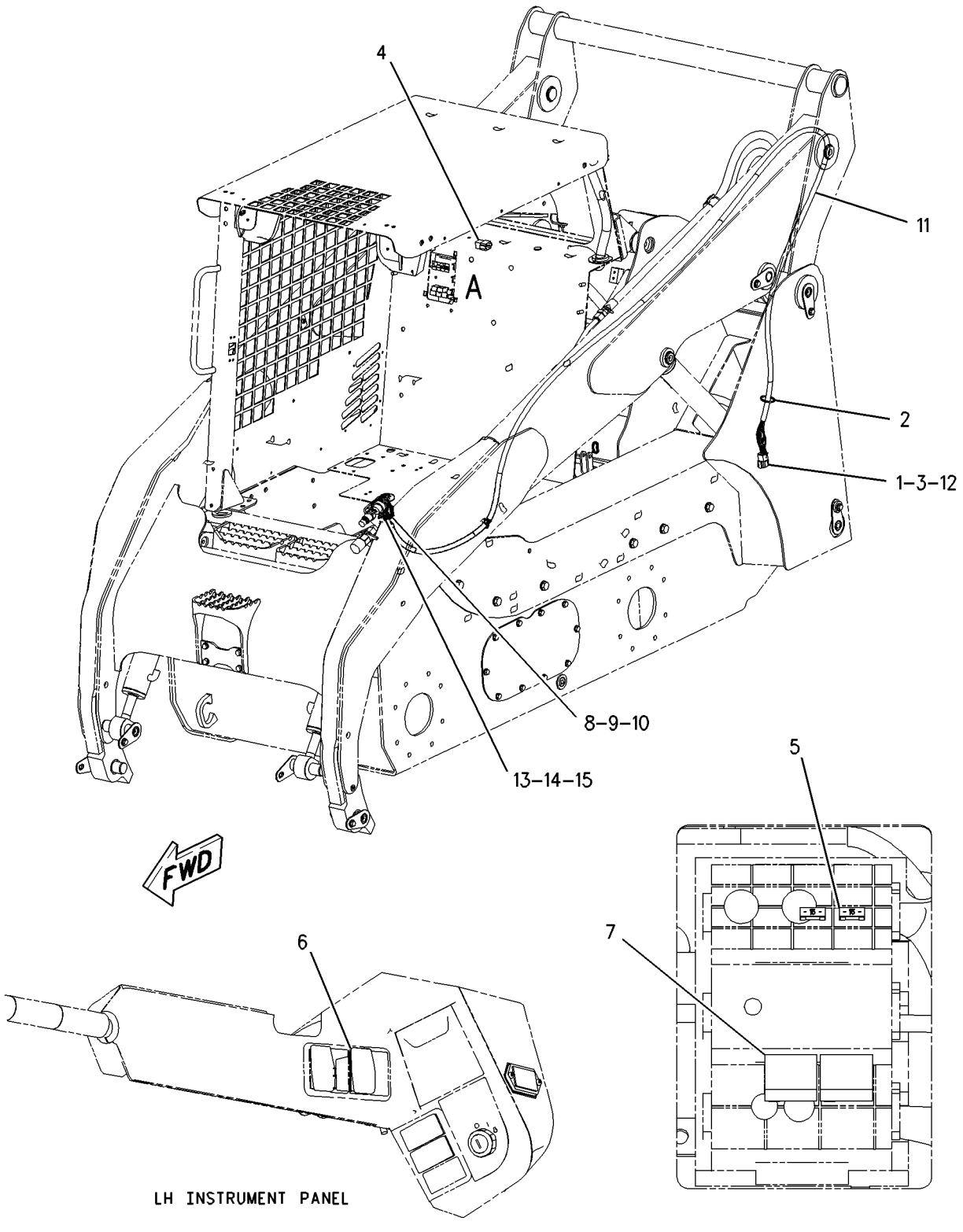

GRAPHIC #1 g00917476

197-8467 WIRING GP-WORK TOOL

S/N: CED1-UP; FDG1-UP
FIELD INSTALLATION

SMCS-1408 **i01793446**

NOTE	REF NO	GRAPHIC REF	PART NUMBER	QTY	PART NAME 1 2 3 4 5 6 (PRODUCT LEVEL)	SEE PAGE
	1	1	**3S-2093**	4	STRAP-CABLE	
	2	1	**8T-8737**	3	PLUG-SEAL	
	3	1	**102-8806**	1	KIT-RECEPTACLE (8 PIN)	
		1	**3E-3389**	1	WEDGE-RECEPTACLE LOCK	
	4	1	**105-3542**	1	DIODE GP	
		1	**102-8806**	1	KIT-RECEPTACLE (8 PIN)	
		1	**3E-3389**	1	WEDGE-RECEPTACLE LOCK	
		1	**7X-8831**	2	DIODE	
		1	**9G-3695**	4	PLUG (GROMMET SEALING)	
	5	1	**113-8491**	2	FUSE (15 AMP)	
	6	1	**142-8633**	1	SWITCH GP-ROCKER (WORK TOOL)	
		1	**111-7899**	1	GASKET	
	7	1	**146-4323**	2	RELAY AS	
	8	1	**159-9495**	1	NUT (1/2X18 THD)	
	9	1	**159-9496**	1	LOCKWASHER	
	10	1	**193-8339**	1	PLATE	
	11	1	**197-7639**	1	HARNESS AS-WORK TOOL	
		1	**7T-0093**	7	PIN-CONNECTOR	
		1	**8T-8737**	1	PLUG-SEAL	
		1	**144-1636**	7	PIN-CONNECTOR	
		1	**156-1458**	1	COVER	
		1	**156-1460**	1	RECEPTACLE (8 PIN)	
Y	12	1	**204-1396**	1	CONTROL GP-HANDLE	318
M	13	1	**5C-7261**	2	NUT (M8X1.25 THD)	
	14	1	**8T-4224**	4	WASHER-HARD (8.8X16X2MM THK)	
M	15	1	**8T-4908**	2	BOLT (M8X1.25X25MM)	
	16	1	**8T-0255**	1	PIN-SPRING	
	17	1	**110-8760**	1	STRAP	

M-METRIC PART
Y-SEPARATE ILLUSTRATION

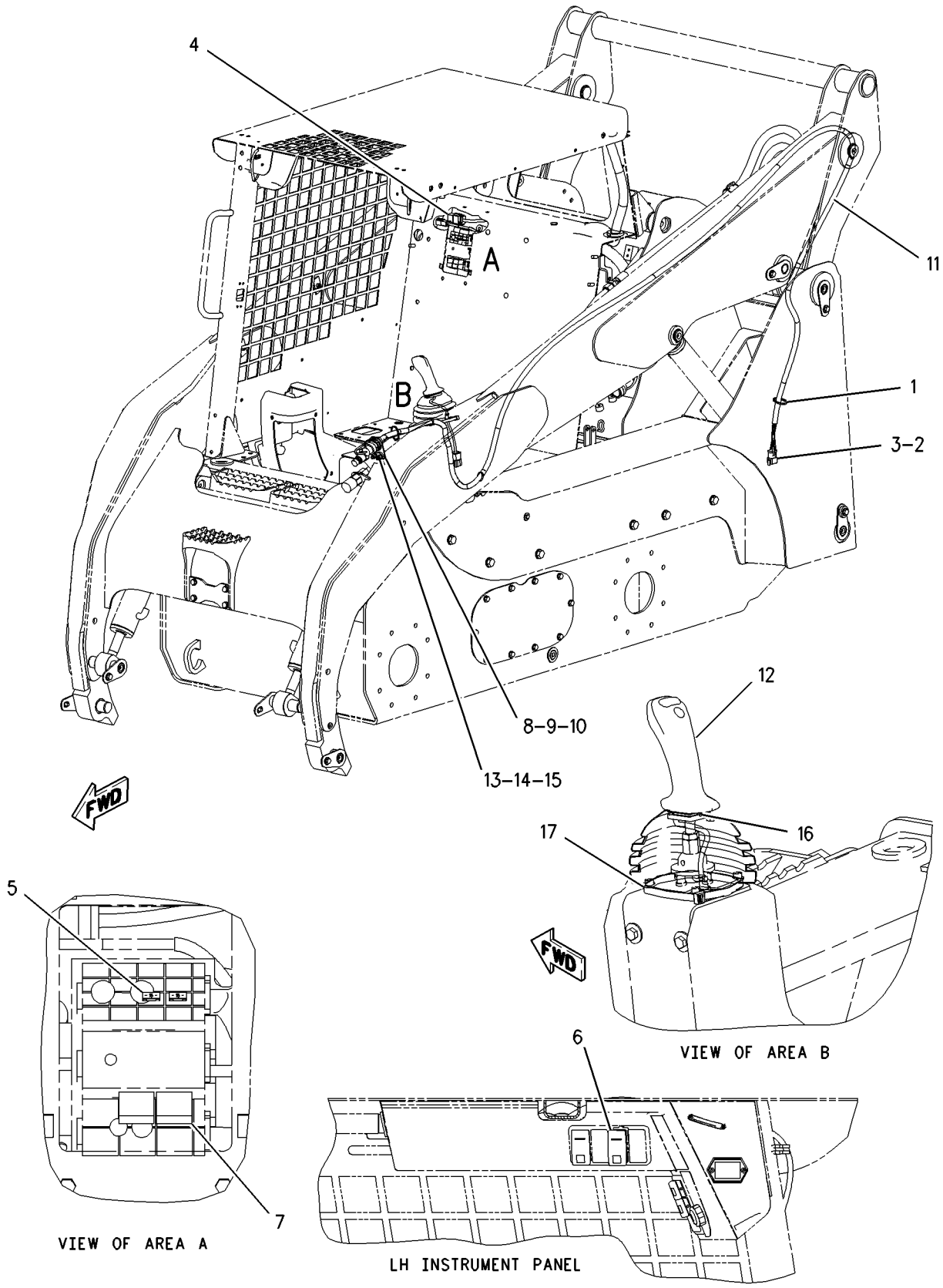

GRAPHIC #1 g00917488

142-9058 AXLE GP

S/N: CED1-UP; FDG1-UP; 4YZ4000-UP; 5SZ4000-UP
PART OF 142-9060, 191-9760 DRIVE GP-TANDEM

SMCS-3278 **i01111596**

NOTE	REF NO	GRAPHIC REF	PART NUMBER	QTY	PART NAME 1 2 3 4 5 6 (PRODUCT LEVEL)	SEE PAGE
	1	1	**142-9023**	1	HOUSING	
	2	1	**142-9024**	1	SPINDLE	
	3	1	**142-9029**	1	SPACER (27.5MM THK)	
	4	1	**155-5652**	1	SEAL-LIP TYPE	
	5	1	**155-9010**	1	CONE-BEARING	
	6	1	**155-9432**	1	CONE-BEARING	
	7	1	**155-9433**	2	CUP-BEARING	
	8	1	**159-5772**	8	STUD (9/16-18-2A THD)	
	9	1	**169-1679**	1	SEAL-LIP TYPE	

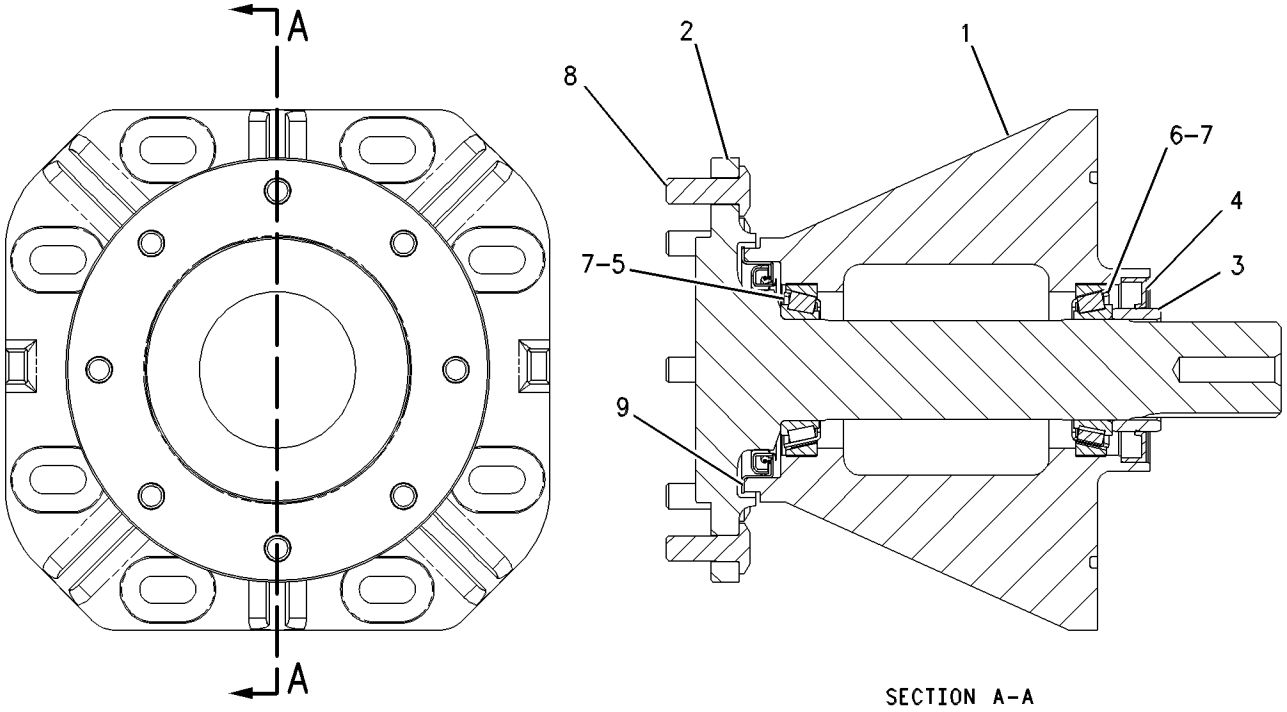

SECTION A-A

GRAPHIC #1 g00592470

MEMORANDA

190-7459 CONTROL GP-PARKING BRAKE

S/N: CED1-1329; FDG1-890
TWO SPEED
PART OF 191-9793, 215-3950 DRIVE CONTROL AR-HYDROSTATIC
AN ATTACHMENT

SMCS-4284 **i01799139**

NOTE	REF NO	GRAPHIC REF	PART NUMBER	QTY	PART NAME 1 2 3 4 5 6 (PRODUCT LEVEL)	SEE PAGE
I	1	1	**100-7530**	2	HOSE AS	
I	2	1	**141-7763**	1	HOSE AS	
	3	1	**193-8324**	1	TUBE AS	
	4	1	*197-9462*	1	FITTING GP	
		1	**3J-1907**	1	SEAL-O-RING	
		1	**6V-8397**	1	SEAL-O-RING	
		1	**6V-8398**	2	SEAL-O-RING	
		1	**197-9460**	1	FITTING-CROSS	
Y	5	1	**210-8640**	1	VALVE & MTG GP-SOLENOID	260
	6	1	*148-8326*	2	CONNECTOR GP	
					(EACH INCLUDES)	
		1	**3J-7354**	1	SEAL-O-RING	
		1	**6V-8397**	1	SEAL-O-RING	
		1	**6V-9872**	1	CONNECTOR	
	7	1	**148-8336**	2	CONNECTOR AS	
					(EACH INCLUDES)	
		1	**3J-1907**	1	SEAL-O-RING	
		1	**6V-8397**	1	SEAL-O-RING	
		1	**6V-8636**	1	CONNECTOR	
	8	1	*148-8378*	1	ELBOW GP (90 DEG)	
		1	**3J-1907**	1	SEAL-O-RING	
		1	**6V-8397**	1	SEAL-O-RING	
		1	**6V-8724**	1	ELBOW	
	9	1	*148-8433*	2	TEE GP	
					(EACH INCLUDES)	
		1	**6V-8397**	2	SEAL-O-RING	
		1	**6V-9836**	1	TEE-SWIVEL	
	10	1	*148-8434*	1	TEE AS-ORFS	
		1	**6V-8397**	2	SEAL-O-RING	
		1	**6V-9843**	1	TEE-SWIVEL	
	11	1	*164-7908*	1	ELBOW GP	
		1	**3J-7354**	1	SEAL-O-RING	
		1	**6V-8397**	1	SEAL-O-RING	
		1	**8T-7546**	1	ELBOW	
I	12	1	**207-9746**	1	HOSE AS	
M	13	1	**5C-7261**	2	NUT (M8X1.25 THD)	
M	14	1	**7X-2539**	2	BOLT (M8X1.25X110MM)	
	15	1	**8T-4224**	4	WASHER-HARD (8.8X16X2MM THK)	

I-SEE HOSE FABRICATION GUIDE
M-METRIC PART
Y-SEPARATE ILLUSTRATION

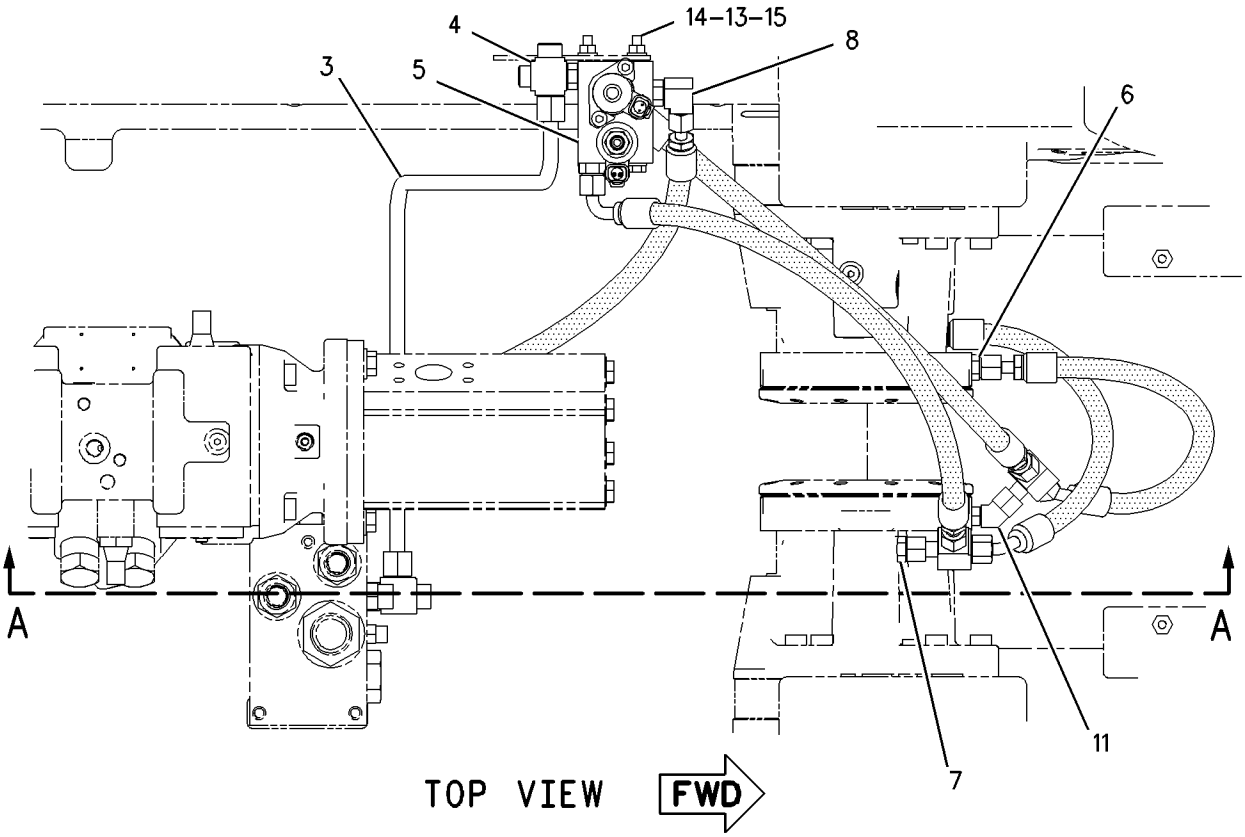

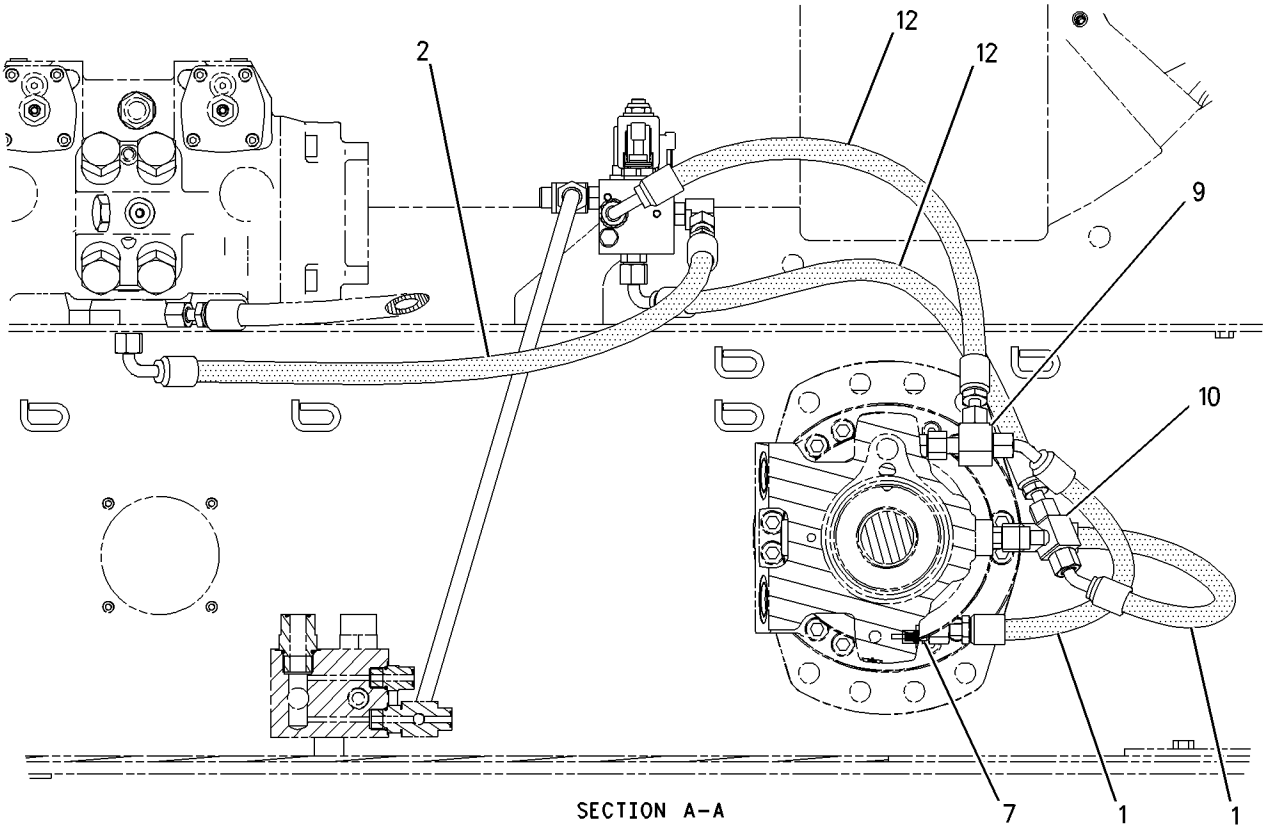

GRAPHIC #1

g00921320

190-7459 CONTROL GP-PARKING BRAKE

S/N: CED1240-UP; FDG891-UP
TWO SPEED
PART OF 191-9793, 215-3950 DRIVE CONTROL AR-HYDROSTATIC
AN ATTACHMENT

SMCS-4284 **i01799147**

NOTE	REF NO	GRAPHIC REF	PART NUMBER	QTY	PART NAME 1 2 3 4 5 6 (PRODUCT LEVEL)	SEE PAGE
I	1	1	**100-7530**	2	HOSE AS	
I	2	1	**141-7763**	1	HOSE AS	
	3	1	**193-8324**	1	TUBE AS	
	4	1	*197-9462*	1	FITTING GP	
		1	**3J-1907**	1	SEAL-O-RING	
		1	**6V-8397**	1	SEAL-O-RING	
		1	**6V-8398**	2	SEAL-O-RING	
		1	**197-9460**	1	FITTING-CROSS	
Y	5	1	**210-8640**	1	VALVE & MTG GP-SOLENOID	260
	6	1	*148-8326*	1	CONNECTOR GP	
		1	**3J-7354**	1	SEAL-O-RING	
		1	**6V-8397**	1	SEAL-O-RING	
		1	**6V-9872**	1	CONNECTOR	
	7	1	*148-8336*	2	CONNECTOR AS	
					(EACH INCLUDES)	
		1	**3J-1907**	1	SEAL-O-RING	
		1	**6V-8397**	1	SEAL-O-RING	
		1	**6V-8636**	1	CONNECTOR	
	8	1	*148-8378*	1	ELBOW GP	
		1	**3J-1907**	1	SEAL-O-RING	
		1	**6V-8397**	1	SEAL-O-RING	
		1	**6V-8724**	1	ELBOW	
	9	1	*148-8433*	1	TEE GP	
		1	**6V-8397**	2	SEAL-O-RING	
		1	**6V-9836**	1	TEE-SWIVEL	
	10	1	*173-7225*	1	TEE AS	
		1	**3J-7354**	1	SEAL-O-RING	
		1	**6V-8397**	2	SEAL-O-RING	
		1	**6V-9161**	1	TEE	
I	11	1	**207-9746**	2	HOSE AS	
M	12	1	**5C-7261**	2	NUT (M8X1.25 THD)	
M	13	1	**7X-2539**	2	BOLT (M8X1.25X110MM)	
	14	1	**8T-4224**	4	WASHER-HARD (8.8X16X2MM THK)	

I-SEE HOSE FABRICATION GUIDE
M-METRIC PART
Y-SEPARATE ILLUSTRATION

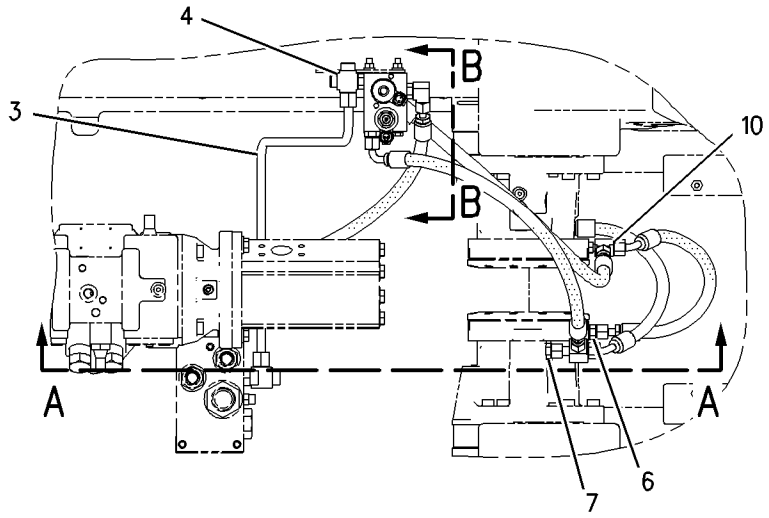

TOP VIEW FWD

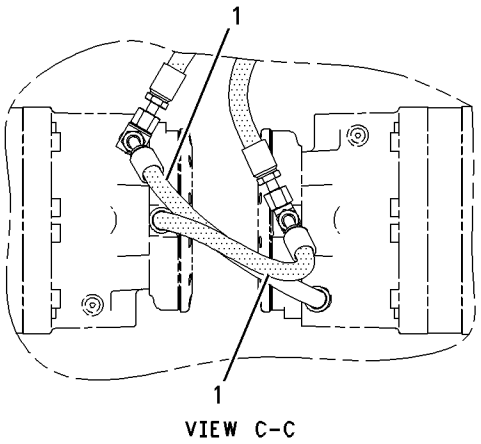

VIEW C-C

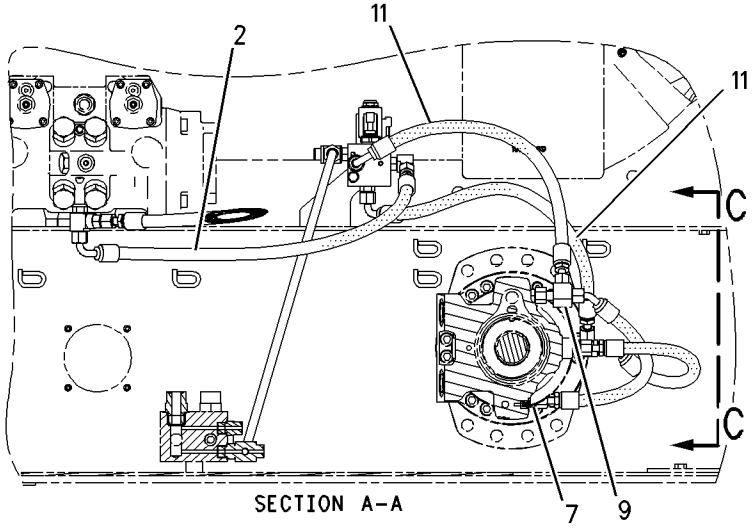

SECTION A-A

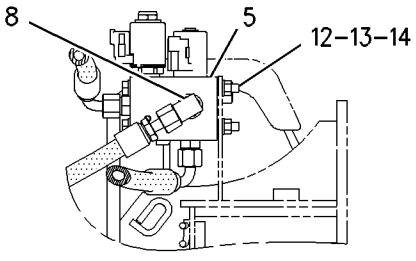

SECTION B-B

GRAPHIC #1 g00921327

190-7939 CONTROL GP-PARKING BRAKE

S/N: 4YZ4000-5525; 5SZ4000-6100
PART OF 212-6670, 212-6672 DRIVE CONTROL AR-HYDROSTATIC
AN ATTACHMENT

SMCS-4284 **i01799152**

NOTE	REF NO	GRAPHIC REF	PART NUMBER	QTY	PART NAME 1 2 3 4 5 6 (PRODUCT LEVEL)	SEE PAGE
I	1	1	**100-7530**	2	HOSE AS	
I	2	1	**141-7763**	1	HOSE AS	
	3	1	**193-8309**	1	BRACKET	
	4	1	**193-8324**	1	TUBE AS	
	5	1	*197-9462*	1	FITTING GP	
		1	**3J-1907**	1	SEAL-O-RING	
		1	**6V-8397**	1	SEAL-O-RING	
		1	**6V-8398**	2	SEAL-O-RING	
		1	**197-9460**	1	FITTING-CROSS	
Y	6	1	**210-8640**	1	VALVE & MTG GP-SOLENOID	260
	7	1	*148-8326*	2	CONNECTOR GP	
					(EACH INCLUDES)	
		1	**3J-7354**	1	SEAL-O-RING	
		1	**6V-8397**	1	SEAL-O-RING	
		1	**6V-9872**	1	CONNECTOR	
	8	1	*148-8336*	2	CONNECTOR AS	
					(EACH INCLUDES)	
		1	**3J-1907**	1	SEAL-O-RING	
		1	**6V-8397**	1	SEAL-O-RING	
		1	**6V-8636**	1	CONNECTOR	
	9	1	*148-8378*	1	ELBOW GP	
		1	**3J-1907**	1	SEAL-O-RING	
		1	**6V-8397**	1	SEAL-O-RING	
		1	**6V-8724**	1	ELBOW	
	10	1	*148-8433*	1	TEE GP	
		1	**6V-8397**	2	SEAL-O-RING	
		1	**6V-9836**	1	TEE-SWIVEL	
	11	1	*148-8434*	2	TEE AS-ORFS	
					(EACH INCLUDES)	
		1	**6V-8397**	2	SEAL-O-RING	
		1	**6V-9843**	1	TEE-SWIVEL	
	12	1	*164-7908*	1	ELBOW GP	
		1	**3J-7354**	1	SEAL-O-RING	
		1	**6V-8397**	1	SEAL-O-RING	
		1	**8T-7546**	1	ELBOW	
I	13	1	**207-9746**	2	HOSE AS	
M	14	1	**5C-7261**	2	NUT (M8X1.25 THD)	
M	15	1	**7X-2539**	2	BOLT (M8X1.25X110MM)	
M	16	1	**8T-4189**	2	BOLT (M8X1.25X20MM)	
	17	1	**8T-4224**	6	WASHER-HARD (8.8X16X2MM THK)	

I-SEE HOSE FABRICATION GUIDE
M-METRIC PART
Y-SEPARATE ILLUSTRATION

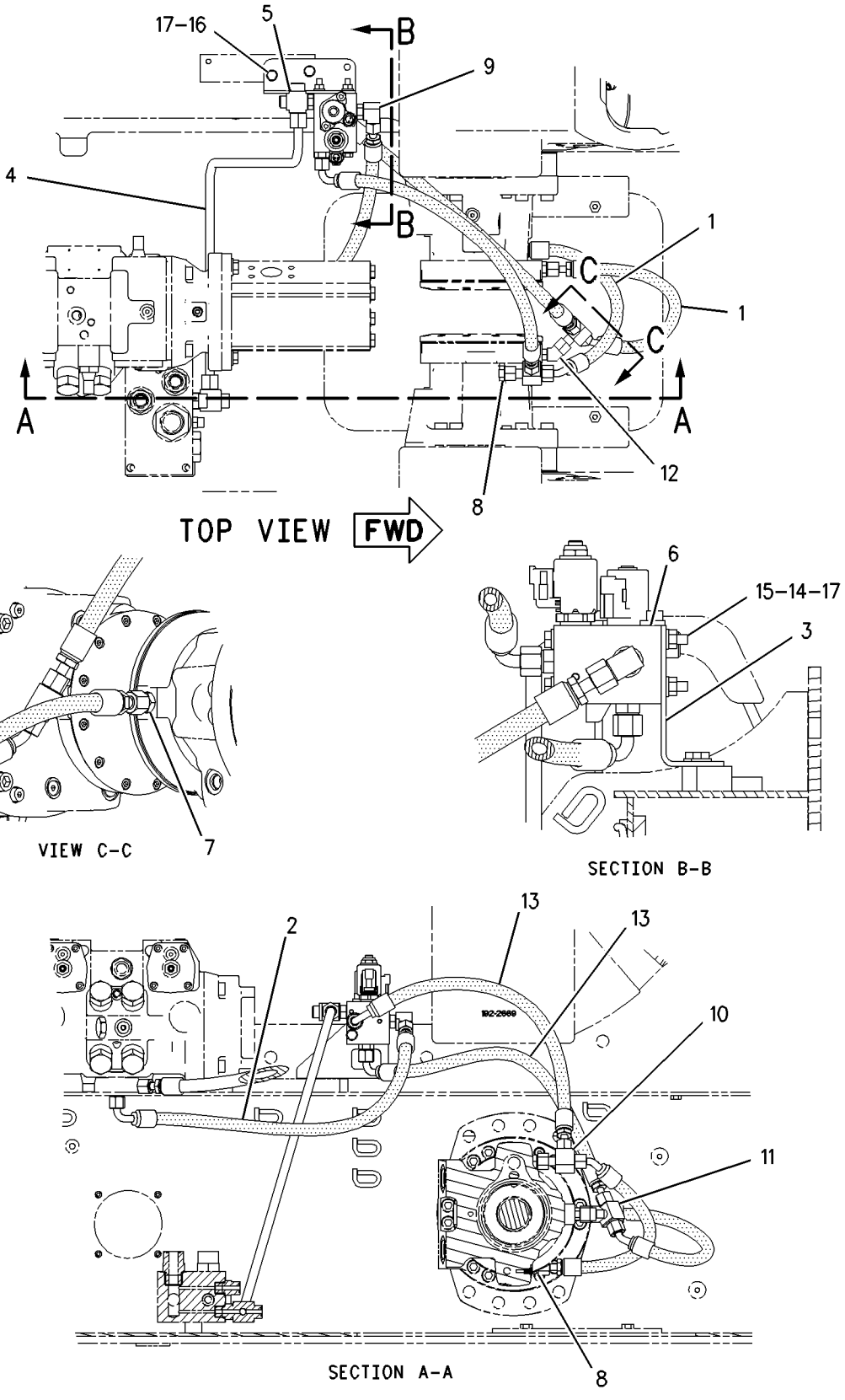

GRAPHIC #1

g00921332

190-7939 CONTROL GP-PARKING BRAKE

S/N: 4YZ5526-UP; 5SZ6101-UP
PART OF 212-6670, 212-6672 DRIVE CONTROL AR-HYDROSTATIC
AN ATTACHMENT

SMCS-4284 **i01799158**

NOTE	REF NO	GRAPHIC REF	PART NUMBER	QTY	PART NAME 1 2 3 4 5 6 (PRODUCT LEVEL)	SEE PAGE
I	1	1	**100-7530**	2	HOSE AS	
I	2	1	**141-7763**	1	HOSE AS	
	3	1	**193-8309**	1	BRACKET	
	4	1	**193-8324**	1	TUBE AS	
	5	1	*197-9462*	1	FITTING GP	
		1	**3J-1907**	1	SEAL-O-RING	
		1	**6V-8397**	1	SEAL-O-RING	
		1	**6V-8398**	2	SEAL-O-RING	
		1	**197-9460**	1	FITTING-CROSS	
Y	6	1	**210-8640**	1	VALVE & MTG GP-SOLENOID	260
	7	1	*148-8326*	1	CONNECTOR GP	
		1	**3J-7354**	1	SEAL-O-RING	
		1	**6V-8397**	1	SEAL-O-RING	
		1	**6V-9872**	1	CONNECTOR	
	8	1	*148-8336*	2	CONNECTOR AS	
					(EACH INCLUDES)	
		1	**3J-1907**	1	SEAL-O-RING	
		1	**6V-8397**	1	SEAL-O-RING	
		1	**6V-8636**	1	CONNECTOR	
	9	1	*148-8378*	1	ELBOW GP	
		1	**3J-1907**	1	SEAL-O-RING	
		1	**6V-8397**	1	SEAL-O-RING	
		1	**6V-8724**	1	ELBOW	
	10	1	*148-8433*	1	TEE GP	
		1	**6V-8397**	2	SEAL-O-RING	
		1	**6V-9836**	1	TEE-SWIVEL	
	11	1	*173-7225*	1	TEE AS	
		1	**3J-7354**	1	SEAL-O-RING	
		1	**6V-8397**	2	SEAL-O-RING	
		1	**6V-9161**	1	TEE	
I	12	1	**207-9746**	2	HOSE AS	
M	13	1	**5C-7261**	2	NUT (M8X1.25 THD)	
M	14	1	**7X-2539**	2	BOLT (M8X1.25X110MM)	
M	15	1	**8T-4189**	2	BOLT (M8X1.25X20MM)	
	16	1	**8T-4224**	6	WASHER-HARD (8.8X16X2MM THK)	

I-SEE HOSE FABRICATION GUIDE
M-METRIC PART
Y-SEPARATE ILLUSTRATION

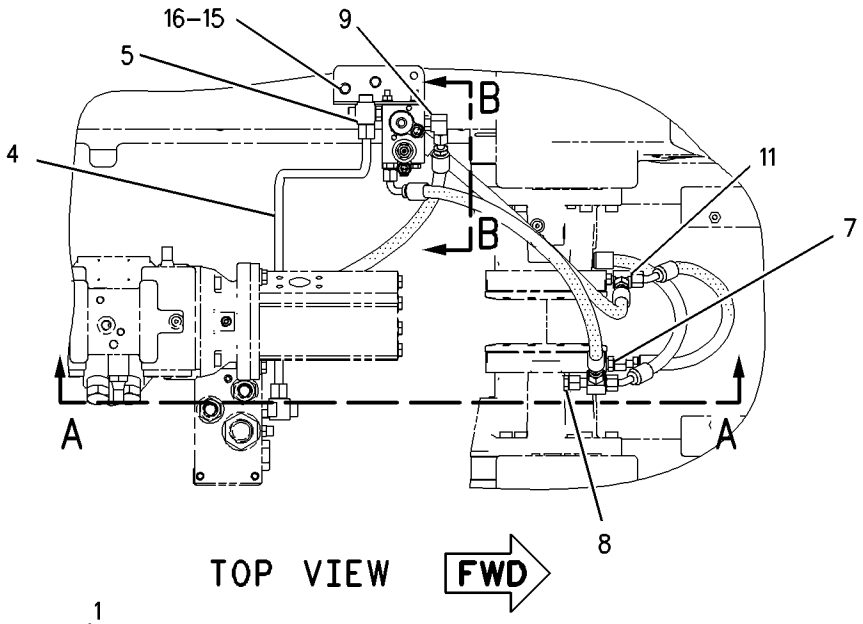

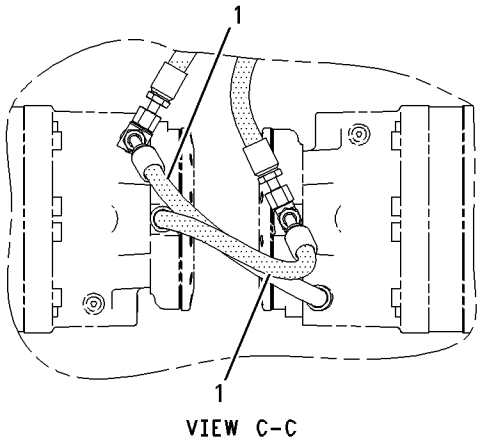

VIEW C-C

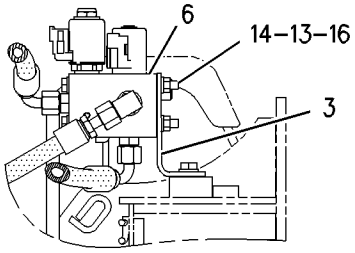

SECTION B-B

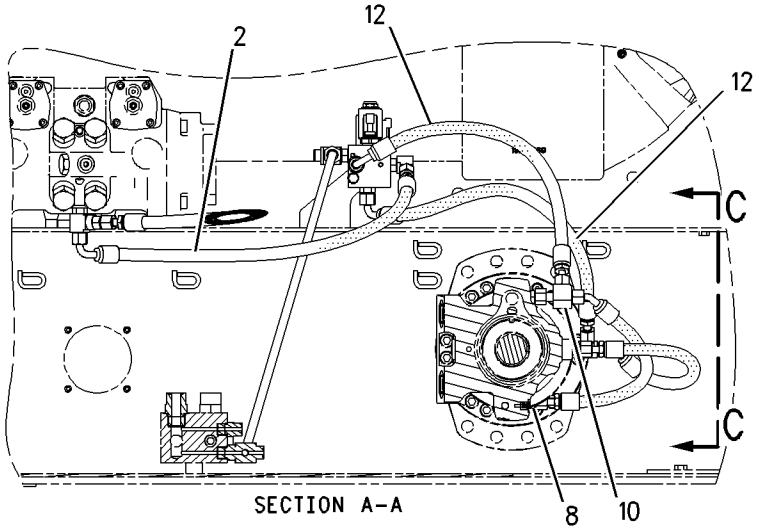

SECTION A-A

GRAPHIC #1 g00921338

190-8101 CONTROL GP-PARKING BRAKE

S/N: CED1-UP; FDG1-UP
PART OF 191-9790, 191-9791, 191-9792 DRIVE CONTROL AR-HYDROSTATIC
AN ATTACHMENT
TYPE 1

SMCS-4284 **i01799167**

NOTE	REF NO	GRAPHIC REF	PART NUMBER	QTY	PART NAME 1 2 3 4 5 6 (PRODUCT LEVEL)	SEE PAGE
I	1	1	**100-7530**	1	HOSE AS	
I	2	1	**141-7763**	1	HOSE AS	
I	3	1	**157-1478**	1	HOSE AS	
	4	1	**193-8324**	1	TUBE AS	
Y	5	1	**194-9376**	1	VALVE & MTG GP-SOLENOID	258
	6	1	**197-9462**	1	FITTING GP	
		1	**197-9460**	1	FITTING-CROSS	
		1	**6V-8398**	2	SEAL-O-RING	
		1	**3J-1907**	1	SEAL-O-RING	
		1	**6V-8397**	1	SEAL-O-RING	
	7	1	*148-8336*	1	CONNECTOR AS	
		1	**3J-1907**	1	SEAL-O-RING	
		1	**6V-8397**	1	SEAL-O-RING	
		1	**6V-8636**	1	CONNECTOR	
	8	1	*148-8435*	1	TEE GP	
		1	**3J-1907**	1	SEAL-O-RING	
		1	**6V-8397**	2	SEAL-O-RING	
		1	**6V-8781**	1	TEE-FACE SEAL	
M	9	1	**5C-7261**	2	NUT (M8X1.25 THD)	
M	10	1	**7X-0818**	2	BOLT (M8X1.25X45MM)	
	11	1	**8T-4224**	4	WASHER-HARD (8.8X16X2MM THK)	

I-SEE HOSE FABRICATION GUIDE
M-METRIC PART
Y-SEPARATE ILLUSTRATION

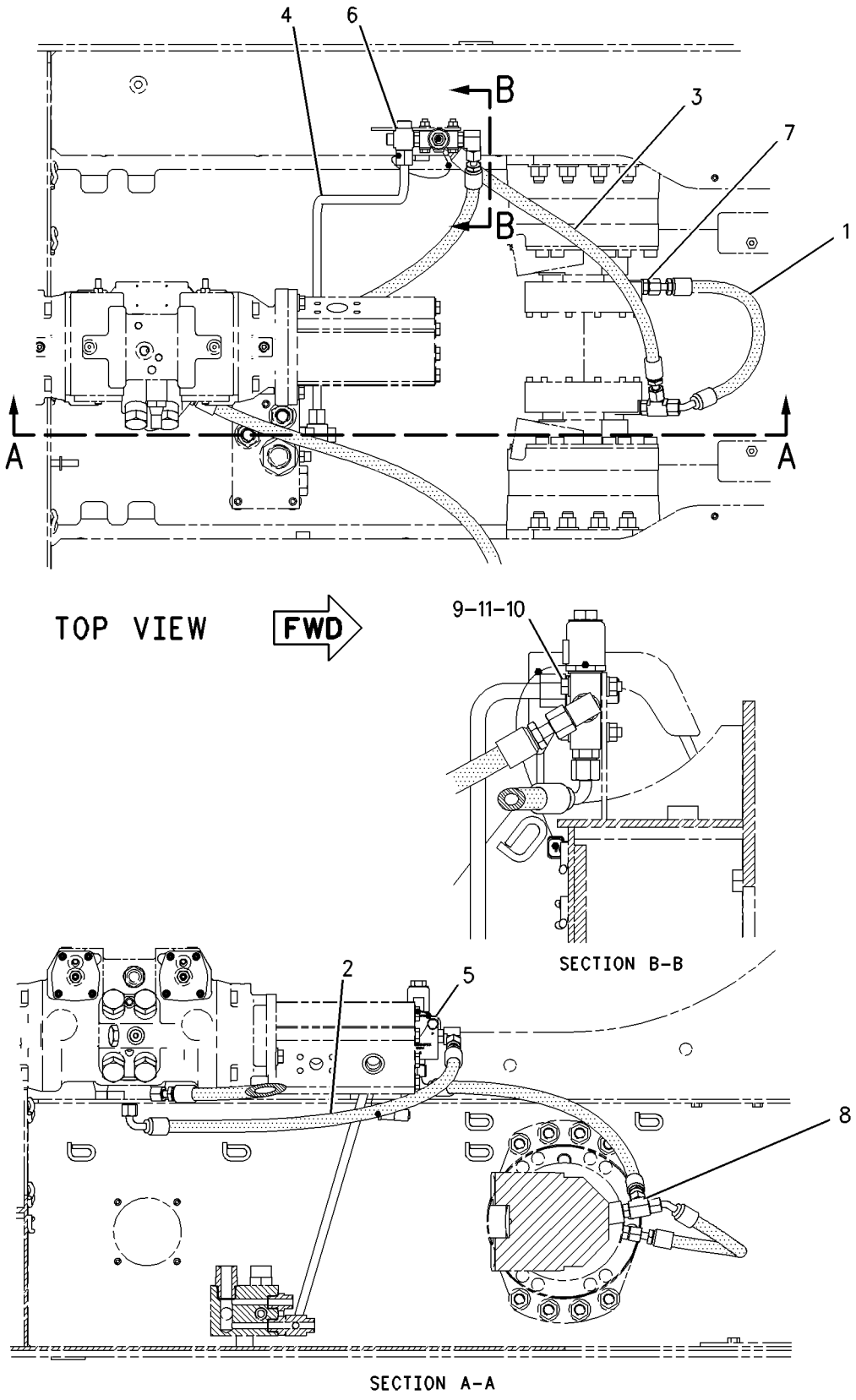

GRAPHIC #1

g00921342

190-8101 CONTROL GP-PARKING BRAKE

S/N: CED1-UP; FDG1-UP
PART OF 191-9790, 191-9791, 191-9792 DRIVE CONTROL AR-HYDROSTATIC
AN ATTACHMENT
TYPE 2

SMCS-4284 **i01799164**

NOTE	REF NO	GRAPHIC REF	PART NUMBER	QTY	PART NAME 1 2 3 4 5 6 (PRODUCT LEVEL)	SEE PAGE
I	1	1	**100-7530**	1	HOSE AS	
I	2	1	**141-7763**	1	HOSE AS	
	3	1	**193-8324**	1	TUBE AS	
	4	1	*197-9462*	1	FITTING GP	
		1	**197-9460**	1	FITTING-CROSS	
		1	**6V-8398**	2	SEAL-O-RING	
		1	**3J-1907**	1	SEAL-O-RING	
		1	**6V-8397**	1	SEAL-O-RING	
Y	5	1	*208-1237*	1	VALVE & MTG GP-CONTROL	453
	6	1	*148-8336*	1	CONNECTOR AS	
		1	**3J-1907**	1	SEAL-O-RING	
		1	**6V-8397**	1	SEAL-O-RING	
		1	**6V-8636**	1	CONNECTOR	
	7	1	*148-8378*	1	ELBOW GP	
		1	**3J-1907**	1	SEAL-O-RING	
		1	**6V-8397**	1	SEAL-O-RING	
		1	**6V-8724**	1	ELBOW	
	8	1	*148-8435*	1	TEE GP	
		1	**3J-1907**	1	SEAL-O-RING	
		1	**6V-8397**	2	SEAL-O-RING	
		1	**6V-8781**	1	TEE-FACE SEAL	
I	9	1	**207-9746**	1	HOSE AS	
M	10	1	**5C-7261**	2	NUT (M8X1.25 THD)	
M	11	1	**8T-3647**	2	BOLT (M8X1.25X80MM)	
	12	1	**8T-4224**	2	WASHER-HARD (8.8X16X2MM THK)	

I-SEE HOSE FABRICATION GUIDE
M-METRIC PART
Y-SEPARATE ILLUSTRATION

190-8101 **CONTROL GP-PARKING BRAKE** ***(contd.)*** **i01799164**

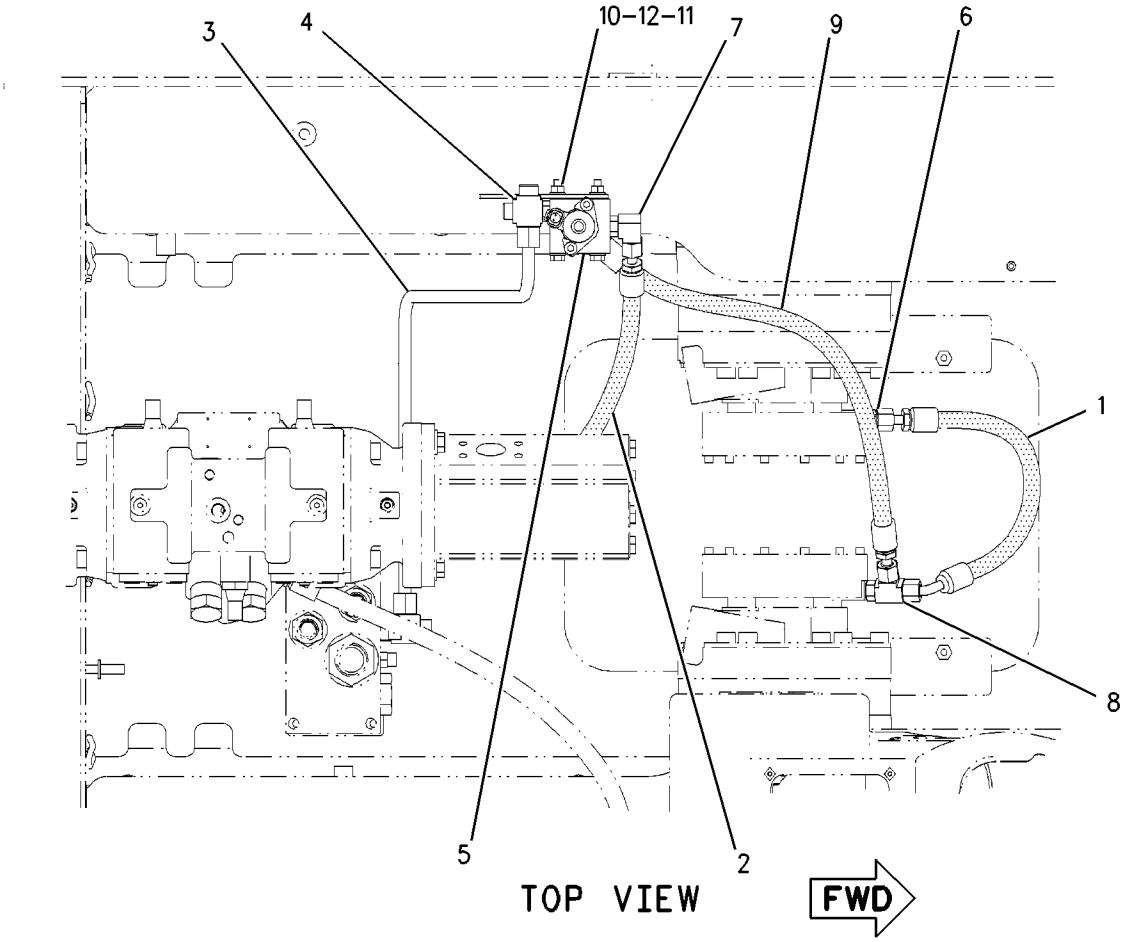

GRAPHIC #1 g00921341

193-8325 CONTROL GP-PARKING BRAKE

S/N: 4YZ4000-UP; 5SZ4000-UP
PART OF 195-6760 POWER TRAIN AR
TYPE 1

SMCS-4284 **i01799170**

NOTE	REF NO	GRAPHIC REF	PART NUMBER	QTY	PART NAME 1 2 3 4 5 6 (PRODUCT LEVEL)	SEE PAGE
I	1	1	**100-7530**	1	HOSE AS	
I	2	1	**141-7763**	1	HOSE AS	
I	3	1	**157-1478**	1	HOSE AS	
	4	1	**193-8309**	1	BRACKET	
	5	1	**193-8324**	1	TUBE AS	
Y	6	1	*194-9376*	1	VALVE & MTG GP-SOLENOID	258
	7	1	*197-9462*	1	FITTING GP	
		1	**3J-1907**	1	SEAL-O-RING	
		1	**6V-8397**	1	SEAL-O-RING	
		1	**6V-8398**	2	SEAL-O-RING	
		1	**197-9460**	1	FITTING-CROSS	
	8	1	*148-8336*	1	CONNECTOR AS	
		1	**3J-1907**	1	SEAL-O-RING	
		1	**6V-8397**	1	SEAL-O-RING	
		1	**6V-8636**	1	CONNECTOR	
	9	1	*148-8435*	1	TEE GP	
		1	**3J-1907**	1	SEAL-O-RING	
		1	**6V-8397**	2	SEAL-O-RING	
		1	**6V-8781**	1	TEE-FACE SEAL	
M	10	1	**5C-7261**	2	NUT (M8X1.25 THD)	
M	11	1	**7X-0818**	2	BOLT (M8X1.25X45MM)	
M	12	1	**8T-4189**	2	BOLT (M8X1.25X20MM)	
	13	1	**8T-4224**	6	WASHER-HARD (8.8X16X2MM THK)	

I-SEE HOSE FABRICATION GUIDE
M-METRIC PART
Y-SEPARATE ILLUSTRATION

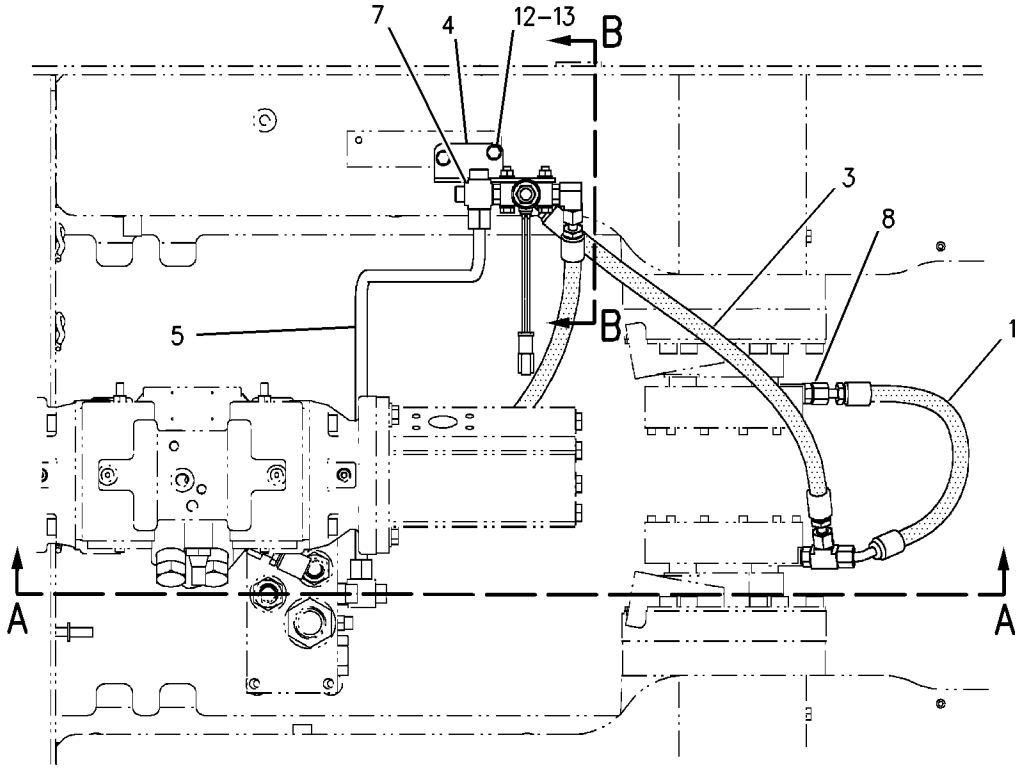

TOP VIEW

FWD

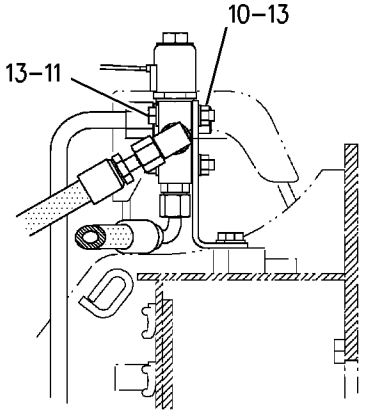

SECTION B-B

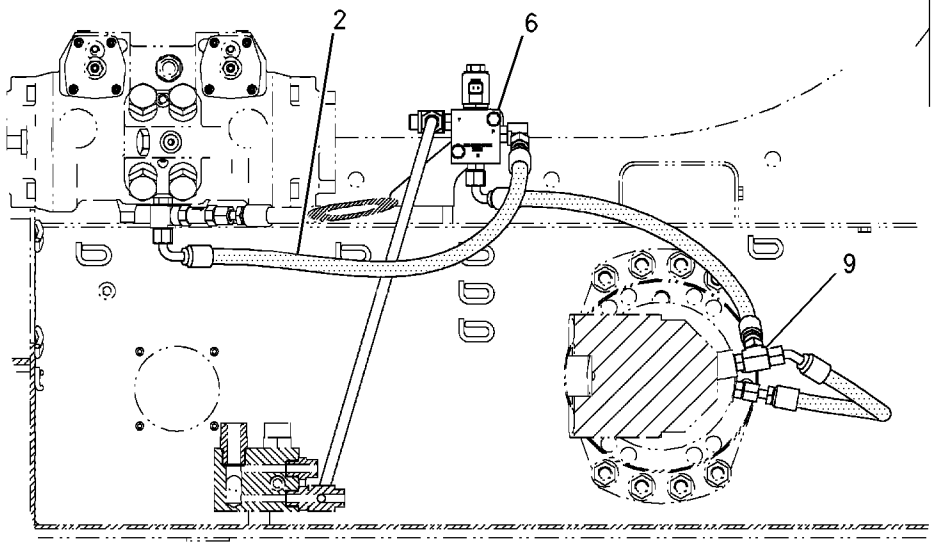

SECTION A-A

GRAPHIC #1

g00921346

193-8325 CONTROL GP-PARKING BRAKE

S/N: 4YZ4000-UP; 5SZ4000-UP
PART OF 191-9680, 191-9681, 191-9682 DRIVE CONTROL AR-HYDROSTATIC, 195-6760
POWER TRAIN AR
ALSO AN ATTACHMENT
TYPE 2

SMCS-4284 **i01799172**

NOTE	REF NO	GRAPHIC REF	PART NUMBER	QTY	PART NAME 1 2 3 4 5 6 (PRODUCT LEVEL)	SEE PAGE
I	1	1	**100-7530**	1	HOSE AS	
I	2	1	**141-7763**	1	HOSE AS	
	3	1	**193-8309**	1	BRACKET	
	4	1	**193-8324**	1	TUBE AS	
	5	1	*197-9462*	1	FITTING GP	
		1	**3J-1907**	1	SEAL-O-RING	
		1	**6V-8397**	1	SEAL-O-RING	
		1	**6V-8398**	2	SEAL-O-RING	
		1	**197-9460**	1	FITTING-CROSS	
I	6	1	**207-9746**	1	HOSE AS	
Y	7	1	*208-1237*	1	VALVE & MTG GP-CONTROL	453
	8	1	*148-8336*	1	CONNECTOR AS	
		1	**3J-1907**	1	SEAL-O-RING	
		1	**6V-8397**	1	SEAL-O-RING	
		1	**6V-8636**	1	CONNECTOR	
	9	1	*148-8378*	1	ELBOW GP	
		1	**3J-1907**	1	SEAL-O-RING	
		1	**6V-8397**	1	SEAL-O-RING	
		1	**6V-8724**	1	ELBOW	
	10	1	*148-8435*	1	TEE GP	
		1	**3J-1907**	1	SEAL-O-RING	
		1	**6V-8781**	1	TEE-FACE SEAL	
		1	**6V-8397**	2	SEAL-O-RING	
M	11	1	**5C-7261**	2	NUT (M8X1.25 THD)	
M	12	1	**8T-3647**	2	BOLT (M8X1.25X80MM)	
M	13	1	**8T-4189**	2	BOLT (M8X1.25X20MM)	
	14	1	**8T-4224**	6	WASHER-HARD (8.8X16X2MM THK)	

I-SEE HOSE FABRICATION GUIDE
M-METRIC PART
Y-SEPARATE ILLUSTRATION

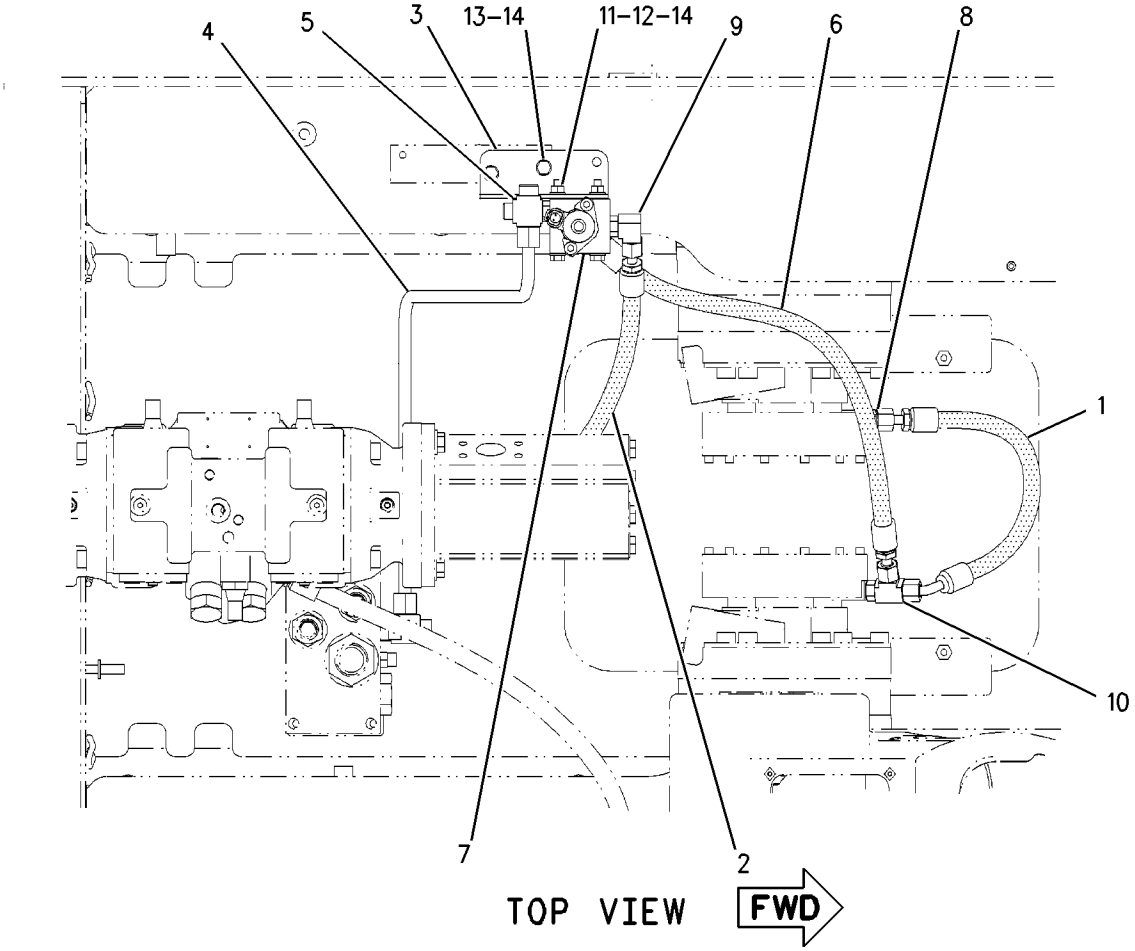

GRAPHIC #1 g00921347

191-9680 DRIVE CONTROL AR-HYDROSTATIC

S/N: 4YZ4000-UP; 5SZ4000-UP
ONE SPEED, WITHOUT HORN OR C1C2 SWITCH
AN ATTACHMENT

SMCS-4284, 4351, 5059, 5705 **i01657795**

NOTE	PART NUMBER	QTY	PART NAME 1 2 3 4 5 6 (PRODUCT LEVEL)	SEE PAGE
Y	*193-8325*	1	CONTROL GP-PARKING BRAKE	218
Y	*191-2907*	1	CONTROL GP-PILOT OPERATED HYD	326
Y	*191-9780*	1	MOTOR & MTG GP-PISTON	244
Y	**191-9617**	1	PUMP GP-PISTON	254

Y-SEPARATE ILLUSTRATION

<END>

191-9681 DRIVE CONTROL AR-HYDROSTATIC

S/N: 4YZ4000-UP; 5SZ4000-UP
ONE SPEED, WITH HORN, WITHOUT C1C2 SWITCH
AN ATTACHMENT

SMCS-4284, 4351, 5059, 5705 **i01657813**

NOTE	PART NUMBER	QTY	PART NAME 1 2 3 4 5 6 (PRODUCT LEVEL)	SEE PAGE
Y	*193-8325*	1	CONTROL GP-PARKING BRAKE	218
Y	*191-2908*	1	CONTROL GP-PILOT OPERATED HYD	328
Y	*191-9780*	1	MOTOR & MTG GP-PISTON	244
Y	**191-9617**	1	PUMP GP-PISTON	254

Y-SEPARATE ILLUSTRATION

<END>

191-9682 DRIVE CONTROL AR-HYDROSTATIC

S/N: 4YZ4000-UP; 5SZ4000-UP
ONE SPEED, WITH HORN AND C1C2 SWITCH
AN ATTACHMENT

SMCS-4284, 4351, 5059, 5705 **i01657824**

NOTE	PART NUMBER	QTY	PART NAME 1 2 3 4 5 6 (PRODUCT LEVEL)	SEE PAGE
Y	*193-8325*	1	CONTROL GP-PARKING BRAKE	218
Y	*191-2909*	1	CONTROL GP-PILOT OPERATED HYD	330
Y	*191-9780*	1	MOTOR & MTG GP-PISTON	244
Y	**191-9617**	1	PUMP GP-PISTON	254

Y-SEPARATE ILLUSTRATION

<END>

191-9790 DRIVE CONTROL AR-HYDROSTATIC

S/N: CED1-597; FDG1-540
ONE SPEED, WITHOUT HORN OR C1C2 SWITCH
AN ATTACHMENT

SMCS-4284, 4351, 5059, 5705 **i01474581**

NOTE	PART NUMBER	QTY	PART NAME 1 2 3 4 5 6 (PRODUCT LEVEL)	SEE PAGE
Y	*190-8101*	1	CONTROL GP-PARKING BRAKE	214
Y	*191-9794*	1	CONTROL GP-PILOT OPERATED HYD	335
Y	*191-9780*	1	MOTOR & MTG GP-PISTON	244

Y-SEPARATE ILLUSTRATION

<END>

191-9791 DRIVE CONTROL AR-HYDROSTATIC

S/N: CED1-UP; FDG1-UP
ONE SPEED, WITH HORN, WITHOUT C1C2 SWITCH
AN ATTACHMENT

SMCS-4284, 4351, 5059, 5705 **i01698482**

NOTE	PART NUMBER	QTY	PART NAME 1 2 3 4 5 6 (PRODUCT LEVEL)	SEE PAGE
Y	*190-8101*	1	CONTROL GP-PARKING BRAKE	214
Y	*206-3795*	1	CONTROL GP-PILOT OPERATED HYD	339
Y	*191-9780*	1	MOTOR & MTG GP-PISTON	244
YR	**191-9617**	1	PUMP GP-PISTON	254

R-REMFG PART MAY BE AVAILABLE
Y-SEPARATE ILLUSTRATION

<END>

191-9792 DRIVE CONTROL AR-HYDROSTATIC

S/N: CED1-UP; FDG1-UP
ONE SPEED, WITH HORN AND C1C2 SWITCH
AN ATTACHMENT

SMCS-4284, 4351, 5059, 5705 **i01698513**

NOTE	PART NUMBER	QTY	PART NAME 1 2 3 4 5 6 (PRODUCT LEVEL)	SEE PAGE
Y	*190-8101*	1	CONTROL GP-PARKING BRAKE	214
Y	*191-9746*	1	CONTROL GP-PILOT OPERATED HYD	333
Y	*191-9780*	1	MOTOR & MTG GP-PISTON	244
YR	**191-9617**	1	PUMP GP-PISTON	254

R-REMFG PART MAY BE AVAILABLE
Y-SEPARATE ILLUSTRATION

<END>

191-9793 DRIVE CONTROL AR-HYDROSTATIC

S/N: CED1-UP; FDG1-UP
HORN, WORK TOOL ELECTRICAL HARNESS, TWO SPEED
CANNOT BE USED WITH 191-9790—PAGE 223, 191-9791—PAGE 223, 191-9792—PAGE 223
AN ATTACHMENT

SMCS-4284, 4351, 5059, 5705 **i01722327**

NOTE	PART NUMBER	QTY	PART NAME 1 2 3 4 5 6 (PRODUCT LEVEL)	SEE PAGE
Y	*190-7459*	1	CONTROL GP-PARKING BRAKE	206
Y	*191-9797*	1	CONTROL GP-PILOT OPERATED HYD	337
	215-3972	1	FILM GP	
Y	*190-7457*	1	MOTOR & MTG GP-PISTON	243
Y	**191-9700**	1	PUMP GP-PISTON	256
Y-SEPARATE ILLUSTRATION				

<END>

212-6670 DRIVE CONTROL AR-HYDROSTATIC

S/N: 4YZ4816-UP; 5SZ4000-UP
WITH HORN, CI/C2, TWO SPEED DRIVE
CANNOT BE USED WITH 191-9680—PAGE 222, 191-9681—PAGE 222, 191-9682—PAGE 222
AN ATTACHMENT

SMCS-4284, 4351, 5059, 5705 **i01697322**

NOTE	PART NUMBER	QTY	PART NAME 1 2 3 4 5 6 (PRODUCT LEVEL)	SEE PAGE
Y	*190-7939*	1	CONTROL GP-PARKING BRAKE	210
Y	*191-9683*	1	CONTROL GP-PILOT OPERATED HYD	332
	215-3972	1	FILM GP	
	215-3971	2	FILM	
Y	*190-7457*	1	MOTOR & MTG GP-PISTON	243
Y	**191-9700**	1	PUMP GP-PISTON	256
Y-SEPARATE ILLUSTRATION				

<END>

212-6672 DRIVE CONTROL AR-HYDROSTATIC

S/N: 4YZ4734-UP; 5SZ5118-UP
WITH HORN, WITHOUT C1/C2, WITH TWO SPEED DRIVE
CANNOT BE USED WITH 191-9680—PAGE 222, 191-9681—PAGE 222, 191-9682—PAGE 222, 212-6670—PAGE 224
AN ATTACHMENT

SMCS-4284, 4351, 5059, 5705 **i01697340**

NOTE	PART NUMBER	QTY	PART NAME 1 2 3 4 5 6 (PRODUCT LEVEL)	SEE PAGE
Y	*190-7939*	1	CONTROL GP-PARKING BRAKE	210
Y	*215-3944*	1	CONTROL GP-PILOT OPERATED HYD	342
	215-3972	1	FILM GP	
	215-3971	2	FILM	
Y	*190-7457*	1	MOTOR & MTG GP-PISTON	243
Y	**191-9700**	1	PUMP GP-PISTON	256
Y-SEPARATE ILLUSTRATION				

<END>

215-3950 DRIVE CONTROL AR-HYDROSTATIC

S/N: CED1-UP; FDG1-UP
HORN, TWO SPEED
CANNOT BE USED WITH 191-9790—PAGE 223, 191-9791—PAGE 223, 191-9792—PAGE 223, 191-9793—PAGE 224
AN ATTACHMENT

SMCS-4284, 4351, 5059, 5705 **i01722882**

NOTE	PART NUMBER	QTY	PART NAME 1 2 3 4 5 6 (PRODUCT LEVEL)	SEE PAGE
Y	*190-7459*	1	CONTROL GP-PARKING BRAKE	206
Y	*215-3946*	1	CONTROL GP-PILOT OPERATED HYD	343
	215-3972	1	FILM GP	
	215-3971	2	FILM (TWO SPEED)	
Y	*190-7457*	1	MOTOR & MTG GP-PISTON	243
Y	**191-9700**	1	PUMP GP-PISTON	256

Y-SEPARATE ILLUSTRATION

<END>

216-6190 DRIVE CONTROL AR-HYDROSTATIC

S/N: CED1-UP; FDG1-UP
CAN NOT BE USED WITH ANY OTHER DRIVE CONTROL AR - REQUIRES REAR AUXILIARY
AN ATTACHMENT

SMCS-4284, 4351, 5059, 5705 **i01718933**

NOTE	PART NUMBER	QTY	PART NAME 1 2 3 4 5 6 (PRODUCT LEVEL)	SEE PAGE
Y	*190-8101*	1	CONTROL GP-PARKING BRAKE	214
Y	*216-6176*	1	CONTROL GP-PILOT OPERATED HYD	344
Y	*191-9780*	1	MOTOR & MTG GP-PISTON	244
YR	**191-9617**	1	PUMP GP-PISTON	254

R-REMFG PART MAY BE AVAILABLE
Y-SEPARATE ILLUSTRATION

<END>

POWER TRAIN

142-9060 DRIVE GP-TANDEM

S/N: 4YZ4000-UP; 5SZ4000-UP
PART OF 195-6760 POWER TRAIN AR

SMCS-4062 **i01793518**

NOTE	REF NO	GRAPHIC REF	PART NUMBER	QTY	PART NAME 1 2 3 4 5 6 (PRODUCT LEVEL)	SEE PAGE
	1	1	**5P-3092**	4	SEAL-O-RING	
	2	1	**7X-0610**	4	WASHER-HARD (20X75X6MM THK)	
	3	1	**142-8725**	32	STUD (9/16-18-2A THDX50.8MM)	
	4	1	**142-9032**	4	SPROCKET (13 TEETH)	
	5	1	**142-9033**	2	RETAINER	
	6	1	**142-9034**	4	SPROCKET (27 TEETH)	
	7	1	**142-9036**	32	NUT (9/16 X 18 THD)	
Y	8	1	**142-9058**	4	AXLE GP	204
	9	1	**152-1157**	32	WASHER (8MM THK)	
	10	1	**165-4892**	2	SPACER	
	11	1	**168-7571**	4	CHAIN AS	
M	12	1	**100-3866**	4	BOLT-SELF LOCKING (M16X2X40MM)	
M	13	1	**8C-8992**	2	BOLT-LOCKING (M12X1.75X30MM)	
	14	1	**8T-4122**	4	WASHER-HARD (17X32X3.5MM THK)	

M-METRIC PART
Y-SEPARATE ILLUSTRATION

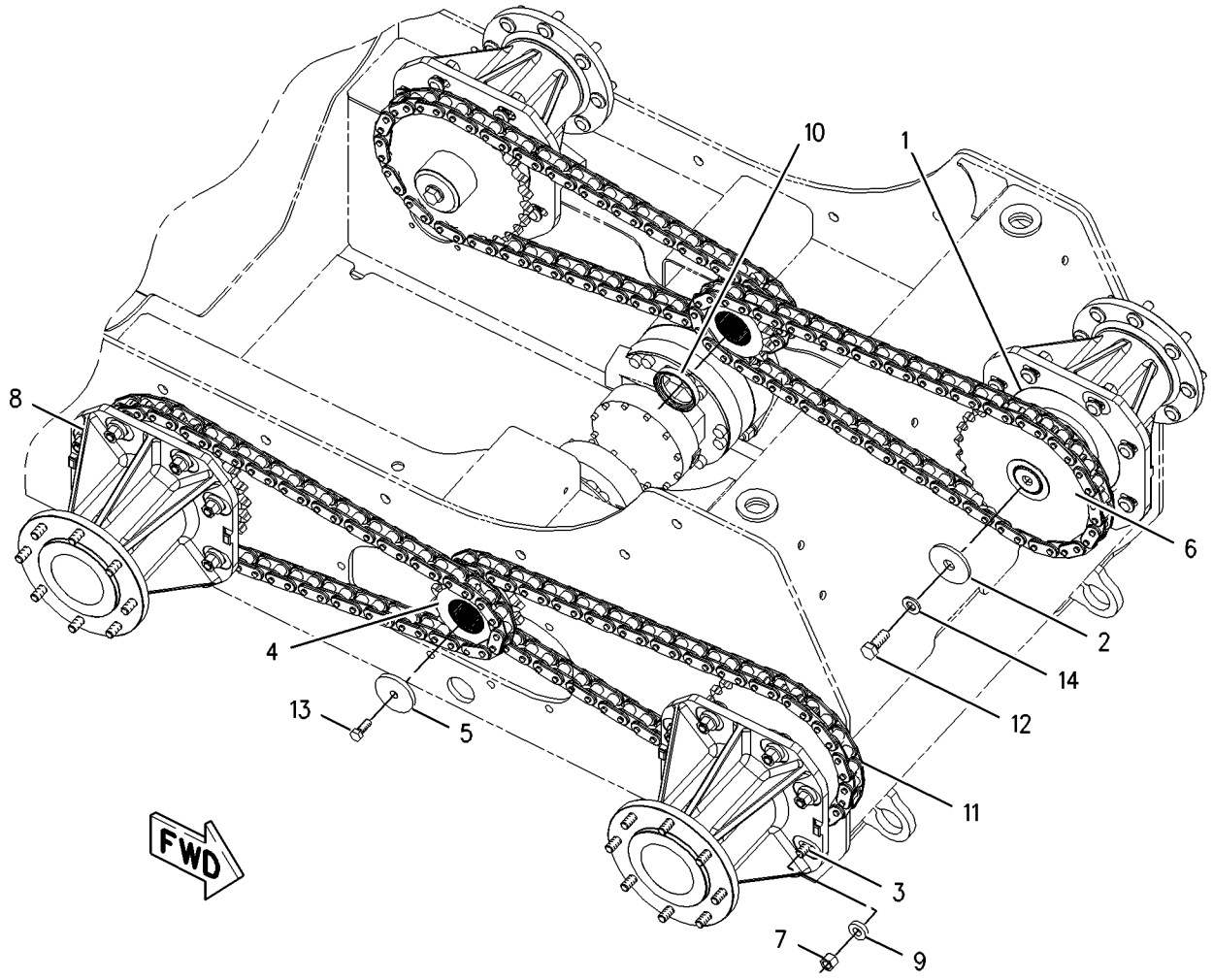

GRAPHIC #1 g00917542

POWER TRAIN

191-9760 DRIVE GP-TANDEM

S/N: CED1-UP; FDG1-UP

PART OF 190-7951 POWER TRAIN AR

SMCS-4062 **i01793558**

NOTE	REF NO	GRAPHIC REF	PART NUMBER	QTY	PART NAME 1 2 3 4 5 6 (PRODUCT LEVEL)	SEE PAGE
	1	1	**5P-3092**	4	SEAL-O-RING	
	2	1	**7X-0610**	4	WASHER-HARD (20X75X6MM THK)	
	3	1	**142-8725**	32	STUD (9/16-18-2A THDX50.8MM)	
	4	1	**142-9032**	4	SPROCKET (13 TEETH)	
	5	1	**142-9033**	2	RETAINER	
	6	1	**142-9036**	32	NUT (9/16 X 18 THD)	
Y	7	1	**142-9058**	4	AXLE GP	204
	8	1	**152-1157**	32	WASHER (8MM THK)	
	9	1	**165-4892**	2	SPACER	
	10	1	**191-9761**	4	SPROCKET (25 TEETH)	
	11	1	**191-9762**	4	CHAIN AS	
M	12	1	**100-3866**	4	BOLT-SELF LOCKING (M16X2X40MM)	
M	13	1	**8C-8992**	2	BOLT-LOCKING (M12X1.75X30MM)	
	14	1	**8T-4122**	4	WASHER-HARD (17X32X3.5MM THK)	

M-METRIC PART
Y-SEPARATE ILLUSTRATION

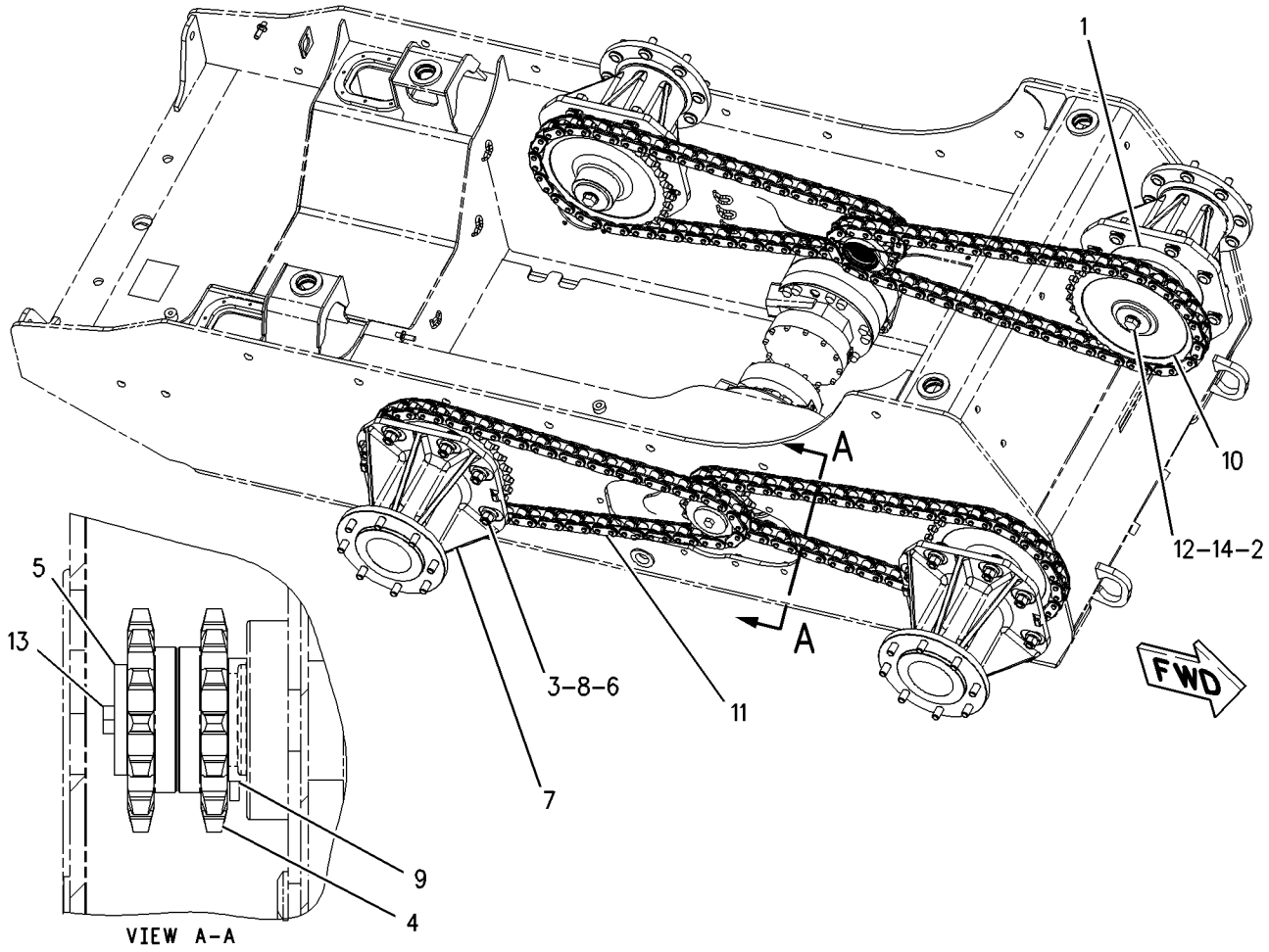

GRAPHIC #1 g00917589

142-8980 FILTER & MTG GP-HYDRAULIC

S/N: CED1-UP; FDG1-UP; 4YZ4000-UP; 5SZ4000-UP

PART OF 190-7952, 195-6705, 195-6762, 195-6764 HYDRAULIC AR

SMCS-5068 **i01787018**

NOTE	REF NO	GRAPHIC REF	PART NUMBER	QTY	PART NAME 1 2 3 4 5 6 (PRODUCT LEVEL)	SEE PAGE
Y	1	1	**191-9784**	1	FILTER GP-OIL	229
	2	1	**8T-4121**	4	WASHER-HARD (11X21X2.5MM THK)	
M	3	1	**8T-4137**	4	BOLT (M10X1.5X20MM)	

M-METRIC PART
Y-SEPARATE ILLUSTRATION

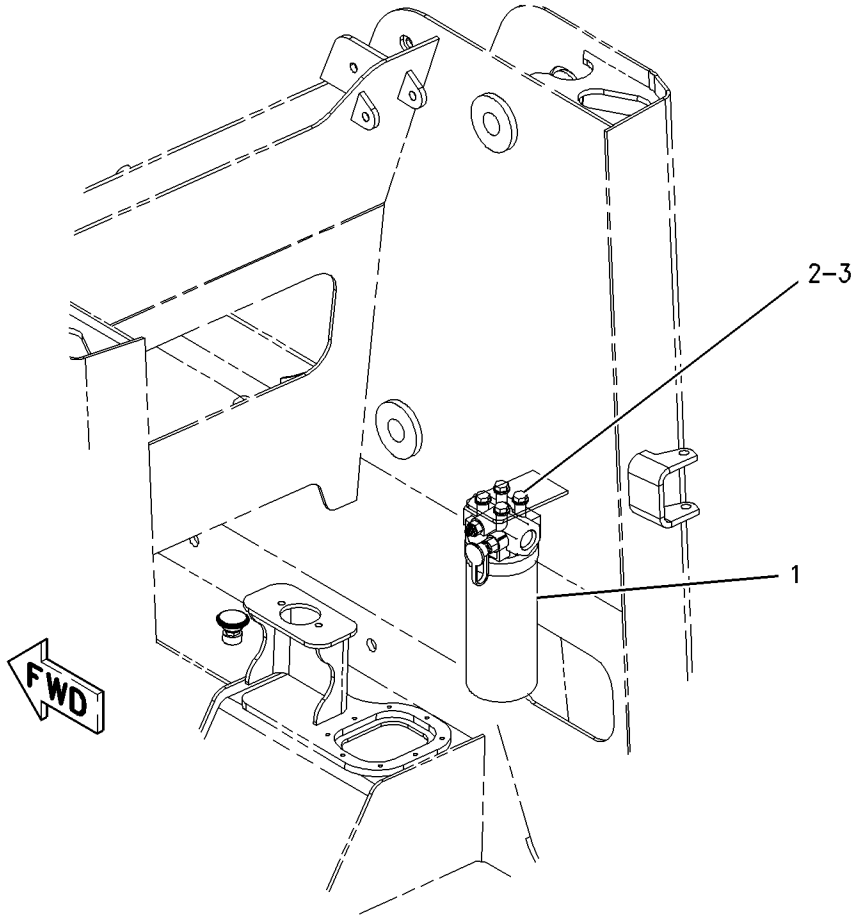

GRAPHIC #1 g00914308

191-9784 FILTER GP-OIL

S/N: CED1-UP; FDG1-UP; 4YZ4000-UP; 5SZ4000-UP
PART OF 142-8980 FILTER & MTG GP-HYDRAULIC

SMCS-5068 **i01762946**

NOTE	REF NO	GRAPHIC REF	PART NUMBER	QTY	PART NAME 1 2 3 4 5 6 (PRODUCT LEVEL)	SEE PAGE
	1	1	**1G-8878**	1	FILTER AS-OIL	
	2	1	**7X-8549**	1	SWITCH AS-PRESSURE	
	3	1	**8C-3451**	1	CAP-DUST	
	4	1	**183-7264**	1	VALVE AS-FLUID SAMPLING	
	5	1	**3J-1907**	1	SEAL-O-RING	

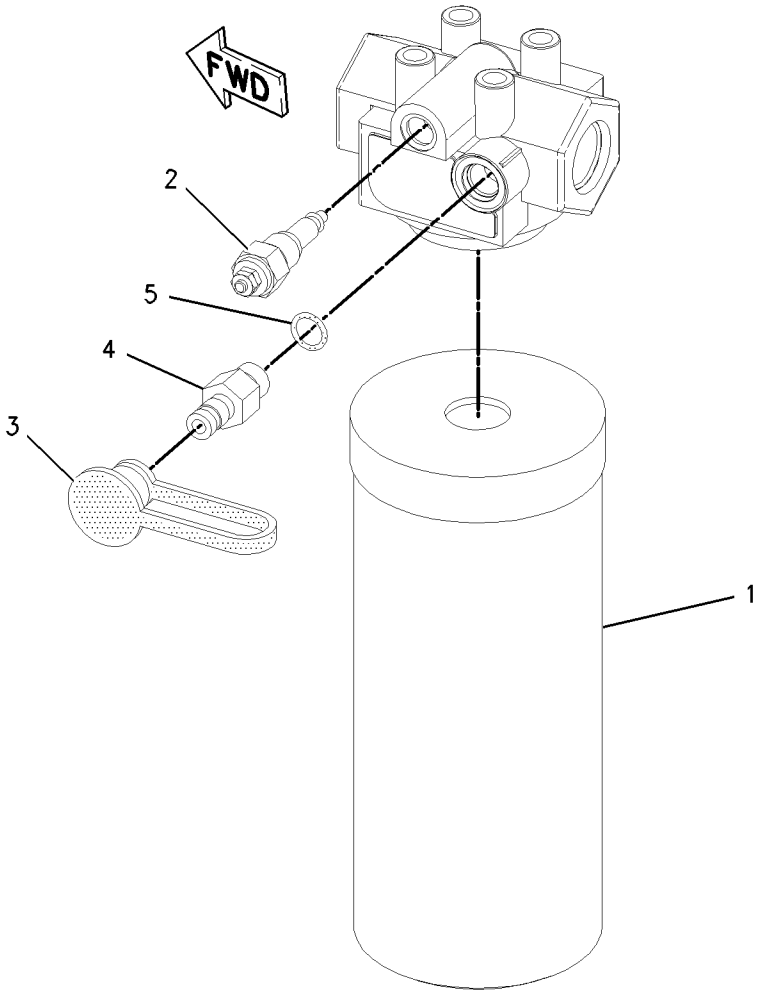

GRAPHIC #1 g00901914

190-8111 LINES GP-HYDRAULIC FILTER

S/N: CED1-UP; FDG1-UP

PART OF 190-7952, 195-6705 HYDRAULIC AR

SMCS-5068 **i01496829**

NOTE	REF NO	GRAPHIC REF	PART NUMBER	QTY	PART NAME 1 2 3 4 5 6 (PRODUCT LEVEL)	SEE PAGE
	1	1	**190-8102**	1	TUBE AS	
	2	1	**190-8117**	1	TUBE AS	
	3	1	**190-8119**	1	HOSE AS	
	4	1	**148-8340**	1	CONNECTOR GP	
		1	**3K-0360**	1	SEAL-O-RING	
		1	**6V-8398**	1	SEAL-O-RING	
		1	**6V-8639**	1	CONNECTOR	
	5	1	*148-8341*	2	CONNECTOR GP	
					(EACH INCLUDES)	
		1	**3D-2824**	1	SEAL-O-RING	
		1	**6V-8713**	1	CONNECTOR (1-14 THD X 1 1/16-12 THD)	
		1	**7J-9108**	1	SEAL-O-RING	
	6	1	**6V-8398**	1	SEAL-O-RING	
	7	1	**7J-9108**	1	SEAL-O-RING	
	8	1	**8T-4121**	1	WASHER-HARD (11X21X2.5MM THK)	
M	9	1	**8T-4137**	1	BOLT (M10X1.5X20MM)	
M	10	1	**8T-4189**	1	BOLT (M8X1.25X20MM)	
	11	1	**8T-4224**	2	WASHER-HARD (8.8X16X2MM THK)	
	12	1	**9R-1004**	2	CLIP (TAB)	
	13	1	**9R-1005**	2	CLIP (SLOT)	

M-METRIC PART

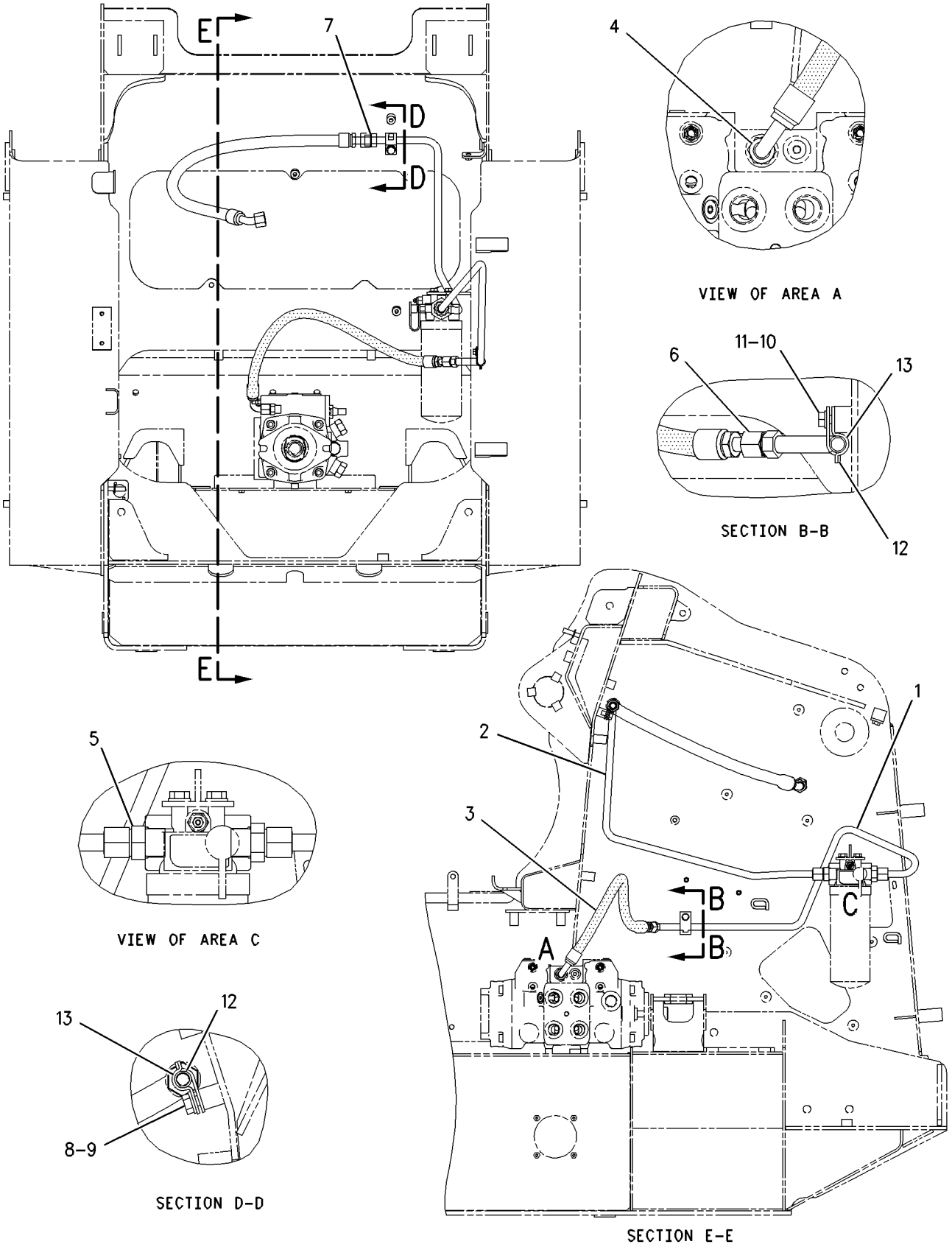

GRAPHIC #1

g00770691

193-8316 LINES GP-HYDRAULIC FILTER

S/N: 4YZ4000-UP; 5SZ4000-UP

PART OF 195-6762, 195-6764 HYDRAULIC AR

SMCS-5068 **i01434169**

NOTE	REF NO	GRAPHIC REF	PART NUMBER	QTY	PART NAME 1 2 3 4 5 6 (PRODUCT LEVEL)	SEE PAGE
	1	1	**193-8315**	1	TUBE AS	
	2	1	**193-8317**	1	HOSE AS	
	3	1	**193-8318**	1	TUBE AS	
	4	1	*148-8340*	1	CONNECTOR GP	
		1	**3K-0360**	1	SEAL-O-RING (16.36MM ID)	
		1	**6V-8398**	1	SEAL-O-RING (12.47MM ID)	
		1	**6V-8639**	1	CONNECTOR	
	5	1	*148-8341*	1	CONNECTOR GP	
		1	**3D-2824**	1	SEAL-O-RING (23.47MM ID)	
		1	**6V-8713**	1	CONNECTOR (1-14 THD X 1 1/16-12 THD)	
		1	**7J-9108**	1	SEAL-O-RING (15.72MM ID)	
	6	1	*148-8382*	1	ELBOW GP	
		1	**3D-2824**	1	SEAL-O-RING (23.47MM ID)	
		1	**7J-9108**	1	SEAL-O-RING (15.72MM ID)	
		1	**8T-0404**	1	ELBOW	
	7	1	**6V-8398**	1	SEAL-O-RING (12.47MM ID)	
	8	1	**7J-9108**	1	SEAL-O-RING (15.72MM ID)	
	9	1	**8T-4121**	2	WASHER-HARD (11X21X2.5MM THK)	
M	10	1	**8T-4137**	2	BOLT (M10X1.5X20MM)	
	11	1	**9R-1004**	2	CLIP (TAB)	
	12	1	**9R-1005**	2	CLIP (SLOT)	

M-METRIC PART

193-8316 **LINES GP-HYDRAULIC FILTER** *(contd.)* **i01434169**

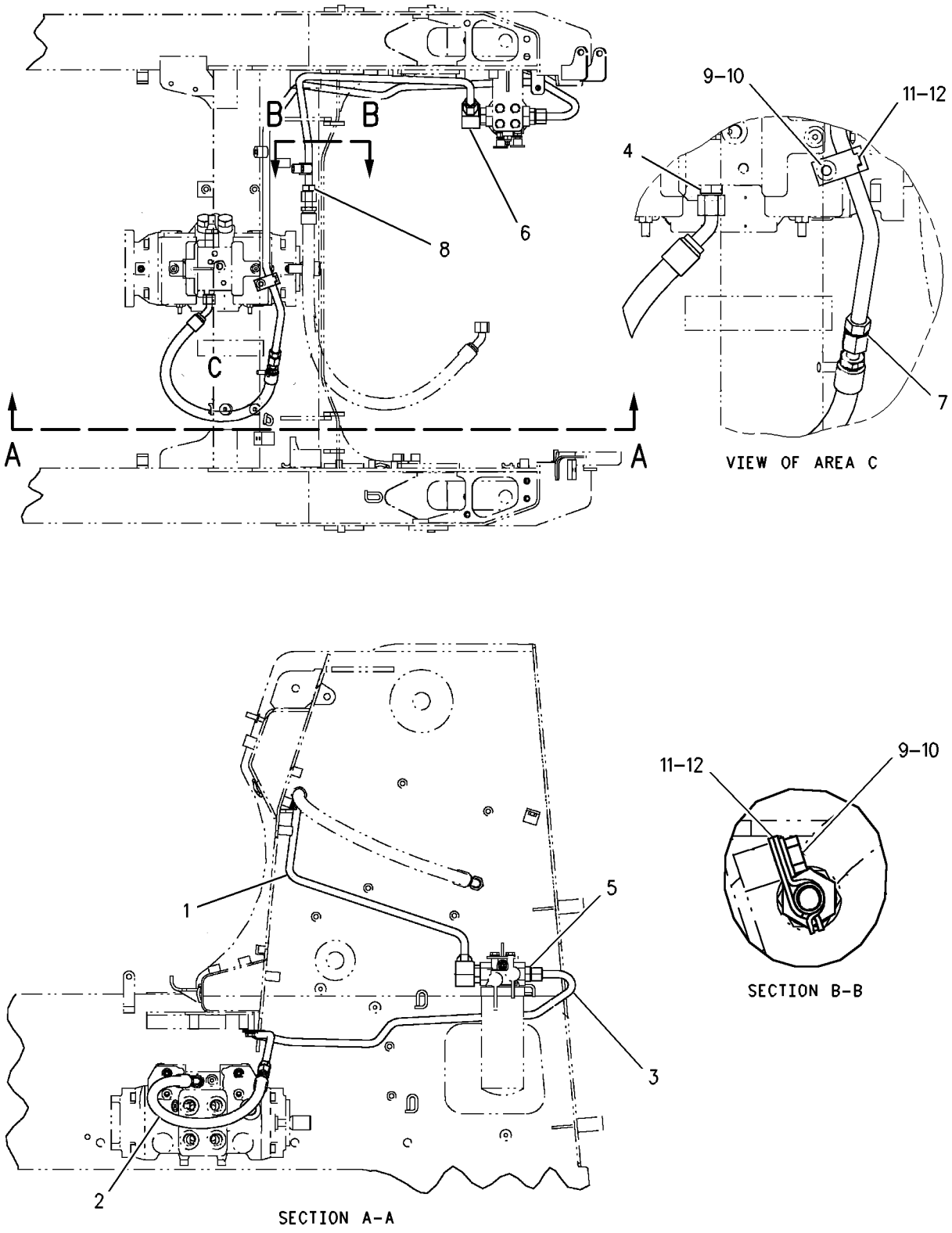

GRAPHIC #1 g00757854

188-3345 LINES GP-HYDROSTATIC

S/N: 4YZ4000-4733; 5SZ4000-5117

PART OF 195-6760 POWER TRAIN AR

SMCS-3218 **i01793578**

NOTE	REF NO	GRAPHIC REF	PART NUMBER	QTY	PART NAME 1 2 3 4 5 6 (PRODUCT LEVEL)	SEE PAGE
	1	1	**5D-1026**	1	CLAMP-HOSE	
	2	1	**5P-2230**	2	CLAMP-HOSE	
	3	1	**6N-2944**	1	PLUG	
	4	1	**6V-0852**	5	CAP-DUST	
I	5	1	**133-9382**	1	HOSE AS	
I	6	1	**138-3758**	1	HOSE AS	
I	7	1	**142-8742**	2	HOSE AS	
	8	1	**142-9237**	1	HOSE	
I	9	1	**142-9241**	2	HOSE AS	
	10	1	*164-5567*	5	FITTING GP	
					(EACH INCLUDES)	
		1	**3J-1907**	1	SEAL-O-RING	
		1	**6V-3965**	1	FITTING AS (9/16-18 2A THD)	
	11	1	*164-5608*	2	CONNECTOR GP	
					(EACH INCLUDES)	
		1	**3K-0360**	1	SEAL-O-RING	
		1	**6V-8398**	1	SEAL-O-RING	
		1	**8T-1687**	1	CONNECTOR	
Y	12	1	**193-8327**	1	MANIFOLD GP-RETURN	240
I	13	1	**193-8328**	1	HOSE AS	
	14	1	*148-8317*	1	CONNECTOR GP	
		1	**3D-2824**	1	SEAL-O-RING	
		1	**5K-9090**	1	SEAL-O-RING	
		1	**6V-8714**	1	CONNECTOR	
	15	1	*148-8327*	8	CONNECTOR AS	
					(EACH INCLUDES)	
		1	**3D-2824**	1	SEAL-O-RING	
		1	**6V-8637**	1	CONNECTOR-SEAL	
		1	**6V-9746**	1	SEAL-O-RING	
M	16	1	**8T-4177**	3	BOLT (M8X1.25X90MM)	
	17	1	**8T-4224**	3	WASHER-HARD (8.8X16X2MM THK)	
	18	1	**5P-0743**	18	HOSE	

I-SEE HOSE FABRICATION GUIDE
M-METRIC PART
Y-SEPARATE ILLUSTRATION

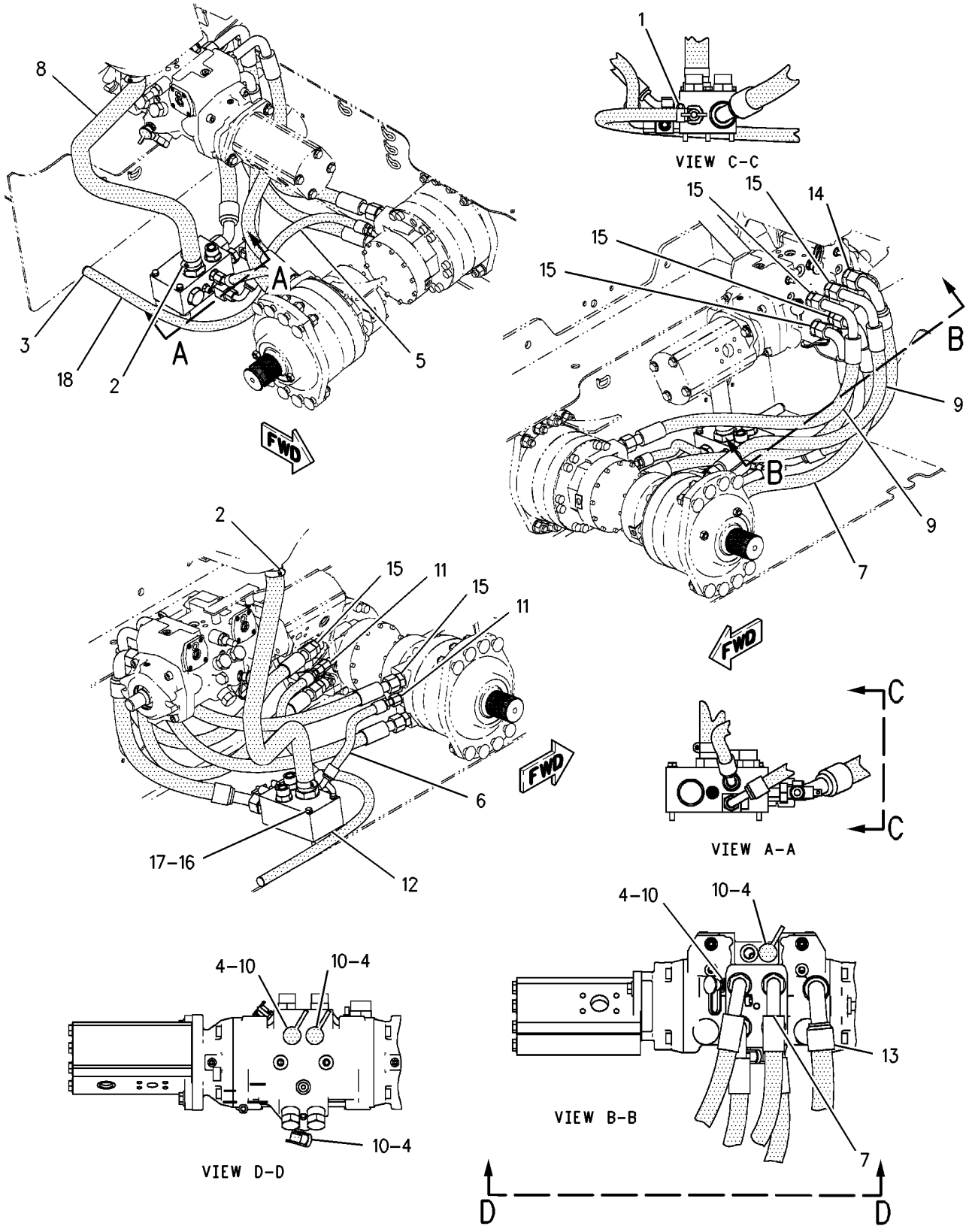

GRAPHIC #1

g00917595

190-8112 LINES GP-HYDROSTATIC

S/N: CED1-UP; FDG1-UP; 4YZ4734-UP; 5SZ5118-UP
PART OF 190-7951, 195-6760 POWER TRAIN AR

SMCS-3218 **i01793598**

NOTE	REF NO	GRAPHIC REF	PART NUMBER	QTY	PART NAME 1 2 3 4 5 6 (PRODUCT LEVEL)	SEE PAGE
	1	1	**5D-1026**	1	CLAMP-HOSE	
	2	1	**5P-2230**	2	CLAMP-HOSE	
	3	1	**6N-2944**	1	PLUG	
	4	2	**6V-0852**	5	CAP-DUST	
I	5	1	**133-9382**	1	HOSE AS	
I	6	1	**138-3758**	1	HOSE AS	
I	7	2	**142-8742**	2	HOSE AS	
	8	1	**142-9237**	1	HOSE	
I	9	2	**142-9241**	2	HOSE AS	
	10	2	*164-5567*	5	FITTING GP (QUICK DISCONNECT)	
					(EACH INCLUDES)	
		2	**3J-1907**	1	SEAL-O-RING	
		2	**6V-3965**	1	FITTING AS (9/16-18 2A THD)	
	11	1	*164-5608*	2	CONNECTOR GP	
					(EACH INCLUDES)	
		1	**3K-0360**	1	SEAL-O-RING	
		1	**6V-8398**	1	SEAL-O-RING	
		1	**8T-1687**	1	CONNECTOR	
Y	12	1	*193-8327*	1	MANIFOLD GP-RETURN	240
I	13	2	**193-8328**	1	HOSE AS	
	14	2	*148-8317*	1	CONNECTOR GP	
		2	**3D-2824**	1	SEAL-O-RING	
		2	**5K-9090**	1	SEAL-O-RING	
		2	**6V-8714**	1	CONNECTOR	
	15	1,2	*148-8327*	8	CONNECTOR AS	
					(EACH INCLUDES)	
		1,2	**3D-2824**	1	SEAL-O-RING	
		1,2	**6V-8637**	1	CONNECTOR-SEAL	
		1,2	**6V-9746**	1	SEAL-O-RING	
M	16	1	**8T-4177**	3	BOLT (M8X1.25X90MM)	
	17	1	**8T-4224**	3	WASHER-HARD (8.8X16X2MM THK)	
	18	1	**5P-0743**		HOSE (73 CM)	

I-SEE HOSE FABRICATION GUIDE
M-METRIC PART
Y-SEPARATE ILLUSTRATION

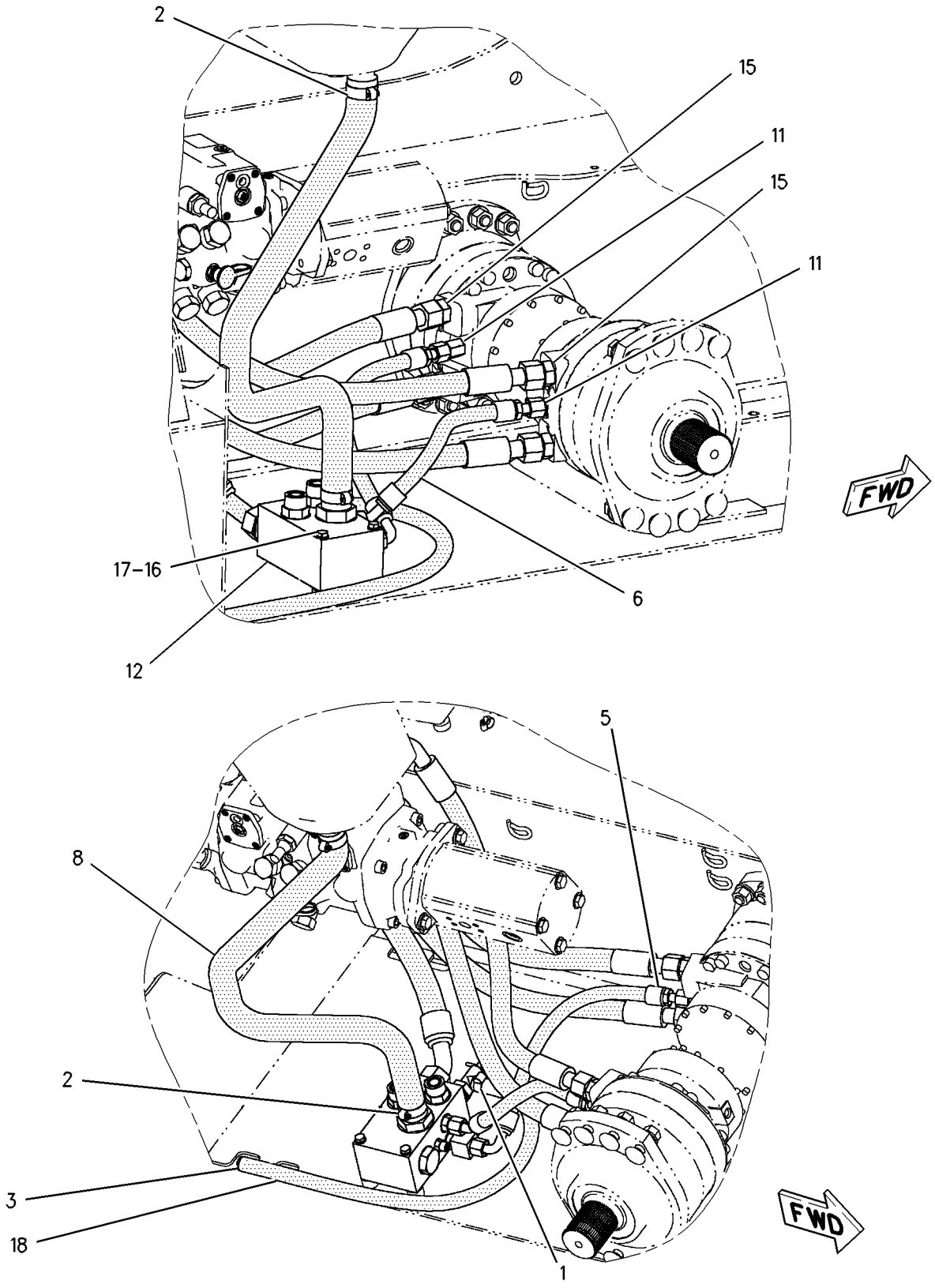

GRAPHIC #1 g00917613

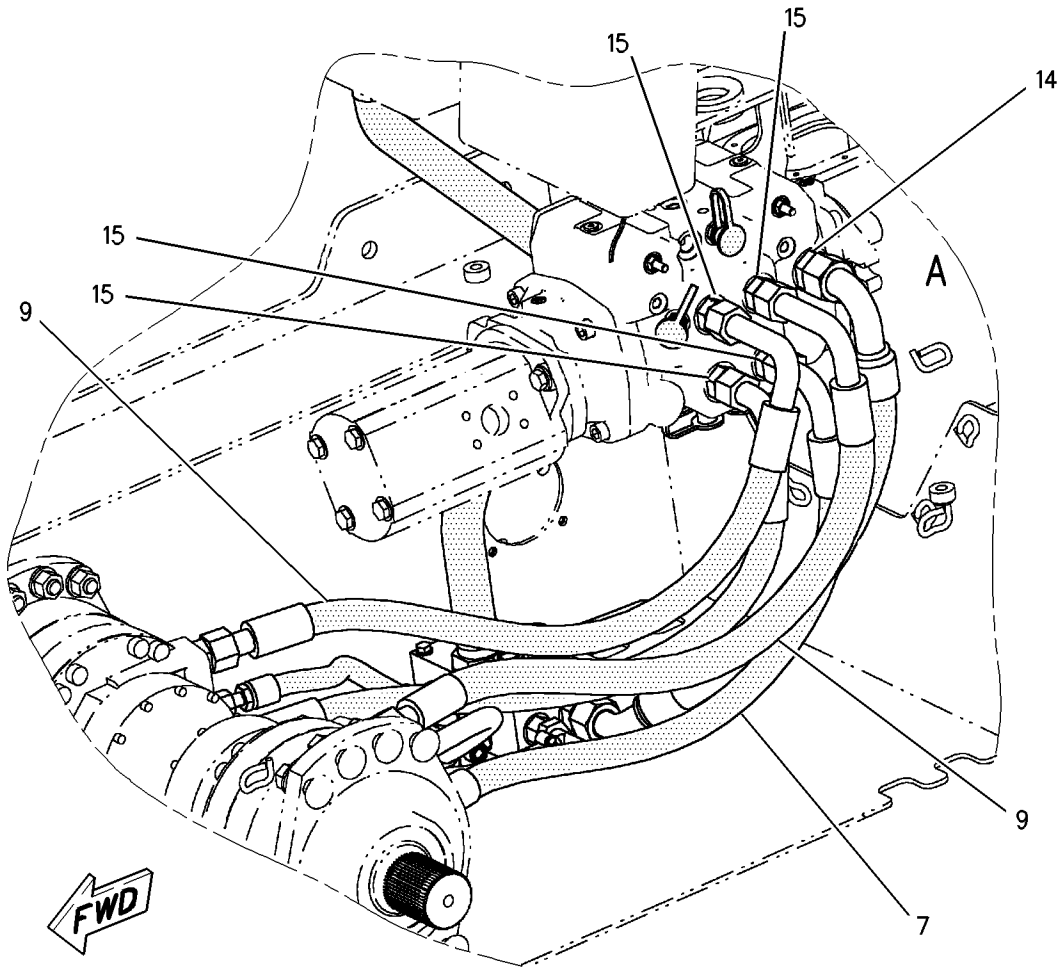

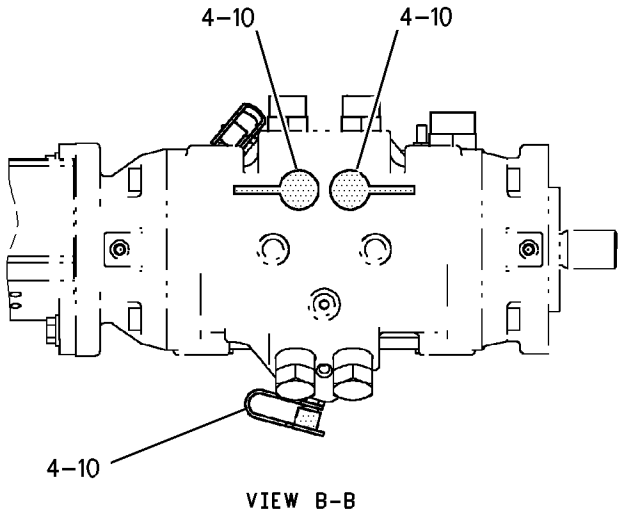

VIEW B–B

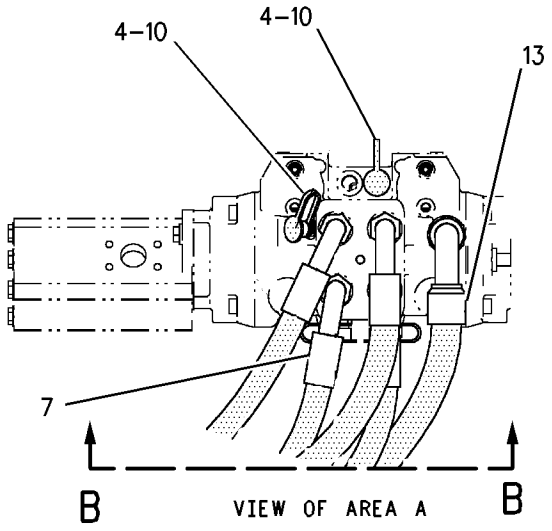

VIEW OF AREA A

GRAPHIC #2 g00917614

MEMORANDA

193-8327 MANIFOLD GP-RETURN

S/N: CED1-UP; FDG1-UP; 4YZ4000-UP; 5SZ4000-UP
PART OF 188-3345, 190-8112 LINES GP-HYDROSTATIC

SMCS-3154, 5264 **i01628280**

NOTE	REF NO	GRAPHIC REF	PART NUMBER	QTY	PART NAME 1 2 3 4 5 6 (PRODUCT LEVEL)	SEE PAGE
	1	1	**9U-6995**	1	ADAPTER	
	2	1	*165-2273*	1	VALVE GP-SHUTOFF	
		1	**3K-0360**	1	SEAL-O-RING	
		1	**6V-7238**	1	VALVE-SHUTOFF	
	3	1	**193-8326**	1	MANIFOLD GP-RETURN	
		1	**142-8977**	1	VALVE GP-CHECK	
	4	1	*148-8316*	1	CONNECTOR GP	
		1	**3J-7354**	1	SEAL-O-RING	
		1	**4J-5477**	1	SEAL-O-RING	
		1	**6V-8647**	1	CONNECTOR	
	5	1	*148-8327*	2	CONNECTOR GP	
					(EACH INCLUDES)	
		1	**3D-2824**	1	SEAL-O-RING	
		1	**6V-8637**	1	CONNECTOR-SEAL	
		1	**6V-9746**	1	SEAL-O-RING	
	6	1	*148-8335*	1	CONNECTOR GP	
		1	**5K-9090**	1	SEAL-O-RING	
		1	**6V-8635**	1	CONNECTOR	
		1	**7M-8485**	1	SEAL-O-RING	
	7	1	*148-8340*	1	CONNECTOR GP	
		1	**3K-0360**	1	SEAL-O-RING	
		1	**6V-8398**	1	SEAL-O-RING	
		1	**6V-8639**	1	CONNECTOR	
	8	1	*148-8428*	1	TEE GP	
		1	**3K-0360**	1	SEAL-O-RING	
		1	**6V-8398**	2	SEAL-O-RING	
		1	**6V-8782**	1	TEE-FACE SEAL	
	9	1	**2M-9780**	1	SEAL-O-RING	
	10	1	**6V-7420**	1	ADAPTER-STRAIGHT THREAD	

193-8327 **MANIFOLD GP-RETURN** ***(contd.)*** **i01628280**

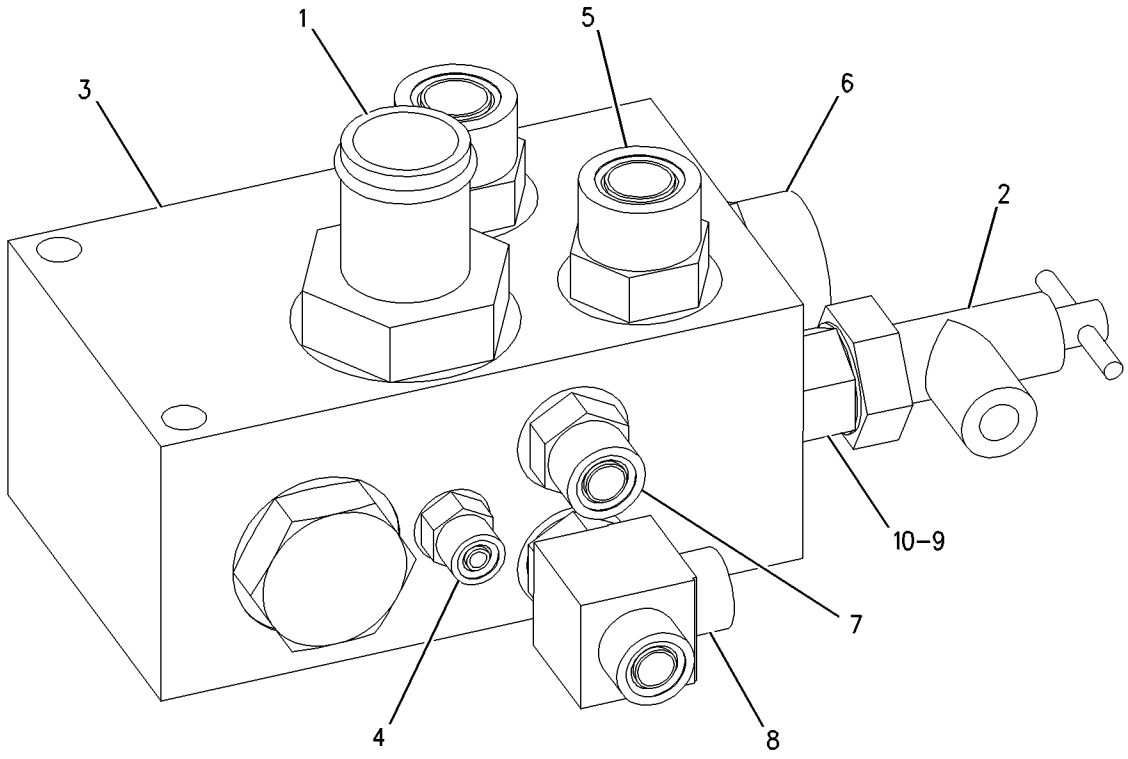

GRAPHIC #1 g00773371

142-9059 MOTOR & MTG GP-PISTON

S/N: 4YZ4011-4024; 5SZ4030-4079
PART OF 195-6760 POWER TRAIN AR

SMCS-5058 **i01799056**

NOTE	REF NO	GRAPHIC REF	PART NUMBER	QTY	PART NAME 1 2 3 4 5 6 (PRODUCT LEVEL)	SEE PAGE
Y	1	1	**142-9020**	2	MOTOR GP-PISTON	246
	2	1	**142-9021**	16	STUD	
	3	1	**8T-4122**	16	WASHER-HARD (17X32X3.5MM THK)	
M	4	1	**8T-4132**	16	NUT (M16X2 THD)	

M-METRIC PART
Y-SEPARATE ILLUSTRATION

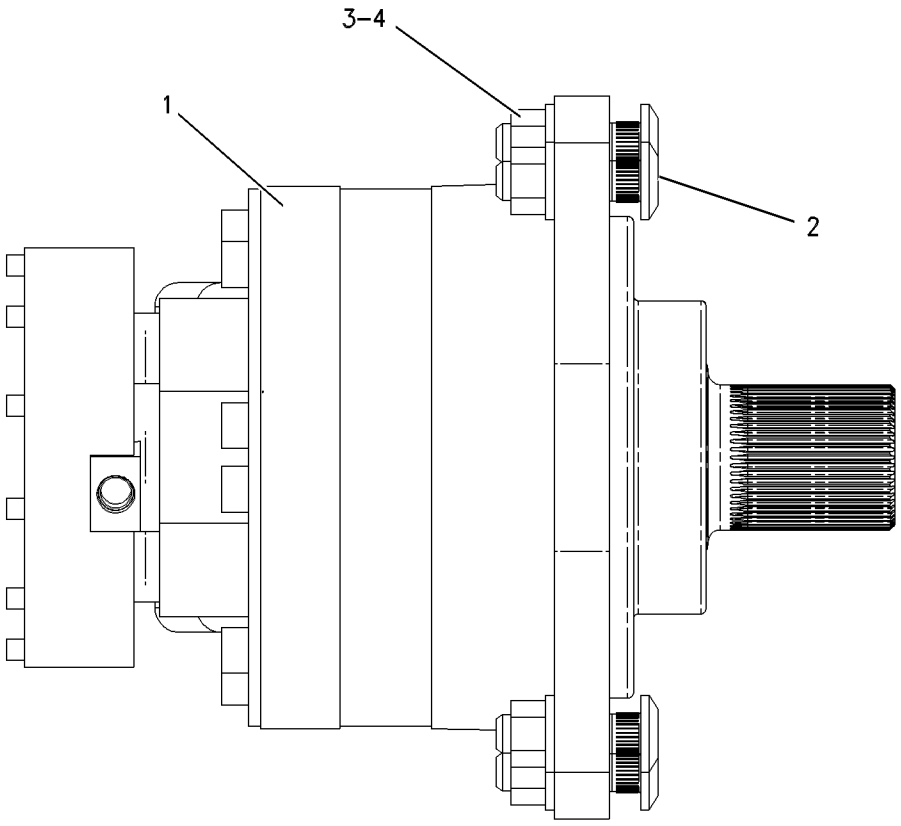

GRAPHIC #1 g00594513

190-7457 MOTOR & MTG GP-PISTON—TWO SPEED

S/N: CED1-UP; FDG1-UP; 4YZ4734-UP; 5SZ4000-UP
PART OF 191-9793, 212-6670, 212-6672, 215-3950 DRIVE CONTROL AR-HYDROSTATIC
AN ATTACHMENT

SMCS-5058 **i01663134**

NOTE	REF NO	GRAPHIC REF	PART NUMBER	QTY	PART NAME 1 2 3 4 5 6 (PRODUCT LEVEL)	SEE PAGE
Y	1	1	**190-7938**	2	MOTOR GP-PISTON	248
	2	1	**193-8340**	16	BOLT-CARRIAGE	
	3	1	**8T-4122**	16	WASHER-HARD (17X32X3.5MM THK)	
M	4	1	**8T-4132**	16	NUT (M16X2 THD)	

QUANTITIES SHOWN ARE THOSE REQUIRED FOR BOTH LH AND RH SIDES
M-METRIC PART
Y-SEPARATE ILLUSTRATION

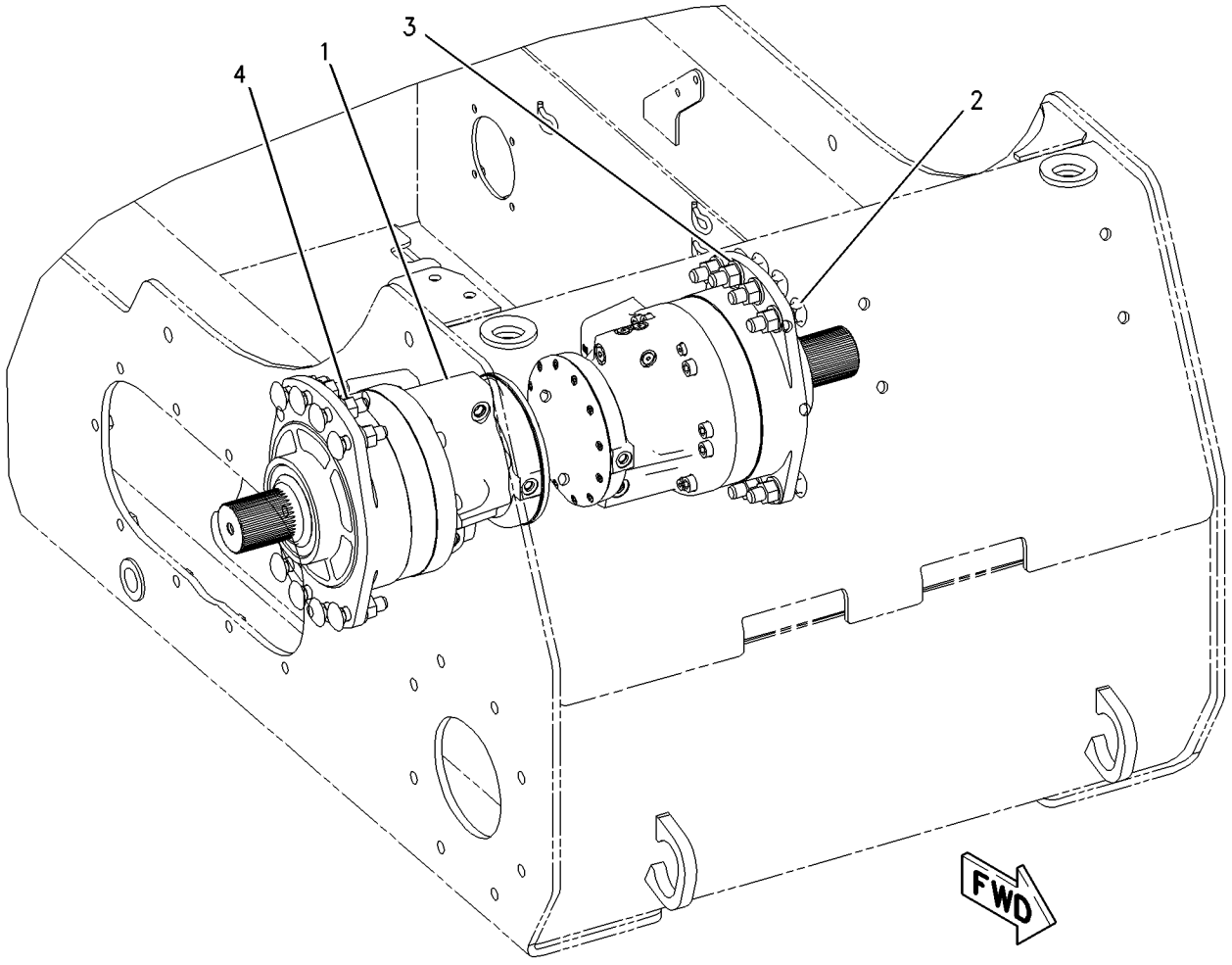

GRAPHIC #1 g00859922

191-9780 MOTOR & MTG GP-PISTON

S/N: CED1-1159; FDG1-845; 4YZ4000-4010, 4025-5379; 5SZ4000-4029, 4080-5930
PART OF 191-9680, 191-9681, 191-9682, 191-9790, 191-9791, 191-9792, 216-6190
DRIVE CONTROL AR-HYDROSTATIC, 195-6760 POWER TRAIN AR
ALSO AN ATTACHMENT

SMCS-5058 **i01799095**

NOTE	REF NO	GRAPHIC REF	PART NUMBER	QTY	PART NAME 1 2 3 4 5 6 (PRODUCT LEVEL)	SEE PAGE
Y	1	1	**142-9020**	2	MOTOR GP-PISTON	246
	2	1	**193-8340**	16	BOLT-CARRIAGE	
	3	1	**8T-4122**	16	WASHER-HARD (17X32X3.5MM THK)	
M	4	1	**8T-4132**	16	NUT (M16X2 THD)	

M-METRIC PART
Y-SEPARATE ILLUSTRATION

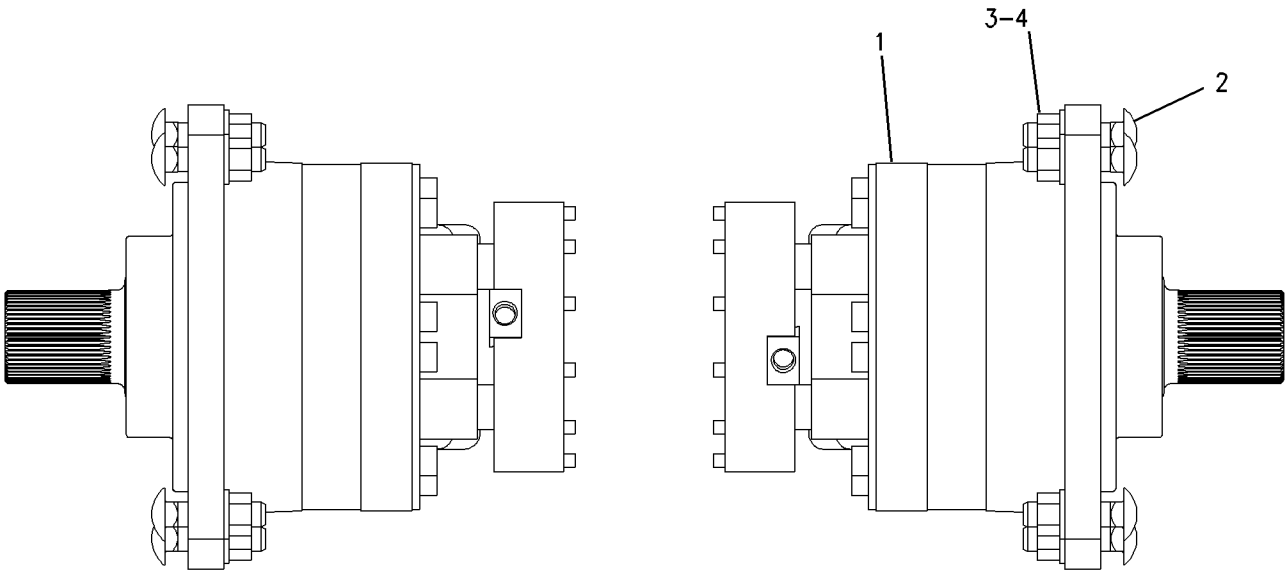

GRAPHIC #1 g00762344

191-9780 MOTOR & MTG GP-PISTON

S/N: CED1160-UP; FDG846-UP; 4YZ5380-UP; 5SZ5931-UP
PART OF 191-9680, 191-9681, 191-9682, 191-9791, 191-9792, 216-6190 DRIVE CONTROL
AR-HYDROSTATIC
AN ATTACHMENT

SMCS-5058 **i01799096**

NOTE	REF NO	GRAPHIC REF	PART NUMBER	QTY	PART NAME 1 2 3 4 5 6 (PRODUCT LEVEL)	SEE PAGE
	1	1	**193-8340**	16	BOLT-CARRIAGE	
Y	2	1	**220-8162**	2	MOTOR GP-PISTON	249
	3	1	**8T-4122**	16	WASHER-HARD (17X32X3.5MM THK)	
M	4	1	**8T-4132**	16	NUT (M16X2 THD)	

M-METRIC PART
Y-SEPARATE ILLUSTRATION

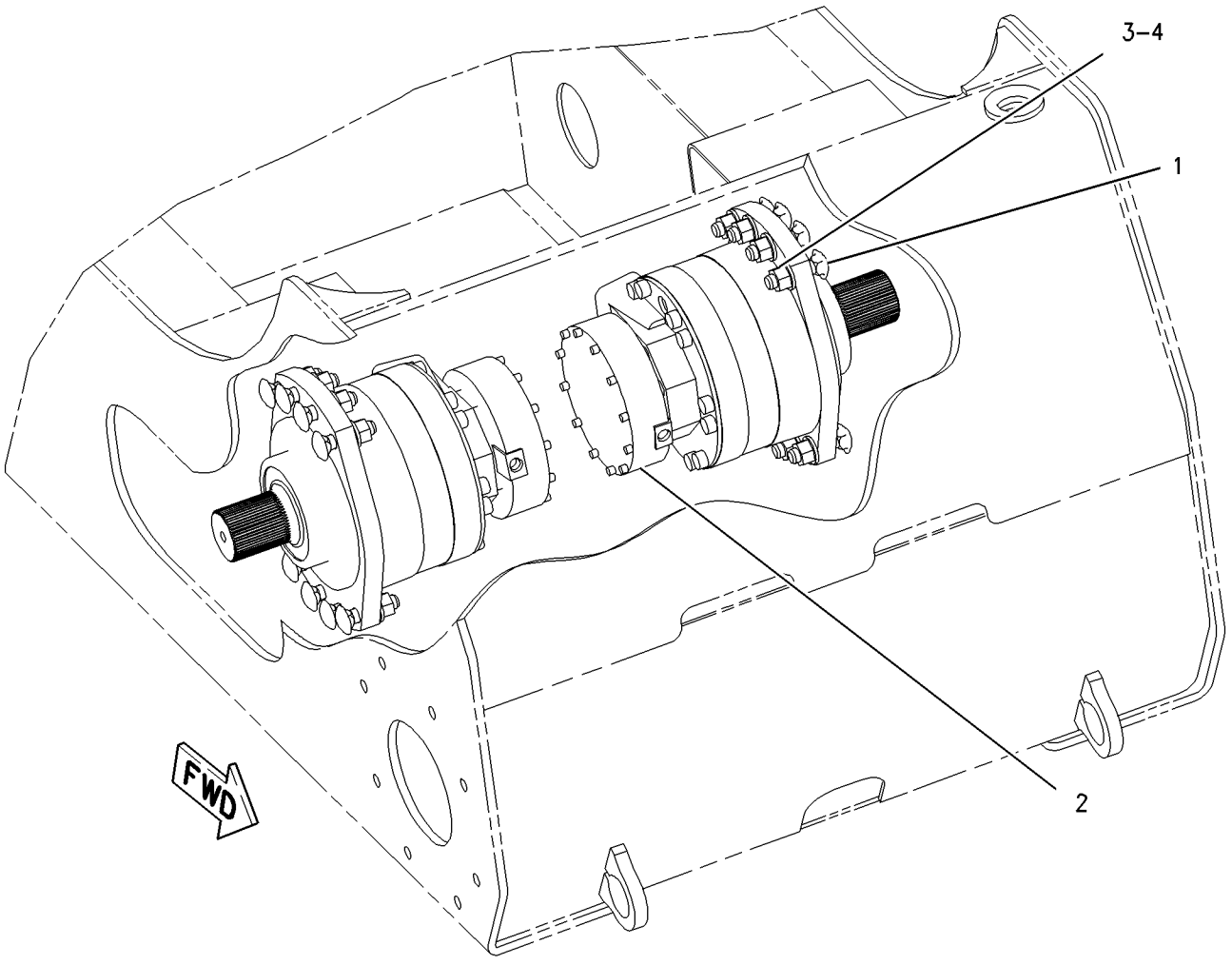

GRAPHIC #1 g00913035

142-9020 MOTOR GP-PISTON

S/N: CED1-597; FDG1-845; 4YZ4000-5379; 5SZ4000-4079
PART OF 142-9059, 191-9780 MOTOR & MTG GP-PISTON
ALSO AN ATTACHMENT

SMCS-5058 **i01771914**

NOTE	REF NO	GRAPHIC REF	PART NUMBER	QTY	PART NAME 1 2 3 4 5 6 (PRODUCT LEVEL)	SEE PAGE
	1	1	**207-9717**	1	SEAL	
	2	1	**207-9718**	1	GASKET	
	3	1	**207-9719**	1	SEAL	
	4	1	**9S-8002**	2	PLUG	
	5	1	**3J-7354**	2	SEAL-O-RING	
	6	1	**033-5853**	1	SEAL-O-RING	
	7	1	**210-4632**	1	SEAL	
	8	1	**9S-4191**	1	PLUG	
	9	1	**3J-1907**	1	SEAL-O-RING	
M	10	1	**5C-7883**	12	BOLT-SOCKET HEAD (M6X1.0X16MM)	
	11	1	**222-5693**	1	PLUG	

M-METRIC PART

142-9020 MOTOR GP-PISTON *(contd.)* **i01771914**

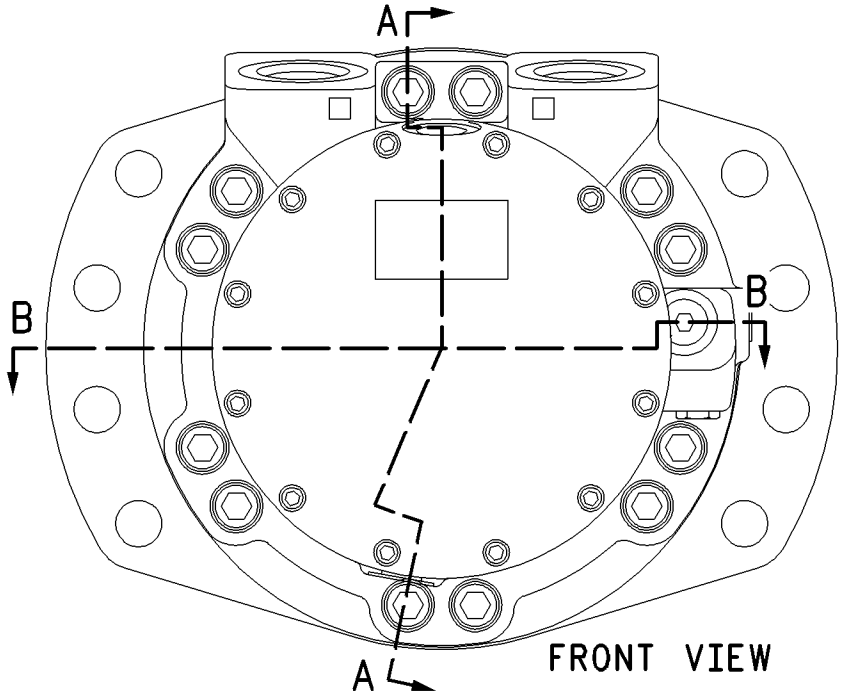

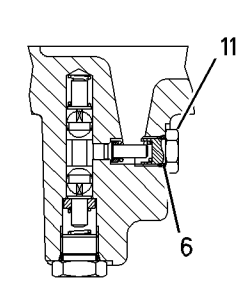

SECTION C-C

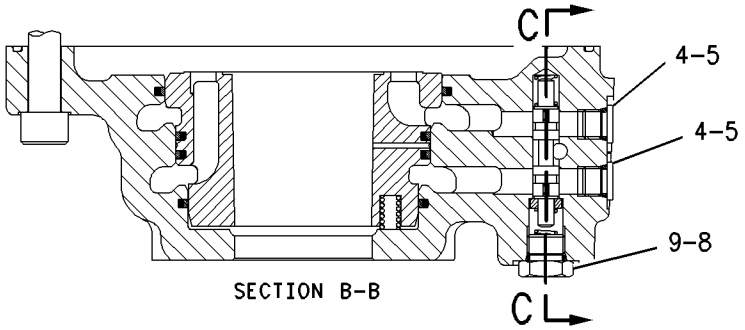

SECTION B-B

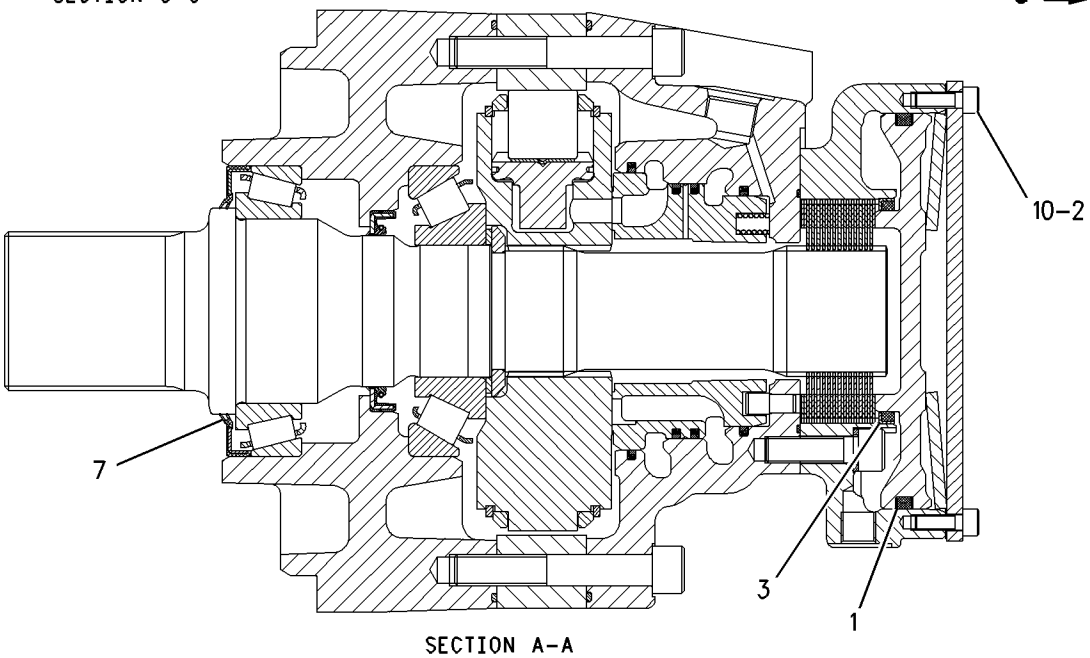

SECTION A-A

GRAPHIC #1

g00905942

190-7938 MOTOR GP-PISTON—TWO SPEED

S/N: CED1-UP; FDG1-UP; 4YZ4734-UP; 5SZ5118-UP
PART OF 190-7457 MOTOR & MTG GP-PISTON
AN ATTACHMENT

SMCS-5058 **i01671193**

NOTE	REF NO	GRAPHIC REF	PART NUMBER	QTY	PART NAME 1 2 3 4 5 6 (PRODUCT LEVEL)	SEE PAGE
	1	1	**207-9717**	1	SEAL	
	2	1	**207-9718**	1	GASKET	
	3	1	**207-9719**	1	SEAL	
	4	1	**210-4632**	1	SEAL	
M	5	1	**096-0001**	2	BOLT-SOCKET HEAD (M8X1.25X40MM)	
M	6	1	**178-7838**	11	BOLT (M12X1.75X75MM)	
	7	1	**3J-1907**	1	SEAL-O-RING	
	8	1	**3J-7354**	3	SEAL-O-RING	
M	9	1	**6V-5683**	12	BOLT (M6X1X16MM)	
	10	1	**9S-8002**	3	PLUG	
	11	1	**9S-8004**	1	PLUG	

M-METRIC PART

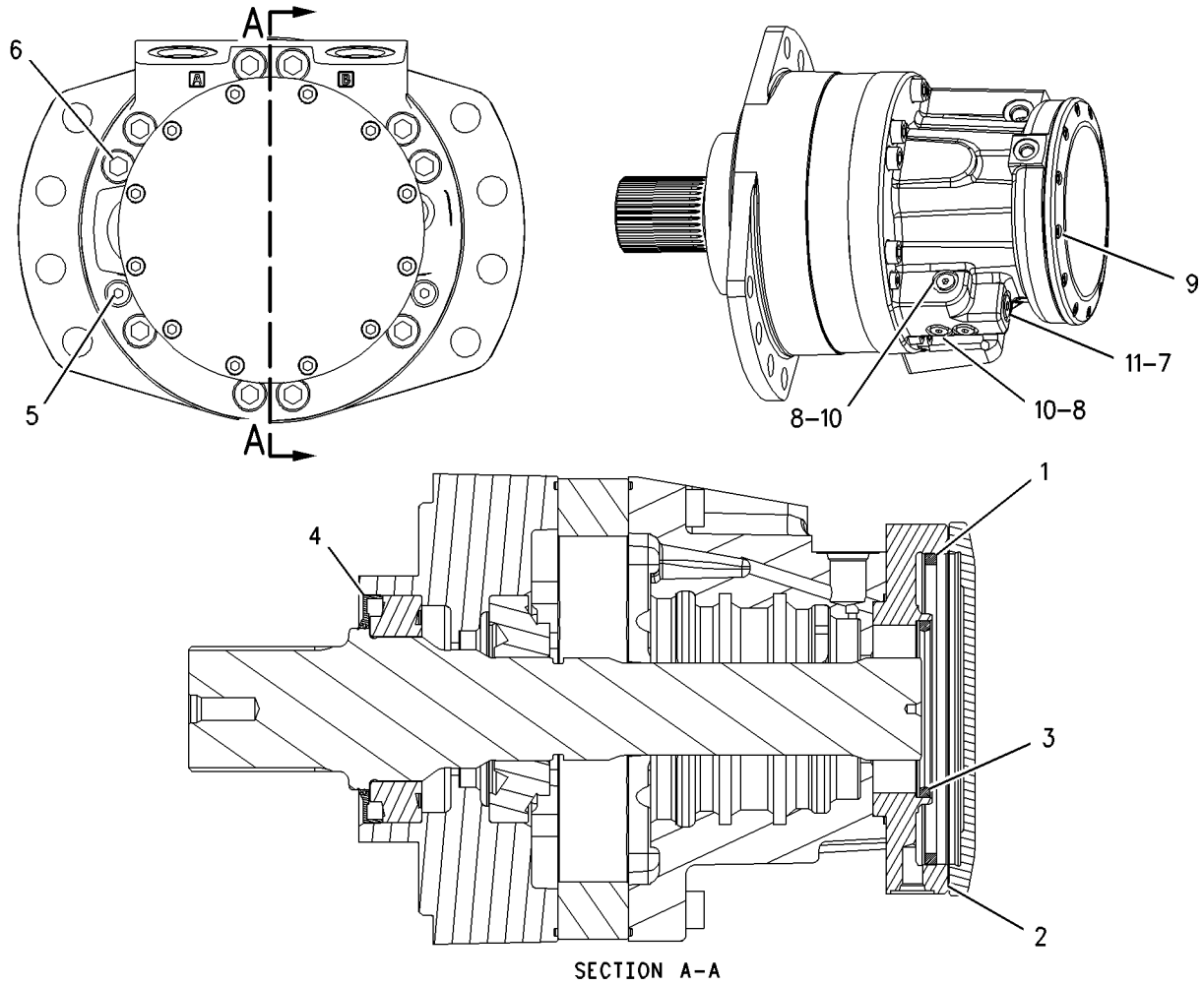

GRAPHIC #1 g00865725

220-8162 MOTOR GP-PISTON

S/N: CED1160-UP; FDG846-UP; 4YZ5380-UP; 5SZ5931-UP
PART OF 191-9780 MOTOR & MTG GP-PISTON
AN ATTACHMENT

SMCS-5058 **i01771981**

NOTE	REF NO	GRAPHIC REF	PART NUMBER	QTY	PART NAME 1 2 3 4 5 6 (PRODUCT LEVEL)	SEE PAGE
	1	1	**207-9717**	1	SEAL	
	2	1	**207-9718**	1	GASKET	
	3	1	**207-9719**	1	SEAL	
	4	1	**222-5693**	1	PLUG	
	5	1	**033-5853**	1	SEAL-O-RING	
	6	1	**210-4632**	1	SEAL	
	7	1	**9S-4191**	1	PLUG	
	8	1	**3J-1907**	1	SEAL-O-RING	
M	9	1	**5C-7883**	12	BOLT-SOCKET HEAD (M6X1.0X16MM)	

M-METRIC PART

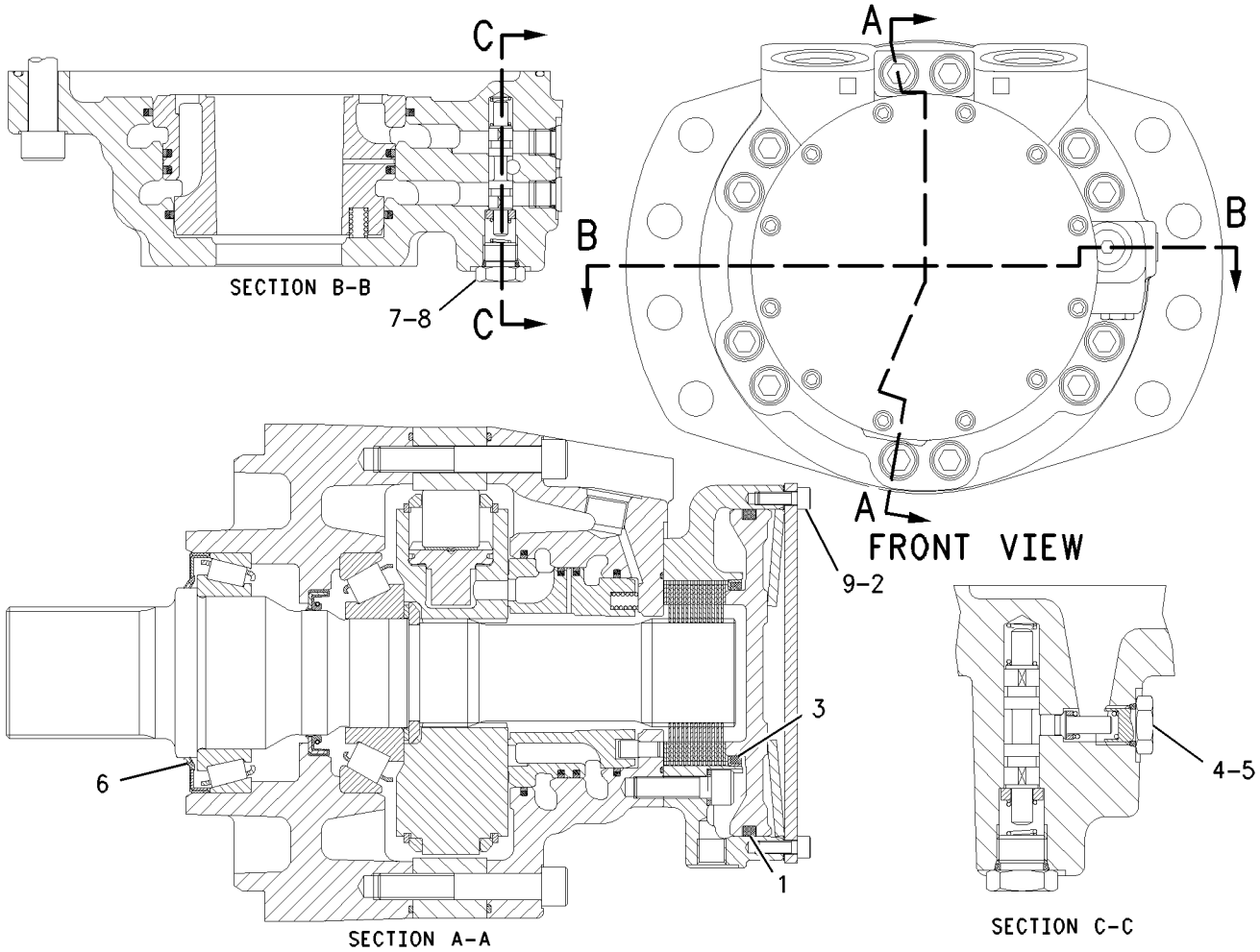

GRAPHIC #1 g00913078

142-8750 MOUNTING GP-PUMP

S/N: CED1-UP; FDG1-UP; 4YZ4000-UP; 5SZ4000-UP
PART OF 190-7951, 195-6760 POWER TRAIN AR

SMCS-3203 **i01762346**

NOTE	REF NO	GRAPHIC REF	PART NUMBER	QTY	PART NAME 1 2 3 4 5 6 (PRODUCT LEVEL)	SEE PAGE
	1	1	**117-7756**	1	FLANGE	
	2	1	**142-8719**	1	PLATE-ADAPTER	
	3	1	**165-0142**	2	WASHER-HARD (3MM THK)	
M	4	1	**167-4339**	2	BOLT-HEX HEAD (M14X2X40)	
	5	1	**193-8342**	1	HUB-COUPLING	
	6	1	**8T-4121**	12	WASHER-HARD (11X21X2.5MM THK)	
M	7	1	**8T-4195**	8	BOLT (M10X1.5X30MM)	
M	8	1	**8T-4196**	12	BOLT (M10X1.5X35MM)	

M-METRIC PART

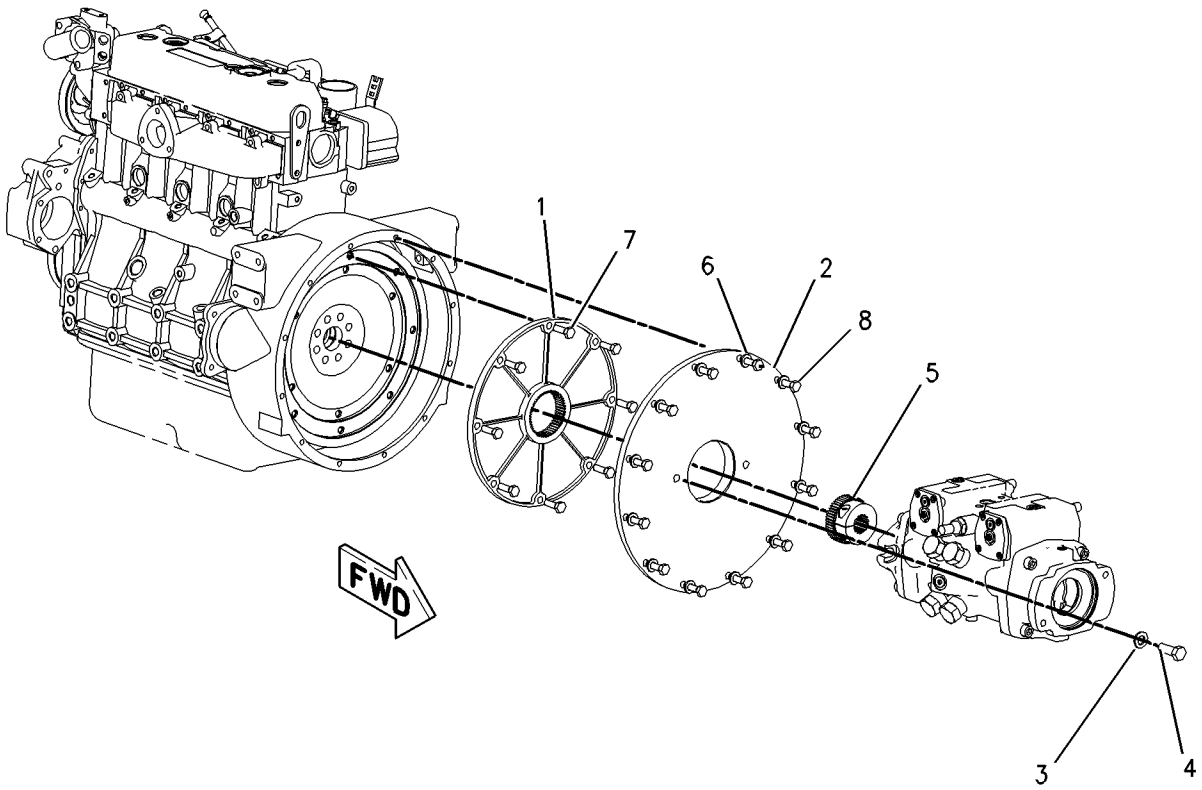

GRAPHIC #1 g00901572

190-7951 POWER TRAIN AR

S/N: CED1-597; FDG1-UP

PART OF 190-8000, 195-6700 COMMON AR

SMCS-4000 **i01794196**

NOTE	PART NUMBER	QTY	PART NAME 1 2 3 4 5 6 (PRODUCT LEVEL)	SEE PAGE
Y	*191-9760*	1	DRIVE GP-TANDEM	227
Y	*190-8112*	1	LINES GP-HYDROSTATIC	236
Y	*142-8750*	1	MOUNTING GP-PUMP	250

Y-SEPARATE ILLUSTRATION

<END>

195-6760 POWER TRAIN AR

S/N: 4YZ4000-UP; 5SZ4000-UP

PART OF 180-3000, 197-4900 COMMON AR

SMCS-4000 **i01794092**

NOTE	PART NUMBER	QTY	PART NAME 1 2 3 4 5 6 (PRODUCT LEVEL)	SEE PAGE
Y	*142-9060*	1	DRIVE GP-TANDEM	226
Y	*188-3345*	1	LINES GP-HYDROSTATIC	234
			S/N: 4YZ4000-4733	
Y	*190-8112*	1	LINES GP-HYDROSTATIC	236
			S/N: 4YZ4734-UP	
Y	*142-8750*	1	MOUNTING GP-PUMP	250
			S/N: 5SZ5118-UP	

Y-SEPARATE ILLUSTRATION

<END>

190-8100 PUMP GP-PISTON*R

S/N: CED1-597; FDG1-540; 4YZ4000-4733; 5SZ4000-5117

PART OF 190-7951, 195-6760 POWER TRAIN AR

SMCS-5070 **i01793709**

NOTE	REF NO	GRAPHIC REF	PART NUMBER	QTY	PART NAME 1 2 3 4 5 6 (PRODUCT LEVEL)	SEE PAGE
	1	1	**6E-5060**	3	CAP AS	
	2	1	**167-7713**	4	RING-BACKUP	
	3	1	**204-1452**	2	V-RING SEAL	
	4	1	**204-1453**	1	RING	
	5	1	**204-1454**	2	PIN	
	6	1	**204-1455**	2	LOCK	
	7	1	**204-1456**	1	SHIM	
	8	1	**204-1457**	1	VALVE GP-SPEED SENSING	
	9	1	**204-1458**	4	VALVE GP-RELIEF	
	10	1	**204-1459**	1	VALVE GP-RELIEF	
	11	1	**135-2655**	2	SEAL-O-RING	
	12	1	**3J-7354**	2	SEAL-O-RING	
	13	1	**3K-0715**	1	SEAL-O-RING	
	14	1	**6V-5326**	4	SEAL-O-RING	
	15	1	**6V-5586**	2	SEAL-O-RING	
	16	1	**6V-8352**	1	SEAL-O-RING	
M	17	1	**8T-0267**	8	BOLT-SOCKET HEAD (M6X1X12MM)	
	18	1	**9S-8002**	2	PLUG	
M	19	1	**9X-6606**	2	NUT-HEX (M10X1)	

M-METRIC PART

190-8100 PUMP GP-PISTON ***(contd.)*** **i01793709**

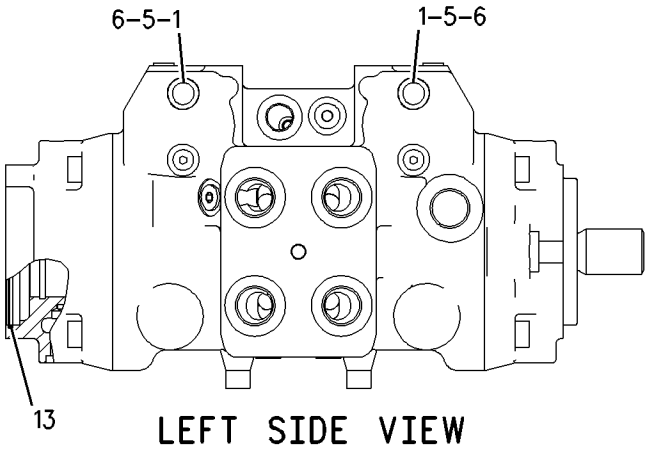

GRAPHIC #1 g00917763

191-9617 PUMP GP-PISTON*R

S/N: CED1-UP; FDG1-UP; 4YZ4000-UP; 5SZ4000-UP
PART OF 191-9680, 191-9681, 191-9682, 191-9791, 191-9792, 216-6190 DRIVE CONTROL
AR-HYDROSTATIC
AN ATTACHMENT

SMCS-5070 **i01793753**

NOTE	REF NO	GRAPHIC REF	PART NUMBER	QTY	PART NAME 1 2 3 4 5 6 (PRODUCT LEVEL)	SEE PAGE
	1	1	**6E-5060**	3	CAP AS	
	2	1	**167-7713**	4	RING-BACKUP	
	3	1	**204-1452**	2	V-RING SEAL	
	4	1	**204-1453**	1	RING	
	5	1	**204-1454**	2	PIN	
	6	1	**204-1455**	2	LOCK	
	7	1	**204-1456**	1	SHIM	
	8	1	**204-1457**	1	VALVE GP-SPEED SENSING	
	9	1	**204-1458**	4	VALVE GP-RELIEF	
	10	1	**204-1459**	1	VALVE GP-RELIEF	
	11	1	**135-2655**	2	SEAL-O-RING	
	12	1	**3J-7354**	2	SEAL-O-RING	
	13	1	**3K-0715**	1	SEAL-O-RING	
	14	1	**6V-5326**	4	SEAL-O-RING	
	15	1	**6V-5586**	2	SEAL-O-RING	
	16	1	**6V-8352**	1	SEAL-O-RING	
M	17	1	**8T-0267**	8	BOLT-SOCKET HEAD (M6X1X12MM)	
	18	1	**9S-8002**	2	PLUG	
M	19	1	**9X-6606**	2	NUT-HEX (M10X1)	

M-METRIC PART

191-9617 PUMP GP-PISTON ***(contd.)*** **i01793753**

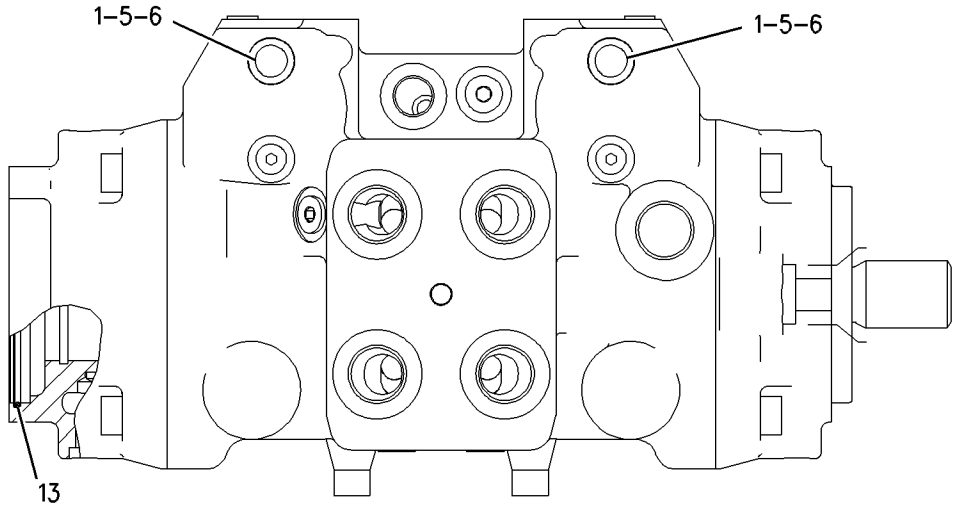

LEFT SIDE VIEW

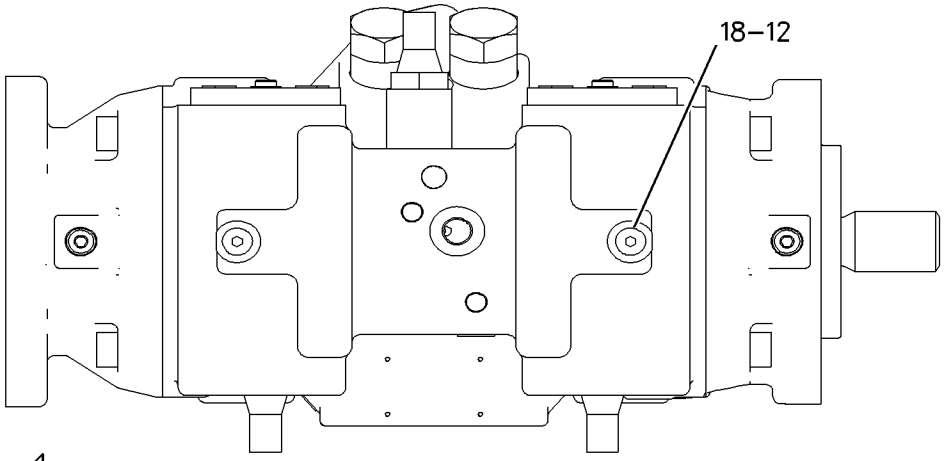

TOP VIEW

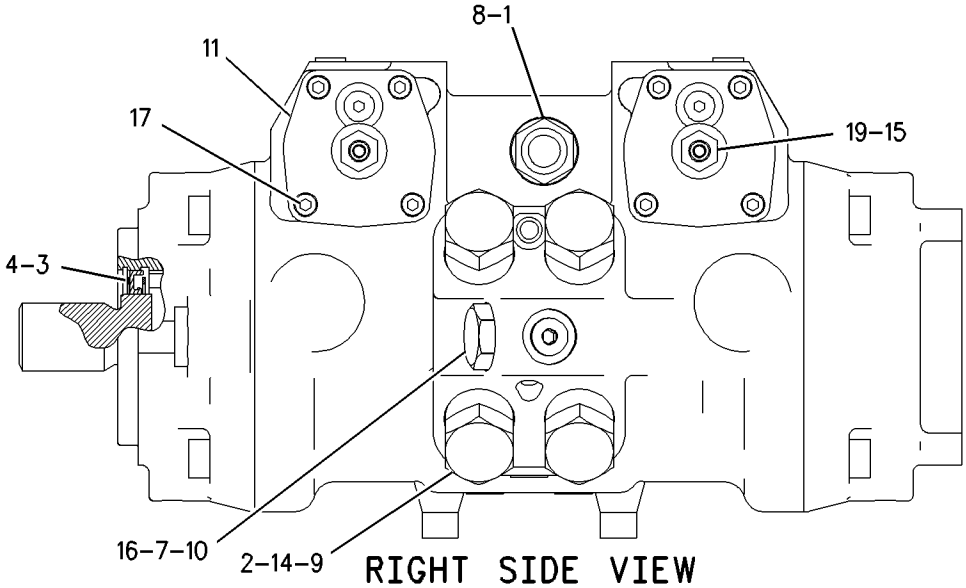

RIGHT SIDE VIEW

GRAPHIC #1 g00917803

191-9700 PUMP GP-PISTON

S/N: CED1-UP; FDG1-UP; 4YZ4734-UP; 5SZ4000-UP
PART OF 191-9793, 212-6670, 212-6672, 215-3950 DRIVE CONTROL AR-HYDROSTATIC
AN ATTACHMENT

SMCS-5070 **i01793771**

NOTE	REF NO	GRAPHIC REF	PART NUMBER	QTY	PART NAME 1 2 3 4 5 6 (PRODUCT LEVEL)	SEE PAGE
	1	1	**6E-5060**	3	CAP AS	
	2	1	**167-7713**	4	RING-BACKUP	
	3	1	**204-1452**	2	V-RING SEAL	
	4	1	**204-1453**	1	RING	
	5	1	**204-1454**	1	PIN	
	6	1	**204-1455**	1	LOCK	
	7	1	**204-1456**	1	SHIM	
	8	1	**204-1457**	1	VALVE GP-SPEED SENSING	
	9	1	**204-1458**	4	VALVE GP-RELIEF	
	10	1	**204-1459**	1	VALVE GP-RELIEF	
	11	1	**135-2655**	2	SEAL-O-RING	
	12	1	**3J-7354**	2	SEAL-O-RING	
	13	1	**3K-0715**	1	SEAL-O-RING	
	14	1	**6V-5326**	4	SEAL-O-RING	
	15	1	**6V-5586**	2	SEAL-O-RING	
	16	1	**6V-8352**	1	SEAL-O-RING	
M	17	1	**8T-0267**	8	BOLT-SOCKET HEAD (M6X1X12MM)	
	18	1	**9S-8002**	2	PLUG	
M	19	1	**9X-6606**	2	NUT-HEX (M10X1)	

M-METRIC PART

191-9700 PUMP GP-PISTON ***(contd.)*** **i01793771**

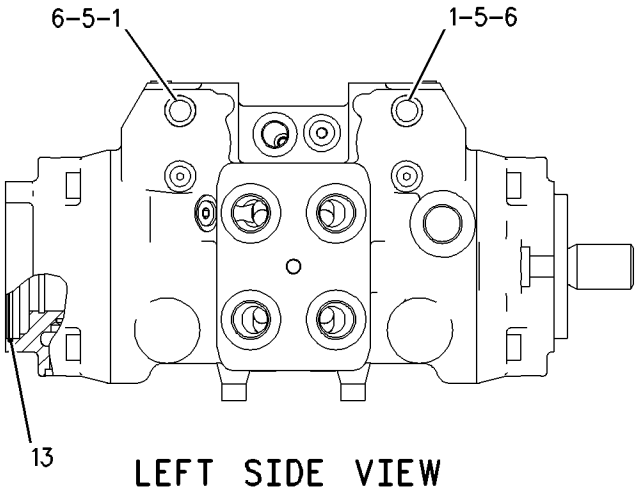

LEFT SIDE VIEW

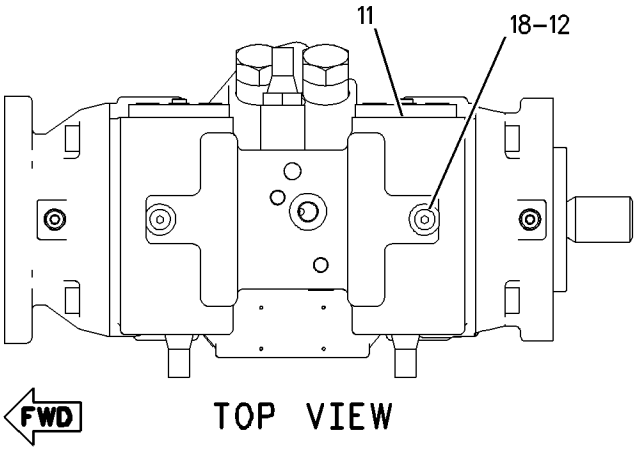

TOP VIEW

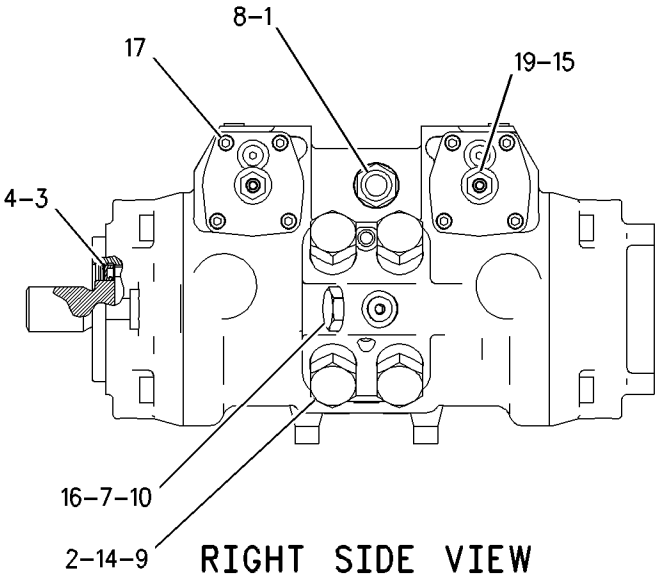

RIGHT SIDE VIEW

GRAPHIC #1 g00917831

194-9376 VALVE & MTG GP-SOLENOID

S/N: CED1-UP; FDG1-UP; 4YZ4000-UP; 5SZ4000-UP
PART OF 190-8101, 193-8325 CONTROL GP-PARKING BRAKE
ALSO AN ATTACHMENT

SMCS-5479 **i01698701**

NOTE	REF NO	GRAPHIC REF	PART NUMBER	QTY	PART NAME 1 2 3 4 5 6 (PRODUCT LEVEL)	SEE PAGE
Y	1	1	**191-0916**	1	VALVE GP-SOLENOID	263
	2	1	**194-7789**	1	MANIFOLD	
	3	1	*148-8336*	1	CONNECTOR GP	
		1	**3J-1907**	1	SEAL-O-RING	
		1	**6V-8397**	1	SEAL-O-RING	
		1	**6V-8636**	1	CONNECTOR	

Y-SEPARATE ILLUSTRATION

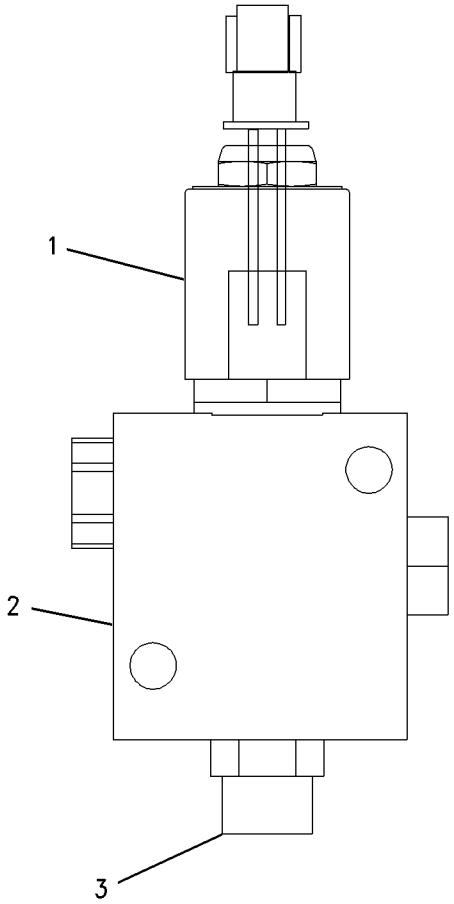

GRAPHIC #1 g00874558

MEMORANDA

210-8640 VALVE & MTG GP-SOLENOID

S/N: CED1-UP; FDG1-UP
PARKING BRAKE
PART OF 190-7459 CONTROL GP-PARKING BRAKE
AN ATTACHMENT

SMCS-5479 **i01660232**

NOTE	REF NO	GRAPHIC REF	PART NUMBER	QTY	PART NAME 1 2 3 4 5 6 (PRODUCT LEVEL)	SEE PAGE
J	1	1	**195-9700**	1	VALVE GP-SOLENOID	
		1	**149-8403**	1	GROMMET	
	2	1	**214-3086**	1	MANIFOLD AS	
L	3	1	**216-0610**	1	VALVE GP-MODULATING	
		1	**155-4426**	4	COIL AS	
		1	**164-2108**	1	WASHER (13.03X25.4X2.38MM THK)	
		1	**167-9524**	1	NUT-SELF LOCKING (1/2-28 THD)	
	4	1	*148-8336*	2	CONNECTOR GP	
		1	**3J-1907**	1	SEAL-O-RING	
		1	**6V-8397**	1	SEAL-O-RING	
		1	**6V-8636**	1	CONNECTOR	
M	5	1	**6V-8202**	2	BOLT-HEX SOCKET (M8X1.25X16MM)	
					AVAILABLE REPAIR KIT(S):	
J			**200-2371**	1	KIT-SEAL	
L			**175-3892**	1	KIT-SEAL	

J-KIT MARKED J SERVICES PART MARKED J
L-KIT MARKED L SERVICES PART MARKED L
M-METRIC PART

210-8640 VALVE & MTG GP-SOLENOID ***(contd.)*** **i01660232**

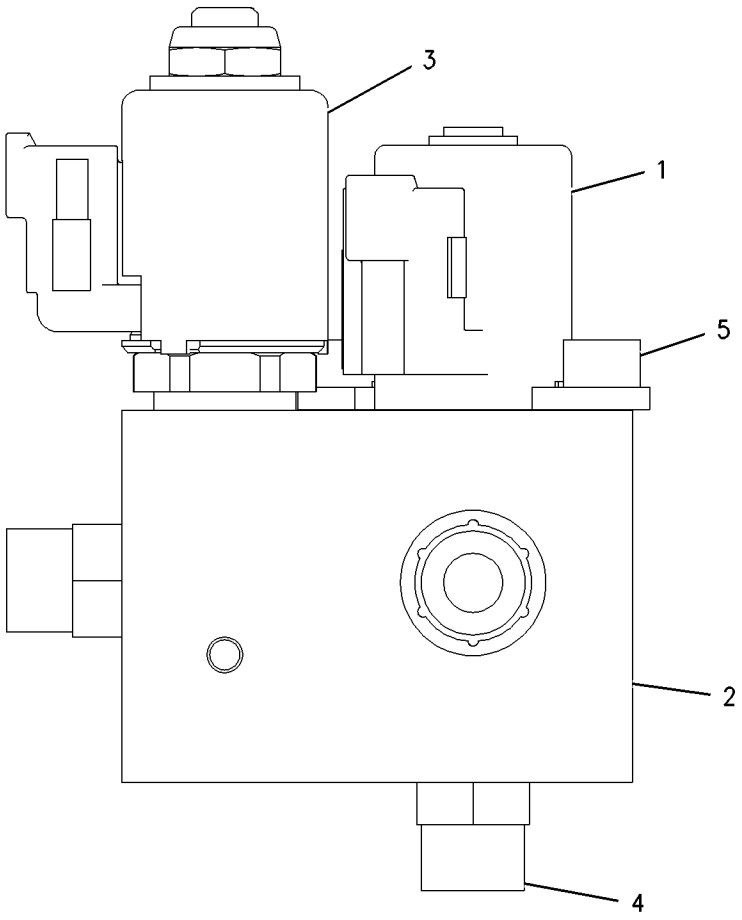

GRAPHIC #1 g00857568

210-8640 VALVE & MTG GP-SOLENOID

S/N: CED1-UP; FDG1-UP; 4YZ4000-UP; 5SZ4000-UP
PARKING BRAKE
PART OF 190-7459, 190-7939 CONTROL GP-PARKING BRAKE
AN ATTACHMENT

SMCS-5479 **i01702011**

NOTE	REF NO	GRAPHIC REF	PART NUMBER	QTY	PART NAME 1 2 3 4 5 6 (PRODUCT LEVEL)	SEE PAGE
	1	1	**195-9700**	1	VALVE GP-SOLENOID	
	2	1	**212-0061**	1	FLANGE	
	3	1	**214-3086**	1	MANIFOLD AS	
	4	1	**216-0610**	1	VALVE GP-SOLENOID	
	5	1	**148-8336**	2	CONNECTOR GP	
					(EACH INCLUDES)	
		1	**3J-1907**	1	SEAL-O-RING	
		1	**6V-8397**	1	SEAL-O-RING	
		1	**6V-8636**	1	CONNECTOR	
M	6	1	**6V-8202**	1	BOLT-HEX SOCKET (M8X1.25X16MM)	

M-METRIC PART

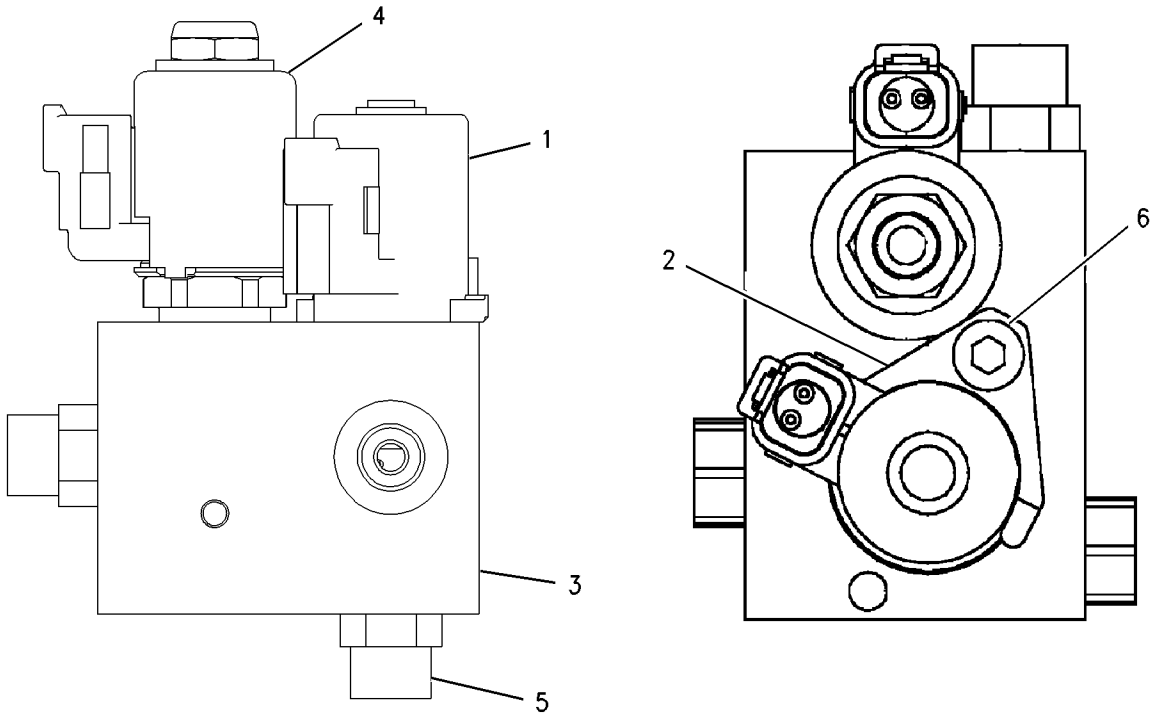

GRAPHIC #1 g00877304

191-0916 VALVE GP-SOLENOID

S/N: CED1-UP; FDG1-UP; 4YZ4000-UP; 5SZ4000-UP
PART OF 194-9376 VALVE & MTG GP-SOLENOID, 193-8387, 193-8388, 204-1397 VALVE GP-PILOT
ALSO AN ATTACHMENT

SMCS-5479 **i01755503**

NOTE	REF NO	GRAPHIC REF	PART NUMBER	QTY	PART NAME 1 2 3 4 5 6 (PRODUCT LEVEL)	SEE PAGE
	1	1	**3E-8621**	1	COIL AS	
		1	**1S-9593**	1	STRAP-CABLE	
		1	**102-8802**	1	KIT-RECEPTACLE (2 PIN)	
	2	1	**156-5970**	1	NUT (1/2-20-2B THD)	
	3	1	**191-0915**	1	CARTRIDGE AS-VALVE	
		1	**156-5970**	1	NUT (1/2-20-2B THD)	
		1	**122-1135**	1	KIT-SEAL	
					(INCLUDES SEALS AND RINGS)	

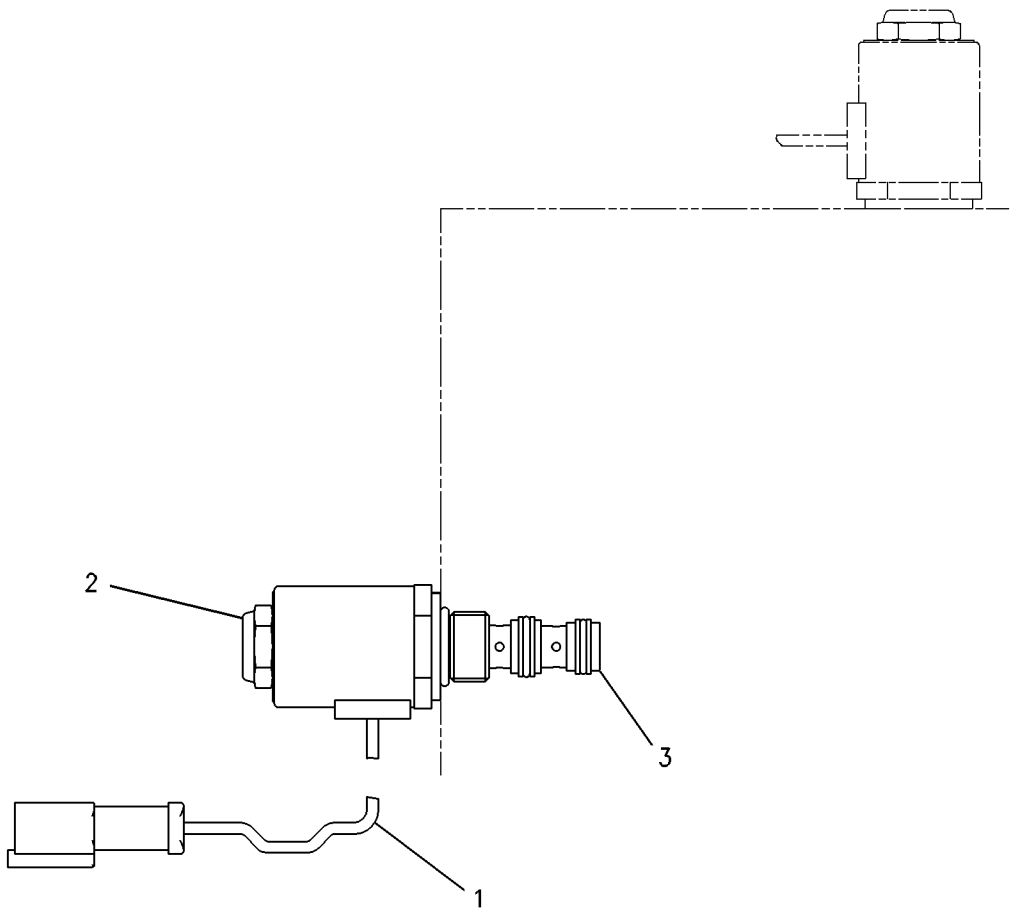

GRAPHIC #1 g00752232

142-7494 WHEEL & TIRE AR

S/N: CED1-UP; FDG1-UP; 4YZ4000-UP; 5SZ4000-UP
(16.5 X 9.75). DIRECTIONAL TIRE
AN ATTACHMENT

SMCS-4200, 4201, 4203 **i01760227**

NOTE	PART NUMBER	QTY	PART NAME 1 2 3 4 5 6 (PRODUCT LEVEL)	SEE PAGE
	142-7493	32	NUT-LUG (9/16-18-2B THD)	
	142-8728	2	TIRE & RIM GP (LH)	
	142-8737	2	TIRE & RIM GP (RH)	
			(EACH TIRE AND RIM GP INCLUDES)	
	142-8731	1	WHEEL AS	
	150-8599	1	VALVE AS-TIRE	
J	*142-8726*	1	TIRE (12-16.5 10 PLY)	

J-CONTACT LOCAL CATERPILLAR DEALER FOR PROPER TIRE REPLACEMENT

<END>

142-7495 WHEEL & TIRE AR

S/N: CED1-UP; FDG1-UP; 4YZ4000-UP; 5SZ4000-UP
(16.5 X 9.75). DIRECTIONAL TIRE
AN ATTACHMENT

SMCS-4200, 4201, 4203 **i01760229**

NOTE	PART NUMBER	QTY	PART NAME 1 2 3 4 5 6 (PRODUCT LEVEL)	SEE PAGE
	142-7493	32	NUT-LUG (9/16-18-2B THD)	
	142-8738	2	TIRE & RIM GP (LH)	
	142-9025	1	TIRE & RIM GP (RH)	
			(EACH TIRE AND RIM GP INCLUDES)	
	142-8759	1	WHEEL AS	
	150-8599	1	VALVE AS-TIRE	
J	*142-8726*	1	TIRE (12-16.5 10 PLY)	

J-CONTACT LOCAL CATERPILLAR DEALER FOR PROPER TIRE REPLACEMENT

<END>

142-8646 WHEEL & TIRE AR

S/N: 4YZ4000-UP
(15 X 6). DIRECTIONAL TIRE
AN ATTACHMENT

SMCS-4200, 4201, 4203 **i01760243**

NOTE	PART NUMBER	QTY	PART NAME 1 2 3 4 5 6 (PRODUCT LEVEL)	SEE PAGE
	142-7493	32	NUT-LUG (9/16-18-2B THD)	
	142-9027	2	TIRE & RIM GP (LH)	
	142-9031	2	TIRE & RIM GP (RH)	
			(EACH TIRE AND RIM GP INCLUDES)	
	142-7481	1	WHEEL AS	
	150-8599	1	VALVE AS-TIRE	
J	*142-8727*	1	TIRE (8.25-15 6 PLY)	

J-CONTACT LOCAL CATERPILLAR DEALER FOR PROPER TIRE REPLACEMENT

<END>

154-3972 WHEEL & TIRE AR

S/N: CED1-UP; FDG1-UP; 4YZ4000-UP; 5SZ4000-UP
(16.5 X 9.75). DIRECTIONAL TIRE, HEAVY DUTY
AN ATTACHMENT

SMCS-4200, 4201, 4203 **i01760249**

NOTE	PART NUMBER	QTY	PART NAME 1 2 3 4 5 6 (PRODUCT LEVEL)	SEE PAGE
	142-7493	32	NUT-LUG (9/16-18-2B THD)	
	154-3978	2	TIRE & RIM GP (LH)	
	154-3979	2	TIRE & RIM GP (RH)	
			(EACH TIRE AND RIM GP INCLUDES)	
	142-8731	1	WHEEL AS	
	150-8599	1	VALVE AS-TIRE	
J	*154-3982*	1	TIRE (12-16.5 10 PLY)	

J-CONTACT LOCAL CATERPILLAR DEALER FOR PROPER TIRE REPLACEMENT

<END>

154-3973 WHEEL & TIRE AR

S/N: CED1-UP; FDG1-UP; 4YZ4000-UP; 5SZ4000-UP
(16.5 X 9.75). DIRECTIONAL TIRE, HEAVY DUTY
AN ATTACHMENT

SMCS-4200, 4201, 4203 **i01760251**

NOTE	PART NUMBER	QTY	PART NAME 1 2 3 4 5 6 (PRODUCT LEVEL)	SEE PAGE
	142-7493	32	NUT-LUG (9/16-18-2B THD)	
	154-3980	2	TIRE & RIM GP (LH)	
	154-3981	2	TIRE & RIM GP (RH)	
			(EACH TIRE AND RIM GP INCLUDES)	
	142-8759	1	WHEEL AS	
	150-8599	1	VALVE AS-TIRE	
J	*154-3982*	1	TIRE (12-16.5 10 PLY)	

J-CONTACT LOCAL CATERPILLAR DEALER FOR PROPER TIRE REPLACEMENT

<END>

159-5761 WHEEL & TIRE AR

S/N: CED1-UP; FDG1-UP; 4YZ4000-UP; 5SZ4000-UP
(8.00 X 16). SOLID TIRE
AN ATTACHMENT

SMCS-4200, 4201, 4203 **i01760252**

NOTE	PART NUMBER	QTY	PART NAME 1 2 3 4 5 6 (PRODUCT LEVEL)	SEE PAGE
	142-7493	32	NUT-LUG (9/16-18-2B THD)	
J	**159-5762**	4	WHEEL AS (8.00-16 SOLID TIRE) (CAERPILLAR)	

J-CONTACT LOCAL CATERPILLAR DEALER FOR PROPER TIRE REPLACEMENT

<END>

159-5763 WHEEL & TIRE AR

S/N: CED1-UP; FDG1-UP; 4YZ4000-UP; 5SZ4000-UP
(12 X 16.5). SEGMENTED TIRE
AN ATTACHMENT

SMCS-4200, 4201, 4203 **i01760256**

NOTE	PART NUMBER	QTY	PART NAME 1 2 3 4 5 6 (PRODUCT LEVEL)	SEE PAGE
	142-7493	32	NUT-LUG (9/16-18-2B THD)	
	159-5764	2	WHEEL & TIRE GP (LH)	
			(EACH INCLUDES)	
	159-5765	1	WHEEL AS-LH	
	159-5769	22	SEGMENT AS-TIRE	
	159-5767	2	WHEEL & TIRE GP (RH)	
			(EACH INCLUDES)	
	159-5768	1	WHEEL AS-RH	
J	**159-5769**	22	SEGMENT AS-TIRE	

J-CONTACT LOCAL CATERPILLAR DEALER FOR PROPER TIRE REPLACEMENT

<END>

165-4898 WHEEL & TIRE AR

S/N: CED1-UP; FDG1-UP; 4YZ4000-UP; 5SZ4000-UP
(16.5 X 9.75). DIRECTIONAL TIRE, HEAVY DUTY
AN ATTACHMENT

SMCS-4200, 4201, 4203 **i01760261**

NOTE	PART NUMBER	QTY	PART NAME 1 2 3 4 5 6 (PRODUCT LEVEL)	SEE PAGE
	142-7493	32	NUT-LUG (9/16-18-2B THD)	
	165-4901	2	TIRE & RIM GP (LH)	
	165-4902	2	TIRE & RIM GP (RH)	
			(EACH TIRE AND RIM GP INCLUDES)	
	142-8731	1	WHEEL AS	
	150-8599	1	VALVE AS-TIRE	
J	*165-4909*	1	TIRE (12-16.5 10 PLY)	

J-CONTACT LOCAL CATERPILLAR DEALER FOR PROPER TIRE REPLACEMENT

<END>

165-4903 WHEEL & TIRE AR

S/N: FDG1-UP; 4YZ4000-UP; 5SZ4000-UP
(16.5 X 9.75). DIRECTIONAL TIRE, HEAVY DUTY
AN ATTACHMENT

SMCS-4200, 4201, 4203 **i01760266**

NOTE	PART NUMBER	QTY	PART NAME 1 2 3 4 5 6 (PRODUCT LEVEL)	SEE PAGE
	142-7493	32	NUT-LUG (9/16-18-2B THD)	
	165-4906	2	TIRE & RIM GP (LH)	
	165-4907	2	TIRE & RIM GP (RH)	
			(EACH TIRE AND RIM GP INCLUDES)	
	142-8759	1	WHEEL AS	
	150-8599	1	VALVE AS-TIRE	
J	*165-4909*	1	TIRE (12-16.5 10 PLY)	

J-CONTACT LOCAL CATERPILLAR DEALER FOR PROPER TIRE REPLACEMENT

<END>

178-2256 WHEEL & TIRE AR

S/N: CED1-UP; FDG1-UP; 4YZ4000-UP; 5SZ4000-UP
(16.5 X 12). DIRECTIONAL TIRE, HEAVY DUTY
AN ATTACHMENT

SMCS-4200, 4201, 4203 **i01760268**

NOTE	PART NUMBER	QTY	PART NAME 1 2 3 4 5 6 (PRODUCT LEVEL)	SEE PAGE
	142-7493	32	NUT-LUG (9/16-18-2B THD)	
	178-2259	2	TIRE & RIM GP (LH)	
	178-2260	2	TIRE & RIM GP (RH)	
			(EACH INCLUDES)	
	178-2270	1	WHEEL AS	
	150-8599	1	VALVE AS-TIRE	
J	**178-2269**	1	TIRE (33 X 15.50-16.5 12 PLY) (CATERPILLAR)	

J-CONTACT LOCAL CATERPILLAR DEALER FOR PROPER TIRE REPLACEMENT

<END>

185-8662 WHEEL & TIRE AR

S/N: CED1-UP; FDG1-UP; 4YZ4000-UP; 5SZ4000-UP
(305 X 546). DIRECTIONAL TIRE, LOW SIDE WALL
AN ATTACHMENT

SMCS-4200, 4201, 4203 **i01760273**

NOTE	PART NUMBER	QTY	PART NAME 1 2 3 4 5 6 (PRODUCT LEVEL)	SEE PAGE
	142-7493	32	NUT-LUG (9/16-18-2B THD)	
	185-8674	2	TIRE & RIM GP (LH)	
	185-8675	2	TIRE & RIM GP (RH)	
			(EACH TIRE AND RIM GP INCLUDES)	
	185-9936	1	WHEEL AS	
	150-8599	1	VALVE AS-TIRE	
J	**185-9935**	1	TIRE (305 X 546 10PLY) (CATERPILLAR)	

J-CONTACT LOCAL CATERPILLAR DEALER FOR PROPER TIRE REPLACEMENT

<END>

185-8663 WHEEL & TIRE AR

S/N: CED1-UP; FDG1-UP; 4YZ4000-UP; 5SZ4000-UP
(305 X 546). DIRECTIONAL TIRE, LOW SIDE WALL
AN ATTACHMENT

SMCS-4200, 4201, 4203 **i01760277**

NOTE	PART NUMBER	QTY	PART NAME 1 2 3 4 5 6 (PRODUCT LEVEL)	SEE PAGE
	142-7493	32	NUT-LUG (9/16-18-2B THD)	
	185-8676	2	TIRE & RIM GP (LH)	
	185-8677	2	TIRE & RIM GP (RH)	
			(EACH TIRE AND RIM GP INCLUDES)	
	185-9937	1	WHEEL AS	
	150-8599	1	VALVE AS-TIRE	
J	**185-9935**	1	TIRE (305 X 546 10PLY) (CATERPILLAR)	

J-CONTACT LOCAL CATERPILLAR DEALER FOR PROPER TIRE REPLACEMENT

<END>

185-8666 WHEEL & TIRE AR

S/N: CED1-UP; FDG1-UP; 4YZ4000-UP; 5SZ4000-UP
(12 X 16.5). DIRECTIONAL TIRE, HEAVY DUTY
AN ATTACHMENT

SMCS-4200, 4201, 4203 **i01763158**

NOTE	PART NUMBER	QTY	PART NAME 1 2 3 4 5 6 (PRODUCT LEVEL)	SEE PAGE
	142-7493	32	NUT-LUG (9/16-18-2B THD)	
	185-9928	2	TIRE & RIM GP (LH)	
	185-9929	2	TIRE & RIM GP (RH)	
			(EACH TIRE AND RIM GP INCLUDES)	
	142-8759	1	WHEEL AS	
	150-8599	1	VALVE AS-TIRE	
J	**185-9933**	1	TIRE (12 X 16.5 10PLY) (CATERPILLAR)	

J-CONTACT LOCAL CATERPILLAR DEALER FOR PROPER TIRE REPLACEMENT

<END>

185-8667 WHEEL & TIRE AR

S/N: CED1-UP; FDG1-UP; 4YZ4000-UP; 5SZ4000-UP
(12 X 16.5). DIRECTIONAL TIRE, HEAVY DUTY
AN ATTACHMENT

SMCS-4200, 4201, 4203 **i01760282**

NOTE	PART NUMBER	QTY	PART NAME 1 2 3 4 5 6 (PRODUCT LEVEL)	SEE PAGE
	142-7493	32	NUT-LUG (9/16-18-2B THD)	
	185-9930	2	TIRE & RIM GP (LH)	
	185-9931	2	TIRE & RIM GP (RH)	
			(EACH TIRE AND RIM GP INCLUDES)	
	142-8731	1	WHEEL AS	
	150-8599	1	VALVE AS-TIRE	
J	**185-9933**	1	TIRE (12 X 16.5 10PLY) (CATERPILLAR)	

J-CONTACT LOCAL CATERPILLAR DEALER FOR PROPER TIRE REPLACEMENT

<END>

187-3237 WHEEL & TIRE AR

S/N: CED1-UP; FDG1-UP; 4YZ4000-UP; 5SZ4000-UP
(546 X 248). DIRECTIONAL TIRE, LOW SIDE WALL, POLYFILL
AN ATTACHMENT

SMCS-4200, 4201, 4203 **i01760296**

NOTE	PART NUMBER	QTY	PART NAME 1 2 3 4 5 6 (PRODUCT LEVEL)	SEE PAGE
	142-7493	32	NUT-LUG (9/16-18-2B THD)	
	188-0116	2	TIRE & RIM GP (LH)	
	188-0117	2	TIRE & RIM GP (RH)	
			(EACH TIRE AND RIM GP INCLUDES)	
	185-9937	1	WHEEL AS	
	150-8599	1	VALVE AS-TIRE	
J	**185-9935**	1	TIRE (305 X 546 10PLY) (CATERPILLAR)	
J-CONTACT LOCAL CATERPILLAR DEALER FOR PROPER TIRE REPLACEMENT				

<END>

187-3238 WHEEL & TIRE AR

S/N: CED1-UP; FDG1-UP; 4YZ4000-UP; 5SZ4000-UP
(546 X 248). DIRECTIONAL TIRE, LOW SIDE WALL, POLYFILL
AN ATTACHMENT

SMCS-4200, 4201, 4203 **i01763159**

NOTE	PART NUMBER	QTY	PART NAME 1 2 3 4 5 6 (PRODUCT LEVEL)	SEE PAGE
	142-7493	32	NUT-LUG (9/16-18-2B THD)	
	188-0118	2	TIRE & RIM GP (LH)	
	188-0119	2	TIRE & RIM GP (RH)	
			(EACH TIRE AND RIM GP INCLUDES)	
	185-9936	1	WHEEL AS	
	150-8599	1	VALVE AS-TIRE	
J	**185-9935**	1	TIRE (305 X 546 10PLY) (CATERPILLAR)	
J-CONTACT LOCAL CATERPILLAR DEALER FOR PROPER TIRE REPLACEMENT				

<END>

187-3239 WHEEL & TIRE AR

S/N: CED1-UP; FDG1-UP; 4YZ4000-UP; 5SZ4000-UP
(16.5 X 9.75). DIRECTIONAL TIRE, POLYFILL
AN ATTACHMENT

SMCS-4200, 4201, 4203 **i01793922**

NOTE	PART NUMBER	QTY	PART NAME 1 2 3 4 5 6 (PRODUCT LEVEL)	SEE PAGE
	142-7493	32	NUT-LUG (9/16-18-2B THD)	
	188-0124	2	TIRE & RIM GP (LH)	
	188-0125	2	TIRE & RIM GP (RH)	
			(EACH TIRE AND RIM GP INCLUDES)	
	142-8731	1	WHEEL AS	
	150-8599	1	VALVE AS-TIRE	
J	**185-9933**	1	TIRE (12 X 16.5 10PLY) (CATERPILLAR)	
J-CONTACT LOCAL CATERPILLAR DEALER FOR PROPER TIRE REPLACEMENT				

<END>

188-0111 WHEEL & TIRE AR

S/N: CED1-UP; FDG1-UP; 4YZ4000-UP; 5SZ4000-UP
(16.5 X 9.75). DIRECTIONAL TIRE, POLYFILL
AN ATTACHMENT

SMCS-4200, 4201, 4203 **i01760299**

NOTE	PART NUMBER	QTY	PART NAME 1 2 3 4 5 6 (PRODUCT LEVEL)	SEE PAGE
	142-7493	32	NUT-LUG (9/16-18-2B THD)	
	188-0126	2	TIRE & RIM GP (LH)	
	188-0127	2	TIRE & RIM GP (RH)	
			(EACH TIRE AND RIM GP INCLUDES)	
	142-8759	1	WHEEL AS	
	150-8599	1	VALVE AS-TIRE	
J	**185-9933**	1	TIRE (12 X 16.5 10PLY) (CATERPILLAR)	

J-CONTACT LOCAL CATERPILLAR DEALER FOR PROPER TIRE REPLACEMENT

<END>

185-9939 WHEEL & TIRE GP

S/N: 4YZ4000-UP; 5SZ4000-UP
KIT-WHEEL AND TIRE, (8.00 X 16), SOLID TIRE
AN ATTACHMENT

SMCS-4200, 4201, 4202, 4203, 4208, 4209 **i01760286**

NOTE	PART NUMBER	QTY	PART NAME 1 2 3 4 5 6 (PRODUCT LEVEL)	SEE PAGE
	159-5762	4	WHEEL AS (8.00-16 SOLID TIRE) (CATERPILLAR)	

<END>

FRAME AND BODY

154-4000 BUMPER GP-REAR

S/N: CED1-UP; FDG1-UP; 4YZ4000-UP; 5SZ4000-UP
PART OF 190-7953, 195-6710, 195-6761, 195-6763 CHASSIS AR

SMCS-7156 **i01513057**

NOTE	REF NO	GRAPHIC REF	PART NUMBER	QTY	PART NAME 1 2 3 4 5 6 (PRODUCT LEVEL)	SEE PAGE
	1	1	**142-9021**	2	STUD	
	2	1	**154-4006**	2	BOSS	
	3	1	**192-2700**	1	BUMPER AS	
	4	1	**8T-4122**	6	WASHER-HARD (17X32X3.5MM THK)	
M	5	1	**8T-4132**	4	NUT (M16X2 THD)	
M	6	1	**8T-7338**	2	BOLT (M16X2.0X45MM)	

M-METRIC PART

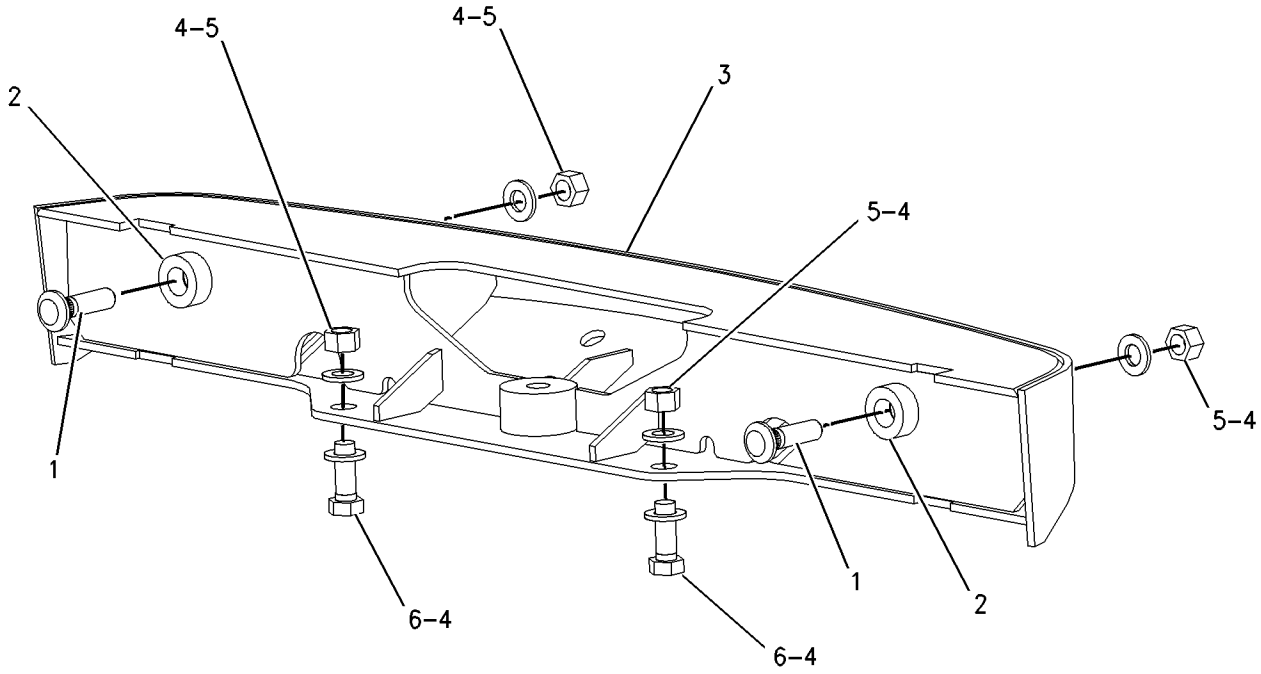

GRAPHIC #1 g00709840

166-2567 CONVERSION AR-ROADING

S/N: 4YZ4000-UP
GERMANY
AN ATTACHMENT

SMCS-7000 **i01655287**

NOTE	PART NUMBER	QTY	PART NAME 1 2 3 4 5 6 (PRODUCT LEVEL)	SEE PAGE
Y	*173-3013*	1	BOX GP-STORAGE	590
Y	*175-4232*	1	CONVERSION GP-ROADING	278
Y	*188-0142*	1	COUPLER GP-QUICK	538
Y	*203-4326*	1	HORN GP-ELECTRIC	637
Y	*142-9101*	1	INSTALLATION AR-ENGINE	7
Y	**177-9152**	1	KIT-ROADING PLATE & MOUNTING	568
Y	*188-0147*	1	LIFTING GP-MACHINE	304
Y	*203-4331*	1	LIGHTING GP-ROADING	162
Y	*175-4238*	1	LOCK GP-QUICK COUPLER	572
Y	*175-4233*	1	MIRROR & MTG GP-REAR VIEW	651
Y	*191-9672*	1	MOTOR & MTG GP-HYDRAULIC FAN	432
Y	*175-4228*	1	MOUNTING GP-ROADING LIGHTS	308
Y	*177-7929*	1	PLATE & FILM GP	708
Y	*176-0613*	1	SUPPRESSION GP-SOUND	312
Y	*173-3022*	1	VISOR GP-CAB	681

Y-SEPARATE ILLUSTRATION

<END>

175-4242 CONVERSION AR-ROADING

S/N: 4YZ4000-UP
ITALY
FOR USE WITH 191-9796—PAGE 336. CANNOT BE USED WITH 191-9794—PAGE 335, 175-4244—PAGE 273, 166-2567—PAGE 272, 188-3310—PAGE 275
AN ATTACHMENT

SMCS-7000 **i01655535**

NOTE	PART NUMBER	QTY	PART NAME 1 2 3 4 5 6 (PRODUCT LEVEL)	SEE PAGE
Y	*173-3013*	1	BOX GP-STORAGE	590
Y	*173-3017*	1	CONVERSION GP-ROADING	277
Y	*188-0142*	1	COUPLER GP-QUICK	538
Y	*203-4326*	1	HORN GP-ELECTRIC	637
Y	*142-9101*	1	INSTALLATION AR-ENGINE	7
Y	*154-3994*	1	INSTALLATION AR-ENGINE	
Y	**177-9152**	1	KIT-ROADING PLATE & MOUNTING	568
Y	*188-0147*	1	LIFTING GP-MACHINE	304
Y	*203-4332*	1	LIGHTING GP-ROADING	166
Y	*175-4238*	1	LOCK GP-QUICK COUPLER	572
Y	*175-4233*	1	MIRROR & MTG GP-REAR VIEW	651
Y	*191-9672*	1	MOTOR & MTG GP-HYDRAULIC FAN	432
Y	*175-4228*	1	MOUNTING GP-ROADING LIGHTS	308
Y	*177-7929*	1	PLATE & FILM GP	708
Y	*176-0613*	1	SUPPRESSION GP-SOUND	312
Y	*192-2694*	1	WIRING GP-REAR LIGHTING	194

Y-SEPARATE ILLUSTRATION

<END>

FRAME AND BODY

175-4244 CONVERSION AR-ROADING

S/N: 4YZ4000-UP
EUROPE
AN ATTACHMENT

SMCS-7000 **i01655968**

NOTE	PART NUMBER	QTY	PART NAME 1 2 3 4 5 6 (PRODUCT LEVEL)	SEE PAGE
Y	*173-3013*	1	BOX GP-STORAGE	590
Y	*142-9080*	1	COUPLER GP-QUICK	
Y	*203-4326*	1	HORN GP-ELECTRIC	637
Y	*142-9101*	1	INSTALLATION AR-ENGINE	7
Y	*142-9110*	1	LIFTING GP-MACHINE	302
Y	*191-9672*	1	MOTOR & MTG GP-HYDRAULIC FAN	432
Y	*177-7929*	1	PLATE & FILM GP	708
Y	*176-0613*	1	SUPPRESSION GP-SOUND	312
Y-SEPARATE ILLUSTRATION				

<END>

188-3306 CONVERSION AR-ROADING

S/N: 5SZ4000-UP
EUROPE
AN ATTACHMENT

SMCS-7000 **i01686990**

NOTE	PART NUMBER	QTY	PART NAME 1 2 3 4 5 6 (PRODUCT LEVEL)	SEE PAGE
Y	*173-3013*	1	BOX GP-STORAGE	590
Y	*142-9080*	1	COUPLER GP-QUICK	
Y	*203-4326*	1	HORN GP-ELECTRIC	637
Y	*183-7125*	1	INSTALLATION AR-ENGINE	8
Y	*142-9110*	1	LIFTING GP-MACHINE	302
Y	*191-9674*	1	MOTOR & MTG GP-HYDRAULIC FAN	433
Y	*177-7929*	1	PLATE & FILM GP	708
Y	*176-0613*	1	SUPPRESSION GP-SOUND	312
Y-SEPARATE ILLUSTRATION				

<END>

188-3307 CONVERSION AR-ROADING

S/N: 5SZ4000-UP
ITALY
AN ATTACHMENT

SMCS-7000 **i01686065**

NOTE	PART NUMBER	QTY	PART NAME 1 2 3 4 5 6 (PRODUCT LEVEL)	SEE PAGE
Y	*173-3013*	1	BOX GP-STORAGE	590
Y	*173-3017*	1	CONVERSION GP-ROADING	277
Y	*188-0142*	1	COUPLER GP-QUICK	538
			S/N: 5SZ4000-5252	
Y	*203-4326*	1	HORN GP-ELECTRIC	637
Y	*183-7125*	1	INSTALLATION AR-ENGINE	8
Y	**177-9152**	1	KIT-ROADING PLATE & MOUNTING (HOMOLOGATION)	568
Y	*188-0147*	1	LIFTING GP-MACHINE	304
Y	*203-4332*	1	LIGHTING GP-ROADING	166
Y	*175-4238*	1	LOCK GP-QUICK COUPLER	572
Y	*175-4233*	1	MIRROR & MTG GP-REAR VIEW	651
Y	*191-9674*	1	MOTOR & MTG GP-HYDRAULIC FAN	433
			S/N: 5SZ4000-5252	
Y	*175-4228*	1	MOUNTING GP-ROADING LIGHTS	308
			S/N: 5SZ4000-5252	
Y	*177-7929*	1	PLATE & FILM GP	708
Y	*176-0613*	1	SUPPRESSION GP-SOUND	312
Y	*192-2694*	1	WIRING GP-REAR LIGHTING	194

Y-SEPARATE ILLUSTRATION

<END>

188-3308 CONVERSION AR-ROADING

S/N: 5SZ4000-UP
GERMANY
AN ATTACHMENT

SMCS-7000 **i01686222**

NOTE	PART NUMBER	QTY	PART NAME 1 2 3 4 5 6 (PRODUCT LEVEL)	SEE PAGE
Y	*173-3013*	1	BOX GP-STORAGE	590
Y	*175-4232*	1	CONVERSION GP-ROADING	278
Y	*188-0142*	1	COUPLER GP-QUICK	538
			S/N: 5SZ4000-5252	
Y	*203-4326*	1	HORN GP-ELECTRIC	637
Y	*183-7125*	1	INSTALLATION AR-ENGINE	8
Y	**177-9152**	1	KIT-ROADING PLATE & MOUNTING (HOMOLOGATION)	568
Y	*188-0147*	1	LIFTING GP-MACHINE	304
Y	*203-4331*	1	LIGHTING GP-ROADING	162
Y	*175-4238*	1	LOCK GP-QUICK COUPLER	572
Y	*175-4233*	1	MIRROR & MTG GP-REAR VIEW	651
Y	*191-9674*	1	MOTOR & MTG GP-HYDRAULIC FAN	433
			S/N: 5SZ4000-5252	
Y	*175-4228*	1	MOUNTING GP-ROADING LIGHTS	308
			S/N: 5SZ4000-5252	
Y	*177-7929*	1	PLATE & FILM GP	708
Y	*176-0613*	1	SUPPRESSION GP-SOUND	312
Y	*173-3022*	1	VISOR GP-CAB	681

Y-SEPARATE ILLUSTRATION

<END>

188-3310 CONVERSION AR-ROADING

S/N: 4YZ4000-UP
UNITED KINGDOM
AN ATTACHMENT

SMCS-7000 **i01657587**

NOTE	PART NUMBER	QTY	PART NAME 1 2 3 4 5 6 (PRODUCT LEVEL)	SEE PAGE
Y	*173-3013*	1	BOX GP-STORAGE	590
Y	*142-9080*	1	COUPLER GP-QUICK	
Y	*203-4326*	1	HORN GP-ELECTRIC	637
Y	*142-9101*	1	INSTALLATION AR-ENGINE	7
Y	*142-9110*	1	LIFTING GP-MACHINE	302
Y	*191-9672*	1	MOTOR & MTG GP-HYDRAULIC FAN	432
Y	*177-7929*	1	PLATE & FILM GP	708
Y	*176-0613*	1	SUPPRESSION GP-SOUND	312

Y-SEPARATE ILLUSTRATION

<END>

FRAME AND BODY

188-3311 CONVERSION AR-ROADING

S/N: 5SZ4000-UP
UNITED KINGDOM
AN ATTACHMENT

SMCS-7000 **i01690510**

NOTE	PART NUMBER	QTY	PART NAME 1 2 3 4 5 6 (PRODUCT LEVEL)	SEE PAGE
Y	*173-3013*	1	BOX GP-STORAGE	590
Y	*142-9080*	1	COUPLER GP-QUICK	
Y	*191-9684*	1	FILM GP	700
Y	*203-4326*	1	HORN GP-ELECTRIC	637
Y	*183-7125*	1	INSTALLATION AR-ENGINE	8
Y	*142-9110*	1	LIFTING GP-MACHINE	302
Y	*177-7929*	1	PLATE & FILM GP	708
Y	*176-0613*	1	SUPPRESSION GP-SOUND	312

Y-SEPARATE ILLUSTRATION

<END>

FRAME AND BODY

173-3017 CONVERSION GP-ROADING

S/N: 4YZ4000-UP; 5SZ4000-UP
ITALY
PART OF 175-4242, 188-3307 CONVERSION AR-ROADING
AN ATTACHMENT

SMCS-7000 **i01408815**

NOTE	REF NO	GRAPHIC REF	PART NUMBER	QTY	PART NAME 1 2 3 4 5 6 (PRODUCT LEVEL)	SEE PAGE
Y	1	1	**128-6985**	1	LAMP GP-WARNING BEACON	157
	2	1	**186-2360**	4	COVER AS	
		1	**129-1854**		FASTENER-LOOP (10CM)	
		1	**129-1855**		FASTENER-HOOK (10CM)	

Y-SEPARATE ILLUSTRATION

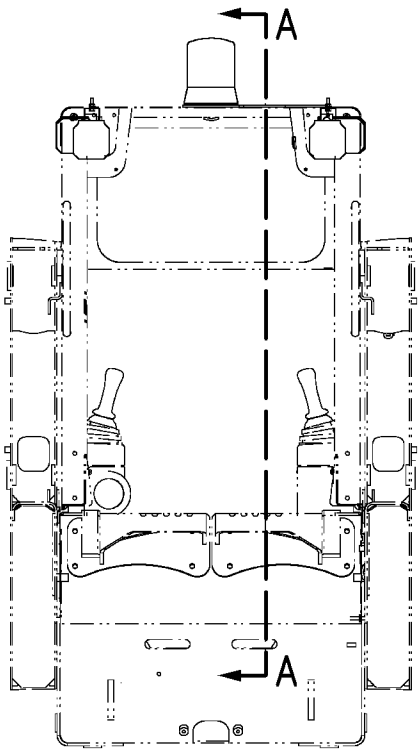

FRONT VIEW

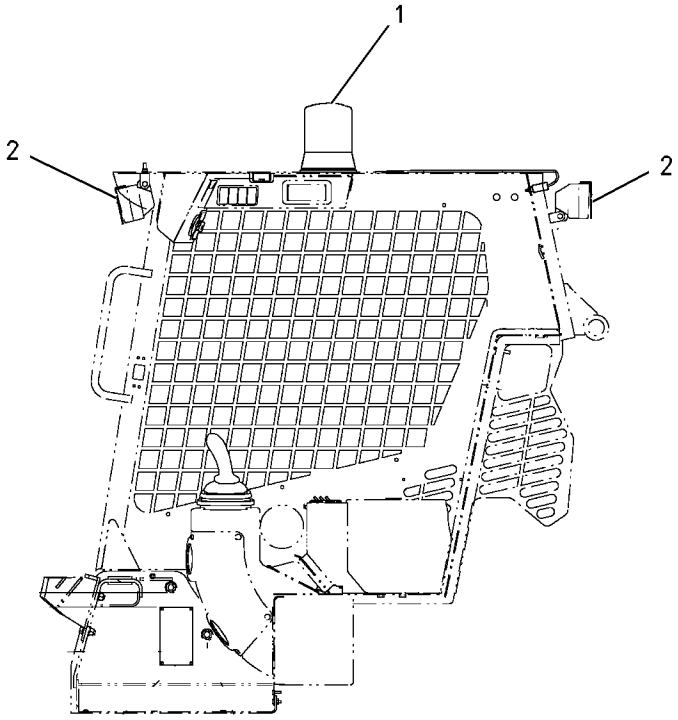

SECTION A-A

GRAPHIC #1 g00701754

175-4232 CONVERSION GP-ROADING

S/N: 4YZ4000-UP; 5SZ4000-UP
GERMANY
PART OF 166-2567, 188-3308 CONVERSION AR-ROADING
AN ATTACHMENT

SMCS-7000 **i01793975**

NOTE	REF NO	GRAPHIC REF	PART NUMBER	QTY	PART NAME 1 2 3 4 5 6 (PRODUCT LEVEL)	SEE PAGE
	1	1	**101-4486**	1	KIT-FIRST AID	
	2	1	**101-4744**	1	PLATE-WARNING (SLOW MOVING VEHICLE)	
	3	1	**108-2953**	1	LAMP GP-WARNING BEACON	
	4	1	**113-7634**	1	FILM-NOTICE	
	5	1	**173-3015**	1	BRACKET AS	
	6	1	**173-3016**	1	CHOCK	
	7	1	**173-3018**	1	BRACKET	
M	8	1	**8T-4171**	5	BOLT (M6X1X12MM)	
	9	1	**8T-4205**	5	WASHER-HARD (7.2X14.5X2MM THK)	
J	10	1	**129-1854**		FASTENER-LOOP (54CM)	
J	11	1	**129-1855**		FASTENER-HOOK (145CM)	

J-LOOP SIDE ON FIRST AID KIT HOOK SIDE ON MACHINE
M-METRIC PART

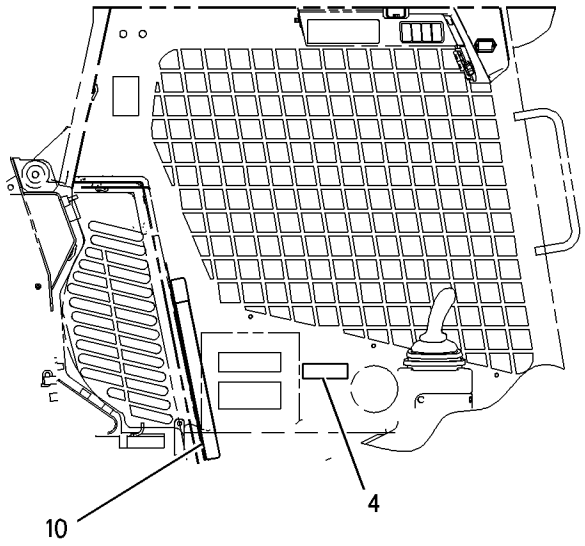

SECTION B-B

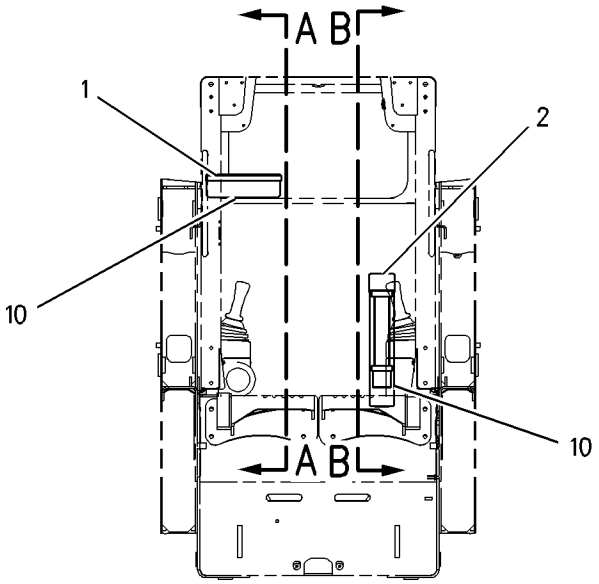

FRONT VIEW

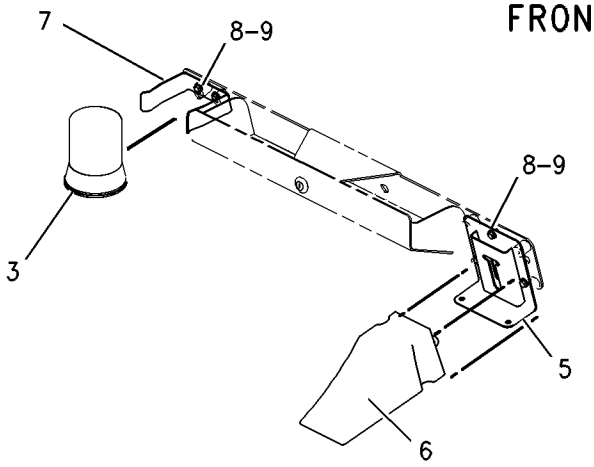

VIEW OF AREA C

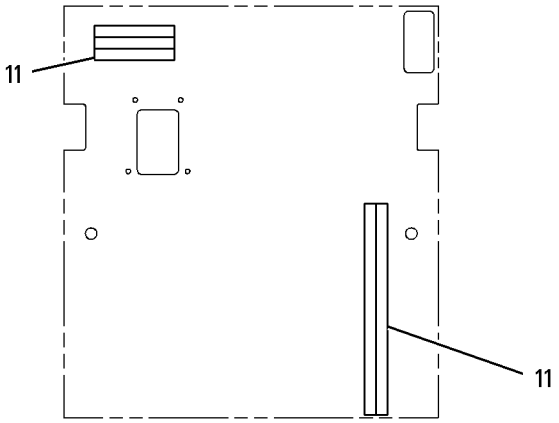

CAB LINER-REAR WALL

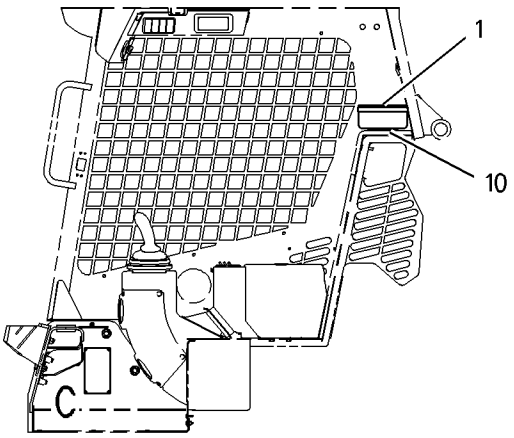

SECTION A-A

GRAPHIC #1 g00856340

154-4050 COUNTERWEIGHT GP

S/N: 5SZ4000-UP
59.5KG (130LB)
PART OF 197-4900 COMMON AR

SMCS-7056 **i01793977**

NOTE	REF NO	GRAPHIC REF	PART NUMBER	QTY	PART NAME 1 2 3 4 5 6 (PRODUCT LEVEL)	SEE PAGE
	1	1	**177-9580**	14	BLOCK	
	2	1	**7X-0590**	2	WASHER-HARD (13.5X44.5X6MM THK)	
M	3	1	**7X-7960**	2	BOLT (M12X1.75X220MM)	

M-METRIC PART

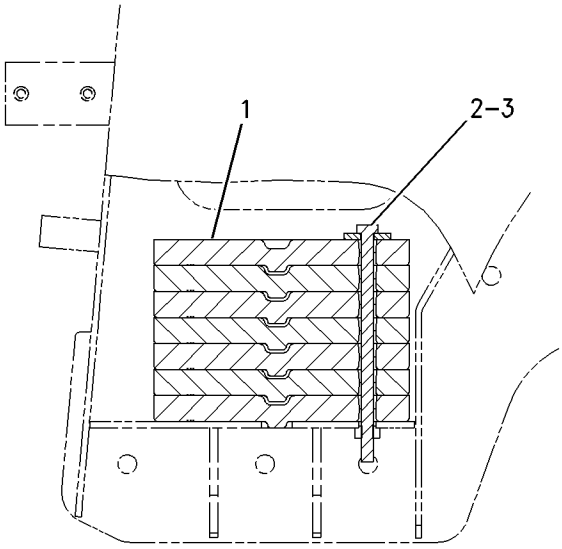

SECTION A-A

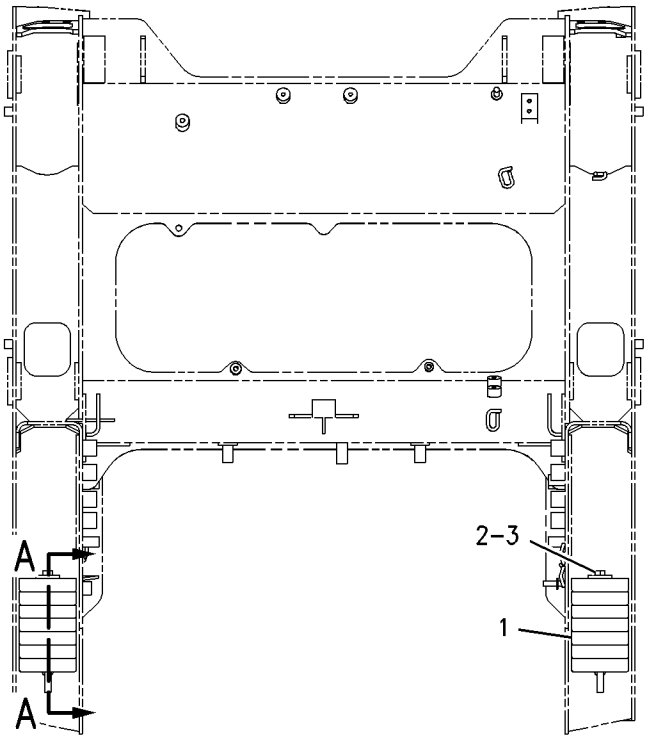

REAR VIEW

GRAPHIC #1 g00917997

FRAME AND BODY

183-7132 COUNTERWEIGHT GP

S/N: 4YZ4000-UP; 5SZ4000-UP

AN ATTACHMENT

SMCS-7056 **i01793980**

NOTE	REF NO	GRAPHIC REF	PART NUMBER	QTY	PART NAME 1 2 3 4 5 6 (PRODUCT LEVEL)	SEE PAGE
	1	1	**183-7131**	2	BLOCK	
	2	1	**183-7133**	1	BLOCK	
	3	1	**183-7134**	1	BLOCK	
M	4	1	**8T-4189**	4	BOLT (M8X1.25X20MM)	
	5	1	**8T-4223**	4	WASHER-HARD (13.5X25.5X3MM THK)	
	6	1	**8T-4224**	4	WASHER-HARD (8.8X16X2MM THK)	
M	7	1	**8T-4648**	4	BOLT (M12X1.75X70MM)	

M-METRIC PART

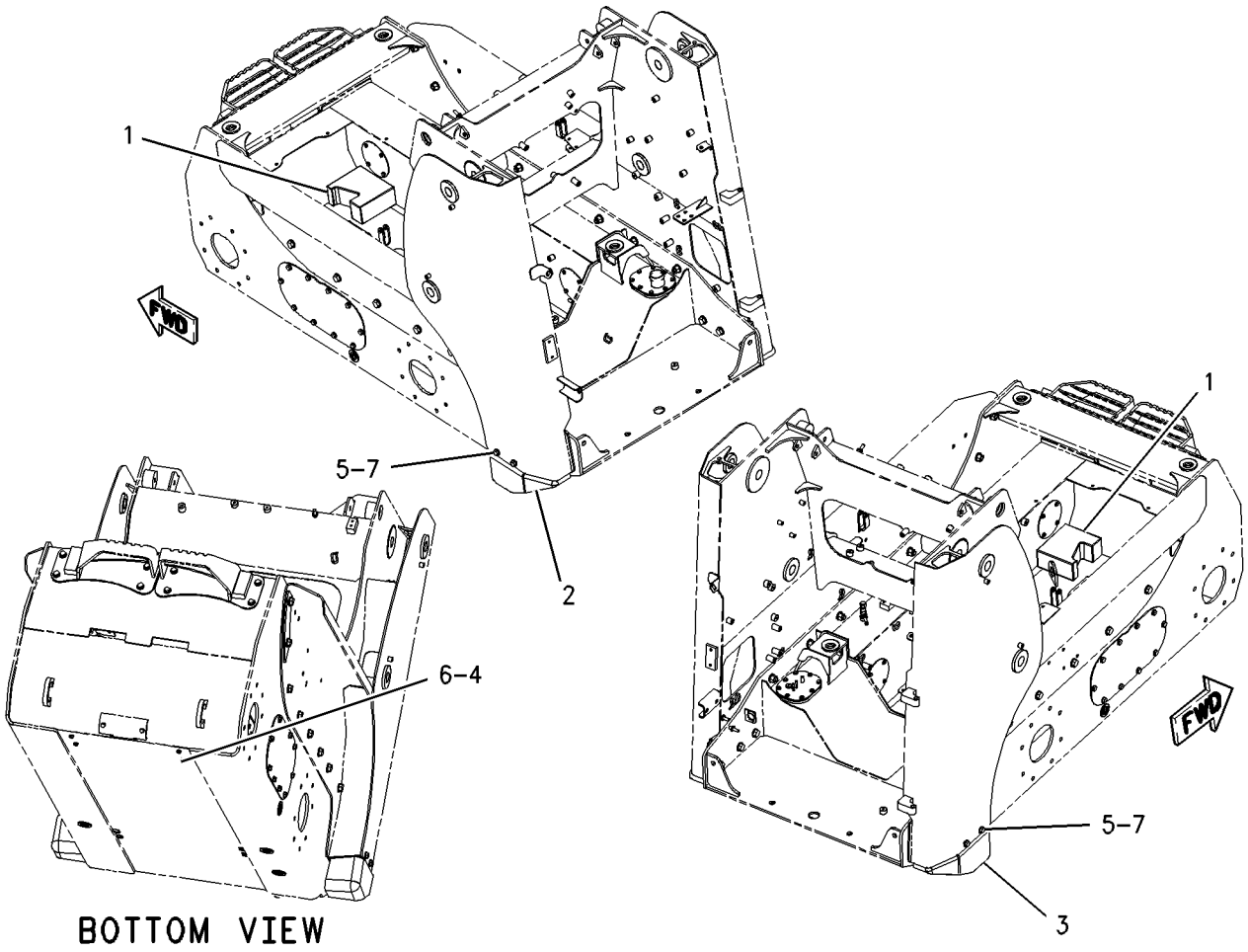

GRAPHIC #1 g00918000

FRAME AND BODY

185-9941 COUNTERWEIGHT GP

S/N: 4YZ4000-UP; 5SZ4000-UP
16.19 KG, 33.99 KG. KIT-COUNTERWEIGHT
FIELD INSTALLATION

SMCS-7056 **i01793982**

NOTE	REF NO	GRAPHIC REF	PART NUMBER	QTY	PART NAME 1 2 3 4 5 6 (PRODUCT LEVEL)	SEE PAGE
	1	1	**183-7131**	2	BLOCK (16.19 KG)	
	2	1	**183-7133**	1	BLOCK (33.99 KG)	
	3	1	**183-7134**	1	BLOCK (33.99 KG)	
M	4	1	**8T-4189**	4	BOLT (M8X1.25X20MM)	
	5	1	**8T-4223**	4	WASHER-HARD (13.5X25.5X3MM THK)	
	6	1	**8T-4224**	4	WASHER-HARD (8.8X16X2MM THK)	
M	7	1	**8T-4648**	4	BOLT (M12X1.75X70MM)	

M-METRIC PART

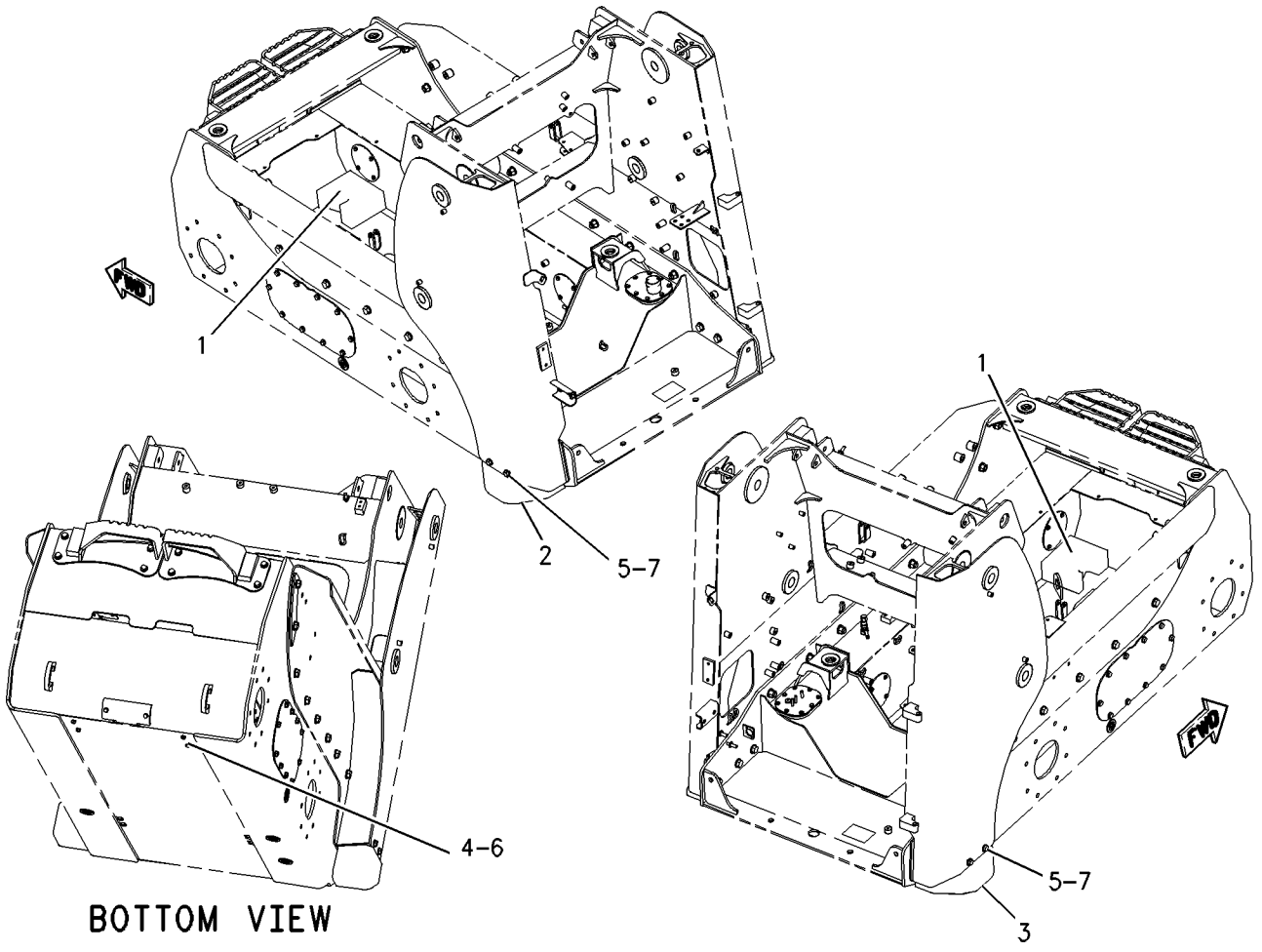

GRAPHIC #1 g00918003

FRAME AND BODY

190-8042 COUNTERWEIGHT GP

S/N: CED1-UP; FDG1-UP
KIT-COUNTERWEIGHT
FIELD INSTALLATION

SMCS-7056 **i01793994**

NOTE	REF NO	GRAPHIC REF	PART NUMBER	QTY	PART NAME 1 2 3 4 5 6 (PRODUCT LEVEL)	SEE PAGE
	1	1	**191-9742**	1	BLOCK	
	2	1	**191-9743**	1	PLATE	
	3	1	**8T-4122**	2	WASHER-HARD (17X32X3.5MM THK)	
M	4	1	**8T-7338**	2	BOLT (M16X2.0X45MM)	

M-METRIC PART

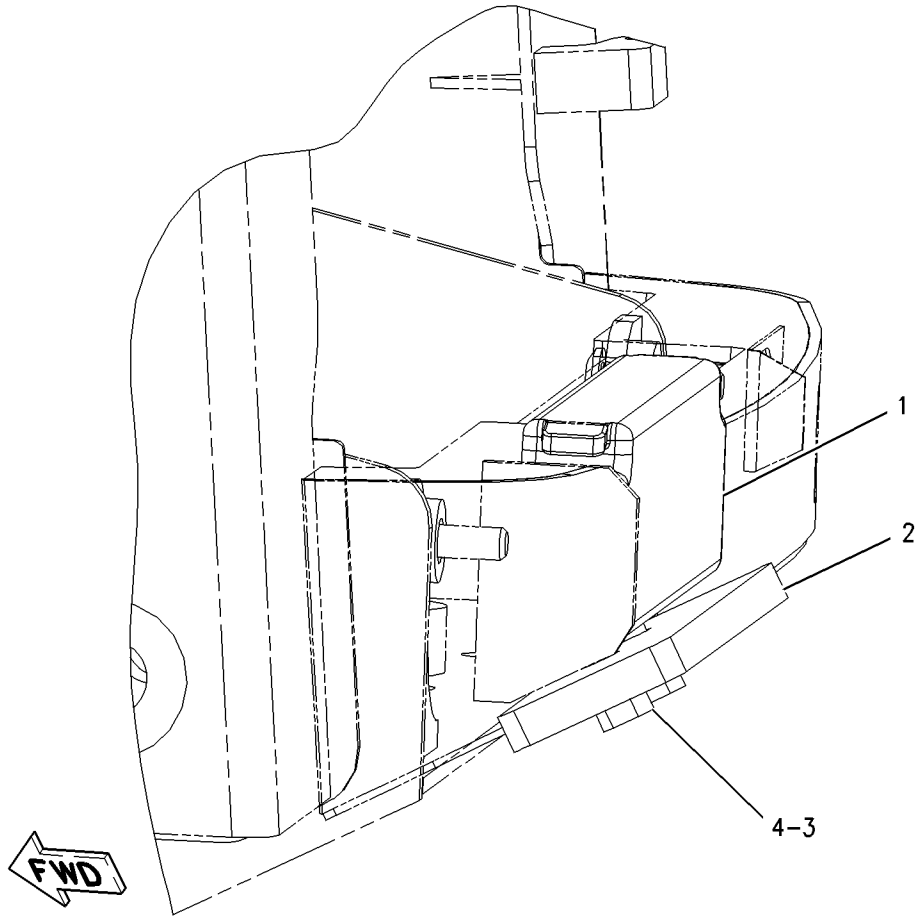

GRAPHIC #1 g00918008

FRAME AND BODY

191-9741 COUNTERWEIGHT GP

S/N: CED1-UP; FDG1-UP

AN ATTACHMENT

SMCS-7056 **i01794001**

NOTE	REF NO	GRAPHIC REF	PART NUMBER	QTY	PART NAME 1 2 3 4 5 6 (PRODUCT LEVEL)	SEE PAGE
	1	1	**191-9742**	1	BLOCK	
	2	1	**191-9743**	1	PLATE	
	3	1	**8T-4122**	2	WASHER-HARD (17X32X3.5MM THK)	
M	4	1	**8T-7338**	2	BOLT (M16X2.0X45MM)	

M-METRIC PART

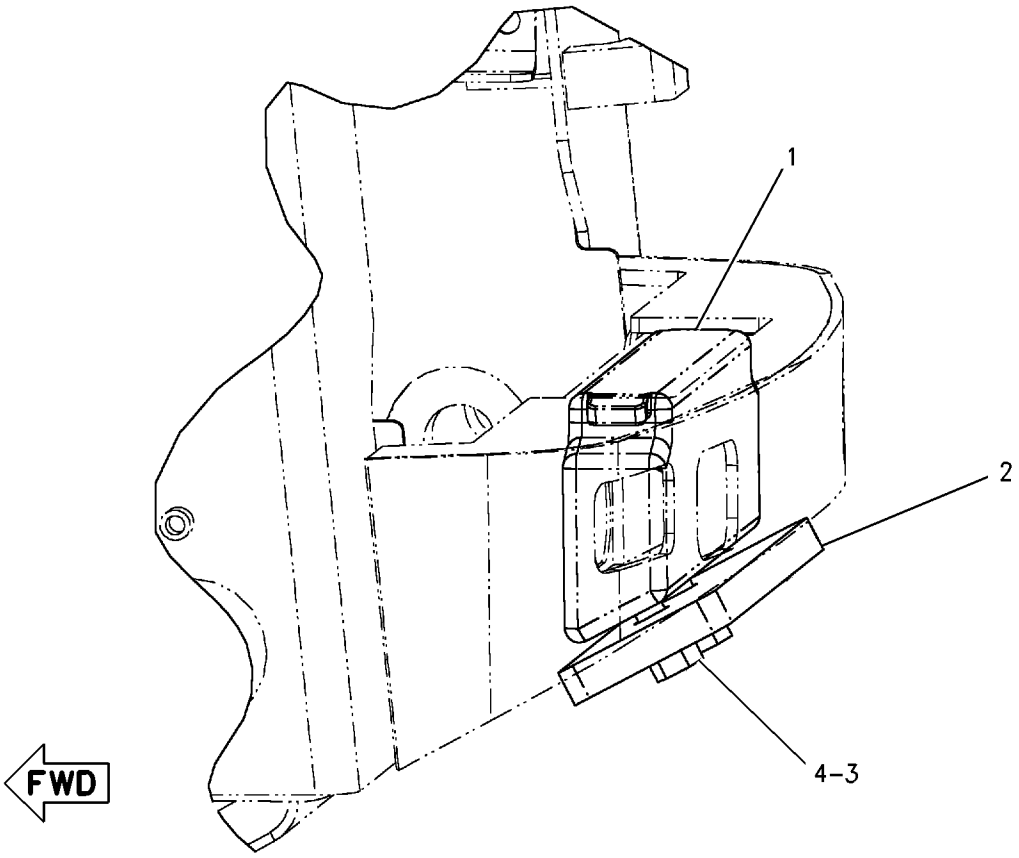

GRAPHIC #1 g00918014

MEMORANDA

142-9103 ENCLOSURE GP-ENGINE

S/N: 5SZ4000-UP

PART OF 195-6763 CHASSIS AR

SMCS-7263 **i01670889**

NOTE	REF NO	GRAPHIC REF	PART NUMBER	QTY	PART NAME 1 2 3 4 5 6 (PRODUCT LEVEL)	SEE PAGE
	1	1	**5V-8309**	1	STRIKER AS	
B	2	1	**8T-0318**	1	SHIM (0.8MM THK)	
	3	1	**8T-2444**	3	STUD-BALL	
	4	1	**8T-4159**	1	BUMPER	
	5	1	**110-0885**	2	BUMPER	
	6	1	**142-8801**	1	HOOD AS	
	7	1	**142-8802**	1	DOOR AS	
	8	1	**142-8814**	1	DAMPER AS	
	9	1	**142-8831**	1	STRIKER AS	
	10	1	**142-8832**	2	PIN AS	
	11	1	**142-8874**	1	GRILL AS	
	12	1	**142-8875**	1	SUPPORT AS	
	13	1	**142-8876**	1	SUPPORT AS	
	14	1	**178-2255**	2	PIN	
	15	1	**152-1041**	1	LATCH AS	
J	16	1	**152-1042**	1	LOCK AS	
		1	**7F-9223**	1	LOCKWASHER	
		1	**8T-5004**	1	SCREW-MACHINE (1/4-28X0.375 IN)	
	17	1	**159-8405**	2	BOLT-SHOULDER	
	18	1	**159-9790**	1	SPRING AS-GAS	
	19	1	**161-2347**	1	LATCH AS	
	20	1	**2K-4973**	3	LOCKNUT (3/8-16 THD)	
M	21	1	**5C-7261**	3	NUT (M8X1.25 THD)	
	22	1	**7X-7729**	3	WASHER (11X25X3MM THK)	
	23	1	**8T-4121**	8	WASHER-HARD (11X21X2.5MM THK)	
M	24	1	**8T-4133**	4	NUT (M10X1.5 THD)	
M	25	1	**8T-4137**	2	BOLT (M10X1.5X20MM)	
M	26	1	**8T-4181**	7	BOLT (M6X1X20MM)	
M	27	1	**8T-4908**	8	BOLT (M8X1.25X25MM)	
	28	1	**8T-4205**	7	WASHER-HARD (7.2X14.5X2MM THK)	
	29	1	**8T-4224**	3	WASHER-HARD (8.8X16X2MM THK)	
M	30	1	**8T-5005**	4	BOLT (M10X1.50X70MM)	
BD	31	1	**5P-8309**		SEAL (2.3M)	
	32	1	**5P-0372**	2	LOCK PIN	
	33	1	**5P-4116**	8	WASHER-HARD (8.8X20.5X2MM THK)	
	34	1	**208-6176**	1	STUD-BALL	

B-USE AS REQUIRED
D-ORDER BY THE METER
J-REQUIRES 5P8500 KEY
M-METRIC PART

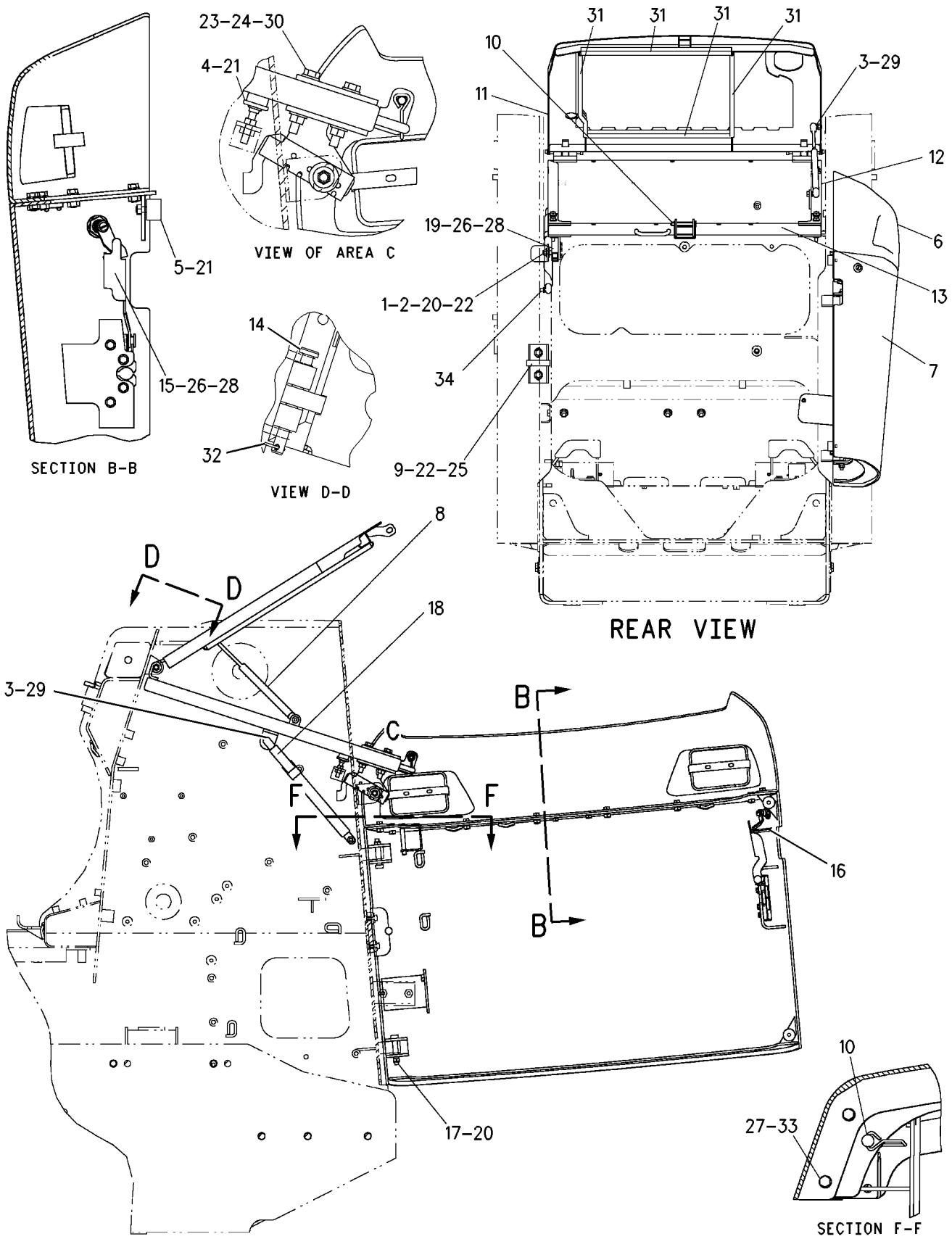

GRAPHIC #1

g00863408

154-3991 ENCLOSURE GP-ENGINE

S/N: 4YZ4000-UP

PART OF 195-6761 CHASSIS AR

SMCS-7263 **i01694134**

NOTE	REF NO	GRAPHIC REF	PART NUMBER	QTY	PART NAME 1 2 3 4 5 6 (PRODUCT LEVEL)	SEE PAGE
	1	1	**5P-0372**	2	LOCK PIN	
	2	1	**5V-8309**	1	STRIKER AS	
	3	1	**8T-0318**	1	SHIM (0.8MM THK)	
	4	1	**8T-2444**	3	STUD-BALL	
	5	1	**8T-4159**	1	BUMPER	
	6	1	**110-0885**	2	BUMPER	
	7	1	**142-8801**	1	HOOD AS	
	8	1	**142-8802**	1	DOOR AS	
	9	1	**142-8814**	1	DAMPER AS	
	10	1	**142-8831**	1	STRIKER AS	
	11	1	**142-8832**	2	PIN AS	
	12	1	**142-8875**	1	SUPPORT AS	
	13	1	**142-8876**	1	SUPPORT AS	
	14	1	**152-1041**	1	LATCH AS	
	15	1	**152-1042**	1	LOCK AS	
		1	**7F-9223**	1	LOCKWASHER	
		1	**8T-5004**	1	SCREW-MACHINE (1/4-28X0.375 IN)	
	16	1	**154-3992**	1	SUPPORT AS	
	17	1	**154-3993**	1	GRILL AS	
	18	1	**159-8405**	2	BOLT-SHOULDER	
	19	1	**159-9790**	1	SPRING AS-GAS	
	20	1	**161-2347**	1	LATCH AS	
	21	1	**178-2255**	2	PIN	
	22	1	**2K-4973**	3	LOCKNUT (3/8-16 THD)	
M	23	1	**5C-7261**	3	NUT (M8X1.25 THD)	
	24	1	**7X-7729**	3	WASHER (11X25X3MM THK)	
	25	1	**8T-4121**	12	WASHER-HARD (11X21X2.5MM THK)	
M	26	1	**8T-4133**	6	NUT (M10X1.5 THD)	
M	27	1	**8T-4137**	2	BOLT (M10X1.5X20MM)	
M	28	1	**8T-4181**	7	BOLT (M6X1X20MM)	
M	29	1	**8T-4908**	8	BOLT (M8X1.25X25MM)	
	30	1	**8T-4205**	7	WASHER-HARD (7.2X14.5X2MM THK)	
	31	1	**8T-4224**	3	WASHER-HARD (8.8X16X2MM THK)	
M	32	1	**8T-5005**	6	BOLT (M10X1.50X70MM)	
BD	33	1	**3E-8082**		SEAL (186CM)	
	34	1	**208-6176**	1	STUD-BALL	
	35	1	**5P-4116**	8	WASHER-HARD (8.8X20.5X2MM THK)	

B-USE AS REQUIRED
D-ORDER BY THE METER
M-METRIC PART

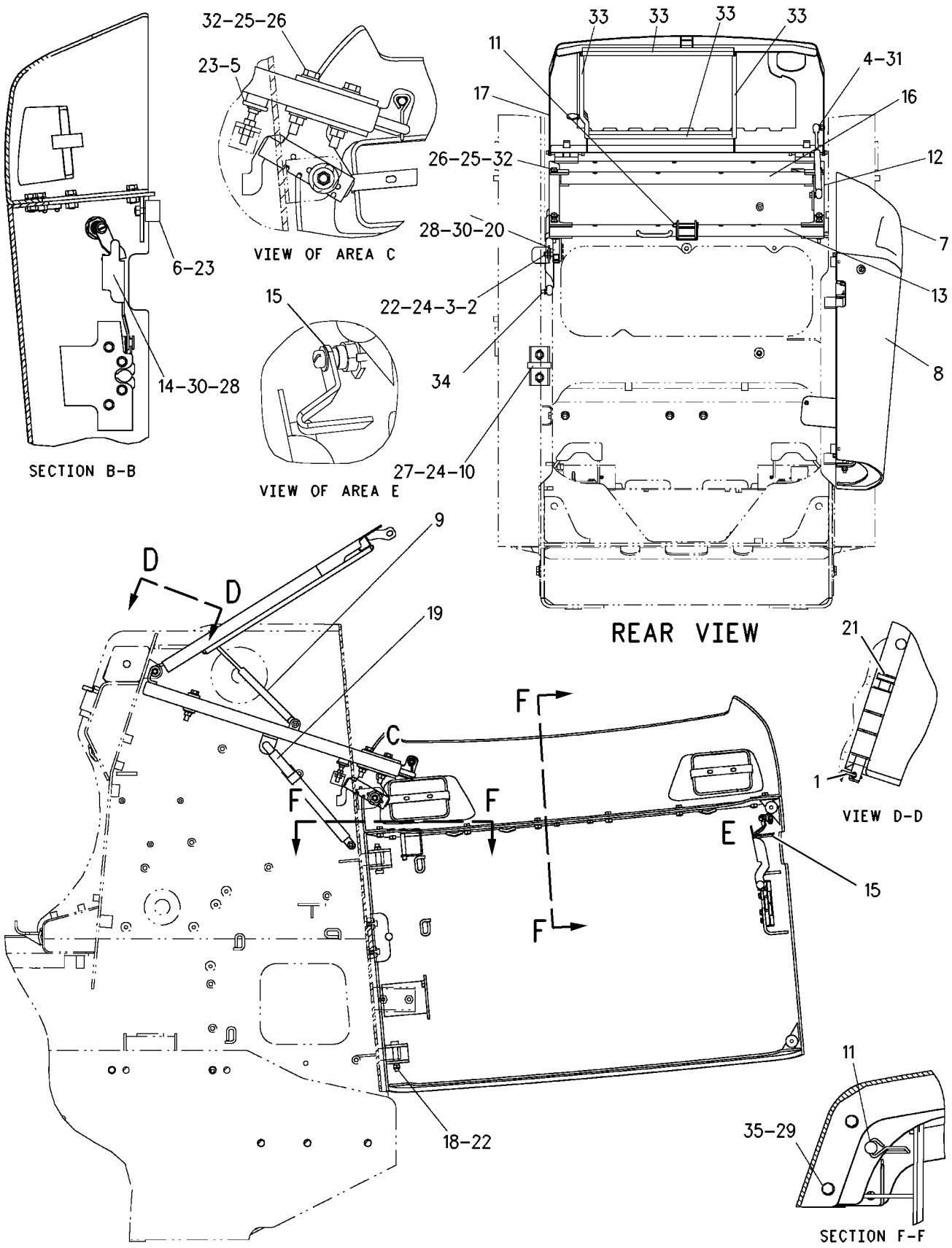

GRAPHIC #1

g00872124

FRAME AND BODY

191-9750 ENCLOSURE GP-ENGINE

S/N: CED1-UP

PART OF 190-7953 CHASSIS AR

SMCS-7263 **i01663163**

NOTE	REF NO	GRAPHIC REF	PART NUMBER	QTY	PART NAME 1 2 3 4 5 6 (PRODUCT LEVEL)	SEE PAGE
	1	1	**5P-0372**	2	LOCK PIN	
	2	1	**5V-8309**	1	STRIKER AS	
	3	1	**8T-0318**	1	SHIM (0.8MM THK)	
	4	1	**8T-2444**	2	STUD-BALL	
	5	1	**8T-4159**	1	BUMPER	
	6	1	**110-0885**	2	BUMPER	
	7	1	**142-8801**	1	HOOD AS	
	8	1	**142-8802**	1	DOOR AS	
	9	1	**142-8814**	1	DAMPER AS	
	10	1	**142-8831**	1	STRIKER AS	
	11	1	**142-8832**	2	PIN AS	
	12	1	**142-8874**	1	GRILL AS	
	13	1	**142-8876**	1	SUPPORT AS	
	14	1	**152-1041**	1	LATCH AS	
J	15	1	**152-1042**	1	LOCK AS	
		1	**7F-9223**	1	LOCKWASHER	
		1	**8T-5004**	1	SCREW-MACHINE (1/4-28X0.375 IN)	
	16	1	**159-8405**	2	BOLT-SHOULDER	
	17	1	**159-9790**	1	SPRING AS-GAS	
	18	1	**161-2347**	1	LATCH AS	
	19	1	**178-2255**	2	PIN	
	20	1	**191-9752**	1	SUPPORT AS	
	21	1	**2K-4973**	3	LOCKNUT (3/8-16 THD)	
M	22	1	**5C-7261**	3	NUT (M8X1.25 THD)	
	23	1	**7X-7729**	3	WASHER (11X25X3MM THK)	
	24	1	**8T-4121**	8	WASHER-HARD (11X21X2.5MM THK)	
M	25	1	**8T-4133**	4	NUT (M10X1.5 THD)	
M	26	1	**8T-4137**	2	BOLT (M10X1.5X20MM)	
M	27	1	**8T-4181**	7	BOLT (M6X1X20MM)	
M	28	1	**8T-4908**	8	BOLT (M8X1.25X25MM)	
	29	1	**8T-4205**	7	WASHER-HARD (7.2X14.5X2MM THK)	
	30	1	**8T-4224**	2	WASHER-HARD (8.8X16X2MM THK)	
	31	1	**208-6176**	2	STUD-BALL	
BE	32	1	**3E-8082**		SEAL (227CM)	
M	33	1	**8T-5005**	4	BOLT (M10X1.50X70MM)	

B-USE AS REQUIRED
E-ORDER BY THE CENTIMETER
J-REQUIRES 5P8500 KEY
M-METRIC PART

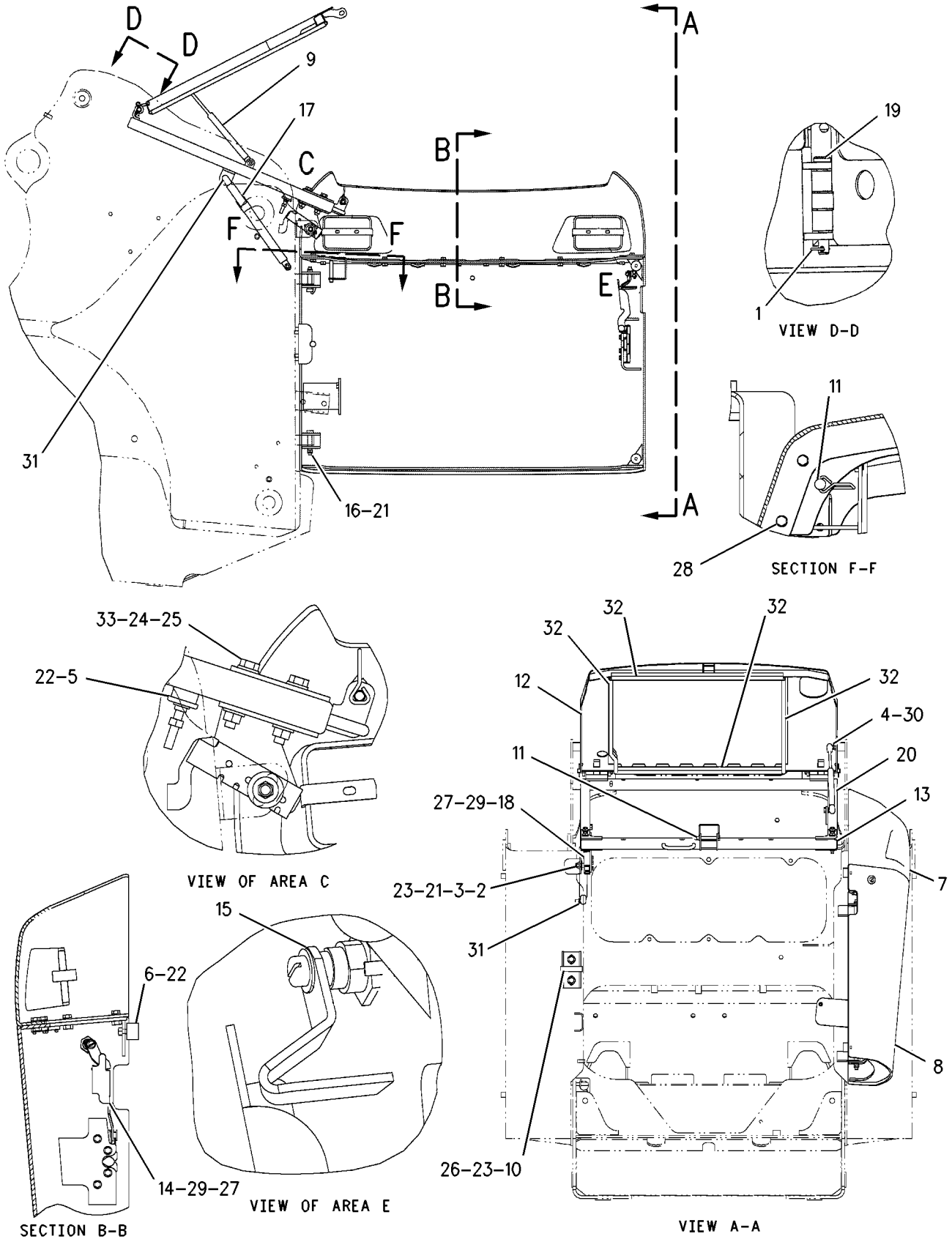

GRAPHIC #1

g00858559

191-9764 ENCLOSURE GP-ENGINE

S/N: FDG1-UP

PART OF 195-6710 CHASSIS AR

SMCS-7263 **i01678039**

NOTE	REF NO	GRAPHIC REF	PART NUMBER	QTY	PART NAME 1 2 3 4 5 6 (PRODUCT LEVEL)	SEE PAGE
	1	1	**5P-0372**	2	LOCK PIN	
	2	1	**5V-8309**	1	STRIKER AS	
	3	1	**8T-0318**	1	SHIM (0.8MM THK)	
	4	1	**8T-2444**	2	STUD-BALL	
	5	1	**8T-4159**	1	BUMPER	
	6	1	**110-0885**	2	BUMPER	
	7	1	**142-8801**	1	HOOD AS	
	8	1	**142-8802**	1	DOOR AS	
	9	1	**142-8814**	1	DAMPER AS	
	10	1	**142-8831**	1	STRIKER AS	
	11	1	**142-8832**	2	PIN AS	
	12	1	**142-8876**	1	SUPPORT AS	
	13	1	**152-1041**	1	LATCH AS	
J	14	1	**152-1042**	1	LOCK AS	
		1	**7F-9223**	1	LOCKWASHER	
		1	**8T-5004**	1	SCREW-MACHINE (1/4-28X0.375 IN)	
	15	1	**154-3993**	1	GRILL AS	
	16	1	**159-8405**	2	BOLT-SHOULDER	
	17	1	**159-9790**	1	SPRING AS-GAS	
	18	1	**161-2347**	1	LATCH AS	
	19	1	**191-9766**	1	SUPPORT AS	
	20	1	**208-6176**	2	STUD-BALL	
	21	1	**178-2255**	2	PIN	
	22	1	**2K-4973**	3	LOCKNUT (3/8-16 THD)	
M	23	1	**5C-7261**	3	NUT (M8X1.25 THD)	
	24	1	**5P-4116**	8	WASHER-HARD (8.8X20.5X2MM THK)	
	25	1	**7X-7729**	3	WASHER (11X25X3MM THK)	
	26	1	**8T-4121**	8	WASHER-HARD (11X21X2.5MM THK)	
M	27	1	**8T-4133**	4	NUT (M10X1.5 THD)	
M	28	1	**8T-4137**	2	BOLT (M10X1.5X20MM)	
M	29	1	**8T-4181**	7	BOLT (M6X1X20MM)	
	30	1	**8T-4205**	7	WASHER-HARD (7.2X14.5X2MM THK)	
	31	1	**8T-4224**	12	WASHER-HARD (8.8X16X2MM THK)	
M	32	1	**8T-4908**	8	BOLT (M8X1.25X25MM)	
M	33	1	**8T-5005**	4	BOLT (M10X1.50X70MM)	
BE	34	1	**3E-8082**		SEAL (186CM)	

B-USE AS REQUIRED
E-ORDER BY THE CENTIMETER
J-REQUIRES 5P8500 KEY
M-METRIC PART

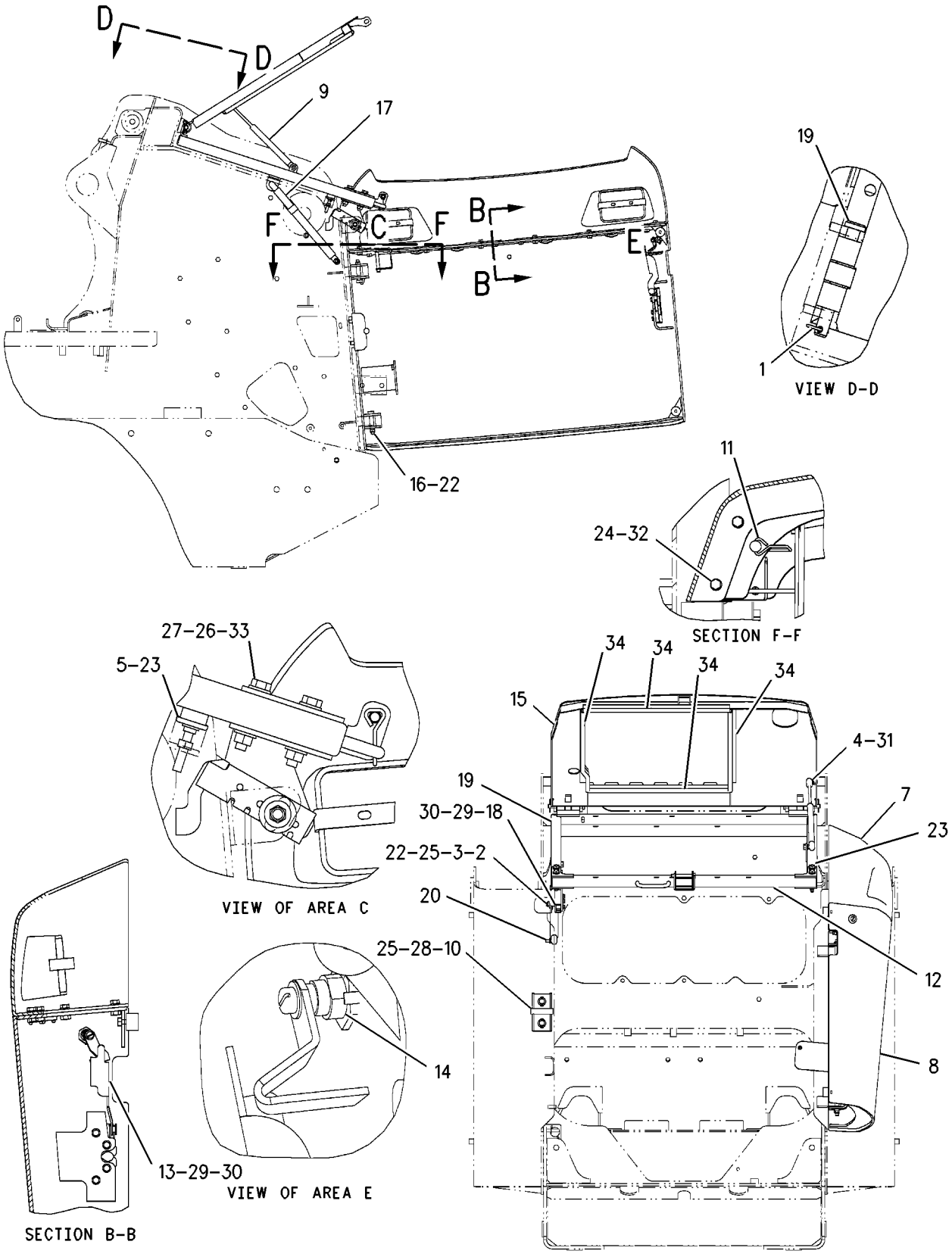

GRAPHIC #1

g00866161

177-1980 FRAME GP-BLADE

S/N: CED1-UP; FDG1-UP; 4YZ4000-UP; 5SZ4000-UP
PART OF 177-1989, 177-1990 BLADE AR
AN ATTACHMENT

SMCS-6060, 7050 **i01763330**

NOTE	REF NO	GRAPHIC REF	PART NUMBER	QTY	PART NAME 1 2 3 4 5 6 (PRODUCT LEVEL)	SEE PAGE
	1	1	**177-1914**	1	PIN AS	
B	2	1	**177-1955**	1	SHIM (1MM)	
B	3	1	**177-1956**	1	SHIM (2MM)	
B	4	1	**177-1957**	1	SHIM (3MM)	
	5	1	**177-1971**	1	FRAME AS	
	6	1	**177-1974**	1	FRAME AS	
	7	1	**177-1975**	1	FRAME AS	
	8	1	**3B-8489**	1	FITTING-GREASE (1/8-27 THD)	
	9	1	**5B-0935**	1	FITTING	
M	10	1	**7X-2553**	8	BOLT (M16X2X40MM)	
	11	1	**7X-7729**	1	WASHER (11X25X3MM THK)	
	12	1	**8T-4122**	8	WASHER-HARD (17X32X3.5MM THK)	
M	13	1	**8T-4137**	1	BOLT (M10X1.5X20MM)	

B-USE AS REQUIRED
M-METRIC PART

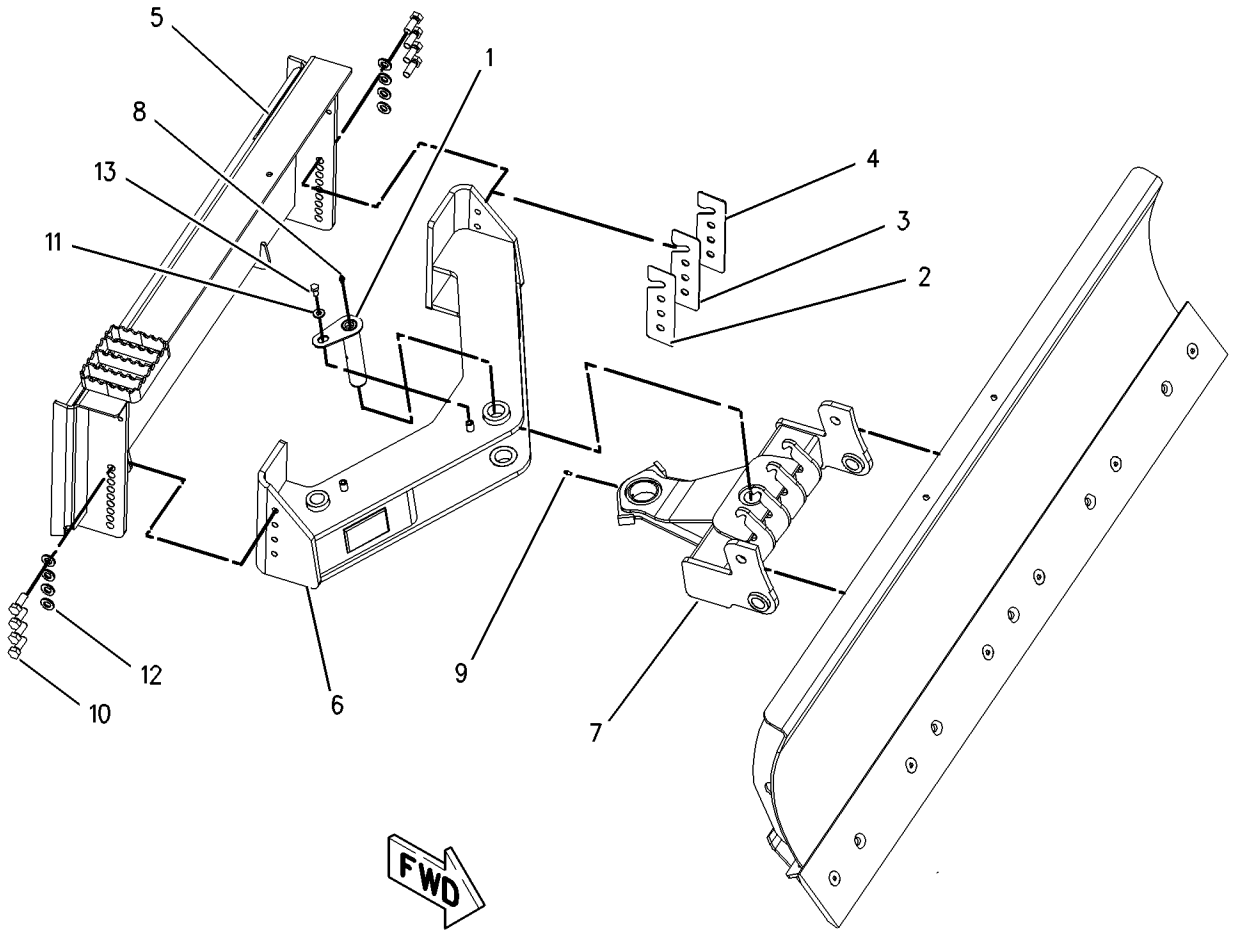

GRAPHIC #1 g00902138

MEMORANDA

142-9075 FRAME GP-LOADER

S/N: 4YZ4011-4024; 5SZ4030-4079
PART OF 195-6761, 195-6763 CHASSIS AR

SMCS-7054 **i01794004**

NOTE	REF NO	GRAPHIC REF	PART NUMBER	QTY	PART NAME 1 2 3 4 5 6 (PRODUCT LEVEL)	SEE PAGE
	1	1	**2D-7325**	1	TEE-PIPE	
	2	1	**3S-9182**	5	PLUG-MAGNETIC	
	3	1	**5P-7175**	1	FITTING-STRAIGHT	
	5	1	**124-2831**	2	BREATHER	
	6	1	**142-8810**	1	PLATE AS	
	7	1	**142-8823**	2	GASKET	
	8	1	**142-8896**	4	COVER	
	9	1	**142-8897**	2	COVER	
	10	1	**142-9073**	1	FRAME AS-LOWER	
	11	1	**142-9074**	1	FRAME AS-UPPER	
	12	1	**154-3957**	1	STEP AS-LH	
	13	1	**154-3958**	1	STEP AS-RH	
	14	1	**154-3988**	1	SENDER AS	
		1	**102-8802**	1	KIT-RECEPTACLE (2 PIN)	
					(KIT INCLUDES WEDGE)	
		1	**3E-3365**	1	WEDGE-RECEPTACLE LOCK (2 PIN)	
		1	**8T-8729**	2	PIN-CONNECTOR	
	15	1	**159-5771**	1	COVER	
M	16	1	**5C-9553**	32	BOLT (M6X1X16MM)	
	17	1	**8T-4121**	20	WASHER-HARD (11X21X2.5MM THK)	
	18	1	**8T-4122**	44	WASHER-HARD (17X32X3.5MM THK)	
M	19	1	**8T-4132**	22	NUT (M16X2 THD)	
M	20	1	**8T-4189**	2	BOLT (M8X1.25X20MM)	
M	21	1	**8T-4136**	20	BOLT (M10X1.5X25MM)	
	22	1	**8T-4205**	32	WASHER-HARD (7.2X14.5X2MM THK)	
	23	1	**8T-4223**	16	WASHER-HARD (13.5X25.5X3MM THK)	
	24	1	**8T-4224**	2	WASHER-HARD (8.8X16X2MM THK)	
M	25	1	**8T-4244**	8	NUT (M12X1.75 THD)	
M	26	1	**8T-4956**	8	BOLT (M12X1.75X35MM)	
M	27	1	**8T-7338**	22	BOLT (M16X2.0X45MM)	

M-METRIC PART

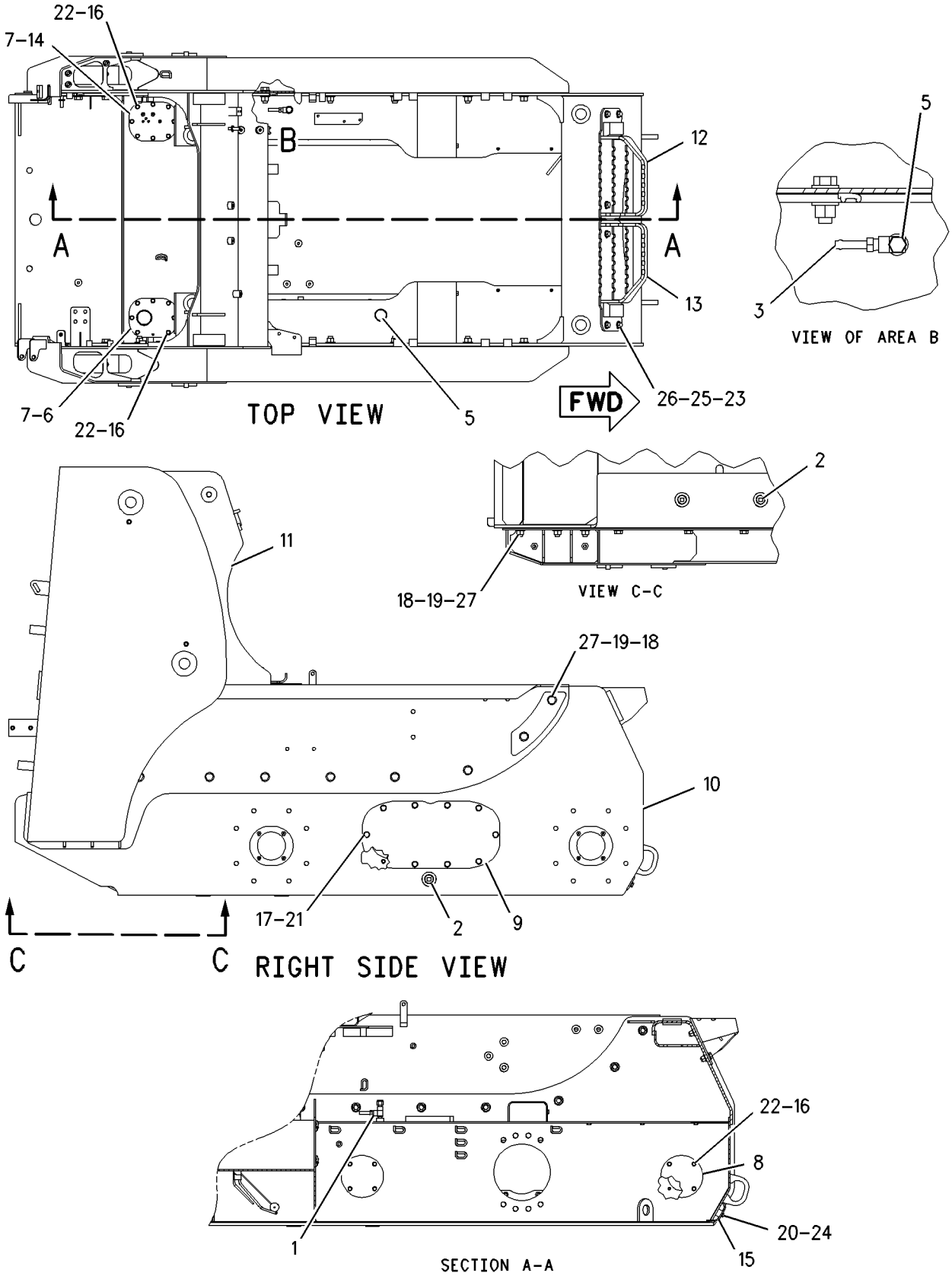

GRAPHIC #1 g00918019

FRAME AND BODY

190-7975 FRAME GP-LOADER

S/N: CED1-UP; FDG1-UP

PART OF 190-7953, 195-6710 CHASSIS AR

SMCS-7054 **i01794007**

NOTE	REF NO	GRAPHIC REF	PART NUMBER	QTY	PART NAME 1 2 3 4 5 6 (PRODUCT LEVEL)	SEE PAGE
	1	1	**3B-8488**	2	FITTING-GREASE	
	2	1	**3S-9182**	5	PLUG-MAGNETIC	
	3	1	**4D-4431**	2	BEARING-ALIGNING	
	4	1	**9G-5127**	2	BREATHER	
	5	1	**142-8810**	1	PLATE AS	
	6	1	**142-8823**	2	GASKET	
	7	1	**142-8896**	4	COVER	
	8	1	**154-3988**	1	SENDER AS	
		1	**102-8802**	1	KIT-RECEPTACLE (2 PIN)	
	9	1	**190-7973**	1	FRAME AS-LOWER	
	10	1	**190-7974**	1	FRAME AS-UPPER	
	11	1	**191-2894**	2	PLATE	
	12	1	**191-9576**	1	COVER AS	
	13	1	**207-9733**	1	STEP AS (LH)	
	14	1	**207-9734**	1	STEP AS (RH)	
M	15	1	**5C-9553**	16	BOLT (M6X1X16MM)	
	16	1	**5P-1076**	16	WASHER-HARD (13.5X30X4MM THK)	
	17	1	**5P-4116**	4	WASHER-HARD (8.8X20.5X2MM THK)	
	18	1	**8T-4121**	20	WASHER-HARD (11X21X2.5MM THK)	
	19	1	**8T-4122**	36	WASHER-HARD (17X32X3.5MM THK)	
M	20	1	**8T-4132**	18	NUT (M16X2 THD)	
M	21	1	**8T-4136**	20	BOLT (M10X1.5X25MM)	
	22	1	**8T-4205**	32	WASHER-HARD (7.2X14.5X2MM THK)	
M	23	1	**8T-4244**	8	NUT (M12X1.75 THD)	
M	24	1	**8T-4908**	4	BOLT (M8X1.25X25MM)	
M	25	1	**8T-4956**	8	BOLT (M12X1.75X35MM)	
M	26	1	**8T-7338**	18	BOLT (M16X2.0X45MM)	
M	27	1	**8T-4970**	16	BOLT (M6X1X14MM)	

M-METRIC PART

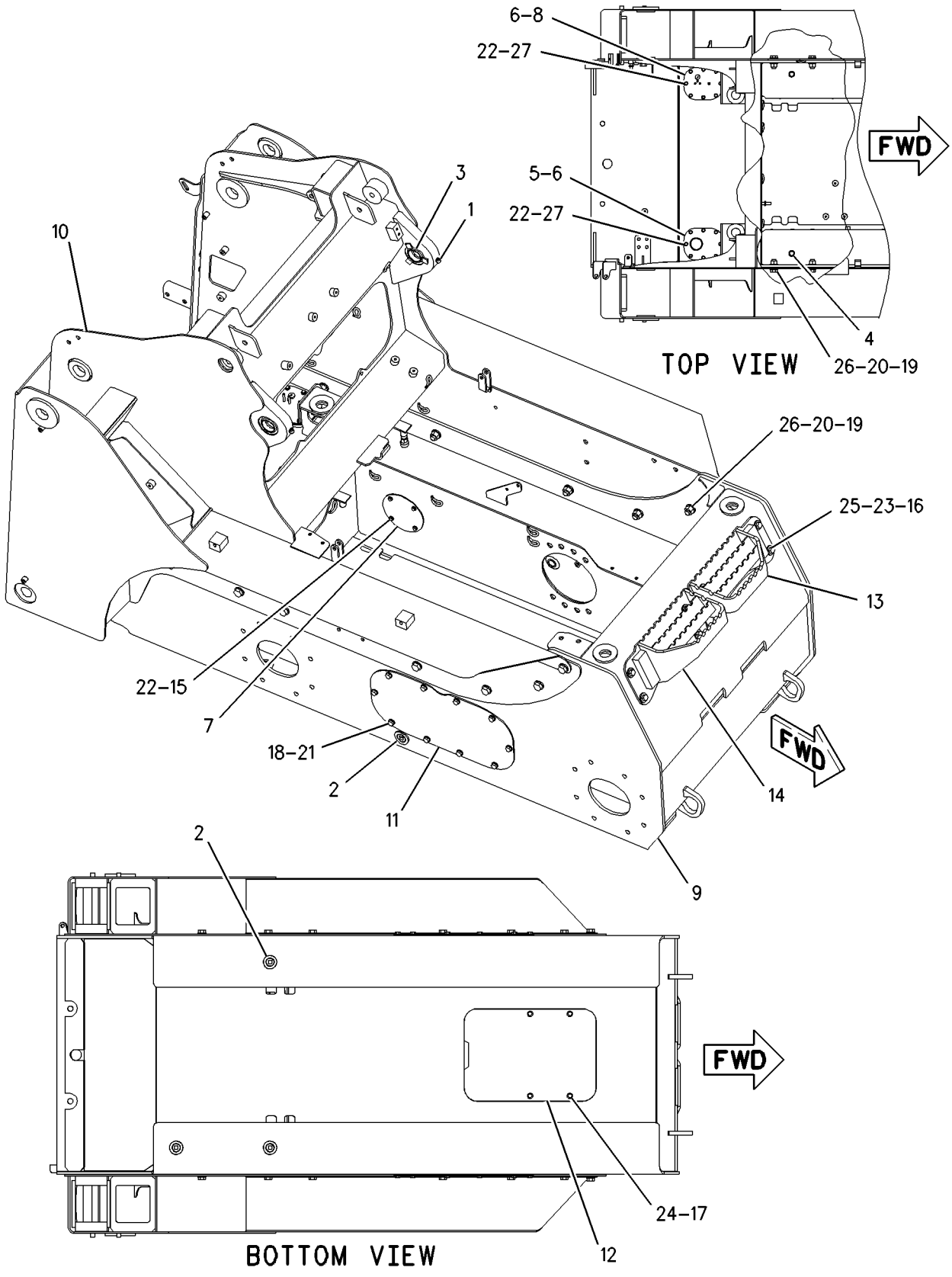

GRAPHIC #1

g00905799

FRAME AND BODY

195-6775 FRAME GP-LOADER

S/N: 4YZ4000-4010, 4025-UP; 5SZ4000-4029, 4080-UP

PART OF 195-6761, 195-6763 CHASSIS AR

SMCS-7054 **i01794008**

NOTE	REF NO	GRAPHIC REF	PART NUMBER	QTY	PART NAME 1 2 3 4 5 6 (PRODUCT LEVEL)	SEE PAGE
	1	1	**3S-9182**	5	PLUG-MAGNETIC	
	2	1	**9G-5127**	2	BREATHER	
	3	1	**142-8810**	1	PLATE AS	
	4	1	**142-8823**	2	GASKET	
	5	1	**142-8896**	4	COVER	
	6	1	**142-8897**	2	COVER	
	7	1	**142-9074**	1	FRAME AS-UPPER	
	8	1	**154-3988**	1	SENDER AS	
		1	**102-8802**	1	KIT-RECEPTACLE (2 PIN)	
	9	1	**191-9576**	1	COVER AS	
	10	1	**195-6773**	1	FRAME AS-LOWER	
	11	1	**207-9733**	1	STEP AS (LH)	
	12	1	**207-9734**	1	STEP AS (RH)	
M	13	1	**5C-9553**	16	BOLT (M6X1X16MM)	
	14	1	**5P-1076**	16	WASHER-HARD (13.5X30X4MM THK)	
	15	1	**5P-4116**	4	WASHER-HARD (8.8X20.5X2MM THK)	
	16	1	**8T-4121**	20	WASHER-HARD (11X21X2.5MM THK)	
	17	1	**8T-4122**	40	WASHER-HARD (17X32X3.5MM THK)	
M	18	1	**8T-4132**	20	NUT (M16X2 THD)	
M	19	1	**8T-4136**	20	BOLT (M10X1.5X25MM)	
	20	1	**8T-4205**	32	WASHER-HARD (7.2X14.5X2MM THK)	
M	21	1	**8T-4244**	8	NUT (M12X1.75 THD)	
M	22	1	**8T-4908**	4	BOLT (M8X1.25X25MM)	
M	23	1	**8T-4956**	8	BOLT (M12X1.75X35MM)	
M	24	1	**8T-7338**	20	BOLT (M16X2.0X45MM)	
M	25	1	**8T-4970**	16	BOLT (M6X1X14MM)	

M-METRIC PART

195-6775 **FRAME GP-LOADER** *(contd.)* **i01794008**

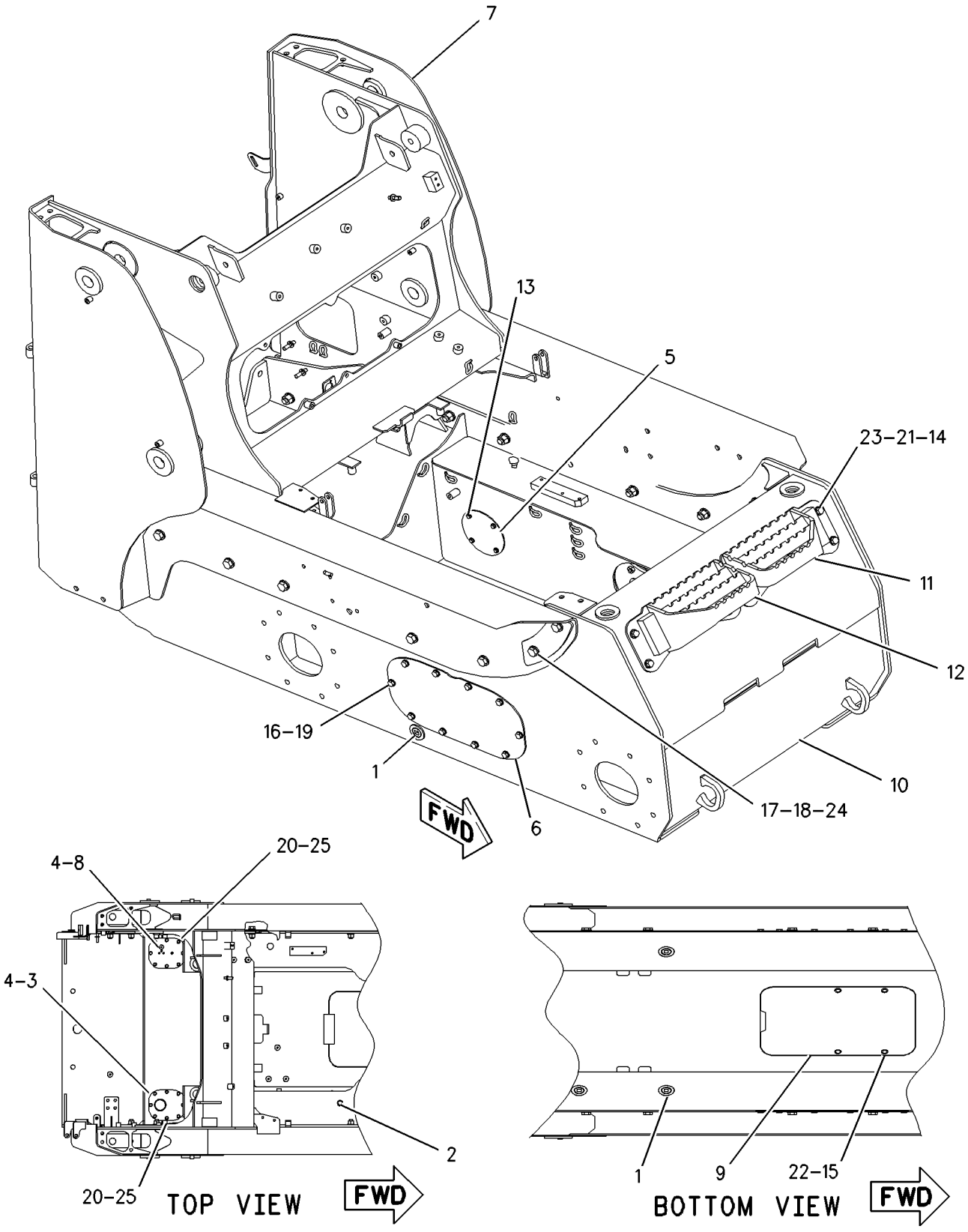

GRAPHIC #1 g00918030

142-9110 LIFTING GP-MACHINE

S/N: CED1-UP; FDG1-UP; 4YZ4000-UP; 5SZ4000-UP
CANNOT BE USED WITH SINGLE POINT LIFTING GROUP
PART OF 175-4244, 188-3306, 188-3310, 188-3311 CONVERSION AR-ROADING AN ATTACHMENT

SMCS-7165 **i01763391**

NOTE	REF NO	GRAPHIC REF	PART NUMBER	QTY	PART NAME 1 2 3 4 5 6 (PRODUCT LEVEL)	SEE PAGE
	1	1	**7E-2700**	4	FILM-SYMBOL (LIFT)	
	2	1	**142-7505**	2	PLATE AS	
	3	1	**142-8826**	4	PLATE-LIFT	
M	4	1	**159-2953**	8	SCREW-FLAT HEAD (M16X2.00 THD)	
	5	1	**8T-4121**	4	WASHER-HARD (11X21X2.5MM THK)	
	6	1	**8T-4122**	4	WASHER-HARD (17X32X3.5MM THK)	
M	7	1	**8T-4132**	4	NUT (M16X2 THD)	
M	8	1	**8T-4137**	4	BOLT (M10X1.5X20MM)	

M-METRIC PART

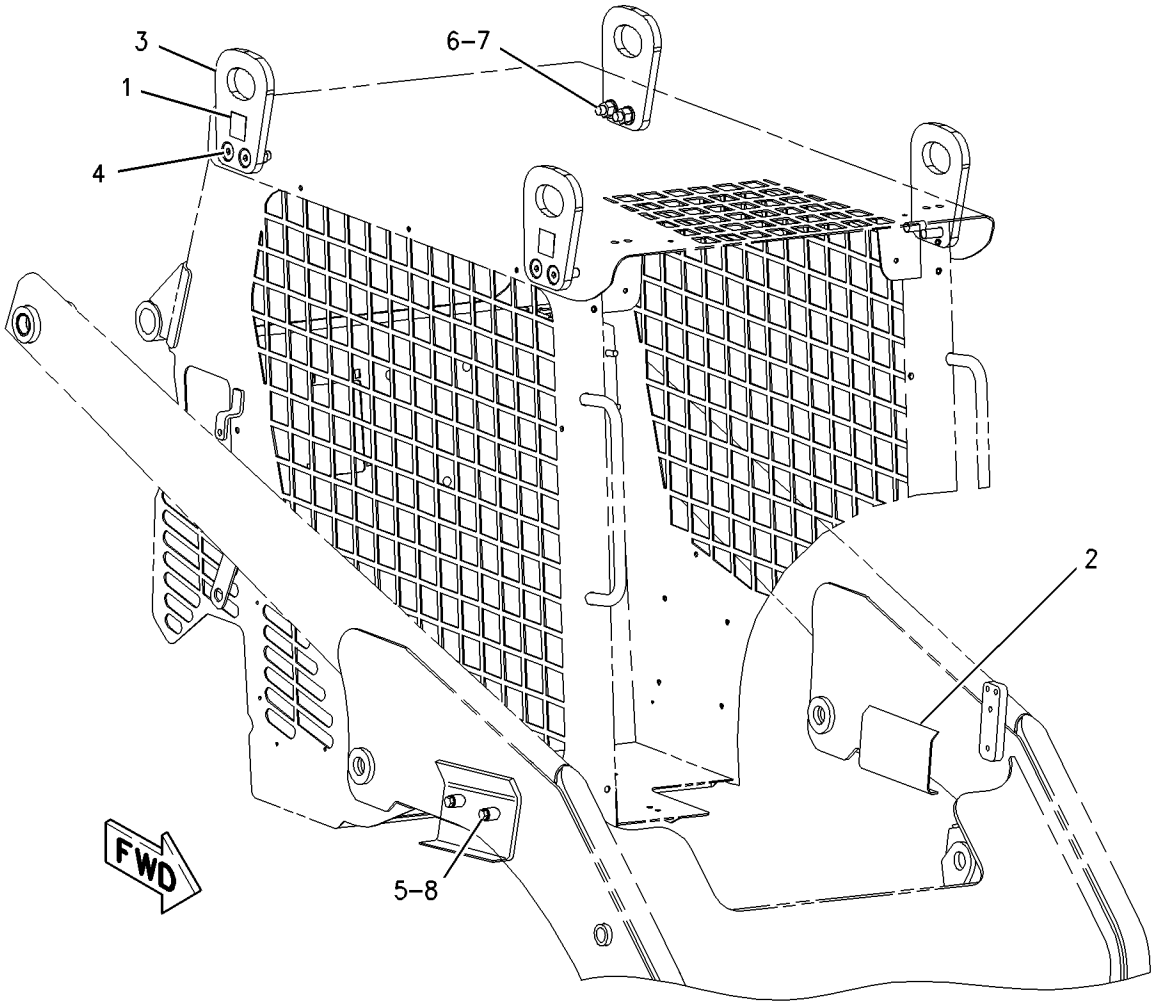

GRAPHIC #1 g00902171

152-1155 LIFTING GP-MACHINE

S/N: 4YZ4000-UP; 5SZ4000-UP
CANNOT BE USED WITH FOUR POINT LIFTING GROUP
AN ATTACHMENT

SMCS-7165 **i01763396**

NOTE	REF NO	GRAPHIC REF	PART NUMBER	QTY	PART NAME 1 2 3 4 5 6 (PRODUCT LEVEL)	SEE PAGE
	1	1	**7E-2700**	2	FILM-SYMBOL (LIFT)	
	2	1	**142-7505**	2	PLATE AS	
	3	1	**152-1154**	1	PLATE AS	
	4	1	**152-1156**	4	PLATE	
M	5	1	**159-2953**	8	SCREW-FLAT HEAD (M16X2.00 THD)	
	6	1	**8T-4121**	4	WASHER-HARD (11X21X2.5MM THK)	
	7	1	**8T-4122**	4	WASHER-HARD (17X32X3.5MM THK)	
M	8	1	**8T-4132**	4	NUT (M16X2 THD)	
M	9	1	**8T-4137**	4	BOLT (M10X1.5X20MM)	

M-METRIC PART

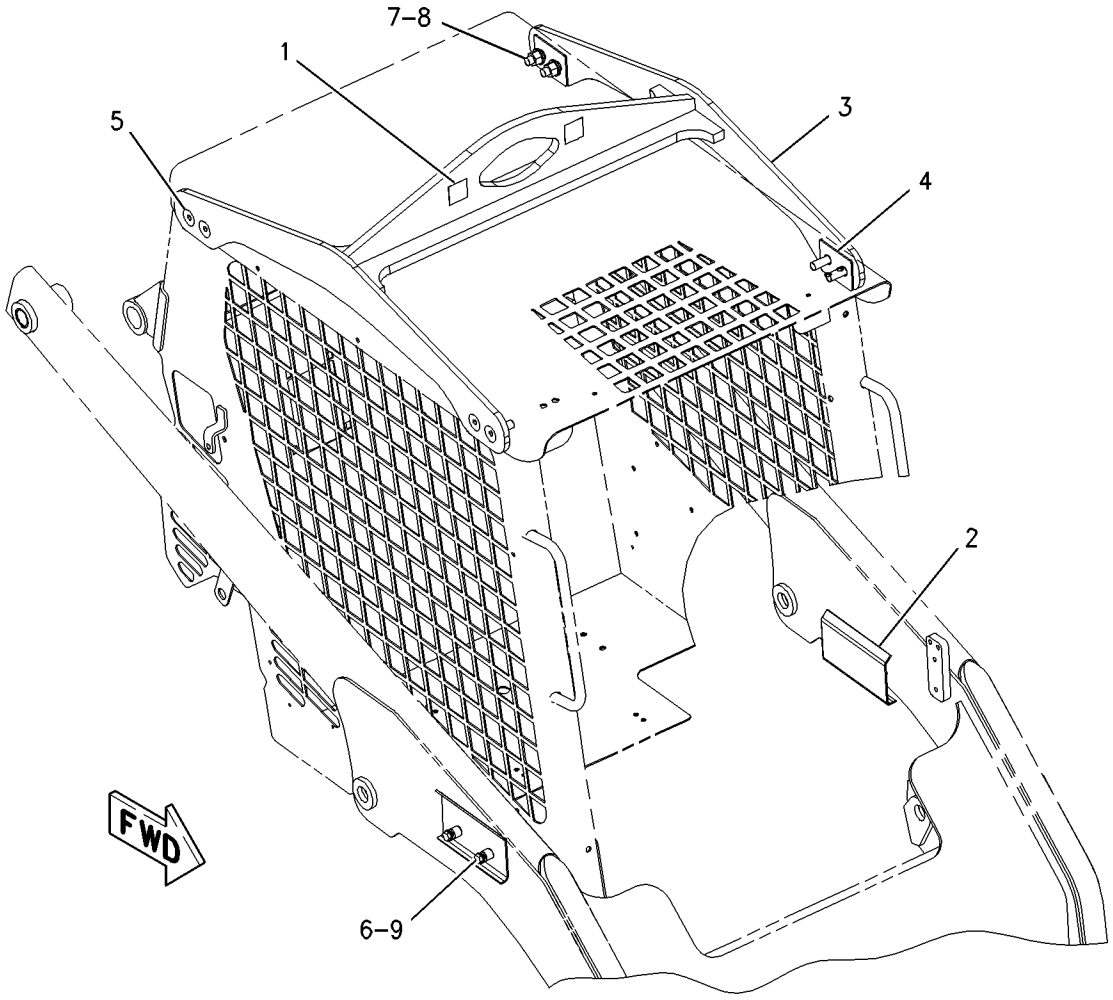

GRAPHIC #1 g00902177

188-0147 LIFTING GP-MACHINE

S/N: CED1-UP; FDG1-UP; 4YZ4000-UP; 5SZ4000-UP
CANNOT BE USED WITH SINGLE POINT LIFTING GROUP. GERMANY, ITALY
PART OF 166-2567, 175-4242, 188-3307, 188-3308 CONVERSION AR-ROADING AN ATTACHMENT

SMCS-7165 **i01763398**

NOTE	REF NO	GRAPHIC REF	PART NUMBER	QTY	PART NAME 1 2 3 4 5 6 (PRODUCT LEVEL)	SEE PAGE
	1	1	**7E-2700**	4	FILM-SYMBOL (LIFT)	
	2	1	**142-8826**	4	PLATE-LIFT	
M	3	1	**159-2953**	8	SCREW-FLAT HEAD (M16X2.00 THD)	
	4	1	**8T-4122**	4	WASHER-HARD (17X32X3.5MM THK)	
M	5	1	**8T-4132**	4	NUT (M16X2 THD)	

M-METRIC PART

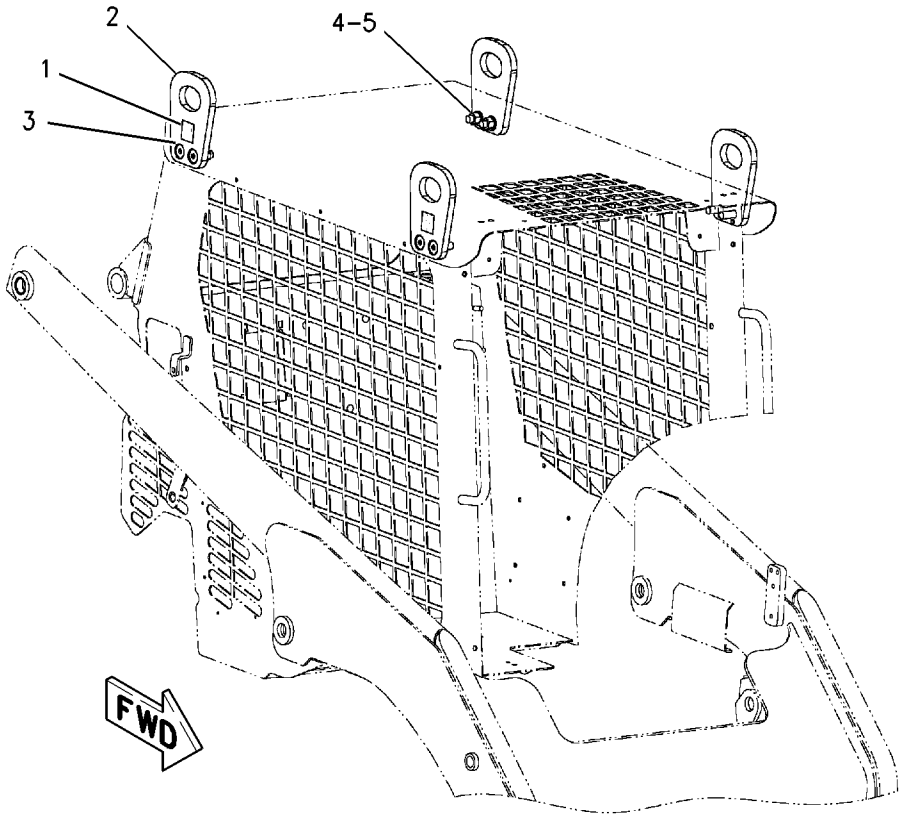

GRAPHIC #1 g00902178

FRAME AND BODY

190-8088 LIFTING GP-MACHINE

S/N: CED1-UP; FDG1-UP
CANNOT BE USED WITH SINGLE POINT LIFTING GROUP
AN ATTACHMENT

SMCS-7165 **i01517181**

NOTE	REF NO	GRAPHIC REF	PART NUMBER	QTY	PART NAME 1 2 3 4 5 6 (PRODUCT LEVEL)	SEE PAGE
	1	1	**7E-2700**	4	FILM-SYMBOL (LIFT)	
	2	1	**142-8826**	4	PLATE-LIFT	
M	3	1	**159-2953**	8	SCREW-FLAT HEAD (M16X2.00 THD)	
	4	1	**8T-4122**	4	WASHER-HARD (17X32X3.5MM THK)	
M	5	1	**8T-4132**	4	NUT (M16X2 THD)	

M-METRIC PART

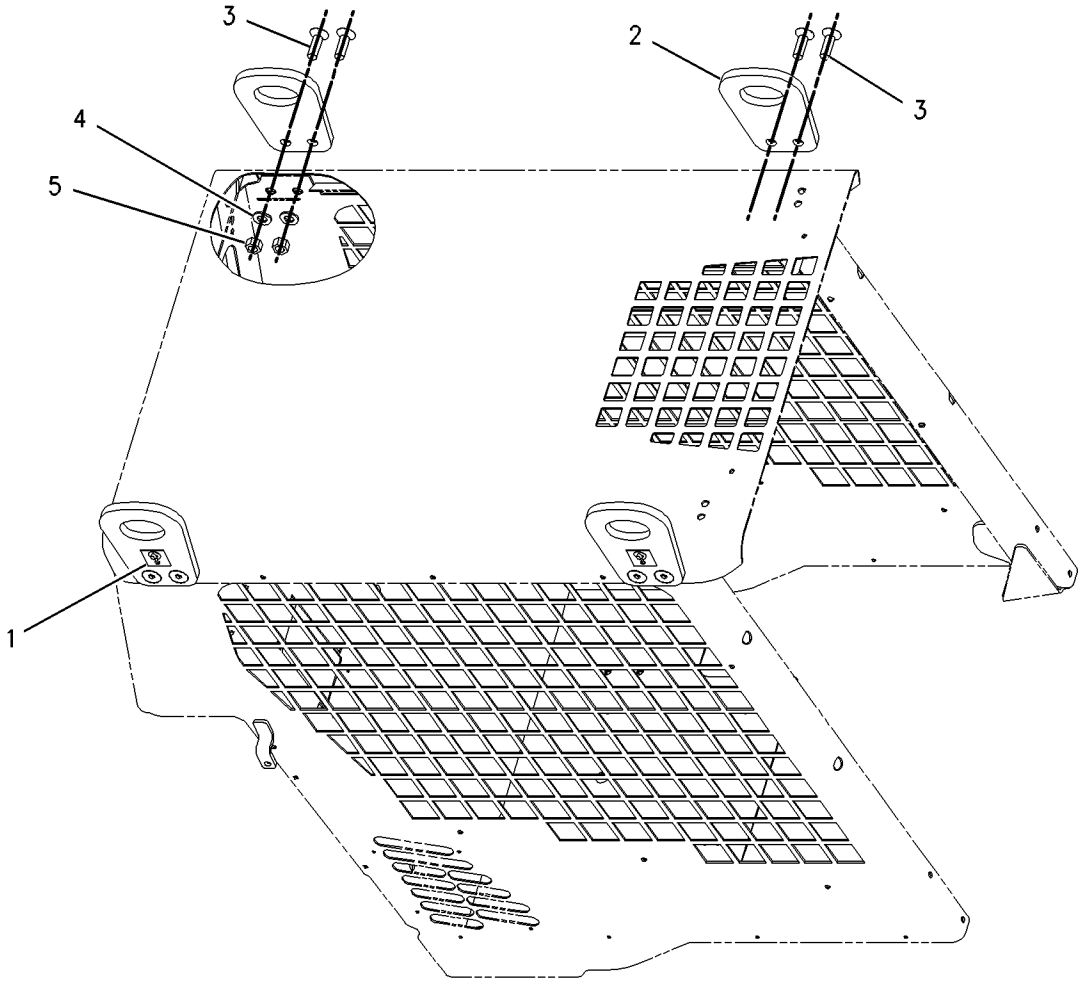

GRAPHIC #1 g00789361

FRAME AND BODY

190-8090 LIFTING GP-MACHINE

S/N: CED1-UP; FDG1-UP
CANNOT BE USED WITH 4 POINT LIFTING GROUP
AN ATTACHMENT

SMCS-7165 **i01763401**

NOTE	REF NO	GRAPHIC REF	PART NUMBER	QTY	PART NAME 1 2 3 4 5 6 (PRODUCT LEVEL)	SEE PAGE
	1	1	**7E-2700**	2	FILM-SYMBOL (LIFT)	
	2	1	**152-1154**	1	PLATE AS	
	3	1	**152-1156**	4	PLATE	
M	4	1	**159-2953**	8	SCREW-FLAT HEAD (M16X2.00 THD)	
	5	1	**8T-4122**	4	WASHER-HARD (17X32X3.5MM THK)	
M	6	1	**8T-4132**	4	NUT (M16X2 THD)	

M-METRIC PART

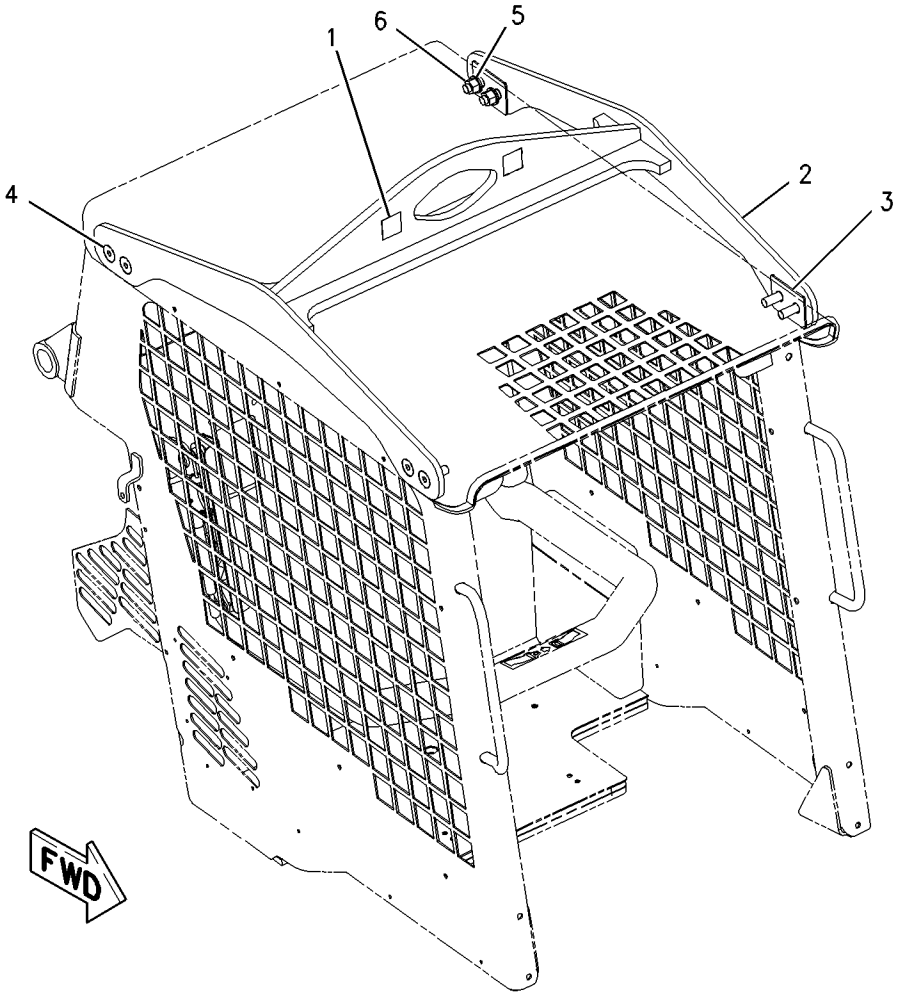

GRAPHIC #1 g00902179

MEMORANDA

175-4228 MOUNTING GP-ROADING LIGHTS

S/N: 4YZ4000-UP; 5SZ4000-UP
KIT-ROADING LIGHTS-MOUNTING
PART OF 188-3307, 188-3308 CONVERSION AR-ROADING
AN ATTACHMENT AND FIELD INSTALLATION

SMCS-1429 **i01763412**

NOTE	REF NO	GRAPHIC REF	PART NUMBER	QTY	PART NAME 1 2 3 4 5 6 (PRODUCT LEVEL)	SEE PAGE
	1	1	**3S-2093**	6	STRAP-CABLE	
	2	1	**9R-1499**	2	REFLECTOR	
	3	1	**165-7098**	2	SUPPORT AS	
	4	1	**166-2561**	1	BRACKET AS	
	5	1	**183-7117**	2	HARNESS AS-REAR LIGHTING	
		1	**102-8804**	1	KIT-RECEPTACLE (4 PIN)	
M	6	1	**5C-2890**	4	NUT (M6X1 THD)	
M	7	1	**6V-7357**	4	BOLT (M6X1.0X25MM)	
M	8	1	**8T-4138**	4	BOLT (M6X1X20MM)	
	9	1	**8T-4205**	12	WASHER-HARD (7.2X14.5X2MM THK)	

M-METRIC PART

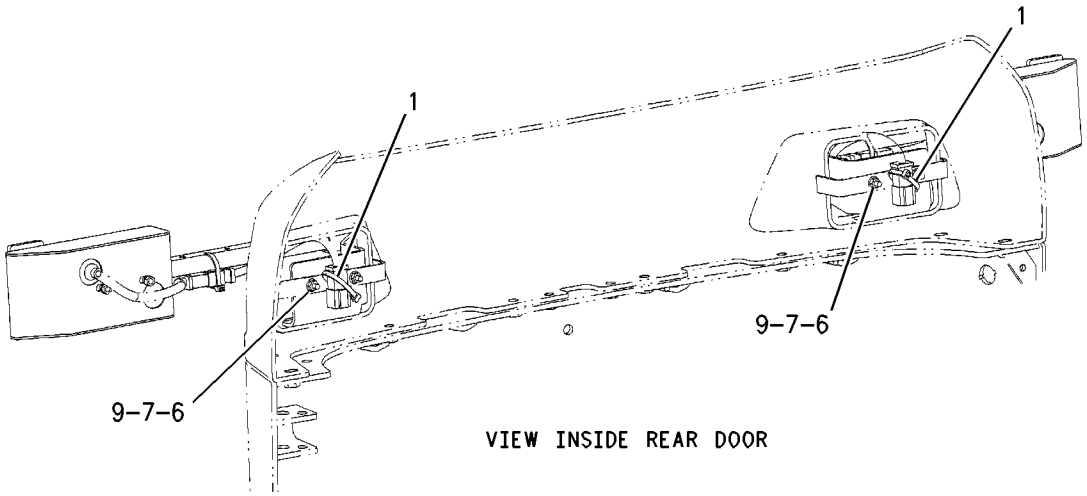

VIEW INSIDE REAR DOOR

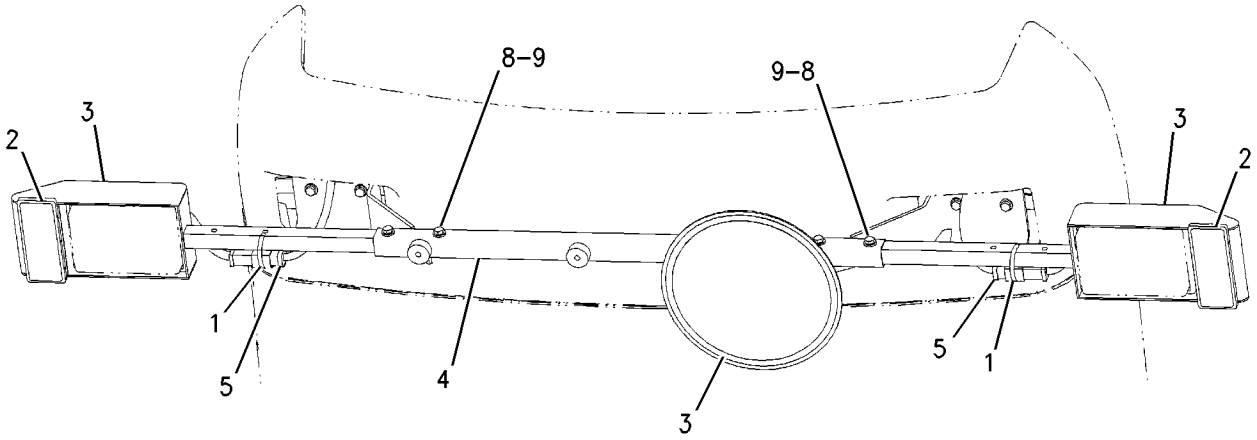

REAR VIEW
GERMAN MACHINE

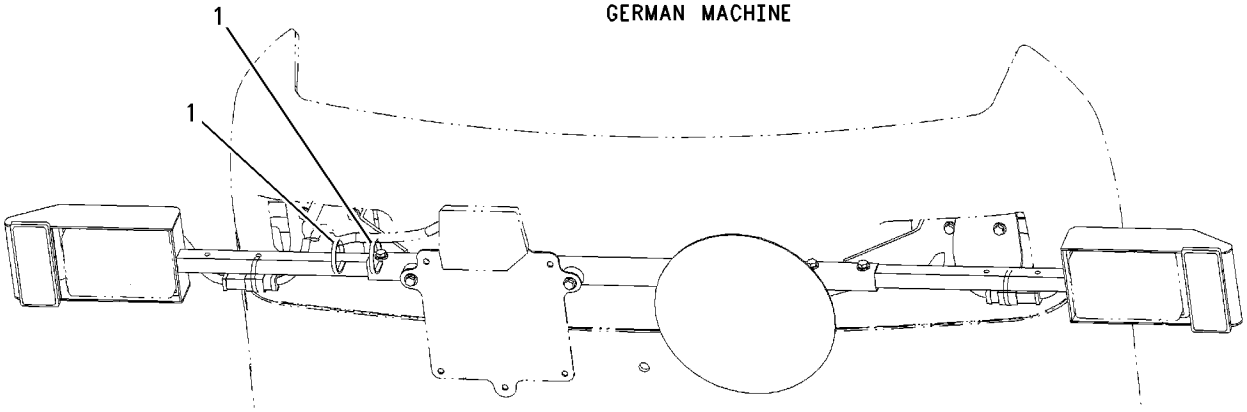

REAR VIEW
ITALIAN MACHINE

GRAPHIC #1 g00902191

199-5271 PANEL GP-SIDE

S/N: CED1-UP; FDG1-UP

PART OF 197-4899 OPERATOR AR-CANOPY

SMCS-7267 **i01464244**

NOTE	REF NO	GRAPHIC REF	PART NUMBER	QTY	PART NAME 1 2 3 4 5 6 (PRODUCT LEVEL)	SEE PAGE
	1	1	**193-8384**	1	PLATE	
	2	1	**193-8385**	1	PLATE	
M	3	1	**131-3543**	6	BOLT-ROUND HEAD	
M	4	1	**5C-2890**	6	NUT (M6X1 THD)	
	5	1	**8T-4205**	6	WASHER-HARD (7.2X14.5X2MM THK)	

M-METRIC PART

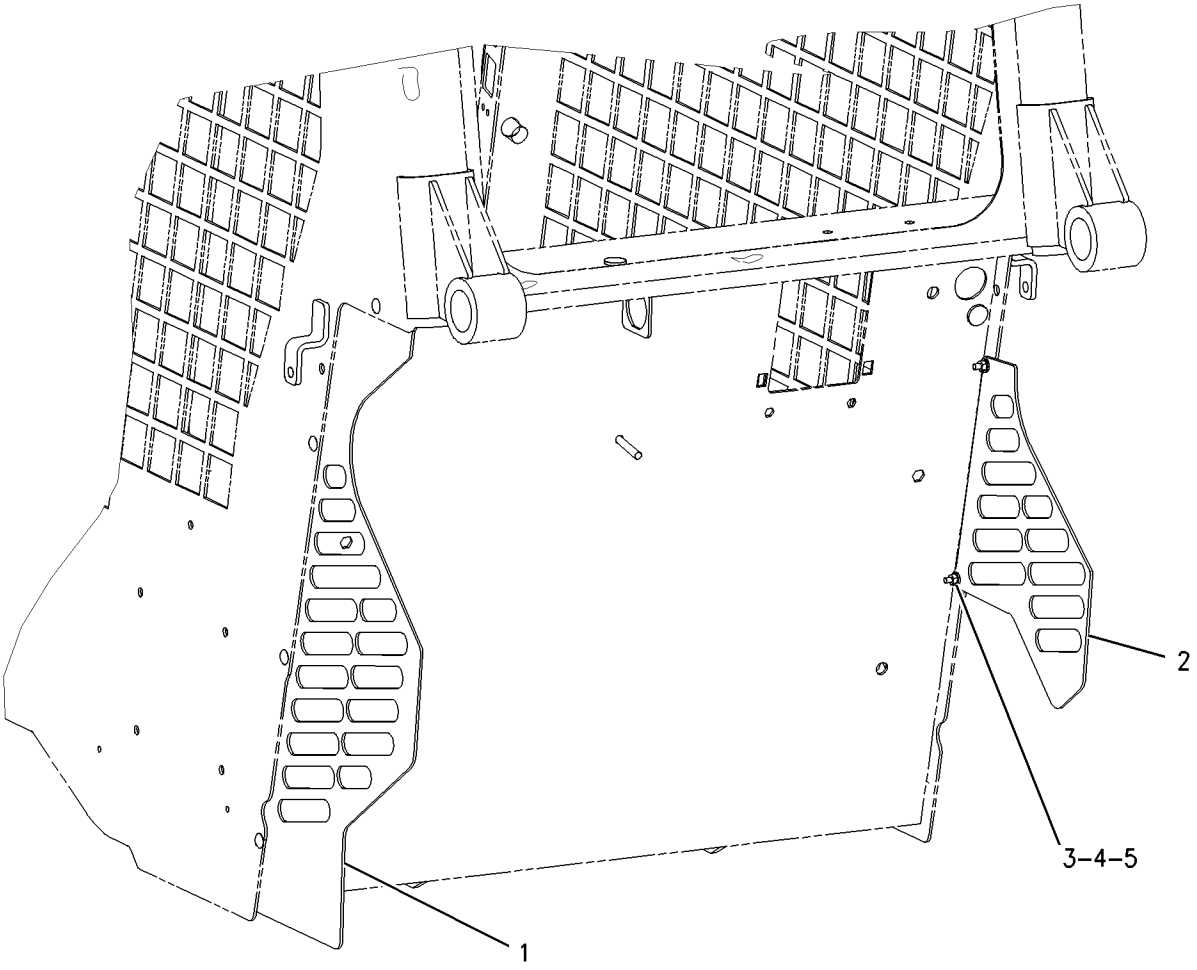

GRAPHIC #1 g00768137

199-5272 PANEL GP-SIDE

S/N: 4YZ4000-UP; 5SZ4000-UP

PART OF 191-9799 OPERATOR AR-CANOPY

SMCS-7267 **i01763424**

NOTE	REF NO	GRAPHIC REF	PART NUMBER	QTY	PART NAME 1 2 3 4 5 6 (PRODUCT LEVEL)	SEE PAGE
	1	1	**193-8380**	1	PLATE (LH)	
	2	1	**193-8385**	1	PLATE (RH)	
M	3	1	**131-3543**	5	BOLT-ROUND HEAD (M6X1-6G THD)	
M	4	1	**5C-2890**	5	NUT (M6X1 THD)	
	5	1	**8T-4205**	5	WASHER-HARD (7.2X14.5X2MM THK)	

M-METRIC PART

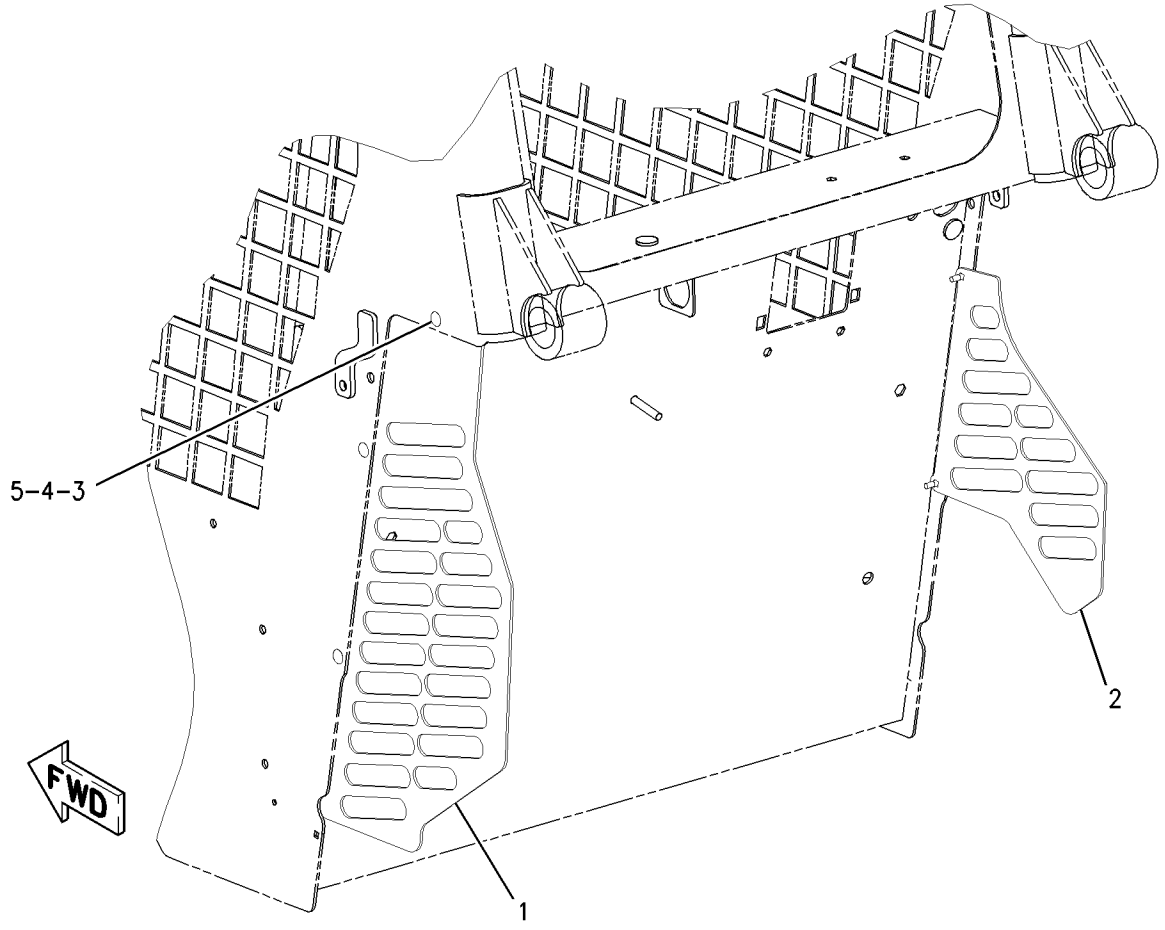

GRAPHIC #1 g00902202

176-0613 SUPPRESSION GP-SOUND

S/N: 4YZ4000-UP; 5SZ4000-UP
PART OF 166-2567, 175-4242, 175-4244, 188-3306, 188-3307, 188-3308, 188-3310, 188-3311 CONVERSION AR-ROADING
AN ATTACHMENT

SMCS-1801, 7076 **i01794013**

NOTE	REF NO	GRAPHIC REF	PART NUMBER	QTY	PART NAME 1 2 3 4 5 6 (PRODUCT LEVEL)	SEE PAGE
	1	1	**165-7099**	1	INSULATION	
	2	1	**176-4077**	1	INSULATION	
	3	1	**176-4079**	2	INSULATION	
	4	1	**176-4089**	1	INSULATION	
	5	1	**177-9578**	1	INSULATION	
	6	1	**177-9579**	1	INSULATION	
	7	1	**178-2249**	1	INSULATION	
	8	1	**188-0138**	1	INSULATION	
	9	1	**188-0140**	1	INSULATION	
Y	10	1	**200-1008**	1	FLOOR MAT	619
E	11	1	**128-7037**		SEAL (200CM)	
E	12	1	**125-3518**		SEAL (84CM)	

E-ORDER BY THE CENTIMETER
Y-SEPARATE ILLUSTRATION

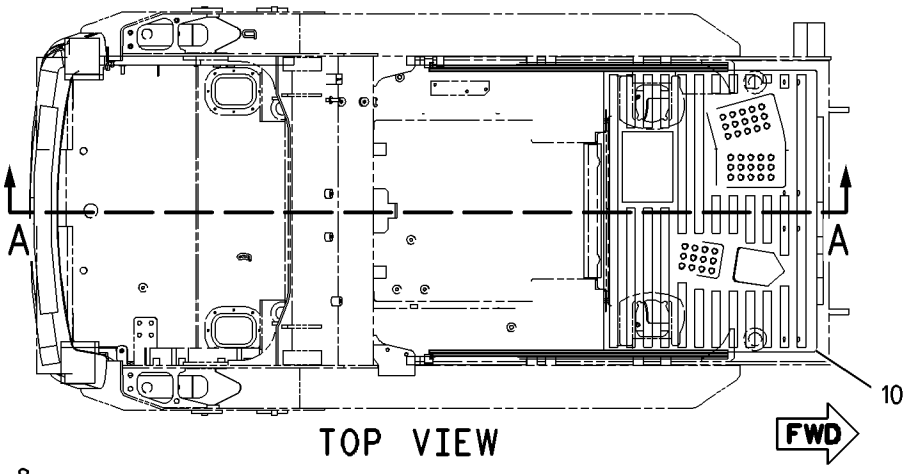

TOP VIEW

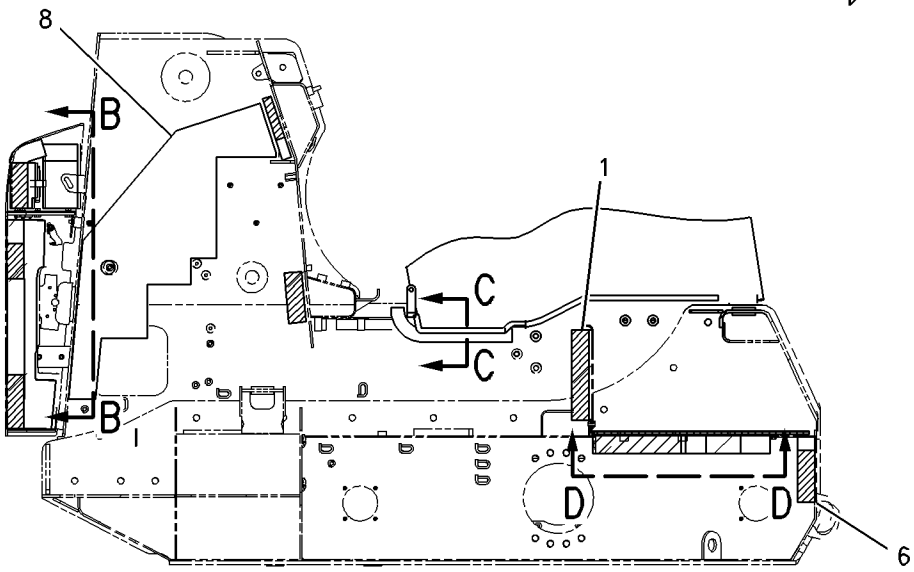

SECTION A-A

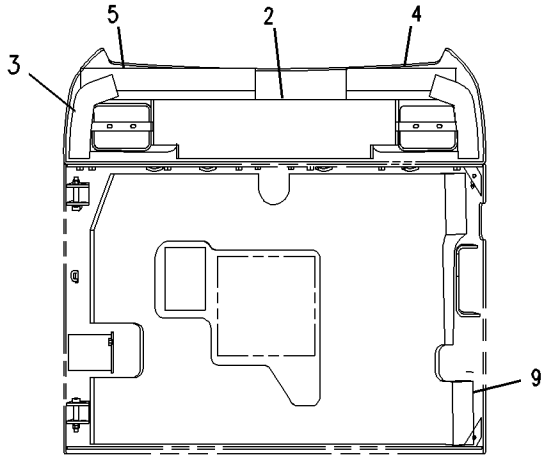

VIEW B-B

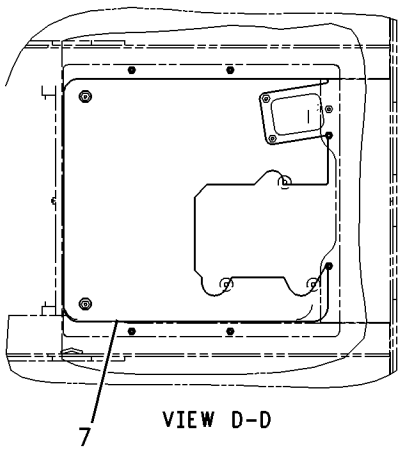

VIEW D-D

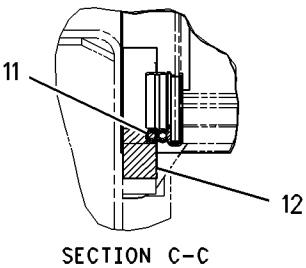

SECTION C-C

GRAPHIC #1 g00918039

193-0447 ACCUMULATOR & MTG GP-HYDRAULIC

S/N: CED1-UP; FDG1-UP; 4YZ4000-UP; 5SZ4000-UP

PART OF 190-7952, 195-6705, 195-6762, 195-6764 HYDRAULIC AR

SMCS-5077 **i01763478**

NOTE	REF NO	GRAPHIC REF	PART NUMBER	QTY	PART NAME 1 2 3 4 5 6 (PRODUCT LEVEL)	SEE PAGE
	1	1	**149-0686**	1	ACCUMULATOR	
	2	1	*194-7632*	1	ELBOW AS	
		1	**3K-0360**	1	SEAL-O-RING	
		1	**194-7631**	1	ELBOW	
	3	1	**3K-0360**	1	SEAL-O-RING	

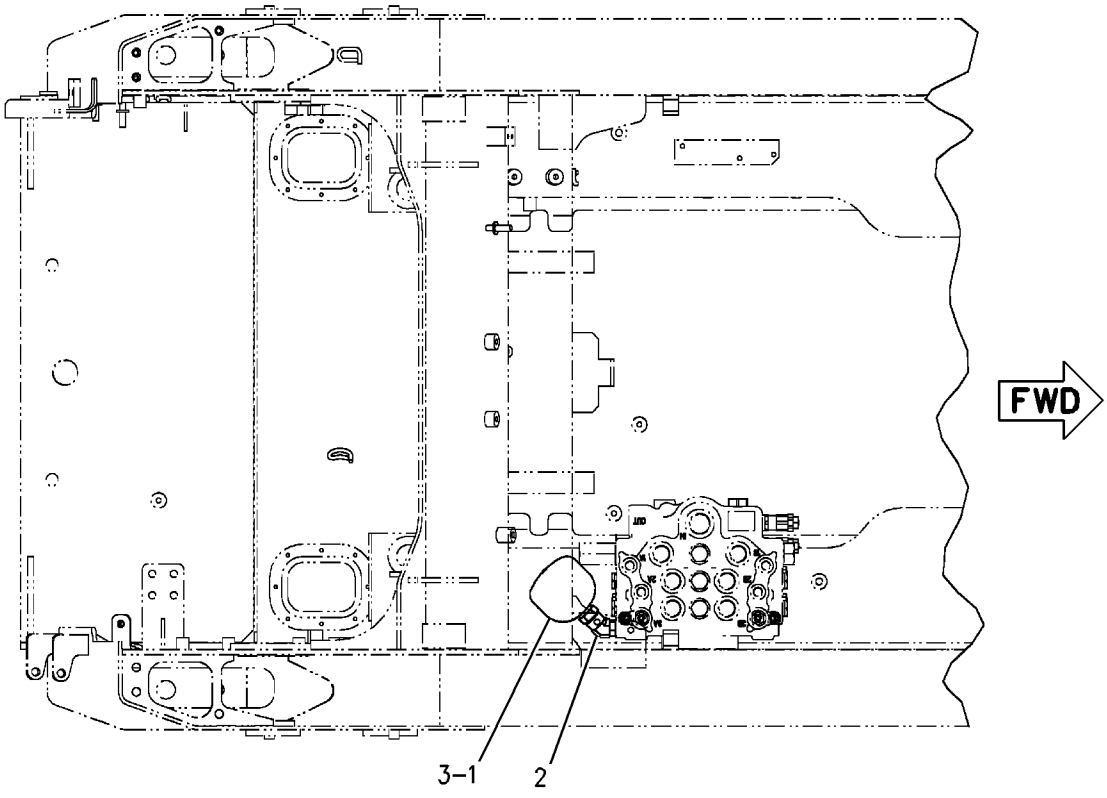

TOP VIEW

GRAPHIC #1 g00902240

159-5751 CONTROL GP-HANDLE

S/N: CED1-UP; FDG1-UP; 4YZ4000-UP; 5SZ4000-UP
FOURTH FUNCTION
PART OF 190-8095 CONTROL GP-PILOT OPERATED HYD, 190-8094 VALVE GP-PILOT
AN ATTACHMENT

SMCS-5705 **i01573719**

NOTE	REF NO	GRAPHIC REF	PART NUMBER	QTY	PART NAME 1 2 3 4 5 6 (PRODUCT LEVEL)	SEE PAGE
	1	1	**8L-8413**	1	STRAP-CABLE	
	2	1	**159-9853**	1	GROMMET	
	3	1	**102-8805**	1	KIT-RECEPTACLE (6 PIN)	
					(KIT INCLUDES WEDGE)	
	4	1	**8T-8729**	4	PIN-CONNECTOR	
	5	1	**9G-3695**	2	PLUG (GROMMET SEALING)	

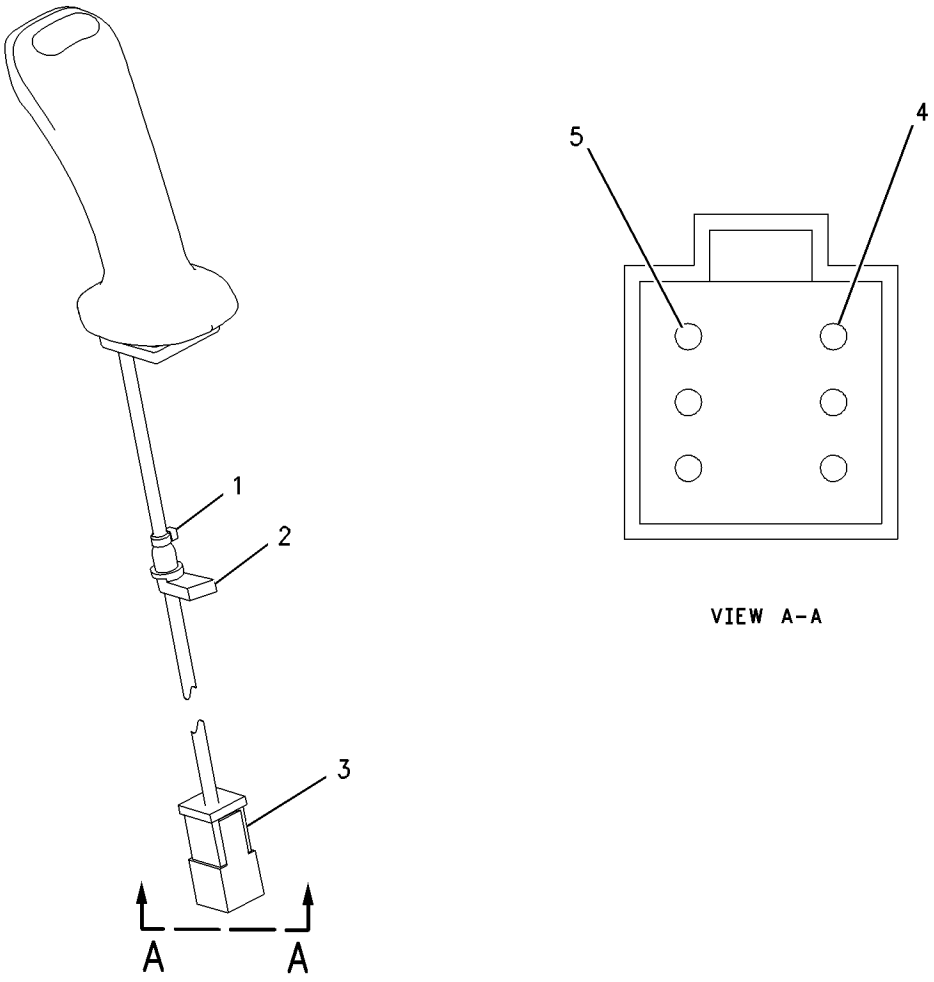

GRAPHIC #1 g00817967

160-4320 CONTROL GP-HANDLE

S/N: CED1-UP; FDG1-UP; 4YZ4000-UP; 5SZ4000-UP
PORPORTIONAL CONTROL
PART OF 190-8080 CONTROL GP-PILOT OPERATED HYD, 190-8081 VALVE GP-PILOT
AN ATTACHMENT

SMCS-5705 **i01636564**

NOTE	REF NO	GRAPHIC REF	PART NUMBER	QTY	PART NAME 1 2 3 4 5 6 (PRODUCT LEVEL)	SEE PAGE
	1	1	**102-8805**	1	KIT-RECEPTACLE (6 PIN)	
					(KIT INCLUDES WEDGE)	
	2	1	**9G-3695**	3	PLUG (GROMMET SEALING)	
	3	1	**3E-3383**	1	WEDGE-RECEPTACLE LOCK	
	4	1	**186-3735**	3	PIN-CONNECTOR	
	5	1	**159-9853**	1	GROMMET	

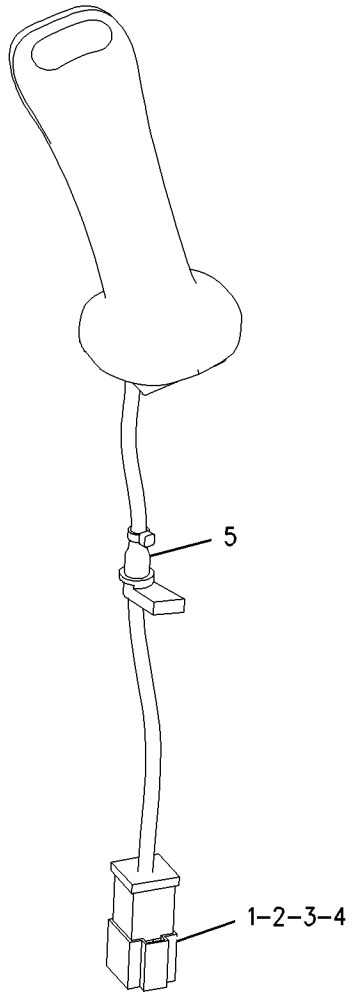

GRAPHIC #1 g00847182

204-1395 CONTROL GP-HANDLE

S/N: CED1-UP; FDG1-UP; 4YZ4000-UP; 5SZ4000-UP

HORN

PART OF 191-2908, 206-3795 CONTROL GP-PILOT OPERATED HYD, 191-9759 VALVE GP-PILOT AN ATTACHMENT

SMCS-5705 **i01628478**

NOTE	REF NO	GRAPHIC REF	PART NUMBER	QTY	PART NAME 1 2 3 4 5 6 (PRODUCT LEVEL)	SEE PAGE
	1	1	**8L-8413**	1	STRAP-CABLE	
	2	1	**159-9853**	1	GROMMET	
J	3	1	**102-8806**	1	KIT-RECEPTACLE (8 PIN)	
					(KIT INCLUDES WEDGE)	
	4	1	**8T-8737**	6	PLUG-SEAL	
J	5	1	**3E-3389**	6	WEDGE-RECEPTACLE LOCK	

J-KIT MARKED J SERVICES PARTS MARKED J

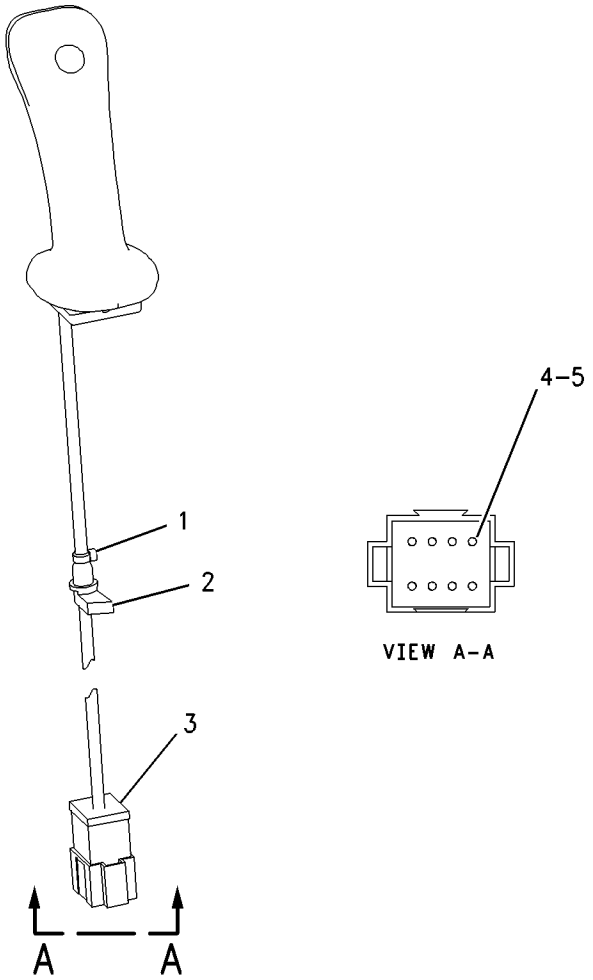

GRAPHIC #1 g00817991

204-1396 CONTROL GP-HANDLE

S/N: CED1-UP; FDG1-UP; 4YZ4000-UP; 5SZ4000-UP
HORN, FOURTH FUNCTION
PART OF 191-2909, 191-9746, 216-6176 CONTROL GP-PILOT OPERATED HYD, 220-8167, 220-8170, 223-8386, 223-8387 LINES GP-AUXILIARY HYDRAULIC, 191-9763 VALVE GP-PILOT, 187-1258, 197-8467 WIRING GP-WORK TOOL
AN ATTACHMENT

SMCS-5705 **i01628482**

NOTE	REF NO	GRAPHIC REF	PART NUMBER	QTY	PART NAME 1 2 3 4 5 6 (PRODUCT LEVEL)	SEE PAGE
	1	1	**8L-8413**	1	STRAP-CABLE	
	2	1	**159-9853**	1	GROMMET	
	3	1	**102-8806**	1	KIT-RECEPTACLE (8 PIN)	
					(KIT INCLUDES WEDGE)	
	4	1	**3E-3389**	1	WEDGE-RECEPTACLE LOCK	
	5	1	**8T-8737**	2	PLUG-SEAL	

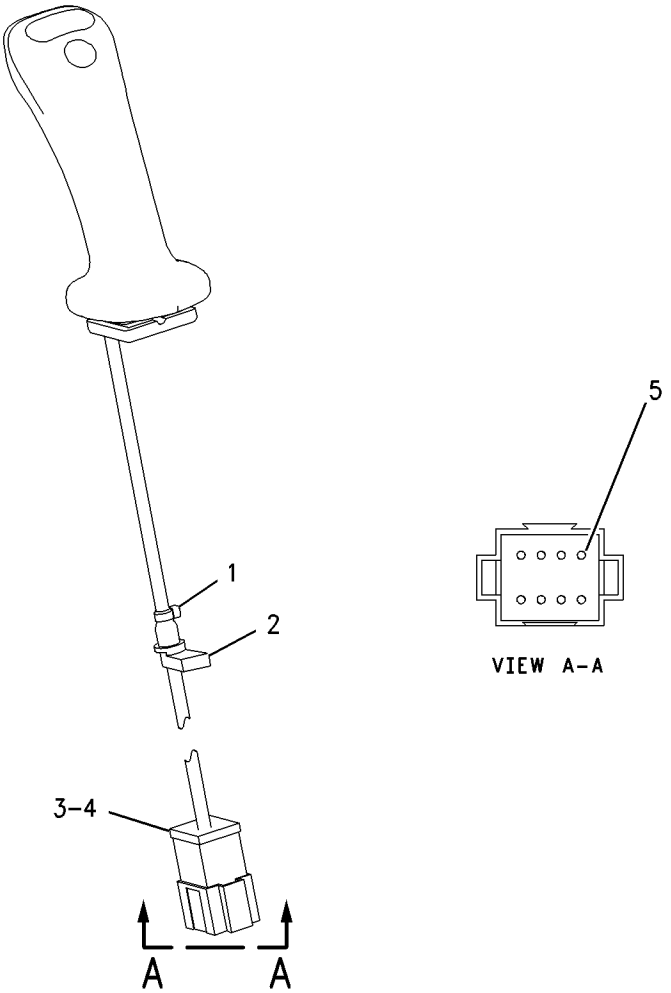

GRAPHIC #1 g00817980

204-1398 CONTROL GP-HANDLE

S/N: CED1-UP; FDG1-UP; 4YZ4000-UP; 5SZ4000-UP
C1 C2, HORN, TWO SPEED
PART OF 191-9683, 191-9797, 215-3944, 215-3946 CONTROL GP-PILOT OPERATED HYD
AN ATTACHMENT

SMCS-5705 **i01692434**

NOTE	REF NO	GRAPHIC REF	PART NUMBER	QTY	PART NAME 1 2 3 4 5 6 (PRODUCT LEVEL)	SEE PAGE
	1	1	**8L-8413**	1	STRAP-CABLE	
	2	1	**159-9853**	1	GROMMET	
	3	1	**102-8806**	1	KIT-RECEPTACLE (8 PIN)	
	4	1	**3E-3389**	1	WEDGE-RECEPTACLE LOCK	

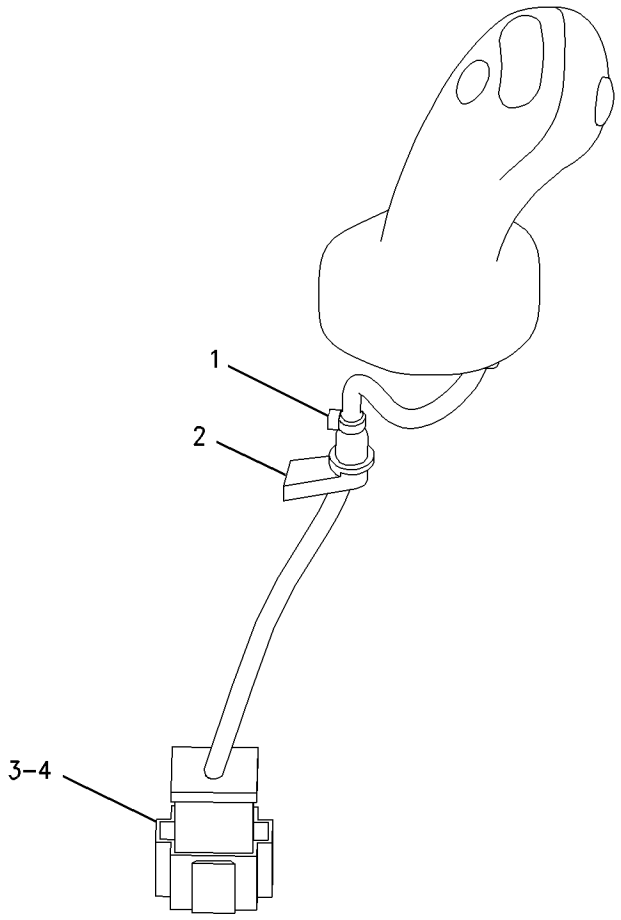

GRAPHIC #1 g00871357

190-8080 CONTROL GP-PILOT OPERATED HYD

S/N: CED1-125; FDG1-133; 4YZ4000-4068; 5SZ4000-4175
CANNOT BE USED WITH 190-8095—PAGE 323
AN ATTACHMENT

SMCS-5059, 5705 **i01794240**

NOTE	REF NO	GRAPHIC REF	PART NUMBER	QTY	PART NAME 1 2 3 4 5 6 (PRODUCT LEVEL)	SEE PAGE
	1	1	**110-8760**	1	STRAP	
Y	2	1	**190-8081**	1	VALVE GP-PILOT (JOYSTICK)	477
	3	1	**190-8092**	1	BRACKET AS	
	4	1	**7X-0579**	2	WASHER-HARD (8.8X25.5X2MM THK)	
M	5	1	**8T-0269**	3	BOLT-SOCKET HEAD (M6X1X20MM)	
	6	1	**8T-4205**	3	WASHER-HARD (7.2X14.5X2MM THK)	
M	7	1	**8T-4908**	2	BOLT (M8X1.25X25MM)	

M-METRIC PART
Y-SEPARATE ILLUSTRATION

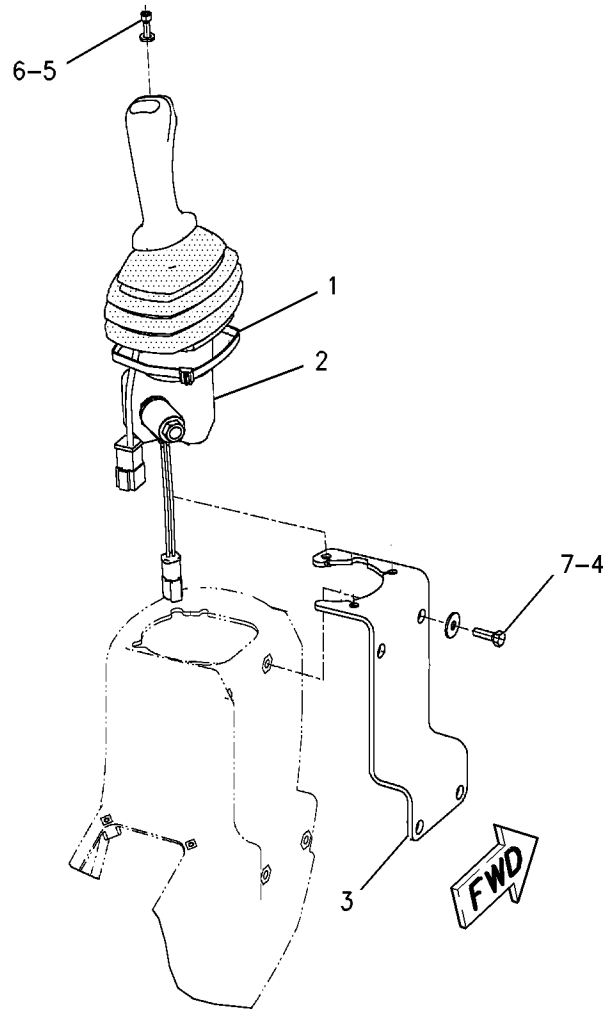

GRAPHIC #1 g00918304

190-8080 CONTROL GP-PILOT OPERATED HYD

S/N: CED126-1195; FDG134-865; 4YZ4069-5449; 5SZ4176-6022
CANNOT BE USED WITH 190-8095—PAGE 323
AN ATTACHMENT

SMCS-5059, 5705 **i01763513**

NOTE	REF NO	GRAPHIC REF	PART NUMBER	QTY	PART NAME 1 2 3 4 5 6 (PRODUCT LEVEL)	SEE PAGE
	1	1	**110-8760**	1	STRAP	
Y	2	1	**160-4320**	1	CONTROL GP-HANDLE	316
	3	1	**190-8092**	1	BRACKET AS	
M		1	**6V-9632**	3	NUT-WELD (M6X1 THD)	
Y	4	1	**193-8387**	1	VALVE GP-PILOT	482
	5	1	**117-8683**	1	PIN-SPRING	
	6	1	**7X-0579**	2	WASHER-HARD (8.8X25.5X2MM THK)	
M	7	1	**8T-0269**	3	BOLT-SOCKET HEAD (M6X1X20MM)	
	8	1	**8T-4205**	3	WASHER-HARD (7.2X14.5X2MM THK)	
M	9	1	**8T-4908**	2	BOLT (M8X1.25X25MM)	

M-METRIC PART
Y-SEPARATE ILLUSTRATION

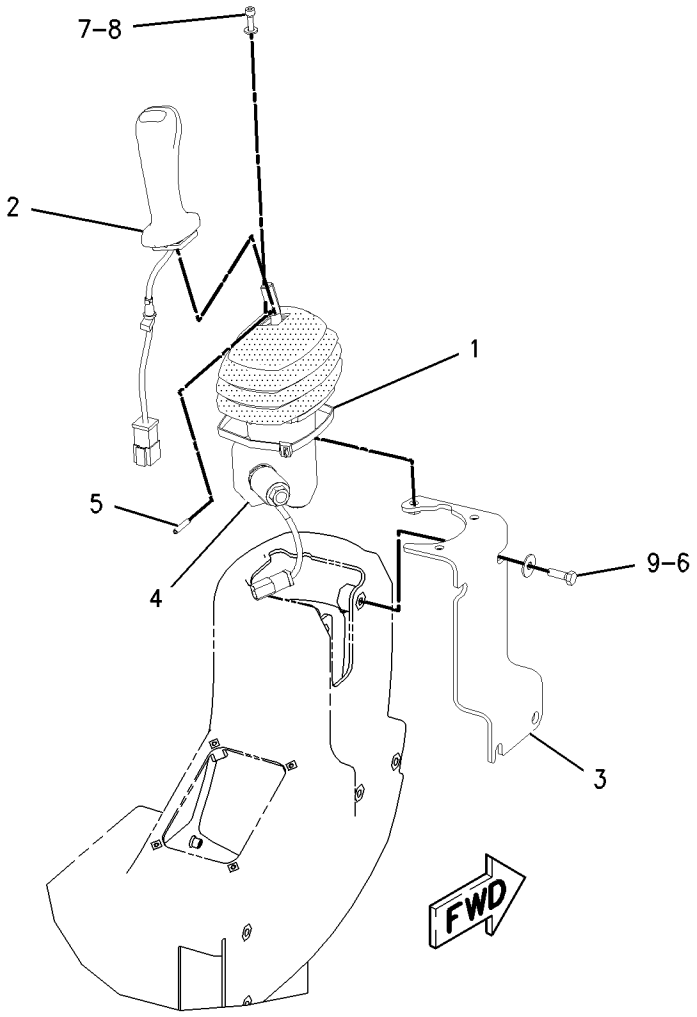

GRAPHIC #1 g00902257

190-8080 CONTROL GP-PILOT OPERATED HYD

S/N: CED1196-UP; FDG866-UP; 4YZ5450-UP; 5SZ6023-UP
CANNOT BE USED WITH 190-8095—PAGE 323
AN ATTACHMENT

SMCS-5059, 5705 **i01794223**

NOTE	REF NO	GRAPHIC REF	PART NUMBER	QTY	PART NAME 1 2 3 4 5 6 (PRODUCT LEVEL)	SEE PAGE
	1	1	**110-8760**	1	STRAP	
Y	2	1	**160-4320**	1	CONTROL GP-HANDLE	316
	3	1	**190-8092**	1	BRACKET AS	
M		1	**6V-9632**	3	NUT-WELD (M6X1 THD)	
Y	4	1	**204-1399**	1	VALVE GP-PILOT	485
	5	1	**117-8683**	1	PIN-SPRING	
	6	1	**7X-0579**	2	WASHER-HARD (8.8X25.5X2MM THK)	
M	7	1	**8T-0269**	3	BOLT-SOCKET HEAD (M6X1X20MM)	
	8	1	**8T-4205**	3	WASHER-HARD (7.2X14.5X2MM THK)	
M	9	1	**8T-4908**	2	BOLT (M8X1.25X25MM)	

M-METRIC PART
Y-SEPARATE ILLUSTRATION

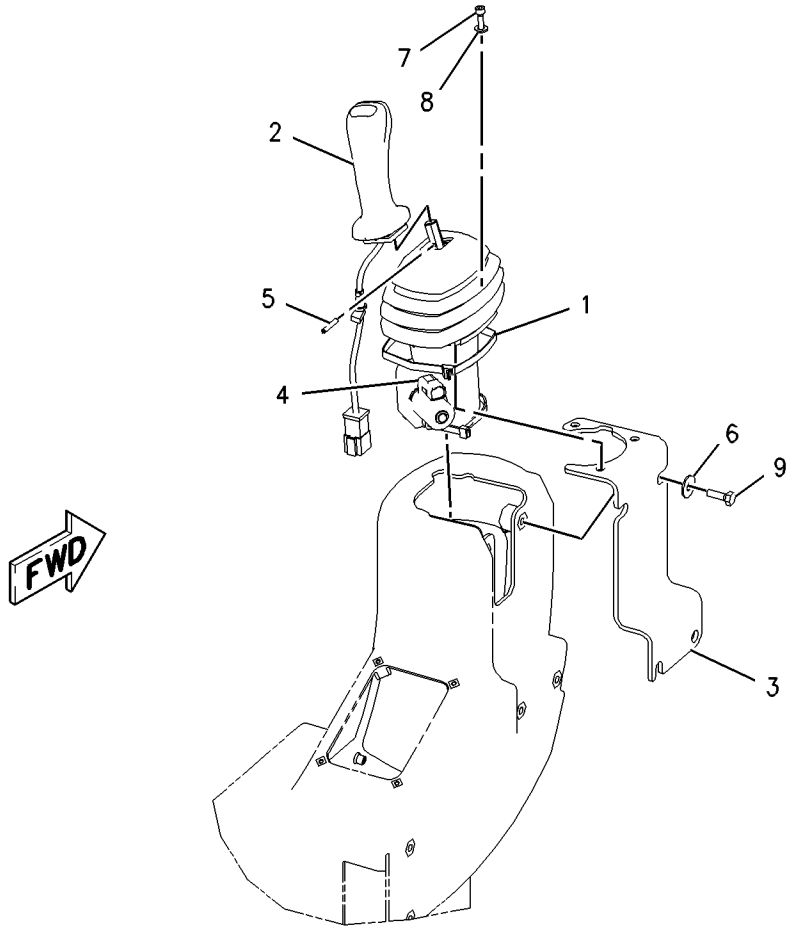

GRAPHIC #1 g00918653

190-8095 CONTROL GP-PILOT OPERATED HYD

S/N: CED1-UP; FDG1-UP; 4YZ4000-UP; 5SZ4000-UP
CANNOT BE USED WITH 190-8080—PAGE 320
AN ATTACHMENT
TYPE 1

SMCS-5059, 5705 **i01794291**

NOTE	REF NO	GRAPHIC REF	PART NUMBER	QTY	PART NAME 1 2 3 4 5 6 (PRODUCT LEVEL)	SEE PAGE
	1	1	**110-8760**	1	STRAP	
	2	1	**190-8092**	1	BRACKET AS	
Y	3	1	**190-8094**	1	VALVE GP-PILOT (JOYSTICK)	478
	4	1	**7X-0579**	2	WASHER-HARD (8.8X25.5X2MM THK)	
M	5	1	**8T-0269**	3	BOLT-SOCKET HEAD (M6X1X20MM)	
	6	1	**8T-4205**	3	WASHER-HARD (7.2X14.5X2MM THK)	
M	7	1	**8T-4908**	2	BOLT (M8X1.25X25MM)	

M-METRIC PART
Y-SEPARATE ILLUSTRATION

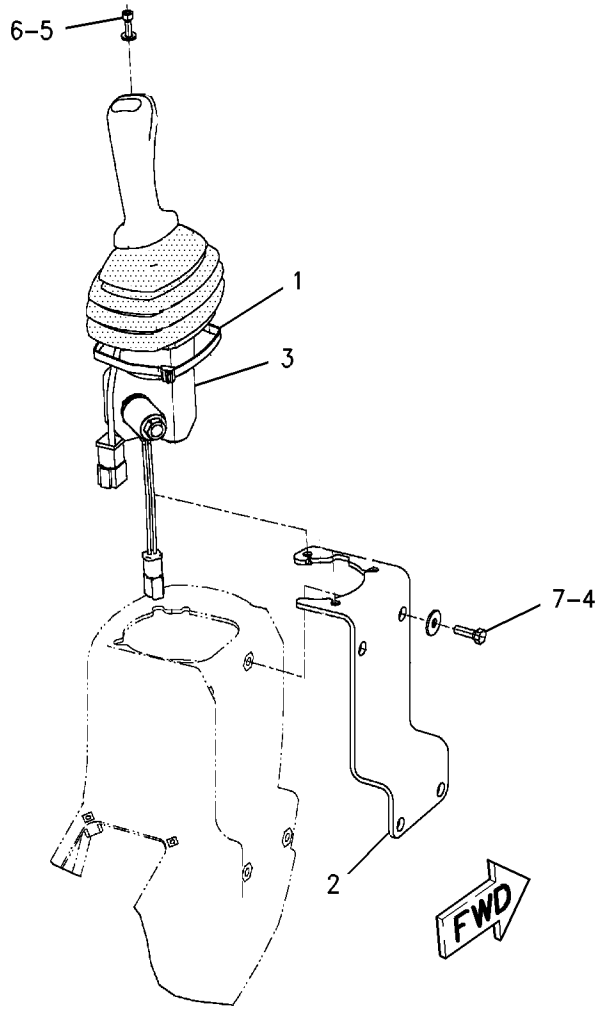

GRAPHIC #1 g00918319

190-8095 CONTROL GP-PILOT OPERATED HYD

S/N: CED1-UP; FDG1-UP; 4YZ4000-UP; 5SZ4000-UP
CANNOT BE USED WITH 190-8080—PAGE 320
AN ATTACHMENT
TYPE 2

SMCS-5059, 5705 **i01763533**

NOTE	REF NO	GRAPHIC REF	PART NUMBER	QTY	PART NAME 1 2 3 4 5 6 (PRODUCT LEVEL)	SEE PAGE
	1	1	**110-8760**	1	STRAP	
Y	2	1	**159-5751**	1	CONTROL GP-HANDLE	315
	3	1	**190-8092**	1	BRACKET AS	
CY	4	1	**193-8387**	1	VALVE GP-PILOT	482
	5	1	**117-8683**	1	PIN-SPRING	
	6	1	**7X-0579**	2	WASHER-HARD (8.8X25.5X2MM THK)	
M	7	1	**8T-0269**	3	BOLT-SOCKET HEAD (M6X1X20MM)	
	8	1	**8T-4205**	3	WASHER-HARD (7.2X14.5X2MM THK)	
M	9	1	**8T-4908**	2	BOLT (M8X1.25X25MM)	

C-CHANGE FROM PREVIOUS TYPE
M-METRIC PART
Y-SEPARATE ILLUSTRATION

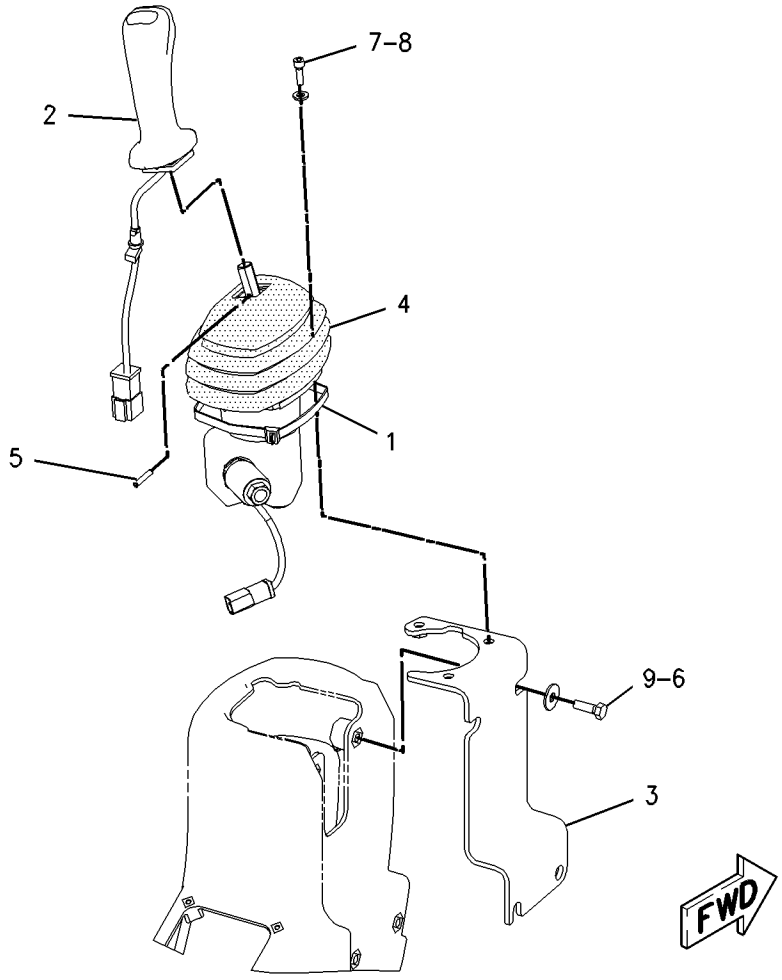

GRAPHIC #1 g00902262

190-8095 CONTROL GP-PILOT OPERATED HYD

S/N: CED1-UP; FDG1-UP; 4YZ4000-UP; 5SZ4000-UP
CANNOT BE USED WITH 190-8080—PAGE 320
AN ATTACHMENT
TYPE 3

SMCS-5059, 5705 **i01794301**

NOTE	REF NO	GRAPHIC REF	PART NUMBER	QTY	PART NAME 1 2 3 4 5 6 (PRODUCT LEVEL)	SEE PAGE
	1	1	**110-8760**	1	STRAP	
Y	2	1	**159-5751**	1	CONTROL GP-HANDLE	315
	3	1	**190-8092**	1	BRACKET AS	
M		1	**6V-9632**	3	NUT-WELD (M6X1 THD)	
CY	4	1	**204-1399**	1	VALVE GP-PILOT	485
	5	1	**117-8683**	1	PIN-SPRING	
	6	1	**7X-0579**	2	WASHER-HARD (8.8X25.5X2MM THK)	
M	7	1	**8T-0269**	3	BOLT-SOCKET HEAD (M6X1X20MM)	
	8	1	**8T-4205**	3	WASHER-HARD (7.2X14.5X2MM THK)	
M	9	1	**8T-4908**	2	BOLT (M8X1.25X25MM)	

C-CHANGE FROM PREVIOUS TYPE
M-METRIC PART
Y-SEPARATE ILLUSTRATION

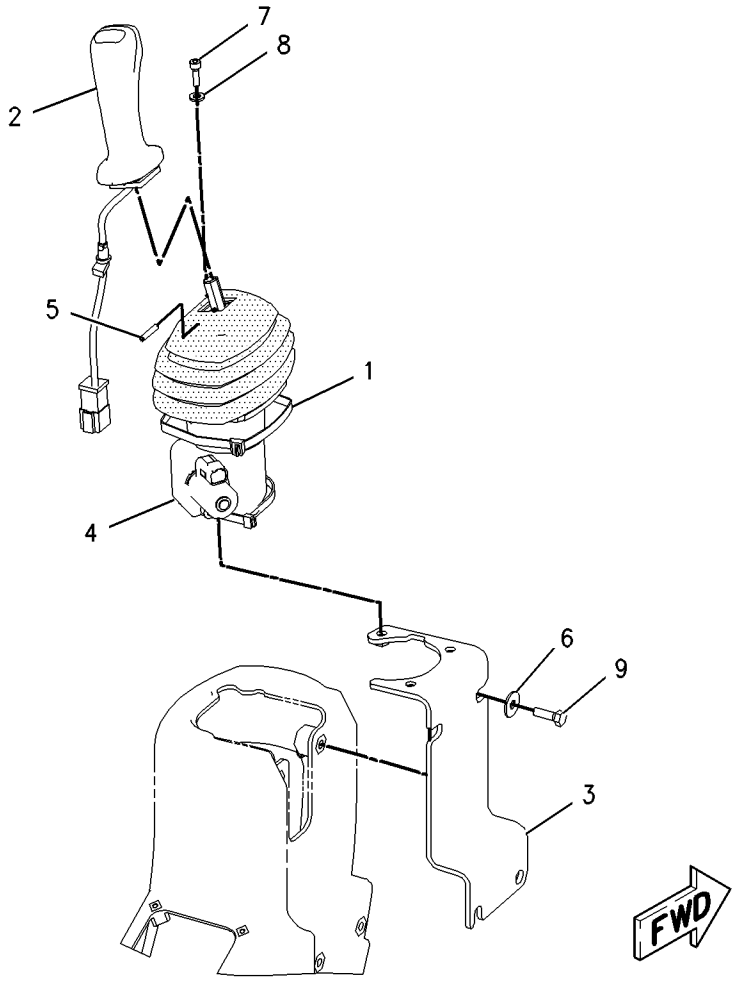

GRAPHIC #1 g00918332

191-2907 CONTROL GP-PILOT OPERATED HYD

S/N: 4YZ4000-UP; 5SZ4000-UP
WITHOUT HORN OR ELECTRICAL WORK TOOL CONTROL
PART OF 191-9680 DRIVE CONTROL AR-HYDROSTATIC
CANNOT BE USED WITH 191-2908—PAGE 328, 191-2909—PAGE 330
AN ATTACHMENT
TYPE 1

SMCS-5059, 5705 **i01794314**

NOTE	REF NO	GRAPHIC REF	PART NUMBER	QTY	PART NAME 1 2 3 4 5 6 (PRODUCT LEVEL)	SEE PAGE
	1	1	**110-8760**	1	STRAP	
	2	1	**142-7508**	1	GROMMET	
	3	1	**191-9788**	1	BRACKET AS	
Y	4	1	**204-1397**	1	VALVE GP-PILOT	484
	5	1	**117-8683**	1	PIN-SPRING	
	6	1	**195-3510**	1	HANDLE	
	7	1	**7X-0579**	2	WASHER-HARD (8.8X25.5X2MM THK)	
M	8	1	**8T-0269**	3	BOLT-SOCKET HEAD (M6X1X20MM)	
	9	1	**8T-4205**	3	WASHER-HARD (7.2X14.5X2MM THK)	
M	10	1	**8T-4908**	1	BOLT (M8X1.25X25MM)	

M-METRIC PART
Y-SEPARATE ILLUSTRATION

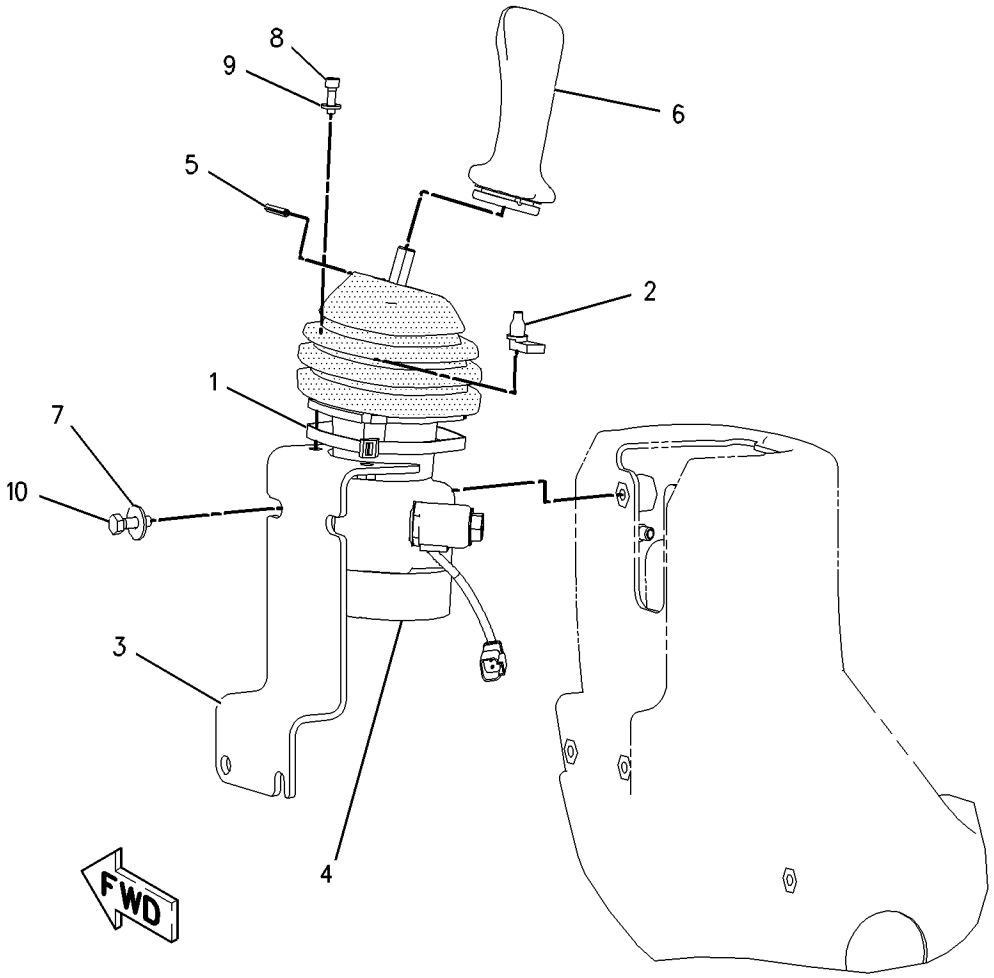

GRAPHIC #1 g00918338

191-2907 CONTROL GP-PILOT OPERATED HYD

S/N: 4YZ4000-UP; 5SZ4000-UP
WITHOUT HORN OR ELECTRICAL WORK TOOL CONTROL
PART OF 191-9680 DRIVE CONTROL AR-HYDROSTATIC
CANNOT BE USED WITH 191-2908—PAGE 328, 191-2909—PAGE 330
AN ATTACHMENT
TYPE 2

SMCS-5059, 5705 **i01794344**

NOTE	REF NO	GRAPHIC REF	PART NUMBER	QTY	PART NAME 1 2 3 4 5 6 (PRODUCT LEVEL)	SEE PAGE
	1	1	**110-8760**	1	STRAP	
	2	1	**142-7508**	1	GROMMET	
	3	1	**191-9788**	1	BRACKET AS	
M		1	**6V-9632**	3	NUT-WELD (M6X1 THD)	
Y	4	1	**204-1400**	1	VALVE GP-PILOT	486
	5	1	**117-8683**	1	PIN-SPRING	
	6	1	**195-3510**	1	HANDLE	
	7	1	**7X-0579**	2	WASHER-HARD (8.8X25.5X2MM THK)	
M	8	1	**8T-0269**	3	BOLT-SOCKET HEAD (M6X1X20MM)	
	9	1	**8T-4205**	3	WASHER-HARD (7.2X14.5X2MM THK)	
M	10	1	**8T-4908**	1	BOLT (M8X1.25X25MM)	

M-METRIC PART
Y-SEPARATE ILLUSTRATION

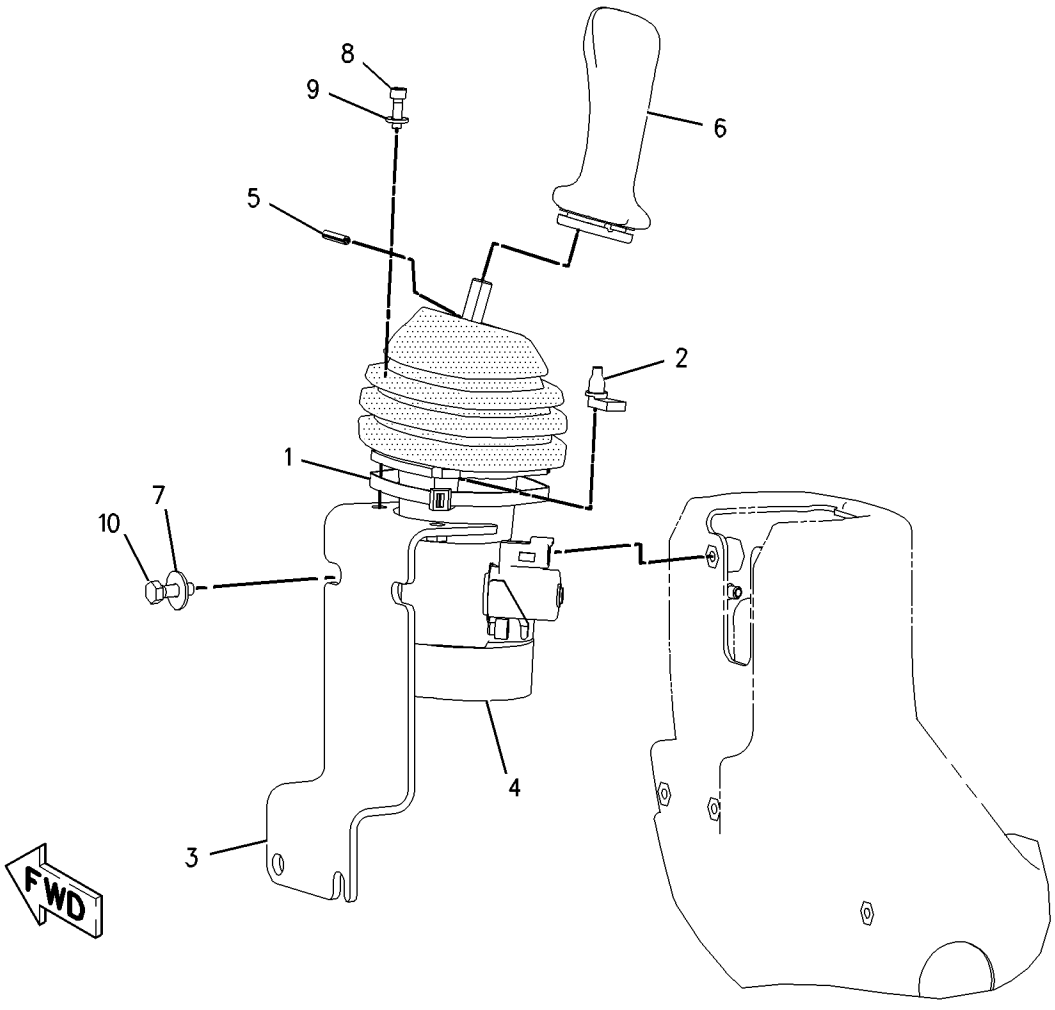

GRAPHIC #1 g00918357

191-2908 CONTROL GP-PILOT OPERATED HYD

S/N: 4YZ4000-UP; 5SZ4000-UP
PART OF 191-9681 DRIVE CONTROL AR-HYDROSTATIC
CANNOT BE USED WITH 191-2907—PAGE 326, 191-2909—PAGE 330
AN ATTACHMENT
TYPE 1

SMCS-5059, 5705 **i01763546**

NOTE	REF NO	GRAPHIC REF	PART NUMBER	QTY	PART NAME 1 2 3 4 5 6 (PRODUCT LEVEL)	SEE PAGE
	1	1	**110-8760**	1	STRAP	
Y	2	1	*190-8004*	1	HORN GP-ELECTRIC	635
	3	1	**191-9788**	1	BRACKET AS	
M		1	**6V-9632**	3	NUT-WELD (M6X1 THD)	
Y	4	1	**204-1397**	1	VALVE GP-PILOT	484
	5	1	**117-8683**	1	PIN-SPRING	
Y	6	1	**204-1395**	1	CONTROL GP-HANDLE	317
	7	1	**7X-0579**	2	WASHER-HARD (8.8X25.5X2MM THK)	
M	8	1	**8T-0269**	3	BOLT-SOCKET HEAD (M6X1X20MM)	
	9	1	**8T-4205**	3	WASHER-HARD (7.2X14.5X2MM THK)	
M	10	1	**8T-4908**	2	BOLT (M8X1.25X25MM)	

M-METRIC PART
Y-SEPARATE ILLUSTRATION

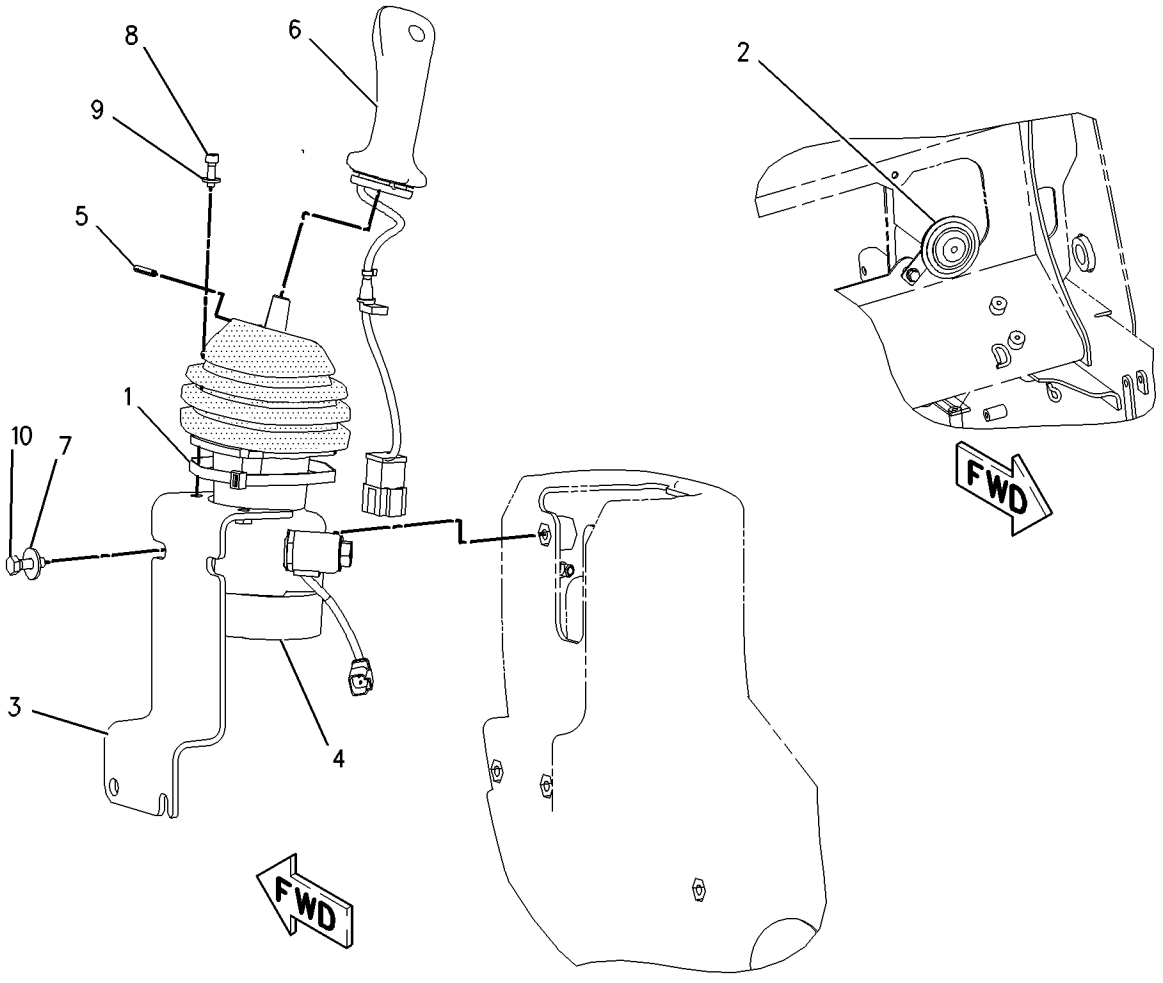

GRAPHIC #1 g00902269

191-2908 CONTROL GP-PILOT OPERATED HYD

S/N: 4YZ4000-UP; 5SZ4000-UP
PART OF 191-9681 DRIVE CONTROL AR-HYDROSTATIC
CANNOT BE USED WITH 191-2907—PAGE 326, 191-2909—PAGE 330
AN ATTACHMENT
TYPE 2

SMCS-5059, 5705 **i01763555**

NOTE	REF NO	GRAPHIC REF	PART NUMBER	QTY	PART NAME 1 2 3 4 5 6 (PRODUCT LEVEL)	SEE PAGE
	1	1	**110-8760**	1	STRAP	
Y	2	1	*190-8004*	1	HORN GP-ELECTRIC	635
	3	1	**191-9788**	1	BRACKET AS	
M		1	**6V-9632**	3	NUT-WELD (M6X1 THD)	
Y	4	1	**204-1400**	1	VALVE GP-PILOT	486
	5	1	**117-8683**	1	PIN-SPRING	
Y	6	1	**204-1395**	1	CONTROL GP-HANDLE	317
	7	1	**7X-0579**	2	WASHER-HARD (8.8X25.5X2MM THK)	
M	8	1	**8T-0269**	3	BOLT-SOCKET HEAD (M6X1X20MM)	
	9	1	**8T-4205**	3	WASHER-HARD (7.2X14.5X2MM THK)	
M	10	1	**8T-4908**	2	BOLT (M8X1.25X25MM)	

M-METRIC PART
Y-SEPARATE ILLUSTRATION

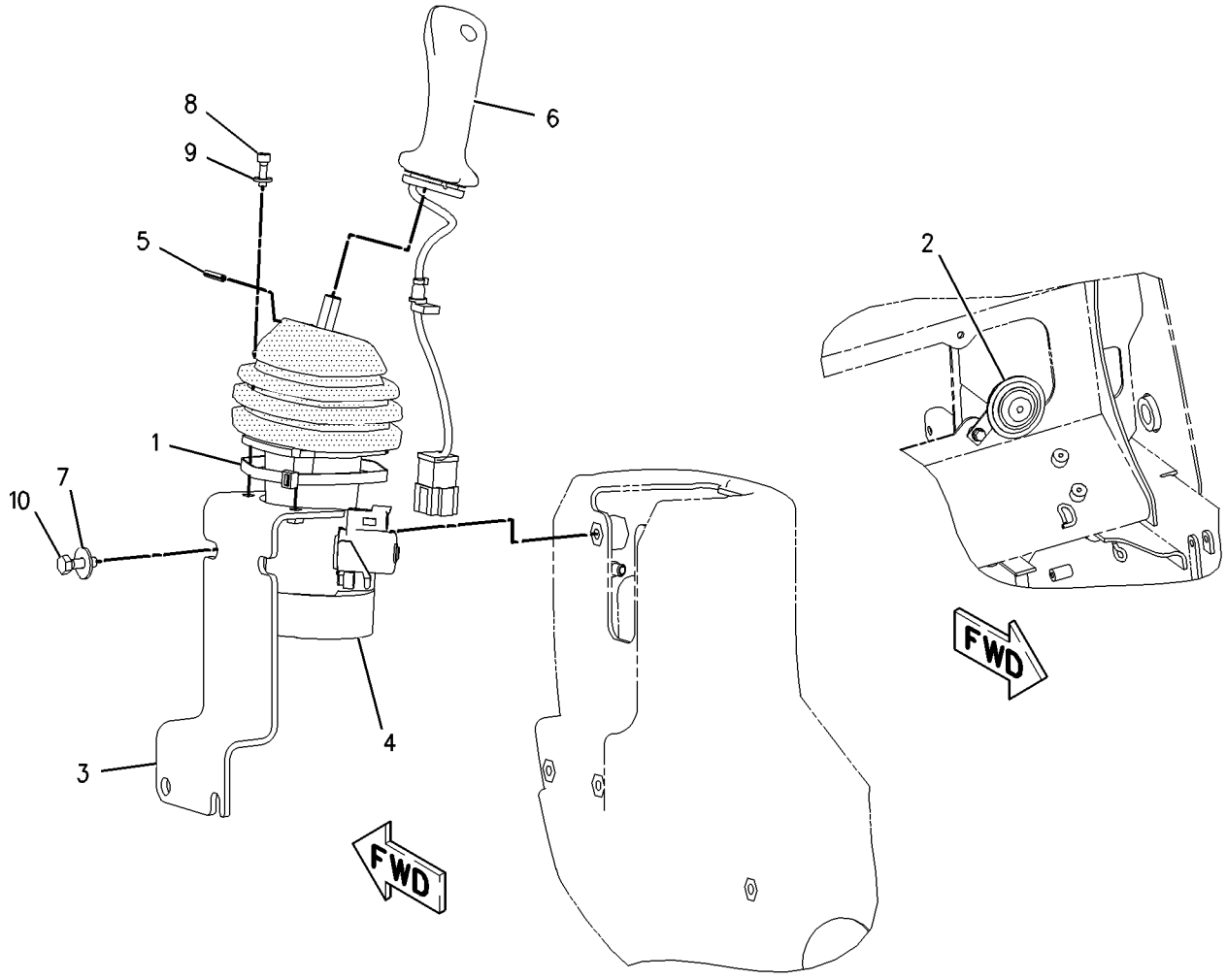

GRAPHIC #1 g00902276

191-2909 CONTROL GP-PILOT OPERATED HYD

S/N: 4YZ4000-UP; 5SZ4000-UP
PART OF 191-9682 DRIVE CONTROL AR-HYDROSTATIC
CANNOT BE USED WITH 191-2907—PAGE 326, 191-2908—PAGE 328
AN ATTACHMENT
TYPE 1

SMCS-5059, 5705 **i01763570**

NOTE	REF NO	GRAPHIC REF	PART NUMBER	QTY	PART NAME 1 2 3 4 5 6 (PRODUCT LEVEL)	SEE PAGE
	1	1	**110-8760**	1	STRAP	
Y	2	1	*190-8004*	1	HORN GP-ELECTRIC	635
	3	1	**191-9788**	1	BRACKET AS	
M		1	**6V-9632**	3	NUT-WELD (M6X1 THD)	
Y	4	1	*193-8353*	1	WIRING GP-WORK TOOL	198
Y	5	1	**204-1397**	1	VALVE GP-PILOT	484
	6	1	**117-8683**	1	PIN-SPRING	
Y	7	1	**204-1396**	1	CONTROL GP-HANDLE	318
	8	1	**7X-0579**	2	WASHER-HARD (8.8X25.5X2MM THK)	
M	9	1	**8T-0269**	3	BOLT-SOCKET HEAD (M6X1X20MM)	
	10	1	**8T-4205**	3	WASHER-HARD (7.2X14.5X2MM THK)	
M	11	1	**8T-4908**	2	BOLT (M8X1.25X25MM)	

M-METRIC PART
Y-SEPARATE ILLUSTRATION

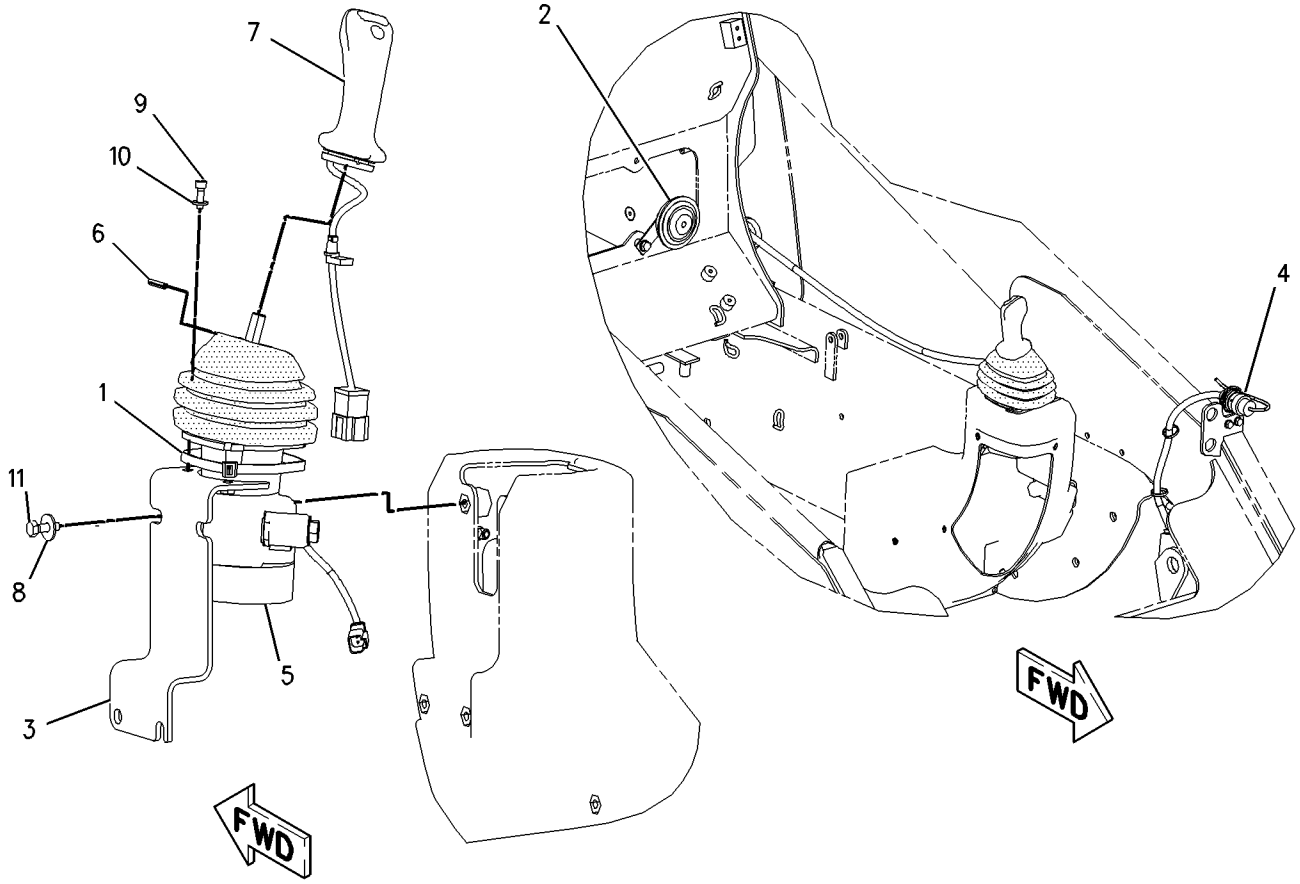

GRAPHIC #1 g00902286

191-2909 CONTROL GP-PILOT OPERATED HYD

S/N: 4YZ4000-UP; 5SZ4000-UP
PART OF 191-9682 DRIVE CONTROL AR-HYDROSTATIC
CANNOT BE USED WITH 191-2907—PAGE 326, 191-2908—PAGE 328
AN ATTACHMENT
TYPE 2

SMCS-5059, 5705 **i01794359**

NOTE	REF NO	GRAPHIC REF	PART NUMBER	QTY	PART NAME 1 2 3 4 5 6 (PRODUCT LEVEL)	SEE PAGE
	1	1	**110-8760**	1	STRAP	
Y	2	1	*190-8004*	1	HORN GP-ELECTRIC	635
	3	1	**191-9788**	1	BRACKET AS	
M		1	**6V-9632**	3	NUT-WELD (M6X1 THD)	
Y	4	1	*193-8353*	1	WIRING GP-WORK TOOL	198
Y	5	1	**204-1400**	1	VALVE GP-PILOT	486
	6	1	**117-8683**	1	PIN-SPRING	
Y	7	1	**204-1396**	1	CONTROL GP-HANDLE	318
	8	1	**7X-0579**	2	WASHER-HARD (8.8X25.5X2MM THK)	
M	9	1	**8T-0269**	3	BOLT-SOCKET HEAD (M6X1X20MM)	
	10	1	**8T-4205**	3	WASHER-HARD (7.2X14.5X2MM THK)	
M	11	1	**8T-4908**	2	BOLT (M8X1.25X25MM)	

M-METRIC PART
Y-SEPARATE ILLUSTRATION

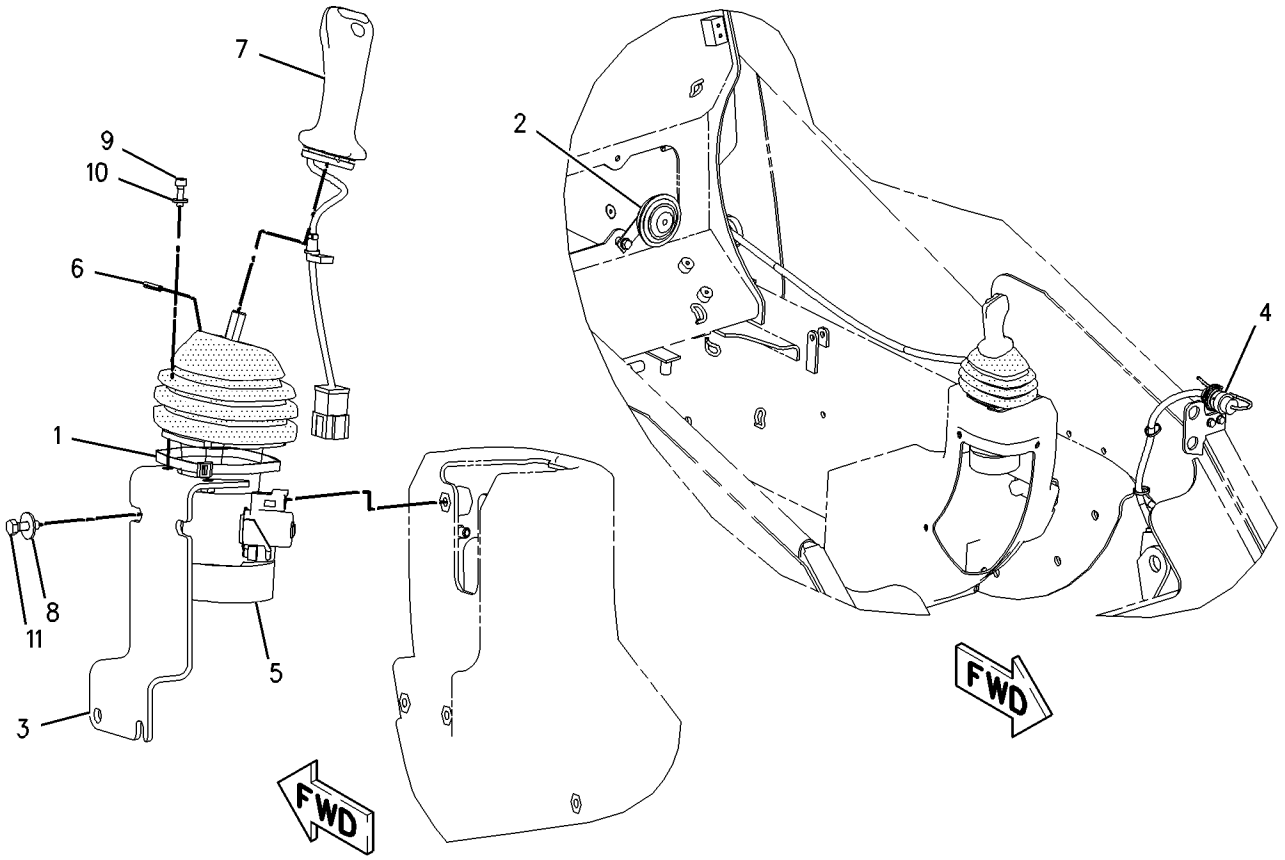

GRAPHIC #1 g00918384

191-9683 CONTROL GP-PILOT OPERATED HYD

S/N: 4YZ4000-UP; 5SZ4000-UP
JOYSTICK, TWO SPEED
PART OF 212-6670 DRIVE CONTROL AR-HYDROSTATIC
AN ATTACHMENT

SMCS-5059, 5705 **i01794386**

NOTE	REF NO	GRAPHIC REF	PART NUMBER	QTY	PART NAME 1 2 3 4 5 6 (PRODUCT LEVEL)	SEE PAGE
	1	1	**110-8760**	1	STRAP	
Y	2	1	*190-8004*	1	HORN GP-ELECTRIC	635
	3	1	**191-9788**	1	BRACKET AS	
M		1	**6V-9632**	3	NUT-WELD (M6X1 THD)	
Y	4	1	*193-8353*	1	WIRING GP-WORK TOOL	198
Y	5	1	**204-1400**	1	VALVE GP-PILOT	486
	6	1	**117-8683**	1	PIN-SPRING	
Y	7	1	**204-1398**	1	CONTROL GP-HANDLE	319
	8	1	**7X-0579**	2	WASHER-HARD (8.8X25.5X2MM THK)	
M	9	1	**8T-0269**	3	BOLT-SOCKET HEAD (M6X1X20MM)	
	10	1	**8T-4205**	3	WASHER-HARD (7.2X14.5X2MM THK)	
M	11	1	**8T-4908**	2	BOLT (M8X1.25X25MM)	

M-METRIC PART
Y-SEPARATE ILLUSTRATION

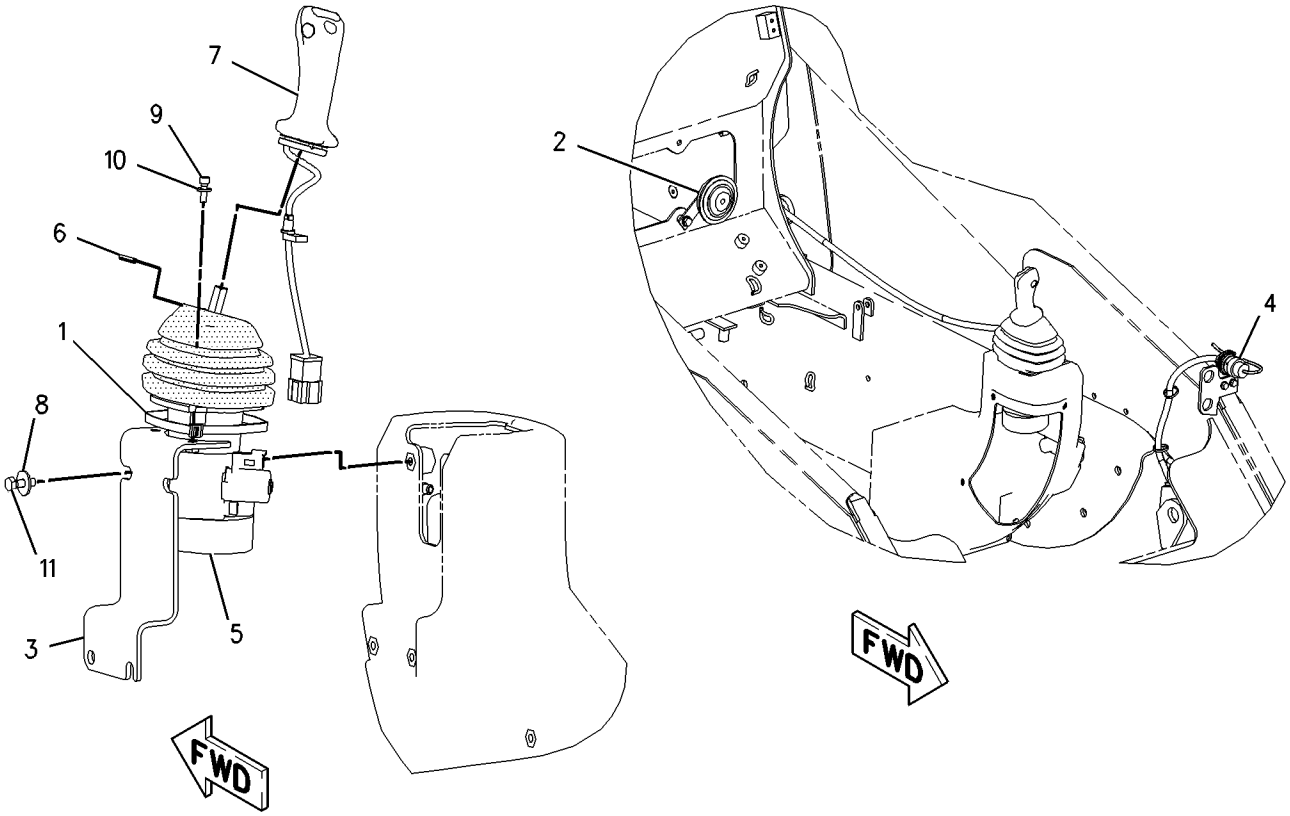

GRAPHIC #1 g00918405

191-9746 CONTROL GP-PILOT OPERATED HYD

S/N: CED1-1195; FDG1-865
HORN AND C1 C2 SWITCH
PART OF 191-9792 DRIVE CONTROL AR-HYDROSTATIC
AN ATTACHMENT

SMCS-5059, 5705 **i01784281**

NOTE	REF NO	GRAPHIC REF	PART NUMBER	QTY	PART NAME 1 2 3 4 5 6 (PRODUCT LEVEL)	SEE PAGE
	1	1	**110-8760**	1	STRAP	
	2	1	**191-9788**	1	BRACKET AS	
Y	3	1	*193-8379*	1	WIRING GP-WORK TOOL	200
Y	4	1	*202-2170*	1	HORN GP-ELECTRIC	636
Y	5	1	**204-1397**	1	VALVE GP-PILOT (JOYSTICK)	484
	6	1	**117-8683**	1	PIN-SPRING	
Y	7	1	**204-1396**	1	CONTROL GP-HANDLE	318
	8	1	**7X-0579**	2	WASHER-HARD (8.8X25.5X2MM THK)	
M	9	1	**8T-0269**	3	BOLT-SOCKET HEAD (M6X1X20MM)	
	10	1	**8T-4205**	3	WASHER-HARD (7.2X14.5X2MM THK)	
M	11	1	**8T-4908**	2	BOLT (M8X1.25X25MM)	

M-METRIC PART
Y-SEPARATE ILLUSTRATION

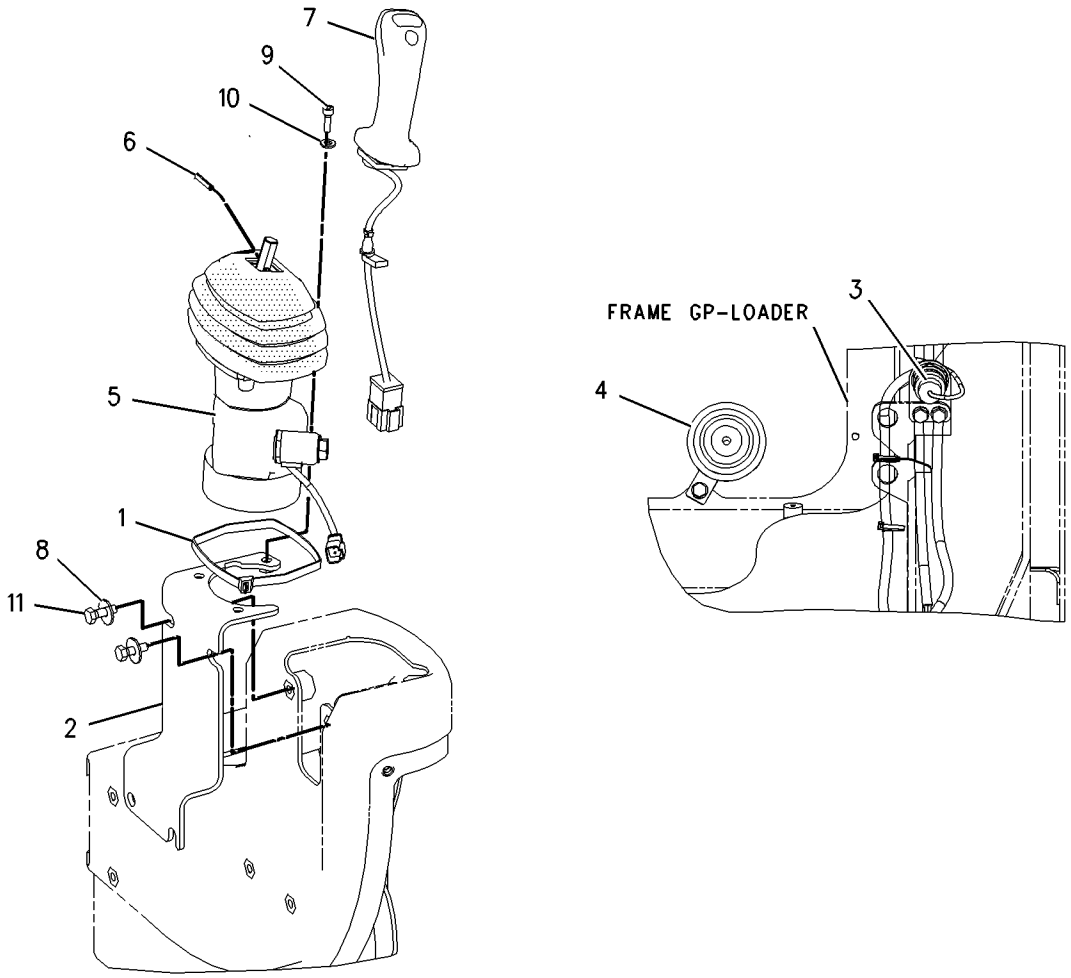

GRAPHIC #1 g00912872

191-9746 CONTROL GP-PILOT OPERATED HYD

S/N: CED1196-UP; FDG866-UP
HORN AND C1 C2 SWITCH
PART OF 191-9792 DRIVE CONTROL AR-HYDROSTATIC
AN ATTACHMENT

SMCS-5059, 5705 **i01784307**

NOTE	REF NO	GRAPHIC REF	PART NUMBER	QTY	PART NAME 1 2 3 4 5 6 (PRODUCT LEVEL)	SEE PAGE
	1	1	**110-8760**	1	STRAP	
	2	1	**191-9788**	1	BRACKET AS	
Y	3	1	*193-8379*	1	WIRING GP-WORK TOOL	200
Y	4	1	*202-2170*	1	HORN GP-ELECTRIC	636
Y	5	1	**204-1400**	1	VALVE GP-PILOT (JOYSTICK)	486
	6	1	**117-8683**	1	PIN-SPRING	
Y	7	1	**204-1396**	1	CONTROL GP-HANDLE	318
	8	1	**7X-0579**	2	WASHER-HARD (8.8X25.5X2MM THK)	
M	9	1	**8T-0269**	3	BOLT-SOCKET HEAD (M6X1X20MM)	
	10	1	**8T-4205**	3	WASHER-HARD (7.2X14.5X2MM THK)	
M	11	1	**8T-4908**	2	BOLT (M8X1.25X25MM)	

M-METRIC PART
Y-SEPARATE ILLUSTRATION

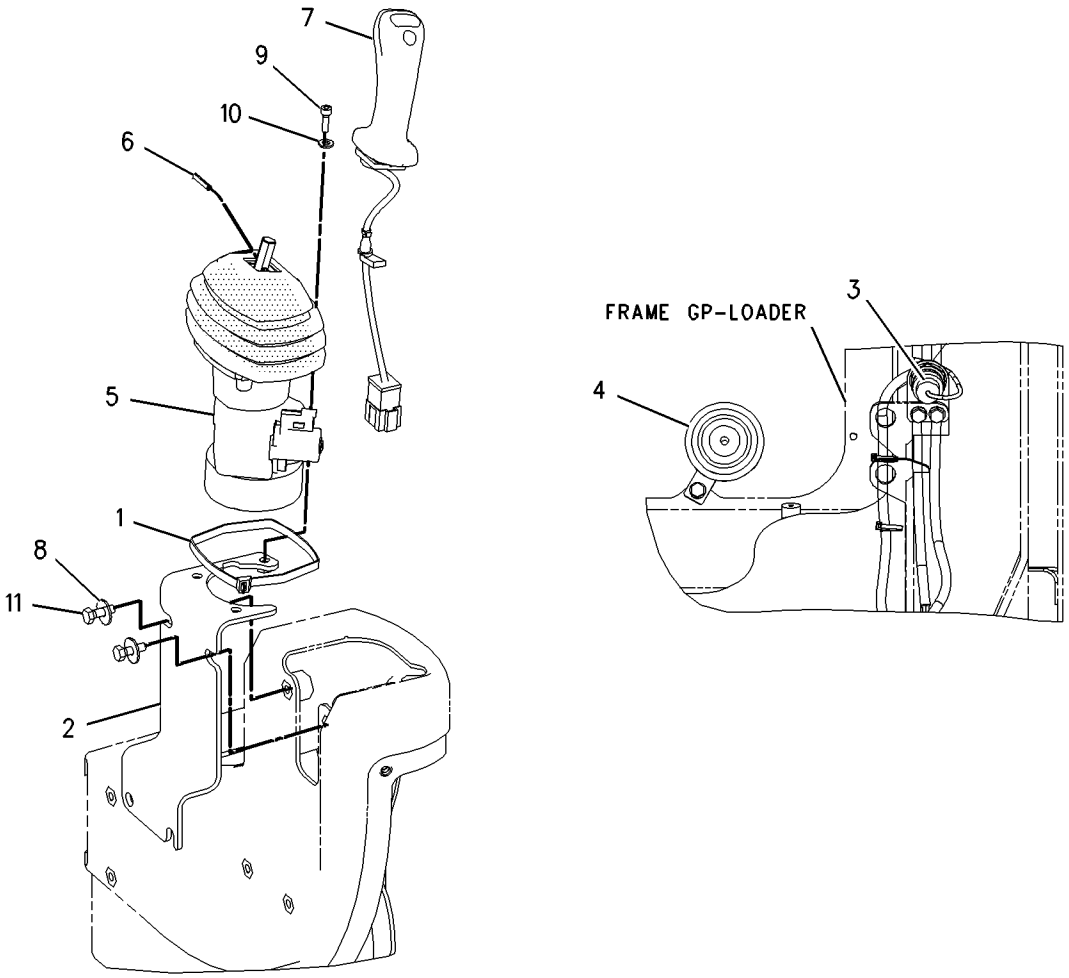

GRAPHIC #1 g00912844

191-9794 CONTROL GP-PILOT OPERATED HYD

S/N: CED1-UP; FDG1-UP; 4YZ4000-UP; 5SZ4000-UP
NO HORN
PART OF 191-9790 DRIVE CONTROL AR-HYDROSTATIC
AN ATTACHMENT

SMCS-5059, 5705 **i01794411**

NOTE	REF NO	GRAPHIC REF	PART NUMBER	QTY	PART NAME 1 2 3 4 5 6 (PRODUCT LEVEL)	SEE PAGE
	1	1	**110-8760**	1	STRAP	
Y	2	1	**191-9758**	1	VALVE GP-PILOT (JOYSTICK)	479
	3	1	**191-9788**	1	BRACKET AS	
	4	1	**7X-0579**	2	WASHER-HARD (8.8X25.5X2MM THK)	
M	5	1	**8T-0269**	3	BOLT-SOCKET HEAD (M6X1X20MM)	
	6	1	**8T-4205**	3	WASHER-HARD (7.2X14.5X2MM THK)	
M	7	1	**8T-4908**	2	BOLT (M8X1.25X25MM)	

M-METRIC PART
Y-SEPARATE ILLUSTRATION

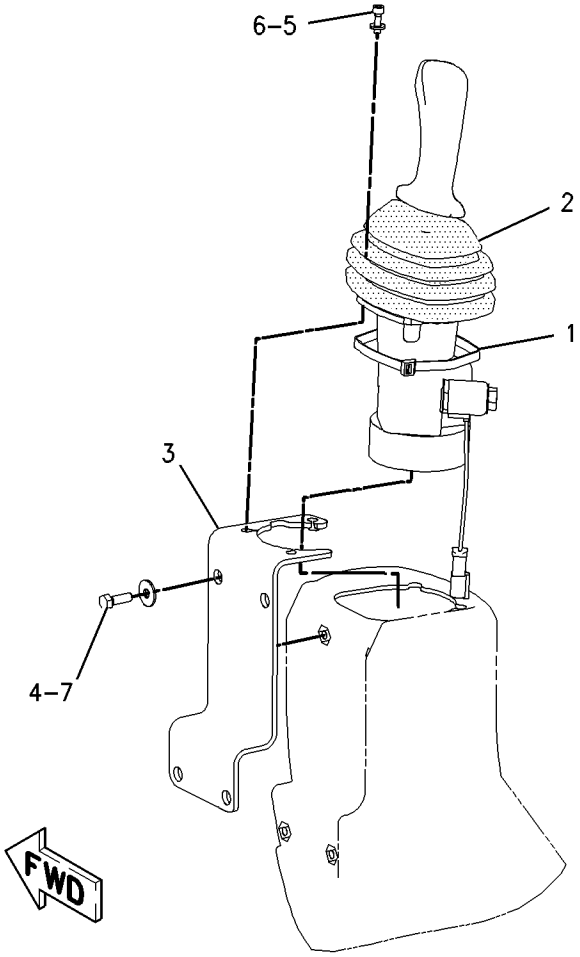

GRAPHIC #1 g00918423

191-9796 CONTROL GP-PILOT OPERATED HYD

S/N: 4YZ4000-UP; 5SZ4000-UP
HORN AND C1 C2 SWITCH
AN ATTACHMENT

SMCS-5059, 5705 **i01794464**

NOTE	REF NO	GRAPHIC REF	PART NUMBER	QTY	PART NAME 1 2 3 4 5 6 (PRODUCT LEVEL)	SEE PAGE
	1	1	**110-8760**	1	STRAP	
Y	2	1	*190-8004*	1	HORN GP-ELECTRIC	635
Y	3	1	**191-9763**	1	VALVE GP-PILOT (JOYSTICK)	481
	4	1	**191-9788**	1	BRACKET AS	
Y	5	1	*193-8353*	1	WIRING GP-WORK TOOL	198
	6	1	**7X-0579**	2	WASHER-HARD (8.8X25.5X2MM THK)	
M	7	1	**8T-0269**	3	BOLT-SOCKET HEAD (M6X1X20MM)	
	8	1	**8T-4205**	3	WASHER-HARD (7.2X14.5X2MM THK)	
M	9	1	**8T-4908**	2	BOLT (M8X1.25X25MM)	

M-METRIC PART
Y-SEPARATE ILLUSTRATION

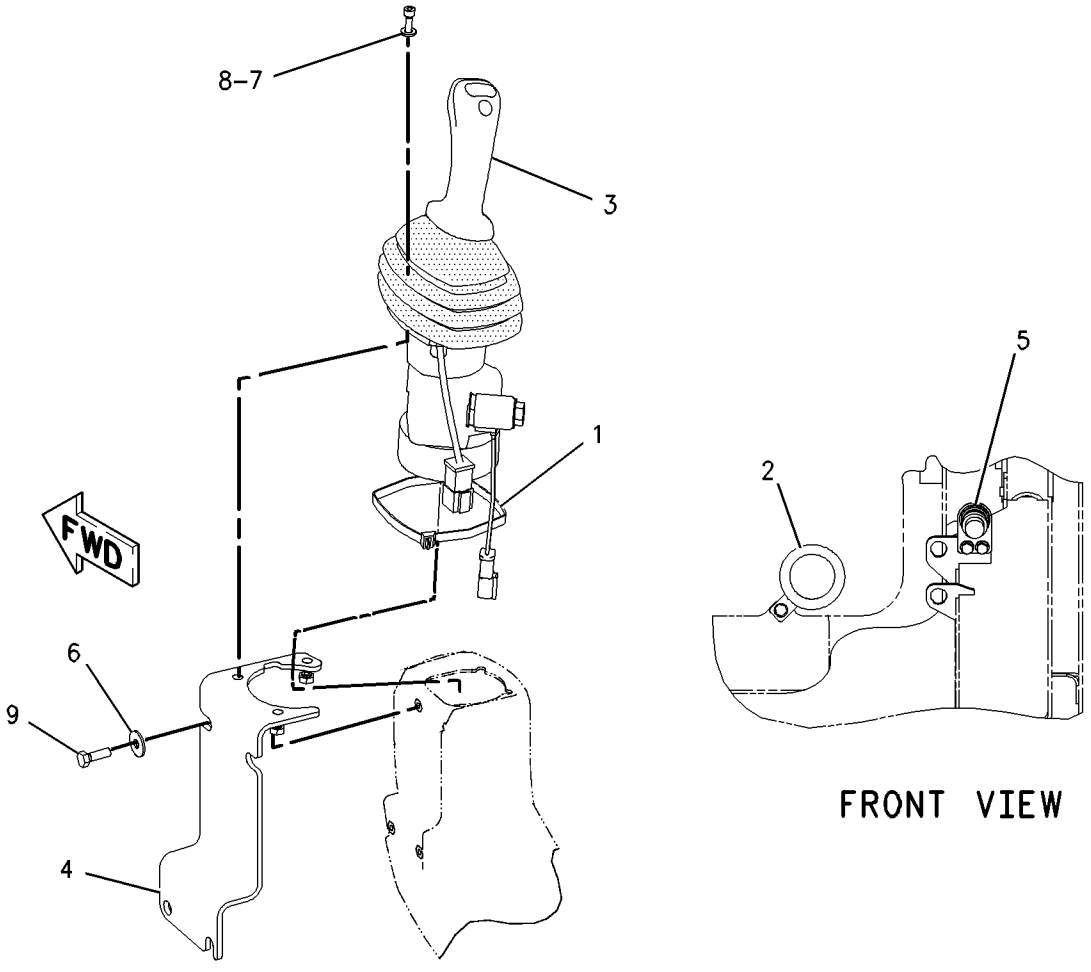

GRAPHIC #1 g00918484

191-9797 CONTROL GP-PILOT OPERATED HYD

S/N: CED1-UP; FDG1-UP
TWO SPEED
PART OF 191-9793 DRIVE CONTROL AR-HYDROSTATIC
AN ATTACHMENT
TYPE 1

SMCS-5059, 5705 **i01794544**

NOTE	REF NO	GRAPHIC REF	PART NUMBER	QTY	PART NAME 1 2 3 4 5 6 (PRODUCT LEVEL)	SEE PAGE
	1	1	**110-8760**	1	STRAP	
	2	1	**191-9788**	1	BRACKET AS	
M		1	**6V-9632**	3	NUT-WELD (M6X1 THD)	
Y	3	1	*193-8379*	1	WIRING GP-WORK TOOL	200
Y	4	1	*202-2170*	1	HORN GP-ELECTRIC	636
Y	5	1	**204-1397**	1	VALVE GP-PILOT	484
	6	1	**117-8683**	1	PIN-SPRING	
Y	7	1	**204-1398**	1	CONTROL GP-HANDLE	319
	8	1	**7X-0579**	2	WASHER-HARD (8.8X25.5X2MM THK)	
M	9	1	**8T-0269**	3	BOLT-SOCKET HEAD (M6X1X20MM)	
	10	1	**8T-4205**	3	WASHER-HARD (7.2X14.5X2MM THK)	
M	11	1	**8T-4908**	2	BOLT (M8X1.25X25MM)	

M-METRIC PART
Y-SEPARATE ILLUSTRATION

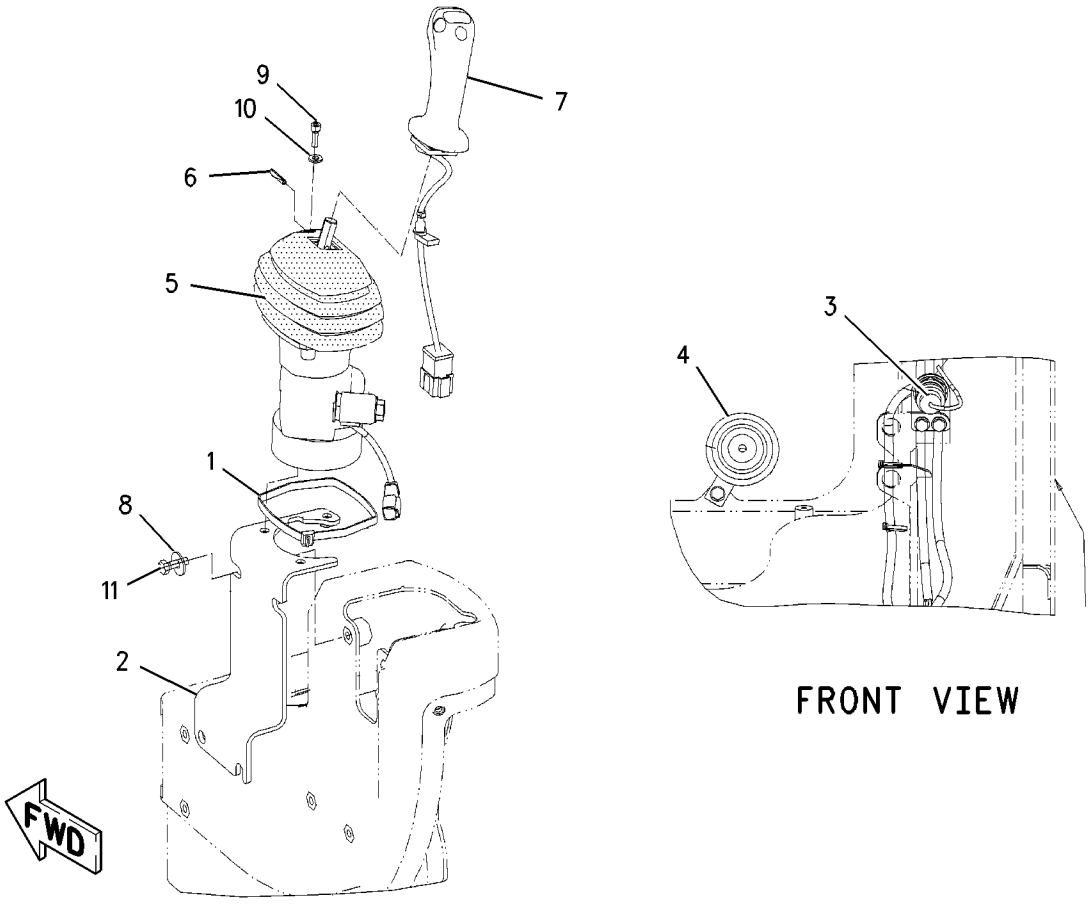

GRAPHIC #1 g00918564

191-9797 CONTROL GP-PILOT OPERATED HYD

S/N: CED1-UP; FDG1-UP
TWO SPEED
PART OF 191-9793 DRIVE CONTROL AR-HYDROSTATIC
AN ATTACHMENT
TYPE 2

SMCS-5059, 5705 **i01794577**

NOTE	REF NO	GRAPHIC REF	PART NUMBER	QTY	PART NAME 1 2 3 4 5 6 (PRODUCT LEVEL)	SEE PAGE
	1	1	**110-8760**	1	STRAP	
	2	1	**191-9788**	1	BRACKET AS	
M		1	**6V-9632**	3	NUT-WELD (M6X1 THD)	
Y	3	1	*193-8379*	1	WIRING GP-WORK TOOL	200
Y	4	1	*202-2170*	1	HORN GP-ELECTRIC	636
Y	5	1	**204-1400**	1	VALVE GP-PILOT	486
	6	1	**117-8683**	1	PIN-SPRING	
Y	7	1	**204-1398**	1	CONTROL GP-HANDLE	319
	8	1	**7X-0579**	2	WASHER-HARD (8.8X25.5X2MM THK)	
M	9	1	**8T-0269**	3	BOLT-SOCKET HEAD (M6X1X20MM)	
	10	1	**8T-4205**	3	WASHER-HARD (7.2X14.5X2MM THK)	
M	11	1	**8T-4908**	2	BOLT (M8X1.25X25MM)	

M-METRIC PART
Y-SEPARATE ILLUSTRATION

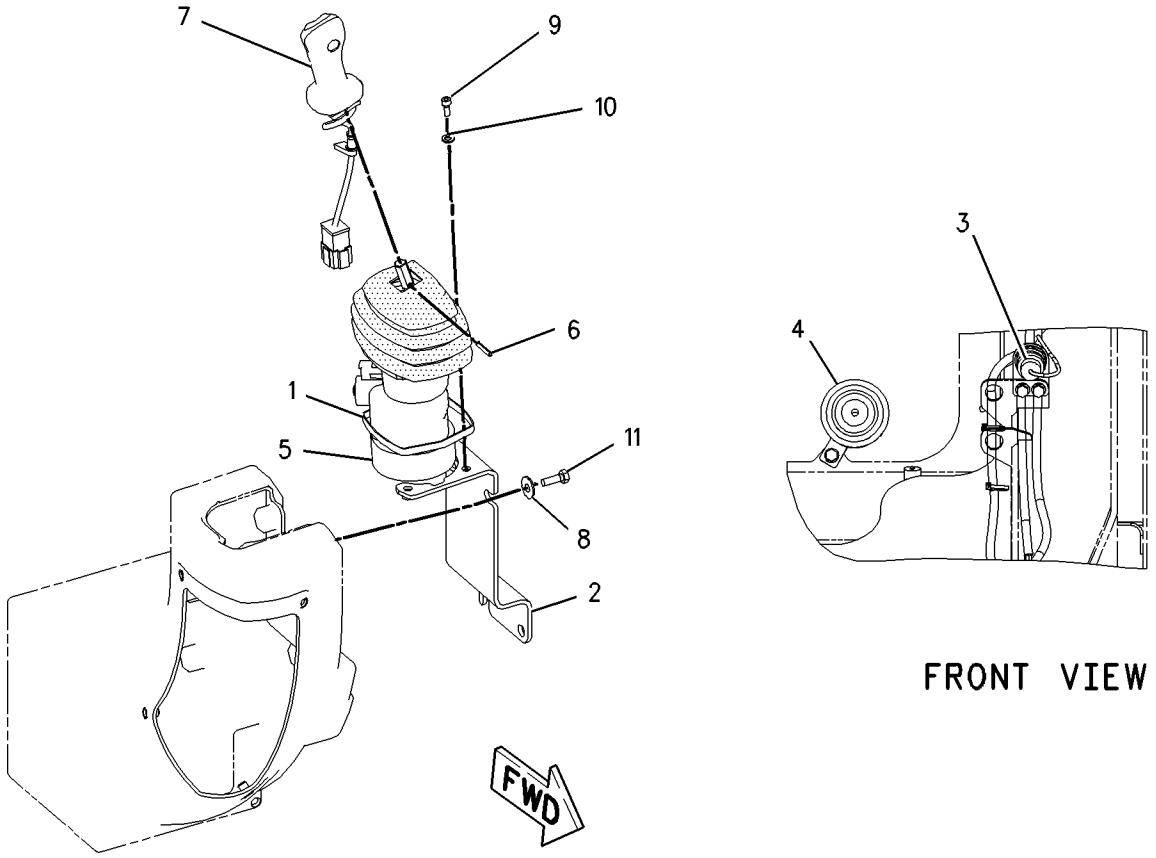

GRAPHIC #1 g00918601

206-3795 CONTROL GP-PILOT OPERATED HYD

S/N: CED1-UP; FDG1-UP
HORN W/O WORK TOOL ELECTRICAL HARNESS
PART OF 191-9791 DRIVE CONTROL AR-HYDROSTATIC
AN ATTACHMENT

SMCS-5059, 5705 **i01794587**

NOTE	REF NO	GRAPHIC REF	PART NUMBER	QTY	PART NAME 1 2 3 4 5 6 (PRODUCT LEVEL)	SEE PAGE
	1	1	**110-8760**	1	STRAP	
Y	2	1	**191-9759**	1	VALVE GP-PILOT	480
	3	1	**191-9788**	1	BRACKET AS	
M		1	**6V-9632**	3	NUT-WELD (M6X1 THD)	
Y	4	1	*202-2170*	1	HORN GP-ELECTRIC	636
	5	1	**7X-0579**	2	WASHER-HARD (8.8X25.5X2MM THK)	
M	6	1	**8T-0269**	3	BOLT-SOCKET HEAD (M6X1X20MM)	
	7	1	**8T-4205**	3	WASHER-HARD (7.2X14.5X2MM THK)	
M	8	1	**8T-4908**	2	BOLT (M8X1.25X25MM)	

M-METRIC PART
Y-SEPARATE ILLUSTRATION

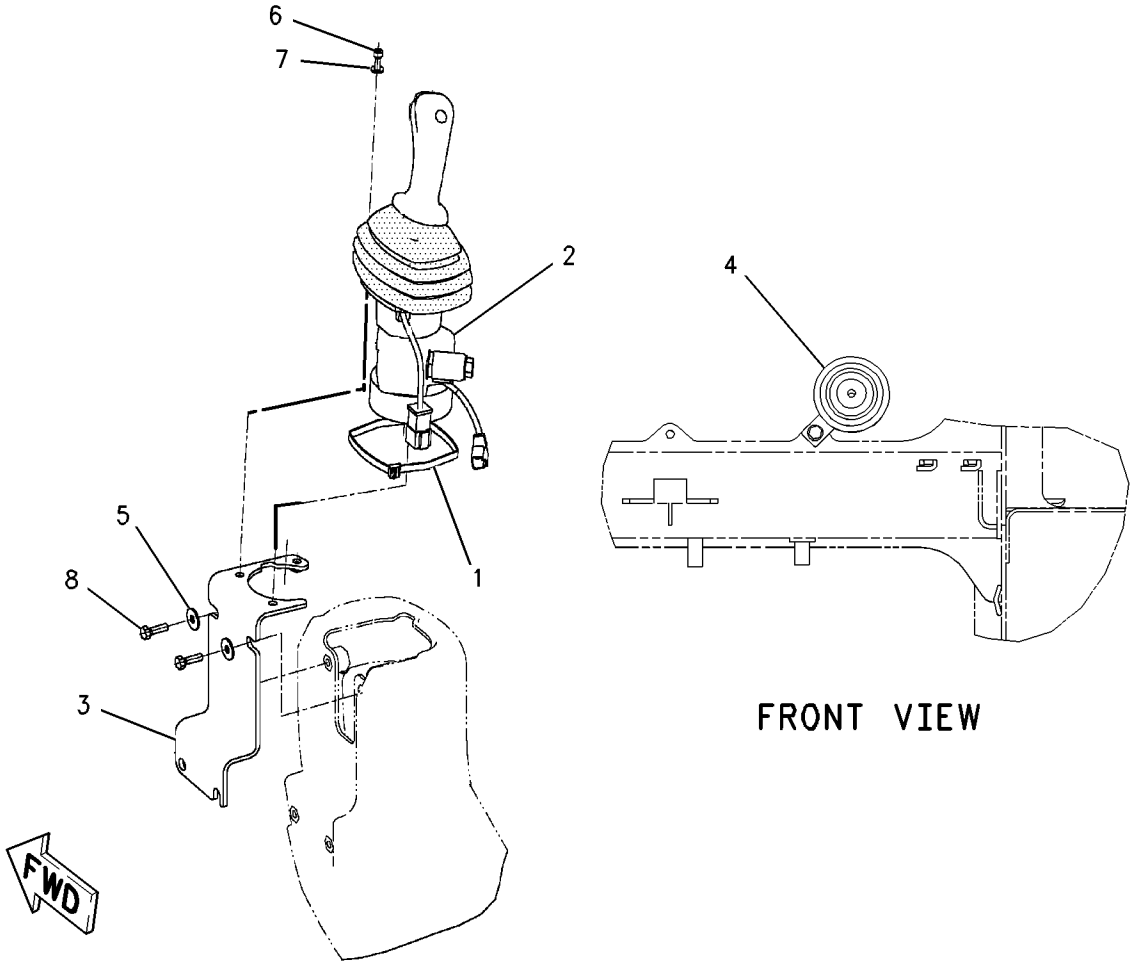

GRAPHIC #1 g00918607

206-3795 CONTROL GP-PILOT OPERATED HYD

S/N: CED1-1195; FDG1-865
HORN W/O WORK TOOL ELECTRICAL HARNESS
PART OF 191-9791 DRIVE CONTROL AR-HYDROSTATIC
AN ATTACHMENT

SMCS-5059, 5705 **i01794610**

NOTE	REF NO	GRAPHIC REF	PART NUMBER	QTY	PART NAME 1 2 3 4 5 6 (PRODUCT LEVEL)	SEE PAGE
	1	1	**110-8760**	1	STRAP	
	2	1	**191-9788**	1	BRACKET AS	
M		1	**6V-9632**	3	NUT-WELD (M6X1 THD)	
Y	3	1	*202-2170*	1	HORN GP-ELECTRIC	636
Y	4	1	**204-1397**	1	VALVE GP-PILOT	484
	5	1	**117-8683**	1	PIN-SPRING	
Y	6	1	**204-1395**	1	CONTROL GP-HANDLE	317
	7	1	**7X-0579**	2	WASHER-HARD (8.8X25.5X2MM THK)	
M	8	1	**8T-0269**	3	BOLT-SOCKET HEAD (M6X1X20MM)	
	9	1	**8T-4205**	3	WASHER-HARD (7.2X14.5X2MM THK)	
M	10	1	**8T-4908**	2	BOLT (M8X1.25X25MM)	

M-METRIC PART
Y-SEPARATE ILLUSTRATION

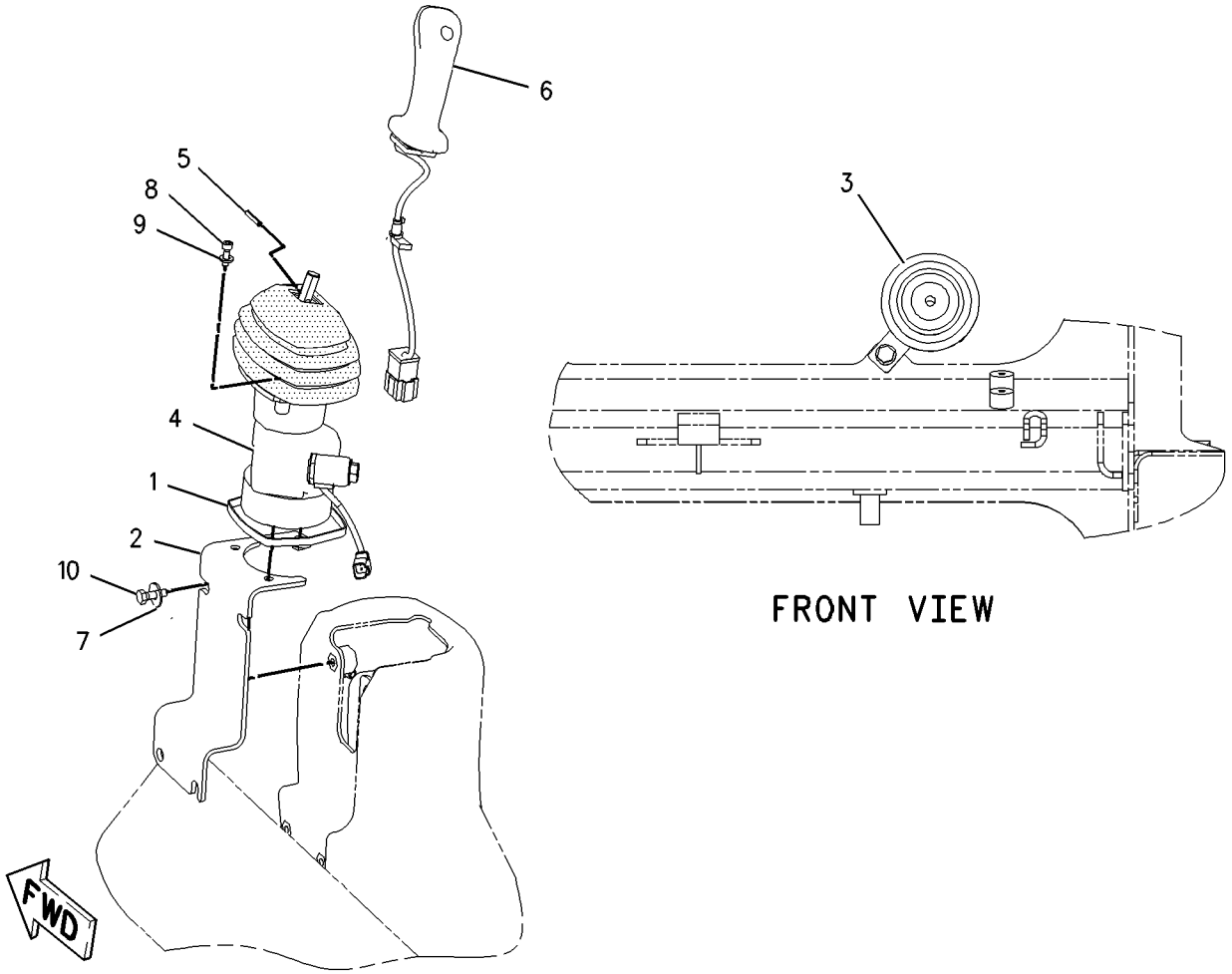

GRAPHIC #1 g00918627

206-3795 CONTROL GP-PILOT OPERATED HYD

S/N: CED1196-UP; FDG866-UP
HORN W/O WORK TOOL ELECTRICAL HARNESS
PART OF 191-9791 DRIVE CONTROL AR-HYDROSTATIC
AN ATTACHMENT

SMCS-5059, 5705 **i01794627**

NOTE	REF NO	GRAPHIC REF	PART NUMBER	QTY	PART NAME 1 2 3 4 5 6 (PRODUCT LEVEL)	SEE PAGE
	1	1	**110-8760**	1	STRAP	
	2	1	**191-9788**	1	BRACKET AS	
M		1	**6V-9632**	3	NUT-WELD (M6X1 THD)	
Y	3	1	*202-2170*	1	HORN GP-ELECTRIC	636
Y	4	1	**204-1400**	1	VALVE GP-PILOT	486
	5	1	**117-8683**	1	PIN-SPRING	
Y	6	1	**204-1395**	1	CONTROL GP-HANDLE	317
	7	1	**7X-0579**	2	WASHER-HARD (8.8X25.5X2MM THK)	
M	8	1	**8T-0269**	3	BOLT-SOCKET HEAD (M6X1X20MM)	
	9	1	**8T-4205**	3	WASHER-HARD (7.2X14.5X2MM THK)	
M	10	1	**8T-4908**	2	BOLT (M8X1.25X25MM)	

M-METRIC PART
Y-SEPARATE ILLUSTRATION

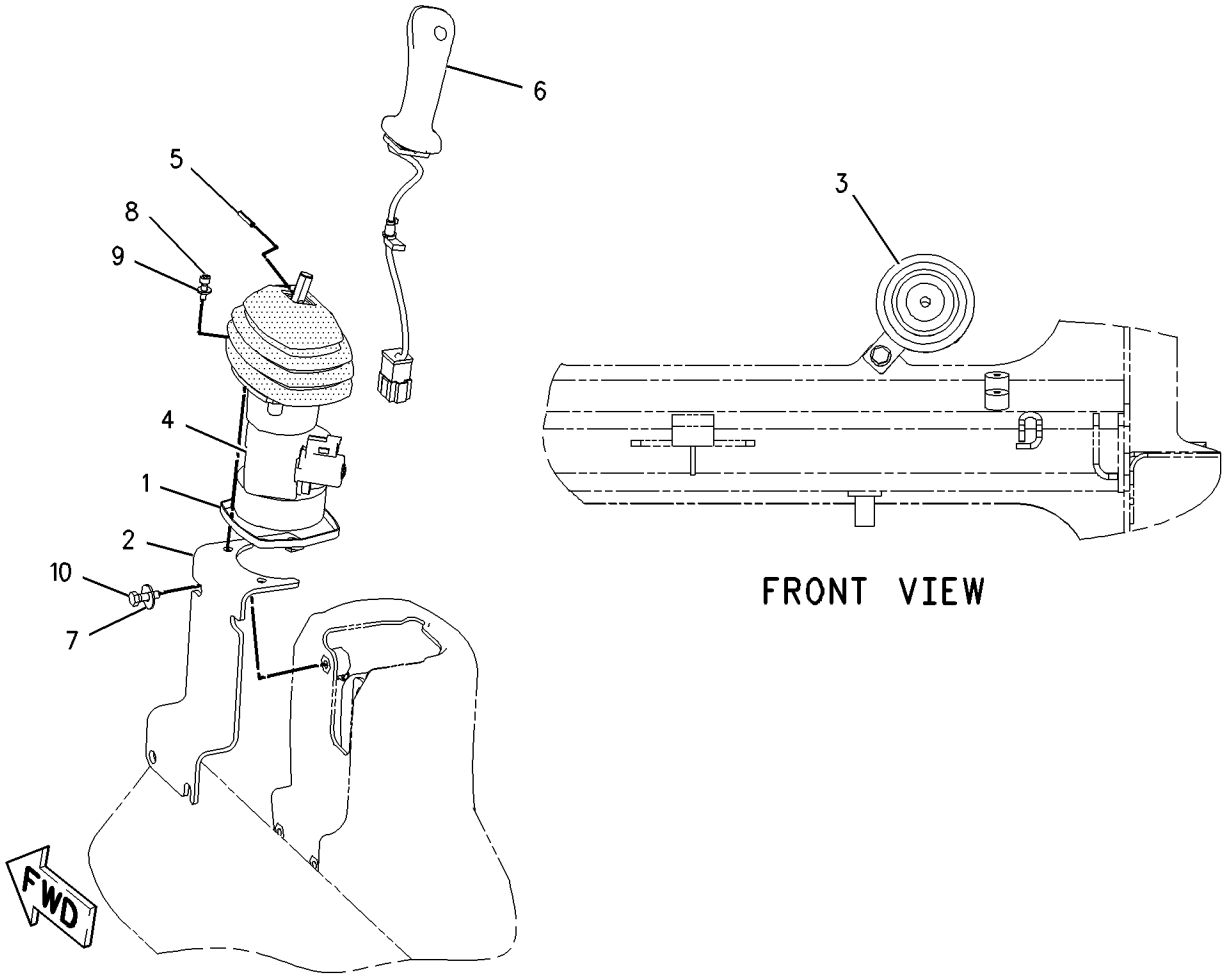

GRAPHIC #1 g00918638

215-3944 CONTROL GP-PILOT OPERATED HYD

S/N: 4YZ4734-UP; 5SZ5118-UP
WITH HORN, TWO SPEED DRIVE
PART OF 212-6672 DRIVE CONTROL AR-HYDROSTATIC
AN ATTACHMENT

SMCS-5059, 5705 **i01794651**

NOTE	REF NO	GRAPHIC REF	PART NUMBER	QTY	PART NAME 1 2 3 4 5 6 (PRODUCT LEVEL)	SEE PAGE
	1	1	**110-8760**	1	STRAP	
Y	2	1	*190-8004*	1	HORN GP-ELECTRIC	635
	3	1	**191-9788**	1	BRACKET AS	
M		1	**6V-9632**	3	NUT-WELD (M6X1 THD)	
Y	4	1	**204-1400**	1	VALVE GP-PILOT	486
	5	1	**117-8683**	1	PIN-SPRING	
Y	6	1	**204-1398**	1	CONTROL GP-HANDLE	319
	7	1	**7X-0579**	2	WASHER-HARD (8.8X25.5X2MM THK)	
M	8	1	**8T-0269**	3	BOLT-SOCKET HEAD (M6X1X20MM)	
	9	1	**8T-4205**	3	WASHER-HARD (7.2X14.5X2MM THK)	
M	10	1	**8T-4908**	2	BOLT (M8X1.25X25MM)	

M-METRIC PART
Y-SEPARATE ILLUSTRATION

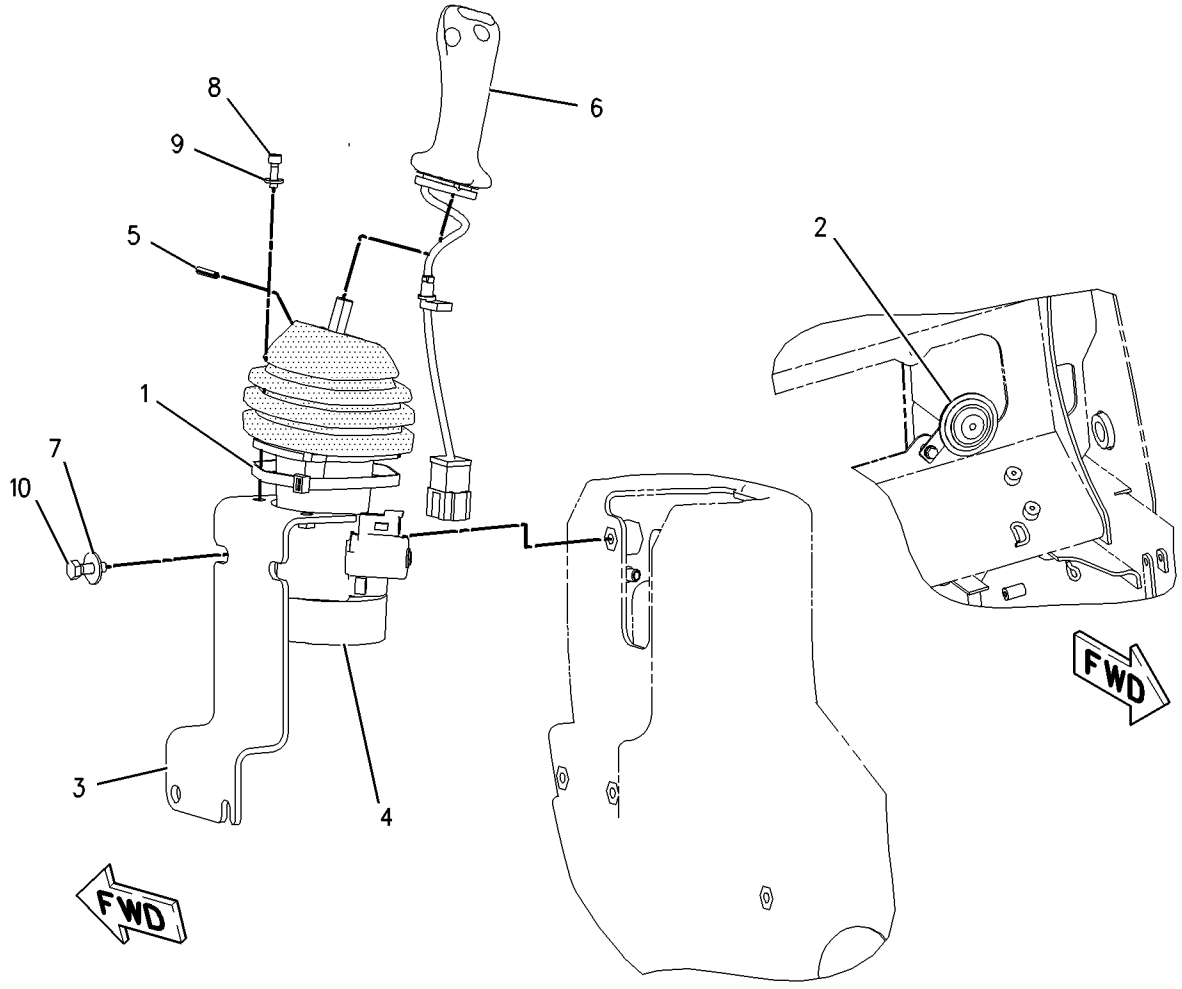

GRAPHIC #1 g00918660

215-3946 CONTROL GP-PILOT OPERATED HYD

S/N: CED1-UP; FDG1-UP
HORN, TWO SPEED
PART OF 215-3950 DRIVE CONTROL AR-HYDROSTATIC
AN ATTACHMENT

SMCS-5059, 5705 **i01794659**

NOTE	REF NO	GRAPHIC REF	PART NUMBER	QTY	PART NAME 1 2 3 4 5 6 (PRODUCT LEVEL)	SEE PAGE
	1	1	**110-8760**	1	STRAP	
	2	1	**191-9788**	1	BRACKET AS	
M		1	**6V-9632**	3	NUT-WELD (M6X1 THD)	
Y	3	1	*202-2170*	1	HORN GP-ELECTRIC	636
Y	4	1	**204-1400**	1	VALVE GP-PILOT	486
	5	1	**117-8683**	1	PIN-SPRING	
Y	6	1	**204-1398**	1	CONTROL GP-HANDLE	319
	7	1	**7X-0579**	2	WASHER-HARD (8.8X25.5X2MM THK)	
M	8	1	**8T-0269**	3	BOLT-SOCKET HEAD (M6X1X20MM)	
	9	1	**8T-4205**	3	WASHER-HARD (7.2X14.5X2MM THK)	
M	10	1	**8T-4908**	2	BOLT (M8X1.25X25MM)	

M-METRIC PART
Y-SEPARATE ILLUSTRATION

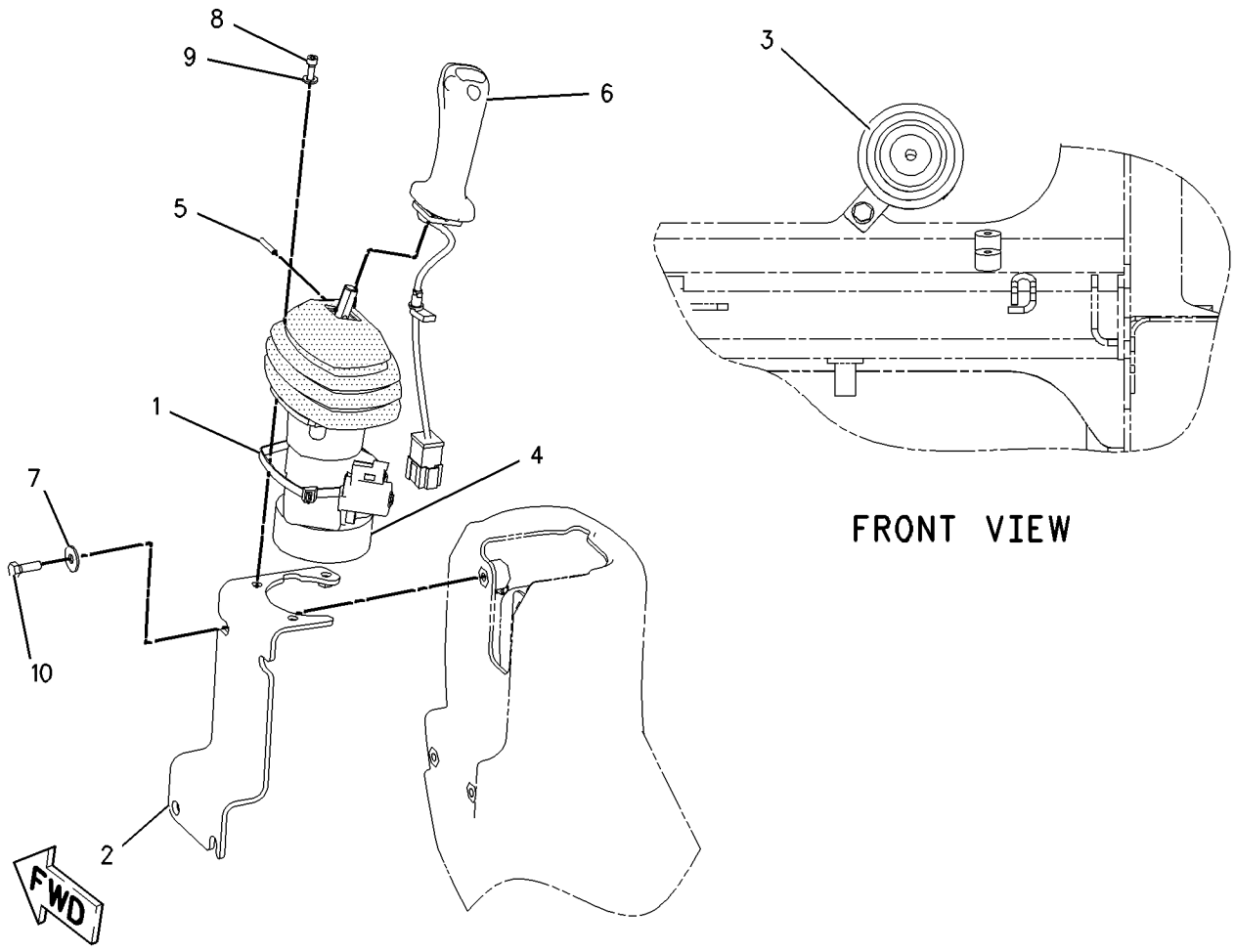

GRAPHIC #1 g00918669

216-6176 CONTROL GP-PILOT OPERATED HYD

S/N: CED1-UP; FDG1-UP
HORN, C1-C2, REAR AUXILIARY
PART OF 216-6190 DRIVE CONTROL AR-HYDROSTATIC
AN ATTACHMENT

SMCS-5059, 5705 **i01794681**

NOTE	REF NO	GRAPHIC REF	PART NUMBER	QTY	PART NAME 1 2 3 4 5 6 (PRODUCT LEVEL)	SEE PAGE
	1	1	**110-8760**	1	STRAP	
	2	1	**191-9788**	1	BRACKET AS	
M		1	**6V-9632**	3	NUT-WELD (M6X1 THD)	
Y	3	1	*202-2170*	1	HORN GP-ELECTRIC	636
Y	4	1	**204-1400**	1	VALVE GP-PILOT	486
Y	5	1	*216-6153*	1	WIRING GP-CHASSIS (REAR AUXILIARY)	188
	6	1	**117-8683**	1	PIN-SPRING	
Y	7	1	**204-1396**	1	CONTROL GP-HANDLE	318
	8	1	**7X-0579**	2	WASHER-HARD (8.8X25.5X2MM THK)	
M	9	1	**8T-0269**	3	BOLT-SOCKET HEAD (M6X1X20MM)	
	10	1	**8T-4205**	3	WASHER-HARD (7.2X14.5X2MM THK)	
M	11	1	**8T-4908**	2	BOLT (M8X1.25X25MM)	

M-METRIC PART
Y-SEPARATE ILLUSTRATION

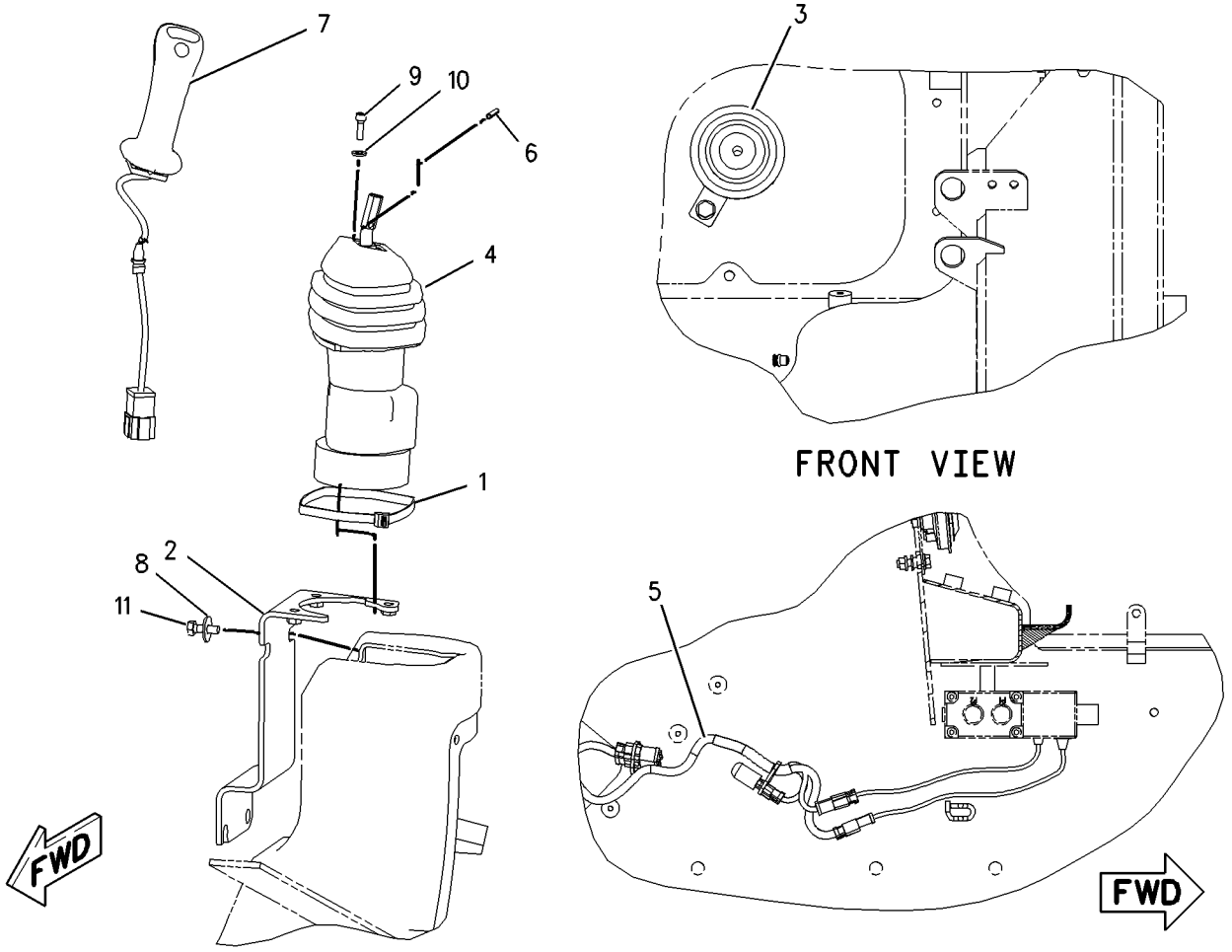

GRAPHIC #1 g00918690

HYDRAULIC SYSTEM

177-1984 CYLINDER & MTG GP-BLADE

S/N: CED1-UP; FDG1-UP; 4YZ4000-UP; 5SZ4000-UP
PART OF 177-1989, 177-1990 BLADE AR
AN ATTACHMENT

SMCS-6701 **i01790265**

NOTE	REF NO	GRAPHIC REF	PART NUMBER	QTY	PART NAME 1 2 3 4 5 6 (PRODUCT LEVEL)	SEE PAGE
	1	1	**064-3843**	1	RING-SNAP	
	2	1	**177-1913**	1	PIN AS	
J	3	1	**177-1985**	1	CYLINDER GP-BLADE (63MM BORE X 300MM STROKE)	
	4	1	**3B-8489**	1	FITTING-GREASE	
	5	1	**7X-7729**	1	WASHER (11X25X3MM THK)	
M	6	1	**8T-4137**	1	BOLT (M10X1.5X20MM)	
					AVAILABLE REPAIR KIT(S):	
J			**177-1958**	1	KIT-SEAL	

J-REPAIR KIT MARKED J AVAILABLE FOR PART MARKED J
M-METRIC PART

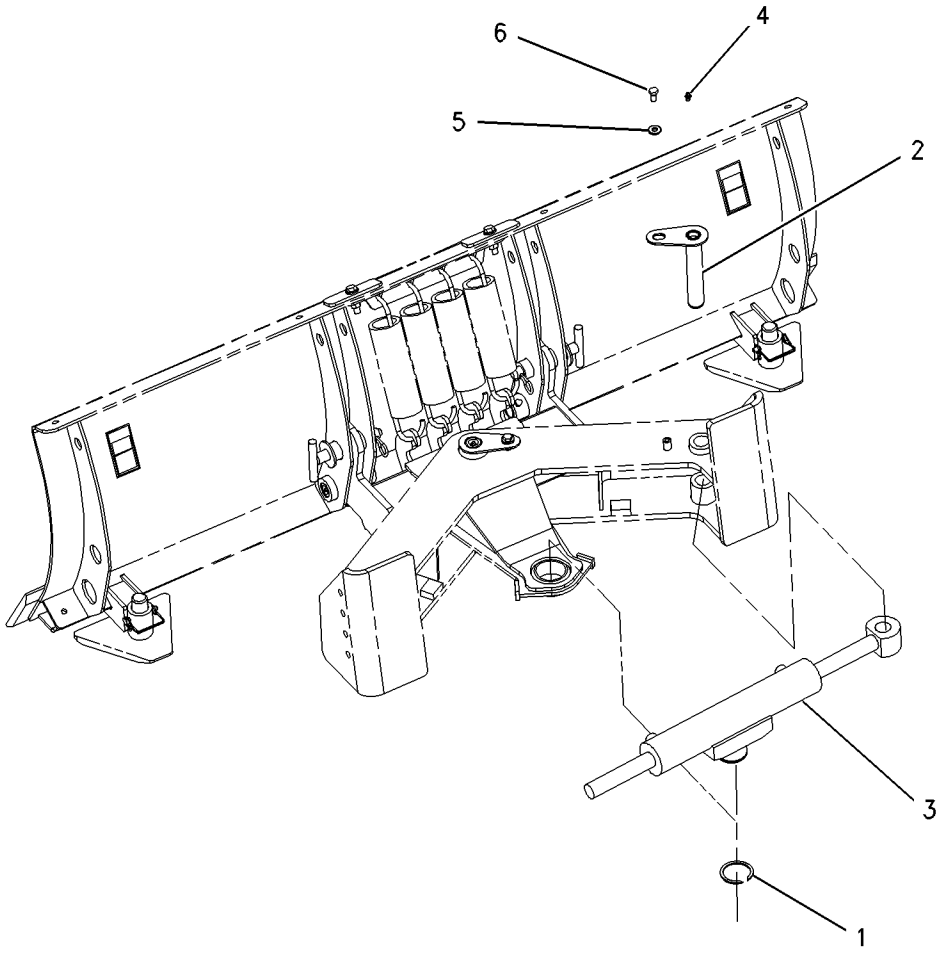

GRAPHIC #1 g00777642

156-0891 CYLINDER & MTG GP-GRAPPLE

S/N: CED1-UP; FDG1-UP; 4YZ4000-UP; 5SZ4000-UP
INDUSTRIAL
PART OF 157-7223, 157-7224, 157-7225 BUCKET AR-GRAPPLE, 162-8139, 163-4812
FORK AR-GRAPPLE
AN ATTACHMENT

SMCS-5457 **i01498639**

NOTE	REF NO	GRAPHIC REF	PART NUMBER	QTY	PART NAME 1 2 3 4 5 6 (PRODUCT LEVEL)	SEE PAGE
	1	1	**156-0892**	2	PLATE	
	2	1	**156-0913**	1	PLATE	
	3	1	**157-0941**	2	PIN	
	4	1	**157-0942**	2	PIN	
	5	1	**159-8035**	2	FILM-WARNING (CRUSH POINT)	
	6	1	**3B-8489**	2	FITTING-GREASE	
	7	1	**4M-5285**	4	RING-RETAINING (EXTERNAL)	
M	8	1	**6V-9189**	2	LOCKNUT (M8X1.25 THD)	
M	9	1	**8T-4138**	3	BOLT (M6X1X20MM)	
M	10	1	**8T-6869**	2	BOLT (M8X1.25X60MM)	
	11	1	**9X-2026**	3	WASHER (6.5X17X1MM THK)	
	12	1	**9X-6274**	4	WASHER (32.5X50X1.6MM THK)	

M-METRIC PART

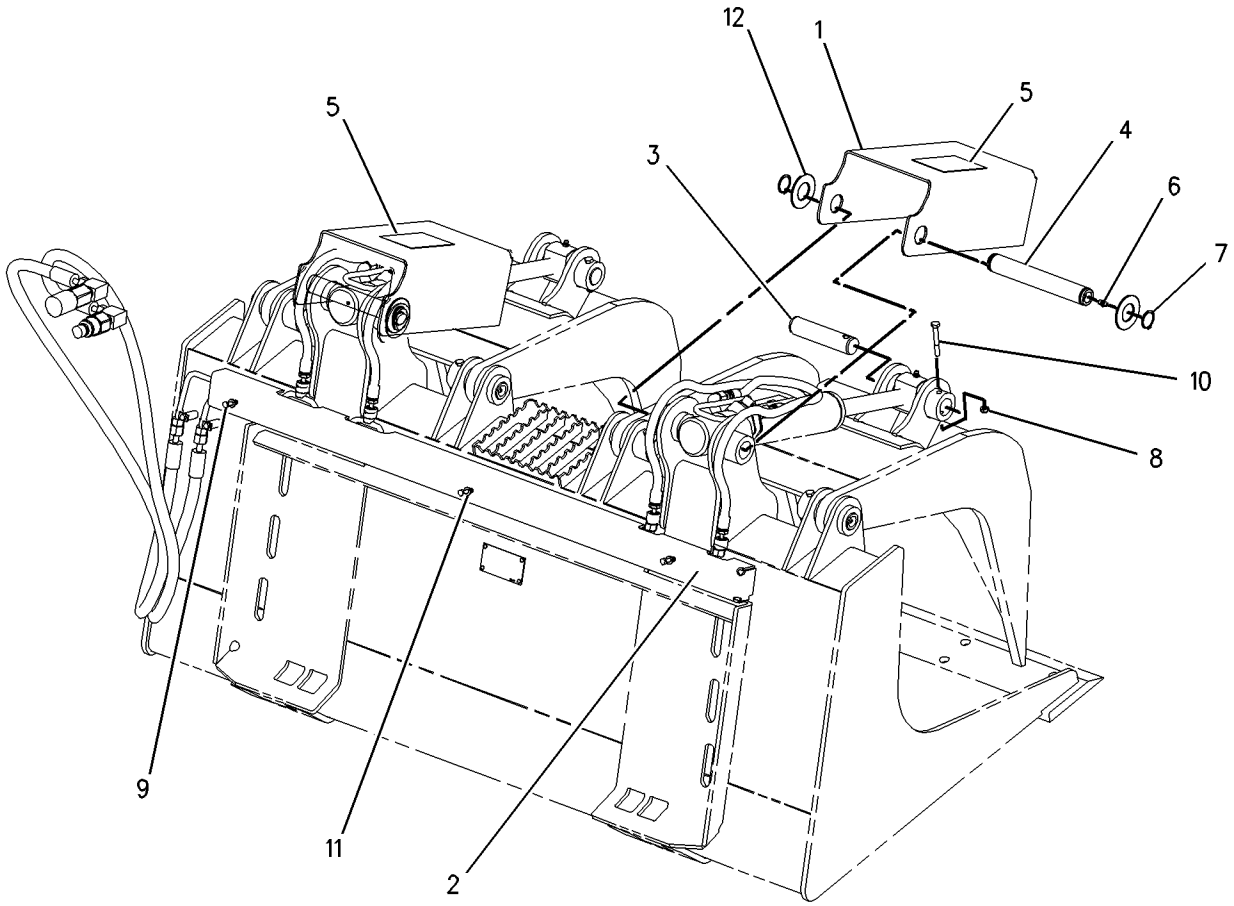

GRAPHIC #1 g00777681

HYDRAULIC SYSTEM

165-8731 CYLINDER & MTG GP-GRAPPLE

S/N: CED1-UP; FDG1-UP; 4YZ4000-UP; 5SZ4000-UP
UTILITY
PART OF 165-8734 GRAPPLE GP-UTILITY
AN ATTACHMENT

SMCS-5457 **i01293213**

NOTE	REF NO	GRAPHIC REF	PART NUMBER	QTY	PART NAME 1 2 3 4 5 6 (PRODUCT LEVEL)	SEE PAGE
	1	1	**154-5013**	2	PIN	
M	2	1	**6V-9189**	2	LOCKNUT (M8X1.25 THD)	
M	3	1	**8T-6869**	2	BOLT (M8X1.25X60MM)	

M-METRIC PART

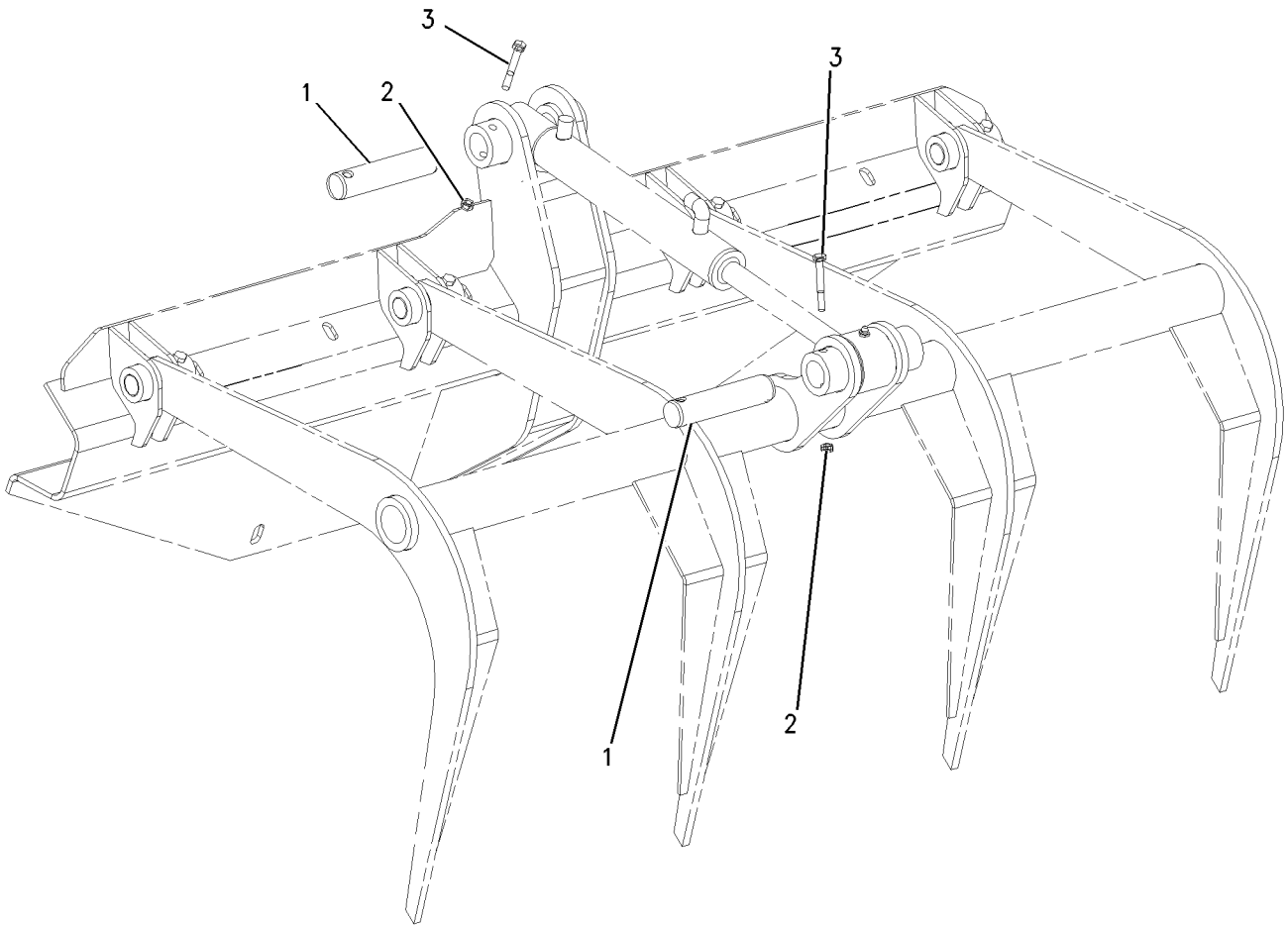

GRAPHIC #1 g00652937

154-5018 CYLINDER GP-BUCKET

S/N: CED1-UP; FDG1-UP; 4YZ4000-UP; 5SZ4000-UP
60MM(2.3 IN)BORE X 200MM(7.7 IN)STROKE
PART OF 154-5004, 154-5008, 154-5010, 199-8320 BUCKET AR-MULTIPURPOSE
AN ATTACHMENT

SMCS-5498 **i01220865**

NOTE	REF NO	GRAPHIC REF	PART NUMBER	QTY	PART NAME 1 2 3 4 5 6 (PRODUCT LEVEL)	SEE PAGE
	1	1	**3B-8489**	1	FITTING-GREASE (1/8-27 THD)	
					AVAILABLE REPAIR KIT(S):	
			164-3213	1	KIT-SEAL	
					(INCLUDES O-RINGS, SEALS, BACK RINGS, PISTON GUIDE RING, SET SCREW AND WIPER RING)	

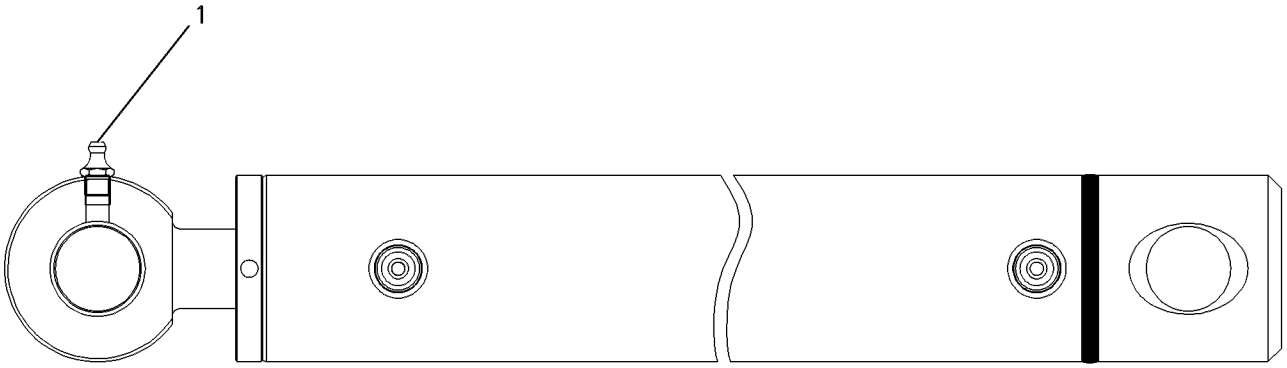

GRAPHIC #1 g00564347

HYDRAULIC SYSTEM

192-2640 CYLINDER GP-COUPLER

S/N: CED1-UP; FDG1-UP; 4YZ4000-UP; 5SZ4000-UP
35MM (1.4 IN) BORE X 103.5MM (4.14 IN) STROKE
PART OF 219-4354 CONVERSION AR-QUICK COUPLER, 219-4355 COUPLER AR-QUICK AN ATTACHMENT

SMCS-5133 **i01672784**

NOTE	PART NUMBER	QTY	PART NAME 1 2 3 4 5 6 (PRODUCT LEVEL)	SEE PAGE
			(NO SERVICED PARTS)	

<END>

HYDRAULIC SYSTEM

156-5512 CYLINDER GP-GRAPPLE

S/N: CED1-UP; FDG1-UP; 4YZ4000-UP; 5SZ4000-UP
60MM (2.3 IN) BORE X 200MM (7.7 IN) STROKE. INDUSTRIAL
PART OF 157-7223, 157-7224, 157-7225 BUCKET AR-GRAPPLE, 162-8139, 163-4812 FORK AR-GRAPPLE
AN ATTACHMENT

SMCS-5457 **i01292602**

NOTE	REF NO	GRAPHIC REF	PART NUMBER	QTY	PART NAME 1 2 3 4 5 6 (PRODUCT LEVEL)	SEE PAGE
	1	1	**3B-8489**	1	FITTING-GREASE (1/8-27 THD)	
					AVAILABLE REPAIR KIT(S):	
			164-3213	1	KIT-SEAL	
					(INCLUDES O-RINGS, SEALS, BACKRING, PISTON GUIDE RING, SET SCREW, AND WIPER RING)	

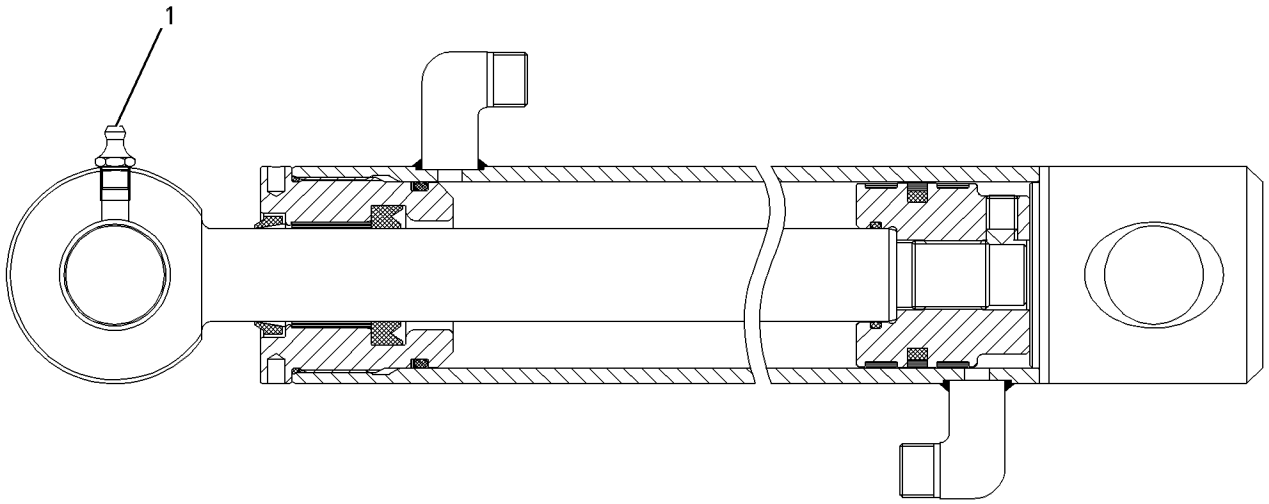

GRAPHIC #1 g00564366

164-9295 CYLINDER GP-GRAPPLE

S/N: CED1-UP; FDG1-UP; 4YZ4000-UP; 5SZ4000-UP
40MM (1.58 IN) BORE X 200MM (7.7 IN) STROKE
PART OF 165-8734 GRAPPLE GP-UTILITY
AN ATTACHMENT

SMCS-5457 **i01217084**

NOTE	REF NO	GRAPHIC REF	PART NUMBER	QTY	PART NAME 1 2 3 4 5 6 (PRODUCT LEVEL)	SEE PAGE
	1	1	**3B-8489**	1	FITTING-GREASE (1/8-27 THD)	
					AVAILABLE REPAIR KIT(S):	
			172-5285	1	KIT-SEAL	
					(INCLUDES WIPER RING, PISTON GUIDE RING, PISTON SEAL AND O-RINGS)	

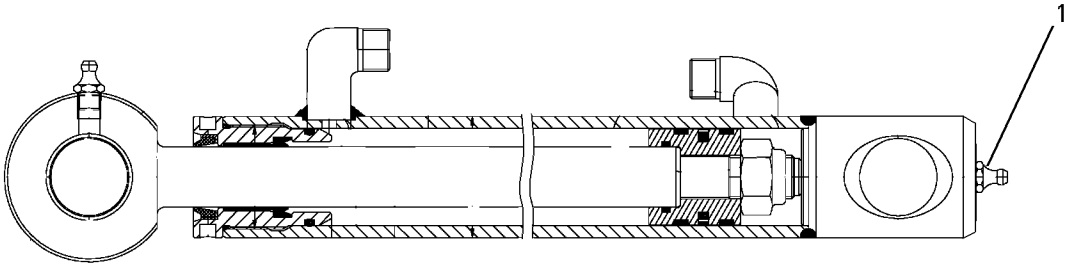

GRAPHIC #1 g00604934

HYDRAULIC SYSTEM

142-9195 CYLINDER GP-LIFT

S/N: 4YZ4000-UP; 5SZ4000-UP
60MM (2.3 IN) BORE X 715MM (28.6 IN) STROKE. RH
PART OF 195-6799 CONTROL GP-WORK TOOL

SMCS-5102 **i01505047**

NOTE	REF NO	GRAPHIC REF	PART NUMBER	QTY	PART NAME 1 2 3 4 5 6 (PRODUCT LEVEL)	SEE PAGE
					AVAILABLE REPAIR KIT(S):	
			142-9193		KIT-SEAL	
					(INCLUDES WIPER RING,SEAL,O-RINGS,BACK RING,PISTON SEAL,PISTON GUIDE RING,SET SCREW)	

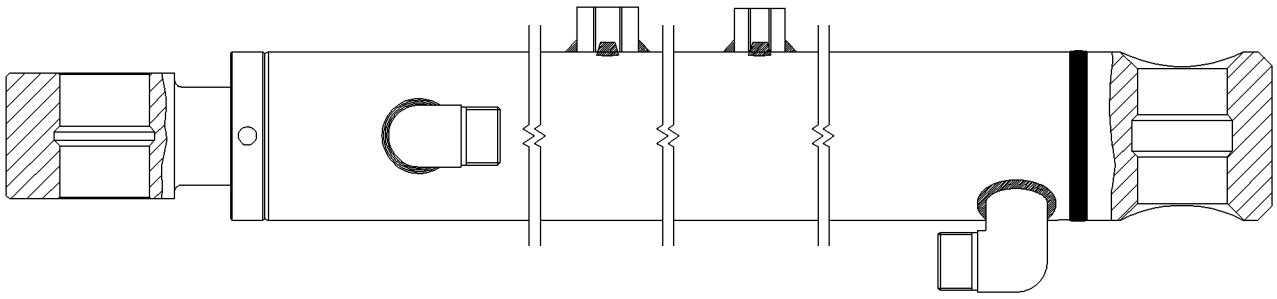

GRAPHIC #1 g00743862

142-9196 CYLINDER GP-LIFT

S/N: 4YZ4000-UP; 5SZ4000-UP
60MM (2.3 IN) BORE X 715MM (28.6 IN) STROKE. LH
PART OF 195-6799 CONTROL GP-WORK TOOL

SMCS-5102 **i01505054**

NOTE	REF NO	GRAPHIC REF	PART NUMBER	QTY	PART NAME 1 2 3 4 5 6 (PRODUCT LEVEL)	SEE PAGE
					AVAILABLE REPAIR KIT(S):	
			142-9193	1	KIT-SEAL	
					(INCLUDES WIPER RING,SEAL,O-RINGS,BACK RING,PISTON SEAL,PISTON GUIDE RING,SET SCREW)	

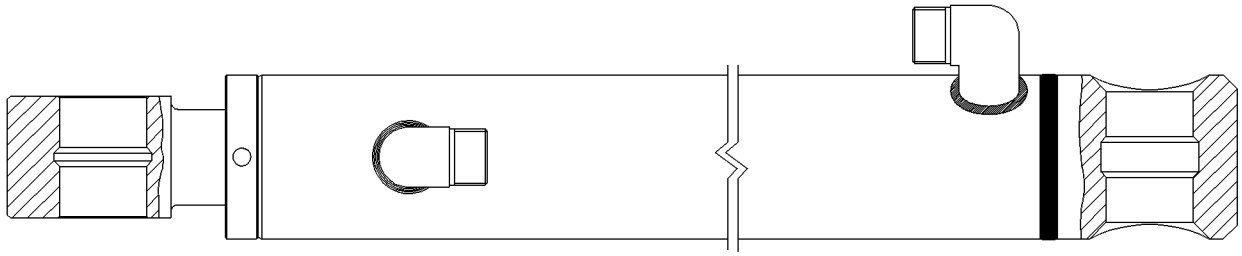

GRAPHIC #1 g00564369

190-8041 CYLINDER GP-LIFT

S/N: CED1-UP; FDG1-UP
45MM (1080 IN) BORE X 935MM (37.4 IN) STROKE
PART OF 190-7999 CONTROL GP-WORK TOOL

SMCS-5102 **i01549479**

NOTE	REF NO	GRAPHIC REF	PART NUMBER	QTY	PART NAME 1 2 3 4 5 6 (PRODUCT LEVEL)	SEE PAGE
	1	1	**6V-8398**	2	SEAL-O-RING	
					AVAILABLE REPAIR KIT(S):	
			206-3805	1	KIT-SEAL	

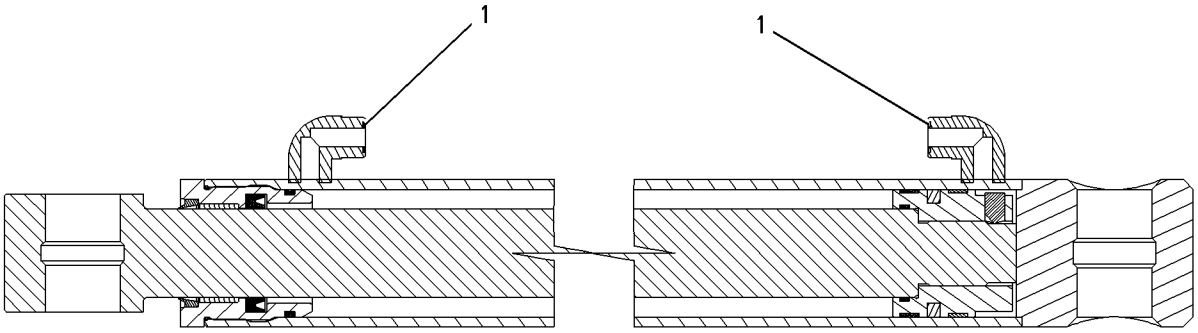

GRAPHIC #1 g00805512

HYDRAULIC SYSTEM

177-9565 CYLINDER GP-TILT

S/N: CED1-UP; FDG1-UP; 4YZ4000-UP; 5SZ4000-UP
70MM (2.75 IN) BORE X 354MM (13.95 IN) STROKE. RIGHT HAND
PART OF 190-7999, 195-6799 CONTROL GP-WORK TOOL

SMCS-5104 **i01231064**

NOTE	REF NO	GRAPHIC REF	PART NUMBER	QTY	PART NAME 1 2 3 4 5 6 (PRODUCT LEVEL)	SEE PAGE
	1	1	**3B-8489**	1	FITTING-GREASE (1/8-27 THD)	
					AVAILABLE REPAIR KIT(S):	
			142-9192	1	KIT-SEAL	

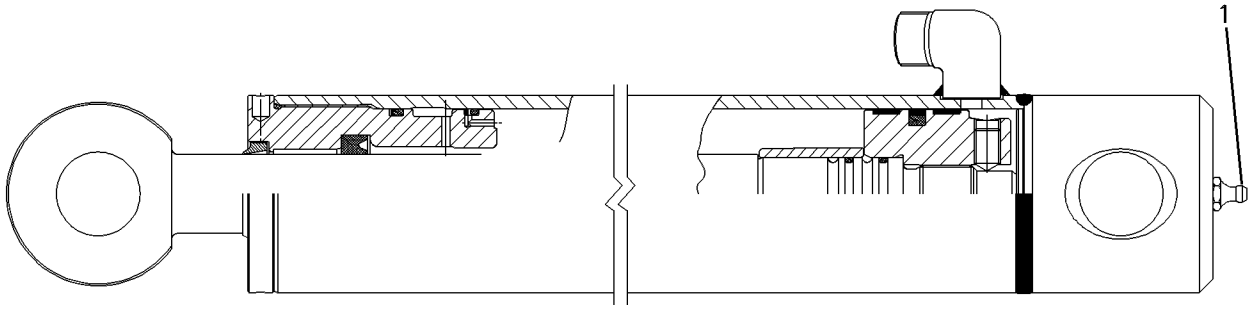

GRAPHIC #1 g00564362

HYDRAULIC SYSTEM

177-9566 CYLINDER GP-TILT

S/N: CED1-UP; FDG1-UP; 4YZ4000-UP; 5SZ4000-UP
70MM (2.75 IN) BORE X 354MM (13.95 IN) STROKE. LH
PART OF 190-7999, 195-6799 CONTROL GP-WORK TOOL

SMCS-5104 **i01231052**

NOTE	REF NO	GRAPHIC REF	PART NUMBER	QTY	PART NAME 1 2 3 4 5 6 (PRODUCT LEVEL)	SEE PAGE
	1	1	**3B-8489**	1	FITTING-GREASE (1/8-27 THD)	
					AVAILABLE REPAIR KIT(S):	
			142-9192	1	KIT-SEAL	

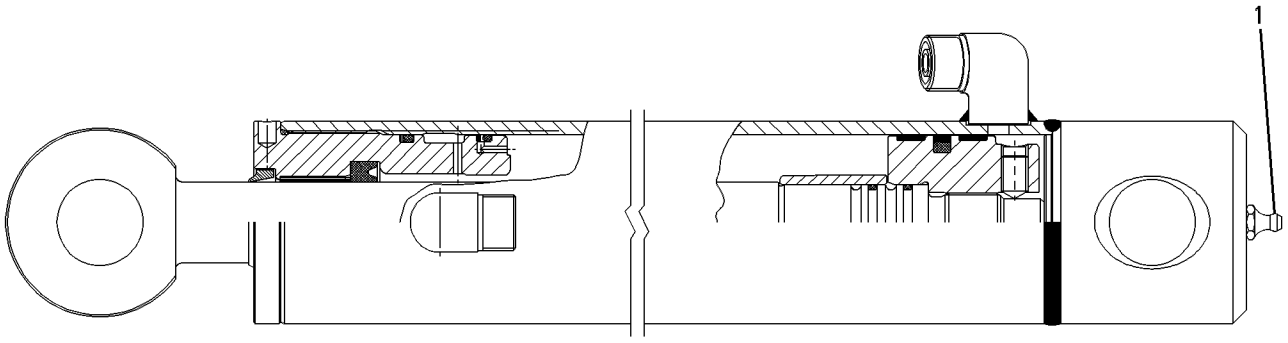

GRAPHIC #1 g00564358

190-7952 HYDRAULIC AR

S/N: CED1-UP
PART OF 190-8000 COMMON AR

SMCS-5050 **i01726361**

NOTE	PART NUMBER	QTY	PART NAME 1 2 3 4 5 6 (PRODUCT LEVEL)	SEE PAGE
Y	*193-0447*	1	ACCUMULATOR & MTG GP-HYDRAULIC	314
Y	*142-8980*	1	FILTER & MTG GP-HYDRAULIC	228
Y	*154-4020*	1	LINES GP-HYDRAULIC FAN	388
Y	*212-6630*	1	LINES GP-HYDRAULIC FAN	391
Y	*190-8111*	1	LINES GP-HYDRAULIC FILTER	230
Y	*191-9782*	1	LINES GP-HYDRAULIC OIL COOLER	395
Y	*190-8114*	1	LINES GP-PILOT	408
Y	*193-8307*	1	LINES GP-PILOT	412
Y	*190-8115*	1	LINES GP-PUMP	414
Y	*190-8116*	1	LINES GP-HYDRAULIC FAN	389
Y	*190-8110*	1	LINES GP-WORK TOOL	428
Y	*191-9676*	1	MOTOR & MTG GP-HYDRAULIC FAN	434
Y	*190-8084*	1	PUMP & MTG GP-WORK TOOL	442
Y	*207-9740*	1	TANK & MTG GP-HYDRAULIC	446
			—OR—	
CY	*204-1490*	1	TANK & MTG GP-HYDRAULIC	445
Y	*190-8085*	1	VALVE & MTG GP-CONTROL	449

C-CHANGE FROM PREVIOUS TYPE
Y-SEPARATE ILLUSTRATION

<END>

190-8050 HYDRAULIC AR

S/N: CED1-UP; FDG1-UP
CANNOT BE USED WITH 190-8051—PAGE 358
AN ATTACHMENT

SMCS-5050 **i01481709**

NOTE	PART NUMBER	QTY	PART NAME 1 2 3 4 5 6 (PRODUCT LEVEL)	SEE PAGE
Y	*190-8060*	1	LINES GP-LIFT CYLINDER	400
Y	*190-8070*	1	LINES GP-TILT CYLINDER	418

Y-SEPARATE ILLUSTRATION

<END>

HYDRAULIC SYSTEM

190-8051 HYDRAULIC AR

S/N: CED1-UP; FDG1-UP
CANNOT BE USED WITH 190-8050—PAGE 357
AN ATTACHMENT

SMCS-5050 **i01467763**

NOTE	PART NUMBER	QTY	PART NAME 1 2 3 4 5 6 (PRODUCT LEVEL)	SEE PAGE
Y	*190-8061*	1	LINES GP-LIFT CYLINDER	402
Y	*190-8071*	1	LINES GP-TILT CYLINDER	420
	142-9116	1	SWITCH AS	
	111-7899	1	GASKET	
Y	*190-8052*	1	VALVE & MTG GP-DIVERTER	455

Y-SEPARATE ILLUSTRATION

<END>

195-6705 HYDRAULIC AR

S/N: FDG1-UP
PART OF 195-6700 COMMON AR

SMCS-5050 **i01663225**

NOTE	PART NUMBER	QTY	PART NAME 1 2 3 4 5 6 (PRODUCT LEVEL)	SEE PAGE
Y	*193-0447*	1	ACCUMULATOR & MTG GP-HYDRAULIC	314
Y	*142-8980*	1	FILTER & MTG GP-HYDRAULIC	228
Y	*154-4020*	1	LINES GP-HYDRAULIC FAN	388
Y	*190-8111*	1	LINES GP-HYDRAULIC FILTER	230
Y	*195-6706*	1	LINES GP-HYDRAULIC OIL COOLER	397
Y	*193-8307*	1	LINES GP-PILOT	412
Y	*190-8114*	1	LINES GP-PILOT	408
Y	*190-8115*	1	LINES GP-PUMP	414
Y	*190-8116*	1	LINES GP-HYDRAULIC FAN	389
Y	*190-8110*	1	LINES GP-WORK TOOL	428
Y	*191-9672*	1	MOTOR & MTG GP-HYDRAULIC FAN	432
			—OR—	
Y	*191-9674*	1	MOTOR & MTG GP-HYDRAULIC FAN	433
Y	*190-8084*	1	PUMP & MTG GP-WORK TOOL	442
Y	*207-9740*	1	TANK & MTG GP-HYDRAULIC	446
			—OR—	
Y	*204-1490*	1	TANK & MTG GP-HYDRAULIC	445
Y	*190-8085*	1	VALVE & MTG GP-CONTROL	449

Y-SEPARATE ILLUSTRATION

<END>

HYDRAULIC SYSTEM

195-6762 HYDRAULIC AR

S/N: 4YZ4000-UP

PART OF 180-3000 COMMON AR

SMCS-5050 **i01727032**

NOTE	PART NUMBER	QTY	PART NAME 1 2 3 4 5 6 (PRODUCT LEVEL)	SEE PAGE
Y	*193-0447*	1	ACCUMULATOR & MTG GP-HYDRAULIC	314
Y	*142-8980*	1	FILTER & MTG GP-HYDRAULIC	228
Y	*154-4020*	1	LINES GP-HYDRAULIC FAN	388
Y	*193-8316*	1	LINES GP-HYDRAULIC FILTER	232
Y	*154-4025*	1	LINES GP-HYDRAULIC OIL COOLER	392
Y	*193-0463*	1	LINES GP-PILOT	410
Y	*193-8307*	1	LINES GP-PILOT	412
Y	*193-8310*	1	LINES GP-HYDRAULIC FAN	390
Y	*193-8320*	1	LINES GP-PUMP	416
Y	*193-0460*	1	LINES GP-WORK TOOL	430
Y	*191-9672*	1	MOTOR & MTG GP-HYDRAULIC FAN	432
Y	*190-8084*	1	PUMP & MTG GP-WORK TOOL	442
Y	*142-8940*	1	TANK & MTG GP-HYDRAULIC	444
			—OR—	
Y	*207-9740*	1	TANK & MTG GP-HYDRAULIC	446
			—OR—	
Y	*204-1490*	1	TANK & MTG GP-HYDRAULIC	445
Y	*195-6753*	1	VALVE & MTG GP-CONTROL	451

Y-SEPARATE ILLUSTRATION

<END>

HYDRAULIC SYSTEM

195-6764 HYDRAULIC AR

S/N: 5SZ4000-UP
PART OF 197-4900 COMMON AR

SMCS-5050 **i01727068**

NOTE	PART NUMBER	QTY	PART NAME 1 2 3 4 5 6 (PRODUCT LEVEL)	SEE PAGE
Y	*193-0447*	1	ACCUMULATOR & MTG GP-HYDRAULIC	314
Y	*142-8980*	1	FILTER & MTG GP-HYDRAULIC	228
Y	*154-4020*	1	LINES GP-HYDRAULIC FAN	388
			—OR—	
Y	*212-6630*	1	LINES GP-HYDRAULIC FAN	391
Y	*193-8316*	1	LINES GP-HYDRAULIC FILTER	232
Y	*154-4055*	1	LINES GP-HYDRAULIC OIL COOLER	393
Y	*193-0463*	1	LINES GP-PILOT	410
Y	*193-8307*	1	LINES GP-PILOT	412
Y	*193-8310*	1	LINES GP-HYDRAULIC FAN	390
Y	*193-8320*	1	LINES GP-PUMP	416
Y	*193-0460*	1	LINES GP-WORK TOOL	430
Y	*191-9675*	1	MOTOR & MOUNTING GP	
Y	*191-9676*	1	MOTOR & MTG GP-HYDRAULIC FAN	434
Y	*190-8084*	1	PUMP & MTG GP-WORK TOOL	442
Y	*142-8940*	1	TANK & MTG GP-HYDRAULIC	444
			—OR—	
Y	*207-9740*	1	TANK & MTG GP-HYDRAULIC	446
			—OR—	
Y	*204-1490*	1	TANK & MTG GP-HYDRAULIC	445
Y	*195-6753*	1	VALVE & MTG GP-CONTROL	451

Y-SEPARATE ILLUSTRATION

<END>

195-6766 HYDRAULIC AR

S/N: 4YZ4000-UP; 5SZ4000-UP
CANNOT BE USED WITH WORK TOOL POSITIONER
AN ATTACHMENT

SMCS-5050 **i01437039**

NOTE	PART NUMBER	QTY	PART NAME 1 2 3 4 5 6 (PRODUCT LEVEL)	SEE PAGE
Y	*193-0465*	1	LINES GP-LIFT CYLINDER	406
Y	*193-0468*	1	LINES GP-TILT CYLINDER	426

Y-SEPARATE ILLUSTRATION

<END>

HYDRAULIC SYSTEM

195-6767 HYDRAULIC AR

S/N: 4YZ4000-UP; 5SZ4000-UP
FOR USE WITH WORK TOOL POSITIONER
AN ATTACHMENT

SMCS-5050 **i01460850**

NOTE	PART NUMBER	QTY	PART NAME 1 2 3 4 5 6 (PRODUCT LEVEL)	SEE PAGE
Y	*193-0454*	1	LINES GP-LIFT CYLINDER	404
Y	*193-0457*	1	LINES GP-TILT CYLINDER	424
	142-9116	1	SWITCH AS	
	111-7899	1	GASKET	
Y	*159-5755*	1	VALVE & MTG GP-DIVERTER	454

Y-SEPARATE ILLUSTRATION

<END>

220-8167 LINES GP-AUXILIARY HYDRAULIC

S/N: CED1-UP
KIT-REAR AUXILIARY HYDRAULIC LINES
FIELD INSTALLATION

SMCS-5057 **i01769200**

NOTE	PART NUMBER	QTY	PART NAME 1 2 3 4 5 6 (PRODUCT LEVEL)	SEE PAGE
M	**8T-4197**	1	BOLT (M8X1.25X40MM)	
M	**8T-4908**	5	BOLT (M8X1.25X25MM)	
M	**6V-8213**	2	BOLT-SOCKET HEAD (M8X1.25X70MM)	
	216-6087	1	BRACKET	
	6V-9829	4	CAP AS	
	186-0357	3	CLIP	
	186-0358	3	CLIP	
	148-8315	4	CONNECTOR GP	
			(EACH INCLUDES)	
	2M-9780	1	SEAL-O-RING	
	6V-8642	1	CONNECTOR	
	7J-9108	1	SEAL-O-RING	
	148-8341	2	CONNECTOR GP	
			(EACH INCLUDES)	
	3D-2824	1	SEAL-O-RING	
	6V-8713	1	CONNECTOR	
	7J-9108	1	SEAL-O-RING	
Y	**204-1396**	1	CONTROL GP-HANDLE	318
	148-8374	2	ELBOW GP	
			(EACH INCLUDES)	
	3K-0360	1	SEAL-O-RING	
	6V-8397	1	SEAL-O-RING	
	6V-8723	1	ELBOW	
	148-8393	2	ELBOW GP	
			(EACH INCLUDES)	
	6V-9852	1	ELBOW-SWIVEL	
	7J-9108	1	SEAL-O-RING	
	212-6581	1	FILM-STRIPE (LH)	
	212-6582	1	FILM-STRIPE (RH)	
M	**5C-7261**	5	NUT (M8X1.25 THD)	
	222-5748	2	PLATE AS	
	6V-8397	2	SEAL-O-RING	
	089-7338	1	SLEEVE	
	215-3984	1	TUBE AS	
	215-3985	1	TUBE AS	
	215-3989	1	TUBE AS	
	215-3991	1	TUBE AS	

220-8167 **LINES GP-AUXILIARY HYDRAULIC** ***(contd.)*** **i01769200**

NOTE	PART NUMBER	QTY	PART NAME 1 2 3 4 5 6 (PRODUCT LEVEL)	SEE PAGE
	215-3993	1	TUBE AS	
	215-3996	1	TUBE AS	
	215-3997	1	TUBE AS	
	216-6110	1	TUBE AS	
	215-3995	1	TUBE AS	
	216-6100	1	TUBE AS	
	216-6106	1	TUBE AS	
	216-6107	1	TUBE AS	
	216-6108	1	TUBE AS	
	216-6109	1	TUBE AS	
	164-5570	6	UNION GP	
			(EACH INCLUDES)	
	6V-8397	2	SEAL-O-RING	
	6V-8730	1	UNION-FACE SEAL	
Y	**212-6570**	1	VALVE GP-CONTROL	465
	8T-4224	12	WASHER-HARD (8.8X16X2MM THK)	
Y	*216-6153*	1	WIRING GP-CHASSIS (REAR AUXILIARY)	188

M-METRIC PART
Y-SEPARATE ILLUSTRATION

<END>

220-8170 LINES GP-AUXILIARY HYDRAULIC

S/N: FDG1-UP
KIT-REAR AUXILIARY HYDRAULIC LINES
FIELD INSTALLATION

SMCS-5057 **i01770514**

NOTE	PART NUMBER	QTY	PART NAME 1 2 3 4 5 6 (PRODUCT LEVEL)	SEE PAGE
M	**8T-4197**	1	BOLT (M8X1.25X40MM)	
M	**8T-4908**	5	BOLT (M8X1.25X25MM)	
M	**6V-8213**	2	BOLT-SOCKET HEAD (M8X1.25X70MM)	
	216-6087	1	BRACKET	
	6V-9829	4	CAP AS	
	186-0357	3	CLIP	
	186-0358	3	CLIP	
	148-8315	4	CONNECTOR GP	
			(EACH INCLUDES)	
	2M-9780	1	SEAL-O-RING	
	6V-8642	1	CONNECTOR	
	7J-9108	1	SEAL-O-RING	
	148-8341	2	CONNECTOR GP	
			(EACH INCLUDES)	
	3D-2824	1	SEAL-O-RING	
	6V-8713	1	CONNECTOR	
	7J-9108	1	SEAL-O-RING	
Y	**204-1396**	1	CONTROL GP-HANDLE	318
	148-8374	2	ELBOW GP	
			(EACH INCLUDES)	
	3K-0360	1	SEAL-O-RING	
	6V-8397	1	SEAL-O-RING	
	6V-8723	1	ELBOW	
	148-8393	2	ELBOW GP	
			(EACH INCLUDES)	
	6V-9852	1	ELBOW-SWIVEL	
	7J-9108	1	SEAL-O-RING	
	212-6579	1	FILM-STRIPE (LH)	
	212-6580	1	FILM-STRIPE (RH)	

220-8170 LINES GP-AUXILIARY HYDRAULIC *(contd.)* i01770514

NOTE	PART NUMBER	QTY	PART NAME 1 2 3 4 5 6 (PRODUCT LEVEL)	SEE PAGE
M	**5C-7261**	5	NUT (M8X1.25 THD)	
	222-5748	2	PLATE AS	
	148-8377	2	ELBOW GP	
			(EACH INCLUDES)	
	6V-8397	2	SEAL-O-RING	
	6V-8980	1	ELBOW	
	6V-8397	2	SEAL-O-RING	
	089-7338	1	SLEEVE	
	215-3984	1	TUBE AS	
	215-3985	1	TUBE AS	
	215-3989	1	TUBE AS	
	215-3991	1	TUBE AS	
	215-3993	1	TUBE AS	
	215-3996	1	TUBE AS	
	215-3997	1	TUBE AS	
	216-6110	1	TUBE AS	
	215-3995	1	TUBE AS	
	216-6100	1	TUBE AS	
	216-6106	1	TUBE AS	
	216-6107	1	TUBE AS	
	216-6108	1	TUBE AS	
	216-6109	1	TUBE AS	
	164-5570	6	UNION GP	
			(EACH INCLUDES)	
	6V-8397	2	SEAL-O-RING	
	6V-8730	1	UNION-FACE SEAL	
Y	**212-6570**	1	VALVE GP-CONTROL	465
	8T-4224	12	WASHER-HARD (8.8X16X2MM THK)	
Y	*216-6153*	1	WIRING GP-CHASSIS (REAR AUXILIARY)	188

M-METRIC PART
Y-SEPARATE ILLUSTRATION

<END>

HYDRAULIC SYSTEM

223-8386 LINES GP-AUXILIARY HYDRAULIC

S/N: 4YZ4000-UP

KIT-REAR AUXILIARY HYDRAULIC LINES

FIELD INSTALLATION

SMCS-5057 **i01770617**

NOTE	PART NUMBER	QTY	PART NAME 1 2 3 4 5 6 (PRODUCT LEVEL)	SEE PAGE
M	**8T-4908**	4	BOLT (M8X1.25X25MM)	
M	**6V-8213**	2	BOLT-SOCKET HEAD (M8X1.25X70MM)	
	6V-9829	4	CAP AS	
	186-0357	3	CLIP	
	186-0358	3	CLIP	
	148-8315	4	CONNECTOR GP	
			(EACH INCLUDES)	
	2M-9780	1	SEAL-O-RING	
	6V-8642	1	CONNECTOR	
	7J-9108	1	SEAL-O-RING	
	148-8318	2	CONNECTOR GP	
			(EACH INCLUDES)	
	3K-0360	1	SEAL-O-RING	
	6V-8397	1	SEAL-O-RING	
	6V-8634	1	CONNECTOR	
	148-8341	2	CONNECTOR GP	
			(EACH INCLUDES)	
	3D-2824	1	SEAL-O-RING	
	6V-8713	1	CONNECTOR	
	7J-9108	1	SEAL-O-RING	
Y	**204-1396**	1	CONTROL GP-HANDLE	318
	212-6575	1	FILM-STRIPE (LH)	
	212-6576	1	FILM-STRIPE (RH)	
M	**5C-7261**	4	NUT (M8X1.25 THD)	
	222-5748	2	PLATE AS	
	148-8377	2	ELBOW GP	
			(EACH INCLUDES)	
	6V-8397	2	SEAL-O-RING	
	6V-8980	1	ELBOW	
	6V-8397	2	SEAL-O-RING	
	216-6088	1	TUBE AS	
	216-6093	1	TUBE AS	
	216-6094	1	TUBE AS	
	216-6096	1	TUBE AS	
	216-6097	1	TUBE AS	
	216-6098	1	TUBE AS	
	216-6099	1	TUBE AS	
	216-6101	1	TUBE AS	
	216-6102	1	TUBE AS	
	216-6103	1	TUBE AS	
	216-6104	1	TUBE AS	
	216-6105	1	TUBE AS	
	164-5570	4	UNION GP	
			(EACH INCLUDES)	
	6V-8397	2	SEAL-O-RING	
	6V-8730	1	UNION-FACE SEAL	
Y	**212-6570**	1	VALVE GP-CONTROL	465
	8T-4224	8	WASHER-HARD (8.8X16X2MM THK)	
Y	*216-6153*	1	WIRING GP-CHASSIS (REAR AUXILIARY)	188

M-METRIC PART
Y-SEPARATE ILLUSTRATION

<END>

HYDRAULIC SYSTEM

223-8387 LINES GP-AUXILIARY HYDRAULIC

S/N: 5SZ4000-UP

KIT-REAR AUXILIARY HYDRAULIC LINES

FIELD INSTALLATION

SMCS-5057 **i01770605**

NOTE	PART NUMBER	QTY	PART NAME 1 2 3 4 5 6 (PRODUCT LEVEL)	SEE PAGE
M	**8T-4908**	4	BOLT (M8X1.25X25MM)	
M	**6V-8213**	2	BOLT-SOCKET HEAD (M8X1.25X70MM)	
	6V-9829	4	CAP AS	
	186-0357	3	CLIP	
	186-0358	3	CLIP	
	148-8315	4	CONNECTOR GP	
			(EACH INCLUDES)	
	2M-9780	1	SEAL-O-RING	
	6V-8642	1	CONNECTOR	
	7J-9108	1	SEAL-O-RING	
	148-8318	2	CONNECTOR GP	
			(EACH INCLUDES)	
	3K-0360	1	SEAL-O-RING	
	6V-8397	1	SEAL-O-RING	
	6V-8634	1	CONNECTOR	
	148-8341	2	CONNECTOR GP	
			(EACH INCLUDES)	
	3D-2824	1	SEAL-O-RING	
	6V-8713	1	CONNECTOR	
	7J-9108	1	SEAL-O-RING	
Y	**204-1396**	1	CONTROL GP-HANDLE	318
	212-6577	1	FILM-STRIPE (LH)	
	212-6578	1	FILM-STRIPE (RH)	
M	**5C-7261**	4	NUT (M8X1.25 THD)	
	222-5748	2	PLATE AS	
	148-8377	2	ELBOW GP	
			(EACH INCLUDES)	
	6V-8397	2	SEAL-O-RING	
	6V-8980	1	ELBOW	
	6V-8397	2	SEAL-O-RING	
	216-6088	1	TUBE AS	
	216-6093	1	TUBE AS	
	216-6094	1	TUBE AS	
	216-6096	1	TUBE AS	
	216-6097	1	TUBE AS	
	216-6098	1	TUBE AS	
	216-6099	1	TUBE AS	
	216-6101	1	TUBE AS	
	216-6102	1	TUBE AS	
	216-6103	1	TUBE AS	
	216-6104	1	TUBE AS	
	216-6105	1	TUBE AS	
	164-5570	4	UNION GP	
			(EACH INCLUDES)	
	6V-8397	2	SEAL-O-RING	
	6V-8730	1	UNION-FACE SEAL	
Y	**212-6570**	1	VALVE GP-CONTROL	465
	8T-4224	8	WASHER-HARD (8.8X16X2MM THK)	
Y	*216-6153*	1	WIRING GP-CHASSIS (REAR AUXILIARY)	188

M-METRIC PART
Y-SEPARATE ILLUSTRATION

<END>

HYDRAULIC SYSTEM

154-5019 LINES GP-BUCKET

S/N: FDG1-UP; 4YZ4000-UP
PART OF 154-5004 BUCKET AR-MULTIPURPOSE
AN ATTACHMENT

SMCS-5057 **i01511898**

NOTE	REF NO	GRAPHIC REF	PART NUMBER	QTY	PART NAME 1 2 3 4 5 6 (PRODUCT LEVEL)	SEE PAGE
	1	1	**153-2994**	1	COUPLING (INTERNAL)	
	2	1	**153-2995**	1	COUPLING (EXTERNAL)	
I	3	1	**154-5020**	2	HOSE AS	
I	4	1	**154-5021**	1	HOSE AS	
I	5	1	**154-5022**	1	HOSE AS	
I	6	1	**154-5024**	1	HOSE AS	
I	7	1	**154-5025**	1	HOSE AS	
	8	1	**163-1386**	1	TEE-UNION	
	9	1	*148-8319*	2	CONNECTOR GP	
					(EACH INCLUDES)	
		1	**2M-9780**	1	SEAL-O-RING	
		1	**6V-8397**	1	SEAL-O-RING	
		1	**6V-8715**	1	CONNECTOR	
	10	1	*150-3056*	1	FITTING GP	
		1	**6V-8397**	3	SEAL-O-RING	
		1	**6V-8788**	1	TEE	
	11	1	**1S-0994**	1	CLIP (SLOT)	
M	12	1	**5C-7261**	4	NUT (M8X1.25 THD)	
	13	1	**6D-4247**	3	CLIP	
	14	1	**6V-8397**	7	SEAL-O-RING	
	15	1	**9X-6273**	2	WASHER (32.5X50X0.8MM THK)	
	16	1	**9X-6274**	2	WASHER (32.5X50X1.6MM THK)	

I-SEE HOSE FABRICATION GUIDE
M-METRIC PART

154-5019 **LINES GP-BUCKET** ***(contd.)*** **i01511898**

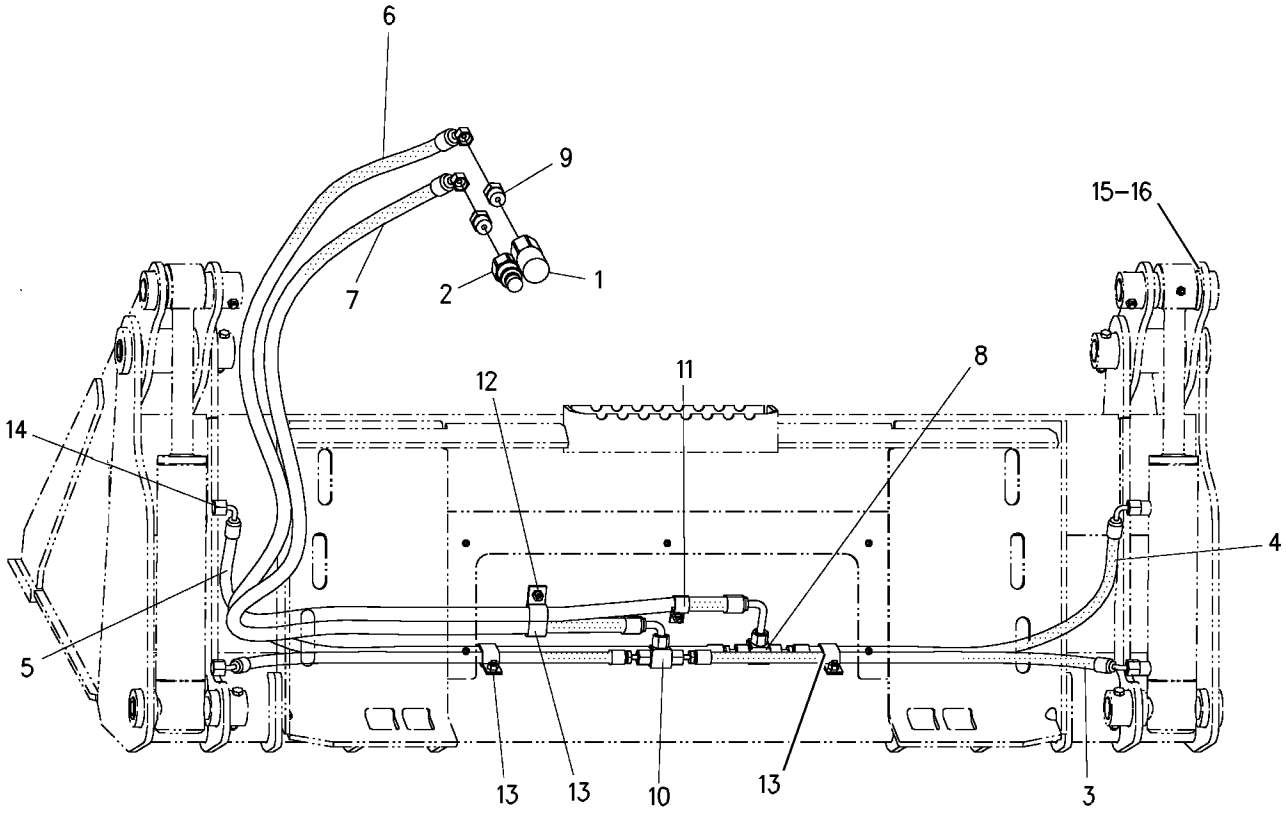

GRAPHIC #1 g00709984

HYDRAULIC SYSTEM

154-5051 LINES GP-BUCKET

S/N: CED1-UP; FDG1-UP; 4YZ4000-UP; 5SZ4000-UP
PART OF 154-5008 BUCKET AR-MULTIPURPOSE
AN ATTACHMENT

SMCS-5057 **i01784437**

NOTE	REF NO	GRAPHIC REF	PART NUMBER	QTY	PART NAME 1 2 3 4 5 6 (PRODUCT LEVEL)	SEE PAGE
	1	1	**153-2994**	1	FITTING (QUICK DISCONNECT) (INTERNAL)	
I	2	1	**154-5024**	1	HOSE AS	
I	3	1	**154-5025**	1	HOSE AS	
I	4	1	**156-5508**	1	HOSE AS	
I	5	1	**156-5509**	2	HOSE AS	
I	6	1	**156-5510**	1	HOSE AS	
	7	1	**163-1386**	1	TEE-UNION	
	8	1	**185-7887**	1	FITTING (QUICK DISCONNECT) (EXTERNAL)	
	9	1	*148-8319*	2	CONNECTOR GP	
					(EACH INCLUDES)	
		1	**2M-9780**	1	SEAL-O-RING	
		1	**6V-8397**	1	SEAL-O-RING	
		1	**6V-8715**	1	CONNECTOR	
	10	1	*150-3056*	1	TEE AS	
		1	**6V-8397**	3	SEAL-O-RING	
		1	**6V-8788**	1	TEE	
	11	1	**1S-0994**	1	CLIP (SLOT)	
M	12	1	**5C-7261**	4	NUT (M8X1.25 THD)	
	13	1	**6D-4247**	3	CLIP	
	14	1	**6V-8397**	7	SEAL-O-RING	
	15	1	**9X-6273**	2	WASHER (32.5X50X0.8MM THK)	
	16	1	**9X-6274**	2	WASHER (32.5X50X1.6MM THK)	

I-SEE HOSE FABRICATION GUIDE
M-METRIC PART

154-5051 **LINES GP-BUCKET** ***(contd.)*** **i01784437**

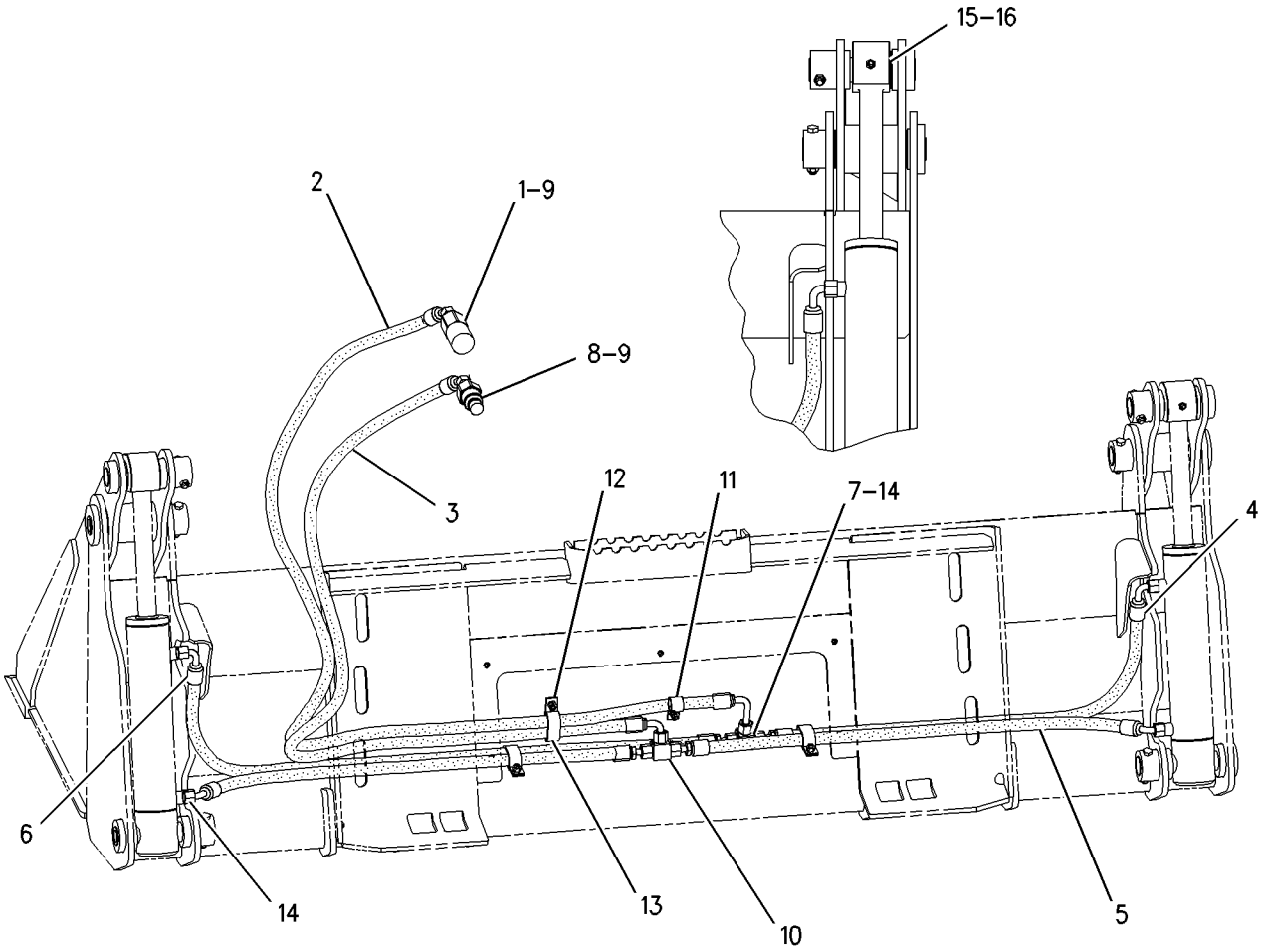

GRAPHIC #1 g00912761

HYDRAULIC SYSTEM

154-5052 LINES GP-BUCKET

S/N: CED1-UP; FDG1-UP; 4YZ4000-UP; 5SZ4000-UP
PART OF 154-5010 BUCKET AR-MULTIPURPOSE
AN ATTACHMENT

SMCS-5057 **i01685822**

NOTE	REF NO	GRAPHIC REF	PART NUMBER	QTY	PART NAME 1 2 3 4 5 6 (PRODUCT LEVEL)	SEE PAGE
	1	1	**153-2994**	1	COUPLING	
	2	1	**153-2995**	1	COUPLING	
I	3	1	**154-5024**	1	HOSE AS	
I	4	1	**154-5025**	1	HOSE AS	
I	5	1	**159-4535**	1	HOSE AS	
I	6	1	**159-4536**	2	HOSE AS	
I	7	1	**159-4537**	1	HOSE AS	
	8	1	**163-1386**	1	TEE-UNION	
	9	1	*148-8319*	2	CONNECTOR GP	
					(EACH INCLUDES)	
		1	**2M-9780**	1	SEAL-O-RING	
		1	**6V-8397**	1	SEAL-O-RING	
		1	**6V-8715**	1	CONNECTOR	
	10	1	*150-3056*	1	FITTING GP	
		1	**6V-8397**	3	SEAL-O-RING	
		1	**6V-8788**	1	TEE	
	11	1	**1S-0994**	1	CLIP (SLOT)	
M	12	1	**5C-7261**	4	NUT (M8X1.25 THD)	
	13	1	**6D-4247**	3	CLIP (SLOT)	
	14	1	**6V-8397**	7	SEAL-O-RING	
	15	1	**9X-6273**	2	WASHER (32.5X50X0.8MM THK)	
	16	1	**9X-6274**	2	WASHER (32.5X50X1.6MM THK)	

I-SEE HOSE FABRICATION GUIDE
M-METRIC PART

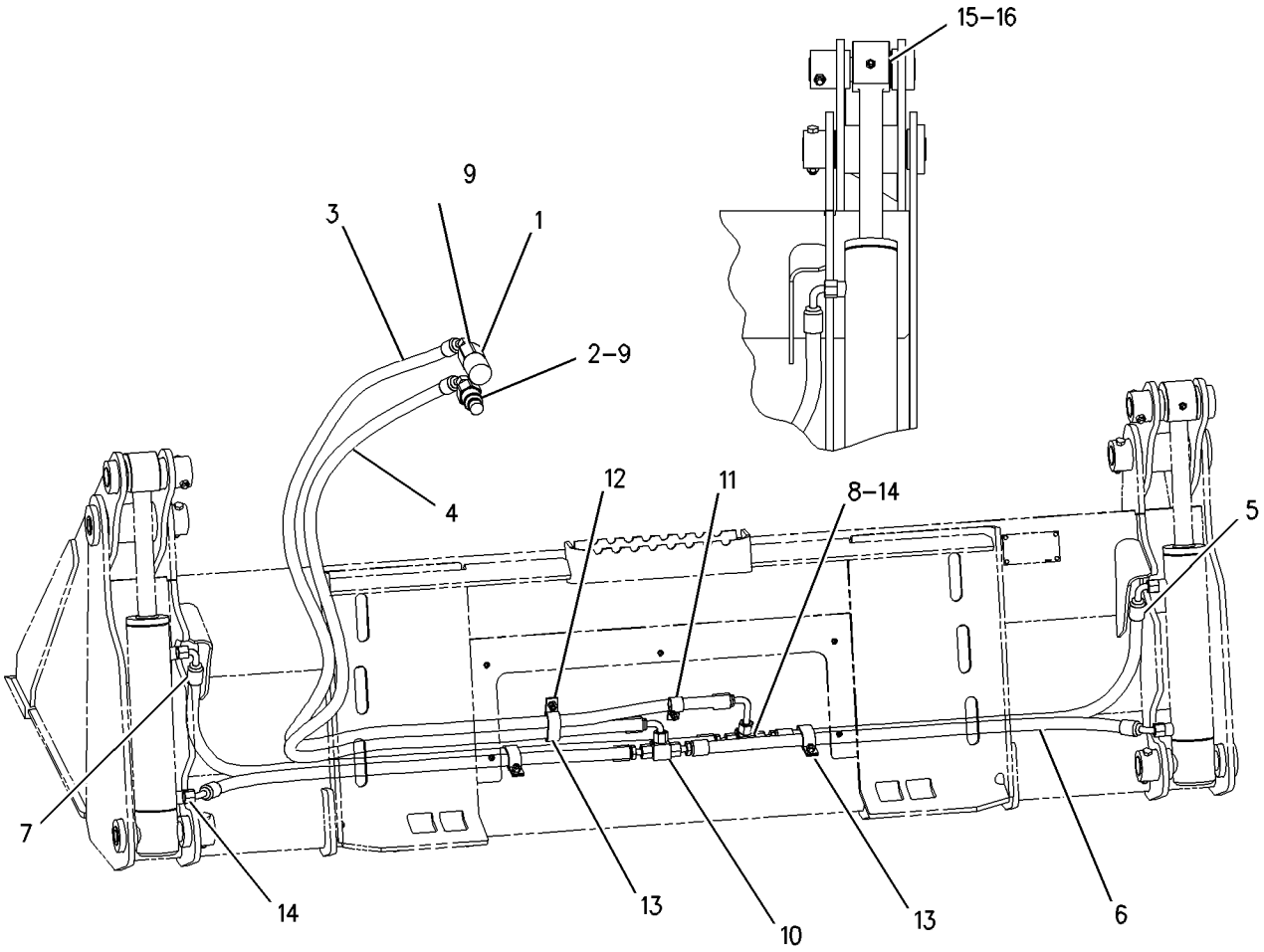

GRAPHIC #1 g00684838

HYDRAULIC SYSTEM

199-8306 LINES GP-BUCKET

S/N: CED1-UP; FDG1-UP
PART OF 199-8320 BUCKET AR-MULTIPURPOSE
AN ATTACHMENT

SMCS-5057 **i01685827**

NOTE	REF NO	GRAPHIC REF	PART NUMBER	QTY	PART NAME 1 2 3 4 5 6 (PRODUCT LEVEL)	SEE PAGE
	1	1	**153-2994**	1	COUPLING	
	2	1	**153-2995**	1	COUPLING	
I	3	1	**154-5024**	1	HOSE AS	
I	4	1	**154-5025**	1	HOSE AS	
	5	1	**163-1386**	1	TEE-UNION	
I	6	1	**199-8309**	1	HOSE AS	
I	7	1	**199-8311**	1	HOSE AS	
	8	1	*148-8319*	2	CONNECTOR GP	
					(EACH INCLUDES)	
		1	**2M-9780**	1	SEAL-O-RING	
		1	**6V-8397**	1	SEAL-O-RING	
		1	**6V-8715**	1	CONNECTOR	
	9	1	*150-3056*	1	FITTING GP	
		1	**6V-8397**	3	SEAL-O-RING	
		1	**6V-8788**	1	TEE	
I	10	1	**199-8310**	2	HOSE AS	
	11	1	**1S-0994**	1	CLIP	
M	12	1	**5C-7261**	4	NUT (M8X1.25 THD)	
	13	1	**6D-4247**	3	CLIP (SLOT)	
	14	1	**6V-8397**	7	SEAL-O-RING	
	15	1	**9X-6273**	2	WASHER (32.5X50X0.8MM THK)	
	16	1	**9X-6274**	2	WASHER (32.5X50X1.6MM THK)	

I-SEE HOSE FABRICATION GUIDE
M-METRIC PART

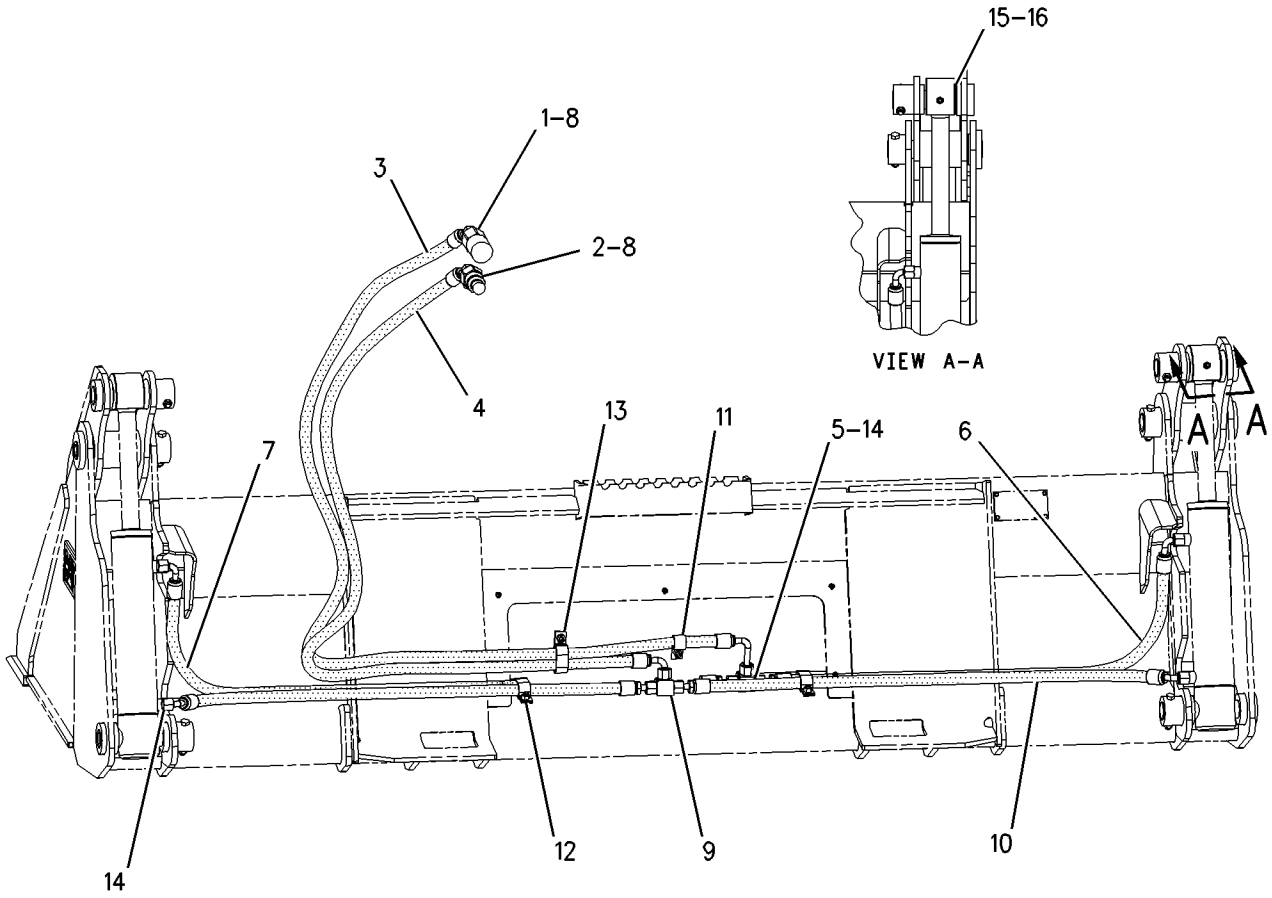

GRAPHIC #1 g00780086

HYDRAULIC SYSTEM

177-1986 LINES GP-CONNECTING

S/N: CED1-UP; FDG1-UP; 4YZ4000-UP; 5SZ4000-UP
PART OF 177-1989, 177-1990 BLADE AR
AN ATTACHMENT

SMCS-5057 **i01787266**

NOTE	REF NO	GRAPHIC REF	PART NUMBER	QTY	PART NAME 1 2 3 4 5 6 (PRODUCT LEVEL)	SEE PAGE
	1	1	**153-2994**	1	FITTING (QUICK DISCONNECT)	
	2	1	**153-2995**	1	FITTING (QUICK DISCONNECT)	
	3	1	**163-1385**	2	ELBOW	
I	4	1	**177-1910**	2	HOSE AS	
I	5	1	**177-1911**	1	HOSE AS	
I	6	1	**177-1912**	1	HOSE AS	
	7	1	**2M-9780**	2	SEAL-O-RING	
	8	1	**3J-1907**	2	SEAL-O-RING	
	9	1	**6V-8397**	8	SEAL-O-RING	
	10	1	**6V-8715**	2	CONNECTOR	
	11	1	**6V-8724**	2	ELBOW	
	12	1	**8T-4121**	4	WASHER-HARD (11X21X2.5MM THK)	
M	13	1	**8T-4133**	2	NUT (M10X1.5 THD)	
M	14	1	**8T-4185**	1	BOLT (M10X1.5X50MM)	
M	15	1	**8T-4195**	1	BOLT (M10X1.5X30MM)	
	16	1	**8T-8192**	2	CLIP (SLOT)	
	17	1	**8T-8193**	2	CLIP (TAB)	

I-SEE HOSE FABRICATION GUIDE
M-METRIC PART

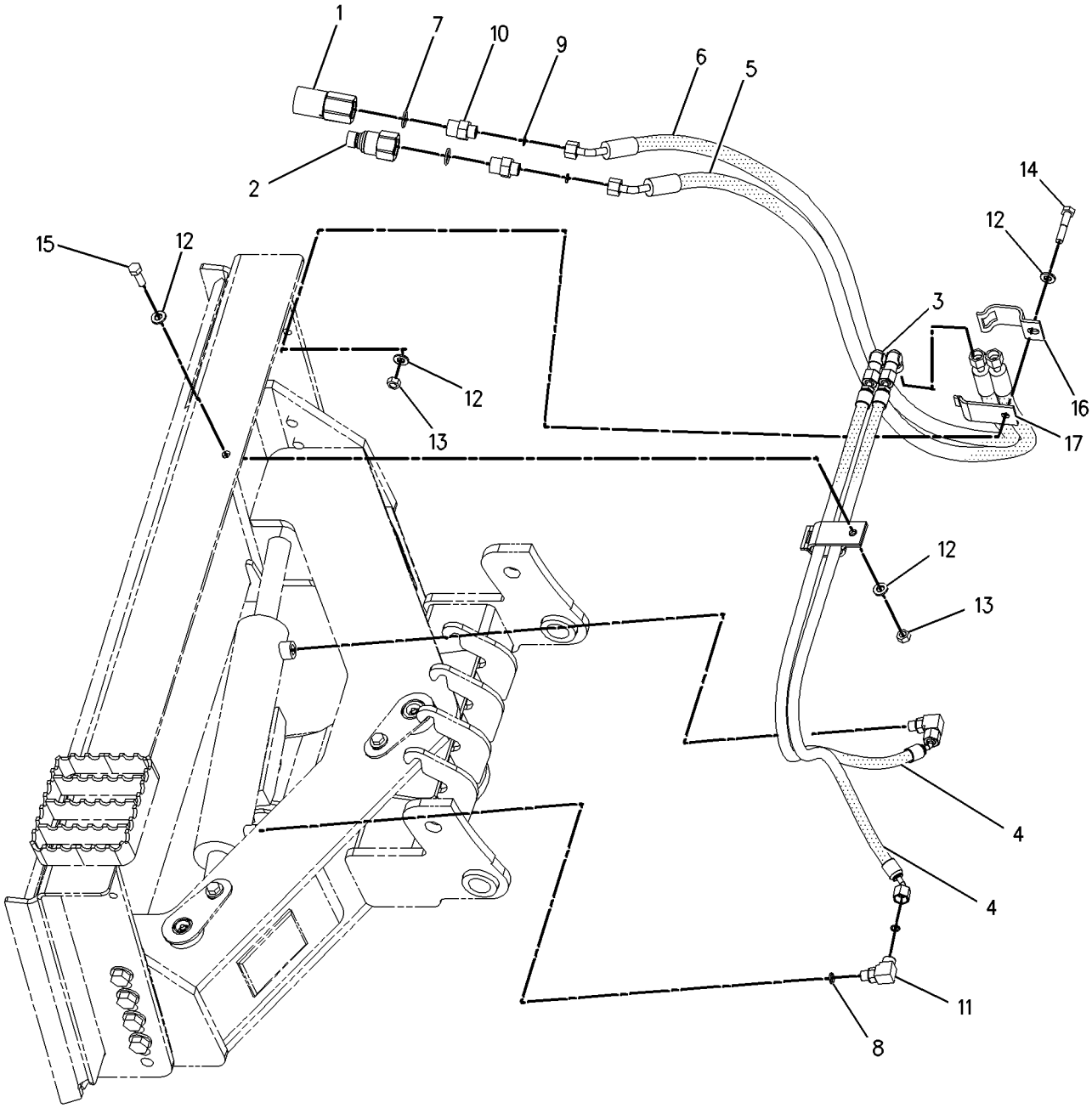

GRAPHIC #1 g00914532

HYDRAULIC SYSTEM

207-9753 LINES GP-COUPLER

S/N: 4YZ4000-UP; 5SZ4000-UP

PART OF 219-4354 CONVERSION AR-QUICK COUPLER, 212-4158 COUPLER AR-QUICK

AN ATTACHMENT

SMCS-5057, 6129 **i01794770**

NOTE	REF NO	GRAPHIC REF	PART NUMBER	QTY	PART NAME 1 2 3 4 5 6 (PRODUCT LEVEL)	SEE PAGE
	1	1	**124-2456**	1	FILM-INSTRUCTION (NO STEP)	
	2	1	*166-2033*	1	TEE GP	
		1	**4J-5477**	1	SEAL-O-RING	
		1	**7X-2444**	1	TEE-SWIVEL	
	3	1	**207-9737**	1	BRACKET AS	
M		1	**8T-3612**	2	NUT-WELD (M8X1.25 THD)	
I	4	1	**207-9756**	4	HOSE AS	
	5	1	**207-9759**	1	TUBE AS	
	6	1	**207-9760**	1	TUBE AS	
I	7	1	**207-9764**	1	HOSE AS	
	8	1	**207-9765**	1	TUBE AS	
	9	1	**207-9797**	1	PLATE	
Y	10	1	**209-0640**	1	VALVE & MTG GP-SOLENOID	456
	11	1	**212-6690**	1	GUARD	
	12	1	*148-8325*	4	CONNECTOR GP	
					(EACH INCLUDES)	
		1	**3J-1907**	1	SEAL-O-RING	
		1	**4J-5477**	1	SEAL-O-RING	
		1	**6V-8641**	1	CONNECTOR	
	13	1,2	*148-8336*	3	CONNECTOR AS	
					(EACH INCLUDES)	
		1,2	**3J-1907**	1	SEAL-O-RING	
		1,2	**6V-8397**	1	SEAL-O-RING	
		1,2	**6V-8636**	1	CONNECTOR	
	14	2	*148-8378*	2	ELBOW GP	
					(EACH INCLUDES)	
		2	**3J-1907**	1	SEAL-O-RING	
		2	**6V-8397**	1	SEAL-O-RING	
		2	**6V-8724**	1	ELBOW	
	15	1	*150-4031*	1	TEE AS	
		1	**6V-9845**	1	TEE-SWIVEL	
		1	**7J-9108**	3	SEAL-O-RING	
	16	1	*150-4034*	2	TEE GP	
					(EACH INCLUDES)	
		1	**6V-8397**	3	SEAL-O-RING	
		1	**8T-0379**	1	TEE-BULKHEAD	
	17	1	*156-4282*	1	REDUCER AS	
		1	**6V-8397**	1	SEAL-O-RING	
		1	**6V-8938**	1	REDUCER-O-RING	
I	18	1	**207-9758**	2	HOSE AS	
I	19	1	**207-9763**	2	HOSE AS	
	20	1	**2V-3216**	4	CLIP	
M	21	2	**5C-7261**	1	NUT (M8X1.25 THD)	
	22	1,2	**5K-8451**	3	CLIP	
	23	2	**5P-4116**	2	WASHER-HARD (8.8X20.5X2MM THK)	
	24	1	**6V-8397**	4	SEAL-O-RING	
	25	1	**6V-8555**	1	NUT-FACE SEAL (1-14THD)	
	26	1	**6V-9168**	2	NUT (11/16-16 THD)	
	27	1	**7G-2950**	1	CLIP (SLOT)	
	28	1	**7G-2951**	1	CLIP (TAB)	
	29	1	**7H-7055**	2	CLIP	
	30	1	**7X-7729**	4	WASHER (11X25X3MM THK)	
	31	2	**8T-1885**	1	CLIP (SLOT)	
	32	2	**8T-1886**	1	CLIP (TAB)	
	33	1,2	**8T-4121**	8	WASHER-HARD (11X21X2.5MM THK)	

207-9753 **LINES GP-COUPLER** ***(contd.)*** **i01794770**

NOTE	REF NO	GRAPHIC REF	PART NUMBER	QTY	PART NAME 1 2 3 4 5 6 (PRODUCT LEVEL)	SEE PAGE
M	34	1,2	**8T-4133**	4	NUT (M10X1.5 THD)	
M	35	1,2	**8T-4189**	3	BOLT (M8X1.25X20MM)	
M	36	1	**8T-4191**	2	BOLT (M10X1.5X16MM)	
M	37	1,2	**8T-4195**	2	BOLT (M10X1.5X30MM)	
M	38	1	**8T-4201**	2	BOLT-LOCKING (M10X1.5X20MM)	
	39	1	**8T-4224**	2	WASHER-HARD (8.8X16X2MM THK)	
M	40	2	**8T-5005**	2	BOLT (M10X1.50X70MM)	
	41	1	**9M-8406**	3	CLIP	

I-SEE HOSE FABRICATION GUIDE
M-METRIC PART
Y-SEPARATE ILLUSTRATION

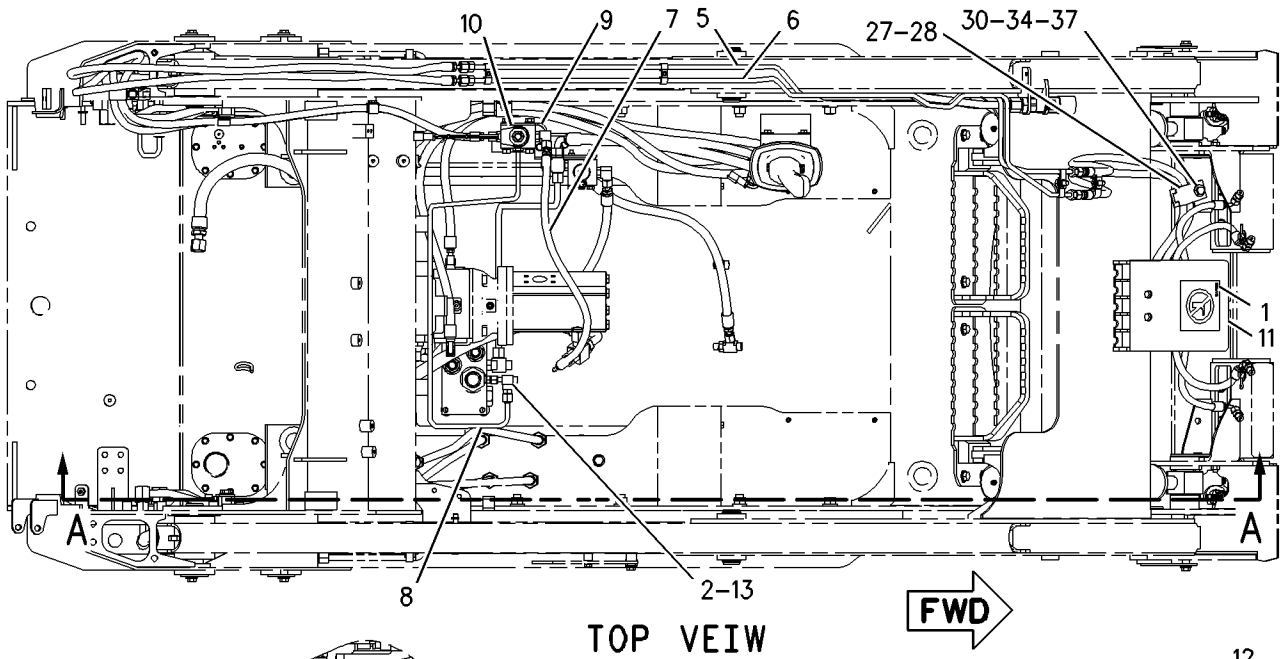

TOP VEIW

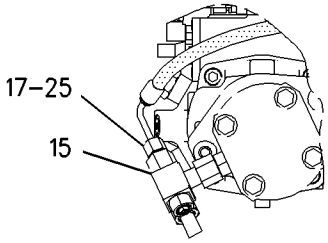

VEIW A-A

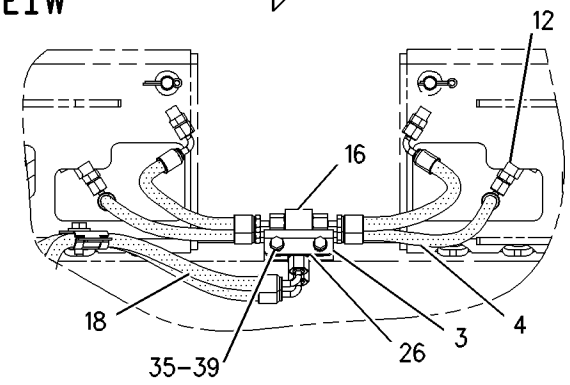

VEIW B-B

REFER TO ALL ILLUSTRATIONS OF THIS GROUP FOR AUXILIARY VIEWS

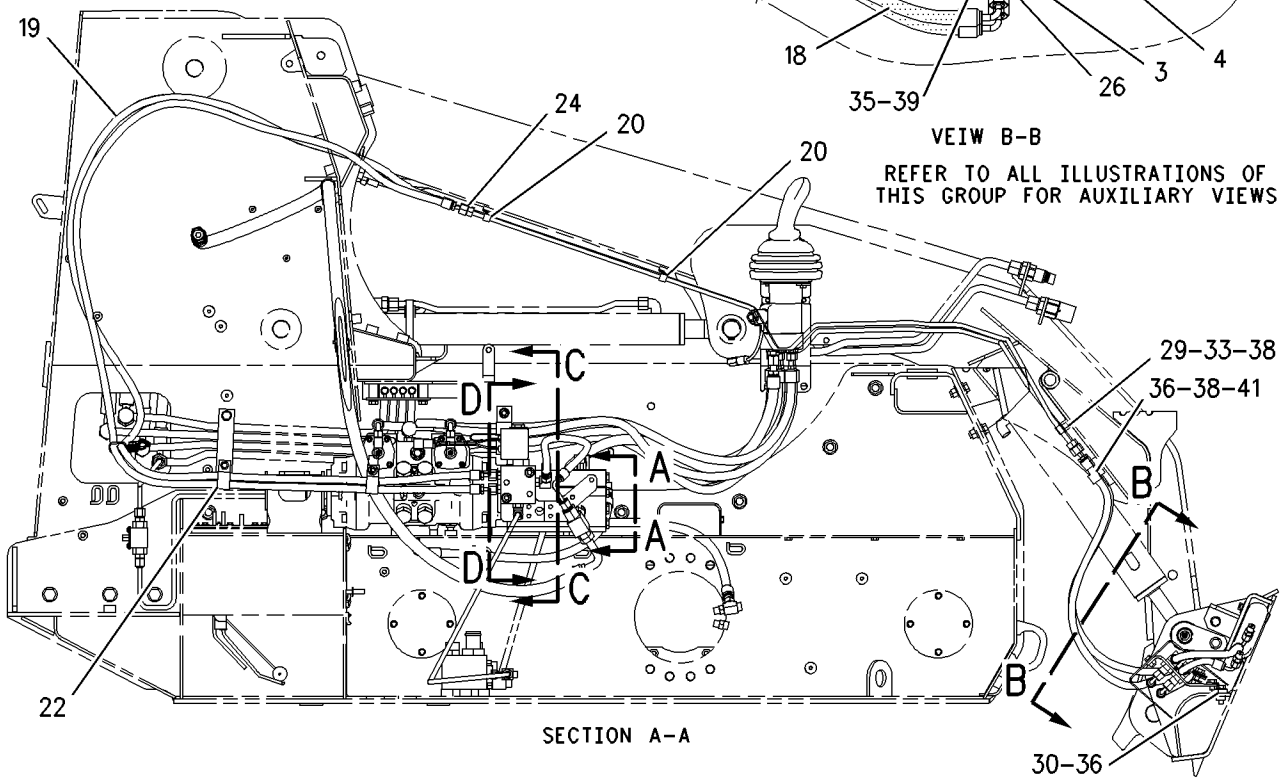

SECTION A-A

GRAPHIC #1

g00920346

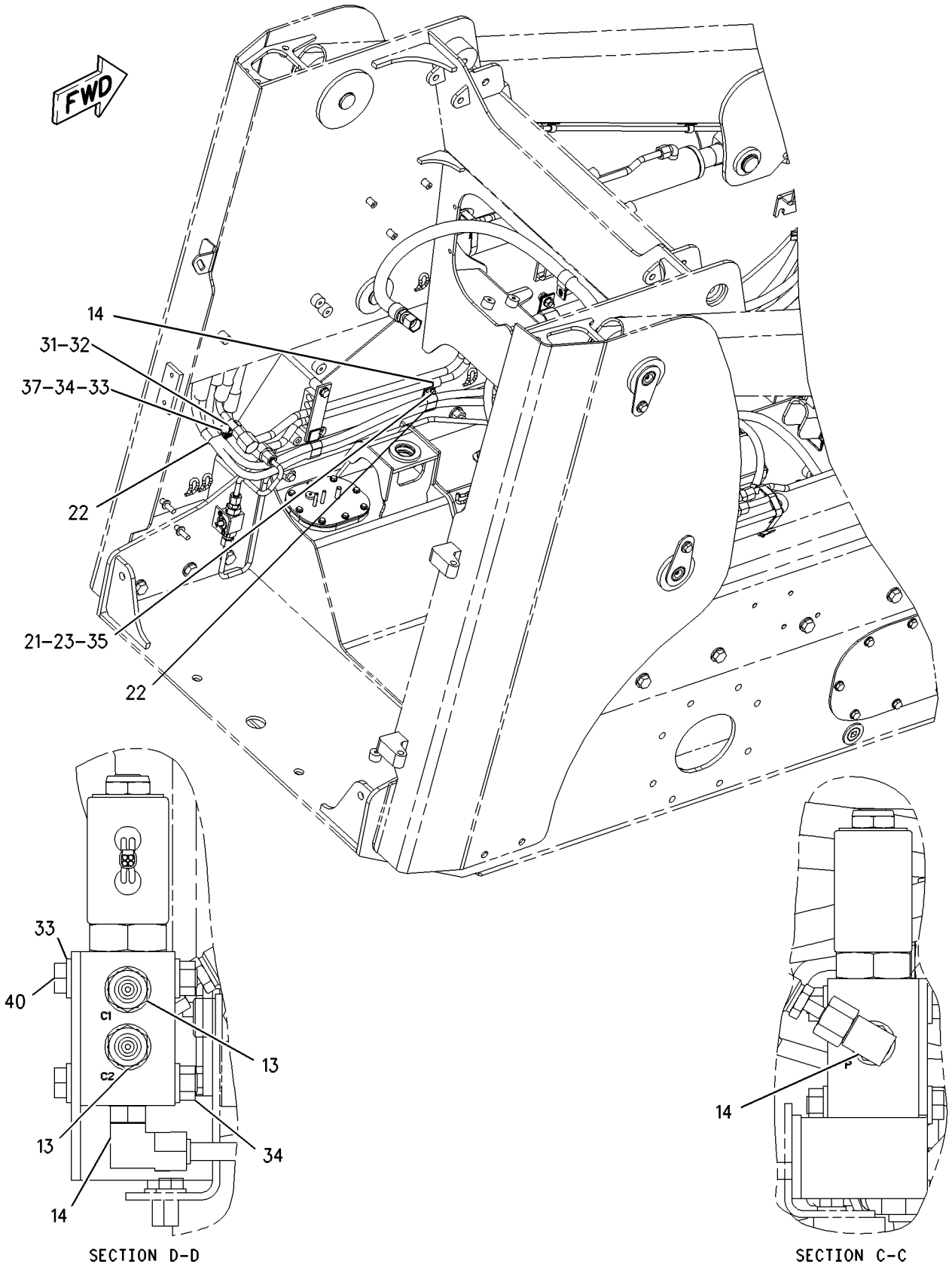

GRAPHIC #2

g00920348

HYDRAULIC SYSTEM

207-9755 LINES GP-COUPLER

S/N: CED1-UP; FDG1-UP
PART OF 212-4159, 219-4355 COUPLER AR-QUICK
AN ATTACHMENT

SMCS-5057, 6129 **i01794825**

NOTE	REF NO	GRAPHIC REF	PART NUMBER	QTY	PART NAME 1 2 3 4 5 6 (PRODUCT LEVEL)	SEE PAGE
	1	1	**2K-5232**	2	SPACER (0.406X0.75X1.81IN THK)	
	2	1	**7K-1181**	2	STRAP-CABLE	
	3	1	**119-6764**	4	CLIP	
	4	1	**124-2456**	1	FILM-INSTRUCTION (NO STEP)	
	5	1	*166-2033*	1	TEE GP	
		1	**4J-5477**	1	SEAL-O-RING	
		1	**7X-2444**	1	TEE-SWIVEL	
	6	1	**207-9737**	1	BRACKET AS	
M		1	**8T-3612**	2	NUT-WELD (M8X1.25 THD)	
I	7	1	**207-9756**	4	HOSE AS	
I	8	1	**207-9758**	2	HOSE AS	
I	9	1	**207-9764**	1	HOSE AS	
	10	1	**207-9765**	1	TUBE AS	
	11	1	**207-9766**	1	TUBE AS	
	12	1	**207-9767**	1	TUBE AS	
	13	1	**207-9797**	1	PLATE	
Y	14	1	**209-0640**	1	VALVE & MTG GP-SOLENOID	456
	15	1	**212-6690**	1	GUARD	
	16	1	*148-8325*	4	CONNECTOR GP	
					(EACH INCLUDES)	
		1	**3J-1907**	1	SEAL-O-RING	
		1	**4J-5477**	1	SEAL-O-RING	
		1	**6V-8641**	1	CONNECTOR	
	17	1	*148-8336*	3	CONNECTOR AS	
					(EACH INCLUDES)	
		1	**3J-1907**	1	SEAL-O-RING	
		1	**6V-8397**	1	SEAL-O-RING	
		1	**6V-8636**	1	CONNECTOR	
	18	1	*148-8378*	2	ELBOW GP	
					(EACH INCLUDES)	
		1	**3J-1907**	1	SEAL-O-RING	
		1	**6V-8397**	1	SEAL-O-RING	
		1	**6V-8724**	1	ELBOW	
	19	1	*150-4031*	1	TEE AS	
		1	**6V-9845**	1	TEE-SWIVEL	
		1	**7J-9108**	3	SEAL-O-RING	
	20	1	*150-4034*	2	TEE GP	
					(EACH INCLUDES)	
		1	**6V-8397**	3	SEAL-O-RING	
		1	**8T-0379**	1	TEE-BULKHEAD	
	21	1	*156-4282*	1	REDUCER AS	
		1	**6V-8397**	1	SEAL-O-RING	
		1	**6V-8938**	1	REDUCER-O-RING	
I	22	1	**207-9795**	2	HOSE AS	
M	23	1	**5C-7261**	2	NUT (M8X1.25 THD)	
	24	1	**5K-8451**	2	CLIP	
	25	1	**6K-8178**	4	CLIP	
	26	1	**6V-8397**	4	SEAL-O-RING	
	27	1	**6V-8555**	1	NUT-FACE SEAL (1-14THD)	
	28	1	**6V-9168**	2	NUT (11/16-16 THD)	
	29	1	**7G-2950**	1	CLIP (SLOT)	
	30	1	**7G-2951**	1	CLIP (TAB)	
	31	1	**7H-7055**	2	CLIP	
	32	1	**7X-7729**	2	WASHER (11X25X3MM THK)	
	33	1	**8T-4121**	12	WASHER-HARD (11X21X2.5MM THK)	

207-9755 **LINES GP-COUPLER** ***(contd.)*** **i01794825**

NOTE	REF NO	GRAPHIC REF	PART NUMBER	QTY	PART NAME 1 2 3 4 5 6 (PRODUCT LEVEL)	SEE PAGE
M	34	1	**8T-4133**	5	NUT (M10X1.5 THD)	
M	35	1	**8T-4195**	1	BOLT (M10X1.5X30MM)	
M	36	1	**8T-4201**	2	BOLT-LOCKING (M10X1.5X20MM)	
M	37	1	**8T-4189**	2	BOLT (M8X1.25X20MM)	
M	38	1	**8T-4191**	2	BOLT (M10X1.5X16MM)	
	39	1	**8T-4224**	2	WASHER-HARD (8.8X16X2MM THK)	
M	40	1	**8T-4908**	2	BOLT (M8X1.25X25MM)	
M	41	1	**8T-5005**	4	BOLT (M10X1.50X70MM)	
	42	1	**9M-8406**	2	CLIP	
	43	1	**9R-1004**	2	CLIP (TAB)	
	44	1	**9R-1005**	2	CLIP (SLOT)	
	45	1	**5P-4116**	4	WASHER-HARD (8.8X20.5X2MM THK)	

I-SEE HOSE FABRICATION GUIDE
M-METRIC PART
Y-SEPARATE ILLUSTRATION

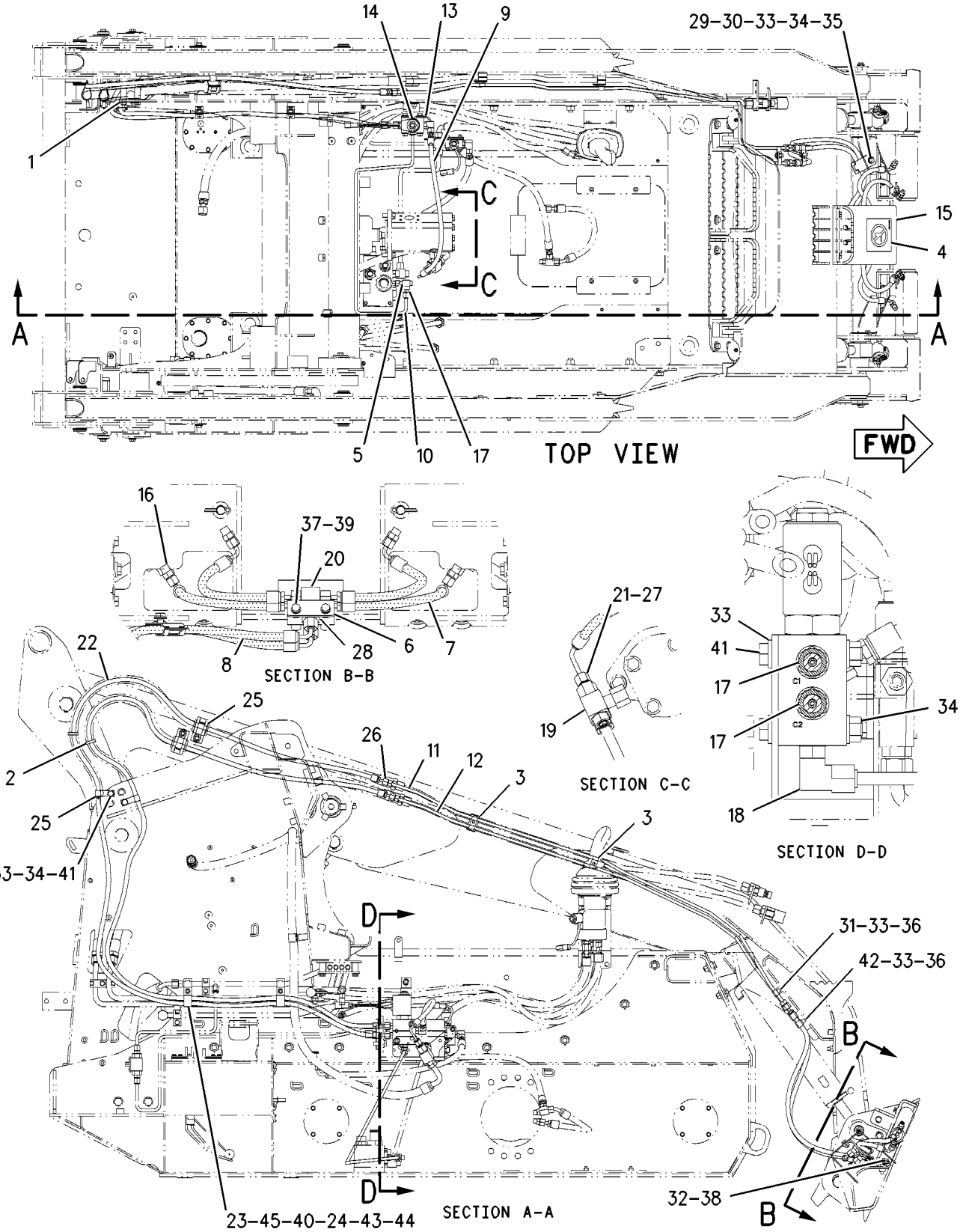

GRAPHIC #1

g00918818

MEMORANDA

161-0187 LINES GP-GRAPPLE

S/N: CED1-UP; FDG1-UP; 4YZ4000-UP; 5SZ4000-UP
INDUSTRIAL
PART OF 157-7223, 157-7224, 157-7225 BUCKET AR-GRAPPLE, 162-8139, 163-4812 FORK AR-GRAPPLE
AN ATTACHMENT

SMCS-5057 **i01391572**

NOTE	REF NO	GRAPHIC REF	PART NUMBER	QTY	PART NAME 1 2 3 4 5 6 (PRODUCT LEVEL)	SEE PAGE
	1	1	**3E-7404**	2	CLAMP-HOSE	
	2	1	**153-2994**	1	COUPLING	
	3	1	**153-2995**	1	COUPLING	
	4	1	**161-0185**	1	TUBE AS	
	5	1	**161-0186**	1	TUBE AS	
	6	1	**161-0188**	2	TUBE AS	
I	7	1	**161-0189**	2	HOSE AS	
I	8	1	**161-0190**	2	HOSE AS	
	9	1	**163-1385**	1	ELBOW	
I	10	1	**163-9320**	1	HOSE AS	
I	11	1	**166-9312**	1	HOSE AS	
	12	1	*148-8319*	2	CONNECTOR GP	
					(EACH INCLUDES)	
		1	**2M-9780**	1	SEAL-O-RING (19.18MM ID)	
		1	**6V-8397**	1	SEAL-O-RING (9.27MM ID)	
		1	**6V-8715**	1	CONNECTOR	
	13	1	**2V-3216**	6	CLIP	
	14	1	**6V-8397**	13	SEAL-O-RING (9.27MM ID)	
	15	1	**7S-3916**	2	CLIP (TAB)	
	16	1	**7S-3919**	2	CLIP (SLOT)	
	17	1	**8T-4121**	2	WASHER-HARD (11X21X2.5MM THK)	
M	18	1	**8T-4136**	2	BOLT (M10X1.5X25MM)	
M	19	1	**8T-4171**	4	BOLT (M6X1.0X12MM)	
	20	1	**9R-2004**	2	BLOCK	

I-SEE HOSE FABRICATION GUIDE
M-METRIC PART

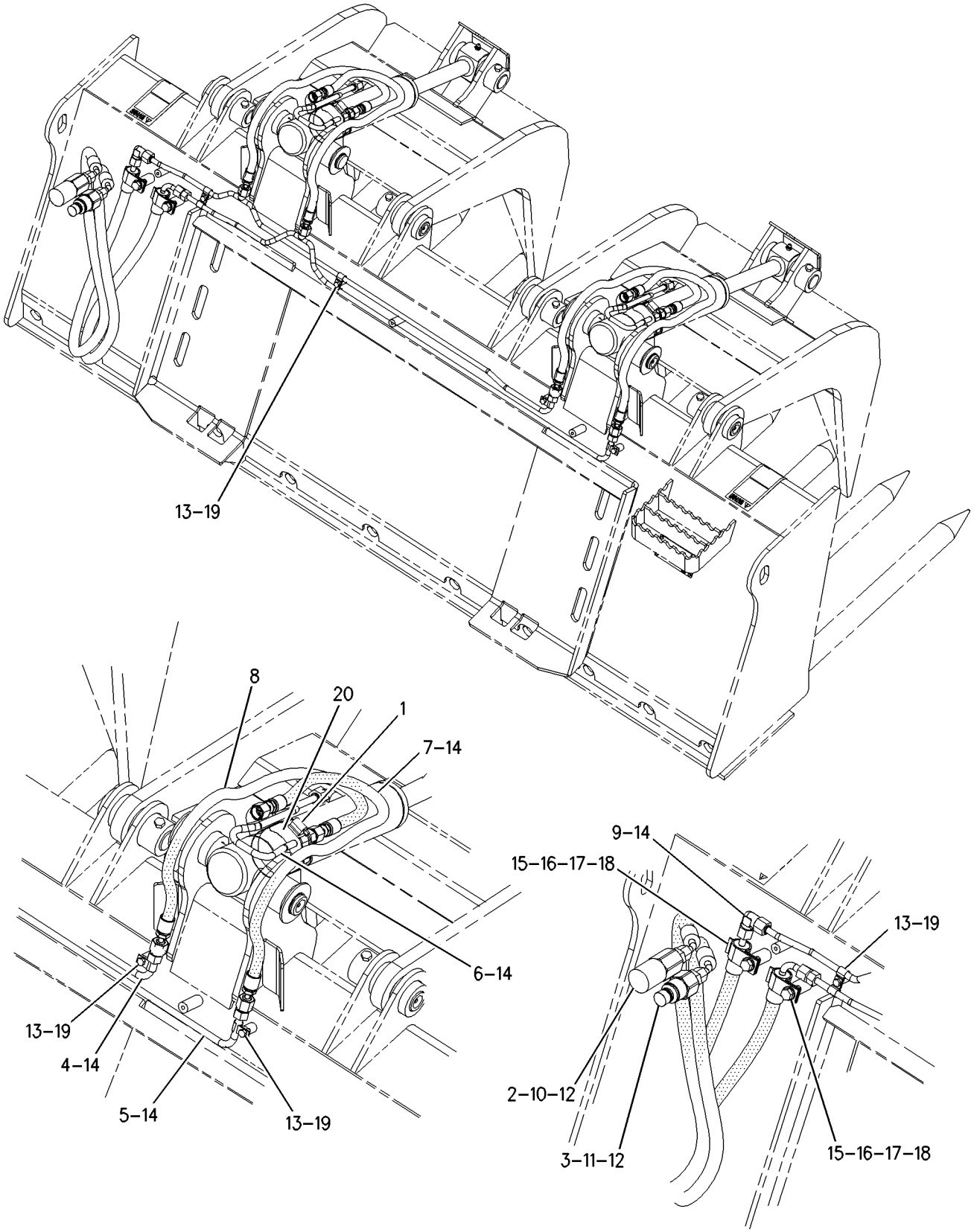

GRAPHIC #1 g00733464

HYDRAULIC SYSTEM

165-8733 LINES GP-GRAPPLE

S/N: CED1-UP; FDG1-UP; 4YZ4000-UP; 5SZ4000-UP
UTILITY
PART OF 165-8734 GRAPPLE GP-UTILITY
AN ATTACHMENT

SMCS-5057 **i01788832**

NOTE	REF NO	GRAPHIC REF	PART NUMBER	QTY	PART NAME 1 2 3 4 5 6 (PRODUCT LEVEL)	SEE PAGE
	1	1	**2J-6540**	1	CLAMP	
	2	1	**153-2994**	1	FITTING (QUICK DISCONNECT)	
	3	1	**153-2995**	1	FITTING (QUICK DISCONNECT)	
I	4	1	**174-2384**	1	HOSE AS	
I	5	1	**174-2385**	1	HOSE AS	
	6	1	**174-2388**	1	TUBE AS	
	7	1	**174-2389**	1	TUBE AS	
I	8	1	**174-2393**	2	HOSE AS	
	9	1	**174-3097**	1	TUBE AS	
	10	1	**183-4085**	1	ELBOW AS	
	11	1	*148-8319*	2	CONNECTOR GP	
					(EACH INCLUDES)	
		1	**2M-9780**	1	SEAL-O-RING	
		1	**6V-8397**	1	SEAL-O-RING	
		1	**6V-8715**	1	CONNECTOR	
	12	1	**6V-8397**	6	SEAL-O-RING	
	13	1	**7S-3912**	2	CLIP (TAB)	
	14	1	**7S-3913**	2	CLIP (SLOT)	
	15	1	**8T-1893**	2	CLIP (SLOT)	
	16	1	**8T-1894**	2	CLIP (TAB)	
	17	1	**8T-4121**	6	WASHER-HARD (11X21X2.5MM THK)	
M	18	1	**8T-4137**	4	BOLT (M10X1.5X20MM)	
	19	1	**9R-2004**	1	BLOCK	

I-SEE HOSE FABRICATION GUIDE
M-METRIC PART

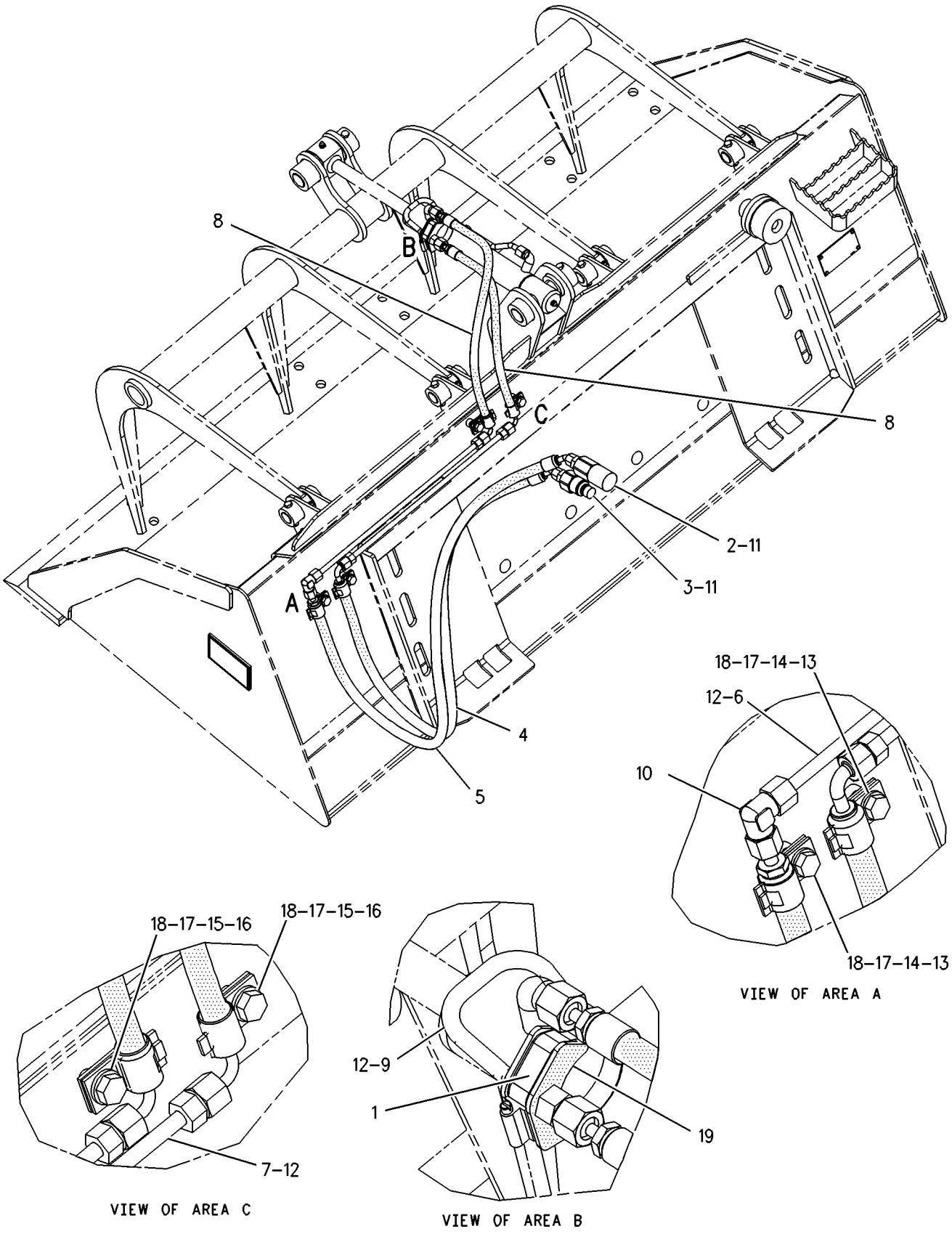

GRAPHIC #1

g00915477

HYDRAULIC SYSTEM

154-4020 LINES GP-HYDRAULIC FAN

S/N: CED1-UP; FDG1-UP; 4YZ4000-UP; 5SZ4000-UP

PART OF 190-7952, 195-6705, 195-6762, 195-6764 HYDRAULIC AR

SMCS-5057 **i01659528**

NOTE	REF NO	GRAPHIC REF	PART NUMBER	QTY	PART NAME 1 2 3 4 5 6 (PRODUCT LEVEL)	SEE PAGE
	1	1	**6V-0394**	1	CONNECTOR-PORT	
I	2	1	**154-4021**	1	HOSE AS	
I	3	1	**204-1410**	1	HOSE AS	
	4	1	*148-8316*	1	CONNECTOR GP	
		1	**3J-7354**	1	SEAL-O-RING	
		1	**4J-5477**	1	SEAL-O-RING	
		1	**6V-8647**	1	CONNECTOR	
	5	1	*148-8390*	2	ELBOW GP	
					(EACH INCLUDES)	
		1	**2M-9780**	1	SEAL-O-RING	
		1	**6V-8626**	1	ELBOW	
		1	**7J-9108**	1	SEAL-O-RING	
	6	1	**4J-7533**	1	SEAL-O-RING	
	7	1	**4K-8864**	1	CLIP	

I-SEE HOSE FABRICATION GUIDE

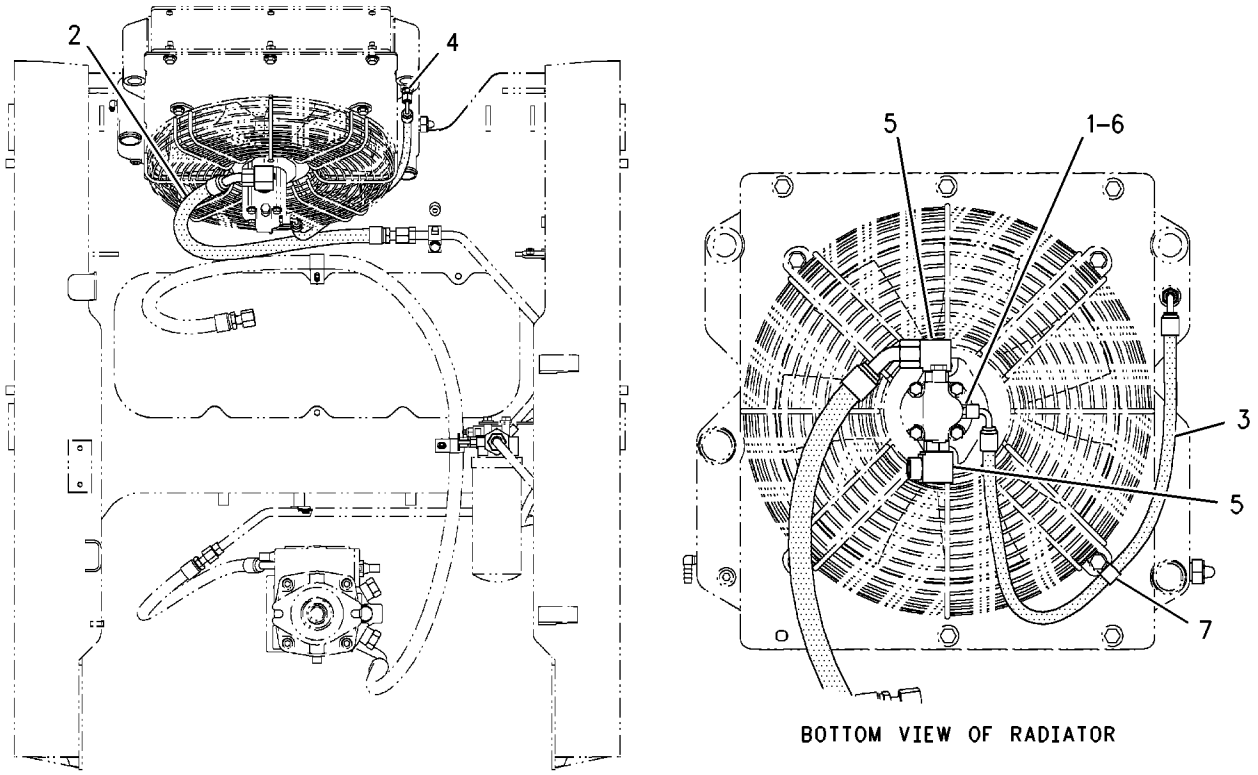

BOTTOM VIEW OF RADIATOR

GRAPHIC #1 g00857564

HYDRAULIC SYSTEM

190-8116 LINES GP-HYDRAULIC FAN

S/N: CED1-UP; FDG1-UP

PART OF 190-7952, 195-6705 HYDRAULIC AR

SMCS-5057 **i01486920**

NOTE	REF NO	GRAPHIC REF	PART NUMBER	QTY	PART NAME 1 2 3 4 5 6 (PRODUCT LEVEL)	SEE PAGE
	1	1	**193-8311**	1	HOSE AS	
	2	1	*148-8315*	1	CONNECTOR GP	
		1	**2M-9780**	1	SEAL-O-RING	
		1	**6V-8642**	1	CONNECTOR	
		1	**7J-9108**	1	SEAL-O-RING	
	3	1	**4S-1962**	2	CLIP (25.4MM ID)	

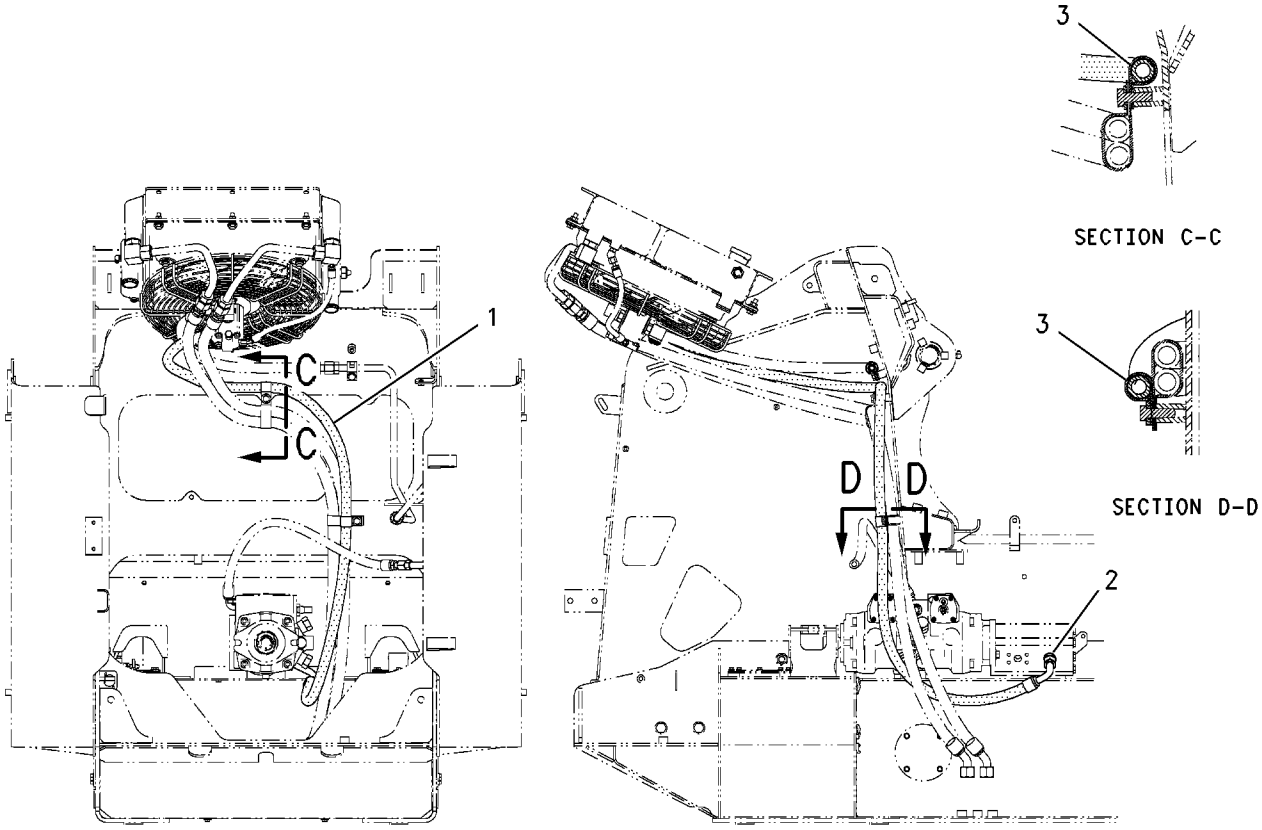

GRAPHIC #1 g00773270

HYDRAULIC SYSTEM

193-8310 LINES GP-HYDRAULIC FAN

S/N: 4YZ4000-UP; 5SZ4000-UP

PART OF 195-6762, 195-6764 HYDRAULIC AR

SMCS-5057 **i01434181**

NOTE	REF NO	GRAPHIC REF	PART NUMBER	QTY	PART NAME 1 2 3 4 5 6 (PRODUCT LEVEL)	SEE PAGE
	1	1	**193-8311**	1	HOSE AS	
	2	1	*148-8315*	1	CONNECTOR GP	
		1	**2M-9780**	1	SEAL-O-RING	
		1	**6V-8642**	1	CONNECTOR	
		1	**7J-9108**	1	SEAL-O-RING	
	3	1	**4S-1962**	2	CLIP (SLOT)	

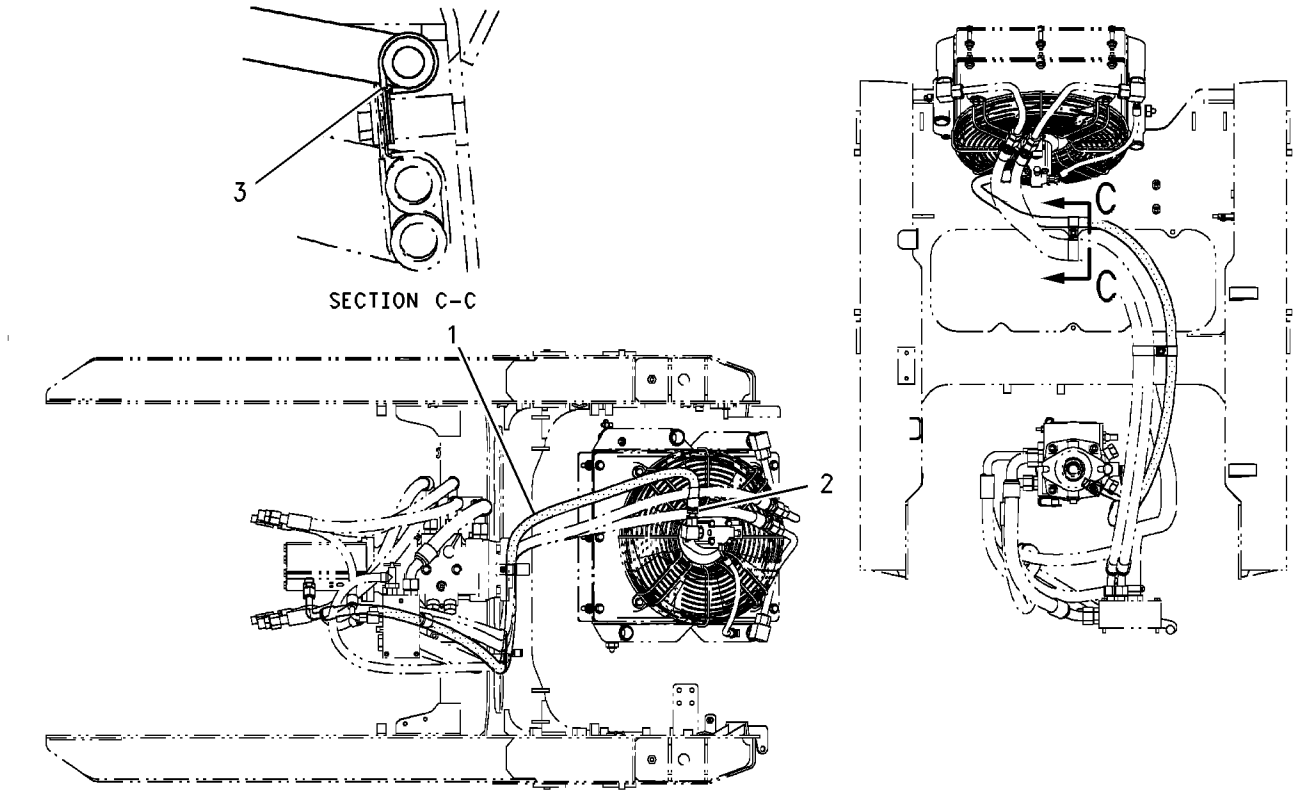

GRAPHIC #1 g00762354

HYDRAULIC SYSTEM

212-6630 LINES GP-HYDRAULIC FAN

S/N: CED1-UP; 5SZ5164-UP

PART OF 190-7952, 195-6764 HYDRAULIC AR

SMCS-5057 **i01659346**

NOTE	REF NO	GRAPHIC REF	PART NUMBER	QTY	PART NAME 1 2 3 4 5 6 (PRODUCT LEVEL)	SEE PAGE
	1	1	**6V-0394**	1	CONNECTOR-PORT	
I	2	1	**154-4021**	1	HOSE AS	
I	3	1	**204-1411**	1	HOSE AS	
	4	1	*148-8316*	1	CONNECTOR GP	
		1	**3J-7354**	1	SEAL-O-RING	
		1	**4J-5477**	1	SEAL-O-RING	
		1	**6V-8647**	1	CONNECTOR	
	5	1	*148-8390*	2	ELBOW GP	
					(EACH INCLUDES)	
		1	**2M-9780**	1	SEAL-O-RING	
		1	**6V-8626**	1	ELBOW	
		1	**7J-9108**	1	SEAL-O-RING	
	6	1	**4J-7533**	1	SEAL-O-RING	
	7	1	**4K-8864**	1	CLIP	

I-SEE HOSE FABRICATION GUIDE

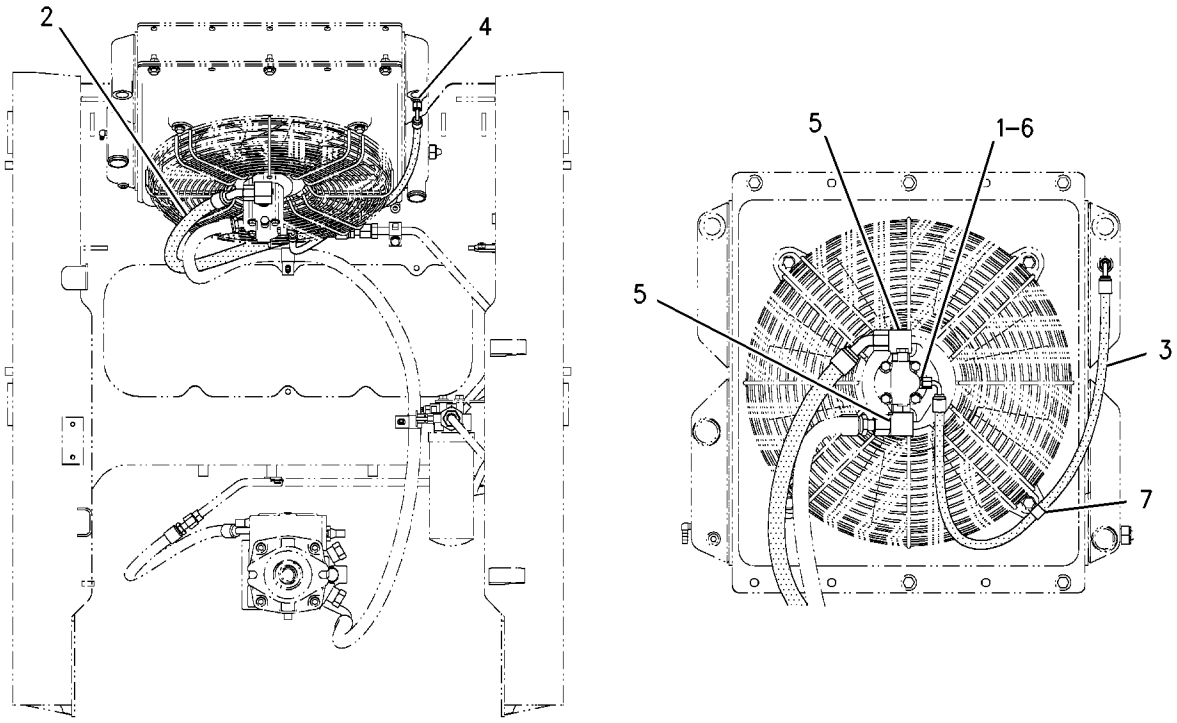

GRAPHIC #1 g00857329

154-4025 LINES GP-HYDRAULIC OIL COOLER

S/N: 4YZ4000-UP

PART OF 195-6762 HYDRAULIC AR

SMCS-5057 **i01650353**

NOTE	REF NO	GRAPHIC REF	PART NUMBER	QTY	PART NAME 1 2 3 4 5 6 (PRODUCT LEVEL)	SEE PAGE
I	1	1	**154-4026**	2	HOSE AS	
	2	1	**212-6650**	1	TUBE AS	
	3	1	**212-6651**	1	TUBE AS	
	4	1	*148-8327*	2	CONNECTOR GP	
		1	**3D-2824**	1	SEAL-O-RING	
		1	**6V-8637**	1	CONNECTOR-SEAL	
		1	**6V-9746**	1	SEAL-O-RING	
	5	1	**5D-0718**	2	CLIP	
	6	1	**6V-9746**	2	SEAL-O-RING	
	7	1	**7X-7729**	2	WASHER (11X25X3MM THK)	
M	8	1	**8T-4195**	2	BOLT (M10X1.5X30MM)	

I-SEE HOSE FABRICATION GUIDE
M-METRIC PART

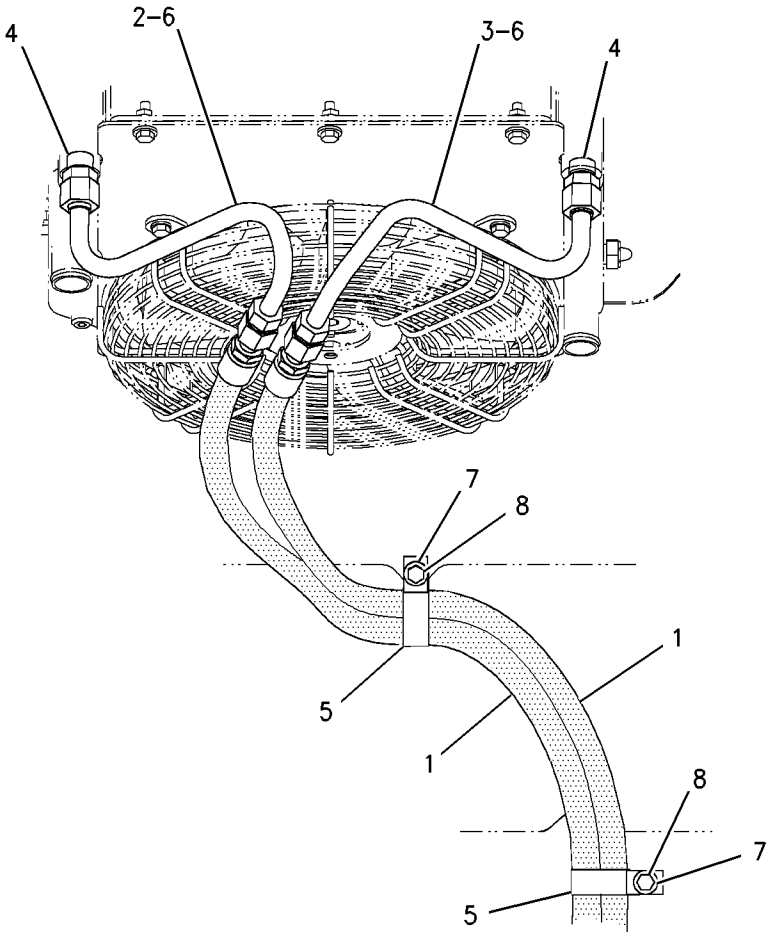

GRAPHIC #1 g00852912

HYDRAULIC SYSTEM

154-4055 LINES GP-HYDRAULIC OIL COOLER

S/N: 5SZ4000-UP
PART OF 195-6764 HYDRAULIC AR
TYPE 1

SMCS-5057 **i01689504**

NOTE	REF NO	GRAPHIC REF	PART NUMBER	QTY	PART NAME 1 2 3 4 5 6 (PRODUCT LEVEL)	SEE PAGE
I	1	1	**154-4026**	2	HOSE AS	
	2	1	**154-4028**	1	TUBE AS	
	3	1	**154-4029**	1	TUBE AS	
	4	1	*148-8347*	2	ELBOW GP	
		1	**3D-2824**	1	SEAL-O-RING	
		1	**6V-9007**	2	ELBOW	
		1	**6V-9746**	1	SEAL-O-RING	
	5	1	**5D-0718**	2	CLIP	
	6	1	**6V-9746**	2	SEAL-O-RING	
	7	1	**7X-7729**	2	WASHER (11X25X3MM THK)	
M	8	1	**8T-4195**	2	BOLT (M10X1.5X30MM)	

I-SEE HOSE FABRICATION GUIDE
M-METRIC PART

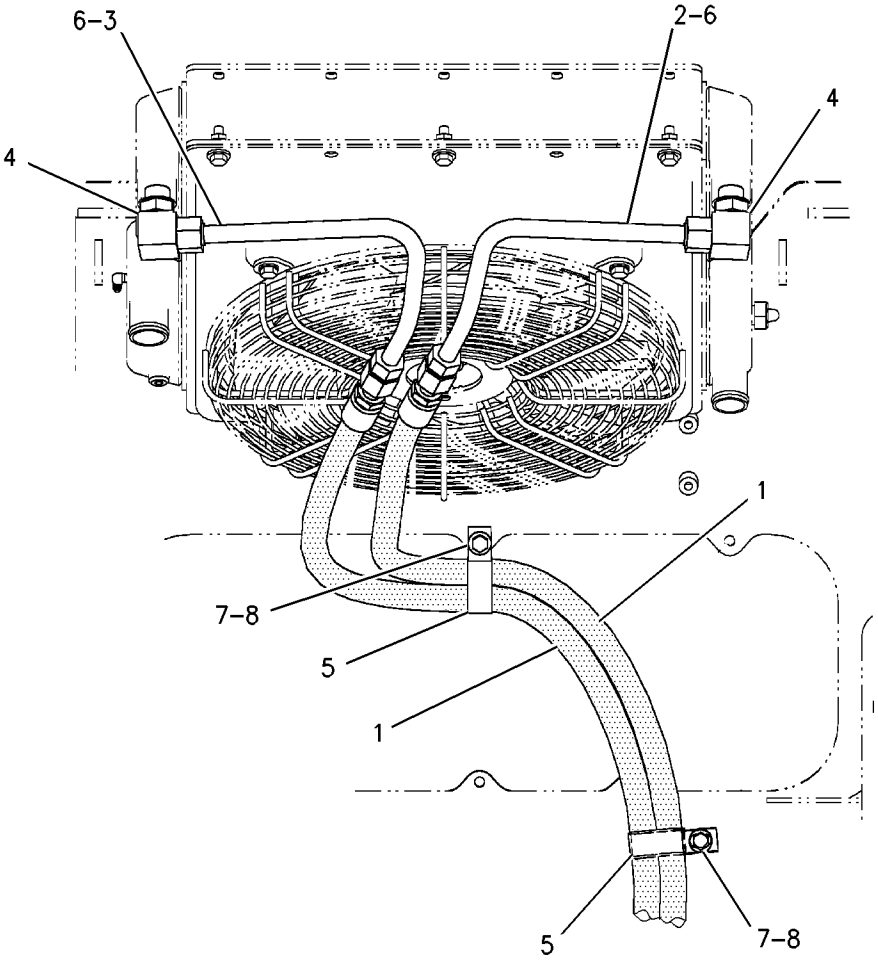

GRAPHIC #1 g00865370

HYDRAULIC SYSTEM

154-4055 LINES GP-HYDRAULIC OIL COOLER

S/N: 5SZ4000-UP
PART OF 195-6764 HYDRAULIC AR
TYPE 2

SMCS-5057 **i01689510**

NOTE	REF NO	GRAPHIC REF	PART NUMBER	QTY	PART NAME 1 2 3 4 5 6 (PRODUCT LEVEL)	SEE PAGE
I	1	1	**154-4026**	2	HOSE AS	
	2	1	**207-9749**	1	TUBE AS	
	3	1	**207-9750**	1	TUBE AS	
	4	1	*148-8327*	2	CONNECTOR GP	
					(EACH INCLUDES)	
		1	**3D-2824**	1	SEAL-O-RING	
		1	**6V-8637**	1	CONNECTOR-SEAL	
		1	**6V-9746**	1	SEAL-O-RING	
	5	1	**5D-0718**	2	CLIP	
	6	1	**6V-9746**	2	SEAL-O-RING	
	7	1	**7X-7729**	2	WASHER (11X25X3MM THK)	
M	8	1	**8T-4195**	2	BOLT (M10X1.5X30MM)	

I-SEE HOSE FABRICATION GUIDE
M-METRIC PART

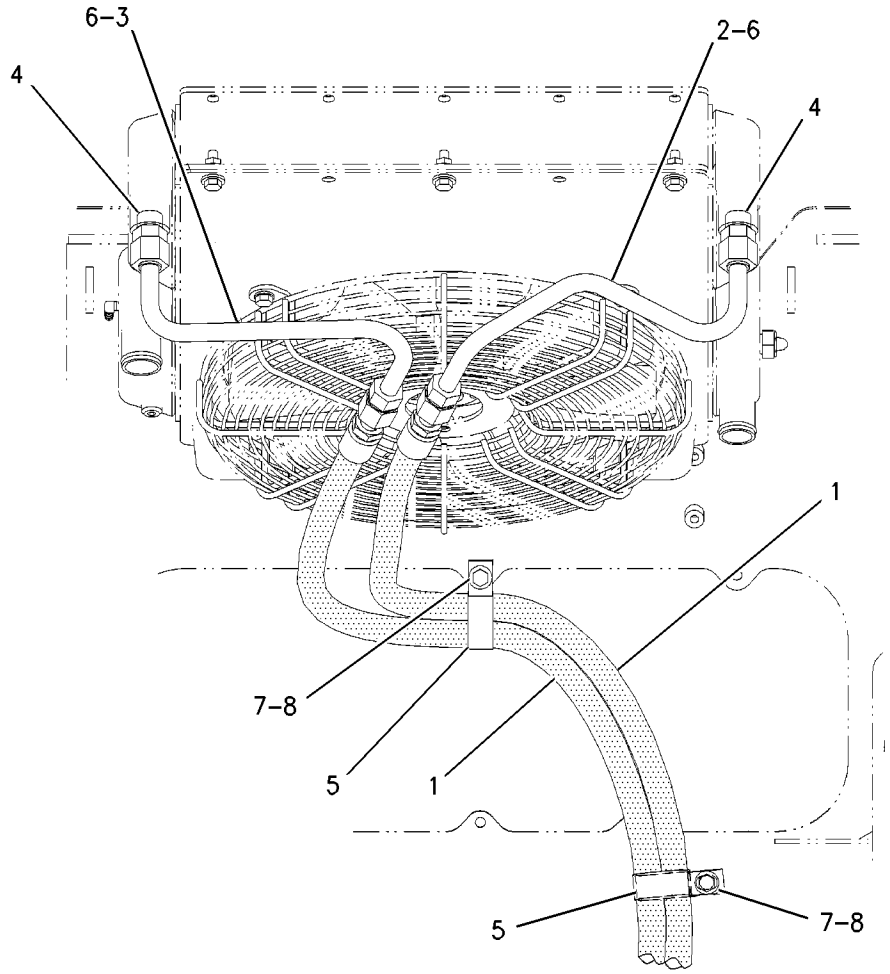

GRAPHIC #1 g00865391

191-9782 LINES GP-HYDRAULIC OIL COOLER

S/N: CED1-UP
PART OF 190-7952 HYDRAULIC AR
TYPE 1

SMCS-5057 **i01698388**

NOTE	REF NO	GRAPHIC REF	PART NUMBER	QTY	PART NAME 1 2 3 4 5 6 (PRODUCT LEVEL)	SEE PAGE
	1	1	**154-4028**	1	TUBE AS	
	2	1	**154-4029**	1	TUBE AS	
I	3	1	**195-6707**	2	HOSE AS	
	4	1	**5D-0718**	2	CLIP	
	5	1	**6V-9746**	2	SEAL-O-RING	
	6	1	**7X-7729**	2	WASHER (11X25X3MM THK)	
M	7	1	**8T-4195**	2	BOLT (M10X1.5X30MM)	
	8	1	**148-8347**	2	ELBOW GP	
					(EACH INCLUDES)	
		1	**3D-2824**	1	SEAL-O-RING	
		1	**6V-9007**	1	ELBOW	
		1	**6V-9746**	1	SEAL-O-RING	

I-SEE HOSE FABRICATION GUIDE
M-METRIC PART

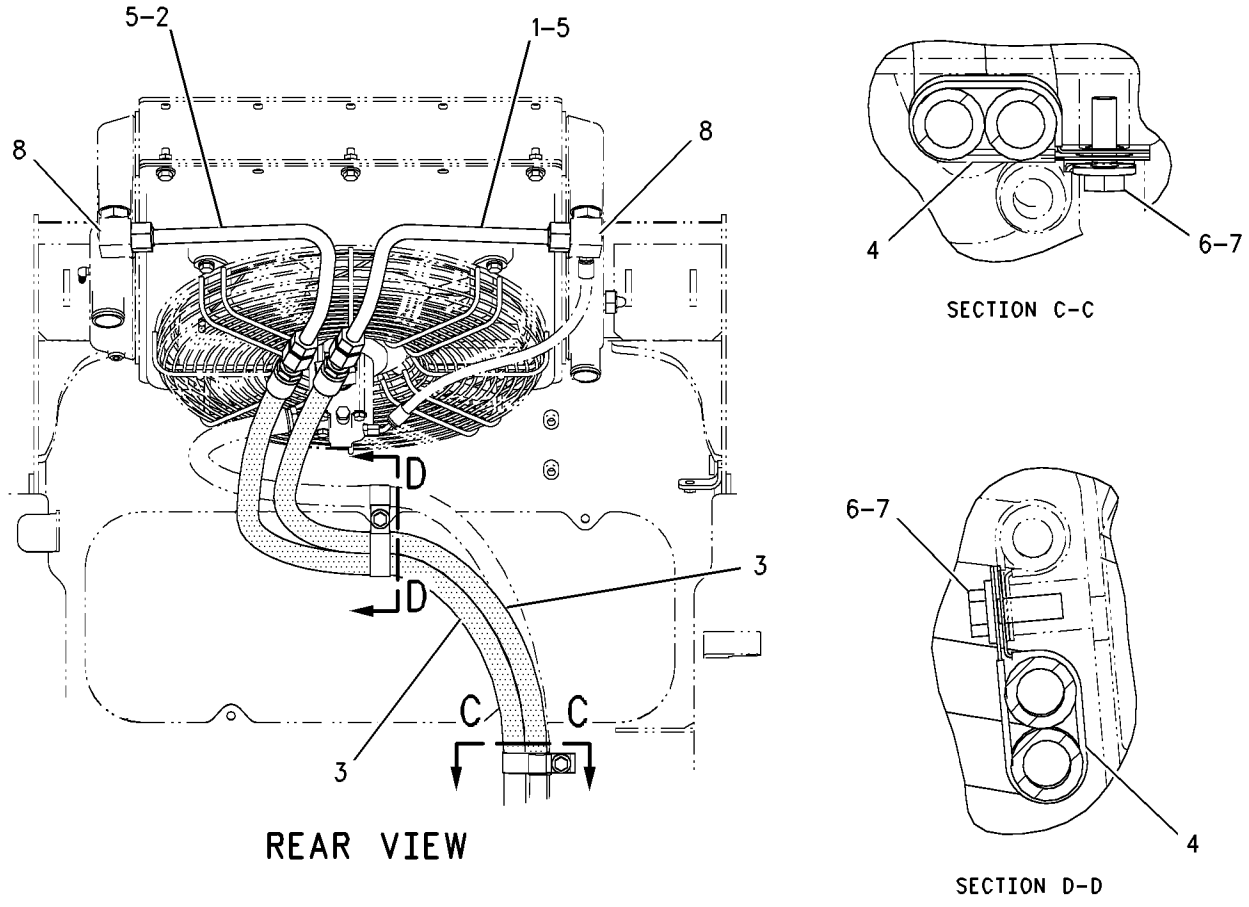

GRAPHIC #1 g00874407

HYDRAULIC SYSTEM

191-9782 LINES GP-HYDRAULIC OIL COOLER

S/N: CED1-UP
PART OF 190-7952 HYDRAULIC AR
TYPE 2

SMCS-5057 **i01698145**

NOTE	REF NO	GRAPHIC REF	PART NUMBER	QTY	PART NAME 1 2 3 4 5 6 (PRODUCT LEVEL)	SEE PAGE
I	1	1	**195-6707**	2	HOSE AS	
	2	1	**207-9749**	1	TUBE AS	
	3	1	**207-9750**	1	TUBE AS	
	4	1	*148-8327*	2	CONNECTOR GP	
					(EACH INCLUDES)	
		1	**3D-2824**	1	SEAL-O-RING	
		1	**6V-8637**	1	CONNECTOR-SEAL	
		1	**6V-9746**	1	SEAL-O-RING	
	5	1	**5D-0718**	2	CLIP	
	6	1	**6V-9746**	2	SEAL-O-RING	
	7	1	**7X-7729**	2	WASHER (11X25X3MM THK)	
M	8	1	**8T-4195**	2	BOLT (M10X1.5X30MM)	

I-SEE HOSE FABRICATION GUIDE
M-METRIC PART

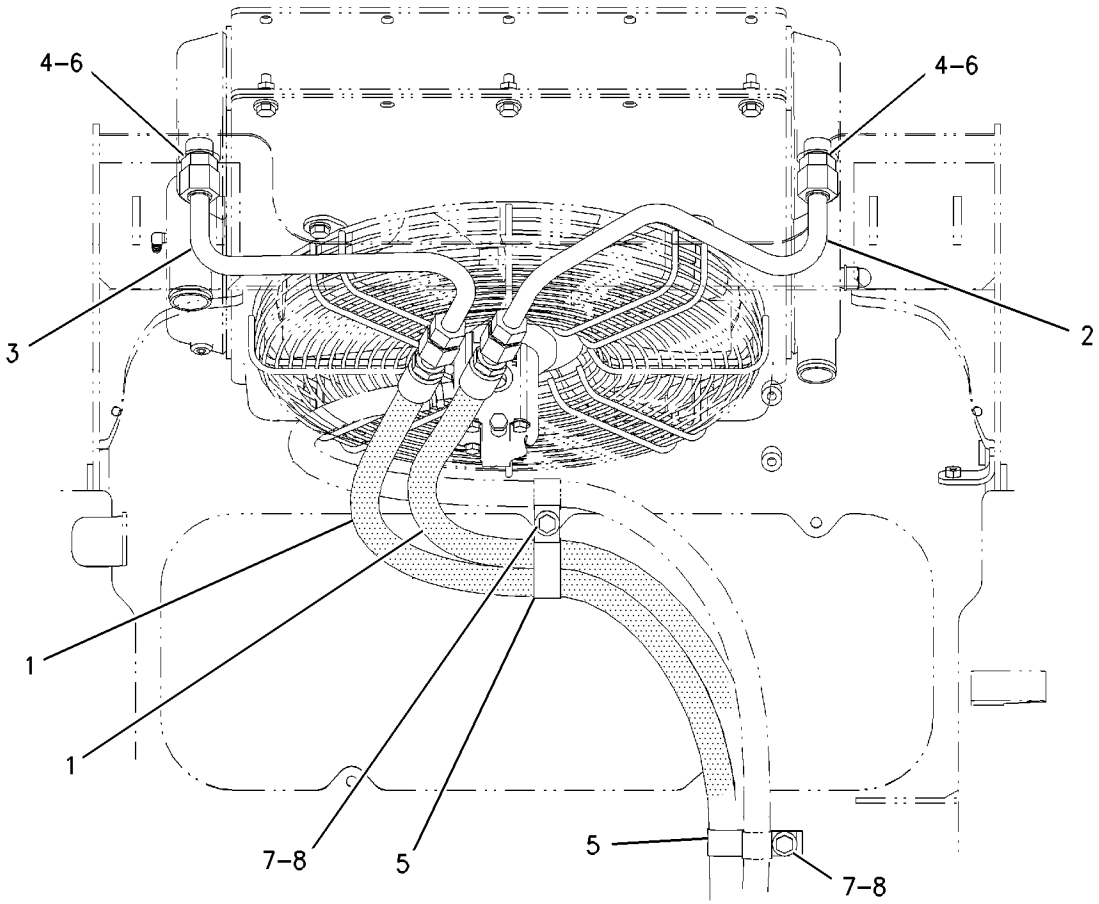

GRAPHIC #1 g00874695

HYDRAULIC SYSTEM

195-6706 LINES GP-HYDRAULIC OIL COOLER

S/N: FDG1-UP
PART OF 195-6705 HYDRAULIC AR
TYPE 1

SMCS-5057 **i01533141**

NOTE	REF NO	GRAPHIC REF	PART NUMBER	QTY	PART NAME 1 2 3 4 5 6 (PRODUCT LEVEL)	SEE PAGE
	1	1	**154-4046**	1	TUBE AS	
	2	1	**154-4047**	1	TUBE AS	
	3	1	**195-6707**	2	HOSE AS	
	4	1	**5D-0718**	2	CLIP	
	5	1	**6V-9746**	2	SEAL-O-RING	
	6	1	**7X-7729**	2	WASHER (11X25X3MM THK)	
M	7	1	**8T-4195**	2	BOLT (M10X1.5X30MM)	

M-METRIC PART

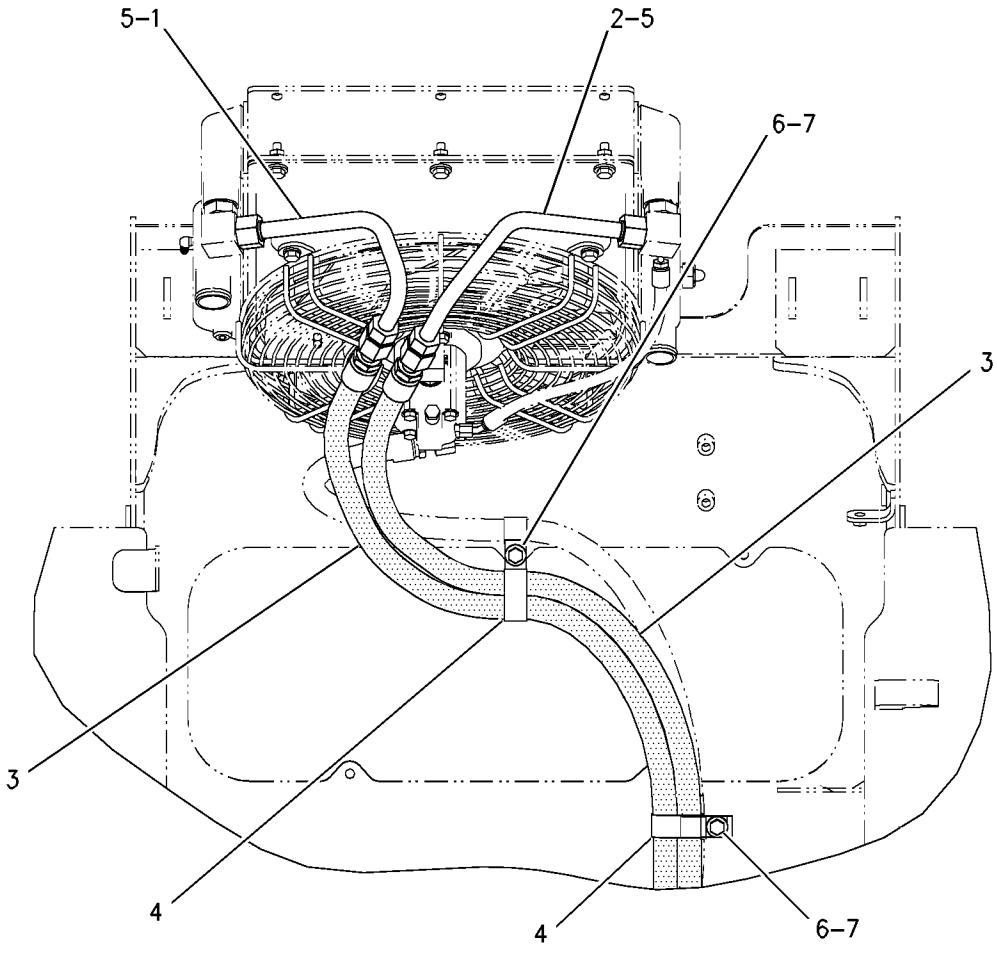

GRAPHIC #1 g00771826

195-6706 LINES GP-HYDRAULIC OIL COOLER

S/N: FDG1-UP
PART OF 195-6705 HYDRAULIC AR
TYPE 2

SMCS-5057 **i01663234**

NOTE	REF NO	GRAPHIC REF	PART NUMBER	QTY	PART NAME 1 2 3 4 5 6 (PRODUCT LEVEL)	SEE PAGE
I	1	1	**195-6707**	2	HOSE AS	
	2	1	**212-6650**	1	TUBE AS	
	3	1	**212-6651**	1	TUBE AS	
	4	1	*148-8327*	2	CONNECTOR GP	
					(EACH INCLUDES)	
		1	**3D-2824**	1	SEAL-O-RING	
		1	**6V-8637**	1	CONNECTOR-SEAL	
		1	**6V-9746**	1	SEAL-O-RING	
	5	1	**5D-0718**	2	CLIP	
	6	1	**6V-9746**	2	SEAL-O-RING	
	7	1	**7X-7729**	2	WASHER (11X25X3MM THK)	
M	8	1	**8T-4195**	2	BOLT (M10X1.5X30MM)	

I-SEE HOSE FABRICATION GUIDE
M-METRIC PART

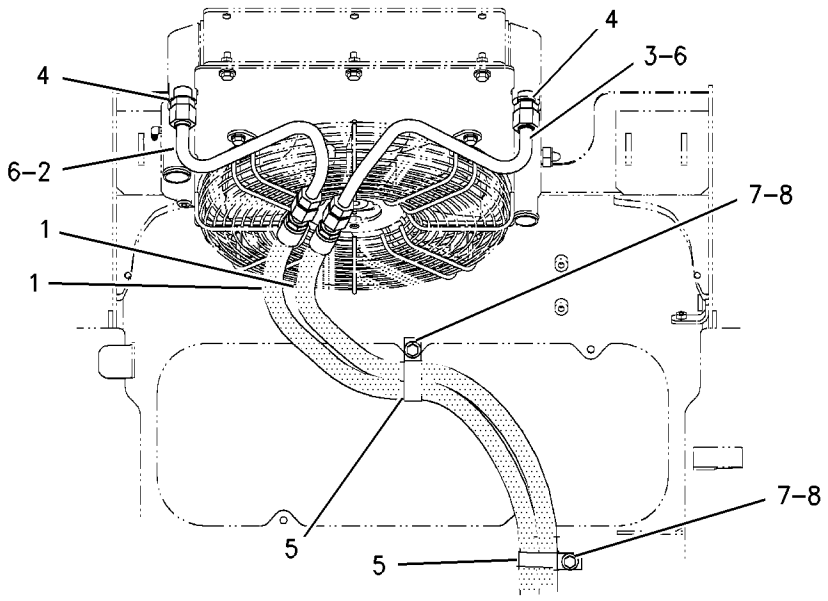

GRAPHIC #1 g00862646

MEMORANDA

HYDRAULIC SYSTEM

190-8060 LINES GP-LIFT CYLINDER

S/N: CED1-UP; FDG1-UP
PART OF 190-8050 HYDRAULIC AR
AN ATTACHMENT

SMCS-5057, 5102 **i01794943**

NOTE	REF NO	GRAPHIC REF	PART NUMBER	QTY	PART NAME 1 2 3 4 5 6 (PRODUCT LEVEL)	SEE PAGE
	1	1	**4B-4863**	2	WASHER (4.7X11X1.2MM THK)	
	2	1	**142-8837**	2	BLOCK	
	3	1	**142-8838**	2	PLATE	
I	4	1	**190-8074**	2	HOSE AS	
I	5	1	**190-8075**	2	HOSE AS	
	6	1	**190-8076**	1	TUBE AS	
	7	1	**190-8077**	1	TUBE AS	
	8	1	**190-8078**	1	TUBE AS	
	9	1	**190-8079**	1	TUBE AS	
	10	1	**190-8082**	1	TUBE AS	
	11	1	**190-8083**	1	TUBE AS	
	12	1	**191-9783**	1	VALVE GP-BALL	
	13	1	*148-8336*	1	CONNECTOR AS	
		1	**3J-1907**	1	SEAL-O-RING	
		1	**6V-8397**	1	SEAL-O-RING	
		1	**6V-8636**	1	CONNECTOR	
	14	1	*148-8341*	2	CONNECTOR GP	
					(EACH INCLUDES)	
		1	**3D-2824**	1	SEAL-O-RING	
		1	**6V-8713**	1	CONNECTOR	
		1	**7J-9108**	1	SEAL-O-RING	
	15	1	**4P-7581**	1	CLIP	
M	16	1	**6V-5698**	2	SCREW-BUTTON HEAD (M4X0.7X10MM)	
	17	1	**6V-8397**	1	SEAL-O-RING	
	18	1	**6V-8398**	8	SEAL-O-RING	
	19	1	**7J-9108**	2	SEAL-O-RING	
	20	1	**8T-4121**	4	WASHER-HARD (11X21X2.5MM THK)	
M	21	1	**8T-4136**	4	BOLT (M10X1.5X25MM)	
M	22	1	**8T-4189**	4	BOLT (M8X1.25X20MM)	
	23	1	**8T-4224**	3	WASHER-HARD (8.8X16X2MM THK)	
	24	1	**9R-1004**	4	CLIP (TAB)	
	25	1	**9R-1005**	4	CLIP (SLOT)	

I-SEE HOSE FABRICATION GUIDE
M-METRIC PART

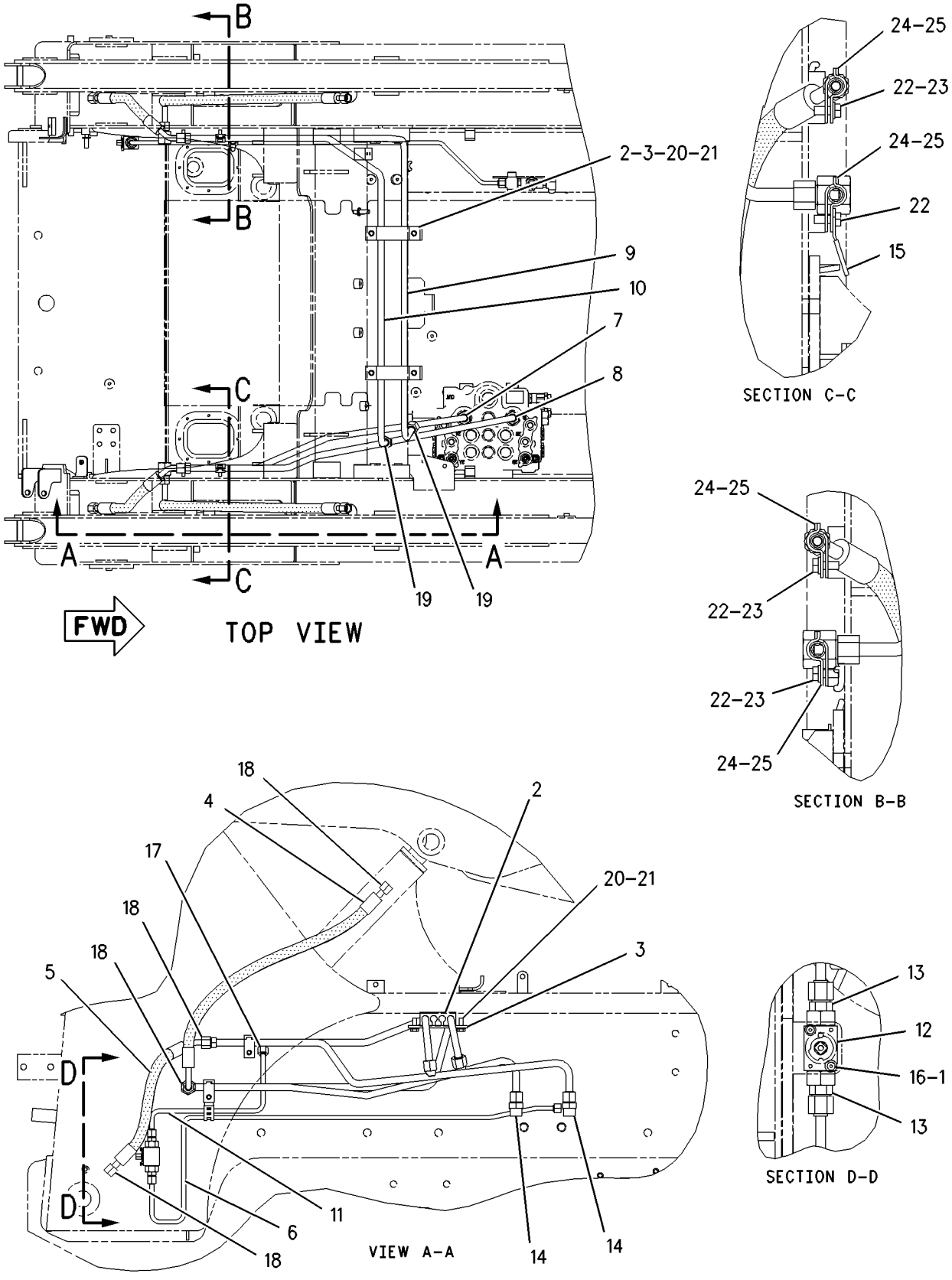

GRAPHIC #1

g00920308

HYDRAULIC SYSTEM

190-8061 LINES GP-LIFT CYLINDER

S/N: CED1-UP; FDG1-UP
PART OF 190-8051 HYDRAULIC AR
AN ATTACHMENT

SMCS-5057, 5102 **i01794992**

NOTE	REF NO	GRAPHIC REF	PART NUMBER	QTY	PART NAME 1 2 3 4 5 6 (PRODUCT LEVEL)	SEE PAGE
	1	1	**4B-4863**	2	WASHER (4.7X11X1.2MM THK)	
	2	1	**142-8837**	2	BLOCK	
	3	1	**142-8838**	2	PLATE	
	4	1	**190-8058**	1	TUBE AS	
	5	1	**190-8059**	1	TUBE AS	
	6	1	**190-8062**	1	TUBE AS	
I	7	1	**190-8074**	2	HOSE AS	
I	8	1	**190-8075**	2	HOSE AS	
	9	1	**190-8076**	1	TUBE AS	
	10	1	**190-8078**	1	TUBE AS	
	11	1	**190-8079**	1	TUBE AS	
	12	1	**190-8082**	1	TUBE AS	
	13	1	**190-8083**	1	TUBE AS	
	14	1	**191-9783**	1	VALVE GP-BALL	
	15	1	*148-8315*	2	CONNECTOR GP	
					(EACH INCLUDES)	
		1	**2M-9780**	1	SEAL-O-RING	
		1	**6V-8642**	1	CONNECTOR	
		1	**7J-9108**	1	SEAL-O-RING	
	16	1	*148-8336*	1	CONNECTOR AS	
		1	**3J-1907**	1	SEAL-O-RING	
		1	**6V-8397**	1	SEAL-O-RING	
		1	**6V-8636**	1	CONNECTOR	
	17	1	*148-8341*	2	CONNECTOR GP	
					(EACH INCLUDES)	
		1	**3D-2824**	1	SEAL-O-RING	
		1	**6V-8713**	1	CONNECTOR	
		1	**7J-9108**	1	SEAL-O-RING	
	18	1	**4P-7581**	1	CLIP	
M	19	1	**6V-5698**	2	SCREW-BUTTON HEAD (M4X0.7X10MM)	
	20	1	**6V-8397**	1	SEAL-O-RING	
	21	1	**6V-8398**	8	SEAL-O-RING	
	22	1	**7J-9108**	2	SEAL-O-RING	
	23	1	**8T-4121**	4	WASHER-HARD (11X21X2.5MM THK)	
M	24	1	**8T-4136**	4	BOLT (M10X1.5X25MM)	
M	25	1	**8T-4189**	4	BOLT (M8X1.25X20MM)	
	26	1	**8T-4224**	3	WASHER-HARD (8.8X16X2MM THK)	
	27	1	**9R-1004**	4	CLIP (TAB)	
	28	1	**9R-1005**	4	CLIP (SLOT)	

I-SEE HOSE FABRICATION GUIDE
M-METRIC PART

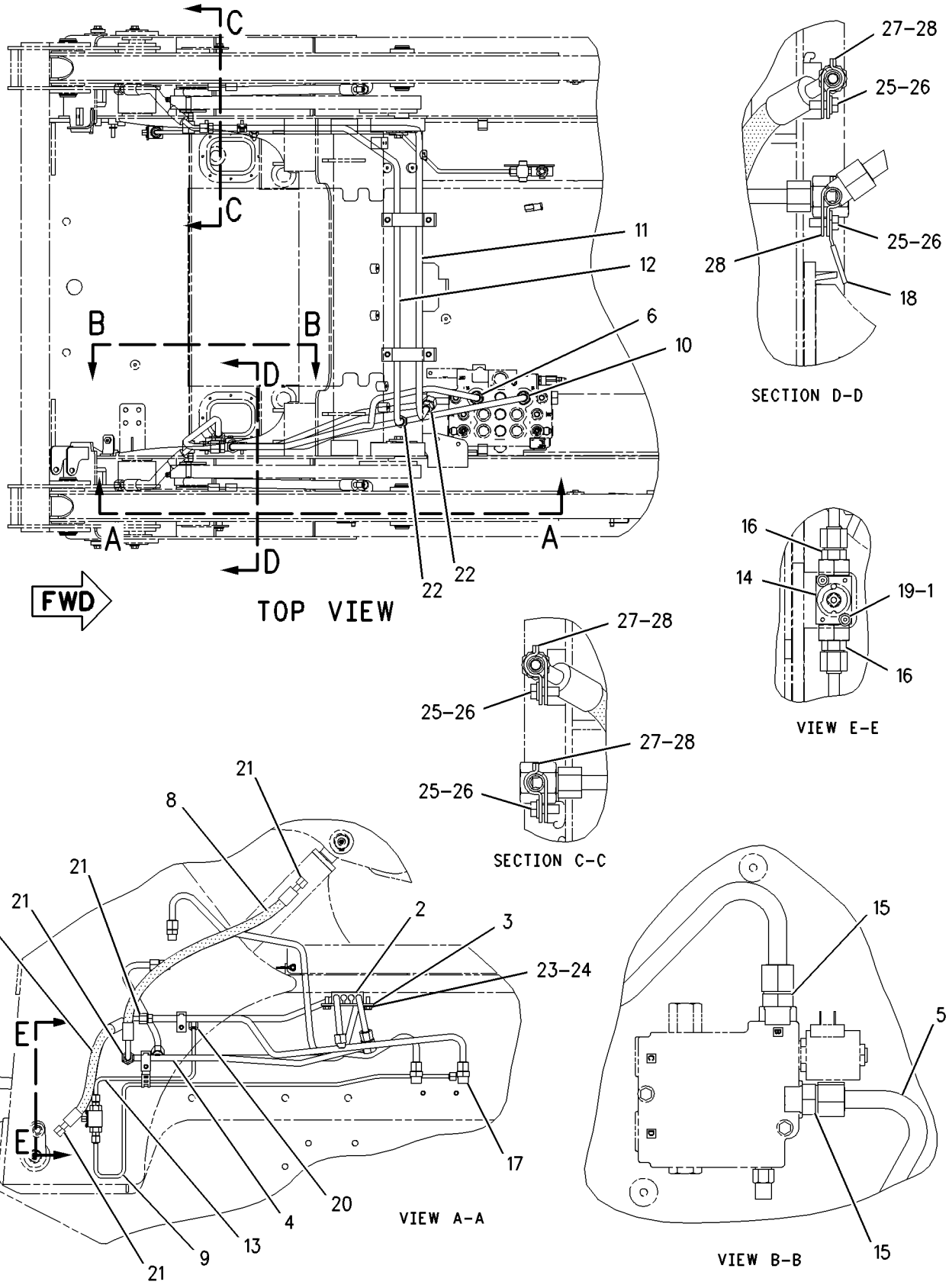

GRAPHIC #1

g00920218

HYDRAULIC SYSTEM

193-0454 LINES GP-LIFT CYLINDER

S/N: 4YZ4000-UP; 5SZ4000-UP
PART OF 195-6767 HYDRAULIC AR
AN ATTACHMENT

SMCS-5057, 5102 **i01795043**

NOTE	REF NO	GRAPHIC REF	PART NUMBER	QTY	PART NAME 1 2 3 4 5 6 (PRODUCT LEVEL)	SEE PAGE
	1	1	**6V-3582**	2	CLAMP-HOSE	
	2	1	**142-8837**	4	BLOCK	
	3	1	**142-8838**	4	PLATE	
	4	1	**142-8997**	2	BLOCK	
	5	1	**154-4064**	1	TUBE AS	
	6	1	**158-6680**	1	TUBE AS	
	7	1	**168-7562**	1	TUBE AS	
	8	1	**177-3406**	1	TUBE AS	
	9	1	**177-3407**	1	TUBE AS	
I	10	1	**187-1268**	4	HOSE AS	
	11	1	**187-1273**	2	TUBE AS	
	12	1	**187-1274**	1	TUBE AS	
	13	1	**187-1275**	1	TUBE AS	
	14	1	**191-9783**	1	VALVE GP-BALL	
	15	1	**193-0456**	1	TUBE AS	
	16	1	**193-0467**	1	TUBE AS	
	17	1	**193-8319**	1	TUBE AS	
	18	1	*148-8315*	2	CONNECTOR GP	
					(EACH INCLUDES)	
		1	**2M-9780**	1	SEAL-O-RING	
		1	**6V-8642**	1	CONNECTOR	
		1	**7J-9108**	1	SEAL-O-RING	
	19	1	*148-8336*	2	CONNECTOR AS	
					(EACH INCLUDES)	
		1	**3J-1907**	1	SEAL-O-RING	
		1	**6V-8397**	1	SEAL-O-RING	
		1	**6V-8636**	1	CONNECTOR	
	20	1	*148-8341*	2	CONNECTOR GP	
					(EACH INCLUDES)	
		1	**3D-2824**	1	SEAL-O-RING	
		1	**6V-8713**	1	CONNECTOR	
		1	**7J-9108**	1	SEAL-O-RING	
	21	1	**4B-4863**	2	WASHER (4.7X11X1.2MM THK)	
M	22	1	**6V-5698**	2	SCREW-BUTTON HEAD (M4X0.7X10MM)	
	23	1	**6V-8398**	13	SEAL-O-RING	
	24	1	**7J-9108**	3	SEAL-O-RING	
	25	1	**8T-4121**	8	WASHER-HARD (11X21X2.5MM THK)	
M	26	1	**8T-4136**	8	BOLT (M10X1.5X25MM)	

I-SEE HOSE FABRICATION GUIDE
M-METRIC PART

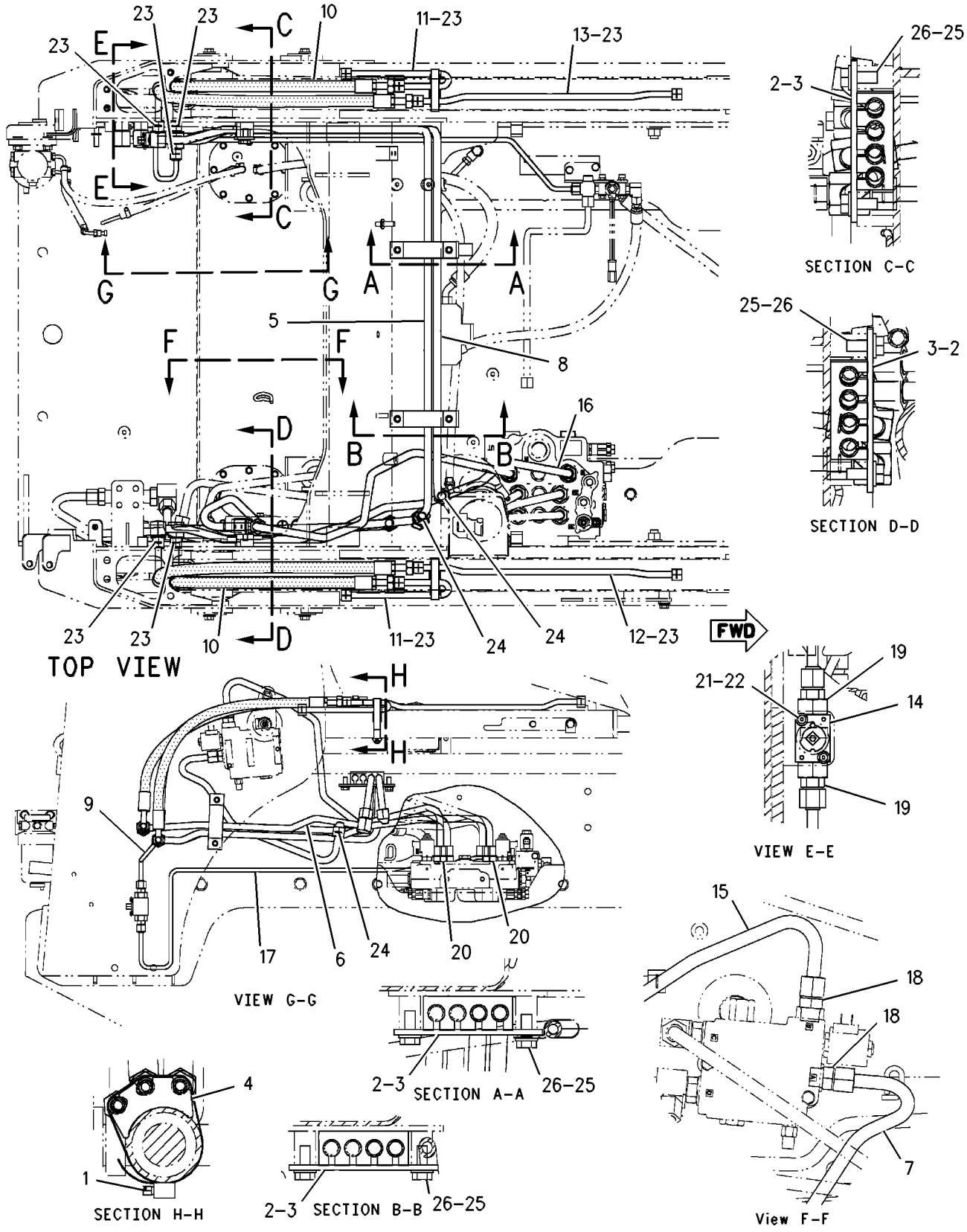

GRAPHIC #1

g00918961

HYDRAULIC SYSTEM

193-0465 LINES GP-LIFT CYLINDER

S/N: 4YZ4000-UP; 5SZ4000-UP
PART OF 195-6766 HYDRAULIC AR
AN ATTACHMENT

SMCS-5057, 5102 **i01795059**

NOTE	REF NO	GRAPHIC REF	PART NUMBER	QTY	PART NAME 1 2 3 4 5 6 (PRODUCT LEVEL)	SEE PAGE
	1	1	**6V-3582**	2	CLAMP-HOSE	
	2	1	**142-8837**	4	BLOCK	
	3	1	**142-8838**	4	PLATE	
	4	1	**142-8997**	2	BLOCK	
	5	1	**154-4064**	1	TUBE AS	
	6	1	**177-3406**	1	TUBE AS	
	7	1	**177-3407**	1	TUBE AS	
I	8	1	**187-1268**	4	HOSE AS	
	9	1	**187-1273**	2	TUBE AS	
	10	1	**187-1274**	1	TUBE AS	
	11	1	**187-1275**	1	TUBE AS	
	12	1	**191-9783**	1	VALVE GP-BALL	
	13	1	**193-0466**	1	TUBE AS	
	14	1	**193-0467**	1	TUBE AS	
	15	1	**193-8319**	1	TUBE AS	
	16	1	*148-8336*	2	CONNECTOR AS	
					(EACH INCLUDES)	
		1	**3J-1907**	1	SEAL-O-RING	
		1	**6V-8397**	1	SEAL-O-RING	
		1	**6V-8636**	1	CONNECTOR	
	17	1	*148-8341*	2	CONNECTOR GP	
					(EACH INCLUDES)	
		1	**3D-2824**	1	SEAL-O-RING	
		1	**6V-8713**	1	CONNECTOR	
		1	**7J-9108**	1	SEAL-O-RING	
		1	**4B-4863**	2	WASHER (4.7X11X1.2MM THK)	
	18	1	*148-8378*	1	ELBOW GP	
		1	**3J-1907**	1	SEAL-O-RING	
		1	**6V-8724**	1	ELBOW	
M	19	1	**6V-5698**	2	SCREW-BUTTON HEAD (M4X0.7X10MM)	
	20	1	**6V-8398**	13	SEAL-O-RING	
	21	1	**7J-9108**	2	SEAL-O-RING	
	22	1	**8T-4121**	8	WASHER-HARD (11X21X2.5MM THK)	
M	23	1	**8T-4136**	8	BOLT (M10X1.5X25MM)	

I-SEE HOSE FABRICATION GUIDE
M-METRIC PART

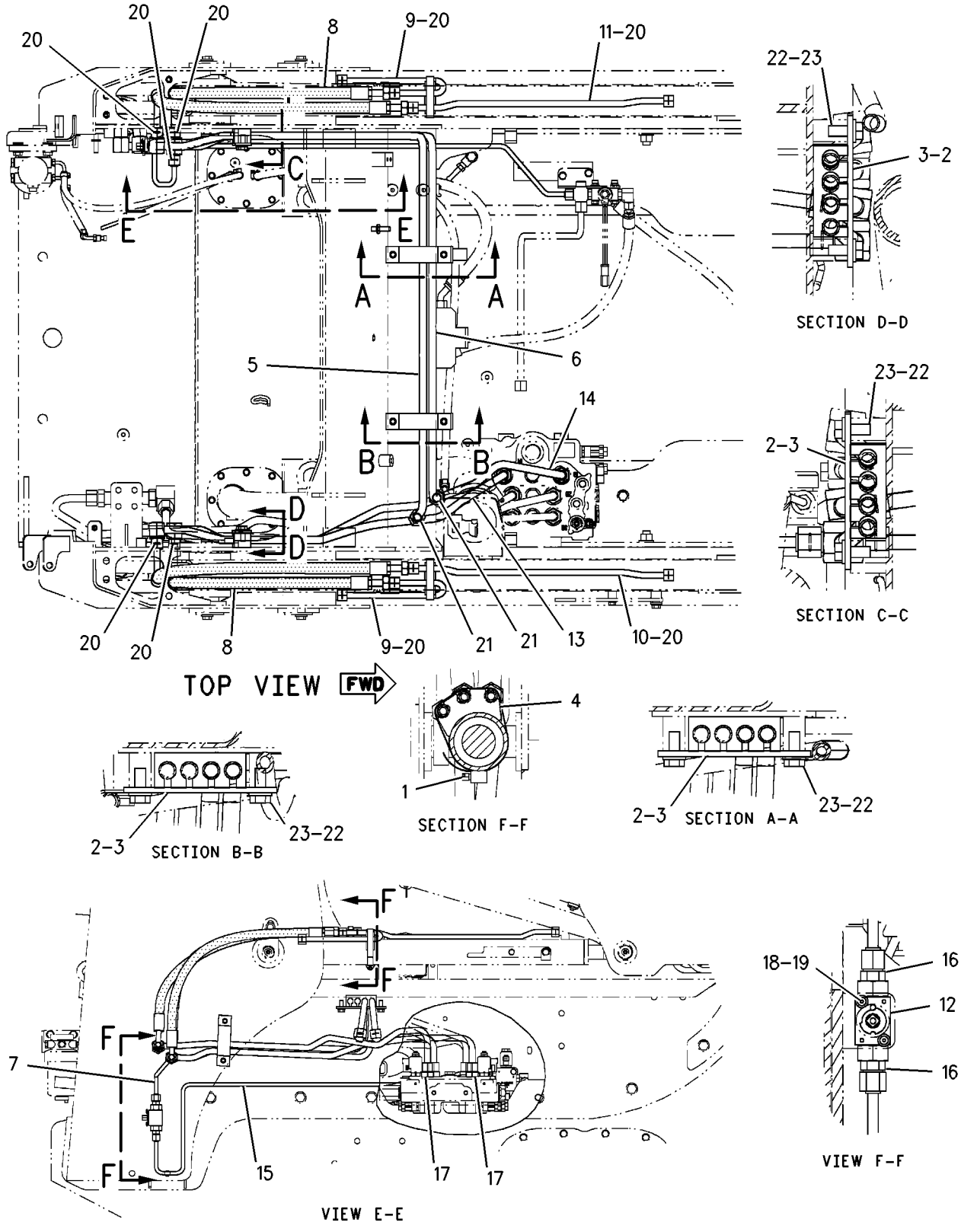

GRAPHIC #1

g00918978

HYDRAULIC SYSTEM

190-8114 LINES GP-PILOT

S/N: CED1-UP; FDG1-UP

PART OF 190-7952, 195-6705 HYDRAULIC AR

SMCS-5057, 5059 **i01795087**

NOTE	REF NO	GRAPHIC REF	PART NUMBER	QTY	PART NAME 1 2 3 4 5 6 (PRODUCT LEVEL)	SEE PAGE
	1	1	**123-4750**	1	VALVE-CHECK	
I	2	1	**142-9216**	1	HOSE AS	
	3	1	**142-9220**	1	BLOCK	
I	4	1	**144-7907**	2	HOSE AS	
I	5	1	**190-7453**	1	HOSE AS	
I	6	1	**193-8312**	2	HOSE AS	
I	7	1	**193-8313**	1	HOSE AS	
	8	1	**195-6768**	1	SCREEN	
	9	1	**195-6769**	1	WASHER	
	10	1	*148-8325*	10	CONNECTOR GP	
					(EACH INCLUDES)	
		1	**3J-1907**	1	SEAL-O-RING	
		1	**4J-5477**	1	SEAL-O-RING	
		1	**6V-8641**	1	CONNECTOR	
	11	1	*148-8435*	1	TEE GP	
		1	**3J-1907**	1	SEAL-O-RING	
		1	**6V-8397**	2	SEAL-O-RING	
		1	**6V-8781**	1	TEE-FACE SEAL	
	12	1	*150-4027*	1	FITTING GP	
		1	**3E-2310**	1	TEE	
		1	**3J-1907**	1	SEAL-O-RING	
		1	**6V-8397**	1	SEAL-O-RING	

I-SEE HOSE FABRICATION GUIDE

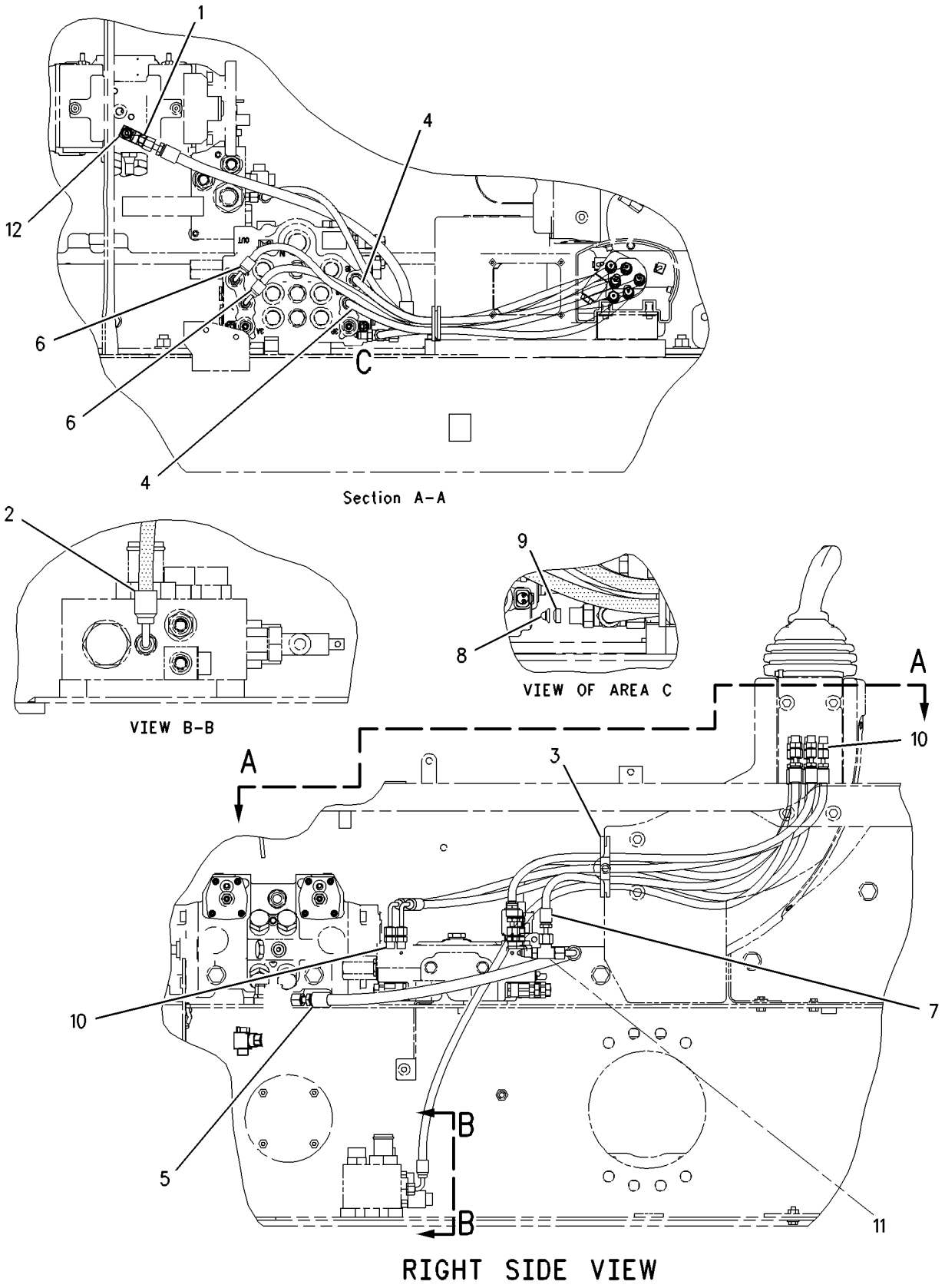

GRAPHIC #1 g00918996

HYDRAULIC SYSTEM

193-0463 LINES GP-PILOT

S/N: 4YZ4000-UP; 5SZ4000-UP

PART OF 195-6762, 195-6764 HYDRAULIC AR

SMCS-5057, 5059 **i01795104**

NOTE	REF NO	GRAPHIC REF	PART NUMBER	QTY	PART NAME 1 2 3 4 5 6 (PRODUCT LEVEL)	SEE PAGE
I	1	1	**142-9216**	1	HOSE AS	
	2	1	**142-9220**	1	BLOCK	
I	3	1	**144-7907**	2	HOSE AS	
I	4	1	**157-1478**	1	HOSE AS	
	5	1	**123-4750**	1	VALVE-CHECK	
I	6	1	**193-8312**	2	HOSE AS	
I	7	1	**193-8313**	1	HOSE AS	
	8	1	**195-6768**	1	SCREEN	
	9	1	**195-6769**	1	WASHER	
	10	1	*148-8325*	10	CONNECTOR GP	
					(EACH INCLUDES)	
		1	**3J-1907**	1	SEAL-O-RING	
		1	**4J-5477**	1	SEAL-O-RING	
		1	**6V-8641**	1	CONNECTOR	
	11	1	*148-8435*	1	TEE GP	
		1	**3J-1907**	1	SEAL-O-RING	
		1	**6V-8397**	2	SEAL-O-RING	
		1	**6V-8781**	1	TEE-FACE SEAL	
	12	1	*150-4027*	1	FITTING GP	
		1	**3E-2310**	1	TEE	
		1	**3J-1907**	1	SEAL-O-RING	
		1	**6V-8397**	1	SEAL-O-RING	

I-SEE HOSE FABRICATION GUIDE

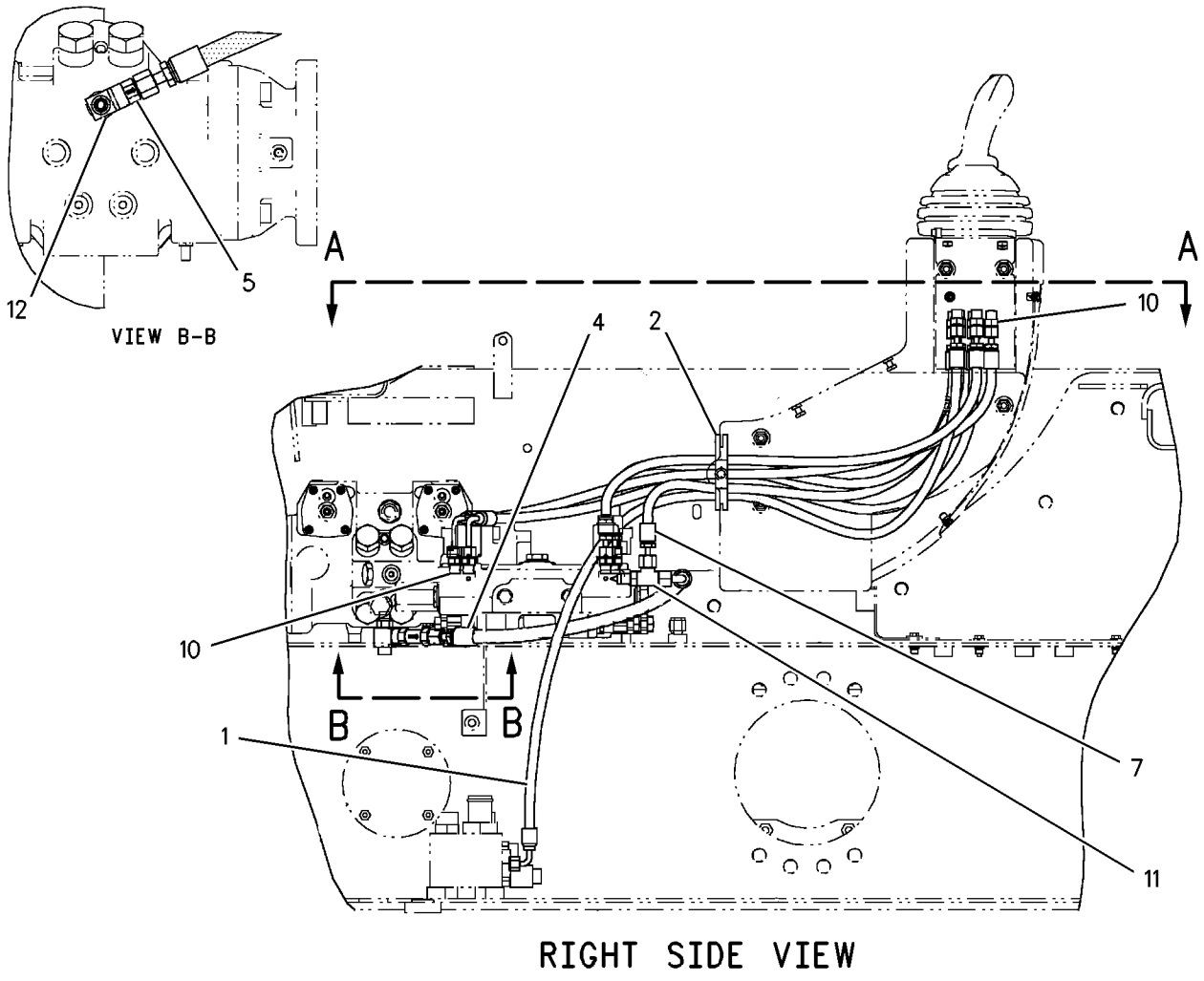

GRAPHIC #1

g00919013

HYDRAULIC SYSTEM

193-8307 LINES GP-PILOT

S/N: CED1-UP; FDG1-UP; 4YZ4000-UP; 5SZ4000-UP

PART OF 190-7952, 195-6705, 195-6762, 195-6764 HYDRAULIC AR

SMCS-5057, 5059 **i01795116**

NOTE	REF NO	GRAPHIC REF	PART NUMBER	QTY	PART NAME 1 2 3 4 5 6 (PRODUCT LEVEL)	SEE PAGE
	1	1	**6V-0852**	1	CAP-DUST	
	2	1	*148-8423*	1	FITTING GP	
		1	**3J-1907**	1	SEAL-O-RING	
		1	**4J-5477**	1	SEAL-O-RING	
		1	**8T-3311**	1	TEE	
	3	1	*164-5567*	1	FITTING GP	
		1	**3J-1907**	1	SEAL-O-RING	
		1	**6V-3965**	1	FITTING AS	
	4	1	**190-8087**	1	HOSE AS	
I	5	1	**190-8119**	1	HOSE AS	
	6	1	**193-8392**	2	HOSE AS	
	7	1	**193-8393**	3	HOSE AS	
	8	1	*148-8316*	2	CONNECTOR GP	
					(EACH INCLUDES)	
		1	**3J-7354**	1	SEAL-O-RING	
		1	**4J-5477**	1	SEAL-O-RING	
		1	**6V-8647**	1	CONNECTOR	
	9	1	*148-8325*	5	CONNECTOR GP	
					(EACH INCLUDES)	
		1	**3J-1907**	1	SEAL-O-RING	
		1	**4J-5477**	1	SEAL-O-RING	
		1	**6V-8641**	1	CONNECTOR	
	10	1	*148-8369*	2	ELBOW GP	
					(EACH INCLUDES)	
		1	**3J-7354**	1	SEAL-O-RING	
		1	**4J-5477**	1	SEAL-O-RING	
		1	**6V-8628**	1	ELBOW	
	11	1	*150-4043*	1	CONNECTOR GP	
		1	**3J-1907**	1	SEAL-O-RING	
		1	**6V-8398**	1	SEAL-O-RING	
		1	**6V-9873**	1	CONNECTOR-SEAL	
	12	1	**8T-4121**	2	WASHER-HARD (11X21X2.5MM THK)	
M	13	1	**8T-4133**	1	NUT (M10X1.5 THD)	
M	14	1	**8T-4195**	1	BOLT (M10X1.5X30MM)	
	15	1	**9D-1829**	1	CLIP	

I-SEE HOSE FABRICATION GUIDE
M-METRIC PART

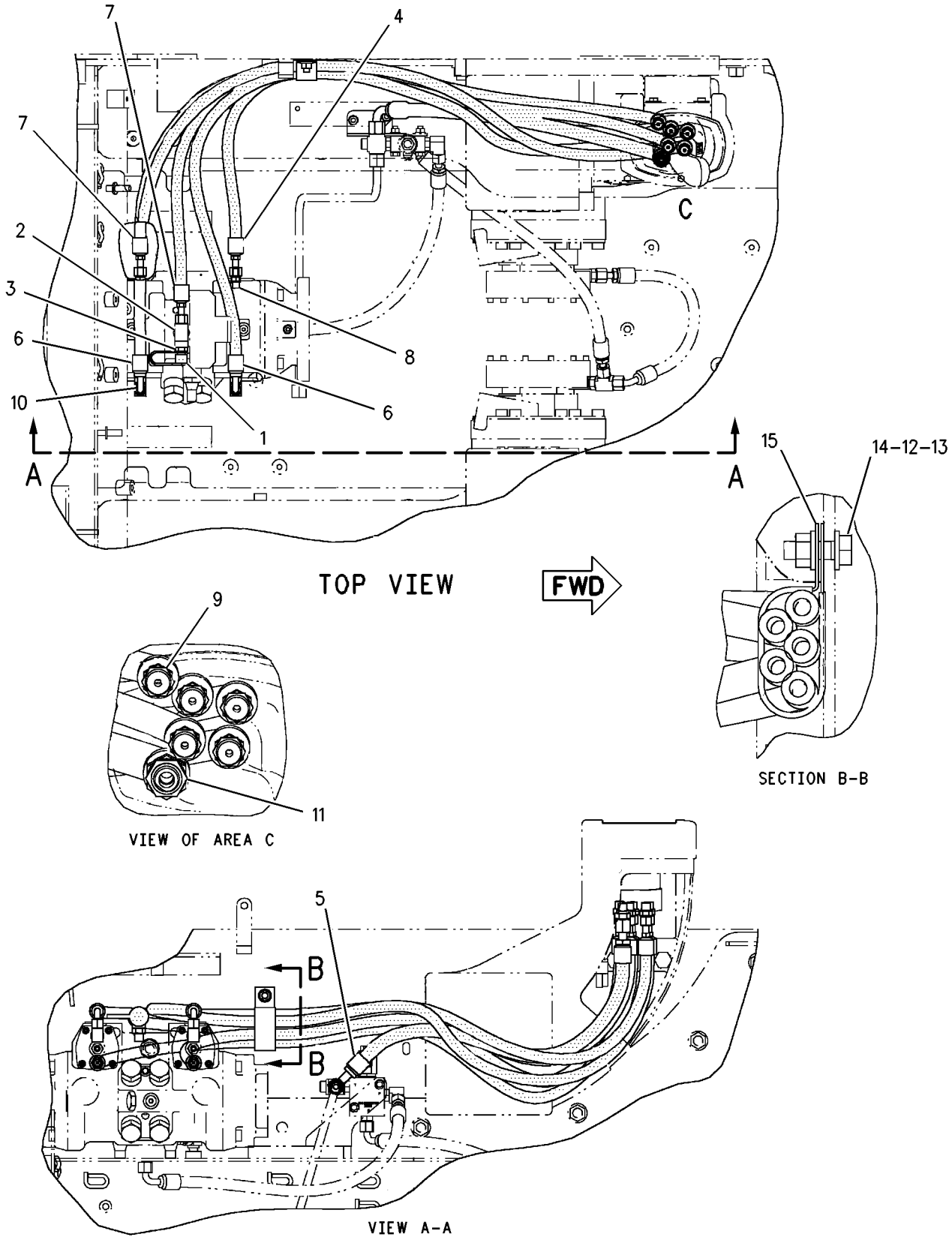

GRAPHIC #1 g00919024

HYDRAULIC SYSTEM

190-8115 LINES GP-PUMP

S/N: CED1-UP; FDG1-UP
WORK TOOL
PART OF 190-7952, 195-6705 HYDRAULIC AR

SMCS-5057 **i01698115**

NOTE	REF NO	GRAPHIC REF	PART NUMBER	QTY	PART NAME 1 2 3 4 5 6 (PRODUCT LEVEL)	SEE PAGE
	1	1	**2S-3440**	2	CLAMP-HOSE	
	2	1	**5P-2230**	1	CLAMP-HOSE	
	3	1	**6V-0852**	1	CAP-DUST	
	4	1	**9U-6994**	1	ADAPTER	
	5	1	**154-4049**	1	HOSE	
	6	1	**159-5740**	1	HOSE	
	7	1	**164-5567**	1	FITTING GP (QUICK DISCONNECT)	
		1	**3J-1907**	1	SEAL-O-RING	
		1	**6V-3965**	1	FITTING AS	
	8	1	**180-3007**	2	CLAMP-HOSE	
	9	1	**193-0464**	1	TUBE	
	10	1	**193-8308**	1	ADAPTER	
I	11	1	**193-8321**	1	HOSE AS	
	12	1	**193-8322**	1	HOSE	
	13	1	*148-8360*	1	ELBOW GP	
		1	**6V-9182**	1	ELBOW	
		1	**6V-9746**	1	SEAL-O-RING	
		1	**7M-8485**	1	SEAL-O-RING	
	14	1	**1P-4578**	2	FLANGE-HALF	
	15	1	**4J-0522**	1	SEAL-O-RING	
	16	1	**4J-5267**	1	SEAL-O-RING	
	17	1	**5P-0597**	1	CLAMP-HOSE	
	18	1	**8C-3205**	2	FLANGE-HALF	
	19	1	**8T-4121**	8	WASHER-HARD (11X21X2.5MM THK)	
M	20	1	**8T-4196**	8	BOLT (M10X1.5X35MM)	

I-SEE HOSE FABRICATION GUIDE
M-METRIC PART

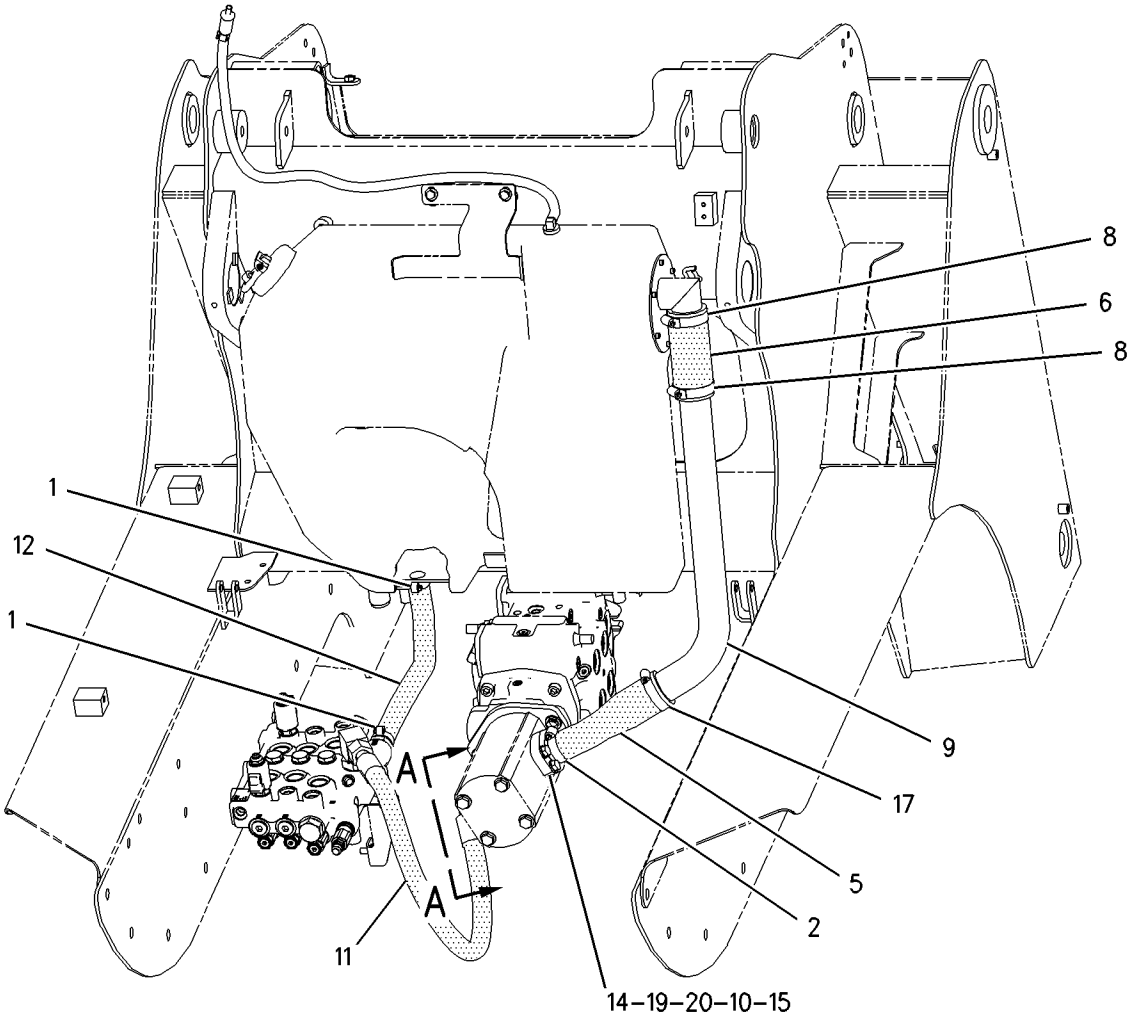

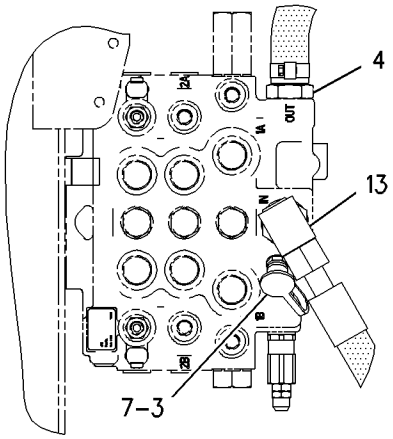

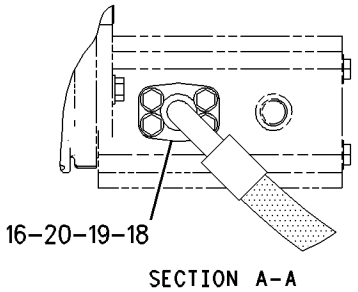

GRAPHIC #1 g00874795

HYDRAULIC SYSTEM

193-8320 LINES GP-PUMP

S/N: 4YZ4000-UP; 5SZ4000-UP

PART OF 195-6762, 195-6764 HYDRAULIC AR

SMCS-5057 **i01795133**

NOTE	REF NO	GRAPHIC REF	PART NUMBER	QTY	PART NAME 1 2 3 4 5 6 (PRODUCT LEVEL)	SEE PAGE
	1	1	**2S-3440**	2	CLAMP-HOSE	
	2	1	**5P-2230**	1	CLAMP-HOSE	
	3	1	**6V-0852**	1	CAP-DUST	
	4	1	**9U-6994**	1	ADAPTER	
	5	1	**159-5740**	1	HOSE	
	6	1	**164-5567**	1	FITTING GP	
	7	1	**180-3007**	2	CLAMP-HOSE	
	8	1	**193-0464**	1	TUBE	
	9	1	**193-8308**	1	ADAPTER	
I	10	1	**193-8321**	1	HOSE AS	
	11	1	**193-8322**	1	HOSE	
	12	1	**193-8323**	1	HOSE	
	13	1	*148-8360*	1	ELBOW GP	
		1	**6V-9182**	1	ELBOW	
		1	**6V-9746**	1	SEAL-O-RING	
	14	1	**1P-4578**	2	FLANGE-HALF	
	15	1	**4J-0522**	1	SEAL-O-RING	
	16	1	**4J-5267**	1	SEAL-O-RING	
	17	1	**5P-0597**	1	CLAMP-HOSE	
	18	1	**8C-3205**	2	FLANGE-HALF	
	19	1	**8T-4121**	8	WASHER-HARD (11X21X2.5MM THK)	
M	20	1	**8T-4196**	8	BOLT (M10X1.5X35MM)	

I-SEE HOSE FABRICATION GUIDE
M-METRIC PART

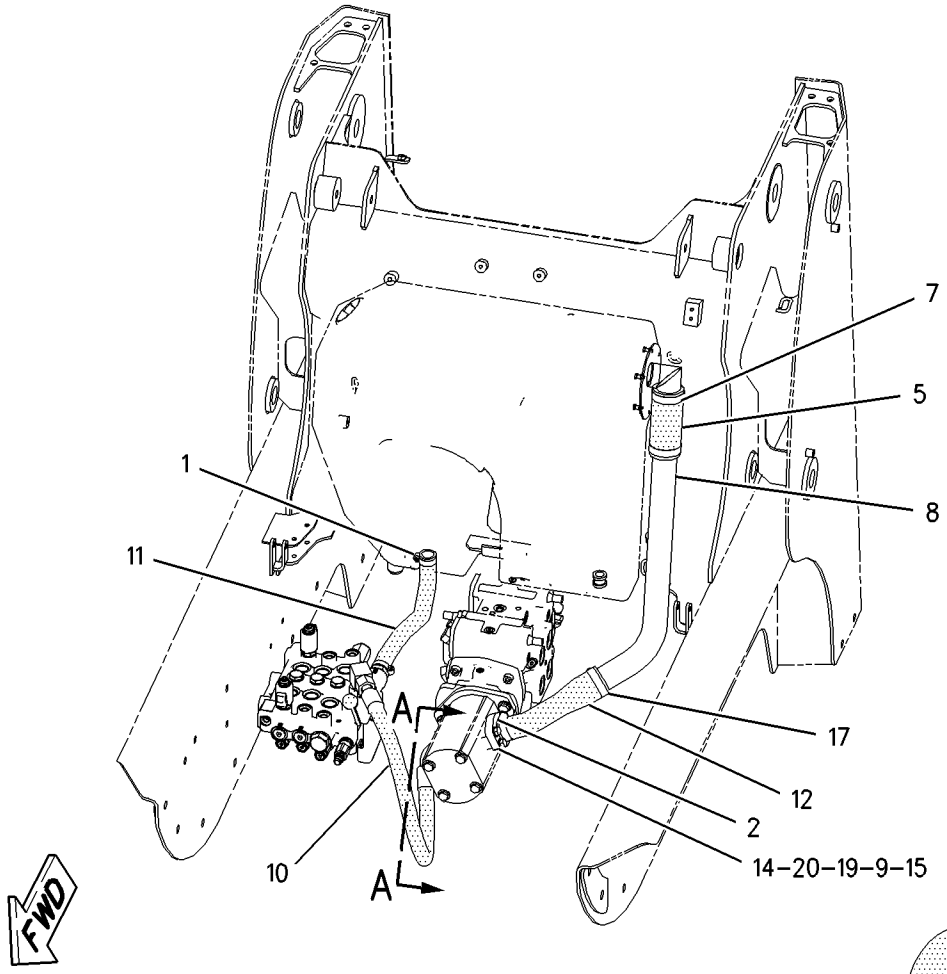

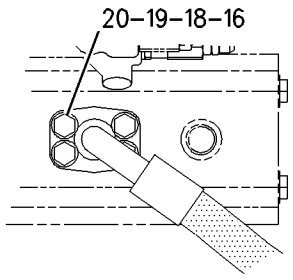

VIEW A-A

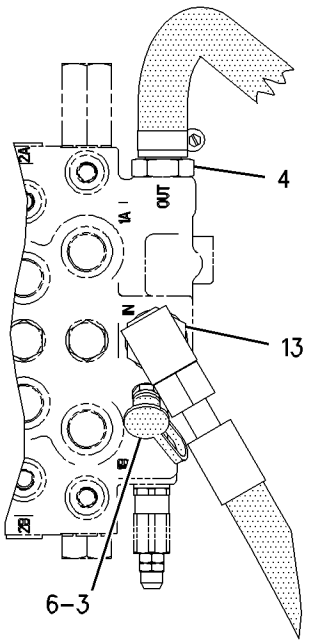

VALVE TOP VIEW

GRAPHIC #1 g00919033

HYDRAULIC SYSTEM

190-8070 LINES GP-TILT CYLINDER

S/N: CED1-UP; FDG1-UP
PART OF 190-8050 HYDRAULIC AR
AN ATTACHMENT

SMCS-5057, 5104 **i01795147**

NOTE	REF NO	GRAPHIC REF	PART NUMBER	QTY	PART NAME 1 2 3 4 5 6 (PRODUCT LEVEL)	SEE PAGE
	1	1	**102-8703**	2	PLATE	
I	2	1	**142-9234**	4	HOSE AS	
	3	1	**190-8067**	1	TUBE AS	
	4	1	**190-8068**	1	TUBE AS	
	5	1	**190-8069**	1	TUBE AS	
	6	1	**190-8072**	1	TUBE AS	
I	7	1	**190-8073**	2	HOSE AS	
	8	1	**195-6750**	4	CLAMP-DOUBLE	
	9	1	**220-6381**	2	BOLT (M8X12.5MM)	
	10	1	*148-8341*	2	CONNECTOR GP	
					(EACH INCLUDES)	
		1	**3D-2824**	1	SEAL-O-RING	
		1	**6V-8713**	1	CONNECTOR	
		1	**7J-9108**	1	SEAL-O-RING	
	11	1	**5P-7464**	4	CLIP (SLOT)	
	12	1	**5P-7465**	4	CLIP (TAB)	
	13	1	**6V-7359**	4	GROMMET	
	14	1	**6V-8398**	8	SEAL-O-RING	
	15	1	**7J-9108**	4	SEAL-O-RING	
	16	1	**8T-4121**	2	WASHER-HARD (11X21X2.5MM THK)	
M	17	1	**8T-4136**	2	BOLT (M10X1.5X25MM)	
M	18	1	**8T-4139**	2	BOLT (M12X1.75X30MM)	
M	19	1	**8T-4189**	1	BOLT (M8X1.25X20MM)	
M	20	1	**8T-4194**	2	BOLT (M12X1.75X50MM)	
	21	1	**8T-4223**	6	WASHER-HARD (13.5X25.5X3MM THK)	
	22	1	**8T-4224**	3	WASHER-HARD (8.8X16X2MM THK)	
M	23	1	**8T-4244**	2	NUT (M12X1.75 THD)	
	24	1	**9R-1005**	3	CLIP (SLOT)	
	25	1	**9R-7802**	3	CLIP (SLOT)	
	26	1	**9R-7803**	3	CLIP (TAB)	

I-SEE HOSE FABRICATION GUIDE
M-METRIC PART

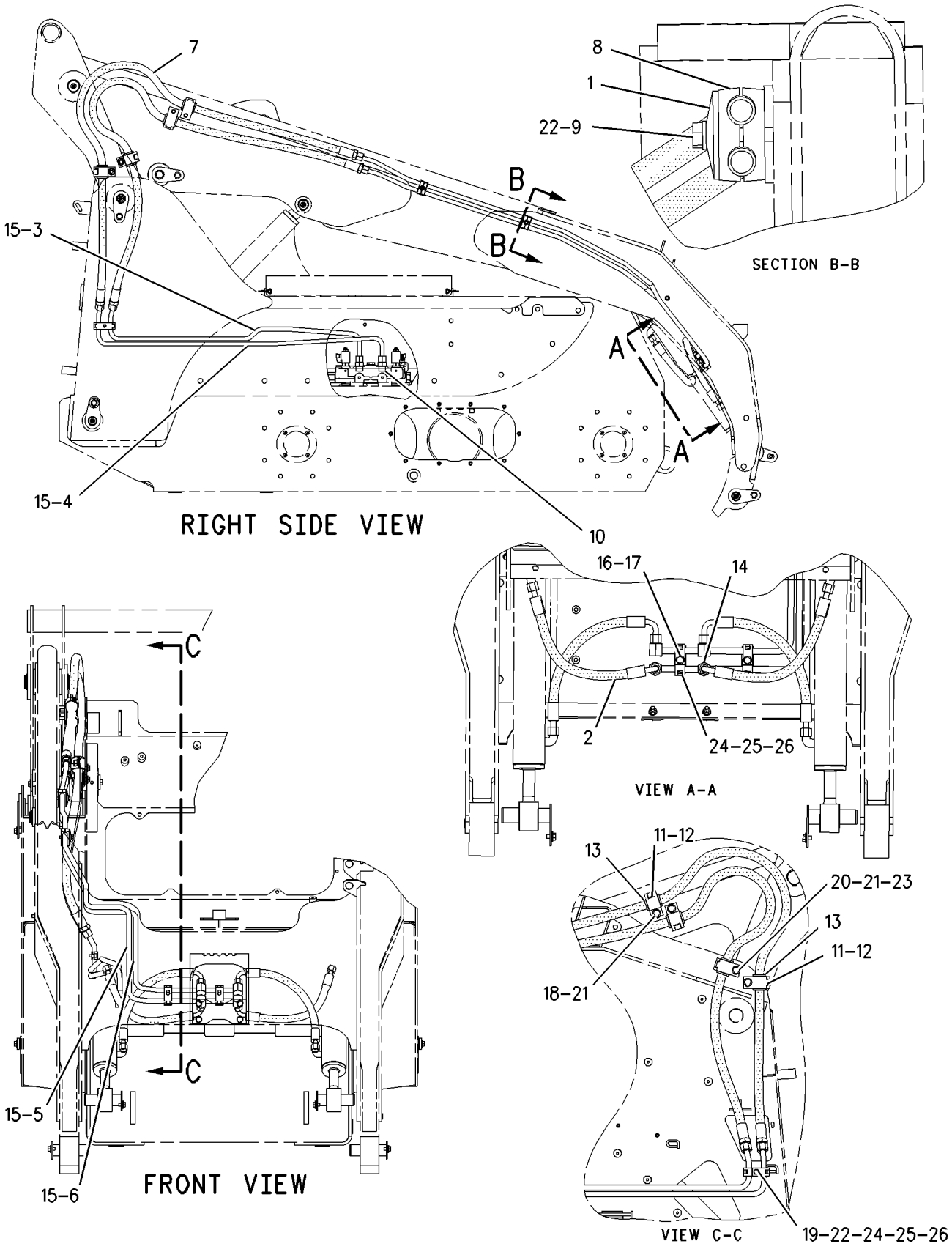

GRAPHIC #1

g00920329

HYDRAULIC SYSTEM

190-8071 LINES GP-TILT CYLINDER

S/N: CED1-UP; FDG1-UP
PART OF 190-8051 HYDRAULIC AR
AN ATTACHMENT

SMCS-5057, 5104 **i01797913**

NOTE	REF NO	GRAPHIC REF	PART NUMBER	QTY	PART NAME 1 2 3 4 5 6 (PRODUCT LEVEL)	SEE PAGE
	1	1	**102-8703**	2	PLATE	
I	2	2	**142-9234**	4	HOSE AS	
	3	1	**190-8063**	1	TUBE AS	
	4	1	**190-8064**	1	TUBE AS	
	5	2	**190-8065**	2	TUBE AS	
	6	1	**190-8069**	1	TUBE AS	
	7	1	**190-8072**	1	TUBE AS	
I	8	1	**190-8073**	2	HOSE AS	
	9	1	**195-6750**	4	CLAMP-DOUBLE	
	10	1	**220-6381**	2	BOLT (M8X12.5MM)	
	11	2	*148-8315*	2	CONNECTOR GP	
					(EACH INCLUDES)	
		2	**2M-9780**	1	SEAL-O-RING	
		2	**6V-8642**	1	CONNECTOR	
		2	**7J-9108**	1	SEAL-O-RING	
	12	1	*148-8341*	2	CONNECTOR GP	
					(EACH INCLUDES)	
		1	**3D-2824**	1	SEAL-O-RING	
		1	**6V-8713**	1	CONNECTOR	
		1	**7J-9108**	1	SEAL-O-RING	
	13	2	**5P-7464**	4	CLIP (SLOT)	
	14	2	**5P-7465**	4	CLIP (TAB)	
	15	2	**6V-7359**	4	GROMMET	
	16	2	**6V-8398**	8	SEAL-O-RING	
	17	1	**7J-9108**	6	SEAL-O-RING	
	18	2	**8T-4121**	2	WASHER-HARD (11X21X2.5MM THK)	
M	19	2	**8T-4136**	2	BOLT (M10X1.5X25MM)	
M	20	2	**8T-4139**	2	BOLT (M12X1.75X30MM)	
M	21	2	**8T-4189**	1	BOLT (M8X1.25X20MM)	
M	22	2	**8T-4194**	2	BOLT (M12X1.75X50MM)	
	23	2	**8T-4223**	6	WASHER-HARD (13.5X25.5X3MM THK)	
	24	1,2	**8T-4224**	3	WASHER-HARD (8.8X16X2MM THK)	
M	25	2	**8T-4244**	2	NUT (M12X1.75 THD)	
	26	2	**9R-1005**	3	CLIP (SLOT)	
	27	2	**9R-7802**	3	CLIP (SLOT)	
	28	2	**9R-7803**	3	CLIP (TAB)	

I-SEE HOSE FABRICATION GUIDE
M-METRIC PART

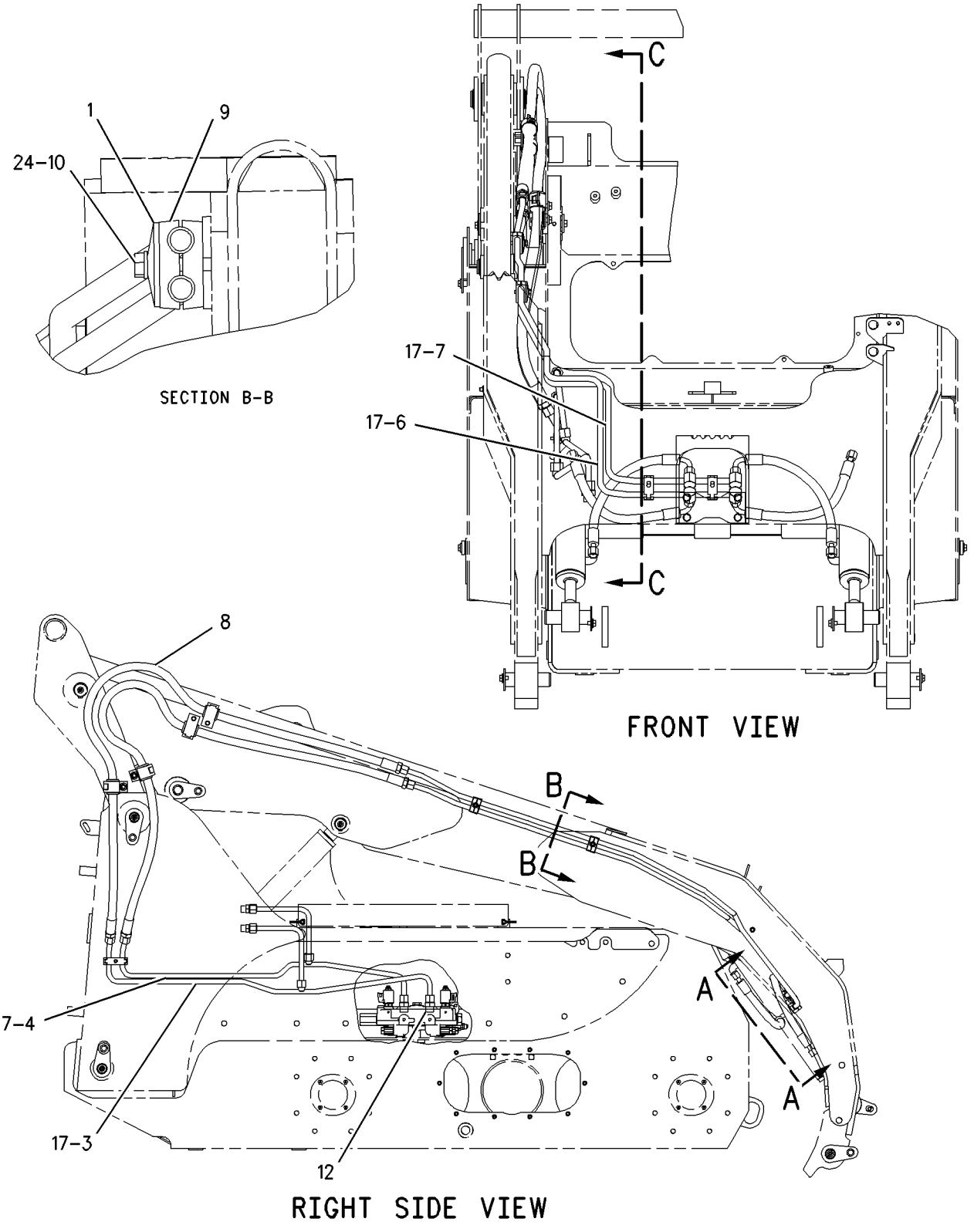

GRAPHIC #1 g00920677

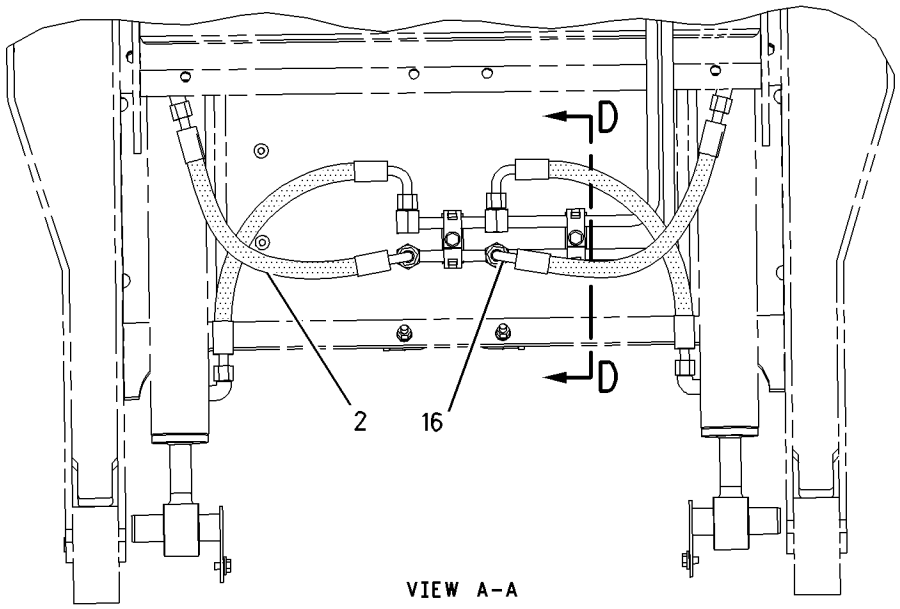

VIEW A-A

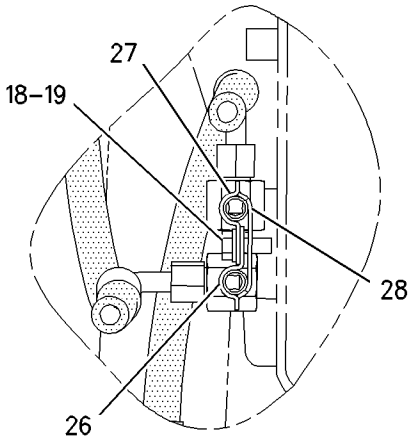

SECTION D-D

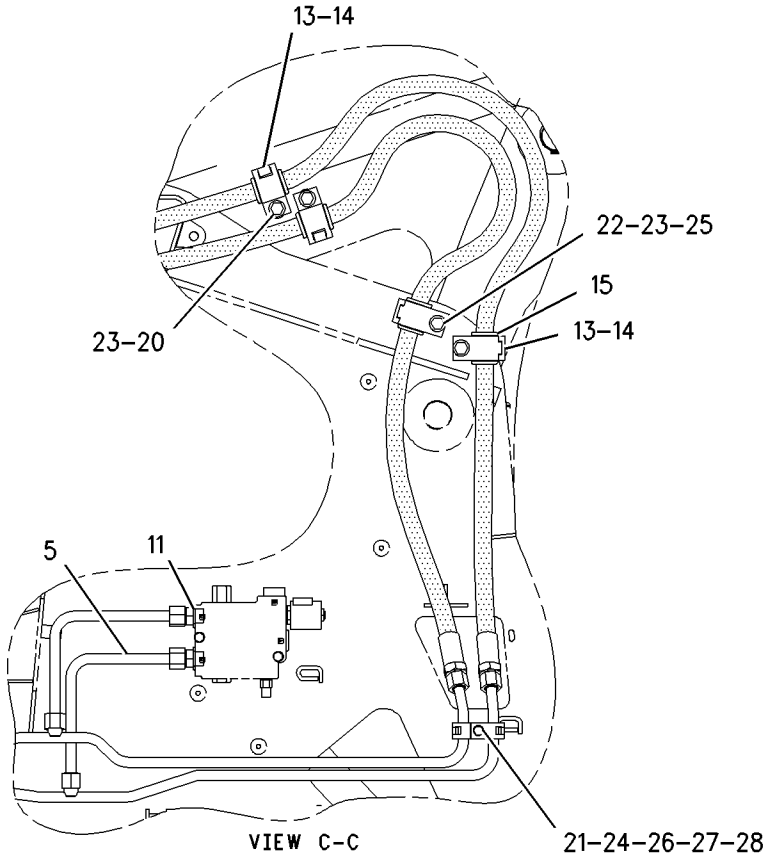

VIEW C-C

GRAPHIC #2

g00919939

MEMORANDA

HYDRAULIC SYSTEM

193-0457 LINES GP-TILT CYLINDER

S/N: 4YZ4000-UP; 5SZ4000-UP
PART OF 195-6767 HYDRAULIC AR
AN ATTACHMENT

SMCS-5057, 5104 **i01795199**

NOTE	REF NO	GRAPHIC REF	PART NUMBER	QTY	PART NAME 1 2 3 4 5 6 (PRODUCT LEVEL)	SEE PAGE
	1	1	**116-4415**	2	PLATE	
	2	1	**142-8998**	2	CLIP	
I	3	1	**142-9234**	4	HOSE AS	
	4	1	**168-7564**	1	TUBE AS	
	5	1	**168-7565**	1	TUBE AS	
I	6	1	**187-1272**	2	HOSE AS	
	7	1	**187-1276**	1	TUBE AS	
	8	1	**187-1277**	1	TUBE AS	
	9	1	**193-0458**	1	TUBE AS	
	10	1	**193-0459**	1	TUBE AS	
	11	1	*148-8341*	2	CONNECTOR GP	
					(EACH INCLUDES)	
		1	**3D-2824**	1	SEAL-O-RING	
		1	**6V-8713**	1	CONNECTOR	
		1	**7J-9108**	1	SEAL-O-RING	
	12	1	*148-8390*	2	ELBOW GP	
					(EACH INCLUDES)	
		1	**2M-9780**	1	SEAL-O-RING	
		1	**6V-8626**	1	ELBOW	
		1	**7J-9108**	1	SEAL-O-RING	
	13	1	**6V-8398**	8	SEAL-O-RING	
	14	1	**7J-9108**	6	SEAL-O-RING	
	15	1	**8T-4121**	2	WASHER-HARD (11X21X2.5MM THK)	
M	16	1	**8T-4136**	2	BOLT (M10X1.5X25MM)	
	17	1	**9R-1005**	2	CLIP (SLOT)	
	18	1	**9R-7802**	2	CLIP (SLOT)	
	19	1	**9R-7803**	2	CLIP (TAB)	
M	20	1	**7X-2534**	2	BOLT (M6X1X50MM)	

I-SEE HOSE FABRICATION GUIDE
M-METRIC PART

193-0457 **LINES GP-TILT CYLINDER** ***(contd.)*** **i01795199**

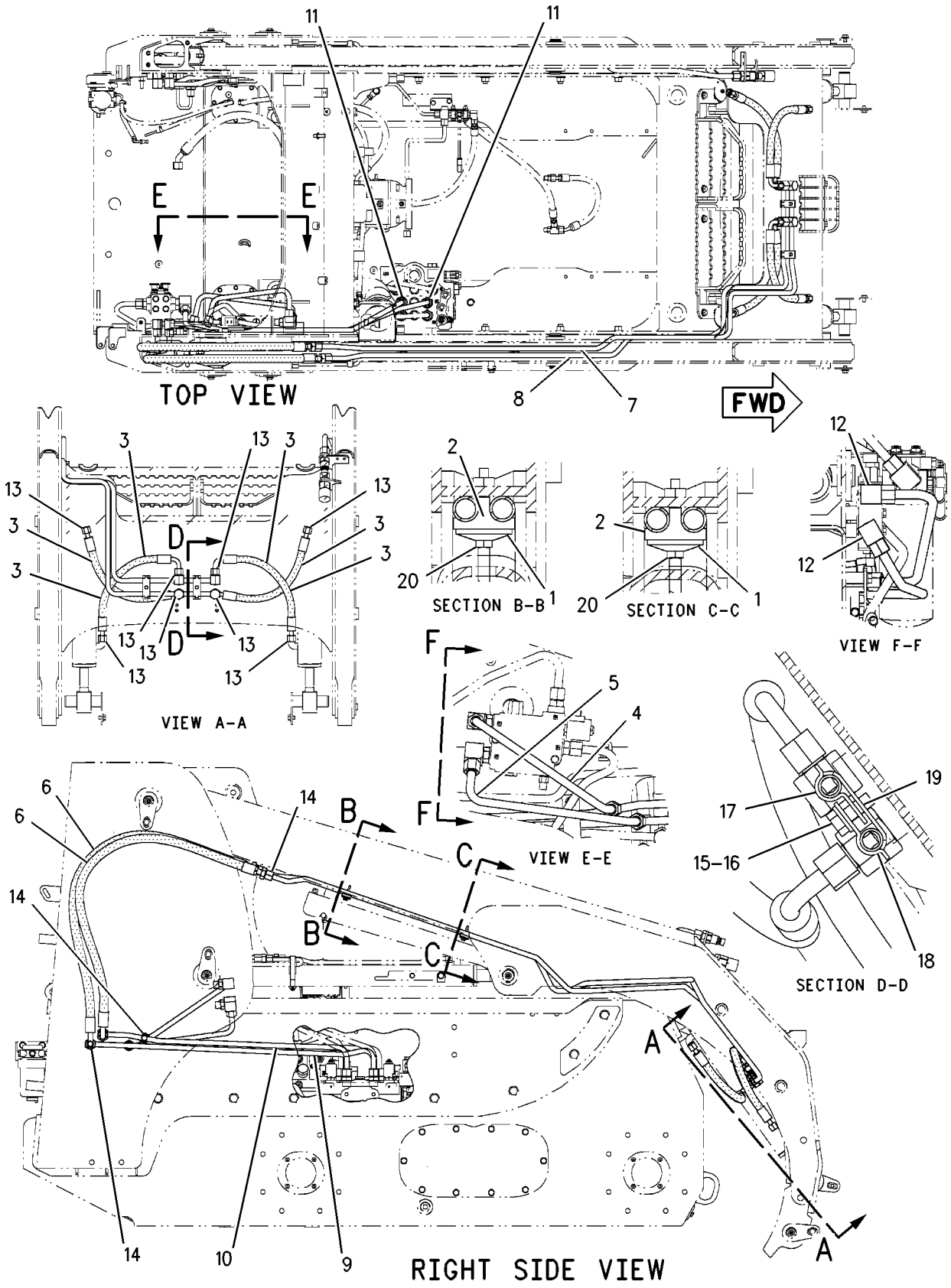

GRAPHIC #1 g00919082

HYDRAULIC SYSTEM

193-0468 LINES GP-TILT CYLINDER

S/N: 4YZ4000-UP; 5SZ4000-UP
PART OF 195-6766 HYDRAULIC AR
AN ATTACHMENT

SMCS-5057, 5104 **i01795212**

NOTE	REF NO	GRAPHIC REF	PART NUMBER	QTY	PART NAME 1 2 3 4 5 6 (PRODUCT LEVEL)	SEE PAGE
	1	1	**116-4415**	2	PLATE	
	2	1	**142-8998**	2	CLIP	
I	3	1	**142-9234**	4	HOSE AS	
I	4	1	**187-1272**	2	HOSE AS	
	5	1	**187-1276**	1	TUBE AS	
	6	1	**187-1277**	1	TUBE AS	
	7	1	**193-0469**	1	TUBE AS	
	8	1	**193-0470**	1	TUBE AS	
	9	1	*148-8341*	2	CONNECTOR GP	
					(EACH INCLUDES)	
		1	**3D-2824**	1	SEAL-O-RING	
		1	**6V-8713**	1	CONNECTOR	
		1	**7J-9108**	1	SEAL-O-RING	
	10	1	**6V-8398**	8	SEAL-O-RING	
	11	1	**7J-9108**	4	SEAL-O-RING	
	12	1	**8T-4121**	2	WASHER-HARD (11X21X2.5MM THK)	
M	13	1	**8T-4136**	2	BOLT (M10X1.5X25MM)	
	14	1	**9R-1005**	2	CLIP (SLOT)	
	15	1	**9R-7802**	2	CLIP (SLOT)	
	16	1	**9R-7803**	2	CLIP (TAB)	
M	17	1	**7X-2534**	2	BOLT (M6X1X50MM)	

I-SEE HOSE FABRICATION GUIDE
M-METRIC PART

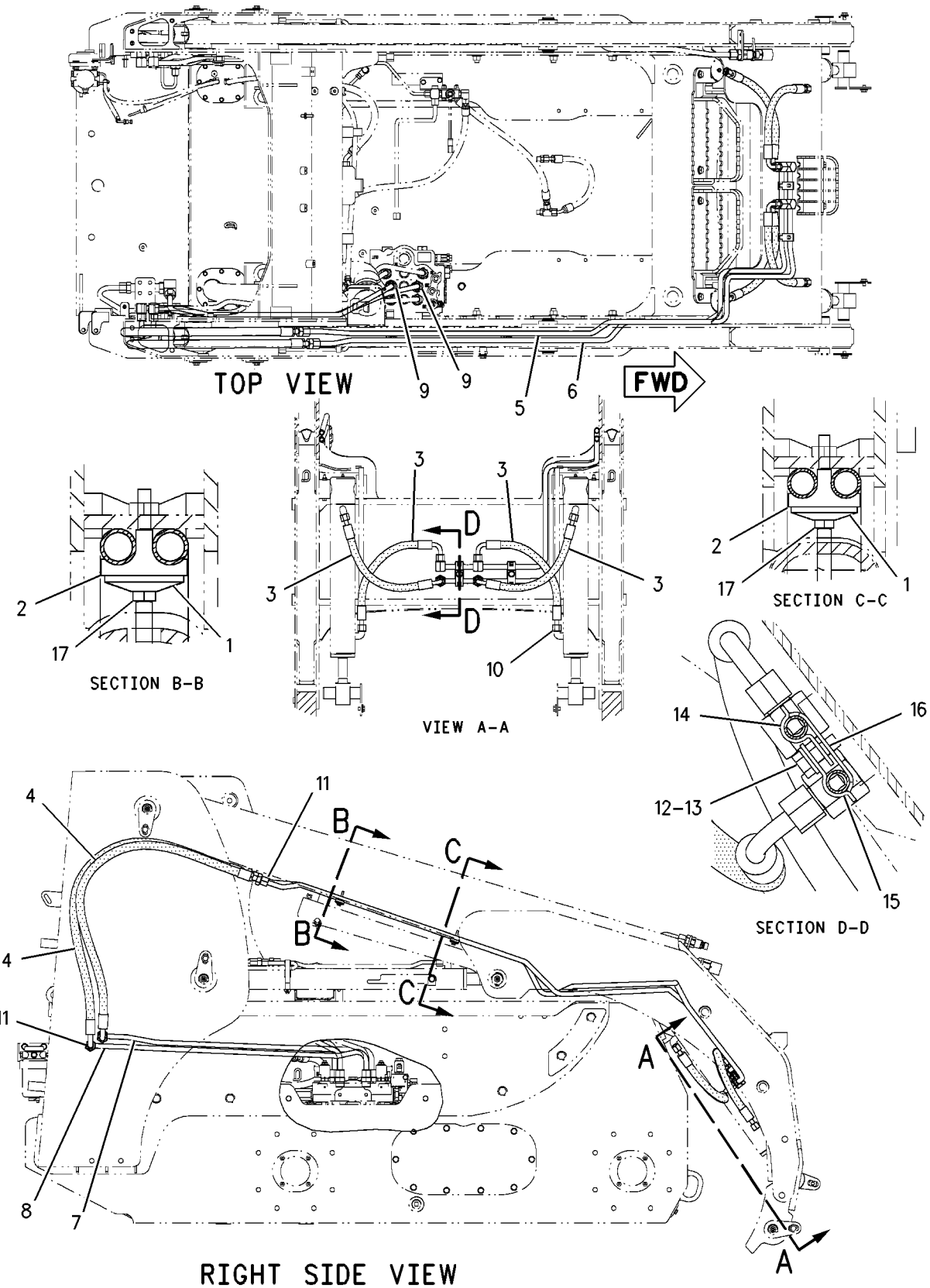

GRAPHIC #1

g00919088

HYDRAULIC SYSTEM

190-8110 LINES GP-WORK TOOL

S/N: CED1-UP; FDG1-UP

PART OF 190-7952, 195-6705 HYDRAULIC AR

SMCS-5057 **i01795224**

NOTE	REF NO	GRAPHIC REF	PART NUMBER	QTY	PART NAME 1 2 3 4 5 6 (PRODUCT LEVEL)	SEE PAGE
	1	1	**102-8703**	2	PLATE	
I	2	1	**190-8073**	2	HOSE AS	
	3	1	**190-8096**	1	TUBE AS	
	4	1	**190-8097**	1	TUBE AS	
	5	1	**190-8098**	1	TUBE AS	
	6	1	**190-8099**	1	TUBE AS	
	7	1	**193-8334**	1	COUPLING	
	8	1	**193-8335**	1	COUPLING	
	9	1	**195-6750**	4	CLAMP-DOUBLE	
	10	1	**148-8341**	2	CONNECTOR GP	
					(EACH INCLUDES)	
		1	**3D-2824**	1	SEAL-O-RING	
		1	**6V-8713**	1	CONNECTOR	
		1	**7J-9108**	1	SEAL-O-RING	
	11	1	**5P-7464**	4	CLIP (SLOT)	
	12	1	**5P-7465**	4	CLIP (TAB)	
	13	1	**6V-7359**	4	GROMMET	
	14	1	**6V-9170**	2	NUT-BULKHEAD (1-14 THD)	
	15	1	**7J-9108**	6	SEAL-O-RING	
	16	1	**206-9185**	2	BOLT	
M	17	1	**8T-4139**	2	BOLT (M12X1.75X30MM)	
M	18	1	**8T-4189**	1	BOLT (M8X1.25X20MM)	
M	19	1	**8T-4194**	2	BOLT (M12X1.75X50MM)	
	20	1	**8T-4223**	6	WASHER-HARD (13.5X25.5X3MM THK)	
	21	1	**8T-4224**	1	WASHER-HARD (8.8X16X2MM THK)	
M	22	1	**8T-4244**	2	NUT (M12X1.75 THD)	
	23	1	**9R-1005**	1	CLIP (SLOT)	
	24	1	**9R-7802**	1	CLIP (SLOT)	
	25	1	**9R-7803**	1	CLIP (TAB)	

I-SEE HOSE FABRICATION GUIDE
M-METRIC PART

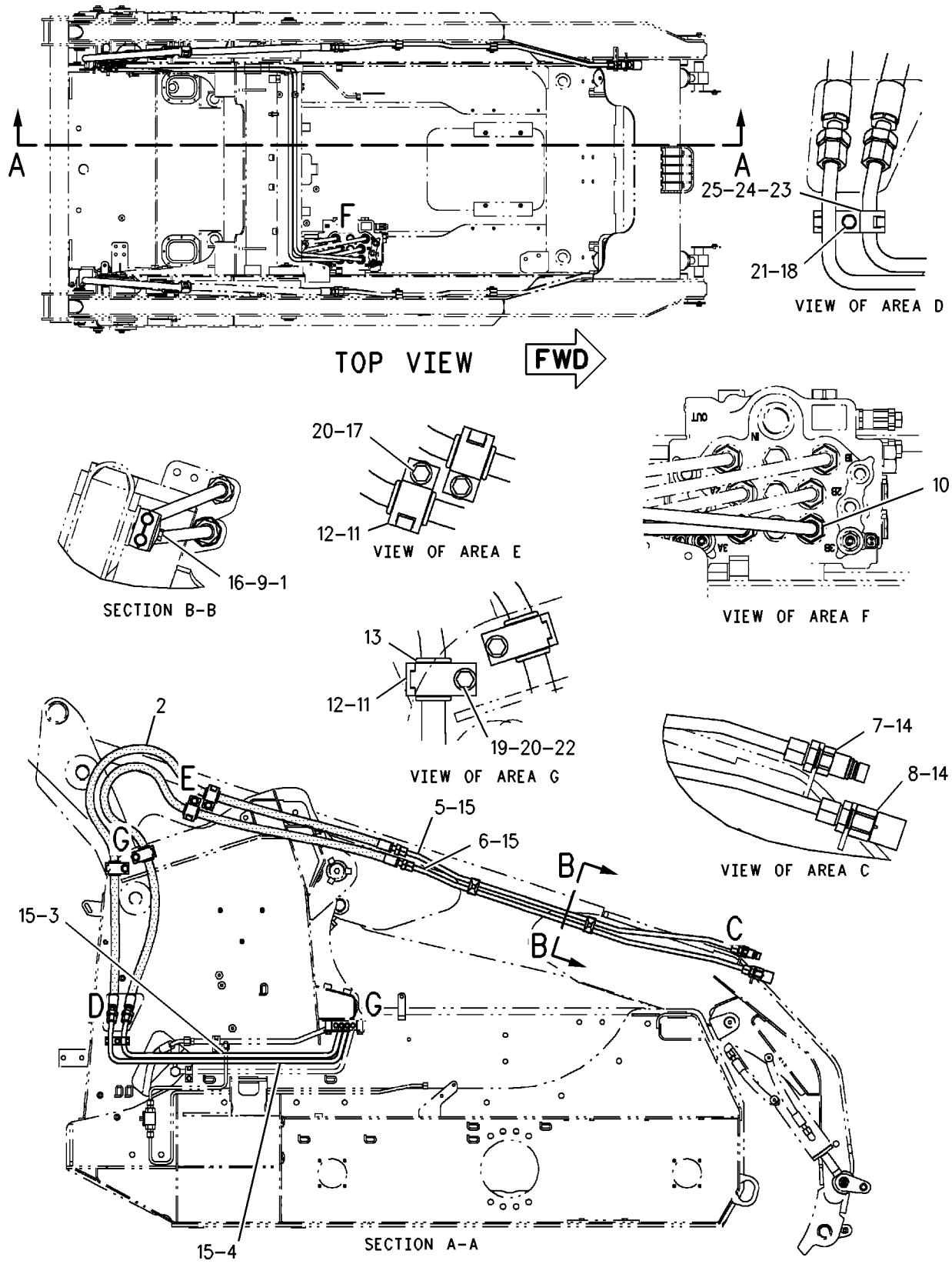

GRAPHIC #1 g00919092

HYDRAULIC SYSTEM

193-0460 LINES GP-WORK TOOL

S/N: 4YZ4000-UP; 5SZ4000-UP

PART OF 195-6762, 195-6764 HYDRAULIC AR

SMCS-5057 **i01795228**

NOTE	REF NO	GRAPHIC REF	PART NUMBER	QTY	PART NAME 1 2 3 4 5 6 (PRODUCT LEVEL)	SEE PAGE
	1	1	**116-4415**	2	PLATE	
	2	1	**142-8998**	2	CLIP	
I	3	1	**187-1272**	2	HOSE AS	
	4	1	**193-0461**	1	TUBE AS	
	5	1	**193-0462**	1	TUBE AS	
	6	1	**193-8332**	1	TUBE AS	
	7	1	**193-8333**	1	TUBE AS	
	8	1	**193-8334**	1	COUPLING	
	9	1	**193-8335**	1	COUPLING	
	10	1	*148-8341*	2	CONNECTOR GP	
		1	**3D-2824**	1	SEAL-O-RING	
		1	**6V-8713**	1	CONNECTOR	
		1	**7J-9108**	1	SEAL-O-RING	
	11	1	**6V-9170**	2	NUT-BULKHEAD (1-14 THD)	
	12	1	**7J-9108**	6	SEAL-O-RING	
M	13	1	**7X-2534**	2	BOLT (M6X1X50MM)	

I-SEE HOSE FABRICATION GUIDE
M-METRIC PART

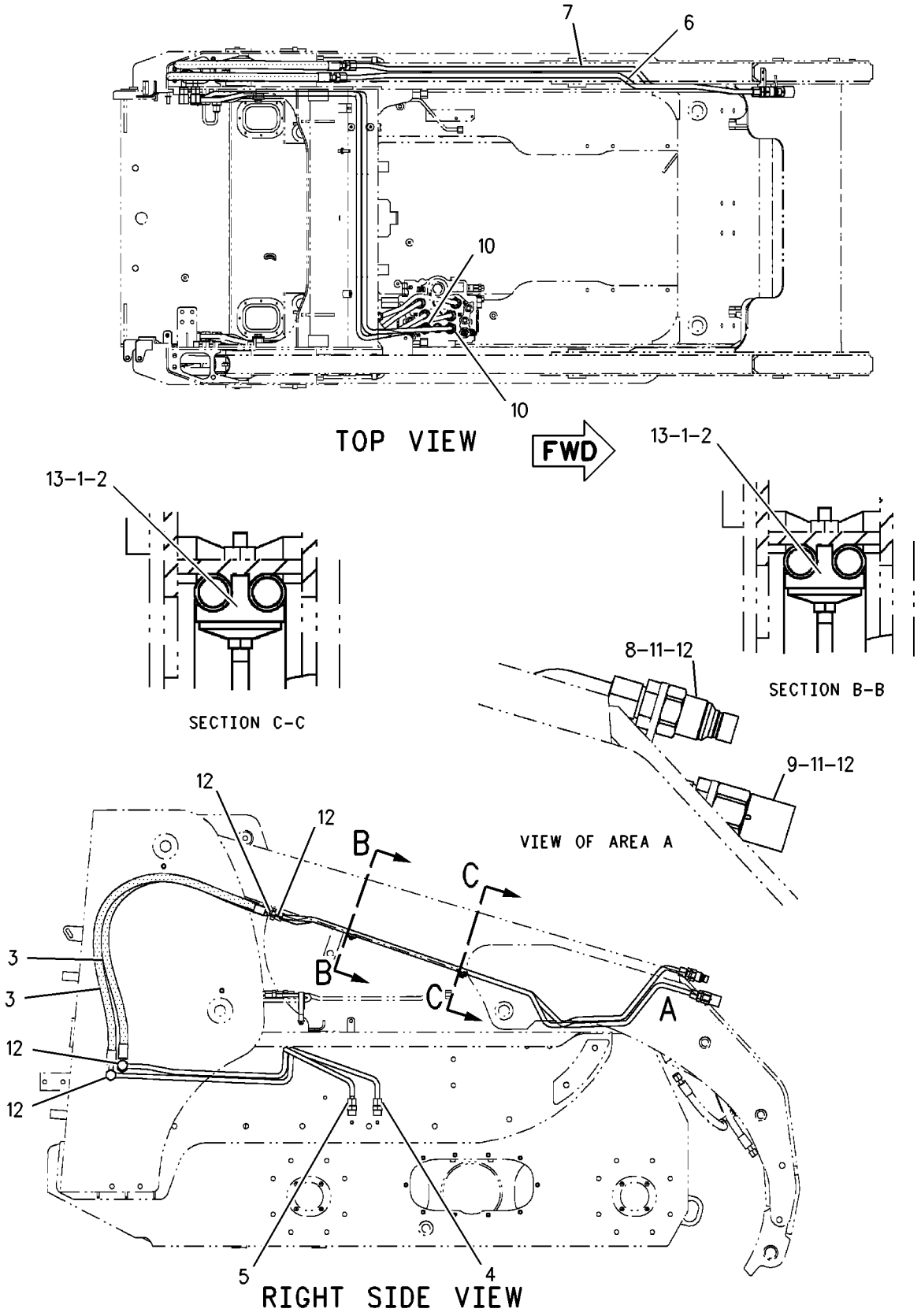

GRAPHIC #1 g00919100

191-9672 MOTOR & MTG GP-HYDRAULIC FAN

S/N: 4YZ4000-UP

PART OF 166-2567, 175-4242, 175-4244, 188-3310 CONVERSION AR-ROADING AN ATTACHMENT

SMCS-1386 **i01685902**

NOTE	REF NO	GRAPHIC REF	PART NUMBER	QTY	PART NAME 1 2 3 4 5 6 (PRODUCT LEVEL)	SEE PAGE
Y	1	1	**191-9662**	1	MOTOR GP-GEAR	438
	2	1	**8T-4121**	2	WASHER-HARD (11X21X2.5MM THK)	
M	3	1	**8T-4196**	2	BOLT (M10X1.5X35MM)	
	4	1	**8T-4224**	1	WASHER-HARD (8.8X16X2MM THK)	
M	5	1	**8T-7547**	1	BOLT (M8X1.25X30MM)	

M-METRIC PART
Y-SEPARATE ILLUSTRATION

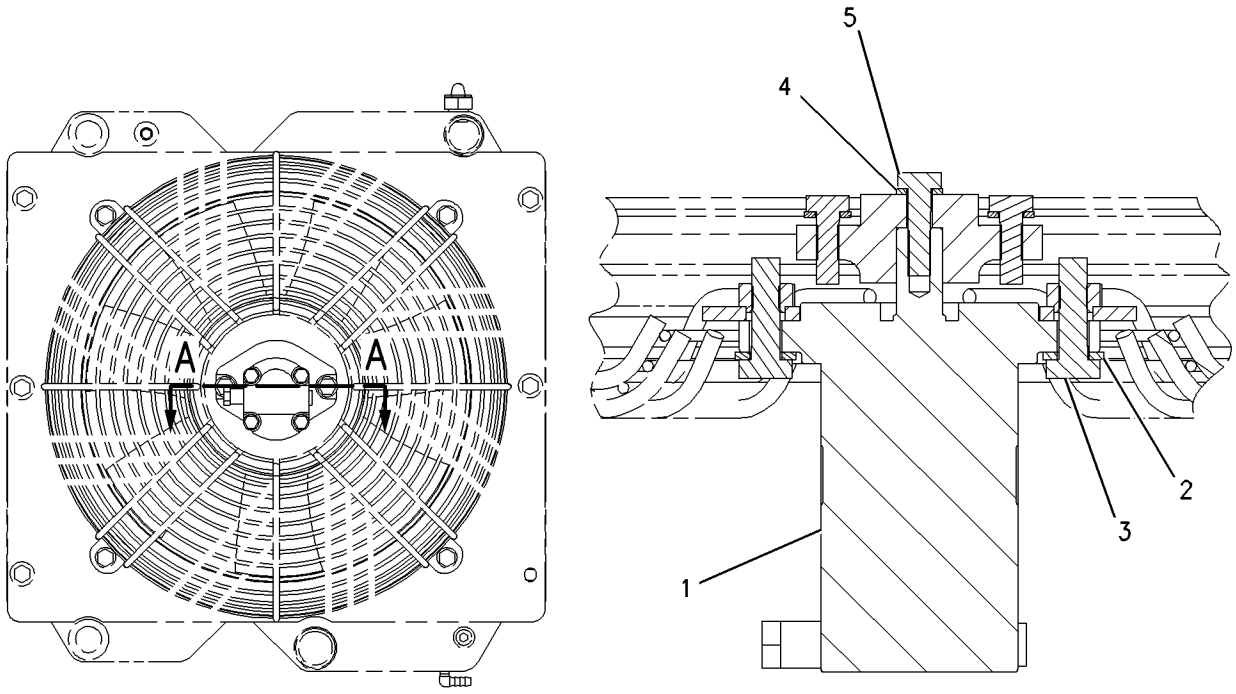

SECTION A-A

GRAPHIC #1 g00847787

191-9674 MOTOR & MTG GP-HYDRAULIC FAN

S/N: FDG1-UP; 5SZ4000-5252

PART OF 188-3307, 188-3308 CONVERSION AR-ROADING, 195-6705 HYDRAULIC AR

ALSO AN ATTACHMENT

SMCS-1386 **i01657730**

NOTE	PART NUMBER	QTY	PART NAME 1 2 3 4 5 6 (PRODUCT LEVEL)	SEE PAGE
M	**8T-4196**	2	BOLT (M10X1.5X35MM)	
M	**8T-7547**	1	BOLT (M8X1.25X30MM)	
Y	**188-0128**	1	MOTOR GP-GEAR (FAN)	437
	8T-4121	2	WASHER-HARD (11X21X2.5MM THK)	
	8T-4224	1	WASHER-HARD (8.8X16X2MM THK)	

M-METRIC PART
Y-SEPARATE ILLUSTRATION

<END>

191-9676 MOTOR & MTG GP-HYDRAULIC FAN

S/N: CED1-UP; 5SZ4000-UP

PART OF 190-7952, 195-6764 HYDRAULIC AR

SMCS-1386 **i01672721**

NOTE	REF NO	GRAPHIC REF	PART NUMBER	QTY	PART NAME 1 2 3 4 5 6 (PRODUCT LEVEL)	SEE PAGE
Y	1	1	**216-6163**	1	MOTOR GP-GEAR	439
	2	1	**8T-4121**	2	WASHER-HARD (11X21X2.5MM THK)	
M	3	1	**8T-4196**	2	BOLT (M10X1.5X35MM)	
	4	1	**8T-4224**	1	WASHER-HARD (8.8X16X2MM THK)	
M	5	1	**8T-7547**	1	BOLT (M8X1.25X30MM)	

M-METRIC PART
Y-SEPARATE ILLUSTRATION

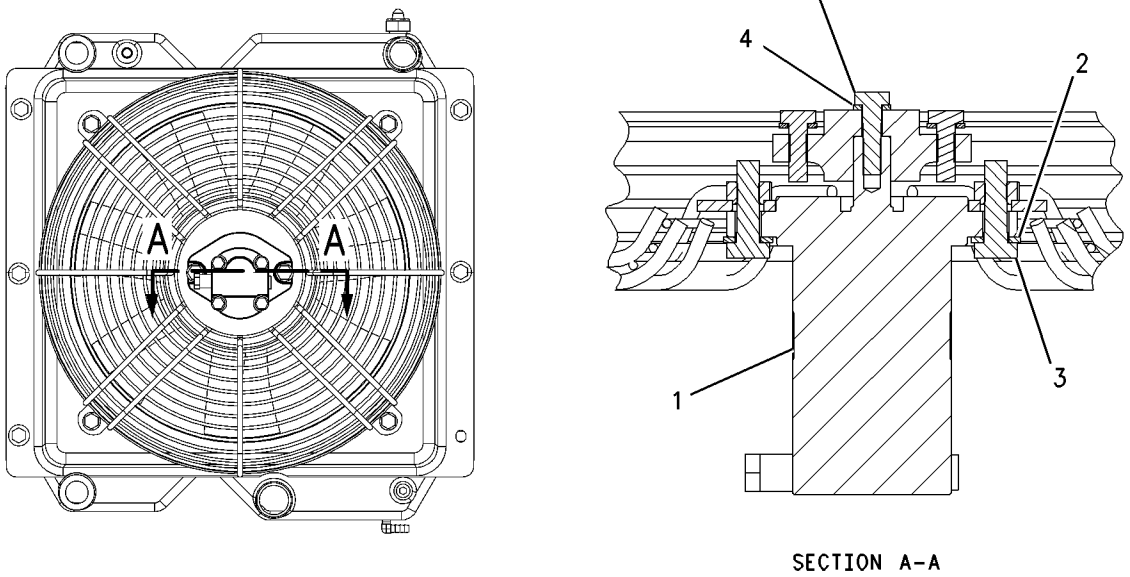

SECTION A-A

GRAPHIC #1 g00865235

HYDRAULIC SYSTEM

152-4888 MOTOR GP-GEAR–FAN

S/N: FDG1-UP

PART OF 165-4910 RADIATOR & HYD OIL COOLER GP

SMCS-1386, 5061 **i01414228**

NOTE	REF NO	GRAPHIC REF	PART NUMBER	QTY	PART NAME 1 2 3 4 5 6 (PRODUCT LEVEL)	SEE PAGE
	1	1	**087-1031**	1	SEAL-O-RING	
	2	1	**187-1261**	1	GASKET	
	3	1	**187-1262**	1	KIT-VALVE	
	4	1	**187-1263**	1	KIT-VALVE	
	5	1	**187-1264**	1	RING-RETAINING	
	6	1	**187-1265**	1	SEAL-SHAFT	

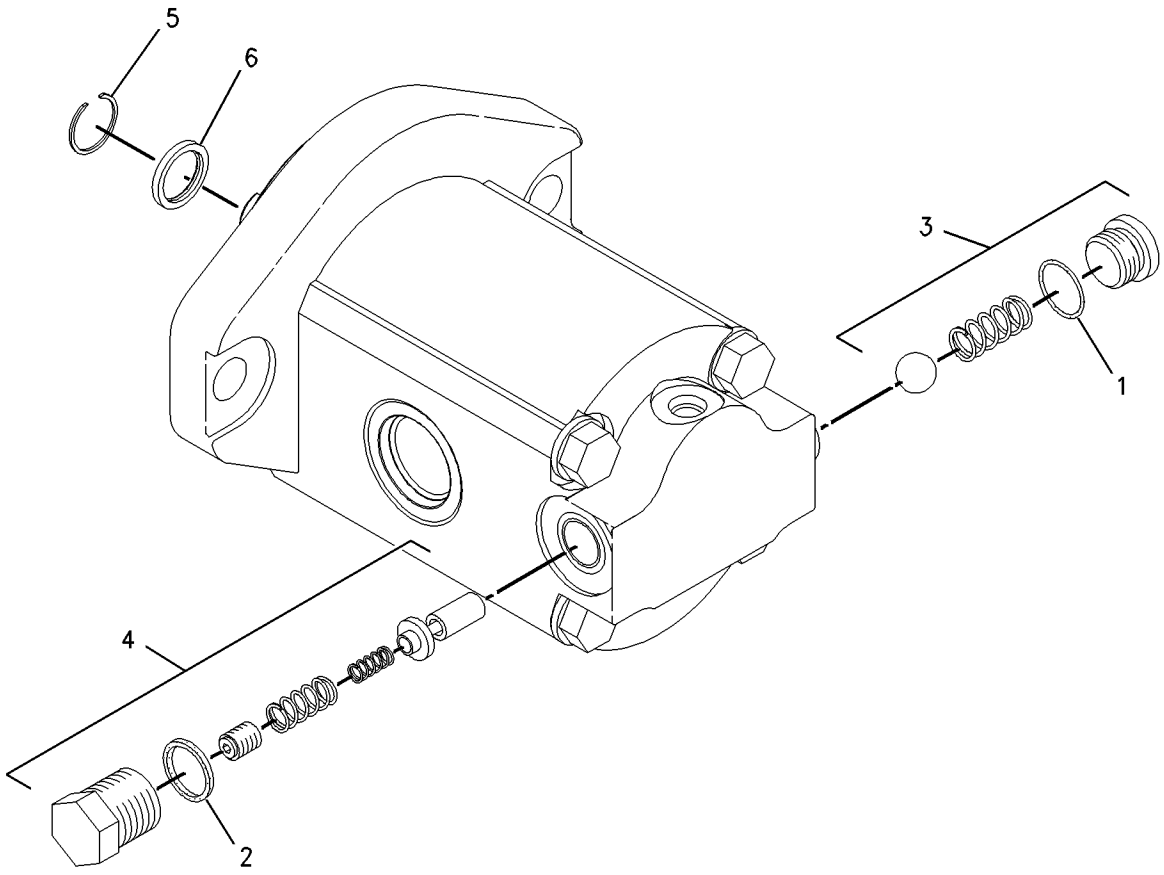

GRAPHIC #1 g00743703

HYDRAULIC SYSTEM

185-9948 MOTOR GP-GEAR

S/N: 5SZ4000-UP
PART OF 192-2604 RADIATOR & HYD OIL COOLER GP
AN ATTACHMENT

SMCS-1386, 5061 **i01795242**

NOTE	REF NO	GRAPHIC REF	PART NUMBER	QTY	PART NAME 1 2 3 4 5 6 (PRODUCT LEVEL)	SEE PAGE
	1	1	**087-1031**	1	SEAL-O-RING	
	2	1	**187-1261**	1	GASKET	
	3	1	**187-1262**	1	KIT-VALVE (CHECK)	
	4	1	**187-1263**	1	KIT-VALVE (RELIEF)	
	5	1	**187-1264**	1	RING-RETAINING	
	6	1	**187-1265**	1	SEAL-SHAFT	

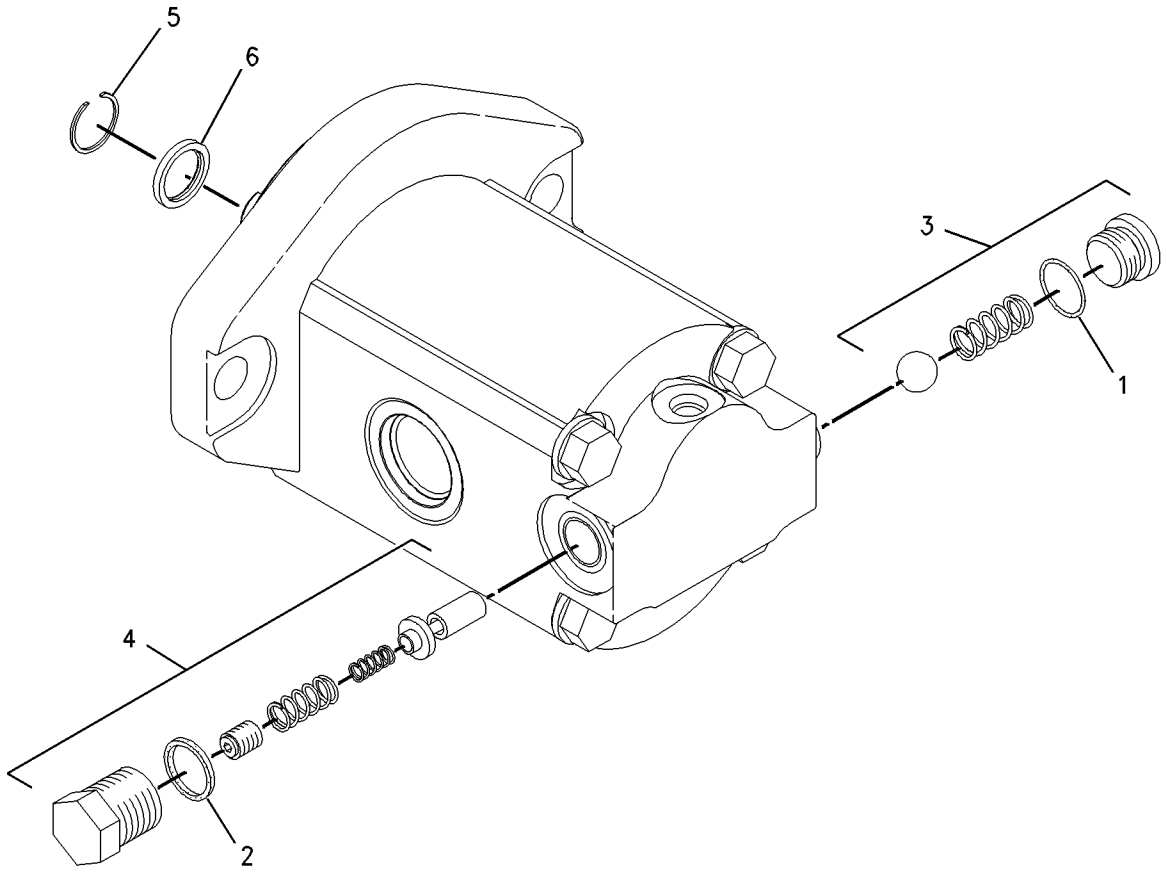

GRAPHIC #1 g00712784

HYDRAULIC SYSTEM

188-0128 MOTOR GP-GEAR

S/N: FDG1-UP; 4YZ4000-UP; 5SZ4000-UP

PART OF 191-9674 MOTOR & MTG GP-HYDRAULIC FAN, 192-2602 RADIATOR & HYD OIL COOLER GP

ALSO AN ATTACHMENT

SMCS-1386, 5061 **i01350142**

NOTE	REF NO	GRAPHIC REF	PART NUMBER	QTY	PART NAME 1 2 3 4 5 6 (PRODUCT LEVEL)	SEE PAGE
	1	1	**087-1031**	1	SEAL-O-RING	
	2	1	**187-1261**	1	GASKET	
	3	1	**187-1262**	1	KIT-VALVE	
	4	1	**187-1263**	1	KIT-VALVE	
	5	1	**187-1264**	1	RING-RETAINING	
	6	1	**187-1265**	1	SEAL-SHAFT	

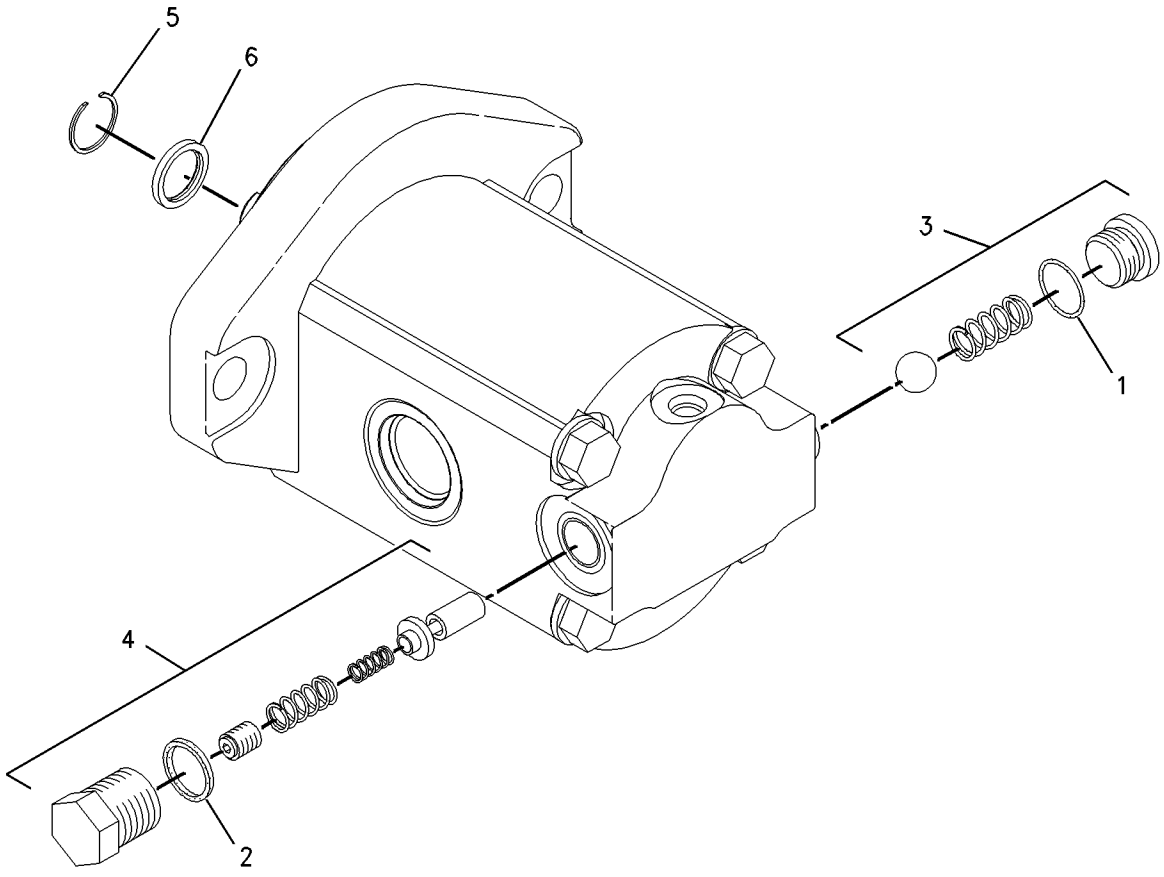

GRAPHIC #1 g00712784

HYDRAULIC SYSTEM

191-9662 MOTOR GP-GEAR

S/N: 4YZ4000-UP
PART OF 191-9672 MOTOR & MTG GP-HYDRAULIC FAN
AN ATTACHMENT

SMCS-1386, 5061 **i01795246**

NOTE	REF NO	GRAPHIC REF	PART NUMBER	QTY	PART NAME 1 2 3 4 5 6 (PRODUCT LEVEL)	SEE PAGE
	1	1	**187-1264**	1	RING-RETAINING	
	2	1	**187-1265**	1	SEAL-SHAFT	
	3	1	**187-1261**	1	GASKET	
	4	1	**187-1263**	1	KIT-VALVE	
	5	1	**087-1031**	1	SEAL-O-RING	
	6	1	**187-1262**	1	KIT-VALVE	

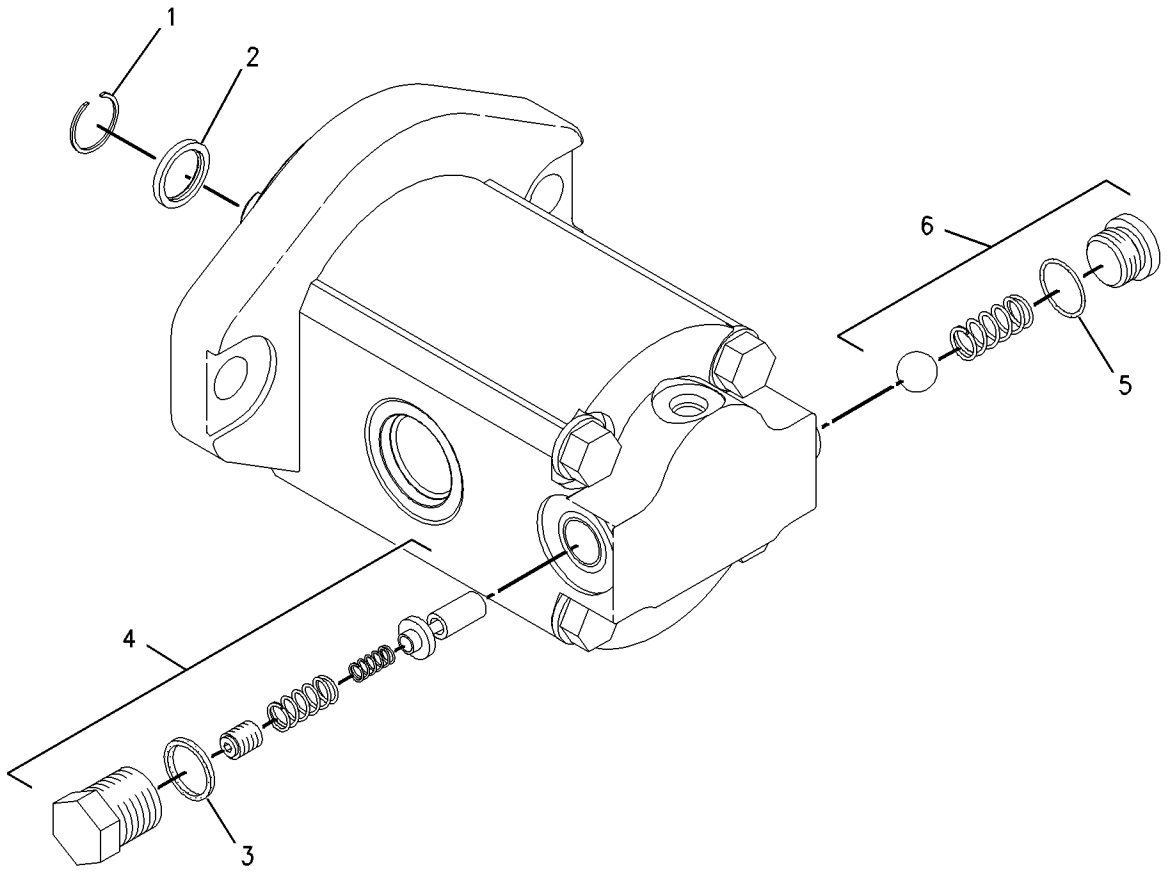

GRAPHIC #1 g00919116

HYDRAULIC SYSTEM

216-6163 MOTOR GP-GEAR

S/N: CED1-UP; 5SZ4000-UP

TURBO

PART OF 191-9676 MOTOR & MTG GP-HYDRAULIC FAN

SMCS-1386, 5061 **i01795253**

NOTE	REF NO	GRAPHIC REF	PART NUMBER	QTY	PART NAME 1 2 3 4 5 6 (PRODUCT LEVEL)	SEE PAGE
	1	1	**187-1264**	1	RING-RETAINING	
	2	1	**187-1265**	1	SEAL-SHAFT	
	3	1	**187-1261**	1	GASKET	
	4	1	**187-1263**	1	KIT-VALVE (RELIEF)	
	5	1	**087-1031**	1	SEAL-O-RING	
	6	1	**187-1262**	1	KIT-VALVE (CHECK)	

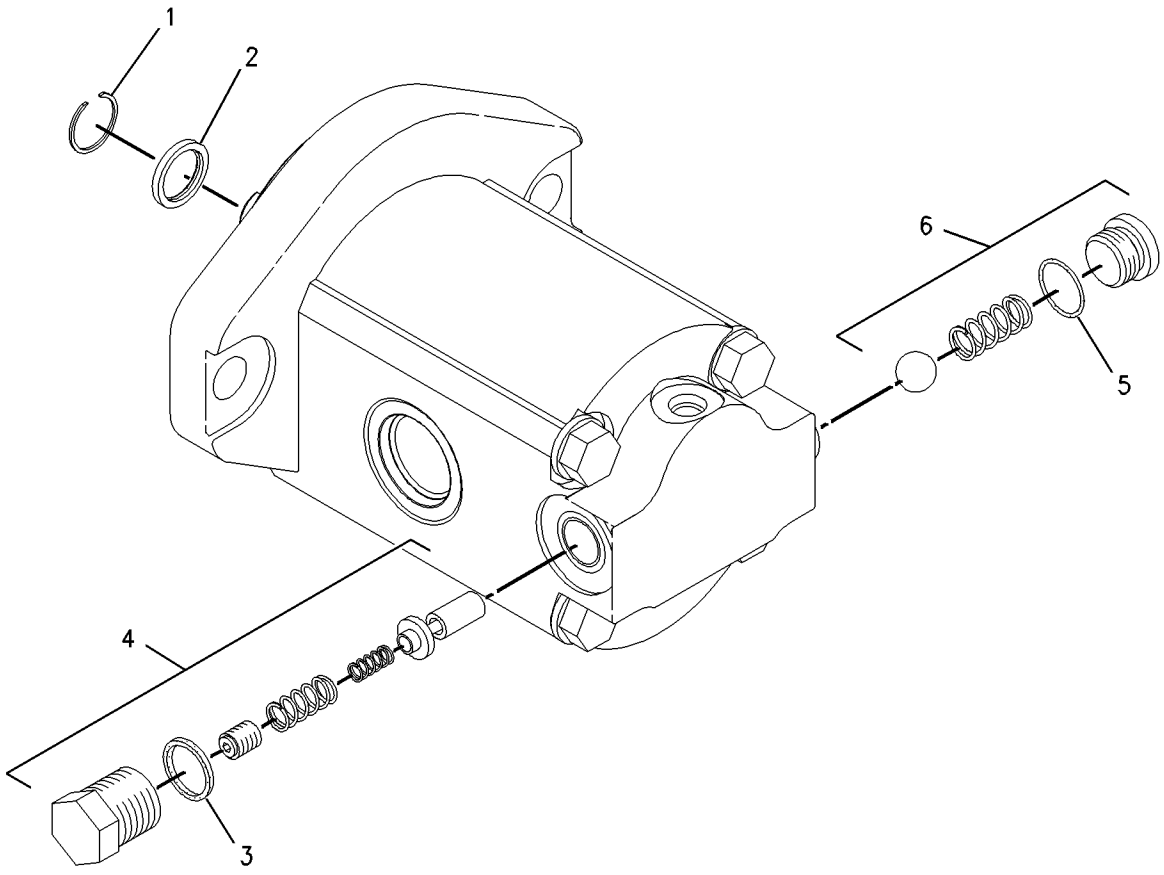

GRAPHIC #1 g00919116

HYDRAULIC SYSTEM

154-5011 MOUNTING GP-CYLINDER

S/N: CED1-UP; FDG1-UP; 4YZ4000-UP; 5SZ4000-UP
PART OF 154-5004, 154-5008, 154-5010, 199-8320 BUCKET AR-MULTIPURPOSE
AN ATTACHMENT

SMCS-5498 **i01066088**

NOTE	REF NO	GRAPHIC REF	PART NUMBER	QTY	PART NAME 1 2 3 4 5 6 (PRODUCT LEVEL)	SEE PAGE
	1	1	**154-5012**	2	PIN	
	2	1	**154-5013**	2	PIN	
	3	1	**3B-8489**	2	FITTING-GREASE (1/8-27 THD)	
M	4	1	**6V-9189**	4	LOCKNUT (M8X1.25 THD)	
M	5	1	**8T-6869**	4	BOLT (M8X1.25X60MM)	

M-METRIC PART

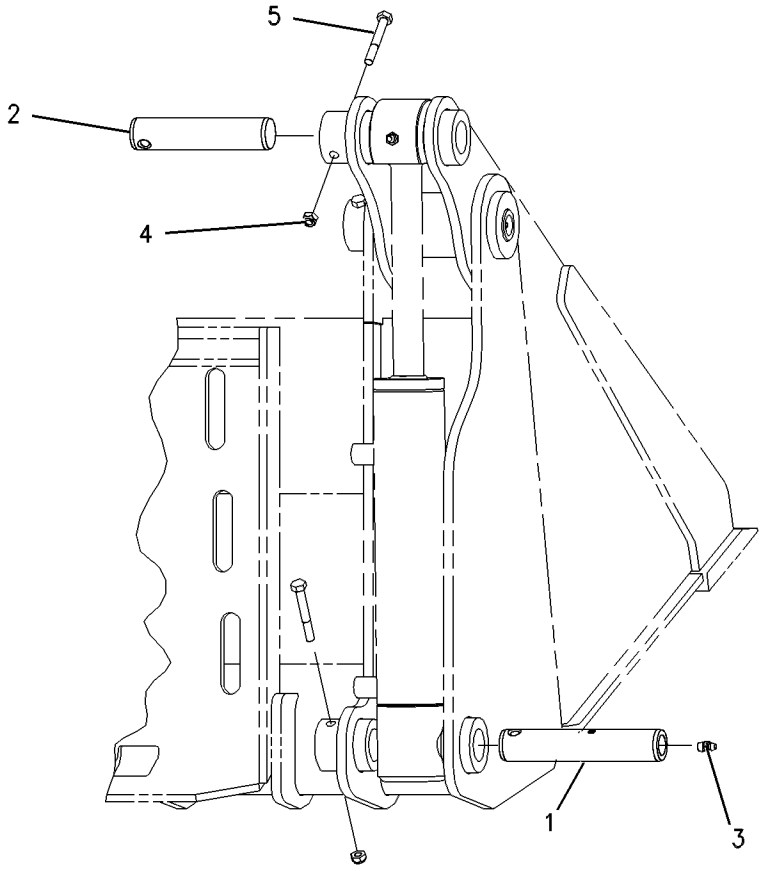

GRAPHIC #1 g00560356

142-8714 PLUG GP-PILOT VALVE

S/N: CED1-UP; FDG1-UP; 4YZ4000-UP; 5SZ4000-UP
AN ATTACHMENT

SMCS-5059 **i01788841**

NOTE	REF NO	GRAPHIC REF	PART NUMBER	QTY	PART NAME 1 2 3 4 5 6 (PRODUCT LEVEL)	SEE PAGE
	1	1	*148-8407*	1	PLUG GP	
		1	**3J-1907**	1	SEAL-O-RING	
		1	**9S-4191**	1	PLUG	

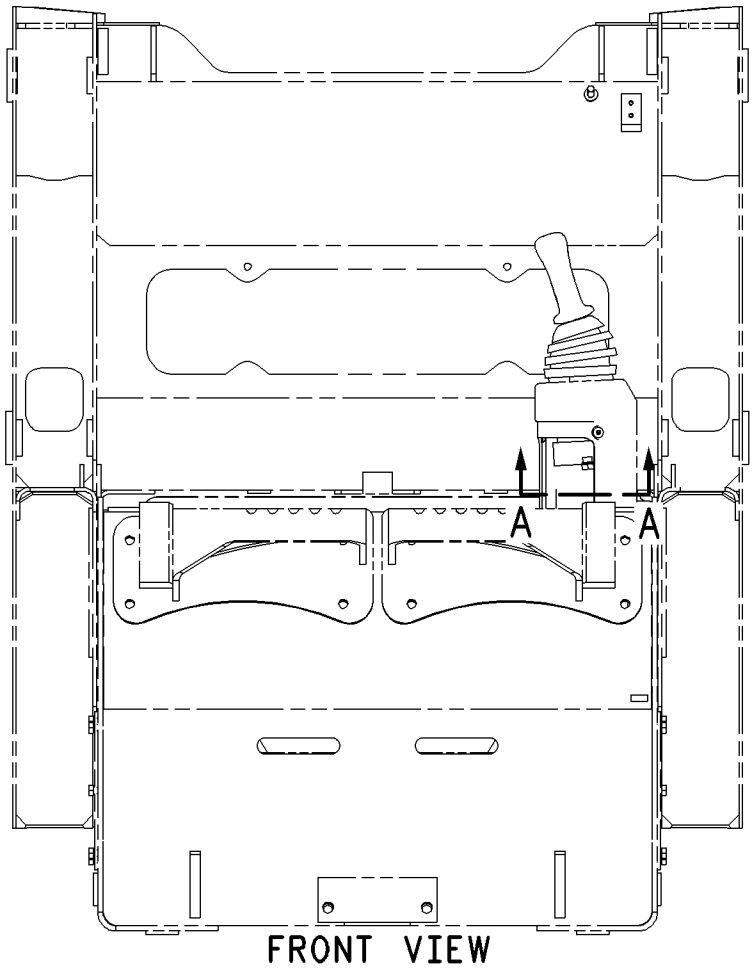

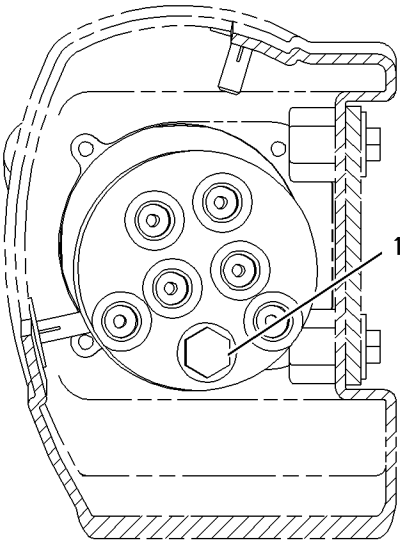

GRAPHIC #1 g00915486

190-8084 PUMP & MTG GP-WORK TOOL

S/N: CED1-UP; FDG1-UP; 4YZ4000-UP; 5SZ4000-UP

PART OF 190-7952, 195-6705, 195-6762, 195-6764 HYDRAULIC AR

SMCS-6700 **i01498645**

NOTE	REF NO	GRAPHIC REF	PART NUMBER	QTY	PART NAME 1 2 3 4 5 6 (PRODUCT LEVEL)	SEE PAGE
Y	1	1	**177-3397**	1	PUMP GP-GEAR	443
	2	1	**8T-4223**	2	WASHER-HARD (13.5X25.5X3MM THK)	
M	3	1	**8T-4956**	2	BOLT (M12X1.75X35MM)	
	4	1	**8T-5049**	1	SEAL-O-RING	

M-METRIC PART
Y-SEPARATE ILLUSTRATION

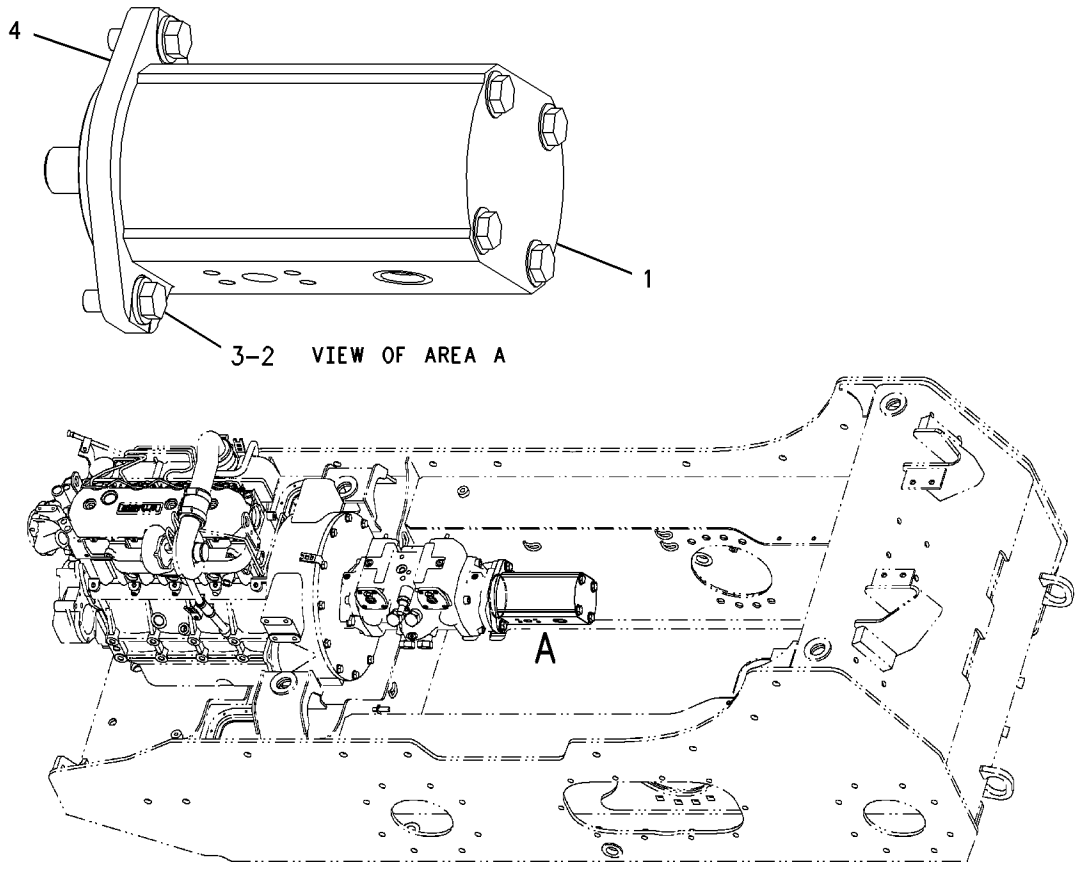

GRAPHIC #1 g00777686

HYDRAULIC SYSTEM

177-3397 PUMP GP-GEAR

S/N: CED1-UP; FDG1-UP; 4YZ4000-UP; 5SZ4000-UP
PART OF 190-8084 PUMP & MTG GP-WORK TOOL

SMCS-5073 **i01494217**

NOTE	REF NO	GRAPHIC REF	PART NUMBER	QTY	PART NAME 1 2 3 4 5 6 (PRODUCT LEVEL)	SEE PAGE
	1	1	**109-1641**	1	RING-SNAP	
	2	1	**131-0715**	1	SEAL-SHAFT	

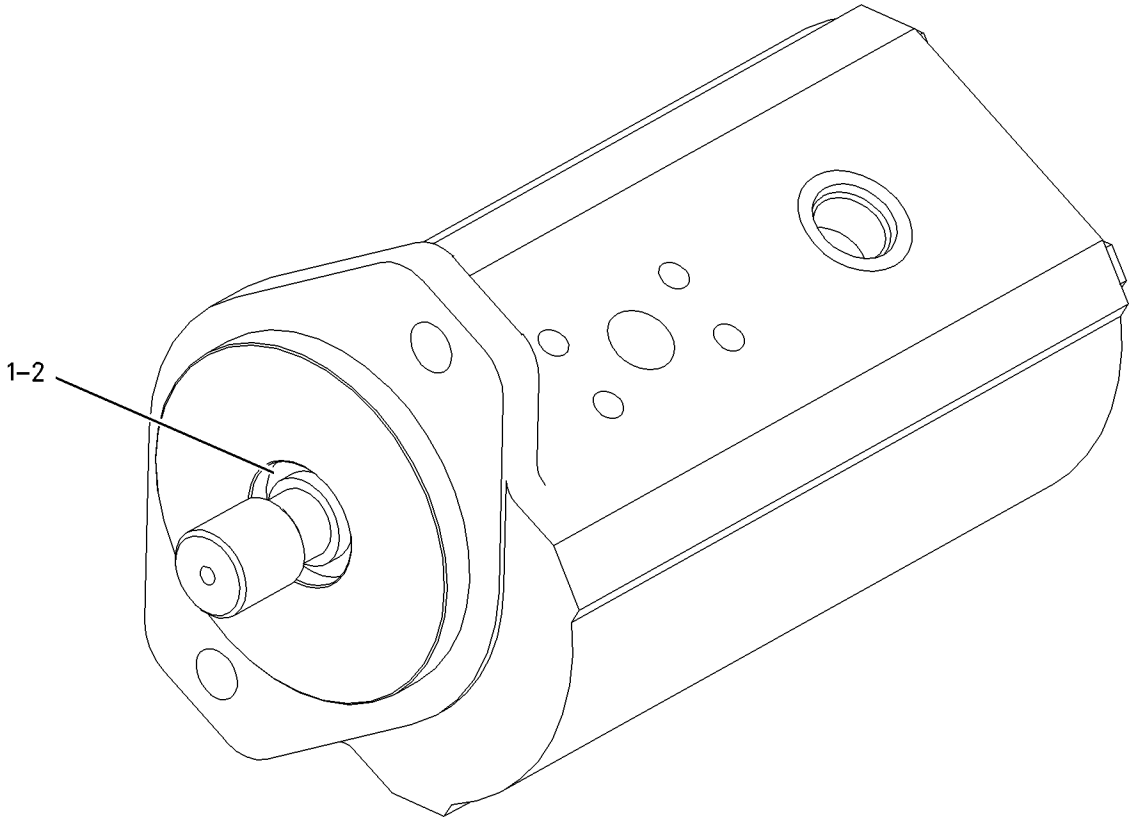

GRAPHIC #1 g00776026

HYDRAULIC SYSTEM

142-8940 TANK & MTG GP-HYDRAULIC

S/N: 4YZ4000-UP; 5SZ4000-UP

PART OF 195-6762, 195-6764 HYDRAULIC AR

SMCS-5056 **i01463199**

NOTE	REF NO	GRAPHIC REF	PART NUMBER	QTY	PART NAME 1 2 3 4 5 6 (PRODUCT LEVEL)	SEE PAGE
	1	1	**5P-4961**	2	CLAMP-HOSE	
	2	1	**154-4014**	1	BRACKET	
Y	3	1	**142-8939**	1	TANK GP-HYDRAULIC	447
M	4	1	**8T-4200**	2	BOLT (M8X1.25X16MM)	
	5	1	**5P-4116**	2	WASHER-HARD (8.8X20.5X2MM THK)	
E	6	1	**5P-1442**		HOSE (130CM)	
	7	1	**7K-1181**	3	STRAP-CABLE	

E-ORDER BY THE CENTIMETER
M-METRIC PART
Y-SEPARATE ILLUSTRATION

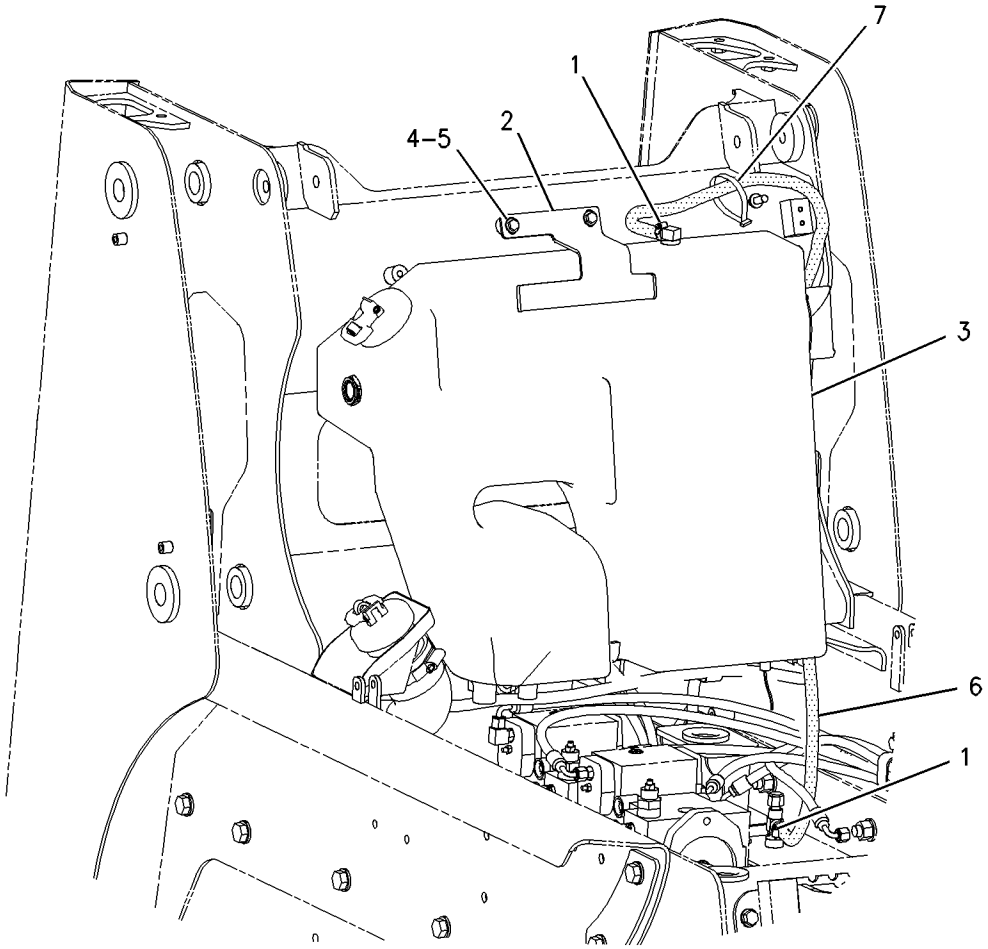

GRAPHIC #1 g00769696

HYDRAULIC SYSTEM

204-1490 TANK & MTG GP-HYDRAULIC

S/N: CED1-UP; FDG1-UP; 4YZ4000-UP; 5SZ4000-UP

PART OF 190-7952, 195-6705, 195-6762, 195-6764 HYDRAULIC AR

SMCS-5056 **i01618340**

NOTE	REF NO	GRAPHIC REF	PART NUMBER	QTY	PART NAME 1 2 3 4 5 6 (PRODUCT LEVEL)	SEE PAGE
	1	1	**5P-4961**	1	CLAMP-HOSE	
	2	1	**154-4014**	1	BRACKET	
Y	3	1	*204-1491*	1	TANK GP-HYDRAULIC	448
	4	1	**207-9729**	1	FILTER AS-FUEL	
	5	1	**5P-4116**	3	WASHER-HARD (8.8X20.5X2MM THK)	
M	6	1	**8T-4200**	3	BOLT (M8X1.25X16MM)	
	7	1	**5P-1442**		HOSE (65CM)	

M-METRIC PART
Y-SEPARATE ILLUSTRATION

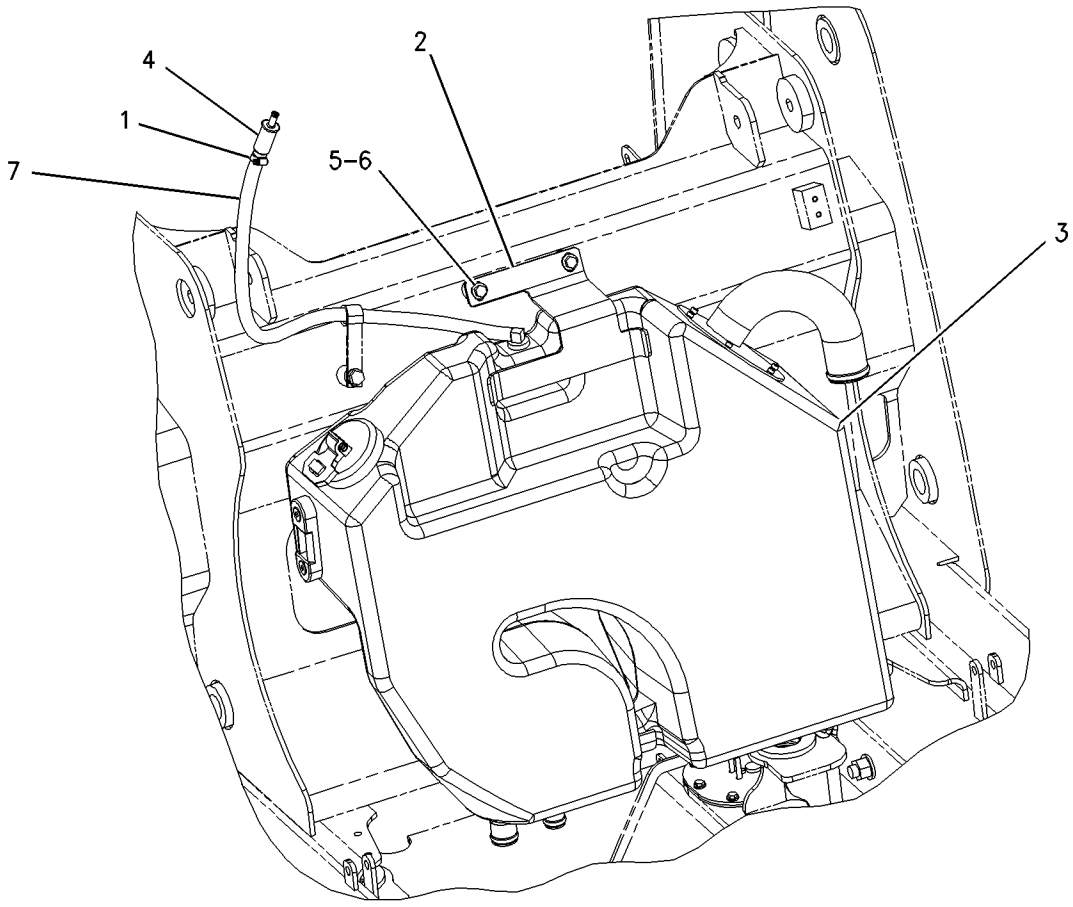

GRAPHIC #1 g00839902

207-9740 TANK & MTG GP-HYDRAULIC

S/N: CED1-UP; FDG1-UP; 4YZ4000-UP; 5SZ4000-UP
PART OF 190-7952, 195-6705, 195-6762, 195-6764 HYDRAULIC AR

SMCS-5056 **i01618524**

NOTE	REF NO	GRAPHIC REF	PART NUMBER	QTY	PART NAME 1 2 3 4 5 6 (PRODUCT LEVEL)	SEE PAGE
	1	1	**5P-4961**	1	CLAMP-HOSE	
Y	2	1	**142-8939**	1	TANK GP-HYDRAULIC	447
	3	1	**154-4014**	1	BRACKET	
	4	1	**207-9729**	1	FILTER AS-FUEL	
	5	1	**5P-4116**	1	WASHER-HARD (8.8X20.5X2MM THK)	
M	6	1	**8T-4200**	1	BOLT (M8X1.25X16MM)	
	7	1	**5P-1442**		HOSE (90CM)	

M-METRIC PART
Y-SEPARATE ILLUSTRATION

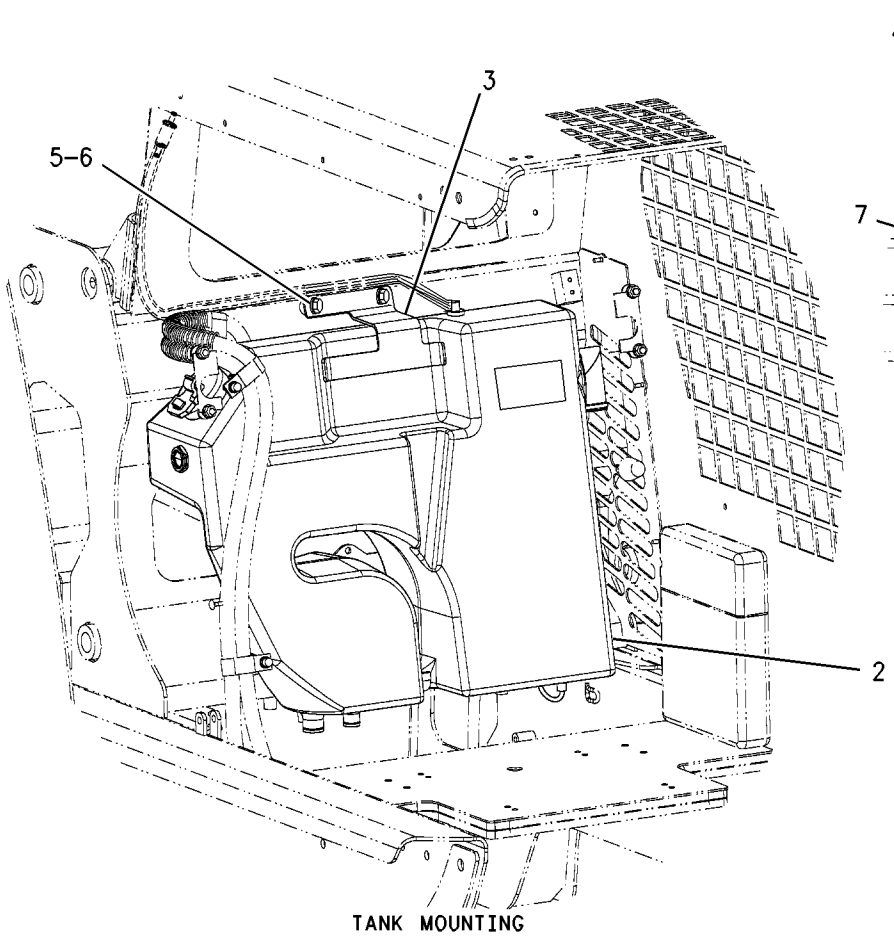

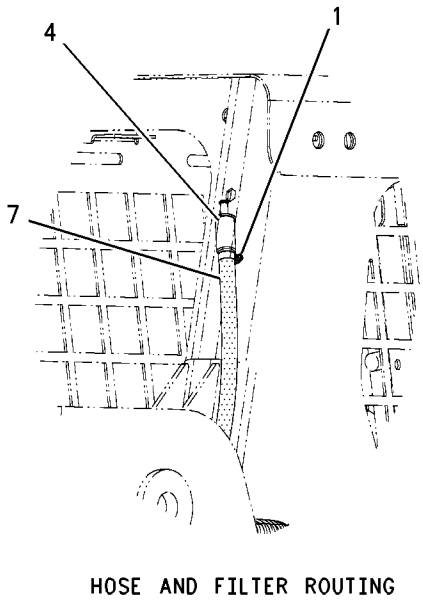

GRAPHIC #1 g00837852

HYDRAULIC SYSTEM

142-8939 TANK GP-HYDRAULIC

S/N: CED1-UP; FDG1-UP; 4YZ4000-UP; 5SZ4000-UP
PART OF 142-8940, 207-9740 TANK & MTG GP-HYDRAULIC

SMCS-5056 **i01628515**

NOTE	REF NO	GRAPHIC REF	PART NUMBER	QTY	PART NAME 1 2 3 4 5 6 (PRODUCT LEVEL)	SEE PAGE
	1	1	**3K-0360**	1	SEAL-O-RING	
	2	1	**6W-5698**	1	GROMMET	
M	3	1	**099-2374**	6	BOLT-SOCKET HEAD	
	4	1	**132-3056**	1	SEAL-O-RING	
	5	1	**142-8927**	1	BODY AS-GAUGE	
		1	**7M-8485**	1	SEAL-O-RING	
	6	1	**142-8928**	1	ELBOW	
	7	1	**142-8929**	1	SCREEN-SUCTION	
	8	1	**142-8937**	1	CAP AS-HYDRAULIC	
	10	1	**142-8942**	1	TUBE AS	
	11	1	**142-9804**	1	SENDER AS-TEMPERATURE	
		1	**102-8803**	1	KIT-RECEPTACLE (3 PIN)	
					(KIT INCLUDES WEDGE)	
		1	**3E-3371**	1	WEDGE-RECEPTACLE LOCK (3 PIN)	
		1	**186-3735**	3	PIN-CONNECTOR	

M-METRIC PART

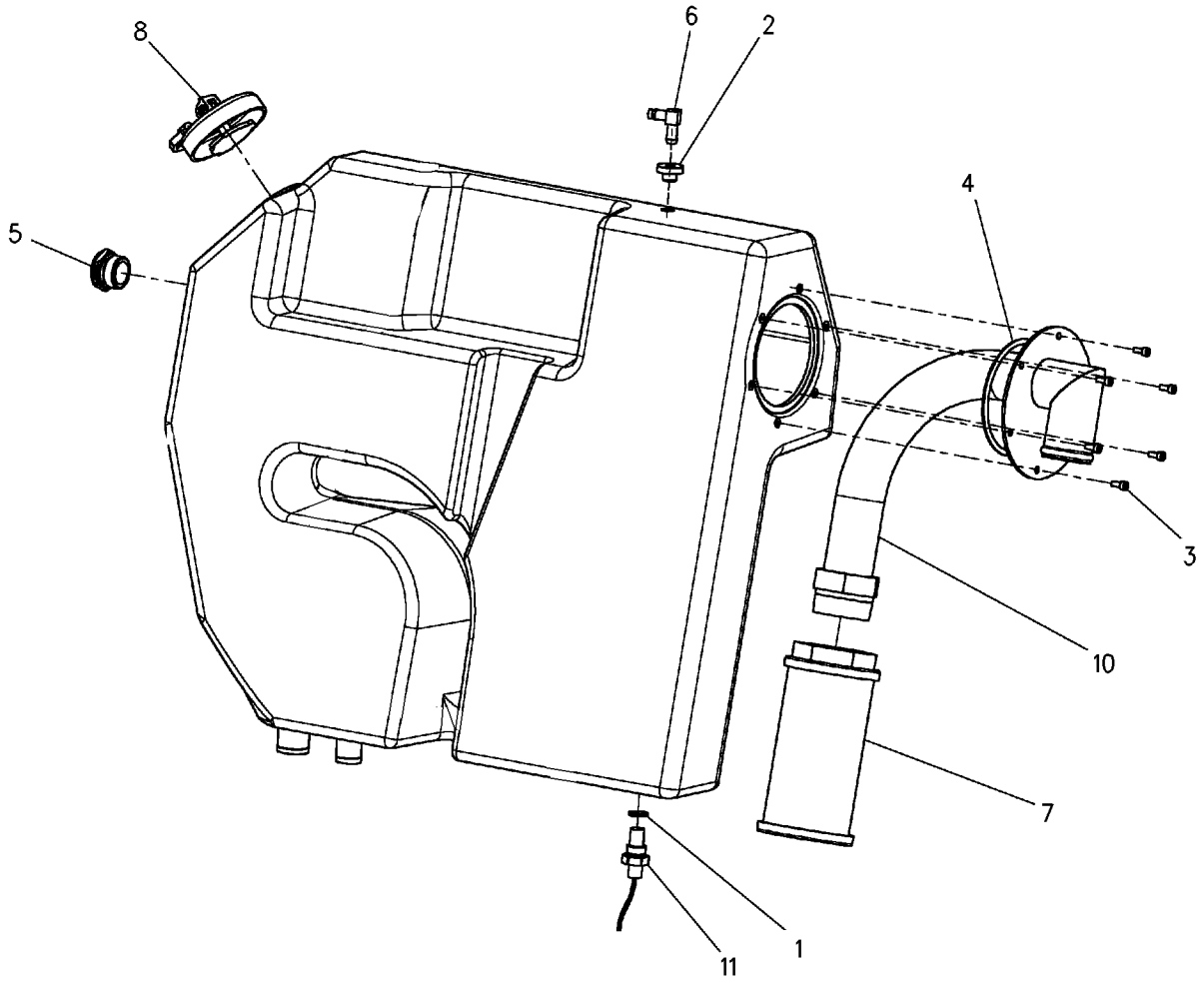

GRAPHIC #1 g00647152

HYDRAULIC SYSTEM

204-1491 TANK GP-HYDRAULIC

S/N: CED1-UP; FDG1-UP; 4YZ4000-UP; 5SZ4000-UP
PART OF 204-1490 TANK & MTG GP-HYDRAULIC

SMCS-5056 **i01618373**

NOTE	REF NO	GRAPHIC REF	PART NUMBER	QTY	PART NAME 1 2 3 4 5 6 (PRODUCT LEVEL)	SEE PAGE
	1	1	**6W-5698**	1	GROMMET	
M	2	1	**099-2374**	6	BOLT-SOCKET HEAD	
	3	1	**132-3056**	1	SEAL-O-RING	
	4	1	**142-8928**	1	ELBOW	
	5	1	**142-8929**	1	SCREEN-SUCTION	
	6	1	**142-8937**	1	CAP AS-HYDRAULIC	
	7	1	**142-9804**	1	SENDER AS-TEMPERATURE	
		1	**102-8803**	1	KIT-RECEPTACLE (3 PIN)	
	8	1	*204-1492*	1	TANK GP-HYDRAULIC	
		1	**192-2668**	1	GAUGE-SIGHT	
	9	1	**204-1499**	1	TUBE AS	
	10	1	**3K-0360**	1	SEAL-O-RING	

M-METRIC PART

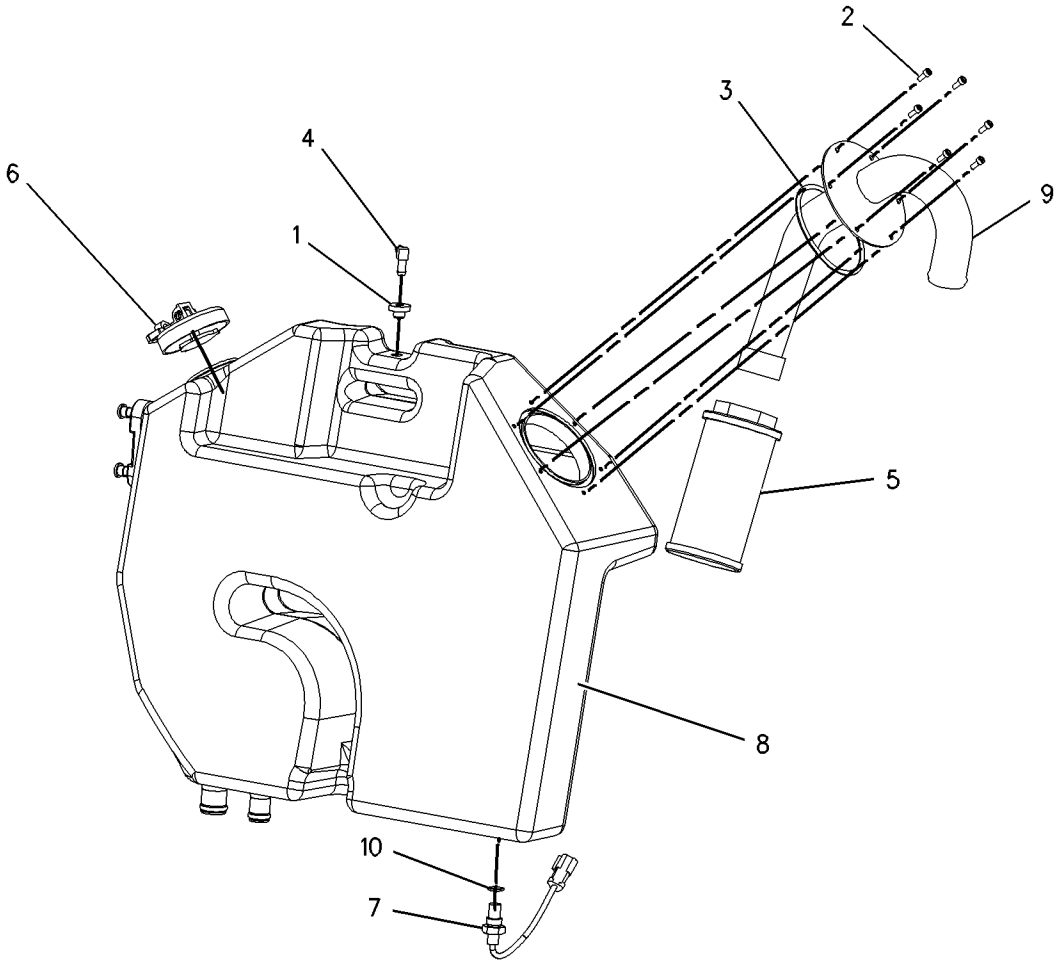

GRAPHIC #1 g00840189

190-8085 VALVE & MTG GP-CONTROL

S/N: CED1-735; FDG1-943
WORK TOOL, THREE FUNCTION
PART OF 190-7952, 195-6705 HYDRAULIC AR

SMCS-5051 **i01505061**

NOTE	REF NO	GRAPHIC REF	PART NUMBER	QTY	PART NAME 1 2 3 4 5 6 (PRODUCT LEVEL)	SEE PAGE
Y	1	1	**190-8086**	1	VALVE GP-CONTROL (WORK TOOL, THREE FUNCTION)	460
	2	1	**8T-4121**	4	WASHER-HARD (11X21X2.5MM THK)	
M	3	1	**8T-4136**	4	BOLT (M10X1.5X25MM)	
	4	1	**193-8389**	1	BRACKET	

M-METRIC PART
Y-SEPARATE ILLUSTRATION

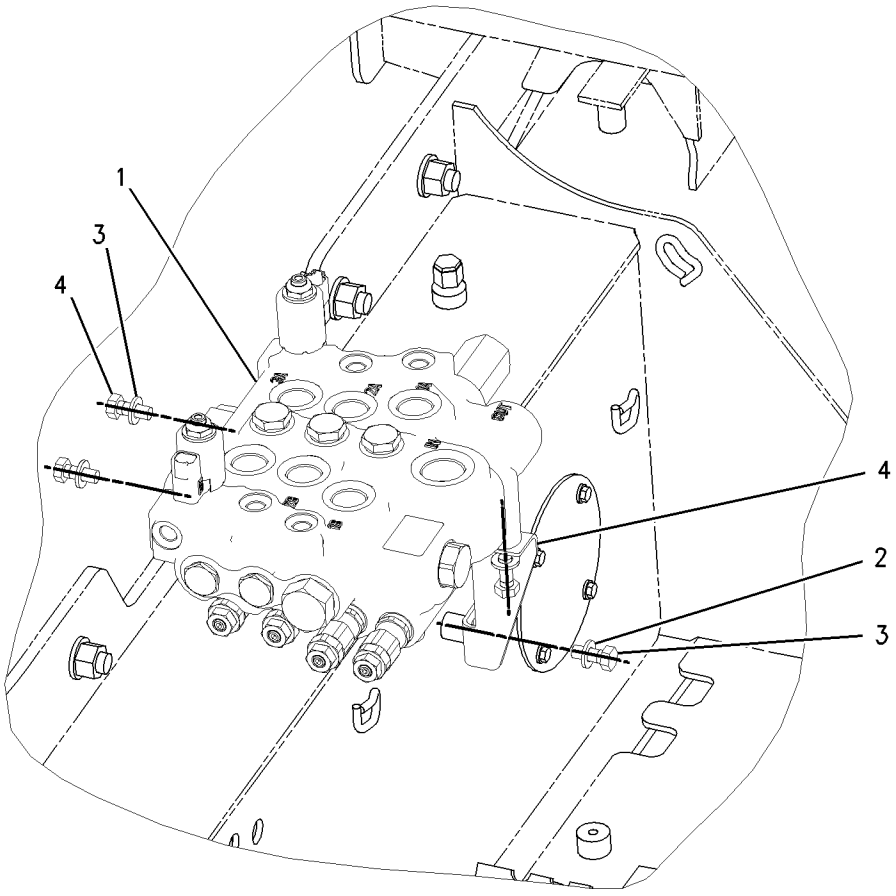

GRAPHIC #1 g00770270

190-8085 VALVE & MTG GP-CONTROL

S/N: CED736-UP; FDG944-UP
WORK TOOL, THREE FUNCTION
PART OF 190-7952, 195-6705 HYDRAULIC AR

SMCS-5051 **i01795264**

NOTE	REF NO	GRAPHIC REF	PART NUMBER	QTY	PART NAME 1 2 3 4 5 6 (PRODUCT LEVEL)	SEE PAGE
	1	1	**193-8389**	1	BRACKET	
Y	2	1	**216-6170**	1	VALVE GP-CONTROL (WORK TOOL)	472
	3	1	**8T-4121**	4	WASHER-HARD (11X21X2.5MM THK)	
M	4	1	**8T-4136**	2	BOLT (M10X1.5X25MM)	
M	5	1	**8T-4137**	2	BOLT (M10X1.5X20MM)	

M-METRIC PART
Y-SEPARATE ILLUSTRATION

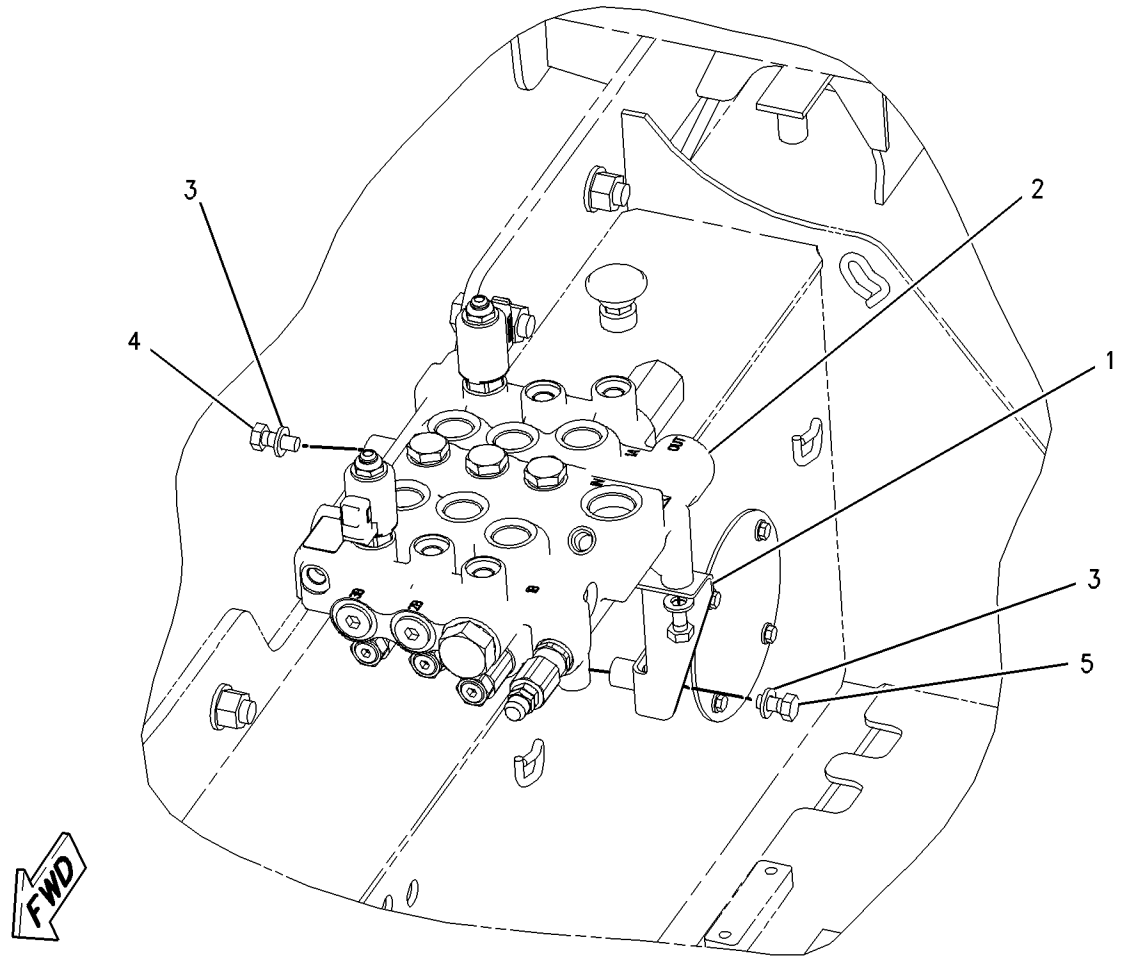

GRAPHIC #1 g00919127

195-6753 VALVE & MTG GP-CONTROL

S/N: 4YZ4000-5058; 5SZ4000-5487
WORK TOOL, THREE FUNCTION
PART OF 195-6762, 195-6764 HYDRAULIC AR

SMCS-5051 **i01772160**

NOTE	REF NO	GRAPHIC REF	PART NUMBER	QTY	PART NAME 1 2 3 4 5 6 (PRODUCT LEVEL)	SEE PAGE
Y	1	1	**193-8386**	1	VALVE GP-CONTROL (WORK TOOL, THREE FUNCTION)	462
	2	1	**193-8389**	1	BRACKET	
	3	1	**8T-4121**	4	WASHER-HARD (11X21X2.5MM THK)	
M	4	1	**8T-4136**	4	BOLT (M10X1.5X25MM)	

M-METRIC PART
Y-SEPARATE ILLUSTRATION

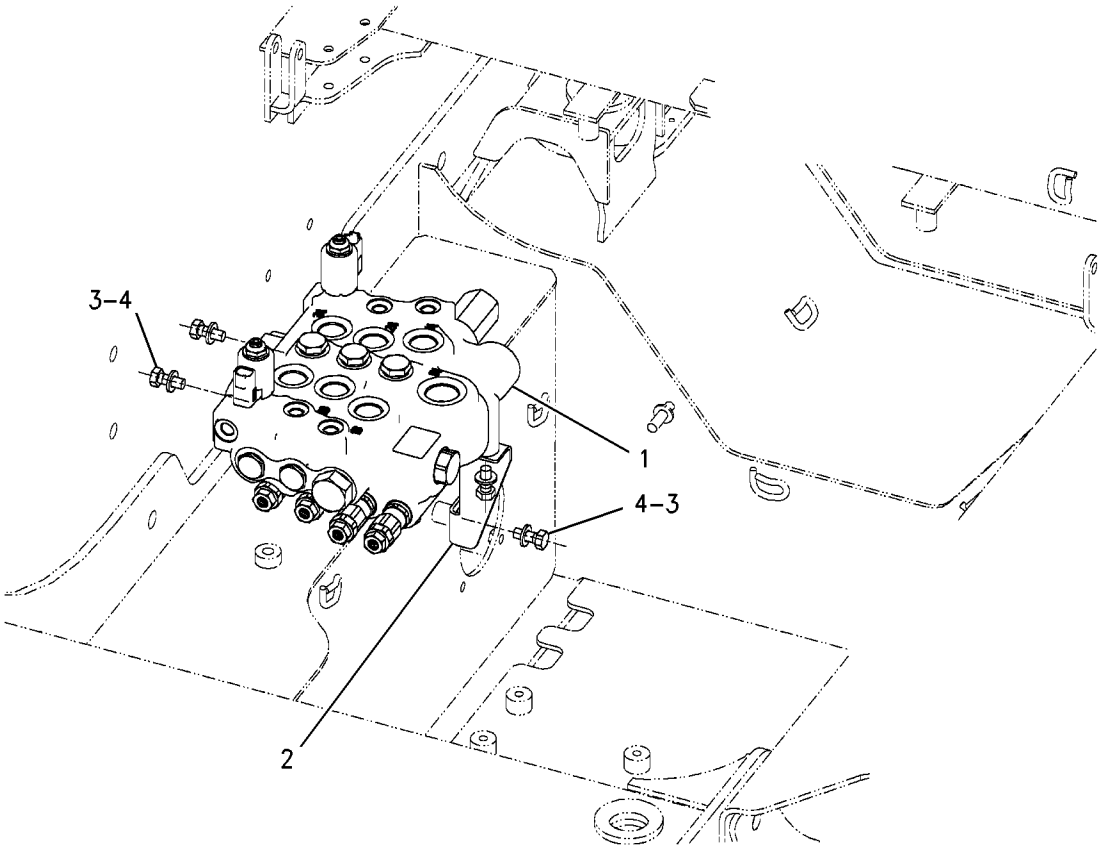

GRAPHIC #1 g00753836

195-6753 VALVE & MTG GP-CONTROL

S/N: 4YZ5059-UP; 5SZ5488-UP
WORK TOOL, THREE FUNCTION
PART OF 195-6762, 195-6764 HYDRAULIC AR

SMCS-5051 **i01709899**

NOTE	REF NO	GRAPHIC REF	PART NUMBER	QTY	PART NAME 1 2 3 4 5 6 (PRODUCT LEVEL)	SEE PAGE
	1	1	**193-8389**	1	BRACKET	
Y	2	1	**216-6169**	1	VALVE GP-CONTROL	468
	3	1	**8T-4121**	4	WASHER-HARD (11X21X2.5MM THK)	
M	4	1	**8T-4136**	2	BOLT (M10X1.5X25MM)	
M	5	1	**8T-4137**	2	BOLT (M10X1.5X20MM)	

M-METRIC PART
Y-SEPARATE ILLUSTRATION

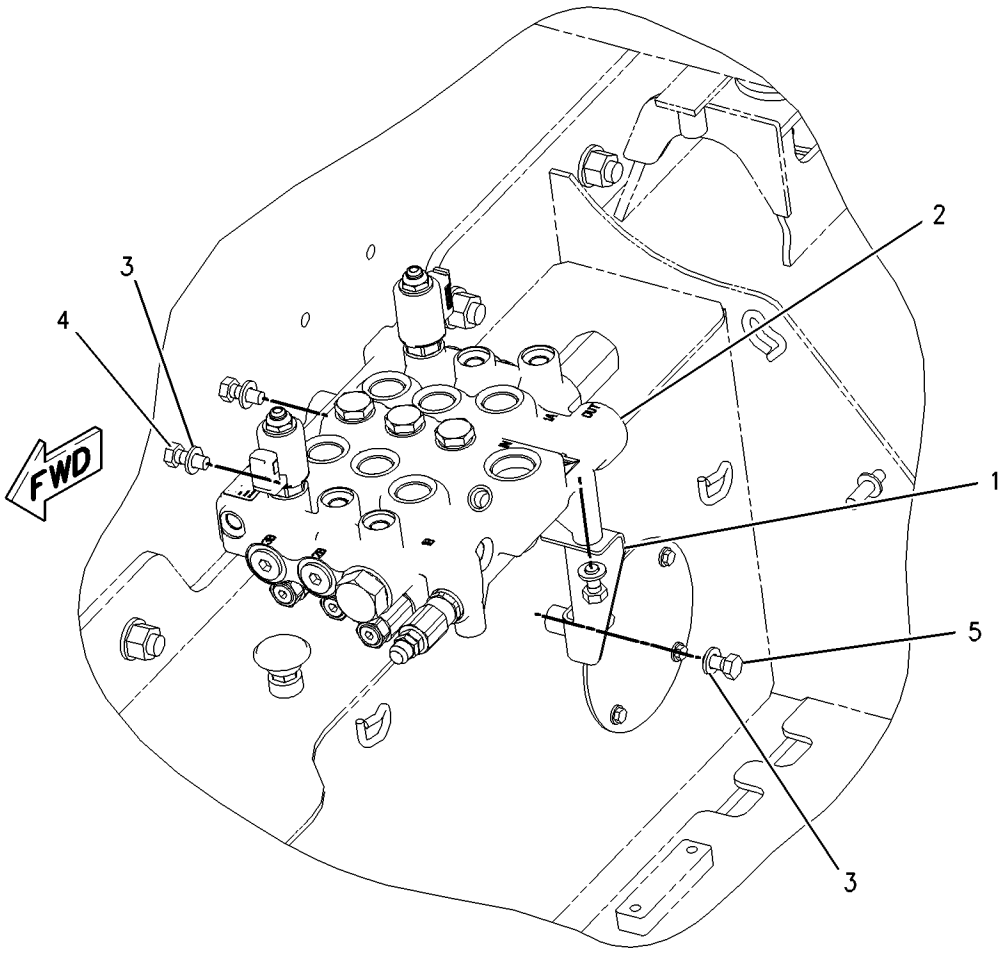

GRAPHIC #1 g00881233

HYDRAULIC SYSTEM

208-1237 VALVE & MTG GP-CONTROL

S/N: CED1-UP; FDG1-UP; 4YZ4000-UP; 5SZ4000-UP
PART OF 190-8101, 193-8325 CONTROL GP-PARKING BRAKE
ALSO AN ATTACHMENT

SMCS-5051 **i01773272**

NOTE	REF NO	GRAPHIC REF	PART NUMBER	QTY	PART NAME 1 2 3 4 5 6 (PRODUCT LEVEL)	SEE PAGE
	1	1	**195-9700**	1	VALVE GP-SOLENOID	
		1	**212-0061**	1	FLANGE	
		1	**200-2371**	1	KIT-SEAL	
					(INCLUDES SEALS)	
	2	1	**208-0973**	1	MANIFOLD AS	
	3	1	**212-0061**	1	FLANGE	
	4	1	*148-8336*	1	CONNECTOR AS	
		1	**3J-1907**	1	SEAL-O-RING	
		1	**6V-8397**	1	SEAL-O-RING	
		1	**6V-8636**	1	CONNECTOR	
M	5	1	**6V-8202**	2	BOLT-HEX SOCKET (M8X1.25X16MM)	

M-METRIC PART

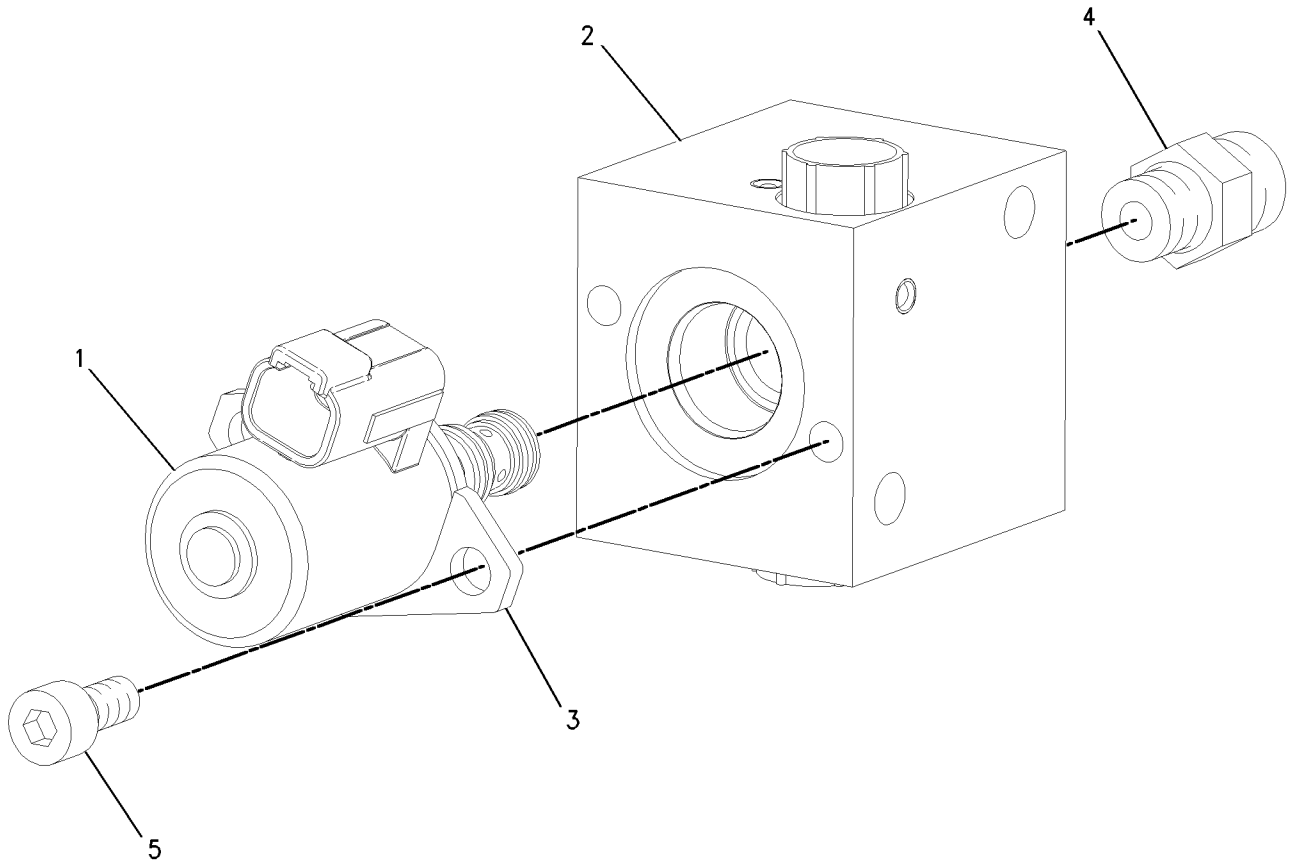

GRAPHIC #1 g00915373

HYDRAULIC SYSTEM

159-5755 VALVE & MTG GP-DIVERTER

S/N: 4YZ4000-UP; 5SZ4000-UP
PART OF 195-6767 HYDRAULIC AR
AN ATTACHMENT

SMCS-5066 **i01491811**

NOTE	REF NO	GRAPHIC REF	PART NUMBER	QTY	PART NAME 1 2 3 4 5 6 (PRODUCT LEVEL)	SEE PAGE
Y	1	1	**176-4072**	1	VALVE GP-DIVERTER	475
	2	1	**8T-4224**	2	WASHER-HARD (8.8X16X2MM THK)	
M	3	1	**8T-6869**	2	BOLT (M8X1.25X60MM)	

M-METRIC PART
Y-SEPARATE ILLUSTRATION

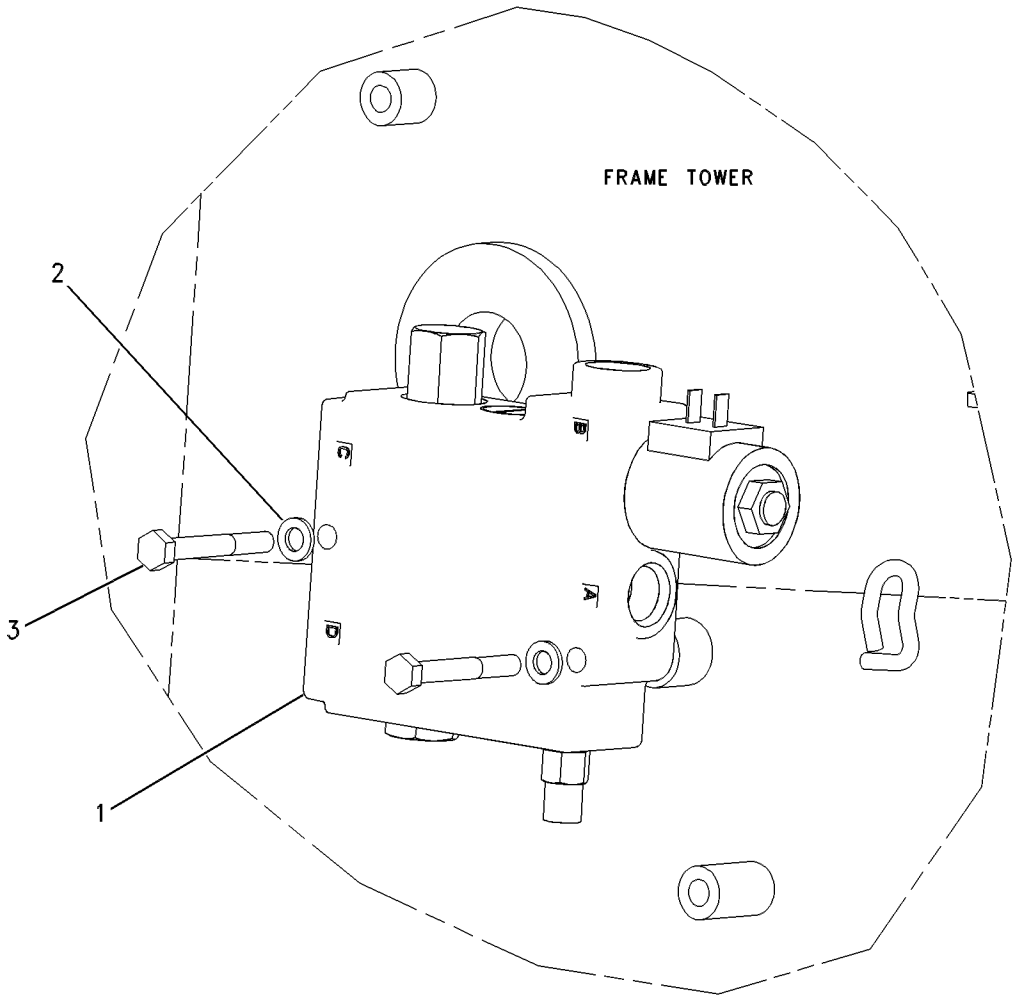

GRAPHIC #1 g00598935

HYDRAULIC SYSTEM

190-8052 VALVE & MTG GP-DIVERTER

S/N: CED1-UP; FDG1-UP
PART OF 190-8051 HYDRAULIC AR
AN ATTACHMENT

SMCS-5066 **i01488725**

NOTE	REF NO	GRAPHIC REF	PART NUMBER	QTY	PART NAME 1 2 3 4 5 6 (PRODUCT LEVEL)	SEE PAGE
	1	1	**190-8053**	1	VALVE GP-DIVERTER	
	2	1	**8T-4224**	4	WASHER-HARD (8.8X16X2MM THK)	
M	3	1	**8T-6870**	2	BOLT (M8X1.25X70MM)	

M-METRIC PART

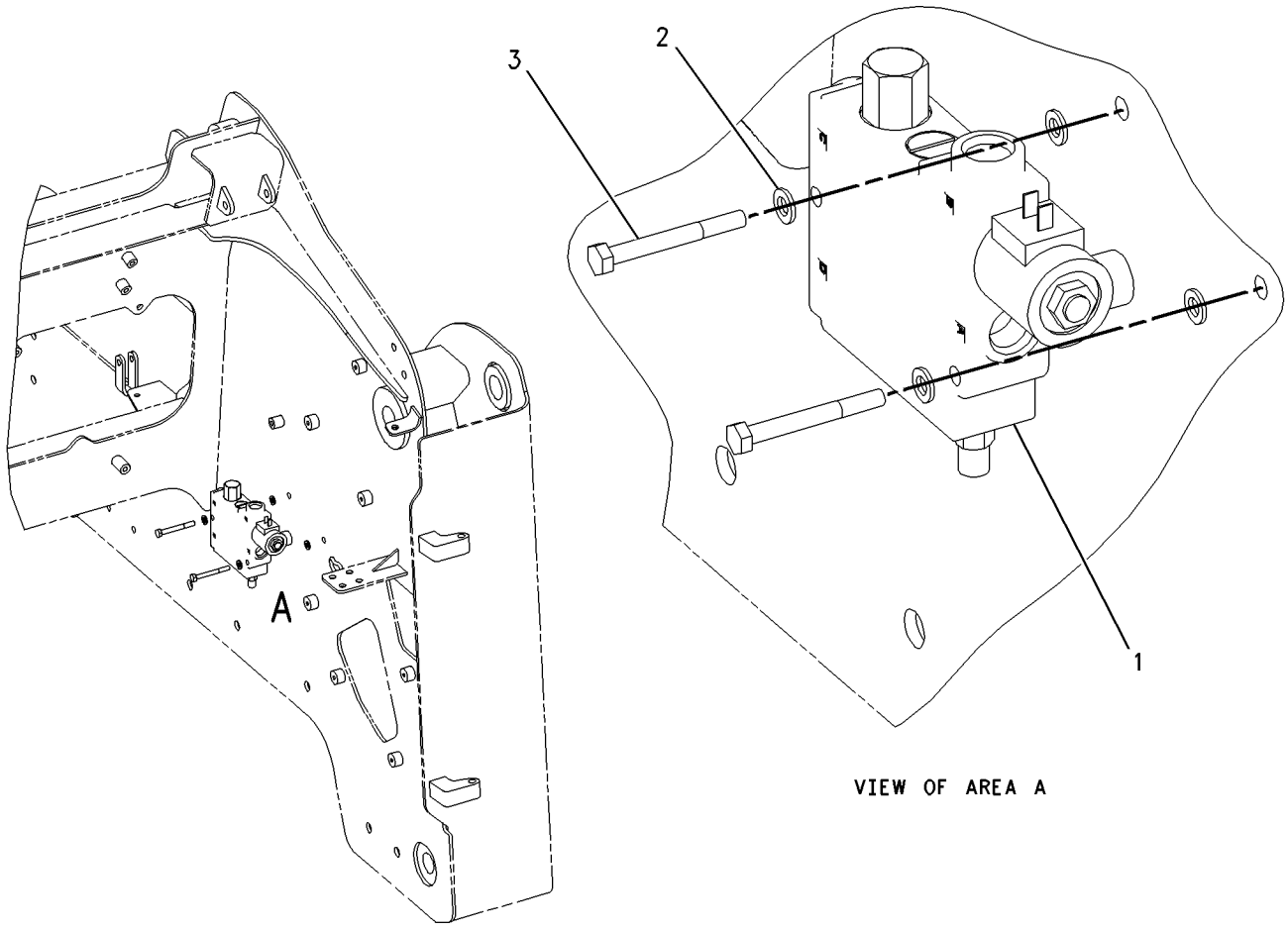

GRAPHIC #1 g00773670

209-0640 VALVE & MTG GP-SOLENOID

S/N: CED1-UP; FDG1-UP; 4YZ4000-UP; 5SZ4000-UP
QUICK COUPLER
PART OF 207-9753, 207-9755 LINES GP-COUPLER
AN ATTACHMENT

SMCS-5479 **i01640323**

NOTE	REF NO	GRAPHIC REF	PART NUMBER	QTY	PART NAME 1 2 3 4 5 6 (PRODUCT LEVEL)	SEE PAGE
Y	1	1	**144-1644**	1	VALVE GP-SOLENOID	491
	2	1	**185-2269**	1	MANIFOLD	

Y-SEPARATE ILLUSTRATION

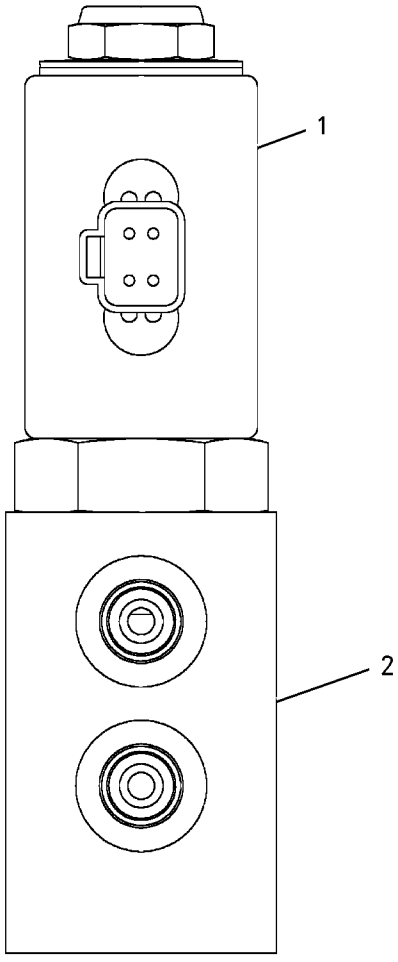

GRAPHIC #1 g00848426

MEMORANDA

HYDRAULIC SYSTEM

173-3326 VALVE GP-BANK 2

S/N: 4YZ4000-UP; 5SZ4000-UP

AN ATTACHMENT

SMCS-5051 **i01792915**

NOTE	REF NO	GRAPHIC REF	PART NUMBER	QTY	PART NAME 1 2 3 4 5 6 (PRODUCT LEVEL)	SEE PAGE
	1	1	**1B-2714**	4	BOLT (1/4-20X2.5 IN)	
	2	1	**5L-4759**	2	SEAL-O-RING	
	3	1	**6V-9178**	4	SEAL-O-RING	
	4	1	**8F-6302**	2	BOLT (1/4-20X3.75IN)	
	5	1	**8S-4711**	2	BOLT (1/4-20X4.5IN)	
J	6	1	**9T-7634**	1	VALVE GP-CHECK	
	6A	1	**033-6027**	1	SEAL-O-RING	
	7	1	**156-2850**	2	RING-BACKUP	
	8	1	**176-4081**	1	VALVE GP-RELIEF	
	8A	1	**033-6027**	1	SEAL-O-RING	
	9	1	**176-4082**	1	VALVE GP-RELIEF	
	9A	1	**033-6027**	1	SEAL-O-RING	
	10	1	**176-4085**	1	VALVE GP-RELIEF	
	10A	1	**033-6027**	1	SEAL-O-RING	
	11	1	**176-4086**	1	VALVE GP-RELIEF	
	11A	1	**033-6027**	1	SEAL-O-RING	
					AVAILABLE REPAIR KIT(S):	
J			**107-7491**	1	KIT-SEAL	

J-KIT MARKED J SERVICES PART MARKED J

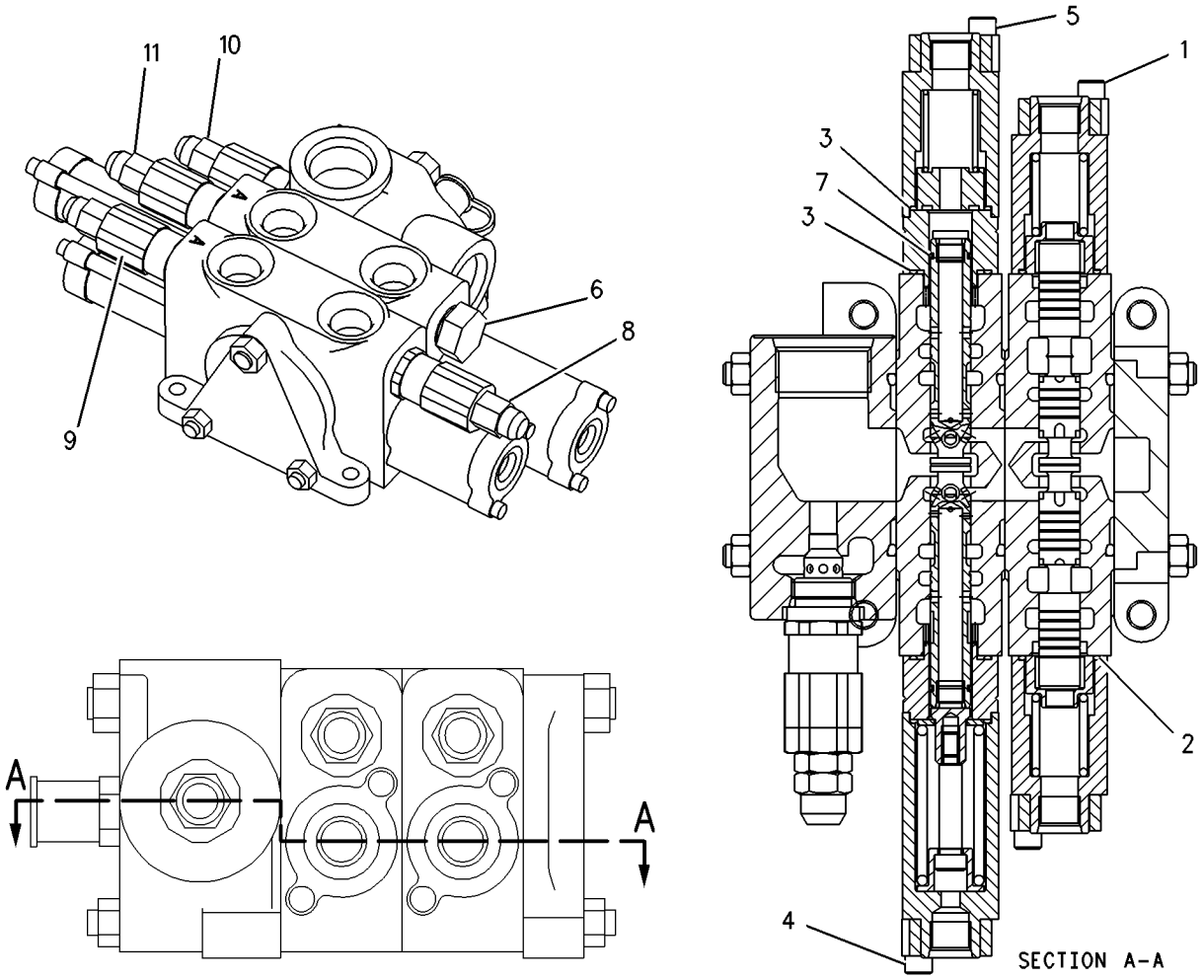

GRAPHIC #1 g00917070

HYDRAULIC SYSTEM

190-8086 VALVE GP-CONTROL

S/N: CED1-735; FDG1-943
WORKTOOL, THREE FUNCTION
PART OF 190-8085 VALVE & MTG GP-CONTROL

SMCS-5051 **i01792966**

NOTE	REF NO	GRAPHIC REF	PART NUMBER	QTY	PART NAME 1 2 3 4 5 6 (PRODUCT LEVEL)	SEE PAGE
Y	1	1	**188-0878**	1	VALVE GP-RELIEF	489
Y	2	1	**185-7709**	1	VALVE GP-RELIEF	488
Y	3	1	**185-4254**	2	VALVE GP-MODULATING	476
Y	4	1	**204-1480**	1	VALVE GP-RELIEF	490
Y	5	1	**185-7708**	2	VALVE GP-RELIEF	487
	6	1	**144-4532**	3	PLUG	
	7	1	**144-4531**	3	VALVE (CHECK) (CHECK)	
	8	1	**204-1481**	1	CAP	
	9	1	**204-1485**	6	WASHER	
	10	1	**204-1482**	1	SPRING	
	11	1	**204-1486**	1	WASHER	
	12	1	**127-6316**	1	BOLT-SHOULDER	
	13	1	**204-1488**	1	SPRING	
	14	1	**204-1489**	4	SPRING	
	15	1	**8I-5078**	3	SEAL-O-RING	
	16	1	**204-1476**	4	PLUG	
	17	1	**9T-0546**	1	SPRING	
	18	1	**9T-0553**	1	VALVE (CHECK)	
	19	1	**204-1472**	2	SEAL-O-RING	
	20	1	**204-1471**	1	CAP	
	21	1	**6E-4816**	1	PLUG GP-CONTROL VALVE	
		1	**6E-2745**	1	SEAL-O-RING	
		1	**9T-4506**	1	PLUG	
					—OR—	
		1	**6E-4793**	1	PLUG GP-CONTROL VALVE	
		1	**9J-0705**	1	RING-BACKUP	
		1	**033-5879**	1	SEAL-O-RING	
		1	**033-6036**	1	SEAL-O-RING	
	22	1	**003-3082**	3	SPRING	
	23	1	**204-1470**	1	SEAL-O-RING	

Y-SEPARATE ILLUSTRATION

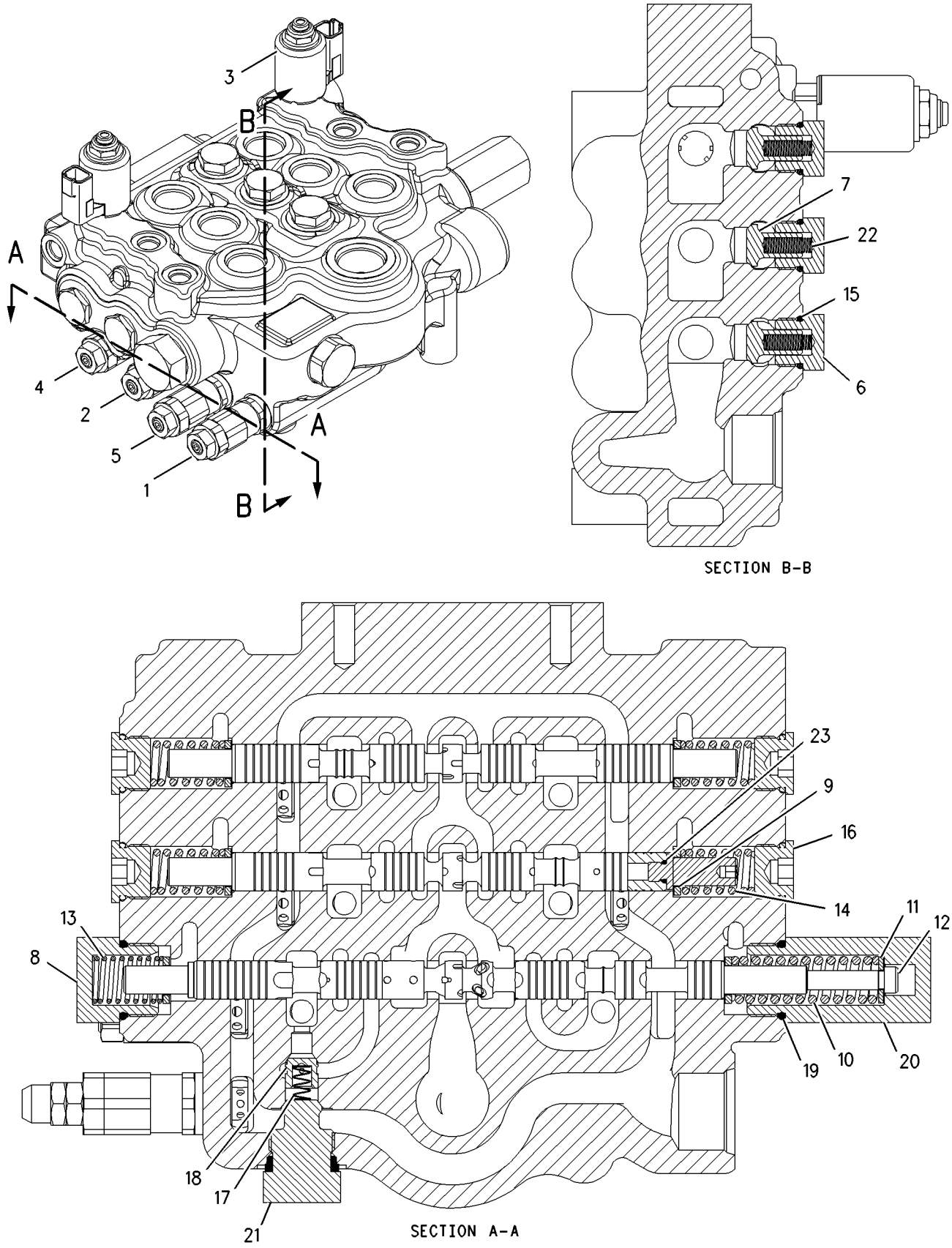

GRAPHIC #1 g00917772

HYDRAULIC SYSTEM

193-8386 VALVE GP-CONTROL

S/N: 4YZ4000-5058; 5SZ4000-5487

WORK TOOL

PART OF 195-6753 VALVE & MTG GP-CONTROL

SMCS-5051 **i01792958**

NOTE	REF NO	GRAPHIC REF	PART NUMBER	QTY	PART NAME 1 2 3 4 5 6 (PRODUCT LEVEL)	SEE PAGE
Y	1	1	**188-0878**	1	VALVE GP-RELIEF	489
Y	2	1	**185-7709**	1	VALVE GP-RELIEF	488
Y	3	1	**185-4254**	2	VALVE GP-MODULATING	476
Y	4	1	**204-1480**	1	VALVE GP-RELIEF	490
Y	5	1	**185-7708**	2	VALVE GP-RELIEF	487
	6	2	**144-4532**	3	PLUG	
	7	2	**144-4531**	3	VALVE (CHECK)	
	8	1	**204-1481**	1	CAP	
	9	2	**204-1485**	6	WASHER	
	10	2	**204-1482**	1	SPRING	
	11	2	**204-1486**		WASHER	
	12	2	**127-6316**	1	BOLT-SHOULDER	
	13	1	**204-1488**	1	SPRING	
	14	2	**204-1489**	4	SPRING	
	15	2	**8I-5078**	3	SEAL-O-RING	
	16	2	**204-1476**	4	PLUG	
	17	2	**9T-0546**	1	SPRING	
	18	2	**9T-0553**	1	VALVE	
	19	2	**204-1472**	2	SEAL-O-RING	
	20	2	**204-1471**	1	CAP	
	21	1	**6E-4816**	1	PLUG GP-CONTROL VALVE	
		1	**9T-4506**	1	PLUG	
		1	**6E-2745**	1	SEAL-O-RING	
					-OR-	
		1	*6E-4793*	1	PLUG GP-CONTROL VALVE	
		1	**6E-4815**	1	PLUG	
		1	**033-5879**	1	SEAL-O-RING	
		1	**033-6036**	1	SEAL-O-RING	
	22	2	**003-3082**	3	SPRING	
	23	2	**204-1470**	1	SEAL-O-RING	

Y-SEPARATE ILLUSTRATION

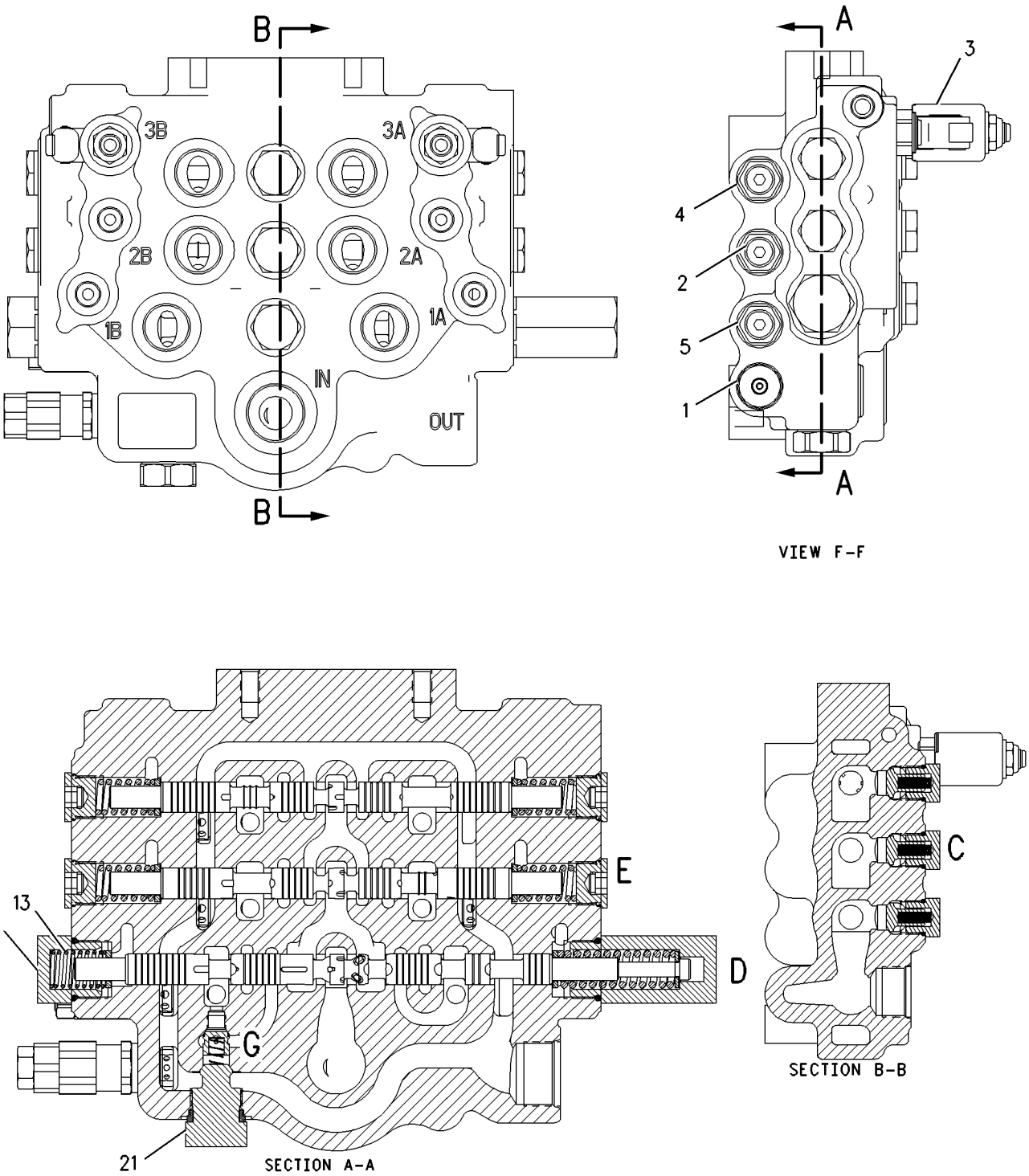

GRAPHIC #1

g00919066

193-8386 VALVE GP-CONTROL ***(contd.)*** **i01792958**

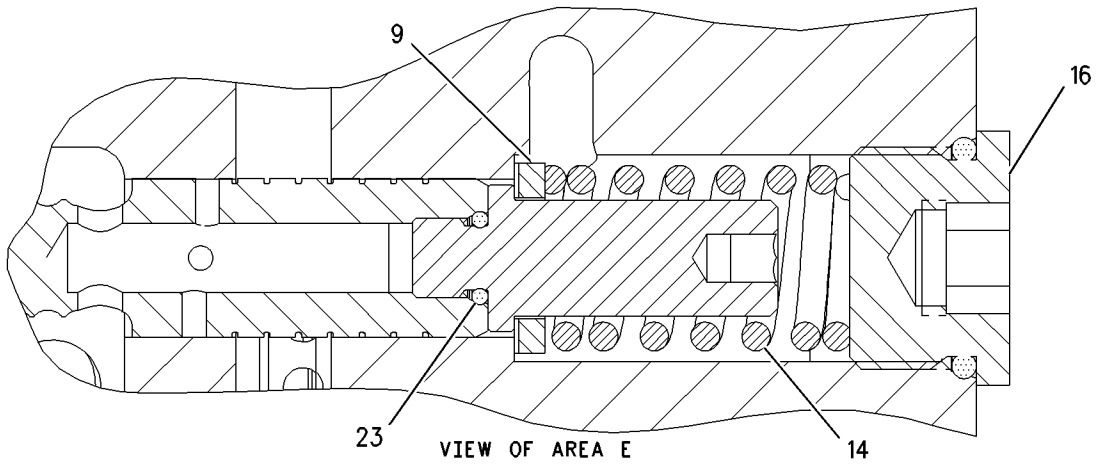

VIEW OF AREA E

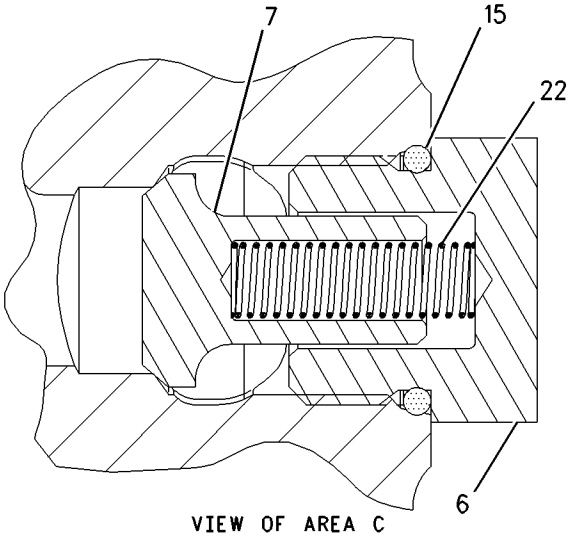

VIEW OF AREA C

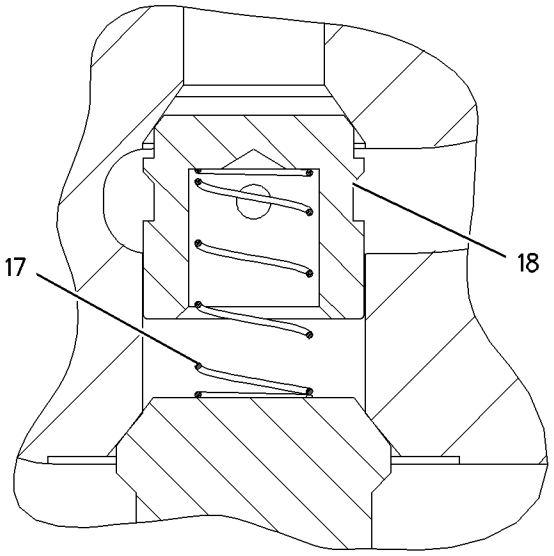

VIEW OF AREA G

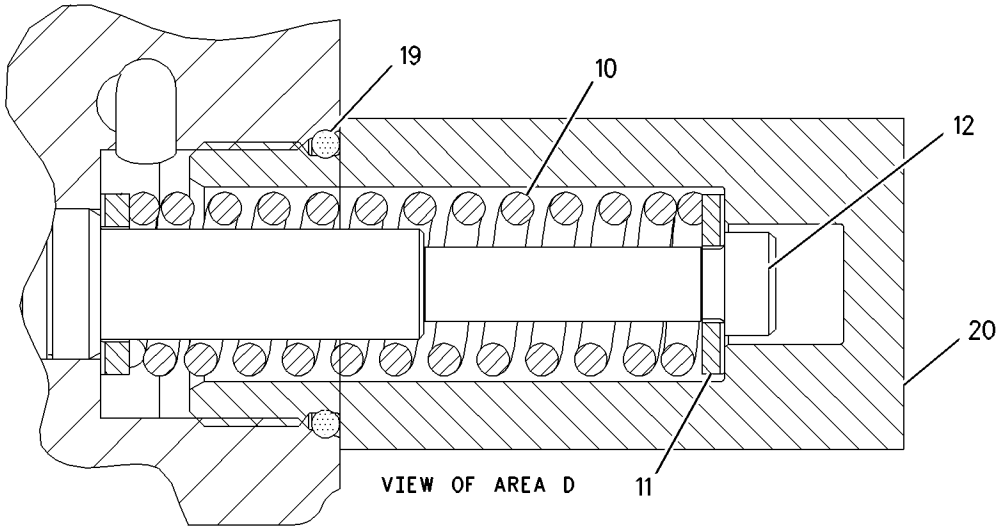

VIEW OF AREA D

GRAPHIC #2 g00919137

212-6570 VALVE GP-CONTROL

S/N: CED1-UP; FDG1-UP; 4YZ4000-UP; 5SZ4000-UP

PART OF 220-8167, 220-8170, 223-8386, 223-8387 LINES GP-AUXILIARY HYDRAULIC

SMCS-5051 **i01770472**

NOTE	REF NO	GRAPHIC REF	PART NUMBER	QTY	PART NAME 1 2 3 4 5 6 (PRODUCT LEVEL)	SEE PAGE
M	1	1	**9X-6615**	4	BOLT (M5X.8X30MM)	
	2	1	**210-5544**	1	VALVE GP-CONTROL	
	3	1	**211-9032**	4	WASHER-HARD	
Y	4	1	**215-3271**	1	VALVE GP-CONTROL	466
	5	1	**8T-4827**	2	SEAL	
	6	1	**126-5984**	4	RING-BACKUP	
M	7	1	**6V-8213**	4	BOLT-SOCKET HEAD (M8X1.25X70MM)	
					AVAILABLE REPAIR KIT(S):	
			215-3275	1	KIT-SEAL	

M-METRIC PART
Y-SEPARATE ILLUSTRATION

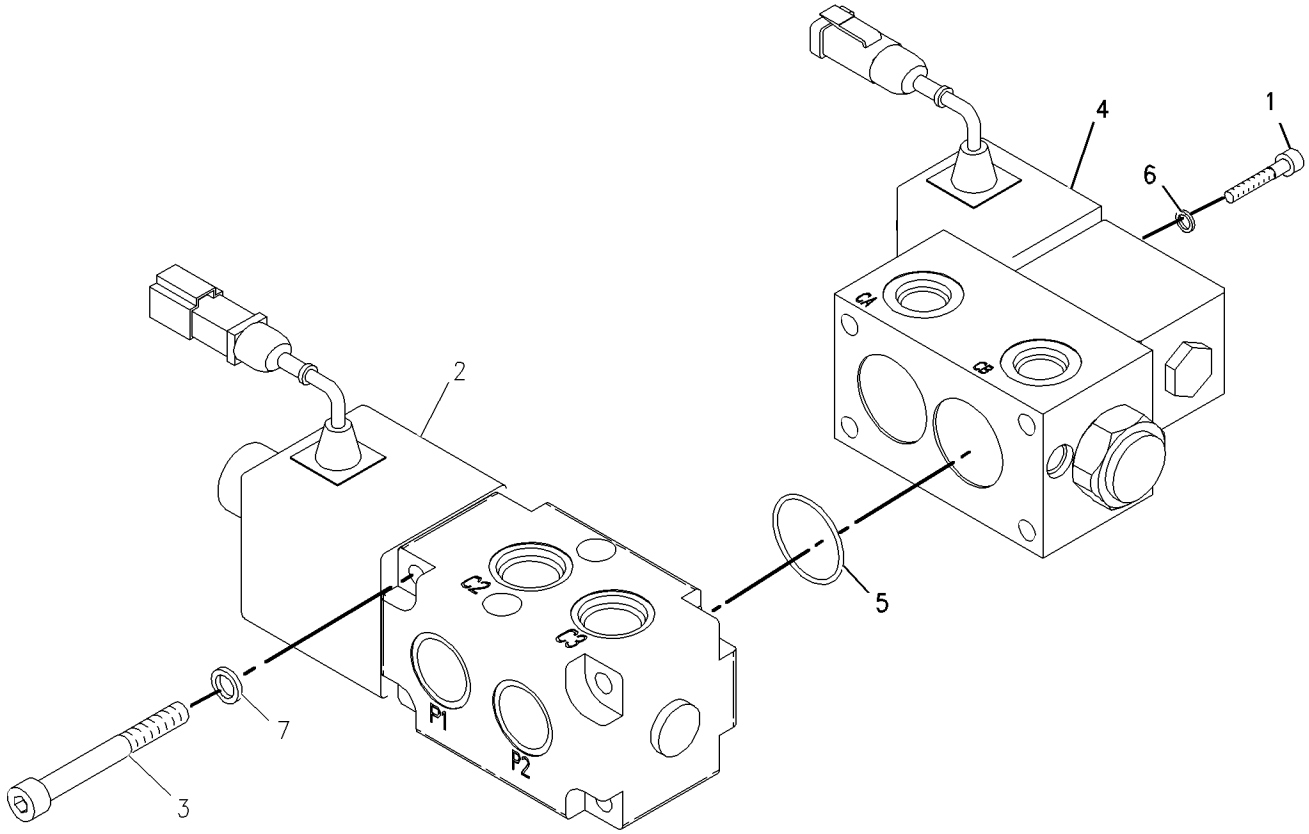

GRAPHIC #1 g00912690

215-3271 VALVE GP-CONTROL

S/N: CED1-UP; FDG1-UP; 4YZ4000-UP; 5SZ4000-UP
PART OF 212-6570 VALVE GP-CONTROL

SMCS-5051 **i01702078**

NOTE	REF NO	GRAPHIC REF	PART NUMBER	QTY	PART NAME 1 2 3 4 5 6 (PRODUCT LEVEL)	SEE PAGE
	1	1	**215-3272**	1	SOLENOID	
		1	**102-8802**	1	KIT-RECEPTACLE (2 PIN)	
		1	**186-3735**	2	PIN-CONNECTOR	
	2	1	**215-3273**	1	CARTRIDGE AS-VALVE	
		1	**6V-8399**	1	SEAL-O-RING	
	3	1	**215-3274**	1	FASTENER GP	

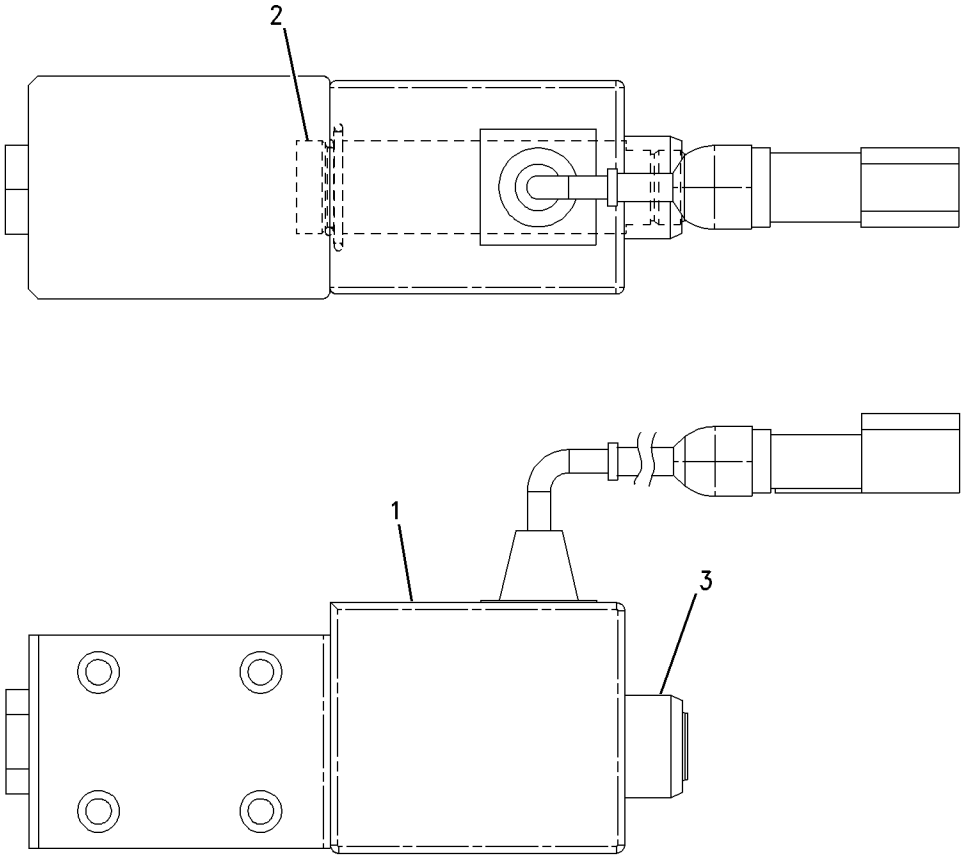

GRAPHIC #1 g00878152

MEMORANDA

HYDRAULIC SYSTEM

216-6169 VALVE GP-CONTROL

S/N: 4YZ4000-UP; 5SZ4000-UP

WORK TOOL

PART OF 195-6753 VALVE & MTG GP-CONTROL

SMCS-5051 **i01792995**

NOTE	REF NO	GRAPHIC REF	PART NUMBER	QTY	PART NAME 1 2 3 4 5 6 (PRODUCT LEVEL)	SEE PAGE
Y	1	1	**188-0878**	1	VALVE GP-RELIEF	489
	2	1	**216-6160**	2	VALVE GP-RELIEF	
	3	1	**216-6161**	2	VALVE GP-RELIEF	
Y	4	1	**185-4254**	2	VALVE GP-MODULATING	476
	5	2	**204-1470**	2	SEAL-O-RING	
	6	2	**204-1485**	6	WASHER	
	7	2	**204-1482**	1	SPRING	
	8	2	**204-1488**	1	SPRING	
	9	2	**204-1489**	4	SPRING	
	10	2	**204-1486**	1	WASHER	
	11	2	**127-6316**	1	BOLT-SHOULDER	
	12	2	**204-1476**	4	PLUG	
	13	2	**204-1472**	2	SEAL-O-RING	
	14	2	**204-1471**	1	CAP	
	15	2	**204-1481**	1	CAP	
	16	2	**144-4531**	3	VALVE (CHECK)	
	17	2	**003-3082**	3	SPRING	
	18	2	**8I-5078**	3	SEAL-O-RING	
	19	2	**144-4532**	3	PLUG	
	20	2	**216-6156**	1	VALVE-CHECK	
	21	2	**216-6157**	1	SPRING	
	22	2	**216-6158**	1	SEAL-O-RING	
	23	2	**216-6159**	1	PLUG	

Y-SEPARATE ILLUSTRATION

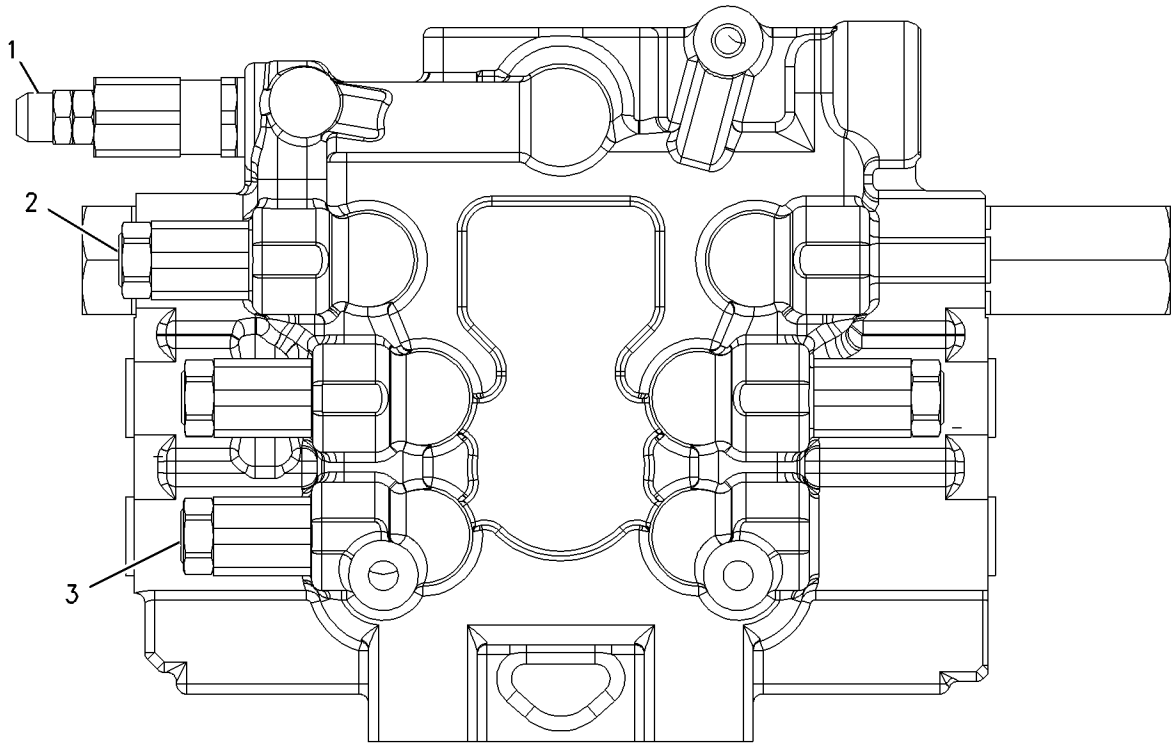

VIEW B-B

REFER TO ALL ILLUSTRATIONS OF
THIS GROUP FOR AUXILIARY VIEWS

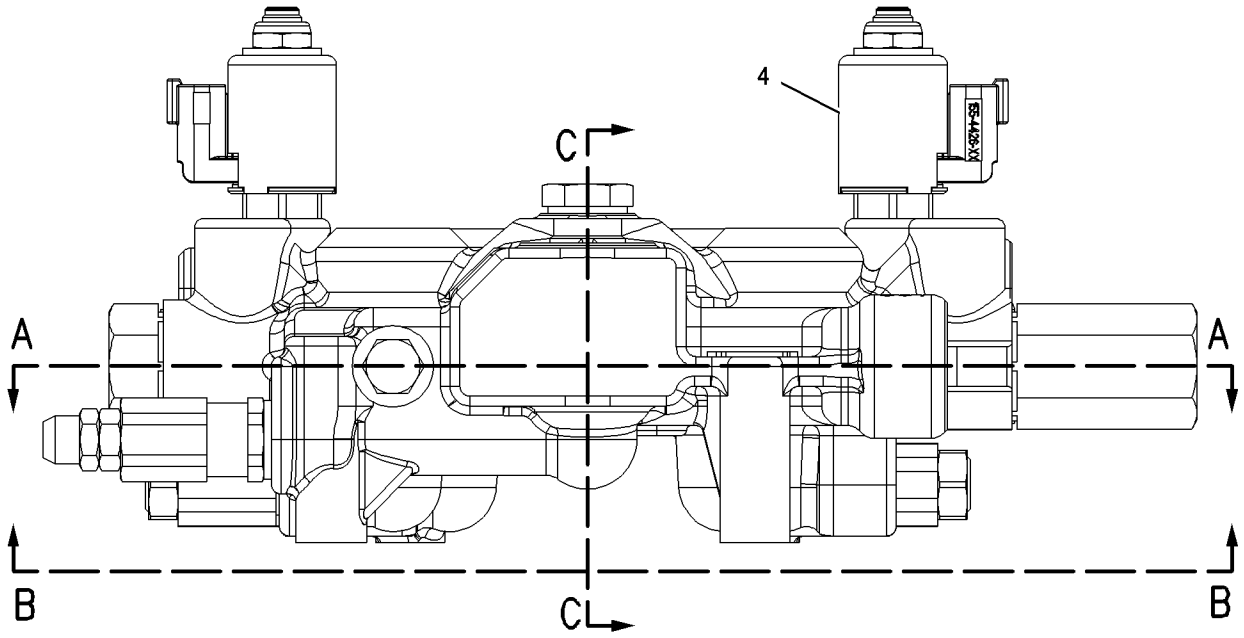

GRAPHIC #1 g00917598

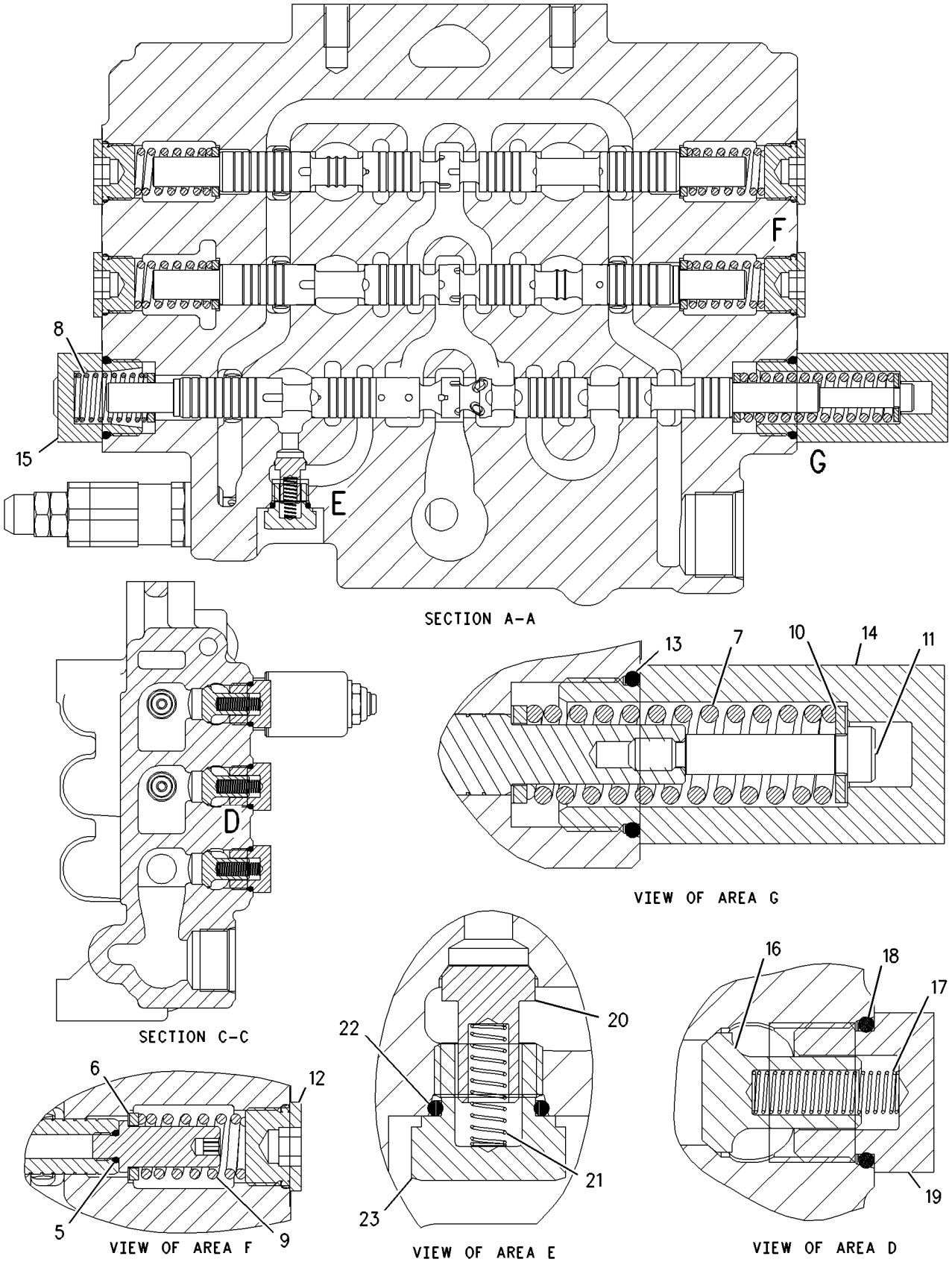

GRAPHIC #2

g00917612

MEMORANDA

HYDRAULIC SYSTEM

216-6170 VALVE GP-CONTROL

S/N: CED1-UP; FDG1-UP
WORK TOOL
PART OF 190-8085 VALVE & MTG GP-CONTROL

SMCS-5051 **i01792999**

NOTE	REF NO	GRAPHIC REF	PART NUMBER	QTY	PART NAME 1 2 3 4 5 6 (PRODUCT LEVEL)	SEE PAGE
Y	1	1	**188-0878**	1	VALVE GP-RELIEF	489
	2	1	**216-6160**	2	VALVE GP-RELIEF	
	3	1	**216-6161**	2	VALVE GP-RELIEF	
Y	4	1	**185-4254**	2	VALVE GP-MODULATING	476
	5	2	**204-1470**	2	SEAL-O-RING	
	6	2	**204-1485**	6	WASHER	
	7	2	**204-1482**	1	SPRING	
	8	2	**204-1488**	1	SPRING	
	9	2	**204-1489**	4	SPRING	
	10	2	**204-1486**	1	WASHER	
	11	2	**127-6316**	1	BOLT-SHOULDER	
	12	2	**204-1476**	4	PLUG	
	13	2	**204-1472**	2	SEAL-O-RING	
	14	2	**204-1471**	1	CAP	
	15	2	**204-1481**	1	CAP	
	16	2	**144-4531**	3	VALVE (CHECK)	
	17	2	**003-3082**	3	SPRING	
	18	2	**8I-5078**	3	SEAL-O-RING	
	19	2	**144-4532**	3	PLUG	
	20	2	**216-6156**	1	VALVE-CHECK	
	21	2	**216-6157**	1	SPRING	
	22	2	**216-6158**	1	SEAL-O-RING	
	23	2	**216-6159**	1	PLUG	

Y-SEPARATE ILLUSTRATION

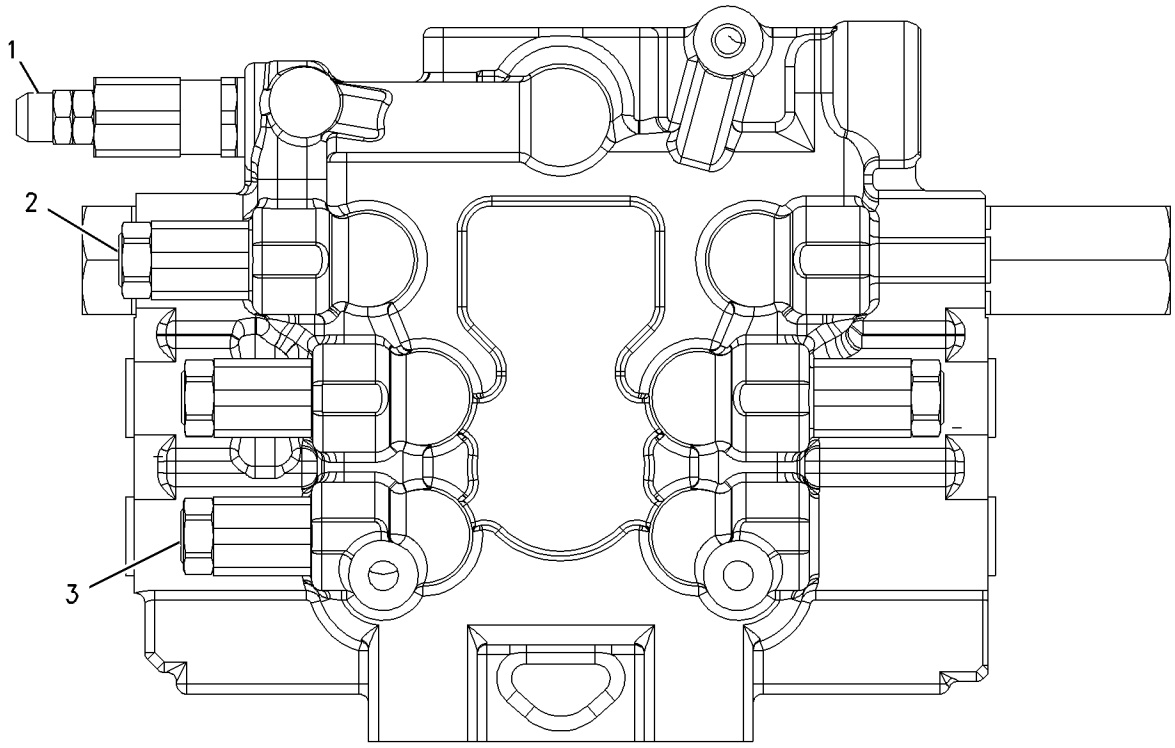

VIEW B-B

REFER TO ALL ILLUSTRATIONS OF
THIS GROUP FOR AUXILIARY VIEWS

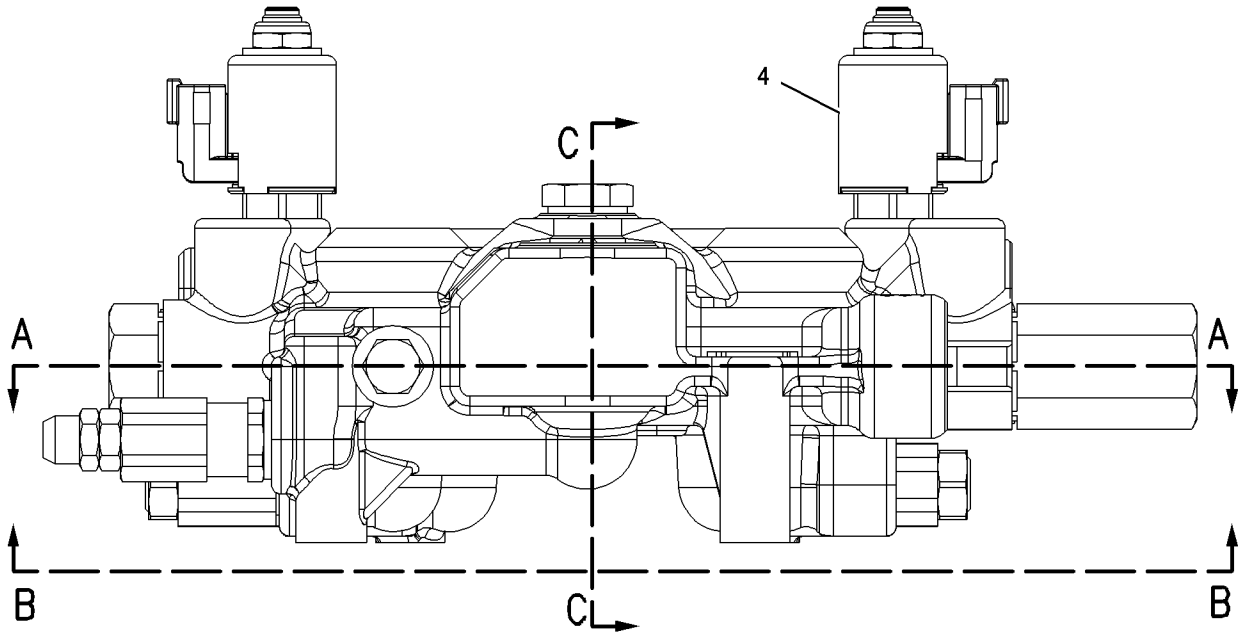

GRAPHIC #1

g00917143

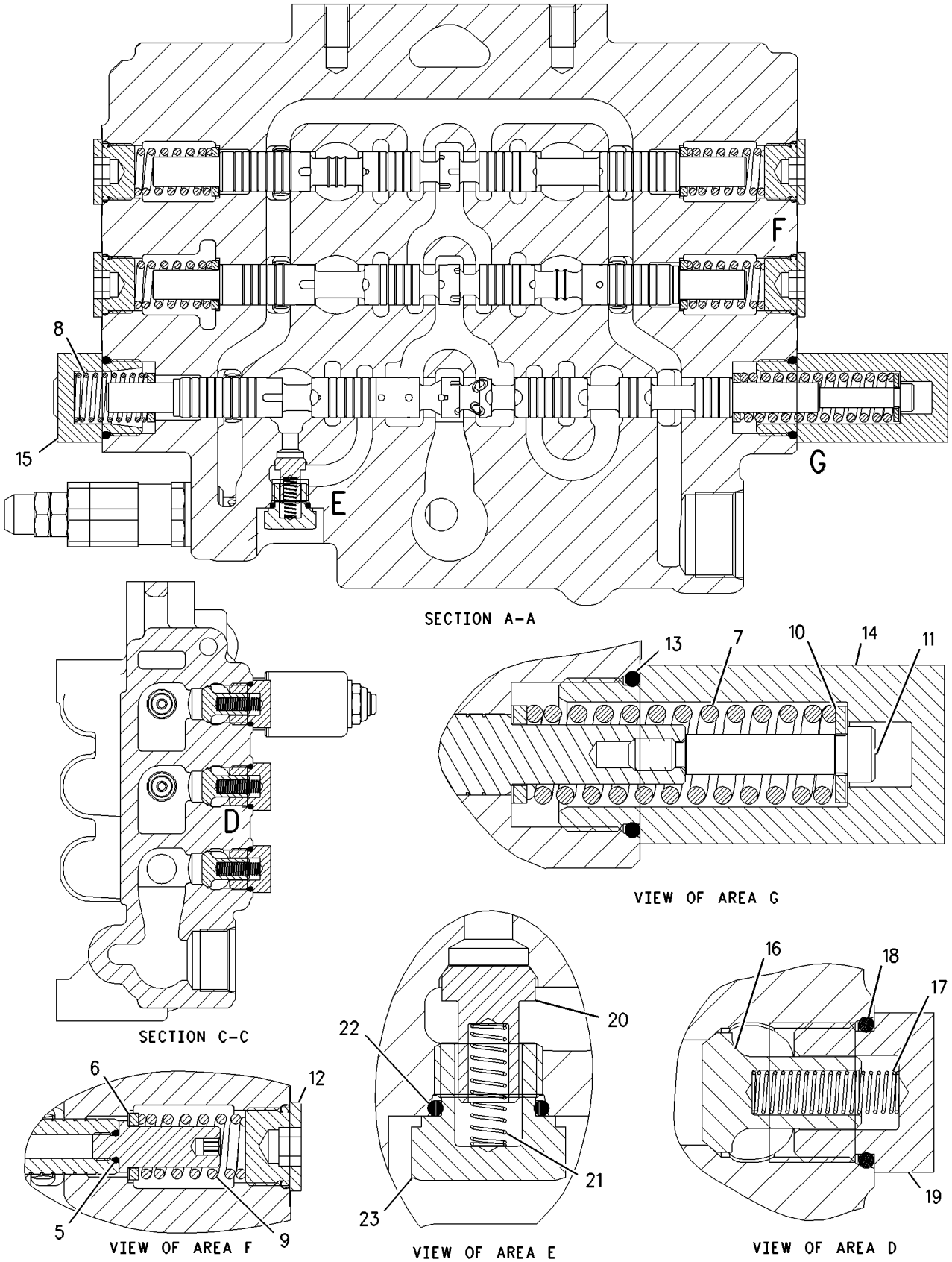

GRAPHIC #2 g00917621

176-4072 VALVE GP-DIVERTER

S/N: 4YZ4000-UP; 5SZ4000-UP
PART OF 159-5755 VALVE & MTG GP-DIVERTER
AN ATTACHMENT

SMCS-5066 **i01207038**

NOTE	REF NO	GRAPHIC REF	PART NUMBER	QTY	PART NAME 1 2 3 4 5 6 (PRODUCT LEVEL)	SEE PAGE
J	1	1	**102-8804**	1	KIT-RECEPTACLE (4 PIN)	
J	2	1	**3E-3377**	1	WEDGE-RECEPTACLE LOCK	
	3	1	**8T-8729**	2	PIN-CONNECTOR	
	4	1	**9G-3695**	2	PLUG-SEAL	

J-KIT MARKED J INCLUDES PART MARKED J

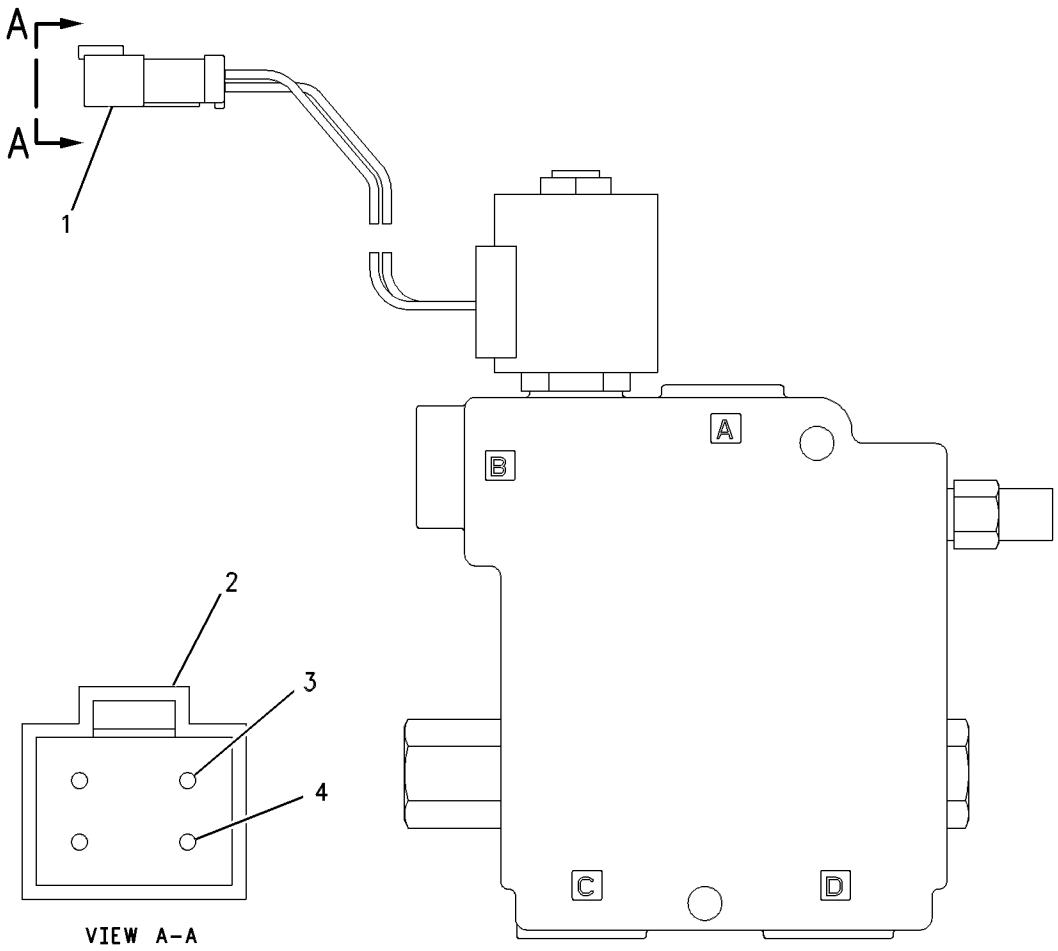

GRAPHIC #1 g00651880

HYDRAULIC SYSTEM

185-4254 VALVE GP-MODULATING

S/N: CED1-UP; FDG1-UP; 4YZ4000-UP; 5SZ4000-UP

PART OF 190-8086, 193-8386, 216-6169, 216-6170 VALVE GP-CONTROL

SMCS-3139 **i01773284**

NOTE	REF NO	GRAPHIC REF	PART NUMBER	QTY	PART NAME 1 2 3 4 5 6 (PRODUCT LEVEL)	SEE PAGE
	1	1	**155-4426**	1	COIL AS	
	2	1	**164-2108**	1	WASHER (13.03X25.4X2.38MM THK)	
	3	1	**167-9524**	1	NUT-SELF LOCKING (1/2-28 THD)	
	4	1	*185-4253*	1	VALVE AS	
	5	1	**3E-6749**	1	SEAL-O-RING	
	6	1	**033-5879**	1	SEAL-O-RING	
	7	1	**123-2341**	1	SEAL-O-RING	
	8	1	**9N-1756**	1	SEAL-O-RING	

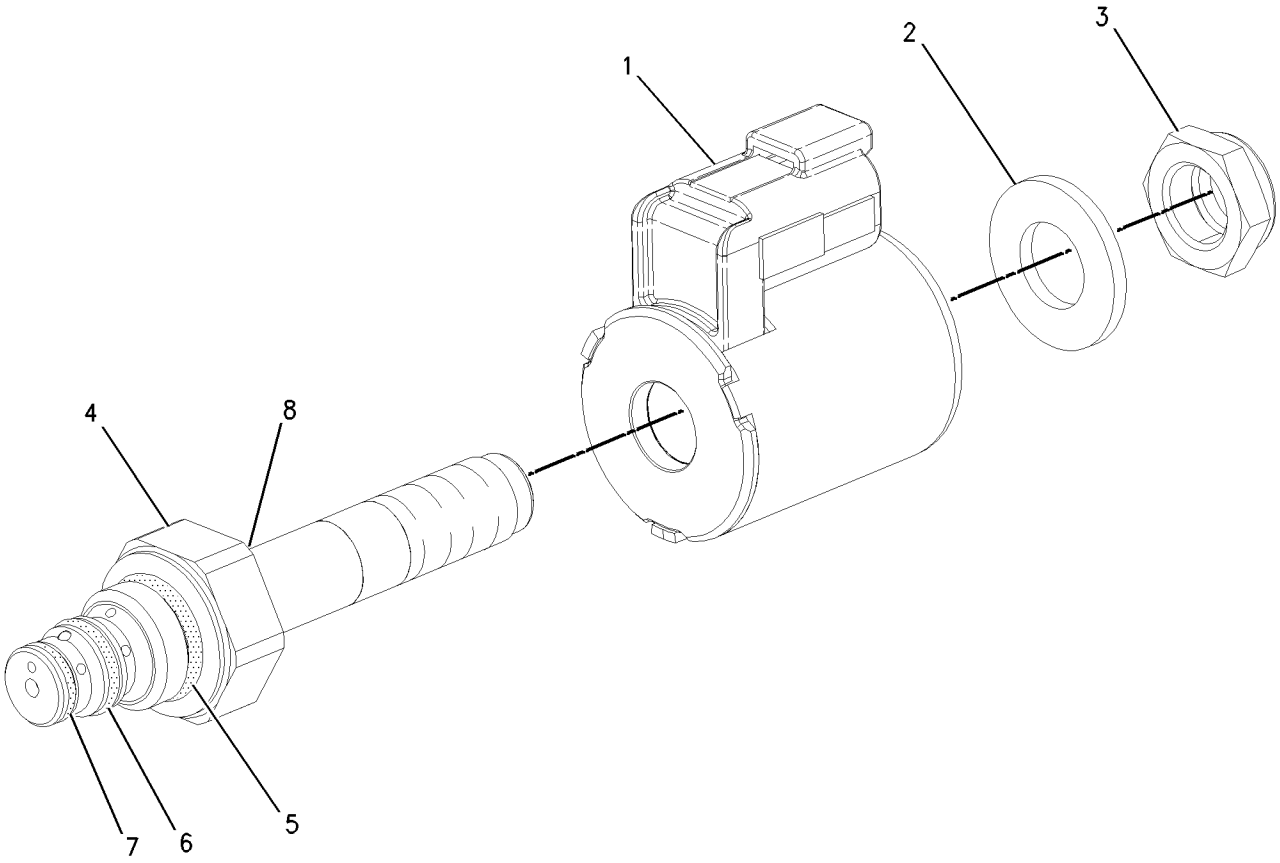

GRAPHIC #1 g00915375

190-8081 VALVE GP-PILOT

S/N: CED1-UP; FDG1-UP; 4YZ4000-UP; 5SZ4000-UP
END COVER
PART OF 190-8080 CONTROL GP-PILOT OPERATED HYD
AN ATTACHMENT

SMCS-5059, 5705 **i01797926**

NOTE	REF NO	GRAPHIC REF	PART NUMBER	QTY	PART NAME 1 2 3 4 5 6 (PRODUCT LEVEL)	SEE PAGE
Y	1	1	**160-4320**	1	CONTROL GP-HANDLE	316
	2	1	**173-0703**	1	BOOT	
Y	3	1	**193-8387**	1	VALVE GP-PILOT	482

Y-SEPARATE ILLUSTRATION

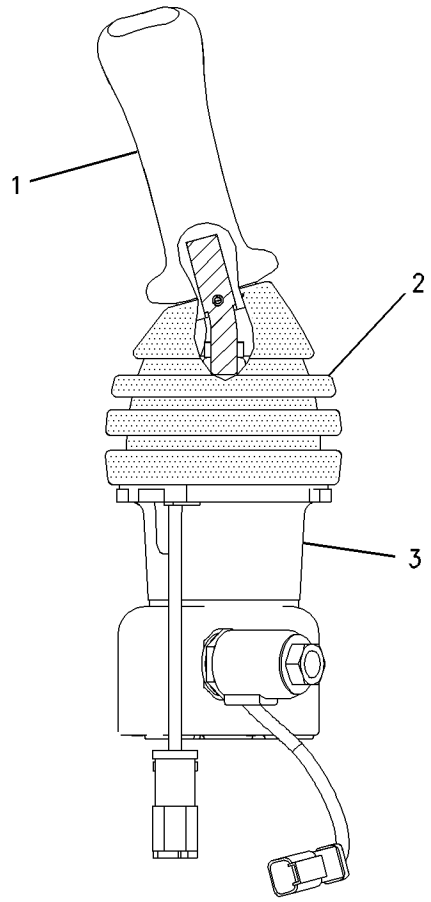

GRAPHIC #1 g00920679

190-8094 VALVE GP-PILOT

S/N: CED1-UP; FDG1-UP; 4YZ4000-UP; 5SZ4000-UP
PART OF 190-8095 CONTROL GP-PILOT OPERATED HYD
AN ATTACHMENT

SMCS-5059, 5705 **i01795277**

NOTE	REF NO	GRAPHIC REF	PART NUMBER	QTY	PART NAME 1 2 3 4 5 6 (PRODUCT LEVEL)	SEE PAGE
Y	1	1	**159-5751**	1	CONTROL GP-HANDLE	315
	2	1	**173-0703**	1	BOOT	
Y	3	1	**193-8387**	1	VALVE GP-PILOT	482

Y-SEPARATE ILLUSTRATION

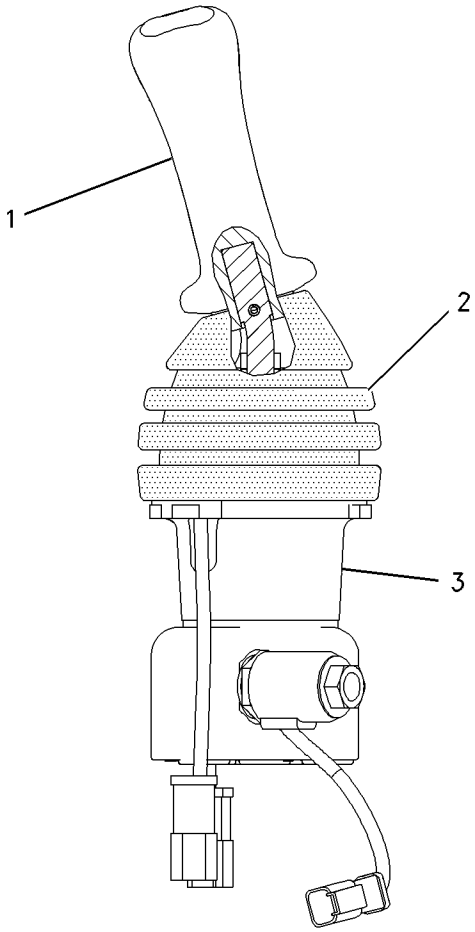

GRAPHIC #1 g00917089

191-9758 VALVE GP-PILOT

S/N: CED1-UP; FDG1-UP; 4YZ4000-UP; 5SZ4000-UP
PART OF 191-9794 CONTROL GP-PILOT OPERATED HYD
AN ATTACHMENT

SMCS-5059, 5705 **i01797934**

NOTE	REF NO	GRAPHIC REF	PART NUMBER	QTY	PART NAME 1 2 3 4 5 6 (PRODUCT LEVEL)	SEE PAGE
	1	1	**195-3510**	1	HANDLE	
	2	1	**142-7508**	1	GROMMET	
	3	1	**173-0702**	1	BOOT	
Y	4	1	**193-8388**	1	VALVE GP-PILOT	483

Y-SEPARATE ILLUSTRATION

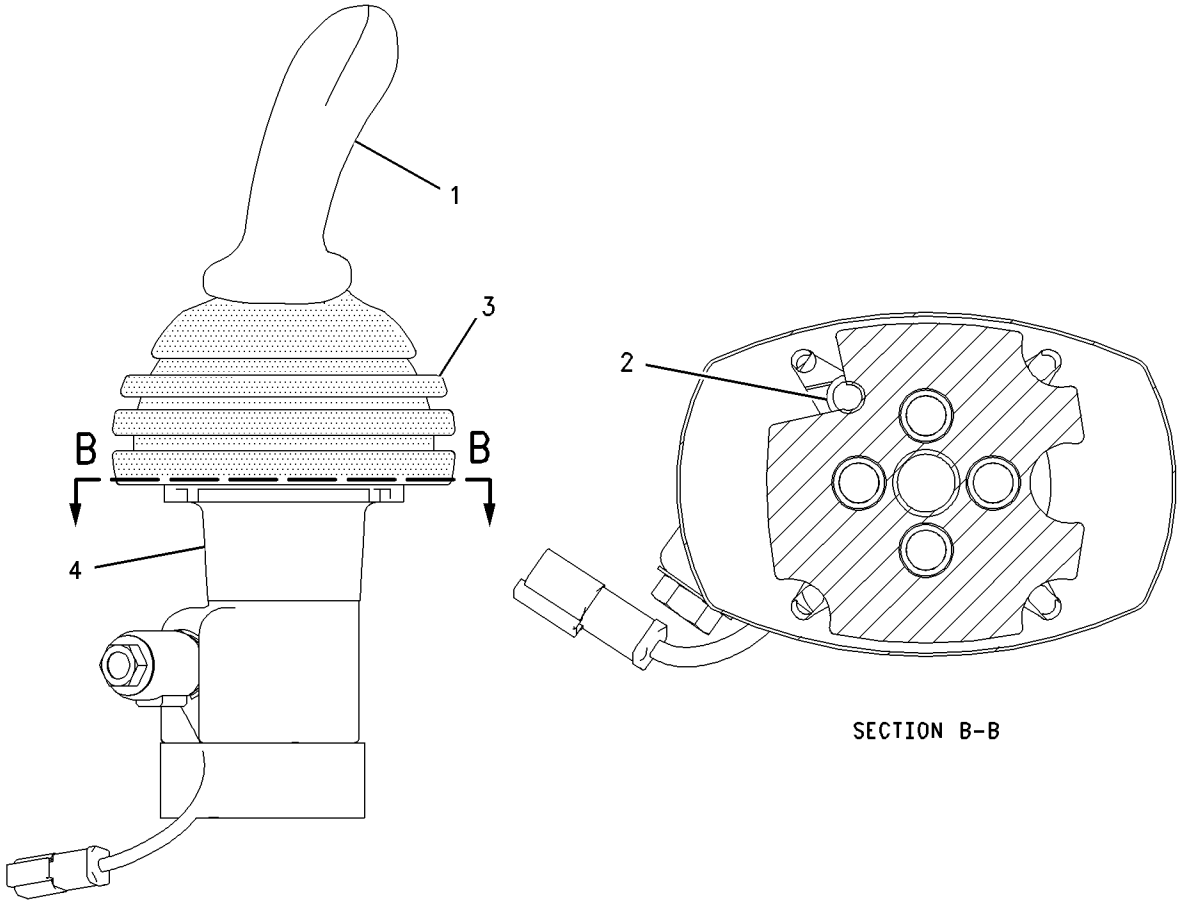

GRAPHIC #1 g00920682

191-9759 VALVE GP-PILOT

S/N: CED1-UP; FDG1-UP
PART OF 206-3795 CONTROL GP-PILOT OPERATED HYD
AN ATTACHMENT

SMCS-5059, 5705 **i01797946**

NOTE	REF NO	GRAPHIC REF	PART NUMBER	QTY	PART NAME 1 2 3 4 5 6 (PRODUCT LEVEL)	SEE PAGE
Y	1	1	**204-1395**	1	CONTROL GP-HANDLE	317
	2	1	**173-0702**	1	BOOT	
Y	3	1	**193-8388**	1	VALVE GP-PILOT	483

Y-SEPARATE ILLUSTRATION

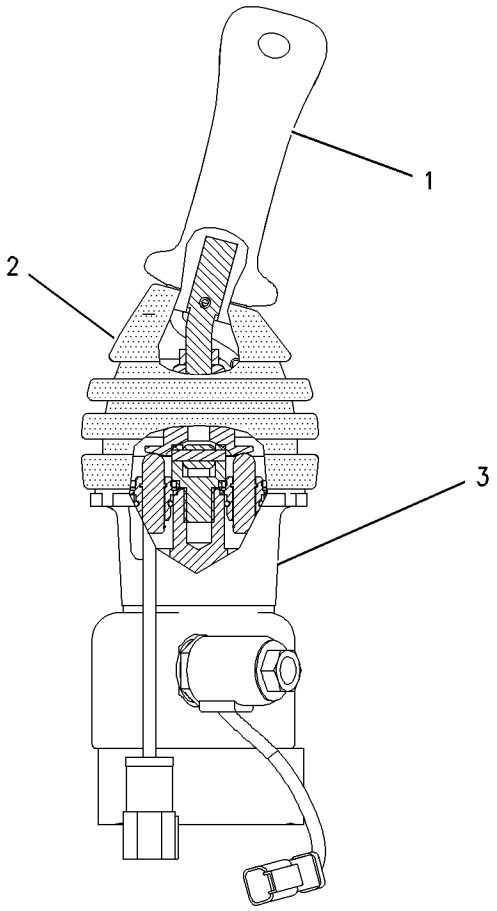

GRAPHIC #1 g00920689

HYDRAULIC SYSTEM

191-9763 VALVE GP-PILOT

S/N: 4YZ4000-UP; 5SZ4000-UP
PART OF 191-9796 CONTROL GP-PILOT OPERATED HYD
AN ATTACHMENT

SMCS-5059, 5705 **i01797999**

NOTE	REF NO	GRAPHIC REF	PART NUMBER	QTY	PART NAME 1 2 3 4 5 6 (PRODUCT LEVEL)	SEE PAGE
Y	1	1	**204-1396**	1	CONTROL GP-HANDLE	318
	2	1	**173-0702**	1	BOOT	
Y	3	1	**193-8388**	1	VALVE GP-PILOT	483

Y-SEPARATE ILLUSTRATION

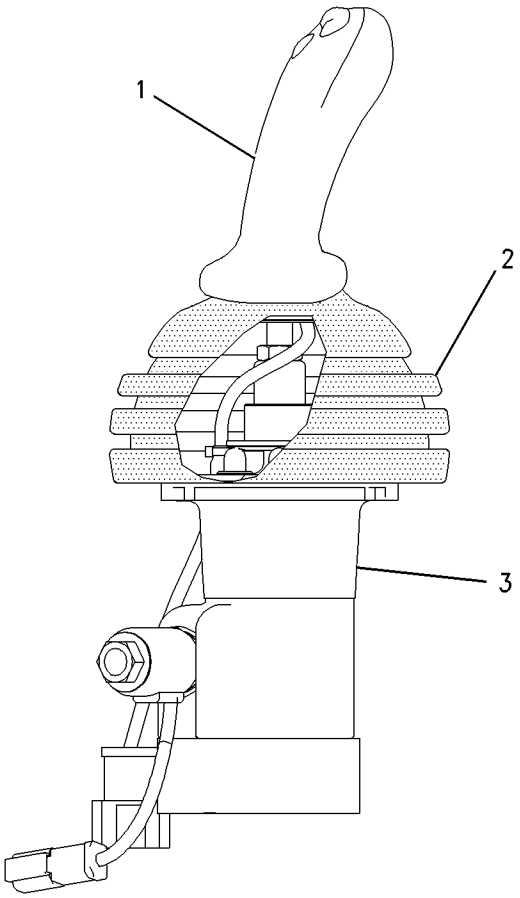

GRAPHIC #1 g00920698

193-8387 VALVE GP-PILOT

S/N: CED1-UP; FDG1-UP; 4YZ4000-UP; 5SZ4000-UP
PART OF 190-8080, 190-8095 CONTROL GP-PILOT OPERATED HYD, 190-8081, 190-8094
VALVE GP-PILOT
AN ATTACHMENT

SMCS-5059, 5705 **i01798028**

NOTE	REF NO	GRAPHIC REF	PART NUMBER	QTY	PART NAME 1 2 3 4 5 6 (PRODUCT LEVEL)	SEE PAGE
	1	1	**158-3770**	1	KIT-LEVER	
	2	1	**172-0970**	1	COIL AS	
		1	**8T-8729**	2	PIN-CONNECTOR	
		1	**102-8802**	1	KIT-RECEPTACLE (2 PIN)	
	3	1	**173-0703**	1	BOOT	
Y	4	1	**191-0916**	1	VALVE GP-SOLENOID	263
M	5	1	**8T-9405**	1	BOLT-SOCKET HEAD (M4X0.7X16MM)	
	6	1	**102-8802**	1	KIT-RECEPTACLE (2 PIN)	

M-METRIC PART
Y-SEPARATE ILLUSTRATION

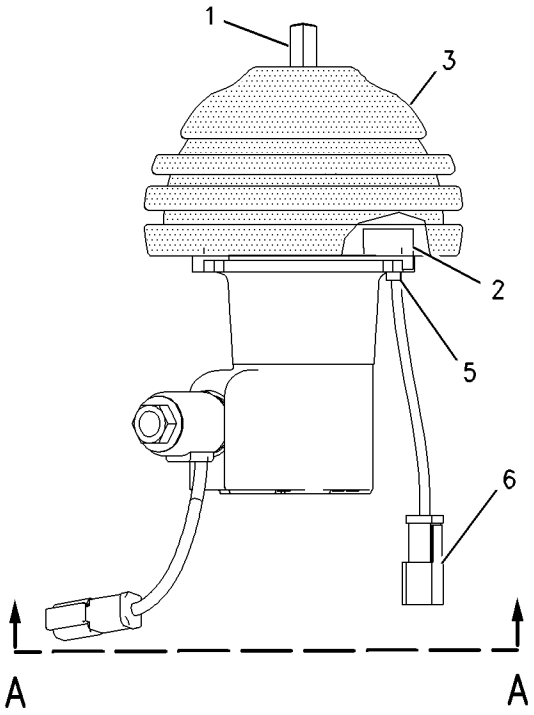

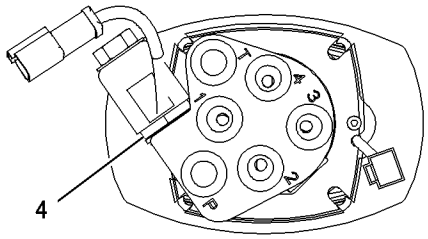

VIEW A–A

GRAPHIC #1 g00920704

193-8388 VALVE GP-PILOT

S/N: CED1-UP; FDG1-UP; 4YZ4000-UP; 5SZ4000-UP
PART OF 191-9758, 191-9759, 191-9763 VALVE GP-PILOT
AN ATTACHMENT

SMCS-5059, 5705 **i01798046**

NOTE	REF NO	GRAPHIC REF	PART NUMBER	QTY	PART NAME 1 2 3 4 5 6 (PRODUCT LEVEL)	SEE PAGE
	1	1	**158-3770**	1	KIT-LEVER	
Y	2	1	**191-0916**	1	VALVE GP-SOLENOID	263
	3	1	**173-0702**	1	BOOT	

Y-SEPARATE ILLUSTRATION

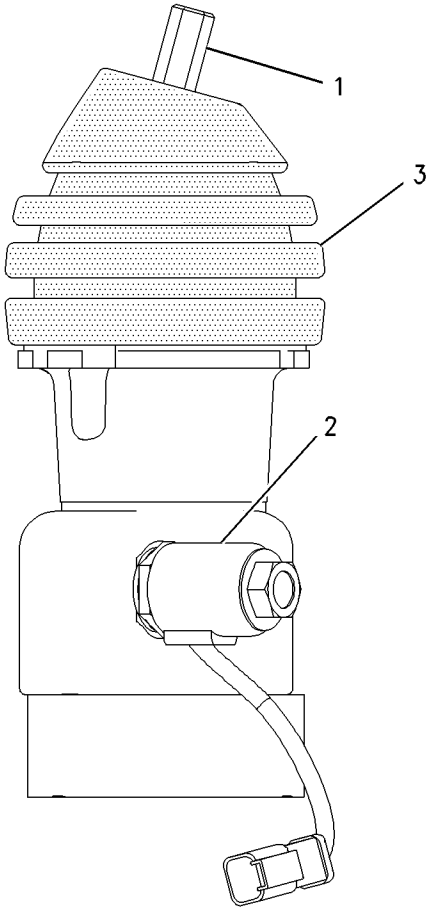

GRAPHIC #1 g00920710

204-1397 VALVE GP-PILOT

S/N: CED1-UP; FDG1-UP; 4YZ4000-UP; 5SZ4000-UP
PART OF 191-2907, 191-2908, 191-2909, 191-9746, 191-9797, 206-3795 CONTROL
GP-PILOT OPERATED HYD
AN ATTACHMENT

SMCS-5059, 5705 **i01798049**

NOTE	REF NO	GRAPHIC REF	PART NUMBER	QTY	PART NAME 1 2 3 4 5 6 (PRODUCT LEVEL)	SEE PAGE
	1	1	**158-3770**	1	KIT-LEVER	
M		1	**095-1207**	1	NUT (M12X1.75 THD)	
Y	2	1	**191-0916**	1	VALVE GP-SOLENOID	263
	3	1	**173-0702**	1	BOOT	

M-METRIC PART
Y-SEPARATE ILLUSTRATION

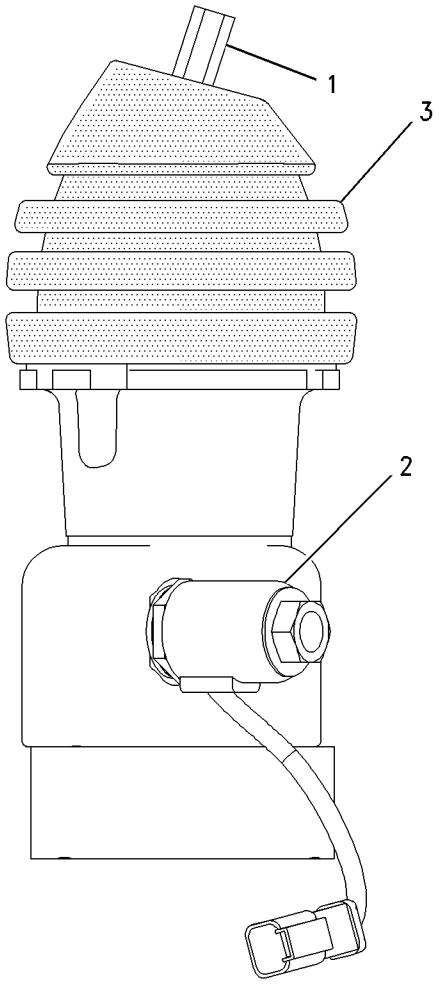

GRAPHIC #1 g00920712

204-1399 VALVE GP-PILOT

S/N: CED1-UP; FDG1-UP; 4YZ4000-UP; 5SZ4000-UP
PART OF 190-8080, 190-8095 CONTROL GP-PILOT OPERATED HYD
AN ATTACHMENT

SMCS-5059, 5705 **i01793150**

NOTE	REF NO	GRAPHIC REF	PART NUMBER	QTY	PART NAME 1 2 3 4 5 6 (PRODUCT LEVEL)	SEE PAGE
	1	1	**7K-1181**	1	STRAP-CABLE	
	2	1	**158-3770**	1	KIT-LEVER	
					(INCLUDES NUT)	
	3	1	**172-0970**	1	COIL AS	
		1	**186-3735**	1	PIN-CONNECTOR	
		1	**102-8802**	1	KIT-RECEPTACLE (2 PIN)	
	4	1	**173-0703**	1	BOOT	
	5	1	**195-9700**	1	VALVE GP-SOLENOID	
M	6	1	**8T-1158**	1	BOLT-SOCKET HEAD (M8X1.25X20MM)	
M	7	1	**8T-9405**	1	BOLT-SOCKET HEAD (M4X0.7X16MM)	
	8	1	**102-8802**	1	KIT-RECEPTACLE (2 PIN)	

M-METRIC PART

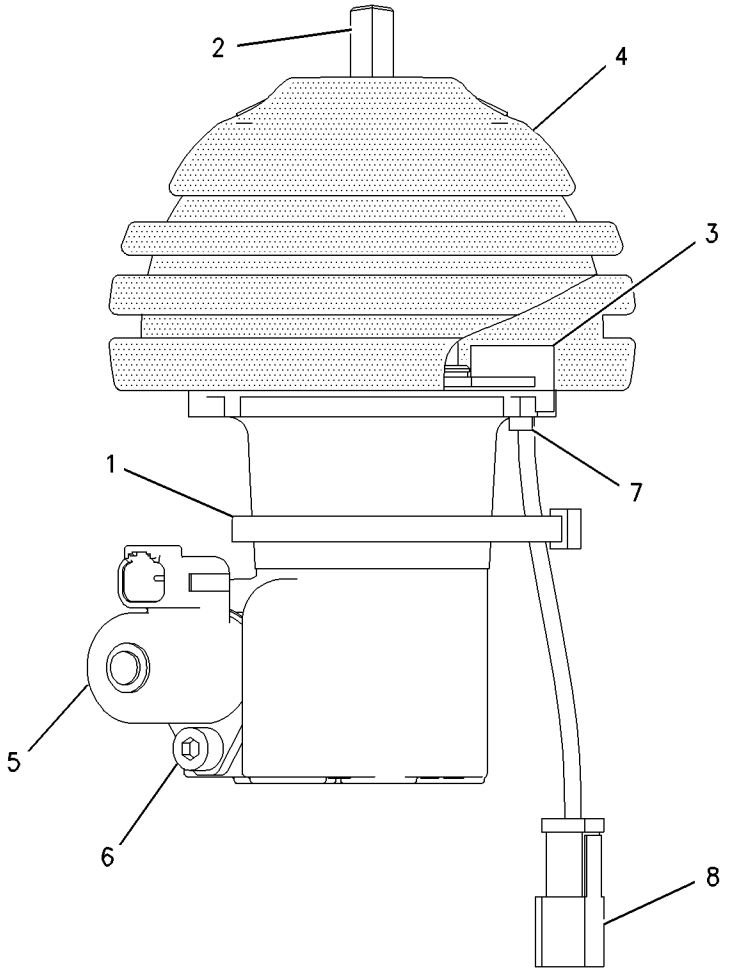

GRAPHIC #1 g00917157

204-1400 VALVE GP-PILOT

S/N: CED1-UP; FDG1-UP; 4YZ4000-UP; 5SZ4000-UP
PART OF 191-2907, 191-2908, 191-2909, 191-9683, 191-9746, 191-9797, 206-3795, 215-3944, 215-3946, 216-6176 CONTROL GP-PILOT OPERATED HYD
AN ATTACHMENT

SMCS-5059, 5705 **i01798052**

NOTE	REF NO	GRAPHIC REF	PART NUMBER	QTY	PART NAME 1 2 3 4 5 6 (PRODUCT LEVEL)	SEE PAGE
	1	1	**158-3770**	1	KIT-LEVER	
					(INCLUDES NUT,LEVER AND PIN-SPRING)	
	2	1	**195-9700**	1	VALVE GP-SOLENOID	
M	3	1	**8T-1158**	1	BOLT-SOCKET HEAD (M8X1.25X20MM)	
	4	1	**173-0702**	1	BOOT	

M-METRIC PART

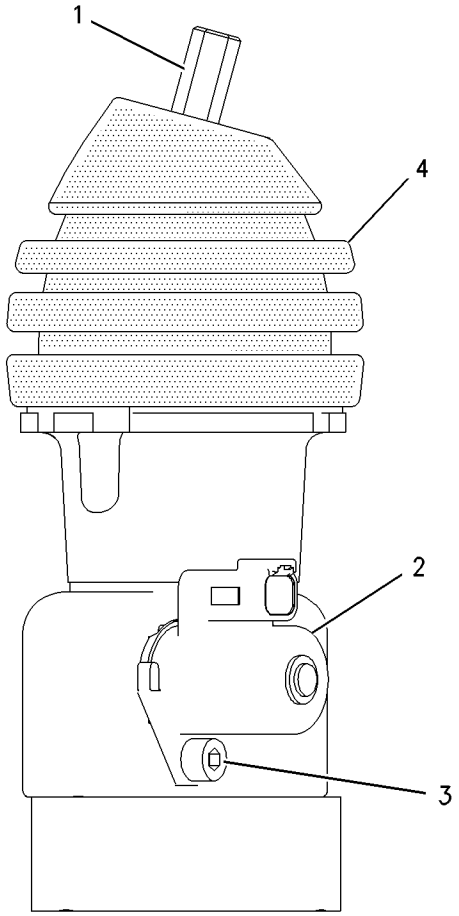

GRAPHIC #1 g00920713

185-7708 VALVE GP-RELIEF

S/N: CED1-UP; FDG1-UP; 4YZ4000-UP; 5SZ4000-UP
PART OF 190-8086, 193-8386 VALVE GP-CONTROL

SMCS-5069, 5117 **i01481595**

NOTE	REF NO	GRAPHIC REF	PART NUMBER	QTY	PART NAME 1 2 3 4 5 6 (PRODUCT LEVEL)	SEE PAGE
	1	1	**9T-7266**	1	NUT (3/4-16 THD)	
	2	1	**033-6028**	1	SEAL-O-RING	
	3	1	**6E-3008**	1	SPRING	
	4	1	**130-1676**	1	SEAL-O-RING	
	5	1	**8L-2779**	1	SEAL-O-RING	

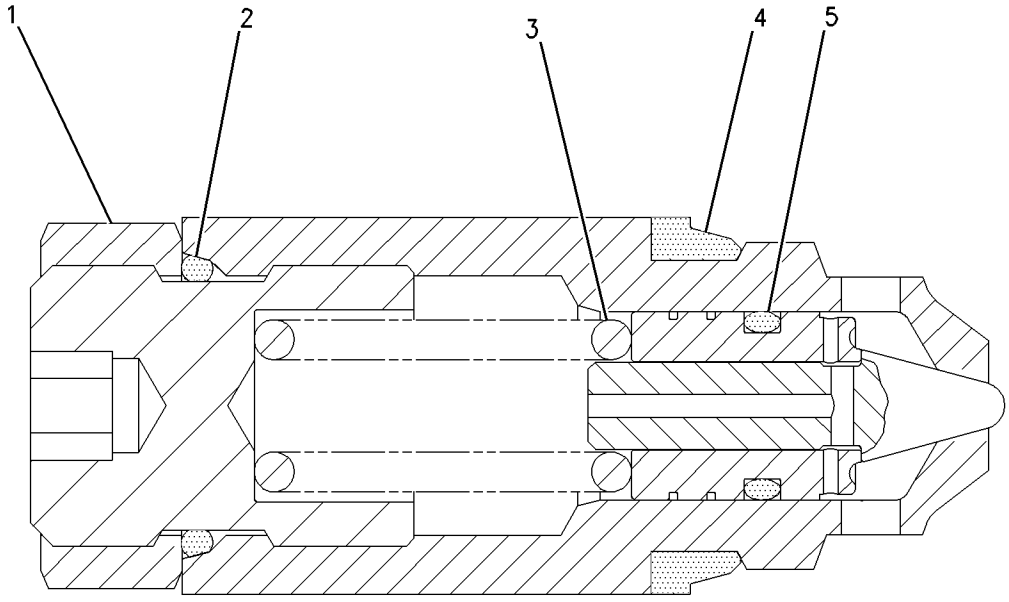

GRAPHIC #1 g00759080

185-7709 VALVE GP-RELIEF

S/N: CED1-UP; FDG1-UP; 4YZ4000-UP; 5SZ4000-UP
PART OF 190-8086, 193-8386 VALVE GP-CONTROL

SMCS-5069, 5117 **i01481612**

NOTE	REF NO	GRAPHIC REF	PART NUMBER	QTY	PART NAME 1 2 3 4 5 6 (PRODUCT LEVEL)	SEE PAGE
	1	1	**9T-7266**	1	NUT (3/4-16 THD)	
	2	1	**033-6028**	1	SEAL-O-RING	
	3	1	**6E-3008**	1	SPRING	
	4	1	**130-1676**	1	SEAL-O-RING	
	5	1	**8L-2779**	1	SEAL-O-RING	

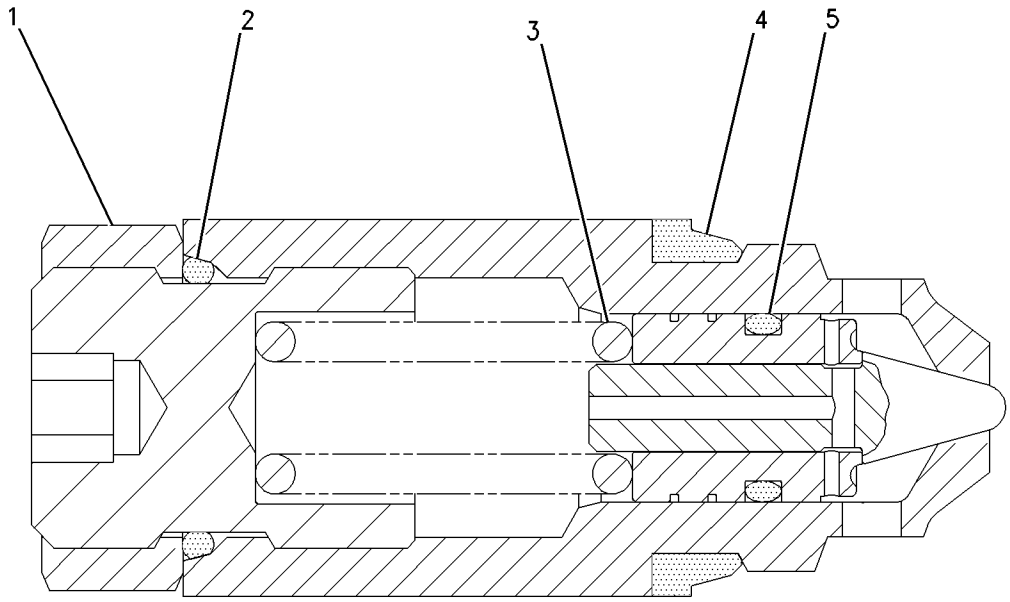

GRAPHIC #1 g00760627

188-0878 VALVE GP-RELIEF

S/N: CED1-UP; FDG1-UP; 4YZ4000-UP; 5SZ4000-UP

PART OF 190-8086, 193-8386, 216-6169, 216-6170 VALVE GP-CONTROL

SMCS-5069, 5117 **i01755687**

NOTE	REF NO	GRAPHIC REF	PART NUMBER	QTY	PART NAME 1 2 3 4 5 6 (PRODUCT LEVEL)	SEE PAGE
	1	1	**039-5069**	1	NUT (3/8-24 THD)	
	2	1	**033-5879**	3	SEAL-O-RING	
	3	1	**039-5070**	1	NUT (3/8-24 THD)	
	4	1	**186-2487**	1	RING-BACKUP	
	5	1	**033-6027**	2	SEAL-O-RING	
	6	1	**9N-1756**	1	SEAL-O-RING	
	7	1	**186-2488**	1	RING-BACKUP	
					AVAILABLE REPAIR KIT(S):	
			151-4003	1	KIT-SERVICE	
					(INCLUDES SEALS, RINGS, SPRINGS)	

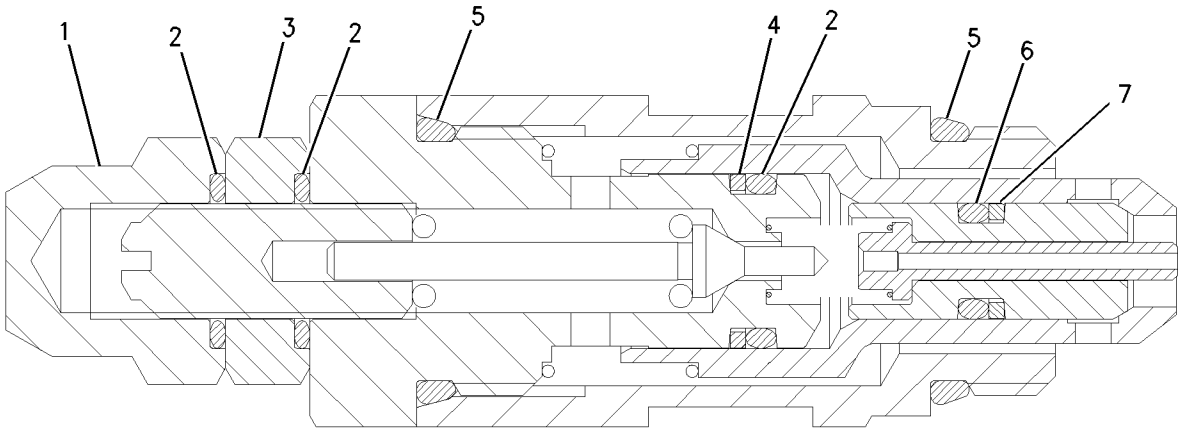

GRAPHIC #1 g00702880

HYDRAULIC SYSTEM

204-1480 VALVE GP-RELIEF

S/N: CED1-UP; FDG1-UP; 4YZ4000-UP; 5SZ4000-UP
PART OF 190-8086, 193-8386 VALVE GP-CONTROL

SMCS-5069, 5117 **i01530753**

NOTE	REF NO	GRAPHIC REF	PART NUMBER	QTY	PART NAME 1 2 3 4 5 6 (PRODUCT LEVEL)	SEE PAGE
	1	1	**9T-7266**	1	NUT (3/4-16 THD)	
	2	1	**033-6028**	1	SEAL-O-RING	
	3	1	**6E-3008**	1	SPRING	
	4	1	**130-1676**	1	SEAL-O-RING	
	5	1	**8L-2779**	1	SEAL-O-RING	

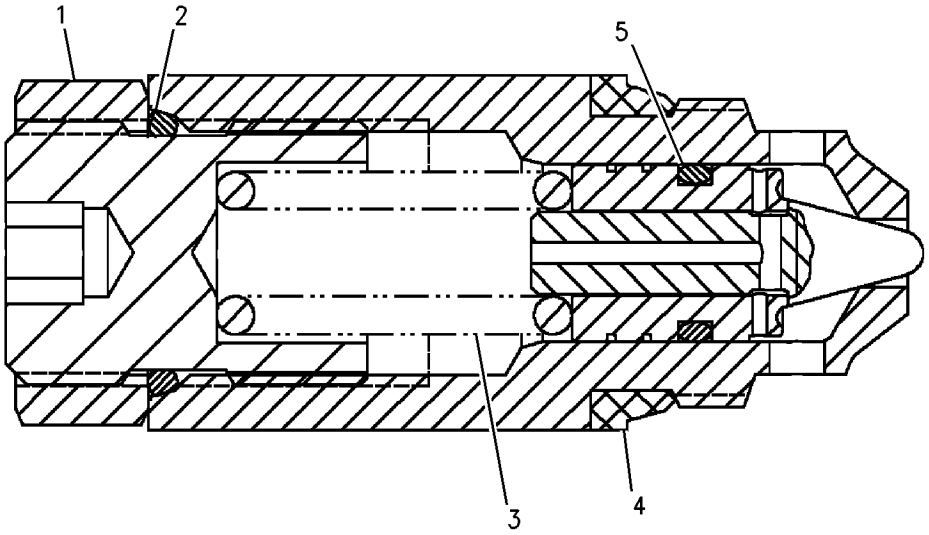

GRAPHIC #1 g00795003

144-1644 VALVE GP-SOLENOID

S/N: CED1-UP; FDG1-UP; 4YZ4000-UP; 5SZ4000-UP
12 VOLT. INTERLOCK
PART OF 209-0640 VALVE & MTG GP-SOLENOID
AN ATTACHMENT

SMCS-5479 **i01755691**

NOTE	REF NO	GRAPHIC REF	PART NUMBER	QTY	PART NAME 1 2 3 4 5 6 (PRODUCT LEVEL)	SEE PAGE
	1	1	**160-5843**	1	WASHER-IDENTIFICATION (16.8X38.1X.5MM THK)	
	2	1	**157-2284**	1	LOCKNUT-SPECIAL (5/8-18 THD)	
	3	1	**160-5844**	1	WASHER-SPRING (16.3X31.5X1.85MM THK)	
	4	1	**6T-9244**	1	CARTRIDGE AS	
		1	**160-5843**	1	WASHER-IDENTIFICATION (16.8X38.1X.5MM THK)	
		1	**157-2284**	1	LOCKNUT-SPECIAL (5/8-18 THD)	
		1	**160-5844**	1	WASHER-SPRING (16.3X31.5X1.85MM THK)	
	5	1	**144-1643**	1	COIL GP-SOLENOID	
		1	**102-8804**	1	KIT-RECEPTACLE (4 PIN)	
					AVAILABLE REPAIR KIT(S):	
			126-5948	1	KIT-SEAL	
					(INCLUDES SEALS AND RINGS)	

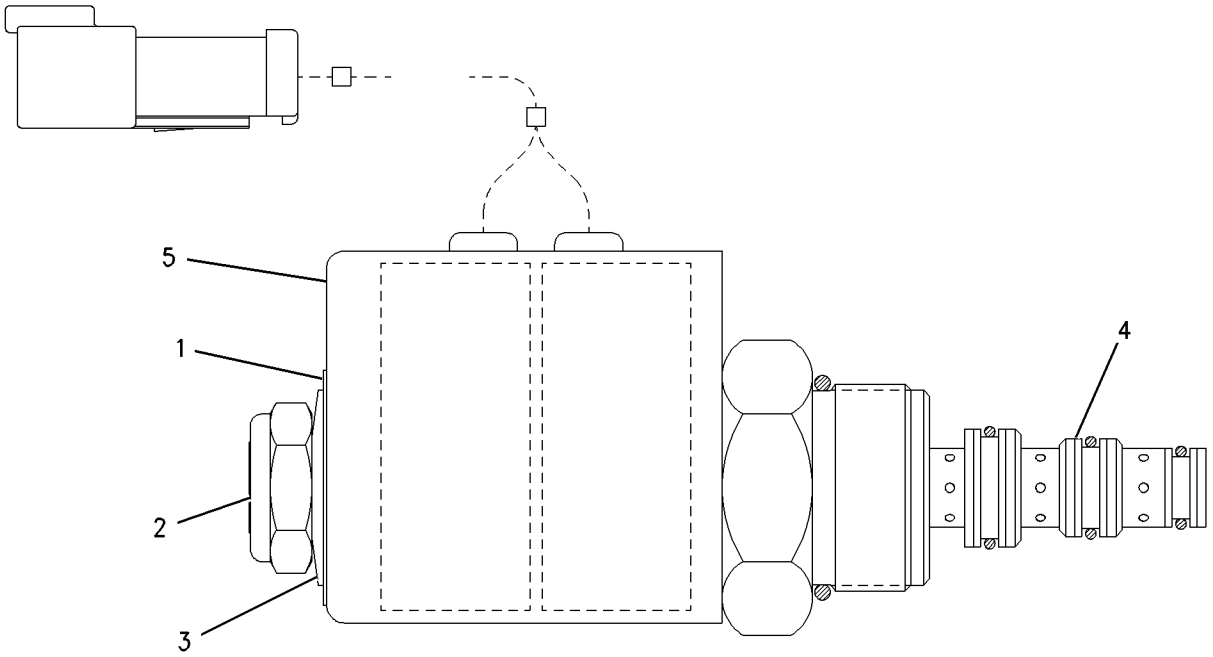

GRAPHIC #1 g00702279

190-7999 CONTROL GP-WORK TOOL

S/N: CED1-UP; FDG1-UP

PART OF 190-7953, 195-6710 CHASSIS AR

SMCS-5102, 5104, 6119, 6700 **i01697963**

NOTE	REF NO	GRAPHIC REF	PART NUMBER	QTY	PART NAME 1 2 3 4 5 6 (PRODUCT LEVEL)	SEE PAGE
	1	1	**3B-8488**	2	FITTING-GREASE (1/8-27 THD)	
	2	1	**111-4337**	12	WASHER (1MM THK)	
	3	2	**142-8832**	2	PIN AS	
	4	1	**142-9091**	4	PIN AS	
	5	1	**142-9093**	2	PIN	
	6	2	**142-9094**	2	PIN	
Y	7	1	**177-9565**	1	CYLINDER GP-TILT (RH)	355
Y	8	1	**177-9566**	1	CYLINDER GP-TILT (LH)	356
	9	1	**190-7989**	1	SUPPORT	
	10	2	**190-7992**	2	SPACER	
	11	1	**190-7994**	1	LINK AS	
		1	**6K-2899**	4	BEARING-SLEEVE	
	12	2	**216-6195**	2	LINK AS	
					(EACH INCLUDES)	
		2	**2G-8624**	2	BEARING-SLEEVE	
	13	1	**190-7998**	1	ARM AS-LIFT	
		1	**4K-4709**	4	BEARING-SLEEVE	
		1	**6K-4148**	4	BEARING-SLEEVE	
		1	**7T-1099**	2	LINK	
		1	**111-0483**	2	BOSS (M10X1.5MM)	
		1	**163-4773**	4	PLATE-WELD	
	14	1	**190-8033**	2	PIN AS	
	15	2	**190-8036**	2	PIN	
	16	2	**190-8037**	2	PIN AS	
	17	2	**190-8038**	2	PIN AS	
Y	18	1	**190-8041**	2	CYLINDER GP-LIFT	354
	19	2	**191-9730**	1	STEP AS	
	20	1	**191-9738**	2	WASHER	
	21	1	**191-9739**	2	BOLT-SOCKET HEAD	
	22	2	**086-0297**	2	WASHER (13X50X6MM THK)	
	23	2	**1H-8134**	4	RING-RETAINING	
	24	1,2	**3B-8489**	10	FITTING-GREASE (1/8-27 THD)	
	25	1	**3K-4897**	2	PIN-SPRING	
	26	2	**5B-0651**	2	FITTING-STRAIGHT (1/8-27X1.27IN)	
	27	2	**6V-7700**	4	RING-RETAINING	
	28	2	**7X-0595**	2	WASHER-HARD	
	29	1,2	**7X-7729**	10	WASHER (11X25X3MM THK)	
	30	2	**8T-4121**	6	WASHER-HARD (11X21X2.5MM THK)	
M	31	2	**8T-4133**	2	NUT (M10X1.5 THD)	
M	32	1,2	**8T-4191**	10	BOLT (M10X1.5X16MM)	
M	33	2	**8T-4196**	6	BOLT (M10X1.5X35MM)	
	34	1	**8T-4224**	2	WASHER-HARD (8.8X16X2MM THK)	
M	35	1	**8T-6870**	2	BOLT (M8X1.25X70MM)	
M	36	2	**8T-4194**	2	BOLT (M12X1.75X50MM)	

M-METRIC PART
Y-SEPARATE ILLUSTRATION

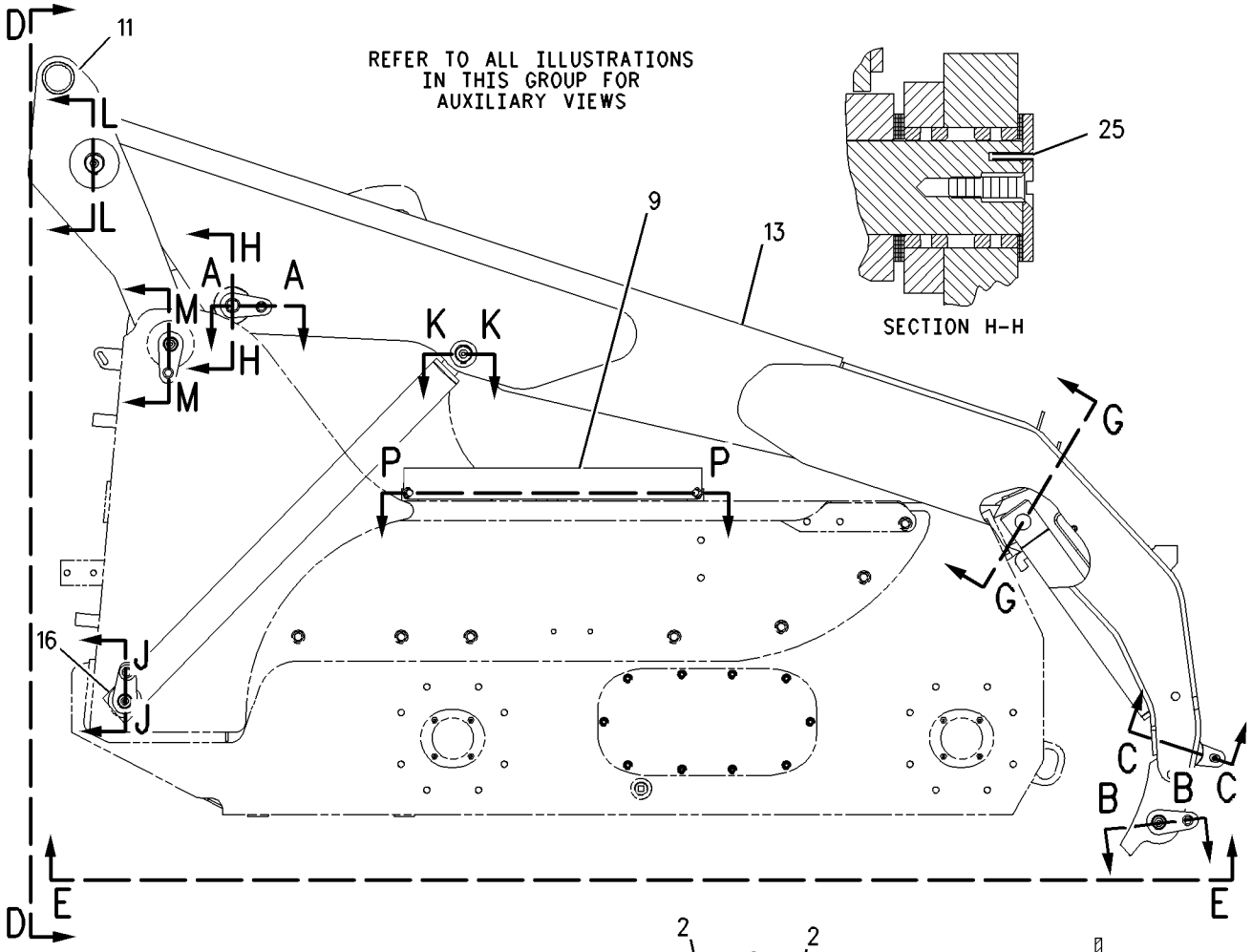

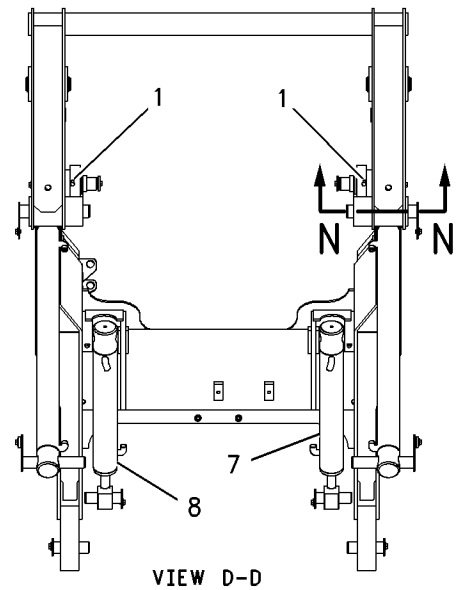

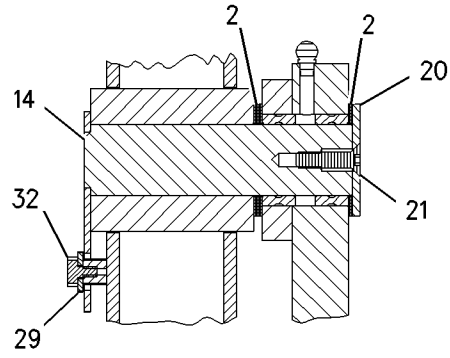

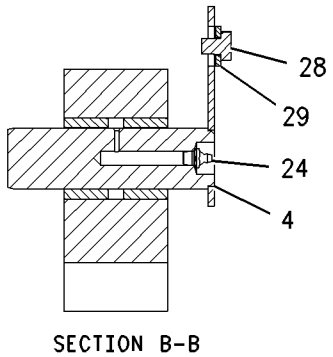

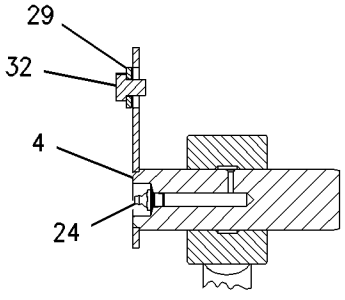

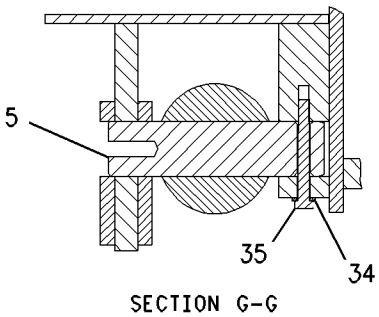

GRAPHIC #1 g00801247

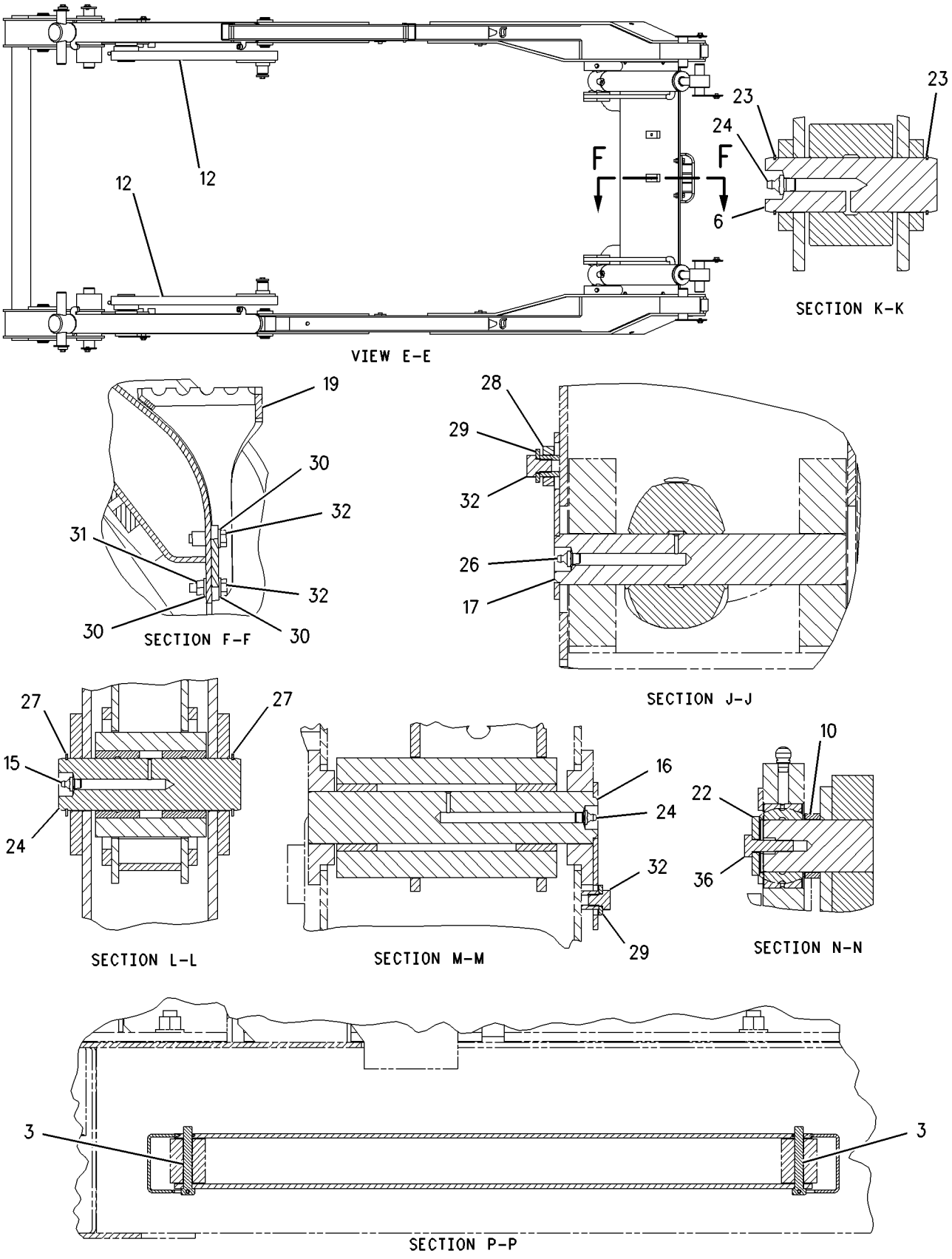

GRAPHIC #2 g00874174

MEMORANDA

195-6799 CONTROL GP-WORK TOOL

S/N: 4YZ4000-UP; 5SZ4000-UP

PART OF 195-6761, 195-6763 CHASSIS AR

SMCS-5102, 5104, 6119, 6700 **i01543405**

NOTE	REF NO	GRAPHIC REF	PART NUMBER	QTY	PART NAME 1 2 3 4 5 6 (PRODUCT LEVEL)	SEE PAGE
B	1	1	**3S-8536**	1	SPACER (9.65MM THK)	
	2	1	**142-8832**	1	PIN AS	
	3	1	**142-8880**	1	LEVER	
	4	1	**142-8881**	1	BRACKET	
	5	1	**142-9089**	1	SUPPORT AS	
	6	1,2	**142-9090**	4	PIN AS	
	7	2	**142-9091**	4	PIN AS	
	8	1	**142-9093**	2	PIN	
	9	2	**142-9094**	2	PIN	
B	10	2	**142-9142**	2	SPACER (18.0MM THK)	
Y	11	2	**142-9195**	1	CYLINDER GP-LIFT (RH)	352
Y	12	2	**142-9196**	1	CYLINDER GP-LIFT (LH)	353
	13	2	**169-6712**	1	STEP AS	
Y	14	1	**177-9565**	1	CYLINDER GP-TILT (RH)	355
Y	15	1	**177-9566**	1	CYLINDER GP-TILT (LH)	356
	16	1	**195-6798**	1	ARM AS-LIFT	
	16A	1,2	**6K-4148**	8	BEARING-SLEEVE	
	16B	1	**193-8337**	1	PLATE	
	16C	1	**193-8338**	1	PLATE	
	17	2	**1H-8134**	4	RING-RETAINING	
	18	1	**3B-8489**	10	FITTING-GREASE ((1/8-27 THD)	
	19	1	**5H-9743**	1	GROMMET	
M	20	1	**6V-9189**	2	LOCKNUT (M8X1.25 THD)	
	21	1,2	**7X-7729**	8	WASHER (11X25X3MM THK)	
M	22	1	**8T-3647**	2	BOLT (M8X1.25X80MM)	
	23	1,2	**8T-4121**	5	WASHER-HARD (11X21X2.5MM THK)	
M	24	1	**8T-4136**	1	BOLT (M10X1.5X25MM)	
M	25	1	**8T-4189**	1	BOLT (M8X1.25X20MM)	
M	26	1,2	**8T-4191**	8	BOLT (M10X1.5X16MM)	
M	27	2	**8T-4196**	4	BOLT (M10X1.5X35MM)	
	28	1	**8T-4224**	1	WASHER-HARD (8.8X16X2MM THK)	

B-USE AS REQUIRED
M-METRIC PART
Y-SEPARATE ILLUSTRATION

195-6799 **CONTROL GP-WORK TOOL** ***(contd.)*** **i01543405**

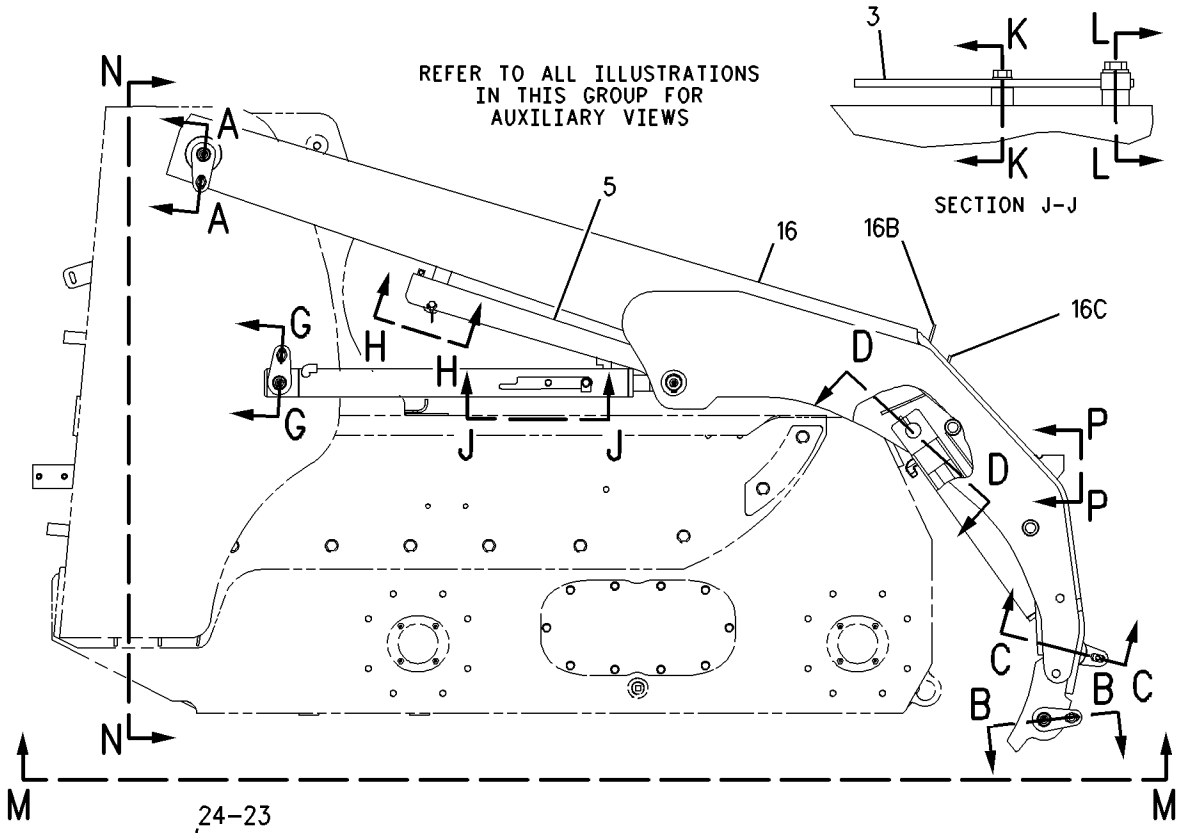

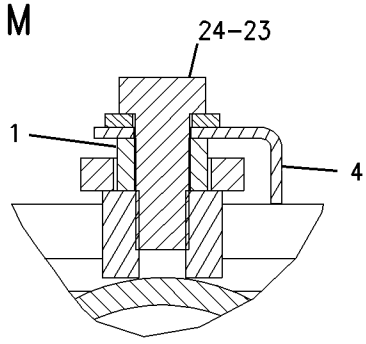

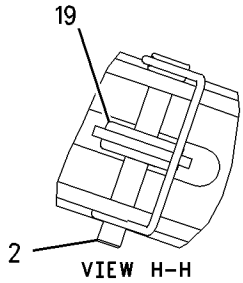

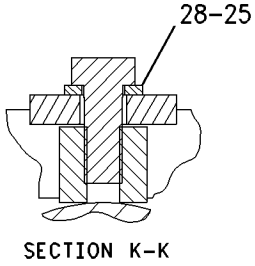

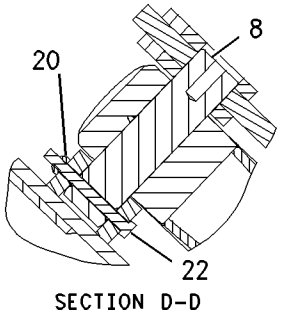

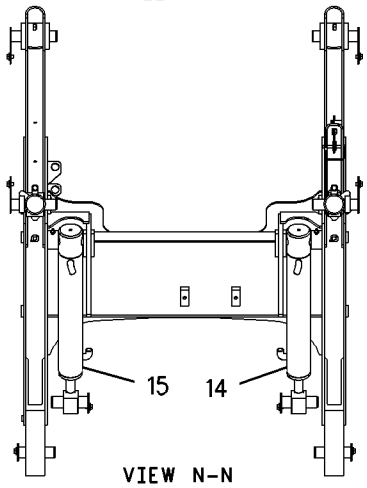

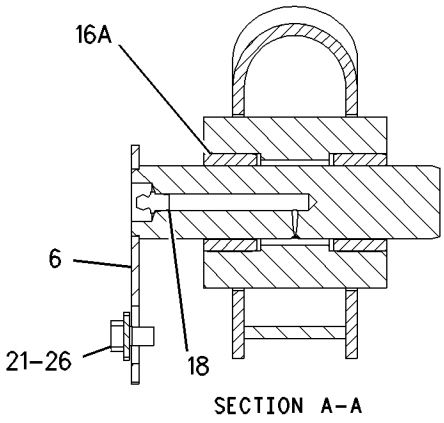

GRAPHIC #1 g00801852

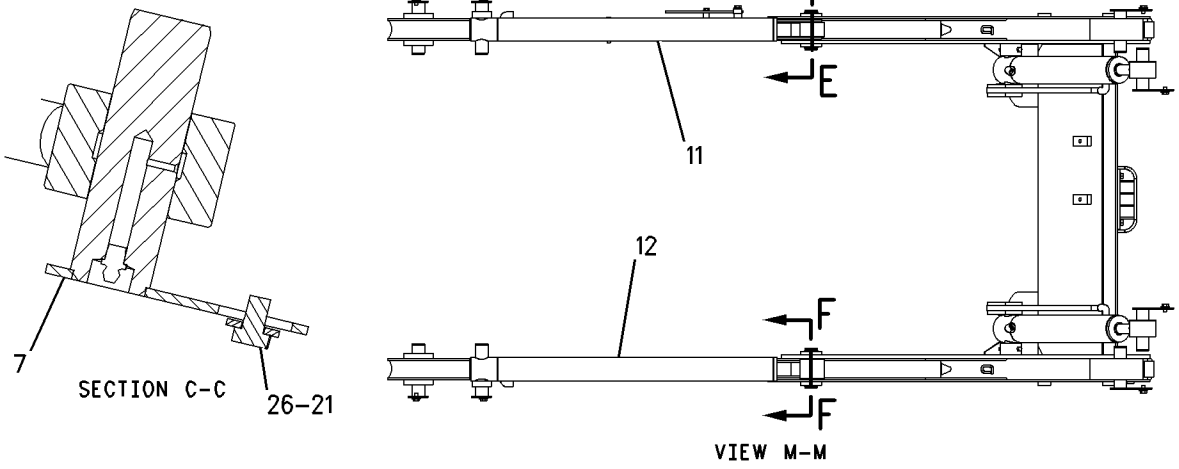

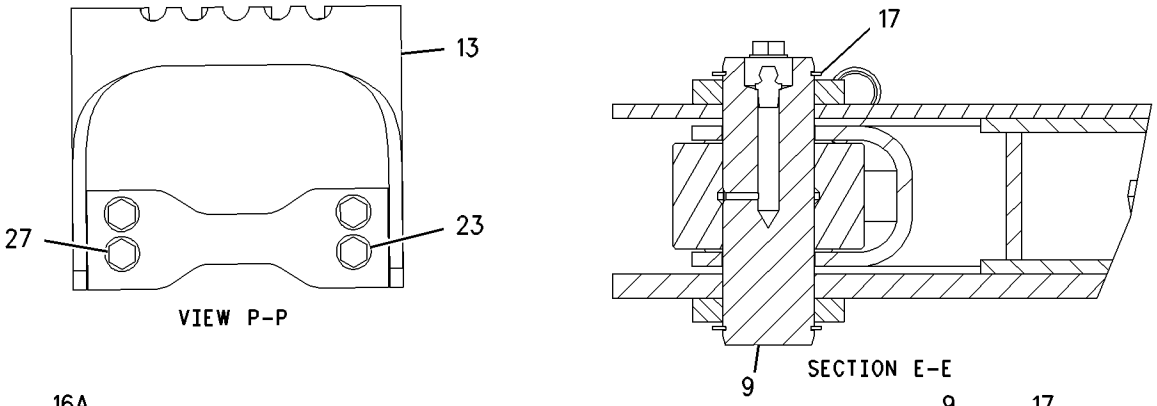

GRAPHIC #2 g00801851

150-8621 GUIDE GP-LINES

S/N: CED1-UP; FDG4000-UP; 4YZ4000-UP; 5SZ4000-UP

PART OF 190-7953, 195-6710, 195-6761, 195-6763 CHASSIS AR

SMCS-5057 **i01285936**

NOTE	REF NO	GRAPHIC REF	PART NUMBER	QTY	PART NAME 1 2 3 4 5 6 (PRODUCT LEVEL)	SEE PAGE
M	1	1	**7X-2539**	1	BOLT (M8X1.25X110MM)	
	2	1	**156-9808**	1	PLATE AS	
M	3	1	**6V-9189**	1	LOCKNUT (M8X1.25 THD)	
	4	1	**7X-0603**	2	WASHER-HARD (2.5MM THK)	
M	5	1	**8T-4199**	1	BOLT (M8X1.25X12MM)	
	6	1	**8T-4224**	1	WASHER-HARD (8.8X16X2MM THK)	

M-METRIC PART

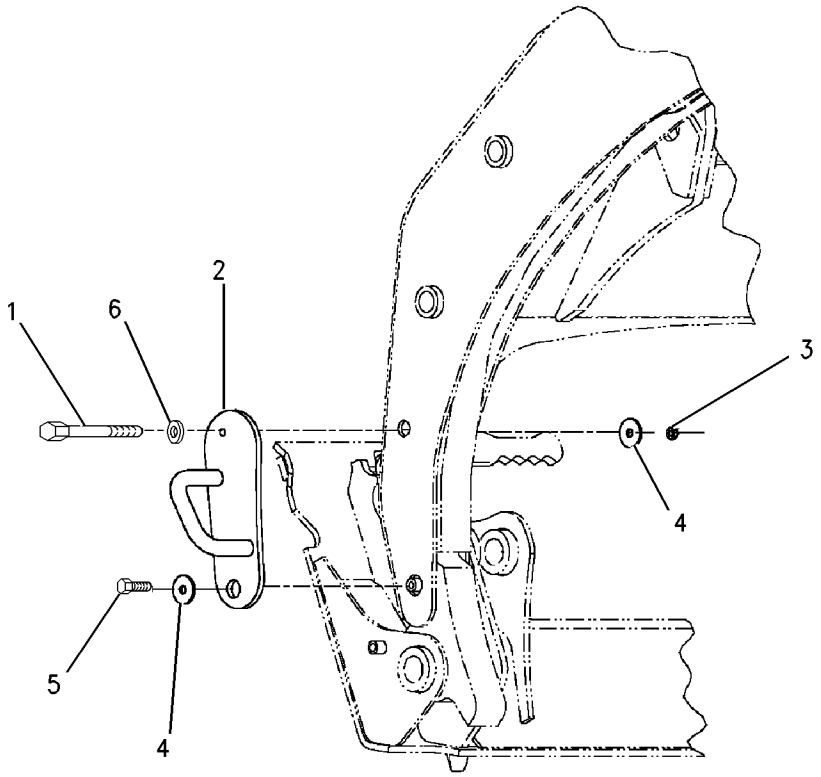

GRAPHIC #1 g00681362

179-7201 ARM GP-MATERIAL HANDLING

S/N: CED1-UP; FDG1-UP; 4YZ4000-UP; 5SZ4000-UP

AN ATTACHMENT

SMCS-6542 **i01512155**

NOTE	REF NO	GRAPHIC REF	PART NUMBER	QTY	PART NAME 1 2 3 4 5 6 (PRODUCT LEVEL)	SEE PAGE
	1	1	**9V-2714**	1	HOOK	
	2	1	**9V-2715**	1	SHACKLE AS	
	3	1	**156-5762**	2	FILM (TIE DOWN)	
	4	1	**178-3377**	1	ARM AS	
Y	5	1	*188-7733*	1	STEP GP-MATERIAL HANDLING ARM	576
M	6	1	**7X-2475**	1	BOLT (M16X2X130MM)	
	7	1	**8T-4122**	2	WASHER-HARD (17X32X3.5MM THK)	
M	8	1	**8T-4132**	2	NUT (M16X2 THD)	

M-METRIC PART
Y-SEPARATE ILLUSTRATION

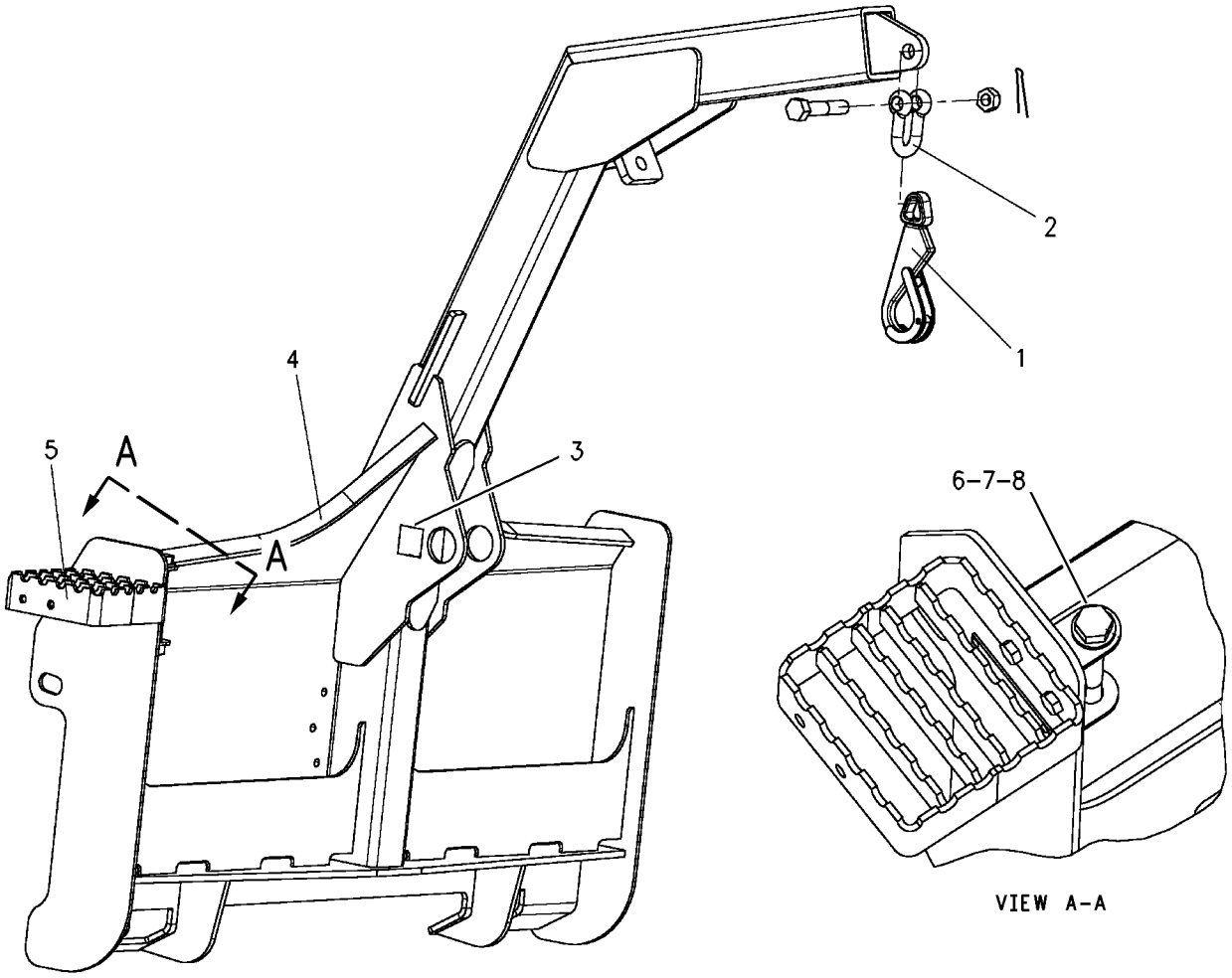

GRAPHIC #1 g00784781

216-8756 ARM GP-MATERIAL HANDLING

S/N: CED1-UP; FDG1-UP; 4YZ4000-UP; 5SZ4000-UP
AN ATTACHMENT

SMCS-6542 **i01775684**

NOTE	REF NO	GRAPHIC REF	PART NUMBER	QTY	PART NAME 1 2 3 4 5 6 (PRODUCT LEVEL)	SEE PAGE
	1	1	**9V-2714**	1	HOOK	
	2	1	**9V-2715**	1	SHACKLE AS	
	3	1	**156-5762**	2	FILM (TIE DOWN)	
Y	4	1	*188-7733*	1	STEP GP-MATERIAL HANDLING ARM	576
	5	1	**216-8850**	1	ARM AS	
	6	1	**1K-6870**	1	LOCKNUT (3/4-10 THD)	
	7	1	**7X-0371**	1	BOLT (3/4-10X3.75 IN)	
M	8	1	**7X-2475**	1	BOLT (M16X2X130MM)	
	9	1	**8T-4122**	1	WASHER-HARD (17X32X3.5MM THK)	
M	10	1	**8T-4132**	1	NUT (M16X2 THD)	

M-METRIC PART
Y-SEPARATE ILLUSTRATION

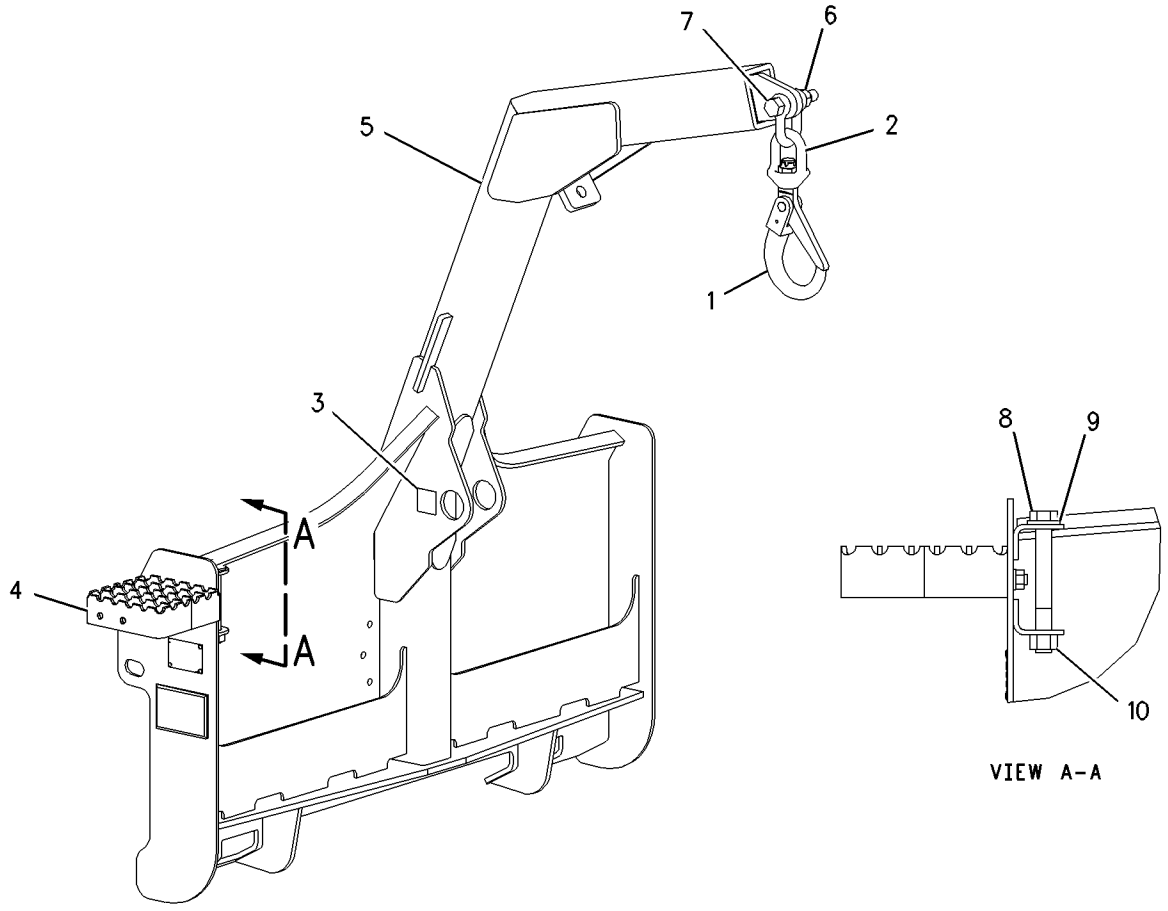

GRAPHIC #1 g00911037

177-1989 BLADE AR

S/N: CED1-UP; FDG1-UP; 4YZ4000-UP; 5SZ4000-UP
AN ATTACHMENT

SMCS-6060, 6701 **i01214886**

NOTE	PART NUMBER	QTY	PART NAME 1 2 3 4 5 6 (PRODUCT LEVEL)	SEE PAGE
Y	*177-1981*	1	BLADE GP	503
Y	*177-1984*	1	CYLINDER & MTG GP-BLADE	345
Y	*135-9386*	1	EDGE GP-CUTTING	545
Y	*177-1980*	1	FRAME GP-BLADE	294
Y	*177-1986*	1	LINES GP-CONNECTING	374
Y	*177-1983*	1	SPRING GP-BLADE	574

Y-SEPARATE ILLUSTRATION

<END>

177-1990 BLADE AR

S/N: CED1-UP; FDG1-UP; 4YZ4000-UP; 5SZ4000-UP
AN ATTACHMENT

SMCS-6060, 6701 **i01214891**

NOTE	PART NUMBER	QTY	PART NAME 1 2 3 4 5 6 (PRODUCT LEVEL)	SEE PAGE
Y	*177-1982*	1	BLADE GP	504
Y	*177-1984*	1	CYLINDER & MTG GP-BLADE	345
Y	*149-5741*	1	EDGE GP-CUTTING	547
Y	*177-1980*	1	FRAME GP-BLADE	294
Y	*177-1986*	1	LINES GP-CONNECTING	374
Y	*177-1983*	1	SPRING GP-BLADE	574

Y-SEPARATE ILLUSTRATION

<END>

WORK TOOLS

177-1981 BLADE GP

S/N: CED1-UP; FDG1-UP; 4YZ4000-UP; 5SZ4000-UP
182.88CM (72 IN) BLADE
PART OF 177-1989 BLADE AR
AN ATTACHMENT

SMCS-6060, 6701 **i01498658**

NOTE	REF NO	GRAPHIC REF	PART NUMBER	QTY	PART NAME 1 2 3 4 5 6 (PRODUCT LEVEL)	SEE PAGE
	1	1	**157-0940**	2	PIN	
	2	1	**166-0319**	2	PIN AS	
	3	1	**169-4868**	2	FILM-WARNING (CLEARANCE/DISTANCE)	
	4	1	**177-1921**	2	PIN AS	
	5	1	**177-1972**	2	SKID AS	
	6	1	**177-1987**	1	BLADE AS	
	7	1	**3B-8489**	2	FITTING-GREASE	
M	8	1	**6V-9189**	2	LOCKNUT (M8X1.25 THD)	
M	9	1	**8T-6869**	2	BOLT (M8X1.25X60MM)	
	10	1	**9R-2959**	2	CLIP	

M-METRIC PART

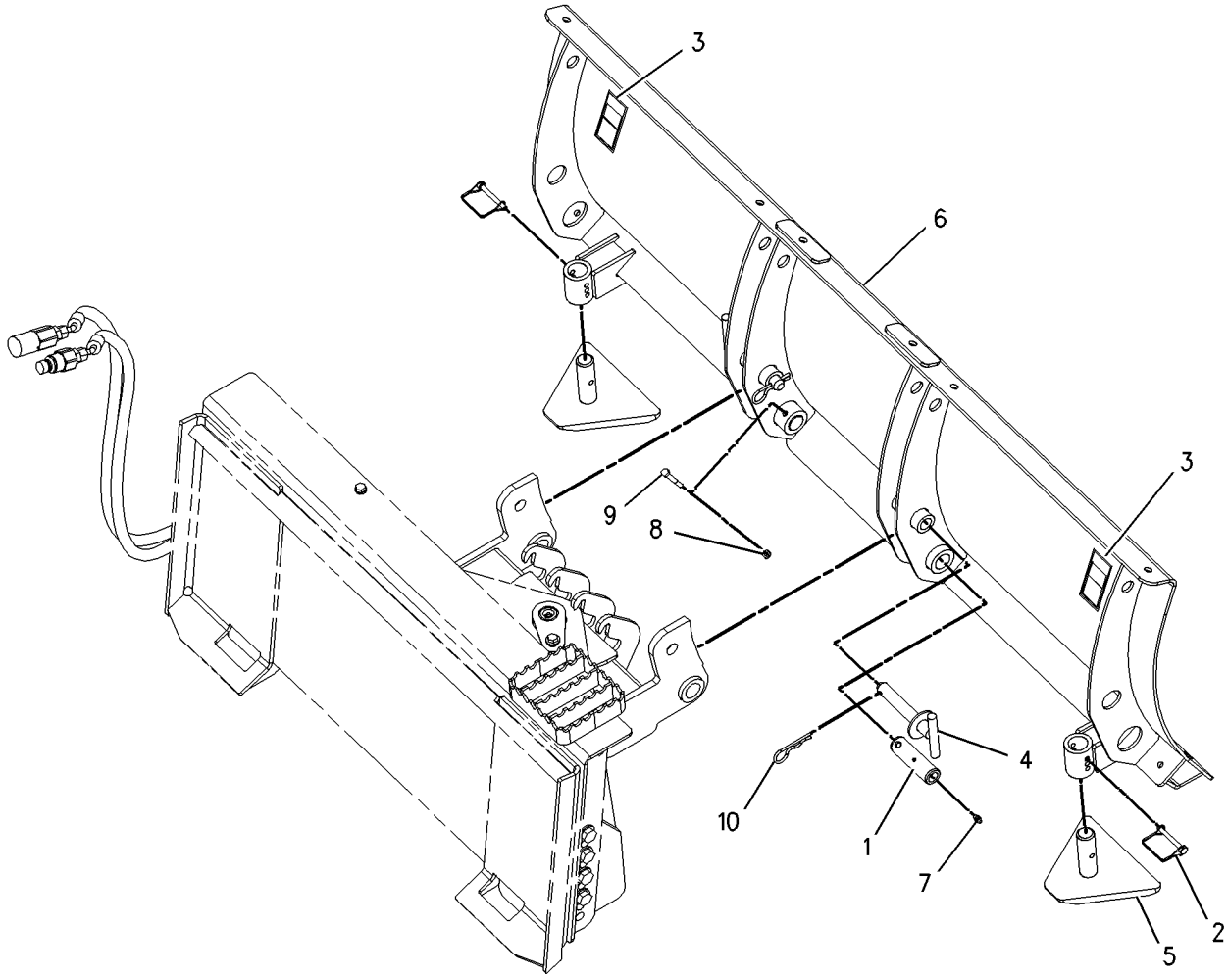

GRAPHIC #1 g00777694

177-1982 BLADE GP

S/N: CED1-UP; FDG1-UP; 4YZ4000-UP; 5SZ4000-UP
213.36CM (84 IN) BLADE
PART OF 177-1990 BLADE AR
AN ATTACHMENT

SMCS-6060, 6701 **i01344828**

NOTE	REF NO	GRAPHIC REF	PART NUMBER	QTY	PART NAME 1 2 3 4 5 6 (PRODUCT LEVEL)	SEE PAGE
	1	1	**157-0940**	2	PIN	
	2	1	**166-0319**	2	PIN AS	
	3	1	**169-4868**	2	FILM-WARNING (CLEARANCE/DISTANCE)	
	4	1	**177-1921**	2	PIN AS	
	5	1	**177-1972**	2	SKID AS	
	6	1	**177-1988**	1	BLADE AS	
	7	1	**3B-8489**	2	FITTING-GREASE	
M	8	1	**6V-9189**	2	LOCKNUT (M8X1.25 THD)	
M	9	1	**8T-6869**	2	BOLT (M8X1.25X60MM)	
	10	1	**9R-2959**	2	CLIP	

M-METRIC PART

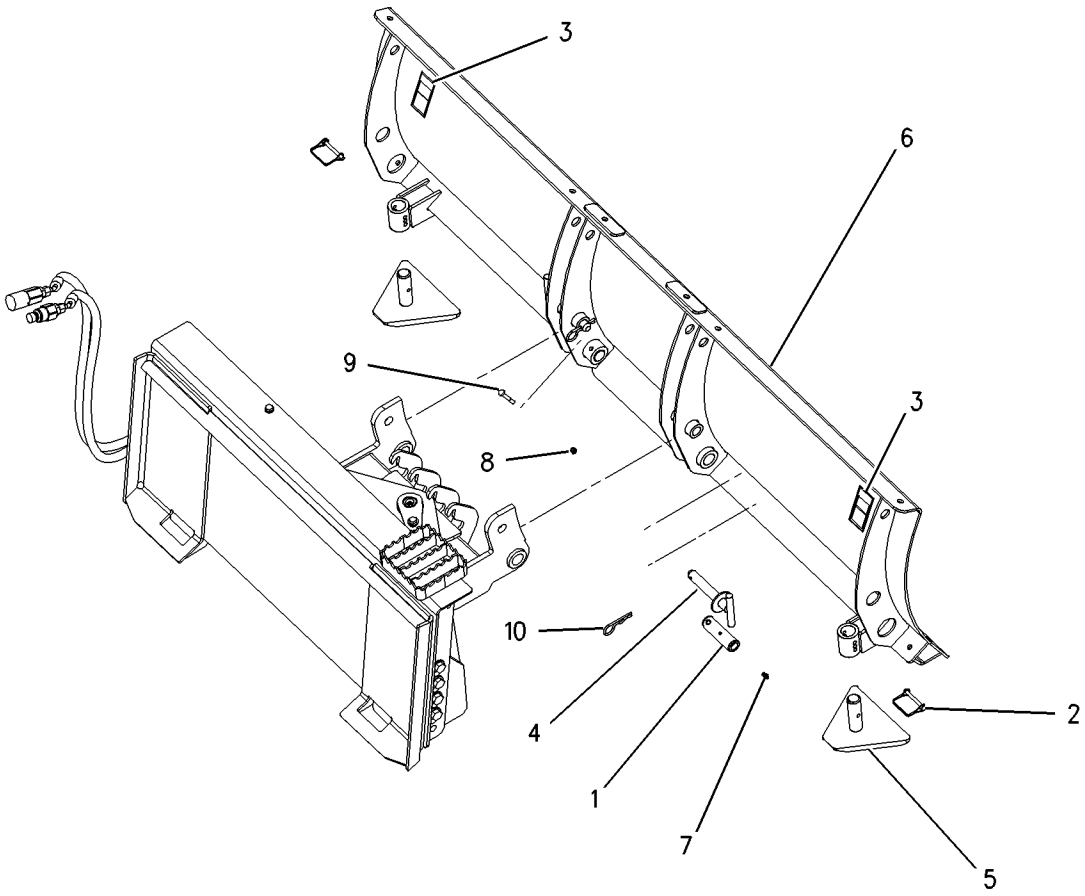

GRAPHIC #1 g00710327

152-0231 BUCKET AR-DIRT

S/N: CED1-UP; FDG1-UP; 4YZ4000-UP; 5SZ4000-UP
152.40CM (60 IN), 0.34CU M (0.44 CU YD)
FIELD REPLACEMENT FOR 165-6156 BUCKET AS-DIRT
AN ATTACHMENT

SMCS-6001 **i01788898**

NOTE	REF NO	GRAPHIC REF	PART NUMBER	QTY	PART NAME 1 2 3 4 5 6 (PRODUCT LEVEL)	SEE PAGE
	1	1	**165-6156**	1	BUCKET AS-DIRT	
	2	1	**149-5435**	1	EDGE	
	3	1	*135-9384*	1	EDGE GP-CUTTING	
	4	1	**135-9394**	1	EDGE-CUTTING	
M	5	1	**8T-4778**	8	LOCKNUT (M16X2 THD)	
M	6	1	**159-2953**	8	SCREW-FLAT HEAD (M16X2.00 THD)	

M-METRIC PART

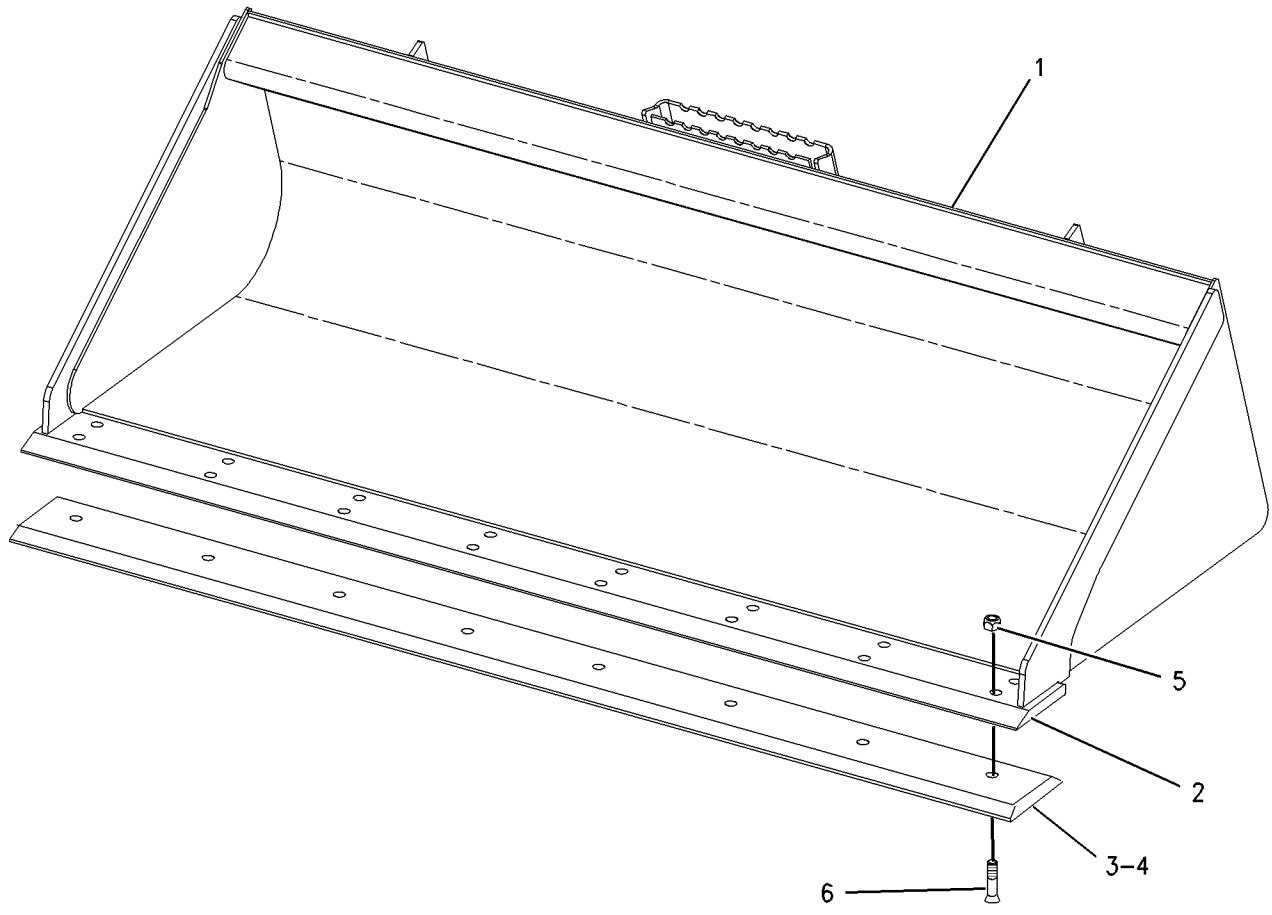

GRAPHIC #1 g00915536

152-0232 BUCKET AR-DIRT

S/N: CED1-UP; FDG1-UP; 4YZ4000-UP; 5SZ4000-UP
167.64CM (66 IN), 0.37CU M (0.48 CU YD)
FIELD REPLACEMENT FOR 165-6157 BUCKET AS-DIRT
AN ATTACHMENT

SMCS-6001 **i01372085**

NOTE	REF NO	GRAPHIC REF	PART NUMBER	QTY	PART NAME 1 2 3 4 5 6 (PRODUCT LEVEL)	SEE PAGE
Y	1	1	**165-6157**	1	BUCKET AS-DIRT	523
Y	2	1	*135-9385*	1	EDGE GP-CUTTING	544

Y-SEPARATE ILLUSTRATION

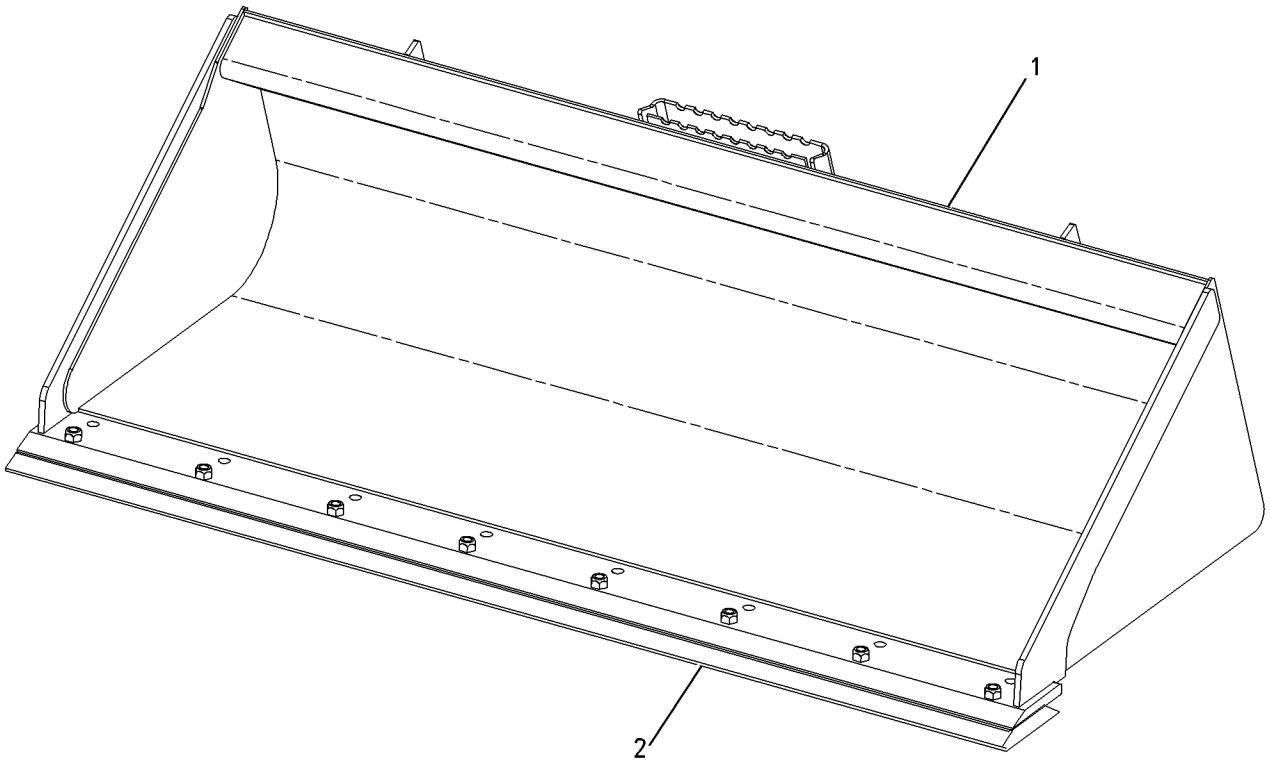

GRAPHIC #1 g00724131

188-2719 BUCKET AR-DIRT

S/N: CED1-UP; FDG1-UP; 4YZ4000-UP; 5SZ4000-UP
182.88CM (72 IN), 0.41CU M (0.53 CU YD)
FIELD REPLACEMENT FOR 188-3526 BUCKET AS-DIRT
AN ATTACHMENT

SMCS-6001 **i01372499**

NOTE	REF NO	GRAPHIC REF	PART NUMBER	QTY	PART NAME 1 2 3 4 5 6 (PRODUCT LEVEL)	SEE PAGE
Y	1	1	**188-3526**	1	BUCKET AS-DIRT	524
Y	2	1	*135-9386*	1	EDGE GP-CUTTING	545

Y-SEPARATE ILLUSTRATION

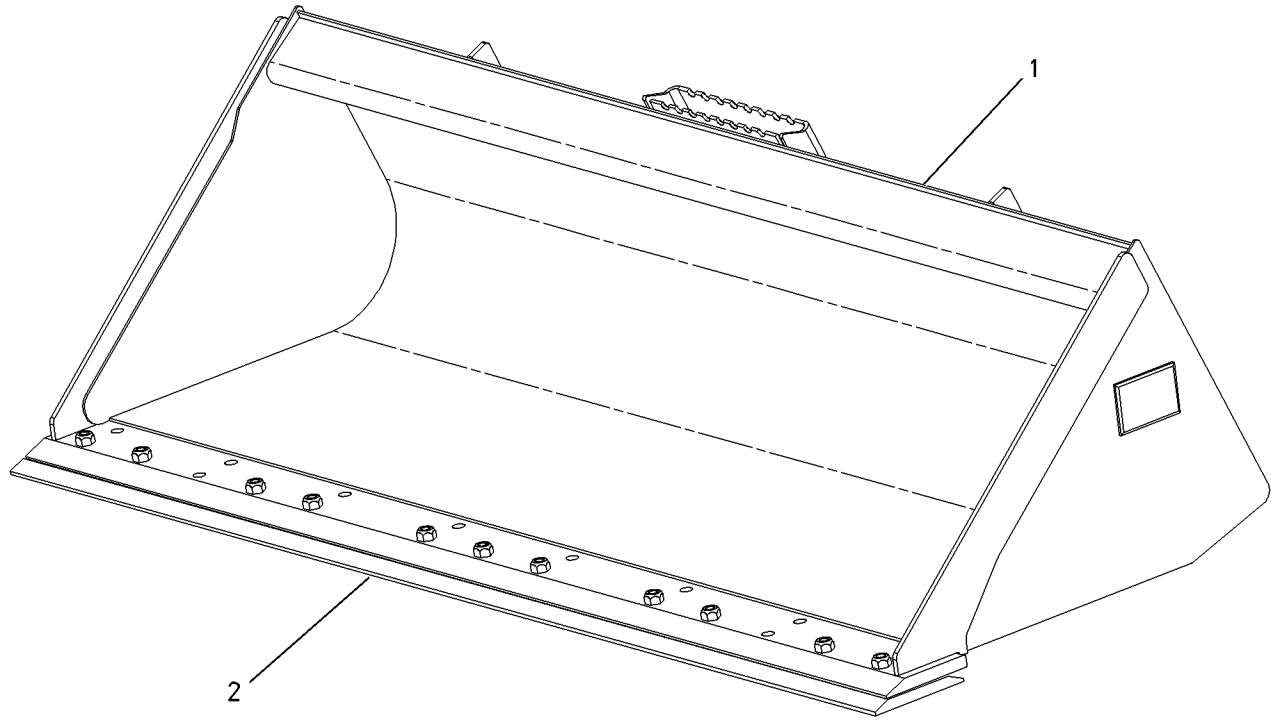

GRAPHIC #1 g00724388

152-0225 BUCKET AR-GENERAL PURPOSE

S/N: CED1-UP; FDG1-UP; 4YZ4000-UP; 5SZ4000-UP
167.64CM (66 IN), 0.37CU M (0.48 CU YD)
AN ATTACHMENT

SMCS-6101 **i01788949**

NOTE	REF NO	GRAPHIC REF	PART NUMBER	QTY	PART NAME 1 2 3 4 5 6 (PRODUCT LEVEL)	SEE PAGE
	1	1	**165-6153**	1	BUCKET AS-GENERAL PURPOSE	
	2	1	**149-5436**	1	EDGE	
	3	1	*141-4999*	8	TOOTH GP-UNI	
	4	1	**132-4720**	1	TOOTH-UNI-SINGLE STRAP	
M	5	1	**159-2953**	2	SCREW-FLAT HEAD (M16X2.00 THD)	
M	6	1	**8T-4778**	2	LOCKNUT (M16X2 THD)	

M-METRIC PART

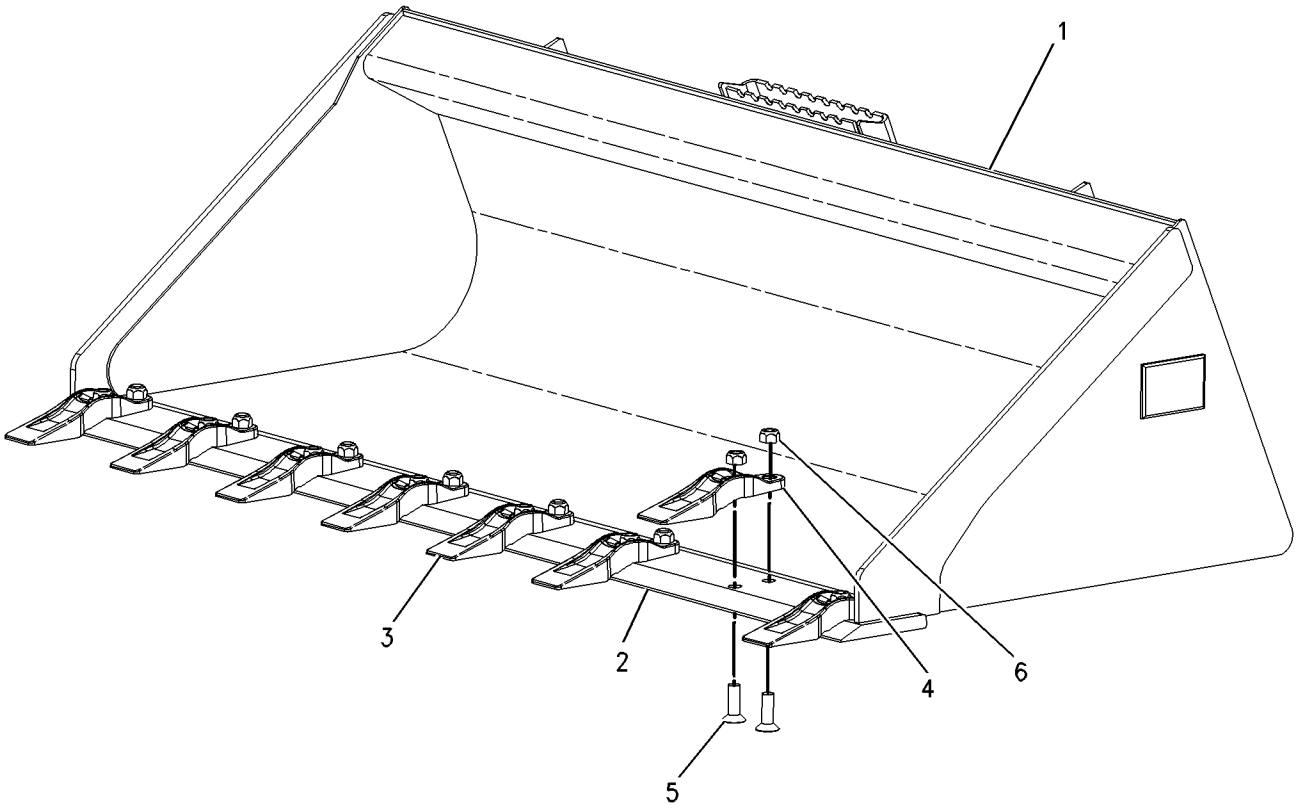

GRAPHIC #1 g00714118

152-0226 BUCKET AR-GENERAL PURPOSE

S/N: CED1-UP; FDG1-UP; 4YZ4000-UP; 5SZ4000-UP
167.64CM (66 IN), 0.37CU M (0.48 CU YD)
AN ATTACHMENT

SMCS-6101 **i01788943**

NOTE	REF NO	GRAPHIC REF	PART NUMBER	QTY	PART NAME 1 2 3 4 5 6 (PRODUCT LEVEL)	SEE PAGE
	1	1	**165-6153**	1	BUCKET AS-GENERAL PURPOSE	
	2	1	**149-5436**	1	EDGE	
	3	1	*135-9385*	1	EDGE GP-CUTTING	
	4	1	**135-9395**	1	EDGE-CUTTING	
M	5	1	**8T-4778**	8	LOCKNUT (M16X2 THD)	
M	6	1	**159-2953**	8	SCREW-FLAT HEAD (M16X2.00 THD)	

M-METRIC PART

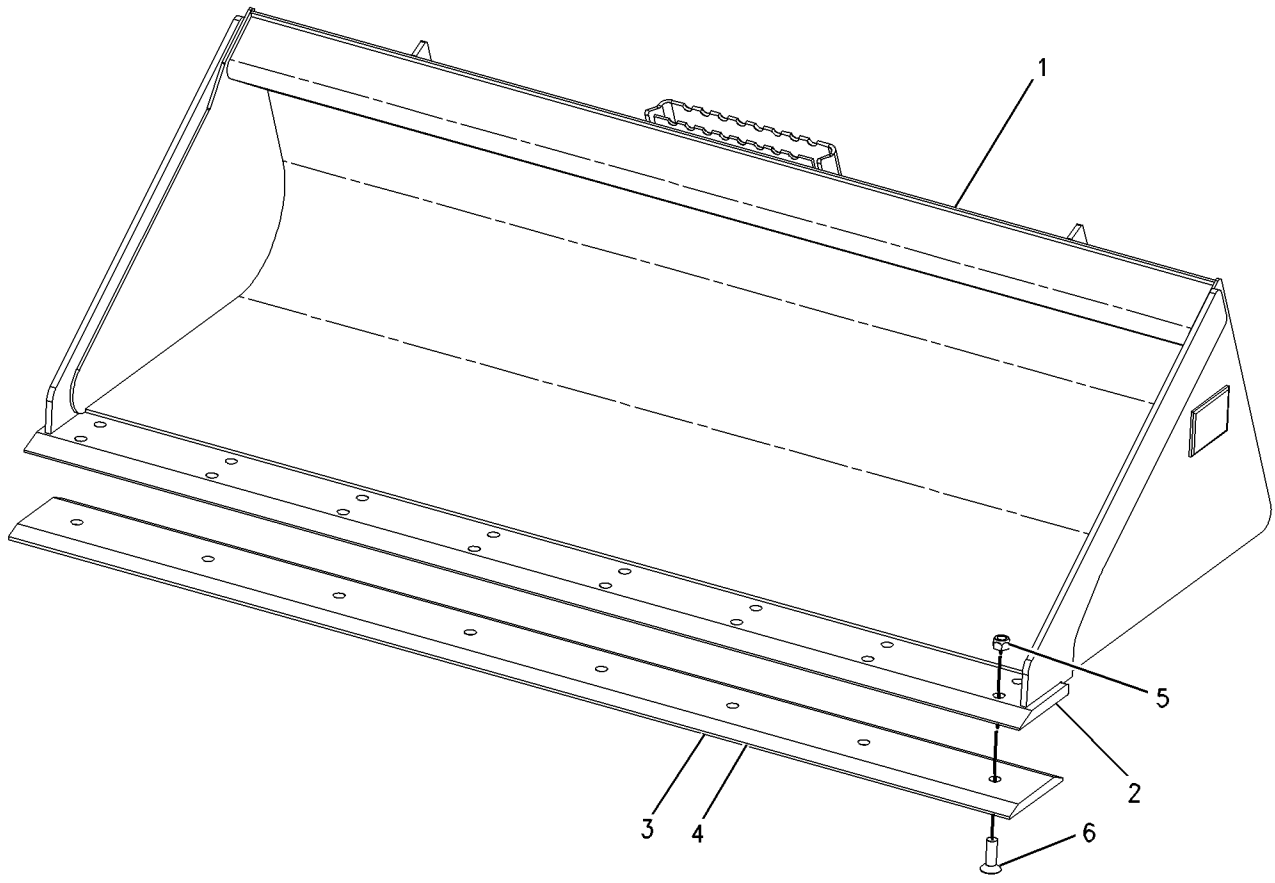

GRAPHIC #1 g00714114

152-0228 BUCKET AR-GENERAL PURPOSE

S/N: CED1-UP; FDG1-UP; 4YZ4000-UP; 5SZ4000-UP
182.88CM (72 IN), 044CU M (0.57 CU YD)
AN ATTACHMENT

SMCS-6101 **i01798729**

NOTE	REF NO	GRAPHIC REF	PART NUMBER	QTY	PART NAME 1 2 3 4 5 6 (PRODUCT LEVEL)	SEE PAGE
	1	1	**165-6154**	1	BUCKET AS-GENERAL PURPOSE	
	2	1	**149-5437**	1	EDGE	
	3	1	**132-4720**	8	TOOTH-UNI-SINGLE STRAP	
M	4	1	**159-2953**	16	SCREW-FLAT HEAD (M16X2.00 THD)	
M	5	1	**8T-4778**	16	LOCKNUT (M16X2 THD)	

M-METRIC PART

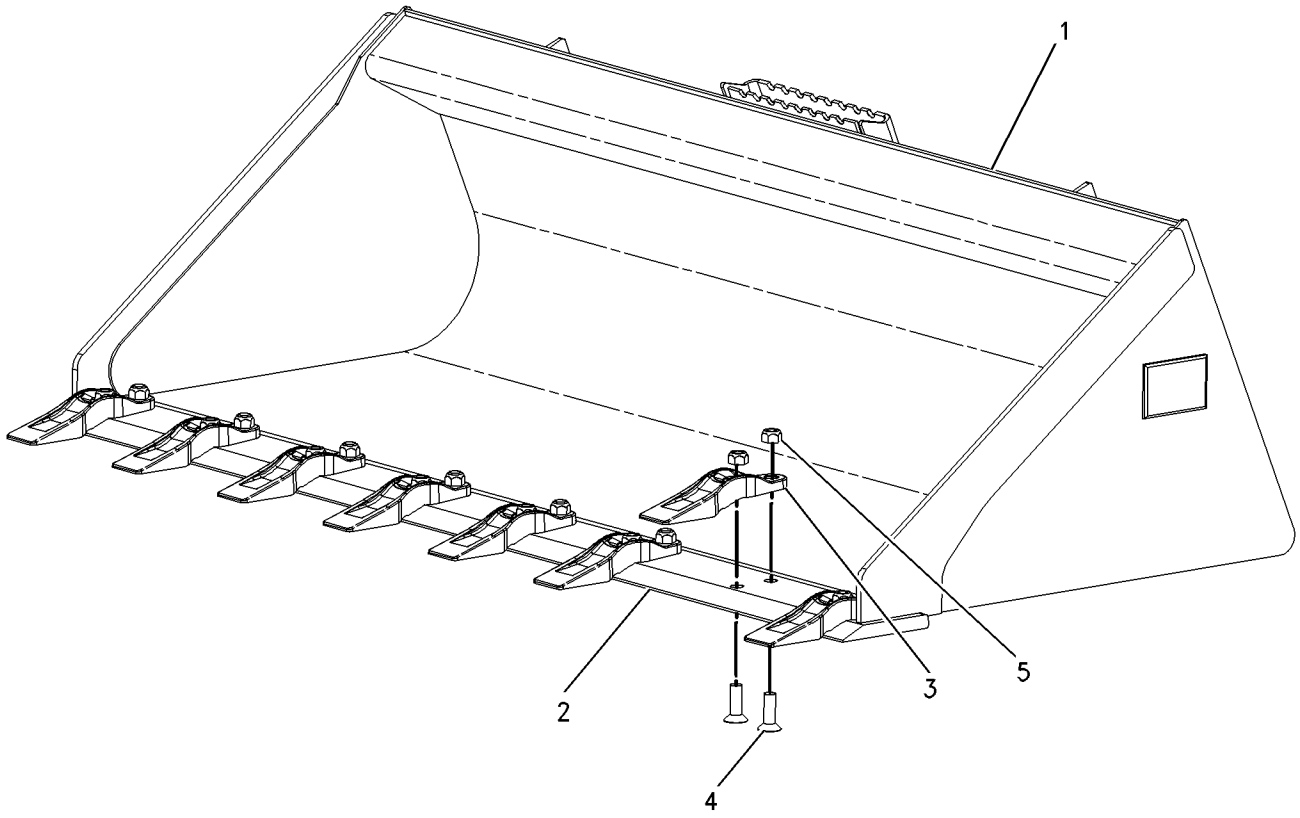

GRAPHIC #1 g00921032

WORK TOOLS

152-0229 BUCKET AR-GENERAL PURPOSE

S/N: CED1-UP; FDG1-UP; 4YZ4000-UP; 5SZ4000-UP
AN ATTACHMENT

SMCS-6101 **i01755487**

NOTE	PART NUMBER	QTY	PART NAME 1 2 3 4 5 6 (PRODUCT LEVEL)	SEE PAGE
Y	**165-6154**	1	BUCKET AS-GENERAL PURPOSE	525
Y	*135-9386*	1	EDGE GP-CUTTING	545
Y-SEPARATE ILLUSTRATION				

<END>

199-7726 BUCKET AR-GENERAL PURPOSE

S/N: CED1-UP; FDG1-UP
AN ATTACHMENT

SMCS-6101 **i01755600**

NOTE	PART NUMBER	QTY	PART NAME 1 2 3 4 5 6 (PRODUCT LEVEL)	SEE PAGE
Y	**199-7720**	1	BUCKET AS-GENERAL PURPOSE	526
Y	*135-9387*	1	EDGE GP-CUTTING	546
Y-SEPARATE ILLUSTRATION				

<END>

199-7727 BUCKET AR-GENERAL PURPOSE

S/N: CED1-UP; FDG1-UP
AN ATTACHMENT

SMCS-6101 **i01755602**

NOTE	PART NUMBER	QTY	PART NAME 1 2 3 4 5 6 (PRODUCT LEVEL)	SEE PAGE
Y	**199-7720**	1	BUCKET AS-GENERAL PURPOSE	526
Y	*141-4999*	9	TOOTH GP-UNI	584
Y-SEPARATE ILLUSTRATION				

<END>

157-7223 BUCKET AR-GRAPPLE

S/N: CED1-UP; FDG1-UP; 4YZ4000-UP; 5SZ4000-UP
INDUSTRIAL
PART OF 157-7226 BUCKET AR-GRAPPLE
AN ATTACHMENT

SMCS-6704 **i01628731**

NOTE	PART NUMBER	QTY	PART NAME 1 2 3 4 5 6 (PRODUCT LEVEL)	SEE PAGE
Y	*156-0884*	1	BUCKET GP-GRAPPLE	527
Y	*156-0891*	1	CYLINDER & MTG GP-GRAPPLE	346
Y	**156-5512**	2	CYLINDER GP-GRAPPLE	350
Y	*161-0187*	1	LINES GP-GRAPPLE	384
Y-SEPARATE ILLUSTRATION				

<END>

157-7224 BUCKET AR-GRAPPLE

S/N: CED1-UP; FDG1-UP; 4YZ4000-UP; 5SZ4000-UP
INDUSTRIAL
PART OF 157-7227 BUCKET AR-GRAPPLE
AN ATTACHMENT

SMCS-6704 **i01529477**

NOTE	PART NUMBER	QTY	PART NAME 1 2 3 4 5 6 (PRODUCT LEVEL)	SEE PAGE
Y	*156-0885*	1	BUCKET GP-GRAPPLE	528
Y	*156-0891*	1	CYLINDER & MTG GP-GRAPPLE	346
Y	**156-5512**	2	CYLINDER GP-GRAPPLE	350
Y	*161-0187*	1	LINES GP-GRAPPLE	384

Y-SEPARATE ILLUSTRATION

<END>

157-7225 BUCKET AR-GRAPPLE

S/N: CED1-UP; FDG1-UP; 4YZ4000-UP; 5SZ4000-UP
INDUSTRIAL
PART OF 158-6095 BUCKET AR-GRAPPLE
AN ATTACHMENT

SMCS-6704 **i01529481**

NOTE	PART NUMBER	QTY	PART NAME 1 2 3 4 5 6 (PRODUCT LEVEL)	SEE PAGE
Y	*156-0886*	1	BUCKET GP-GRAPPLE	529
Y	*156-0891*	1	CYLINDER & MTG GP-GRAPPLE	346
Y	**156-5512**	2	CYLINDER GP-GRAPPLE	350
Y	*161-0187*	1	LINES GP-GRAPPLE	384

Y-SEPARATE ILLUSTRATION

<END>

157-7226 BUCKET AR-GRAPPLE

S/N: CED1-UP; FDG1-UP; 4YZ4000-UP; 5SZ4000-UP
INDUSTRIAL
AN ATTACHMENT

SMCS-6704 **i01788957**

NOTE	PART NUMBER	QTY	PART NAME 1 2 3 4 5 6 (PRODUCT LEVEL)	SEE PAGE
Y	**157-7223**	1	BUCKET AR-GRAPPLE	511
Y	*135-9384*	1	EDGE GP-CUTTING	543

Y-SEPARATE ILLUSTRATION

<END>

WORK TOOLS

157-7227 BUCKET AR-GRAPPLE

S/N: CED1-UP; FDG1-UP; 4YZ4000-UP; 5SZ4000-UP
INDUSTRIAL
AN ATTACHMENT

SMCS-6704 **i01788965**

NOTE	PART NUMBER	QTY	PART NAME 1 2 3 4 5 6 (PRODUCT LEVEL)	SEE PAGE
Y	**157-7224**	1	BUCKET AR-GRAPPLE	512
Y	*135-9385*	1	EDGE GP-CUTTING	544

Y-SEPARATE ILLUSTRATION

<END>

158-6095 BUCKET AR-GRAPPLE

S/N: CED1-UP; FDG1-UP; 4YZ4000-UP; 5SZ4000-UP
INDUSTRIAL
AN ATTACHMENT

SMCS-6704 **i01060288**

NOTE	PART NUMBER	QTY	PART NAME 1 2 3 4 5 6 (PRODUCT LEVEL)	SEE PAGE
Y	**157-7225**	1	BUCKET AR-GRAPPLE	512
Y	*135-9386*	1	EDGE GP-CUTTING	545

Y-SEPARATE ILLUSTRATION

<END>

165-8729 BUCKET AR-GRAPPLE

S/N: CED1-UP; FDG1-UP; 4YZ4000-UP; 5SZ4000-UP
167.64CM (66 IN), 0.47CU M (0.61 CU YD). UTILITY
AN ATTACHMENT

SMCS-6704 **i01345426**

NOTE	REF NO	GRAPHIC REF	PART NUMBER	QTY	PART NAME 1 2 3 4 5 6 (PRODUCT LEVEL)	SEE PAGE
	1	1	**165-8746**	1	BUCKET AS-UTILITY	
	2	1	**149-5436**	1	EDGE	
	3	1	**111-0483**	4	BOSS (M10X1.5MM)	
Y	4	1	**165-8734**	1	GRAPPLE GP-UTILITY	560

Y-SEPARATE ILLUSTRATION

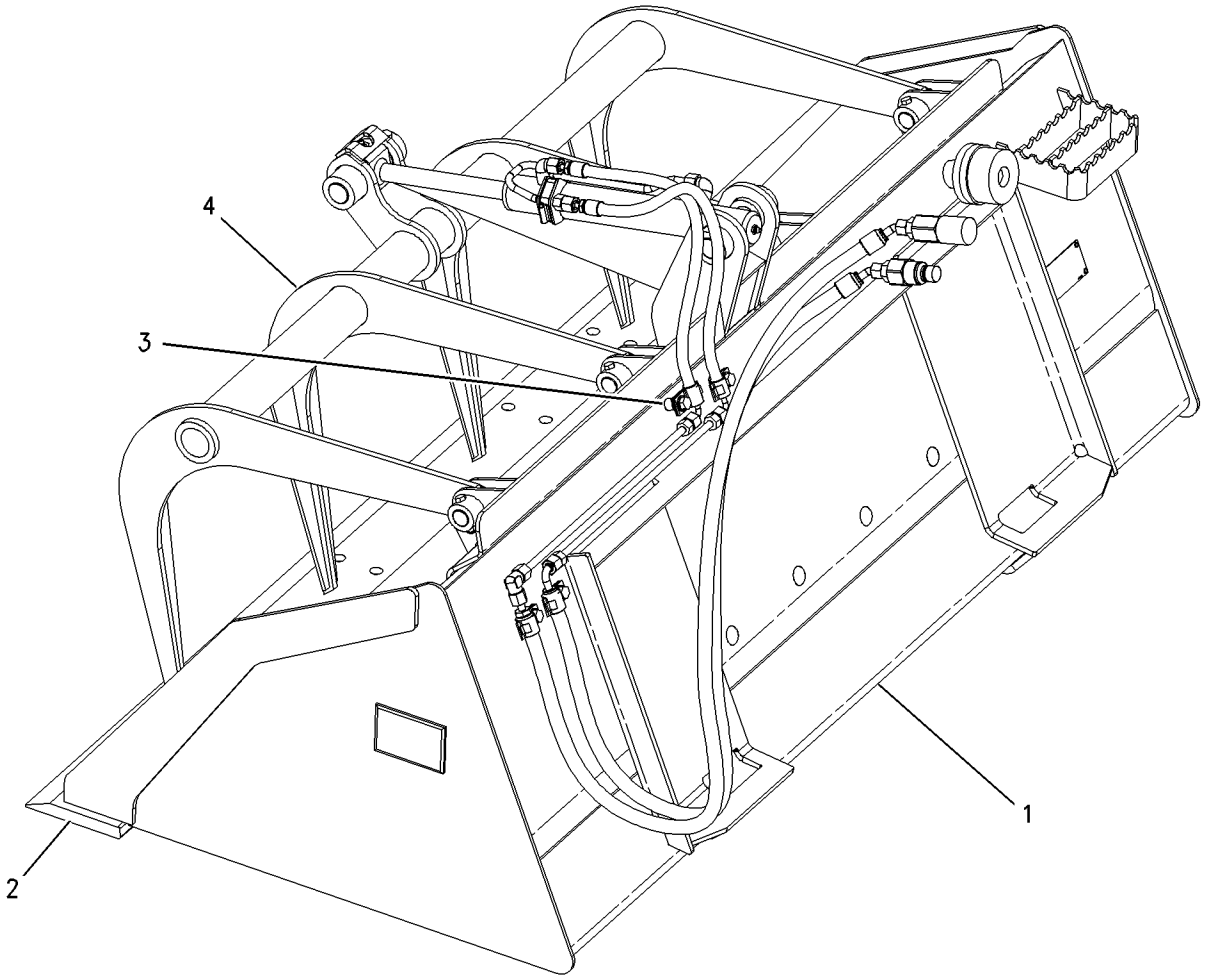

GRAPHIC #1 g00710560

WORK TOOLS

165-8730 BUCKET AR-GRAPPLE

S/N: CED1-UP; FDG1-UP; 4YZ4000-UP; 5SZ4000-UP
182.88CM (72 IN), 0.51CU M (0.66 CU YD). UTILITY
AN ATTACHMENT

SMCS-6704 **i01345450**

NOTE	REF NO	GRAPHIC REF	PART NUMBER	QTY	PART NAME 1 2 3 4 5 6 (PRODUCT LEVEL)	SEE PAGE
	1	1	**165-8747**	1	BUCKET AS-UTILITY	
	2	1	**149-5437**	1	EDGE	
	3	1	**111-0483**	4	BOSS (M10X1.5MM)	
Y	4	1	**165-8734**	1	GRAPPLE GP-UTILITY	560

Y-SEPARATE ILLUSTRATION

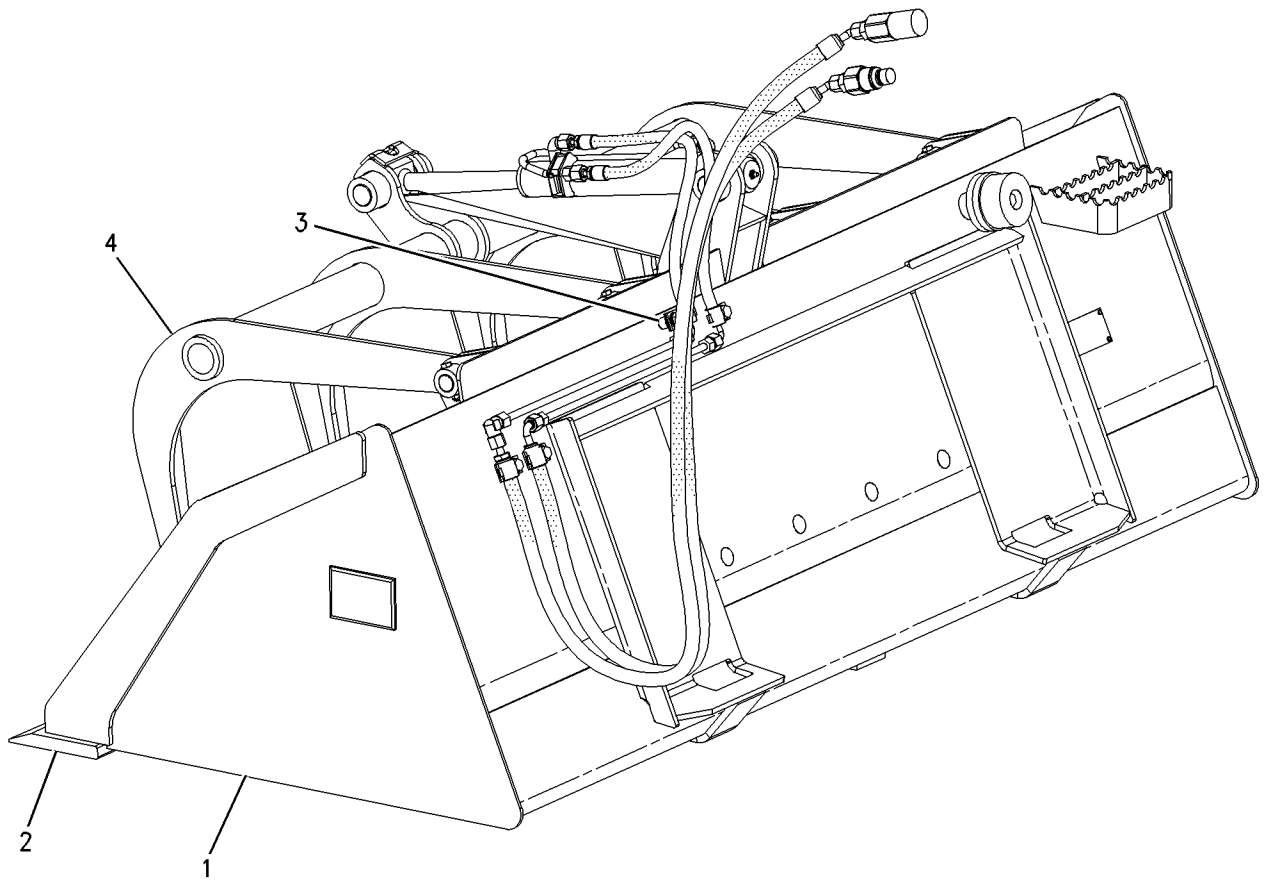

GRAPHIC #1 g00710565

165-8779 BUCKET AR-GRAPPLE

S/N: CED1-UP; FDG1-UP; 4YZ4000-UP; 5SZ4000-UP
167.64CM (66 IN), 0.47CU M (0.61 CU YD). UTILITY
AN ATTACHMENT

SMCS-6704 **i01345476**

NOTE	REF NO	GRAPHIC REF	PART NUMBER	QTY	PART NAME 1 2 3 4 5 6 (PRODUCT LEVEL)	SEE PAGE
	1	1	**165-8777**	1	BUCKET GP-UTILITY	
	2	1	**165-8746**	1	BUCKET AS-UTILITY	
	3	1	**149-5436**	1	EDGE	
	4	1	**111-0483**	4	BOSS (M10X1.5MM)	
	5	1	*135-9385*	1	EDGE GP-CUTTING	
	6	1	**135-9395**	1	EDGE-CUTTING	
M	7	1	**8T-4778**	8	LOCKNUT (M16X2.00 THD)	
M	8	1	**159-2953**	8	SCREW-FLAT HEAD (M16X2.00 THD)	
Y	9	1	**165-8734**	1	GRAPPLE GP-UTILITY	560

M-METRIC PART
Y-SEPARATE ILLUSTRATION

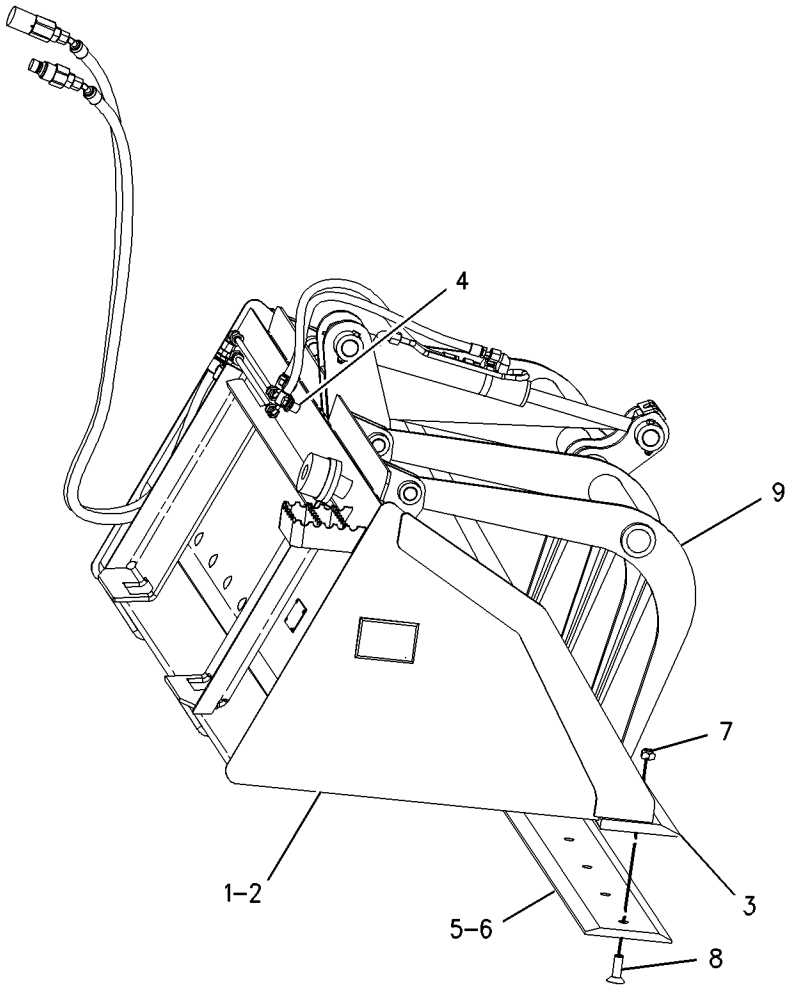

GRAPHIC #1 g00710579

WORK TOOLS

165-8780 BUCKET AR-GRAPPLE

S/N: CED1-UP; FDG1-UP; 4YZ4000-UP; 5SZ4000-UP
167.64CM (66 IN), 0.34CU M (0.44 CU YD). UTILITY
AN ATTACHMENT

SMCS-6704 **i01788975**

NOTE	REF NO	GRAPHIC REF	PART NUMBER	QTY	PART NAME 1 2 3 4 5 6 (PRODUCT LEVEL)	SEE PAGE
	1	1	**165-8778**	1	BUCKET GP-UTILITY	
	2	1	**165-8747**	1	BUCKET AS-UTILITY	
	3	1	**149-5437**	1	EDGE	
	4	1	**111-0483**	4	BOSS (M10X1.5MM)	
	5	1	**135-9386**	1	EDGE GP-CUTTING	
	6	1	**135-9396**	1	EDGE-CUTTING	
M	7	1	**8T-4778**	11	LOCKNUT (M16X2 THD)	
M	8	1	**159-2953**	11	SCREW-FLAT HEAD (M16X2.00 THD)	
Y	9	1	**165-8734**	1	GRAPPLE GP-UTILITY	560

M-METRIC PART
Y-SEPARATE ILLUSTRATION

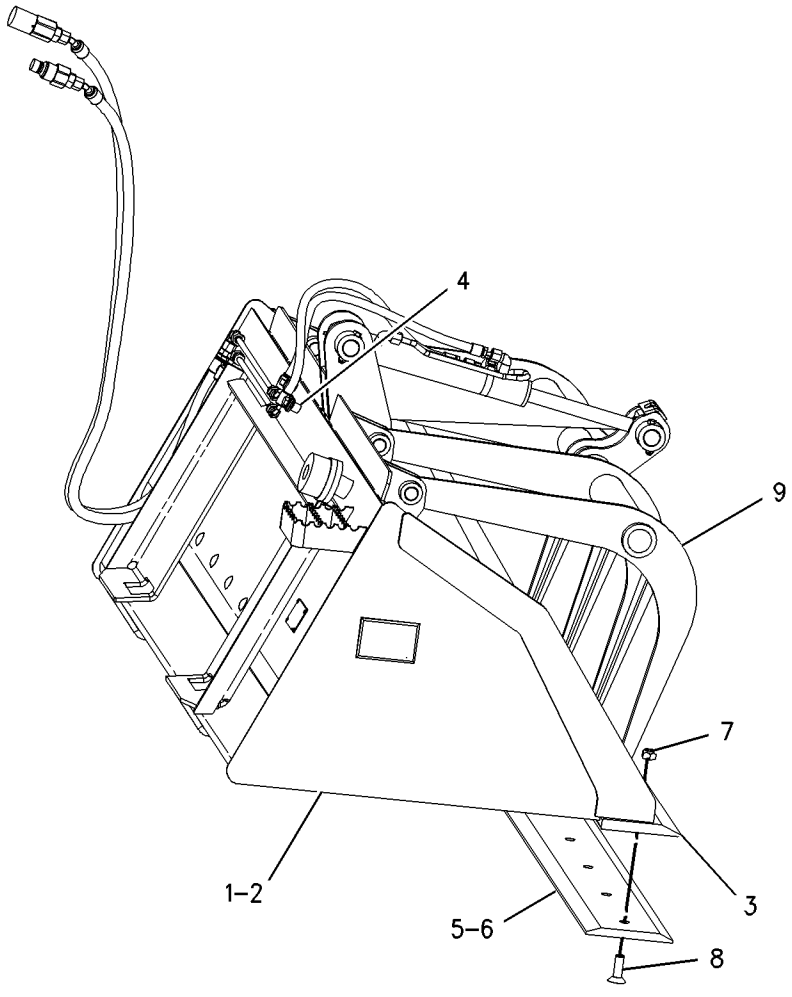

GRAPHIC #1 g00710579

164-7413 BUCKET AR-LIGHT MATERIAL

S/N: CED1-UP; FDG1-UP; 4YZ4000-UP; 5SZ4000-UP
198.12CM (78 IN), 0.75CU M (0.98 CU YD)
AN ATTACHMENT

SMCS-6103 **i01345492**

NOTE	REF NO	GRAPHIC REF	PART NUMBER	QTY	PART NAME 1 2 3 4 5 6 (PRODUCT LEVEL)	SEE PAGE
	1	1	**164-7415**	1	BUCKET AS-LIGHT MATERIAL	
	2	1	**164-7433**	1	EDGE	
	3	1	*135-9387*	1	EDGE GP-CUTTING	
	4	1	**135-9397**	1	EDGE-CUTTING	
M	5	1	**8T-4778**	11	LOCKNUT (M16X2.00 THD)	
M	6	1	**159-2953**	11	SCREW-FLAT HEAD (M16X2.00 THD)	

M-METRIC PART

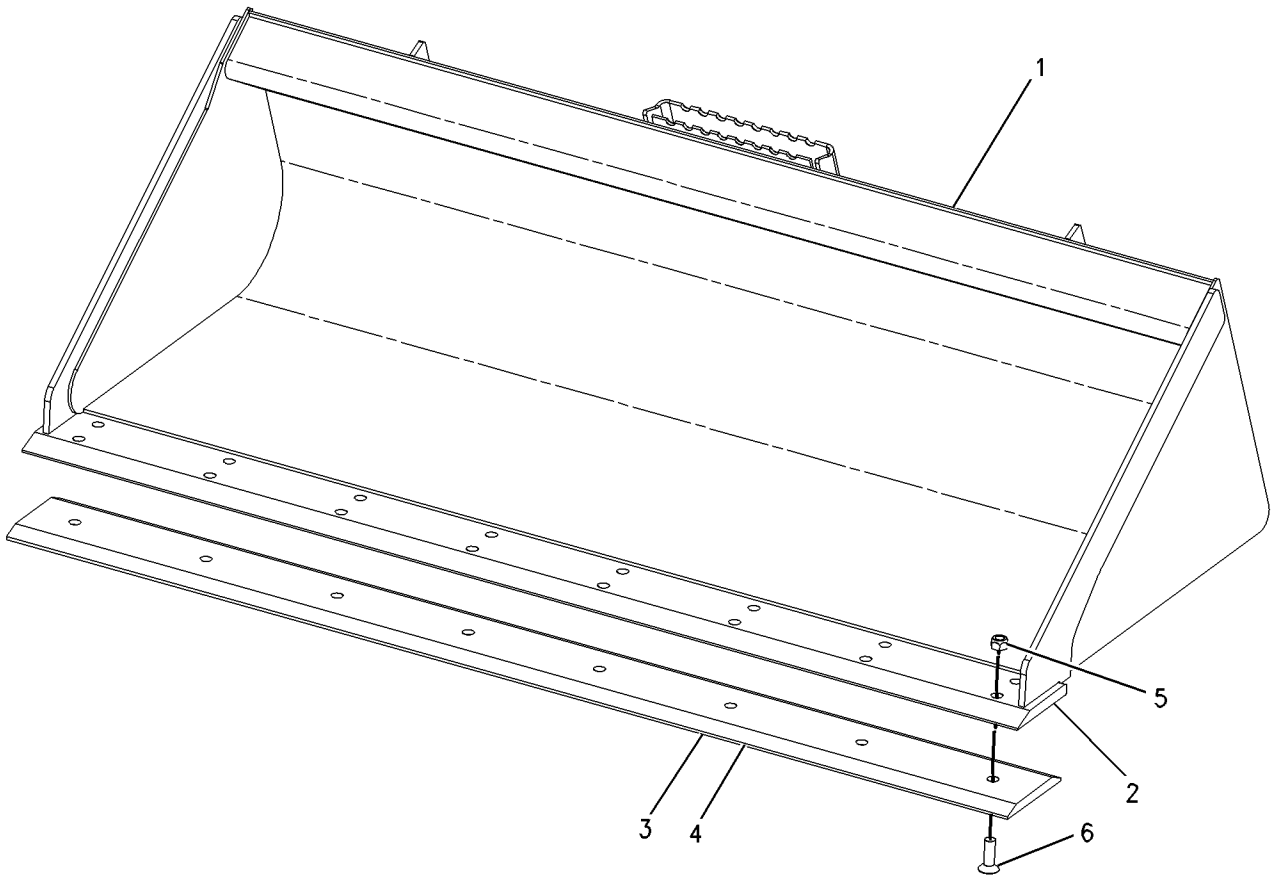

GRAPHIC #1 g00710585

154-5004 BUCKET AR-MULTIPURPOSE

S/N: FDG1-UP; 4YZ4000-UP
PART OF 154-5045, 154-5046 BUCKET AR-MULTIPURPOSE
AN ATTACHMENT

SMCS-6104 **i01519821**

NOTE	PART NUMBER	QTY	PART NAME 1 2 3 4 5 6 (PRODUCT LEVEL)	SEE PAGE
Y	**154-5005**	1	BUCKET GP-MULTIPURPOSE	530
Y	*162-5236*	1	COVER GP-LINES	542
Y	**154-5018**	2	CYLINDER GP-BUCKET	348
Y	*154-5019*	1	LINES GP-BUCKET	366
Y	*154-5011*	1	MOUNTING GP-CYLINDER	440

Y-SEPARATE ILLUSTRATION

<END>

154-5008 BUCKET AR-MULTIPURPOSE

S/N: CED1-UP; FDG1-UP; 4YZ4000-UP; 5SZ4000-UP
PART OF 154-5047, 154-5048 BUCKET AR-MULTIPURPOSE
AN ATTACHMENT

SMCS-6104 **i01218109**

NOTE	PART NUMBER	QTY	PART NAME 1 2 3 4 5 6 (PRODUCT LEVEL)	SEE PAGE
Y	**154-5007**	1	BUCKET GP-MULTIPURPOSE	531
Y	**154-5018**	2	CYLINDER GP-BUCKET	348
Y	*162-5236*	1	COVER GP-LINES	542
Y	*154-5051*	1	LINES GP-BUCKET	368
Y	*154-5011*	1	MOUNTING GP-CYLINDER	440

Y-SEPARATE ILLUSTRATION

<END>

154-5010 BUCKET AR-MULTIPURPOSE

S/N: CED1-UP; FDG1-UP; 4YZ4000-UP; 5SZ4000-UP
PART OF 154-5049, 154-5050 BUCKET AR-MULTIPURPOSE
AN ATTACHMENT

SMCS-6104 **i01092083**

NOTE	PART NUMBER	QTY	PART NAME 1 2 3 4 5 6 (PRODUCT LEVEL)	SEE PAGE
Y	**154-5009**	1	BUCKET GP-MULTIPURPOSE	532
Y	**154-5018**	2	CYLINDER GP-BUCKET	348
Y	*162-5236*	1	COVER GP-LINES	542
Y	*154-5052*	1	LINES GP-BUCKET	370
Y	*154-5011*	1	MOUNTING GP-CYLINDER	440

Y-SEPARATE ILLUSTRATION

<END>

154-5045 BUCKET AR-MULTIPURPOSE

S/N: FDG1-UP; 4YZ4000-UP
AN ATTACHMENT

SMCS-6104 **i01218111**

NOTE	PART NUMBER	QTY	PART NAME 1 2 3 4 5 6 (PRODUCT LEVEL)	SEE PAGE
Y	**154-5004**	1	BUCKET AR-MULTIPURPOSE	519
Y	*135-9384*	1	EDGE GP-CUTTING	543
Y-SEPARATE ILLUSTRATION				

<END>

154-5046 BUCKET AR-MULTIPURPOSE

S/N: FDG1-UP; 4YZ4000-UP
AN ATTACHMENT

SMCS-6104 **i01218112**

NOTE	PART NUMBER	QTY	PART NAME 1 2 3 4 5 6 (PRODUCT LEVEL)	SEE PAGE
Y	**154-5004**	1	BUCKET AR-MULTIPURPOSE	519
Y	*141-4999*	8	TOOTH GP-UNI	584
Y-SEPARATE ILLUSTRATION				

<END>

154-5047 BUCKET AR-MULTIPURPOSE

S/N: CED1-UP; FDG1-UP; 4YZ4000-UP; 5SZ4000-UP
AN ATTACHMENT

SMCS-6104 **i01218113**

NOTE	PART NUMBER	QTY	PART NAME 1 2 3 4 5 6 (PRODUCT LEVEL)	SEE PAGE
Y	**154-5008**	1	BUCKET AR-MULTIPURPOSE	519
Y	*135-9385*	1	EDGE GP-CUTTING	544
Y-SEPARATE ILLUSTRATION				

<END>

154-5048 BUCKET AR-MULTIPURPOSE

S/N: CED1-UP; FDG1-UP; 4YZ4000-UP; 5SZ4000-UP
AN ATTACHMENT

SMCS-6104 **i01218115**

NOTE	PART NUMBER	QTY	PART NAME 1 2 3 4 5 6 (PRODUCT LEVEL)	SEE PAGE
Y	**154-5008**	1	BUCKET AR-MULTIPURPOSE	519
Y	*141-4999*	8	TOOTH GP-UNI	584
Y-SEPARATE ILLUSTRATION				

<END>

154-5049 BUCKET AR-MULTIPURPOSE

S/N: CED1-UP; FDG1-UP; 4YZ4000-UP; 5SZ4000-UP
AN ATTACHMENT

SMCS-6104 **i01112307**

NOTE	PART NUMBER	QTY	PART NAME 1 2 3 4 5 6 (PRODUCT LEVEL)	SEE PAGE
Y	*135-9386*	1	EDGE GP-CUTTING	545
Y	**154-5010**	1	BUCKET AR-MULTIPURPOSE	519
Y-SEPARATE ILLUSTRATION				

<END>

154-5050 BUCKET AR-MULTIPURPOSE

S/N: CED1-UP; FDG1-UP; 4YZ4000-UP; 5SZ4000-UP
AN ATTACHMENT

SMCS-6104 **i01092089**

NOTE	PART NUMBER	QTY	PART NAME 1 2 3 4 5 6 (PRODUCT LEVEL)	SEE PAGE
Y	**154-5010**	1	BUCKET AR-MULTIPURPOSE	519
Y	*141-4999*	8	TOOTH GP-UNI	584
Y-SEPARATE ILLUSTRATION				

<END>

199-8320 BUCKET AR-MULTIPURPOSE

S/N: CED1-UP; FDG1-UP
PART OF 199-8321, 199-8322 BUCKET AR-MULTIPURPOSE
AN ATTACHMENT

SMCS-6104 **i01529485**

NOTE	PART NUMBER	QTY	PART NAME 1 2 3 4 5 6 (PRODUCT LEVEL)	SEE PAGE
Y	*199-8319*	1	BUCKET GP-MULTIPURPOSE	533
Y	*162-5236*	1	COVER GP-LINES	542
Y	**154-5018**	2	CYLINDER GP-BUCKET	348
Y	*199-8306*	1	LINES GP-BUCKET	372
Y	*154-5011*	1	MOUNTING GP-CYLINDER	440
Y-SEPARATE ILLUSTRATION				

<END>

199-8321 BUCKET AR-MULTIPURPOSE

S/N: CED1-UP; FDG1-UP
AN ATTACHMENT

SMCS-6104 **i01502939**

NOTE	PART NUMBER	QTY	PART NAME 1 2 3 4 5 6 (PRODUCT LEVEL)	SEE PAGE
Y	**199-8320**	1	BUCKET AR-MULTIPURPOSE	521
Y	*135-9387*	1	EDGE GP-CUTTING	546
Y-SEPARATE ILLUSTRATION				

<END>

WORK TOOLS

199-8322 BUCKET AR-MULTIPURPOSE

S/N: CED1-UP; FDG1-UP

AN ATTACHMENT

SMCS-6104 **i01505169**

NOTE	PART NUMBER	QTY	PART NAME 1 2 3 4 5 6 (PRODUCT LEVEL)	SEE PAGE
Y	**199-8320**	1	BUCKET AR-MULTIPURPOSE	521
Y	*141-4999*	9	TOOTH GP-UNI	584

Y-SEPARATE ILLUSTRATION

<END>

WORK TOOLS

165-6157 BUCKET AS-DIRT

S/N: CED1-UP; FDG1-UP; 4YZ4000-UP; 5SZ4000-UP
0.37CU M (0.48 CU YD)
PART OF 152-0232 BUCKET AR-DIRT
AN ATTACHMENT

SMCS-6001 **i01209621**

NOTE	REF NO	GRAPHIC REF	PART NUMBER	QTY	PART NAME 1 2 3 4 5 6 (PRODUCT LEVEL)	SEE PAGE
	1	1	**149-5436**	1	EDGE	

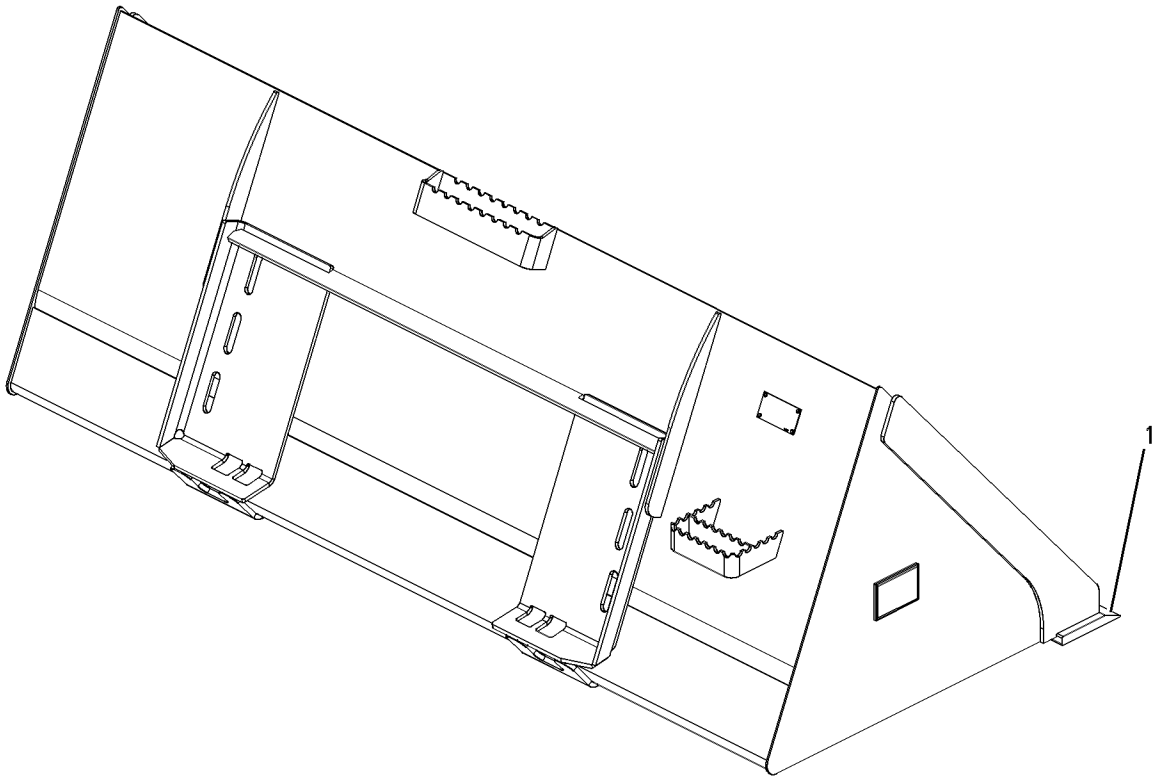

GRAPHIC #1 g00606824

WORK TOOLS

188-3526 BUCKET AS-DIRT

S/N: CED1-UP; FDG1-UP; 4YZ4000-UP; 5SZ4000-UP
1829CM (72 IN), 0.41CU M (0.53CU YD)
PART OF 188-2719 BUCKET AR-DIRT
AN ATTACHMENT

SMCS-6001 **i01371114**

NOTE	REF NO	GRAPHIC REF	PART NUMBER	QTY	PART NAME 1 2 3 4 5 6 (PRODUCT LEVEL)	SEE PAGE
	1	1	**149-5437**	1	EDGE	

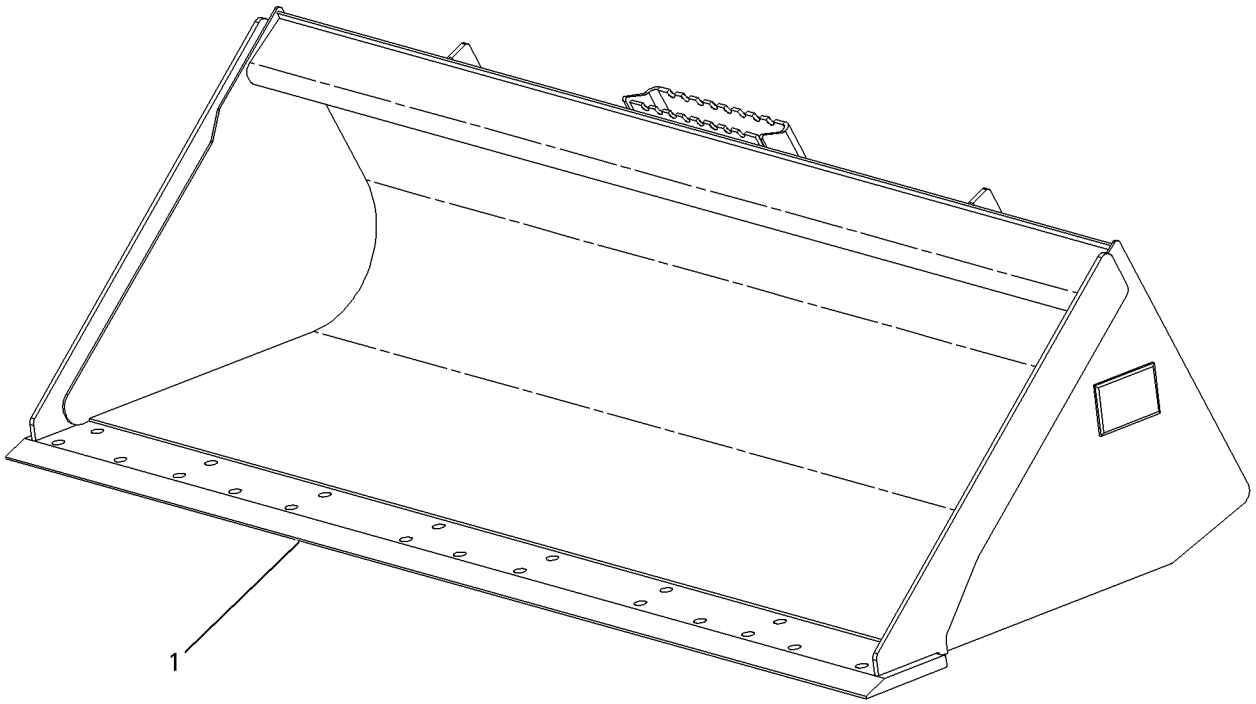

GRAPHIC #1 g00723342

165-6154 BUCKET AS-GENERAL PURPOSE

S/N: CED1-UP; FDG1-UP; 4YZ4000-UP; 5SZ4000-UP
182.88CM (72 IN), 0.44CU M (0.57 CU YD)
PART OF 152-0229 BUCKET AR-GENERAL PURPOSE
AN ATTACHMENT

SMCS-6101 **i01798721**

NOTE	REF NO	GRAPHIC REF	PART NUMBER	QTY	PART NAME 1 2 3 4 5 6 (PRODUCT LEVEL)	SEE PAGE
	1	1	**149-5437**	1	EDGE	

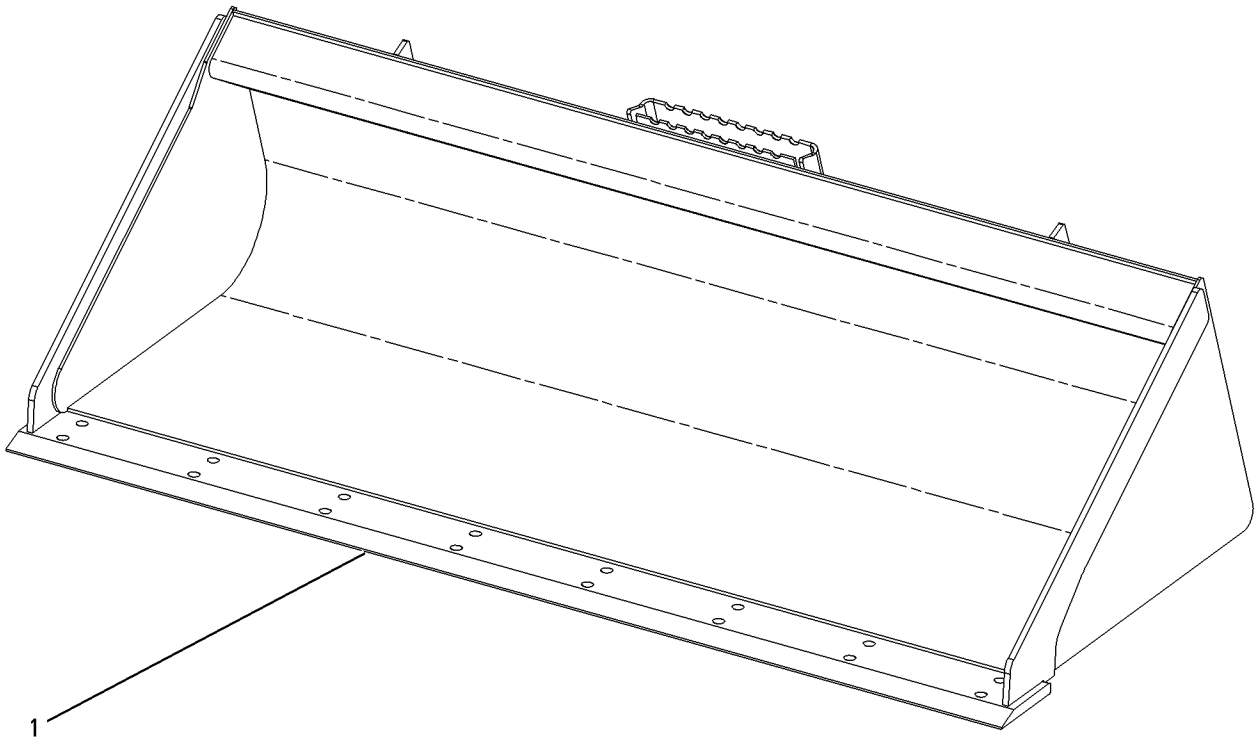

GRAPHIC #1 g00921017

199-7720 BUCKET AS-GENERAL PURPOSE

S/N: CED1-UP; FDG1-UP
198.12CM(78IN),0.75 CU M(0.98 CU YD)
PART OF 199-7726, 199-7727 BUCKET AR-GENERAL PURPOSE
AN ATTACHMENT

SMCS-6101 **i01755216**

NOTE	REF NO	GRAPHIC REF	PART NUMBER	QTY	PART NAME 1 2 3 4 5 6 (PRODUCT LEVEL)	SEE PAGE
	1	1	**199-7722**	1	EDGE	

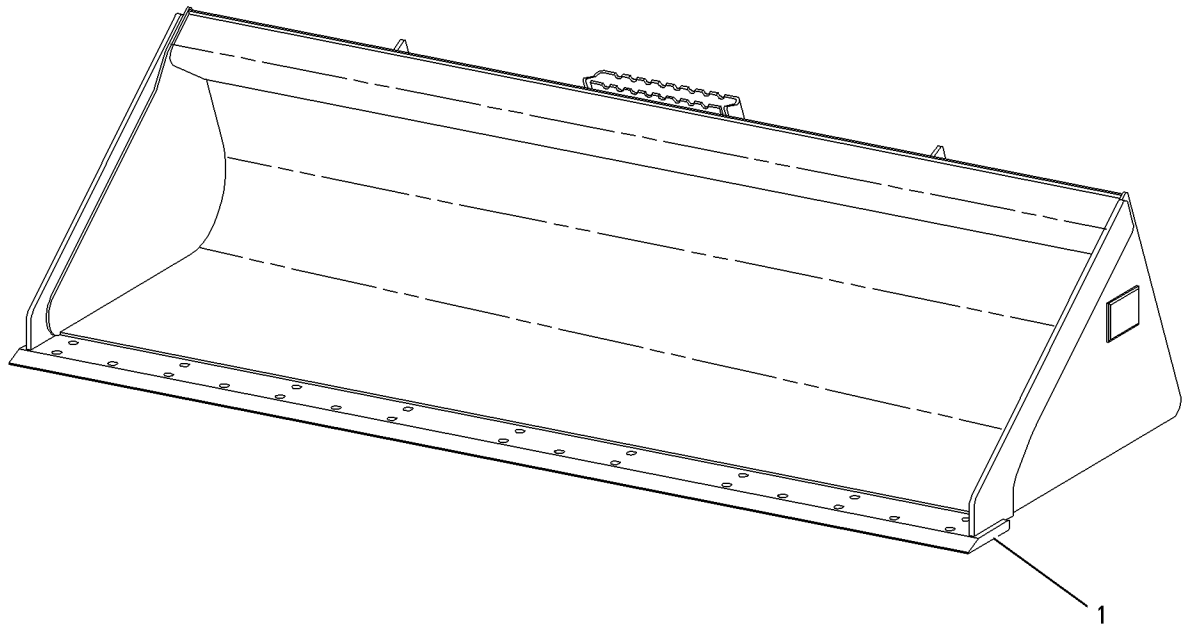

GRAPHIC #1 g00898200

156-0884 BUCKET GP-GRAPPLE

S/N: CED1-UP; FDG1-UP; 4YZ4000-UP; 5SZ4000-UP
152.4CM (60 IN). INDUSTRIAL
PART OF 157-7223 BUCKET AR-GRAPPLE
AN ATTACHMENT

SMCS-6704 **i01628741**

NOTE	REF NO	GRAPHIC REF	PART NUMBER	QTY	PART NAME 1 2 3 4 5 6 (PRODUCT LEVEL)	SEE PAGE
	1	1	**156-0890**	2	FORK AS (GRAPPLE)	
					(EACH INCLUDES)	
		1	**158-5648**	2	BEARING-SLEEVE	
	2	1	**157-0940**	4	PIN	
	3	1	**169-8941**	1	BUCKET AS-GRAPPLE	
		1	**8Y-4489**	2	BOSS	
		1	**149-5435**	1	EDGE	
	4	1	**3B-8489**	4	FITTING-GREASE (1/8-27 THD)	
M	5	1	**6V-9189**	4	LOCKNUT (M8X1.25 THD)	
M	6	1	**8T-6869**	4	BOLT (M8X1.25X60MM)	

M-METRIC PART

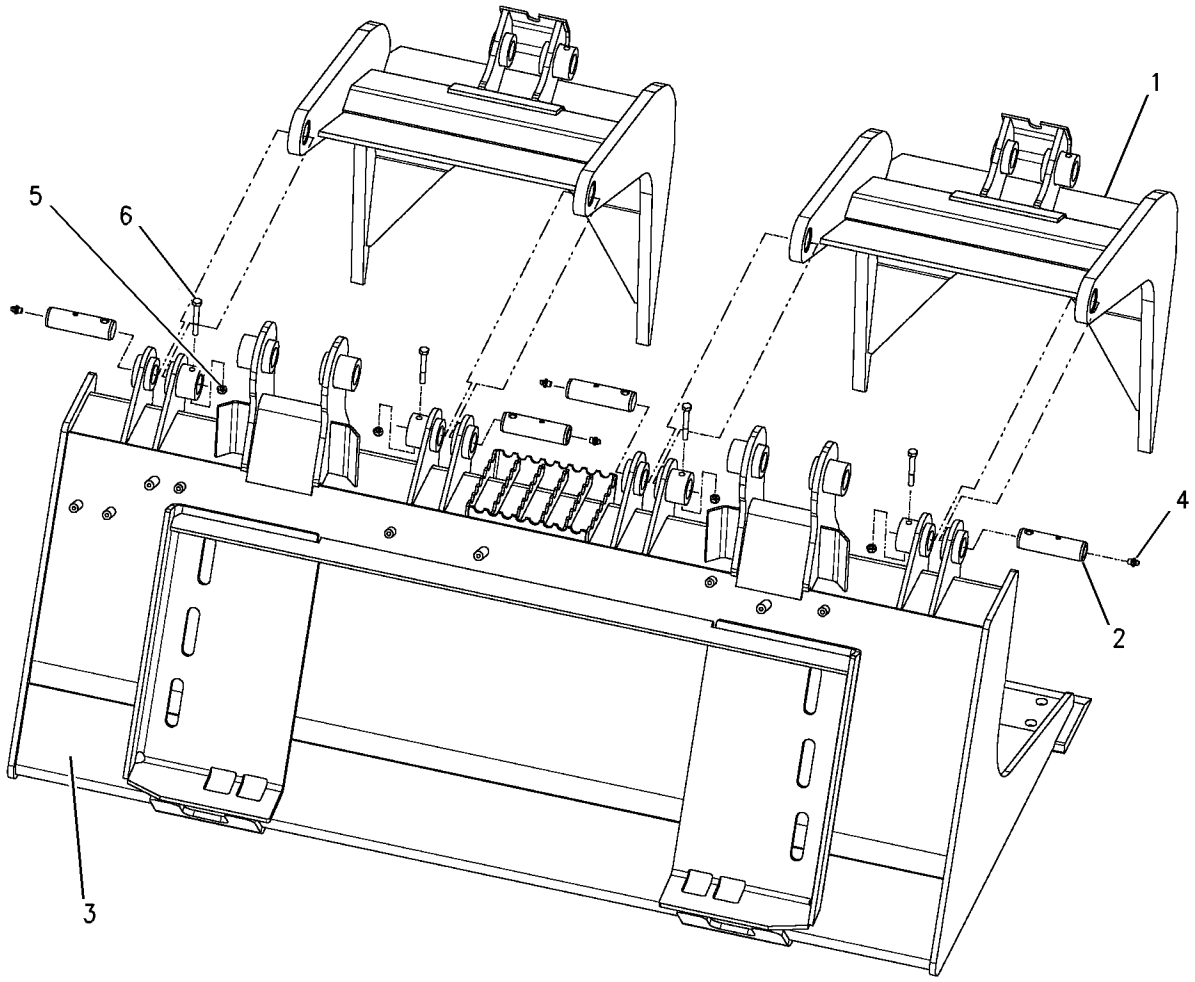

GRAPHIC #1 g00651138

156-0885 BUCKET GP-GRAPPLE

S/N: CED1-UP; FDG1-UP; 4YZ4000-UP; 5SZ4000-UP
167.64CM (66 IN). INDUSTRIAL
PART OF 157-7224 BUCKET AR-GRAPPLE
AN ATTACHMENT

SMCS-6704 **i01628742**

NOTE	REF NO	GRAPHIC REF	PART NUMBER	QTY	PART NAME 1 2 3 4 5 6 (PRODUCT LEVEL)	SEE PAGE
	1	1	**156-0890**	2	FORK AS (GRAPPLE)	
					(EACH INCLUDES)	
		1	**158-5648**	2	BEARING-SLEEVE	
	2	1	**157-0940**	4	PIN	
	3	1	**169-8942**	1	BUCKET AS-GRAPPLE	
		1	**8Y-4489**	2	BOSS	
		1	**149-5436**	1	EDGE	
	4	1	**3B-8489**	4	FITTING-GREASE (1/8-27 THD)	
M	5	1	**6V-9189**	4	LOCKNUT (M8X1.25 THD)	
M	6	1	**8T-6869**	4	BOLT (M8X1.25X60MM)	

M-METRIC PART

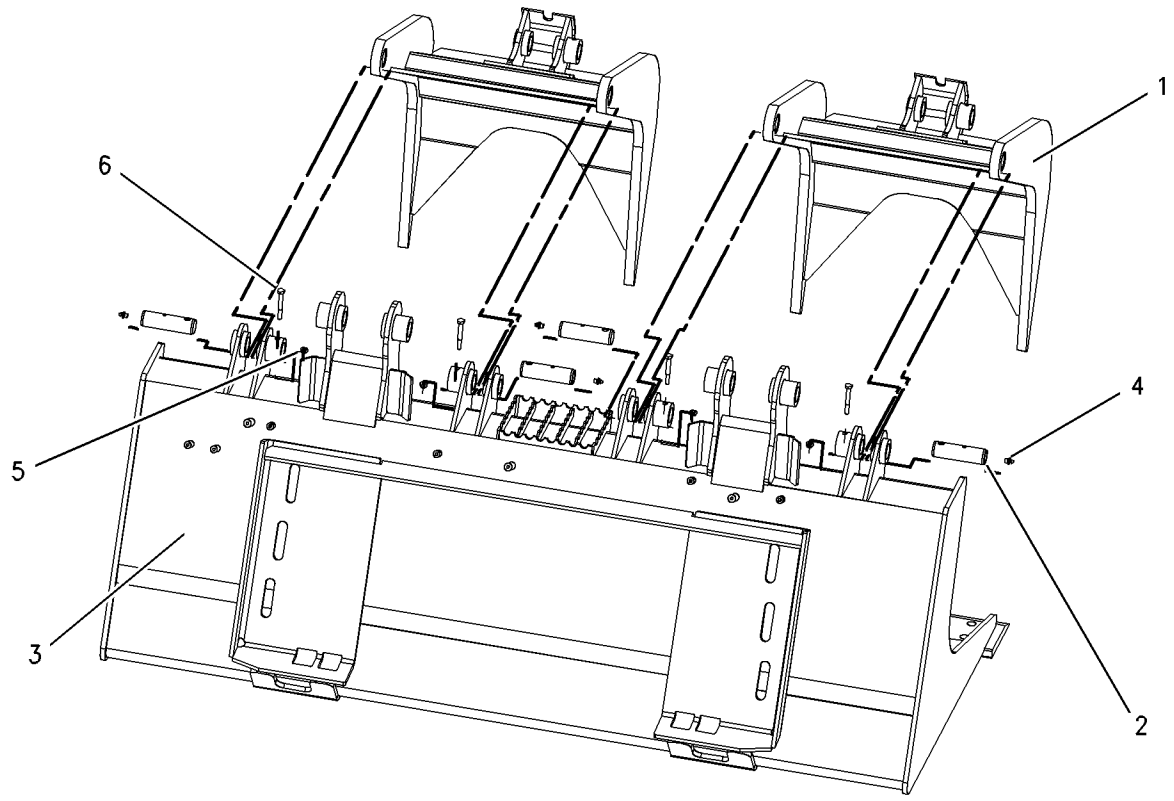

GRAPHIC #1 g00710591

156-0886 BUCKET GP-GRAPPLE

S/N: CED1-UP; FDG1-UP; 4YZ4000-UP; 5SZ4000-UP
182.88CM (72 IN). INDUSTRIAL
PART OF 157-7225 BUCKET AR-GRAPPLE
AN ATTACHMENT

SMCS-6704 **i01204535**

NOTE	REF NO	GRAPHIC REF	PART NUMBER	QTY	PART NAME 1 2 3 4 5 6 (PRODUCT LEVEL)	SEE PAGE
	1	1	**156-0890**	2	FORK AS (GRAPPLE)	
		1	**158-5648**	2	BEARING-SLEEVE	
	2	1	**157-0940**	4	PIN	
	3	1	**169-8943**	1	BUCKET AS-GRAPPLE	
		1	**149-5437**	1	EDGE	
	4	1	**3B-8489**	4	FITTING-GREASE (1/8-27 THD)	
M	5	1	**6V-9189**	4	LOCKNUT (M8X1.25 THD)	
M	6	1	**8T-6869**	4	BOLT (M8X1.25X60MM)	

M-METRIC PART

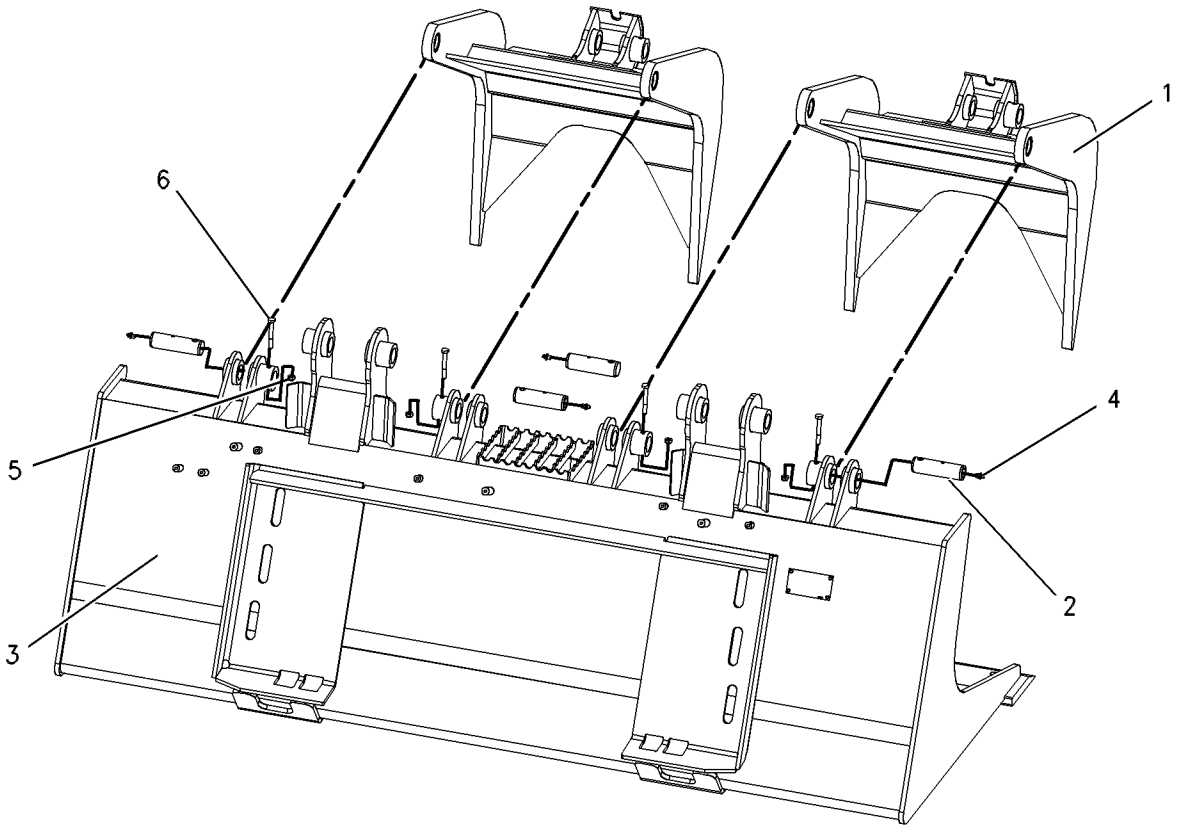

GRAPHIC #1 g00559393

WORK TOOLS

154-5005 BUCKET GP-MULTIPURPOSE

S/N: FDG1-UP; 4YZ4000-UP
152.40CM (60 IN), 0.30CU M (0.39 CU YD)
PART OF 154-5004 BUCKET AR-MULTIPURPOSE
AN ATTACHMENT

SMCS-6104 **i01628762**

NOTE	REF NO	GRAPHIC REF	PART NUMBER	QTY	PART NAME 1 2 3 4 5 6 (PRODUCT LEVEL)	SEE PAGE
	1	1	**149-4232**	1	CLAM AS	
	2	1	**142-8805**	4	BEARING-SLEEVE	
	3	1	**149-5435**	1	EDGE	
	4	1	**154-5012**	2	PIN	
	5	1	**159-5345**	1	BLADE GP	
	5A	1	**154-5037**	1	EDGE	
M	6	1	**6V-9189**	2	LOCKNUT (M8X1.25 THD)	
M	7	1	**8T-6869**	2	BOLT (M8X1.25X60MM)	
	8	1	**159-8038**	2	FILM-WARNING	
	9	1	**3B-8489**	2	FITTING-GREASE (1/8-27 THD)	

M-METRIC PART

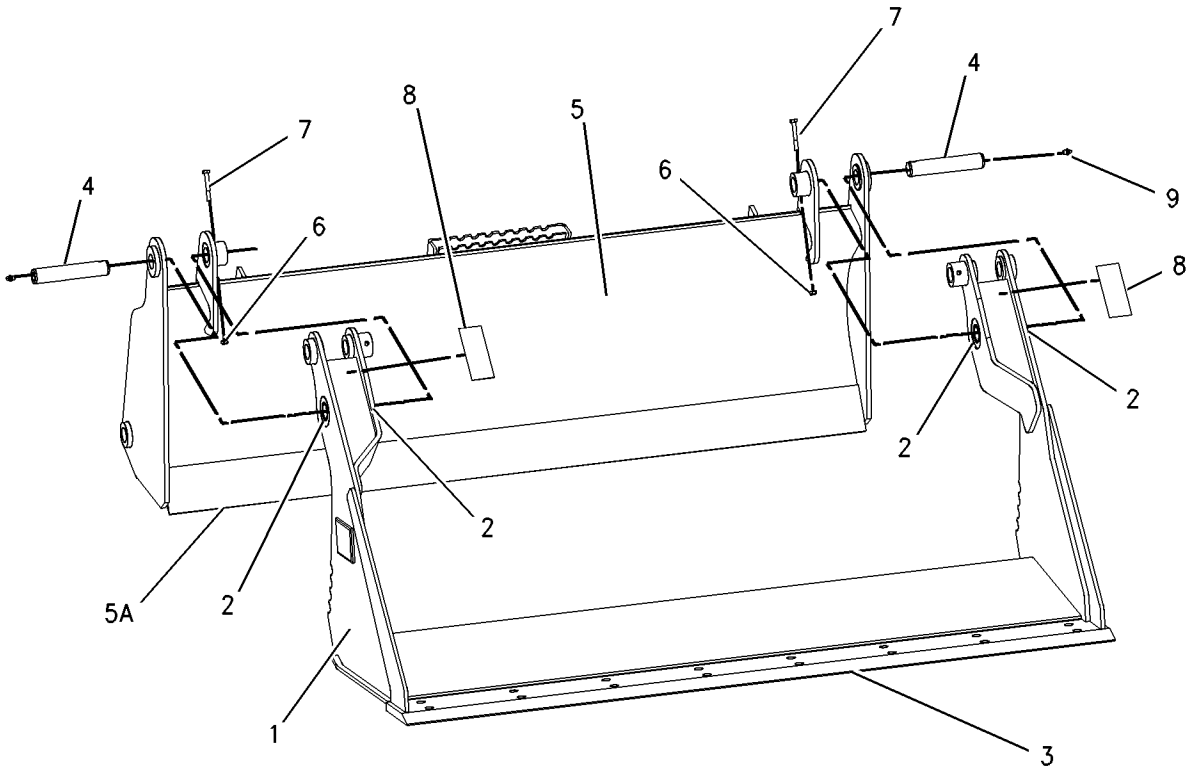

GRAPHIC #1 g00780644

WORK TOOLS

154-5007 BUCKET GP-MULTIPURPOSE

S/N: CED1-UP; FDG1-UP; 4YZ4000-UP; 5SZ4000-UP
167.64CM (66 IN), 0.34CU M (0.44 CU YD)
PART OF 154-5008 BUCKET AR-MULTIPURPOSE
AN ATTACHMENT

SMCS-6104 **i01628771**

NOTE	REF NO	GRAPHIC REF	PART NUMBER	QTY	PART NAME 1 2 3 4 5 6 (PRODUCT LEVEL)	SEE PAGE
	1	1	**154-5012**	1	PIN	
	2	1	**154-5053**	1	CLAM AS	
	3	1	**142-8805**	4	BEARING-SLEEVE	
	4	1	**149-5436**	1	EDGE	
	5	1	**159-5346**	1	BLADE GP	
	5A	1	**154-5059**	1	EDGE	
M	6	1	**6V-9189**	2	LOCKNUT (M8X1.25 THD)	
M	7	1	**8T-6869**	2	BOLT (M8X1.25X60MM)	
	8	1	**159-8038**	2	FILM-WARNING	
	9	1	**3B-8489**	2	FITTING-GREASE (1/8-27 THD)	

M-METRIC PART

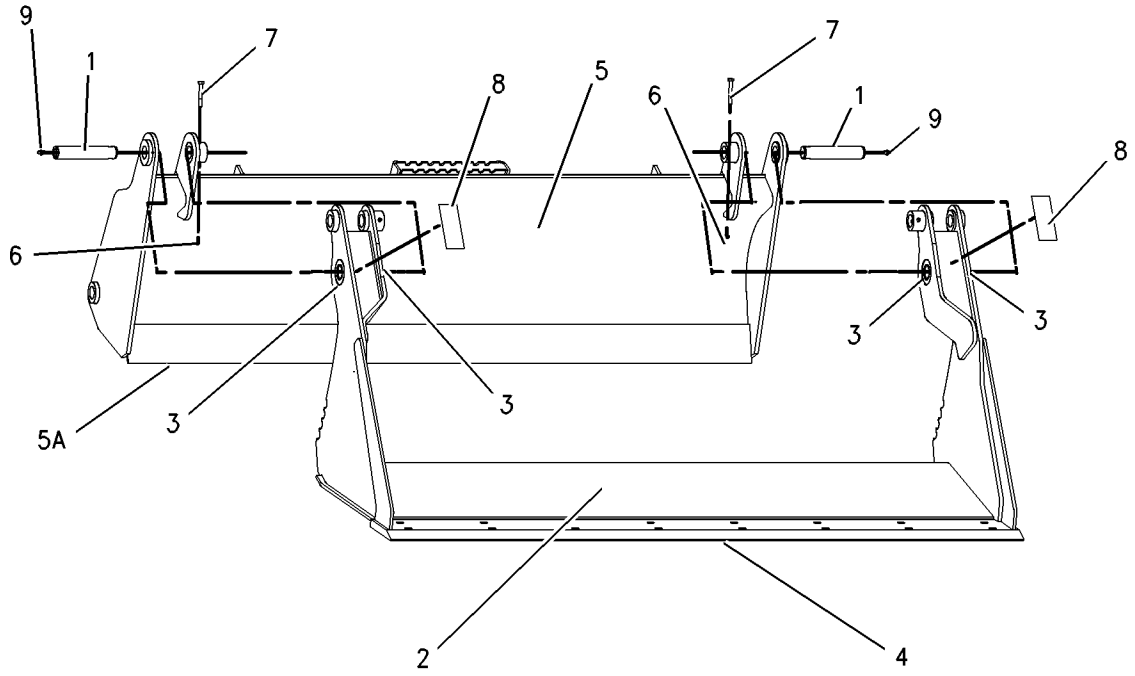

GRAPHIC #1 g00780675

154-5009 BUCKET GP-MULTIPURPOSE

S/N: CED1-UP; FDG1-UP; 4YZ4000-UP; 5SZ4000-UP
182.88CM (72 IN), 0.37CU M (0.48 CU YD)
PART OF 154-5010 BUCKET AR-MULTIPURPOSE
AN ATTACHMENT

SMCS-6104 **i01529472**

NOTE	REF NO	GRAPHIC REF	PART NUMBER	QTY	PART NAME 1 2 3 4 5 6 (PRODUCT LEVEL)	SEE PAGE
	1	1	**154-5012**	2	PIN	
	2	1	**154-5070**	1	CLAM AS	
	3	1	**142-8805**	4	BEARING-SLEEVE	
	4	1	**149-5437**	1	EDGE	
	5	1	**159-5347**	1	BLADE GP	
	5A	1	**154-5077**	1	EDGE	
M	6	1	**6V-9189**	2	LOCKNUT (M8X1.25 THD)	
M	7	1	**8T-6869**	2	BOLT (M8X1.25X60MM)	
	8	1	**159-8038**	2	FILM-WARNING	
	9	1	**3B-8489**	2	FITTING-GREASE	

M-METRIC PART

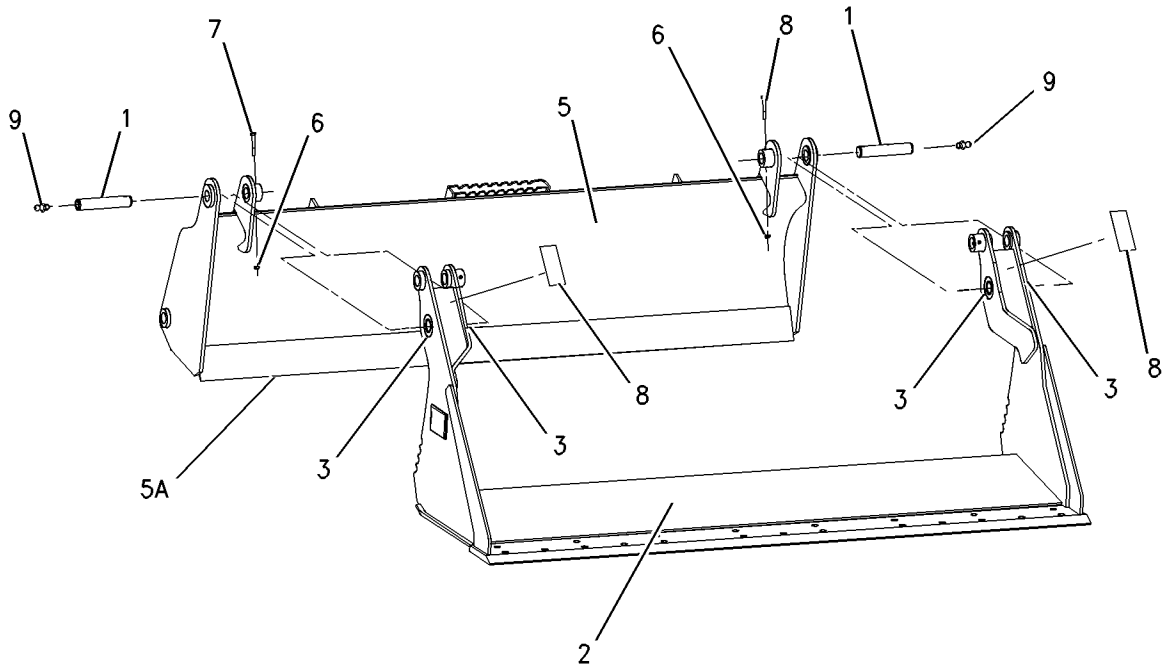

GRAPHIC #1 g00780703

WORK TOOLS

199-8319 BUCKET GP-MULTIPURPOSE

S/N: CED1-UP; FDG1-UP
198.12CM (78 IN)
PART OF 199-8320 BUCKET AR-MULTIPURPOSE
AN ATTACHMENT

SMCS-6104 **i01529484**

NOTE	REF NO	GRAPHIC REF	PART NUMBER	QTY	PART NAME 1 2 3 4 5 6 (PRODUCT LEVEL)	SEE PAGE
	1	1	**154-5012**	2	PIN	
	2	1	**159-8038**	2	FILM-WARNING	
	3	1	**199-8305**	1	BLADE GP	
	3A	1	**199-8316**	1	EDGE	
	4	1	**199-8308**	1	CLAM AS	
	4A	1	**142-8805**	4	BEARING-SLEEVE	
	4B	1	**199-7722**	1	EDGE	
C	4C	1	**199-8317**	1	EDGE	
	5	1	**3B-8489**	2	FITTING-GREASE	
M	6	1	**6V-9189**	2	LOCKNUT (M8X1.25 THD)	
M	7	1	**8T-6869**	2	BOLT (M8X1.25X60MM)	

C-CHANGE FROM PREVIOUS TYPE
M-METRIC PART

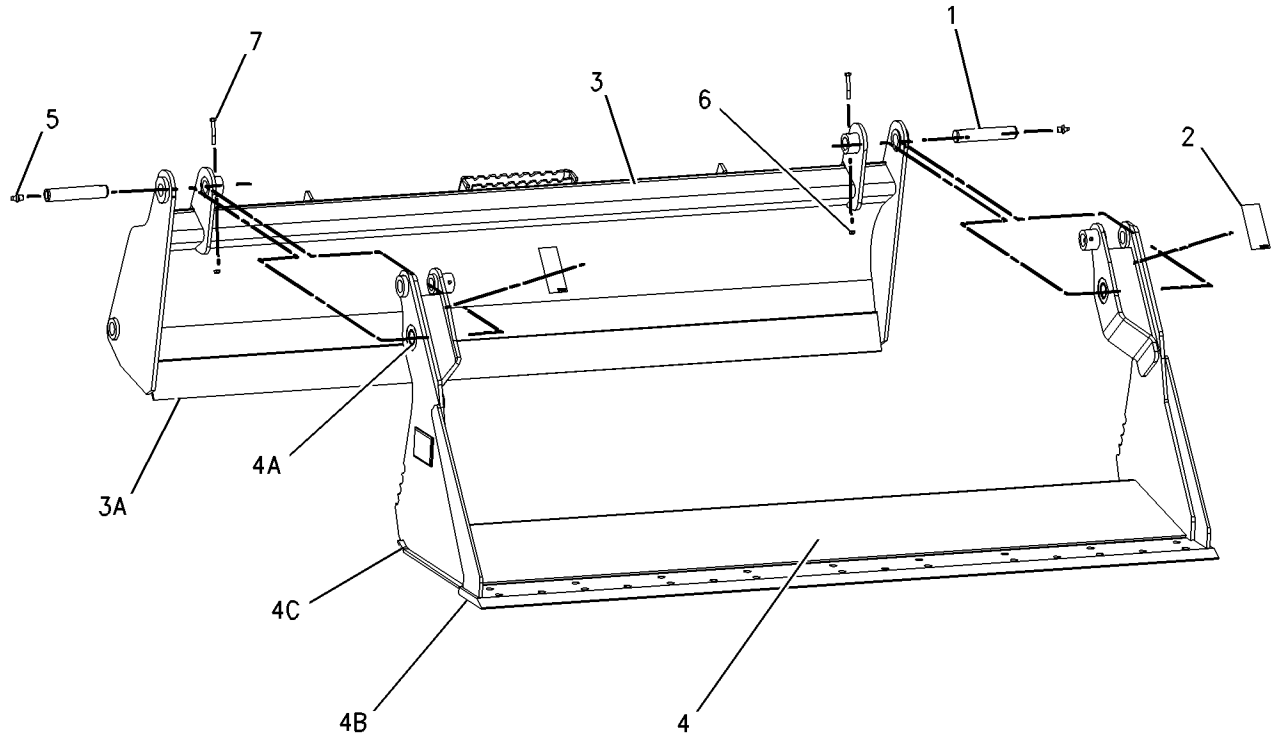

GRAPHIC #1 g00780519

165-8836 BUCKET GP-UTILITY

S/N: CED1-UP; FDG1-UP; 4YZ4000-UP; 5SZ4000-UP
152.40CM (60 IN), 0.42CU M (0.55 CU YD)
AN ATTACHMENT

SMCS-6101 **i01345577**

NOTE	REF NO	GRAPHIC REF	PART NUMBER	QTY	PART NAME 1 2 3 4 5 6 (PRODUCT LEVEL)	SEE PAGE
	1	1	**165-8835**	1	BUCKET AS-UTILITY	
	2	1	**149-5435**	1	EDGE	
	3	1	**111-0483**	1	BOSS (M10X1.5MM)	
	4	1	*135-9384*	1	EDGE GP-CUTTING	
	5	1	**135-9394**	1	EDGE-CUTTING	
M	6	1	**8T-4778**	8	LOCKNUT (M16X2.00 THD)	
M	7	1	**159-2953**	8	SCREW-FLAT HEAD (M16X2.00 THD)	

M-METRIC PART

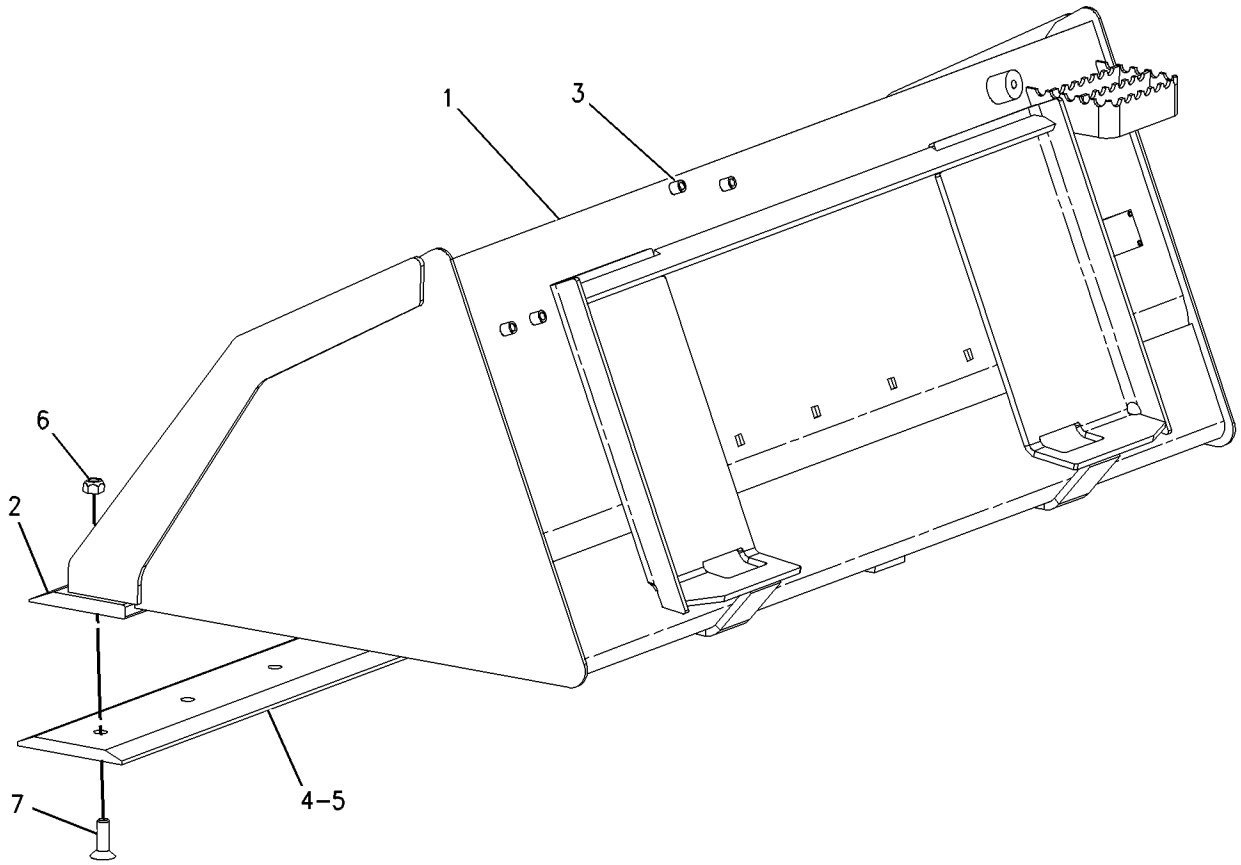

GRAPHIC #1 g00710625

WORK TOOLS

149-1411 CARRIAGE AS-FORK

S/N: CED1-UP; FDG1-UP; 4YZ4000-UP; 5SZ4000-UP

AN ATTACHMENT

SMCS-6402 **i01492473**

NOTE	REF NO	GRAPHIC REF	PART NUMBER	QTY	PART NAME 1 2 3 4 5 6 (PRODUCT LEVEL)	SEE PAGE
					(NO SERVICED PARTS)	

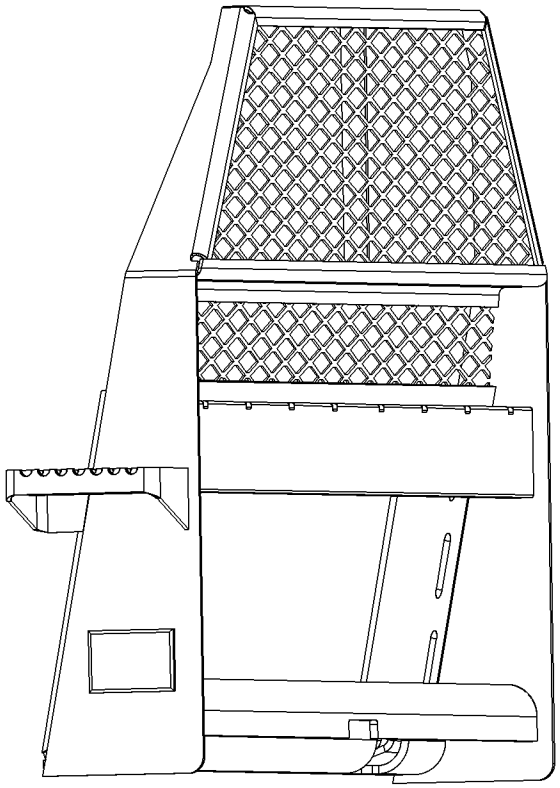

GRAPHIC #1 g00774902

219-4354 CONVERSION AR-QUICK COUPLER

S/N: 4YZ4000-UP; 5SZ4000-UP
KIT
AN ATTACHMENT

SMCS-6129 **i01729080**

NOTE	PART NUMBER	QTY	PART NAME 1 2 3 4 5 6 (PRODUCT LEVEL)	SEE PAGE
M	**8T-4196**	4	BOLT (M10X1.5X35MM)	
	204-1435	1	BRACKET	
	204-1436	1	BRACKET	
Y	**192-2640**	2	CYLINDER GP-COUPLER	349
	5B-0651	2	FITTING-STRAIGHT (1/8-27X1.27IN)	
Y	*207-9753*	1	LINES GP-COUPLER	376
Y	*215-3957*	2	LINK GP-COUPLER	571
	5P-0372	2	LOCK PIN	
M	**8T-4133**	4	NUT (M10X1.5 THD)	
	8L-5188	2	PIN	
	207-9785	2	PIN	
	3B-4628	2	PIN-COTTER	
	195-6754	2	PIN-SPRING	
	9T-7303	4	SPACER (16X28X1.5MM THK)	
	212-6678	1	TREAD-NONSKID	
	8T-4121	10	WASHER-HARD (11X21X2.5MM THK)	
Y	*212-6520*	1	WIRING GP-COUPLER	190

M-METRIC PART
Y-SEPARATE ILLUSTRATION

<END>

212-4158 COUPLER AR-QUICK

S/N: 4YZ4811-UP; 5SZ4000-UP
CANNOT BE USED WITH 196-8870—PAGE 541
AN ATTACHMENT

SMCS-6129 **i01670995**

NOTE	PART NUMBER	QTY	PART NAME 1 2 3 4 5 6 (PRODUCT LEVEL)	SEE PAGE
Y	*192-2655*	1	COUPLER GP-QUICK	540
Y	*207-9753*	1	LINES GP-COUPLER	376
Y	*212-6520*	1	WIRING GP-COUPLER	190

Y-SEPARATE ILLUSTRATION

<END>

212-4159 COUPLER AR-QUICK

S/N: CED1-UP; FDG1-UP
CANNOT BE USED WITH 196-8870—PAGE 541
AN ATTACHMENT

SMCS-6129 **i01691384**

NOTE	PART NUMBER	QTY	PART NAME 1 2 3 4 5 6 (PRODUCT LEVEL)	SEE PAGE
Y	*192-2655*	1	COUPLER GP-QUICK	540
Y	*207-9755*	1	LINES GP-COUPLER	380
Y	*212-6520*	1	WIRING GP-COUPLER	190

Y-SEPARATE ILLUSTRATION

<END>

219-4355 COUPLER AR-QUICK

S/N: CED1-UP; FDG1-UP
KIT-COUPLER
FIELD INSTALLATION

SMCS-6129 **i01747153**

NOTE	PART NUMBER	QTY	PART NAME 1 2 3 4 5 6 (PRODUCT LEVEL)	SEE PAGE
M	**8T-4196**	4	BOLT (M10X1.5X35MM)	
	204-1435	1	BRACKET	
	204-1436	1	BRACKET	
Y	**192-2640**	2	CYLINDER GP-COUPLER	349
	5B-0651	2	FITTING-STRAIGHT (1/8-27X1.27IN)	
Y	*207-9755*	1	LINES GP-COUPLER	380
Y	*215-3957*	2	LINK GP-COUPLER	571
	5P-0372	2	LOCK PIN	
M	**8T-4133**	4	NUT (M10X1.5 THD)	
	8L-5188	2	PIN	
	207-9785	2	PIN	
	3B-4628	2	PIN-COTTER	
	195-6754	2	PIN-SPRING	
	9T-7303	4	SPACER (16X28X1.5MM THK)	
	212-6678	1	TREAD-NONSKID	
	8T-4121	10	WASHER-HARD (11X21X2.5MM THK)	
Y	*212-6520*	1	WIRING GP-COUPLER	190

M-METRIC PART
Y-SEPARATE ILLUSTRATION

<END>

188-0142 COUPLER GP-QUICK

S/N: CED1-UP; FDG1-UP; 4YZ4000-UP; 5SZ4000-UP
GERMANY, ITALY
PART OF 188-3307, 188-3308 CONVERSION AR-ROADING
CANNOT BE USED WITH 196-8870—PAGE 541, 212-4158—PAGE 536, 212-4159—PAGE 537
AN ATTACHMENT

SMCS-6129 **i01405660**

NOTE	REF NO	GRAPHIC REF	PART NUMBER	QTY	PART NAME 1 2 3 4 5 6 (PRODUCT LEVEL)	SEE PAGE
	1	1	**3B-8491**	2	FITTING-STRAIGHT	
	2	1	**142-8776**	2	PIN	
	3	1	**142-8783**	2	BLOCK	
	4	1	**142-8784**	2	BLOCK	
	5	1	**142-8786**	1	PLATE	
	6	1	**142-8787**	1	PLATE	
	7	1	**152-1164**	2	SPRING	
	8	1	**159-5797**	2	SPRING	
	9	1	**166-2560**	2	PIN-SPRING	
	10	1	**188-0143**	1	COUPLER AS	
		1	**142-9079**	1	COUPLER AS	
		1	**111-0483**	4	BOSS (M10X1.5MM)	
M	11	1	**095-0707**	2	BOLT (M16X2X120MM)	
	12	1	**131-5879**	2	WASHER (3MM THK)	
	13	1	**132-7551**	2	SPACER (6MM THK)	
M	14	1	**6V-7744**	2	LOCKNUT (M10X1.50 THD)	
M	15	1	**8T-4178**	2	BOLT (M10X1.5X90MM)	

M-METRIC PART

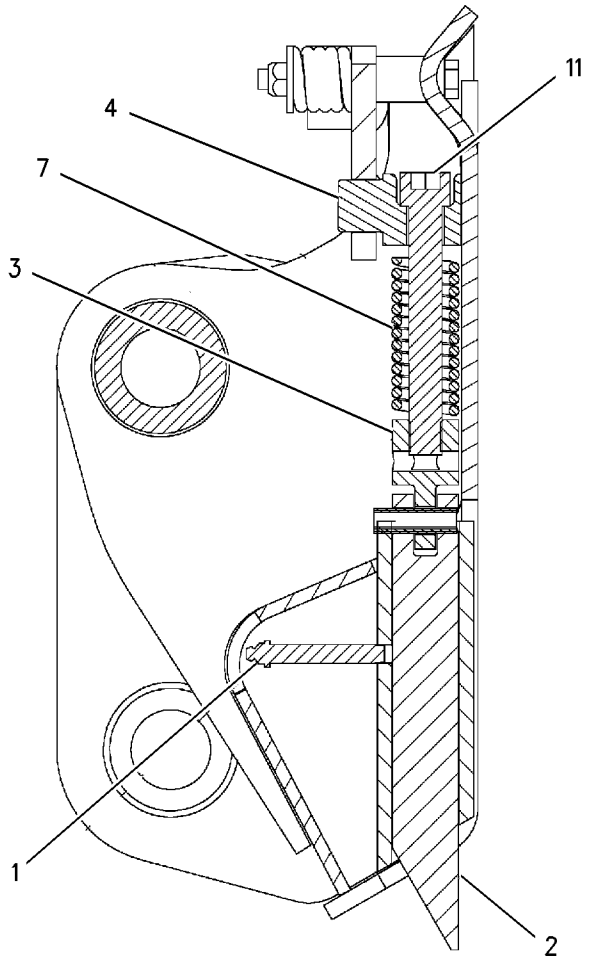

SECTION A-A

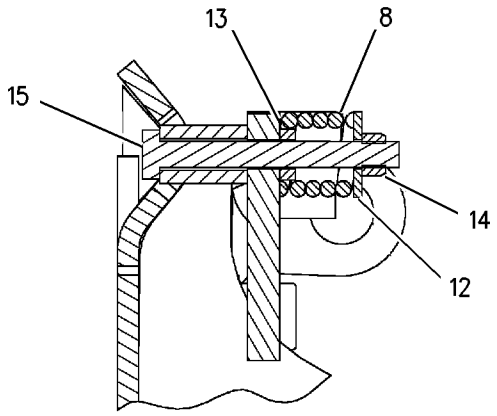

SECTION B-B

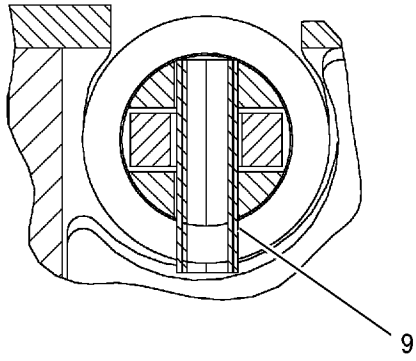

SECTION C-C

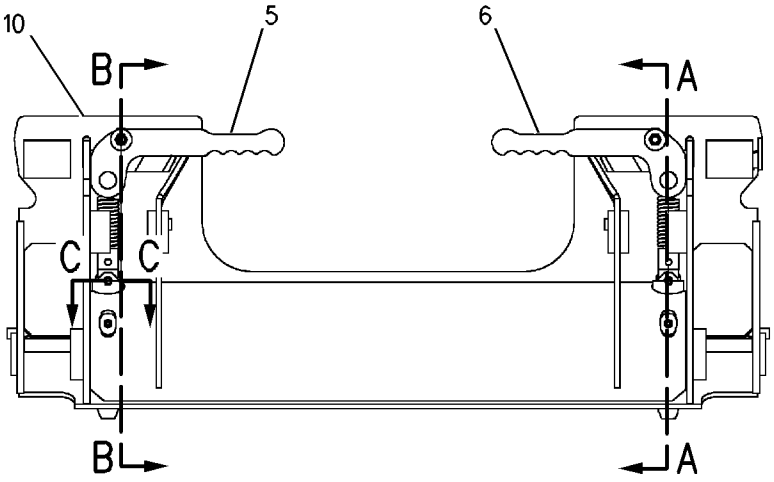

GRAPHIC #1

g00740156

WORK TOOLS

192-2655 COUPLER GP-QUICK

S/N: CED1-UP; FDG1-UP; 4YZ4000-UP; 5SZ4000-UP
HYDRAULIC
PART OF 212-4158, 212-4159 COUPLER AR-QUICK
AN ATTACHMENT

SMCS-6129 **i01671067**

NOTE	REF NO	GRAPHIC REF	PART NUMBER	QTY	PART NAME 1 2 3 4 5 6 (PRODUCT LEVEL)	SEE PAGE
	1	1	**5B-0651**	2	FITTING-STRAIGHT (1/8-27X1.27IN)	
	2	1	**5P-0372**	2	LOCK PIN	
	3	1	**196-8875**	1	COUPLER AS	
	4	1	**204-1435**	1	BRACKET	
	5	1	**204-1436**	1	BRACKET	
	6	1	**207-9785**	2	PIN	
	7	1	**212-6678**	1	TREAD-NONSKID	
	8	1	**215-3962**	1	CYLINDER & LINK GP-COUPLER	
	9	1	**215-3963**	1	CYLINDER & LINK GP-COUPLER	
	10	1	**3B-4628**	2	PIN-COTTER	
	11	1	**8L-5188**	2	PIN	
	12	1	**8T-4121**	14	WASHER-HARD (11X21X2.5MM THK)	
M	13	1	**8T-4133**	4	NUT (M10X1.5 THD)	
M	14	1	**8T-4196**	8	BOLT (M10X1.5X35MM)	
	15	1	**9T-7303**	4	SPACER	

M-METRIC PART

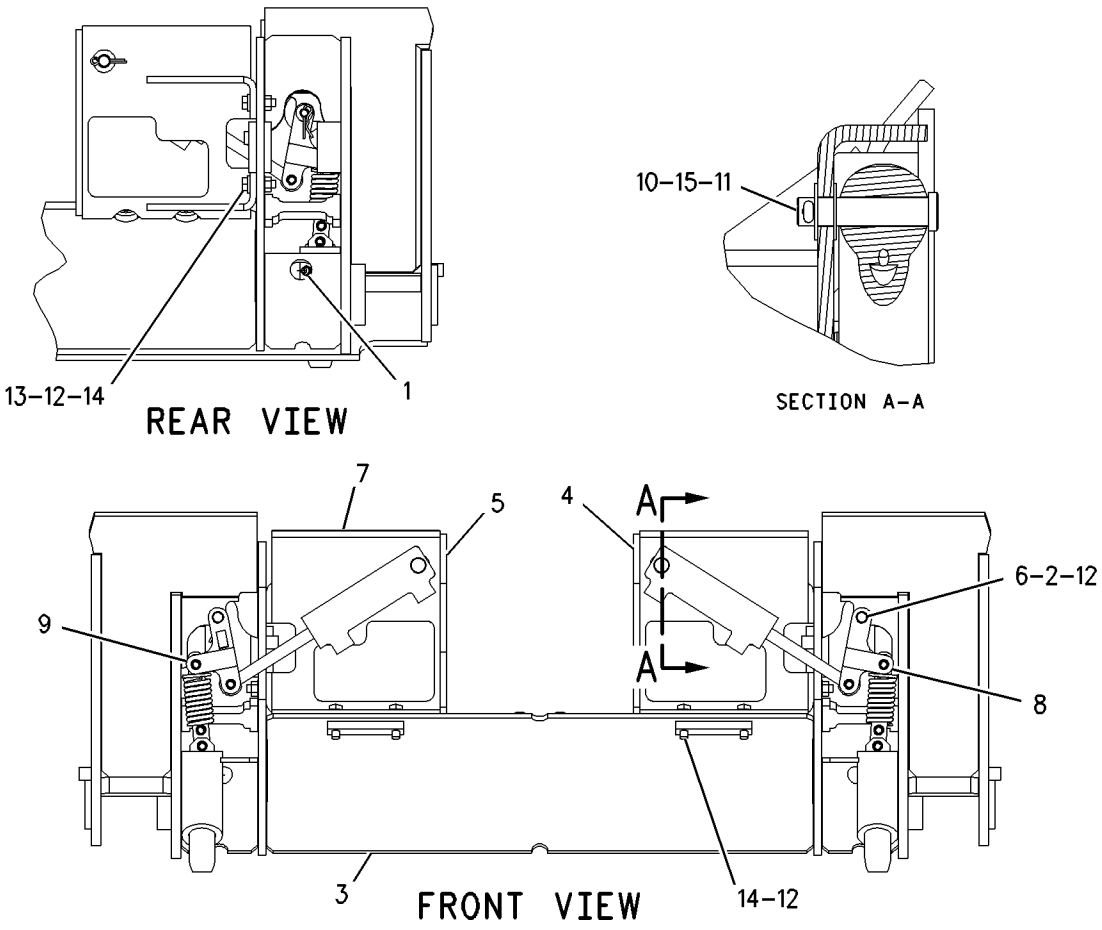

GRAPHIC #1 g00865413

WORK TOOLS

196-8870 COUPLER GP-QUICK

S/N: CED1-UP; FDG1-UP; 4YZ4000-UP; 5SZ4000-UP

AN ATTACHMENT

SMCS-6129 **i01667729**

NOTE	REF NO	GRAPHIC REF	PART NUMBER	QTY	PART NAME 1 2 3 4 5 6 (PRODUCT LEVEL)	SEE PAGE
	1	1	**5B-0651**	2	FITTING-STRAIGHT (1/8-27X1.27IN)	
	2	1	**159-5797**	2	SPRING	
	3	1	**196-8875**	1	COUPLER AS	
		1	**111-0483**	6	BOSS (M10X1.5MM)	
		1	**126-5701**	2	PLATE-RETAINER	
Y	4	1	**215-3960**	1	HANDLE & PIN GP-COUPLER (LH)	563
Y	5	1	**215-3961**	1	HANDLE & PIN GP-COUPLER (RH)	564
	6	1	**131-5879**	2	WASHER (3MM THK)	
	7	1	**132-7551**	2	SPACER (11X19X6MM THK)	
M	8	1	**6V-7744**	2	LOCKNUT (M10X1.5 THD)	
M	9	1	**7X-2621**	2	BOLT (M10X1.50X12MM)	
	10	1	**7X-7729**	4	WASHER (11X25X3MM THK)	
	11	1	**8T-4121**	6	WASHER-HARD (11X21X2.5MM THK)	
M	12	1	**8T-4172**	2	BOLT (M10X1.50X80MM)	
M	13	1	**8T-4196**	4	BOLT (M10X1.5X35MM)	

M-METRIC PART
Y-SEPARATE ILLUSTRATION

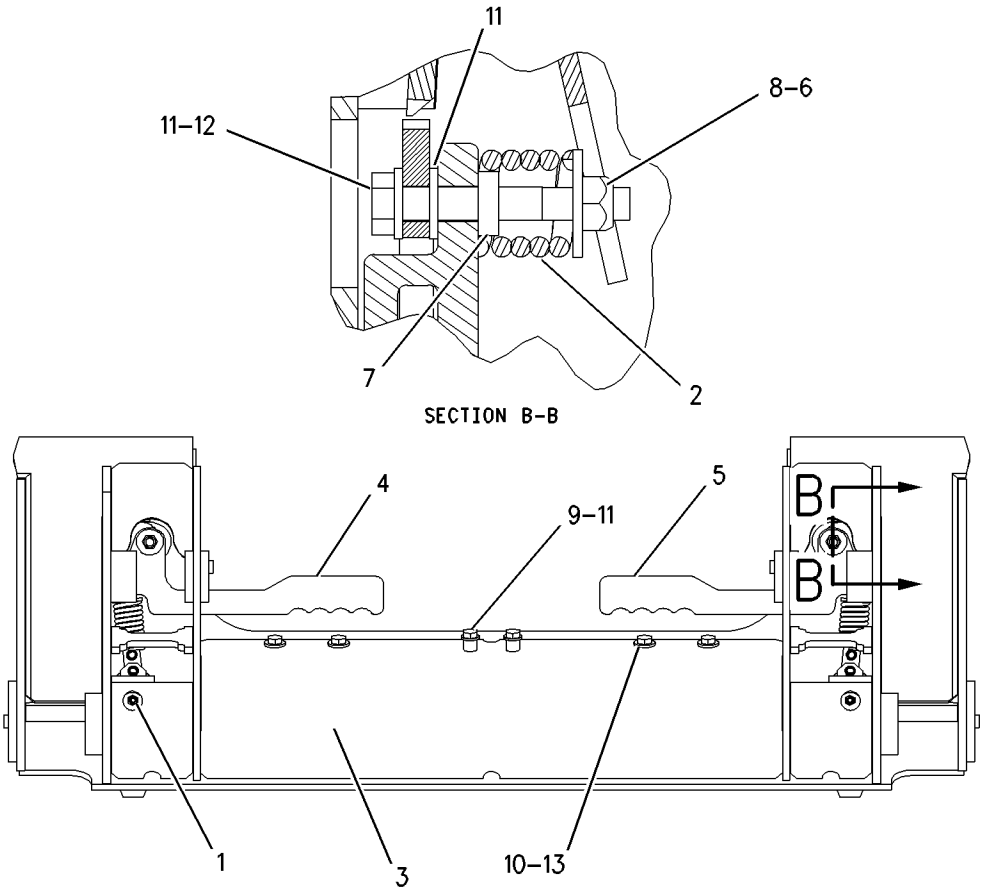

GRAPHIC #1 g00858646

162-5236 COVER GP-LINES

S/N: CED1-UP; FDG1-UP; 4YZ4000-UP; 5SZ4000-UP
PART OF 154-5004, 154-5008, 154-5010, 199-8320 BUCKET AR-MULTIPURPOSE
AN ATTACHMENT

SMCS-5057 **i01227894**

NOTE	REF NO	GRAPHIC REF	PART NUMBER	QTY	PART NAME 1 2 3 4 5 6 (PRODUCT LEVEL)	SEE PAGE
	1	1	**161-4128**	1	PLATE	
M	2	1	**5C-9553**	5	BOLT (M6X1.0X16MM)	
	3	1	**9X-2026**	5	WASHER (1MM THK)	

M-METRIC PART

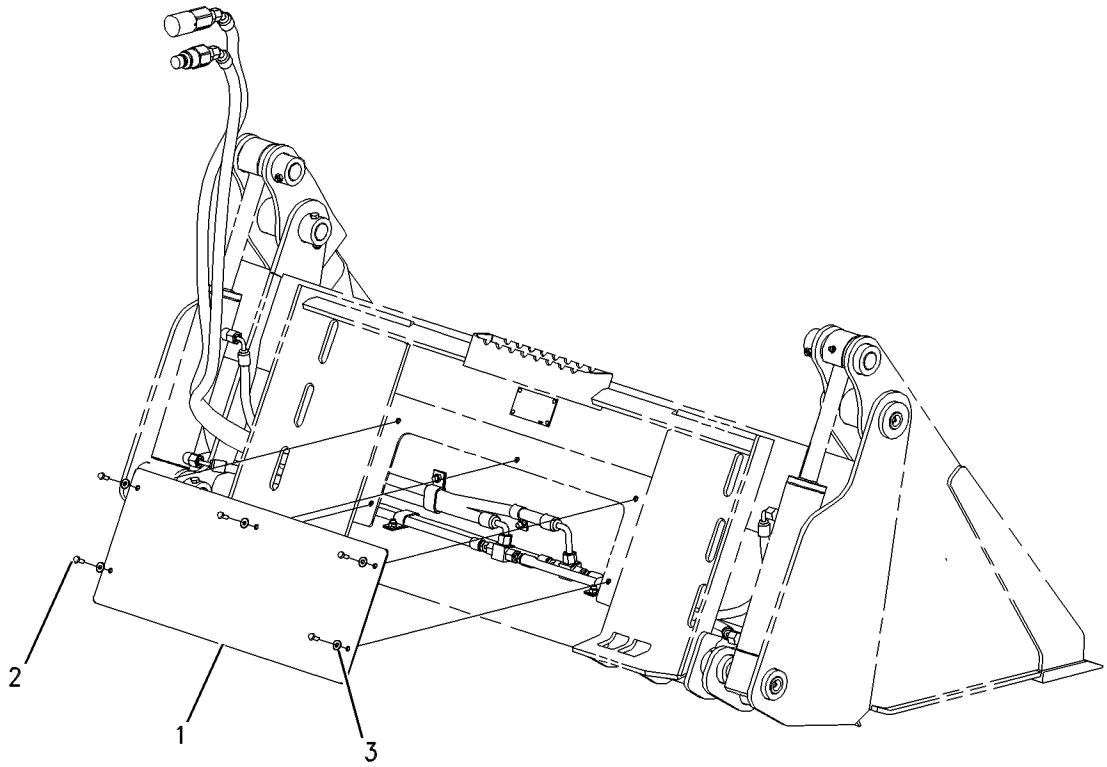

GRAPHIC #1 g00560360

WORK TOOLS

135-9384 EDGE GP-CUTTING

S/N: CED1-UP; FDG1-UP; 4YZ4000-UP; 5SZ4000-UP
PART OF 157-7226 BUCKET AR-GRAPPLE, 154-5045 BUCKET AR-MULTIPURPOSE
FOR USE WITH 152.40CM (60 IN) BUCKET
AN ATTACHMENT

SMCS-6801 **i01372033**

NOTE	REF NO	GRAPHIC REF	PART NUMBER	QTY	PART NAME 1 2 3 4 5 6 (PRODUCT LEVEL)	SEE PAGE
	1	1	**135-9394**	1	EDGE-CUTTING	
M	2	1	**8T-4778**	8	LOCKNUT (M16X2.00 THD)	
M	3	1	**159-2953**	8	SCREW-FLAT HEAD (M16X2.00 THD)	

M-METRIC PART

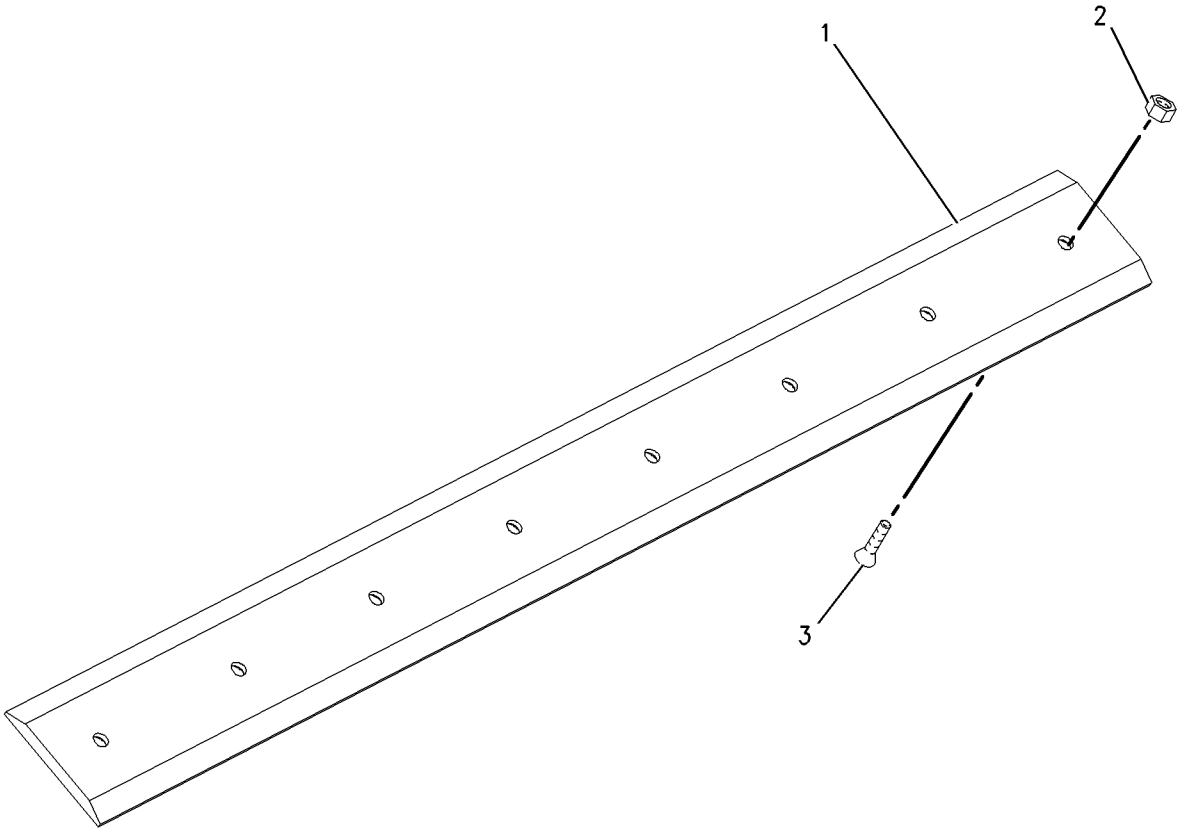

GRAPHIC #1 g00724087

135-9385 EDGE GP-CUTTING

S/N: CED1-UP; FDG1-UP; 4YZ4000-UP; 5SZ4000-UP
PART OF 152-0232 BUCKET AR-DIRT, 157-7227 BUCKET AR-GRAPPLE, 154-5047 BUCKET AR-MULTIPURPOSE
FOR USE WITH 167.64CM (66 IN) BUCKET
AN ATTACHMENT

SMCS-6801 **i01228508**

NOTE	REF NO	GRAPHIC REF	PART NUMBER	QTY	PART NAME 1 2 3 4 5 6 (PRODUCT LEVEL)	SEE PAGE
	1	1	**135-9395**	1	EDGE-CUTTING	
M	2	1	**8T-4778**	8	LOCKNUT (M16X2.00 THD)	
M	3	1	**159-2953**	8	SCREW-FLAT HEAD (M16X2.00 THD)	

M-METRIC PART

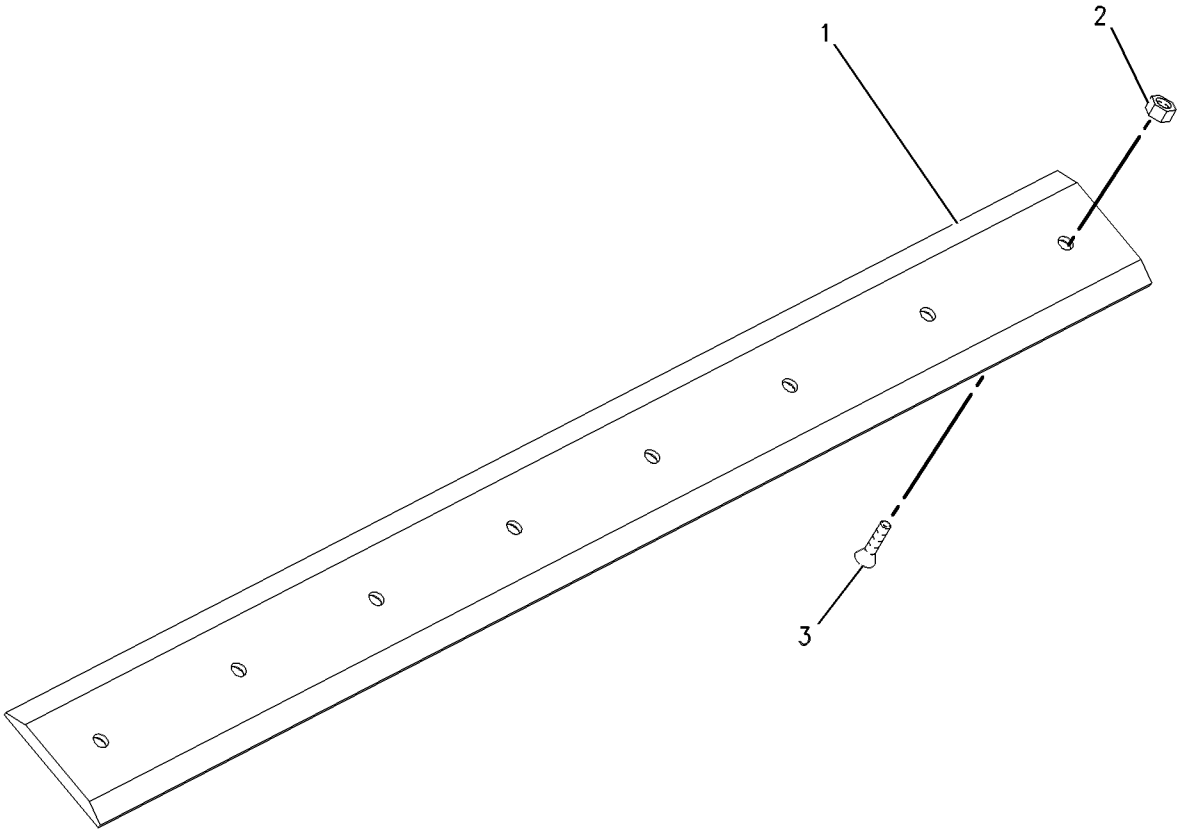

GRAPHIC #1 g00657004

135-9386 EDGE GP-CUTTING

S/N: CED1-UP; FDG1-UP; 4YZ4000-UP; 5SZ4000-UP
PART OF 177-1989 BLADE AR, 188-2719 BUCKET AR-DIRT, 152-0229 BUCKET AR-GENERAL PURPOSE, 158-6095 BUCKET AR-GRAPPLE, 154-5049 BUCKET AR-MULTIPURPOSE
FOR USE WITH 182.88CM (72 IN) BUCKET
AN ATTACHMENT

SMCS-6801 **i01372498**

NOTE	REF NO	GRAPHIC REF	PART NUMBER	QTY	PART NAME 1 2 3 4 5 6 (PRODUCT LEVEL)	SEE PAGE
	1	1	**135-9396**	1	EDGE-CUTTING	
M	2	1	**8T-4778**	11	LOCKNUT (M16X2.00 THD)	
M	3	1	**159-2953**	11	SCREW-FLAT HEAD (M16X2.00 THD)	

M-METRIC PART

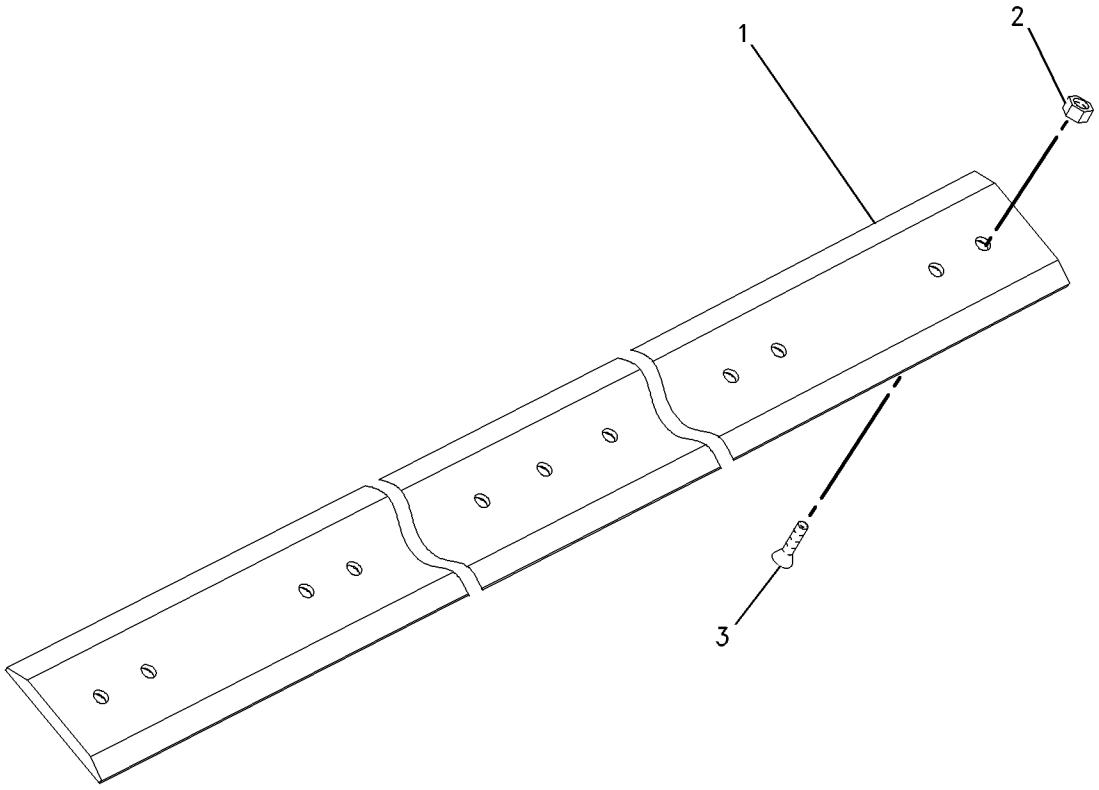

GRAPHIC #1 g00724435

135-9387 EDGE GP-CUTTING

S/N: CED1-UP; FDG1-UP
PART OF 199-7726 BUCKET AR-GENERAL PURPOSE, 199-8321 BUCKET AR-MULTIPURPOSE
FOR USE WITH 198.12CM (78 IN) BUCKET
AN ATTACHMENT

SMCS-6801 **i01755490**

NOTE	REF NO	GRAPHIC REF	PART NUMBER	QTY	PART NAME 1 2 3 4 5 6 (PRODUCT LEVEL)	SEE PAGE
	1	1	**135-9397**	1	EDGE-CUTTING	
M	2	1	**8T-4778**	11	LOCKNUT (M16X2 THD)	
M	3	1	**159-2953**	11	SCREW-FLAT HEAD (M16X2.00 THD)	

M-METRIC PART

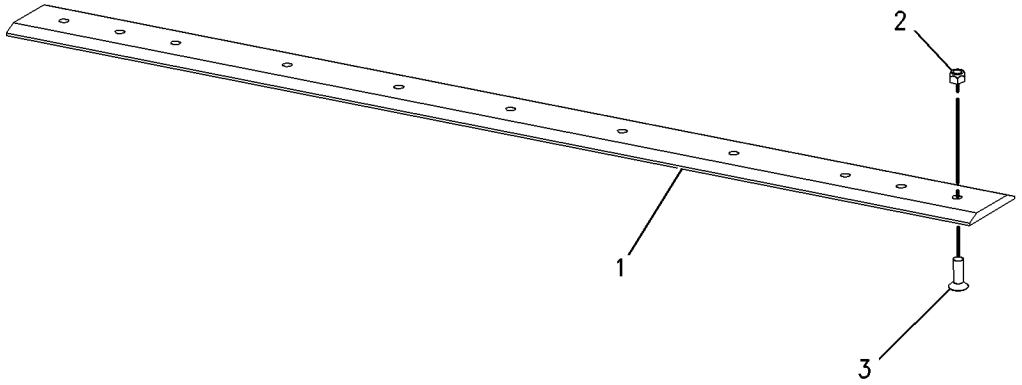

GRAPHIC #1 g00898154

149-5741 EDGE GP-CUTTING

S/N: CED1-UP; FDG1-UP; 4YZ4000-UP; 5SZ4000-UP
PART OF 177-1990 BLADE AR
FOR USE WITH 215.90CM (85 IN) BUCKET
AN ATTACHMENT

SMCS-6801 **i01228512**

NOTE	REF NO	GRAPHIC REF	PART NUMBER	QTY	PART NAME 1 2 3 4 5 6 (PRODUCT LEVEL)	SEE PAGE
	1	1	**149-5740**	1	EDGE-CUTTING	
M	2	1	**8T-4778**	7	LOCKNUT (M16X2.00 THD)	
M	3	1	**159-2953**	7	SCREW-FLAT HEAD (M16X2.00 THD)	

M-METRIC PART

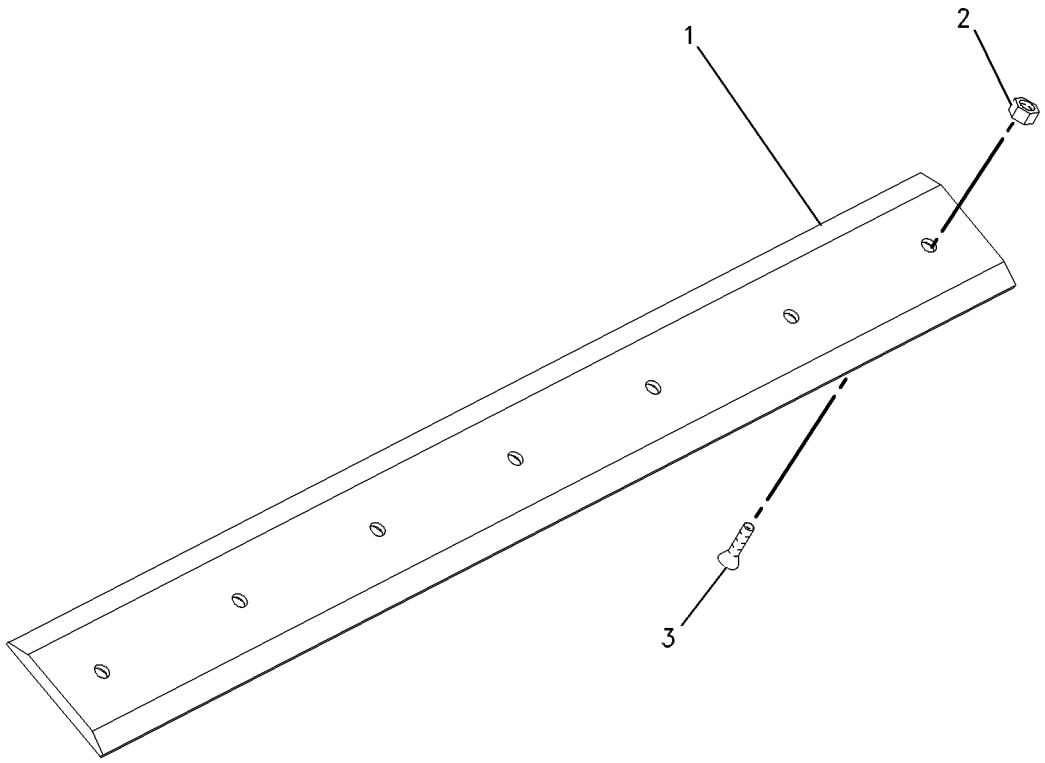

GRAPHIC #1 g00657017

164-7424 EDGE GP-CUTTING

S/N: CED1-UP; FDG1-UP; 4YZ4000-UP; 5SZ4000-UP
182.88CM (72 IN). POLYETHYLENE
FOR USE WITH 177-1989—PAGE 502
AN ATTACHMENT

SMCS-6801 **i01423187**

NOTE	REF NO	GRAPHIC REF	PART NUMBER	QTY	PART NAME 1 2 3 4 5 6 (PRODUCT LEVEL)	SEE PAGE
	1	1	**165-7095**	6	WASHER	
	2	1	**165-8477**	1	EDGE AS (POLYETHYLENE)	
M	3	1	**8T-4140**	6	BOLT (M16X2X60MM)	
M	4	1	**8T-4778**	6	LOCKNUT (M16X2.00 THD)	

M-METRIC PART

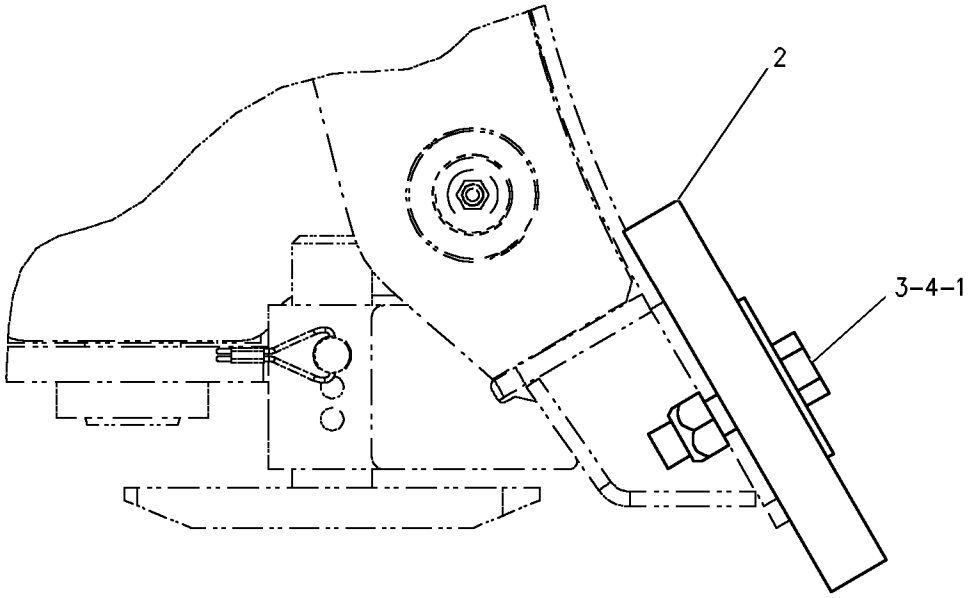

GRAPHIC #1 g00745708

WORK TOOLS

177-1909 EDGE GP-CUTTING

S/N: CED1-UP; FDG1-UP; 4YZ4000-UP; 5SZ4000-UP
213.36CM (84 IN). POLYETHYLENE
FOR USE WITH 177-1990—PAGE 502
AN ATTACHMENT

SMCS-6801 **i01421238**

NOTE	REF NO	GRAPHIC REF	PART NUMBER	QTY	PART NAME 1 2 3 4 5 6 (PRODUCT LEVEL)	SEE PAGE
	1	1	**165-7095**	7	WASHER	
	2	1	**165-8478**	1	EDGE AS (POLYETHYLENE)	
M	3	1	**8T-4140**	7	BOLT (M16X2X60MM)	
M	4	1	**8T-4778**	7	LOCKNUT (M16X2.00 THD)	

M-METRIC PART

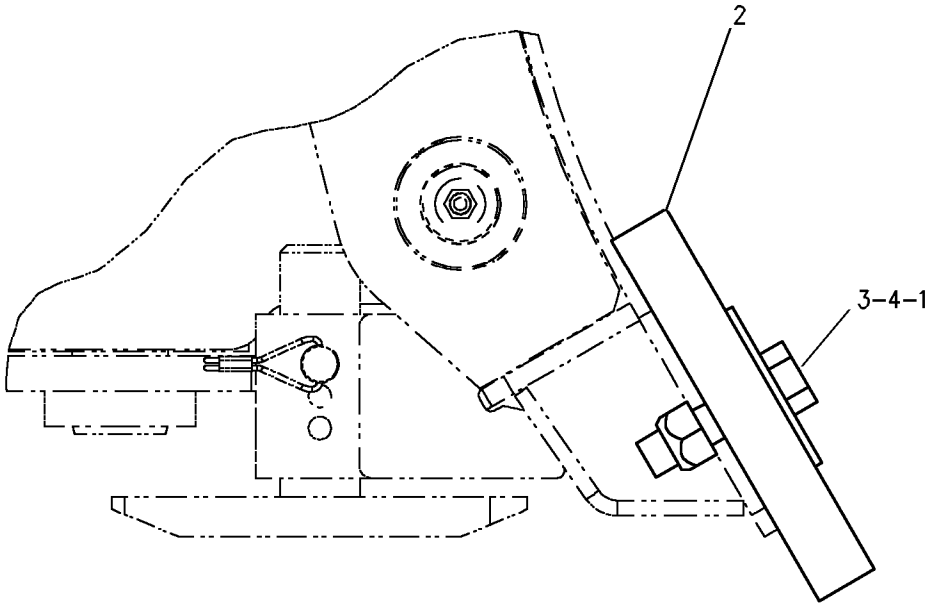

GRAPHIC #1 g00745733

162-8139 FORK AR-GRAPPLE

S/N: CED1-UP; FDG1-UP; 4YZ4000-UP; 5SZ4000-UP
INDUSTRIAL
AN ATTACHMENT

SMCS-6705 **i01520325**

NOTE	PART NUMBER	QTY	PART NAME 1 2 3 4 5 6 (PRODUCT LEVEL)	SEE PAGE
Y	*156-0891*	1	CYLINDER & MTG GP-GRAPPLE	346
Y	**156-5512**	2	CYLINDER GP-GRAPPLE	350
Y	*162-8140*	1	FORK GP-GRAPPLE	552
Y	*164-9614*	9	FORK GP-GRAPPLE	554
Y	*161-0187*	1	LINES GP-GRAPPLE	384

Y-SEPARATE ILLUSTRATION

<END>

163-4812 FORK AR-GRAPPLE

S/N: CED1-UP; FDG1-UP; 4YZ4000-UP; 5SZ4000-UP
INDUSTRIAL
AN ATTACHMENT

SMCS-6705 **i01520322**

NOTE	PART NUMBER	QTY	PART NAME 1 2 3 4 5 6 (PRODUCT LEVEL)	SEE PAGE
Y	*156-0891*	1	CYLINDER & MTG GP-GRAPPLE	346
Y	**156-5512**	2	CYLINDER GP-GRAPPLE	350
Y	*163-4811*	1	FORK GP-GRAPPLE	553
Y	*164-9614*	11	FORK GP-GRAPPLE	554
Y	*161-0187*	1	LINES GP-GRAPPLE	384

Y-SEPARATE ILLUSTRATION

<END>

165-8727 FORK AR-GRAPPLE

S/N: CED1-UP; FDG1-UP; 4YZ4000-UP; 5SZ4000-UP
167.64CM (66 IN). UTILITY
AN ATTACHMENT

SMCS-6705 **i01629852**

NOTE	PART NUMBER	QTY	PART NAME 1 2 3 4 5 6 (PRODUCT LEVEL)	SEE PAGE
Y	**165-8736**	1	FORK GP-UTILITY	557
Y	**165-8734**	1	GRAPPLE GP-UTILITY	560

Y-SEPARATE ILLUSTRATION

<END>

WORK TOOLS

165-8728 FORK AR-GRAPPLE

S/N: CED1-UP; FDG1-UP; 4YZ4000-UP; 5SZ4000-UP
85.0CM (33.49 IN). UTILITY
AN ATTACHMENT

SMCS-6705 **i01629996**

NOTE	PART NUMBER	QTY	PART NAME 1 2 3 4 5 6 (PRODUCT LEVEL)	SEE PAGE
Y	**165-8737**	1	FORK GP-UTILITY	558
Y	**165-8734**	1	GRAPPLE GP-UTILITY	560

Y-SEPARATE ILLUSTRATION

<END>

162-8140 FORK GP-GRAPPLE

S/N: CED1-UP; FDG1-UP; 4YZ4000-UP; 5SZ4000-UP
INDUSTRIAL
PART OF 162-8139 FORK AR-GRAPPLE
AN ATTACHMENT

SMCS-6705 **i01218738**

NOTE	REF NO	GRAPHIC REF	PART NUMBER	QTY	PART NAME 1 2 3 4 5 6 (PRODUCT LEVEL)	SEE PAGE
	1	1	**156-0890**	2	FORK AS (GRAPPLE)	
					(EACH AS INCLUDES)	
		1	**158-5648**	2	BEARING-SLEEVE	
	2	1	**157-0940**	4	PIN	
	3	1	**164-9989**	2	FILM-WARNING (IMPALED POINT)	
	4	1	**169-3567**	1	FORK AS	
	5	1	**3B-8489**	4	FITTING-GREASE (1/8-27 THD)	
M	6	1	**6V-9189**	4	LOCKNUT (M8X1.25 THD)	
M	7	1	**8T-6869**	4	BOLT (M8X1.25X60MM)	

M-METRIC PART

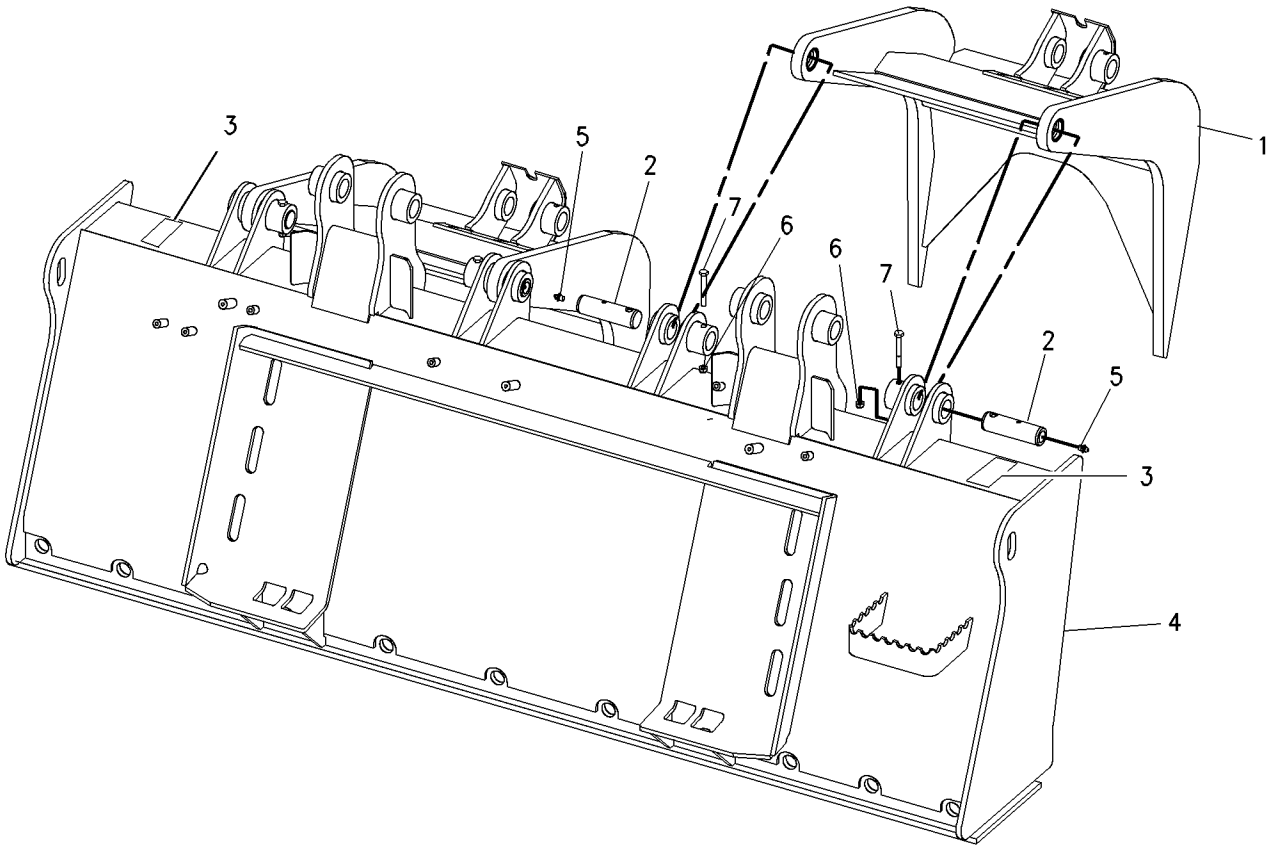

GRAPHIC #1 g00651449

WORK TOOLS

163-4811 FORK GP-GRAPPLE

S/N: CED1-UP; FDG1-UP; 4YZ4000-UP; 5SZ4000-UP
INDUSTRIAL
PART OF 163-4812 FORK AR-GRAPPLE
AN ATTACHMENT

SMCS-6705 **i01630026**

NOTE	REF NO	GRAPHIC REF	PART NUMBER	QTY	PART NAME 1 2 3 4 5 6 (PRODUCT LEVEL)	SEE PAGE
	1	1	**156-0890**	2	FORK AS (GRAPPLE)	
					(EACH AS INCLUDES)	
		1	**158-5648**	2	BEARING-SLEEVE	
	2	1	**157-0940**	4	PIN	
	3	1	**164-9989**	2	FILM-WARNING (IMPALED POINT)	
	4	1	**169-3568**	1	FORK AS	
		1	**8Y-4489**	2	BOSS	
	5	1	**3B-8489**	4	FITTING-GREASE (1/8-27 THD)	
M	6	1	**6V-9189**	4	LOCKNUT (M8X1.25 THD)	
M	7	1	**8T-6869**	4	BOLT (M8X1.25X60MM)	

M-METRIC PART

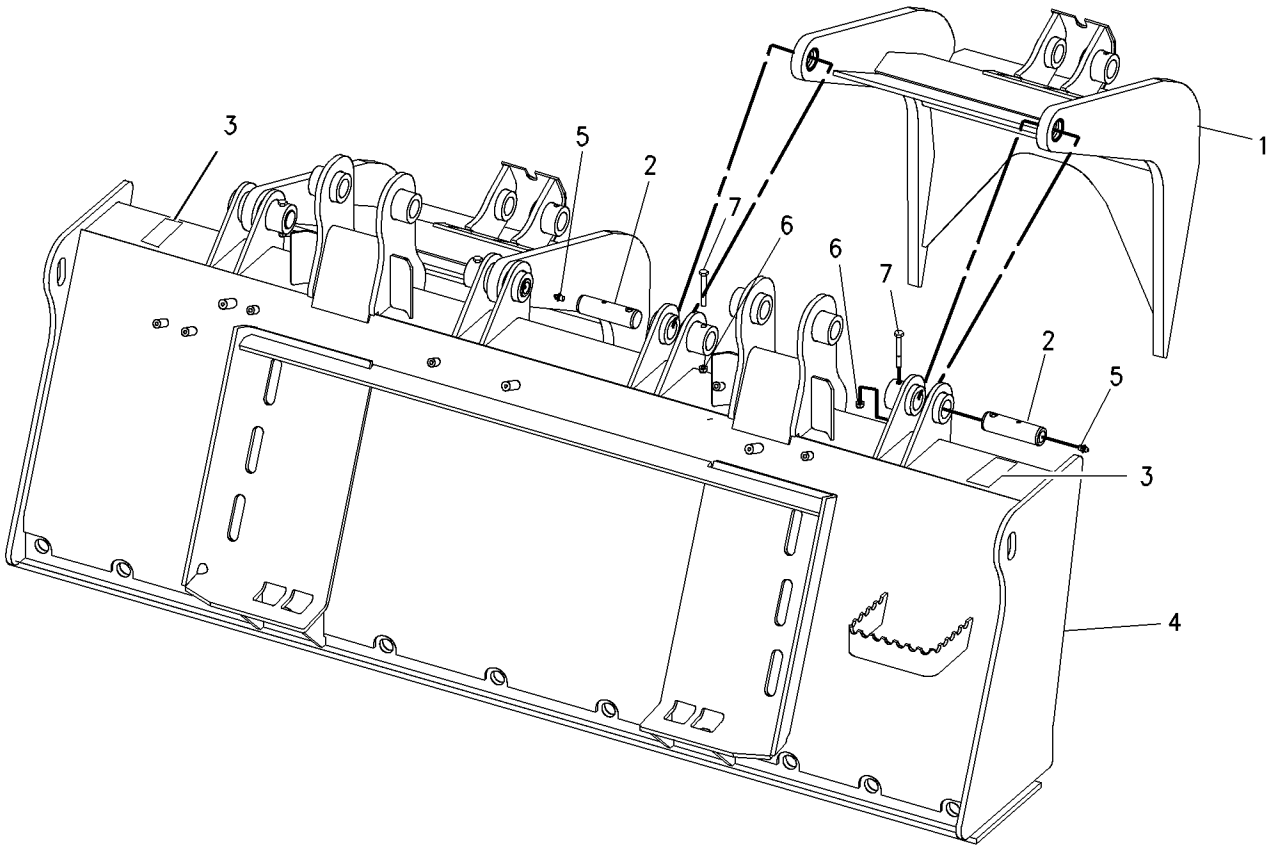

GRAPHIC #1 g00651449

164-9614 FORK GP-GRAPPLE

S/N: CED1-UP; FDG1-UP; 4YZ4000-UP; 5SZ4000-UP
INDUSTRIAL
PART OF 162-8139, 163-4812 FORK AR-GRAPPLE
AN ATTACHMENT

SMCS-6705 **i01075196**

NOTE	REF NO	GRAPHIC REF	PART NUMBER	QTY	PART NAME 1 2 3 4 5 6 (PRODUCT LEVEL)	SEE PAGE
	1	1	**3E-4370**	1	PIN-SPRING	
	2	1	**162-8154**	1	TINE	

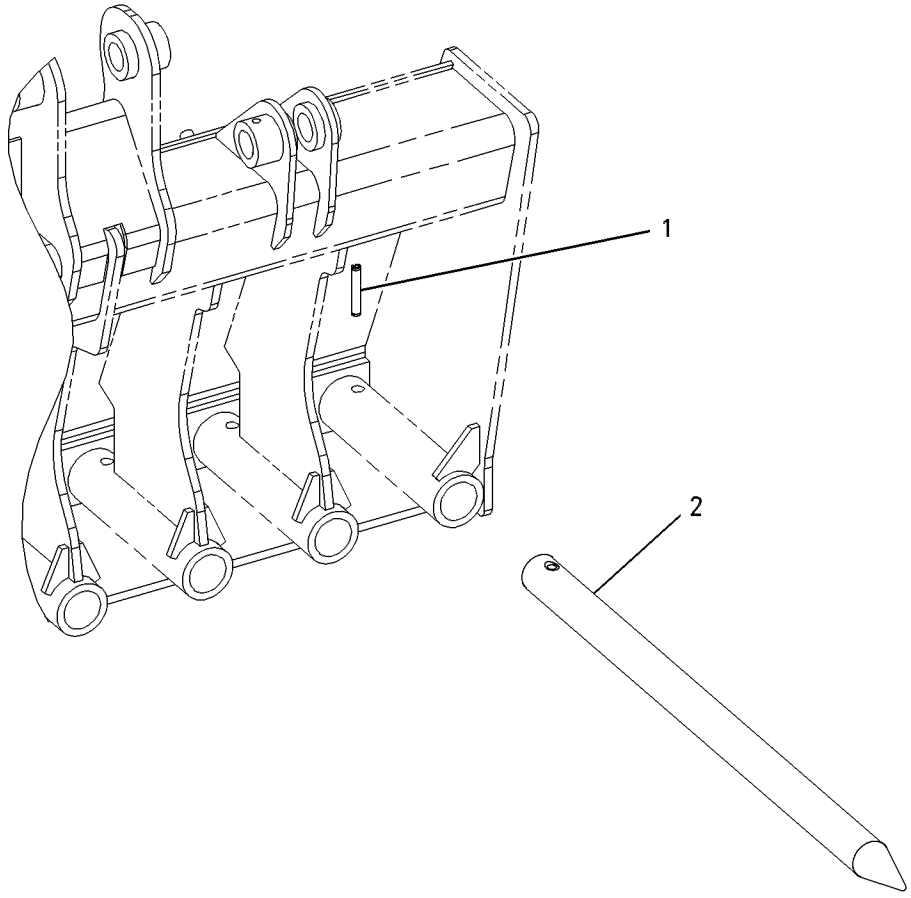

GRAPHIC #1 g00559648

161-2437 FORK GP-PALLET

S/N: CED1-UP; FDG1-UP; 4YZ4000-UP; 5SZ4000-UP
121.92CM (48 IN). EUROPEAN SOURCE ONLY
AN ATTACHMENT

SMCS-6136 **i01798363**

NOTE	PART NUMBER	QTY	PART NAME 1 2 3 4 5 6 (PRODUCT LEVEL)	SEE PAGE
	163-8680	1	POSITIONER GP-FORK	

<END>

195-6942 FORK GP-PALLET

S/N: CED1-UP; FDG1-UP; 4YZ4000-UP; 5SZ4000-UP
106.68CM (42 IN)
AN ATTACHMENT

SMCS-6136 **i01798370**

NOTE	PART NUMBER	QTY	PART NAME 1 2 3 4 5 6 (PRODUCT LEVEL)	SEE PAGE
	196-1338	1	POSITIONER GP-FORK	

<END>

195-6943 FORK GP-PALLET

S/N: CED1-UP; FDG1-UP; 4YZ4000-UP; 5SZ4000-UP
91.44CM (36 IN)
AN ATTACHMENT

SMCS-6136 **i01798372**

NOTE	PART NUMBER	QTY	PART NAME 1 2 3 4 5 6 (PRODUCT LEVEL)	SEE PAGE
	196-1338	1	POSITIONER GP-FORK	

<END>

195-8545 FORK GP-PALLET

S/N: CED1-UP; FDG1-UP; 4YZ4000-UP; 5SZ4000-UP
121.92CM (48 IN)
AN ATTACHMENT

SMCS-6136 **i01798374**

NOTE	PART NUMBER	QTY	PART NAME 1 2 3 4 5 6 (PRODUCT LEVEL)	SEE PAGE
	196-1338	1	POSITIONER GP-FORK	

<END>

WORK TOOLS

165-8732 FORK GP-UTILITY

S/N: CED1-UP; FDG1-UP; 4YZ4000-UP; 5SZ4000-UP
85.0CM (33.49 IN)
PART OF 165-8736, 165-8737 FORK GP-UTILITY
AN ATTACHMENT

SMCS-6458 **i01204324**

NOTE	REF NO	GRAPHIC REF	PART NUMBER	QTY	PART NAME 1 2 3 4 5 6 (PRODUCT LEVEL)	SEE PAGE
	1	1	**9R-2959**	1	CLIP	
	2	1	**166-4041**	1	TINE	

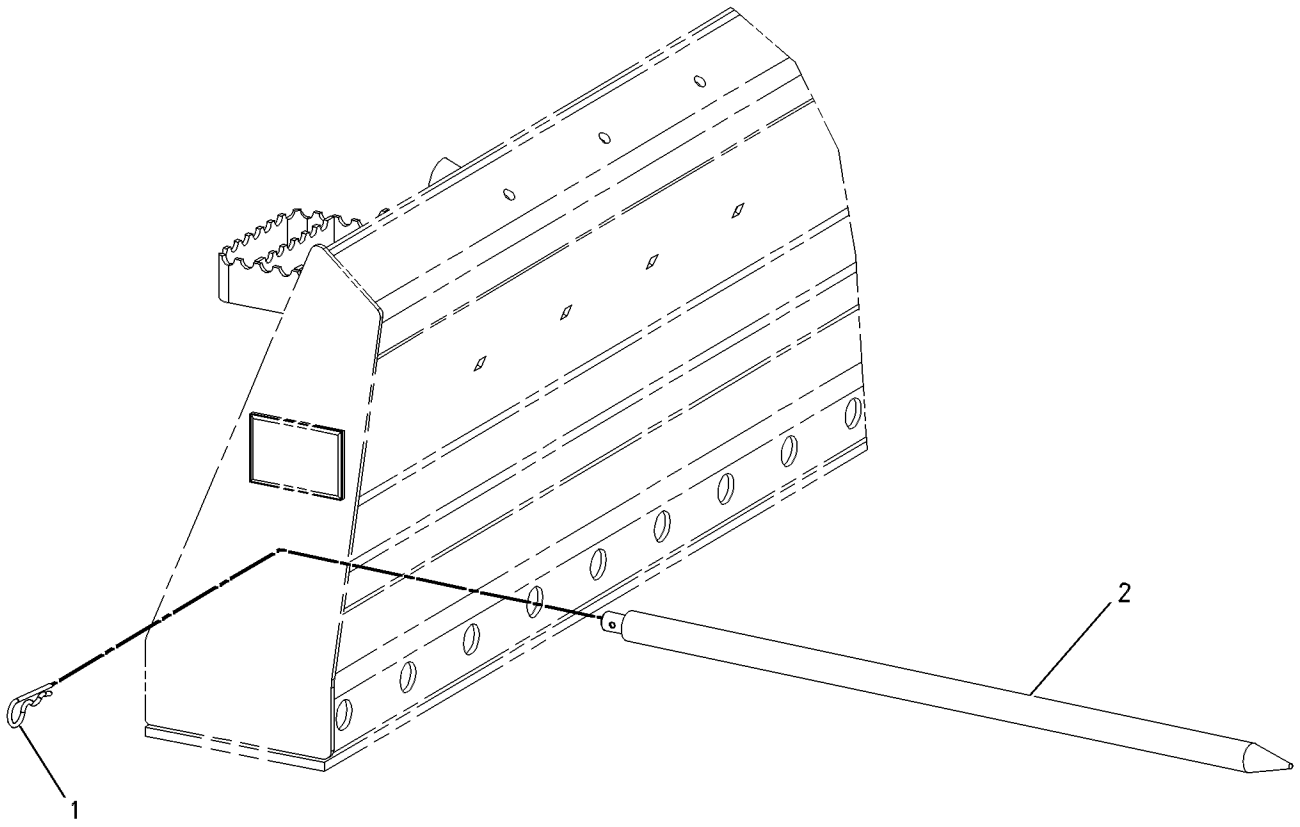

GRAPHIC #1 g00639778

165-8736 FORK GP-UTILITY

S/N: CED1-UP; FDG1-UP; 4YZ4000-UP; 5SZ4000-UP
167.64CM (66 IN)
PART OF 165-8727 FORK AR-GRAPPLE
AN ATTACHMENT

SMCS-6458 **i01629909**

NOTE	REF NO	GRAPHIC REF	PART NUMBER	QTY	PART NAME 1 2 3 4 5 6 (PRODUCT LEVEL)	SEE PAGE
	1	1	**164-9989**	2	FILM-WARNING (IMPALED POINT)	
Y	2	1	*165-8732*	7	FORK GP-UTILITY	556

Y-SEPARATE ILLUSTRATION

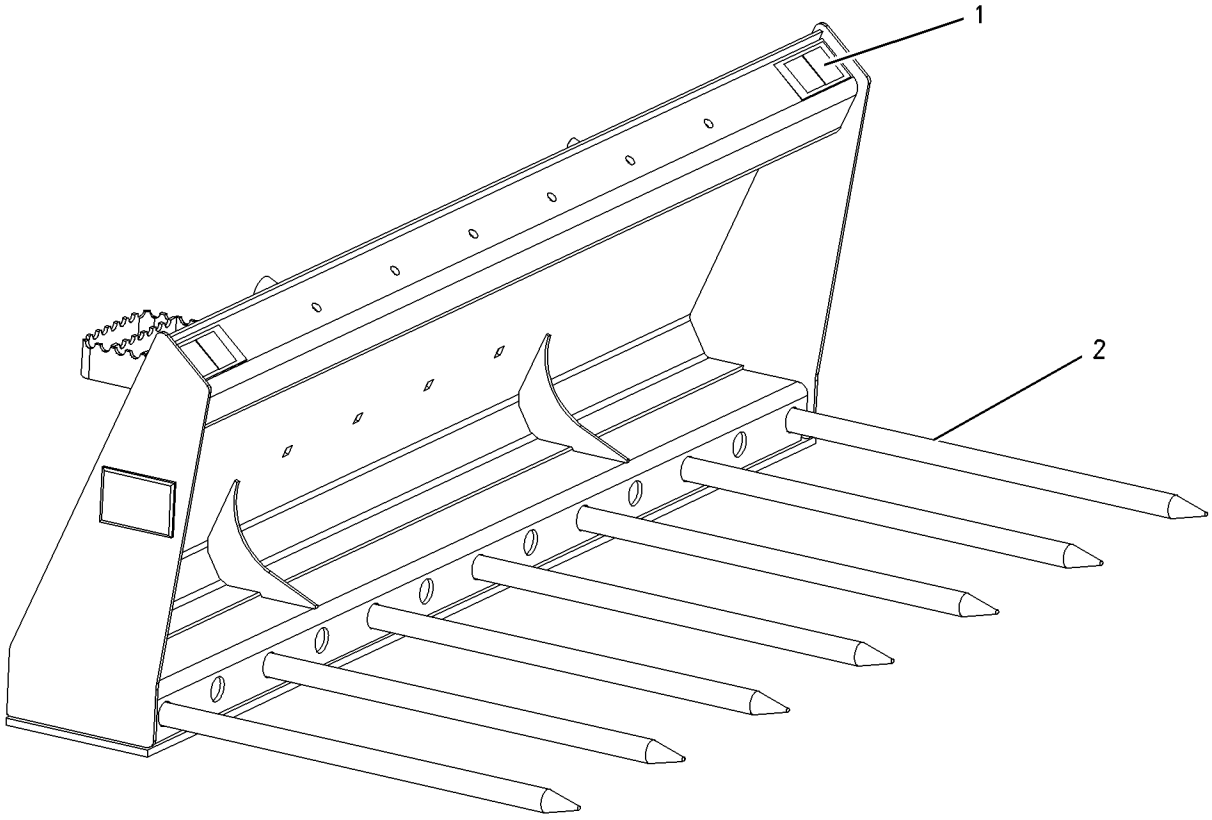

GRAPHIC #1 g00844429

165-8737 FORK GP-UTILITY

S/N: CED1-UP; FDG1-UP; 4YZ4000-UP; 5SZ4000-UP
182.88CM (72 IN)
PART OF 165-8728 FORK AR-GRAPPLE
AN ATTACHMENT

SMCS-6458 **i01629999**

NOTE	REF NO	GRAPHIC REF	PART NUMBER	QTY	PART NAME 1 2 3 4 5 6 (PRODUCT LEVEL)	SEE PAGE
	1	1	**164-9989**	2	FILM-WARNING (IMPALED POINT)	
Y	2	1	*165-8732*	9	FORK GP-UTILITY	556

Y-SEPARATE ILLUSTRATION

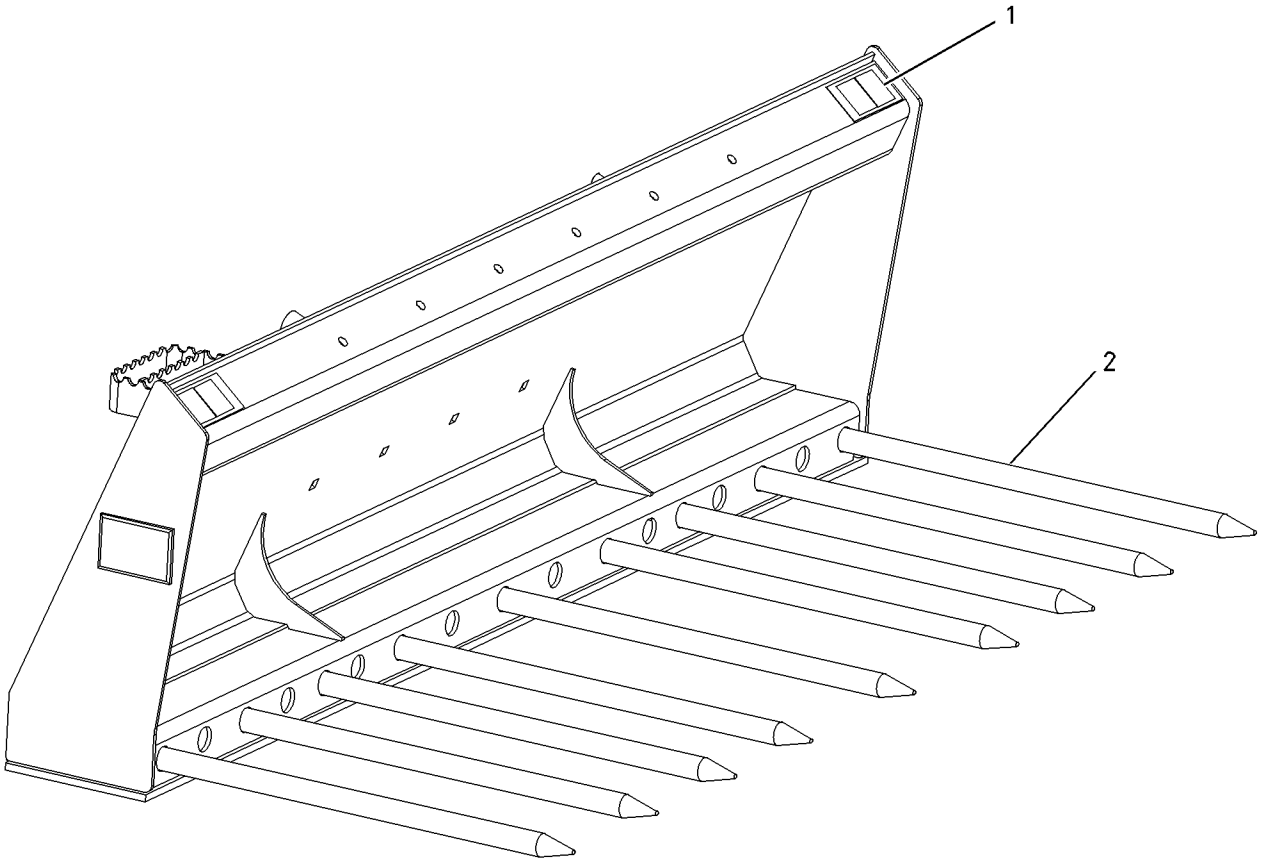

GRAPHIC #1 g00844486

MEMORANDA

165-8734 GRAPPLE GP-UTILITY

S/N: CED1-UP; FDG1-UP; 4YZ4000-UP; 5SZ4000-UP
PART OF 165-8729, 165-8730, 165-8779, 165-8780 BUCKET AR-GRAPPLE, 165-8727, 165-8728 FORK AR-GRAPPLE
FOR USE WITH 165-8836—PAGE 534
AN ATTACHMENT

SMCS-6307 **i01788985**

NOTE	REF NO	GRAPHIC REF	PART NUMBER	QTY	PART NAME 1 2 3 4 5 6 (PRODUCT LEVEL)	SEE PAGE
Y	1	1	**164-9295**	1	CYLINDER GP-GRAPPLE	351
Y	2	1	*165-8731*	1	CYLINDER & MTG GP-GRAPPLE	347
Y	3	1	*165-8733*	1	LINES GP-GRAPPLE	386
Y	4	1	*165-8740*	1	GRAPPLE GP-UTILITY	562
M	5	1	**170-5836**	4	BOLT (M12X1.75X35MM)	
	6	1	*173-7407*	1	STOP GP-GRAPPLE	
B	7	1	**8Y-7386**	1	SPACER (12.5X17.1X16.5MM THK)	
	8	1	**2S-6408**	2	WASHER-RETAINING (.531X3.25X.4 IN THK)	
	9	1	**8T-4223**	1	WASHER-HARD (13.5X25.5X3MM THK)	
M	10	1	**8T-4910**	1	BOLT (M12X1.75X60MM)	
	11	1	**8Y-7385**	1	STOP	
	12	1	**5P-1076**	4	WASHER-HARD (13.5X30X4MM THK)	
M	13	1	**8T-4139**	6	BOLT (M12X1.75X30MM)	
	14	1	**8T-4223**	6	WASHER-HARD (13.5X25.5X3MM THK)	
M	15	1	**8T-4244**	10	NUT (M12X1.75 THD)	

B-USE AS REQUIRED
M-METRIC PART
Y-SEPARATE ILLUSTRATION

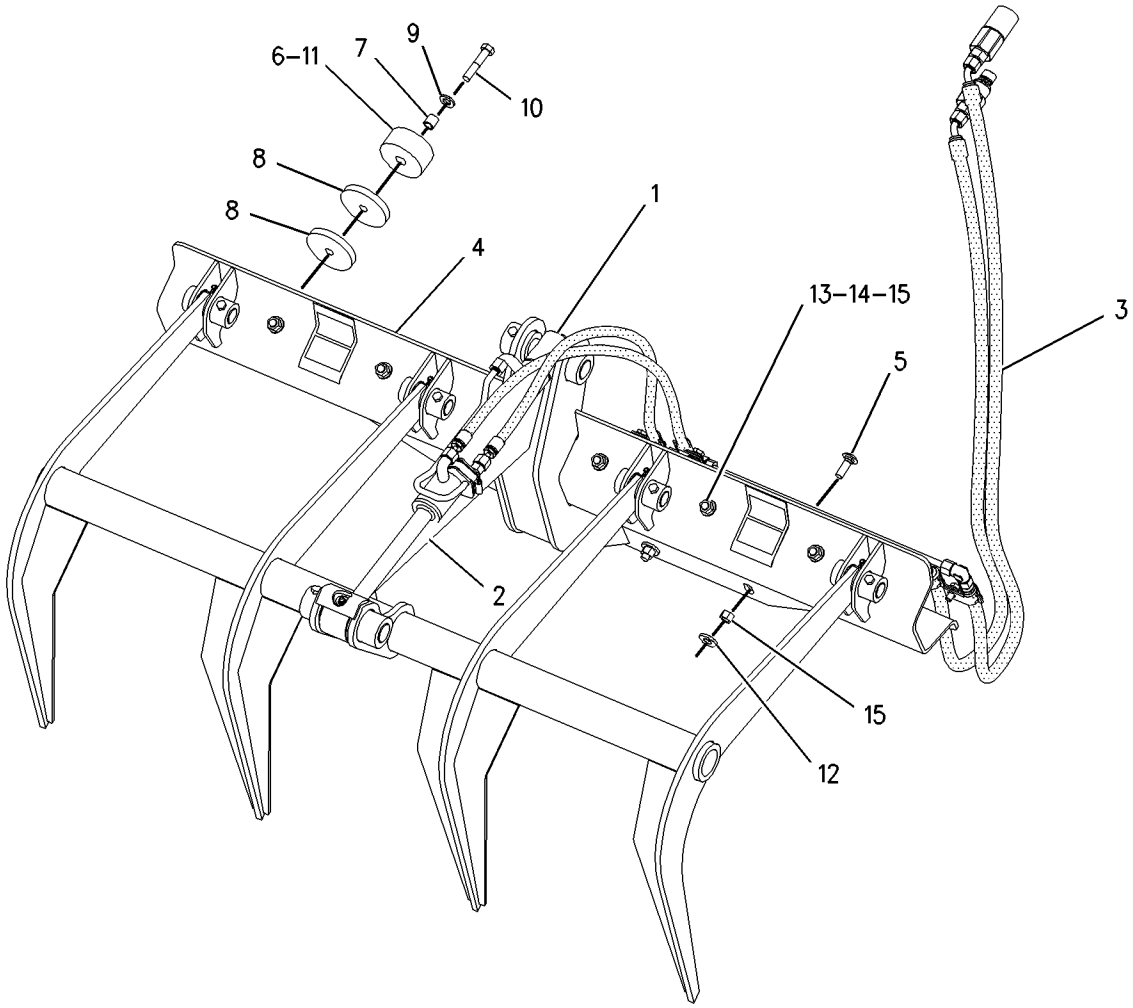

GRAPHIC #1 g00844464

165-8740 GRAPPLE GP-UTILITY

S/N: CED1-UP; FDG1-UP; 4YZ4000-UP; 5SZ4000-UP
PART OF 165-8734 GRAPPLE GP-UTILITY
AN ATTACHMENT

SMCS-6307 **i01497963**

NOTE	REF NO	GRAPHIC REF	PART NUMBER	QTY	PART NAME 1 2 3 4 5 6 (PRODUCT LEVEL)	SEE PAGE
	1	1	**3B-8488**	4	FITTING-HYDRAULIC	
	2	1	**159-5411**	4	PIN	
	3	1	**165-8743**	1	ARM AS	
	4	1	**169-3569**	1	BRACKET AS	
		1	**159-8035**	2	FILM-WARNING (CRUSH POINT)	
M	5	1	**6V-9189**	4	LOCKNUT (M8X1.25 THD)	
M	6	1	**8T-6912**	4	BOLT (M8X1.25X50MM)	

M-METRIC PART

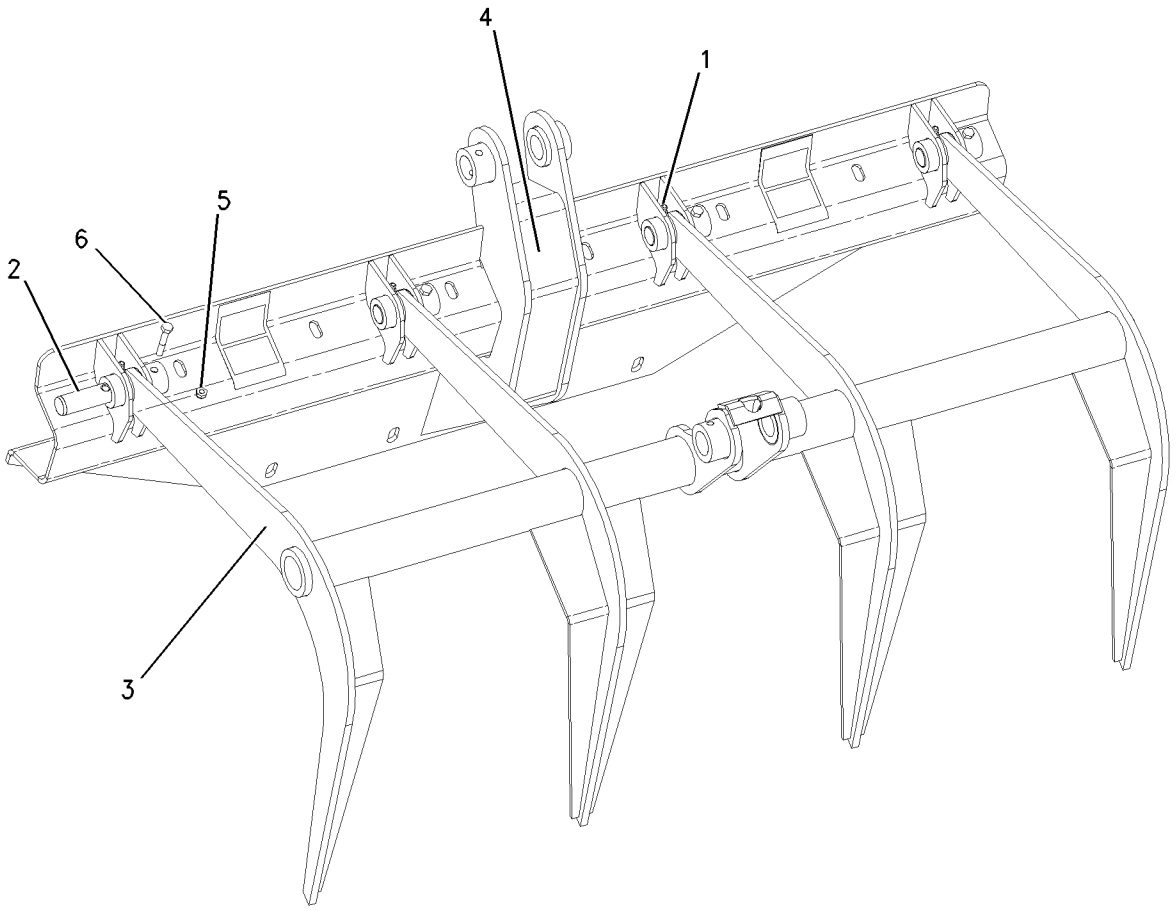

GRAPHIC #1 g00777325

215-3960 HANDLE & PIN GP-COUPLER–LH

S/N: CED1-UP; FDG1-UP; 4YZ4000-UP; 5SZ4000-UP
PART OF 196-8870 COUPLER GP-QUICK
AN ATTACHMENT

i01788995

NOTE	REF NO	GRAPHIC REF	PART NUMBER	QTY	PART NAME 1 2 3 4 5 6 (PRODUCT LEVEL)	SEE PAGE
	1	1	**166-2560**	1	PIN-SPRING	
	2	1	**192-2642**	1	PIN	
Y	3	1	*215-3958*	1	HANDLE GP-COUPLER	565

Y-SEPARATE ILLUSTRATION

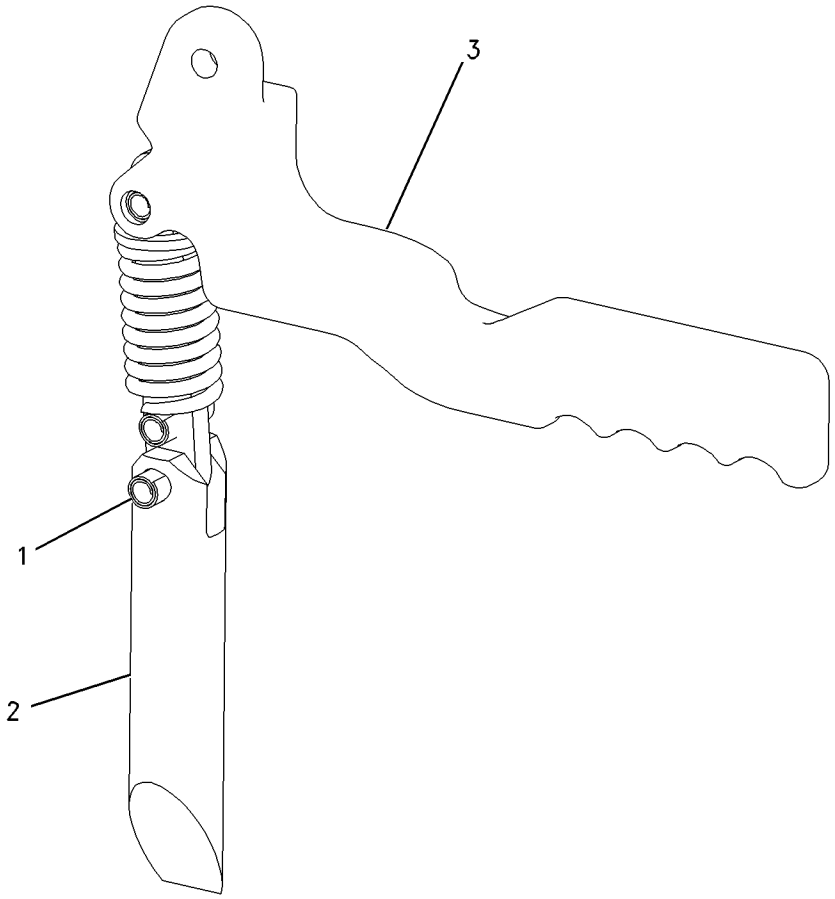

GRAPHIC #1

g00861964

215-3961 HANDLE & PIN GP-COUPLER—RH

S/N: CED1-UP; FDG1-UP; 4YZ4000-UP; 5SZ4000-UP
PART OF 196-8870 COUPLER GP-QUICK
AN ATTACHMENT

i01788997

NOTE	REF NO	GRAPHIC REF	PART NUMBER	QTY	PART NAME 1 2 3 4 5 6 (PRODUCT LEVEL)	SEE PAGE
	1	1	**166-2560**	1	PIN-SPRING	
	2	1	**192-2642**	1	PIN	
Y	3	1	*215-3959*	1	HANDLE GP-COUPLER	566

Y-SEPARATE ILLUSTRATION

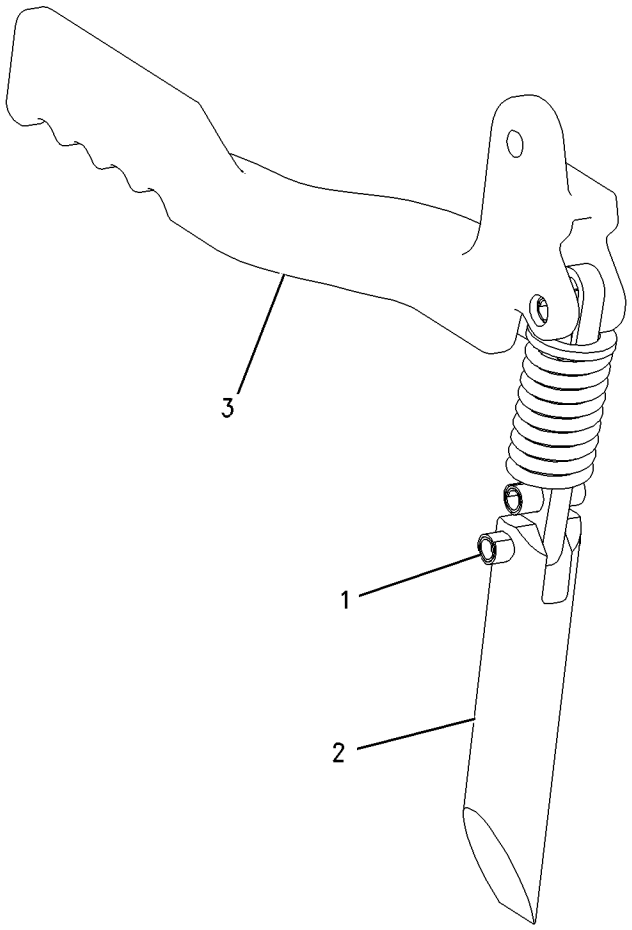

GRAPHIC #1

g00861970

215-3958 HANDLE GP-COUPLER–LH

S/N: CED1-UP; FDG1-UP; 4YZ4000-UP; 5SZ4000-UP
PART OF 215-3960 HANDLE & PIN GP-COUPLER
AN ATTACHMENT

i01668573

NOTE	REF NO	GRAPHIC REF	PART NUMBER	QTY	PART NAME 1 2 3 4 5 6 (PRODUCT LEVEL)	SEE PAGE
	1	1	**192-2637**	1	PLATE	
	2	1	**192-2645**	1	SPRING	
	3	1	**192-2648**	1	HANDLE	
	4	1	**195-6754**	2	PIN-SPRING	
	5	1	**8T-4123**	1	WASHER-PLATED (22X35X3.5MM THK)	

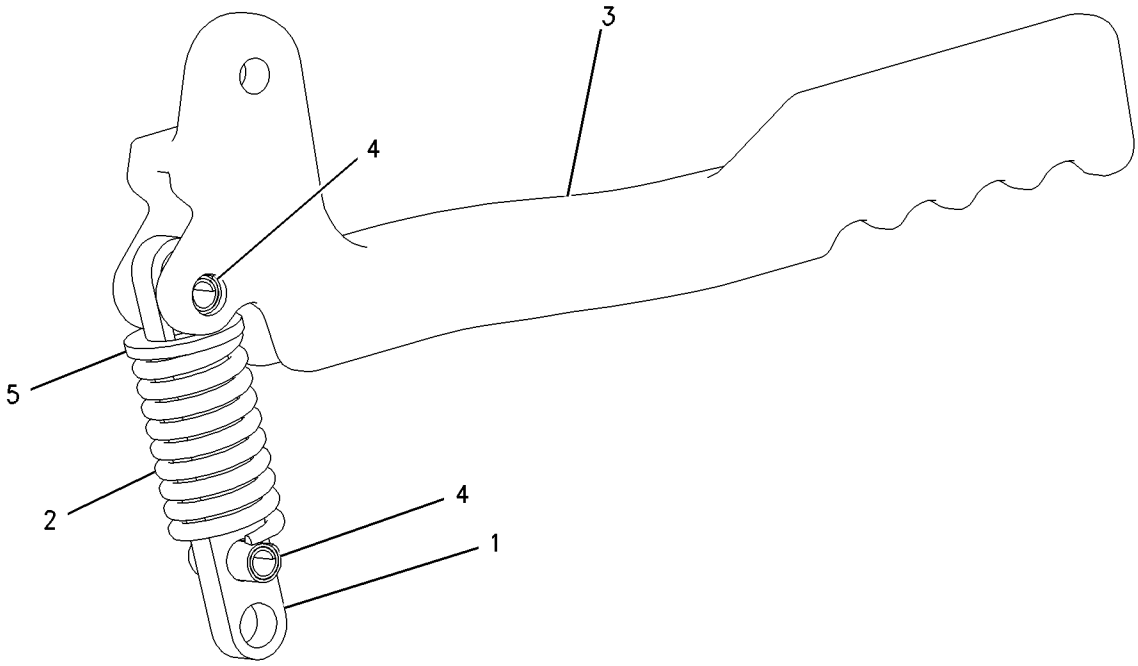

GRAPHIC #1

g00861957

215-3959 HANDLE GP-COUPLER–RH

S/N: CED1-UP; FDG1-UP; 4YZ4000-UP; 5SZ4000-UP
PART OF 215-3961 HANDLE & PIN GP-COUPLER
AN ATTACHMENT

i01668578

NOTE	REF NO	GRAPHIC REF	PART NUMBER	QTY	PART NAME 1 2 3 4 5 6 (PRODUCT LEVEL)	SEE PAGE
	1	1	**192-2637**	1	PLATE	
	2	1	**192-2645**	1	SPRING	
	3	1	**192-2653**	1	HANDLE	
	4	1	**195-6754**	2	PIN-SPRING	
	5	1	**8T-4123**	1	WASHER-PLATED (22X35X3.5MM THK)	

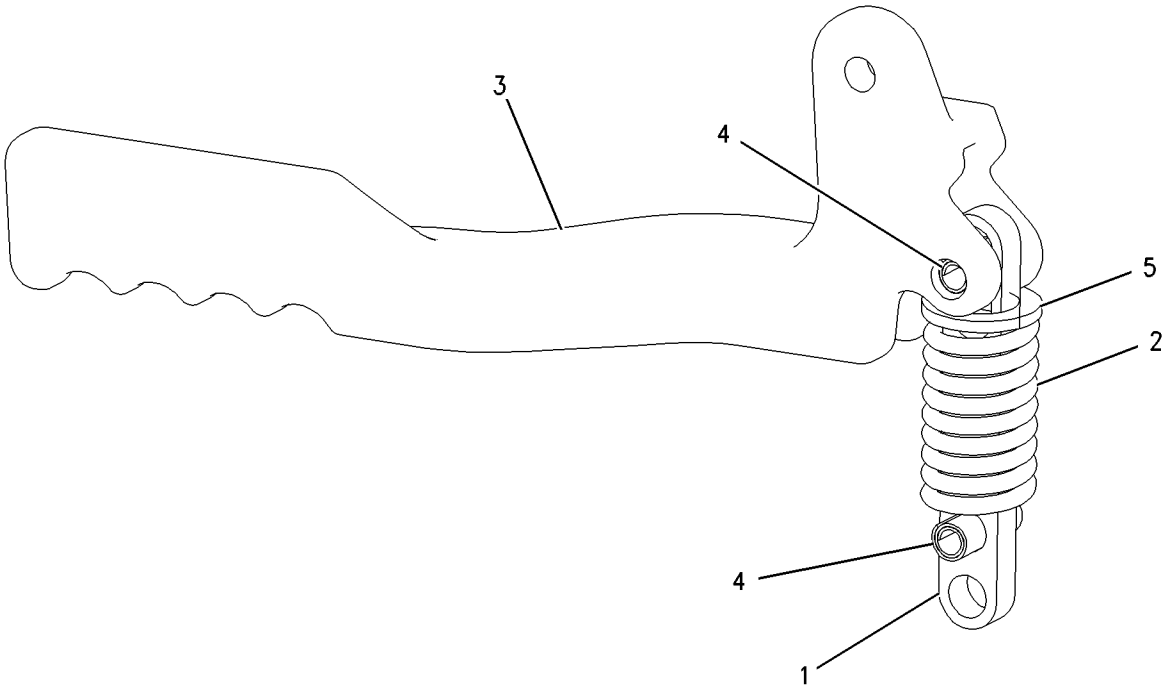

GRAPHIC #1

g00861959

165-8488 KIT-ROADING PLATE & MOUNTING

S/N: CED1-UP; FDG1-UP; 4YZ4000-UP; 5SZ4000-UP
ANGLE BLADE
FIELD INSTALLATION

SMCS-6001, 6101, 6103, 6104, 6704, 7405, 7557 **i01746508**

NOTE	REF NO	GRAPHIC REF	PART NUMBER	QTY	PART NAME 1 2 3 4 5 6 (PRODUCT LEVEL)	SEE PAGE
	1	1	**165-8486**	1	LOCK AS	
	2	1	**165-8487**	2	PLATE GP-ROADING	
	3	1	**177-7415**	4	FILM	
M	4	1	**6V-8949**	2	NUT (M10X1.5-6H THD)	
	5	1	**8T-4121**	4	WASHER-HARD (11X21X2.5MM THK)	
M	6	1	**8T-4186**	2	BOLT (M10X1.5X40MM)	
	7	1	**9R-2959**	1	CLIP	

M-METRIC PART

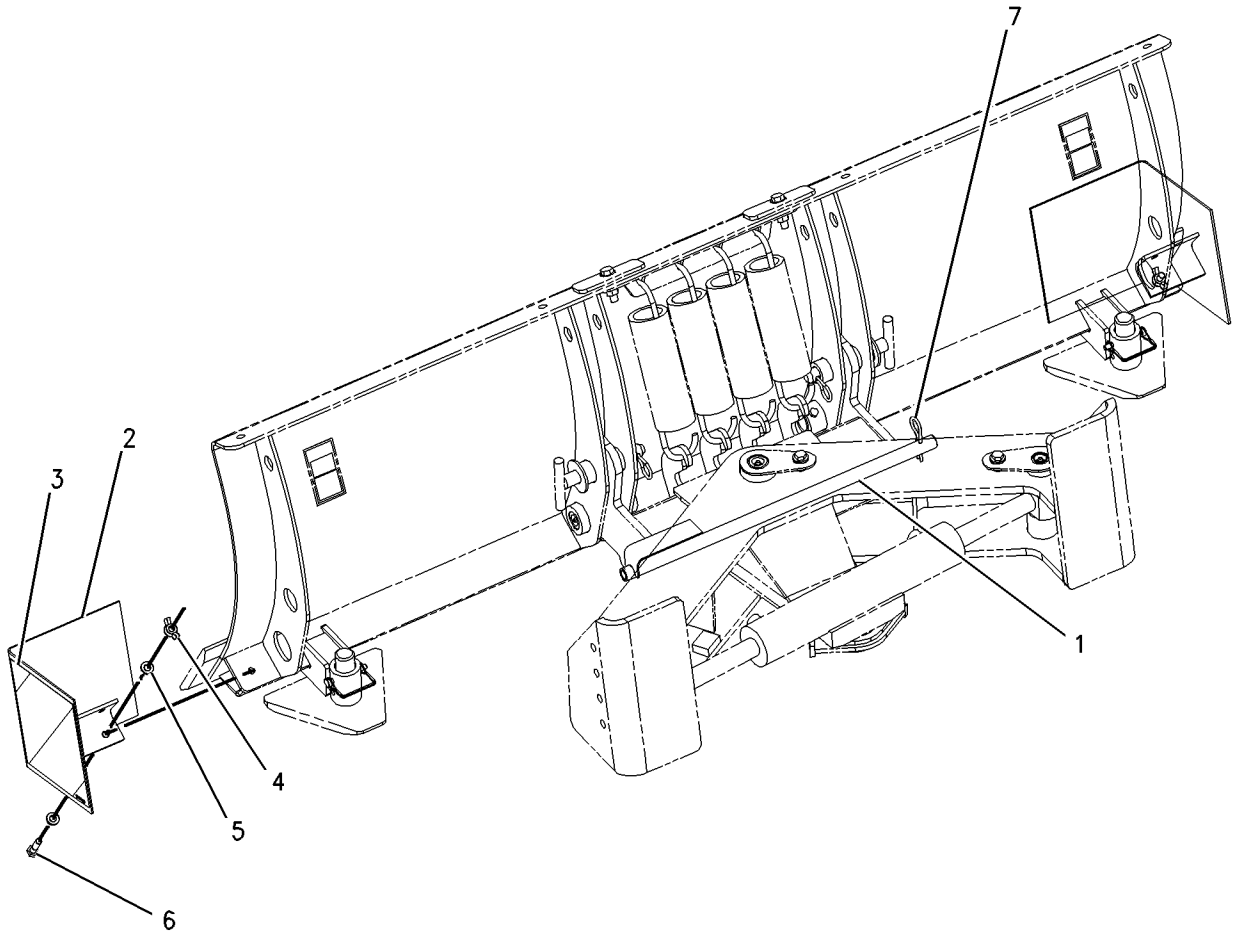

GRAPHIC #1 g00777737

177-9152 KIT-ROADING PLATE & MOUNTING

S/N: CED1-UP; FDG1-UP; 4YZ4000-UP; 5SZ4000-UP
BUCKET
PART OF 166-2567, 175-4242, 188-3307, 188-3308 CONVERSION AR-ROADING
AN ATTACHMENT AND FIELD INSTALLATION

SMCS-6001, 6101, 6103, 6104, 6704, 7405, 7557 **i01746506**

NOTE	REF NO	GRAPHIC REF	PART NUMBER	QTY	PART NAME 1 2 3 4 5 6 (PRODUCT LEVEL)	SEE PAGE
	1	1	**177-9153**	2	PLATE	
	2	1	*184-6097*	1	PLATE GP-ROADING (LH)	
		1	**177-7414**	1	FILM	
		1	**177-7415**	1	FILM	
		1	**177-9150**	1	PLATE AS	
	3	1	*184-6098*	1	PLATE GP-ROADING (RH)	
		1	**177-7414**	1	FILM	
		1	**177-7415**	1	FILM	
		1	**177-9151**	1	PLATE AS	
	4	1	**039-8557**	2	WASHER (13X26X6MM THK)	
M	5	1	**6V-8949**	4	NUT (M10X1.5-6H THD)	
	6	1	**8T-4121**	8	WASHER-HARD (11X21X2.5MM THK)	
M	7	1	**8T-4137**	2	BOLT (M10X1.5X20MM)	
M	8	1	**8T-4186**	2	BOLT (M10X1.5X40MM)	

M-METRIC PART

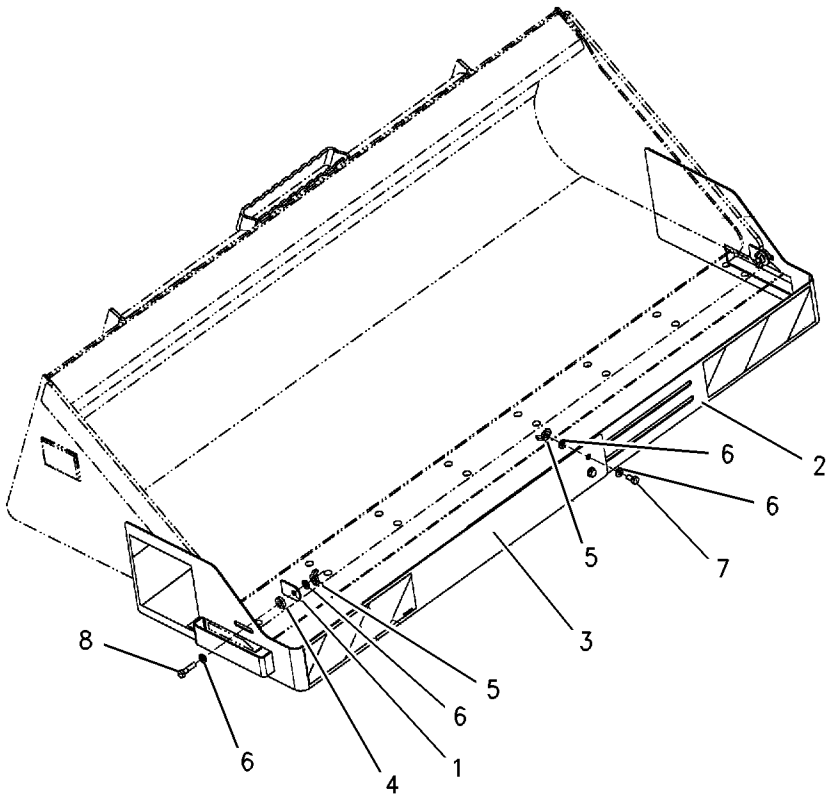

GRAPHIC #1 g00778934

WORK TOOLS

197-0926 KIT-SNOW REMOVAL CONVERSION

S/N: CED1-UP; FDG1-UP; 4YZ4000-UP; 5SZ4000-UP
182.88CM (72IN)ANGLE BLADE
FOR USE WITH 177-1989—PAGE 502
FIELD INSTALLATION

SMCS-6701 **i01630039**

NOTE	REF NO	GRAPHIC REF	PART NUMBER	QTY	PART NAME 1 2 3 4 5 6 (PRODUCT LEVEL)	SEE PAGE
	1	1	**197-0882**	2	MARKER AS	
	2	1	**197-0883**	1	GUARD AS	
M	3	1	**5C-7261**	4	NUT (M8X1.25 THD)	
M	4	1	**8T-4908**	4	BOLT (M8X1.25X25MM)	
M	5	1	**8T-4139**	4	BOLT (M12X1.75X30MM)	
	6	1	**8T-4223**	8	WASHER-HARD (13.5X25.5X3MM THK)	
	7	1	**8T-4224**	8	WASHER-HARD (8.8X16X2MM THK)	
M	8	1	**8T-4244**	4	NUT (M12X1.75 THD)	

M-METRIC PART

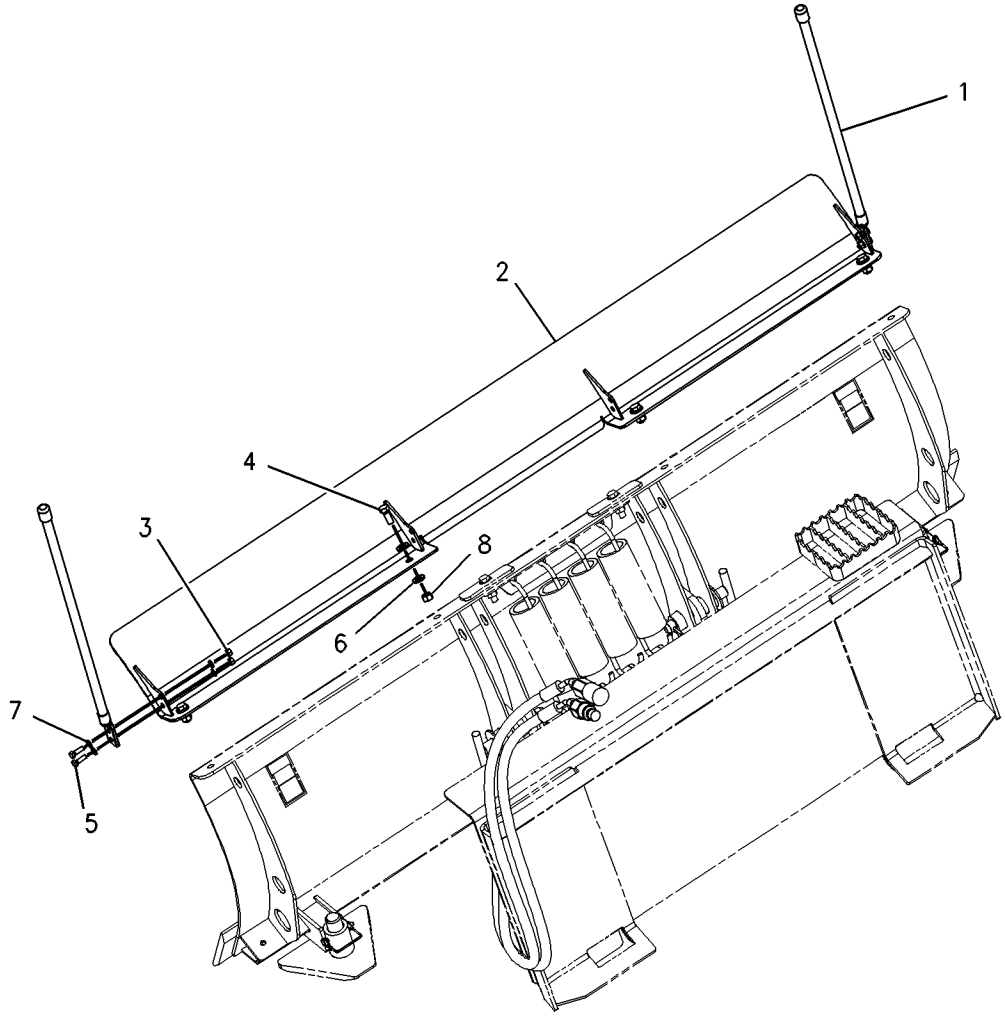

GRAPHIC #1 g00777279

WORK TOOLS

197-0927 KIT-SNOW REMOVAL CONVERSION

S/N: CED1-UP; FDG1-UP; 4YZ4000-UP; 5SZ4000-UP
KIT-SNOW REMOVEL CONVERSION-84INCH ANGLE BLADE
FOR USE WITH 177-1990—PAGE 502
FIELD INSTALLATION

SMCS-6701 **i01497797**

NOTE	REF NO	GRAPHIC REF	PART NUMBER	QTY	PART NAME 1 2 3 4 5 6 (PRODUCT LEVEL)	SEE PAGE
	1	1	**197-0882**	2	MARKER AS	
	2	1	**197-0884**	1	GUARD AS	
M	3	1	**5C-7261**	4	NUT (M8X1.25 THD)	
M	4	1	**8T-4908**	4	BOLT (M8X1.25X25MM)	
	5	1	**8T-4223**	8	WASHER-HARD (13.5X25.5X3MM THK)	
	6	1	**8T-4224**	8	WASHER-HARD (8.8X16X2MM THK)	
M	7	1	**8T-4244**	4	NUT (M12X1.75 THD)	
M	8	1	**8T-4956**	4	BOLT (M12X1.75X35MM)	

M-METRIC PART

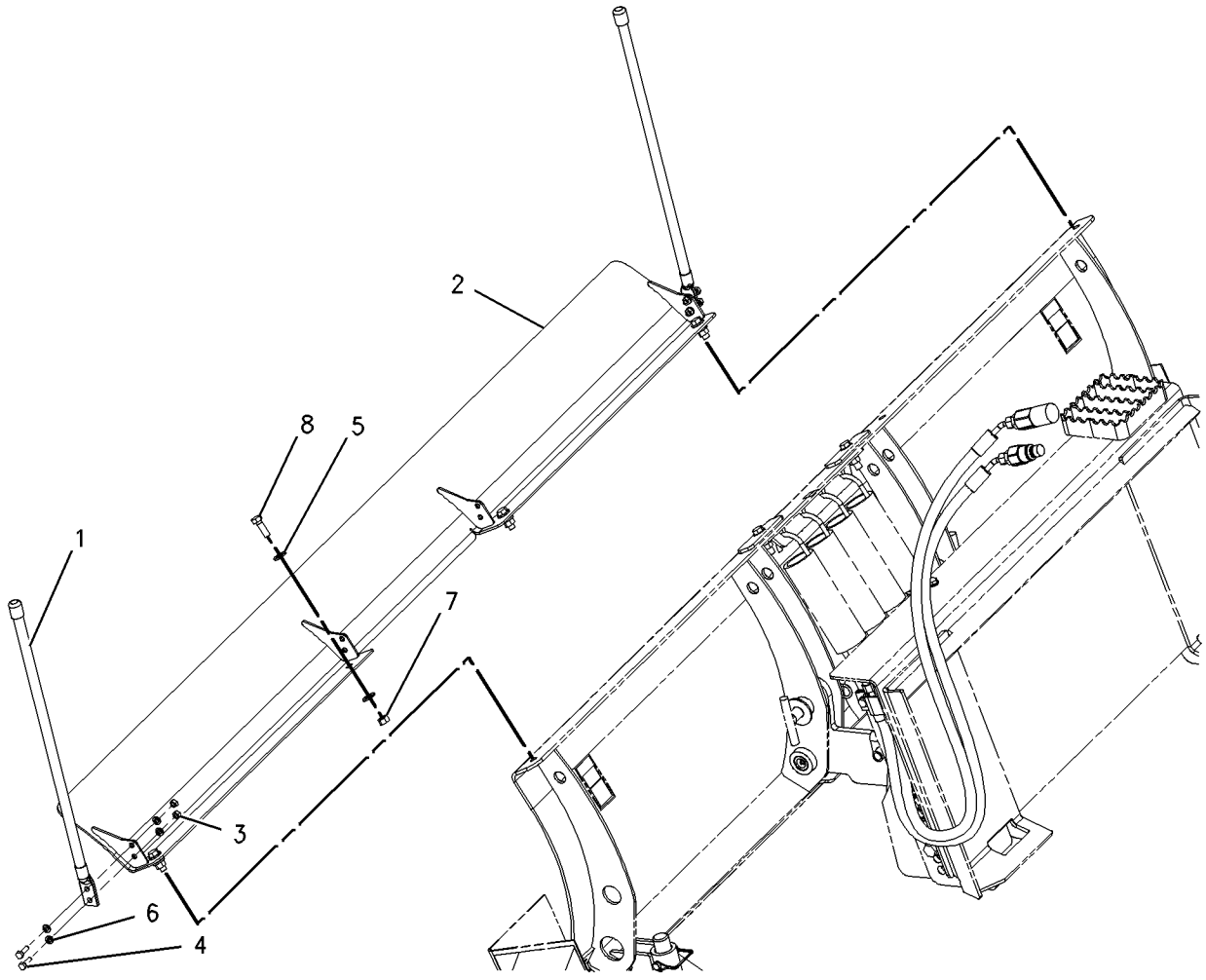

GRAPHIC #1 g00777292

215-3957 LINK GP-COUPLER

S/N: CED1-UP; FDG1-UP; 4YZ4000-UP; 5SZ4000-UP
PART OF 219-4354 CONVERSION AR-QUICK COUPLER, 219-4355 COUPLER AR-QUICK
AN ATTACHMENT

SMCS-6129 **i01692249**

NOTE	REF NO	GRAPHIC REF	PART NUMBER	QTY	PART NAME 1 2 3 4 5 6 (PRODUCT LEVEL)	SEE PAGE
	1	1	**192-2637**	1	PLATE	
	2	1	**192-2638**	1	BRACKET	
	3	1	**192-2645**	1	SPRING	
	4	1	**195-6754**	2	PIN-SPRING	
	5	1	**8T-4123**	1	WASHER-PLATED (22X35X3.5MM THK)	

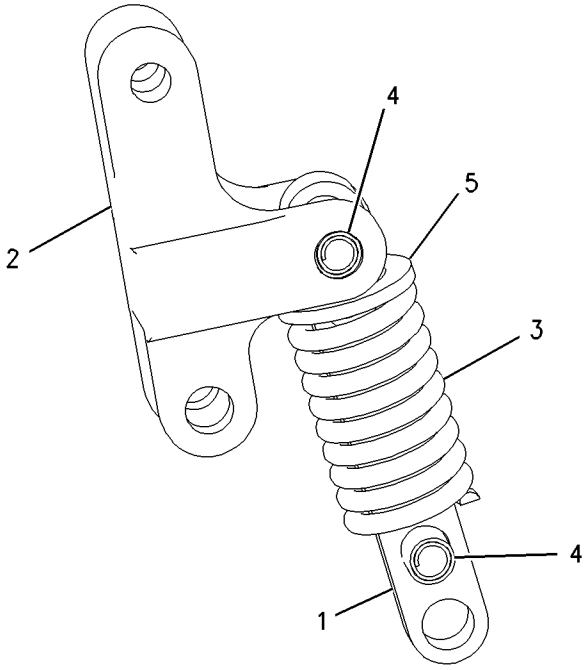

GRAPHIC #1 g00871291

WORK TOOLS

175-4238 LOCK GP-QUICK COUPLER

S/N: 4YZ4000-UP; 5SZ4000-UP

PART OF 166-2567, 175-4242, 188-3307, 188-3308 CONVERSION AR-ROADING AN ATTACHMENT

SMCS-6129 **i01408856**

NOTE	REF NO	GRAPHIC REF	PART NUMBER	QTY	PART NAME 1 2 3 4 5 6 (PRODUCT LEVEL)	SEE PAGE
	1	1	**9R-5301**	1	PIN-COTTER	
	2	1	**178-2247**	1	PIN	
	3	1	**9X-8257**	1	WASHER (17.5X30X3.5MM THK)	

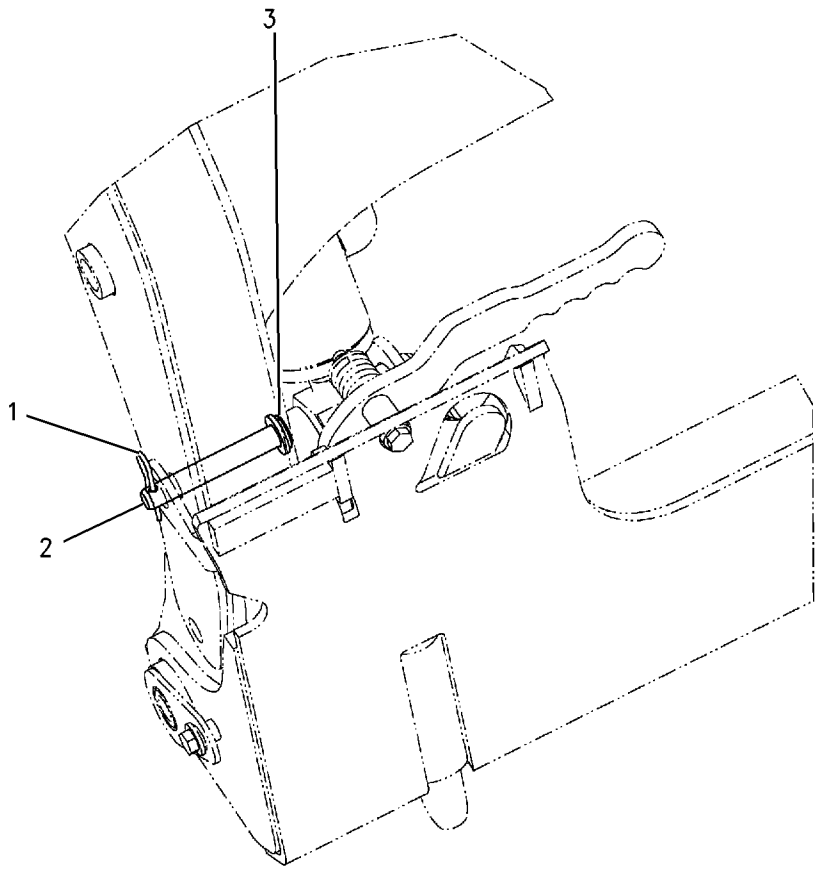

GRAPHIC #1 g00741828

161-7290 PUMP GP-DIAPHRAGM

S/N: CED1-UP; FDG1-UP; 4YZ4000-UP; 5SZ4000-UP
PART OF 166-2550 TANK & MTG GP-WATER, 193-0451 TANK GP-WATER
AN ATTACHMENT

SMCS-5612 **i01237066**

NOTE	REF NO	GRAPHIC REF	PART NUMBER	QTY	PART NAME 1 2 3 4 5 6 (PRODUCT LEVEL)	SEE PAGE
	1	1	**174-6633**	1	HEAD-PUMP	
	2	1	**160-0663**	1	MOTOR-ELECTRIC	

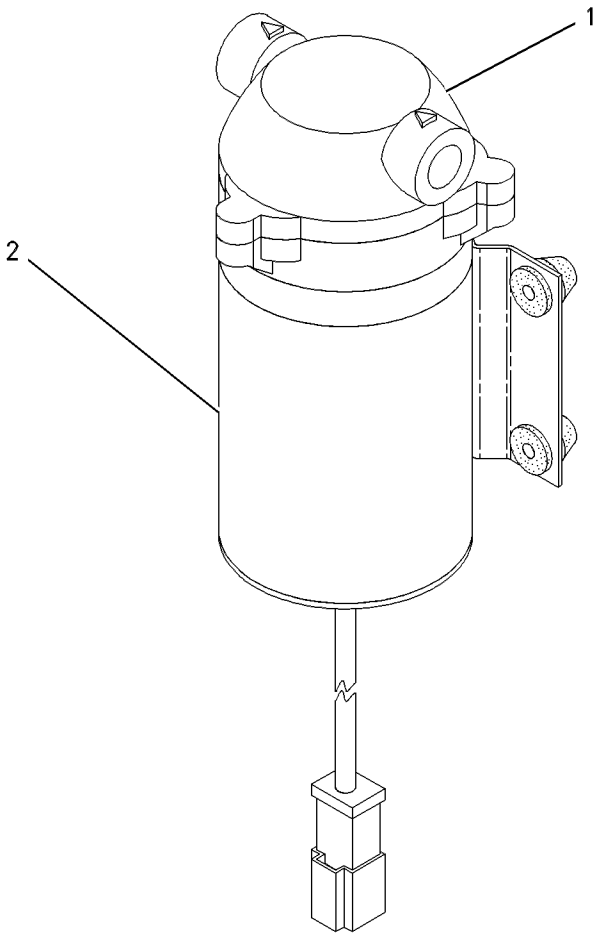

GRAPHIC #1 g00652915

WORK TOOLS

177-1983 SPRING GP-BLADE

S/N: CED1-UP; FDG1-UP; 4YZ4000-UP; 5SZ4000-UP
PART OF 177-1989, 177-1990 BLADE AR
AN ATTACHMENT

SMCS-6060 **i01497986**

NOTE	REF NO	GRAPHIC REF	PART NUMBER	QTY	PART NAME 1 2 3 4 5 6 (PRODUCT LEVEL)	SEE PAGE
	1	1	**177-1941**	4	SPRING	
	2	1	**177-1973**	1	PLATE AS	
M	3	1	**8T-4194**	2	BOLT (M12X1.75X50MM)	
	4	1	**8T-4223**	4	WASHER-HARD (13.5X25.5X3MM THK)	
M	5	1	**8T-4244**	2	NUT (M12X1.75 THD)	

M-METRIC PART

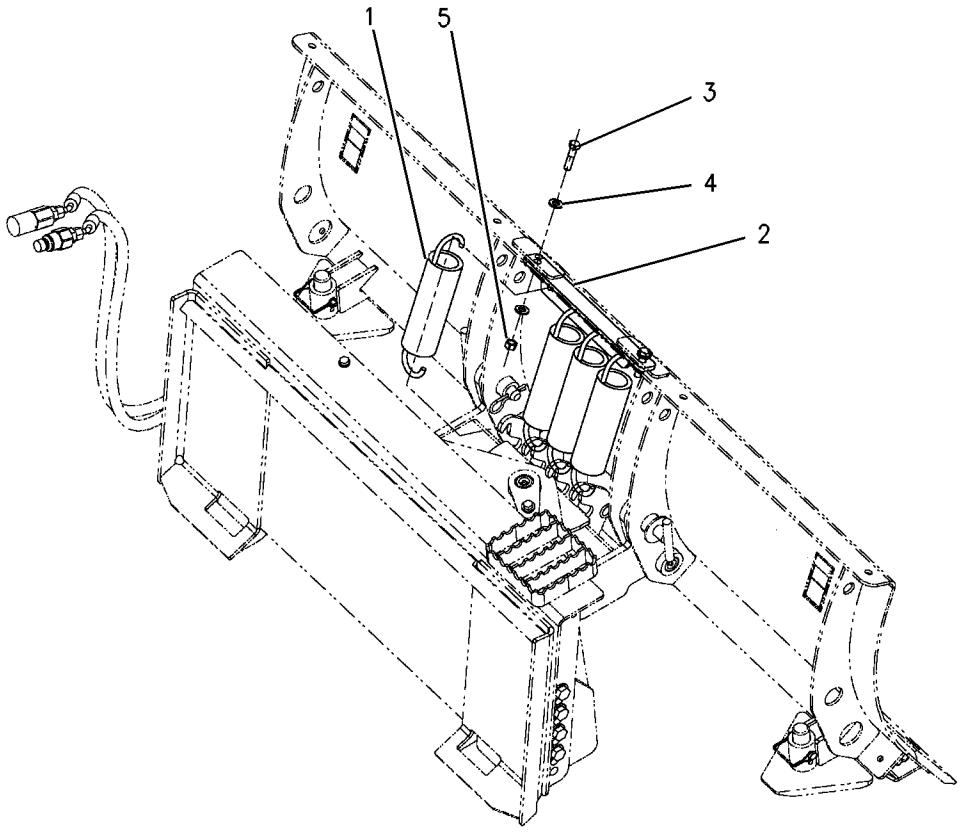

GRAPHIC #1 g00777337

186-3562 STEP GP-MATERIAL HANDLING ARM

S/N: 4YZ4000-UP; 5SZ4000-UP
FOR USE WITH 179-7201—PAGE 500
AN ATTACHMENT

SMCS-6542 **i01498004**

NOTE	REF NO	GRAPHIC REF	PART NUMBER	QTY	PART NAME 1 2 3 4 5 6 (PRODUCT LEVEL)	SEE PAGE
	1	1	**188-7176**	1	STEP AS	
	2	1	**8T-4121**	6	WASHER-HARD (11X21X2.5MM THK)	
M	3	1	**8T-4133**	6	NUT (M10X1.5 THD)	
M	4	1	**8T-4195**	6	BOLT (M10X1.5X30MM)	

M-METRIC PART

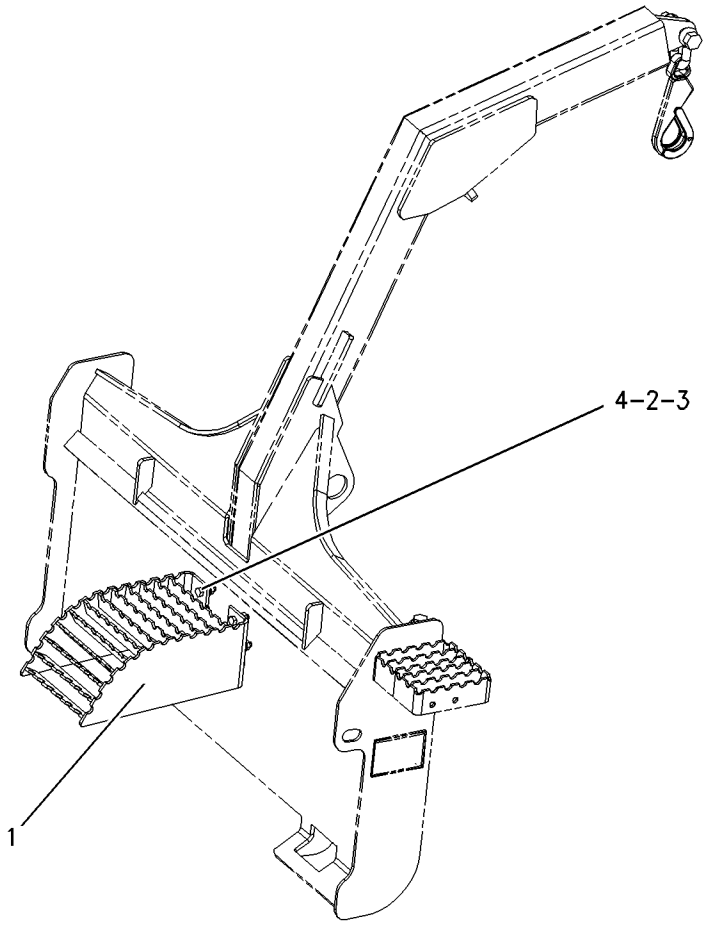

GRAPHIC #1 g00777344

188-7733 STEP GP-MATERIAL HANDLING ARM

S/N: CED1-UP; FDG1-UP; 4YZ4000-UP; 5SZ4000-UP
PART OF 179-7201, 216-8756 ARM GP-MATERIAL HANDLING
AN ATTACHMENT

SMCS-6542 **i01498007**

NOTE	REF NO	GRAPHIC REF	PART NUMBER	QTY	PART NAME 1 2 3 4 5 6 (PRODUCT LEVEL)	SEE PAGE
	1	1	**186-5186**	1	STEP AS	
	2	1	**8T-4121**	2	WASHER-HARD (11X21X2.5MM THK)	
M	3	1	**8T-4133**	2	NUT (M10X1.5 THD)	
M	4	1	**8T-4136**	2	BOLT (M10X1.5X25MM)	

M-METRIC PART

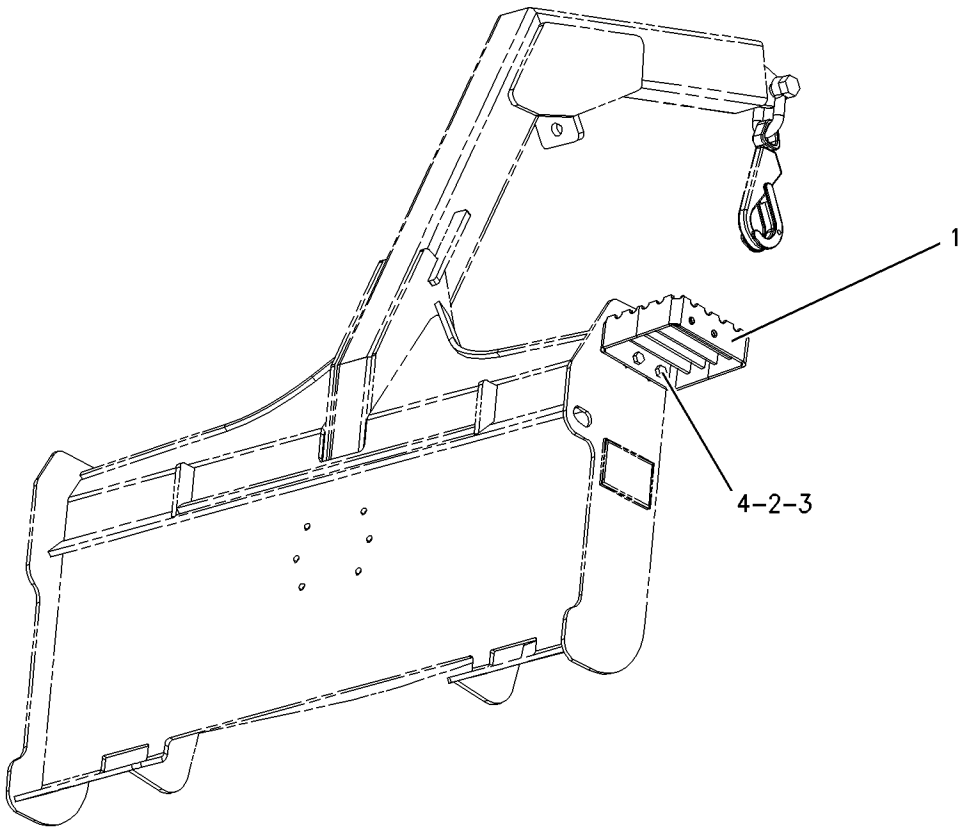

GRAPHIC #1 g00777345

116-2001 STRAINER GP-WATER

S/N: CED1-UP; FDG1-UP; 4YZ4000-UP; 5SZ4000-UP
PART OF 166-2550 TANK & MTG GP-WATER, 193-0451 TANK GP-WATER
AN ATTACHMENT

SMCS-5612 **i01385622**

NOTE	REF NO	GRAPHIC REF	PART NUMBER	QTY	PART NAME 1 2 3 4 5 6 (PRODUCT LEVEL)	SEE PAGE
	1	1	**119-1415**	1	GASKET	
	2	1	**119-1414**	1	SCREEN	

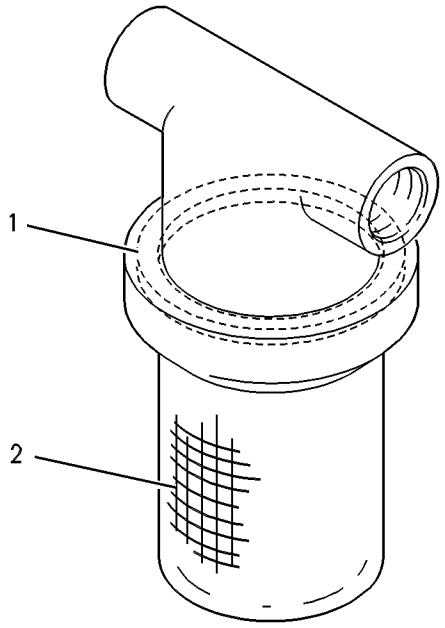

GRAPHIC #1 g00293866

WORK TOOLS

166-2550 TANK & MTG GP-WATER

S/N: 4YZ4000-UP; 5SZ4000-UP

AN ATTACHMENT

SMCS-5613 **i01787458**

NOTE	REF NO	GRAPHIC REF	PART NUMBER	QTY	PART NAME 1 2 3 4 5 6 (PRODUCT LEVEL)	SEE PAGE
	1	1	**3B-7255**	1	BUSHING-REDUCING	
	2	1	**3S-2093**	4	STRAP-CABLE	
	3	1	**7X-0495**	1	ADAPTER	
	4	1	**8T-0737**	1	VALVE-SHUTOFF	
Y	5	1	**116-2001**	1	STRAINER GP-WATER	577
	6	2	**142-7505**	2	PLATE AS	
Y	7	1	**161-7290**	1	PUMP GP-DIAPHRAGM	573
	8	1	**165-4894**	1	HARNESS AS	
Y	9	1	**166-2551**	1	TANK GP-WATER	581
I	10	1	**166-2552**	1	HOSE AS	
	11	1	**166-2553**	1	BRACKET AS	
I	12	2	**166-2554**	1	HOSE AS	
	13	2	**166-2556**	1	BRACKET	
	14	2	**166-2557**	1	PLATE	
	15	2	**166-2558**	1	COUPLING	
	16	1	**166-2559**	2	BRACKET	
	17	2	**191-9665**	1	BRACKET AS	
	18	2	**195-6696**	1	PLATE	
	19	1	**003-2143**	1	ELBOW	
	20	1	**067-2551**	2	CLIP	
	21	1	**095-0912**	2	CLIP	
M	22	1	**111-4627**	4	SCREW-MACHINE (M6X1.0X30MM)	
	23	2	**119-3859**	6	SCREW-PAN HEAD (10-16X0.75 IN)	
M	24	1	**129-3178**	4	LOCKNUT (M6X1 THD)	
	25	1	**1L-2279**	1	ELBOW	
M	26	2	**5C-7261**	2	NUT (M8X1.25 THD)	
	27	2	**5P-8246**	2	WASHER-HARD (15.5X29X3MM THK)	
	28	1,2	**8T-4121**	7	WASHER-HARD (11X21X2.5MM THK)	
	29	1	**8T-4122**	16	WASHER-HARD (17X32X3.5MM THK)	
M	30	1	**8T-4132**	4	NUT (M16X2 THD)	
M	31	1,2	**8T-4137**	5	BOLT (M10X1.5X20MM)	
M	32	2	**8T-4191**	2	BOLT (M10X1.5X16MM)	
	33	1	**8T-4205**	6	WASHER-HARD (7.2X14.5X2MM THK)	
	34	2	**8T-4224**	4	WASHER-HARD (8.8X16X2MM THK)	
M	35	1	**8T-4779**	12	BOLT (M16X2X35MM)	
M	36	2	**8T-4908**	2	BOLT (M8X1.25X25MM)	
	37	1	**167-0608**		SEAL (82CM)	

I-SEE HOSE FABRICATION GUIDE
M-METRIC PART
Y-SEPARATE ILLUSTRATION

166-2550 TANK & MTG GP-WATER *(contd.)* i01787458

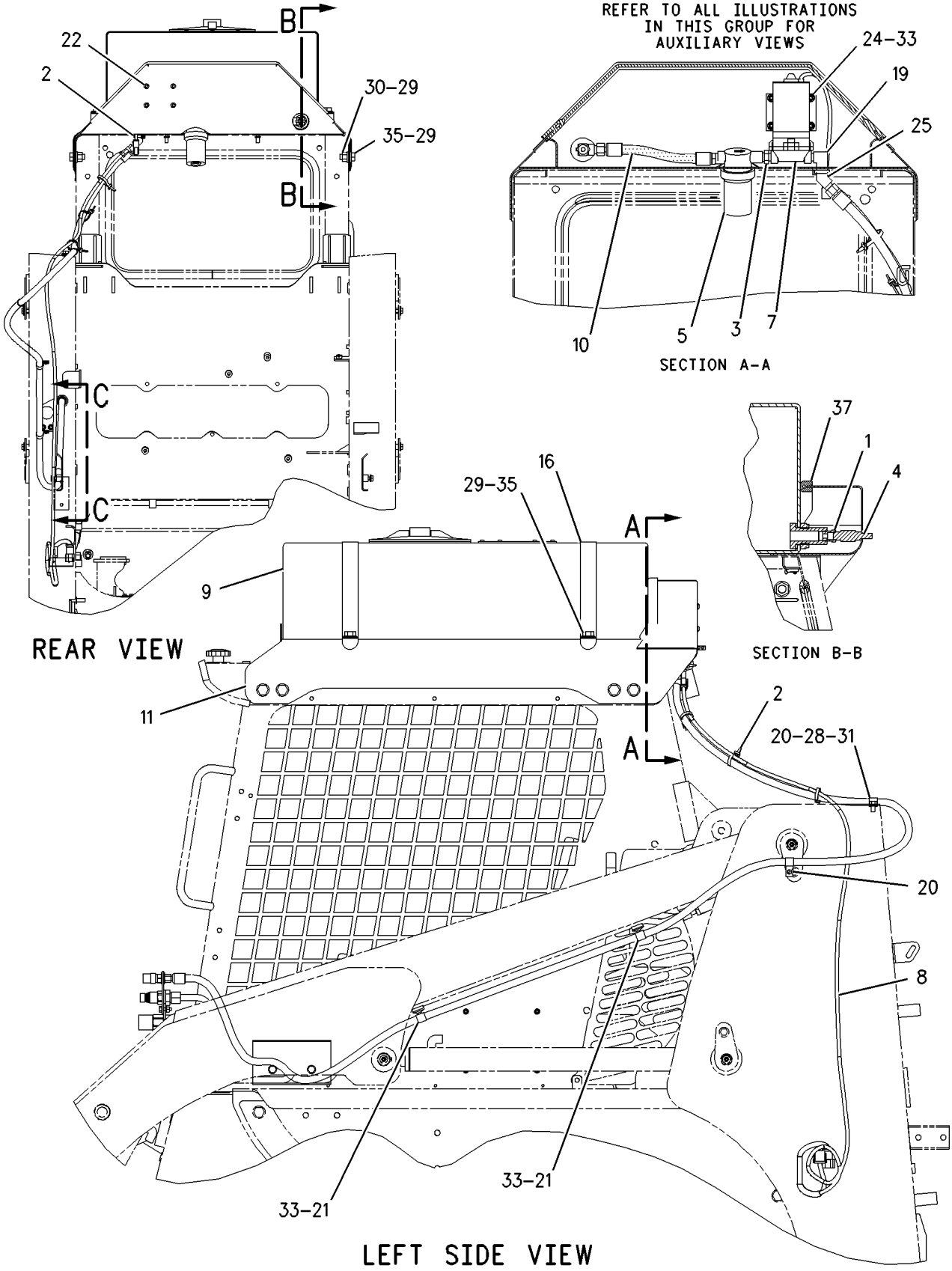

GRAPHIC #1 g00847797

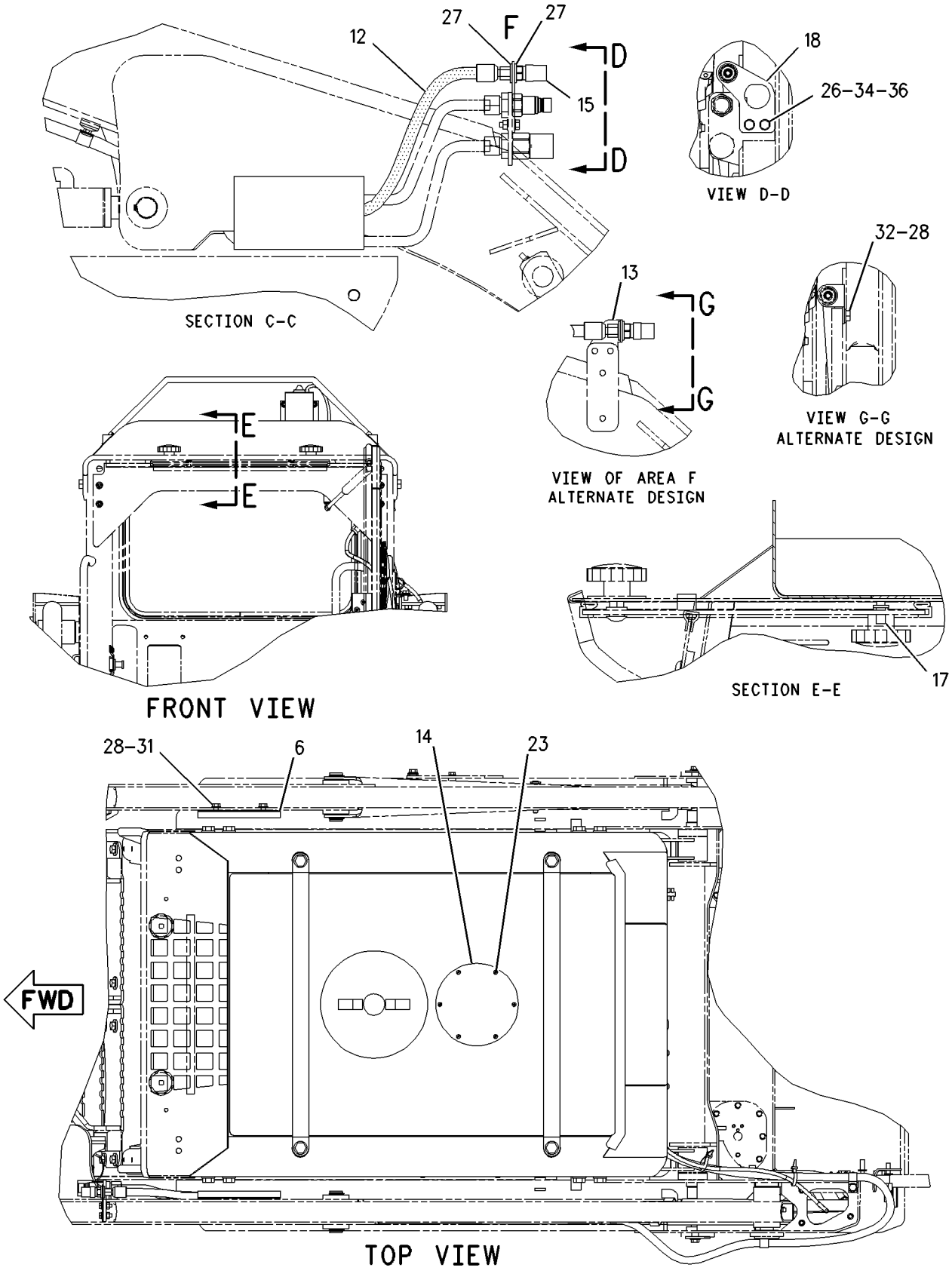

GRAPHIC #2 g00914712

166-2551 TANK GP-WATER

S/N: CED1-UP; FDG1-UP; 4YZ4000-UP; 5SZ4000-UP
PART OF 166-2550 TANK & MTG GP-WATER, 193-0451 TANK GP-WATER
AN ATTACHMENT

SMCS-5613 **i01411266**

NOTE	REF NO	GRAPHIC REF	PART NUMBER	QTY	PART NAME 1 2 3 4 5 6 (PRODUCT LEVEL)	SEE PAGE
	1	1	**192-2606**	1	CAP AS	
	2	1	**192-2607**	1	OUTLET	

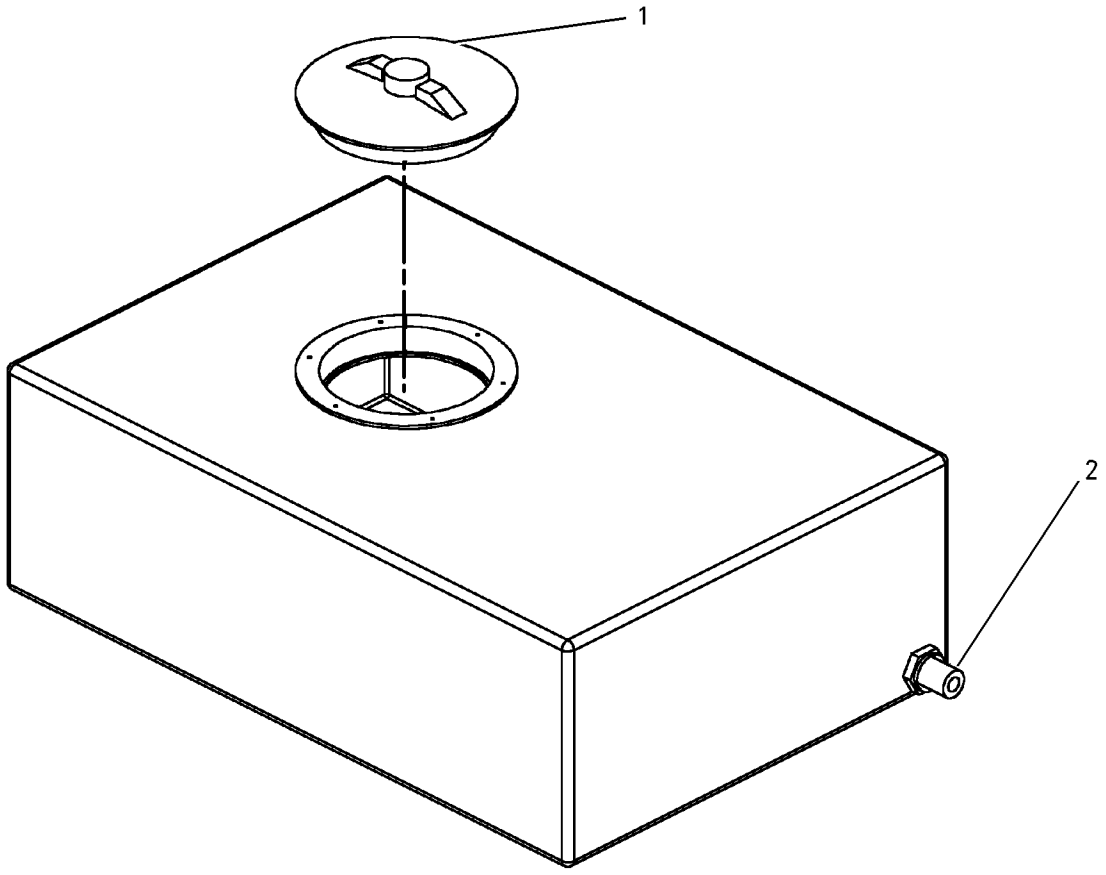

GRAPHIC #1 g00742953

WORK TOOLS

193-0451 TANK GP-WATER

S/N: CED1-UP; FDG1-UP; 5SZ4000-UP

AN ATTACHMENT

SMCS-5613 **i01708523**

NOTE	REF NO	GRAPHIC REF	PART NUMBER	QTY	PART NAME 1 2 3 4 5 6 (PRODUCT LEVEL)	SEE PAGE
	1	1	**3B-7255**	1	BUSHING-REDUCING	
	2	1	**3S-2093**	4	STRAP-CABLE	
	3	1	**7K-1181**	2	STRAP-CABLE	
	4	1	**7X-0495**	1	ADAPTER	
	5	1	**8T-0737**	1	VALVE-SHUTOFF	
Y	6	1	**116-2001**	1	STRAINER GP-WATER	577
Y	7	1	**161-7290**	1	PUMP GP-DIAPHRAGM	573
	8	1	**165-4894**	1	HARNESS AS	
		1	**102-8806**	1	KIT-RECEPTACLE (8 PIN)	
		1	**155-2265**	1	KIT-CONNECTING PLUG (8 PIN)	
		1	**155-2270**	1	KIT-CONNECTING PLUG (2 PIN)	
Y	9	1	**166-2551**	1	TANK GP-WATER	581
I	10	1	**166-2552**	1	HOSE AS	
	11	1	**166-2553**	1	BRACKET AS	
	12	1	**166-2557**	1	PLATE	
	13	1	**166-2558**	1	COUPLING	
	14	1	**166-2559**	2	BRACKET	
	15	1	**195-6696**	1	PLATE	
	16	1	**003-2143**	1	ELBOW	
	17	1	**095-0912**	2	CLIP	
M	18	1	**111-4627**	4	SCREW-MACHINE (M6X1.0X30MM)	
	19	1	**119-3859**	6	SCREW-PAN HEAD (10-16X0.75 IN)	
M	20	1	**129-3178**	4	LOCKNUT (M6X1 THD)	
	21	1	**5P-8246**	2	WASHER-HARD (15.5X29X3MM THK)	
	22	1	**8T-4121**	4	WASHER-HARD (11X21X2.5MM THK)	
	23	1	**8T-4122**	16	WASHER-HARD (17X32X3.5MM THK)	
M	24	1	**8T-4132**	4	NUT (M16X2 THD)	
M	25	1	**8T-4133**	2	NUT (M10X1.5 THD)	
M	26	1	**8T-4136**	2	BOLT (M10X1.5X25MM)	
	27	1	**8T-4205**	6	WASHER-HARD (7.2X14.5X2MM THK)	
M	28	1	**8T-4779**	12	BOLT (M16X2X35MM)	
	29	1	**167-0608**		SEAL (82CM)	
	30	1	**206-3802**	1	HOSE AS	

I-SEE HOSE FABRICATION GUIDE
M-METRIC PART
Y-SEPARATE ILLUSTRATION

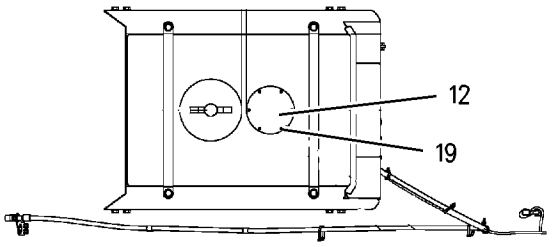

TOP VIEW

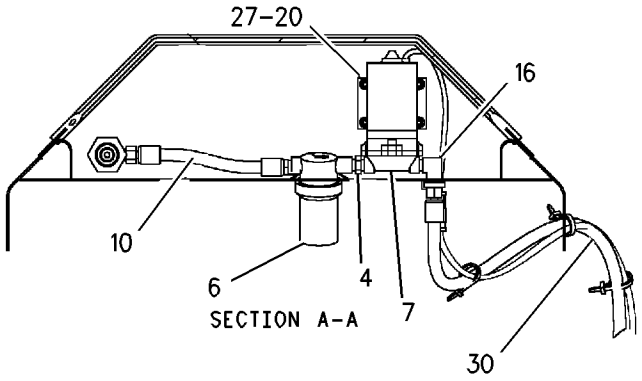

SECTION A-A

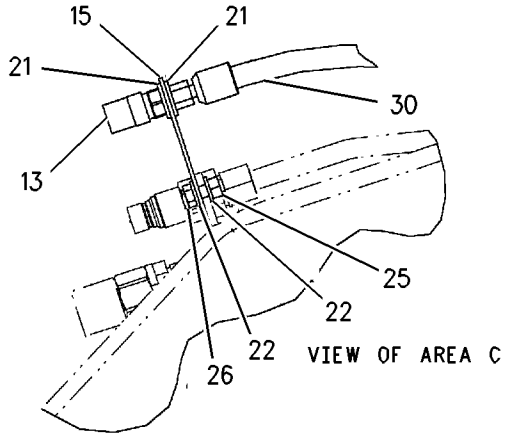

VIEW OF AREA C

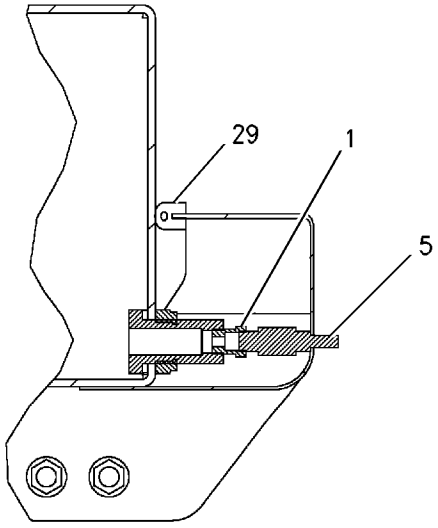

SECTION B-B

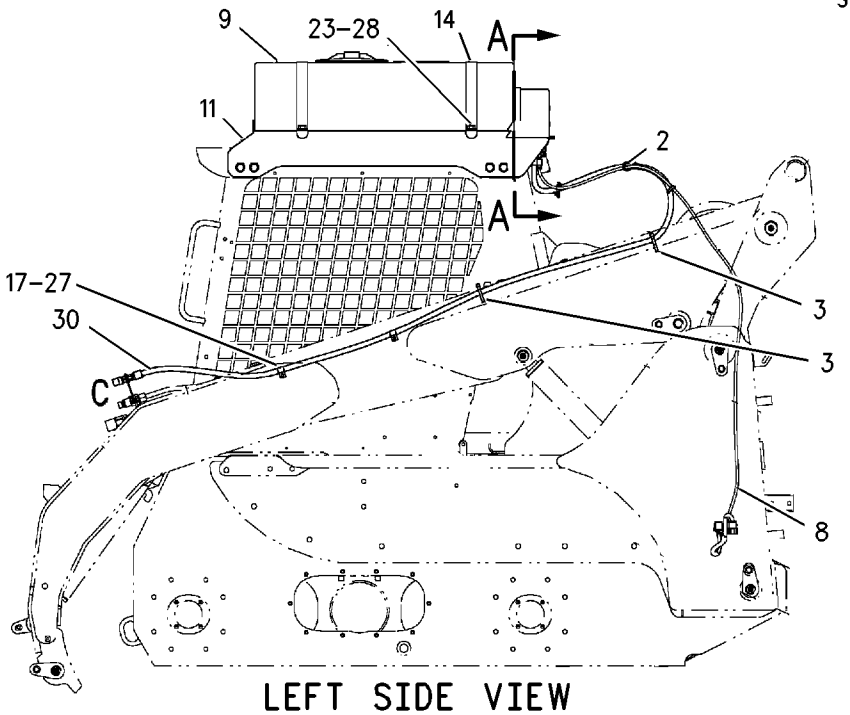

LEFT SIDE VIEW

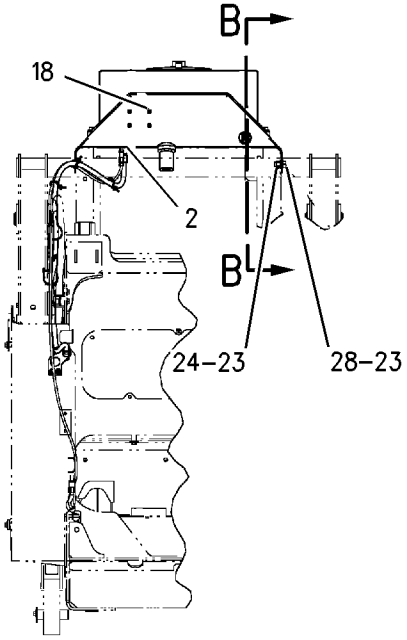

REAR VIEW

GRAPHIC #1

g00879388

141-4999 TOOTH GP-UNI

S/N: CED1-UP; FDG1-UP; 4YZ4000-UP; 5SZ4000-UP
PART OF 199-7727 BUCKET AR-GENERAL PURPOSE, 154-5046, 154-5048, 154-5050,
199-8322 BUCKET AR-MULTIPURPOSE
AN ATTACHMENT

SMCS-6822 **i01755719**

NOTE	REF NO	GRAPHIC REF	PART NUMBER	QTY	PART NAME 1 2 3 4 5 6 (PRODUCT LEVEL)	SEE PAGE
	1	1	**132-4720**	1	TOOTH-UNI-SINGLE STRAP	
M	2	1	**159-2953**	2	SCREW-FLAT HEAD (M16X2.00 THD)	
M	3	1	**8T-4778**	2	LOCKNUT (M16X2 THD)	

M-METRIC PART

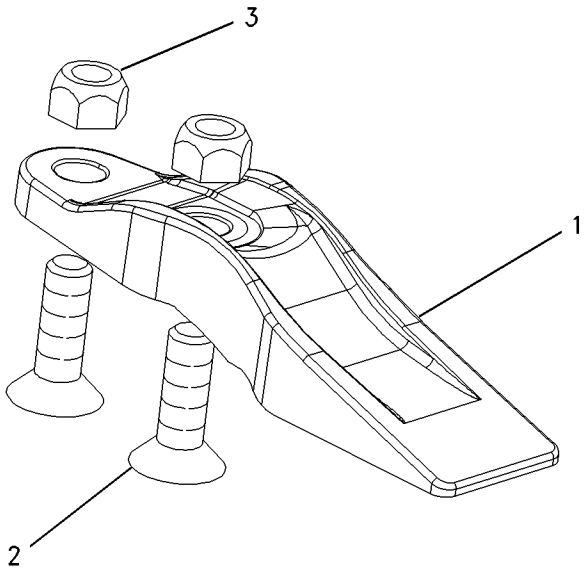

GRAPHIC #1 g00898307

OPERATOR STATION

219-4351 AIR CONDITIONER & MOUNTING GP

S/N: CED1-UP
PART OF 220-8110 INSTALLATION AR
AN ATTACHMENT

SMCS-7320 **i01776086**

NOTE	PART NUMBER	QTY	PART NAME 1 2 3 4 5 6 (PRODUCT LEVEL)	SEE PAGE
Y	**219-7182**	1	AIR CONDITIONER GP	585
M	**5C-9553**	4	BOLT (M6X1X16MM)	
	8T-4205	4	WASHER-HARD (7.2X14.5X2MM THK)	

M-METRIC PART
Y-SEPARATE ILLUSTRATION

<END>

219-7182 AIR CONDITIONER GP

S/N: CED1-UP
PART OF 219-4351 AIR CONDITIONER & MOUNTING GP
FOR USAGE REFER TO CHART 219-4351 AIR CONDITIONER & MOUNTING GP
AN ATTACHMENT

SMCS-7320 **i01777411**

NOTE	PART NUMBER	QTY	PART NAME 1 2 3 4 5 6 (PRODUCT LEVEL)	SEE PAGE
			(NO SERVICED PARTS)	

<END>

OPERATOR STATION

195-6721 ARMREST & MOUNTING GP

S/N: CED1-UP; FDG1-UP; 4YZ4000-UP; 5SZ4000-UP
PART OF 191-9799, 197-4899 OPERATOR AR-CANOPY

SMCS-7307, 7312 **i01519843**

NOTE	REF NO	GRAPHIC REF	PART NUMBER	QTY	PART NAME 1 2 3 4 5 6 (PRODUCT LEVEL)	SEE PAGE
	1	1	**4E-1384**	2	BUMPER-CONICAL	
Y	2	1	**142-9276**	1	ARMREST GP	588
	3	1	**142-9288**	2	PLATE	
	4	1	**195-0937**	2	INSERT-THREADED	
M	5	1	**5C-7261**	2	NUT (M8X1.25 THD)	
	6	1	**8T-4121**	4	WASHER-HARD (11X21X2.5MM THK)	
M	7	1	**8T-4133**	4	NUT (M10X1.5 THD)	

M-METRIC PART
Y-SEPARATE ILLUSTRATION

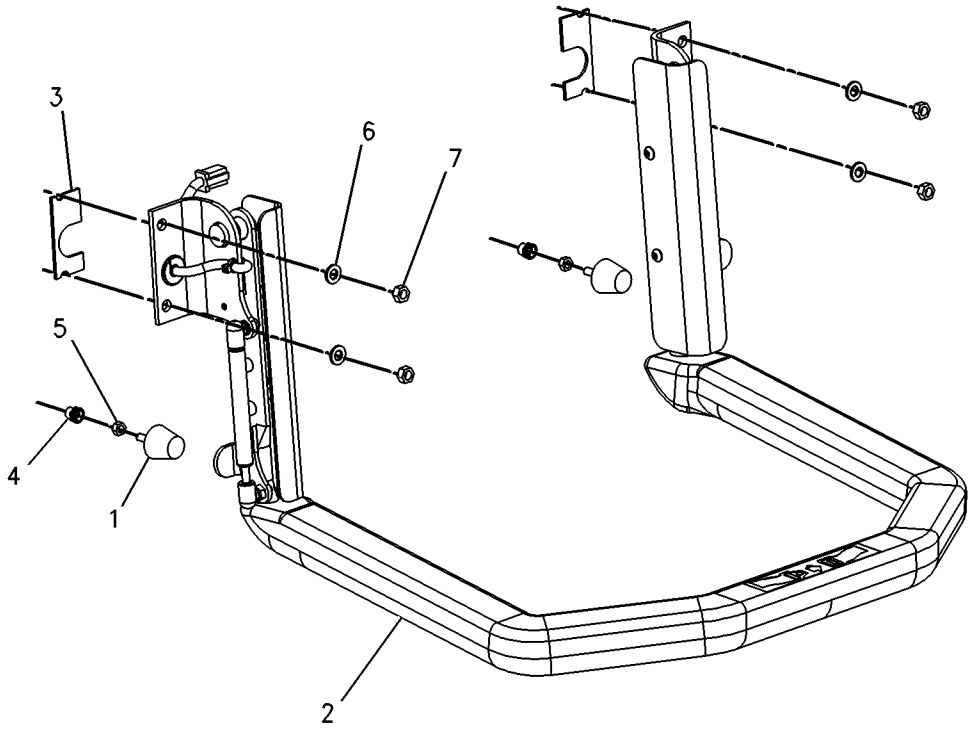

GRAPHIC #1 g00789233

MEMORANDA

OPERATOR STATION

142-9276 ARMREST GP

S/N: CED1-UP; FDG1-UP; 4YZ4000-UP; 5SZ4000-UP
PART OF 195-6721 ARMREST & MOUNTING GP

SMCS-7307, 7312 **i01544065**

NOTE	REF NO	GRAPHIC REF	PART NUMBER	QTY	PART NAME 1 2 3 4 5 6 (PRODUCT LEVEL)	SEE PAGE
	1	1	**3S-2093**	1	STRAP-CABLE	
	2	1	**7D-8431**	2	RING-RETAINING	
	3	1	**7G-7053**	1	GROMMET	
	4	1	**9P-4609**	1	ACTUATOR-MAGNETIC	
	5	1	**9S-0285**	2	BEARING-SLEEVE	
	7	1	**142-9278**	1	BRACKET AS-RH	
	8	1	**142-9279**	1	BRACKET AS-LH	
	9	1	**142-9287**	1	SPRING AS-GAS	
	10	1	**142-9386**	1	BRACKET AS	
	11	1	**152-4875**	2	COVER AS	
	12	1	**152-4884**	1	BRACKET AS	
	13	1	**162-0223**	1	SWITCH AS (INTERLOCK)	
E		1	**9X-1813**		SLEEVE (24CM)	
		1	**176-2947**	1	PLUG KIT-CONN	
					(INCLUDES PLUG AS AND WEDGE)	
	14	1	**103-6262**	4	SCREW-MACHINE (4-40X.63 IN)	
	15	1	**130-1916**	2	STUD-BALL	
	16	1	**142-2928**	4	LOCKNUT	
M	17	1	**5C-9553**	4	BOLT (M6X1X16MM)	
	18	1	**8T-4205**	4	WASHER-HARD (7.2X14.5X2MM THK)	
	19	1	**8T-4224**	1	WASHER-HARD (8.8X16X2MM THK)	
M	20	1	**9X-2042**	4	SCREW-TRUSS HEAD (M6X1X12MM)	

E-ORDER BY THE CENTIMETER
M-METRIC PART

142-9276 ARMREST GP *(contd.)* **i01544065**

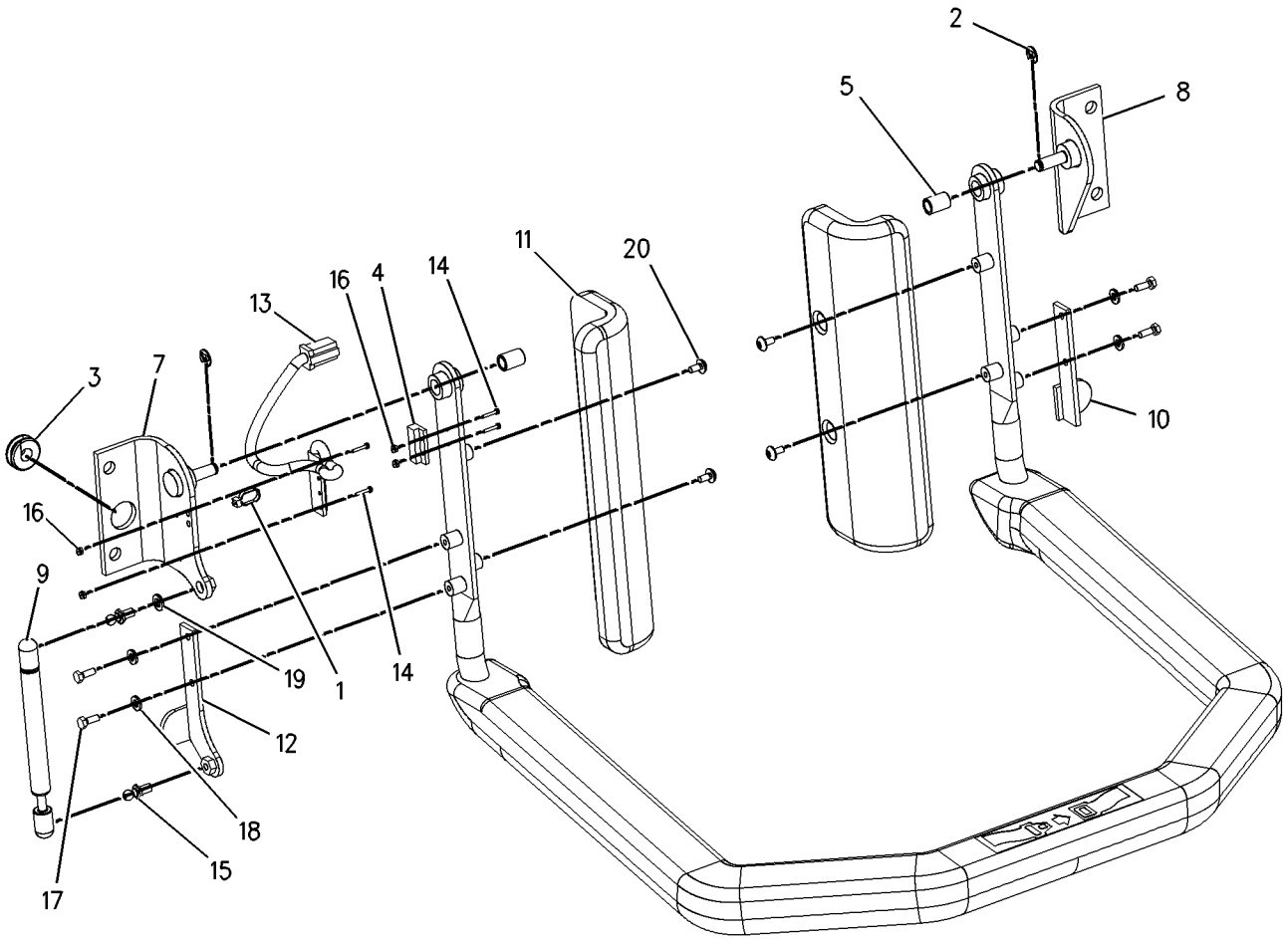

GRAPHIC #1 g00789235

OPERATOR STATION

173-3013 BOX GP-STORAGE

S/N: 4YZ4000-UP; 5SZ4000-UP
PART OF 166-2567, 175-4242, 175-4244, 188-3306, 188-3307, 188-3308, 188-3310, 188-3311 CONVERSION AR-ROADING
AN ATTACHMENT

SMCS-7268 **i01286443**

NOTE	REF NO	GRAPHIC REF	PART NUMBER	QTY	PART NAME 1 2 3 4 5 6 (PRODUCT LEVEL)	SEE PAGE
	1	1	**8T-2895**	1	LOCK AS-CYLINDER	
		1	**7F-9223**	1	LOCKWASHER (0.91MM THK)	
		1	**8T-5004**	1	SCREW-MACHINE (1/4-28X0.375 IN)	
	2	1	**173-3014**	1	TOOL BOX AS	
		1	**5G-8871**	5	BOSS	
D	3	1	**6V-1392**		SEAL (1M)	

D-ORDER BY THE METER

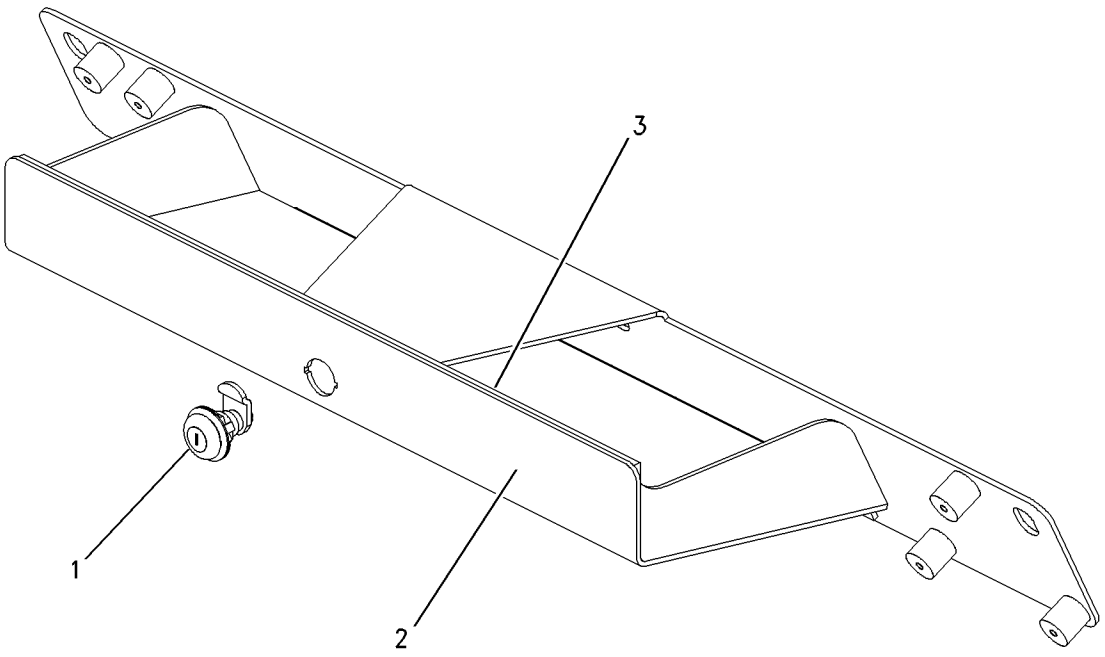

GRAPHIC #1 g00702553

OPERATOR STATION

206-3819 CANOPY GP-ROPS

S/N: CED1-UP; FDG1-UP; 4YZ4000-UP; 5SZ4000-UP
FIELD REPLACEMENT FOR 191-9781 CANOPY GP-ROPS
FIELD INSTALLATION

SMCS-7323 **i01761407**

NOTE	REF NO	GRAPHIC REF	PART NUMBER	QTY	PART NAME 1 2 3 4 5 6 (PRODUCT LEVEL)	SEE PAGE
	1	1	**191-9781**	1	CANOPY GP-ROPS	
	2	1	**195-0939**	2	STUD-THREADED	
	3	1	**195-0935**	4	INSERT-THREADED	
	4	1	**195-0936**	12	INSERT-THREADED (M6X1)	
	5	1	**195-0937**	8	INSERT-THREADED	

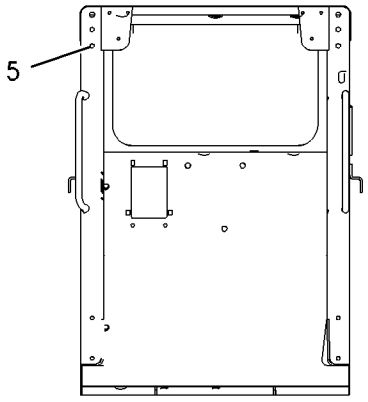

FRONT VIEW

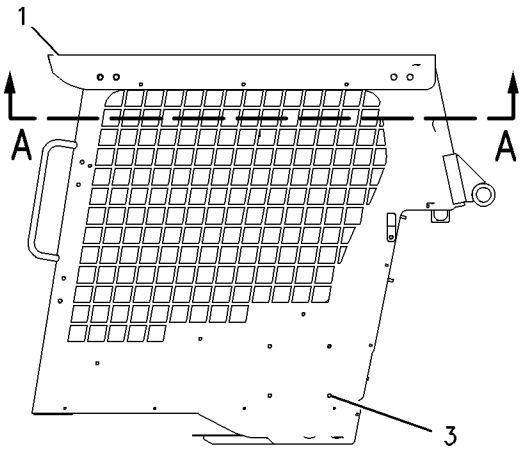

LEFT SIDE VIEW

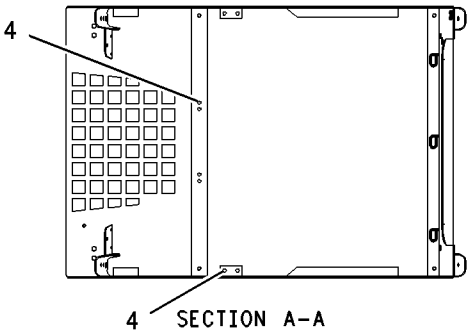

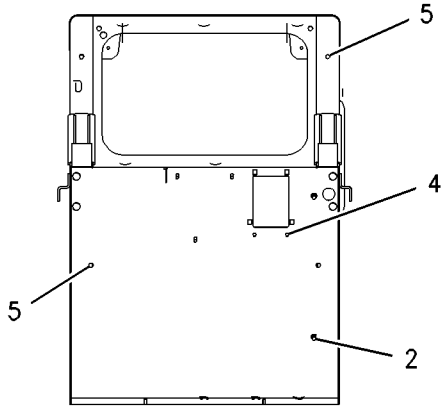

REAR VIEW

GRAPHIC #1 g00901100

OPERATOR STATION

219-4391 COMPRESSOR & MTG GP-REFRIG

S/N: CED1-UP
PART OF 220-8110 INSTALLATION AR
AN ATTACHMENT

SMCS-1802 **i01798603**

NOTE	REF NO	GRAPHIC REF	PART NUMBER	QTY	PART NAME 1 2 3 4 5 6 (PRODUCT LEVEL)	SEE PAGE
	1	1	**1P-6356**	1	PLATE	
	2	1	**2P-6818**	1	V-BELT	
	3	1	**3S-2093**	1	STRAP-CABLE	
	4	1	**4P-8134**	1	CLIP	
	5	1	**9R-5383**	1	BOSS	
	6	1	**114-5333**	1	SWITCH AS-PRESSURE	
		1	**3E-3365**	1	WEDGE-RECEPTACLE LOCK (2 PIN)	
	7	1	**216-6152**	1	BRACKET AS	
Y	8	1	**218-4994**	1	COMPRESSOR GP-REFRIGERANT	594
	9	1	**219-4368**	1	BRACKET AS	
	10	1	**219-4369**	1	BRACKET AS	
M		1	**6V-8224**	3	NUT-WELD (M10X1.5-6H THD)	
	11	1	**225-0297**	1	FITTING AS	
		1	**2L-1224**	1	CAP	
		1	**3E-4052**	1	CAP AS (AIR CONDITIONER)	
		1	**3E-4058**	1	VALVE AS (AIR CONDITIONER)	
	12	1	**125-2796**	1	FITTING AS	
		1	**3E-4051**	1	CAP AS (AIR CONDITIONER)	
		1	**3E-4057**	1	VALVE AS (AIR CONDITIONER)	
	13	1	**5P-4116**	2	WASHER-HARD (8.8X20.5X2MM THK)	
	14	1	**7X-7729**	3	WASHER (11X25X3MM THK)	
M	15	1	**8T-0342**	1	BOLT-SOCKET HEAD (M10X1.5X80MM)	
	16	1	**8T-4121**	7	WASHER-HARD (11X21X2.5MM THK)	
M	17	1	**8T-4133**	1	NUT (M10X1.5 THD)	
M	18	1	**8T-4189**	2	BOLT (M8X1.25X20MM)	
M	19	1	**8T-4196**	2	BOLT (M10X1.5X35MM)	
M	20	1	**8T-5436**	2	BOLT (M10X1.50X130MM)	
M	21	1	**8T-6466**	1	BOLT (M10X1.50X60MM)	
M	22	1	**8T-7586**	1	BOLT (M10X1.5X100MM)	
	23	1	**9X-7379**	1	SEAL-O-RING	

M-METRIC PART
Y-SEPARATE ILLUSTRATION

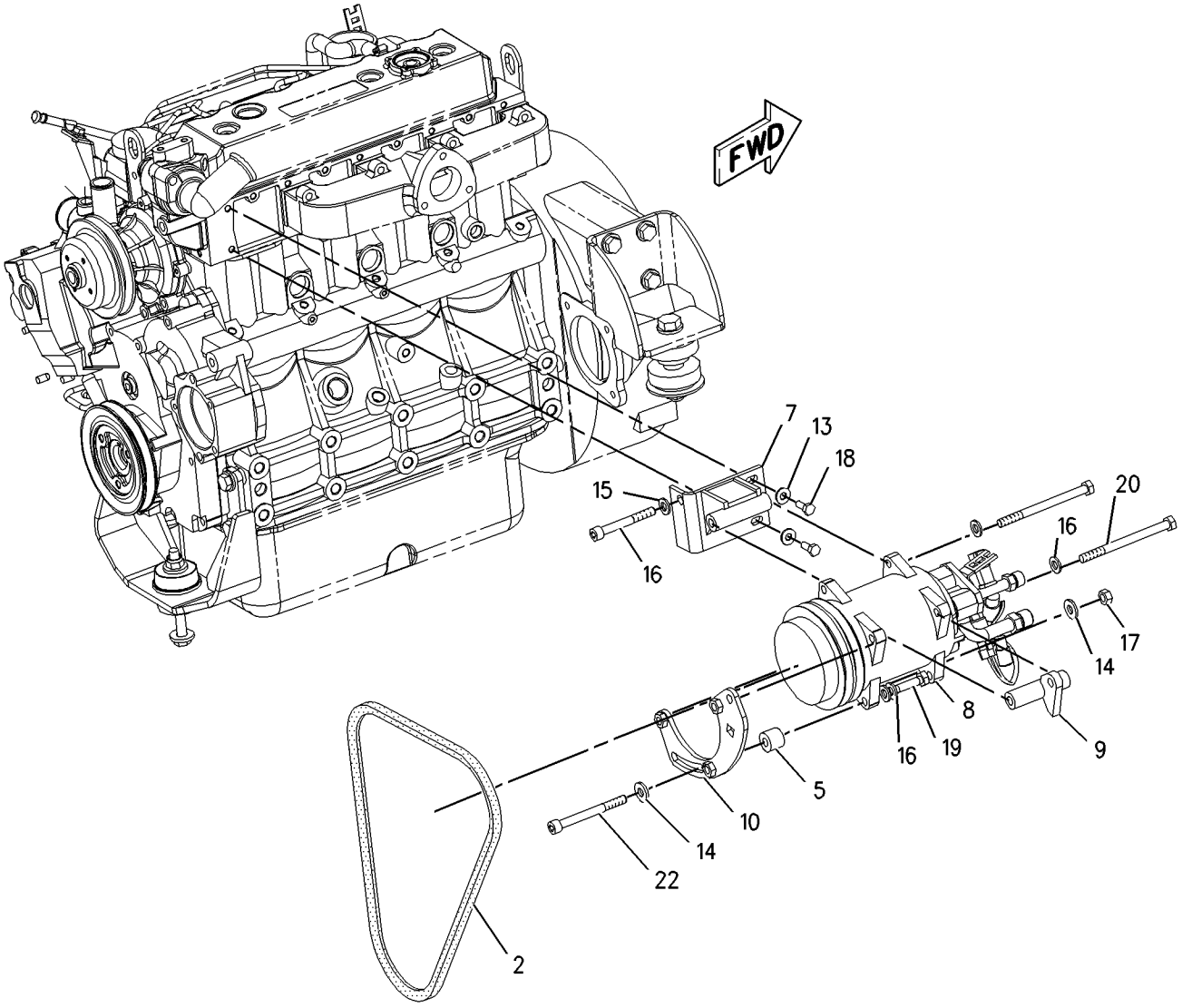

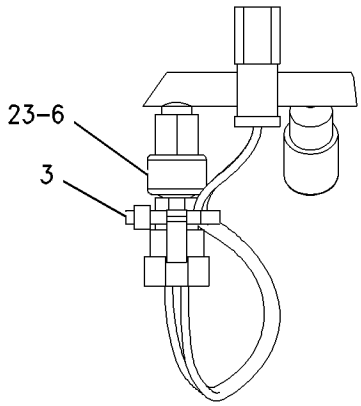

VIEW A-A

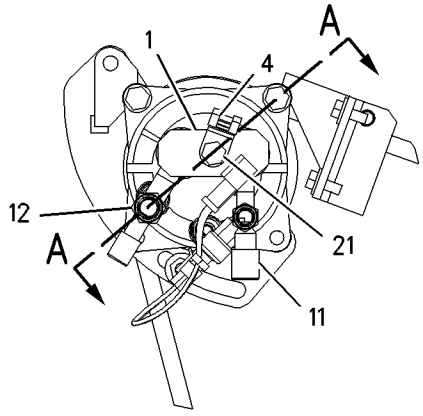

REAR VIEW

GRAPHIC #1 g00911420

OPERATOR STATION

218-4994 COMPRESSOR GP-REFRIGERANT

S/N: CED1-UP

PART OF 219-4391 COMPRESSOR & MTG GP-REFRIG

AN ATTACHMENT

SMCS-1802 **i01775756**

NOTE	PART NUMBER	QTY	PART NAME 1 2 3 4 5 6 (PRODUCT LEVEL)	SEE PAGE
			(NO SERVICED PARTS)	

<END>

OPERATOR STATION

219-4352 CONDENSER & MTG GP-REFRIGERANT

S/N: CED1-UP
PART OF 220-8110 INSTALLATION AR
AN ATTACHMENT

SMCS-1805 **i01776104**

NOTE	REF NO	GRAPHIC REF	PART NUMBER	QTY	PART NAME 1 2 3 4 5 6 (PRODUCT LEVEL)	SEE PAGE
	1	1	**8V-3032**	2	SPACER (6.5X11.2X6MM THK)	
	2	1	**220-0163**	1	FAN AS-SUCTION	
	3	1	**220-8119**	1	BRACKET	
	4	1	**220-8131**	1	FAN AS	
	5	1	**220-8155**	1	COIL AS	
M	6	1	**129-3178**	6	LOCKNUT (M6X1 THD)	
M	7	1	**5C-7261**	4	NUT (M8X1.25 THD)	
M	8	1	**6V-7357**	6	BOLT (M6X1.0X25MM)	
	9	1	**8T-4205**	12	WASHER-HARD (7.2X14.5X2MM THK)	
	10	1	**8T-4224**	4	WASHER-HARD (8.8X16X2MM THK)	

M-METRIC PART

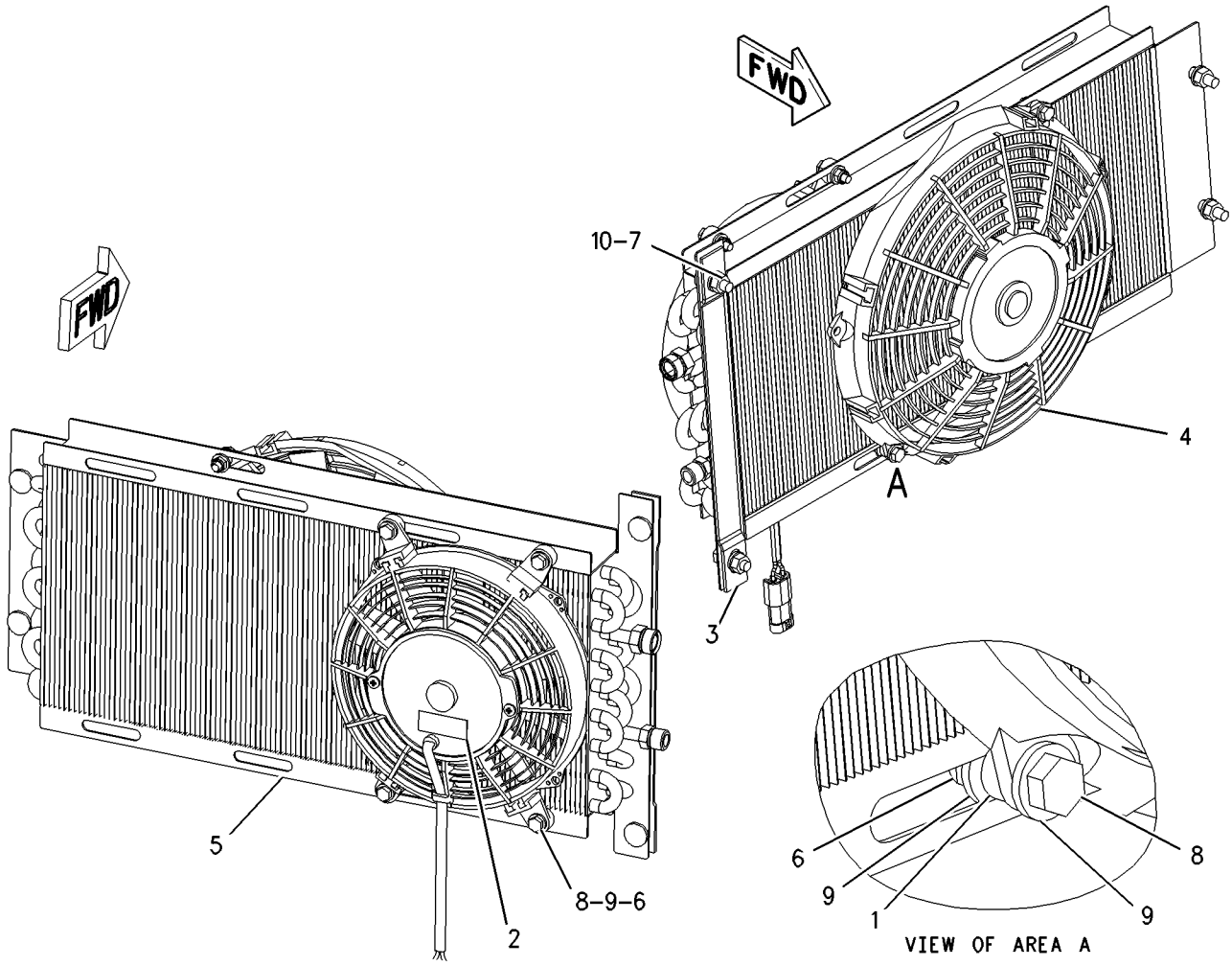

GRAPHIC #1 g00915654

OPERATOR STATION

142-9118 COVER GP-CAB

S/N: CED1-UP; FDG1-UP; 4YZ4000-UP; 5SZ4000-UP
PART OF 193-8371 PANEL GP-INSTRUMENT
AN ATTACHMENT

SMCS-7301, 7478 **i01755054**

NOTE	REF NO	GRAPHIC REF	PART NUMBER	QTY	PART NAME 1 2 3 4 5 6 (PRODUCT LEVEL)	SEE PAGE
	1	1	**158-6695**	1	COVER	
	2	1	**214-2465**	1	KIT-SERVICE METER	
					(INCLUDES METER, FILM, BOLT, AND LOCKNUT)	
	3	1	**215-3207**	1	HARNESS AS	
		1	**102-8803**	1	KIT-RECEPTACLE (3 PIN)	
	4	1	**103-2006**	2	SCREW-PAN HEAD	

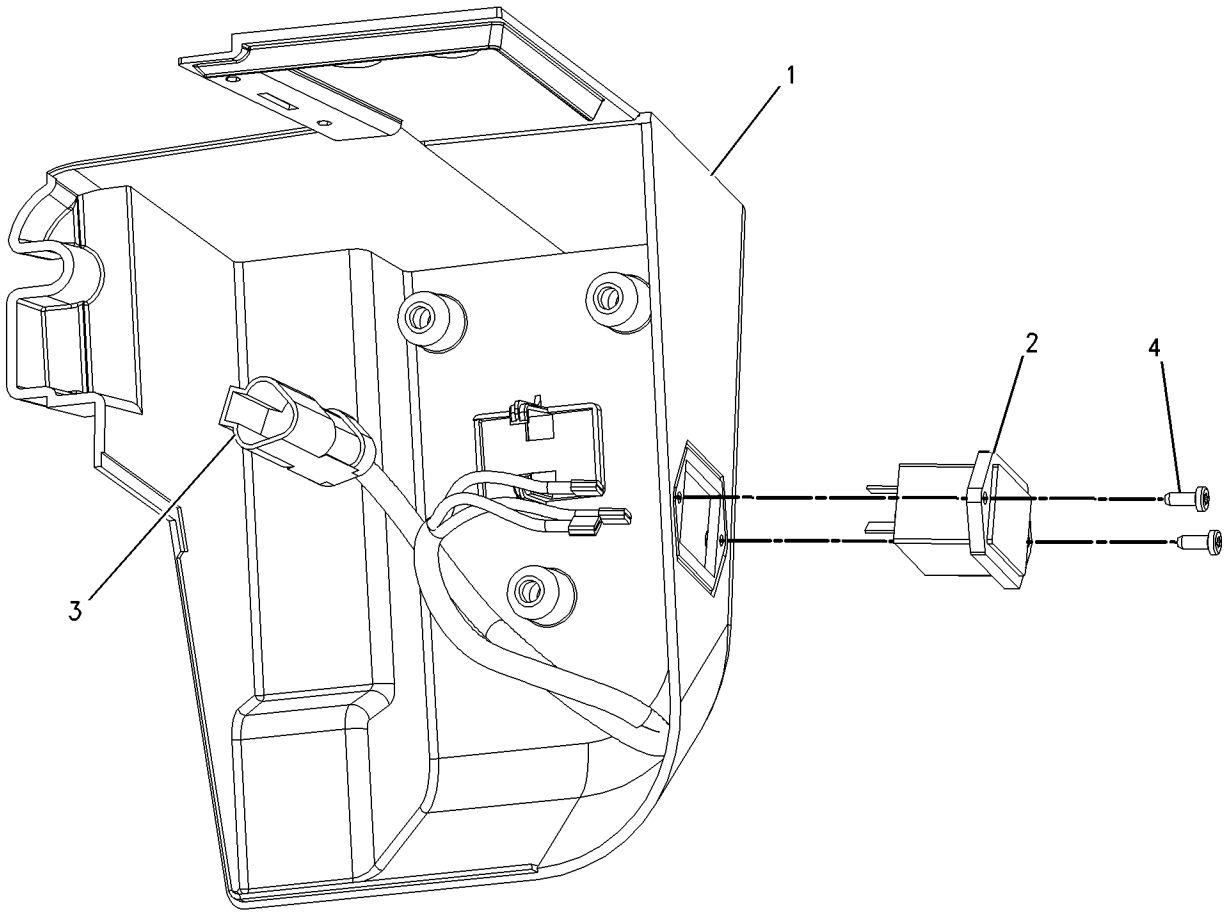

GRAPHIC #1 g00865346

OPERATOR STATION

142-9269 COVER GP-CONSOLE

S/N: CED1-UP; FDG1-UP; 4YZ4000-UP; 5SZ4000-UP
PART OF 150-8627, 150-8629, 190-7944, 190-7945 HEATER & MTG GP-CAB
FOR USE WITH HEATER
AN ATTACHMENT

SMCS-5258 **i01075191**

NOTE	REF NO	GRAPHIC REF	PART NUMBER	QTY	PART NAME 1 2 3 4 5 6 (PRODUCT LEVEL)	SEE PAGE
	1	1	**142-9270**	1	COVER-LH	
	2	1	**142-9271**	1	COVER-RH	
M	3	1	**9X-2045**	8	SCREW-TRUSS HEAD (M6X1X20MM)	

M-METRIC PART

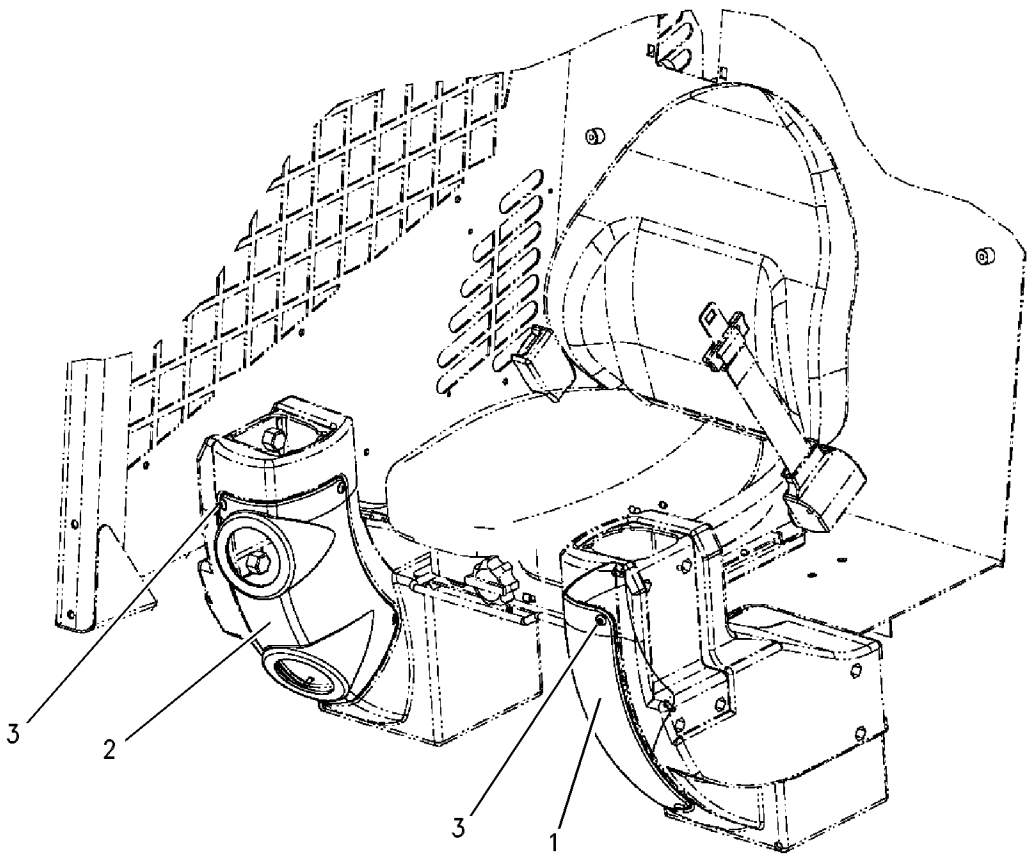

GRAPHIC #1 g00561010

OPERATOR STATION

142-9274 COVER GP-CONSOLE

S/N: CED1-UP; FDG1-UP; 4YZ4000-UP; 5SZ4000-UP
PART OF 220-8098 INSTALLATION AR
CANNOT BE USED WITH 190-7944—PAGE 628
AN ATTACHMENT

SMCS-5258 **i01620115**

NOTE	REF NO	GRAPHIC REF	PART NUMBER	QTY	PART NAME 1 2 3 4 5 6 (PRODUCT LEVEL)	SEE PAGE
	1	1	**142-9268**	1	PLATE	
	2	1	**142-9270**	1	COVER-LH	
	3	1	**142-9272**	1	PLATE	
	4	1	**142-9275**	1	COVER-RH	
M	5	1	**5C-2890**	4	NUT (M6X1 THD)	
	6	1	**8D-9671**	1	CLIP	
	7	1	**8T-4121**	1	WASHER-HARD (11X21X2.5MM THK)	
M	8	1	**8T-4136**	1	BOLT (M10X1.5X25MM)	
	9	1	**8T-4205**	4	WASHER-HARD (7.2X14.5X2MM THK)	
M	10	1	**9X-1046**	4	SCREW (M4X0.7X18MM)	
M	11	1	**9X-2044**	4	SCREW-TRUSS HEAD (M6X1X16MM)	
M	12	1	**9X-2045**	8	SCREW-TRUSS HEAD (M6X1X20MM)	

M-METRIC PART

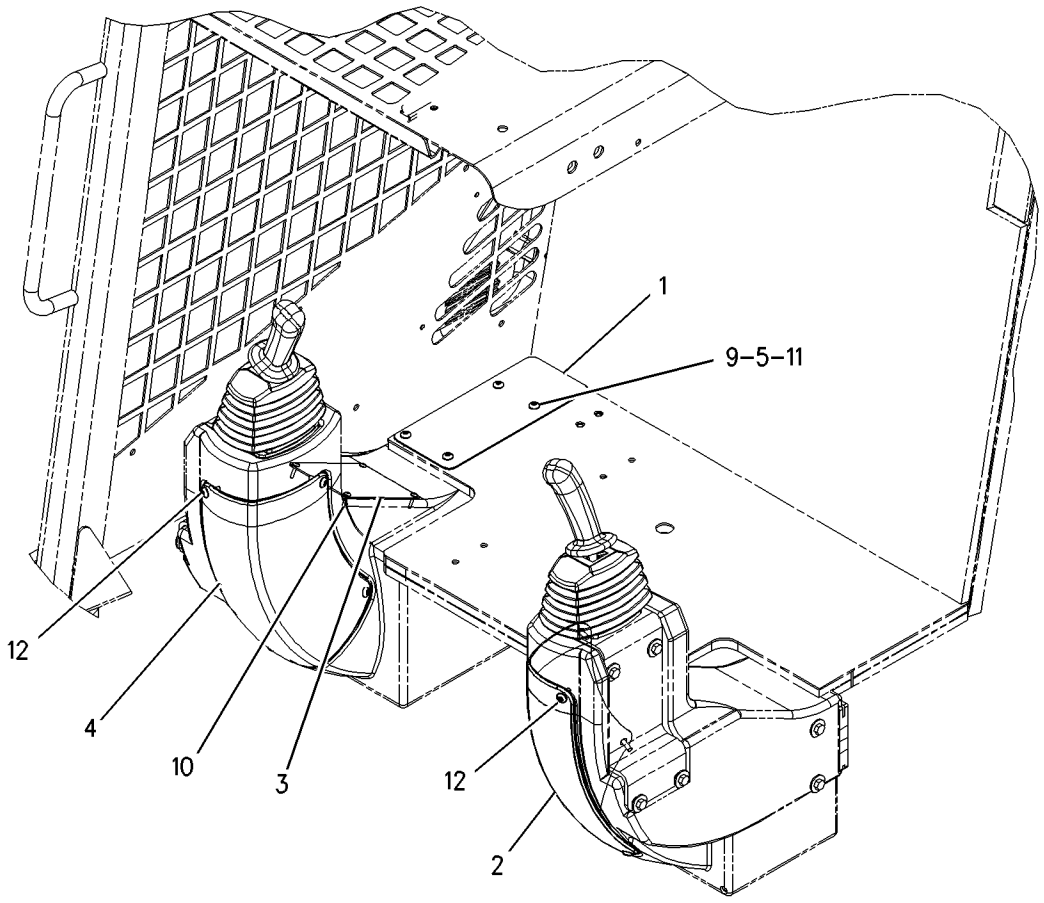

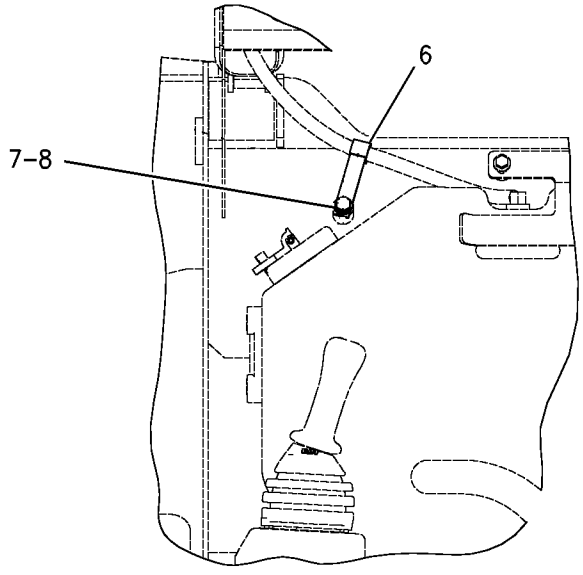

VIEW OF HYDRAULIC TANK

GRAPHIC #1 g00839740

OPERATOR STATION

195-6724 DOOR & MTG GP-CAB

S/N: CED1-UP; FDG1-UP; 4YZ4000-UP; 5SZ4000-UP
CANNOT BE USED WITH 195-6726—PAGE 606
AN ATTACHMENT
TYPE 1

SMCS-7308 **i01787476**

NOTE	REF NO	GRAPHIC REF	PART NUMBER	QTY	PART NAME 1 2 3 4 5 6 (PRODUCT LEVEL)	SEE PAGE
	1	2	**3S-2093**	1	STRAP-CABLE	
	2	1	**8T-2444**	1	STUD-BALL	
	3	1	**8T-3848**	1	STRIKER AS-LATCH	
		1	**6V-4270**	1	LOCKWASHER	
	4	2	**142-9127**	1	HARNESS AS-WINDOW WIPER	
		2	**155-2260**	1	KIT-CONNECTING PLUG (3 PIN)	
		2	**102-8803**	1	KIT-RECEPTACLE (3 PIN)	
	5	1	**142-9285**	1	SPRING AS-GAS	
	6	1	**142-9318**	1	STEP AS	
Y	7	1	**142-9340**	1	DOOR GP-CAB (GLASS)	612
	8	1	**142-9348**	1	PLATE AS	
	9	1	**142-9355**	1	MOUNT	
	10	1	**142-9356**	1	BLOCK	
	11	2	**150-8622**	2	HINGE AS	
		2	**5P-0372**	1	LOCK PIN	
	12	2	**159-5799**	1	HANDLE	
M	13	1,2	**127-2170**	8	SCREW-TRUSS HEAD (M8X1.25X20MM)	
	14	1	**195-0937**	4	INSERT-THREADED	
M	15	1	**5C-2890**	4	NUT (M6X1 THD)	
M	16	1,2	**5C-7261**	4	NUT (M8X1.25 THD)	
	17	2	**8T-4121**	6	WASHER-HARD (11X21X2.5MM THK)	
M	18	2	**8T-4133**	6	NUT (M10X1.5 THD)	
	19	1	**8T-4205**	4	WASHER-HARD (7.2X14.5X2MM THK)	
	20	1,2	**8T-4224**	5	WASHER-HARD (8.8X16X2MM THK)	
M	21	2	**9X-2041**	10	SCREW-TRUSS HEAD (M10X1.5X20MM)	
M	22	1	**9X-2045**	4	SCREW-TRUSS HEAD (M6X1X20MM)	
BE	23	2	**124-3243**		SEAL (45CM)	
BE	24	2	**125-3518**		SEAL (65CM)	

B-USE AS REQUIRED
E-ORDER BY THE CENTIMETER
M-METRIC PART
Y-SEPARATE ILLUSTRATION

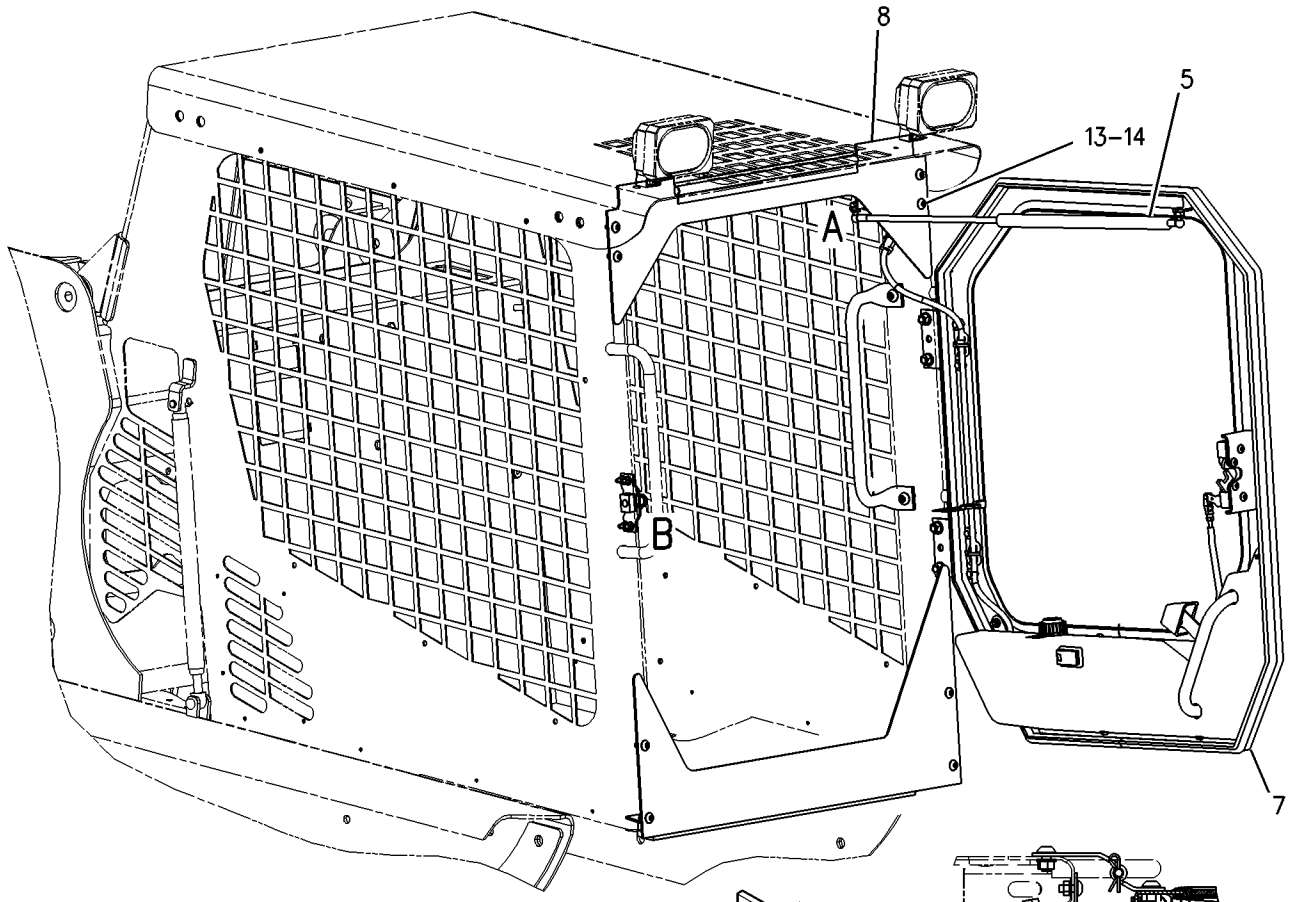

REFER TO ALL ILLUSTRATIONS
IN THIS GROUP FOR
AUXILIARY VIEWS

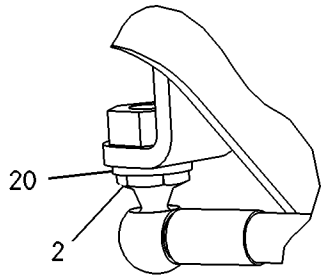

VIEW OF AREA A

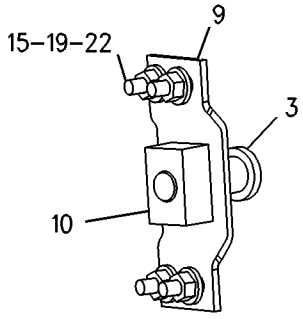

VIEW OF AREA B

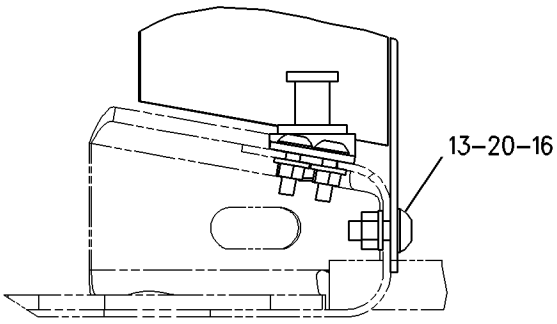

VIEW OF AREA F

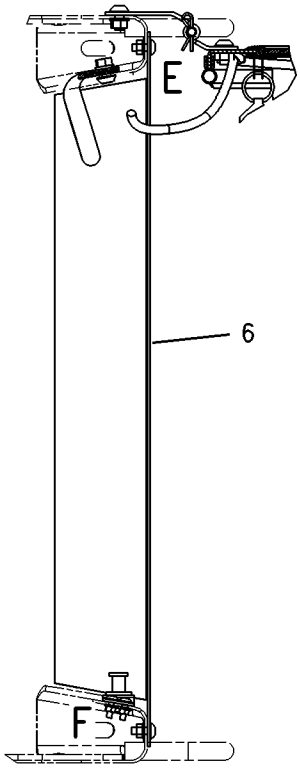

SECTION C-C

GRAPHIC #1 g00914723

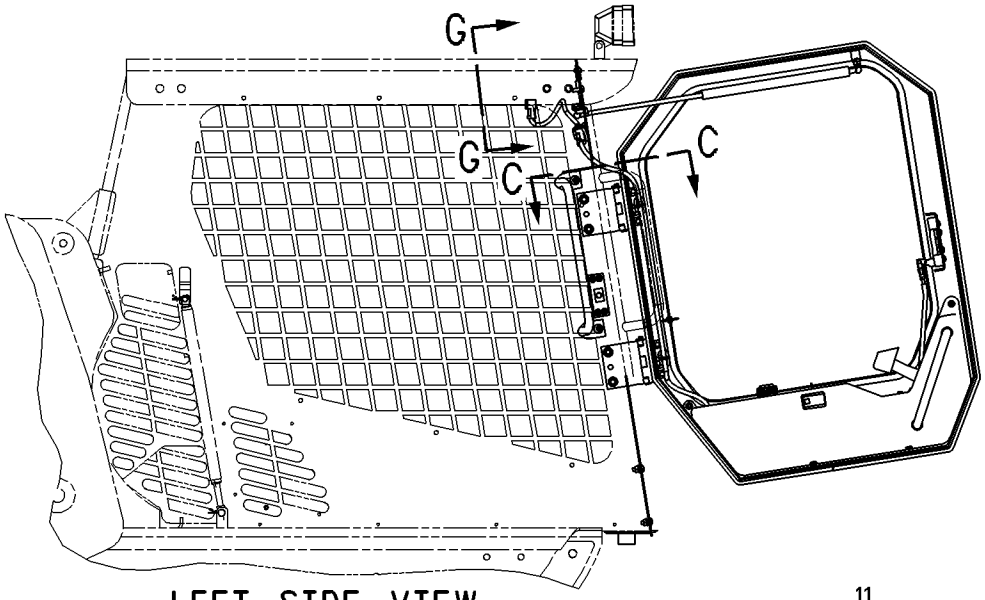

LEFT SIDE VIEW

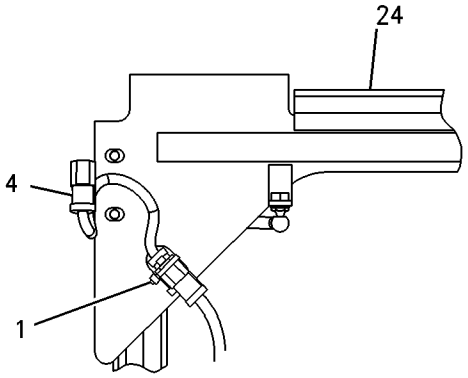

VIEW OF AREA G-G

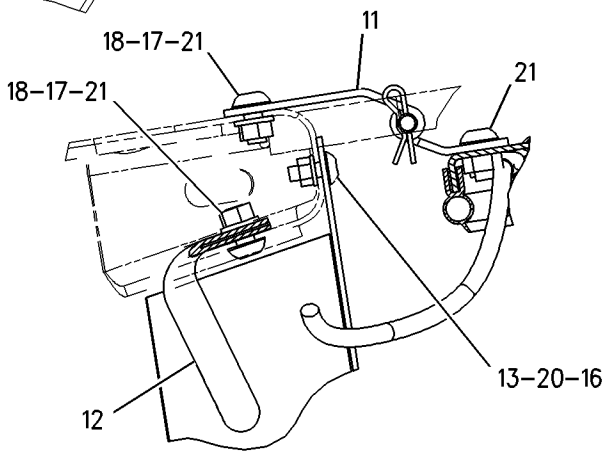

VIEW OF AREA E

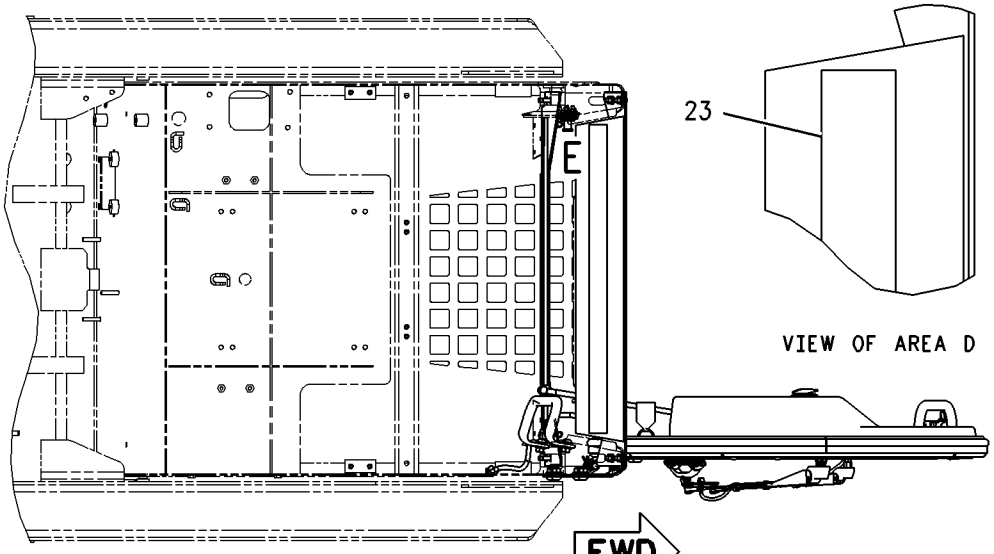

VIEW OF AREA D

BOTTOM VIEW

GRAPHIC #2 g00914722

MEMORANDA

OPERATOR STATION

195-6724 DOOR & MTG GP-CAB

S/N: CED1-UP; FDG1-UP; 4YZ4000-UP; 5SZ4000-UP
CANNOT BE USED WITH 195-6726—PAGE 606
AN ATTACHMENT
TYPE 2

SMCS-7308 **i01755059**

NOTE	REF NO	GRAPHIC REF	PART NUMBER	QTY	PART NAME 1 2 3 4 5 6 (PRODUCT LEVEL)	SEE PAGE
	1	1	**3S-2093**	1	STRAP-CABLE	
	2	1	**8T-2444**	1	STUD-BALL	
	3	1	**8T-3848**	1	STRIKER AS-LATCH	
		1	**6V-4270**	1	LOCKWASHER	
	4	1	**142-9127**	1	HARNESS AS-WINDOW WIPER	
		1	**102-8803**	1	KIT-RECEPTACLE (3 PIN)	
	5	1	**142-9285**	1	SPRING AS-GAS	
	6	1	**142-9318**	1	STEP AS	
Y	7	1	**142-9340**	1	DOOR GP-CAB (GLASS)	612
	8	1	**142-9355**	1	MOUNT	
	9	1	**142-9356**	1	BLOCK	
	10	1	**150-8622**	2	HINGE AS	
		1	**5P-0372**	1	LOCK PIN	
	11	1	**159-5799**	1	HANDLE	
	12	1	**206-3817**	1	PLATE AS	
		1	**7T-1099**	1	LINK	
M		1	**8T-3612**	1	NUT-WELD (M8X1.25 THD)	
M	13	1	**127-2170**	8	SCREW-TRUSS HEAD (M8X1.25X20MM)	
	14	1	**195-0937**	4	INSERT-THREADED	
M	15	1	**5C-2890**	4	NUT (M6X1 THD)	
M	16	1	**5C-7261**	4	NUT (M8X1.25 THD)	
	17	1	**8T-4121**	6	WASHER-HARD (11X21X2.5MM THK)	
M	18	1	**8T-4133**	6	NUT (M10X1.5 THD)	
	19	1	**8T-4205**	4	WASHER-HARD (7.2X14.5X2MM THK)	
	20	1	**8T-4224**	5	WASHER-HARD (8.8X16X2MM THK)	
M	21	1	**9X-2041**	10	SCREW-TRUSS HEAD (M10X1.5X20MM)	
M	22	1	**9X-2045**	4	SCREW-TRUSS HEAD (M6X1X20MM)	
E	23	1	**3E-8082**		SEAL (72CM)	
E	24	1	**125-3518**		SEAL (65CM)	

E-ORDER BY THE CENTIMETER
M-METRIC PART
Y-SEPARATE ILLUSTRATION

195-6724 **DOOR & MTG GP-CAB** ***(contd.)*** **i01755059**

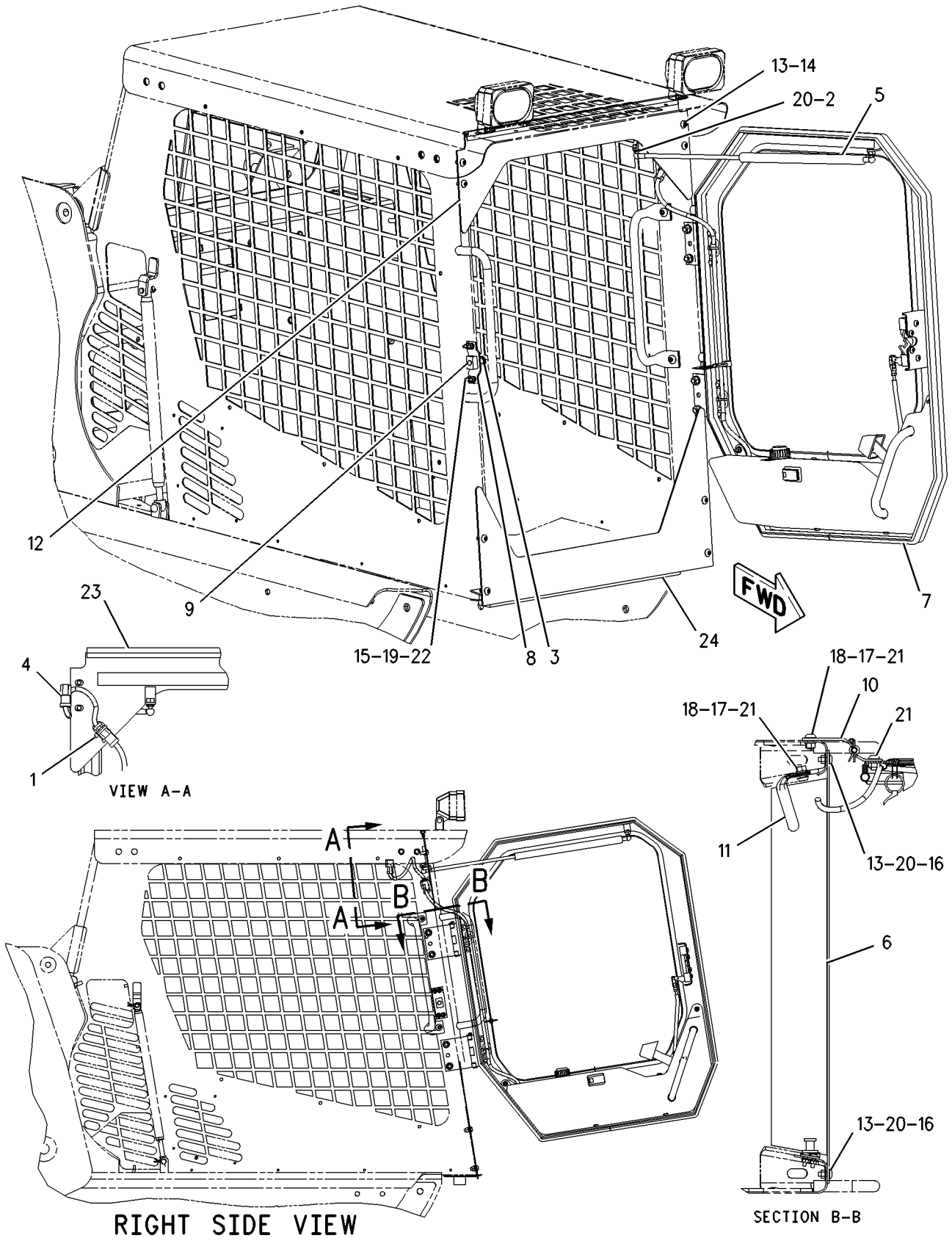

GRAPHIC #1 g00866078

OPERATOR STATION

195-6726 DOOR & MTG GP-CAB

S/N: CED1-UP; FDG1-UP; 4YZ4000-UP; 5SZ4000-UP
POLYCARBONATE
CANNOT BE USED WITH 195-6724—PAGE 600
AN ATTACHMENT
TYPE 1

SMCS-7308 **i01787500**

NOTE	REF NO	GRAPHIC REF	PART NUMBER	QTY	PART NAME 1 2 3 4 5 6 (PRODUCT LEVEL)	SEE PAGE
	1	2	**3S-2093**	1	STRAP-CABLE	
	2	1	**8T-2444**	1	STUD-BALL	
	3	1	**8T-3848**	1	STRIKER AS-LATCH	
		1	**6V-4270**	1	LOCKWASHER	
	4	2	**142-9127**	1	HARNESS AS-WINDOW WIPER	
		2	**155-2260**	1	KIT-CONNECTING PLUG (3 PIN)	
		2	**102-8803**	1	KIT-RECEPTACLE (3 PIN)	
	5	1	**142-9285**	1	SPRING AS-GAS	
	6	1	**142-9318**	1	STEP AS	
	7	1	**142-9348**	1	PLATE AS	
	8	1	**142-9355**	1	MOUNT	
	9	1	**142-9356**	1	BLOCK	
	10	2	**150-8622**	2	HINGE AS	
		2	**5P-0372**	1	LOCK PIN	
	11	2	**159-5799**	1	HANDLE	
Y	12	1	**159-5801**	1	DOOR GP-CAB (POLYCARBONATE)	614
M	13	1,2	**127-2170**	8	SCREW-TRUSS HEAD (M8X1.25X20MM)	
	14	1	**195-0937**	4	INSERT-THREADED	
M	15	1	**5C-2890**	4	NUT (M6X1 THD)	
M	16	1,2	**5C-7261**	4	NUT (M8X1.25 THD)	
	17	2	**8T-4121**	6	WASHER-HARD (11X21X2.5MM THK)	
M	18	2	**8T-4133**	6	NUT (M10X1.5 THD)	
	19	1	**8T-4205**	4	WASHER-HARD (7.2X14.5X2MM THK)	
	20	1,2	**8T-4224**	5	WASHER-HARD (8.8X16X2MM THK)	
M	21	2	**9X-2041**	10	SCREW-TRUSS HEAD (M10X1.5X20MM)	
M	22	1	**9X-2045**	4	SCREW-TRUSS HEAD (M6X1X20MM)	
BE	23	2	**124-3243**		SEAL (45CM)	
BE	24	2	**125-3518**		SEAL (65CM)	

B-USE AS REQUIRED
E-ORDER BY THE CENTIMETER
M-METRIC PART
Y-SEPARATE ILLUSTRATION

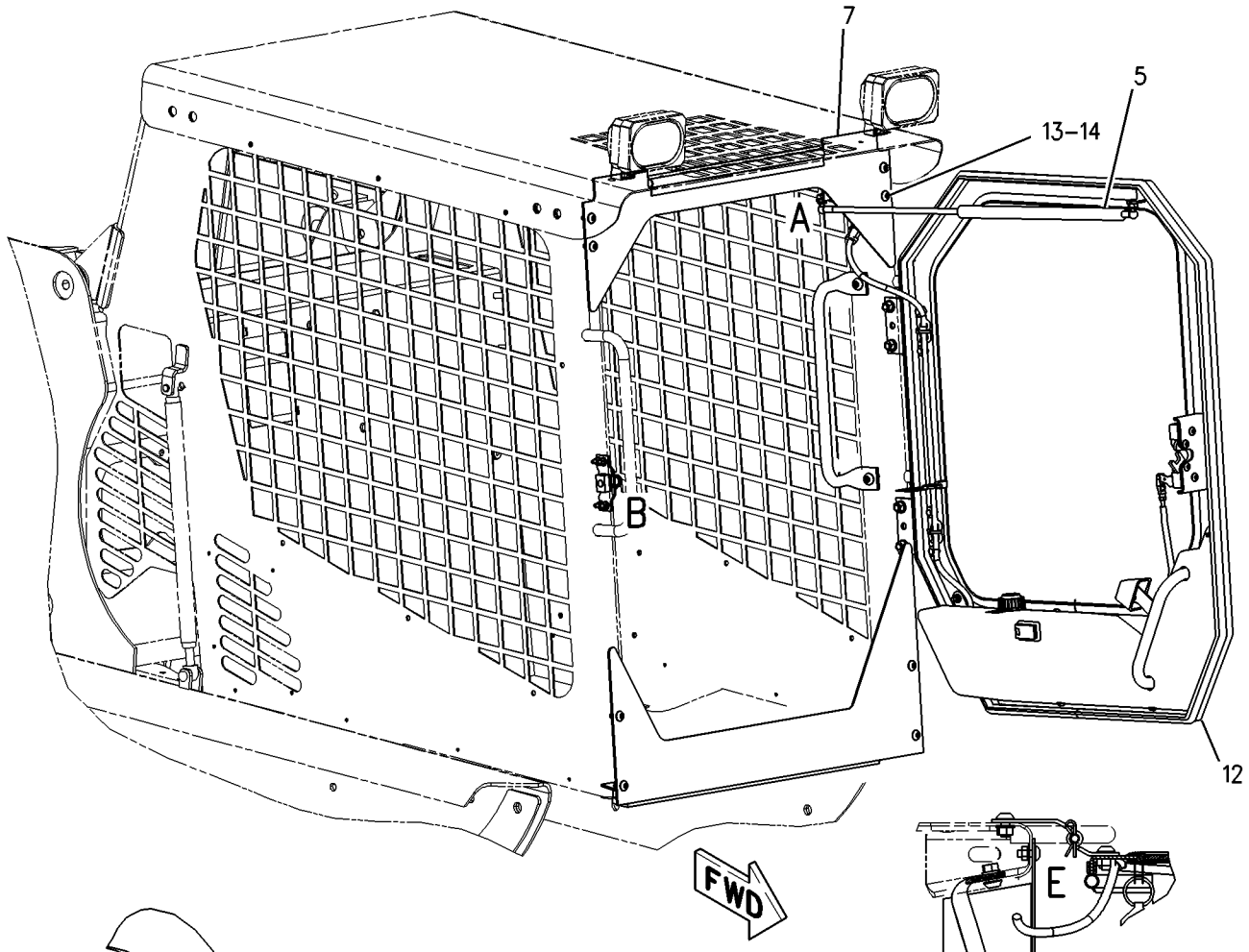

REFER TO ALL ILLUSTRATIONS
IN THIS GROUP FOR
AUXILIARY VIEWS

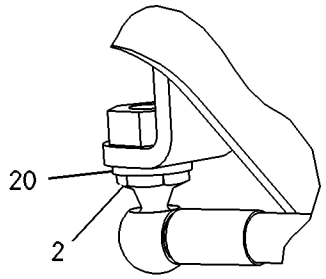

VIEW OF AREA A

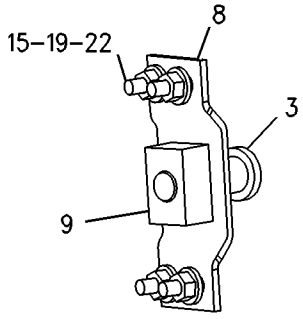

VIEW OF AREA B

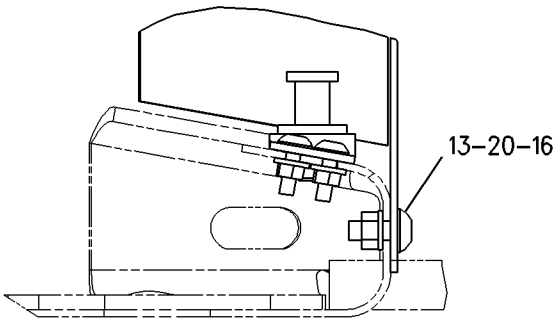

VIEW OF AREA F

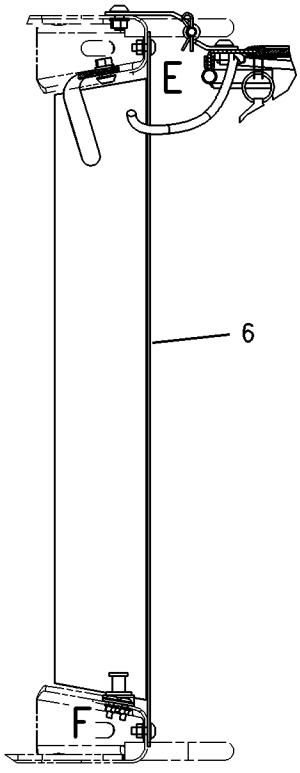

SECTION C-C

GRAPHIC #1 g00914737

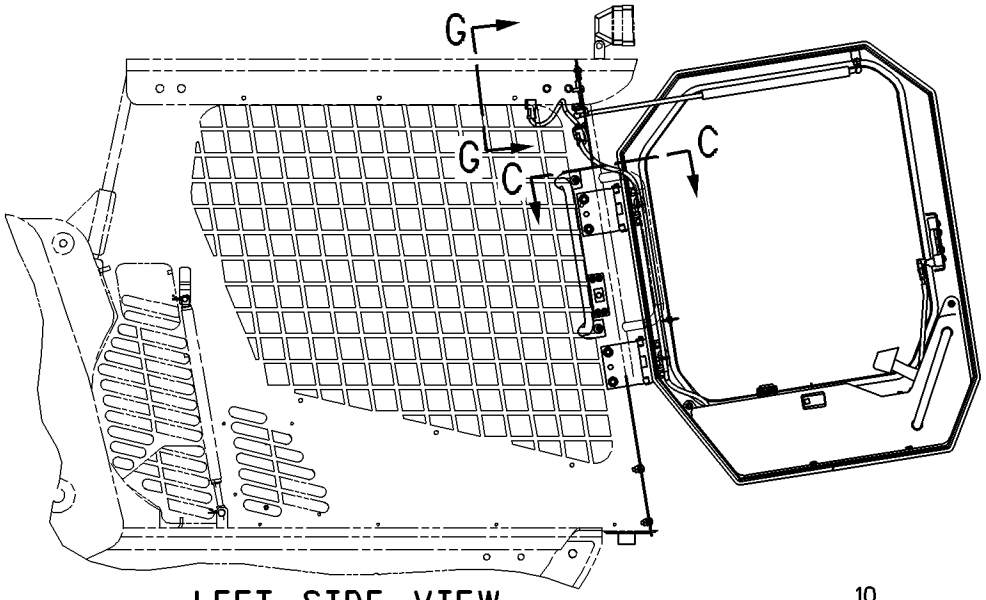

LEFT SIDE VIEW

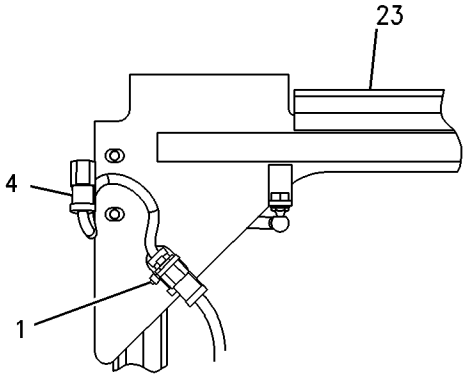

VIEW G-G

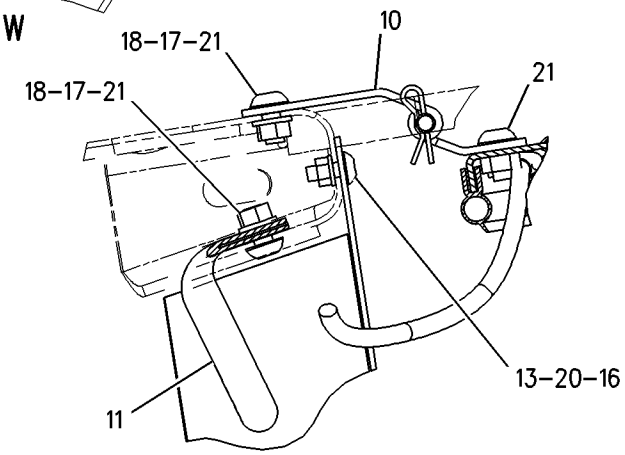

VIEW OF AREA E

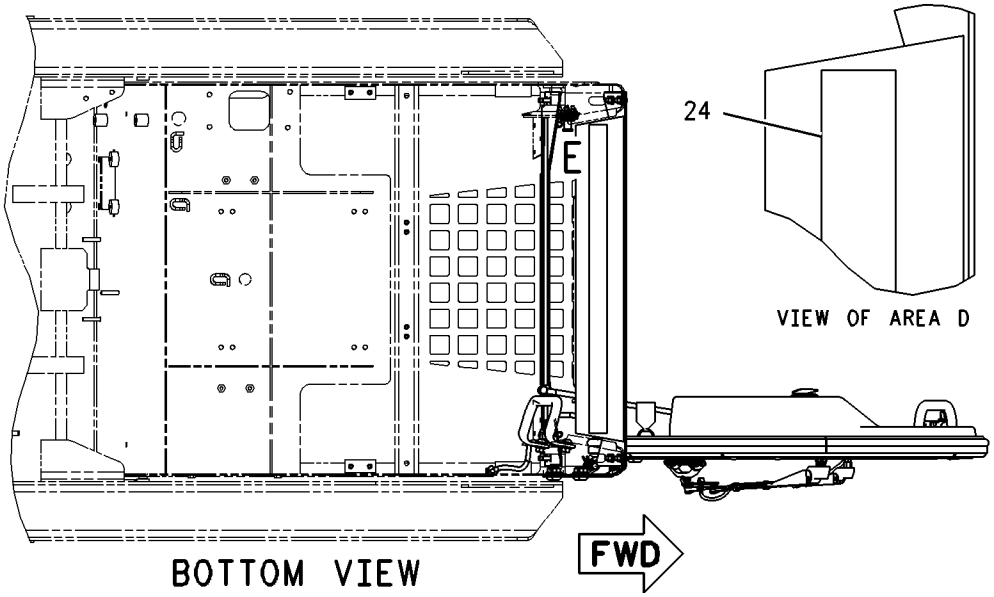

VIEW OF AREA D

BOTTOM VIEW

GRAPHIC #2 g00914739

MEMORANDA

OPERATOR STATION

195-6726 DOOR & MTG GP-CAB

S/N: CED1-UP; FDG1-UP; 4YZ4000-UP; 5SZ4000-UP
POLYCARBONATE
CANNOT BE USED WITH 195-6724—PAGE 600
AN ATTACHMENT
TYPE 2

SMCS-7308 **i01674433**

NOTE	REF NO	GRAPHIC REF	PART NUMBER	QTY	PART NAME 1 2 3 4 5 6 (PRODUCT LEVEL)	SEE PAGE
	1	1	**3S-2093**	1	STRAP-CABLE	
	2	1	**8T-2444**	1	STUD-BALL	
	3	1	**8T-3848**	1	STRIKER AS-LATCH	
		1	**6V-4270**	1	LOCKWASHER	
	4	1	**142-9127**	1	HARNESS AS-WINDOW WIPER	
		1	**102-8803**		KIT-RECEPTACLE (3 PIN)	
		1	**3E-3371**	1	WEDGE-RECEPTACLE LOCK (3 PIN)	
		1	**144-1636**	3	PIN-CONNECTOR	
		1	**155-2276**	1	WEDGE-PLUG LOCK (3 PIN)	
	5	1	**142-9285**	1	SPRING AS-GAS	
	6	1	**142-9318**	1	STEP AS	
	7	1	**142-9355**	1	MOUNT	
	8	1	**142-9356**	1	BLOCK	
	9	1	**150-8622**	2	HINGE AS	
		1	**5P-0372**	1	LOCK PIN	
	10	1	**159-5799**	1	HANDLE	
Y	11	1	**159-5801**	1	DOOR GP-CAB (POLYCARBONATE)	614
	12	1	**206-3817**	1	PLATE AS	
		1	**7T-1099**	1	LINK	
M		1	**8T-3612**	1	NUT-WELD (M8X1.25 THD)	
M	13	1	**127-2170**	8	SCREW-TRUSS HEAD (M8X1.25X20MM)	
	14	1	**195-0937**	4	INSERT-THREADED	
M	15	1	**5C-2890**	4	NUT (M6X1 THD)	
M	16	1	**5C-7261**	4	NUT (M8X1.25 THD)	
	17	1	**8T-4121**	6	WASHER-HARD (11X21X2.5MM THK)	
M	18	1	**8T-4133**	6	NUT (M10X1.5 THD)	
	19	1	**8T-4205**	4	WASHER-HARD (7.2X14.5X2MM THK)	
	20	1	**8T-4224**	5	WASHER-HARD (8.8X16X2MM THK)	
M	21	1	**9X-2041**	10	SCREW-TRUSS HEAD (M10X1.5X20MM)	
M	22	1	**9X-2045**	4	SCREW-TRUSS HEAD (M6X1X20MM)	
	23	1	**3E-8082**		SEAL (72CM)	
	24	1	**125-3518**		SEAL (65CM)	

M-METRIC PART
Y-SEPARATE ILLUSTRATION

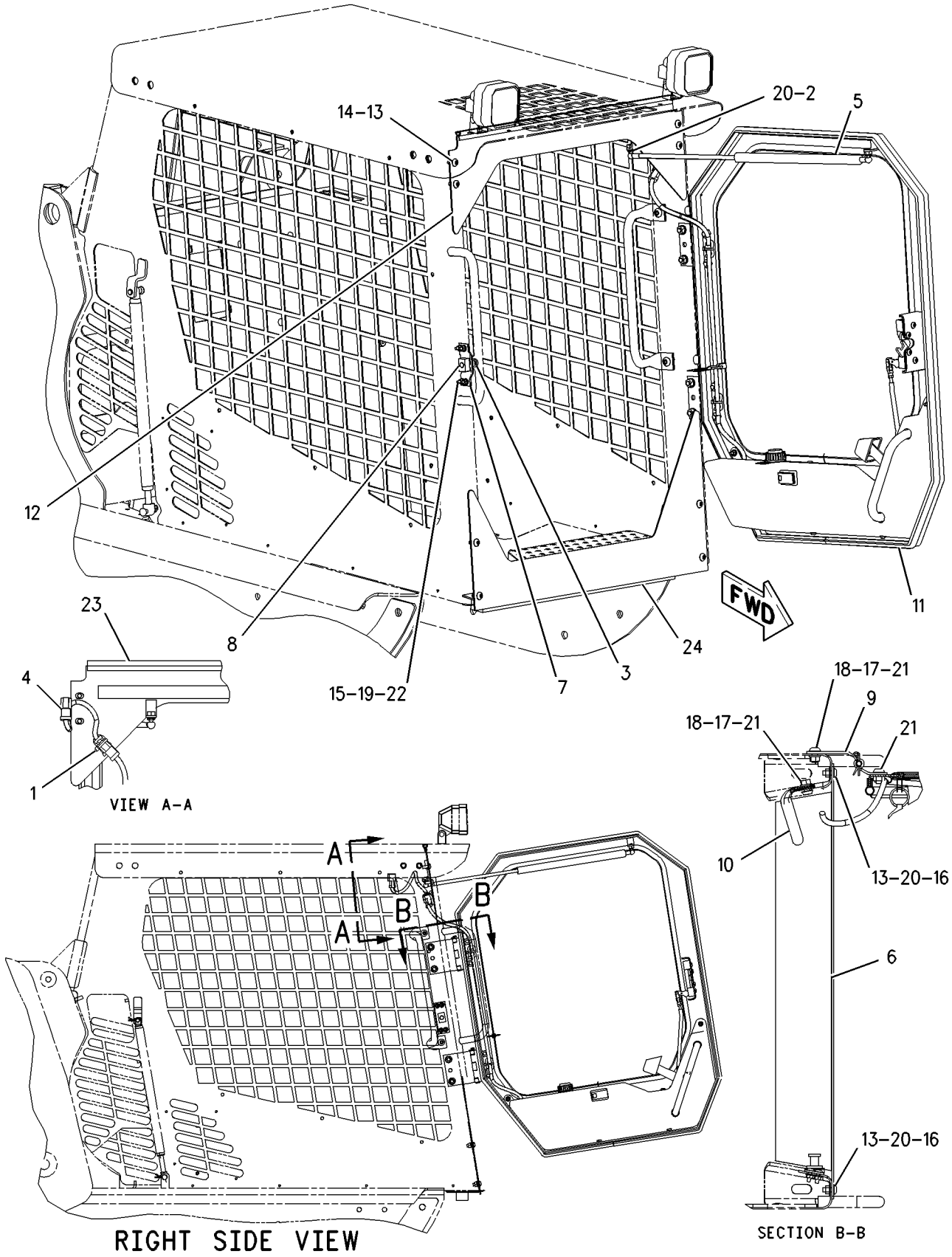

GRAPHIC #1 g00866094

OPERATOR STATION

142-9340 DOOR GP-CAB

S/N: CED1-UP; FDG1-UP; 4YZ4000-UP; 5SZ4000-UP
GLASS WINDOW
PART OF 195-6724 DOOR & MTG GP-CAB, 178-2252 KIT-CAB DOOR & MOUNTING
AN ATTACHMENT

SMCS-7308 **i01755071**

NOTE	REF NO	GRAPHIC REF	PART NUMBER	QTY	PART NAME 1 2 3 4 5 6 (PRODUCT LEVEL)	SEE PAGE
	1	1	**3S-2093**	2	STRAP-CABLE	
	2	1	**5C-8310**	1	BRACKET-RING	
	3	1	**5C-8311**	1	RING	
	4	1	**6V-7636**	2	PIN AS-SPRING	
	5	1	**8T-2444**	1	STUD-BALL	
M	6	1	**8T-4180**	4	SCREW-MACHINE (M5X0.8X20MM)	
	7	1	**8T-5461**	1	HANDLE-LATCH	
	8	1	**8T-6842**	1	FILM-INSTRUCTION (ALTERNATE EXIT)	
	9	1	**109-2355**	1	HOUSING-SWITCH	
	10	1	**109-9828**	1	LATCH AS-ROTARY	
	11	1	**138-4883**	1	SWITCH AS (WIPER/WASHER)	
		1	**111-7899**	1	GASKET	
	12	1	**141-7633**	1	LINKAGE GP-DOOR	
		1	**6V-8185**	1	NUT (1/4-20 THD)	
		1	**108-5471**	1	CLEVIS	
	13	1	**141-7634**	1	HANDLE AS	
	14	1	**142-9128**	1	HARNESS AS-CAB	
	15	1	**142-9339**	1	BOTTLE AS-WASHER	
		1	**144-0195**		HOSE (12CM)	
	16	1	**142-9341**	1	DOOR AS	
	17	1	**142-9342**	1	GLASS	
	18	1	**142-9372**	1	HANDLE	
	19	1	**147-3019**	2	BRACKET	
	20	1	**159-5798**	1	COVER	
Y	21	1	**161-7522**	1	MOTOR GP-WINDOW WIPER	652
	22	1	**161-7523**	1	ARM AS-WIPER	
	23	1	**161-7524**	1	BLADE AS-WIPER	
M	24	1	**127-2170**	2	SCREW-TRUSS HEAD (M8X1.25X20MM)	
M	25	1	**131-3540**	2	LOCKNUT	
	26	1	**4V-5091**	1	GROMMET	
M	27	1	**5C-2890**	2	NUT (M6X1 THD)	
	28	1	**5Y-0974**	1	SCREW	
	29	1	**8T-4205**	2	WASHER-HARD (7.2X14.5X2MM THK)	
	30	1	**8T-4224**	2	WASHER-HARD (8.8X16X2MM THK)	
M	31	1	**9X-2042**	4	SCREW-TRUSS HEAD (M6X1X12MM)	
M	32	1	**9X-2045**	8	SCREW-TRUSS HEAD (M6X1X20MM)	
	33	1	**9X-8372**	1	FILM-INSTRUCTION (WASHER FILL)	
E	34	1	**124-3243**		SEAL (303CM)	
E	35	1	**104-5957**		STRIP-LOCKING (236CM)	
E	36	1	**108-0656**		SEAL (246CM)	

E-ORDER BY THE CENTIMETER
M-METRIC PART
Y-SEPARATE ILLUSTRATION

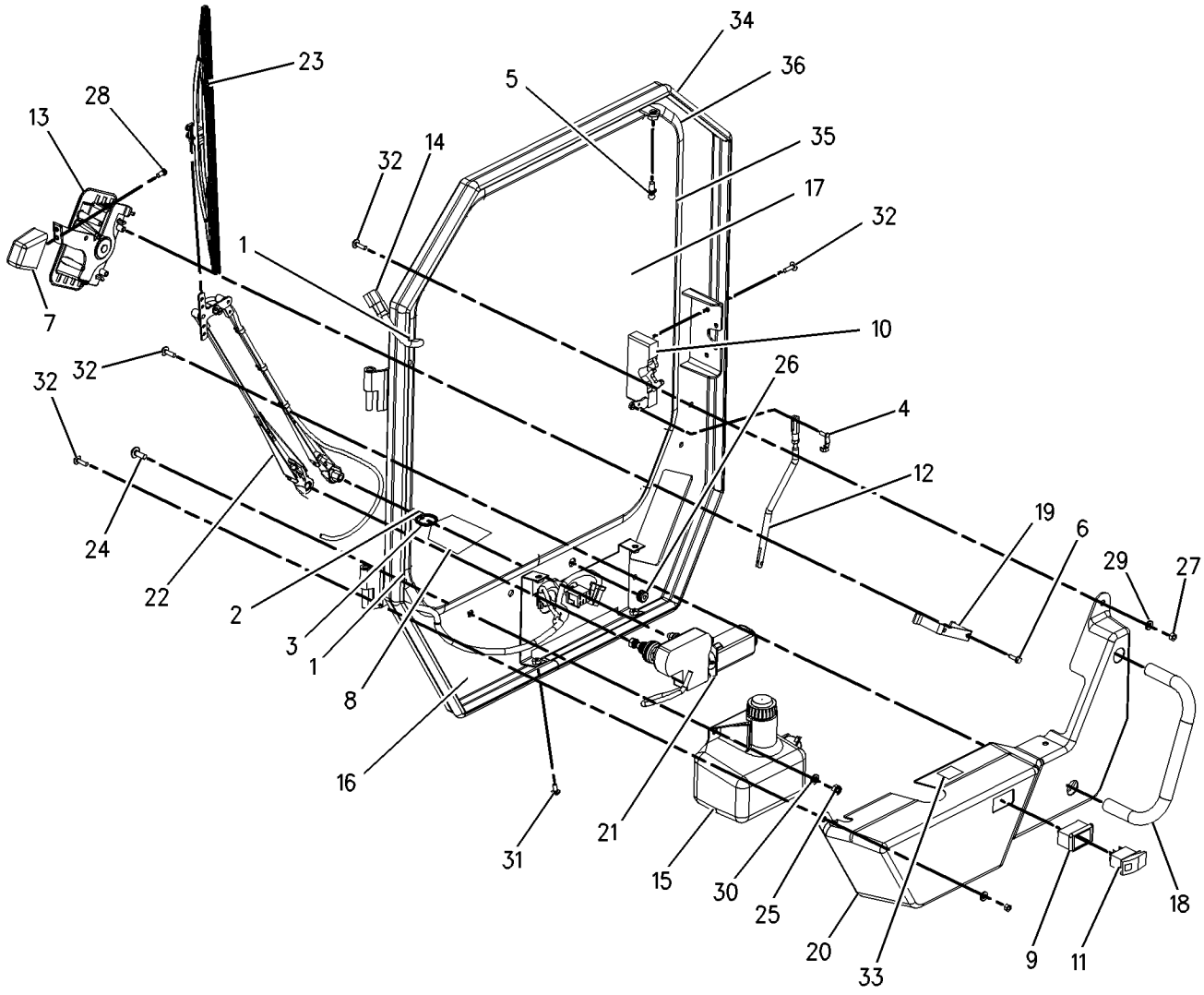

GRAPHIC #1 g00898031

OPERATOR STATION

159-5801 DOOR GP-CAB

S/N: CED1-UP; FDG1-UP; 4YZ4000-UP; 5SZ4000-UP
POLYCARBONATE WINDOW
PART OF 195-6726 DOOR & MTG GP-CAB, 178-2253 KIT-CAB DOOR & MOUNTING
AN ATTACHMENT

SMCS-7308 **i01755102**

NOTE	REF NO	GRAPHIC REF	PART NUMBER	QTY	PART NAME 1 2 3 4 5 6 (PRODUCT LEVEL)	SEE PAGE
	1	1	**3S-2093**	2	STRAP-CABLE	
	2	1	**5C-8310**	1	BRACKET-RING	
	3	1	**5C-8311**	1	RING	
	4	1	**6V-7636**	2	PIN AS-SPRING	
	5	1	**8T-2444**	1	STUD-BALL	
M	6	1	**8T-4180**	4	SCREW-MACHINE (M5X0.8X20MM)	
	7	1	**8T-5461**	1	HANDLE-LATCH	
	8	1	**8T-6842**	1	FILM-INSTRUCTION (ALTERNATE EXIT)	
	9	1	**9X-8372**	1	FILM-INSTRUCTION (WASHER FILL)	
	10	1	**109-2355**	1	HOUSING-SWITCH	
	11	1	**109-9828**	1	LATCH AS-ROTARY	
	12	1	**138-4883**	1	SWITCH AS (WIPER/WASHER)	
		1	**111-7899**	1	GASKET	
	13	1	**141-7633**	1	LINKAGE GP-DOOR	
		1	**6V-8185**	1	NUT (1/4-20 THD)	
		1	**108-5471**	1	CLEVIS	
	14	1	**141-7634**	1	HANDLE AS	
	15	1	**142-9128**	1	HARNESS AS-CAB	
	16	1	**142-9339**	1	BOTTLE AS-WASHER	
E		1	**144-0195**		HOSE (12CM)	
	17	1	**142-9341**	1	DOOR AS	
	18	1	**142-9372**	1	HANDLE	
	19	1	**147-3019**	2	BRACKET	
	20	1	**159-5798**	1	COVER	
Y	21	1	**161-7522**	1	MOTOR GP-WINDOW WIPER	652
	22	1	**161-7523**	1	ARM AS-WIPER	
	23	1	**161-7524**	1	BLADE AS-WIPER	
	24	1	**165-7089**	1	GLASS	
M	25	1	**127-2170**	2	SCREW-TRUSS HEAD (M8X1.25X20MM)	
M	26	1	**131-3540**	2	LOCKNUT	
	27	1	**4V-5091**	1	GROMMET	
M	28	1	**5C-2890**	2	NUT (M6X1 THD)	
	29	1	**5Y-0974**	1	SCREW	
	30	1	**8T-4205**	2	WASHER-HARD (7.2X14.5X2MM THK)	
	31	1	**8T-4224**	2	WASHER-HARD (8.8X16X2MM THK)	
M	32	1	**9X-2042**	4	SCREW-TRUSS HEAD (M6X1X12MM)	
M	33	1	**9X-2045**	8	SCREW-TRUSS HEAD (M6X1X20MM)	
E	34	1	**124-3243**		SEAL (303CM)	
E	35	1	**104-5957**		STRIP-LOCKING (236CM)	
E	36	1	**108-0656**		SEAL (246CM)	

E-ORDER BY THE CENTIMETER
M-METRIC PART
Y-SEPARATE ILLUSTRATION

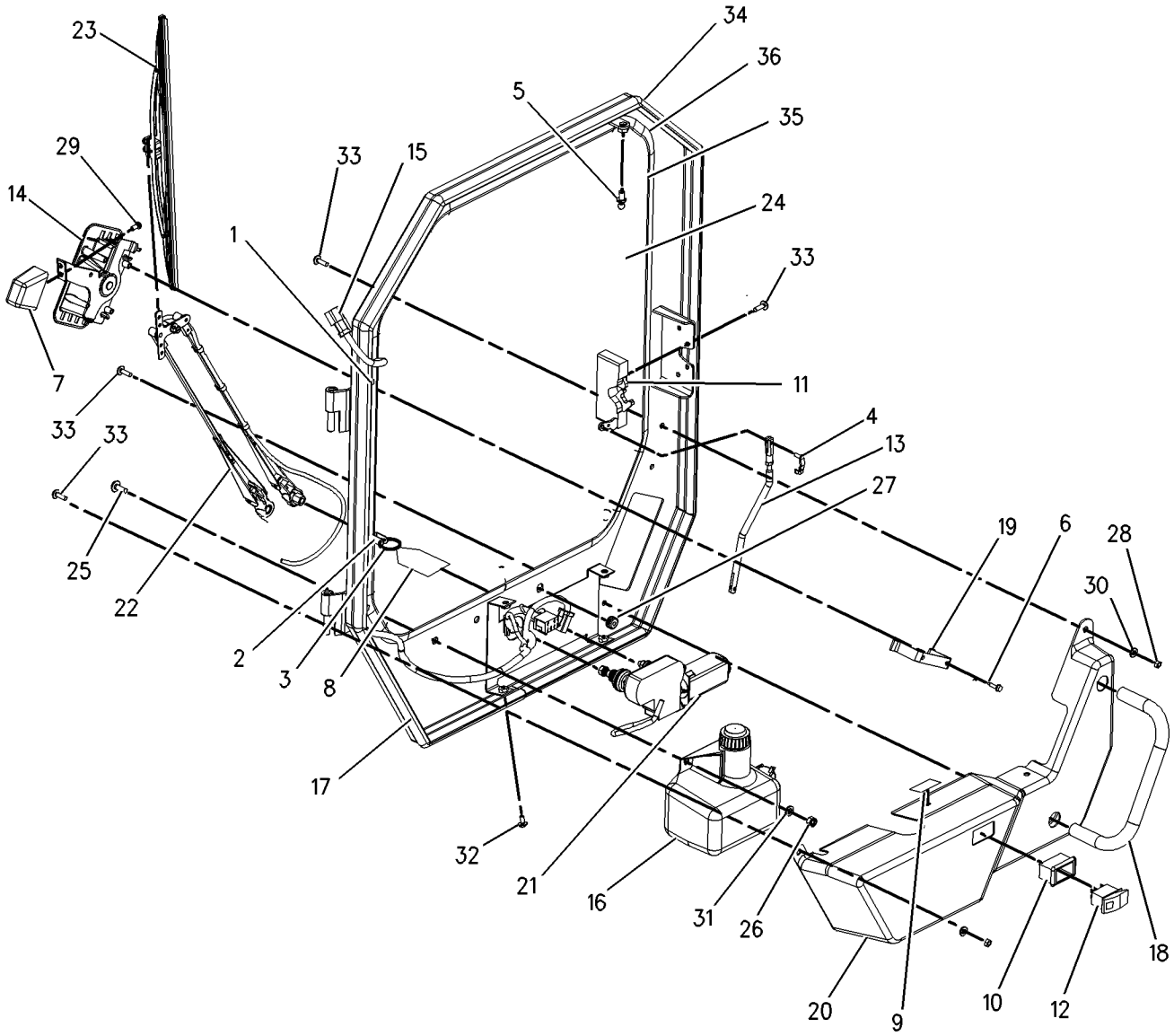

GRAPHIC #1 g00898035

OPERATOR STATION

219-4358 DUCT & CONTROL GP

S/N: CED1-UP; FDG1-UP; 4YZ4000-UP; 5SZ4000-UP
PART OF 222-5721 HEATER & MTG GP-CAB, 220-8104, 220-8110 INSTALLATION AR
AN ATTACHMENT

SMCS-7337 **i01792808**

NOTE	REF NO	GRAPHIC REF	PART NUMBER	QTY	PART NAME 1 2 3 4 5 6 (PRODUCT LEVEL)	SEE PAGE
	1	1	**218-0666**	5	LOUVER AS	
	2	1	**219-4359**	1	DUCT	
	3	1	**219-4360**	1	DUCT	
	4	1	**219-4362**	1	COVER (RH)	
	5	1	**219-4363**	1	COVER (LH)	
	6	1	**220-8095**	1	SUPPORT AS (RH)	
	7	1	**220-8096**	1	SUPPORT AS (LH)	
B	8	1	**219-4361**		TUBING (FLEX) (31CM EACH)	
	9	1	**7K-1181**	10	STRAP-CABLE	
M	10	1	**9X-2045**	8	SCREW-TRUSS HEAD (M6X1X20MM)	
B	11	1	**219-4361**		TUBING (FLEX) (69CM EACH)	

B-USE AS REQUIRED
M-METRIC PART

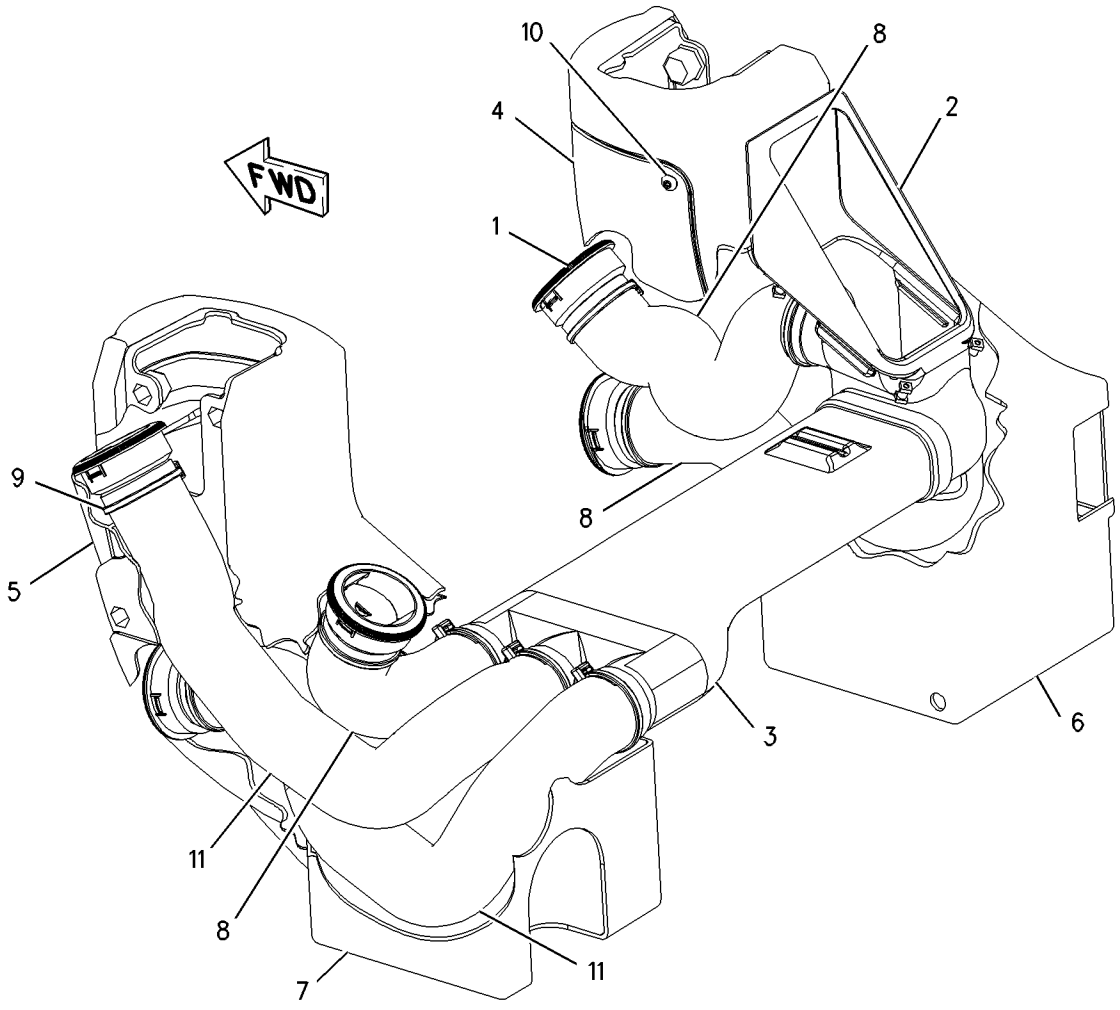

GRAPHIC #1 g00917615

OPERATOR STATION

152-4881 DUCT GP-DEFROST

S/N: CED1-UP; FDG1-UP; 4YZ4000-UP; 5SZ4000-UP
PART OF 150-8627, 150-8629, 183-7130, 190-7944, 190-7945 HEATER & MTG GP-CAB
AN ATTACHMENT

SMCS-7316, 734D **i01787549**

NOTE	REF NO	GRAPHIC REF	PART NUMBER	QTY	PART NAME 1 2 3 4 5 6 (PRODUCT LEVEL)	SEE PAGE
	1	1	**142-9273**	1	DUCT	
	2	1	**152-4879**	1	SEAL	
M	3	1	**9X-1046**	4	SCREW (M4X0.7X18MM)	

M-METRIC PART

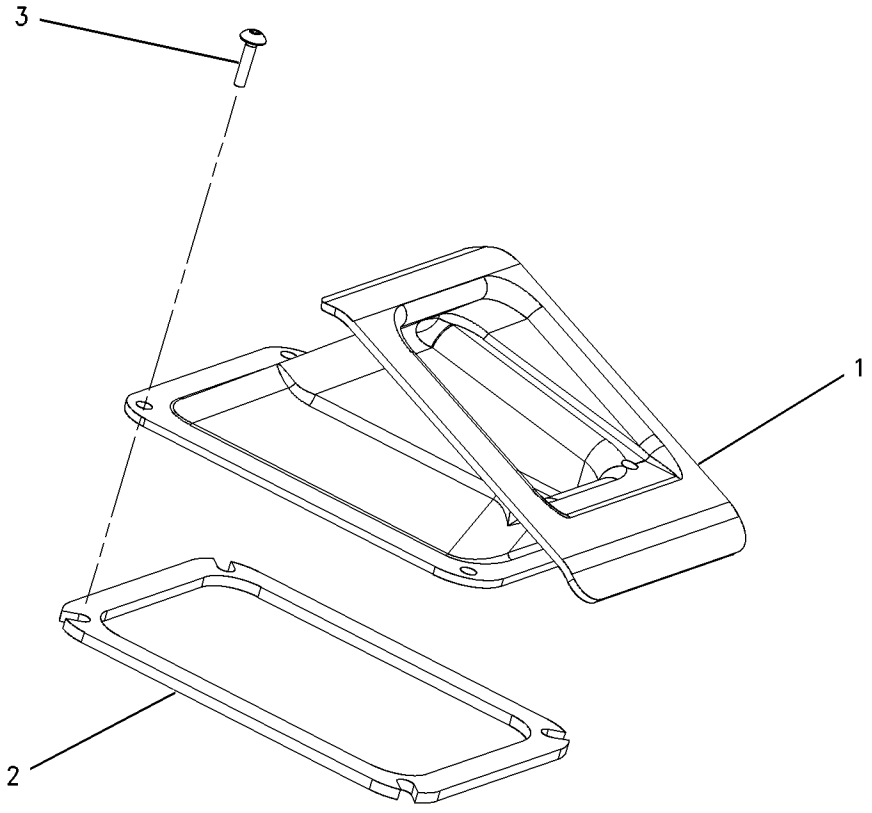

GRAPHIC #1 g00914755

OPERATOR STATION

152-4880 FILTER GP-CAB AIR

S/N: CED1-UP; FDG1-UP; 4YZ4000-UP; 5SZ4000-UP
PART OF 150-8627, 150-8629, 183-7130, 190-7944, 190-7945, 220-8143 HEATER & MTG
GP-CAB
AN ATTACHMENT

SMCS-7342 **i01148378**

NOTE	REF NO	GRAPHIC REF	PART NUMBER	QTY	PART NAME 1 2 3 4 5 6 (PRODUCT LEVEL)	SEE PAGE
	1	1	**142-9290**	1	COVER AS-FILTER	
	2	1	**142-9291**	1	FILTER	
	3	1	**152-4876**	1	SEAL	

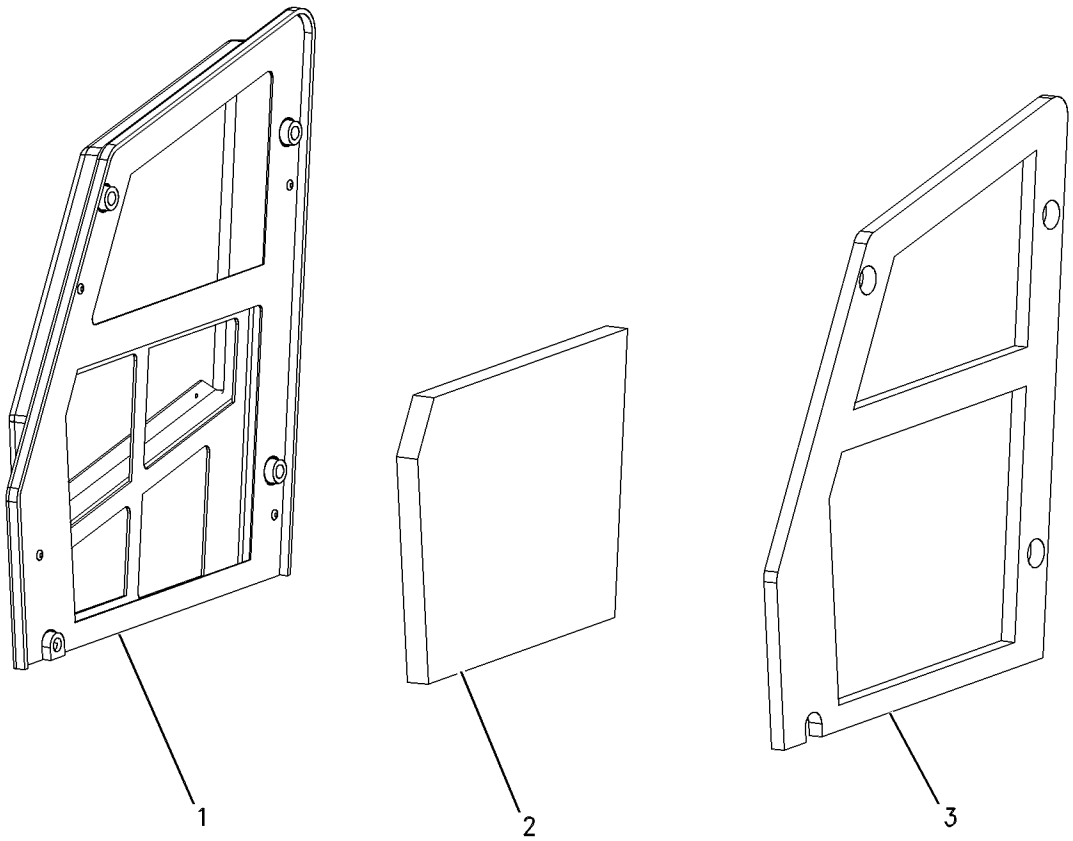

GRAPHIC #1 g00560354

OPERATOR STATION

200-1008 FLOOR MAT

S/N: CED1-UP; FDG1-UP; 4YZ4000-UP; 5SZ4000-UP
PART OF 176-0613 SUPPRESSION GP-SOUND
AN ATTACHMENT

SMCS-726M **i01731272**

NOTE	REF NO	GRAPHIC REF	PART NUMBER	QTY	PART NAME 1 2 3 4 5 6 (PRODUCT LEVEL)	SEE PAGE
					(NO SERVICED PARTS)	

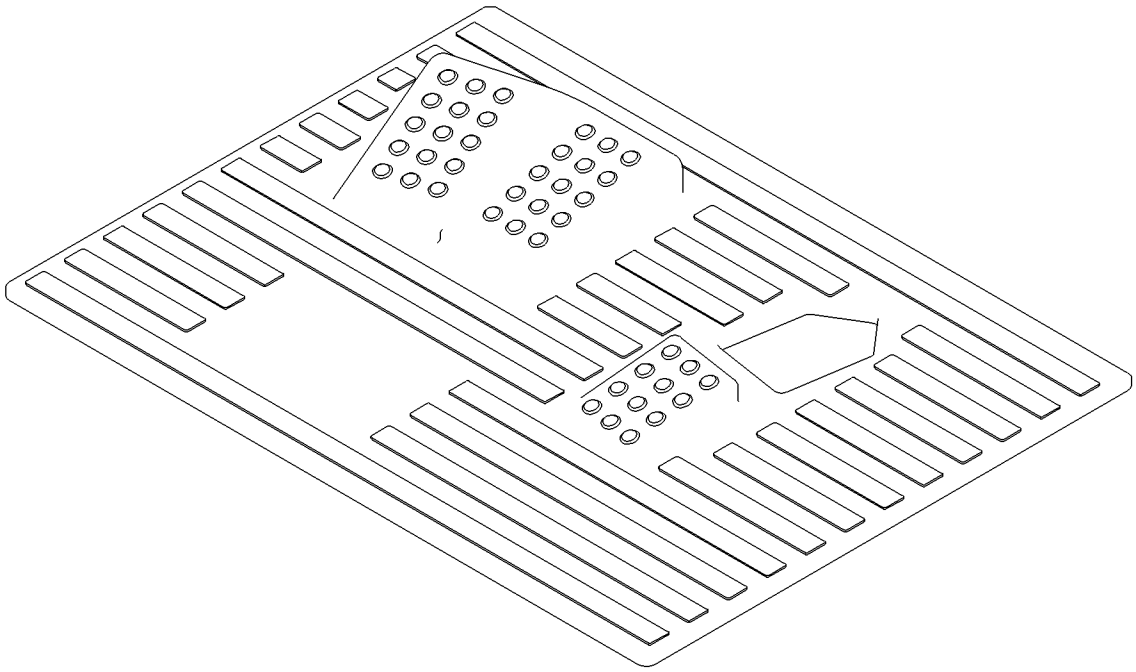

GRAPHIC #1 g00888867

OPERATOR STATION

197-6898 GAUGE & WARNING GP—LH

S/N: CED1-UP; FDG1-UP; 4YZ4000-UP; 5SZ4000-UP
PART OF 193-8371 PANEL GP-INSTRUMENT
AN ATTACHMENT

SMCS-7450, 7451 **i01787562**

NOTE	REF NO	GRAPHIC REF	PART NUMBER	QTY	PART NAME 1 2 3 4 5 6 (PRODUCT LEVEL)	SEE PAGE
J	1	1	**142-8858**	1	SWITCH AS-KEY START	
	1A	1	**167-1530**	1	NUT	
Y	2	1	**144-9930**	1	MODULE GP-WARNING INDICATOR	170
Y	3	1	**144-9933**	1	LAMP GP-PANEL ILLUMINATION	154
	4	1	**158-6694**	1	PANEL	
	5	1	**197-6894**	1	FILM-INSTRUCTION (INSTRUMENT PANEL)	
	6	1	**197-6895**	1	FILM-INSTRUCTION (INSTRUMENT PANEL)	
	7	1	**103-2006**	4	SCREW-PAN HEAD	

J-REQUIRES 5P8500 KEY
Y-SEPARATE ILLUSTRATION

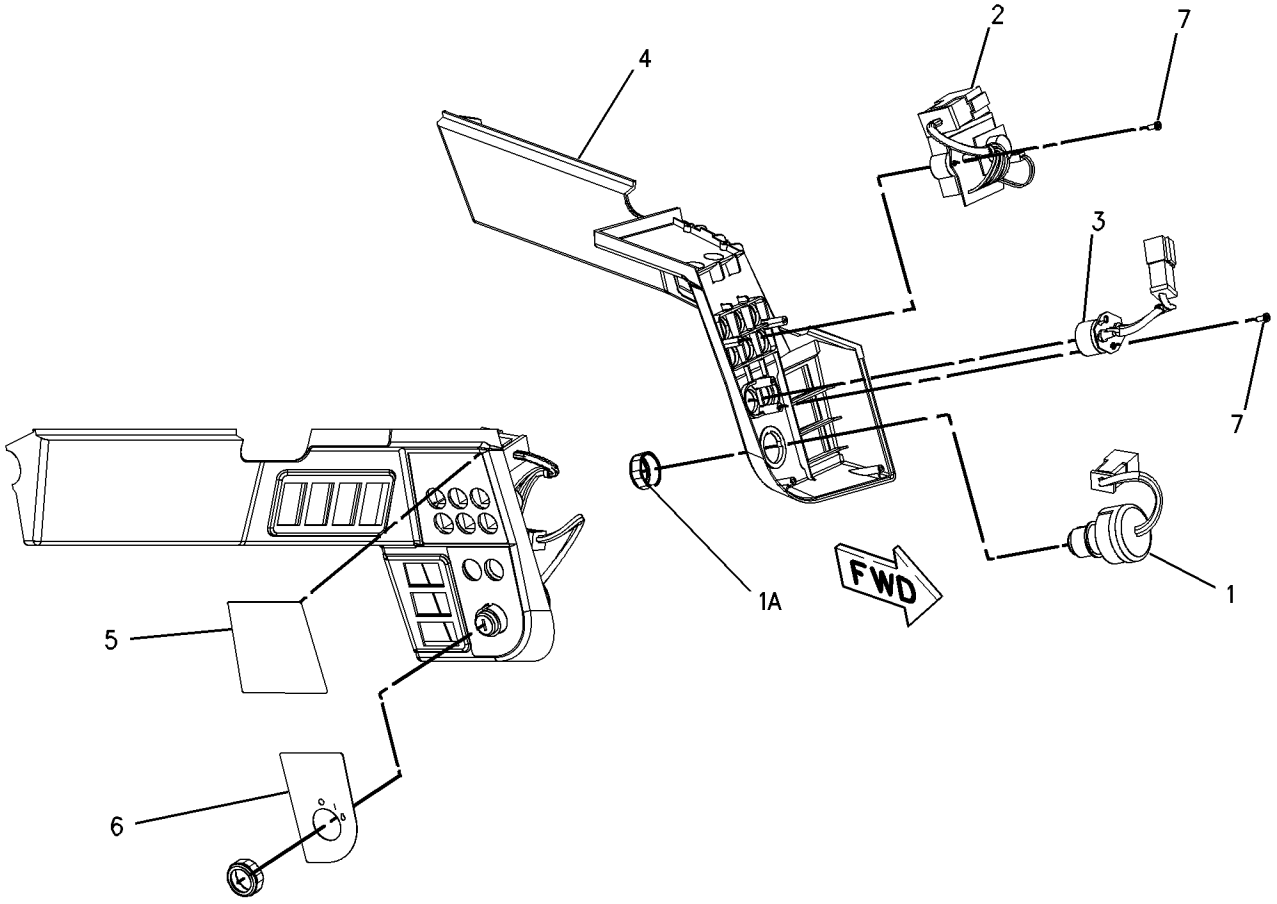

GRAPHIC #1 g00914758

OPERATOR STATION

197-6899 GAUGE & WARNING GP–RH

S/N: CED1-UP; FDG1-UP; 4YZ4000-UP; 5SZ4000-UP
PART OF 193-8371 PANEL GP-INSTRUMENT
AN ATTACHMENT

SMCS-7450, 7451 **i01789000**

NOTE	REF NO	GRAPHIC REF	PART NUMBER	QTY	PART NAME 1 2 3 4 5 6 (PRODUCT LEVEL)	SEE PAGE
	1	1	**084-4277**	1	LAMP GP-DOME	
		1	**6R-7490**	1	LAMP (12 VOLT)(10 WATT)	
	2	1	**153-0455**	1	INDICATOR GP-LIQUID LEVEL (FUEL)	
	3	1	**4B-2043**	3	NUT (8-32 THD)	
	4	1	**7X-9065**	1	LAMP (12 VOLT)	
	5	1	**9B-7233**	3	LOCKWASHER	
	6	1	**158-6697**	1	PANEL	
	7	1	**197-6896**	1	FILM-PANEL	

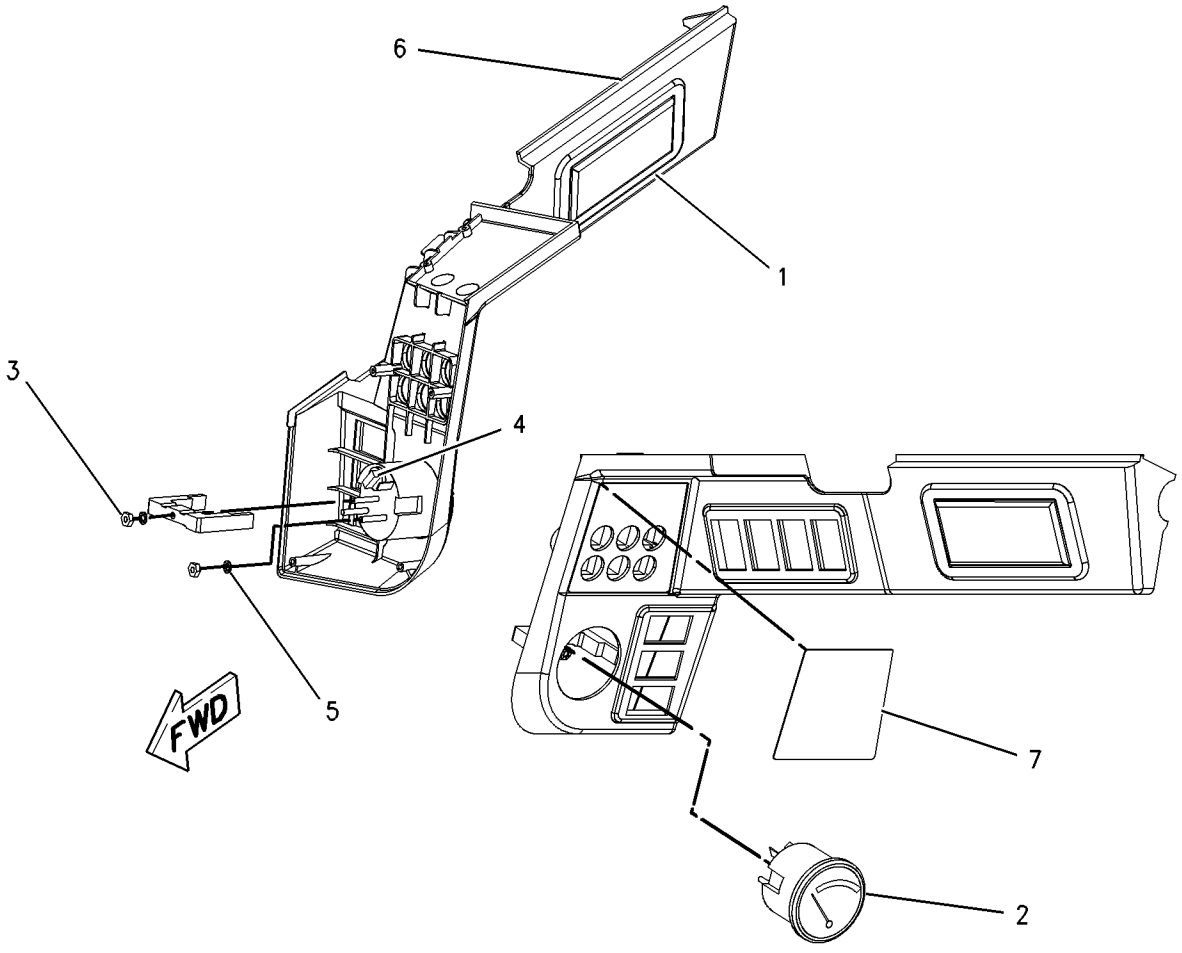

GRAPHIC #1 g00914780

OPERATOR STATION

152-1160 GUARD GP-ROPS/FOPS

S/N: CED1-UP; FDG1-UP; 4YZ4000-UP; 5SZ4000-UP

AN ATTACHMENT

SMCS-7323 **i01787643**

NOTE	REF NO	GRAPHIC REF	PART NUMBER	QTY	PART NAME 1 2 3 4 5 6 (PRODUCT LEVEL)	SEE PAGE
	1	1	**152-1161**	1	PLATE AS-FOPS	
	2	1	**152-4883**	1	PLATE-ROPS/FOPS (WARNING)	
M	3	1	**7X-2553**	8	BOLT (M16X2X40MM)	
	4	1	**8T-4122**	12	WASHER-HARD (17X32X3.5MM THK)	
M	5	1	**8T-4132**	4	NUT (M16X2 THD)	
	6	1	**5P-5927**		SEAL (1M)	

M-METRIC PART

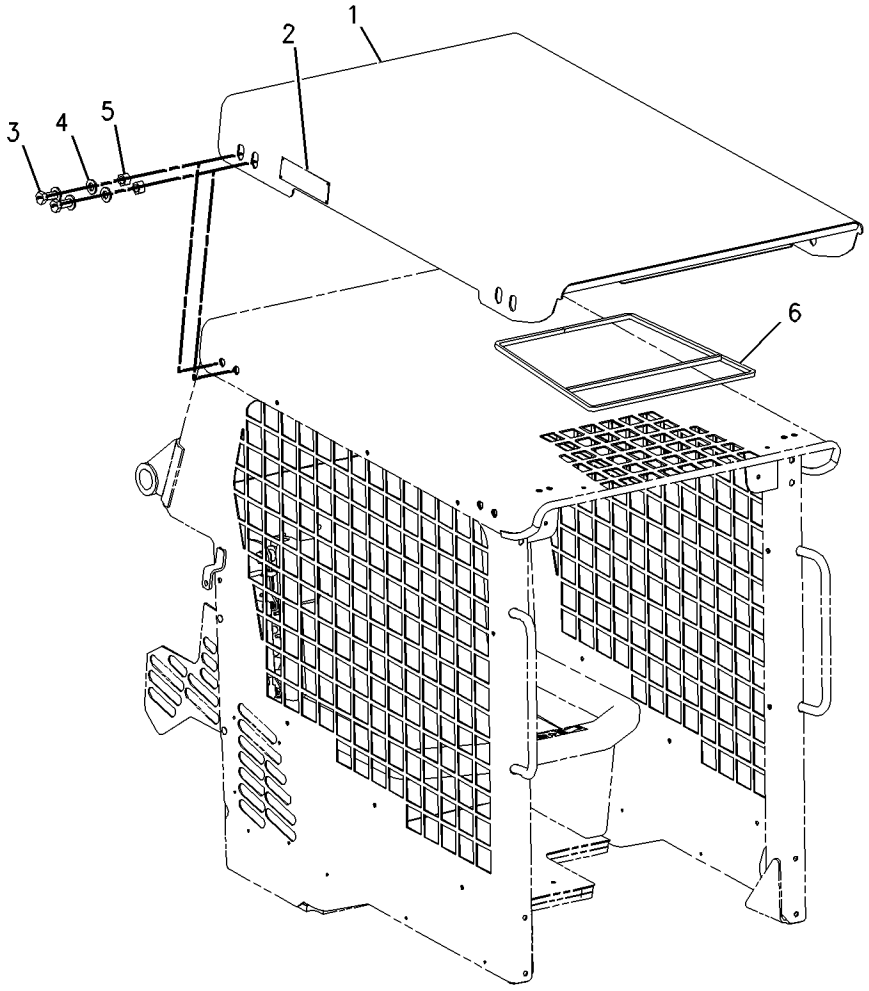

GRAPHIC #1 g00914788

OPERATOR STATION

142-9311 HEADLINER-CAB

S/N: CED1-UP; FDG1-UP; 4YZ4000-UP; 5SZ4000-UP

AN ATTACHMENT

SMCS-7329 **i01507747**

NOTE	REF NO	GRAPHIC REF	PART NUMBER	QTY	PART NAME 1 2 3 4 5 6 (PRODUCT LEVEL)	SEE PAGE
					(NO SERVICED PARTS)	

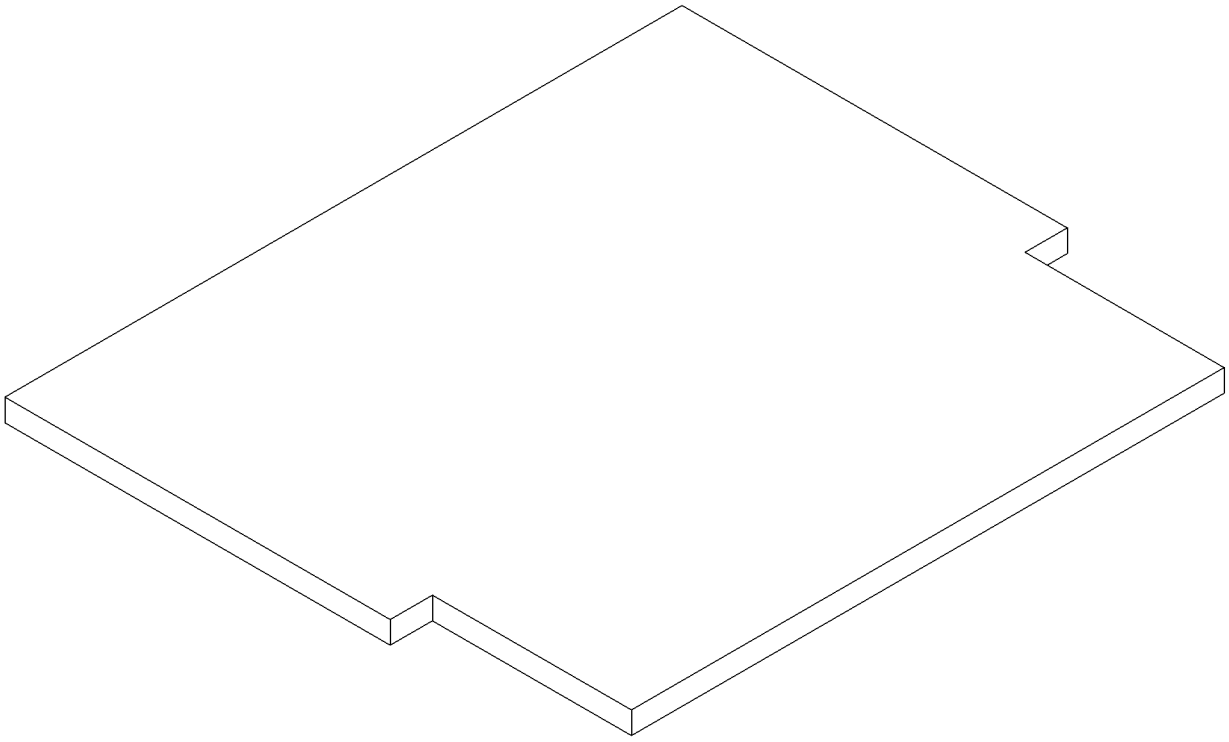

GRAPHIC #1 g00782727

OPERATOR STATION

150-8627 HEATER & MTG GP-CAB

S/N: 4YZ4000-UP
AN ATTACHMENT

SMCS-7304 **i01676169**

NOTE	REF NO	GRAPHIC REF	PART NUMBER	QTY	PART NAME 1 2 3 4 5 6 (PRODUCT LEVEL)	SEE PAGE
	1	1	**7G-7053**	1	GROMMET	
	2	1	**113-8492**	1	FUSE (20 AMP)	
Y	3	1	*142-9269*	1	COVER GP-CONSOLE (WITH HEATER)	597
Y	4	1	**142-9289**	1	HEATER GP-CAB	632
	5	1	**146-6371**	2	LOUVER AS	
Y	6	1	*150-8628*	1	LINES GP-HEATER	647
Y	7	1	*152-4880*	1	FILTER GP-CAB AIR	618
Y	8	1	*152-4881*	1	DUCT GP-DEFROST	617
	9	1	**199-6619**	4	STUD-CLINCH	
M	10	1	**5C-2890**	4	NUT (M6X1 THD)	
M	11	1	**5C-9553**	4	BOLT (M6X1X16MM)	
	12	1	**8T-4205**	8	WASHER-HARD (7.2X14.5X2MM THK)	

M-METRIC PART
Y-SEPARATE ILLUSTRATION

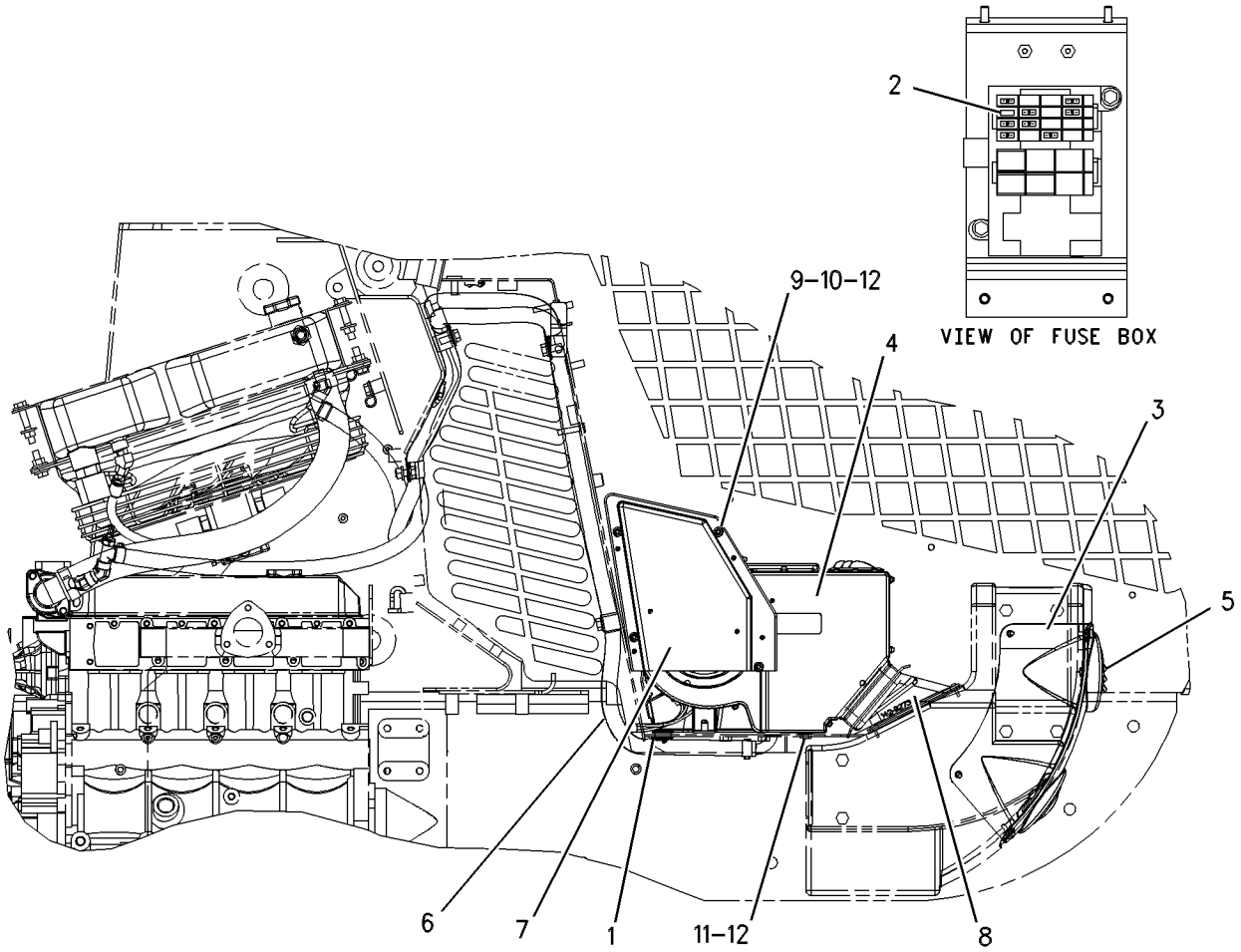

GRAPHIC #1 g00604518

OPERATOR STATION

150-8629 HEATER & MTG GP-CAB

S/N: 5SZ4000-UP
AN ATTACHMENT

SMCS-7304 **i01676173**

NOTE	REF NO	GRAPHIC REF	PART NUMBER	QTY	PART NAME 1 2 3 4 5 6 (PRODUCT LEVEL)	SEE PAGE
	1	1	**7G-7053**	1	GROMMET	
	2	1	**113-8492**	1	FUSE (20 AMP)	
Y	3	1	*142-9269*	1	COVER GP-CONSOLE (WITH HEATER)	597
Y	4	1	**142-9289**	1	HEATER GP-CAB	632
	5	1	**146-6371**	2	LOUVER AS	
Y	6	1	*150-8630*	1	LINES GP-HEATER	648
Y	7	1	*152-4880*	1	FILTER GP-CAB AIR	618
Y	8	1	*152-4881*	1	DUCT GP-DEFROST	617
	9	1	**199-6619**	4	STUD-CLINCH	
M	10	1	**5C-2890**	4	NUT (M6X1 THD)	
M	11	1	**5C-9553**	4	BOLT (M6X1X16MM)	
	12	1	**8T-4205**	8	WASHER-HARD (7.2X14.5X2MM THK)	

M-METRIC PART
Y-SEPARATE ILLUSTRATION

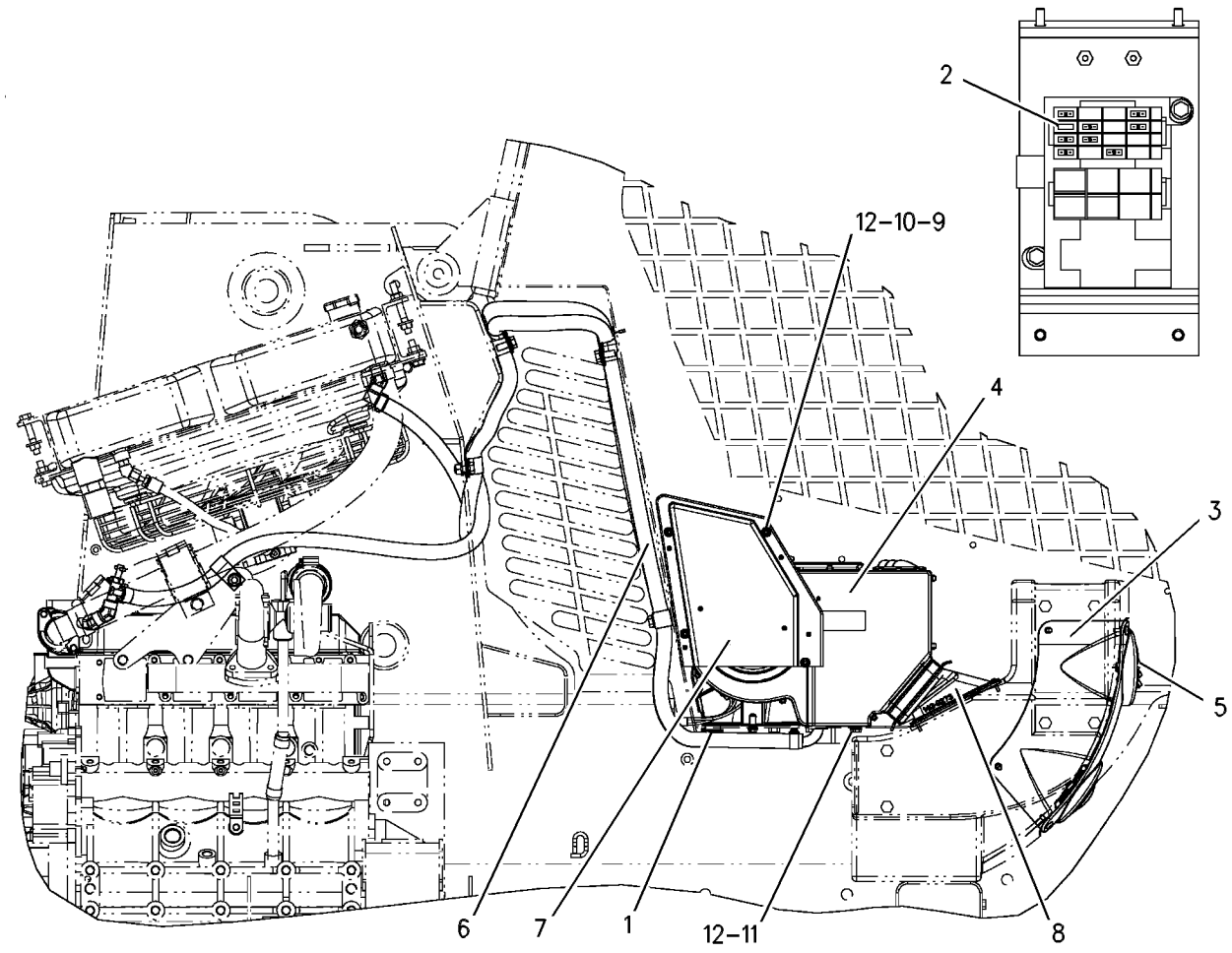

GRAPHIC #1 g00592455

OPERATOR STATION

183-7130 HEATER & MTG GP-CAB

S/N: CED1-UP; FDG1-UP; 4YZ4000-UP; 5SZ4000-UP
KIT-CAB HEATER AND MOUNTING
FIELD INSTALLATION

SMCS-7304 **i01793823**

NOTE	REF NO	GRAPHIC REF	PART NUMBER	QTY	PART NAME 1 2 3 4 5 6 (PRODUCT LEVEL)	SEE PAGE
C	1	1	**1L-2279**	2	ELBOW	
	2	1	**7G-7053**	1	GROMMET	
	3	1	**8F-8151**	1	VALVE-SHUTOFF	
	4	1	**8T-0154**	4	CLAMP-HOSE	
	5	1	**004-6810**	1	ELBOW	
	6	1	**113-8492**	1	FUSE (20 AMP)	
	7	1	**142-9271**	1	COVER-RH	
Y	8	1	**142-9289**	1	HEATER GP-CAB	632
	9	1	**146-6371**	2	LOUVER AS	
Y	10	1	**152-4880**	1	FILTER GP-CAB AIR	618
Y	11	1	*152-4881*	1	DUCT GP-DEFROST	617
	12	1	**161-6560**	4	STUD	
	13	1	**183-7120**	2	GUARD-HOSE	
	14	1	**205-9883**	1	ELBOW	
C	15	1	**4S-1962**	2	CLIP	
M	16	1	**5C-2890**	4	NUT (M6X1 THD)	
M	17	1	**5C-9553**	4	BOLT (M6X1X16MM)	
	18	1	**6D-1641**	3	CLIP	
	19	1	**8T-4121**	5	WASHER-HARD (11X21X2.5MM THK)	
M	20	1	**8T-4133**	3	NUT (M10X1.5 THD)	
M	21	1	**8T-4136**	4	BOLT (M10X1.5X25MM)	
	22	1	**8T-4205**	8	WASHER-HARD (7.2X14.5X2MM THK)	
M	23	1	**9X-2045**	4	SCREW-TRUSS HEAD (M6X1X20MM)	
BE	24	1	**136-1953**		HOSE (467CM)	
BE	25	1	**9X-2092**		STRIP-EDGE (10CM)	
	26	1	**150-7568**	1	ADAPTER	

B-USE AS REQUIRED
C-CHANGE FROM PREVIOUS TYPE
E-ORDER BY THE CENTIMETER
M-METRIC PART
Y-SEPARATE ILLUSTRATION

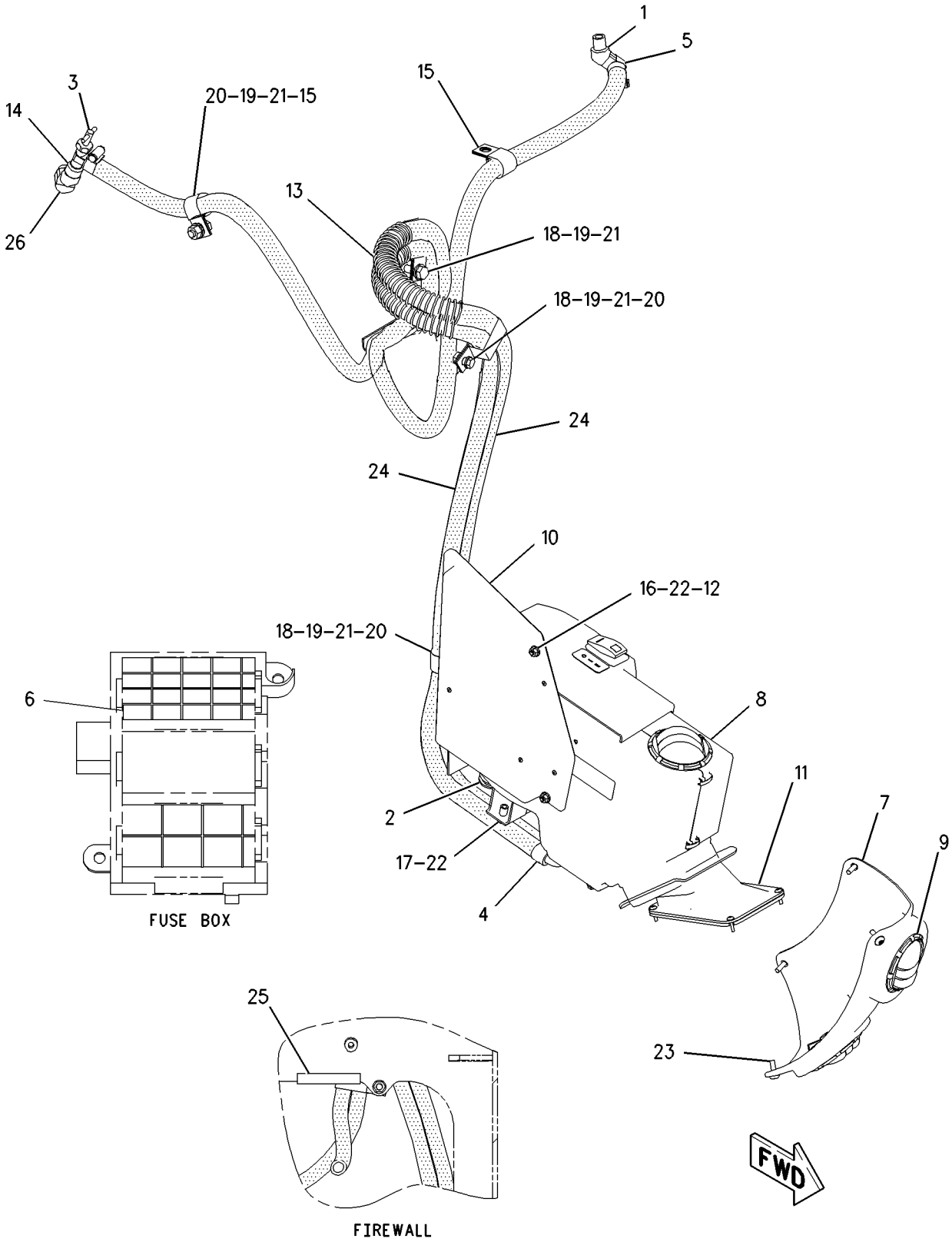

GRAPHIC #1 g00917891

OPERATOR STATION

190-7944 HEATER & MTG GP-CAB

S/N: FDG1-UP
CANNOT BE USED WITH 142-9274—PAGE 598
AN ATTACHMENT

SMCS-7304 **i01676177**

NOTE	REF NO	GRAPHIC REF	PART NUMBER	QTY	PART NAME 1 2 3 4 5 6 (PRODUCT LEVEL)	SEE PAGE
	1	1	**7G-7053**	1	GROMMET	
	2	1	**113-8492**	1	FUSE (20 AMP)	
Y	3	1	*142-9269*	1	COVER GP-CONSOLE (WITH HEATER)	597
Y	4	1	**142-9289**	1	HEATER GP-CAB	632
	5	1	**146-6371**	2	LOUVER AS	
Y	6	1	*152-4880*	1	FILTER GP-CAB AIR	618
Y	7	1	*152-4881*	1	DUCT GP-DEFROST	617
Y	8	1	*190-7942*	1	LINES GP-HEATER	649
	9	1	**199-6619**	4	STUD-CLINCH	
M	10	1	**5C-2890**	4	NUT (M6X1 THD)	
M	11	1	**5C-9553**	4	BOLT (M6X1X16MM)	
	12	1	**8T-4205**	8	WASHER-HARD (7.2X14.5X2MM THK)	

M-METRIC PART
Y-SEPARATE ILLUSTRATION

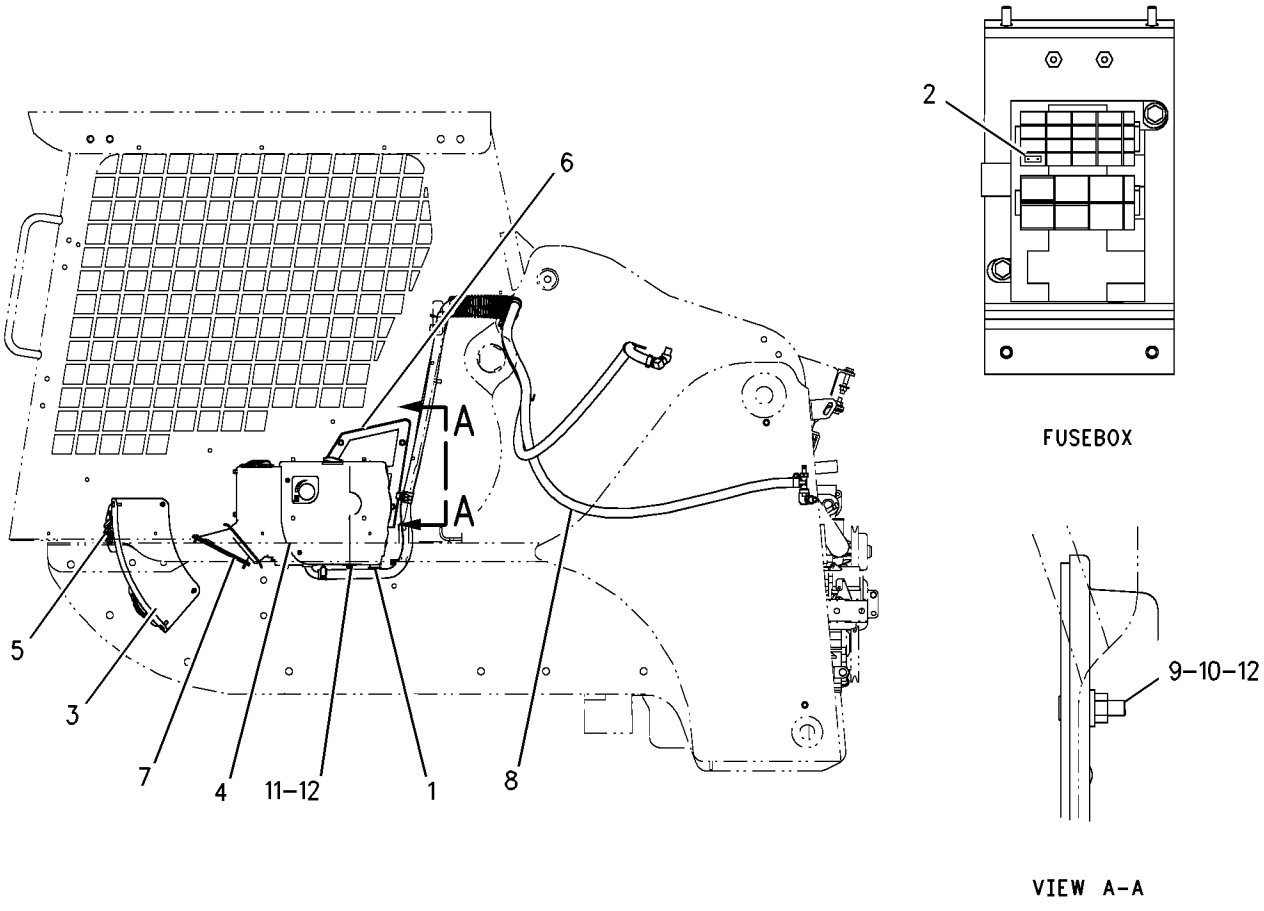

GRAPHIC #1 g00768927

OPERATOR STATION

190-7945 HEATER & MTG GP-CAB

S/N: CED1-UP
AN ATTACHMENT

SMCS-7304 **i01676180**

NOTE	REF NO	GRAPHIC REF	PART NUMBER	QTY	PART NAME 1 2 3 4 5 6 (PRODUCT LEVEL)	SEE PAGE
	1	1	**7G-7053**	1	GROMMET	
	2	1	**113-8492**	1	FUSE (20 AMP)	
Y	3	1	*142-9269*	1	COVER GP-CONSOLE (WITH HEATER)	597
Y	4	1	**142-9289**	1	HEATER GP-CAB	632
	5	1	**146-6371**	2	LOUVER AS	
Y	6	1	*152-4880*	1	FILTER GP-CAB AIR	618
Y	7	1	*152-4881*	1	DUCT GP-DEFROST	617
Y	8	1	*190-7943*	1	LINES GP-HEATER	650
	9	1	**199-6619**	4	STUD-CLINCH	
M	10	1	**5C-2890**	4	NUT (M6X1 THD)	
M	11	1	**5C-9553**	4	BOLT (M6X1X16MM)	
	12	1	**8T-4205**	8	WASHER-HARD (7.2X14.5X2MM THK)	

M-METRIC PART
Y-SEPARATE ILLUSTRATION

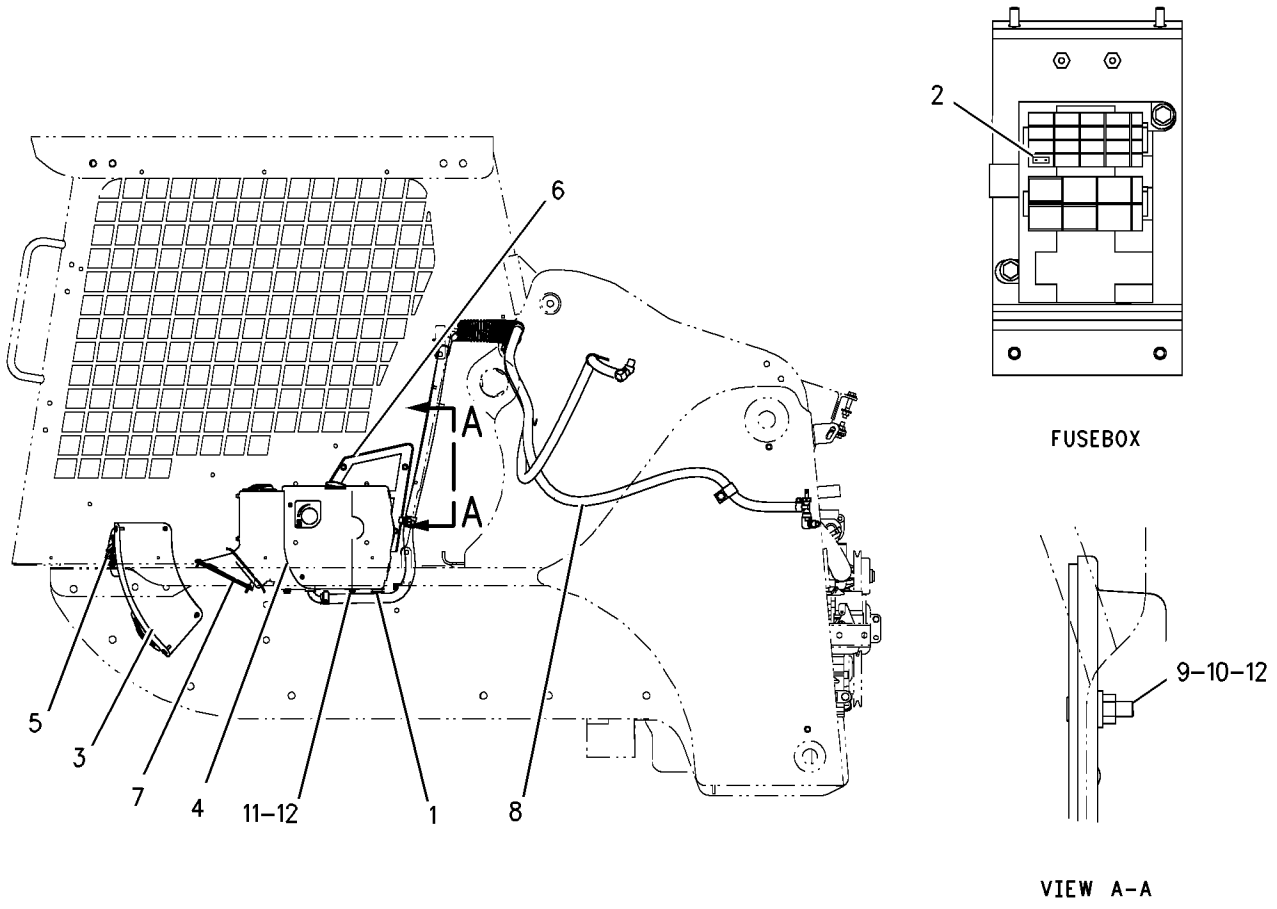

GRAPHIC #1 g00768942

OPERATOR STATION

220-8143 HEATER & MTG GP-CAB

S/N: CED1-UP; FDG1-UP; 4YZ4000-UP; 5SZ4000-UP
PART OF 222-5721 HEATER & MTG GP-CAB, 220-8104 INSTALLATION AR
AN ATTACHMENT

SMCS-7304 **i01792871**

NOTE	PART NUMBER	QTY	PART NAME 1 2 3 4 5 6 (PRODUCT LEVEL)	SEE PAGE
M	**5C-9553**	4	BOLT (M6X1X16MM)	
Y	**152-4880**	1	FILTER GP-CAB AIR	618
	220-8144	1	HEATER GP-CAB	
M	**5C-2890**	4	NUT (M6X1 THD)	
	199-6619	4	STUD-CLINCH	
	8T-4205	8	WASHER-HARD (7.2X14.5X2MM THK)	

M-METRIC PART
Y-SEPARATE ILLUSTRATION

<END>

222-5721 HEATER & MTG GP-CAB

S/N: CED1-UP; FDG1-UP; 4YZ4000-UP; 5SZ4000-UP
KIT-CAB HEATER
FIELD INSTALLATION

SMCS-7304 **i01792751**

NOTE	PART NUMBER	QTY	PART NAME 1 2 3 4 5 6 (PRODUCT LEVEL)	SEE PAGE
	150-7568	1	ADAPTER	
M	**5C-9553**	4	BOLT (M6X1X16MM)	
M	**8T-4136**	5	BOLT (M10X1.5X25MM)	
	4S-1962	2	CLIP	
Y	*219-4358*	1	DUCT & CONTROL GP	616
	113-8492	1	FUSE (20 AMP)	
	7G-7053	1	GROMMET	
Y	*220-8143*	1	HEATER & MTG GP-CAB	630
Y	*190-7943*	1	LINES GP-HEATER	650
M	**5C-2890**	4	NUT (M6X1 THD)	
M	**8T-4133**	4	NUT (M10X1.5 THD)	
	8T-4121	7	WASHER-HARD (11X21X2.5MM THK)	
	8T-4205	8	WASHER-HARD (7.2X14.5X2MM THK)	

M-METRIC PART
Y-SEPARATE ILLUSTRATION

<END>

MEMORANDA

OPERATOR STATION

142-9289 HEATER GP-CAB

S/N: CED1-UP; FDG1-UP; 4YZ4000-UP; 5SZ4000-UP
PART OF 150-8627, 150-8629, 183-7130, 190-7944, 190-7945 HEATER & MTG GP-CAB
AN ATTACHMENT

SMCS-7304 **i01261476**

NOTE	REF NO	GRAPHIC REF	PART NUMBER	QTY	PART NAME 1 2 3 4 5 6 (PRODUCT LEVEL)	SEE PAGE
	1	1	**109-2355**	1	HOUSING-SWITCH	
	2	1	**114-4519**	1	SWITCH AS-3 POSITION (HEATER FAN)	
		1	**111-7899**	1	GASKET	
	3	1	**115-1615**	1	RELAY AS	
	4	1	**146-6371**	1	LOUVER AS	
	5	1	**146-6372**	1	BLOWER AS	
	6	1	**146-6376**	1	FILM (FAN SPEED)	
	7	1	**146-6377**	1	GROMMET	
	8	1	**146-6380**	1	HARNESS AS	
	9	1	**146-6381**	2	NUT-SPEED	
	10	1	**146-6382**	1	RESISTOR	
	11	1	**146-6383**	1	COVER	
	12	1	**146-6385**	1	FILM (TEMPERATURE)	
	13	1	**146-6386**	1	KNOB-CONTROL	
Y	14	1	**150-8624**	1	HEATER GP-CAB	634
	15	1	**177-4563**	5	SCREW (8-16 THD 7/16)	
	16	1	**166-6825**	1	SEAL	
M	17	1	**5C-9553**	1	BOLT (M6X1.0X16MM)	
	18	1	**8T-4205**	1	WASHER-HARD (2MM THK)	
E	19	1	**9X-8699**		SEAL (37.5CM)	

E-ORDER BY THE CENTIMETER
M-METRIC PART
Y-SEPARATE ILLUSTRATION

142-9289 HEATER GP-CAB *(contd.)* i01261476

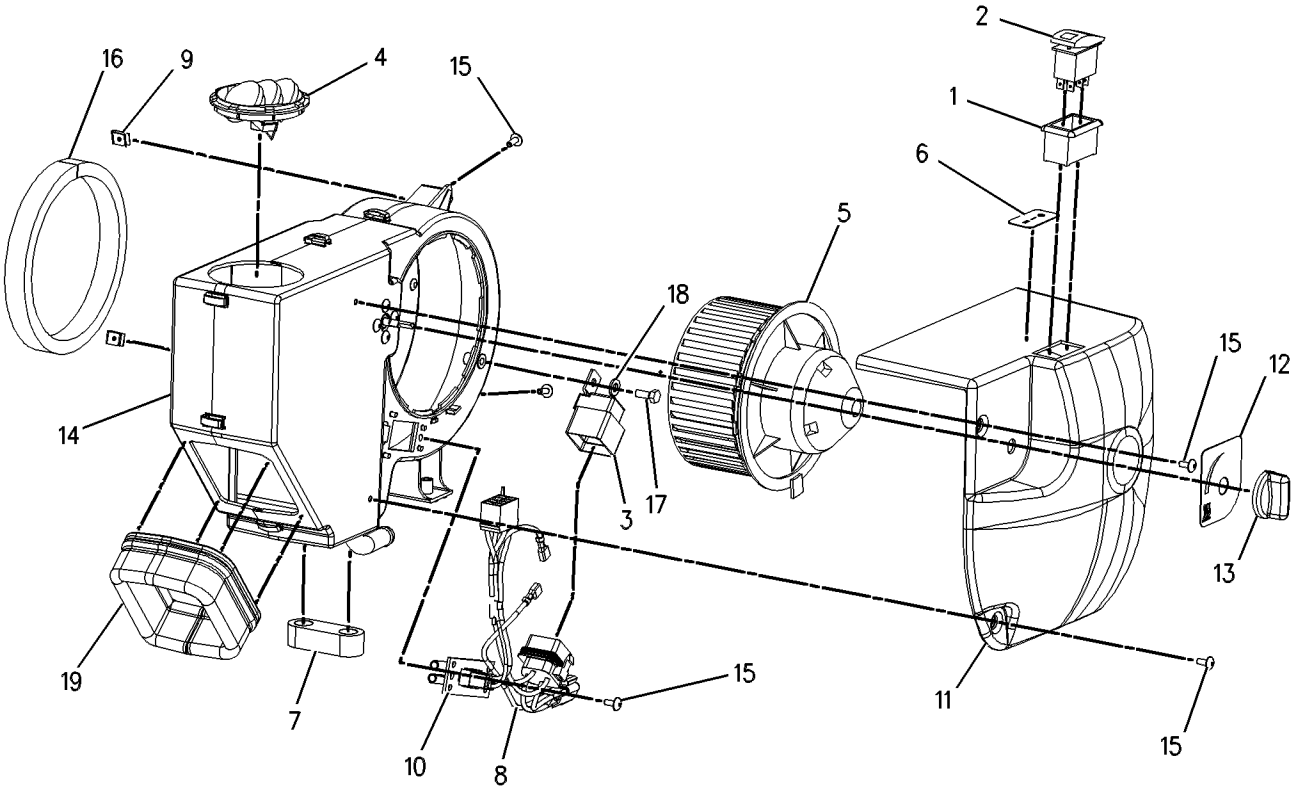

GRAPHIC #1 g00560676

OPERATOR STATION

150-8624 HEATER GP-CAB

S/N: CED1-UP; FDG1-UP; 4YZ4000-UP; 5SZ4000-UP
PART OF 142-9289 HEATER GP-CAB
AN ATTACHMENT

SMCS-7304 **i01787705**

NOTE	REF NO	GRAPHIC REF	PART NUMBER	QTY	PART NAME 1 2 3 4 5 6 (PRODUCT LEVEL)	SEE PAGE
	1	1	**4M-6582**	2	SEAL-O-RING	
	2	1	**8C-3756**	1	FILM-IDENTIFICATION (GROUP & SEQUENCE NO.)	
	3	1	**177-4563**	4	SCREW (8-16 THD 7/16)	
	4	1	**146-6370**	8	CLIP	
	5	1	**146-6374**	1	VALVE AS	
	6	1	**146-6390**	8	SCREW-TRUSS HEAD	

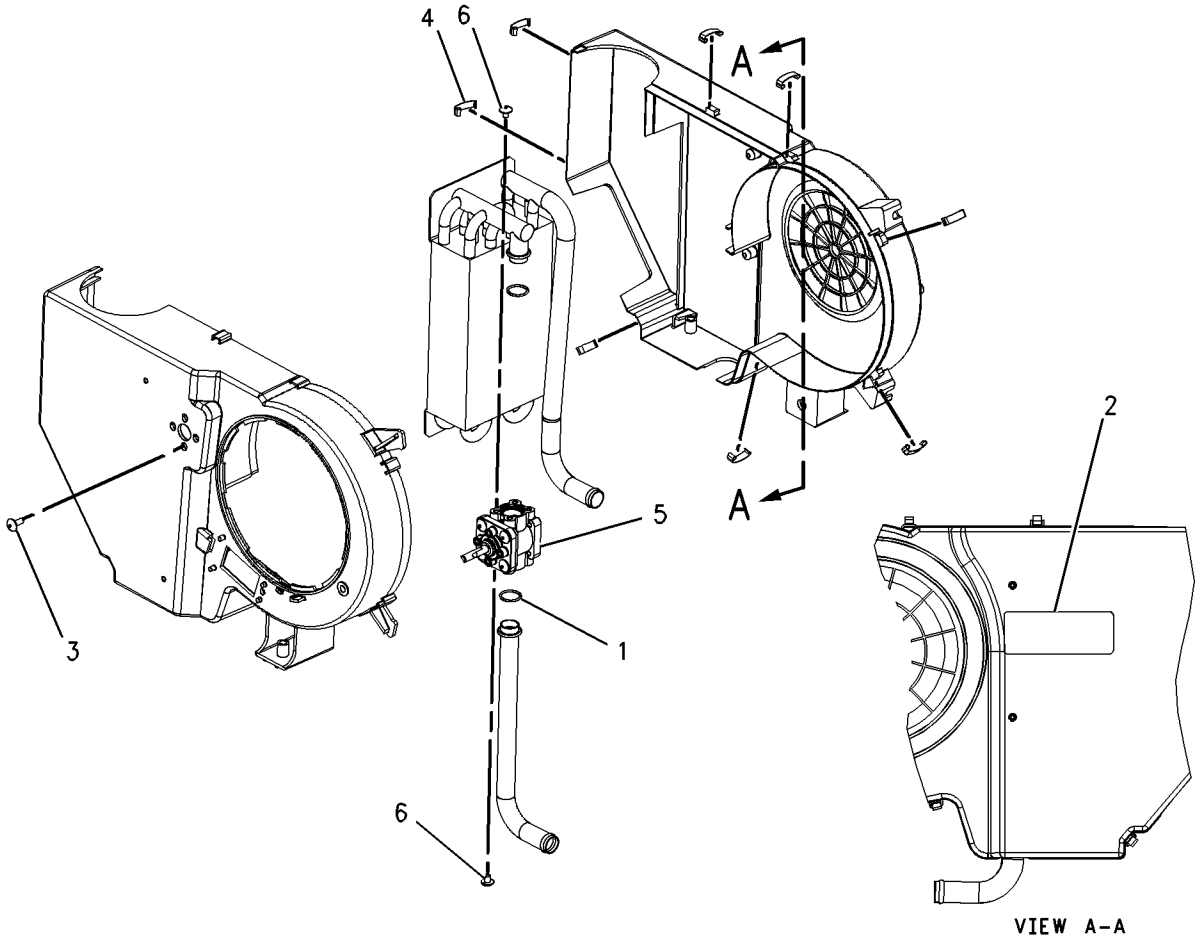

GRAPHIC #1 g00914820

190-8004 HORN GP-ELECTRIC

S/N: 4YZ4000-UP; 5SZ4000-UP

PART OF 191-2908, 191-2909, 191-9683, 191-9796, 215-3944 CONTROL GP-PILOT OPERATED HYD AN ATTACHMENT

SMCS-7402 **i01630146**

NOTE	REF NO	GRAPHIC REF	PART NUMBER	QTY	PART NAME 1 2 3 4 5 6 (PRODUCT LEVEL)	SEE PAGE
	1	1	**164-9425**	1	HORN AS	
	2	1	**8T-4121**	1	WASHER-HARD (11X21X2.5MM THK)	
M	3	1	**8T-4137**	1	BOLT (M10X1.5X20MM)	
	4	1	**113-8490**	1	FUSE (10 AMP)	

M-METRIC PART

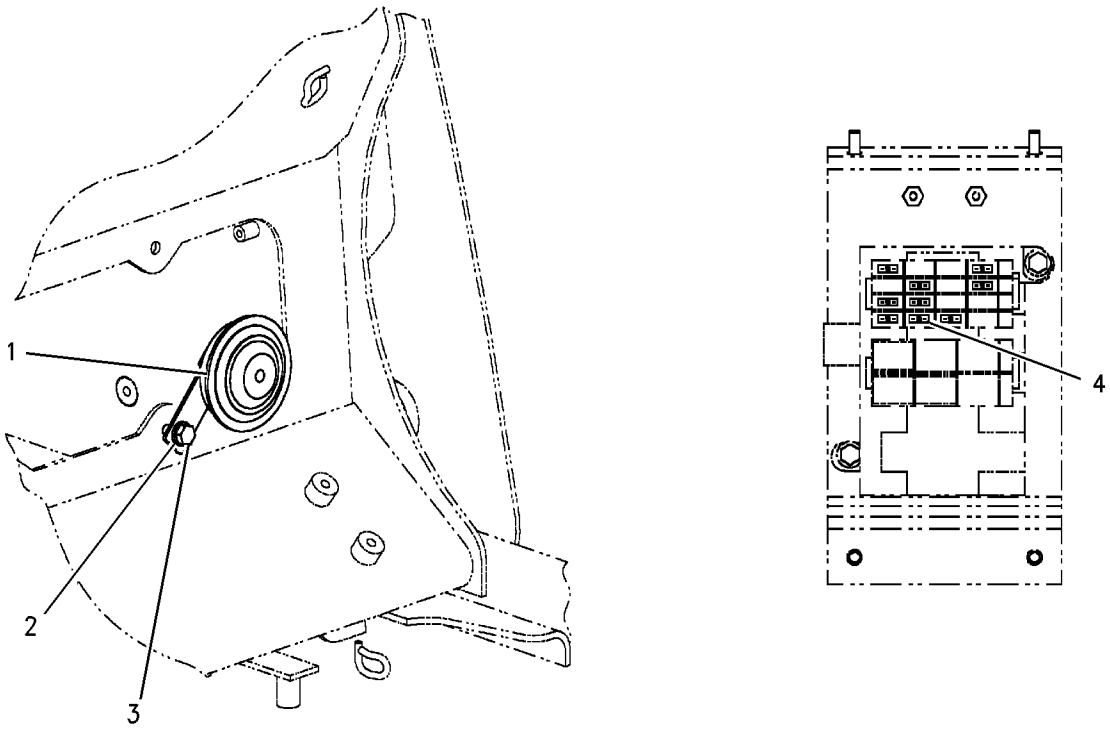

GRAPHIC #1 g00844551

OPERATOR STATION

202-2170 HORN GP-ELECTRIC

S/N: CED1-UP; FDG1-UP
PART OF 191-9746, 191-9797, 206-3795, 215-3946, 216-6176 CONTROL GP-PILOT OPERATED HYD AN ATTACHMENT

SMCS-7402 **i01795284**

NOTE	REF NO	GRAPHIC REF	PART NUMBER	QTY	PART NAME 1 2 3 4 5 6 (PRODUCT LEVEL)	SEE PAGE
	1	1	**113-8490**	1	FUSE (10 AMP)	
	2	1	**142-8833**	1	SPACER	
	3	1	**164-9425**	1	HORN AS	
	4	1	**8T-4121**	4	WASHER-HARD (11X21X2.5MM THK)	
M	5	1	**8T-4133**	1	NUT (M10X1.5 THD)	
M	6	1	**8T-4186**	1	BOLT (M10X1.5X40MM)	

M-METRIC PART

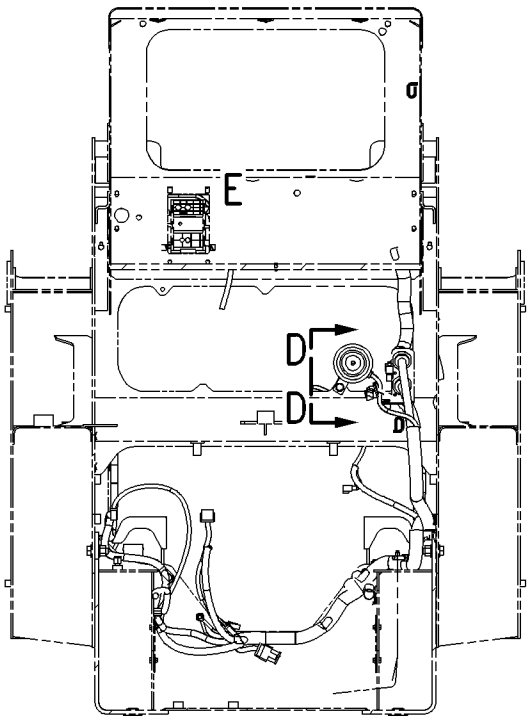

FRONT VIEW

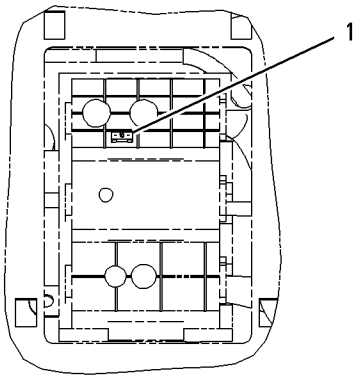

VIEW OF AREA E

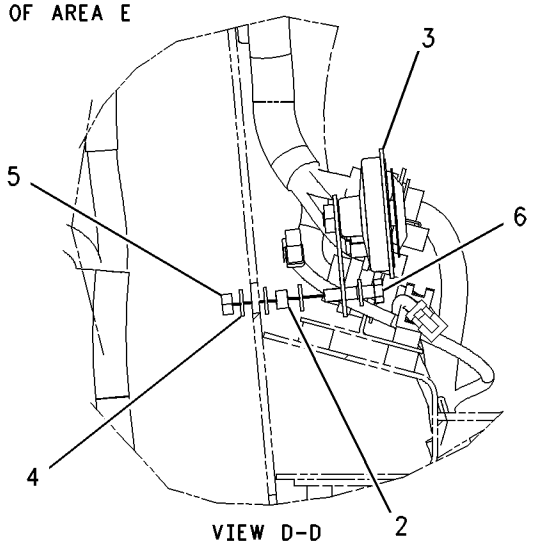

VIEW D-D

GRAPHIC #1 g00919139

203-4326 HORN GP-ELECTRIC

S/N: 4YZ4000-UP; 5SZ4000-UP
EUROPEAN UNION
PART OF 166-2567, 175-4242, 175-4244, 188-3306, 188-3307, 188-3308, 188-3310, 188-3311 CONVERSION AR-ROADING
AN ATTACHMENT

SMCS-7402 **i01512539**

NOTE	PART NUMBER	QTY	PART NAME 1 2 3 4 5 6 (PRODUCT LEVEL)	SEE PAGE
M	**8T-4186**	1	BOLT (M10X1.5X40MM)	
	186-3362	1	HARNESS AS	
	102-8802	1	KIT-RECEPTACLE (2 PIN)	
	155-2270	1	KIT-CONNECTING PLUG (2 PIN)	
M	**8T-4133**	1	NUT (M10X1.5 THD)	
	142-8833	1	SPACER (11X14.3X9MM THK)	
	3S-2093	10	STRAP-CABLE	
	8T-4121	3	WASHER-HARD (11X21X2.5MM THK)	

M-METRIC PART

<END>

220-8098 INSTALLATION AR—WITHOUT HEATER

S/N: CED1-UP; FDG1-UP; 4YZ4000-UP; 5SZ4000-UP
AN ATTACHMENT

SMCS-1405, 1802, 1805, 1808, 7174, 7304, 7320, 734D **i01798329**

NOTE	PART NUMBER	QTY	PART NAME 1 2 3 4 5 6 (PRODUCT LEVEL)	SEE PAGE
Y	*142-9108*	1	ALTERNATOR GP-CHARGING	141
Y	*142-9274*	1	COVER GP-CONSOLE (WITHOUT HEATER)	598
	222-5680	1	GUARD GP-BELT	
	220-8107	1	SUPPORT GP-PLATFORM	
	192-2667	1	SUPPORT AS (LH)	
	192-2669	1	SUPPORT AS (RH)	

Y-SEPARATE ILLUSTRATION

<END>

OPERATOR STATION

220-8104 INSTALLATION AR—HEATER

S/N: CED1-UP; 5SZ4000-UP
AN ATTACHMENT

SMCS-1405, 1802, 1805, 1808, 7174, 7304, 7320, 734D **i01798337**

NOTE	PART NUMBER	QTY	PART NAME 1 2 3 4 5 6 (PRODUCT LEVEL)	SEE PAGE
Y	*142-9108*	1	ALTERNATOR GP-CHARGING	141
Y	*219-4358*	1	DUCT & CONTROL GP	616
	222-5680	1	GUARD GP-BELT	
Y	*220-8143*	1	HEATER & MTG GP-CAB	630
M	**5C-9553**	4	BOLT (M6X1X16MM)	
	8T-4205	4	WASHER-HARD (7.2X14.5X2MM THK)	
	220-8144	1	HEATER GP-CAB	
Y	*152-4895*	1	LINES GP-AIR	98
Y	*190-7943*	1	LINES GP-HEATER	650

M-METRIC PART
Y-SEPARATE ILLUSTRATION

<END>

220-8110 INSTALLATION AR—AIR CONDITIONER

S/N: CED1-UP
AN ATTACHMENT

SMCS-1405, 1802, 1805, 1808, 7174, 7304, 7320, 734D **i01798317**

NOTE	PART NUMBER	QTY	PART NAME 1 2 3 4 5 6 (PRODUCT LEVEL)	SEE PAGE
Y	*219-4351*	1	AIR CONDITIONER & MOUNTING GP	585
	220-8084	1	ALTERNATOR GP-CHARGING	
Y	*219-4391*	1	COMPRESSOR & MTG GP-REFRIG	592
Y	*219-4352*	1	CONDENSER & MTG GP-REFRIGERANT	595
Y	*219-4358*	1	DUCT & CONTROL GP	616
	222-5681	1	GUARD GP-BELT	
Y	*219-4339*	1	LINES GP-AIR CONDITIONER	646
Y	*190-7943*	1	LINES GP-HEATER	650
Y	*220-5526*	1	WIRING GP-AIR CONDITIONER	179

Y-SEPARATE ILLUSTRATION

<END>

MEMORANDA

OPERATOR STATION

178-2252 KIT-CAB DOOR & MOUNTING

S/N: CED1-UP; FDG1-UP; 4YZ4000-UP; 5SZ4000-UP
KIT-CAB DOOR, GLASS WINDOW
CANNOT BE USED WITH 178-2253—PAGE 642
FIELD INSTALLATION

SMCS-7308 **i01755226**

NOTE	REF NO	GRAPHIC REF	PART NUMBER	QTY	PART NAME 1 2 3 4 5 6 (PRODUCT LEVEL)	SEE PAGE
	1	1	**3S-2093**	1	STRAP-CABLE	
	2	1	**5P-0372**	2	LOCK PIN	
	3	1	**8T-2444**	1	STUD-BALL	
	4	1	**8T-3848**	1	STRIKER AS-LATCH	
	5	1	**9C-5344**	1	SPACER (10.5X20X18MM THK)	
	6	1	**095-1325**	1	PIN-CLEVIS	
	7	1	**142-9127**	1	HARNESS AS-WINDOW WIPER	
	8	1	**142-9285**	1	SPRING AS-GAS	
	9	1	**142-9318**	1	STEP AS	
Y	10	1	*142-9340*	1	DOOR GP-CAB (GLASS)	612
	11	1	**142-9348**	1	PLATE AS	
	12	1	**142-9355**	1	MOUNT	
	13	1	**150-8622**	2	HINGE AS	
	14	1	**153-2682**	1	SPRING AS-GAS	
	15	1	**153-2683**	1	SPRING AS-GAS	
	16	1	**159-5799**	1	HANDLE	
	17	1	**177-3405**	1	PIN	
	18	1	**191-9664**	1	PLATE AS	
M	19	1	**127-2170**	8	SCREW-TRUSS HEAD (M8X1.25X20MM)	
	20	1	**142-9356**	1	BLOCK	
	21	1	**195-0937**	4	INSERT-THREADED	
M	22	1	**5C-2890**	4	NUT (M6X1 THD)	
M	23	1	**5C-7261**	4	NUT (M8X1.25 THD)	
	24	1	**8T-4121**	6	WASHER-HARD (11X21X2.5MM THK)	
M	25	1	**8T-4133**	6	NUT (M10X1.5 THD)	
	26	1	**8T-4205**	4	WASHER-HARD (7.2X14.5X2MM THK)	
	27	1	**8T-4224**	5	WASHER-HARD (8.8X16X2MM THK)	
M	28	1	**9X-2041**	10	SCREW-TRUSS HEAD (M10X1.5X20MM)	
M	29	1	**9X-2045**	4	SCREW-TRUSS HEAD (M6X1X20MM)	
E	30	1	**124-3243**		SEAL (45CM)	
E	31	1	**125-3518**		SEAL (65CM)	

E-ORDER BY THE CENTIMETER
M-METRIC PART
Y-SEPARATE ILLUSTRATION

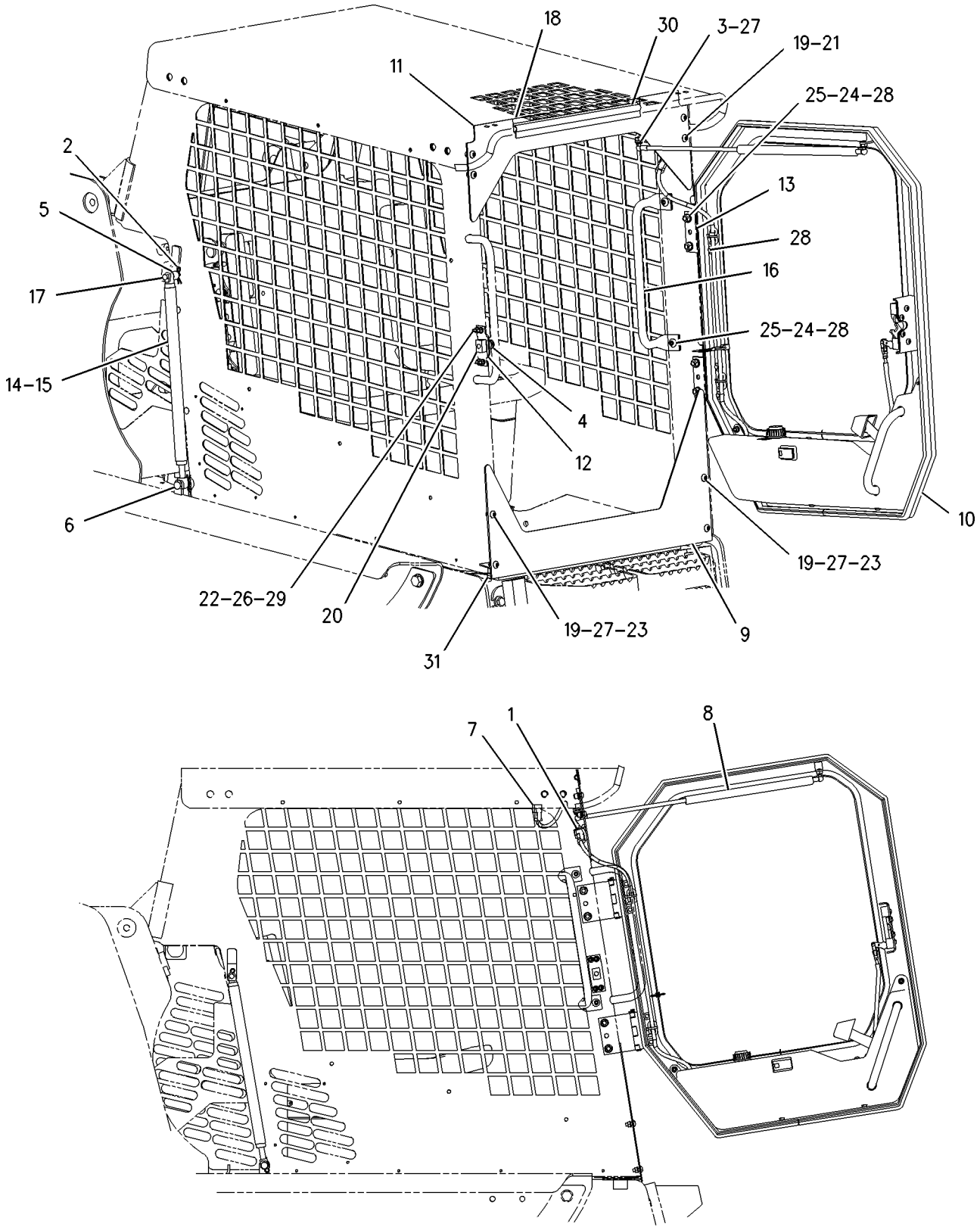

RIGHT SIDE VIEW

GRAPHIC #1 g00859228

OPERATOR STATION

178-2253 KIT-CAB DOOR & MOUNTING

S/N: CED1-UP; FDG1-UP; 4YZ4000-UP; 5SZ4000-UP
KIT-CAB DOOR, POLYCARBONATE WINDOW
CANNOT BE USED WITH 178-2252—PAGE 640
FIELD INSTALLATION

SMCS-7308 **i01787726**

NOTE	REF NO	GRAPHIC REF	PART NUMBER	QTY	PART NAME 1 2 3 4 5 6 (PRODUCT LEVEL)	SEE PAGE
	1	1	**3S-2093**	1	STRAP-CABLE	
	2	1	**5P-0372**	2	LOCK PIN	
	3	1	**8T-2444**	1	STUD-BALL	
	4	1	**8T-3848**	1	STRIKER AS-LATCH	
	5	1	**9C-5344**	1	SPACER (10.5X20X18MM THK)	
	6	1	**095-1325**	1	PIN-CLEVIS	
	7	1	**142-9127**	1	HARNESS AS-WINDOW WIPER	
	8	1	**142-9285**	1	SPRING AS-GAS	
	9	1	**142-9318**	1	STEP AS	
	10	1	**142-9348**	1	PLATE AS	
	11	1	**142-9355**	1	MOUNT	
	12	1	**150-8622**	2	HINGE AS	
	13	1	**153-2682**	1	SPRING AS-GAS	
	14	1	**153-2683**	1	SPRING AS-GAS	
	15	1	**159-5799**	1	HANDLE	
Y	16	1	*159-5801*	1	DOOR GP-CAB (POLYCARBONATE)	614
	17	1	**177-3405**	1	PIN	
	18	1	**191-9664**	1	PLATE AS	
M	19	1	**127-2170**	8	SCREW-TRUSS HEAD (M8X1.25X20MM)	
	20	1	**142-9356**	1	BLOCK	
	21	1	**195-0937**	4	INSERT-THREADED	
M	22	1	**5C-2890**	4	NUT (M6X1 THD)	
M	23	1	**5C-7261**	4	NUT (M8X1.25 THD)	
	24	1	**8T-4121**	6	WASHER-HARD (11X21X2.5MM THK)	
M	25	1	**8T-4133**	6	NUT (M10X1.5 THD)	
	26	1	**8T-4205**	4	WASHER-HARD (7.2X14.5X2MM THK)	
	27	1	**8T-4224**	5	WASHER-HARD (8.8X16X2MM THK)	
M	28	1	**9X-2041**	10	SCREW-TRUSS HEAD (M10X1.5X20MM)	
M	29	1	**9X-2045**	4	SCREW-TRUSS HEAD (M6X1X20MM)	
E	30	1	**124-3243**		SEAL (45CM)	
E	31	1	**125-3518**		SEAL (65CM)	

E-ORDER BY THE CENTIMETER
M-METRIC PART
Y-SEPARATE ILLUSTRATION

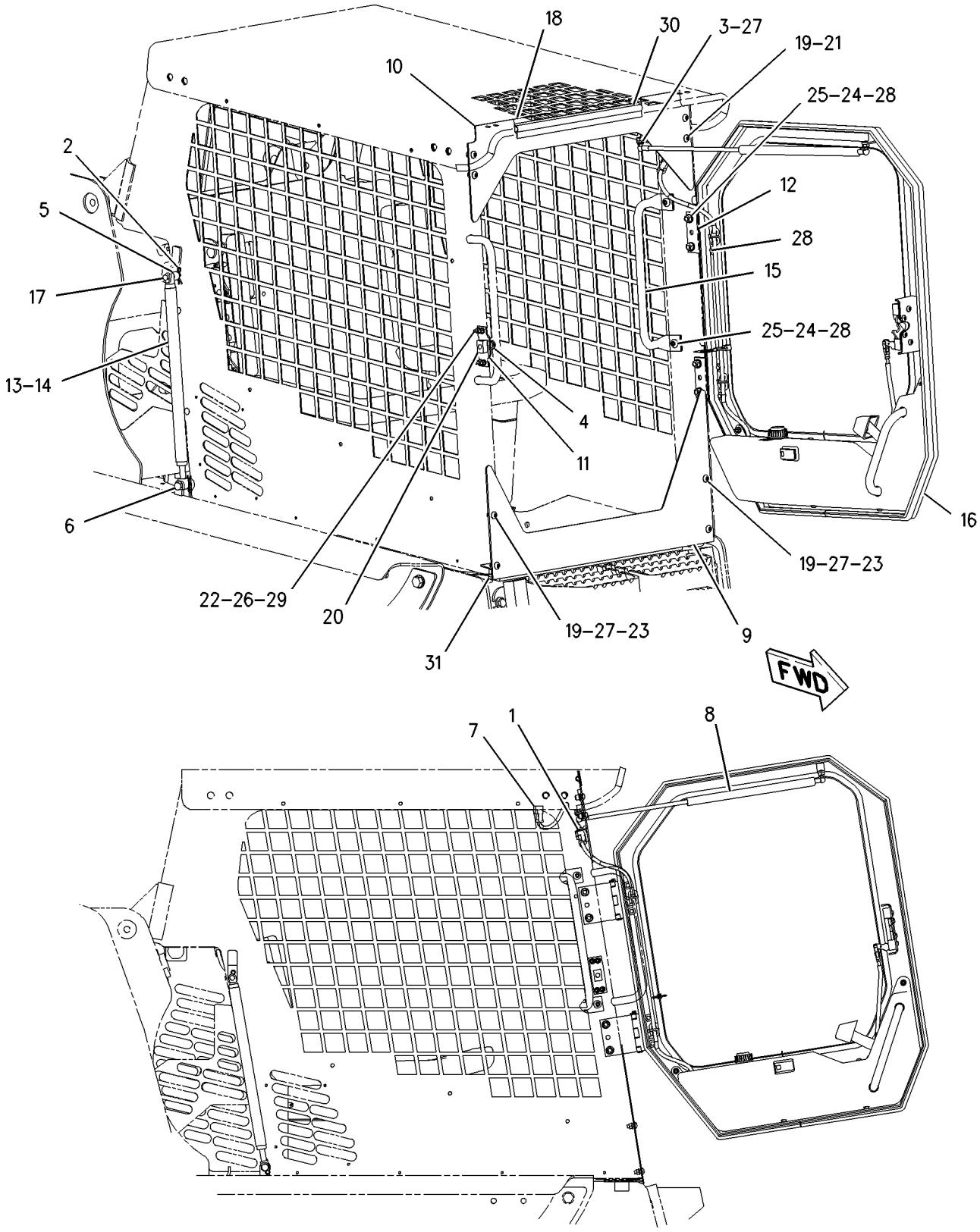

RIGHT SIDE VIEW

GRAPHIC #1 g00914835

OPERATOR STATION

195-6725 LINER GP-CAB

S/N: CED1-UP; FDG1-UP; 4YZ4000-UP; 5SZ4000-UP
PART OF 191-9799, 197-4899 OPERATOR AR-CANOPY

SMCS-7329 **i01787729**

NOTE	REF NO	GRAPHIC REF	PART NUMBER	QTY	PART NAME 1 2 3 4 5 6 (PRODUCT LEVEL)	SEE PAGE
	1	1	**5P-7957**	1	LANYARD	
	2	1	**142-9353**	1	INSULATION	
	3	1	**152-4871**	1	BOX-STORAGE	
	4	1	**195-0939**	2	STUD-THREADED	
	5	1	**195-6727**	1	LINER	
	6	1	**195-6728**	1	INSULATION	
	7	1	**195-0935**	4	INSERT-THREADED	
M	8	1	**9X-2042**	4	SCREW-TRUSS HEAD (M6X1X12MM)	
BE	9	1	**9X-2092**		STRIP-EDGE (113CM)	

B-USE AS REQUIRED
E-ORDER BY THE CENTIMETER
M-METRIC PART

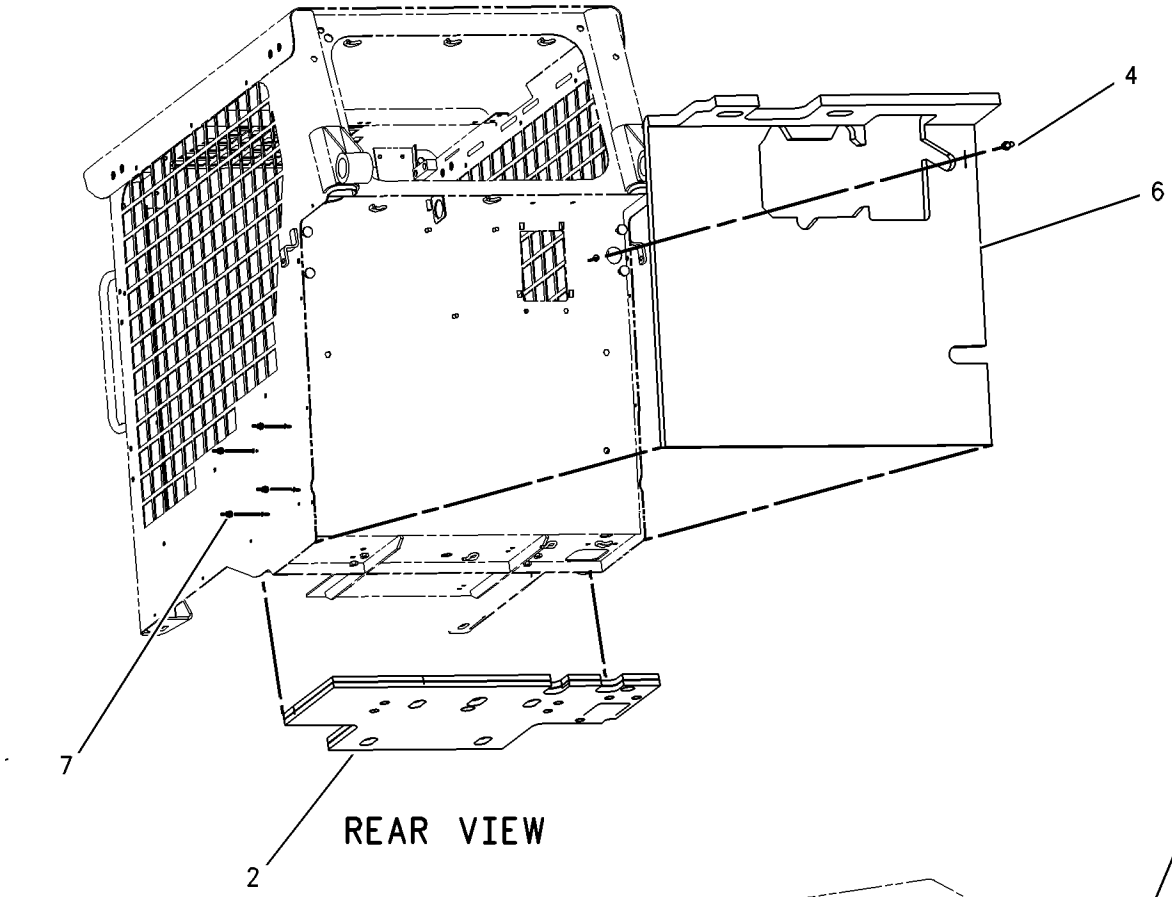

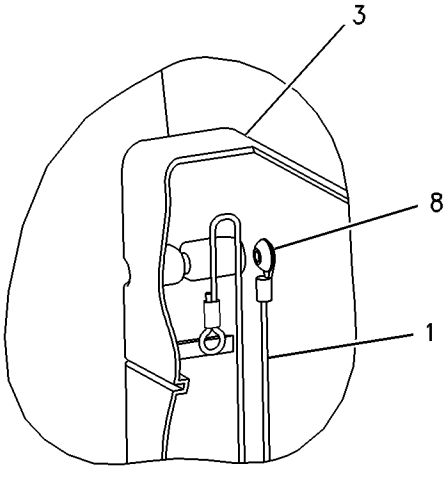

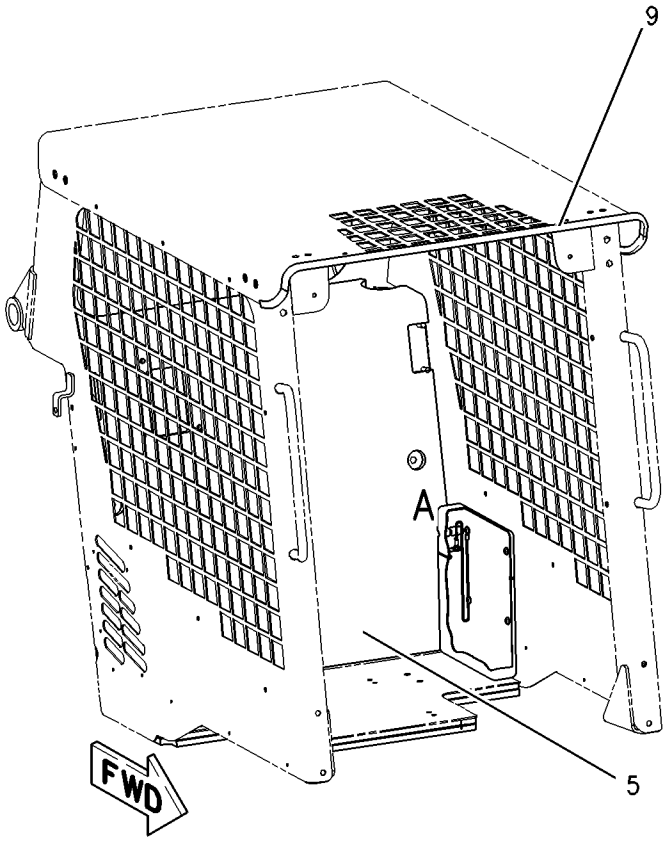

GRAPHIC #1 g00914839

OPERATOR STATION

219-4339 LINES GP-AIR CONDITIONER

S/N: CED1-UP
PART OF 220-8110 INSTALLATION AR
AN ATTACHMENT

SMCS-1808 **i01776069**

NOTE	PART NUMBER	QTY	PART NAME 1 2 3 4 5 6 (PRODUCT LEVEL)	SEE PAGE
	176-3900	1	ACCUMULATOR	
M	**8T-4195**	2	BOLT (M10X1.5X30MM)	
M	**8T-4198**	1	BOLT (M10X1.5X100MM)	
M	**8T-6466**	2	BOLT (M10X1.50X60MM)	
	219-4349	1	BRACKET AS	
	4S-1962	1	CLIP	
	6D-1641	2	CLIP	
	101-8296	2	CLIP	
	125-2796	1	FITTING AS	
	3E-4051	1	CAP AS (AIR CONDITIONER)	
	3E-4057	1	VALVE AS (AIR CONDITIONER)	
	3E-4066	1	FITTING AS-AIR CONDITIONER	
	3E-4052	1	CAP AS (AIR CONDITIONER)	
	3E-4058	1	VALVE AS (AIR CONDITIONER)	
	219-4341	1	HOSE AS	
	219-4342	1	HOSE AS	
I	**219-4343**	1	HOSE AS	
I	**219-4344**	1	HOSE AS	
M	**8T-4133**	1	NUT (M10X1.5 THD)	
	199-6243	1	PLATE	
	5P-5924	1	SEAL	
	9X-7381	3	SEAL-O-RING	
	9X-7382	2	SEAL-O-RING	
	9X-7383	2	SEAL-O-RING	
	2K-5232	2	SPACER (0.406X0.75X1.81IN THK)	
	3S-2093	1	STRAP-CABLE	
	114-5333	1	SWITCH AS-PRESSURE	
	102-8802	1	KIT-RECEPTACLE (2 PIN)	
	220-8134	1	TUBE AS-ORIFICE	
	8T-4121	5	WASHER-HARD (11X21X2.5MM THK)	

I-SEE HOSE FABRICATION GUIDE
M-METRIC PART

<END>

OPERATOR STATION

150-8628 LINES GP-HEATER

S/N: 4YZ4000-UP
PART OF 150-8627 HEATER & MTG GP-CAB
AN ATTACHMENT

SMCS-1812, 7304 **i01707292**

NOTE	REF NO	GRAPHIC REF	PART NUMBER	QTY	PART NAME 1 2 3 4 5 6 (PRODUCT LEVEL)	SEE PAGE
	1	1	**8F-8151**	1	VALVE-SHUTOFF	
	2	1	**8T-0154**	4	CLAMP-HOSE	
	3	1	**004-6810**	1	ELBOW	
	4	1	**183-7120**	2	GUARD-HOSE	
	5	1	**205-9883**	1	ELBOW	
	6	1	**1L-2279**	2	ELBOW	
	7	1	**6D-1641**	3	CLIP (LOOP)	
C	8	1	**8T-4121**	3	WASHER-HARD (11X21X2.5MM THK)	
M	9	1	**8T-4133**	1	NUT (M10X1.5 THD)	
M	10	1	**8T-4136**	1	BOLT (M10X1.5X25MM)	
C	11	1	**136-1953**		HOSE (442CM)	
C	12	1	**9X-2092**		STRIP-EDGE (10CM)	

C-CHANGE FROM PREVIOUS TYPE
M-METRIC PART

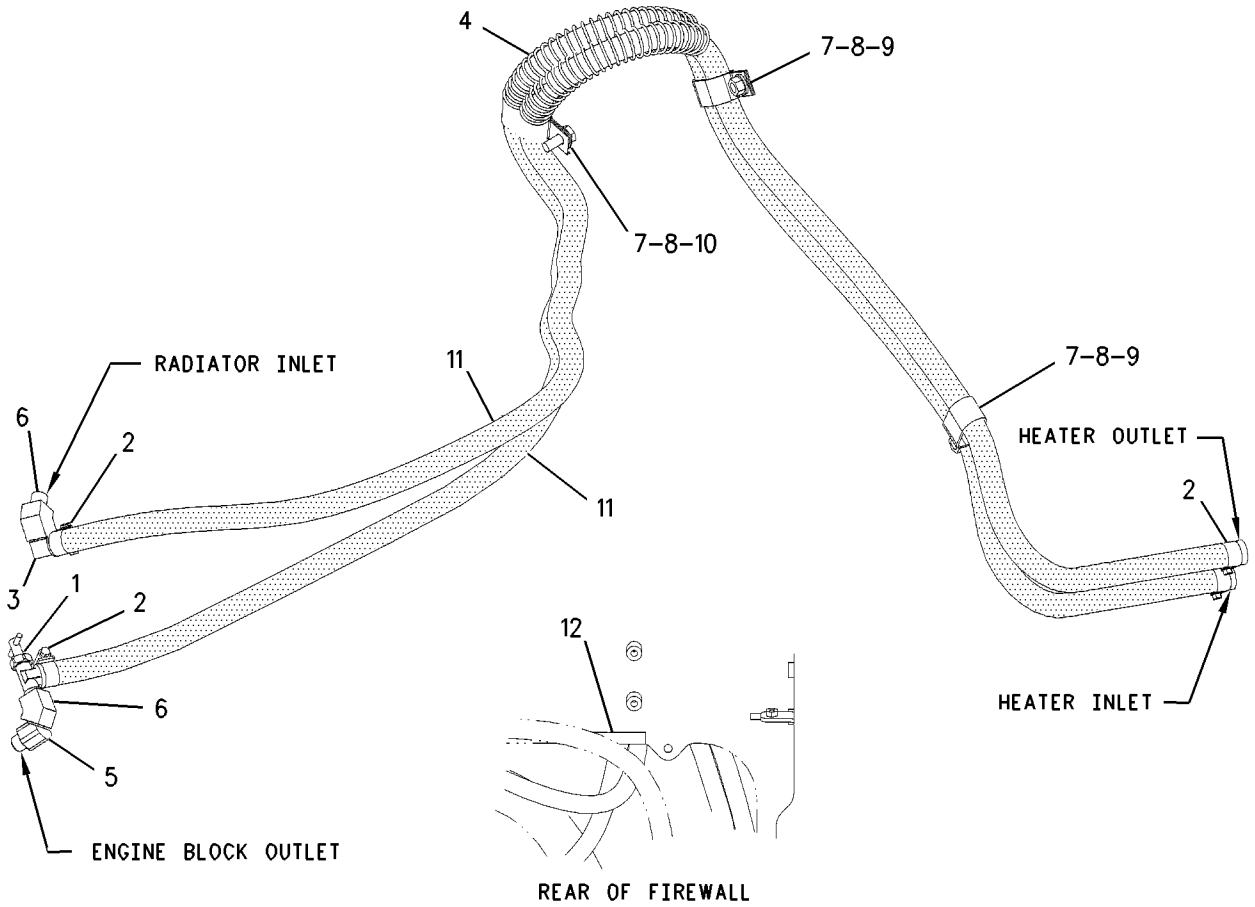

GRAPHIC #1 g00878973

OPERATOR STATION

150-8630 LINES GP-HEATER

S/N: 5SZ4000-UP
PART OF 150-8629 HEATER & MTG GP-CAB
AN ATTACHMENT

SMCS-1812, 7304 **i01693675**

NOTE	REF NO	GRAPHIC REF	PART NUMBER	QTY	PART NAME 1 2 3 4 5 6 (PRODUCT LEVEL)	SEE PAGE
	1	1	**1L-2279**	2	ELBOW	
	2	1	**8F-8151**	1	VALVE-SHUTOFF	
	3	1	**8T-0154**	4	CLAMP-HOSE	
	4	1	**004-6810**	1	ELBOW	
	5	1	**183-7120**	2	GUARD-HOSE	
	6	1	**205-9883**	1	ELBOW	
C	7	1	**4S-1962**	1	CLIP	
	8	1	**6D-1641**	3	CLIP (LOOP)	
	9	1	**8T-4121**	5	WASHER-HARD (11X21X2.5MM THK)	
CM	10	1	**8T-4133**	3	NUT (M10X1.5 THD)	
M	11	1	**8T-4136**	2	BOLT (M10X1.5X25MM)	
C	12	1	**136-1953**		HOSE (442CM)	
C	13	1	**9X-2092**		STRIP-EDGE (10CM)	

C-CHANGE FROM PREVIOUS TYPE
M-METRIC PART

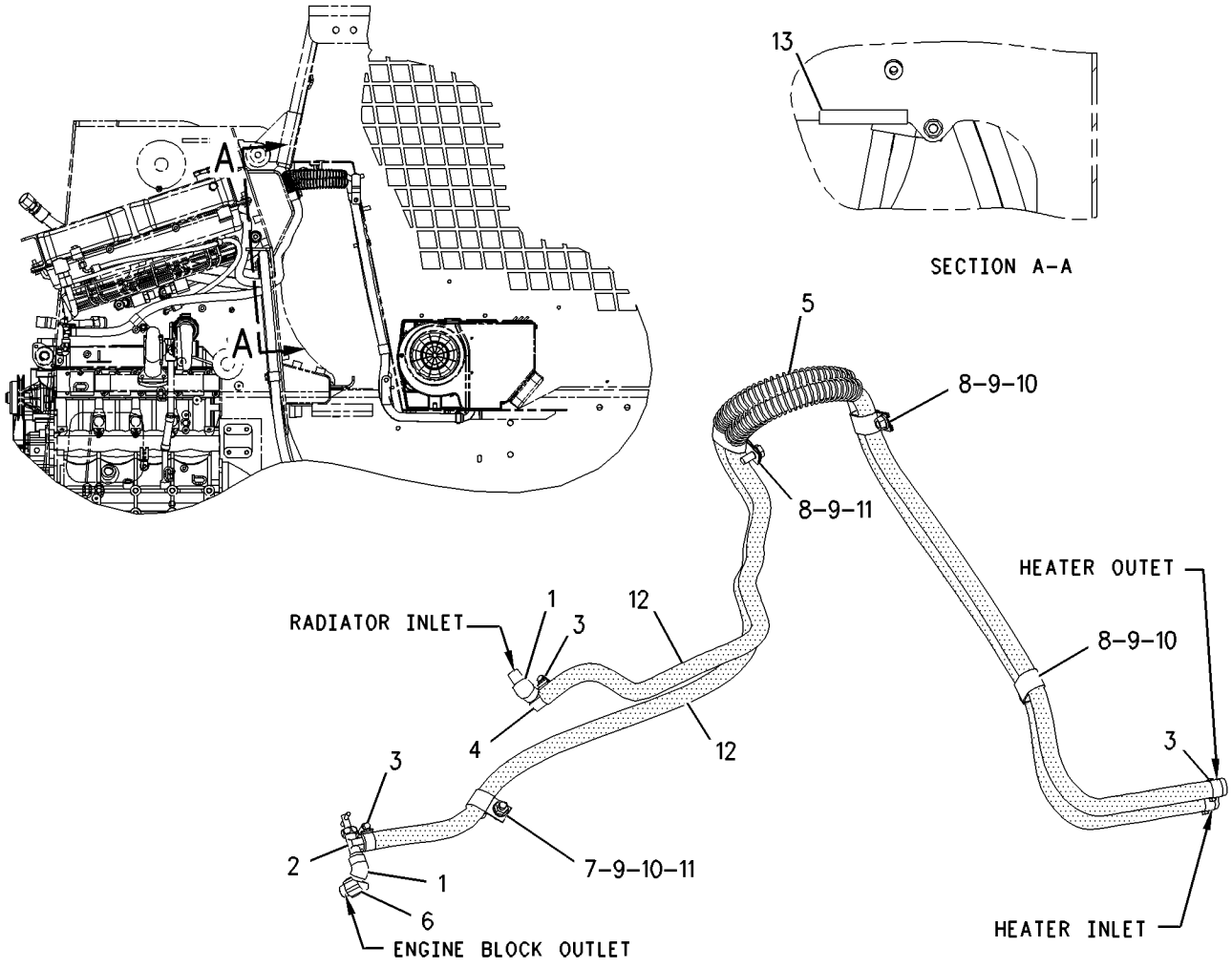

GRAPHIC #1 g00872174

OPERATOR STATION

190-7942 LINES GP-HEATER

S/N: FDG1-UP
PART OF 190-7944 HEATER & MTG GP-CAB
AN ATTACHMENT

SMCS-1812, 7304 **i01790473**

NOTE	REF NO	GRAPHIC REF	PART NUMBER	QTY	PART NAME 1 2 3 4 5 6 (PRODUCT LEVEL)	SEE PAGE
	1	1	**8F-8151**	1	VALVE-SHUTOFF	
	2	1	**8T-0154**	4	CLAMP-HOSE	
	3	1	**004-6810**	1	ELBOW	
	4	1	**183-7120**	2	GUARD-HOSE	
	5	1	**219-4328**	1	ELBOW	
	6	1	**1L-2279**	1	ELBOW	
	7	1	**5K-6875**	1	ADAPTER	
	8	1	**6D-1641**	3	CLIP (LOOP)	
	9	1	**8T-4121**	3	WASHER-HARD (11X21X2.5MM THK)	
M	10	1	**8T-4133**	2	NUT (M10X1.5 THD)	
M	11	1	**8T-4136**	1	BOLT (M10X1.5X25MM)	
BE	12	1	**136-1953**		HOSE (452CM)	
BE	13	1	**9X-2092**		STRIP-EDGE (10CM)	

B-USE AS REQUIRED
E-ORDER BY THE CENTIMETER
M-METRIC PART

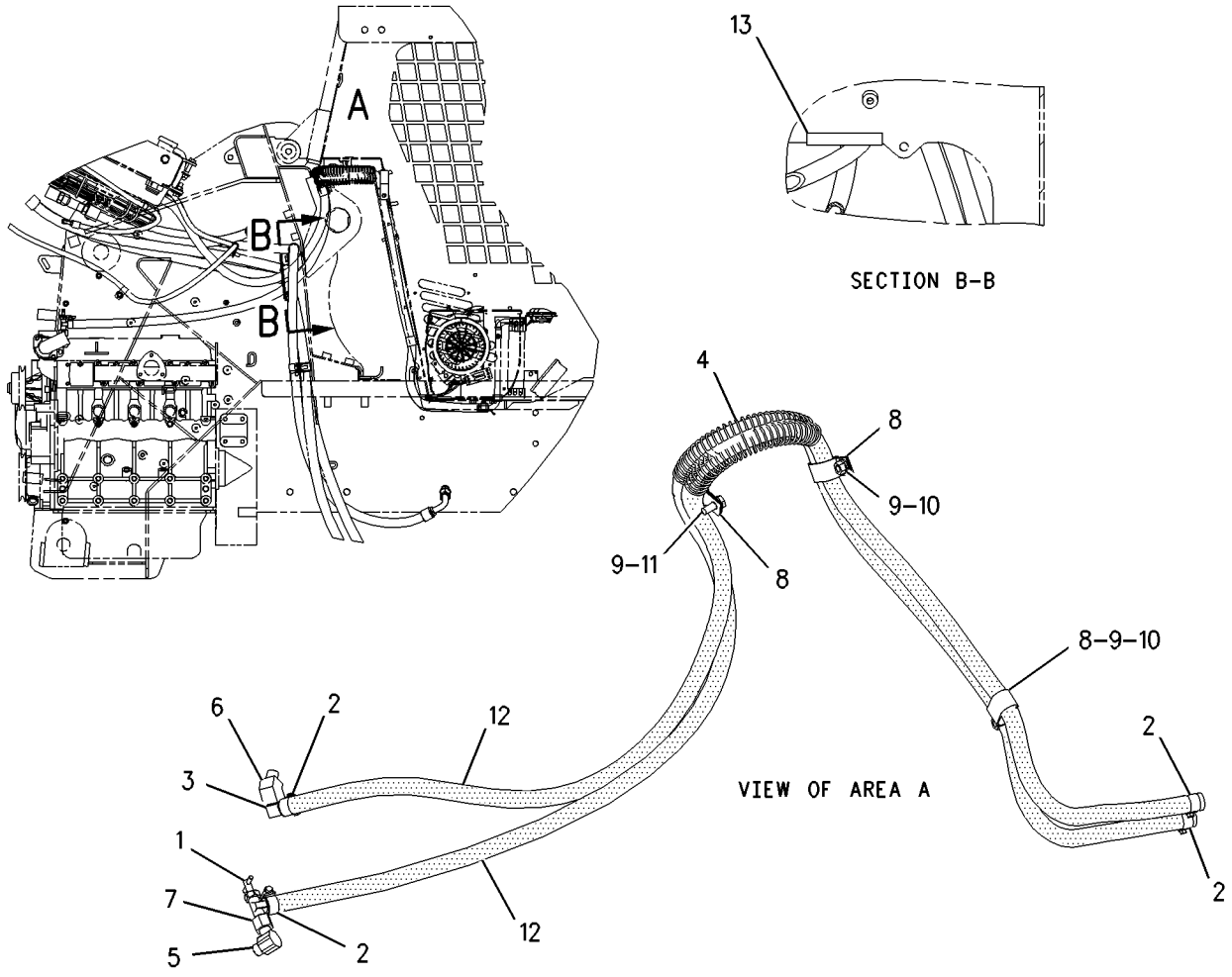

GRAPHIC #1 g00919927

OPERATOR STATION

190-7943 LINES GP-HEATER

S/N: CED1-UP; FDG1-UP; 4YZ4000-UP; 5SZ4000-UP
PART OF 190-7945, 222-5721 HEATER & MTG GP-CAB, 220-8104, 220-8110 INSTALLATION AR
AN ATTACHMENT

SMCS-1812, 7304 **i01792783**

NOTE	REF NO	GRAPHIC REF	PART NUMBER	QTY	PART NAME 1 2 3 4 5 6 (PRODUCT LEVEL)	SEE PAGE
	1	1	**1L-2279**	1	ELBOW	
	2	1	**8F-8151**	1	VALVE-SHUTOFF	
	3	1	**8T-0154**	4	CLAMP-HOSE	
	4	1	**004-6810**	1	ELBOW	
	5	1	**183-7120**	2	GUARD-HOSE	
	6	1	**219-4328**	1	ELBOW	
	7	1	**4S-1962**	1	CLIP	
	8	1	**5K-6875**	1	ADAPTER	
	9	1	**6D-1641**	3	CLIP	
	10	1	**8T-4121**	5	WASHER-HARD (11X21X2.5MM THK)	
M	11	1	**8T-4133**	3	NUT (M10X1.5 THD)	
M	12	1	**8T-4136**	2	BOLT (M10X1.5X25MM)	
BE	13	1	**136-1953**		HOSE (452CM)	
BE	14	1	**9X-2092**		STRIP-EDGE (10CM)	

B-USE AS REQUIRED
E-ORDER BY THE CENTIMETER
M-METRIC PART

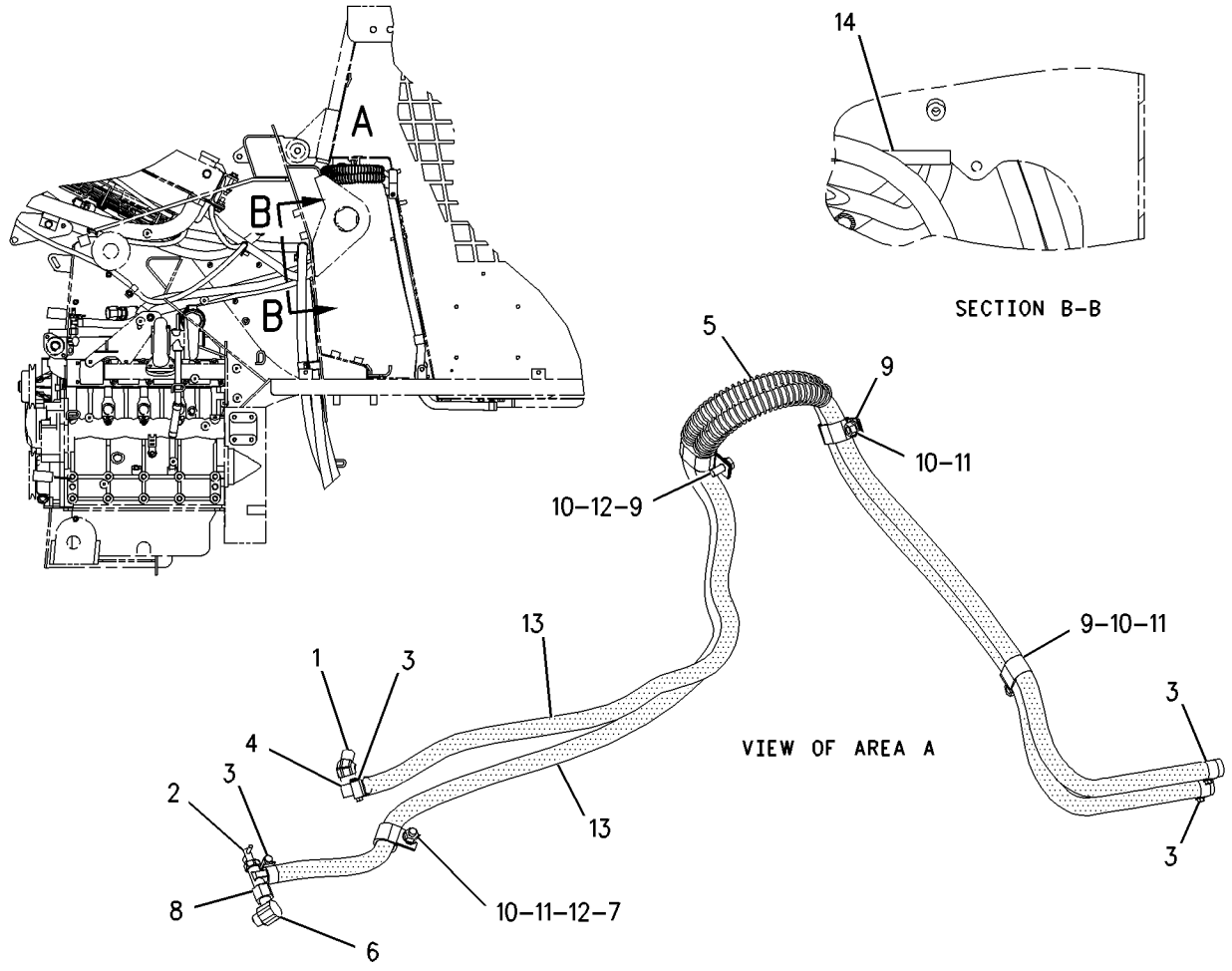

GRAPHIC #1 g00920453

OPERATOR STATION

175-4233 MIRROR & MTG GP-REAR VIEW

S/N: 4YZ4000-UP; 5SZ4000-UP
PART OF 166-2567, 175-4242, 188-3307, 188-3308 CONVERSION AR-ROADING AN ATTACHMENT

SMCS-7319 **i01795289**

NOTE	REF NO	GRAPHIC REF	PART NUMBER	QTY	PART NAME 1 2 3 4 5 6 (PRODUCT LEVEL)	SEE PAGE
D	1	1	**6V-1392**		SEAL (1M)	
	2	1	**132-5166**	2	MIRROR	
		1	**148-2371**	1	CLAMP (TOP)	
		1	**148-2372**	1	CLAMP (BOTTOM)	
	3	1	**175-4234**	1	BASE AS	
		1	**7T-1099**	2	LINK	
	4	1	**175-4239**	2	BRACKET AS	
	5	1	**183-7136**	1	BASE AS	
		1	**7T-1099**	2	LINK	
M	6	1	**5C-9553**	4	BOLT (M6X1X16MM)	
	7	1	**8T-4121**	4	WASHER-HARD (11X21X2.5MM THK)	
M	8	1	**8T-4136**	4	BOLT (M10X1.5X25MM)	
	9	1	**8T-4205**	4	WASHER-HARD (7.2X14.5X2MM THK)	

D-ORDER BY THE METER
M-METRIC PART

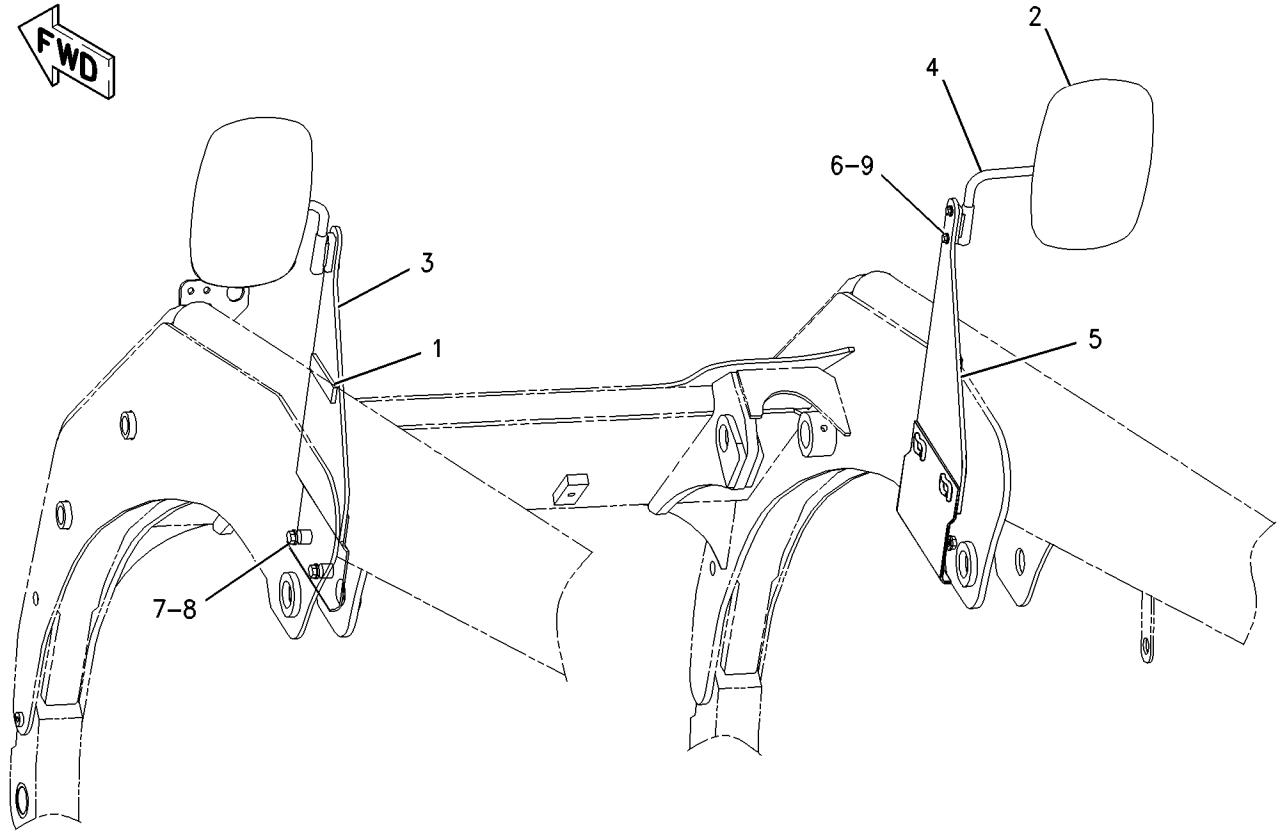

GRAPHIC #1 g00919142

OPERATOR STATION

161-7522 MOTOR GP-WINDOW WIPER

S/N: CED1-UP; FDG1-UP; 4YZ4000-UP; 5SZ4000-UP
PART OF 142-9340, 159-5801 DOOR GP-CAB
AN ATTACHMENT

SMCS-7305 **i01755241**

NOTE	REF NO	GRAPHIC REF	PART NUMBER	QTY	PART NAME 1 2 3 4 5 6 (PRODUCT LEVEL)	SEE PAGE
	1	1	**102-8804**	1	KIT-RECEPTACLE (4 PIN)	
	2	1	**186-3735**	4	PIN-CONNECTOR	

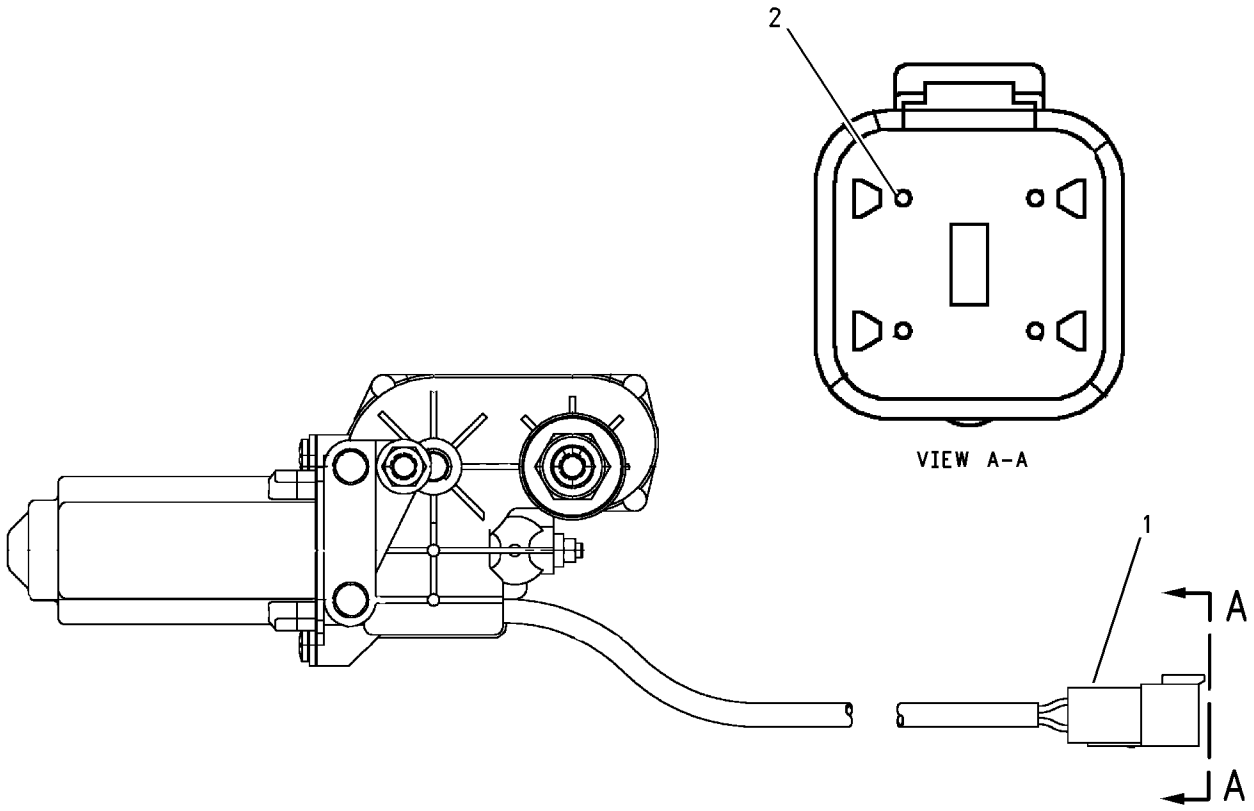

GRAPHIC #1 g00647191

OPERATOR STATION

142-9354 MOUNTING GP-ROPS

S/N: CED1-UP; FDG1-UP; 4YZ4000-UP; 5SZ4000-UP

PART OF 190-7953, 195-6710, 195-6761, 195-6763 CHASSIS AR

SMCS-7266, 7323, 7325 **i01795293**

NOTE	REF NO	GRAPHIC REF	PART NUMBER	QTY	PART NAME 1 2 3 4 5 6 (PRODUCT LEVEL)	SEE PAGE
	1	1	**152-5878**	2	MOUNT AS	
		1	**1D-4622**	4	BOLT (3/4-10X8IN)	
		1	**6K-1330**	4	BOLT (3/4-10X5.75 IN)	
	2	1	**153-6981**	2	MOUNT	
	3	1	**159-5790**	1	BRACKET	
	4	1	**159-5792**	1	BAR AS	
	5	1	**159-5794**	1	SPRING	
	6	1	**165-7095**	4	WASHER (16.5X71.5X3MM THK) (3MM THK)	
M	7	1	**6V-9805**	2	BOLT (M6X1X20MM)	
M	8	1	**7X-2556**	2	BOLT (M16X2X100MM)	
M	9	1	**7X-2475**	2	BOLT (M16X2X130MM)	
	10	1	**8T-4122**	6	WASHER-HARD (17X32X3.5MM THK)	
	11	1	**8T-4205**	2	WASHER-HARD (7.2X14.5X2MM THK)	
M	12	1	**8T-4778**	4	LOCKNUT (M16X2 THD)	
	13	1	**4P-7581**	1	CLIP (LADDER)	

M-METRIC PART

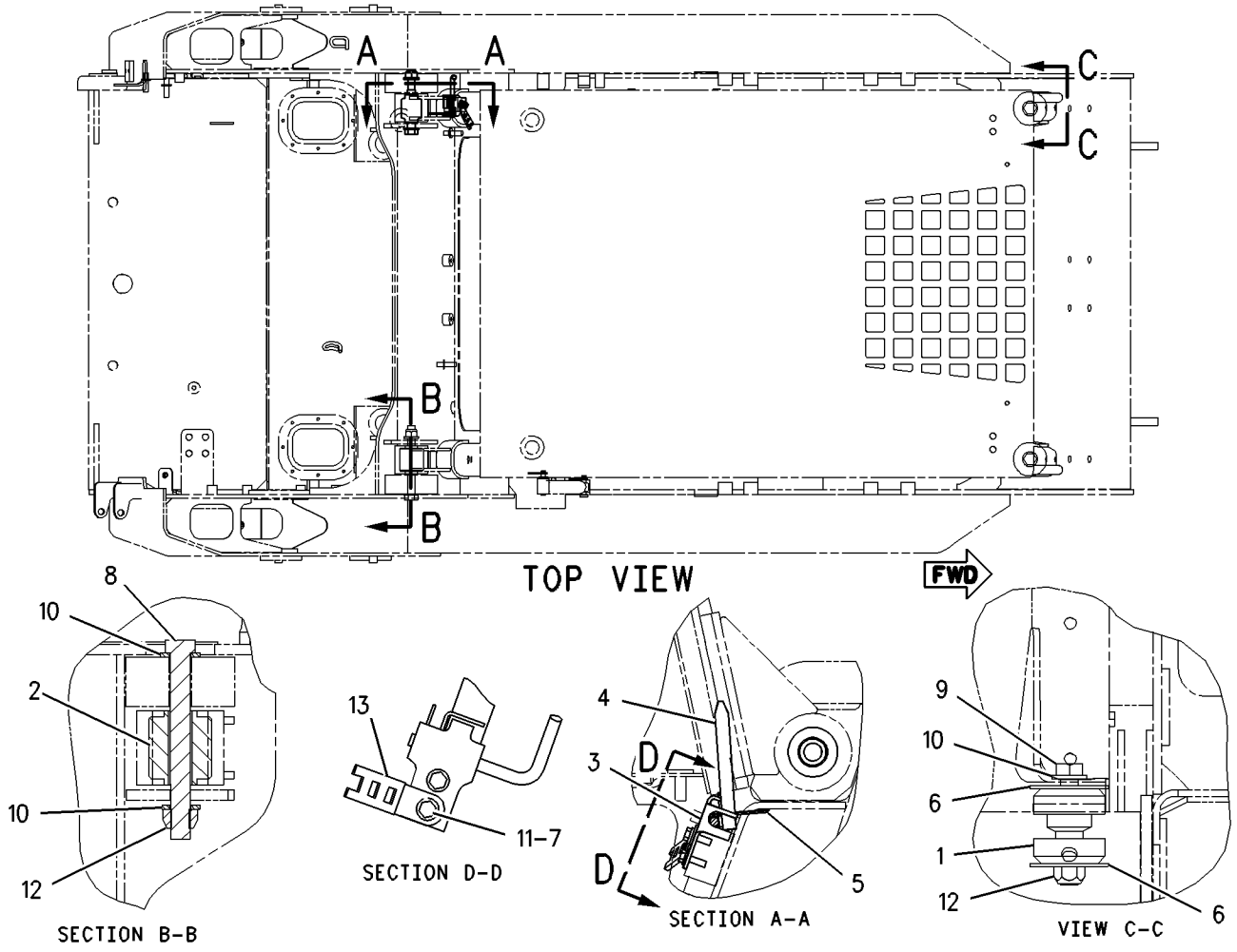

GRAPHIC #1 g00919148

OPERATOR STATION

191-9799 OPERATOR AR-CANOPY

S/N: 4YZ4000-UP; 5SZ4000-UP
PART OF 195-6761, 195-6763 CHASSIS AR

SMCS-7302 **i01630158**

NOTE	PART NUMBER	QTY	PART NAME 1 2 3 4 5 6 (PRODUCT LEVEL)	SEE PAGE
Y	*195-6721*	1	ARMREST & MOUNTING GP	586
	191-9781	1	CANOPY AS-ROPS	
M	**8T-3612**	4	NUT-WELD (M8X1.25 THD)	
	7T-1099	7	LINK	
Y	*195-6725*	1	LINER GP-CAB	644
Y	**199-5272**	1	PANEL GP-SIDE	311

M-METRIC PART
Y-SEPARATE ILLUSTRATION

<END>

197-4899 OPERATOR AR-CANOPY

S/N: CED1-UP; FDG1-UP
PART OF 190-7953, 195-6710 CHASSIS AR

SMCS-7302 **i01464191**

NOTE	PART NUMBER	QTY	PART NAME 1 2 3 4 5 6 (PRODUCT LEVEL)	SEE PAGE
Y	*195-6721*	1	ARMREST & MOUNTING GP	586
	191-9781	1	CANOPY AS	
	7T-1099	7	LINK	
Y	*195-6725*	1	LINER GP-CAB	644
Y	**199-5271**	1	PANEL GP-SIDE	310

Y-SEPARATE ILLUSTRATION

<END>

195-6791 PANEL AR-INSTRUMENT

S/N: CED1-UP; FDG1-UP; 4YZ40000-UP; 5SZ40000-UP
AN ATTACHMENT

SMCS-7451 **i01489845**

NOTE	PART NUMBER	QTY	PART NAME 1 2 3 4 5 6 (PRODUCT LEVEL)	SEE PAGE
Y	*193-8371*	1	PANEL GP-INSTRUMENT	656

Y-SEPARATE ILLUSTRATION

<END>

MEMORANDA

OPERATOR STATION

193-8371 PANEL GP-INSTRUMENT

S/N: CED1-UP; FDG1-UP; 4YZ4000-UP; 5SZ4000-UP
PART OF 195-6791 PANEL AR-INSTRUMENT
AN ATTACHMENT

SMCS-7451 **i01789021**

NOTE	REF NO	GRAPHIC REF	PART NUMBER	QTY	PART NAME 1 2 3 4 5 6 (PRODUCT LEVEL)	SEE PAGE
	1	2	**109-2356**	2	PLUG	
Y	2	1	*142-9118*	1	COVER GP-CAB	596
	3	2	**142-9320**	1	SWITCH AS (PARKING BRAKE)	
		2	**111-7899**	1	GASKET	
	4	2	**142-9325**	1	SWITCH AS (GLOW PLUG)	
	5	2	**142-9328**	1	SWITCH AS (FRONT WORKING LAMP)	
		2	**111-7899**	1	GASKET	
	6	1	**158-6696**	1	COVER	
	7	1	**158-6698**	1	COVER	
	8	1	**158-6699**	1	COVER	
	9	2	**165-0311**	7	PLUG	
	10	1	**165-0312**	2	WIRE AS	
	11	1	**193-8373**	1	HARNESS AS-INSTRUMENT PANEL	
		1	**102-8805**	1	KIT-RECEPTACLE (6 PIN)	
	12	2	**194-8168**	1	SWITCH AS (CONTINOUS FLOW CONTROL)	
		2	**111-7899**	1	GASKET	
Y	13	1	*197-6898*	1	GAUGE & WARNING GP (LH)	620
Y	14	1	*197-6899*	1	GAUGE & WARNING GP (RH)	621
	15	1	**103-2006**	16	SCREW-PAN HEAD	
	16	1	**9P-0719**	2	GROMMET	

Y-SEPARATE ILLUSTRATION

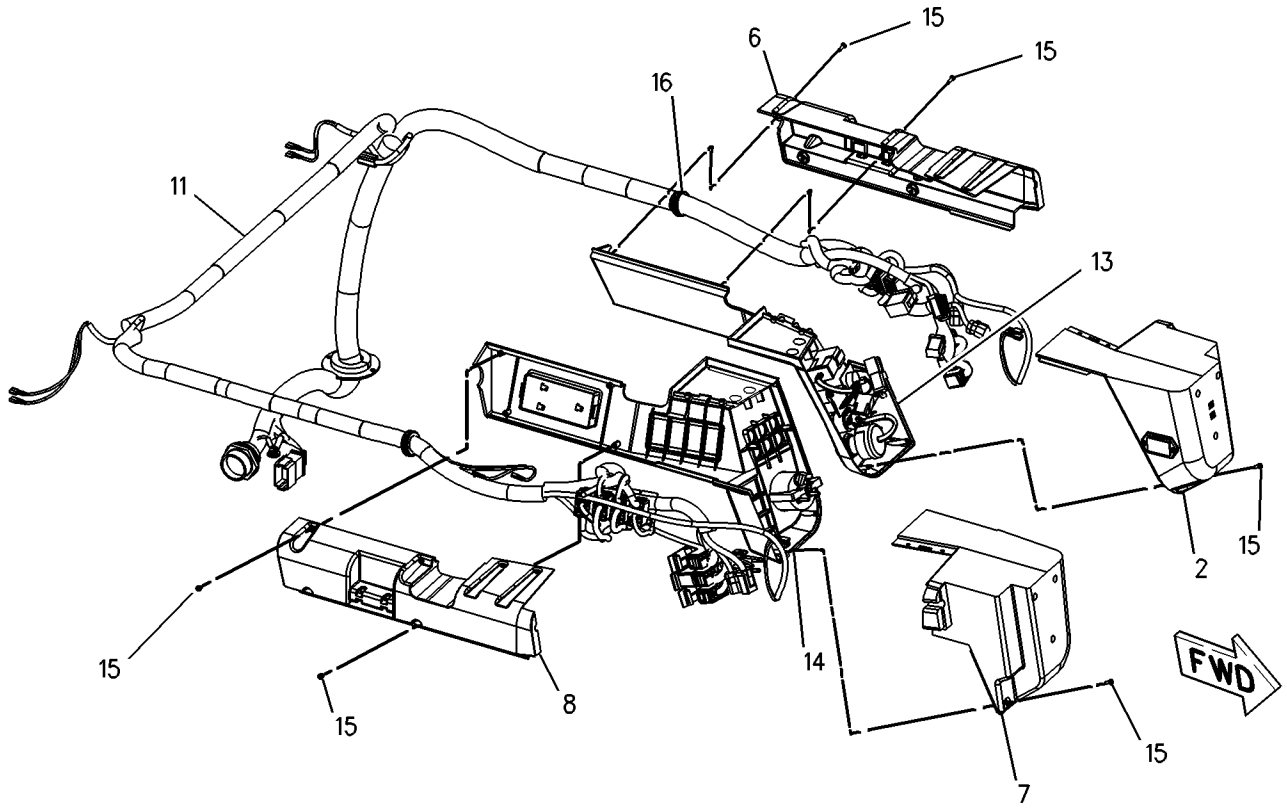

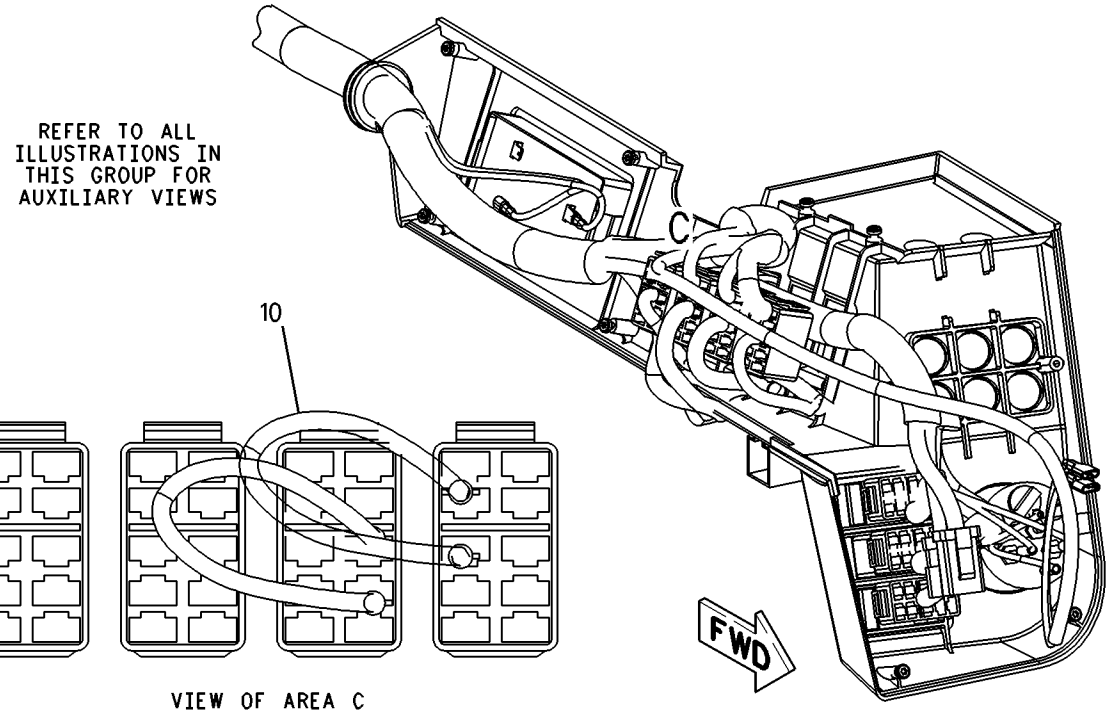

GRAPHIC #1 g00914867

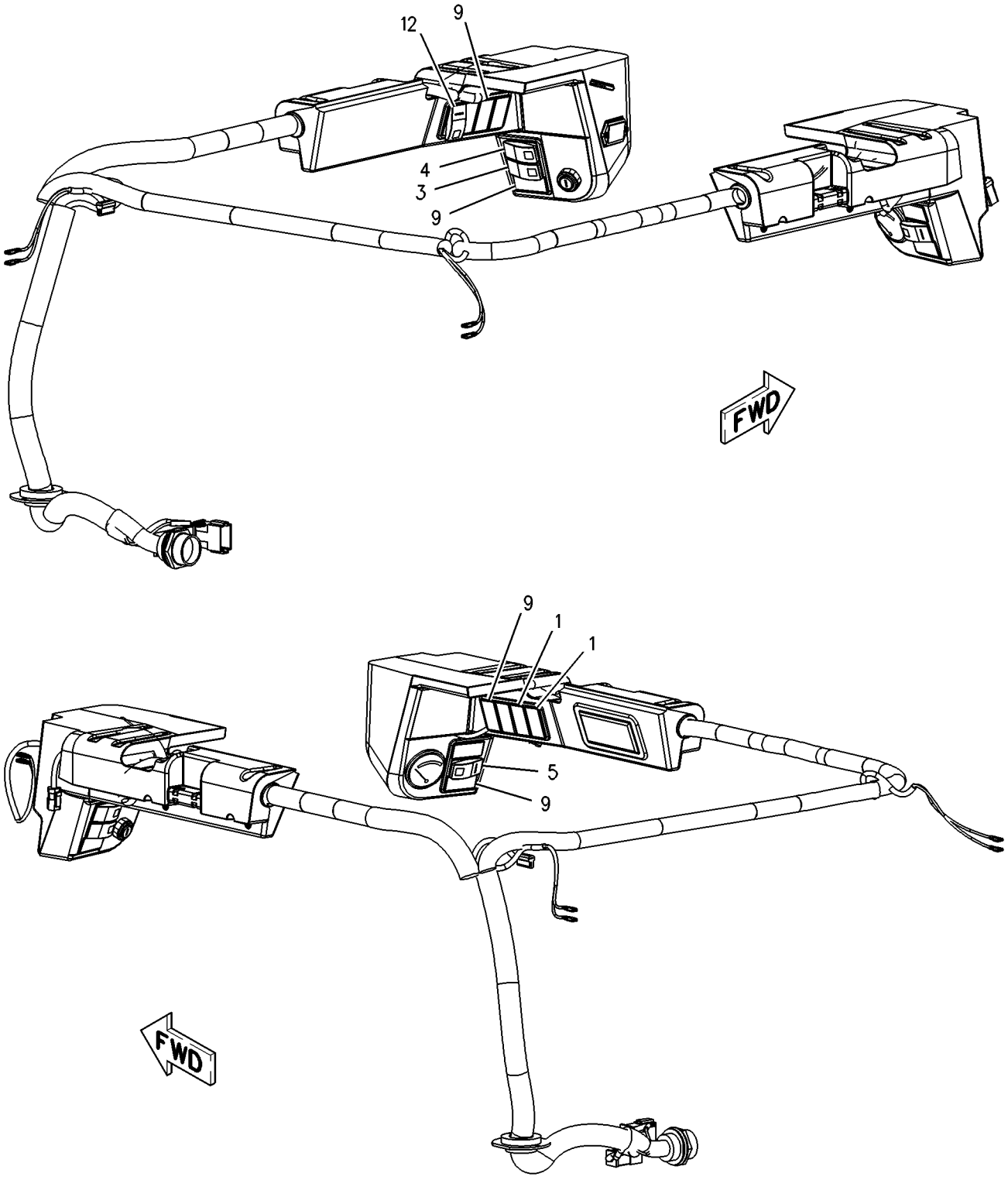

GRAPHIC #2 g00906609

OPERATOR STATION

203-4330 PANEL GP-INSTRUMENT

S/N: 4YZ4000-UP; 5SZ4000-UP
ROADING
PART OF 203-4331, 203-4332 LIGHTING GP-ROADING
AN ATTACHMENT

SMCS-7451 **i01517364**

NOTE	PART NUMBER	QTY	PART NAME 1 2 3 4 5 6 (PRODUCT LEVEL)	SEE PAGE
	142-8632	1	SWITCH GP-ROCKER (HYDRAULIC SHUT OFF CONTROL)	
	111-7899	1	GASKET	
	142-9329	1	SWITCH GP-ROCKER (ROADING LIGHTS)	
	111-7899	1	GASKET	
	142-9331	1	SWITCH GP-ROCKER (HAZARD FLASHER CONTROL)	
	111-7899	1	GASKET	
	202-9700	1	SWITCH GP-ROCKER (DIRECTIONAL TURN SIGNAL)	
	111-7899	1	GASKET	

<END>

OPERATOR STATION

192-2661 PEDAL GP-GOVERNOR

S/N: CED1-UP; FDG1-UP; 4YZ4000-UP; 5SZ4000-UP
PART OF 192-2664, 215-3981 PEDAL GP-GOVERNOR

SMCS-1265, 1276 **i01787799**

NOTE	REF NO	GRAPHIC REF	PART NUMBER	QTY	PART NAME 1 2 3 4 5 6 (PRODUCT LEVEL)	SEE PAGE
M	1	1	**129-3178**	1	LOCKNUT (M6X1 THD)	
	2	1	**3F-9556**	2	LOCKWASHER	
M	3	1	**5C-7261**	1	NUT (M8X1.25 THD)	
M	4	1	**5C-9553**	1	BOLT (M6X1X16MM)	
M	5	1	**6V-5698**	4	SCREW-BUTTON HEAD (M4X0.7X10MM)	
	6	1	**6V-8186**	2	NUT-FULL (5/16-24 THD)	
M	7	1	**8T-4197**	1	BOLT (M8X1.25X40MM)	
	8	1	**8T-4205**	1	WASHER-HARD (7.2X14.5X2MM THK)	
	9	1	**8T-6902**	1	CLIP	
					AVAILABLE REPAIR KIT(S):	
			164-1154	1	KIT-SERVICE	
					(INCLUDES CABLE CLAMPS AND SCREWS)	

M-METRIC PART

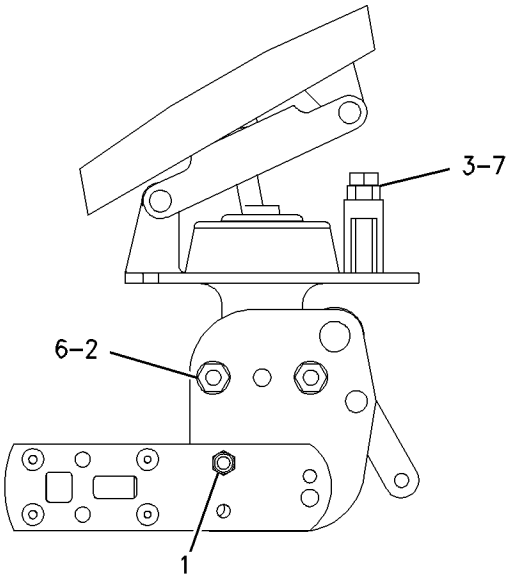

LEFT SIDE VIEW

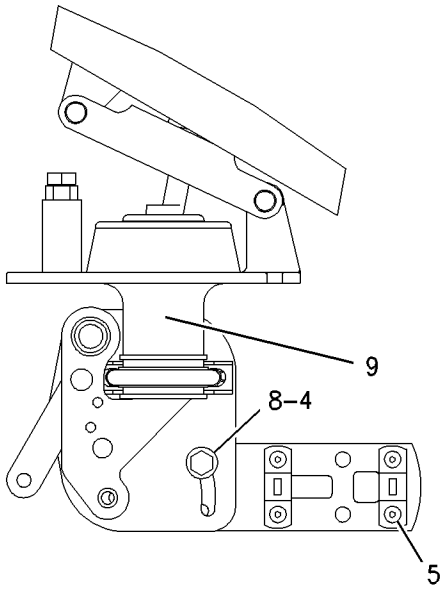

RIGHT SIDE VIEW

GRAPHIC #1 g00914881

OPERATOR STATION

192-2664 PEDAL GP-GOVERNOR

S/N: CED1-402; FDG1-403; 4YZ4000-4580; 5SZ4000-4920

PART OF 192-2657 CONTROL GP-GOVERNOR

SMCS-1265, 1276 **i01787810**

NOTE	REF NO	GRAPHIC REF	PART NUMBER	QTY	PART NAME 1 2 3 4 5 6 (PRODUCT LEVEL)	SEE PAGE
Y	1	1	**192-2661**	1	PEDAL GP-GOVERNOR	660
	2	1	**192-2662**	1	CABLE AS	
	3	1	**192-2663**	1	LEVER GP-GOVERNOR	
	4	1	**207-9735**	1	CABLE AS	
	5	1	**8T-4742**	1	END-YOKE ROD	
	6	1	**8T-4744**	1	PIN AS-SPRING	

Y-SEPARATE ILLUSTRATION

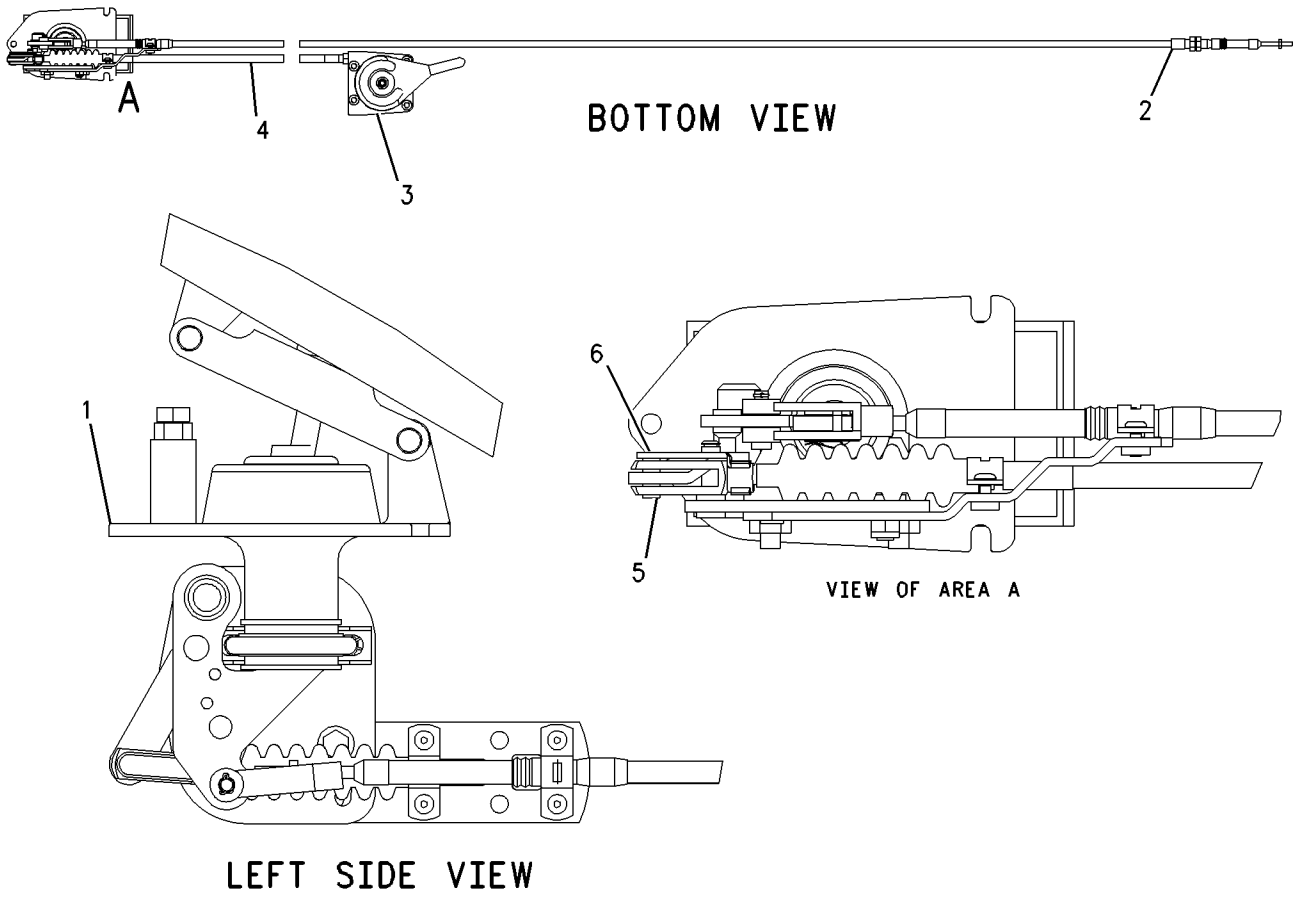

GRAPHIC #1 g00914884

OPERATOR STATION

215-3981 PEDAL GP-GOVERNOR

S/N: CED403-UP; FDG400-UP; 4YZ4000-UP; 5SZ4000-UP
PART OF 215-3980 CONTROL GP-GOVERNOR

SMCS-1265, 1276 **i01795302**

NOTE	REF NO	GRAPHIC REF	PART NUMBER	QTY	PART NAME 1 2 3 4 5 6 (PRODUCT LEVEL)	SEE PAGE
	1	1	**8T-4742**	2	END-YOKE ROD	
	2	1	**8T-4744**	2	PIN AS-SPRING	
Y	3	1	**192-2661**	1	PEDAL GP-GOVERNOR	660
	4	1	**192-2663**	1	LEVER GP-GOVERNOR	
M		1	**8T-4971**	1	BOLT (M6X1X30MM)	
M		1	**129-3178**	1	LOCKNUT (M6X1 THD)	
	5	1	**207-9735**	1	CABLE AS	
	6	1	**215-3928**	1	CABLE AS	

M-METRIC PART
Y-SEPARATE ILLUSTRATION

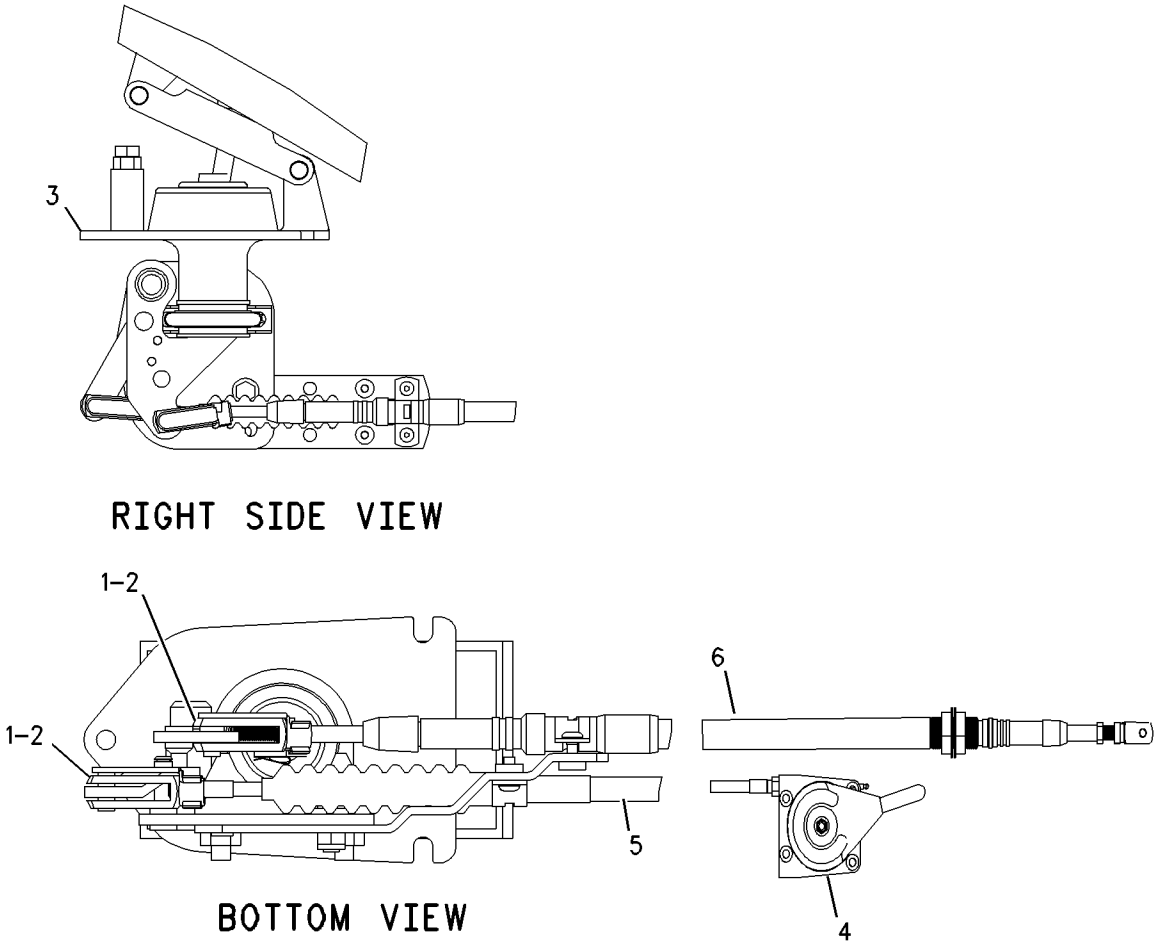

GRAPHIC #1 g00919156

OPERATOR STATION

192-2666 PLATFORM GP-OPERATOR

S/N: CED1-UP; FDG1-UP; 4YZ4000-UP; 5SZ4000-UP

PART OF 190-7953, 195-6710, 195-6761, 195-6763 CHASSIS AR

SMCS-7253 **i01783278**

NOTE	REF NO	GRAPHIC REF	PART NUMBER	QTY	PART NAME 1 2 3 4 5 6 (PRODUCT LEVEL)	SEE PAGE
	1	1	**154-3968**	2	STRIP	
	2	1	**192-2658**	1	FLOORPLATE AS	
	3	1	**192-2670**	1	FLOORPLATE (VERTICLE)	
	4	1	**192-2675**	2	INSULATION AS	
M	5	1	**5C-9553**	6	BOLT (M6X1X16MM)	
M	6	1	**6V-7357**	2	BOLT (M6X1.0X25MM)	
	7	1	**7X-0579**	8	WASHER-HARD (8.8X25.5X2MM THK)	
	8	1	**8T-4205**	6	WASHER-HARD (7.2X14.5X2MM THK)	
M	9	1	**8T-6912**	8	BOLT (M8X1.25X50MM)	
	10	1	**9X-6165**	2	WASHER (6.5X22X2.5MM THK)	

M-METRIC PART

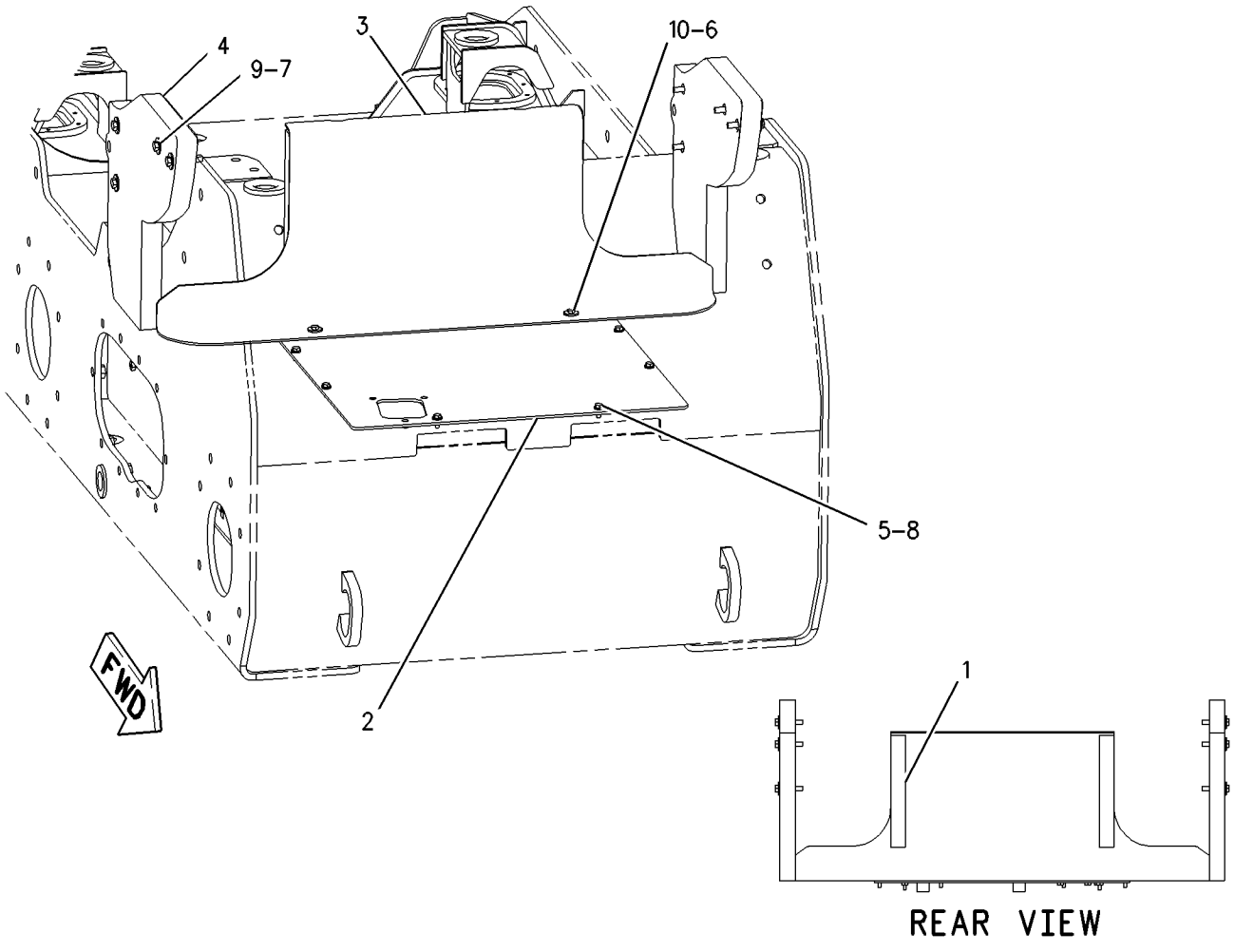

GRAPHIC #1 g00912173

OPERATOR STATION

187-3201 SEAL GP-CAB

S/N: CED1-UP; FDG1-UP; 4YZ4000-UP; 5SZ4000-UP
PART OF 188-0141 SEAL GP-CAB

SMCS-7301 **i01795309**

NOTE	REF NO	GRAPHIC REF	PART NUMBER	QTY	PART NAME 1 2 3 4 5 6 (PRODUCT LEVEL)	SEE PAGE
	1	1	**6V-1178**	2	PLUG-BUTTON	
	2	1	**187-3202**	1	BRACKET AS-LH	
	3	1	**187-3203**	1	BRACKET AS-RH	
	4	1	**187-3211**	1	PLATE AS	
	5	1	**187-3212**	1	PLATE	
M	6	1	**7X-2552**	8	BOLT (M16X2X30MM)	
	7	1	**8T-4122**	12	WASHER-HARD (17X32X3.5MM THK)	
M	8	1	**8T-4132**	4	NUT (M16X2 THD)	
M	9	1	**8T-4189**	2	BOLT (M8X1.25X20MM)	
	10	1	**8T-4224**	8	WASHER-HARD (8.8X16X2MM THK)	
BE	11	1	**124-3243**		SEAL (118CM)	

B-USE AS REQUIRED
E-ORDER BY THE CENTIMETER
M-METRIC PART

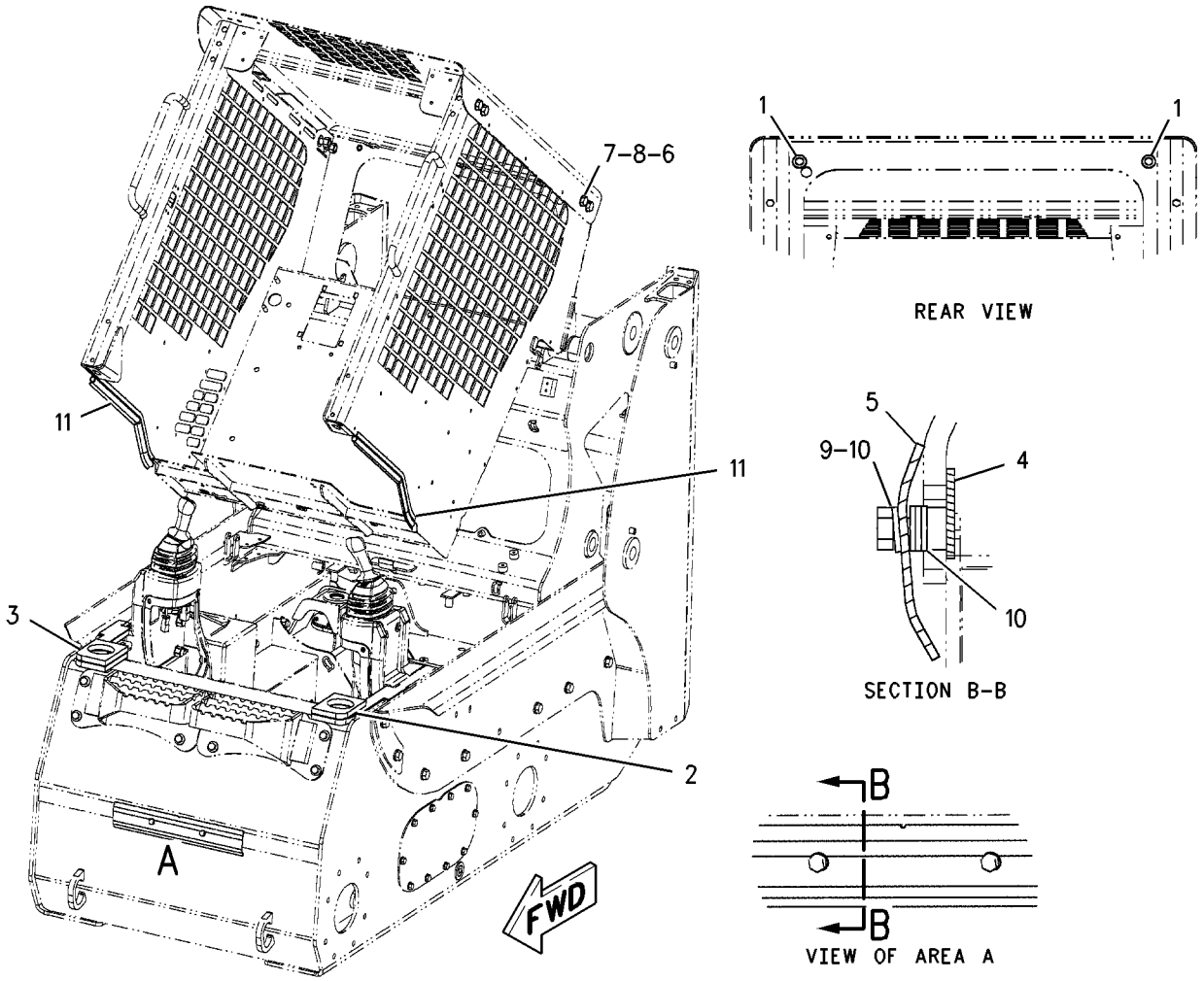

GRAPHIC #1 g00919159

OPERATOR STATION

188-0141 SEAL GP-CAB

S/N: CED1-UP; FDG1-UP; 4YZ4000-UP; 5SZ4000-UP
KIT-CAB SEAL, DEBRIS BARRIER
FIELD INSTALLATION

SMCS-7301 **i01400556**

NOTE	PART NUMBER	QTY	PART NAME 1 2 3 4 5 6 (PRODUCT LEVEL)	SEE PAGE
Y	*187-3201*	1	SEAL GP-CAB	664

Y-SEPARATE ILLUSTRATION

<END>

OPERATOR STATION

210-4702 SEAL GP-CAB

S/N: CED1-UP; FDG1-UP; 4YZ4000-UP; 5SZ4000-UP
CANNOT BE USED WITH 187-3201—PAGE 664
AN ATTACHMENT

SMCS-7301 **i01795313**

NOTE	REF NO	GRAPHIC REF	PART NUMBER	QTY	PART NAME 1 2 3 4 5 6 (PRODUCT LEVEL)	SEE PAGE
	1	1	**6V-1178**	2	PLUG-BUTTON	
	2	1	**187-3202**	1	BRACKET AS-LH	
	3	1	**187-3203**	1	BRACKET AS-RH	
	4	1	**187-3211**	1	PLATE AS	
M		1	**8T-3612**	2	NUT-WELD (M8X1.25 THD)	
	5	1	**187-3212**	1	PLATE	
M	6	1	**7X-2552**	8	BOLT (M16X2X30MM)	
	7	1	**8T-4122**	12	WASHER-HARD (17X32X3.5MM THK)	
M	8	1	**8T-4132**	4	NUT (M16X2 THD)	
M	9	1	**8T-4189**	2	BOLT (M8X1.25X20MM)	
	10	1	**8T-4224**	8	WASHER-HARD (8.8X16X2MM THK)	

M-METRIC PART

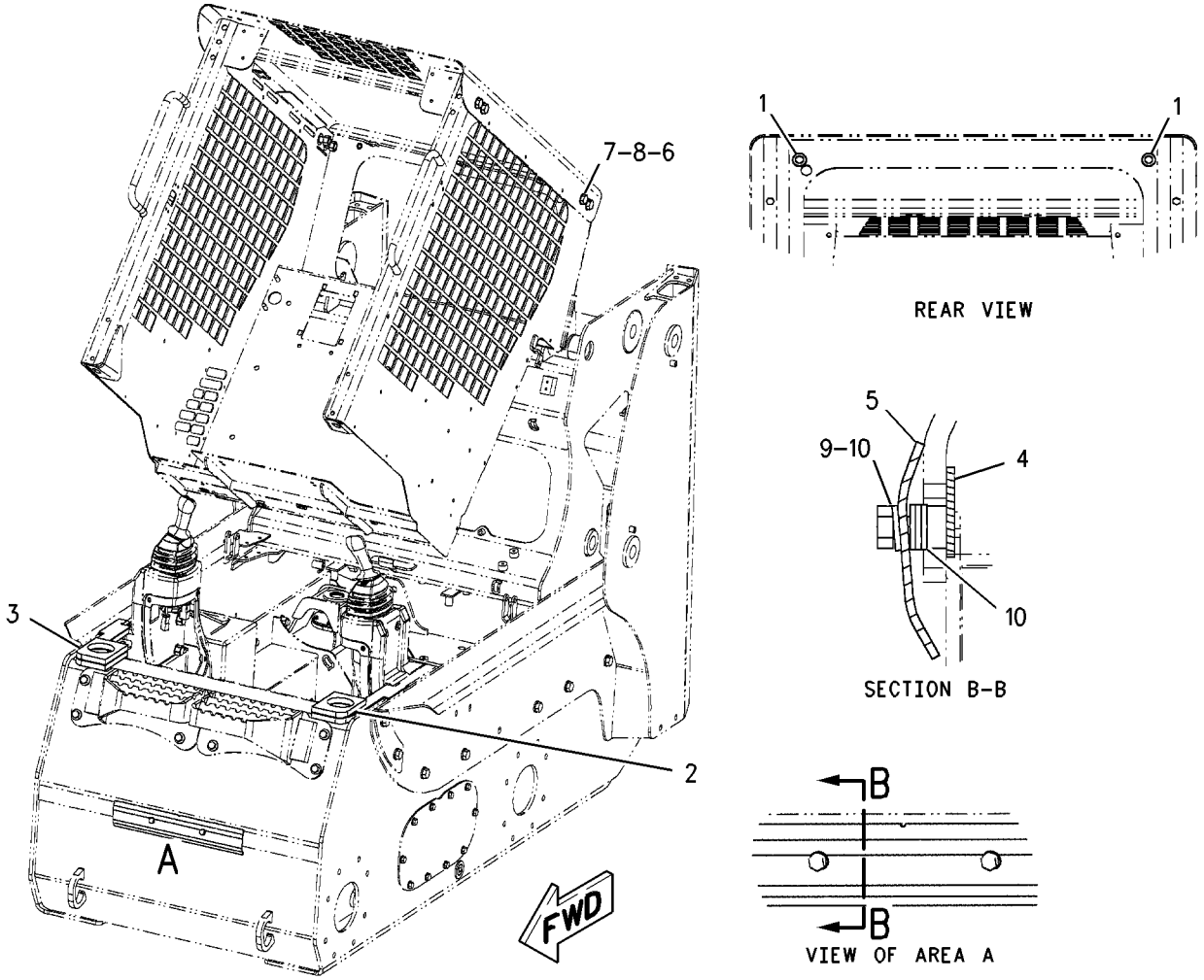

GRAPHIC #1 g00919162

OPERATOR STATION

142-9305 SEAT & MOUNTING GP

S/N: CED1-UP; FDG1-UP; 4YZ4000-UP; 5SZ4000-UP
SUSPENSION
CANNOT BE USED WITH 142-9310—PAGE 669
AN ATTACHMENT
TYPE 1

SMCS-7312 **i01787826**

NOTE	REF NO	GRAPHIC REF	PART NUMBER	QTY	PART NAME 1 2 3 4 5 6 (PRODUCT LEVEL)	SEE PAGE
Y	1	1	**142-9304**	1	SEAT GP-SUSPENSION	676
M	2	1	**5C-7261**	4	NUT (M8X1.25 THD)	
	3	1	**8T-4224**	4	WASHER-HARD (8.8X16X2MM THK)	

M-METRIC PART
Y-SEPARATE ILLUSTRATION

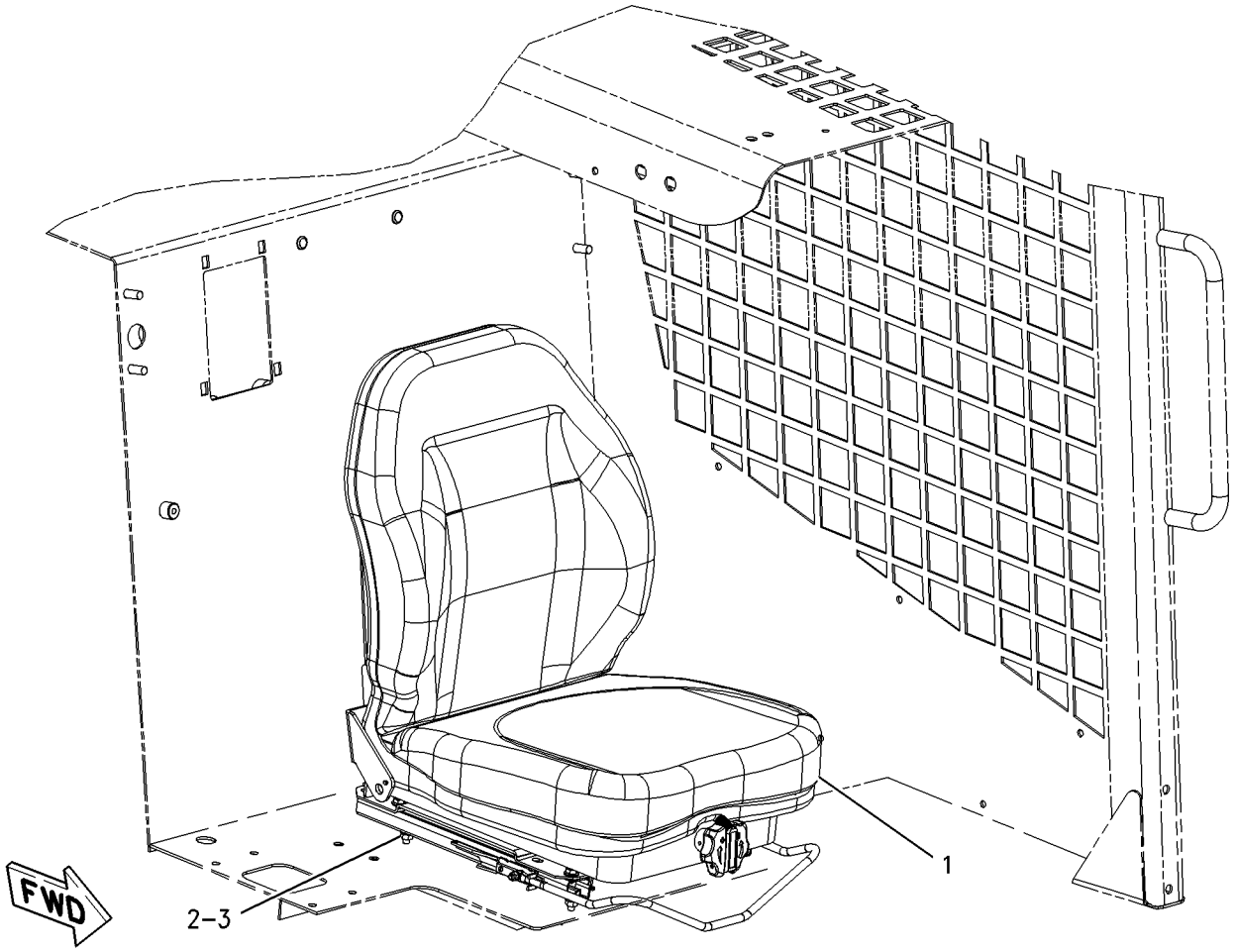

GRAPHIC #1 g00914897

OPERATOR STATION

142-9305 SEAT & MOUNTING GP

S/N: CED1-UP; FDG1-UP; 4YZ4000-UP; 5SZ4000-UP
SUSPENSION
CANNOT BE USED WITH 142-9310—PAGE 669
AN ATTACHMENT
TYPE 2

SMCS-7312 **i01787823**

NOTE	REF NO	GRAPHIC REF	PART NUMBER	QTY	PART NAME 1 2 3 4 5 6 (PRODUCT LEVEL)	SEE PAGE
Y	1	1	**219-4380**	1	SEAT GP-SUSPENSION	678
M	2	1	**5C-7261**	4	NUT (M8X1.25 THD)	
	3	1	**8T-4224**	4	WASHER-HARD (8.8X16X2MM THK)	

M-METRIC PART
Y-SEPARATE ILLUSTRATION

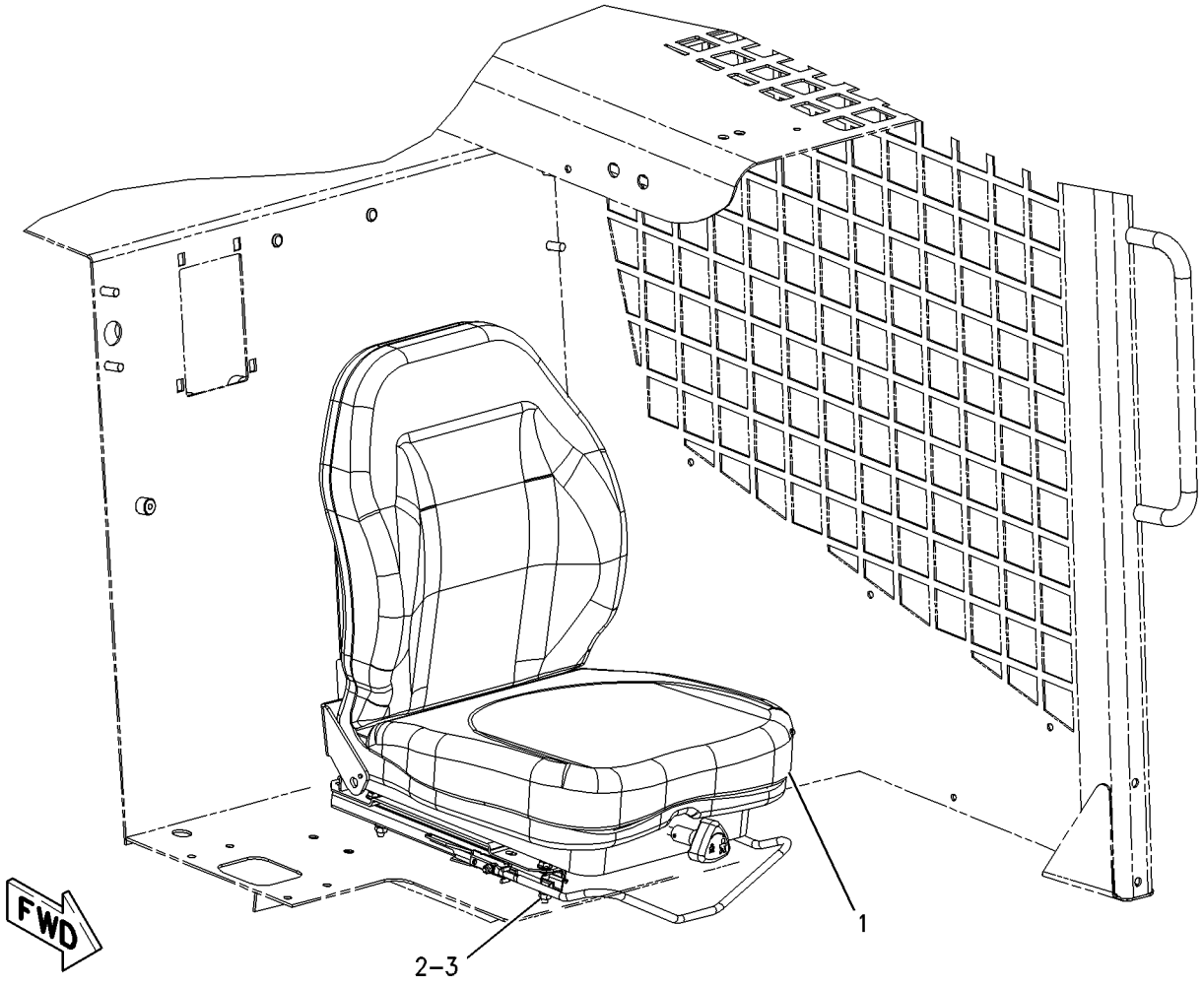

GRAPHIC #1 g00914893

OPERATOR STATION

142-9310 SEAT & MOUNTING GP

S/N: CED1-UP; FDG1-UP; 4YZ4000-UP; 5SZ4000-UP
STATIC
CANNOT BE USED WITH 142-9305—PAGE 667
AN ATTACHMENT

SMCS-7312 **i01787828**

NOTE	REF NO	GRAPHIC REF	PART NUMBER	QTY	PART NAME 1 2 3 4 5 6 (PRODUCT LEVEL)	SEE PAGE
	1	1	**142-9309**	1	SEAT GP	
		1	**154-3985**	1	WIRE AS	
		1	**153-1260**	1	SWITCH (SEAT)	
		1	**219-4379**	1	HANDLE	
	2	1	**142-9346**	1	BRACKET	
	3	1	**220-8079**	1	BRACKET	
M	4	1	**5C-7261**	4	NUT (M8X1.25 THD)	
	5	1	**8T-4224**	8	WASHER-HARD (8.8X16X2MM THK)	
M	6	1	**8T-4908**	4	BOLT (M8X1.25X25MM)	

M-METRIC PART

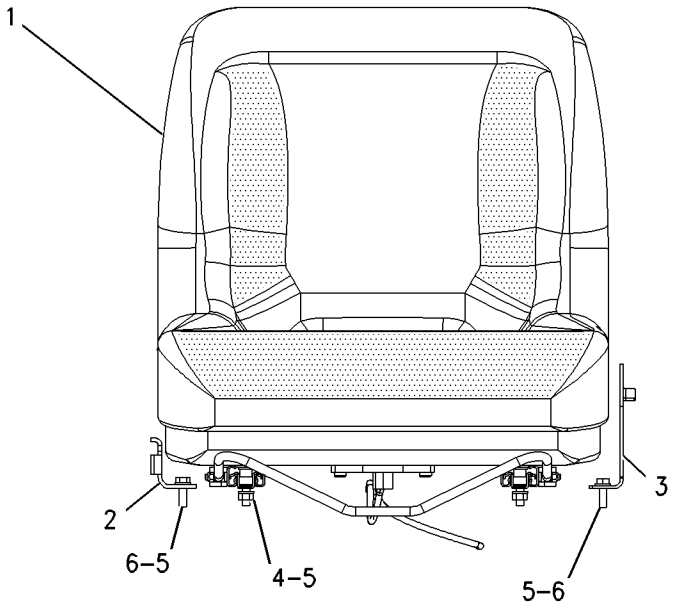

FRONT VIEW

GRAPHIC #1 g00914898

OPERATOR STATION

142-9303 SEAT BELT GP

S/N: CED1-UP; FDG1-UP; 4YZ4000-UP; 5SZ4000-UP
2 INCH, RETRACTABLE, SUSPENSION
FOR USE WITH 142-9305–PAGE 667. CANNOT BE USED WITH 142-9306–PAGE 671, 142-9307–PAGE 672, 142-9308–PAGE 673, 142-9310–PAGE 669
AN ATTACHMENT

SMCS-7327 **i01261504**

NOTE	REF NO	GRAPHIC REF	PART NUMBER	QTY	PART NAME 1 2 3 4 5 6 (PRODUCT LEVEL)	SEE PAGE
	1	1	**8T-4223**	2	WASHER-HARD (3MM THK)	
C	2	1	**0T-0244**	2	BOLT (7/16-20)	
	3	1	**8S-0934**	2	LOCKNUT-FLANGE (7/16-20 THD)	
	4	1	**6E-6549**	2	PLATE	

C-CHANGE FROM PREVIOUS TYPE

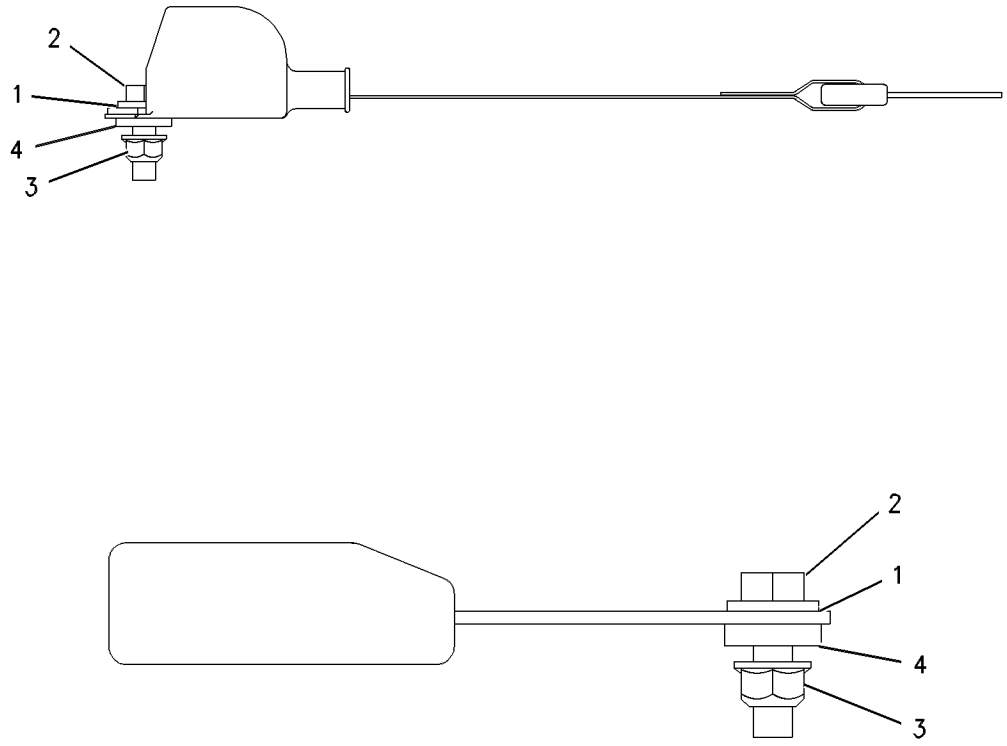

GRAPHIC #1 g00559147

OPERATOR STATION

142-9306 SEAT BELT GP

S/N: CED1-UP; FDG1-UP; 4YZ4000-UP; 5SZ4000-UP
2 INCH, RETRACTABLE, STATIC
FOR USE WITH STATIC SEAT, 142-9310–PAGE 669. CANNOT BE USED WITH 142-9303–PAGE 670, 142-9307–PAGE 672, 142-9308–PAGE 673, 142-9305–PAGE 667 AN ATTACHMENT

SMCS-7327 **i01261752**

NOTE	REF NO	GRAPHIC REF	PART NUMBER	QTY	PART NAME 1 2 3 4 5 6 (PRODUCT LEVEL)	SEE PAGE
	1	1	**8T-4223**	2	WASHER-HARD (3MM THK)	
	2	1	**8T-9381**	2	BOLT (7/16-20X1IN)	
	3	1	**8S-0934**	2	LOCKNUT-FLANGE (7/16-20 THD)	

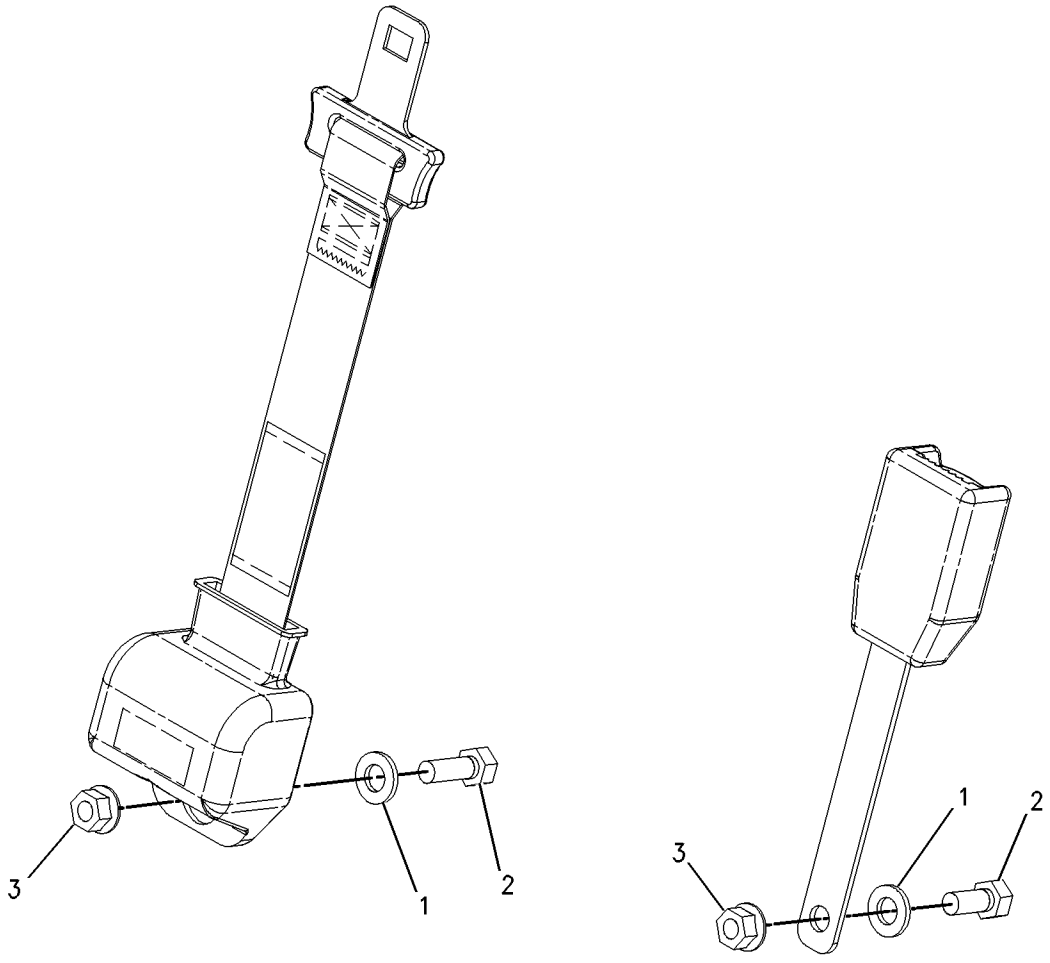

GRAPHIC #1 g00671235

OPERATOR STATION

142-9307 SEAT BELT GP

S/N: CED1-UP; FDG1-UP; 4YZ4000-UP; 5SZ4000-UP
3 INCH, RETRACTABLE, STATIC
FOR USE WITH 142-9310–PAGE 669. CANNOT BE USED WITH 142-9306–PAGE 671, 142-9303–PAGE 670, 142-9308–PAGE 673, 142-9305–PAGE 667
AN ATTACHMENT

SMCS-7327 **i01261781**

NOTE	REF NO	GRAPHIC REF	PART NUMBER	QTY	PART NAME 1 2 3 4 5 6 (PRODUCT LEVEL)	SEE PAGE
	1	1	**8T-4223**	2	WASHER-HARD (3MM THK)	
	2	1	**8T-9381**	2	BOLT (7/16-20X1IN)	
	3	1	**8S-0934**	2	LOCKNUT-FLANGE (7/16-20 THD)	

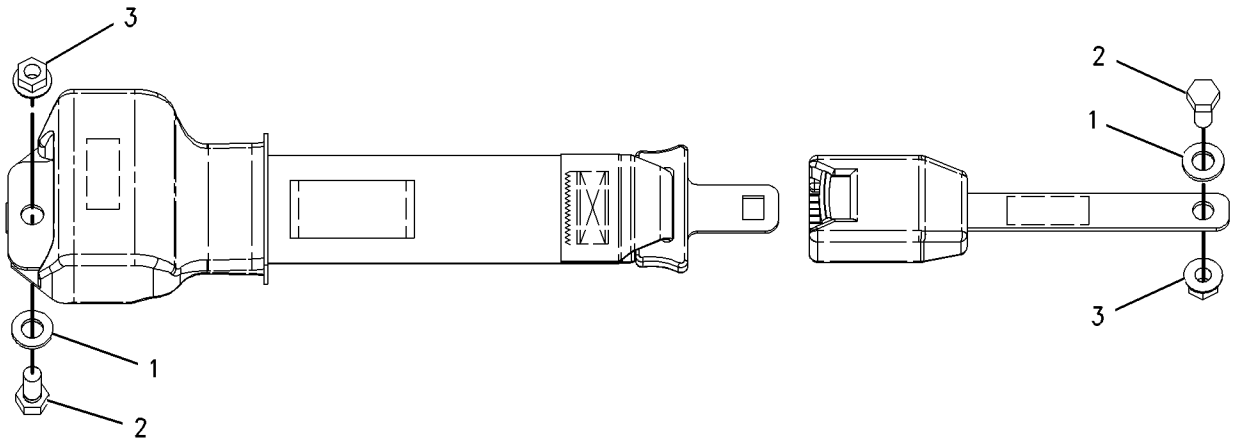

GRAPHIC #1 g00696240

OPERATOR STATION

142-9308 SEAT BELT GP

S/N: CED1-UP; FDG1-UP; 4YZ4000-UP; 5SZ4000-UP
3 INCH, RETRACTABLE, SUSPENSION
FIELD REPLACEMENT FOR 142-9303—PAGE 670. FOR USE WITH 142-9305—PAGE 667.
CANNOT BE USED WITH 142-9306—PAGE 671, 142-9303—PAGE 670, 142-9307—PAGE 672, 142-9310—PAGE 669
AN ATTACHMENT

SMCS-7327 **i01261803**

NOTE	REF NO	GRAPHIC REF	PART NUMBER	QTY	PART NAME 1 2 3 4 5 6 (PRODUCT LEVEL)	SEE PAGE
	1	1	**8T-4223**	2	WASHER-HARD (3MM THK)	
	2	1	**0T-0244**	2	BOLT (7/16-20) (7/16X20X11/4)	
	3	1	**8S-0934**	2	LOCKNUT-FLANGE (7/16-20 THD)	
	4	1	**6E-6549**	2	PLATE	

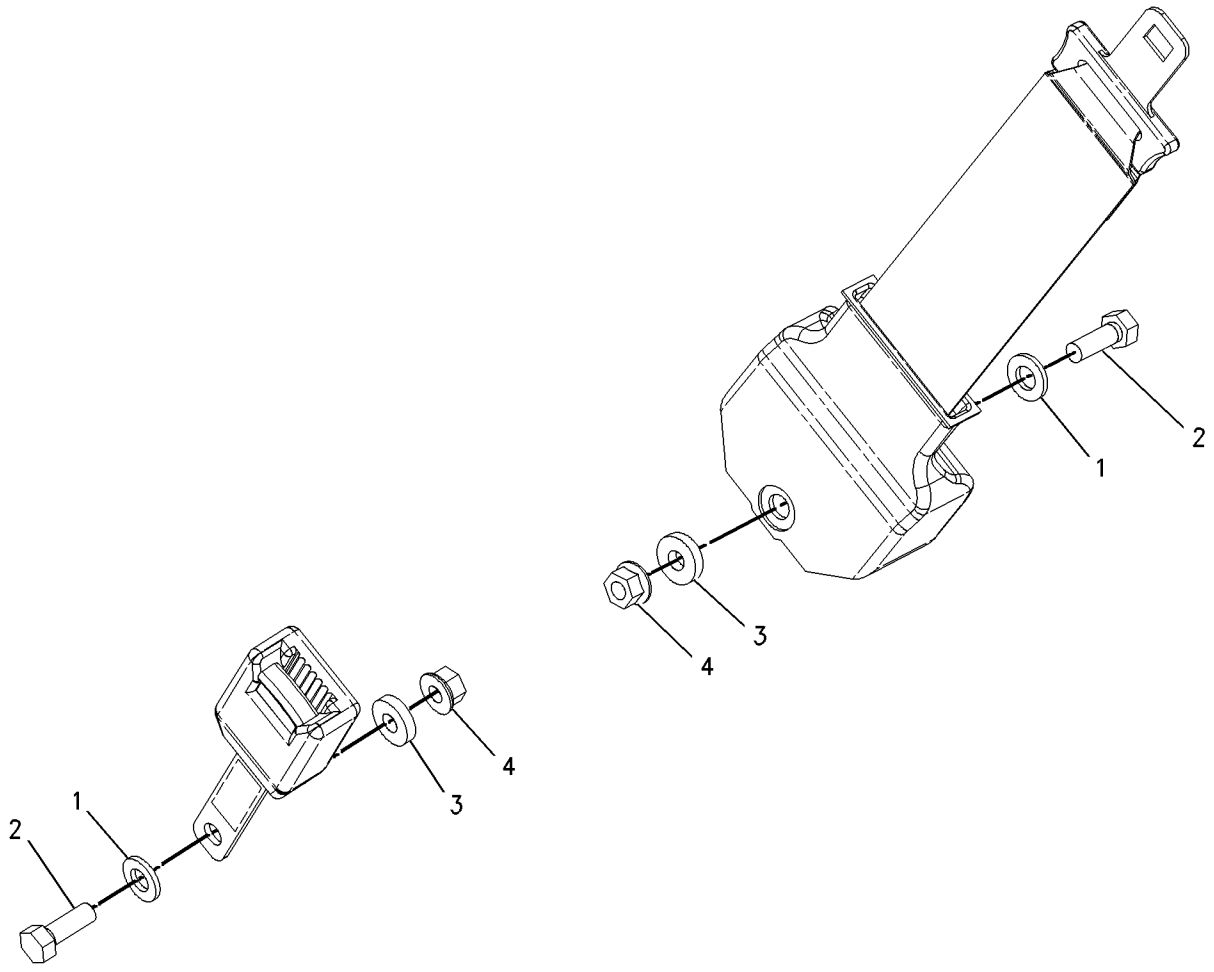

GRAPHIC #1 g00671091

OPERATOR STATION

220-8082 SEAT BELT GP

S/N: CED1-UP; FDG1-UP; 4YZ4000-UP; 5SZ4000-UP
2 INCH, RETRACTABLE
FOR USE WITH SUSPENSION SEAT
AN ATTACHMENT

SMCS-7327 **i01778377**

NOTE	REF NO	GRAPHIC REF	PART NUMBER	QTY	PART NAME 1 2 3 4 5 6 (PRODUCT LEVEL)	SEE PAGE
	1	1	**6E-6549**	2	PLATE	
	2	1	**0T-0244**	2	BOLT (7/16-20X1.25 IN)	
	3	1	**8S-0934**	2	LOCKNUT-FLANGE (7/16-20 THD)	
	4	1	**8T-4223**	2	WASHER-HARD (13.5X25.5X3MM THK)	

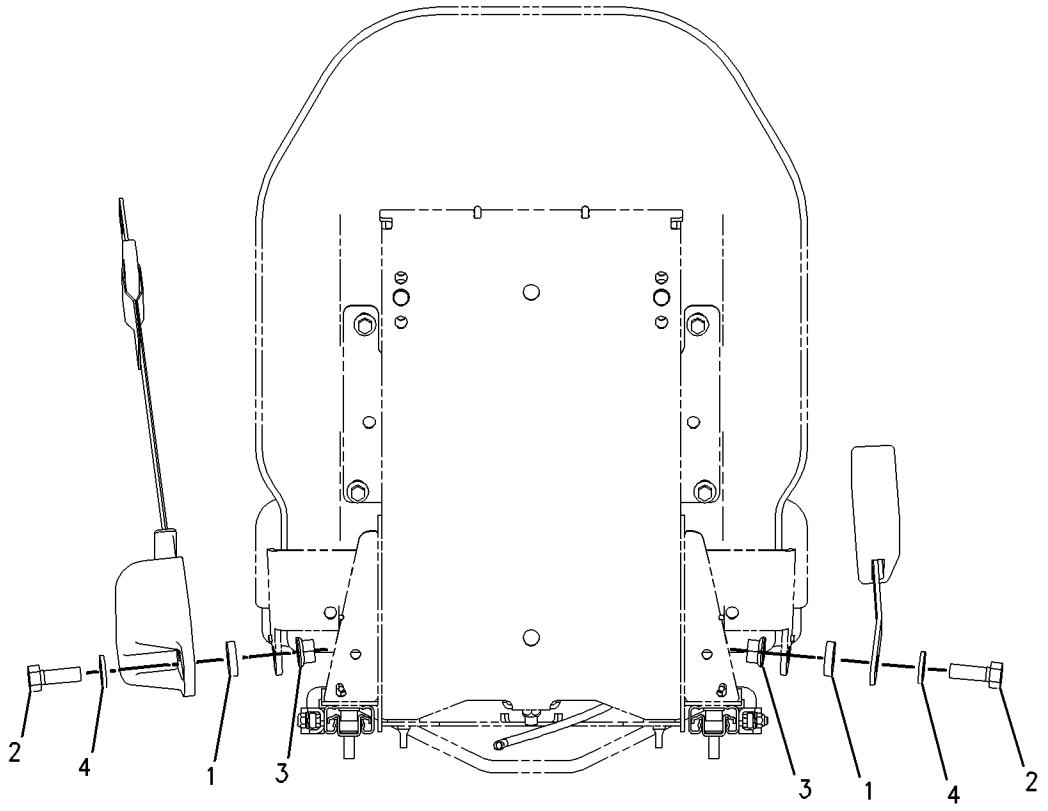

REAR VIEW

GRAPHIC #1 g00910070

OPERATOR STATION

220-8083 SEAT BELT GP

S/N: CED1-UP; FDG1-UP; 4YZ4000-UP; 5SZ4000-UP
3 INCH, RETRACTABLE
FOR USE WITH SUSPENSION SEATS AND AIR CONDITIONING
AN ATTACHMENT

SMCS-7327 **i01787830**

NOTE	REF NO	GRAPHIC REF	PART NUMBER	QTY	PART NAME 1 2 3 4 5 6 (PRODUCT LEVEL)	SEE PAGE
	1	1	**6E-6549**	2	PLATE	
	2	1	**0T-0244**	2	BOLT (7/16-20X1.25 IN)	
	3	1	**8S-0934**	2	LOCKNUT-FLANGE (7/16-20 THD)	
	4	1	**8T-4223**	2	WASHER-HARD (13.5X25.5X3MM THK)	

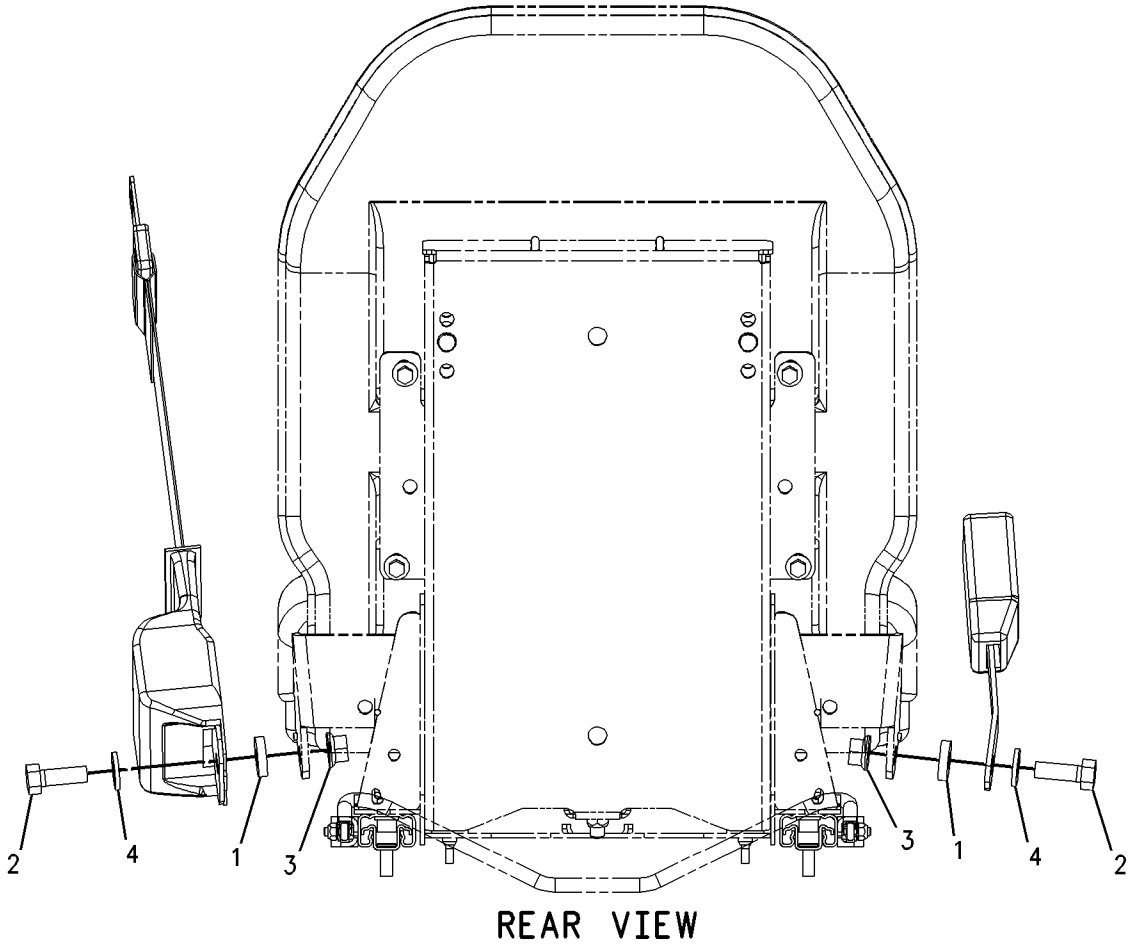

REAR VIEW

GRAPHIC #1 g00914900

OPERATOR STATION

142-9304 SEAT GP-SUSPENSION

S/N: CED1-UP; FDG1-UP; 4YZ4000-UP; 5SZ4000-UP
PART OF 142-9305 SEAT & MOUNTING GP
AN ATTACHMENT

SMCS-7324 **i01787832**

NOTE	REF NO	GRAPHIC REF	PART NUMBER	QTY	PART NAME 1 2 3 4 5 6 (PRODUCT LEVEL)	SEE PAGE
	1	1	**154-3985**	1	WIRE AS	
	2	1	**154-3986**	1	SWITCH AS (SEAT)	
	3	1	**154-8711**	1	KIT-SPRING	
Z		1		2	SPRING	
Z	3A	1		1	CABLE AS	
Z	3B	1		2	NUT-PUSH	
	4	1	**154-8715**	1	KIT-DAMPER	
					(INCLUDES DAMPER,NUT-LOCK,WASHER & SPACER)	
	5	1	**154-8717**	1	KIT-KNOB	
Z		1		1	KNOB AS	
Z	5A	1		1	SHAFT (TENSION ADJUST)	
Z	5B	1		2	PIN-SPRING	
Z	5C	1		1	HANGER (SPRING)	
Z	5D	1		2	NUT-PUSH	
Z		1		2	SPACER	
	6	1	**154-8719**	1	KIT-INDICATOR	
	7	1	**173-2543**	1	KIT-CUSHION	
	8	1	**219-4379**	1	HANDLE	

Z-NOT SERVICED SEPARATELY

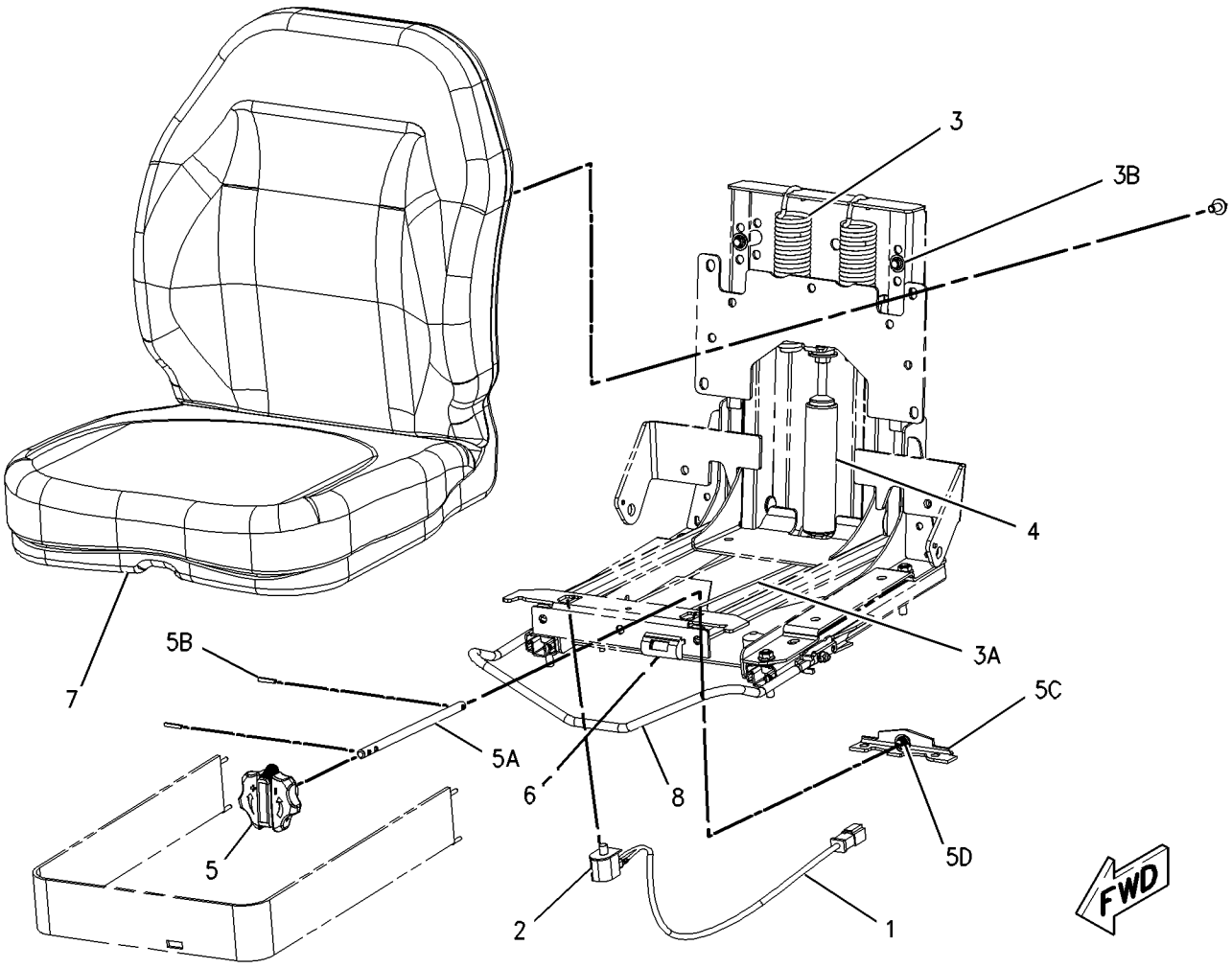

GRAPHIC #1 g00914980

OPERATOR STATION

219-4380 SEAT GP-SUSPENSION

S/N: CED1-UP; FDG1-UP; 4YZ4000-UP; 5SZ4000-UP
PART OF 142-9305 SEAT & MOUNTING GP
AN ATTACHMENT

SMCS-7324 **i01787930**

NOTE	REF NO	GRAPHIC REF	PART NUMBER	QTY	PART NAME 1 2 3 4 5 6 (PRODUCT LEVEL)	SEE PAGE
	1	1	**154-3985**	1	WIRE AS	
	2	1	**154-3986**	1	SWITCH AS (SEAT)	
	3	1	**154-8711**	1	KIT-SPRING	
Z		1		2	SPRING	
Z	3A	1		1	CABLE AS	
Z	3B	1		2	NUT-PUSH	
	4	1	**154-8715**	1	KIT-DAMPER	
					(INCLUDES DAMPER, NUT-LOCK, WASHER & SPACER)	
	5	1	**173-2543**	1	KIT-CUSHION	
	6	1	**219-4379**	1	HANDLE	
	7	1	**219-4388**	1	KIT-HANDLE (KNOB)	
Z		1		1	KNOB	
Z	7A	1		1	SHAFT	
Z	7B	1		2	PIN-SPRING	
Z	7C	1		1	HANGER (SPRING)	
Z	7D	1		1	NUT-PUSH	
Z		1		2	SPACER	

Z-NOT SERVICED SEPARATELY

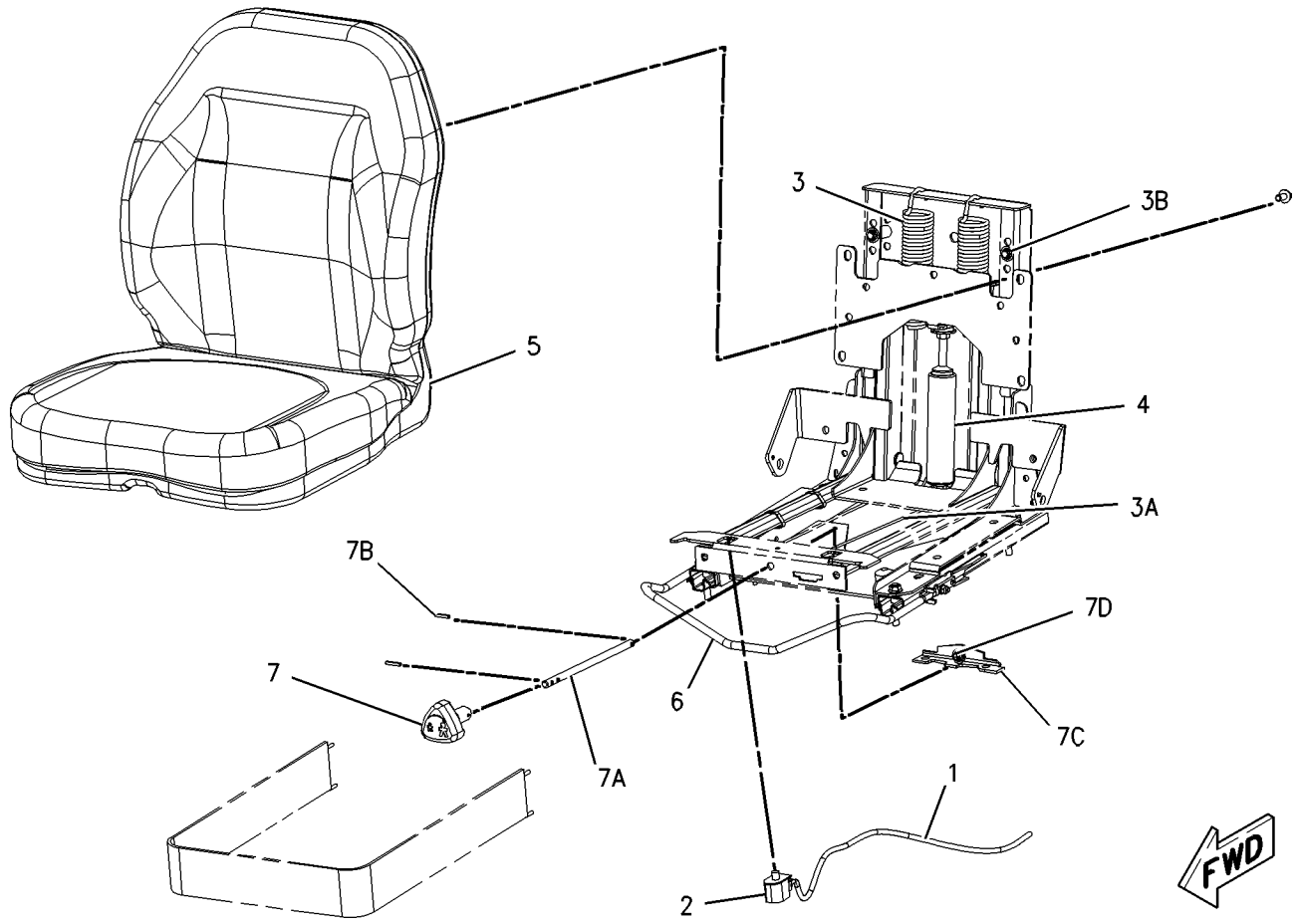

GRAPHIC #1 g00915009

OPERATOR STATION

177-3403 SPRING GP-GAS

S/N: CED1-UP; FDG1-UP; 4YZ4000-UP; 5SZ4000-UP
PART OF 190-7953, 195-6710, 195-6761, 195-6763 CHASSIS AR

SMCS-7301 **i01663127**

NOTE	REF NO	GRAPHIC REF	PART NUMBER	QTY	PART NAME 1 2 3 4 5 6 (PRODUCT LEVEL)	SEE PAGE
	1	1	**5P-0372**	4	LOCK PIN	
	2	1	**9C-5344**	2	SPACER (10.5X20X18MM THK)	
	3	1	**095-1325**	2	PIN-CLEVIS	
BJ	4	1	**153-2682**	2	SPRING AS-GAS	
BJ	5	1	**153-2683**	2	SPRING AS-GAS	
	6	1	**177-3405**	2	PIN	

B-USE AS REQUIRED
J-CONTACT LOCAL CATERPILLAR DEALER FOR PROPER SPRING CONFIGURATION

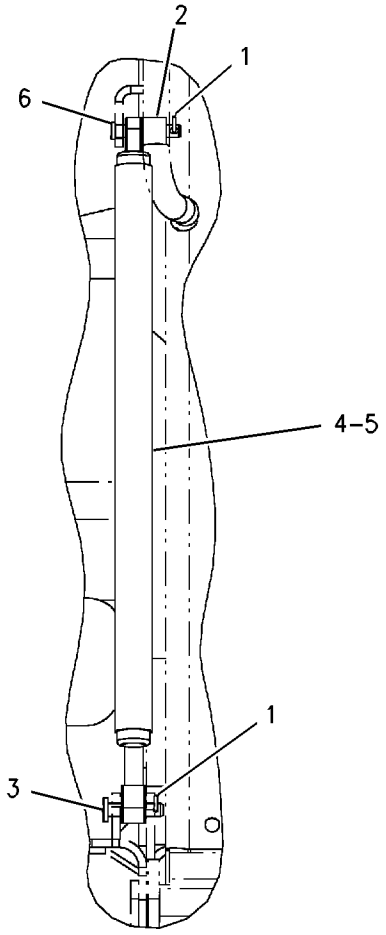

GRAPHIC #1 g00741774

OPERATOR STATION

166-2569 VISOR GP-CAB

S/N: 4YZ4000-UP; 5SZ4000-UP
PART OF 173-3022 VISOR GP-CAB
AN ATTACHMENT

SMCS-7301 **i01297216**

NOTE	REF NO	GRAPHIC REF	PART NUMBER	QTY	PART NAME 1 2 3 4 5 6 (PRODUCT LEVEL)	SEE PAGE
	1	1	**2S-5717**	1	LOCKNUT	
	2	1	**5T-7869**	2	CLAMP	
	3	1	**5T-7870**	1	KNOB	
	4	1	**1D-4677**	2	BOLT-ROUND HEAD (3/8-16X1 IN)	
M	5	1	**9X-2042**	4	SCREW-TRUSS HEAD (M6X1.0X12MM)	

M-METRIC PART

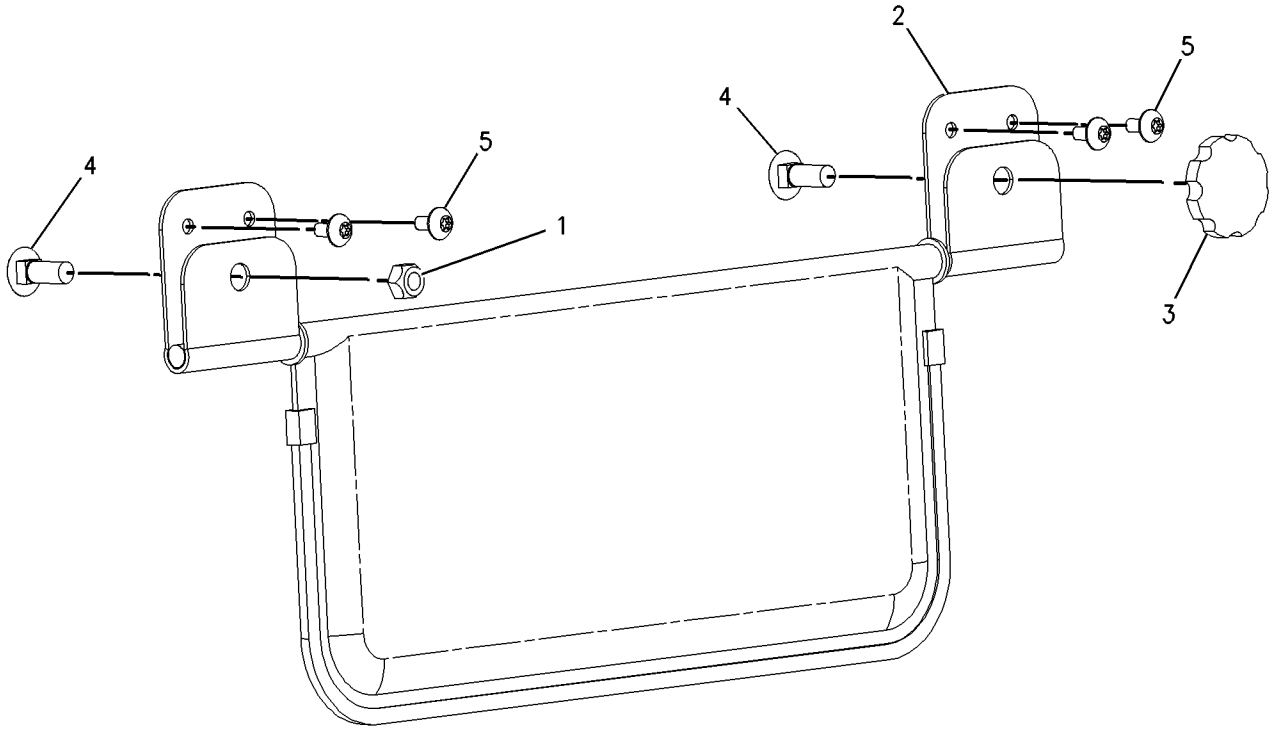

GRAPHIC #1 g00695703

OPERATOR STATION

173-3022 VISOR GP-CAB

S/N: 4YZ4000-UP; 5SZ4000-UP
PART OF 166-2567, 188-3308 CONVERSION AR-ROADING AN ATTACHMENT

SMCS-7301 **i01486233**

NOTE	REF NO	GRAPHIC REF	PART NUMBER	QTY	PART NAME 1 2 3 4 5 6 (PRODUCT LEVEL)	SEE PAGE
	1	1	**166-2562**	1	PLATE AS	
Y	2	1	**166-2569**	1	VISOR GP-CAB	680
	3	1	**195-0936**	4	INSERT-THREADED	
M	4	1	**9X-2045**	4	SCREW-TRUSS HEAD (M6X1X20MM)	

M-METRIC PART
Y-SEPARATE ILLUSTRATION

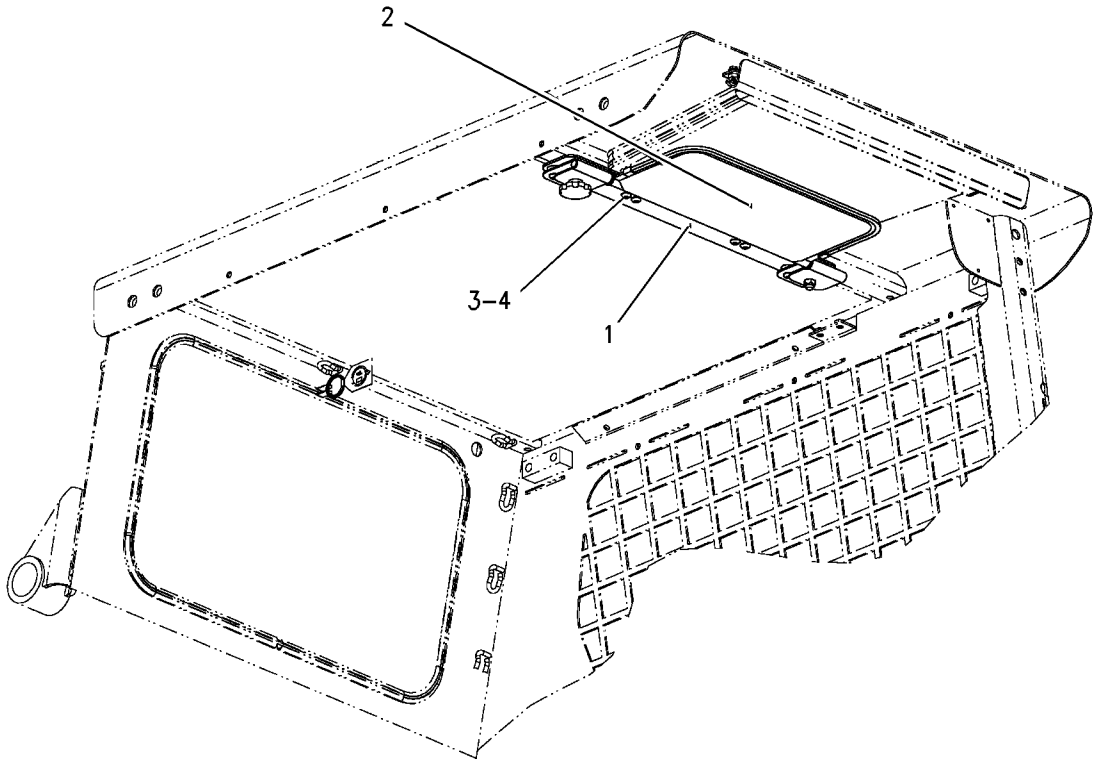

GRAPHIC #1 g00772669

OPERATOR STATION

142-9363 WINDOW GP-CAB

S/N: CED1-UP; FDG1-UP; 4YZ4000-UP; 5SZ4000-UP
SIDE, NO HEATER USED
PART OF 183-7138 WINDOW GP-CAB
CANNOT BE USED WITH 187-3213—PAGE 693

SMCS-7310 **i01684433**

NOTE	REF NO	GRAPHIC REF	PART NUMBER	QTY	PART NAME 1 2 3 4 5 6 (PRODUCT LEVEL)	SEE PAGE
	1	1	**150-8625**	1	PLATE	
Y	2	1	**154-7988**	1	WINDOW GP-CAB (RH)	684
Y	3	1	**154-7989**	1	WINDOW GP-CAB (LH)	686
	4	1	**161-6560**	4	STUD (M6X1 THD)	
M	5	1	**5C-2890**	4	NUT (M6X1 THD)	
	6	1	**8T-4205**	4	WASHER-HARD (7.2X14.5X2MM THK)	
M	7	1	**9X-2045**	14	SCREW-TRUSS HEAD (M6X1X20MM)	

M-METRIC PART
Y-SEPARATE ILLUSTRATION

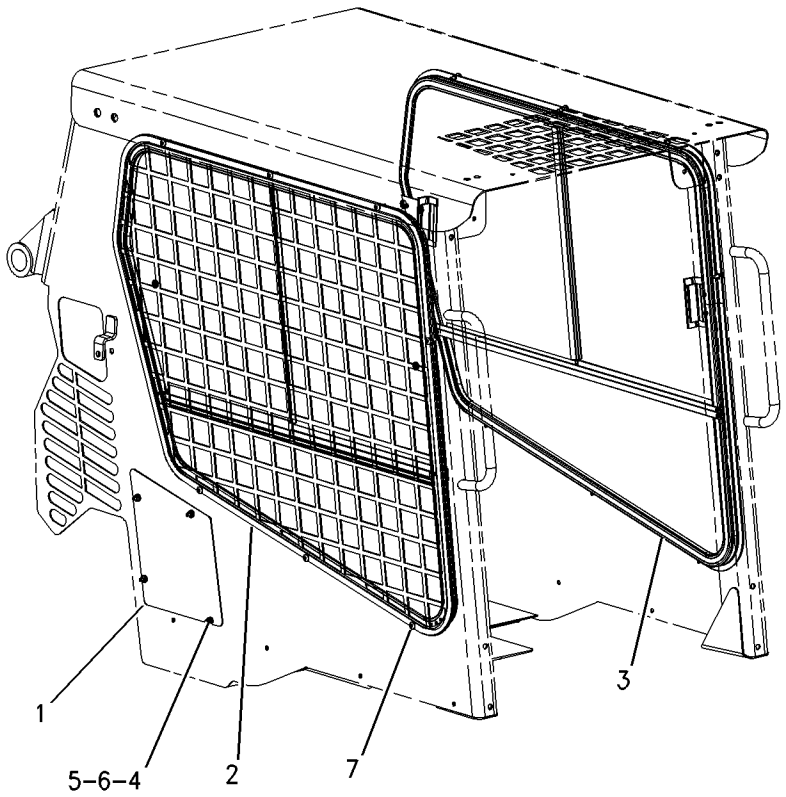

GRAPHIC #1 g00686531

MEMORANDA

OPERATOR STATION

154-7988 WINDOW GP-CAB—RH

S/N: CED1-UP; FDG1-UP; 4YZ4000-UP; 5SZ4000-UP
PART OF 142-9363, 187-3213 WINDOW GP-CAB
AN ATTACHMENT

SMCS-7310 **i01755297**

NOTE	REF NO	GRAPHIC REF	PART NUMBER	QTY	PART NAME 1 2 3 4 5 6 (PRODUCT LEVEL)	SEE PAGE
	1	1	**6D-5797**	2	SCREW-SOCKET	
	2	1	**207-0530**	1	GLASS (SLIDER)	
	3	1	**207-0531**	1	GLASS (SLIDER)	
	4	1	**207-0532**	1	GLASS (BOTTOM)	
	5	1	**207-0546**	2	LATCH AS	
	6	1	**207-0548**	1	CATCH	
	7	1	**207-0549**	1	CATCH	
	8	1	**207-0550**	1	RAIL-SLIDE	
	9	1	**207-0551**	1	RAIL	
	10	1	**207-0552**	1	RAIL	
	11	1	**207-0554**	1	RAIL-SLIDE	
	12	1	**207-0561**	1	RAIL (CROSS)	
	13	1	**9X-6016**	6	SCREW-HEX SOCKET (8-32)	
E	14	1	**207-0538**		SEAL (52CM)	
E	15	1	**207-0539**		SEAL (79CM)	
	16	1	**207-0541**		TAPE (BUTYL)	
E	17	1	**207-0573**		SEAL (220CM)	
E	18	1	**3E-3892**		SEAL (314CM)	
E	19	1	**207-0572**		SEAL (354CM)	

E-ORDER BY THE CENTIMETER

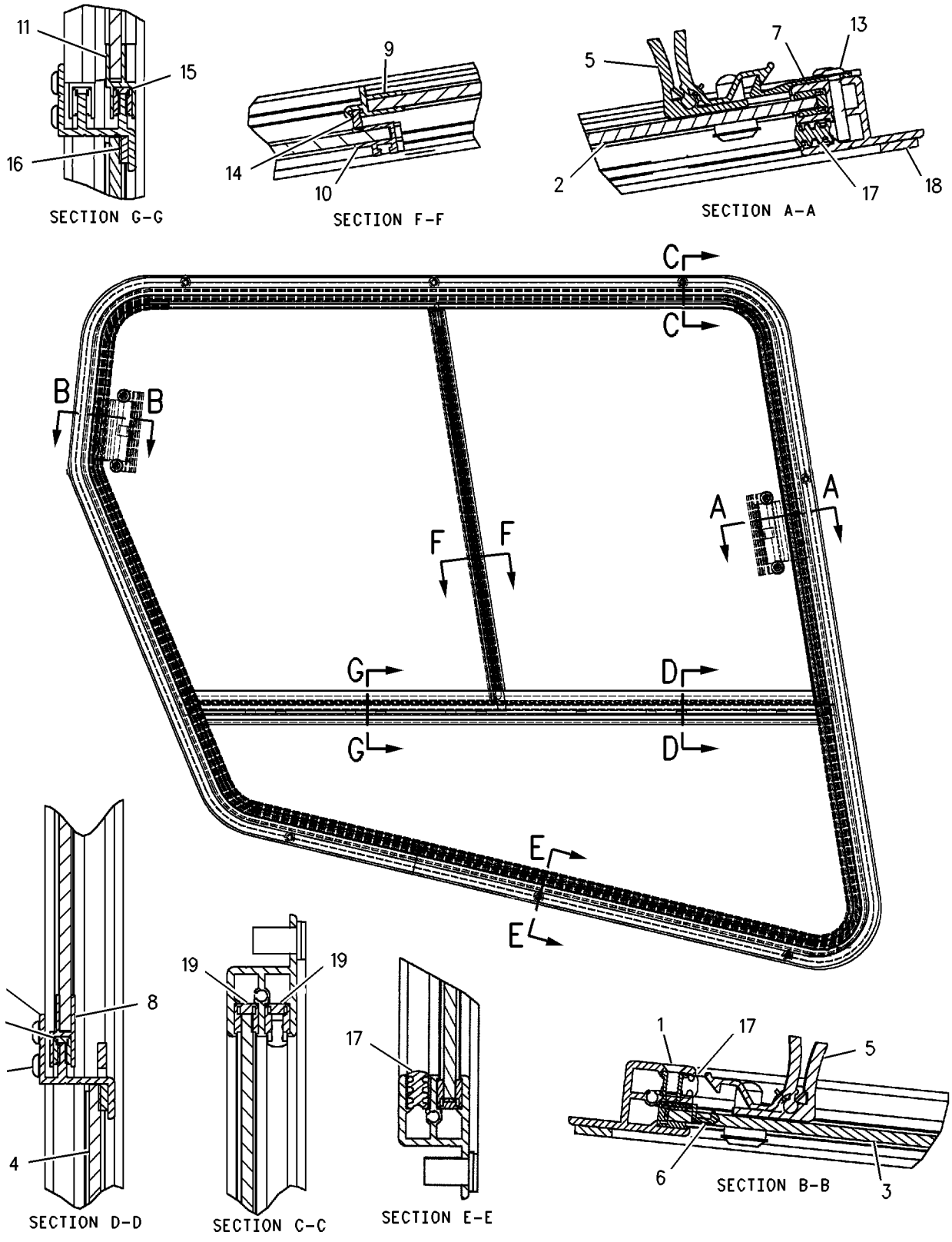

GRAPHIC #1 g00839920

OPERATOR STATION

154-7989 WINDOW GP-CAB—LH

S/N: CED1-UP; FDG1-UP; 4YZ4000-UP; 5SZ4000-UP
PART OF 142-9363, 187-3213 WINDOW GP-CAB
AN ATTACHMENT

SMCS-7310 **i01615402**

NOTE	REF NO	GRAPHIC REF	PART NUMBER	QTY	PART NAME 1 2 3 4 5 6 (PRODUCT LEVEL)	SEE PAGE
	1	1	**6D-5797**	2	SCREW-SOCKET	
	2	1	**207-0530**	1	GLASS (SLIDER)	
	3	1	**207-0531**	1	GLASS (SLIDER)	
	4	1	**207-0532**	1	GLASS (BOTTOM)	
	5	1	**207-0546**	2	LATCH AS	
	6	1	**207-0548**	1	CATCH	
	7	1	**207-0549**		CATCH	
	8	1	**207-0574**	1	RAIL-SLIDE	
	9	1	**207-0575**	1	RAIL	
	10	1	**207-0576**	1	RAIL	
	11	1	**207-0577**	1	RAIL-SLIDE	
	12	1	**207-0578**	1	RAIL (CROSS)	
	13	1	**9X-6016**	6	SCREW-HEX SOCKET (8-32)	
	14	1	**207-0538**		SEAL (52CM)	
	15	1	**207-0539**		SEAL (79CM)	
	16	1	**207-0541**		TAPE (BUTYL)(80CM)	
	17	1	**207-0573**		SEAL (220CM)	
	18	1	**3E-3892**		SEAL (314CM)	
	19	1	**207-0572**		SEAL (354CM)	

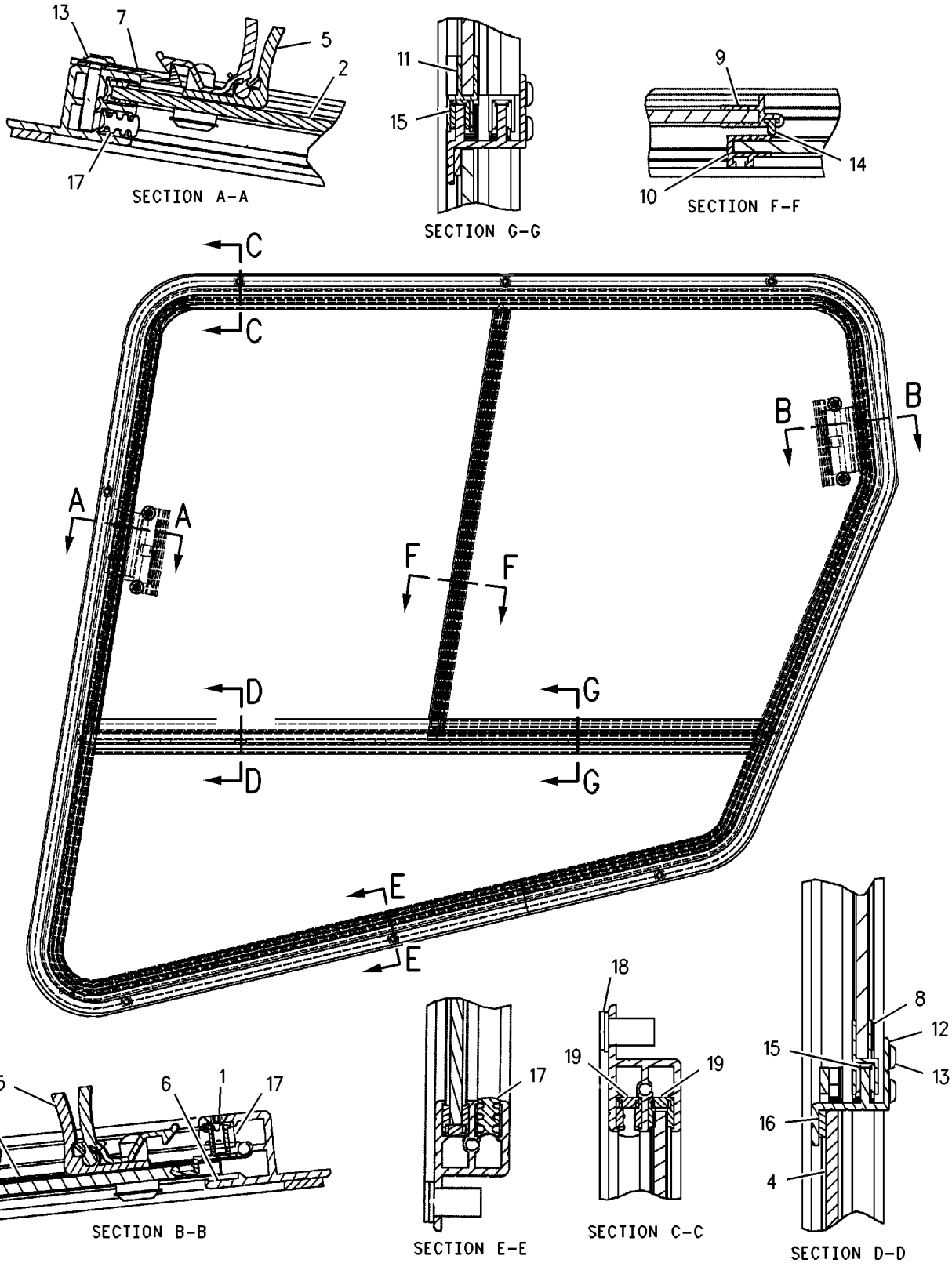

GRAPHIC #1 g00839918

OPERATOR STATION

183-7137 WINDOW GP-CAB

S/N: 4YZ4000-4886; 5SZ4000-5297

KIT-CAB WINDOW, TOP & REAR

FIELD INSTALLATION

SMCS-7310 **i01789953**

NOTE	PART NUMBER	QTY	PART NAME 1 2 3 4 5 6 (PRODUCT LEVEL)	SEE PAGE
Y	*195-6723*	1	WINDOW GP-CAB (TOP & REAR)	694

Y-SEPARATE ILLUSTRATION

<END>

MEMORANDA

OPERATOR STATION

183-7137 WINDOW GP-CAB

S/N: 4YZ4887-UP; 5SZ5298-UP
KIT-CAB WINDOW, TOP & REAR
FIELD INSTALLATION

SMCS-7310 **i01789992**

NOTE	REF NO	GRAPHIC REF	PART NUMBER	QTY	PART NAME 1 2 3 4 5 6 (PRODUCT LEVEL)	SEE PAGE
	1	1	**2G-8767**	4	WASHER (10.5X60X3MM THK)	
	2	1	**5C-8310**	1	BRACKET-RING	
	3	1	**5C-8311**	1	RING	
	4	1	**6D-6812**	4	KNOB AS	
	5	1	**8T-6842**	1	FILM-INSTRUCTION (ALTERNATE EXIT)	
	6	1	**142-9319**	1	WINDOW	
	7	1	**191-9668**	1	INSULATION	
	8	1	**206-3818**	1	WINDOW	
	9	1	**212-6693**	1	PLATE	
	10	1	**3J-1907**	4	SEAL-O-RING	
M	11	1	**5C-2890**	2	NUT (M6X1 THD)	
M	12	1	**5C-9553**	2	BOLT (M6X1X16MM)	
	13	1	**6V-8801**	4	NUT (3/8-16 THD)	
	14	1	**8T-4121**	4	WASHER-HARD (11X21X2.5MM THK)	
	15	1	**8T-4205**	4	WASHER-HARD (7.2X14.5X2MM THK)	
	16	1	**8T-9407**	4	BOLT-CARRIAGE (3/8-16X1.25 IN)	
	17	1	**206-7951**	191	SEAL	
	18	1	**206-7952**	191	STRIP	
	19	1	**5P-7483**		SEAL (1.5M)	

M-METRIC PART

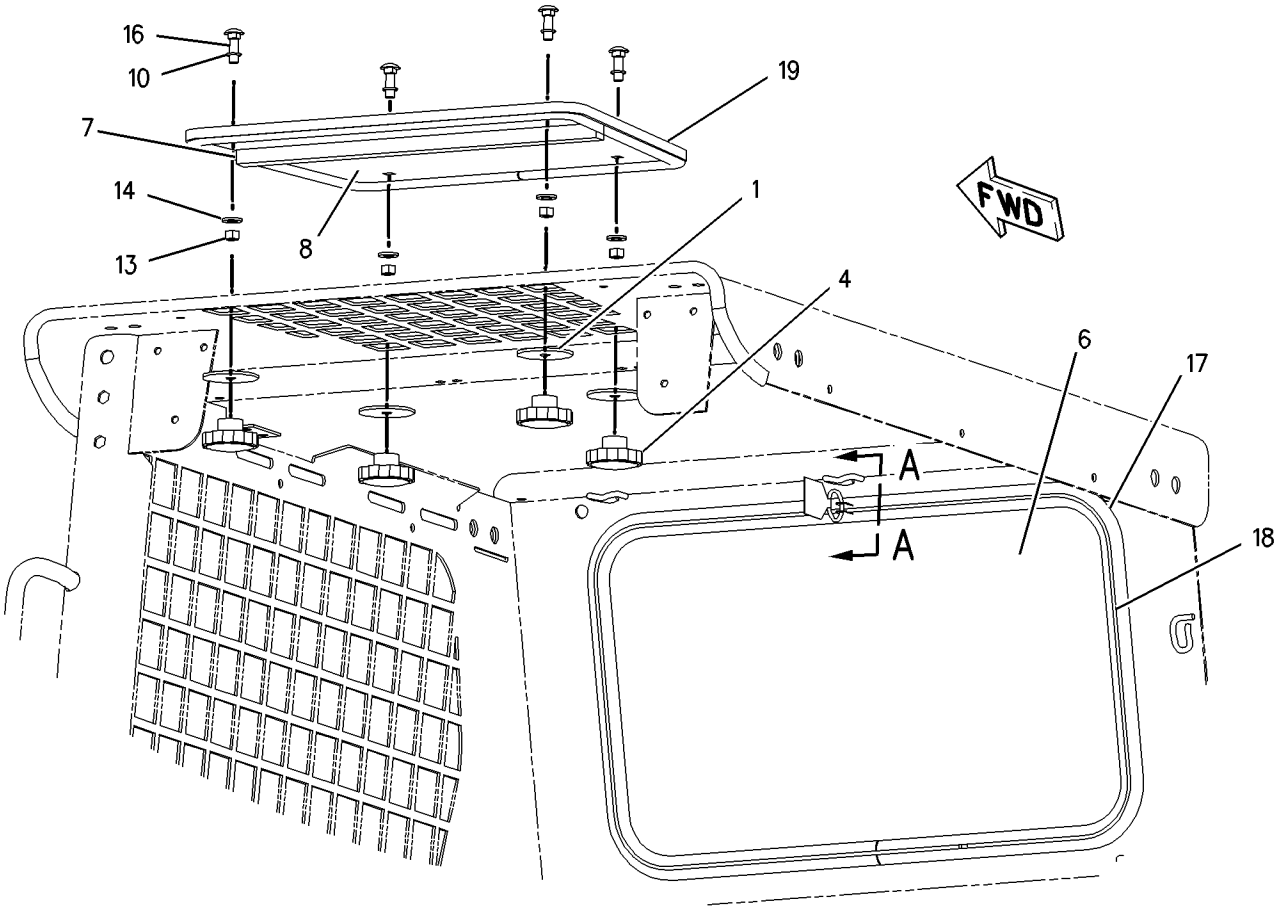

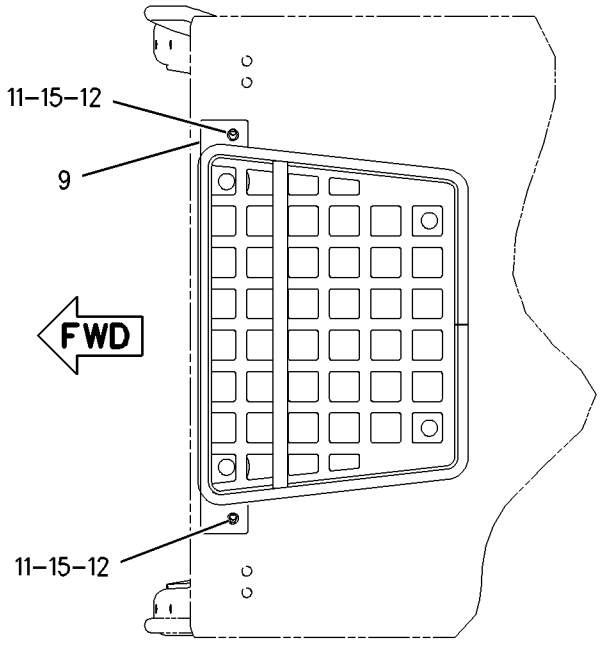

TOP VIEW

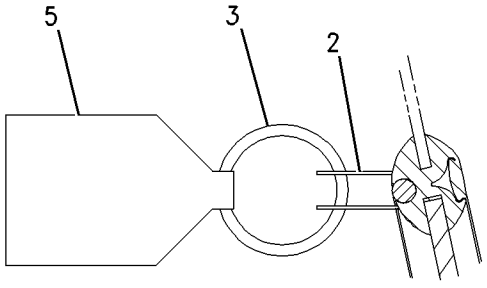

SECTION A-A

GRAPHIC #1 g00915010

OPERATOR STATION

183-7138 WINDOW GP-CAB

S/N: CED1-UP; FDG1-UP; 4YZ4000-UP; 5SZ4000-UP
KIT-CAB WINDOW, SIDE
FIELD INSTALLATION

SMCS-7310 **i01251766**

NOTE	PART NUMBER	QTY	PART NAME 1 2 3 4 5 6 (PRODUCT LEVEL)	SEE PAGE
Y	*142-9363*	1	WINDOW GP-CAB (SIDE)	682

Y-SEPARATE ILLUSTRATION

<END>

OPERATOR STATION

187-3213 WINDOW GP-CAB

S/N: CED1-UP; FDG1-UP; 4YZ4000-UP; 5SZ4000-UP
SIDE, HEATER USED
CANNOT BE USED WITH 142-9363—PAGE 682
AN ATTACHMENT

SMCS-7310 **i01787936**

NOTE	REF NO	GRAPHIC REF	PART NUMBER	QTY	PART NAME 1 2 3 4 5 6 (PRODUCT LEVEL)	SEE PAGE
Y	1	1	**154-7988**	1	WINDOW GP-CAB (RH)	684
Y	2	1	**154-7989**	1	WINDOW GP-CAB (LH)	686
M	3	1	**9X-2045**	14	SCREW-TRUSS HEAD (M6X1X20MM)	

M-METRIC PART
Y-SEPARATE ILLUSTRATION

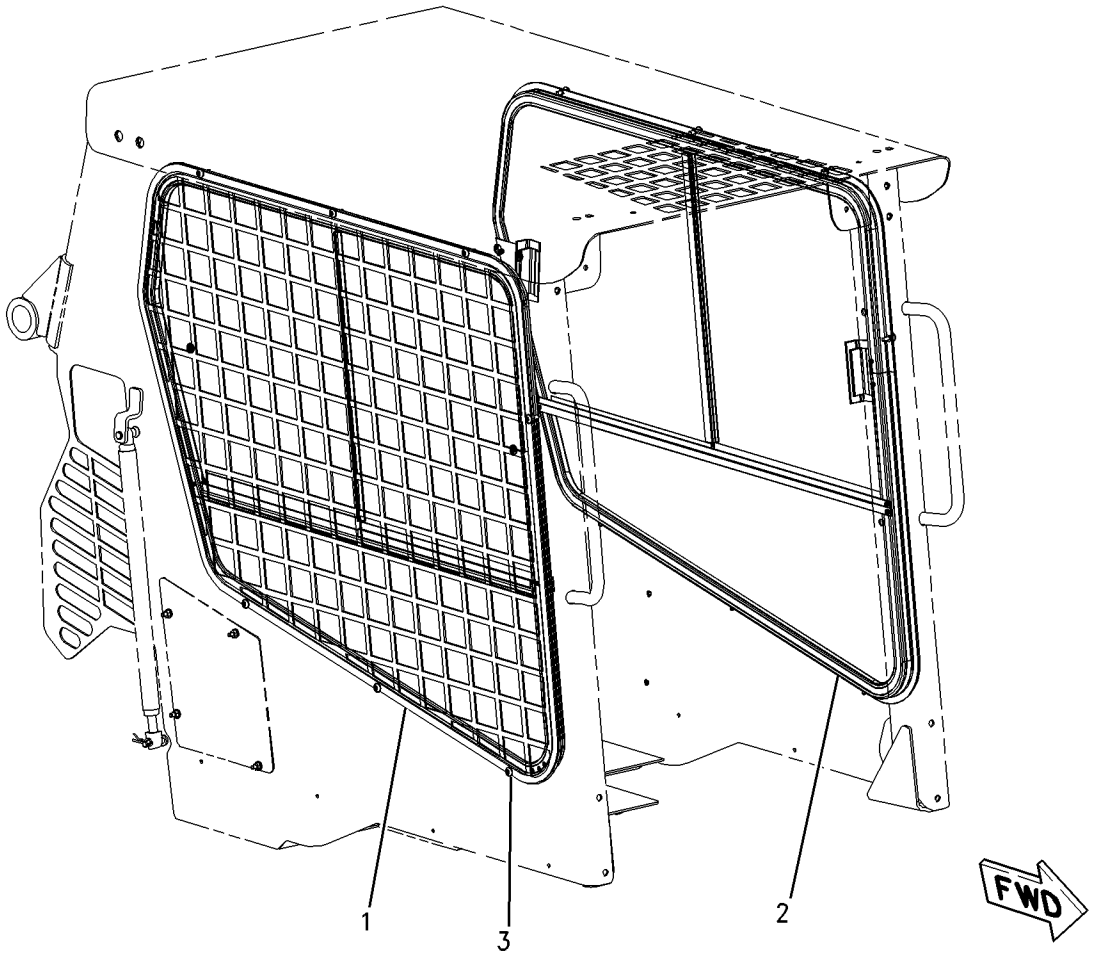

GRAPHIC #1 g00915017

OPERATOR STATION

195-6723 WINDOW GP-CAB

S/N: CED1-UP; FDG1-UP; 4YZ4000-4886; 5SZ4000-5297
PART OF 190-7953, 195-6710 CHASSIS AR, 183-7137 WINDOW GP-CAB
ALSO AN ATTACHMENT

SMCS-7310 **i01787943**

NOTE	REF NO	GRAPHIC REF	PART NUMBER	QTY	PART NAME 1 2 3 4 5 6 (PRODUCT LEVEL)	SEE PAGE
	1	1	**5C-8310**	1	BRACKET-RING	
	2	1	**5C-8311**	1	RING	
	3	1	**8T-6842**	1	FILM-INSTRUCTION (ALTERNATE EXIT)	
	4	1	**142-9314**	1	GLASS-TOP	
	5	1	**142-9316**	1	BRACKET AS	
	6	1	**142-9317**	2	PLATE	
	7	1	**142-9319**	1	WINDOW	
	8	1	**195-0936**	4	INSERT-THREADED (M6X1)	
M	9	1	**8T-4138**	2	BOLT (M6X1X20MM)	
	10	1	**8T-4205**	2	WASHER-HARD (7.2X14.5X2MM THK)	
M	11	1	**9X-2045**	4	SCREW-TRUSS HEAD (M6X1X20MM)	
BE	12	1	**108-0656**		SEAL (190CM)	
BE	13	1	**104-5957**		STRIP-LOCKING (190CM)	
BE	14	1	**128-7037**		SEAL (104CM)	
BE	15	1	**6V-1392**		SEAL (6CM)	

B-USE AS REQUIRED
E-ORDER BY THE CENTIMETER
M-METRIC PART

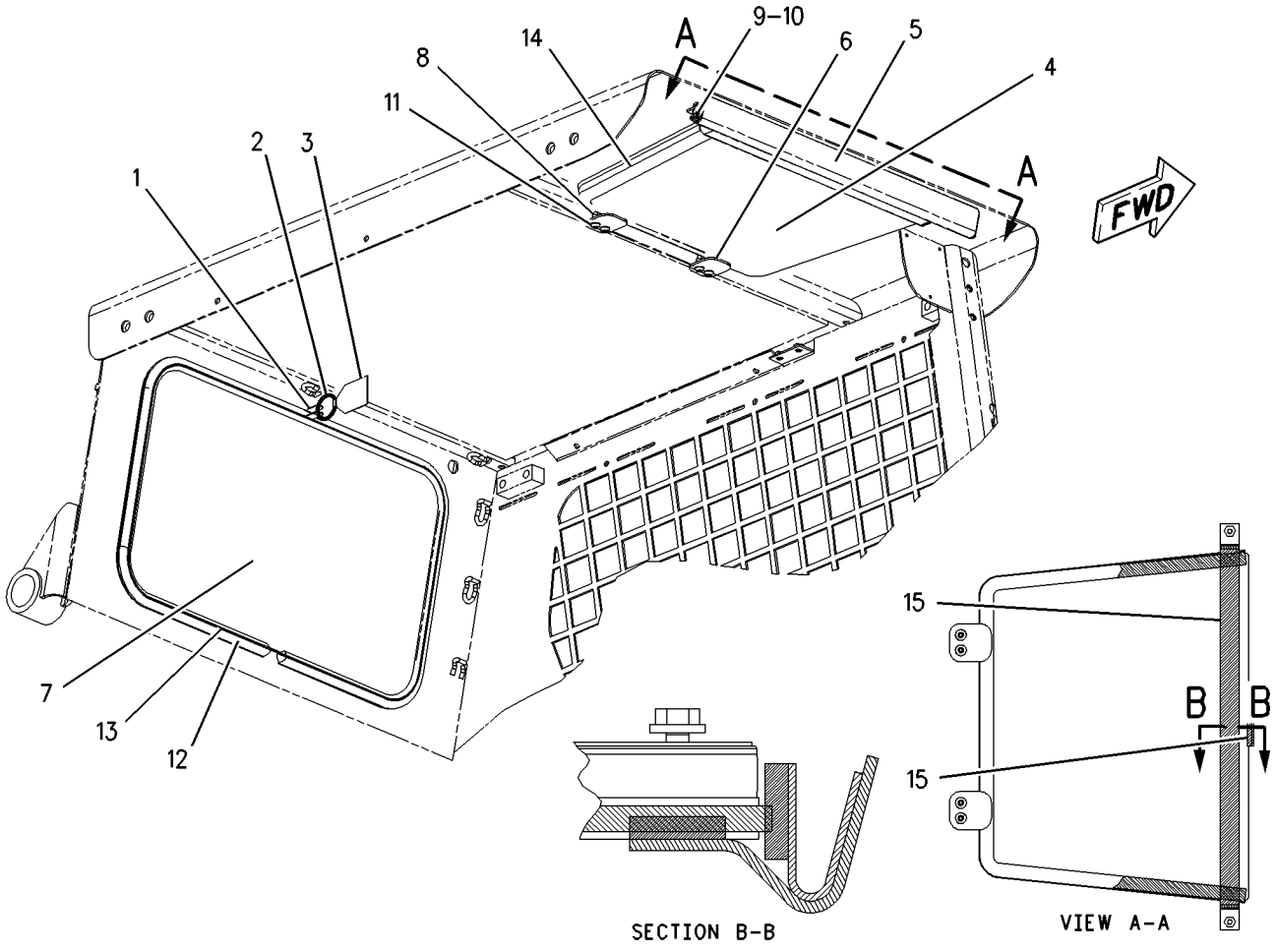

GRAPHIC #1 g00915022

OPERATOR STATION

195-6723 WINDOW GP-CAB

S/N: CED1-UP; FDG1-UP; 4YZ4887-UP; 5SZ5298-UP
PART OF 190-7953, 195-6710 CHASSIS AR
ALSO AN ATTACHMENT

SMCS-7310 **i01789030**

NOTE	REF NO	GRAPHIC REF	PART NUMBER	QTY	PART NAME 1 2 3 4 5 6 (PRODUCT LEVEL)	SEE PAGE
C	1	1	**2G-8767**	4	WASHER (10.5X60X3MM THK)	
	2	1	**5C-8310**	1	BRACKET-RING	
	3	1	**5C-8311**	1	RING	
C	4	1	**6D-6812**	4	KNOB AS	
	5	1	**8T-6842**	1	FILM-INSTRUCTION (ALTERNATE EXIT)	
	6	1	**142-9319**	1	WINDOW	
C	7	1	**191-9668**	1	INSULATION	
C	8	1	**206-3818**	1	WINDOW	
C	9	1	**3J-1907**	4	SEAL-O-RING	
C	10	1	**6V-8801**	4	NUT (3/8-16 THD)	
C	11	1	**8T-4121**	4	WASHER-HARD (11X21X2.5MM THK)	
C	12	1	**8T-9407**	4	BOLT-CARRIAGE (3/8-16X1.25 IN)	
BC	13	1	**206-7951**		SEAL (191CM)	
BC	14	1	**206-7952**		STRIP (191CM)	
D	15	1	**5P-7483**	1	SEAL	

B-USE AS REQUIRED
C-CHANGE FROM PREVIOUS TYPE
D-ORDER BY THE METER

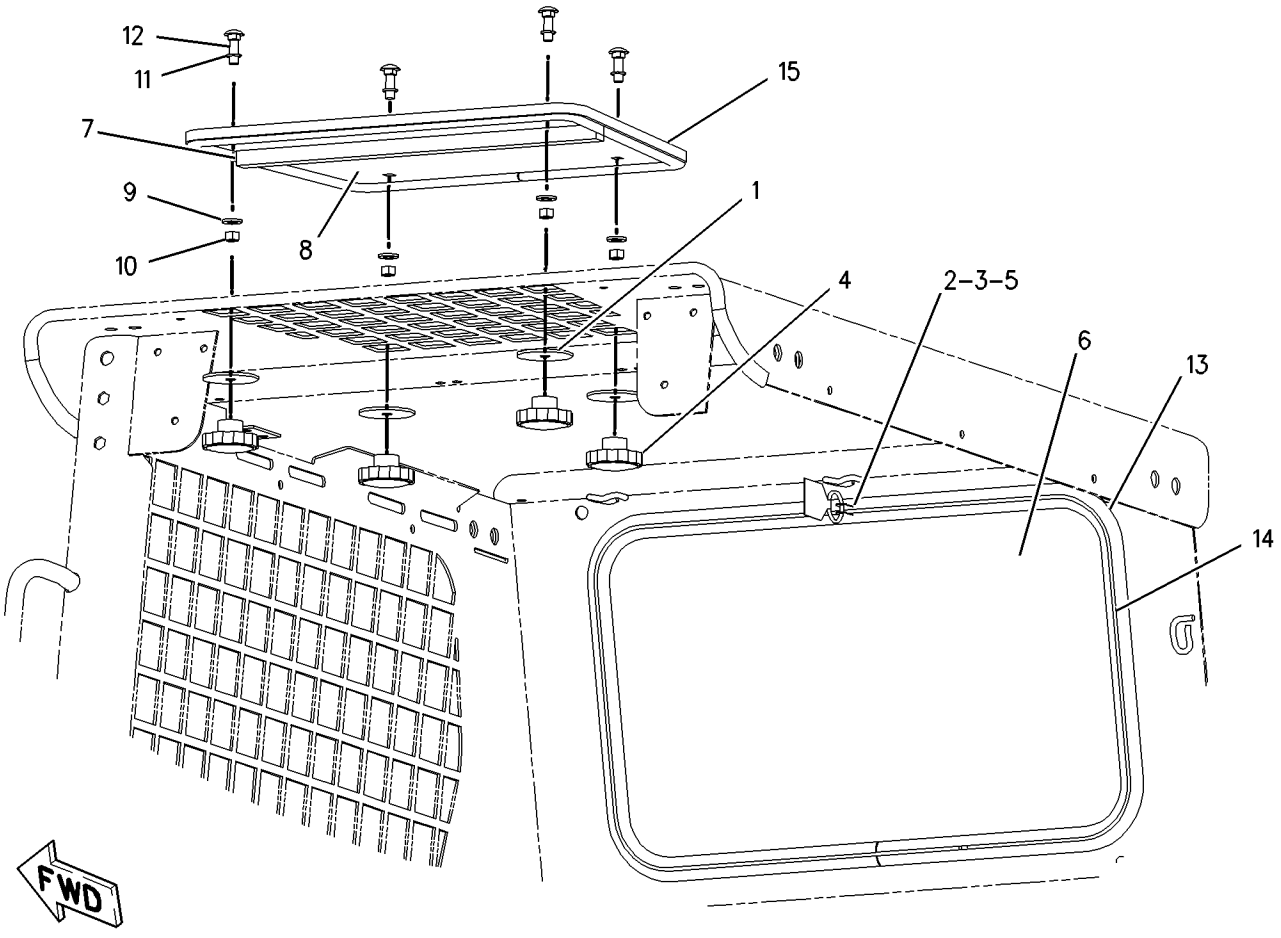

GRAPHIC #1 g00915027

SERVICE EQUIPMENT AND SUPPLIES

8T-9190 BOTTLE GP-FLUID SAMPLING

S/N: 4YZ4000-UP; 5SZ4000-UP
PART OF 177-2955 KIT-MAINTENANCE

SMCS-7542 **i01798355**

NOTE	REF NO	GRAPHIC REF	PART NUMBER	QTY	PART NAME 1 2 3 4 5 6 (PRODUCT LEVEL)	SEE PAGE
	1	1	**8T-9186**	1	LINE GP	
	2	1	**1U-5814**	1	BOTTLE AS	

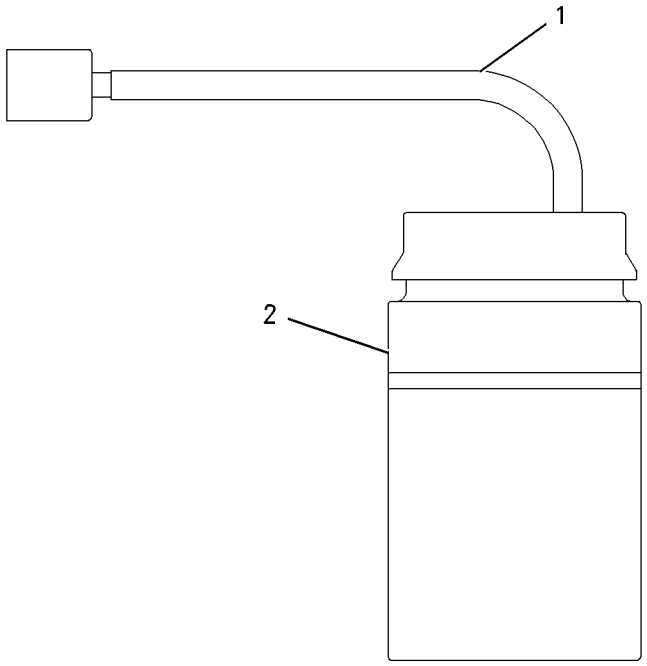

GRAPHIC #1 g00920821

SERVICE EQUIPMENT AND SUPPLIES

166-8835 FILM GP

S/N: 4YZ4000-UP

PART OF 180-3000 COMMON AR

SMCS-7557 **i01498011**

NOTE	REF NO	GRAPHIC REF	PART NUMBER	QTY	PART NAME 1 2 3 4 5 6 (PRODUCT LEVEL)	SEE PAGE
	1	1	**162-6887**	1	FILM-STRIPE (LH)	
	2	1	**162-6886**	1	FILM-STRIPE (RH)	
	3	1	**167-0007**	1	FILM-STRIPE (LH)	
	4	1	**167-0008**	1	FILM-STRIPE (RH)	
	5	1	**9X-2754**	1	FILM-CAT	
	6	1	**162-6889**	1	FILM-STRIPE	
	7	1	**120-0210**		FILM (60CM)	

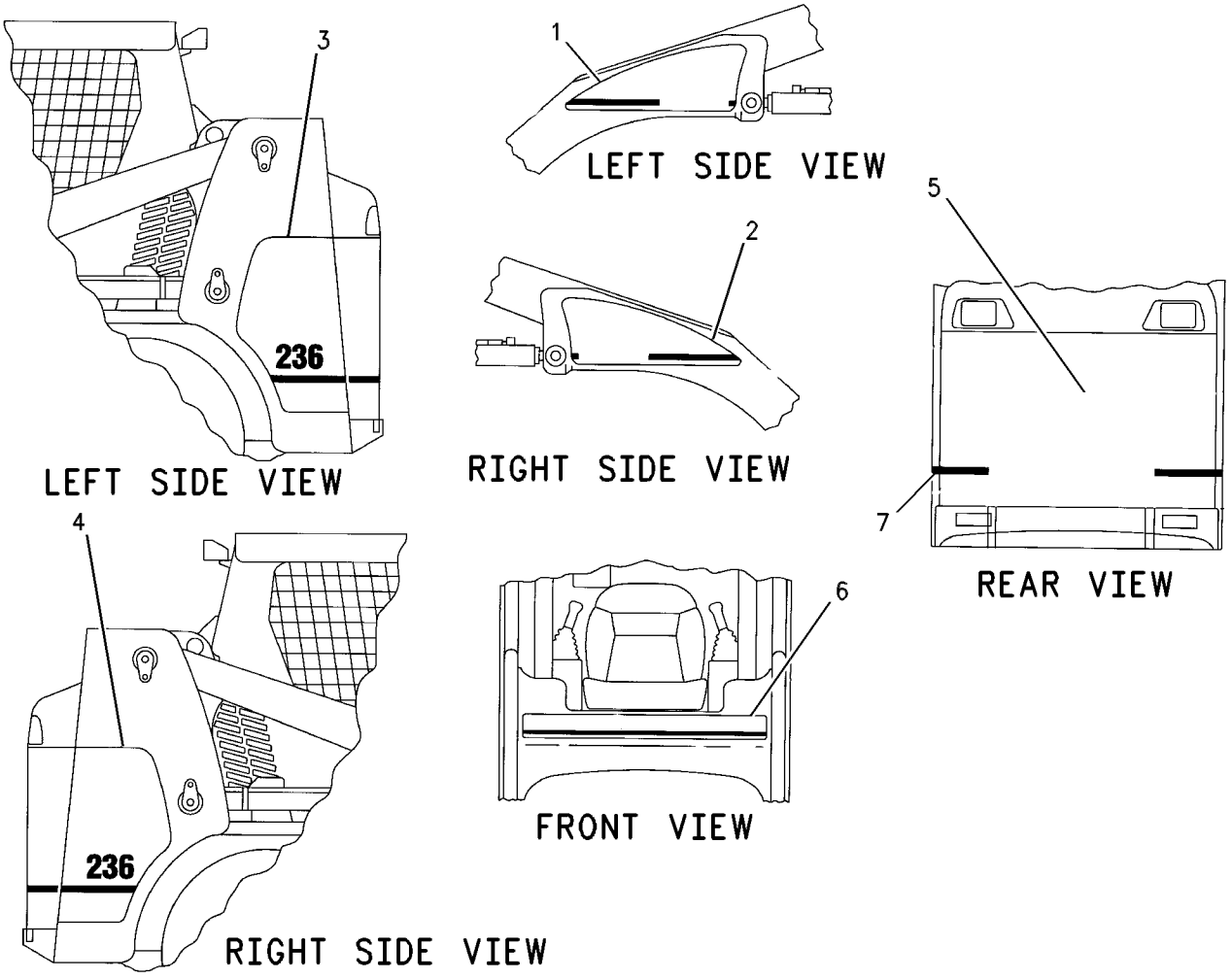

GRAPHIC #1 g00596317

SERVICE EQUIPMENT AND SUPPLIES

166-8836 FILM GP

S/N: 5SZ4000-UP

PART OF 197-4900 COMMON AR

SMCS-7557 **i01498012**

NOTE	REF NO	GRAPHIC REF	PART NUMBER	QTY	PART NAME 1 2 3 4 5 6 (PRODUCT LEVEL)	SEE PAGE
	1	1	**162-6887**	1	FILM-STRIPE (LH)	
	2	1	**162-6886**	1	FILM-STRIPE (RH)	
	3	1	**167-0009**	1	FILM-STRIPE (LH)	
	4	1	**167-0010**	1	FILM-STRIPE (RH)	
	5	1	**9X-2754**	1	FILM-CAT	
	6	1	**162-6889**	1	FILM-STRIPE	
	7	1	**120-0210**		FILM (60CM)	
	8	1	**174-3944**	2	FILM-TURBOCHARGER	

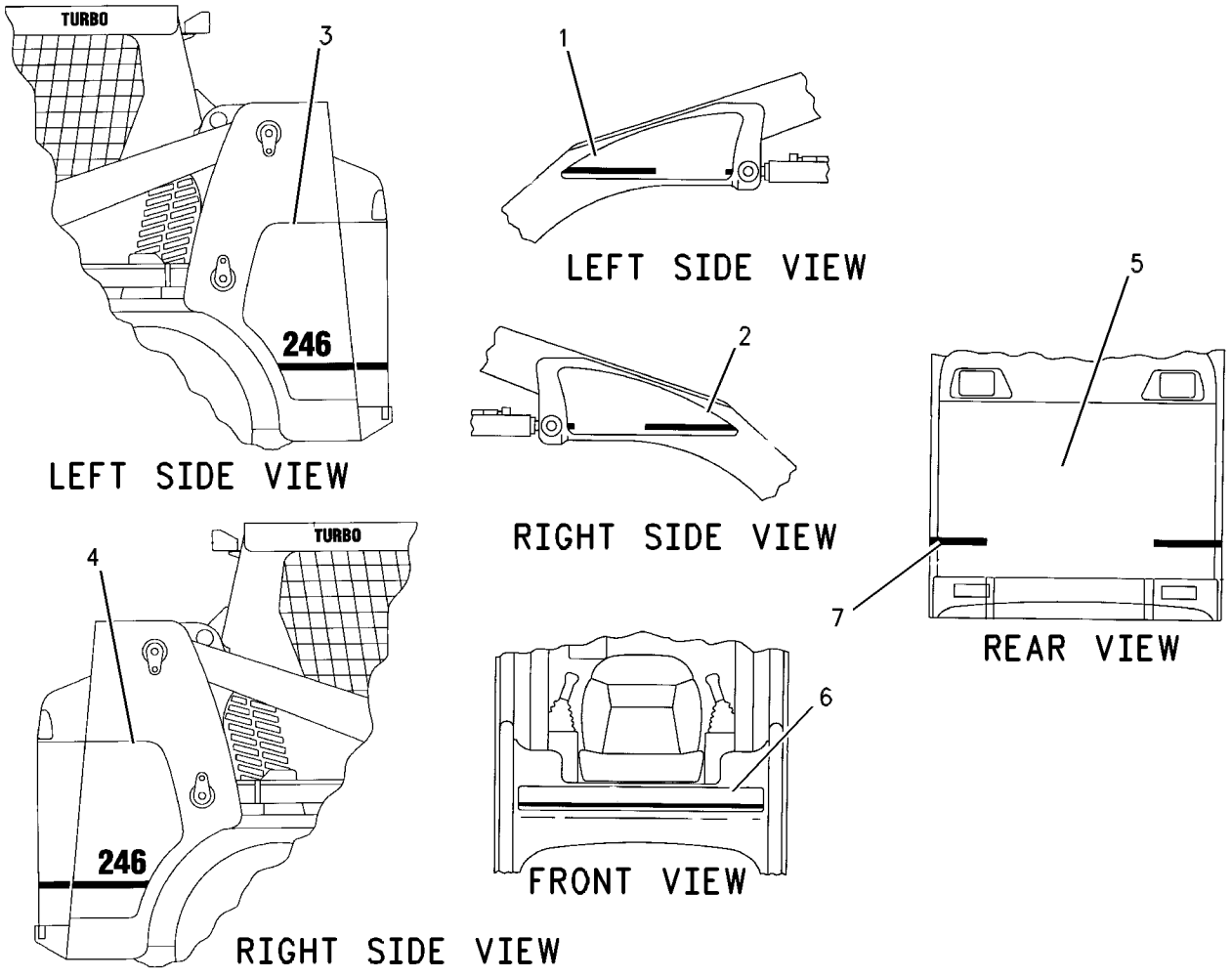

GRAPHIC #1 g00596340

SERVICE EQUIPMENT AND SUPPLIES

190-7955 FILM GP

S/N: CED1-UP

PART OF 190-8000 COMMON AR

SMCS-7557 **i01551492**

NOTE	REF NO	GRAPHIC REF	PART NUMBER	QTY	PART NAME 1 2 3 4 5 6 (PRODUCT LEVEL)	SEE PAGE
	1	1	**162-6887**	1	FILM-STRIPE (LH)	
	2	1	**162-6886**	1	FILM-STRIPE (RH)	
	3	1	**190-8045**	1	FILM-STRIPE (LH)	
	4	1	**190-8046**	1	FILM-STRIPE (RH)	
	5	1	**9X-2754**	1	FILM-CAT	
	6	1	**162-6889**	1	FILM-STRIPE	
	7	1	**120-0210**		FILM-STRIPE (RED) (60CM)	
	8	1	**174-3944**	2	FILM-TURBOCHARGER	

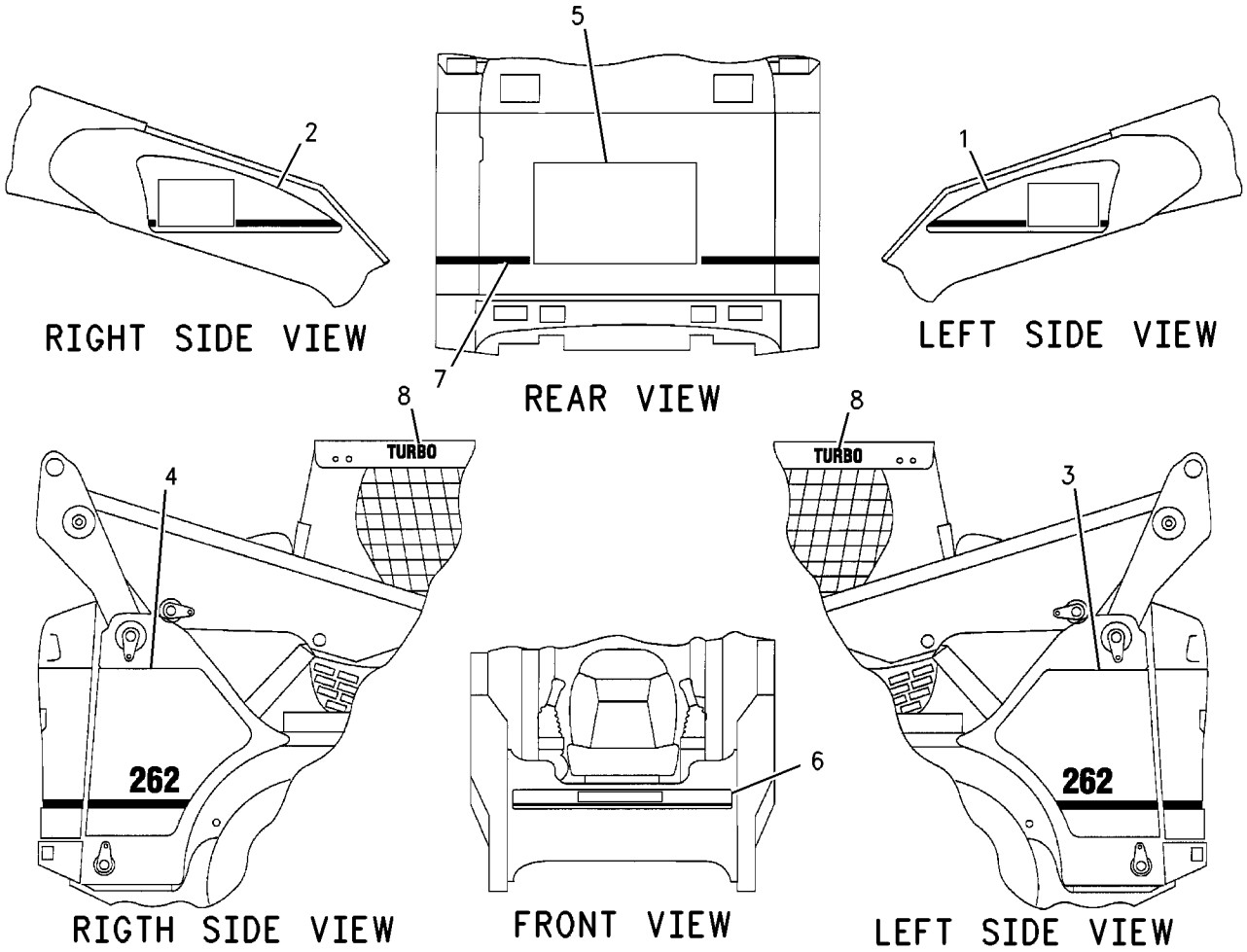

GRAPHIC #1 g00807241

SERVICE EQUIPMENT AND SUPPLIES

191-9684 FILM GP

S/N: 5SZ4000-UP
PART OF 188-3311 CONVERSION AR-ROADING
AN ATTACHMENT

SMCS-7557 **i01481193**

NOTE	REF NO	GRAPHIC REF	PART NUMBER	QTY	PART NAME 1 2 3 4 5 6 (PRODUCT LEVEL)	SEE PAGE
	1	1	**160-1600**	1	FILM-WARNING	

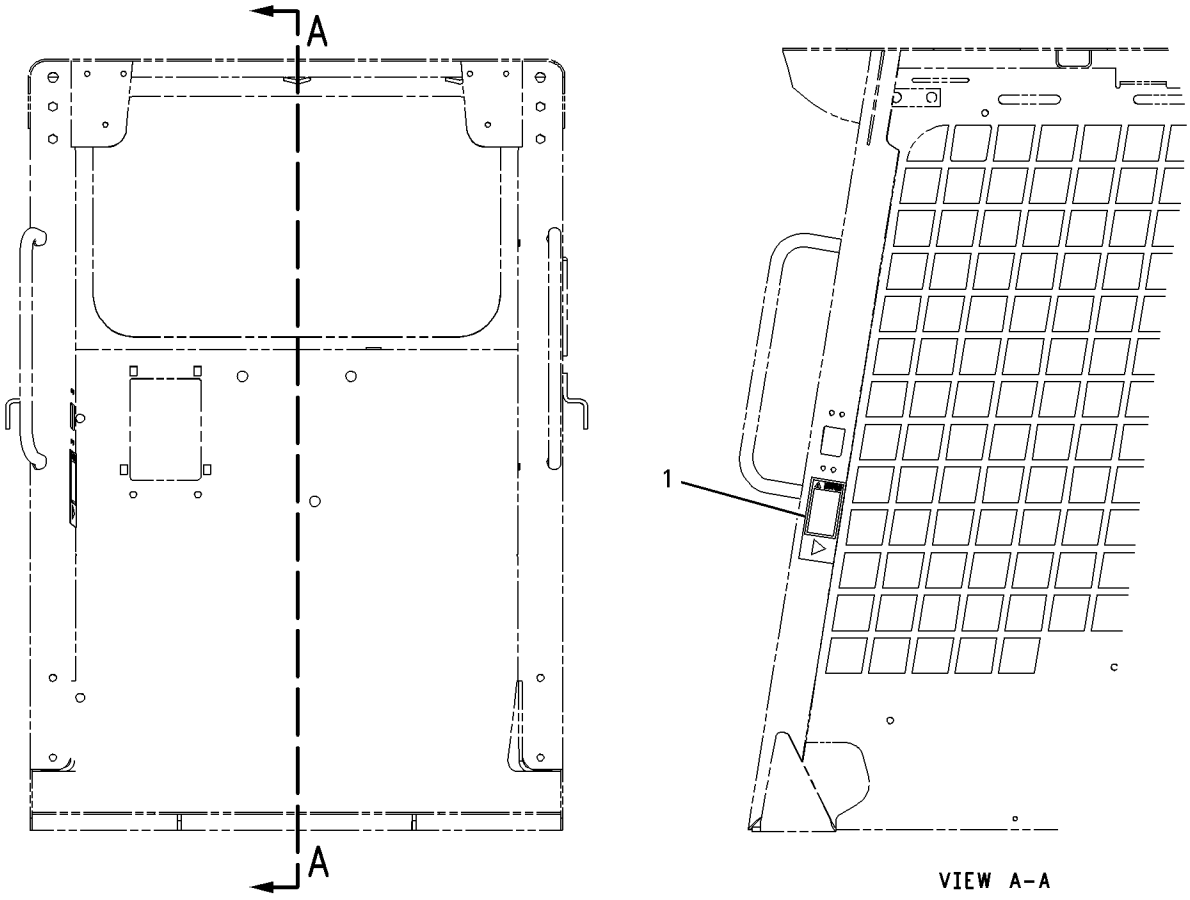

GRAPHIC #1 g00771257

MEMORANDA

SERVICE EQUIPMENT AND SUPPLIES

195-6702 FILM GP

S/N: FDG1-UP

PART OF 195-6700 COMMON AR

SMCS-7557 **i01546340**

NOTE	REF NO	GRAPHIC REF	PART NUMBER	QTY	PART NAME 1 2 3 4 5 6 (PRODUCT LEVEL)	SEE PAGE
	1	1	**162-6887**	1	FILM-STRIPE (LH)	
	2	1	**162-6886**	1	FILM-STRIPE (RH)	
	3	1	**195-6703**	1	FILM-STRIPE (LH)	
	4	1	**195-6704**	1	FILM-STRIPE (RH)	
	5	1	**9X-2754**	1	FILM-CAT	
	6	1	**162-6889**	1	FILM-STRIPE	
BE	7	1	**120-0210**		FILM-STRIPE (RED) (60CM)	

B-USE AS REQUIRED
E-ORDER BY THE CENTIMETER

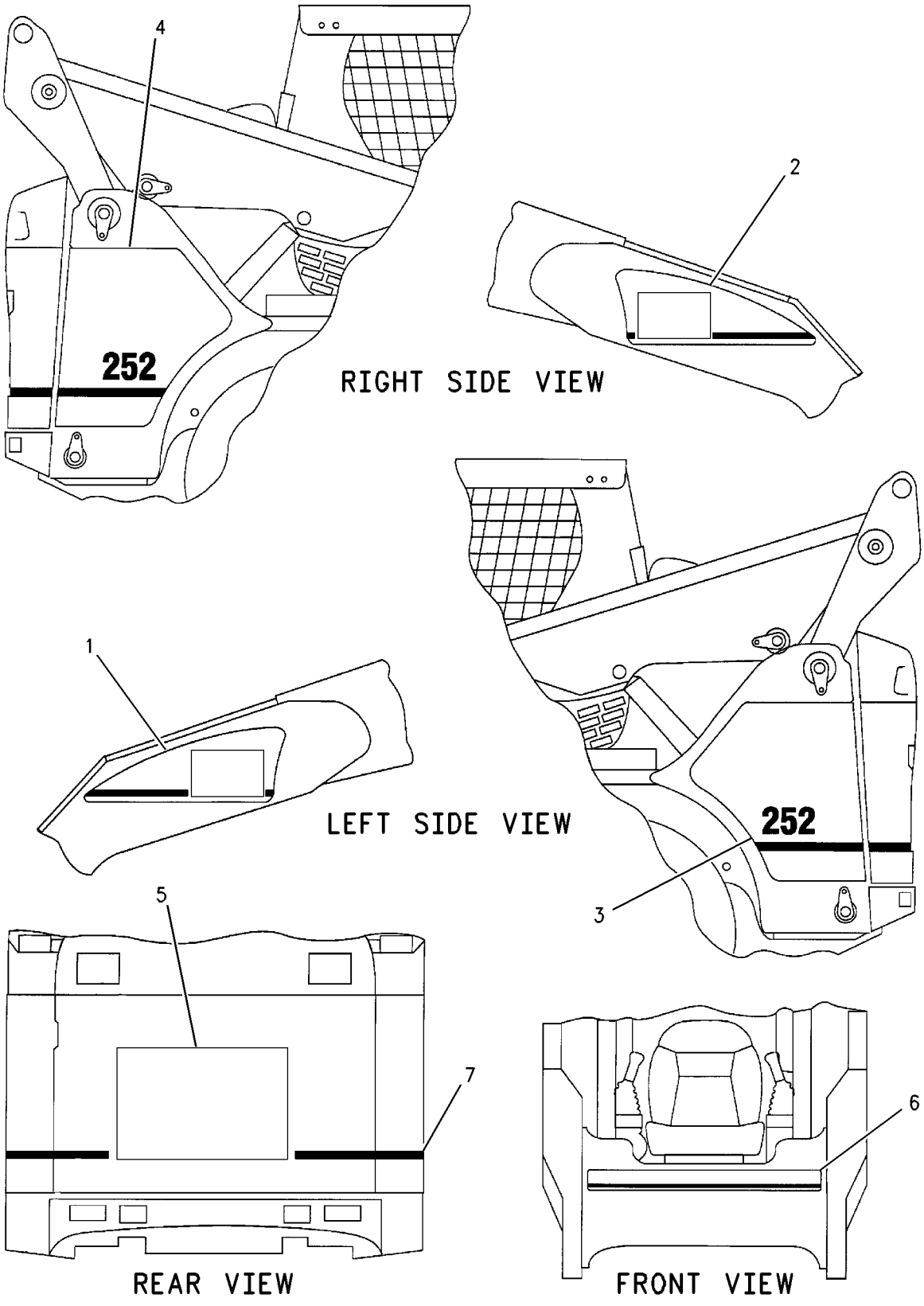

GRAPHIC #1

g00803603

SERVICE EQUIPMENT AND SUPPLIES

177-2955 KIT-MAINTENANCE

S/N: 4YZ4000-UP; 5SZ4000-UP
PREVENTIVE
FIELD INSTALLATION

SMCS-6700, 7000, 7519 **i01771835**

NOTE	PART NUMBER	QTY	PART NAME 1 2 3 4 5 6 (PRODUCT LEVEL)	SEE PAGE
	1G-8878	1	FILTER AS-OIL	
	4C-4600	2	CONTAINER AS	
	7W-2327	1	FILTER AS-ENGINE OIL	
Y	**8T-9190**	2	BOTTLE GP-FLUID SAMPLING	696
	159-6102	1	FILTER ELEMENT AS-FUEL	
	163-4465	1	ELEMENT AS	

Y-SEPARATE ILLUSTRATION

<END>

SERVICE EQUIPMENT AND SUPPLIES

173-3021 MOUNTING GP-REGISTRATION

S/N: 4YZ4000-UP; 5SZ4000-UP
PART OF 203-4332 LIGHTING GP-ROADING
AN ATTACHMENT

SMCS-1429, 7000, 7557 **i01697273**

NOTE	REF NO	GRAPHIC REF	PART NUMBER	QTY	PART NAME 1 2 3 4 5 6 (PRODUCT LEVEL)	SEE PAGE
	1	1	**175-4236**	1	PLATE	
	2	1	**190-8962**	1	LAMP GP-FLOOD	
		1	**7M-9957**	1	LAMP (12 VOLTS)	
	3	1	**204-1365**	1	PLATE	
	4	1	**207-9780**	1	BRACKET AS	
	5	1	**215-4001**	1	PLATE	
	6	1	**4B-4863**	2	WASHER (4.7X11X1.2MM THK)	
M	7	1	**5C-8312**	2	NUT (M4X0.7 THD)	
M	8	1	**6V-9672**	2	SCREW-MACHINE (M4X.7X16MM)	
M	9	1	**8T-4171**	3	BOLT (M6X1X12MM)	
	10	1	**8T-4205**	3	WASHER-HARD (7.2X14.5X2MM THK)	

M-METRIC PART

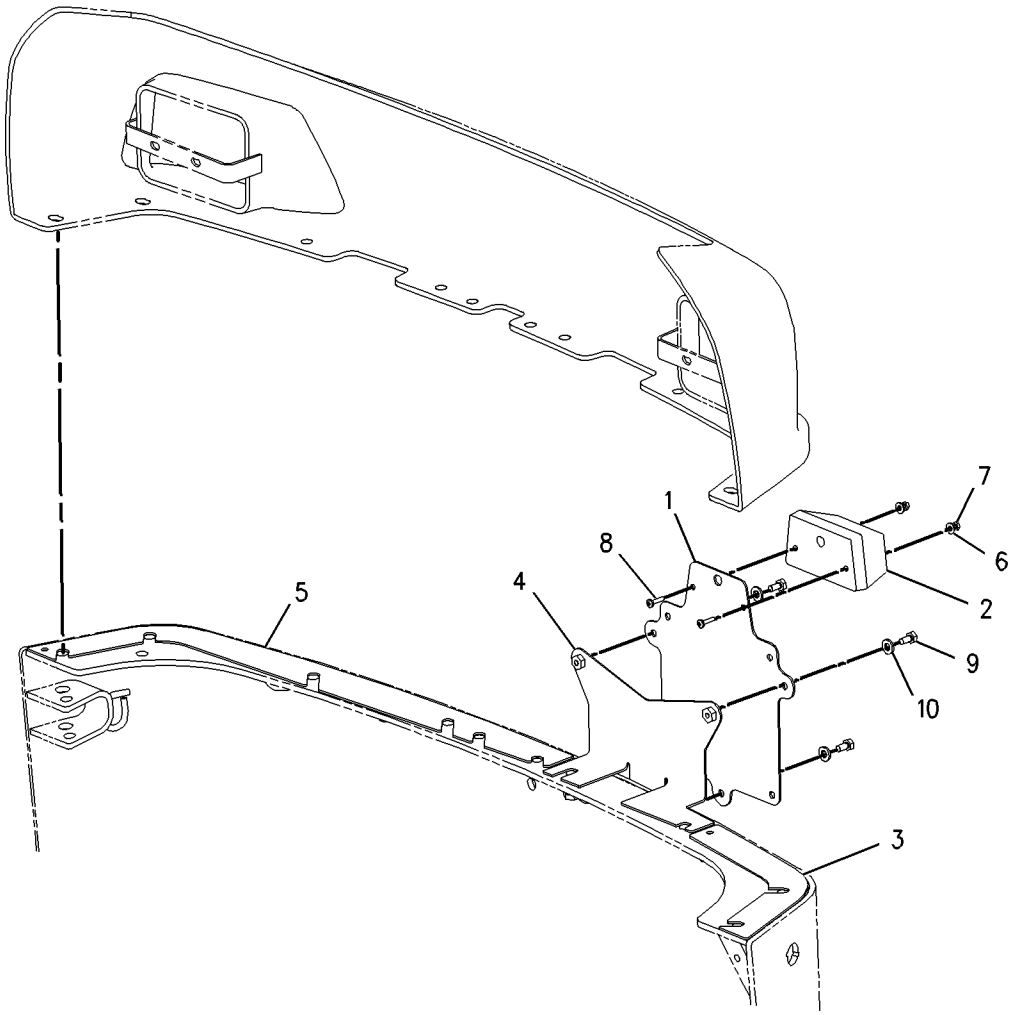

GRAPHIC #1 g00874745

SERVICE EQUIPMENT AND SUPPLIES

163-5016 PLATE & FILM GP–ENGLISH

S/N: 4YZ4000-UP; 5SZ4000-UP

AN ATTACHMENT

SMCS-7405, 7557 **i01759696**

NOTE	REF NO	GRAPHIC REF	PART NUMBER	QTY	PART NAME 1 2 3 4 5 6 (PRODUCT LEVEL)	SEE PAGE
	1	1	**164-9741**	1	FILM-INSTRUCTION (OMM)	
	2	1	**162-5235**	1	FILM-WARNING (LIFT ARM BRACE)	
B	3	1	**156-3843**	2	FILM-WARNING (CAB TILT SUPPORT LEVER)	
	4	1	**164-9740**	1	FILM-INSTRUCTION (ENGINE START PROCEDURE)	
	5	1	**175-7413**	1	FILM-WARNING (WARNING/DANGER COMBINTION)	
	6	1	**8C-7588**	1	FILM-WARNING (BATTERY)	
	7	1	**215-3901**	1	FILM-WARNING (QUICK COUPLER)	
	8	1	**156-3834**	1	FILM-WARNING (UNIVERSAL)	

B-USE AS REQUIRED

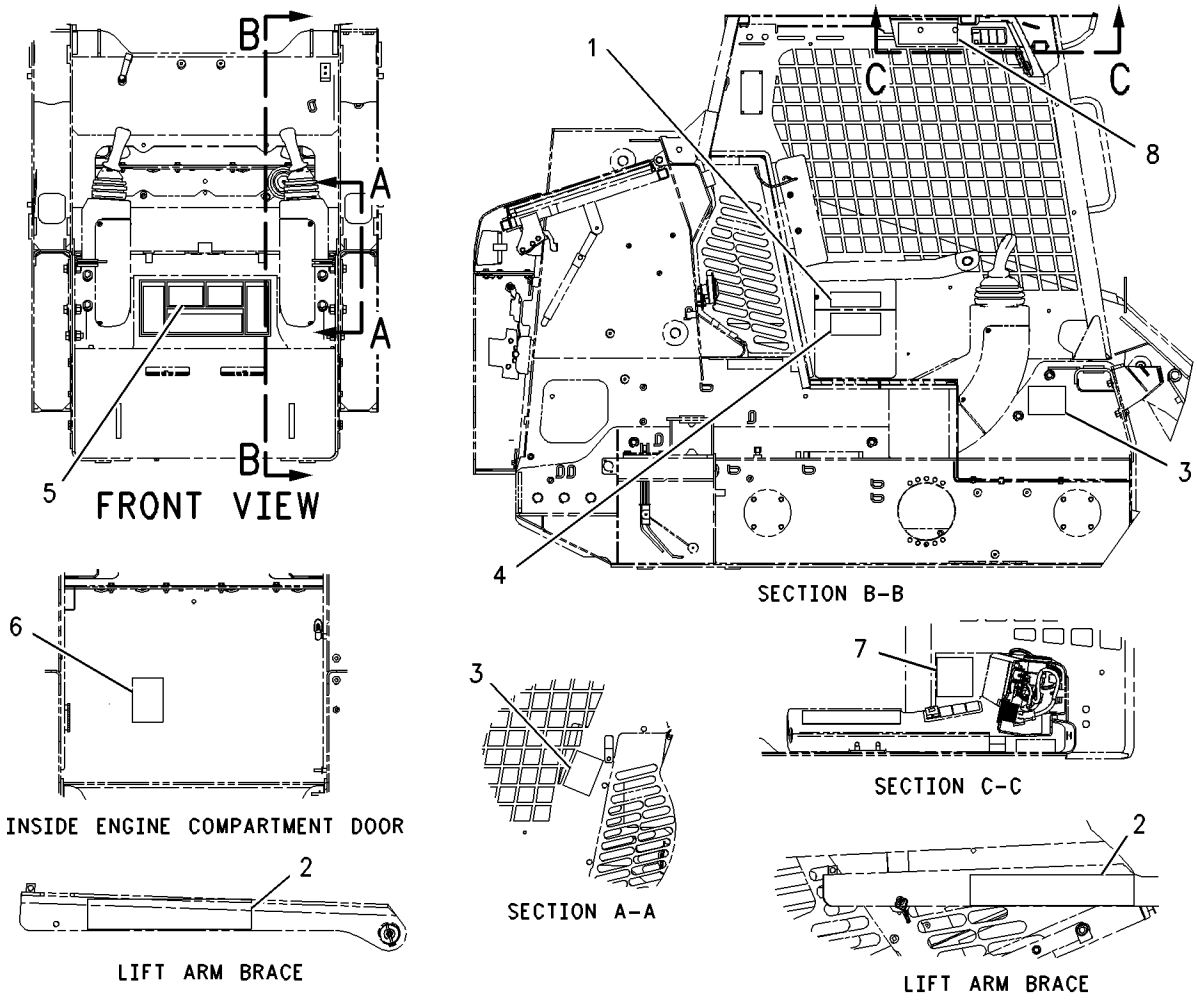

GRAPHIC #1 g00900345

SERVICE EQUIPMENT AND SUPPLIES

176-0614 PLATE & FILM GP—SPANISH

S/N: 4YZ4000-UP; 5SZ4000-UP
SEE 163-5016 FOR FILM LOCATION
AN ATTACHMENT

SMCS-7405, 7557 **i01759686**

NOTE	PART NUMBER	QTY	PART NAME 1 2 3 4 5 6 (PRODUCT LEVEL)	SEE PAGE
	176-1226	1	FILM-INSTRUCTION (OMM)	
	176-1335	1	FILM-WARNING (LIFT ARM BRACE)	
	163-9112	2	FILM-WARNING (CAB TILT SUPPORT LEVER)	
	176-1336	1	FILM-NOTICE (ENGINE START PROCEDURE)	
	176-1337	1	FILM-WARNING (WARNING/DANGER COMBINATION)	
	101-0569	1	FILM-WARNING (BATTERY)	
	215-3920	1	FILM-WARNING (QUICK COUPLER)	
	164-2346	1	FILM-WARNING (UNIVERSAL)	

<END>

SERVICE EQUIPMENT AND SUPPLIES

177-7929 PLATE & FILM GP

S/N: 4YZ4000-UP; 5SZ4000-UP
EUROPEAN SOURCE ONLY
PART OF 166-2567, 175-4242, 175-4244, 188-3306, 188-3307, 188-3308, 188-3310, 188-3311 CONVERSION AR-ROADING
AN ATTACHMENT

SMCS-7405, 7557 **i01759427**

NOTE	REF NO	GRAPHIC REF	PART NUMBER	QTY	PART NAME 1 2 3 4 5 6 (PRODUCT LEVEL)	SEE PAGE
	1	1	**172-1241**	1	FILM-CAUTION (LIFTING/TIEDOWN)	

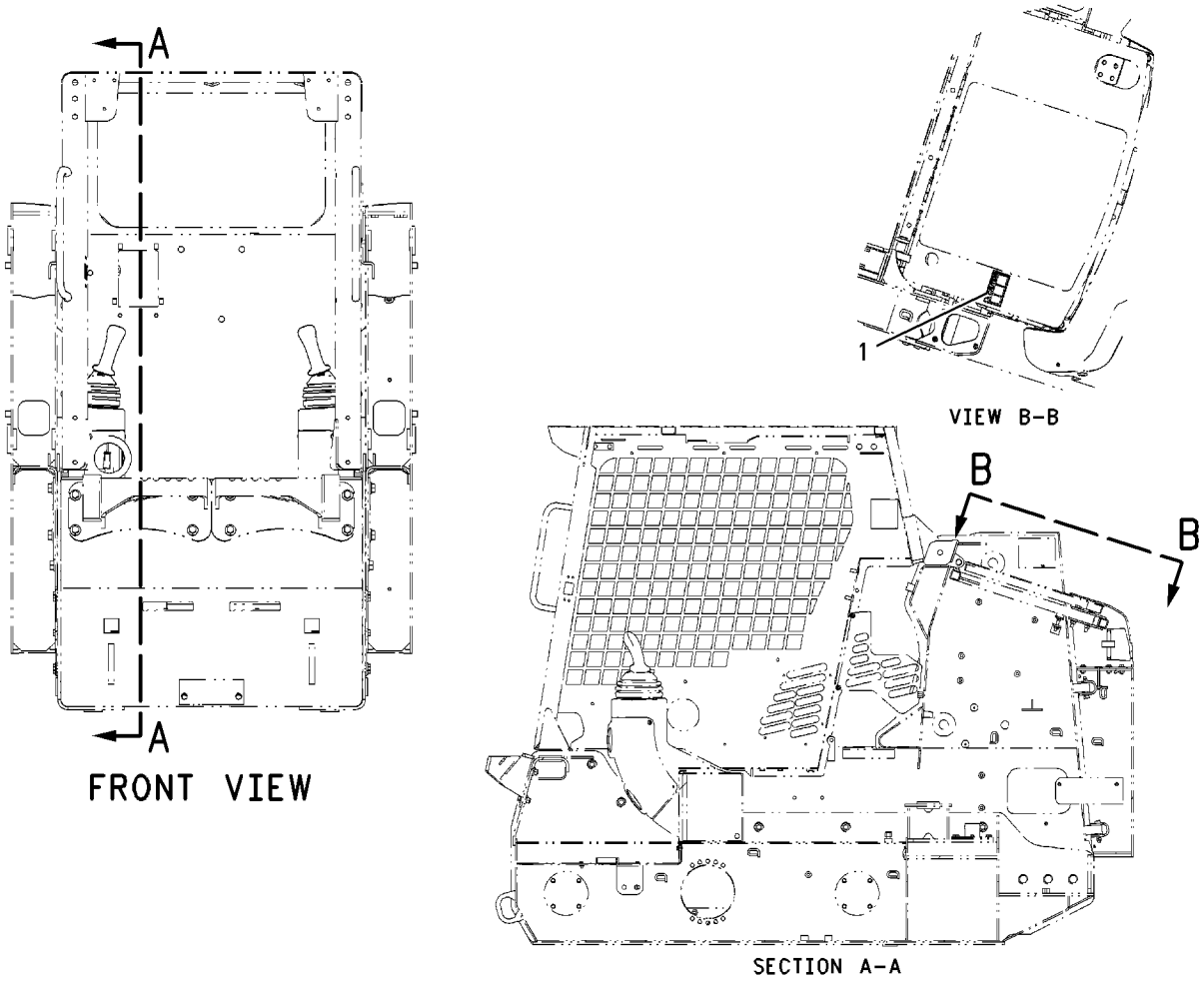

GRAPHIC #1 g00900306

179-1980 PLATE & FILM GP—ARABIC

S/N: 4YZ4000-UP; 5SZ4000-UP
SEE 163-5016 FOR FILM LOCATION
AN ATTACHMENT

SMCS-7405, 7557 **i01759777**

NOTE	PART NUMBER	QTY	PART NAME 1 2 3 4 5 6 (PRODUCT LEVEL)	SEE PAGE
	179-5866	1	FILM-INSTRUCTION (OMM)	
	179-5884	1	FILM-WARNING (LIFT ARM BRACE)	
B	**163-9119**	2	FILM-WARNING (CAB TILT SUPPORT LEVER)	
	179-5640	1	FILM-NOTICE (ENGINE START PROCEDURE)	
	179-5661	1	FILM-WARNING (WARNING/DANGER COMBINATION)	
	101-0576	1	FILM-WARNING (BATTERY)	
	215-3902	1	FILM-WARNING (QUICK COUPLER)	
	164-2354	1	FILM-WARNING (UNIVERSAL)	

B-USE AS REQUIRED

<END>

179-1981 PLATE & FILM GP—CHINESE

S/N: 4YZ4000-UP; 5SZ4000-UP
SEE 163-5016 FOR FILM LOCATION
AN ATTACHMENT

SMCS-7405, 7557 **i01756515**

NOTE	PART NUMBER	QTY	PART NAME 1 2 3 4 5 6 (PRODUCT LEVEL)	SEE PAGE
	179-5869	1	FILM-INSTRUCTION (OMM)	
B	**179-5887**	1	FILM-WARNING (LIFT ARM BRACE)	
	179-5916	2	FILM-WARNING (CAB TILT SUPPORT LEVER)	
	179-5643	1	FILM-WARNING (ENGINE START PROCEDURE)	
	179-5664	1	FILM-WARNING (WARNING/DANGER COMBINATION)	
	192-3519	1	FILM-WARNING (BATTERY)	
	215-3903	1	FILM-WARNING (QUICK COUPLER)	
	179-6575	1	FILM-WARNING (UNIVERSAL)	

B-USE AS REQUIRED

<END>

179-1982 PLATE & FILM GP—CZECHOSLOVAKIAN

S/N: 4YZ4000-UP; 5SZ4000-UP
SEE 163-5016 FOR FILM LOCATION
AN ATTACHMENT

SMCS-7405, 7557 **i01759689**

NOTE	PART NUMBER	QTY	PART NAME 1 2 3 4 5 6 (PRODUCT LEVEL)	SEE PAGE
	179-5865	1	FILM-INSTRUCTION (OMM)	
	179-5883	1	FILM-WARNING (LIFT ARM BRACE)	
	163-9120	2	FILM-WARNING (CAB TILT SUPPORT LEVER)	
	179-5639	1	FILM-NOTICE (ENGINE START PROCEDURE)	
	179-5660	1	FILM-WARNING (WARNING/DANGER COMBINATION)	
	140-8760	1	FILM-WARNING (BATTERY)	
	215-3904	1	FILM-WARNING (QUICK COUPLER)	
	164-2353	1	FILM-WARNING (UNIVERSAL)	

<END>

179-1983 PLATE & FILM GP—DANISH

S/N: 4YZ4000-UP; 5SZ4000-UP
SEE 163-5016 FOR FILM LOCATION
AN ATTACHMENT

SMCS-7405, 7557 **i01759692**

NOTE	PART NUMBER	QTY	PART NAME 1 2 3 4 5 6 (PRODUCT LEVEL)	SEE PAGE
	179-5861	1	FILM-INSTRUCTION (OMM)	
	179-5879	1	FILM-WARNING (LIFT ARM BRACE)	
	163-9116	2	FILM-WARNING (CAB TILT SUPPORT LEVER)	
	179-5635	1	FILM-NOTICE (ENGINE START PROCEURE)	
	179-5656	1	FILM-WARNING (WARNING/DANGER COMBINATION)	
	101-0573	1	FILM-WARNING (BATTERY)	
	215-3905	1	FILM-WARNING (QUICK COUPLER)	
	164-2350	1	FILM-WARNING (UNIVERSAL)	

<END>

179-1984 PLATE & FILM GP—DUTCH

S/N: 4YZ4000-UP; 5SZ4000-UP
SEE 163-5016 FOR FILM LOCATION
AN ATTACHMENT

SMCS-7405, 7557 **i01759724**

NOTE	PART NUMBER	QTY	PART NAME 1 2 3 4 5 6 (PRODUCT LEVEL)	SEE PAGE
	179-5863	1	FILM-INSTRUCTION (OMM)	
	179-5881	1	FILM-WARNING (LIFT ARM BRACE)	
B	**163-9118**	2	FILM-WARNING (CAB TILT SUPPORT LEVER)	
	179-5637	1	FILM-NOTICE (ENGINE START PROCEDURE)	
	179-5658	1	FILM-WARNING (WARNING/DANGER COMBINATION)	
	101-0575	1	FILM-WARNING (BATTERY)	
	163-9455	1	FILM-WARNING (QUICK COUPLER)	
	164-2352	1	FILM-WARNING (UNIVERSAL)	

B-USE AS REQUIRED

<END>

179-1985 PLATE & FILM GP—FINNISH

S/N: 4YZ4000-UP; 5SZ4000-UP
SEE 163-5016 FOR FILM LOCATION
AN ATTACHMENT

SMCS-7405, 7557 **i01759730**

NOTE	PART NUMBER	QTY	PART NAME 1 2 3 4 5 6 (PRODUCT LEVEL)	SEE PAGE
	179-5873	1	FILM-INSTRUCTION (OMM)	
	179-5891	1	FILM-WARNING (LIFT ARM BRACE)	
B	**163-9125**	2	FILM-WARNING (CAB TILT SUPPORT LEVER)	
	179-5647	1	FILM-NOTICE (ENGINE START PROCEDURE)	
	179-5668	1	FILM-WARNING (WARNING/DANGER COMBINATION)	
	128-8583	1	FILM-WARNING (BATTERY)	
	215-3907	1	FILM-WARNING (QUICK COUPLER)	
	164-2360	1	FILM-WARNING (UNIVERSAL)	

B-USE AS REQUIRED

<END>

179-1986 PLATE & FILM GP—FRENCH

S/N: 4YZ4000-UP; 5SZ4000-UP
SEE 163-5016 FOR FILM LOCATION
AN ATTACHMENT

SMCS-7405, 7557 **i01759734**

NOTE	PART NUMBER	QTY	PART NAME 1 2 3 4 5 6 (PRODUCT LEVEL)	SEE PAGE
	176-1225	1	FILM-INSTRUCTION (OMM)	
	163-5015	1	FILM-WARNING (LIFT ARM BRACE)	
B	**163-5050**	2	FILM-WARNING (CAB TILT SUPPORT LEVER)	
	179-5631	1	FILM-NOTICE (ENGINE START PROCEDURE)	
	179-5651	1	FILM-WARNING (WARNING/DANGER COMBINATION)	
	101-0568	1	FILM-WARNING (BATTERY)	
	215-3908	1	FILM-WARNING (QUICK COUPLER)	
	163-5020	1	FILM-WARNING (UNIVERSAL)	

B-USE AS REQUIRED

<END>

179-1987 PLATE & FILM GP—GERMAN

S/N: 4YZ4000-UP; 5SZ4000-UP
SEE 163-5016 FOR FILM LOCATION
AN ATTACHMENT

SMCS-7405, 7557 **i01759737**

NOTE	PART NUMBER	QTY	PART NAME 1 2 3 4 5 6 (PRODUCT LEVEL)	SEE PAGE
	176-1229	1	FILM-INSTRUCTION (OMM)	
	179-5877	1	FILM-WARNING (LIFT ARM BRACE)	
B	**163-9114**	2	FILM-WARNING (CAB TILT SUPPORT LEVER)	
	179-5633	1	FILM-NOTICE (ENGINE START PROCEDURE)	
	179-5654	1	FILM-WARNING (WARNING/DANGER COMBINATION)	
	101-0571	1	FILM-WARNING (BATTERY)	
	215-3909	1	FILM-WARNING (QUICK COUPLER)	
	164-2348	1	FILM-WARNING (UNIVERSAL)	

B-USE AS REQUIRED

<END>

179-1988 PLATE & FILM GP—GREEK

S/N: 4YZ4000-UP; 5SZ4000-UP
SEE 163-5016 FOR FILM LOCATION
AN ATTACHMENT

SMCS-7405, 7557 **i01759738**

NOTE	PART NUMBER	QTY	PART NAME 1 2 3 4 5 6 (PRODUCT LEVEL)	SEE PAGE
	179-5862	1	FILM-INSTRUCTION (OMM)	
	179-5880	1	FILM-WARNING (LIFT ARM BRACE)	
B	**163-9117**	2	FILM-WARNING (CAB TILT SUPPORT LEVER)	
	179-5636	1	FILM-NOTICE (ENGINE START PROCEDURE)	
	179-5657	1	FILM (WARNING/DANGER COMBINATOIN)	
	101-0574	1	FILM-WARNING (BATTERY)	
	215-3910	1	FILM-WARNING (QUICK COUPLER)	
	164-2351	1	FILM-WARNING (UNIVERSAL)	

B-USE AS REQUIRED

<END>

179-1990 PLATE & FILM GP—ICELANDIC

S/N: 4YZ4000-UP; 5SZ4000-UP
SEE 163-5016 FOR FILM LOCATION
AN ATTACHMENT

SMCS-7405, 7557 **i01759748**

NOTE	PART NUMBER	QTY	PART NAME 1 2 3 4 5 6 (PRODUCT LEVEL)	SEE PAGE
	179-5871	1	FILM-INSTRUCTION (OMM)	
	179-5889	1	FILM-WARNING (LIFT ARM BRACE)	
B	**179-5917**	2	FILM-WARNING (CAB TILT SUPPORT LEVER)	
	179-5645	1	FILM-WARNING (ENGINE START PROCEDURE)	
	179-5666	1	FILM-WARNING (WARNING/DANGER COMBINATION)	
	192-3520	1	FILM-WARNING (BATTERY)	
	215-3912	1	FILM-WARNING (QUICK COUPLER)	
	179-6577	1	FILM-WARNING (UNIVERSAL)	

B-USE AS REQUIRED

<END>

179-1991 PLATE & FILM GP—INDONESIAN

S/N: 4YZ4000-UP; 5SZ4000-UP
SEE 163-5016 FOR FILM LOCATION
AN ATTACHMENT

SMCS-7405, 7557 **i01759754**

NOTE	PART NUMBER	QTY	PART NAME 1 2 3 4 5 6 (PRODUCT LEVEL)	SEE PAGE
	179-5864	1	FILM-INSTRUCTION (OMM)	
	179-5882	1	FILM-WARNING (LIFT ARM BRACE)	
B	**179-5915**	2	FILM-WARNING (CAB TILT SUPPORT LEVER)	
	179-5638	1	FILM-WARNING (ENGINE START PROCEDURE)	
	179-5659	1	FILM-WARNING (WARNING/DANGER COMBINATION)	
	192-3517	1	FILM-WARNING (BATTERY)	
	215-3913	1	FILM-WARNING (QUICK COUPLER)	
	179-6578	1	FILM-WARNING (UNIVERSAL)	

B-USE AS REQUIRED

<END>

SERVICE EQUIPMENT AND SUPPLIES

179-1992 PLATE & FILM GP—ITALIAN

S/N: 4YZ4000-UP; 5SZ4000-UP
SEE 163-5016 FOR FILM LOCATION
AN ATTACHMENT

SMCS-7405, 7557 **i01759757**

NOTE	PART NUMBER	QTY	PART NAME 1 2 3 4 5 6 (PRODUCT LEVEL)	SEE PAGE
	179-5860	1	FILM-INSTRUCTION (OMM)	
	179-5878	1	FILM-WARNING (LIFT ARM BRACE)	
B	**163-9115**	2	FILM-WARNING (CAB TILT SUPPORT LEVER)	
	179-5634	1	FILM-NOTICE (ENGINE START PROCEDURE)	
	179-5655	1	FILM-WARNING (WARNING/DANGER COMBINATION)	
	101-0572	1	FILM-WARNING (BATTERY)	
	215-3914	1	FILM-WARNING (QUICK COUPLER)	
	164-2349	1	FILM-WARNING (UNIVERSAL)	

B-USE AS REQUIRED

<END>

179-1993 PLATE & FILM GP—JAPANESE

S/N: 4YZ4000-UP; 5SZ4000-UP
SEE 163-5016 FOR FILM LOCATION
AN ATTACHMENT

SMCS-7405, 7557 **i01759772**

NOTE	PART NUMBER	QTY	PART NAME 1 2 3 4 5 6 (PRODUCT LEVEL)	SEE PAGE
	179-5865	1	FILM-INSTRUCTION (OMM)	
	179-5885	1	FILM-WARNING (LIFT ARM BRACE)	
B	**163-9121**	2	FILM-WARNING (CAB TILT SUPPORT LEVER)	
	179-5641	1	FILM-WARNING (ENGINE START PROCEDURE)	
	179-5662	1	FILM-WARNING (WARNING/DANGER COMBINATION)	
	136-2151	1	FILM-WARNING (BATTERY)	
	163-9458	1	FILM-WARNING (QUICK COUPLER)	
	164-2356	1	FILM-WARNING (UNIVERSAL)	

B-USE AS REQUIRED

<END>

179-1994 PLATE & FILM GP—NORWEGIAN

S/N: 4YZ4000-UP; 5SZ4000-UP
SEE 163-5016 FOR FILM LOCATION
AN ATTACHMENT

SMCS-7405, 7557 **i01759779**

NOTE	PART NUMBER	QTY	PART NAME 1 2 3 4 5 6 (PRODUCT LEVEL)	SEE PAGE
	179-5872	1	FILM-INSTRUCTION (OMM)	
	179-5890	1	FILM-WARNING (LIFT ARM BRACE)	
B	**163-9124**	2	FILM-WARNING (CAB TILT SUPPORT LEVER)	
	179-5646	1	FILM-NOTICE (ENGINE START PROCEDURE)	
	179-5667	1	FILM-WARNING (WARNING/DANGER COMBINATION)	
	192-3518	1	FILM-WARNING (BATTERY)	
	215-3916	1	FILM-WARNING (QUICK COUPLER)	
	164-2359	1	FILM-WARNING (UNIVERSAL)	

B-USE AS REQUIRED

<END>

179-1995 PLATE & FILM GP—POLISH

S/N: 4YZ4000-UP; 5SZ4000-UP
SEE 163-5016 FOR FILM LOCATION
AN ATTACHMENT

SMCS-7405, 7557 **i01759785**

NOTE	PART NUMBER	QTY	PART NAME 1 2 3 4 5 6 (PRODUCT LEVEL)	SEE PAGE
	179-5858	1	FILM-INSTRUCTION (OMM)	
	179-5893	1	FILM-WARNING (LIFT ARM BRACE)	
B	**179-5919**	2	FILM-WARNING (CAB TILT SUPPORT LEVER)	
	179-5650	1	FILM-NOTICE (ENGINE START PROCEDURE)	
	179-5670	1	FILM-WARNING (WARNING/DANGER COMBINATION)	
	152-9784	1	FILM-WARNING (BATTERY)	
	215-3917	1	FILM-WARNING (QUICK COUPLER)	
	179-6579	1	FILM-WARNING (UNIVERAL)	

B-USE AS REQUIRED

<END>

SERVICE EQUIPMENT AND SUPPLIES

179-1996 PLATE & FILM GP—PORTUGUESE

S/N: 4YZ4000; 5SZ4000
SEE 163-5016 FOR FILM LOCATION
AN ATTACHMENT

SMCS-7405, 7557 **i01759788**

NOTE	PART NUMBER	QTY	PART NAME 1 2 3 4 5 6 (PRODUCT LEVEL)	SEE PAGE
	176-1228	1	FILM-INSTRUCTION (OMM)	
	179-5876	1	FILM-WARNING (LIFT ARM BRACE)	
B	**163-9113**	2	FILM-WARNING (CAB TILT SUPPORT LEVER)	
	179-5632	1	FILM-NOTICE (ENGINE START PROCEDURE)	
	179-5653	1	FILM-WARNING (WARNING/DANGER COMBINAITON)	
	101-0570	1	FILM-WARNING (BATTERY)	
	215-3918	1	FILM-WARNING (QUICK COUPLER)	
	164-2347	1	FILM-WARNING (UNIVERSAL)	

B-USE AS REQUIRED

<END>

179-1997 PLATE & FILM GP—RUSSIAN

S/N: 4YZ4000-UP; 5SZ4000-UP
SEE 1635016 FOR FILM LOCATION
AN ATTACHMENT

SMCS-7405, 7557 **i01787956**

NOTE	PART NUMBER	QTY	PART NAME 1 2 3 4 5 6 (PRODUCT LEVEL)	SEE PAGE
	179-5868	1	FILM-INSTRUCTION (OMM)	
	179-5886	1	FILM-WARNING (LIFT ARM BRACE)	
	163-9122	2	FILM-WARNING (CAB TILT SUPPORT LEVER)	
	179-5642	1	FILM-NOTICE (ENGINE START PROCEDURE)	
	179-5663	1	FILM-WARNING (WARNING/DANGER COMBINATION)	
	117-9667	1	FILM-WARNING (BATTERY)	
	215-3919	1	FILM-WARNING (QUICK COUPLER)	
	164-2357	1	FILM-WARNING (UNIVERSAL)	

<END>

179-1998 PLATE & FILM GP—SWEDISH

S/N: 4YZ4000-UP; 5SZ4000-UP
SEE 163-5016 FOR FILM LOCATION
AN ATTACHMENT

SMCS-7405, 7557 **i01759792**

NOTE	PART NUMBER	QTY	PART NAME 1 2 3 4 5 6 (PRODUCT LEVEL)	SEE PAGE
	179-5870	1	FILM-INSTRUCTION (OMM)	
	179-5888	1	FILM-WARNING (LIFT ARM BRACE)	
B	**163-9123**	2	FILM-WARNING (CAB TILT SUPPORT LEVER)	
	179-5644	1	FILM-WARNING (ENGINE START PROCEDURE)	
	179-5665	1	FILM-WARNING (WARNING/DANGER COMBINATION)	
	101-0577	1	FILM-WARNING (BATTERY)	
	163-9460	1	FILM-WARNING (QUICK COUPLER)	
	164-2358	1	FILM-WARNING (UNIVERSAL)	

B-USE AS REQUIRED

<END>

179-1999 PLATE & FILM GP—TURKISH

S/N: 4YZ4000-UP; 5SZ4000-UP
SEE 163-5016 FOR FILM LOCATION
AN ATTACHMENT

SMCS-7405, 7557 **i01759793**

NOTE	PART NUMBER	QTY	PART NAME 1 2 3 4 5 6 (PRODUCT LEVEL)	SEE PAGE
	192-8955	1	FILM-INSTRUCTION (OMM)	
	193-1053	1	FILM-WARNING (LIFT ARM BRACE)	
B	**192-9027**	2	FILM-WARNING (CAB TILT SUPPORT LEVER)	
	179-5648	1	FILM-NOTICE (ENGINE START PROCEDURE)	
	179-5652	1	FILM-WARNING (WARNING/DANGER COMBINATION)	
	192-3521	1	FILM-WARNING (BATTERY)	
	179-6883	1	FILM-WARNING (QUIK COUPLER)	
	179-6580	1	FILM-WARNING (UNIVERSAL)	

B-USE AS REQUIRED

<END>

190-7954 PLATE & FILM GP

S/N: CED1-UP; FDG1-UP
ENGLISH
PART OF 190-8000, 195-6700 COMMON AR

SMCS-7405, 7557 **i01697826**

NOTE	REF NO	GRAPHIC REF	PART NUMBER	QTY	PART NAME 1 2 3 4 5 6 (PRODUCT LEVEL)	SEE PAGE
	1	1	**105-3330**	1	FILM-WARNING (ACCUMULATOR PRESSURE)	
	2	1	**190-8118**	1	FILM (SERVICE CHART)	
	3	1	**162-5233**	1	FILM-INSTRUCTION (WORK TOOL CONTROL RH)	
	4	1	**162-5234**	1	FILM-INSTRUCTION (MACHINE CONTROL LH)	
	5	1	**156-5762**	4	FILM (TIE DOWN)	
	7	1	**190-8108**	1	FILM (THROTTLE)	
	8	1	**190-8109**	1	FILM (RELAY)	
	9	1	**194-7790**	1	FILM-WARNING (COLD WEATHER OPERATION)	
	10	1	**159-8035**	2	FILM-WARNING (CRUSH POINT)	
	26	1	**156-3849**	1	FILM-WARNING (RADIATOR)	

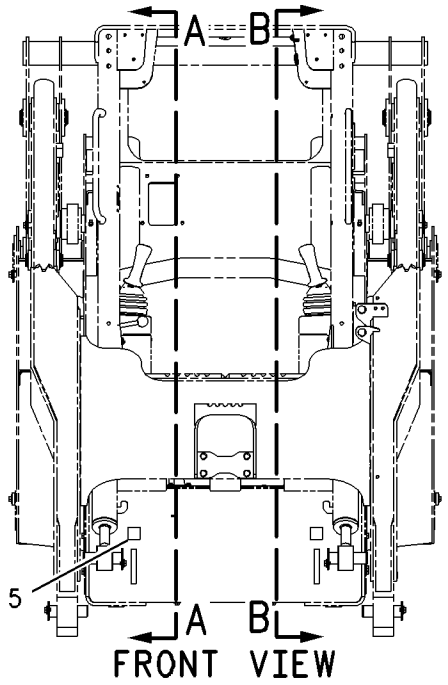

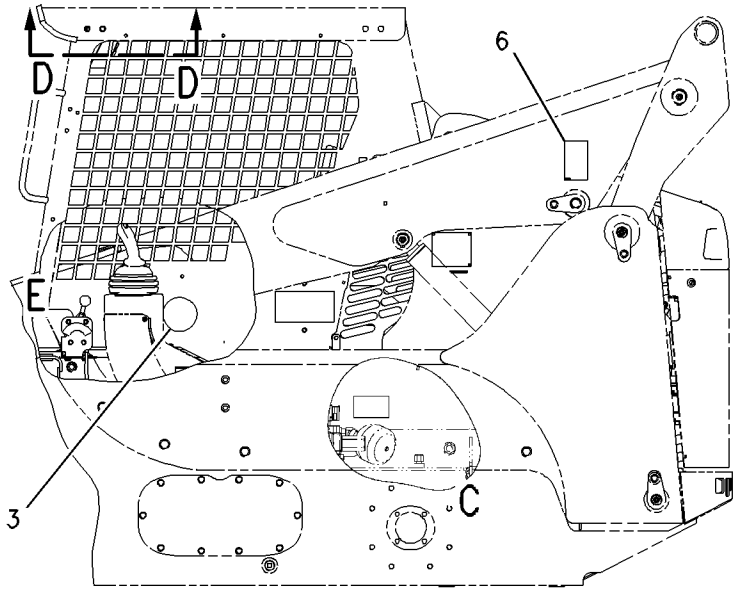

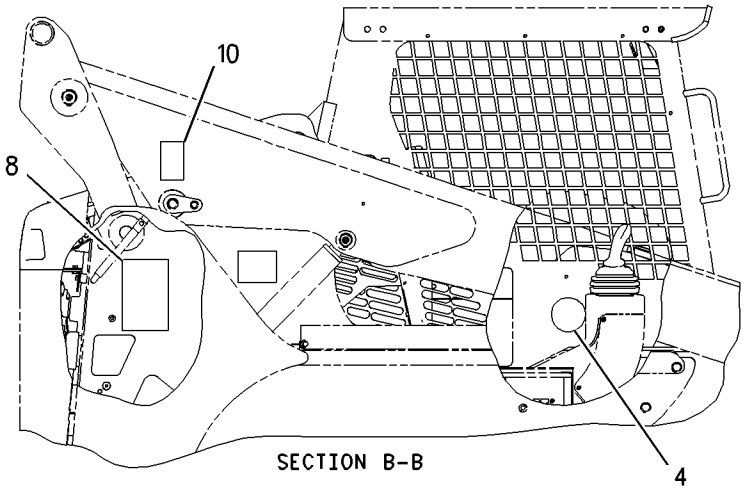

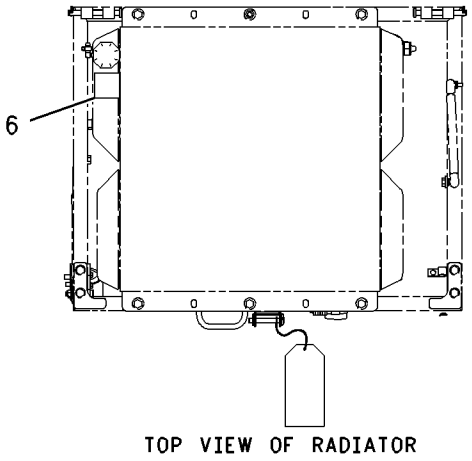

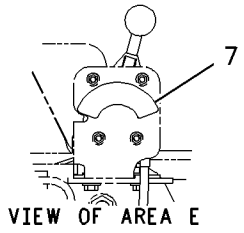

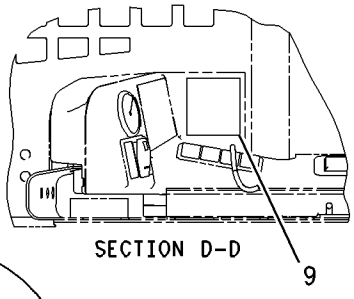

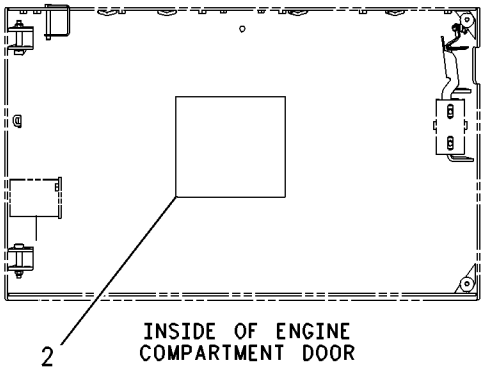

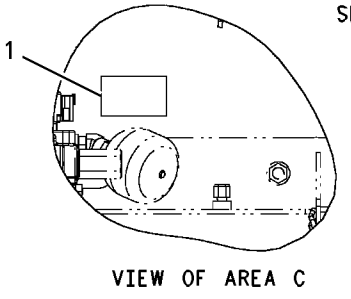

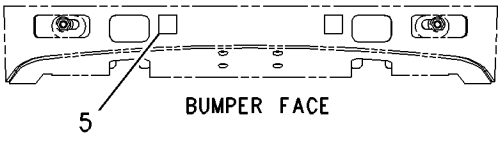

GRAPHIC #1 g00874122

SERVICE EQUIPMENT AND SUPPLIES

191-9564 PLATE & FILM GP

S/N: CED1-UP; FDG1-UP
ENGLISH
CANNOT BE USED WITH 193-8365—PAGE 722, 204-1359—PAGE 726, 204-1373—PAGE 728
AN ATTACHMENT

SMCS-7405, 7557 **i01666501**

NOTE	REF NO	GRAPHIC REF	PART NUMBER	QTY	PART NAME 1 2 3 4 5 6 (PRODUCT LEVEL)	SEE PAGE
	1	1	**164-9741**	1	FILM-INSTRUCTION (OMM)	
	2	1	**190-7456**	1	FILM-WARNING (LIFT ARM BRACE)	
	3	1	**156-3843**	2	FILM-WARNING (CAB TILT SUPPORT LEVER)	
	4	1	**164-9740**	1	FILM-INSTRUCTION (ENGINE START PROCEDURE)	
	5	1	**175-7413**	1	FILM-WARNING (WARNING/DANGER COMBINTION)	
	6	1	**8C-7588**	1	FILM-WARNING (BATTERY)	
	7	1	**215-3901**	1	FILM-WARNING (QUICK COUPLER)	
	8	1	**156-3834**	1	FILM-WARNING (UNIVERSAL)	

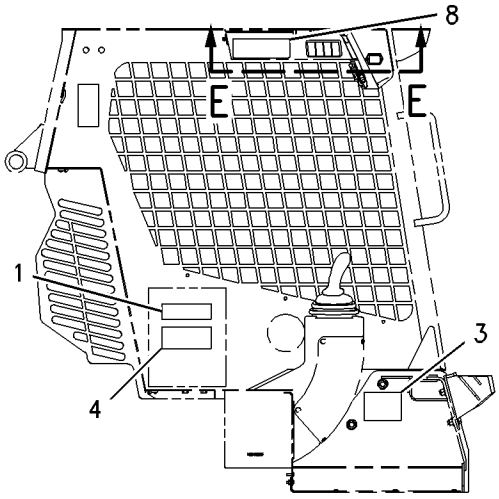

LEFT HAND CAB INTERIOR

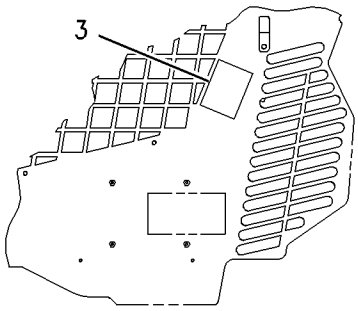

LEFT HAND CAB EXTERIOR

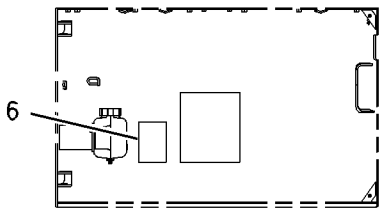

INSIDE ENGINE COMPARTMENT DOOR

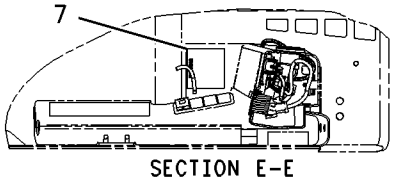

SECTION E-E

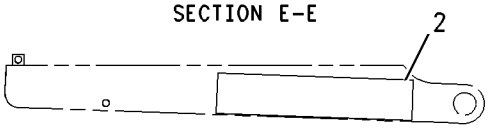

LIFT ARM BRACE

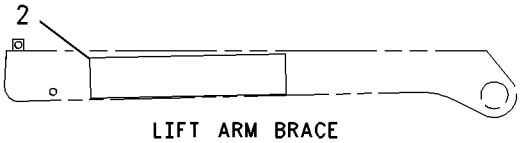

LIFT ARM BRACE

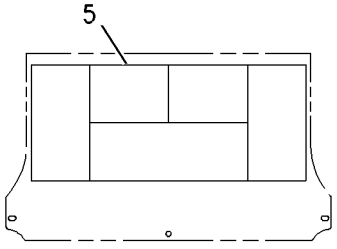

VERTICAL FLOOR PLATE

GRAPHIC #1 g00850594

192-2697 PLATE & FILM GP—HUNGARIAN

S/N: 4YZ4000-UP; 5SZ4000-UP
SEE 1635016 FOR FILM LOCATION
AN ATTACHMENT

SMCS-7405, 7557 **i01787965**

NOTE	PART NUMBER	QTY	PART NAME 1 2 3 4 5 6 (PRODUCT LEVEL)	SEE PAGE
	192-8953	1	FILM-INSTRUCTION (OMM)	
	197-3720	1	FILM-WARNING (LIFT ARM BRACE)	
	197-3723	1	FILM-WARNING (CAB TILT SUPPPORT LEVER)	
	192-9003	1	FILM-WARNING (ENGINE START PROCEDURE)	
	197-3724	1	FILM-WARNING (WARNNG/DANGER COMBINATION)	
	197-3727	1	FILM-WARNING (BATTERY)	
	215-3924	1	FILM-WARNING (QUICK COUPLER)	
	197-3726	1	FILM-WARNING (UNIVERSAL)	

<END>

192-2698 PLATE & FILM GP—KOREAN

S/N: 4YZ4000; 5SZ4000
SEE 1635016 FOR FILM LOCATION
AN ATTACHMENT

SMCS-7405, 7557 **i01787976**

NOTE	PART NUMBER	QTY	PART NAME 1 2 3 4 5 6 (PRODUCT LEVEL)	SEE PAGE
	193-8927	1	FILM-INSTRUCTION (OMM)	
	193-8939	1	FILM-WARNING (LIFT ARM BRACE)	
	193-8915	2	FILM-WARNING (CAB TILT SUPPORT LEVER)	
	193-8942	1	FILM-NOTICE (ENGINE START PROCEDURE)	
	193-8930	1	FILM-WARNING (WARNING/DANGER COMBINATION)	
	193-8921	1	FILM-WARNING (BATTERY)	
	215-3923	1	FILM-WARNING (QUICK COUPLER)	
	193-8918	1	FILM-WARNING (UNIVERSAL)	

<END>

SERVICE EQUIPMENT AND SUPPLIES

193-8365 PLATE & FILM GP

S/N: CED1-UP; FDG1-UP

SPANISH

CANNOT BE USED WITH 191-9564—PAGE 720, 204-1359—PAGE 726, 204-1373—PAGE 728

AN ATTACHMENT

SMCS-7405, 7557 **i01666511**

NOTE	REF NO	GRAPHIC REF	PART NUMBER	QTY	PART NAME 1 2 3 4 5 6 (PRODUCT LEVEL)	SEE PAGE
	1	1	**176-1226**	1	FILM-INSTRUCTION (OMM)	
	2	1	**190-8107**	1	FILM-WARNING (LIFT ARM BRACE)	
	3	1	**163-9112**	2	FILM-WARNING (CAB TILT SUPPORT LEVER)	
	4	1	**176-1336**	1	FILM-NOTICE (ENGINE START PROCEDURE)	
	5	1	**176-1337**	1	FILM-WARNING (WARNING/DANGER COMBINATION)	
	6	1	**101-0569**	1	FILM-WARNING (BATTERY)	
	7	1	**215-3920**	1	FILM-WARNING (QUICK COUPLER)	
	8	1	**164-2346**	1	FILM-WARNING (UNIVERSAL)	

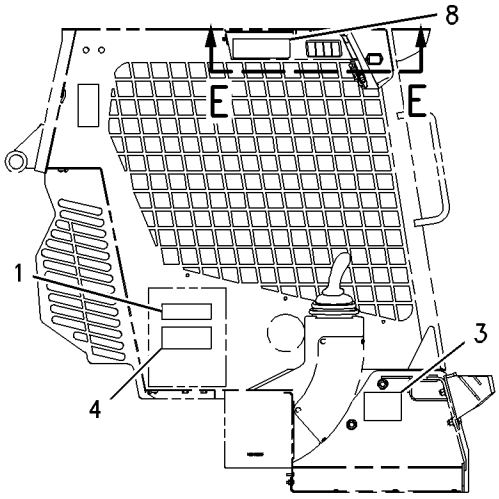

LEFT HAND CAB INTERIOR

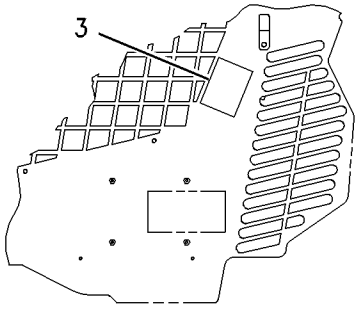

LEFT HAND CAB EXTERIOR

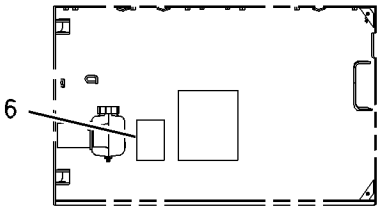

INSIDE ENGINE COMPARTMENT DOOR

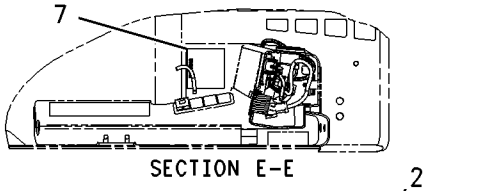

SECTION E-E

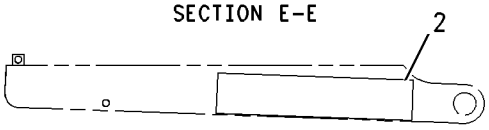

LIFT ARM BRACE

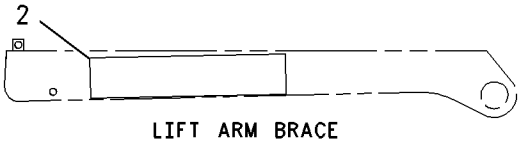

LIFT ARM BRACE

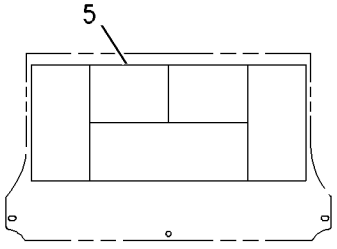

VERTICAL FLOOR PLATE

GRAPHIC #1 g00850594

MEMORANDA

SERVICE EQUIPMENT AND SUPPLIES

195-6765 PLATE & FILM GP

S/N: 4YZ4000-UP; 5SZ4000-UP
ENGLISH
PART OF 180-3000, 197-4900 COMMON AR

SMCS-7405, 7557 **i01492583**

NOTE	REF NO	GRAPHIC REF	PART NUMBER	QTY	PART NAME 1 2 3 4 5 6 (PRODUCT LEVEL)	SEE PAGE
	1	1	**105-3330**	1	FILM-WARNING (ACCUMULATOR PRESSURE)	
	2	1	**142-9126**	1	FILM-INSTRUCTION (SERVICE CHART)	
	3	1	**162-5233**	1	FILM-INSTRUCTION (WORK TOOL CONTROL RH)	
	4	1	**162-5234**	1	FILM-INSTRUCTION (MACHINE CONTROL LH)	
	5	1	**156-5762**	4	FILM (TIE DOWN)	
	6	1	**156-3849**	1	FILM-WARNING (RADIATOR)	
	7	1	**190-8108**	1	FILM (THROTTLE)	
	8	1	**190-8109**	1	FILM (RELAY)	
	9	1	**194-7790**	1	FILM-WARNING (COLD TEMPERATURE OPERATION)	

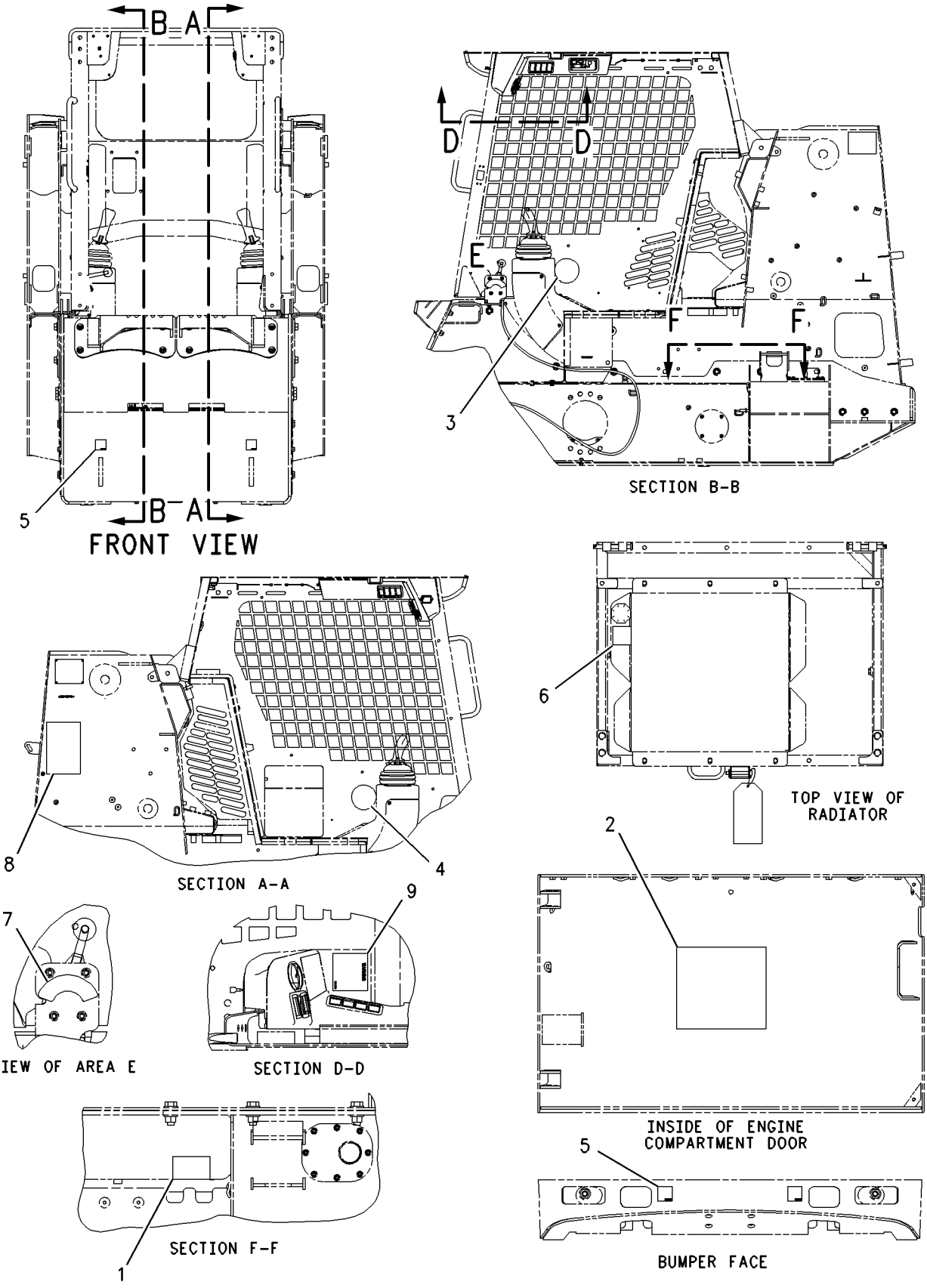

GRAPHIC #1

g00775163

204-1359 PLATE & FILM GP

S/N: CED1-UP; FDG1-UP

FRENCH

CANNOT BE USED WITH 191-9564—PAGE 720, 193-8365—PAGE 722, 204-1373—PAGE 728

AN ATTACHMENT

SMCS-7405, 7557 **i01666528**

NOTE	REF NO	GRAPHIC REF	PART NUMBER	QTY	PART NAME 1 2 3 4 5 6 (PRODUCT LEVEL)	SEE PAGE
	1	1	**176-1225**	1	FILM-INSTRUCTION (OMM)	
	2	1	**204-1361**	1	FILM-WARNING (LIFT ARM BRACE)	
	3	1	**163-5050**	2	FILM-WARNING (CAB TILT SUPPORT LEVER)	
	4	1	**179-5631**	1	FILM-NOTICE (ENGINE START PROCEDURE)	
	5	1	**179-5651**	1	FILM-WARNING (WARNING/DANGER COMBINATION)	
	6	1	**101-0568**	1	FILM-WARNING (BATTERY)	
	7	1	**163-5051**	1	FILM-WARNING (QUICK COUPLER)	
	8	1	**163-5020**	1	FILM-WARNING (UNIVERSAL)	

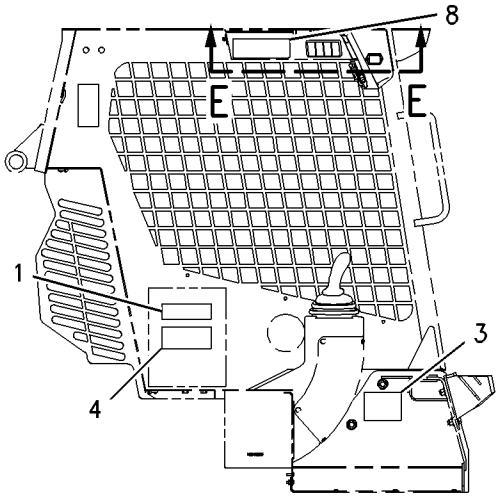

LEFT HAND CAB INTERIOR

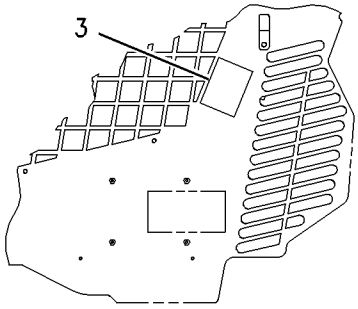

LEFT HAND CAB EXTERIOR

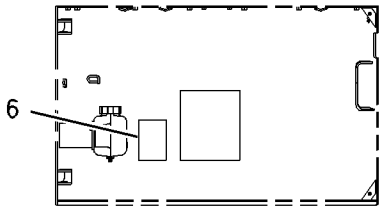

INSIDE ENGINE COMPARTMENT DOOR

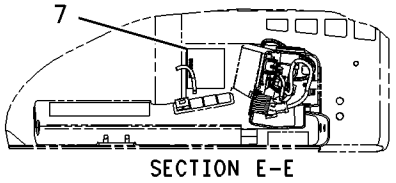

SECTION E-E

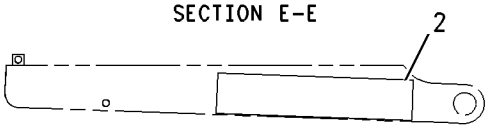

LIFT ARM BRACE

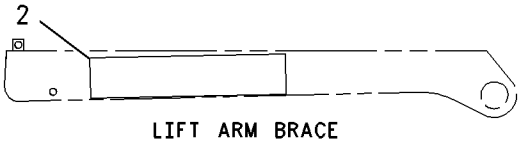

LIFT ARM BRACE

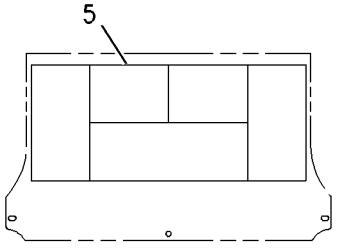

VERTICAL FLOOR PLATE

GRAPHIC #1 g00850594

MEMORANDA

204-1373 PLATE & FILM GP

S/N: CED1-UP; FDG1-UP
PORTUGUESE
CANNOT BE USED WITH 191-9564—PAGE 720, 193-8365—PAGE 722, 204-1359—PAGE 726
AN ATTACHMENT
TYPE 1

SMCS-7405, 7557 **i01533209**

NOTE	REF NO	GRAPHIC REF	PART NUMBER	QTY	PART NAME 1 2 3 4 5 6 (PRODUCT LEVEL)	SEE PAGE
	1	1	**101-0570**	1	FILM-WARNING (BATTERY)	
	2	1	**164-2347**	1	FILM-WARNING (UNIVERSAL)	
	3	1	**163-9113**	2	FILM-WARNING (CAB TILT SUPPORT LEVER)	
	4	1	**163-9127**	1	FILM-WARNING (QUICK COUPLER)	
	5	1	**179-5632**	1	FILM-NOTICE (ENGINE START PROCEDURE)	
	6	1	**176-1228**	1	FILM-INSTRUCTION (OMM)	
	7	1	**179-5653**	1	FILM (WARNING/DANGER COMBINATION)	
	8	1	**204-1374**	1	FILM-WARNING (LIFT ARM BRACE)	

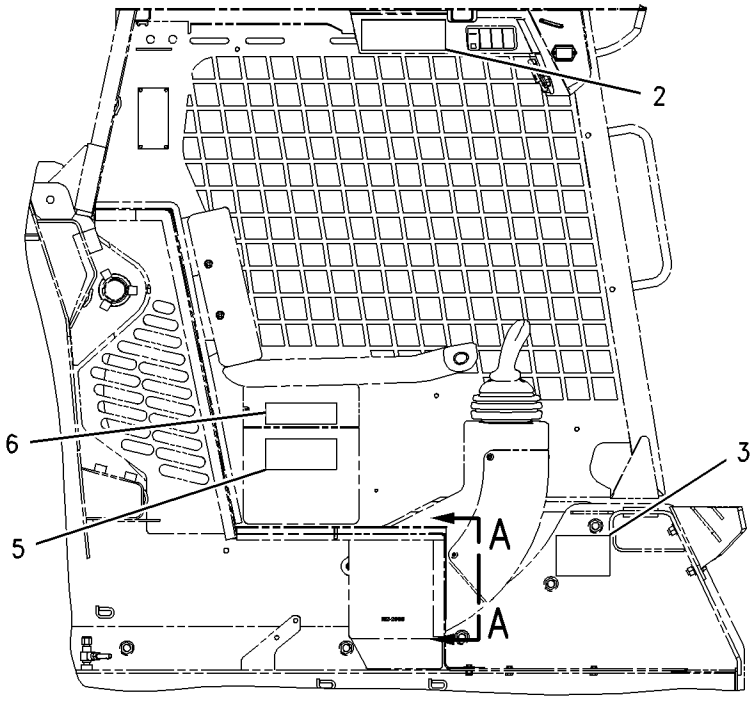

SECTION B-B

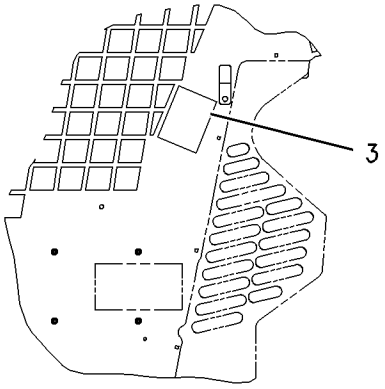

VIEW C-C

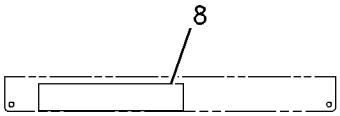

LIFT ARM BRACE

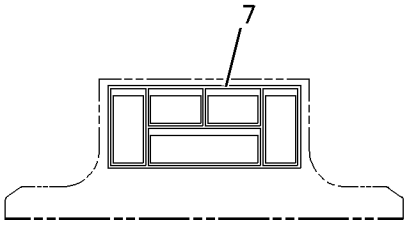

SECTION A-A

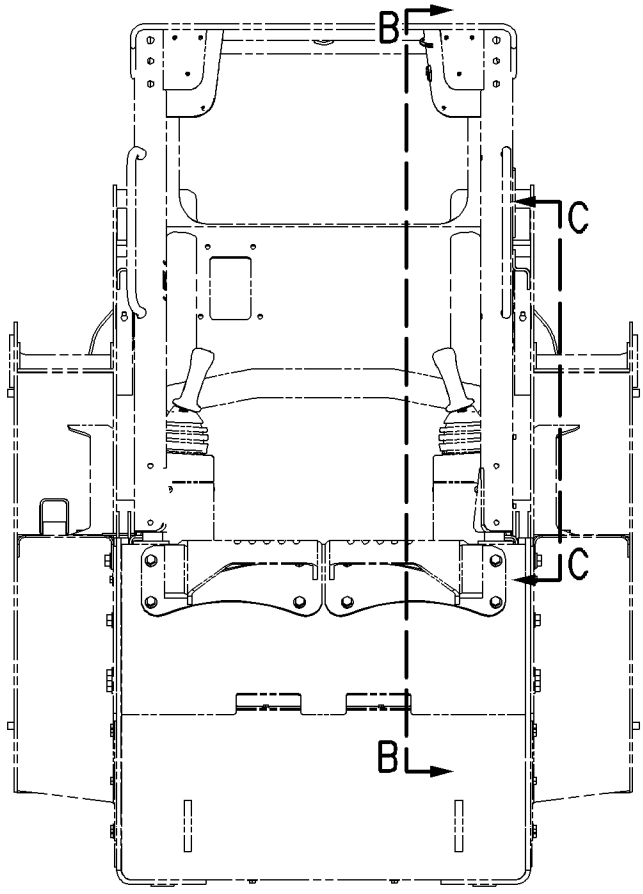

FRONT VIEW

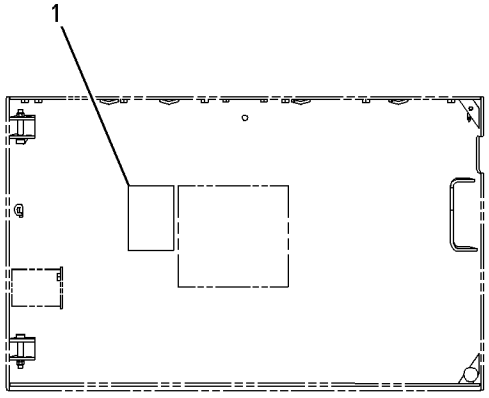

INSIDE OF ENGINE COMPARTMENT DOOR

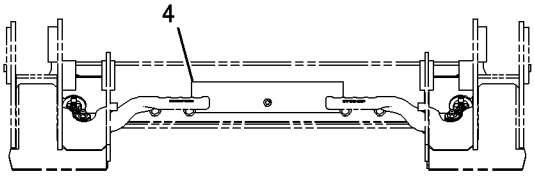

TOP OF QUICK COUPLER

GRAPHIC #1

g00789290

204-1373 PLATE & FILM GP

S/N: CED1-UP; FDG1-UP
PORTUGUESE
CANNOT BE USED WITH 191-9564–PAGE 720, 193-8365–PAGE 722, 204-1359–PAGE 726
AN ATTACHMENT
TYPE 2

SMCS-7405, 7557 **i01693608**

NOTE	REF NO	GRAPHIC REF	PART NUMBER	QTY	PART NAME 1 2 3 4 5 6 (PRODUCT LEVEL)	SEE PAGE
	1	1	**176-1228**	1	FILM-INSTRUCTION (OMM)	
	2	1	**204-1374**	1	FILM-WARNING (LIFT ARM BRACE)	
	3	1	**163-9113**	2	FILM-WARNING (CAB TILT SUPPORT LEVER)	
	4	1	**179-5632**	1	FILM-NOTICE (ENGINE START PROCEDURE)	
	5	1	**179-5653**	1	FILM-WARNING (WARNING/DANGER COMBINAITON)	
	6	1	**101-0570**	1	FILM-WARNING (BATTERY)	
	7	1	**215-3918**	1	FILM-WARNING (QUICK COUPLER)	
	8	1	**164-2347**	1	FILM-WARNING (UNIVERSAL)	

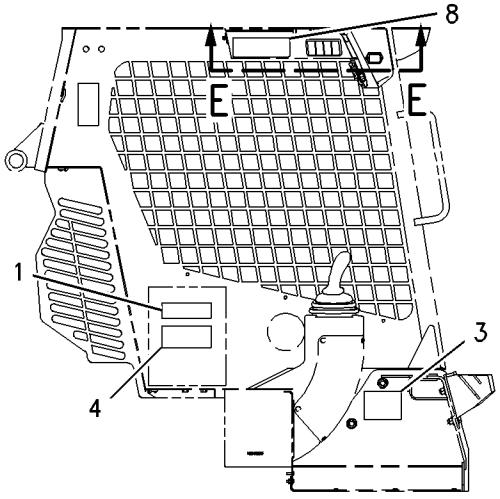

LEFT HAND CAB INTERIOR

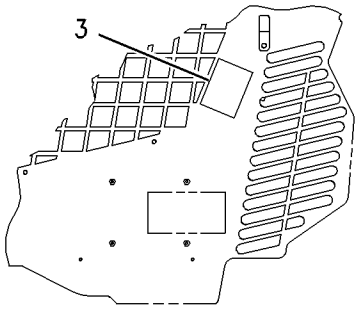

LEFT HAND CAB EXTERIOR

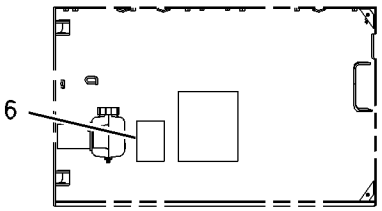

INSIDE ENGINE COMPARTMENT DOOR

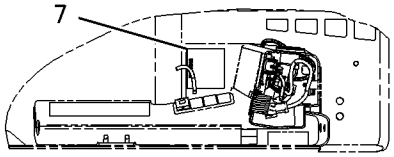

SECTION E-E

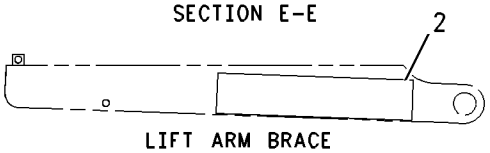

LIFT ARM BRACE

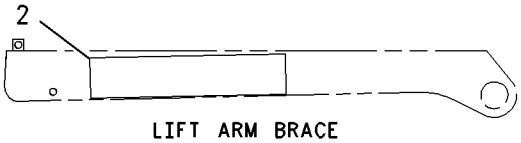

LIFT ARM BRACE

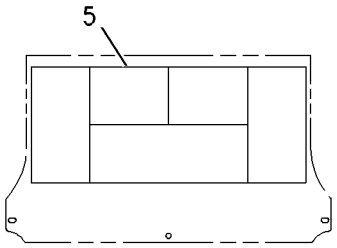

VERTICAL FLOOR PLATE

GRAPHIC #1 g00850594

222-5709 PLATE & FILM GP—HEBREW

S/N: FDG1-UP; 4YZ4000-UP; 5SZ4000-UP
SEE 163-5016 FOR FILM LOCATION
AN ATTACHMENT

SMCS-7405, 7557 **i01760127**

NOTE	PART NUMBER	QTY	PART NAME 1 2 3 4 5 6 (PRODUCT LEVEL)	SEE PAGE
	179-5874	1	FILM-INSTRUCTION (OMM)	
	223-4841	1	FILM-WARNING (LIFT ARM BRACE)	
B	**179-5918**	2	FILM-WARNING (CAB TILT SUPPORT LEVER)	
	179-5649	1	FILM-NOTICE (ENGINE SART PROCEDURE)	
	179-5669	1	FILM (WARNING/DANGER COMBINATION)	
	141-4797	1	FILM-WARNING (BATTERY)	
	215-3911	1	FILM-WARNING (QUICK COUPLER)	
	179-6576	1	FILM-WARNING (UNIVERSAL)	

B-USE AS REQUIRED

<END>

222-5720 PLATE & FILM GP—KOREAN

S/N: FDG1-UP; 4YZ4000-UP; 5SZ4000-UP
SEE 163-5016 FOR FILM LOCATION
AN ATTACHMENT

SMCS-7405, 7557 **i01760156**

NOTE	PART NUMBER	QTY	PART NAME 1 2 3 4 5 6 (PRODUCT LEVEL)	SEE PAGE
	193-8927	1	FILM-INSTRUCTION (OMM)	
	223-4864	1	FILM-WARNING (LIFT ARM BRACE)	
B	**193-8915**	2	FILM-WARNING (CAB TILT SUPPORT LEVER)	
	193-8942	1	FILM-NOTICE (ENGINE START PROCEDURE)	
	193-8930	1	FILM-WARNING (WARNING/DANGER COMBINATION)	
	193-8921	1	FILM-WARNING (BATTERY)	
	215-3923	1	FILM-WARNING (QUICK COUPLER)	
	193-8918	1	FILM-WARNING (UNIVERSAL)	

B-USE AS REQUIRED

<END>

MEMORANDA

PART NUMBER INDEX

Part	Page
0	
0T-0244	670
	673
	674
	675
1	
1B-2714	458
1B-8736	18
	50
1D-4622	653
1D-4677	680
1G-8878	229
	704
1H-3244	155
1H-8134	492
	496
1K-6870	501
1L-2279	578
	626
	647
	648
	649
	650
1M-6119	184
1M-6120	184
1N-3762	21
	22
	103
	112
	116
1P-4278	80
	82
	84
	86
	88
	92
	132
	134
1P-4578	414
	416
1P-6356	592
1Q-6031	68
	72
	74
	76
1S-0994	366
	368
	370
	372
1S-7251	184
1S-9593	196
	198
	263
1U-5814	696
1W-8438	21
	22
	175
2	
2B-0858	24
	26
2D-7325	296
2G-8624	492
2G-8767	690
	695
2J-6540	386
2K-4973	286
	288
	290
	292
2K-5232	380
	646
2L-1224	592
2L-8067	184
2M-9780	72
	74
	76
	240
	361
	362
	364
	365
	366
	368
	370
	372
	374
	384
	386
	388
	389
	390
	391
	402
	404
	420
	424
2P-6818	592
2S-3440	98
	100
	414
	416
2S-5717	680
2S-6408	560
2V-3216	376
	384
2W-8076	124
3	
3B-4628	536
	537
	540
3B-7255	578
	582
3B-8488	298
	492
	562
3B-8489	294
	345
	346
	348
	350
	351
	355
	356
	440
	492
	496
	503
	504
	527
	528
	529
	530
	531
	532
	533
	552
	553
3B-8491	538
3D-2824	72
	74
	76
	230
	232
	234
	236
	240
	361
	362
	364
	365
	392
	393
	394
	395
	396
	398
	400
	402
	404
	406
	418
	420
	424
	426
	428
	430
3E-2310	408
	410
3E-3365	176
	178
	296
	592
3E-3371	447
	610
3E-3377	155
	475
3E-3383	152
	316
3E-3386	200
3E-3389	188
	196
	198
	200
	202
	317
	318
	319
3E-3892	684
	686
3E-4051	592
	646
3E-4052	592
	646
3E-4057	592
	646
3E-4058	592
	646
3E-4066	646
3E-4370	554
3E-6749	476
3E-7404	132
	134
	384
3E-7584	►152
	162
	166
3E-8082	288
	290
	292
	604
	610
3E-8621	263
3E-9854	149
	150
3F-9556	660
3J-1907	176
	178
	206
	208
	210
	212
	214
	216
	218
	220
	229
	234
	236
	246
	248
	249
	258
	260
	262
	374
	376
	380
	400
	402
	404
	406
	408
	410
	412
	414
	441
	453
	690
	695
3J-7354	72
	74

► **PRIMARY REFERENCE**

PART NUMBER INDEX

Part	Page
	76
	206
	208
	210
	212
	240
	246
	248
	252
	254
	256
	388
	391
	412
3K-0360	230
	232
	234
	236
	240
	314
	361
	362
	364
	365
	447
	448
3K-0715	252
	254
	256
3K-4897	492
3S-2093	148
	160
	162
	166
	179
	180
	184
	188
	192
	194
	196
	198
	200
	202
	308
	578
	582
	588
	592
	600
	604
	606
	610
	612
	614
	637
	640
	642
	646
3S-6050	184
3S-8536	496
3S-9182	296
	298
	300

4

Part	Page
4B-2043	621
4B-4281	14
	16
4B-4863	180
	184
	400
	402
	404
	406
	705
4C-4600	704
4D-4431	298
4E-1384	586
4H-2494	132
	134
4J-0522	414
	416
4J-5267	414
	416
4J-5477	72
	74
	76
	194
	240
	376
	380
	388
	391
	408
	410
	412
4J-7533	72
	74
	76
	388
	391
4K-4709	492
4K-8864	80
	82
	84
	86
	88
	92
	388
	391
4M-5285	346
4M-6582	634
4P-7581	30
	160
	180
	192
	400
	402
	653
4P-8134	30
	141
	174
	180
	184
	192
	592
4S-1962	389
	390

Part	Page
	626
	630
	646
	648
	650
4V-5091	612
	614
4W-8063	65
	66

5

Part	Page
5B-0651	492
	536
	537
	540
	541
5B-0935	294
5C-1809	16
5C-2890	120
	122
	155
	156
	308
	310
	311
	598
	600
	604
	606
	610
	612
	614
	624
	625
	626
	628
	629
	630
	640
	642
	682
	690
5C-7261	120
	122
	180
	196
	198
	200
	202
	206
	208
	210
	212
	214
	216
	218
	220
	286
	288
	290
	292
	361
	363

Part	Page
	364
	365
	366
	368
	370
	372
	376
	380
	569
	570
	578
	586
	595
	600
	604
	606
	610
	640
	642
	660
	667
	668
	669
5C-7883	246
	249
5C-8310	612
	614
	690
	694
	695
5C-8311	612
	614
	690
	694
	695
5C-8312	180
	705
5C-9553	180
	184
	296
	298
	300
	542
	585
	588
	624
	625
	626
	628
	629
	630
	632
	638
	651
	660
	663
	690
5D-0718	392
	393
	394
	395
	396
	397
	398
5D-1026	14

► **PRIMARY REFERENCE**

PART NUMBER INDEX

Part	Page	Part	Page	Part	Page	Part	Page
	16		99		84		65
	28		100		86		66
	59	5P-2230	234		88		136
	112		236		92		138
	116		414	5P-7957	644	6I-0293	103
	234		416	5P-8246	578		112
	236	5P-3092	226		582		116
5G-3244	152		227	5P-8309	286	6I-0364	41
5G-8871	590	5P-3422	28	5T-7869	680	6I-0423	32
5H-9743	496	5P-4116	95	5T-7870	680	6I-0454	39
5K-6875	649		96	5V-8309	286	6I-0512	34
	650		97		288		36
5K-8451	376		104		290	6I-0572	136
	380		108		292		138
5K-9090	234		109	5Y-0974	612	6I-0594	13
	236		120		614	6I-0631	32
	240		122				65
5L-3834	141		141				66
5L-4759	458		142	**6**			128
5P-0372	286		143				130
	288		286	6D-1641	626		136
	290		288		646		138
	292		292		647	6I-0654	124
	536		298		648	6I-0686	19
	537		300		649		22
	540		376		650	6I-0839	16
	600		381	6D-4247	366		34
	604		444		368		36
	606		445		370	6I-0840	136
	610		446		372		138
	640		592	6D-5797	684	6I-0846	172
	642	5P-4868	99		686		173
	679		101	6D-6812	690	6I-1064	42
5P-0597	98	5P-4961	132		695		44
	100		134	6E-2745	460	6I-1074	19
	132		444		462		22
	134		445	6E-3008	487	6I-1075	19
	414		446		488		22
	416	5P-5924	646		490	6I-1076	19
5P-0743	234	5P-5927	622	6E-4793	460		22
	236	5P-6442	132		462	6I-1200	53
5P-0761	184		134	6E-4815	462	6I-1418	180
5P-1075	80	5P-7175	296	6E-4816	460		184
	82	5P-7464	418		462	6I-1497	42
	84		420	6E-5060	252		44
	86		428		254	6I-2604	59
	88	5P-7465	418		256	6I-4037	34
	92		420	6E-6549	670		36
5P-1076	40		428		673	6I-4079	42
	298	5P-7470	80		674		44
	300		82		675	6I-4200	16
	560		84	6F-0711	148	6I-4374	34
5P-1420	80		86	6I-0217	34		36
	82		88		36	6I-4709	103
	84		92		42		112
	86	5P-7471	80		44		116
	88		82	6I-0254	34	6K-1330	653
	92		84		36	6K-2899	492
5P-1442	132		86	6I-0289	42	6K-4148	492
	134		88		44		496
	444		92	6I-0291	13	6K-8178	380
	445	5P-7483	690		34	6N-2944	28
	446		695		36		234
5P-1517	28	5P-7703	80		51		236
5P-1717	98		82		52	6R-7490	621

► **PRIMARY REFERENCE**

PART NUMBER INDEX

Part	Page
6T-9244	491
6V-0394	72
	74
	76
	388
	391
6V-0852	234
	236
	412
	414
	416
6V-1178	664
	666
6V-1392	590
	651
	694
6V-1572	82
	84
	92
6V-1573	82
	84
	92
6V-1875	82
	84
	92
6V-3582	404
	406
6V-3965	234
	236
	412
	414
6V-4270	600
	604
	606
	610
6V-5326	252
	254
	256
6V-5586	252
	254
	256
6V-5683	248
6V-5698	400
	402
	404
	406
	660
6V-7238	240
6V-7357	178
	308
	595
	663
6V-7359	418
	420
	428
6V-7420	240
6V-7636	612
	614
6V-7700	492
6V-7744	538
	541
6V-8185	612
	614
6V-8186	660
6V-8202	260
	262
	453
6V-8210	98
	100
6V-8213	361
	362
	364
	365
	465
6V-8224	592
6V-8352	252
	254
	256
6V-8378	184
6V-8397	206
	208
	210
	212
	214
	216
	218
	220
	258
	260
	262
	361
	362
	363
	364
	365
	366
	368
	370
	372
	374
	376
	380
	384
	406
6V-8398	206
	208
	210
	212
	214
	216
	218
	220
	230
	232
	234
	236
	240
	354
	400
	402
	404
	406
	412
	418
	420
	424
	426
6V-8399	466
6V-8555	376
	380
6V-8626	72
	74
	76
	388
	391
	424
6V-8628	412
6V-8634	364
	365
6V-8635	240
6V-8636	206
	208
	210
	212
	214
	216
	218
	220
	258
	260
	262
	376
	380
	400
	402
	404
	406
	453
6V-8637	234
	236
	240
	392
	394
	396
	398
6V-8639	230
	232
	240
6V-8641	376
	380
	408
	410
	412
6V-8642	361
	362
	364
	365
	389
	390
	402
	404
	420
6V-8647	240
	388
	391
	412
6V-8713	230
	232
6V-8714	234
	236
6V-8715	366
	368
	370
	372
	374
	384
	386
6V-8723	361
	362
6V-8724	206
	208
	210
	212
	216
	220
	374
	376
	380
	406
6V-8730	362
	363
	364
	365
6V-8781	214
	216
	218
	220
	408
	410
6V-8782	240
6V-8788	366
	368
	370
	372
6V-8801	690
	695
6V-8938	376
	380
6V-8949	567
	568
6V-8980	363
	364
	365
6V-9000	72
	74
	76
6V-9007	72
	74
	76

► **PRIMARY REFERENCE**

PART NUMBER INDEX

Part	Page	Part	Page	Part	Page	Part	Page
	393		362		376		323
	395		364		380		324
6V-9161	208		365		388		325
	212	6V-9836	206		389		326
6V-9168	376		208		390		327
	380		210		391		328
6V-9170	428		212		400		329
	430	6V-9843	206		402		330
6V-9178	458		210		404		331
6V-9182	414	6V-9845	376		406		332
	416		380		418		333
6V-9189	149	6V-9852	361		420		334
	150		362		424		335
	346	6V-9872	206		426		336
	347		208		428		337
	440		210		430		338
	496		212	7K-1181	380		339
	499	6V-9873	412		444		340
	503	6W-5698	447		485		341
	504		448		582		342
	527				616		343
	528			7M-7410	64		344
	529	**7**			68		663
	530				70	7X-0590	280
	531	7C-6921	141		72	7X-0595	492
	532	7D-5473	184		74	7X-0603	499
	533	7D-8431	588		76	7X-0610	226
	552	7E-2700	302		78		227
	553		303	7M-8485	240	7X-0818	185
	562		304		414		214
6V-9632	321		305		447		218
	322		306	7M-9957	705	7X-2444	194
	325	7F-9223	286	7S-3912	386		376
	327		288	7S-3913	386		380
	328		290	7S-3916	384	7X-2475	500
	329		292	7S-3919	384		501
	330		590	7T-0093	196		653
	331	7G-1060	180		198	7X-2534	424
	332		192		200		426
	337	7G-2950	376		202		430
	338		380	7T-1099	492	7X-2539	206
	339	7G-2951	376		604		208
	340		380		610		210
	341	7G-7053	180		651		212
	342		588		654		499
	343		624	7T-4848	162	7X-2552	664
	344		625		166		666
6V-9672	705		626	7W-1238	175	7X-2553	294
6V-9746	72		628	7W-2327	53		622
	74		629		59	7X-2556	40
	76		630		704		653
	234	7H-7055	376	7W-2501	24	7X-2621	192
	236		380		26		541
	240	7J-0204	99	7W-2632	42	7X-6315	144
	392		100		44		146
	393		101	7W-4724	34		171
	394	7J-9108	72		36	7X-7729	68
	395		74	7X-0371	501		70
	396		76	7X-0495	578		72
	397		230		582		74
	398		232	7X-0579	180		76
	414		361		185		78
	416		362		320		80
6V-9805	653		364		321		82
6V-9829	361		365		322		84

► **PRIMARY REFERENCE**

PART NUMBER INDEX

Part	Page
	86
	88
	92
	286
	288
	290
	292
	294
	345
	376
	380
	392
	393
	394
	395
	396
	397
	398
	492
	496
	541
	592
7X-7960	280
7X-8549	229
7X-8831	196
	198
	200
	202
7X-9065	621
8	
8C-3205	414
	416
8C-3445	28
8C-3451	229
8C-3756	634
8C-5748	149
	150
8C-6354	184
8C-6802	120
	122
8C-7588	706
	720
8C-8558	185
8C-8992	226
	227
8D-9671	598
8F-1434	184
8F-6302	458
8F-8151	626
	647
	648
	649
	650
8F-8513	132
	134
8I-5078	460
	462
	468
	472
8L-2779	487
	488
	490
8L-5188	536
	537
	540
8L-8413	184
	315
	317
	318
	319
8M-4963	184
8N-0869	184
8N-1725	184
8S-0934	670
	671
	672
	673
	674
	675
8S-4711	458
8T-0087	156
8T-0154	626
	647
	648
	649
	650
8T-0255	196
	202
8T-0267	252
	254
	256
8T-0269	320
	321
	322
	323
	324
	325
	326
	327
	328
	329
	330
	331
	332
	333
	334
	335
	336
	337
	338
	339
	340
	341
	342
	343
	344
8T-0318	286
	288
	290
	292
8T-0328	184
8T-0342	592
8T-0379	376
	380
8T-0389	152
8T-0404	232
8T-0737	578
	582
8T-1158	485
	486
8T-1687	234
	236
8T-1885	376
8T-1886	376
8T-1887	162
	166
8T-1888	162
	166
8T-1893	386
8T-1894	386
8T-2444	286
	288
	290
	292
	600
	604
	606
	610
	612
	614
	640
	642
8T-2895	590
8T-3311	412
8T-3612	376
	380
	604
	610
	654
	666
8T-3647	216
	220
	496
8T-3848	600
	604
	606
	610
	640
	642
8T-3984	120
	122
8T-4121	68
	70
	72
	74
	76
	78
	80
	82
	84
	86
	88
	92
	104
	107
	108
	132
	134
	141
	174
	180
	185
	192
	196
	228
	230
	232
	250
	286
	288
	290
	292
	296
	298
	300
	302
	303
	374
	376
	380
	384
	386
	400
	402
	404
	406
	412
	414
	416
	418
	420
	424
	426
	432
	433
	434
	449
	450
	451
	452
	492
	496
	536
	537
	540
	541
	567
	568
	575
	576
	578
	582
	586
	592
	598
	600
	604
	606
	610
	626
	630
	635
	636
	637
	640
	642
	646

► **PRIMARY REFERENCE**

PART NUMBER INDEX

Part	Page	Part	Page	Part	Page	Part	Page
	647		82		630		568
	648		84		647		636
	649		86		648		637
	650		88		649	8T-4189	109
	651		92		650		141
	690		132		651		142
	695		134	8T-4137	80		143
8T-4122	40		141		82		210
	226		174		84		212
	227		180		86		218
	242		185		88		220
	243		192		92		230
	244		286		107		281
	245		288		108		282
	271		290		228		296
	283		292		230		377
	284		374		232		381
	294		377		286		400
	296		381		288		402
	298		412		290		418
	300		492		292		420
	302		536		294		428
	303		537		302		496
	304		540		303		592
	305		575		345		664
	306		576		386		666
	500		582		450	8T-4191	196
	501		586		452		377
	578		592		568		381
	582		600		578		492
	622		604		635		496
	653		606	8T-4138	120		578
	664		610		122	8T-4192	40
	666		626		132	8T-4194	418
8T-4123	565		630		134		420
	566		636		308		428
	571		637		346		492
8T-4132	40		640		694		574
	242		642	8T-4139	40	8T-4195	82
	243		646		418		84
	244		647		420		92
	245		648		428		104
	271		649		560		107
	296		650		569		250
	298	8T-4136	296	8T-4140	548		374
	300		298		549		377
	302		300	8T-4159	286		381
	303		384		288		392
	304		400		290		393
	305		402		292		394
	306		404	8T-4171	278		395
	500		406		384		396
	501		418		705		397
	578		420	8T-4172	541		398
	582		424	8T-4177	234		412
	622		426		236		575
	664		449	8T-4178	538		646
	666		450	8T-4180	612	8T-4196	68
8T-4133	68		451		614		70
	70		452	8T-4181	286		72
	72		496		288		74
	74		576		290		76
	76		582		292		78
	78		598	8T-4185	374		80
	80		626	8T-4186	567		82

► **PRIMARY REFERENCE**

PART NUMBER INDEX

Part	Page	Part	Page	Part	Page	Part	Page
	84		335		80		642
	86		336		82		664
	88		337		84		666
	92		338		86		667
	132		339		88		668
	134		340		92		669
	250		341		98	8T-4244	296
	414		342		100		298
	416		343		149		300
	432		344		150		418
	433		578		185		420
	434		582		192		428
	492		585		196		560
	496		588		198		569
	536		595		200		570
	537		598		202		574
	540		600		206	8T-4648	281
	541		604		208		282
	592		606		210	8T-4742	661
8T-4197	361		610		212		662
	362		612		214	8T-4744	661
	660		614		216		662
8T-4198	646		624		218	8T-4778	505
8T-4199	499		625		220		508
8T-4200	82		626		230		509
	84		628		234		510
	92		629		236		516
	185		630		281		517
	444		632		282		518
	445		638		286		534
	446		640		288		543
8T-4201	377		642		290		544
	381		651		292		545
8T-4205	120		653		296		546
	122		660		362		547
	160		663		363		548
	178		682		364		549
	180		690		365		584
	185		694		377		653
	278		705		381	8T-4779	578
	286	8T-4223	40		400		582
	288		281		402	8T-4827	465
	290		282		418	8T-4908	60
	292		296		420		61
	296		418		428		62
	298		420		432		63
	300		428		433		95
	308		442		434		96
	310		560		454		97
	311		569		455		104
	320		570		492		108
	321		574		496		109
	322		670		499		120
	323		671		569		122
	324		672		570		192
	325		673		578		196
	326		674		588		198
	327		675		595		200
	328	8T-4224	60		600		202
	329		61		604		286
	330		62		606		288
	331		63		610		290
	332		72		612		292
	333		74		614		298
	334		76		640		300

PART NUMBER INDEX

Part	Page	Part	Page	Part	Page	Part	Page
	320		82		475		402
	321		84		482	9R-1005	230
	322		86	8T-8737	152		232
	323		88		162		381
	324		92		180		400
	325	8T-5436	592		185		402
	326	8T-5461	612		188		418
	327		614		196		420
	328	8T-6466	80		198		424
	329		82		200		426
	330		84		202		428
	331		86		317	9R-1499	160
	332		88		318		308
	333		92	8T-9186	696	9R-2004	384
	334		592	8T-9190	▶696		386
	335		646		704	9R-2959	503
	336	8T-6842	612	8T-9381	671		504
	337		614		672		556
	338		690	8T-9405	482		567
	339		694		485	9R-5301	572
	340		695	8T-9407	690	9R-5383	592
	341	8T-6869	346		695	9R-7802	418
	342		347	8T-9655	180		420
	343		440		184		424
	344		454	8V-3032	595		426
	361		503	8W-8909	162		428
	362		504		166	9R-7803	418
	364		527	8Y-4489	527		420
	365		528		528		424
	381		529		553		426
	569		530	8Y-7385	560		428
	570		531	8Y-7386	560	9R-7941	180
	578		532			9R-7942	157
	669		533			9R-7958	157
8T-4910	560		552	**9**		9S-0285	588
8T-4956	296		553			9S-4191	246
	298	8T-6870	143	9B-7233	621		249
	300		455	9C-5344	640		441
	442		492		642	9S-8002	246
	570	8T-6902	660		679		248
8T-4970	298	8T-6912	142	9D-1829	412		252
	300		562	9D-8508	159		254
8T-4971	662		663		161		256
8T-4983	80	8T-7338	271	9F-2247	21	9S-8004	248
	82		283		22	9T-0546	460
	84		284	9G-3695	196		462
	86		296		198	9T-0553	460
8T-5004	286		298		200		462
	288		300		202	9T-4506	460
	290	8T-7546	206		315		462
	292		210		316	9T-7266	487
	590	8T-7547	72		475		488
8T-5005	82		74	9G-5127	298		490
	84		76		300	9T-7303	536
	92		432	9J-0705	460		537
	152		433	9M-8406	377		540
	286		434		381	9T-7634	458
	288	8T-7586	592	9N-1756	476	9U-6994	414
	290	8T-8192	374		489		416
	292	8T-8193	374	9P-0719	656	9U-6995	240
	377	8T-8729	152	9P-4609	588	9V-2714	500
	381		176	9R-1004	230		501
8T-5041	40		178		232	9V-2715	500
8T-5049	442		296		381		501
8T-5091	80		315		400	9W-0607	149

▶ **PRIMARY REFERENCE**

PART NUMBER INDEX

Part	Page
	150
9W-3324	152
9W-3326	155
9W-6226	40
9W-8096	40
9X-1046	180
	598
	617
9X-1813	176
	588
9X-2026	346
	542
9X-2038	132
	134
9X-2041	600
	604
	606
	610
	640
	642
9X-2042	180
	588
	612
	614
	644
	680
9X-2044	598
9X-2045	597
	598
	600
	604
	606
	610
	612
	614
	616
	626
	640
	642
	681
	682
	693
	694
9X-2092	180
	626
	644
	647
	648
	649
	650
9X-2125	80
	82
	84
	86
	88
	92
9X-2754	697
	698
	699
	702
9X-4244	152
9X-6016	684
	686
9X-6165	180
	663
9X-6273	366
	368
	370
	372
9X-6274	346
	366
	368
	370
	372
9X-6606	252
	254
	256
9X-6615	465
9X-7379	592
9X-7381	646
9X-7382	646
9X-7383	646
9X-8118	157
9X-8121	157
9X-8139	157
9X-8257	572
9X-8372	612
	614
9X-8699	632
9X-9865	152
9Y-5015	21
	22
	24
	26

0

Part	Page
003-2143	578
	582
003-3082	460
	462
	468
	472
004-6810	626
	647
	648
	649
	650
032-8047	124
032-8062	51
	52
032-8100	124
	132
	134
032-8139	31
033-5853	246
	249
033-5879	460
	462
	476
	489
033-6027	458
	489
033-6028	487
	488
	490
033-6036	460
	462
033-7849	124
	132
	134
035-8014	124
036-1865	78
039-5069	489
039-5070	489
039-8557	568
064-3058	112
	116
064-3843	345
067-2551	578
067-6006	14
	16
	21
	22
067-6007	21
	22
	175
067-6045	177
067-6268	127
067-6269	127
067-6998	124
	136
	138
067-6999	124
	136
	138
067-9509	21
	22
069-1124	21
	22
	49
069-4080	68
	70
	72
	74
	76
	78
084-4277	621
084-4348	155
	156
086-0297	492
087-1031	435
	436
	437
	438
	439
089-7338	361
	363
095-0707	538
095-0912	578
	582
095-1207	484
095-1325	640
	642
	679
096-0001	248
099-2374	447
	448

1

Part	Page
100-3246	152
100-3247	152
100-3248	152
100-3250	152
100-3251	152
100-3253	152
100-3254	152
100-3255	152
100-3751	34
	36
100-3753	36
	65
	66
100-3866	226
	227
100-4454	112
	116
100-4458	38
100-4463	13
100-4841	11
	12
100-4845	128
	130
100-7530	206
	208
	210
	212
	214
	216
	218
	220
101-0568	711
	726
101-0569	707
	722
101-0570	716
	728
	730
101-0571	712
101-0572	714
101-0573	710
101-0574	712
101-0575	710
101-0576	709
101-0577	717
101-3675	14
	16
101-3691	34
	36
101-3739	126
101-3740	126
101-3741	126
101-3742	126
101-3743	126
101-3771	42
	44
101-3805	34
	36
101-3906	124
101-3907	124
101-4486	278
101-4744	278
101-7399	141
101-8296	646
102-1957	32
102-8703	418
	420

► **PRIMARY REFERENCE**

PART NUMBER INDEX

Part	Page
	428
102-8801	170
	184
102-8802	162
	166
	176
	178
	184
	188
	263
	296
	298
	300
	466
	482
	485
	637
	646
102-8803	162
	180
	194
	447
	448
	596
	600
	604
	606
	610
102-8804	154
	155
	156
	162
	166
	180
	184
	308
	475
	491
	652
102-8805	152
	162
	166
	179
	180
	184
	190
	315
	316
	656
102-8806	180
	184
	188
	196
	198
	200
	202
	317
	318
	319
	582
102-8809	184
103-2006	596
	620
	656
103-2543	145
103-5687	13
103-5705	16
103-6262	588
103-6714	112
	116
104-5957	612
	614
	694
105-2423	124
105-2425	112
	116
105-3330	718
	724
105-3479	141
105-3542	196
	198
	200
	202
106-4159	141
106-8704	188
107-7491	458
108-0656	612
	614
	694
108-2953	278
108-5471	612
	614
109-1641	443
109-2355	612
	614
	632
109-2356	656
109-9828	612
	614
110-0885	286
	288
	290
	292
110-6326	95
	96
110-6331	95
	96
110-8760	196
	202
	320
	321
	322
	323
	324
	325
	326
	327
	328
	329
	330
	331
	332
	333
	334
	335
	336
	337
	338
	339
	340
	341
	342
	343
	344
111-0483	492
	514
	515
	516
	517
	534
	538
	541
111-4337	492
111-4627	180
	578
	582
111-7899	190
	196
	198
	200
	202
	358
	361
	612
	614
	632
	656
	659
111-8222	124
112-2370	34
112-9717	95
	96
	97
113-7634	278
113-8490	178
	180
	635
	636
113-8491	179
	180
	196
	198
	200
	202
113-8492	624
	625
	626
	628
	629
	630
114-2583	112
114-4363	42
	44
	112
	116
114-4519	632
114-5333	592
	646
115-1615	184
	194
	632
115-2422	143
115-3073	192
116-2001	▶577
	578
	582
116-4415	424
	426
	430
116-4808	132
	134
116-7471	145
117-3789	145
117-7756	250
117-8683	321
	322
	324
	325
	326
	327
	328
	329
	330
	331
	332
	333
	334
	337
	338
	340
	341
	342
	343
	344
117-9667	716
118-8118	126
	140
118-8119	140
118-9145	21
	22
	53
	59
119-1414	577
119-1415	577
119-3859	578
	582
119-6764	380
120-0210	697
	698
	699
	702
120-4897	146
	171
121-3221	124
121-4480	140
121-7034	124
122-1135	263
123-2341	476
123-2899	56
	57
	58
123-4750	408
	410
124-2456	376
	380
124-2831	296
124-3243	600
	606
	612
	614

▶ **PRIMARY REFERENCE**

PART NUMBER INDEX

Part	Page
	640
	642
	664
124-3533	136
	138
124-3809	112
	116
124-3815	34
	36
	65
	66
124-6264	80
	82
	84
	86
	88
	92
125-2796	592
	646
125-3518	312
	600
	604
	606
	610
	640
	642
126-5027	68
	70
	72
	74
	76
126-5701	541
126-5948	491
126-5984	465
127-2170	600
	604
	606
	610
	612
	614
	640
	642
127-2836	65
	66
127-6316	460
	462
	468
	472
127-8167	124
128-4249	180
	184
128-6985	▶157
	169
	277
128-7037	312
	694
128-8583	711
129-1854	277
	278
129-1855	277
	278
129-3178	578
	582
	595
	660
	662
129-3180	40
130-1676	487
	488
	490
130-1841	128
	130
130-1916	588
130-7092	132
	134
	▶140
131-0715	443
131-1812	140
131-3540	612
	614
131-3543	310
	311
131-5879	538
	541
132-3056	447
	448
132-4720	508
	510
	584
132-5166	651
132-7551	538
	541
133-5512	128
	130
133-9382	234
	236
134-4126	144
	146
	171
134-8726	97
135-2655	252
	254
	256
135-9384	505
	512
	520
	534
	▶543
135-9385	506
	509
	513
	516
	520
	▶544
135-9386	502
	507
	511
	513
	517
	521
	▶545
135-9387	511
	518
	521
	▶546
135-9394	505
	534
	543
135-9395	509
	516
	544
135-9396	517
	545
135-9397	518
	546
136-1953	626
	647
	648
	649
	650
136-2151	714
137-6390	128
	130
137-6391	5
	▶46
138-3096	124
	▶126
138-3758	234
	236
138-4883	612
	614
138-8330	112
	116
139-5511	130
140-2331	97
140-2334	97
140-2349	104
	107
	108
	109
140-8713	136
	138
140-8714	136
	138
140-8718	136
	138
140-8760	710
141-4797	731
141-4999	508
	511
	520
	521
	522
	▶584
141-7633	612
	614
141-7634	612
	614
141-7763	206
	208
	210
	212
	214
	216
	218
	220
142-2928	588
142-7267	19
	22
142-7481	264
142-7493	264
	265
	266
	267
	268
	269
	270
142-7494	▶264
142-7495	▶264
142-7496	▶142
142-7503	▶156
	160
142-7505	302
	303
	578
142-7508	326
	327
	479
142-7513	184
142-7517	192
142-7520	▶143
142-8632	659
142-8633	196
	198
	200
	202
142-8634	▶155
	162
	166
142-8637	▶149
	159
142-8640	184
142-8646	▶264
142-8650	158
	▶159
142-8652	158
	▶160
142-8653	▶169
142-8656	▶178
142-8703	96
142-8704	96
142-8714	▶441
142-8719	250
142-8725	226
	227
142-8726	264
142-8727	264
142-8728	264
142-8731	264
	265
	266
	268
	269
142-8737	264
142-8738	264
142-8742	234
	236
142-8750	▶250
	251
142-8759	264
	265
	267
	268
	270
142-8776	538
142-8783	538
142-8784	538
142-8786	538
142-8787	538
142-8801	286

▶ **PRIMARY REFERENCE**

PART NUMBER INDEX

Part	Page	Part	Page	Part	Page	Part	Page
	288		402	142-8880	496		▶296
	290		404	142-8881	496	142-9079	538
	292		406	142-8896	296	142-9080	1
142-8802	286	142-8839	61		298		273
	288	142-8842	95		300		275
	290	142-8843	2	142-8897	296		276
	292		3		300	142-9089	496
142-8805	530		▶132	142-8927	447	142-9090	496
	531	142-8844	▶106	142-8928	447	142-9091	492
	532		107		448		496
	533	142-8845	106	142-8929	447	142-9093	492
142-8810	296	142-8850	7		448		496
	298		8	142-8937	447	142-9094	492
	300		9		448		496
142-8814	286		10	142-8939	444	142-9101	▶7
	288		▶40		446		272
	290	142-8853	40		▶447		273
	292	142-8854	40	142-8940	359		275
142-8815	▶105	142-8858	620		360	142-9102	82
	108	142-8861	72		▶444		84
142-8816	104		74	142-8942	447		92
	106		78	142-8969	72	142-9103	3
142-8818	104	142-8862	72		74		▶286
	105		74	142-8977	240	142-9108	7
	106	142-8863	72	142-8980	▶228		8
	110		74		357		9
142-8819	98	142-8864	▶60		358		10
	100		72		359		▶141
142-8820	105		74		360		637
142-8823	296	142-8865	60	142-8997	404		638
	298	142-8866	80		406	142-9110	273
	300		82	142-8998	424		275
142-8825	105		84		426		276
	110		86		430		▶302
142-8826	302		88	142-9003	7	142-9113	145
	304		92		▶107	142-9116	358
	305	142-8867	80	142-9020	242		361
142-8827	132		86		244	142-9118	▶596
	134		88		▶246		656
142-8828	132	142-8870	60	142-9021	242	142-9126	724
	134		61		271	142-9127	600
142-8831	286	142-8871	68	142-9023	204		604
	288		76	142-9024	204		606
	290	142-8872	68	142-9025	264		610
	292		70	142-9027	264		640
142-8832	286		76	142-9029	204		642
	288	142-8873	▶61	142-9031	264	142-9128	612
	290		68	142-9032	226		614
	292		76		227	142-9142	496
	492	142-8874	286	142-9033	226	142-9181	82
	496		290		227		84
142-8833	80	142-8875	286	142-9034	226		92
	82		288	142-9036	226	142-9182	80
	84	142-8876	286		227		82
	86		288	142-9058	▶204		84
	88		290		226		86
	92		292		227		88
	192	142-8877	▶82	142-9059	▶242		92
	636	142-8878	▶68	142-9060	▶226	142-9184	196
	637		▶70		251	142-9192	355
142-8837	400		82	142-9073	296		356
	402		84	142-9074	296	142-9193	352
	404	142-8879	68		300		353
	406		70	142-9075	2	142-9195	▶352
142-8838	400		76		3		496

▶ **PRIMARY REFERENCE**

PART NUMBER INDEX

Part	Page
142-9196	▶353
	496
142-9216	408
	410
142-9220	408
	410
142-9234	418
	420
	424
	426
142-9237	234
	236
142-9241	234
	236
142-9268	598
142-9269	▶597
	624
	625
	628
	629
142-9270	597
	598
142-9271	597
	626
142-9272	598
142-9273	617
142-9274	▶598
	637
142-9275	598
142-9276	586
	▶588
142-9278	588
142-9279	588
142-9285	600
	604
	606
	610
	640
	642
142-9287	588
142-9288	586
142-9289	624
	625
	626
	628
	629
	▶632
142-9290	618
142-9291	618
142-9303	▶670
142-9304	667
	▶676
142-9305	▶667
	▶668
142-9306	▶671
142-9307	▶672
142-9308	▶673
142-9309	669
142-9310	▶669
142-9311	▶623
142-9314	694
142-9316	694
142-9317	694
142-9318	600
	604
	606
	610
	640
	642
142-9319	690
	694
	695
142-9320	656
142-9325	656
142-9326	161
142-9327	169
142-9328	656
142-9329	659
142-9331	659
142-9333	196
	198
142-9339	612
	614
142-9340	600
	604
	▶612
	640
142-9341	612
	614
142-9342	612
142-9346	669
142-9348	600
	606
	640
	642
	644
142-9353	1
142-9354	2
	3
	▶653
142-9355	600
	604
	606
	610
	640
	642
142-9356	600
	604
	606
	610
	640
	642
142-9363	▶682
	692
142-9372	612
	614
142-9386	588
142-9804	447
	448
143-1974	180
143-4534	112
	116
144-0195	612
	614
144-1636	196
	198
	200
	202
	610
144-1643	491
144-1644	456
	▶491
144-4531	460
	462
	468
	472
144-4532	460
	462
	468
	472
144-7907	408
	410
144-9930	▶170
	620
144-9933	▶154
	620
144-9934	170
144-9954	141
144-9955	174
144-9960	141
146-0006	136
	138
146-0018	136
	138
146-2438	155
146-2698	16
146-2701	16
146-4323	180
	196
	198
	200
	202
146-6370	634
146-6371	624
	625
	626
	628
	629
	632
146-6372	632
146-6374	634
146-6376	632
146-6377	632
146-6380	632
146-6381	632
146-6382	632
146-6383	632
146-6385	632
146-6386	632
146-6390	634
146-7810	16
146-9303	136
	138
147-1233	3
	4
	▶5
147-1234	4
	▶6
147-1773	184
147-2991	138
147-2994	138
147-2995	138
147-3019	612
	614
147-3043	136
147-3046	136
	138
147-3047	136
	138
148-2371	651
148-2372	651
148-7549	19
148-8315	361
	362
	364
	365
	389
	390
	402
	404
	420
148-8316	240
	388
	391
	412
148-8317	234
	236
148-8318	364
	365
148-8319	366
	368
	370
	372
	384
	386
148-8325	376
	380
	408
	410
	412
148-8326	206
	208
	210
	212
148-8327	234
	236
	240
	392
	394
	396
	398
148-8335	240
148-8336	206
	208
	210
	212
	214
	216
	218
	220
	258
	260
	262
	376
	380
	400
	402
	404
	406

▶ **PRIMARY REFERENCE**

PART NUMBER INDEX

Part	Page	Part	Page	Part	Page	Part	Page
	453		218	150-8625	682	152-4897	97
148-8340	230		220	150-8627	▶624	152-4898	95
	232		408	150-8628	624		96
	240		410		▶647	152-4899	95
148-8341	230	149-0686	314	150-8629	▶625	152-5878	40
	232	149-1411	▶535	150-8630	625		653
	361	149-4232	530		▶648	152-6555	19
	362	149-5435	505	151-4003	489		20
	364		527	152-0225	▶508	152-6556	19
	365		530	152-0226	▶509		20
	400		534	152-0228	▶510	152-6557	21
	402	149-5436	508	152-0229	▶511		22
	404		509	152-0231	▶505	152-6558	21
	406		514	152-0232	▶506		22
	418		516	152-1041	286	152-6559	21
	420		523		288		22
	424		528		290	152-6560	11
	426		531		292	152-6561	21
	428	149-5437	510	152-1042	286		22
	430		515		288	152-6572	51
148-8347	72		517		290		52
	74		524		292	152-6573	51
	76		525	152-1154	303		52
	393		529		306	152-6574	51
	395		532	152-1155	▶303		52
148-8360	414	149-5740	547	152-1156	303	152-6576	51
	416	149-5741	502		306		52
148-8369	412		▶547	152-1157	226	152-6577	51
148-8374	361	149-8403	260		227		52
	362	150-3056	366	152-1160	▶622	152-6578	51
148-8377	363		368	152-1161	622		52
	364		370	152-1164	538	152-6579	51
	365		372	152-4858	7		52
148-8378	206	150-4027	408		8	152-6580	51
	208		410		9		52
	210	150-4031	376		10	152-6581	51
	212		380		▶28		52
	216	150-4034	376	152-4871	644	152-6582	51
	220		380	152-4875	588		52
	376	150-4043	412	152-4876	618	152-6584	51
	380	150-5030	98	152-4879	617		52
	406		99	152-4880	▶618	152-6605	51
148-8382	232		100		624		52
148-8385	72		101		625	152-6730	34
	74	150-7568	626		626		36
	76		630		628	152-6735	34
148-8390	72	150-8599	264		629		36
	74		265		630	152-6738	34
	76		266	152-4881	▶617		36
	388		267		624	152-6739	34
	391		268		625		36
	424		269		626	152-6740	34
148-8393	361		270		628		36
	362	150-8621	1		629	152-6743	34
148-8407	441		2	152-4883	622		36
148-8423	412		3	152-4884	588	152-6791	18
148-8428	240		▶499	152-4888	72	152-6799	18
148-8433	206	150-8622	600		▶435	152-6801	18
	208		604	152-4891	97	152-6862	11
	210		606	152-4892	132	152-6864	11
	212		610	152-4893	9		130
148-8434	206		640		▶95	152-6866	11
	210		642	152-4895	8		12
148-8435	214	150-8624	632		▶98	152-6867	11
	216		▶634		638		12

▶ **PRIMARY REFERENCE**

PART NUMBER INDEX

Part	Page
152-6868	11
	12
152-6869	11
	12
152-9784	715
152-9857	24
	26
152-9858	24
	26
152-9859	24
	26
152-9860	24
	26
152-9862	25
	27
152-9863	25
	27
152-9864	25
	27
153-0072	31
153-0073	31
153-0077	5
	6
	▶31
153-0083	42
	44
153-0084	42
	44
153-0104	14
153-0105	14
153-0106	14
153-0108	14
153-0112	14
	16
153-0115	5
	▶14
153-0117	14
153-0160	65
	66
153-0162	65
	66
153-0163	65
	66
153-0164	65
153-0165	5
	▶65
153-0176	65
	66
153-0177	65
	66
153-0178	65
	66
153-0314	50
153-0317	50
153-0319	5
	6
	▶50
153-0405	103
	112
	116
153-0455	621
153-0488	124
153-0507	124
153-0508	124
153-0524	5
	6
	▶147
153-0561	5
	6
	▶38
153-0562	21
	22
	175
153-0563	38
153-0564	5
	▶172
153-0566	172
	173
153-0693	5
	6
	▶49
153-0982	55
153-0983	54
	55
153-0985	54
153-0988	54
	55
153-0989	54
	55
153-0991	54
	55
153-0992	54
	55
153-1006	5
	6
	▶127
153-1013	32
153-1014	5
	6
	▶32
153-1022	136
	138
153-1023	136
	138
153-1029	46
	47
	48
153-1153	136
	138
153-1154	136
	138
153-1155	136
	138
153-1156	136
	138
153-1176	5
	6
	▶39
153-1217	5
153-1260	669
153-2682	640
	642
	679
153-2683	640
	642
	679
153-2994	366
	368
	370
	372
	374
	384
	386
153-2995	366
	370
	372
	374
	384
	386
153-5656	142
153-6981	653
154-3957	296
154-3958	296
154-3968	663
154-3972	▶265
154-3973	▶265
154-3978	265
154-3979	265
154-3980	265
154-3981	265
154-3982	265
154-3985	669
	676
	678
154-3986	676
	678
154-3988	296
	298
	300
154-3989	98
	100
154-3991	2
	▶288
154-3992	288
154-3993	288
	292
154-3994	272
154-3995	7
	8
	9
	10
	▶174
154-3996	98
154-3997	98
	100
154-3998	98
	100
154-4000	1
	2
	3
	▶271
154-4006	271
154-4014	444
	445
	446
154-4019	76
154-4020	357
	358
	359
	360
	▶388
154-4021	388
	391
154-4025	359
	▶392
154-4026	392
	393
	394
154-4028	393
	395
154-4029	393
	395
154-4046	397
154-4047	397
154-4049	414
154-4050	4
	▶280
154-4055	360
	▶393
	▶394
154-4064	404
	406
154-4233	▶144
	180
154-5004	▶519
	520
154-5005	519
	▶530
154-5007	519
	▶531
154-5008	▶519
	520
154-5009	519
	▶532
154-5010	▶519
	521
154-5011	▶440
	519
	521
154-5012	440
	530
	531
	532
	533
154-5013	347
	440
154-5018	▶348
	519
	521
154-5019	▶366
	519
154-5020	366
154-5021	366
154-5022	366
154-5024	366
	368
	370
	372
154-5025	366
	368
	370
	372
154-5037	530
154-5045	▶520
154-5046	▶520
154-5047	▶520
154-5048	▶520
154-5049	▶521
154-5050	▶521
154-5051	▶368

▶ **PRIMARY REFERENCE**

PART NUMBER INDEX

Part	Page
	519
154-5052	▶370
	519
154-5053	531
154-5059	531
154-5070	532
154-5077	532
154-7988	682
	▶684
	693
154-7989	682
	▶686
	693
154-8711	676
	678
154-8715	676
	678
154-8717	676
154-8719	676
155-2255	180
	184
155-2260	162
	166
	180
	184
	600
	606
155-2265	180
	184
	188
	582
155-2270	179
	180
	184
	188
	194
	582
	637
155-2271	162
	166
	179
	180
	184
	190
155-2274	162
	166
	179
	184
155-2276	610
155-4426	260
	476
155-5652	204
155-9010	204
155-9432	204
155-9433	204
156-0884	511
	▶527
156-0885	512
	▶528
156-0886	512
	▶529
156-0890	527
	528
	529
	552
	553
156-0891	▶346
	511
	512
	550
156-0892	346
156-0913	346
156-1458	196
	198
	200
	202
156-1460	196
	198
	200
	202
156-2850	458
156-3834	706
	720
156-3843	706
	720
156-3849	718
	724
156-4282	376
	380
156-5508	368
156-5509	368
156-5510	368
156-5512	▶350
	511
	512
	550
156-5762	500
	501
	718
	724
156-5970	263
156-9808	499
157-0940	503
	504
	527
	528
	529
	552
	553
157-0941	346
157-0942	346
157-1478	214
	218
	410
157-2284	491
157-7223	▶511
	512
157-7224	▶512
	513
157-7225	▶512
	513
157-7226	▶512
157-7227	▶513
158-3770	482
	483
	484
	485
	486
158-5648	527
	528
	529
	552
	553
158-6095	▶513
158-6680	404
158-6694	620
158-6695	596
158-6696	656
158-6697	621
158-6698	656
158-6699	656
158-7896	128
	130
158-7897	128
	130
158-7898	128
	130
158-7899	128
	130
158-7900	128
	130
158-7902	128
	130
158-7903	128
	130
158-7905	128
	130
158-7906	128
	130
158-7909	128
	130
158-7911	128
	130
158-7912	128
	130
158-7916	128
158-7921	128
	130
158-7922	128
	130
158-7923	128
	130
158-7924	128
	130
158-7926	128
	130
158-7931	136
	138
158-7933	128
	130
158-7934	128
	130
158-7936	128
	130
158-7940	128
	130
158-7946	128
	130
158-7947	128
	130
158-7948	130
158-7950	128
	130
158-7951	128
	130
	529
159-0082	14
	16
159-1752	177
159-2953	302
	303
	304
	305
	306
	505
	508
	509
	510
	516
	517
	518
	534
	543
	544
	545
	546
	547
	584
159-4535	370
159-4536	370
159-4537	370
159-5345	530
159-5346	531
159-5347	532
159-5411	562
159-5740	414
	416
159-5751	▶315
	324
	325
	478
159-5755	361
	▶454
159-5761	▶265
159-5762	265
	270
159-5763	▶266
159-5764	266
159-5765	266
159-5767	266
159-5768	266
159-5769	266
159-5771	296
159-5772	204
159-5774	99
159-5786	132
	134
159-5787	8
	▶108
159-5790	653
159-5792	653
159-5794	653
159-5797	538
	541
159-5798	612
	614
159-5799	600
	604
	606
	610
	640

▶ **PRIMARY REFERENCE**

PART NUMBER INDEX

Part	Page
	642
159-5801	606
	610
	▶614
	642
159-6102	126
	704
159-6108	148
159-8035	346
	562
	718
159-8038	530
	531
	532
	533
159-8336	28
159-8405	286
	288
	290
	292
159-9495	196
	198
	200
	202
159-9496	196
	198
	200
	202
159-9790	286
	288
	290
	292
159-9853	315
	316
	317
	318
	319
160-0663	573
160-1600	700
160-1737	145
160-4320	▶316
	321
	322
	477
160-5843	491
160-5844	491
160-8657	136
	138
161-0185	384
161-0186	384
161-0187	▶384
	511
	512
	550
161-0188	384
161-0189	384
161-0190	384
161-2347	286
	288
	290
	292
161-2437	▶555
161-2539	178
161-4128	542
161-6560	626
	682
161-7290	▶573
	578
	582
161-7522	612
	614
	▶652
161-7523	612
	614
161-7524	612
	614
162-0223	588
162-2207	130
162-2210	128
162-2213	128
162-2215	128
162-5233	718
	724
162-5234	718
	724
162-5235	706
162-5236	519
	521
	▶542
162-6886	697
	698
	699
	702
162-6887	697
	698
	699
	702
162-6889	697
	698
	699
	702
162-8139	▶550
162-8140	550
	▶552
162-8154	554
163-1385	374
	384
163-1386	366
	368
	370
	372
163-1627	32
163-4465	704
163-4773	492
163-4811	550
	▶553
163-4812	▶550
163-5015	711
163-5016	▶706
163-5020	711
	726
163-5050	711
	726
163-5051	726
163-8680	555
163-9112	707
	722
163-9113	716
	728
	730
163-9114	712
163-9115	714
163-9116	710
163-9117	712
163-9118	710
163-9119	709
163-9120	710
163-9121	714
163-9122	716
163-9123	717
163-9124	715
163-9125	711
163-9127	728
163-9320	384
163-9455	710
163-9458	714
163-9460	717
164-1154	660
164-2108	260
	476
164-2346	707
	722
164-2347	716
	728
	730
164-2348	712
164-2349	714
164-2350	710
164-2351	712
164-2352	710
164-2353	710
164-2354	709
164-2356	714
164-2357	716
164-2358	717
164-2359	715
164-2360	711
164-3213	348
	350
164-5567	234
	236
	412
	414
	416
164-5570	362
	363
	364
	365
164-5608	234
	236
164-7413	▶518
164-7415	518
164-7424	▶548
164-7433	518
164-7590	47
164-7591	47
164-7592	47
164-7597	▶24
	25
164-7606	11
164-7610	138
164-7613	5
	6
	▶41
164-7616	5
	▶53
164-7619	53
164-7620	53
164-7621	53
	59
164-7622	5
	6
	▶56
	▶57
	▶58
164-7623	5
	6
	▶13
164-7624	5
	▶103
164-7625	103
164-7627	102
164-7628	102
	112
	116
164-7629	5
	6
	▶124
164-7630	124
164-7633	6
	▶64
164-7908	206
	210
164-8388	5
	6
	▶177
164-9295	▶351
	560
164-9425	635
	636
164-9614	550
	▶554
164-9740	706
	720
164-9741	706
	720
164-9989	552
	553
	557
	558
165-0142	250
165-0311	656
165-0312	656
165-2273	240
165-4892	226
	227
165-4894	578
	582
165-4895	156
165-4898	▶266
165-4901	266
165-4902	266
165-4903	▶267
165-4906	267
165-4907	267
165-4909	266
	267
165-4910	▶72
	86
165-4961	5

▶ **PRIMARY REFERENCE**

PART NUMBER INDEX

Part	Page
	▶102
165-6153	508
	509
165-6154	510
	511
	▶525
165-6156	505
165-6157	506
	▶523
165-7089	614
165-7095	40
	548
	549
	653
165-7098	308
165-7099	312
165-8477	548
165-8478	549
165-8486	567
165-8487	567
165-8488	▶567
165-8727	▶550
165-8728	▶551
165-8729	▶514
165-8730	▶515
165-8731	▶347
	560
165-8732	▶556
	557
	558
165-8733	▶386
	560
165-8734	514
	515
	516
	517
	550
	551
	▶560
165-8736	550
	▶557
165-8737	551
	▶558
165-8740	560
	▶562
165-8743	562
165-8746	514
	516
165-8747	515
	517
165-8777	516
165-8778	517
165-8779	▶516
165-8780	▶517
165-8835	534
165-8836	▶534
166-0319	503
	504
166-2033	194
	376
	380
166-2550	▶578
166-2551	578
	▶581
	582
166-2552	578
	582
166-2553	578
	582
166-2554	578
166-2556	578
166-2557	578
	582
166-2558	578
	582
166-2559	578
	582
166-2560	538
	563
	564
166-2561	308
166-2562	681
166-2567	▶272
166-2569	▶680
	681
166-3758	147
166-3759	5
	6
	▶29
166-3760	29
166-4041	556
166-6825	632
166-8835	3
	▶697
166-8836	4
	▶698
166-9312	384
167-0007	697
167-0008	697
167-0009	698
167-0010	698
167-0608	578
	582
167-1530	620
167-4339	250
167-7713	252
	254
	256
167-7801	184
167-9524	260
	476
168-6410	▶150
	161
168-7562	404
168-7564	424
168-7565	424
168-7571	226
168-7574	148
168-7575	▶148
169-1679	204
169-3567	552
169-3568	553
169-3569	562
169-4868	503
	504
169-6689	▶158
169-6712	496
169-6713	98
	99
	100
	101
169-6715	82
	84
	88
	92
169-8941	527
169-8942	528
169-8943	529
170-5836	560
170-6666	6
	▶19
170-6669	19
170-7498	6
	▶136
170-7499	136
170-7500	136
170-7611	42
	44
170-7612	42
	44
170-7614	42
	44
170-7615	42
	44
170-7666	14
	16
170-7667	16
170-7668	16
170-7669	16
170-7675	16
170-7677	16
170-7682	16
171-1187	56
	58
171-1840	124
171-1841	124
171-1842	124
171-1845	124
171-2792	5
	▶20
171-2803	5
	▶25
171-2808	5
	▶51
171-2823	5
	▶34
171-2824	5
	▶11
171-2929	5
	▶128
171-2948	5
	▶54
171-3957	5
	▶138
171-4613	5
	6
	▶175
172-0970	482
	485
172-1241	708
172-5285	351
172-6704	▶26
	27
172-6705	6
	▶27
172-6711	6
	▶52
172-6739	6
	▶36
172-6740	6
	▶12
172-7209	172
	173
173-0122	6
	▶130
173-0125	130
	136
173-0127	130
173-0128	130
173-0140	6
	▶55
173-0141	55
173-0142	55
173-0410	6
	▶59
173-0411	59
173-0412	59
173-0413	59
173-0414	59
173-0415	59
173-0416	59
173-0417	59
173-0418	22
173-0424	6
	▶112
173-0425	112
	116
173-0426	112
	116
173-0427	102
	112
	116
173-0428	112
	116
173-0429	112
	116
173-0430	112
	116
173-0431	112
	116
173-0432	112
	116
173-0433	112
	116
173-0436	112
	116
173-0442	112
	116
173-0702	479
	480
	481
	483
	484
	486
173-0703	477
	478
	482
	485
173-1252	6
	▶18

▶ **PRIMARY REFERENCE**

PART NUMBER INDEX

Part	Page
173-1253	6
	▶47
	▶48
173-1263	47
	48
173-1272	18
173-1280	18
173-1281	6
	▶66
173-1282	66
173-1284	65
	66
173-1338	6
	▶173
173-1339	5
	6
173-1340	6
173-2543	676
	678
173-3013	272
	273
	274
	275
	276
	▶590
173-3014	590
173-3015	278
173-3016	278
173-3017	272
	274
	▶277
173-3018	278
173-3021	166
	▶705
173-3022	272
	275
	▶681
173-3326	▶458
173-7225	208
	212
173-7407	560
173-7798	162
	166
173-9855	11
174-2384	386
174-2385	386
174-2388	386
174-2389	386
174-2393	386
174-3097	386
174-3944	698
	699
174-6633	573
175-3892	260
175-4228	272
	274
	275
	▶308
175-4232	272
	275
	▶278
175-4233	272
	274
	275
	▶651
175-4234	651
175-4236	705
175-4238	272
	274
	275
	▶572
175-4239	651
175-4242	▶272
175-4244	▶273
175-4921	21
	22
175-7413	706
	720
176-0613	272
	273
	274
	275
	276
	▶312
176-0614	▶707
176-0633	51
	52
176-1225	711
	726
176-1226	707
	722
176-1228	716
	728
	730
176-1229	712
176-1335	707
176-1336	707
	722
176-1337	707
	722
176-2947	588
176-3900	646
176-4072	454
	▶475
176-4077	312
176-4079	312
176-4081	458
176-4082	458
176-4085	458
176-4086	458
176-4089	312
177-1909	▶549
177-1910	374
177-1911	374
177-1912	374
177-1913	345
177-1914	294
177-1921	503
	504
177-1941	574
177-1955	294
177-1956	294
177-1957	294
177-1958	345
177-1971	294
177-1972	503
	504
177-1973	574
177-1974	294
177-1975	294
177-1980	▶294
	502
177-1981	502
	▶503
177-1982	502
	▶504
177-1983	502
	▶574
177-1984	▶345
	502
177-1985	345
177-1986	▶374
	502
177-1987	503
177-1988	504
177-1989	▶502
177-1990	▶502
177-2955	▶704
177-3397	442
	▶443
177-3403	1
	2
	3
	▶679
177-3405	640
	642
	679
177-3406	404
	406
177-3407	404
	406
177-4563	632
	634
177-7414	568
177-7415	567
	568
177-7559	147
177-7929	272
	273
	274
	275
	276
	▶708
177-9150	568
177-9151	568
177-9152	272
	274
	275
	▶568
177-9153	568
177-9565	▶355
	492
	496
177-9566	▶356
	492
	496
177-9578	312
177-9579	312
177-9580	280
177-9648	184
178-2247	572
178-2249	312
178-2252	▶640
178-2253	▶642
178-2254	▶146
	184
178-2255	286
	288
	290
	292
178-2256	▶267
178-2259	267
178-2260	267
178-2269	267
178-2270	267
178-2452	65
178-3377	500
178-5019	34
	36
178-6226	136
178-7838	248
179-1980	▶709
179-1981	▶709
179-1982	▶710
179-1983	▶710
179-1984	▶710
179-1985	▶711
179-1986	▶711
179-1987	▶712
179-1988	▶712
179-1990	▶713
179-1991	▶713
179-1992	▶714
179-1993	▶714
179-1994	▶715
179-1995	▶715
179-1996	▶716
179-1997	▶716
179-1998	▶717
179-1999	▶717
179-5631	711
	726
179-5632	716
	728
	730
179-5633	712
179-5634	714
179-5635	710
179-5636	712
179-5637	710
179-5638	713
179-5639	710
179-5640	709
179-5641	714
179-5642	716
179-5643	709
179-5644	717
179-5645	713
179-5646	715
179-5647	711
179-5648	717
179-5649	731
179-5650	715
179-5651	711
	726
179-5652	717
179-5653	716
	728
	730
179-5654	712

▶ **PRIMARY REFERENCE**

PART NUMBER INDEX

Part	Page	Part	Page	Part	Page	Part	Page
179-5655	714		416	185-9933	268		426
179-5656	710	180-3008	194		269		430
179-5657	712	183-4085	386		270	187-1273	404
179-5658	710	183-7117	162	185-9935	267		406
179-5659	713		166		268	187-1274	404
179-5660	710		308		269		406
179-5661	709	183-7120	626	185-9936	267	187-1275	404
179-5662	714		647		269		406
179-5663	716		648	185-9937	268	187-1276	424
179-5664	709		649		269		426
179-5665	717		650	185-9939	▶270	187-1277	424
179-5666	713	183-7125	▶8	185-9941	▶282		426
179-5667	715		273	185-9948	76	187-3201	▶664
179-5668	711		274		▶436		665
179-5669	731		275	186-0239	166	187-3202	664
179-5670	715		276	186-0357	361		666
179-5858	715	183-7126	7		362	187-3203	664
179-5860	714		8		364		666
179-5861	710		▶96		365	187-3211	664
179-5862	712	183-7127	7	186-0358	361		666
179-5863	710		▶99		362	187-3212	664
179-5864	713	183-7130	▶626		364		666
179-5865	710	183-7131	281		365	187-3213	▶693
	714		282	186-2360	277	187-3216	8
179-5866	709	183-7132	▶281	186-2487	489		9
179-5868	716	183-7133	281	186-2488	489		▶84
179-5869	709		282	186-3362	637	187-3237	▶269
179-5870	717	183-7134	281	186-3562	▶575	187-3238	▶269
179-5871	713		282	186-3735	155	187-3239	▶269
179-5872	715	183-7136	651		188	188-0111	▶270
179-5873	711	183-7137	▶688		316	188-0116	269
179-5874	731		▶690		447	188-0117	269
179-5876	716	183-7138	▶692		466	188-0118	269
179-5877	712	183-7264	229		485	188-0119	269
179-5878	714	184-1564	▶176		652	188-0124	269
179-5879	710		194	186-5186	576	188-0125	269
179-5880	712	184-2472	144	187-1258	▶196	188-0126	270
179-5881	710	184-6097	568	187-1261	435	188-0127	270
179-5882	713	184-6098	568		436	188-0128	74
179-5883	710	185-2269	456		437		433
179-5884	709	185-4253	476		438		▶437
179-5885	714	185-4254	460		439	188-0131	180
179-5886	716		462	187-1262	435	188-0138	312
179-5887	709		468		436	188-0140	312
179-5888	717		472		437	188-0141	▶665
179-5889	713		▶476		438	188-0142	272
179-5890	715	185-7708	460		439		274
179-5891	711		462	187-1263	435		275
179-5893	715		▶487		436		▶538
179-5915	713	185-7709	460		437	188-0143	538
179-5916	709		462		438	188-0147	272
179-5917	713		▶488		439		274
179-5918	731	185-7887	368	187-1264	435		275
179-5919	715	185-8662	▶267		436		▶304
179-6575	709	185-8663	▶268		437	188-0878	460
179-6576	731	185-8666	▶268		438		462
179-6577	713	185-8667	▶268		439		468
179-6578	713	185-8674	267	187-1265	435		472
179-6579	715	185-8675	267		436		▶489
179-6580	717	185-8676	268		437	188-1052	50
179-6883	717	185-8677	268		438	188-2719	▶507
179-7201	▶500	185-9928	268		439	188-3306	▶273
180-2428	14	185-9929	268	187-1268	404	188-3307	▶274
180-3000	▶3	185-9930	268		406	188-3308	▶275
180-3007	414	185-9931	268	187-1272	424	188-3310	▶275

▶ **PRIMARY REFERENCE**

PART NUMBER INDEX

Part	Page
188-3311	▶276
188-3345	▶234
	251
188-3526	507
	▶524
188-4513	12
188-5102	21
	22
188-7176	575
188-7733	500
	501
	▶576
188-8541	47
188-8543	46
	47
	48
188-8544	47
	48
188-8545	18
188-8633	24
	26
188-8636	24
	26
188-8637	24
	26
188-8640	26
188-9044	24
188-9071	54
189-3610	154
190-7453	408
190-7456	720
190-7457	224
	225
	▶243
190-7459	▶206
	▶208
	224
	225
190-7938	243
	▶248
190-7939	▶210
	▶212
	224
190-7942	628
	▶649
190-7943	629
	630
	638
	▶650
190-7944	▶628
190-7945	▶629
190-7951	4
	▶251
190-7952	4
	▶357
190-7953	▶1
	4
190-7954	4
	▶718
190-7955	4
	▶699
190-7973	298
190-7974	298
190-7975	1
	▶298
190-7989	492
190-7992	492
190-7994	492
190-7998	492
190-7999	1
	▶492
190-8000	▶4
190-8001	1
	2
	3
	▶184
190-8002	180
190-8004	328
	329
	330
	331
	332
	336
	342
	▶635
190-8006	184
190-8008	184
190-8009	184
190-8033	492
190-8036	492
190-8037	492
190-8038	492
190-8041	▶354
	492
190-8042	▶283
190-8045	699
190-8046	699
190-8050	▶357
190-8051	▶358
190-8052	358
	▶455
190-8053	455
190-8058	402
190-8059	402
190-8060	357
	▶400
190-8061	358
	▶402
190-8062	402
190-8063	420
190-8064	420
190-8065	420
190-8067	418
190-8068	418
190-8069	418
	420
190-8070	357
	▶418
190-8071	358
	▶420
190-8072	418
	420
190-8073	418
	420
	428
190-8074	400
	402
190-8075	400
	402
190-8076	400
	402
190-8077	400
190-8078	400
	402
190-8079	400
	402
190-8080	▶320
	▶321
	▶322
190-8081	320
	▶477
190-8082	400
	402
190-8083	400
	402
190-8084	357
	358
	359
	360
	▶442
190-8085	357
	358
	▶449
	▶450
190-8086	449
	▶460
190-8087	412
190-8088	▶305
190-8090	▶306
190-8092	320
	321
	322
	323
	324
	325
190-8094	323
	▶478
190-8095	▶323
	▶324
	▶325
190-8096	428
190-8097	428
190-8098	428
190-8099	428
190-8100	▶252
190-8101	▶214
	▶216
	223
	225
190-8102	230
190-8107	722
190-8108	718
	724
190-8109	718
	724
190-8110	357
	358
	▶428
190-8111	▶230
	357
	358
190-8112	▶236
	251
190-8114	357
	358
190-8115	357
	358
	▶414
190-8116	357
	358
	▶389
190-8117	230
190-8118	718
190-8119	230
	412
190-8377	46
190-8962	705
191-0915	263
191-0916	258
	▶263
	482
	483
	484
191-2894	298
191-2907	222
	▶326
	▶327
191-2908	222
	▶328
	▶329
191-2909	222
	▶330
	▶331
191-9288	51
	52
191-9289	51
	52
191-9564	▶720
191-9576	298
	300
191-9617	222
	223
	225
	▶254
191-9662	432
	▶438
191-9664	640
	642
191-9665	578
191-9668	690
	695
191-9672	272
	273
	275
	358
	359
	▶432
191-9674	273
	274
	275
	358
	▶433
191-9675	360
191-9676	357
	360
	▶434
191-9680	▶222
191-9681	▶222
191-9682	▶222

▶ **PRIMARY REFERENCE**

PART NUMBER INDEX

Part	Page
191-9683	224
	▶332
191-9684	276
	▶700
191-9700	224
	225
	▶256
191-9730	492
191-9738	492
191-9739	492
191-9741	▶284
191-9742	283
	284
191-9743	283
	284
191-9746	223
	▶333
	▶334
191-9750	1
	▶290
191-9752	290
191-9755	1
	▶134
191-9758	335
	▶479
191-9759	339
	▶480
191-9760	▶227
	251
191-9761	227
191-9762	227
191-9763	336
	▶481
191-9764	1
	▶292
191-9765	4
	▶9
191-9766	292
191-9775	10
	▶86
191-9776	134
191-9777	9
	▶109
191-9778	109
	▶110
191-9779	110
191-9780	222
	223
	225
	▶244
	▶245
191-9781	591
	654
191-9782	357
	▶395
	▶396
191-9783	400
	402
	404
	406
191-9784	228
	▶229
191-9788	326
	327
	328
191-9790	▶223
191-9791	▶223
191-9792	▶223
191-9793	▶224
191-9794	223
	▶335
191-9796	▶336
191-9797	224
	▶337
	▶338
191-9799	2
	3
	▶654
192-0836	178
192-1590	171
192-2601	7
	▶88
192-2602	▶74
	88
192-2603	8
	▶92
192-2604	▶76
	92
192-2606	581
192-2607	581
192-2612	10
	▶104
192-2613	104
192-2614	104
192-2615	9
	▶100
192-2616	100
192-2617	10
	▶97
192-2618	10
	▶101
192-2619	101
192-2620	4
	▶10
192-2637	565
	566
	571
192-2638	571
192-2640	▶349
	536
	537
192-2642	563
	564
192-2645	565
	566
	571
192-2648	565
192-2653	566
192-2655	536
	537
	▶540
192-2657	1
	2
	3
	▶120
192-2658	663
192-2660	120
	122
192-2661	▶660
	661
	662
192-2662	661
192-2663	661
	662
192-2664	120
	▶661
192-2666	1
	2
	3
	▶663
192-2667	637
192-2668	448
192-2669	637
192-2670	663
192-2675	663
192-2694	▶194
	272
	274
192-2697	▶721
192-2698	▶721
192-2700	271
192-3517	713
192-3518	715
192-3519	709
192-3520	713
192-3521	717
192-5845	136
	138
192-6335	24
	26
192-8754	16
192-8755	16
192-8953	721
192-8955	717
192-9003	721
192-9027	717
193-0447	▶314
	357
	358
	359
	360
193-0451	▶582
193-0454	361
	▶404
193-0456	404
193-0457	361
	▶424
193-0458	424
193-0459	424
193-0460	359
	360
	▶430
193-0461	430
193-0462	430
193-0463	359
	360
	▶410
193-0464	414
	416
193-0465	360
	▶406
193-0466	406
193-0467	404
	406
193-0468	360
	▶426
193-0469	426
193-0470	426
193-1053	717
193-8307	357
	358
	359
	360
	▶412
193-8308	414
	416
193-8309	210
	212
	218
	220
193-8310	359
	360
	▶390
193-8311	389
	390
193-8312	408
	410
193-8313	408
	410
193-8315	232
193-8316	▶232
	359
	360
193-8317	232
193-8318	232
193-8319	404
	406
193-8320	359
	360
	▶416
193-8321	414
	416
193-8322	414
	416
193-8323	416
193-8324	206
	208
	210
	212
	214
	216
	218
	220
193-8325	▶218

▶ **PRIMARY REFERENCE**

PART NUMBER INDEX

Part	Page
	▶220
	222
193-8326	240
193-8327	234
	236
	▶240
193-8328	234
	236
193-8329	142
	143
193-8332	430
193-8333	430
193-8334	428
	430
193-8335	428
	430
193-8337	496
193-8338	496
193-8339	196
	198
	200
	202
193-8340	243
	244
	245
193-8342	250
193-8353	▶198
	330
	331
	332
	336
193-8365	▶722
193-8371	654
	▶656
193-8373	656
193-8374	▶145
	180
193-8375	1
	2
	3
	▶180
193-8378	184
193-8379	▶200
	333
	334
	337
	338
193-8380	311
193-8384	310
193-8385	310
	311
193-8386	451
	▶462
193-8387	321
	324
	477
	478
	▶482
193-8388	479
	480
	481
	▶483
193-8389	449
	450
	451
	452
193-8392	412
193-8393	412
193-8915	721
	731
193-8918	721
	731
193-8921	721
	731
193-8927	721
	731
193-8930	721
	731
193-8939	721
193-8942	721
	731
194-7631	314
194-7632	314
194-7789	258
194-7790	718
	724
194-8168	656
194-9376	214
	218
	▶258
195-0935	591
	644
195-0936	180
	591
	681
	694
195-0937	161
	586
	591
	600
	604
	606
	610
	640
	642
195-0938	104
195-0939	591
	644
195-3510	326
	327
	479
195-3709	34
	36
195-3710	34
	36
195-3758	124
195-3786	34
	36
195-6696	578
	582
195-6700	▶4
195-6702	4
	▶702
195-6703	702
195-6704	702
195-6705	4
	▶358
195-6706	358
	▶397
	▶398
195-6707	395
	396
	397
	398
195-6710	▶1
	4
195-6721	▶586
	654
195-6722	▶161
195-6723	1
	688
	▶694
	▶695
195-6724	▶600
	▶604
195-6725	▶644
	654
195-6726	▶606
	▶610
195-6727	644
195-6728	644
195-6750	418
	420
	428
195-6753	359
	360
	▶451
	▶452
195-6754	536
	537
	565
	566
	571
195-6760	3
	4
	▶251
195-6761	▶2
	3
195-6762	3
	▶359
195-6763	▶3
	4
195-6764	4
	▶360
195-6765	3
	4
	▶724
195-6766	▶360
195-6767	▶361
195-6768	408
	410
195-6769	408
	410
195-6773	300
195-6775	2
	3
	▶300
195-6791	▶654
195-6798	496
195-6799	2
	3
	▶496
195-6942	▶555
195-6943	▶555
195-8545	▶555
195-9243	6
	▶16
195-9244	14
	16
195-9245	16
195-9246	16
195-9248	16
195-9253	16
195-9254	16
195-9255	16
195-9700	260
	262
	453
	485
	486
196-0975	136
	138
196-0982	136
	138
196-1338	555
196-8870	▶541
196-8875	540
	541
197-0882	569
	570
197-0883	569
197-0884	570
197-0926	▶569
197-0927	▶570
197-3720	721
197-3723	721
197-3724	721
197-3726	721
197-3727	721
197-4899	1
	▶654
197-4900	▶4
197-6893	145
197-6894	620
197-6895	620
197-6896	621
197-6897	184
197-6898	▶620
	656
197-6899	▶621
	656
197-6900	1
	2
	3
	▶192
197-6901	192
197-7639	200
	202
197-8467	▶202
197-9460	206
	208
	210
	212
	214
	216
	218
	220
197-9462	206
	208
	210

▶ **PRIMARY REFERENCE**

PART NUMBER INDEX

Part	Page
	212
	214
	216
	218
	220
198-8555	56
	58
199-5271	▶310
	654
199-5272	▶311
	654
199-5741	130
199-6243	646
199-6619	624
	625
	628
	629
	630
199-7720	511
	▶526
199-7722	526
	533
199-7726	▶511
199-7727	▶511
199-8305	533
199-8306	▶372
	521
199-8308	533
199-8309	372
199-8310	372
199-8311	372
199-8316	533
199-8317	533
199-8319	521
	▶533
199-8320	▶521
	522
199-8321	▶521
199-8322	▶522

2

Part	Page
200-1008	312
	▶619
200-2371	260
	453
201-7803	▶78
	80
201-8964	128
201-8965	130
201-9884	46
	48
201-9885	46
	48
201-9886	46
	48
201-9887	46
	48
202-0602	184
202-0919	42
	44
202-0920	42
	44
202-0921	42
	44
202-0950	6
	▶42
202-2170	333
	334
	337
	338
	339
	340
	341
	343
	344
	▶636
202-3185	5
	▶44
202-9013	78
202-9014	▶62
	78
202-9700	659
203-4326	272
	273
	274
	275
	276
	▶637
203-4330	162
	166
	▶659
203-4331	▶162
	272
	275
203-4332	▶166
	272
	274
203-4740	57
203-4743	57
203-4827	63
204-1359	▶726
204-1361	726
204-1365	705
204-1373	▶728
	▶730
204-1374	728
	730
204-1395	▶317
	328
	329
	340
	341
	480
204-1396	196
	202
	▶318
	330
	331
	333
	334
	337
	338
	339
	340
	341
	343
	344
	▶636
204-1397	326
	328
	330
	333
	337
	340
	▶484
204-1398	▶319
	332
	337
	338
	342
	343
204-1399	322
	325
	▶485
204-1400	327
	329
	331
	332
	334
	338
	341
	342
	343
	344
	▶486
204-1410	388
204-1411	391
204-1435	536
	537
	540
204-1436	536
	537
	540
204-1452	252
	254
	256
204-1453	252
	254
	256
204-1454	252
	254
	256
204-1455	252
	254
	256
204-1456	252
	254
	256
204-1457	252
	254
	256
204-1458	252
	254
	256
204-1459	252
	254
	256
204-1470	460
	462
	468
	472
204-1471	460
	462
	468
	472
204-1472	460
	462
	468
	472
204-1476	460
	462
	468
	472
204-1480	460
	462
	▶490
204-1481	460
	462
	468
	472
204-1482	460
	462
	468
	472
204-1485	460
	462
	468
	472
204-1486	460
	462
204-1488	460
	462
	468
	472
204-1489	460
	462
	468
	472
204-1490	357
	358
	359
	360
	▶445
204-1491	445
	▶448
204-1492	448
204-1499	448
204-2097	53
	59
205-2325	62
	63
205-3727	62
205-5490	20
	▶21
205-5491	19
	▶22
205-7644	128
	130
205-9883	626
	647
	648
206-3795	223
	▶339
	▶340
	▶341
206-3802	582
206-3805	354
206-3817	604

▶ **PRIMARY REFERENCE**

PART NUMBER INDEX

Part	Page
	610
206-3818	690
	695
206-3819	▶591
206-7951	690
	695
206-7952	690
	695
206-9185	428
207-0530	684
	686
207-0531	684
	686
207-0532	684
	686
207-0538	684
	686
207-0539	684
	686
207-0541	684
	686
207-0546	684
	686
207-0548	684
	686
207-0549	684
	686
207-0550	684
207-0551	684
207-0552	684
207-0554	684
207-0561	684
207-0572	684
	686
207-0573	684
	686
207-0574	686
207-0575	686
207-0576	686
207-0577	686
207-0578	686
207-1611	171
207-1612	▶171
207-5959	130
207-6154	70
	78
207-9717	246
	248
	249
207-9718	246
	248
	249
207-9719	246
	248
	249
207-9729	445
	446
207-9733	298
	300
207-9734	298
	300
207-9735	661
	662
207-9737	376
	380
207-9740	357
	358
	359
	360
	▶446
207-9746	206
	208
	210
	212
	216
	220
207-9749	394
	396
207-9750	394
	396
207-9753	▶376
	536
207-9755	▶380
	537
207-9756	376
	380
207-9758	376
	380
207-9759	376
207-9760	376
207-9763	376
207-9764	376
	380
207-9765	376
	380
207-9766	380
207-9767	380
207-9780	705
207-9785	536
	537
	540
207-9795	380
207-9797	376
	380
208-0973	453
208-1237	216
	220
	▶453
208-4704	78
208-6176	286
	288
	290
	292
209-0640	376
	380
	▶456
209-6270	70
209-6429	▶63
	70
210-0837	10
	▶80
210-4632	246
	248
	249
210-4702	▶666
210-5544	465
210-8640	206
	208
	210
	212
	▶260
	▶262
211-0052	180
	184
211-9032	465
212-0061	262
	453
212-4158	▶536
212-4159	▶537
212-6520	▶190
	536
	537
212-6521	190
212-6522	190
212-6524	188
212-6570	362
	363
	364
	365
	▶465
212-6575	364
212-6576	364
212-6577	365
212-6578	365
212-6579	362
212-6580	362
212-6581	361
212-6582	361
212-6630	357
	360
	▶391
212-6650	392
	398
212-6651	392
	398
212-6670	▶224
212-6672	▶224
212-6678	536
	537
	540
212-6690	376
	380
212-6693	690
214-2465	596
214-3086	260
	262
215-3207	596
215-3271	465
	▶466
215-3272	466
215-3273	466
215-3274	466
215-3275	465
215-3488	6
	▶30
215-3901	706
	720
215-3902	709
215-3903	709
215-3904	710
215-3905	710
215-3907	711
215-3908	711
215-3909	712
215-3910	712
215-3911	731
215-3912	713
215-3913	713
215-3914	714
215-3916	715
215-3917	715
215-3918	716
	730
215-3919	716
215-3920	707
	722
215-3923	721
	731
215-3924	721
215-3928	662
215-3944	224
	▶342
215-3946	225
	▶343
215-3950	▶225
215-3957	536
	537
	▶571
215-3958	563
	▶565
215-3959	564
	▶566
215-3960	541
	▶563
215-3961	541
	▶564
215-3962	540
215-3963	540
215-3971	224
	225
215-3972	224
	225
215-3980	1
	2
	3
	▶122
215-3981	122
	▶662
215-3984	361
	363
215-3985	361
	363
215-3989	361
	363
215-3991	361
	363
215-3993	362
	363
215-3995	362
	363
215-3996	362
	363
215-3997	362
	363
215-4001	705
216-0610	260
	262
216-0658	146
216-6087	361
	362

▶ **PRIMARY REFERENCE**

PART NUMBER INDEX

Part	Page
216-6088	364
	365
216-6093	364
	365
216-6094	364
	365
216-6096	364
	365
216-6097	364
	365
216-6098	364
	365
216-6099	364
	365
216-6100	362
	363
216-6101	364
	365
216-6102	364
	365
216-6103	364
	365
216-6104	364
	365
216-6105	364
	365
216-6106	362
	363
216-6107	362
	363
216-6108	362
	363
216-6109	362
	363
216-6110	362
	363
216-6152	592
216-6153	▶188
	344
	362
	363
	364
	365
216-6156	468
	472
216-6157	468
	472
216-6158	468
	472
216-6159	468
	472
216-6160	468
	472
216-6161	468
	472
216-6163	434
	▶439
216-6169	452
	▶468
216-6170	450
	▶472
216-6176	225
	▶344
216-6190	▶225
216-6195	492
216-8756	▶501
216-8850	501
218-0666	616
218-4994	592
	▶594
218-8327	146
219-4328	649
	650
219-4339	638
	▶646
219-4341	646
219-4342	646
219-4343	646
219-4344	646
219-4349	646
219-4351	▶585
	638
219-4352	▶595
	638
219-4354	▶536
219-4355	▶537
219-4358	▶616
	630
	638
219-4359	616
219-4360	616
219-4361	616
219-4362	616
219-4363	616
219-4368	592
219-4369	592
219-4379	669
	676
	678
219-4380	668
	▶678
219-4388	678
219-4391	▶592
	638
219-7182	▶585
220-0163	595
220-5526	▶179
	638
220-5527	179
220-5528	179
220-5943	6
	▶116
220-6381	418
	420
220-8079	669
220-8082	▶674
220-8083	▶675
220-8084	638
220-8095	616
220-8096	616
220-8098	▶637
220-8104	▶638
220-8107	637
220-8110	▶638
220-8119	595
220-8131	595
220-8134	646
220-8143	▶630
	638
220-8144	630
	638
220-8155	595
220-8162	245
	▶249
220-8167	▶361
220-8170	▶362
222-5680	637
	638
222-5681	638
222-5693	246
	249
222-5709	▶731
222-5720	▶731
222-5721	▶630
222-5748	361
	363
	364
	365
223-4841	731
223-4864	731
223-8386	▶364
223-8387	▶365
225-0297	592

▶ **PRIMARY REFERENCE**

MEMORANDA



© 2002 Caterpillar
All Rights Reserved

Printed in U.S.A.