CATERPILLAR®

SEBP5923
June 2010

RUTHZIL TRATOR COMERCIAL DE PEÇAS LTDA  11 97083-6812 ROLANDO

# Parts Manual

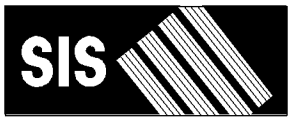


**See "General Information" for New Parts Manual Features.**

## 252B Skid Steer Loader

**TNK1-Up (Machine)**
**CYM1-Up (Engine)**

**Powered By C3.4 IND Engine**
**This Parts Manual is also available .pdf format on Compact Disc (CD - ROM) Caterpillar Form No. SERP5923.**

# Product and Dealer Information

Note: For product identification plate locations, see the section “Product Identification Information” in the Operation and Maintenance Manual.

**Delivery Date:** _____

## Product Information

Model: _____

Product Identification Number: _____

Engine Serial Number: _____

Transmission Serial Number: _____

Generator Serial Number: _____

Attachment Serial Numbers: _____

Attachment Information: _____

Customer Equipment Number: _____

Dealer Equipment Number: _____

## Dealer Information

Name: _____ Branch: _____

Address: _____

_____

_____

| | Dealer Contact | Phone Number | Hours |
|---|---|---|---|
| Sales: | _____ | _____ | _____ |
| Parts: | _____ | _____ | _____ |
| Service: | _____ | _____ | _____ |

# MEMORANDA

# TABLE OF CONTENTS


| Name | Page |
|---|---|
| **GENERAL INFORMATION** | A4 |
| **REPAIR ALTERNATIVES** | A7 |
| **SUPPLEMENTAL COOLANT ADDITIVES** | A8 |
| **MAINTENANCE PARTS** | A9 |
| **INDEX** | A11 |
| **MACHINE ARRANGEMENT** | 1 |
| CHASSIS AR | 1 |
| COMMON AR | 1 |
| CONTROL AR-MACHINE | 1 |
| **ENGINE ARRANGEMENT** | 4 |
| ENGINE AR-PRIMARY | 4 |
| INSTALLATION AR-ENGINE | 6 |
| **BASIC ENGINE** | 7 |
| ACCESSORY GP-ENGINE | 7 |
| BEARING GP-MAIN | 8 |
| CAMSHAFT GP | 9 |
| CONNECTING ROD GP | 10 |
| COVER GP-VALVE MECHANISM | 11 |
| CRANKSHAFT GP | 12 |
| CYLINDER BLOCK GP | 13 |
| CYLINDER HEAD GP | 15 |
| DRAIN GP-ENGINE OIL | 16 |
| FLYWHEEL GP | 17 |
| GEAR GP-FRONT | 18 |
| GUARD GP-BELT | 19 |
| HOUSING GP-FLYWHEEL | 20 |
| HOUSING GP-FRONT | 21 |
| LIFTING GP-ENGINE | 23 |
| MOUNTING GP-ENGINE | 24 |
| PAN GP-OIL | 25 |
| PISTON GP | 27 |
| PLUG GP-ENGINE | 28 |
| PULLEY GP-CRANKSHAFT | 30 |
| PULLEY GP-WATER PUMP | 31 |
| V-BELT GP | 32 |
| VALVE MECHANISM GP | 33 |
| **LUBRICATION SYSTEM** | 34 |
| FILTER GP-ENGINE OIL | 34 |
| LINES GP-ENGINE OIL | 35 |
| PUMP GP-ENGINE OIL | 36 |
| VALVE GP-ENGINE OIL RELIEF | 37 |
| **COOLING SYSTEM** | 38 |
| COOLER GP-ENGINE OIL | 38 |
| DRAIN GP-COOLANT | 39 |
| LINES GP-WATER | 40 |
| MOUNTING GP-RAD & OIL COOLER | 41 |
| PUMP GP-WATER | 43 |
| RADIATOR & HYD OIL COOLER GP | 45 |
| RADIATOR & OIL COOLER MTG GP | 46 |
| **AIR INLET AND EXHAUST SYSTEM** | 48 |
| AIR CLEANER GP | 48 |
| LINES GP-AIR | 50 |
| MANIFOLD GP-EXHAUST | 53 |
| MANIFOLD GP-INLET | 54 |
| MUFFLER & MOUNTING GP | 55 |
| TURBOCHARGER GP | 56 |
| **FUEL SYSTEM** | 58 |
| CONTROL GP-GOVERNOR | 58 |
| LINES GP-FUEL INJECTION | 59 |
| LINES GP-FUEL PRM & FILTER | 61 |
| PUMP GP-FUEL INJECTION | 63 |
| PUMP GP-FUEL PRM & PRIM FILTER | 65 |
| **ELECTRICAL AND STARTING SYSTEM** | 66 |
| ALTERNATOR GP-CHARGING | 66 |
| BATTERY & WIRING GP | 69 |
| ELECTRONICS GP-MACHINE | 71 |
| GLOW PLUG GP | 72 |
| HEATER GP-JACKET WATER | 73 |
| LAMP GP-FLOOD | 75 |
| LAMP GP-STOP & TAIL | 77 |
| LAMP GP-WARNING BEACON | 79 |
| LIGHTING GP-FLOOD | 80 |
| RELAY GP | 82 |
| STARTING MOTOR GP-ELECTRIC | 83 |
| SWITCH GP-PRESSURE | 86 |
| WIRING GP-CAB | 87 |
| WIRING GP-ENGINE | 90 |
| WIRING GP-MACHINE | 92 |
| WIRING GP-WORK TOOL | 96 |
| **POWER TRAIN** | 97 |
| AXLE GP | 97 |
| DRIVE GP-TANDEM | 99 |
| FILTER & LINES GP-HYDRAULIC | 100 |
| FILTER GP-OIL | 102 |
| LINES GP-HYDROSTATIC | 103 |
| MANIFOLD & LINES GP-CONTROL | 105 |
| MANIFOLD & SOLENOID GP-CONTROL | 109 |
| MANIFOLD GP-RETURN | 111 |
| MOTOR & MTG GP-HYDROSTATIC | 113 |
| MOTOR GP-PISTON | 115 |
| MOUNTING GP-PUMP | 119 |
| POWERTRAIN AR | 120 |
| PUMP & MTG GP-HYDROSTATIC | 121 |
| PUMP GP-PISTON | 123 |
| TIRE & RIM GP | 127 |
| VALVE GP-RELIEF | 134 |

# TABLE OF CONTENTS


| Name | Page |
|---|---|
| VALVE GP-SOLENOID | 135 |
| WHEEL & TIRE AR | 136 |
| **FRAME AND BODY** | 140 |
| BUMPER GP | 140 |
| COUNTERWEIGHT GP | 141 |
| ENCLOSURE GP-ENGINE | 142 |
| FRAME AS-LOWER | 144 |
| FRAME AS-UPPER | 145 |
| FRAME GP-LOADER | 147 |
| FRAME GP-MACHINE | 149 |
| GUIDE GP-LINES | 150 |
| LIFTING GP-MACHINE | 151 |
| LINK AS | 153 |
| **HYDRAULIC SYSTEM** | 154 |
| ACCUMULATOR & MTG GP-HYDRAULIC | 154 |
| ACCUMULATOR GP-HYDRAULIC | 155 |
| ADAPTER GP-OIL LINE | 157 |
| CYLINDER & MTG GP-LIFT ARM | 158 |
| CYLINDER GP-HYDRAULIC | 160 |
| CYLINDER GP-LIFT | 161 |
| CYLINDER GP-TILT | 162 |
| HYDRAULIC AR | 164 |
| LINES GP-COUPLER | 165 |
| LINES GP-HYDRAULIC FAN | 168 |
| LINES GP-HYDRAULIC OIL COOLER | 170 |
| LINES GP-LIFT CYLINDER | 172 |
| LINES GP-PILOT | 177 |
| LINES GP-PUMP | 181 |
| LINES GP-TILT CYLINDER | 183 |
| LINES GP-WORK TOOL | 187 |
| MANIFOLD & SOLENOID GP-CONTROL | 189 |
| MANIFOLD GP-CONTROL | 190 |
| MOTOR & MTG GP-HYDRAULIC FAN | 191 |
| MOTOR AR-HYDRAULIC FAN | 193 |
| MOTOR GP-GEAR | 194 |
| PUMP & MTG GP-WORK TOOL | 195 |
| PUMP GP-GEAR | 196 |
| TANK & MTG GP-HYDRAULIC | 197 |
| TANK GP-HYDRAULIC | 198 |
| VALVE & MTG GP-CONTROL | 199 |
| VALVE GP-CONTROL | 200 |
| VALVE GP-MANUAL | 202 |
| VALVE GP-PILOT | 203 |
| VALVE GP-SOLENOID | 206 |
| **IMPLEMENTS** | 207 |
| ARM AS-LIFT | 207 |
| **WORK TOOLS** | 208 |
| COUPLER AR-QUICK | 208 |
| COUPLER GP-QUICK | 209 |
| CYLINDER & LINK GP-COUPLER | 212 |
| HANDLE & PIN GP-COUPLER | 214 |
| LINK GP-COUPLER | 216 |
| LOCK GP-QUICK COUPLER | 217 |
| **OPERATOR STATION** | 219 |
| ACCUMULATOR GP-REFRIGERANT | 219 |
| AIR CONDITIONER AR | 221 |
| AIR CONDITIONER GP | 222 |
| ARM GP-WINDOW WIPER | 225 |
| ARMREST & MOUNTING GP | 226 |
| ARMREST GP | 227 |
| BOX GP-STORAGE | 229 |
| CAB AR | 231 |
| CAB AR-ENCLOSED ROPS | 231 |
| CAB AR-OPEN ROPS | 232 |
| CAB AS | 233 |
| CAB GP-ENCLOSED ROPS | 234 |
| COMPRESSOR & MTG GP-REFRIG | 235 |
| CONDENSER & MTG GP-REFRIGERANT | 236 |
| CONTROL GP-HANDLE | 237 |
| CONTROL GP-PILOT OPERATED HYD | 242 |
| COVER GP-CONSOLE | 247 |
| DOOR & MTG GP-CAB | 249 |
| DOOR GP-CAB | 254 |
| DUCT GP-CAB AIR | 260 |
| FRAME GP-WINDOW | 262 |
| GUARD GP-ROPS/FOPS | 264 |
| HANDHOLD GP | 265 |
| HANDLE GP-MODULAR | 266 |
| HEATER & MTG GP-CAB | 267 |
| HEATER AR-CAB | 268 |
| HEATER GP-CAB | 269 |
| HOUSING AS-SIDE | 271 |
| INSTALLATION GP-COVER & LINES | 272 |
| LEVER GP-GOVERNOR | 273 |
| LINER GP-CAB | 274 |
| LINER-CAB | 275 |
| LINES GP-AIR CONDITIONER | 276 |
| LINES GP-HEATER | 278 |
| MIRROR GP-REAR VIEW | 279 |
| MODULE GP-WARNING INDICATOR | 280 |
| MOTOR GP-WINDOW WIPER | 282 |
| MOUNTING GP-ROPS | 283 |
| PANEL GP-INSTRUMENT | 284 |
| PANEL GP-SIDE | 287 |
| PEDAL GP-GOVERNOR | 288 |
| PLATFORM GP-OPERATOR | 290 |
| SEAL GP-CAB | 291 |
| SEAT BELT GP | 293 |
| SEAT GP | 297 |
| SEAT GP-ADJUSTABLE | 299 |
| SPRING GP-GAS | 300 |

# TABLE OF CONTENTS


| Name | Page | Name | Page |
|---|---|---|---|
| WINDOW GP-CAB | 301 | | |
| **SERVICE EQUIPMENT AND SUPPLIES** | 307 | | |
| FILM GP | 307 | | |
| PLATE & FILM GP | 311 | | |
| **PART NUMBER INDEX** | B1 | | |

# GENERAL INFORMATION

## 1. MACHINE IDENTIFICATION

Caterpillar machines are identified by Product Identification Numbers (PIN). Some components included in a machine may be identified by Serial Numbers (S/N). Typical components that will be serialized include engines, transmissions, bulldozers, and rippers. The machine and engine are further identified by arrangement numbers and in some cases modification numbers. These numbers are shown on the product identification plate(s) and on the master plate in the operator's compartment.

Caterpillar dealers need all of these numbers to determine accurate parts identification.

SIS *New Feature*

Effective First Quarter 2001 the Caterpillar Product Identification Number (PIN) changed from 8 to 17 characters. In an effort to provide uniform equipment identification, Caterpillar and other construction equipment manufacturers are moving to comply with the latest version of the product identification numbering standard. Non-road machine PINs are defined by ISO 10261. The new PIN format will apply to all Caterpillar machines and generator sets. The PIN plates and frame marking will display the 17 character PIN. The new format will look like the following:

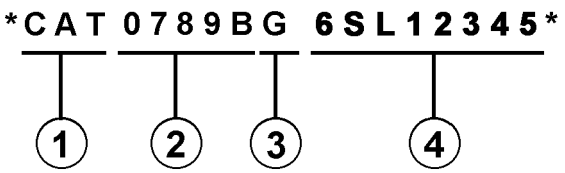


Where:

1. Caterpillar's World Manufacturing Code (characters 1-3)

2. Machine Descriptor (characters 4-8)

3. Check Character (character 9)

4. Machine Indicator Section (MIS) or Product Sequence Number (characters 10-17). These were previously referred to as the Serial Number.

Machines and generator sets produced before First Quarter 2001 will maintain their 8 character PIN format.

Components such as engines, transmissions, axles, etc. and work tools will continue to use an 8 character Serial Number (S/N).

## 2. ORDERING PARTS

**⚠ WARNING**

**When replacement parts are required for this product Caterpillar recommends using Caterpillar replacement parts or parts with equivalent specifications including, but not limited to, physical dimensions, type, strength and material.**

**Failure to heed this warning can lead to premature failures, product damage, personal injury or death.**

Quality Caterpillar replacement parts are available from Caterpillar dealers throughout the world. Their parts inventories are up to date and include all parts normally required to protect your investment in Caterpillar machines. Dealers may offer repair kits or remanufactured parts to allow selection of the most effective repair alternative for a particular situation. When ordering parts, your order should specify the quantity, part number, part name, and the serial number/product identification number of the machine for which the parts are needed.

## 3. PARTS MANUAL ORGANIZATION

Product information in this manual is presented as "information elements" that represent all of the components for the specific model. Engine Arrangement and Seat Group are examples of information elements. The information elements are organized alphabetically by part name and secondarily by part number within each major section of the manual.

## 4. TABLE OF CONTENTS

A table of contents (TOC) is found at the beginning of the manual. The TOC lists each section of the manual with a complete list of all information elements organized as they appear in the manual. Page numbers are provided for quick reference to detailed parts identification illustrations and serviceable consist lists.

## 5. MAINTENANCE PARTS INDEX

The Maintenance Parts Index, located near the beginning of the manual, references most frequently used maintenance part numbers, providing description, quantity, usage and page number. This information is organized alphabetically by part description.

### 6. INDEX

The index located near the front of the manual is an alphabetical listing of all information elements included in the manual. Page numbers are provided for quick reference to detailed parts identification illustrations and serviceable consist lists.

### 7. PART NUMBER INDEX

A numerical index listing all part numbers and the corresponding page number(s) appears at the back of the manual.

### 8. CAPTIONS

Captions located at the beginning of each information element identify the part number and part name along with additional descriptive information. PIN and S/N information found in each caption should be used to select correct information for a specific machine. Field replacement options, identification of optional attachment components, and where used ("part of") information is also provided.

The first line of a caption is shown in larger type font to indicate the beginning of an information element. Captions for additional pages that may be required to illustrate an information element will be shown in standard type font and will include the term *(contd.)* .

### 9. NON-SERVICED PARTS

In some instances it is necessary to display non-serviced parts that are a link to a lower level serviceable consist lists. These non-serviced part numbers are shown in *italic* type indicating that they are not available.

### 10. PARTS LIST REFERENCE NUMBERS

Numbers shown in the Ref No column correspond to numbers used in the associated graphic(s). An alphabetic suffix may be added to a reference number to identify lower level consist items. Numbers shown in the Graphic Ref column refer to the graphic number identifier displayed in the lower left corner of each illustration. The Graphic Ref number may be used in combination with the item Ref No to determine the correct part number. There may be intentional omission of a Ref No in a consist list as information is updated to reflect the latest serviceable part numbers.

### 11. INDENTED PART NAMES

When a part name is indented in a parts list, it is part of (included in) the group or assembly under which it is indented.

### 12. ILLUSTRATION REFERENCE LETTERS

When necessary, illustrations contain reference letters (A, B, C etc.) that are intended to track lines and harnesses from one point to another. They are also used to show where to reconnect illustrations that have been separated.

### 13. ABBREVIATIONS AND SYMBOLS

**O.D.** – Outside Diameter
**I.D.** – Inside Diameter
**A** – Not Part Of This Group
**B** – Use As Required
**C** – Change From Previous Type
**D** – Order By The Meter
**E** – Order By The Centimeter
**F** – Not Shown
**G** – Order By The Inch
**I** – Refer To Hydraulic Information System
**M** – Metric Part
**R** – Remfg Part May Be Available
**Y** – Separate Illustration
**Z** – Not Serviced Separately

SIS *New Feature*

### 14. DESCRIPTION OF TYPE CHANGES

Type - A type is defined as any configuration change that requires an additional Information Element for an Arrangement, Group, or Assembly. If serial number breaks for types are not available, a type # ( Type 1, Type 2, etc.) will be displayed in the caption. These "type" changes are identified with a "C" note (change from previous type) in the Parts List. Only the "types" that apply to this Parts Manual will be included. Additional types may exist causing "C" notes to appear on an Information Element when no other types are shown.

### 15.<END>

This symbol indicates the end of an information element.

**NOTE:**

**Continuing improvement and advancement of product design may cause changes to your machine which may not be included in this publication. Whenever a question arises regarding your Caterpillar product or this publication, please consult your Caterpillar dealer for the latest available information.**

# GENERAL INFORMATION

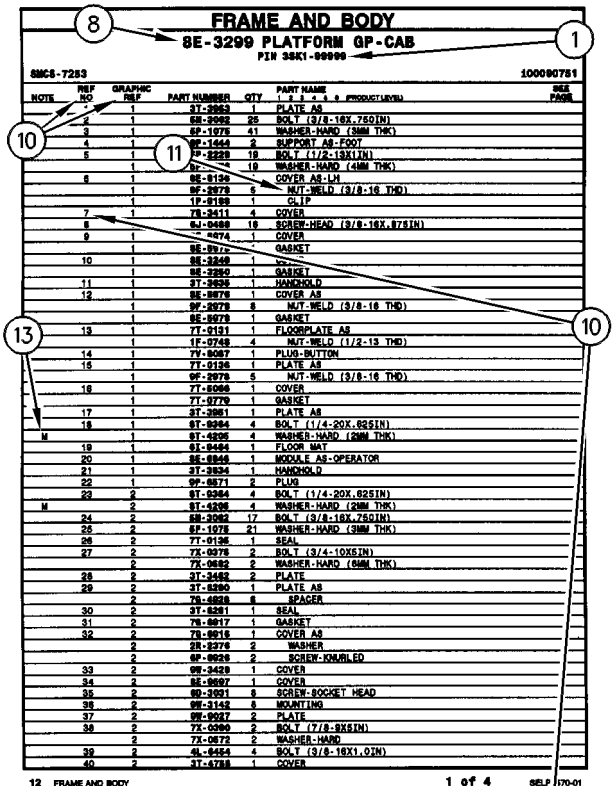


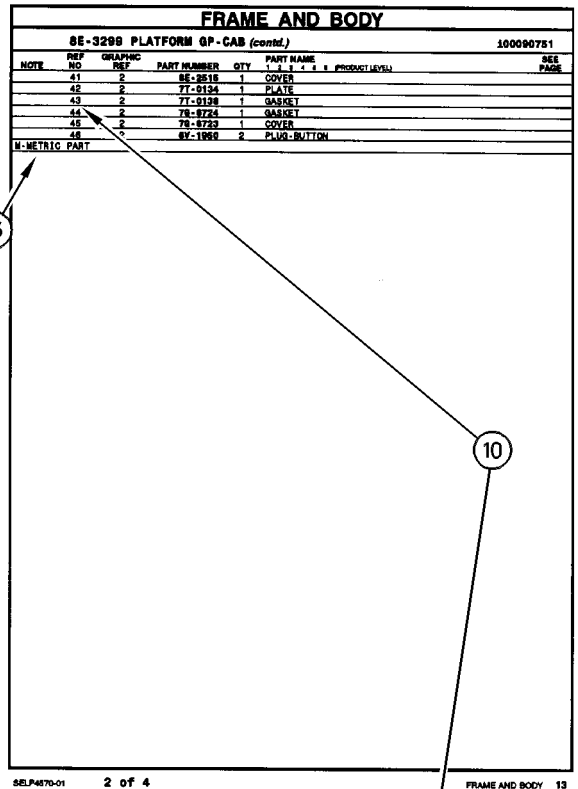


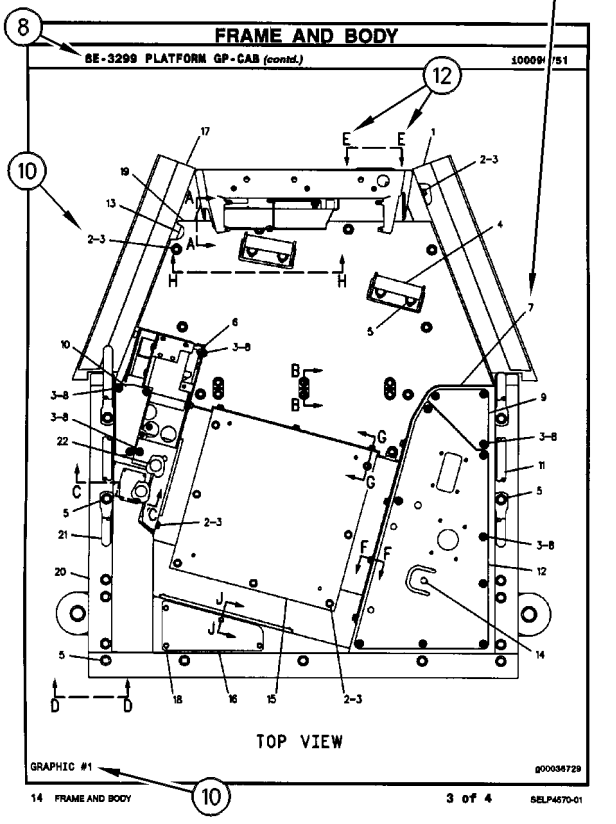


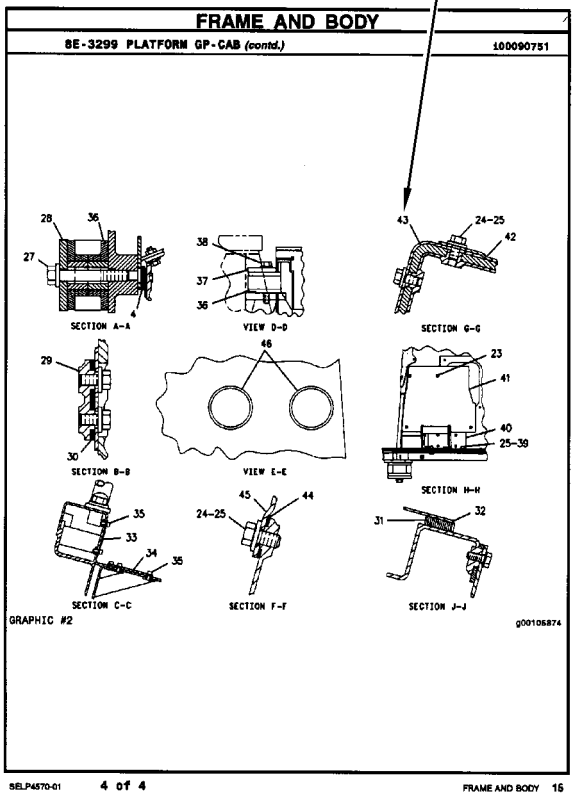

# REPAIR ALTERNATIVES

**REMANUFACTURED COMPONENTS**

As an option when making repairs consider Caterpillar Remanufactured Components. Components that are available through the Caterpillar Remanufactured Program are identified three ways in the parts book:

- with the letter R in the note field of the parts list
- with an R* at the beginning of the first line of the caption
- with an *R at the end of the first line of the caption

Typical components included in the Remanufacturing Program include:

ALTERNATORS
CONNECTING RODS
CRANKSHAFTS - UNDERSIZE
CRANKSHAFTS - UPGRADE TO NEW
CYLINDER HEADS
ELECTRONIC CONTROL MODULES (ECM)
ELECTRONIC SENSORS
FUEL INJECTORS
FUEL NOZZLES
FUEL PUMPS
GOVERNORS
OIL PUMPS
PISTONS
SHORT BLOCKS
STARTERS
TURBOCHARGERS - COMPLETE
TURBOCHARGER CARTRIDGES
WATER PUMPS

Caterpillar Remanufactured engines for many engine arrangements are also available.

# SUPPLEMENTAL COOLANT ADDITIVES

**CUSTOMER BENEFITS:**

Protects against cavitation, foam, erosion, corrosion, and scale buildup in cooling systems.

- Provides measured coolant conditioner.

**DESCRIPTION:**

Additives deplete from the coolant with normal operation. For this reason, Supplemental Coolant Additives (SCA) must be added to all heavy duty coolants at regular intervals. In addition, when not using a fully formulated, pre-charged antifreeze, like Caterpillar's DEAC, an initial charge of SCA must be added to the cooling system. The amount of SCA added to the system is dependent on the capacity of the system.

The SCA for initial fill is provided as a liquid. SCA's for maintenance intervals are available in liquid form and as a spin-on element. (No Spin-on available for 3600 Family of Engines)

**NOTE:**

The amount of SCA added at initial fill is not the same as the amount added at maintenance intervals.

The coolant additive elements can be used with any ethylene or propylene glycol type antifreeze which meets ASTM D4985 or ASTM D5345 Specifications.

**NOTE:**

For use with standard heavy duty coolant only, not for use with Extended Life Coolant.

**PARTS NEEDED:**

| Cooling System Capacity | | Liquid SCA at Initial Fill | Liquid SCA at Maintenance* | Spin-on SCA Maintenance Element* |
|---|---|---|---|---|
| Liters | Gallons | | | |
| 22-30 | (6-8) | 3P-2044 (1) | 6V-3542 (1) | 111-2370 (1) |
| 30-38 | (8-10) | 3P-2044 (1)<br>6V-3542 (1) | 111-2372 (1) | 111-2369 (1) |
| 38-49 | (10-13) | 3P-2044 (1)<br>8T-1589 (1) | 111-2372 (1) | 111-2369 (1) |
| 49-64 | (13-17) | 3P-2044 (2) | 8T-1589 (1) | 9N-3368 (1) |
| 64-83 | (17-22) | 3P-2044 (2)<br>8T-1589 (1) | 111-2372 (1)<br>6V-3542 (1) | 111-2371 (1) |
| 83-114 | (22-30) | 3P-2044 (3)<br>8T-1589 (1) | 3P-2044 (1) | 9N-3718 (1) |
| 114-163 | (30-43) | 3P-2044 (5) | 3P-2044 (1)<br>6V-3542 (1) | 111-2371 (2) |
| 163-242 | (43-64) | 3P-2044 (8) | 3P-2044 (2) | 9N-3718 (2) |

** Normal maintenance period is 250 hrs. See your Operation and Maintenance Manual for complete coolant maintenance instructions.*

( ) Indicates quantity required.

# MAINTENANCE PARTS

| DESCRIPTION | PART NUMBER | QTY | WHERE USED | PAGE |
|---|---|---|---|---|
| **AIR INLET AND EXHAUST SYSTEM** | | | | |
| FILTER ELEMENT AS-AIR (PRIMARY) | 110-6326 | 1 | AIR CLEANER GP | 49 |
| FILTER ELEMENT AS-AIR (SECONDARY) | 110-6331 | 1 | AIR CLEANER GP | 49 |
| **BASIC ENGINE** | | | | |
| CAP-OIL FILLER (ENGINE) | 310-8798 | 1 | COVER GP-VALVE MECHANISM | 11 |
| GASKET (VALVE MECHANISM) | 233-5483 | 1 | COVER GP-VALVE MECHANISM | 11 |
| PLUG (DRAIN, ENGINE OIL) | 135-8432 | 1 | PAN GP-OIL | 25 |
| V-BELT (WATER PUMP) | 352-4169 | 1 | V-BELT GP | 32 |
| **COOLING SYSTEM** | | | | |
| CAP AS-RADIATOR | 036-1865 | 1 | RADIATOR & HYD OIL COOLER GP | 45 |
| CAP-VENTED (COOLANT RECOVERY) | 169-6715 | 1 | RADIATOR & OIL COOLER MTG GP | 46 |
| GASKET (WATER TEMPERATURE REGULATOR) | 235-4959 | 1 | LINES GP-WATER | 40 |
| REGULATOR AS-WATER TEMPERATURE (THERMOSTAT) | 235-4960 | 1 | LINES GP-WATER | 40 |
| **ELECTRICAL AND STARTING SYSTEM** | | | | |
| BATTERY (12-VOLT, MAINTENANCE FREE) | 230-6368 | 1 | BATTERY & WIRING GP | 69 |
| BELT-DRIVE (WARNING BEACON) | 9X-8139 | 1 | LAMP GP-WARNING BEACON | 79 |
| FUSE (10-AMPERE) | 113-8490 | 7 | WIRING GP-CAB | 87 |
| FUSE (100-AMPERE) | 235-1845 | 1 | WIRING GP-MACHINE | 92 |
| FUSE (15-AMPERE) | 113-8491 | 10 | WIRING GP-CAB | 87 |
| FUSE (20-AMPERE) | 113-8492 | 2 | WIRING GP-CAB | 87 |
| | 267-2680 | 1 | RELAY GP | 82 |
| | | 2 | WIRING GP-CAB | 87 |
| FUSE (30-AMPERE) | 124-3548 | 1 | WIRING GP-CAB | 87 |
| FUSE (60-AMPERE) | 267-2701 | 1 | RELAY GP | 82 |
| FUSE AS (MAIN POWER) | 258-4136 | 1 | WIRING GP-CAB | 87 |
| GLOW PLUG | 107-3659 | 4 | GLOW PLUG GP | 72 |
| LAMP (12-VOLT, 5-WATT) | 084-4348 | 1 | LAMP GP-STOP & TAIL | 77 |
| LAMP (12-VOLT, 55-WATT) (FLOODLIGHT) | 9W-0607 | 1 | LAMP GP-FLOOD | 75 |
| | | 1 | LAMP GP-FLOOD | 76 |
| LAMP (12-VOLT, 55-WATT) (WARNING BEACON) | 9X-8118 | 1 | LAMP GP-WARNING BEACON | 79 |
| **FRAME AND BODY** | | | | |
| BREATHER (TANDEM HOUSING) | 9G-5127 | 2 | FRAME GP-LOADER | 147 |
| PLUG-MAGNETIC (FRAME) | 3S-9182 | 5 | FRAME GP-LOADER | 147 |
| **FUEL SYSTEM** | | | | |
| CAP-FUEL (WATER SEPARATOR) | 304-3885 | 1 | LINES GP-FUEL PRM & FILTER | 61 |
| FILTER AS-WATER SEP & FUEL | 233-9856 | 1 | PUMP GP-FUEL PRM & PRIM FILTER | 65 |
| **HYDRAULIC SYSTEM** | | | | |
| BREATHER (INLINE) (HYDRAULIC OIL) | 207-9729 | 1 | TANK & MTG GP-HYDRAULIC | 197 |
| CAP AS-FILLER (HYDRAULIC TANK) | 142-8937 | 1 | TANK GP-HYDRAULIC | 198 |
| SCREEN (HYDRAULIC) | 195-6768 | 1 | LINES GP-PILOT | 179 |
| SCREEN-SUCTION (HYDRAULIC TANK) | 348-4609 | 1 | TANK GP-HYDRAULIC | 198 |

# MAINTENANCE PARTS

| DESCRIPTION | PART NUMBER | QTY | WHERE USED | PAGE |
|---|---|---|---|---|
| **LUBRICATION SYSTEM** | | | | |
| FILTER AS-ENGINE OIL | 267-2528 | 1 | FILTER GP-ENGINE OIL | 34 |
| **OPERATOR STATION** | | | | |
| BLADE-WIPER (558-MM) (CAB DOOR) | 320-1390 | 1 | DOOR GP-CAB | 257 |
| BLADE-WIPER (558-MM) (FRONT, REAR) | 320-1390 | 1 | DOOR GP-CAB | 255 |
| FILTER ELEMENT-CAB AIR | 231-8132 | 1 | AIR CONDITIONER GP | 223 |
| | | 1 | HEATER GP-CAB | 269 |
| | 303-6658 | 1 | AIR CONDITIONER GP | 223 |
| | | 1 | HEATER GP-CAB | 269 |
| LAMP (12-VOLT) (DOME) | 210-8754 | 1 | PANEL GP-INSTRUMENT | 284 |
| LAMP (12-VOLT) (FUEL LEVEL INDICATOR) | 7X-9065 | 1 | PANEL GP-INSTRUMENT | 285 |
| V-BELT (COMPRESSOR) | 258-3539 | 1 | COMPRESSOR & MTG GP-REFRIG | 235 |
| **POWER TRAIN** | | | | |
| FILTER-OIL (ADVANCED EFFICIENCY) (HYDRAULIC) | 1G-8878 | 1 | FILTER GP-OIL | 102 |

# INDEX


| Name | Page |
|---|---|
| **A** | |
| ACCESSORY GP-ENGINE | 7 |
| ACCUMULATOR & MTG GP-HYDRAULIC | 154 |
| ACCUMULATOR GP-HYDRAULIC–CHARGED | 155 |
| ACCUMULATOR GP-HYDRAULIC–UNCHARGED | 156 |
| ACCUMULATOR GP-REFRIGERANT–CHARGED | 220 |
| ACCUMULATOR GP-REFRIGERANT–UNCHARGED | 219 |
| ADAPTER GP-OIL LINE | 157 |
| AIR CLEANER GP | 48<br>49 |
| AIR CONDITIONER AR | 221 |
| AIR CONDITIONER GP | 222<br>223 |
| ALTERNATOR GP-CHARGING | 66<br>68 |
| ARM AS-LIFT | 207 |
| ARM GP-WINDOW WIPER | 225 |
| ARMREST & MOUNTING GP | 226 |
| ARMREST GP | 227 |
| AXLE GP | 97<br>98 |
| **B** | |
| BATTERY & WIRING GP | 69 |
| BATTERY (12-VOLT, MAINTENANCE FREE) | 69 |
| BEARING GP-MAIN | 8 |
| BELT-DRIVE (WARNING BEACON) | 79 |
| BLADE-WIPER (558-MM) (CAB DOOR) | 257 |
| BLADE-WIPER (558-MM) (FRONT, REAR) | 255 |
| BOLT (M6X1X14-MM) | 147 |
| BOX GP-STORAGE | 229 |
| BOX GP-STORAGE–LITERATURE | 230 |
| BREATHER (INLINE) (HYDRAULIC OIL) | 197 |
| BREATHER (TANDEM HOUSING) | 147 |
| BUMPER GP–REAR | 140 |
| **C** | |
| CAB AR | 231 |
| CAB AR-ENCLOSED ROPS | 231 |
| CAB AR-ENCLOSED ROPS–MECH SUSP SEAT & A/C | 231 |
| CAB AR-OPEN ROPS | 232 |
| CAB AR-OPEN ROPS–MECH SUSP SEAT | 232 |
| CAB AS | 233 |
| CAB GP-ENCLOSED ROPS | 234 |
| CAMSHAFT GP | 9 |
| CAP AS-FILLER (HYDRAULIC TANK) | 198 |
| CAP AS-RADIATOR | 45 |
| CAP-FUEL (WATER SEPARATOR) | 61 |
| CAP-OIL FILLER (ENGINE) | 11 |
| CAP-VENTED (COOLANT RECOVERY) | 46 |
| CHASSIS AR | 1 |
| COMMON AR | 1 |
| COMPRESSOR & MTG GP-REFRIG | 235 |
| COMPRESSOR GP-REFRIGERANT (AIR CONDITIONER) | 235 |
| CONDENSER & MTG GP-REFRIGERANT | 236 |
| CONNECTING ROD GP | 10 |
| CONTROL AR-MACHINE–AUX PROPORTIONAL FLOW, 1-SPEED | 2 |
| CONTROL AR-MACHINE–AUX PROPORTIONAL FLOW, 2-SPEED | 2<br>3 |
| CONTROL AR-MACHINE–ON, OFF AUXILIARY CONTROL, 1-SPEED | 1 |
| CONTROL GP-GOVERNOR | 58 |
| CONTROL GP-HANDLE | 241 |
| CONTROL GP-HANDLE–DIRECTION, SPEED | 237 |
| CONTROL GP-HANDLE–LH | 239<br>240 |
| CONTROL GP-HANDLE–RH | 241 |
| CONTROL GP-HANDLE–WORK TOOL | 238 |
| CONTROL GP-PILOT OPERATED HYD | 245<br>246 |
| CONTROL GP-PILOT OPERATED HYD–AUXILIARY | 243 |
| CONTROL GP-PILOT OPERATED HYD–HYDROSTATIC | 244 |
| CONTROL GP-PILOT OPERATED HYD–WORK TOOL | 242 |
| CONTROL GP-UNPROGRAMMED (MACHINE) | 71 |
| COOLER GP-ENGINE OIL | 38 |
| COUNTERWEIGHT GP | 141 |
| COUPLER AR-QUICK–HYDRAULIC | 208 |
| COUPLER AR-QUICK–MANUAL | 208 |
| COUPLER GP-QUICK | 209<br>211 |
| COVER GP-ACCESS | 223<br>269 |
| COVER GP-CONSOLE–WITH AIR CONDITIONER, HEATER | 247 |
| COVER GP-CONSOLE–WITHOUT AIR CONDITIONER, HEATER | 248 |
| COVER GP-VALVE MECHANISM | 11 |
| CRANKSHAFT GP | 12 |
| CYLINDER & LINK GP-COUPLER–LH | 212 |
| CYLINDER & LINK GP-COUPLER–RH | 213 |
| CYLINDER & MTG GP-LIFT ARM | 158 |
| CYLINDER BLOCK GP | 13 |
| CYLINDER GP-HYDRAULIC–COUPLER | 160 |
| CYLINDER GP-LIFT | 161 |

# INDEX


| Name | Page |
|---|---|
| CYLINDER GP-TILT–LH | 163 |
| CYLINDER GP-TILT–RH | 162 |
| CYLINDER HEAD GP | 15 |
| **D** | |
| DOOR & MTG GP-CAB–GLASS | 252 |
| DOOR & MTG GP-CAB–POLYCARBONATE | 249 |
| DOOR GP-CAB–GLASS | 254, 255 |
| DOOR GP-CAB–POLYCARBONATE | 257, 259 |
| DRAIN GP-COOLANT | 39 |
| DRAIN GP-ENGINE OIL | 16 |
| DRIVE GP-TANDEM | 99 |
| DUCT GP-CAB AIR | 260 |
| **E** | |
| ELECTRONICS GP-MACHINE | 71 |
| ENCLOSURE GP-ENGINE | 142 |
| ENGINE AR-PRIMARY | 4, 5 |
| **F** | |
| FAN GP-BLOWER | 45 |
| FASTENER GP-FRONT COVER | 21 |
| FILM (FOPS) | 264 |
| FILM (POWER DISTRIBUTION) | 87 |
| FILM (TEMPERATURE CONTROL) | 223, 269 |
| FILM GP | 309 |
| FILM GP–TWO SPEED | 310 |
| FILM GP–UN | 307 |
| FILM-IDENTIFICATION (FUSE, RELAY PANEL) | 88 |
| FILM-IDENTIFICATION (POWER RECEPTACLE, 12-VOLT) | 312, 315 |
| FILM-INFORMATION (LIFT EYE LOCATION) | 152 |
| FILM-INFORMATION (READ OMM) | 312 |
| FILM-INSTRUCTION (DASH) | 285 |
| FILM-INSTRUCTION (INSTRUMENT PANEL) | 285 |
| FILM-INSTRUCTION (KEY SWITCH) | 285 |
| FILM-INSTRUCTION (MACHINE CONTROL, READ OMM) | 244, 245, 246 |
| FILM-INSTRUCTION (MACHINE CONTROLS) | 242, 243 |
| FILM-INSTRUCTION (NO STEP) | 165 |
| FILM-INSTRUCTION (PULL RING, ALTERNATE EXIT) | 259 |
| FILM-WARNING (CRUSH HAZARD, STAY BACK) | 312, 315 |
| FILM-WARNING (NO WELD, NO DRILL, READ OMM) | 312 |
| FILTER & LINES GP-HYDRAULIC | 100 |
| FILTER AS-ENGINE OIL | 34 |
| FILTER AS-WATER SEP & FUEL | 65 |
| FILTER ELEMENT AS-AIR (PRIMARY) | 49 |
| FILTER ELEMENT AS-AIR (SECONDARY) | 49 |
| FILTER ELEMENT-CAB AIR | 223, 269 |
| FILTER GP-ENGINE OIL | 34 |
| FILTER GP-OIL–HYDRAULIC | 102 |
| FILTER-OIL (ADVANCED EFFICIENCY) (HYDRAULIC) | 102 |
| FITTING GP | 181 |
| FITTING GP-HYDRAULIC | 181 |
| FLOOR MAT | 1 |
| FLYWHEEL GP | 17 |
| FRAME AS-LOWER | 144 |
| FRAME AS-UPPER | 145 |
| FRAME GP-LOADER | 147 |
| FRAME GP-MACHINE | 149 |
| FRAME GP-WINDOW–LH | 263 |
| FRAME GP-WINDOW–RH | 262 |
| FUSE (10-AMPERE) | 87 |
| FUSE (100-AMPERE) | 92 |
| FUSE (15-AMPERE) | 87 |
| FUSE (20-AMPERE) | 82, 87 |
| FUSE (30-AMPERE) | 87 |
| FUSE (60-AMPERE) | 82 |
| FUSE AS (MAIN POWER) | 87 |
| **G** | |
| GASKET (VALVE MECHANISM) | 11 |
| GASKET (WATER TEMPERATURE REGULATOR) | 40 |
| GAUGE GP-FUEL LEVEL | 285 |
| GAUGE GP-OIL LEVEL (DIPSTICK) (ENGINE) | 25 |
| GAUGE-SIGHT (HYDRAULIC TANK) | 198 |
| GAUGE-SIGHT (RADIATOR) | 45 |
| GEAR GP-FRONT | 18 |
| GLOW PLUG | 72 |
| GLOW PLUG GP | 72 |
| GUARD GP-BELT | 19 |
| GUARD GP-ROPS/FOPS | 264 |
| GUIDE GP-LINES | 150 |
| **H** | |
| HANDHOLD GP | 265 |
| HANDLE & PIN GP-COUPLER–LH | 215 |

# INDEX


| Name | Page |
|---|---|
| HANDLE & PIN GP-COUPLER–RH | 214 |
| HANDLE GP-MODULAR | 239 |
| | 240 |
| | 266 |
| HARNESS AS-CAB (CAB REAR) | 87 |
| HARNESS AS-ENGINE | 90 |
| HARNESS AS-HEATER & AIR COND | 223 |
| | 269 |
| | 276 |
| HARNESS AS-LIGHTING | 92 |
| HARNESS AS-PANEL | 284 |
| HARNESS AS-PLATFORM | 92 |
| HARNESS AS-SOLENOID (DEMAND FAN) | 95 |
| HARNESS AS-SWITCH | 100 |
| HARNESS AS-WINDOW WIPER | 249 |
| | 252 |
| | 255 |
| | 257 |
| HARNESS AS-WORK TOOL (LIFT ARM) | 96 |
| HEATER & MTG GP-CAB | 267 |
| HEATER AR-CAB | 268 |
| HEATER GP-CAB | 269 |
| HEATER GP-JACKET WATER | 73 |
| | 74 |
| HEATER GP-JACKET WATER (120-VOLT, 530-WATT) | 73 |
| HEATER GP-JACKET WATER (240-VOLT, 530-WATT) | 74 |
| HORN AS (24-VOLT, LOW TONE) | 245 |
| | 246 |
| HOUSING AS-SIDE–AIR CONDITIONER, HEATER | 271 |
| HOUSING GP-FLYWHEEL | 20 |
| HOUSING GP-FRONT | 21 |
| HYDRAULIC AR | 164 |
| HYDRAULIC AR–WITH WORK TOOL POSITIONER | 164 |
| HYDRAULIC AR–WITHOUT WORK TOOL POSITIONER | 164 |


## I


| Name | Page |
|---|---|
| INDICATOR (AIR CLEANER) | 49 |
| INSTALLATION AR-ENGINE | 6 |
| INSTALLATION GP-COVER & LINES–WITHOUT A/C, HEATER | 272 |


## L


| Name | Page |
|---|---|
| LAMP (12-VOLT) (DOME) | 284 |
| LAMP (12-VOLT) (FUEL LEVEL INDICATOR) | 285 |
| LAMP (12-VOLT, 5-WATT) | 77 |
| LAMP (12-VOLT, 55-WATT) (FLOODLIGHT) | 75 |
| | 76 |
| LAMP (12-VOLT, 55-WATT) (WARNING BEACON) | 79 |
| LAMP GP-DOME (12-VOLT) | 284 |
| LAMP GP-FLOOD | 75 |
| | 76 |
| LAMP GP-STOP & TAIL | 77 |
| LAMP GP-STOP & TAIL–REAR | 78 |
| LAMP GP-WARNING BEACON–AMBER | 79 |
| LEVER GP-GOVERNOR | 273 |
| LEVER GP-HAND CONTROL (GOVERNOR) | 273 |
| LIFTING GP-ENGINE | 23 |
| LIFTING GP-MACHINE–4-POINT | 151 |
| LIFTING GP-MACHINE–SINGLE POINT | 152 |
| LIGHTING GP-FLOOD–FRONT | 81 |
| LIGHTING GP-FLOOD–REAR | 80 |
| LINER GP-CAB | 274 |
| LINER-CAB–GRAY | 275 |
| LINES GP-AIR | 50 |
| | 51 |
| | 52 |
| LINES GP-AIR CONDITIONER | 276 |
| LINES GP-COUPLER–WITH MANUAL LOWERING CONTROL | 165 |
| LINES GP-ENGINE OIL | 35 |
| LINES GP-FUEL INJECTION | 59 |
| LINES GP-FUEL PRM & FILTER | 61 |
| LINES GP-HEATER | 278 |
| LINES GP-HYDRAULIC FAN | 168 |
| LINES GP-HYDRAULIC OIL COOLER | 170 |
| LINES GP-HYDROSTATIC | 103 |
| LINES GP-LIFT CYLINDER | 175 |
| LINES GP-LIFT CYLINDER–WITH WORK TOOL POSITIONER | 172 |
| LINES GP-PILOT–DIRECTION, SPEED | 177 |
| LINES GP-PILOT–WORK TOOL | 179 |
| LINES GP-PUMP–WORK TOOL | 181 |
| LINES GP-TILT CYLINDER | 185 |
| LINES GP-TILT CYLINDER–WITH WORK TOOL POSITIONER | 183 |
| LINES GP-WATER | 40 |
| LINES GP-WORK TOOL | 187 |
| LINK AS | 153 |
| LINK GP-COUPLER | 216 |
| LITERATURE GP | 1 |
| LOCK GP (ENGINE) | 142 |
| LOCK GP-CYLINDER | 229 |
| LOCK GP-QUICK COUPLER–LH | 218 |
| LOCK GP-QUICK COUPLER–RH | 217 |


## M


| Name | Page |
|---|---|
| MANIFOLD & LINES GP-CONTROL–PARKING BRAKE | 105 |
| MANIFOLD & LINES GP-CONTROL–PARKING BRAKE, 2-SPEED | 107 |

# INDEX


| Name | Page |
|---|---|
| MANIFOLD & SOLENOID GP-CONTROL | 189 |
| MANIFOLD & SOLENOID GP-CONTROL–PARKING BRAKE | 109 |
| MANIFOLD & SOLENOID GP-CONTROL–PARKING BRAKE, 2-SPEED | 110 |
| MANIFOLD GP-CONTROL–QUICK COUPLER | 190 |
| MANIFOLD GP-EXHAUST | 53 |
| MANIFOLD GP-INLET | 54 |
| MANIFOLD GP-RETURN | 111 |
| MIRROR GP-REAR VIEW | 279 |
| MODULE GP-WARNING INDICATOR | 280 281 |
| MOTOR & MTG GP-HYDRAULIC FAN | 191 192 |
| MOTOR & MTG GP-HYDROSTATIC | 113 114 |
| MOTOR AR-HYDRAULIC FAN–NACD | 193 |
| MOTOR AR-HYDRAULIC FAN–STANDARD | 193 |
| MOTOR GP-GEAR (FAN, DEMAND) | 191 |
| MOTOR GP-GEAR–HYDRAULIC FAN | 194 |
| MOTOR GP-PISTON–HYDROSTATIC | 115 117 |
| MOTOR GP-WINDOW WIPER | 282 |
| MOUNTING GP-ENGINE | 24 |
| MOUNTING GP-PUMP | 119 |
| MOUNTING GP-RAD & OIL COOLER | 41 |
| MOUNTING GP-ROPS | 283 |
| MUFFLER & MOUNTING GP | 55 |


## O


| Name | Page |
|---|---|
| ORIFICE AS-AIR CONDITIONER | 223 |


## P


| Name | Page |
|---|---|
| PAN GP-OIL | 25 |
| PANEL GP-INSTRUMENT | 284 |
| PANEL GP-SIDE | 287 |
| PEDAL GP-GOVERNOR | 288 289 |
| PISTON GP | 27 |
| PLATE & FILM GP | 311 312 |
| PLATE & FILM GP–INTERNATIONAL | 315 |
| PLATFORM GP-OPERATOR | 290 |
| PLUG (DRAIN, ENGINE OIL) | 25 |
| PLUG GP-ENGINE | 28 29 |
| PLUG-MAGNETIC (FRAME) | 147 |
| POWERTRAIN AR | 120 |
| PULLEY GP-CRANKSHAFT | 30 |
| PULLEY GP-WATER PUMP | 31 |
| PUMP & MTG GP-HYDROSTATIC | 121 122 |
| PUMP & MTG GP-WORK TOOL | 195 |
| PUMP GP-ENGINE OIL | 36 |
| PUMP GP-FUEL INJECTION | 63 |
| PUMP GP-FUEL PRM & PRIM FILTER–WATER SEPARATOR | 65 |
| PUMP GP-GEAR–WORK TOOL | 196 |
| PUMP GP-PISTON | 123 125 |
| PUMP GP-WATER | 43 44 |


## R


| Name | Page |
|---|---|
| RADIATOR & HYD OIL COOLER GP | 45 |
| RADIATOR & OIL COOLER MTG GP | 46 |
| RECOVERY GP-COOLANT | 46 |
| REGULATOR AS-ALTERNATOR | 66 |
| REGULATOR AS-WATER TEMPERATURE (THERMOSTAT) | 40 |
| RELAY AS (12-VOLT) (AIR CONDITIONER, HEATER) | 223 |
| RELAY AS (12-VOLT) (CAB) | 88 |
| RELAY AS (12-VOLT) (COLD START) | 90 |
| RELAY AS (12-VOLT) (HEATER) | 269 |
| RELAY AS (12-VOLT) (START) | 90 |
| RELAY AS (12-VOLT) (WORK TOOL) | 96 |
| RELAY GP–MAIN POWER | 82 |
| ROCKER ARM GP | 33 |
| ROTATING GP-PUMP (LH) | 123 125 |
| ROTATING GP-PUMP (RH) | 123 125 |


## S


| Name | Page |
|---|---|
| SCREEN (HYDRAULIC) | 179 |
| SCREEN-SUCTION (HYDRAULIC TANK) | 198 |
| SEAL GP-CAB | 291 |
| SEAT BELT GP | 293 294 295 296 |
| SEAT GP–STATIC | 298 |
| SEAT GP–SUSPENSION | 297 |
| SEAT GP-ADJUSTABLE | 299 |
| SENDER AS-FUEL LEVEL | 147 |
| SENSOR GP-TEMPERATURE (ENGINE COOLANT) | 90 |
| SENSOR GP-TEMPERATURE (HYDRAULIC OIL) | 198 |
| SERVICE GP-MACHINE | 71 |
| SOFTWARE GP-MACHINE | 71 |
| SOLENOID (COLD START ADVANCE) | 63 |
| SOLENOID (FUEL SHUTOFF) | 63 |
| SPRING AS-GAS | 227 |

# INDEX


| Name | Page |
|---|---|
| | 264 |
| SPRING AS-GAS (CAB DOOR) | 249 |
| | 252 |
| SPRING AS-GAS (CAB) | 152 |
| | 300 |
| SPRING AS-GAS (GRILL) | 41 |
| SPRING AS-GAS (LOCKING) | 249 |
| | 252 |
| SPRING AS-GAS (SUPPORT) | 41 |
| SPRING GP-GAS–CAB, DOOR | 300 |
| STARTING MOTOR GP-ELECTRIC | 83 |
| | 85 |
| SWITCH (SEAT) | 298 |
| SWITCH AS (INTERLOCK) | 227 |
| SWITCH AS (SEAT) | 299 |
| SWITCH AS (STARTING MOTOR)(12-VOLT) | 83 |
| SWITCH AS-LIMIT | 257 |
| SWITCH AS-LIMIT (ENGINE START, HYD LOCKOUT) | 255 |
| SWITCH AS-PRESSURE (HYDRAULIC OIL) | 102 |
| SWITCH AS-PRESSURE (REFRIGERANT) | 276 |
| SWITCH AS-ROCKER (AIR CONDITIONER) | 223 |
| SWITCH AS-ROCKER (ELECTRIC POWER, WORK TOOL) | 96 |
| SWITCH AS-ROCKER (FRONT WORK LIGHT) | 284 |
| SWITCH AS-ROCKER (INTERLOCK OVERRIDE) | 284 |
| SWITCH AS-ROCKER (PARKING BRAKE) | 284 |
| SWITCH AS-ROCKER (REAR WINDOW WASHER, WIPER) | 255 |
| | 257 |
| SWITCH AS-ROCKER (REAR WORK LAMPS) | 80 |
| SWITCH AS-ROCKER (WORK TOOL HYD PRESS RELEASE) | 284 |
| SWITCH AS-START (KEY) | 284 |
| SWITCH GP-PRESSURE | 86 |
| SWITCH GP-PRESSURE (BACKUP ALARM) | 92 |
| SWITCH GP-ROCKER (WORK TOOL POSITIONER) | 172 |
| SWITCH-OIL PRESS (ENGINE) | 86 |
| SWITCH-ROCKER (HEATER) | 223 |
| | 269 |


## T


| Name | Page |
|---|---|
| TANK & MTG GP-HYDRAULIC | 197 |
| TANK GP-HYDRAULIC | 198 |
| TIRE & RIM GP–HEAVY-DUTY, LH | 127 |
| TIRE & RIM GP–HEAVY-DUTY, RH | 127 |
| | 128 |
| TIRE & RIM GP–LH | 128 |
| | 129 |
| | 130 |
| | 131 |
| | 132 |
| | 133 |
| TIRE & RIM GP–RH | 128 |
| | 129 |
| | 130 |
| | 131 |
| | 132 |
| | 133 |
| TURBOCHARGER GP | 56 |


## V


| Name | Page |
|---|---|
| V-BELT (COMPRESSOR) | 235 |
| V-BELT (WATER PUMP) | 32 |
| V-BELT GP | 32 |
| VALVE & MTG GP-CONTROL | 199 |
| VALVE AS-RELIEF (REFRIGERANT COMPRESSOR) | 235 |
| VALVE GP-CONTROL | 200 |
| VALVE GP-ENGINE OIL RELIEF | 37 |
| VALVE GP-MANUAL | 202 |
| VALVE GP-MANUAL (COUPLER PIN, LIFT ARM LWR CONT) | 202 |
| VALVE GP-PILOT | 203 |
| | 205 |
| VALVE GP-RELIEF | 134 |
| VALVE GP-RELIEF (CHARGE) | 123 |
| | 125 |
| VALVE GP-RELIEF (CROSSOVER) | 123 |
| | 125 |
| VALVE GP-RELIEF (GEAR MOTOR) | 194 |
| VALVE GP-RELIEF (LIFT) | 200 |
| VALVE GP-RELIEF (TILT, AUXILIARY) | 200 |
| VALVE GP-SHUTTLE (DIRECTION, SPEED) | 205 |
| VALVE GP-SOLENOID (12-VOLT) (WORK TOOL) | 203 |
| | 205 |
| VALVE GP-SOLENOID (MODULATION, AUXILIARY CIRCUIT) | 200 |
| VALVE GP-SOLENOID (QUICK COUPLER) | 190 |
| VALVE GP-SOLENOID (REAR AXLE FAN UNLOADER) | 191 |
| VALVE GP-SOLENOID–12-VOLT | 206 |
| VALVE GP-SOLENOID–PARKING BRAKE | 135 |
| VALVE GP-SPEED SENSING (PISTON PUMP) | 123 |
| | 125 |
| VALVE MECHANISM GP | 33 |


## W


| Name | Page |
|---|---|
| WHEEL & TIRE AR | 138 |
| WHEEL & TIRE AR–HEAVY DUTY | 136 |
| | 137 |
| WHEEL & TIRE AR–LOW SIDE WALL | 137 |
| WHEEL & TIRE AR–SOLID | 136 |

# INDEX


| Name | Page | Name | Page |
|---|---|---|---|
| | 138 | | |
| | 139 | | |
| WINDOW GP-CAB | 301 | | |
| WINDOW GP-CAB–SIDE | 302 | | |
| WINDOW GP-CAB–UPPER, RH | 305 | | |
| WINDOW GP-CAB–UPPER,LH | 303 | | |
| WIRING GP-CAB | 87 | | |
| WIRING GP-ENGINE | 90 | | |
| WIRING GP-MACHINE | 92 | | |
| WIRING GP-MACHINE–DEMAND FAN | 95 | | |
| WIRING GP-WORK TOOL | 96 | | |

# MACHINE ARRANGEMENT

## *326-4786* CHASSIS AR

**S/N: TNK1-UP**

**PART OF 326-5422 COMMON AR**

**SMCS-7000** **i03906999**

| NOTE | PART NUMBER | QTY | PART NAME 1 2 3 4 5 6 (PRODUCT LEVEL) | SEE PAGE |
|---|---|---|---|---|
| Y | *261-6275* | 1 | AXLE GP | 98 |
| Y | *328-2278* | 1 | BATTERY & WIRING GP | 69 |
| Y | *218-5660* | 1 | BUMPER GP (REAR) | 140 |
| Y | *218-5602* | 1 | CONTROL GP-GOVERNOR | 58 |
| Y | *218-5899* | 1 | CYLINDER & MTG GP-LIFT ARM | 158 |
| Y | *326-5609* | 1 | ENCLOSURE GP-ENGINE | 142 |
| Y | *326-4793* | 1 | FRAME GP-LOADER | 147 |
| Y | *150-8621* | 1 | GUIDE GP-LINES | 150 |
| Y | *328-2344* | 1 | LAMP GP-STOP & TAIL (REAR) | 78 |
| Y | *218-6429* | 1 | PANEL GP-SIDE | 287 |
| Y | *326-5572* | 1 | PLATFORM GP-OPERATOR | 290 |
| Y | *328-2274* | 1 | WIRING GP-MACHINE | 92 |

Y-SEPARATE ILLUSTRATION

**<END>**

## *326-5422* COMMON AR

**S/N: TNK1-UP**

**SMCS-7000** **i03904673**

| NOTE | PART NUMBER | QTY | PART NAME 1 2 3 4 5 6 (PRODUCT LEVEL) | SEE PAGE |
|---|---|---|---|---|
| Y | *326-5400* | 1 | CAB AR | 231 |
| Y | *326-4786* | 1 | CHASSIS AR | 1 |
| Y | *356-1894* | 1 | FILM GP | 309 |
| Y | *326-5445* | 1 | HYDRAULIC AR | 164 |
| Y | *326-5361* | 1 | INSTALLATION AR-ENGINE | 6 |
| Y | *326-5248* | 1 | POWERTRAIN AR | 120 |
| | | | | |
| | *6V-1970* | 1 | LITERATURE GP | |
| | **5P-8500** | 2 | KEY | |
| | **5P-7958** | 1 | SLEEVE-CABLE SPLICE | |
| | | | | |
| | **229-8752** | 1 | FLOOR MAT | |

Y-SEPARATE ILLUSTRATION

**<END>**

## *326-5276* CONTROL AR-MACHINE–ON, OFF AUXILIARY CONTROL, 1-SPEED

**S/N: TNK1-UP**

**AN ATTACHMENT**

**SMCS-4062, 4284, 4351, 5059, 5705** **i03901800**

| NOTE | PART NUMBER | QTY | PART NAME 1 2 3 4 5 6 (PRODUCT LEVEL) | SEE PAGE |
|---|---|---|---|---|
| Y | *326-5264* | 1 | CONTROL GP-PILOT OPERATED HYD (WORK TOOL) | 242 |
| Y | *343-5543* | 1 | CONTROL GP-PILOT OPERATED HYD (HYDROSTATIC) | 246 |
| Y | *218-5635* | 1 | MANIFOLD & LINES GP-CONTROL (PARKING BRAKE) | 105 |
| Y | *191-9780* | 1 | MOTOR & MTG GP-HYDROSTATIC | 114 |
| Y | *218-0928* | 1 | PUMP & MTG GP-HYDROSTATIC | 121 |

Y-SEPARATE ILLUSTRATION

**<END>**

# MACHINE ARRANGEMENT

## *326-5277* CONTROL AR-MACHINE–
### AUX PROPORTIONAL FLOW, 1-SPEED
### S/N: TNK1-UP
### AN ATTACHMENT

**SMCS-4062, 4284, 4351, 5059, 5705** **i03901804**

| NOTE | PART NUMBER | QTY | PART NAME 1 2 3 4 5 6 (PRODUCT LEVEL) | SEE PAGE |
|---|---|---|---|---|
| Y | *326-5265* | 1 | CONTROL GP-PILOT OPERATED HYD (AUXILIARY) | 243 |
| Y | *343-5542* | 1 | CONTROL GP-PILOT OPERATED HYD (HYDROSTATIC) | 245 |
| Y | *218-5635* | 1 | MANIFOLD & LINES GP-CONTROL (PARKING BRAKE) | 105 |
| Y | *191-9780* | 1 | MOTOR & MTG GP-HYDROSTATIC | 114 |
| Y | *218-0928* | 1 | PUMP & MTG GP-HYDROSTATIC | 121 |
| Y-SEPARATE ILLUSTRATION | | | | |

**<END>**

## *326-5278* CONTROL AR-MACHINE–
### AUX PROPORTIONAL FLOW, 2-SPEED
### S/N: TNK1-UP
### AN ATTACHMENT

**SMCS-4062, 4284, 4351, 5059, 5705** **i03901805**

| NOTE | PART NUMBER | QTY | PART NAME 1 2 3 4 5 6 (PRODUCT LEVEL) | SEE PAGE |
|---|---|---|---|---|
| Y | *326-5265* | 1 | CONTROL GP-PILOT OPERATED HYD (AUXILIARY) | 243 |
| Y | *326-5267* | 1 | CONTROL GP-PILOT OPERATED HYD (HYDROSTATIC) | 244 |
| Y | *356-1897* | 1 | FILM GP | 310 |
| Y | *218-5636* | 1 | MANIFOLD & LINES GP-CONTROL (PARKING BRAKE, 2-SPEED) | 107 |
| Y | *190-7457* | 1 | MOTOR & MTG GP-HYDROSTATIC (2-SPEED) | 113 |
| Y | *218-5928* | 1 | PUMP & MTG GP-HYDROSTATIC | 122 |
| Y-SEPARATE ILLUSTRATION | | | | |

**<END>**

## *326-5427* CONTROL AR-MACHINE–
### AUX PROPORTIONAL FLOW, 1-SPEED
### S/N: TNK1-UP
### AN ATTACHMENT

**SMCS-4062, 4284, 4351, 5059, 5705** **i03902897**

| NOTE | PART NUMBER | QTY | PART NAME 1 2 3 4 5 6 (PRODUCT LEVEL) | SEE PAGE |
|---|---|---|---|---|
| Y | *326-5265* | 1 | CONTROL GP-PILOT OPERATED HYD (AUXILIARY) | 243 |
| Y | *326-5267* | 1 | CONTROL GP-PILOT OPERATED HYD (HYDROSTATIC) | 244 |
| Y | *218-5635* | 1 | MANIFOLD & LINES GP-CONTROL (PARKING BRAKE) | 105 |
| Y | *191-9780* | 1 | MOTOR & MTG GP-HYDROSTATIC | 114 |
| Y | *218-0928* | 1 | PUMP & MTG GP-HYDROSTATIC | 121 |
| Y | *328-2335* | 1 | WIRING GP-WORK TOOL | 96 |
| Y-SEPARATE ILLUSTRATION | | | | |

**<END>**

# MACHINE ARRANGEMENT

## *326-5428* CONTROL AR-MACHINE–
### AUX PROPORTIONAL FLOW, 2-SPEED
### S/N: TNK1-UP
### AN ATTACHMENT

**SMCS-4062, 4284, 4351, 5059, 5705** **i03902898**

| NOTE | PART NUMBER | QTY | PART NAME 1 2 3 4 5 6 (PRODUCT LEVEL) | SEE PAGE |
|---|---|---|---|---|
| Y | *326-5265* | 1 | CONTROL GP-PILOT OPERATED HYD (AUXILIARY) | 243 |
| Y | *326-5267* | 1 | CONTROL GP-PILOT OPERATED HYD (HYDROSTATIC) | 244 |
| Y | *356-1897* | 1 | FILM GP | 310 |
| Y | *218-5636* | 1 | MANIFOLD & LINES GP-CONTROL (PARKING BRAKE, 2-SPEED) | 107 |
| Y | *190-7457* | 1 | MOTOR & MTG GP-HYDROSTATIC (2-SPEED) | 113 |
| Y | *218-5928* | 1 | PUMP & MTG GP-HYDROSTATIC | 122 |
| Y | *328-2335* | 1 | WIRING GP-WORK TOOL | 96 |

Y-SEPARATE ILLUSTRATION

**<END>**

# ENGINE ARRANGEMENT

## *326-5239* ENGINE AR-PRIMARY

**S/N: TNK1-UP**

**AN ATTACHMENT**

**SMCS-1000** **i03907346**

| NOTE | PART NUMBER | QTY | PART NAME 1 2 3 4 5 6 (PRODUCT LEVEL) | SEE PAGE |
|---|---|---|---|---|
| Y | **342-1219** | 1 | ENGINE AR-PRIMARY | 5 |

Y-SEPARATE ILLUSTRATION

# ENGINE ARRANGEMENT

## 342-1219 ENGINE AR-PRIMARY

**S/N: CYM1-UP**
**55 BRAKE KW (74 BHP) AT 2500 RPM**
**PART OF 326-5239 ENGINE AR-PRIMARY**
**AN ATTACHMENT**

**SMCS-1000** **i03938009**

| NOTE | PART NUMBER | QTY | PART NAME<br>1 2 3 4 5 6 (PRODUCT LEVEL) | SEE PAGE |
|---|---|---|---|---|
| Y | *323-2009* | 1 | ACCESSORY GP-ENGINE | 7 |
| Y | *315-8353* | 1 | ALTERNATOR GP-CHARGING | 68 |
| Y | *292-4041* | 1 | BEARING GP-MAIN | 8 |
| Y | *315-8329* | 1 | CAMSHAFT GP | 9 |
| Y | *287-4033* | 1 | CONNECTING ROD GP | 10 |
| Y | *361-2880* | 1 | COOLER GP-ENGINE OIL | 38 |
| Y | *315-7762* | 1 | COVER GP-VALVE MECHANISM | 11 |
| Y | *314-9860* | 1 | CRANKSHAFT GP | 12 |
| Y | *330-7633* | 1 | CYLINDER BLOCK GP | 13 |
| Y | *233-5500* | 1 | CYLINDER HEAD GP | 15 |
| Y | *292-4040* | 1 | DRAIN GP-COOLANT | 39 |
| Y | *361-3334* | 1 | FILTER GP-ENGINE OIL | 34 |
| Y | *314-9861* | 1 | FLYWHEEL GP | 17 |
| Y | *315-7766* | 1 | GEAR GP-FRONT | 18 |
| Y | *235-5904* | 1 | GLOW PLUG GP | 72 |
| Y | *361-2874* | 1 | HOUSING GP-FLYWHEEL | 20 |
| Y | *315-8336* | 1 | HOUSING GP-FRONT | 21 |
| Y | *315-7761* | 1 | LIFTING GP-ENGINE | 23 |
| Y | *315-7769* | 1 | LINES GP-AIR | 51 |
| Y | *247-6317* | 1 | LINES GP-AIR | 50 |
| Y | *287-5377* | 1 | LINES GP-ENGINE OIL | 35 |
| Y | *315-8350* | 1 | LINES GP-FUEL INJECTION | 59 |
| Y | *235-5900* | 1 | LINES GP-WATER (TEMPERATURE REGULATOR) | 40 |
| Y | *287-5323* | 1 | MANIFOLD GP-EXHAUST | 53 |
| Y | *335-5750* | 1 | MANIFOLD GP-INLET | 54 |
| Y | *315-7765* | 1 | PAN GP-OIL | 25 |
| Y | *315-8348* | 1 | PISTON GP | 27 |
| Y | *287-2922* | 1 | PLUG GP-ENGINE | 28 |
| Y | *287-2983* | 1 | PLUG GP-ENGINE | 29 |
| Y | *301-3396* | 1 | PULLEY GP-CRANKSHAFT | 30 |
| Y | *287-6114* | 1 | PULLEY GP-WATER PUMP | 31 |
| Y | *235-5895* | 1 | PUMP GP-ENGINE OIL | 36 |
| Y | *315-8352* | 1 | PUMP GP-FUEL INJECTION | 63 |
| Y | *287-6056* | 1 | PUMP GP-WATER | 43 |
| Y | *287-6181* | 1 | STARTING MOTOR GP-ELECTRIC | 85 |
| Y | *300-1071* | 1 | SWITCH GP-PRESSURE (ENGINE OIL) | 86 |
| Y | *315-7768* | 1 | TURBOCHARGER GP | 56 |
| Y | *287-6138* | 1 | V-BELT GP (WATER PUMP) | 32 |
| Y | *287-5665* | 1 | VALVE GP-ENGINE OIL RELIEF | 37 |
| Y | *235-5880* | 1 | VALVE MECHANISM GP | 33 |

Y-SEPARATE ILLUSTRATION

# ENGINE ARRANGEMENT

## *326-5361* INSTALLATION AR-ENGINE

**S/N: TNK1-UP**

**PART OF 326-5422 COMMON AR**

**SMCS-1000** **i03906997**

| NOTE | PART NUMBER | QTY | PART NAME 1 2 3 4 5 6 (PRODUCT LEVEL) | SEE PAGE |
|---|---|---|---|---|
| Y | *222-9812* | 1 | AIR CLEANER GP | 48 |
| Y | *326-5368* | 1 | DRAIN GP-ENGINE OIL | 16 |
| Y | *280-8407* | 1 | GUARD GP-BELT | 19 |
| Y | *326-5376* | 1 | LINES GP-AIR | 52 |
| Y | *326-5366* | 1 | LINES GP-FUEL PRM & FILTER | 61 |
| Y | *326-5329* | 1 | MOUNTING GP-ENGINE | 24 |
| Y | *218-0918* | 1 | MOUNTING GP-PUMP | 119 |
| Y | *218-0938* | 1 | MOUNTING GP-RAD & OIL COOLER | 41 |
| Y | *258-2462* | 1 | MUFFLER & MOUNTING GP | 55 |
| Y | *218-0924* | 1 | RADIATOR & OIL COOLER MTG GP | 46 |
| Y | *328-2276* | 1 | WIRING GP-ENGINE | 90 |

Y-SEPARATE ILLUSTRATION

# BASIC ENGINE

## *323-2009* ACCESSORY GP-ENGINE

**S/N: CYM1-UP**

**PART OF 342-1219 ENGINE AR-PRIMARY**

**AN ATTACHMENT**

**SMCS-1207, 1358, 1405, 1802** **i03637509**

| NOTE | PART NUMBER | QTY | PART NAME 1 2 3 4 5 6 (PRODUCT LEVEL) | SEE PAGE |
|---|---|---|---|---|
| | | | AVAILABLE REPAIR KIT(S): | |
| | **341-3561** | 1 | KIT-GASKET | |
| | | | KIT HAS ALL SEALING GASKET FOR WHOLE ENGINE EXCEPT FOR FRONT AND REAR SEALS. | |

**<END>**

# BASIC ENGINE

## *292-4041* BEARING GP-MAIN

**S/N: CYM1-UP**
**PART OF 342-1219 ENGINE AR-PRIMARY**
**AN ATTACHMENT**

**SMCS-1203** **i03790794**

| NOTE | REF NO | GRAPHIC REF | PART NUMBER | QTY | PART NAME 1 2 3 4 5 6 (PRODUCT LEVEL) | SEE PAGE |
|---|---|---|---|---|---|---|
| | 1 | 1 | **103-9288** | 3 | PLATE-THRUST (STANDARD) | |
| AB | | 1 | **103-9289** | | PLATE-THRUST (0.15-MM OS) | |
| AB | | 1 | **103-9290** | | PLATE-THRUST (0.35-MM OS) | |
| | 2 | 1 | **233-5486** | 1 | BEARING-MAIN (STANDARD) | |
| AB | | 1 | **294-4890** | | KIT-BEARING (0.25-MM US) | |
| AB | | 1 | **294-4891** | | KIT-BEARING (0.5-MM US) | |
| AB | | 1 | **294-4892** | | KIT-BEARING (0.75-MM US) | |

A-NOT PART OF THIS GROUP
B-USE AS REQUIRED

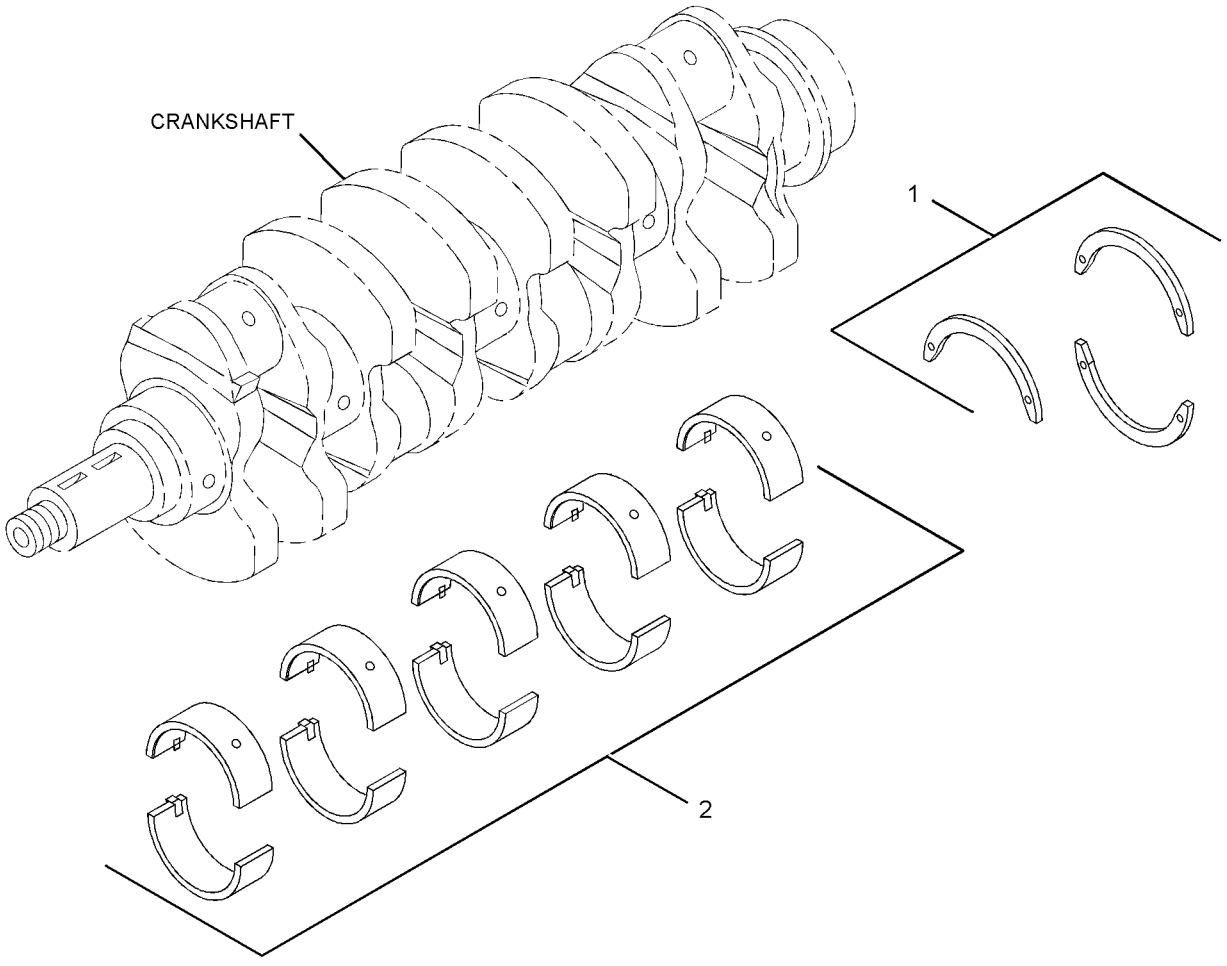


GRAPHIC #1 **<END>** g01379195

# *315-8329* CAMSHAFT GP

**S/N: CYM1-UP**

**PART OF 342-1219 ENGINE AR-PRIMARY**

**AN ATTACHMENT**

**SMCS-1210, 1211, 1212** **i03606061**

| NOTE | REF NO | GRAPHIC REF | PART NUMBER | QTY | PART NAME 1 2 3 4 5 6 (PRODUCT LEVEL) | SEE PAGE |
|---|---|---|---|---|---|---|
| | 1 | 1 | **3B-4505** | 2 | LOCKWASHER | |
| M | 2 | 1 | **8T-4200** | 2 | BOLT (M8X1.25X16-MM) | |
| | 3 | 1 | **094-4628** | 1 | KEY | |
| | 4 | 1 | **233-5485** | 1 | PLATE-THRUST | |
| | 5 | 1 | **103-9273** | 8 | PUSHROD | |
| | 6 | 1 | **103-9272** | 8 | TAPPET | |
| | 7 | 1 | **315-4664** | 1 | CAMSHAFT | |

M-METRIC PART

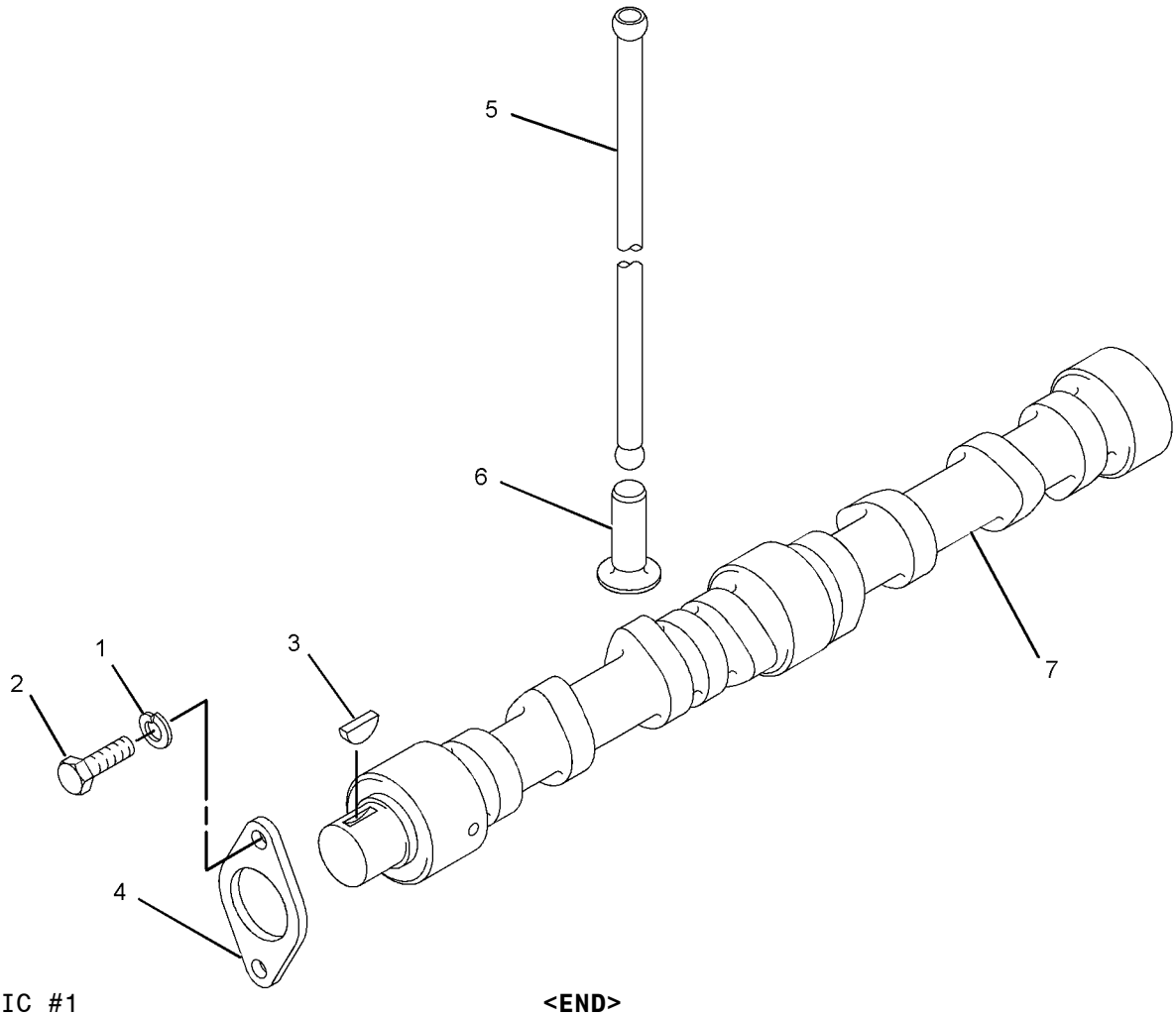


GRAPHIC #1 **<END>** g01448098

# BASIC ENGINE

## *287-4033* CONNECTING ROD GP

**S/N: CYM1-UP**
**PART OF 342-1219 ENGINE AR-PRIMARY**
**AN ATTACHMENT**

**SMCS-1218** **i03894132**

| NOTE | REF NO | GRAPHIC REF | PART NUMBER | QTY | PART NAME 1 2 3 4 5 6 (PRODUCT LEVEL) | SEE PAGE |
|---|---|---|---|---|---|---|
| | 1 | 1 | **103-9680** | 4 | ROD AS-CONNECTING | |
| | | | | | (EACH INCLUDES) | |
| | 1A | 1 | **128-2955** | 2 | BOLT-CONNECTING ROD | |
| | 1B | 1 | **128-2956** | 2 | NUT | |
| | 1C | 1 | **128-2958** | 1 | BUSHING | |
| | 2 | 1 | **238-8282** | 1 | SET-BEARING (STANDARD) | |
| | | | | | (INCLUDES A COMPLETE SET OF ROD BEARINGS) | |
| AB | | 1 | **238-8283** | | SET-BEARING (0.25-MM US) | |
| AB | | 1 | **238-8284** | | SET-BEARING (0.5-MM US) | |
| AB | | 1 | **238-8285** | | SET-BEARING (0.75-MM US) | |

A-NOT PART OF THIS GROUP
B-USE AS REQUIRED

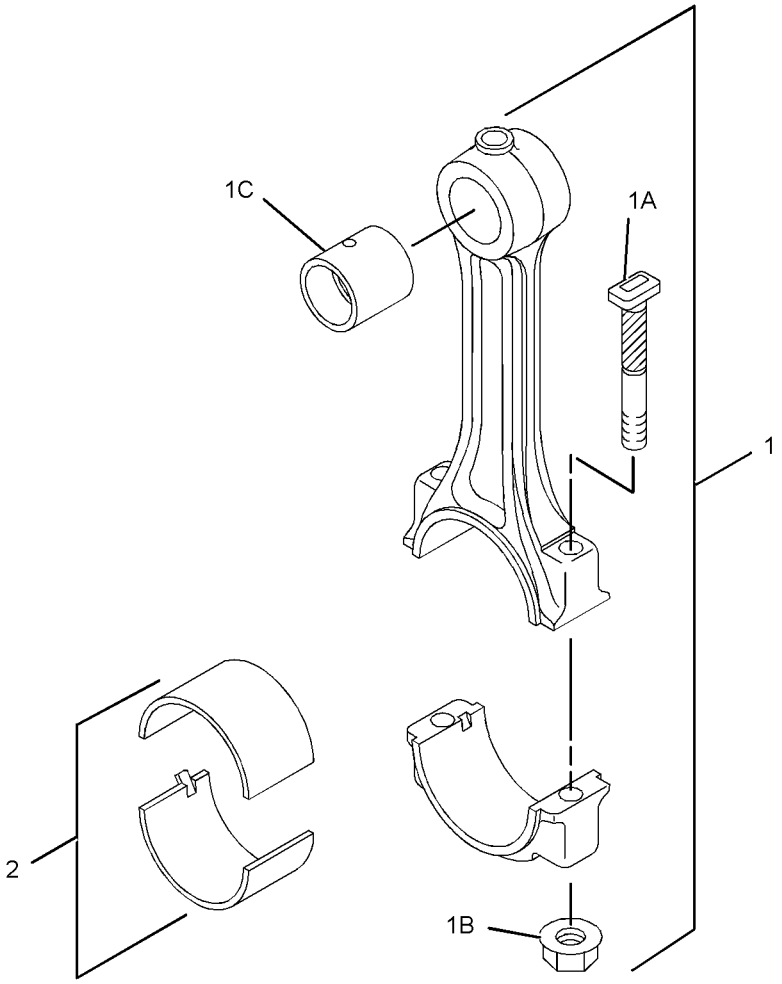


GRAPHIC #1 **<END>** g01380324

# *315-7762* COVER GP-VALVE MECHANISM

**S/N: CYM1-UP**

**PART OF 342-1219 ENGINE AR-PRIMARY**

**AN ATTACHMENT**

**SMCS-1107** **i03649086**

| NOTE | REF NO | GRAPHIC REF | PART NUMBER | QTY | PART NAME 1 2 3 4 5 6 (PRODUCT LEVEL) | SEE PAGE |
|---|---|---|---|---|---|---|
| | 1 | 1 | **3B-4505** | 5 | LOCKWASHER | |
| M | 2 | 1 | **099-3649** | 5 | BOLT (M8X1.25X40-MM) | |
| | 3 | 1 | **233-5483** | 1 | GASKET (VALVE MECHANISM) | |
| | 4 | 1 | **348-7676** | 1 | COVER-VALVE MECHANISM | |
| | 5 | 1 | **310-8798** | 1 | CAP-OIL FILLER (ENGINE) | |

M-METRIC PART

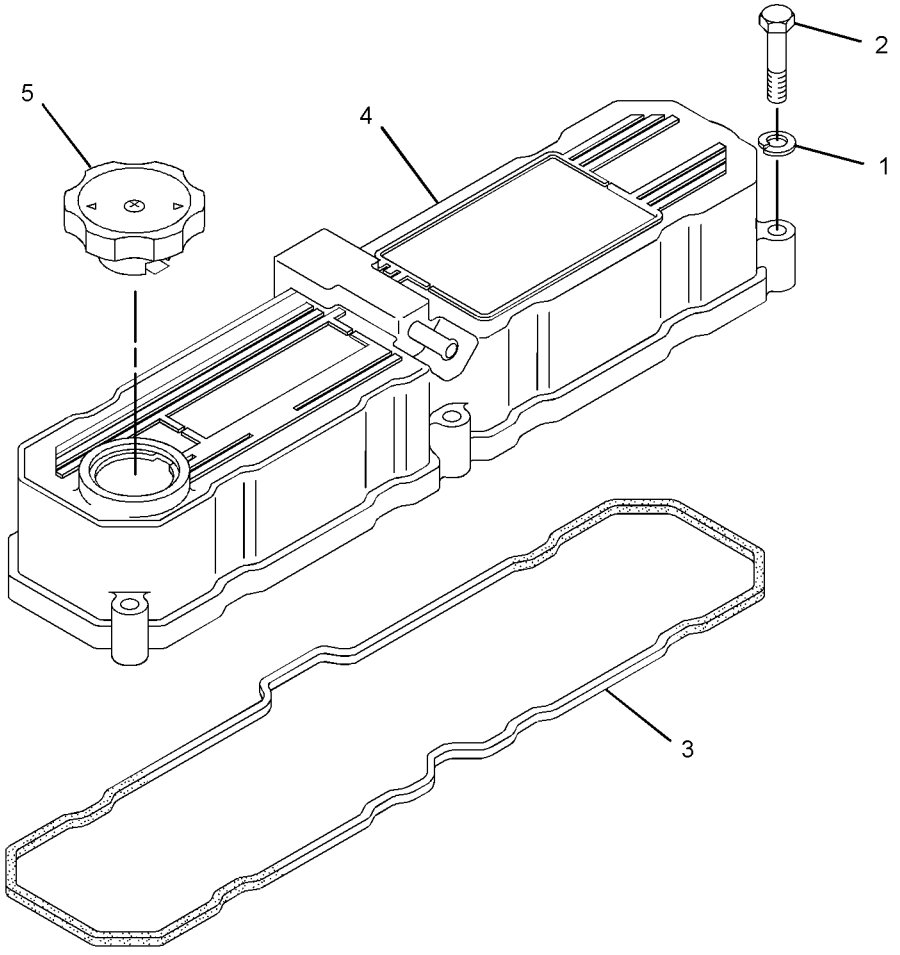


GRAPHIC #1 **<END>** g01400933

# BASIC ENGINE

## *314-9860* CRANKSHAFT GP

**S/N: CYM1-UP**
**PART OF 342-1219 ENGINE AR-PRIMARY**
**AN ATTACHMENT**

**SMCS-1202** **i02822912**

| NOTE | REF NO | GRAPHIC REF | PART NUMBER | QTY | PART NAME 1 2 3 4 5 6 (PRODUCT LEVEL) | SEE PAGE |
|---|---|---|---|---|---|---|
| | 1 | 1 | **085-9513** | 2 | PIN | |
| | 2 | 1 | **094-4628** | 2 | KEY | |
| | 3 | 1 | **130-7596** | 1 | NUT | |
| | 4 | 1 | **294-7922** | 1 | CRANKSHAFT | |

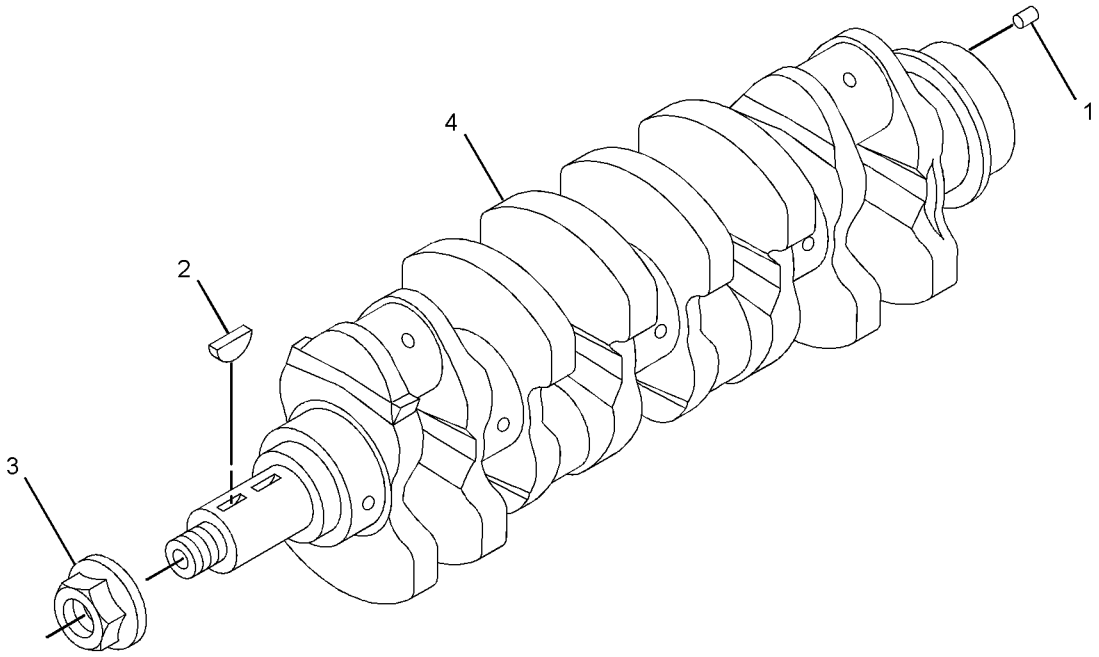


GRAPHIC #1 **<END>** g01392963

# *330-7633* CYLINDER BLOCK GP

**S/N: CYM1-UP**

**PART OF 342-1219 ENGINE AR-PRIMARY**

**AN ATTACHMENT**

**SMCS-1201** **i03098184**

| NOTE | REF NO | GRAPHIC REF | PART NUMBER | QTY | PART NAME 1 2 3 4 5 6 (PRODUCT LEVEL) | SEE PAGE |
|---|---|---|---|---|---|---|
| | 1 | 1 | **5I-7525** | 1 | PLUG | |
| | 2 | 1 | **096-3741** | 5 | CAP | |
| | 3 | 1 | **099-4420** | 2 | PIN | |
| | 4 | 1 | **103-9279** | 2 | SEAL-SIDE | |
| | 5 | 1 | **103-9703** | 1 | SHAFT-IDLER | |
| | 6 | 1 | **183-5916** | 6 | PIN-SPRING | |
| | 7 | 1 | **104-1218** | 2 | DOWEL | |
| | 8 | 1 | **233-5457** | 4 | ORIFICE-JET (OIL PISTON COOLING) | |
| | 9 | 1 | **233-5488** | 2 | PIN | |
| | 10 | 1 | **310-2682** | 2 | PLUG | |
| | 11 | 1 | **314-9938** | 1 | BUSHING | |
| | 12 | 1 | **330-7634** | 1 | CYLINDER BLOCK GP | |
| | 12A | 1 | **3P-1896** | 10 | PLUG-CUP | |
| | 12B | 1 | **096-3741** | 5 | CAP | |
| | 12C | 1 | **103-9276** | 10 | BOLT | |

*330-7633* **CYLINDER BLOCK GP** *(contd.)* **i03098184**

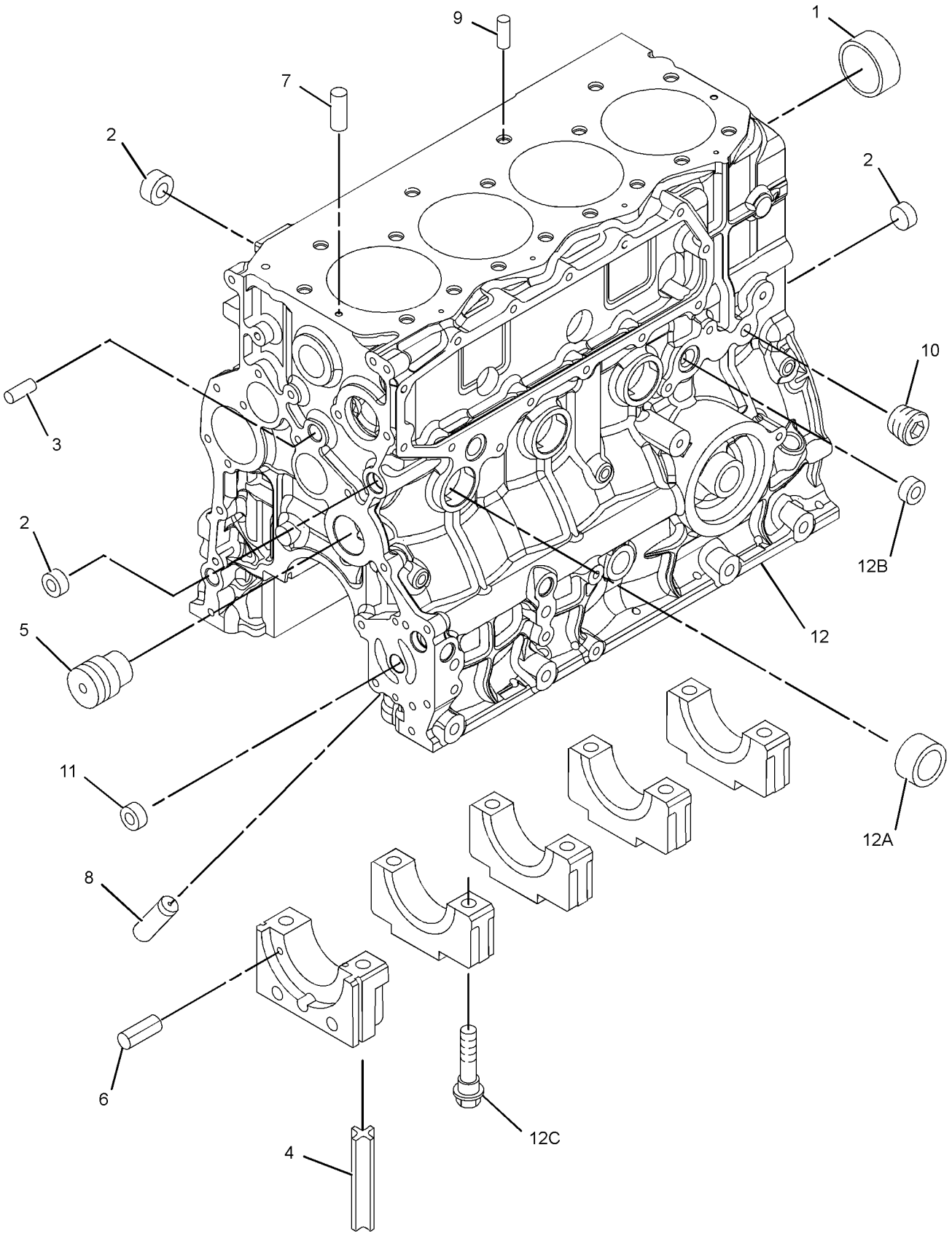


GRAPHIC #1 **<END>** g01562194

# *233-5500* CYLINDER HEAD GP

**S/N: CYM1-UP**

**PART OF 342-1219 ENGINE AR-PRIMARY**

**AN ATTACHMENT**

**SMCS-1100, 1101, 1103, 1104, 1105, 1108, 1109, 1115, 1117, 1121, 1124, 1125**

**i03536270**

| NOTE | REF NO | GRAPHIC REF | PART NUMBER | QTY | PART NAME 1 2 3 4 5 6 (PRODUCT LEVEL) | SEE PAGE |
|---|---|---|---|---|---|---|
| | 1 | 1 | **103-9246** | 17 | BOLT-CYLINDER HEAD | |
| | 2 | 1 | **299-4645** | 1 | GASKET-HEAD | |
| C | 3 | 1 | **319-7263** | 1 | CYLINDER HEAD AS | |
| | 4 | 1 | **319-7262** | 1 | STUD | |
| | 5 | 1 | **103-9252** | 4 | SEAT-VALVE (INLET) | |
| | 6 | 1 | **103-9253** | 4 | SEAT-VALVE (EXHAUST) | |
| | 7 | 1 | **103-9247** | 8 | GUIDE-VALVE | |

C-CHANGE FROM PREVIOUS TYPE

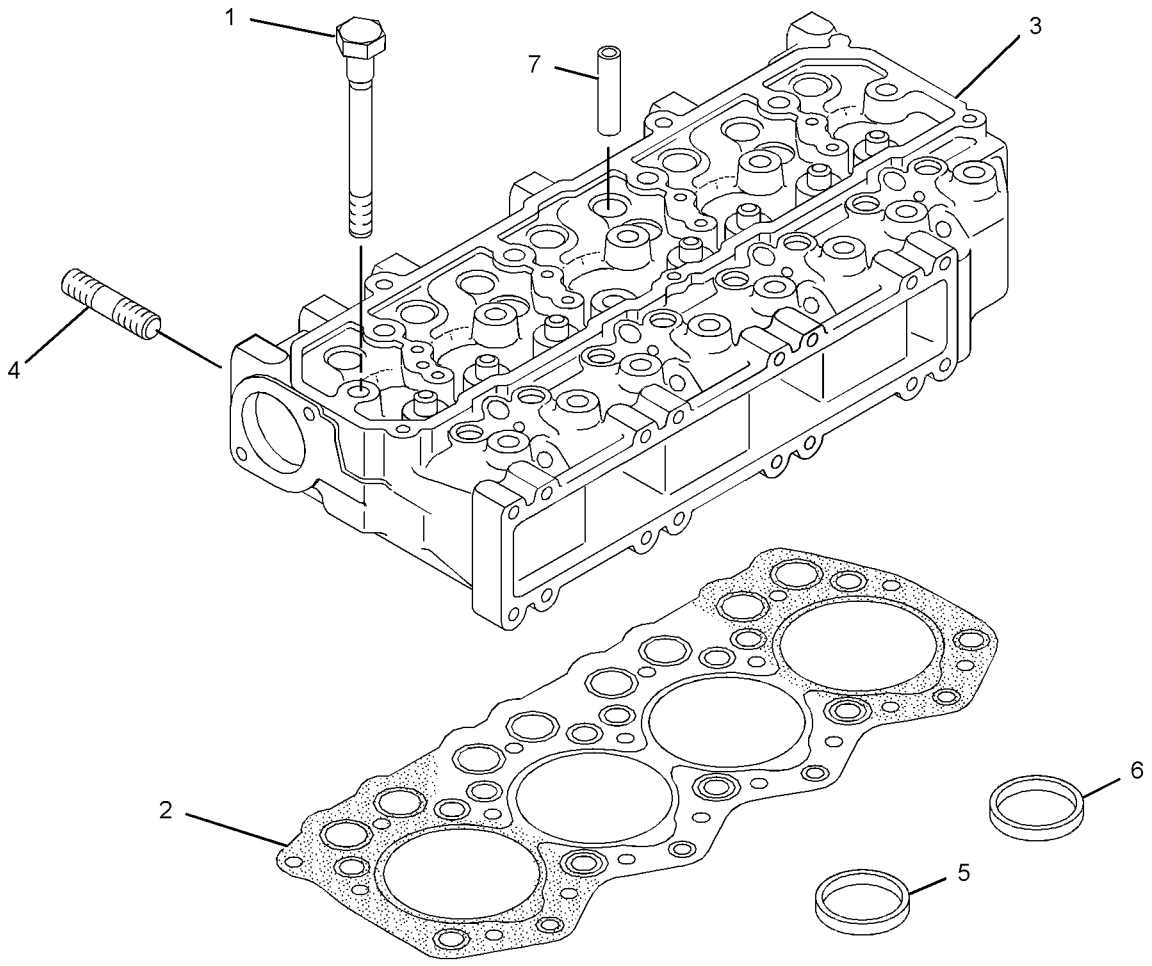


GRAPHIC #1

**<END>**

g01869753

# *326-5368* DRAIN GP-ENGINE OIL

**S/N: TNK1-UP**

**PART OF 326-5361 INSTALLATION AR-ENGINE**

**SMCS-1302** **i03969169**

| NOTE | REF NO | GRAPHIC REF | PART NUMBER | QTY | PART NAME 1 2 3 4 5 6 (PRODUCT LEVEL) | SEE PAGE |
|---|---|---|---|---|---|---|
| | 1 | 1 | **1P-4278** | 1 | CLAMP-HOSE | |
| | 2 | 1 | **110-2570** | 1 | CAP | |
| | 3 | 1 | **326-5336** | 1 | GUARD AS | |
| M | 4 | 1 | **8T-4179** | 1 | BOLT (M12X1.75X20-MM) | |
| M | 5 | 1 | **8T-4189** | 1 | BOLT (M8X1.25X20-MM) | |
| | 6 | 1 | **8T-4223** | 1 | WASHER-HARD (13.5X25.5X3-MM THK) | |
| | 7 | 1 | **8T-4224** | 1 | WASHER-HARD (8.8X16X2-MM THK) | |
| E | 8 | 1 | **5P-1442** | | HOSE (51-CM) | |

E-ORDER BY THE CENTIMETER
M-METRIC PART

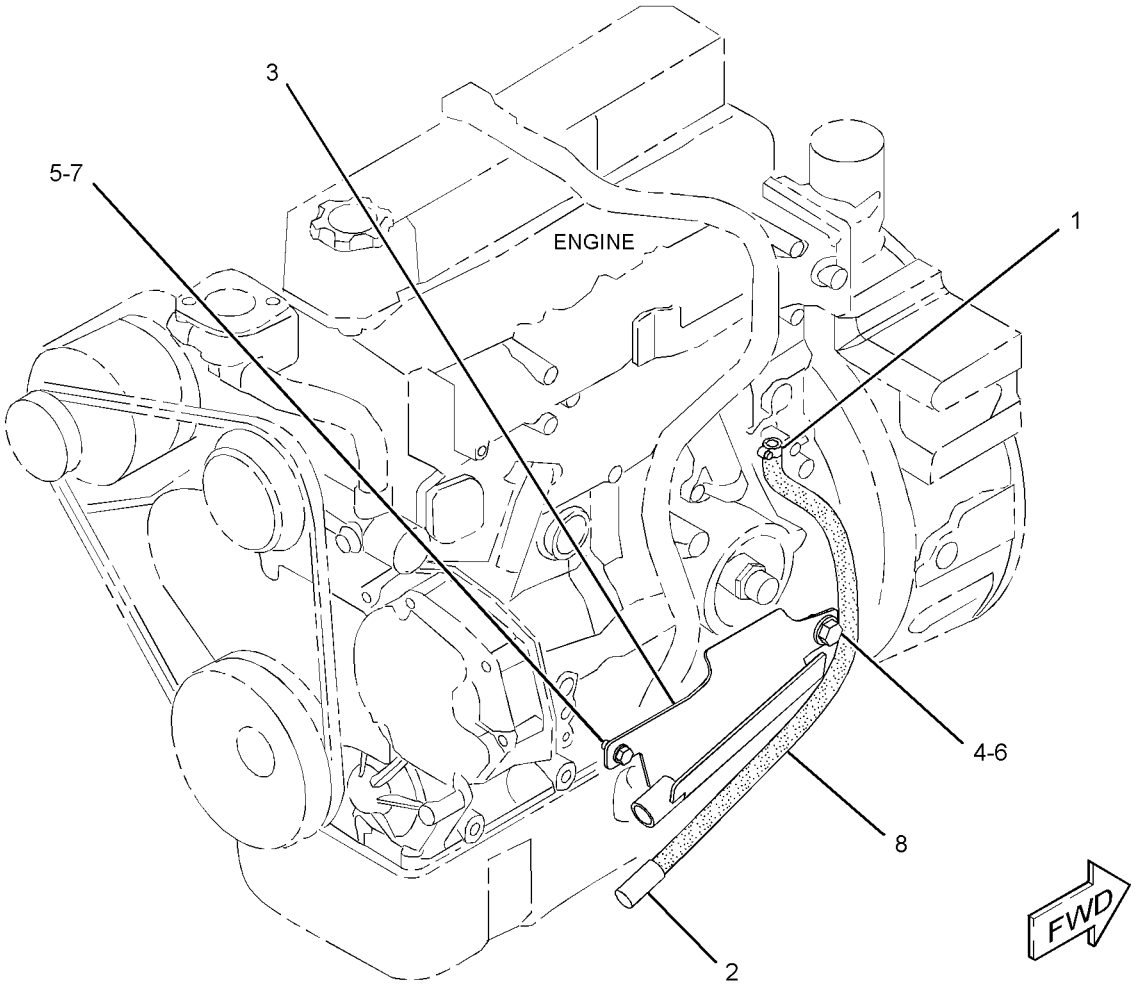


GRAPHIC #1 **<END>** g02146753

# *314-9861* FLYWHEEL GP

**S/N: CYM1-UP**
**PART OF 342-1219 ENGINE AR-PRIMARY**
**AN ATTACHMENT**

**SMCS-1156, 1158** **i02824838**

| NOTE | REF NO | GRAPHIC REF | PART NUMBER | QTY | PART NAME 1 2 3 4 5 6 (PRODUCT LEVEL) | SEE PAGE |
|---|---|---|---|---|---|---|
| M | 1 | 1 | **226-3693** | 6 | BOLT (M12X1.25X30-MM) | |
| | 2 | 1 | **234-4791** | 1 | FLYWHEEL AS | |
| | 2A | 1 | **032-8139** | 1 | GEAR-STARTER (112-TEETH) | |

M-METRIC PART

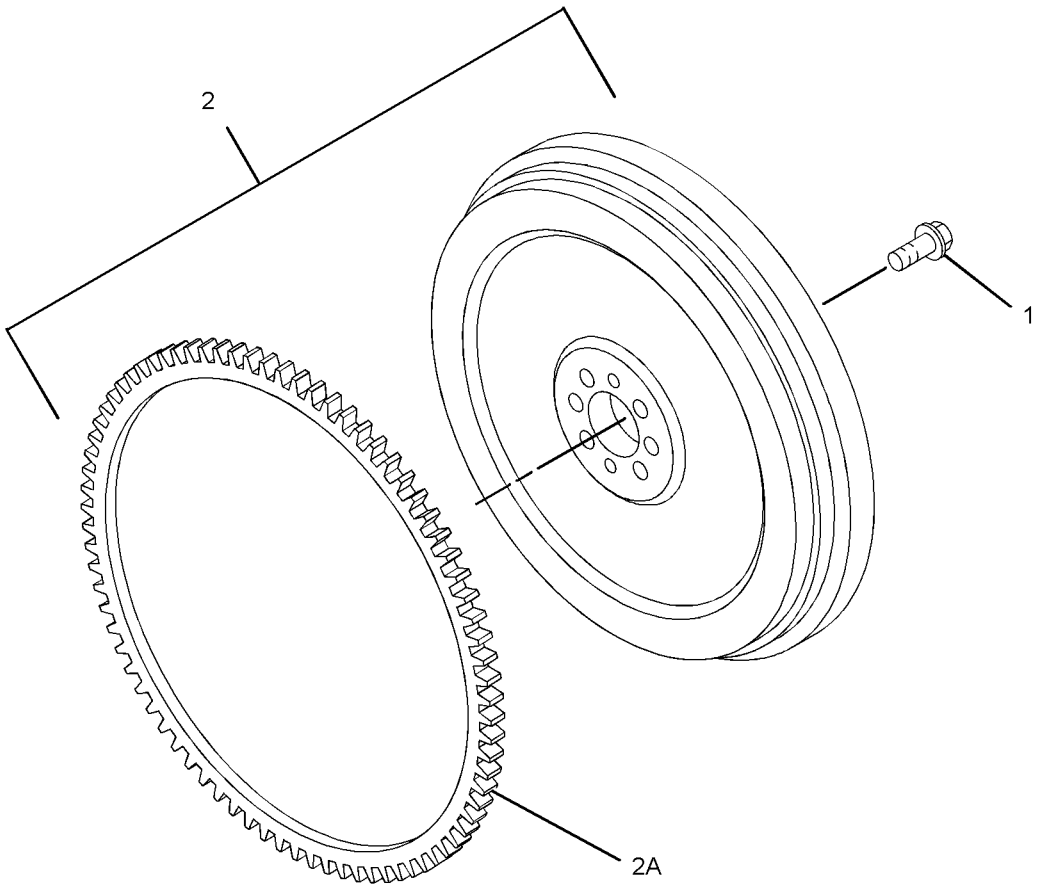


GRAPHIC #1 **<END>** g01394554

# BASIC ENGINE

## *315-7766* GEAR GP-FRONT

**S/N: CYM1-UP**

**PART OF 342-1219 ENGINE AR-PRIMARY**

**AN ATTACHMENT**

**SMCS-1206, 1212, 1234, 1288, 1313** **i03469908**

| NOTE | REF NO | GRAPHIC REF | PART NUMBER | QTY | PART NAME 1 2 3 4 5 6 (PRODUCT LEVEL) | SEE PAGE |
|---|---|---|---|---|---|---|
| M | 1 | 1 | **5I-4936** | 1 | BOLT (M10X1.25X20-MM) | |
| | 2 | 1 | **5I-7543** | 1 | PLATE | |
| | 3 | 1 | **8T-4121** | 1 | WASHER-HARD (11X21X2.5-MM THK) | |
| | 4 | 1 | **117-2827** | 1 | GEAR (46-TEETH) | |
| | 5 | 1 | **117-2829** | 1 | GEAR (23-TEETH) | |
| | 6 | 1 | **117-3285** | 1 | GEAR-PUMP (OIL, 31-TEETH) | |
| | 7 | 1 | **239-4292** | 1 | GEAR | |
| | 8 | 1 | **322-3150** | 1 | GEAR-IDLER | |

M-METRIC PART

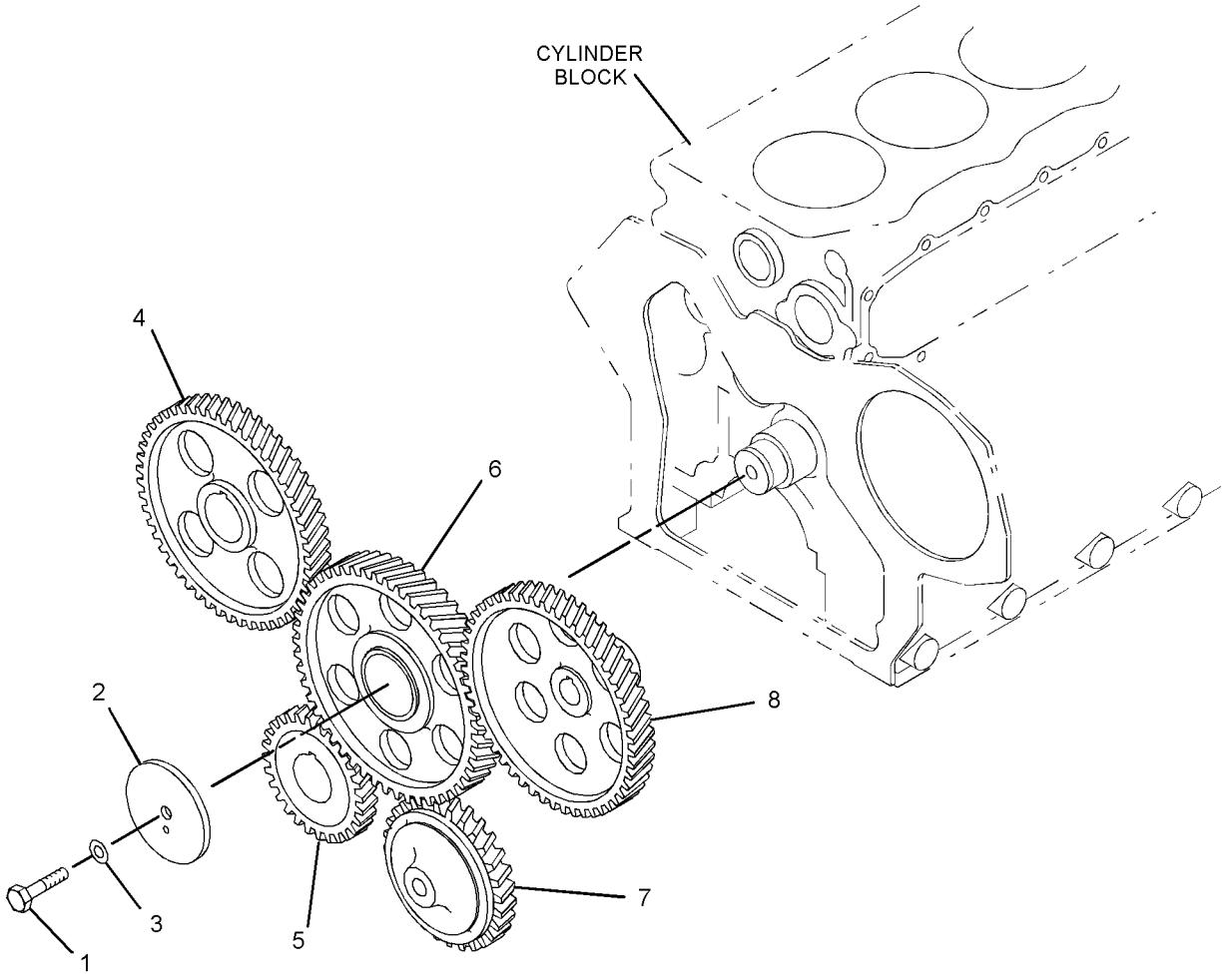


GRAPHIC #1 **<END>** g01322038

# BASIC ENGINE

## *280-8407* GUARD GP-BELT

**S/N: TNK1-UP**

**PART OF 326-5361 INSTALLATION AR-ENGINE**

**SMCS-7174** **i03902842**

| NOTE | REF NO | GRAPHIC REF | PART NUMBER | QTY | PART NAME 1 2 3 4 5 6 (PRODUCT LEVEL) | SEE PAGE |
|---|---|---|---|---|---|---|
| | 1 | 1 | **280-8307** | 1 | BRACKET AS | |
| | 2 | 1 | **280-8314** | 1 | BRACKET AS | |
| | 3 | 1 | **280-8335** | 2 | SPACER (6.5X12X4.5-MM THK) | |
| | 4 | 1 | **280-8408** | 1 | GUARD-BELT | |
| | 5 | 1 | **280-8409** | 1 | BRACKET AS | |
| M | | 1 | **6V-9632** | 2 | NUT-WELD (M6X1-THD) | |
| M | | 1 | **8T-3612** | 2 | NUT-WELD (M8X1.25-THD) | |
| | 6 | 1 | **280-8417** | 8 | NUT-PUSH ON | |
| | 7 | 1 | **354-6574** | 5 | BOLT-SPECIAL | |
| M | 8 | 1 | **134-7722** | 2 | BOLT-LOCKING (M8X1.25X16-MM) | |
| | 9 | 1 | **5P-4116** | 7 | WASHER-HARD (8.8X20.5X2-MM THK) | |
| M | 10 | 1 | **6V-7357** | 2 | BOLT (M6X1X25-MM) | |
| M | 11 | 1 | **8T-4908** | 2 | BOLT (M8X1.25X25-MM) | |
| | 12 | 1 | **8T-7934** | 2 | WASHER-HARD (11X21X5-MM THK) | |

M-METRIC PART

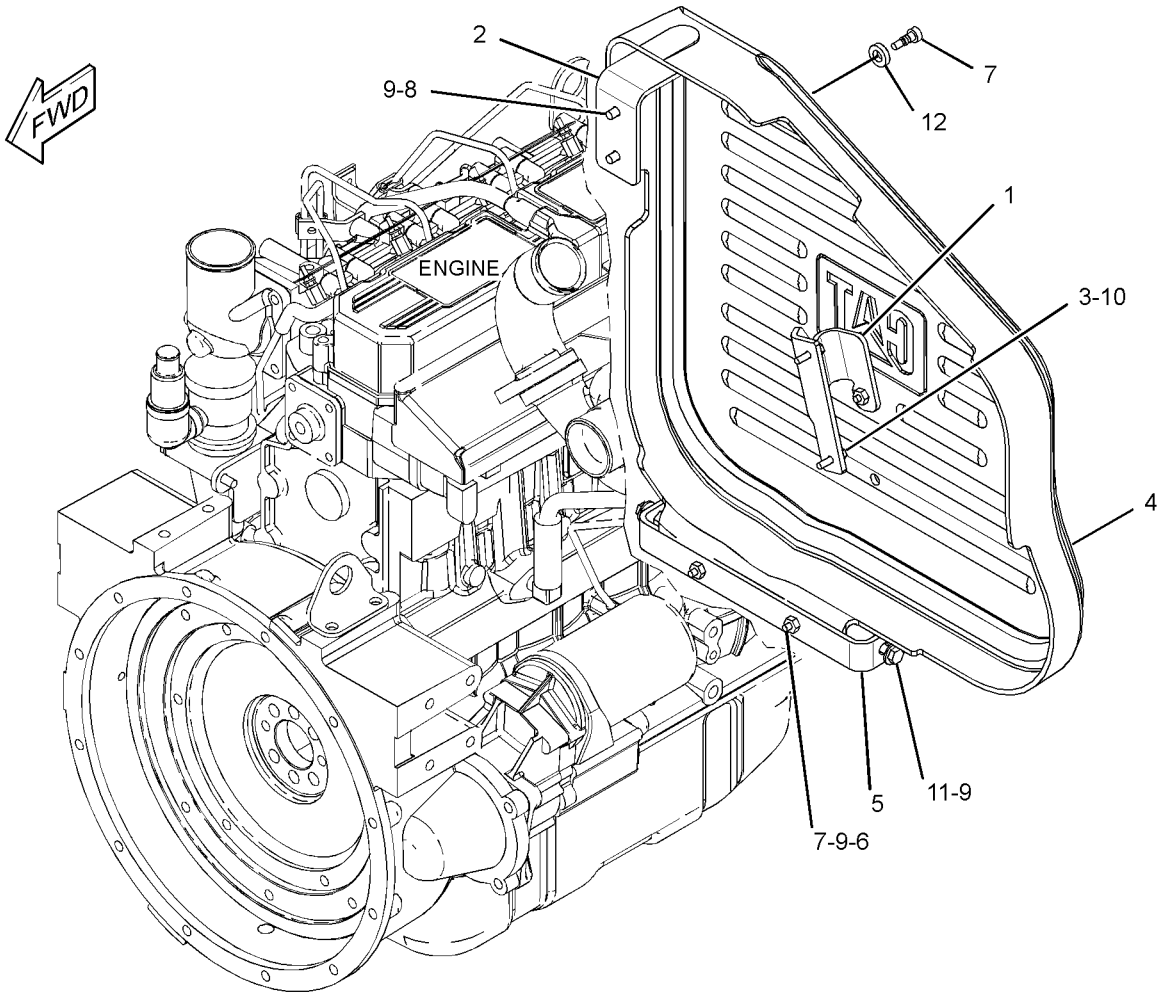


GRAPHIC #1 **<END>** g02146743

# BASIC ENGINE

## *361-2874* HOUSING GP-FLYWHEEL

**S/N: CYM1-UP**

**PART OF 342-1219 ENGINE AR-PRIMARY**

**AN ATTACHMENT**

**SMCS-1157** **i03937751**

| NOTE | PART NUMBER | QTY | PART NAME 1 2 3 4 5 6 (PRODUCT LEVEL) | SEE PAGE |
|---|---|---|---|---|
| M | **8T-4137** | 2 | BOLT (M10X1.5X20-MM) | |
| M | **8T-4195** | 2 | BOLT (M10X1.5X30-MM) | |
| M | **140-5217** | 10 | BOLT (M10X1.25X25-MM) | |
| | **233-5482** | 1 | EYE | |
| | **5I-7628** | 1 | GASKET | |
| | **103-9280** | 1 | GASKET-REAR | |
| M | **212-8510** | 3 | NUT (M10X1.25-THD) | |
| | **5I-8056** | 1 | PLUG | |
| | **117-5015** | 1 | SEAL AS-OIL | |
| | **212-8499** | 3 | STUD | |
| | **8T-4896** | 14 | WASHER-HARD (10.2X18.5X2.5-MM THK) | |

M-METRIC PART

**<END>**

# *315-8336* HOUSING GP-FRONT

**S/N: CYM1-UP**

**PART OF 342-1219 ENGINE AR-PRIMARY**

**AN ATTACHMENT**

**SMCS-1151, 1160, 1162, 1166, 3108** **i03245870**

| NOTE | REF NO | GRAPHIC REF | PART NUMBER | QTY | PART NAME 1 2 3 4 5 6 (PRODUCT LEVEL) | SEE PAGE |
|---|---|---|---|---|---|---|
| | 1 | 1 | **3B-4505** | 5 | LOCKWASHER | |
| M | 2 | 1 | **6V-7357** | 2 | BOLT (M6X1X25-MM) | |
| M | 3 | 1 | **8T-4200** | 5 | BOLT (M8X1.25X16-MM) | |
| | 4 | 1 | **8T-4224** | 15 | WASHER-HARD (8.8X16X2-MM THK) | |
| M | 5 | 1 | **8T-7329** | 11 | BOLT (M8X1.25X55-MM) | |
| | 6 | 1 | **9X-8256** | 6 | WASHER (6.6X12X2-MM THK) | |
| | 7 | 1 | **096-2500** | 2 | LOCKWASHER | |
| | 8 | 1 | **096-9529** | 1 | SEAL-O-RING | |
| | 9 | 1 | **199-2212** | 4 | BOLT (M6X1X18-MM) | |
| | 11 | 1 | **246-1259** | 1 | COVER-INSULATION | |
| | 12 | 1 | **246-1260** | 1 | COVER-INSULATION | |
| | 13 | 1 | **285-9066** | 4 | BOLT (M8X1.25X65-MM) | |
| | 14 | 1 | **314-9947** | 1 | GASKET | |
| | 15 | 1 | **314-9948** | 1 | FASTENER GP-FRONT COVER | |
| | 17 | 1 | **315-4667** | 1 | GASKET | |
| | 18 | 1 | **315-4668** | 1 | PLATE | |
| | 19 | 1 | **315-4686** | 1 | HOUSING-FRONT | |
| | 20 | 1 | **315-4687** | 1 | COVER | |
| | 21 | 1 | **239-8429** | 1 | SEAL-CRANKSHAFT | |

M-METRIC PART

*315-8336* **HOUSING GP-FRONT** *(contd.)* **i03245870**

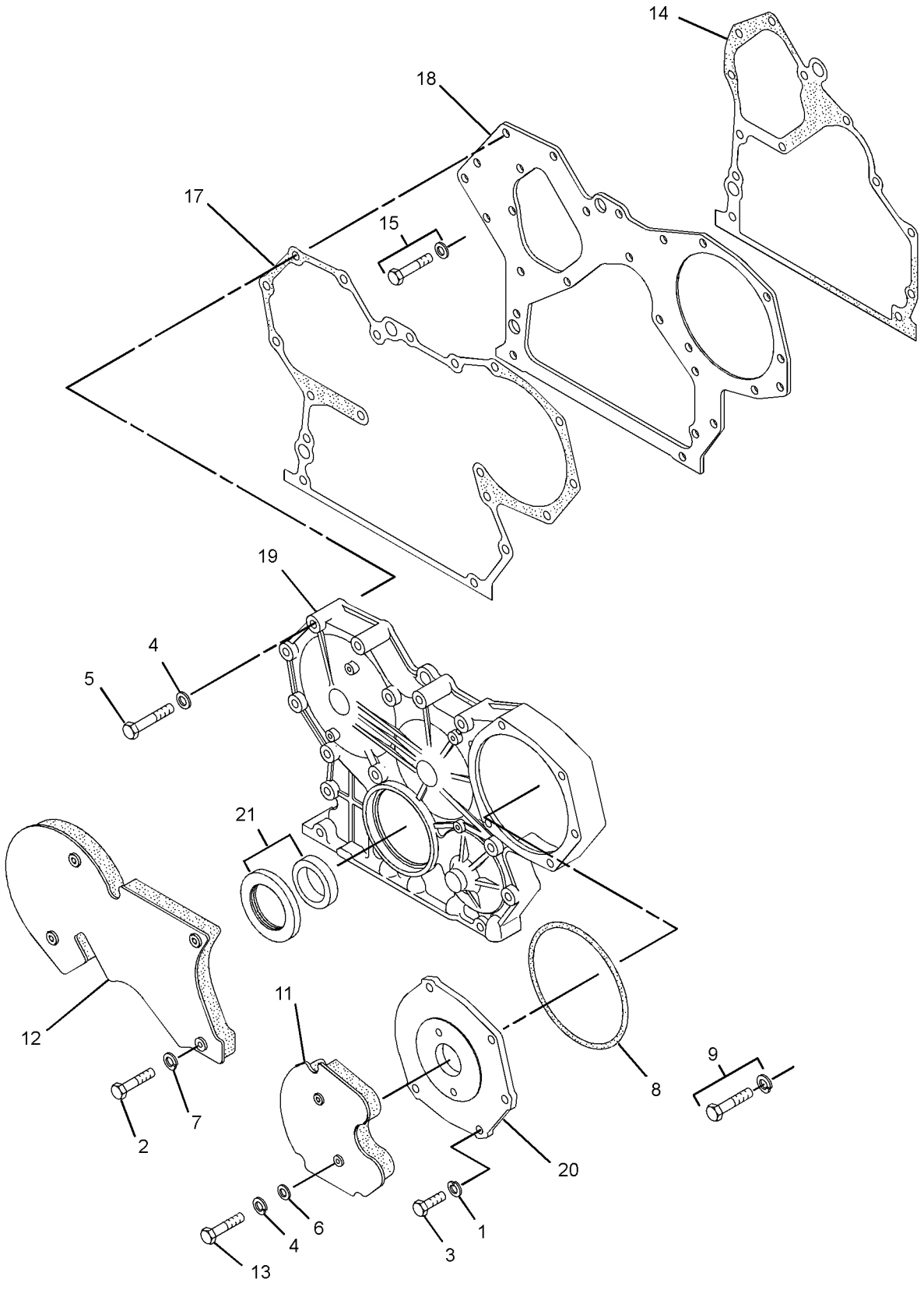


GRAPHIC #1 **<END>** g01658277

# *315-7761* LIFTING GP-ENGINE

**S/N: CYM1-UP**
**PART OF 342-1219 ENGINE AR-PRIMARY**
**AN ATTACHMENT**

**SMCS-1122** **i02864974**

| NOTE | REF NO | GRAPHIC REF | PART NUMBER | QTY | PART NAME 1 2 3 4 5 6 (PRODUCT LEVEL) | SEE PAGE |
|---|---|---|---|---|---|---|
| | 1 | 1 | **3B-4505** | 4 | LOCKWASHER | |
| M | 2 | 1 | **8T-4200** | 4 | BOLT (M8X1.25X16-MM) | |
| | 3 | 1 | **233-5466** | 1 | EYE | |
| | 4 | 1 | **233-5468** | 1 | GASKET | |
| | 5 | 1 | **315-7704** | 1 | COVER | |

M-METRIC PART

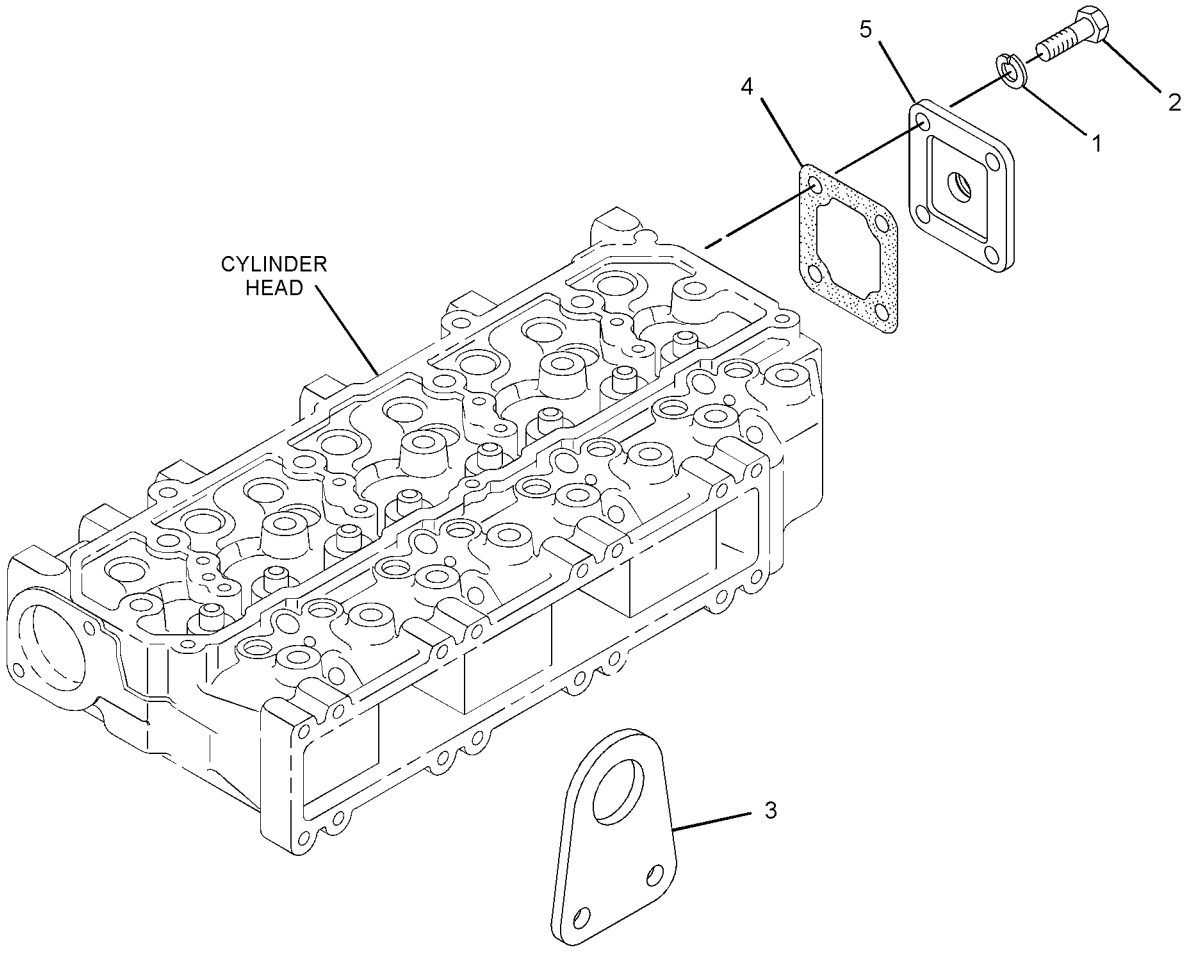


GRAPHIC #1 **<END>** g01430113

# BASIC ENGINE

## *326-5329* MOUNTING GP-ENGINE

**S/N: TNK1-UP**

**PART OF 326-5361 INSTALLATION AR-ENGINE**

**SMCS-1152, 1153, 1154** **i03902847**

| NOTE | REF NO | GRAPHIC REF | PART NUMBER | QTY | PART NAME 1 2 3 4 5 6 (PRODUCT LEVEL) | SEE PAGE |
|---|---|---|---|---|---|---|
| | 1 | 1 | **118-2990** | 2 | MOUNT AS | |
| | 2 | 1 | **230-3621** | 1 | MOUNT AS | |
| | | 1 | **149-3488** | 2 | MOUNT-ENGINE | |
| | | 1 | **241-6397** | 1 | SLEEVE | |
| | 3 | 1 | **258-2448** | 1 | BRACKET AS | |
| | 4 | 1 | **326-5358** | 2 | BRACKET AS | |
| M | 5 | 1 | **129-3180** | 1 | LOCKNUT (M12X1.75-THD) | |
| | 6 | 1 | **165-7095** | 4 | WASHER (16.5X71.5X3-MM THK) | |
| | 7 | 1 | **5P-1076** | 2 | WASHER-HARD (13.5X30X4-MM THK) | |
| M | 8 | 1 | **7X-2556** | 2 | BOLT (M16X2X100-MM) | |
| | 9 | 1 | **8T-4122** | 2 | WASHER-HARD (17X32X3.5-MM THK) | |
| M | 10 | 1 | **8T-4132** | 2 | NUT (M16X2-THD) | |
| M | 11 | 1 | **8T-4176** | 1 | BOLT (M12X1.75X90-MM) | |
| M | 12 | 1 | **8T-4192** | 16 | BOLT (M12X1.75X25-MM) | |
| | 13 | 1 | **8T-4223** | 16 | WASHER-HARD (13.5X25.5X3-MM THK) | |

M-METRIC PART

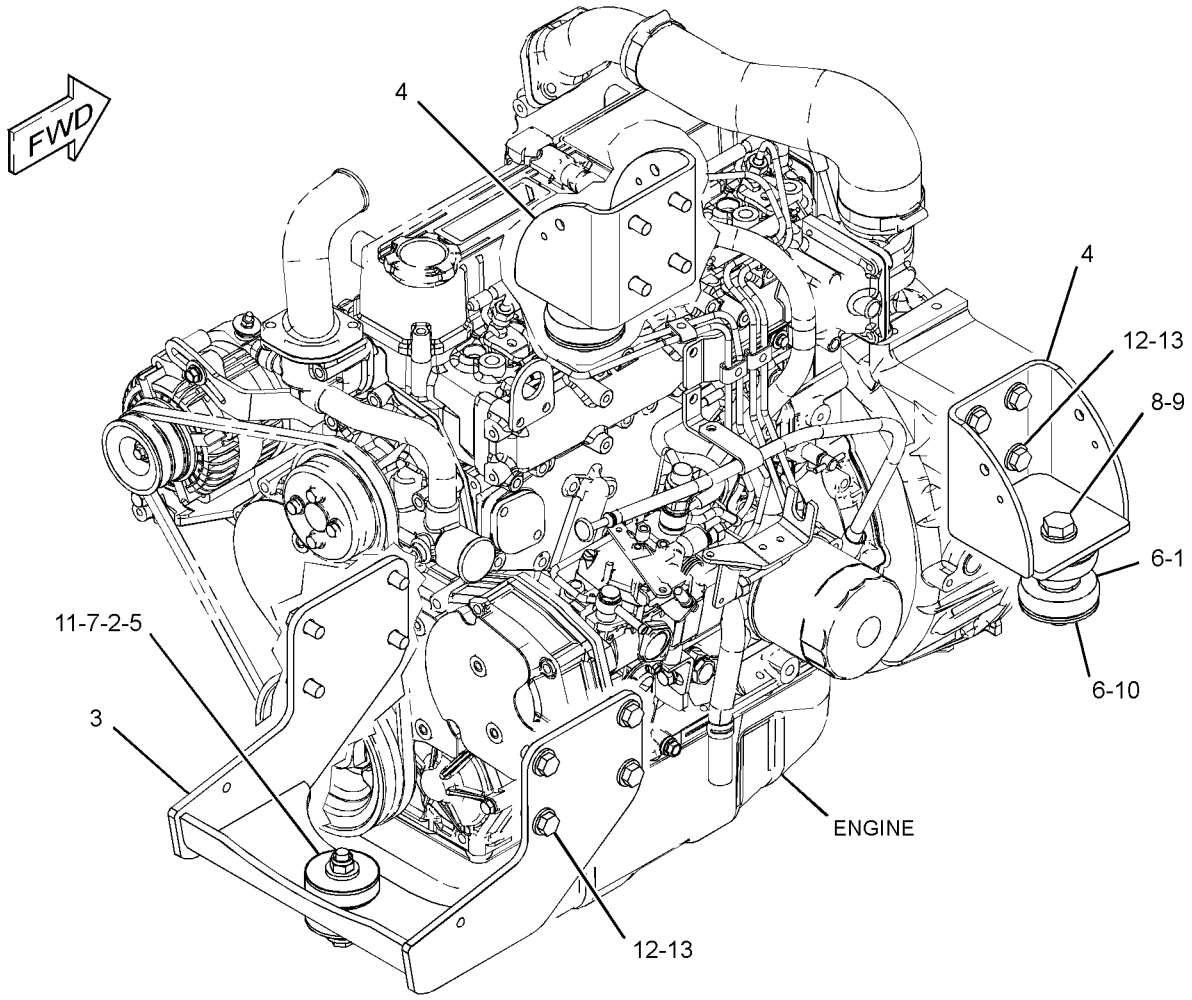


GRAPHIC #1 **<END>** g02146775

# *315-7765* PAN GP-OIL

**S/N: CYM1-UP**

**PART OF 342-1219 ENGINE AR-PRIMARY**

**AN ATTACHMENT**

**SMCS-1302** **i03198483**

| NOTE | REF NO | GRAPHIC REF | PART NUMBER | QTY | PART NAME 1 2 3 4 5 6 (PRODUCT LEVEL) | SEE PAGE |
|---|---|---|---|---|---|---|
| | 1 | 1 | **3B-4505** | 25 | LOCKWASHER | |
| | 2 | 1 | **5I-4993** | 2 | SEAL | |
| M | 3 | 1 | **8T-4200** | 25 | BOLT (M8X1.25X16-MM) | |
| | 4 | 1 | **165-2601** | 1 | SEALANT-SILICONE | |
| M | 5 | 1 | **195-8403** | 1 | BOLT AS | |
| | 6 | 1 | **234-4812** | 1 | GUIDE | |
| | 7 | 1 | **300-9449** | 1 | PAN AS-OIL | |
| | 7A | 1 | **096-8482** | 1 | GASKET | |
| | 7B | 1 | **135-8432** | 1 | PLUG (DRAIN, ENGINE OIL) | |
| | 8 | 1 | **309-8909** | 1 | GAUGE GP-OIL LEVEL (DIPSTICK) (ENGINE) | |
| C | 9 | 1 | **325-5905** | 1 | BRACKET | |
| | 10 | 1 | **315-2356** | 1 | GUIDE | |

C-CHANGE FROM PREVIOUS TYPE
M-METRIC PART

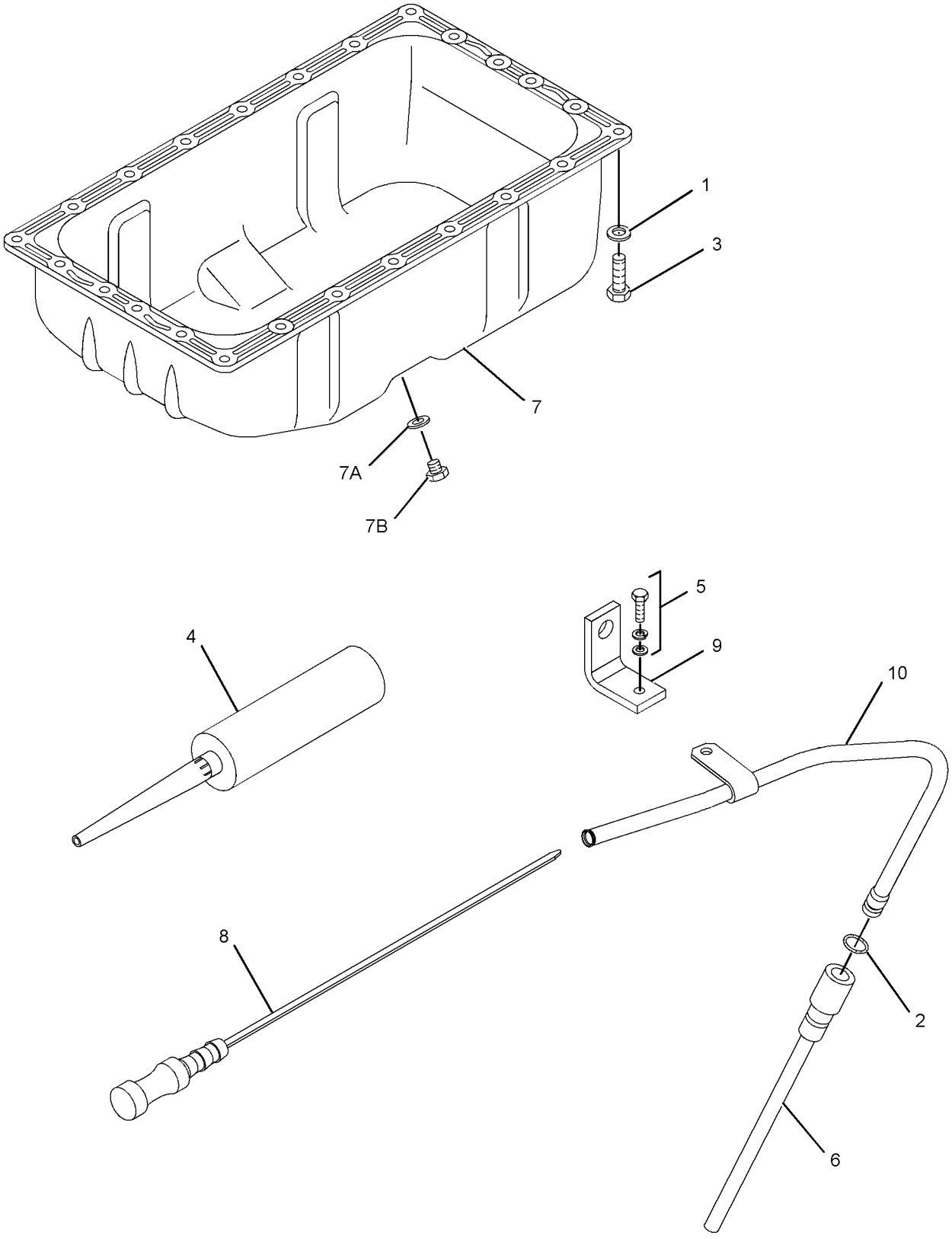


GRAPHIC #1 **<END>** g01852093

# BASIC ENGINE

## *315-8348* PISTON GP

**S/N: CYM1-UP**
**PART OF 342-1219 ENGINE AR-PRIMARY**
**AN ATTACHMENT**

**SMCS-1214, 1215** **i02883796**

| NOTE | REF NO | GRAPHIC REF | PART NUMBER | QTY | PART NAME 1 2 3 4 5 6 (PRODUCT LEVEL) | SEE PAGE |
|---|---|---|---|---|---|---|
| | 1 | 1 | **212-8597** | 8 | RING | |
| | 2 | 1 | **234-4815** | 4 | PIN-PISTON | |
| | 3 | 1 | **314-9962** | 4 | RING-PISTON (STANDARD) | |
| AB | | 1 | **314-9964** | 1 | RING-PISTON (0.25-MM OS) | |
| AB | | 1 | **314-9963** | 1 | RING-PISTON (0.5-MM OS) | |
| | 4 | 1 | **315-4669** | 4 | PISTON (STANDARD) | |
| AB | | 1 | **315-4670** | 1 | PISTON (0.25-MM OS) | |
| AB | | 1 | **315-4671** | 1 | PISTON (0.50-MM OS) | |

A-NOT PART OF THIS GROUP
B-USE AS REQUIRED

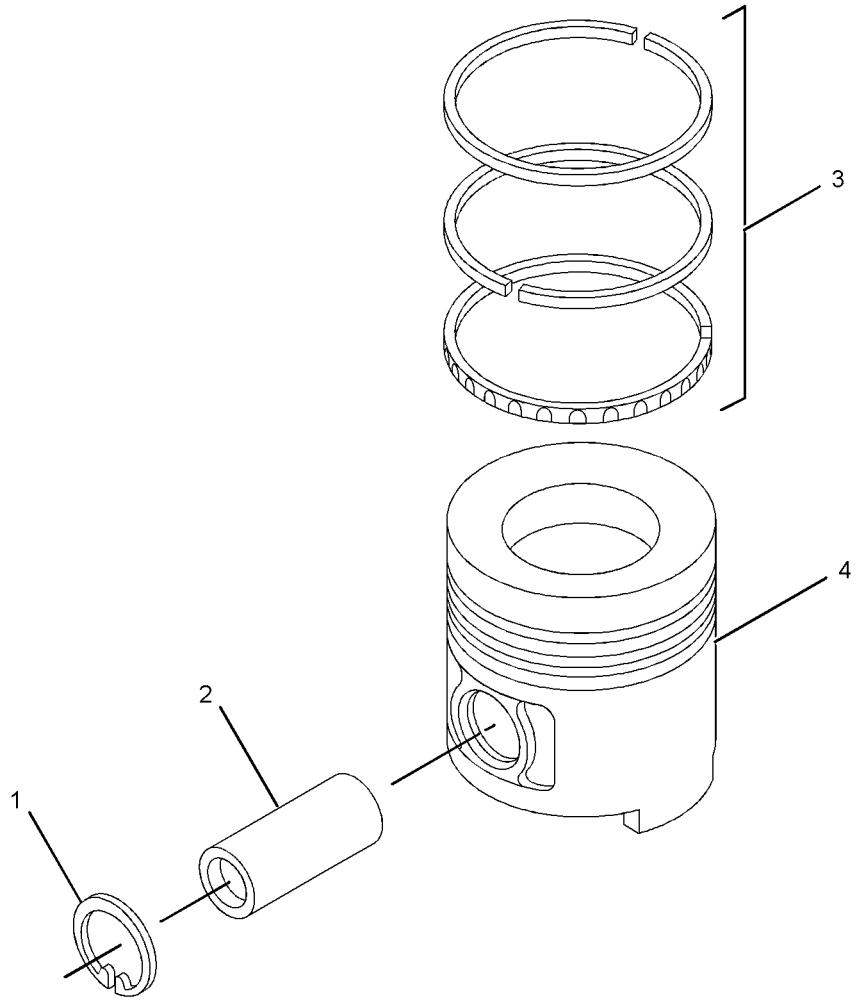


GRAPHIC #1 **<END>** g01445478

# 287-2922 PLUG GP-ENGINE

**S/N: CYM1-UP**
**PART OF 342-1219 ENGINE AR-PRIMARY**
**AN ATTACHMENT**

**SMCS-1000** **i02568378**

| NOTE | REF NO | GRAPHIC REF | PART NUMBER | QTY | PART NAME 1 2 3 4 5 6 (PRODUCT LEVEL) | SEE PAGE |
|---|---|---|---|---|---|---|
| | 1 | 1 | **5I-7505** | 6 | PLUG | |

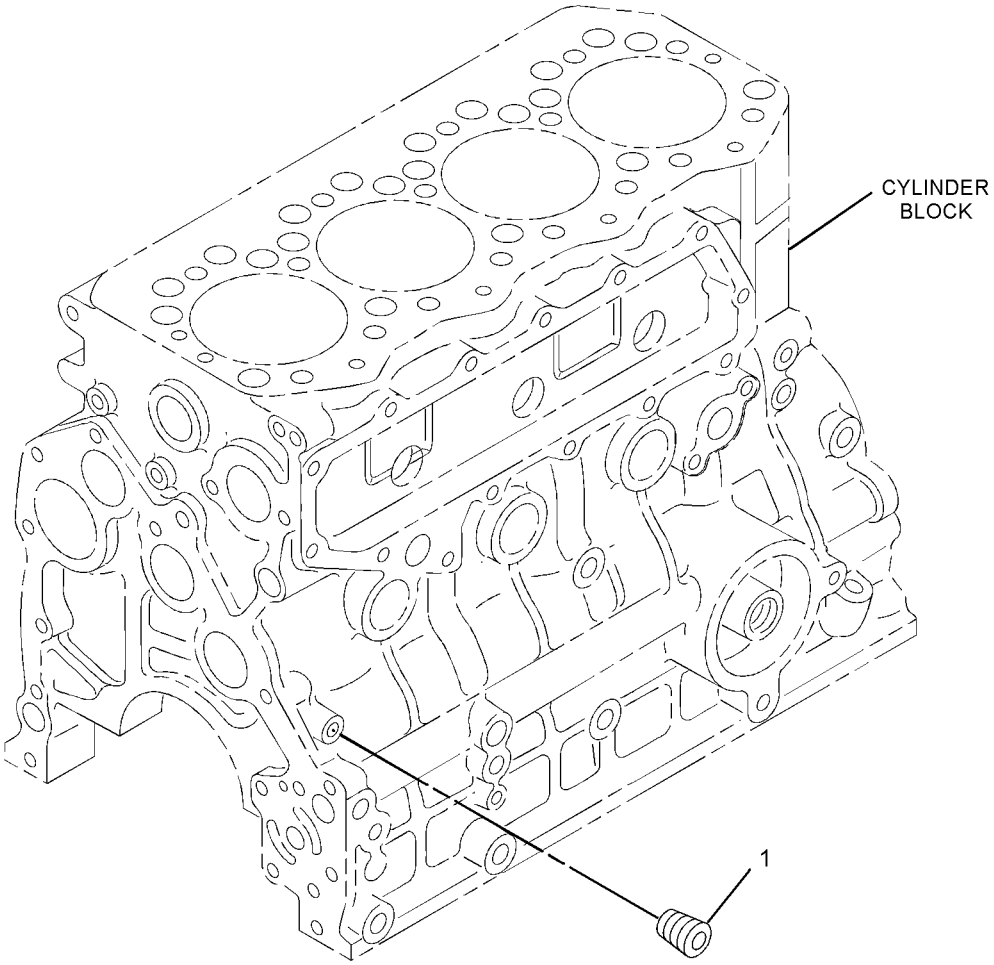


GRAPHIC #1 **<END>** g01325237

# BASIC ENGINE

## *287-2983* PLUG GP-ENGINE

**S/N: CYM1-UP**

**PART OF 342-1219 ENGINE AR-PRIMARY**

**AN ATTACHMENT**

**SMCS-1000** **i02616574**

| NOTE | REF NO | GRAPHIC REF | PART NUMBER | QTY | PART NAME 1 2 3 4 5 6 (PRODUCT LEVEL) | SEE PAGE |
|---|---|---|---|---|---|---|
| | 1 | 1 | **195-8211** | 1 | PLUG | |

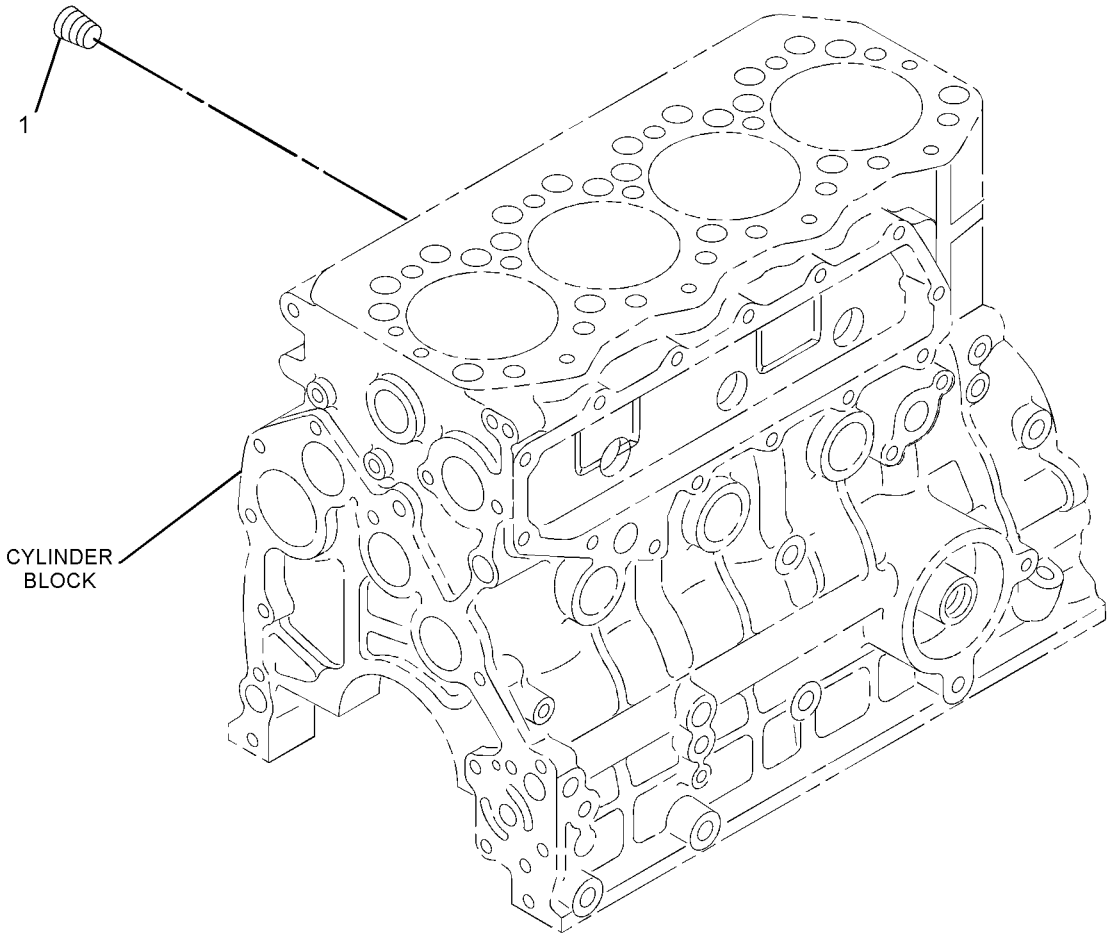


GRAPHIC #1 **<END>** g01325240

# BASIC ENGINE

## *301-3396* PULLEY GP-CRANKSHAFT

**S/N: CYM1-UP**

**PART OF 342-1219 ENGINE AR-PRIMARY**

**AN ATTACHMENT**

**SMCS-1205** **i02864961**

| NOTE | REF NO | GRAPHIC REF | PART NUMBER | QTY | PART NAME 1 2 3 4 5 6 (PRODUCT LEVEL) | SEE PAGE |
|---|---|---|---|---|---|---|
| | 1 | 1 | **301-3397** | 1 | PULLEY-CRANKSHAFT (2-GROOVE) | |

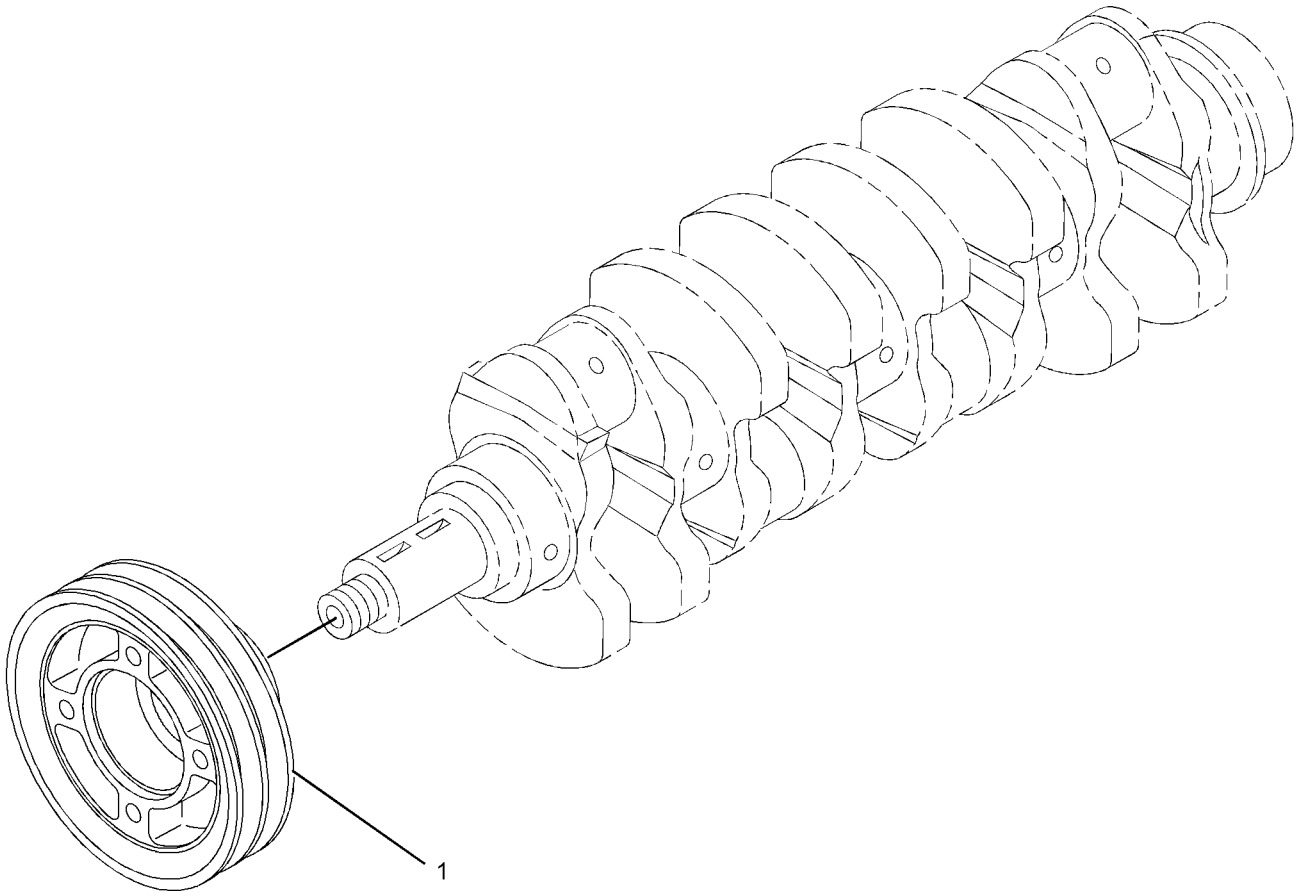


GRAPHIC #1 **<END>** g01351097

# *287-6114* PULLEY GP-WATER PUMP

**S/N: CYM1-UP**
**PART OF 342-1219 ENGINE AR-PRIMARY**
**AN ATTACHMENT**

**SMCS-1384** **i03552847**

| NOTE | REF NO | GRAPHIC REF | PART NUMBER | QTY | PART NAME 1 2 3 4 5 6 (PRODUCT LEVEL) | SEE PAGE |
|---|---|---|---|---|---|---|
| M | 1 | 1 | **8T-0642** | 4 | BOLT (M8X1.25X14-MM) | |
| | 2 | 1 | **9M-1974** | 4 | WASHER-HARD (8.8X16X2-MM THK) | |
| | 3 | 1 | **234-4807** | 1 | PULLEY (1-GROOVE) | |

M-METRIC PART

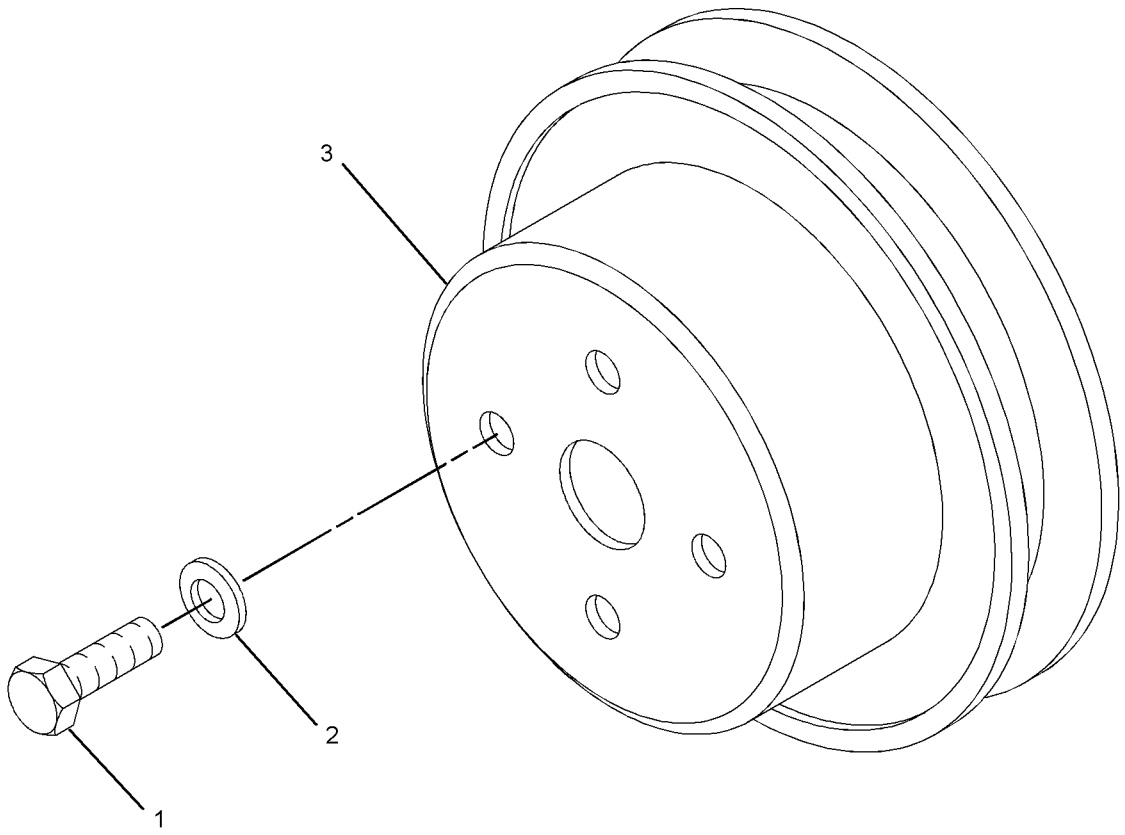


GRAPHIC #1 **<END>** g01326766

# BASIC ENGINE

## *287-6138* V-BELT GP

**S/N: CYM1-UP**
**WATER PUMP**
**PART OF 342-1219 ENGINE AR-PRIMARY**
**AN ATTACHMENT**

**SMCS-1357** **i03880351**

| NOTE | REF NO | GRAPHIC REF | PART NUMBER | QTY | PART NAME 1 2 3 4 5 6 (PRODUCT LEVEL) | SEE PAGE |
|---|---|---|---|---|---|---|
| | 1 | 1 | **352-4169** | 1 | V-BELT (WATER PUMP) | |

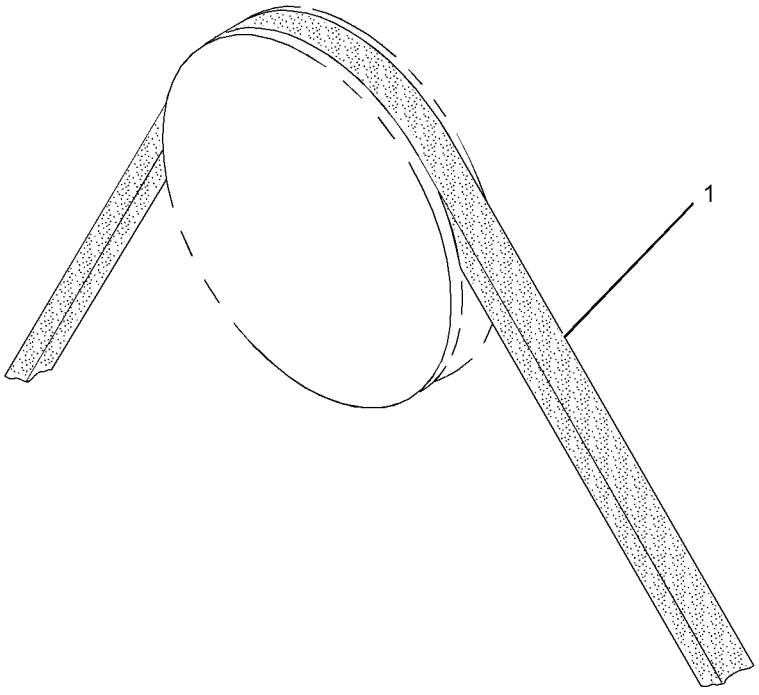


GRAPHIC #1 **<END>** g01321905

# *235-5880* VALVE MECHANISM GP

**S/N: CYM1-UP**

**PART OF 342-1219 ENGINE AR-PRIMARY**

**AN ATTACHMENT**

**SMCS-1102, 1112, 1121, 1123, 1208, 1209** **i02628721**

| NOTE | REF NO | GRAPHIC REF | PART NUMBER | QTY | PART NAME 1 2 3 4 5 6 (PRODUCT LEVEL) | SEE PAGE |
|---|---|---|---|---|---|---|
| | 1 | 1 | **5I-7625** | 8 | RETAINER | |
| | 2 | 1 | **5I-7630** | 8 | CAP | |
| | 3 | 1 | **5I-7719** | 16 | RETAINER | |
| M | 4 | 1 | **6V-3940** | 4 | BOLT (M8X1.25X25-MM) | |
| | 5 | 1 | **9M-1974** | 4 | WASHER-HARD (8.8X16X2-MM THK) | |
| | 6 | 1 | **233-5469** | 4 | VALVE-INLET | |
| | 7 | 1 | **233-5470** | 4 | VALVE-EXHAUST | |
| | 8 | 1 | **233-5471** | 8 | SPRING-VALVE | |
| | 10 | 1 | **233-5501** | 1 | ROCKER ARM GP | |
| | | 1 | **233-5476** | 1 | SHAFT AS | |
| | 10A | 1 | **095-2005** | 1 | CAP | |
| | 10B | 1 | **195-8324** | 2 | RING-SNAP | |
| | 10C | 1 | **221-5245** | 8 | ROCKER AS | |
| | 10D | 1 | **221-5250** | 3 | SPRING | |
| | 10E | 1 | **233-5477** | 4 | BRACKET | |
| | 10F | 1 | **233-5478** | 4 | BOLT | |

M-METRIC PART

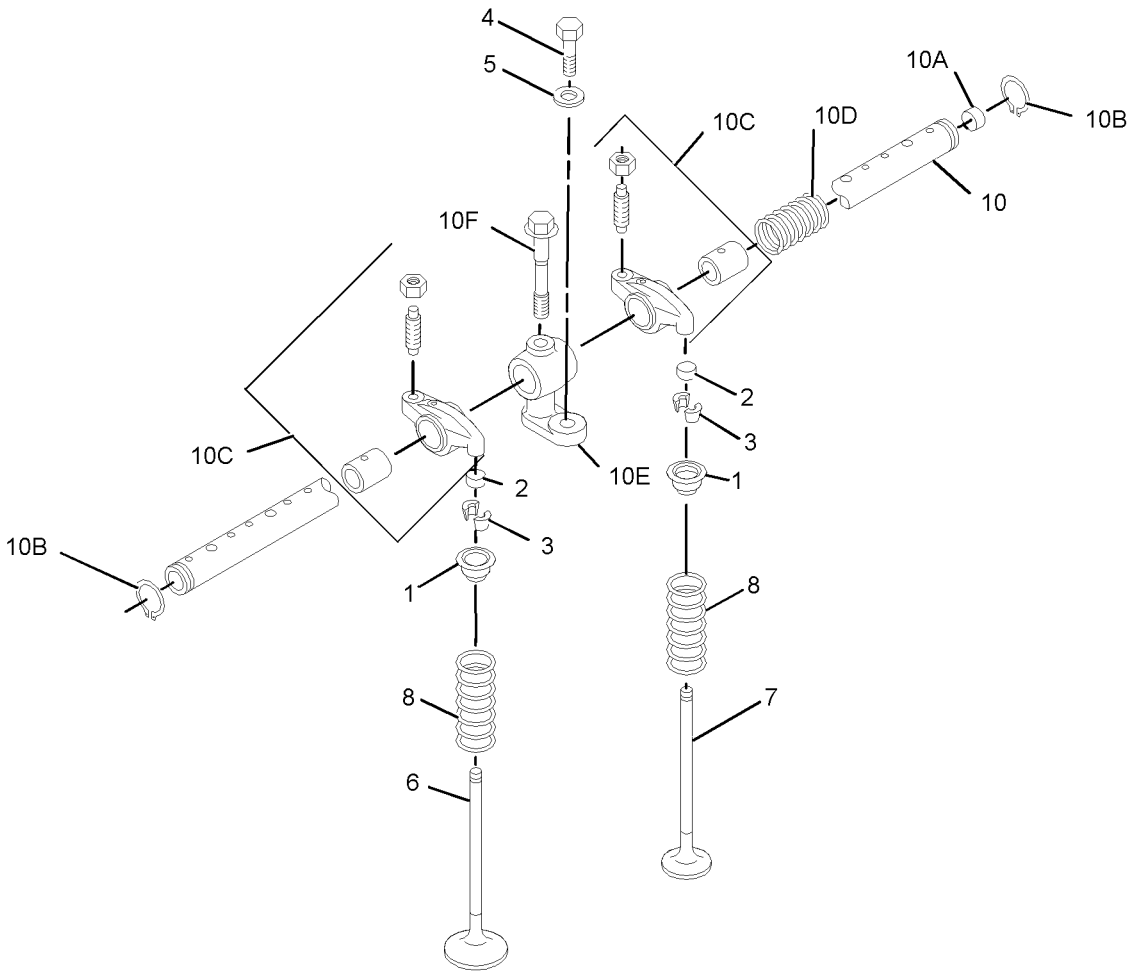


GRAPHIC #1 **<END>** g01348046

# LUBRICATION SYSTEM

## *361-3334* FILTER GP-ENGINE OIL

**S/N: CYM1-UP**
**PART OF 342-1219 ENGINE AR-PRIMARY**
**AN ATTACHMENT**

**SMCS-1308** **i03907399**

| NOTE | REF NO | GRAPHIC REF | PART NUMBER | QTY | PART NAME 1 2 3 4 5 6 (PRODUCT LEVEL) | SEE PAGE |
|---|---|---|---|---|---|---|
| | 1 | 1 | **253-0244** | 1 | BUSHING-THREADED | |
| | 2 | 1 | **267-2528** | 1 | FILTER AS-ENGINE OIL | |

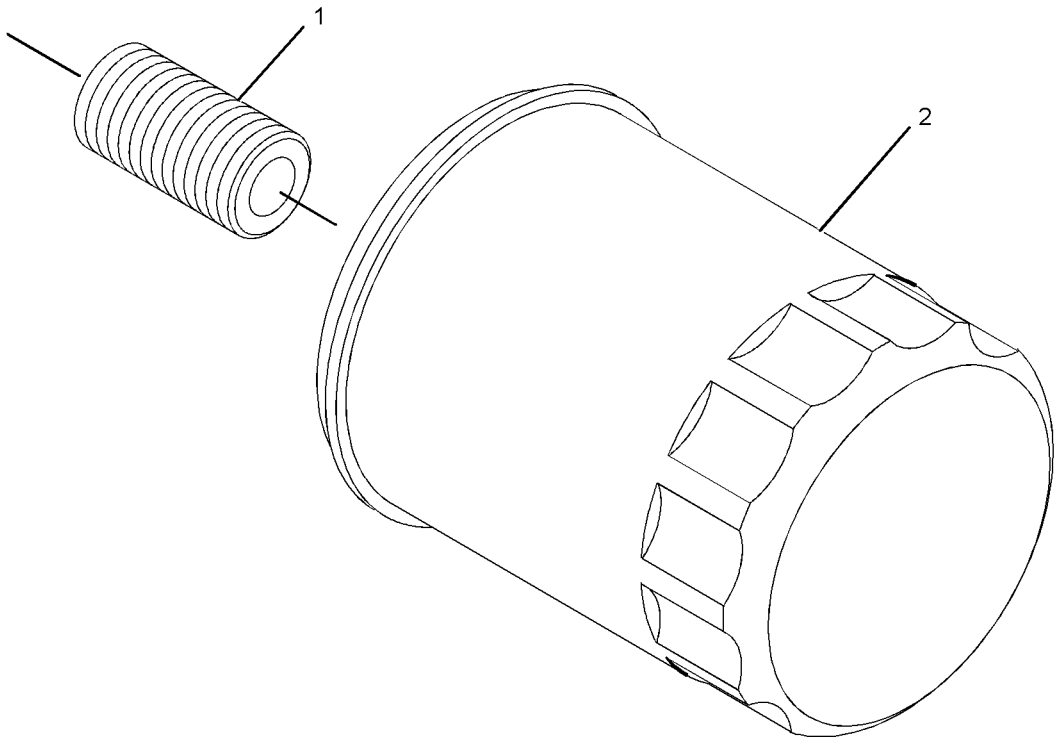


GRAPHIC #1 **<END>** g02150821

# *287-5377* LINES GP-ENGINE OIL

**S/N: CYM1-UP**

**PART OF 342-1219 ENGINE AR-PRIMARY**

**AN ATTACHMENT**

**SMCS-1307** **i02555558**

| NOTE | REF NO | GRAPHIC REF | PART NUMBER | QTY | PART NAME 1 2 3 4 5 6 (PRODUCT LEVEL) | SEE PAGE |
|---|---|---|---|---|---|---|
| M | 1 | 1 | **6V-5215** | 3 | BOLT (M8X1.25X16-MM) | |
| | 2 | 1 | **9M-1974** | 3 | WASHER-HARD (8.8X16X2-MM THK) | |
| | 3 | 1 | **233-5494** | 1 | STRAINER AS-OIL (ENGINE) | |
| | 4 | 1 | **239-8513** | 1 | SEAL-O-RING | |

M-METRIC PART

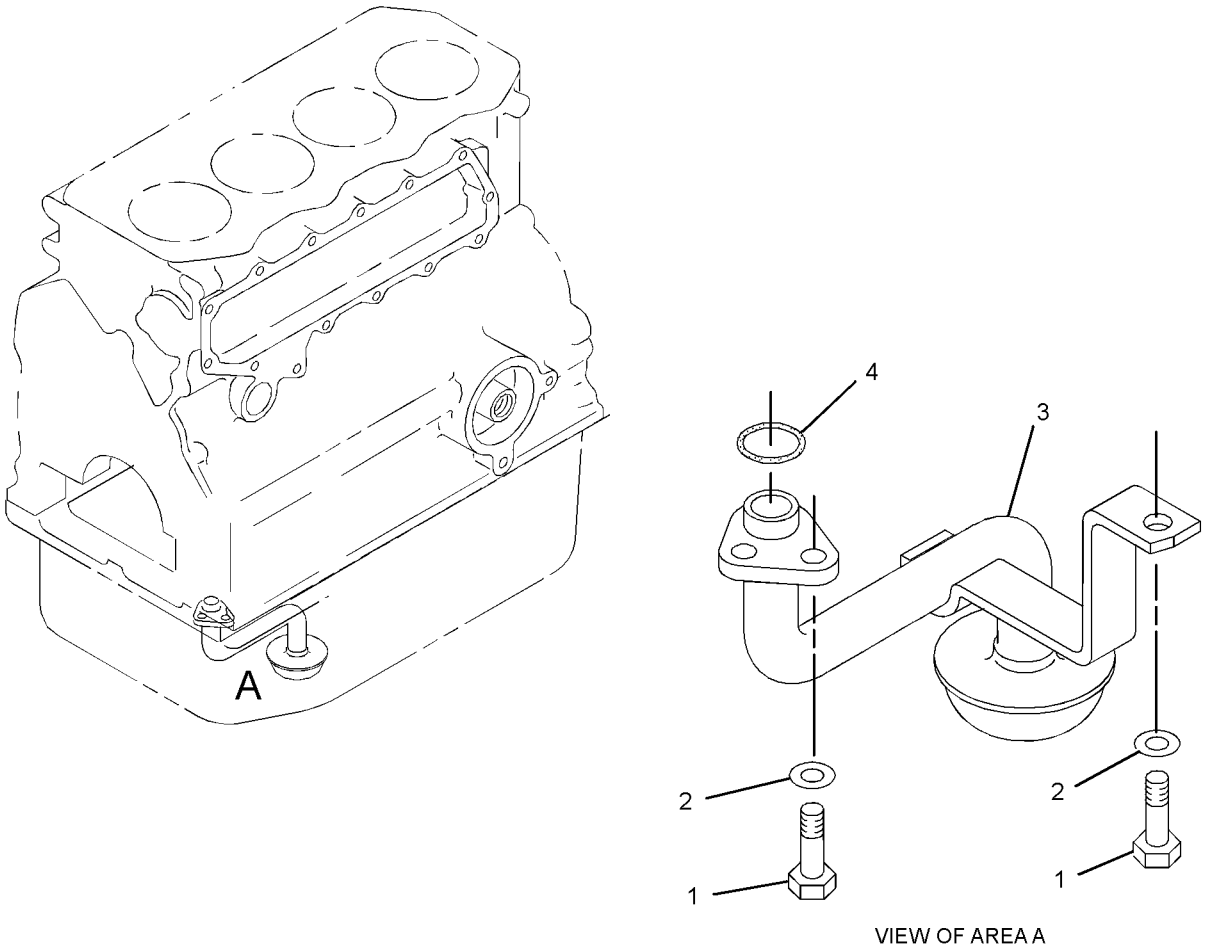


VIEW OF AREA A

GRAPHIC #1 **<END>** g01342337

# LUBRICATION SYSTEM

## *235-5895* PUMP GP-ENGINE OIL

**S/N: CYM1-UP**
**PART OF 342-1219 ENGINE AR-PRIMARY**
**AN ATTACHMENT**

**SMCS-1304, 1315** **i02524390**

| NOTE | REF NO | GRAPHIC REF | PART NUMBER | QTY | PART NAME 1 2 3 4 5 6 (PRODUCT LEVEL) | SEE PAGE |
|---|---|---|---|---|---|---|
| M | 1 | 1 | **6V-5217** | 4 | BOLT (M8X1.25X20-MM) | |
| | 2 | 1 | **9M-1974** | 4 | WASHER-HARD (8.8X16X2-MM THK) | |
| | 3 | 1 | **113-1141** | 1 | PUMP AS-OIL | |
| | 4 | 1 | **101-6544** | 1 | NUT | |
| | 5 | 1 | **6V-5839** | 1 | WASHER (11X21X2.5-MM THK) | |
| | 6 | 1 | **103-9083** | 1 | SEAL-O-RING | |

M-METRIC PART

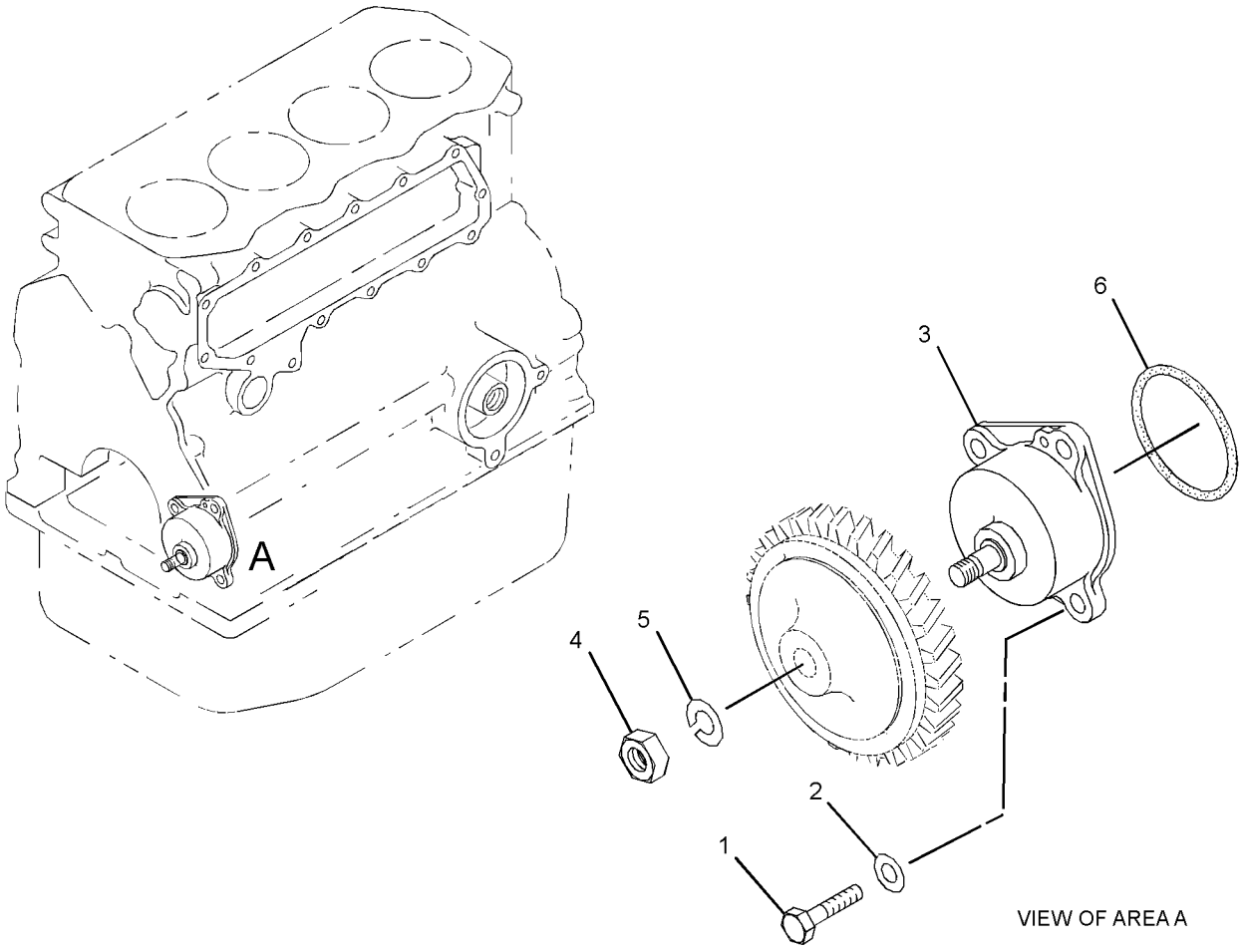


GRAPHIC #1 **<END>** g01348493

# *287-5665* VALVE GP-ENGINE OIL RELIEF

**S/N: CYM1-UP**
**PART OF 342-1219 ENGINE AR-PRIMARY**
**AN ATTACHMENT**

**SMCS-1315** **i02961094**

| NOTE | REF NO | GRAPHIC REF | PART NUMBER | QTY | PART NAME 1 2 3 4 5 6 (PRODUCT LEVEL) | SEE PAGE |
|---|---|---|---|---|---|---|
| | 1 | 1 | **294-1767** | 1 | VALVE (ENGINE OIL PRESSURE) | |
| | 2 | 1 | **103-9725** | 1 | VALVE AS (RELIEF) (ENGINE) | |
| | 3 | 1 | **233-5496** | 1 | GASKET | |
| | 4 | 1 | **234-4796** | 1 | GASKET | |

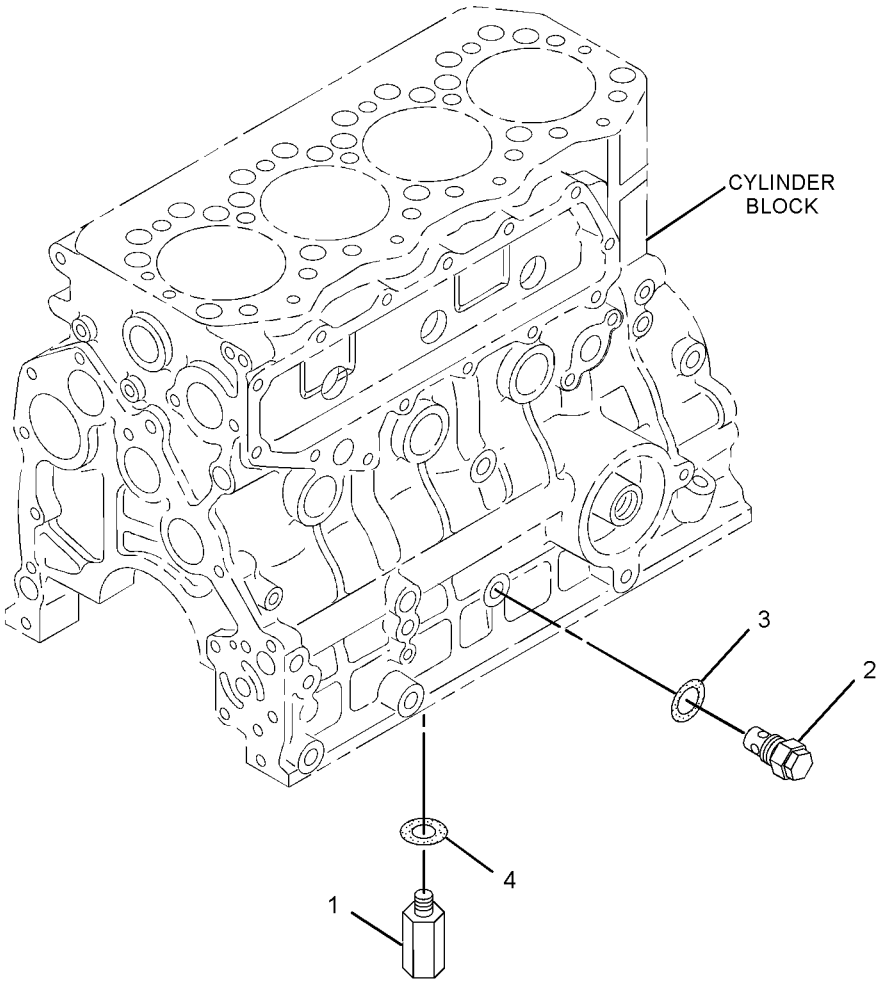


GRAPHIC #1 **<END>** g01323255

# COOLING SYSTEM

## *361-2880* COOLER GP-ENGINE OIL

**S/N: CYM1-UP**
**PART OF 342-1219 ENGINE AR-PRIMARY**
**AN ATTACHMENT**

**SMCS-1378** **i03937750**

| NOTE | PART NUMBER | QTY | PART NAME 1 2 3 4 5 6 (PRODUCT LEVEL) | SEE PAGE |
|---|---|---|---|---|
| | **336-9857** | 15 | BOLT | |
| | **195-8356** | 1 | BOLT AS | |
| | **234-4803** | 2 | COOLER AS | |
| | **234-4801** | 1 | COVER | |
| | **234-4802** | 1 | COVER AS | |
| | **234-4800** | 1 | GASKET | |
| | **336-9856** | 1 | GASKET | |
| M | **178-3336** | 5 | NUT-HEX FLANGE (M8X1.25-THD) | |
| | **4I-9404** | 2 | SEAL-O-RING | |
| | **095-1513** | 4 | SEAL-O-RING | |
| | **239-8513** | 2 | SEAL-O-RING | |
| | **234-4798** | 1 | STUD | |

M-METRIC PART

**<END>**

## *292-4040* DRAIN GP-COOLANT

**S/N: CYM1-UP**

**PART OF 342-1219 ENGINE AR-PRIMARY**

**AN ATTACHMENT**

**SMCS-1380, 1395** **i03552850**

| NOTE | REF NO | GRAPHIC REF | PART NUMBER | QTY | PART NAME 1 2 3 4 5 6 (PRODUCT LEVEL) | SEE PAGE |
|---|---|---|---|---|---|---|
| | 1 | 1 | **238-8278** | 1 | VALVE AS-DRAIN (WATER) | |

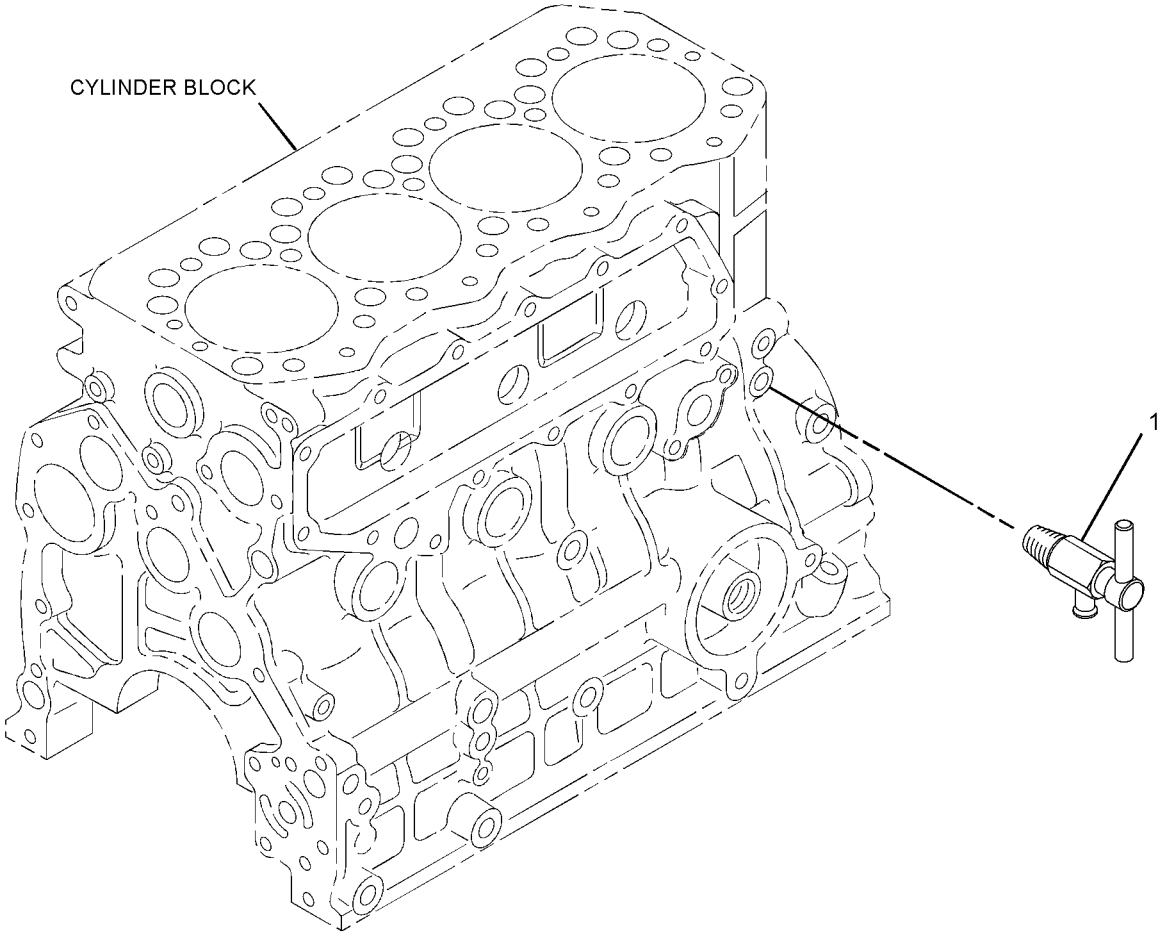


GRAPHIC #1 **<END>** g01354785

# COOLING SYSTEM

## *235-5900* LINES GP-WATER

**S/N: CYM1-UP**
**PART OF 342-1219 ENGINE AR-PRIMARY**
**AN ATTACHMENT**

**SMCS-1355, 1380, 1393** **i02643608**

| NOTE | REF NO | GRAPHIC REF | PART NUMBER | QTY | PART NAME 1 2 3 4 5 6 (PRODUCT LEVEL) | SEE PAGE |
|---|---|---|---|---|---|---|
| | 1 | 1 | **5I-7628** | 2 | GASKET | |
| | 2 | 1 | **5I-8056** | 2 | PLUG (DRAIN) | |
| | 3 | 1 | **096-8475** | 2 | BOLT (25-MM LG) | |
| M | 4 | 1 | **6V-5221** | 1 | BOLT (M8X1.25X80-MM) | |
| M | 5 | 1 | **8T-0276** | 1 | BOLT (M8X1.25X45-MM) | |
| | 6 | 1 | **9M-1974** | 4 | WASHER-HARD (8.8X16X2-MM THK) | |
| | 7 | 1 | **5I-7728** | 1 | GASKET | |
| | 8 | 1 | **246-8315** | 1 | HOSE-BYPASS | |
| | 9 | 1 | **257-8739** | 2 | CLAMP-HOSE (HOSE) | |
| | 10 | 1 | **234-4831** | 1 | COVER | |
| | 11 | 1 | **235-4959** | 1 | GASKET (WATER TEMPERATURE REGULATOR) | |
| | 12 | 1 | **235-4960** | 1 | REGULATOR AS-WATER TEMPERATURE (THERMOSTAT) | |
| | 13 | 1 | **246-8314** | 1 | HOUSING | |

M-METRIC PART

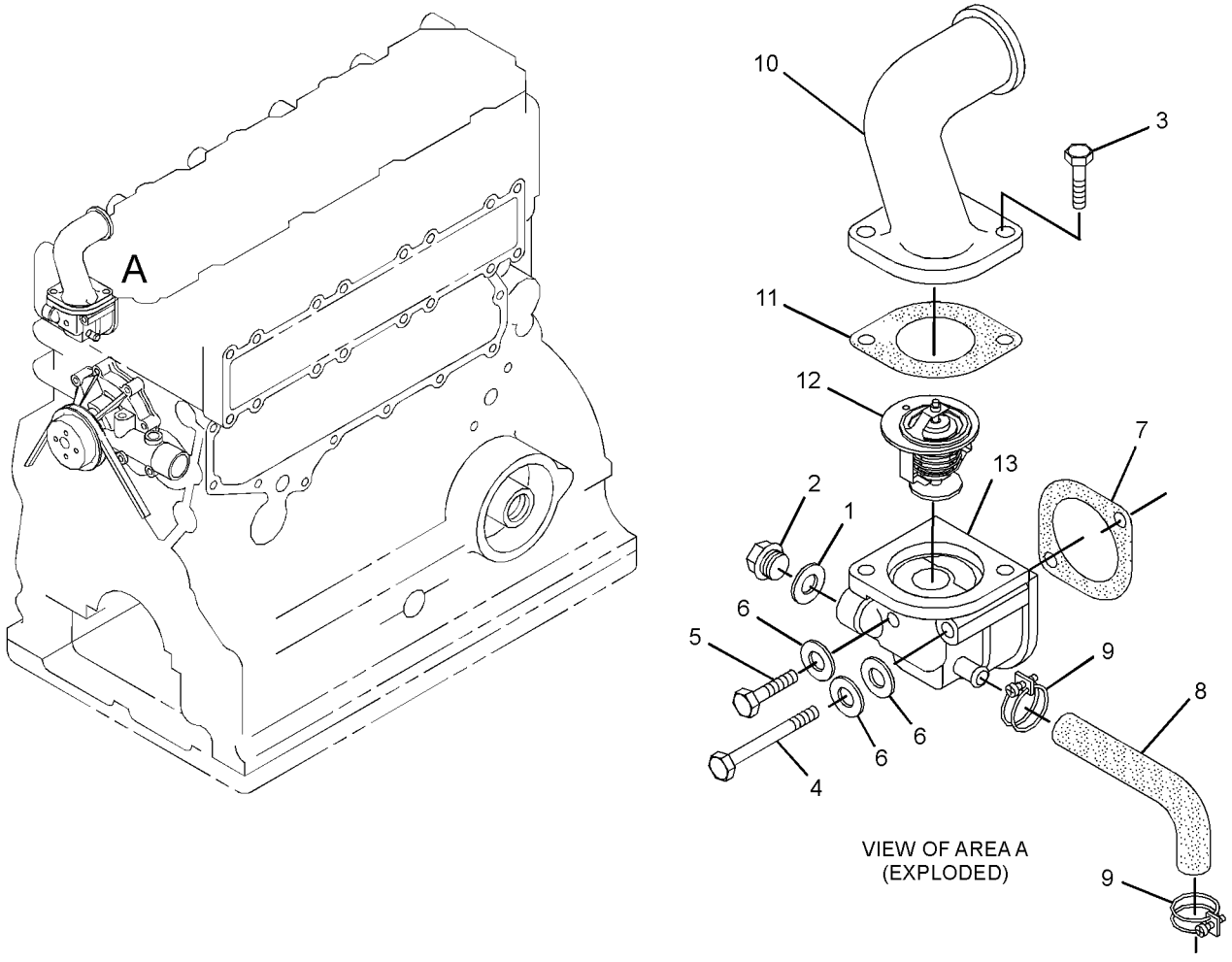


GRAPHIC #1 **<END>** g01345074

# *218-0938* MOUNTING GP-RAD & OIL COOLER

**S/N: TNK1-UP**

**PART OF 326-5361 INSTALLATION AR-ENGINE**

**SMCS-1353, 1374** **i03969179**

| NOTE | REF NO | GRAPHIC REF | PART NUMBER | QTY | PART NAME 1 2 3 4 5 6 (PRODUCT LEVEL) | SEE PAGE |
|---|---|---|---|---|---|---|
| D | 1 | 1 | **5P-8309** | | SEAL (0.6-M EACH) | |
| | 2 | 1 | **5P-0372** | 2 | LOCK PIN | |
| | 3 | 1 | **5V-8309** | 1 | STRIKER AS | |
| | 4 | 1 | **8T-0318** | 1 | SHIM (0.8-MM THK) | |
| | 5 | 1 | **8T-4159** | 1 | BUMPER | |
| | 6 | 1 | **142-8832** | 1 | PIN AS | |
| | 7 | 1 | **193-8345** | 1 | SPRING AS-GAS (GRILL) | |
| | 8 | 1 | **208-6176** | 4 | STUD-BALL | |
| | 9 | 1 | **220-8586** | 1 | SUPPORT AS | |
| | 10 | 1 | **220-8587** | 1 | SUPPORT AS | |
| | 11 | 1 | **220-8588** | 1 | GRILL AS | |
| | 12 | 1 | **223-4275** | 1 | LATCH AS | |
| | 13 | 1 | **232-1789** | 1 | SPRING AS-GAS (SUPPORT) | |
| | 14 | 1 | **178-2255** | 2 | PIN | |
| | 15 | 1 | **2K-4973** | 1 | LOCKNUT (3/8-16-THD) | |
| M | 16 | 1 | **5C-7261** | 1 | NUT (M8X1.25-THD) | |
| | 17 | 1 | **7X-7729** | 1 | WASHER (11X25X3-MM THK) | |
| | 18 | 1 | **8T-4121** | 8 | WASHER-HARD (11X21X2.5-MM THK) | |
| M | 19 | 1 | **8T-4133** | 4 | NUT (M10X1.5-THD) | |
| M | 20 | 1 | **8T-4181** | 3 | BOLT (M6X1X20-MM) | |
| | 21 | 1 | **8T-4205** | 3 | WASHER-HARD (7.2X14.5X2-MM THK) | |
| M | 22 | 1 | **8T-6466** | 4 | BOLT (M10X1.5X60-MM) | |

D-ORDER BY THE METER
M-METRIC PART

## *218-0938* **MOUNTING GP-RAD & OIL COOLER** *(contd.)* **i03969179**

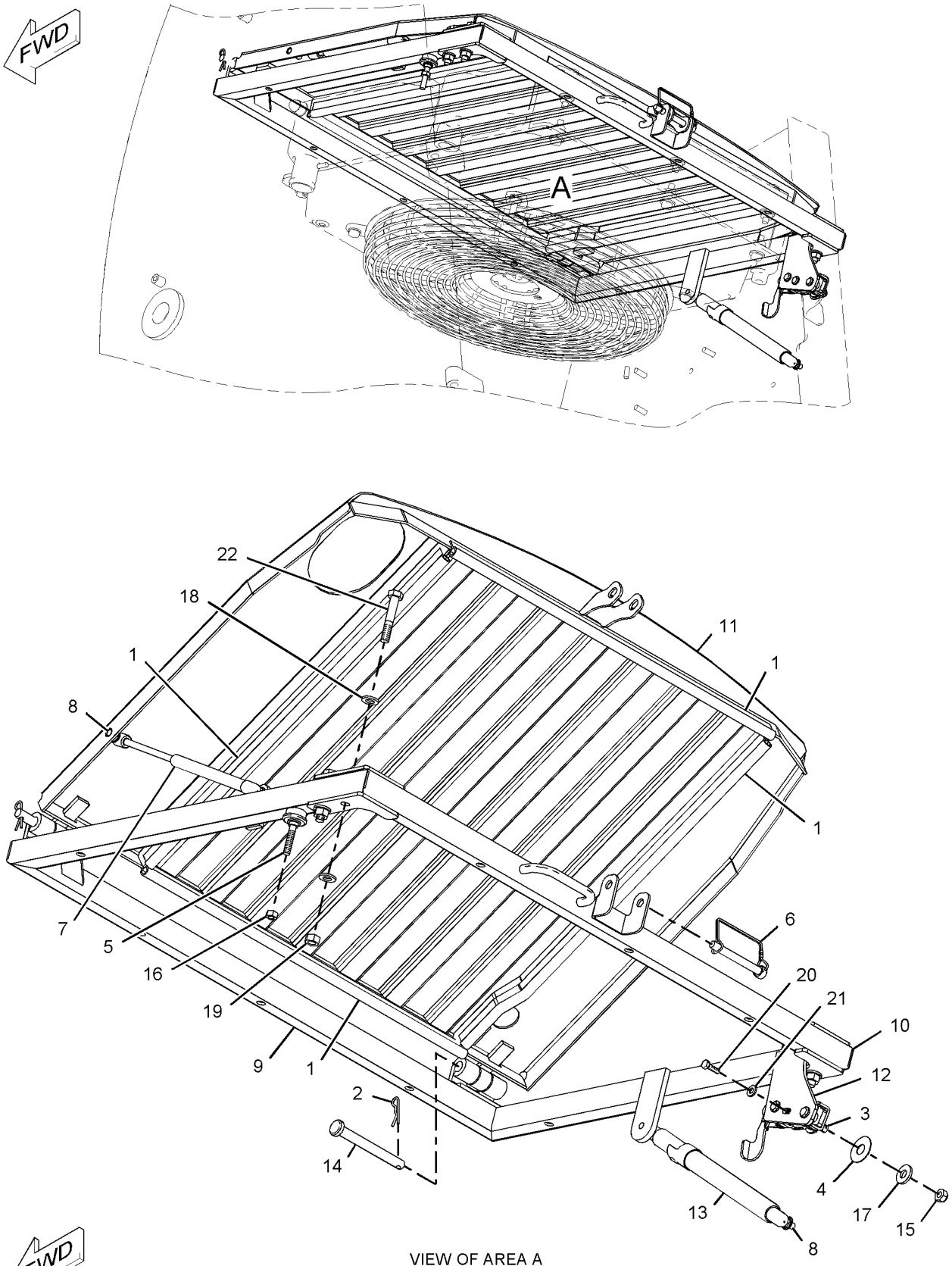


VIEW OF AREA A

GRAPHIC #1 **<END>** g01033317

# COOLING SYSTEM

## *287-6056* PUMP GP-WATER

**S/N: CYM1-UP**
**PART OF 342-1219 ENGINE AR-PRIMARY**
**AN ATTACHMENT**

**SMCS-1355, 1361** **i03355624**

| NOTE | REF NO | GRAPHIC REF | PART NUMBER | QTY | PART NAME 1 2 3 4 5 6 (PRODUCT LEVEL) | SEE PAGE |
|---|---|---|---|---|---|---|
| | 1 | 1 | **8T-4224** | 5 | WASHER-HARD (8.8X16X2-MM THK) | |
| | 2 | 1 | **285-9066** | 1 | BOLT (M8X1.25X65-MM) | |
| Y | 3 | 1 | **335-9117** | 1 | PUMP GP-WATER | 44 |
| | 4 | 1 | **335-9125** | 1 | GASKET | |
| M | 5 | 1 | **7X-0818** | 4 | BOLT (M8X1.25X45-MM) | |

M-METRIC PART
Y-SEPARATE ILLUSTRATION

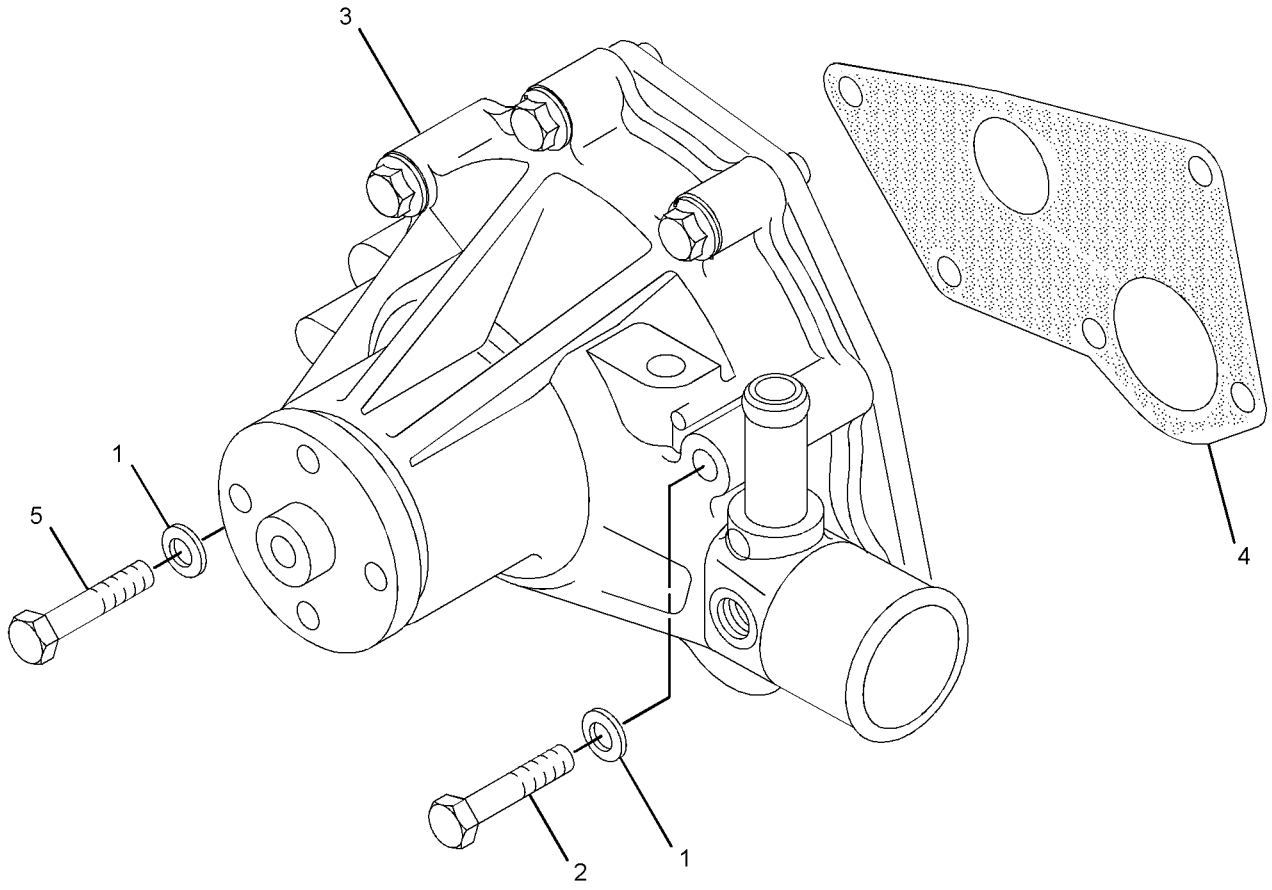


GRAPHIC #1 **<END>** g01757413

## 335-9117 PUMP GP-WATER

**S/N: CYM1-UP**
**PART OF 287-6056 PUMP GP-WATER**
**AN ATTACHMENT**

**SMCS-1355, 1361** **i03562121**

| NOTE | REF NO | GRAPHIC REF | PART NUMBER | QTY | PART NAME 1 2 3 4 5 6 (PRODUCT LEVEL) | SEE PAGE |
|---|---|---|---|---|---|---|
| M | 1 | 1 | **6V-3940** | 2 | BOLT (M8X1.25X25-MM) | |
| M | 2 | 1 | **7X-2537** | 1 | BOLT (M8X1.25X35-MM) | |
| | 3 | 1 | **9M-1974** | 2 | WASHER-HARD (8.8X16X2-MM THK) | |
| | 4 | 1 | **103-9747** | 1 | COVER-PUMP | |
| | 5 | 1 | **195-8460** | 1 | PLUG | |
| | 6 | 1 | **335-9124** | 1 | GASKET | |

M-METRIC PART

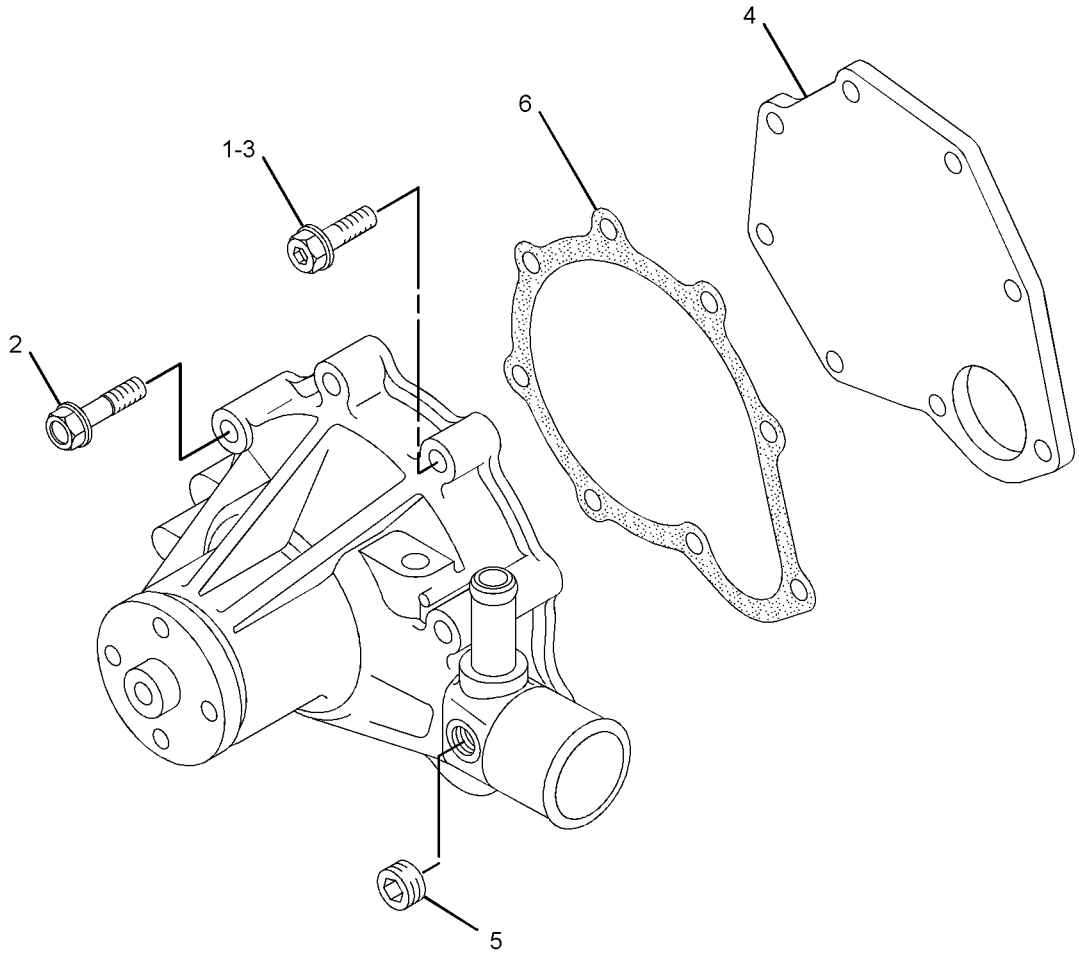


GRAPHIC #1 **<END>** g01757556

## *221-9124* RADIATOR & HYD OIL COOLER GP

**S/N: TNK1-UP**

**PART OF 218-0924 RADIATOR & OIL COOLER MTG GP**

**SMCS-1351, 1356, 1386** **i03969177**

| NOTE | REF NO | GRAPHIC REF | PART NUMBER | QTY | PART NAME 1 2 3 4 5 6 (PRODUCT LEVEL) | SEE PAGE |
|---|---|---|---|---|---|---|
| | 1 | 1 | **036-1865** | 1 | CAP AS-RADIATOR | |
| | 2 | 1 | **069-4080** | 1 | FITTING | |
| | 3 | 1 | **207-6154** | 1 | GAUGE-SIGHT (RADIATOR) | |
| | 4 | 1 | *217-3572* | 1 | FAN GP-BLOWER | |
| | | 1 | **8T-4224** | 4 | WASHER-HARD (8.8X16X2-MM THK) | |
| M | | 1 | **8T-4908** | 4 | BOLT (M8X1.25X25-MM) | |
| | | 1 | **203-4827** | 1 | FAN AS (7-BLADE) | |
| | | 1 | **229-8796** | 1 | ADAPTER | |
| | 5 | 1 | **218-0926** | 1 | GUARD AS | |
| | 6 | 1 | **220-1043** | 1 | SHROUD AS | |
| M | 7 | 1 | **227-6715** | 1 | STUD (M10X1.5X30-MM) | |
| | 8 | 1 | **280-8312** | 1 | RADIATOR & HYD OIL COOLER AS | |
| | 9 | 1 | **4K-8864** | 2 | CLIP | |
| | 10 | 1 | **7M-7410** | 1 | PLUG-PIPE | |
| | 11 | 1 | **7X-7729** | 12 | WASHER (11X25X3-MM THK) | |
| | 12 | 1 | **8T-4121** | 4 | WASHER-HARD (11X21X2.5-MM THK) | |
| M | 13 | 1 | **8T-4133** | 6 | NUT (M10X1.5-THD) | |
| M | 14 | 1 | **8T-4196** | 9 | BOLT (M10X1.5X35-MM) | |

M-METRIC PART

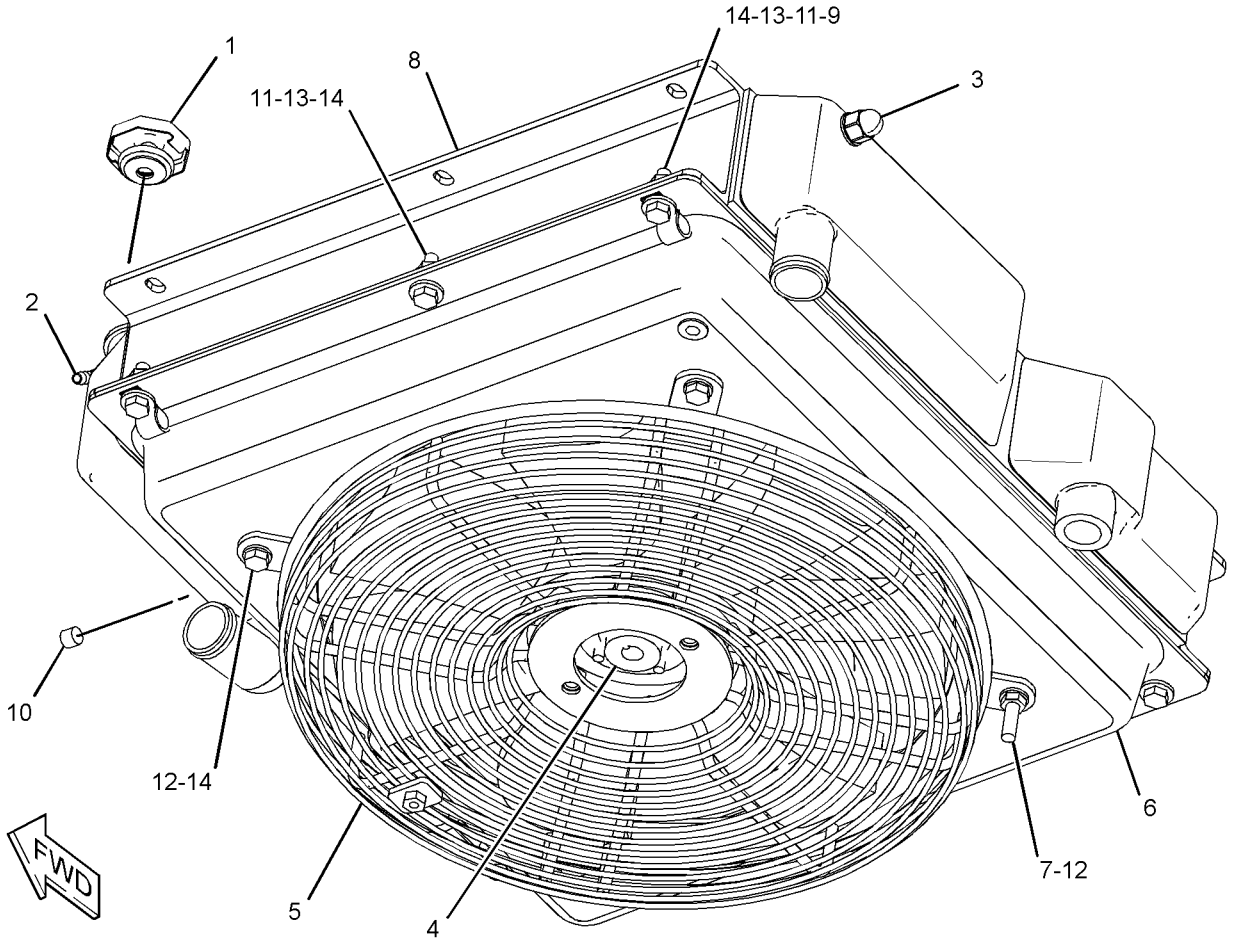


GRAPHIC #1 **<END>** g01376155

# COOLING SYSTEM

## *218-0924* RADIATOR & OIL COOLER MTG GP

**S/N: TNK1-UP**

**PART OF 326-5361 INSTALLATION AR-ENGINE**

**SMCS-1351, 1354** **i03164451**

| NOTE | REF NO | GRAPHIC REF | PART NUMBER | QTY | PART NAME 1 2 3 4 5 6 (PRODUCT LEVEL) | SEE PAGE |
|---|---|---|---|---|---|---|
| | 1 | 1 | **1P-4278** | 2 | CLAMP-HOSE | |
| | 2 | 1 | **7X-1443** | 4 | PROTECTOR | |
| | 3 | 1 | **9C-5344** | 1 | SPACER (10.5X20X18-MM THK) | |
| | 4 | 1 | **218-0935** | 1 | HOSE (WATER PUMP) | |
| | 5 | 1 | **218-0936** | 1 | HOSE (TEMPERATURE REGULATOR) | |
| Y | 6 | 1 | *221-9124* | 1 | RADIATOR & HYD OIL COOLER GP | 45 |
| | 7 | 1 | **222-1178** | 4 | CLAMP | |
| C | 8 | 1 | **285-5794** | 1 | RECOVERY GP-COOLANT | |
| | | 1 | **169-6715** | 1 | CAP-VENTED (COOLANT RECOVERY) | |
| M | 9 | 1 | **131-3540** | 2 | LOCKNUT (M8X1.25-THD) | |
| | 10 | 1 | **4K-8864** | 1 | CLIP | |
| | 11 | 1 | **5P-7470** | 1 | CLIP (SLOT) | |
| | 12 | 1 | **5P-7471** | 1 | CLIP (TAB) | |
| | 13 | 1 | **5P-7703** | 1 | GROMMET | |
| | 14 | 1 | **7X-7729** | 12 | WASHER (11X25X3-MM THK) | |
| | 15 | 1 | **8T-4121** | 2 | WASHER-HARD (11X21X2.5-MM THK) | |
| M | 16 | 1 | **8T-4133** | 6 | NUT (M10X1.5-THD) | |
| M | 17 | 1 | **8T-4191** | 1 | BOLT (M10X1.5X16-MM) | |
| | 18 | 1 | **8T-4224** | 2 | WASHER-HARD (8.8X16X2-MM THK) | |
| M | 19 | 1 | **8T-5005** | 1 | BOLT (M10X1.5X70-MM) | |
| M | 20 | 1 | **8T-6466** | 5 | BOLT (M10X1.5X60-MM) | |
| M | 21 | 1 | **8T-4185** | 1 | BOLT (M10X1.5X50-MM) | |
| E | 22 | 1 | **5P-1420** | | HOSE (146-CM) | |
| | 23 | 1 | **200-6345** | 1 | MOUNT (DUAL SWIVEL) | |
| | 24 | 1 | **204-2281** | 2 | STRAP-CABLE | |

C-CHANGE FROM PREVIOUS TYPE
E-ORDER BY THE CENTIMETER
M-METRIC PART
Y-SEPARATE ILLUSTRATION

## *218-0924* **RADIATOR & OIL COOLER MTG GP** *(contd.)* **i03164451**

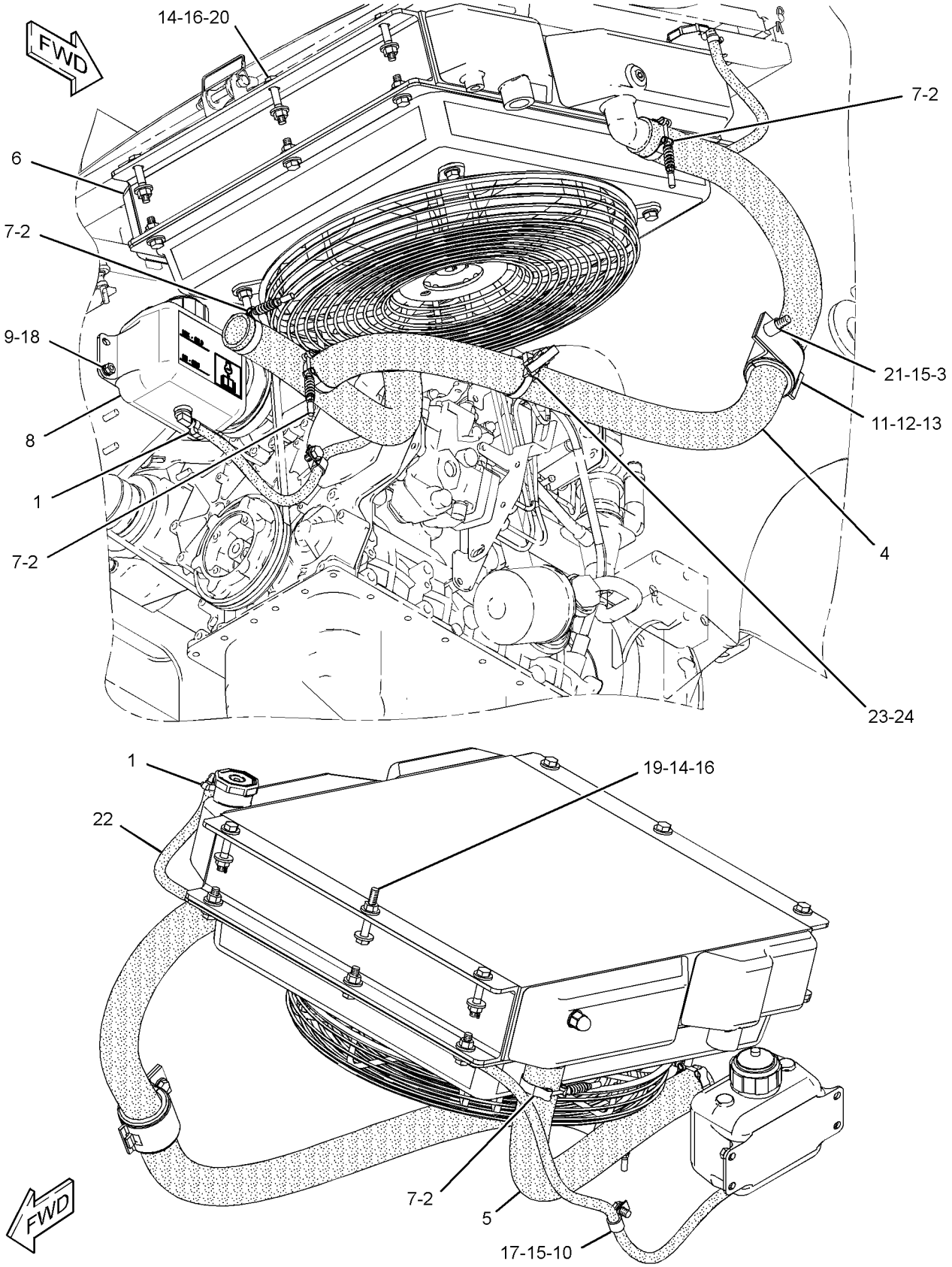


GRAPHIC #1

**<END>**

g01829898

# AIR INLET AND EXHAUST SYSTEM

## *222-9812* AIR CLEANER GP

**S/N: TNK1-UP**

**PART OF 326-5361 INSTALLATION AR-ENGINE**

**SMCS-1051, 1054** **i01991441**

| NOTE | REF NO | GRAPHIC REF | PART NUMBER | QTY | PART NAME 1 2 3 4 5 6 (PRODUCT LEVEL) | SEE PAGE |
|---|---|---|---|---|---|---|
| Y | 1 | 1 | *243-0405* | 1 | AIR CLEANER GP | 49 |
| M | 2 | 1 | **5C-7261** | 2 | NUT (M8X1.25-THD) | |
| | 3 | 1 | **5P-4116** | 2 | WASHER-HARD (8.8X20.5X2-MM THK) | |

M-METRIC PART
Y-SEPARATE ILLUSTRATION

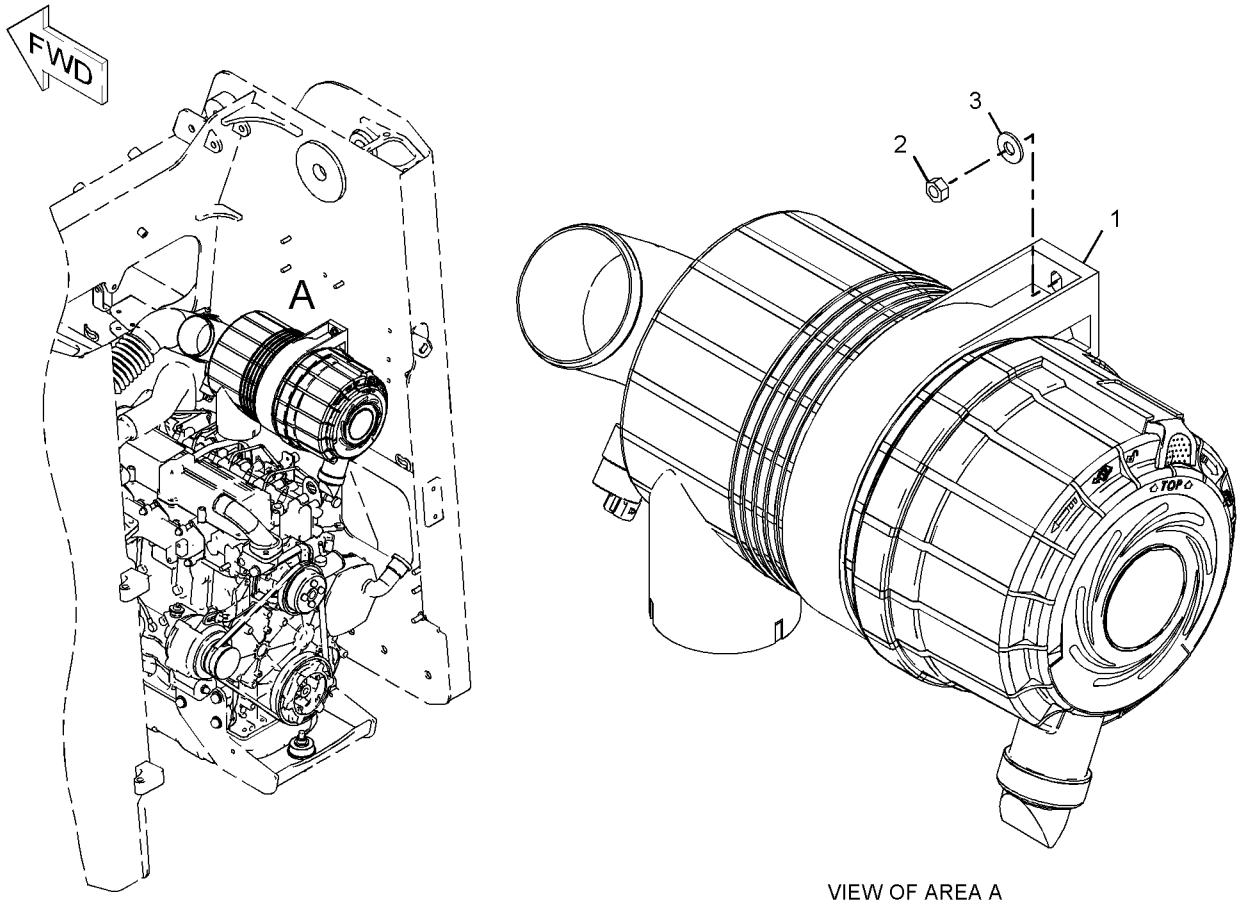


VIEW OF AREA A

GRAPHIC #1 **<END>** g01034818

# *243-0405* AIR CLEANER GP

**S/N: TNK1-UP**

**PART OF 222-9812 AIR CLEANER GP**

**SMCS-1051, 1054** **i03969174**

| NOTE | REF NO | GRAPHIC REF | PART NUMBER | QTY | PART NAME 1 2 3 4 5 6 (PRODUCT LEVEL) | SEE PAGE |
|---|---|---|---|---|---|---|
| | 1 | 1 | **152-4898** | 1 | BAND-MOUNTING | |
| | 2 | 1 | **237-7325** | 1 | INDICATOR (AIR CLEANER) | |
| | 3 | 1 | **243-0406** | 1 | AIR CLEANER GP | |
| | | 1 | **110-6326** | 1 | FILTER ELEMENT AS-AIR (PRIMARY) | |
| | | 1 | **110-6331** | 1 | FILTER ELEMENT AS-AIR (SECONDARY) | |
| | | 1 | **112-9717** | 1 | VALVE-DUST (AIR CLEANER) | |
| | | 1 | **243-0407** | 1 | COVER AS | |
| | 4 | 1 | **280-8298** | 1 | CLAMP | |

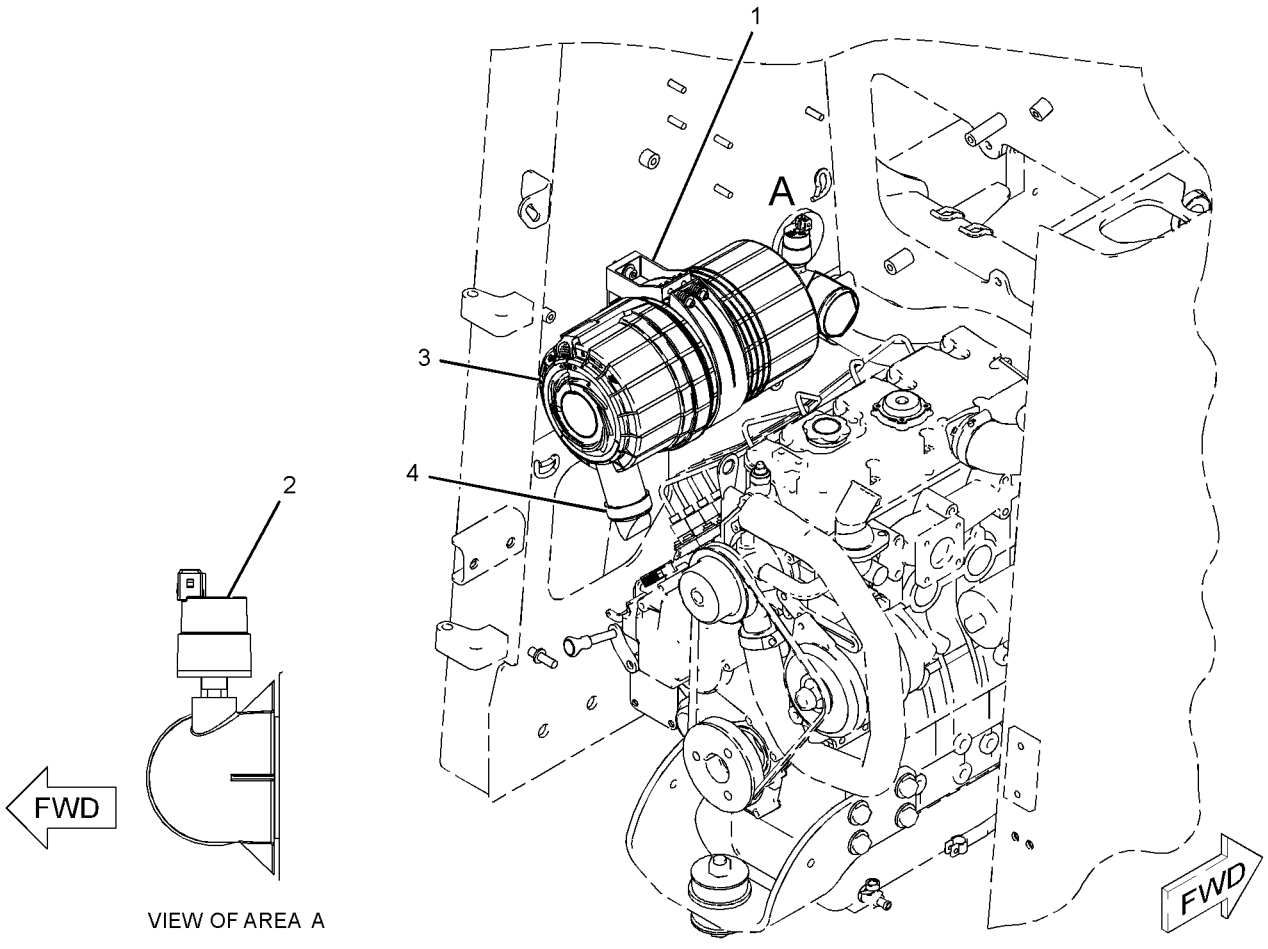


VIEW OF AREA A

GRAPHIC #1 **<END>** g01326594

# AIR INLET AND EXHAUST SYSTEM

## *247-6317* LINES GP-AIR

**S/N: CYM1-UP**
**PART OF 342-1219 ENGINE AR-PRIMARY**
**AN ATTACHMENT**

**SMCS-1071** **i02712952**

| NOTE | REF NO | GRAPHIC REF | PART NUMBER | QTY | PART NAME 1 2 3 4 5 6 (PRODUCT LEVEL) | SEE PAGE |
|---|---|---|---|---|---|---|
| M | 1 | 1 | **6V-3940** | 4 | BOLT (M8X1.25X25-MM) | |
| | 2 | 1 | **9M-1974** | 4 | WASHER-HARD (8.8X16X2-MM THK) | |
| | 3 | 1 | **5I-7678** | 1 | GASKET | |
| | 4 | 1 | **5I-8021** | 1 | ELBOW AS | |
| | | 1 | **5I-8023** | 1 | PLUG | |

M-METRIC PART

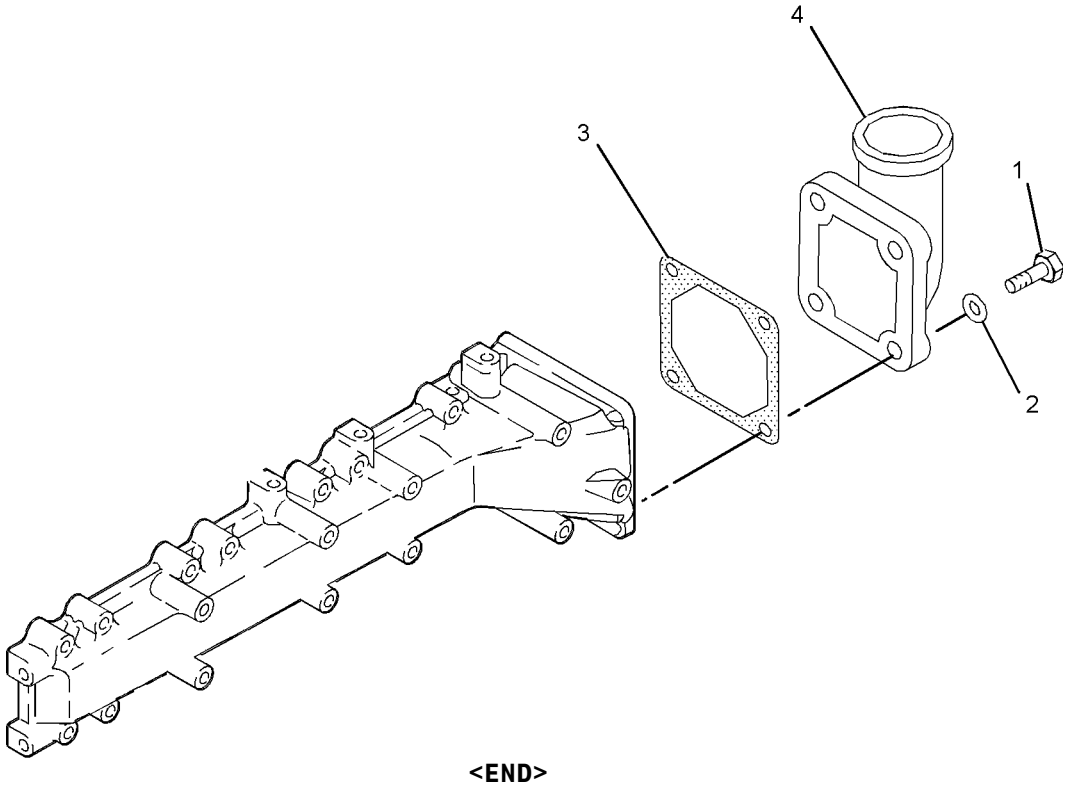


GRAPHIC #1 **<END>** g01048173

# *315-7769* LINES GP-AIR

**S/N: CYM1-UP**

**PART OF 342-1219 ENGINE AR-PRIMARY**

**AN ATTACHMENT**

**SMCS-1071** **i03529260**

| NOTE | REF NO | GRAPHIC REF | PART NUMBER | QTY | PART NAME 1 2 3 4 5 6 (PRODUCT LEVEL) | SEE PAGE |
|---|---|---|---|---|---|---|
| | 1 | 1 | **330-7621** | 1 | HOSE-BREATHER | |
| | 2 | 1 | **330-7622** | 2 | CLIP | |
| M | 3 | 1 | **5C-9553** | 2 | BOLT (M6X1X16-MM) | |
| | 4 | 1 | **9X-8256** | 2 | WASHER (6.6X12X2-MM THK) | |
| | 5 | 1 | **315-8697** | 1 | CLIP HOSE | |
| | 6 | 1 | **253-5512** | 1 | CLIP | |
| | 7 | 1 | **315-7701** | 2 | SCREW | |
| | 8 | 1 | **315-8698** | 2 | RETAINER-WASHER | |
| | 9 | 1 | **315-7702** | 1 | CLIP HOSE | |
| | 10 | 1 | **330-7620** | 1 | BRACKET-SUPPORT | |
| | 11 | 1 | **096-2500** | 2 | LOCKWASHER | |

M-METRIC PART

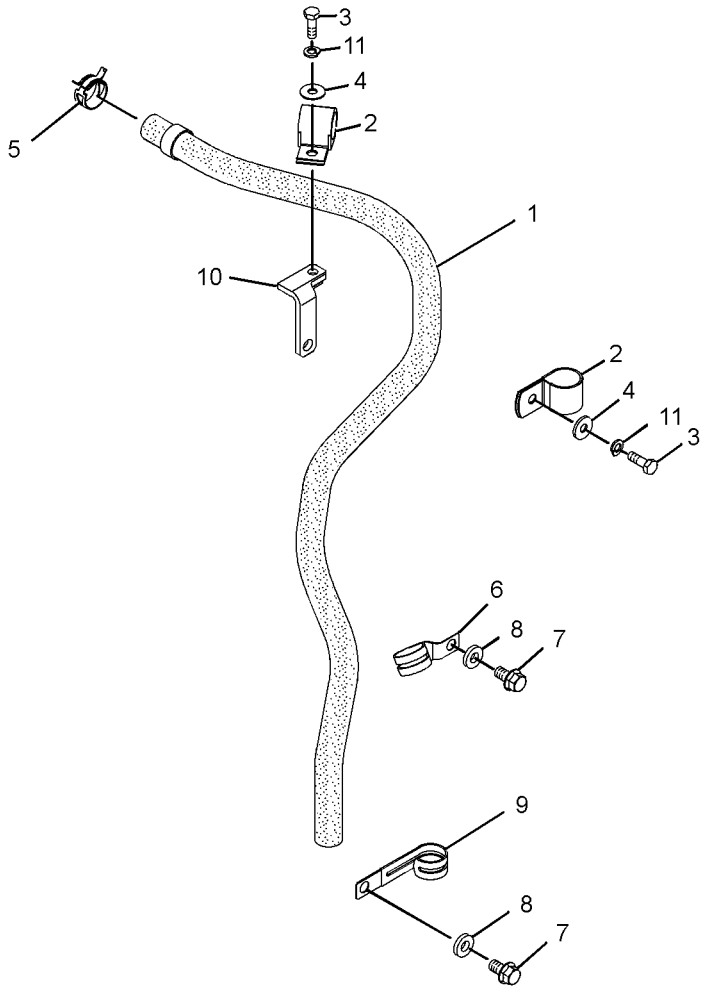


GRAPHIC #1 **<END>** g01802753

# AIR INLET AND EXHAUST SYSTEM

## *326-5376* LINES GP-AIR

**S/N: TNK1-UP**

**PART OF 326-5361 INSTALLATION AR-ENGINE**

**SMCS-1071** **i03902846**

| NOTE | REF NO | GRAPHIC REF | PART NUMBER | QTY | PART NAME 1 2 3 4 5 6 (PRODUCT LEVEL) | SEE PAGE |
|---|---|---|---|---|---|---|
| | 1 | 1 | **5P-4868** | 1 | CLAMP - HOSE | |
| | 2 | 1 | **8T-6726** | 1 | CLAMP - HOSE | |
| | 3 | 1 | **280-8319** | 1 | HOSE | |

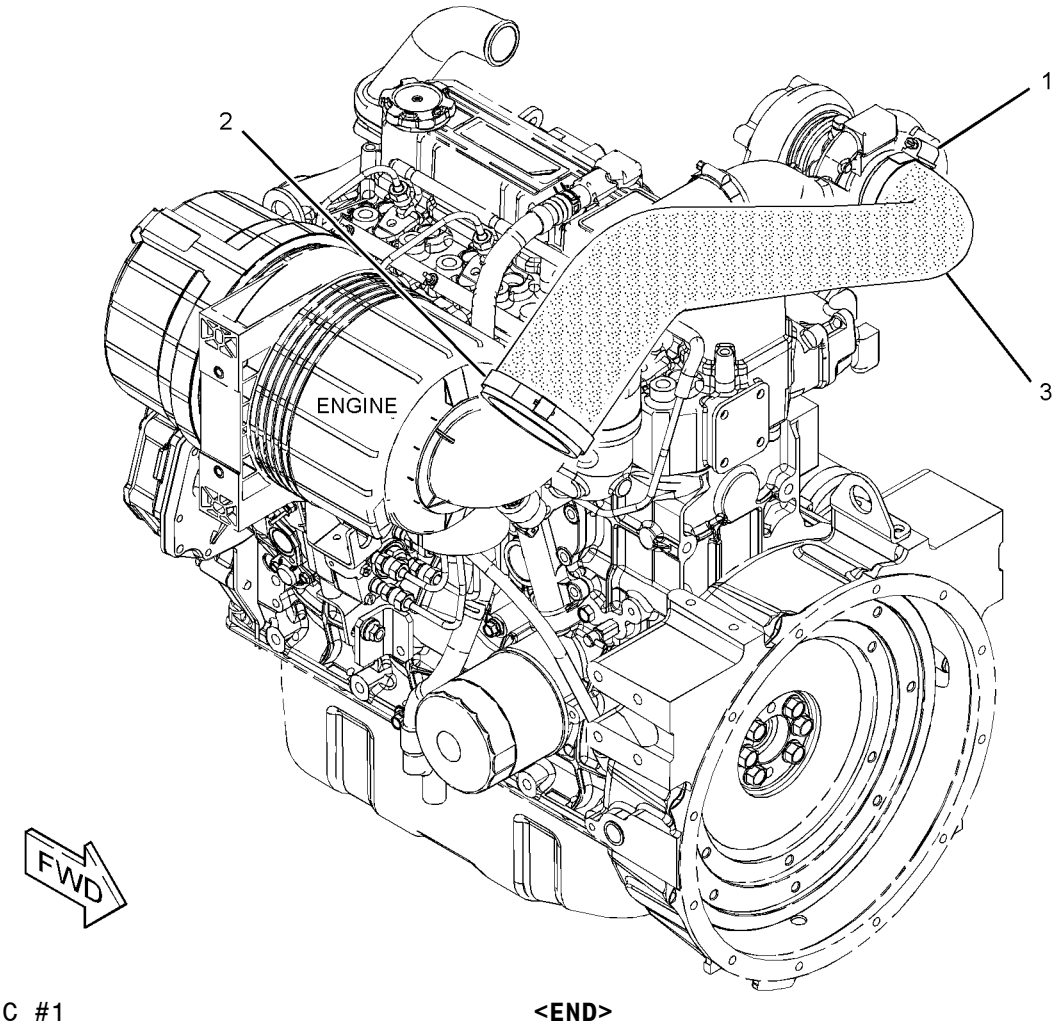


GRAPHIC #1 **<END>** g02146713

# *287-5323* MANIFOLD GP-EXHAUST

**S/N: CYM1-UP**
**PART OF 342-1219 ENGINE AR-PRIMARY**
**AN ATTACHMENT**

**SMCS-1059** **i03041710**

| NOTE | REF NO | GRAPHIC REF | PART NUMBER | QTY | PART NAME 1 2 3 4 5 6 (PRODUCT LEVEL) | SEE PAGE |
|---|---|---|---|---|---|---|
| | 1 | 1 | **5I-7931** | 4 | STUD | |
| | 2 | 1 | **195-8260** | 8 | NUT (M8X1.25-THD) | |
| | 3 | 1 | **233-5460** | 8 | BOLT | |
| | 4 | 1 | **328-5192** | 1 | MANIFOLD-EXHAUST | |
| | 5 | 1 | **234-4824** | 1 | GASKET-MANIFOLD | |

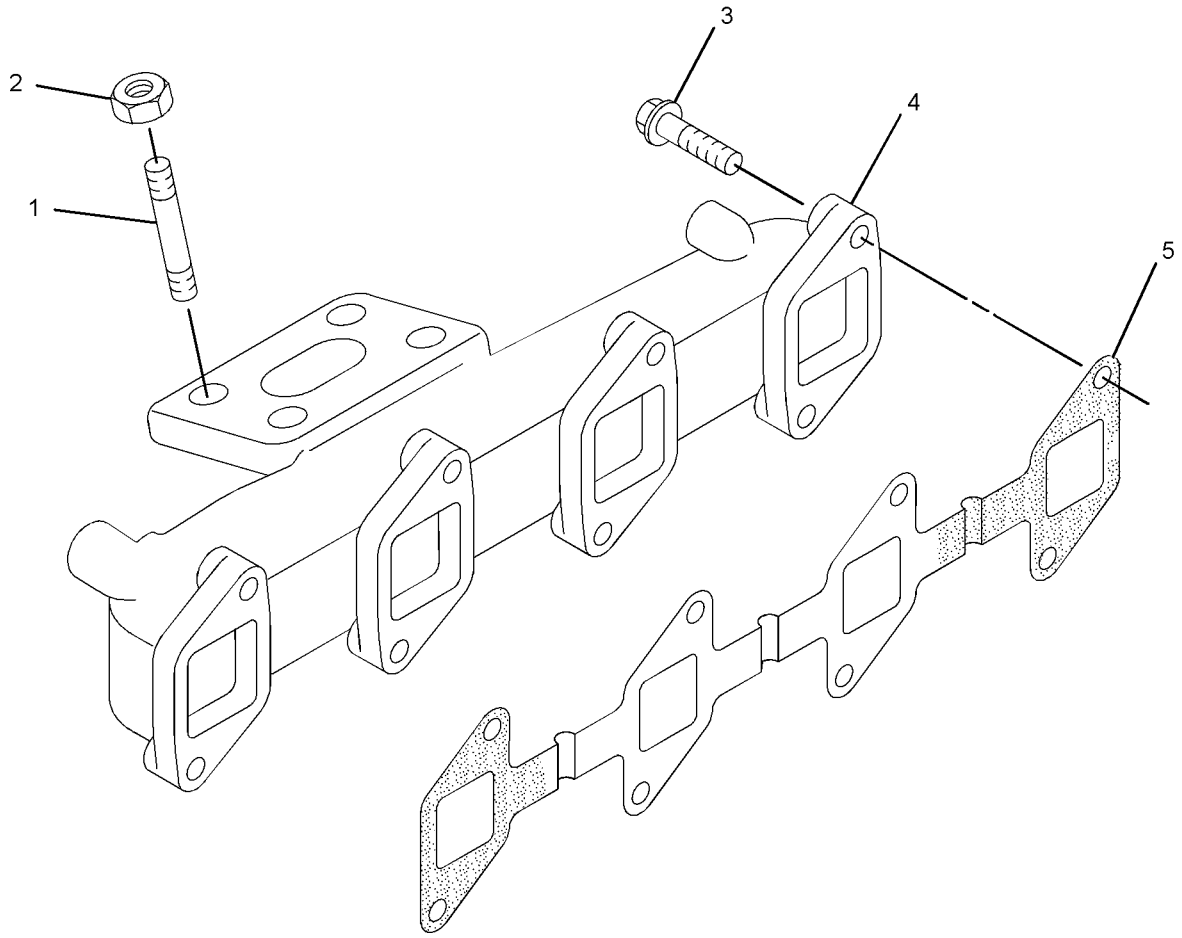


GRAPHIC #1 **<END>** g01327717

# AIR INLET AND EXHAUST SYSTEM

## *335-5750* MANIFOLD GP-INLET

**S/N: CYM1-UP**
**PART OF 342-1219 ENGINE AR-PRIMARY**
**AN ATTACHMENT**

**SMCS-1058** **i03254952**

| NOTE | REF NO | GRAPHIC REF | PART NUMBER | QTY | PART NAME 1 2 3 4 5 6 (PRODUCT LEVEL) | SEE PAGE |
|---|---|---|---|---|---|---|
| | 1 | 1 | **3B-4505** | 13 | LOCKWASHER | |
| M | 2 | 1 | **7X-0818** | 3 | BOLT (M8X1.25X45-MM) | |
| M | 3 | 1 | **8T-4177** | 2 | BOLT (M8X1.25X90-MM) | |
| | 4 | 1 | **8T-4224** | 3 | WASHER-HARD (8.8X16X2-MM THK) | |
| M | 5 | 1 | **099-3649** | 11 | BOLT (M8X1.25X40-MM) | |
| | 6 | 1 | **234-4805** | 1 | MANIFOLD-INLET | |
| | 7 | 1 | **234-4806** | 1 | GASKET | |

M-METRIC PART

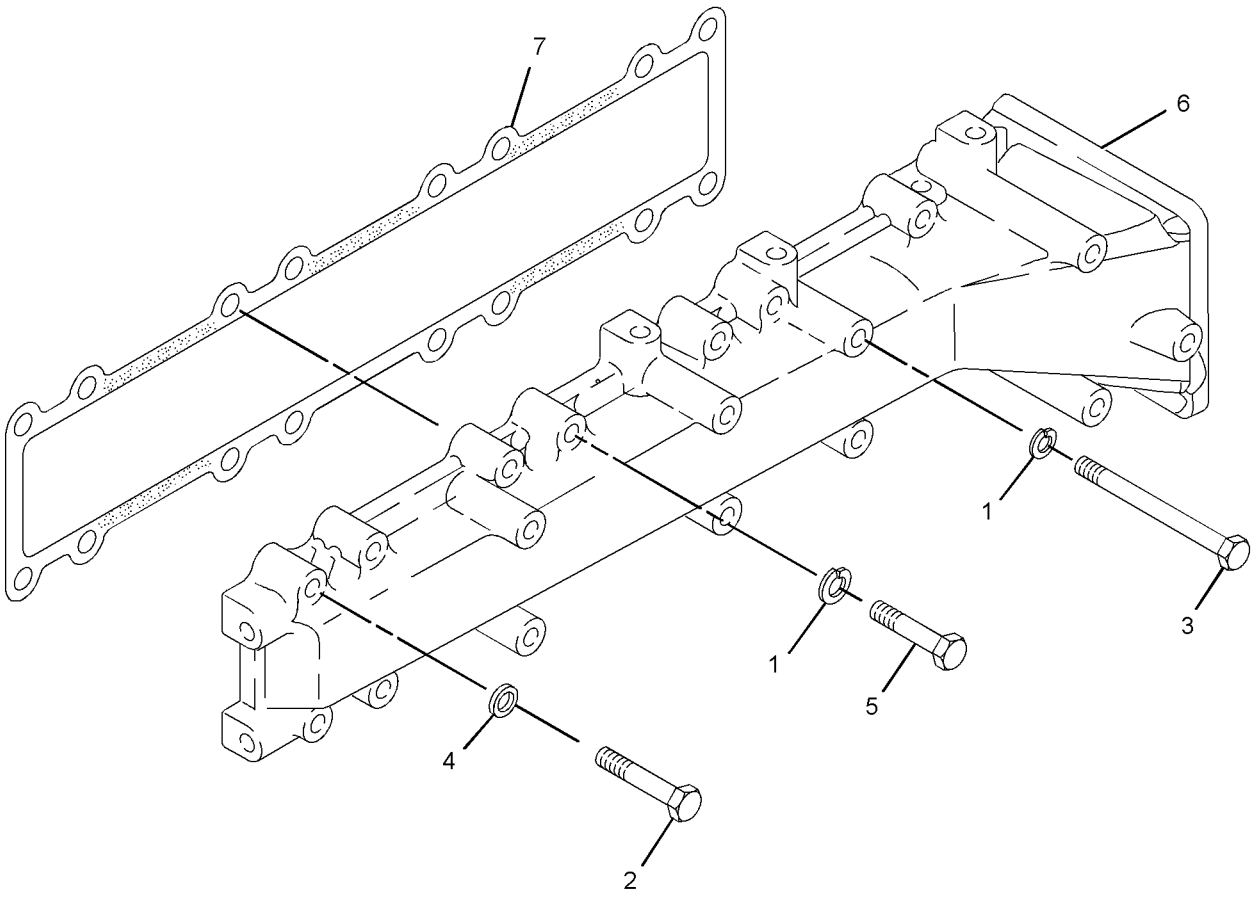


GRAPHIC #1 **<END>** g01664575

# AIR INLET AND EXHAUST SYSTEM

## *258-2462* MUFFLER & MOUNTING GP

**S/N: TNK1-UP**

**PART OF 326-5361 INSTALLATION AR-ENGINE**

**SMCS-1062** **i02930638**

| NOTE | REF NO | GRAPHIC REF | PART NUMBER | QTY | PART NAME 1 2 3 4 5 6 (PRODUCT LEVEL) | SEE PAGE |
|---|---|---|---|---|---|---|
| | 1 | 1 | **5I-8111** | 1 | GASKET | |
| | 2 | 1 | **198-4776** | 3 | WASHER-HARD (8.8X20X8-MM THK) | |
| | 3 | 1 | **258-2419** | 1 | MUFFLER AS | |
| | 4 | 1 | **280-8240** | 1 | PLATE | |
| | 5 | 1 | **232-3121** | 1 | NUT (M10X1.25-THD) | |
| | 6 | 1 | **280-8341** | 2 | SPACER (8.7X15.8X21.1-MM THK) | |
| M | 7 | 1 | **8T-7547** | 3 | BOLT (M8X1.25X30-MM) | |
| | 8 | 1 | **280-8377** | 1 | SPACER (11.1X19.1X25-MM THK) | |
| M | 9 | 1 | **305-5385** | 2 | BOLT (M8X1.25X50-MM) | |

M-METRIC PART

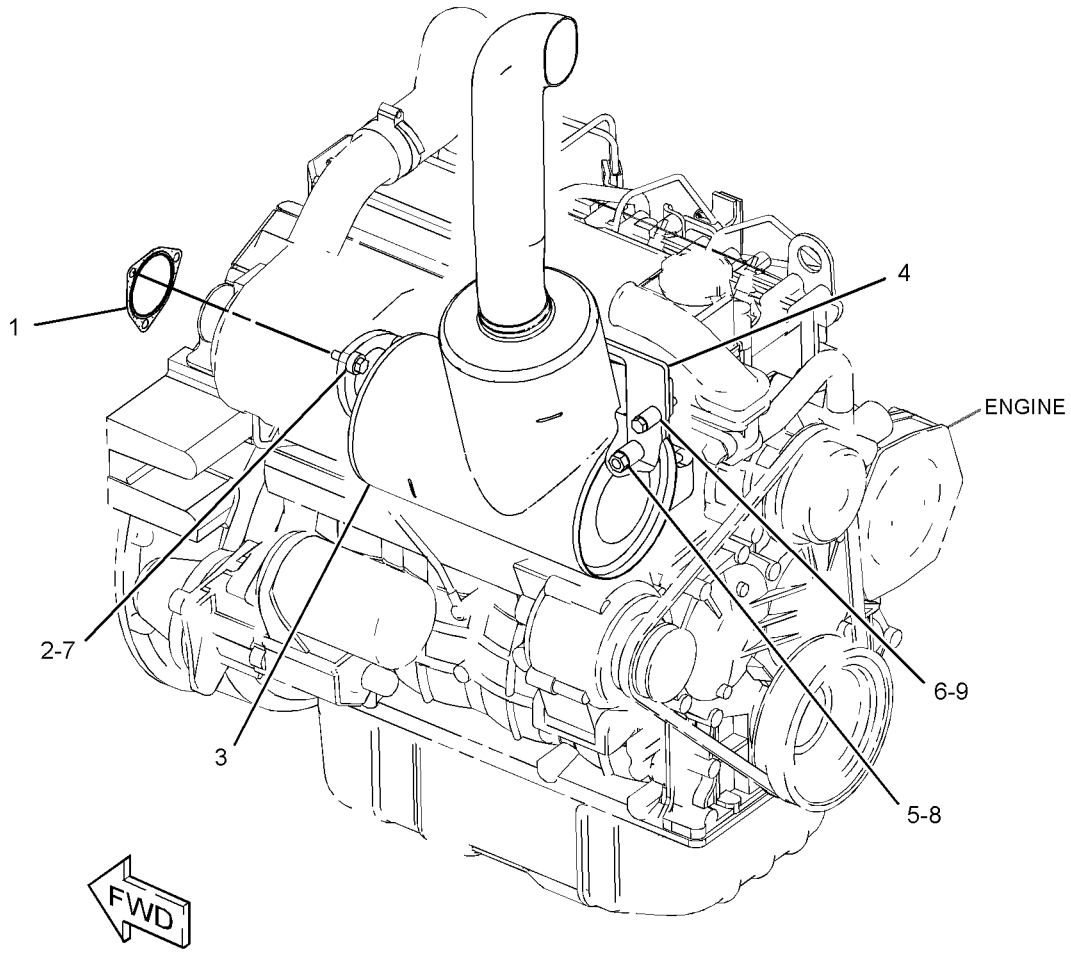


GRAPHIC #1 **<END>** g01457027

# AIR INLET AND EXHAUST SYSTEM

## *315-7768* TURBOCHARGER GP

**S/N: CYM1-UP**
**PART OF 342-1219 ENGINE AR-PRIMARY**
**AN ATTACHMENT**

**SMCS-1052, 1053** **i03671415**

| NOTE | REF NO | GRAPHIC REF | PART NUMBER | QTY | PART NAME 1 2 3 4 5 6 (PRODUCT LEVEL) | SEE PAGE |
|---|---|---|---|---|---|---|
| M | 1 | 1 | **5C-2890** | 1 | NUT (M6X1-THD) | |
| M | 2 | 1 | **5C-9553** | 2 | BOLT (M6X1X16-MM) | |
| | 3 | 1 | **5I-5077** | 2 | CLAMP | |
| | 4 | 1 | **5I-7623** | 1 | BOLT (M10X1.25X20-MM) | |
| | 5 | 1 | **5I-7689** | 1 | GASKET | |
| | 6 | 1 | **5I-7933** | 1 | GASKET | |
| | 7 | 1 | **5I-8109** | 1 | HOSE | |
| | 8 | 1 | **5I-8110** | 1 | ELBOW | |
| M | 9 | 1 | **6V-2317** | 2 | BOLT (M8X1.25X30-MM) | |
| M | 10 | 1 | **6V-7357** | 1 | BOLT (M6X1X25-MM) | |
| | 11 | 1 | **9M-1974** | 2 | WASHER-HARD (8.8X16X2-MM THK) | |
| | 12 | 1 | **096-2500** | 3 | LOCKWASHER | |
| | 13 | 1 | **191-3206** | 4 | GASKET | |
| | 14 | 1 | **5P-0597** | 1 | CLAMP-HOSE | |
| | 15 | 1 | **5P-4868** | 1 | CLAMP-HOSE | |
| | 16 | 1 | **234-4818** | 1 | GASKET | |
| | 17 | 1 | **234-4820** | 1 | PIPE | |
| | 18 | 1 | **234-4821** | 1 | PIPE | |
| | 19 | 1 | **234-4822** | 2 | CLAMP | |
| | 20 | 1 | **296-4812** | 1 | BOLT | |
| | 21 | 1 | **235-4967** | 1 | CONNECTOR | |
| | 22 | 1 | **235-4968** | 1 | PIPE | |
| | 23 | 1 | **314-9972** | 1 | TURBOCHARGER AS | |
| | 24 | 1 | **314-9974** | 1 | HOSE-AIR | |

M-METRIC PART

*315-7768* **TURBOCHARGER GP** *(contd.)* **i03671415**

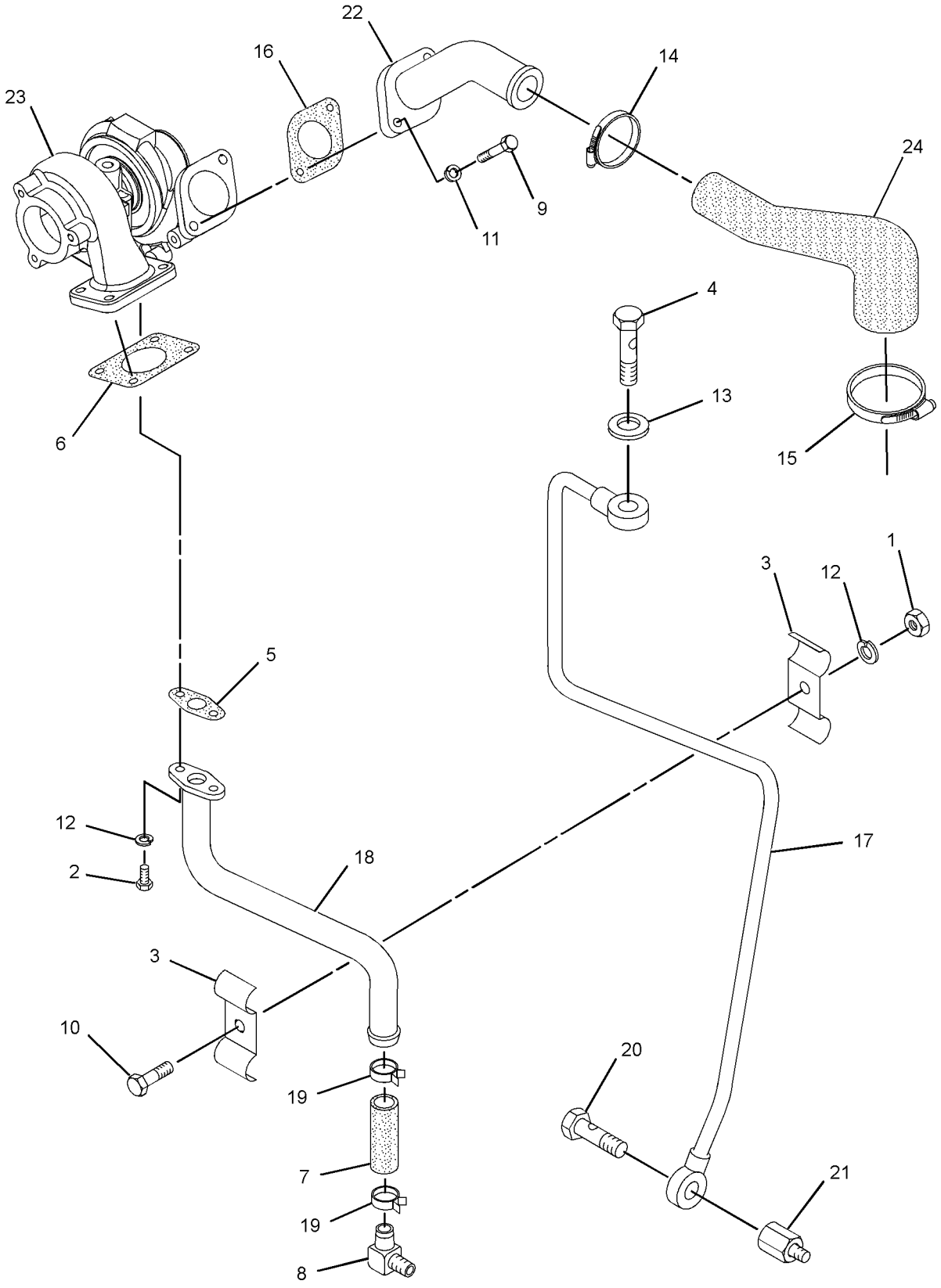


GRAPHIC #1 **<END>** g01445155

# FUEL SYSTEM

## *218-5602* CONTROL GP-GOVERNOR

**S/N: TNK1-UP**

**PART OF 326-4786 CHASSIS AR**

**SMCS-1265, 1276** **i03809973**

| NOTE | REF NO | GRAPHIC REF | PART NUMBER | QTY | PART NAME 1 2 3 4 5 6 (PRODUCT LEVEL) | SEE PAGE |
|---|---|---|---|---|---|---|
| | 1 | 1 | **7K-1181** | 1 | STRAP-CABLE | |
| | 2 | 1 | **262-6518** | 1 | BRACKET AS | |
| | 3 | 1 | **262-6480** | 1 | BRACKET-STOP | |
| CY | 4 | 1 | **327-8939** | 1 | PEDAL GP-GOVERNOR | 289 |
| | 5 | 1 | **237-7296** | 4 | SCREW-FLAT HEAD (M6X1X35-MM) | |
| | 6 | 1 | **8T-4205** | 9 | WASHER-HARD (7.2X14.5X2-MM THK) | |
| M | 7 | 1 | **5C-2890** | 4 | NUT (M6X1-THD) | |
| | 8 | 1 | **8T-3984** | 1 | KNOB | |
| M | 9 | 1 | **6V-5683** | 2 | BOLT (M6X1X16-MM) | |
| M | 10 | 1 | **8T-4138** | 3 | BOLT (M6X1X20-MM) | |

C-CHANGE FROM PREVIOUS TYPE
M-METRIC PART
Y-SEPARATE ILLUSTRATION

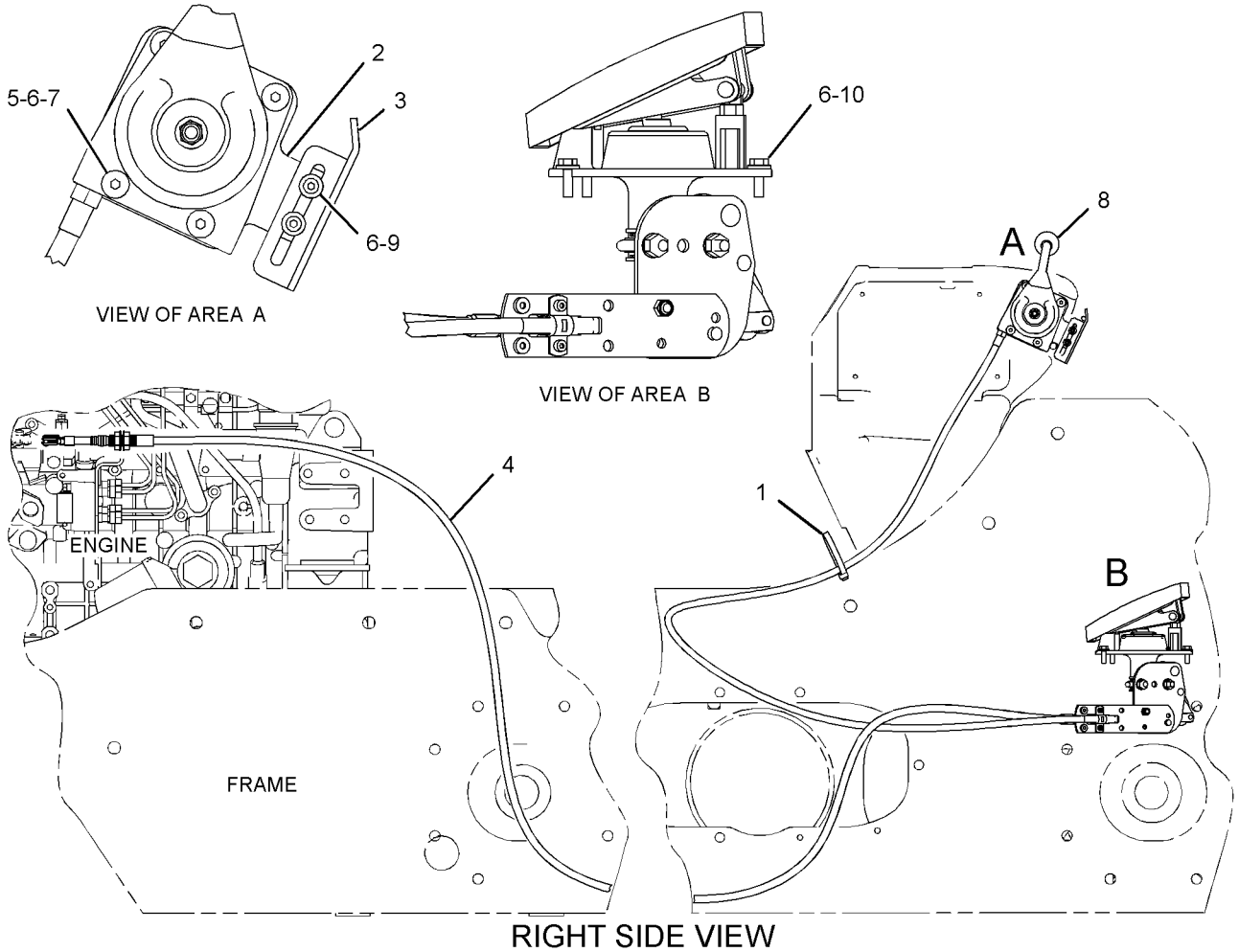


RIGHT SIDE VIEW

GRAPHIC #1 **<END>** g01927600

# *315-8350* LINES GP-FUEL INJECTION

**S/N: CYM1-UP**

**PART OF 342-1219 ENGINE AR-PRIMARY**

**AN ATTACHMENT**

**SMCS-1252, 1254** **i02883793**

| NOTE | REF NO | GRAPHIC REF | PART NUMBER | QTY | PART NAME 1 2 3 4 5 6 (PRODUCT LEVEL) | SEE PAGE |
|---|---|---|---|---|---|---|
| | 1 | 1 | **3B-4505** | 2 | LOCKWASHER | |
| M | 2 | 1 | **6V-2317** | 4 | BOLT (M8X1.25X30-MM) | |
| M | 3 | 1 | **8T-4200** | 2 | BOLT (M8X1.25X16-MM) | |
| | 4 | 1 | **9M-1974** | 4 | WASHER-HARD (8.8X16X2-MM THK) | |
| | 5 | 1 | **094-7235** | 1 | CAP | |
| | 6 | 1 | **113-0363** | 4 | SUPPORT | |
| | 7 | 1 | **113-0364** | 4 | HOSE | |
| | 8 | 1 | **122-8948** | 6 | CLAMP | |
| | 9 | 1 | **122-8949** | 2 | CLAMP | |
| M | 10 | 1 | **195-8364** | 4 | BOLT AS | |
| | 11 | 1 | **196-8356** | 8 | CLIP | |
| | 12 | 1 | **314-9980** | 1 | TUBE (CYL NO. 1) | |
| | 13 | 1 | **314-9981** | 1 | TUBE (CYL NO. 2) | |
| | 14 | 1 | **314-9982** | 1 | TUBE (CYL NO. 3) | |
| | 15 | 1 | **314-9983** | 1 | TUBE (CYL NO. 4) | |
| | 16 | 1 | **314-9984** | 4 | WASHER | |
| | 17 | 1 | **314-9985** | 4 | INJECTOR AS | |
| | | | | | (EACH INCLUDES) | |
| | | 1 | **314-9986** | 1 | NOZZLE AS-FUEL INJECTION | |
| | 18 | 1 | **314-9987** | 1 | TUBE | |
| | 19 | 1 | **314-9988** | 1 | BRACKET | |
| | 20 | 1 | **314-9989** | 1 | HOSE | |

M-METRIC PART

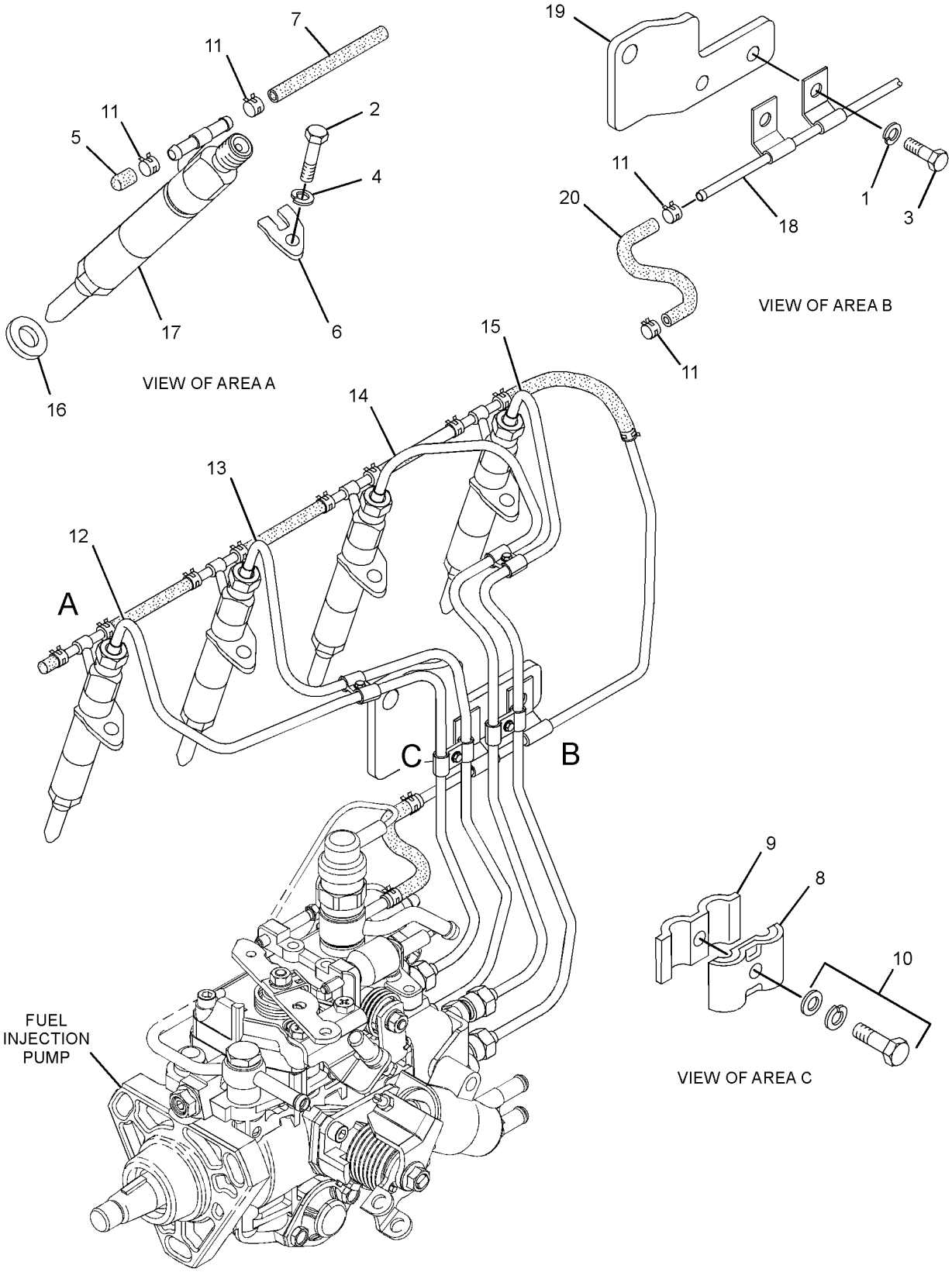


GRAPHIC #1 **<END>** g01395214

# FUEL SYSTEM

## *326-5366* LINES GP-FUEL PRM & FILTER

**S/N: TNK1-UP**

**PART OF 326-5361 INSTALLATION AR-ENGINE**

**SMCS-1258, 1263, 1274** **i03908692**

| NOTE | REF NO | GRAPHIC REF | PART NUMBER | QTY | PART NAME 1 2 3 4 5 6 (PRODUCT LEVEL) | SEE PAGE |
|---|---|---|---|---|---|---|
| | 1 | 1 | **1P-4278** | 10 | CLAMP-HOSE | |
| | 2 | 1 | **3E-7404** | 1 | CLAMP-HOSE | |
| | 3 | 1 | **5P-4961** | 2 | CLAMP-HOSE | |
| | 4 | 1 | **069-4080** | 1 | FITTING | |
| | 5 | 1 | **178-3620** | 2 | STRAP-DUAL CLAMP | |
| | 6 | 1 | **180-3007** | 1 | CLAMP-HOSE | |
| | 7 | 1 | **191-9776** | 1 | HOSE | |
| | 8 | 1 | **195-8372** | 1 | CLIP | |
| | 9 | 1 | **246-2622** | 2 | ELBOW | |
| | 10 | 1 | **252-0368** | 1 | GUARD AS (FUEL FILLER) | |
| | | 1 | **6W-5698** | 1 | GROMMET | |
| | | 1 | **142-8928** | 1 | ELBOW | |
| | 11 | 1 | **256-2155** | 1 | TEE | |
| Y | 12 | 1 | **258-3442** | 1 | PUMP GP-FUEL PRM & PRIM FILTER (WATER SEPARATOR) | 65 |
| | 13 | 1 | **304-3885** | 1 | CAP-FUEL (WATER SEPARATOR) | |
| | 14 | 1 | **312-2179** | 2 | BRACKET AS | |
| | 16 | 1 | **326-5371** | 1 | BRACKET AS | |
| M | | 1 | **159-9541** | 2 | NUT-WELD (M10X1.5-THD) | |
| | 17 | 1 | **212-0431** | 2 | STUD | |
| | 19 | 1 | **326-5346** | 1 | HOSE | |
| | 20 | 1 | **4B-9302** | 2 | CLIP | |
| | 21 | 1 | **4D-6466** | 6 | CLIP | |
| M | 22 | 1 | **5C-2890** | 2 | NUT (M6X1-THD) | |
| M | 23 | 1 | **5C-9553** | 2 | BOLT (M6X1X16-MM) | |
| | 24 | 1 | **5K-4778** | 1 | CLIP | |
| | 25 | 1 | **5P-4116** | 4 | WASHER-HARD (8.8X20.5X2-MM THK) | |
| | 26 | 1 | **6D-3479** | 2 | CLIP | |
| M | 27 | 1 | **6V-7357** | 2 | BOLT (M6X1X25-MM) | |
| | 28 | 1 | **8T-4121** | 8 | WASHER-HARD (11X21X2.5-MM THK) | |
| M | 29 | 1 | **8T-4133** | 3 | NUT (M10X1.5-THD) | |
| M | 30 | 1 | **8T-4136** | 3 | BOLT (M10X1.5X25-MM) | |
| M | 31 | 1 | **8T-4196** | 2 | BOLT (M10X1.5X35-MM) | |
| M | 32 | 1 | **8T-4908** | 4 | BOLT (M8X1.25X25-MM) | |
| | 33 | 1 | **9X-2038** | 6 | WASHER (7X19X2-MM THK) | |
| E | 34 | 1 | **8C-6959** | | HOSE (33-CM) | |
| E | 35 | 1 | **5P-1442** | | HOSE (129-CM) | |
| E | 36 | 1 | **5P-1420** | | HOSE (17.5-CM) | |
| E | 36A | 1 | **5P-1420** | | HOSE (64.5-CM) | |
| E | 36B | 1 | **5P-1420** | | HOSE (52-CM) | |
| E | 36C | 1 | **5P-1420** | | HOSE (205-CM) | |

E-ORDER BY THE CENTIMETER
M-METRIC PART
Y-SEPARATE ILLUSTRATION

## *326-5366* **LINES GP-FUEL PRM & FILTER** *(contd.)* **i03908692**

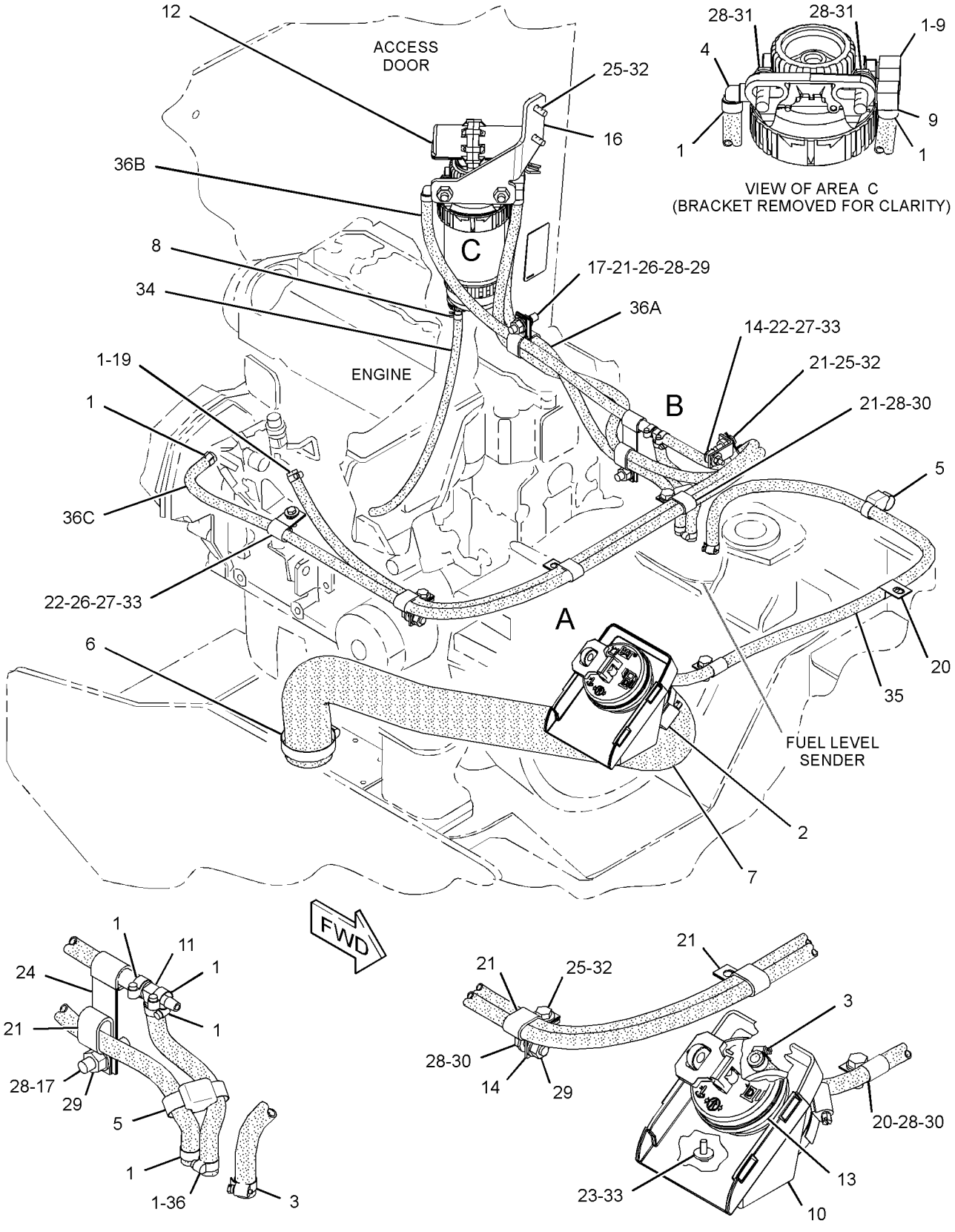


GRAPHIC #1 **<END>** g02149685

# *315-8352* PUMP GP-FUEL INJECTION

**S/N: CYM1-UP**

**PART OF 342-1219 ENGINE AR-PRIMARY**

**AN ATTACHMENT**

**SMCS-1251, 1290, 5479** **i03938469**

| NOTE | REF NO | GRAPHIC REF | PART NUMBER | QTY | PART NAME 1 2 3 4 5 6 (PRODUCT LEVEL) | SEE PAGE |
|---|---|---|---|---|---|---|
| M | 1 | 1 | **6V-5217** | 1 | BOLT (M8X1.25X20-MM) | |
| | 2 | 1 | **7X-0796** | 1 | LOCKWASHER | |
| | 3 | 1 | **8T-4121** | 2 | WASHER-HARD (11X21X2.5-MM THK) | |
| M | 4 | 1 | **8T-4137** | 1 | BOLT (M10X1.5X20-MM) | |
| | 5 | 1 | **8T-4896** | 1 | WASHER-HARD (10.2X18.5X2.5-MM THK) | |
| | 6 | 1 | **9M-1974** | 1 | WASHER-HARD (8.8X16X2-MM THK) | |
| M | 7 | 1 | **140-5217** | 1 | BOLT (M10X1.25X25-MM) | |
| M | 9 | 1 | **212-8510** | 1 | NUT (M10X1.25-THD) | |
| | 10 | 1 | **225-5249** | 1 | RETAINER | |
| | 11 | 1 | **234-4835** | 3 | STUD | |
| | 12 | 1 | **241-6010** | 1 | BOLT | |
| | 13 | 1 | **244-7127** | 3 | NUT-FLANGE (M8X1.25-THD) | |
| | 14 | 1 | **294-5060** | 1 | SEAL-O-RING | |
| | 15 | 1 | **300-3988** | 1 | SEAL-O-RING | |
| | 16 | 1 | **300-3867** | 1 | WASHER | |
| | 17 | 1 | **314-9991** | 1 | FLANGE | |
| | 18 | 1 | **314-9992** | 1 | BRACKET | |
| C | 20 | 1 | **336-9190** | 1 | PUMP GP-FUEL INJECTION | |
| | 20A | 1 | **335-5735** | 1 | SOLENOID (FUEL SHUTOFF) | |
| | 20B | 1 | **352-3694** | 1 | SOLENOID (COLD START ADVANCE) | |
| | 21 | 1 | **315-8326** | 1 | BRACKET | |
| | 22 | 1 | **314-9999** | 1 | NUT | |
| | 23 | 1 | **199-2333** | 2 | BOLT | |

C-CHANGE FROM PREVIOUS TYPE
M-METRIC PART

*315-8352* **PUMP GP-FUEL INJECTION** *(contd.)* **i03938469**

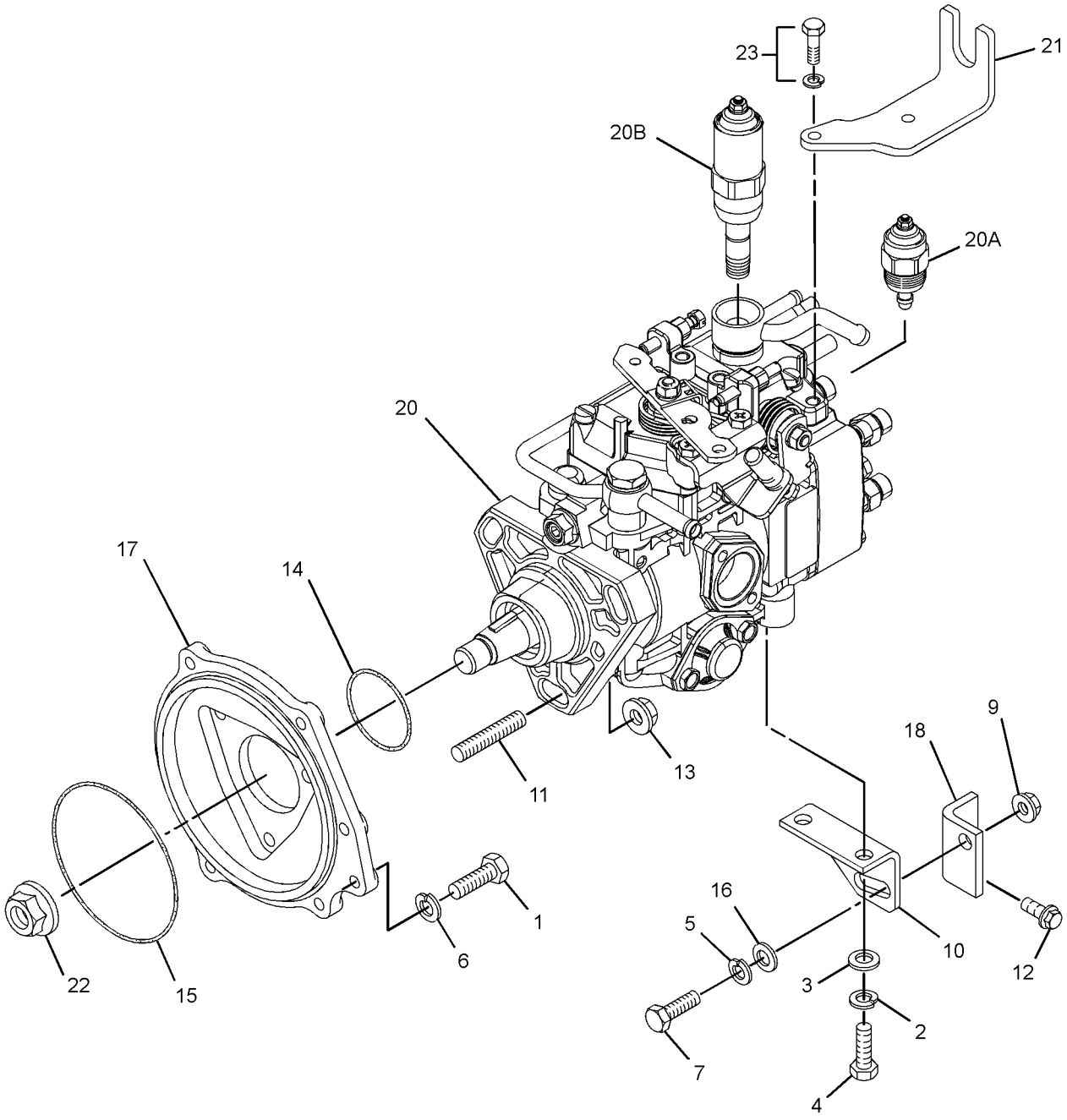


GRAPHIC #1 **<END>** g02153915

# *258-3442* PUMP GP-FUEL PRM & PRIM FILTER–WATER SEPARATOR

**S/N: TNK1-UP**

**PART OF 326-5366 LINES GP-FUEL PRM & FILTER**

**SMCS-1258, 1261, 1263** **i03911392**

| NOTE | REF NO | GRAPHIC REF | PART NUMBER | QTY | PART NAME 1 2 3 4 5 6 (PRODUCT LEVEL) | SEE PAGE |
|---|---|---|---|---|---|---|
| J | 1 | 1 | **112-9401** | 1 | BOWL AS-WATER COLLECTION | |
| | 2 | 1 | **118-8118** | 1 | RING-RETAINING | |
| | 3 | 1 | **228-9132** | 1 | FITTING (FUEL PUMP) | |
| | 4 | 1 | **233-9856** | 1 | FILTER AS-WATER SEP & FUEL | |
| | | | | | | |
| | | | | | PARTS SHOWN IN GRAPHIC(S) WITHOUT A REFERENCE NUMBER ARE NOT SERVICED SEPARATELY | |
| | | | | | AVAILABLE REPAIR KIT(S): | |
| J | | | **128-8614** | 1 | KIT-SEAL (WATER SEPARATOR) | |
| | | | | | (INCLUDES SEALS) | |

J-KIT MARKED J SERVICES PARTS MARKED J

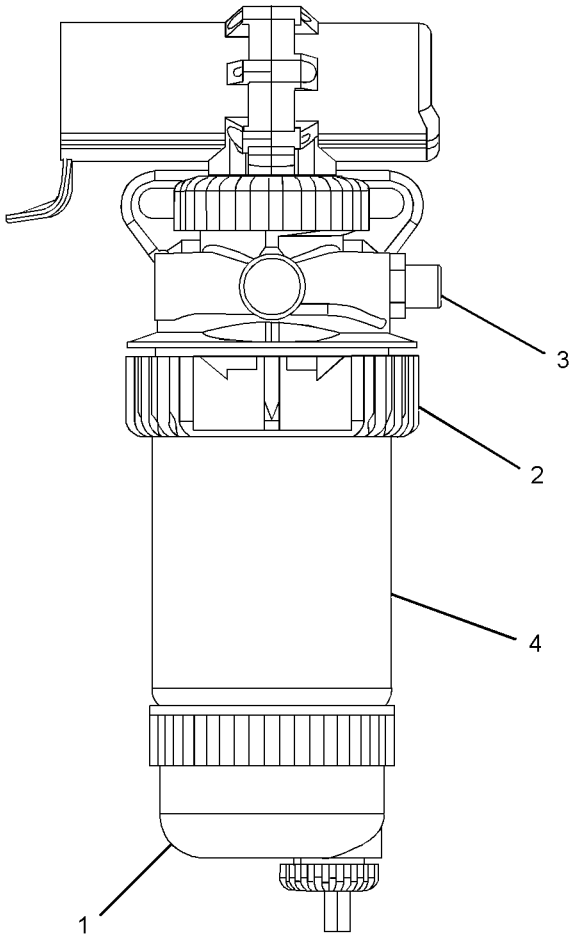


GRAPHIC #1 **<END>** g02151099

# ELECTRICAL AND STARTING SYSTEM

## *105-2814* ALTERNATOR GP-CHARGING*R

**S/N: CYM1-UP**
**12 VOLT, 90 AMPERE**
**PART OF 315-8353 ALTERNATOR GP-CHARGING**
**AN ATTACHMENT**

**SMCS-1405** **i03552882**

| NOTE | REF NO | GRAPHIC REF | PART NUMBER | QTY | PART NAME 1 2 3 4 5 6 (PRODUCT LEVEL) | SEE PAGE |
|---|---|---|---|---|---|---|
| | 1 | 1 | **113-4458** | 1 | PULLEY-ALTERNATOR (2-GROOVE) | |
| | 2 | 1 | **113-4459** | 1 | FRAME AS-ALTERNATOR | |
| | 3 | 1 | **113-4460** | 1 | ROTOR AS-ALTERNATOR | |
| | 4 | 1 | **113-4461** | 1 | FRAME AS-ALTERNATOR | |
| | 5 | 1 | **113-4462** | 1 | REGULATOR AS-ALTERNATOR | |
| | 6 | 1 | **113-4463** | 1 | RECTIFIER AS-ALTERNATOR | |
| | 7 | 1 | **113-4464** | 1 | COVER-ALTERNATOR | |
| | 8 | 1 | **113-4469** | 4 | BUSHING-ALTERNATOR | |
| | 9 | 1 | **113-4470** | 1 | BUSHING-ALTERNATOR | |
| M | 10 | 1 | **5C-2890** | 1 | NUT (M6X1-THD) | |
| | 11 | 1 | **8T-4205** | 1 | WASHER-HARD (7.2X14.5X2-MM THK) | |
| | 12 | 1 | **1H-3244** | 1 | LOCKWASHER | |
| | | | | | AVAILABLE REPAIR KIT(S): | |
| | | | **113-4465** | 1 | KIT-ALTERNATOR BEARING | |
| | | | | | (INCLUDES COVERS, BEARINGS & WASHERS) | |
| | | | **113-4466** | 1 | KIT-REPAIR (ALTERNATOR BRUSHES) | |
| | | | | | (INCLUDES HOLDER ASSEMBLY & SEALS) | |
| | | | **113-4467** | 1 | KIT-ALTERNATOR TERMINAL | |
| | | | | | (INCLUDES SCREWS, PLATE & NUTS) | |
| | | | **113-4468** | 1 | KIT-ALTERNATOR HARDWARE | |
| | | | | | (INCLUDES SCREWS) | |

M-METRIC PART

*105-2814* **ALTERNATOR GP-CHARGING** ***(contd.)*** **i03552882**

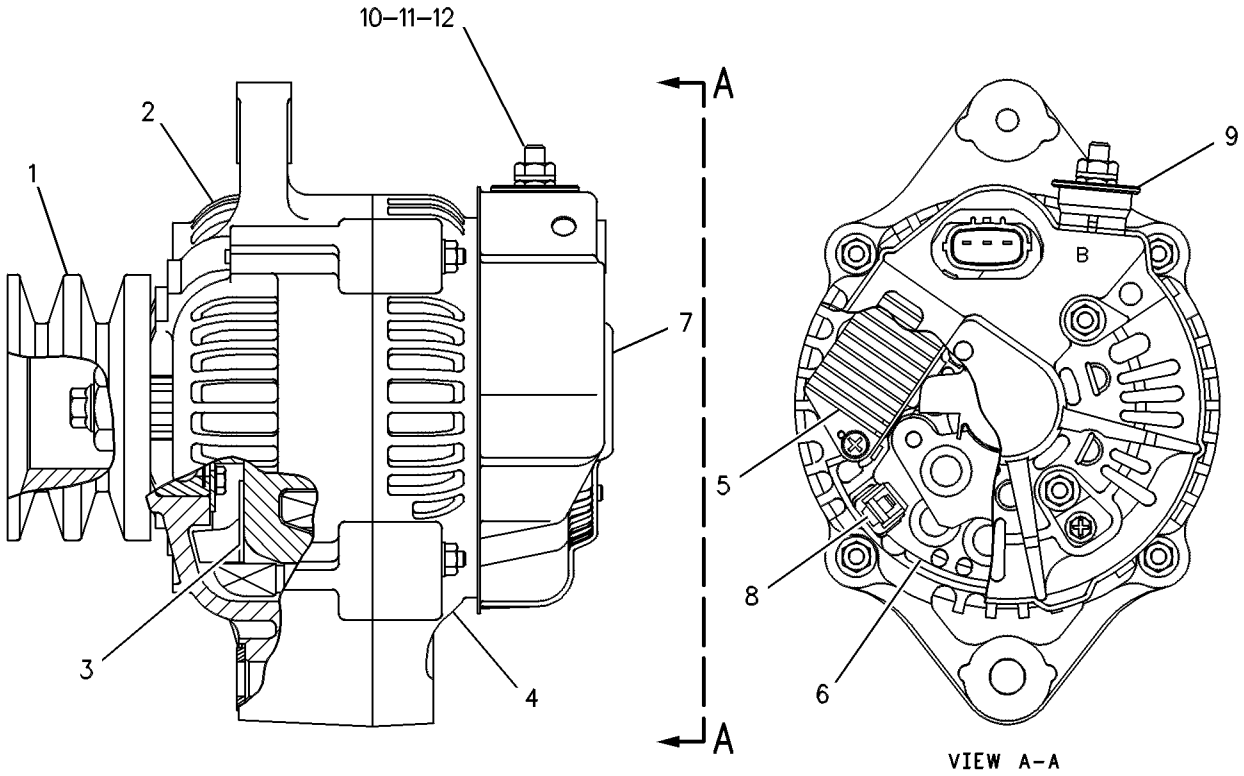


GRAPHIC #1 **<END>** g00128916

# *315-8353* ALTERNATOR GP-CHARGING

**S/N: CYM1-UP**
**PART OF 342-1219 ENGINE AR-PRIMARY**
**AN ATTACHMENT**

**SMCS-1405** **i03077440**

| NOTE | REF NO | GRAPHIC REF | PART NUMBER | QTY | PART NAME 1 2 3 4 5 6 (PRODUCT LEVEL) | SEE PAGE |
|---|---|---|---|---|---|---|
| | 1 | 1 | **294-7916** | 1 | BRACKET | |
| M | 2 | 1 | **6V-5217** | 1 | BOLT (M8X1.25X20-MM) | |
| C | 3 | 1 | **241-6010** | 3 | BOLT | |
| | 4 | 1 | **8T-4896** | 1 | WASHER-HARD (10.2X18.5X2.5-MM THK) | |
| | 5 | 1 | **9M-1974** | 1 | WASHER-HARD (8.8X16X2-MM THK) | |
| | 6 | 1 | **235-4962** | 1 | PLATE | |
| | 7 | 1 | **235-4973** | 1 | BOLT (M10X1.5X90-MM) | |
| YR | 8 | 1 | **105-2814** | 1 | ALTERNATOR GP-CHARGING | 66 |

C-CHANGE FROM PREVIOUS TYPE
M-METRIC PART
R-REMFG PART MAY BE AVAILABLE
Y-SEPARATE ILLUSTRATION

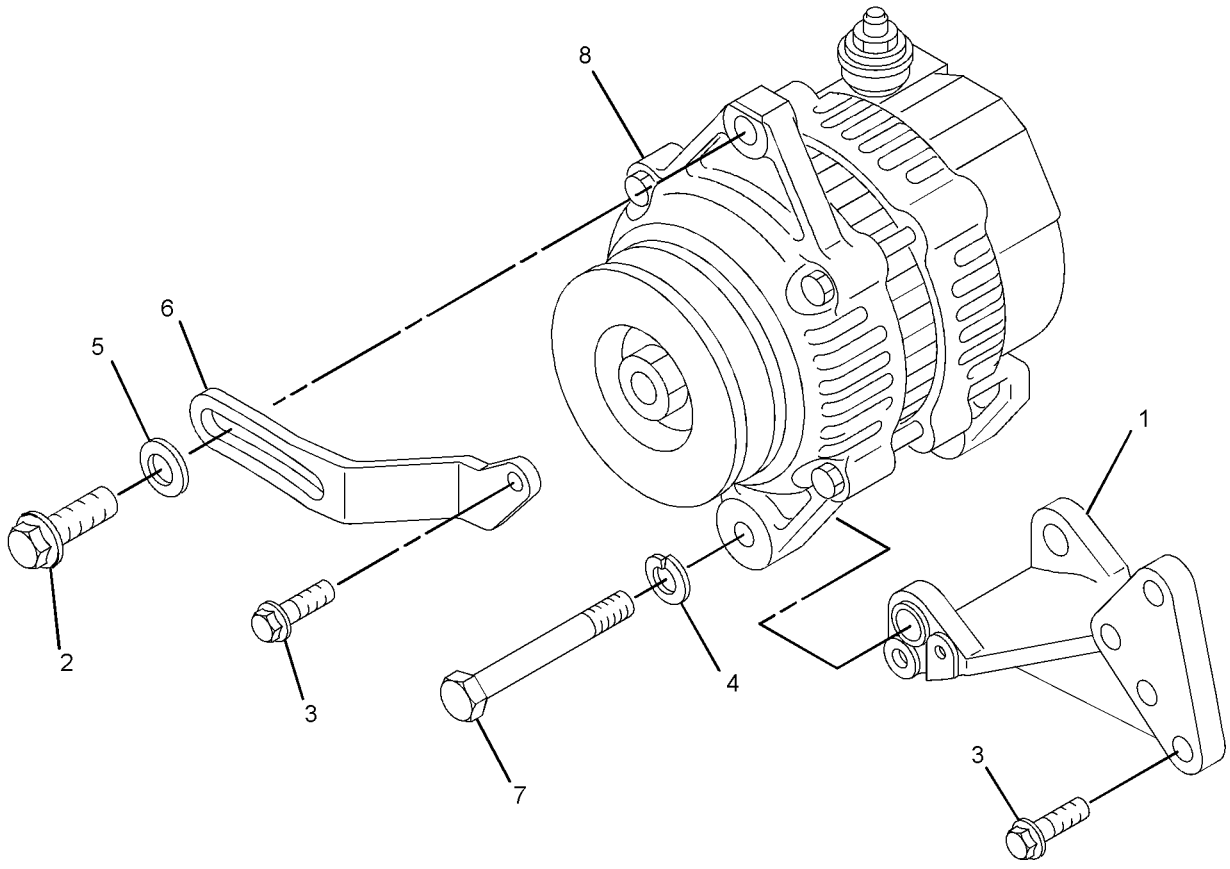


GRAPHIC #1 **<END>** g01567413

# *328-2278* BATTERY & WIRING GP

**S/N: TNK1-UP**

**PART OF 326-4786 CHASSIS AR**

**SMCS-1401, 1402** **i03969170**

| NOTE | REF NO | GRAPHIC REF | PART NUMBER | QTY | PART NAME 1 2 3 4 5 6 (PRODUCT LEVEL) | SEE PAGE |
|---|---|---|---|---|---|---|
| | 1 | 1 | **7K-1181** | 5 | STRAP-CABLE | |
| | 2 | 1 | **178-3620** | 2 | STRAP-DUAL CLAMP | |
| | 3 | 1 | **193-8329** | 1 | CLAMP | |
| | 4 | 1 | **230-6368** | 1 | BATTERY (12-VOLT, MAINTENANCE FREE) | |
| | 5 | 1 | **328-2279** | 1 | CABLE AS-BATTERY (POSITIVE) | |
| E | | 1 | **159-8049** | | CABLE (00-GA, RED) (179-CM) | |
| | | 1 | **8N-0869** | 1 | COVER-TERMINAL (RED) | |
| | | 1 | **8N-1725** | 1 | COVER AS-TERMINAL (RED) | |
| | | 1 | **3S-6049** | 1 | TERMINAL AS-BATTERY (POSITIVE) | |
| | | 1 | **1M-6119** | 1 | BOLT (5/16-18X1.375-IN) | |
| | | 1 | **1M-6120** | 1 | NUT (5/16-18-THD) | |
| | | 1 | **276-7278** | 1 | TERMINAL-RING | |
| | 6 | 1 | **328-2280** | 1 | CABLE AS-BATTERY (GROUND) | |
| E | | 1 | **159-8050** | | CABLE (00-GA, BLACK) (61-CM) | |
| | | 1 | **9G-0005** | 1 | COVER-TERMINAL (BLACK) | |
| | | 1 | **8C-5918** | 1 | TERMINAL AS (NEGATIVE) | |
| | | 1 | **1M-6119** | 1 | BOLT (5/16-18X1.375-IN) | |
| | | 1 | **1M-6120** | 1 | NUT (5/16-18-THD) | |
| | | 1 | **216-7790** | 1 | TERMINAL-CABLE (00-GA, 3/8-IN SCREW) | |
| | 7 | 1 | **328-2281** | 2 | BRACKET AS | |
| | | | | | (EACH INCLUDES) | |
| M | | 1 | **159-9540** | 1 | NUT-WELD (M8X1.25-THD) | |
| | 8 | 1 | **328-2337** | 1 | CABLE AS-BATTERY (NEGATIVE) | |
| E | | 1 | **159-8050** | | CABLE (00-GA, BLACK) (26-CM) | |
| | | 1 | **216-7790** | 1 | TERMINAL-CABLE (00-GA, 3/8-IN SCREW) | |
| | | 1 | **315-0180** | 1 | TERMINAL-RING | |
| | 9 | 1 | **132-5789** | 4 | CLIP | |
| | 10 | 1 | **277-1873** | 1 | CLIP | |
| | 11 | 1 | **5P-4116** | 4 | WASHER-HARD (8.8X20.5X2-MM THK) | |
| | 12 | 1 | **8T-4121** | 2 | WASHER-HARD (11X21X2.5-MM THK) | |
| M | 13 | 1 | **8T-4133** | 2 | NUT (M10X1.5-THD) | |
| M | 14 | 1 | **8T-4189** | 2 | BOLT (M8X1.25X20-MM) | |
| M | 15 | 1 | **8T-4200** | 2 | BOLT (M8X1.25X16-MM) | |
| | 16 | 1 | **8X-5489** | 5 | SLEEVE | |

E-ORDER BY THE CENTIMETER
M-METRIC PART

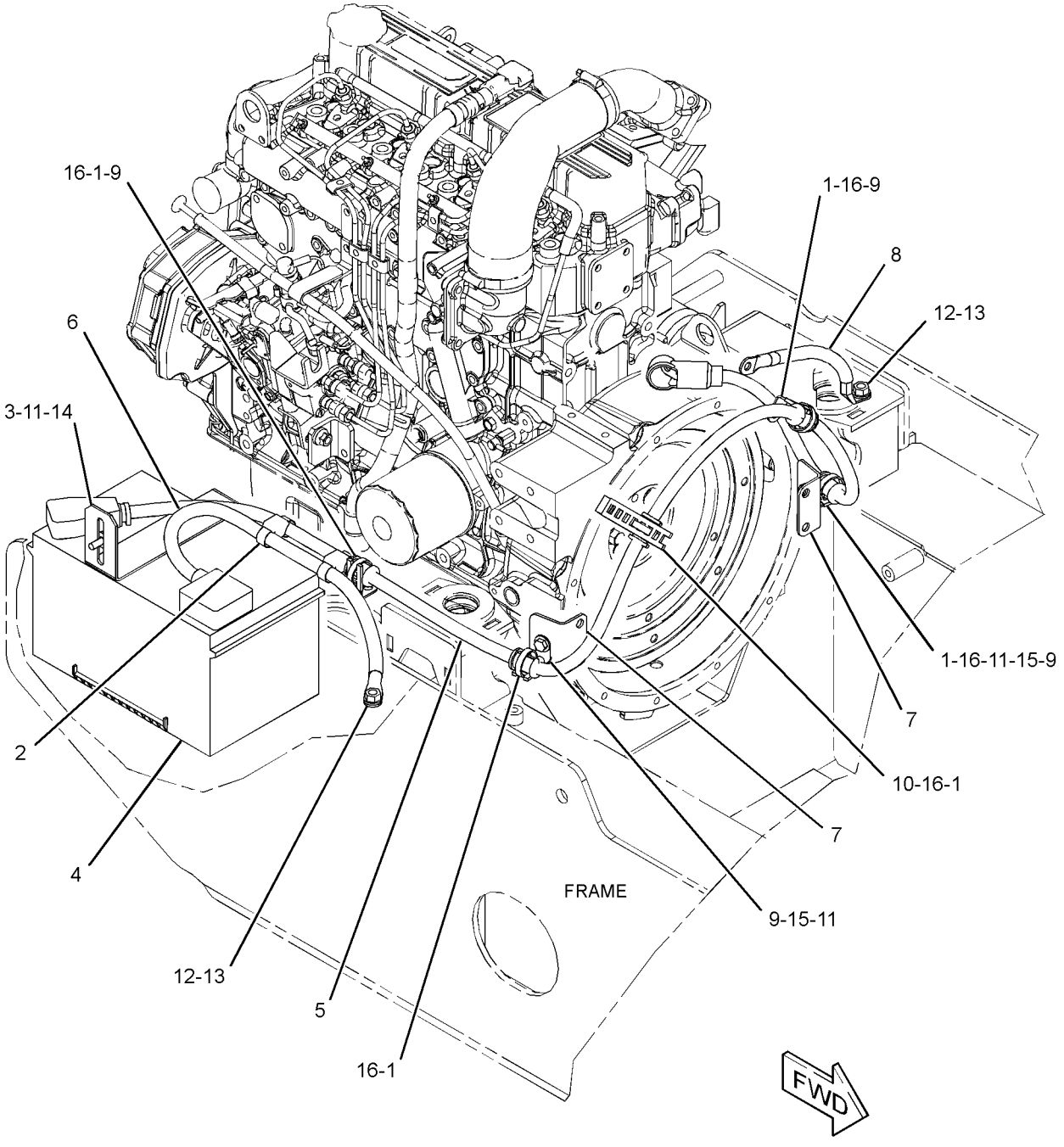


GRAPHIC #1 **<END>** g02148204

## *328-2345* ELECTRONICS GP-MACHINE

**S/N: TNK1-UP**

**PART OF 328-2272 WIRING GP-CAB**

**SMCS-7610, 7620** **i03905349**

| NOTE | PART NUMBER | QTY | PART NAME 1 2 3 4 5 6 (PRODUCT LEVEL) | SEE PAGE |
|---|---|---|---|---|
| | **343-6004** | 1 | SOFTWARE GP-MACHINE | |
| | | | —OR— | |
| | **329-2576** | 1 | CONTROL GP-UNPROGRAMMED (MACHINE) | |
| | | | —OR— | |
| | **343-6005** | 1 | SERVICE GP-MACHINE | |
| | | | (OPTIONAL SERVICE REPLACEMENT)(INCLUDES CONTROL GP & SOFTWARE) | |

**<END>**

# *235-5904* GLOW PLUG GP

**S/N: CYM1-UP**
**PART OF 342-1219 ENGINE AR-PRIMARY**
**AN ATTACHMENT**

**SMCS-1412** **i02162785**

| NOTE | REF NO | GRAPHIC REF | PART NUMBER | QTY | PART NAME 1 2 3 4 5 6 (PRODUCT LEVEL) | SEE PAGE |
|---|---|---|---|---|---|---|
| | 1 | 1 | **107-3659** | 4 | GLOW PLUG | |
| | 2 | 1 | **257-8390** | 1 | PLATE-CONNECTION | |

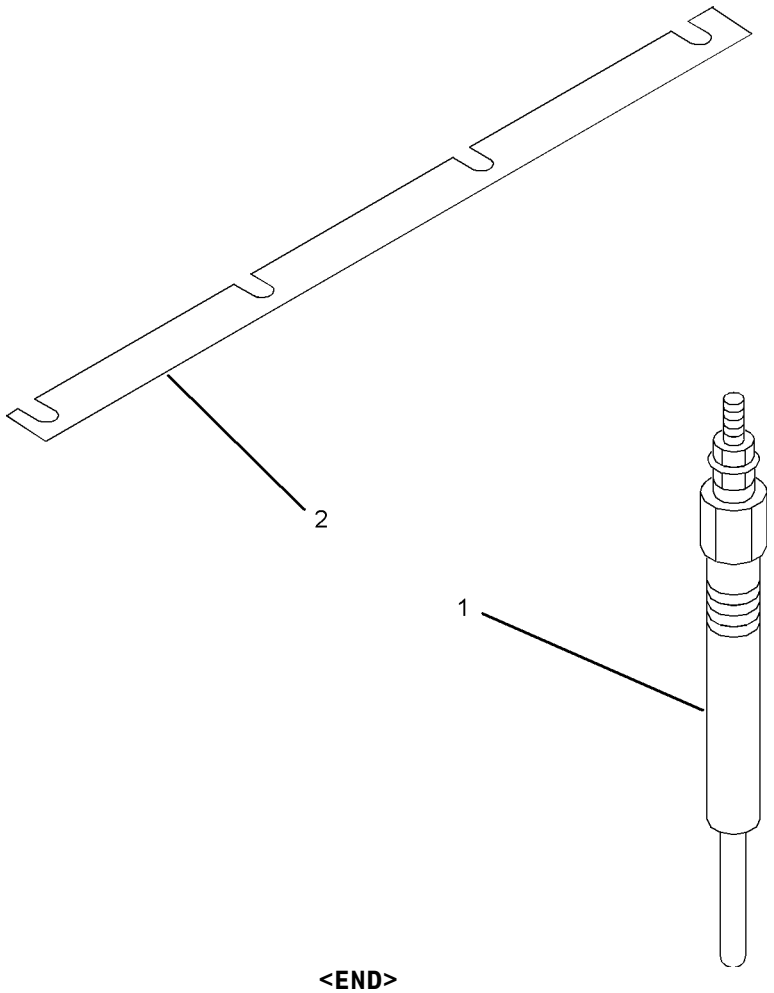


GRAPHIC #1 **<END>** g01011629

# *218-0942* HEATER GP-JACKET WATER

**S/N: TNK1-UP**
**120-VOLT, 530-WATT**
**AN ATTACHMENT**

**SMCS-1383** **i03969178**

| NOTE | REF NO | GRAPHIC REF | PART NUMBER | QTY | PART NAME 1 2 3 4 5 6 (PRODUCT LEVEL) | SEE PAGE |
|---|---|---|---|---|---|---|
| | 1 | 1 | **9X-6772** | 2 | STRAP-CABLE | |
| | 2 | 1 | *225-5642* | 1 | HEATER GP-JACKET WATER (120-VOLT, 530-WATT) | |
| | 2A | 1 | **7X-6312** | 1 | CORD AS-HEATER ELEMENT (120-VOLT, 15-AMPERE) | |
| | 2B | 1 | **225-5541** | 1 | ELEMENT AS-JACKET WATER HEATER (120-VOLT, 530-WATT) | |
| | | 1 | **133-6517** | 1 | CAP AS-DUST | |
| | 2C | 1 | **232-4703** | 1 | GASKET | |

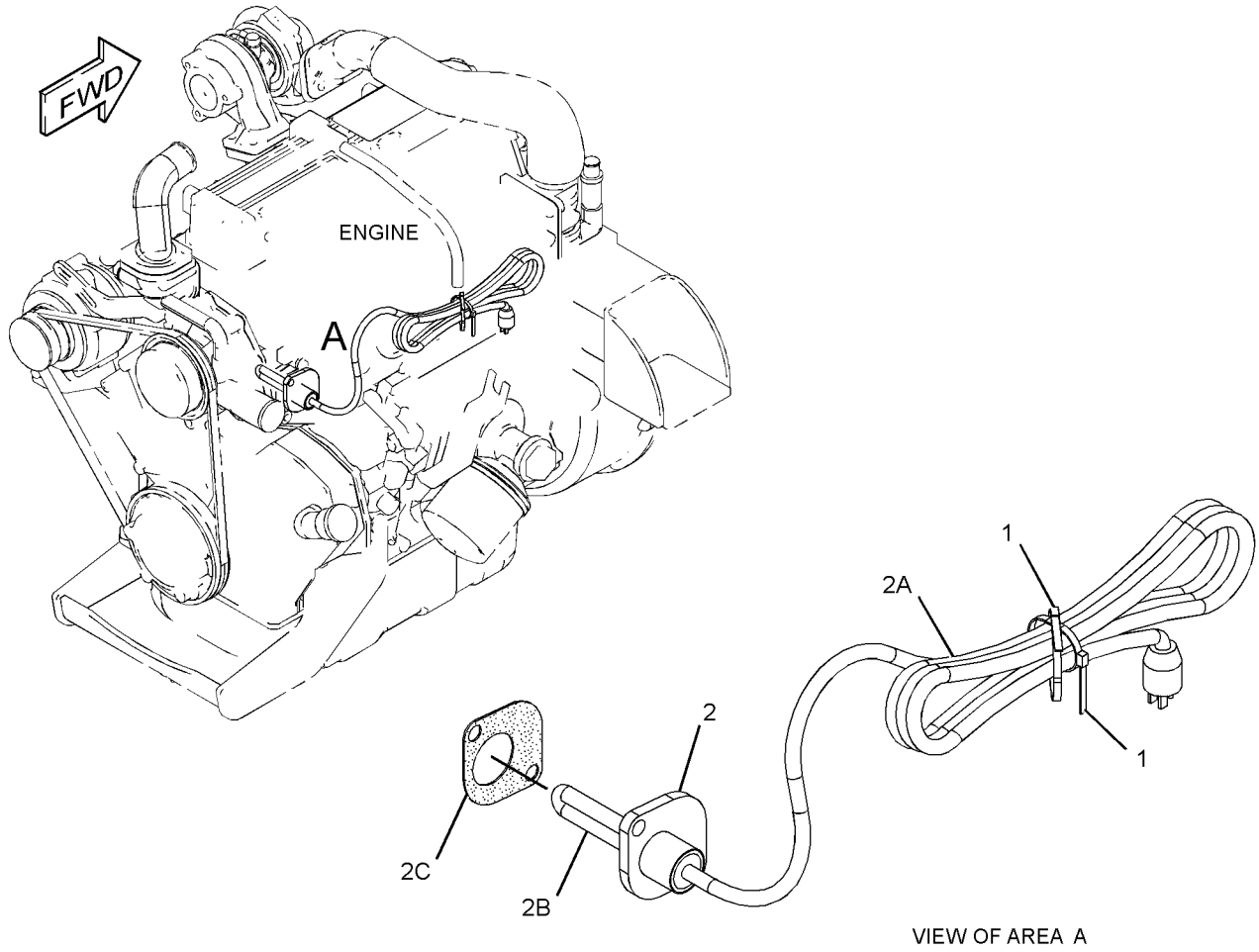


GRAPHIC #1 **<END>** g01335541

# *218-0943* HEATER GP-JACKET WATER

**S/N: TNK1-UP**
**240-VOLT, 530-WATT**
**AN ATTACHMENT**

**SMCS-1383** **i03775170**

| NOTE | REF NO | GRAPHIC REF | PART NUMBER | QTY | PART NAME 1 2 3 4 5 6 (PRODUCT LEVEL) | SEE PAGE |
|---|---|---|---|---|---|---|
| | 1 | 1 | **9X-6772** | 2 | STRAP-CABLE | |
| | 2 | 1 | *225-5644* | 1 | HEATER GP-JACKET WATER (240-VOLT, 530-WATT) | |
| | 2A | 1 | **217-5912** | 1 | CORD AS | |
| | 2B | 1 | **225-5535** | 1 | ELEMENT AS-JACKET WATER HEATER (240-VOLT, 530-WATT) | |
| | | 1 | **133-6517** | 1 | CAP AS-DUST | |
| | 2C | 1 | **232-4703** | 1 | GASKET | |

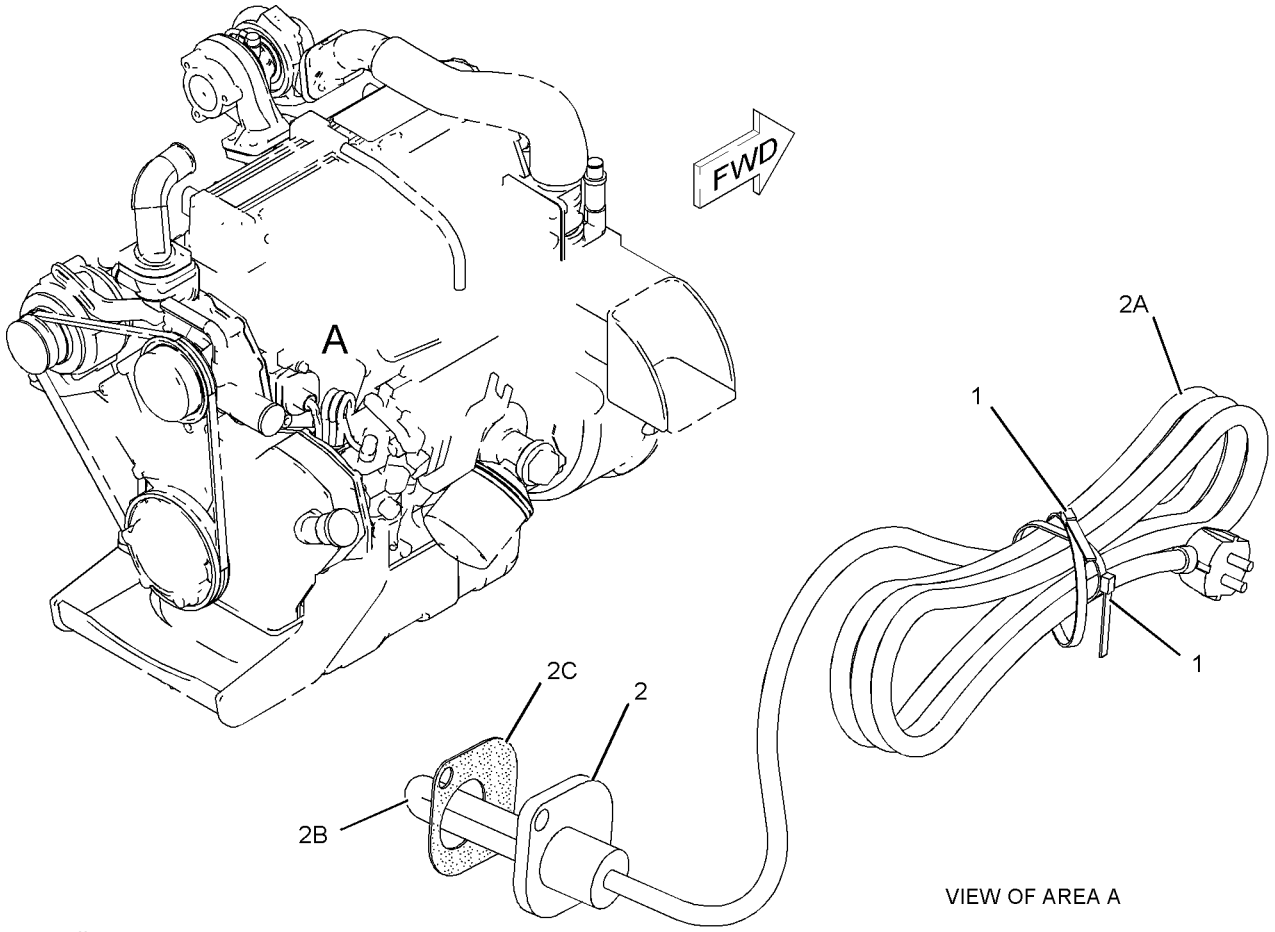


GRAPHIC #1

**<END>**

g01108040

# 234-4328 LAMP GP-FLOOD

**S/N: TNK1-UP**
**12-VOLT**
**PART OF 218-6425 LIGHTING GP-FLOOD**

**SMCS-1434** **i03969175**

| NOTE | REF NO | GRAPHIC REF | PART NUMBER | QTY | PART NAME 1 2 3 4 5 6 (PRODUCT LEVEL) | SEE PAGE |
|---|---|---|---|---|---|---|
| | 1 | 1 | **9W-0607** | 1 | LAMP (12-VOLT, 55-WATT) (FLOODLIGHT) | |
| M | 2 | 1 | **8T-0389** | 1 | LOCKNUT (M10X1.5-THD) | |
| | 3 | 1 | **9X-4244** | 2 | SCREW-SPECIAL (M4X1.79X25-MM) | |
| | 4 | 1 | **202-6614** | 1 | LENS AS (FLOODLIGHT) | |
| | 5 | 1 | **234-7730** | 1 | BODY AS (FLOODLIGHT) | |
| | 6 | 1 | **164-7556** | 1 | BRACKET (LAMP RETAINING) | |
| | 7 | 1 | **234-7731** | 1 | BRACKET AS | |
| | 8 | 1 | **8T-4121** | 1 | WASHER-HARD (11X21X2.5-MM THK) | |

M-METRIC PART

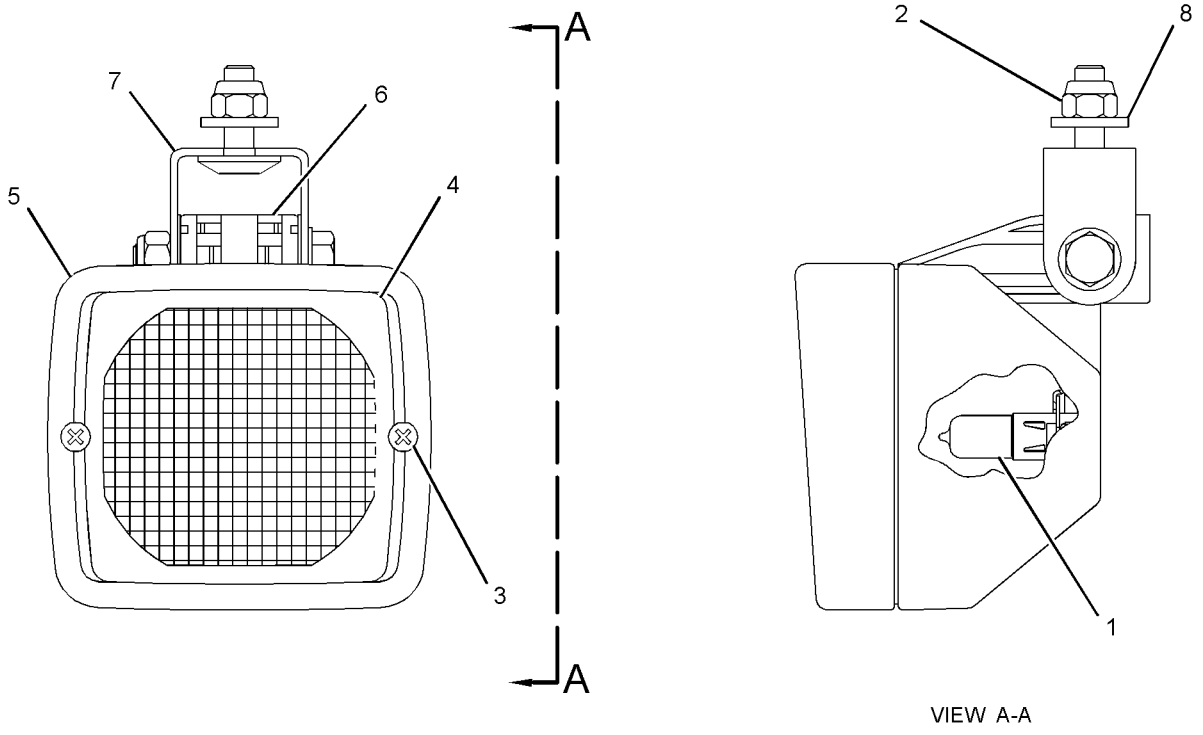


GRAPHIC #1 **<END>** g01283627

# *234-7727* LAMP GP-FLOOD

**S/N: TNK1-UP**
**12-VOLT**
**PART OF 216-4746 LIGHTING GP-FLOOD**

**SMCS-1434** **i03686766**

| NOTE | REF NO | GRAPHIC REF | PART NUMBER | QTY | PART NAME 1 2 3 4 5 6 (PRODUCT LEVEL) | SEE PAGE |
|---|---|---|---|---|---|---|
| | 1 | 1 | **9W-0607** | 1 | LAMP (12-VOLT, 55-WATT) (FLOODLIGHT) | |
| | 2 | 1 | **9X-4244** | 2 | SCREW-SPECIAL (M4X1.79X25-MM) | |
| | 3 | 1 | **202-6611** | 1 | LENS AS (FLOODLIGHT) | |
| | 4 | 1 | **234-7758** | 1 | BODY AS | |
| | 5 | 1 | **164-7556** | 1 | BRACKET (LAMP RETAINING) | |
| | 6 | 1 | **234-7756** | 1 | BRACKET-MOUNTING | |

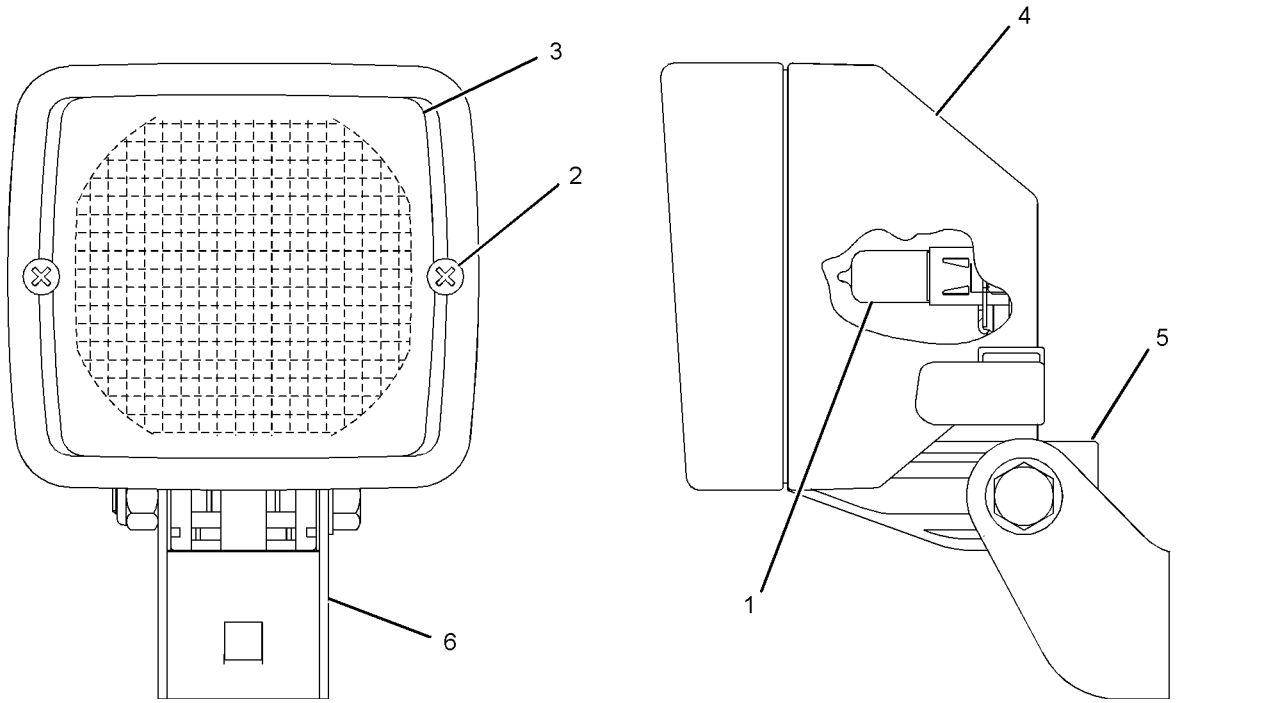


GRAPHIC #1 **<END>** g01017848

# 142-7503 LAMP GP-STOP & TAIL

**S/N: TNK1-UP**
**12-VOLT**
**PART OF 328-2344 LAMP GP-STOP & TAIL**

**SMCS-1432** **i02577856**

| NOTE | REF NO | GRAPHIC REF | PART NUMBER | QTY | PART NAME 1 2 3 4 5 6 (PRODUCT LEVEL) | SEE PAGE |
|---|---|---|---|---|---|---|
| | 1 | 1 | **084-4348** | 1 | LAMP (12-VOLT, 5-WATT) | |
| | 2 | 1 | **102-8804** | 1 | KIT-RECEPTACLE (4-PIN) | |
| | | | | | (INCLUDES RECEPTACLE AS & WEDGE) | |
| | 3 | 1 | **165-4895** | 1 | LENS | |
| M | 4 | 1 | **5C-2890** | 2 | NUT (M6X1-THD) | |
| | 5 | 1 | **8T-0087** | 2 | LOCKWASHER | |

M-METRIC PART

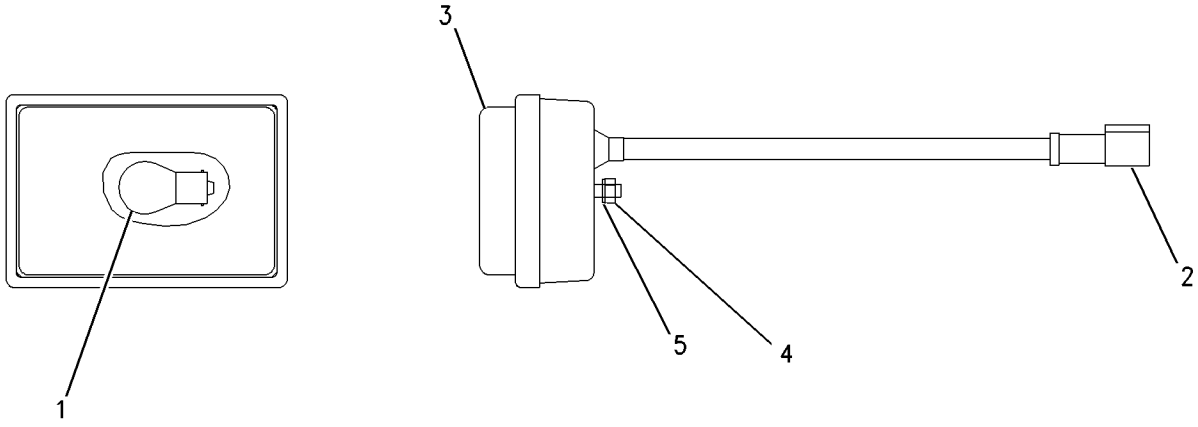


GRAPHIC #1 **<END>** g00669668

# *328-2344* LAMP GP-STOP & TAIL–REAR

**S/N: TNK1-UP**

**PART OF 326-4786 CHASSIS AR**

**SMCS-1432** **i03901797**

| NOTE | REF NO | GRAPHIC REF | PART NUMBER | QTY | PART NAME 1 2 3 4 5 6 (PRODUCT LEVEL) | SEE PAGE |
|---|---|---|---|---|---|---|
| | 1 | 1 | **9R-1499** | 2 | REFLECTOR | |
| Y | 2 | 1 | **142-7503** | 1 | LAMP GP-STOP & TAIL (12-VOLT) (LH) | 77 |
| Y | 2A | 1 | **142-7503** | 1 | LAMP GP-STOP & TAIL (12-VOLT) (RH) | 77 |
| | 3 | 1 | **8T-4205** | 4 | WASHER-HARD (7.2X14.5X2-MM THK) | |

Y-SEPARATE ILLUSTRATION

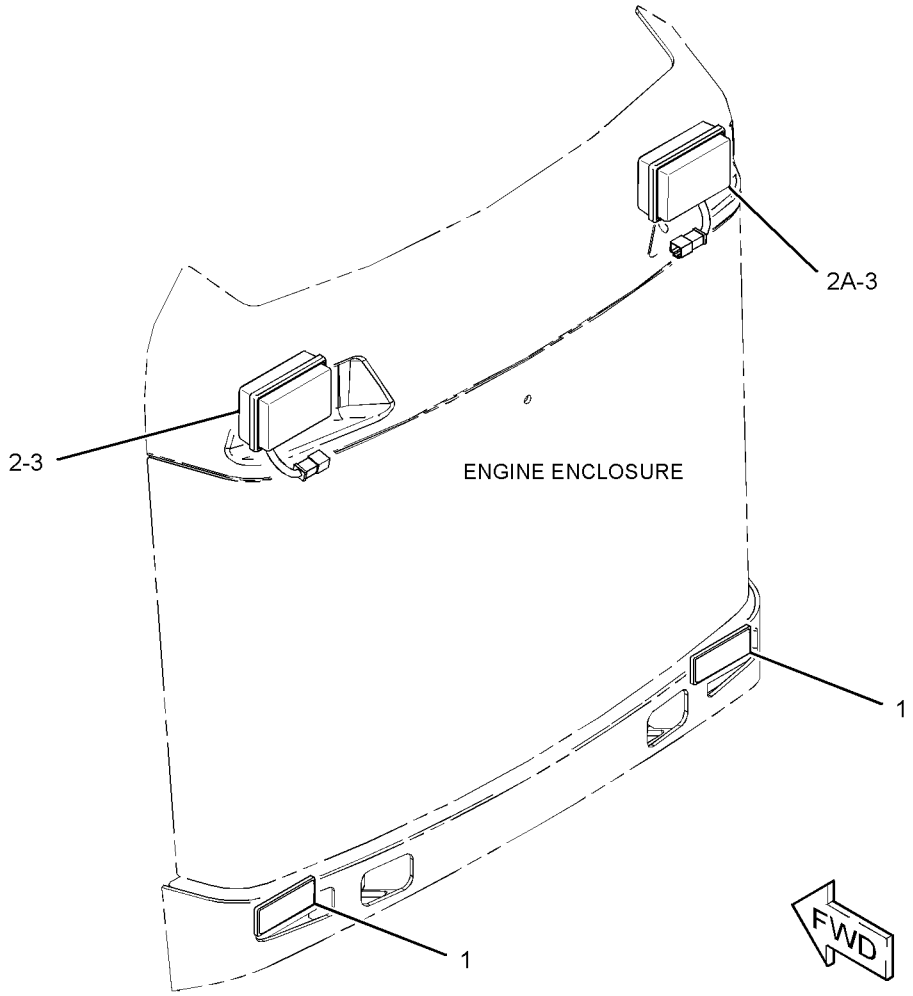


GRAPHIC #1 **<END>** g02148188

# *309-1325* LAMP GP-WARNING BEACON–AMBER

**S/N: TNK1-UP**
**12-VOLT**
**AN ATTACHMENT**

**SMCS-1431** **i03686768**

| NOTE | REF NO | GRAPHIC REF | PART NUMBER | QTY | PART NAME 1 2 3 4 5 6 (PRODUCT LEVEL) | SEE PAGE |
|---|---|---|---|---|---|---|
| | 1 | 1 | **272-9800** | 1 | LENS (AMBER) (WARNING BEACON) | |
| | 2 | 1 | **9X-8118** | 1 | LAMP (12-VOLT, 55-WATT) (WARNING BEACON) | |
| | 3 | 1 | **9X-8139** | 1 | BELT-DRIVE (WARNING BEACON) | |
| | 4 | 1 | **9R-7958** | 1 | CORD AS | |
| | 4A | 1 | **9R-7942** | 1 | PLUG AS | |

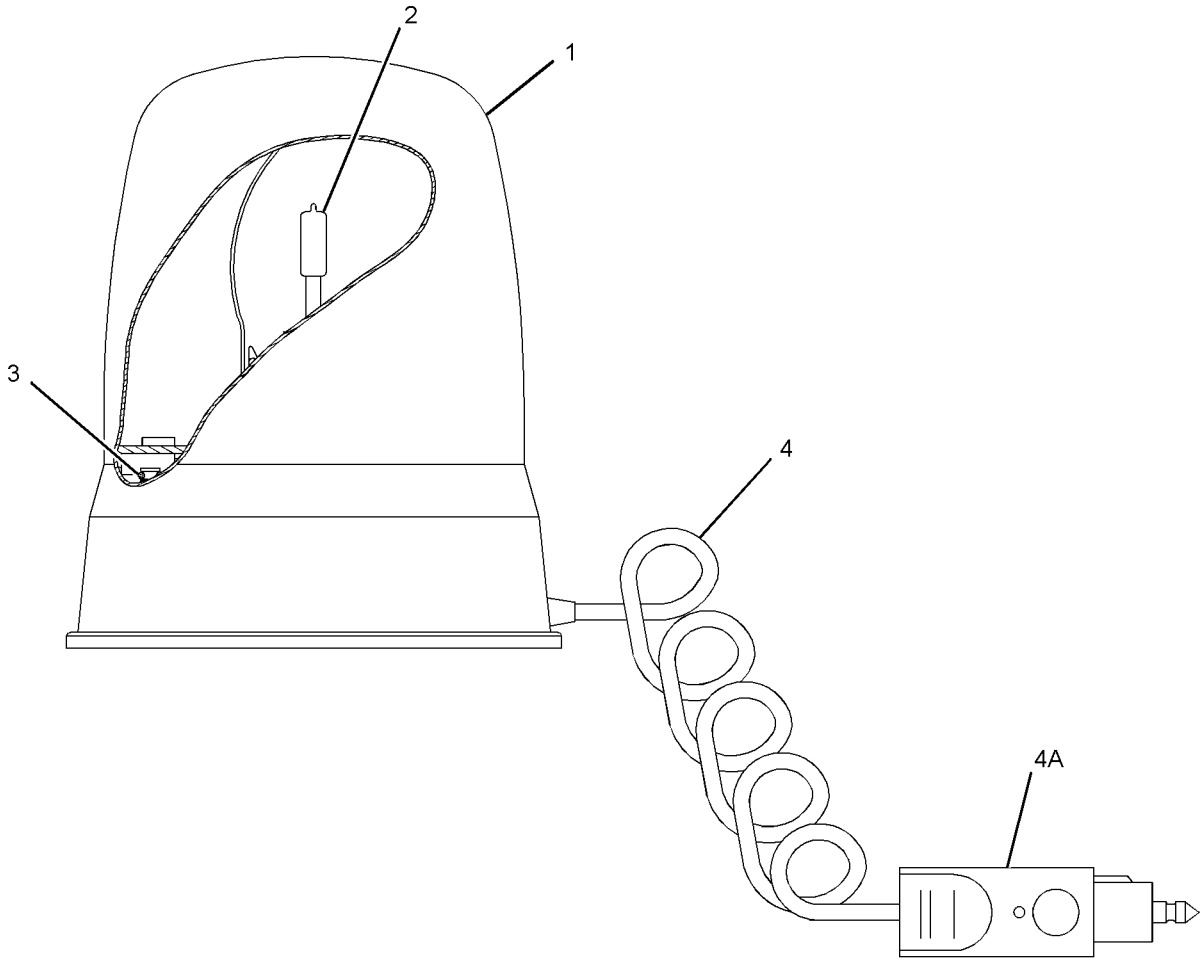


GRAPHIC #1 **<END>** g01382357

# *216-4746* LIGHTING GP-FLOOD–REAR

**S/N: TNK1-UP**

**PART OF 326-5400 CAB AR**

**SMCS-1434** **i03961872**

| NOTE | REF NO | GRAPHIC REF | PART NUMBER | QTY | PART NAME 1 2 3 4 5 6 (PRODUCT LEVEL) | SEE PAGE |
|---|---|---|---|---|---|---|
| | 1 | 1 | **142-9326** | 1 | SWITCH AS-ROCKER (REAR WORK LAMPS) | |
| | | 1 | **111-7899** | 1 | GASKET | |
| Y | 2 | 1 | **234-7727** | 2 | LAMP GP-FLOOD (12-VOLT) (REAR) | 76 |
| M | 3 | 1 | **195-0937** | 2 | INSERT-THREADED (M8X1.25-THD) | |
| | 4 | 1 | **5P-8439** | 2 | GROMMET | |
| M | 5 | 1 | **6V-2317** | 2 | BOLT (M8X1.25X30-MM) | |
| | 6 | 1 | **8T-4224** | 4 | WASHER-HARD (8.8X16X2-MM THK) | |

M-METRIC PART
Y-SEPARATE ILLUSTRATION

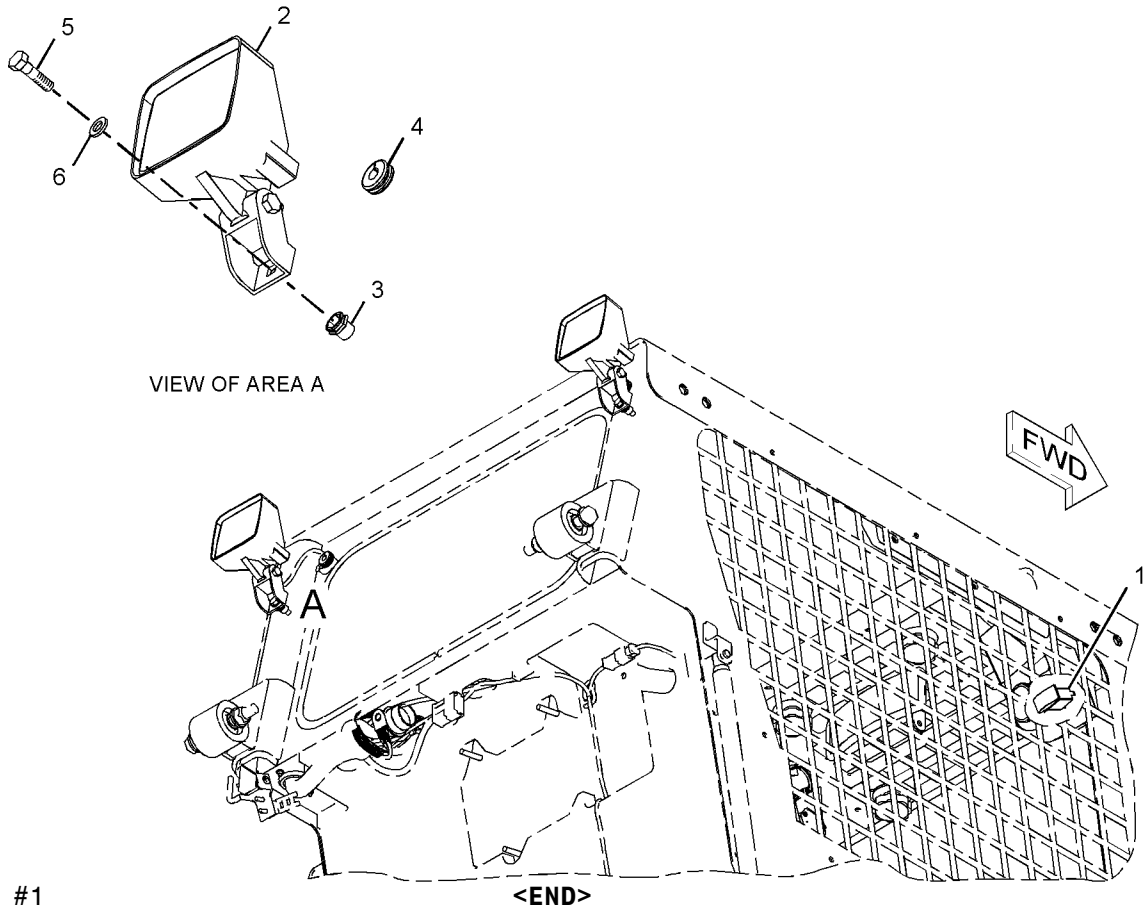


GRAPHIC #1 **<END>** g01136313

# ELECTRICAL AND STARTING SYSTEM

## *218-6425* LIGHTING GP-FLOOD–FRONT

**S/N: TNK1-UP**

**PART OF 326-5400 CAB AR**

**SMCS-1434** **i03961871**

| NOTE | REF NO | GRAPHIC REF | PART NUMBER | QTY | PART NAME 1 2 3 4 5 6 (PRODUCT LEVEL) | SEE PAGE |
|---|---|---|---|---|---|---|
| Y | 1 | | **234-4328** | 2 | LAMP GP-FLOOD (12-VOLT) | 75 |
| | 2 | | **5P-8439** | 2 | GROMMET | |
| | 3 | | **8T-4121** | 4 | WASHER-HARD (11X21X2.5-MM THK) | |

Y-SEPARATE ILLUSTRATION

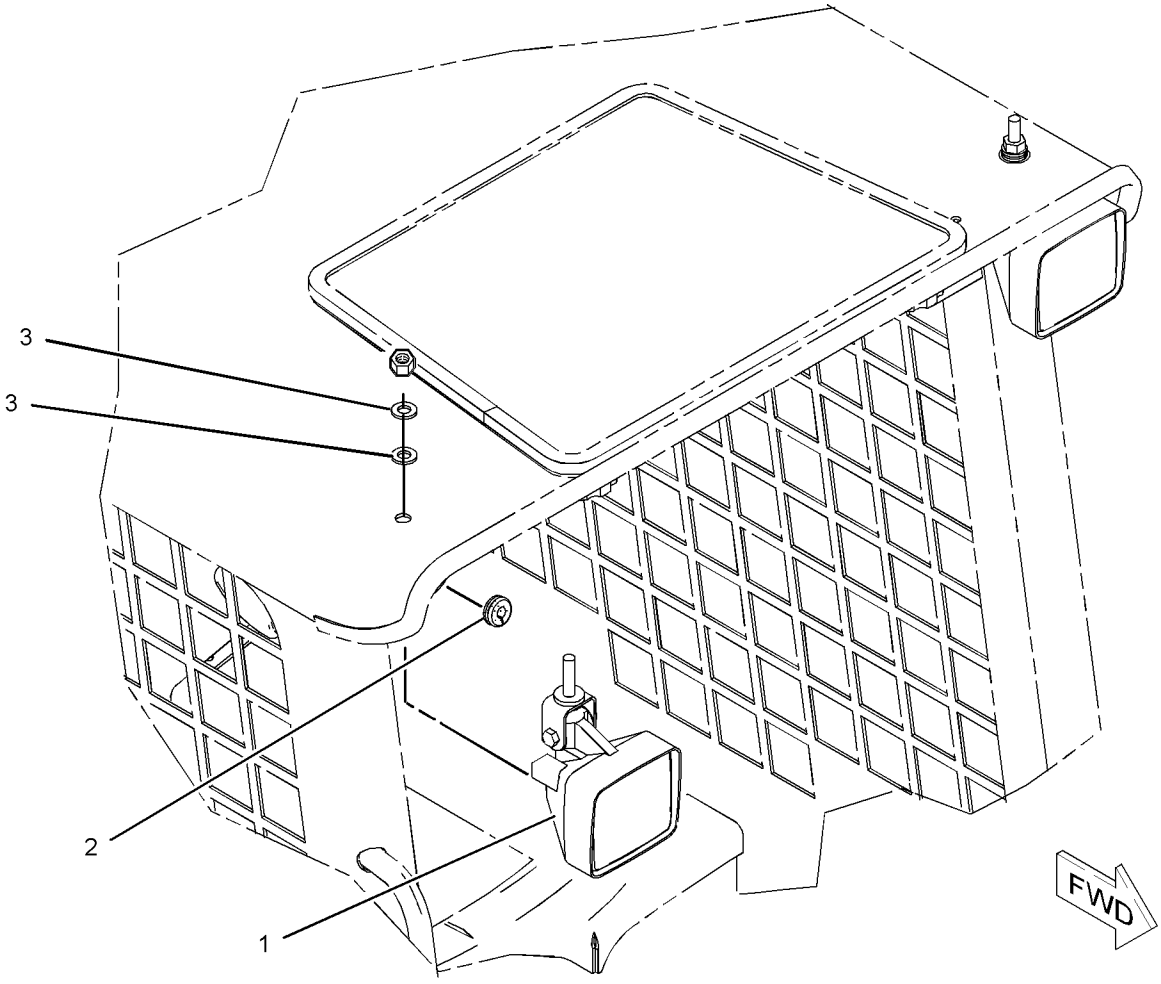


GRAPHIC #1 **<END>** g01040888

# 258-4135 RELAY GP–MAIN POWER

**S/N: TNK1-UP**
**12-VOLT**
**PART OF 328-2272 WIRING GP-CAB**

**SMCS-1422, 4493** **i03959893**

| NOTE | REF NO | GRAPHIC REF | PART NUMBER | QTY | PART NAME 1 2 3 4 5 6 (PRODUCT LEVEL) | SEE PAGE |
|---|---|---|---|---|---|---|
| M | 1 | 1 | **5C-2890** | 2 | NUT (M6X1-THD) | |
| | 2 | 1 | **8T-4205** | 2 | WASHER-HARD (7.2X14.5X2-MM THK) | |
| | 3 | 1 | **1H-3244** | 2 | LOCKWASHER | |
| M | 4 | 1 | **5C-7261** | 1 | NUT (M8X1.25-THD) | |
| | 5 | 1 | **8T-4224** | 1 | WASHER-HARD (8.8X16X2-MM THK) | |
| | 6 | 1 | **267-5213** | 1 | COVER (FUSE) | |
| | 7 | 1 | **267-5211** | 1 | SEAL | |
| | 8 | 1 | **267-2680** | 1 | FUSE (20-AMPERE) | |
| | 9 | 1 | **267-2701** | 1 | FUSE (60-AMPERE) | |

M-METRIC PART

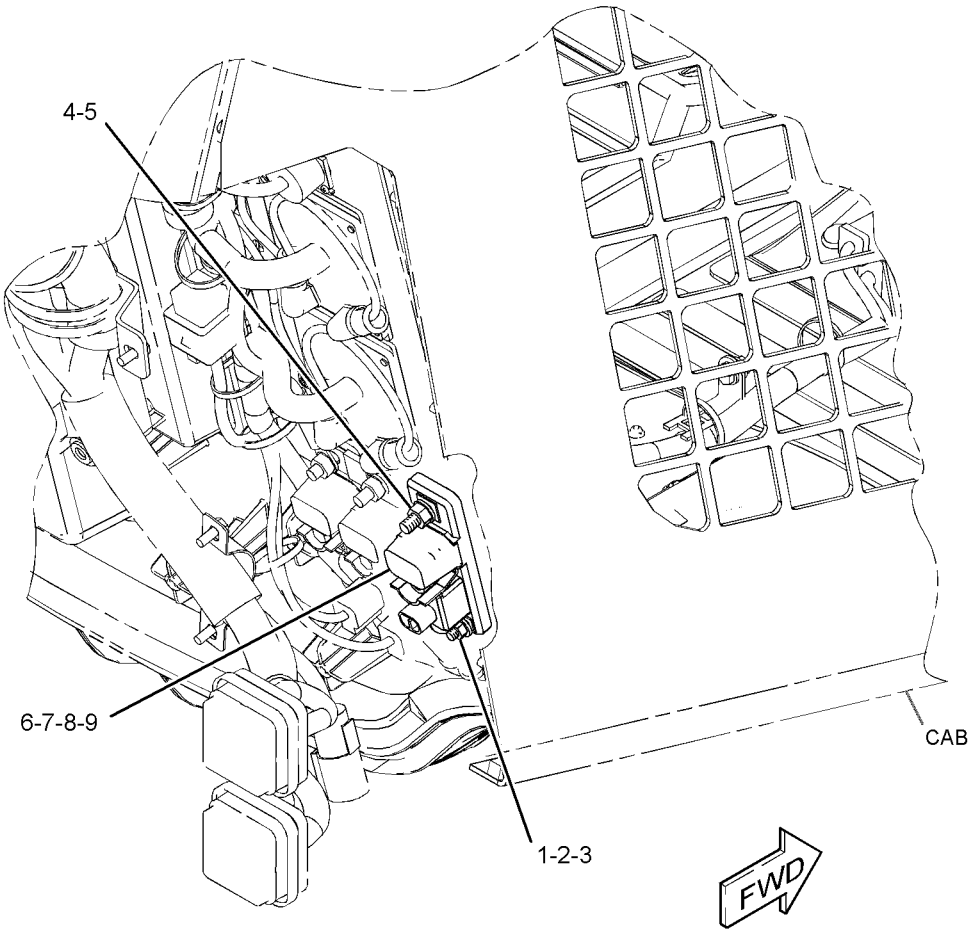


GRAPHIC #1 **<END>** g01328212

# *143-0539* STARTING MOTOR GP-ELECTRIC*R

**S/N: CYM1-UP**
**12-VOLT**
**PART OF 287-6181 STARTING MOTOR GP-ELECTRIC**
**AN ATTACHMENT**

**SMCS-1453** **i02712964**

| NOTE | REF NO | GRAPHIC REF | PART NUMBER | QTY | PART NAME 1 2 3 4 5 6 (PRODUCT LEVEL) | SEE PAGE |
|---|---|---|---|---|---|---|
| | 1 | 1 | **8C-9778** | 1 | PLUNGER AS | |
| | 2 | 1 | **8C-9783** | 1 | GASKET | |
| | 3 | 1 | **2P-8104** | 1 | BEARING | |
| | 4 | 1 | **7T-6092** | 1 | HOLDER AS-BRUSH | |
| M | 5 | 1 | **8T-4133** | 2 | NUT (M10X1.5-THD) | |
| | 6 | 1 | **7T-6088** | 1 | BEARING AS | |
| | 7 | 1 | **7T-6087** | 1 | WASHER (15.2X40X0.5-MM THK) | |
| | 8 | 1 | **7T-6093** | 1 | CLUTCH AS | |
| | 9 | 1 | **8J-4455** | 1 | BALL | |
| | 10 | 1 | **7T-6090** | 1 | SPRING | |
| | 11 | 1 | **8T-4121** | 2 | WASHER-HARD (11X21X2.5-MM THK) | |
| | 12 | 1 | **3E-5153** | 1 | COVER-STARTING MOTOR | |
| M | 13 | 1 | **9X-2036** | 1 | SCREW-PAN HEAD | |
| | 14 | 1 | **8F-1434** | 1 | LOCKWASHER | |
| | 15 | 1 | **100-4113** | 1 | SWITCH AS (STARTING MOTOR)(12-VOLT) | |
| | 16 | 1 | **100-4119** | 1 | ARMATURE AS | |
| | 17 | 1 | **100-4118** | 1 | CASE AS-STARTING MOTOR | |
| | 18 | 1 | **100-4115** | 1 | HOUSING-STARTING MOTOR | |
| | 19 | 1 | **143-1344** | 1 | FRAME-STARTER | |
| | 20 | 1 | **100-3685** | 1 | CAP | |
| | 21 | 1 | **3E-5154** | 1 | BUSHING-STARTING MOTOR | |
| | | | | | AVAILABLE REPAIR KIT(S): | |
| | | | **7T-6099** | 1 | KIT-GEAR (STARTING MOTOR) | |
| | | | | | (INCLUDES RETAINER, PINION & ROLLERS) | |
| | | | **146-6729** | 1 | KIT-HARDWARE (STARTING MOTOR) | |
| | | | | | (INCLUDES BOLTS, SCREWS, SCREW ASSEMBLIES & PLATE) | |
| | | | **100-4112** | 1 | KIT-CONTACT (STARTING MOTOR) | |
| | | | | | (INCLUDES NUT, WASHERS, SEAL, BUSHINGS, PLATE & BOLT) | |

M-METRIC PART

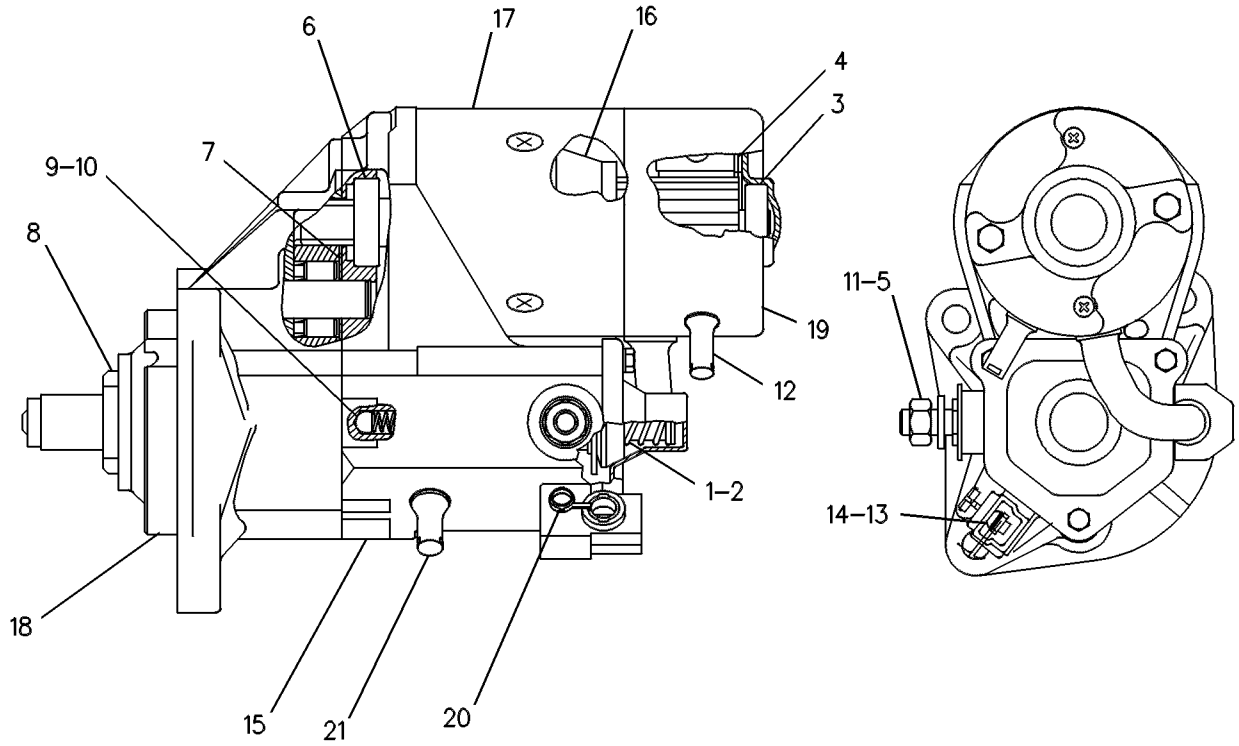


GRAPHIC #1 **<END>** g00131126

# ELECTRICAL AND STARTING SYSTEM

## *287-6181* STARTING MOTOR GP-ELECTRIC

**S/N: CYM1-UP**
**12-VOLT**
**PART OF 342-1219 ENGINE AR-PRIMARY**
**AN ATTACHMENT**

**SMCS-1453** **i02568571**

| NOTE | REF NO | GRAPHIC REF | PART NUMBER | QTY | PART NAME 1 2 3 4 5 6 (PRODUCT LEVEL) | SEE PAGE |
|---|---|---|---|---|---|---|
| YR | 1 | 1 | **143-0539** | 1 | STARTING MOTOR GP-ELECTRIC | 83 |

R-REMFG PART MAY BE AVAILABLE
Y-SEPARATE ILLUSTRATION

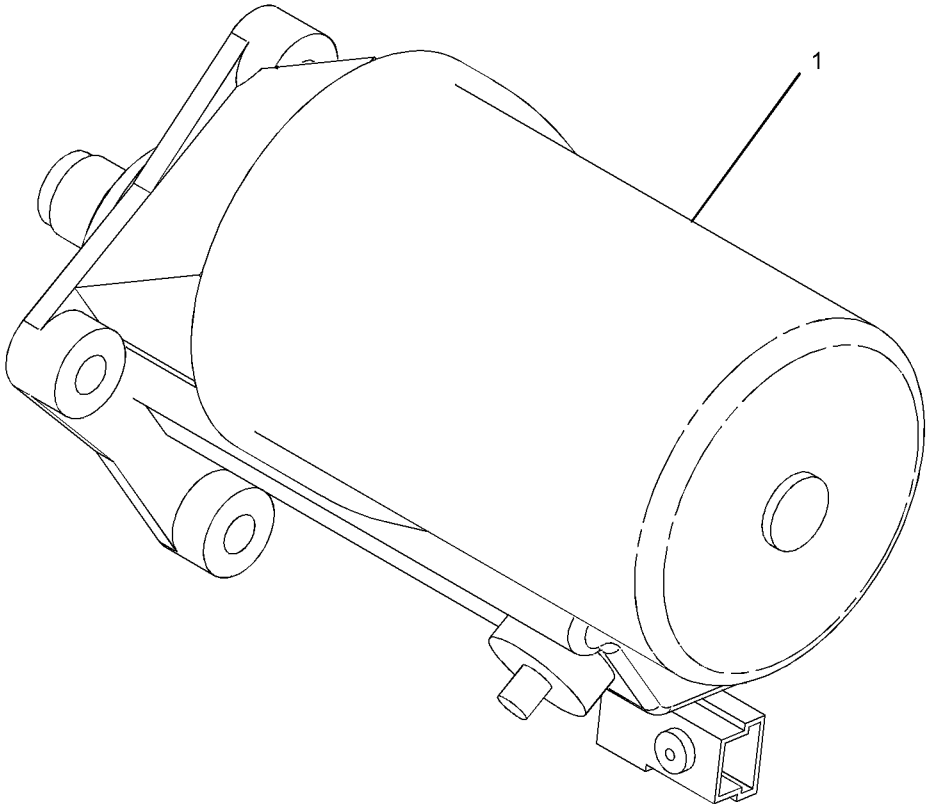


GRAPHIC #1 **<END>** g01345353

# *300-1071* SWITCH GP-PRESSURE

**S/N: CYM1-UP**
**PART OF 342-1219 ENGINE AR-PRIMARY**
**AN ATTACHMENT**

**SMCS-1435, 7400** **i02974920**

| NOTE | REF NO | GRAPHIC REF | PART NUMBER | QTY | PART NAME 1 2 3 4 5 6 (PRODUCT LEVEL) | SEE PAGE |
|---|---|---|---|---|---|---|
| | 1 | 1 | **327-0752** | 1 | SWITCH-OIL PRESS (ENGINE) | |

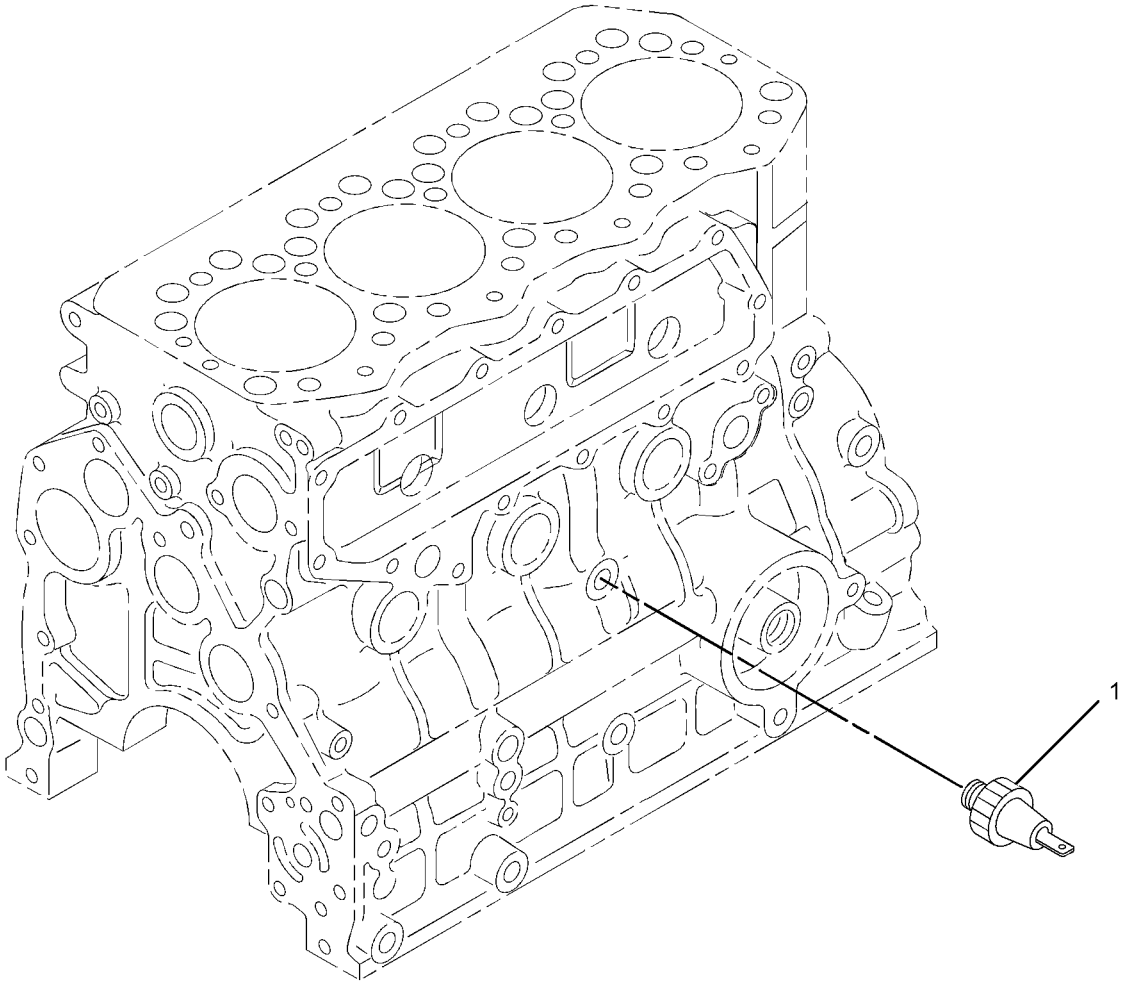


GRAPHIC #1 **<END>** g01345516

## *328-2272* WIRING GP-CAB

**S/N: TNK1-UP**

**PART OF 326-5400 CAB AR**

**SMCS-1408, 7301** **i03973032**

| NOTE | REF NO | GRAPHIC REF | PART NUMBER | QTY | PART NAME 1 2 3 4 5 6 (PRODUCT LEVEL) | SEE PAGE |
|---|---|---|---|---|---|---|
| | 1 | 1 | **6I-1418** | 4 | SPACER (8.2X12.7X28.7-MM THK) | |
| | 2 | 1 | **7G-1060** | 1 | STRAP AS-GROUND | |
| | 3 | 1 | **7K-1181** | 10 | STRAP-CABLE | |
| | 4 | 1 | **8T-9655** | 8 | MOUNT-ISOLATION | |
| | 5 | 1 | **116-7471** | 1 | PULLER-MINIFUSE | |
| | 6 | 1 | **180-9900** | 1 | CAP AS | |
| | | 1 | **5P-7958** | 1 | SLEEVE-CABLE SPLICE | |
| | | 1 | **8C-6354** | 1 | CAP-RECEPTACLE | |
| | | 1 | **179-9392** | 1 | LANYARD | |
| Y | 7 | 1 | **258-4135** | 2 | RELAY GP (12-VOLT) (MAIN POWER) | 82 |
| | 8 | 1 | **258-4136** | 1 | FUSE AS (MAIN POWER) | |
| | | 1 | **267-2680** | 2 | FUSE (20-AMPERE) | |
| | | 1 | **267-5211** | 1 | SEAL | |
| | | 1 | **267-5213** | 1 | COVER | |
| | 9 | 1 | **258-4138** | 1 | FILM (POWER DISTRIBUTION) | |
| | 10 | 1 | **258-4143** | 1 | BAR-BUS | |
| | 11 | 1 | **258-4196** | 2 | WIRE AS | |
| | 12 | 1 | **267-2680** | 2 | FUSE (20-AMPERE) | |
| | 13 | 1 | **328-2273** | 1 | HARNESS AS-CAB (CAB REAR) | |
| | | 1 | **275-7878** | 2 | BLOCK AS-FUSE | |
| | | | | | (EACH INCLUDES) | |
| M | | 1 | **5C-2890** | 2 | NUT (M6X1-THD) | |
| | | 1 | **8C-3398** | 2 | LOCKWASHER | |
| | | 1 | **8T-4205** | 2 | WASHER-HARD (7.2X14.5X2-MM THK) | |
| | | 1 | **306-0350** | 1 | COVER | |
| | | 1 | **306-0351** | 1 | SEAL-COVER | |
| | | 1 | **8T-8799** | 6 | BOOT | |
| | | 1 | **274-3775** | 1 | CAP-CONNECTOR | |
| E | | 1 | **283-0632** | | CONDUIT (113-CM) | |
| E | | 1 | **283-4198** | | CONDUIT (31-CM) | |
| | | 1 | **126-1774** | 1 | COVER-CONNECTOR | |
| | | 1 | **124-3548** | 1 | FUSE (30-AMPERE) | |
| | | 1 | **113-8490** | 7 | FUSE (10-AMPERE) | |
| | | 1 | **113-8491** | 10 | FUSE (15-AMPERE) | |
| | | 1 | **113-8492** | 2 | FUSE (20-AMPERE) | |
| | | 1 | **203-9007** | 1 | NUT (1-1/2-18-THD) | |
| | | 1 | **213-0139** | 11 | PIN | |
| | | 1 | **8N-1548** | 1 | PIN-CONNECTOR (4-GA) | |
| | | 1 | **186-3735** | 23 | PIN-CONNECTOR (16-GA TO 18-GA) | |
| | | 1 | **9X-3401** | 17 | PIN-CONNECTOR (16-GA TO 18-GA) | |
| | | 1 | **155-2260** | 3 | KIT-CONNECTING PLUG (3-PIN) | |
| | | 1 | **155-2270** | 2 | KIT-CONNECTING PLUG (2-PIN) | |
| | | | | | (EACH PLUG KIT INCLUDES PLUG AS, WEDGE & INTERFACE SEAL) | |
| | | 1 | **160-7689** | 1 | PLUG AS-CONNECTOR (70-PIN) | |
| | | 1 | **159-9322** | 1 | SEAL-O-RING | |
| | | 1 | **230-4011** | 2 | PLUG AS-CONNECTOR (2-PIN) | |
| | | | | | (EACH INCLUDES) | |
| | | 1 | **264-7029** | 1 | SEAL-CONNECTOR | |
| | | 1 | **7R-2751** | 25 | PLUG-CONNECTOR | |
| | | 1 | **8T-8737** | 33 | PLUG-SEAL | |
| | | 1 | **102-8802** | 1 | KIT-RECEPTACLE (2-PIN) | |
| | | 1 | **102-8804** | 1 | KIT-RECEPTACLE (4-PIN) | |
| | | | | | (EACH RECEPTACLE KIT INCLUDES RECEPTACLE AS & WEDGE) | |
| | | 1 | **127-5484** | 1 | RECEPTACLE AS-CONNECTOR (1-PIN) | |

*328-2272* **WIRING GP-CAB** *(contd.)* **i03973032**

| NOTE | REF NO | GRAPHIC REF | PART NUMBER | QTY | PART NAME 1 2 3 4 5 6 (PRODUCT LEVEL) | SEE PAGE |
|---|---|---|---|---|---|---|
| | | 1 | **134-2540** | 2 | RESISTOR AS-CONNECTION (3-PIN) | |
| | | 1 | **167-3692** | 1 | RECEPTACLE AS-CONNECTOR (31-PIN) | |
| | | 1 | **225-3861** | 1 | RECEPTACLE AS (31-PIN) | |
| | | 1 | **146-9439** | 3 | RELAY AS (12-VOLT) (CAB) | |
| | | 1 | **128-5016** | 25 | SEAL-CABLE | |
| | | 1 | **7R-2750** | 19 | SEAL-CONNECTOR | |
| | | 1 | **186-3736** | 27 | SOCKET-CONNECTOR (16-GA TO 18-GA) | |
| | | 1 | **9W-0844** | 11 | SOCKET-CONNECTOR (14-GA) | |
| | | 1 | **9X-3402** | 54 | SOCKET-CONNECTOR (16-GA TO 18-GA) | |
| | | 1 | **180-9340** | 16 | SOCKET-CONNECTOR (14-GA TO 18-GA) | |
| | | 1 | **202-0313** | 26 | TERMINAL AS | |
| | | | | | (EACH INCLUDES) | |
| | | 1 | **128-5016** | 1 | SEAL-CABLE | |
| | | 1 | **202-0314** | 19 | TERMINAL AS | |
| | | | | | (EACH INCLUDES) | |
| | | 1 | **128-4123** | 1 | SEAL | |
| | | 1 | **275-0601** | 20 | SOCKET-CONNECTOR | |
| | | 1 | **3S-2093** | 26 | STRAP-CABLE | |
| | | 1 | **9X-6772** | 2 | STRAP-CABLE | |
| | | 1 | **2L-8069** | 2 | TERMINAL-RING (2-GA TO 10-GA, 3/8-IN SCREW) | |
| | | 1 | **2L-8067** | 6 | TERMINAL-RING (10-GA TO 12-GA, 1/4-IN SCREW) | |
| | | 1 | **2L-8077** | 2 | TERMINAL-RING (14-GA TO 16-GA, 1/4-IN SCREW) | |
| E | | 1 | **125-7876** | | TUBE-HEAT SHRINK (17.78-MM DIA) (4-CM) | |
| E | | 1 | **119-3662** | | TUBE-HEAT SHRINK (10.85-MM DIA) (20-CM) | |
| E | | 1 | **125-7874** | | TUBE-HEAT SHRINK (5.72-MM DIA) (70-CM) | |
| E | | 1 | **125-7875** | | TUBE-HEAT SHRINK (7.44-MM DIA) (20-CM) | |
| | | 1 | **270-2679** | 1 | LOCKWASHER | |
| Y | 14 | 1 | *328-2345* | 1 | ELECTRONICS GP-MACHINE | 71 |
| | 15 | 1 | **343-6022** | 1 | FILM-IDENTIFICATION (FUSE, RELAY PANEL) | |
| | 16 | 1 | **343-6885** | 1 | FILM-IDENTIFICATION (FUSE, RELAY PANEL) | |
| | 17 | 1 | **4P-7581** | 2 | CLIP | |
| | 18 | 1 | **4P-8134** | 2 | CLIP | |
| M | 19 | 1 | **5C-2890** | 10 | NUT (M6X1-THD) | |
| M | 20 | 1 | **5C-7261** | 8 | NUT (M8X1.25-THD) | |
| | 21 | 1 | **5P-7162** | 8 | SCREW-MACHINE (10-32X0.5-IN) | |
| M | 22 | 1 | **6V-7728** | 3 | BOLT (M6X1X45-MM) | |
| | 23 | 1 | **7X-0579** | 2 | WASHER-HARD (8.8X25.5X2-MM THK) | |
| | 24 | 1 | **8C-3398** | 4 | LOCKWASHER | |
| | 25 | 1 | **8T-4205** | 13 | WASHER-HARD (7.2X14.5X2-MM THK) | |
| | 26 | 1 | **8T-4224** | 4 | WASHER-HARD (8.8X16X2-MM THK) | |
| E | 27 | 1 | **103-2543** | | SEAL (3-CM EACH) | |

E-ORDER BY THE CENTIMETER
M-METRIC PART
Y-SEPARATE ILLUSTRATION

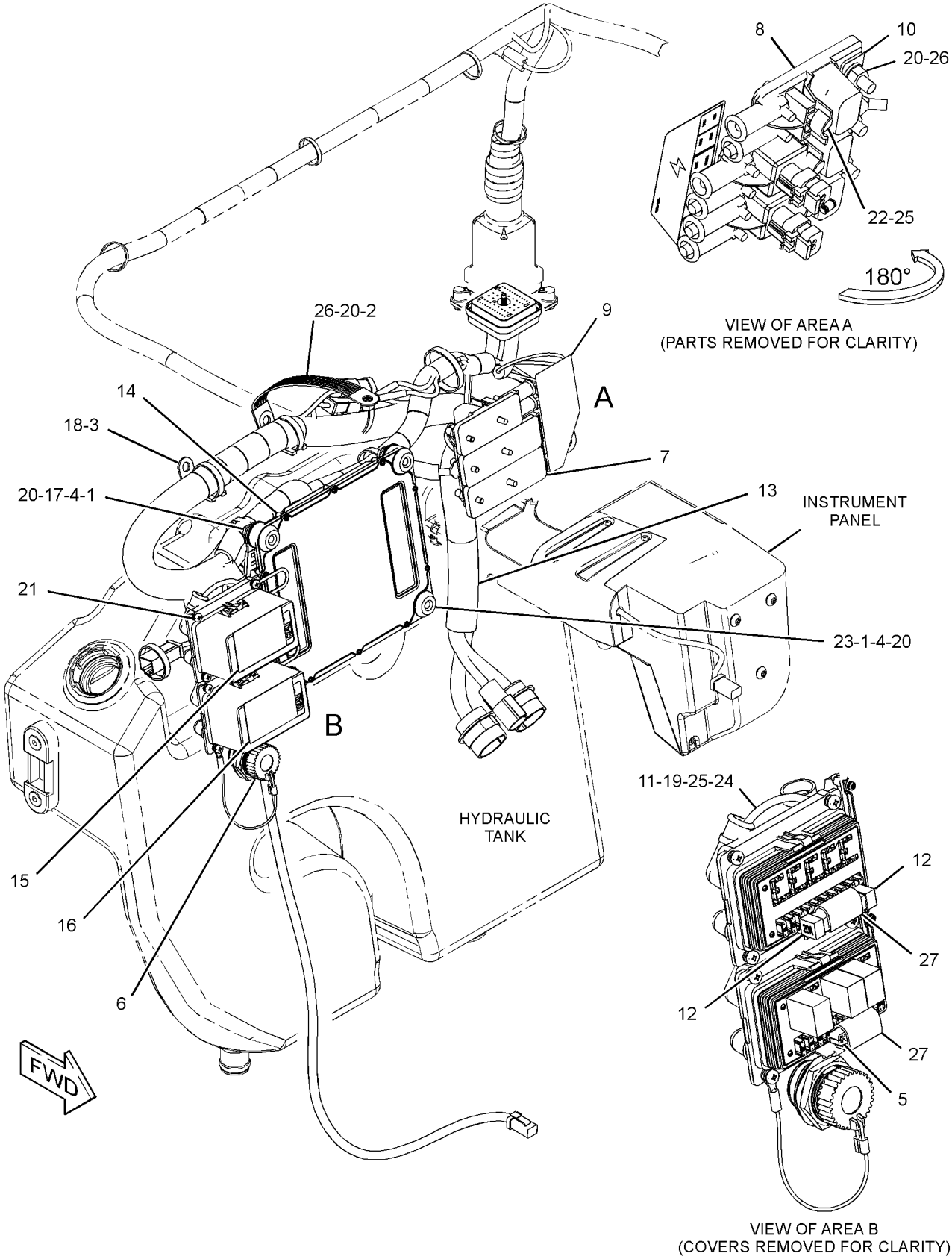


GRAPHIC #1 **<END>** g02148276

# ELECTRICAL AND STARTING SYSTEM

## *328-2276* WIRING GP-ENGINE

**S/N: TNK1-UP**

**PART OF 326-5361 INSTALLATION AR-ENGINE**

**SMCS-1000, 1408, 1420** **i03902844**

| NOTE | REF NO | GRAPHIC REF | PART NUMBER | QTY | PART NAME 1 2 3 4 5 6 (PRODUCT LEVEL) | SEE PAGE |
|---|---|---|---|---|---|---|
| | 1 | 1 | **7K-1181** | 2 | STRAP-CABLE | |
| | 2 | 1 | **238-0112** | 1 | SENSOR GP-TEMPERATURE (ENGINE COOLANT) | |
| B | 3 | 1 | **274-3774** | 2 | CAP-CONNECTOR | |
| | 4 | 1 | **328-2277** | 1 | HARNESS AS-ENGINE | |
| | | 1 | **8T-8799** | 1 | BOOT | |
| | | 1 | **107-3134** | 1 | HOUSING-CONNECTOR | |
| | | 1 | **186-3735** | 4 | PIN-CONNECTOR (16-GA TO 18-GA) | |
| | | 1 | **9X-3401** | 9 | PIN-CONNECTOR (16-GA TO 18-GA) | |
| | | 1 | **176-1477** | 1 | PLUG AS (2-PIN) | |
| | | 1 | **9X-1054** | 2 | PLUG AS-CONNECTOR (4-PIN) | |
| | | 1 | **155-2270** | 2 | KIT-CONNECTING PLUG (2-PIN) | |
| | | | | | (EACH INCLUDES PLUG AS, WEDGE & INTERFACE SEAL) | |
| | | 1 | **230-4011** | 1 | PLUG AS-CONNECTOR (2-PIN) | |
| | | 1 | **264-7029** | 1 | SEAL-CONNECTOR | |
| | | 1 | **8T-8737** | 1 | PLUG-SEAL | |
| | | 1 | **107-3136** | 5 | PLUG-SEAL | |
| | | 1 | **102-8801** | 1 | KIT-RECEPTACLE (12-PIN) | |
| | | 1 | **102-8802** | 1 | KIT-RECEPTACLE (2-PIN) | |
| | | | | | (EACH RECEPTACLE KIT INCLUDES RECEPTACLE AS & WEDGE) | |
| | | 1 | **185-1861** | 2 | SEAL-WIRE | |
| | | 1 | **186-3736** | 4 | SOCKET-CONNECTOR (16-GA TO 18-GA) | |
| | | 1 | **9X-3402** | 2 | SOCKET-CONNECTOR (16-GA TO 18-GA) | |
| | | 1 | **3S-2093** | 9 | STRAP-CABLE | |
| | | 1 | **030-1712** | 1 | TERMINAL-RING (2-GA, 1/4-IN SCREW) | |
| | | 1 | **9G-4336** | 1 | TERMINAL-RING (4-GA) | |
| | | 1 | **2L-8065** | 1 | TERMINAL-RING (10-GA TO 12-GA, NO. 8 SCREW) | |
| | | 1 | **5P-4571** | 1 | TERMINAL-BLADE (14-GA TO 16-GA) | |
| | | 1 | **5P-1478** | 1 | TERMINAL-FORK (10-GA TO 12-GA, NO. 10 SCREW) | |
| | | 1 | **9G-4336** | 2 | TERMINAL-RING (4-GA) | |
| | | 1 | **107-3135** | 3 | TERMINAL (16-GA TO 20-GA) | |
| | | 1 | **9X-1055** | 4 | TERMINAL-RECEPTACLE (12-GA) | |
| | | 1 | **9X-1056** | 4 | TERMINAL-RECEPTACLE (14-GA TO 16-GA) | |
| E | | 1 | **119-3662** | | TUBE-HEAT SHRINK (10.85-MM DIA) (7-CM) | |
| E | | 1 | **125-7874** | | TUBE-HEAT SHRINK (5.72-MM DIA) (10-CM) | |
| | 5 | 1 | **115-1615** | 1 | RELAY AS (12-VOLT) (COLD START) | |
| | 5A | 1 | **115-1615** | 1 | RELAY AS (12-VOLT) (START) | |
| | 6 | 1 | **208-9277** | 2 | BOLT-FLANGE HEAD (M8X1X25-MM) | |
| | 7 | 1 | **3S-2093** | 8 | STRAP-CABLE | |
| | 8 | 1 | **4P-7429** | 2 | CLIP | |
| | 9 | 1 | **4P-7581** | 1 | CLIP | |
| | 10 | 1 | **4P-8134** | 6 | CLIP | |
| M | 11 | 1 | **5C-7261** | 2 | NUT (M8X1.25-THD) | |
| | 12 | 1 | **5P-4116** | 4 | WASHER-HARD (8.8X20.5X2-MM THK) | |
| | 13 | 1 | **6V-9028** | 1 | SEAL-O-RING | |
| | 14 | 1 | **7X-0608** | 1 | WASHER-HARD (10.2X16X2-MM THK) | |
| M | 15 | 1 | **7X-2548** | 1 | BOLT (M12X1.75X16-MM) | |
| | 16 | 1 | **8T-4121** | 2 | WASHER-HARD (11X21X2.5-MM THK) | |
| M | 17 | 1 | **8T-4136** | 2 | BOLT (M10X1.5X25-MM) | |
| M | 18 | 1 | **8T-4200** | 2 | BOLT (M8X1.25X16-MM) | |
| M | 19 | 1 | **8T-7547** | 1 | BOLT (M8X1.25X30-MM) | |
| | 20 | 1 | **9F-5644** | 1 | LOCKWASHER | |

B-USE AS REQUIRED
E-ORDER BY THE CENTIMETER
M-METRIC PART

*328-2276* **WIRING GP-ENGINE** *(contd.)* **i03902844**

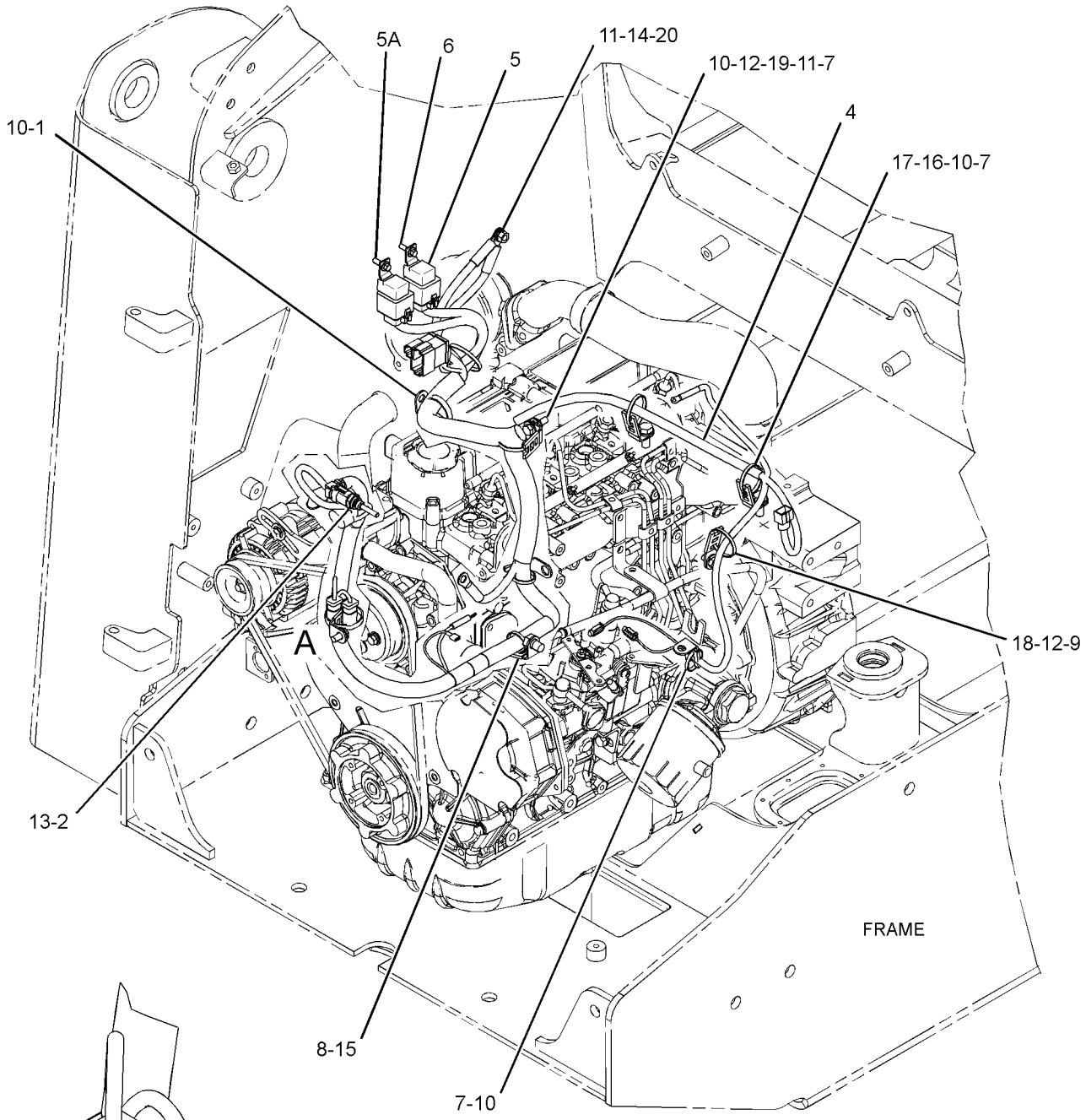


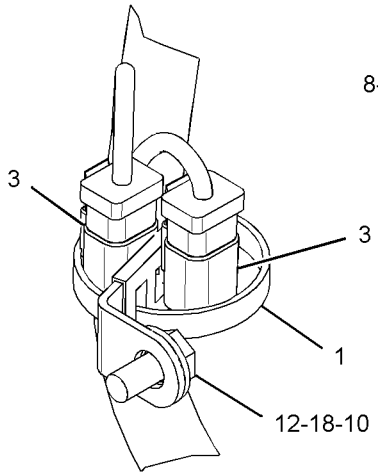


VIEW OF AREA A

GRAPHIC #1 **<END>** g02154821

# ELECTRICAL AND STARTING SYSTEM

## *328-2274* WIRING GP-MACHINE

**S/N: TNK1-UP**

**PART OF 326-4786 CHASSIS AR**

**SMCS-1408** **i03902876**

| NOTE | REF NO | GRAPHIC REF | PART NUMBER | QTY | PART NAME 1 2 3 4 5 6 (PRODUCT LEVEL) | SEE PAGE |
|---|---|---|---|---|---|---|
| | 1 | 1 | **7K-1181** | 23 | STRAP-CABLE | |
| | 2 | 1 | **8M-4963** | 1 | STRAP AS-GROUND | |
| | 3 | 1 | **161-2539** | 1 | ALARM AS | |
| | | 1 | **4B-2043** | 2 | NUT (8-32-THD) | |
| | 4 | 1 | **178-3620** | 1 | STRAP-DUAL CLAMP | |
| | 5 | 1 | **178-7539** | 1 | RECEPTACLE AS (POWER SUPPLY) | |
| | 6 | 1 | **192-0836** | 1 | SWITCH GP-PRESSURE (BACKUP ALARM) | |
| | | 1 | **102-8802** | 1 | KIT-RECEPTACLE (2-PIN) | |
| | | | | | (INCLUDES RECEPTACLE AS & WEDGE) | |
| | | 1 | **3J-1907** | 1 | SEAL-O-RING | |
| | | 1 | **8T-8729** | 2 | PIN-CONNECTOR (16-GA TO 18-GA) | |
| | 7 | 1 | **235-1845** | 1 | FUSE (100-AMPERE) | |
| | 8 | 1 | **267-2744** | 1 | HOLDER AS-FUSE | |
| M | | 1 | **5C-7261** | 2 | NUT (M8X1.25-THD) | |
| | | 1 | **7X-0608** | 2 | WASHER-HARD (10.2X16X2-MM THK) | |
| | | 1 | **9F-5644** | 2 | LOCKWASHER | |
| | | 1 | **267-2746** | 1 | COVER AS | |
| B | 9 | 1 | **274-3774** | 4 | CAP-CONNECTOR | |
| B | 10 | 1 | **274-3776** | 3 | CAP-SEAL | |
| B | 11 | 1 | **274-3778** | 1 | CAP-SEAL | |
| | 12 | 1 | **328-2275** | 1 | HARNESS AS-PLATFORM | |
| | | 1 | **102-8802** | 2 | KIT-RECEPTACLE (2-PIN) | |
| | | | | | (EACH INCLUDES RECEPTACLE AS & WEDGE) | |
| | | 1 | **155-2265** | 2 | KIT-CONNECTING PLUG (8-PIN) | |
| | | 1 | **155-2255** | 3 | KIT-CONNECTING PLUG (12-PIN) | |
| | | 1 | **155-2270** | 16 | KIT-CONNECTING PLUG (2-PIN) | |
| | | 1 | **155-2271** | 3 | KIT-CONNECTING PLUG (4-PIN) | |
| | | | | | (EACH PLUG KIT INCLUDES PLUG AS , WEDGE & INTERFACE SEAL) | |
| | | 1 | **186-3735** | 16 | PIN-CONNECTOR (16-GA TO 18-GA) | |
| | | 1 | **180-9340** | 62 | SOCKET-CONNECTOR (14-GA TO 18-GA) | |
| | | 1 | **186-3736** | 48 | SOCKET-CONNECTOR (16-GA TO 18-GA) | |
| | | 1 | **9W-0852** | 7 | PIN-CONNECTOR (14-GA) | |
| | | 1 | **9W-0844** | 12 | SOCKET-CONNECTOR (14-GA) | |
| | | 1 | **9X-3401** | 8 | PIN-CONNECTOR (16-GA TO 18-GA) | |
| | | 1 | **274-3774** | 2 | CAP-CONNECTOR | |
| E | | 1 | **283-0632** | | CONDUIT (19-CM) | |
| | | 1 | **127-5483** | 1 | PLUG AS-CONNECTOR (1-PIN) | |
| | | 1 | **167-3693** | 1 | PLUG AS-CONNECTOR (31-PIN) | |
| | | 1 | **225-3854** | 1 | PLUG AS | |
| | | 1 | **8T-8737** | 11 | PLUG-SEAL | |
| | | 1 | **9W-0844** | 12 | SOCKET-CONNECTOR (14-GA) | |
| | | 1 | **8N-1549** | 1 | SOCKET-CONNECTOR (4-GA) | |
| | | 1 | **3S-2093** | 40 | STRAP-CABLE | |
| | | 1 | **2L-8069** | 2 | TERMINAL-RING (2-GA TO 10-GA, 3/8-IN SCREW) | |
| | | 1 | **2L-8079** | 2 | TERMINAL-RING (14-GA TO 16-GA, 3/8-IN SCREW) | |
| | | 1 | **5P-4571** | 2 | TERMINAL-BLADE (14-GA TO 16-GA) | |
| | | 1 | **9G-4336** | 1 | TERMINAL-RING (4-GA) | |
| E | | 1 | **119-3662** | | TUBE-HEAT SHRINK (10.85-MM DIA) (20-CM) | |
| E | | 1 | **125-7874** | | TUBE-HEAT SHRINK (5.72-MM DIA) (35-CM) | |
| | 13 | 1 | **328-2340** | 1 | HARNESS AS-LIGHTING | |
| | | 1 | **186-3735** | 6 | PIN-CONNECTOR (16-GA TO 18-GA) | |
| | | 1 | **9W-0852** | 1 | PIN-CONNECTOR (14-GA) | |

*328-2274* **WIRING GP-MACHINE** *(contd.)* **i03902876**

| NOTE | REF NO | GRAPHIC REF | PART NUMBER | QTY | PART NAME 1 2 3 4 5 6 (PRODUCT LEVEL) | SEE PAGE |
|---|---|---|---|---|---|---|
| | | 1 | **155-2271** | 2 | KIT-CONNECTING PLUG (4-PIN) | |
| | | | | | (EACH INCLUDES PLUG AS, WEDGE & INTERFACE SEAL) | |
| | | 1 | **8T-8737** | 1 | PLUG-SEAL | |
| | | 1 | **102-8806** | 1 | KIT-RECEPTACLE (8-PIN) | |
| | | | | | (INCLUDES RECEPTACLE AS & WEDGE) | |
| | | 1 | **3S-2093** | 2 | STRAP-CABLE | |
| | | 1 | **186-3736** | 8 | SOCKET-CONNECTOR (16-GA TO 18-GA) | |
| E | | 1 | **125-7874** | | TUBE-HEAT SHRINK (5.72-MM DIA) (10-CM) | |
| | | 1 | **7N-9017** | 2 | TERMINAL-RING (18-GA TO 22-GA, NO. 10 SCREW) | |
| | 14 | 1 | **132-5789** | 3 | CLIP | |
| | 15 | 1 | **155-2270** | 1 | KIT-CONNECTING PLUG (2-PIN) | |
| | | | | | (INCLUDES PLUG AS, WEDGE & INTERFACE SEAL) | |
| | 16 | 1 | **208-9277** | 2 | BOLT-FLANGE HEAD (M8X1X25-MM) | |
| | 17 | 1 | **3S-2093** | 14 | STRAP-CABLE | |
| | 18 | 1 | **4P-8134** | 1 | CLIP | |
| M | 19 | 1 | **5C-7261** | 1 | NUT (M8X1.25-THD) | |
| | 20 | 1 | **5P-4115** | 2 | WASHER-HARD (7.2X19X2-MM THK) | |
| M | 21 | 1 | **6V-7728** | 2 | BOLT (M6X1X45-MM) | |
| | 22 | 1 | **7X-0608** | 1 | WASHER-HARD (10.2X16X2-MM THK) | |
| | 23 | 1 | **8T-4121** | 3 | WASHER-HARD (11X21X2.5-MM THK) | |
| M | 24 | 1 | **8T-4133** | 3 | NUT (M10X1.5-THD) | |
| | 25 | 1 | **9F-5644** | 1 | LOCKWASHER | |

B-USE AS REQUIRED
E-ORDER BY THE CENTIMETER
M-METRIC PART

*328-2274* **WIRING GP-MACHINE** *(contd.)* **i03902876**

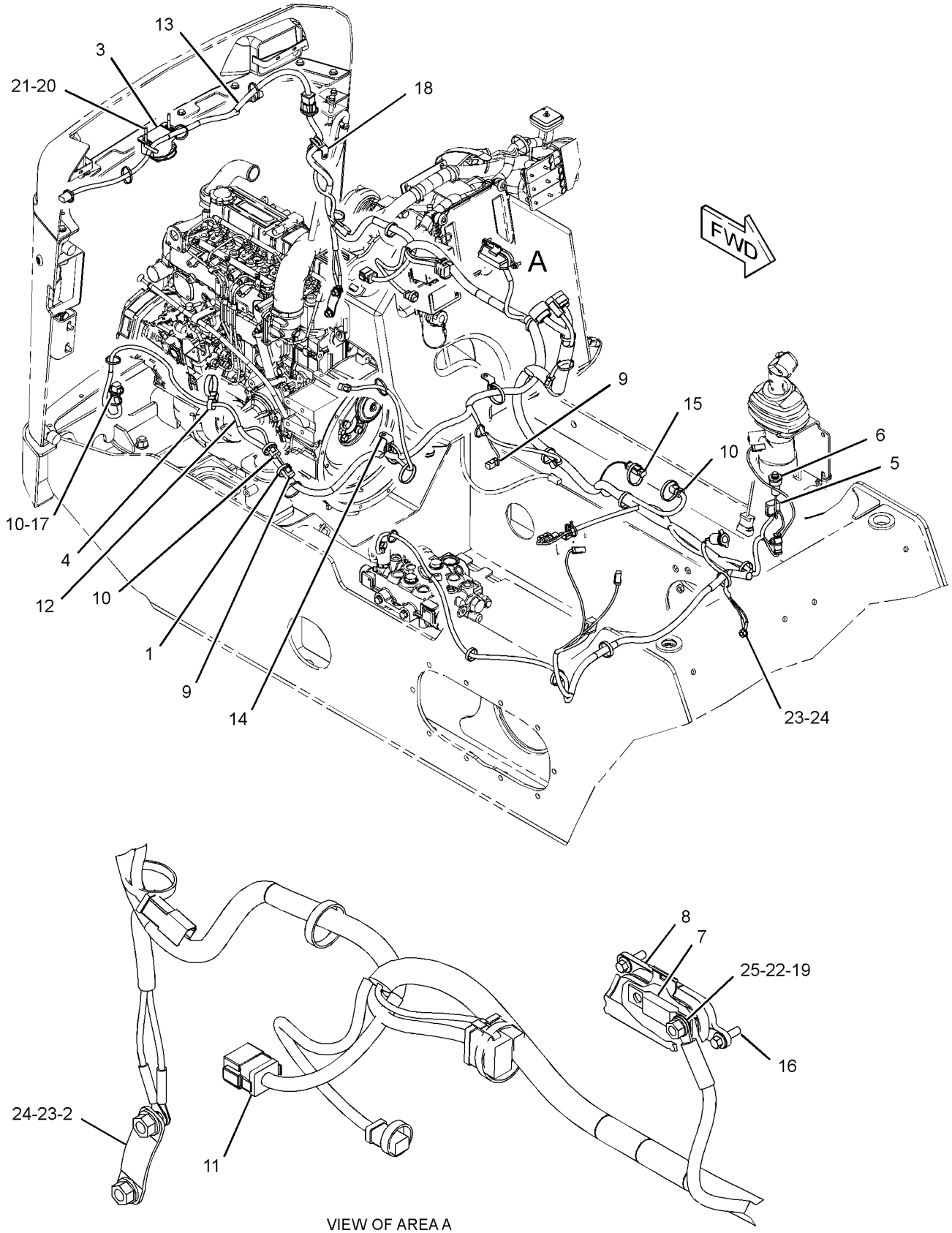


VIEW OF AREA A

GRAPHIC #1 **<END>** g02150637

# *328-2342* WIRING GP-MACHINE–DEMAND FAN

**S/N: TNK1-UP**

**PART OF 356-1901 MOTOR AR-HYDRAULIC FAN**

**AN ATTACHMENT**

**SMCS-1408** **i03973037**

| NOTE | REF NO | GRAPHIC REF | PART NUMBER | QTY | PART NAME 1 2 3 4 5 6 (PRODUCT LEVEL) | SEE PAGE |
|---|---|---|---|---|---|---|
| | 1 | 1 | **328-2341** | 1 | HARNESS AS-SOLENOID (DEMAND FAN) | |
| | | 1 | **186-3735** | 2 | PIN-CONNECTOR (16-GA TO 18-GA) | |
| | | 1 | **155-2270** | 1 | KIT-CONNECTING PLUG (2-PIN) | |
| | | | | | (INCLUDES PLUG AS, WEDGE & INTERFACE SEAL) | |
| | | 1 | **102-8802** | 1 | KIT-RECEPTACLE (2-PIN) | |
| | | | | | (INCLUDES RECEPTACLE AS & WEDGE) | |
| | | 1 | **186-3736** | 2 | SOCKET-CONNECTOR (16-GA TO 18-GA) | |
| | 2 | 1 | **3S-2093** | 5 | STRAP-CABLE | |
| | 3 | 1 | **4P-7581** | 1 | CLIP | |

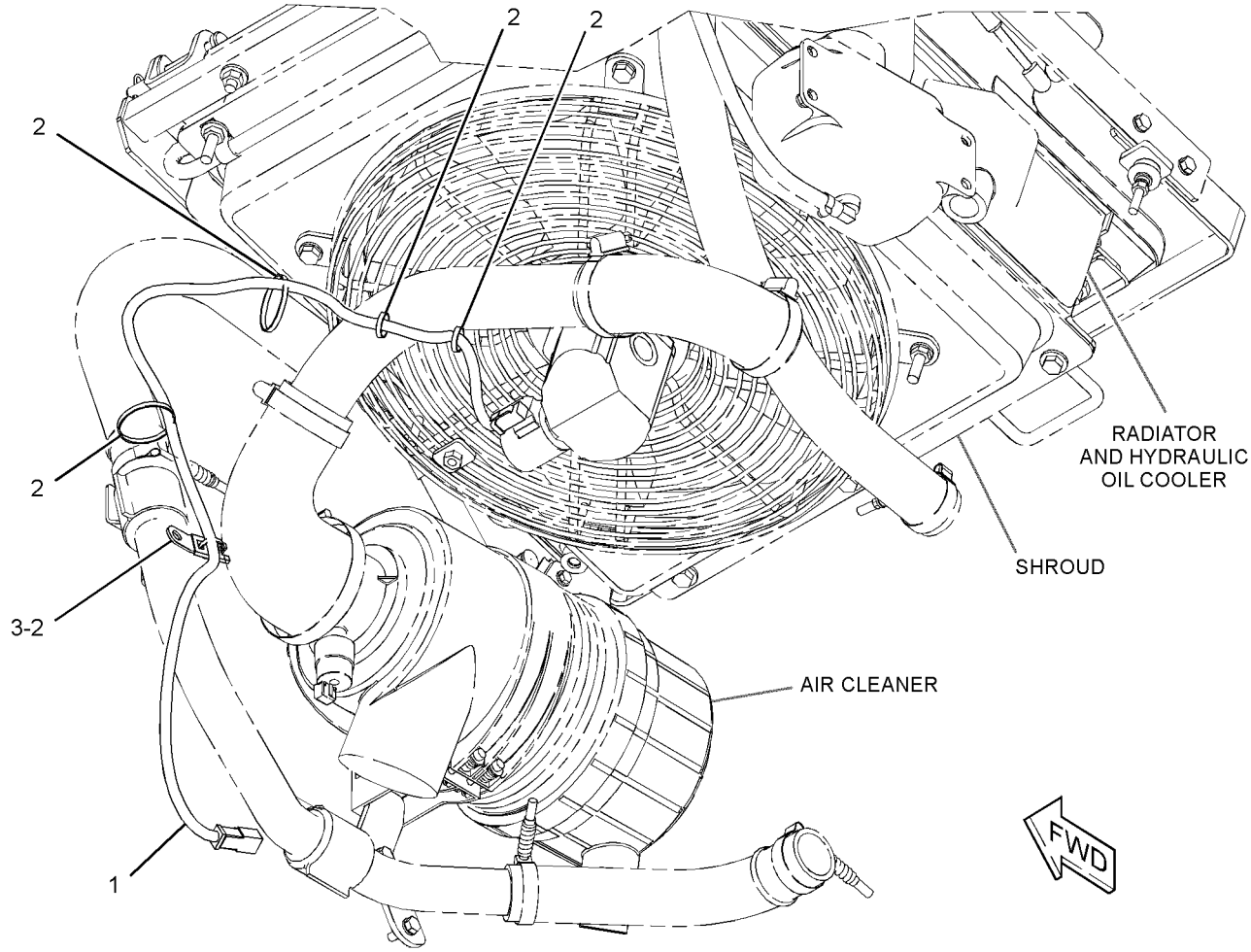


GRAPHIC #1 **<END>** g02150630

# *328-2335* WIRING GP-WORK TOOL

**S/N: TNK1-UP**
**PART OF 326-5427, 326-5428 CONTROL AR-MACHINE**
**AN ATTACHMENT**

**SMCS-1408** **i03902930**

| NOTE | REF NO | GRAPHIC REF | PART NUMBER | QTY | PART NAME 1 2 3 4 5 6 (PRODUCT LEVEL) | SEE PAGE |
|---|---|---|---|---|---|---|
| | 1 | 1 | **110-8760** | 1 | STRAP | |
| | 2 | 1 | **142-8633** | 1 | SWITCH AS-ROCKER (ELECTRIC POWER, WORK TOOL) | |
| | | 1 | **111-7899** | 1 | GASKET | |
| | 3 | 1 | **146-9439** | 5 | RELAY AS (12-VOLT) (WORK TOOL) | |
| | 4 | 1 | **159-9495** | 1 | NUT (1-1/2-18-THD) | |
| | 5 | 1 | **178-3620** | 1 | STRAP-DUAL CLAMP | |
| | 6 | 1 | **216-4725** | 1 | HARNESS AS-WORK TOOL (LIFT ARM) | |
| | | 1 | **1S-9593** | 1 | STRAP-CABLE | |
| | | 1 | **7T-0093** | 8 | PIN-CONNECTOR (12-GA TO 14-GA) | |
| | | 1 | **9W-0852** | 8 | PIN-CONNECTOR (14-GA) | |
| | | 1 | **156-1458** | 1 | COVER | |
| | | 1 | **156-1460** | 1 | RECEPTACLE (8-PIN) | |
| | 7 | 1 | **159-9496** | 1 | LOCKWASHER | |
| | 8 | 1 | **102-8806** | 1 | KIT-RECEPTACLE (8-PIN) | |
| | | | | | (INCLUDES RECEPTACLE AS & WEDGE) | |
| | 9 | 1 | **3S-2093** | 3 | STRAP-CABLE | |

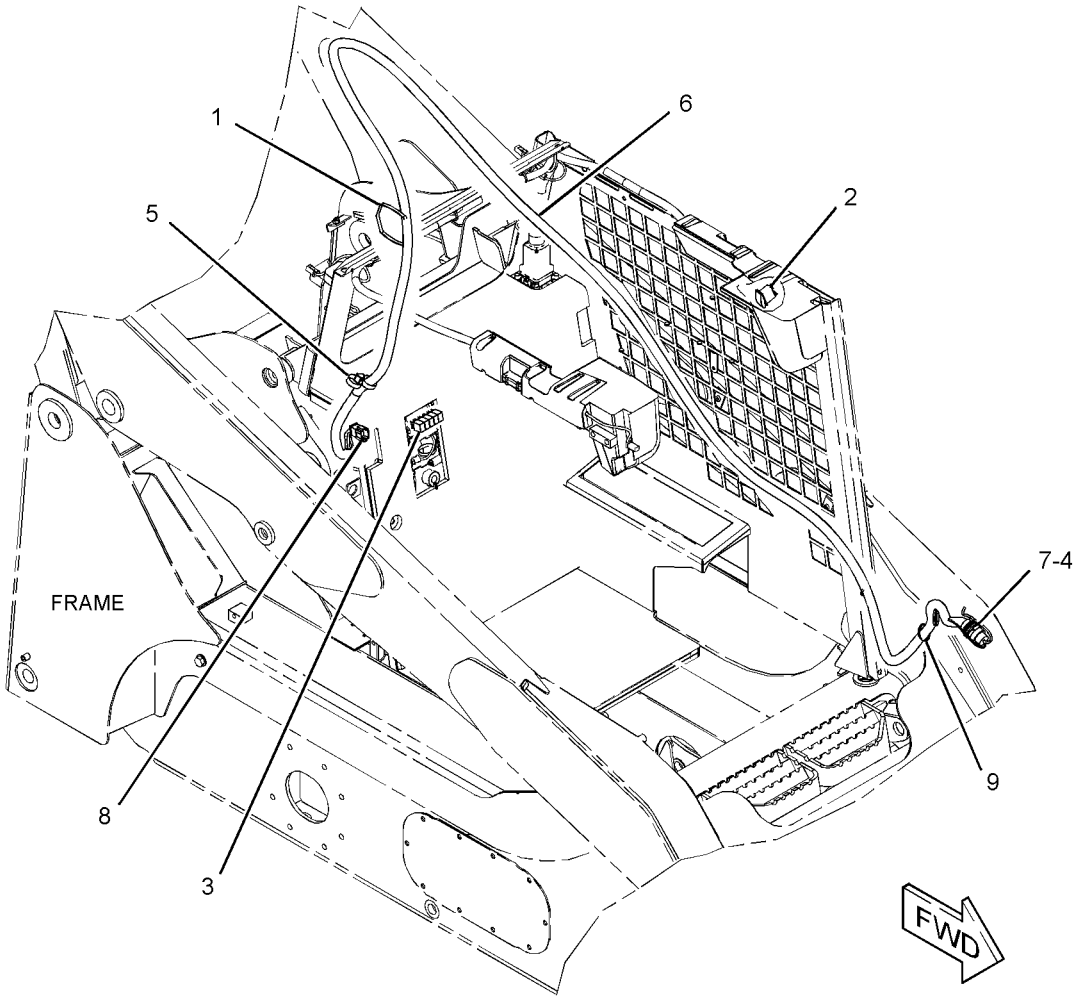


GRAPHIC #1 **<END>** g02150595

# 142-9058 AXLE GP

**S/N: TNK1-UP**

**PART OF 261-6275 AXLE GP**

**SMCS-3278** **i01938931**

| NOTE | REF NO | GRAPHIC REF | PART NUMBER | QTY | PART NAME 1 2 3 4 5 6 (PRODUCT LEVEL) | SEE PAGE |
|---|---|---|---|---|---|---|
| | 1 | 1 | **142-9023** | 1 | HOUSING-AXLE | |
| | 2 | 1 | **142-9024** | 1 | SPINDLE-WHEEL | |
| | 3 | 1 | **142-9029** | 1 | SPACER (57.16X69.85X27.54MM THK) | |
| | 4 | 1 | **155-5652** | 1 | SEAL-LIP TYPE | |
| | 5 | 1 | **155-9010** | 1 | CONE-BEARING | |
| | 6 | 1 | **155-9432** | 1 | CONE-BEARING | |
| | 7 | 1 | **155-9433** | 2 | CUP-BEARING | |
| | 8 | 1 | **159-5772** | 8 | STUD (9/16-18-2A THD) | |
| | 9 | 1 | **169-1679** | 1 | SEAL-LIP TYPE | |

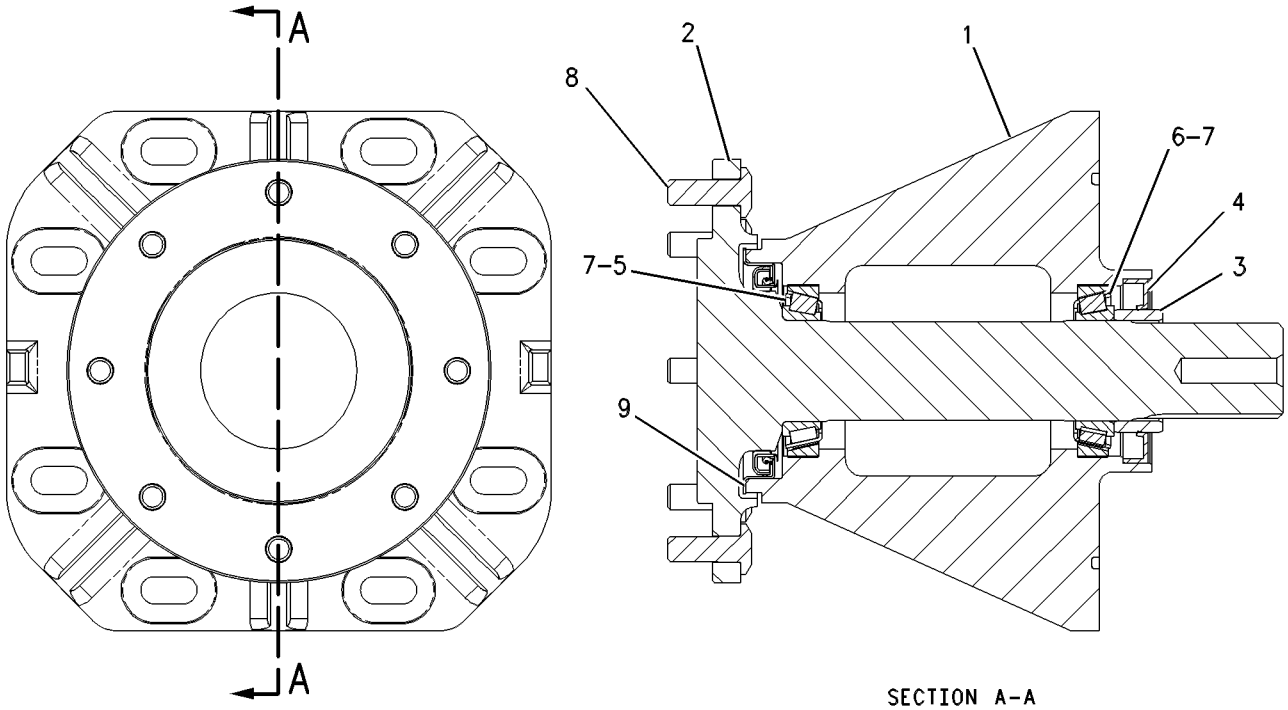


SECTION A-A

GRAPHIC #1 **<END>** g00592470

# POWER TRAIN

## *261-6275* AXLE GP

**S/N: TNK1-UP**

**PART OF 326-4786 CHASSIS AR**

**SMCS-3278** **i02476320**

| NOTE | PART NUMBER | QTY | PART NAME 1 2 3 4 5 6 (PRODUCT LEVEL) | SEE PAGE |
|---|---|---|---|---|
| Y | **142-9058** | 4 | AXLE GP | 97 |

Y-SEPARATE ILLUSTRATION

**<END>**

# POWER TRAIN

## *191-9760* DRIVE GP-TANDEM

**S/N: TNK1-UP**

**PART OF 326-5248 POWER TRAIN AR**

**SMCS-4062** **i03880429**

| NOTE | REF NO | GRAPHIC REF | PART NUMBER | QTY | PART NAME 1 2 3 4 5 6 (PRODUCT LEVEL) | SEE PAGE |
|---|---|---|---|---|---|---|
| | 1 | 1 | **5P-3092** | 4 | SEAL-O-RING | |
| C | 2 | 1 | **258-2763** | 2 | SPROCKET-MOTOR | |
| | 3 | 1 | **142-9033** | 2 | RETAINER | |
| | 4 | 1 | **152-1157** | 32 | WASHER (15.5X32X8-MM THK) | |
| | 5 | 1 | **165-4892** | 2 | SPACER (60.6X72.1X11.87-MM THK) | |
| C | 6 | 1 | **191-9761** | 2 | SPROCKET (29-TEETH) | |
| | 7 | 1 | **191-9762** | 4 | CHAIN AS | |
| | 8 | 1 | **200-0999** | 32 | STUD | |
| M | 9 | 1 | **100-3866** | 4 | BOLT-SELF-LOCKING (M16X2X40-MM) | |
| | 10 | 1 | **142-9036** | 32 | NUT (9/16-18-THD) | |
| | 11 | 1 | **7X-0610** | 4 | WASHER-HARD (20X75X6-MM THK) | |
| M | 12 | 1 | **8C-8992** | 2 | BOLT-LOCKING (M12X1.75X30-MM) | |
| | 13 | 1 | **8T-4122** | 4 | WASHER-HARD (17X32X3.5-MM THK) | |
| | | | | | | |
| CF | | | **258-2762** | 2 | SPROCKET-AXLE | |

C-CHANGE FROM PREVIOUS TYPE
F-NOT SHOWN
M-METRIC PART

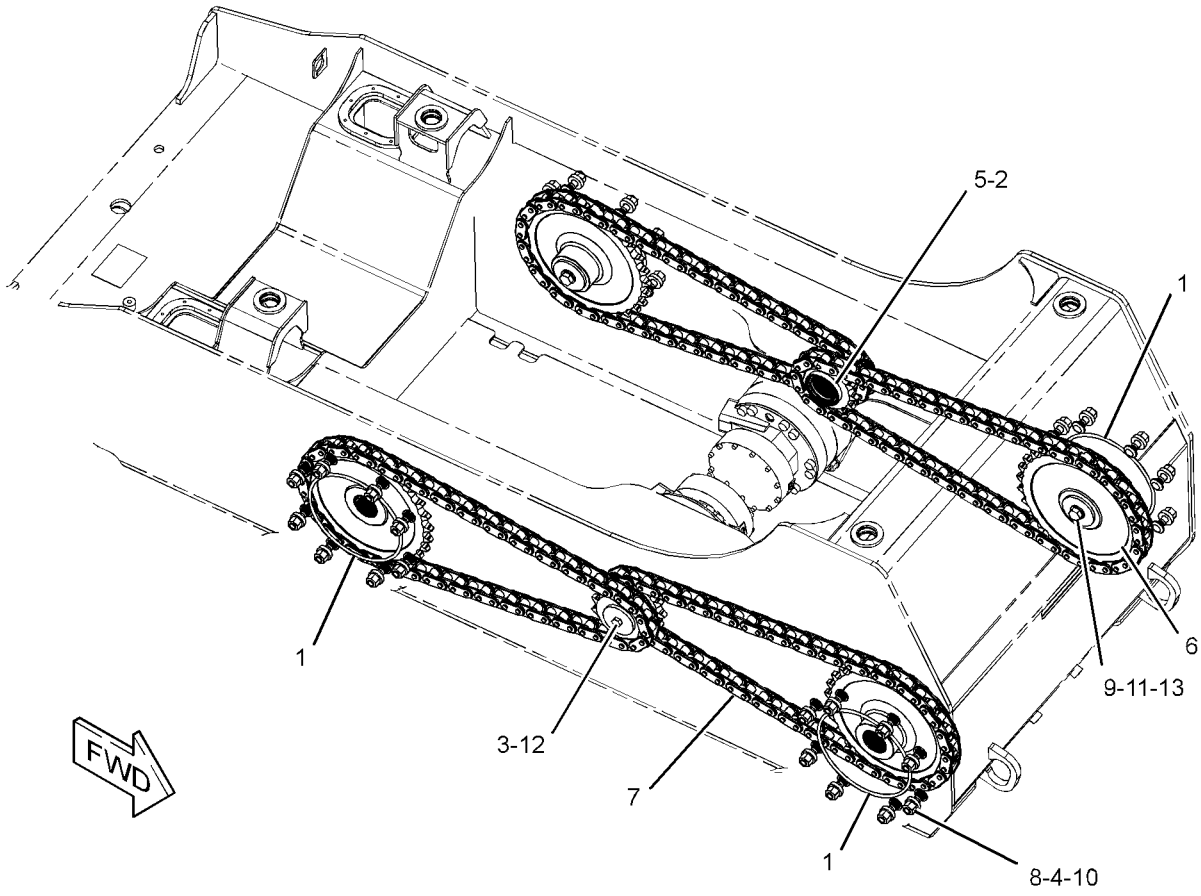


GRAPHIC #1 **<END>** g01229138

# *356-1917* FILTER & LINES GP-HYDRAULIC

**S/N: TNK1-UP**

**PART OF 326-5445 HYDRAULIC AR**

**SMCS-5057, 5068** **i03907513**

| NOTE | REF NO | GRAPHIC REF | PART NUMBER | QTY | PART NAME 1 2 3 4 5 6 (PRODUCT LEVEL) | SEE PAGE |
|---|---|---|---|---|---|---|
| | 1 | 1 | **7K-1181** | 3 | STRAP-CABLE | |
| | 2 | 1 | **178-3620** | 1 | STRAP-DUAL CLAMP | |
| Y | 3 | 1 | **223-9974** | 1 | FILTER GP-OIL (HYDRAULIC) | 102 |
| I | 4 | 1 | **238-7735** | 1 | HOSE AS | |
| | 5 | 1 | **328-2353** | 1 | HARNESS AS-SWITCH | |
| | | 1 | **155-2270** | 1 | KIT-CONNECTING PLUG (2-PIN) | |
| | | | | | (INCLUDES PLUG AS, WEDGE & INTERFACE SEAL) | |
| | | 1 | **9W-0844** | 1 | SOCKET-CONNECTOR (14-GA) | |
| | | 1 | **180-9340** | 1 | SOCKET-CONNECTOR (14-GA TO 18-GA) | |
| | | 1 | **2L-8069** | 1 | TERMINAL-RING (2-GA TO 10-GA, 3/8-IN SCREW) | |
| | | 1 | **7N-9017** | 1 | TERMINAL-RING (18-GA TO 22-GA, NO. 10 SCREW) | |
| I | 6 | 1 | **356-1922** | 1 | HOSE AS | |
| | 7 | 1 | *148-8315* | 1 | CONNECTOR AS | |
| | | 1 | **2M-9780** | 1 | SEAL-O-RING | |
| | | 1 | **6V-8642** | 1 | CONNECTOR | |
| | | 1 | **7J-9108** | 1 | SEAL-O-RING | |
| | 8 | 1 | *148-8328* | 1 | CONNECTOR AS | |
| | | 1 | **3D-2824** | 1 | SEAL-O-RING | |
| | | 1 | **6V-8398** | 1 | SEAL-O-RING | |
| | | 1 | **6V-8633** | 1 | CONNECTOR | |
| | 9 | 1 | *148-8340* | 1 | CONNECTOR AS | |
| | | 1 | **3K-0360** | 1 | SEAL-O-RING | |
| | | 1 | **6V-8398** | 1 | SEAL-O-RING | |
| | | 1 | **6V-8639** | 1 | CONNECTOR | |
| | 10 | 1 | *148-8341* | 1 | CONNECTOR AS | |
| | | 1 | **3D-2824** | 1 | SEAL-O-RING | |
| | | 1 | **6V-8713** | 1 | CONNECTOR | |
| | | 1 | **7J-9108** | 1 | SEAL-O-RING | |
| | 11 | 1 | **3S-8665** | 1 | CLIP | |
| | 12 | 1 | **5P-4116** | 1 | WASHER-HARD (8.8X20.5X2-MM THK) | |
| | 13 | 1 | **8T-4121** | 5 | WASHER-HARD (11X21X2.5-MM THK) | |
| M | 14 | 1 | **8T-4136** | 1 | BOLT (M10X1.5X25-MM) | |
| M | 15 | 1 | **8T-4137** | 4 | BOLT (M10X1.5X20-MM) | |
| M | 16 | 1 | **8T-4908** | 1 | BOLT (M8X1.25X25-MM) | |
| | 17 | 1 | **9M-4972** | 1 | CLIP | |

I-REFER TO HYDRAULIC INFORMATION SYSTEM
M-METRIC PART
Y-SEPARATE ILLUSTRATION

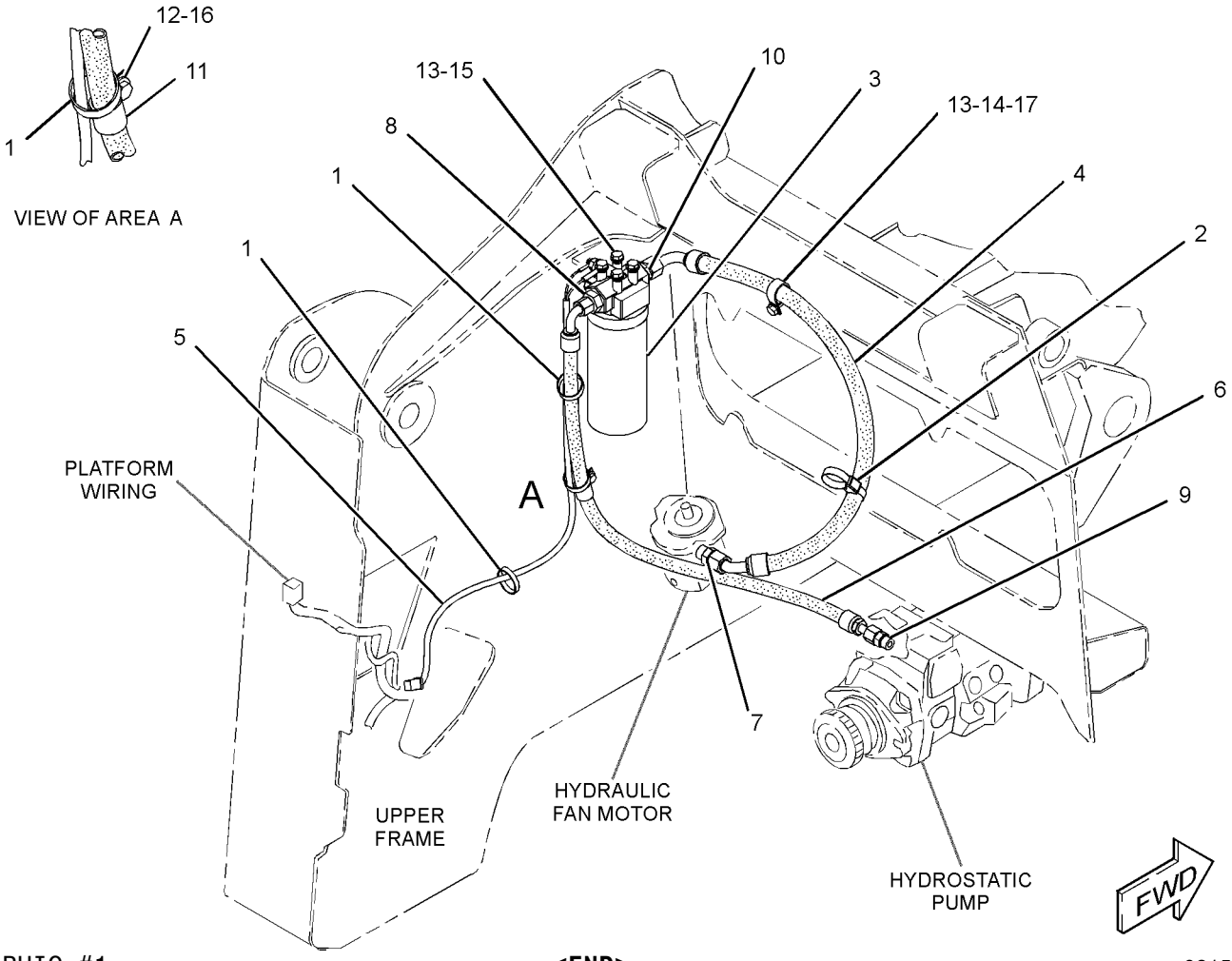


GRAPHIC #1 **<END>** g02154161

# 223-9974 FILTER GP-OIL–HYDRAULIC

**S/N: TNK1-UP**

**PART OF 356-1917 FILTER & LINES GP-HYDRAULIC**

**SMCS-5068** **i02469830**

| NOTE | REF NO | GRAPHIC REF | PART NUMBER | QTY | PART NAME 1 2 3 4 5 6 (PRODUCT LEVEL) | SEE PAGE |
|---|---|---|---|---|---|---|
| | 1 | 1 | **3J-1907** | 1 | SEAL-O-RING | |
| | 2 | 1 | **134-0404** | 1 | SWITCH AS-PRESSURE (HYDRAULIC OIL) | |
| | 3 | 1 | **1G-8878** | 1 | FILTER-OIL (ADVANCED EFFICIENCY) (HYDRAULIC) | |

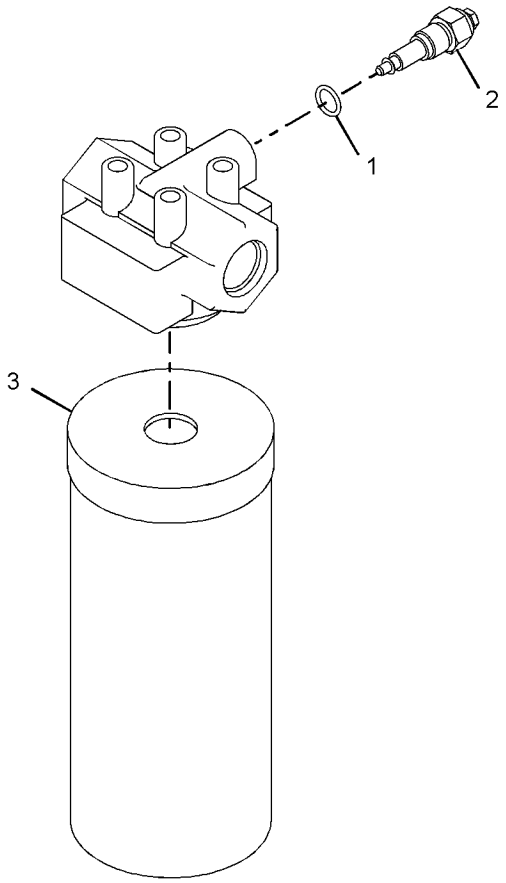


GRAPHIC #1 **<END>** g01035150

# *218-5621* LINES GP-HYDROSTATIC

**S/N: TNK1-UP**

**PART OF 326-5445 HYDRAULIC AR**

**SMCS-3154** **i03695643**

| NOTE | REF NO | GRAPHIC REF | PART NUMBER | QTY | PART NAME 1 2 3 4 5 6 (PRODUCT LEVEL) | SEE PAGE |
|---|---|---|---|---|---|---|
| | 1 | 1 | **5P-4116** | 3 | WASHER-HARD (8.8X20.5X2-MM THK) | |
| | 2 | 1 | **6V-0852** | 3 | CAP-DUST | |
| C | 3 | 1 | *188-2008* | 2 | ELBOW AS | |
| | | | | | (EACH INCLUDES) | |
| | | 1 | **3D-2824** | 1 | SEAL-O-RING | |
| | | 1 | **5K-9090** | 1 | SEAL-O-RING | |
| | | 1 | **8T-7970** | 1 | ELBOW | |
| I | 4 | 1 | **218-6095** | 2 | HOSE AS | |
| I | 5 | 1 | **142-9241** | 2 | HOSE AS | |
| | 6 | 1 | *164-5567* | 3 | COUPLER AS-QUICK DISCONNECT (MALE) | |
| | | | | | (EACH INCLUDES) | |
| | | 1 | **214-7568** | 1 | SEAL-O-RING | |
| | | 1 | **6V-3965** | 1 | FITTING (QUICK DISCONNECT) | |
| | 7 | 1 | *164-5608* | 2 | CONNECTOR AS | |
| | | | | | (EACH INCLUDES) | |
| | | 1 | **8T-1687** | 1 | CONNECTOR | |
| | | 1 | **3K-0360** | 1 | SEAL-O-RING | |
| | | 1 | **6V-8398** | 1 | SEAL-O-RING | |
| CY | 8 | 1 | *308-0421* | 1 | MANIFOLD GP-RETURN | 111 |
| C | 9 | 1 | **306-0175** | 1 | HOSE AS | |
| I | 10 | 1 | **218-5758** | 2 | HOSE AS | |
| | 11 | 1 | *148-8327* | 8 | CONNECTOR AS | |
| | | | | | (EACH INCLUDES) | |
| | | 1 | **6V-8637** | 1 | CONNECTOR | |
| | | 1 | **3D-2824** | 1 | SEAL-O-RING | |
| | | 1 | **6V-9746** | 1 | SEAL-O-RING | |
| M | 12 | 1 | **5C-7261** | 3 | NUT (M8X1.25-THD) | |

C-CHANGE FROM PREVIOUS TYPE
I-REFER TO HYDRAULIC INFORMATION SYSTEM
M-METRIC PART
Y-SEPARATE ILLUSTRATION

*218-5621* **LINES GP-HYDROSTATIC** *(contd.)* **i03695643**

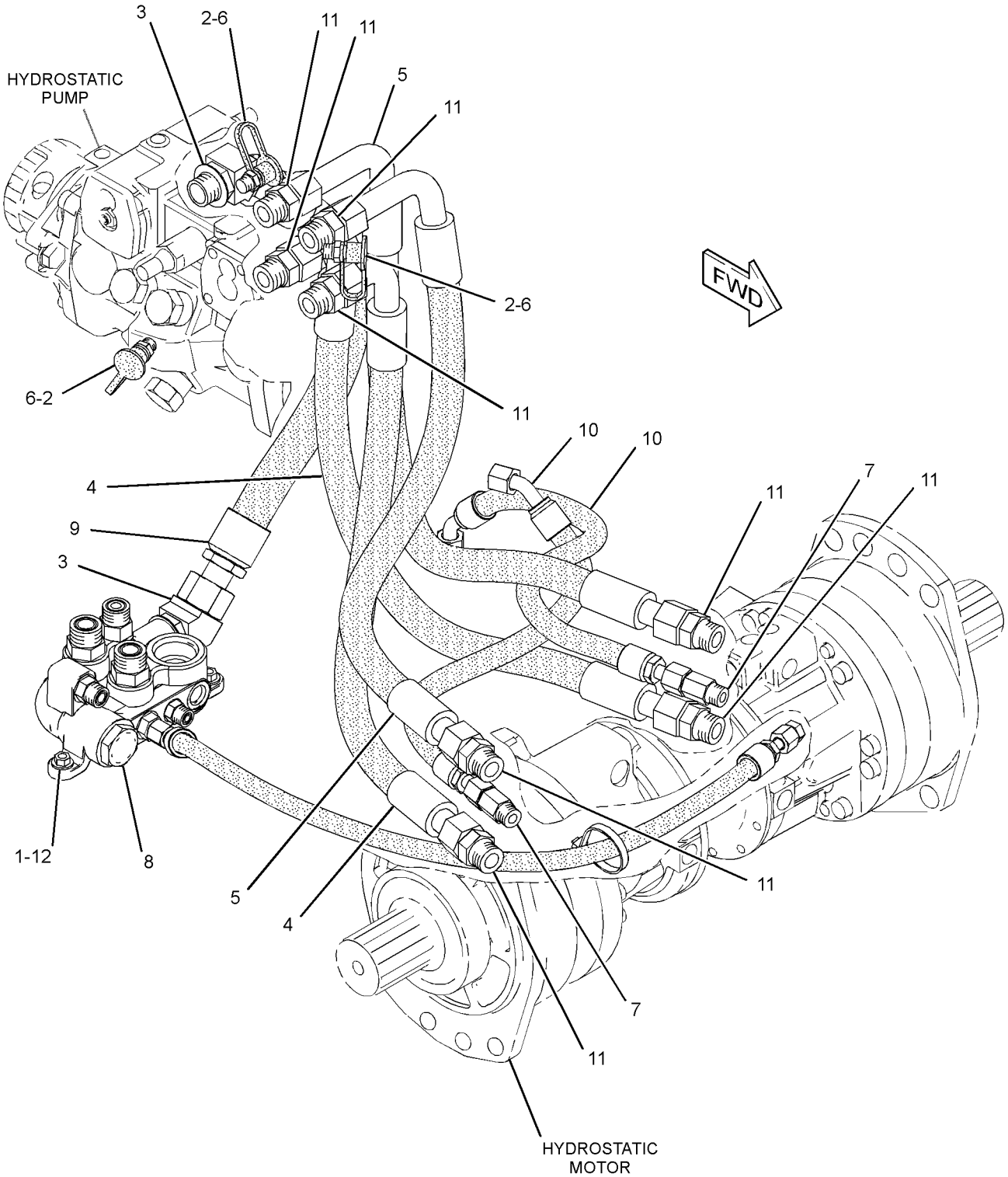


GRAPHIC #1 **<END>** g01932394

# *218-5635* MANIFOLD & LINES GP-CONTROL—PARKING BRAKE

**S/N: TNK1-UP**

**PART OF 326-5276, 326-5277, 326-5427 CONTROL AR-MACHINE**

**AN ATTACHMENT**

**SMCS-5057, 5264, 5479** **i02595599**

| NOTE | REF NO | GRAPHIC REF | PART NUMBER | QTY | PART NAME 1 2 3 4 5 6 (PRODUCT LEVEL) | SEE PAGE |
|---|---|---|---|---|---|---|
| I | 1 | 1 | **100-7530** | 1 | HOSE AS | |
| CY | 2 | 1 | **233-7131** | 1 | MANIFOLD & SOLENOID GP-CONTROL (PARKING BRAKE) | 109 |
| I | 3 | 1 | **218-5580** | 1 | HOSE AS | |
| I | 4 | 1 | **218-5581** | 1 | HOSE AS | |
| | 5 | 1 | **218-6879** | 1 | TUBE AS | |
| | 6 | 1 | *148-8336* | 3 | CONNECTOR AS | |
| | | | | | (EACH INCLUDES) | |
| | | 1 | **3J-1907** | 1 | SEAL-O-RING | |
| | | 1 | **6V-8397** | 1 | SEAL-O-RING | |
| | | 1 | **6V-8636** | 1 | CONNECTOR | |
| | 7 | 1 | *148-8435* | 1 | TEE AS | |
| | | 1 | **3J-1907** | 1 | SEAL-O-RING | |
| | | 1 | **6V-8397** | 2 | SEAL-O-RING | |
| | | 1 | **6V-8781** | 1 | TEE-FACE SEAL | |
| | 8 | 1 | *161-8560* | 1 | CONNECTOR AS | |
| | | 1 | **3J-1907** | 1 | SEAL-O-RING | |
| | | 1 | **7J-9108** | 1 | SEAL-O-RING | |
| | | 1 | **8C-6758** | 1 | CONNECTOR | |
| M | 9 | 1 | **5C-7261** | 2 | NUT (M8X1.25-THD) | |
| | 10 | 1 | **6V-8398** | 2 | SEAL-O-RING | |
| | 11 | 1 | **8T-4224** | 4 | WASHER-HARD (8.8X16X2-MM THK) | |
| M | 12 | 1 | **8T-6870** | 2 | BOLT (M8X1.25X70-MM) | |

C-CHANGE FROM PREVIOUS TYPE
I-REFER TO HYDRAULIC INFORMATION SYSTEM
M-METRIC PART
Y-SEPARATE ILLUSTRATION

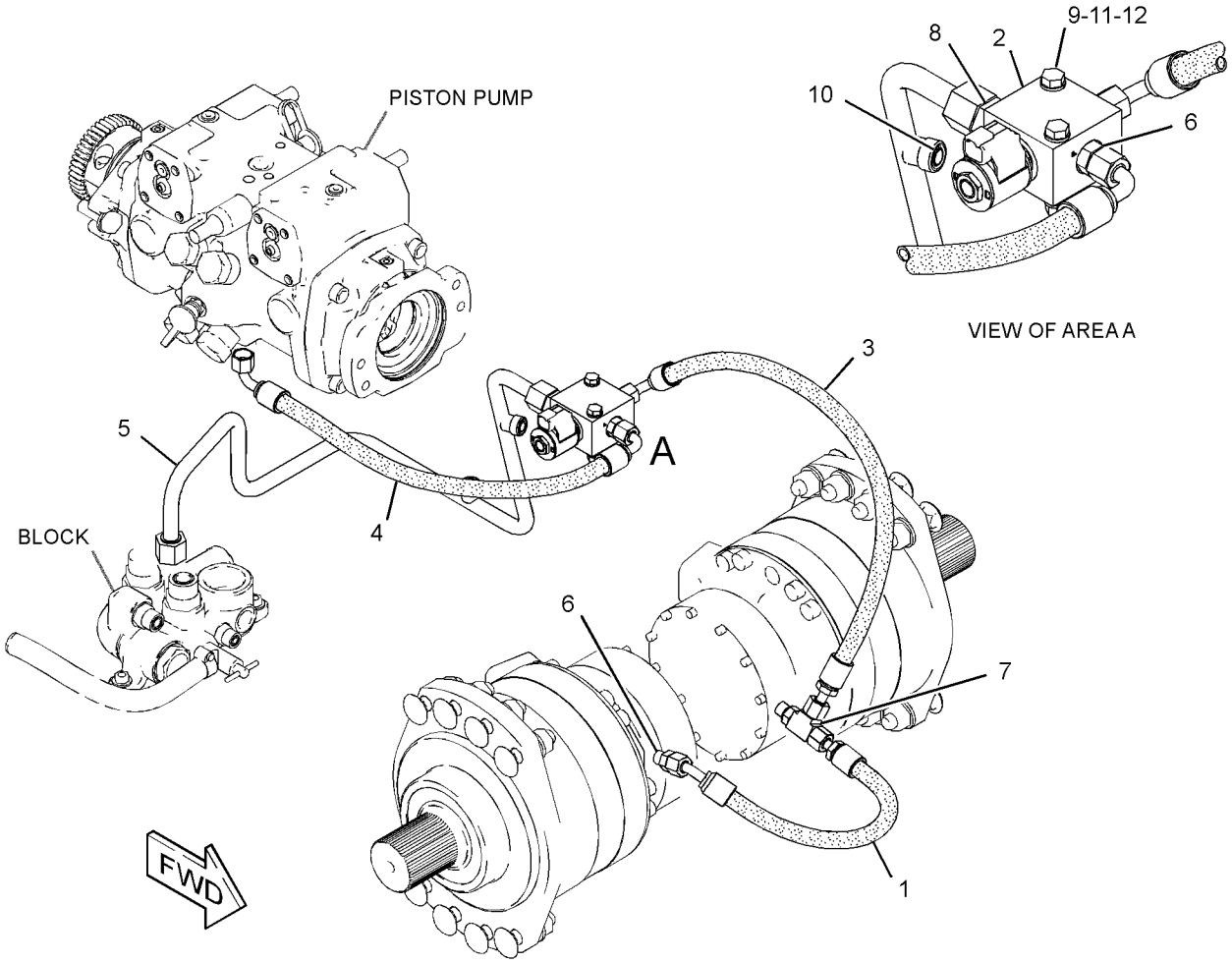


GRAPHIC #1 **<END>** g01299758

# *218-5636* MANIFOLD & LINES GP-CONTROL–
## PARKING BRAKE, 2-SPEED
**S/N: TNK1-UP**
**PART OF 326-5278, 326-5428 CONTROL AR-MACHINE**
**AN ATTACHMENT**

**SMCS-5057, 5264, 5479** **i02595688**

| NOTE | REF NO | GRAPHIC REF | PART NUMBER | QTY | PART NAME 1 2 3 4 5 6 (PRODUCT LEVEL) | SEE PAGE |
|---|---|---|---|---|---|---|
| I | 1 | 1 | **100-7530** | 2 | HOSE AS | |
| I | 2 | 1 | **218-5580** | 2 | HOSE AS | |
| I | 3 | 1 | **218-5581** | 1 | HOSE AS | |
| | 4 | 1 | **218-6879** | 1 | TUBE AS | |
| CY | 5 | 1 | **293-6591** | 1 | MANIFOLD & SOLENOID GP-CONTROL (PARKING BRAKE, 2-SPEED) | 110 |
| | 6 | 1 | *148-8326* | 1 | CONNECTOR AS | |
| | | 1 | **3J-7354** | 1 | SEAL-O-RING | |
| | | 1 | **6V-8397** | 1 | SEAL-O-RING | |
| | | 1 | **6V-9872** | 1 | CONNECTOR | |
| | 7 | 1 | *148-8336* | 5 | CONNECTOR AS | |
| | | | | | (EACH INCLUDES) | |
| | | 1 | **3J-1907** | 1 | SEAL-O-RING | |
| | | 1 | **6V-8397** | 1 | SEAL-O-RING | |
| | | 1 | **6V-8636** | 1 | CONNECTOR | |
| | 8 | 1 | *148-8433* | 1 | TEE AS | |
| | | 1 | **6V-8397** | 2 | SEAL-O-RING | |
| | | 1 | **6V-9836** | 1 | TEE-SWIVEL | |
| | 9 | 1 | *161-8560* | 1 | CONNECTOR AS | |
| | | 1 | **3J-1907** | 1 | SEAL-O-RING | |
| | | 1 | **7J-9108** | 1 | SEAL-O-RING | |
| | | 1 | **8C-6758** | 1 | CONNECTOR | |
| | 10 | 1 | *173-7225* | 1 | TEE AS | |
| | | 1 | **3J-7354** | 1 | SEAL-O-RING | |
| | | 1 | **6V-8397** | 2 | SEAL-O-RING | |
| | | 1 | **6V-9161** | 1 | TEE | |
| M | 11 | 1 | **5C-7261** | 2 | NUT (M8X1.25-THD) | |
| M | 12 | 1 | **7X-2539** | 2 | BOLT (M8X1.25X110-MM) | |
| | 13 | 1 | **8T-4224** | 4 | WASHER-HARD (8.8X16X2-MM THK) | |
| | 14 | 1 | **6V-8398** | 2 | SEAL-O-RING | |

C-CHANGE FROM PREVIOUS TYPE
I-REFER TO HYDRAULIC INFORMATION SYSTEM
M-METRIC PART
Y-SEPARATE ILLUSTRATION

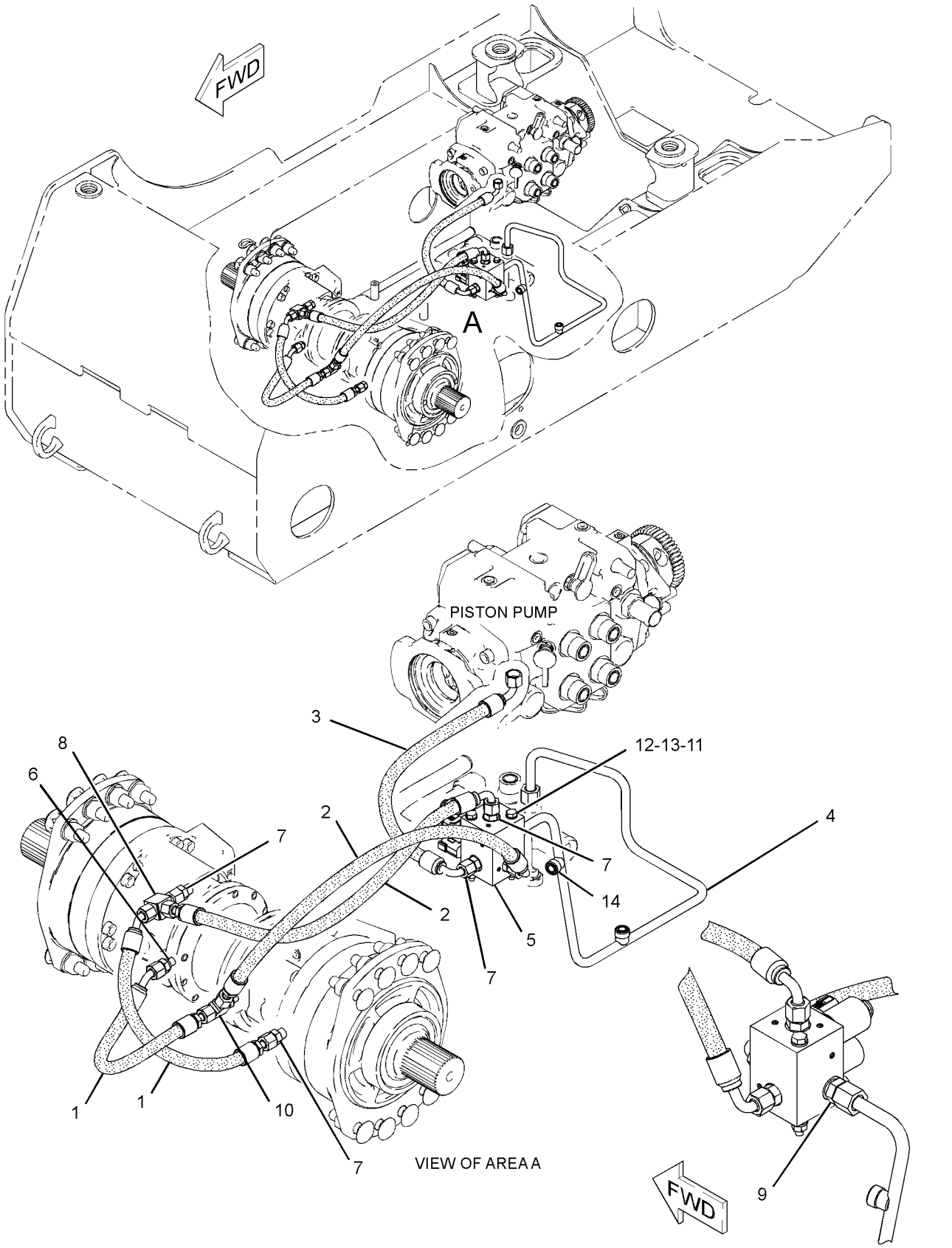


GRAPHIC #1 **<END>** g01172521

# *233-7131* MANIFOLD & SOLENOID GP-CONTROL–

**PARKING BRAKE**

**S/N: TNK1-UP**

**PART OF 218-5635 MANIFOLD & LINES GP-CONTROL**

**AN ATTACHMENT**

**SMCS-5264, 5479** **i03969176**

| NOTE | REF NO | GRAPHIC REF | PART NUMBER | QTY | PART NAME 1 2 3 4 5 6 (PRODUCT LEVEL) | SEE PAGE |
|---|---|---|---|---|---|---|
| Y | 1 | 1 | **259-8194** | 1 | VALVE GP-SOLENOID (PARKING BRAKE) | 135 |
| | 2 | 1 | **259-8195** | 1 | MANIFOLD | |

Y-SEPARATE ILLUSTRATION

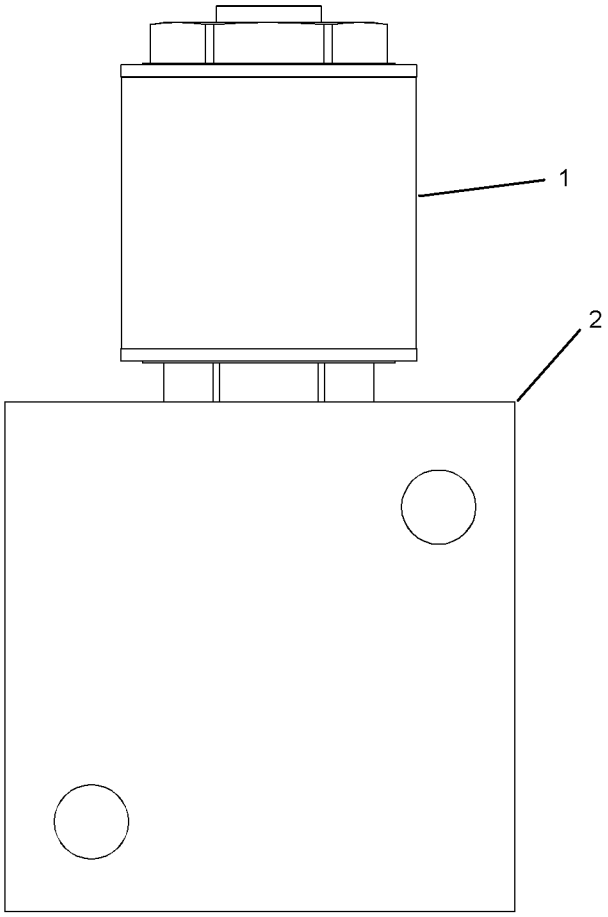


RIGHT SIDE VIEW

GRAPHIC #1

**<END>**

g01416438

# 293-6591 MANIFOLD & SOLENOID GP-CONTROL–

**PARKING BRAKE, 2-SPEED**
**S/N: TNK1-UP**
**12-VOLT**
**PART OF 218-5636 MANIFOLD & LINES GP-CONTROL**
**AN ATTACHMENT**

**SMCS-5264, 5479** **i02940522**

| NOTE | PART NUMBER | QTY | PART NAME 1 2 3 4 5 6 (PRODUCT LEVEL) | SEE PAGE |
|---|---|---|---|---|
| | | | (NO SERVICED PARTS) | |

**<END>**

# *308-0421* MANIFOLD GP-RETURN

**S/N: TNK1-UP**

**PART OF 218-5621 LINES GP-HYDROSTATIC**

**SMCS-5264** **i02730543**

| NOTE | REF NO | GRAPHIC REF | PART NUMBER | QTY | PART NAME 1 2 3 4 5 6 (PRODUCT LEVEL) | SEE PAGE |
|---|---|---|---|---|---|---|
| | 1 | 1 | **7K-1181** | 1 | STRAP-CABLE | |
| | 2 | 1 | **105-4593** | 1 | POPPET | |
| | 3 | 1 | **212-6603** | 1 | PLUG AS | |
| | | 1 | **6V-8978** | 1 | SEAL-O-RING | |
| | 4 | 1 | **212-6604** | 1 | SPRING | |
| I | 5 | 1 | **233-5716** | 1 | HOSE AS | |
| | 6 | 1 | **305-4185** | 1 | BLOCK | |
| | 7 | 1 | *148-8318* | 1 | CONNECTOR AS | |
| | | 1 | **3K-0360** | 1 | SEAL-O-RING | |
| | | 1 | **6V-8397** | 1 | SEAL-O-RING | |
| | | 1 | **6V-8634** | 1 | CONNECTOR | |
| | 8 | 1 | *148-8327* | 2 | CONNECTOR AS | |
| | | | | | (EACH INCLUDES) | |
| | | 1 | **3D-2824** | 1 | SEAL-O-RING | |
| | | 1 | **6V-8637** | 1 | CONNECTOR | |
| | | 1 | **6V-9746** | 1 | SEAL-O-RING | |
| | 9 | 1 | *148-8336* | 1 | CONNECTOR AS | |
| | | 1 | **3J-1907** | 1 | SEAL-O-RING | |
| | | 1 | **6V-8397** | 1 | SEAL-O-RING | |
| | | 1 | **6V-8636** | 1 | CONNECTOR | |
| | 10 | 1 | *148-8340* | 1 | CONNECTOR AS | |
| | | 1 | **3K-0360** | 1 | SEAL-O-RING | |
| | | 1 | **6V-8398** | 1 | SEAL-O-RING | |
| | | 1 | **6V-8639** | 1 | CONNECTOR | |
| | 11 | 1 | *148-8342* | 1 | CONNECTOR AS | |
| | | 1 | **3K-0360** | 1 | SEAL-O-RING | |
| | | 1 | **6V-8632** | 1 | CONNECTOR | |
| | | 1 | **7J-9108** | 1 | SEAL-O-RING | |
| | 12 | 1 | *165-4934* | 1 | PLUG AS | |
| | | 1 | **6V-8397** | 1 | SEAL-O-RING | |
| | | 1 | **6V-9508** | 1 | PLUG (11/16-16-THD) | |

I-REFER TO HYDRAULIC INFORMATION SYSTEM

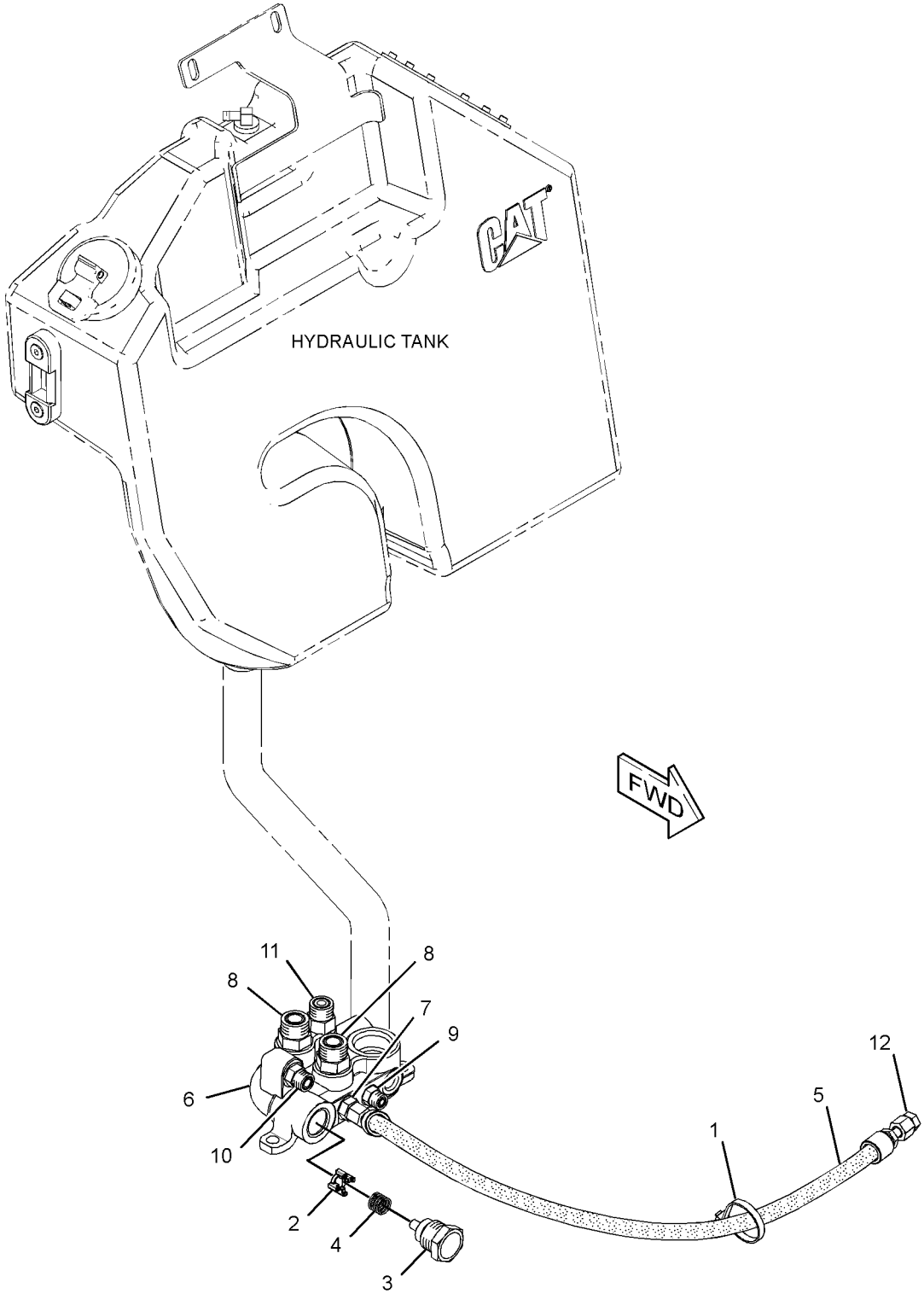


GRAPHIC #1 **<END>** g01380873

# *190-7457* MOTOR & MTG GP-HYDROSTATIC

**S/N: TNK1-UP**
**PART OF 326-5278, 326-5428 CONTROL AR-MACHINE**
**AN ATTACHMENT**

**SMCS-5058** **i02637361**

| NOTE | REF NO | GRAPHIC REF | PART NUMBER | QTY | PART NAME 1 2 3 4 5 6 (PRODUCT LEVEL) | SEE PAGE |
|---|---|---|---|---|---|---|
| M | 1 | 1 | **193-8340** | 16 | BOLT-CARRIAGE (M16X2X65-MM) | |
| CYR | 2 | 1 | **280-7858** | 2 | MOTOR GP-PISTON (2-SPEED) | 117 |
| | 3 | 1 | **8T-4122** | 16 | WASHER-HARD (17X32X3.5-MM THK) | |
| M | 4 | 1 | **8T-4132** | 16 | NUT (M16X2-THD) | |

C-CHANGE FROM PREVIOUS TYPE
M-METRIC PART
R-REMFG PART MAY BE AVAILABLE
Y-SEPARATE ILLUSTRATION

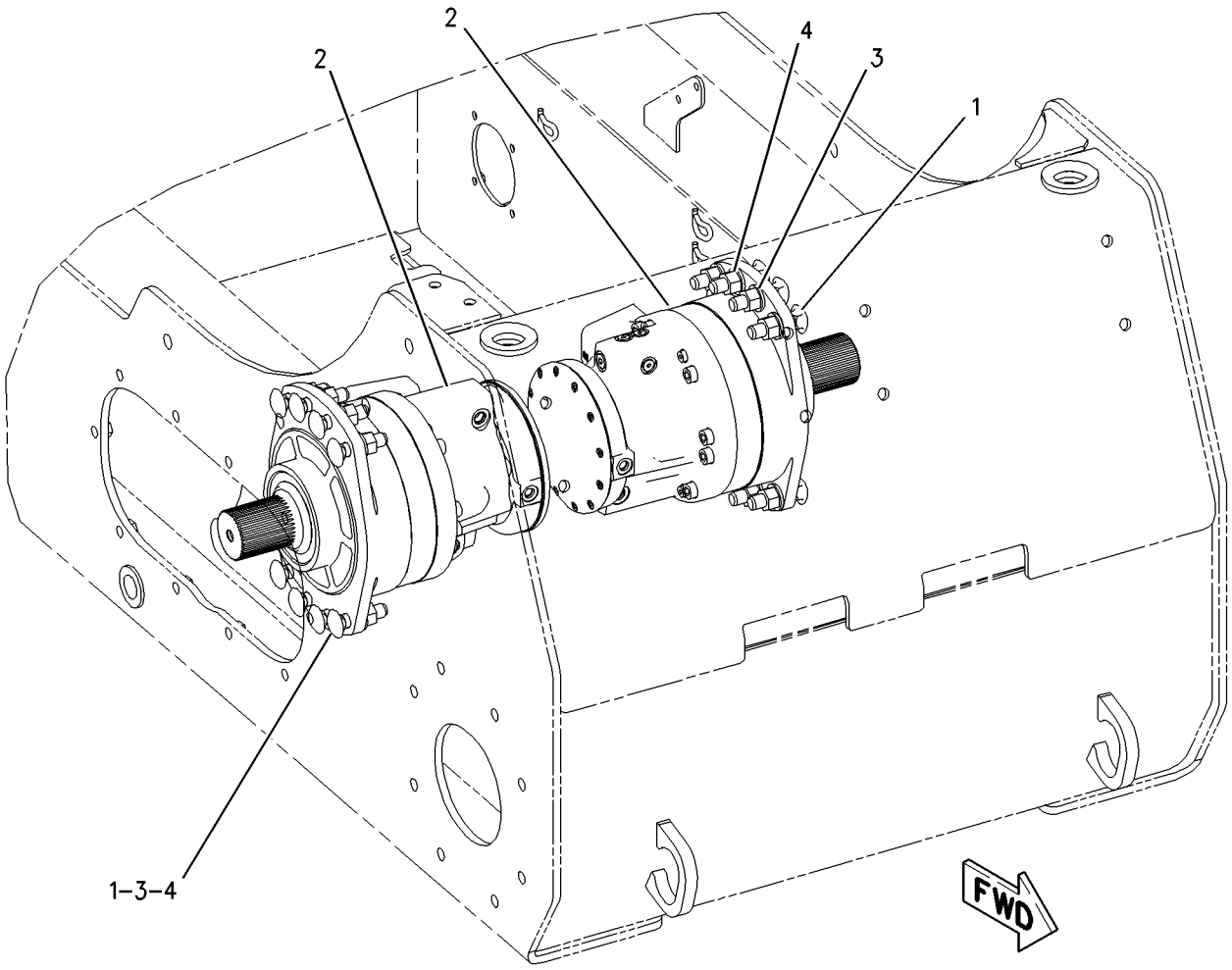


GRAPHIC #1 **<END>** g00933476

# *191-9780* MOTOR & MTG GP-HYDROSTATIC

**S/N: TNK1-UP**

**PART OF 326-5276, 326-5277, 326-5427 CONTROL AR-MACHINE**

**AN ATTACHMENT**

**SMCS-5058** **i02639967**

| NOTE | REF NO | GRAPHIC REF | PART NUMBER | QTY | PART NAME 1 2 3 4 5 6 (PRODUCT LEVEL) | SEE PAGE |
|---|---|---|---|---|---|---|
| M | 1 | 1 | **193-8340** | 16 | BOLT-CARRIAGE (M16X2X65-MM) | |
| CYR | 2 | 1 | **280-7856** | 2 | MOTOR GP-PISTON | 115 |
| | 3 | 1 | **8T-4122** | 16 | WASHER-HARD (17X32X3.5-MM THK) | |
| M | 4 | 1 | **8T-4132** | 16 | NUT (M16X2-THD) | |

C-CHANGE FROM PREVIOUS TYPE
M-METRIC PART
R-REMFG PART MAY BE AVAILABLE
Y-SEPARATE ILLUSTRATION

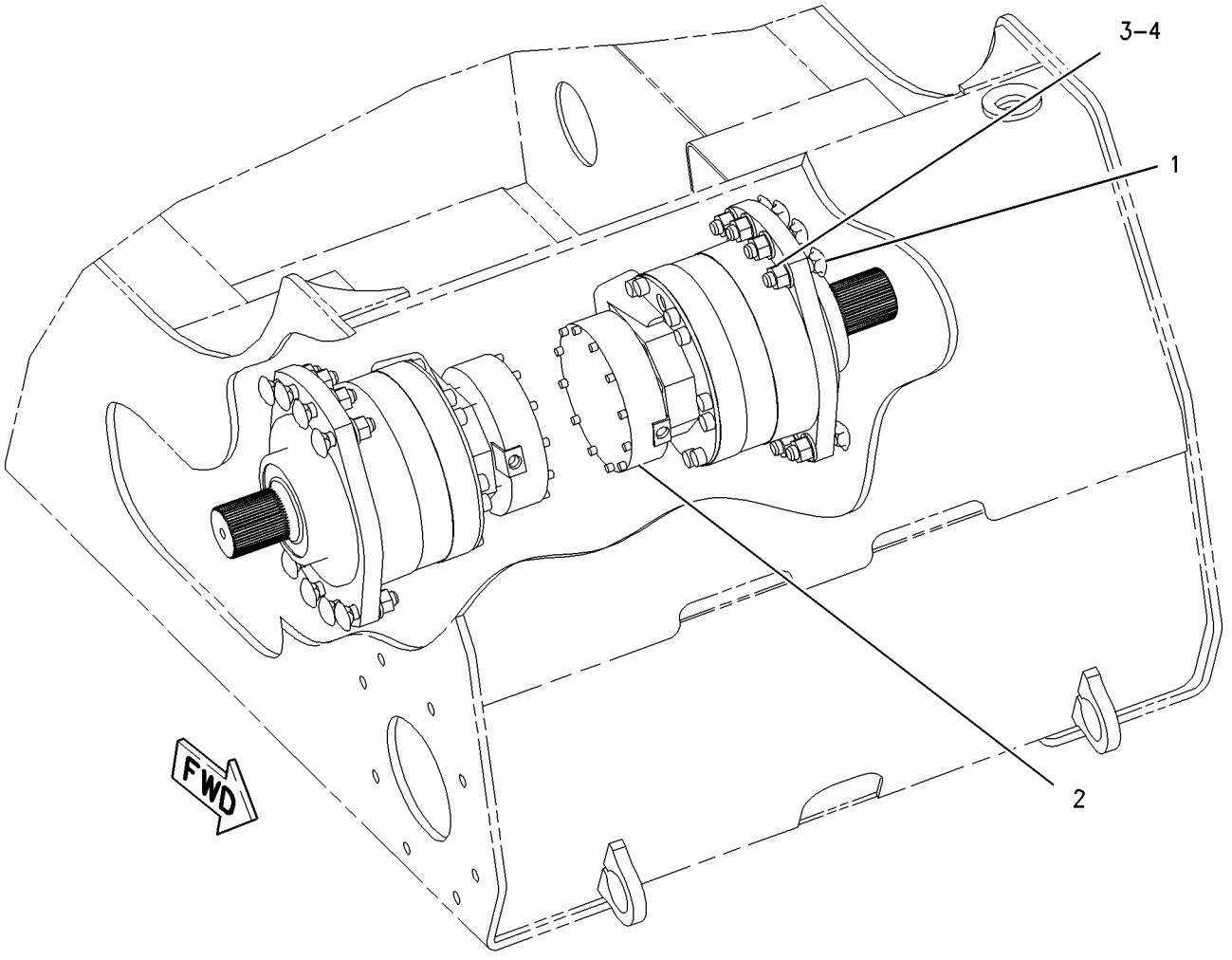


GRAPHIC #1 **<END>** g00913035

# 280-7856 MOTOR GP-PISTON—HYDROSTATIC*R

**S/N: TNK1-UP**
**PART OF 191-9780 MOTOR & MTG GP-HYDROSTATIC**
**AN ATTACHMENT**

**SMCS-4351, 5058** **i03969173**

| NOTE | REF NO | GRAPHIC REF | PART NUMBER | QTY | PART NAME 1 2 3 4 5 6 (PRODUCT LEVEL) | SEE PAGE |
|---|---|---|---|---|---|---|
| M | 1 | 1 | **160-8493** | 12 | BOLT-SOCKET HEAD (M14X2X80-MM) | |
| B | 2 | 1 | **140-2513** | 1 | SHIM (0.01-MM THK) | |
| B | 3 | 1 | **140-2514** | 2 | SHIM (0.3-MM THK) | |
| | 4 | 1 | **222-5693** | 1 | PLUG-O-RING | |
| J | 5 | 1 | **033-5853** | 1 | SEAL-O-RING | |
| | 6 | 1 | **190-6534** | 1 | RING-SPLIT | |
| | 7 | 1 | **289-6354** | 1 | PLUG-O-RING | |
| | 8 | 1 | **8T-5095** | 5 | WASHER-PLATED (11X16X2-MM THK) | |
| M | 9 | 1 | **5C-7883** | 12 | BOLT-SOCKET HEAD (M6X1X16-MM) | |
| | 10 | 1 | **268-1935** | 1 | BEARING-TAPERED ROLLER | |
| | 11 | 1 | **141-3049** | 1 | BEARING (INNER) | |
| | 12 | 1 | **172-8173** | 15 | DISC-BRAKE (OUTER) | |
| | 13 | 1 | **268-1923** | 13 | PLATE-INNER (BRAKE) | |
| | 14 | 1 | **141-3046** | 1 | KIT-SHIM (PISTON MOTOR) | |
| | | | | | (INCLUDES SHIMS) | |
| M | 15 | 1 | **8T-0271** | 5 | BOLT-SOCKET HEAD (M10X1.5X35-MM) | |
| J | 16 | 1 | **033-6042** | 1 | SEAL-O-RING | |
| | 17 | 1 | **320-0650** | 1 | RING-RETAINING | |
| | 18 | 1 | **307-3039** | 1 | RING-SEAL | |
| | | | | | AVAILABLE REPAIR KIT(S): | |
| J | | | **289-6337** | 1 | KIT-SEAL (PISTON MOTOR) | |
| | | | | | (INCUDES SEALS, SEAL RINGS & GASKET) | |

B-USE AS REQUIRED
J-KIT MARKED J INCLUDES PARTS MARKED J
M-METRIC PART

**280-7856 MOTOR GP-PISTON** *(contd. )* **i03969173**

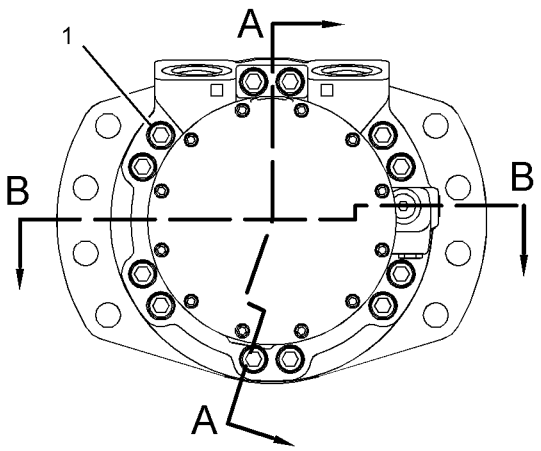


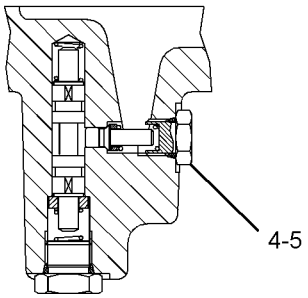


SECTION C-C

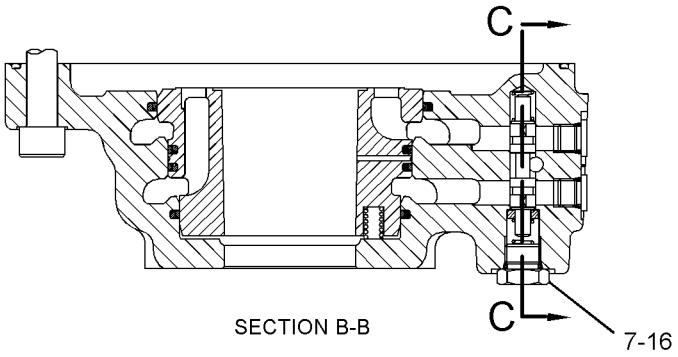


SECTION B-B

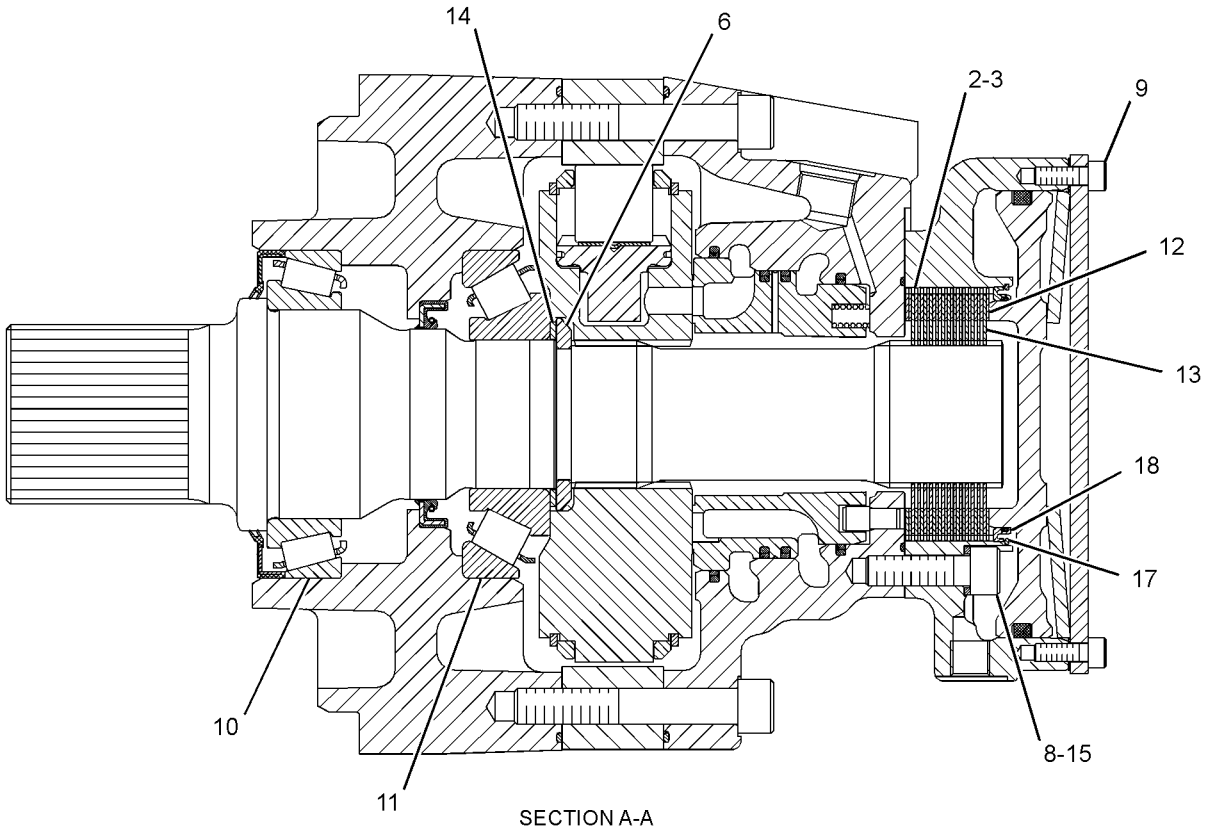


SECTION A-A

GRAPHIC #1 **<END>** g01727716

# 280-7858 MOTOR GP-PISTON–HYDROSTATIC*R

**S/N: TNK1-UP**
**PART OF 190-7457 MOTOR & MTG GP-HYDROSTATIC**
**AN ATTACHMENT**

**SMCS-4351, 5058** **i03969172**

| NOTE | REF NO | GRAPHIC REF | PART NUMBER | QTY | PART NAME 1 2 3 4 5 6 (PRODUCT LEVEL) | SEE PAGE |
|---|---|---|---|---|---|---|
| M | 1 | 1 | **8T-1159** | 5 | BOLT-SOCKET HEAD (M10X1.5X25-MM) | |
| B | 2 | 1 | **140-2514** | 1 | SHIM (0.3-MM THK) | |
| B | 3 | 1 | **140-2513** | 1 | SHIM (0.01-MM THK) | |
| | 4 | 1 | **190-6534** | 1 | RING-SPLIT | |
| M | 5 | 1 | **6V-5193** | 2 | BOLT-SOCKET HEAD (M8X1.25X40-MM) | |
| M | 6 | 1 | **160-8493** | 10 | BOLT-SOCKET HEAD (M14X2X80-MM) | |
| J | 7 | 1 | **033-6042** | 1 | SEAL-O-RING | |
| J | 8 | 1 | **033-5853** | 1 | SEAL-O-RING | |
| M | 9 | 1 | **6V-5683** | 12 | BOLT (M6X1X16-MM) | |
| | 10 | 1 | **222-5693** | 1 | PLUG-O-RING | |
| | 11 | 1 | **289-6354** | 1 | PLUG-O-RING | |
| | 12 | 1 | **268-1935** | 1 | BEARING-TAPERED ROLLER | |
| | 13 | 1 | **141-3049** | 1 | BEARING (INNER) | |
| | 14 | 1 | **172-8173** | 10 | DISC-BRAKE (OUTER) | |
| | 15 | 1 | **268-1923** | 9 | PLATE-INNER (BRAKE) | |
| | 16 | 1 | **141-3046** | 1 | KIT-SHIM (PISTON MOTOR) | |
| | | | | | (INCLUDES SHIMS) | |
| | 17 | 1 | **3K-0360** | 1 | SEAL-O-RING | |
| | 18 | 1 | **9S-8005** | 1 | PLUG-O-RING | |
| | 19 | 1 | **320-0650** | 1 | RING-RETAINING | |
| | 20 | 1 | **307-3039** | 1 | RING-SEAL | |
| | | | | | AVAILABLE REPAIR KIT(S): | |
| J | | | **289-6338** | 1 | KIT-SEAL (PISTON MOTOR) | |
| | | | | | (INCLUDES SEALS, SEAL RINGS & GASKET) | |

B-USE AS REQUIRED
J-KIT MARKED J INCLUDES PARTS MARKED J
M-METRIC PART

**280-7858 MOTOR GP-PISTON** *(contd. )* **i03969172**

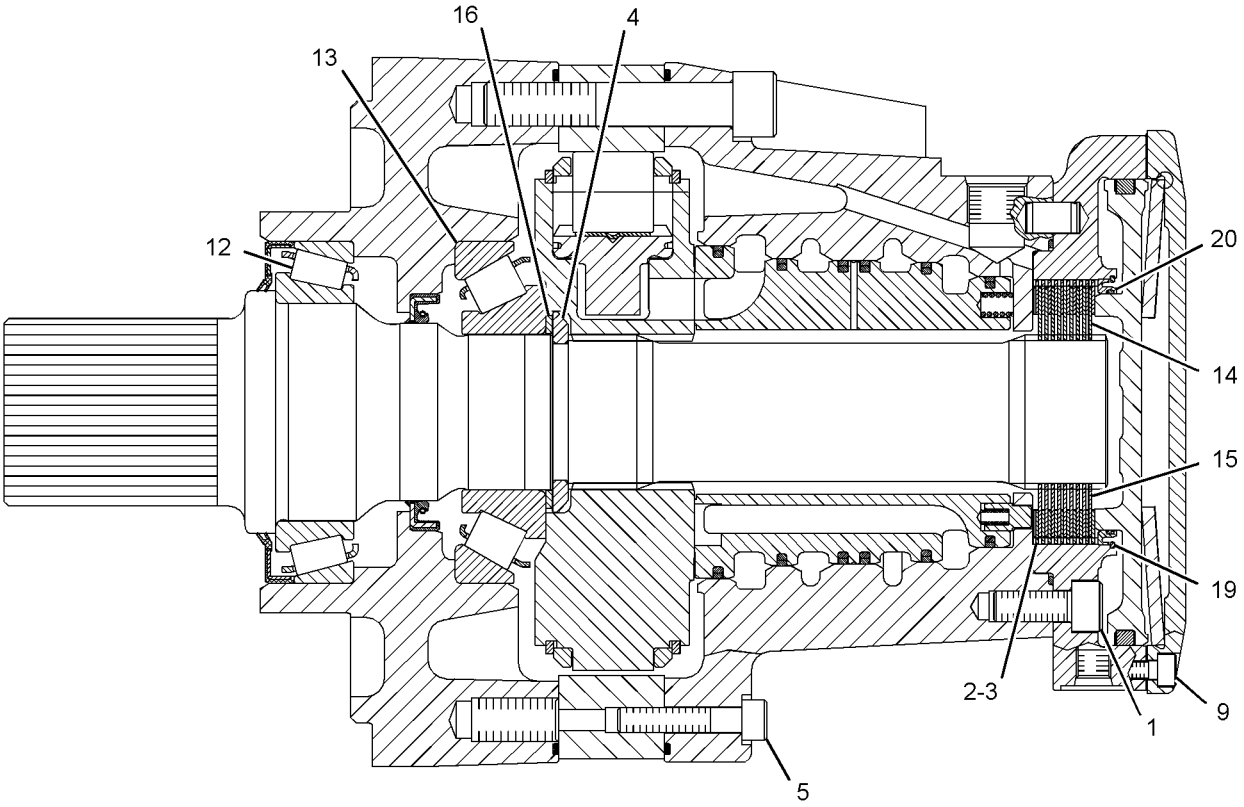


SECTION A-A

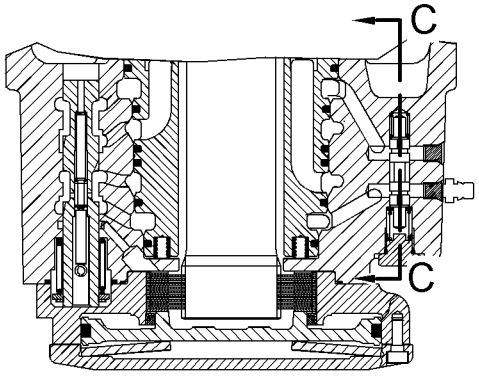


SECTION B-B

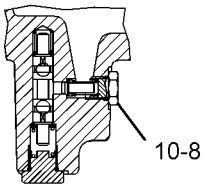


SECTION C-C

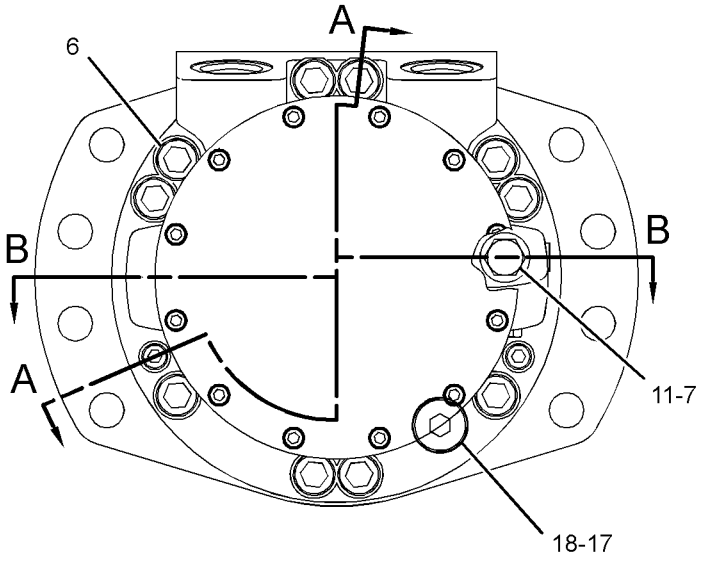


GRAPHIC #1 **<END>** g01807874

# *218-0918* MOUNTING GP-PUMP

**S/N: TNK1-UP**

**PART OF 326-5361 INSTALLATION AR-ENGINE**

**SMCS-3203, 5062, 5070** **i01971011**

| NOTE | REF NO | GRAPHIC REF | PART NUMBER | QTY | PART NAME 1 2 3 4 5 6 (PRODUCT LEVEL) | SEE PAGE |
|---|---|---|---|---|---|---|
| | 1 | 1 | **142-8719** | 1 | PLATE-ADAPTER | |
| | 2 | 1 | **226-7635** | 1 | FLANGE | |
| | 3 | 1 | **8T-4121** | 12 | WASHER-HARD (11X21X2.5-MM THK) | |
| M | 4 | 1 | **8T-4195** | 8 | BOLT (M10X1.5X30-MM) | |
| M | 5 | 1 | **8T-4196** | 12 | BOLT (M10X1.5X35-MM) | |

M-METRIC PART

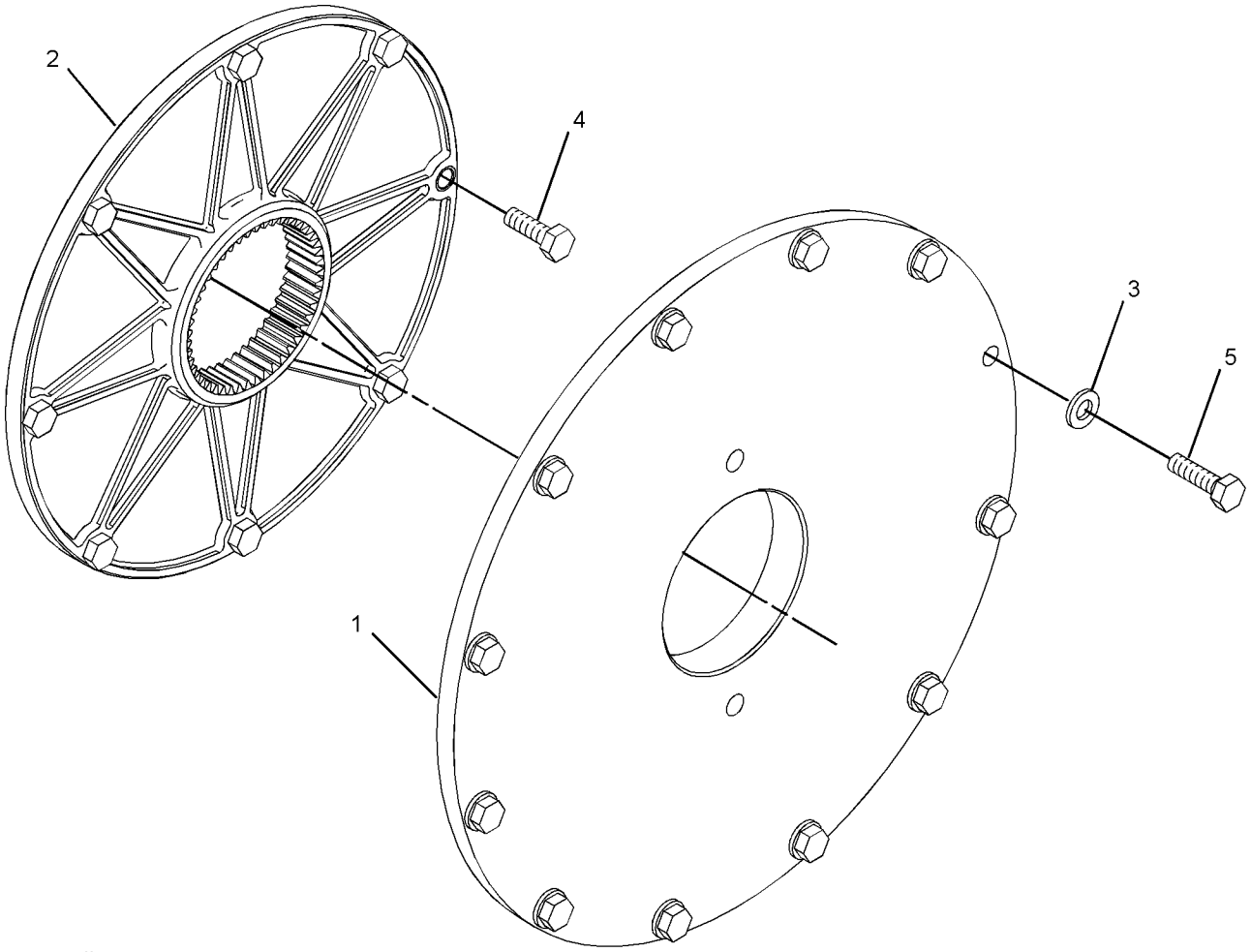


GRAPHIC #1 **<END>** g01024585

# POWER TRAIN

## *326-5248* POWERTRAIN AR

**S/N: TNK1-UP**

**PART OF 326-5422 COMMON AR**

**SMCS-3203, 4062, 5058, 5070** **i03906998**

| NOTE | PART NUMBER | QTY | PART NAME 1 2 3 4 5 6 (PRODUCT LEVEL) | SEE PAGE |
|---|---|---|---|---|
| Y | *191-9760* | 1 | DRIVE GP-TANDEM | 99 |

Y-SEPARATE ILLUSTRATION

**<END>**

# *218-0928* PUMP & MTG GP-HYDROSTATIC

**S/N: TNK1-UP**

**PART OF 326-5276, 326-5277, 326-5427 CONTROL AR-MACHINE**

**AN ATTACHMENT**

**SMCS-3203, 5070** **i03292668**

| NOTE | REF NO | GRAPHIC REF | PART NUMBER | QTY | PART NAME 1 2 3 4 5 6 (PRODUCT LEVEL) | SEE PAGE |
|---|---|---|---|---|---|---|
| | 1 | 1 | **165-0142** | 2 | WASHER-HARD (14.8X27X3-MM THK) | |
| M | 2 | 1 | **167-4339** | 2 | BOLT (M14X2X40-MM) | |
| CY | 3 | 1 | **307-3070** | 1 | PUMP GP-PISTON (HYDROSTATIC) | 125 |
| | 4 | 1 | **252-9197** | 1 | BOLT-SOCKET HEAD (M12X1.75X35-MM) | |
| | 5 | 1 | **263-4996** | 1 | HUB AS-COUPLING | |
| | | 1 | **096-0194** | 1 | RING-RETAINING | |

C-CHANGE FROM PREVIOUS TYPE
M-METRIC PART
Y-SEPARATE ILLUSTRATION

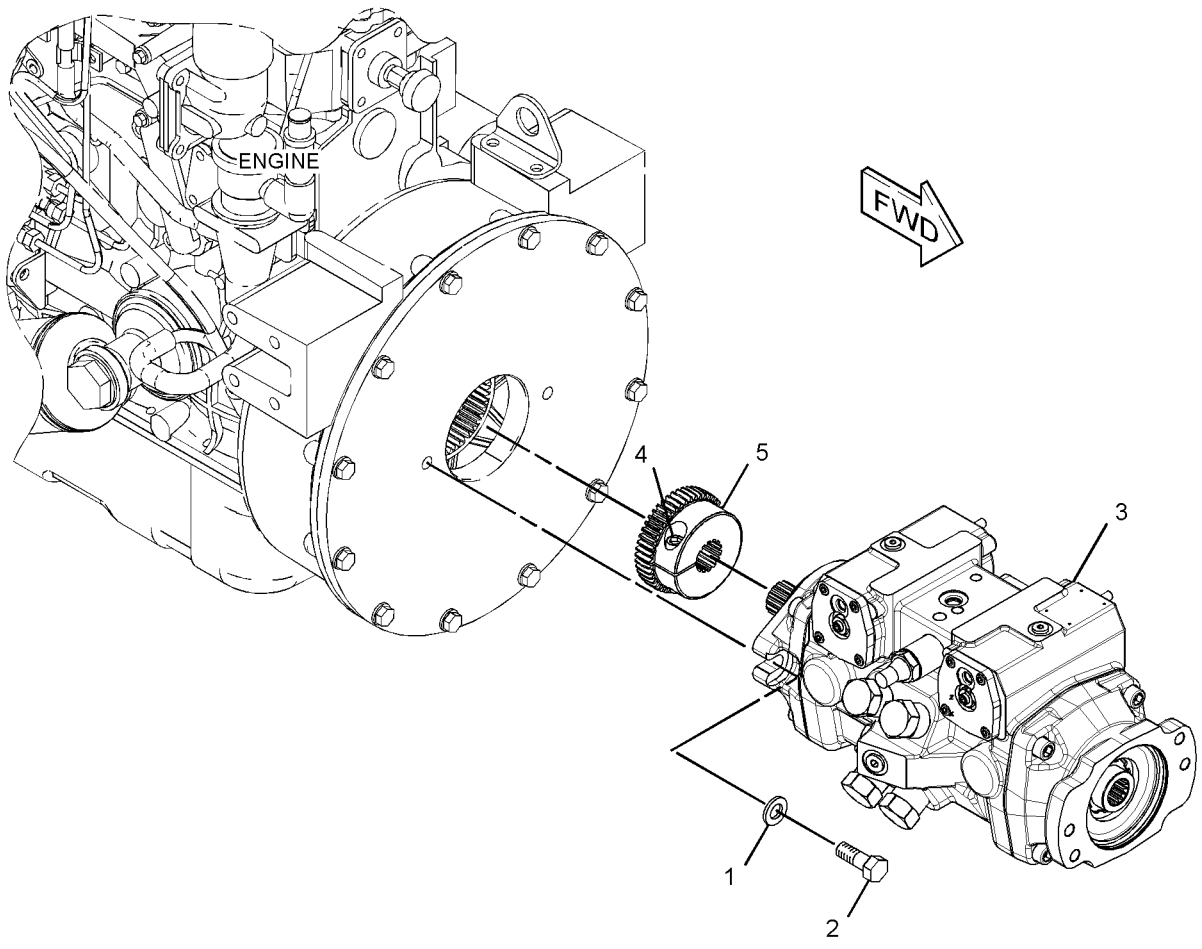


GRAPHIC #1 **<END>** g01791598

# POWER TRAIN

## *218-5928* PUMP & MTG GP-HYDROSTATIC

**S/N: TNK1-UP**
**PART OF 326-5278, 326-5428 CONTROL AR-MACHINE**
**AN ATTACHMENT**

**SMCS-3203, 5070** **i03380597**

| NOTE | REF NO | GRAPHIC REF | PART NUMBER | QTY | PART NAME 1 2 3 4 5 6 (PRODUCT LEVEL) | SEE PAGE |
|---|---|---|---|---|---|---|
| | 1 | 1 | **165-0142** | 2 | WASHER-HARD (14.8X27X3-MM THK) | |
| M | 2 | 1 | **167-4339** | 2 | BOLT (M14X2X40-MM) | |
| CY | 3 | 1 | **307-3068** | 1 | PUMP GP-PISTON | 123 |
| | 4 | 1 | **252-9197** | 1 | BOLT-SOCKET HEAD (M12X1.75X35-MM) | |
| | 5 | 1 | **263-4996** | 1 | HUB AS-COUPLING | |
| | | 1 | **096-0194** | 1 | RING-RETAINING | |

C-CHANGE FROM PREVIOUS TYPE
M-METRIC PART
Y-SEPARATE ILLUSTRATION

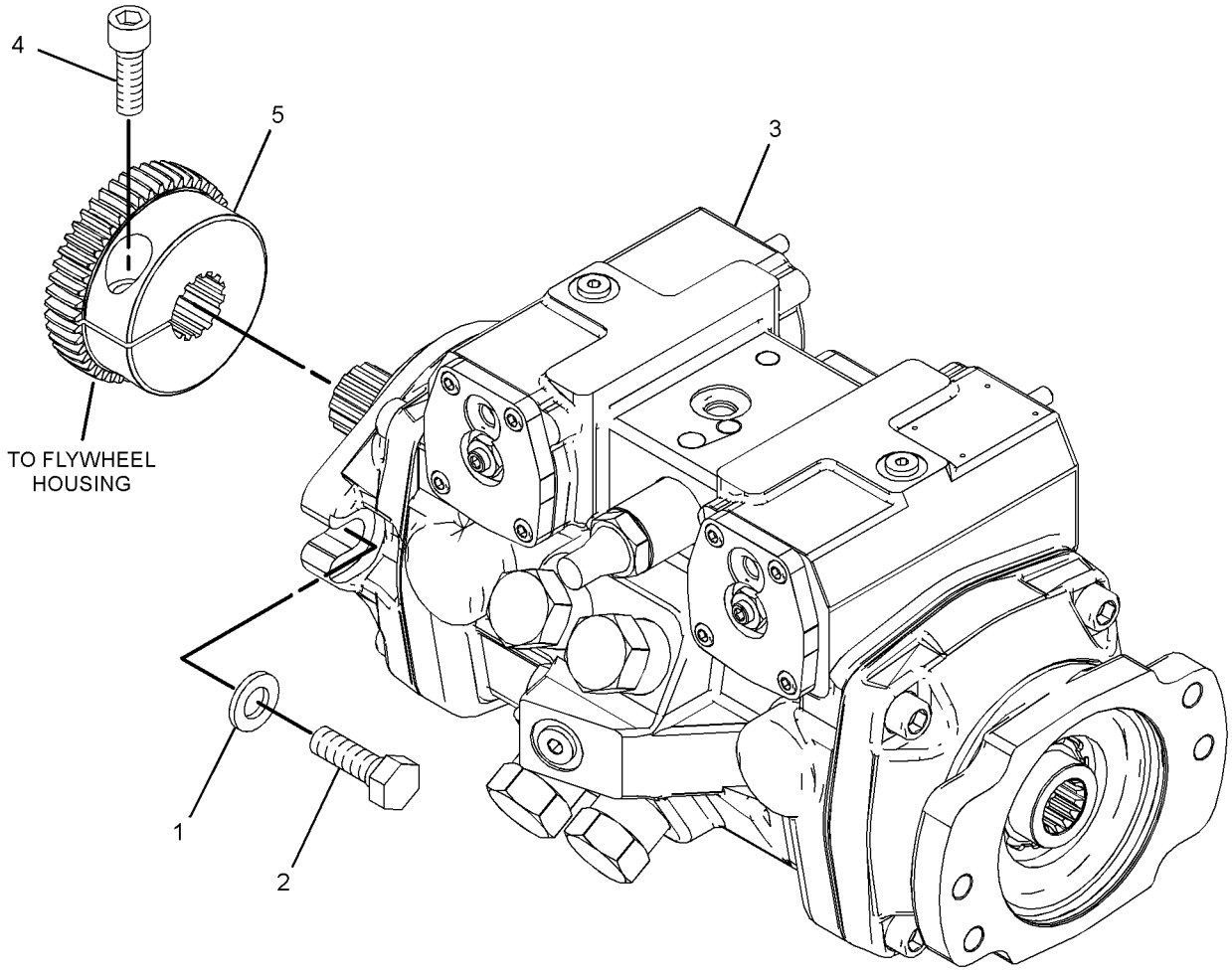


GRAPHIC #1 **<END>** g01827540

# 307-3068 PUMP GP-PISTON

**S/N: TNK1-UP**

**PART OF 218-5928 PUMP & MTG GP-HYDROSTATIC**

**AN ATTACHMENT**

**SMCS-3203, 5070, 5117, 5455, 5479** **i03901102**

| NOTE | REF NO | GRAPHIC REF | PART NUMBER | QTY | PART NAME 1 2 3 4 5 6 (PRODUCT LEVEL) | SEE PAGE |
|---|---|---|---|---|---|---|
| | 1 | 1 | **6E-5060** | 3 | CAP AS | |
| J | 2 | 1 | **112-4719** | 4 | RING-BACKUP | |
| | 3 | 1 | **121-4459** | 2 | BEARING-ROLLER | |
| | 4 | 1 | **108-3565** | 2 | CLIP | |
| | 5 | 1 | **204-1454** | 2 | PIN-THREADED | |
| JM | 6 | 1 | **9T-4817** | 2 | NUT (M8X1-THD) | |
| | 7 | 1 | **204-1456** | 1 | SHIM | |
| | 8 | 1 | **204-1457** | 1 | VALVE GP-SPEED SENSING (PISTON PUMP) | |
| | 9 | 1 | **204-1458** | 4 | VALVE GP-RELIEF (CROSSOVER) | |
| | 10 | 1 | **204-1459** | 1 | VALVE GP-RELIEF (CHARGE) | |
| J | 11 | 1 | **135-2655** | 2 | SEAL-O-RING | |
| | 12 | 1 | **3J-7354** | 2 | SEAL-O-RING | |
| J | 13 | 1 | **3K-0715** | 1 | SEAL-O-RING | |
| J | 14 | 1 | **6V-5326** | 4 | SEAL-O-RING | |
| J | 15 | 1 | **6V-5586** | 2 | SEAL-O-RING | |
| J | 16 | 1 | **6V-8352** | 1 | SEAL-O-RING | |
| M | 17 | 1 | **8T-0267** | 8 | BOLT-SOCKET HEAD (M6X1X12-MM) | |
| | 18 | 1 | **9S-8002** | 2 | PLUG-O-RING | |
| M | 19 | 1 | **9X-6606** | 2 | NUT-HEX (M10X1-THD) | |
| | 20 | 1 | **268-1929** | 2 | CRADLE | |
| | 21 | 1 | **081-3698** | 2 | BEARING | |
| | 22 | 1 | **204-1452** | 3 | RING-RETAINING | |
| J | 23 | 1 | **233-9744** | 1 | SEAL-LIP TYPE | |
| | 24 | 1 | **307-3075** | 2 | RACE-BEARING | |
| | 25 | 1 | **280-7865** | 1 | ROTATING GP-PUMP (LH) | |
| | 26 | 1 | **280-7863** | 1 | ROTATING GP-PUMP (RH) | |
| M | 27 | 1 | **8T-0273** | 8 | BOLT-SOCKET HEAD (M12X1.75X40-MM) | |
| | 28 | 1 | **307-3074** | 2 | BEARING-ROLLER | |
| | | | | | AVAILABLE REPAIR KIT(S): | |
| J | | | **268-9529** | 1 | KIT-SEAL | |
| | | | | | (ALSO INCLUDES SEAL-O-RING, SEAL LOCK NUT, RING DIN, SPACER & SEAL) | |

J-KIT MARKED J SERVICES PARTS MARKED J
M-METRIC PART

## 307-3068 PUMP GP-PISTON *(contd. )* i03901102

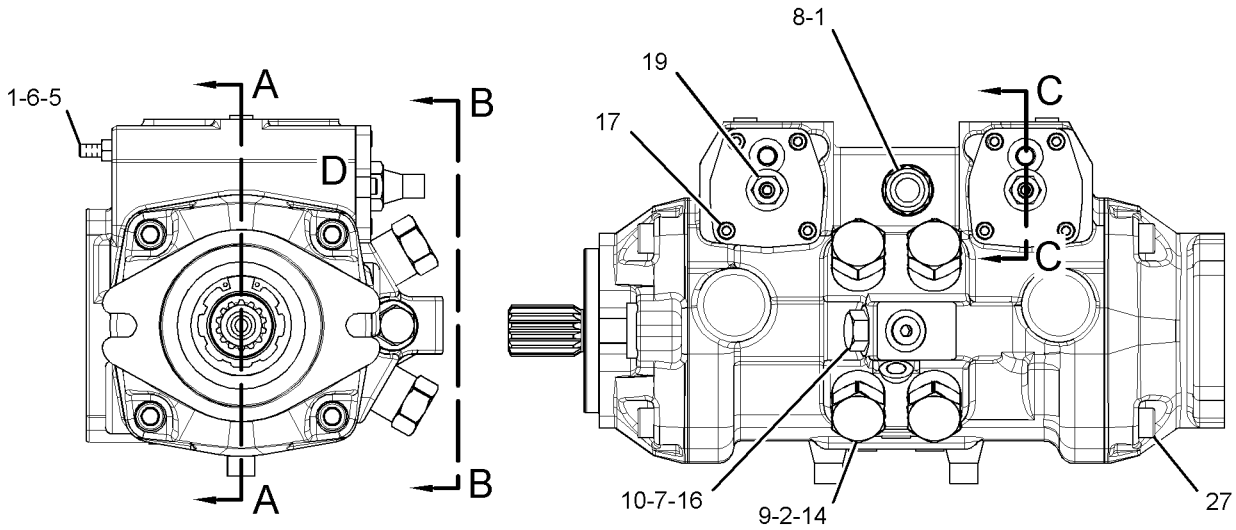


VIEW B-B

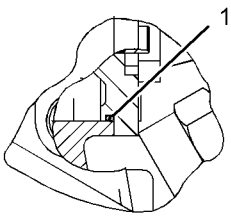


VIEW OF AREA D

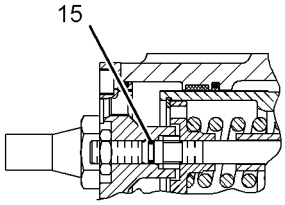


SECTION C-C

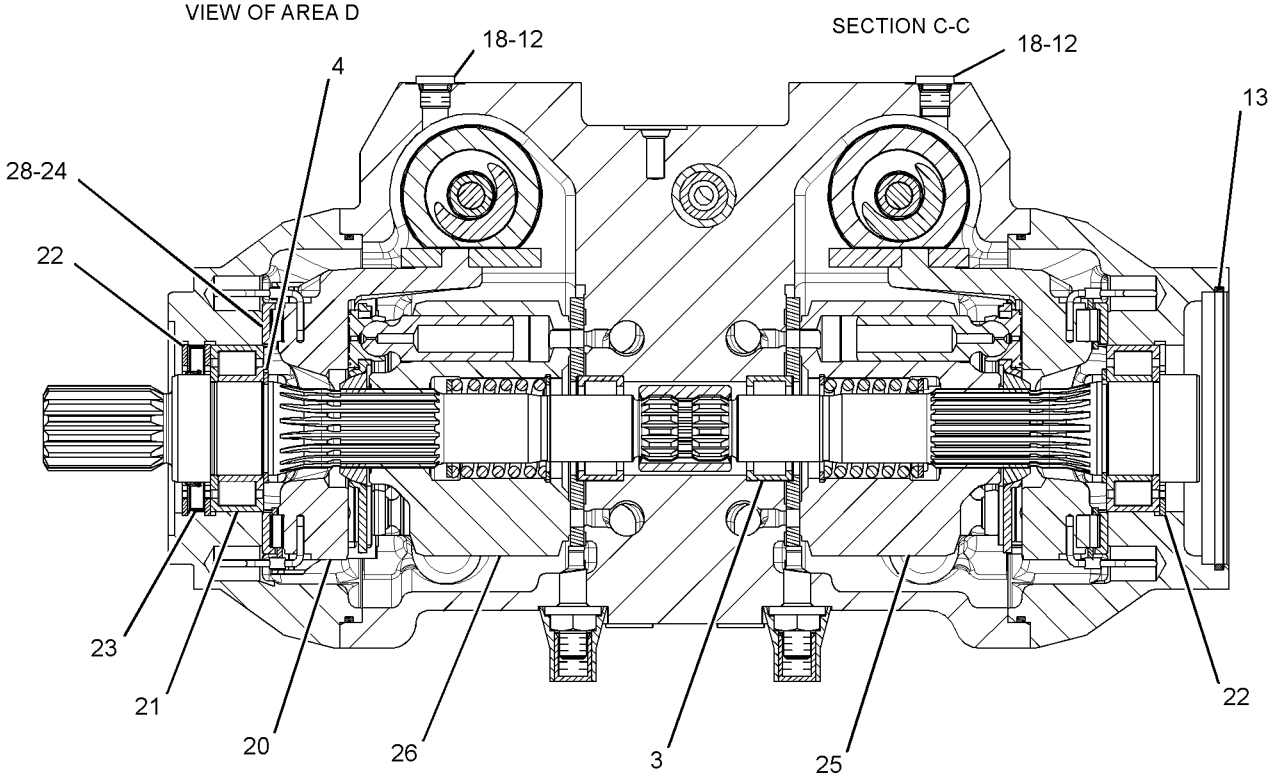


SECTION A-A

GRAPHIC #1 **<END>** g01792053

# 307-3070 PUMP GP-PISTON

**S/N: TNK1-UP**

**PART OF 218-0928 PUMP & MTG GP-HYDROSTATIC**

**AN ATTACHMENT**

**SMCS-3203, 5070, 5117, 5455, 5479** **i03969171**

| NOTE | REF NO | GRAPHIC REF | PART NUMBER | QTY | PART NAME 1 2 3 4 5 6 (PRODUCT LEVEL) | SEE PAGE |
|---|---|---|---|---|---|---|
| | 1 | 1 | **6E-5060** | 3 | CAP AS | |
| J | 2 | 1 | **112-4719** | 4 | RING-BACKUP | |
| | 3 | 1 | **121-4459** | 2 | BEARING-ROLLER | |
| | 4 | 1 | **108-3565** | 2 | CLIP | |
| | 5 | 1 | **204-1454** | 2 | PIN-THREADED | |
| JM | 6 | 1 | **9T-4817** | 2 | NUT (M8X1-THD) | |
| | 7 | 1 | **204-1456** | 1 | SHIM | |
| | 8 | 1 | **204-1457** | 1 | VALVE GP-SPEED SENSING (PISTON PUMP) | |
| | 9 | 1 | **204-1458** | 4 | VALVE GP-RELIEF (CROSSOVER) | |
| | 10 | 1 | **204-1459** | 1 | VALVE GP-RELIEF (CHARGE) | |
| J | 11 | 1 | **135-2655** | 2 | SEAL-O-RING | |
| | 12 | 1 | **3J-7354** | 2 | SEAL-O-RING | |
| J | 13 | 1 | **3K-0715** | 1 | SEAL-O-RING | |
| J | 14 | 1 | **6V-5326** | 4 | SEAL-O-RING | |
| J | 15 | 1 | **6V-5586** | 2 | SEAL-O-RING | |
| J | 16 | 1 | **6V-8352** | 1 | SEAL-O-RING | |
| M | 17 | 1 | **8T-0267** | 8 | BOLT-SOCKET HEAD (M6X1X12-MM) | |
| | 18 | 1 | **9S-8002** | 2 | PLUG-O-RING | |
| M | 19 | 1 | **9X-6606** | 2 | NUT-HEX (M10X1-THD) | |
| | 20 | 1 | **268-1929** | 2 | CRADLE | |
| | 21 | 1 | **081-3698** | 1 | BEARING | |
| | 22 | 1 | **204-1452** | 3 | RING-RETAINING | |
| J | 23 | 1 | **233-9744** | 1 | SEAL-LIP TYPE | |
| | 24 | 1 | **307-3075** | 2 | RACE-BEARING | |
| | 25 | 1 | **280-7865** | 1 | ROTATING GP-PUMP (LH) | |
| | 26 | 1 | **280-7863** | 1 | ROTATING GP-PUMP (RH) | |
| M | 27 | 1 | **8T-0273** | 8 | BOLT-SOCKET HEAD (M12X1.75X40-MM) | |
| | 28 | 1 | **307-3074** | 2 | BEARING-ROLLER | |
| | | | | | AVAILABLE REPAIR KIT(S): | |
| | | | **268-9529** | 1 | KIT-SEAL | |
| | | | | | (INCLUDES O-RINGS, SEAL LOCKNUTS, RING, SPACERS, SHAFTSEAL & SEALS) | |

J-KIT MARKED J SERVICES PARTS MARKED J
M-METRIC PART

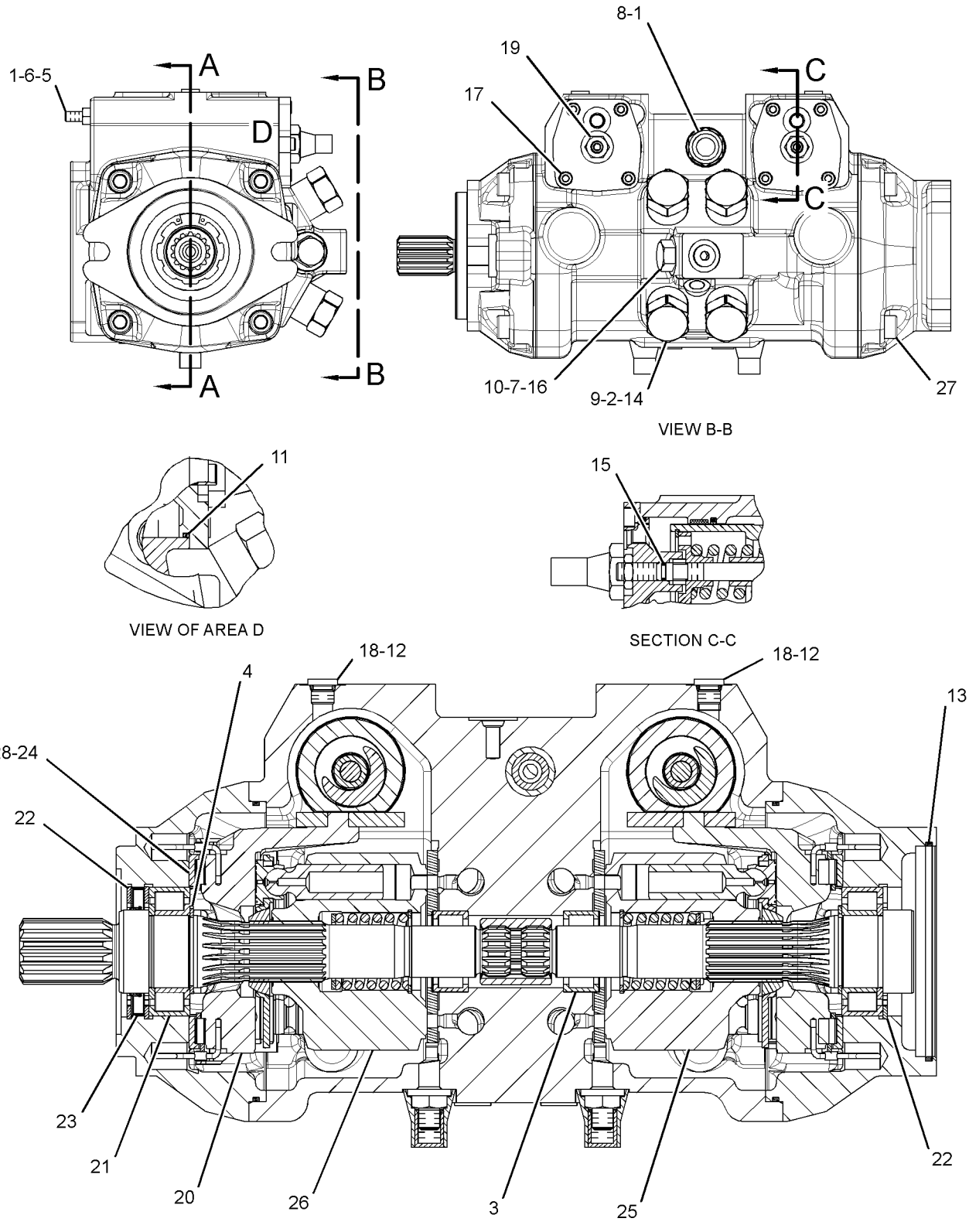


GRAPHIC #1 **<END>** g01792075

## *165-4901* TIRE & RIM GP—HEAVY-DUTY, LH

**S/N: TNK1-UP**
**(16.5X9.75). DIRECTIONAL TIRE**
**PART OF 165-4898 WHEEL & TIRE AR**
**AN ATTACHMENT**

**SMCS-4202** **i02474449**

| NOTE | PART NUMBER | QTY | PART NAME 1 2 3 4 5 6 (PRODUCT LEVEL) | SEE PAGE |
|---|---|---|---|---|
| | **150-8599** | 1 | VALVE AS-TIRE | |
| | **142-8731** | 1 | WHEEL AS | |
| | | | | |
| | *165-4909* | 1 | TIRE (12-16.5) | |

**<END>**

## *165-4902* TIRE & RIM GP—HEAVY-DUTY, RH

**S/N: TNK1-UP**
**(16.5X9.75). DIRECTIONAL TIRE**
**PART OF 165-4898 WHEEL & TIRE AR**
**AN ATTACHMENT**

**SMCS-4202** **i02474458**

| NOTE | PART NUMBER | QTY | PART NAME 1 2 3 4 5 6 (PRODUCT LEVEL) | SEE PAGE |
|---|---|---|---|---|
| | **150-8599** | 1 | VALVE AS-TIRE | |
| | **142-8731** | 1 | WHEEL AS | |
| | | | | |
| | *165-4909* | 1 | TIRE (12-16.5) | |

**<END>**

## *165-4906* TIRE & RIM GP—HEAVY-DUTY, LH

**S/N: TNK1-UP**
**(16.5X9.75). DIRECTIONAL TIRE**
**PART OF 165-4903 WHEEL & TIRE AR**
**AN ATTACHMENT**

**SMCS-4202** **i02571051**

| NOTE | PART NUMBER | QTY | PART NAME 1 2 3 4 5 6 (PRODUCT LEVEL) | SEE PAGE |
|---|---|---|---|---|
| | **150-8599** | 1 | VALVE AS-TIRE | |
| | **142-8759** | 1 | WHEEL AS | |
| | | | | |
| | *165-4909* | 1 | TIRE (12-16.5) | |

**<END>**

## *165-4907* TIRE & RIM GP—HEAVY-DUTY, RH

**S/N: TNK1-UP**
**(16.5X9.75). DIRECTIONAL TIRE**
**PART OF 165-4903 WHEEL & TIRE AR**
**AN ATTACHMENT**

**SMCS-4202** **i02571052**

| NOTE | PART NUMBER | QTY | PART NAME 1 2 3 4 5 6 (PRODUCT LEVEL) | SEE PAGE |
|---|---|---|---|---|
| | **150-8599** | 1 | VALVE AS-TIRE | |
| | **142-8759** | 1 | WHEEL AS | |
| | | | | |
| | *165-4909* | 1 | TIRE (12-16.5) | |

**<END>**

## *185-8674* TIRE & RIM GP—LH

**S/N: TNK1-UP**
**(21.5X9.75). DIRECTIONAL TIRE**
**PART OF 185-8662 WHEEL & TIRE AR**
**AN ATTACHMENT**

**SMCS-4202** **i02571069**

| NOTE | PART NUMBER | QTY | PART NAME 1 2 3 4 5 6 (PRODUCT LEVEL) | SEE PAGE |
|---|---|---|---|---|
| | **150-8599** | 1 | VALVE AS-TIRE | |
| | **185-9936** | 1 | WHEEL AS | |
| | | | | |
| | **185-9935** | 1 | TIRE (305-546) | |

**<END>**

## *185-8675* TIRE & RIM GP—RH

**S/N: TNK1-UP**
**(21.5X9.75). DIRECTIONAL TIRE**
**PART OF 185-8662 WHEEL & TIRE AR**
**AN ATTACHMENT**

**SMCS-4202** **i02571070**

| NOTE | PART NUMBER | QTY | PART NAME 1 2 3 4 5 6 (PRODUCT LEVEL) | SEE PAGE |
|---|---|---|---|---|
| | **150-8599** | 1 | VALVE AS-TIRE | |
| | **185-9936** | 1 | WHEEL AS | |
| | | | | |
| | **185-9935** | 1 | TIRE (305-546) | |

**<END>**

## *185-8676* TIRE & RIM GP–LH

**S/N: TNK1-UP**
**(21.5X9.75). DIRECTIONAL TIRE**
**PART OF 185-8663 WHEEL & TIRE AR**
**AN ATTACHMENT**

**SMCS-4202** **i02474467**

| NOTE | PART NUMBER | QTY | PART NAME 1 2 3 4 5 6 (PRODUCT LEVEL) | SEE PAGE |
|---|---|---|---|---|
| | **150-8599** | 1 | VALVE AS-TIRE | |
| | **185-9937** | 1 | WHEEL AS | |
| | | | | |
| | *185-9935* | 1 | TIRE (305-546) | |

**<END>**

## *185-8677* TIRE & RIM GP–RH

**S/N: TNK1-UP**
**(21.5X9.75). DIRECTIONAL TIRE**
**PART OF 185-8663 WHEEL & TIRE AR**
**AN ATTACHMENT**

**SMCS-4202** **i02474504**

| NOTE | PART NUMBER | QTY | PART NAME 1 2 3 4 5 6 (PRODUCT LEVEL) | SEE PAGE |
|---|---|---|---|---|
| | **150-8599** | 1 | VALVE AS-TIRE | |
| | **185-9937** | 1 | WHEEL AS | |
| | | | | |
| | *185-9935* | 1 | TIRE (305-546) | |

**<END>**

## *185-9928* TIRE & RIM GP–LH

**S/N: TNK1-UP**
**(16.5X9.75). DIRECTIONAL TIRE**
**PART OF 185-8666 WHEEL & TIRE AR**
**AN ATTACHMENT**

**SMCS-4202** **i02571082**

| NOTE | PART NUMBER | QTY | PART NAME 1 2 3 4 5 6 (PRODUCT LEVEL) | SEE PAGE |
|---|---|---|---|---|
| | **150-8599** | 1 | VALVE AS-TIRE | |
| | **142-8759** | 1 | WHEEL AS | |
| | | | | |
| | **185-9933** | 1 | TIRE (12-16.5) | |

**<END>**

## *185-9929* TIRE & RIM GP–RH

**S/N: TNK1-UP**
**(16.5X9.75). DIRECTIONAL TIRE**
**PART OF 185-8666 WHEEL & TIRE AR**
**AN ATTACHMENT**

**SMCS-4202** **i02571083**

| NOTE | PART NUMBER | QTY | PART NAME 1 2 3 4 5 6 (PRODUCT LEVEL) | SEE PAGE |
|---|---|---|---|---|
| | **150-8599** | 1 | VALVE AS-TIRE | |
| | **142-8759** | 1 | WHEEL AS | |
| | | | | |
| | **185-9933** | 1 | TIRE (12-16.5) | |

**<END>**

## *185-9930* TIRE & RIM GP–LH

**S/N: TNK1-UP**
**(16.5X9.75). DIRECTIONAL TIRE**
**PART OF 185-8667 WHEEL & TIRE AR**
**AN ATTACHMENT**

**SMCS-4202** **i02362232**

| NOTE | PART NUMBER | QTY | PART NAME 1 2 3 4 5 6 (PRODUCT LEVEL) | SEE PAGE |
|---|---|---|---|---|
| | **150-8599** | 1 | VALVE AS-TIRE | |
| | **142-8731** | 1 | WHEEL AS | |
| | | | | |
| | *185-9933* | 1 | TIRE (12-16.5) | |

**<END>**

## *185-9931* TIRE & RIM GP–RH

**S/N: TNK1-UP**
**(16.5X9.75). DIRECTIONAL TIRE**
**PART OF 185-8667 WHEEL & TIRE AR**
**AN ATTACHMENT**

**SMCS-4202** **i02362236**

| NOTE | PART NUMBER | QTY | PART NAME 1 2 3 4 5 6 (PRODUCT LEVEL) | SEE PAGE |
|---|---|---|---|---|
| | **150-8599** | 1 | VALVE AS-TIRE | |
| | **142-8731** | 1 | WHEEL AS | |
| | | | | |
| | *185-9933* | 1 | TIRE (12-16.5) | |

**<END>**

## *188-0124* TIRE & RIM GP–LH

**S/N: TNK1-UP**
**(16.5X9.75). DIRECTIONAL TIRE**
**PART OF 187-3239 WHEEL & TIRE AR**
**AN ATTACHMENT**

**SMCS-4202** **i02474523**

| NOTE | PART NUMBER | QTY | PART NAME 1 2 3 4 5 6 (PRODUCT LEVEL) | SEE PAGE |
|---|---|---|---|---|
| | **142-8731** | 1 | WHEEL AS | |
| | **150-8599** | 1 | VALVE AS-TIRE | |
| | | | | |
| | *185-9933* | 1 | TIRE (12-16.5) | |

**<END>**

## *188-0125* TIRE & RIM GP–RH

**S/N: TNK1-UP**
**(16.5X9.75). DIRECTIONAL TIRE**
**PART OF 187-3239 WHEEL & TIRE AR**
**AN ATTACHMENT**

**SMCS-4202** **i02474537**

| NOTE | PART NUMBER | QTY | PART NAME 1 2 3 4 5 6 (PRODUCT LEVEL) | SEE PAGE |
|---|---|---|---|---|
| | **142-8731** | 1 | WHEEL AS | |
| | **150-8599** | 1 | VALVE AS-TIRE | |
| | | | | |
| | *185-9933* | 1 | TIRE (12-16.5) | |

**<END>**

## *199-5438* TIRE & RIM GP–LH

**S/N: TNK1-UP**
**(16.5X12). DIRECTIONAL TIRE**
**PART OF 178-2256 WHEEL & TIRE AR**
**AN ATTACHMENT**

**SMCS-4202** **i02362244**

| NOTE | PART NUMBER | QTY | PART NAME 1 2 3 4 5 6 (PRODUCT LEVEL) | SEE PAGE |
|---|---|---|---|---|
| | **150-8599** | 1 | VALVE AS-TIRE | |
| | **178-2270** | 1 | WHEEL AS | |
| | | | | |
| | *199-5440* | 1 | TIRE (33/15.5-16.5) | |

**<END>**

## *199-5439* TIRE & RIM GP–RH

**S/N: TNK1-UP**
**(16.5X12). DIRECTIONAL TIRE**
**PART OF 178-2256 WHEEL & TIRE AR**
**AN ATTACHMENT**

**SMCS-4202** **i02362243**

| NOTE | PART NUMBER | QTY | PART NAME 1 2 3 4 5 6 (PRODUCT LEVEL) | SEE PAGE |
|---|---|---|---|---|
| | **150-8599** | 1 | VALVE AS-TIRE | |
| | **178-2270** | 1 | WHEEL AS | |
| | | | | |
| | *199-5440* | 1 | TIRE (33/15.5-16.5) | |

**<END>**

## 265-2898 TIRE & RIM GP–LH

**S/N: TNK1-UP**
**(16.5X9.75)**
**PART OF 252-0346 WHEEL & TIRE AR**
**AN ATTACHMENT**

**SMCS-4202** **i02361217**

| NOTE | PART NUMBER | QTY | PART NAME 1 2 3 4 5 6 (PRODUCT LEVEL) | SEE PAGE |
|---|---|---|---|---|
| | **150-8599** | 1 | VALVE AS-TIRE | |
| | **142-8731** | 1 | WHEEL AS | |
| | | | | |
| | *222-3963* | 1 | TIRE (12-16.5) | |

**<END>**

## 265-2899 TIRE & RIM GP–RH

**S/N: TNK1-UP**
**(16.5X9.75)**
**PART OF 252-0346 WHEEL & TIRE AR**
**AN ATTACHMENT**

**SMCS-4202** **i02361220**

| NOTE | PART NUMBER | QTY | PART NAME 1 2 3 4 5 6 (PRODUCT LEVEL) | SEE PAGE |
|---|---|---|---|---|
| | **150-8599** | 1 | VALVE AS-TIRE | |
| | **142-8731** | 1 | WHEEL AS | |
| | | | | |
| | *222-3963* | 1 | TIRE (12-16.5) | |

**<END>**

## 265-2900 TIRE & RIM GP—LH

**S/N: TNK1-UP**
**(16.5X9.75)**
**PART OF 252-0347 WHEEL & TIRE AR**
**AN ATTACHMENT**

**SMCS-4202** **i02279760**

| NOTE | PART NUMBER | QTY | PART NAME 1 2 3 4 5 6 (PRODUCT LEVEL) | SEE PAGE |
|---|---|---|---|---|
| | **150-8599** | 1 | VALVE AS-TIRE | |
| | **142-8759** | 1 | WHEEL AS | |
| | | | | |
| | **222-3963** | 1 | TIRE (12-16.5) | |

**<END>**

## 265-2901 TIRE & RIM GP—RH

**S/N: TNK1-UP**
**(16.5X9.75)**
**PART OF 252-0347 WHEEL & TIRE AR**
**AN ATTACHMENT**

**SMCS-4202** **i02279766**

| NOTE | PART NUMBER | QTY | PART NAME 1 2 3 4 5 6 (PRODUCT LEVEL) | SEE PAGE |
|---|---|---|---|---|
| | **150-8599** | 1 | VALVE AS-TIRE | |
| | **142-8759** | 1 | WHEEL AS | |
| | | | | |
| | **222-3963** | 1 | TIRE (12-16.5) | |

**<END>**

# 295-1799 VALVE GP-RELIEF

**S/N: TNK1-UP**

**PART OF 336-1320 VALVE GP-CONTROL**

**SMCS-5117** **i02605603**

| NOTE | REF NO | GRAPHIC REF | PART NUMBER | QTY | PART NAME 1 2 3 4 5 6 (PRODUCT LEVEL) | SEE PAGE |
|---|---|---|---|---|---|---|
| | 1 | 1 | **130-1676** | 1 | SEAL-O-RING | |

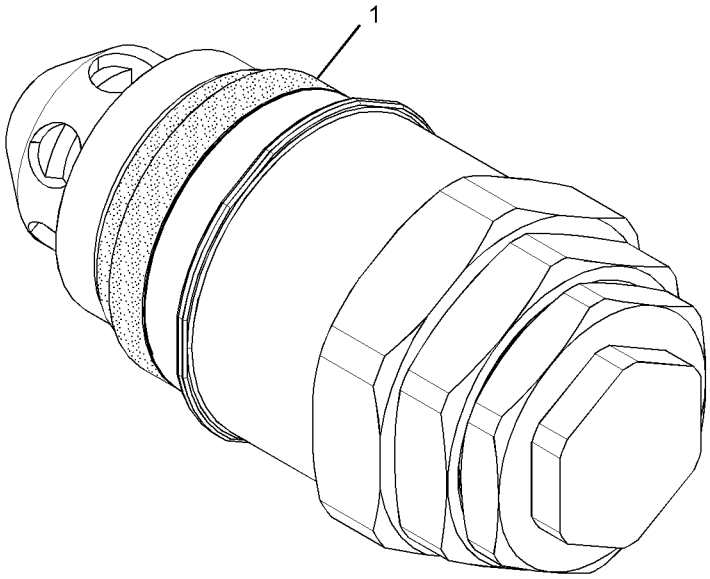


GRAPHIC #1 **<END>** g01304645

# *259-8194* VALVE GP-SOLENOID—PARKING BRAKE

**S/N: TNK1-UP**

**PART OF 233-7131 MANIFOLD & SOLENOID GP-CONTROL**

**AN ATTACHMENT**

**SMCS-5479** **i02485890**

| NOTE | REF NO | GRAPHIC REF | PART NUMBER | QTY | PART NAME 1 2 3 4 5 6 (PRODUCT LEVEL) | SEE PAGE |
|---|---|---|---|---|---|---|
| | 1 | 1 | **238-4626** | 1 | COIL AS (AUXILIARY FLOW CONTROL) | |

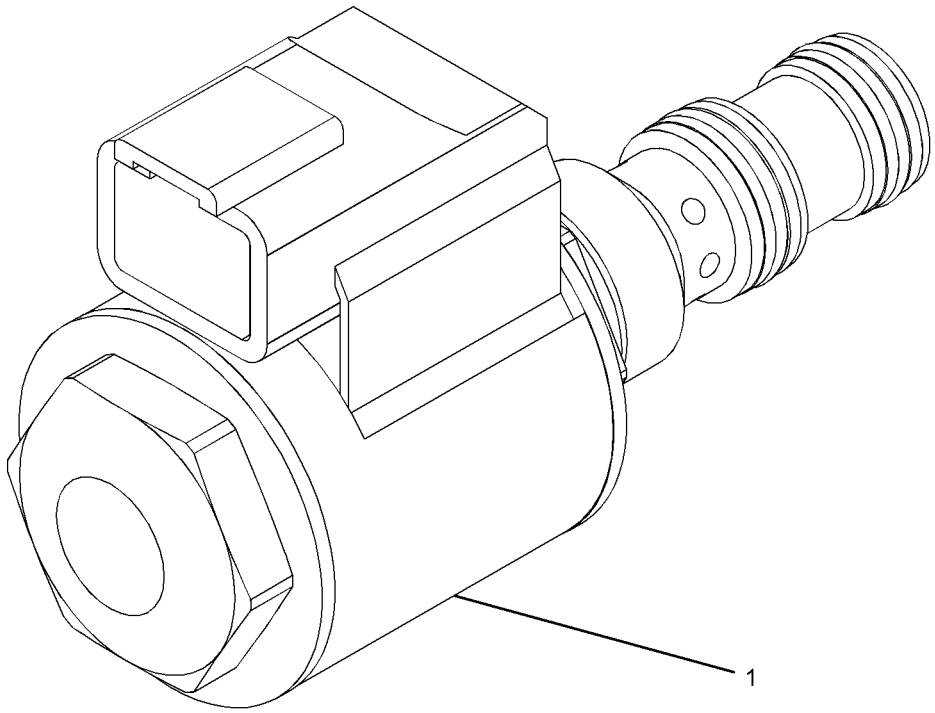


GRAPHIC #1 **<END>** g01121017

## *159-5761* WHEEL & TIRE AR—SOLID

**S/N: TNK1-UP**

**AN ATTACHMENT**

**SMCS-4200, 4201, 4203** **i02361156**

| NOTE | PART NUMBER | QTY | PART NAME 1 2 3 4 5 6 (PRODUCT LEVEL) | SEE PAGE |
|---|---|---|---|---|
| | **142-7493** | 32 | NUT-LUG (9/16-18-THD) | |
| | **187-3230** | 4 | TIRE-SOLID (33X6X8) | |

**<END>**

## *165-4898* WHEEL & TIRE AR—HEAVY DUTY

**S/N: TNK1-UP**

**AN ATTACHMENT**

**SMCS-4200, 4201, 4203** **i02361187**

| NOTE | PART NUMBER | QTY | PART NAME 1 2 3 4 5 6 (PRODUCT LEVEL) | SEE PAGE |
|---|---|---|---|---|
| Y | *165-4901* | 2 | TIRE & RIM GP (LH) | 127 |
| Y | *165-4902* | 2 | TIRE & RIM GP (RH) | 127 |
| | | | | |
| | **142-7493** | 32 | NUT-LUG (9/16-18-2B THD) | |

Y-SEPARATE ILLUSTRATION

**<END>**

## *165-4903* WHEEL & TIRE AR—HEAVY DUTY

**S/N: TNK1-UP**

**AN ATTACHMENT**

**SMCS-4200, 4201, 4203** **i02571050**

| NOTE | PART NUMBER | QTY | PART NAME 1 2 3 4 5 6 (PRODUCT LEVEL) | SEE PAGE |
|---|---|---|---|---|
| Y | *165-4906* | 2 | TIRE & RIM GP (LH) | 127 |
| Y | *165-4907* | 2 | TIRE & RIM GP (RH) | 128 |
| | | | | |
| | **142-7493** | 32 | NUT-LUG (9/16-18-2B-THD) | |

Y-SEPARATE ILLUSTRATION

**<END>**

## *178-2256* WHEEL & TIRE AR—HEAVY DUTY

**S/N: TNK1-UP**

**AN ATTACHMENT**

**SMCS-4200, 4201, 4203** **i02361189**

| NOTE | PART NUMBER | QTY | PART NAME 1 2 3 4 5 6 (PRODUCT LEVEL) | SEE PAGE |
|---|---|---|---|---|
| Y | *199-5438* | 2 | TIRE & RIM GP (LH) | 131 |
| Y | *199-5439* | 2 | TIRE & RIM GP (RH) | 132 |
| | | | | |
| | **142-7493** | 32 | NUT-LUG (9/16-18-2B THD) | |

Y-SEPARATE ILLUSTRATION

**<END>**

## *185-8662* WHEEL & TIRE AR—LOW SIDE WALL

**S/N: TNK1-UP**
**AN ATTACHMENT**

**SMCS-4200, 4201, 4203** **i02571068**

| NOTE | PART NUMBER | QTY | PART NAME 1 2 3 4 5 6 (PRODUCT LEVEL) | SEE PAGE |
|---|---|---|---|---|
| Y | *185-8674* | 2 | TIRE & RIM GP (LH) | 128 |
| Y | *185-8675* | 2 | TIRE & RIM GP (RH) | 128 |
| | | | | |
| | **142-7493** | 32 | NUT-LUG (9/16-18-2B-THD) | |

Y-SEPARATE ILLUSTRATION

**<END>**

## *185-8663* WHEEL & TIRE AR—LOW SIDE WALL

**S/N: TNK1-UP**
**AN ATTACHMENT**

**SMCS-4200, 4201, 4203** **i02361197**

| NOTE | PART NUMBER | QTY | PART NAME 1 2 3 4 5 6 (PRODUCT LEVEL) | SEE PAGE |
|---|---|---|---|---|
| Y | *185-8676* | 2 | TIRE & RIM GP (LH) | 129 |
| Y | *185-8677* | 2 | TIRE & RIM GP (RH) | 129 |
| | | | | |
| | **142-7493** | 32 | NUT-LUG (9/16-18-2B THD) | |

Y-SEPARATE ILLUSTRATION

**<END>**

## *185-8666* WHEEL & TIRE AR—HEAVY DUTY

**S/N: TNK1-UP**
**AN ATTACHMENT**

**SMCS-4200, 4201, 4203** **i02571081**

| NOTE | PART NUMBER | QTY | PART NAME 1 2 3 4 5 6 (PRODUCT LEVEL) | SEE PAGE |
|---|---|---|---|---|
| Y | *185-9928* | 2 | TIRE & RIM GP (LH) | 129 |
| Y | *185-9929* | 2 | TIRE & RIM GP (RH) | 130 |
| | | | | |
| | **142-7493** | 32 | NUT-LUG (9/16-18-2B-THD) | |

Y-SEPARATE ILLUSTRATION

**<END>**

## *185-8667* WHEEL & TIRE AR—HEAVY DUTY

**S/N: TNK1-UP**
**AN ATTACHMENT**

**SMCS-4200, 4201, 4203** **i02361203**

| NOTE | PART NUMBER | QTY | PART NAME 1 2 3 4 5 6 (PRODUCT LEVEL) | SEE PAGE |
|---|---|---|---|---|
| Y | *185-9930* | 2 | TIRE & RIM GP (LH) | 130 |
| Y | *185-9931* | 2 | TIRE & RIM GP (RH) | 130 |
| | | | | |
| | **142-7493** | 32 | NUT-LUG (9/16-18-2B THD) | |

Y-SEPARATE ILLUSTRATION

**<END>**

# POWER TRAIN

## *187-3239* WHEEL & TIRE AR

**S/N: TNK1-UP**
**AN ATTACHMENT**

**SMCS-4200, 4201, 4203** **i02361206**

| NOTE | PART NUMBER | QTY | PART NAME 1 2 3 4 5 6 (PRODUCT LEVEL) | SEE PAGE |
|---|---|---|---|---|
| Y | *188-0124* | 2 | TIRE & RIM GP (LH) | 131 |
| Y | *188-0125* | 2 | TIRE & RIM GP (RH) | 131 |
| | | | | |
| | **142-7493** | 32 | NUT-LUG (9/16-18-2B THD) | |

Y-SEPARATE ILLUSTRATION

**<END>**

## *252-0346* WHEEL & TIRE AR

**S/N: TNK1-UP**
**AN ATTACHMENT**

**SMCS-4200, 4201, 4203** **i02279611**

| NOTE | PART NUMBER | QTY | PART NAME 1 2 3 4 5 6 (PRODUCT LEVEL) | SEE PAGE |
|---|---|---|---|---|
| Y | **265-2899** | 2 | TIRE & RIM GP (RH) | 132 |
| Y | **265-2898** | 2 | TIRE & RIM GP (LH) | 132 |
| | | | | |
| | **142-7493** | 32 | NUT-LUG (9/16-18-2B THD) | |

Y-SEPARATE ILLUSTRATION

**<END>**

## *252-0347* WHEEL & TIRE AR

**S/N: TNK1-UP**
**AN ATTACHMENT**

**SMCS-4200, 4201, 4203** **i02279615**

| NOTE | PART NUMBER | QTY | PART NAME 1 2 3 4 5 6 (PRODUCT LEVEL) | SEE PAGE |
|---|---|---|---|---|
| Y | **265-2900** | 2 | TIRE & RIM GP (LH) | 133 |
| Y | **265-2901** | 2 | TIRE & RIM GP (RH) | 133 |
| | | | | |
| | **142-7493** | 32 | NUT-LUG (9/16-18-2B THD) | |

Y-SEPARATE ILLUSTRATION

**<END>**

## *252-0366* WHEEL & TIRE AR–SOLID

**S/N: TNK1-UP**
**AN ATTACHMENT**

**SMCS-4200, 4201, 4203** **i02233317**

| NOTE | PART NUMBER | QTY | PART NAME 1 2 3 4 5 6 (PRODUCT LEVEL) | SEE PAGE |
|---|---|---|---|---|
| | **142-7493** | 32 | NUT-LUG (9/16-18-2B THD) | |
| | **226-3734** | 2 | TIRE-SOLID (33X6X11) (LH) | |
| | **226-3735** | 2 | TIRE-SOLID (33X6X11) (RH) | |

**<END>**

## *252-0377* WHEEL & TIRE AR—SOLID

**S/N: TNK1-UP**

**AN ATTACHMENT**

**SMCS-4200, 4201, 4203** **i02233313**

| NOTE | PART NUMBER | QTY | PART NAME 1 2 3 4 5 6 (PRODUCT LEVEL) | SEE PAGE |
|---|---|---|---|---|
| | **142-7493** | 32 | NUT-LUG (9/16-18-2B THD) | |
| | **226-3734** | 2 | TIRE-SOLID (33X6X11) (RH) | |
| | **226-3735** | 2 | TIRE-SOLID (33X6X11) (LH) | |

**<END>**

# *218-5660* BUMPER GP–REAR

**S/N: TNK1-UP**

**PART OF 326-4786 CHASSIS AR**

**SMCS-7156** **i01934911**

| NOTE | REF NO | GRAPHIC REF | PART NUMBER | QTY | PART NAME 1 2 3 4 5 6 (PRODUCT LEVEL) | SEE PAGE |
|---|---|---|---|---|---|---|
| | 1 | 1 | **142-9021** | 2 | STUD | |
| | 2 | 1 | **154-4006** | 2 | BOSS | |
| | 3 | 1 | **218-5661** | 1 | BUMPER AS | |
| | 4 | 1 | **8T-4122** | 6 | WASHER-HARD (17X32X3.5-MM THK) | |
| M | 5 | 1 | **8T-4132** | 4 | NUT (M16X2-THD) | |
| M | 6 | 1 | **8T-7338** | 2 | BOLT (M16X2X45-MM) | |

M-METRIC PART

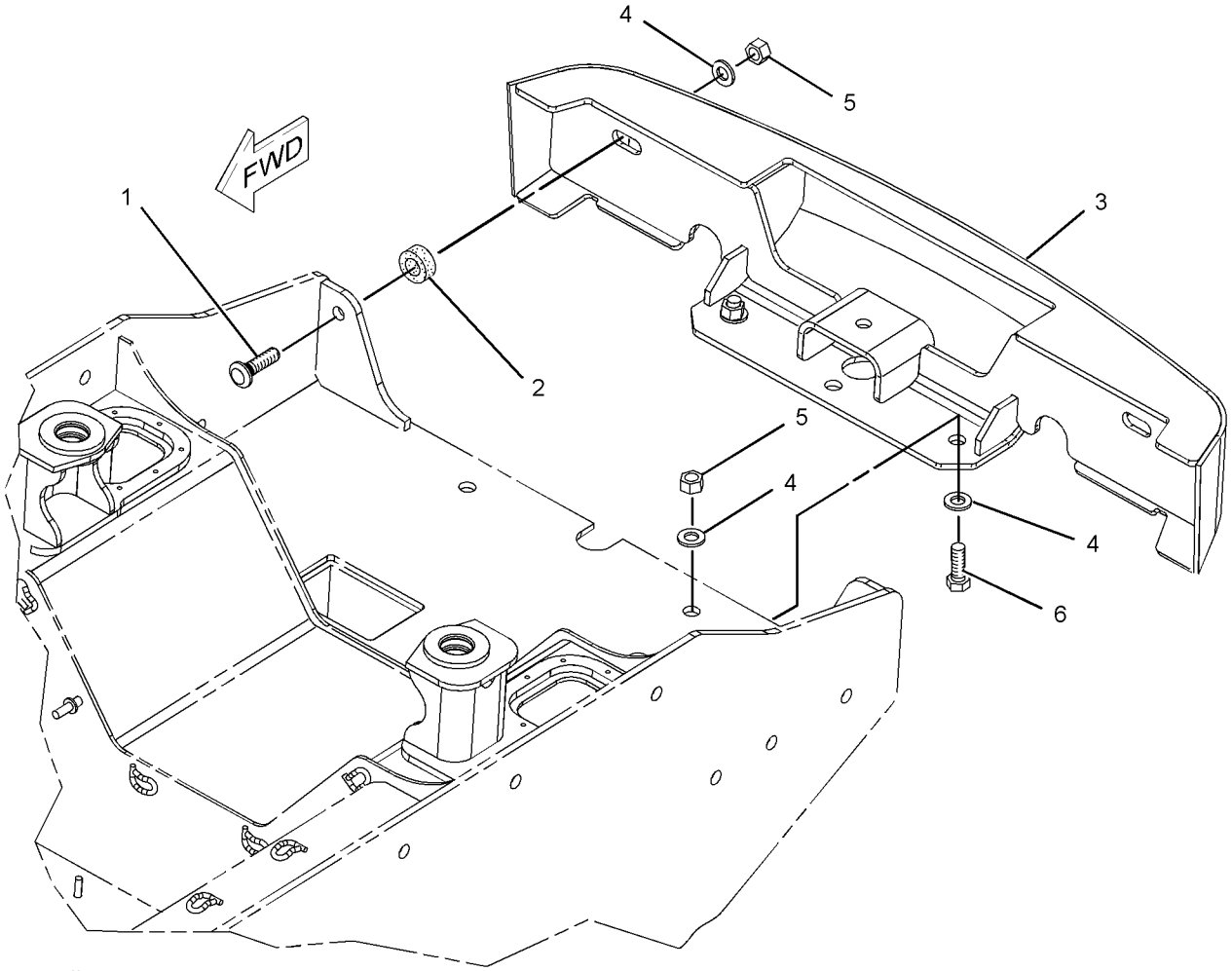


GRAPHIC #1 **<END>** g01019293

# *218-6016* COUNTERWEIGHT GP

**S/N: TNK1-UP**
**22.68-KG (50-LB)**
**AN ATTACHMENT**

**SMCS-7056** **i01959491**

| NOTE | REF NO | GRAPHIC REF | PART NUMBER | QTY | PART NAME 1 2 3 4 5 6 (PRODUCT LEVEL) | SEE PAGE |
|---|---|---|---|---|---|---|
| | 1 | 1 | **218-6017** | 4 | PLATE | |
| | 2 | 1 | **5P-1076** | 12 | WASHER-HARD (13.5X30X4-MM THK) | |
| M | 3 | 1 | **8T-4244** | 6 | NUT (M12X1.75-THD) | |
| M | 4 | 1 | **8T-4910** | 6 | BOLT (M12X1.75X60-MM) | |

M-METRIC PART

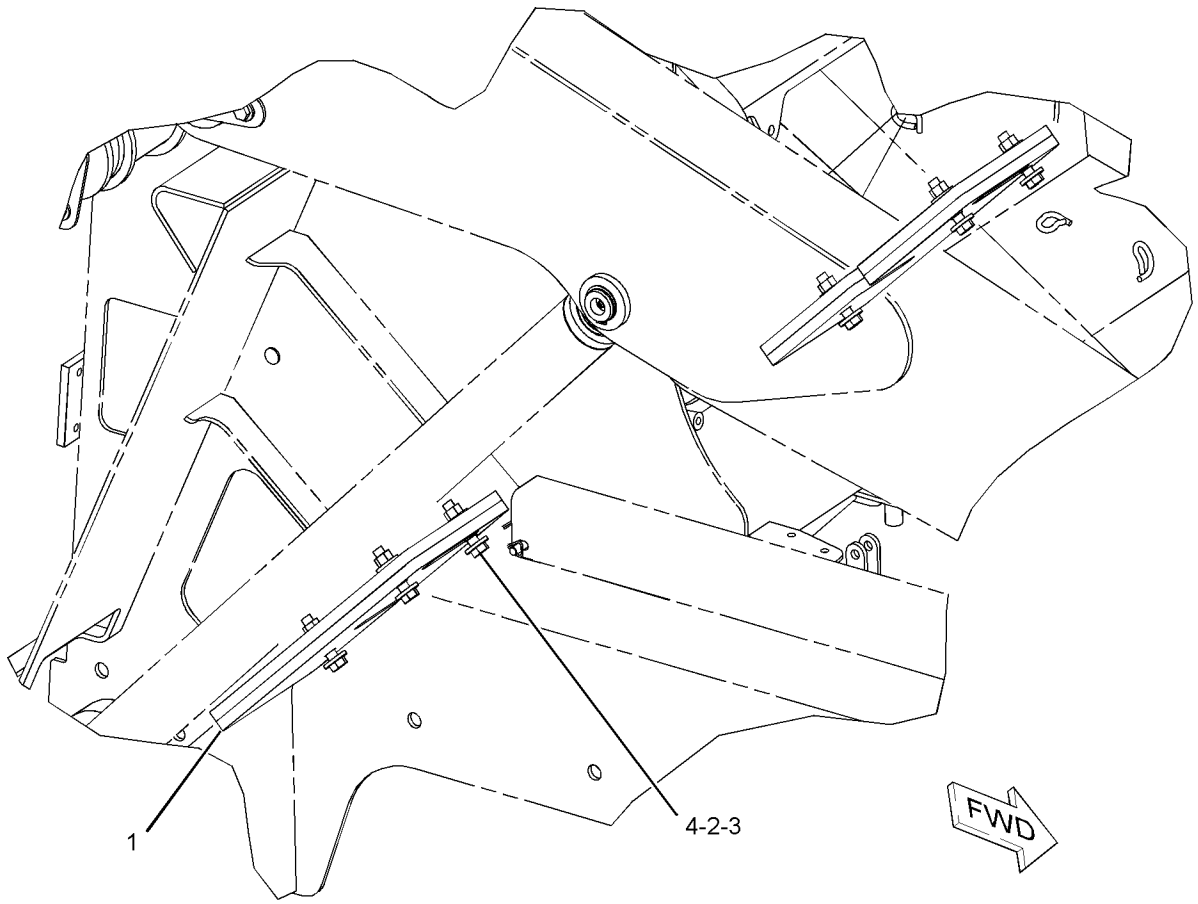


GRAPHIC #1 **<END>** g01026586

# FRAME AND BODY

## *326-5609* ENCLOSURE GP-ENGINE

**S/N: TNK1-UP**

**PART OF 326-4786 CHASSIS AR**

**SMCS-7263, 7273** **i03959950**

| NOTE | REF NO | GRAPHIC REF | PART NUMBER | QTY | PART NAME 1 2 3 4 5 6 (PRODUCT LEVEL) | SEE PAGE |
|---|---|---|---|---|---|---|
| | 1 | 1 | **142-8801** | 1 | HOOD AS | |
| | 2 | 1 | **142-8831** | 1 | STRIKER AS | |
| | 3 | 1 | **142-8832** | 1 | PIN AS | |
| | 4 | 1 | **159-8405** | 2 | BOLT-SPECIAL | |
| | 5 | 1 | **223-4240** | 1 | LATCH AS | |
| | 6 | 1 | *224-3875* | 1 | LOCK GP (ENGINE) | |
| J | | 1 | **226-0291** | 1 | LOCK AS | |
| | | 1 | **233-4872** | 1 | CAM | |
| | 7 | 1 | **308-6767** | 2 | BUMPER AS | |
| | 8 | 1 | **326-5610** | 1 | DOOR AS-ACCESS | |
| M | 9 | 1 | **131-3540** | 3 | LOCKNUT (M8X1.25-THD) | |
| | 10 | 1 | **2K-4973** | 2 | LOCKNUT (3/8-16-THD) | |
| M | 11 | 1 | **5C-7261** | 2 | NUT (M8X1.25-THD) | |
| | 12 | 1 | **5P-4116** | 11 | WASHER-HARD (8.8X20.5X2-MM THK) | |
| M | 13 | 1 | **7X-2537** | 3 | BOLT (M8X1.25X35-MM) | |
| | 14 | 1 | **7X-7729** | 2 | WASHER (11X25X3-MM THK) | |
| M | 15 | 1 | **8T-4137** | 2 | BOLT (M10X1.5X20-MM) | |
| M | 16 | 1 | **8T-4181** | 4 | BOLT (M6X1X20-MM) | |
| | 17 | 1 | **8T-4205** | 4 | WASHER-HARD (7.2X14.5X2-MM THK) | |
| M | 18 | 1 | **8T-4908** | 5 | BOLT (M8X1.25X25-MM) | |

J-REQUIRES CORPORATE KEY
M-METRIC PART

*326-5609* **ENCLOSURE GP-ENGINE** *(contd.)* **i03959950**

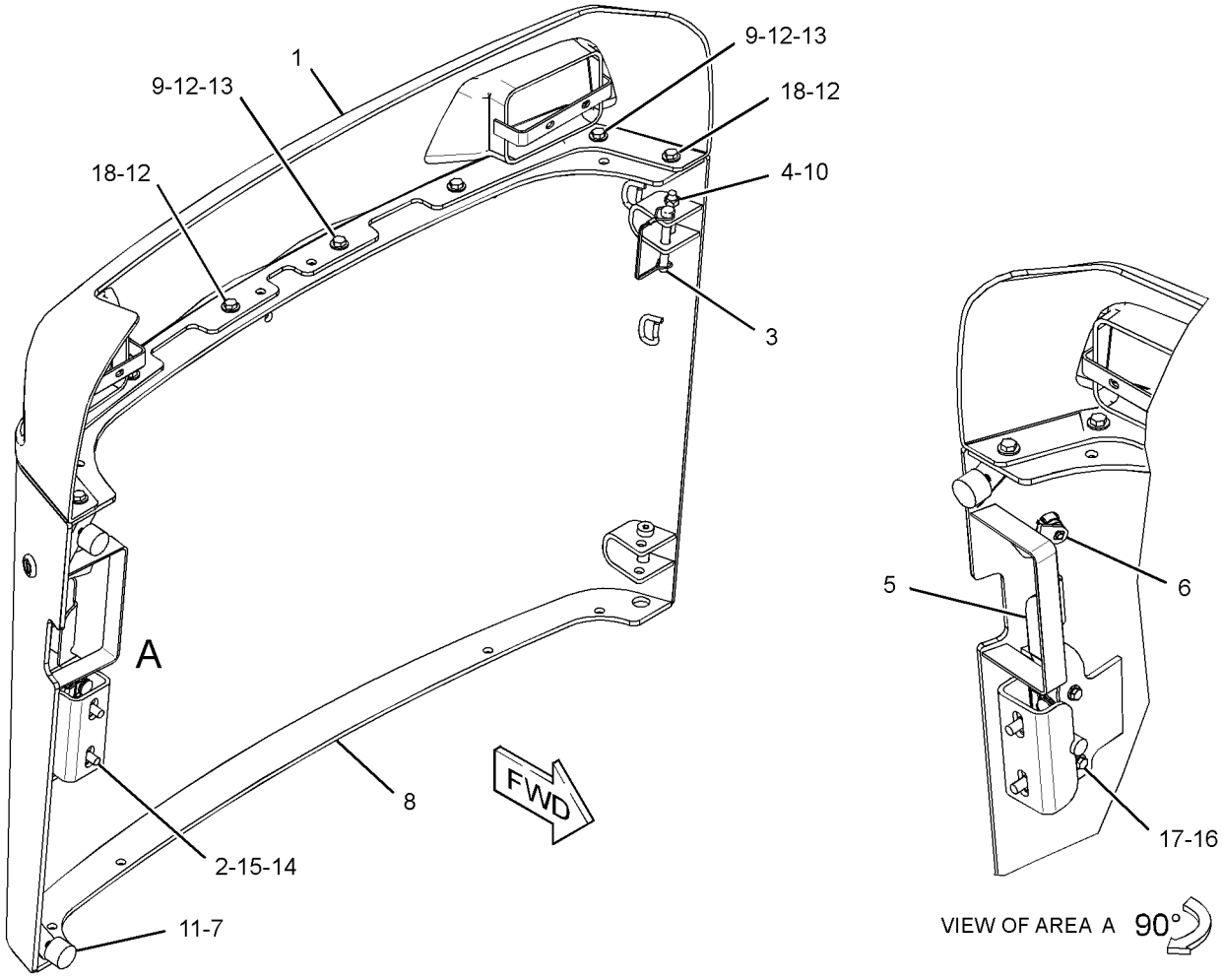


GRAPHIC #1 **<END>** g02146601

# FRAME AND BODY

## 326-5729 FRAME AS-LOWER

**S/N: TNK1-UP**

**PART OF 326-5452 FRAME GP-MACHINE**

**SMCS-7050** **i03908720**

| NOTE | REF NO | GRAPHIC REF | PART NUMBER | QTY | PART NAME 1 2 3 4 5 6 (PRODUCT LEVEL) | SEE PAGE |
|---|---|---|---|---|---|---|
| | 1 | 1 | **2Y-5974** | 2 | BOSS | |
| | 2 | 1 | **238-7716** | 5 | BOSS | |
| M | 3 | 1 | **110-2023** | 4 | STUD-WELD (M10X1.5X25-MM) | |
| M | 4 | 1 | **6V-9632** | 6 | NUT-WELD (M6X1-THD) | |
| | 5 | 1 | **7T-1099** | 9 | LINK | |
| M | 6 | 1 | **8T-3490** | 20 | NUT-WELD (M10X1.5-THD) | |
| M | 7 | 1 | **8T-3612** | 6 | NUT-WELD (M8X1.25-THD) | |
| | 8 | 1 | **9R-1610** | 1 | BOSS | |
| M | 9 | 1 | **9R-2672** | 7 | BOSS (M10X1.5X20-MM) | |
| | 10 | 1 | **9R-9282** | 1 | BOSS (M10X1.5-THD) | |
| M | 11 | 1 | **9R-9866** | 3 | BOSS (M10X1.5X45-MM) | |

M-METRIC PART

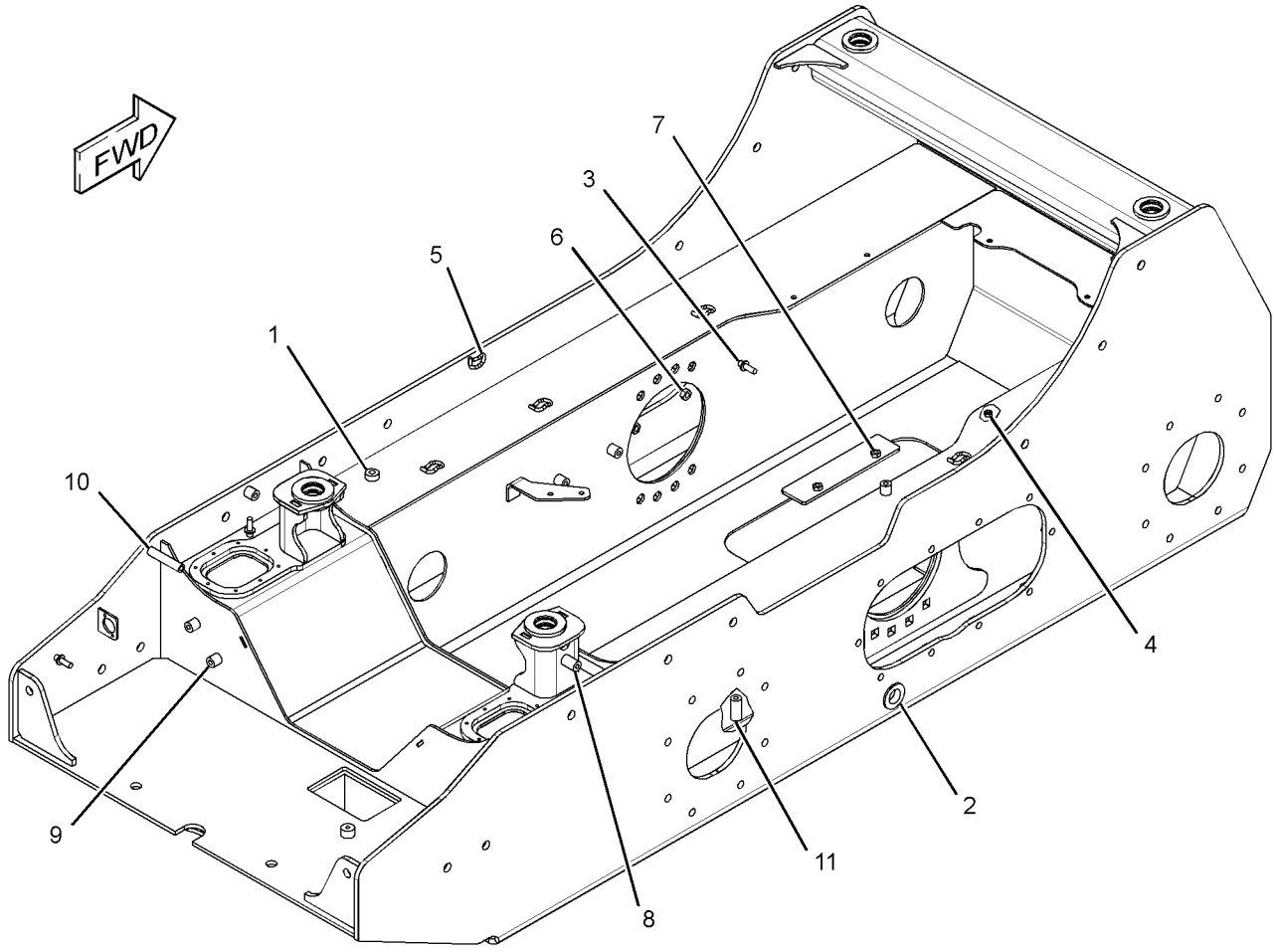


GRAPHIC #1 **<END>** g02149786

# FRAME AND BODY

## 326-5826 FRAME AS-UPPER

**S/N: TNK1-UP**

**PART OF 326-5452 FRAME GP-MACHINE**

**SMCS-7050** **i03908721**

| NOTE | REF NO | GRAPHIC REF | PART NUMBER | QTY | PART NAME 1 2 3 4 5 6 (PRODUCT LEVEL) | SEE PAGE |
|---|---|---|---|---|---|---|
| | 1 | 1 | **190-7964** | 4 | BOSS | |
| M | 2 | 1 | **110-2023** | 1 | STUD-WELD (M10X1.5X25-MM) | |
| M | 3 | 1 | **111-0483** | 2 | BOSS (M10X1.5-THD) | |
| | 4 | 1 | **183-7602** | 2 | BOSS | |
| M | 5 | 1 | **6V-9632** | 4 | NUT-WELD (M6X1-THD) | |
| | 6 | 1 | **7T-1099** | 13 | LINK | |
| | 7 | 1 | **8R-3857** | 1 | BOSS (M8X1.25X12-MM) | |
| M | 8 | 1 | **8T-3612** | 3 | NUT-WELD (M8X1.25-THD) | |
| M | 9 | 1 | **8T-5413** | 2 | STUD-WELD (M10X1.5X25-MM OAL) | |
| | 10 | 1 | **9R-1610** | 8 | BOSS | |
| M | 11 | 1 | **9R-2672** | 1 | BOSS (M10X1.5X20-MM) | |
| M | 12 | 1 | **9R-9866** | 1 | BOSS (M10X1.5X45-MM) | |

M-METRIC PART

**326-5826 FRAME AS-UPPER** *(contd. )* **i03908721**

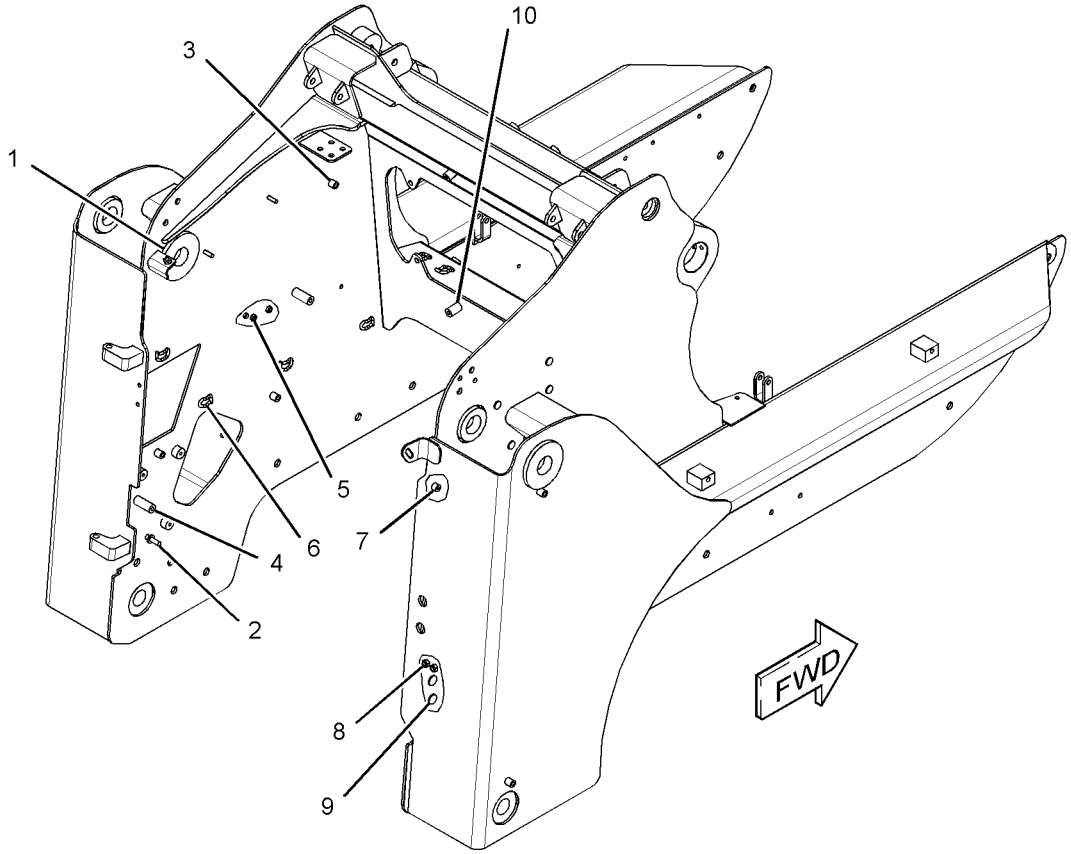


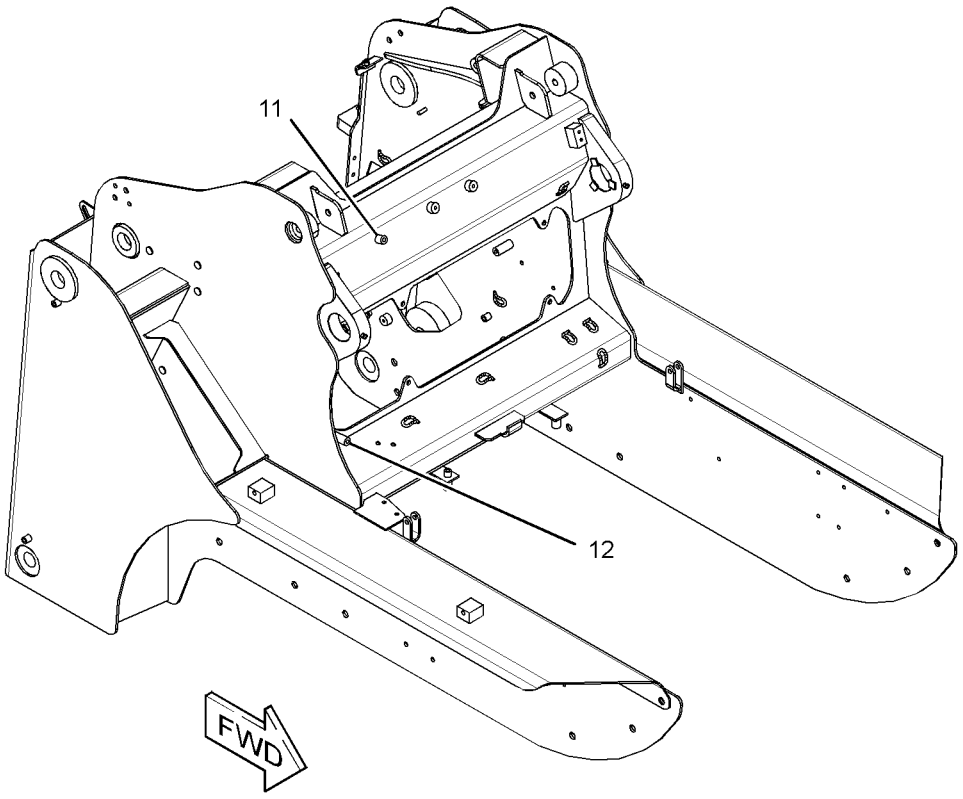


GRAPHIC #1 **<END>** g02149687

# *326-4793* FRAME GP-LOADER

**S/N: TNK1-UP**

**PART OF 326-4786 CHASSIS AR**

**SMCS-7054** **i03970870**

| NOTE | REF NO | GRAPHIC REF | PART NUMBER | QTY | PART NAME 1 2 3 4 5 6 (PRODUCT LEVEL) | SEE PAGE |
|---|---|---|---|---|---|---|
| | 1 | 1 | **3S-9182** | 5 | PLUG-MAGNETIC (FRAME) | |
| | 2 | 1 | **4D-4431** | 2 | BEARING-ALIGNING | |
| | 3 | 1 | **9G-5127** | 2 | BREATHER (TANDEM HOUSING) | |
| | 4 | 1 | **142-8810** | 1 | PLATE AS | |
| | 5 | 1 | **142-8823** | 2 | GASKET | |
| | 6 | 1 | **191-2894** | 2 | PLATE | |
| | 7 | 1 | **191-9576** | 1 | COVER AS | |
| | 8 | 1 | **207-9733** | 1 | STEP AS (LH) | |
| | 9 | 1 | **207-9734** | 1 | STEP AS (RH) | |
| | 10 | 1 | **218-6343** | 1 | PLATE | |
| | 11 | 1 | **224-8544** | 1 | SENDER AS-FUEL LEVEL | |
| | | 1 | **102-8802** | 1 | KIT-RECEPTACLE (2-PIN) | |
| | | | | | (INCLUDES RECEPTACLE AS & WEDGE) | |
| | | 1 | **186-3735** | 2 | PIN-CONNECTOR (16-GA TO 18-GA) | |
| | 12 | 1 | **261-6101** | 4 | COVER | |
| Y | 13 | 1 | *326-5452* | 1 | FRAME GP-MACHINE | 149 |
| | 14 | 1 | **3B-8488** | 2 | FITTING-GREASE | |
| | 15 | 1 | **5P-1076** | 16 | WASHER-HARD (13.5X30X4-MM THK) | |
| | 16 | 1 | **5P-4116** | 4 | WASHER-HARD (8.8X20.5X2-MM THK) | |
| | 17 | 1 | **8T-4121** | 20 | WASHER-HARD (11X21X2.5-MM THK) | |
| | 18 | 1 | **8T-4122** | 32 | WASHER-HARD (17X32X3.5-MM THK) | |
| M | 19 | 1 | **8T-4132** | 16 | NUT (M16X2-THD) | |
| M | 20 | 1 | **8T-4136** | 20 | BOLT (M10X1.5X25-MM) | |
| M | 21 | 1 | **8T-4189** | 2 | BOLT (M8X1.25X20-MM) | |
| M | 22 | 1 | **8T-4194** | 8 | BOLT (M12X1.75X50-MM) | |
| | 23 | 1 | **8T-4205** | 16 | WASHER-HARD (7.2X14.5X2-MM THK) | |
| | 24 | 1 | **8T-4224** | 2 | WASHER-HARD (8.8X16X2-MM THK) | |
| M | 25 | 1 | **8T-4244** | 8 | NUT (M12X1.75-THD) | |
| M | 26 | 1 | **8T-4908** | 4 | BOLT (M8X1.25X25-MM) | |
| M | 27 | 1 | **8T-4970** | 16 | BOLT (M6X1X14-MM) | |
| M | 28 | 1 | **8T-7338** | 16 | BOLT (M16X2X45-MM) | |
| | | | | | | |
| BF | | | **228-9222** | 1 | SHIM (3-MM THK) | |

B-USE AS REQUIRED
F-NOT SHOWN
M-METRIC PART
Y-SEPARATE ILLUSTRATION

*326-4793* **FRAME GP-LOADER** *(contd.)* **i03970870**

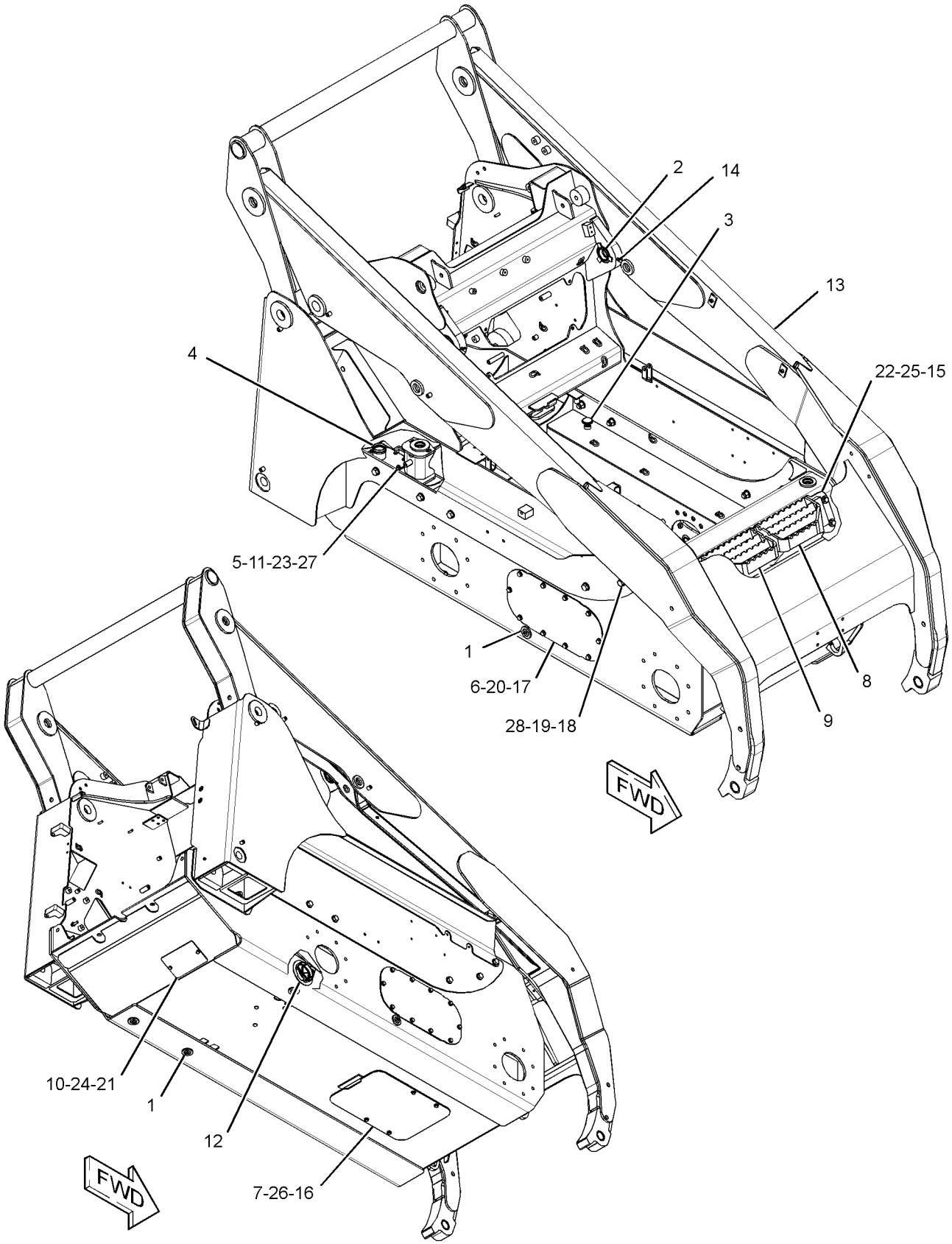


GRAPHIC #1 **<END>** g02149295

# *326-5452* FRAME GP-MACHINE

**S/N: TNK1-UP**

**PART OF 326-4793 FRAME GP-LOADER**

**SMCS-6119, 7050** **i03908719**

| NOTE | PART NUMBER | QTY | PART NAME 1 2 3 4 5 6 (PRODUCT LEVEL) | SEE PAGE |
|---|---|---|---|---|
| Y | **218-5898** | 1 | ARM AS-LIFT | 207 |
| Y | **326-5729** | 1 | FRAME AS-LOWER | 144 |
| Y | **326-5826** | 1 | FRAME AS-UPPER | 145 |
| Y | **190-7994** | 1 | LINK AS (LOADER FRAME) | 153 |

Y-SEPARATE ILLUSTRATION

**<END>**

# FRAME AND BODY

## *150-8621* GUIDE GP-LINES

**S/N: TNK1-UP**

**PART OF 326-4786 CHASSIS AR**

**SMCS-5057** **i02059885**

| NOTE | REF NO | GRAPHIC REF | PART NUMBER | QTY | PART NAME 1 2 3 4 5 6 (PRODUCT LEVEL) | SEE PAGE |
|---|---|---|---|---|---|---|
| | 1 | 1 | **227-4315** | 1 | PLATE AS | |
| | 2 | 1 | **247-4877** | 1 | BOLT (M8X1.25X12-MM) | |
| M | 3 | 1 | **6V-9189** | 1 | LOCKNUT (M8X1.25-THD) | |
| | 4 | 1 | **7X-0603** | 2 | WASHER-HARD (9.9X35X2.5-MM THK) | |
| M | 5 | 1 | **7X-2539** | 1 | BOLT (M8X1.25X110-MM) | |
| | 6 | 1 | **8T-4224** | 1 | WASHER-HARD (8.8X16X2-MM THK) | |

M-METRIC PART

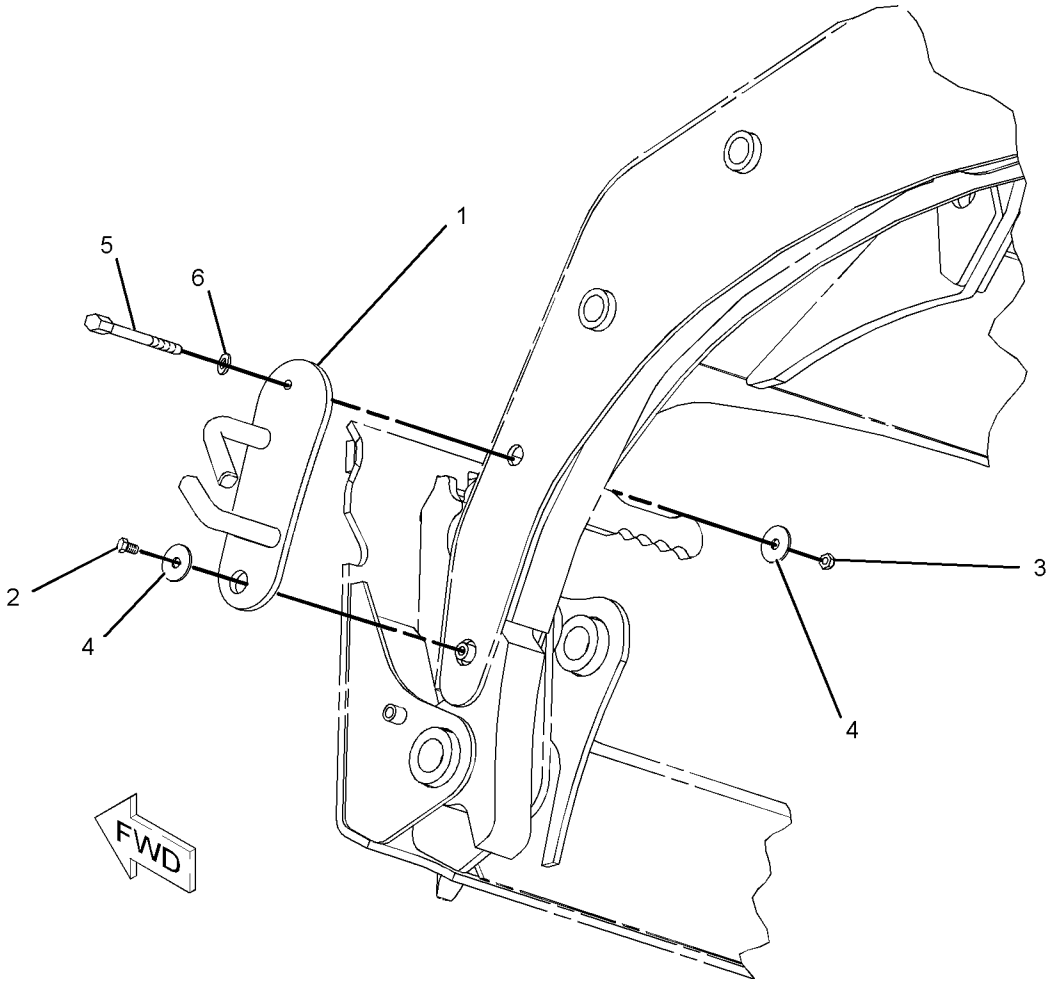


GRAPHIC #1 **<END>** g01056803

## *188-0147* LIFTING GP-MACHINE–4-POINT

**S/N: TNK1-UP**

**AN ATTACHMENT**

**SMCS-1122, 6459, 7000** **i02571185**

| NOTE | REF NO | GRAPHIC REF | PART NUMBER | QTY | PART NAME 1 2 3 4 5 6 (PRODUCT LEVEL) | SEE PAGE |
|---|---|---|---|---|---|---|
| | 1 | 1 | **7E-2700** | 4 | FILM-INFORMATION (LIFT EYE LOCATION) | |
| | 2 | 1 | **142-8826** | 4 | PLATE-LIFT | |
| M | 3 | 1 | **159-2953** | 8 | SCREW-FLAT HEAD (M16X2-THD) | |
| | 4 | 1 | **8T-4122** | 4 | WASHER-HARD (17X32X3.5-MM THK) | |
| M | 5 | 1 | **8T-4132** | 4 | NUT (M16X2-THD) | |

M-METRIC PART

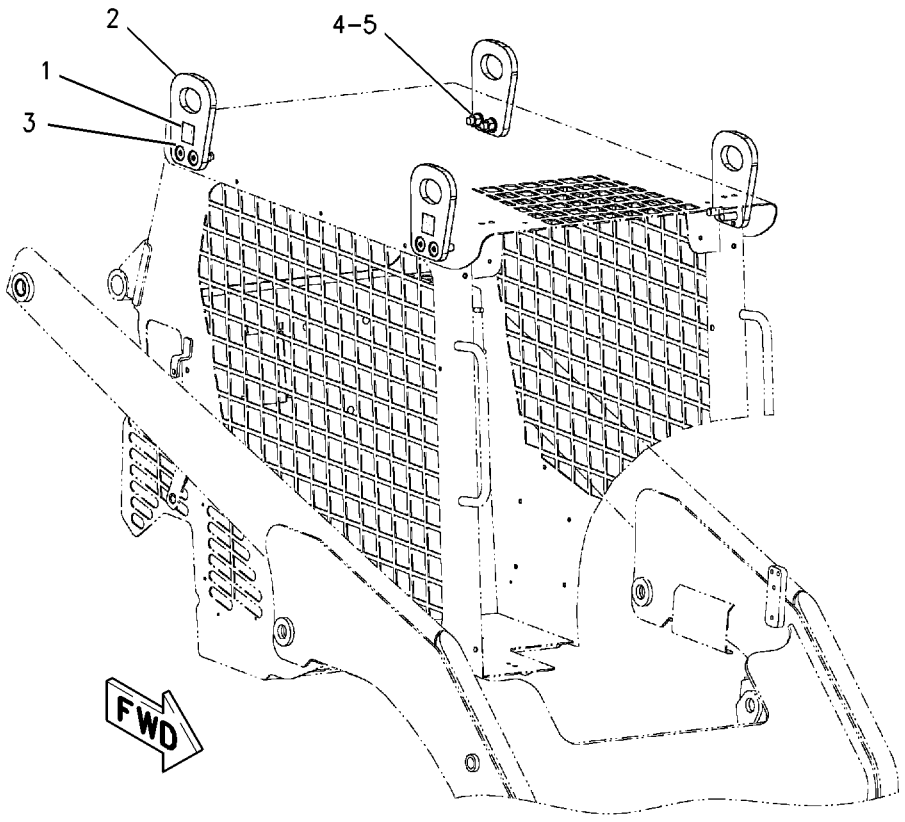


GRAPHIC #1 **<END>** g00902178

## *218-5969* LIFTING GP-MACHINE—SINGLE POINT

**S/N: TNK1-UP**

**CANNOT BE USED WITH 188-0147—PAGE 151**

**AN ATTACHMENT**

**SMCS-1122, 6459, 7000** **i03973390**

| NOTE | REF NO | GRAPHIC REF | PART NUMBER | QTY | PART NAME 1 2 3 4 5 6 (PRODUCT LEVEL) | SEE PAGE |
|---|---|---|---|---|---|---|
| | 1 | 1 | **5P-0372** | 2 | LOCK PIN | |
| | 2 | 1 | **7E-2700** | 2 | FILM-INFORMATION (LIFT EYE LOCATION) | |
| | 3 | 1 | **9C-5344** | 1 | SPACER (10.5X20X18-MM THK) | |
| | 4 | 1 | **095-1325** | 1 | PIN-CLEVIS | |
| | 5 | 1 | **152-1154** | 1 | BRACKET AS-LIFT | |
| | 6 | 1 | **152-1156** | 4 | PLATE | |
| | 7 | 1 | **153-2683** | 1 | SPRING AS-GAS (CAB) | |
| | 8 | 1 | **177-3405** | 1 | PIN | |
| M | 9 | 1 | **159-2953** | 8 | SCREW-FLAT HEAD (M16X2-THD) | |
| | 10 | 1 | **8T-4122** | 4 | WASHER-HARD (17X32X3.5-MM THK) | |
| M | 11 | 1 | **8T-4132** | 4 | NUT (M16X2-THD) | |

M-METRIC PART

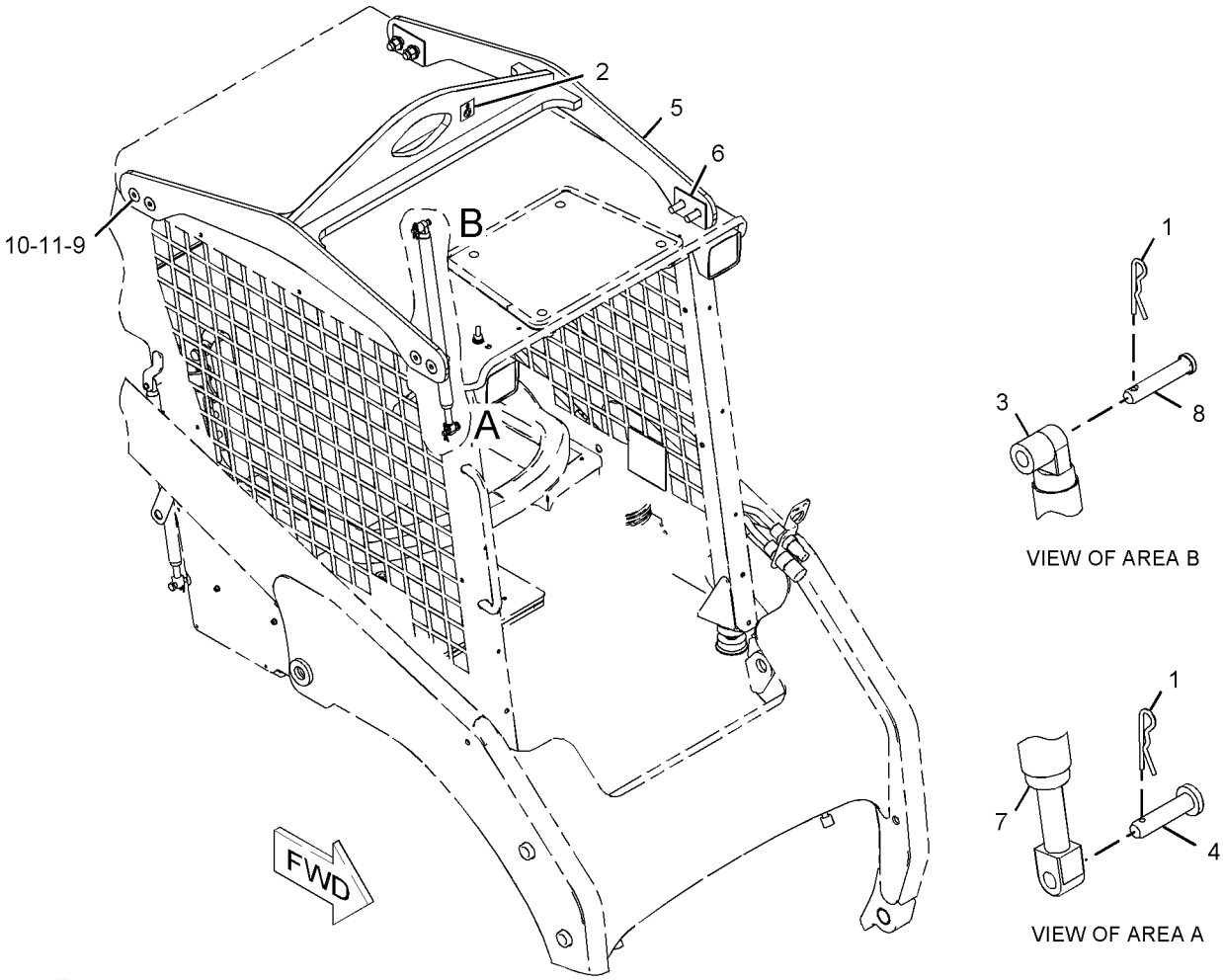


GRAPHIC #1

**<END>**

g01033956

# *190-7994* LINK AS

**S/N: TNK1-UP**

**PART OF 326-5452 FRAME GP-MACHINE**

**SMCS-6513, 7507** **i03649944**

| NOTE | REF NO | GRAPHIC REF | PART NUMBER | QTY | PART NAME 1 2 3 4 5 6 (PRODUCT LEVEL) | SEE PAGE |
|---|---|---|---|---|---|---|
| | 1 | 1 | **6K-2899** | 4 | BEARING-SLEEVE | |

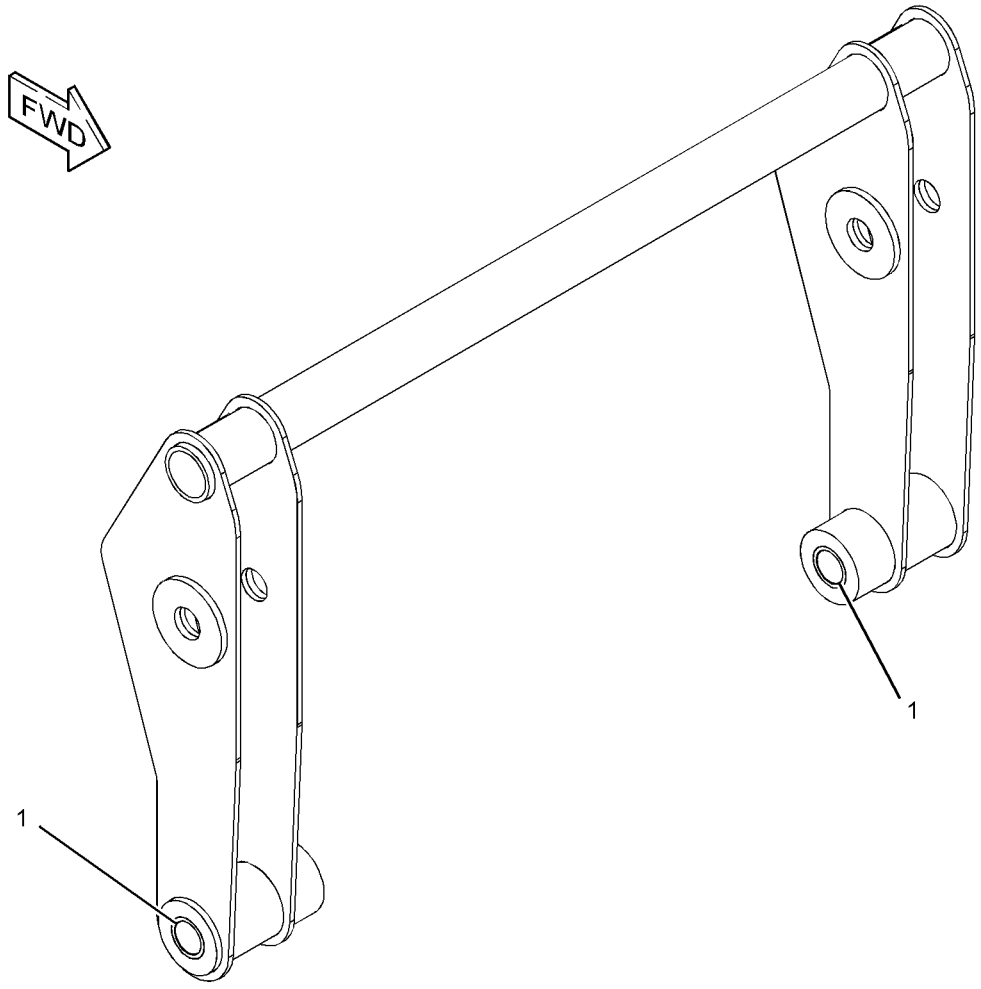


GRAPHIC #1 **<END>** g01961393

# *193-0447* ACCUMULATOR & MTG GP-HYDRAULIC

**S/N: TNK1-UP**

**PART OF 326-5445 HYDRAULIC AR**

**SMCS-5077** **i03587742**

| NOTE | REF NO | GRAPHIC REF | PART NUMBER | QTY | PART NAME 1 2 3 4 5 6 (PRODUCT LEVEL) | SEE PAGE |
|---|---|---|---|---|---|---|
| Y | 1 | 1 | *149-0686* | 1 | ACCUMULATOR GP-HYDRAULIC (CHARGED) | 155 |
| | 2 | 1 | *194-7632* | 1 | ELBOW AS | |
| | | 1 | **3K-0360** | 1 | SEAL-O-RING | |
| | | 1 | **194-7631** | 1 | ELBOW | |
| | 3 | 1 | **3K-0360** | 1 | SEAL-O-RING | |

Y-SEPARATE ILLUSTRATION

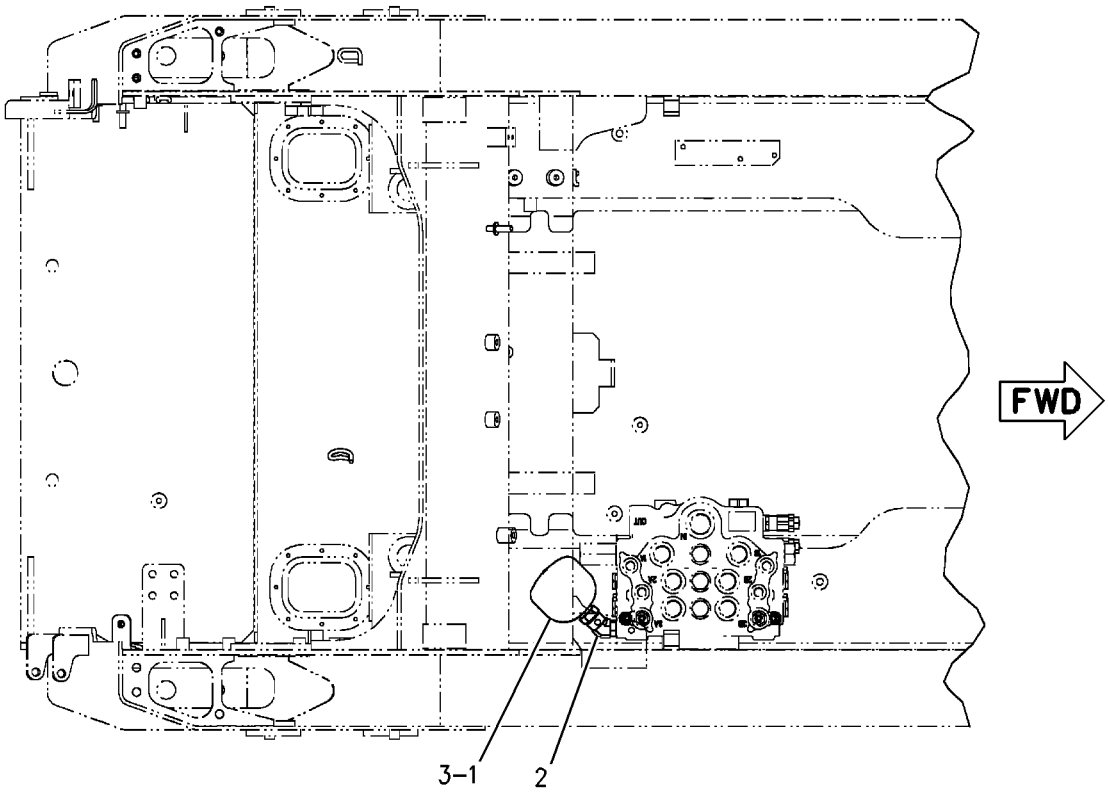


TOP VIEW

GRAPHIC #1 **<END>** g00902240

## *149-0686* ACCUMULATOR GP-HYDRAULIC—CHARGED

**S/N: TNK1-UP**

**PART OF 193-0447 ACCUMULATOR & MTG GP-HYDRAULIC**

**FIELD REPLACEMENT ORDER 227-8807—PAGE 156**

**SMCS-5077** **i03971211**

| NOTE | REF NO | GRAPHIC REF | PART NUMBER | QTY | PART NAME 1 2 3 4 5 6 (PRODUCT LEVEL) | SEE PAGE |
|---|---|---|---|---|---|---|
| | | | | | (NO SERVICED PARTS) | |

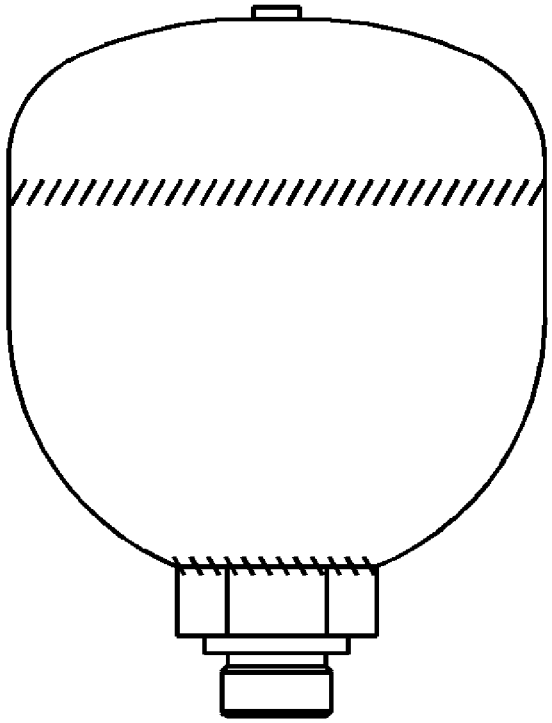

GRAPHIC #1 **<END>** g02162624

# HYDRAULIC SYSTEM

## 227-8807 ACCUMULATOR GP-HYDRAULIC—UNCHARGED

**S/N: TNK1-UP**

**FIELD REPLACEMENT FOR 149-0686—PAGE 155**

**SMCS-5077** **i03971213**

| NOTE | REF NO | GRAPHIC REF | PART NUMBER | QTY | PART NAME 1 2 3 4 5 6 (PRODUCT LEVEL) | SEE PAGE |
|---|---|---|---|---|---|---|
| | | | | | (NO SERVICED PARTS) | |

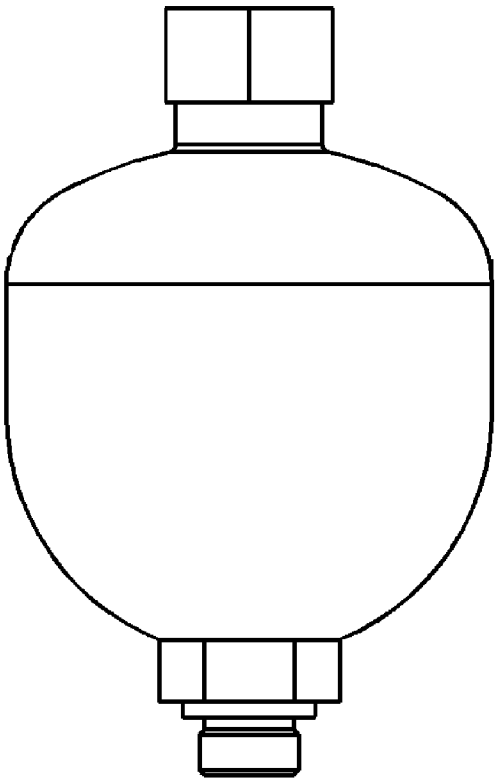

GRAPHIC #1 **<END>** g02162620

# HYDRAULIC SYSTEM

## *179-7001* ADAPTER GP-OIL LINE

**S/N: TNK1-UP**

**PART OF 218-5632 LINES GP-PILOT**

**SMCS-5057** **i01836385**

| NOTE | REF NO | GRAPHIC REF | PART NUMBER | QTY | PART NAME 1 2 3 4 5 6 (PRODUCT LEVEL) | SEE PAGE |
|---|---|---|---|---|---|---|
| | 1 | 1 | **179-7002** | 1 | ADAPTER AS | |
| | 2 | 1 | **214-7568** | 1 | SEAL-O-RING | |

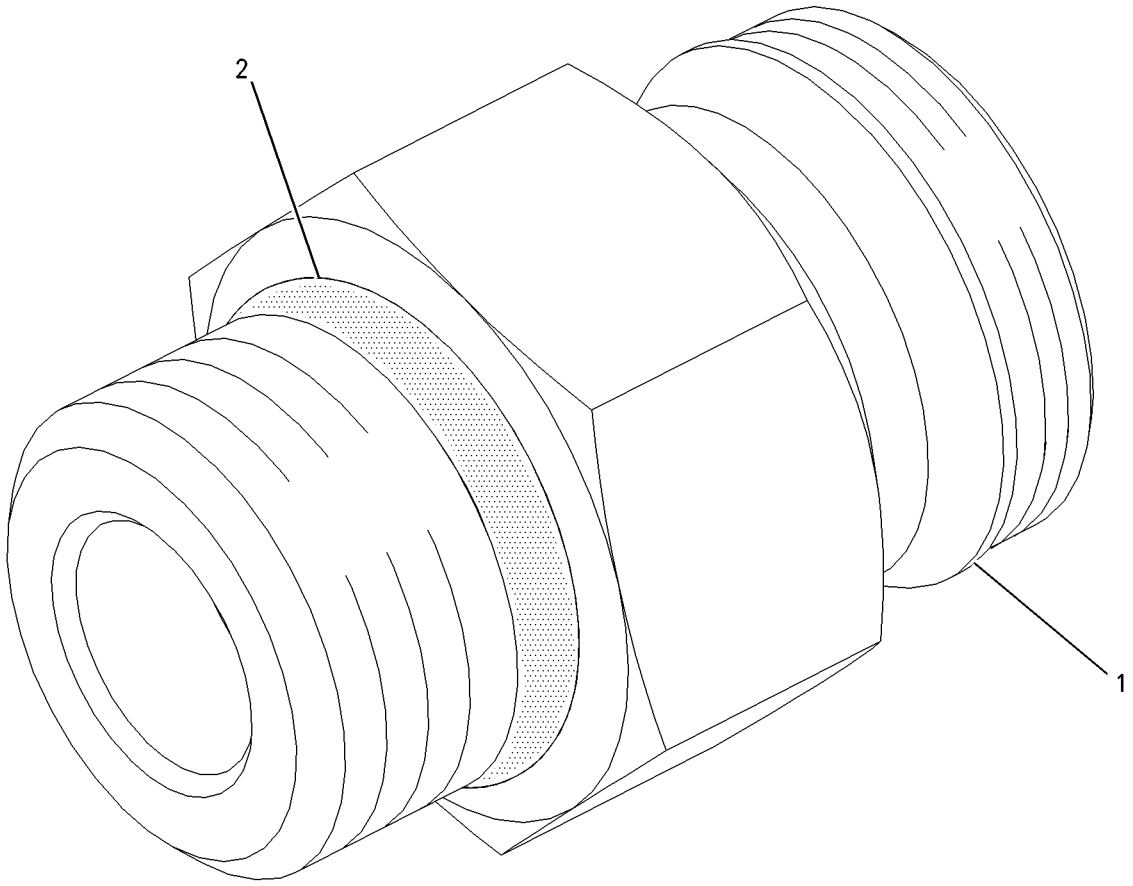


GRAPHIC #1 **<END>** g00938522

# HYDRAULIC SYSTEM

## *218-5899* CYLINDER & MTG GP-LIFT ARM

**S/N: TNK1-UP**

**PART OF 326-4786 CHASSIS AR**

**SMCS-5102, 5104, 6118, 6119** **i03975254**

| NOTE | REF NO | GRAPHIC REF | PART NUMBER | QTY | PART NAME 1 2 3 4 5 6 (PRODUCT LEVEL) | SEE PAGE |
|---|---|---|---|---|---|---|
| B | 1 | 1 | **111-4337** | 16 | WASHER (46X70X1-MM THK) | |
| | 2 | 1 | **142-9091** | 4 | PIN AS | |
| | 3 | 1 | **142-9093** | 2 | PIN | |
| | 4 | 1 | **287-3787** | 2 | PIN AS | |
| | 5 | 1 | **190-7989** | 1 | SUPPORT | |
| | 6 | 1 | **190-7992** | 2 | SPACER (44.7X54.7X13.1-MM THK) | |
| | 7 | 1 | **190-8033** | 2 | PIN AS | |
| | 8 | 1 | **190-8036** | 2 | PIN | |
| | 9 | 1 | **190-8037** | 2 | PIN AS | |
| | 10 | 1 | **190-8038** | 2 | PIN AS | |
| | 11 | 1 | **191-9730** | 1 | STEP AS | |
| | 12 | 1 | **191-9738** | 2 | WASHER (13.8X70X5-MM THK) | |
| | 13 | 1 | **191-9739** | 2 | BOLT-SOCKET HEAD (M10X1.5X40-MM) | |
| Y | 14 | 1 | **295-6954** | 1 | CYLINDER GP-TILT (LH) | 163 |
| Y | 15 | 1 | **295-6953** | 1 | CYLINDER GP-TILT (RH) | 162 |
| CY | 16 | 1 | **297-8699** | 2 | CYLINDER GP-LIFT | 161 |
| | 17 | 1 | **238-7685** | 2 | LINK AS | |
| | | | | | (EACH INCLUDES) | |
| | | 1 | **2G-8624** | 2 | BUSHING | |
| | 18 | 1 | **142-8832** | 2 | PIN AS | |
| | 20 | 1 | **3B-8488** | 2 | FITTING-GREASE | |
| | 21 | 1 | **3B-8489** | 10 | FITTING-GREASE | |
| | 22 | 1 | **3K-4897** | 2 | PIN-SPRING | |
| | 23 | 1 | **4S-5875** | 2 | RING-RETAINING | |
| | 24 | 1 | **5B-0651** | 2 | FITTING-STRAIGHT | |
| | 25 | 1 | **6V-7700** | 4 | RING-RETAINING | |
| | 26 | 1 | **7X-0595** | 2 | WASHER-HARD (17X30X8-MM THK) | |
| | 27 | 1 | **7X-7729** | 12 | WASHER (11X25X3-MM THK) | |
| | 28 | 1 | **8T-4121** | 6 | WASHER-HARD (11X21X2.5-MM THK) | |
| M | 29 | 1 | **8T-4133** | 2 | NUT (M10X1.5-THD) | |
| M | 30 | 1 | **8T-4191** | 12 | BOLT (M10X1.5X16-MM) | |
| M | 31 | 1 | **8T-4196** | 4 | BOLT (M10X1.5X35-MM) | |
| | 32 | 1 | **8T-4224** | 2 | WASHER-HARD (8.8X16X2-MM THK) | |
| M | 33 | 1 | **8T-6870** | 2 | BOLT (M8X1.25X70-MM) | |

B-USE AS REQUIRED
C-CHANGE FROM PREVIOUS TYPE
M-METRIC PART
Y-SEPARATE ILLUSTRATION

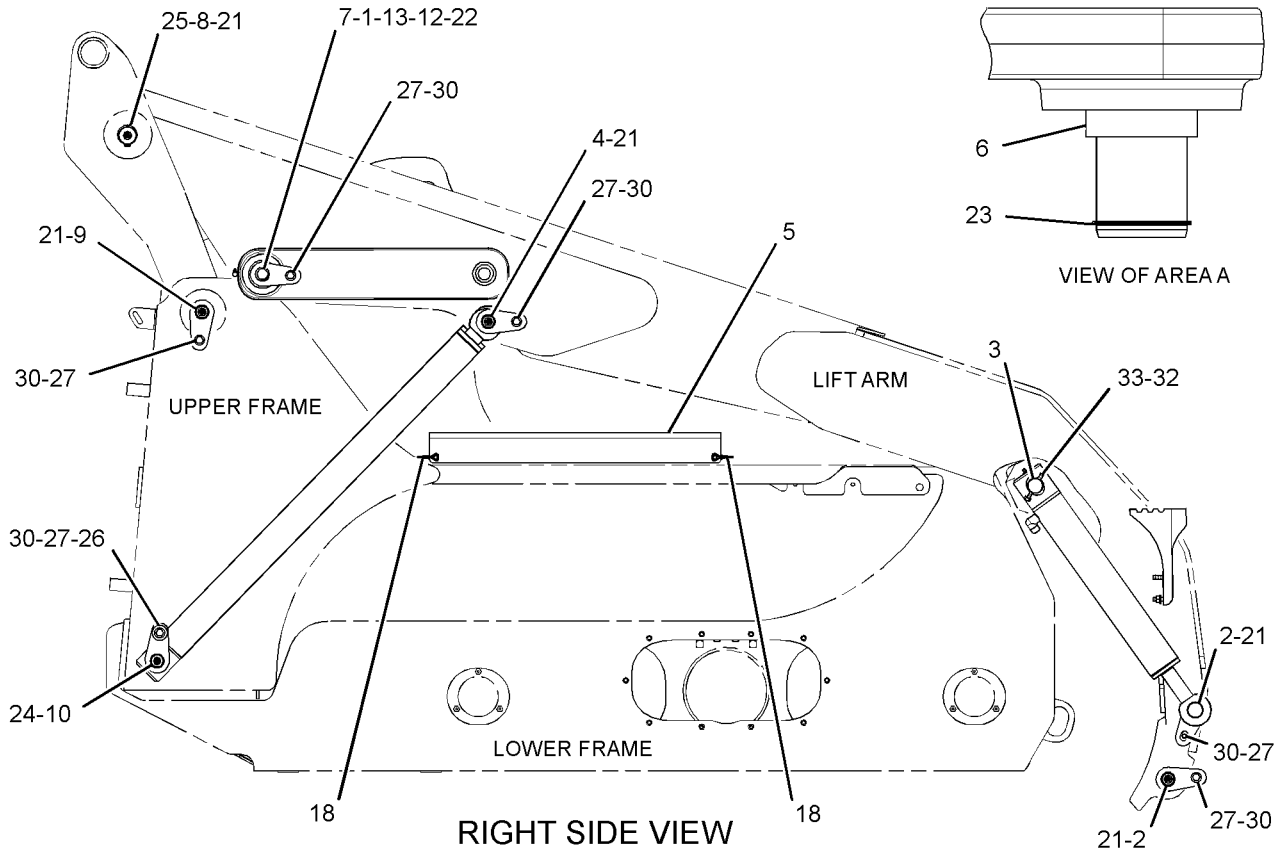


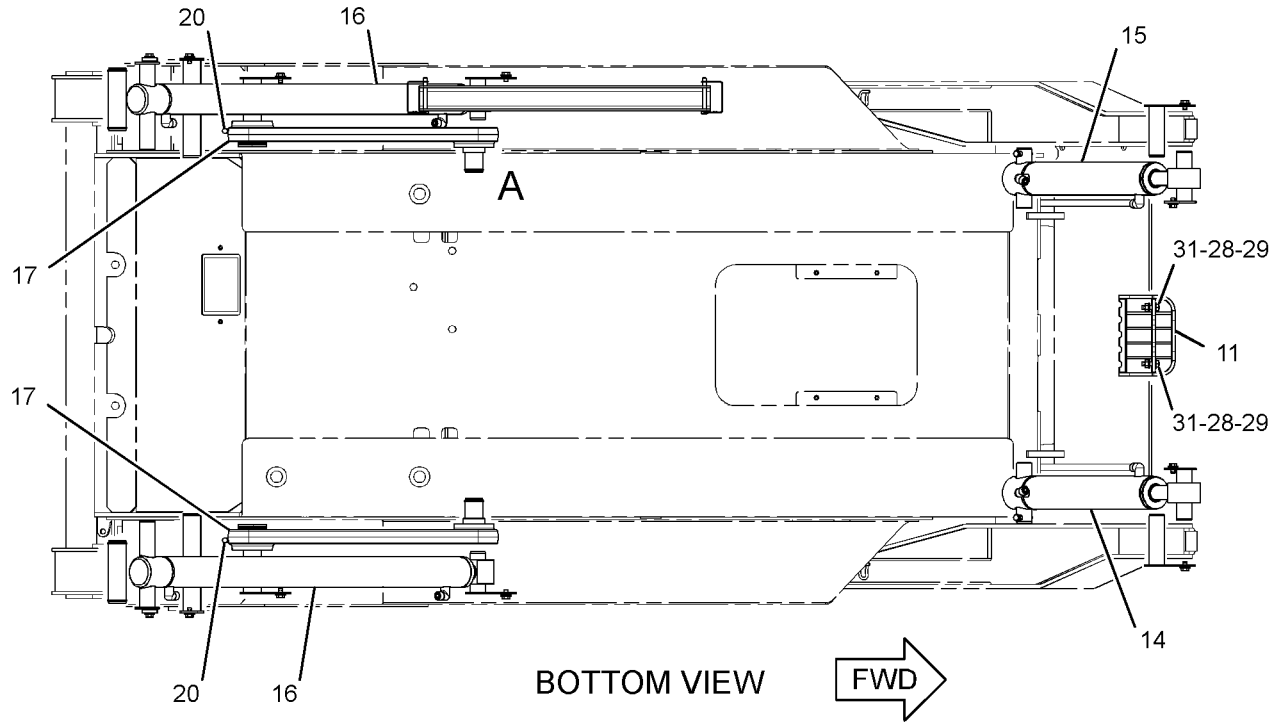


GRAPHIC #1 **<END>** g01347466

# HYDRAULIC SYSTEM

## 192-2640 CYLINDER GP-HYDRAULIC–COUPLER

**S/N: TNK1-UP**
**35-MM (1.4-IN) BORE X 103.5-MM (4.1-IN) STROKE**
**PART OF 215-3962, 215-3963 CYLINDER & LINK GP-COUPLER**
**AN ATTACHMENT**

**SMCS-5362, 7562** **i03435422**

| NOTE | REF NO | GRAPHIC REF | PART NUMBER | QTY | PART NAME 1 2 3 4 5 6 (PRODUCT LEVEL) | SEE PAGE |
|---|---|---|---|---|---|---|
| | | | | | (NO SERVICED PARTS) | |

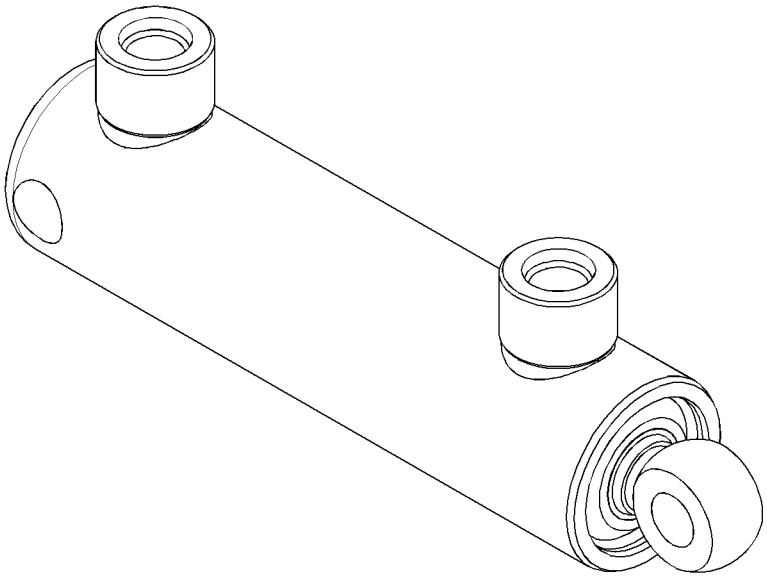

GRAPHIC #1 **<END>** g01787137

# *297-8699* CYLINDER GP-LIFT

**S/N: TNK1-UP**

**PART OF 218-5899 CYLINDER & MTG GP-LIFT ARM**

**SMCS-5102** **i03952174**

| NOTE | REF NO | GRAPHIC REF | PART NUMBER | QTY | PART NAME 1 2 3 4 5 6 (PRODUCT LEVEL) | SEE PAGE |
|---|---|---|---|---|---|---|
| | 1 | 1 | **141-0713** | 1 | SEAL-LIP TYPE | |
| | 2 | 1 | **295-8096** | 1 | HEAD | |
| | 3 | 1 | **295-8097** | 1 | PISTON | |
| | 4 | 1 | **296-5141** | 1 | RING-WEAR | |
| | 5 | 1 | **297-8695** | 1 | ROD AS-HYDRAULIC CYLINDER | |
| | 6 | 1 | **297-8698** | 1 | CYLINDER AS | |
| | 7 | 1 | **144-9491** | 1 | RING-WEAR | |
| | 8 | 1 | **161-7144** | 1 | SEAL-PISTON | |
| | 9 | 1 | *162-0177* | 2 | PLUG AS | |
| | | | | | (EACH INCLUDES) | |
| | | 1 | **3J-1907** | 1 | SEAL-O-RING | |
| | | 1 | **9S-8004** | 1 | PLUG-O-RING | |
| | 10 | 1 | **298-6947** | 1 | SEAL-U-CUP | |
| M | 11 | 1 | **9X-6611** | 1 | SETSCREW-SOCKET (M10X1.5X16-MM) | |
| | 12 | 1 | **329-2588** | 1 | RING-BACKUP | |
| | 13 | 1 | **4J-0527** | 1 | SEAL-O-RING | |
| | 14 | 1 | **6V-8398** | 2 | SEAL-O-RING | |
| | 15 | 1 | **8C-3081** | 1 | SEAL-O-RING | |

M-METRIC PART

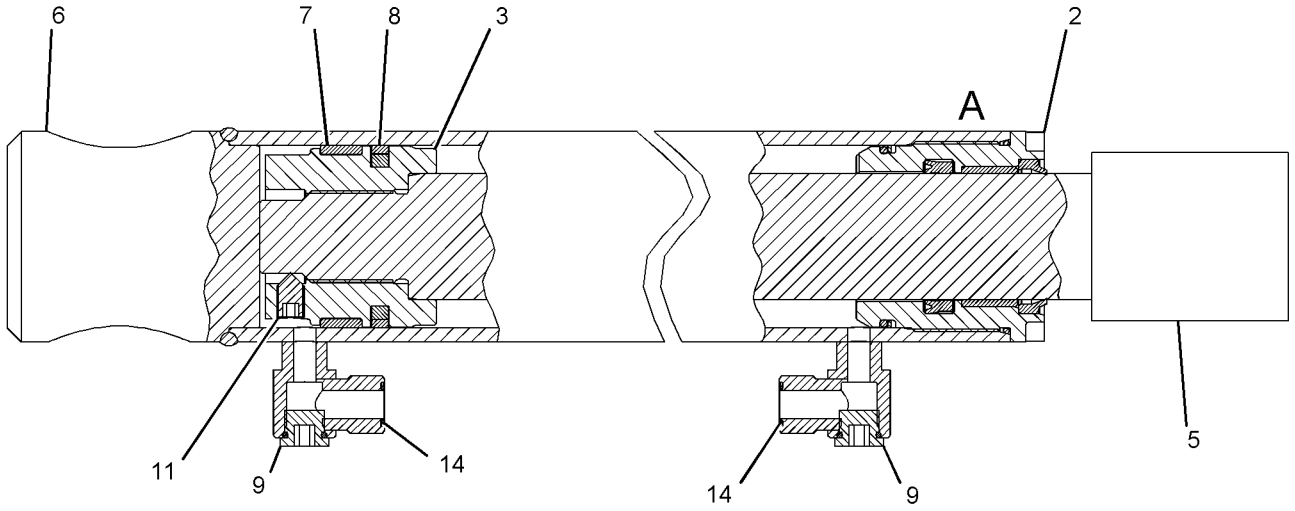


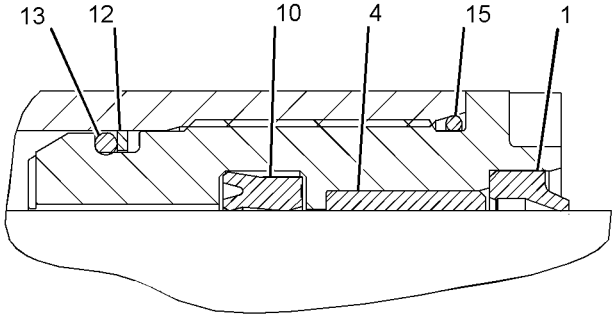


VIEW OF AREA A

GRAPHIC #1 **<END>** g02163768

# HYDRAULIC SYSTEM

## 295-6953 CYLINDER GP-TILT–RH

**S/N: TNK1-UP**
**70-MM (2.8-IN) BORE X 354-MM (14-IN) STROKE**
**PART OF 218-5899 CYLINDER & MTG GP-LIFT ARM**

**SMCS-5104** **i03952150**

| NOTE | REF NO | GRAPHIC REF | PART NUMBER | QTY | PART NAME 1 2 3 4 5 6 (PRODUCT LEVEL) | SEE PAGE |
|---|---|---|---|---|---|---|
| | 1 | 1 | **3B-8489** | 1 | FITTING-GREASE | |
| | 2 | 1 | **140-2392** | 1 | SEAL-LIP TYPE | |
| | 3 | 1 | **161-7145** | 1 | SEAL-PISTON | |
| | 4 | 1 | **296-5140** | 1 | RING-WEAR | |
| | 5 | 1 | **329-2589** | 2 | RING-BACKUP | |
| | 6 | 1 | **3P-0439** | 2 | SEAL-O-RING | |
| | 7 | 1 | **6V-8398** | 2 | SEAL-O-RING | |
| M | 8 | 1 | **9X-6611** | 1 | SETSCREW-SOCKET (M10X1.5X16-MM) | |
| | 9 | 1 | **297-8522** | 1 | CYLINDER AS | |
| | 10 | 1 | **107-4057** | 1 | SEAL-O-RING | |
| | 11 | 1 | **151-2566** | 1 | RING-WEAR | |
| | 12 | 1 | *162-0177* | 2 | PLUG AS | |
| | | | | | (EACH INCLUDES) | |
| | | 1 | **3J-1907** | 1 | SEAL-O-RING | |
| | | 1 | **9S-8004** | 1 | PLUG-O-RING | |
| | | | | | | |
| F | | | **3K-2151** | 1 | BUSHING | |

F-NOT SHOWN
M-METRIC PART

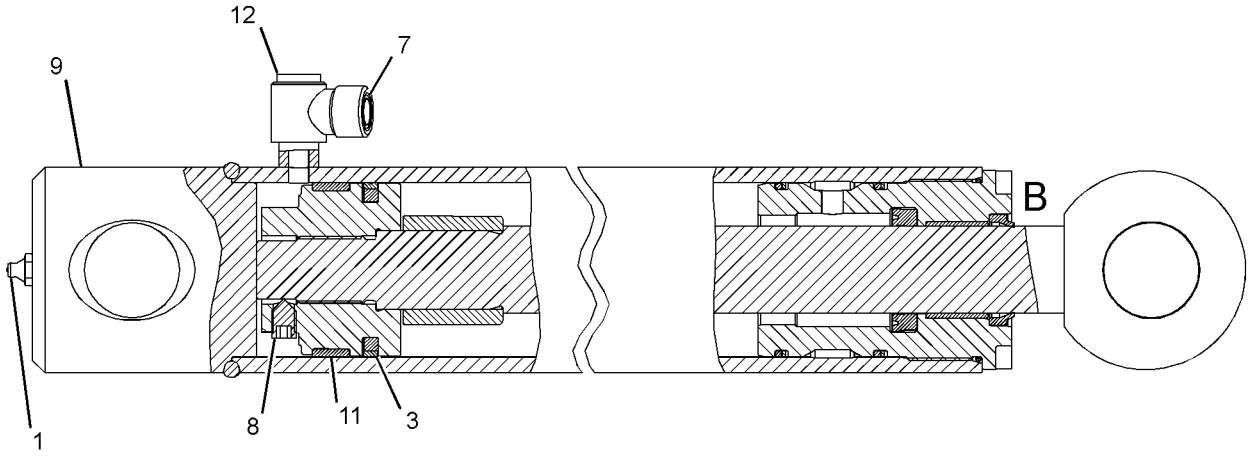


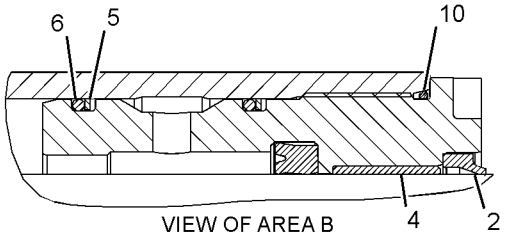


GRAPHIC #1 **<END>** g02163794

# 295-6954 CYLINDER GP-TILT–LH

**S/N: TNK1-UP**
**70-MM (2.8-IN) BORE X 354-MM (14-IN) STROKE**
**PART OF 218-5899 CYLINDER & MTG GP-LIFT ARM**

**SMCS-5104** **i03952169**

| NOTE | REF NO | GRAPHIC REF | PART NUMBER | QTY | PART NAME 1 2 3 4 5 6 (PRODUCT LEVEL) | SEE PAGE |
|---|---|---|---|---|---|---|
| | 1 | 1 | **3B-8489** | 1 | FITTING-GREASE | |
| | 2 | 1 | **140-2392** | 1 | SEAL-LIP TYPE | |
| | 3 | 1 | **161-7145** | 1 | SEAL-PISTON | |
| | 4 | 1 | **296-5140** | 1 | RING-WEAR | |
| | 5 | 1 | **329-2589** | 2 | RING-BACKUP | |
| | 6 | 1 | **3P-0439** | 2 | SEAL-O-RING | |
| | 7 | 1 | **6V-8398** | 2 | SEAL-O-RING | |
| M | 8 | 1 | **9X-6611** | 1 | SETSCREW-SOCKET (M10X1.5X16-MM) | |
| | 9 | 1 | **297-8524** | 1 | CYLINDER AS | |
| | 10 | 1 | **107-4057** | 1 | SEAL-O-RING | |
| | 11 | 1 | **151-2566** | 1 | RING-WEAR | |
| | 12 | 1 | *162-0177* | 2 | PLUG AS | |
| | | | | | (EACH INCLUDES) | |
| | | 1 | **3J-1907** | 1 | SEAL-O-RING | |
| | | 1 | **9S-8004** | 1 | PLUG-O-RING | |
| | | | | | | |
| F | | | **3K-2151** | 1 | BUSHING | |

F-NOT SHOWN
M-METRIC PART

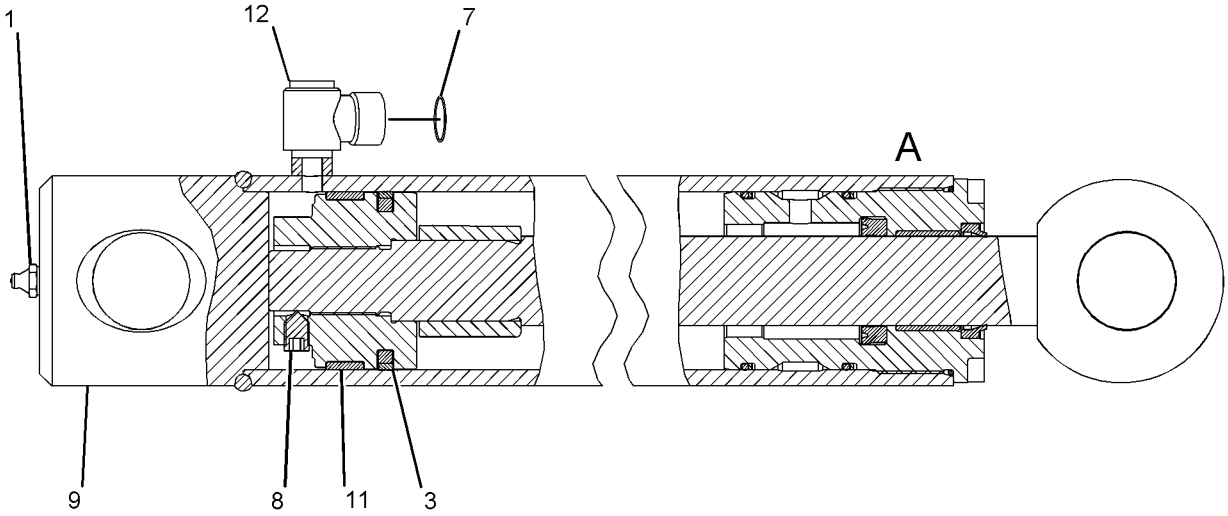


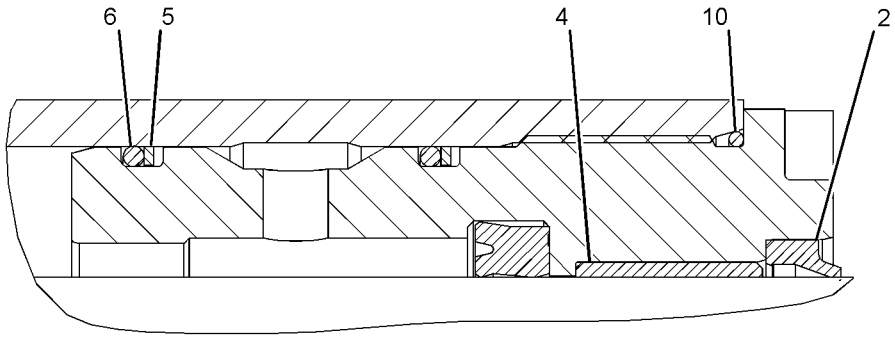


VIEW OF AREA A

GRAPHIC #1 **<END>** g02163826

# HYDRAULIC SYSTEM

## *326-5445* HYDRAULIC AR

**S/N: TNK1-UP**
**PART OF 326-5422 COMMON AR**

**SMCS-5050** **i03907000**

| NOTE | PART NUMBER | QTY | PART NAME 1 2 3 4 5 6 (PRODUCT LEVEL) | SEE PAGE |
|---|---|---|---|---|
| Y | *193-0447* | 1 | ACCUMULATOR & MTG GP-HYDRAULIC (WORK TOOL) | 154 |
| Y | *356-1917* | 1 | FILTER & LINES GP-HYDRAULIC | 100 |
| Y | *218-5630* | 1 | LINES GP-HYDRAULIC FAN | 168 |
| Y | *218-6572* | 1 | LINES GP-HYDRAULIC OIL COOLER | 170 |
| Y | *218-5621* | 1 | LINES GP-HYDROSTATIC | 103 |
| Y | *218-5631* | 1 | LINES GP-PILOT (DIRECTION, SPEED) | 177 |
| Y | *218-5632* | 1 | LINES GP-PILOT (WORK TOOL) | 179 |
| Y | *356-1911* | 1 | LINES GP-PUMP | 181 |
| Y | *218-5936* | 1 | LINES GP-WORK TOOL | 187 |
| Y | *190-8084* | 1 | PUMP & MTG GP-WORK TOOL | 195 |
| Y | *326-5780* | 1 | TANK & MTG GP-HYDRAULIC | 197 |
| Y | *218-6725* | 1 | VALVE & MTG GP-CONTROL (WORK TOOL) | 199 |

Y-SEPARATE ILLUSTRATION

**<END>**

## *326-5468* HYDRAULIC AR—WITHOUT WORK TOOL POSITIONER

**S/N: TNK1-UP**
**CANNOT BE USED WITH 326-5481—PAGE 164**
**AN ATTACHMENT**

**SMCS-5050** **i03904670**

| NOTE | PART NUMBER | QTY | PART NAME 1 2 3 4 5 6 (PRODUCT LEVEL) | SEE PAGE |
|---|---|---|---|---|
| Y | *332-7664* | 1 | LINES GP-LIFT CYLINDER | 175 |
| Y | *218-6170* | 1 | LINES GP-TILT CYLINDER | 185 |

Y-SEPARATE ILLUSTRATION

**<END>**

## *326-5481* HYDRAULIC AR—WITH WORK TOOL POSITIONER

**S/N: TNK1-UP**
**CANNOT BE USED WITH 326-5468—PAGE 164**
**AN ATTACHMENT**

**SMCS-5050** **i03904671**

| NOTE | PART NUMBER | QTY | PART NAME 1 2 3 4 5 6 (PRODUCT LEVEL) | SEE PAGE |
|---|---|---|---|---|
| Y | *326-5677* | 1 | LINES GP-LIFT CYLINDER (WITH WORK TOOL POSITIONER) | 172 |
| Y | *218-5712* | 1 | LINES GP-TILT CYLINDER (WITH WORK TOOL POSITIONER) | 183 |

Y-SEPARATE ILLUSTRATION

**<END>**

# HYDRAULIC SYSTEM

## *332-8541* LINES GP-COUPLER—WITH MANUAL LOWERING CONTROL

**S/N: TNK1-UP**

**PART OF 326-5579 COUPLER AR-QUICK**

**AN ATTACHMENT**

**SMCS-5057, 6129** **i03904549**

| NOTE | REF NO | GRAPHIC REF | PART NUMBER | QTY | PART NAME 1 2 3 4 5 6 (PRODUCT LEVEL) | SEE PAGE |
|---|---|---|---|---|---|---|
| | 1 | 1 | **2K-5232** | 2 | SPACER (0.406X0.75X1.81-IN THK) | |
| | 2 | 1 | **3S-2093** | 2 | STRAP-CABLE | |
| | 3 | 1 | **7K-1181** | 2 | STRAP-CABLE | |
| | 4 | 1 | **9X-6581** | 1 | NUT-O-RING SEAL (1-14-THD) | |
| | 5 | 1 | **124-2456** | 1 | FILM-INSTRUCTION (NO STEP) | |
| | 6 | 1 | **207-9737** | 1 | BRACKET AS | |
| I | 7 | 1 | **207-9756** | 4 | HOSE AS | |
| I | 8 | 1 | **207-9758** | 2 | HOSE AS | |
| | 9 | 1 | **212-6690** | 1 | GUARD | |
| | 10 | 1 | **218-5943** | 1 | TUBE AS | |
| | 11 | 1 | **218-5944** | 1 | TUBE AS | |
| Y | 12 | 1 | **233-7128** | 1 | MANIFOLD GP-CONTROL (QUICK COUPLER) | 190 |
| | 13 | 1 | **326-5584** | 1 | TUBE AS | |
| I | 14 | 1 | **326-5586** | 2 | HOSE AS | |
| I | 15 | 1 | **326-5637** | 1 | HOSE AS | |
| | 16 | 1 | **326-5762** | 1 | BRACKET AS | |
| M | | 1 | **8T-3490** | 4 | NUT-WELD (M10X1.5-THD) | |
| | 17 | 1 | *148-8325* | 4 | CONNECTOR AS | |
| | | | | | (EACH INCLUDES) | |
| | | 1 | **3J-1907** | 1 | SEAL-O-RING | |
| | | 1 | **4J-5477** | 1 | SEAL-O-RING | |
| | | 1 | **6V-8641** | 1 | CONNECTOR | |
| | 18 | 1 | *148-8336* | 1 | CONNECTOR AS | |
| | | 1 | **3J-1907** | 1 | SEAL-O-RING | |
| | | 1 | **6V-8397** | 1 | SEAL-O-RING | |
| | | 1 | **6V-8636** | 1 | CONNECTOR | |
| | 19 | 1 | *148-8353* | 1 | ELBOW AS | |
| | | 1 | **3J-1907** | 1 | SEAL-O-RING | |
| | | 1 | **6V-8397** | 1 | SEAL-O-RING | |
| | | 1 | **6V-9001** | 1 | ELBOW | |
| | 20 | 1 | *148-8378* | 2 | ELBOW AS | |
| | | | | | (EACH INCLUDES) | |
| | | 1 | **3J-1907** | 1 | SEAL-O-RING | |
| | | 1 | **6V-8397** | 1 | SEAL-O-RING | |
| | | 1 | **6V-8724** | 1 | ELBOW | |
| | 21 | 1 | *148-8433* | 1 | TEE AS | |
| | | 1 | **6V-8397** | 2 | SEAL-O-RING | |
| | | 1 | **6V-9836** | 1 | TEE-SWIVEL | |
| | 22 | 1 | *148-8446* | 1 | TEE AS-SWIVEL | |
| | | 1 | **6V-9838** | 1 | TEE-SWIVEL | |
| | | 1 | **7J-9108** | 2 | SEAL-O-RING | |
| | 23 | 1 | *150-4034* | 2 | TEE AS | |
| | | | | | (EACH INCLUDES) | |
| | | 1 | **6V-8397** | 3 | SEAL-O-RING | |
| | | 1 | **8T-0379** | 1 | TEE-BULKHEAD | |
| | 24 | 1 | *156-4282* | 1 | REDUCER AS | |
| | | 1 | **6V-8397** | 1 | SEAL-O-RING | |
| | | 1 | **6V-8938** | 1 | REDUCER-O-RING | |
| | 25 | 1 | **164-4225** | 2 | CLIP | |
| | 26 | 1 | **1P-7009** | 1 | CLIP | |
| | 27 | 1 | **4P-7581** | 2 | CLIP | |
| M | 28 | 1 | **5C-7261** | 2 | NUT (M8X1.25-THD) | |
| | 29 | 1 | **5K-8451** | 1 | CLIP | |
| | 30 | 1 | **5P-4116** | 2 | WASHER-HARD (8.8X20.5X2-MM THK) | |
| | 31 | 1 | **5P-9297** | 1 | CLIP | |

## *332-8541* **LINES GP-COUPLER** *(contd.)* **i03904549**

| NOTE | REF NO | GRAPHIC REF | PART NUMBER | QTY | PART NAME 1 2 3 4 5 6 (PRODUCT LEVEL) | SEE PAGE |
|---|---|---|---|---|---|---|
| | 32 | 1 | **6K-8178** | 2 | CLIP | |
| | 33 | 1 | **6V-8397** | 4 | SEAL-O-RING | |
| | 34 | 1 | **6V-9168** | 2 | NUT (11/16-16-THD) | |
| | 35 | 1 | **7G-2950** | 1 | CLIP (SLOT) | |
| | 36 | 1 | **7G-2951** | 1 | CLIP (TAB) | |
| | 37 | 1 | **7H-7055** | 8 | CLIP | |
| | 38 | 1 | **7X-7729** | 3 | WASHER (11X25X3-MM THK) | |
| | 39 | 1 | **8T-4121** | 10 | WASHER-HARD (11X21X2.5-MM THK) | |
| M | 40 | 1 | **8T-4133** | 2 | NUT (M10X1.5-THD) | |
| M | 41 | 1 | **8T-4136** | 1 | BOLT (M10X1.5X25-MM) | |
| M | 42 | 1 | **8T-4137** | 1 | BOLT (M10X1.5X20-MM) | |
| M | 43 | 1 | **8T-4189** | 4 | BOLT (M8X1.25X20-MM) | |
| M | 44 | 1 | **8T-4191** | 2 | BOLT (M10X1.5X16-MM) | |
| M | 45 | 1 | **8T-4201** | 3 | BOLT-LOCKING (M10X1.5X20-MM) | |
| | 46 | 1 | **8T-4224** | 6 | WASHER-HARD (8.8X16X2-MM THK) | |
| M | 47 | 1 | **8T-4908** | 2 | BOLT (M8X1.25X25-MM) | |
| M | 48 | 1 | **8T-5005** | 4 | BOLT (M10X1.5X70-MM) | |
| | 49 | 1 | **9M-8406** | 3 | CLIP | |
| | 50 | 1 | **9R-1004** | 1 | CLIP (TAB) | |
| | 51 | | **9R-1005** | 1 | CLIP (SLOT) | |

I-REFER TO HYDRAULIC INFORMATION SYSTEM
M-METRIC PART
Y-SEPARATE ILLUSTRATION

*332-8541* **LINES GP-COUPLER** *(contd.)* **i03904549**

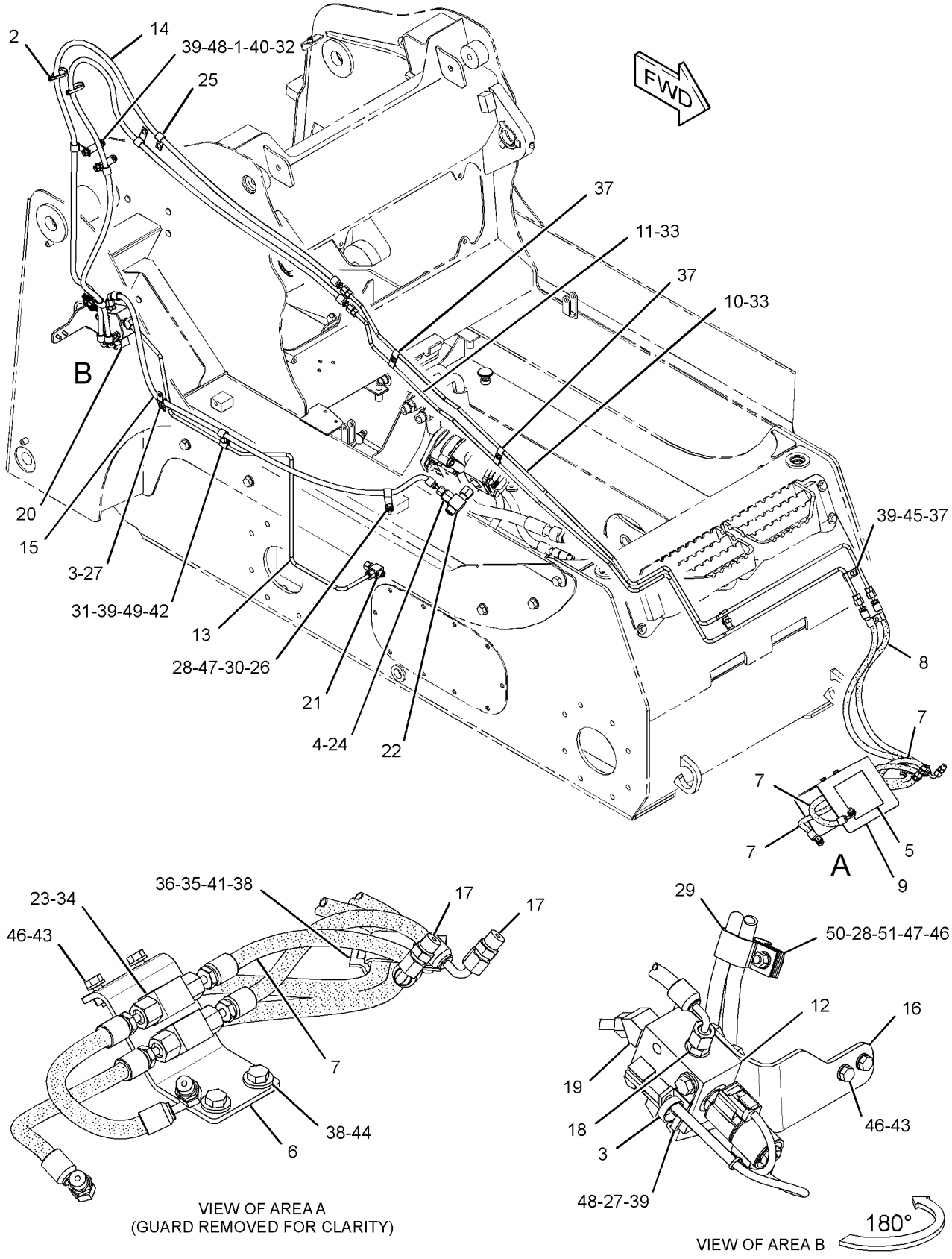


GRAPHIC #1 **<END>** g02148995

# HYDRAULIC SYSTEM

## *218-5630* LINES GP-HYDRAULIC FAN

**S/N: TNK1-UP**

**PART OF 326-5445 HYDRAULIC AR**

**SMCS-5057** **i03630980**

| NOTE | REF NO | GRAPHIC REF | PART NUMBER | QTY | PART NAME 1 2 3 4 5 6 (PRODUCT LEVEL) | SEE PAGE |
|---|---|---|---|---|---|---|
| C | 1 | 1 | **7K-1181** | 2 | STRAP-CABLE | |
| I | 2 | 1 | **218-5588** | 1 | HOSE AS | |
| | 3 | 1 | *164-5590* | 1 | VALVE AS-FLUID SAMPLING | |
| | | 1 | **3J-7354** | 1 | SEAL-O-RING | |
| | | 1 | **8C-3446** | 1 | VALVE-FLUID SAMPLING | |
| CI | 4 | 1 | **328-7495** | 1 | HOSE AS | |
| | 5 | 1 | *148-8315* | 1 | CONNECTOR AS | |
| | | 1 | **2M-9780** | 1 | SEAL-O-RING | |
| | | 1 | **6V-8642** | 1 | CONNECTOR | |
| | | 1 | **7J-9108** | 1 | SEAL-O-RING | |
| C | 6 | 1 | *148-8316* | 1 | CONNECTOR AS | |
| | | 1 | **3J-7354** | 1 | SEAL-O-RING | |
| | | 1 | **4J-5477** | 1 | SEAL-O-RING | |
| | | 1 | **6V-8647** | 1 | CONNECTOR | |
| C | 7 | 1 | *148-8385* | 1 | ELBOW AS | |
| | | 1 | **3J-7354** | 1 | SEAL-O-RING | |
| | | 1 | **4J-5477** | 1 | SEAL-O-RING | |
| | | 1 | **6V-9000** | 1 | ELBOW | |
| | 8 | 1 | **4S-1962** | 1 | CLIP | |
| | 9 | 1 | **6V-9829** | 1 | CAP AS | |
| | 10 | 1 | **8C-3451** | 1 | CAP-DUST | |
| CE | 11 | 1 | **9X-2092** | | TRIM-EDGE (35-CM) | |

C-CHANGE FROM PREVIOUS TYPE
E-ORDER BY THE CENTIMETER
I-REFER TO HYDRAULIC INFORMATION SYSTEM

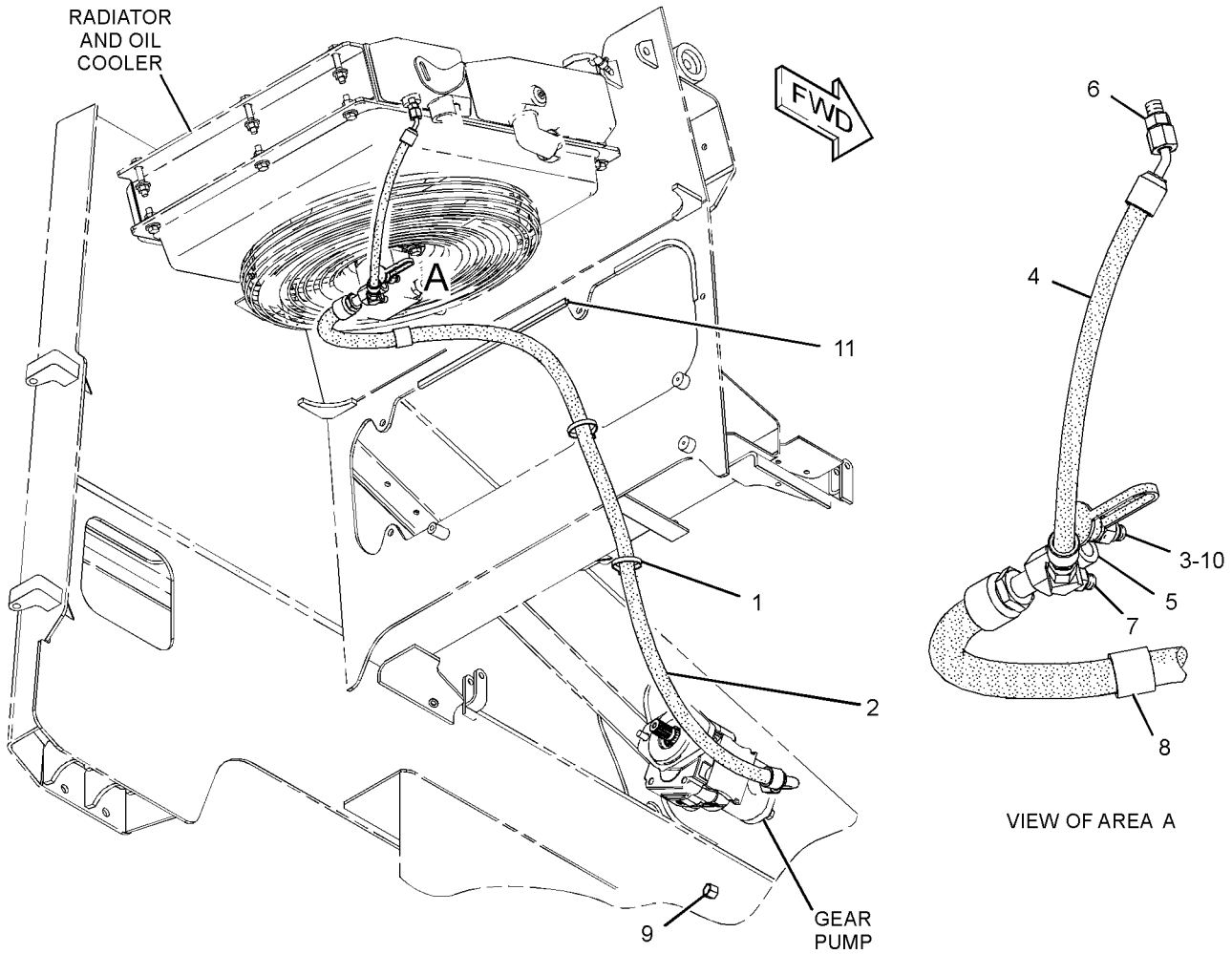


GRAPHIC #1 **<END>** g01636962

# HYDRAULIC SYSTEM

## *218-6572* LINES GP-HYDRAULIC OIL COOLER

**S/N: TNK1-UP**

**PART OF 326-5445 HYDRAULIC AR**

**SMCS-5057** **i03148524**

| NOTE | REF NO | GRAPHIC REF | PART NUMBER | QTY | PART NAME 1 2 3 4 5 6 (PRODUCT LEVEL) | SEE PAGE |
|---|---|---|---|---|---|---|
| | 1 | 1 | *106-8715* | 1 | ELBOW AS | |
| | | 1 | **8C-8400** | 1 | ELBOW | |
| | | 1 | **3D-2824** | 1 | SEAL-O-RING | |
| | | 1 | **6V-9746** | 1 | SEAL-O-RING | |
| I | 2 | 1 | **218-5585** | 1 | HOSE AS | |
| I | 3 | 1 | **218-6304** | 1 | HOSE AS | |
| | 4 | 1 | *148-8347* | 1 | ELBOW AS | |
| | | 1 | **6V-9007** | 1 | ELBOW | |
| | | 1 | **3D-2824** | 1 | SEAL-O-RING | |
| | | 1 | **6V-9746** | 1 | SEAL-O-RING | |
| | 5 | 1 | **5D-0718** | 2 | CLIP | |
| | 6 | 1 | **092-2467** | 1 | SPACER (10.5X2X45-MM THK) | |
| | 7 | 1 | **6V-1889** | 1 | CLIP | |
| | 8 | 1 | **7K-1181** | 1 | STRAP-CABLE | |
| | 9 | 1 | **8T-4121** | 4 | WASHER-HARD (11X21X2.5-MM THK) | |
| M | 10 | 1 | **8T-4133** | 3 | NUT (M10X1.5-THD) | |
| | 11 | 1 | **234-9525** | 1 | STUD (M10X1.5-THD) | |
| M | 12 | 1 | **8T-4195** | 1 | BOLT (M10X1.5X30-MM) | |
| E | 13 | 1 | **9X-2092** | | TRIM-EDGE (30-CM) | |

E-ORDER BY THE CENTIMETER
I-REFER TO HYDRAULIC INFORMATION SYSTEM
M-METRIC PART

*218-6572* **LINES GP-HYDRAULIC OIL COOLER** *(contd.)* **i03148524**

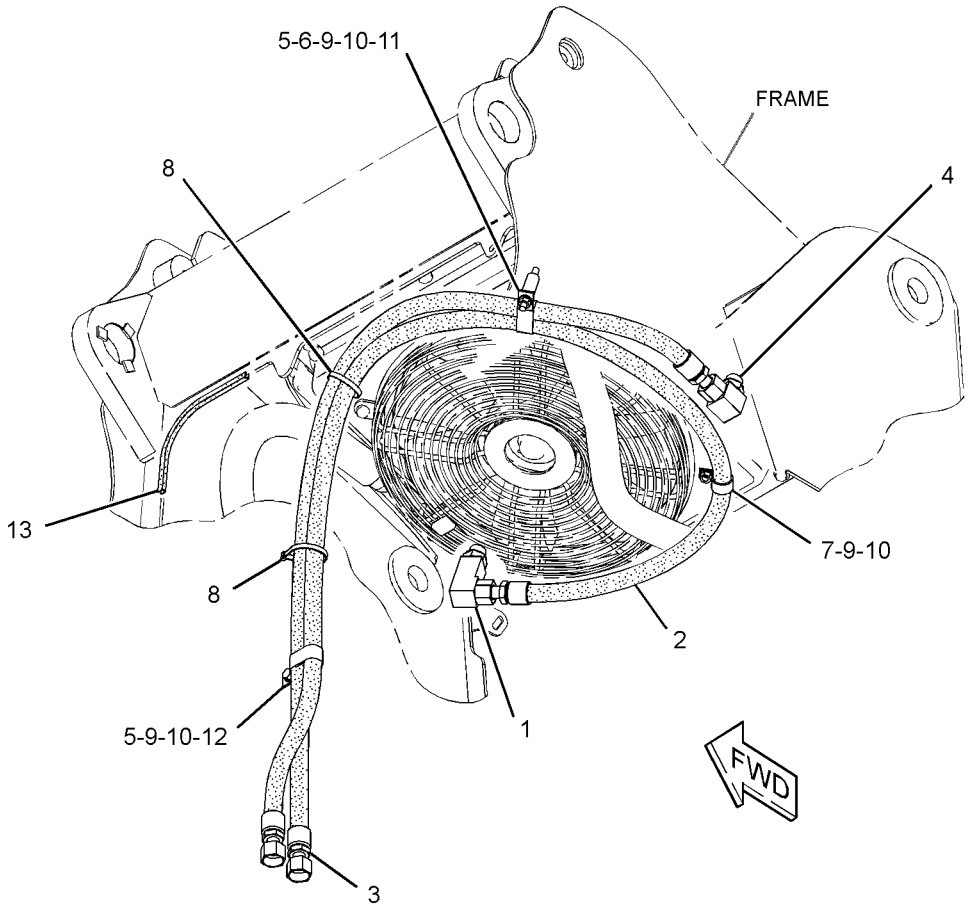


GRAPHIC #1 **<END>** g01621959

# HYDRAULIC SYSTEM

## *326-5677* LINES GP-LIFT CYLINDER–

**WITH WORK TOOL POSITIONER**

**S/N: TNK1-UP**

**PART OF 326-5481 HYDRAULIC AR**

**AN ATTACHMENT**

**SMCS-5057, 5102** **i03906993**

| NOTE | REF NO | GRAPHIC REF | PART NUMBER | QTY | PART NAME 1 2 3 4 5 6 (PRODUCT LEVEL) | SEE PAGE |
|---|---|---|---|---|---|---|
| Y | 1 | 2 | **112-1817** | 1 | VALVE GP-MANUAL (WORK TOOL POSITIONER) | 202 |
| | 2 | 1 | **142-9116** | 1 | SWITCH GP-ROCKER (WORK TOOL POSITIONER) | |
| | | 1 | **111-7899** | 1 | GASKET | |
| I | 3 | 1 | **190-8074** | 2 | HOSE AS | |
| I | 4 | 1 | **190-8075** | 2 | HOSE AS | |
| | 5 | 2 | **218-5977** | 1 | PLATE AS | |
| | 6 | 2 | **218-6438** | 1 | SEAL | |
| Y | 7 | 2 | **223-8418** | 1 | MANIFOLD & SOLENOID GP-CONTROL (WORK TOOL POSITIONER) | 189 |
| | 8 | 1 | **289-3765** | 1 | TUBE AS | |
| | 9 | 1 | **289-3766** | 1 | TUBE AS | |
| | 10 | 1 | **289-3777** | 1 | TUBE AS | |
| | 11 | 1 | **289-3778** | 1 | TUBE AS | |
| | 12 | 1 | **289-3779** | 1 | TUBE AS | |
| I | 13 | 1 | **326-5581** | 1 | HOSE AS | |
| | 14 | 1 | **326-5590** | 1 | TUBE AS | |
| I | 15 | 1 | **326-5612** | 1 | HOSE AS | |
| | 16 | 2 | **326-5614** | 1 | HANDLE AS | |
| | 17 | 2 | **326-5634** | 1 | BRUSH AS | |
| | 18 | 2 | **326-5640** | 1 | BRACKET AS | |
| M | | 2 | **6V-9632** | 3 | NUT-WELD (M6X1-THD) | |
| M | | 2 | **8T-3612** | 3 | NUT-WELD (M8X1.25-THD) | |
| | 19 | 2 | **101-2867** | 1 | WASHER-HARD (7.2X25X2-MM THK) | |
| | 20 | 2 | *148-8315* | 1 | CONNECTOR AS | |
| | | 2 | **2M-9780** | 1 | SEAL-O-RING | |
| | | 2 | **6V-8642** | 1 | CONNECTOR | |
| | | 2 | **7J-9108** | 1 | SEAL-O-RING | |
| | 21 | 2 | *148-8341* | 2 | CONNECTOR AS | |
| | | | | | (EACH INCLUDES) | |
| | | 2 | **3D-2824** | 1 | SEAL-O-RING | |
| | | 2 | **6V-8713** | 1 | CONNECTOR | |
| | | 2 | **7J-9108** | 1 | SEAL-O-RING | |
| | 22 | 2 | *148-8378* | 2 | ELBOW AS | |
| | | | | | (EACH INCLUDES) | |
| | | 2 | **3J-1907** | 1 | SEAL-O-RING | |
| | | 2 | **6V-8397** | 1 | SEAL-O-RING | |
| | | 2 | **6V-8724** | 1 | ELBOW | |
| | 23 | 2 | *148-8390* | 1 | ELBOW AS | |
| | | 2 | **2M-9780** | 1 | SEAL-O-RING | |
| | | 2 | **6V-8626** | 1 | ELBOW | |
| | | 2 | **7J-9108** | 1 | SEAL-O-RING | |
| M | 24 | 2 | **271-9408** | 3 | SCREW-TRUSS HEAD (M5X0.8X10-MM) | |
| | 25 | 2 | **4B-4863** | 4 | WASHER (4.7X11X1.2-MM THK) | |
| M | 26 | 2 | **5C-2874** | 2 | NUT (M5X0.8-THD) | |
| | 27 | 1 | **6V-8397** | 1 | SEAL-O-RING | |
| | 28 | 1 | **6V-8398** | 8 | SEAL-O-RING | |
| | 29 | 1 | **7J-9108** | 3 | SEAL-O-RING | |
| M | 30 | 2 | **7X-2535** | 2 | BOLT (M6X1X60-MM) | |
| M | 31 | 2 | **8T-0285** | 4 | SCREW-MACHINE (M4X0.7X12-MM) | |
| | 32 | 1,2 | **8T-4121** | 3 | WASHER-HARD (11X21X2.5-MM THK) | |
| M | 33 | 1,2 | **8T-4137** | 3 | BOLT (M10X1.5X20-MM) | |
| M | 34 | 2 | **8T-4171** | 2 | BOLT (M6X1X12-MM) | |
| | 35 | 2 | **8T-4205** | 8 | WASHER-HARD (7.2X14.5X2-MM THK) | |
| | 36 | 2 | **8T-4224** | 3 | WASHER-HARD (8.8X16X2-MM THK) | |

## *326-5677* **LINES GP-LIFT CYLINDER** *(contd.)* **i03906993**

| NOTE | REF NO | GRAPHIC REF | PART NUMBER | QTY | PART NAME 1 2 3 4 5 6 (PRODUCT LEVEL) | SEE PAGE |
|---|---|---|---|---|---|---|
| M | 37 | 2 | **8T-4908** | 3 | BOLT (M8X1.25X25-MM) | |
| | 38 | 1 | **9R-1004** | 2 | CLIP (TAB) | |
| | 39 | 1,2 | **9R-1005** | 3 | CLIP (SLOT) | |
| | 40 | 2 | **9R-7802** | 1 | CLIP (SLOT) | |
| | 41 | 2 | **9R-7803** | 1 | CLIP (TAB) | |
| M | 42 | 2 | **9X-2043** | 3 | SCREW-TRUSS HEAD (M6X1X14-MM) | |

I-REFER TO HYDRAULIC INFORMATION SYSTEM
M-METRIC PART
Y-SEPARATE ILLUSTRATION

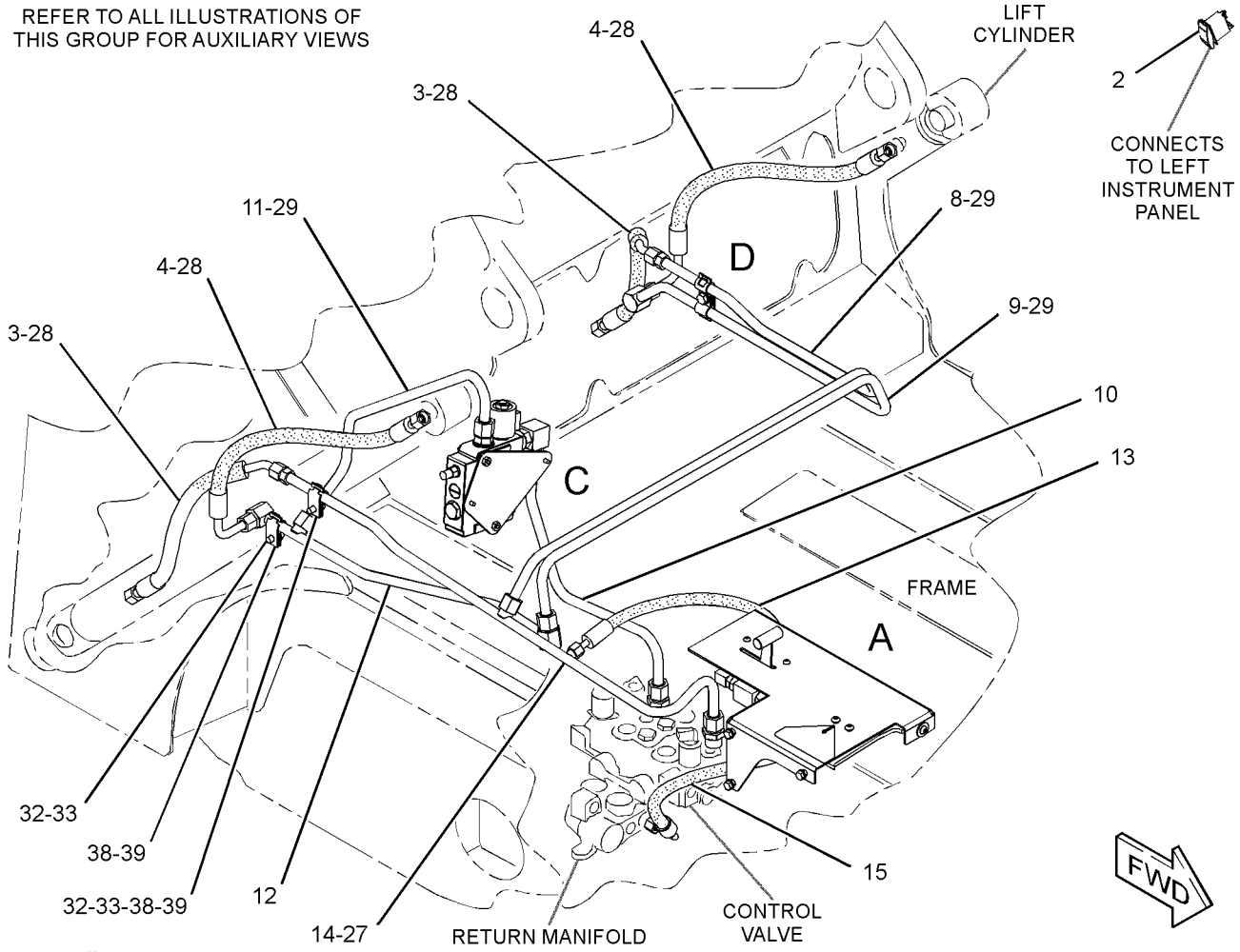


GRAPHIC #1

g02155268

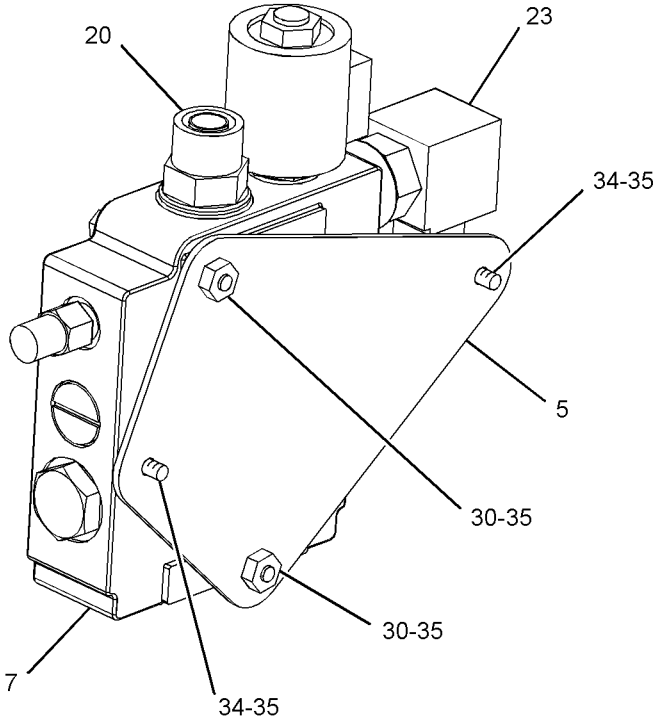


VIEW OF AREA C
(TUBES REMOVED FOR CLARITY)

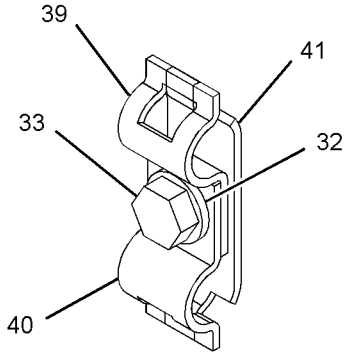


VIEW OF AREA D

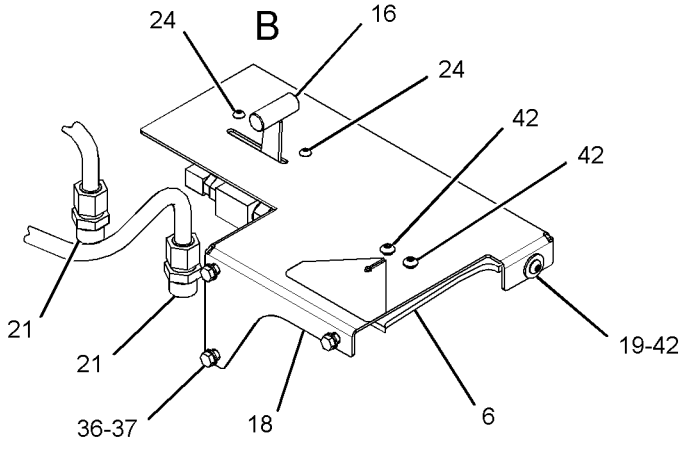


VIEW OF AREA A

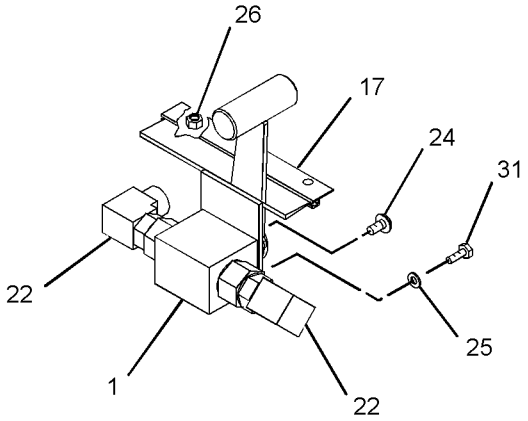


VIEW OF AREA B
(BRACKET REMOVED FOR CLARITY)

GRAPHIC #2 **<END>** g02155269

# HYDRAULIC SYSTEM

## *332-7664* LINES GP-LIFT CYLINDER

**S/N: TNK1-UP**
**PART OF 326-5468 HYDRAULIC AR**
**AN ATTACHMENT**

**SMCS-5057, 5102** **i03906992**

| NOTE | REF NO | GRAPHIC REF | PART NUMBER | QTY | PART NAME 1 2 3 4 5 6 (PRODUCT LEVEL) | SEE PAGE |
|---|---|---|---|---|---|---|
| Y | 1 | 1 | **112-1817** | 1 | VALVE GP-MANUAL (LIFT CYLINDER) | 202 |
| I | 2 | 1 | **190-8074** | 2 | HOSE AS | |
| I | 3 | 1 | **190-8075** | 2 | HOSE AS | |
| | 4 | 1 | **218-6438** | 1 | SEAL | |
| | 5 | 1 | **289-3763** | 1 | TUBE AS | |
| | 6 | 1 | **289-3765** | 1 | TUBE AS | |
| | 7 | 1 | **289-3766** | 1 | TUBE AS | |
| I | 8 | 1 | **326-5581** | 1 | HOSE AS | |
| | 9 | 1 | **326-5590** | 1 | TUBE AS | |
| I | 10 | 1 | **326-5612** | 1 | HOSE AS | |
| | 11 | 1 | **326-5614** | 1 | HANDLE AS | |
| | 12 | 1 | **326-5634** | 1 | BRUSH AS | |
| | 13 | 1 | **326-5640** | 1 | BRACKET AS | |
| M | | 1 | **6V-9632** | 3 | NUT-WELD (M6X1-THD) | |
| M | | 1 | **8T-3612** | 3 | NUT-WELD (M8X1.25-THD) | |
| | 14 | 1 | **101-2867** | 1 | WASHER-HARD (7.2X25X2-MM THK) | |
| | 15 | 1 | *148-8341* | 2 | CONNECTOR AS | |
| | | | | | (EACH INCLUDES) | |
| | | 1 | **3D-2824** | 1 | SEAL-O-RING | |
| | | 1 | **6V-8713** | 1 | CONNECTOR | |
| | | 1 | **7J-9108** | 1 | SEAL-O-RING | |
| | 16 | 1 | *148-8378* | 2 | ELBOW AS | |
| | | | | | (EACH INCLUDES) | |
| | | 1 | **3J-1907** | 1 | SEAL-O-RING | |
| | | 1 | **6V-8397** | 1 | SEAL-O-RING | |
| | | 1 | **6V-8724** | 1 | ELBOW | |
| M | 17 | 1 | **271-9408** | 3 | SCREW-TRUSS HEAD (M5X0.8X10-MM) | |
| | 18 | 1 | **4B-4863** | 4 | WASHER (4.7X11X1.2-MM THK) | |
| M | 19 | 1 | **5C-2874** | 2 | NUT (M5X0.8-THD) | |
| | 20 | 1 | **6V-8398** | 8 | SEAL-O-RING | |
| | 21 | 1 | **7J-9108** | 2 | SEAL-O-RING | |
| M | 22 | 1 | **8T-0285** | 4 | SCREW-MACHINE (M4X0.7X12-MM) | |
| | 23 | 1 | **8T-4121** | 3 | WASHER-HARD (11X21X2.5-MM THK) | |
| M | 24 | 1 | **8T-4137** | 3 | BOLT (M10X1.5X20-MM) | |
| | 25 | 1 | **8T-4224** | 3 | WASHER-HARD (8.8X16X2-MM THK) | |
| M | 26 | 1 | **8T-4908** | 3 | BOLT (M8X1.25X25-MM) | |
| | 27 | 1 | **9R-1004** | 2 | CLIP (TAB) | |
| | 28 | 1 | **9R-1005** | 3 | CLIP (SLOT) | |
| | 29 | 1 | **9R-7802** | 1 | CLIP (SLOT) | |
| | 30 | 1 | **9R-7803** | 1 | CLIP (TAB) | |
| M | 31 | 1 | **9X-2043** | 3 | SCREW-TRUSS HEAD (M6X1X14-MM) | |

I-REFER TO HYDRAULIC INFORMATION SYSTEM
M-METRIC PART
Y-SEPARATE ILLUSTRATION

## *332-7664* **LINES GP-LIFT CYLINDER** *(contd.)* **i03906992**

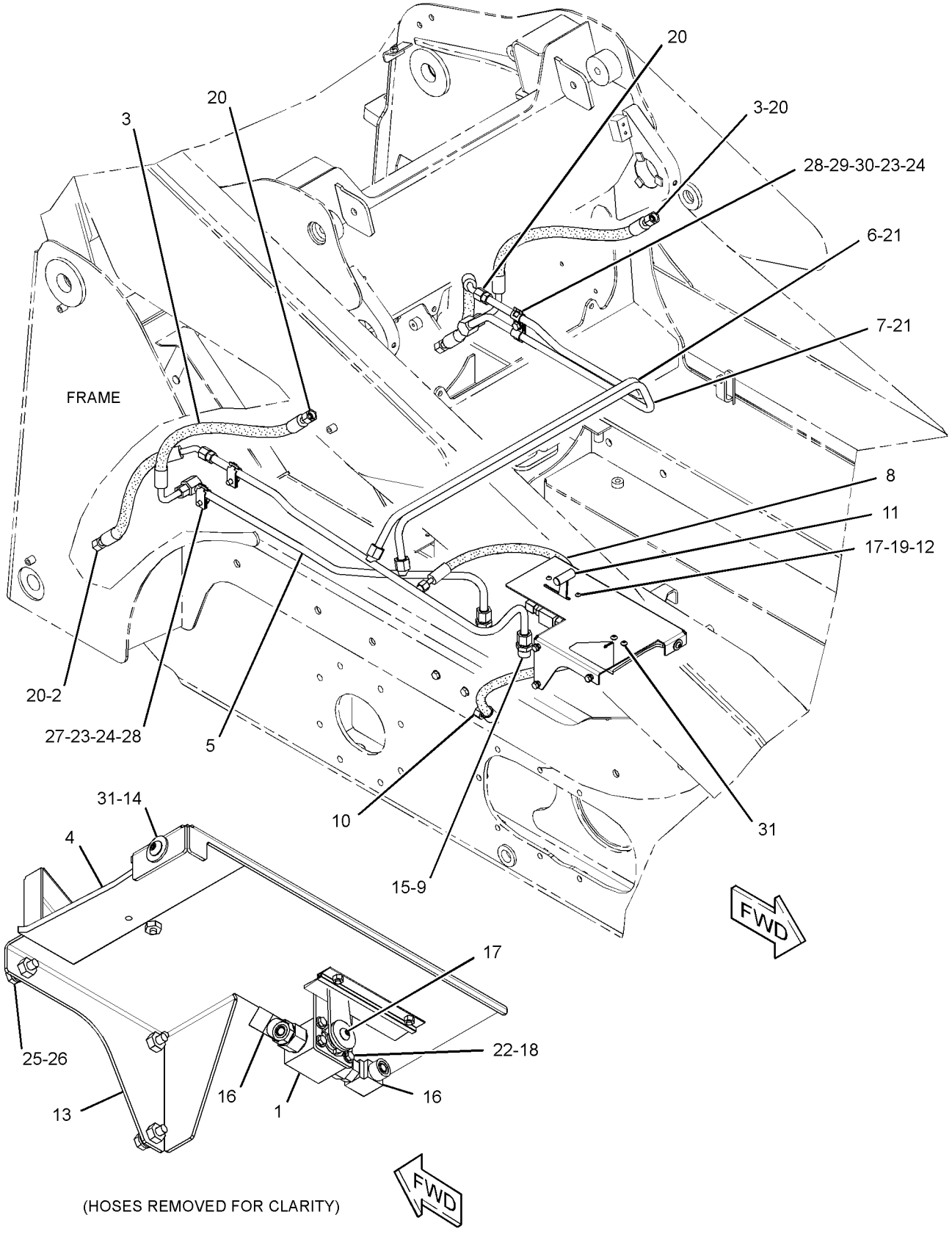


GRAPHIC #1 **<END>** g02154143

# HYDRAULIC SYSTEM

## *218-5631* LINES GP-PILOT—DIRECTION, SPEED

**S/N: TNK1-UP**

**PART OF 326-5445 HYDRAULIC AR**

**SMCS-5057, 5059** **i02757329**

| NOTE | REF NO | GRAPHIC REF | PART NUMBER | QTY | PART NAME 1 2 3 4 5 6 (PRODUCT LEVEL) | SEE PAGE |
|---|---|---|---|---|---|---|
| | 1 | 1 | **6V-0852** | 1 | CAP-DUST | |
| | 2 | 1 | **7K-1181** | 2 | STRAP-CABLE | |
| | 3 | 1 | *148-8423* | 1 | TEE AS | |
| | | 1 | **8T-3311** | 1 | TEE | |
| | | 1 | **3J-1907** | 1 | SEAL-O-RING | |
| | | 1 | **4J-5477** | 1 | SEAL-O-RING | |
| | 4 | 1 | *164-5567* | 1 | COUPLER AS-QUICK DISCONNECT (MALE) | |
| | | 1 | **6V-3965** | 1 | FITTING (QUICK DISCONNECT) | |
| | | 1 | **3J-1907** | 1 | SEAL-O-RING | |
| | 5 | 1 | **193-8392** | 2 | HOSE AS | |
| | 6 | 1 | **193-8393** | 2 | HOSE AS | |
| | 7 | 1 | **218-5770** | 1 | HOSE AS | |
| | 8 | 1 | **218-5968** | 1 | BRACKET | |
| | 9 | 1 | **218-6864** | 1 | HOSE AS | |
| | 10 | 1 | *148-8316* | 2 | CONNECTOR AS | |
| | | | | | (EACH INCLUDES) | |
| | | 1 | **6V-8647** | 1 | CONNECTOR | |
| | | 1 | **3J-7354** | 1 | SEAL-O-RING | |
| | | 1 | **4J-5477** | 1 | SEAL-O-RING | |
| | 11 | 1 | *148-8325* | 5 | CONNECTOR AS | |
| | | | | | (EACH INCLUDES) | |
| | | 1 | **6V-8641** | 1 | CONNECTOR | |
| | | 1 | **3J-1907** | 1 | SEAL-O-RING | |
| | | 1 | **4J-5477** | 1 | SEAL-O-RING | |
| | 12 | 1 | *148-8369* | 2 | ELBOW AS | |
| | | | | | (EACH INCLUDES) | |
| | | 1 | **6V-8628** | 1 | ELBOW | |
| | | 1 | **3J-7354** | 1 | SEAL-O-RING | |
| | | 1 | **4J-5477** | 1 | SEAL-O-RING | |
| | 13 | 1 | *150-4043* | 1 | CONNECTOR AS | |
| | | 1 | **6V-9873** | 1 | CONNECTOR | |
| | | 1 | **3J-1907** | 1 | SEAL-O-RING | |
| | | 1 | **6V-8398** | 1 | SEAL-O-RING | |

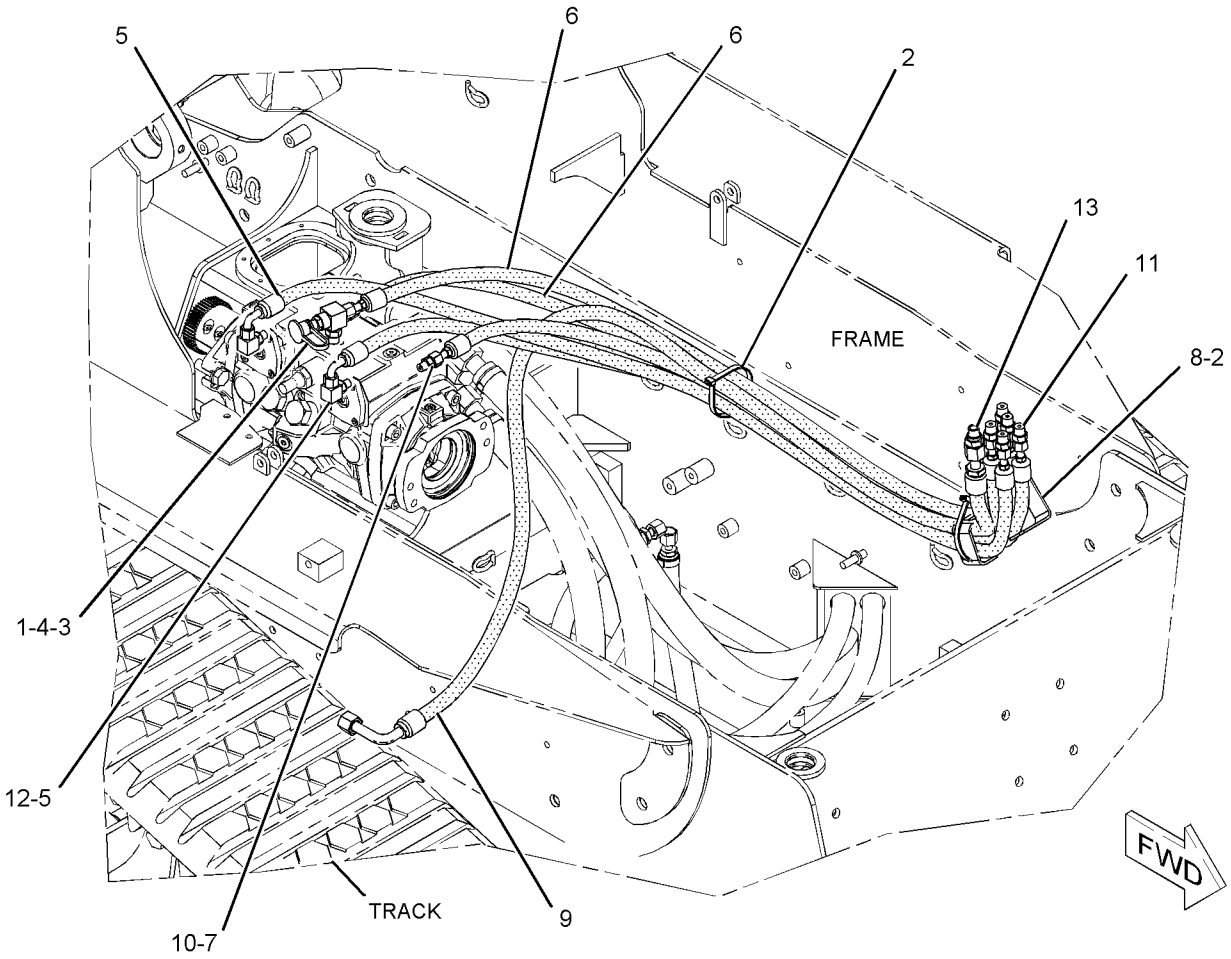


GRAPHIC #1 **<END>** g01066425

# *218-5632* LINES GP-PILOT—WORK TOOL

**S/N: TNK1-UP**

**PART OF 326-5445 HYDRAULIC AR**

**SMCS-5057, 5059** **i03970889**

| NOTE | REF NO | GRAPHIC REF | PART NUMBER | QTY | PART NAME 1 2 3 4 5 6 (PRODUCT LEVEL) | SEE PAGE |
|---|---|---|---|---|---|---|
| | 1 | 1 | *154-5232* | 1 | ADAPTER AS | |
| | | 1 | **112-9783** | 1 | ADAPTER | |
| | | 1 | **3K-0360** | 1 | SEAL-O-RING | |
| | | 1 | **4J-5477** | 1 | SEAL-O-RING | |
| Y | 2 | 1 | *179-7001* | 1 | ADAPTER GP-OIL LINE | 157 |
| I | 3 | 1 | **190-7453** | 1 | HOSE AS | |
| | 4 | 1 | **195-6768** | 1 | SCREEN (HYDRAULIC) | |
| | 5 | 1 | **195-6769** | 1 | WASHER (6.99X12.7X5.46-MM THK) | |
| I | 6 | 1 | **218-5571** | 2 | HOSE AS | |
| I | 7 | 1 | **218-5572** | 2 | HOSE AS | |
| I | 8 | 1 | **218-6601** | 1 | HOSE AS | |
| | 9 | 1 | **123-4750** | 1 | VALVE-CHECK | |
| | 10 | 1 | *148-8325* | 9 | CONNECTOR AS | |
| | | | | | (EACH INCLUDES) | |
| | | 1 | **6V-8641** | 1 | CONNECTOR | |
| | | 1 | **3J-1907** | 1 | SEAL-O-RING | |
| | | 1 | **4J-5477** | 1 | SEAL-O-RING | |
| | 11 | 1 | *148-8435* | 1 | TEE AS | |
| | | 1 | **6V-8781** | 1 | TEE-FACE SEAL | |
| | | 1 | **3J-1907** | 1 | SEAL-O-RING | |
| | | 1 | **6V-8397** | 2 | SEAL-O-RING | |
| | 12 | 1 | *150-4027* | 1 | TEE AS | |
| | | 1 | **3E-2310** | 1 | TEE | |
| | | 1 | **3J-1907** | 1 | SEAL-O-RING | |
| | | 1 | **6V-8397** | 1 | SEAL-O-RING | |
| I | 13 | 1 | **193-8313** | 1 | HOSE AS | |
| | 16 | 1 | **6D-3479** | 1 | CLIP | |
| | 17 | 1 | **8T-4121** | 1 | WASHER-HARD (11X21X2.5-MM THK) | |
| M | 18 | 1 | **8T-4191** | 1 | BOLT (M10X1.5X16-MM) | |

I-REFER TO HYDRAULIC INFORMATION SYSTEM
M-METRIC PART
Y-SEPARATE ILLUSTRATION

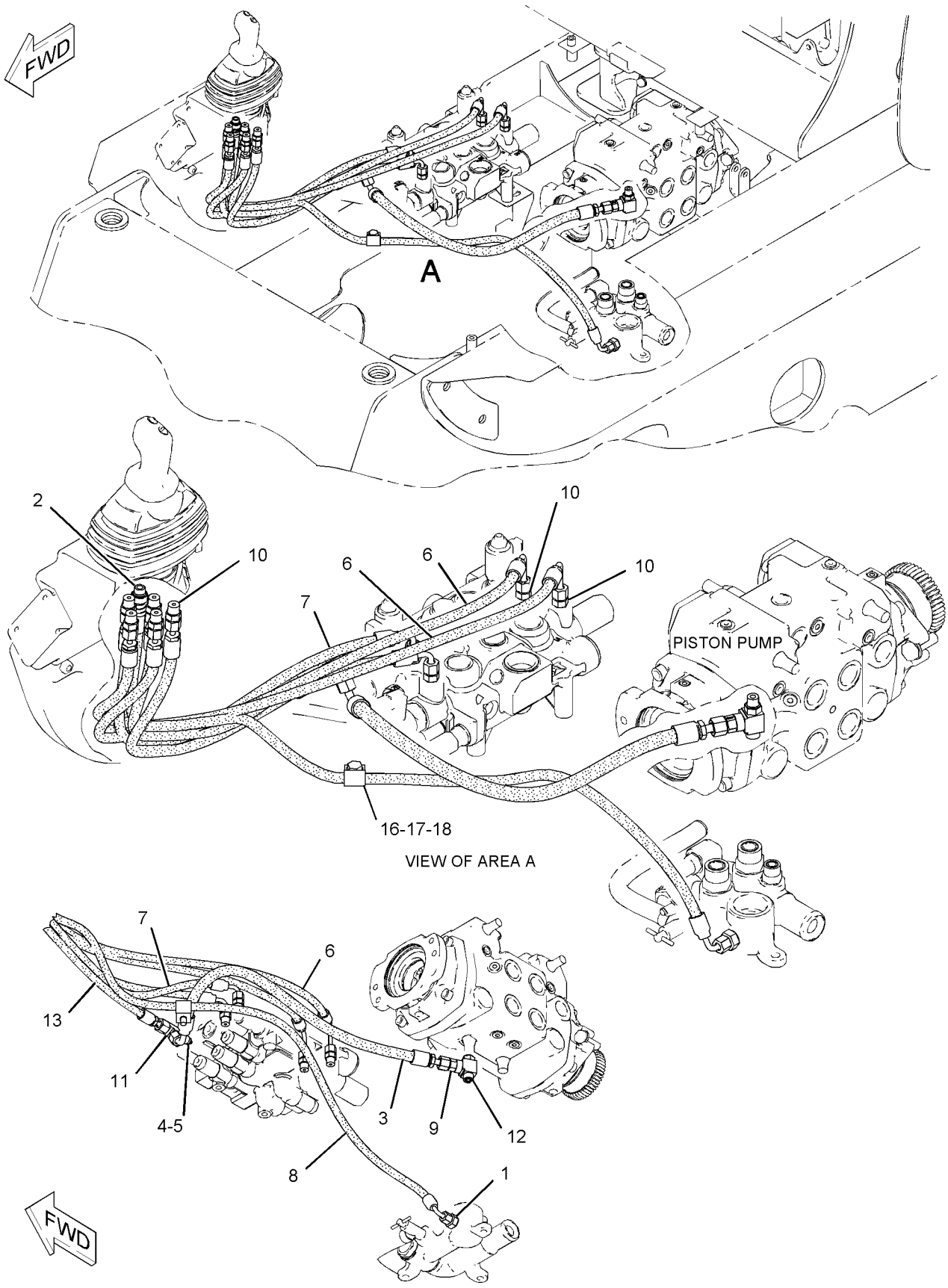


GRAPHIC #1 **<END>** g01127586

# *356-1911* LINES GP-PUMP—WORK TOOL

**S/N: TNK1-UP**

**PART OF 326-5445 HYDRAULIC AR**

**SMCS-5057** **i03907512**

| NOTE | REF NO | GRAPHIC REF | PART NUMBER | QTY | PART NAME 1 2 3 4 5 6 (PRODUCT LEVEL) | SEE PAGE |
|---|---|---|---|---|---|---|
| D | 1 | 1 | **5P-9909** | | SEAL (0.1-M) | |
| | 2 | 1 | **2S-3440** | 2 | CLAMP-HOSE | |
| | 3 | 1 | **5P-2230** | 3 | CLAMP-HOSE | |
| | 4 | 1 | **6V-0852** | 1 | CAP-DUST | |
| | 5 | 1 | *9U-6994* | 1 | FITTING GP | |
| | | 1 | **5P-4362** | 1 | CONNECTOR | |
| | | 1 | **7M-8485** | 1 | SEAL-O-RING | |
| | 6 | 1 | **9U-6995** | 1 | FITTING GP-HYDRAULIC | |
| | | 1 | **2S-4078** | 1 | SEAL-O-RING | |
| | | 1 | **034-2151** | 1 | CONNECTOR | |
| | 7 | 1 | **180-3007** | 1 | CLAMP-HOSE | |
| | 8 | 1 | **193-8308** | 1 | ADAPTER | |
| I | 9 | 1 | **193-8321** | 1 | HOSE AS | |
| | 10 | 1 | **218-5831** | 1 | HOSE | |
| | 11 | 1 | **283-9477** | 1 | HOSE | |
| | 12 | 1 | **347-4040** | 1 | HOSE | |
| | 13 | 1 | *148-8315* | 1 | CONNECTOR AS | |
| | | 1 | **2M-9780** | 1 | SEAL-O-RING | |
| | | 1 | **6V-8642** | 1 | CONNECTOR | |
| | | 1 | **7J-9108** | 1 | SEAL-O-RING | |
| | 14 | 1 | *148-8360* | 1 | ELBOW AS | |
| | | 1 | **6V-9182** | 1 | ELBOW | |
| | | 1 | **6V-9746** | 1 | SEAL-O-RING | |
| | | 1 | **7M-8485** | 1 | SEAL-O-RING | |
| | 15 | 1 | *164-5567* | 1 | COUPLER AS-QUICK DISCONNECT (MALE) | |
| | | 1 | **6V-3965** | 1 | FITTING (QUICK DISCONNECT) | |
| | | 1 | **214-7568** | 1 | SEAL-O-RING | |
| | 16 | 1 | **1P-4578** | 2 | FLANGE-HALF | |
| | 17 | 1 | **4J-0522** | 1 | SEAL-O-RING | |
| | 18 | 1 | **4J-5267** | 1 | SEAL-O-RING | |
| | 19 | 1 | **8C-3205** | 2 | FLANGE-HALF | |
| | 20 | 1 | **8T-4121** | 8 | WASHER-HARD (11X21X2.5-MM THK) | |
| M | 21 | 1 | **8T-4196** | 8 | BOLT (M10X1.5X35-MM) | |

D-ORDER BY THE METER
I-REFER TO HYDRAULIC INFORMATION SYSTEM
M-METRIC PART

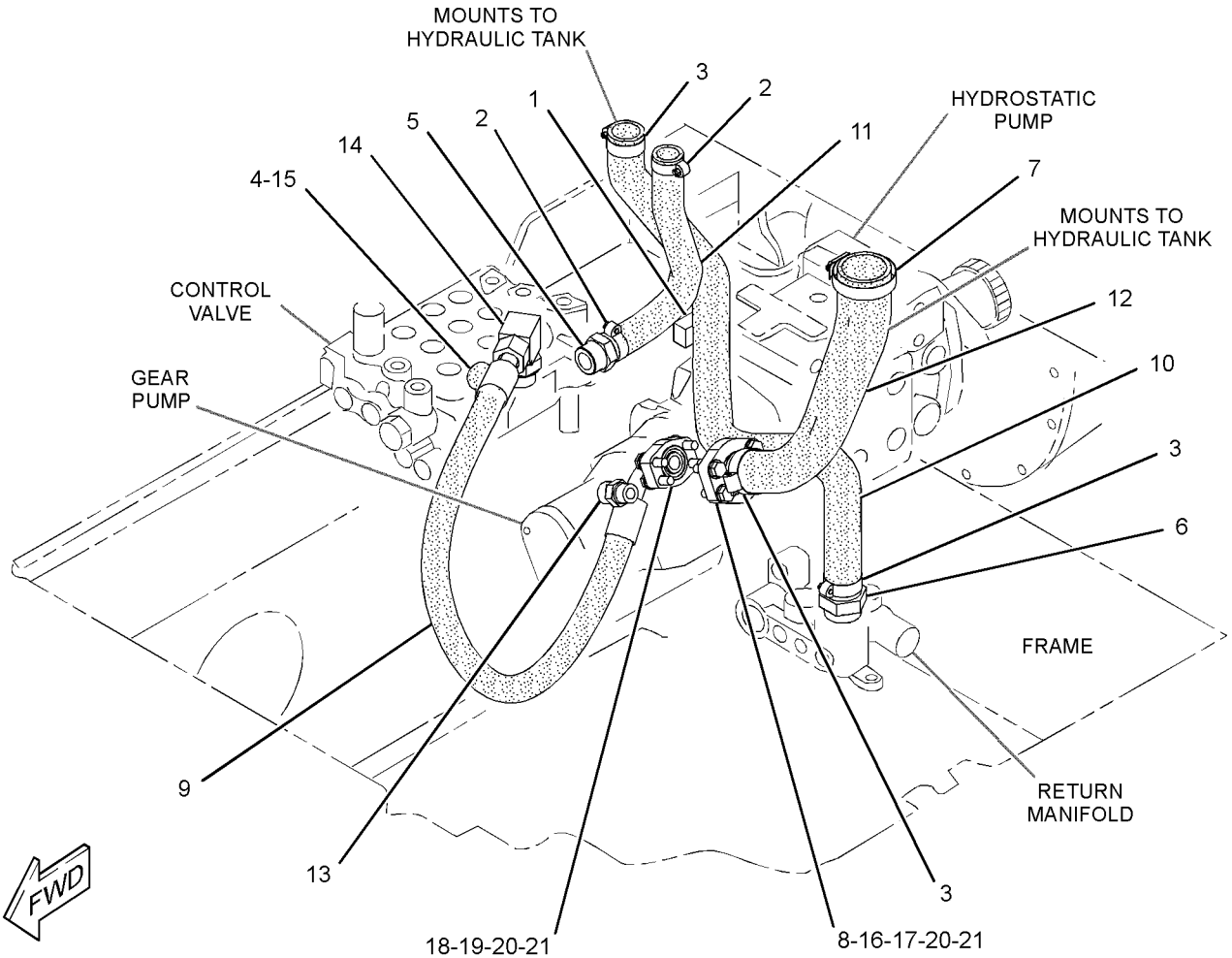


GRAPHIC #1

**<END>**

g02150647

# HYDRAULIC SYSTEM

## *218-5712* LINES GP-TILT CYLINDER–
### WITH WORK TOOL POSITIONER
### S/N: TNK1-UP
### PART OF 326-5481 HYDRAULIC AR
### AN ATTACHMENT

**SMCS-5057, 5104** **i02545860**

| NOTE | REF NO | GRAPHIC REF | PART NUMBER | QTY | PART NAME 1 2 3 4 5 6 (PRODUCT LEVEL) | SEE PAGE |
|---|---|---|---|---|---|---|
| | 1 | 1 | **102-8703** | 2 | PLATE-COVER | |
| I | 2 | 1 | **142-9234** | 4 | HOSE AS | |
| I | 3 | 1 | **190-8073** | 2 | HOSE AS | |
| | 4 | 1 | **195-6750** | 4 | CLAMP-DOUBLE | |
| | 5 | 1 | **218-6162** | 1 | TUBE AS | |
| | 6 | 1 | **289-3785** | 1 | TUBE AS | |
| | 7 | 1 | **218-6164** | 1 | TUBE AS | |
| | 8 | 1 | **289-3787** | 1 | TUBE AS | |
| | 9 | 1 | **220-6381** | 2 | BOLT (M8X1.25X40-MM) | |
| | 10 | 1 | **233-5697** | 1 | TUBE AS | |
| | 11 | 1 | **233-5698** | 1 | TUBE AS | |
| C | 12 | 1 | *148-8315* | 2 | CONNECTOR AS | |
| | | | | | (EACH INCLUDES) | |
| | | 1 | **2M-9780** | 1 | SEAL-O-RING | |
| | | 1 | **6V-8642** | 1 | CONNECTOR | |
| | | 1 | **7J-9108** | 1 | SEAL-O-RING | |
| | 13 | 1 | *148-8319* | 1 | CONNECTOR AS | |
| | | 1 | **2M-9780** | 1 | SEAL-O-RING | |
| | | 1 | **6V-8397** | 1 | SEAL-O-RING | |
| | | 1 | **6V-8715** | 1 | CONNECTOR | |
| | 14 | 1 | *205-3692* | 1 | ELBOW AS | |
| | | 1 | **2M-9780** | 1 | SEAL-O-RING | |
| | | 1 | **6V-8397** | 1 | SEAL-O-RING | |
| | | 1 | **9X-2134** | 1 | ELBOW | |
| | 15 | 1 | **5P-7464** | 4 | CLIP (SLOT) | |
| | 16 | 1 | **5P-7465** | 4 | CLIP (TAB) | |
| | 17 | 1 | **6V-7359** | 4 | GROMMET | |
| | 18 | 1 | **6V-8397** | 2 | SEAL-O-RING | |
| | 19 | 1 | **6V-8398** | 8 | SEAL-O-RING | |
| | 20 | 1 | **7J-9108** | 4 | SEAL-O-RING | |
| | 21 | 1 | **8T-4121** | 3 | WASHER-HARD (11X21X2.5-MM THK) | |
| M | 22 | 1 | **8T-4136** | 2 | BOLT (M10X1.5X25-MM) | |
| M | 23 | 1 | **8T-4137** | 1 | BOLT (M10X1.5X20-MM) | |
| M | 24 | 1 | **8T-4139** | 2 | BOLT (M12X1.75X30-MM) | |
| M | 25 | 1 | **8T-4194** | 2 | BOLT (M12X1.75X50-MM) | |
| | 26 | 1 | **8T-4223** | 6 | WASHER-HARD (13.5X25.5X3-MM THK) | |
| M | 27 | 1 | **8T-4244** | 2 | NUT (M12X1.75-THD) | |
| | 28 | 1 | **9R-1005** | 3 | CLIP (SLOT) | |
| | 29 | 1 | **9R-7802** | 3 | CLIP (SLOT) | |
| | 30 | 1 | **9R-7803** | 3 | CLIP (TAB) | |
| | 31 | 1 | **8T-4224** | 2 | WASHER-HARD (8.8X16X2-MM THK) | |

C-CHANGE FROM PREVIOUS TYPE
I-REFER TO HYDRAULIC INFORMATION SYSTEM
M-METRIC PART

## *218-5712* **LINES GP-TILT CYLINDER** *(contd.)* **i02545860**

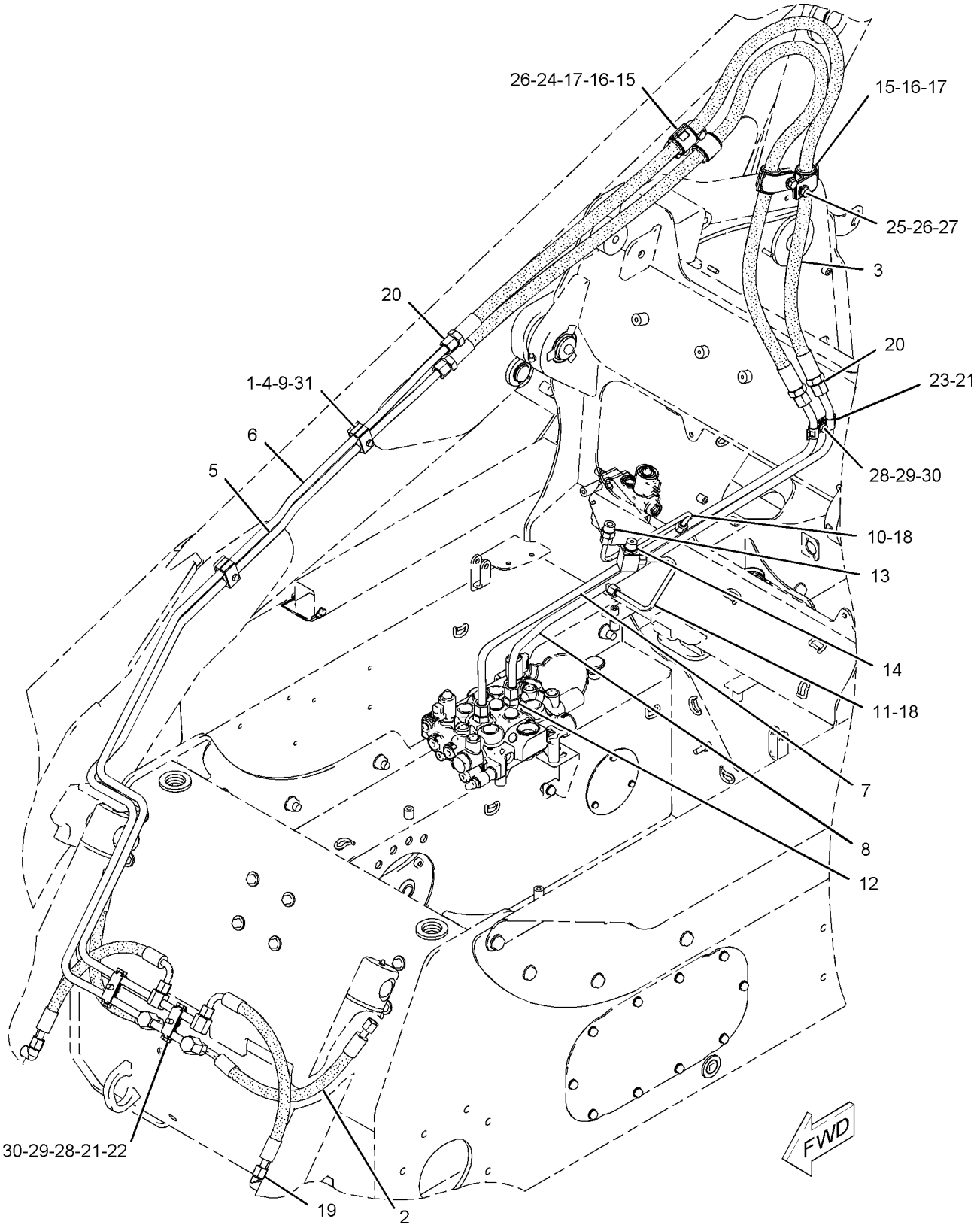


GRAPHIC #1 **<END>** g01102210

# HYDRAULIC SYSTEM

## *218-6170* LINES GP-TILT CYLINDER

**S/N: TNK1-UP**
**PART OF 326-5468 HYDRAULIC AR**
**AN ATTACHMENT**

**SMCS-5057, 5104** **i02545865**

| NOTE | REF NO | GRAPHIC REF | PART NUMBER | QTY | PART NAME 1 2 3 4 5 6 (PRODUCT LEVEL) | SEE PAGE |
|---|---|---|---|---|---|---|
| | 1 | 1 | **102-8703** | 2 | PLATE-COVER | |
| I | 2 | 1 | **142-9234** | 4 | HOSE AS | |
| I | 3 | 1 | **190-8073** | 2 | HOSE AS | |
| | 4 | 1 | **195-6750** | 4 | CLAMP-DOUBLE | |
| | 5 | 1 | **289-3784** | 1 | TUBE AS | |
| | 6 | 1 | **218-6155** | 1 | TUBE AS | |
| | 7 | 1 | **218-6162** | 1 | TUBE AS | |
| | 8 | 1 | **289-3785** | 1 | TUBE AS | |
| | 9 | 1 | **220-6381** | 2 | BOLT (M8X1.25X40-MM) | |
| C | 10 | 1 | *148-8315* | 2 | CONNECTOR AS | |
| | | | | | (EACH INCLUDES) | |
| | | 1 | **2M-9780** | 1 | SEAL-O-RING | |
| | | 1 | **6V-8642** | 1 | CONNECTOR | |
| | | 1 | **7J-9108** | 1 | SEAL-O-RING | |
| | 11 | 1 | **5P-7464** | 4 | CLIP (SLOT) | |
| | 12 | 1 | **5P-7465** | 4 | CLIP (TAB) | |
| | 13 | 1 | **6V-7359** | 4 | GROMMET | |
| | 14 | 1 | **6V-8398** | 8 | SEAL-O-RING | |
| | 15 | 1 | **7J-9108** | 4 | SEAL-O-RING | |
| | 16 | 1 | **8T-4121** | 3 | WASHER-HARD (11X21X2.5-MM THK) | |
| M | 17 | 1 | **8T-4136** | 2 | BOLT (M10X1.5X25-MM) | |
| M | 18 | 1 | **8T-4137** | 1 | BOLT (M10X1.5X20-MM) | |
| M | 19 | 1 | **8T-4139** | 2 | BOLT (M12X1.75X30-MM) | |
| M | 20 | 1 | **8T-4194** | 2 | BOLT (M12X1.75X50-MM) | |
| | 21 | 1 | **8T-4223** | 6 | WASHER-HARD (13.5X25.5X3-MM THK) | |
| M | 22 | 1 | **8T-4244** | 2 | NUT (M12X1.75-THD) | |
| | 23 | 1 | **9R-1005** | 3 | CLIP (SLOT) | |
| | 24 | 1 | **9R-7802** | 3 | CLIP (SLOT) | |
| | 25 | 1 | **9R-7803** | 3 | CLIP (TAB) | |

C-CHANGE FROM PREVIOUS TYPE
I-REFER TO HYDRAULIC INFORMATION SYSTEM
M-METRIC PART

*218-6170* **LINES GP-TILT CYLINDER** *(contd.)* **i02545865**

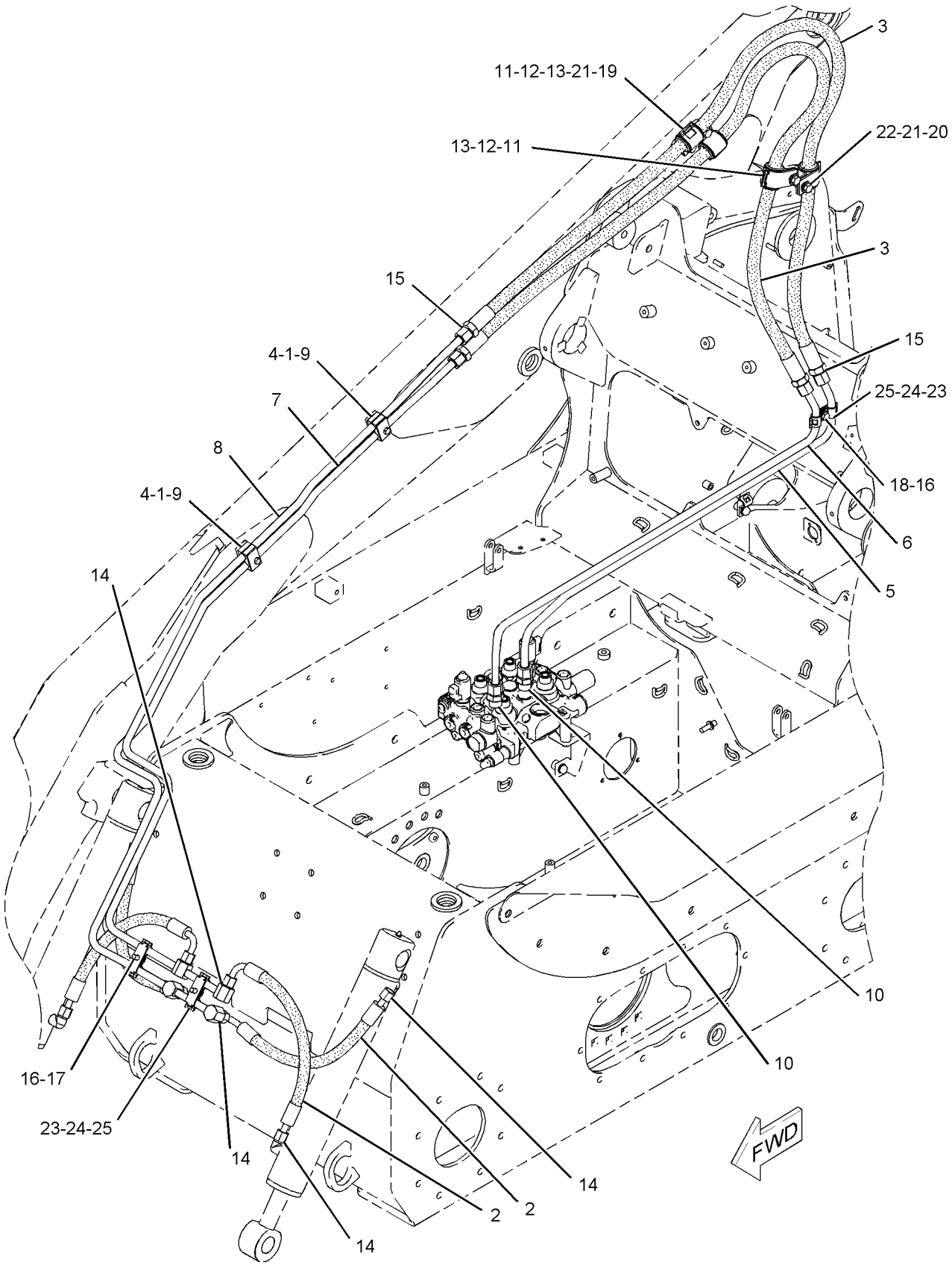


GRAPHIC #1 **<END>** g01102295

# HYDRAULIC SYSTEM

## *218-5936* LINES GP-WORK TOOL

**S/N: TNK1-UP**

**PART OF 326-5445 HYDRAULIC AR**

**SMCS-5057** **i02559813**

| NOTE | REF NO | GRAPHIC REF | PART NUMBER | QTY | PART NAME 1 2 3 4 5 6 (PRODUCT LEVEL) | SEE PAGE |
|---|---|---|---|---|---|---|
| M | 1 | 1 | **101-3129** | 1 | STUD (M10X1.5-THD) | |
| | 2 | 1 | **102-8703** | 2 | PLATE-COVER | |
| I | 3 | 1 | **190-8073** | 2 | HOSE AS | |
| | 4 | 1 | **193-8334** | 1 | FITTING AS (QUICK DISCONNECT, MALE) | |
| | 5 | 1 | **193-8335** | 1 | FITTING AS (QUICK DISCONNECT, FEMALE) | |
| | 6 | 1 | **195-6750** | 4 | CLAMP-DOUBLE | |
| C | 7 | 1 | **285-9286** | 2 | BLOCK | |
| | 8 | 1 | **218-5764** | 2 | PLATE | |
| | 9 | 1 | **291-5067** | 1 | TUBE AS | |
| | 10 | 1 | **291-5070** | 1 | TUBE AS | |
| | 11 | 1 | **291-5068** | 1 | TUBE AS | |
| | 12 | 1 | **291-5069** | 1 | TUBE AS | |
| | 13 | 1 | **218-6006** | 1 | BRACKET AS | |
| | 14 | 1 | **220-6381** | 2 | BOLT (M8X1.25X40-MM) | |
| | 15 | 1 | *148-8341* | 2 | CONNECTOR AS | |
| | | | | | (EACH INCLUDES) | |
| | | 1 | **3D-2824** | 1 | SEAL-O-RING | |
| | | 1 | **6V-8713** | 1 | CONNECTOR | |
| | | 1 | **7J-9108** | 1 | SEAL-O-RING | |
| | 16 | 1 | **5P-7464** | 4 | CLIP (SLOT) | |
| | 17 | 1 | **5P-7465** | 4 | CLIP (TAB) | |
| | 18 | 1 | **6V-7359** | 4 | GROMMET | |
| | 19 | 1 | **6V-9170** | 2 | NUT-BULKHEAD (1-14-THD) | |
| | 20 | 1 | **7J-9108** | 6 | SEAL-O-RING | |
| M | 21 | 1 | **7X-2546** | 2 | BOLT (M10X1.5X180-MM) | |
| | 22 | 1 | **8T-4121** | 7 | WASHER-HARD (11X21X2.5-MM THK) | |
| M | 23 | 1 | **8T-4137** | 1 | BOLT (M10X1.5X20-MM) | |
| M | 24 | 1 | **8T-4139** | 2 | BOLT (M12X1.75X30-MM) | |
| M | 25 | 1 | **8T-4194** | 2 | BOLT (M12X1.75X50-MM) | |
| M | 26 | 1 | **8T-4195** | 3 | BOLT (M10X1.5X30-MM) | |
| | 27 | 1 | **8T-4223** | 6 | WASHER-HARD (13.5X25.5X3-MM THK) | |
| | 28 | 1 | **8T-4224** | 2 | WASHER-HARD (8.8X16X2-MM THK) | |
| M | 29 | 1 | **8T-4244** | 2 | NUT (M12X1.75-THD) | |
| | 30 | 1 | **9R-1005** | 1 | CLIP (SLOT) | |
| | 31 | 1 | **9R-7802** | 1 | CLIP (SLOT) | |
| | 32 | 1 | **9R-7803** | 1 | CLIP (TAB) | |

C-CHANGE FROM PREVIOUS TYPE
I-REFER TO HYDRAULIC INFORMATION SYSTEM
M-METRIC PART

*218-5936* **LINES GP-WORK TOOL** *(contd.)* **i02559813**

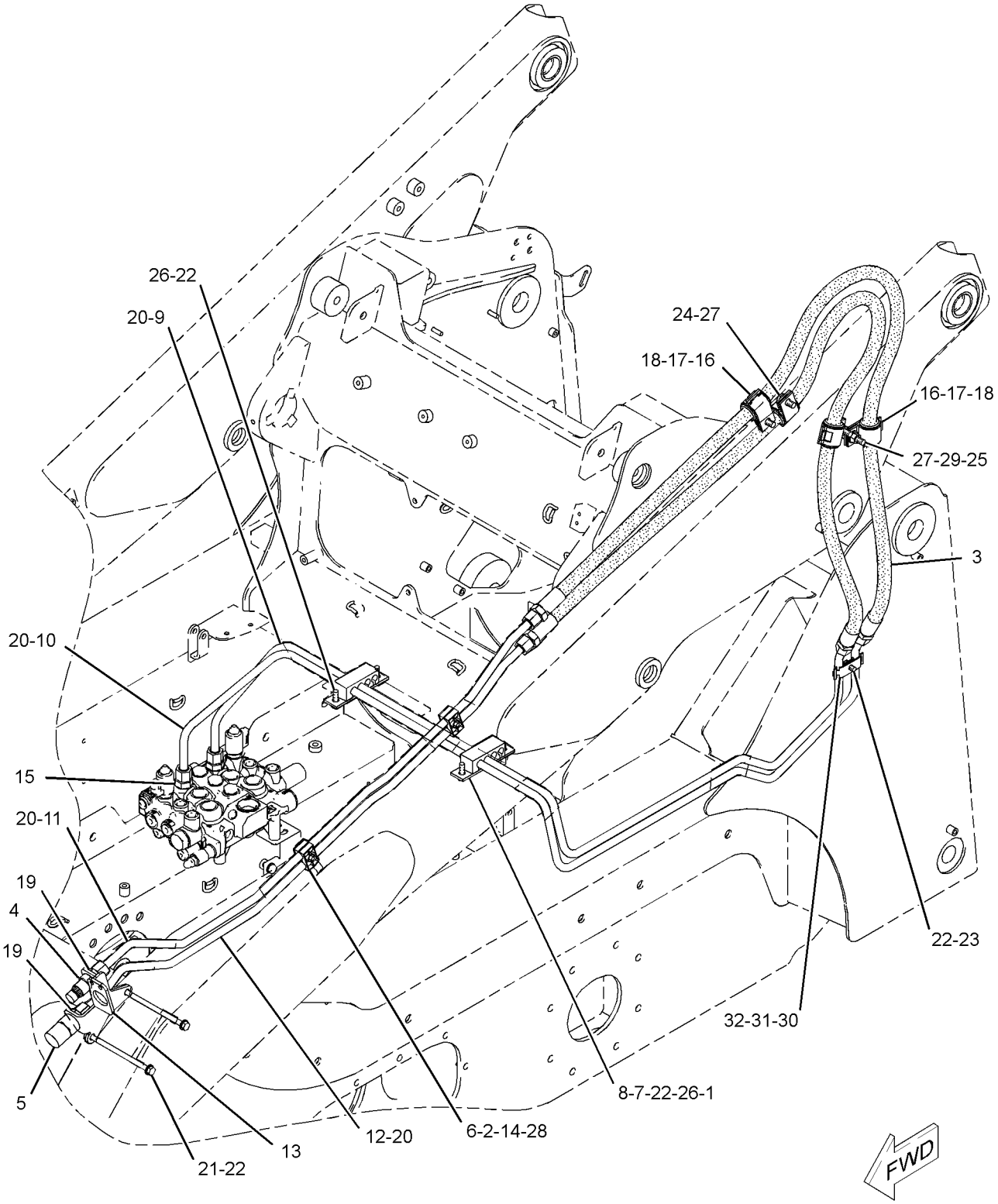


GRAPHIC #1 **<END>** g01258164

# 223-8418 MANIFOLD & SOLENOID GP-CONTROL

**S/N: TNK1-UP**
**PART OF 326-5677 LINES GP-LIFT CYLINDER**
**AN ATTACHMENT**

**SMCS-5264, 5479** **i03971114**

| NOTE | REF NO | GRAPHIC REF | PART NUMBER | QTY | PART NAME 1 2 3 4 5 6 (PRODUCT LEVEL) | SEE PAGE |
|---|---|---|---|---|---|---|
| | 1 | 1 | **102-8804** | 1 | KIT-RECEPTACLE (4-PIN) | |
| | | | | | (INCLUDES RECEPTACLE AS & WEDGE) | |
| J | 2 | 1 | **218-6858** | 1 | CARTRIDGE AS-VALVE | |
| | 3 | 1 | **9G-3695** | 2 | PLUG-SEAL | |
| | 4 | 1 | **126-1767** | 1 | PIN-CONNECTOR (14-GA) | |
| J | 5 | 1 | **218-6857** | 1 | COIL AS | |
| | | | | | AVAILABLE REPAIR KIT(S): | |
| | | | **218-6856** | 1 | KIT-SEAL | |
| | | | | | (INCLUDES O-RINGS, COVER & BACKUP WASHER) | |
| J | | | **155-1279** | 1 | KIT-SEAL | |
| | | | | | (ALSO INCLUDES O-RINGS & BACKUP RING) | |

J-KIT MARKED J SERVICES PARTS MARKED J

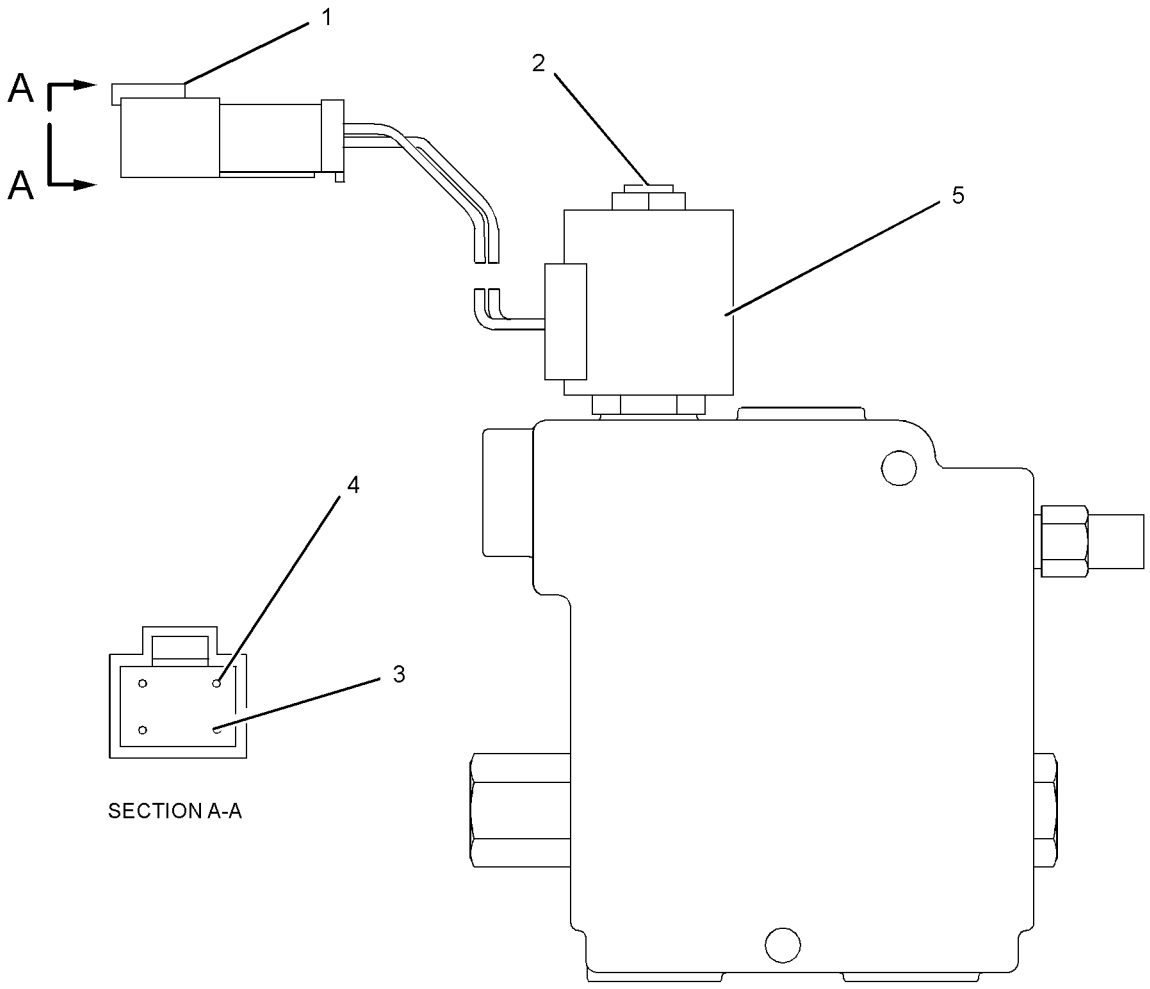


GRAPHIC #1 **<END>** g02162622

# 233-7128 MANIFOLD GP-CONTROL–QUICK COUPLER

**S/N: TNK1-UP**
**PART OF 332-8541 LINES GP-COUPLER**
**AN ATTACHMENT**

**SMCS-5117, 5264, 5479** **i03913092**

| NOTE | REF NO | GRAPHIC REF | PART NUMBER | QTY | PART NAME 1 2 3 4 5 6 (PRODUCT LEVEL) | SEE PAGE |
|---|---|---|---|---|---|---|
| | 1 | 1 | **245-1911** | 1 | WIRE AS | |
| | 2 | 1 | **249-7160** | 1 | VALVE GP-SOLENOID (QUICK COUPLER) | |
| | | 1 | **351-7389** | 1 | SPACER-SPECIAL | |
| | | 1 | **238-4626** | 2 | COIL AS | |

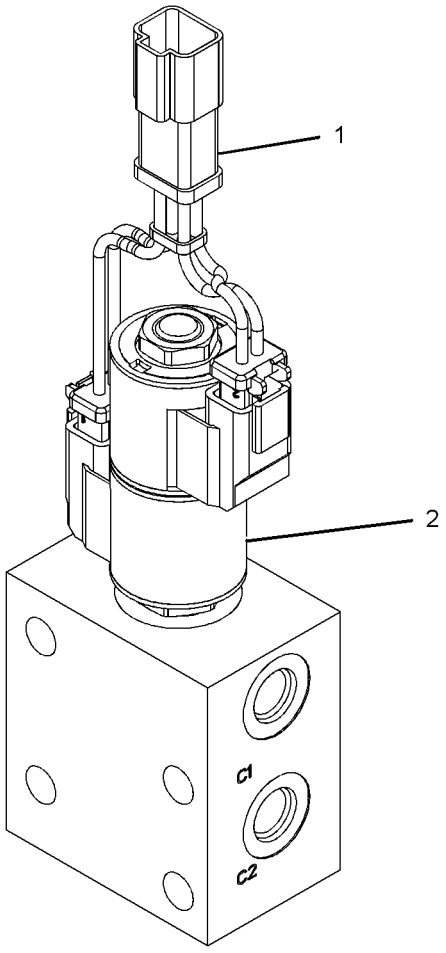


GRAPHIC #1 **<END>** g01132286

# *258-2579* MOTOR & MTG GP-HYDRAULIC FAN

**S/N: TNK1-UP**

**PART OF 356-1901 MOTOR AR-HYDRAULIC FAN**

**AN ATTACHMENT**

**SMCS-1386** **i03970896**

| NOTE | REF NO | GRAPHIC REF | PART NUMBER | QTY | PART NAME 1 2 3 4 5 6 (PRODUCT LEVEL) | SEE PAGE |
|---|---|---|---|---|---|---|
| J | 1 | 1 | **258-2577** | 1 | MOTOR GP-GEAR (FAN, DEMAND) | |
| M | | 1 | **8T-0271** | 2 | BOLT-SOCKET HEAD (M10X1.5X35-MM) | |
| M | | 1 | **9T-4884** | 2 | BOLT (M10X1.5X30-MM) | |
| | 2 | 1 | **277-8862** | 1 | VALVE GP-SOLENOID (REAR AXLE FAN UNLOADER) | |
| | | 1 | **238-4628** | 1 | COIL AS (12-VOLT) | |
| | 3 | 1 | **8T-4121** | 2 | WASHER-HARD (11X21X2.5-MM THK) | |
| | 4 | 1 | **8T-4224** | 1 | WASHER-HARD (8.8X16X2-MM THK) | |
| M | 5 | 1 | **8T-7547** | 1 | BOLT (M8X1.25X30-MM) | |
| M | 6 | 1 | **9X-6032** | 2 | BOLT-SOCKET HEAD (M10X1.5X30-MM) | |
| | | | | | AVAILABLE REPAIR KIT(S): | |
| J | | | **278-8716** | 1 | KIT-SEAL | |
| | | | | | (INCLUDES E-SEALS, O-RINGS, SHAFT SEAL, SNAP RING, BACKUP SEALS, AXIAL SEAL KIT & SEALS) | |

J-KIT MARKED J SERVICES PARTS MARKED J
M-METRIC PART

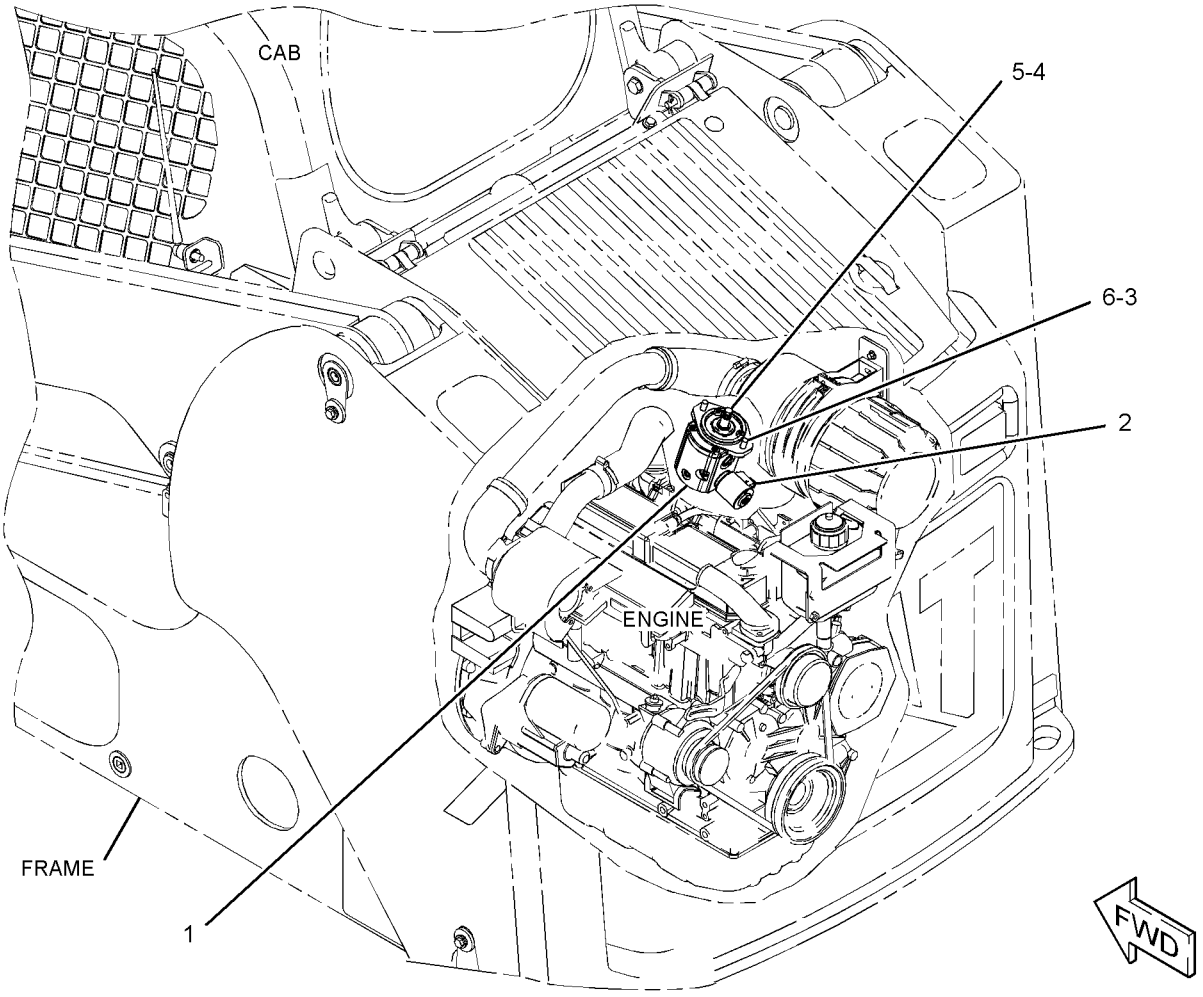


GRAPHIC #1 **<END>** g01315096

# HYDRAULIC SYSTEM

## *295-7221* MOTOR & MTG GP-HYDRAULIC FAN

**S/N: TNK1-UP**
**PART OF 356-1900 MOTOR AR-HYDRAULIC FAN**
**AN ATTACHMENT**

**SMCS-1386** **i02985302**

| NOTE | REF NO | GRAPHIC REF | PART NUMBER | QTY | PART NAME 1 2 3 4 5 6 (PRODUCT LEVEL) | SEE PAGE |
|---|---|---|---|---|---|---|
| CY | 1 | 1 | **307-3036** | 1 | MOTOR GP-GEAR (HYDRAULIC FAN) | 194 |
| | 2 | 1 | **8T-4121** | 2 | WASHER-HARD (11X21X2.5-MM THK) | |
| M | 3 | 1 | **8T-4196** | 2 | BOLT (M10X1.5X35-MM) | |
| | 4 | 1 | **8T-4224** | 1 | WASHER-HARD (8.8X16X2-MM THK) | |
| M | 5 | 1 | **8T-7547** | 1 | BOLT (M8X1.25X30-MM) | |

C-CHANGE FROM PREVIOUS TYPE
M-METRIC PART
Y-SEPARATE ILLUSTRATION

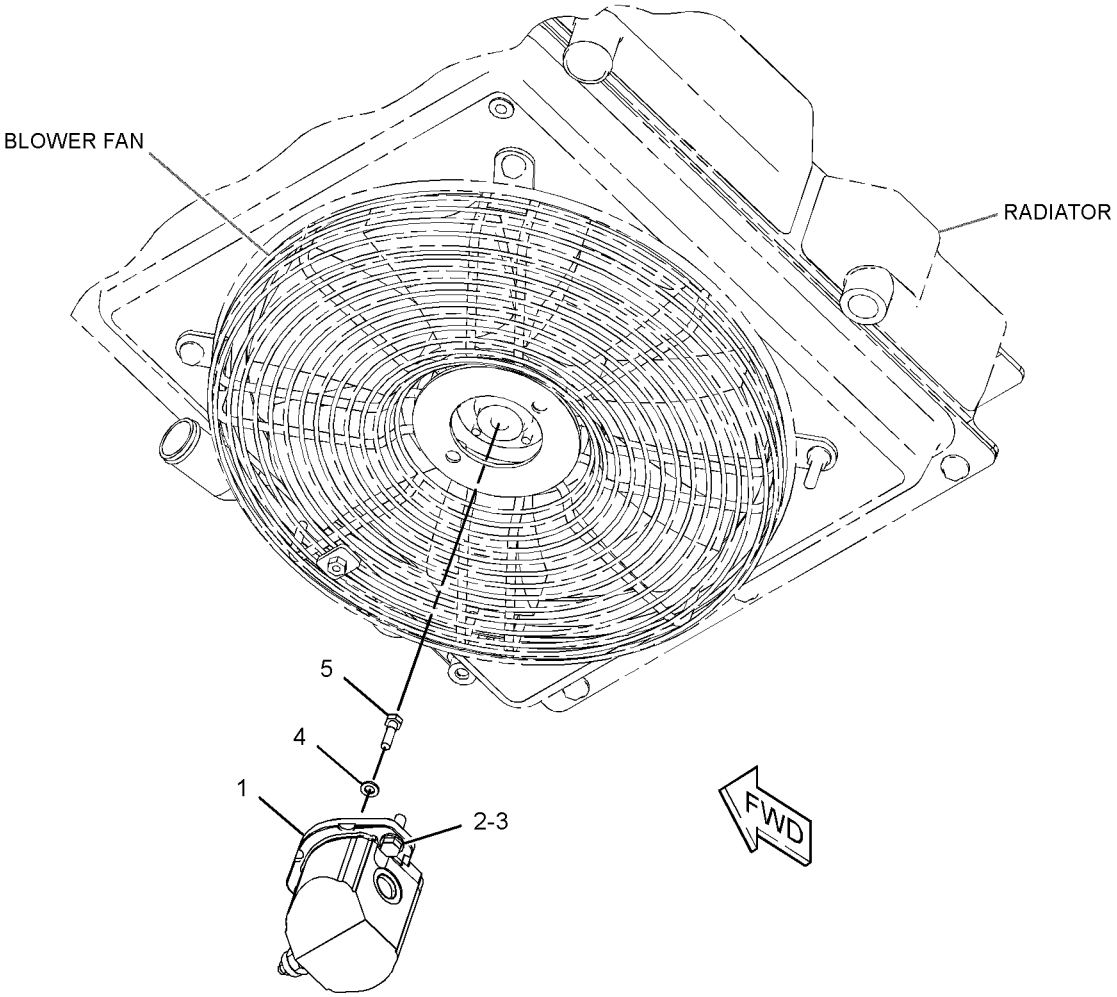


GRAPHIC #1 **<END>** g01414236

# HYDRAULIC SYSTEM

## *356-1900* MOTOR AR-HYDRAULIC FAN—STANDARD

**S/N: TNK1-UP**
**AN ATTACHMENT**

**SMCS-1386** **i03901812**

| NOTE | PART NUMBER | QTY | PART NAME 1 2 3 4 5 6 (PRODUCT LEVEL) | SEE PAGE |
|---|---|---|---|---|
| Y | *295-7221* | 1 | MOTOR & MTG GP-HYDRAULIC FAN | 192 |
| Y-SEPARATE ILLUSTRATION | | | | |

**<END>**

## *356-1901* MOTOR AR-HYDRAULIC FAN—NACD

**S/N: TNK1-UP**
**AN ATTACHMENT**

**SMCS-1386** **i03901813**

| NOTE | PART NUMBER | QTY | PART NAME 1 2 3 4 5 6 (PRODUCT LEVEL) | SEE PAGE |
|---|---|---|---|---|
| Y | *258-2579* | 1 | MOTOR & MTG GP-HYDRAULIC FAN | 191 |
| Y | *328-2342* | 1 | WIRING GP-MACHINE (DEMAND FAN) | 95 |
| Y-SEPARATE ILLUSTRATION | | | | |

**<END>**

# 307-3036 MOTOR GP-GEAR–HYDRAULIC FAN

**S/N: TNK1-UP**
**PART OF 295-7221 MOTOR & MTG GP-HYDRAULIC FAN**
**AN ATTACHMENT**

**SMCS-1386, 5061** **i03970898**

| NOTE | REF NO | GRAPHIC REF | PART NUMBER | QTY | PART NAME 1 2 3 4 5 6 (PRODUCT LEVEL) | SEE PAGE |
|---|---|---|---|---|---|---|
| | 1 | 1 | **228-9240** | 1 | VALVE GP-RELIEF (GEAR MOTOR) | |
| | | 1 | **6F-6672** | 1 | SEAL-O-RING | |
| | | 1 | **215-3277** | 1 | SEAL-O-RING | |
| M | 2 | 1 | **9T-4884** | 2 | BOLT (M10X1.5X30-MM) | |
| M | 3 | 1 | **8T-0271** | 2 | BOLT-SOCKET HEAD (M10X1.5X35-MM) | |
| | | | | | | |
| | | | | | PARTS SHOWN IN GRAPHIC(S) WITHOUT A REFERENCE NUMBER ARE NOT SERVICED SEPARATELY | |
| | | | | | AVAILABLE REPAIR KIT(S): | |
| | | | **278-8716** | 1 | KIT-SEAL (GEAR MOTOR) | |
| | | | | | (INCLUDES O-RINGS, E-SEALS, SHAFT SEAL, SNAP RING, BACKUP SEALS, AXIAL SEAL KIT & SEALS) | |

M-METRIC PART

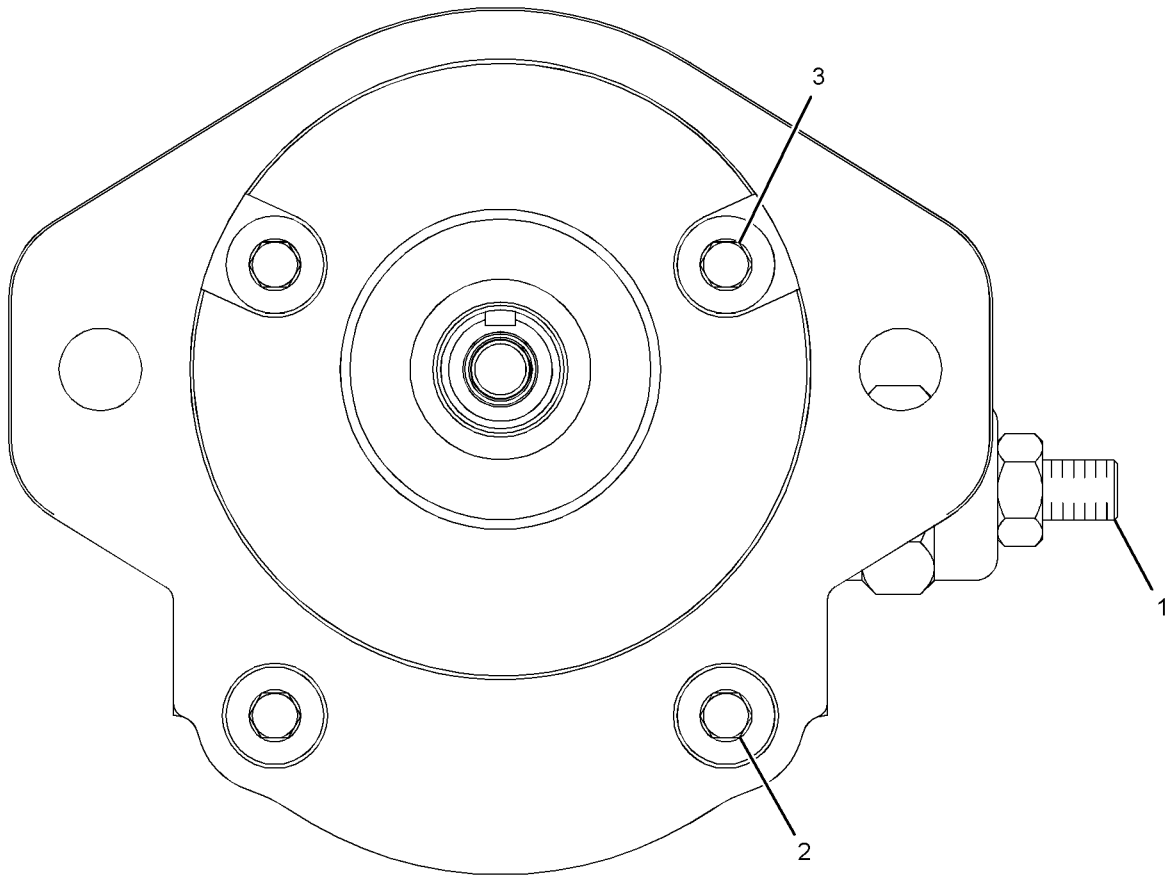


GRAPHIC #1 **<END>** g01761253

# *190-8084* PUMP & MTG GP-WORK TOOL

**S/N: TNK1-UP**

**PART OF 326-5445 HYDRAULIC AR**

**SMCS-6700** **i02212112**

| NOTE | REF NO | GRAPHIC REF | PART NUMBER | QTY | PART NAME 1 2 3 4 5 6 (PRODUCT LEVEL) | SEE PAGE |
|---|---|---|---|---|---|---|
| CY | 1 | 1 | **238-7642** | 1 | PUMP GP-GEAR | 196 |
| | 2 | 1 | **8T-4223** | 2 | WASHER-HARD (13.5X25.5X3-MM THK) | |
| M | 3 | 1 | **8T-4956** | 2 | BOLT (M12X1.75X35-MM) | |
| | 4 | 1 | **8T-5049** | 1 | SEAL-O-RING | |

C-CHANGE FROM PREVIOUS TYPE
M-METRIC PART
Y-SEPARATE ILLUSTRATION

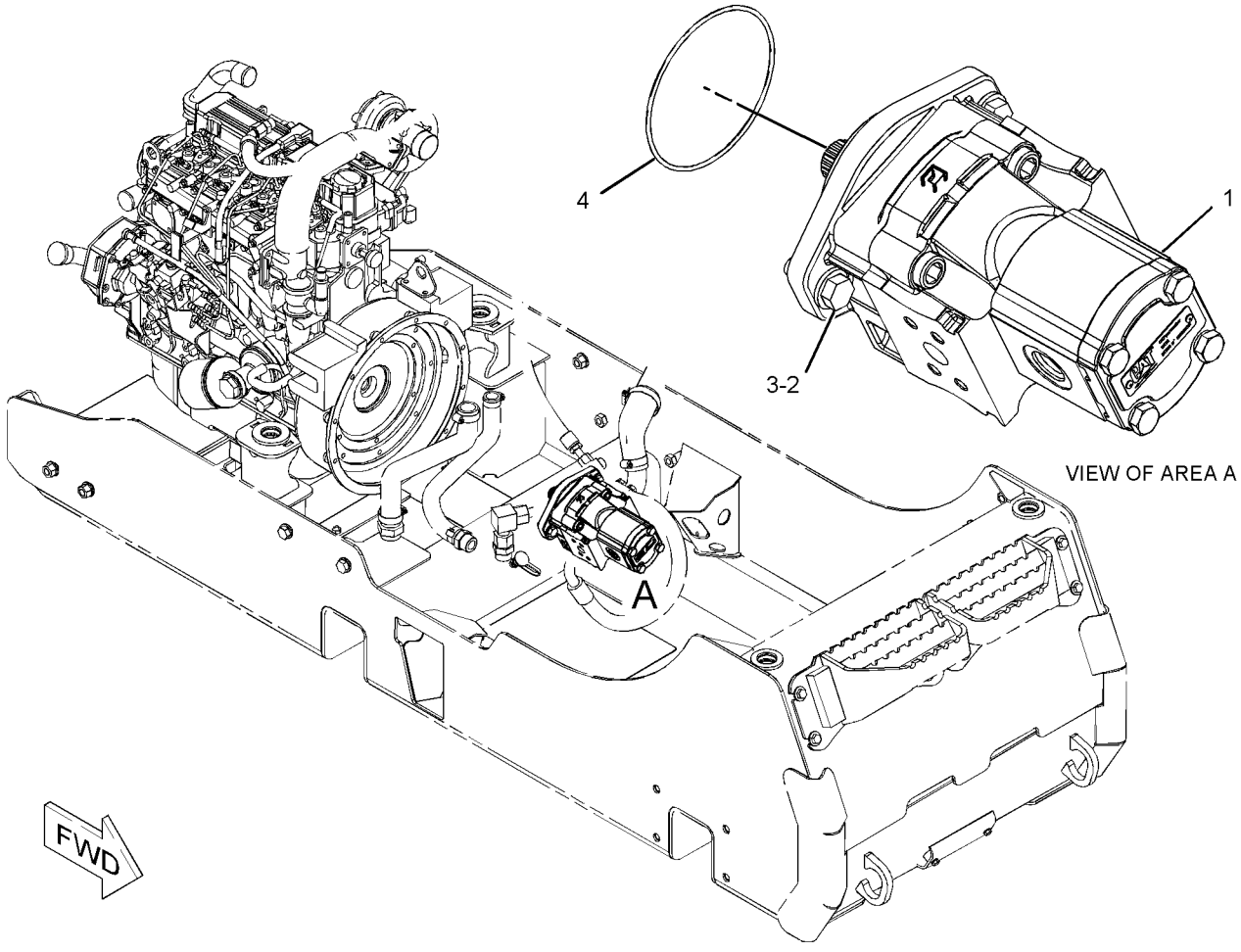


GRAPHIC #1 **<END>** g01131877

# 238-7642 PUMP GP-GEAR–WORK TOOL

**S/N: TNK1-UP**

**PART OF 190-8084 PUMP & MTG GP-WORK TOOL**

**SMCS-5073** **i03767049**

| NOTE | REF NO | GRAPHIC REF | PART NUMBER | QTY | PART NAME 1 2 3 4 5 6 (PRODUCT LEVEL) | SEE PAGE |
|---|---|---|---|---|---|---|
| J | 1 | 1 | **230-3757** | 2 | SEAL-SHAFT | |
| | 2 | 1 | **8C-3110** | 1 | RING-RETAINING | |
| | 3 | 1 | **313-5646** | 4 | BOLT | |
| | 4 | 1 | **271-2360** | 4 | WASHER-HARD (15X22X2.5-MM THK) | |
| M | 5 | 1 | **8T-4198** | 4 | BOLT (M10X1.5X100-MM) | |
| | 6 | 1 | **8T-5095** | 4 | WASHER-PLATED (11X16X2-MM THK) | |
| | | | | | AVAILABLE REPAIR KIT(S): | |
| J | | | **278-8714** | 1 | KIT-SEAL | |
| | | | | | (INCLUDES E-SEALS, SEAL-O-RINGS, SNAP RING & BACKUP SEALS) | |

J-KIT MARKED J SERVICES PARTS MARKED J
M-METRIC PART

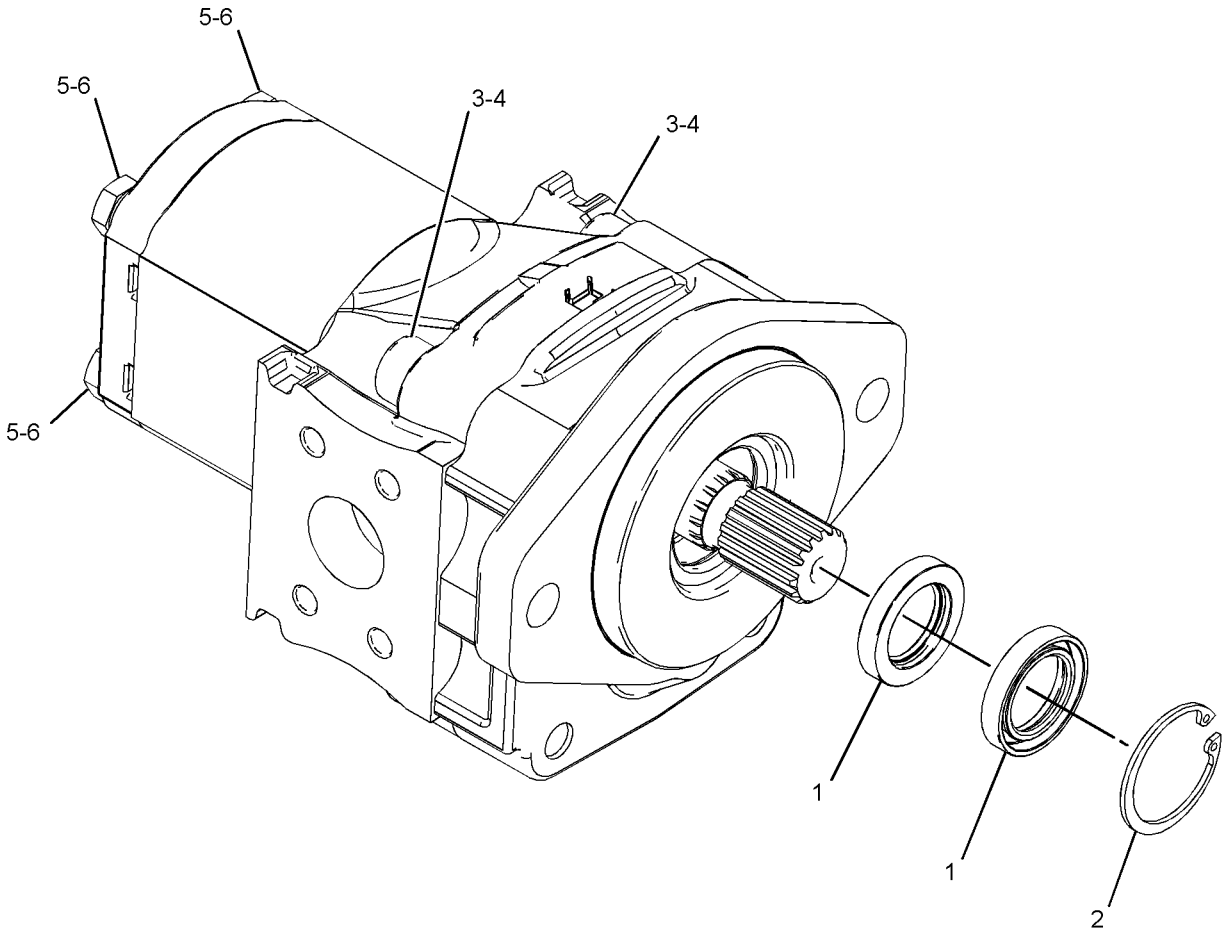


GRAPHIC #1 **<END>** g01442438

# HYDRAULIC SYSTEM

## *326-5780* TANK & MTG GP-HYDRAULIC

**S/N: TNK1-UP**

**PART OF 326-5445 HYDRAULIC AR**

**SMCS-5056** **i03902058**

| NOTE | REF NO | GRAPHIC REF | PART NUMBER | QTY | PART NAME 1 2 3 4 5 6 (PRODUCT LEVEL) | SEE PAGE |
|---|---|---|---|---|---|---|
| | 1 | 1 | **5P-4961** | 2 | CLAMP-HOSE | |
| | 2 | 1 | **154-4014** | 1 | BRACKET | |
| | 3 | 1 | **207-9729** | 1 | BREATHER (INLINE) (HYDRAULIC OIL) | |
| | 4 | 1 | **233-5997** | 1 | HOSE | |
| Y | 5 | 1 | *326-5781* | 1 | TANK GP-HYDRAULIC | 198 |
| | 6 | 1 | **6D-4246** | 1 | CLIP | |
| | 7 | 1 | **8T-4121** | 1 | WASHER-HARD (11X21X2.5-MM THK) | |
| M | 8 | 1 | **8T-4136** | 1 | BOLT (M10X1.5X25-MM) | |
| M | 9 | 1 | **8T-4189** | 2 | BOLT (M8X1.25X20-MM) | |
| E | 10 | 1 | **5P-1442** | | HOSE (65-CM) | |

E-ORDER BY THE CENTIMETER
M-METRIC PART
Y-SEPARATE ILLUSTRATION

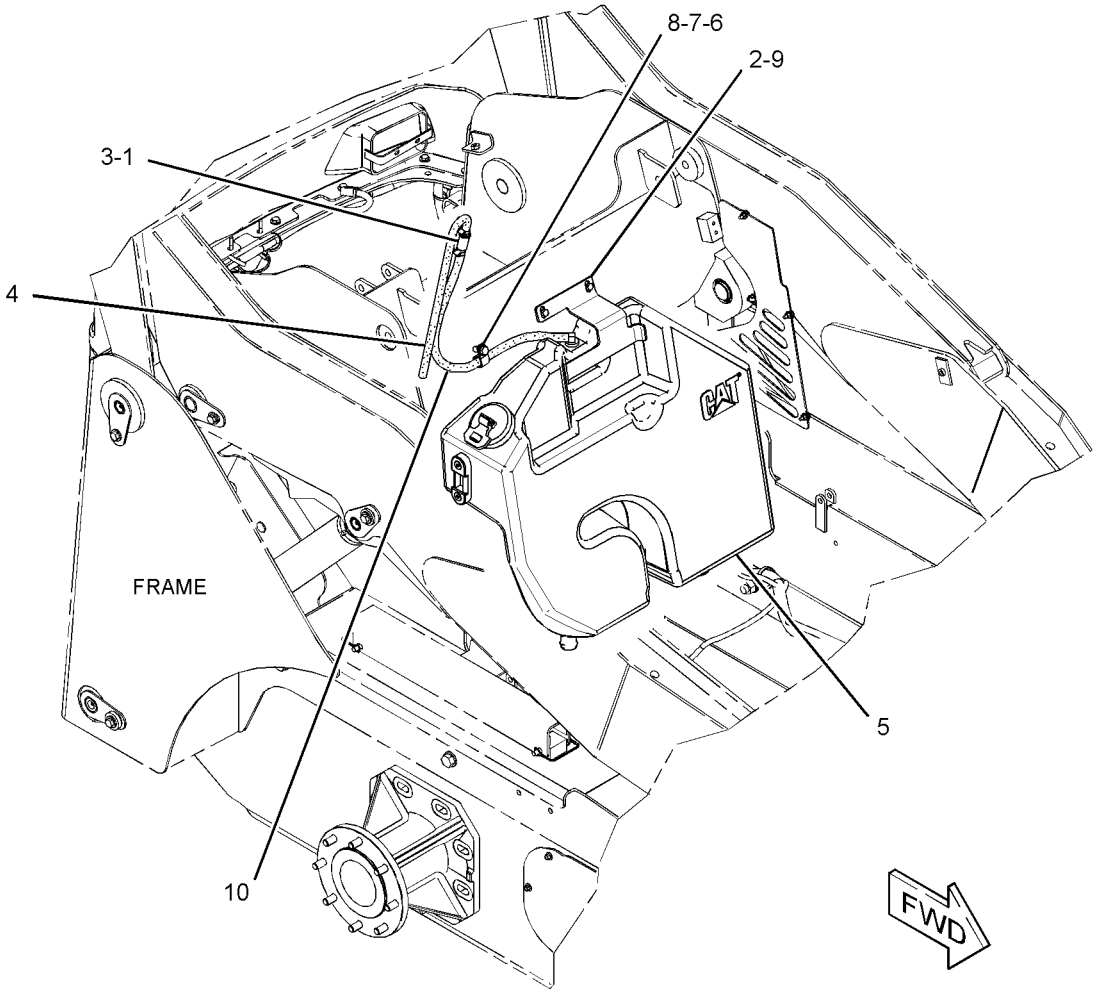


GRAPHIC #1 **<END>** g02146413

# HYDRAULIC SYSTEM

## *326-5781* TANK GP-HYDRAULIC

**S/N: TNK1-UP**

**PART OF 326-5780 TANK & MTG GP-HYDRAULIC**

**SMCS-5056** **i03902802**

| NOTE | REF NO | GRAPHIC REF | PART NUMBER | QTY | PART NAME 1 2 3 4 5 6 (PRODUCT LEVEL) | SEE PAGE |
|---|---|---|---|---|---|---|
| | 1 | 1 | **6W-5698** | 1 | GROMMET | |
| | 2 | 1 | **142-8928** | 1 | ELBOW | |
| | 3 | 1 | **142-8937** | 1 | CAP AS-FILLER (HYDRAULIC TANK) | |
| | 4 | 1 | **264-4297** | 1 | SENSOR GP-TEMPERATURE (HYDRAULIC OIL) | |
| | | 1 | **137-6645** | 1 | PAD | |
| | 5 | 1 | **347-5346** | 1 | TANK GP-HYDRAULIC | |
| | | 1 | **317-3128** | 1 | GAUGE-SIGHT (HYDRAULIC TANK) | |
| | | 1 | **348-4609** | 1 | SCREEN-SUCTION (HYDRAULIC TANK) | |
| | | 1 | **5W-6388** | 1 | SEAL-O-RING | |
| | 6 | 1 | **3K-0360** | 1 | SEAL-O-RING | |

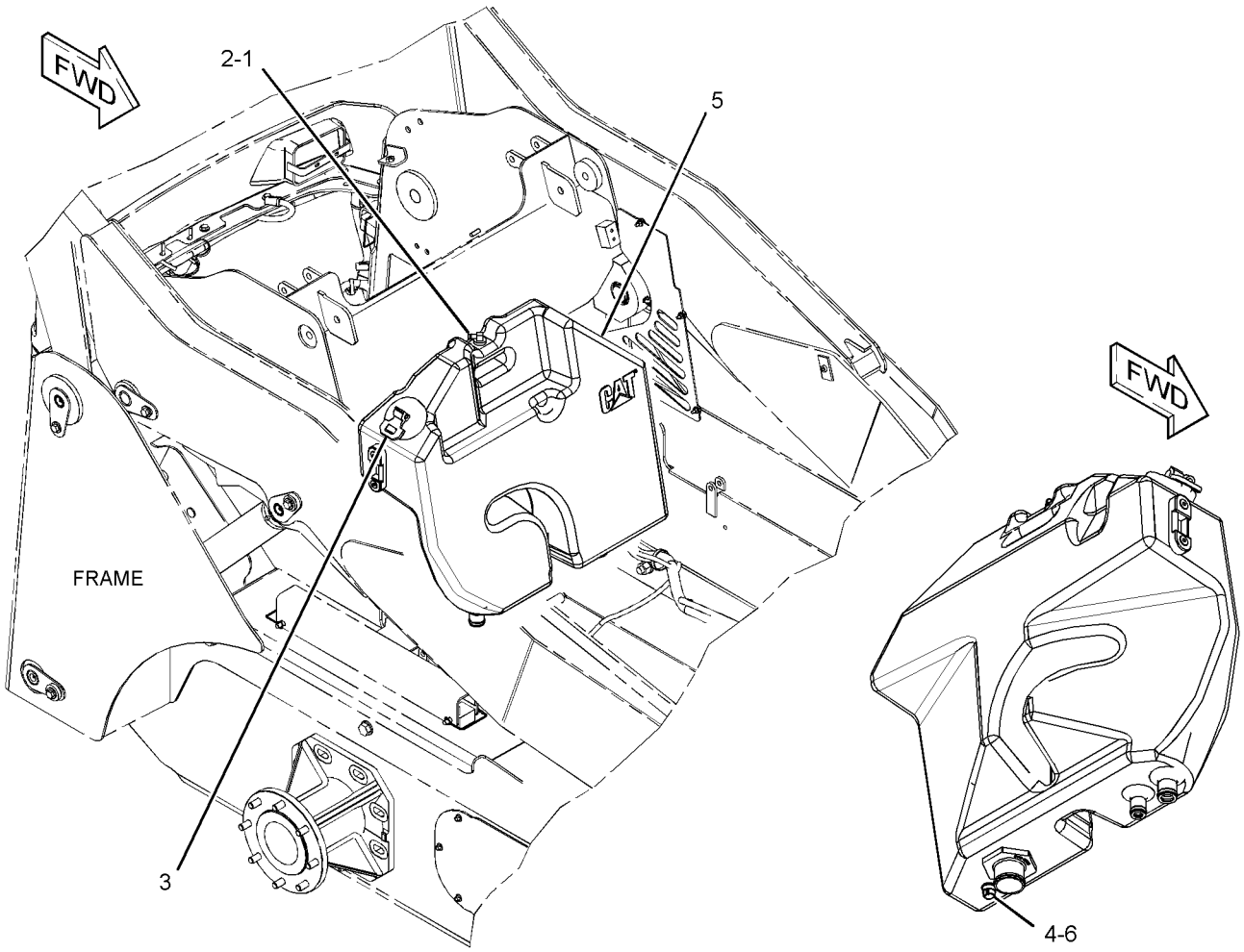


GRAPHIC #1 **<END>** g02146395

# HYDRAULIC SYSTEM

## *218-6725* VALVE & MTG GP-CONTROL

**S/N: TNK1-UP**
**WORK TOOL**
**PART OF 326-5445 HYDRAULIC AR**

**SMCS-5051** **i03875940**

| NOTE | REF NO | GRAPHIC REF | PART NUMBER | QTY | PART NAME 1 2 3 4 5 6 (PRODUCT LEVEL) | SEE PAGE |
|---|---|---|---|---|---|---|
| CY | 1 | 1 | **336-1320** | 1 | VALVE GP-CONTROL (WORKTOOL) | 200 |
| | 2 | 1 | **218-6561** | 1 | BRACKET | |
| | 3 | 1 | **8T-4121** | 4 | WASHER-HARD (11X21X2.5-MM THK) | |
| M | 4 | 1 | **8T-4136** | 2 | BOLT (M10X1.5X25-MM) | |
| M | 5 | 1 | **8T-4137** | 2 | BOLT (M10X1.5X20-MM) | |

C-CHANGE FROM PREVIOUS TYPE
M-METRIC PART
Y-SEPARATE ILLUSTRATION

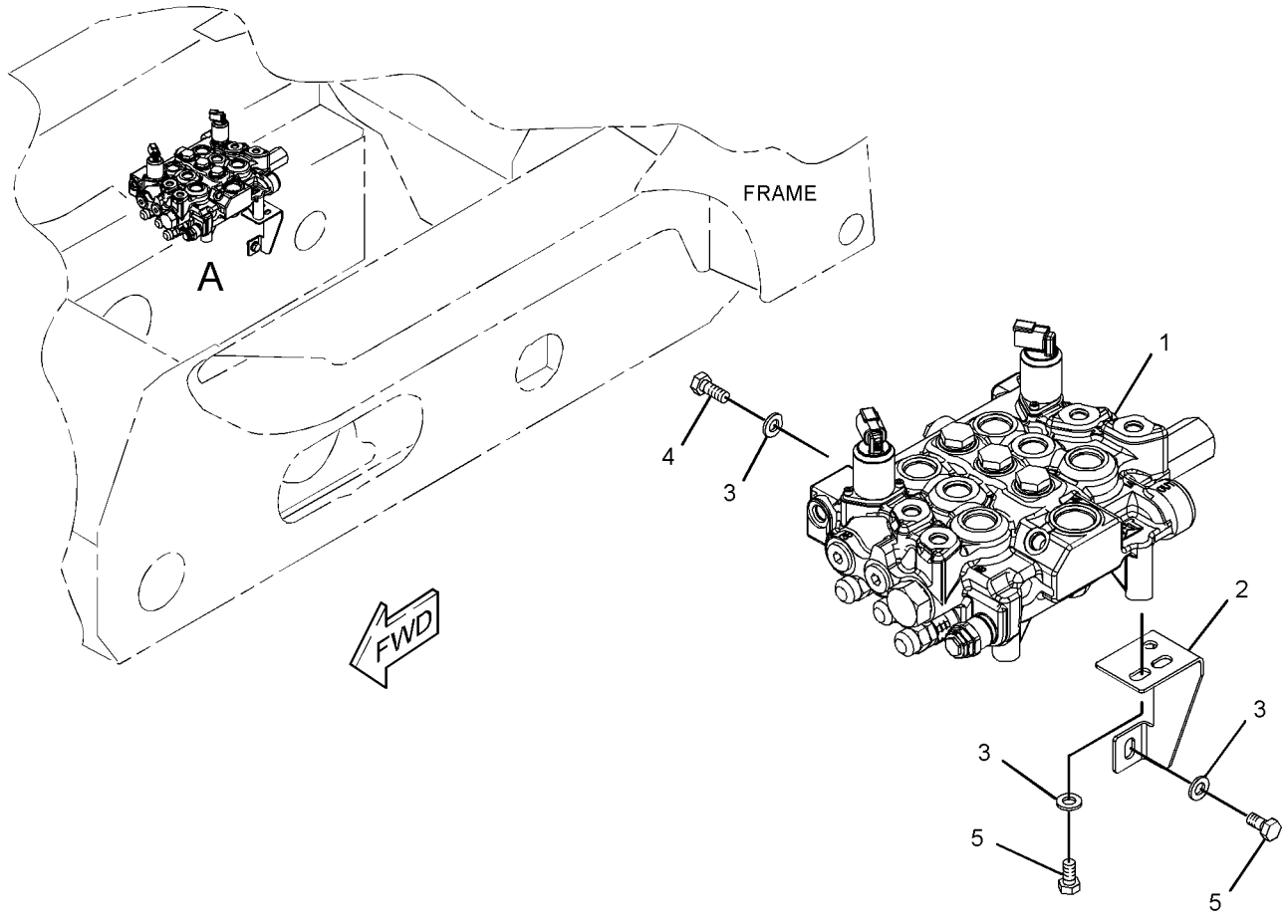


VIEW OF AREA A
(EXPLODED)

GRAPHIC #1 **<END>** g02124034

# HYDRAULIC SYSTEM

## 336-1320 VALVE GP-CONTROL

**S/N: TNK1-UP**

**PART OF 218-6725 VALVE & MTG GP-CONTROL**

**SMCS-5051** **i03875948**

| NOTE | REF NO | GRAPHIC REF | PART NUMBER | QTY | PART NAME 1 2 3 4 5 6 (PRODUCT LEVEL) | SEE PAGE |
|---|---|---|---|---|---|---|
| Y | 1 | 1 | **295-1799** | 1 | VALVE GP-RELIEF (MAIN) | 134 |
| | 2 | 1 | **216-6160** | 2 | VALVE GP-RELIEF (TILT, AUXILIARY) | |
| | 3 | 1 | **216-6161** | 2 | VALVE GP-RELIEF (LIFT) | |
| | 4 | 1 | **358-5951** | 2 | VALVE GP-SOLENOID (MODULATION, AUXILIARY CIRCUIT) | |
| | 5 | 1 | **4J-7533** | 1 | SEAL-O-RING | |
| | 6 | 1 | **204-1485** | 6 | WASHER (0.47X0.75X0.02-MM THK) | |
| | 7 | 1 | **204-1482** | 1 | SPRING | |
| | 8 | 1 | **204-1488** | 1 | SPRING | |
| | 9 | 1 | **204-1489** | 4 | SPRING | |
| | 10 | 1 | **204-1486** | 1 | WASHER (0.32X0.74X0.02-MM THK) | |
| | 11 | 1 | **127-6316** | 1 | BOLT-SPECIAL | |
| | 12 | 1 | **180-8071** | 4 | PLUG-HEX SOCKET | |
| | 13 | 1 | **291-8148** | 2 | SEAL-O-RING | |
| | 14 | 1 | **204-1471** | 1 | CAP | |
| | 15 | 1 | **204-1481** | 1 | CAP | |
| | 16 | 1 | **144-4531** | 3 | VALVE-CHECK | |
| | 17 | 1 | **003-3082** | 3 | SPRING | |
| | 18 | 1 | **8I-5078** | 3 | SEAL-O-RING | |
| | 19 | 1 | **144-4532** | 3 | PLUG | |
| | 20 | 1 | **216-6156** | 1 | VALVE-CHECK | |
| | 21 | 1 | **216-6157** | 1 | SPRING | |
| | 22 | 1 | **3J-1907** | 1 | SEAL-O-RING | |
| | 23 | 1 | **216-6159** | 1 | PLUG | |
| | 24 | 1 | **2M-9780** | 4 | SEAL-O-RING | |
| M | 25 | 1 | **095-0641** | 4 | BOLT-SOCKET HEAD (M4X0.7X10-MM) | |

M-METRIC PART
Y-SEPARATE ILLUSTRATION

**336-1320 VALVE GP-CONTROL** *(contd. )* **i03875948**

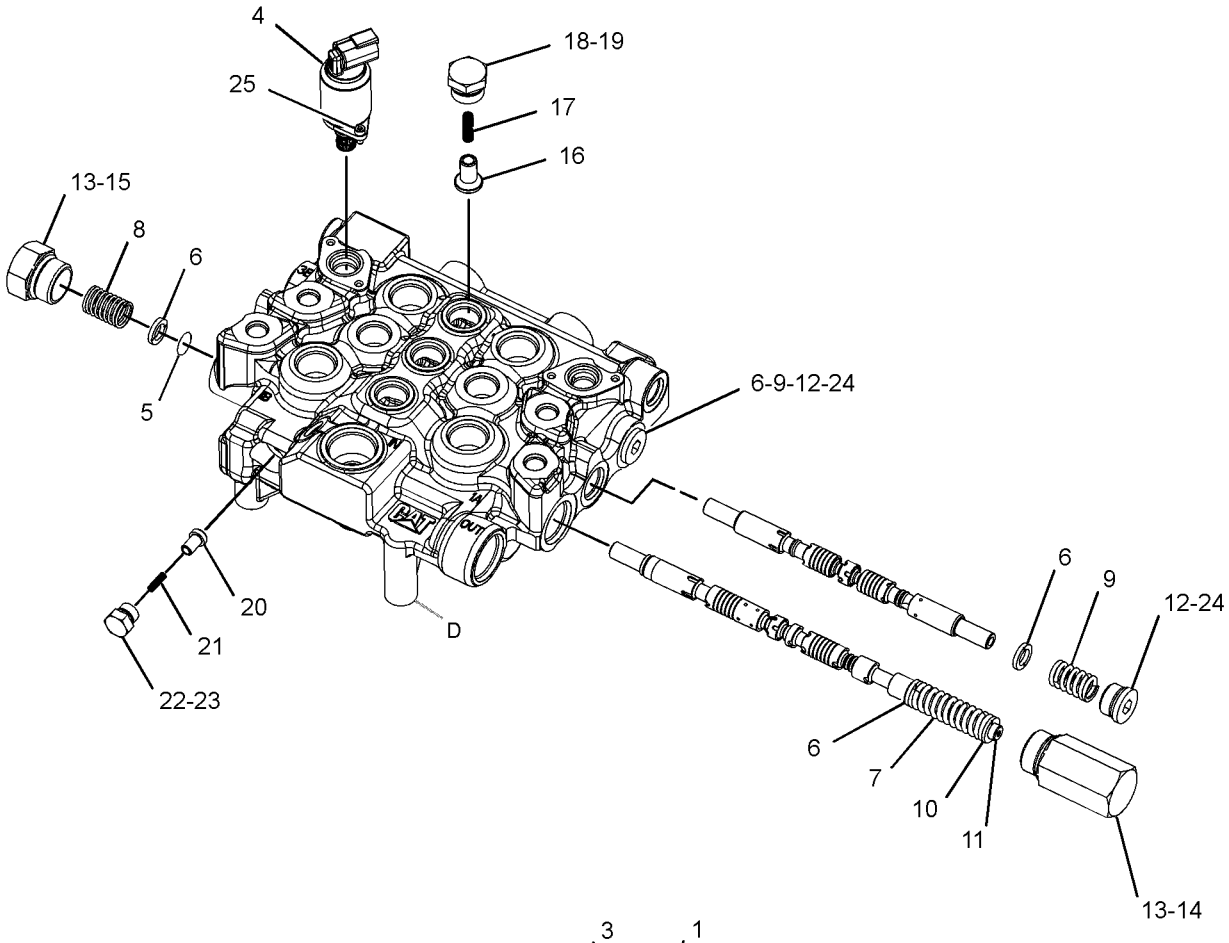


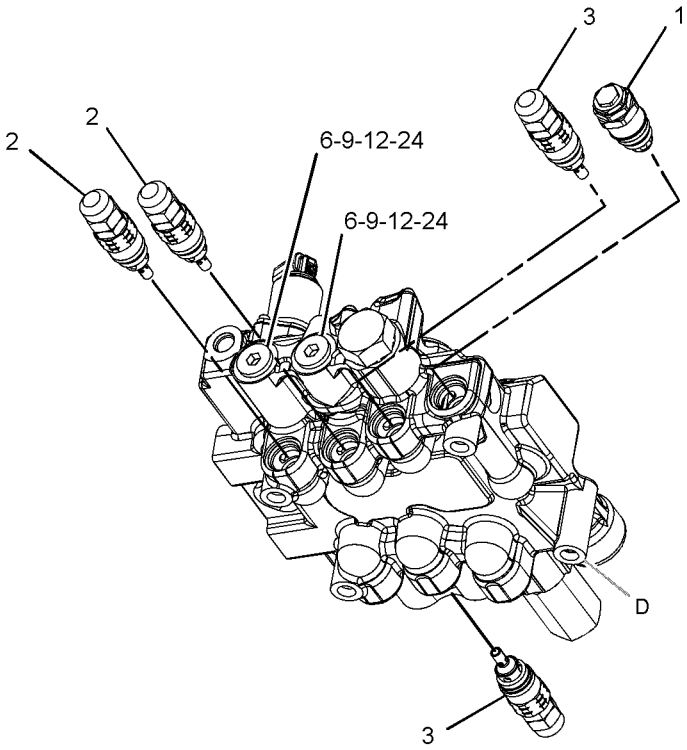


GRAPHIC #1 **<END>** g02124493

# HYDRAULIC SYSTEM

## 112-1817 VALVE GP-MANUAL

**S/N: TNK1-UP**

**PART OF 326-5677, 332-7664 LINES GP-LIFT CYLINDER**

**AN ATTACHMENT**

**SMCS-5147** **i03970894**

| NOTE | PART NUMBER | QTY | PART NAME<br>1 2 3 4 5 6 (PRODUCT LEVEL) | SEE PAGE |
|---|---|---|---|---|
| J | *202-0671* | 1 | VALVE GP-MANUAL<br>(COUPLER PIN, LIFT ARM LWR CONT) | |
| | | | —OR— | |
| J | *202-0673* | 1 | VALVE GP-MANUAL<br>(COUPLER PIN, LIFT ARM LWR CONT) | |
| | | | —OR— | |
| J | *202-0674* | 1 | VALVE GP-MANUAL<br>(COUPLER PIN, LIFT ARM LWR CONT) | |
| | | | AVAILABLE REPAIR KIT(S): | |
| J | **112-9861** | 1 | KIT-SEAL (DEAD ENGINE LOWERING) | |
| | | | (INCLUDES SEALS, CONNECTOR O-RINGS, THRUST RING & STEM O-RING) | |

J-KIT MARKED J SERVICES PARTS MARKED J

**<END>**

# HYDRAULIC SYSTEM

## 299-9119 VALVE GP-PILOT

**S/N: TNK1-UP**

**PART OF 326-5264, 326-5265 CONTROL GP-PILOT OPERATED HYD AN ATTACHMENT**

**SMCS-5059, 5705** **i03960051**

| NOTE | REF NO | GRAPHIC REF | PART NUMBER | QTY | PART NAME 1 2 3 4 5 6 (PRODUCT LEVEL) | SEE PAGE |
|---|---|---|---|---|---|---|
| | 1 | 1 | **7K-1181** | 1 | STRAP-CABLE | |
| | 2 | 1 | **172-0970** | 1 | COIL AS | |
| | | 1 | **186-3735** | 2 | PIN-CONNECTOR (16-GA TO 18-GA) | |
| | | 1 | **102-8802** | 1 | KIT-RECEPTACLE (2-PIN) | |
| | | | | | (INCLUDES RECEPTACLE AS & WEDGE) | |
| Y | 3 | 1 | **195-9700** | 1 | VALVE GP-SOLENOID (12-VOLT) (WORK TOOL) | 206 |
| M | 4 | 1 | **8T-1158** | 1 | BOLT-SOCKET HEAD (M8X1.25X20-MM) | |
| M | 5 | 1 | **8T-9405** | 1 | BOLT-SOCKET HEAD (M4X0.7X16-MM) | |
| | 6 | 1 | **102-8802** | 1 | KIT-RECEPTACLE (2-PIN) | |
| | | | | | (INCLUDES RECEPTACLE AS & WEDGE) | |
| | 7 | 1 | **313-6251** | 1 | KIT-JOINT | |
| | | | | | (INCLUDES SHIMS, NUT, WASHER, DETENT ARM & CARDAN) | |
| | 8 | 1 | **299-9121** | 1 | PLATE | |
| | 9 | 1 | **198-1076** | 3 | KIT-PLUNGER (PILOT VALVE) | |
| | | | | | (INCLUDES PLUNGERS, SNAP RINGS, CAPS & WASHERS) | |
| | 10 | 1 | **203-1100** | 1 | KIT-PLUNGER (TILT BACK) | |
| | | | | | (INCLUDES PLUNGERS, SNAP RINGS & RETAINERS) | |
| | 11 | 1 | **160-6778** | 1 | KIT-PILOT VALVE (SPRING) | |
| | | | | | (INCLUDES SPRINGS) | |
| | 12 | 1 | **9T-2837** | 1 | KIT-SEAL (PILOT VALVE) | |
| | | | | | (INCLUDES PINS, O-RINGS & BOLT) | |

M-METRIC PART
Y-SEPARATE ILLUSTRATION

**299-9119 VALVE GP-PILOT** *(contd. )* **i03960051**

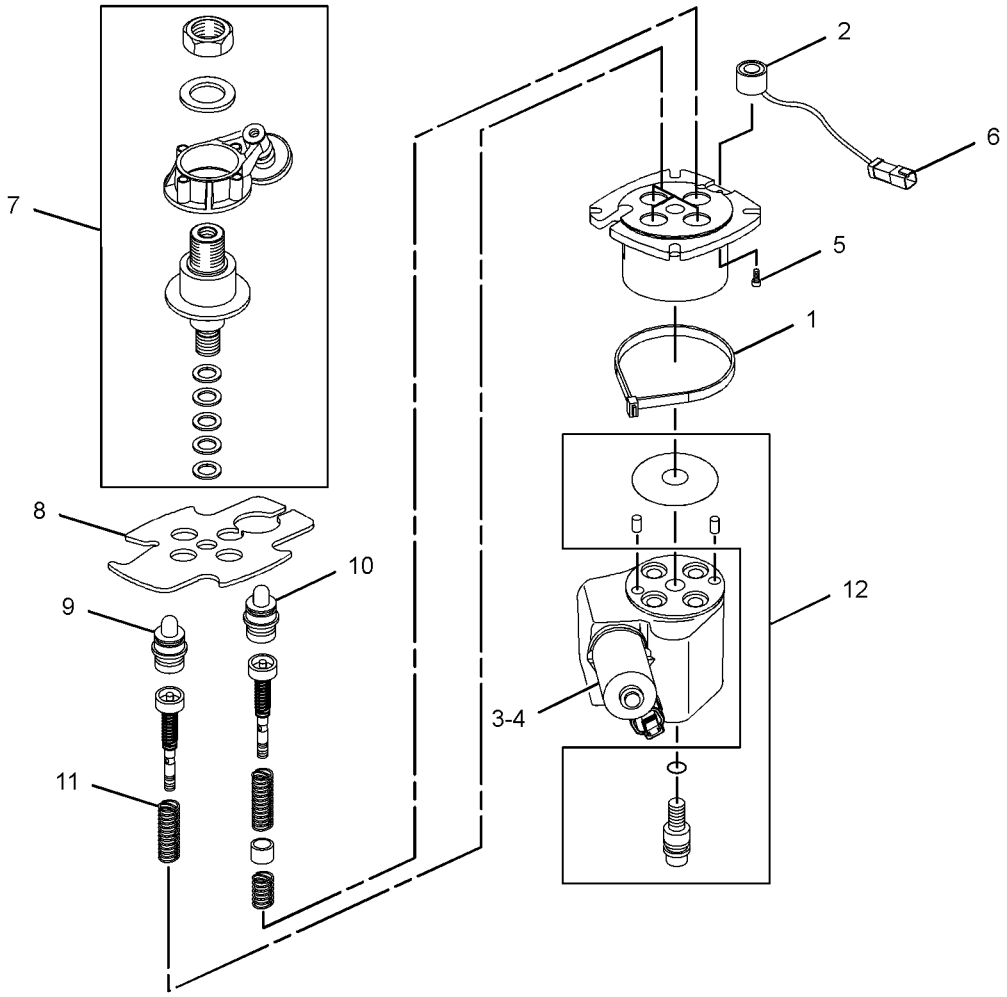


GRAPHIC #1 **<END>** g01417349

# 343-0868 VALVE GP-PILOT

**S/N: TNK1-UP**

**PART OF 326-5267, 343-5542, 343-5543 CONTROL GP-PILOT OPERATED HYD AN ATTACHMENT**

**SMCS-5059, 5705** **i03960217**

| NOTE | REF NO | GRAPHIC REF | PART NUMBER | QTY | PART NAME 1 2 3 4 5 6 (PRODUCT LEVEL) | SEE PAGE |
|---|---|---|---|---|---|---|
| Y | 1 | 1 | **195-9700** | 1 | VALVE GP-SOLENOID (12-VOLT) (WORK TOOL) | 206 |
| M | 2 | 1 | **8T-1158** | 1 | BOLT-SOCKET HEAD (M8X1.25X20-MM) | |
| | 3 | 1 | **217-3850** | 1 | KIT-UNIVERSAL JOINT (PILOT VALVE) | |
| | | | | | (INCLUDES UNIVERSAL JOINT & SHIMS) | |
| | 4 | 1 | **299-9121** | 1 | PLATE | |
| | 5 | 1 | **198-1076** | 2 | KIT-PLUNGER (PILOT VALVE) | |
| | | | | | (EACH INCLUDES PLUNGERS, PLUNGER GUIDES, SNAP RINGS, CAPS & WASHERS) | |
| | 6 | 1 | **160-6778** | 1 | KIT-PILOT VALVE (SPRING) | |
| | | | | | (INCLUDE SPRINGS) | |
| | 7 | 1 | **289-9560** | 1 | KIT-SEAL (PILOT VALVE) | |
| | | | | | (INCLUDES O-RINGS, PINS & SCREW AS) | |
| | 8 | 1 | **151-4965** | 1 | KIT-SEAL (PILOT VALVE) | |
| | | | | | (INCLUDES O-RINGS, PIN & BOLT) | |
| | 9 | 1 | **343-0877** | 1 | VALVE GP-SHUTTLE (DIRECTION, SPEED) | |
| | | | | | | |
| | | | | | PARTS SHOWN IN GRAPHIC(S) WITHOUT A REFERENCE NUMBER ARE NOT SERVICED SEPARATELY | |

M-METRIC PART
Y-SEPARATE ILLUSTRATION

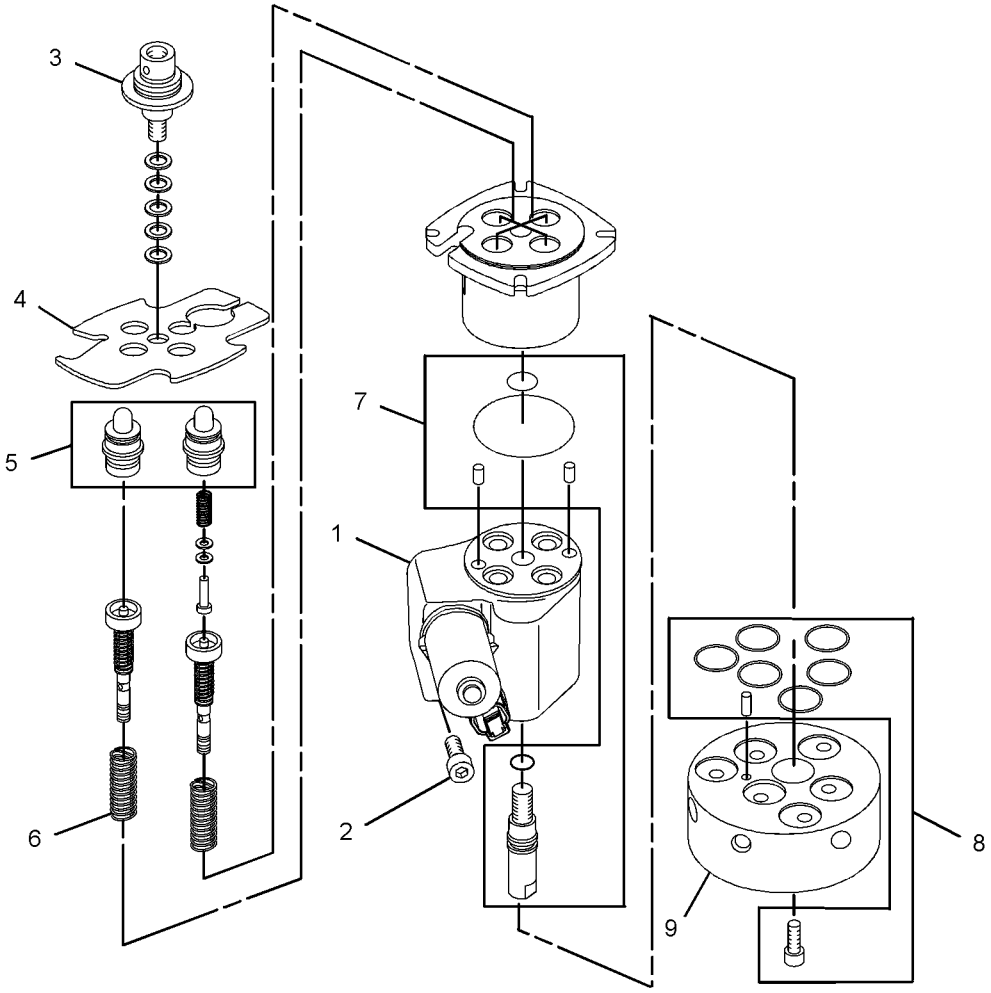


GRAPHIC #1 **<END>** g01943777

# 195-9700 VALVE GP-SOLENOID–12-VOLT

**S/N: TNK1-UP**
**PART OF 299-9119, 343-0868 VALVE GP-PILOT**
**AN ATTACHMENT**

**SMCS-5479** **i03690247**

| NOTE | REF NO | GRAPHIC REF | PART NUMBER | QTY | PART NAME 1 2 3 4 5 6 (PRODUCT LEVEL) | SEE PAGE |
|---|---|---|---|---|---|---|
| | 1 | 1 | **212-0061** | 1 | FLANGE | |
| | | | | | AVAILABLE REPAIR KIT(S): | |
| | | | **200-2371** | 1 | KIT-SEAL (SOLENOID VALVE) | |
| | | | | | (INCLUDES SEALS) | |

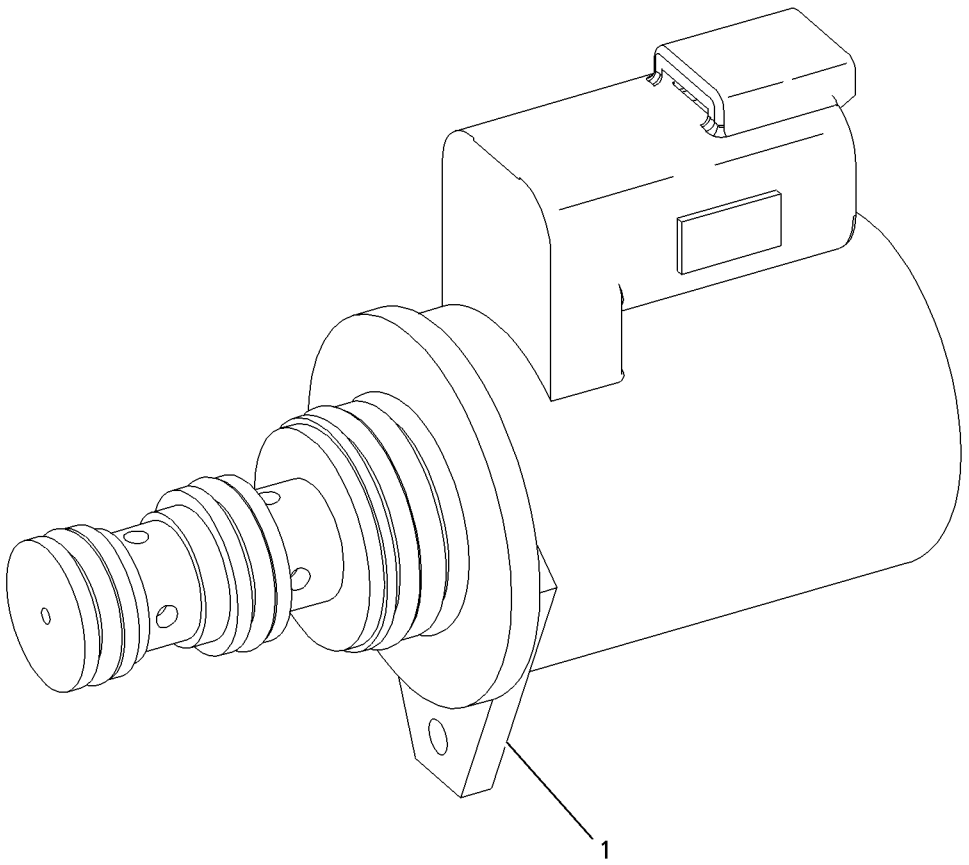


GRAPHIC #1 **<END>** g00947284

# IMPLEMENTS

## *218-5898* ARM AS-LIFT

**S/N: TNK1-UP**

**PART OF 326-5452 FRAME GP-MACHINE**

**SMCS-6119** **i03649928**

| NOTE | REF NO | GRAPHIC REF | PART NUMBER | QTY | PART NAME 1 2 3 4 5 6 (PRODUCT LEVEL) | SEE PAGE |
|---|---|---|---|---|---|---|
| | 1 | 1 | **4K-4709** | 4 | BEARING-SLEEVE | |
| | 2 | 1 | **6K-4148** | 4 | BEARING-SLEEVE | |

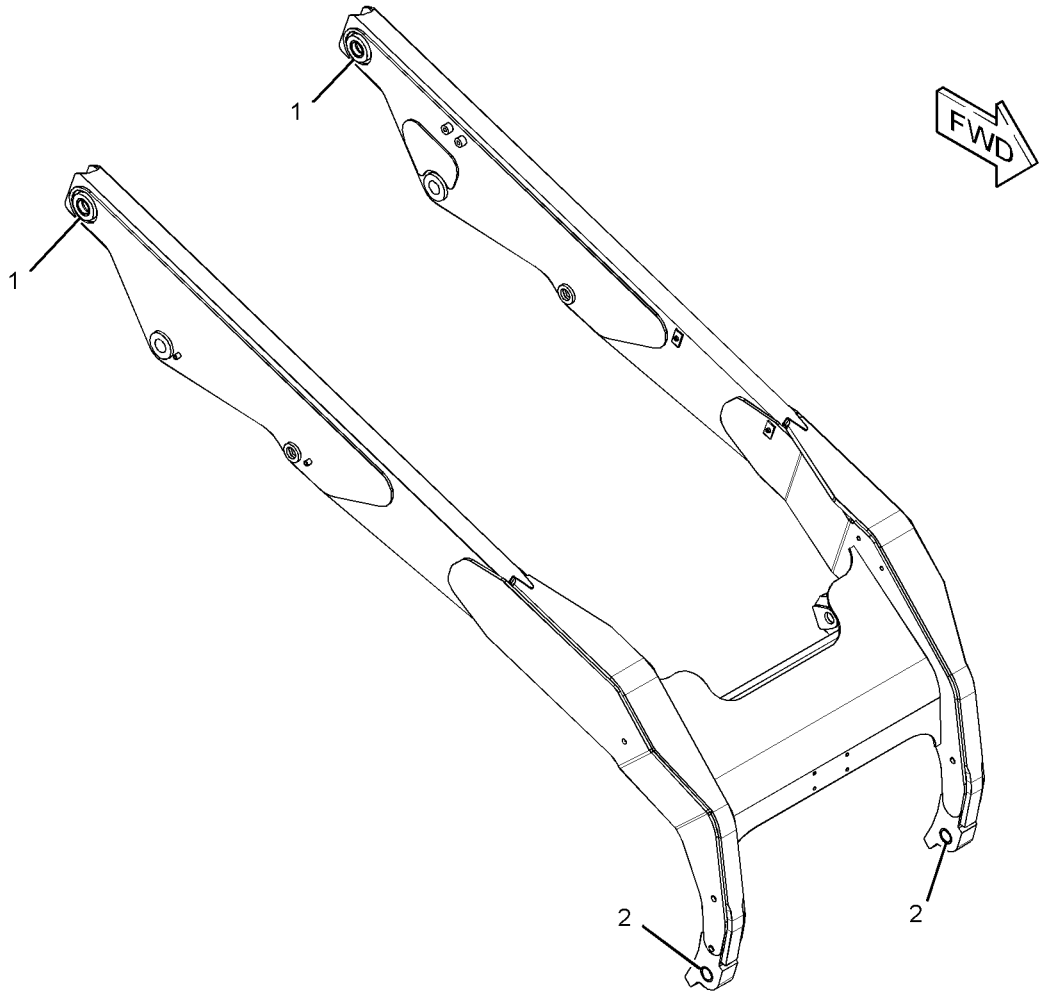


GRAPHIC #1 **<END>** g01961333

## *326-5569* COUPLER AR-QUICK—MANUAL

**S/N: TNK1-UP**
**CANNOT BE USED WITH 326-5579—PAGE 208**
**AN ATTACHMENT**

**SMCS-6129** **i03903862**

| NOTE | PART NUMBER | QTY | PART NAME 1 2 3 4 5 6 (PRODUCT LEVEL) | SEE PAGE |
|---|---|---|---|---|
| Y | *196-8870* | 1 | COUPLER GP-QUICK | 211 |

Y-SEPARATE ILLUSTRATION

**<END>**

## *326-5579* COUPLER AR-QUICK—HYDRAULIC

**S/N: TNK1-UP**
**CANNOT BE USED WITH 326-5569—PAGE 208**
**AN ATTACHMENT**

**SMCS-6129** **i03904529**

| NOTE | PART NUMBER | QTY | PART NAME 1 2 3 4 5 6 (PRODUCT LEVEL) | SEE PAGE |
|---|---|---|---|---|
| Y | *192-2655* | 1 | COUPLER GP-QUICK (HYDRAULIC) | 209 |
| Y | *332-8541* | 1 | LINES GP-COUPLER (WITH MANUAL LOWERING CONTROL) | 165 |

Y-SEPARATE ILLUSTRATION

**<END>**

# WORK TOOLS

## *192-2655* COUPLER GP-QUICK

**S/N: TNK1-UP**
**HYDRAULIC**
**PART OF 326-5579 COUPLER AR-QUICK**
**AN ATTACHMENT**

**SMCS-6129** **i02235744**

| NOTE | REF NO | GRAPHIC REF | PART NUMBER | QTY | PART NAME 1 2 3 4 5 6 (PRODUCT LEVEL) | SEE PAGE |
|---|---|---|---|---|---|---|
| | 1 | 1 | **5B-0651** | 2 | FITTING-STRAIGHT | |
| | 2 | 1 | **5P-0372** | 2 | LOCK PIN | |
| C | 3 | 1 | **252-0426** | 1 | COUPLER AS | |
| | | 1 | **126-5701** | 2 | PLATE-RETAINER | |
| | 4 | 1 | **207-9785** | 2 | PIN | |
| Y | 5 | 1 | *215-3962* | 1 | CYLINDER & LINK GP-COUPLER (LH) | 212 |
| Y | 6 | 1 | *215-3963* | 1 | CYLINDER & LINK GP-COUPLER (RH) | 213 |
| | 7 | 1 | **218-6332** | 1 | BRACKET AS (LH) | |
| M | | 1 | **9R-2672** | 1 | BOSS (M10X1.5X20-MM) | |
| | 8 | 1 | **218-6333** | 1 | BRACKET AS (RH) | |
| | 9 | 1 | **3B-4628** | 2 | PIN-COTTER | |
| | 10 | 1 | **8L-5188** | 2 | PIN | |
| | 11 | 1 | **8T-4121** | 12 | WASHER-HARD (11X21X2.5-MM THK) | |
| M | 12 | 1 | **8T-4133** | 4 | NUT (M10X1.5-THD) | |
| M | 13 | 1 | **8T-4196** | 8 | BOLT (M10X1.5X35-MM) | |
| | 14 | 1 | **9T-7303** | 4 | SPACER (16X28X1.5-MM THK) | |

C-CHANGE FROM PREVIOUS TYPE
M-METRIC PART
Y-SEPARATE ILLUSTRATION

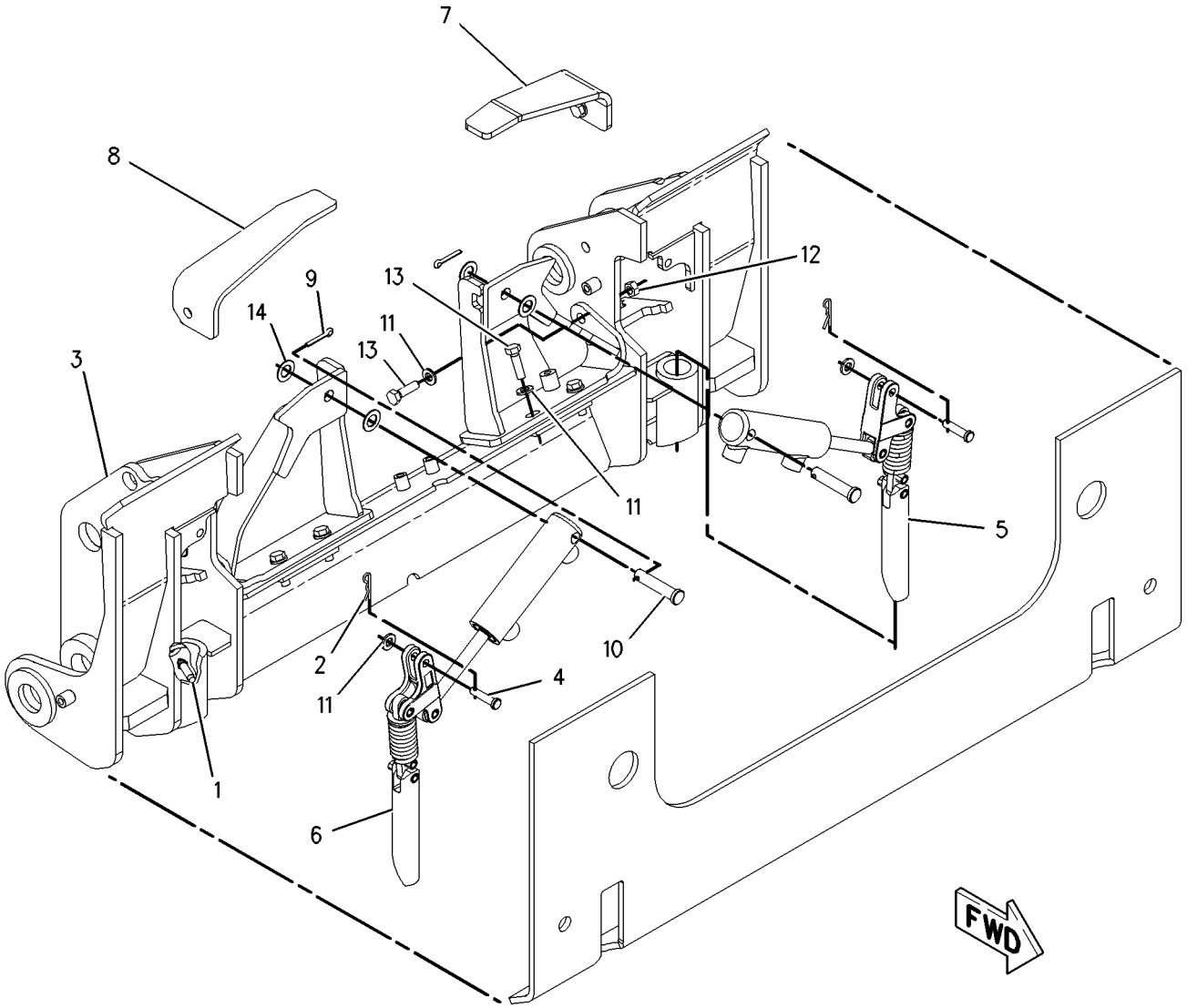


GRAPHIC #1 **<END>** g00983789

# *196-8870* COUPLER GP-QUICK

**S/N: TNK1-UP**
**MANUAL**
**PART OF 326-5569 COUPLER AR-QUICK**
**AN ATTACHMENT**

**SMCS-6129** **i02998703**

| NOTE | REF NO | GRAPHIC REF | PART NUMBER | QTY | PART NAME 1 2 3 4 5 6 (PRODUCT LEVEL) | SEE PAGE |
|---|---|---|---|---|---|---|
| | 1 | 1 | **5B-0651** | 2 | FITTING-STRAIGHT | |
| | 2 | 1 | **159-5797** | 2 | SPRING | |
| | 3 | 1 | **252-0426** | 1 | COUPLER AS | |
| CY | 4 | 1 | *258-2537* | 1 | LOCK GP-QUICK COUPLER (LH) | 218 |
| CY | 5 | 1 | *258-2535* | 1 | LOCK GP-QUICK COUPLER (RH) | 217 |
| | 6 | 1 | **131-5879** | 2 | WASHER (11X32X3-MM THK) | |
| | 7 | 1 | **132-7551** | 2 | SPACER (11X19X6-MM THK) | |
| M | 8 | 1 | **6V-7744** | 2 | LOCKNUT (M10X1.5-THD) | |
| M | 9 | 1 | **7X-2621** | 2 | BOLT (M10X1.5X12-MM) | |
| | 10 | 1 | **7X-7729** | 4 | WASHER (11X25X3-MM THK) | |
| | 11 | 1 | **8T-4121** | 6 | WASHER-HARD (11X21X2.5-MM THK) | |
| M | 12 | 1 | **8T-4172** | 2 | BOLT (M10X1.5X80-MM) | |
| M | 13 | 1 | **8T-4196** | 4 | BOLT (M10X1.5X35-MM) | |

C-CHANGE FROM PREVIOUS TYPE
M-METRIC PART
Y-SEPARATE ILLUSTRATION

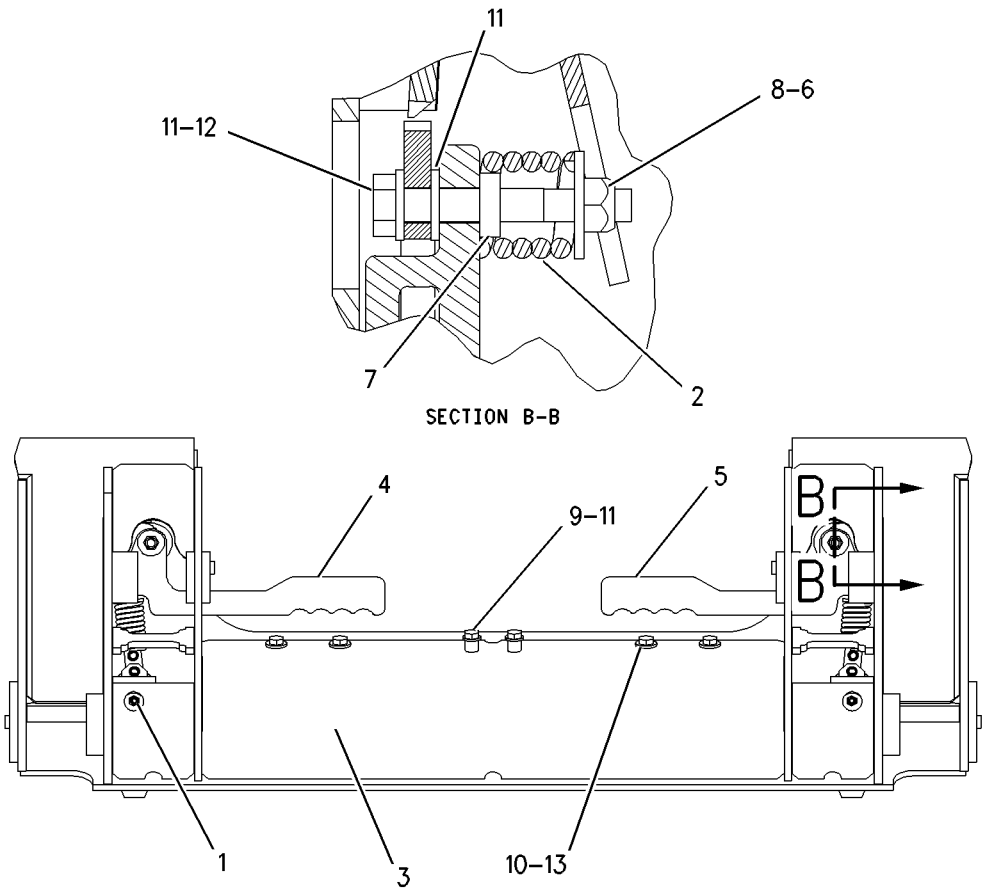


GRAPHIC #1 **<END>** g00858646

# *215-3962* CYLINDER & LINK GP-COUPLER–LH

**S/N: TNK1-UP**
**PART OF 192-2655 COUPLER GP-QUICK**
**AN ATTACHMENT**

**SMCS-5133, 6129** **i02960140**

| NOTE | REF NO | GRAPHIC REF | PART NUMBER | QTY | PART NAME 1 2 3 4 5 6 (PRODUCT LEVEL) | SEE PAGE |
|---|---|---|---|---|---|---|
| | 1 | 1 | **303-8767** | 1 | PIN-SPRING | |
| Y | 2 | 1 | **192-2640** | 1 | CYLINDER GP-HYDRAULIC (COUPLER) | 160 |
| | 3 | 1 | **192-2642** | 1 | PIN | |
| | 4 | 1 | **303-8768** | 1 | PIN-SPRING | |
| Y | 5 | 1 | *215-3957* | 1 | LINK GP-COUPLER | 216 |

Y-SEPARATE ILLUSTRATION

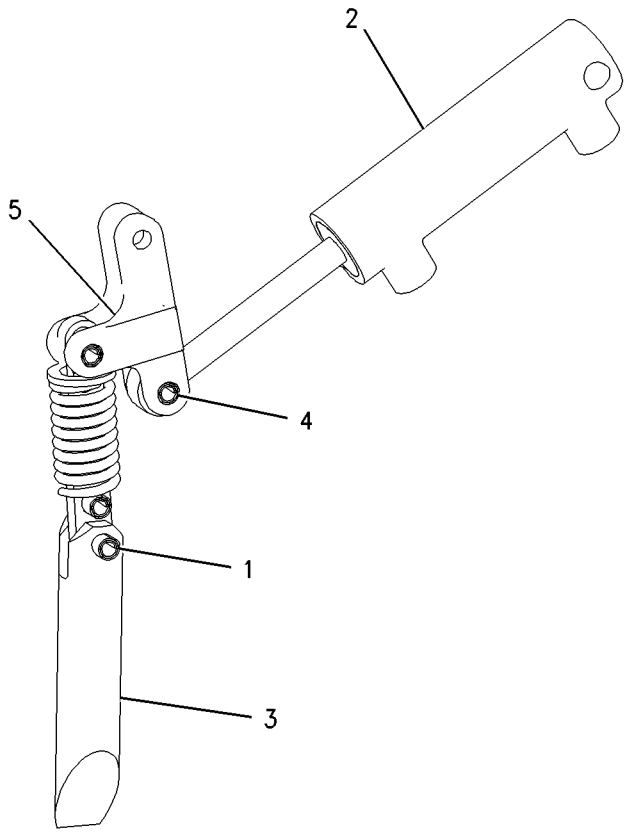


GRAPHIC #1 **<END>** g00871294

# *215-3963* CYLINDER & LINK GP-COUPLER–RH

**S/N: TNK1-UP**
**PART OF 192-2655 COUPLER GP-QUICK**
**AN ATTACHMENT**

**SMCS-5133, 6129** **i02960142**

| NOTE | REF NO | GRAPHIC REF | PART NUMBER | QTY | PART NAME 1 2 3 4 5 6 (PRODUCT LEVEL) | SEE PAGE |
|---|---|---|---|---|---|---|
| | 1 | 1 | **303-8767** | 1 | PIN-SPRING | |
| Y | 2 | 1 | **192-2640** | 1 | CYLINDER GP-HYDRAULIC (COUPLER) | 160 |
| | 3 | 1 | **192-2642** | 1 | PIN | |
| | 4 | 1 | **303-8768** | 1 | PIN-SPRING | |
| Y | 5 | 1 | *215-3957* | 1 | LINK GP-COUPLER | 216 |

Y-SEPARATE ILLUSTRATION

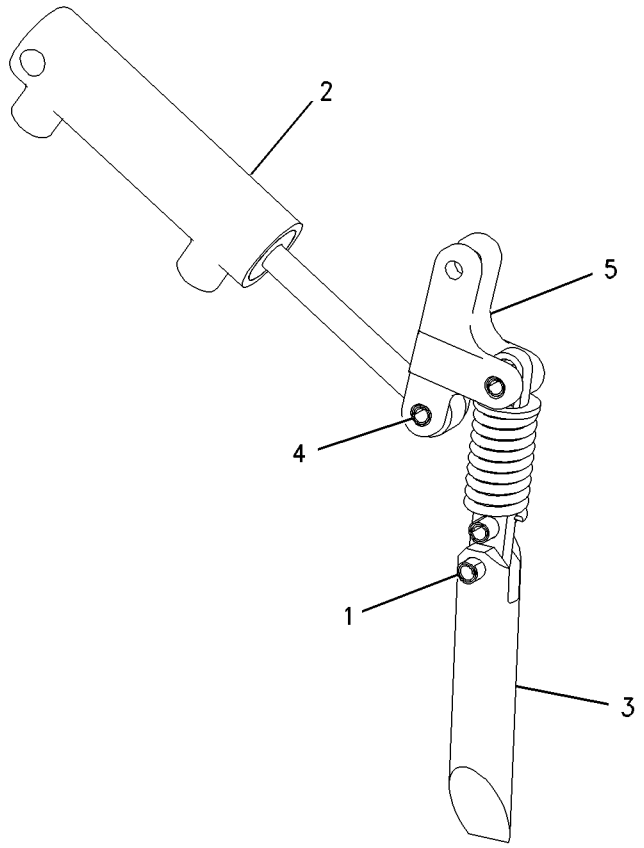


GRAPHIC #1 **<END>** g00871299

# *258-2536* HANDLE & PIN GP-COUPLER–RH

**S/N: TNK1-UP**
**PART OF 258-2535 LOCK GP-QUICK COUPLER**
**AN ATTACHMENT**

**SMCS-6129** **i02960198**

| NOTE | REF NO | GRAPHIC REF | PART NUMBER | QTY | PART NAME 1 2 3 4 5 6 (PRODUCT LEVEL) | SEE PAGE |
|---|---|---|---|---|---|---|
| | 1 | 1 | **192-2637** | 1 | PLATE | |
| | 2 | 1 | **195-6754** | 2 | PIN-SPRING | |
| | 3 | 1 | **192-2645** | 1 | SPRING | |
| | 4 | 1 | **258-2534** | 1 | HANDLE-RH | |
| M | 5 | 1 | **315-5493** | 2 | WASHER-HARD (22.5X35X4.5-MM THK) | |

M-METRIC PART

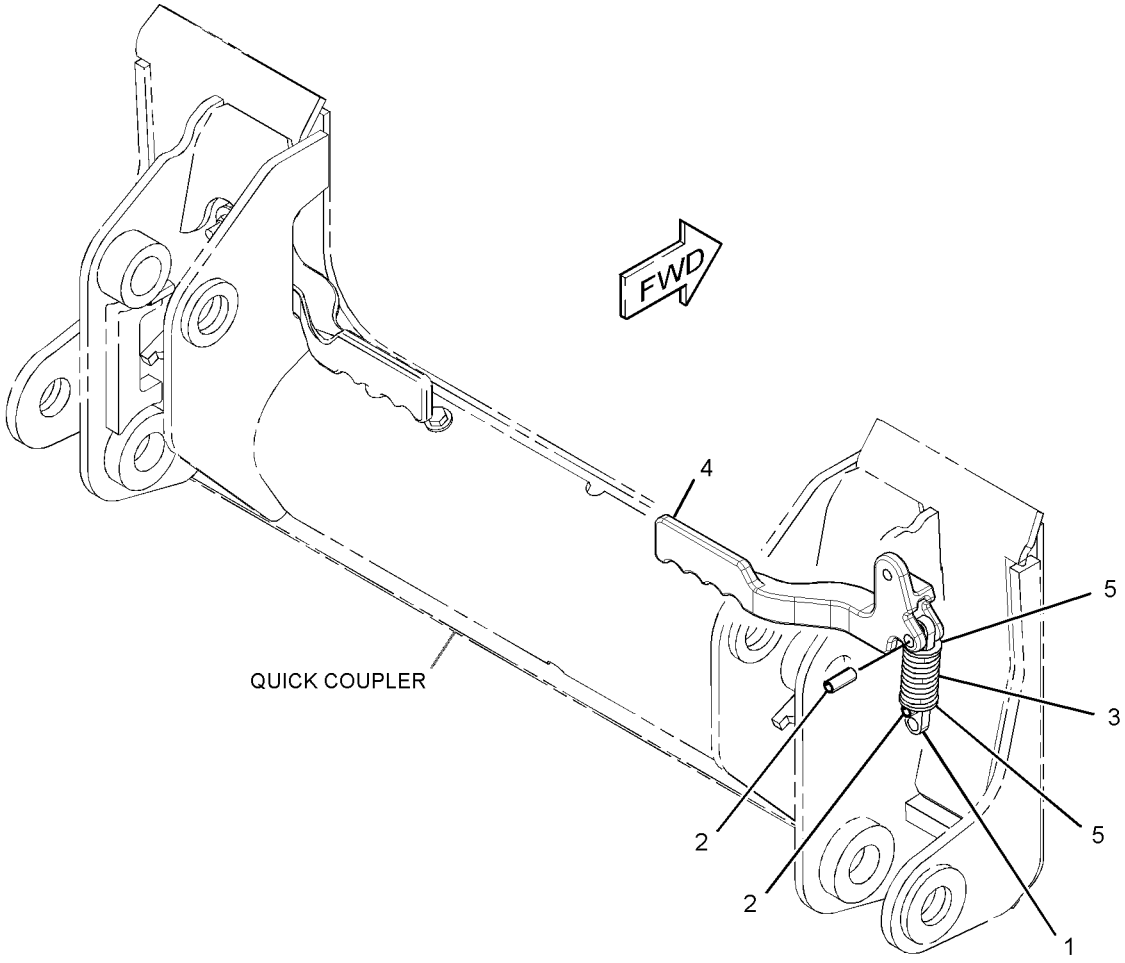


GRAPHIC #1 **<END>** g01335572

# 258-2538 HANDLE & PIN GP-COUPLER–LH

**S/N: TNK1-UP**
**PART OF 258-2537 LOCK GP-QUICK COUPLER**
**AN ATTACHMENT**

**SMCS-6129** **i02960209**

| NOTE | REF NO | GRAPHIC REF | PART NUMBER | QTY | PART NAME 1 2 3 4 5 6 (PRODUCT LEVEL) | SEE PAGE |
|---|---|---|---|---|---|---|
| | 1 | 1 | **192-2637** | 1 | PLATE | |
| | 2 | 1 | **195-6754** | 2 | PIN-SPRING | |
| | 3 | 1 | **192-2645** | 1 | SPRING | |
| | 4 | 1 | **258-2533** | 1 | HANDLE-LH | |
| M | 5 | 1 | **315-5493** | 2 | WASHER-HARD (22.5X35X4.5-MM THK) | |

M-METRIC PART

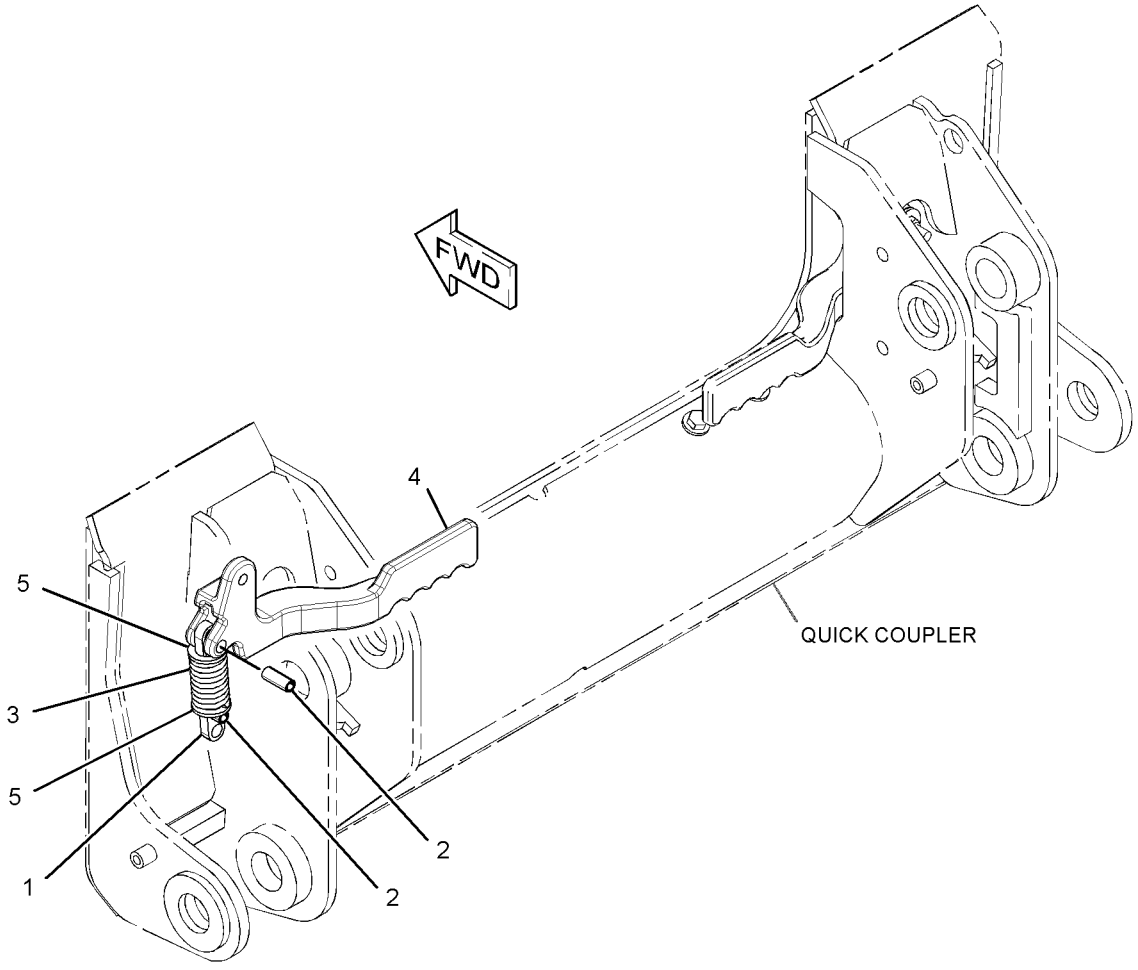


GRAPHIC #1 **<END>** g01335567

# WORK TOOLS

## *215-3957* LINK GP-COUPLER

**S/N: TNK1-UP**

**PART OF 215-3962, 215-3963 CYLINDER & LINK GP-COUPLER**

**AN ATTACHMENT**

**SMCS-6129** **i02999956**

| NOTE | REF NO | GRAPHIC REF | PART NUMBER | QTY | PART NAME 1 2 3 4 5 6 (PRODUCT LEVEL) | SEE PAGE |
|---|---|---|---|---|---|---|
| C | 1 | 1 | **192-2645** | 1 | SPRING | |
| C | 2 | 1 | **303-8768** | 1 | PIN-SPRING | |
| C | 3 | 1 | **310-6660** | 1 | PIN-SPRING | |
| C | 4 | 1 | **311-9240** | 1 | PLATE | |
| CM | 5 | 1 | **315-5493** | 2 | WASHER-HARD (22.5X35X4.5-MM THK) | |
| C | 6 | 1 | **319-2137** | 1 | BRACKET | |

C-CHANGE FROM PREVIOUS TYPE
M-METRIC PART

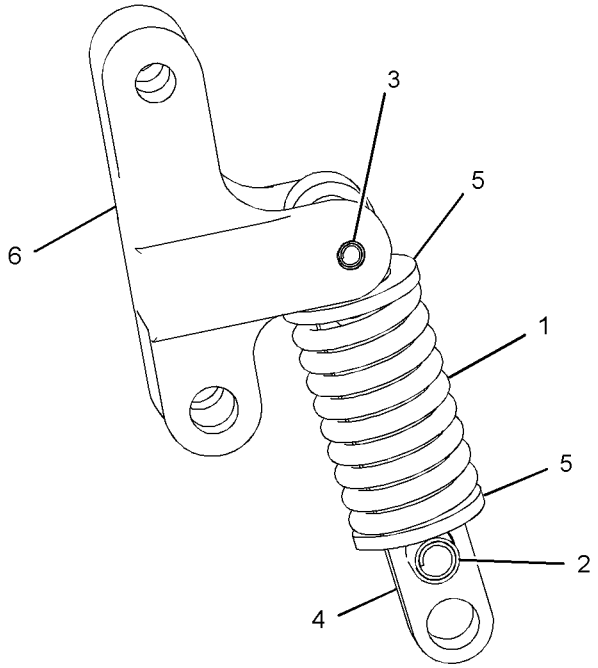


GRAPHIC #1 **<END>** g01523779

# *258-2535* LOCK GP-QUICK COUPLER–RH

**S/N: TNK1-UP**
**PART OF 196-8870 COUPLER GP-QUICK**
**AN ATTACHMENT**

**SMCS-6129** **i02655596**

| NOTE | REF NO | GRAPHIC REF | PART NUMBER | QTY | PART NAME 1 2 3 4 5 6 (PRODUCT LEVEL) | SEE PAGE |
|---|---|---|---|---|---|---|
| | 1 | 1 | **166-2560** | 1 | PIN-SPRING | |
| | 2 | 1 | **192-2642** | 1 | PIN | |
| Y | 3 | 1 | *258-2536* | 1 | HANDLE & PIN GP-COUPLER (RH) | 214 |

Y-SEPARATE ILLUSTRATION

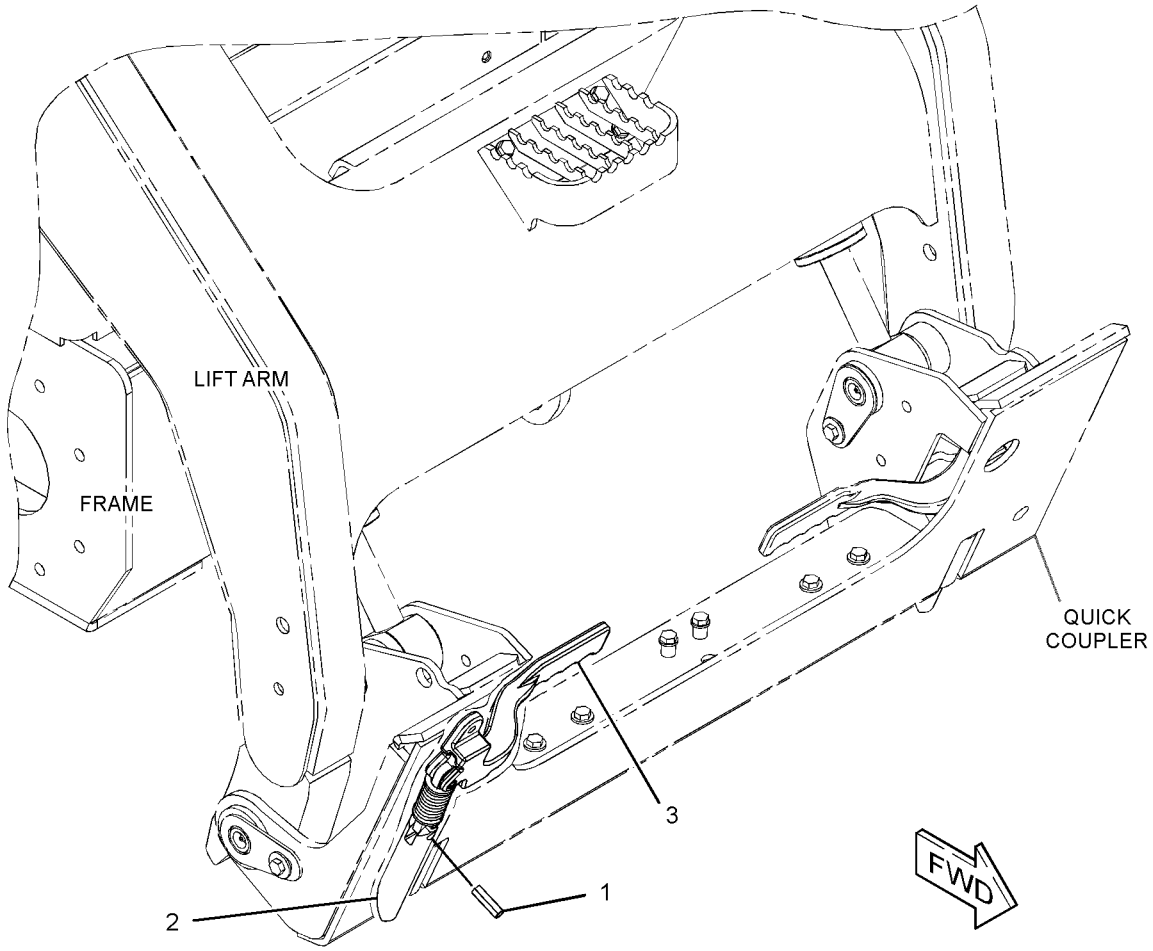


GRAPHIC #1 **<END>** g01335585

# WORK TOOLS

## *258-2537* LOCK GP-QUICK COUPLER—LH

**S/N: TNK1-UP**
**PART OF 196-8870 COUPLER GP-QUICK**
**AN ATTACHMENT**

**SMCS-6129** **i02655597**

| NOTE | REF NO | GRAPHIC REF | PART NUMBER | QTY | PART NAME 1 2 3 4 5 6 (PRODUCT LEVEL) | SEE PAGE |
|---|---|---|---|---|---|---|
| | 1 | 1 | **166-2560** | 1 | PIN-SPRING | |
| | 2 | 1 | **192-2642** | 1 | PIN | |
| Y | 3 | 1 | *258-2538* | 1 | HANDLE & PIN GP-COUPLER (LH) | 215 |

Y-SEPARATE ILLUSTRATION

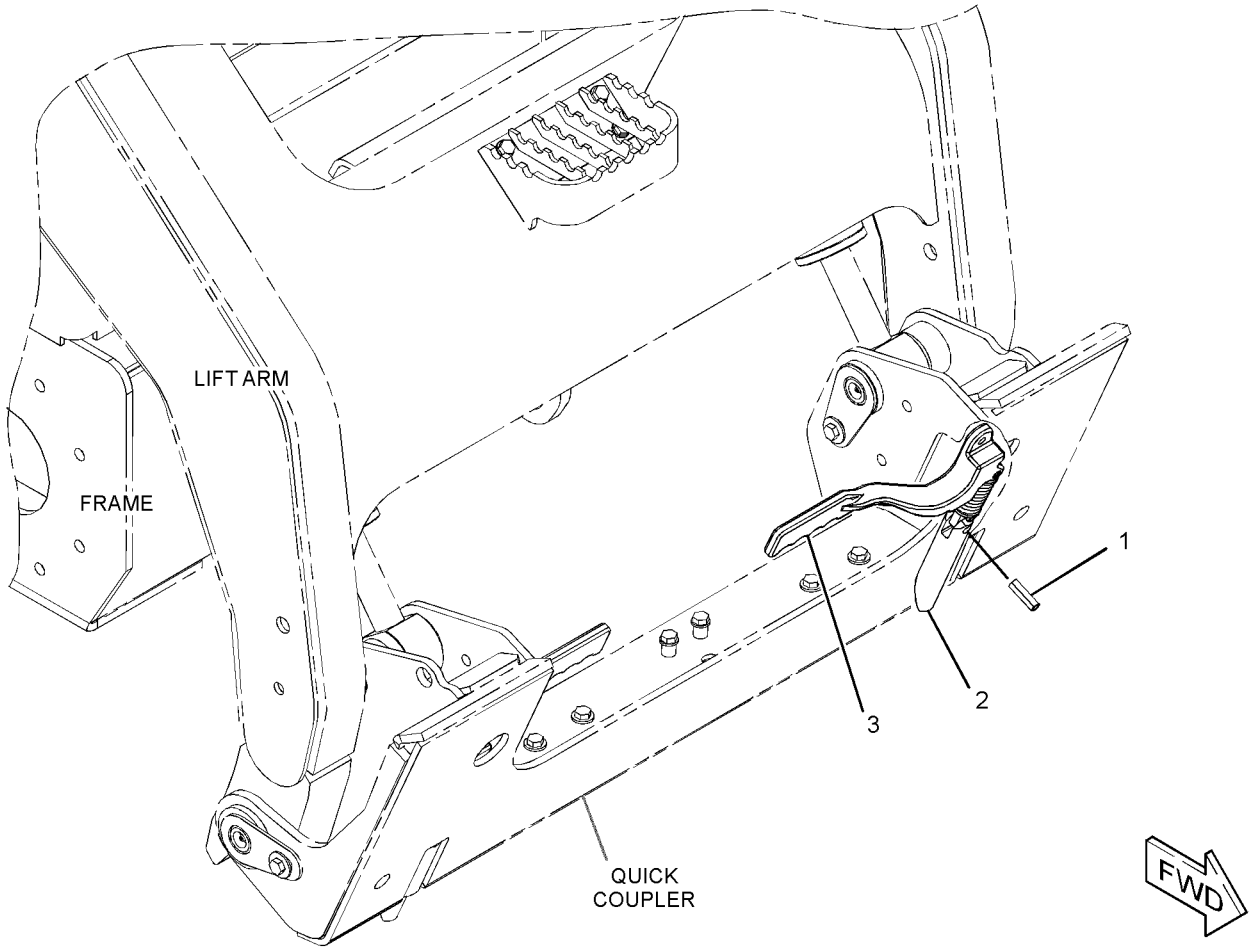


GRAPHIC #1 **<END>** g01335566

# OPERATOR STATION

## *176-3900* ACCUMULATOR GP-REFRIGERANT—UNCHARGED

**S/N: TNK1-UP**

**FIELD REPLACEMENT FOR 186-6190—PAGE 220**

**SMCS-7320** **i02195254**

| NOTE | REF NO | GRAPHIC REF | PART NUMBER | QTY | PART NAME 1 2 3 4 5 6 (PRODUCT LEVEL) | SEE PAGE |
|---|---|---|---|---|---|---|
| | | | | | (NO SERVICED PARTS) | |

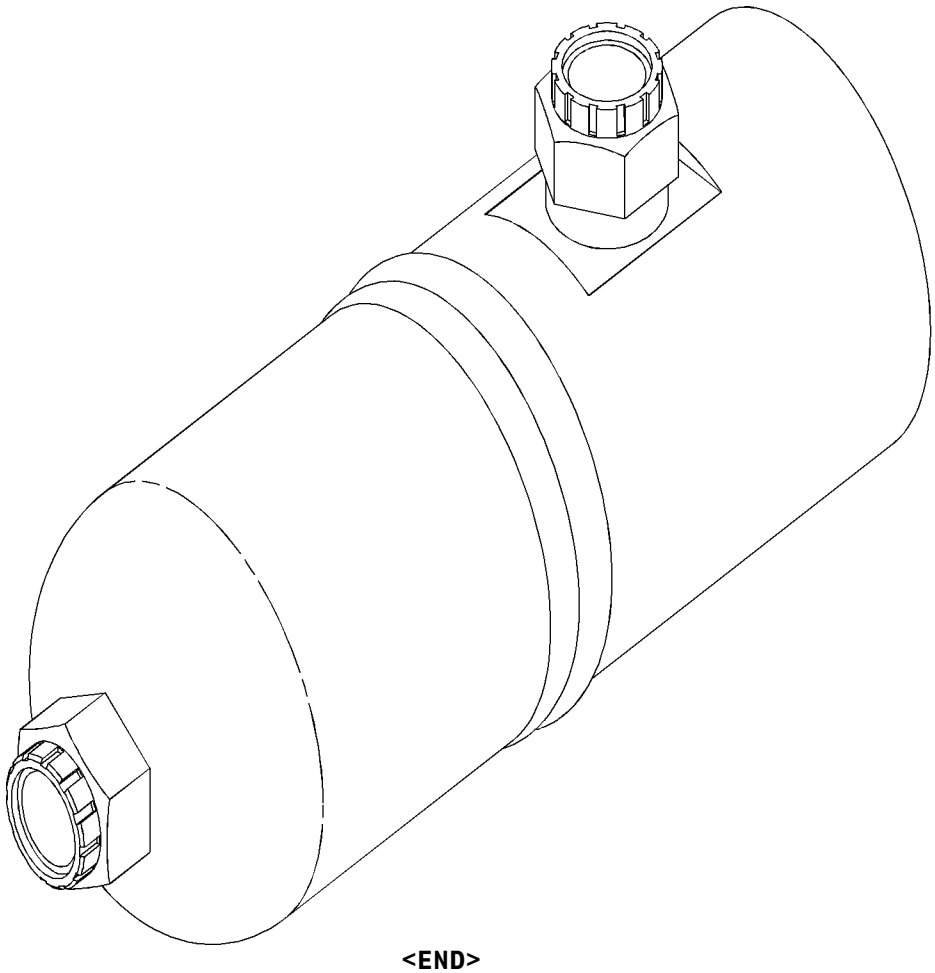

GRAPHIC #1 **<END>** g01035076

# OPERATOR STATION

## *186-6190* ACCUMULATOR GP-REFRIGERANT—CHARGED

**S/N: TNK1-UP**
**PART OF 326-5381 LINES GP-AIR CONDITIONER**
**FIELD REPLACEMENT ORDER 176-3900—PAGE 219**
**AN ATTACHMENT**

**SMCS-7320** **i02306357**

| NOTE | REF NO | GRAPHIC REF | PART NUMBER | QTY | PART NAME 1 2 3 4 5 6 (PRODUCT LEVEL) | SEE PAGE |
|---|---|---|---|---|---|---|
| | | | | | (NO SERVICED PARTS) | |

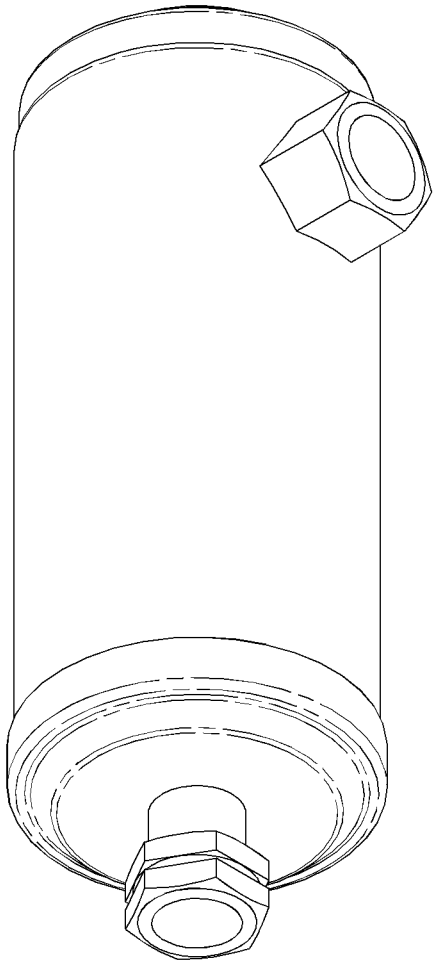

GRAPHIC #1 **<END>** g01155244

# OPERATOR STATION

## *326-5518* AIR CONDITIONER AR

**S/N: TNK1-UP**

**PART OF 326-5517 CAB AR-ENCLOSED ROPS**

**CANNOT BE USED WITH 326-5514—PAGE 272, 326-5515—PAGE 268**

**AN ATTACHMENT**

**SMCS-7320** **i03904676**

| NOTE | PART NUMBER | QTY | PART NAME 1 2 3 4 5 6 (PRODUCT LEVEL) | SEE PAGE |
|---|---|---|---|---|
| Y | *218-6404* | 1 | AIR CONDITIONER GP | 222 |
| Y | *258-2468* | 1 | COMPRESSOR & MTG GP-REFRIG | 235 |
| Y | *218-6148* | 1 | CONDENSER & MTG GP-REFRIGERANT | 236 |
| Y | *218-6394* | 1 | DUCT GP-CAB AIR | 260 |
| Y | *326-5381* | 1 | LINES GP-AIR CONDITIONER | 276 |
| Y | *218-5619* | 1 | LINES GP-HEATER | 278 |

Y-SEPARATE ILLUSTRATION

**<END>**

# OPERATOR STATION

## *218-6404* AIR CONDITIONER GP

**S/N: TNK1-UP**
**PART OF 326-5518 AIR CONDITIONER AR**
**AN ATTACHMENT**

**SMCS-7320, 7342** **i02010224**

| NOTE | REF NO | GRAPHIC REF | PART NUMBER | QTY | PART NAME 1 2 3 4 5 6 (PRODUCT LEVEL) | SEE PAGE |
|---|---|---|---|---|---|---|
| | 1 | 1 | **218-6402** | 1 | INSULATION AS | |
| Y | 2 | 1 | *218-6405* | 1 | AIR CONDITIONER GP | 223 |
| | 3 | 1 | **8T-4224** | 4 | WASHER-HARD (8.8X16X2MM THK) | |
| M | 4 | 1 | **8T-6869** | 4 | BOLT (M8X1.25X60MM) | |

M-METRIC PART
Y-SEPARATE ILLUSTRATION

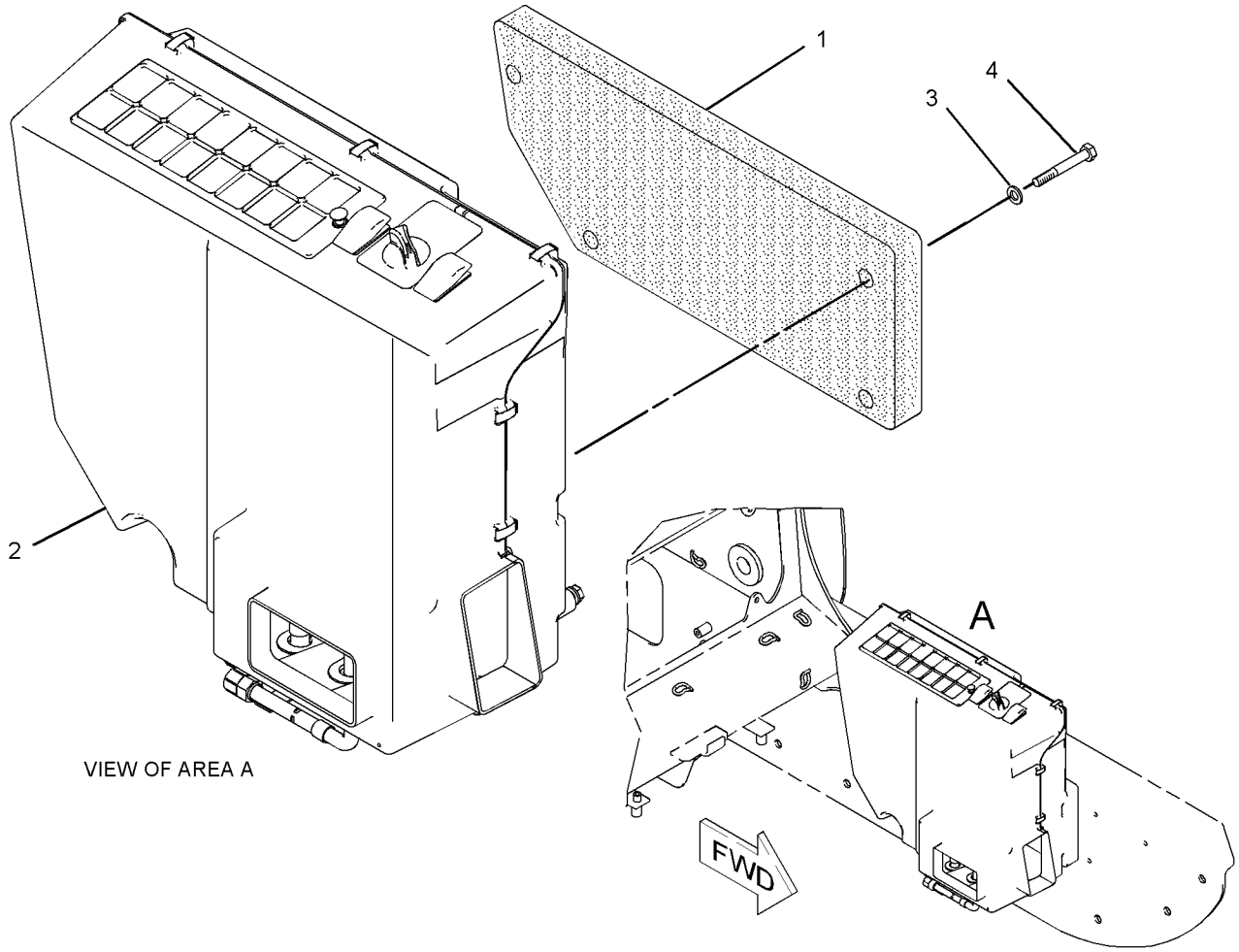


VIEW OF AREA A

GRAPHIC #1 **<END>** g01036189

# OPERATOR STATION

## *218-6405* AIR CONDITIONER GP

**S/N: TNK1-UP**

**PART OF 218-6404 AIR CONDITIONER GP**

**AN ATTACHMENT**

**SMCS-7320, 7342** **i03753706**

| NOTE | REF NO | GRAPHIC REF | PART NUMBER | QTY | PART NAME 1 2 3 4 5 6 (PRODUCT LEVEL) | SEE PAGE |
|---|---|---|---|---|---|---|
| | 1 | 1 | **185-4015** | 10 | CLIP | |
| | 2 | 1 | **202-2284** | 1 | SWITCH AS-ROCKER (AIR CONDITIONER) | |
| | | 1 | **111-7899** | 1 | GASKET | |
| | 3 | 1 | **218-6399** | 1 | SEAL | |
| | 4 | 1 | **206-7398** | 1 | KNOB-CONTROL (TEMPERATURE SELECT) | |
| | 5 | 1 | **119-9631** | 1 | SWITCH-TEMPERATURE (AIR CONDITIONER) | |
| | 6 | 1 | **305-2969** | 2 | SCREW-THUMB | |
| | 7 | 1 | **231-8123** | 1 | COIL AS-EVAPORATOR | |
| | 8 | 1 | **231-8124** | 1 | COIL AS-HEATER | |
| | 9 | 1 | **295-5440** | 1 | MOTOR | |
| | 10 | 1 | **236-5067** | 1 | SWITCH-ROCKER (HEATER) | |
| | 11 | 1 | **231-8127** | 2 | GROMMET | |
| C | 12 | 1 | **312-2635** | 1 | COVER GP-ACCESS | |
| | | 1 | **231-8129** | 2 | PIN | |
| | | 1 | **231-8142** | 2 | RETAINER | |
| | 14 | 1 | **303-6658** | 1 | FILTER ELEMENT-CAB AIR | |
| | 16 | 1 | **231-8132** | 1 | FILTER ELEMENT-CAB AIR | |
| | 17 | 1 | **231-8133** | 1 | PANEL | |
| | 18 | 1 | **231-8137** | 1 | FILM (TEMPERATURE CONTROL) | |
| | 19 | 1 | **231-8141** | 1 | GROMMET | |
| | 21 | 1 | **236-5069** | 3 | RELAY AS (12-VOLT) (AIR CONDITIONER, HEATER) | |
| C | 22 | 1 | **312-1683** | 1 | HOUSING-COVER | |
| Y | 23 | 1 | **231-8122** | 1 | HOUSING AS-SIDE (AIR CONDITIONER, HEATER) | 271 |
| | 24 | 1 | **231-8126** | 1 | VALVE AS-WATER | |
| | 25 | 1 | **232-1384** | 1 | ORIFICE AS-AIR CONDITIONER | |
| | 26 | 1 | **218-6948** | 1 | HARNESS AS-HEATER & AIR COND | |

C-CHANGE FROM PREVIOUS TYPE
Y-SEPARATE ILLUSTRATION

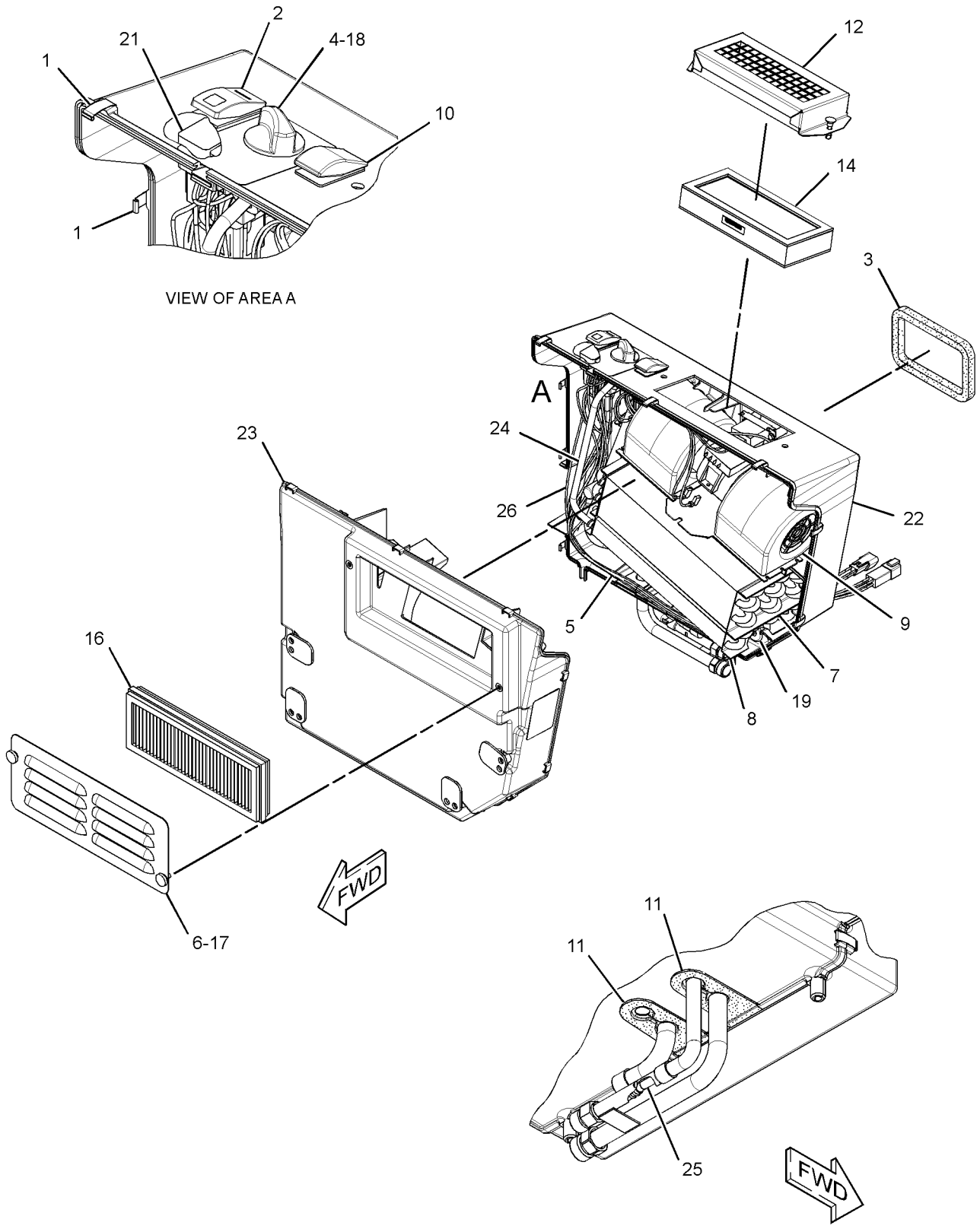


GRAPHIC #1 **<END>** g01594158

# OPERATOR STATION

## *320-1389* ARM GP-WINDOW WIPER

**S/N: TNK1-UP**

**PART OF 223-0616, 276-3440 DOOR GP-CAB**

**AN ATTACHMENT**

**SMCS-7305** **i03434603**

| NOTE | REF NO | GRAPHIC REF | PART NUMBER | QTY | PART NAME 1 2 3 4 5 6 (PRODUCT LEVEL) | SEE PAGE |
|---|---|---|---|---|---|---|
| | 1 | 1 | **240-8666** | 2 | CLIP | |
| | 2 | 1 | **136-3191** | 1 | NOZZLE AS-WASHER | |
| E | 3 | 1 | **194-5171** | | HOSE (60-CM) | |

E-ORDER BY THE CENTIMETER

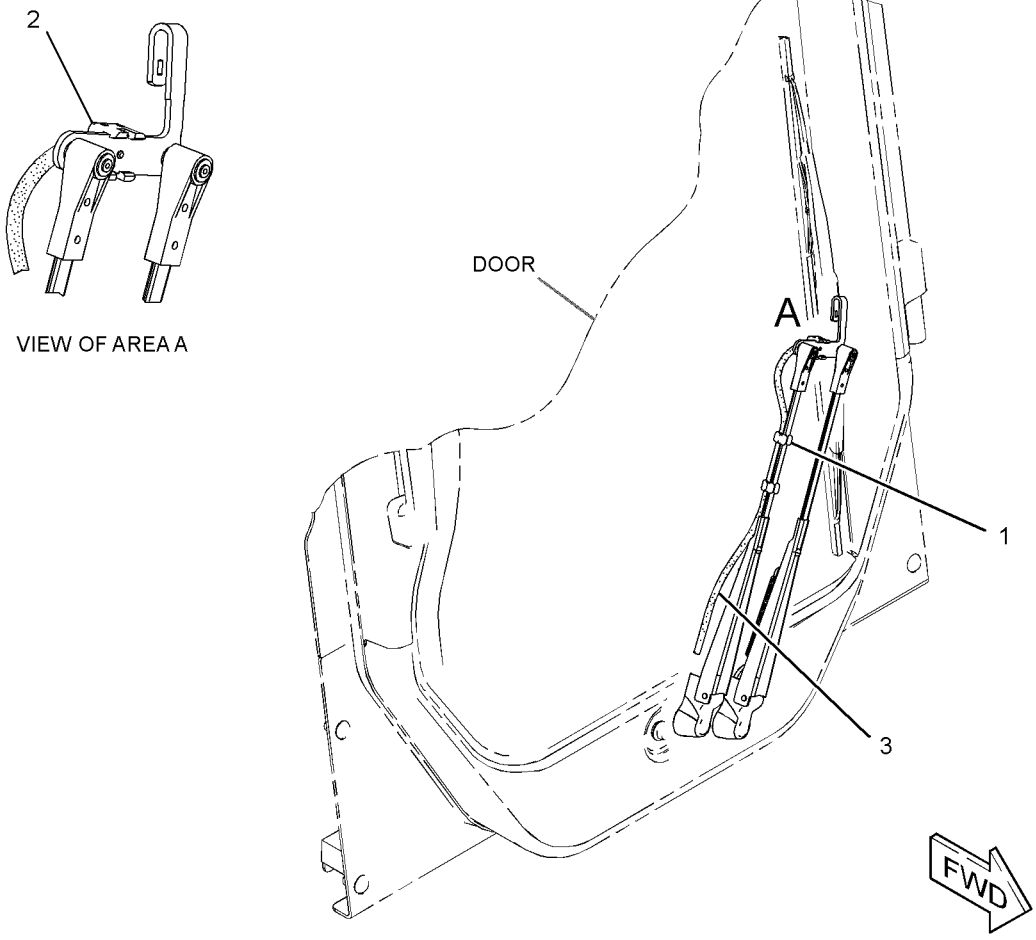


GRAPHIC #1 **<END>** g01788004

# OPERATOR STATION

## *236-4830* ARMREST & MOUNTING GP

**S/N: TNK1-UP**

**PART OF 326-5400 CAB AR**

**SMCS-7307** **i01955195**

| NOTE | REF NO | GRAPHIC REF | PART NUMBER | QTY | PART NAME 1 2 3 4 5 6 (PRODUCT LEVEL) | SEE PAGE |
|---|---|---|---|---|---|---|
| | 1 | 1 | **4E-1384** | 2 | BUMPER-CONICAL | |
| | 2 | 1 | **195-0939** | 4 | STUD | |
| | 3 | 1 | **218-6442** | 2 | PLATE | |
| Y | 4 | 1 | **236-4833** | 1 | ARMREST GP | 227 |
| M | 5 | 1 | **195-0937** | 2 | INSERT-THREADED (M8X1.25-THD) | |
| M | 6 | 1 | **5C-7261** | 2 | NUT (M8X1.25-THD) | |
| | 7 | 1 | **8T-4121** | 4 | WASHER-HARD (11X21X2.5-MM THK) | |
| M | 8 | 1 | **8T-4133** | 4 | NUT (M10X1.5-THD) | |

M-METRIC PART
Y-SEPARATE ILLUSTRATION

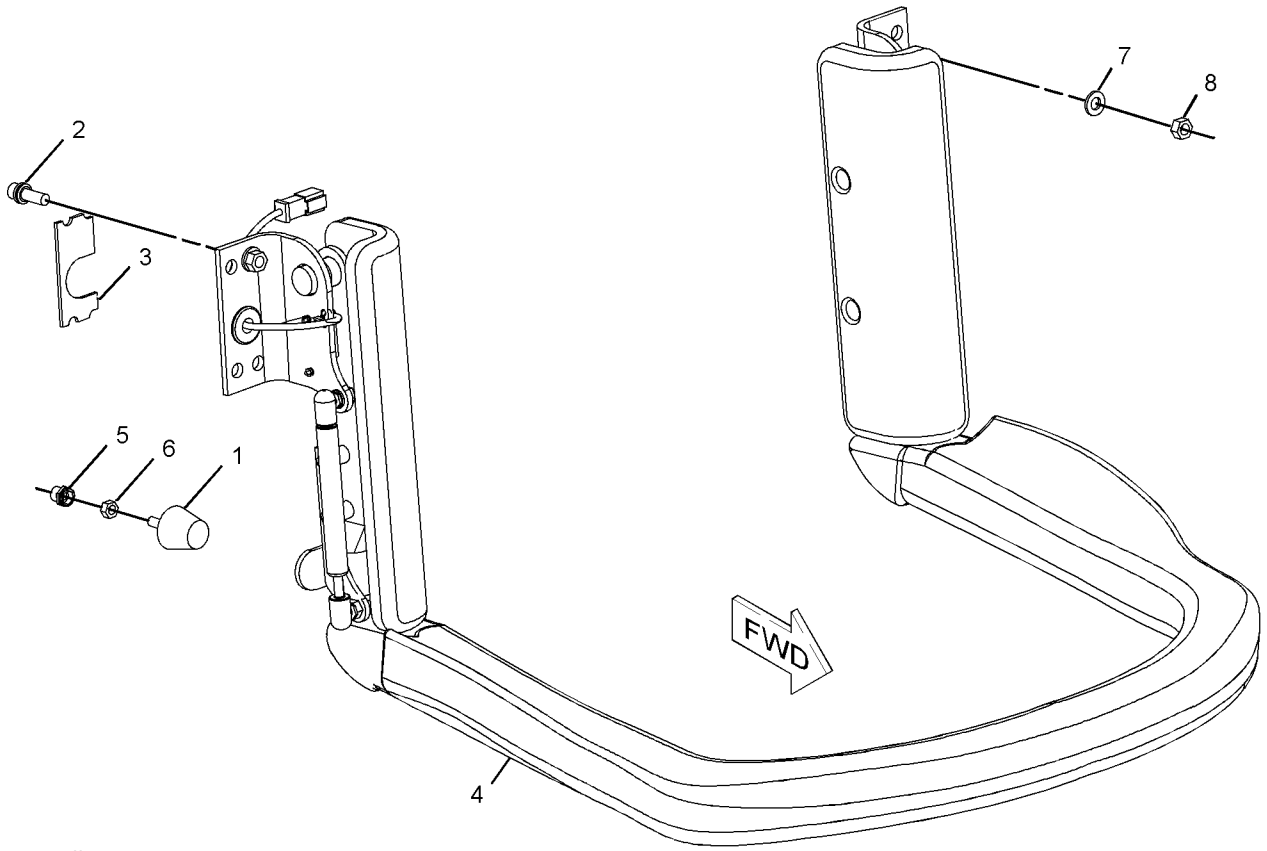


GRAPHIC #1 **<END>** g01016683

# OPERATOR STATION

## 236-4833 ARMREST GP

**S/N: TNK1-UP**

**PART OF 236-4830 ARMREST & MOUNTING GP**

**SMCS-7307** **i03647962**

| NOTE | REF NO | GRAPHIC REF | PART NUMBER | QTY | PART NAME 1 2 3 4 5 6 (PRODUCT LEVEL) | SEE PAGE |
|---|---|---|---|---|---|---|
| | 1 | 1 | **3S-2093** | 1 | STRAP-CABLE | |
| | 2 | 1 | **7D-8431** | 2 | RING-RETAINING | |
| | 3 | 1 | **7G-7053** | 1 | GROMMET | |
| | 4 | 1 | **9P-4609** | 1 | PLATE (MAGNETIC) | |
| | 5 | 1 | **9S-0285** | 2 | BUSHING | |
| | 6 | 1 | **130-1916** | 2 | STUD-BALL | |
| | 7 | 1 | **142-9278** | 1 | BRACKET AS (RH) | |
| | 8 | 1 | **142-9279** | 1 | BRACKET AS (LH) | |
| | 9 | 1 | **142-9287** | 1 | SPRING AS-GAS | |
| | 10 | 1 | **142-9386** | 1 | BRACKET AS (LH) | |
| | 11 | 1 | **152-4875** | 2 | COVER AS | |
| | 12 | 1 | **152-4884** | 1 | BRACKET AS (RH) | |
| | 13 | 1 | **162-0223** | 1 | SWITCH AS (INTERLOCK) | |
| | | 1 | **155-2271** | 1 | KIT-CONNECTING PLUG (4-PIN) | |
| | | 1 | **176-2947** | 1 | PLUG KIT-CONN (4-PIN) | |
| | | | | | (EACH PLUG KIT INCLUDES PLUG AS, WEDGE & INTERFACE SEAL) | |
| | | 1 | **186-3736** | 3 | SOCKET-CONNECTOR (16-GA TO 18-GA) | |
| | | 1 | **9G-3695** | 1 | PLUG-SEAL | |
| E | | 1 | **9X-1813** | | SLEEVE (24-CM) | |
| | 14 | 1 | **236-4832** | 1 | ARMREST AS | |
| | 15 | 1 | **103-6262** | 4 | SCREW-MACHINE (4-40X0.63-IN) | |
| | 16 | 1 | **142-2928** | 4 | LOCKNUT (4-40-THD) | |
| M | 17 | 1 | **5C-9553** | 4 | BOLT (M6X1X16-MM) | |
| | 18 | 1 | **8T-4205** | 4 | WASHER-HARD (7.2X14.5X2-MM THK) | |
| | 19 | 1 | **8T-4224** | 1 | WASHER-HARD (8.8X16X2-MM THK) | |
| M | 20 | 1 | **9X-2042** | 4 | SCREW-TRUSS HEAD (M6X1X12-MM) | |

E-ORDER BY THE CENTIMETER
M-METRIC PART

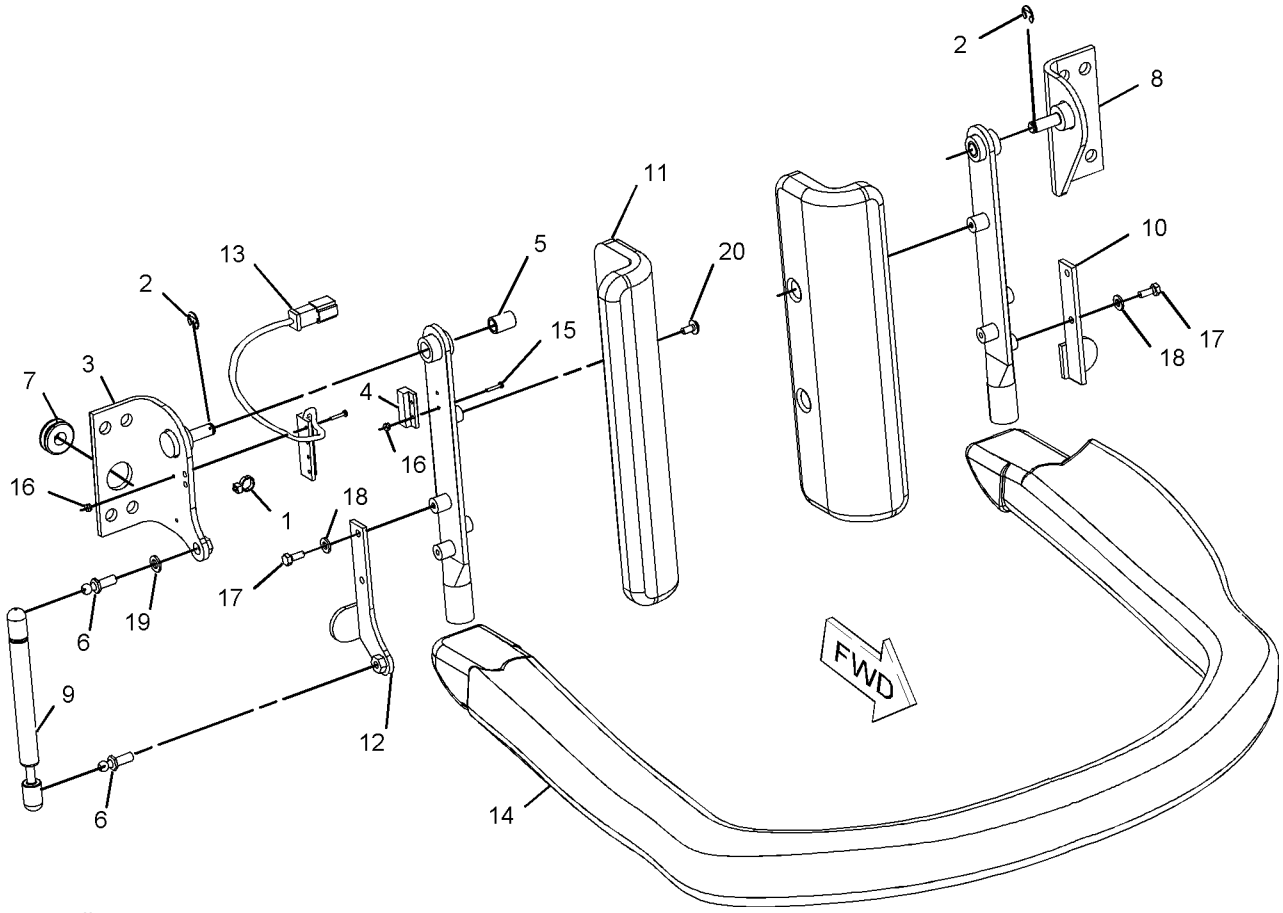


GRAPHIC #1 **<END>** g01016724

# OPERATOR STATION

## *216-6146* BOX GP-STORAGE

**S/N: TNK1-UP**

**AN ATTACHMENT**

**SMCS-7268** **i03909558**

| NOTE | REF NO | GRAPHIC REF | PART NUMBER | QTY | PART NAME 1 2 3 4 5 6 (PRODUCT LEVEL) | SEE PAGE |
|---|---|---|---|---|---|---|
| | 1 | 1 | **8T-2895** | 1 | LOCK GP-CYLINDER | |
| | | 1 | **226-0323** | 1 | CAM-LOCK | |
| J | | 1 | **226-0291** | 1 | LOCK AS | |
| | 2 | 1 | **216-6145** | 1 | BOX AS-STORAGE | |
| D | 3 | 1 | **6V-1392** | | SEAL (0.3-M) | |

D-ORDER BY THE METER
J-REQUIRES CORPORATE KEY

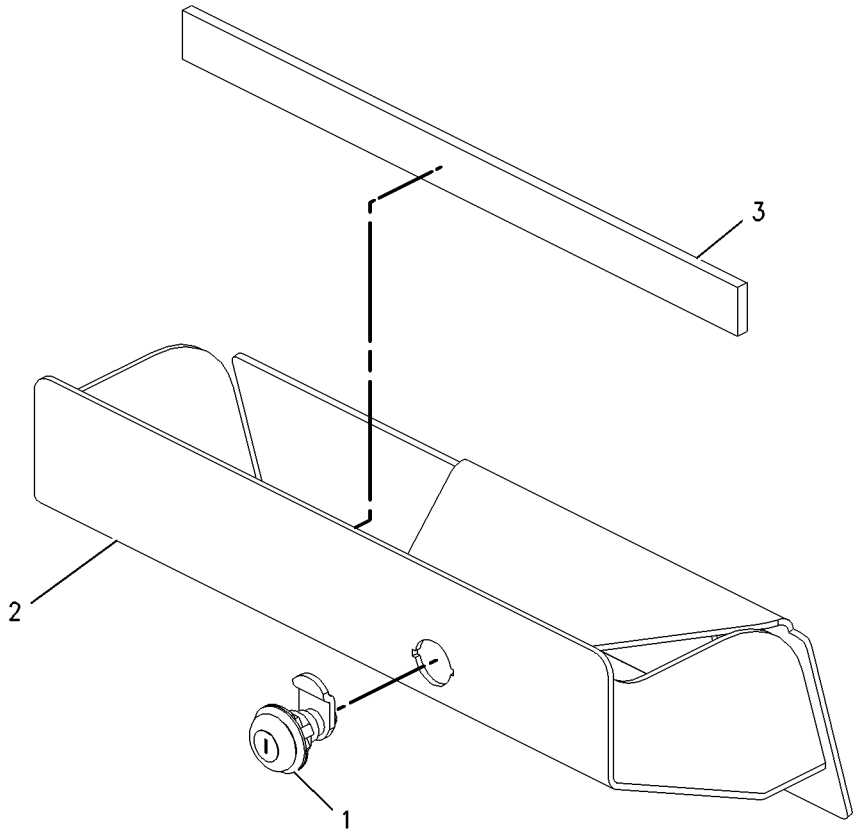


GRAPHIC #1 **<END>** g00932357

# OPERATOR STATION

## *218-6420* BOX GP-STORAGE—LITERATURE

**S/N: TNK1-UP**

**PART OF 326-5400 CAB AR**

**SMCS-7268** **i03291842**

| NOTE | REF NO | GRAPHIC REF | PART NUMBER | QTY | PART NAME 1 2 3 4 5 6 (PRODUCT LEVEL) | SEE PAGE |
|---|---|---|---|---|---|---|
| | 1 | 1 | **5P-7957** | 1 | LANYARD | |
| | 2 | 1 | **152-4871** | 1 | BOX-STORAGE | |
| | 3 | 1 | **195-0935** | 4 | INSERT-THREADED (M6X1-THD) | |
| M | 4 | 1 | **9X-2042** | 4 | SCREW-TRUSS HEAD (M6X1X12-MM) | |

M-METRIC PART

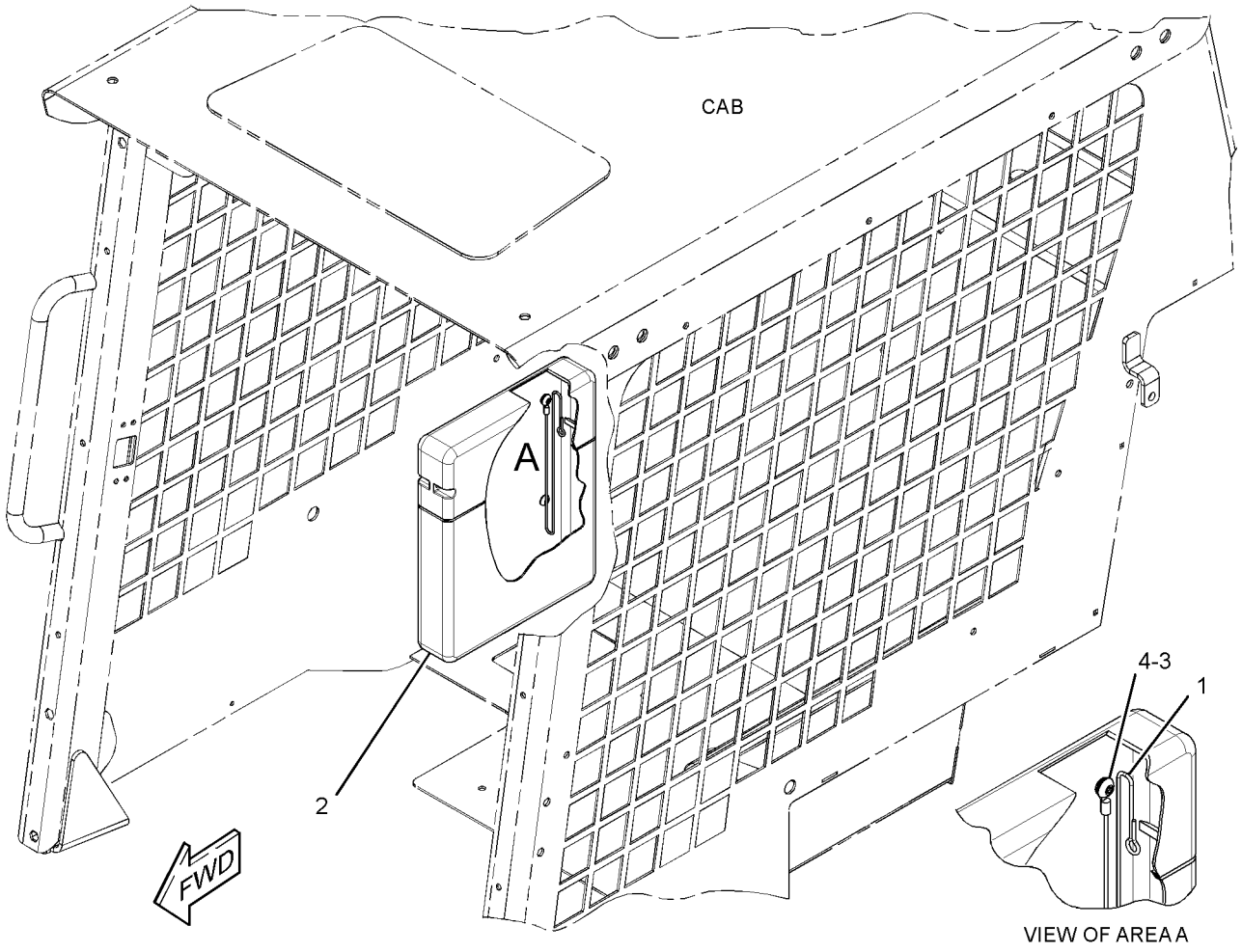


GRAPHIC #1 **<END>** g01716516

# OPERATOR STATION

## *326-5400* CAB AR

**S/N: TNK1-UP**

**PART OF 326-5422 COMMON AR**

**SMCS-7301, 7325** **i03902031**

| NOTE | PART NUMBER | QTY | PART NAME 1 2 3 4 5 6 (PRODUCT LEVEL) | SEE PAGE |
|---|---|---|---|---|
| Y | *236-4830* | 1 | ARMREST & MOUNTING GP | 226 |
| Y | *218-6420* | 1 | BOX GP-STORAGE (LITERATURE) | 230 |
| Y | *326-5401* | 1 | CAB GP-ENCLOSED ROPS | 234 |
| Y | *216-4746* | 1 | LIGHTING GP-FLOOD (REAR) | 80 |
| Y | *218-6425* | 1 | LIGHTING GP-FLOOD (FRONT) | 81 |
| Y | *326-5406* | 1 | LINER GP-CAB | 274 |
| Y | *258-4230* | 1 | MIRROR GP-REAR VIEW | 279 |
| Y | *218-6370* | 1 | MOUNTING GP-ROPS | 283 |
| Y | *328-2270* | 1 | PANEL GP-INSTRUMENT | 284 |
| Y | *218-6380* | 1 | SPRING GP-GAS (CAB) | 300 |
| Y | *195-6723* | 1 | WINDOW GP-CAB | 301 |
| Y | *328-2272* | 1 | WIRING GP-CAB | 87 |

Y-SEPARATE ILLUSTRATION

**<END>**

## *326-5512* CAB AR-ENCLOSED ROPS

**S/N: TNK1-UP**

**AN ATTACHMENT**

**SMCS-7301** **i03975111**

| NOTE | PART NUMBER | QTY | PART NAME 1 2 3 4 5 6 (PRODUCT LEVEL) | SEE PAGE |
|---|---|---|---|---|
| Y | *326-5515* | 1 | HEATER AR-CAB | 268 |
| Y | *218-6406* | 1 | SEAL GP-CAB | 291 |
| Y | *142-9305* | 1 | SEAT GP (SUSPENSION) | 297 |
| Y | *218-6411* | 1 | WINDOW GP-CAB (SIDE) | 302 |
| | | | | |
| | **245-6811** | 1 | HOLDER-CUP | |
| | **142-9311** | 1 | LINER-CAB (GRAY) | |

Y-SEPARATE ILLUSTRATION

**<END>**

## *326-5517* CAB AR-ENCLOSED ROPS—MECH SUSP SEAT & A/C

**S/N: TNK1-UP**

**AN ATTACHMENT**

**SMCS-7301** **i03975112**

| NOTE | PART NUMBER | QTY | PART NAME 1 2 3 4 5 6 (PRODUCT LEVEL) | SEE PAGE |
|---|---|---|---|---|
| Y | *326-5518* | 1 | AIR CONDITIONER AR | 221 |
| Y | *218-6406* | 1 | SEAL GP-CAB | 291 |
| Y | *142-9305* | 1 | SEAT GP (SUSPENSION) | 297 |
| Y | *218-6411* | 1 | WINDOW GP-CAB (SIDE) | 302 |
| | | | | |
| | **245-6811** | 1 | HOLDER-CUP | |
| | **142-9311** | 1 | LINER-CAB (GRAY) | |

Y-SEPARATE ILLUSTRATION

**<END>**

# OPERATOR STATION

## *326-5510* CAB AR-OPEN ROPS

**S/N: TNK1-UP**

**AN ATTACHMENT**

**SMCS-7301, 7325** **i03903052**

| NOTE | PART NUMBER | QTY | PART NAME 1 2 3 4 5 6 (PRODUCT LEVEL) | SEE PAGE |
|---|---|---|---|---|
| Y | *218-6400* | 1 | HANDHOLD GP | 265 |
| Y | *326-5514* | 1 | INSTALLATION GP-COVER & LINES (WITHOUT A/C, HEATER) | 272 |
| Y | *218-5562* | 1 | SEAT GP (STATIC) | 298 |
| Y-SEPARATE ILLUSTRATION | | | | |

**<END>**

## *326-5511* CAB AR-OPEN ROPS—MECH SUSP SEAT

**S/N: TNK1-UP**

**AN ATTACHMENT**

**SMCS-7301, 7325** **i03975110**

| NOTE | PART NUMBER | QTY | PART NAME 1 2 3 4 5 6 (PRODUCT LEVEL) | SEE PAGE |
|---|---|---|---|---|
| Y | *218-6400* | 1 | HANDHOLD GP | 265 |
| Y | *326-5514* | 1 | INSTALLATION GP-COVER & LINES (WITHOUT A/C, HEATER) | 272 |
| Y | *142-9305* | 1 | SEAT GP (SUSPENSION) | 297 |
| | | | | |
| | **142-9311** | 1 | LINER-CAB (GRAY) | |
| Y-SEPARATE ILLUSTRATION | | | | |

**<END>**

# OPERATOR STATION

## 326-5404 CAB AS

**S/N: TNK1-UP**

**SMCS-7301** **i03907015**

| NOTE | REF NO | GRAPHIC REF | PART NUMBER | QTY | PART NAME 1 2 3 4 5 6 (PRODUCT LEVEL) | SEE PAGE |
|---|---|---|---|---|---|---|
| | 1 | 1 | **195-0939** | 4 | STUD | |
| | 2 | 1 | **214-9186** | 7 | BUTTON | |
| | 3 | 1 | **280-6072** | 1 | WINDOW | |
| | 4 | 1 | *326-5402* | 1 | CANOPY AS | |
| M | | 1 | **6V-3918** | 4 | BOLT (M8X1.25X50-MM) | |
| M | | 1 | **6V-9632** | 3 | NUT-WELD (M6X1-THD) | |
| M | | 1 | **8T-5413** | 1 | STUD-WELD (M10X1.5X25-MM OAL) | |
| | 5 | 1 | **195-0935** | 4 | INSERT-THREADED (M6X1-THD) | |
| | 6 | 1 | **195-0936** | 8 | INSERT-THREADED (M6X1-THD) | |
| M | 7 | 1 | **195-0937** | 8 | INSERT-THREADED (M8X1.25-THD) | |

M-METRIC PART

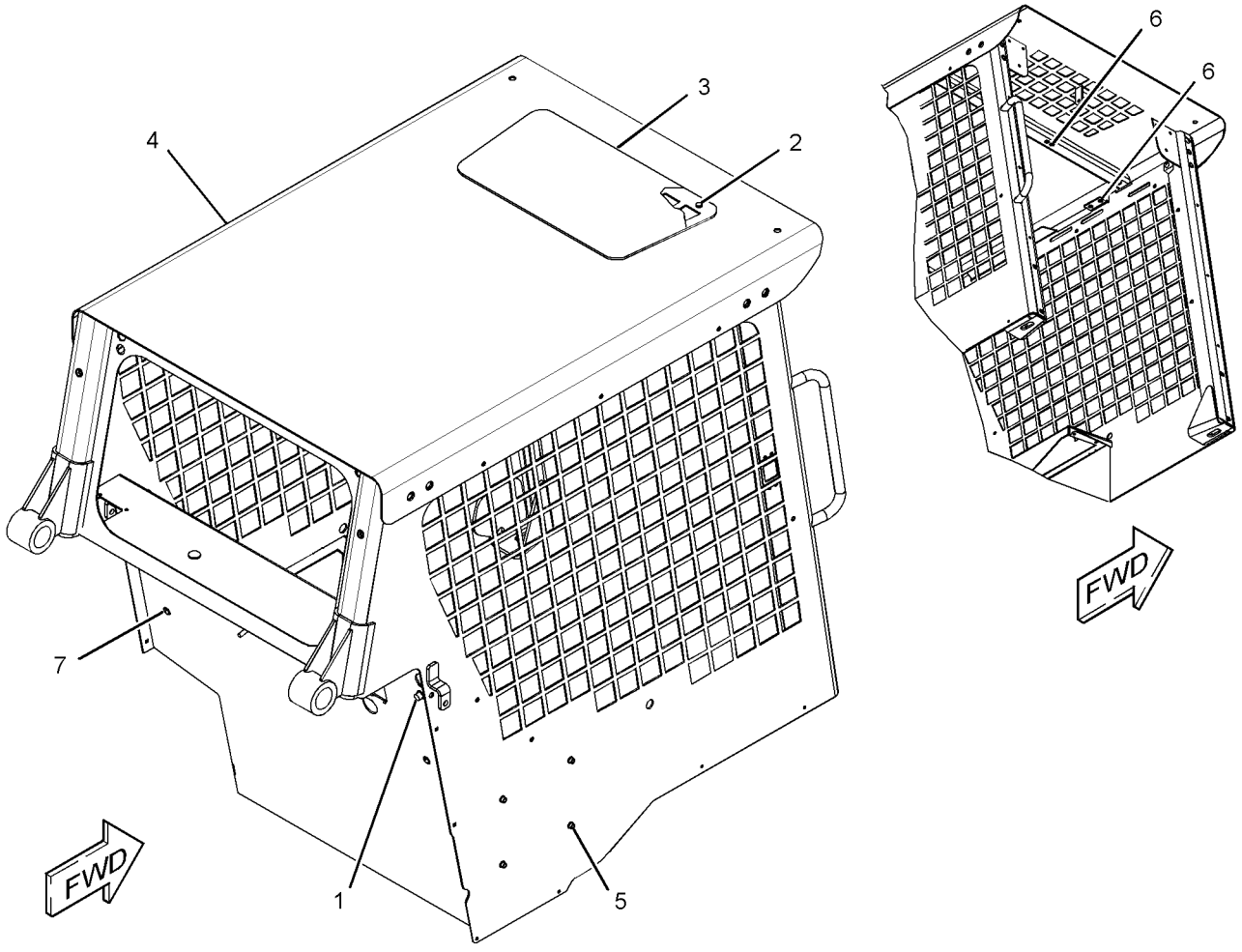


GRAPHIC #1 **<END>** g02149330

# OPERATOR STATION

## *326-5401* CAB GP-ENCLOSED ROPS

**S/N: TNK1-UP**
**PART OF 326-5400 CAB AR**
**FIELD REPLACEMENT ORDER 326-5404—PAGE 233**

**SMCS-7301** **i03902808**

| NOTE | REF NO | GRAPHIC REF | PART NUMBER | QTY | PART NAME 1 2 3 4 5 6 (PRODUCT LEVEL) | SEE PAGE |
|---|---|---|---|---|---|---|
| | 1 | 1 | **214-9186** | 7 | BUTTON | |
| | 2 | 1 | **280-6072** | 1 | WINDOW | |
| | 3 | 1 | *326-5402* | 1 | CANOPY AS | |
| M | | 1 | **6V-3918** | 4 | BOLT (M8X1.25X50-MM) | |
| M | | 1 | **6V-9632** | 3 | NUT-WELD (M6X1-THD) | |
| M | | 1 | **8T-5413** | 1 | STUD-WELD (M10X1.5X25-MM OAL) | |

M-METRIC PART

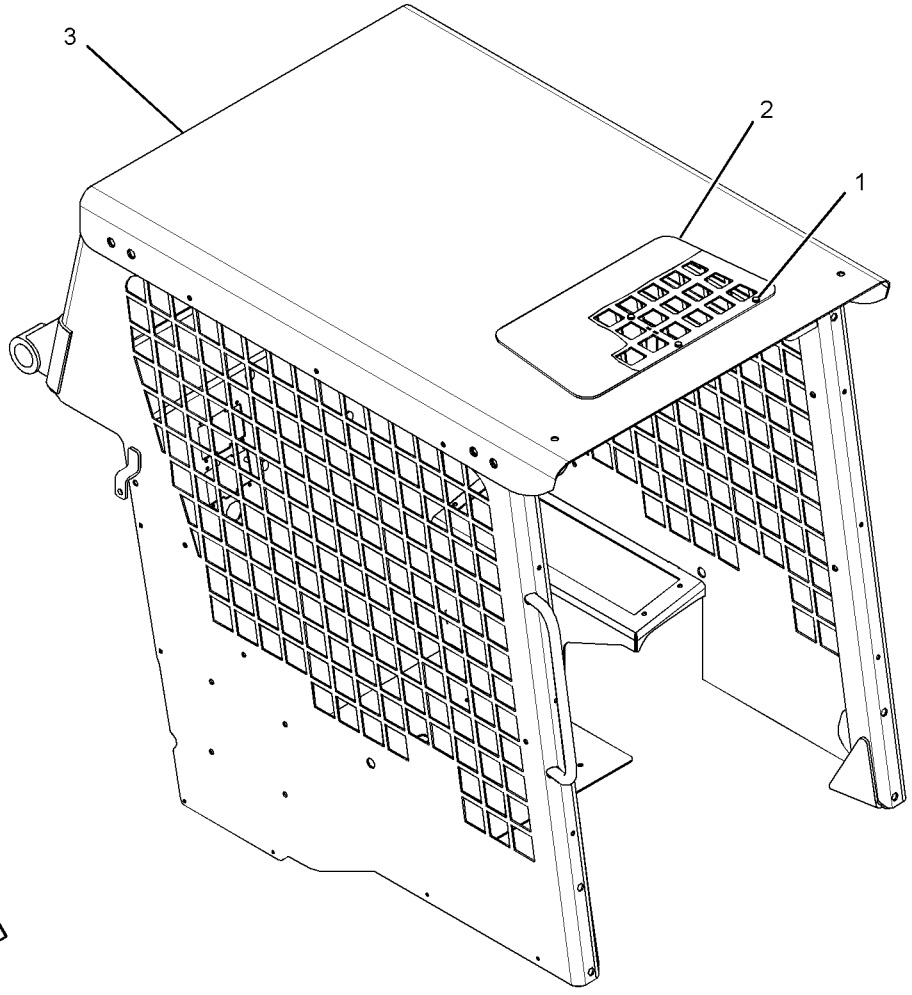


GRAPHIC #1 **<END>** g02146674

# OPERATOR STATION

## *258-2468* COMPRESSOR & MTG GP-REFRIG

**S/N: TNK1-UP**
**PART OF 326-5518 AIR CONDITIONER AR**
**AN ATTACHMENT**

**SMCS-1802** **i03656648**

| NOTE | REF NO | GRAPHIC REF | PART NUMBER | QTY | PART NAME 1 2 3 4 5 6 (PRODUCT LEVEL) | SEE PAGE |
|---|---|---|---|---|---|---|
| | 1 | 1 | **258-2466** | 1 | BRACKET | |
| | 2 | 1 | **280-8395** | 1 | BRACKET | |
| | 3 | 1 | **258-3539** | 1 | V-BELT (COMPRESSOR) | |
| | 4 | 1 | **276-9875** | 1 | COMPRESSOR GP-REFRIGERANT (AIR CONDITIONER) | |
| | | 1 | **102-8802** | 1 | KIT-RECEPTACLE (2-PIN) | |
| | | | | | (INCLUDES RECEPTACLE AS & WEDGE) | |
| | | 1 | **229-4896** | 2 | SEAL-O-RING | |
| | | 1 | **229-7356** | 1 | VALVE AS-RELIEF (REFRIGERANT COMPRESSOR) | |
| | | 1 | **9X-7378** | 1 | SEAL-O-RING | |
| | 5 | 1 | **113-0693** | 1 | LOCKWASHER | |
| | 6 | 1 | **8T-4121** | 8 | WASHER-HARD (11X21X2.5-MM THK) | |
| M | 7 | 1 | **8T-4133** | 3 | NUT (M10X1.5-THD) | |
| M | 8 | 1 | **8T-4196** | 3 | BOLT (M10X1.5X35-MM) | |
| | 9 | 1 | **8T-4223** | 3 | WASHER-HARD (13.5X25.5X3-MM THK) | |
| M | 10 | 1 | **8T-4183** | 3 | BOLT (M12X1.75X40-MM) | |
| M | 11 | 1 | **8T-6685** | 1 | BOLT (M10X1.5X110-MM) | |
| | 12 | 1 | **4P-7429** | 1 | CLIP | |
| | 13 | 1 | **7K-1181** | 1 | STRAP-CABLE | |

M-METRIC PART

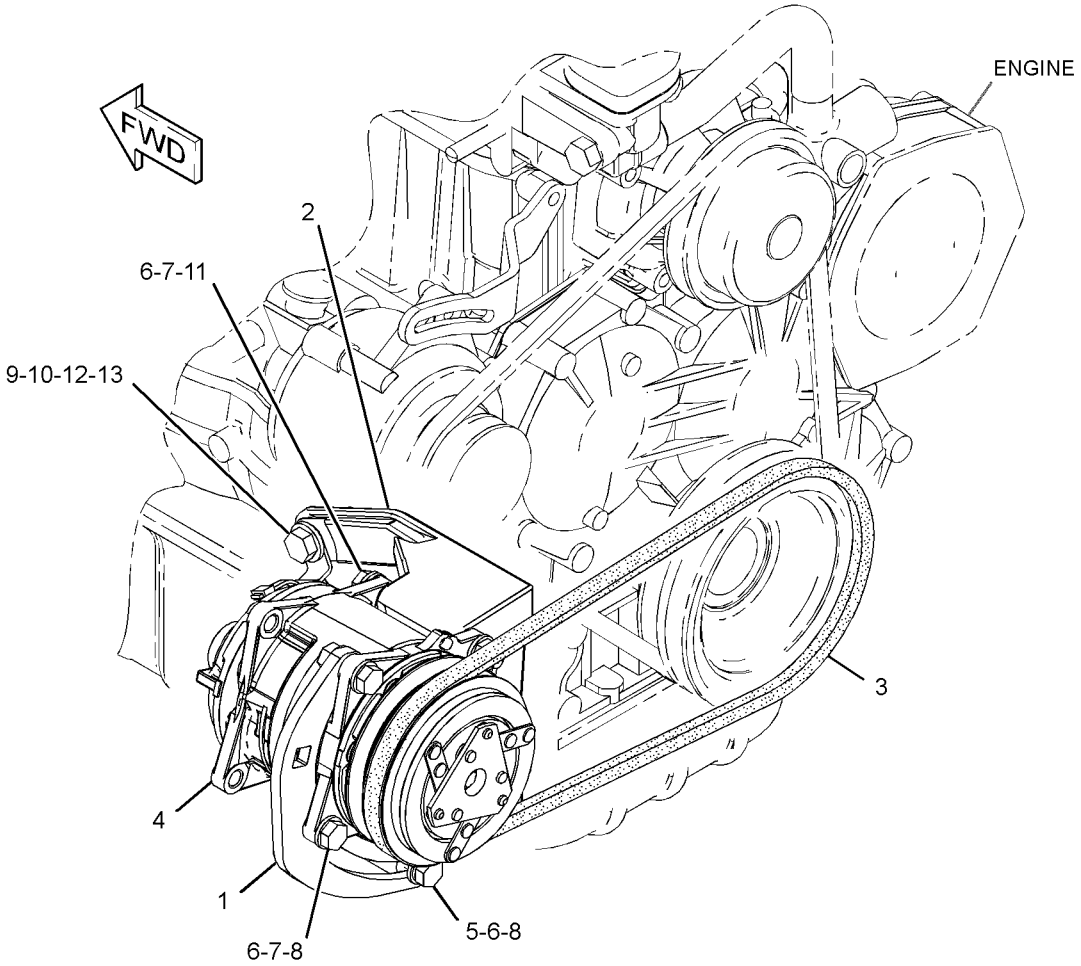


GRAPHIC #1 **<END>** g01964995

# OPERATOR STATION

## *218-6148* CONDENSER & MTG GP-REFRIGERANT

**S/N: TNK1-UP**
**PART OF 326-5518 AIR CONDITIONER AR**
**AN ATTACHMENT**

**SMCS-1805** **i02449992**

| NOTE | REF NO | GRAPHIC REF | PART NUMBER | QTY | PART NAME 1 2 3 4 5 6 (PRODUCT LEVEL) | SEE PAGE |
|---|---|---|---|---|---|---|
| | 1 | 1 | **116-5763** | 3 | CLIP-SPRING | |
| | 2 | 1 | **218-6060** | 1 | SHROUD AS | |
| | 3 | 1 | **218-6250** | 2 | FAN AS | |
| C | 4 | 1 | **252-0348** | 1 | COIL AS | |
| M | 5 | 1 | **5C-7261** | 14 | NUT (M8X1.25-THD) | |
| | 6 | 1 | **5P-4116** | 3 | WASHER-HARD (8.8X20.5X2-MM THK) | |
| | 7 | 1 | **6B-2882** | 4 | SPACER (0.406X0.75X0.312-IN THK) | |
| | 8 | 1 | **8T-4121** | 4 | WASHER-HARD (11X21X2.5-MM THK) | |
| M | 9 | 1 | **8T-4133** | 4 | NUT (M10X1.5-THD) | |
| M | 10 | 1 | **8T-4189** | 14 | BOLT (M8X1.25X20-MM) | |
| | 11 | 1 | **8T-4224** | 20 | WASHER-HARD (8.8X16X2-MM THK) | |
| M | 12 | 1 | **8T-4908** | 3 | BOLT (M8X1.25X25-MM) | |

C-CHANGE FROM PREVIOUS TYPE
M-METRIC PART

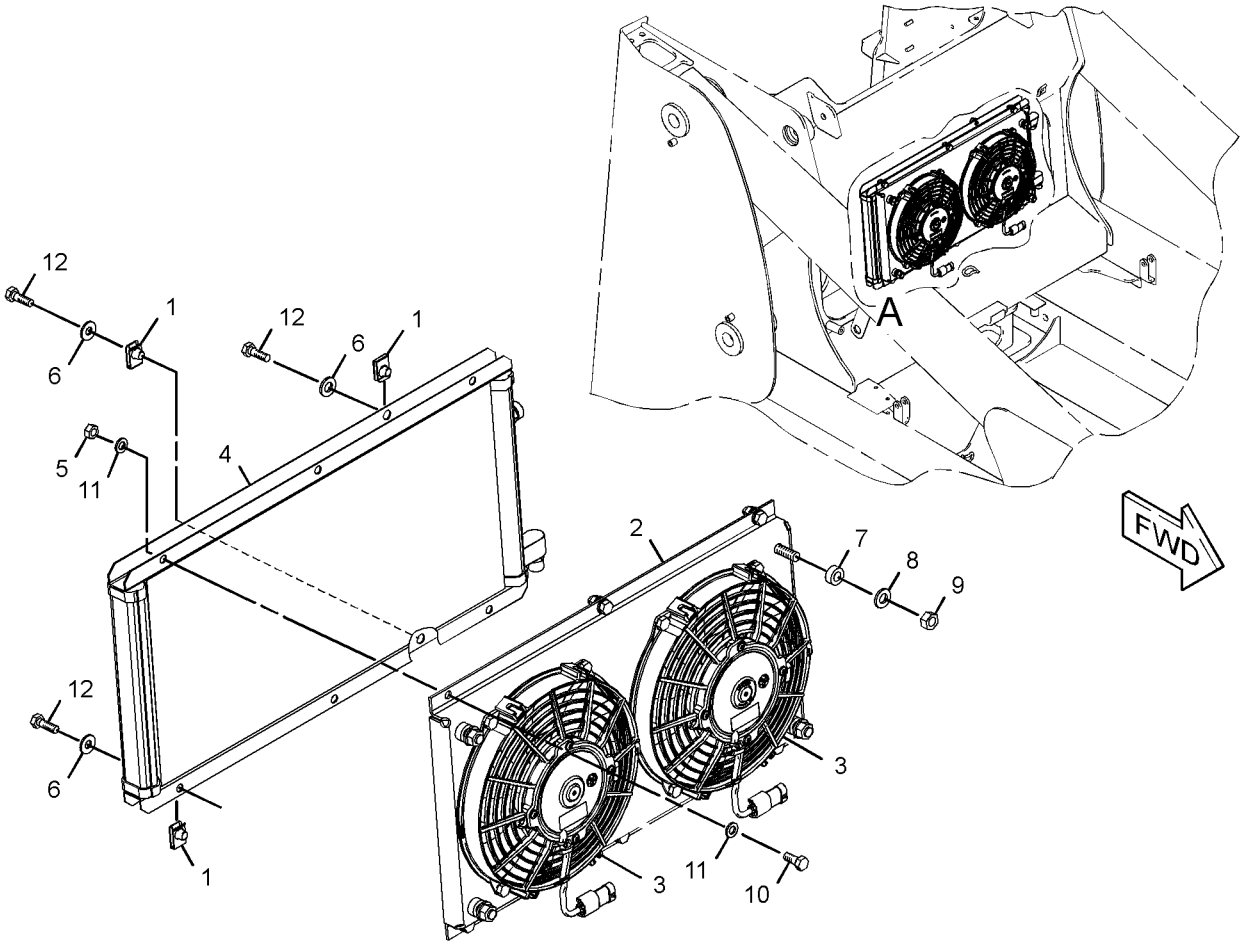


VIEW OF AREA A

GRAPHIC #1 **<END>** g01229749

# OPERATOR STATION

## 218-6485 CONTROL GP-HANDLE—DIRECTION, SPEED

**S/N: TNK1-UP**

**PART OF 343-5543 CONTROL GP-PILOT OPERATED HYD**

**AN ATTACHMENT**

**SMCS-5705** **i02545868**

| NOTE | REF NO | GRAPHIC REF | PART NUMBER | QTY | PART NAME 1 2 3 4 5 6 (PRODUCT LEVEL) | SEE PAGE |
|---|---|---|---|---|---|---|
| | 1 | 1 | **173-0702** | 1 | BOOT | |
| Y | 2 | 1 | **218-6118** | 1 | HANDLE GP-MODULAR | 266 |
| | 3 | 1 | **158-3770** | 1 | KIT-PILOT VALVE (LEVER) | |
| | | | | | (INCLUDES NUT, LEVER & PIN) | |

Y-SEPARATE ILLUSTRATION

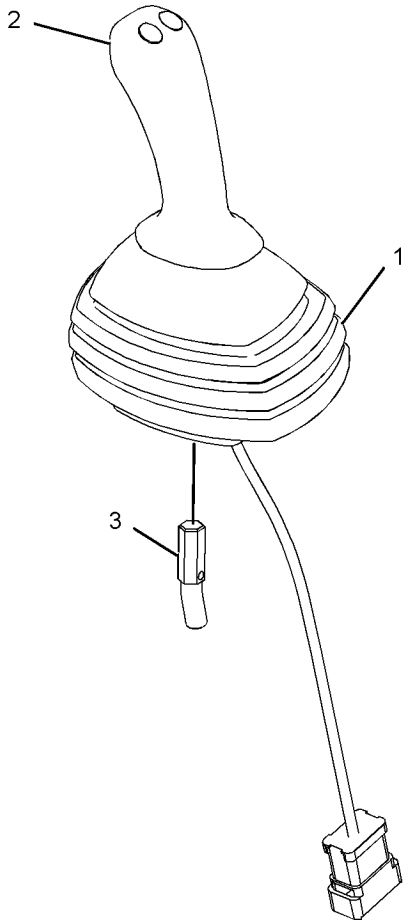


GRAPHIC #1 **<END>** g01111214

# OPERATOR STATION

## 218-6490 CONTROL GP-HANDLE—WORK TOOL

**S/N: TNK1-UP**
**PART OF 326-5264 CONTROL GP-PILOT OPERATED HYD**
**AN ATTACHMENT**

**SMCS-5705** **i02545869**

| NOTE | REF NO | GRAPHIC REF | PART NUMBER | QTY | PART NAME 1 2 3 4 5 6 (PRODUCT LEVEL) | SEE PAGE |
|---|---|---|---|---|---|---|
| | 1 | 1 | **173-0703** | 1 | BOOT | |
| Y | 2 | 1 | **218-6118** | 1 | HANDLE GP-MODULAR | 266 |
| | 3 | 1 | **158-3770** | 1 | KIT-PILOT VALVE (LEVER) | |
| | | | | | (INCLUDES NUT, LEVER & PIN) | |

Y-SEPARATE ILLUSTRATION

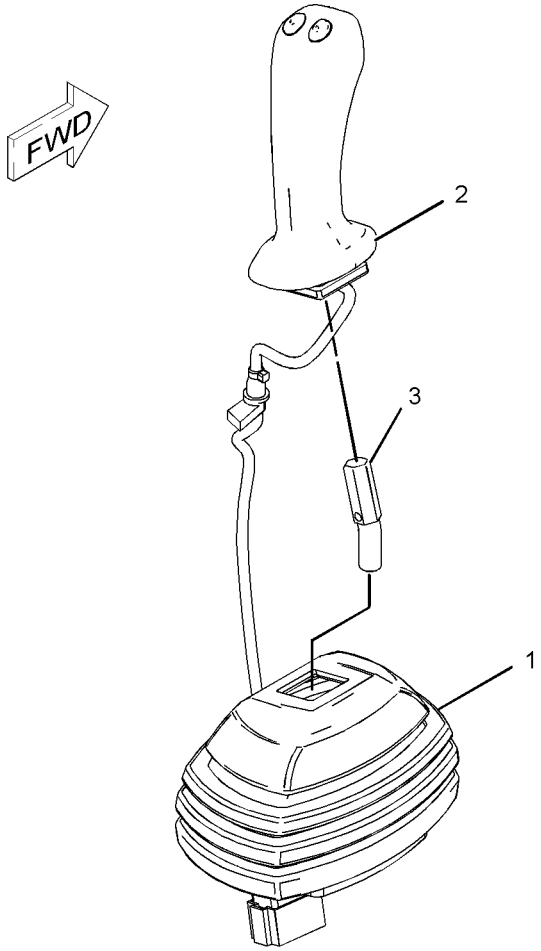


GRAPHIC #1 **<END>** g01111213

## 231-4256 CONTROL GP-HANDLE–LH

**S/N: TNK1-UP**

**PART OF 343-5542 CONTROL GP-PILOT OPERATED HYD**

**AN ATTACHMENT**

**SMCS-5705** **i02189555**

| NOTE | REF NO | GRAPHIC REF | PART NUMBER | QTY | PART NAME 1 2 3 4 5 6 (PRODUCT LEVEL) | SEE PAGE |
|---|---|---|---|---|---|---|
| | 1 | 1 | **223-3725** | 1 | HANDLE GP-MODULAR | |
| | 1A | 1 | **186-3735** | 4 | PIN-CONNECTOR (16-GA TO 18-GA) | |
| | 1B | 1 | **174-3091** | 1 | KIT-RECEPTACLE (12-PIN) | |
| | | | | | (INCLUDES RECEPTACLE AS & WEDGE) | |
| | 2 | 1 | **223-3728** | 1 | BOOT | |
| | 3 | 1 | **231-4261** | 1 | ADAPTER (LH) | |
| M | 4 | 1 | **213-7489** | 3 | SCREW (M4X25-MM) | |
| M | 5 | 1 | **178-9983** | 3 | LOCKNUT (M4X0.7-THD) | |
| | 6 | 1 | **1S-9593** | 1 | STRAP-CABLE | |
| | 7 | 1 | **8T-8737** | 8 | PLUG-SEAL | |
| | 8 | 1 | **252-6934** | 1 | GROMMET | |

M-METRIC PART

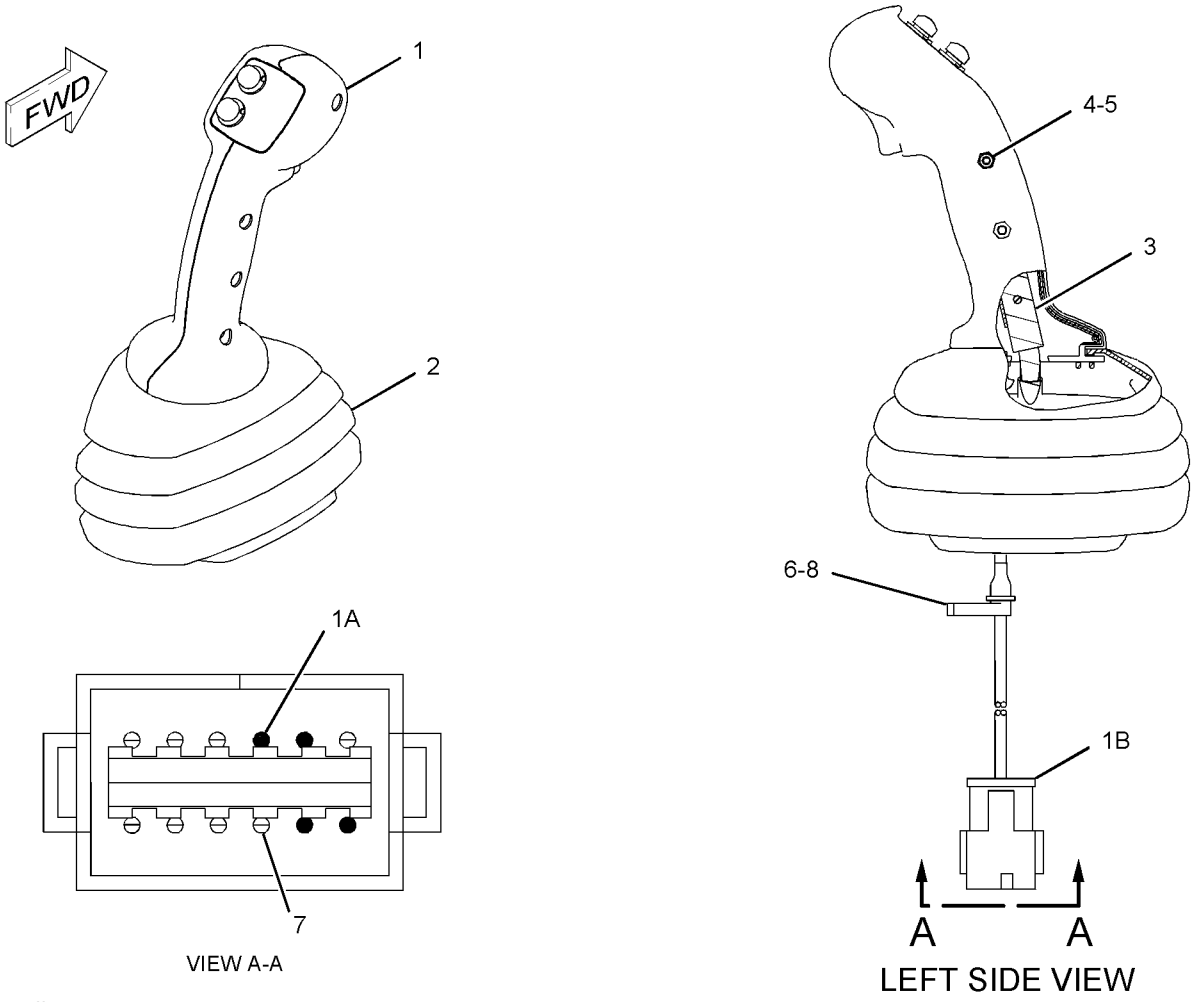


GRAPHIC #1 **<END>** g01132335

# OPERATOR STATION

## 231-4258 CONTROL GP-HANDLE–LH

**S/N: TNK1-UP**
**PART OF 326-5267 CONTROL GP-PILOT OPERATED HYD**
**AN ATTACHMENT**

**SMCS-5705** **i02189624**

| NOTE | REF NO | GRAPHIC REF | PART NUMBER | QTY | PART NAME 1 2 3 4 5 6 (PRODUCT LEVEL) | SEE PAGE |
|---|---|---|---|---|---|---|
| | 1 | 1 | **223-3726** | 1 | HANDLE GP-MODULAR | |
| | 1A | 1 | **186-3735** | 7 | PIN-CONNECTOR (16-GA TO 18-GA) | |
| | 1B | 1 | **174-3091** | 1 | KIT-RECEPTACLE (12-PIN) | |
| | | | | | (INCLUDES RECEPTACLE AS & WEDGE) | |
| | 2 | 1 | **223-3728** | 1 | BOOT | |
| | 3 | 1 | **231-4261** | 1 | ADAPTER (LH) | |
| M | 4 | 1 | **213-7489** | 3 | SCREW (M4X25-MM) | |
| M | 5 | 1 | **178-9983** | 3 | LOCKNUT (M4X0.7-THD) | |
| | 6 | 1 | **1S-9593** | 1 | STRAP-CABLE | |
| | 7 | 1 | **8T-8737** | 3 | PLUG-SEAL | |
| | 8 | 1 | **252-6934** | 1 | GROMMET | |

M-METRIC PART

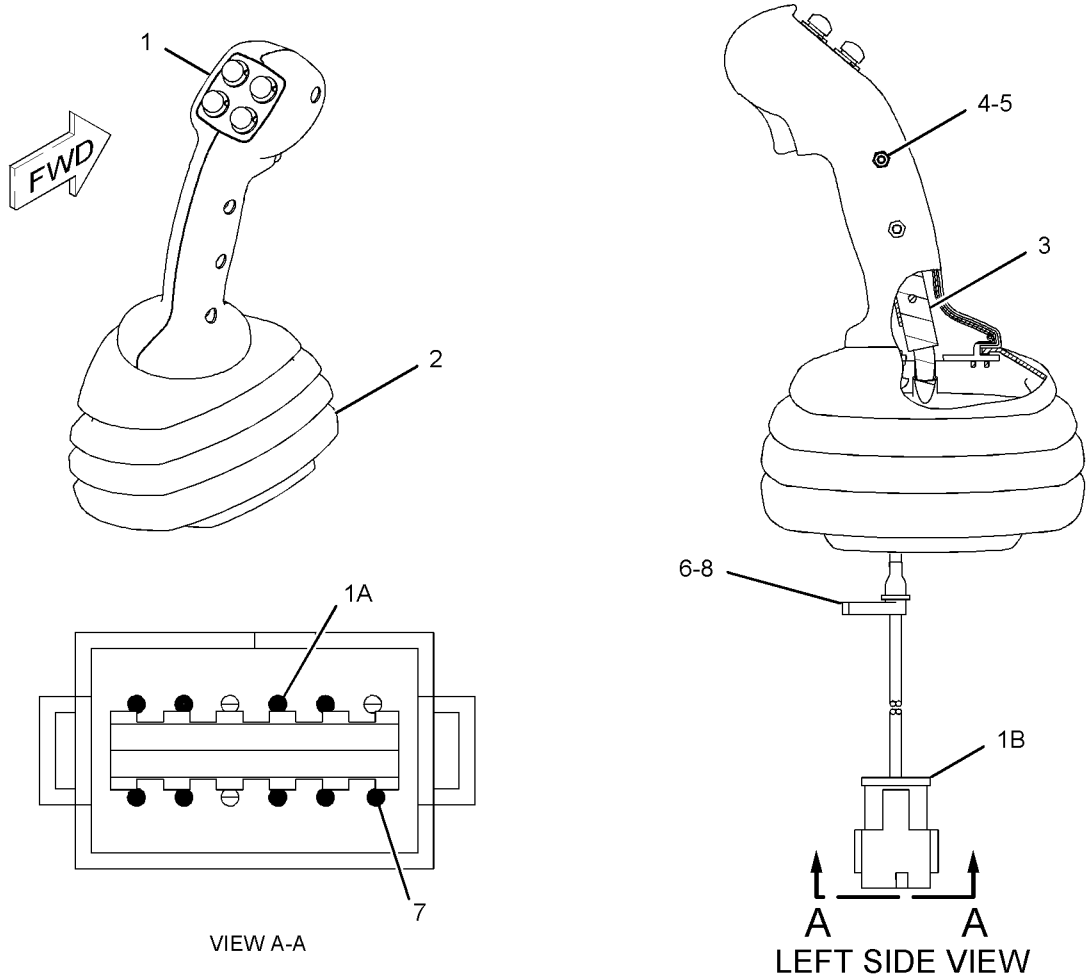


GRAPHIC #1 **<END>** g01132255

## 231-4260 CONTROL GP-HANDLE–RH

**S/N: TNK1-UP**

**PART OF 326-5265 CONTROL GP-PILOT OPERATED HYD**

**AN ATTACHMENT**

**SMCS-5705** **i02189795**

| NOTE | REF NO | GRAPHIC REF | PART NUMBER | QTY | PART NAME 1 2 3 4 5 6 (PRODUCT LEVEL) | SEE PAGE |
|---|---|---|---|---|---|---|
| | 1 | 1 | **215-8307** | 1 | CONTROL GP-HANDLE | |
| | 1A | 1 | **186-3735** | 7 | PIN-CONNECTOR (16-GA TO 18-GA) | |
| | 1B | 1 | **174-3091** | 1 | KIT-RECEPTACLE (12-PIN) | |
| | | | | | (INCLUDES RECEPTACLE AS & WEDGE) | |
| | 2 | 1 | **223-3728** | 1 | BOOT | |
| | 3 | 1 | **231-4262** | 1 | ADAPTER (RH) | |
| M | 4 | 1 | **213-7489** | 3 | SCREW (M4X25-MM) | |
| M | 5 | 1 | **178-9983** | 3 | LOCKNUT (M4X0.7-THD) | |
| | 6 | 1 | **1S-9593** | 1 | STRAP-CABLE | |
| | 7 | 1 | **8T-8737** | 5 | PLUG-SEAL | |
| | 8 | 1 | **252-6934** | 1 | GROMMET | |

M-METRIC PART

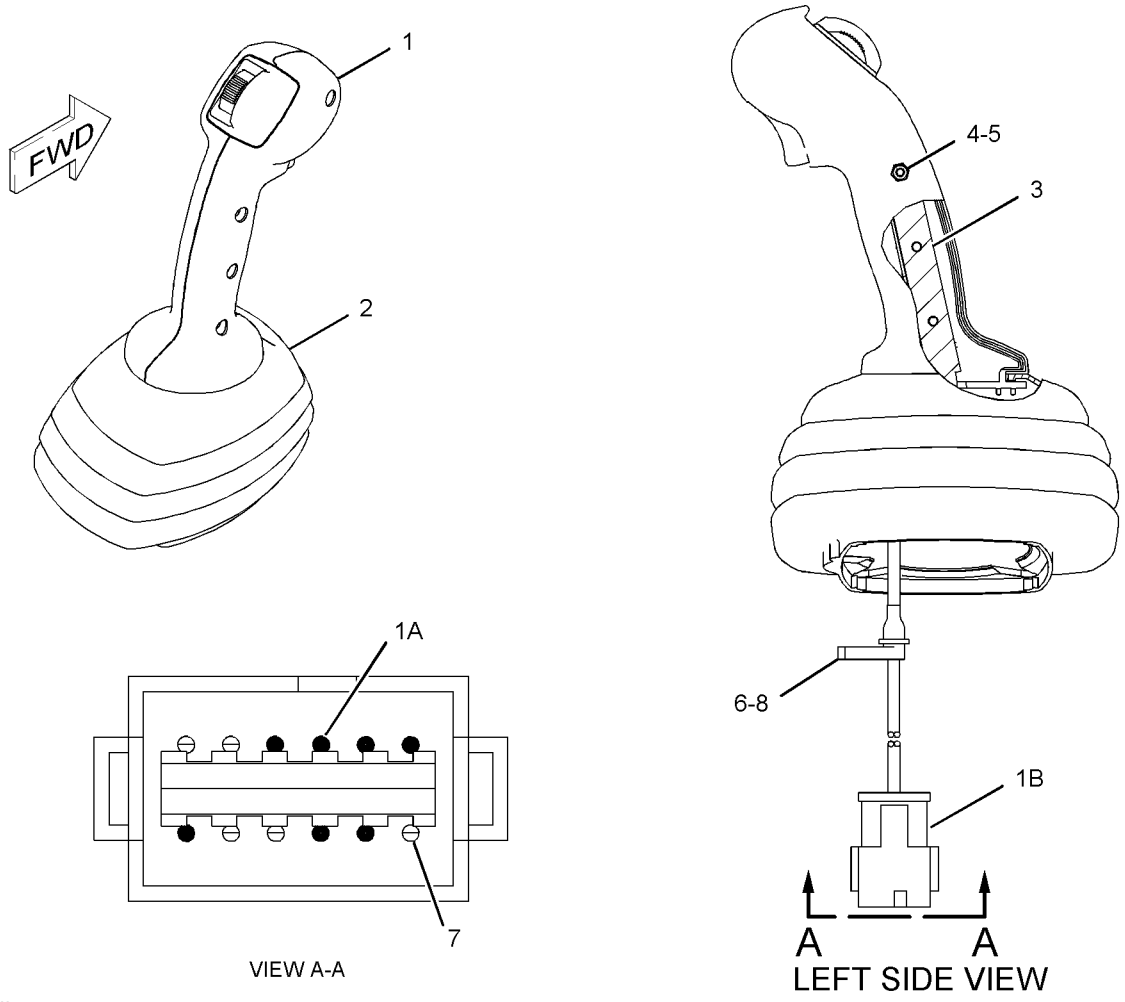


GRAPHIC #1 **<END>** g01132271

# OPERATOR STATION

## *326-5264* CONTROL GP-PILOT OPERATED HYD—WORK TOOL

**S/N: TNK1-UP**
**PART OF 326-5276 CONTROL AR-MACHINE**
**AN ATTACHMENT**

**SMCS-5059, 5705** **i03901799**

| NOTE | REF NO | GRAPHIC REF | PART NUMBER | QTY | PART NAME 1 2 3 4 5 6 (PRODUCT LEVEL) | SEE PAGE |
|---|---|---|---|---|---|---|
| | 1 | 1 | **218-6421** | 1 | BRACKET AS | |
| Y | 2 | 1 | **218-6490** | 1 | CONTROL GP-HANDLE (WORK TOOL) | 238 |
| | 3 | 1 | **237-5332** | 1 | FILM-INSTRUCTION (MACHINE CONTROLS) | |
| Y | 4 | 1 | **299-9119** | 1 | VALVE GP-PILOT (WORK TOOL) | 203 |
| M | 5 | 1 | **8T-0269** | 3 | BOLT-SOCKET HEAD (M6X1X20-MM) | |
| | 6 | 1 | **8T-4205** | 3 | WASHER-HARD (7.2X14.5X2-MM THK) | |

M-METRIC PART
Y-SEPARATE ILLUSTRATION

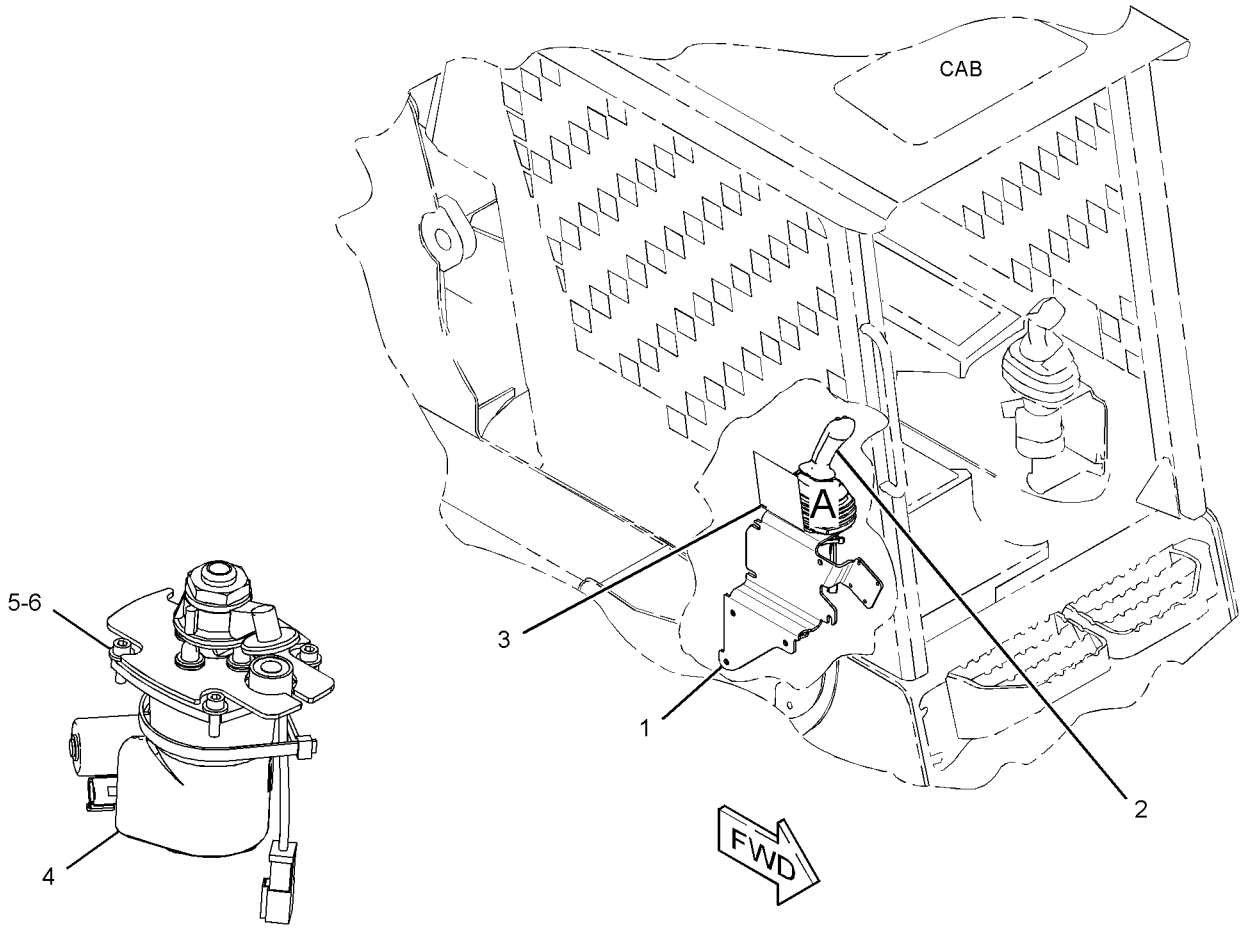


VIEW OF AREA A
(HANDLE AND BRACKET REMOVED FOR CLARITY)

GRAPHIC #1 **<END>** g02148360

## *326-5265* CONTROL GP-PILOT OPERATED HYD–AUXILIARY

**S/N: TNK1-UP**

**PART OF 326-5277, 326-5278, 326-5427, 326-5428 CONTROL AR-MACHINE AN ATTACHMENT**

**SMCS-5059, 5705** **i03901803**

| NOTE | REF NO | GRAPHIC REF | PART NUMBER | QTY | PART NAME 1 2 3 4 5 6 (PRODUCT LEVEL) | SEE PAGE |
|---|---|---|---|---|---|---|
| | 1 | 1 | **218-6421** | 1 | BRACKET AS | |
| Y | 2 | 1 | **231-4260** | 1 | CONTROL GP-HANDLE (RH) | 241 |
| | 3 | 1 | **235-5243** | 1 | FILM-INSTRUCTION (MACHINE CONTROLS) | |
| Y | 4 | 1 | **299-9119** | 1 | VALVE GP-PILOT | 203 |
| M | 5 | 1 | **095-1207** | 1 | NUT (M12X1.75-THD) | |
| M | 6 | 1 | **8T-0269** | 3 | BOLT-SOCKET HEAD (M6X1X20-MM) | |
| | 7 | 1 | **8T-4205** | 3 | WASHER-HARD (7.2X14.5X2-MM THK) | |

M-METRIC PART
Y-SEPARATE ILLUSTRATION

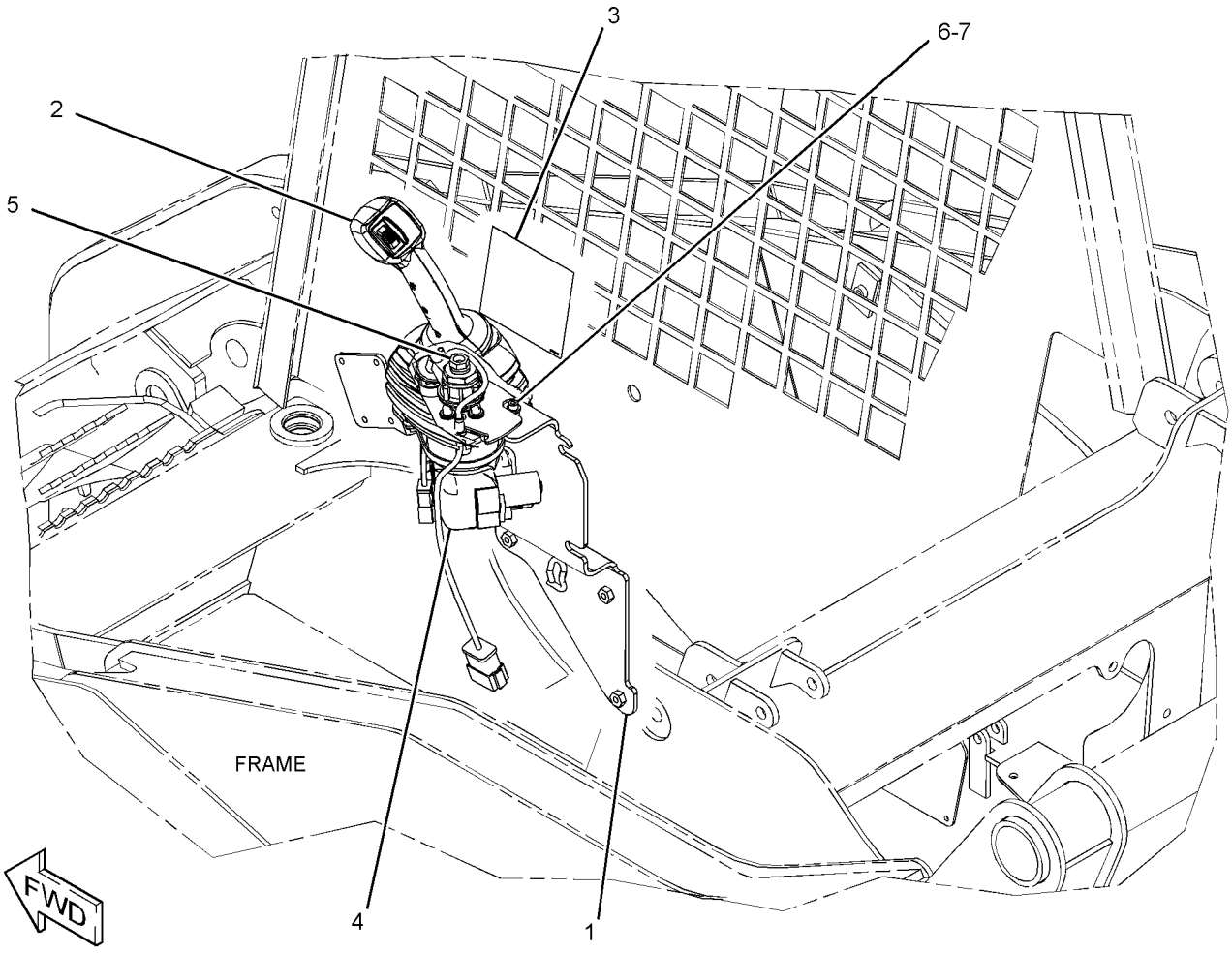


GRAPHIC #1 **<END>** g02145324

# OPERATOR STATION

## *326-5267* CONTROL GP-PILOT OPERATED HYD—HYDROSTATIC

**S/N: TNK1-UP**

**PART OF 326-5278, 326-5427, 326-5428 CONTROL AR-MACHINE**

**AN ATTACHMENT**

**SMCS-5059, 5705** **i03901807**

| NOTE | REF NO | GRAPHIC REF | PART NUMBER | QTY | PART NAME 1 2 3 4 5 6 (PRODUCT LEVEL) | SEE PAGE |
|---|---|---|---|---|---|---|
| | 1 | 1 | **218-6422** | 1 | BRACKET AS | |
| | 2 | 1 | **235-5246** | 1 | FILM-INSTRUCTION (MACHINE CONTROL, READ OMM) | |
| Y | 3 | 1 | **343-0868** | 1 | VALVE GP-PILOT (DIRECTION, SPEED) | 205 |
| M | 4 | 1 | **095-1207** | 1 | NUT (M12X1.75-THD) | |
| | 5 | 1 | **164-9425** | 1 | HORN AS (24-VOLT, LOW TONE) | |
| Y | 6 | 1 | **231-4258** | 1 | CONTROL GP-HANDLE (LH) | 240 |
| M | 7 | 1 | **8T-0269** | 3 | BOLT-SOCKET HEAD (M6X1X20-MM) | |
| | 8 | 1 | **8T-4121** | 1 | WASHER-HARD (11X21X2.5-MM THK) | |
| M | 9 | 1 | **8T-4137** | 1 | BOLT (M10X1.5X20-MM) | |
| | 10 | 1 | **8T-4205** | 3 | WASHER-HARD (7.2X14.5X2-MM THK) | |

M-METRIC PART
Y-SEPARATE ILLUSTRATION

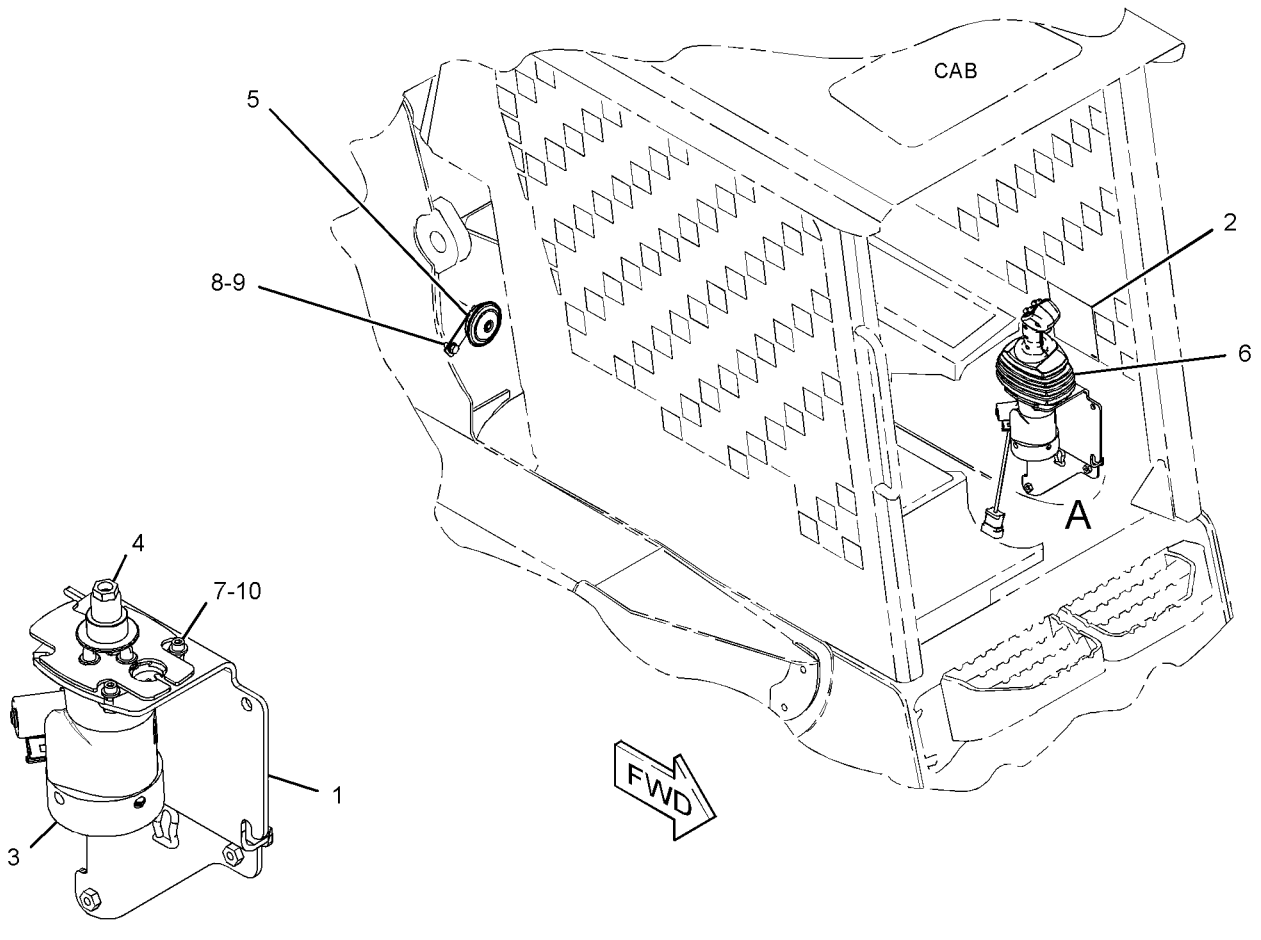


VIEW OF AREA A
(HANDLE REMOVED FOR CLARITY)

GRAPHIC #1 **<END>** g02148358

# *343-5542* CONTROL GP-PILOT OPERATED HYD

**S/N: TNK1-UP**
**PART OF 326-5277 CONTROL AR-MACHINE**
**AN ATTACHMENT**

**SMCS-5059, 5705** **i03514441**

| NOTE | REF NO | GRAPHIC REF | PART NUMBER | QTY | PART NAME 1 2 3 4 5 6 (PRODUCT LEVEL) | SEE PAGE |
|---|---|---|---|---|---|---|
| M | 1 | 1 | **095-1207** | 1 | NUT (M12X1.75-THD) | |
| | 2 | 1 | **218-6422** | 1 | BRACKET AS | |
| Y | 3 | 1 | **343-0868** | 1 | VALVE GP-PILOT | 205 |
| | 4 | 1 | **164-9425** | 1 | HORN AS (24-VOLT, LOW TONE) | |
| Y | 5 | 1 | **231-4256** | 1 | CONTROL GP-HANDLE (LH) | 239 |
| | 6 | 1 | **235-5246** | 1 | FILM-INSTRUCTION (MACHINE CONTROL, READ OMM) | |
| M | 7 | 1 | **8T-0269** | 3 | BOLT-SOCKET HEAD (M6X1X20-MM) | |
| | 8 | 1 | **8T-4121** | 1 | WASHER-HARD (11X21X2.5-MM THK) | |
| M | 9 | 1 | **8T-4137** | 1 | BOLT (M10X1.5X20-MM) | |
| | 10 | 1 | **8T-4205** | 3 | WASHER-HARD (7.2X14.5X2-MM THK) | |

M-METRIC PART
Y-SEPARATE ILLUSTRATION

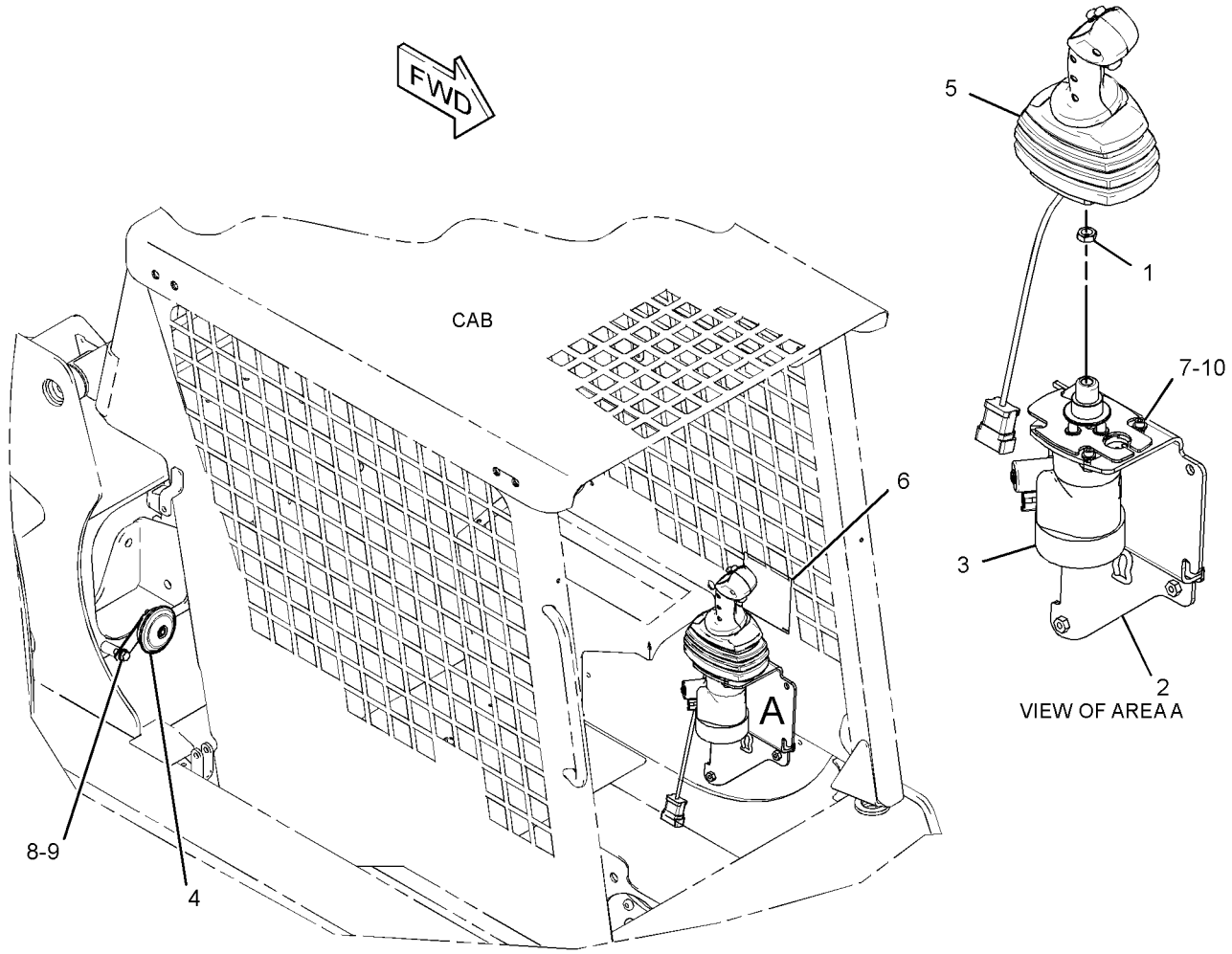


GRAPHIC #1 **<END>** g01455640

# OPERATOR STATION

## *343-5543* CONTROL GP-PILOT OPERATED HYD

**S/N: TNK1-UP**
**PART OF 326-5276 CONTROL AR-MACHINE**
**AN ATTACHMENT**

**SMCS-5059, 5705** **i03511321**

| NOTE | REF NO | GRAPHIC REF | PART NUMBER | QTY | PART NAME 1 2 3 4 5 6 (PRODUCT LEVEL) | SEE PAGE |
|---|---|---|---|---|---|---|
| | 1 | 1 | **218-6422** | 1 | BRACKET AS | |
| Y | 2 | 1 | **218-6485** | 1 | CONTROL GP-HANDLE (LH) | 237 |
| Y | 3 | 1 | **343-0868** | 1 | VALVE GP-PILOT | 205 |
| | 4 | 1 | **164-9425** | 1 | HORN AS (24-VOLT, LOW TONE) | |
| | 5 | 1 | **237-5331** | 1 | FILM-INSTRUCTION (MACHINE CONTROL, READ OMM) | |
| M | 6 | 1 | **8T-0269** | 3 | BOLT-SOCKET HEAD (M6X1X20-MM) | |
| | 7 | 1 | **8T-4121** | 1 | WASHER-HARD (11X21X2.5-MM THK) | |
| M | 8 | 1 | **8T-4137** | 1 | BOLT (M10X1.5X20-MM) | |
| | 9 | 1 | **8T-4205** | 3 | WASHER-HARD (7.2X14.5X2-MM THK) | |

M-METRIC PART
Y-SEPARATE ILLUSTRATION

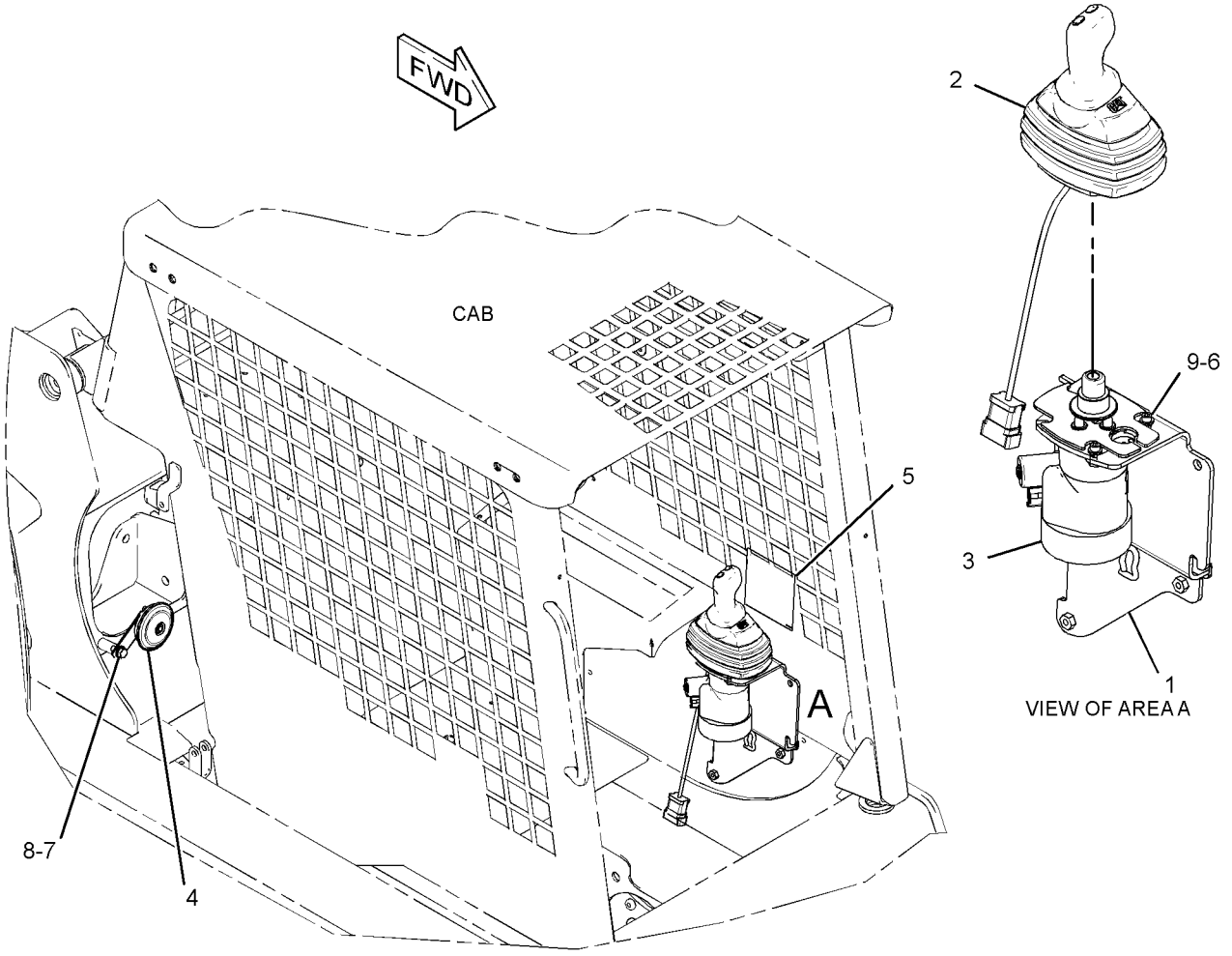


GRAPHIC #1 **<END>** g01455653

## *218-6418* COVER GP-CONSOLE—WITH AIR CONDITIONER, HEATER

**S/N: TNK1-UP**

**PART OF 326-5514 INSTALLATION GP-COVER & LINES**

**AN ATTACHMENT**

**SMCS-5258** **i02602678**

| NOTE | REF NO | GRAPHIC REF | PART NUMBER | QTY | PART NAME 1 2 3 4 5 6 (PRODUCT LEVEL) | SEE PAGE |
|---|---|---|---|---|---|---|
| E | 1 | 1 | **124-3243** | | SEAL (52-CM) | |
| | 2 | 1 | **114-6658** | 6 | WASHER (6.5X17X1-MM THK) | |
| | 3 | 1 | **218-6386** | 1 | COVER AS | |
| | 4 | 1 | **218-6387** | 1 | COVER AS | |
| | 5 | 1 | **218-6388** | 1 | COVER AS | |
| | 6 | 1 | **218-6435** | 2 | SPACER (16.6X21.8X25.4-MM THK) | |
| | 7 | 1 | **8T-4224** | 2 | WASHER-HARD (8.8X16X2-MM THK) | |
| M | 8 | 1 | **8T-6912** | 2 | BOLT (M8X1.25X50-MM) | |
| M | 9 | 1 | **9X-2044** | 7 | SCREW-TRUSS HEAD (M6X1X16-MM) | |
| | 10 | 1 | **9X-6165** | 1 | WASHER (6.5X22X2.5-MM THK) | |

E-ORDER BY THE CENTIMETER
M-METRIC PART

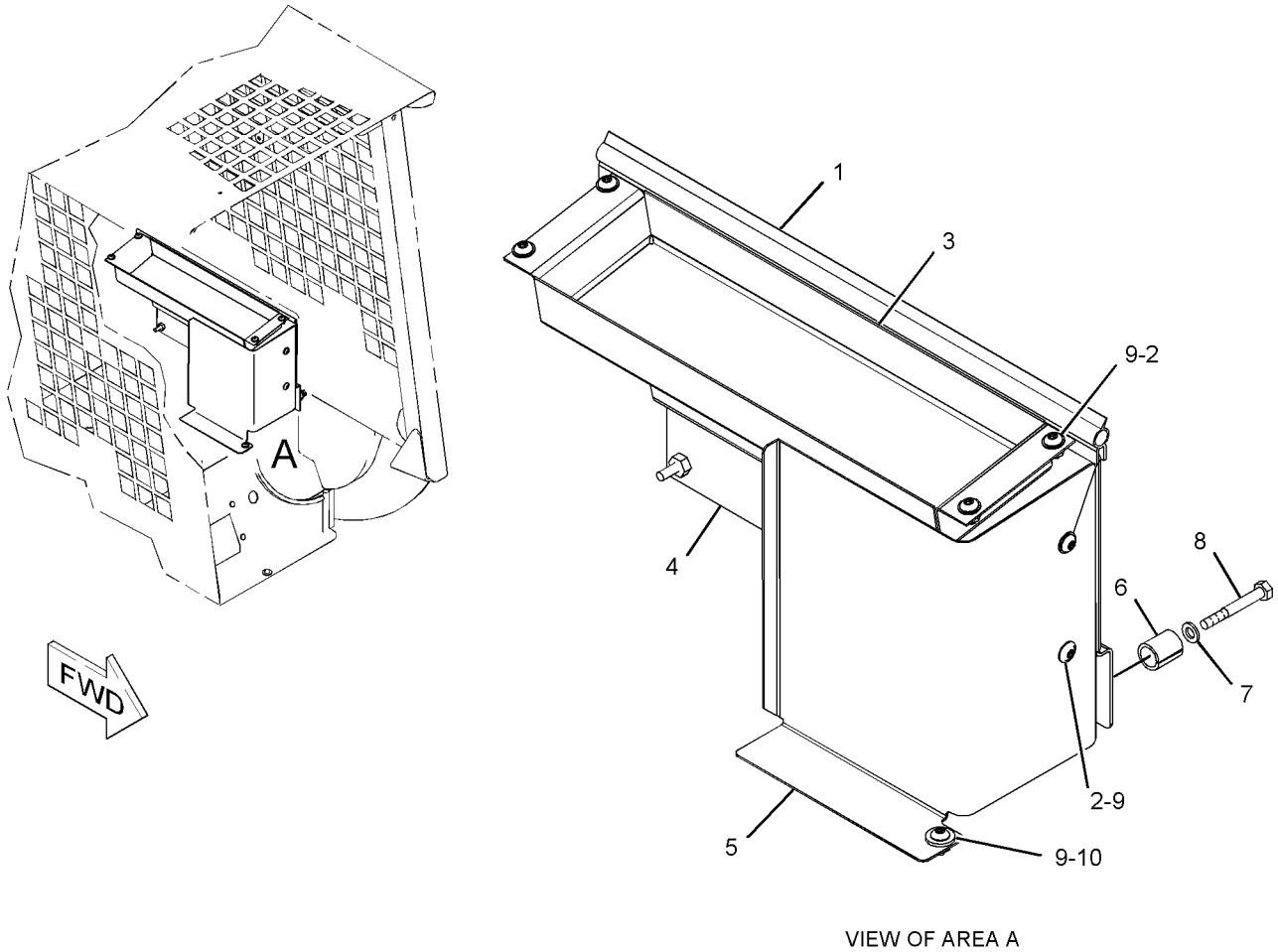


VIEW OF AREA A

GRAPHIC #1 **<END>** g01132491

## *218-6419* COVER GP-CONSOLE–
**WITHOUT AIR CONDITIONER, HEATER**
**S/N: TNK1-UP**
**PART OF 326-5514 INSTALLATION GP-COVER & LINES**
**AN ATTACHMENT**

**SMCS-5258** **i02392269**

| NOTE | REF NO | GRAPHIC REF | PART NUMBER | QTY | PART NAME 1 2 3 4 5 6 (PRODUCT LEVEL) | SEE PAGE |
|---|---|---|---|---|---|---|
| | 1 | 1 | **218-6389** | 1 | CONSOLE (RH) | |
| | 2 | 1 | **218-6391** | 1 | CONSOLE (LH) | |
| M | 3 | 1 | **175-0005** | 8 | SCREW-BUTTON HEAD (M6X1X25-MM) | |

M-METRIC PART

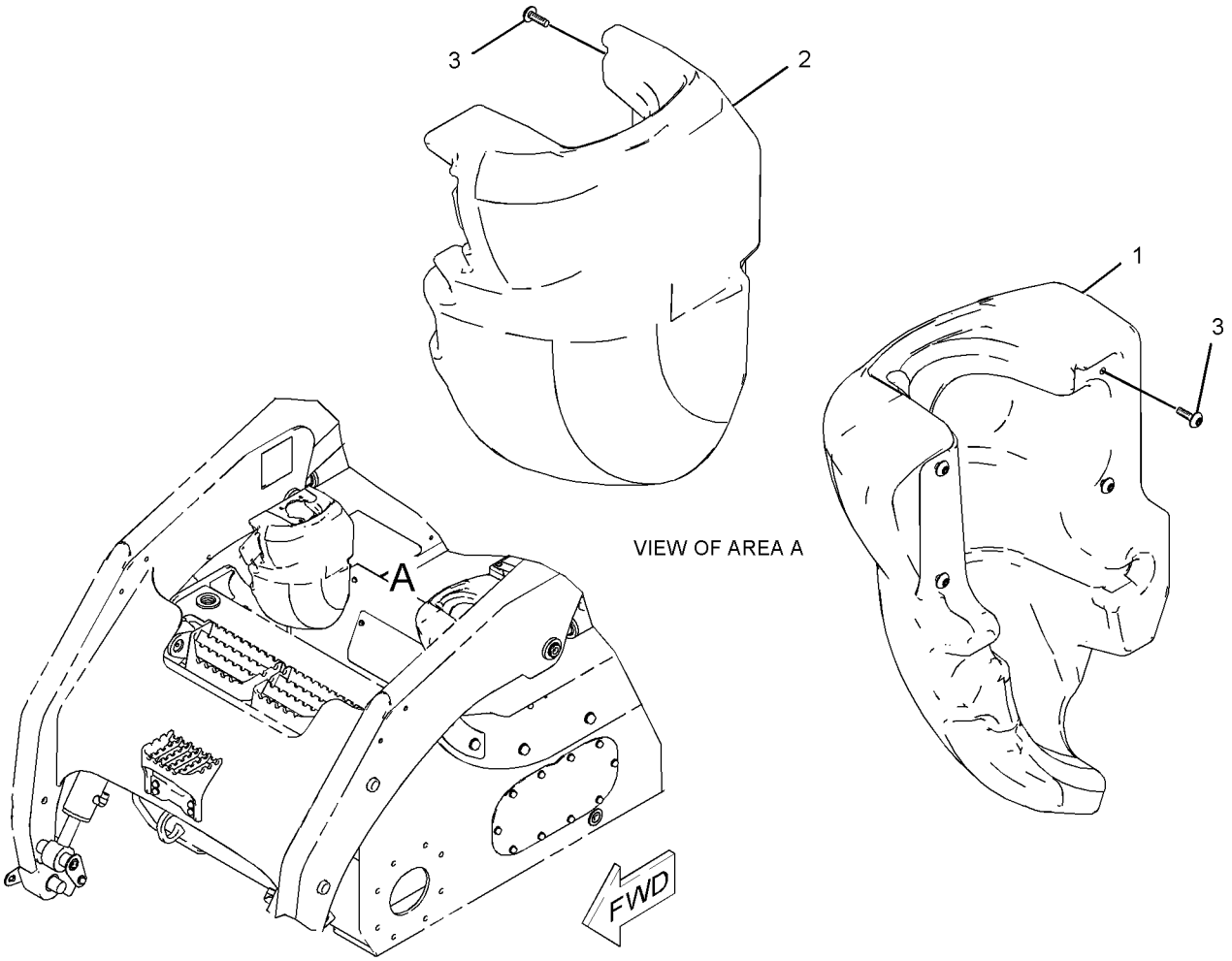


GRAPHIC #1 **<END>** g01019449

# OPERATOR STATION

## *218-6440* DOOR & MTG GP-CAB—POLYCARBONATE

**S/N: TNK1-UP**

**CANNOT BE USED WITH 218-6400—PAGE 265, 223-0600—PAGE 252**

**AN ATTACHMENT**

**SMCS-7308** **i03973430**

| NOTE | REF NO | GRAPHIC REF | PART NUMBER | QTY | PART NAME 1 2 3 4 5 6 (PRODUCT LEVEL) | SEE PAGE |
|---|---|---|---|---|---|---|
| E | 1 | 2 | **125-3518** | | SEAL (6-CM EACH) | |
| E | 1A | 2 | **125-3518** | | SEAL (65-CM) | |
| E | 3 | 2 | **144-0195** | | HOSE (40-CM) | |
| D | 4 | 2 | **5P-9909** | | SEAL (0.05-M EACH) | |
| | 5 | 1 | **5P-0372** | 2 | LOCK PIN | |
| | 6 | 2 | **8T-2444** | 2 | STUD-BALL | |
| | 7 | 2 | **8T-3848** | 1 | STRIKER AS-LATCH | |
| | | 2 | **6V-4270** | 1 | LOCKWASHER | |
| | 8 | 1 | **9C-5344** | 1 | SPACER (10.5X20X18-MM THK) | |
| | 9 | 1 | **095-1325** | 1 | PIN-CLEVIS | |
| | 10 | 1 | **153-2683** | 1 | SPRING AS-GAS (LOCKING) | |
| | 11 | 1 | **177-3405** | 1 | PIN | |
| | 12 | 2 | **218-0728** | 2 | SPRING | |
| CY | 13 | 2 | *276-3440* | 1 | DOOR GP-CAB (POLYCARBONATE) | 257 |
| | 14 | 2 | **219-9739** | 1 | TANK AS-WINDOW WASHER | |
| | 15 | 2 | **221-3877** | 1 | HARNESS AS-WINDOW WIPER | |
| | | 2 | **102-8805** | 1 | KIT-RECEPTACLE (6-PIN) | |
| | | | | | (INCLUDES RECEPTACLE AS & WEDGE) | |
| | | 2 | **123-7615** | 1 | CONNECTOR | |
| | | 2 | **8T-8737** | 1 | PLUG-SEAL | |
| | | 2 | **5W-1987** | 2 | TERMINAL-BLADE (12-GA TO 16-GA) | |
| E | | 2 | **125-7875** | | TUBE-HEAT SHRINK (7.44-MM DIA) (5-CM) | |
| | | 2 | **9X-3401** | 5 | PIN-CONNECTOR (16-GA TO 18-GA) | |
| | | | | | —OR— | |
| | | 2 | **126-1767** | 5 | PIN-CONNECTOR (14-GA) | |
| | | 2 | **180-9340** | 6 | SOCKET-CONNECTOR (14-GA TO 18-GA) | |
| | | 2 | **155-2274** | 1 | KIT-CONNECTING PLUG (6-PIN) | |
| | | | | | (INCLUDES PLUG AS, WEDGE & INTERFACE SEAL) | |
| | 16 | 2 | **280-1575** | 1 | PLATE AS | |
| | 17 | 2 | **223-0591** | 1 | PLATE AS | |
| | 18 | 2 | **223-0601** | 2 | PLATE AS | |
| | 19 | 2 | **223-0608** | 1 | HINGE AS | |
| | 20 | 2 | **223-0617** | 1 | MOUNT | |
| | 21 | 2 | **230-3214** | 1 | SPRING AS-GAS (CAB DOOR) | |
| M | 22 | 2 | **127-2170** | 8 | SCREW-TRUSS HEAD (M8X1.25X20-MM) | |
| | 23 | 2 | **142-9356** | 1 | BLOCK | |
| M | 24 | 2 | **195-0937** | 8 | INSERT-THREADED (M8X1.25-THD) | |
| | 25 | 2 | **3S-2093** | 3 | STRAP-CABLE | |
| M | 26 | 2 | **5C-2890** | 13 | NUT (M6X1-THD) | |
| D | 27 | 2 | **5P-5969** | | SEAL (1.1-M EACH) | |
| | 28 | 2 | **8T-4121** | 4 | WASHER-HARD (11X21X2.5-MM THK) | |
| M | 29 | 2 | **8T-4133** | 4 | NUT (M10X1.5-THD) | |
| | 30 | 2 | **8T-4205** | 13 | WASHER-HARD (7.2X14.5X2-MM THK) | |
| | 31 | 2 | **8T-4222** | 1 | WASHER-PLATED (11X32X2.5-MM THK) | |
| | 32 | 2 | **8T-4224** | 2 | WASHER-HARD (8.8X16X2-MM THK) | |
| M | 33 | 2 | **9X-2041** | 4 | SCREW-TRUSS HEAD (M10X1.5X20-MM) | |
| M | 34 | 2 | **9X-2044** | 3 | SCREW-TRUSS HEAD (M6X1X16-MM) | |
| M | 35 | 2 | **9X-2045** | 4 | SCREW-TRUSS HEAD (M6X1X20-MM) | |
| D | 36 | 2 | **5P-8309** | | SEAL (0.8-M) | |

C-CHANGE FROM PREVIOUS TYPE
D-ORDER BY THE METER
E-ORDER BY THE CENTIMETER
M-METRIC PART
Y-SEPARATE ILLUSTRATION

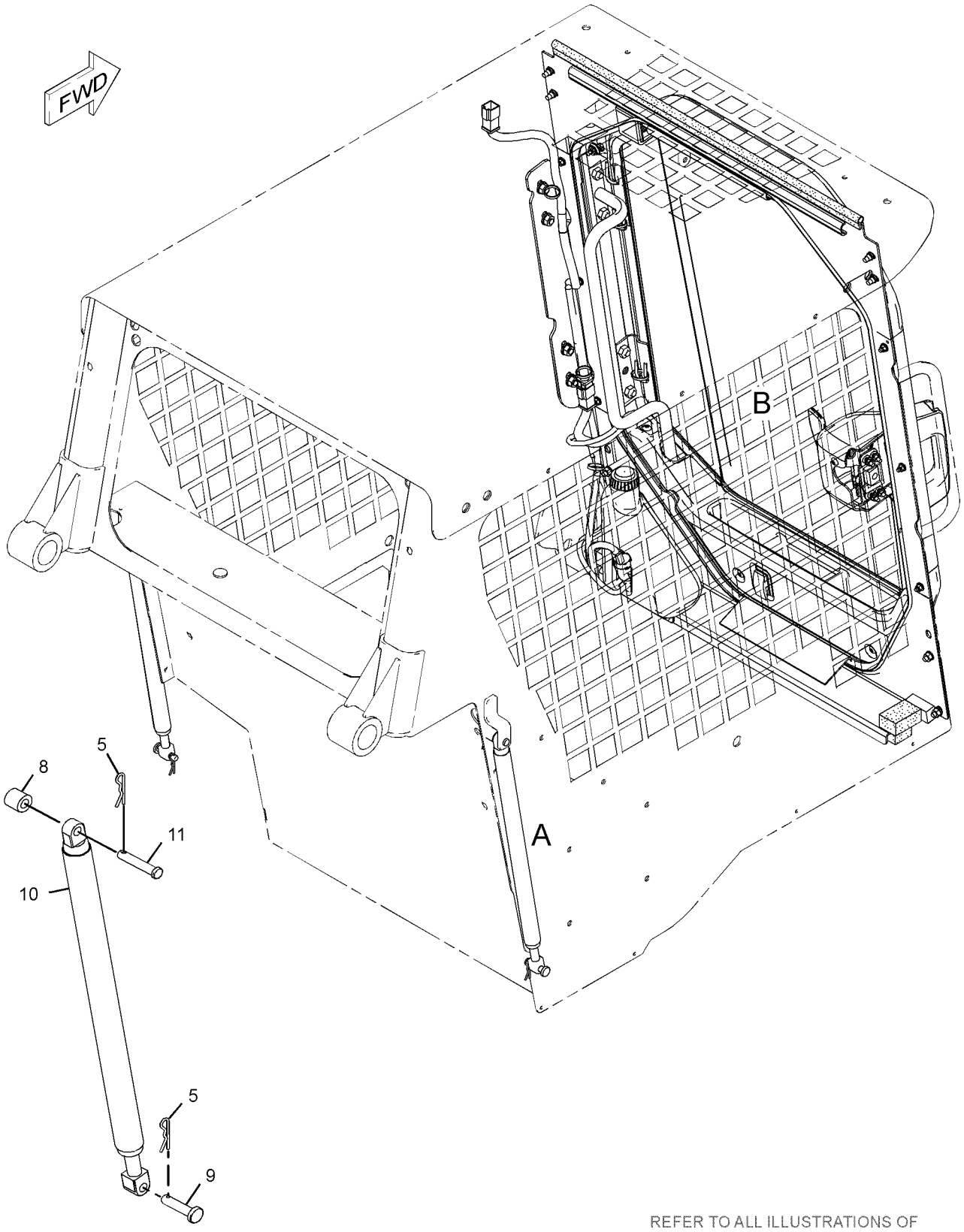


VIEW OF AREA A

REFER TO ALL ILLUSTRATIONS OF
THIS GROUP FOR AUXILIARY VIEWS

GRAPHIC #1

g01249527

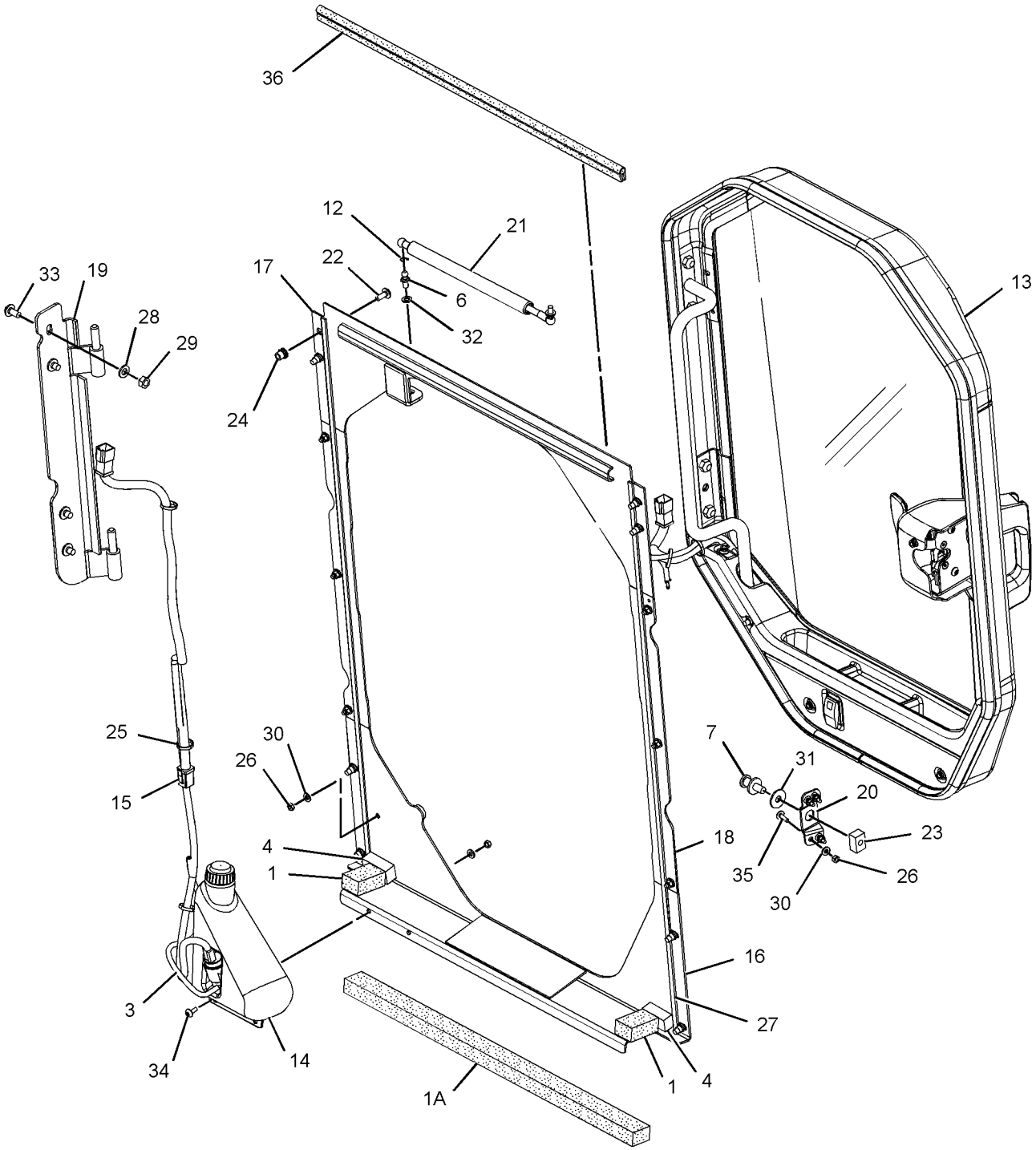


VIEW OF AREA B
(EXPLODED)

GRAPHIC #2 **<END>** g01944445

# OPERATOR STATION

## *223-0600* DOOR & MTG GP-CAB—GLASS

**S/N: TNK1-UP**

**CANNOT BE USED WITH 218-6400—PAGE 265, 218-6440—PAGE 249**

**AN ATTACHMENT**

**SMCS-7308** **i03973431**

| NOTE | REF NO | GRAPHIC REF | PART NUMBER | QTY | PART NAME 1 2 3 4 5 6 (PRODUCT LEVEL) | SEE PAGE |
|---|---|---|---|---|---|---|
| D | 1 | 1 | **5P-8309** | | SEAL (0.72-M) | |
| E | 2 | 1 | **125-3518** | | SEAL (65-CM) | |
| E | 3 | 1 | **144-0195** | | HOSE (40-CM) | |
| D | 4 | 1 | **5P-9909** | | SEAL (0.05-M EACH) | |
| | 5 | 1 | **5P-0372** | 2 | LOCK PIN | |
| | 6 | 1 | **8T-2444** | 2 | STUD-BALL | |
| | 7 | 1 | **8T-3848** | 1 | STRIKER AS-LATCH | |
| | | 1 | **6V-4270** | 1 | LOCKWASHER | |
| | 8 | 1 | **9C-5344** | 1 | SPACER (10.5X20X18-MM THK) | |
| | 9 | 1 | **095-1325** | 1 | PIN-CLEVIS | |
| | 10 | 1 | **153-2683** | 1 | SPRING AS-GAS (LOCKING) | |
| | 11 | 1 | **177-3405** | 1 | PIN | |
| | 12 | 1 | **218-0728** | 2 | SPRING | |
| | 13 | 1 | **219-9739** | 1 | TANK AS-WINDOW WASHER | |
| | 14 | 1 | **221-3877** | 1 | HARNESS AS-WINDOW WIPER | |
| | | 1 | **9X-3401** | 5 | PIN-CONNECTOR (16-GA TO 18-GA) | |
| | | | | | —OR— | |
| | | 1 | **126-1767** | 5 | PIN-CONNECTOR (14-GA) | |
| | | 1 | **123-7615** | 1 | CONNECTOR | |
| | | 1 | **155-2274** | 1 | KIT-CONNECTING PLUG (6-PIN) | |
| | | | | | (INCLUDES PLUG AS, WEDGE & INTERFACE SEAL) | |
| | | 1 | **8T-8737** | 1 | PLUG-SEAL | |
| | | 1 | **102-8805** | 1 | KIT-RECEPTACLE (6-PIN) | |
| | | | | | (INCLUDES RECEPTACLE AS & WEDGE) | |
| | | 1 | **180-9340** | 6 | SOCKET-CONNECTOR (14-GA TO 18-GA) | |
| E | | 1 | **125-7875** | | TUBE-HEAT SHRINK (7.44-MM DIA) (5-CM) | |
| | | 1 | **5W-1987** | 2 | TERMINAL-BLADE (12-GA TO 16-GA) | |
| C | 15 | 1 | **280-1575** | 1 | PLATE AS | |
| | 16 | 1 | **223-0591** | 1 | PLATE AS | |
| | 17 | 1 | **223-0601** | 2 | PLATE AS | |
| | 18 | 1 | **223-0608** | 1 | HINGE AS | |
| Y | 19 | 1 | *223-0616* | 1 | DOOR GP-CAB (GLASS) | 255 |
| | 20 | 1 | **223-0617** | 1 | MOUNT | |
| | 21 | 1 | **230-3214** | 1 | SPRING AS-GAS (CAB DOOR) | |
| M | 22 | 1 | **127-2170** | 8 | SCREW-TRUSS HEAD (M8X1.25X20-MM) | |
| | 23 | 1 | **142-9356** | 1 | BLOCK | |
| CM | 24 | 1 | **195-0937** | 8 | INSERT-THREADED (M8X1.25-THD) | |
| | 25 | 1 | **3S-2093** | 3 | STRAP-CABLE | |
| M | 26 | 1 | **5C-2890** | 13 | NUT (M6X1-THD) | |
| | 28 | 1 | **8T-4121** | 4 | WASHER-HARD (11X21X2.5-MM THK) | |
| M | 29 | 1 | **8T-4133** | 4 | NUT (M10X1.5-THD) | |
| | 30 | 1 | **8T-4205** | 13 | WASHER-HARD (7.2X14.5X2-MM THK) | |
| B | 31 | 1 | **8T-4222** | 1 | WASHER-PLATED (11X32X2.5-MM THK) | |
| C | 32 | 1 | **8T-4224** | 2 | WASHER-HARD (8.8X16X2-MM THK) | |
| M | 33 | 1 | **9X-2041** | 4 | SCREW-TRUSS HEAD (M10X1.5X20-MM) | |
| M | 34 | 1 | **9X-2044** | 3 | SCREW-TRUSS HEAD (M6X1X16-MM) | |
| M | 35 | 1 | **9X-2045** | 4 | SCREW-TRUSS HEAD (M6X1X20-MM) | |
| E | 36 | 1 | **125-3518** | | SEAL (6-CM EACH) | |
| CD | 37 | 1 | **5P-5969** | | SEAL (1.1-M EACH) | |

B-USE AS REQUIRED
C-CHANGE FROM PREVIOUS TYPE
D-ORDER BY THE METER
E-ORDER BY THE CENTIMETER
M-METRIC PART
Y-SEPARATE ILLUSTRATION

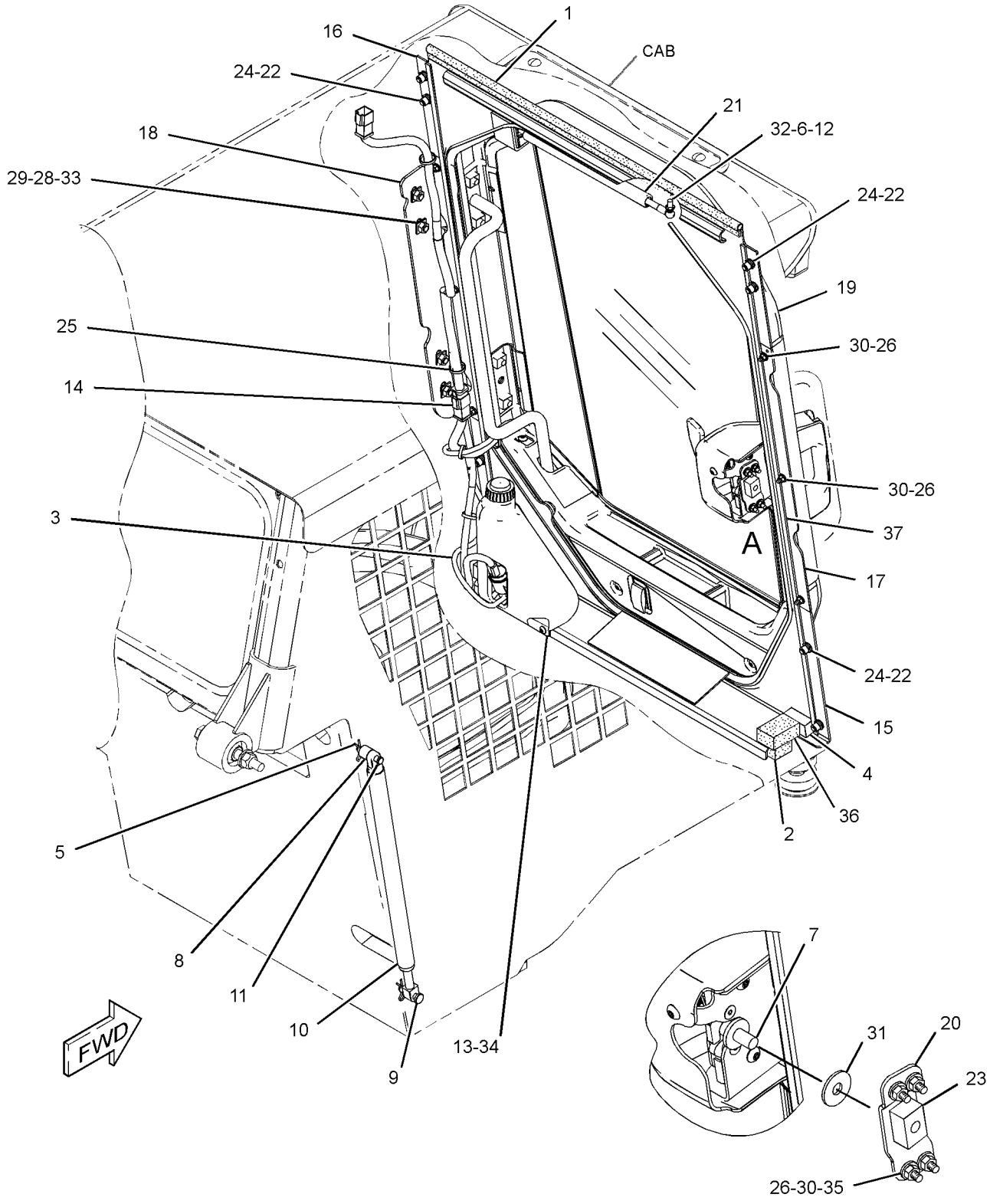


VIEW OF AREA A
(EXPLODED)

GRAPHIC #1 **<END>** g01258688

# *218-6431* DOOR GP-CAB–GLASS

**S/N: TNK1-UP**
**PART OF 223-0616 DOOR GP-CAB**
**AN ATTACHMENT**

**SMCS-7308** **i02619575**

| NOTE | REF NO | GRAPHIC REF | PART NUMBER | QTY | PART NAME 1 2 3 4 5 6 (PRODUCT LEVEL) | SEE PAGE |
|---|---|---|---|---|---|---|
| | 1 | 1 | **223-0609** | 1 | GLASS-CAB (DOOR) | |
| | 2 | 1 | **223-0610** | 1 | GLASS-CAB (DOOR) | |
| | 3 | 1 | **223-0612** | 1 | GLASS-CAB (DOOR) | |
| | 4 | 1 | **282-9059** | 1 | FRAME AS | |

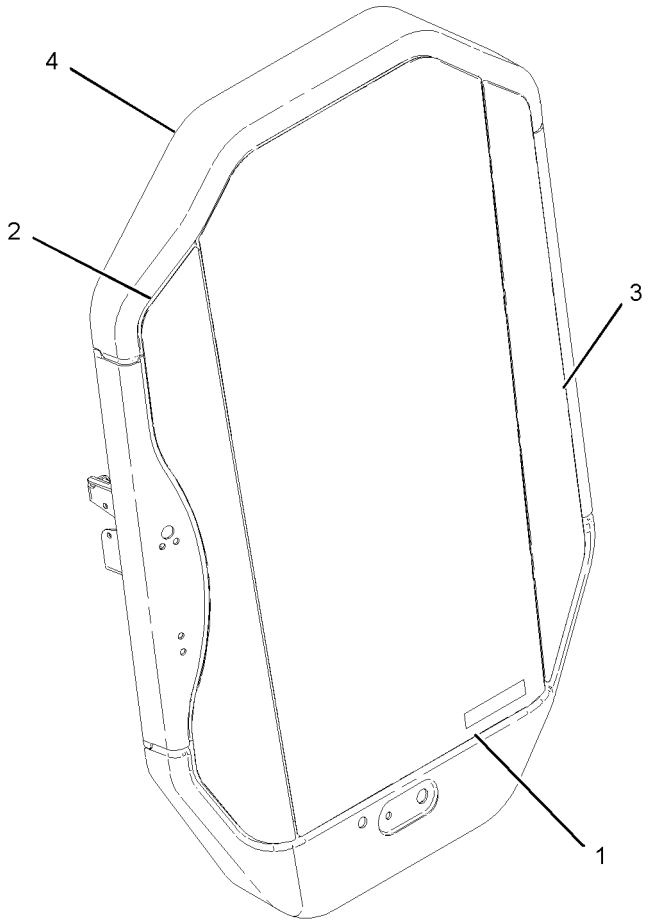


GRAPHIC #1 **<END>** g01010846

# OPERATOR STATION

## *223-0616* DOOR GP-CAB—GLASS

**S/N: TNK1-UP**
**PART OF 223-0600 DOOR & MTG GP-CAB**
**AN ATTACHMENT**

**SMCS-7308** **i03897524**

| NOTE | REF NO | GRAPHIC REF | PART NUMBER | QTY | PART NAME 1 2 3 4 5 6 (PRODUCT LEVEL) | SEE PAGE |
|---|---|---|---|---|---|---|
| E | 1 | 1 | **124-3243** | | SEAL (306-CM) | |
| E | 2 | 1 | **144-0195** | | HOSE (73-CM) | |
| | 3 | 1 | **8G-1151** | 2 | CONNECTOR | |
| C | 4 | 1 | **320-1390** | 1 | BLADE-WIPER (558-MM) (FRONT, REAR) | |
| | 6 | 1 | **138-4883** | 1 | SWITCH AS-ROCKER (REAR WINDOW WASHER, WIPER) | |
| | | 1 | **111-7899** | 1 | GASKET | |
| M | 7 | 1 | **260-6695** | 2 | SCREW-FLAT HEAD (M6X1X25-MM) | |
| Y | 8 | 1 | *218-6431* | 1 | DOOR GP-CAB (GLASS) | 254 |
| | 9 | 1 | **221-3876** | 1 | HARNESS AS-WINDOW WIPER | |
| | | 1 | **111-7898** | 1 | CONNECTOR | |
| | | 1 | **9X-3401** | 6 | PIN-CONNECTOR (16-GA TO 18-GA) | |
| | | 1 | **155-2260** | 1 | KIT-CONNECTING PLUG (3-PIN) | |
| | | 1 | **155-2271** | 1 | KIT-CONNECTING PLUG (4-PIN) | |
| | | | | | (EACH PLUG KIT INCLUDES PLUG AS, WEDGE & INTERFACE SEAL) | |
| | | 1 | **102-8805** | 1 | KIT-RECEPTACLE (6-PIN) | |
| | | | | | (INCLUDES RECEPTACLE AS & WEDGE) | |
| | | 1 | **9X-3402** | 7 | SOCKET-CONNECTOR (16-GA TO 18-GA) | |
| | | 1 | **8L-8413** | 8 | STRAP-CABLE | |
| | | 1 | **122-4406** | 3 | TERMINAL | |
| | | 1 | **112-9611** | 1 | TERMINAL-BLADE | |
| | | 1 | **3E-9179** | 3 | TERMINAL-RECEPTACLE (14-GA TO 18-GA) | |
| E | | 1 | **119-3662** | | TUBE-HEAT SHRINK (10.85-MM DIA) (7-CM) | |
| CY | 10 | 1 | **320-1389** | 1 | ARM GP-WINDOW WIPER (FRONT) | 225 |
| C | 11 | 1 | **313-9185** | 1 | COVER AS | |
| | 12 | 1 | **223-8488** | 1 | COVER-LATCH | |
| | 13 | 1 | **223-8495** | 1 | HANDLE AS | |
| M | | 1 | **6V-9632** | 1 | NUT-WELD (M6X1-THD) | |
| | 14 | 1 | **225-3187** | 1 | LATCH AS | |
| | 15 | 1 | **229-8757** | 1 | SWITCH AS-LIMIT (ENGINE START, HYD LOCKOUT) | |
| | | 1 | **102-8803** | 1 | KIT-RECEPTACLE (3-PIN) | |
| | | | | | (INCLUDES RECEPTACLE AS & WEDGE) | |
| | | 1 | **186-3735** | 3 | PIN-CONNECTOR (16-GA TO 18-GA) | |
| | 17 | 1 | **235-4768** | 2 | HINGE | |
| | 18 | 1 | **248-2171** | 1 | HANDLE AS (PUSH BUTTON) | |
| Y | 19 | 1 | **330-5012** | 1 | MOTOR GP-WINDOW WIPER | 282 |
| | 20 | 1 | **032-9828** | 1 | GROMMET | |
| M | 21 | 1 | **134-8273** | 4 | SCREW-FLAT HEAD (M10X1.5X25-MM) | |
| | 22 | 1 | **3S-2093** | 3 | STRAP-CABLE | |
| M | 23 | 1 | **9X-2044** | 14 | SCREW-TRUSS HEAD (M6X1X16-MM) | |
| M | 24 | 1 | **9X-2045** | 2 | SCREW-TRUSS HEAD (M6X1X20-MM) | |

C-CHANGE FROM PREVIOUS TYPE
E-ORDER BY THE CENTIMETER
M-METRIC PART
Y-SEPARATE ILLUSTRATION

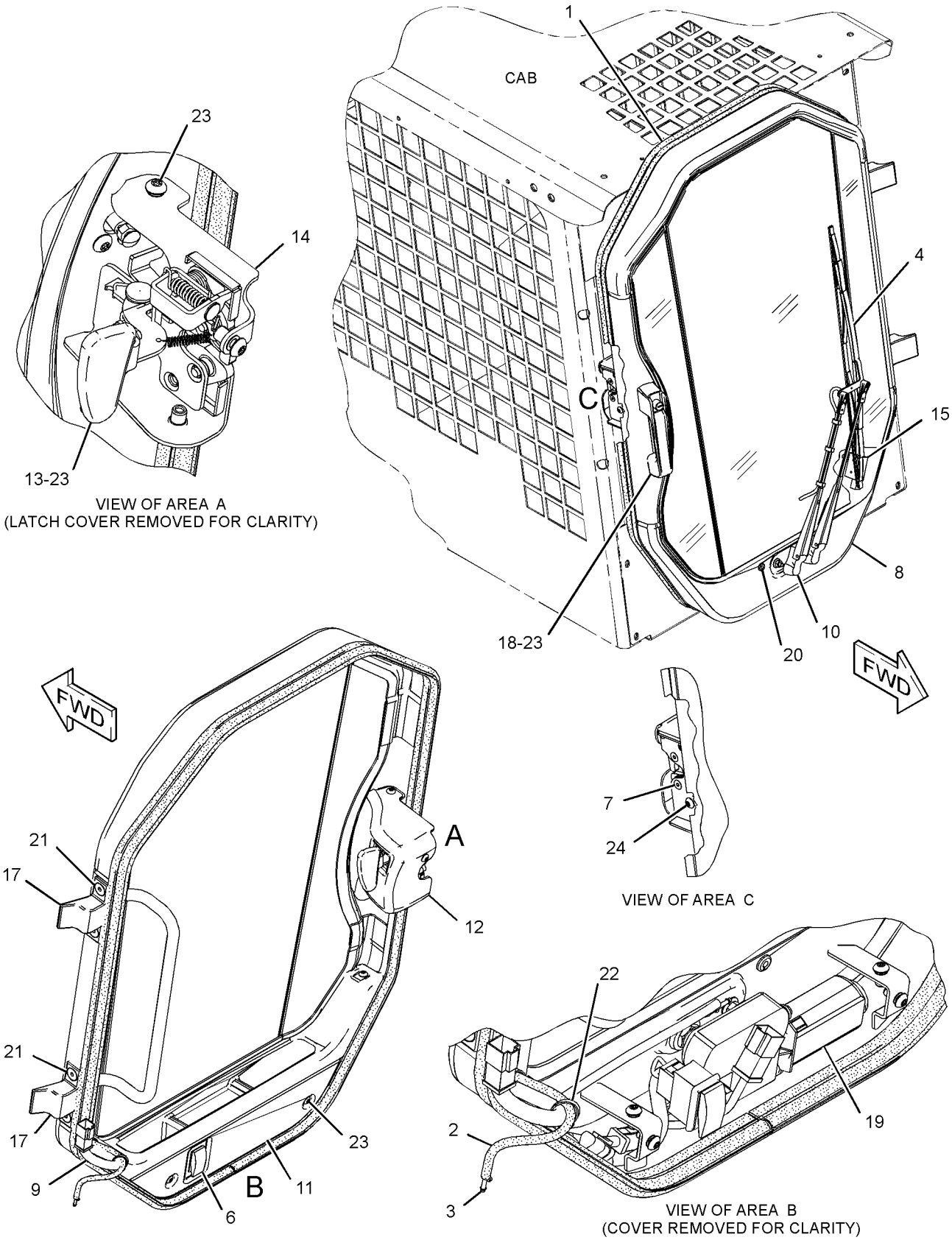


GRAPHIC #1 **<END>** g01431673

# OPERATOR STATION

## *276-3440* DOOR GP-CAB—POLYCARBONATE

**S/N: TNK1-UP**

**PART OF 218-6440 DOOR & MTG GP-CAB**

**AN ATTACHMENT**

**SMCS-7308** **i03970897**

| NOTE | REF NO | GRAPHIC REF | PART NUMBER | QTY | PART NAME 1 2 3 4 5 6 (PRODUCT LEVEL) | SEE PAGE |
|---|---|---|---|---|---|---|
| | 1 | 1 | **8G-1151** | 2 | CONNECTOR | |
| C | 2 | 1 | **320-1390** | 1 | BLADE-WIPER (558-MM) (CAB DOOR) | |
| | 4 | 1 | **138-4883** | 1 | SWITCH AS-ROCKER (REAR WINDOW WASHER, WIPER) | |
| | | 1 | **111-7899** | 1 | GASKET | |
| | 5 | 1 | **205-5148** | 2 | SCREW-FLAT HEAD (M6X1X25-MM) | |
| | 6 | 1 | **221-3876** | 1 | HARNESS AS-WINDOW WIPER | |
| | | 1 | **111-7898** | 1 | CONNECTOR | |
| | | 1 | **9X-3401** | 6 | PIN-CONNECTOR (16-GA TO 18-GA) | |
| | | 1 | **155-2260** | 1 | KIT-CONNECTING PLUG (3-PIN) | |
| | | 1 | **155-2271** | 1 | KIT-CONNECTING PLUG (4-PIN) | |
| | | | | | (EACH PLUG KIT INCLUDES PLUG AS, WEDGE & INTERFACE SEAL) | |
| | | 1 | **102-8805** | 1 | KIT-RECEPTACLE (6-PIN) | |
| | | | | | (INCLUDES RECEPTACLE AS & WEDGE) | |
| | | 1 | **9X-3402** | 7 | SOCKET-CONNECTOR (16-GA TO 18-GA) | |
| | | 1 | **8L-8413** | 8 | STRAP-CABLE | |
| | | 1 | **122-4406** | 3 | TERMINAL | |
| | | 1 | **112-9611** | 1 | TERMINAL-BLADE | |
| | | 1 | **3E-9179** | 3 | TERMINAL-RECEPTACLE (14-GA TO 18-GA) | |
| E | | 1 | **119-3662** | | TUBE-HEAT SHRINK (10.85-MM DIA) (7-CM) | |
| | 7 | 1 | **223-8488** | 1 | COVER-LATCH | |
| | 8 | 1 | **223-8495** | 1 | HANDLE AS | |
| M | | 1 | **6V-9632** | 1 | NUT-WELD (M6X1-THD) | |
| | 9 | 1 | **225-3187** | 1 | LATCH AS | |
| | 10 | 1 | **229-8757** | 1 | SWITCH AS-LIMIT | |
| | | 1 | **102-8803** | 1 | KIT-RECEPTACLE (3-PIN) | |
| | | | | | (INCLUDES RECEPTACLE AS & WEDGE) | |
| | | 1 | **186-3735** | 3 | PIN-CONNECTOR (16-GA TO 18-GA) | |
| | 11 | 1 | **235-4768** | 2 | HINGE | |
| | 12 | 1 | **248-2171** | 1 | HANDLE AS (PUSH BUTTON) (PUSH BUTTON) | |
| Y | 13 | 1 | **330-5012** | 1 | MOTOR GP-WINDOW WIPER | 282 |
| CY | 14 | 1 | **320-1389** | 1 | ARM GP-WINDOW WIPER (FRONT) | 225 |
| Y | 15 | 1 | *276-3615* | 1 | DOOR GP-CAB (POLYCARBONATE) | 259 |
| | 16 | 1 | **313-9185** | 1 | COVER AS | |
| | 17 | 1 | **032-9828** | 1 | GROMMET | |
| M | 18 | 1 | **134-8273** | 4 | SCREW-FLAT HEAD (M10X1.5X25-MM) | |
| | 19 | 1 | **3S-2093** | 3 | STRAP-CABLE | |
| M | 20 | 1 | **9X-2044** | 14 | SCREW-TRUSS HEAD (M6X1X16-MM) | |
| M | 21 | 1 | **9X-2045** | 2 | SCREW-TRUSS HEAD (M6X1X20-MM) | |
| E | 22 | 1 | **144-0195** | | HOSE (73-CM) | |
| E | 23 | 1 | **124-3243** | | SEAL (306-CM) | |

C-CHANGE FROM PREVIOUS TYPE
E-ORDER BY THE CENTIMETER
M-METRIC PART
Y-SEPARATE ILLUSTRATION

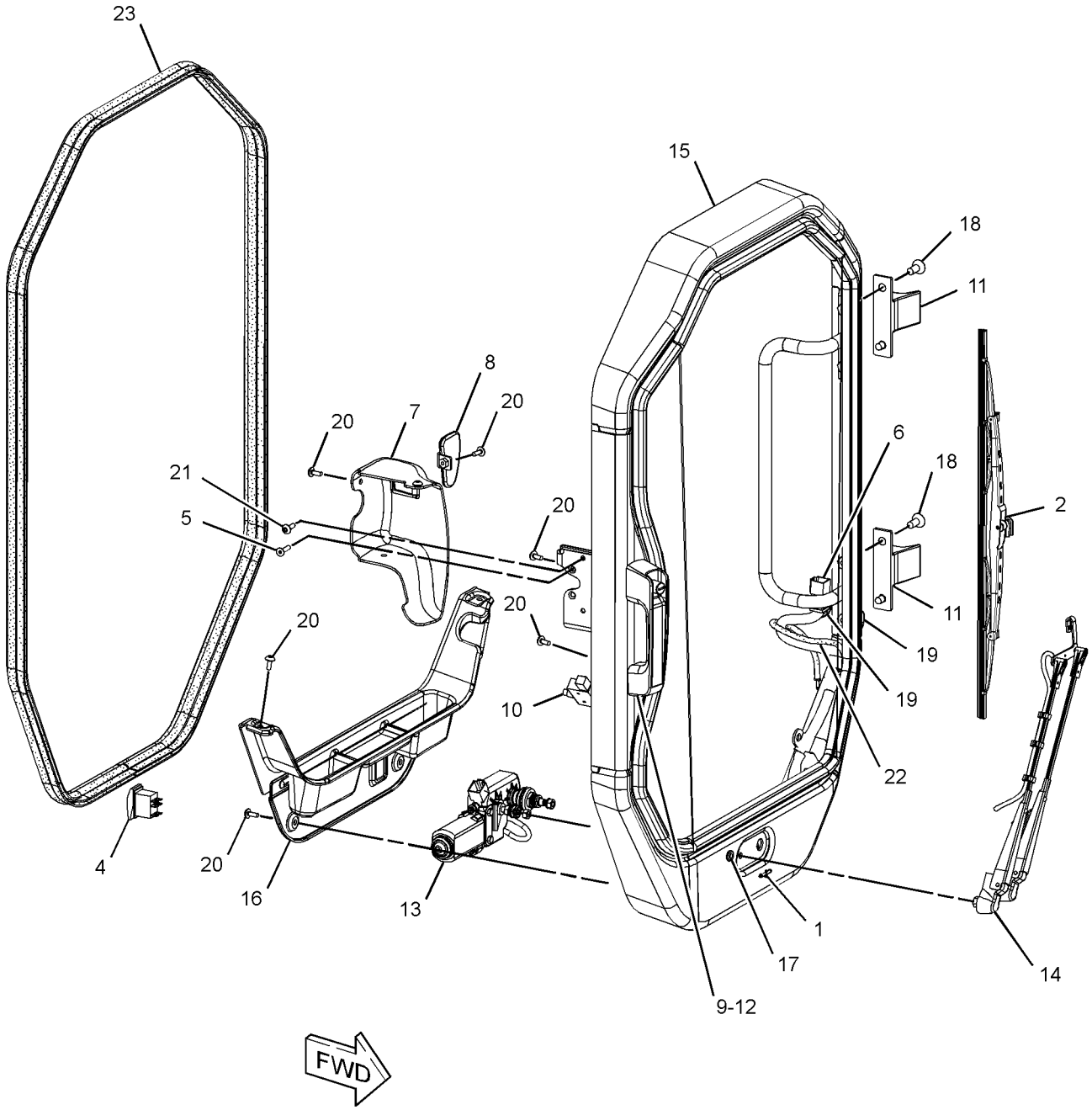


GRAPHIC #1 **<END>** g01792833

# OPERATOR STATION

## *276-3615* DOOR GP-CAB—POLYCARBONATE

**S/N: TNK1-UP**

**PART OF 276-3440 DOOR GP-CAB**

**AN ATTACHMENT**

**SMCS-7308** **i03076920**

| NOTE | REF NO | GRAPHIC REF | PART NUMBER | QTY | PART NAME 1 2 3 4 5 6 (PRODUCT LEVEL) | SEE PAGE |
|---|---|---|---|---|---|---|
| | 1 | 1 | **5C-8310** | 1 | BRACKET-RING | |
| | 2 | 1 | **5C-8311** | 1 | RING | |
| | 3 | 1 | **8T-6842** | 1 | FILM-INSTRUCTION (PULL RING, ALTERNATE EXIT) | |
| | 4 | 1 | **316-1698** | 1 | WINDOW | |
| | 5 | 1 | **279-3232** | 1 | SEAL | |
| | 6 | 1 | **282-9059** | 1 | FRAME AS | |
| | 7 | 1 | **283-7554** | 1 | STRIP-LOCKING | |

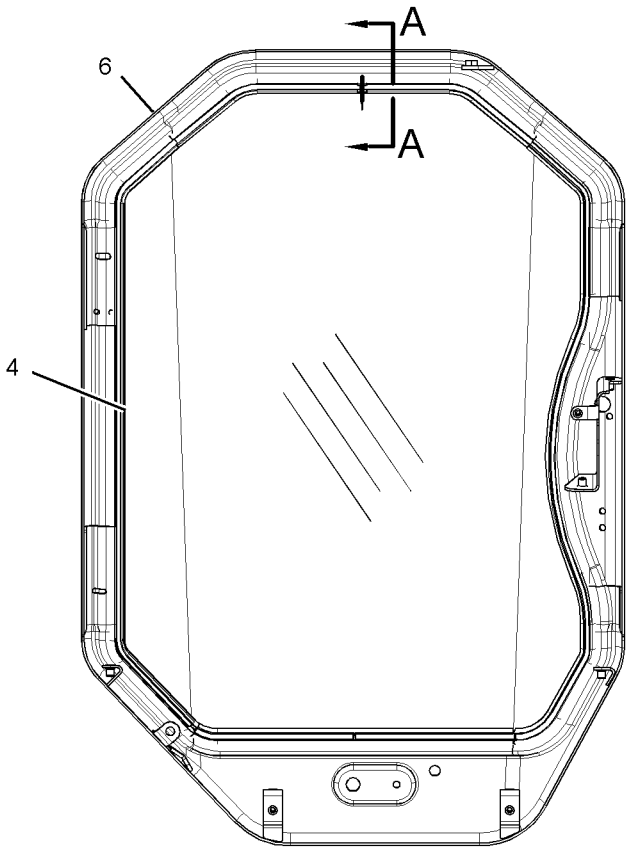


REAR VIEW

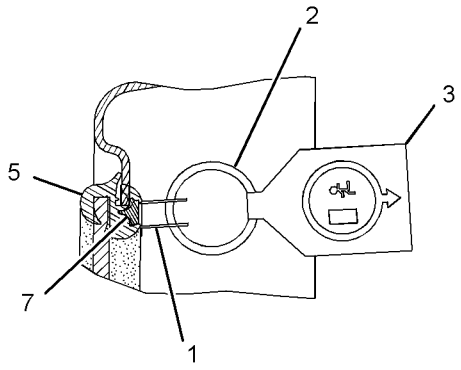


SECTION A-A

GRAPHIC #1 **<END>** g01327089

# OPERATOR STATION

## *218-6394* DUCT GP-CAB AIR

**S/N: TNK1-UP**

**PART OF 326-5518 AIR CONDITIONER AR, 326-5515 HEATER AR-CAB**

**AN ATTACHMENT**

**SMCS-734D** **i02541254**

| NOTE | REF NO | GRAPHIC REF | PART NUMBER | QTY | PART NAME 1 2 3 4 5 6 (PRODUCT LEVEL) | SEE PAGE |
|---|---|---|---|---|---|---|
| CD | 1 | 1 | **5P-5969** | | SEAL (0.2-M EACH) | |
| | 2 | 1 | **146-6371** | 6 | LOUVER AS | |
| | 3 | 1 | **218-6396** | 1 | DUCT | |
| | 4 | 1 | **218-6397** | 1 | CONSOLE (RH) | |
| | 5 | 1 | **218-6398** | 1 | CONSOLE (LH) | |
| CD | 6 | 1 | **5P-7070** | | INSULATION-STRIP (0.5-M) | |
| | 7 | 1 | **218-6414** | 1 | SEAL | |
| | 8 | 1 | **285-9133** | 1 | INSULATION | |
| M | 9 | 1 | **175-0005** | 8 | SCREW-BUTTON HEAD (M6X1X25-MM) | |
| | 10 | 1 | **285-8570** | 1 | INSULATION | |
| | 11 | 1 | **240-6877** | 1 | SEAL | |
| | 12 | 1 | **240-6878** | 1 | SEAL | |
| | 13 | 1 | **240-6879** | 2 | SEAL | |
| | 14 | 1 | **6V-6689** | 2 | SCREW-SELF-TAPPING (10-16X.625-IN) | |
| | 15 | 1 | **285-8565** | 1 | INSULATION | |

C-CHANGE FROM PREVIOUS TYPE
D-ORDER BY THE METER
M-METRIC PART

*218-6394* **DUCT GP-CAB AIR** *(contd.)* **i02541254**

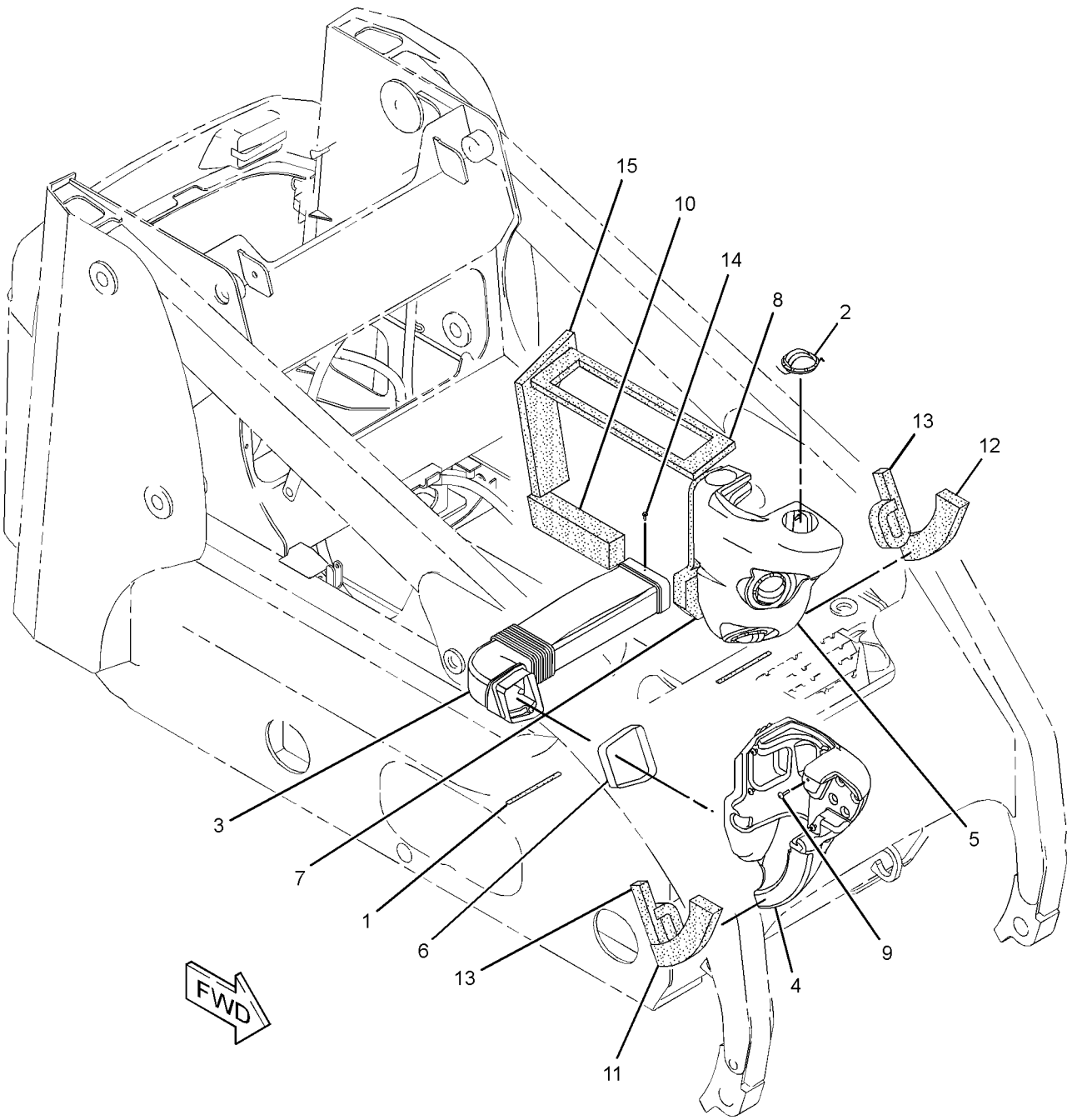


GRAPHIC #1 **<END>** g01293158

# OPERATOR STATION

## 231-7325 FRAME GP-WINDOW–RH

**S/N: TNK1-UP**
**PART OF 224-7058 WINDOW GP-CAB**
**AN ATTACHMENT**

**SMCS-7310** **i03971269**

| NOTE | REF NO | GRAPHIC REF | PART NUMBER | QTY | PART NAME 1 2 3 4 5 6 (PRODUCT LEVEL) | SEE PAGE |
|---|---|---|---|---|---|---|
| | 1 | 1 | **231-7326** | 1 | FRAME AS-WINDOW (RH) | |
| | 2 | 1 | **231-7401** | 1 | HINGE | |
| | 3 | 1 | **239-6138** | 1 | BRACKET AS | |
| | 4 | 1 | **231-7329** | 1 | KIT-LATCH (RH) | |
| | | | | | (INCLUDES BOLT, LATCH, SCREW, SPRING, CLIPS & WASHERS) | |
| | 5 | 1 | **5C-7682** | 3 | SCREW (8-32X0.25-IN) | |

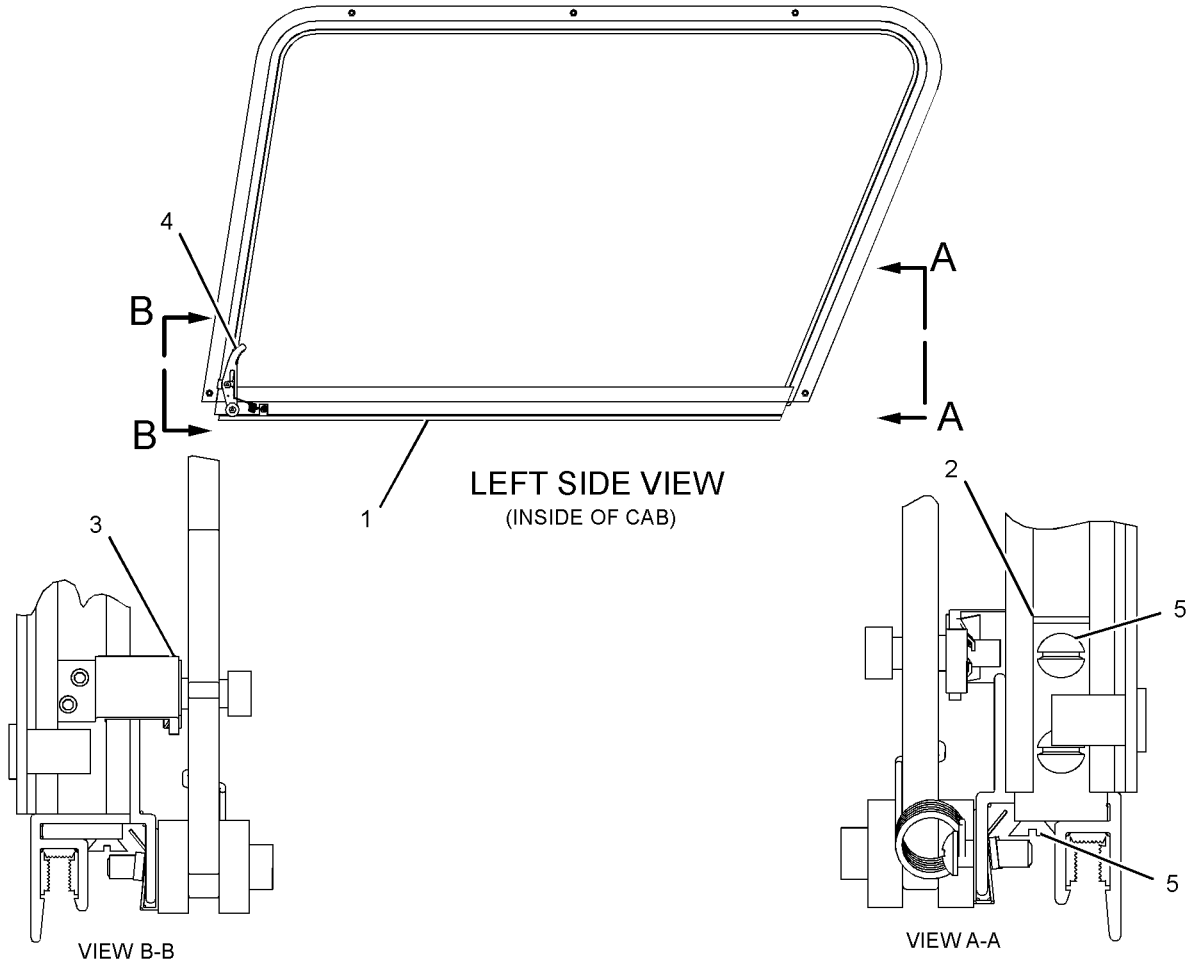


GRAPHIC #1 **<END>** g01487014

# OPERATOR STATION

## 231-7327 FRAME GP-WINDOW–LH

**S/N: TNK1-UP**
**PART OF 224-7057 WINDOW GP-CAB**
**AN ATTACHMENT**

**SMCS-7310** **i03971270**

| NOTE | REF NO | GRAPHIC REF | PART NUMBER | QTY | PART NAME 1 2 3 4 5 6 (PRODUCT LEVEL) | SEE PAGE |
|---|---|---|---|---|---|---|
| | 1 | 1 | **231-7328** | 1 | FRAME AS-WINDOW (LH) | |
| | 2 | 1 | **231-7401** | 1 | HINGE | |
| | 3 | 1 | **239-6138** | 1 | BRACKET AS | |
| | 4 | 1 | **231-7329** | 1 | KIT-LATCH (LH) | |
| | | | | | (INCLUDES BOLT, LATCH, SCREW, SPRING, CLIPS & WASHERS) | |
| | 5 | 1 | **5C-7682** | 3 | SCREW (8-32X0.25-IN) | |

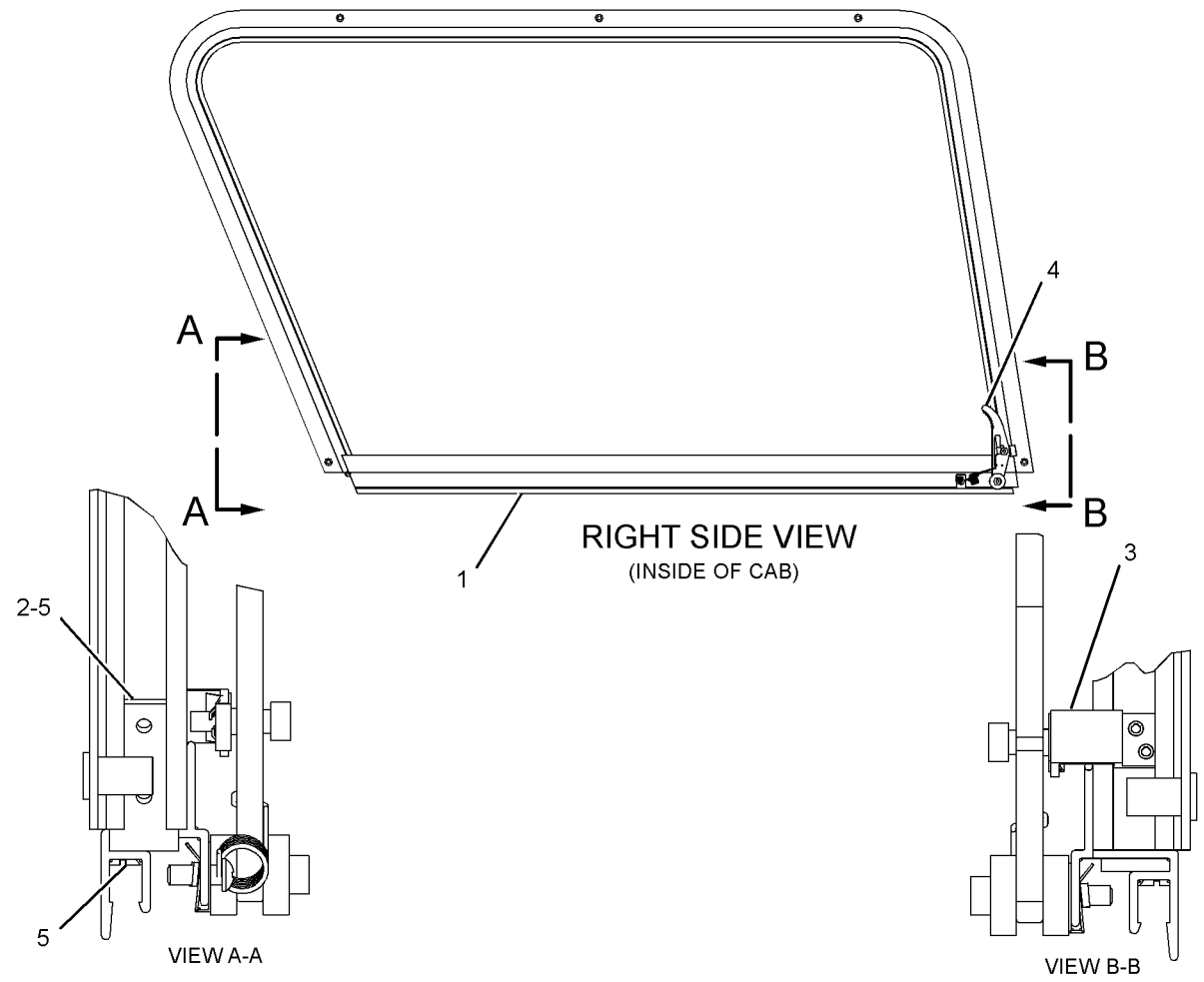


GRAPHIC #1 **<END>** g01487373

# OPERATOR STATION

## *233-5632* GUARD GP-ROPS/FOPS

**S/N: TNK1-UP**

**AN ATTACHMENT**

**SMCS-7323** **i03973432**

| NOTE | REF NO | GRAPHIC REF | PART NUMBER | QTY | PART NAME 1 2 3 4 5 6 (PRODUCT LEVEL) | SEE PAGE |
|---|---|---|---|---|---|---|
| | 1 | 1 | **152-1161** | 1 | PLATE AS-FOPS | |
| | 2 | 1 | **153-2683** | 1 | SPRING AS-GAS | |
| | 4 | 1 | **247-7182** | 1 | FILM (FOPS) | |
| M | 5 | 1 | **7X-2553** | 8 | BOLT (M16X2X40-MM) | |
| | 6 | 1 | **8T-4122** | 12 | WASHER-HARD (17X32X3.5-MM THK) | |
| M | 7 | 1 | **8T-4132** | 4 | NUT (M16X2-THD) | |
| D | 8 | 1 | **8T-5372** | | SEAL (1.4-M) | |

D-ORDER BY THE METER
M-METRIC PART

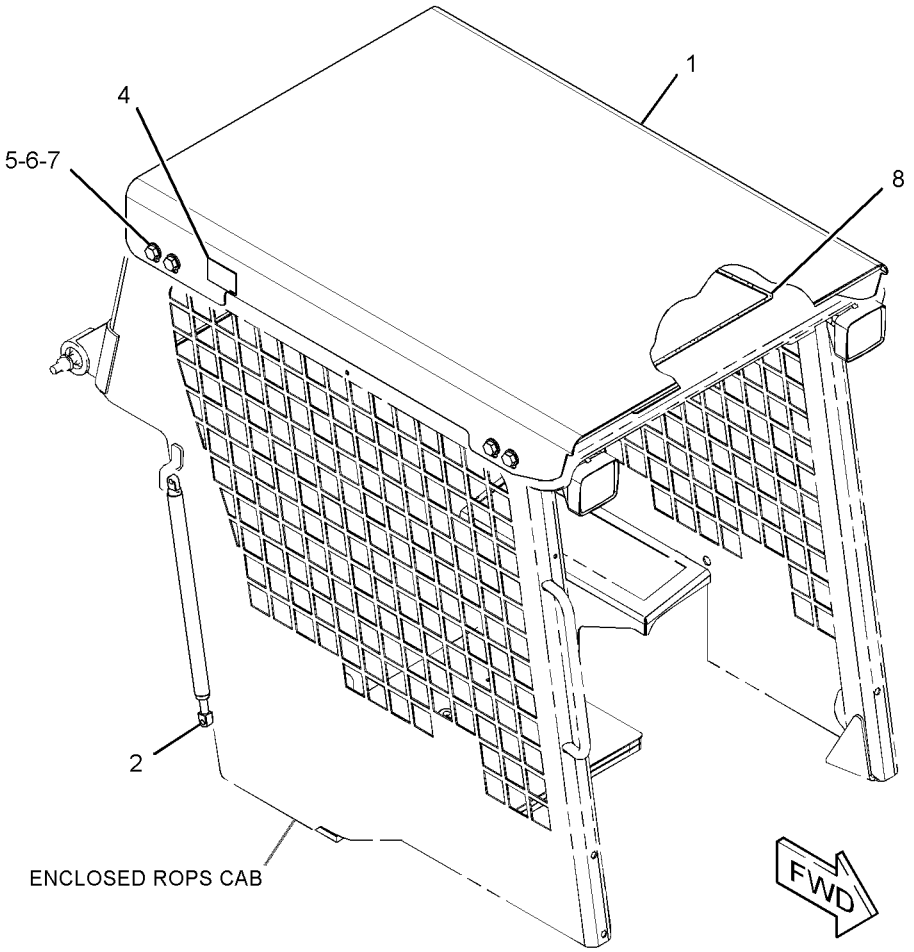


GRAPHIC #1 **<END>** g01437181

# *218-6400* HANDHOLD GP

**S/N: TNK1-UP**
**PART OF 326-5510, 326-5511 CAB AR-OPEN ROPS**
**CANNOT BE USED WITH 218-6440—PAGE 249, 223-0600—PAGE 252**
**AN ATTACHMENT**

**SMCS-7256** **i01908092**

| NOTE | REF NO | GRAPHIC REF | PART NUMBER | QTY | PART NAME 1 2 3 4 5 6 (PRODUCT LEVEL) | SEE PAGE |
|---|---|---|---|---|---|---|
| | 1 | 1 | **218-6377** | 1 | HANDLE | |
| | 2 | 1 | **8T-4121** | 2 | WASHER-HARD (11X21X2.5-MM THK) | |
| M | 3 | 1 | **8T-4133** | 2 | NUT (M10X1.5-THD) | |
| M | 4 | 1 | **9X-2041** | 2 | SCREW-TRUSS HEAD (M10X1.5X20-MM) | |

M-METRIC PART

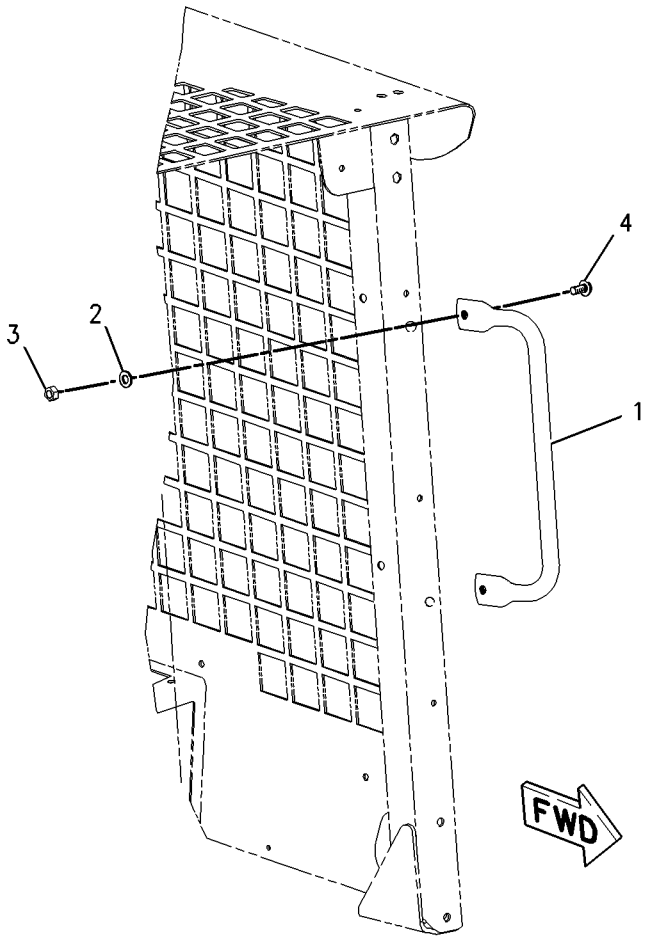


GRAPHIC #1 **<END>** g01002446

# OPERATOR STATION

## 218-6118 HANDLE GP-MODULAR

**S/N: TNK1-UP**

**PART OF 218-6485, 218-6490 CONTROL GP-HANDLE**

**AN ATTACHMENT**

**SMCS-5705** **i03648355**

| NOTE | REF NO | GRAPHIC REF | PART NUMBER | QTY | PART NAME 1 2 3 4 5 6 (PRODUCT LEVEL) | SEE PAGE |
|---|---|---|---|---|---|---|
| | 1 | 1 | **8L-8413** | 1 | STRAP-CABLE | |
| | 2 | 1 | **159-9853** | 1 | GROMMET | |
| | 3 | 1 | **174-3091** | 1 | KIT-RECEPTACLE (12-PIN) | |
| | | | | | (INCLUDES RECEPTACLE AS & WEDGE) | |
| | 4 | 1 | **186-3735** | 4 | PIN-CONNECTOR (16-GA TO 18-GA) | |
| | 5 | 1 | **8T-8737** | 8 | PLUG-SEAL | |

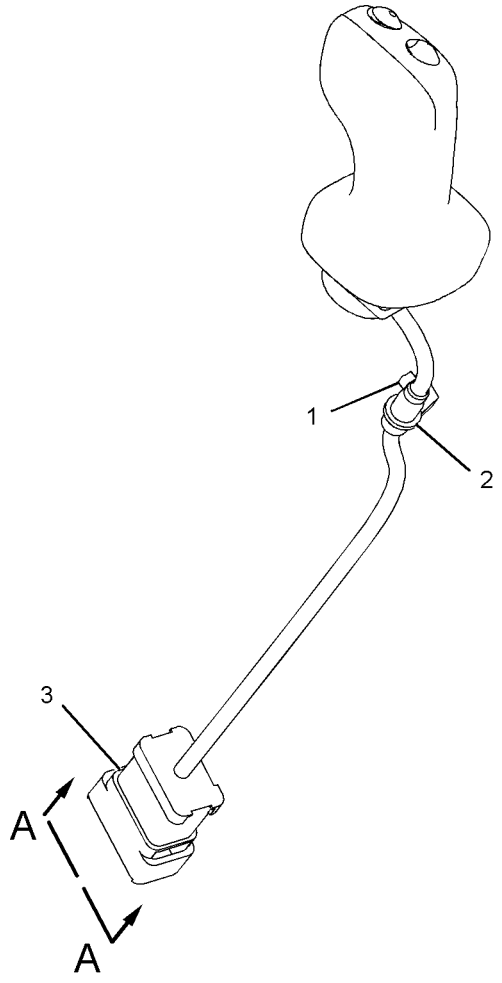


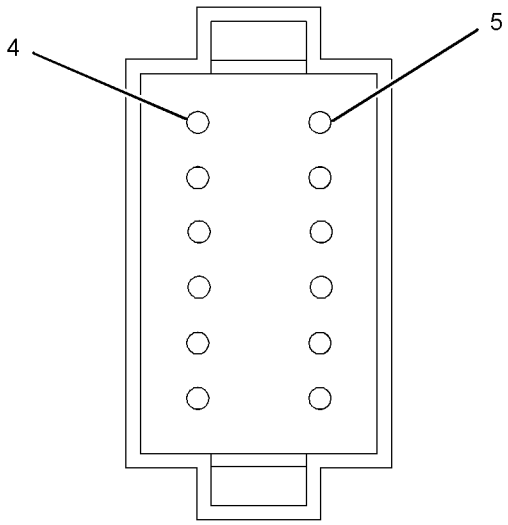


VIEW A-A

GRAPHIC #1 **<END>** g01113888

# OPERATOR STATION

## *218-6392* HEATER & MTG GP-CAB

**S/N: TNK1-UP**
**PART OF 326-5515 HEATER AR-CAB**
**AN ATTACHMENT**

**SMCS-7304** **i02014370**

| NOTE | REF NO | GRAPHIC REF | PART NUMBER | QTY | PART NAME 1 2 3 4 5 6 (PRODUCT LEVEL) | SEE PAGE |
|---|---|---|---|---|---|---|
| Y | 1 | 1 | *218-6393* | 1 | HEATER GP-CAB | 269 |
| | 2 | 1 | **218-6402** | 1 | INSULATION AS | |
| | 3 | 1 | **8T-4224** | 4 | WASHER-HARD (8.8X16X2-MM THK) | |
| M | 4 | 1 | **8T-6869** | 4 | BOLT (M8X1.25X60-MM) | |

M-METRIC PART
Y-SEPARATE ILLUSTRATION

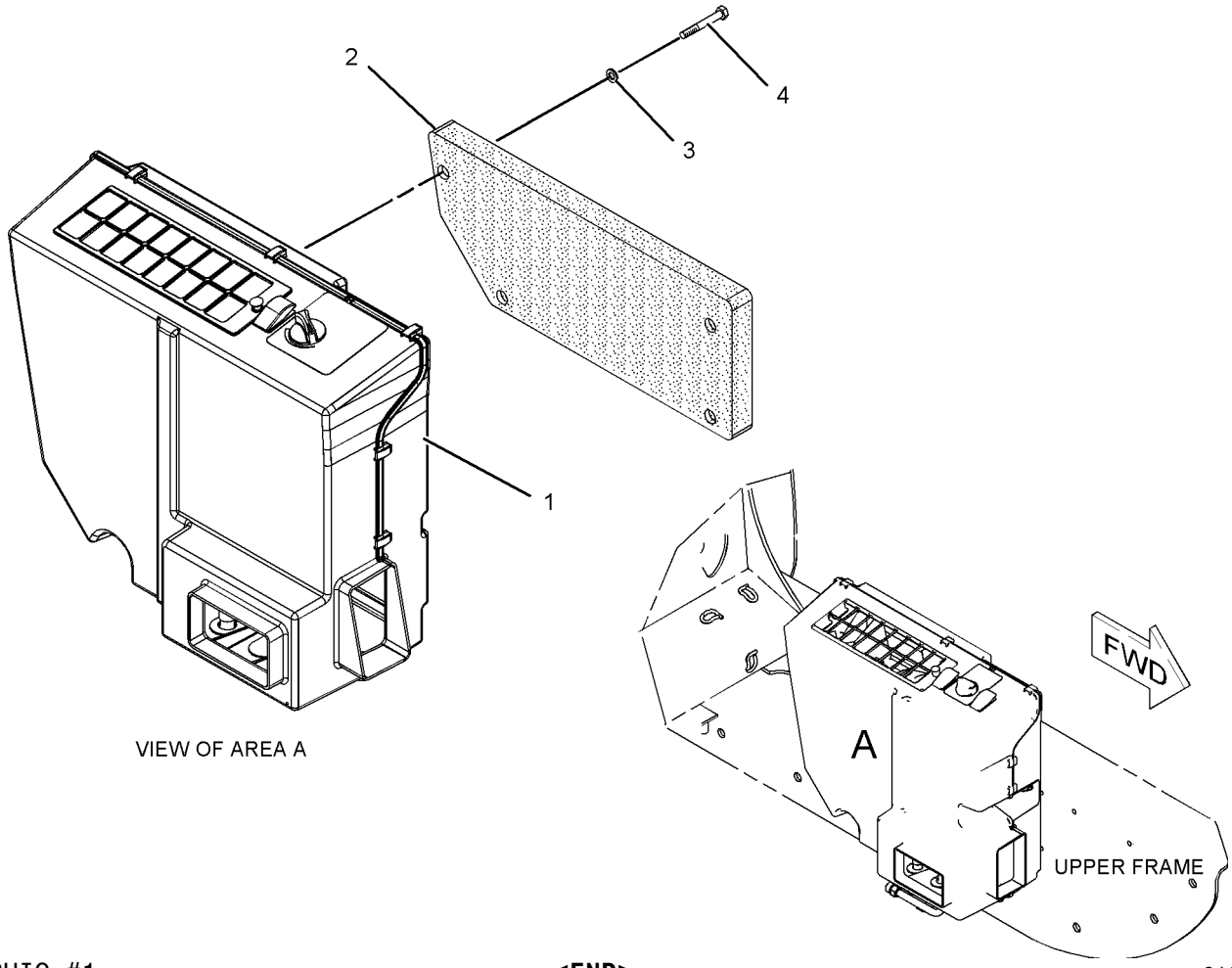


GRAPHIC #1 **<END>** g01036187

# OPERATOR STATION

## *326-5515* HEATER AR-CAB

**S/N: TNK1-UP**
**PART OF 326-5512 CAB AR-ENCLOSED ROPS**
**CANNOT BE USED WITH 326-5514—PAGE 272, 326-5518—PAGE 221**
**AN ATTACHMENT**

**SMCS-7304** **i03903083**

| NOTE | PART NUMBER | QTY | PART NAME 1 2 3 4 5 6 (PRODUCT LEVEL) | SEE PAGE |
|---|---|---|---|---|
| Y | *218-6394* | 1 | DUCT GP-CAB AIR | 260 |
| Y | *218-6392* | 1 | HEATER & MTG GP-CAB | 267 |
| Y | *218-5619* | 1 | LINES GP-HEATER | 278 |
| | | | | |
| M | **8T-4191** | 1 | BOLT (M10X1.5X16-MM) | |
| | **8T-4121** | 1 | WASHER-HARD (11X21X2.5-MM THK) | |

M-METRIC PART
Y-SEPARATE ILLUSTRATION

**<END>**

# OPERATOR STATION

## *218-6393* HEATER GP-CAB

**S/N: TNK1-UP**
**PART OF 218-6392 HEATER & MTG GP-CAB**
**AN ATTACHMENT**

**SMCS-7304, 7342** **i03588483**

| NOTE | REF NO | GRAPHIC REF | PART NUMBER | QTY | PART NAME 1 2 3 4 5 6 (PRODUCT LEVEL) | SEE PAGE |
|---|---|---|---|---|---|---|
| | 1 | 1 | **185-4015** | 10 | CLIP | |
| | 2 | 1 | **218-6399** | 1 | SEAL | |
| C | 3 | 1 | **312-1683** | 1 | HOUSING-COVER | |
| Y | 4 | 1 | **231-8122** | 1 | HOUSING AS-SIDE (AIR CONDITIONER, HEATER) | 271 |
| | 5 | 1 | **231-8124** | 1 | COIL AS-HEATER | |
| | 6 | 1 | **295-5440** | 1 | MOTOR | |
| | 7 | 1 | **231-8126** | 1 | VALVE AS-WATER | |
| | 8 | 1 | **231-8127** | 1 | GROMMET | |
| C | 9 | 1 | **312-2635** | 1 | COVER GP-ACCESS | |
| | | 1 | **231-8129** | 2 | PIN | |
| | | 1 | **231-8142** | 2 | RETAINER | |
| C | 11 | 1 | **303-6658** | 1 | FILTER ELEMENT-CAB AIR | |
| | 13 | 1 | **231-8132** | 1 | FILTER ELEMENT-CAB AIR | |
| | 14 | 1 | **231-8133** | 1 | PANEL | |
| | 15 | 1 | **231-8141** | 1 | GROMMET | |
| | 17 | 1 | **231-8143** | 1 | FILM (TEMPERATURE CONTROL) | |
| | 18 | 1 | **231-8144** | 1 | BAFFLE | |
| | 19 | 1 | **231-8145** | 1 | GROMMET | |
| | 20 | 1 | **206-7398** | 1 | KNOB-CONTROL (TEMPERATURE SELECT) | |
| | 21 | 1 | **305-2969** | 2 | SCREW-THUMB | |
| | 22 | 1 | **218-6947** | 1 | HARNESS AS-HEATER & AIR COND | |
| | 23 | 1 | **236-5067** | 1 | SWITCH-ROCKER (HEATER) | |
| | 24 | 1 | **236-5069** | 1 | RELAY AS (12-VOLT) (HEATER) | |

C-CHANGE FROM PREVIOUS TYPE
Y-SEPARATE ILLUSTRATION

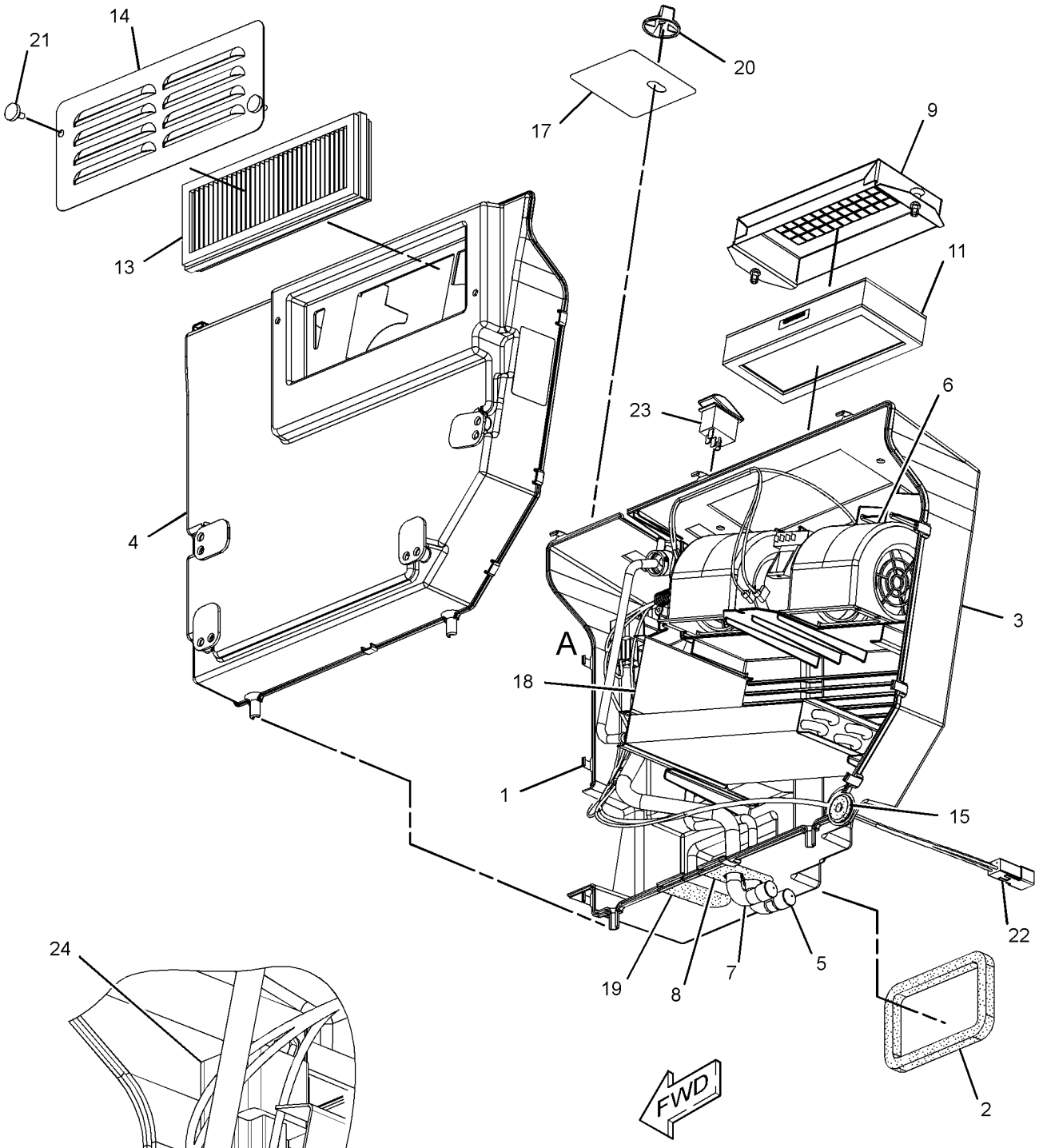


VIEW OF AREA A

GRAPHIC #1 **<END>** g01416774

# OPERATOR STATION

## 231-8122 HOUSING AS-SIDE—AIR CONDITIONER, HEATER

**S/N: TNK1-UP**

**PART OF 218-6405 AIR CONDITIONER GP, 218-6393 HEATER GP-CAB**

**AN ATTACHMENT**

**SMCS-7320** **i02014573**

| NOTE | REF NO | GRAPHIC REF | PART NUMBER | QTY | PART NAME 1 2 3 4 5 6 (PRODUCT LEVEL) | SEE PAGE |
|---|---|---|---|---|---|---|
| | 1 | 1 | **233-5929** | 2 | LOCKWASHER | |
| | 2 | 1 | **233-5931** | 4 | LOCKWASHER | |
| M | 3 | 1 | **131-3540** | 4 | LOCKNUT (M8X1.25 THD) | |
| | 4 | 1 | **233-5934** | 4 | MOUNT | |
| M | 5 | 1 | **129-3178** | 2 | LOCKNUT (M6X1 THD) | |

M-METRIC PART

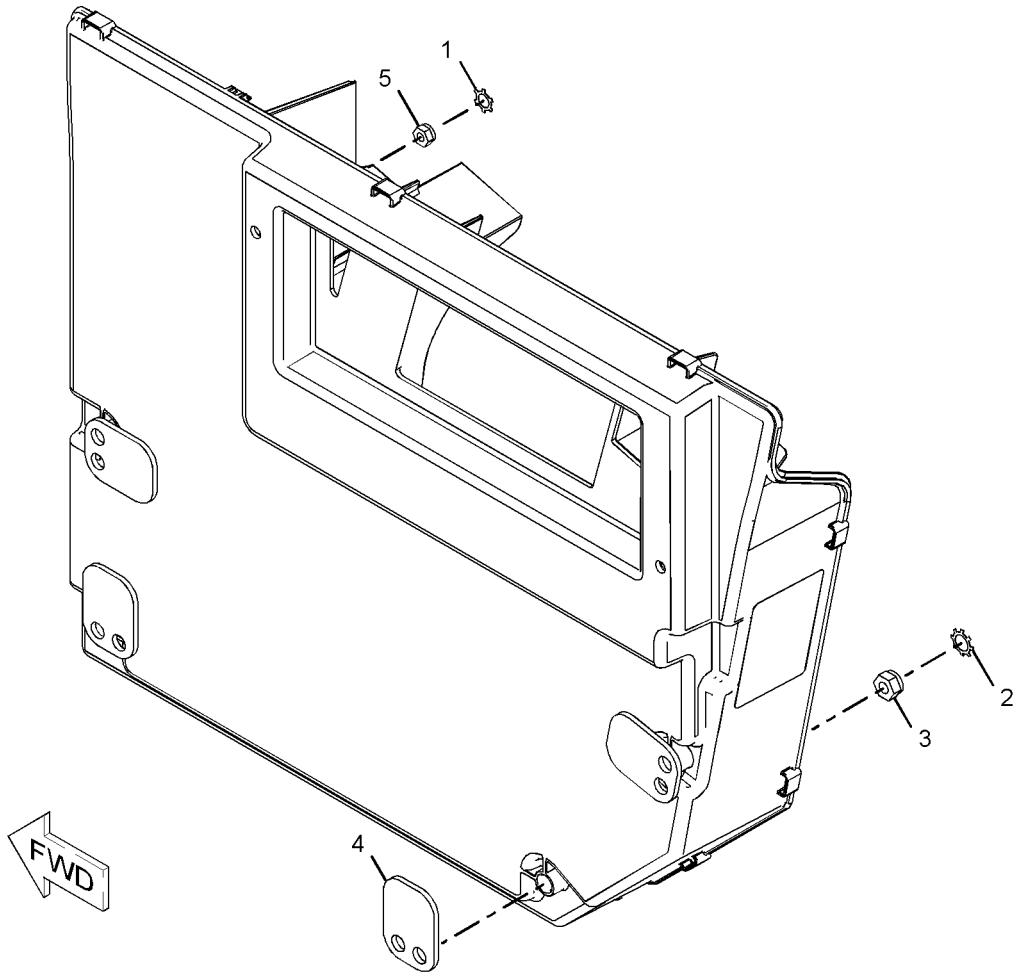


GRAPHIC #1 **<END>** g01041727

# OPERATOR STATION

## *326-5514* INSTALLATION GP-COVER & LINES–

**WITHOUT A/C, HEATER**

**S/N: TNK1-UP**

**PART OF 326-5510, 326-5511 CAB AR-OPEN ROPS**

**CANNOT BE USED WITH 326-5515–PAGE 268, 326-5518–PAGE 221**

**AN ATTACHMENT**

**SMCS-5057, 5258** **i03903090**

| NOTE | PART NUMBER | QTY | PART NAME 1 2 3 4 5 6 (PRODUCT LEVEL) | SEE PAGE |
|---|---|---|---|---|
| Y | *218-6418* | 1 | COVER GP-CONSOLE | 247 |
| Y | *218-6419* | 1 | COVER GP-CONSOLE | 248 |

Y-SEPARATE ILLUSTRATION

**<END>**

# OPERATOR STATION

## 234-0774 LEVER GP-GOVERNOR

**S/N: TNK1-UP**

**PART OF 327-8939 PEDAL GP-GOVERNOR**

**SMCS-1265, 1276** **i03809932**

| NOTE | REF NO | GRAPHIC REF | PART NUMBER | QTY | PART NAME 1 2 3 4 5 6 (PRODUCT LEVEL) | SEE PAGE |
|---|---|---|---|---|---|---|
| | 1 | 1 | **192-2663** | 1 | LEVER GP-HAND CONTROL (GOVERNOR) | |
| M | | 1 | **8T-4971** | 1 | BOLT (M6X1X30-MM) | |
| M | | 1 | **129-3178** | 1 | LOCKNUT (M6X1-THD) | |
| | 2 | 1 | **234-0732** | 1 | CABLE AS | |
| | 3 | 1 | **8T-4742** | 1 | END-YOKE ROD | |
| | 4 | 1 | **8T-4744** | 1 | PIN AS-SPRING | |
| M | 5 | 1 | **5C-2890** | 1 | NUT (M6X1-THD) | |

M-METRIC PART

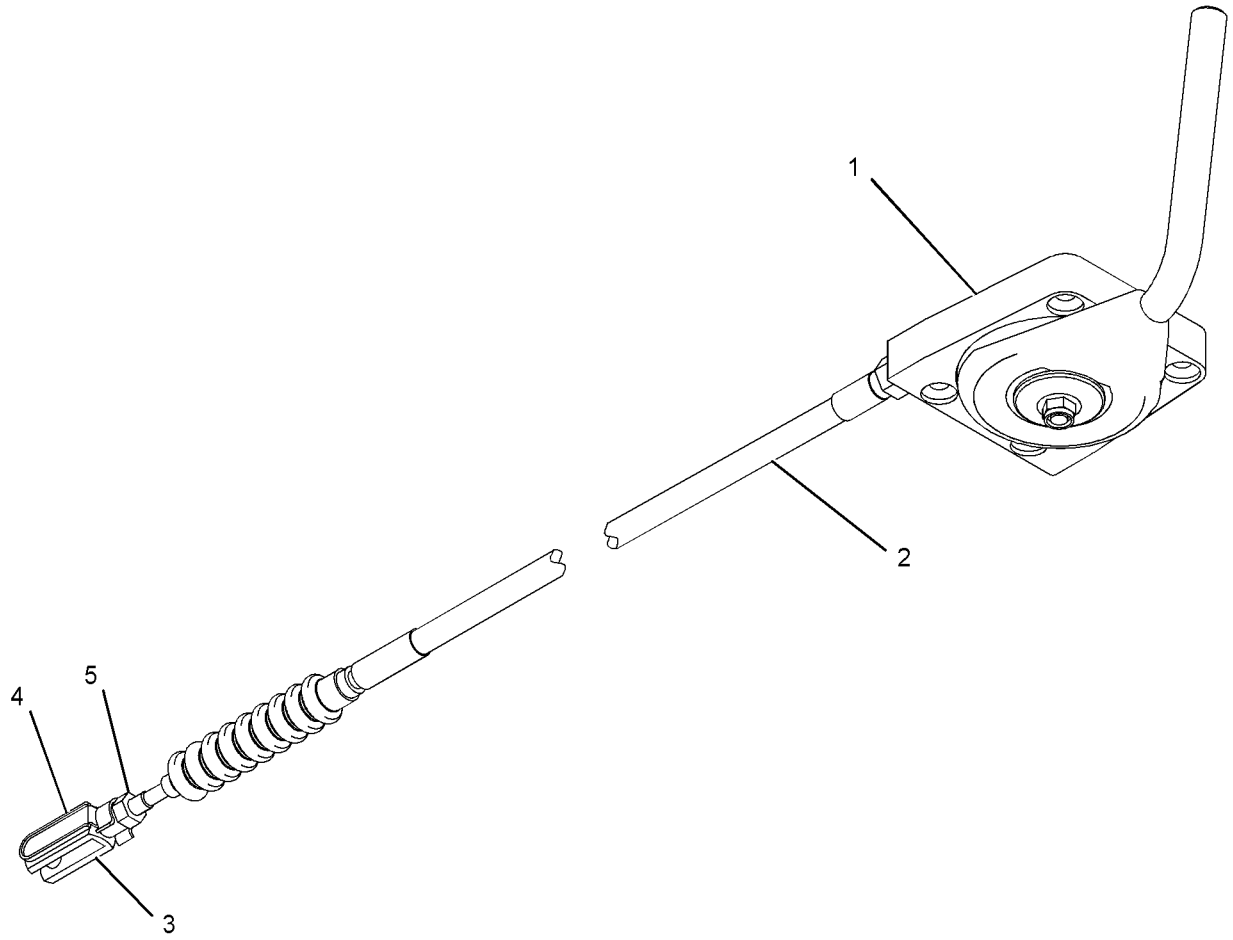


GRAPHIC #1 **<END>** g02064773

# OPERATOR STATION

## *326-5406* LINER GP-CAB

**S/N: TNK1-UP**

**PART OF 326-5400 CAB AR**

**SMCS-7268, 7329** **i03970899**

| NOTE | REF NO | GRAPHIC REF | PART NUMBER | QTY | PART NAME 1 2 3 4 5 6 (PRODUCT LEVEL) | SEE PAGE |
|---|---|---|---|---|---|---|
| | 1 | 1 | **218-6357** | 1 | INSULATION | |
| | 2 | 1 | **292-3114** | 2 | SEAL | |
| | 3 | 1 | **326-5407** | 1 | LINER | |
| | 4 | 1 | **326-5408** | 1 | INSULATION | |
| E | 5 | 1 | **9X-2092** | | TRIM-EDGE (113-CM) | |

E-ORDER BY THE CENTIMETER

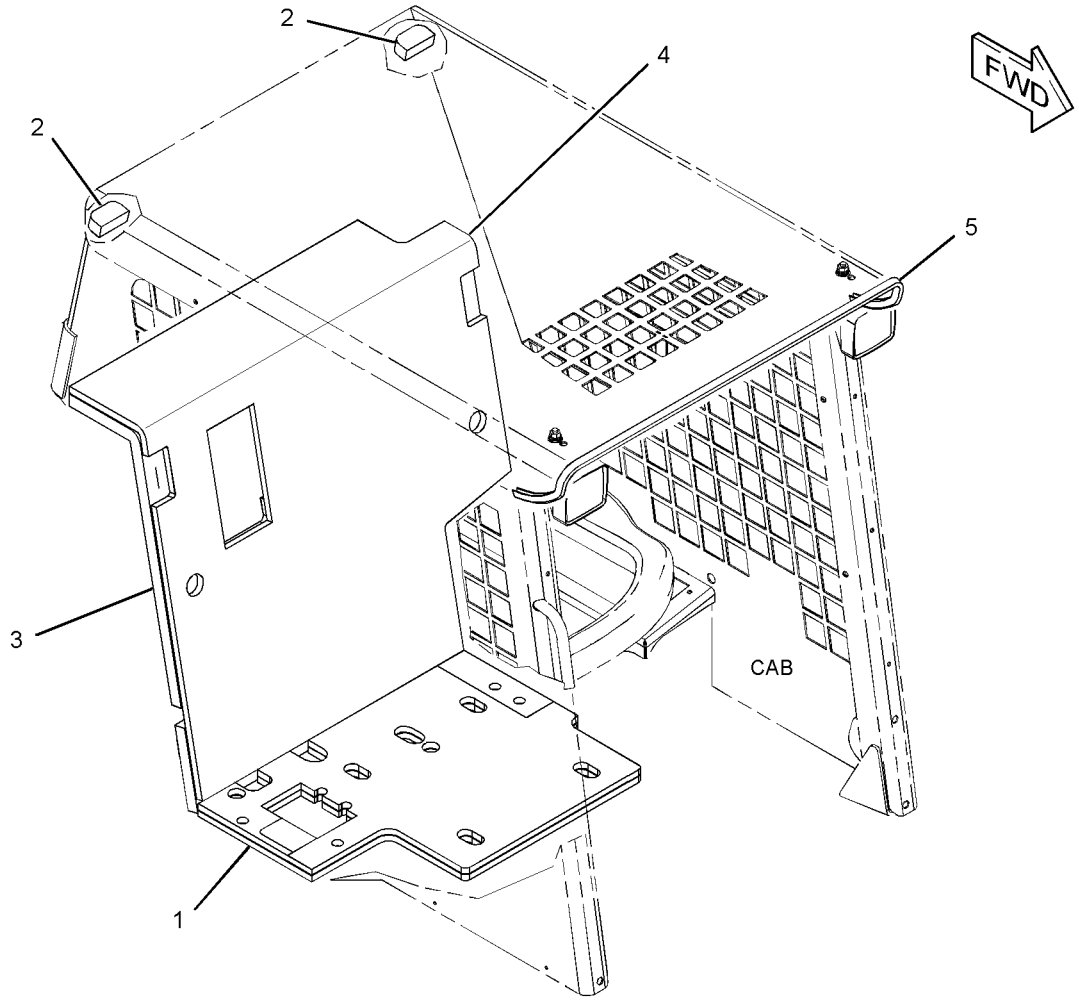


GRAPHIC #1 **<END>** g02146633

# OPERATOR STATION

## *142-9311* LINER-CAB—GRAY

**S/N: TNK1-UP**

**AN ATTACHMENT**

**SMCS-7329** **i02016735**

| NOTE | REF NO | GRAPHIC REF | PART NUMBER | QTY | PART NAME 1 2 3 4 5 6 (PRODUCT LEVEL) | SEE PAGE |
|---|---|---|---|---|---|---|
| | | | | | (NO SERVICED PARTS) | |

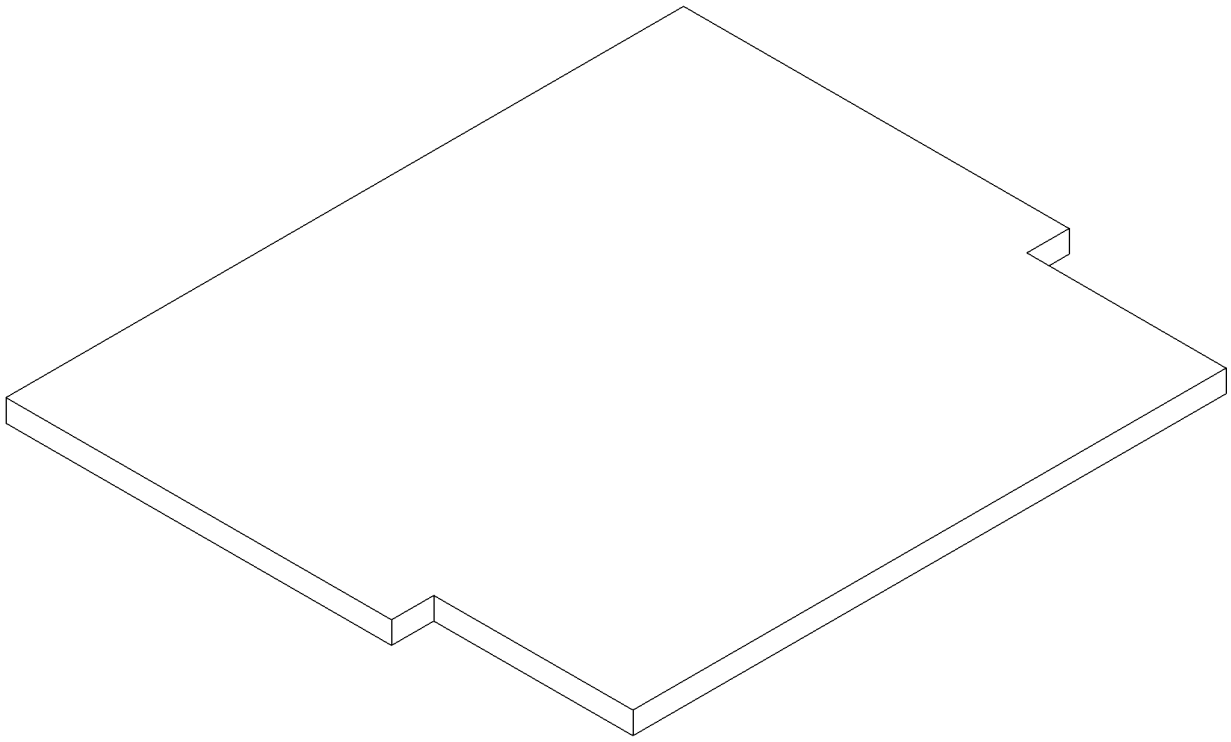

GRAPHIC #1 **<END>** g00782727

# OPERATOR STATION

## *326-5381* LINES GP-AIR CONDITIONER

**S/N: TNK1-UP**
**PART OF 326-5518 AIR CONDITIONER AR**
**AN ATTACHMENT**

**SMCS-1808, 7320** **i03906995**

| NOTE | REF NO | GRAPHIC REF | PART NUMBER | QTY | PART NAME 1 2 3 4 5 6 (PRODUCT LEVEL) | SEE PAGE |
|---|---|---|---|---|---|---|
| | 1 | 1 | **7K-1181** | 4 | STRAP-CABLE | |
| | 2 | 1 | **105-9411** | 1 | SUPPORT | |
| | 3 | 1 | **178-3620** | 1 | STRAP-DUAL CLAMP | |
| Y | 4 | 1 | *186-6190* | 1 | ACCUMULATOR GP-REFRIGERANT (CHARGED) | 220 |
| | 5 | 1 | **189-3158** | 1 | SUPPRESSOR-ARC | |
| | 6 | 1 | **200-6345** | 2 | MOUNT (DUAL SWIVEL) | |
| I | 7 | 1 | **218-5685** | 1 | HOSE AS | |
| I | 8 | 1 | **218-5686** | 1 | HOSE AS | |
| | 9 | 1 | **221-3879** | 1 | HARNESS AS-HEATER & AIR COND | |
| | | 1 | **155-2270** | 3 | KIT-CONNECTING PLUG (2-PIN) | |
| | | 1 | **155-2260** | 1 | KIT-CONNECTING PLUG (3-PIN) | |
| | | | | | (EACH PLUG KIT INCLUDES PLUG AS, WEDGE & INTERFACE SEAL) | |
| | | 1 | **100-6674** | 2 | SEAL-CONNECTOR | |
| | | 1 | **180-9340** | 4 | SOCKET-CONNECTOR (14-GA TO 18-GA) | |
| | | 1 | **9W-0844** | 5 | SOCKET-CONNECTOR (14-GA) | |
| | | 1 | **124-5640** | 2 | TERMINAL-SOCKET | |
| | | 1 | **2L-8069** | 1 | TERMINAL-RING (2-GA TO 10-GA, 3/8-IN SCREW) | |
| E | | 1 | **119-3662** | | TUBE-HEAT SHRINK (10.85-MM DIA) (13-CM) | |
| | 10 | 1 | **236-6923** | 1 | SWITCH AS-PRESSURE (REFRIGERANT) | |
| | 11 | 1 | **312-2179** | 2 | BRACKET AS | |
| | 12 | 1 | **326-5382** | 1 | HOSE AS | |
| | 13 | 1 | **326-5384** | 1 | HOSE AS | |
| M | 14 | 1 | **085-8091** | 2 | BOLT (M10X1.5X55-MM) | |
| | 15 | 1 | **095-0913** | 1 | CLIP | |
| | 16 | 1 | **101-8296** | 2 | CLIP | |
| | 17 | 1 | **234-0566** | 1 | FITTING AS | |
| | | 1 | **3E-4051** | 1 | CAP-SEAL (REFRIGERANT, LOW SIDE) | |
| | | 1 | **3E-4057** | 1 | VALVE AS (REFRIGERANT, LOW SIDE) | |
| | 18 | 1 | **246-9039** | 1 | PLATE-INFORMATION (AIR CONDITIONER REFRIGERANT) | |
| | 19 | 1 | **3S-2093** | 7 | STRAP-CABLE | |
| | 20 | 1 | **6D-4246** | 1 | CLIP | |
| | 21 | 1 | **8T-4121** | 3 | WASHER-HARD (11X21X2.5-MM THK) | |
| M | 22 | 1 | **8T-4136** | 1 | BOLT (M10X1.5X25-MM) | |
| M | 23 | 1 | **8T-4189** | 2 | BOLT (M8X1.25X20-MM) | |
| | 24 | 1 | **8T-4224** | 2 | WASHER-HARD (8.8X16X2-MM THK) | |
| | 25 | 1 | **9C-2741** | 2 | SPACER (13.94X17.14X34-MM THK) | |
| | 26 | 1 | **9X-7378** | 1 | SEAL-O-RING | |
| | 27 | 1 | **9X-7380** | 1 | SEAL-O-RING | |
| | 28 | 1 | **9X-7381** | 2 | SEAL-O-RING | |
| | 29 | 1 | **9X-7382** | 1 | SEAL-O-RING | |
| | 30 | 1 | **9X-7383** | 3 | SEAL-O-RING | |
| D | 31 | 1 | **5P-5924** | | SEAL (0.2-M EACH) | |

D-ORDER BY THE METER
E-ORDER BY THE CENTIMETER
I-REFER TO HYDRAULIC INFORMATION SYSTEM
M-METRIC PART
Y-SEPARATE ILLUSTRATION

## *326-5381* **LINES GP-AIR CONDITIONER** *(contd.)* **i03906995**

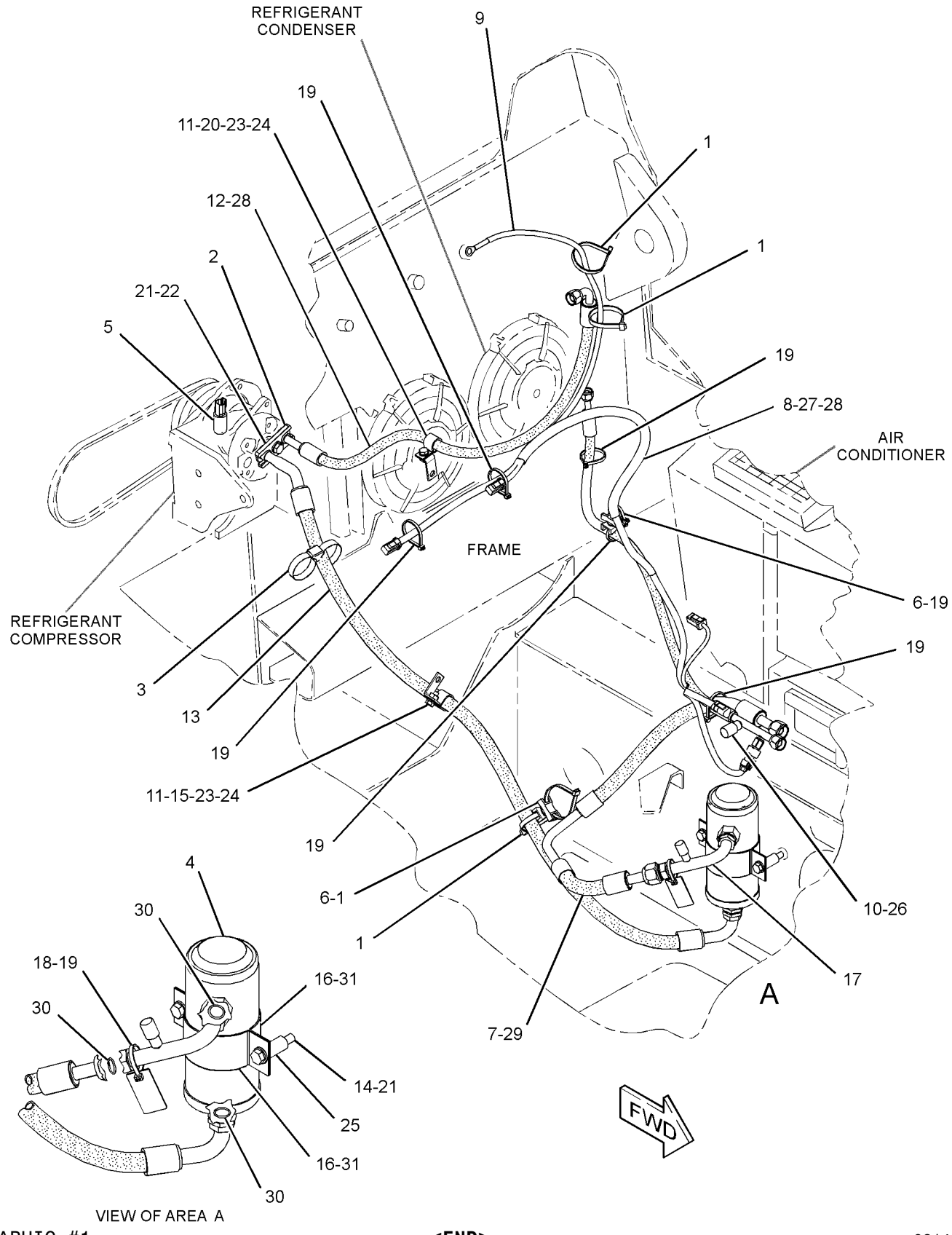


GRAPHIC #1 **<END>** g02149058

# OPERATOR STATION

## *218-5619* LINES GP-HEATER

**S/N: TNK1-UP**
**PART OF 326-5518 AIR CONDITIONER AR, 326-5515 HEATER AR-CAB**
**AN ATTACHMENT**

**SMCS-1812, 7304** **i03970895**

| NOTE | REF NO | GRAPHIC REF | PART NUMBER | QTY | PART NAME 1 2 3 4 5 6 (PRODUCT LEVEL) | SEE PAGE |
|---|---|---|---|---|---|---|
| C | 1 | 1 | **7K-1181** | 1 | STRAP-CABLE | |
| | 2 | 1 | **8T-0154** | 4 | CLAMP-HOSE | |
| | 3 | 1 | **004-6810** | 1 | ELBOW | |
| C | 4 | 1 | **178-3620** | 1 | STRAP-DUAL CLAMP | |
| | 5 | 1 | **218-6645** | 1 | ELBOW | |
| | 6 | 1 | **5P-4116** | 1 | WASHER-HARD (8.8X20.5X2-MM THK) | |
| C | 7 | 1 | **6D-1641** | 1 | CLIP | |
| C | 8 | 1 | **8T-4121** | 3 | WASHER-HARD (11X21X2.5-MM THK) | |
| CM | 9 | 1 | **8T-4133** | 1 | NUT (M10X1.5-THD) | |
| M | 10 | 1 | **8T-4191** | 1 | BOLT (M10X1.5X16-MM) | |
| M | 11 | 1 | **8T-4908** | 1 | BOLT (M8X1.25X25-MM) | |
| C | 12 | 1 | **9X-8250** | 3 | CLIP | |
| BCE | 13 | 1 | **136-1953** | | HOSE | |
| BE | 13A | 1 | **136-1953** | | HOSE | |
| CE | 14 | 1 | **9X-2092** | | TRIM-EDGE (26-CM) | |

B-USE AS REQUIRED
C-CHANGE FROM PREVIOUS TYPE
E-ORDER BY THE CENTIMETER
M-METRIC PART

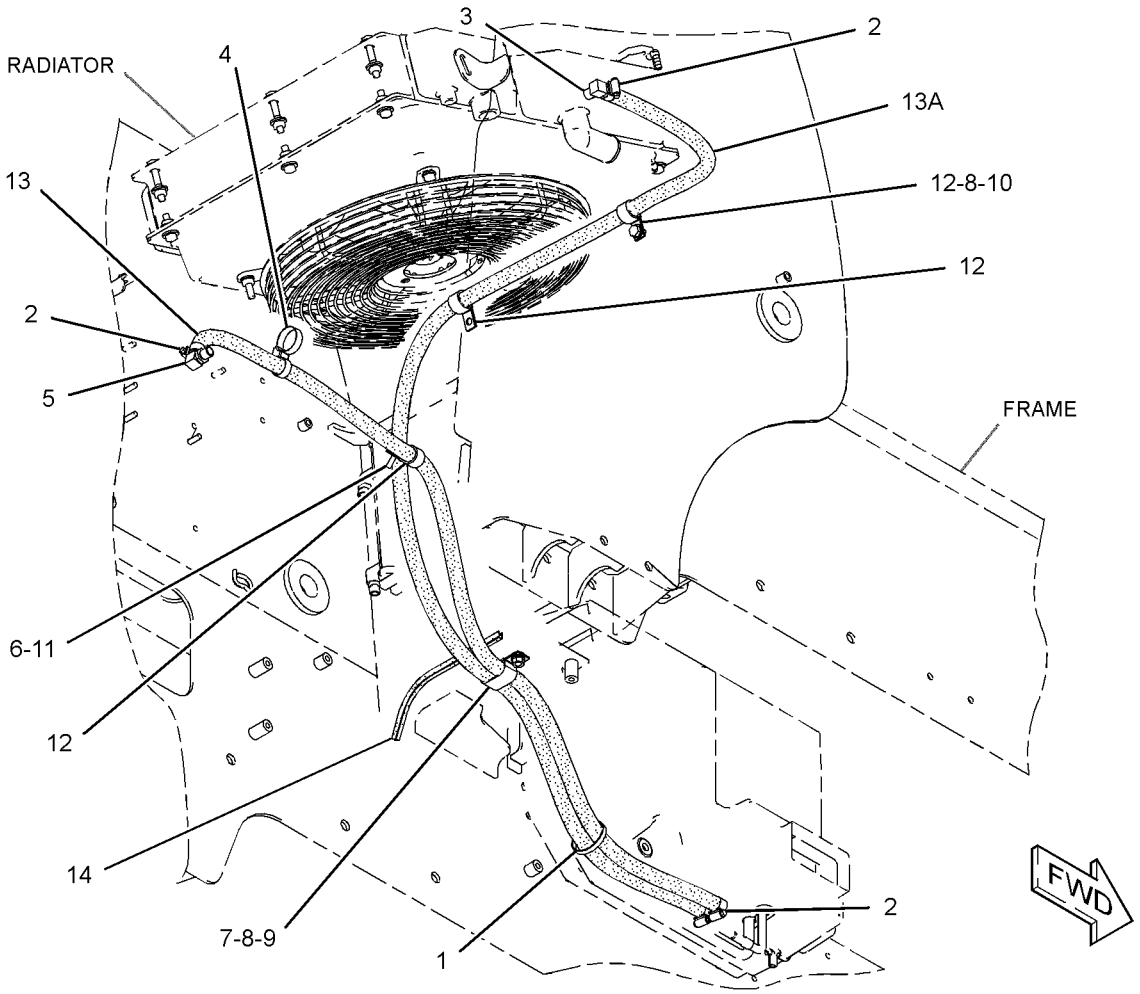


GRAPHIC #1 **<END>** g01636956

# *258-4230* MIRROR GP-REAR VIEW

**S/N: TNK1-UP**

**PART OF 326-5400 CAB AR**

**SMCS-7319** **i03505726**

| NOTE | REF NO | GRAPHIC REF | PART NUMBER | QTY | PART NAME 1 2 3 4 5 6 (PRODUCT LEVEL) | SEE PAGE |
|---|---|---|---|---|---|---|
| | 1 | 1 | **280-6070** | 1 | MIRROR AS (REAR VIEW) | |
| | 2 | 1 | **3B-4505** | 1 | LOCKWASHER | |
| M | 3 | 1 | **5C-7261** | 1 | NUT (M8X1.25-THD) | |
| | 4 | 1 | **8T-4224** | 1 | WASHER-HARD (8.8X16X2-MM THK) | |

M-METRIC PART

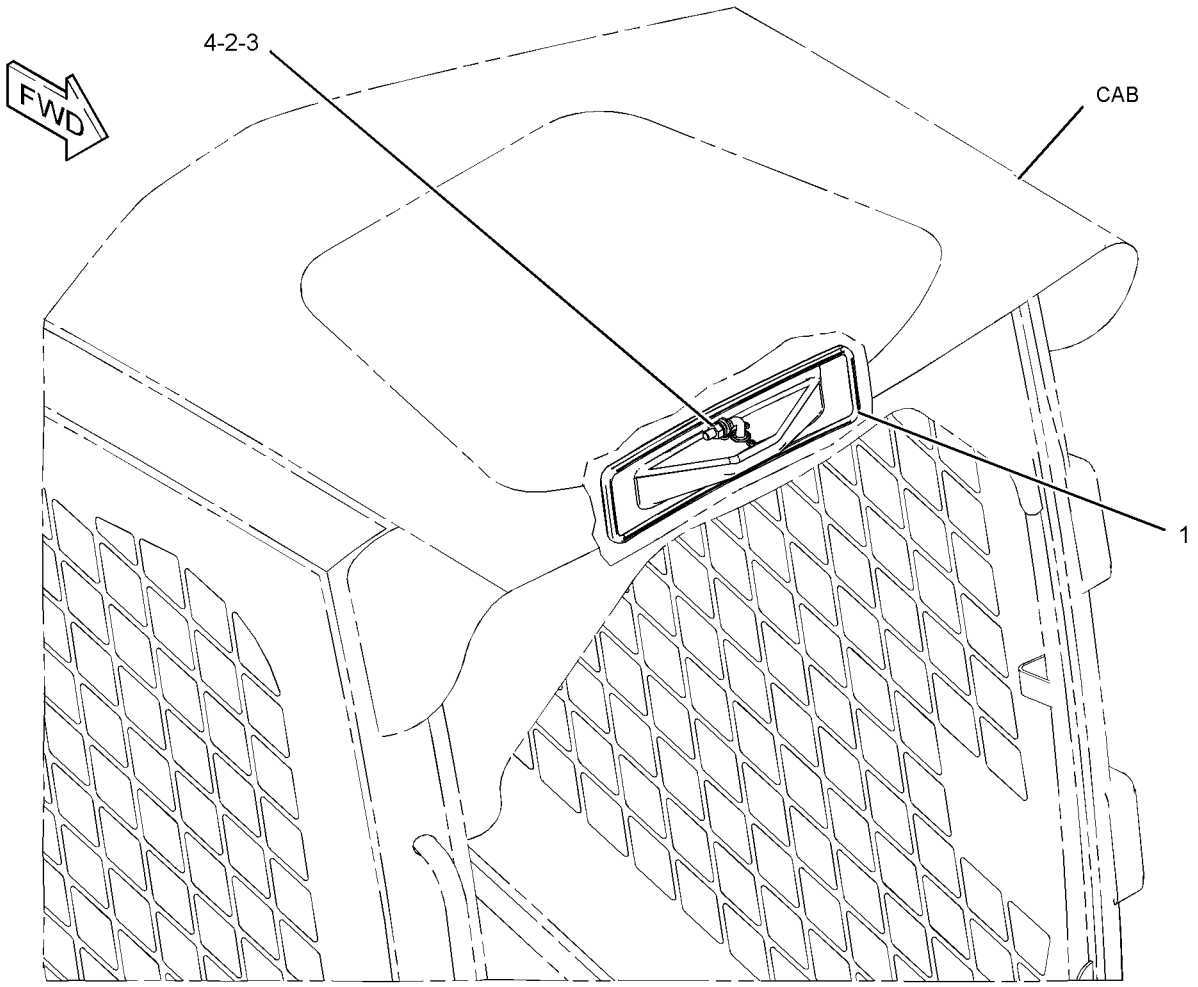


GRAPHIC #1 **<END>** g01316638

# OPERATOR STATION

## 223-6537 MODULE GP-WARNING INDICATOR

**S/N: TNK1-UP**

**PART OF 328-2270 PANEL GP-INSTRUMENT**

**SMCS-7407, 7431** **i03355683**

| NOTE | REF NO | GRAPHIC REF | PART NUMBER | QTY | PART NAME 1 2 3 4 5 6 (PRODUCT LEVEL) | SEE PAGE |
|---|---|---|---|---|---|---|
| | 1 | 1 | **102-8801** | 1 | KIT-RECEPTACLE (12-PIN) | |
| | | | | | (INCLUDES RECEPTACLE AS & WEDGE) | |
| | 2 | 1 | **232-4706** | 1 | GASKET | |
| | 4 | 1 | **186-3735** | 10 | PIN-CONNECTOR (16-GA TO 18-GA) | |
| | 5 | 1 | **8T-8737** | 2 | PLUG-SEAL | |

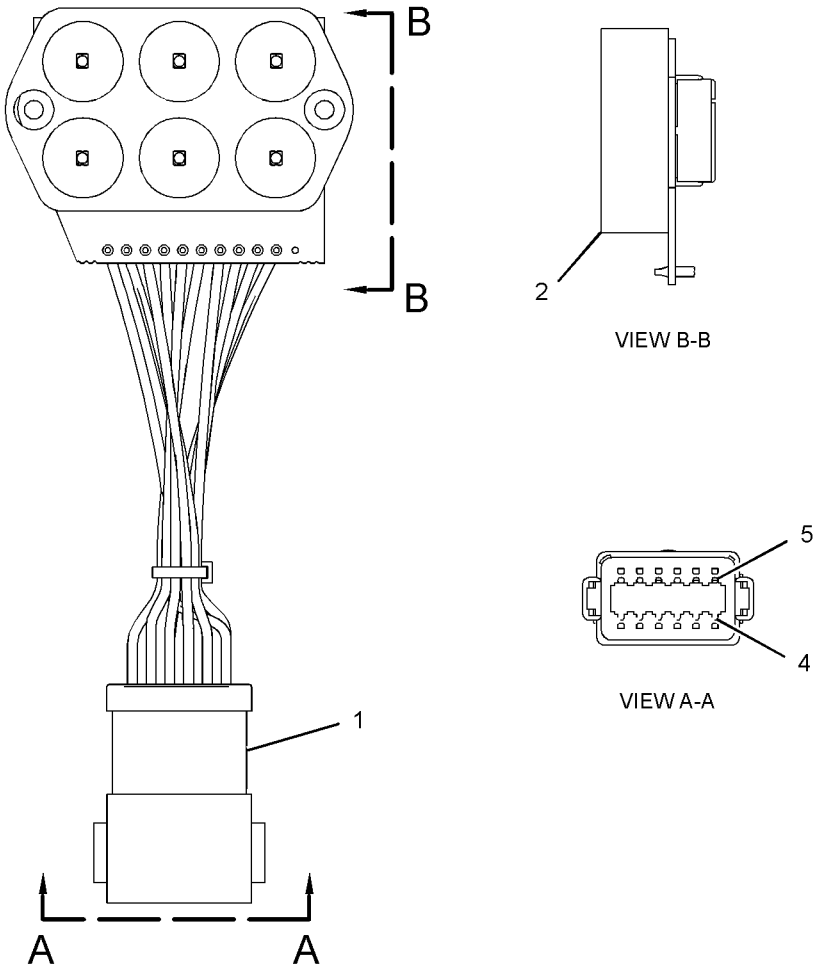


GRAPHIC #1 **<END>** g01839133

# OPERATOR STATION

## 249-2910 MODULE GP-WARNING INDICATOR

**S/N: TNK1-UP**

**PART OF 328-2270 PANEL GP-INSTRUMENT**

**SMCS-7407, 7431** **i02757214**

| NOTE | REF NO | GRAPHIC REF | PART NUMBER | QTY | PART NAME 1 2 3 4 5 6 (PRODUCT LEVEL) | SEE PAGE |
|---|---|---|---|---|---|---|
| | 1 | 1 | **8T-8737** | 3 | PLUG-SEAL | |
| | 2 | 1 | **232-4706** | 1 | GASKET | |
| | 3 | 1 | **186-3735** | 9 | PIN-CONNECTOR (16-GA TO 18-GA) | |
| | 4 | 1 | **102-8801** | 1 | KIT-RECEPTACLE (12-PIN) | |
| | | | | | (INCLUDES RECEPTACLE AS & WEDGE) | |

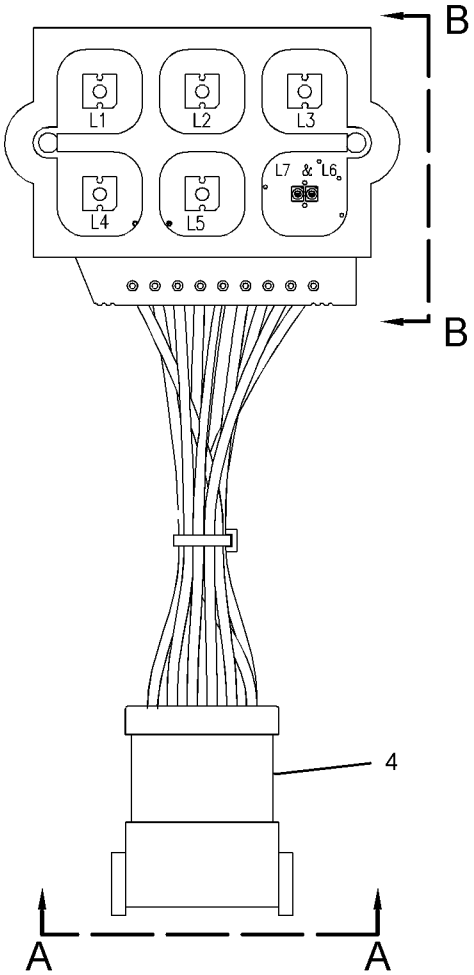


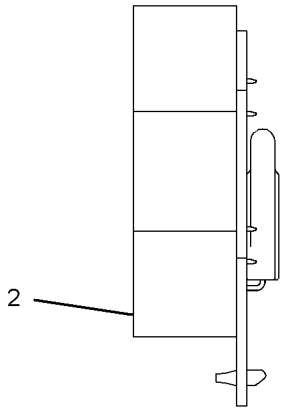


VIEW B-B

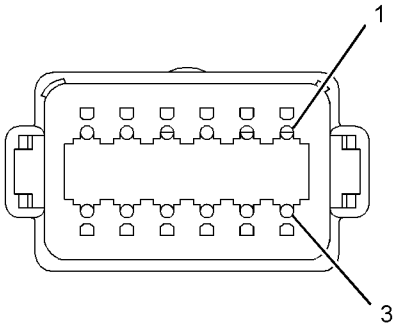


VIEW A-A

GRAPHIC #1 **<END>** g01152784

# OPERATOR STATION

## 330-5012 MOTOR GP-WINDOW WIPER

**S/N: TNK1-UP**
**12-VOLT**
**PART OF 223-0616, 276-3440 DOOR GP-CAB**
**AN ATTACHMENT**

**SMCS-7305** **i03644764**

| NOTE | REF NO | GRAPHIC REF | PART NUMBER | QTY | PART NAME 1 2 3 4 5 6 (PRODUCT LEVEL) | SEE PAGE |
|---|---|---|---|---|---|---|
| | 1 | 1 | **102-8804** | 1 | KIT-RECEPTACLE (4-PIN) | |
| | | | | | (INCLUDES RECEPTACLE AS & WEDGE) | |
| | 2 | 1 | **186-3735** | 4 | PIN-CONNECTOR (16-GA TO 18-GA) | |
| | 3 | 1 | **263-3823** | 1 | CAP-WIPER | |
| | 4 | 1 | **3F-9556** | 1 | LOCKWASHER | |
| M | 5 | 1 | **5C-7261** | 1 | NUT (M8X1.25-THD) | |

M-METRIC PART

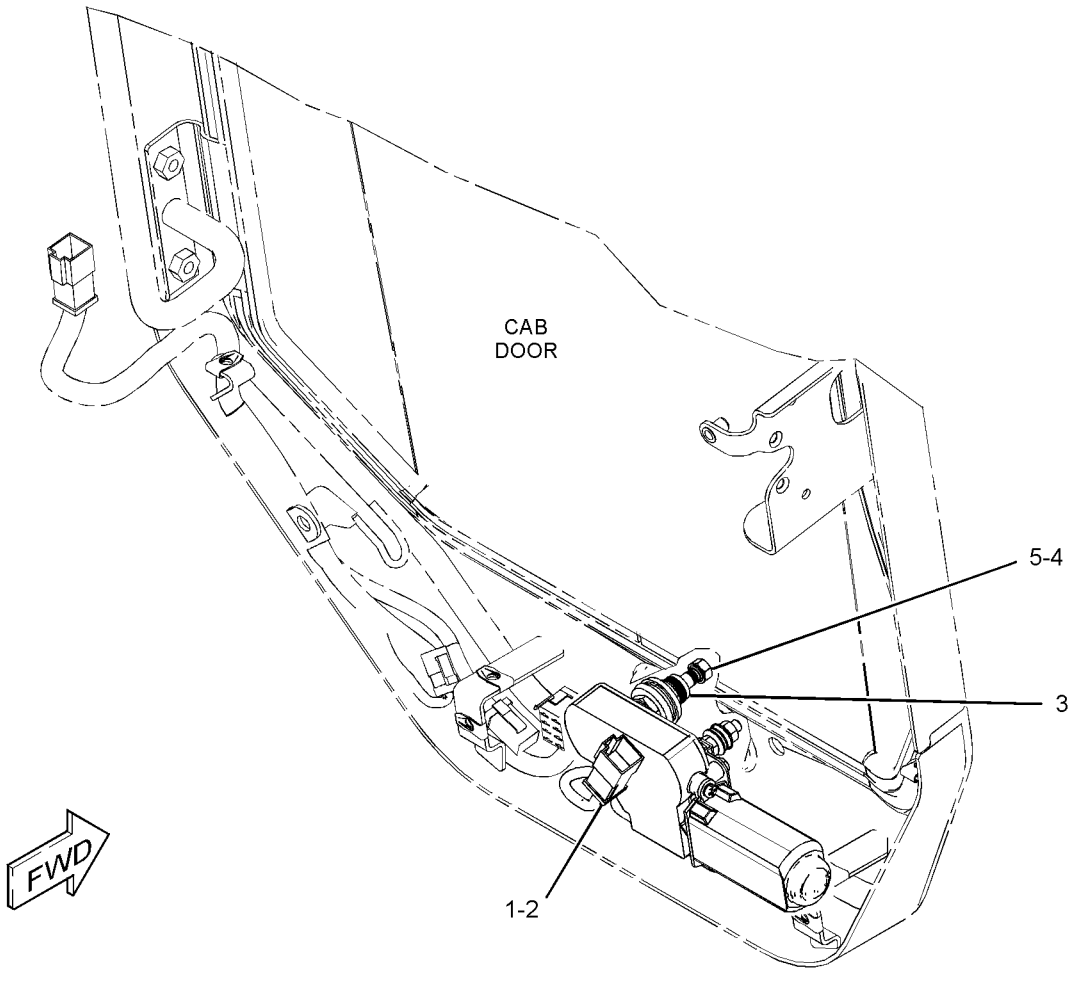


GRAPHIC #1 **<END>** g01956124

# OPERATOR STATION

## *218-6370* MOUNTING GP-ROPS

**S/N: TNK1-UP**

**PART OF 326-5400 CAB AR**

**SMCS-7266, 7325** **i01955254**

| NOTE | REF NO | GRAPHIC REF | PART NUMBER | QTY | PART NAME 1 2 3 4 5 6 (PRODUCT LEVEL) | SEE PAGE |
|---|---|---|---|---|---|---|
| | 1 | 1 | **152-5878** | 2 | MOUNT AS | |
| | 2 | 1 | **153-6981** | 2 | MOUNT | |
| | 3 | 1 | **159-5790** | 1 | BRACKET | |
| | 4 | 1 | **159-5792** | 1 | BAR AS | |
| | 5 | 1 | **159-5794** | 1 | SPRING | |
| | 6 | 1 | **218-6381** | 2 | SPACER | |
| | 7 | 1 | **165-7095** | 4 | WASHER (16.5X71.5X3-MM THK) | |
| | 8 | 1 | **4P-7581** | 1 | CLIP | |
| M | 9 | 1 | **6V-9805** | 2 | BOLT (M6X1X20-MM) | |
| M | 10 | 1 | **7X-2475** | 2 | BOLT (M16X2X130-MM) | |
| | 11 | 1 | **8T-4122** | 4 | WASHER-HARD (17X32X3.5-MM THK) | |
| M | 12 | 1 | **8T-4173** | 2 | BOLT (M16X2X110-MM) | |
| | 13 | 1 | **8T-4205** | 2 | WASHER-HARD (7.2X14.5X2-MM THK) | |
| M | 14 | 1 | **8T-4778** | 4 | LOCKNUT (M16X2-THD) | |

M-METRIC PART

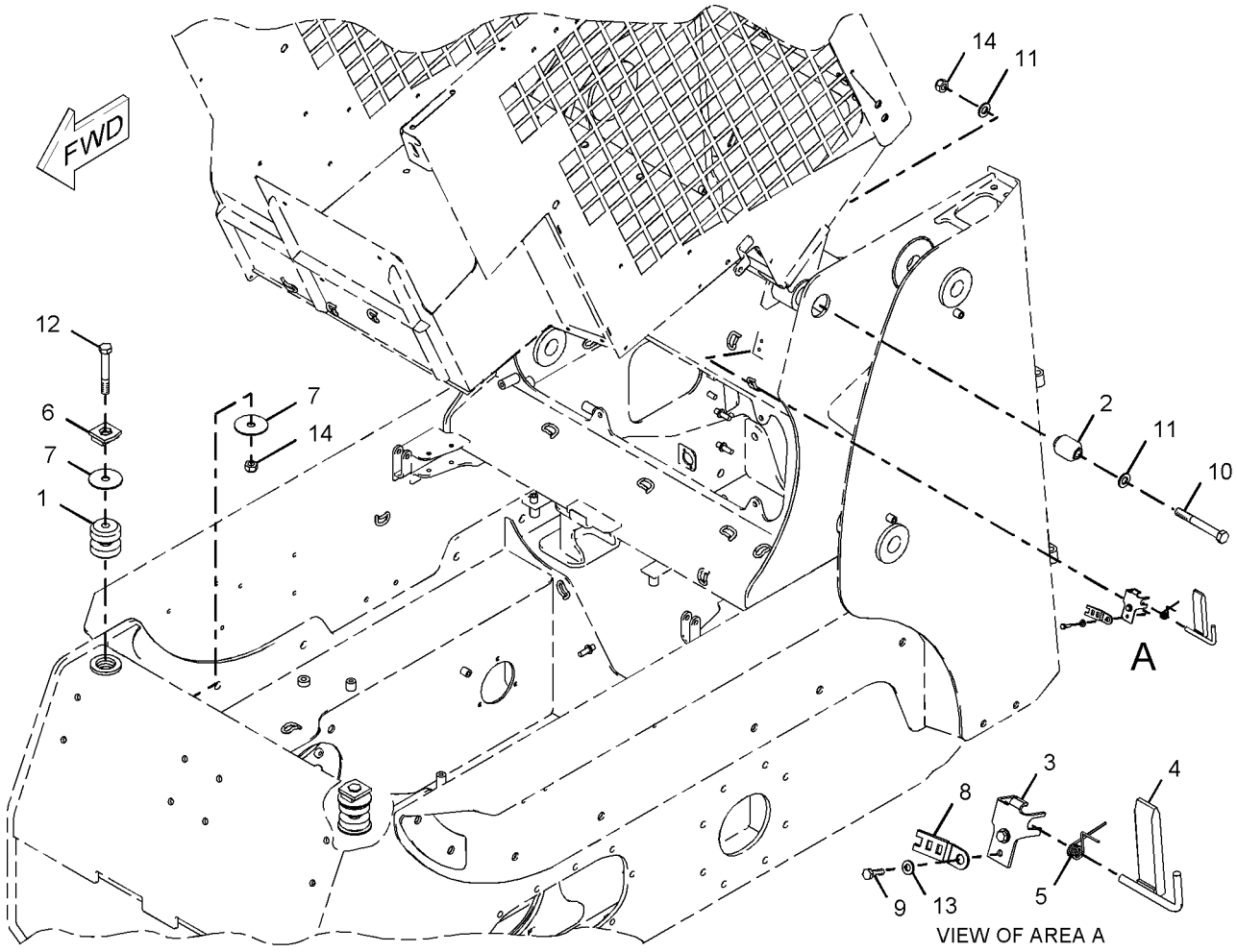


GRAPHIC #1 **<END>** g01018977

# OPERATOR STATION

## *328-2270* PANEL GP-INSTRUMENT

**S/N: TNK1-UP**

**PART OF 326-5400 CAB AR**

**SMCS-7451** **i03970901**

| NOTE | REF NO | GRAPHIC REF | PART NUMBER | QTY | PART NAME 1 2 3 4 5 6 (PRODUCT LEVEL) | SEE PAGE |
|---|---|---|---|---|---|---|
| | 1 | 1 | **9R-7941** | 1 | SOCKET AS | |
| | | 1 | **9R-7980** | 1 | COVER | |
| | 2 | 2 | **084-4277** | 1 | LAMP GP-DOME (12-VOLT) | |
| | | 2 | **210-8754** | 1 | LAMP (12-VOLT) (DOME) | |
| | 3 | 2 | **109-2356** | 9 | PLUG | |
| | 4 | 2 | **110-7887** | 1 | SWITCH AS-START (KEY) | |
| | | 2 | **7T-6799** | 1 | NUT-MOUNTING (1-32-THD) | |
| | | 2 | **102-8804** | 1 | KIT-RECEPTACLE (4-PIN) | |
| | | | | | (INCLUDES RECEPTACLE AS & WEDGE) | |
| | | 2 | **186-3735** | 4 | PIN-CONNECTOR (16-GA TO 18-GA) | |
| | 5 | 2 | **142-9320** | 1 | SWITCH AS-ROCKER (PARKING BRAKE) | |
| | 6 | 2 | **142-9328** | 1 | SWITCH AS-ROCKER (FRONT WORK LIGHT) | |
| | | | | | (EACH SWITCH AS INCLUDES) | |
| | | 2 | **111-7899** | 1 | GASKET | |
| | 7 | 2 | **158-6694** | 1 | PANEL | |
| | 8 | 1 | **158-6695** | 1 | COVER | |
| | 9 | 1 | **158-6696** | 1 | COVER | |
| | 10 | 2 | **158-6697** | 1 | PANEL | |
| | 11 | 1 | **158-6698** | 1 | COVER | |
| | 12 | 1 | **158-6699** | 1 | COVER | |
| | 13 | 2 | **223-5941** | 1 | SWITCH AS-ROCKER (WORK TOOL HYD PRESS RELEASE) | |
| | | 2 | **111-7899** | 1 | GASKET | |
| Y | 14 | 2 | **223-6537** | 1 | MODULE GP-WARNING INDICATOR | 280 |
| | 15 | 2 | **226-5901** | 1 | SWITCH AS-ROCKER (INTERLOCK OVERRIDE) | |
| | | 2 | **111-7899** | 1 | GASKET | |
| Y | 16 | 2 | **249-2910** | 1 | MODULE GP-WARNING INDICATOR | 281 |
| | 17 | 1 | **258-4178** | 1 | FLANGE-MOUNTING | |
| | 18 | 1 | **301-7293** | 1 | KIT-SERVICE METER | |
| | | | | | (INCLUDES SERVICE METER, FILM, BOLTS & LOCK NUTS) | |
| | 19 | 1 | **328-2271** | 1 | HARNESS AS-PANEL | |
| | | 1 | **123-7615** | 1 | CONNECTOR | |
| | | 1 | **228-5856** | 6 | CONNECTOR | |
| | | 1 | **186-3735** | 11 | PIN-CONNECTOR (16-GA TO 18-GA) | |
| | | 1 | **9X-3401** | 3 | PIN-CONNECTOR (16-GA TO 18-GA) | |
| | | 1 | **155-2255** | 2 | KIT-CONNECTING PLUG (12-PIN) | |
| | | 1 | **155-2270** | 5 | KIT-CONNECTING PLUG (2-PIN) | |
| | | 1 | **155-2271** | 1 | KIT-CONNECTING PLUG (4-PIN) | |
| | | 1 | **155-2274** | 1 | KIT-CONNECTING PLUG (6-PIN) | |
| | | | | | (EACH PLUG KIT INCLUDES PLUG AS, WEDGE & INTERFACE SEAL) | |
| | | 1 | **8T-8737** | 18 | PLUG-SEAL | |
| | | 1 | **102-8805** | 1 | KIT-RECEPTACLE (6-PIN) | |
| | | | | | (INCLUDES RECEPTACLE AS & WEDGE) | |
| | | 1 | **186-3736** | 19 | SOCKET-CONNECTOR (16-GA TO 18-GA) | |
| | | 1 | **9W-0844** | 1 | SOCKET-CONNECTOR (14-GA) | |
| | | 1 | **180-9340** | 15 | SOCKET-CONNECTOR (14-GA TO 18-GA) | |
| | | 1 | **3S-2093** | 15 | STRAP-CABLE | |
| | | 1 | **189-3158** | 1 | SUPPRESSOR-ARC | |
| | | 1 | **097-7234** | 5 | TERMINAL-BLADE (18-GA TO 22-GA) | |
| | | 1 | **7N-7221** | 1 | TERMINAL-BLADE (18-GA TO 22-GA) | |
| | | 1 | **091-2436** | 45 | TERMINAL-BLADE (18-GA TO 22-GA) | |
| | | 1 | **104-1995** | 20 | TERMINAL-BLADE (14-GA TO 18-GA) | |
| E | | 1 | **119-3662** | | TUBE-HEAT SHRINK (10.85-MM DIA) (13-CM) | |
| E | | 1 | **125-7874** | | TUBE-HEAT SHRINK (5.72-MM DIA) (75-CM) | |

## *328-2270* **PANEL GP-INSTRUMENT** *(contd.)* **i03970901**

| NOTE | REF NO | GRAPHIC REF | PART NUMBER | QTY | PART NAME 1 2 3 4 5 6 (PRODUCT LEVEL) | SEE PAGE |
|---|---|---|---|---|---|---|
| E | | 1 | **125-7875** | | TUBE-HEAT SHRINK (7.44-MM DIA) (10-CM) | |
| E | | 1 | **125-7876** | | TUBE-HEAT SHRINK (17.78-MM DIA) (8-CM) | |
| | 20 | 2 | **328-2352** | 1 | FILM-INSTRUCTION (DASH) | |
| | 21 | 2 | **330-8684** | 1 | LAMP AS (12-VOLT) | |
| | 22 | 1,2 | **101-2867** | 4 | WASHER-HARD (7.2X25X2-MM THK) | |
| | 23 | 1,2 | **103-2006** | 22 | SCREW-PAN HEAD (6-19X0.37-IN) | |
| | 24 | 2 | **170-6305** | 1 | GAUGE GP-FUEL LEVEL | |
| | | 2 | **4B-2043** | 3 | NUT (8-32-THD) | |
| | | 2 | **7X-9065** | 1 | LAMP (12-VOLT) (FUEL LEVEL INDICATOR) | |
| | | 2 | **9B-7233** | 3 | LOCKWASHER | |
| | 25 | 1,2 | **195-0936** | 4 | INSERT-THREADED (M6X1-THD) | |
| | 26 | 2 | **197-6894** | 1 | FILM-INSTRUCTION (INSTRUMENT PANEL) | |
| | 27 | 1,2 | **198-9707** | 4 | SCREW-TRUSS HEAD (M6X1X35-MM) | |
| | 28 | 2 | **216-4753** | 1 | FILM-INSTRUCTION (KEY SWITCH) | |
| | 29 | 1,2 | **3S-2093** | 5 | STRAP-CABLE | |
| | 30 | 1 | **6V-5834** | 4 | SCREW-HEAD (10-14X0.75-IN) | |
| M | 31 | 1 | **9X-2042** | 6 | SCREW-TRUSS HEAD (M6X1X12-MM) | |
| | 32 | 1 | **9X-8256** | 4 | WASHER (6.6X12X2-MM THK) | |

E-ORDER BY THE CENTIMETER
M-METRIC PART
Y-SEPARATE ILLUSTRATION

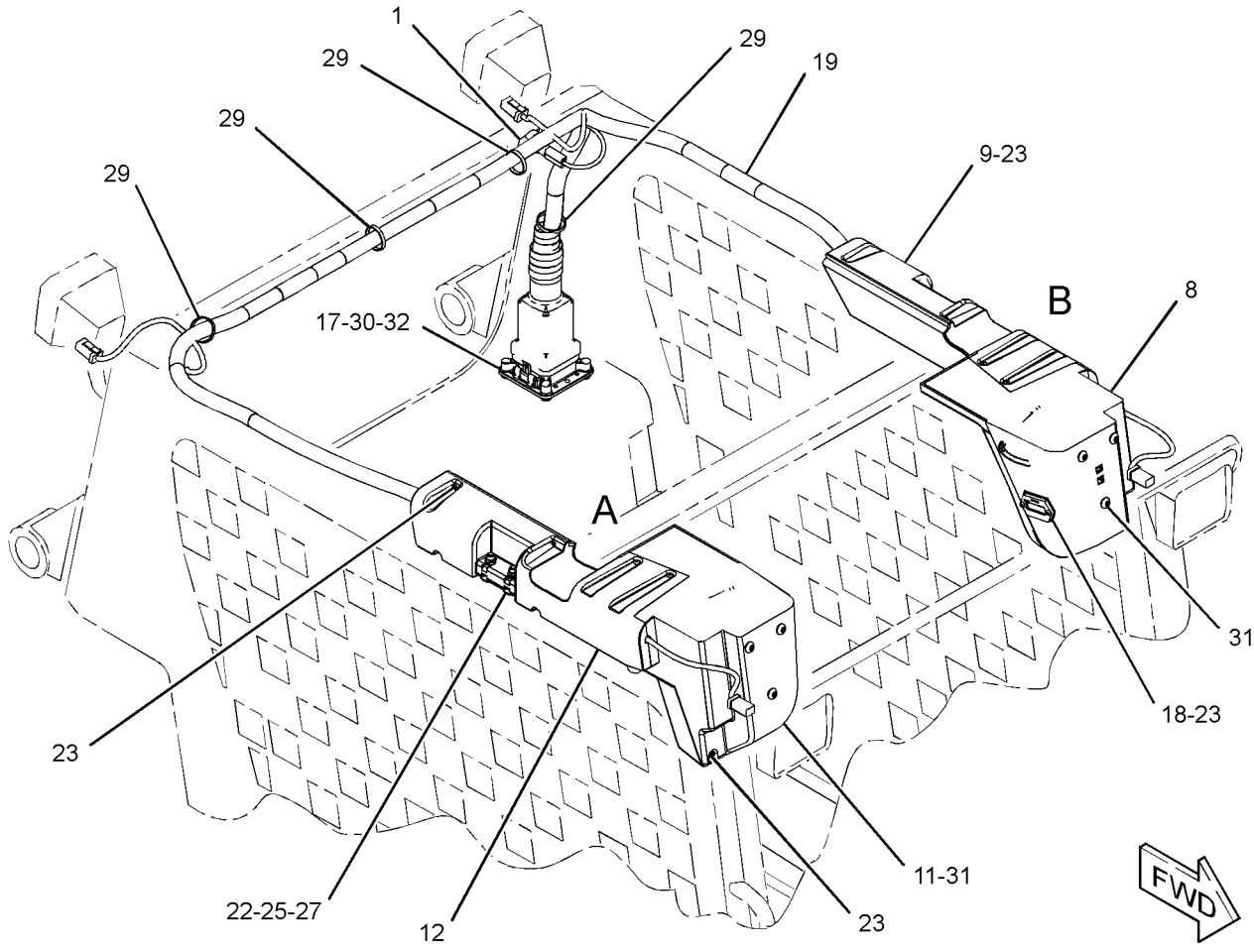


GRAPHIC #1 g02146899

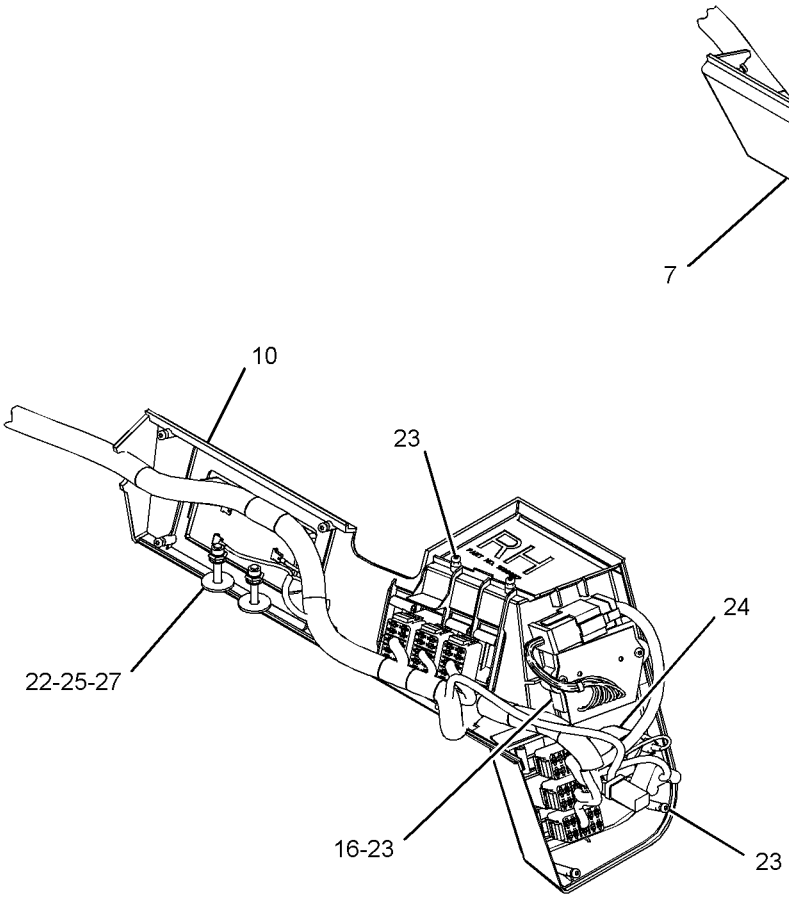


VIEW OF AREA A
(COVER REMOVED FOR CLARITY)

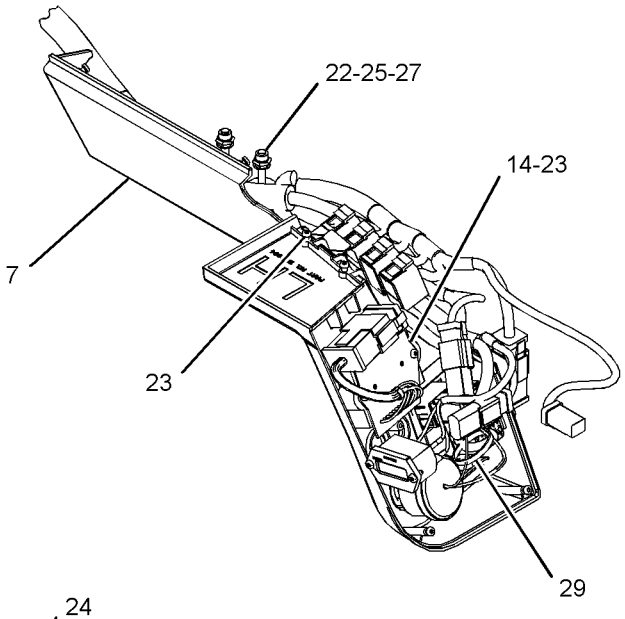


VIEW OF AREA B
(COVER REMOVED FOR CLARITY)

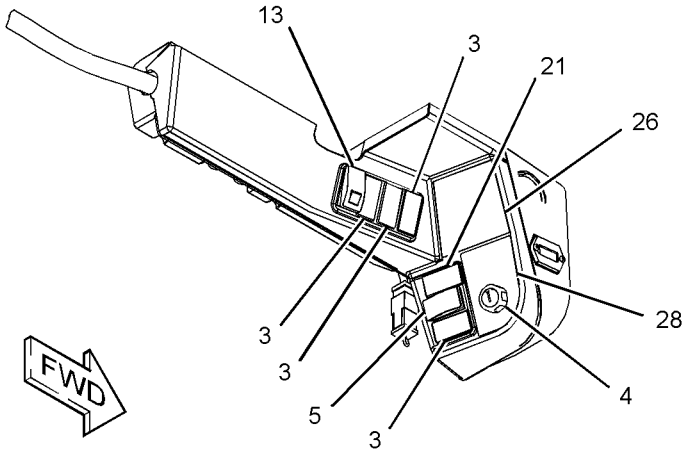


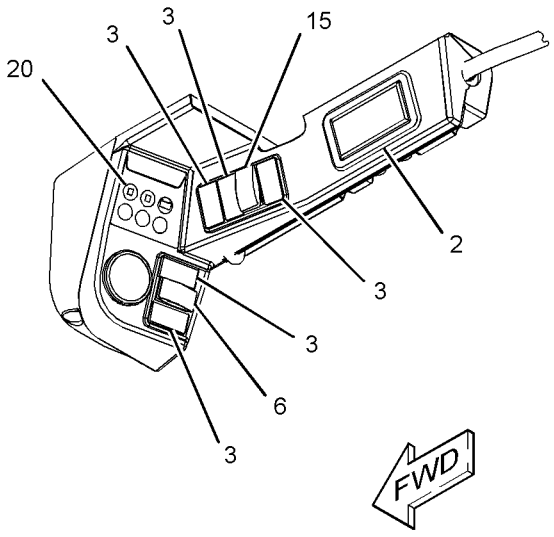


GRAPHIC #2 **<END>** g02146900

# OPERATOR STATION

## *218-6429* PANEL GP-SIDE

**S/N: TNK1-UP**

**PART OF 326-4786 CHASSIS AR**

**SMCS-7267** **i01938580**

| NOTE | REF NO | GRAPHIC REF | PART NUMBER | QTY | PART NAME 1 2 3 4 5 6 (PRODUCT LEVEL) | SEE PAGE |
|---|---|---|---|---|---|---|
| | 1 | 1 | **193-8385** | 1 | PLATE (RH) | |
| | 2 | 1 | **218-6444** | 1 | PLATE (LH) | |
| M | 3 | 1 | **131-3543** | 5 | BOLT-ROUND HEAD (M6X1-6G-THD) | |
| M | 4 | 1 | **5C-2890** | 5 | NUT (M6X1-THD) | |
| | 5 | 1 | **8T-4205** | 5 | WASHER-HARD (7.2X14.5X2-MM THK) | |

M-METRIC PART

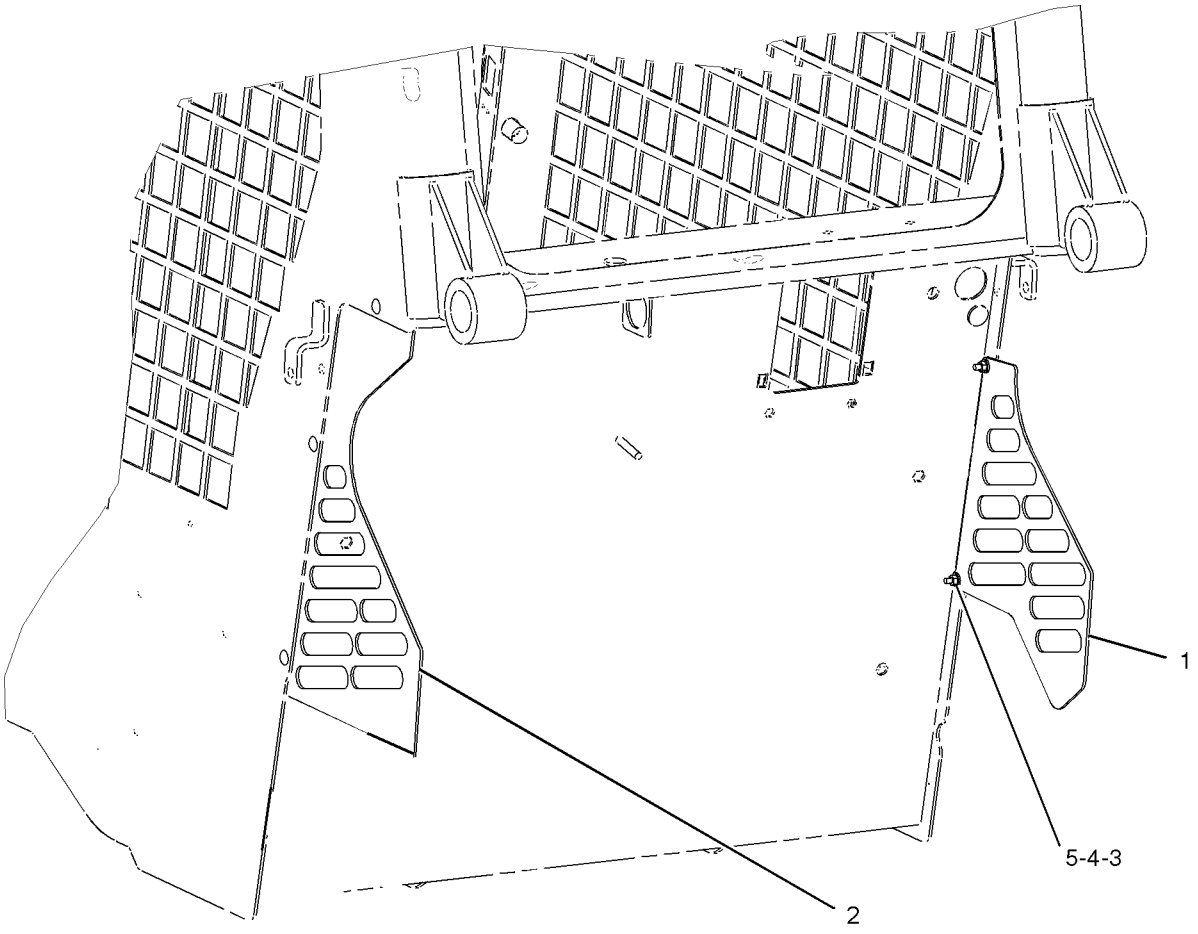


GRAPHIC #1 **<END>** g01010937

# OPERATOR STATION

## 325-8382 PEDAL GP-GOVERNOR

**S/N: TNK1-UP**

**PART OF 327-8939 PEDAL GP-GOVERNOR**

**SMCS-1265, 1276** **i03755302**

| NOTE | REF NO | GRAPHIC REF | PART NUMBER | QTY | PART NAME 1 2 3 4 5 6 (PRODUCT LEVEL) | SEE PAGE |
|---|---|---|---|---|---|---|
| M | 1 | 1 | **095-0641** | 4 | BOLT-SOCKET HEAD (M4X0.7X10-MM) | |
| M | 2 | 1 | **129-3178** | 1 | LOCKNUT (M6X1-THD) | |
| | 3 | 1 | **3F-9556** | 2 | LOCKWASHER | |
| M | 4 | 1 | **5C-7261** | 1 | NUT (M8X1.25-THD) | |
| M | 5 | 1 | **5C-9553** | 1 | BOLT (M6X1X16-MM) | |
| | 6 | 1 | **6V-8186** | 2 | NUT-FULL (5/16-24-THD) | |
| M | 7 | 1 | **8T-4197** | 1 | BOLT (M8X1.25X40-MM) | |
| | 8 | 1 | **8T-4205** | 1 | WASHER-HARD (7.2X14.5X2-MM THK) | |
| | 9 | 1 | **8T-6902** | 1 | CLIP | |
| | | | | | AVAILABLE REPAIR KIT(S): | |
| | | | **164-1154** | 1 | KIT-SERVICE (PEDAL) | |
| | | | | | (INCLUDES CLAMPS & SCREWS) | |

M-METRIC PART

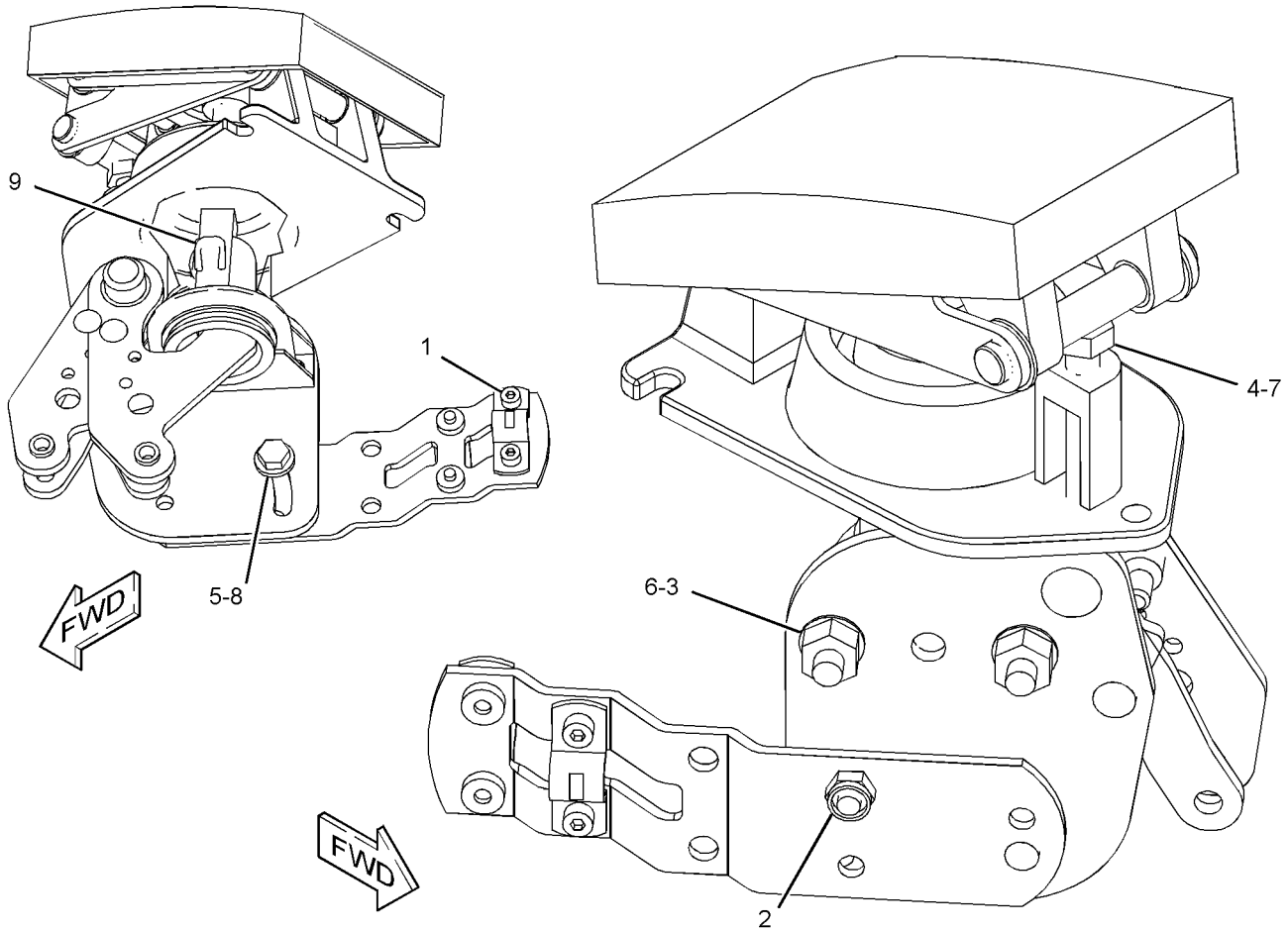


GRAPHIC #1 **<END>** g01164366

# OPERATOR STATION

## 327-8939 PEDAL GP-GOVERNOR

**S/N: TNK1-UP**

**PART OF 218-5602 CONTROL GP-GOVERNOR**

**SMCS-1265, 1276** **i03809979**

| NOTE | REF NO | GRAPHIC REF | PART NUMBER | QTY | PART NAME 1 2 3 4 5 6 (PRODUCT LEVEL) | SEE PAGE |
|---|---|---|---|---|---|---|
| Y | 1 | 1 | **234-0774** | 1 | LEVER GP-GOVERNOR | 273 |
| Y | 2 | 1 | **325-8382** | 1 | PEDAL GP-GOVERNOR | 288 |
| | 3 | 1 | **327-8945** | 1 | CABLE AS | |
| | | 1 | **2R-0364** | 1 | RING-RETAINING | |
| M | | 1 | **5C-2890** | 2 | NUT (M6X1-THD) | |
| | | 1 | **8T-4742** | 2 | END-YOKE ROD | |
| | | 1 | **8T-4744** | 2 | PIN AS-SPRING | |

M-METRIC PART
Y-SEPARATE ILLUSTRATION

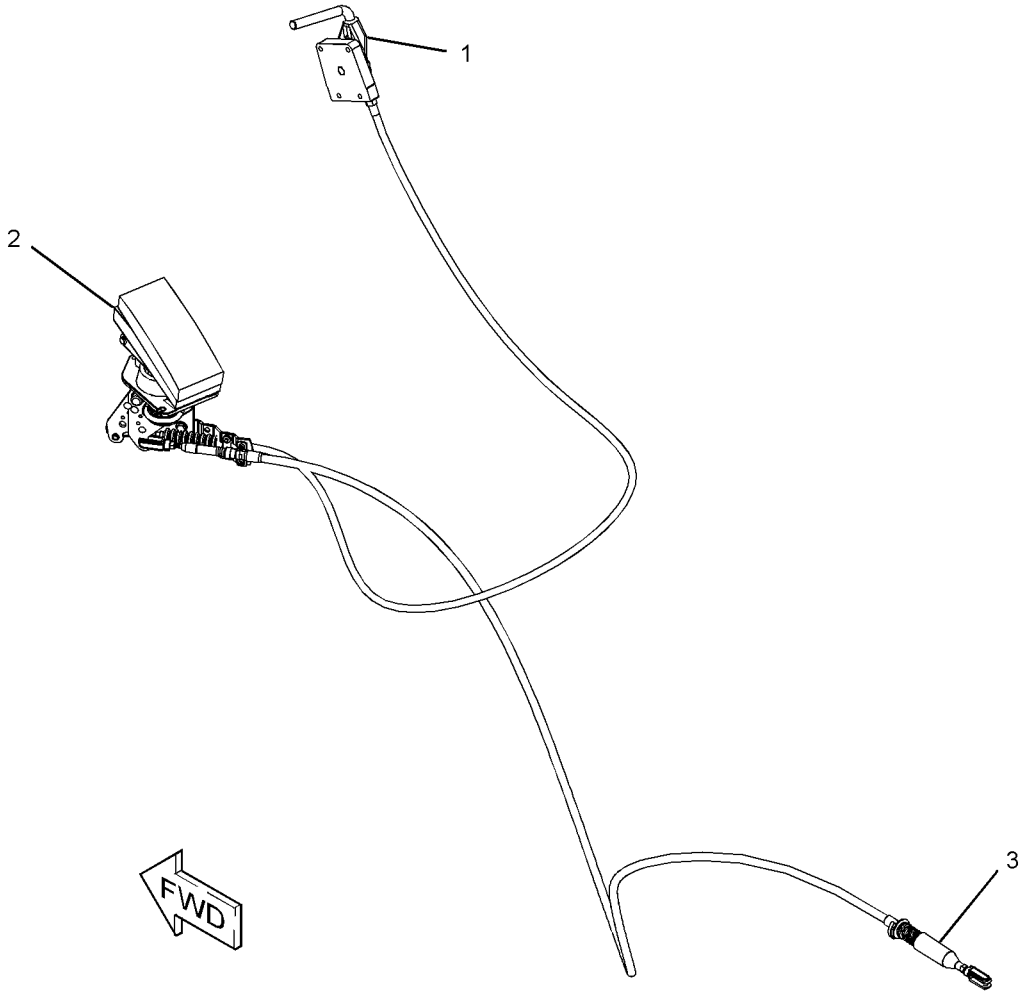


GRAPHIC #1 **<END>** g02068515

# OPERATOR STATION

## *326-5572* PLATFORM GP-OPERATOR

**S/N: TNK1-UP**

**PART OF 326-4786 CHASSIS AR**

**SMCS-7253** **i03970900**

| NOTE | REF NO | GRAPHIC REF | PART NUMBER | QTY | PART NAME 1 2 3 4 5 6 (PRODUCT LEVEL) | SEE PAGE |
|---|---|---|---|---|---|---|
| | 1 | 1 | **218-6362** | 2 | INSULATION AS | |
| | | | | | (EACH INCLUDES) | |
| | | 1 | **218-6435** | 3 | SPACER (16.6X21.8X25.4-MM THK) | |
| | 2 | 1 | **218-6417** | 1 | FLOORPLATE AS | |
| | 3 | 1 | **326-5594** | 1 | PLATE AS | |
| | | 1 | **7T-1099** | 2 | LINK | |
| M | 4 | 1 | **5C-7261** | 1 | NUT (M8X1.25-THD) | |
| M | 5 | 1 | **8T-4138** | 8 | BOLT (M6X1X20-MM) | |
| | 6 | 1 | **8T-4205** | 6 | WASHER-HARD (7.2X14.5X2-MM THK) | |
| | 7 | 1 | **8T-4224** | 7 | WASHER-HARD (8.8X16X2-MM THK) | |
| M | 8 | 1 | **8T-6912** | 5 | BOLT (M8X1.25X50-MM) | |
| | 9 | 1 | **9X-6165** | 2 | WASHER (6.5X22X2.5-MM THK) | |
| M | 10 | 1 | **9X-6277** | 1 | BOLT (M8X1.25X60-MM) | |
| D | 11 | 1 | **5P-5927** | | SEAL (0.4-M EACH) | |
| E | 12 | 1 | **124-3243** | | SEAL (19.5-CM) | |
| E | 12A | 1 | **124-3243** | | SEAL (11-CM EACH) | |

D-ORDER BY THE METER
E-ORDER BY THE CENTIMETER
M-METRIC PART

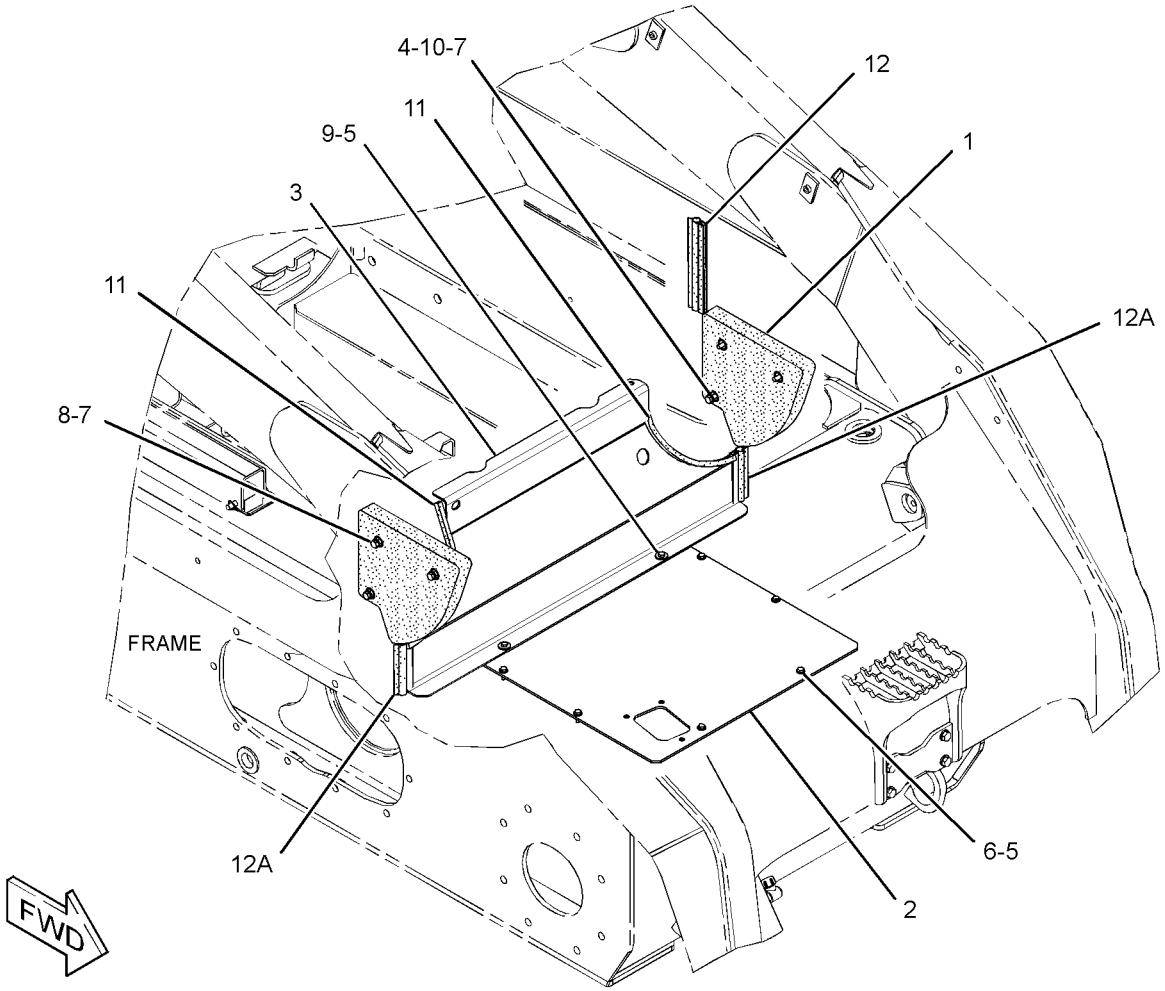


GRAPHIC #1 **<END>** g02148373

# OPERATOR STATION

## *218-6406* SEAL GP-CAB

**S/N: TNK1-UP**

**PART OF 326-5512, 326-5517 CAB AR-ENCLOSED ROPS**

**AN ATTACHMENT**

**SMCS-7301** **i02891531**

| NOTE | REF NO | GRAPHIC REF | PART NUMBER | QTY | PART NAME 1 2 3 4 5 6 (PRODUCT LEVEL) | SEE PAGE |
|---|---|---|---|---|---|---|
| E | 1 | 1 | **124-3243** | | SEAL (59-CM) | |
| E | 1A | 1 | **124-3243** | | SEAL (39-CM) | |
| | 2 | 1 | **187-3211** | 1 | PLATE AS | |
| M | | 1 | **8T-3612** | 2 | NUT-WELD (M8X1.25-THD) | |
| | 3 | 1 | **187-3212** | 1 | PLATE | |
| | 4 | 1 | **218-6036** | 1 | BRACKET AS (LH) | |
| | 5 | 1 | **218-6037** | 1 | BRACKET AS (RH) | |
| | 6 | 1 | **284-3743** | 2 | SEAL-RUBBER | |
| | 7 | 1 | **284-3744** | 1 | SEAL-RUBBER | |
| | 8 | 1 | **287-6603** | 2 | PLUG-BUTTON | |
| | 9 | 1 | **288-5767** | 8 | PLUG-BUTTON | |
| | 10 | 1 | **189-4523** | 2 | BOSS | |
| M | 11 | 1 | **7X-2537** | 2 | BOLT (M8X1.25X35-MM) | |
| | 12 | 1 | **8T-4224** | 2 | WASHER-HARD (8.8X16X2-MM THK) | |

E-ORDER BY THE CENTIMETER
M-METRIC PART

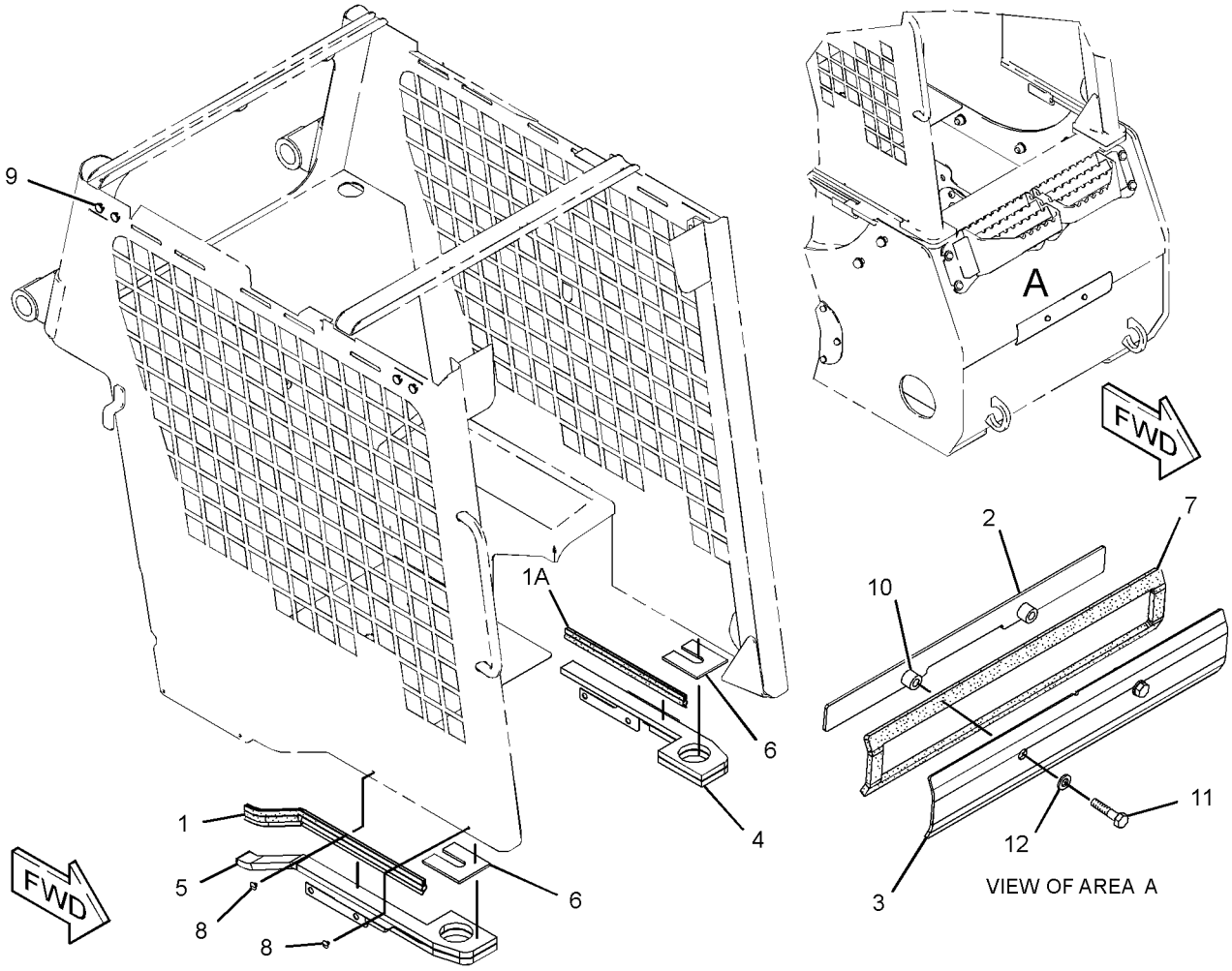


GRAPHIC #1 **<END>** g01441642

# OPERATOR STATION

## *276-6019* SEAT BELT GP

**S/N: TNK1-UP**
**3-INCH, RETRACTABLE SUSPENSION**
**FOR USE WITH IN CALIFORNIA, WASHINGTON, AND OREGAN**
**AN ATTACHMENT**

**SMCS-7327** **i03584623**

| NOTE | REF NO | GRAPHIC REF | PART NUMBER | QTY | PART NAME 1 2 3 4 5 6 (PRODUCT LEVEL) | SEE PAGE |
|---|---|---|---|---|---|---|
| | 1 | 1 | **2D-6412** | 2 | WASHER (7/16X15/16X1/4-IN THK) | |
| | 2 | 1 | **0T-0244** | 2 | BOLT (7/16-20X1.25-IN) | |
| | 3 | 1 | **8S-0934** | 2 | LOCKNUT-FLANGE (7/16-20-THD) | |
| | 4 | 1 | **8T-4223** | 2 | WASHER-HARD (13.5X25.5X3-MM THK) | |

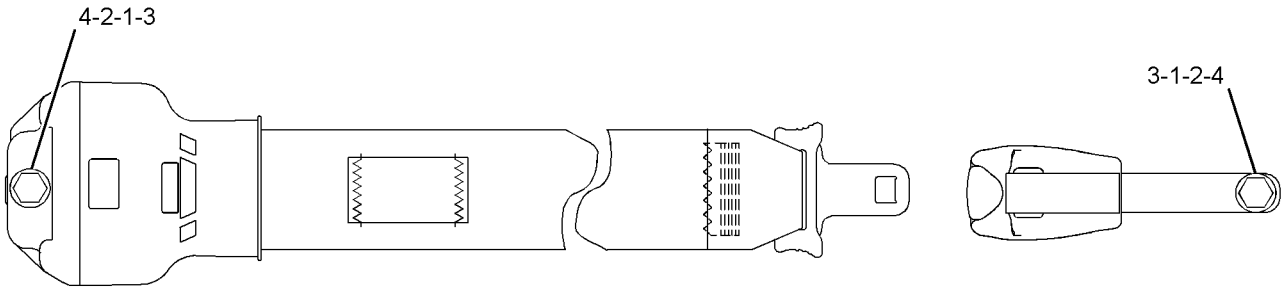


GRAPHIC #1 **<END>** g01230176

# OPERATOR STATION

## 276-6020 SEAT BELT GP

**S/N: TNK1-UP**
**3-INCH, RETRACTABLE STATIC**
**AN ATTACHMENT**

**SMCS-7327** **i02718272**

| NOTE | REF NO | GRAPHIC REF | PART NUMBER | QTY | PART NAME 1 2 3 4 5 6 (PRODUCT LEVEL) | SEE PAGE |
|---|---|---|---|---|---|---|
| | 1 | 1 | **2D-6412** | 2 | WASHER (7/16X15/16X1/4-IN THK) | |
| | 2 | 1 | **0T-0244** | 2 | BOLT (7/16-20X1.25-IN) | |
| | 3 | 1 | **8S-0934** | 2 | LOCKNUT-FLANGE (7/16-20-THD) | |
| | 4 | 1 | **8T-4223** | 2 | WASHER-HARD (13.5X25.5X3-MM THK) | |

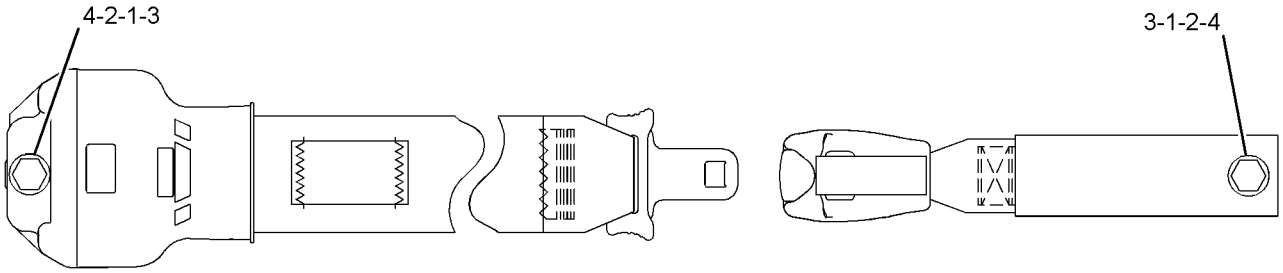


GRAPHIC #1 **<END>** g01230231

# OPERATOR STATION

## 276-7276 SEAT BELT GP

**S/N: TNK1-UP**
**2-INCH, SUSPENSION**
**CANNOT BE USED WITH IN CALIFORNIA, OREGAN, AND WASHINGTON**
**AN ATTACHMENT**

**SMCS-7327** **i02738465**

| NOTE | REF NO | GRAPHIC REF | PART NUMBER | QTY | PART NAME 1 2 3 4 5 6 (PRODUCT LEVEL) | SEE PAGE |
|---|---|---|---|---|---|---|
| | 1 | 1 | **2D-6412** | 2 | WASHER (7/16X15/16X1/4-IN THK) | |
| | 2 | 1 | **0T-0244** | 2 | BOLT (7/16-20X1.25-IN) | |
| | 3 | 1 | **8S-0934** | 2 | LOCKNUT-FLANGE (7/16-20-THD) | |
| | 4 | 1 | **8T-4223** | 2 | WASHER-HARD (13.5X25.5X3-MM THK) | |

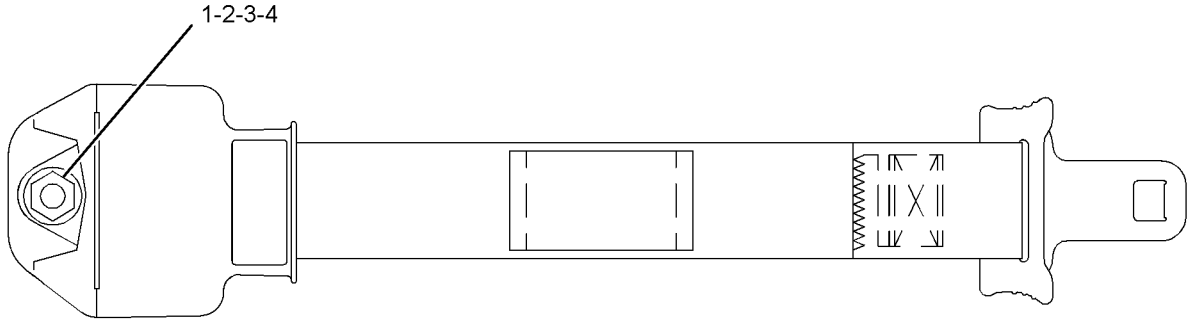


GRAPHIC #1 **<END>** g01230125

# OPERATOR STATION

## 276-7277 SEAT BELT GP

**S/N: TNK1-UP**
**2-INCH, RETRACTABLE STATIC**
**AN ATTACHMENT**

**SMCS-7327** **i02712903**

| NOTE | REF NO | GRAPHIC REF | PART NUMBER | QTY | PART NAME 1 2 3 4 5 6 (PRODUCT LEVEL) | SEE PAGE |
|---|---|---|---|---|---|---|
| | 1 | 1 | **2D-6412** | 2 | WASHER (7/16X15/16X1/4-IN THK) | |
| | 2 | 1 | **0T-0244** | 2 | BOLT (7/16-20X1.25-IN) | |
| | 3 | 1 | **8S-0934** | 2 | LOCKNUT-FLANGE (7/16-20-THD) | |
| | 4 | 1 | **8T-4223** | 2 | WASHER-HARD (13.5X25.5X3-MM THK) | |

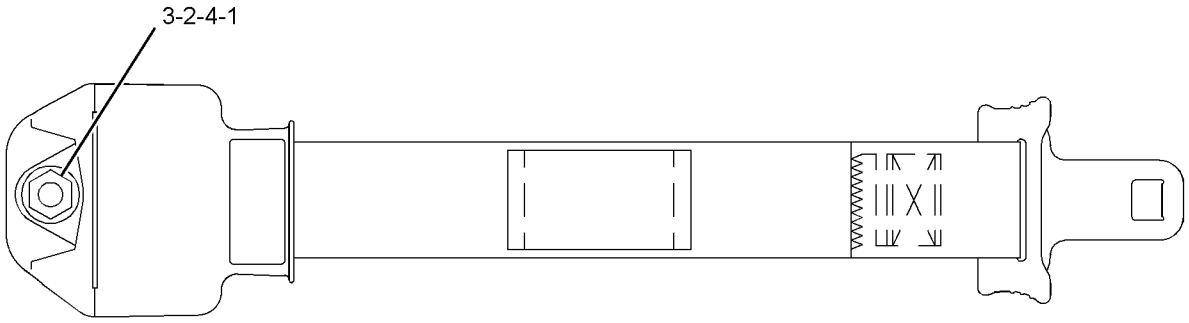


GRAPHIC #1 **<END>** g01230239

# *142-9305* SEAT GP–SUSPENSION

**S/N: TNK1-UP**

**PART OF 326-5512, 326-5517 CAB AR-ENCLOSED ROPS, 326-5511 CAB AR-OPEN ROPS**

**CANNOT BE USED WITH 218-5562–PAGE 298**

**AN ATTACHMENT**

**SMCS-7312, 7324** **i02571422**

| NOTE | REF NO | GRAPHIC REF | PART NUMBER | QTY | PART NAME 1 2 3 4 5 6 (PRODUCT LEVEL) | SEE PAGE |
|---|---|---|---|---|---|---|
| CY | 1 | 1 | **219-4380** | 1 | SEAT GP-ADJUSTABLE | 299 |
| M | 2 | 1 | **5C-7261** | 4 | NUT (M8X1.25-THD) | |
| | 3 | 1 | **8T-4224** | 4 | WASHER-HARD (8.8X16X2-MM THK) | |

C-CHANGE FROM PREVIOUS TYPE
M-METRIC PART
Y-SEPARATE ILLUSTRATION

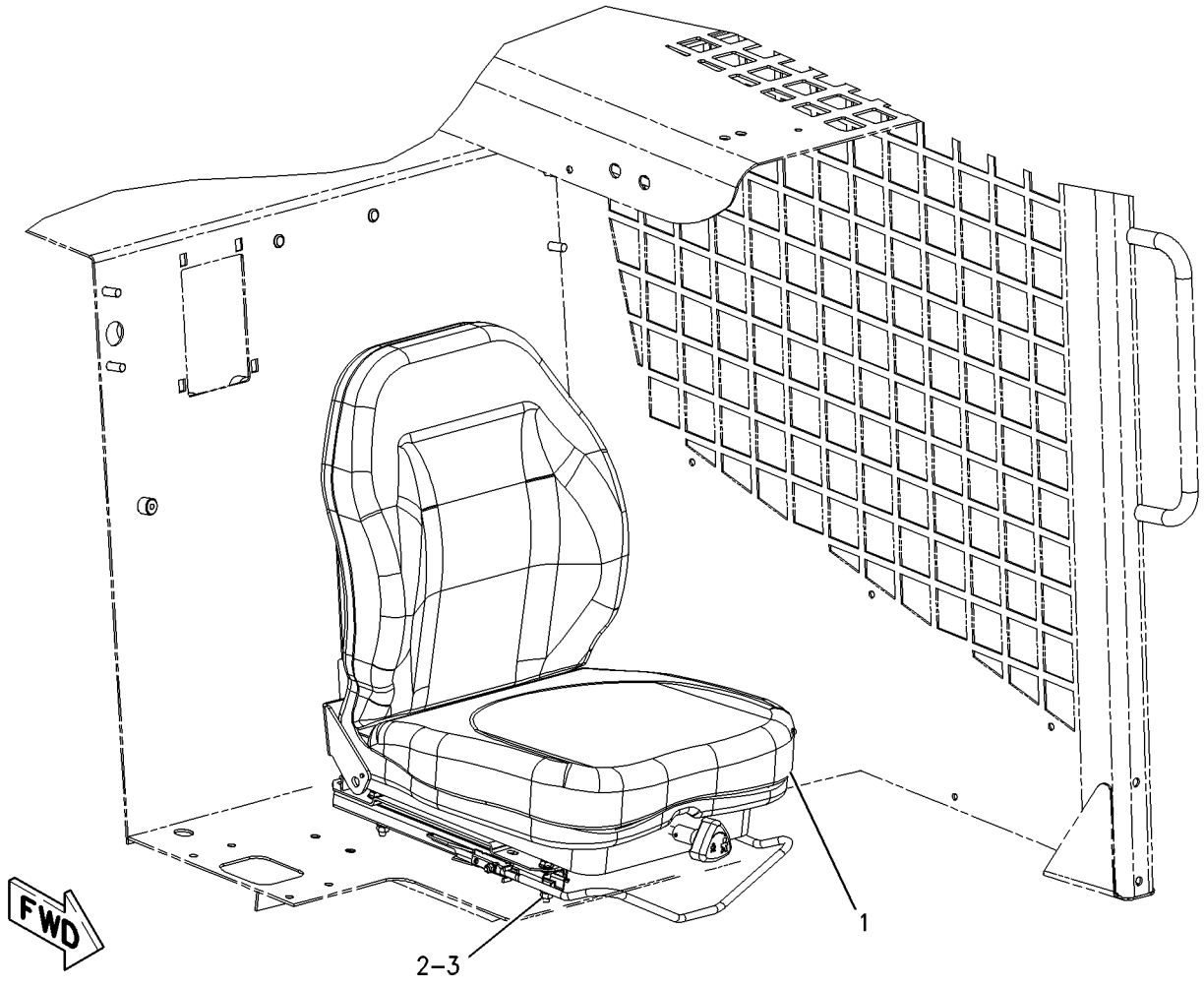


GRAPHIC #1 **<END>** g00914893

# OPERATOR STATION

## *218-5562* SEAT GP–STATIC

**S/N: TNK1-UP**
**PART OF 326-5510 CAB AR-OPEN ROPS**
**CANNOT BE USED WITH 142-9305–PAGE 297**
**AN ATTACHMENT**

**SMCS-7312, 7324** **i02757222**

| NOTE | REF NO | GRAPHIC REF | PART NUMBER | QTY | PART NAME 1 2 3 4 5 6 (PRODUCT LEVEL) | SEE PAGE |
|---|---|---|---|---|---|---|
| | 1 | 1 | **218-6662** | 1 | SEAT GP (STATIC) | |
| | | 1 | **153-1260** | 1 | SWITCH (SEAT) | |
| | | 1 | **154-3985** | 1 | WIRE AS | |
| | | 1 | **219-4379** | 1 | HANDLE | |
| M | 2 | 1 | **5C-7261** | 4 | NUT (M8X1.25-THD) | |
| | 3 | 1 | **8T-4224** | 4 | WASHER-HARD (8.8X16X2-MM THK) | |

M-METRIC PART

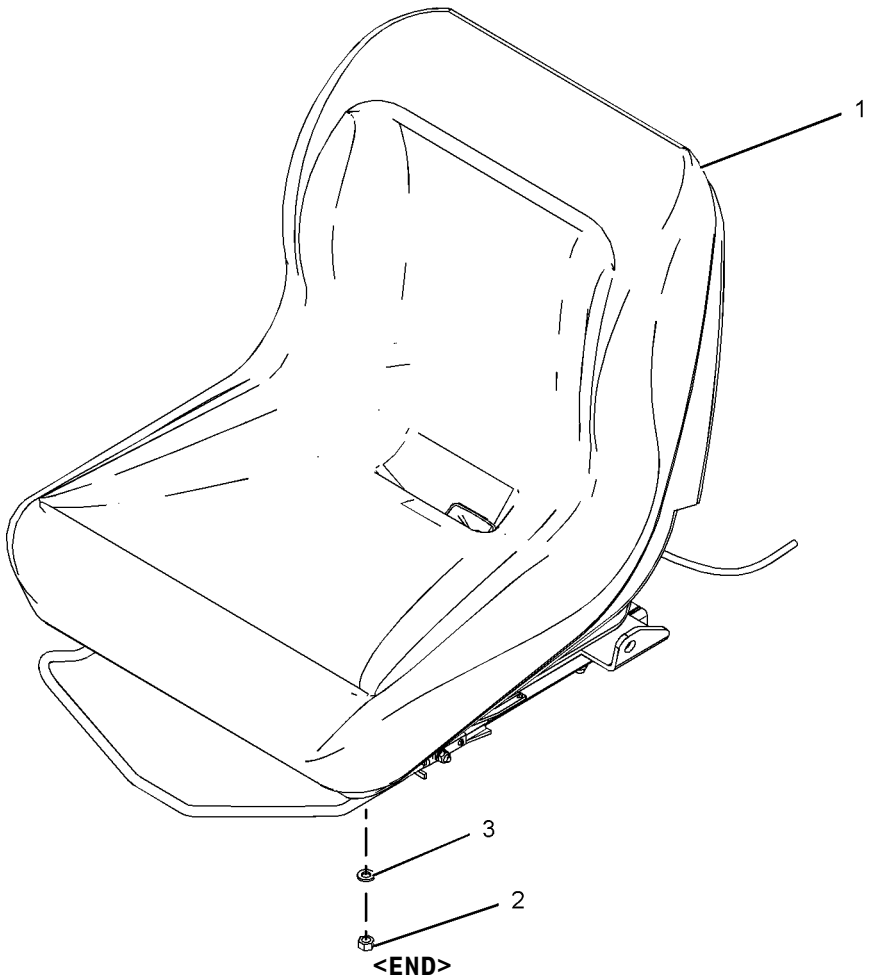


GRAPHIC #1 **<END>** g01018112

# OPERATOR STATION

## 219-4380 SEAT GP-ADJUSTABLE

**S/N: TNK1-UP**
**PART OF 142-9305 SEAT GP**
**AN ATTACHMENT**

**SMCS-7312, 7321** **i03611200**

| NOTE | REF NO | GRAPHIC REF | PART NUMBER | QTY | PART NAME 1 2 3 4 5 6 (PRODUCT LEVEL) | SEE PAGE |
|---|---|---|---|---|---|---|
| | 1 | 1 | **154-3985** | 1 | WIRE AS | |
| | 2 | 1 | **154-3986** | 1 | SWITCH AS (SEAT) | |
| | 3 | 1 | **154-8711** | 1 | KIT-SPRING (ADJUSTABLE SEAT) | |
| | | | | | (INCLUDES SPRINGS, CABLE AS & NUTS) | |
| | 4 | 1 | **154-8715** | 1 | KIT-DAMPER (ADJUSTABLE SEAT) | |
| | | | | | (INCLUDES DAMPER, NUT-LOCK, WASHER & SPACER) | |
| | 5 | 1 | **173-2543** | 1 | KIT-CUSHION | |
| | 6 | 1 | **219-4379** | 1 | HANDLE | |
| | 7 | 1 | **219-4388** | 1 | KIT-HANDLE (KNOB) | |
| | | | | | (INCLUDES KNOB, SHAFT, PINS, HANGER, NUT & SPACERS) | |

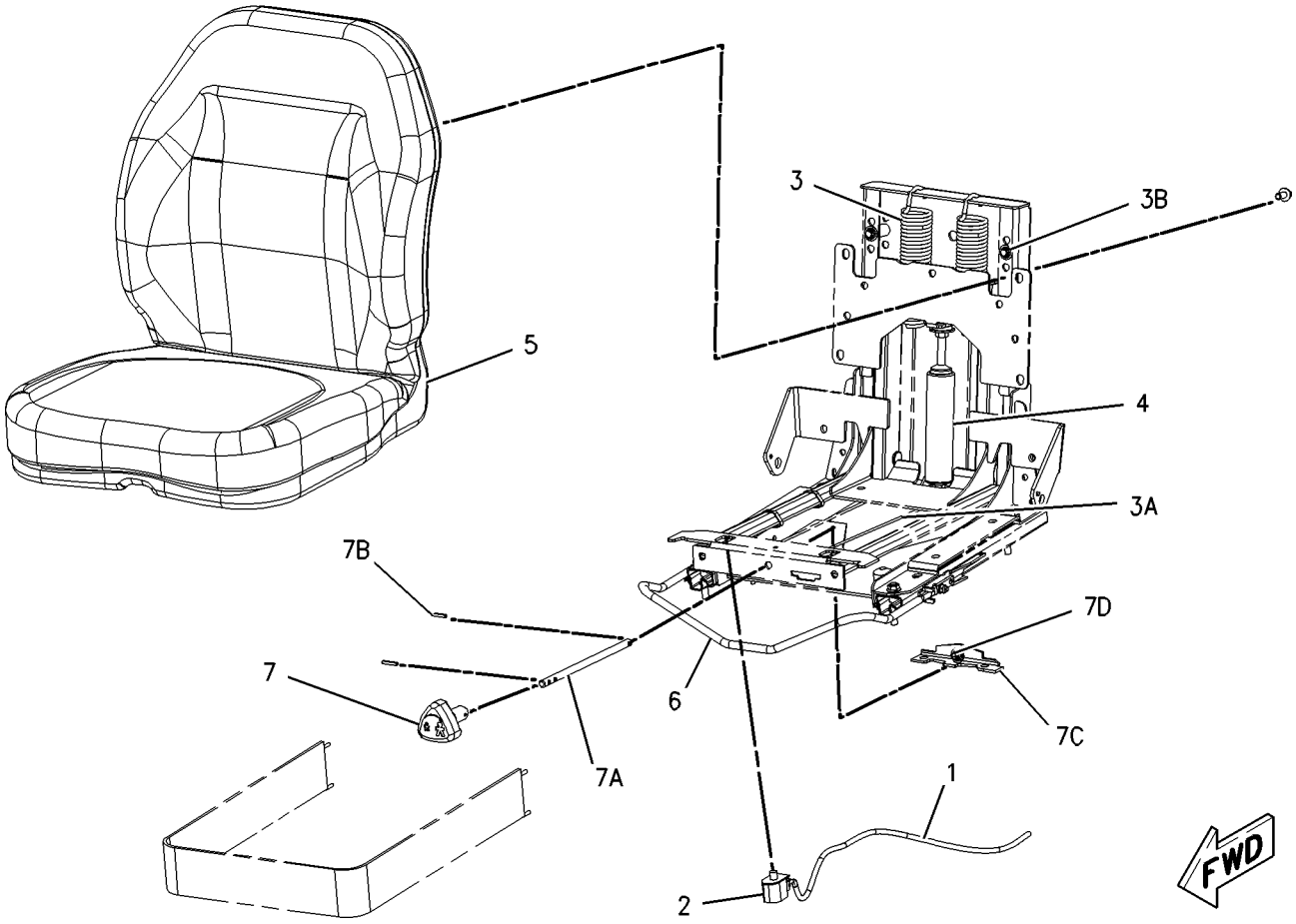


GRAPHIC #1 **<END>** g00915009

# OPERATOR STATION

## *218-6380* SPRING GP-GAS–CAB, DOOR

**S/N: TNK1-UP**

**PART OF 326-5400 CAB AR**

**SMCS-7301** **i03973391**

| NOTE | REF NO | GRAPHIC REF | PART NUMBER | QTY | PART NAME 1 2 3 4 5 6 (PRODUCT LEVEL) | SEE PAGE |
|---|---|---|---|---|---|---|
| | 1 | 1 | **5P-0372** | 2 | LOCK PIN | |
| | 2 | 1 | **9C-5344** | 1 | SPACER (10.5X20X18-MM THK) | |
| | 3 | 1 | **095-1325** | 1 | PIN-CLEVIS | |
| | 4 | 1 | **153-2682** | 1 | SPRING AS-GAS (CAB) | |
| | 5 | 1 | **177-3405** | 1 | PIN | |

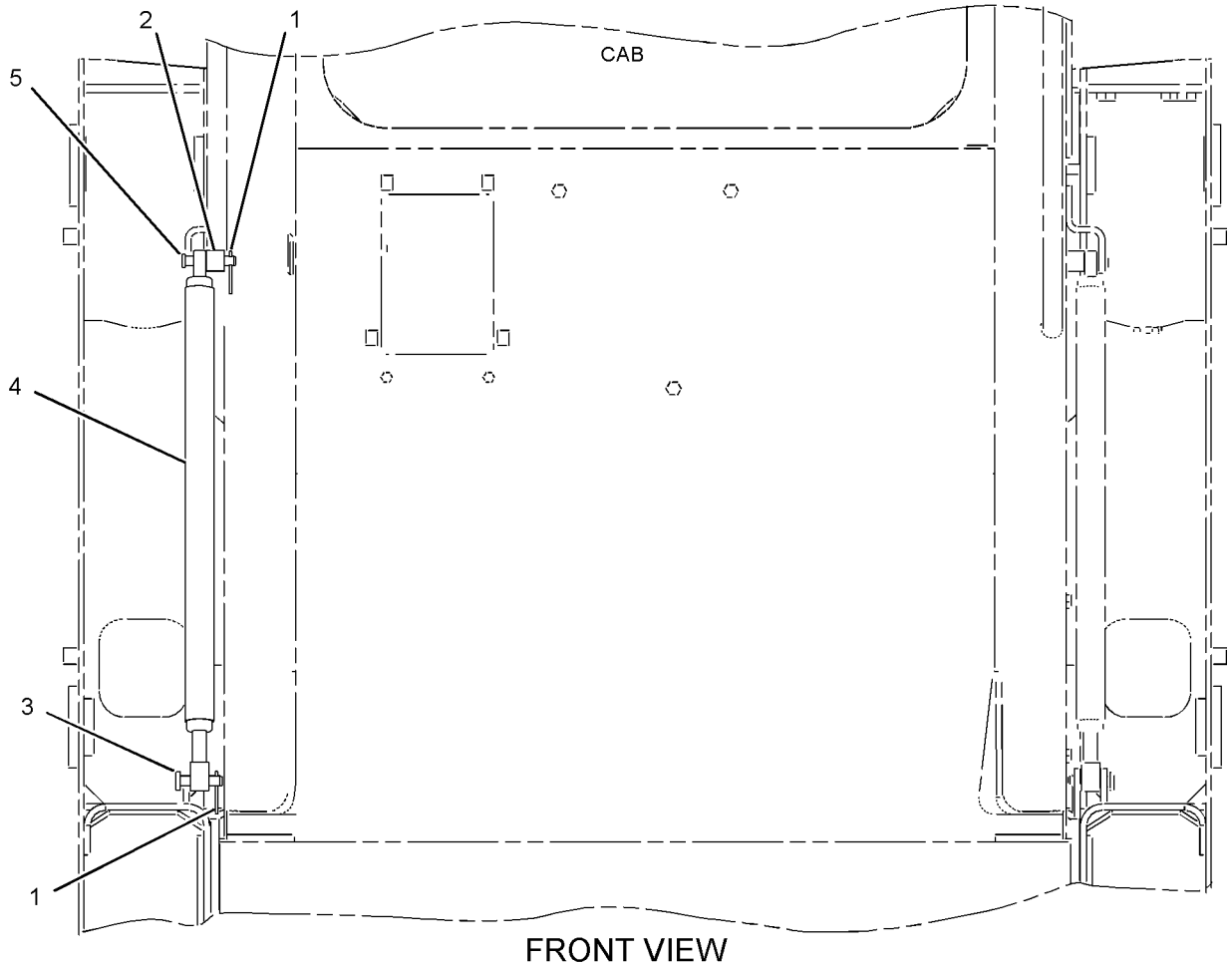


FRONT VIEW

GRAPHIC #1 **<END>** g01031997

# OPERATOR STATION

## *195-6723* WINDOW GP-CAB

**S/N: TNK1-UP**

**PART OF 326-5400 CAB AR**

**SMCS-7310** **i02534285**

| NOTE | REF NO | GRAPHIC REF | PART NUMBER | QTY | PART NAME 1 2 3 4 5 6 (PRODUCT LEVEL) | SEE PAGE |
|---|---|---|---|---|---|---|
| | 1 | 1 | **5C-8310** | 1 | BRACKET-RING | |
| | 2 | 1 | **5C-8311** | 1 | RING | |
| | 3 | 1 | **8T-6842** | 1 | FILM-INSTRUCTION (PULL RING, ALTERNATE EXIT) | |
| | 4 | 1 | **142-9319** | 1 | WINDOW | |
| CE | 5 | 1 | **108-0656** | | SEAL (192-CM) | |
| CE | 6 | 1 | **104-5957** | | STRIP-LOCKING (186-CM) | |

C-CHANGE FROM PREVIOUS TYPE
E-ORDER BY THE CENTIMETER

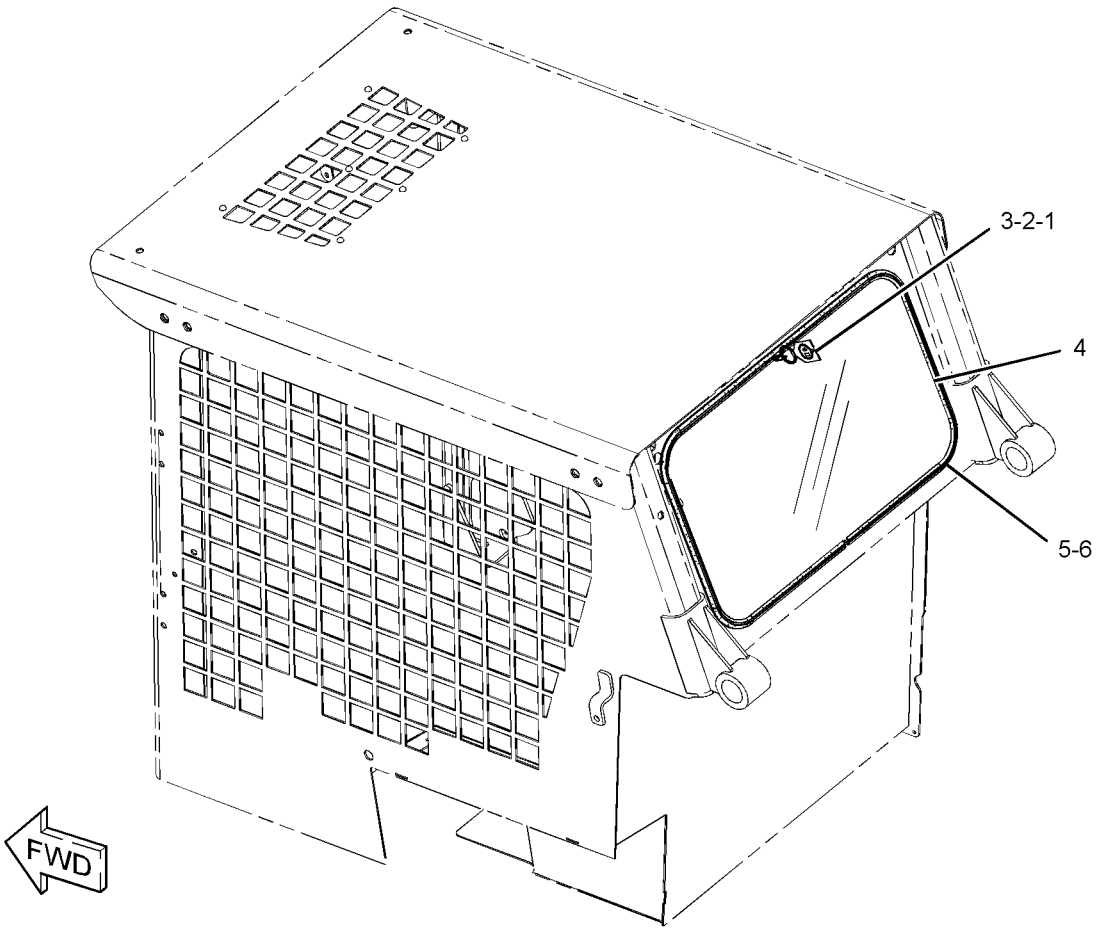


GRAPHIC #1 **<END>** g01268492

# OPERATOR STATION

## *218-6411* WINDOW GP-CAB—SIDE

**S/N: TNK1-UP**
**PART OF 326-5512, 326-5517 CAB AR-ENCLOSED ROPS**
**AN ATTACHMENT**

**SMCS-7310** **i02501965**

| NOTE | REF NO | GRAPHIC REF | PART NUMBER | QTY | PART NAME 1 2 3 4 5 6 (PRODUCT LEVEL) | SEE PAGE |
|---|---|---|---|---|---|---|
| Y | 1 | 1 | **224-7057** | 1 | WINDOW GP-CAB (UPPER, LH) | 303 |
| Y | 2 | 1 | **224-7058** | 1 | WINDOW GP-CAB (UPPER, RH) | 305 |
| | 3 | 1 | **231-7321** | 1 | WINDOW AS-CAB (LOWER, RH) | |
| | | 1 | **239-6109** | 1 | LATCH AS | |
| E | | 1 | **282-6961** | | SEAL (122-CM) | |
| | 4 | 1 | **231-7324** | 1 | WINDOW AS-CAB (LOWER, LH) | |
| | | 1 | **239-6109** | 1 | LATCH AS | |
| E | | 1 | **282-6961** | | SEAL (122-CM) | |
| M | 5 | 1 | **9X-2045** | 10 | SCREW-TRUSS HEAD (M6X1X20-MM) | |

E-ORDER BY THE CENTIMETER
M-METRIC PART
Y-SEPARATE ILLUSTRATION

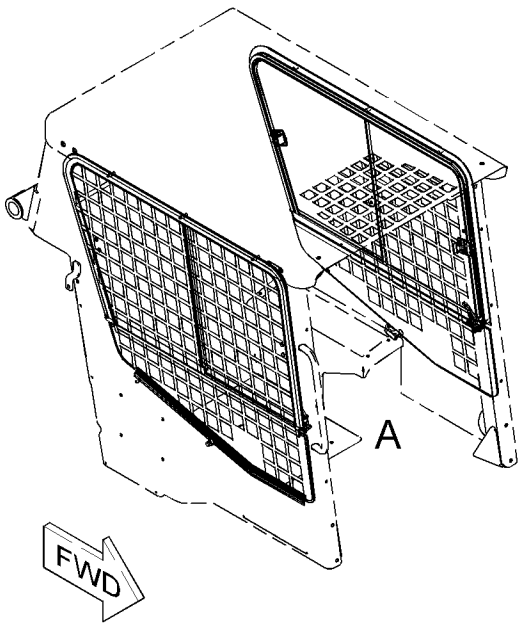


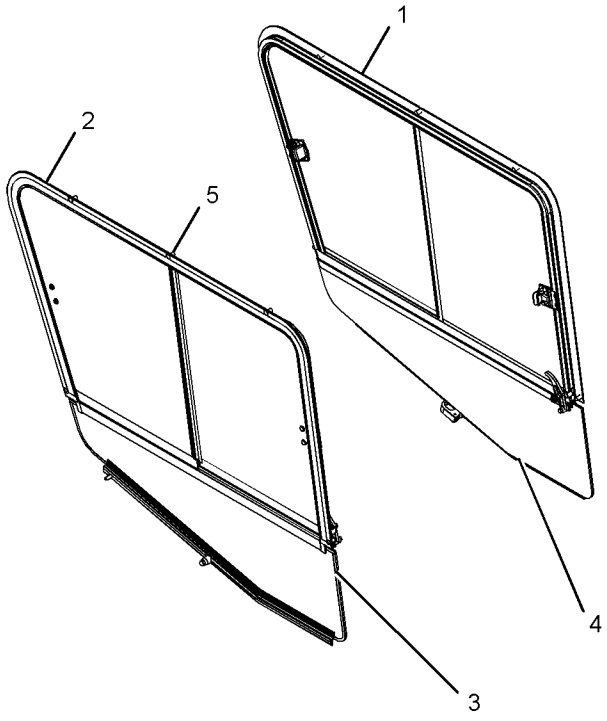


VIEW OF AREA A

GRAPHIC #1 **<END>** g01057739

## 224-7057 WINDOW GP-CAB–UPPER,LH

**S/N: TNK1-UP**

**PART OF 218-6411 WINDOW GP-CAB**

**AN ATTACHMENT**

**SMCS-7310** **i03648870**

| NOTE | REF NO | GRAPHIC REF | PART NUMBER | QTY | PART NAME 1 2 3 4 5 6 (PRODUCT LEVEL) | SEE PAGE |
|---|---|---|---|---|---|---|
| | 1 | 1 | **231-7322** | 1 | WINDOW AS-CAB (SLIDING, REAR) | |
| E | | 1 | **207-0573** | | SEAL (76-CM) | |
| | | 1 | **231-7331** | 1 | LATCH AS | |
| | 2 | 1 | **231-7323** | 1 | WINDOW AS-CAB (SLIDING, FRONT) | |
| E | | 1 | **207-0573** | | SEAL (41-CM) | |
| | | 1 | **231-7331** | 1 | LATCH AS | |
| Y | 3 | 1 | **231-7327** | 1 | FRAME GP-WINDOW (LH) | 263 |
| | 4 | 1 | **231-7372** | 1 | CATCH | |
| | 5 | 1 | **243-1323** | 1 | CATCH | |
| | 6 | 1 | **6D-5797** | 2 | SCREW-SOCKET | |
| | 7 | 1 | **9X-8918** | 2 | SCREW-FLAT HEAD (8-32X0.5-IN) | |
| E | 8 | 1 | **207-0539** | | SEAL (125-CM) | |
| E | 8A | 1 | **207-0539** | | SEAL (138-CM) | |
| E | 8B | 1 | **207-0539** | | SEAL (81-CM) | |
| E | 9 | 1 | **207-0573** | | SEAL (62-CM) | |
| E | 9A | 1 | **207-0573** | | SEAL (80-CM) | |
| E | 10 | 1 | **3E-3892** | | SEAL (31-CM EACH) | |
| E | 10A | 1 | **3E-3892** | | SEAL (75-CM) | |
| E | 10B | 1 | **3E-3892** | | SEAL (65-CM) | |
| E | 10C | 1 | **3E-3892** | | SEAL (4-CM EACH) | |

E-ORDER BY THE CENTIMETER
Y-SEPARATE ILLUSTRATION

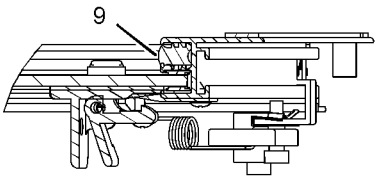


VIEW OF AREA E

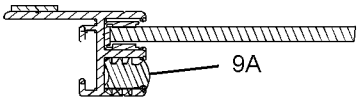


SECTION H-H

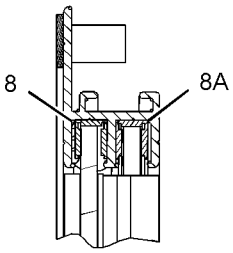


VIEW OF AREA C

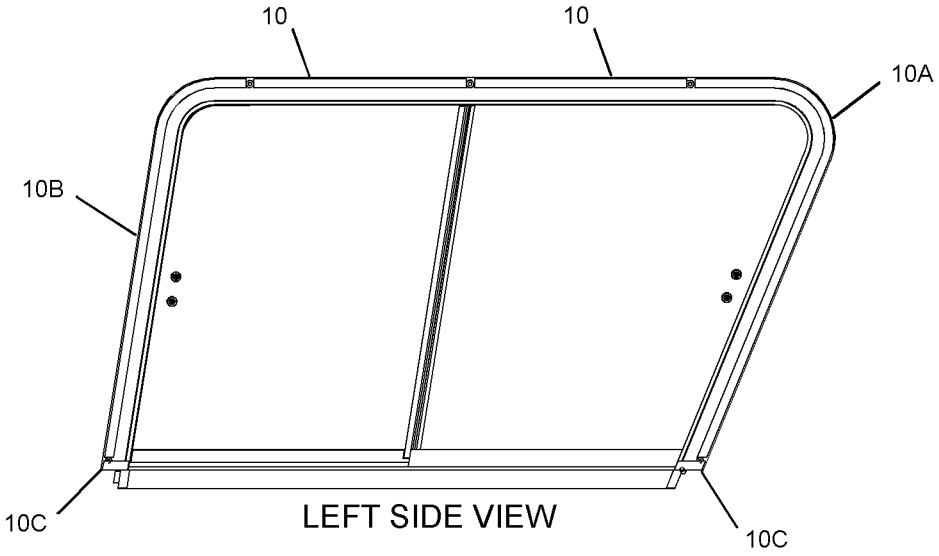


LEFT SIDE VIEW

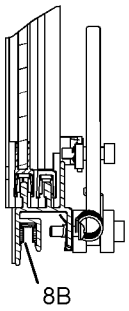


VIEW OF AREA D

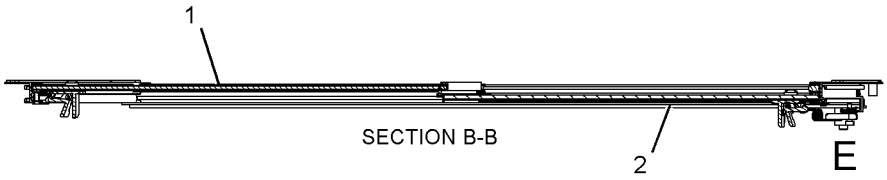


SECTION B-B

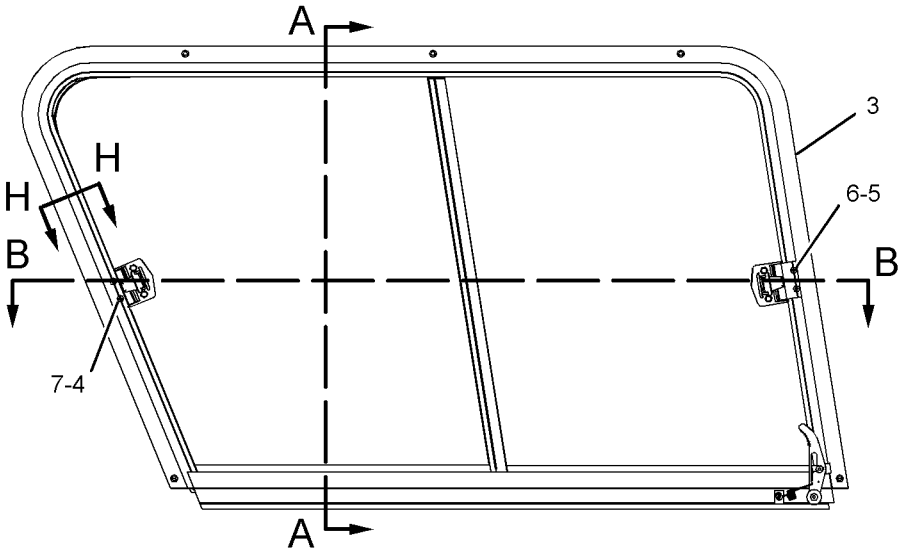


RIGHT SIDE VIEW
(INSIDE OF CAB)

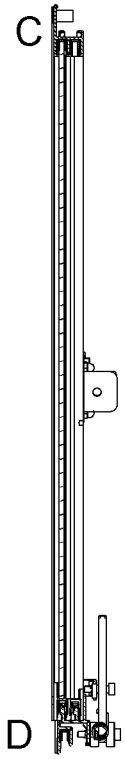


SECTION A-A

GRAPHIC #1 **<END>** g01958440

## 224-7058 WINDOW GP-CAB–UPPER, RH

**S/N: TNK1-UP**

**PART OF 218-6411 WINDOW GP-CAB**

**AN ATTACHMENT**

**SMCS-7310** **i03648873**

| NOTE | REF NO | GRAPHIC REF | PART NUMBER | QTY | PART NAME 1 2 3 4 5 6 (PRODUCT LEVEL) | SEE PAGE |
|---|---|---|---|---|---|---|
| | 1 | 1 | **231-7319** | 1 | WINDOW AS-CAB (SLIDING, REAR) | |
| E | | | **207-0573** | | SEAL (76-CM) | |
| | | | **231-7331** | 1 | LATCH AS | |
| | 2 | 1 | **231-7320** | 1 | WINDOW AS-CAB (SLIDING, FRONT) | |
| E | | 1 | **207-0573** | | SEAL (41-CM) | |
| | | 1 | **231-7331** | 1 | LATCH AS | |
| Y | 3 | 1 | **231-7325** | 1 | FRAME GP-WINDOW (RH) | 262 |
| | 4 | 1 | **231-7372** | 1 | CATCH | |
| | 5 | 1 | **243-1323** | 1 | CATCH | |
| | 6 | 1 | **6D-5797** | 2 | SCREW-SOCKET | |
| | 7 | 1 | **9X-8918** | 2 | SCREW-FLAT HEAD (8-32X0.5-IN) | |
| E | 8 | 1 | **3E-3892** | | SEAL (4-CM EACH) | |
| E | 8A | 1 | **3E-3892** | | SEAL (31-CM EACH) | |
| E | 8B | 1 | **3E-3892** | | SEAL (75-CM) | |
| E | 8C | 1 | **3E-3892** | | SEAL (65-CM) | |
| E | 9 | 1 | **207-0539** | | SEAL (81-CM) | |
| E | 9A | 1 | **207-0539** | | SEAL (138-CM) | |
| E | 9B | 1 | **207-0539** | | SEAL (125-CM) | |
| E | 10 | 1 | **207-0573** | | SEAL (80-CM) | |
| E | 10A | 1 | **207-0573** | | SEAL (62-CM) | |

E-ORDER BY THE CENTIMETER
Y-SEPARATE ILLUSTRATION

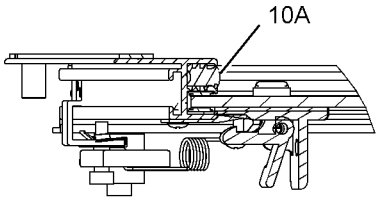


VIEW OF AREA E

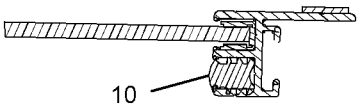


SECTION H-H

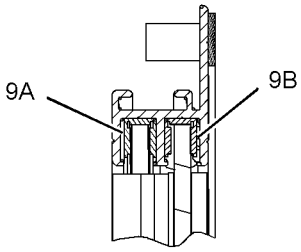


VIEW OF AREA C

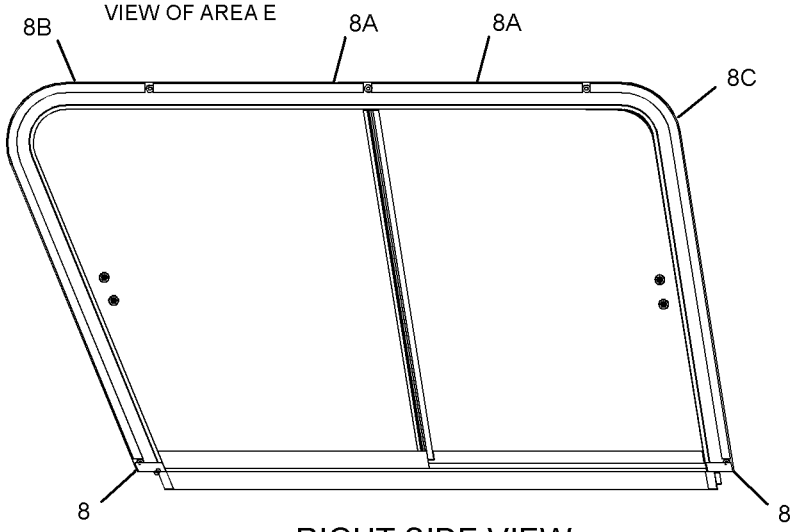


RIGHT SIDE VIEW

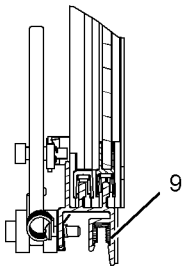


VIEW OF AREA D

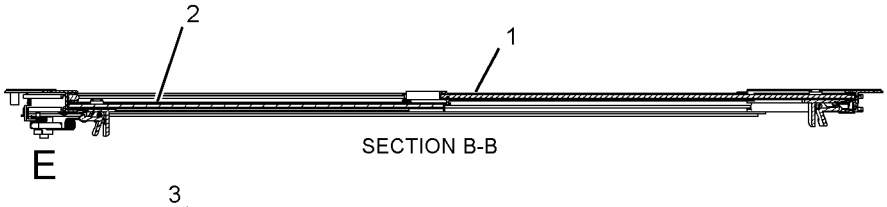


SECTION B-B

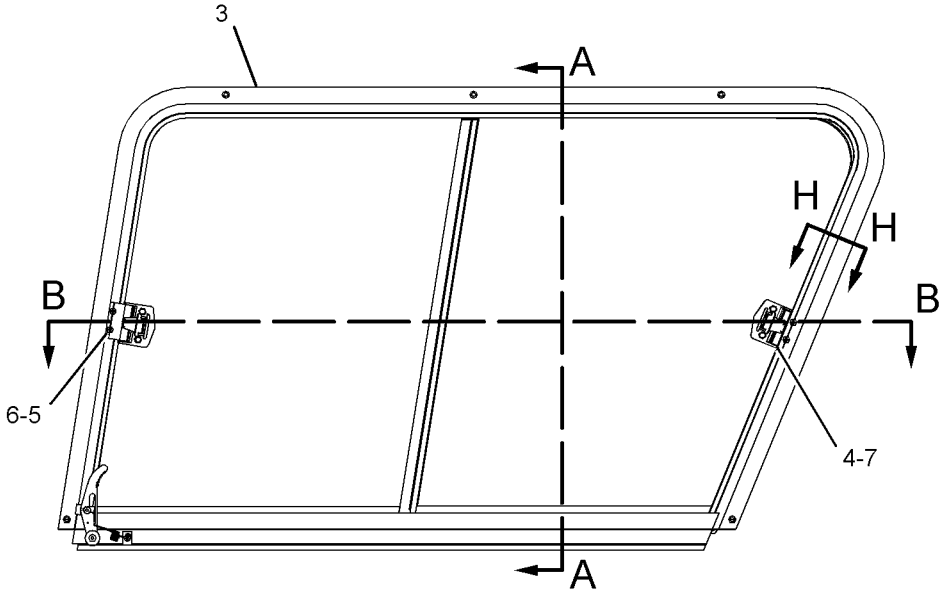


LEFT SIDE VIEW
(INSIDE OF CAB)

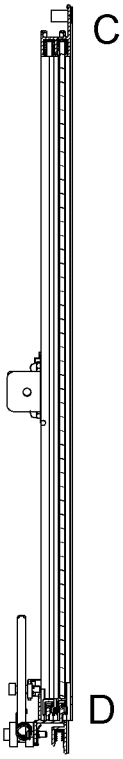


SECTION A-A

GRAPHIC #1 **<END>** g01958448

# SERVICE EQUIPMENT AND SUPPLIES

## *238-7734* FILM GP–UN

**S/N: TNK1-UP**

**AN ATTACHMENT**

**SMCS-7557** **i03775033**

| NOTE | REF NO | GRAPHIC REF | PART NUMBER | QTY | PART NAME 1 2 3 4 5 6 (PRODUCT LEVEL) | SEE PAGE |
|---|---|---|---|---|---|---|
| | 1 | 1 | **252-9015** | 1 | FILM-IDENTIFICATION (UN) (FRONT) | |
| | 2 | 1 | **252-9016** | 2 | FILM-IDENTIFICATION (UN) (SIDE) | |
| | 3 | 1 | **252-9017** | 2 | FILM-IDENTIFICATION (UN) (REAR) | |

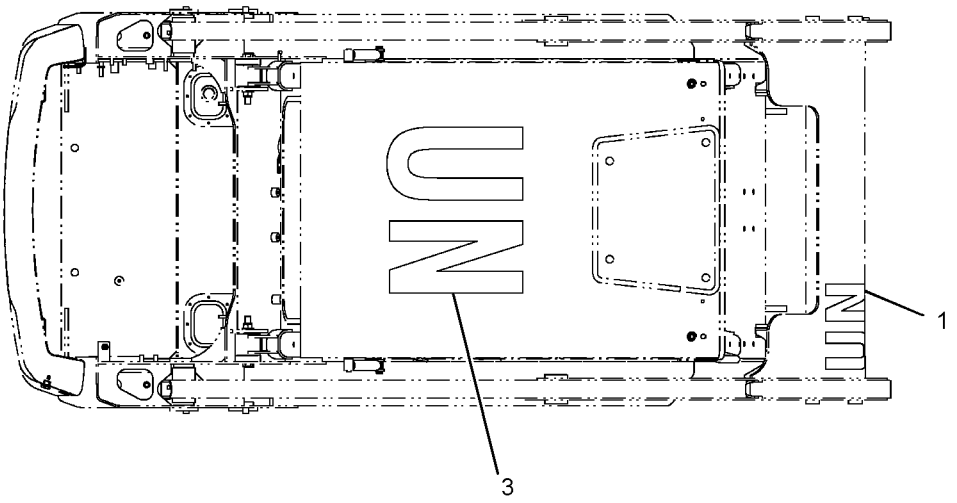


TOP VIEW FWD

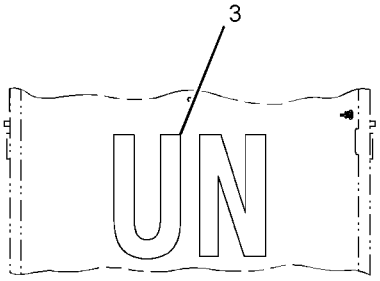


VIEW A-A

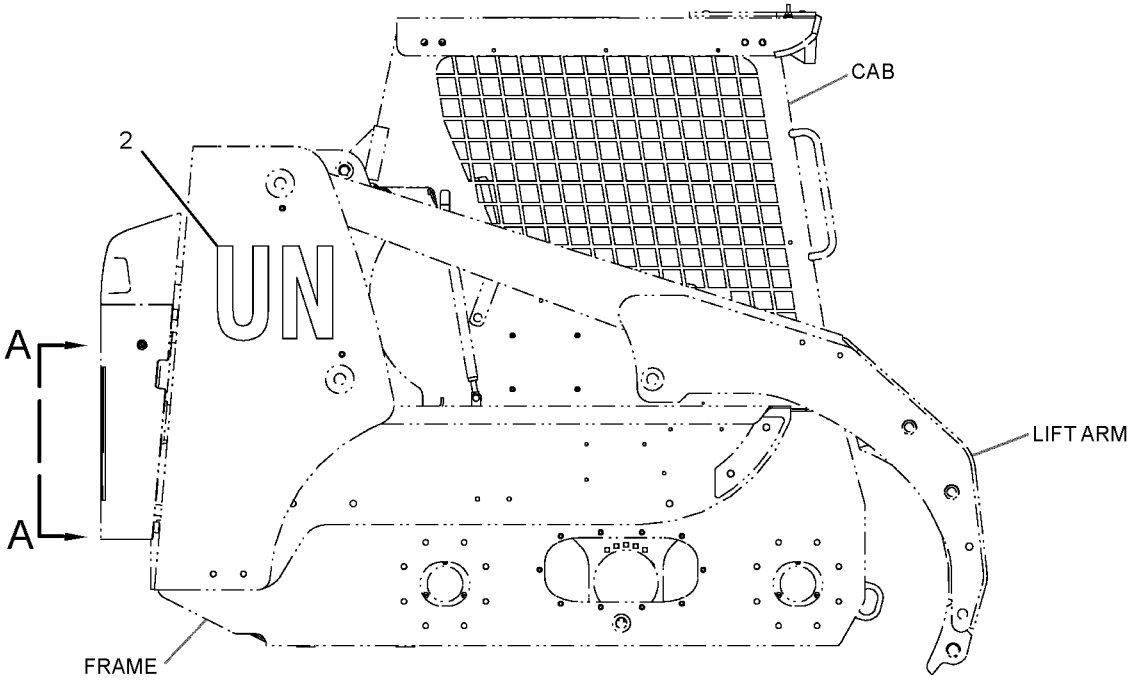


RIGHT SIDE VIEW

GRAPHIC #1 **<END>** g01397986

# SERVICE EQUIPMENT AND SUPPLIES

## *356-1894* FILM GP

**S/N: TNK1-UP**

**PART OF 326-5422 COMMON AR**

**SMCS-7557** **i03908849**

| NOTE | REF NO | GRAPHIC REF | PART NUMBER | QTY | PART NAME 1 2 3 4 5 6 (PRODUCT LEVEL) | SEE PAGE |
|---|---|---|---|---|---|---|
| | 1 | 1 | **258-3423** | 1 | FILM-IDENTIFICATION (CATERPILLAR) | |
| | 2 | 1 | **258-3424** | 1 | FILM-IDENTIFICATION (CAT, LH) | |
| | 3 | 1 | **258-3425** | 1 | FILM-IDENTIFICATION (CAT, RH) | |
| | 4 | 1 | **258-3427** | 1 | FILM-IDENTIFICATION (CAT) | |
| | 5 | 1 | **356-1895** | 1 | FILM-IDENTIFICATION (252B3, LH) | |
| | 6 | 1 | **356-1896** | 1 | FILM-IDENTIFICATION (252B3, RH) | |

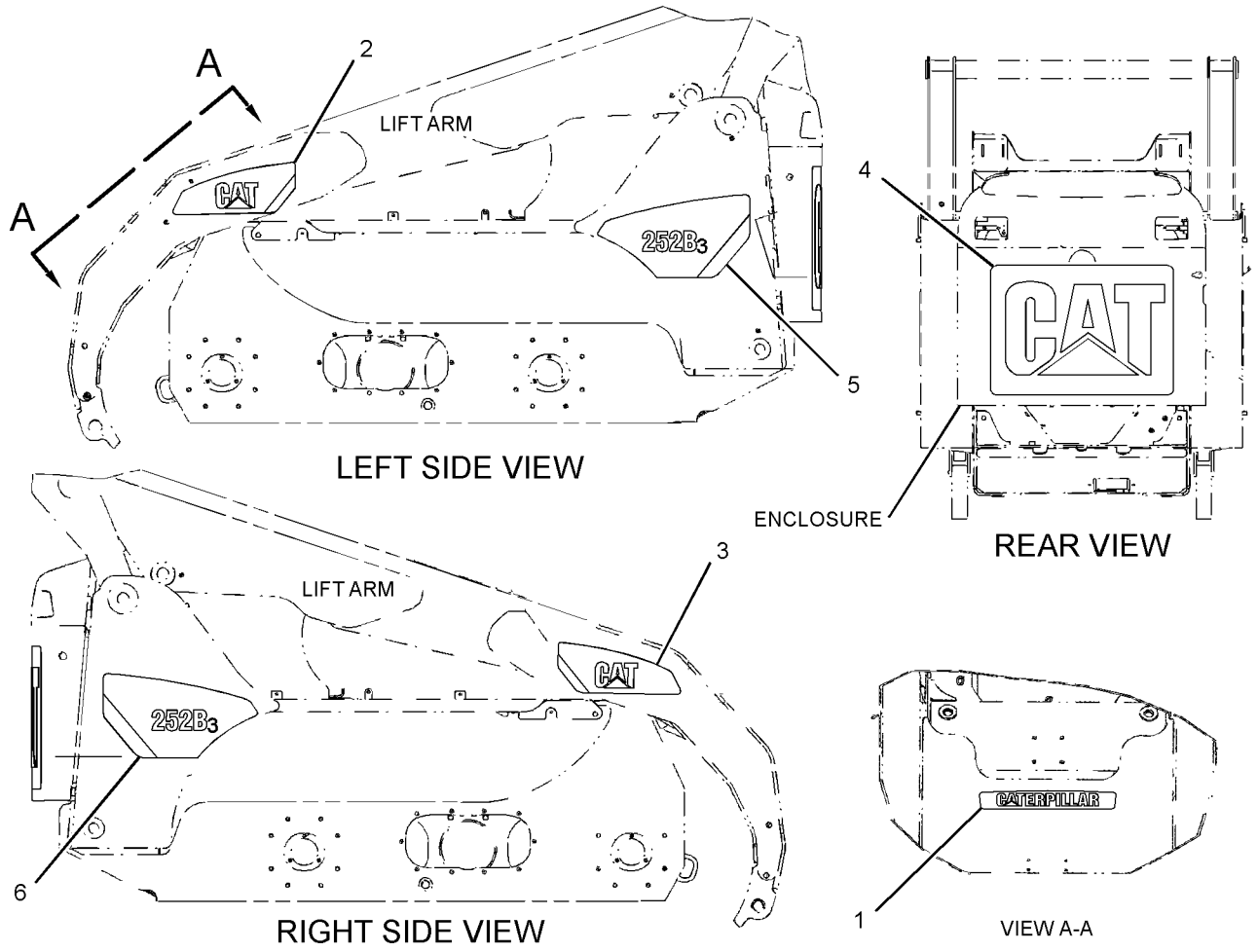


GRAPHIC #1 **<END>** g02153872

# SERVICE EQUIPMENT AND SUPPLIES

## *356-1897* FILM GP—TWO SPEED

**S/N: TNK1-UP**
**PART OF 326-5278, 326-5428 CONTROL AR-MACHINE**
**AN ATTACHMENT**

**SMCS-7557** **i03905410**

| NOTE | REF NO | GRAPHIC REF | PART NUMBER | QTY | PART NAME 1 2 3 4 5 6 (PRODUCT LEVEL) | SEE PAGE |
|---|---|---|---|---|---|---|
| | 1 | 1 | **290-2110** | 2 | FILM-IDENTIFICATION (TWO SPEED) | |

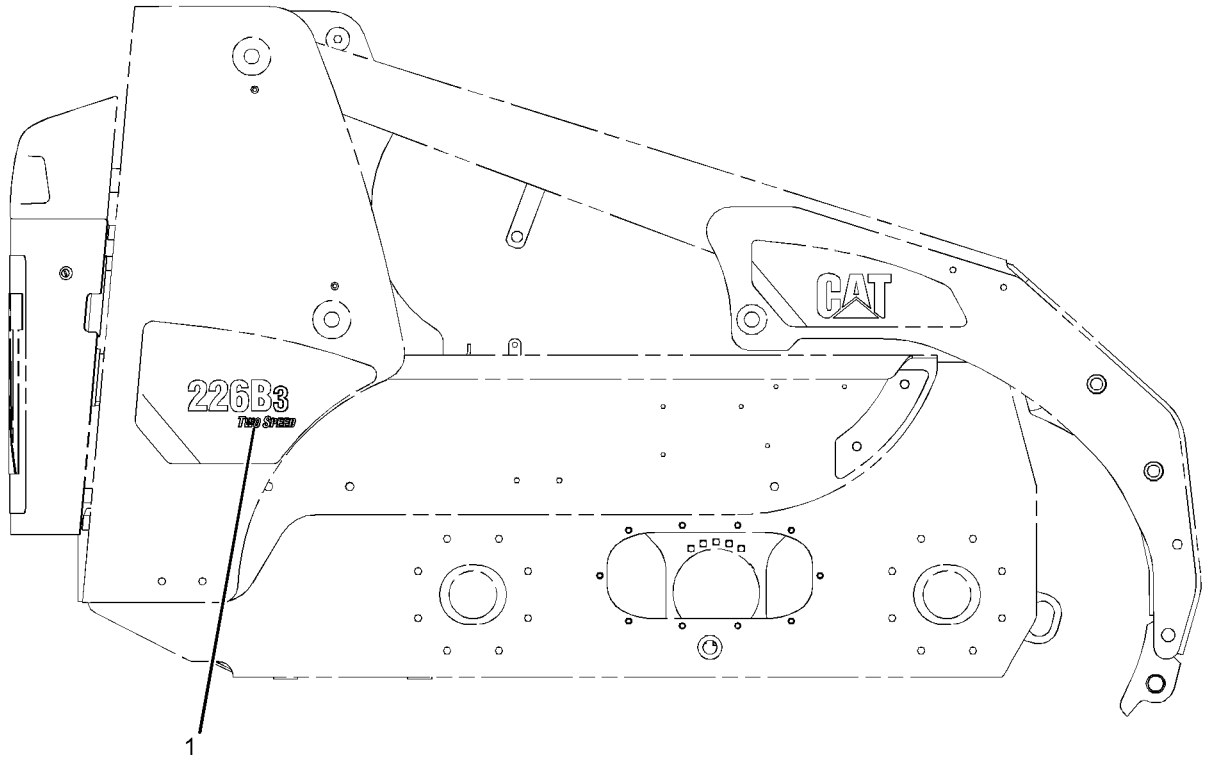


RIGHT SIDE VIEW

GRAPHIC #1 **<END>** g02147978

# SERVICE EQUIPMENT AND SUPPLIES

## *195-6740* PLATE & FILM GP

**S/N: TNK1-UP**
**AN ATTACHMENT**

**SMCS-7405, 7557** **i02890284**

| NOTE | REF NO | GRAPHIC REF | PART NUMBER | QTY | PART NAME 1 2 3 4 5 6 (PRODUCT LEVEL) | SEE PAGE |
|---|---|---|---|---|---|---|
| | 1 | 1 | **199-3410** | 1 | FILM-IDENTIFICATION<br>(SYNTHETIC HYD OIL, READ OMM) | |

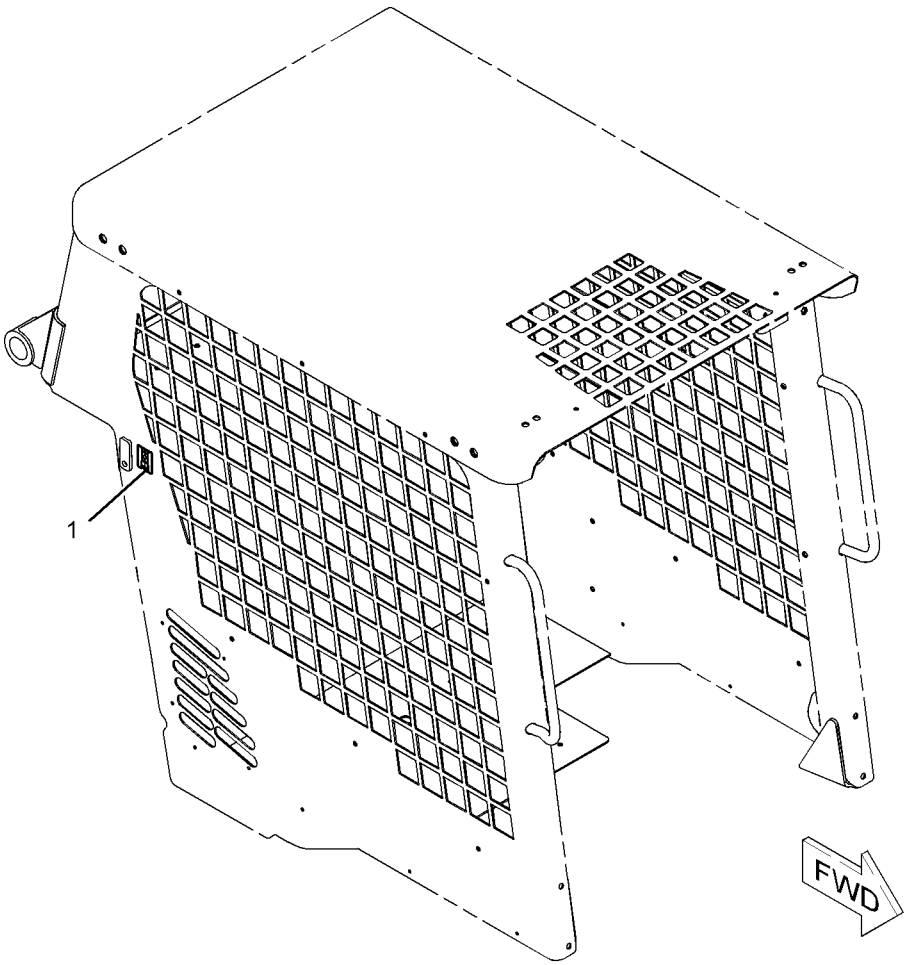


GRAPHIC #1 **<END>** g01086583

# SERVICE EQUIPMENT AND SUPPLIES

## *326-5682* PLATE & FILM GP

**S/N: TNK1-UP**

**AN ATTACHMENT**

**SMCS-7405, 7557** **i03904672**

| NOTE | REF NO | GRAPHIC REF | PART NUMBER | QTY | PART NAME 1 2 3 4 5 6 (PRODUCT LEVEL) | SEE PAGE |
|---|---|---|---|---|---|---|
| | 1 | 1 | **157-2853** | 1 | FILM-INFORMATION (READ OMM) | |
| | 3 | 2 | **169-2876** | 1 | FILM-IDENTIFICATION (POWER RECEPTACLE, 12-VOLT) | |
| | 4 | 1 | **219-0302** | 1 | FILM-WARNING (NO WELD, NO DRILL, READ OMM) | |
| | 5 | 1 | **239-4990** | 1 | FILM-WARNING (HIGH PRESSURE CYLINDER) | |
| | 6 | 2 | **224-8645** | 2 | FILM-WARNING (CRUSH HAZARD, STAY BACK) | |
| | 7 | 2 | **224-8945** | 1 | FILM-WARNING (DO NOT USE ETHER, U.S) | |
| | 8 | 1 | **224-9021** | 1 | FILM-WARNING (SEAT BELT) | |
| | 9 | 1 | **225-3305** | 1 | FILM-WARNING (UNIVERSAL, READ OMM, U.S.) | |
| | 10 | 1 | **234-6065** | 1 | FILM-CERTIFICATION (OPS, READ OMM) | |
| | 11 | 2 | **295-7317** | 1 | FILM-WARNING (CRUSH HAZARD, CAB, READ OMM) | |
| | 12 | 1 | **295-7318** | 1 | FILM-WARNING (FALL/CRUSH HAZARD, NO ACCESS) | |
| | 13 | 1 | **295-7319** | 1 | FILM-WARNING (CRUSH HAZARD, READ OMM) (WORK TOOL) | |
| | 15 | 2 | **235-1365** | 1 | FILM-WARNING (HOT FLUID UNDER PRESSURE) | |
| | 16 | 2 | **239-6986** | 1 | PLATE-IDENTIFICATION (MACHINE) | |
| | 17 | 1 | **263-4836** | 4 | FILM-SYMBOL (TIE-DOWN) | |
| | 18 | 2 | **356-1905** | 1 | FILM-INSTRUCTION (BUCKET LOWER) | |
| | 19 | 2 | **326-5683** | 1 | FILM-IDENTIFICATION (SERVICE CHART, READ OMM) | |
| | 21 | 2 | **225-0313** | 1 | FILM-WARNING (JUMP START, READ OMM, U.S.) | |
| | 24 | 1,2 | **295-7315** | 2 | FILM-WARNING (CRUSH HAZARD, CAB, READ OMM) | |
| | 25 | 1 | **295-7320** | 1 | FILM-WARNING (CRUSH HAZARD, READ OMM) (STATION) | |
| | 26 | 1 | **234-9575** | 1 | FILM-INSTRUCTION (GOVERNOR CONTROL) | |
| | 27 | 2 | **312-7747** | 1 | PLATE-WARNING (UNIVERSAL) | |

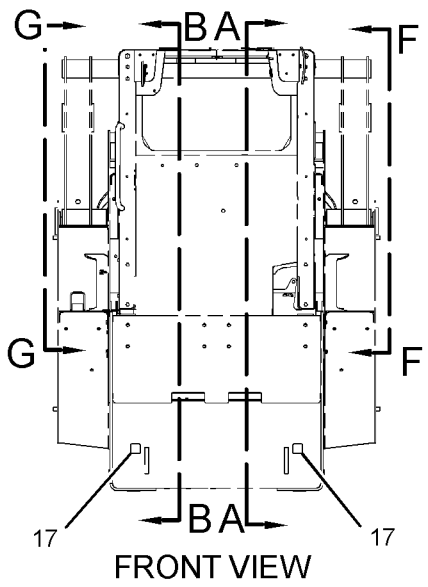


FRONT VIEW

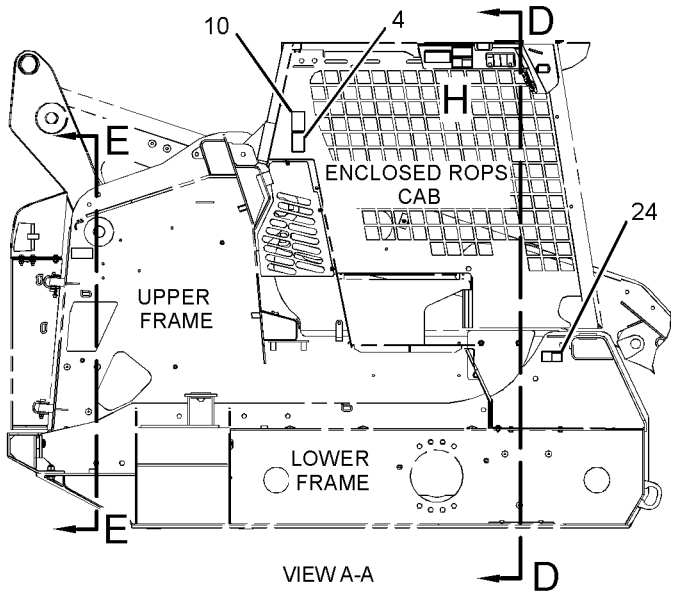


VIEW A-A

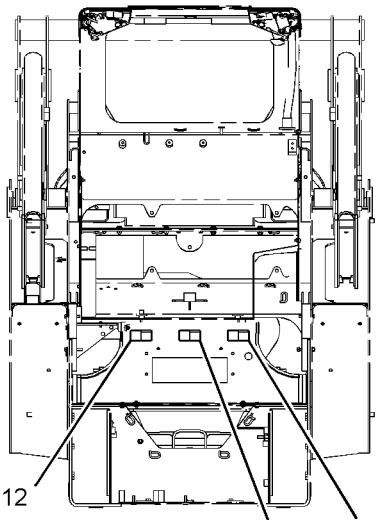


VIEW D-D

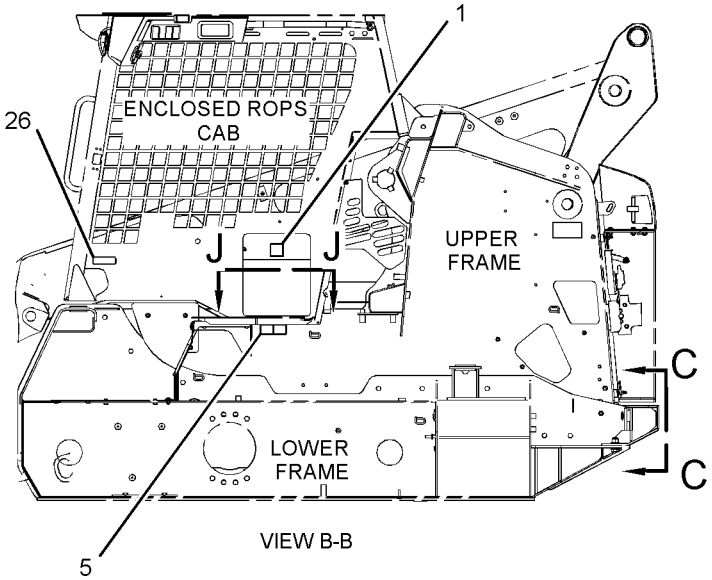


VIEW B-B

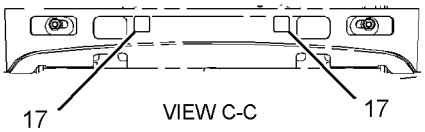


VIEW C-C

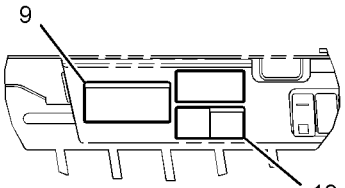


VIEW OF AREA H

REFER TO ALL ILLUSTRATIONS OF THIS GROUP FOR AUXILIARY VIEWS

GRAPHIC #1 g02149808

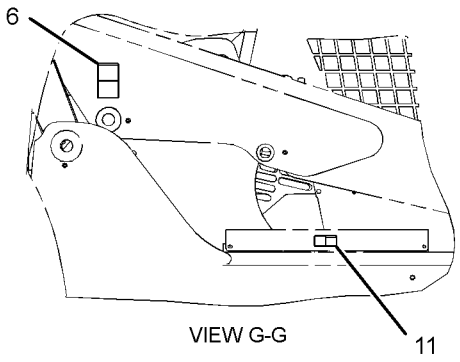


VIEW G-G

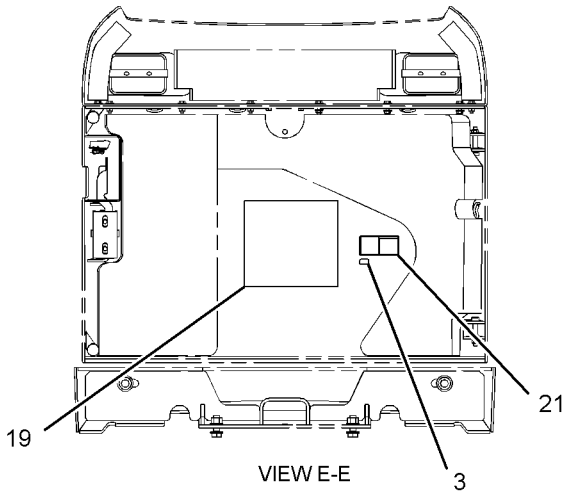


VIEW E-E

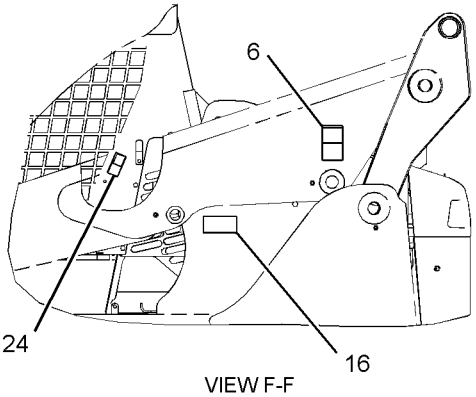


VIEW F-F

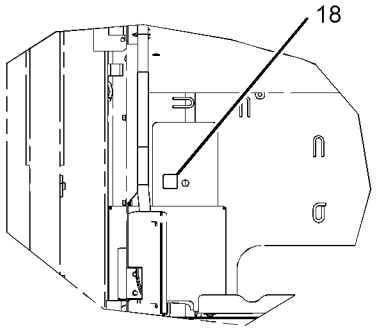


VIEW J-J

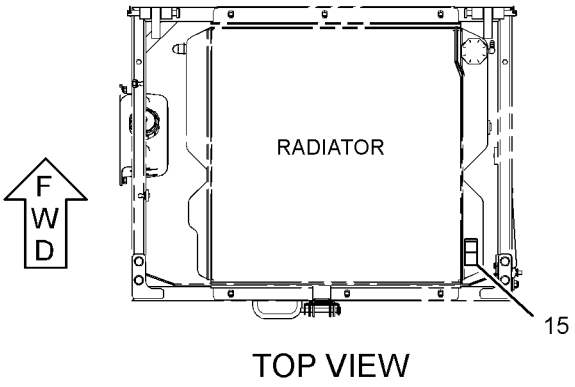


TOP VIEW

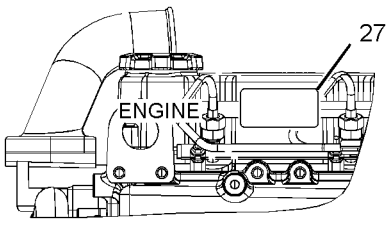


RIGHT SIDE VIEW
(FOR MODEL 252)

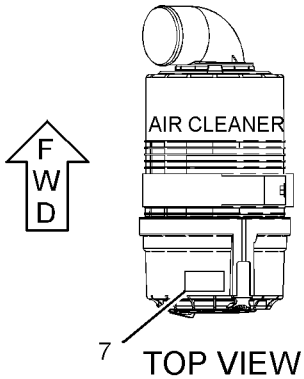


TOP VIEW

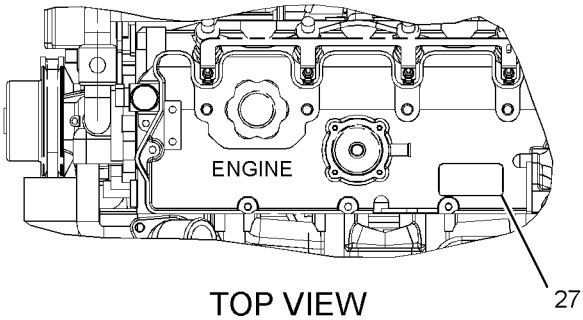


TOP VIEW
(FOR MODEL 232 & 242)

GRAPHIC #2 **<END>** g01416616

# SERVICE EQUIPMENT AND SUPPLIES

## *326-5686* PLATE & FILM GP–INTERNATIONAL

**S/N: TNK1-UP**

**AN ATTACHMENT**

**SMCS-7405, 7557** **i03904674**

| NOTE | REF NO | GRAPHIC REF | PART NUMBER | QTY | PART NAME 1 2 3 4 5 6 (PRODUCT LEVEL) | SEE PAGE |
|---|---|---|---|---|---|---|
| | 1 | 2 | **157-2853** | 1 | FILM-INFORMATION (READ OMM) | |
| | 2 | 1 | **169-2876** | 1 | FILM-IDENTIFICATION (POWER RECEPTACLE, 12-VOLT) | |
| | 3 | 2 | **219-0302** | 1 | FILM-WARNING (NO WELD, NO DRILL, READ OMM) | |
| | 4 | 2 | **234-6065** | 1 | FILM-CERTIFICATION (OPS, READ OMM) | |
| | 5 | 2 | **263-4836** | 4 | FILM-SYMBOL (TIE-DOWN) | |
| | 6 | 1 | **326-5683** | 1 | FILM-IDENTIFICATION (SERVICE CHART, READ OMM) | |
| | 7 | 2 | **239-4991** | 1 | FILM-WARNING (HIGH PRESSURE CYLINDER) | |
| | 8 | 2 | **295-7330** | 1 | FILM-WARNING (CRUSH HAZARD, READ OMM) | |
| | 9 | 1 | **312-7748** | 1 | PLATE-WARNING (UNIVERSAL, READ OMM) | |
| | 10 | 1 | **356-1905** | 1 | FILM-INSTRUCTION (BUCKET LOWER) | |
| | 11 | 2 | **224-0554** | 1 | FILM-WARNING (UNIVERSAL, READ OMM, INTL) | |
| | 12 | 1 | **224-8946** | 1 | FILM-WARNING (NO ETHER SPRAY/AIR INTK, INTL) | |
| | 13 | 2 | **224-9022** | 1 | FILM-WARNING (SEAT BELT) | |
| | 14 | 1 | **295-7327** | 1 | FILM-WARNING (CRUSH HAZARD, READ OMM) | |
| | 15 | 2 | **295-7328** | 1 | FILM-WARNING (FALL/CRUSH HAZARD, NO ACCESS) | |
| | 16 | 1,2 | **295-7325** | 2 | FILM-WARNING (CRUSH HAZARD, CAB, READ OMM) | |
| | 17 | 2 | **295-7329** | 1 | FILM-WARNING (CRUSH HAZARD, READ OMM) | |
| | 18 | 2 | **234-9575** | 1 | FILM-INSTRUCTION (GOVERNOR CONTROL) | |
| | 19 | 1 | **239-6986** | 1 | PLATE-IDENTIFICATION (MACHINE) | |
| | 20 | 1 | **225-0312** | 1 | FILM-WARNING (JUMP START, READ OMM, INTL) | |
| | 21 | 1 | **235-1368** | 1 | FILM-WARNING (RADIATOR) | |
| | 22 | 1 | **224-8646** | 2 | FILM-WARNING (CRUSH HAZARD, STAY BACK) | |

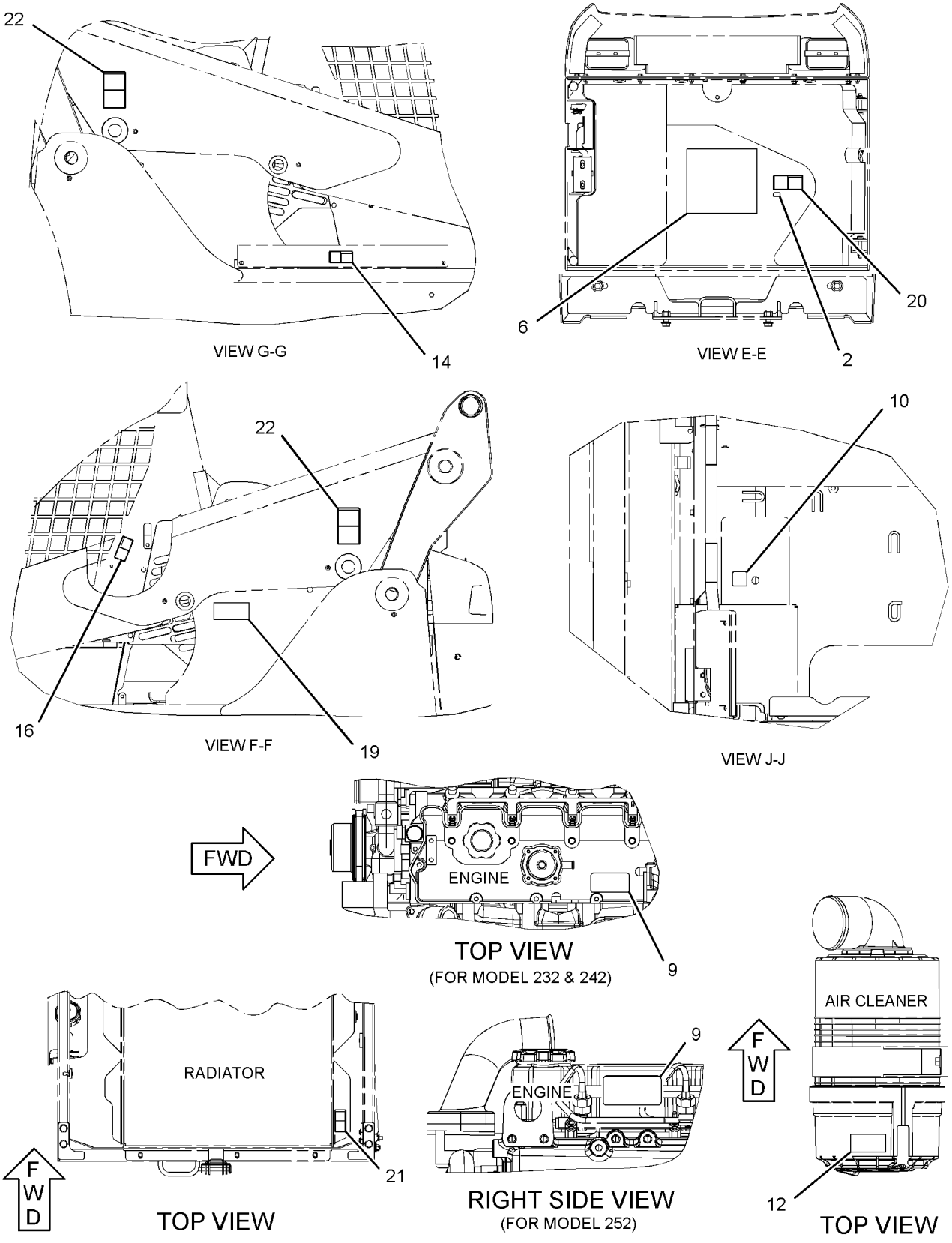


GRAPHIC #1

g02155915

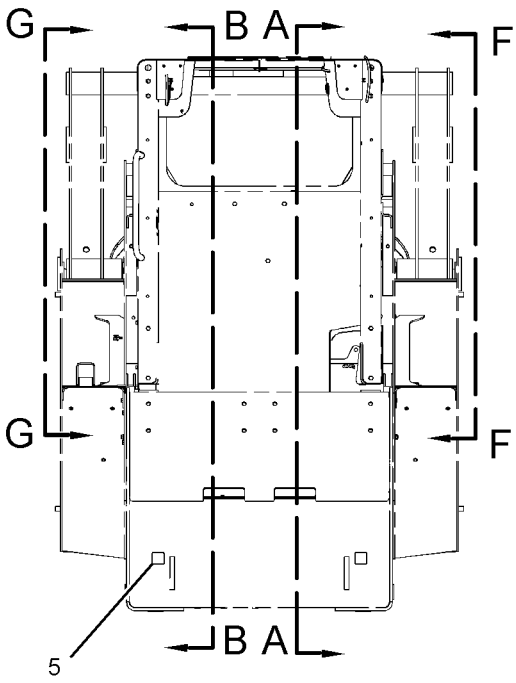


FRONT VIEW

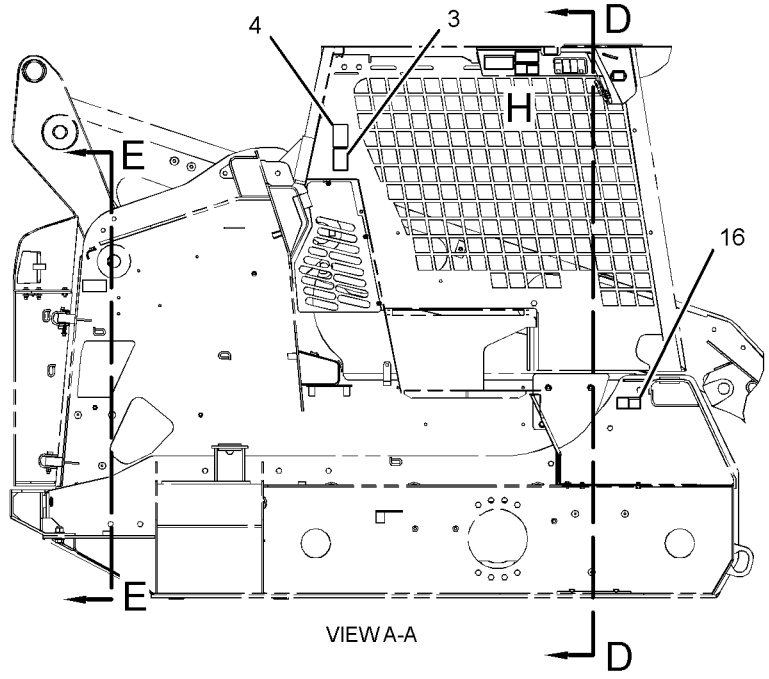


VIEW A-A

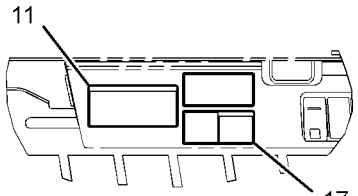


VIEW OF AREA H

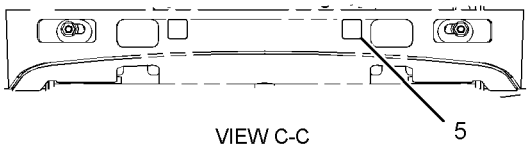


VIEW C-C

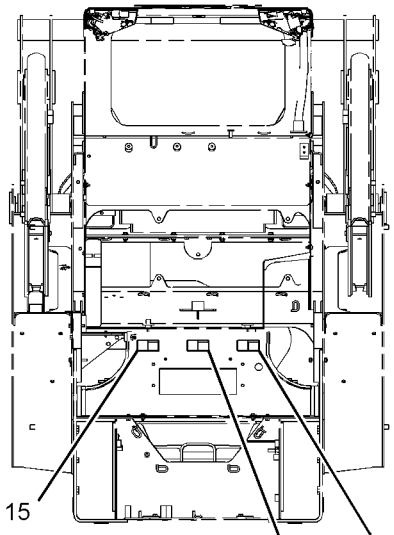


VIEW D-D

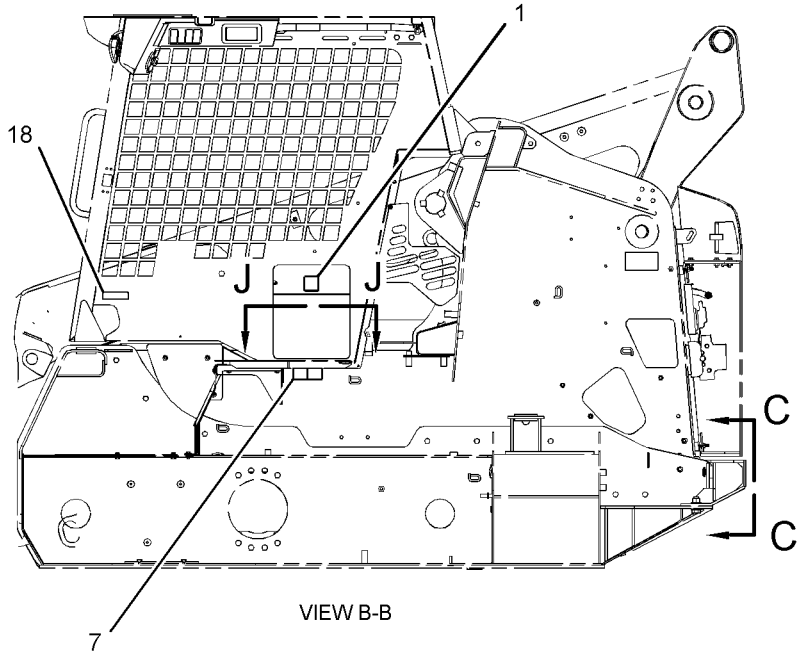


VIEW B-B

REFER TO ALL ILLUSTRATIONS OF THIS GROUP FOR AUXILIARY VIEWS

GRAPHIC #2 **<END>** g02155916

# MEMORANDA

# PART NUMBER INDEX


| Part | Page |
|---|---|
| **0** | |
| 0T-0244 | 293 |
| | 294 |
| | 295 |
| | 296 |
| **1** | |
| 1G-8878 | 102 |
| 1H-3244 | 66 |
| | 82 |
| 1M-6119 | 69 |
| 1M-6120 | 69 |
| 1P-4278 | 16 |
| | 46 |
| | 61 |
| 1P-4578 | 181 |
| 1P-7009 | 165 |
| 1S-9593 | 96 |
| | 239 |
| | 240 |
| | 241 |
| **2** | |
| 2D-6412 | 293 |
| | 294 |
| | 295 |
| | 296 |
| 2G-8624 | 158 |
| 2K-4973 | 41 |
| | 142 |
| 2K-5232 | 165 |
| 2L-8065 | 90 |
| 2L-8067 | 88 |
| 2L-8069 | 88 |
| | 92 |
| | 100 |
| | 276 |
| 2L-8077 | 88 |
| 2L-8079 | 92 |
| 2M-9780 | 100 |
| | 168 |
| | 172 |
| | 181 |
| | 183 |
| | 185 |
| | 200 |
| 2P-8104 | 83 |
| 2R-0364 | 289 |
| 2S-3440 | 181 |
| 2S-4078 | 181 |
| 2Y-5974 | 144 |
| **3** | |
| 3B-4505 | 9 |
| | 11 |
| | 21 |
| | 23 |
| | 25 |
| | 54 |
| 3B-4628 | 209 |
| 3B-8488 | 147 |
| | 158 |
| 3B-8489 | 158 |
| | 162 |
| | 163 |
| 3D-2824 | 100 |
| | 103 |
| | 111 |
| | 170 |
| | 172 |
| | 175 |
| | 187 |
| 3E-2310 | 179 |
| 3E-3892 | 303 |
| | 305 |
| 3E-4051 | 276 |
| 3E-4057 | 276 |
| 3E-5153 | 83 |
| 3E-5154 | 83 |
| 3E-7404 | 61 |
| 3E-9179 | 255 |
| | 257 |
| 3F-9556 | 282 |
| | 288 |
| 3J-1907 | 92 |
| | 102 |
| | 105 |
| | 107 |
| | 111 |
| | 161 |
| | 162 |
| | 163 |
| | 165 |
| | 172 |
| | 175 |
| | 177 |
| | 179 |
| | 200 |
| 3J-7354 | 107 |
| | 123 |
| | 125 |
| | 168 |
| | 177 |
| 3K-0360 | 100 |
| | 103 |
| | 111 |
| | 117 |
| | 154 |
| | 179 |
| | 198 |
| 3K-0715 | 123 |
| | 125 |
| 3K-2151 | 162 |
| | 163 |
| 3K-4897 | 158 |
| 3P-0439 | 162 |
| | 163 |
| 3P-1896 | 13 |
| 3S-2093 | 88 |
| | 90 |
| | 92 |
| | 93 |
| | 95 |
| | 96 |
| | 165 |
| | 227 |
| | 249 |
| | 252 |
| | 255 |
| | 257 |
| | 276 |
| | 284 |
| | 285 |
| 3S-6049 | 69 |
| 3S-8665 | 100 |
| 3S-9182 | 147 |
| **4** | |
| 4B-2043 | 92 |
| | 285 |
| 4B-4863 | 172 |
| | 175 |
| 4B-9302 | 61 |
| 4D-4431 | 147 |
| 4D-6466 | 61 |
| 4E-1384 | 226 |
| 4I-9404 | 38 |
| 4J-0522 | 181 |
| 4J-0527 | 161 |
| 4J-5267 | 181 |
| 4J-5477 | 165 |
| | 168 |
| | 177 |
| | 179 |
| 4J-7533 | 200 |
| 4K-4709 | 207 |
| 4K-8864 | 45 |
| | 46 |
| 4P-7429 | 90 |
| | 235 |
| 4P-7581 | 88 |
| | 90 |
| | 95 |
| | 165 |
| | 283 |
| 4P-8134 | 88 |
| | 90 |
| | 93 |
| 4S-1962 | 168 |
| 4S-5875 | 158 |
| **5** | |
| 5B-0651 | 158 |
| | 209 |
| | 211 |
| 5C-2874 | 172 |
| | 175 |
| 5C-2890 | 56 |
| | 58 |
| | 61 |
| | 66 |
| | 77 |
| | 82 |
| | 87 |
| | 88 |
| | 249 |
| | 252 |
| | 273 |
| | 287 |
| | 289 |
| 5C-7261 | 41 |
| | 48 |
| | 82 |
| | 88 |
| | 90 |
| | 92 |
| | 93 |
| | 103 |
| | 105 |
| | 107 |
| | 142 |
| | 165 |
| | 226 |
| | 236 |
| | 279 |
| | 282 |
| | 288 |
| | 290 |
| | 297 |
| | 298 |
| 5C-7682 | 262 |
| | 263 |
| 5C-7883 | 115 |
| 5C-8310 | 259 |
| | 301 |
| 5C-8311 | 259 |
| | 301 |
| 5C-9553 | 51 |
| | 56 |
| | 61 |
| | 227 |
| | 288 |
| 5D-0718 | 170 |
| 5I-4936 | 18 |
| 5I-4993 | 25 |
| 5I-5077 | 56 |
| 5I-7505 | 28 |
| 5I-7525 | 13 |
| 5I-7543 | 18 |
| 5I-7623 | 56 |
| 5I-7625 | 33 |
| 5I-7628 | 20 |
| | 40 |
| 5I-7630 | 33 |
| 5I-7678 | 50 |
| 5I-7689 | 56 |
| 5I-7719 | 33 |
| 5I-7728 | 40 |
| 5I-7931 | 53 |
| 5I-7933 | 56 |
| 5I-8021 | 50 |
| 5I-8023 | 50 |
| 5I-8056 | 20 |
| | 40 |
| 5I-8109 | 56 |
| 5I-8110 | 56 |
| 5I-8111 | 55 |
| 5K-4778 | 61 |


► **PRIMARY REFERENCE**

# PART NUMBER INDEX


| Part | Page |
|---|---|
| 5K-8451 | 165 |
| 5K-9090 | 103 |
| 5P-0372 | 41 |
| | 152 |
| | 209 |
| | 249 |
| | 252 |
| | 300 |
| 5P-0597 | 56 |
| 5P-1076 | 24 |
| | 141 |
| | 147 |
| 5P-1420 | 46 |
| | 61 |
| 5P-1442 | 16 |
| | 61 |
| | 197 |
| 5P-1478 | 90 |
| 5P-2230 | 181 |
| 5P-3092 | 99 |
| 5P-4115 | 93 |
| 5P-4116 | 19 |
| | 48 |
| | 61 |
| | 69 |
| | 90 |
| | 100 |
| | 103 |
| | 142 |
| | 147 |
| | 165 |
| | 236 |
| | 278 |
| 5P-4362 | 181 |
| 5P-4571 | 90 |
| | 92 |
| 5P-4868 | 52 |
| | 56 |
| 5P-4961 | 61 |
| | 197 |
| 5P-5924 | 276 |
| 5P-5927 | 290 |
| 5P-5969 | 249 |
| | 252 |
| | 260 |
| 5P-7070 | 260 |
| 5P-7162 | 88 |
| 5P-7464 | 183 |
| | 185 |
| | 187 |
| 5P-7465 | 183 |
| | 185 |
| | 187 |
| 5P-7470 | 46 |
| 5P-7471 | 46 |
| 5P-7703 | 46 |
| 5P-7957 | 230 |
| 5P-7958 | 1 |
| | 87 |
| 5P-8309 | 41 |
| | 249 |
| | 252 |
| 5P-8439 | 80 |
| | 81 |
| 5P-8500 | 1 |
| 5P-9297 | 165 |
| 5P-9909 | 181 |
| | 249 |
| | 252 |
| 5V-8309 | 41 |
| 5W-1987 | 249 |
| | 252 |
| 5W-6388 | 198 |

## 6

| Part | Page |
|---|---|
| 6B-2882 | 236 |
| 6D-1641 | 278 |
| 6D-3479 | 61 |
| | 179 |
| 6D-4246 | 197 |
| | 276 |
| 6D-5797 | 303 |
| | 305 |
| 6E-5060 | 123 |
| | 125 |
| 6F-6672 | 194 |
| 6I-1418 | 87 |
| 6K-2899 | 153 |
| 6K-4148 | 207 |
| 6K-8178 | 166 |
| 6V-0852 | 103 |
| | 177 |
| | 181 |
| 6V-1392 | 229 |
| 6V-1889 | 170 |
| 6V-1970 | 1 |
| 6V-2317 | 56 |
| | 59 |
| | 80 |
| 6V-3918 | 233 |
| | 234 |
| 6V-3940 | 33 |
| | 44 |
| | 50 |
| 6V-3965 | 103 |
| | 177 |
| | 181 |
| 6V-4270 | 249 |
| | 252 |
| 6V-5193 | 117 |
| 6V-5215 | 35 |
| 6V-5217 | 36 |
| | 63 |
| | 68 |
| 6V-5221 | 40 |
| 6V-5326 | 123 |
| | 125 |
| 6V-5586 | 123 |
| | 125 |
| 6V-5683 | 58 |
| | 117 |
| 6V-5834 | 285 |
| 6V-5839 | 36 |
| 6V-6689 | 260 |
| 6V-7357 | 19 |
| | 21 |
| | 56 |
| | 61 |
| 6V-7359 | 183 |
| | 185 |
| | 187 |
| 6V-7700 | 158 |
| 6V-7728 | 88 |
| | 93 |
| 6V-7744 | 211 |
| 6V-8186 | 288 |
| 6V-8352 | 123 |
| | 125 |
| 6V-8397 | 105 |
| | 107 |
| | 111 |
| | 165 |
| | 166 |
| | 172 |
| | 175 |
| | 179 |
| | 183 |
| 6V-8398 | 100 |
| | 103 |
| | 105 |
| | 107 |
| | 111 |
| | 161 |
| | 162 |
| | 163 |
| | 172 |
| | 175 |
| | 177 |
| | 183 |
| | 185 |
| 6V-8626 | 172 |
| 6V-8628 | 177 |
| 6V-8632 | 111 |
| 6V-8633 | 100 |
| 6V-8634 | 111 |
| 6V-8636 | 105 |
| | 107 |
| | 111 |
| | 165 |
| 6V-8637 | 103 |
| | 111 |
| 6V-8639 | 100 |
| | 111 |
| 6V-8641 | 165 |
| | 177 |
| | 179 |
| 6V-8642 | 100 |
| | 168 |
| | 172 |
| | 181 |
| | 183 |
| | 185 |
| 6V-8647 | 168 |
| | 177 |
| 6V-8713 | 100 |
| | 172 |
| | 175 |
| | 187 |
| 6V-8715 | 183 |
| 6V-8724 | 165 |
| | 172 |
| | 175 |
| 6V-8781 | 105 |
| | 179 |
| 6V-8938 | 165 |
| 6V-8978 | 111 |
| 6V-9000 | 168 |
| 6V-9001 | 165 |
| 6V-9007 | 170 |
| 6V-9028 | 90 |
| 6V-9161 | 107 |
| 6V-9168 | 166 |
| 6V-9170 | 187 |
| 6V-9182 | 181 |
| 6V-9189 | 150 |
| 6V-9508 | 111 |
| 6V-9632 | 19 |
| | 144 |
| | 145 |
| | 172 |
| | 175 |
| | 233 |
| | 234 |
| | 255 |
| | 257 |
| 6V-9746 | 103 |
| | 111 |
| | 170 |
| | 181 |
| 6V-9805 | 283 |
| 6V-9829 | 168 |
| 6V-9836 | 107 |
| | 165 |
| 6V-9838 | 165 |
| 6V-9872 | 107 |
| 6V-9873 | 177 |
| 6W-5698 | 61 |
| | 198 |

## 7

| Part | Page |
|---|---|
| 7D-8431 | 227 |
| 7E-2700 | 151 |
| | 152 |
| 7G-1060 | 87 |
| 7G-2950 | 166 |
| 7G-2951 | 166 |
| 7G-7053 | 227 |
| 7H-7055 | 166 |
| 7J-9108 | 100 |
| | 105 |
| | 107 |
| | 111 |
| | 165 |
| | 168 |
| | 172 |
| | 175 |
| | 181 |
| | 183 |
| | 185 |
| | 187 |
| 7K-1181 | 58 |
| | 69 |
| | 87 |
| | 90 |
| | 92 |
| | 100 |


► **PRIMARY REFERENCE**

# PART NUMBER INDEX


| Part | Page | Part | Page | Part | Page | Part | Page |
|---|---|---|---|---|---|---|---|
| | 111 | 8C-3205 | 181 | | 144 | | 147 |
| | 165 | 8C-3398 | 87 | | 145 | | 151 |
| | 168 | | 88 | | 172 | | 152 |
| | 170 | 8C-3446 | 168 | | 175 | | 264 |
| | 177 | 8C-3451 | 168 | | 291 | 8T-4133 | 41 |
| | 203 | 8C-5918 | 69 | 8T-3848 | 249 | | 45 |
| | 235 | 8C-6354 | 87 | | 252 | | 46 |
| | 276 | 8C-6758 | 105 | 8T-3984 | 58 | | 61 |
| | 278 | | 107 | 8T-4121 | 18 | | 69 |
| 7M-7410 | 45 | 8C-6959 | 61 | | 41 | | 83 |
| 7M-8485 | 181 | 8C-8400 | 170 | | 45 | | 93 |
| 7N-7221 | 284 | 8C-8992 | 99 | | 46 | | 158 |
| 7N-9017 | 93 | 8C-9778 | 83 | | 61 | | 166 |
| | 100 | 8C-9783 | 83 | | 63 | | 170 |
| 7R-2750 | 88 | 8F-1434 | 83 | | 69 | | 209 |
| 7R-2751 | 87 | 8G-1151 | 255 | | 75 | | 226 |
| 7T-0093 | 96 | | 257 | | 81 | | 235 |
| 7T-1099 | 144 | 8I-5078 | 200 | | 83 | | 236 |
| | 145 | 8J-4455 | 83 | | 90 | | 249 |
| | 290 | 8L-5188 | 209 | | 93 | | 252 |
| 7T-6087 | 83 | 8L-8413 | 255 | | 100 | | 265 |
| 7T-6088 | 83 | | 257 | | 119 | | 278 |
| 7T-6090 | 83 | | 266 | | 147 | 8T-4136 | 61 |
| 7T-6092 | 83 | 8M-4963 | 92 | | 158 | | 90 |
| 7T-6093 | 83 | 8N-0869 | 69 | | 166 | | 100 |
| 7T-6099 | 83 | 8N-1548 | 87 | | 170 | | 147 |
| 7T-6799 | 284 | 8N-1549 | 92 | | 172 | | 166 |
| 7X-0579 | 88 | 8N-1725 | 69 | | 175 | | 183 |
| 7X-0595 | 158 | 8R-3857 | 145 | | 179 | | 185 |
| 7X-0603 | 150 | 8S-0934 | 293 | | 181 | | 197 |
| 7X-0608 | 90 | | 294 | | 183 | | 199 |
| | 92 | | 295 | | 185 | | 276 |
| | 93 | | 296 | | 187 | 8T-4137 | 20 |
| 7X-0610 | 99 | 8T-0087 | 77 | | 191 | | 63 |
| 7X-0796 | 63 | 8T-0154 | 278 | | 192 | | 100 |
| 7X-0818 | 43 | 8T-0267 | 123 | | 197 | | 142 |
| | 54 | | 125 | | 199 | | 166 |
| 7X-1443 | 46 | 8T-0269 | 242 | | 209 | | 172 |
| 7X-2475 | 283 | | 243 | | 211 | | 175 |
| 7X-2535 | 172 | | 244 | | 226 | | 183 |
| 7X-2537 | 44 | | 245 | | 235 | | 185 |
| | 142 | | 246 | | 236 | | 187 |
| | 291 | 8T-0271 | 115 | | 244 | | 199 |
| 7X-2539 | 107 | | 191 | | 245 | | 244 |
| | 150 | | 194 | | 246 | | 245 |
| 7X-2546 | 187 | 8T-0273 | 123 | | 249 | | 246 |
| 7X-2548 | 90 | | 125 | | 252 | 8T-4138 | 58 |
| 7X-2553 | 264 | 8T-0276 | 40 | | 265 | | 290 |
| 7X-2556 | 24 | 8T-0285 | 172 | | 268 | 8T-4139 | 183 |
| 7X-2621 | 211 | | 175 | | 276 | | 185 |
| 7X-6312 | 73 | 8T-0318 | 41 | | 278 | | 187 |
| 7X-7729 | 41 | 8T-0379 | 165 | 8T-4122 | 24 | 8T-4159 | 41 |
| | 45 | 8T-0389 | 75 | | 99 | 8T-4171 | 172 |
| | 46 | 8T-0642 | 31 | | 113 | 8T-4172 | 211 |
| | 142 | 8T-1158 | 203 | | 114 | 8T-4173 | 283 |
| | 158 | | 205 | | 140 | 8T-4176 | 24 |
| | 166 | 8T-1159 | 117 | | 147 | 8T-4177 | 54 |
| | 211 | 8T-1687 | 103 | | 151 | 8T-4179 | 16 |
| 7X-9065 | 285 | 8T-2444 | 249 | | 152 | 8T-4181 | 41 |
| | | | 252 | | 264 | | 142 |
| | | 8T-2895 | 229 | | 283 | 8T-4183 | 235 |
| **8** | | 8T-3311 | 177 | 8T-4132 | 24 | 8T-4185 | 46 |
| | | 8T-3490 | 144 | | 113 | 8T-4189 | 16 |
| 8C-3081 | 161 | | 165 | | 114 | | 69 |
| 8C-3110 | 196 | 8T-3612 | 19 | | 140 | | 147 |


► **PRIMARY REFERENCE**

# PART NUMBER INDEX


| Part | Page |
|---|---|
| | 166 |
| | 197 |
| | 236 |
| | 276 |
| 8T-4191 | 46 |
| | 158 |
| | 166 |
| | 179 |
| | 268 |
| | 278 |
| 8T-4192 | 24 |
| 8T-4194 | 147 |
| | 183 |
| | 185 |
| | 187 |
| 8T-4195 | 20 |
| | 119 |
| | 170 |
| | 187 |
| 8T-4196 | 45 |
| | 61 |
| | 119 |
| | 158 |
| | 181 |
| | 192 |
| | 209 |
| | 211 |
| | 235 |
| 8T-4197 | 288 |
| 8T-4198 | 196 |
| 8T-4200 | 9 |
| | 21 |
| | 23 |
| | 25 |
| | 59 |
| | 69 |
| | 90 |
| 8T-4201 | 166 |
| 8T-4205 | 41 |
| | 58 |
| | 66 |
| | 78 |
| | 82 |
| | 87 |
| | 88 |
| | 142 |
| | 147 |
| | 172 |
| | 227 |
| | 242 |
| | 243 |
| | 244 |
| | 245 |
| | 246 |
| | 249 |
| | 252 |
| | 283 |
| | 287 |
| | 288 |
| | 290 |
| 8T-4222 | 249 |
| | 252 |
| 8T-4223 | 16 |
| | 24 |
| | 183 |
| | 185 |
| | 187 |
| | 195 |
| | 235 |
| | 293 |
| | 294 |
| | 295 |
| | 296 |
| 8T-4224 | 16 |
| | 21 |
| | 43 |
| | 45 |
| | 46 |
| | 54 |
| | 80 |
| | 82 |
| | 88 |
| | 105 |
| | 107 |
| | 147 |
| | 150 |
| | 158 |
| | 166 |
| | 172 |
| | 175 |
| | 183 |
| | 187 |
| | 191 |
| | 192 |
| | 222 |
| | 227 |
| | 236 |
| | 247 |
| | 249 |
| | 252 |
| | 267 |
| | 276 |
| | 279 |
| | 290 |
| | 291 |
| | 297 |
| | 298 |
| 8T-4244 | 141 |
| | 147 |
| | 183 |
| | 185 |
| | 187 |
| 8T-4742 | 273 |
| | 289 |
| 8T-4744 | 273 |
| | 289 |
| 8T-4778 | 283 |
| 8T-4896 | 20 |
| | 63 |
| | 68 |
| 8T-4908 | 19 |
| | 45 |
| | 61 |
| | 100 |
| | 142 |
| | 147 |
| | 166 |
| | 173 |
| | 175 |
| | 236 |
| | 278 |
| 8T-4910 | 141 |
| 8T-4956 | 195 |
| 8T-4970 | 147 |
| 8T-4971 | 273 |
| 8T-5005 | 46 |
| | 166 |
| 8T-5049 | 195 |
| 8T-5095 | 115 |
| | 196 |
| 8T-5372 | 264 |
| 8T-5413 | 145 |
| | 233 |
| | 234 |
| 8T-6466 | 41 |
| | 46 |
| 8T-6685 | 235 |
| 8T-6726 | 52 |
| 8T-6842 | 259 |
| | 301 |
| 8T-6869 | 222 |
| | 267 |
| 8T-6870 | 105 |
| | 158 |
| 8T-6902 | 288 |
| 8T-6912 | 247 |
| | 290 |
| 8T-7329 | 21 |
| 8T-7338 | 140 |
| | 147 |
| 8T-7547 | 55 |
| | 90 |
| | 191 |
| | 192 |
| 8T-7934 | 19 |
| 8T-7970 | 103 |
| 8T-8729 | 92 |
| 8T-8737 | 87 |
| | 90 |
| | 92 |
| | 93 |
| | 239 |
| | 240 |
| | 241 |
| | 249 |
| | 252 |
| | 266 |
| | 280 |
| | 281 |
| | 284 |
| 8T-8799 | 87 |
| | 90 |
| 8T-9405 | 203 |
| 8T-9655 | 87 |
| 8X-5489 | 69 |
| | |
| 9B-7233 | 285 |
| 9C-2741 | 276 |
| 9C-5344 | 46 |
| | 152 |
| | 249 |
| | 252 |
| 9F-5644 | 90 |
| | 92 |
| | 93 |
| 9G-0005 | 69 |
| 9G-3695 | 189 |
| | 227 |
| 9G-4336 | 90 |
| | 92 |
| 9G-5127 | 147 |
| 9M-1974 | 31 |
| | 33 |
| | 35 |
| | 36 |
| | 40 |
| | 44 |
| | 50 |
| | 56 |
| | 59 |
| | 63 |
| | 68 |
| 9M-4972 | 100 |
| 9M-8406 | 166 |
| 9P-4609 | 227 |
| 9R-1004 | 166 |
| | 173 |
| | 175 |
| 9R-1005 | 166 |
| | 173 |
| | 175 |
| | 183 |
| | 185 |
| | 187 |
| 9R-1499 | 78 |
| 9R-1610 | 144 |
| | 145 |
| 9R-2672 | 144 |
| | 145 |
| | 209 |
| 9R-7802 | 173 |
| | 175 |
| | 183 |
| | 185 |
| | 187 |
| 9R-7803 | 173 |
| | 175 |
| | 183 |
| | 185 |
| | 187 |
| 9R-7941 | 284 |
| 9R-7942 | 79 |
| 9R-7958 | 79 |
| 9R-7980 | 284 |
| 9R-9282 | 144 |
| 9R-9866 | 144 |
| | 145 |
| 9S-0285 | 227 |
| 9S-8002 | 123 |
| | 125 |
| 9S-8004 | 161 |
| | 162 |
| | 163 |
| 9S-8005 | 117 |
| 9T-2837 | 203 |
| 9T-4817 | 123 |


9

# PART NUMBER INDEX


| Part | Page |
|---|---|
| | 125 |
| 9T-4884 | 191 |
| | 194 |
| 9T-7303 | 209 |
| 9U-6994 | 181 |
| 9U-6995 | 181 |
| 9W-0607 | 75 |
| | 76 |
| 9W-0844 | 88 |
| | 92 |
| | 100 |
| | 276 |
| | 284 |
| 9W-0852 | 92 |
| | 96 |
| 9X-1054 | 90 |
| 9X-1055 | 90 |
| 9X-1056 | 90 |
| 9X-1813 | 227 |
| 9X-2036 | 83 |
| 9X-2038 | 61 |
| 9X-2041 | 249 |
| | 252 |
| | 265 |
| 9X-2042 | 227 |
| | 230 |
| | 285 |
| 9X-2043 | 173 |
| | 175 |
| 9X-2044 | 247 |
| | 249 |
| | 252 |
| | 255 |
| | 257 |
| 9X-2045 | 249 |
| | 252 |
| | 255 |
| | 257 |
| 9X-2092 | 168 |
| | 170 |
| | 274 |
| | 278 |
| 9X-2134 | 183 |
| 9X-3401 | 87 |
| | 90 |
| | 92 |
| | 249 |
| | 252 |
| | 255 |
| | 257 |
| | 284 |
| 9X-3402 | 88 |
| | 90 |
| | 255 |
| | 257 |
| 9X-4244 | 75 |
| | 76 |
| 9X-6032 | 191 |
| 9X-6165 | 247 |
| | 290 |
| 9X-6277 | 290 |
| 9X-6581 | 165 |
| 9X-6606 | 123 |
| | 125 |
| 9X-6611 | 161 |
| | 162 |
| | 163 |
| 9X-6772 | 73 |
| | 74 |
| | 88 |
| 9X-7378 | 235 |
| | 276 |
| 9X-7380 | 276 |
| 9X-7381 | 276 |
| 9X-7382 | 276 |
| 9X-7383 | 276 |
| 9X-8118 | 79 |
| 9X-8139 | 79 |
| 9X-8250 | 278 |
| 9X-8256 | 21 |
| | 51 |
| | 285 |
| 9X-8918 | 303 |
| | 305 |

## 0

| Part | Page |
|---|---|
| 003-3082 | 200 |
| 004-6810 | 278 |
| 030-1712 | 90 |
| 032-8139 | 17 |
| 032-9828 | 255 |
| | 257 |
| 033-5853 | 115 |
| | 117 |
| 033-6042 | 115 |
| | 117 |
| 034-2151 | 181 |
| 036-1865 | 45 |
| 069-4080 | 45 |
| | 61 |
| 081-3698 | 123 |
| | 125 |
| 084-4277 | 284 |
| 084-4348 | 77 |
| 085-8091 | 276 |
| 085-9513 | 12 |
| 091-2436 | 284 |
| 092-2467 | 170 |
| 094-4628 | 9 |
| | 12 |
| 094-7235 | 59 |
| 095-0641 | 200 |
| | 288 |
| 095-0913 | 276 |
| 095-1207 | 243 |
| | 244 |
| | 245 |
| 095-1325 | 152 |
| | 249 |
| | 252 |
| | 300 |
| 095-1513 | 38 |
| 095-2005 | 33 |
| 096-0194 | 121 |
| | 122 |
| 096-2500 | 21 |
| | 51 |
| 096-3741 | 13 |
| 096-8475 | 40 |
| 096-8482 | 25 |
| 096-9529 | 21 |
| 097-7234 | 284 |
| 099-3649 | 11 |
| | 54 |
| 099-4420 | 13 |

## 1

| Part | Page |
|---|---|
| 100-3685 | 83 |
| 100-3866 | 99 |
| 100-4112 | 83 |
| 100-4113 | 83 |
| 100-4115 | 83 |
| 100-4118 | 83 |
| 100-4119 | 83 |
| 100-6674 | 276 |
| 100-7530 | 105 |
| | 107 |
| 101-2867 | 172 |
| | 175 |
| | 285 |
| 101-3129 | 187 |
| 101-6544 | 36 |
| 101-8296 | 276 |
| 102-8703 | 183 |
| | 185 |
| | 187 |
| 102-8801 | 90 |
| | 280 |
| | 281 |
| 102-8802 | 87 |
| | 90 |
| | 92 |
| | 95 |
| | 147 |
| | 203 |
| | 235 |
| 102-8803 | 255 |
| | 257 |
| 102-8804 | 77 |
| | 87 |
| | 189 |
| | 282 |
| | 284 |
| 102-8805 | 249 |
| | 252 |
| | 255 |
| | 257 |
| | 284 |
| 102-8806 | 93 |
| | 96 |
| 103-2006 | 285 |
| 103-2543 | 88 |
| 103-6262 | 227 |
| 103-9083 | 36 |
| 103-9246 | 15 |
| 103-9247 | 15 |
| 103-9252 | 15 |
| 103-9253 | 15 |
| 103-9272 | 9 |
| 103-9273 | 9 |
| 103-9276 | 13 |
| 103-9279 | 13 |
| 103-9280 | 20 |
| 103-9288 | 8 |
| 103-9289 | 8 |
| 103-9290 | 8 |
| 103-9680 | 10 |
| 103-9703 | 13 |
| 103-9725 | 37 |
| 103-9747 | 44 |
| 104-1218 | 13 |
| 104-1995 | 284 |
| 104-5957 | 301 |
| 105-2814 | ►66 |
| | 68 |
| 105-4593 | 111 |
| 105-9411 | 276 |
| 106-8715 | 170 |
| 107-3134 | 90 |
| 107-3135 | 90 |
| 107-3136 | 90 |
| 107-3659 | 72 |
| 107-4057 | 162 |
| | 163 |
| 108-0656 | 301 |
| 108-3565 | 123 |
| | 125 |
| 109-2356 | 284 |
| 110-2023 | 144 |
| | 145 |
| 110-2570 | 16 |
| 110-6326 | 49 |
| 110-6331 | 49 |
| 110-7887 | 284 |
| 110-8760 | 96 |
| 111-0483 | 145 |
| 111-4337 | 158 |
| 111-7898 | 255 |
| | 257 |
| 111-7899 | 80 |
| | 96 |
| | 172 |
| | 223 |
| | 255 |
| | 257 |
| | 284 |
| 112-1817 | 172 |
| | 175 |
| | ►202 |
| 112-4719 | 123 |
| | 125 |
| 112-9401 | 65 |
| 112-9611 | 255 |
| | 257 |
| 112-9717 | 49 |
| 112-9783 | 179 |
| 112-9861 | 202 |
| 113-0363 | 59 |
| 113-0364 | 59 |
| 113-0693 | 235 |
| 113-1141 | 36 |
| 113-4458 | 66 |
| 113-4459 | 66 |
| 113-4460 | 66 |


► **PRIMARY REFERENCE**

# PART NUMBER INDEX


| Part | Page |
|---|---|
| 113-4461 | 66 |
| 113-4462 | 66 |
| 113-4463 | 66 |
| 113-4464 | 66 |
| 113-4465 | 66 |
| 113-4466 | 66 |
| 113-4467 | 66 |
| 113-4468 | 66 |
| 113-4469 | 66 |
| 113-4470 | 66 |
| 113-8490 | 87 |
| 113-8491 | 87 |
| 113-8492 | 87 |
| 114-6658 | 247 |
| 115-1615 | 90 |
| 116-5763 | 236 |
| 116-7471 | 87 |
| 117-2827 | 18 |
| 117-2829 | 18 |
| 117-3285 | 18 |
| 117-5015 | 20 |
| 118-2990 | 24 |
| 118-8118 | 65 |
| 119-3662 | 88 |
| | 90 |
| | 92 |
| | 255 |
| | 257 |
| | 276 |
| | 284 |
| 119-9631 | 223 |
| 121-4459 | 123 |
| | 125 |
| 122-4406 | 255 |
| | 257 |
| 122-8948 | 59 |
| 122-8949 | 59 |
| 123-4750 | 179 |
| 123-7615 | 249 |
| | 252 |
| | 284 |
| 124-2456 | 165 |
| 124-3243 | 247 |
| | 255 |
| | 257 |
| | 290 |
| | 291 |
| 124-3548 | 87 |
| 124-5640 | 276 |
| 125-3518 | 249 |
| | 252 |
| 125-7874 | 88 |
| | 90 |
| | 92 |
| | 93 |
| | 284 |
| 125-7875 | 88 |
| | 249 |
| | 252 |
| | 285 |
| 125-7876 | 88 |
| | 285 |
| 126-1767 | 189 |
| | 249 |
| | 252 |
| 126-1774 | 87 |
| 126-5701 | 209 |
| 127-2170 | 249 |
| | 252 |
| 127-5483 | 92 |
| 127-5484 | 87 |
| 127-6316 | 200 |
| 128-2955 | 10 |
| 128-2956 | 10 |
| 128-2958 | 10 |
| 128-4123 | 88 |
| 128-5016 | 88 |
| 128-8614 | 65 |
| 129-3178 | 271 |
| | 273 |
| | 288 |
| 129-3180 | 24 |
| 130-1676 | 134 |
| 130-1916 | 227 |
| 130-7596 | 12 |
| 131-3540 | 46 |
| | 142 |
| | 271 |
| 131-3543 | 287 |
| 131-5879 | 211 |
| 132-5789 | 69 |
| | 93 |
| 132-7551 | 211 |
| 133-6517 | 73 |
| | 74 |
| 134-0404 | 102 |
| 134-2540 | 88 |
| 134-7722 | 19 |
| 134-8273 | 255 |
| | 257 |
| 135-2655 | 123 |
| | 125 |
| 135-8432 | 25 |
| 136-1953 | 278 |
| 136-3191 | 225 |
| 137-6645 | 198 |
| 138-4883 | 255 |
| | 257 |
| 140-2392 | 162 |
| | 163 |
| 140-2513 | 115 |
| | 117 |
| 140-2514 | 115 |
| | 117 |
| 140-5217 | 20 |
| | 63 |
| 141-0713 | 161 |
| 141-3046 | 115 |
| | 117 |
| 141-3049 | 115 |
| | 117 |
| 142-2928 | 227 |
| 142-7493 | 136 |
| | 137 |
| | 138 |
| | 139 |
| 142-7503 | ▶77 |
| | 78 |
| 142-8633 | 96 |
| 142-8719 | 119 |
| 142-8731 | 127 |
| | 130 |
| | 131 |
| | 132 |
| 142-8759 | 127 |
| | 128 |
| | 129 |
| | 130 |
| | 133 |
| 142-8801 | 142 |
| 142-8810 | 147 |
| 142-8823 | 147 |
| 142-8826 | 151 |
| 142-8831 | 142 |
| 142-8832 | 41 |
| | 142 |
| | 158 |
| 142-8928 | 61 |
| | 198 |
| 142-8937 | 198 |
| 142-9021 | 140 |
| 142-9023 | 97 |
| 142-9024 | 97 |
| 142-9029 | 97 |
| 142-9033 | 99 |
| 142-9036 | 99 |
| 142-9058 | ▶97 |
| | 98 |
| 142-9091 | 158 |
| 142-9093 | 158 |
| 142-9116 | 172 |
| 142-9234 | 183 |
| | 185 |
| 142-9241 | 103 |
| 142-9278 | 227 |
| 142-9279 | 227 |
| 142-9287 | 227 |
| 142-9305 | 231 |
| | 232 |
| | ▶297 |
| 142-9311 | 231 |
| | 232 |
| | ▶275 |
| 142-9319 | 301 |
| 142-9320 | 284 |
| 142-9326 | 80 |
| 142-9328 | 284 |
| 142-9356 | 249 |
| | 252 |
| 142-9386 | 227 |
| 143-0539 | ▶83 |
| | 85 |
| 143-1344 | 83 |
| 144-0195 | 249 |
| | 252 |
| | 255 |
| | 257 |
| 144-4531 | 200 |
| 144-4532 | 200 |
| 144-9491 | 161 |
| 146-6371 | 260 |
| 146-6729 | 83 |
| 146-9439 | 88 |
| | 96 |
| 148-8315 | 100 |
| | 168 |
| | 172 |
| | 181 |
| | 183 |
| | 185 |
| 148-8316 | 168 |
| | 177 |
| 148-8318 | 111 |
| 148-8319 | 183 |
| 148-8325 | 165 |
| | 177 |
| | 179 |
| 148-8326 | 107 |
| 148-8327 | 103 |
| | 111 |
| 148-8328 | 100 |
| 148-8336 | 105 |
| | 107 |
| | 111 |
| | 165 |
| 148-8340 | 100 |
| | 111 |
| 148-8341 | 100 |
| | 172 |
| | 175 |
| | 187 |
| 148-8342 | 111 |
| 148-8347 | 170 |
| 148-8353 | 165 |
| 148-8360 | 181 |
| 148-8369 | 177 |
| 148-8378 | 165 |
| | 172 |
| | 175 |
| 148-8385 | 168 |
| 148-8390 | 172 |
| 148-8423 | 177 |
| 148-8433 | 107 |
| | 165 |
| 148-8435 | 105 |
| | 179 |
| 148-8446 | 165 |
| 149-0686 | 154 |
| | ▶155 |
| 149-3488 | 24 |
| 150-4027 | 179 |
| 150-4034 | 165 |
| 150-4043 | 177 |
| 150-8599 | 127 |
| | 128 |
| | 129 |
| | 130 |
| | 131 |
| | 132 |
| | 133 |
| 150-8621 | 1 |
| | ▶150 |
| 151-2566 | 162 |
| | 163 |
| 151-4965 | 205 |
| 152-1154 | 152 |
| 152-1156 | 152 |
| 152-1157 | 99 |
| 152-1161 | 264 |
| 152-4871 | 230 |

# PART NUMBER INDEX


| Part | Page | Part | Page | Part | Page | Part | Page |
|---|---|---|---|---|---|---|---|
| 152-4875 | 227 | 159-5790 | 283 | | 122 | 185-8667 | ▶137 |
| 152-4884 | 227 | 159-5792 | 283 | 169-1679 | 97 | 185-8674 | ▶128 |
| 152-4898 | 49 | 159-5794 | 283 | 169-2876 | 312 | | 137 |
| 152-5878 | 283 | 159-5797 | 211 | | 315 | 185-8675 | ▶128 |
| 153-1260 | 298 | 159-8049 | 69 | 169-6715 | 46 | | 137 |
| 153-2682 | 300 | 159-8050 | 69 | 170-6305 | 285 | 185-8676 | ▶129 |
| 153-2683 | 152 | 159-8405 | 142 | 172-0970 | 203 | | 137 |
| | 249 | 159-9322 | 87 | 172-8173 | 115 | 185-8677 | ▶129 |
| | 252 | 159-9495 | 96 | | 117 | | 137 |
| | 264 | 159-9496 | 96 | 173-0702 | 237 | 185-9928 | ▶129 |
| 153-6981 | 283 | 159-9540 | 69 | 173-0703 | 238 | | 137 |
| 154-3985 | 298 | 159-9541 | 61 | 173-2543 | 299 | 185-9929 | ▶130 |
| | 299 | 159-9853 | 266 | 173-7225 | 107 | | 137 |
| 154-3986 | 299 | 160-6778 | 203 | 174-3091 | 239 | 185-9930 | ▶130 |
| 154-4006 | 140 | | 205 | | 240 | | 137 |
| 154-4014 | 197 | 160-7689 | 87 | | 241 | 185-9931 | ▶130 |
| 154-5232 | 179 | 160-8493 | 115 | | 266 | | 137 |
| 154-8711 | 299 | | 117 | 175-0005 | 248 | 185-9933 | 129 |
| 154-8715 | 299 | 161-2539 | 92 | | 260 | | 130 |
| 155-1279 | 189 | 161-7144 | 161 | 176-1477 | 90 | | 131 |
| 155-2255 | 92 | 161-7145 | 162 | 176-2947 | 227 | 185-9935 | 128 |
| | 284 | | 163 | 176-3900 | ▶219 | | 129 |
| 155-2260 | 87 | 161-8560 | 105 | 177-3405 | 152 | 185-9936 | 128 |
| | 255 | | 107 | | 249 | 185-9937 | 129 |
| | 257 | 162-0177 | 161 | | 252 | 186-3735 | 87 |
| | 276 | | 162 | | 300 | | 90 |
| 155-2265 | 92 | | 163 | 178-2255 | 41 | | 92 |
| 155-2270 | 87 | 162-0223 | 227 | 178-2256 | ▶136 | | 95 |
| | 90 | 164-1154 | 288 | 178-2270 | 131 | | 147 |
| | 92 | 164-4225 | 165 | | 132 | | 203 |
| | 93 | 164-5567 | 103 | 178-3336 | 38 | | 239 |
| | 95 | | 177 | 178-3620 | 61 | | 240 |
| | 100 | | 181 | | 69 | | 241 |
| | 276 | 164-5590 | 168 | | 92 | | 255 |
| | 284 | 164-5608 | 103 | | 96 | | 257 |
| 155-2271 | 92 | 164-7556 | 75 | | 100 | | 266 |
| | 93 | | 76 | | 276 | | 280 |
| | 227 | 164-9425 | 244 | | 278 | | 281 |
| | 255 | | 245 | 178-7539 | 92 | | 282 |
| | 257 | | 246 | 178-9983 | 239 | | 284 |
| | 284 | 165-0142 | 121 | | 240 | 186-3736 | 88 |
| 155-2274 | 249 | | 122 | | 241 | | 90 |
| | 252 | 165-2601 | 25 | 179-7001 | ▶157 | | 92 |
| | 284 | 165-4892 | 99 | | 179 | | 93 |
| 155-5652 | 97 | 165-4895 | 77 | 179-7002 | 157 | | 95 |
| 155-9010 | 97 | 165-4898 | ▶136 | 179-9392 | 87 | | 227 |
| 155-9432 | 97 | 165-4901 | ▶127 | 180-3007 | 61 | | 284 |
| 155-9433 | 97 | | 136 | | 181 | 186-6190 | ▶220 |
| 156-1458 | 96 | 165-4902 | ▶127 | 180-8071 | 200 | | 276 |
| 156-1460 | 96 | | 136 | 180-9340 | 88 | 187-3211 | 291 |
| 156-4282 | 165 | 165-4903 | ▶136 | | 92 | 187-3212 | 291 |
| 157-2853 | 312 | 165-4906 | ▶127 | | 100 | 187-3230 | 136 |
| | 315 | | 136 | | 249 | 187-3239 | ▶138 |
| 158-3770 | 237 | 165-4907 | ▶128 | | 252 | 188-0124 | ▶131 |
| | 238 | | 136 | | 276 | | 138 |
| 158-6694 | 284 | 165-4909 | 127 | | 284 | 188-0125 | ▶131 |
| 158-6695 | 284 | | 128 | 180-9900 | 87 | | 138 |
| 158-6696 | 284 | 165-4934 | 111 | 183-5916 | 13 | 188-0147 | ▶151 |
| 158-6697 | 284 | 165-7095 | 24 | 183-7602 | 145 | 188-2008 | 103 |
| 158-6698 | 284 | | 283 | 185-1861 | 90 | 189-3158 | 276 |
| 158-6699 | 284 | 166-2560 | 217 | 185-4015 | 223 | | 284 |
| 159-2953 | 151 | | 218 | | 269 | 189-4523 | 291 |
| | 152 | 167-3692 | 88 | 185-8662 | ▶137 | 190-6534 | 115 |
| 159-5761 | ▶136 | 167-3693 | 92 | 185-8663 | ▶137 | | 117 |
| 159-5772 | 97 | 167-4339 | 121 | 185-8666 | ▶137 | 190-7453 | 179 |


▶ **PRIMARY REFERENCE**

# PART NUMBER INDEX


| Part | Page |
|---|---|
| 190-7457 | 2 |
| | 3 |
| | ▶113 |
| 190-7964 | 145 |
| 190-7989 | 158 |
| 190-7992 | 158 |
| 190-7994 | 149 |
| | ▶153 |
| 190-8033 | 158 |
| 190-8036 | 158 |
| 190-8037 | 158 |
| 190-8038 | 158 |
| 190-8073 | 183 |
| | 185 |
| | 187 |
| 190-8074 | 172 |
| | 175 |
| 190-8075 | 172 |
| | 175 |
| 190-8084 | 164 |
| | ▶195 |
| 191-2894 | 147 |
| 191-3206 | 56 |
| 191-9576 | 147 |
| 191-9730 | 158 |
| 191-9738 | 158 |
| 191-9739 | 158 |
| 191-9760 | ▶99 |
| | 120 |
| 191-9761 | 99 |
| 191-9762 | 99 |
| 191-9776 | 61 |
| 191-9780 | 1 |
| | 2 |
| | ▶114 |
| 192-0836 | 92 |
| 192-2637 | 214 |
| | 215 |
| 192-2640 | ▶160 |
| | 212 |
| | 213 |
| 192-2642 | 212 |
| | 213 |
| | 217 |
| | 218 |
| 192-2645 | 214 |
| | 215 |
| | 216 |
| 192-2655 | 208 |
| | ▶209 |
| 192-2663 | 273 |
| 193-0447 | ▶154 |
| | 164 |
| 193-8308 | 181 |
| 193-8313 | 179 |
| 193-8321 | 181 |
| 193-8329 | 69 |
| 193-8334 | 187 |
| 193-8335 | 187 |
| 193-8340 | 113 |
| | 114 |
| 193-8345 | 41 |
| 193-8385 | 287 |
| 193-8392 | 177 |
| 193-8393 | 177 |
| 194-5171 | 225 |
| 194-7631 | 154 |
| 194-7632 | 154 |
| 195-0935 | 230 |
| | 233 |
| 195-0936 | 233 |
| | 285 |
| 195-0937 | 80 |
| | 226 |
| | 233 |
| | 249 |
| | 252 |
| 195-0939 | 226 |
| | 233 |
| 195-6723 | 231 |
| | ▶301 |
| 195-6740 | ▶311 |
| 195-6750 | 183 |
| | 185 |
| | 187 |
| 195-6754 | 214 |
| | 215 |
| 195-6768 | 179 |
| 195-6769 | 179 |
| 195-8211 | 29 |
| 195-8260 | 53 |
| 195-8324 | 33 |
| 195-8356 | 38 |
| 195-8364 | 59 |
| 195-8372 | 61 |
| 195-8403 | 25 |
| 195-8460 | 44 |
| 195-9700 | 203 |
| | 205 |
| | ▶206 |
| 196-8356 | 59 |
| 196-8870 | 208 |
| | ▶211 |
| 197-6894 | 285 |
| 198-1076 | 203 |
| | 205 |
| 198-4776 | 55 |
| 198-9707 | 285 |
| 199-2212 | 21 |
| 199-2333 | 63 |
| 199-3410 | 311 |
| 199-5438 | ▶131 |
| | 136 |
| 199-5439 | ▶132 |
| | 136 |
| 199-5440 | 131 |
| | 132 |
| 200-0999 | 99 |
| 200-2371 | 206 |
| 200-6345 | 46 |
| | 276 |
| 202-0313 | 88 |
| 202-0314 | 88 |
| 202-0671 | 202 |
| 202-0673 | 202 |
| 202-0674 | 202 |
| 202-2284 | 223 |
| 202-6611 | 76 |
| 202-6614 | 75 |
| 203-1100 | 203 |
| 203-4827 | 45 |
| 203-9007 | 87 |
| 204-1452 | 123 |
| | 125 |
| 204-1454 | 123 |
| | 125 |
| 204-1456 | 123 |
| | 125 |
| 204-1457 | 123 |
| | 125 |
| 204-1458 | 123 |
| | 125 |
| 204-1459 | 123 |
| | 125 |
| 204-1471 | 200 |
| 204-1481 | 200 |
| 204-1482 | 200 |
| 204-1485 | 200 |
| 204-1486 | 200 |
| 204-1488 | 200 |
| 204-1489 | 200 |
| 204-2281 | 46 |
| 205-3692 | 183 |
| 205-5148 | 257 |
| 206-7398 | 223 |
| | 269 |
| 207-0539 | 303 |
| | 305 |
| 207-0573 | 303 |
| | 305 |
| 207-6154 | 45 |
| 207-9729 | 197 |
| 207-9733 | 147 |
| 207-9734 | 147 |
| 207-9737 | 165 |
| 207-9756 | 165 |
| 207-9758 | 165 |
| 207-9785 | 209 |
| 208-6176 | 41 |
| 208-9277 | 90 |
| | 93 |
| 210-8754 | 284 |
| 212-0061 | 206 |
| 212-0431 | 61 |
| 212-6603 | 111 |
| 212-6604 | 111 |
| 212-6690 | 165 |
| 212-8499 | 20 |
| 212-8510 | 20 |
| | 63 |
| 212-8597 | 27 |
| 213-0139 | 87 |
| 213-7489 | 239 |
| | 240 |
| | 241 |
| 214-7568 | 103 |
| | 157 |
| | 181 |
| 214-9186 | 233 |
| | 234 |
| 215-3277 | 194 |
| 215-3957 | 212 |
| | 213 |
| | ▶216 |
| 215-3962 | 209 |
| | ▶212 |
| 215-3963 | 209 |
| | ▶213 |
| 215-8307 | 241 |
| 216-4725 | 96 |
| 216-4746 | ▶80 |
| | 231 |
| 216-4753 | 285 |
| 216-6145 | 229 |
| 216-6146 | ▶229 |
| 216-6156 | 200 |
| 216-6157 | 200 |
| 216-6159 | 200 |
| 216-6160 | 200 |
| 216-6161 | 200 |
| 216-7790 | 69 |
| 217-3572 | 45 |
| 217-3850 | 205 |
| 217-5912 | 74 |
| 218-0728 | 249 |
| | 252 |
| 218-0918 | 6 |
| | ▶119 |
| 218-0924 | 6 |
| | ▶46 |
| 218-0926 | 45 |
| 218-0928 | 1 |
| | 2 |
| | ▶121 |
| 218-0935 | 46 |
| 218-0936 | 46 |
| 218-0938 | 6 |
| | ▶41 |
| 218-0942 | ▶73 |
| 218-0943 | ▶74 |
| 218-5562 | 232 |
| | ▶298 |
| 218-5571 | 179 |
| 218-5572 | 179 |
| 218-5580 | 105 |
| | 107 |
| 218-5581 | 105 |
| | 107 |
| 218-5585 | 170 |
| 218-5588 | 168 |
| 218-5602 | 1 |
| | ▶58 |
| 218-5619 | 221 |
| | 268 |
| | ▶278 |
| 218-5621 | ▶103 |
| | 164 |
| 218-5630 | 164 |
| | ▶168 |
| 218-5631 | 164 |
| | ▶177 |
| 218-5632 | 164 |
| | ▶179 |
| 218-5635 | 1 |
| | 2 |
| | ▶105 |


2

▶ PRIMARY REFERENCE

# PART NUMBER INDEX


| Part | Page |
|---|---|
| 218-5636 | 2 |
| | 3 |
| | ▶107 |
| 218-5660 | 1 |
| | ▶140 |
| 218-5661 | 140 |
| 218-5685 | 276 |
| 218-5686 | 276 |
| 218-5712 | 164 |
| | ▶183 |
| 218-5758 | 103 |
| 218-5764 | 187 |
| 218-5770 | 177 |
| 218-5831 | 181 |
| 218-5898 | 149 |
| | ▶207 |
| 218-5899 | 1 |
| | ▶158 |
| 218-5928 | 2 |
| | 3 |
| | ▶122 |
| 218-5936 | 164 |
| | ▶187 |
| 218-5943 | 165 |
| 218-5944 | 165 |
| 218-5968 | 177 |
| 218-5969 | ▶152 |
| 218-5977 | 172 |
| 218-6006 | 187 |
| 218-6016 | ▶141 |
| 218-6017 | 141 |
| 218-6036 | 291 |
| 218-6037 | 291 |
| 218-6060 | 236 |
| 218-6095 | 103 |
| 218-6118 | 237 |
| | 238 |
| | ▶266 |
| 218-6148 | 221 |
| | ▶236 |
| 218-6155 | 185 |
| 218-6162 | 183 |
| | 185 |
| 218-6164 | 183 |
| 218-6170 | 164 |
| | ▶185 |
| 218-6250 | 236 |
| 218-6304 | 170 |
| 218-6332 | 209 |
| 218-6333 | 209 |
| 218-6343 | 147 |
| 218-6357 | 274 |
| 218-6362 | 290 |
| 218-6370 | 231 |
| | ▶283 |
| 218-6377 | 265 |
| 218-6380 | 231 |
| | ▶300 |
| 218-6381 | 283 |
| 218-6386 | 247 |
| 218-6387 | 247 |
| 218-6388 | 247 |
| 218-6389 | 248 |
| 218-6391 | 248 |
| 218-6392 | ▶267 |
| 218-6393 | 267 |
| | ▶269 |
| 218-6394 | 221 |
| | ▶260 |
| | 268 |
| 218-6396 | 260 |
| 218-6397 | 260 |
| 218-6398 | 260 |
| 218-6399 | 223 |
| | 269 |
| 218-6400 | 232 |
| | ▶265 |
| 218-6402 | 222 |
| | 267 |
| 218-6404 | 221 |
| | ▶222 |
| 218-6405 | 222 |
| | ▶223 |
| 218-6406 | 231 |
| | ▶291 |
| 218-6411 | 231 |
| | ▶302 |
| 218-6414 | 260 |
| 218-6417 | 290 |
| 218-6418 | ▶247 |
| | 272 |
| 218-6419 | ▶248 |
| | 272 |
| 218-6420 | ▶230 |
| | 231 |
| 218-6421 | 242 |
| | 243 |
| 218-6422 | 244 |
| | 245 |
| | 246 |
| 218-6425 | ▶81 |
| | 231 |
| 218-6429 | 1 |
| | ▶287 |
| 218-6431 | ▶254 |
| | 255 |
| 218-6435 | 247 |
| | 290 |
| 218-6438 | 172 |
| | 175 |
| 218-6440 | ▶249 |
| 218-6442 | 226 |
| 218-6444 | 287 |
| 218-6485 | ▶237 |
| | 246 |
| 218-6490 | ▶238 |
| | 242 |
| 218-6561 | 199 |
| 218-6572 | 164 |
| | ▶170 |
| 218-6601 | 179 |
| 218-6645 | 278 |
| 218-6662 | 298 |
| 218-6725 | 164 |
| | ▶199 |
| 218-6856 | 189 |
| 218-6857 | 189 |
| 218-6858 | 189 |
| 218-6864 | 177 |
| 218-6879 | 105 |
| | 107 |
| 218-6947 | 269 |
| 218-6948 | 223 |
| 219-0302 | 312 |
| | 315 |
| 219-4379 | 298 |
| | 299 |
| 219-4380 | 297 |
| | ▶299 |
| 219-4388 | 299 |
| 219-9739 | 249 |
| | 252 |
| 220-1043 | 45 |
| 220-6381 | 183 |
| | 185 |
| | 187 |
| 220-8586 | 41 |
| 220-8587 | 41 |
| 220-8588 | 41 |
| 221-3876 | 255 |
| | 257 |
| 221-3877 | 249 |
| | 252 |
| 221-3879 | 276 |
| 221-5245 | 33 |
| 221-5250 | 33 |
| 221-9124 | ▶45 |
| | 46 |
| 222-1178 | 46 |
| 222-3963 | 132 |
| | 133 |
| 222-5693 | 115 |
| | 117 |
| 222-9812 | 6 |
| | ▶48 |
| 223-0591 | 249 |
| | 252 |
| 223-0600 | ▶252 |
| 223-0601 | 249 |
| | 252 |
| 223-0608 | 249 |
| | 252 |
| 223-0609 | 254 |
| 223-0610 | 254 |
| 223-0612 | 254 |
| 223-0616 | 252 |
| | ▶255 |
| 223-0617 | 249 |
| | 252 |
| 223-3725 | 239 |
| 223-3726 | 240 |
| 223-3728 | 239 |
| | 240 |
| | 241 |
| 223-4240 | 142 |
| 223-4275 | 41 |
| 223-5941 | 284 |
| 223-6537 | ▶280 |
| | 284 |
| 223-8418 | 172 |
| | ▶189 |
| 223-8488 | 255 |
| | 257 |
| 223-8495 | 255 |
| 223-9974 | 100 |
| | ▶102 |
| 224-0554 | 315 |
| 224-3875 | 142 |
| 224-7057 | 302 |
| | ▶303 |
| 224-7058 | 302 |
| | ▶305 |
| 224-8544 | 147 |
| 224-8645 | 312 |
| 224-8646 | 315 |
| 224-8945 | 312 |
| 224-8946 | 315 |
| 224-9021 | 312 |
| 224-9022 | 315 |
| 225-0312 | 315 |
| 225-0313 | 312 |
| 225-3187 | 255 |
| | 257 |
| 225-3305 | 312 |
| 225-3854 | 92 |
| 225-3861 | 88 |
| 225-5249 | 63 |
| 225-5535 | 74 |
| 225-5541 | 73 |
| 225-5642 | 73 |
| 225-5644 | 74 |
| 226-0291 | 142 |
| | 229 |
| 226-0323 | 229 |
| 226-3693 | 17 |
| 226-3734 | 138 |
| | 139 |
| 226-3735 | 138 |
| | 139 |
| 226-5901 | 284 |
| 226-7635 | 119 |
| 227-4315 | 150 |
| 227-6715 | 45 |
| 227-8807 | ▶156 |
| 228-5856 | 284 |
| 228-9132 | 65 |
| 228-9222 | 147 |
| 228-9240 | 194 |
| 229-4896 | 235 |
| 229-7356 | 235 |
| 229-8752 | 1 |
| 229-8757 | 255 |
| | 257 |
| 229-8796 | 45 |
| 230-3214 | 249 |
| | 252 |
| 230-3621 | 24 |
| 230-3757 | 196 |
| 230-4011 | 87 |
| | 90 |
| 230-6368 | 69 |
| 231-4256 | ▶239 |
| | 245 |
| 231-4258 | ▶240 |
| | 244 |
| 231-4260 | ▶241 |
| | 243 |
| 231-4261 | 239 |


▶ **PRIMARY REFERENCE**

# PART NUMBER INDEX


| Part | Page | Part | Page | Part | Page | Part | Page |
|---|---|---|---|---|---|---|---|
| | 240 | 233-5483 | 11 | 235-4959 | 40 | | ▶49 |
| 231-4262 | 241 | 233-5485 | 9 | 235-4960 | 40 | 243-0406 | 49 |
| 231-7319 | 305 | 233-5486 | 8 | 235-4962 | 68 | 243-0407 | 49 |
| 231-7320 | 305 | 233-5488 | 13 | 235-4967 | 56 | 243-1323 | 303 |
| 231-7321 | 302 | 233-5494 | 35 | 235-4968 | 56 | | 305 |
| 231-7322 | 303 | 233-5496 | 37 | 235-4973 | 68 | 244-7127 | 63 |
| 231-7323 | 303 | 233-5500 | 5 | 235-5243 | 243 | 245-1911 | 190 |
| 231-7324 | 302 | | ▶15 | 235-5246 | 244 | 245-6811 | 231 |
| 231-7325 | ▶262 | 233-5501 | 33 | | 245 | 246-1259 | 21 |
| | 305 | 233-5632 | ▶264 | 235-5880 | 5 | 246-1260 | 21 |
| 231-7326 | 262 | 233-5697 | 183 | | ▶33 | 246-2622 | 61 |
| 231-7327 | ▶263 | 233-5698 | 183 | 235-5895 | 5 | 246-8314 | 40 |
| | 303 | 233-5716 | 111 | | ▶36 | 246-8315 | 40 |
| 231-7328 | 263 | 233-5929 | 271 | 235-5900 | 5 | 246-9039 | 276 |
| 231-7329 | 262 | 233-5931 | 271 | | ▶40 | 247-4877 | 150 |
| | 263 | 233-5934 | 271 | 235-5904 | 5 | 247-6317 | 5 |
| 231-7331 | 303 | 233-5997 | 197 | | ▶72 | | ▶50 |
| | 305 | 233-7128 | 165 | 236-4830 | ▶226 | 247-7182 | 264 |
| 231-7372 | 303 | | ▶190 | | 231 | 248-2171 | 255 |
| | 305 | 233-7131 | 105 | 236-4832 | 227 | | 257 |
| 231-7401 | 262 | | ▶109 | 236-4833 | 226 | 249-2910 | ▶281 |
| | 263 | 233-9744 | 123 | | ▶227 | | 284 |
| 231-8122 | 223 | | 125 | 236-5067 | 223 | 249-7160 | 190 |
| | 269 | 233-9856 | 65 | | 269 | 252-0346 | ▶138 |
| | ▶271 | 234-0566 | 276 | 236-5069 | 223 | 252-0347 | ▶138 |
| 231-8123 | 223 | 234-0732 | 273 | | 269 | 252-0348 | 236 |
| 231-8124 | 223 | 234-0774 | ▶273 | 236-6923 | 276 | 252-0366 | ▶138 |
| | 269 | | 289 | 237-5331 | 246 | 252-0368 | 61 |
| 231-8126 | 223 | 234-4328 | ▶75 | 237-5332 | 242 | 252-0377 | ▶139 |
| | 269 | | 81 | 237-7296 | 58 | 252-0426 | 209 |
| 231-8127 | 223 | 234-4791 | 17 | 237-7325 | 49 | | 211 |
| | 269 | 234-4796 | 37 | 238-0112 | 90 | 252-6934 | 239 |
| 231-8129 | 223 | 234-4798 | 38 | 238-4626 | 135 | | 240 |
| | 269 | 234-4800 | 38 | | 190 | | 241 |
| 231-8132 | 223 | 234-4801 | 38 | 238-4628 | 191 | 252-9015 | 307 |
| | 269 | 234-4802 | 38 | 238-7642 | 195 | 252-9016 | 307 |
| 231-8133 | 223 | 234-4803 | 38 | | ▶196 | 252-9017 | 307 |
| | 269 | 234-4805 | 54 | 238-7685 | 158 | 252-9197 | 121 |
| 231-8137 | 223 | 234-4806 | 54 | 238-7716 | 144 | | 122 |
| 231-8141 | 223 | 234-4807 | 31 | 238-7734 | ▶307 | 253-0244 | 34 |
| | 269 | 234-4812 | 25 | 238-7735 | 100 | 253-5512 | 51 |
| 231-8142 | 223 | 234-4815 | 27 | 238-8278 | 39 | 256-2155 | 61 |
| | 269 | 234-4818 | 56 | 238-8282 | 10 | 257-8390 | 72 |
| 231-8143 | 269 | 234-4820 | 56 | 238-8283 | 10 | 257-8739 | 40 |
| 231-8144 | 269 | 234-4821 | 56 | 238-8284 | 10 | 258-2419 | 55 |
| 231-8145 | 269 | 234-4822 | 56 | 238-8285 | 10 | 258-2448 | 24 |
| 232-1384 | 223 | 234-4824 | 53 | 239-4292 | 18 | 258-2462 | 6 |
| 232-1789 | 41 | 234-4831 | 40 | 239-4990 | 312 | | ▶55 |
| 232-3121 | 55 | 234-4835 | 63 | 239-4991 | 315 | 258-2466 | 235 |
| 232-4703 | 73 | 234-6065 | 312 | 239-6109 | 302 | 258-2468 | 221 |
| | 74 | | 315 | 239-6138 | 262 | | ▶235 |
| 232-4706 | 280 | 234-7727 | ▶76 | | 263 | 258-2533 | 215 |
| | 281 | | 80 | 239-6986 | 312 | 258-2534 | 214 |
| 233-4872 | 142 | 234-7730 | 75 | | 315 | 258-2535 | 211 |
| 233-5457 | 13 | 234-7731 | 75 | 239-8429 | 21 | | ▶217 |
| 233-5460 | 53 | 234-7756 | 76 | 239-8513 | 35 | 258-2536 | ▶214 |
| 233-5466 | 23 | 234-7758 | 76 | | 38 | | 217 |
| 233-5468 | 23 | 234-9525 | 170 | 240-6877 | 260 | 258-2537 | 211 |
| 233-5469 | 33 | 234-9575 | 312 | 240-6878 | 260 | | ▶218 |
| 233-5470 | 33 | | 315 | 240-6879 | 260 | 258-2538 | ▶215 |
| 233-5471 | 33 | 235-1365 | 312 | 240-8666 | 225 | | 218 |
| 233-5476 | 33 | 235-1368 | 315 | 241-6010 | 63 | 258-2577 | 191 |
| 233-5477 | 33 | 235-1845 | 92 | | 68 | 258-2579 | ▶191 |
| 233-5478 | 33 | 235-4768 | 255 | 241-6397 | 24 | | 193 |
| 233-5482 | 20 | | 257 | 243-0405 | 48 | 258-2762 | 99 |


▶ **PRIMARY REFERENCE**

# PART NUMBER INDEX


| Part | Page |
|---|---|
| 258-2763 | 99 |
| 258-3423 | 309 |
| 258-3424 | 309 |
| 258-3425 | 309 |
| 258-3427 | 309 |
| 258-3442 | 61 |
| | ▶65 |
| 258-3539 | 235 |
| 258-4135 | ▶82 |
| | 87 |
| 258-4136 | 87 |
| 258-4138 | 87 |
| 258-4143 | 87 |
| 258-4178 | 284 |
| 258-4196 | 87 |
| 258-4230 | 231 |
| | ▶279 |
| 259-8194 | 109 |
| | ▶135 |
| 259-8195 | 109 |
| 260-6695 | 255 |
| 261-6101 | 147 |
| 261-6275 | 1 |
| | ▶98 |
| 262-6480 | 58 |
| 262-6518 | 58 |
| 263-3823 | 282 |
| 263-4836 | 312 |
| | 315 |
| 263-4996 | 121 |
| | 122 |
| 264-4297 | 198 |
| 264-7029 | 87 |
| | 90 |
| 265-2898 | ▶132 |
| | 138 |
| 265-2899 | ▶132 |
| | 138 |
| 265-2900 | ▶133 |
| | 138 |
| 265-2901 | ▶133 |
| | 138 |
| 267-2528 | 34 |
| 267-2680 | 82 |
| | 87 |
| 267-2701 | 82 |
| 267-2744 | 92 |
| 267-2746 | 92 |
| 267-5211 | 82 |
| | 87 |
| 267-5213 | 82 |
| | 87 |
| 268-1923 | 115 |
| | 117 |
| 268-1929 | 123 |
| | 125 |
| 268-1935 | 115 |
| | 117 |
| 268-9529 | 123 |
| | 125 |
| 270-2679 | 88 |
| 271-2360 | 196 |
| 271-9408 | 172 |
| | 175 |
| 272-9800 | 79 |
| 274-3774 | 90 |
| | 92 |
| 274-3775 | 87 |
| 274-3776 | 92 |
| 274-3778 | 92 |
| 275-0601 | 88 |
| 275-7878 | 87 |
| 276-3440 | 249 |
| | ▶257 |
| 276-3615 | 257 |
| | ▶259 |
| 276-6019 | ▶293 |
| 276-6020 | ▶294 |
| 276-7276 | ▶295 |
| 276-7277 | ▶296 |
| 276-7278 | 69 |
| 276-9875 | 235 |
| 277-1873 | 69 |
| 277-8862 | 191 |
| 278-8714 | 196 |
| 278-8716 | 191 |
| | 194 |
| 279-3232 | 259 |
| 280-1575 | 249 |
| | 252 |
| 280-6070 | 279 |
| 280-6072 | 233 |
| | 234 |
| 280-7856 | 114 |
| | ▶115 |
| 280-7858 | 113 |
| | ▶117 |
| 280-7863 | 123 |
| | 125 |
| 280-7865 | 123 |
| | 125 |
| 280-8240 | 55 |
| 280-8298 | 49 |
| 280-8307 | 19 |
| 280-8312 | 45 |
| 280-8314 | 19 |
| 280-8319 | 52 |
| 280-8335 | 19 |
| 280-8341 | 55 |
| 280-8377 | 55 |
| 280-8395 | 235 |
| 280-8407 | 6 |
| | ▶19 |
| 280-8408 | 19 |
| 280-8409 | 19 |
| 280-8417 | 19 |
| 282-6961 | 302 |
| 282-9059 | 254 |
| | 259 |
| 283-0632 | 87 |
| | 92 |
| 283-4198 | 87 |
| 283-7554 | 259 |
| 283-9477 | 181 |
| 284-3743 | 291 |
| 284-3744 | 291 |
| 285-5794 | 46 |
| 285-8565 | 260 |
| 285-8570 | 260 |
| 285-9066 | 21 |
| | 43 |
| 285-9133 | 260 |
| 285-9286 | 187 |
| 287-2922 | 5 |
| | ▶28 |
| 287-2983 | 5 |
| | ▶29 |
| 287-3787 | 158 |
| 287-4033 | 5 |
| | ▶10 |
| 287-5323 | 5 |
| | ▶53 |
| 287-5377 | 5 |
| | ▶35 |
| 287-5665 | 5 |
| | ▶37 |
| 287-6056 | 5 |
| | ▶43 |
| 287-6114 | 5 |
| | ▶31 |
| 287-6138 | 5 |
| | ▶32 |
| 287-6181 | 5 |
| | ▶85 |
| 287-6603 | 291 |
| 288-5767 | 291 |
| 289-3763 | 175 |
| 289-3765 | 172 |
| | 175 |
| 289-3766 | 172 |
| | 175 |
| 289-3777 | 172 |
| 289-3778 | 172 |
| 289-3779 | 172 |
| 289-3784 | 185 |
| 289-3785 | 183 |
| | 185 |
| 289-3787 | 183 |
| 289-6337 | 115 |
| 289-6338 | 117 |
| 289-6354 | 115 |
| | 117 |
| 289-9560 | 205 |
| 290-2110 | 310 |
| 291-5067 | 187 |
| 291-5068 | 187 |
| 291-5069 | 187 |
| 291-5070 | 187 |
| 291-8148 | 200 |
| 292-3114 | 274 |
| 292-4040 | 5 |
| | ▶39 |
| 292-4041 | 5 |
| | ▶8 |
| 293-6591 | 107 |
| | ▶110 |
| 294-1767 | 37 |
| 294-4890 | 8 |
| 294-4891 | 8 |
| 294-4892 | 8 |
| 294-5060 | 63 |
| 294-7916 | 68 |
| 294-7922 | 12 |
| 295-1799 | ▶134 |
| | 200 |
| 295-5440 | 223 |
| | 269 |
| 295-6953 | 158 |
| | ▶162 |
| 295-6954 | 158 |
| | ▶163 |
| 295-7221 | ▶192 |
| | 193 |
| 295-7315 | 312 |
| 295-7317 | 312 |
| 295-7318 | 312 |
| 295-7319 | 312 |
| 295-7320 | 312 |
| 295-7325 | 315 |
| 295-7327 | 315 |
| 295-7328 | 315 |
| 295-7329 | 315 |
| 295-7330 | 315 |
| 295-8096 | 161 |
| 295-8097 | 161 |
| 296-4812 | 56 |
| 296-5140 | 162 |
| | 163 |
| 296-5141 | 161 |
| 297-8522 | 162 |
| 297-8524 | 163 |
| 297-8695 | 161 |
| 297-8698 | 161 |
| 297-8699 | 158 |
| | ▶161 |
| 298-6947 | 161 |
| 299-4645 | 15 |
| 299-9119 | ▶203 |
| | 242 |
| | 243 |
| 299-9121 | 203 |
| | 205 |
| | 3 |
| 300-1071 | 5 |
| | ▶86 |
| 300-3867 | 63 |
| 300-3988 | 63 |
| 300-9449 | 25 |
| 301-3396 | 5 |
| | ▶30 |
| 301-3397 | 30 |
| 301-7293 | 284 |
| 303-6658 | 223 |
| | 269 |
| 303-8767 | 212 |
| | 213 |
| 303-8768 | 212 |
| | 213 |
| | 216 |
| 304-3885 | 61 |
| 305-2969 | 223 |
| | 269 |
| 305-4185 | 111 |
| 305-5385 | 55 |
| 306-0175 | 103 |
| 306-0350 | 87 |
| 306-0351 | 87 |


▶ **PRIMARY REFERENCE**

# PART NUMBER INDEX


| Part | Page | Part | Page | Part | Page | Part | Page |
|---|---|---|---|---|---|---|---|
| 307-3036 | 192 | 315-4671 | 27 | 326-5267 | 2 | 326-5609 | 1 |
| | ▶194 | 315-4686 | 21 | | 3 | | ▶142 |
| 307-3039 | 115 | 315-4687 | 21 | | ▶244 | 326-5610 | 142 |
| | 117 | 315-5493 | 214 | 326-5276 | ▶1 | 326-5612 | 172 |
| 307-3068 | 122 | | 215 | 326-5277 | ▶2 | | 175 |
| | ▶123 | | 216 | 326-5278 | ▶2 | 326-5614 | 172 |
| 307-3070 | 121 | 315-7701 | 51 | 326-5329 | 6 | | 175 |
| | ▶125 | 315-7702 | 51 | | ▶24 | 326-5634 | 172 |
| 307-3074 | 123 | 315-7704 | 23 | 326-5336 | 16 | | 175 |
| | 125 | 315-7761 | 5 | 326-5346 | 61 | 326-5637 | 165 |
| 307-3075 | 123 | | ▶23 | 326-5358 | 24 | 326-5640 | 172 |
| | 125 | 315-7762 | 5 | 326-5361 | 1 | | 175 |
| 308-0421 | 103 | | ▶11 | | ▶6 | 326-5677 | 164 |
| | ▶111 | 315-7765 | 5 | 326-5366 | 6 | | ▶172 |
| 308-6767 | 142 | | ▶25 | | ▶61 | 326-5682 | ▶312 |
| 309-1325 | ▶79 | 315-7766 | 5 | 326-5368 | 6 | 326-5683 | 312 |
| 309-8909 | 25 | | ▶18 | | ▶16 | | 315 |
| 310-2682 | 13 | 315-7768 | 5 | 326-5371 | 61 | 326-5686 | ▶315 |
| 310-6660 | 216 | | ▶56 | 326-5376 | 6 | 326-5729 | ▶144 |
| 310-8798 | 11 | 315-7769 | 5 | | ▶52 | | 149 |
| 311-9240 | 216 | | ▶51 | 326-5381 | 221 | 326-5762 | 165 |
| 312-1683 | 223 | 315-8326 | 63 | | ▶276 | 326-5780 | 164 |
| | 269 | 315-8329 | 5 | 326-5382 | 276 | | ▶197 |
| 312-2179 | 61 | | ▶9 | 326-5384 | 276 | 326-5781 | 197 |
| | 276 | 315-8336 | 5 | 326-5400 | 1 | | ▶198 |
| 312-2635 | 223 | | ▶21 | | ▶231 | 326-5826 | ▶145 |
| | 269 | 315-8348 | 5 | 326-5401 | 231 | | 149 |
| 312-7747 | 312 | | ▶27 | | ▶234 | 327-0752 | 86 |
| 312-7748 | 315 | 315-8350 | 5 | 326-5402 | 233 | 327-8939 | 58 |
| 313-5646 | 196 | | ▶59 | | 234 | | ▶289 |
| 313-6251 | 203 | 315-8352 | 5 | 326-5404 | ▶233 | 327-8945 | 289 |
| 313-9185 | 255 | | ▶63 | 326-5406 | 231 | 328-2270 | 231 |
| | 257 | 315-8353 | 5 | | ▶274 | | ▶284 |
| 314-9860 | 5 | | ▶68 | 326-5407 | 274 | 328-2271 | 284 |
| | ▶12 | 315-8697 | 51 | 326-5408 | 274 | 328-2272 | ▶87 |
| 314-9861 | 5 | 315-8698 | 51 | 326-5422 | ▶1 | | 231 |
| | ▶17 | 316-1698 | 259 | 326-5427 | ▶2 | 328-2273 | 87 |
| 314-9938 | 13 | 317-3128 | 198 | 326-5428 | ▶3 | 328-2274 | 1 |
| 314-9947 | 21 | 319-2137 | 216 | 326-5445 | 1 | | ▶92 |
| 314-9948 | 21 | 319-7262 | 15 | | ▶164 | 328-2275 | 92 |
| 314-9962 | 27 | 319-7263 | 15 | 326-5452 | 147 | 328-2276 | 6 |
| 314-9963 | 27 | 320-0650 | 115 | | ▶149 | | ▶90 |
| 314-9964 | 27 | | 117 | 326-5468 | ▶164 | 328-2277 | 90 |
| 314-9972 | 56 | 320-1389 | ▶225 | 326-5481 | ▶164 | 328-2278 | 1 |
| 314-9974 | 56 | | 255 | 326-5510 | ▶232 | | ▶69 |
| 314-9980 | 59 | | 257 | 326-5511 | ▶232 | 328-2279 | 69 |
| 314-9981 | 59 | 320-1390 | 255 | 326-5512 | ▶231 | 328-2280 | 69 |
| 314-9982 | 59 | | 257 | 326-5514 | 232 | 328-2281 | 69 |
| 314-9983 | 59 | 322-3150 | 18 | | ▶272 | 328-2335 | 2 |
| 314-9984 | 59 | 323-2009 | 5 | 326-5515 | 231 | | 3 |
| 314-9985 | 59 | | ▶7 | | ▶268 | | ▶96 |
| 314-9986 | 59 | 325-5905 | 25 | 326-5517 | ▶231 | 328-2337 | 69 |
| 314-9987 | 59 | 325-8382 | ▶288 | 326-5518 | ▶221 | 328-2340 | 92 |
| 314-9988 | 59 | | 289 | | 231 | 328-2341 | 95 |
| 314-9989 | 59 | 326-4786 | 1 | 326-5569 | ▶208 | 328-2342 | ▶95 |
| 314-9991 | 63 | 326-4793 | 1 | 326-5572 | 1 | | 193 |
| 314-9992 | 63 | | ▶147 | | ▶290 | 328-2344 | 1 |
| 314-9999 | 63 | 326-5239 | ▶4 | 326-5579 | ▶208 | | ▶78 |
| 315-0180 | 69 | 326-5248 | 1 | 326-5581 | 172 | 328-2345 | ▶71 |
| 315-2356 | 25 | | ▶120 | | 175 | | 88 |
| 315-4664 | 9 | 326-5264 | 1 | 326-5584 | 165 | 328-2352 | 285 |
| 315-4667 | 21 | | ▶242 | 326-5586 | 165 | 328-2353 | 100 |
| 315-4668 | 21 | 326-5265 | 2 | 326-5590 | 172 | 328-5192 | 53 |
| 315-4669 | 27 | | 3 | | 175 | 328-7495 | 168 |
| 315-4670 | 27 | | ▶243 | 326-5594 | 290 | 329-2576 | 71 |


▶ **PRIMARY REFERENCE**

# PART NUMBER INDEX


| Part | Page |
|---|---|
| 329-2588 | 161 |
| 329-2589 | 162 |
| | 163 |
| 330-5012 | 255 |
| | 257 |
| | ▶282 |
| 330-7620 | 51 |
| 330-7621 | 51 |
| 330-7622 | 51 |
| 330-7633 | 5 |
| | ▶13 |
| 330-7634 | 13 |
| 330-8684 | 285 |
| 332-7664 | 164 |
| | ▶175 |
| 332-8541 | ▶165 |
| | 208 |
| 335-5735 | 63 |
| 335-5750 | 5 |
| | ▶54 |
| 335-9117 | 43 |
| | ▶44 |
| 335-9124 | 44 |
| 335-9125 | 43 |
| 336-1320 | 199 |
| | ▶200 |
| 336-9190 | 63 |
| 336-9856 | 38 |
| 336-9857 | 38 |
| 341-3561 | 7 |
| 342-1219 | 4 |
| | ▶5 |
| 343-0868 | ▶205 |
| | 244 |
| | 245 |
| | 246 |
| 343-0877 | 205 |
| 343-5542 | 2 |
| | ▶245 |
| 343-5543 | 1 |
| | ▶246 |
| 343-6004 | 71 |
| 343-6005 | 71 |
| 343-6022 | 88 |
| 343-6885 | 88 |
| 347-4040 | 181 |
| 347-5346 | 198 |
| 348-4609 | 198 |
| 348-7676 | 11 |
| 351-7389 | 190 |
| 352-3694 | 63 |
| 352-4169 | 32 |
| 354-6574 | 19 |
| 356-1894 | 1 |
| | ▶309 |
| 356-1895 | 309 |
| 356-1896 | 309 |
| 356-1897 | 2 |
| | 3 |
| | ▶310 |
| 356-1900 | ▶193 |
| 356-1901 | ▶193 |
| 356-1905 | 312 |
| | 315 |
| 356-1911 | 164 |
| | ▶181 |
| 356-1917 | ▶100 |
| | 164 |
| 356-1922 | 100 |
| 358-5951 | 200 |
| 361-2874 | 5 |
| | ▶20 |
| 361-2880 | 5 |
| | ▶38 |
| 361-3334 | 5 |
| | ▶34 |


▶ **PRIMARY REFERENCE**

# MEMORANDA



© 2010 CATERPILLAR
ALL RIGHTS
RESERVED

CAT, CATERPILLAR, THEIR RESPECTIVE LOGOS, “CATERPILLAR YELLOW” AND THE POWER EDGE TRADE DRESS, AS WELL AS CORPORATE AND PRODUCT IDENTITY USED HEREIN, ARE TRADEMARKS OF CATERPILLAR AND MAY NOT BE USED WITHOUT PERMISSION.

PRINTED IN
U.S.A.