RUTHZIL TRATOR COMERCIAL DE PEÇAS LTDA 11 97083-6812 ROLANDO CITRANGULO

Foreword

This Supplement provides information for the correct servicing and overhaul of the new series Ford Tractors and should be inserted at the front of the current Ford Tractor Repair Manual.

MODEL IDENTIFICATION

The new tractors carry revised identification numbers which are shown below. The preceding equivalent model identification numbers, where applicable, are listed for reference.

Previous Model Identification	*New Model Identification*
Ford 2000	Ford 2600
Ford 3000	Ford 3600
Ford 3055	Ford 4100
Ford 4000	Ford 4600
—	Ford 5600
Ford 5000	Ford 6600
Ford 7000	Ford 7600

The model identification numbers are incorporated in new two-colour decals mounted on the sides of the engine hood panel assemblies.

The basic Service overhaul procedures for the new series Ford Tractors are in many respects similar to those which apply to previous models. This Supplement only details the changes and unique repair information.

The material contained in this Supplement was correct at the time of going to print but Ford policy is one of continuous improvement and the right to change prices, specifications, equipment or design at any time without notice is reserved.

TRACTOR OPERATIONS
FORD MOTOR COMPANY LIMITED

Part 1

ENGINE SYSTEMS

The engines are in many respects similar to those of the previous models but incorporate design changes to increase efficiency.

The following chart shows the new model diesel engine options available.

Model	*Ford 2600*	*Ford 3600*	*Ford 4100*	*Ford 4600*	*Ford 5600*	*Ford 6600*	*Ford 7600*
No. of Cylinders	3	3	3	3	4	4	4
Bore	4.2 in (106.7 mm)	4.2 in (106.7 mm)	4.2 in (106.7 mm)	4.4 in (111.8 mm)	4.2 in (106.7 mm)	4.4 in (111.8 mm)	4.4 in (111.8 mm)
Stroke	3.8 in (96.5 mm)	4.2 in (106.7 mm)	4.4 in (111.8 mm)	4.4 in (111.8 mm)	4.2 in (106.7 mm)	4.2 in (106.7 mm)	4.2 in (106.7 mm)
Displacement	158 cu in (2588 cc)	175 cu in (2861 cc)	183 cu in (2977 cc)	201 cu in (3289 cc)	233 cu in (3814 cc)	256 cu in (4186 cc)	256 cu in (4186 cc)

NOTE – The Ford 5600 diesel engine is of normally aspirated design similar to the Ford 6600 diesel engine with which it shares a high degree of component interchangeability.

The following areas are where the principal design changes have been incorporated.

CYLINDER HEAD

The engine cylinder heads feature circular section inlet ports which terminate at a tangent to the cylinder bores. Tangential porting improves breathing and combustion.

The new cylinder heads are not interchangeable with those of the previous engines.

CYLINDER HEAD GASKET

The cylinder head gaskets feature extra coolant holes for the 4.4 in (111.8 mm) bore 3- and 4-cylinder diesel engines, Figure 1.

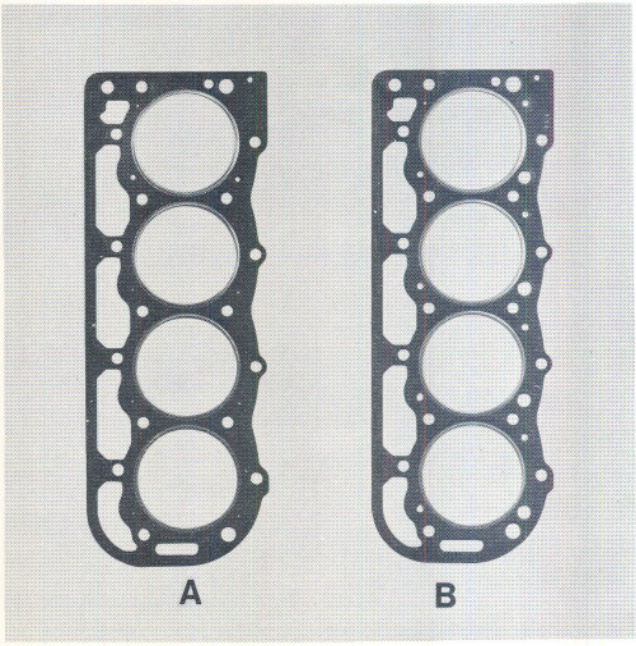

Figure 1
4.4 in (111.8 mm) Bore Gasket Configuration
A. Previous gasket B. Current gasket

 © FORD MOTOR COMPANY, 1975

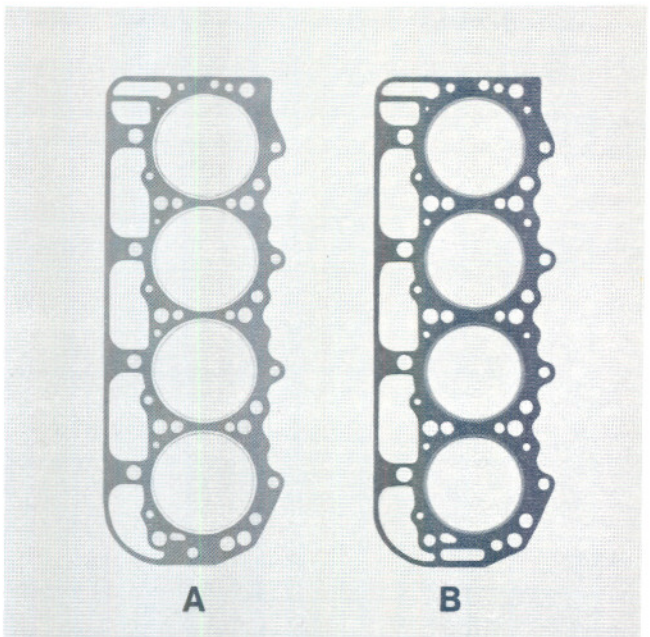

Figure 2
4.2 in (106.7 mm) Bore Gasket Configuration
A. Previous gasket B. Current gasket

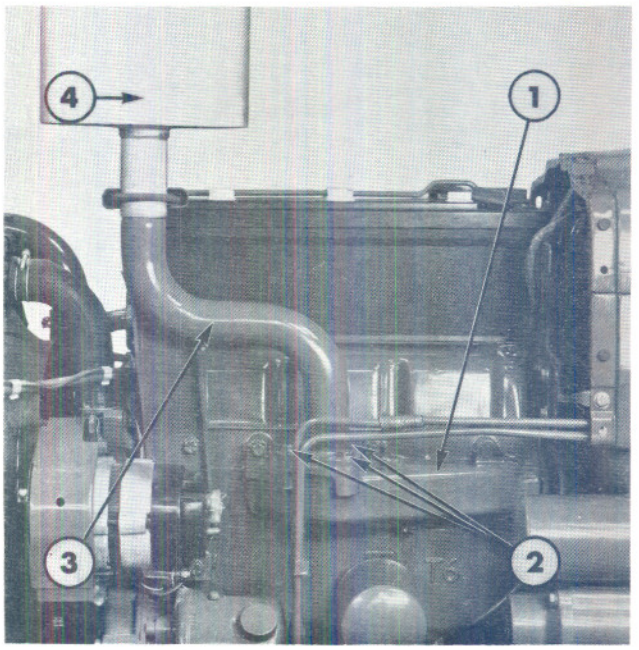

Figure 4
Exhaust Manifold, Pipe and Muffler Installation
1. Exhaust Manifold
2. Exhaust Pipe Flange Mounting Bolts
3. Exhaust Pipe
4. Exhaust Muffler

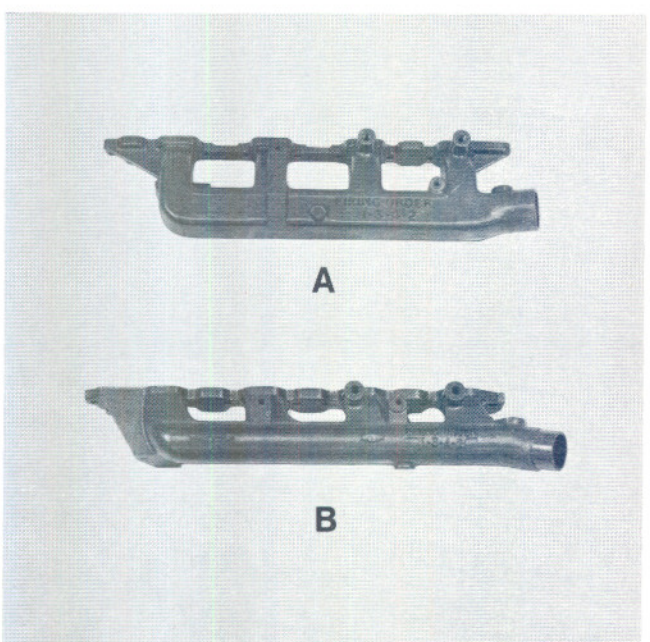

Figure 3
Intake Manifold Porting
A. Previous Porting (Rectangular Section)
B. Current Porting (Circular Section)

The 4.2 in (106.7 mm) bore 3- and 4-cylinder diesel engine cylinder head gaskets also incorporate extra coolant holes, Figure 2.

The new gaskets may be used to service previous models.

MANIFOLDS

Improved engine breathing is achieved by changing the intake manifold to circular section as opposed to the square section of previous models, Figure 3.

The flange mounted exhaust pipe is bolted to the exhaust manifold and carries the exhaust muffler to the front end of the tractor, Figure 4.

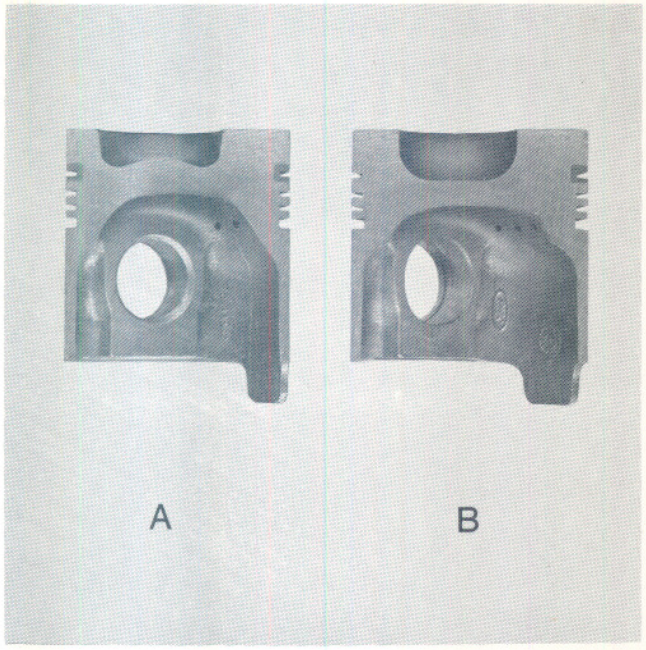

Figure 5
Piston Combustion Chamber
A. Previous Piston B. Current Piston

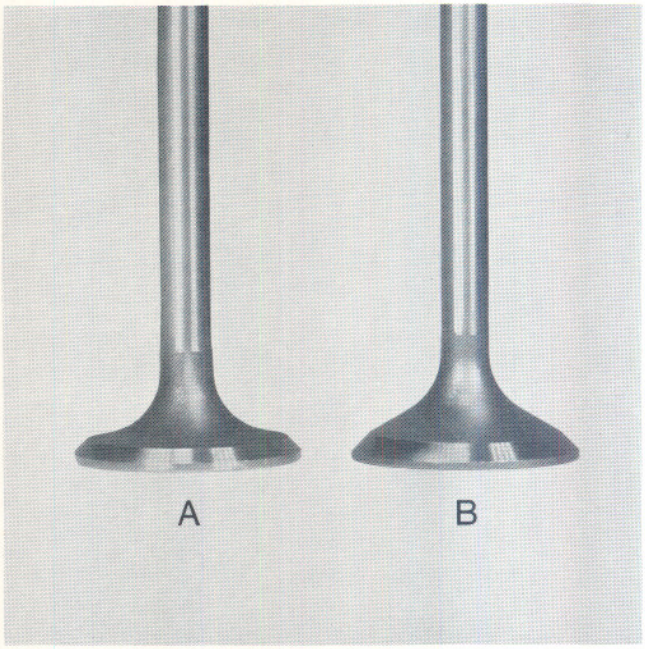

Figure 6
Intake Valve
A. Previous Valve with Curved Underhead Surface
B. Current Valve with Flat Underhead Surface

PISTONS

To match the cylinder head porting system, the pistons incorporate a combustion chamber of hemispherical section with a flat centre as opposed to the sloping section and raised centre of previous pistons, Figure 5.

The pistons are not interchangeable with those of previous models.

VALVES AND VALVE SEAT INSERTS

The intake valve profile has been revised as shown in Figure 6.

The valve head has been thickened and the underhead surface flattened to positively direct the flow of intake air into the piston bowl and thereby achieve improved combustion.

Intake valve inserts are installed in all diesel engines and the seat area in the cylinder head is relieved to further direct the flow of intake air, Figure 7.

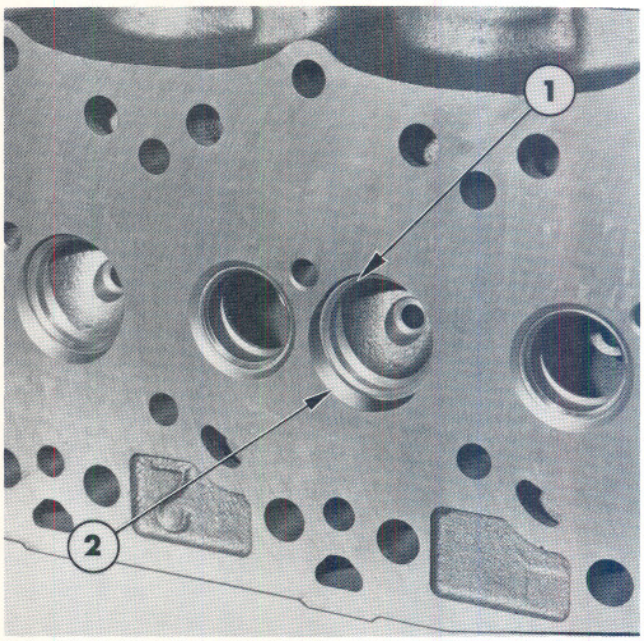

Figure 7
Cylinder Head Relief in Area of Intake Valve Seat
1. Valve Seat
2. Area of Relief

 © FORD MOTOR COMPANY, 1975

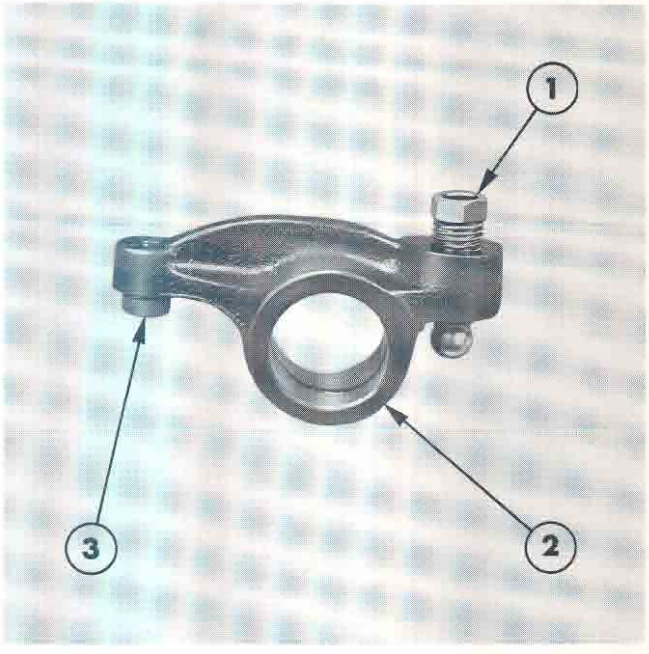

Figure 8
Intake Valve Rocker Arm Assembly
1. Adjuster Screw
2. Rocker Arm
3. Insert

Specially hardened exhaust valves and valve seat inserts are common for the Ford 6600 and 7600 model diesel engines.

IMPORTANT – The softer exhaust valves and inserts of the Ford 5600 are dimensionally different to, and not interchangeable with, those of the Ford 6600 and 7600 model diesel engines.

ROCKER ARMS

A non-serviceable hardened steel insert is located at the valve actuating end of the intake valve rocker arms to increase durability, Figure 8.

FUEL INJECTION PUMP DRIVE GEAR

The fuel injection pump drive gear is common for all engines with the distributor type fuel injection pump.

The drive gear features two timing marks, identified with numerals '3' and '4' for 3- and 4-cylinder engines respectively, Figure 9.

When installing the pump drive gear ensure the appropriate 3- or 4-cylinder timing mark aligns with the camshaft drive gear timing mark.

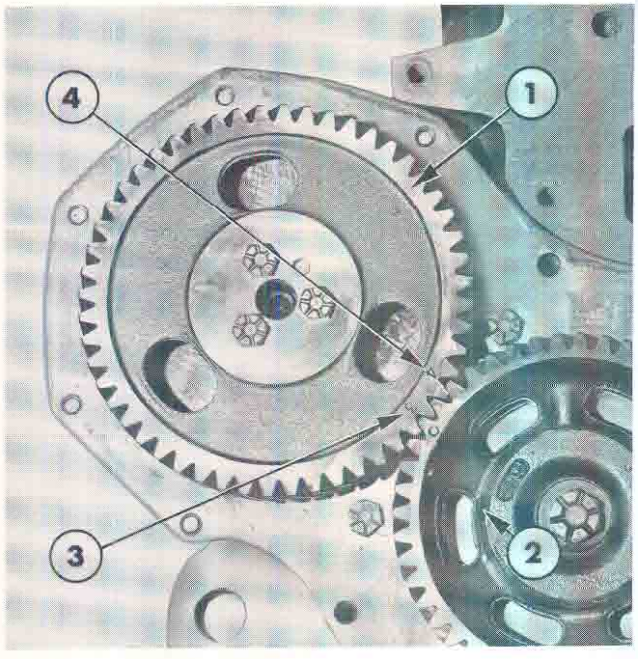

Figure 9
Distributor Type Fuel Injection Pump Drive Gear to Camshaft Drive Gear Timing
1. Pump Drive Gear
2. Camshaft Drive Gear
3. 3-Cylinder Timing Mark
4. 4-Cylinder Timing Mark

ENGINE REAR COVER PLATE

The engine rear cover plate is of laminated construction and consists of a layer of vibration- and sound-absorbing polymer resin bonded between two sheets of steel, Figure 10.

WATER PUMP

To cater for the increased cooling requirements associated with improved engine performance, an increased capacity water pump is incorporated.

DRIVE BELT

The drive belt is notched to ensure satisfactory high speed drive of the alternator. The belts are not interchangeable with those of previous models.

CAMSHAFT HYDRAULIC PUMP DRIVE GEAR

Due to the high output of the engine mounted gear type hydraulic pump, all Ford 2600 and 3600 model diesel engines feature a camshaft mounted drive gear to a material specification harder than that required for previous models.

This high durability hydraulic pump drive gear may be used to service previous models.

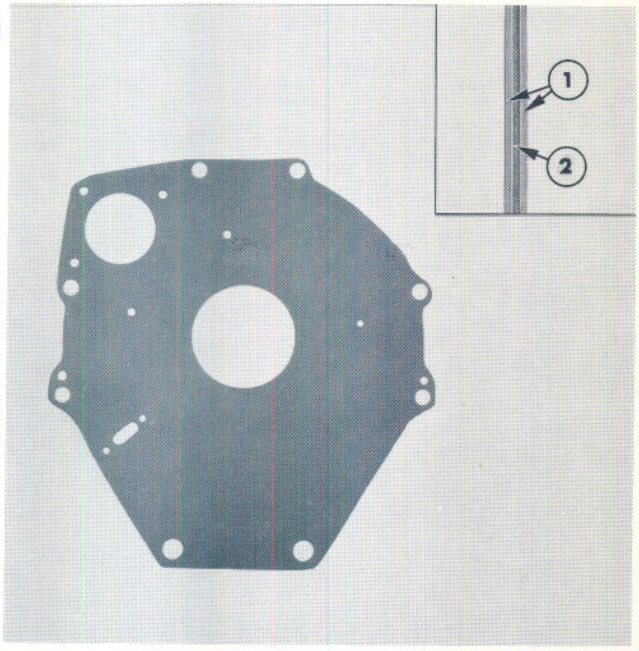

Figure 10
Engine Rear Cover Plate Construction
1. Steel Sheets
2. Polymer Resin

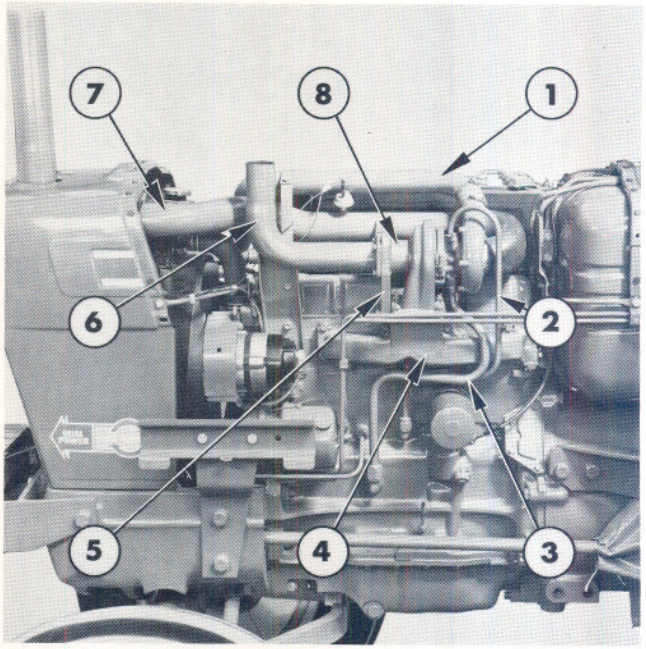

Figure 11
Ford 7600 Turbocharger
Component Identification – Left Side
1. Turbocharger-to-Intake Manifold Tube
2. Oil Supply Tube
3. Oil Return Tube
4. Exhaust Manifold
5. Exhaust Flange
6. Exhaust Pipe
7. Air Cleaner-to-Turbocharger Tube
8. Seal Ring

TURBOCHARGER – FORD 7600

As the new exhaust outlet is relocated to the forward end of the Ford 7600 tractor, the position of the turbocharger and associated components is revised as shown in Figure 11.

To improve torque at lower engine speeds, the turbocharger features a twin entry turbine, Figure 12. Dual inlet ports split the exhaust gases and smooth out periodic pulsing.

This new design improves turbocharger performance and efficiency.

The twin entry turbocharger is not interchangeable with the previous design.

The exhaust manifold has a revised mounting to accept the new turbocharger.

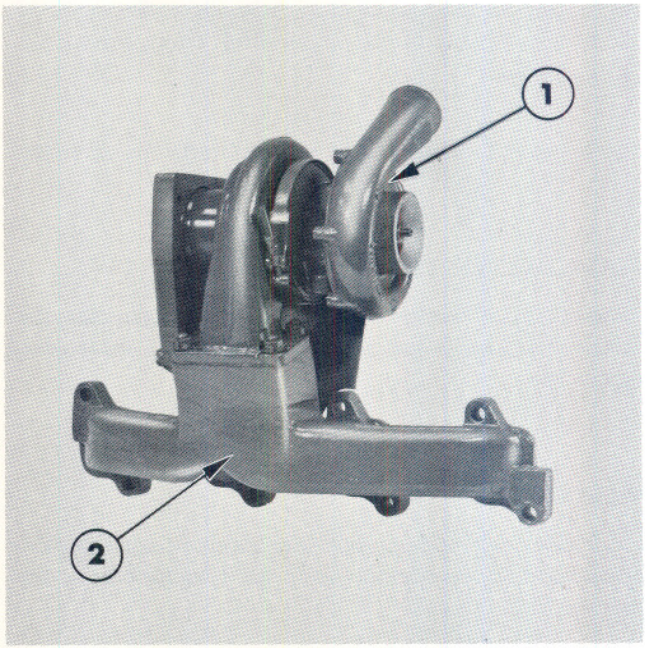

Figure 12
Turbocharger and Exhaust Manifold
1. Turbocharger
2. Exhaust Manifold

 © FORD MOTOR COMPANY, 1975

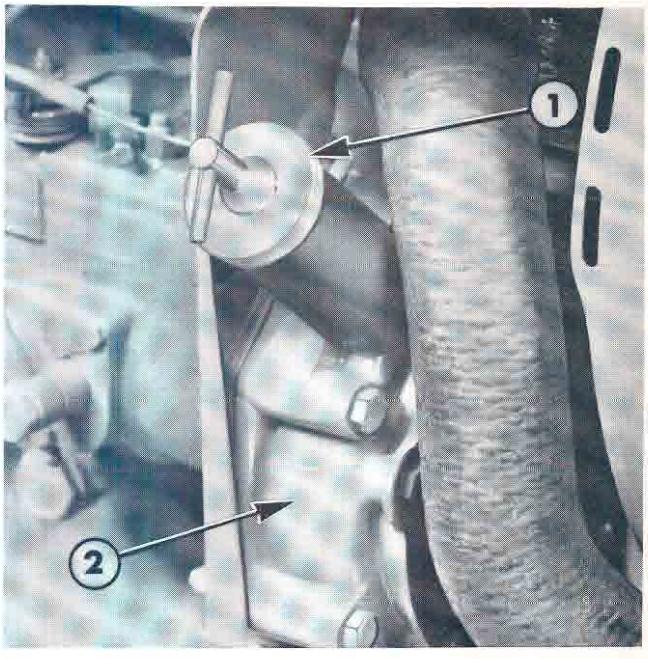

Figure 13
Oil Filler Location

1. Oil Filler
2. Engine Front Cover

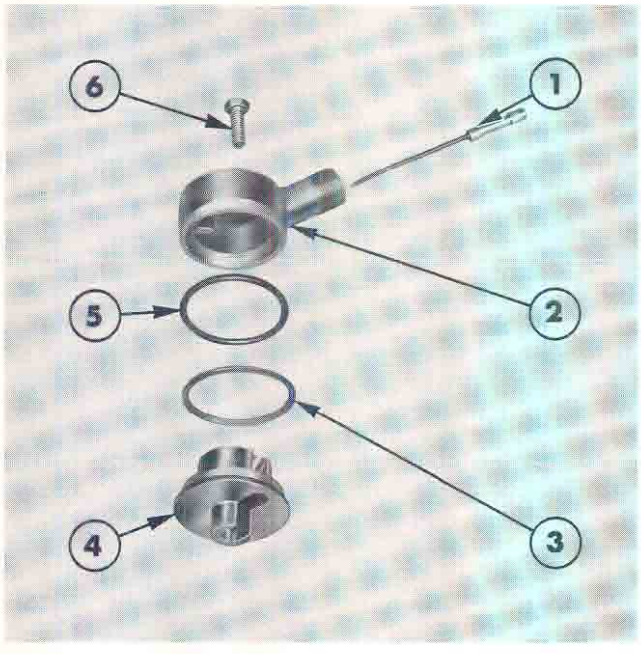

Figure 14
Tachometer Drive

1. Drive Shaft Assembly
2. Driveshaft Adaptor Body
3. Retaining Ring
4. Drive Shaft Adaptor Mounting Base
5. 'O'-Ring Seal
6. Retaining Bolt

OIL FILLER

The engine oil filler is relocated from the rocker cover to the right-hand side of the engine front cover, Figure 13.

The breather tube connection remains at the rocker cover.

TACHOMETER DRIVE

Because all new models are equipped with alternators, the tachometer drive is taken from the oil pump drive gear, Figure 14.

REMOVAL

1. Slacken the retaining bolt and withdraw the complete driveshaft adaptor assembly from the locating bore in the cylinder block.

NOTE – It may be necessary to lightly tap the adaptor body with a soft faced mallet to effect removal.

INSTALLATION

1. Pre-assemble the drive shaft, cable, retaining ring, 'O'-ring, driveshaft adaptor body and mounting base.

2. Install the retaining bolt finger tight and holding the complete assembly, ensure the drive cable is pulled through to the fullest extent towards the oil pump drive shaft.

3. Carefully insert the drive cable into the square hole at the end of the oil pump drive gear.

4. Turn the assembly so that the drive cable outlet assumes a position whereby the drive cable may follow an unobstructed path.

5. Press the assembly firmly into the locating bore in the cylinder block and lightly tap the bolt to ensure correct seating.

6. Tighten the retaining bolt to a torque of 10-15 lbf ft (14-20 Nm).

Part 2

FUEL SYSTEM

AIR CLEANER

A larger, oil bath type air cleaner is installed on the Ford 4600, 5600 and 6600 models.

FUEL INJECTORS

The fuel injectors are spigot located at the nozzle nut to prevent tilt when tightening the retaining nuts, Figure 1.

The lower location ensures the nozzle is positioned centrally in the hole in the combustion face.

The fuel injectors are not interchangeable with those of previous design.

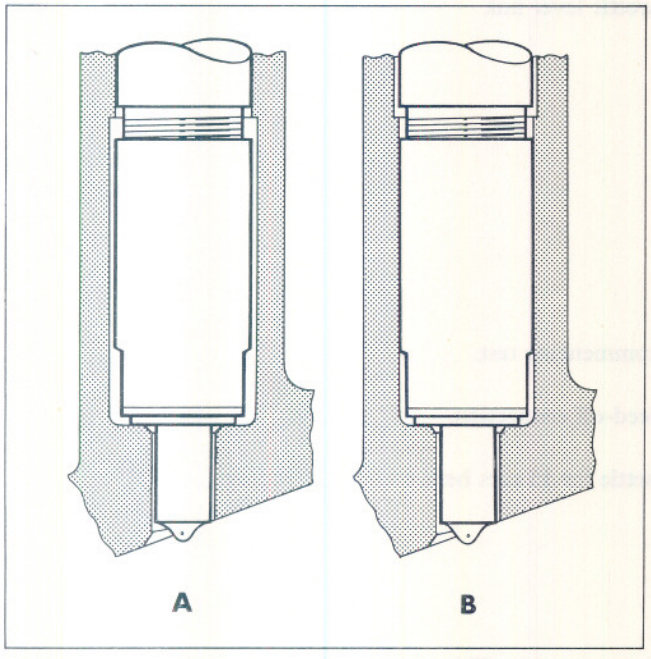

Figure 1
Fuel Injector Location
A. Previous Location B. Current Location

The fuel injector nozzles incorporate revised spray angles, therefore, when re-conditioning injectors in Service, note the identification code numbers etched on the body of the nozzles.

The fuel injector and nozzle assembly identification numbers are as follows:

Model	*Fuel Injector Assembly*	*Fuel Injector Nozzle Assembly*
Ford 2600	D 5222001	BDLL 150S6329
Ford 3600	D 5221903	BDLL 150S6665
Ford 4100	D 5221903	BDLL 150S6665
Ford 4600	D 5221902	BDLL 150S6666
Ford 5600	D 5221903	BDLL 150S6665
Ford 6600	D 5221903	BDLL 150S6665
Ford 7600	D 5222002	BDLL 150S6667

FUEL INJECTION PUMP

With the exception of the Ford 7600, all diesel engines have a distributor type fuel injection pump incorporating a revised profile cam ring and different advance setting.

The in-line type injection pump features larger 9.5 mm diameter plungers and a revised retard setting.

Pump overhaul procedures are the same as those detailed in the Tractor Repair Manual.

Test plans and Specifications for the distributor pumps and for the in-line pump are as follows:

Printed in U.K. 8/75 © FORD MOTOR COMPANY, 1975

FUEL INJECTION PUMP

TEST PLAN

FORD 2600

Pump Type Number 3233F660

Basic Pump Specification

Mechanical governor

Automatic speed advance device

Rotation (looking at drive end) – Clockwise

Hydraulic head and transfer pump liner modified to provide for self-venting

Cambox pressurising valve

Governor link length 52.5 mm (2.067 in) nominal $\pm$1.0 mm (0.039 in)

Governor control spring – No. 2 hole control arm and No. 2 hole throttle lever link

Roller to roller dimension 49.75 mm (1.959 in)

Plunger diameter 9.5 mm (0.374 in)

Test Procedure

Install auto-advance measuring device and set scale to zero before commencing test.

Install pressure gauge to measure Cambox pressure using special bleed-off connection.

Where marked *, use 30 secs glass draining time and allow fuel to settle for 15 secs before taking a reading.

Shimming of Automatic Speed Advance Device:

a. A 0.5 mm (0.0197 in) shim is installed to the piston spring cap on assembly. This must NOT be removed.

b. The amount of additional shimming that may be added to meet test requirements may vary from 0 to 5.5 mm (0–0.217 in).

Test No.	*Description*	*r.p.m.*	*Requirements*
1	Priming	100	Fuel delivery from all injectors and control cover vent orifice
2	Transfer pressure	100	0.55 bar (8 lbf/in²) minimum
3	Cambox pressure	700	0.41 to 0.69 bar (6 to 10 lbf/in²)
4	Advance setting	700	4½°–5° (shim as required)
5	Full advance position	1000	5½°–6¼°
6	Transfer pressure	900	5.52 to 7.24 bar (80 to 105 lbf/in²)
7	Advance position	100	0°
8	Transfer pump vacuum	100	Note time to reach 20 in (508 mm) Hg. Max time allowed 20 secs
9	Back leakage	700	5 to 100 cc for 100 stroke time cycle
10	Maximum fuel setting	*700	Set to 8.8 ±0.1 cc. Spread between lines not to exceed 1.0 cc
11	Maximum fuel delivery check	*100	Average delivery not to be less than average at (10) minus 2.5 cc
12	Cut-off operation Shut-off lever closed	200	Average delivery not to exceed 0.8 cc
13	Throttle operation Throttle lever closed	200	Average delivery not to exceed 1.5 cc
14	Maximum fuel delivery	1000	Record average delivery
15	Governor setting	1130	Set throttle by maximum speed screw to give an average delivery between 3.6 and 4.4 cc. Lock maximum speed screw
16	Delivery check	1180	With throttle set as at test (15) average delivery not to exceed 2.0 cc
17	Delivery check	1000	With throttle set as at test (15) average delivery to be not less than average at test (14) minus 0.4 cc
18	Delivery check	975	Delivery must be average delivery at test (17) ± 0.4 cc.
19	Timing		Using outlet 'W' (30 ats. pressure) and indexing tool set to 271°, scribe line on pump housing flange

NOTE – The governor setting speed quoted in this test plan is for test purposes only. The governor maximum speed screw must be finally set on the engine.

Maximum No Load Speed *2225–2275 rev/min* *Idle Speed* *600–700 rev/min*

Printed in U.K. 8/75 © FORD MOTOR COMPANY, 1975

FUEL INJECTION PUMP

TEST PLAN

FORD 3600

Pump Type Number 3233F630

Basic Pump Specification

Mechanical governor

Automatic speed advance device

Rotation (looking at drive end) – Clockwise

Hydraulic head and transfer pump liner modified to provide for self-venting

Cambox pressurising valve

Governor link length 52.5 mm (2.067 in) nominal $\pm$1.0 mm (0.039 in)

Governor control spring – No. 2 hole control arm and No. 2 hole throttle lever link

Roller to roller dimension 49.66 mm (1.955 in)

Plunger diameter 9.5 mm (0.374 in)

Test Procedure

Install auto-advance measuring device and set scale to zero before commencing test.

Install pressure gauge to measure Cambox pressure using special bleed-off connection.

Where marked *, use 30 secs glass draining time and allow fuel to settle for 15 secs before taking a reading.

Shimming of Automatic Speed Advance Device:

a. A 0.5 mm (0.0197 in) shim is installed to the piston spring cap on assembly. This must NOT be removed.

b. The amount of additional shimming that may be added to meet test requirements may vary from 0 to 5.5 mm (0–0.217 in).

Test No.	*Description*	*r.p.m.*	*Requirements*
1	Priming	100	Fuel delivery from all injectors and control cover vent orifice
2	Transfer pressure	100	0.55 bar (8 lbf/in²) minimum
3	Cambox pressure	600	0.41 to 0.69 bar (6 to 10 lbf/in²)
4	Advance setting	600	$7\frac{1}{4}°$–$7\frac{3}{4}°$ (shim as required)
5	Full advance position	1000	$8\frac{1}{2}°$–$9\frac{1}{4}°$
6	Transfer pressure	900	5.52 to 7.24 bar (80 to 105 lbf/in²)
7	Advance position	100	0°
8	Transfer pump vacuum	100	Note time to reach 20 in (508 mm) Hg. Max time allowed 20 secs
9	Back leakage	600	5 to 100 cc for 100 stroke time cycle
10	Maximum fuel setting	*600	Set to 11.6 ±0.1 cc. Spread between lines not to exceed 1.2 cc
11	Maximum fuel delivery check	*100	Average delivery not to be less than average at (10) minus 3.5 cc
12	Cut-off operation Shut-off lever closed	200	Average delivery not to exceed 0.8 cc
13	Throttle operation Throttle lever closed	200	Average delivery not to exceed 1.5 cc
14	Maximum fuel delivery	1000	Record average delivery
15	Governor setting	1130	Set throttle by maximum speed screw to give an average delivery between 3.6 and 4.4 cc. Lock maximum speed screw
16	Delivery check	1180	With throttle set as at test (15) average delivery not to exceed 2.0 cc
17	Delivery check	1000	With throttle set as at test (15) average delivery to be not less than average at test (14) minus 0.4 cc
18	Delivery check	975	Delivery must be average delivery at test (17) ± 0.4 cc.
19	Timing		Using outlet 'W' (30 ats. pressure) and indexing tool set to 269°, scribe line on pump housing flange

NOTE – The governor setting speed quoted in this test plan is for test purposes only. The governor maximum speed screw must be finally set on the engine.

Maximum No Load Speed *2225–2275 rev/min* *Idle Speed* *600–700 rev/min*

 © FORD MOTOR COMPANY, 1975

FUEL INJECTION PUMP

TEST PLAN

FORD 4100

Pump Type Number 3233F640

Basic Pump Specification

Mechanical governor

Automatic speed advance device

Rotation (looking at drive end) – Clockwise

Hydraulic head and transfer pump liner modified to provide for self-venting

Cambox pressurising valve

Governor link length 52.5 mm (2.067 in) nominal $\pm$1.0 mm (0.039 in)

Governor control spring – No. 2 hole control arm and No. 2 hole throttle lever link

Roller to roller dimension 49.71 mm (1.957 in)

Plunger diameter 9.5 mm (0.374 in)

Test Procedure

Install auto-advance measuring device and set scale to zero before commencing test.

Install pressure gauge to measure Cambox pressure using special bleed-off connection.

Where marked *, use 30 secs glass draining time and allow fuel to settle for 15 secs before taking a reading.

Shimming of Automatic Speed Advance Device:

a. A 0.5 mm (0.0197 in) shim is installed to the piston spring cap on assembly. This must NOT be removed.

b. The amount of additional shimming that may be added to meet test requirements may vary from 0 to 5.5 mm (0–0.217 in).

Test No.	*Description*	*r.p.m.*	*Requirements*
1	Priming	100	Fuel delivery from all injectors and control cover vent orifice
2	Transfer pressure	100	0.55 bar (8 lbf/in²) minimum
3	Cambox pressure	600	0.41 to 0.69 bar (6 to 10 lbf/in²)
4	Advance setting	600	$7\frac{1}{4}°$–$7\frac{3}{4}°$ (shim as required)
5	Full advance position	1000	$8\frac{1}{2}°$–$9\frac{1}{4}°$
6	Transfer pressure	900	5.52 to 7.24 bar (80 to 105 lbf/in²)
7	Advance position	100	0°
8	Transfer pump vacuum	100	Note time to reach 20 in (508 mm) Hg. Max time allowed 20 secs
9	Back leakage	600	5 to 100 cc for 100 stroke time cycle
10	Maximum fuel setting	*600	Set to 12.6 ±0.1 cc. Spread between lines not to exceed 1.2 cc
11	Maximum fuel delivery check	*100	Average delivery not to be less than average at (10) minus 3.5 cc
12	Cut-off operation Shut-off lever closed	200	Average delivery not to exceed 0.8 cc
13	Throttle operation Throttle lever closed	200	Average delivery not to exceed 1.5 cc
14	Maximum fuel delivery	1100	Record average delivery
15	Governor setting	1240	Set throttle by maximum speed screw to give an average delivery between 3.6 and 4.4 cc. Lock maximum speed screw
16	Delivery check	1280	With throttle set as at test (15) average delivery not to exceed 2.0 cc
17	Delivery check	1100	With throttle set as at test (15) average delivery to be not less than average at test (14) minus 0.4 cc
18	Delivery check	1075	Delivery must be average delivery at test (17) ± 0.4 cc.
19	Timing		Using outlet 'W' (30 ats. pressure) and indexing tool set to 269°, scribe line on pump housing flange

NOTE – The governor setting speed quoted in this test plan is for test purposes only. The governor maximum speed screw must be finally set on the engine.

Maximum No Load Speed *2425–2475 rev/min* *Idle Speed* *600–700 rev/min*

Printed in U.K. 8/75 © FORD MOTOR COMPANY, 1975

FUEL INJECTION PUMP

TEST PLAN

FORD 4600

Pump Type Number 3233F650

Basic Pump Specification

Mechanical governor

Automatic speed advance device

Rotation (looking at drive end) – Clockwise

Hydraulic head and transfer pump liner modified to provide for self-venting

Cambox pressurising valve

Governor link length 52.5 mm (2.067 in) nominal $\pm$1.0 mm (0.039 in)

Governor control spring – No. 2 hole control arm and No. 2 hole throttle lever link

Roller to roller dimension 49.82 mm (1.961 in)

Plunger diameter 9.5 mm (0.374 in)

Test Procedure

Install auto-advance measuring device and set scale to zero before commencing test.

Install pressure gauge to measure Cambox pressure using special bleed-off connection.

Where marked *, use 30 secs glass draining time and allow fuel to settle for 15 secs before taking a reading.

Shimming of Automatic Speed Advance Device:

a. A 0.5 mm (0.0197 in) shim is installed to the piston spring cap on assembly. This must NOT be removed.

b. The amount of additional shimming that may be added to meet test requirements may vary from 0 to 5.5 mm (0–0.217 in).

Test No.	*Description*	*r.p.m.*	*Requirements*
1	Priming	100	Fuel delivery from all injectors and control cover vent orifice
2	Transfer pressure	100	0.55 bar (8 lbf/in²) minimum
3	Cambox pressure	600	0.41 to 0.69 bar (6 to 10 lbf/in²)
4	Advance setting	500	$7\frac{1}{4}°$–$7\frac{3}{4}°$ (shim as required)
5	Full advance position	1000	$8\frac{1}{2}°$–$9\frac{1}{4}°$
6	Transfer pressure	900	5.52 to 7.24 bar (80 to 105 lbf/in²)
7	Advance position	100	1° maximum
8	Transfer pump vacuum	100	Note time to reach 20 in (508 mm) Hg. Max time allowed 20 secs
9	Back leakage	600	5 to 100 cc for 100 stroke time cycle
10	Maximum fuel setting	*600	Set to 13.3 ±0.1 cc. Spread between lines not to exceed 1.2 cc
11	Maximum fuel delivery check	*100	Average delivery not to be less than average at (10) minus 3.5 cc
12	Cut-off operation Shut-off lever closed	200	Average delivery not to exceed 0.8 cc
13	Throttle operation Throttle lever closed	200	Average delivery not to exceed 1.5 cc
14	Maximum fuel delivery	1100	Record average delivery
15	Governor setting	1240	Set throttle by maximum speed screw to give an average delivery between 3.6 and 4.4 cc. Lock maximum speed screw
16	Delivery check	1280	With throttle set as at test (15) average delivery not to exceed 2.0 cc
17	Delivery check	1100	With throttle set as at test (15) average delivery to be not less than average at test (14) minus 0.4 cc
18	Delivery check	1075	Delivery must be average delivery at test (17) ± 0.4 cc.
19	Timing		Using outlet 'W' (30 ats. pressure) and indexing tool set to 269°, scribe line on pump housing flange

NOTE – The governor setting speed quoted in this test plan is for test purposes only. The governor maximum speed screw must be finally set on the engine.

Maximum No Load Speed *2425–2475 rev/min* *Idle Speed* *600–700 rev/min*

 © FORD MOTOR COMPANY, 1975

FUEL INJECTION PUMP

TEST PLAN

FORD 5600

Pump Type Number 3249F920

Basic Pump Specification

Mechanical governor

Automatic speed advance device

Rotation (looking at drive end) – Clockwise

Hydraulic head and transfer pump liner modified to provide for self-venting

Cambox pressurising valve

Governor link length 53.0 mm (2.087 in) nominal ± 1.0 mm (0.039 in)

Governor control spring – No. 2 hole control arm and No. 2 hole throttle lever link

Roller to roller dimension 49.70 mm (1.957 in)

Plunger diameter 9.5 mm (0.374 in)

Test Procedure

Install auto-advance measuring device and set scale to zero before commencing test.

Install pressure gauge to measure Cambox pressure using special bleed-off connection.

Where marked *, use 30 secs glass draining time and allow fuel to settle for 15 secs before taking a reading.

Shimming of Automatic Speed Advance Device:

a. A 0.5 mm (0.0197 in) shim is installed to the piston spring cap on assembly. This must NOT be removed

b. The amount of additional shimming that may be added to meet test requirements may vary from 0 to 5.5 mm (0–0.217 in).

Test No.	*Description*	*r.p.m.*	*Requirements*
1	Priming	100	Fuel delivery from all injectors and control cover vent orifice
2	Transfer pressure	100	0.55 bar (8 lbf/in²) minimum
3	Cambox pressure	800	0.41 to 0.69 bar (6 to 10 lbf/in²)
4	Advance setting	500	7°–7½° (shim as required)
5	Full advance position	800	8½°–9¼°
6	Transfer pressure	900	5.52 to 7.24 bar (80 to 105 lbf/in²)
7	Advance position	100	0°
8	Transfer pump vacuum	100	Note time to reach 20 in (508 mm) Hg. Max time allowed 20 secs
9	Back leakage	800	5 to 100 cc for 100 stroke time cycle
10	Maximum fuel setting	*800	Set to 11.6 ± 0.1 cc. Spread between lines not to exceed 1.2 cc
11	Maximum fuel delivery check	*100	Average delivery not to be less than average at (10) minus 3.0 cc
12	Cut-off operation Shut-off lever closed	200	Average delivery not to exceed 0.8 cc
13	Throttle operation Throttle lever closed	200	Average delivery not to exceed 1.5 cc
14	Maximum fuel delivery	1050	Record average delivery
15	Governor setting	1230	Set throttle by maximum speed screw to give an average delivery between 3.6 and 4.4 cc. Lock maximum speed screw
16	Delivery check	1280	With throttle set as at test (15) average delivery not to exceed 2.0 cc
17	Delivery check	1050	With throttle set as at test (15) average delivery to be not less than average at test (14) minus 0.4 cc
18	Delivery check	1025	Delivery must be average delivery at test (17) ± 0.4 cc.
19	Timing	—	Using outlet 'X' (30 ats. pressure) and indexing tool set to 255°, scribe line on pump housing flange

NOTE – The governor setting speed quoted in this test plan is for test purposes only. The governor maximum speed screw must be finally set on the engine.

Maximum No Load Speed *2325–2375 rev/min* *Idle Speed* *600–700 rev/min*

Printed in U.K. 8/75 © FORD MOTOR COMPANY, 1975

FUEL INJECTION PUMP

TEST PLAN

FORD 6600

Pump Type Number 3249F950

Basic Pump Specification

Mechanical governor

Automatic speed advance device

Rotation (looking at drive end) – Clockwise

Hydraulic head and transfer pump liner modified to provide for self-venting

Cambox pressurising valve

Governor link length 53.0 mm (2.087 in) nominal $\pm$1.0 mm (0.039 in)

Governor control spring – No. 2 hole control arm and No. 2 hole throttle lever link

Roller to roller dimension 49.98 mm (1.968 in)

Plunger diameter 9.5 mm (0.374 in)

Test Procedure

Install auto-advance measuring device and set scale to zero before commencing test.

Install pressure gauge to measure Cambox pressure using special bleed-off connection.

Where marked *, use 30 secs glass draining time and allow fuel to settle for 15 secs before taking a reading.

Shimming of Automatic Speed Advance Device:

a. A 0.5 mm (0.0197 in) shim is installed to the piston spring cap on assembly. This must NOT be removed.

b. The amount of additional shimming that may be added to meet test requirements may vary from 0 to 5.5 mm (0–0.217 in).

Test No.	*Description*	*r.p.m.*	*Requirements*
1	Priming	100	Fuel delivery from all injectors and control cover vent orifice
2	Transfer pressure	100	0.55 bar (8 lbf/in²) minimum
3	Cambox pressure	600	0.41 to 0.69 bar (6 to 10 lbf/in²)
4	Advance setting	600	$8\frac{1}{4}°$–$8\frac{3}{4}°$ (shim as required)
5	Full advance position	900	$9\frac{1}{2}°$–$10\frac{1}{4}°$
6	Transfer pressure	900	5.52 to 7.24 bar (80 to 105 lbf/in²)
7	Advance position	100	0°
8	Transfer pump vacuum	100	Note time to reach 20 in (508 mm) Hg. Max time allowed 20 secs
9	Back leakage	600	5 to 100 cc for 100 stroke time cycle
10	Maximum fuel setting	*600	Set to 14.0 ±0.1 cc. Spread between lines not to exceed 1.2 cc
11	Maximum fuel delivery check	*100	Average delivery not to be less than average at (10)
12	Cut-off operation Shut-off lever closed	200	Average delivery not to exceed 0.8 cc
13	Throttle operation Throttle lever closed	200	Average delivery not to exceed 1.5 cc
14	Maximum fuel delivery	1050	Record average delivery
15	Governor setting	1230	Set throttle by maximum speed screw to give an average delivery between 3.6 and 4.4 cc. Lock maximum speed screw
16	Delivery check	1280	With throttle set as at test (15) average delivery not to exceed 2.0 cc
17	Delivery check	1050	With throttle set as at test (15) average delivery to be not less than average at test (14) minus 0.4 cc
18	Delivery check	1025	Delivery must be average delivery at test (17) ± 0.4 cc.
19	Timing		Using outlet 'X' (30 ats. pressure) and indexing tool set to 255°, scribe line on pump housing flange

NOTE – The governor setting speed quoted in this test plan is for test purposes only. The governor maximum speed screw must be finally set on the engine.

Maximum No Load Speed 2325–2375 rev/min *Idle Speed* 600–700 rev/min

 © FORD MOTOR COMPANY, 1975

SPECIFICATIONS AND SPECIAL TOOLS

FUEL INJECTION PUMP

FORD 7600

Type	Enclosed camshaft with mechanical governor
Plunger Stroke and Diameter	7 mm × 9 mm
Camshaft Rotation	Clockwise from drive end
Lubrication	Change oil every 300 hours and clean breather
Oil Capacity	0.62 Imp. pint (0.38 U.S. quart) (0.36 litres)
Oil Grade	Same as engine
Pump Timing	23° B.T.D.C.
Camshaft End Float	0.002–0.005 in (0.051–0.127 mm)
Camshaft End Float Shims	0.004–0.008 in (0.102–0.203 mm)
Dimensions, rear control fork to end of square section on control rod	0.02 in (0.5 mm)
Dimensions, B.D.C. to point of spill cut-off	0.114–0.122 in (2.90–3.10 mm)
Phasing Spacers:	
Number 1	0.151–0.153 in (3.85–3.90 mm)
Number 2	0.155–0.157 in (3.95–4.00 mm)
Number 3	0.159–0.161 in (4.03–4.10 mm)
Number 4	0.163–0.165 in (4.15–4.20 mm)
Number 5	0.167–0.169 in (4.25–4.30 mm)
Phasing Tolerance	± ½° (Pump)
Plunger Arm Clearance	0.008–0.020 in (0.2–0.5 mm)
Lower Spring Seat	Seats graded in thickness from 0.023–0.085 in (0.60–2.10 mm) in steps of 0.004 in (0.1 mm)
Maximum Fuel Delivery	17.8–18.2 cc – 900 rev/min for 200 shots

Governor

Type	Mechanical
Pump No Delivery Speed	1200 rev/min (Pump)
Idling	2.2–3.8 cc in 300 strokes at 300 rev/min
Governor Spring Identification	BLUE/GREEN

Tightening Torques

	Ft lbf	*Mkg*	*Nm*
Screws, Governor Backplate to Pump	9	1.2	12
Delivery Valve Holders	40–45	5.5–6.2	54–61
Pump Drive Gear Adaptor Retaining Nut	45	6.2	61
Governor Spring Retaining Bolt	2–4	0.3–0.6	2.7–5.4
Control Fork Socket Screws	2	0.3	2.7
Pump Body, Socket Screws	5	0.7	6.8
Fuel Injection Pump to Front Plate	26–30	3.6–4.2	36–41
Bolt Gear to Injection Pump	20–25	2.8–3.5	27–34

Chapter 7
ALTERNATOR AND REGULATOR — FORD 7000

Section		*Page*
1.	Introduction	1
2.	In-Vehicle Tests and Service Procedures ..	6
3.	Alternator Overhaul and Bench Check	16
4.	Trouble Shooting	30
5.	Specifications	32
6.	Special Tools	33

Chapter 8
ALTERNATOR AND REGULATOR — FORD 2600, 3600, 4100, 4600, 5600, 6600 & 7600

Section		*Page*
1.	Description and Operation	1
2.	Service Precautions, Preliminary Checks and Initial Tests	6
3.	Alternator and Voltage Regulator Removal and Overhaul	13
4.	Trouble Shooting	29
5.	Specifications	29
6.	Special Tools	29

Printed in U.K. 8/75

© FORD MOTOR COMPANY, 1975

Part 3

ELECTRICAL SYSTEM

Chapter 8

ALTERNATOR AND REGULATOR — FORD 2600, 3600, 4100, 4600, 5600, 6600 & 7600

Section		Page
1.	Description and Operation	1
2.	Service Precautions, Preliminary Checks and Initial Tests	6
3.	Alternator and Voltage Regulator Removal and Overhaul	13
4.	Trouble Shooting	29
5.	Specifications	29
6.	Special Tools	29

1. DESCRIPTION AND OPERATION

CHARGING SYSTEM

The alternator charging system is a negative ground system and consists of an alternator, alternator regulator, storage battery and the necessary wires to connect the circuit.

The alternator is mounted on the left side of the engine and is belt driven from the crankshaft pulley, Figure 1. The alternator is cooled by a fan attached at the pulley end. Air is drawn through openings in the rear housing and expelled at the fan, thus cooling the alternator components. Four terminals on the rear housing connect the alternator into the electrical system.

The alternator regulator is mounted on the inside wall of the battery compartment adjacent to the battery. The regulator is fully transistorised and is completely sealed in epoxy resin, making the unit weatherproof and resistant to vibration. Four terminals connect the regulator into the charging system, Figure 2.

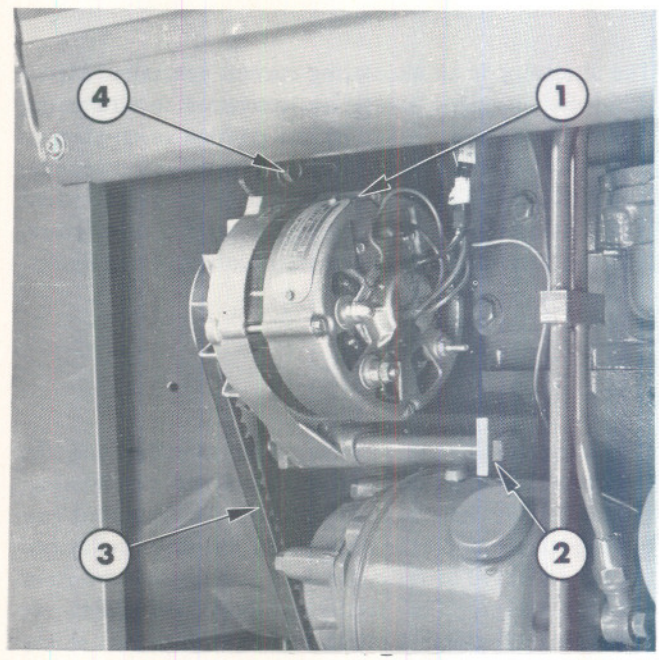

Figure 1
Alternator Installed on Tractor

1. Alternator
2. Alternator Bracket and Retaining Bolt
3. Alternator Fan Belt
4. Adjusting Bolt

© FORD MOTOR COMPANY, 1975

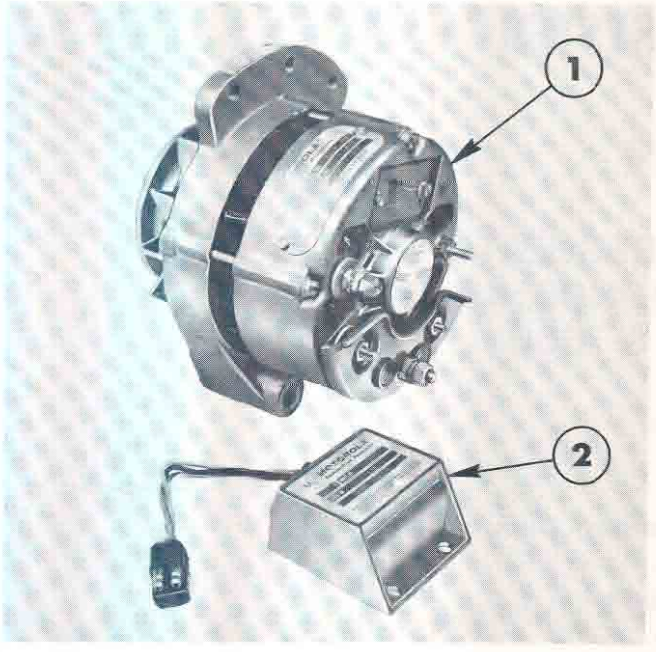

Figure 2
Alternator and Regulator
1. Alternator 2. Regulator

ALTERNATOR

The alternator is an alternating current generator. Mechanical and magnetic energy are converted to alternating current (A.C.) and voltage by the rotation of an electromagnetic field (rotor) inside a three phase stator assembly. The A.C. current and voltage are changed to direct current (D.C.) by passing the A.C. energy through a three phase, full wave rectifier system using six silicon rectifying diodes.

The alternator stator assembly, rotor assembly and the rectifying diodes are enclosed in a front and rear housing, Figure 3. The housings also contain the front and rear bearings that support the rotor shaft. The drive pulley and the fan are keyed to the rotor shaft and retained by a nut and lockwasher. The rectifying diode assemblies are mounted in the rear housing and are connected to the stator coil wires. The cover and brush assembly are mounted in the rear housing and the brushes are held against the rotor slip rings by springs. The isolation diode assembly is attached externally on the rear housing.

STATOR

The stator is the part of the alternator which contains the conductors (windings) and is stationary in the alternator. The magnetic field (rotor assembly) rotates inside the stator. The stator consists of the core assembly and the winding assembly.

The core is made of a number of thin steel plates that, when assembled, contain 36 equally spaced slots, which retain the coil windings, on the inner surface, Figure 4. Three separate wires form the coil windings (phases) of the stator. Each wire is started in a separate slot and routed through every third slot. In assembly, each wire is wound clockwise several times between the beginning and the third slot. The wire is then turned at right angles to the beginning slot and, missing two slots, it is similarly wound an equal number of turns but in a counter-clockwise direction. This alternating of every third slot, and the direction of winding, continues around the core with each wire forming 12 separate loops. The ends of each wire are connected to the two diode assemblies in the rear housing.

ROTOR

The rotor is the part of the alternator that contains the magnetic field. When rotated inside the stator, an electric current is induced in the stator windings.

The rotor assembly consists of a splined shaft, coil and core assembly, front and rear pole pieces, and two slip rings, Figure 5. The coil and core, pole pieces and slip rings are splined to the shaft. These pole pieces are placed on either side of, and enclose, the coil and core assembly. The six fingers of each pole piece interlace to form six north poles and six south poles. The two ends of the coil wire are connected to the two slip rings. When battery current is applied to the slip rings, the coil and core assembly is magnetized. The two pole pieces concentrate the magnetic lines of force at the six pairs of fingers.

Current flow to the rotor field is controlled by the key start switch and regulated by the regulator assembly.

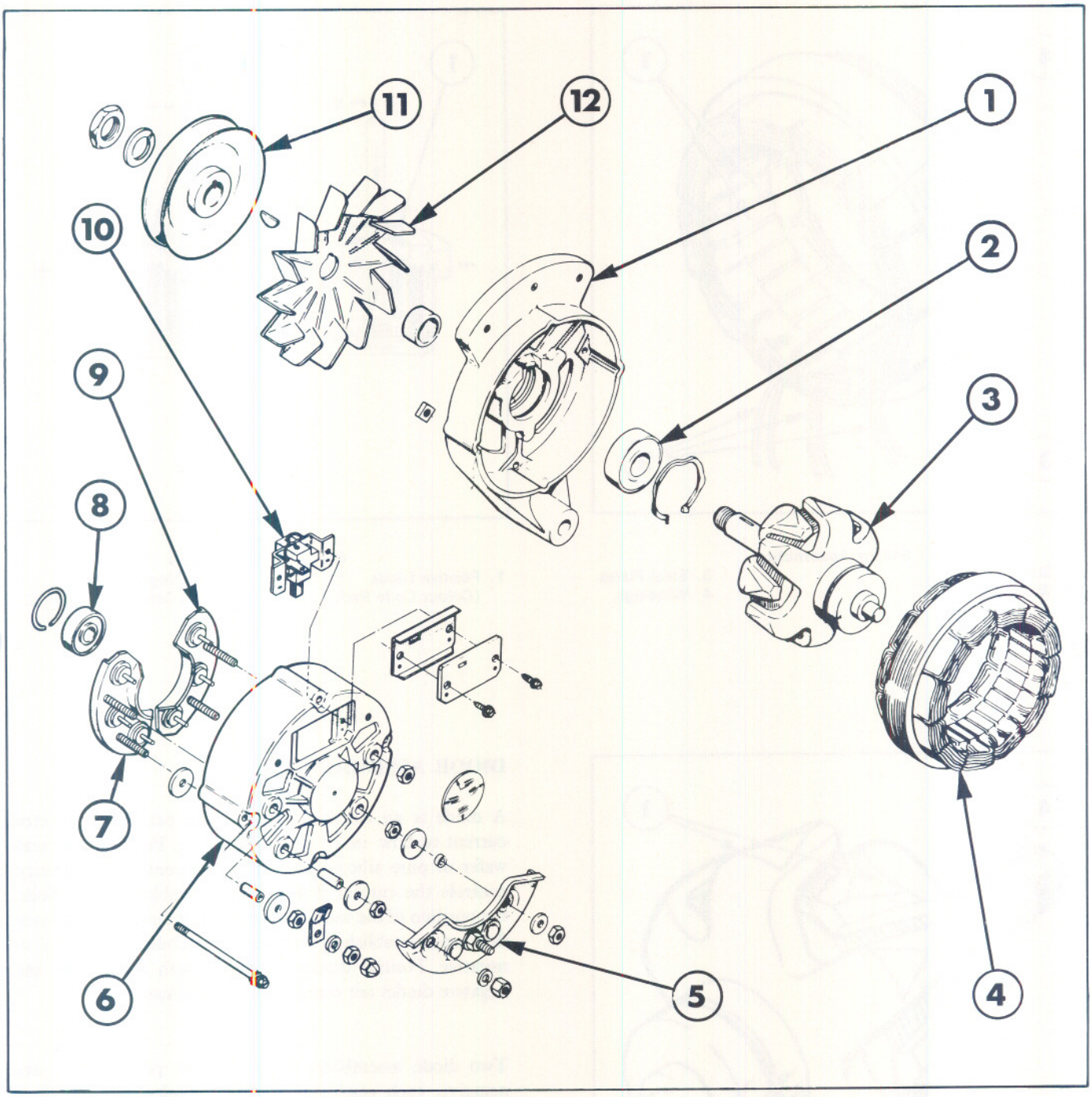

Figure 3
Alternator Components – Exploded View

1. Front Housing
2. Front Bearing
3. Rotor
4. Stator and Coil Assembly
5. Negative Auxiliary Plate
6. Rear Housing
7. Diode Assembly (Positive)
8. Rear Bearing
9. Diode Assembly (Negative)
10. Cover and Brush Assembly
11. Pulley
12. Fan

© FORD MOTOR COMPANY, 1975

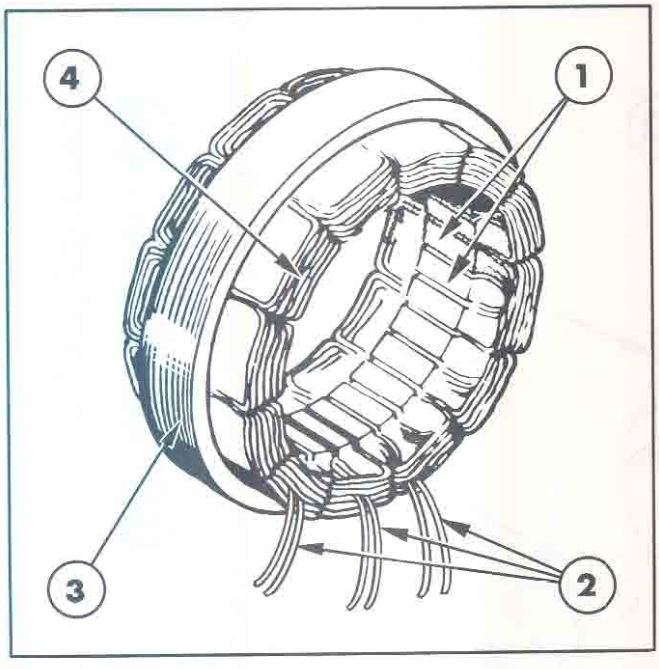

Stator Assembly

1. Slots
2. Winding Ends
3. Steel Plates
4. Windings

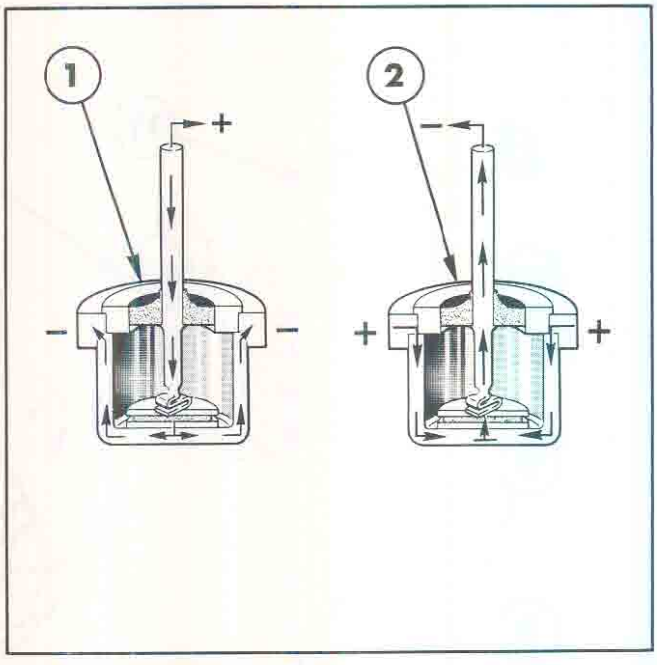

Figure 6
Diode Electron Flow

1. Positive Diode (Colour Code Red)
2. Negative Diode (Colour Code Black)

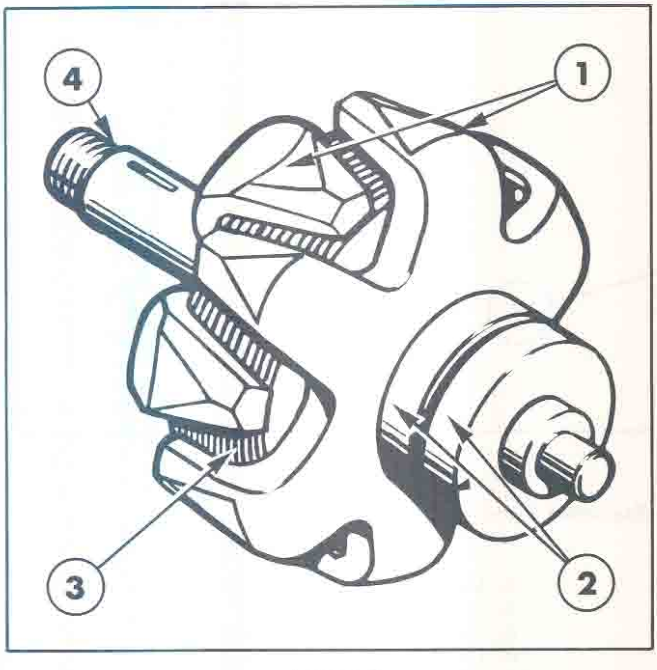

Figure 5
Rotor Assembly

1. Pole Pieces
2. Slip Rings
3. Coil and Core Assembly
4. Shaft

DIODE ASSEMBLY

A diode is an electronic device that permits an electric current to flow in only one direction, Figure 6. A small wafer of pure silicon, treated with a controlled impurity, controls the current flow. When assembled in the diode, the position of the wafer determines the direction of current flow and establishes whether the diode is positive or negative. Positive diodes are coded with a red mark and negative diodes are coded with a black mark.

Two diode assemblies, Figure 7, one positive and one negative, each consisting of three diodes mounted in a metal plate, are used to rectify the A.C. current to D.C. current.

The plate, called a heat-sink, dissipates heat away from the diodes and also serves as a conductor for the diodes. One end of each of the three stator windings is connected to the three positive diodes and the other ends of the windings are connected to the negative diodes. Two studs on each diode assembly attach the assembly to the rear housing.

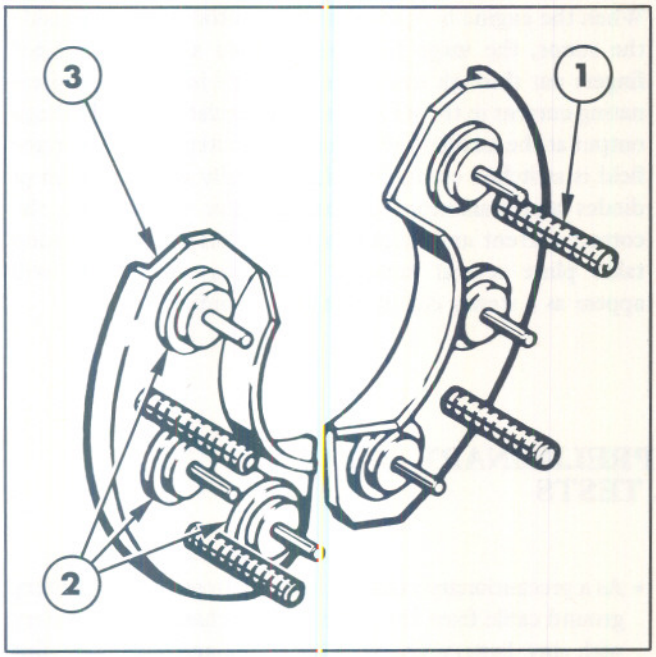

Figure 7
Rectifying Diode Assemblies
1. Terminal Stud
2. Diodes
3. Heat Sink

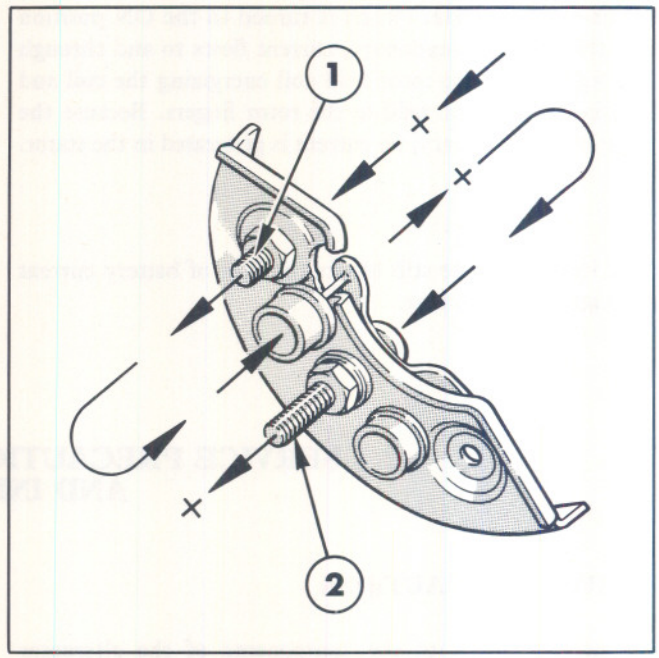

Figure 8
Current Flow Through Isolation Diode
1. Auxiliary Terminal (Part of Rear Housing Assembly)
2. Output

One stud on the positive diode assembly is the alternator regulator terminal and the other is the output terminal. The positive diode assembly is insulated from the rear housing. The negative diode assembly is not insulated and the upper stud is the alternator ground connection.

The isolation diode assembly, Figure 8, contains two negative diodes in the plate and is attached externally on the rear housing. It is attached to the lower negative diode stud and connects electrically at the positive diode stud. A similar stud on the isolation diode plate is the output connection to the battery. The isolation diode prevents the flow of current from the battery back to the alternator, thus eliminating the need for a cut-out system in the regulator.

REGULATOR

The regulator is an electronic switching device that senses the voltage at the alternator auxiliary terminal and supplies the necessary current to the rotor coil to maintain system voltage at the output terminal. The components of the regulator are sealed in epoxy resin for protection against damage from vibration, dust and moisture. A system of diodes, transistors and calibrating resistors regulates the current to the rotor coil and adjusts the regulating system for temperature changes.

There is no cut-out system or current regulating system in the regulator. The alternator isolation diode assembly functions as the charging system cut-out. The alternator is so designed that it is self-current limiting. When the maximum current output is reached, it cannot be increased with a further increase in rotor speed.

With the key starter switch in the off position and the alternator stopped, no current flows through the charging system. No battery current is available to energize the rotor field coil. The isolation diode assembly prevents the flow of battery current through the alternator.

© FORD MOTOR COMPANY, 1975

When the key starter switch is turned to the ON position and the engine is stationary, current flows to and through the regulator to the rotor field coil energizing the coil and creating a magnetic field at the rotor fingers. Because the rotor is still stationary, no current is generated in the stator.

The isolation diode still blocks the flow of battery current through the alternator.

When the engine is running and the rotor is turning inside the stator, the magnetic lines of force at the pole piece fingers cut through the stator windings inducing an alternating current in the windings. The regulator senses voltage output at the auxiliary terminal of the alternator. The rotor field is switched on and off electronically by the system of diodes and transistors in the regulator to maintain the correct current and voltage output. This switching action takes place several hundred times per second and will appear as a steady charge rate at the ammeter.

2. SERVICE PRECAUTIONS, PRELIMINARY CHECKS AND INITIAL TESTS

SERVICE PRECAUTIONS

To avoid damage to the components of the alternator charging system, service precautions must be observed as follows:

- Observe proper battery and system polarity when installing the battery in the tractor. The alternator nameplate indicates the system polarity, see Figure 9. Incorrect battery polarity will destroy the rectifier diodes in the alternator.

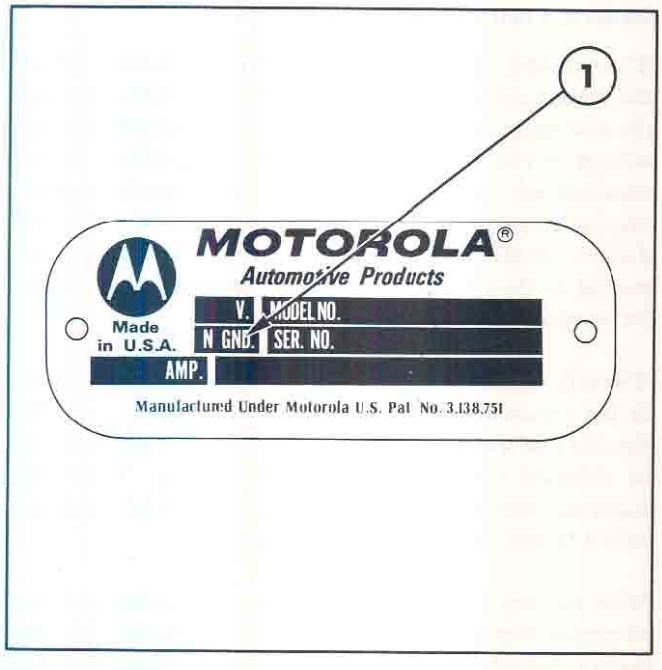

Figure 9
Alternator Nameplate
1. Ground Information

- As a precautionary measure, always disconnect the battery ground cable from the battery when charging the battery with any battery charger. This is mandatory with fast chargers that may have defective rectifying systems, as the rectifier diodes in the alternator could be destroyed.

- Never short the alternator field terminal to ground, as permanent damage to the regulator may result.

- Never disconnect the voltage regulator connector plug from the tractor wiring harness while the alternator is operating. A large voltage transient could develop and may damage the alternator.

- Never disconnect the alternator output lead from the alternator while the alternator is operating. This same precaution applies to the battery cables. They must not be disconnected from the battery while the alternator is operating. The loss of battery resistance would cause system voltage to rise to an extreme value, damaging the alternator, regulator, and possibly other accessories.

- Always disconnect the battery ground cable from the battery when removing or installing the alternator.

PRELIMINARY CHECKS

Prior to electrical testing, a thorough inspection of the charging and electrical system is required to eliminate associated conditions that may be interpreted as a defective alternator or regulator.

1. Check all electrical leads and connections, repair or replace necessary parts. Check the condition of the alternator drive belt and pulleys. Severe operating conditions will accelerate belt and pulley wear. Tighten the belt to avoid slippage during testing.

A correctly adjusted belt will deflect 0.75 to 1.0 in (19.05 to 25.40 mm) when a 25 lbf (11.34 kg) force is applied midway between the alternator pulley and crankshaft pulley.

If the belt shows signs of cracking or fraying, install a new belt.

NOTE – When prying the alternator away from the engine, apply pressure to the front housing only. Do not pry on the rear housing.

2. Check the alternator brushes for wear. Replace if worn more than half the original length. Brush removal and installation is covered later in this Chapter. Brushes worn too short tend to lose contact with the slip rings. While the brush cavity is exposed, check the slip rings for cleanliness. If cleaning is required, use a fine grade of abrasive cloth. Inspect radio capacitors (filter), if installed, for open or shorted conditions and replace defective units.

3. Check the battery. The battery used in electrical testing must be of correct voltage and must be in good condition and fully charged. If a slave or jumper battery is used for testing, the connecting cables must be securely fastened to the system.

4. Check the key starter switch. One of its functions is to supply initial excitation current for the alternator rotor (field) windings. The switch must be in good condition to perform the following tests. Switch removal and installation is covered in an earlier Chapter.

INITIAL TESTS

The initial tests may be performed without removing any of the charging system components and will enable the following items to be checked:

- Isolation Diode.
- Alternator Field Windings.
- Voltage Regulator.
- Alternator Output.

Test Equipment required

The alternator and regulator tests require electrical test equipment that will measure voltage, current and resistance. Individual meters are used in the following initial tests, however, most commercial testing equipment incorporate several testing devices in a single assembly. Use your equipment according to the manufacturer's instructions. Equipment should provide:

- Voltmeter, with 0 to 20 volt scale.
- Ammeter, with 0 to 60 ampere and 0 to 6 ampere scales.
- Field Rheostat, wire-wound, 0 to 50 ohms, 100 watt rating, with alligator clips on connecting leads.
- Series Resistor, 0.25 ohm, with connecting clip or leads.
- Carbon Pile (Sun BST-11 or equivalent).
- Volt-Ohm-Milliammeter (Simpson 260 or equal).
- 12 volt Test Lamp, and 115–120 volt A.C. Test Lamp.
- Diode Tester, any commercial type (optional).
- Assortment of jumper cables with alligator clips.

The ammeter will be connected into the system when the field current is tested, and for the alternator output test. If the ammeter has provisions for reversing meter circuit, and for switching from one scale to another, the test will advise this action. If necessary, meter leads would be reversed to accomplish this action.

NOTE – Ammeter leads must be secure and should not separate during testing. If alligator clips on the ammeter leads are worn, replace them.

Reference to "ground" indicates that a good ground is necessary. The alternator ground stud is the best grounding point.

© FORD MOTOR COMPANY, 1975

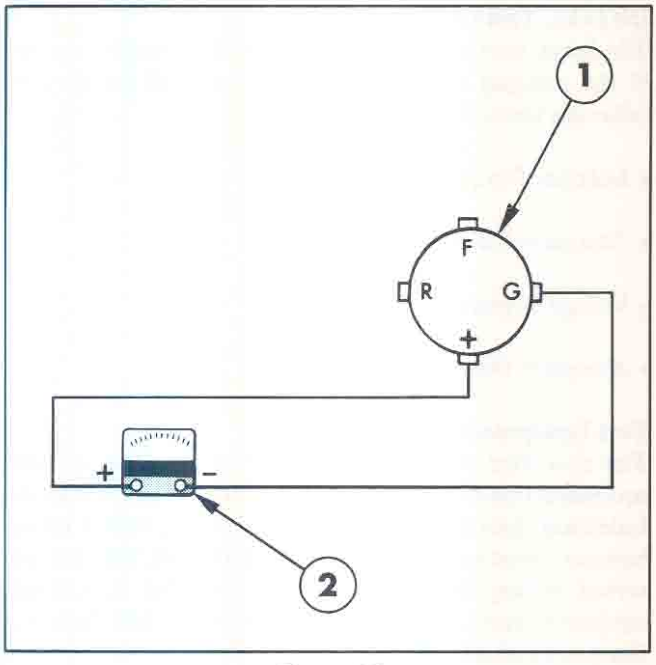

Figure 10
Battery Voltage

1. Alternator
2. Voltmeter

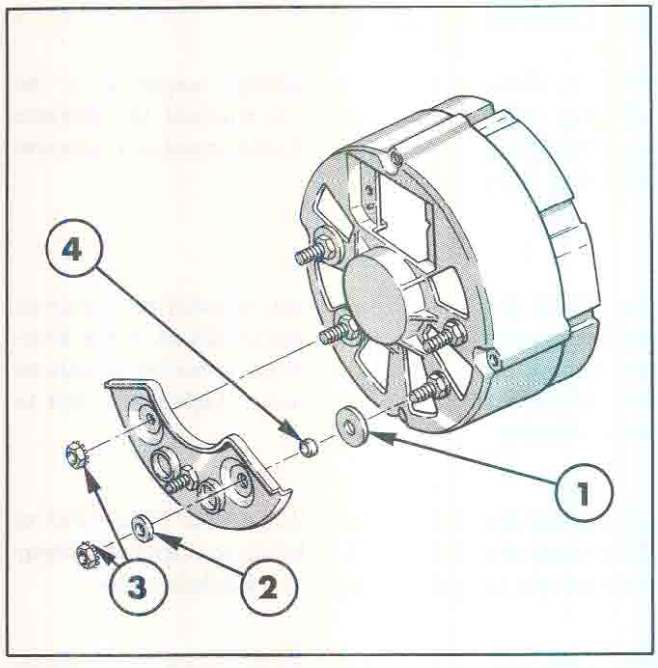

Figure 12
Insulations for Isolation Diode Assembly

1. 0.75 in O.D. Washer
2. 0.50 in O.D. Fibre Washer
3. Lock Nuts
4. Nylon Sleeve

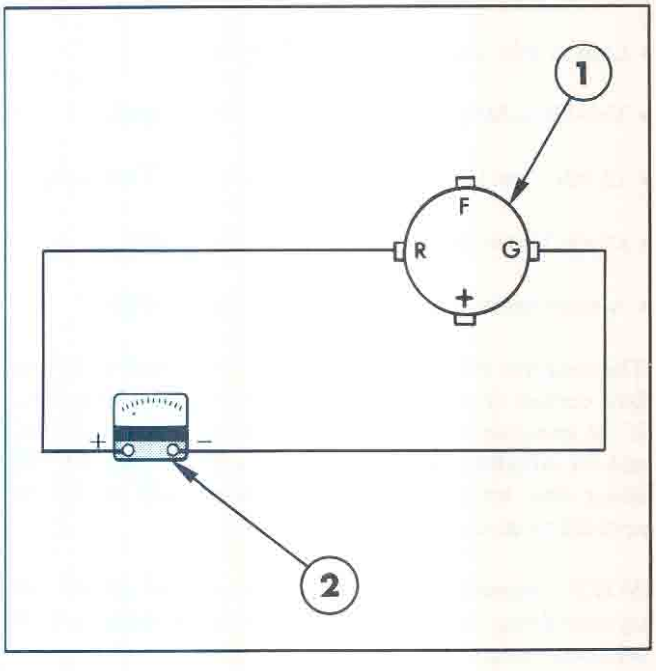

Figure 11
Shorted Isolation Diode Test

1. Alternator
2. Voltmeter

Battery Voltage and Shorted Isolation Diode Test

1. This test will determine if the tractor battery is properly installed and if the isolation diode is functioning properly by keeping battery voltage off of the alternator auxiliary terminal. A shorted isolation diode will allow the battery to discharge through the voltage regulator. The charge indicator will show discharge when the key starter switch is off, if the isolation diode is shorted.

2. With the key starter switch OFF and the engine stopped, connect the voltmeter negative lead to ground and the positive lead to the output terminal at the isolation diode heat sink, Figure 10. The voltmeter should indicate battery voltage.

3. Move the positive voltmeter lead to the auxiliary terminal, Figure 11. The voltmeter should read zero volts. If the voltmeter continues to indicate battery voltage, either the isolation diode is shorted or the output lead is contacting the isolation diode heat sink, allowing battery current to bypass the isolation diode. Loosen the nut and re-position the output lead if necessary.

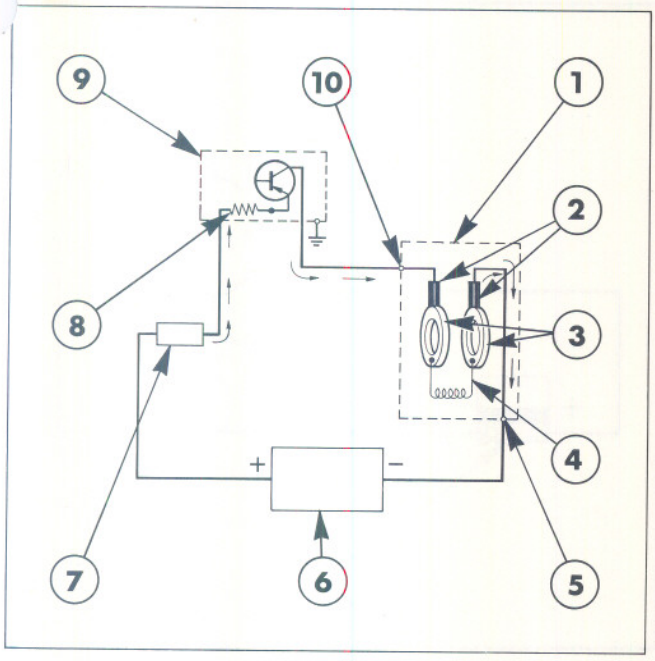

Figure 13
Alternator Field Circuit

1. Alternator
2. Brush Set
3. Slip Rings
4. Rotor Winding
5. Negative Output
6. Battery
7. Key Starter Switch
8. Excitation Resistor
9. Regulator
10. Field Terminal (Alternator)

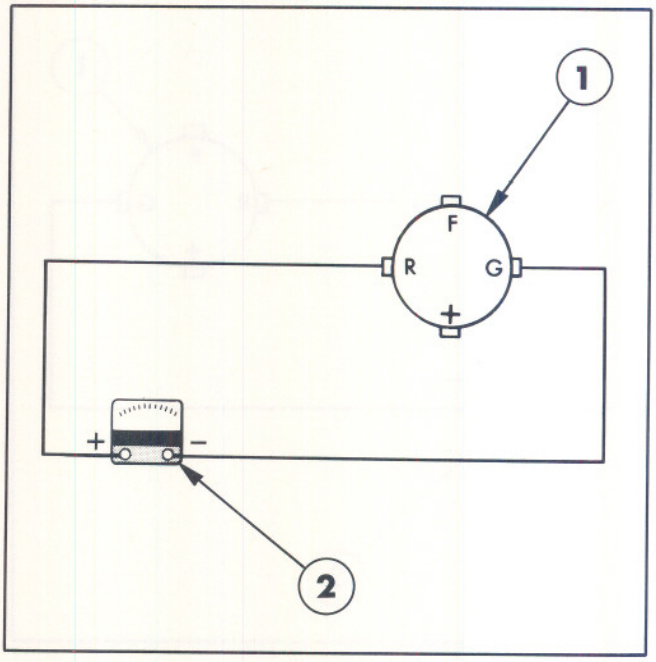

Figure 14
Excitation Voltage (Rotor Field) Test 1

1. Alternator
2. Voltmeter

4. The isolation diode may be replaced without removing the alternator from the tractor and this is covered later in this Chapter. Remove the battery ground cable (negative) during replacement of the isolation diode.

NOTE – Re-install the heat sink insulators in the original positions, Figure 12.

Excitation Voltage Test

1. The results of this test will indicate if battery voltage and current, controlled by the key starter switch, is passing through the voltage regulator and into the rotor (field) winding to provide initial excitation of the alternator. Figure 13 shows the circuit involved.

2. With the engine stopped and the key starter switch OFF, connect the voltmeter negative lead to ground and the positive lead to the auxiliary terminal, Figure 14. Turn the key starter switch ON. The voltmeter reading should be approximately 1.5 volts.

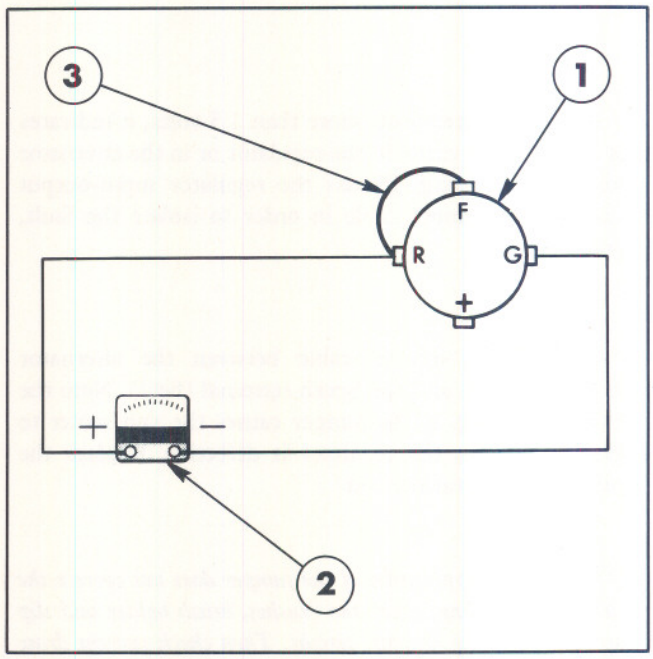

Figure 15
Excitation Voltage (Rotor Field) with Jumper Wire, Test 2

1. Alternator
2. Voltmeter
3. Jumper Wire

© FORD MOTOR COMPANY, 1975

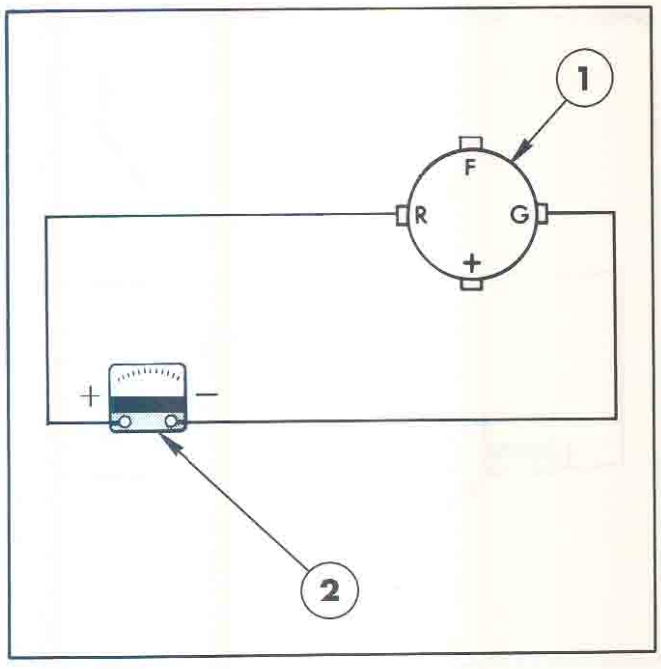

Figure 16
Open Isolation Diode – First Test
1. Alternator 2. Voltmeter

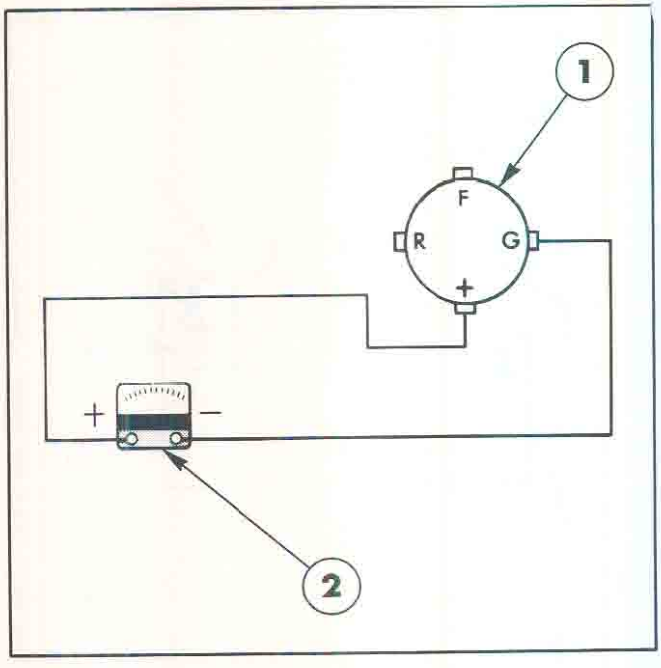

Figure 17
Open Isolation Diode – Second Test
1. Alternator 2. Voltmeter

3. If the voltmeter indicates zero volts, re-check all connections between the key starter switch and the excitation lead of the regulator. Repair if necessary and continue the test.

4. If the voltmeter reads more than 1.5 volts, it indicates that a fault either exists in the regulator or in the alternator rotor (field) winding. Bypass the regulator input-output circuit with a jumper cable in order to isolate the fault, Figure 15.

5. Connect the jumper cable between the alternator auxiliary terminal and the brush terminal (field). Note the voltmeter reading. If the jumper causes the volt meter to indicate 1.5 volts, the regulator is defective. Replace the regulator and repeat the test.

NOTE – If the application of the jumper does not correct the high-voltage reading, check the brushes, brush holder and slip rings for grounding or short circuit. Then check current draw of the rotor (field) winding, as in the "Field (Rotor) Circuit Test", the "Rotor Coil Current Draw" and "Rotor Coil (Field) Ground Tests".

Open Isolation Diode Test

1. This test determines if the isolation diode is conducting the electrical current, produced in the alternator, to the tractor battery.

2. With the engine stopped and the key start switch OFF, connect the voltmeter negative lead to ground and the positive lead to the alternator auxiliary terminal, Figure 16. Start the engine and run at fast idle. The voltmeter should indicate 15.1 to 15.8 volts (depending on ambient temperature). Refer to the chart in "Specifications".

3. Move the voltmeter positive lead to the output terminal, Figure 17. The voltmeter should indicate 14.1 to 14.8 volts if the isolation diode is conducting the alternator output to the tractor battery. If the voltmeter indicates battery voltage (12.0 to 12.6 volts), the isolation diode is open circuited an requires replacement. Re-test after installing a new isolation diode.

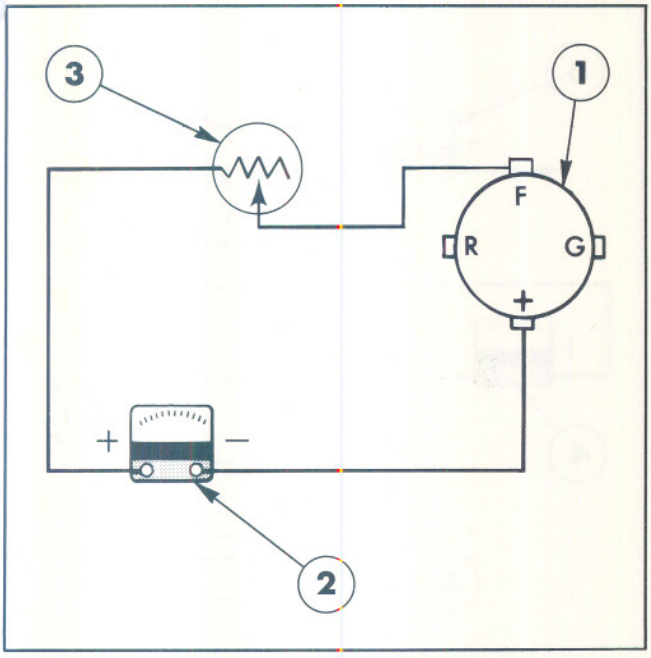

Figure 18
Field Current Test

1. Alternator 2. Ammeter 3. Field Rheostat

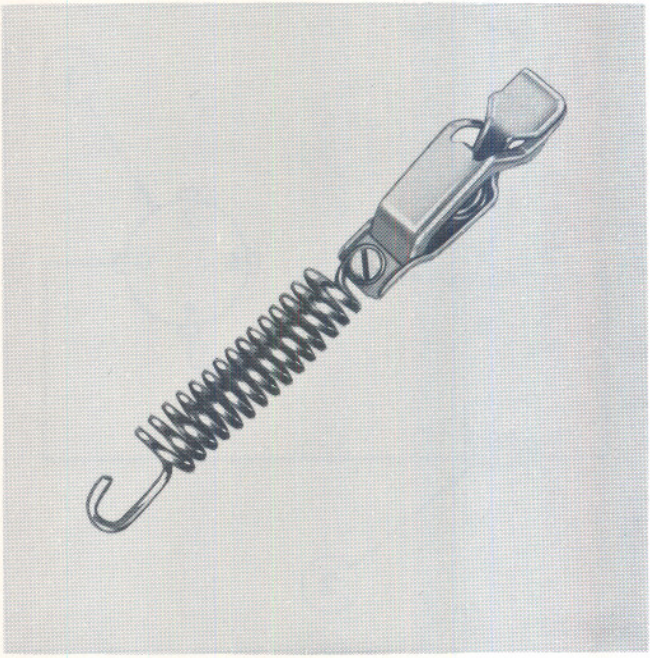

Figure 19
Typical 0.25 Ohm Resistor

Field (Rotor) Circuit Test

1. This test will determine if the electrical circuit (field winding) of the alternator rotor is in good condition. The field circuit, including the brush assembly, is shown in Figure 13. High field current may produce uncontrolled alternator output and probable damage to the voltage regulator. Low field current will result in low alternator output.

2. With the engine stopped and the key starter switch OFF, disconnect the field lead from the alternator brush connecting terminal. Switch test ammeter to the low current scale (0 to 10 amperes). Set control knob of field rheostat in maximum resistance position. The field rheostat will prevent damage to the test ammeter if the rotor winding is shorted or grounded. Place the field rheostat and the test ammeter in a series circuit between the alternator positive output (test point A) and field terminals as shown in Figure 18.

3. Slowly reduce field rheostat resistance, noting test ammeter reading. If entire field rheostat resistance can be eliminated with the ammeter indicating less than 3.5 amperes, the field winding is not shorted or grounded. The test ammeter reading, with the field rheostat resistance eliminated, is the current draw of the rotor (field) circuit.

4. Generally, this is approximately 2.0 to 2.5 amperes at battery voltage. If the ammeter tends to vary when the rotor is slightly turned, the slip rings and brushes require cleaning. Use a fine grade of abrasive cloth for this purpose.

5. If normal rotor current cannot be obtained, the alternator will require disassembly and replacement of defective parts. If a satisfactory ammeter reading is noted, proceed with the next test.

Voltage Regulator Operating Voltage Test

1. This test will determine operating level of the voltage regulator. Voltage tests are most accurate when the alternator is charging a fully charged battery, as current output is at minimum. Under this condition, charging voltage will rise to the regulators limiting maximum.

2. A 0.25 ohm 25 watt resistor, Figure 19, may be placed in series with the alternator output lead to reduce current to 8 to 10 amperes for a battery that is less than fully charged. The connections for the 0.25 ohm resistor and test equipment are shown in Figure 20.

© FORD MOTOR COMPANY, 1975

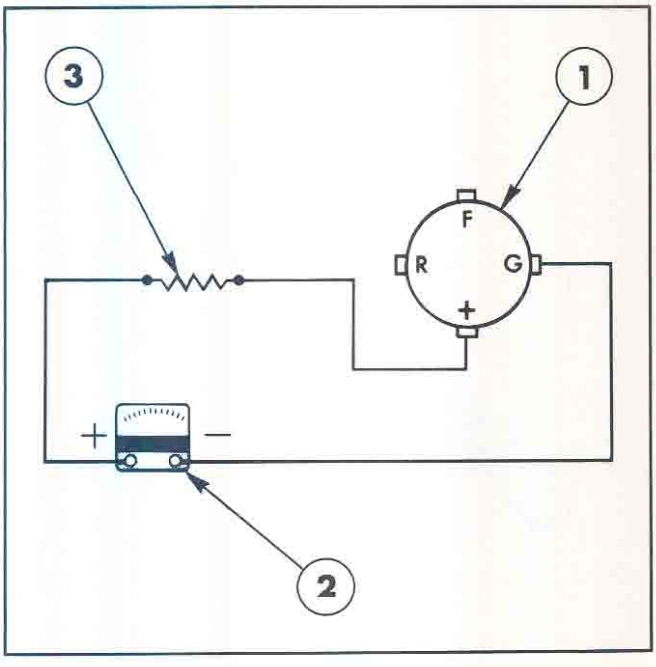

Figure 20
Voltage Regulator Operating Voltage

1. Alternator
2. Voltmeter
3. 0.25 Ohm Resistor

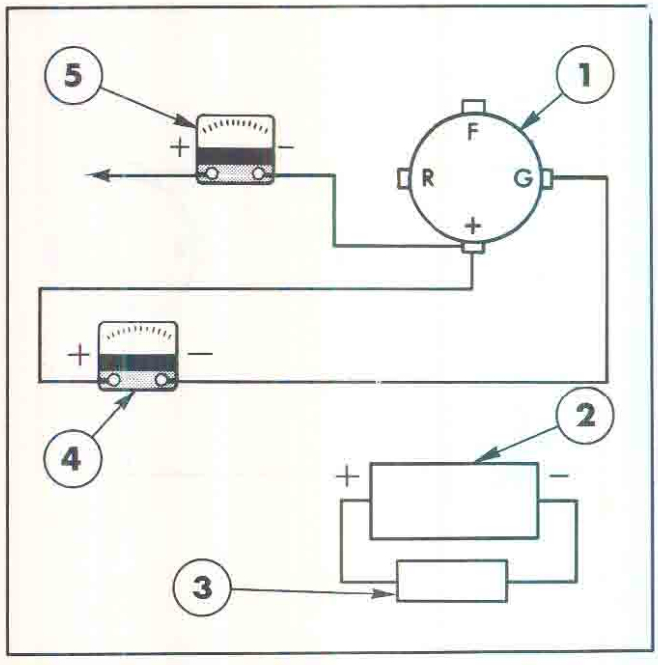

Figure 21
Output and System Test

1. Alternator
2. Battery
3. Carbon Pile
4. Voltmeter
5. Ammeter

3. Connect the voltmeter negative lead to ground, and the positive to the alternator output terminal. Start the engine and run for a few minutes to stabilize component temperature. The voltage indicated is the level established by the voltage regulator, usually 13.9 to 14.7 volts, depending on the regulator ambient temperature. Compare the indicated voltage with the value given in the table in "Specifications".

4. High voltage may be due to a poor ground connection for the voltage regulator circuit board. Since the circuit board is insulated from the regulator housing, one regulator lead, usually black, serves as the ground connection. The ground lead must be a clean and tight connection at the alternator ground.

5. If the ground connection is not faulty, the regulator is probably inoperative and will require replacement.

6. A low charging rate is usually due to a faulty regulator. Replace regulator if necessary.

7. Stop the engine and remove the 0.25 ohm resistor from the alternator positive output lead immediately after this test.

Alternator Output and System Test

1. This test will determine if the alternator is capable of producing its minimum rated output, and is an evaluation of the rotor, stator and diodes ability to produce current and voltage.

2. Maximum alternator output depends on alternator ambient temperature as well as rotor speed, therefore a general minimum rated output is acceptable for common reference.

3. The charging system is also tested under partial load to determine if an excessive voltage loss exists between the alternator and the battery through the connecting cables. With the engine stopped and key starter switch OFF, connect the carbon pile to the battery terminals as shown in Figure 21. Connect the voltmeter negative lead to ground and the positive lead to the alternator output terminal. The ammeter should be on the 0 to 60 ampere scale.

4. Turn the key starter switch on. Start the engine and run it at approximately 750 rev/min for 5 minutes to normalize component temperature. If the ammeter indicates less than 10 ampere charge, slowly load the battery with the carbon pile until 10 ampere is shown on the ammeter. Record the voltmeter reading.

5. Move the positive voltmeter lead to the positive battery post, note the voltmeter reading. The voltmeter readings obtained should be within 0.3 volt of each other. If a greater differential exists, inspect all cables and connections between the alternator and the battery for poor or loose connections. If satisfactory voltage loss is indicated, proceed with the test.

6. Increase engine speed to provide 3,000 to 4,000 rev/min alternator rotor speed (1,400 to 1,870 engine rev/min). Increase the carbon pile load, causing the alternator to deliver maximum output in amperes. Voltage should remain between 13.0 and 15.0 volts (with voltmeter positive lead on output terminal). The ammeter should indicate a minimum of 43 amperes.

7. Stop the engine and to avoid discharging the battery turn the carbon pile loading knob to OFF after the test.

8. If the alternator does not produce the minimum rated output (45 amps), it should be disassembled and repaired. The problem could be one or more defective rectifying diodes or defective stator windings (open or shorted).

This concludes the series of initial tests. If it is necessary to repair the alternator, carry out the following Overhaul procedures.

3. ALTERNATOR AND VOLTAGE REGULATOR REMOVAL AND OVERHAUL

REMOVAL

Alternator Removal

1. Disconnect the battery ground cable (negative) from the battery.

2. Disconnect all wires from the alternator, Figure 22.

3. Remove the alternator from the tractor by removing the attaching bolts.

Voltage Regulator Removal

1. Disconnect the battery ground cable (negative) from the battery.

2. Disconnect the wiring harness from the voltage regulator inside the battery compartment.

3. Remove the attaching screws from the regulator. Remove the regulator from the battery compartment.

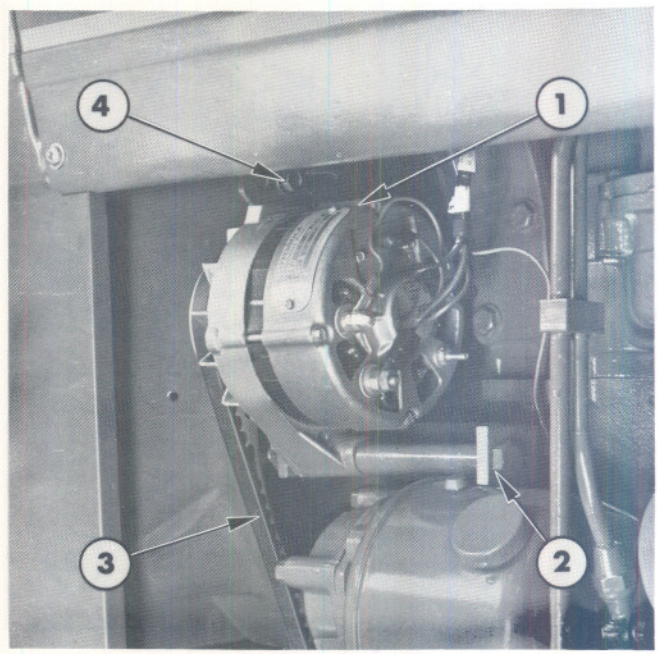

Figure 22
Alternator Installed on Tractor

1. Alternator
2. Alternator Bracket and Retaining Bolt
3. Alternator Fan Belt
4. Adjusting Bolt

© FORD MOTOR COMPANY, 1975

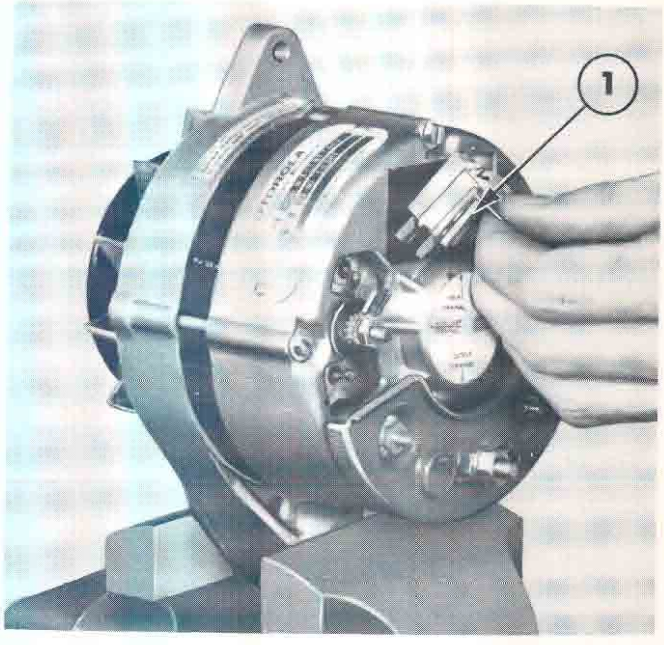

Figure 23
Alternator Brush Removal
1. Brush Assembly

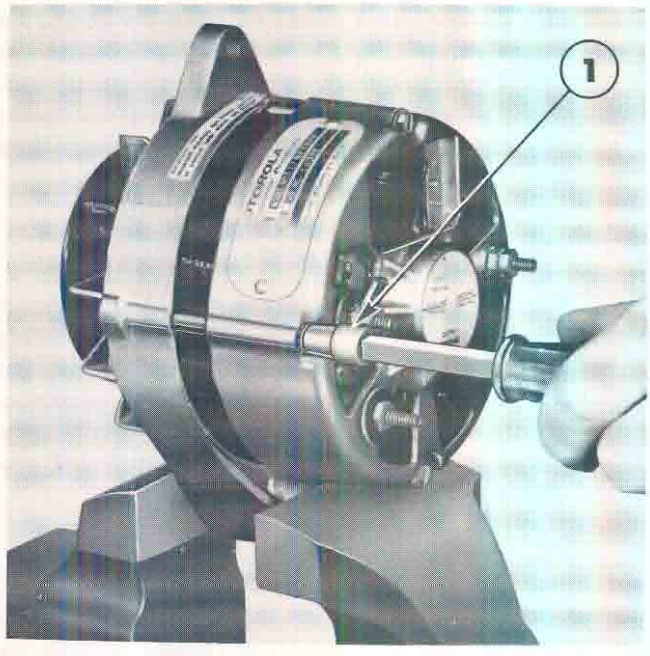

Figure 25
Removing Through Bolts
1. ¼ in Socket

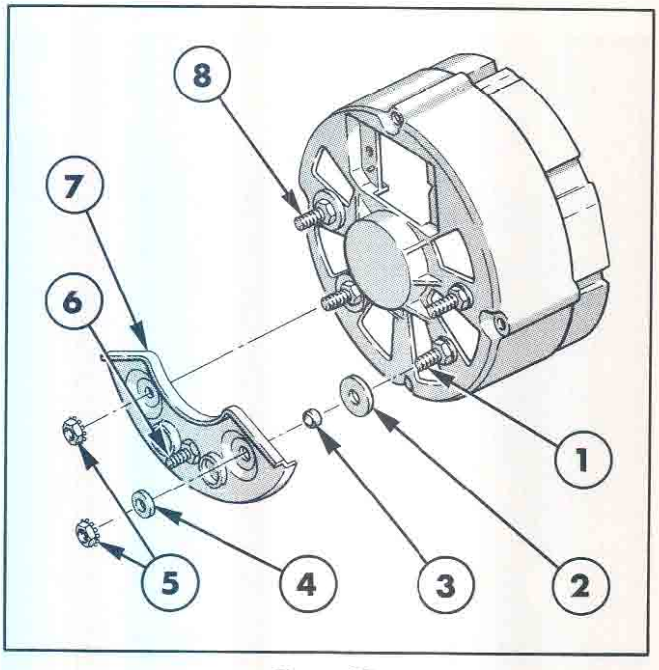

Figure 24
Isolation Diode Removal
1. Negative Output Stud
2. 0.75 in O.D. Washer
3. Nylon Sleeve
4. 0.5 in O.D. Fibre Washer
5. Locknuts
6. Output Terminal
7. Isolation Diode Assembly
8. Auxiliary Output Stud

DISASSEMBLY

Brush Removal

1. Remove the two brush mounting screws, then lift the cover and dust shield from the brush assembly.

2. Grasp the field terminal and gently pull the brush assembly down and away from the alternator as shown in Figure 23.

Isolation Diode Removal

1. Remove the two 10–24 locknuts and the 0.5 in (12.70 mm) O.D. fibre washer, Figure 24, from the auxiliary and negative output studs.

2. Lift the isolation diode assembly from the alternator.

NOTE – Do not lose the nylon sleeve that insulates the diode assembly from the negative output terminal.

3. Remove the nylon sleeve and 0.75 in (19.00 mm) O.D. washer from the negative output terminal.

NOTE – Removal of the brush assembly and isolation diode assembly can be achieved with the alternator in situ on the tractor.

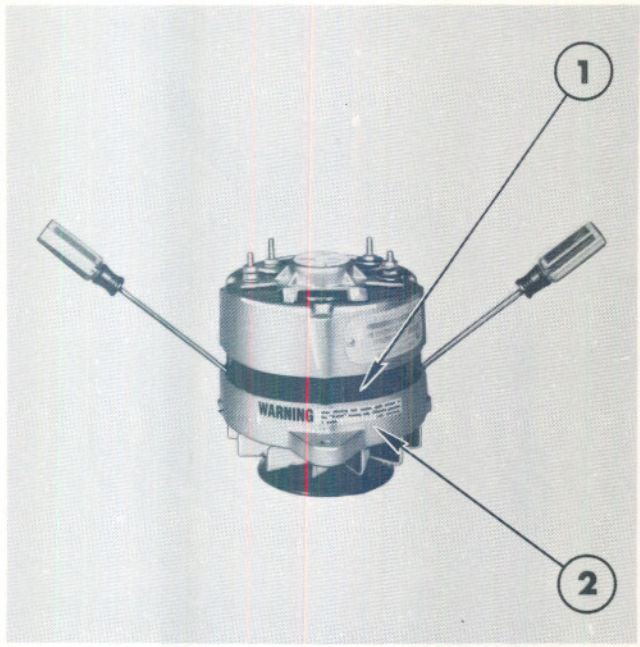

Figure 26
Separating Stator from Front Housing
1. Stator 2. Front Housing

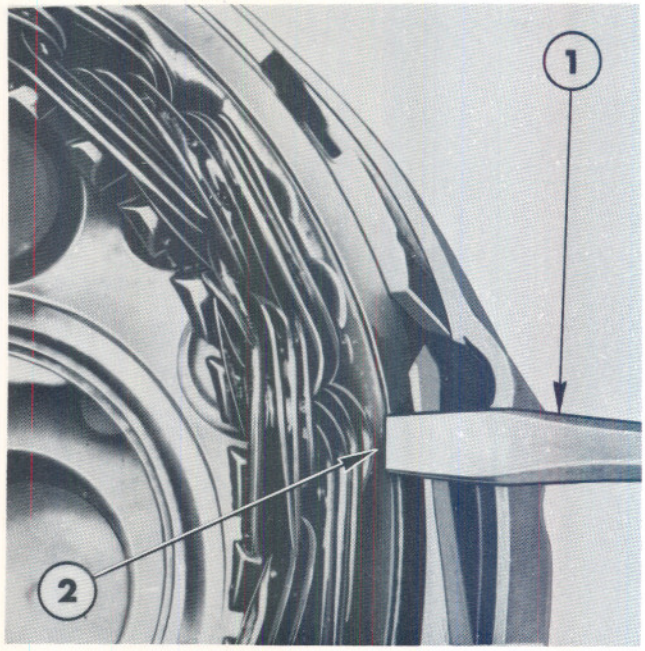

Figure 27
Clearance Required to Prevent Damage During Housing Separation
1. Screwdriver 2. Stator Winding

Rear Housing Removal

1. Remove the four through bolts and square nuts holding the housings together, Figure 25.

2. Insert two small screwdrivers in the stator slots between the stator and front housing, Figure 26.
NOTE – Do not insert the screwdriver blades deeper than 0.062 in (1.59 mm), Figure 27, to avoid damaging the stator winding.

3. Apply pressure at several points around the stator to extract the rotor and front housing as an assembly. Do not burr the stator core, as it may make re-assembly difficult.

Separating Stator from Rear Housing

1. Place the stator and rear housing assembly on a clean smooth working surface, free of metal chips that could damage the windings.

2. Remove the remaining locknuts and insulating washers from the rectifying diode terminal studs. Carefully slip the diode plate studs from the rear housing. Do not exert unnecessary pressure on the stator leads.

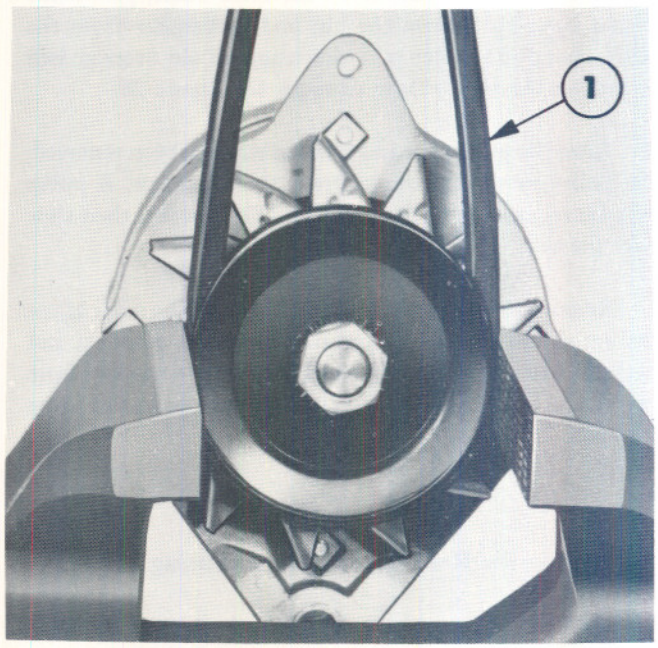

Figure 28
Pulley Removal
1. Oversize Belt

© FORD MOTOR COMPANY, 1975

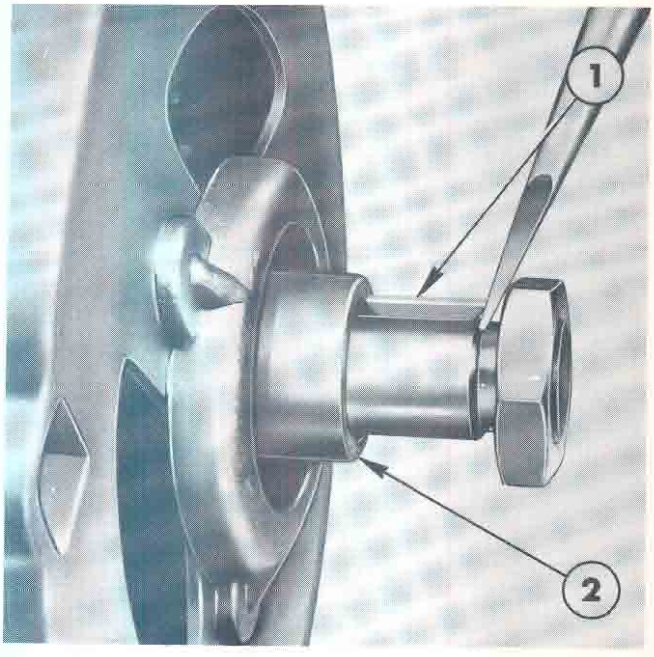

Figure 29
Woodruff Key Removal
1. Woodruff Key 2. Spacer



Figure 30
Releasing Front Bearing Retainer
1. Front Bearing Retainer

Pulley Fan and Spacer

1. The pulley is a slip-fit on the rotor shaft, positioned with a key. To remove the nut and lockwasher from the shaft, clamp the pulley in a vice using an old oversize belt to protect the pulley from damage, see Figure 28.

2. After the pulley nut and lockwasher have been removed, the pulley may be separated from the alternator. A puller may be required for this operation. The fan will then slide over the key.

3. Remove the key with diagonal pliers. If the sides of the key are slightly rounded from running loose, place the nut back on the shaft. Use a screwdriver to pry the key from the slot as shown in Figure 29. Remove the spacer from the shaft.

Separating the Rotor from Front Housing

1. Using long nose pliers, compress the ears of the front bearing retainer, as shown in Figure 30. Lift the retainer free of the recess. After the rotor and front housing are separated, the retainer can be removed from the shaft.

2. In most cases the housing and rotor can be separated from the bearing by tapping the assembly on a block of wood, as shown in Figure 31. Special pullers are needed if the above method fails to separate the assembly. After the use of such equipment, examine the housing for possible damage.

INSPECTION AND REPAIR

Brush

1. Inspect the brush assembly for excessive wear. Install a new assembly if the brushes are worn so they protrude from the brush holder less than 0.187 in (4.76 mm) (half the original length).

2. Check for deposits of foreign material, oil or dirt, that may bind brush movement or result in poor slip ring contact. Clean the entire assembly in cleaning solvent. Blow dry with compressed air.

3. Check the brush spring tension. It should be 4 to 6 oz (153.4 to 170.1 grams). Install a new brush assembly if the tension is too high or too low.



Figure 31
Separating Front Housing from Rotor

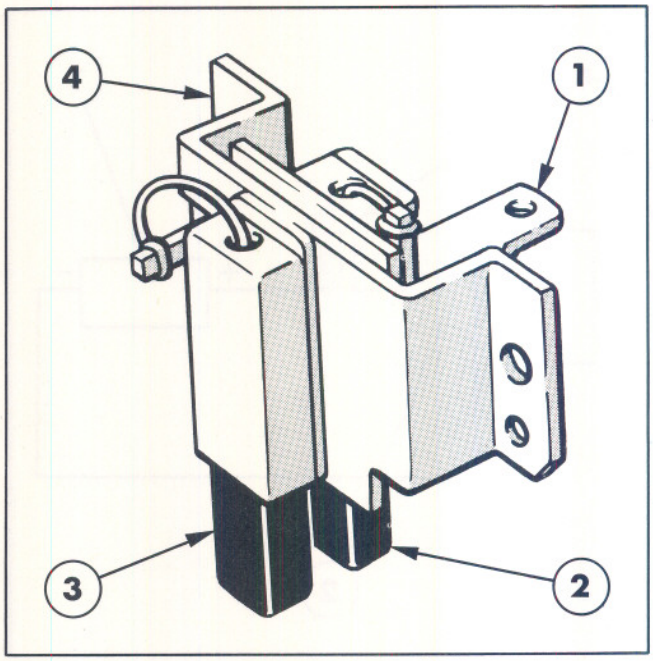

Figure 32
Insulation and Continuity Test Points
1. Field Terminal A
2. Insulated Brush C
3. Grounded Brush E
4. Bracket D

4. Check the insulation and continuity with a 12 volt test lamp or ohmmeter (single terminal assembly). See Figure 32 and refer to the following:

- Insulation test. Point A to D, no circuit indicates no short circuit, assembly correct.
- Continuity test. Point A to C and D to E, continuous circuit indicates no open connection, assembly correct.

NOTE – In each of the above tests, resistance should not vary when the brush and connecting lead wire is moved around.

Isolation Diode

1. Test the isolation diode with a commercial diode tester according to the manufacturer's instructions.

NOTE – If a commercial tester is not available, a 9 to 12 volt battery-operated test lamp may be used in the following manner:

2. Connect one test lead to the output terminal stud of the diode and the other to the exposed metal area on the auxiliary terminal of the heat sink, Figure 33.

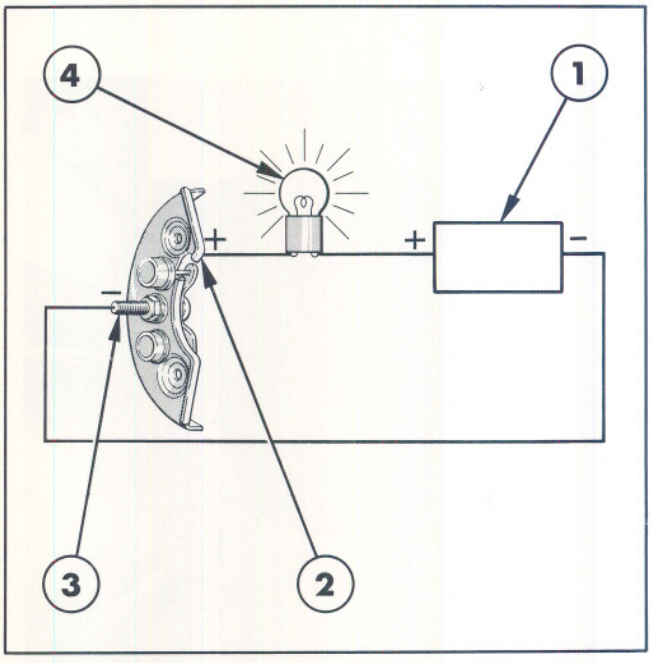

Figure 33
Isolation Diode Test, Red or Yellow Diode Plate
(Lamp should light)
1. Battery 12V
2. Bare Metal Input Area of Heat Sink
3. Positive Output Terminal
4. Lamp should light

© FORD MOTOR COMPANY, 1975

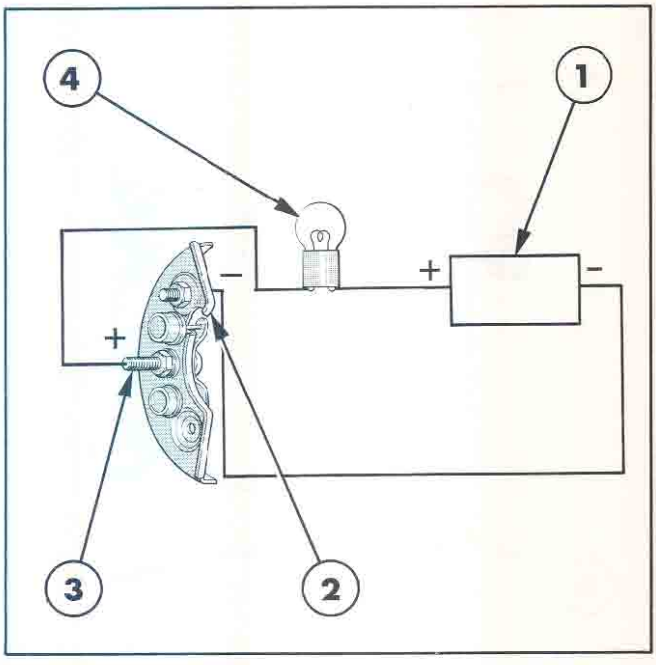

Figure 34
Isolation Diode Test, Red or Yellow Diode Plate (Lamp should not light)

1. Battery 12V
2. Bare Metal Input Area of Heat Sink
3. Positive Output Terminal
4. Lamp should not light

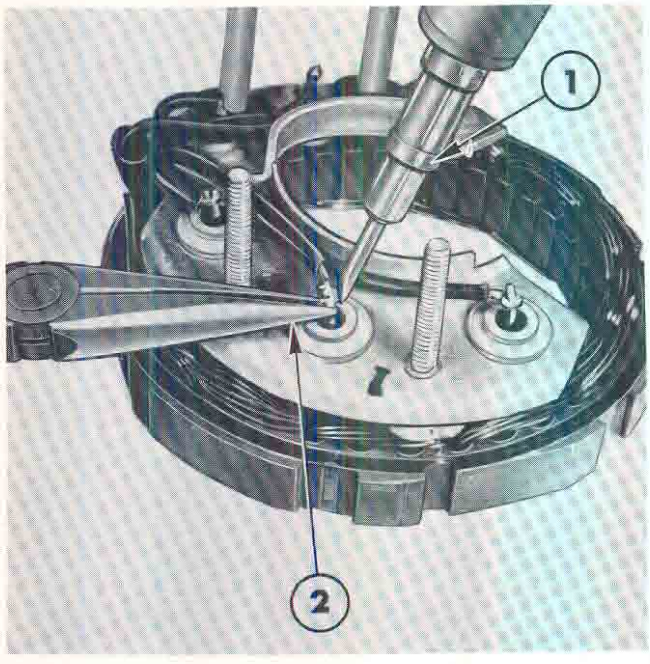

Figure 36
Soldering and Unsoldering Diode Leads using Pliers as a Heat Shield

1. Soldering Iron
2. Pliers used as heat shield

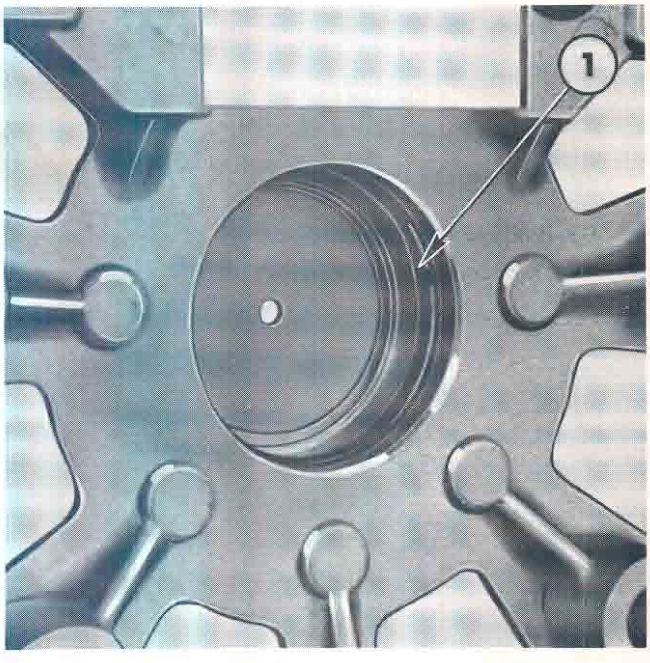

Figure 35
Rear Bearing Retainer Installed

1. Retainer (O-Ring)

3. Repeat the test with the leads reversed, as shown in Figure 34.

NOTE – The lamp should light when the leads are connected as shown in Figure 33. If the lamp fails to light, the diode is open and must be replaced. The lamp should not light when the leads are reversed, as in Figure 34. If the lamp does light, the diode is shorted and it must be replaced. Replace a defective isolation diode as a complete assembly. Do not immerse the isolation diode in a severe cleaning chemical, as it may remove the special corrosion-resistant paint.

Rear Housing

1. Check the rear housing for cracks around the drilled openings.

2. If the rear bearing bore has been scuffed from the bearing turning in the casting, the housing must be replaced.

3. Clean the housing in solvent if it is to be re-used.

4. Install a new bearing retainer (O-Ring) in the bore recess, Figure 35.

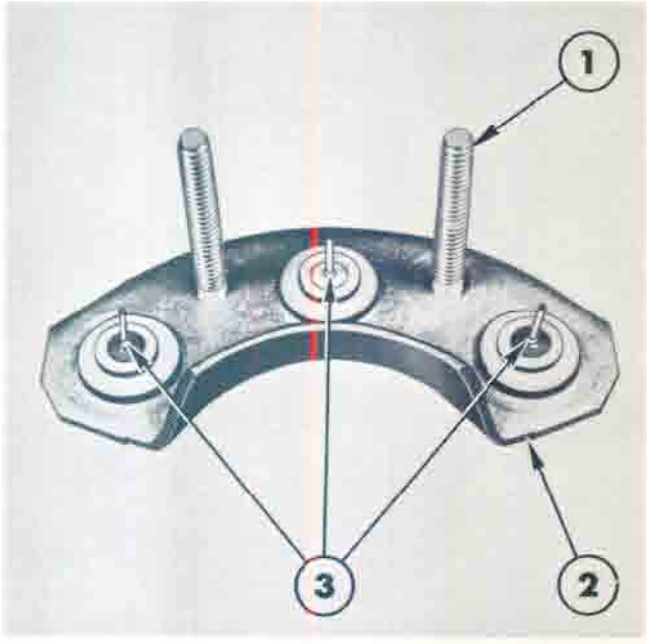

Figure 37
Diode Testing
1. Do not use Studs
2. Connect Test Lead to Heat Sink
3. Diodes

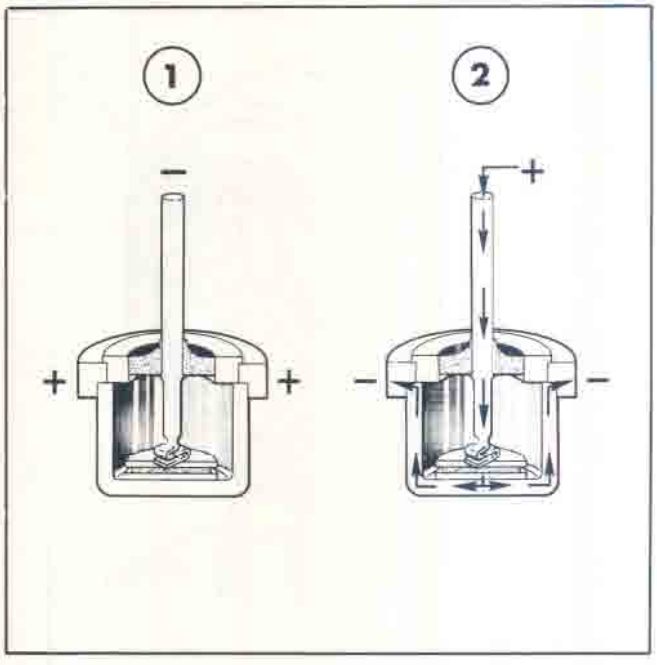

Figure 38
Positive Diode Testing (Red Paint on Diode)
1. Current does not flow
2. Current flows

Rectifier Diode

1. Separate the diode assemblies from the stator leads, as shown in Figure 36. Use pliers as a heat shield between the diodes and solder point to protect the diodes from heat damage. Avoid bending or twisting the diode terminal.

2. With the equipment and procedure used for testing the isolation diode, test each rectifier diode. All diodes in the same heat sink must test alike. Replace the complete assembly if one or more of the diodes are defective.

NOTE – Do not connect the test lead to the heat sink studs, Figure 37, when testing the diodes. Use the heat sink itself, as the studs may be loose. When assembled in the alternator, the studs are tightened with lock nuts.

Diodes with RED part numbers are Positive Diodes and will conduct Positive potential through the diode, as shown in Figure 38.

Diodes with BLACK part numbers are Negative Diodes and will conduct Negative potential through the diode, as shown in Figure 39.

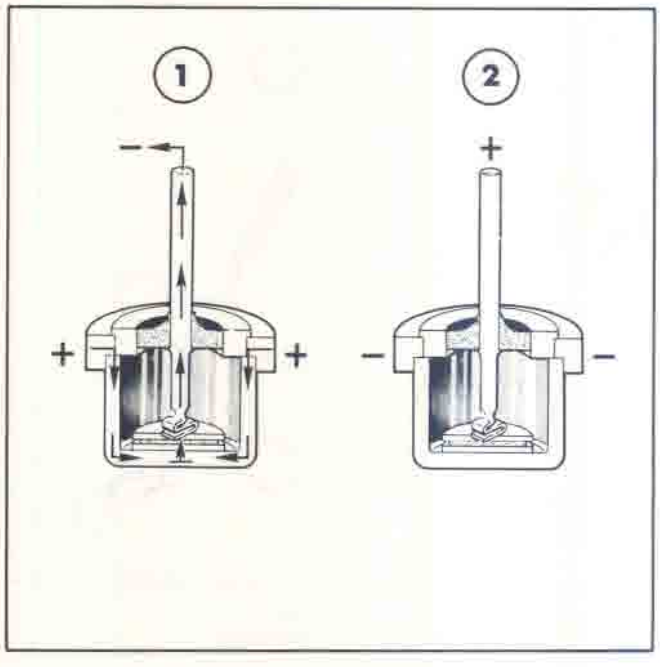

Figure 39
Negative Diode Testing (Black Paint on Diode)
1. Current flows
2. Current does not flow

© FORD MOTOR COMPANY, 1975

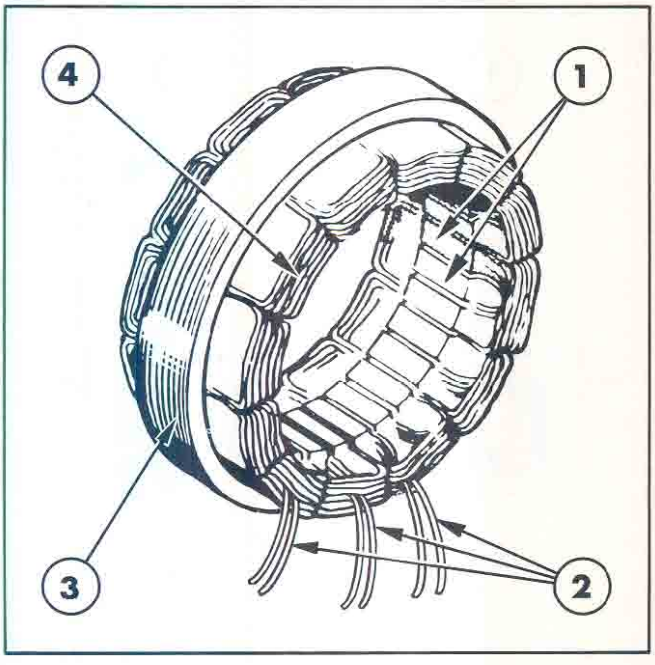

Figure 40
Stator Assembly

1. Slots
2. Winding Ends
3. Steel Plates
4. Windings

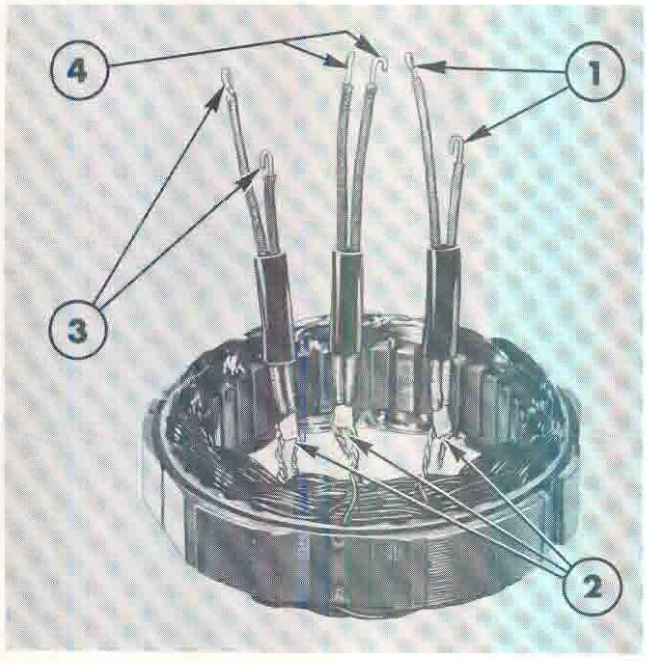

Figure 42
Stator Connecting Lead Junctions

1. Stator Junction
2. Stator Junction
3. Stator Junction
4. Stator Junction

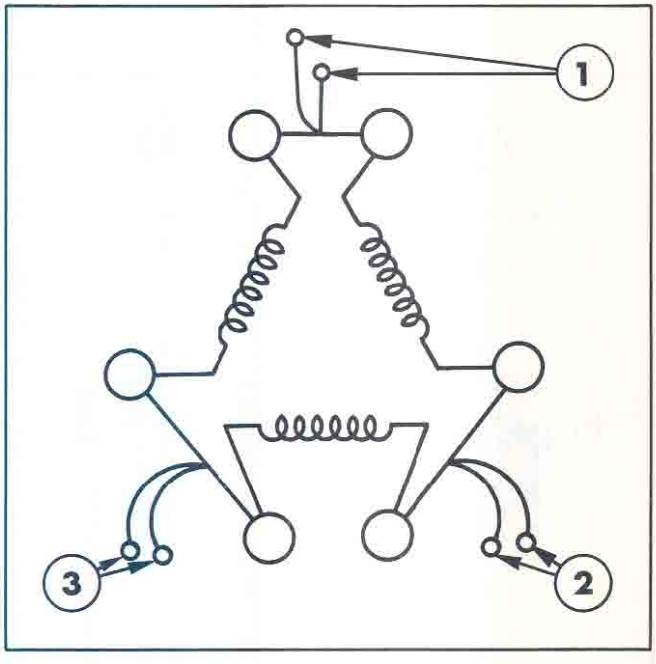

Figure 41
Delta Type Winding

1. Stator Junction
2. Stator Junction
3. Stator Junction

Stator

1. The alternator stator assembly, Figure 40, consists of three individual windings, wound on a common core or lamination. The lamination is epoxy coated to provide durable insulation.

NOTE – Discolouration of the enamel on the windings is evidence of overheating and a shorted condition.

2. The "Delta" wound stator, used in 55 ampere alternators, terminates the ends of the three windings to form three junctions of two conductors each, see Figure 41.

3. Unsolder the diode connecting leads from the stator junctions, Figure 42. Separate the leads as shown in Figure 43.

4. With an ohmmeter or 12 volt test lamp, test each circuit (A, B and C) for faults. Re-use the stator if the tests indicate that it is in good condition.

NOTE – The resistance of each winding is very low, approximately 0.1 ohm. Therefore, the ohmmeter test will indicate continuity, open circuit or ground without much reference to actual value or resistance. The 12 volt test lamp will also indicate continuity, open circuit or ground.

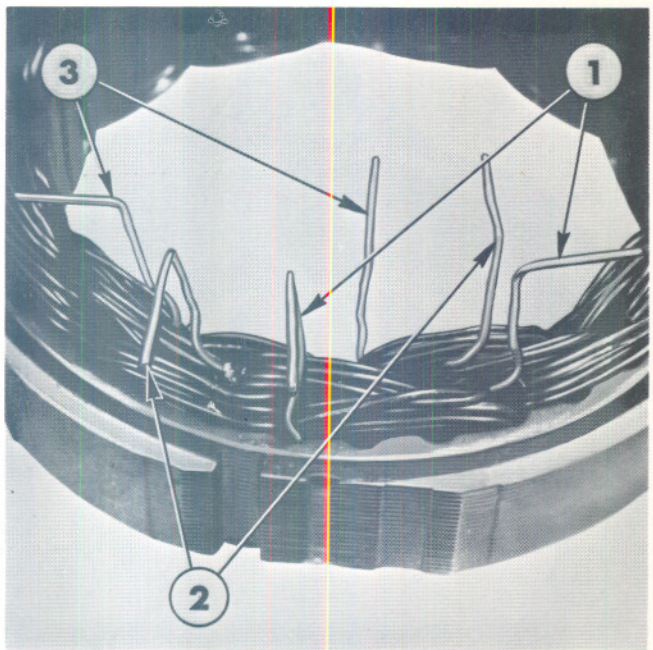

Figure 43
Stator Connecting Leads Separated for Test Purposes
1. Circuit A
2. Circuit C
3. Circuit B

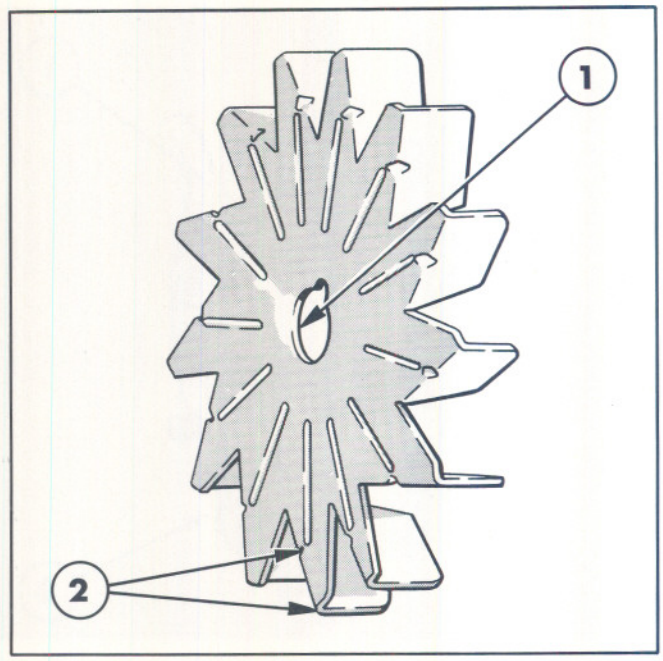

Figure 44
Fan Inspection Points
1. Inspect Bore for Wear
2. Check for Cracked Fins

5. Re-assemble the stator and diodes using only resin core solder to secure good mechanical connections. Route the leads in their original position for ease of assembly.

IMPORTANT – Be sure to use a heat shield to protect the diodes when resoldering them to the stator.

Fan, Pulley and Spacer

1. Inspect the fan for cracked or broken fins, also note the condition of the mounting hole. If the hole is worn from running loose, install a new fan, Figure 44.

2. Inspect the pulley for possible wear at the points shown in Figure 45.

3. Check the spacer for cracks. Install a new spacer if cracks exist.

Rotor and Front Housing

1. Inspect the front bearing cavity for evidence of wear. Note the condition of the retainer recess and replace the housing if necessary. If the original housing is re-used, clean with solvent, then dry with compressed air.

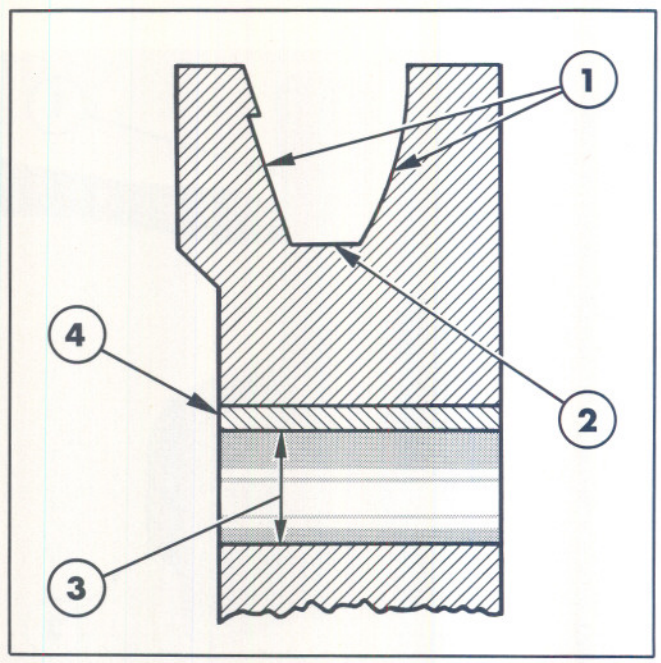

Figure 45
Cross-section of Typical Pulley showing Inspection Points
1. Check for Worn Drive Surface
2. Check for Polished Surface
3. Check Bore for Wear
4. Check Condition of Key Groove

© FORD MOTOR COMPANY, 1975

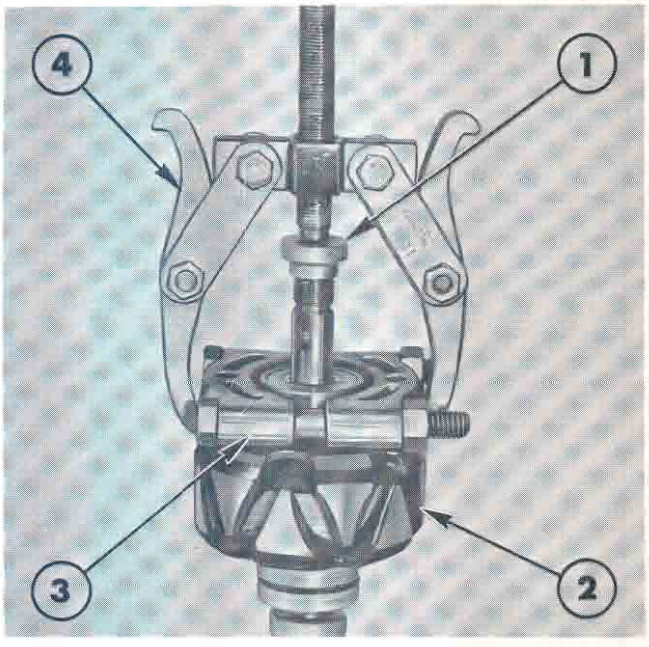

Figure 46
Front Bearing Removal

1. Step Plate – Tool No. 630-1
2. Rotor
3. Pulling Attachment – Tool No. 950
4. Puller – Tool No. 1001

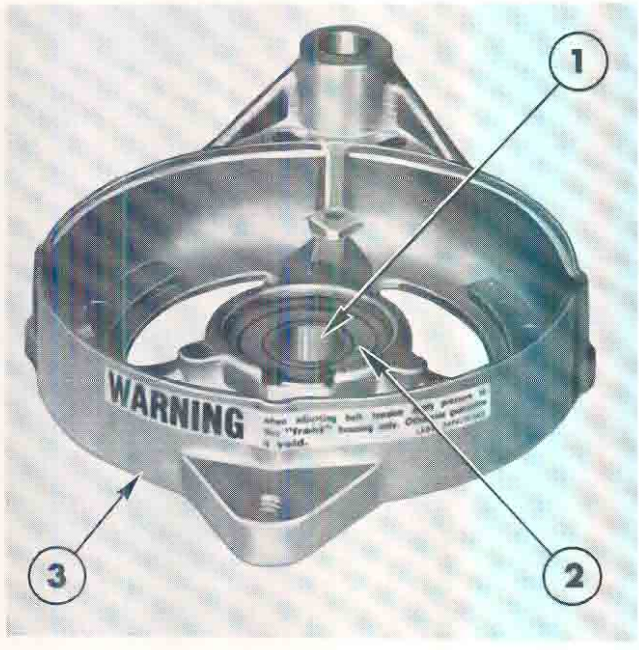

Figure 48
Front Bearing Retainer Installed

1. Bearing
2. Retainer
3. Front Housing

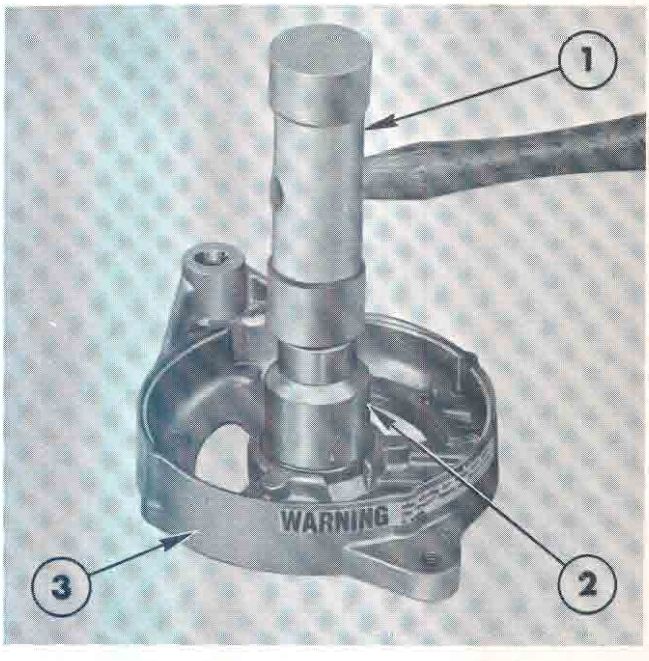

Figure 47
Front Bearing Installation

1. Mallet
2. $1\frac{1}{8}$ in Socket
3. Front Housing

2. Using the tools shown in Figure 46, pull the front bearing from the rotor shaft. If the bearing is to be re-used, the pulling attachment must contact the inner race only.

3. Remove the front bearing retainer from the shaft, inspect for distortion, and replace if unsatisfactory.

4. Clean the front bearing cavity and remove any burrs.

5. Tap the bearing into the housing, using a $1\frac{1}{8}$ in (29 mm) socket or a driver tool that exerts pressure on the outer race only, Figure 47. Apply only sufficient pressure to seat the bearing against the bottom of the cavity.

6. Replace the front bearing retainer in the recess, Figure 48. Make certain the retainer ears line up with the opening in the housing. Use a wood dowel or a $1\frac{1}{8}$ in (29 mm) socket to exert pressure on the retainer while locking the edge into the recess.

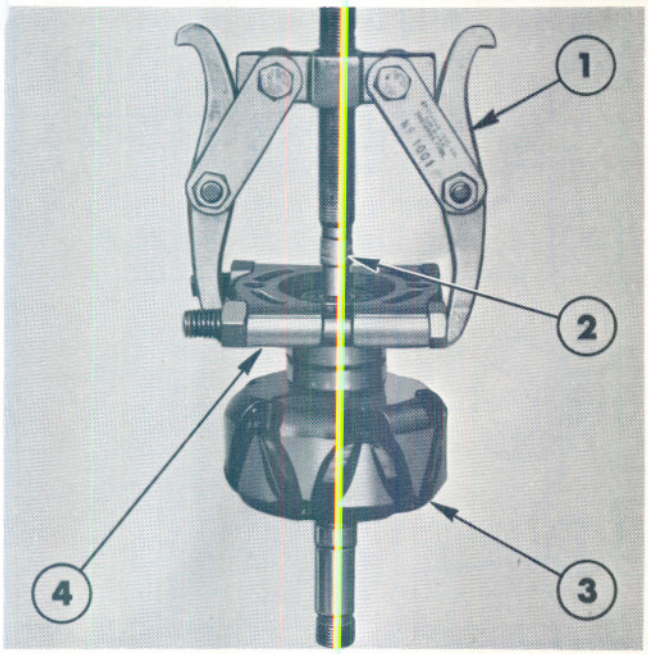

Figure 49
Rear Bearing Removal

1. Puller – Tool No. 1001
2. $\frac{7}{32}$ in Socket
3. Rotor
4. Pulling Attachment – Tool No. 950

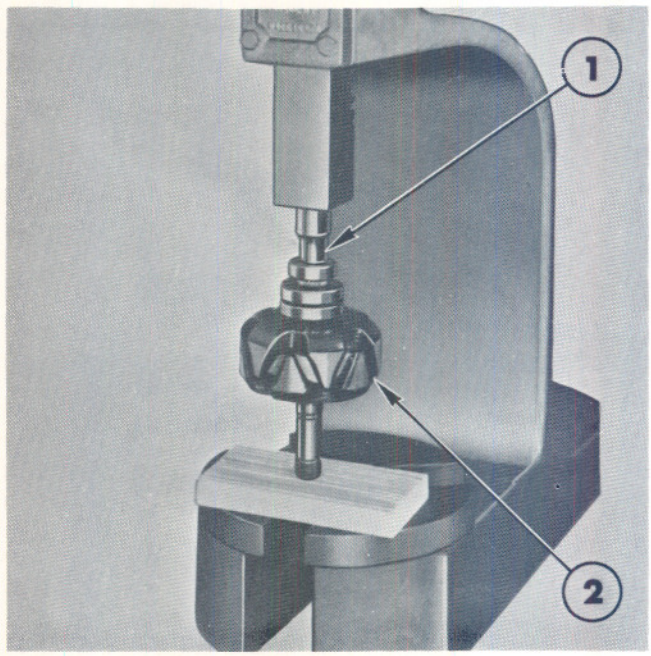

Figure 50
Rear Bearing Installation

1. $\frac{7}{16}$ in Socket or Sleeve to Fit Inner Bearing Race
2. Rotor

7. Using the tools shown in Figure 49, pull the rear bearing from the rotor. If the bearing is to be re-used, the pulling attachment must contact the inner race only.

8. Inspect the bearings for adequate lubrication. If replacement bearings are required, they must equal or exceed original equipment.

9. Support the front of the rotor shaft in a press. Using a $\frac{7}{16}$ in (12 mm) socket or suitable sleeve that contacts the inner race only, press the rear bearing over the rotor, Figure 50.

10. Support the bottom (rear bearing area) of the rotor in a press, then place the front housing and bearing assembly over the shaft.

11. Using a $\frac{11}{16}$ in (18 mm) deep socket or suitable sleeve contacting the inner bearing race only, press the front housing and bearing over the rotor shaft until the bearing contacts the shoulder on the shaft, Figure 51.

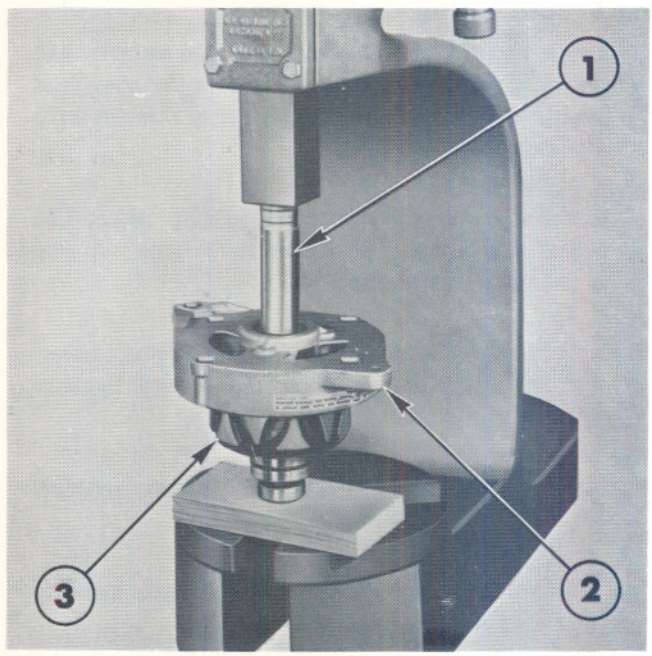

Figure 51
Pressing Front Housing (with Bearing Installed) over Rotor Shaft

1. $\frac{11}{16}$ in deep Socket or Sleeve to fit Inner Bearing Race
2. Front Housing and Bearing
3. Rotor

© FORD MOTOR COMPANY, 1975

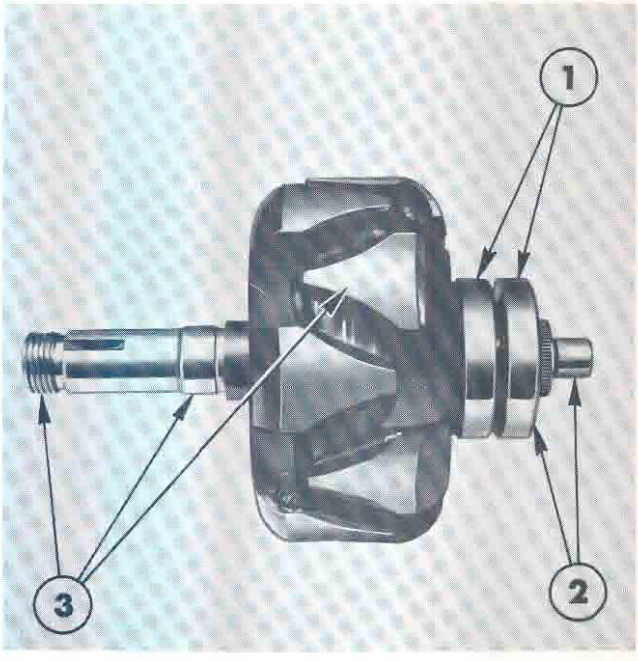

Figure 52
Rotor Test Points

1. Test A & B
2. Test C
3. Check

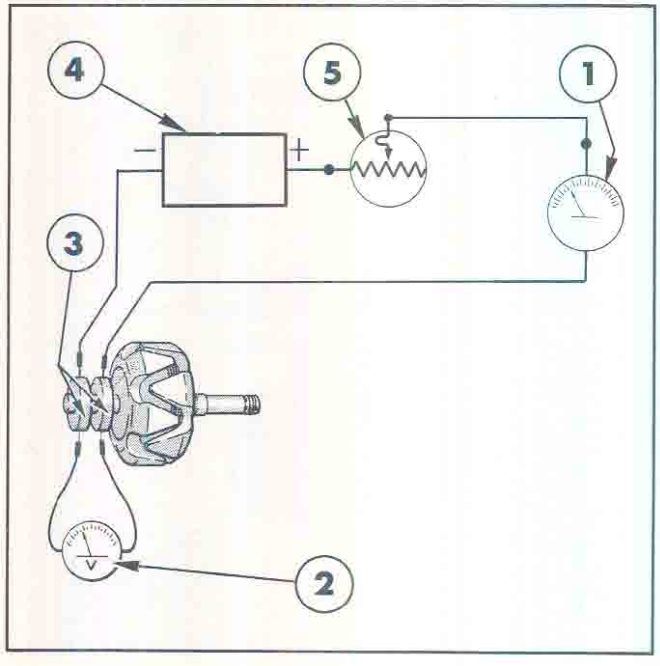

Figure 53
Rotor Coil Current Draw Test

1. Ammeter
2. Voltmeter
3. Slip Rings
4. 12V Battery
5. Field Rheostat

12. Check the rotor assembly, Figure 52, for electrical performance as follows:

Test A – Rotor coil current draw.

(*i*) Connect a field rheostat in series with an ammeter and the battery positive terminal. Connect the black lead (negative) from the ammeter to one of the two rotor slip rings, Figure 53.

(*ii*) Connect a voltmeter between the slip rings. The positive lead should be attached to the same slip ring as the ammeter negative lead.

(*iii*) With the field rheostat adjusted to maximum resistance, attach a jumper from the battery negative terminal to the other slip ring.

(*iv*) Adjust the field rheostat until the voltmeter reads 10 volts.

(*v*) The ammeter should read 1.65 to 2.25 amps at 70° to 80°F (21.1° to 26.7°C).

Test B – Rotor coil resistance.

(*i*) Using an ohmmeter, check the resistance of the rotor coil winding.

(*ii*) Connect the ohmmeter leads to the two slip rings. The resistance should be 4.0 to 5.2 ohms.

(*iii*) If the resistance is less than 4.0 ohms, it indicates a shorted rotor coil.

(*iv*) If the resistance is greater than 5.5 ohms, it indicates a broken winding or defective slip ring connection and the rotor assembly should be replaced.

Test C – Rotor slip ring ground test.

(*i*) Using a 12 volt test light, touch one test probe to the rotor shaft.

(*ii*) Touch the other test probe to one slip ring and then the other.

(*iii*) If the light burns when either of the slip rings are contacted, it indicates a grounded slip ring and the rotor assembly should be replaced.

(*iv*) Clean the brush contacting surface of the slip rings with fine abrasive cloth, wipe away all dust and residue.

(*v*) Check for a worn key slot, worn bearing surfaces, stripped threads, and scuff marks on the pole fingers. Replace the rotor if any of the above faults are noted.

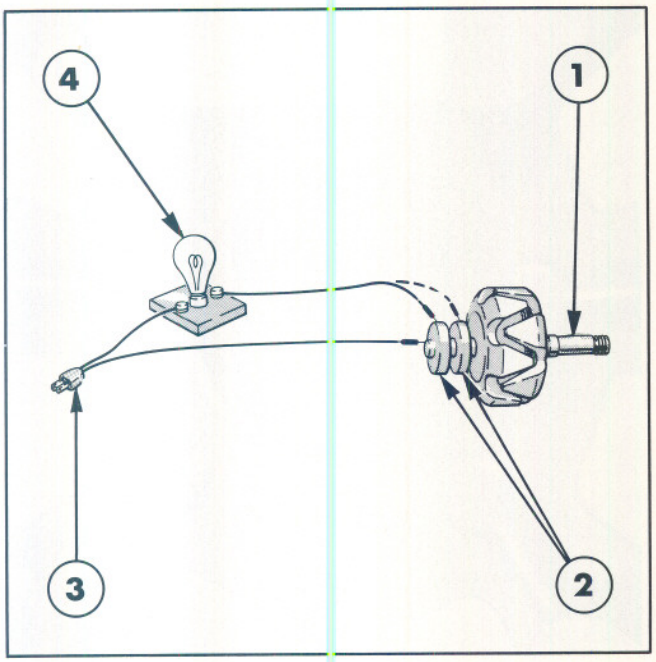

Figure 54
Rotor Coil (Field) Ground Test
1. Rotor Shaft
2. Slip Rings
3. Male Wall Plug
4. 12 Watt Bulb

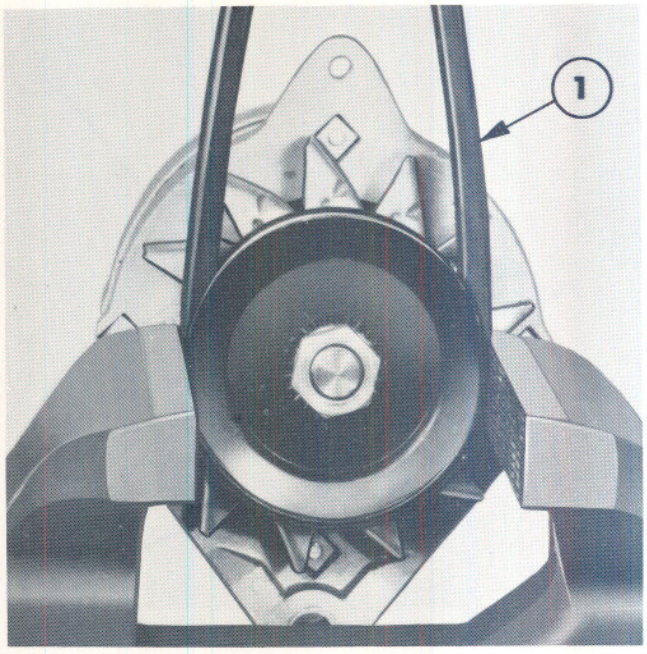

Figure 55
Pulley Installation
1. Oversize Belt

Test D – Rotor coil (field) ground test.

Defective coil or lead wire insulation allowing the wire to contact any metal parts of the rotor will ground the rotor (field) coil. Damage to the regulator can result and the alternator will fail to reach its rated output. By using a relatively high voltage for this check, slight leakage can be detected before actual failure occurs. The test instrument is a 115 volt to 120 volt AC test light. This can be made locally using a 15 watt bulb, bulb holder, male wall plug, and necessary wiring, Figure 54.

(*i*) Insert the plug into a 115 volt to 120 volt AC outlet.

NOTE – Avoid touching the bare test probes, as a severe electrical shock will result.

(*ii*) Touch one test probe to the rotor shaft and the other to the slip rings. The 15 watt bulb should not light.

(*iii*) Replace the rotor assembly if even the slightest glow is seen in the test lamp.

NOTE – If the rotor winding has higher current draw, it will provide uncontrolled output while endangering the components in the voltage regulator. If the rotor winding has less current draw, the alternator may fail to develop its rated output at special speeds. A grounded rotor winding will probably damage the regulator and provide uncontrolled output.

RE-ASSEMBLY

Rotor and Front Housing

Assemble the front housing and the rotor as covered in the preceding "Rotor and Front Housing Inspection" procedure.

Pulley, Fan and Spacer

1. Place the spacer over the shaft and install the key.

2. Place the fan and pulley over the shaft and install the lockwasher and nut.

3. Clamp the pulley in a vice, using an old oversize belt to protect the pulley as shown in Figure 55. Tighten the pulley nut to a torque of 35-50 lbf ft (5.0-6.5 Mkg).

© FORD MOTOR COMPANY, 1975

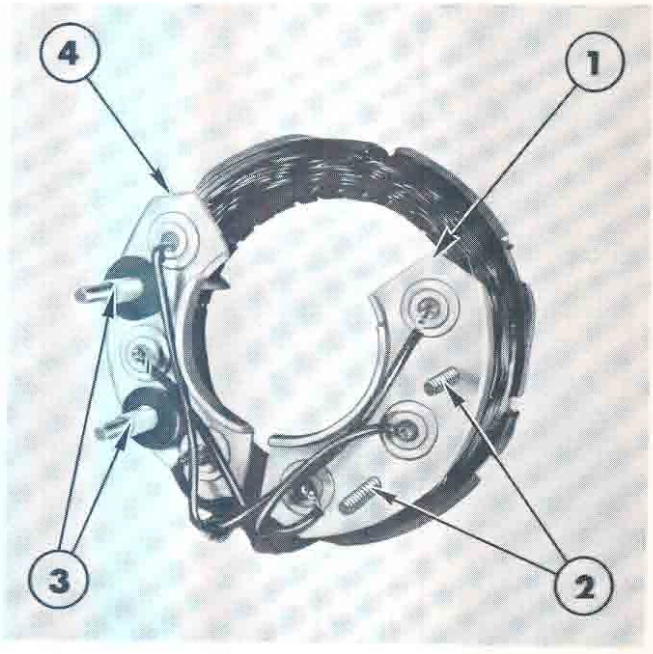

Figure 56
Diode Insulators – Internal
1. Negative Diode Assembly
2. Not Insulated
3. Insulating Sleeves and Washers
4. Positive Diode Assembly

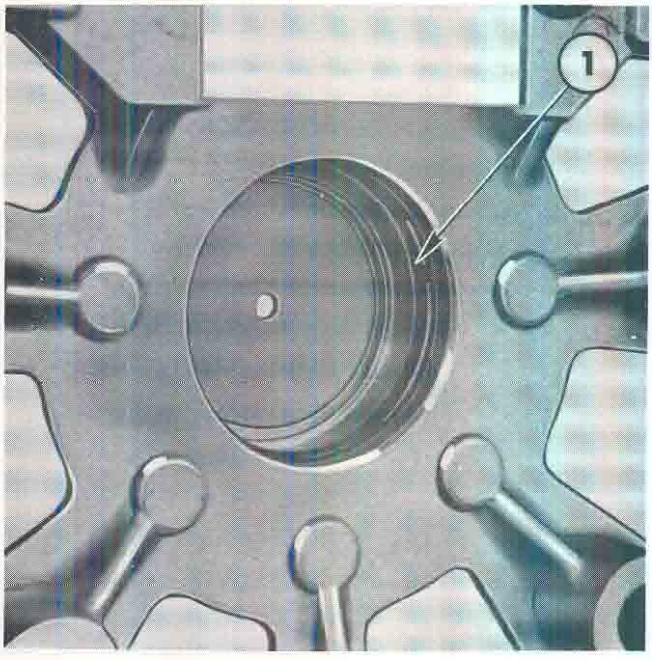

Figure 58
Rear Bearing Retainer Installed
1. Retainer (O-Ring)

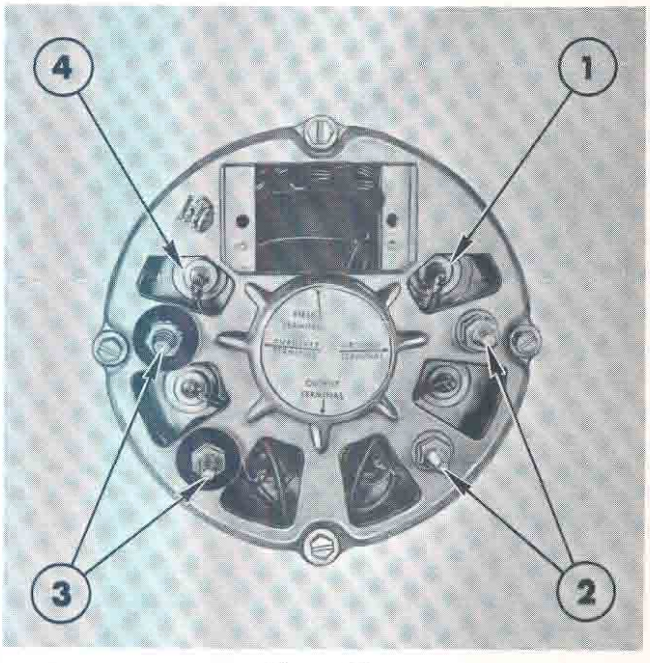

Figure 57
Diode Insulators – External
1. Negative Diode Assembly
2. Do not use Insulators
3. 0.75 in Insulating Washers beneath Nuts
4. Positive Diode Assembly

Stator and Rear Housing

1. Place the insulating sleeves and washers over the rectifying diode studs, Figure 56.

2. Insert the heat sink studs through the openings in the rear housing. Place the insulating washers over the studs, Figure 57. Install the locknuts as shown and tighten securely.

Rear Housing

1. Be sure the rear bearing retainer (O-Ring), Figure 58, is installed in the recess.

2. Position the rear housing and stator assembly over the rotor. Hand-press the housings together.

3. Install the through bolts, Figure 59, and tighten evenly. Spin the rotor to test for freedom of the bearings and rotor.

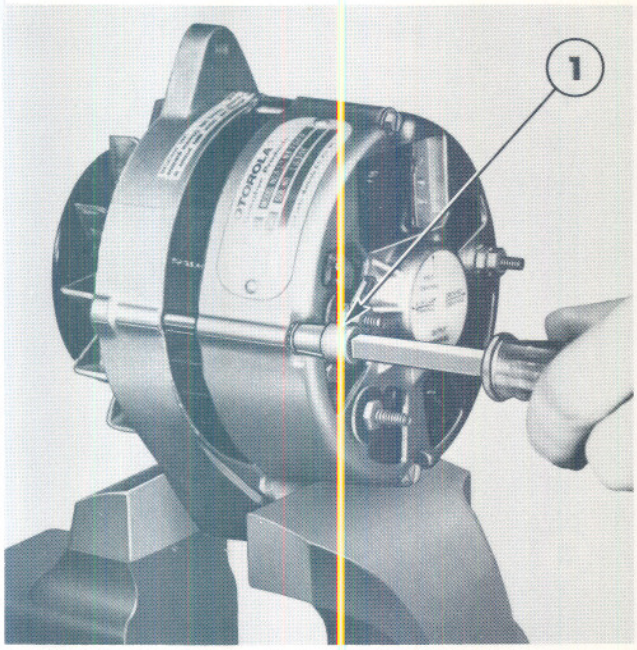

Figure 59
Installing Through Bolts

1. $\frac{1}{4}$ in Socket

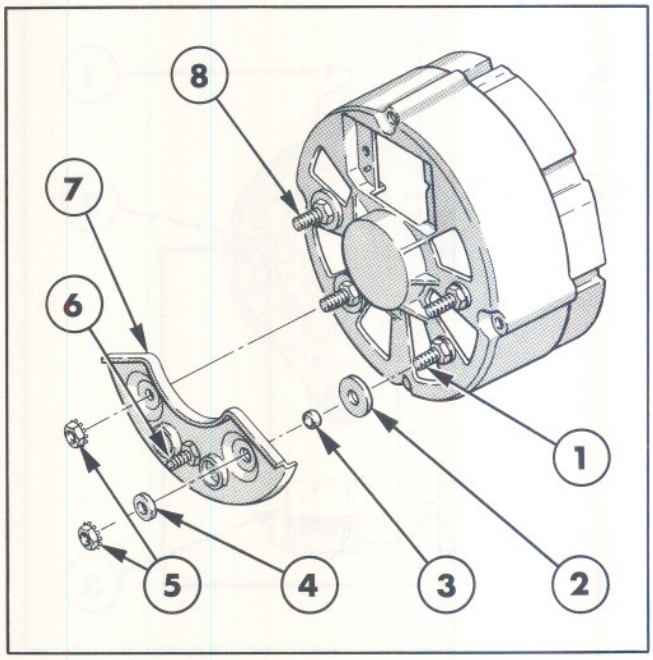

Figure 60
Isolation Diode Installation

1. Negative Output Stud
2. 0.75 in O.D. Washer
3. Nylon Sleeve
4. 0.5 in O.D. Fibre Washer
5. Locknuts
6. Output Terminal
7. Isolation Diode Assembly
8. Auxiliary Output Stud

Isolation Diode

1. Refer to Figure 60 for correct installation of the insulators and the isolation diode assembly.

2. Install the assembly and secure with the locknuts.

Brush

1. Place the brush assembly, Figure 61, in the cavity.

2. Install the dust shield and cover plate. Secure with the screws.

3. Bench check the alternator as covered under "Alternator Bench Check".

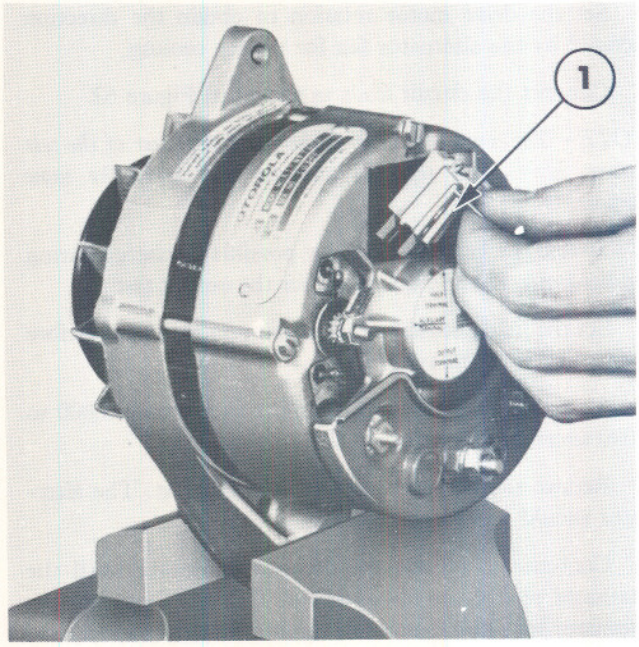

Figure 61
Alternator Brush Installation

1. Brush Assembly

© FORD MOTOR COMPANY, 1975

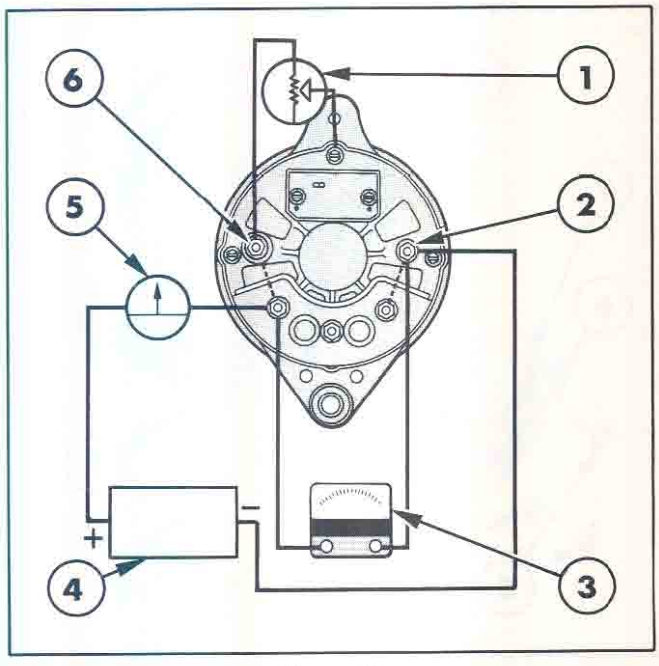

Figure 62
Alternator Bench Check (less Regulator)

1. Field Rheostat
2. Negative Output
3. Test Voltmeter
4. 12V Battery
5. Ammeter
6. Auxiliary

ALTERNATOR BENCH CHECK

1. Mount the alternator in a test fixture capable of providing 3000 to 4000 alternator rev/min.

2. Set the drive motor rotation to obtain the direction dictated by the alternator fan for proper cooling.

3. Connect the circuit leads as shown in Figure 62.

NOTE – The ammeter shown is the panel ammeter of the test fixture, although a separate ammeter will serve the same purpose.

4. Switch the ammeter to show possible discharge during the hook-up. Reverse the meter for the output test.

5. Set the field rheostat to the maximum resistance before connecting it to the system.

6. Start the drive motor and adjust it to obtain 3,000 to 4,000 alternator rev/min.

7. Reduce the resistance of the field rheostat. The alternator should now begin to charge.

8. Continue to reduce the rheostat resistance until the alternator reaches its rated output. DO NOT operate the alternator for more than a few minutes in this manner, due to lack of voltage control. If the alternator delivers rated current output, terminate the test. Refer to "Specifications" for output specification. If rated output cannot be obtained, the rotor, stator or diodes are at fault.

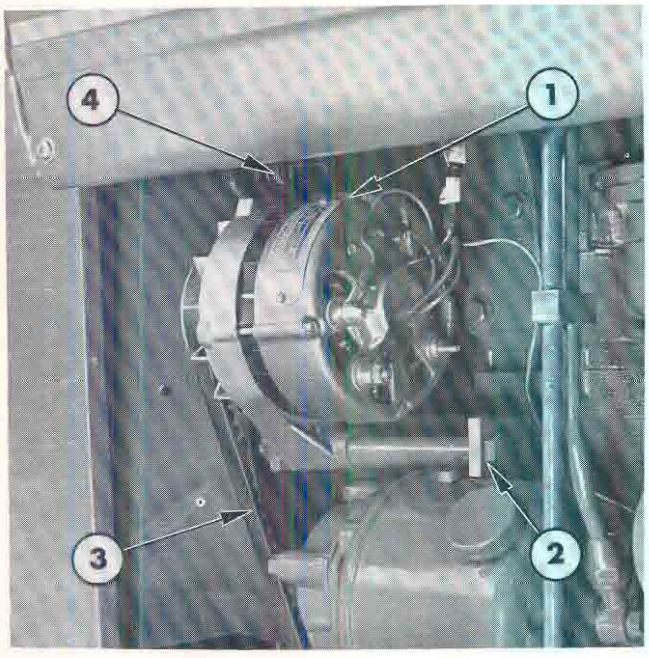

Figure 63
Alternator Installed on Tractor

1. Alternator
2. Alternator Bracket and Retaining Bolt
3. Alternator Fan Belt
4. Adjusting Bolt

INSTALLATION

Alternator

1. Make sure the battery ground cable (negative) is disconnected from the battery.

2. Place the alternator in position on the tractor and install the attaching bolts and spacer, Figure 63. Loosely tighten the bolts so the alternator is free to pivot when moderate pressure is applied.

3. Position the alternator belt over the pulley.

4. Connect the wires to the alternator as shown in Figure 63.

5. Connect the battery ground cable (negative) to the battery.

6. Adjust the alternator belt as outlined previously in this Chapter.

Voltage Regulator

1. Attach the voltage regulator with the attaching screws.

2. Connect the wiring harness to the regulator.

3. Connect the battery ground cable (negative) to the battery.

4. TROUBLE SHOOTING

Problem	*Possible Causes*
Battery Discharged	1. Loose or Worn Alternator Drive Belt 2. Defective Battery (will not accept charge) 3. Alternator not Producing Rated Output 4. Defective Voltage Regulator 5. Excessive Resistance in Alternator to Battery or Battery to Ground Terminals
Alternator Charging at High Rate	1. Defective Voltage Regulator
No Output from Alternator	1. Alternator Drive Belt Broken 2. Loose Output Connection 3. All Rectifying Diodes Defective 4. Defective Rotor or Stator 5. Defective Isolation Diodes (Open) 6. Defective Voltage Regulator
Intermittent or Low Alternator Output	1. Alternator Drive Belt Slipping 2. Loose Connections or Broken Cables in Charging System 3. One or Two Rectifying Diodes Defective 4. Defective Voltage Regulator 5. Wire Broken in Stator

5. SPECIFICATIONS

Alternator:	
Maximum Output (Hot) (160°F) at approximately 2,400 engine rev/min	
(5,136 Alternator rev/min) and 14.4 Volts	47 amps
(5,136 Alternator rev/min) and 14.4 Volts	47 amps
Field Current	1.8–2.4 amps
Field Resistance	6 ohms
Brush Length (Minimum)	0.187 in (4.76 mm)
Brush Spring Tension with New Brush (Minimum)	4 oz (113.4 gms)

Voltage Regulator (with Alternator):

Output Terminal Voltage at 10 amp load against Ambient Air Temperature

Temperature in Degrees									
°F	0°	20°	40°	60°	80°	100°	120°	140°	160°
(°C)	(−18°)	(−7°)	(4°)	(16°)	(27°)	(38°)	(49°)	(60°)	(71°)
Minimum Output Terminal Voltage (10 amp Load)	14.60	14.45	14.26	14.13	13.95	13.80	13.65	13.60	13.30
Maximum Output Terminal Voltage (10 amp Load)	15.40	15.25	15.08	14.92	14.75	14.60	14.45	14.28	14.13

6. SPECIAL TOOLS

Tool No.	*Description*
630-S	Step Plate Adaptors
950	Pulling Attachments
1001	Puller

© FORD MOTOR COMPANY, 1975

Chapter 6
HYDRAULIC SYSTEMS WITH LOAD MONITOR — FORD 5000 & 7000 TRACTORS

Section		*Page*
1.	Description and Operation	1
2.	Adjustments	9
3.	Overhaul Load Monitor	16
4.	Overhaul Lift Cylinder Assembly	22
5.	Overhaul Lift Cover Assembly	23

Chapter 7
HYDRAULIC SYSTEM — FORD 2600, 3600, 4100 & 4600 TRACTORS

Section		*Page*
1.	Description and Operation	1
2.	Adjustments	18
3.	Overhaul Lift Cylinder Assembly	19
4.	Overhaul Lift Cover Assembly	26
5.	Overhaul Flow Control Valve Plate and Linkage	33
6.	Overhaul Oil Filter Support Assembly – Ford 4100 & 4600 Tractors	36

Chapter 8
HYDRAULIC SYSTEM — FORD 5600, 6600, & 7600 TRACTORS

Section		*Page*
1.	Description and Operation	1
2.	Adjustments	9
3.	Overhaul Lift Cylinder Assembly	10
4.	Overhaul Lift Cover Assembly	12
5.	Overhaul Cooler Valve Assembly	13
6.	Overhaul Oil Filter Support and Adaptor Assembly	14

Printed in U.K. 8/75 © FORD MOTOR COMPANY, 1975

Chapter 9
HYDRAULIC PUMP — ENGINE MOUNTED GEAR TYPE

Section		*Page*
1.	Description and Operation	1
2.	Overhaul Hydraulic Lift Pump	2

Chapter 10
HYDRAULIC PUMP—INCREASED CAPACITY TRANSMISSION MOUNTED GEAR TYPE

Section		*Page*
1.	Description and Operation	1
2.	Overhaul Hydraulic Lift Pump	2

Chapter 11
TROUBLE SHOOTING, SPECIFICATIONS AND SPECIAL TOOLS— FORD 2600, 3600, 4100, 4600, 5600, 6600 & 7600 TRACTORS

Section		*Page*
1.	Trouble Shooting	1
2.	Specifications	6
3.	Special Tools	12

Part 11

HYDRAULIC SYSTEMS

Chapter 7

HYDRAULIC SYSTEM — FORD 2600, 3600, 4100 & 4600 TRACTORS

Section		*Page*
1.	Description and Operation	1
2.	Adjustments	18
3.	Overhaul Lift Cylinder Assembly	19
4.	Overhaul Lift Cover Assembly	26
5.	Overhaul Flow Control Valve Plate and Linkage	33
6.	Overhaul Oil Filter Support Assembly – Ford 4100 & 4600 Tractors	36

1. DESCRIPTION AND OPERATION

Figure 1 illustrates the hydraulic system for the Ford 2600 and 3600 models with an engine mounted gear type hydraulic pump. Various differences which exist between this system and that of the Ford 2600 and 3600 models with an engine mounted piston pump, and the Ford 4100 and 4600 models, with a transmission mounted gear pump, are explained throughout this Chapter.

HYDRAULIC FILTERS

A full flow micronic suction filter system is featured with the optional engine mounted gear type hydraulic pump for the Ford 2600 and 3600 models and as standard for all Ford 4100 and 4600 models.

ord 2600 and 3600 models with the standard engine nounted piston pump retain the previous intake strainer and discharge filter system.

The micronic inlet filters are located externally to facilitate renewal. The filter is situated adjacent to the engine mounted gear pump for the Ford 2600 and 3600 models, Figure 2, and at the end of a manifold, under the left-hand platform, for the Ford 4100 and 4600 models, Figure 3.

HYDRAULIC OIL COOLER

An air-to-oil type hydraulic oil cooler is featured for the Ford 2600 and 3600 models with the optional, high output engine mounted gear type hydraulic pump.

Hydraulic system exhaust oil is passed through the cooler, situated in front of the radiator, before returning to the rear axle centre housing.

NOTE – The hydraulic oil cooler is not installed in production for the Ford 4100 and 4600 models but provisions are incorporated to facilitate Service installation if required.

Printed in U.K. 8/75 © FORD MOTOR COMPANY, 1975

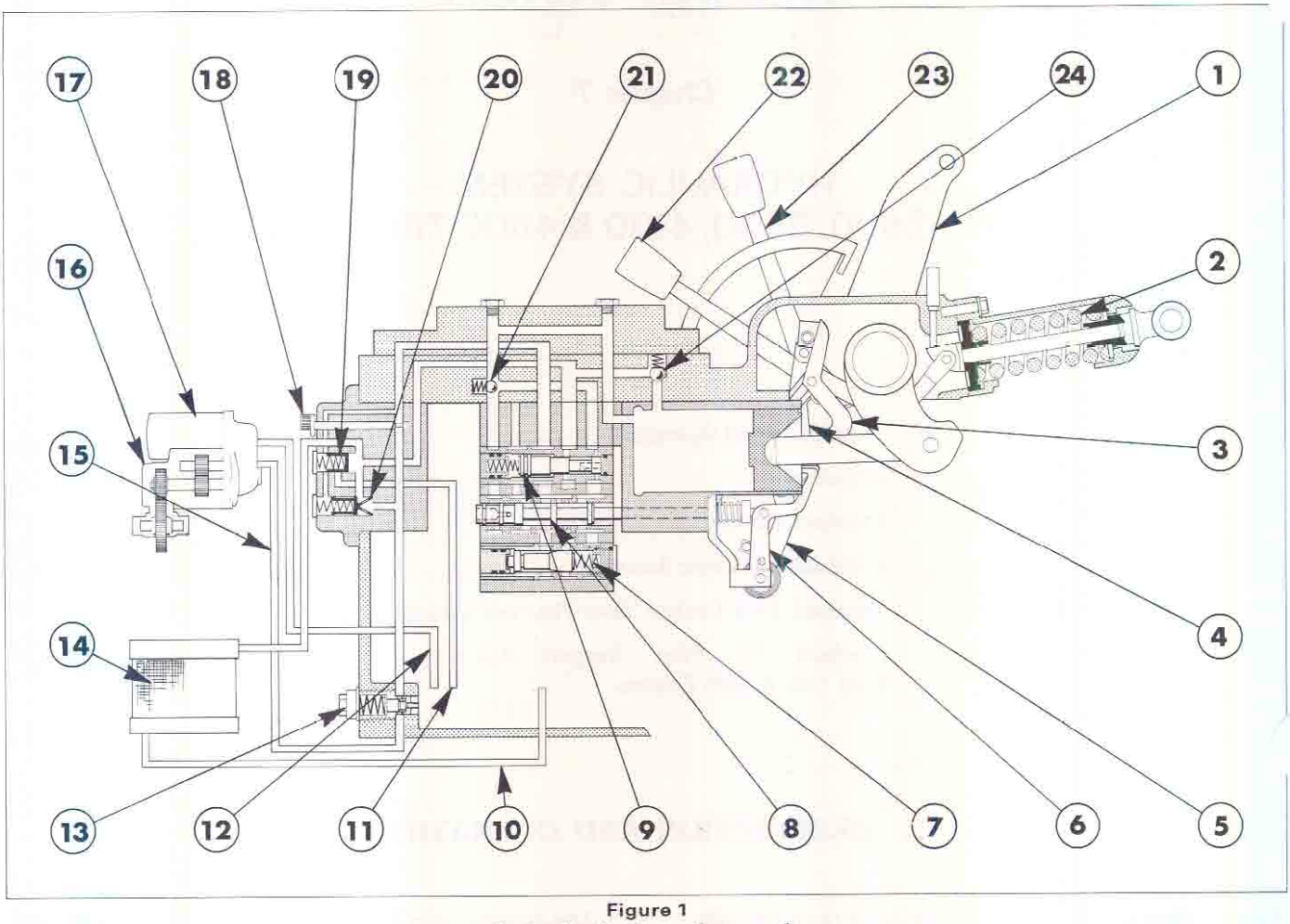

Figure 1
Hydraulic System – Schematic

1. Lift Arm
2. Draft Control Spring
3. Draft Lever
4. Position Lever
5. Actuating Lever
6. Control Valve Lever
7. Feathering Valve
8. Control Valve
9. Unload Valve
10. Oil Cooler Return to Sump
11. Dump Pipe
12. Hydraulic Pump Inlet Tube
13. Pressure Relief Valve
14. Oil Cooler
15. Pump Pressure Tube
16. Engine Mounted Gear Pump
17. Micronic Inlet Filter
18. Flow Control Valve Restrictor Knob
19. Cooler Valve
20. Flow Control Valve
21. Check Valve
22. Draft Control Lever
23. Position Control Lever
24. Lift Cylinder Safety Valve

EXTERNAL CONTROLS

Lift Control Levers

The previous single lift control lever and draft/position control selector lever have been superseded by a two-lever control system for Ford 2600, 3600, 4100 and 4600 models.

NOTE – The previous single-lever control system is retained for the Narrow, Narrow Orchard and Vineyard models.

The two-lever control system incorporates separate lever for draft and position control situated at the right-hand side of the operator's seat in the same locations as the single-lever system, Figure 4.

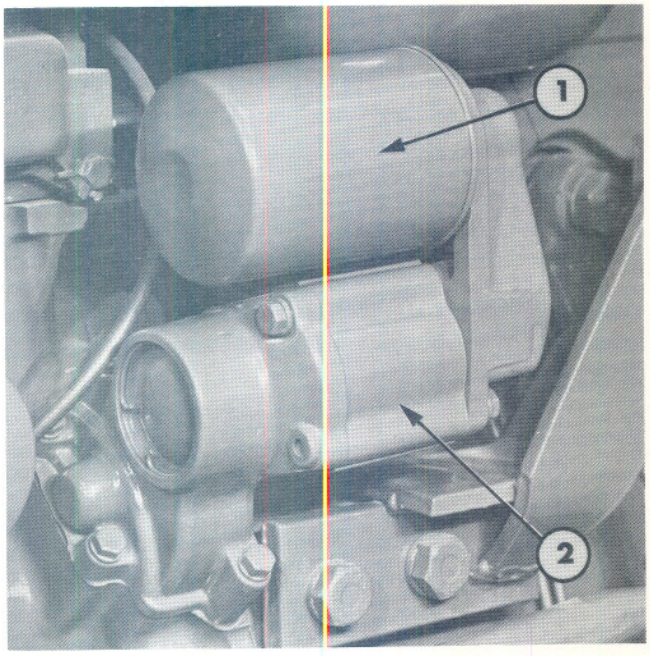

Figure 2
Location of Hydraulic Inlet Filter –
Ford 2600 and 3600
1. Micronic Inlet Filter 2. Engine Mounted Gear Pump

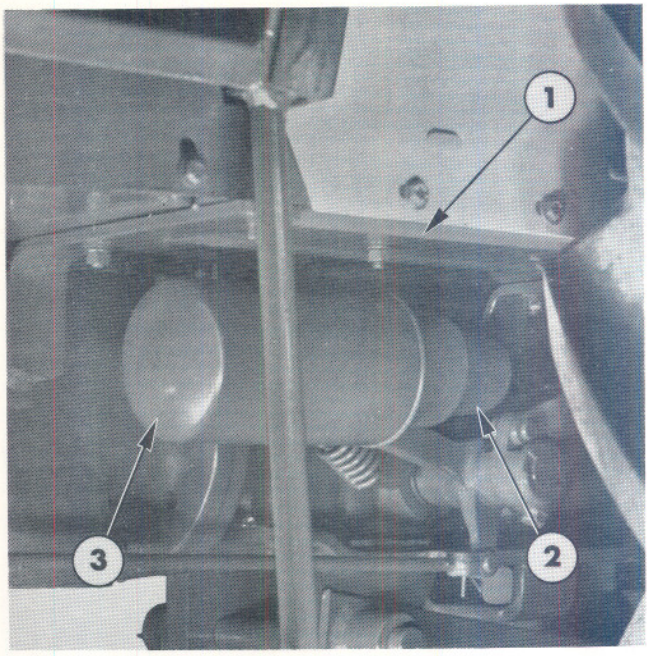

Figure 3
Location of Hydraulic Inlet Filter –
Ford 4100 and 4600
1. Left-hand Platform 2. Filter Manifold
3. Micronic Inlet Filter

The system enables the operator to select full draft control (inner lever), full position control (outer lever) or a combination of both whereby maximum implement depth control, in addition to draft response, may be effected in the draft control mode.

The two-lever control system provides more accurate positioning and finer increments of control compared to the single-lever system.

Draft Control

Draft control is selected by pushing the position control lever to the bottom of the quadrant (this action makes the position control linkage inoperative) and moving the draft control lever.

Flow control override, to permit rapid implement lift, only comes into operation when the draft control lever is moved to the top of the quadrant.

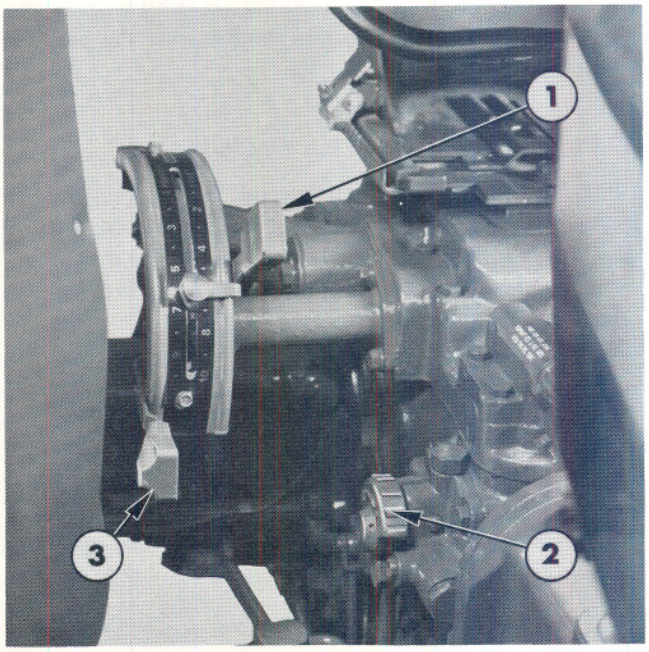

Figure 4
Hydraulic System Controls
1. Draft Control Lever 3. Position Control Lever
2. Flow Control Knob

 © FORD MOTOR COMPANY, 1975

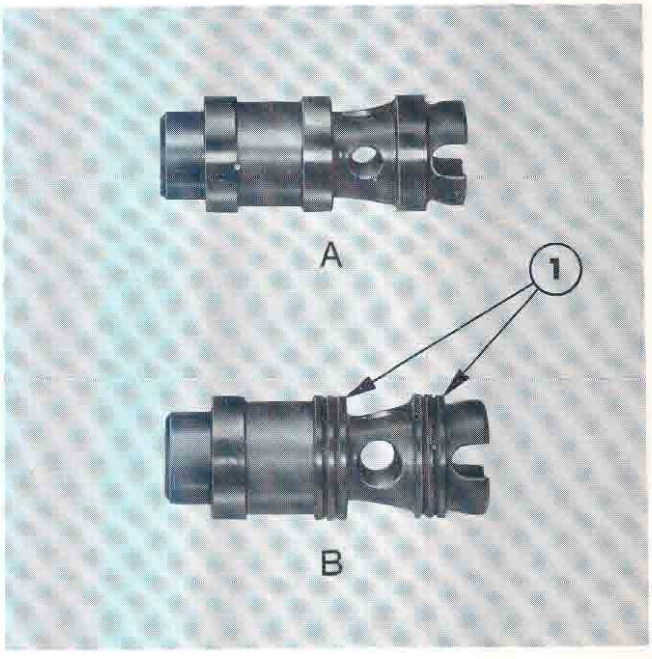

Figure 5
Flow Control Valve

A. Previous Valve
B. Current Valve
1. Anti-Friction Grooves

Position Control

Position control is selected by pushing the draft control lever to the bottom of the quadrant (thereby making the draft control linkage inoperative) and moving the position control lever.

Draft Control with Position Control

When the system is in draft control, the position control lever can be utilised to set a desired maximum implement working depth. Draft control is maintained but the implement depth is regulated by the position control setting which overrides the draft control linkage.

Flow Control Valve

A high capacity manually operated flow control valve caters for the increased output of the optional engine mounted gear type hydraulic pump for the Ford 2600 and 3600 models and the standard transmission mounted gear pump for all Ford 4100 and 4600 models.

The Ford 3600 model with the standard engine mounted piston pump also features the flow control valve but the Ford 2600 model with the lower capacity engine mounted piston pump does not have a manual flow control system.

The flow control valve housing is situated on the right-hand side of the rear axle centre housing and features a rocking control knob, see Figure 4. This control knob moves through an angle of approximately 45° to give a slow flow (S) in the forward position and a fast flow (F) in the rearward position.

The control knob is attached to the end of the restrictor shaft and a wider relief in the restrictor caters for the increased hydraulic flow.

The high capacity flow control valve has larger ports than the previous valve and features anti-friction grooves, Figure 5.

The flow control valve may be used to service previous models.

HYDRAULIC LIFT CAPACITY

Increased lift capacity for the Ford 4100 and 4600 models is achieved by increasing the lift cylinder bore diameter from 3.31 in (84.14 mm) to 3.50 in (88.90 mm).

A unique lift cylinder piston, seal and ring are installed and the connecting rod, ram arm, lift arms and cross shaft are all strengthened to cater for the increased lift capacity.

VALVES IN THE LIFT CYLINDER ASSEMBLY

Feathering Valve

A feathering valve which modulates the flow of hydraulic oil to the lift cylinder, depending on the size of the lift signal, is featured for all Ford 2600, 3600, 4100 and 4600 models with or without the two-lever lift control system, Figure 6.

The feathering valve is located within a colour coded bushing.

The feathering valve flow control system is described in detail in this Chapter.

Control Valve

To cater for the increased flow of hydraulic oil associated with the high output gear type pumps, the control valve has narrow section lands. The land positions are designed for compatibility with the feathering valve flow control system, Figure 7.

The control valve spool is matched with a unique colour coded bushing.

Previous and current control valves and bushings are not interchangeable.

Unload Valve

A unique spring assisted unload valve forms an integral part of the feathering valve flow control system. The spring ensures effective return of the unload valve and no longer necessitates the inclusion of a back pressure valve in the hydraulic system.

The land form of the unload valve is shown in Figure 8.

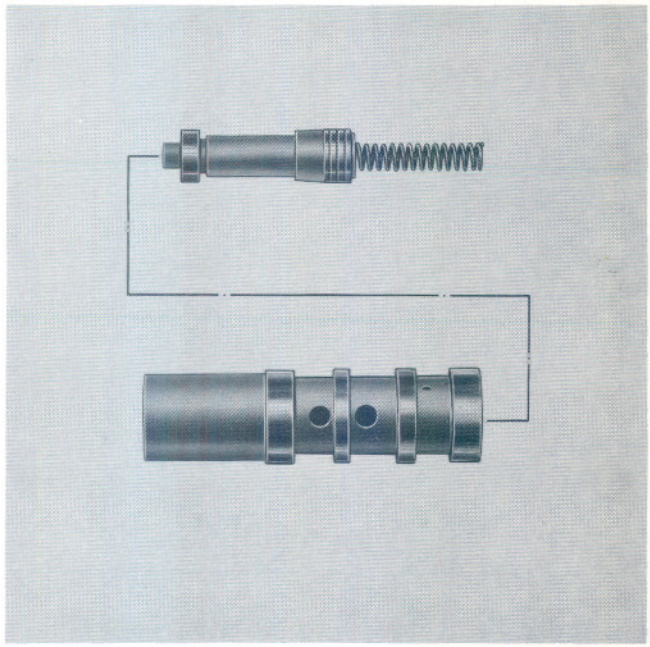

Figure 6
Feathering Valve and Bushing Assembly

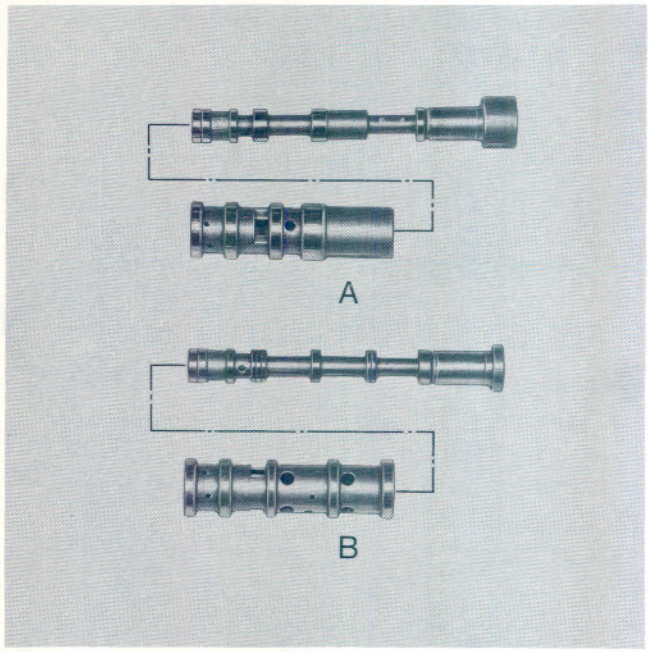

Figure 7
Hydraulic Lift Control Valve and Bushing Assembly
A. Previous Valve and Bushing B. Current Valve and Bushing

The current valve is located within a one-piece colour coded bushing as opposed to the separate front and rear bushings of the previous valve.

Previous and current unload valves and bushings are not interchangeable.

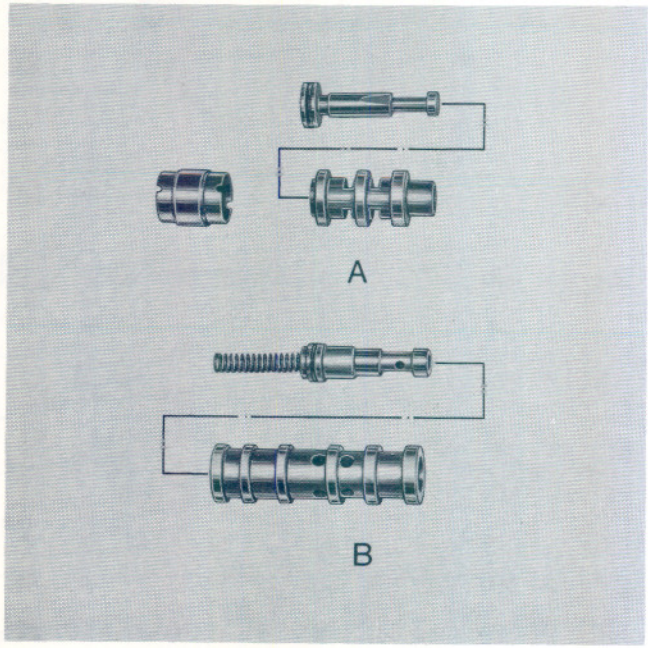

Figure 8
Unload Valve and Bushing Assembly
A. Previous Valve and Front and Rear Bushings
B. Current Valve and Bushing Assembly

 © FORD MOTOR COMPANY, 1975

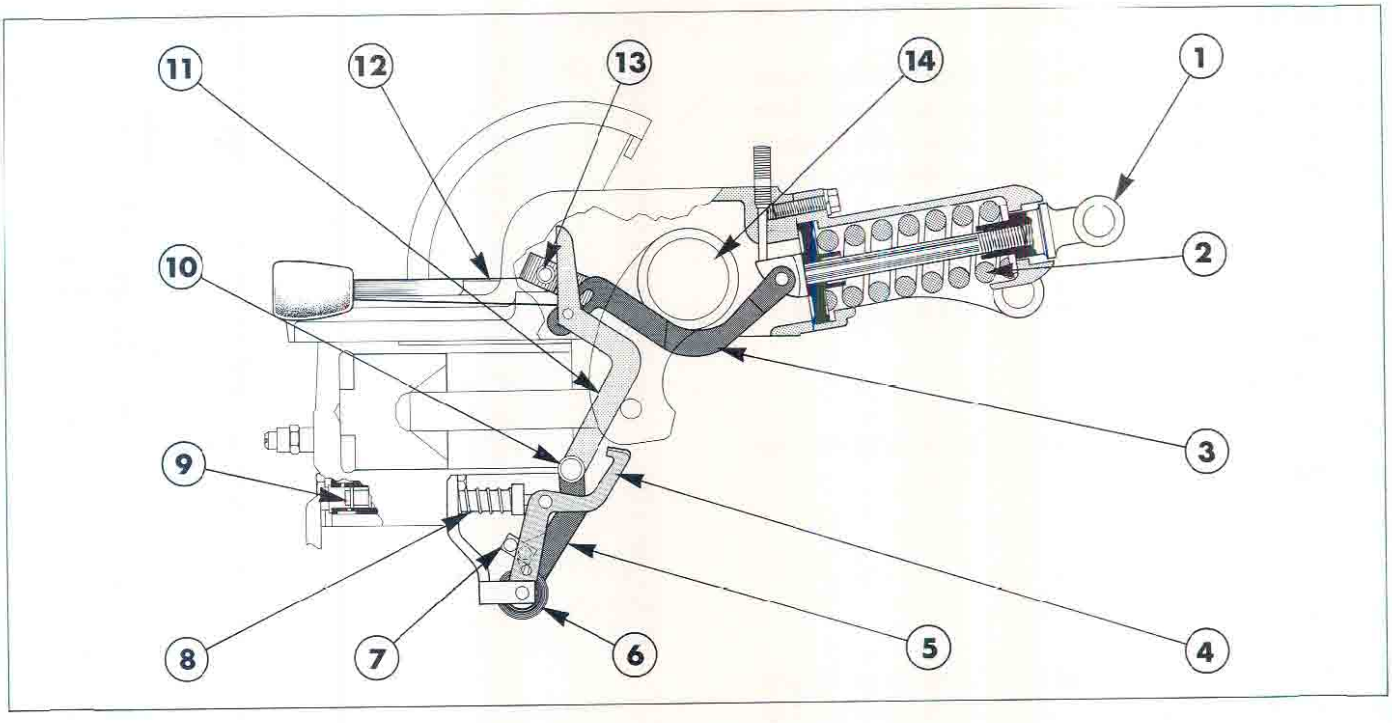

Figure 9
Draft Control Linkage – Lowering into Work

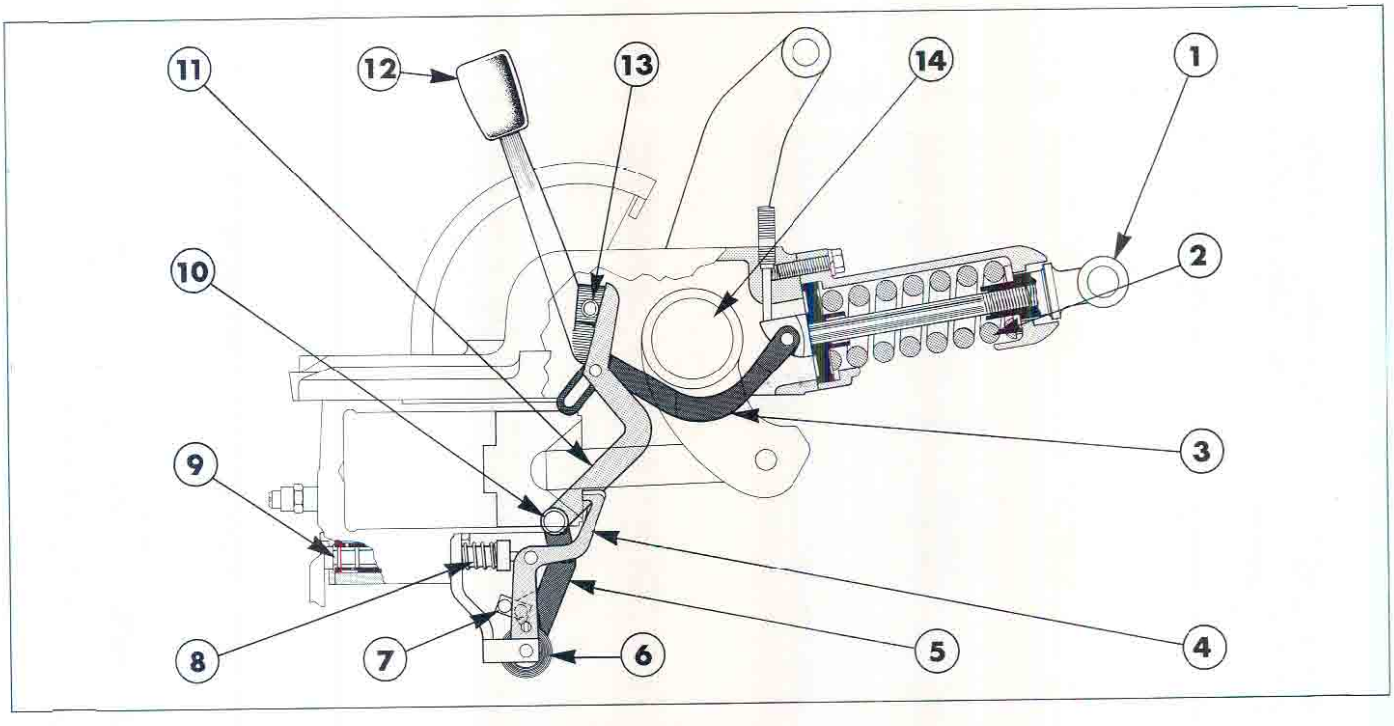

Figure 10
Draft Control Linkage – Raising in Work

1. Yoke
2. Draft Control Main Spring
3. Draft Control Link
4. Control Valve Lever
5. Actuating Lever
6. Torsion Spring
7. Adjustable Stop
8. Control Valve Spring
9. Control Valve
10. Pivot Pin
11. Draft Lever
12. Draft Control Lever
13. Draft Control Roller
14. Lift Cross Shaft

HYDRAULIC LIFT OPERATION

The hydraulic power lift is regulated both in position control and draft control by movement of the control valve. Depending upon the position of this valve, hydraulic oil pressure is directed to effect a raising, lowering or neutral action.

The position of the control valve can be altered either by moving the lift control levers or by a force acting on the draft control main spring when in draft control.

Draft Control

The system of Draft Control uses the top link signal for raising or lowering the implement working depth to maintain a constant draft. When the position control lever is in the lowest position, the double acting Draft Control System of the Ford 3600, 4100 and 4600 Tractors functions as follows:

Light Implements

Lowering into Work

With reference to Figure 9.

Downward movement of the draft control lever swings the roller forward and away from the draft lever which is connected by the pivot pin to the actuating lever. The actuating lever is coupled via a torsion spring to the control valve lever.

NOTE – The torsion spring is in permanent torsion to ensure that any movement of the actuating lever is transmitted directly through the spring to the control valve lever. An adjustable stop positions the levers relative to one another but does allow the control valve lever to move rearwards relative to the actuating lever.

As the draft control roller moves forward and away from the draft lever, the control valve spring extends and pushes the control valve and actuating levers rearwards. The draft lever pivots about the connection in the slotted draft control link until it again contacts the draft control lever roller. At this point all the linkage comes to rest with the control valve held in the drop position.

Lowering stops when the implement draft compresses the draft control main spring in a forward direction a sufficient amount to pivot the draft control link about the roller and hence push the control valve lever forward. This action overcomes the rearward pressure of the control valve spring and moves the control valve into the neutral position.

Draft producing Compression in Top Link

With reference to Figure 10.

When working in Draft Control an increase in draft at the implement will compress the draft control main spring in a forward direction and push the draft control link and hence the control valve lever forward. This action moves the control valve forward into a raise position and as the implement is lifted the draft force, and hence the force on the draft control main spring, decreases to the original amount. The control valve spring now moves the control valve rearward into the neutral position.

A decrease in draft at the implement will reduce the compression of the draft control main spring and allow the draft control link and hence the control valve lever to move rearward.

This allows the control valve spring to extend and move the control valve rearward into a lowering position.

As the implement runs deeper the draft increases to the original amount and the control valve again returns to the neutral position.

Heavy Implements

Lowering into Work

With reference to Figure 9.

The following action occurs when the implement always produces tension in the top link. Downward movement of the draft control lever swings the roller forward. As the roller moves forward, the connecting linkage allows the control valve spring to extend and pull the control valve rearward to the slow drop position. As the implement descends, the tensile force on the yoke increases and further compresses the draft control main spring against the spring rear seat. At the same time the slotted draft control link is moved rearward allowing the draft lever also to pivot rearward about the roller. As the draft lever pivots, the control valve lever and the actuating lever swing rearward due to the force of the control valve spring which allows the control valve to move further into the lowering position, thereby increasing the rate of drop.

 © FORD MOTOR COMPANY, 1975

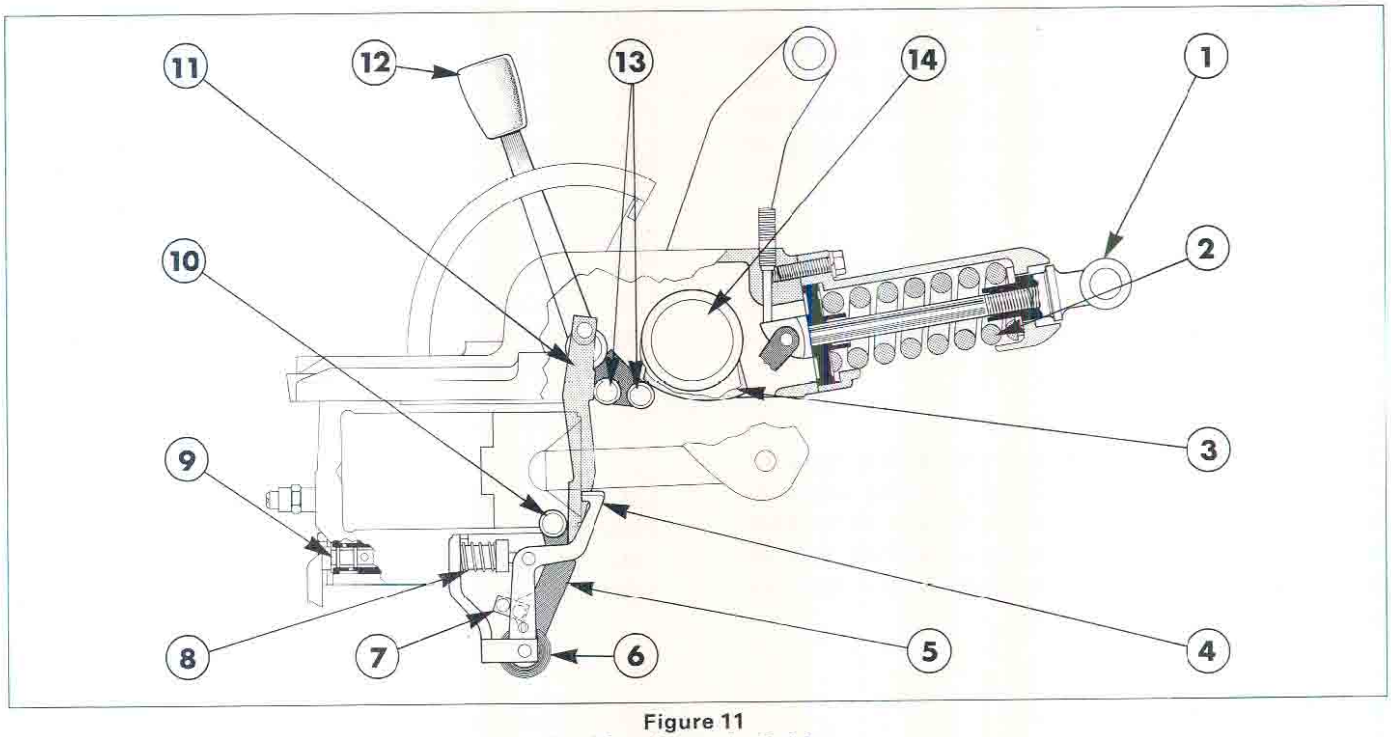

Figure 11
Position Control – Raising

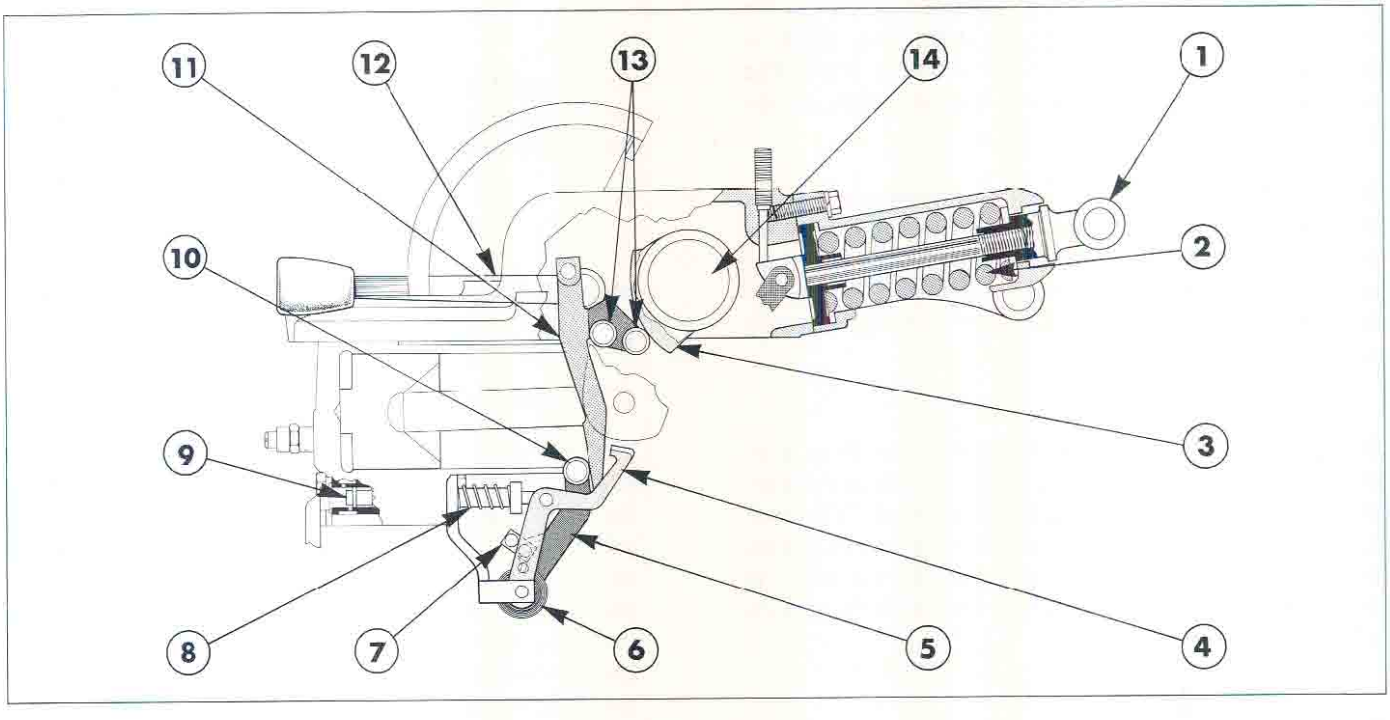

Figure 12
Position Control – Lowering

1. Yoke
2. Draft Control Main Spring
3. Position Control Cam
4. Control Valve Lever
5. Actuating Lever
6. Torsion Spring
7. Adjustable Stop
8. Control Valve Spring
9. Control Valve
10. Actuating Lever Roller
11. Position Lever
12. Position Control Lever
13. Position Control Rollers
14. Lift Cross Shaft

Lowering stops when the implement draft reduces the tension in the top link a sufficient amount for the draft control main spring to push the draft control link and hence the control valve lever forward. This action overcomes the rearward pressure of the control valve spring and moves the control valve into the neutral position.

Draft Insufficient to Produce Compression in Top Link

When the implement draft is constant but is insufficient to overcome the weight of the implement, the top link will be in tension and the draft control main spring compressed rearward against the spring seat.

With reference to Figure 10.

An increase in draft will produce a decrease in tension in the top link and allow the draft control main spring to expand in a forward direction, thus pushing the draft control link and hence the control valve lever forward. This action moves the control valve into a raise position and as the implement is lifted the draft force decreases but the tension in the top link increases. The yoke is pulled rearward until the original draft is obtained. The control valve spring now moves the control valve into the neutral position.

With reference to Figure 9.

A decrease in draft will produce an increase in tension in the top link and increase the rearward compression of the draft control main spring. This action allows the control valve spring to move the control valve into a lowering position. As the implement runs deeper the draft will increase until the original draft is obtained and the draft control main spring expands in a forward direction thereby moving the control valve into the neutral position.

Raising Implement to Transport Position

When the draft control lever is pulled to the top of the quadrant to the transport position, the draft control roller pushes the draft lever rearwards and causes the lever centre pivot to move to the top of the slot in the draft control link. In this position the draft lever pivots about the slotted link and forces the actuating lever forward. The torsion spring transmits the movement to the control valve lever which in turn moves the control valve fully forward into the fast raise position.

To limit the maximum height to which the implement can be raised, the linkage is designed so that the piston skirt projects slightly beyond the end of the lift cylinder. On reaching the fully raised position, the piston contacts the control valve lever which moves rearwards.

NOTE – The torsion spring allows the control valve lever to move rearwards relative to the actuating lever.

This action moves the control valve rearwards into the neutral position and stops any further movement of the piston. The piston stop mechanism operates both in Draft Control and Position Control.

Position Control

The system of Position Control enables the working depth or height of an implement to be pre-set and maintained.

Raising

With reference to Figure 11.

Upward movement of the position control lever causes the position lever to pivot about the forward roller.

NOTE – The two rollers are fixed in position relative to one another but rotate freely about the position control lever horizontal shaft.

When the position lever pivots it pushes against a roller attached to the actuating lever which moves forward. The torsion spring transmits the movement to the control valve lever which in turn moves the control valve forward into the raise position.

As the lift cross shaft rotates, a cam allows the two rollers to move rearwards. Due to the force of the control valve spring all the linkage follows the rollers allowing the control valve to move rearward to the neutral position. As soon as the valve is in this position the lifting action stops. If a further lift is required, the position control lever is moved further up the quadrant and the above procedure is repeated.

 © FORD MOTOR COMPANY, 1975

Lowering

With reference to Figure 12.

Downward movement of the position control lever tends to allow the position lever to swing free of the forward roller, but the rearward force of the control valve spring pushes the control valve lever and actuating lever roller against the foot of the position lever which maintains contact with the forward roller. The rearward movement of the control valve spring pulls the control valve into the drop position.

As the lift cross-shaft rotates in a clockwise direction, the cam pushes the two rollers forwards. This action forces the position lever, and hence the control valve lever, forward until the control valve moves to the neutral position. Further downward movement of the position control lever will cause the lift arms to drop until such time as the valve is in neutral or the implement reaches the lowest position.

Draft Control with Position Control

When the system is in draft control, the position control lever can be adjusted to maintain a selected maximum implement working depth. The draft control lever can simultaneously be adjusted to maintain the desired draft load within the limits of the pre-selected maximum implement working depth.

HYDRAULIC OIL CIRCUIT PRESSURE VALVES IN THE HYDRAULIC CIRCUIT

System Relief Valve

The system relief valve is positioned at the beginning of the hydraulic circuit in the lower right-hand side of the rear axle centre housing for Ford 2600 and 3600 models and in the transmission mounted hydraulic pump for Ford 4100 and 4600 models.

The valve is direct operated and features both hydraulic and friction damping to ensure controlled lift-off and re-seating, Figure 13.

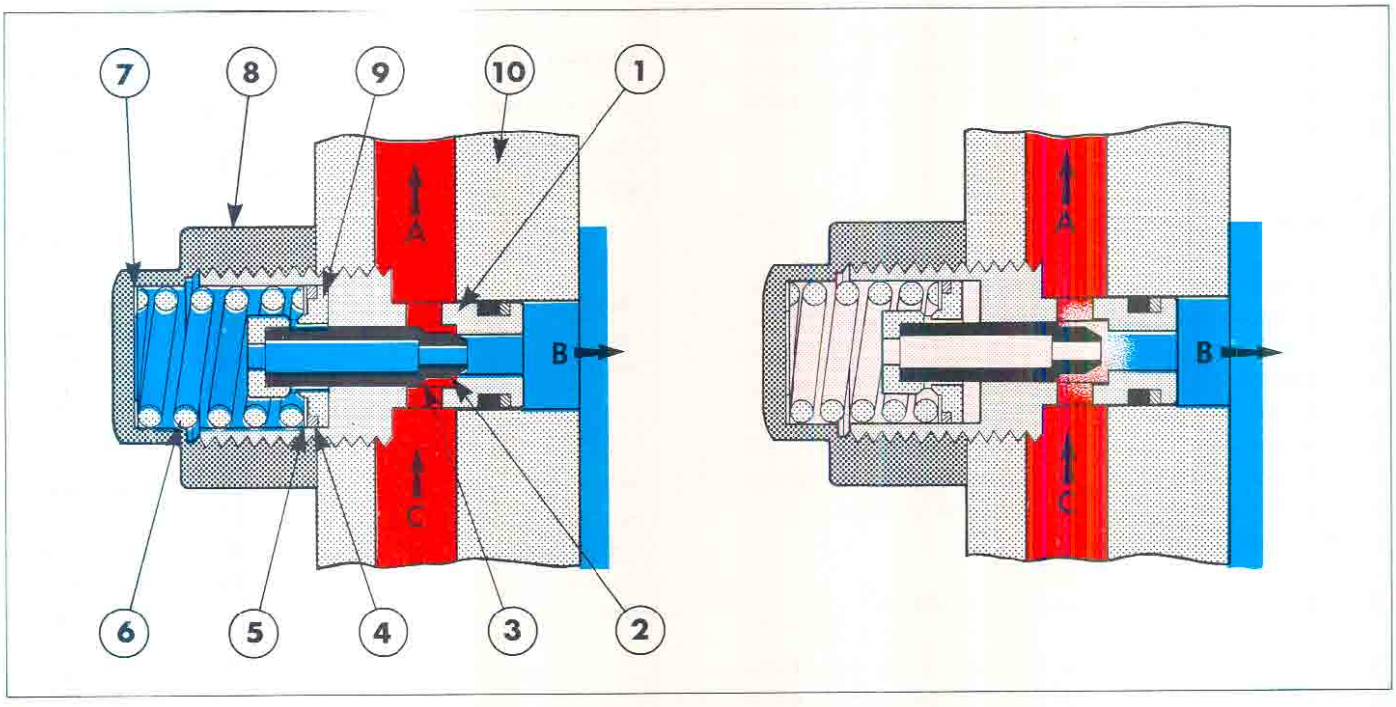

Figure 13
System Relief Valve – Ford 2600 and 3600

HIGH PRESSURE OIL
REDUCED PRESSURE OIL
RESERVOIR AND EXHAUST OIL

A. To Hydraulic Circuit
1. Valve Seat
2. Valve
3. Valve Land
4. Friction Seal
B. To Reservoir
5. Back-up Washer
6. Spring
7. Shims
8. Cap Nut
C. From Hydraulic Pump
9. Piston
10. Rear Axle Centre Housing

Controlled lift-off and re-seating eliminates relief valve "chatter" caused by the valve continually lifting-off and re-seating at critical system pressures.

Operation

With reference to Figure 13.

NOTE – The operation of the system relief valve is identical for all models.

Hydraulic oil at system pressure passes through the ports in the valve seat and acts on the valve land. The valve is restrained by a spring and piston and at normal system pressures the force exerted on the valve land is insufficient to overcome that of the spring.

If ever the system pressure is excessive, the force on the valve land overcomes that of the spring and pushes the valve and piston rearwards. As the valve lifts off the seat, the high pressure system oil is allowed to exhaust directly to the reservoir.

During valve lift-off oil is allowed to pass, via two bleed holes, from the spring to the valve-side of the piston, thereby effectively damping the piston movement. A friction seal further restricts the piston movement and, when combined with the effect of hydraulic damping, ensures controlled relief valve lift-off.

After the excessive system pressure condition has passed, the spring overcomes the force on the valve land and pushes the piston forwards until the valve re-seats thereby preventing system oil exhausting to the reservoir.

This valve re-seat action is also controlled by the piston which, on moving forward, tends to compress the oil which had previously passed to the valve side of the piston. This trapped oil now passes back, via the two bleed holes, into the cap nut chamber and out, through the hollow valve, to the reservoir. So, the piston movement is again effectively damped and, when combined with the resistance of the friction seal, maintains controlled valve re-seating. The valve may be adjusted by adding or removing shims from behind the spring.

NOTE – The flow of relieved oil across the nose of the valve ensures any foreign matter is carried to the reservoir and not embedded in the head of the valve.

The system relief valve is not interchangeable with previous models.

Check Valve

To cater for the increased flow of hydraulic oil and for compatibility with the feathering valve flow control system, the check valve housing and seat incorporate larger ports and revised lands respectively and the check valve guide has been removed, Figure 14.

The current check valve housing and spring may be used to service previous models.

The current check valve seat is not interchangeable.

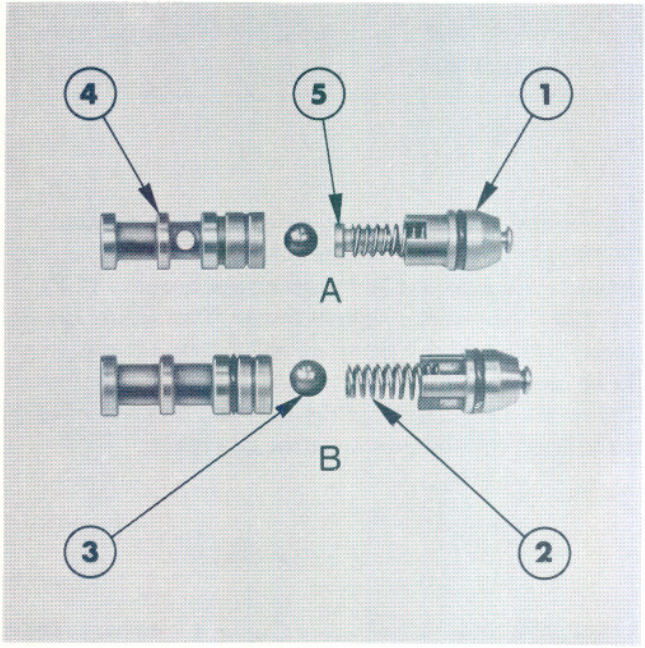

Figure 14
Check Valve Assembly

A. Previous Valve
1. Housing
2. Spring
3. Ball
B. Current Valve
4. Seat
5. Guide

 © FORD MOTOR COMPANY, 1975

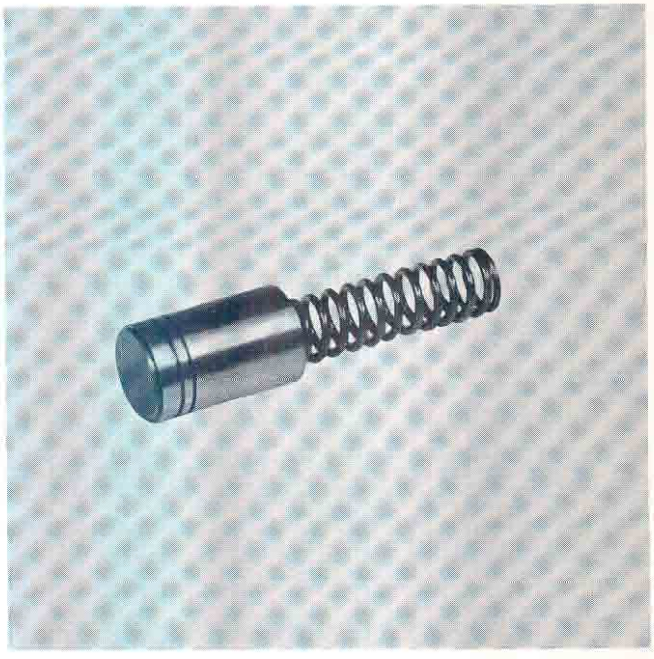

Figure 15
Cooler Valve Assembly

Cooler Valve (Ford Models with Flow Control)

A cooler by-pass valve is incorporated in the flow control valve housing, Figure 15.

This spring operated valve ensures that a pressure of 45 lbf/in^2 (3.1 bar) in the hydraulic system return circuit is not exceeded and an adequate quantity of oil is supplied to the cooler (where fitted). The return circuit directs both restricted pump oil and system exhaust oil to the oil cooler before returning to the sump. Excessive pressure on the valve results in the oil being dumped straight to the sump thereby protecting the oil cooler.

NOTE – The flow control valve housing for models without an oil cooler also incorporates the cooler valve but the oil cooler feed port is plugged.

Whenever installing an hydraulic oil cooler system, ensure the cooler by-pass valve is fitted.

OIL FLOW

Figures 16, 17, 18 and 19 show the hydraulic system oil flows for the neutral, lowering, slow raise and fast raise functions.

To facilitate detailed explanation of the hydraulic oil flow in the lift cylinder assembly, simplified diagrams for the neutral, lowering, slow and fast raise functions are shown in Figures 20, 21, 22 and 23 respectively.

Oil Flow in Neutral

With reference to Figure 16.

Hydraulic oil is drawn from the rear axle centre housing reservoir by the hydraulic pump (via a full flow micronic intake filter on certain models.) Pump pressure oil is then circulated to the hydraulic system.

The oil flows firstly past the system relief valve and then vertically upwards, past the flow control valve to the restrictor. According to the position of the restrictor only a certain percentage of oil is allowed to pass and the pressure of this oil is registered, via a bleed gallery, at the rear face of the flow control valve. The pressure of the restricted oil builds up on the face of the flow control valve spool which moves back and allows the oil to be dumped to the return circuit. Actual movement of the flow control valve depends upon the pressure differential between the force of the restricted oil on the front face and the combined coil spring force and bleed oil pressure on the rear face.

The excess oil joins forces with returning system oil before passing to the reservoir via an oil cooler (where fitted).

High system return pressure causes the cooler valve to lift and uncover a port which allows the oil to flow directly to the reservoir. This action protects the oil cooler from excessive system pressure.

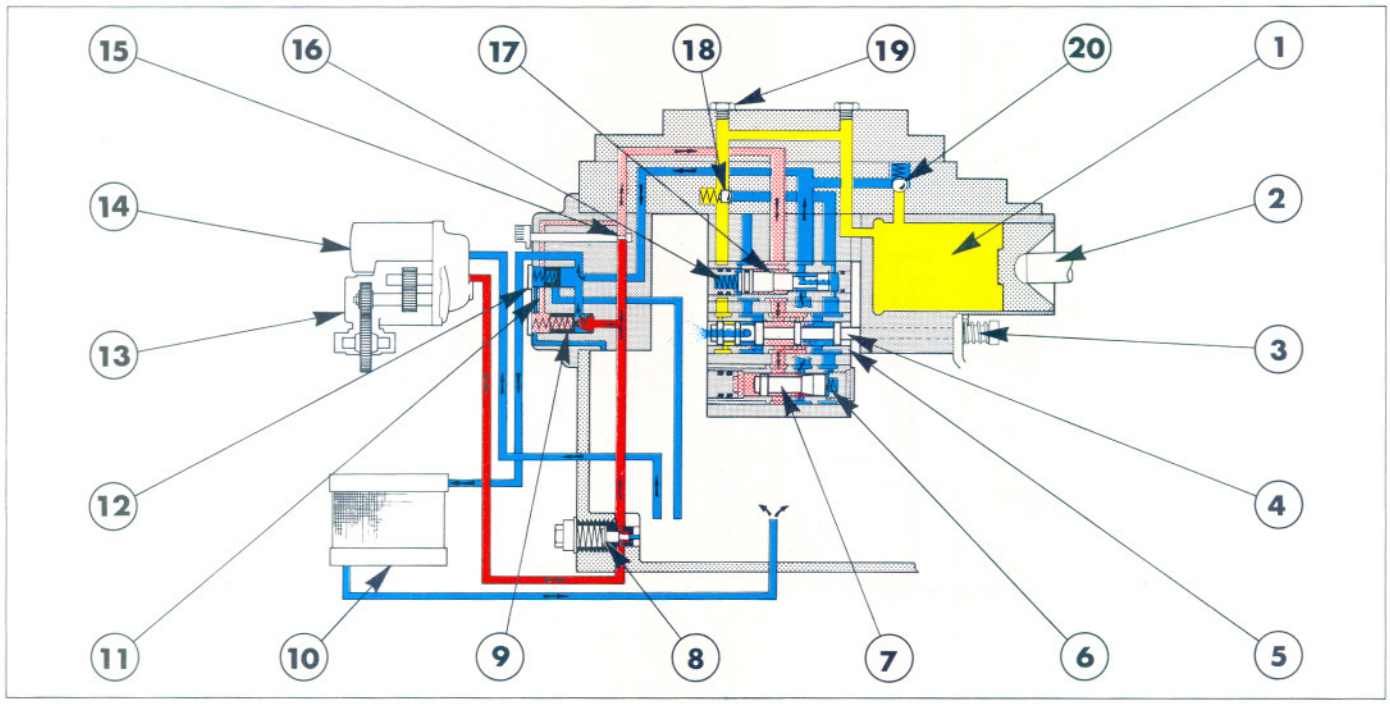

Figure 16
Oil Flow in Neutral

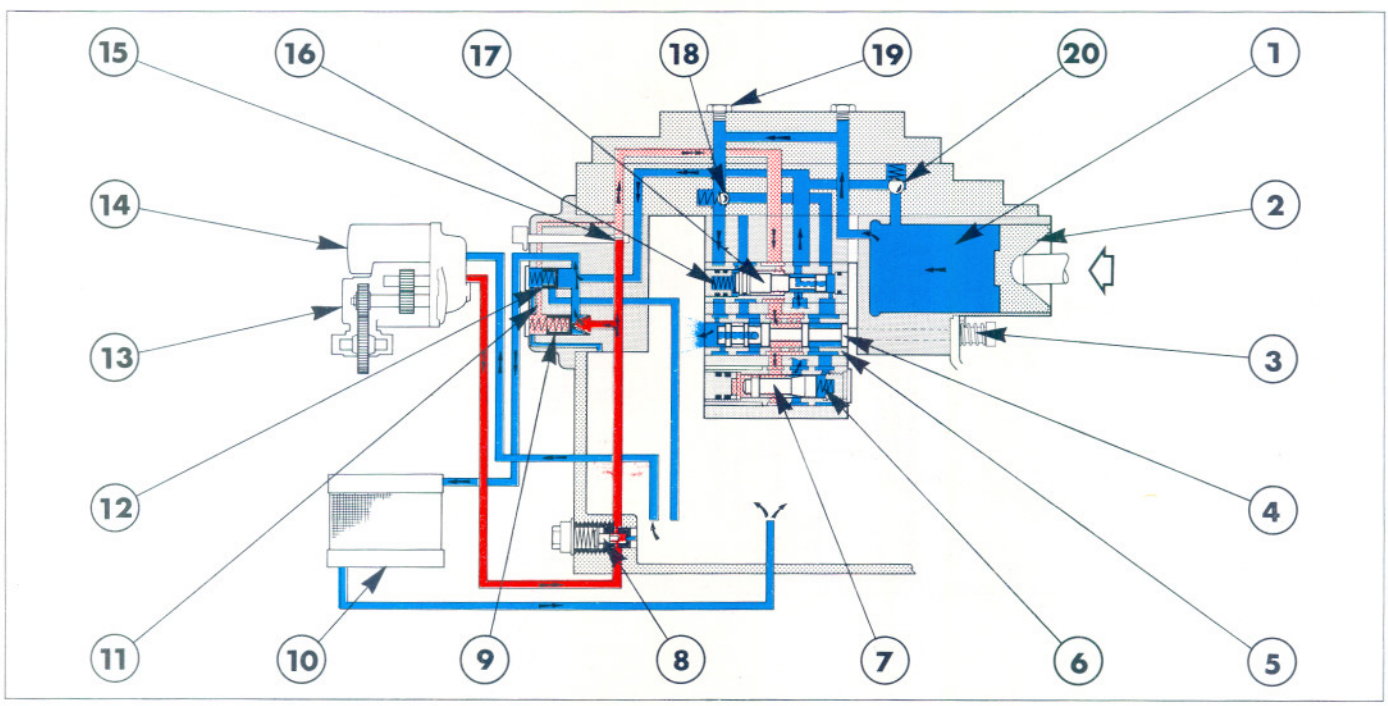

Figure 17
Oil Flow when Lowering

PUMP PRESSURE OIL
REDUCED PUMP PRESSURE OIL
RESERVOIR SUCTION AND EXHAUST OIL
TRAPPED OIL

1. Lift Cylinder
2. Piston
3. Control Valve Return Spring
4. Control Valve
5. Control Valve Bushing
6. Feathering Valve Spring
7. Feathering Valve
8. System Relief Valve
9. Flow Control Valve
10. Oil Cooler
11. Bleed Gallery
12. Cooler Valve
13. Hydraulic Pump
14. Micronic Intake Filter
15. Flow Control Valve Restrictor
16. Unload Valve Spring
17. Unload Valve
18. Check Valve
19. Auxiliary Services Feed
20. Lift Cylinder Safety Valve

 © FORD MOTOR COMPANY, 1975

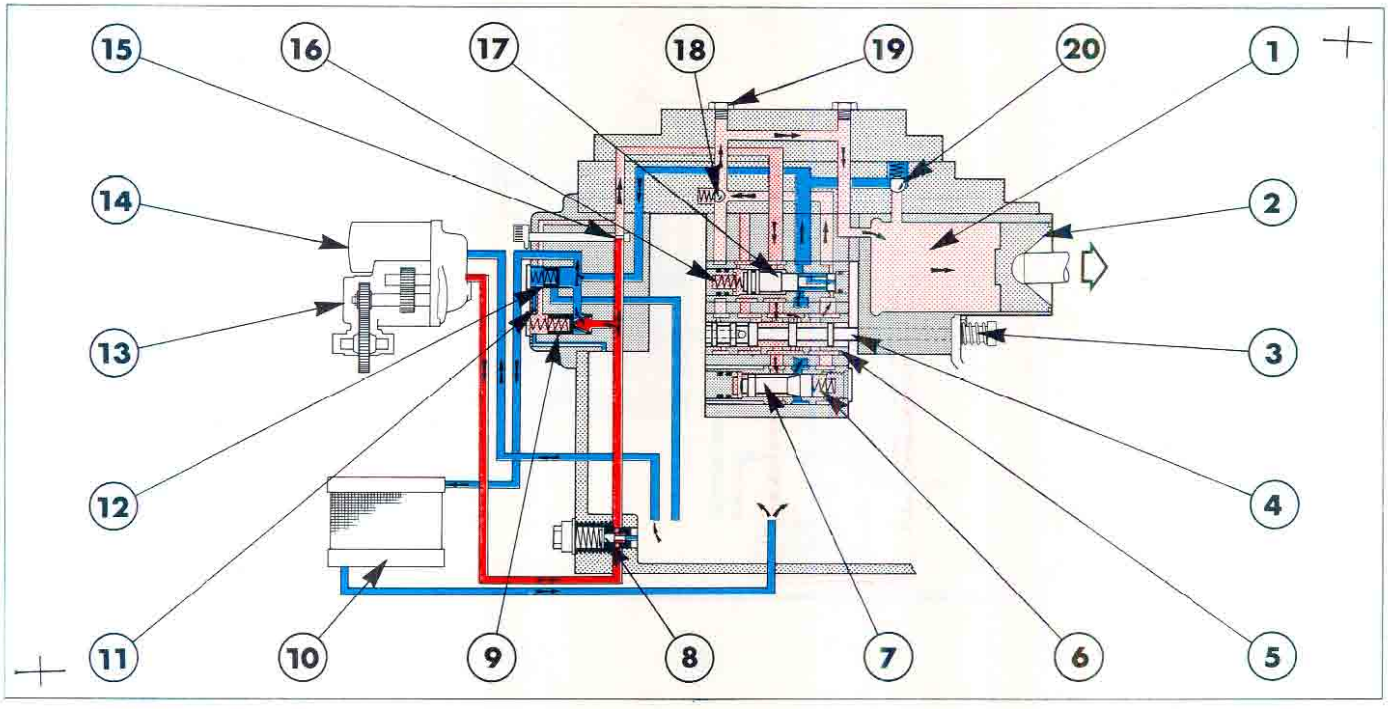

Figure 18
Oil Flow when Slow Raising

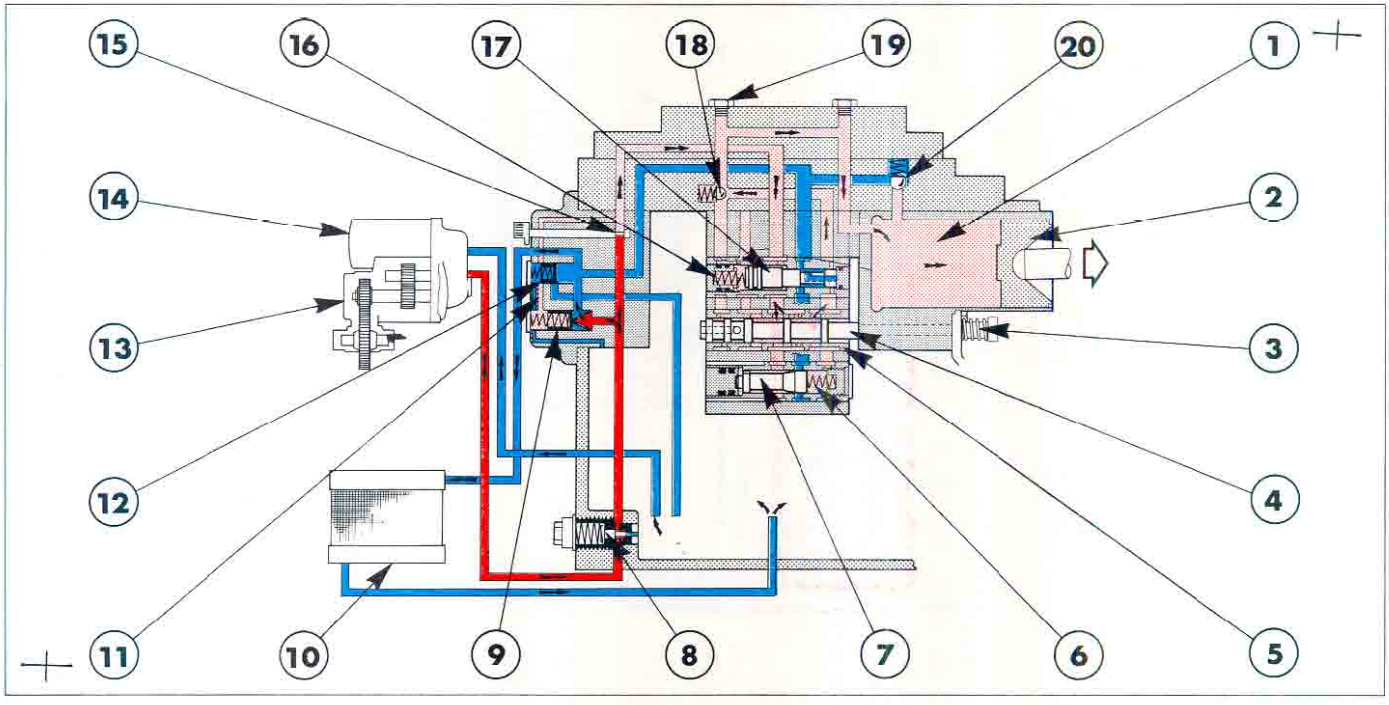

Figure 19
Oil Flow when Fast Raising

PUMP PRESSURE OIL

1. Lift Cylinder
2. Piston
3. Control Valve Return Spring
4. Control Valve
5. Control Valve Bushing
6. Feathering Valve Spring
7. Feathering Valve

REDUCED PUMP PRESSURE OIL

8. System Relief Valve
9. Flow Control Valve
10. Oil Cooler
11. Bleed Gallery
12. Cooler Valve
13. Hydraulic Pump
14. Micronic Intake Filter

RESERVOIR SUCTION AND EXHAUST OIL

15. Flow Control Valve Restrictor
16. Unload Valve Spring
17. Unload Valve
18. Check Valve
19. Auxiliary Services Feed
20. Lift Cylinder Safety Valve

With reference to Figure 20.

The oil passes through passages in the lift cover and lift cylinder assembly to the unload valve. Due to the position of the control valve, the oil on the left-hand side of the unload valve is allowed to escape to the reservoir via a hole drilled in the control valve. The supply oil entering the unload valve gallery 'C' forces the valve to the left.

The supply oil then continues to pass through and around the control valve bushing, which incorporates ports of increasing diameter machined in a helical formation, then on to the feathering valve. Due to the position of the control valve, the first ports in the control valve bushing are uncovered and allow oil to pass to the lift gallery 'E' and to the rear of the feathering valve.

The feathering valve movement depends upon the pressure differential between the force of the supply oil on the front face and the combined coil spring and reduced pressure oil on the rear face.

In the neutral position the lift gallery 'E' is connected to the exhaust gallery 'D' via a hole drilled in the unload valve, so the oil pressure at the rear of the feathering valve is only at the cooler valve pressure setting. Therefore, as supply oil passes to the front faces of the feathering valve, the pressure differential forces the valve to the right, thereby uncovering the port leading to the exhaust gallery 'D'.

The supply oil drops in pressure as it passes across this feathering valve restriction before returning, via the exhaust gallery 'D', to the cooler valve.

Hydraulic oil trapped in the lift cylinder and gallery 'A' is prevented from exhausting by the check valve and the position of the control valve front land.

Oil Flow when Lowering

With reference to Figure 21.

When the control valve is moved to the lowering position, which is to the right, the front land of the valve uncovers the lowering port at the base of gallery 'A' and oil from the lift cylinder is allowed to exhaust directly to the reservoir.

As in the neutral position, the oil on the left-hand side of the unload valve is allowed to escape to the reservoir, via the control valve, and the pump oil forces the unload valve to the left. The unload valve connects the lift gallery 'E' to the exhaust gallery 'D'.

Therefore, supply oil pressure on the front faces forces the feathering valve to the right, thereby fully uncovering the port leading to the exhaust gallery 'D'. The pump oil passes across the feathering valve restriction and returns via the exhaust gallery 'D' to the cooler valve.

 © FORD MOTOR COMPANY, 1975

Oil Flow when Slow Raising
With reference to Figure 22.

Partial movement of the control valve to the raise position, that is to the left, blocks off the lowering port at the base of gallery 'A' and allows supply oil to pass into gallery 'B' where it is directed to the front face of the unload valve. The combined force of the coil spring and oil pressure acting on the large frontal area overcomes the lesser force of the same oil pressure on the small rear face, so the valve moves to the right. This action prevents oil flowing from the lift gallery 'E' to the exhaust gallery 'D'.

Due to the position of the control valve, several ports in the control valve bushing are uncovered and supply oil not only passes to the front faces of the feathering valve but a restricted supply also flows to the lift gallery 'E' and the rear faces of the feathering valve. The pressure differential causes the feathering valve to move to the left a sufficient distance as to partially close the port leading to the exhaust gallery 'D'.

The oil pressure in the lift gallery 'E' forces the check valve ball off the seat and oil flows to the lift cylinder. Because a certain percentage of the supply oil is allowed to escape across the feathering valve restriction into the exhaust gallery 'D', the raise function is necessarily slow.

Oil Flow when Fast Raising
With reference to Figure 23.

Movement of the control valve to the fast raise position, that is fully to the left, uncovers all the ports in the control valve bushing. Due to the lesser restriction, the oil passing to the rear faces of the feathering valve is of sufficiently high pressure to ensure the valve moves fully to the left. This action completely closes the port leading to the exhaust gallery 'D', therefore all the supply oil passes into the lift gallery 'E' and is utilised to effect a fast raise function.

The feathering valve modulates the flow of hydraulic oil to the lift cylinder proportional to the size of the lift signal, therefore after the manual flow control valve has been adjusted for initial system setting the feathering valve will minimise the need for any further adjustment.

NOTE – Pump flow to hydraulic trailer brakes and remote cylinder control valves is regulated by the manual flow control valve only. Also, the flow to the trailer brakes and remote valves has priority over the supply to the lift cylinder.

The Auxiliary Services Control valve output is regulated by the flow control and feathering valves.

IMPORTANT – Where a high external hydraulic power requirement is expected, remote valves should be used instead of the Auxiliary Services Control valve in order to have the full power of the hydraulic system available.

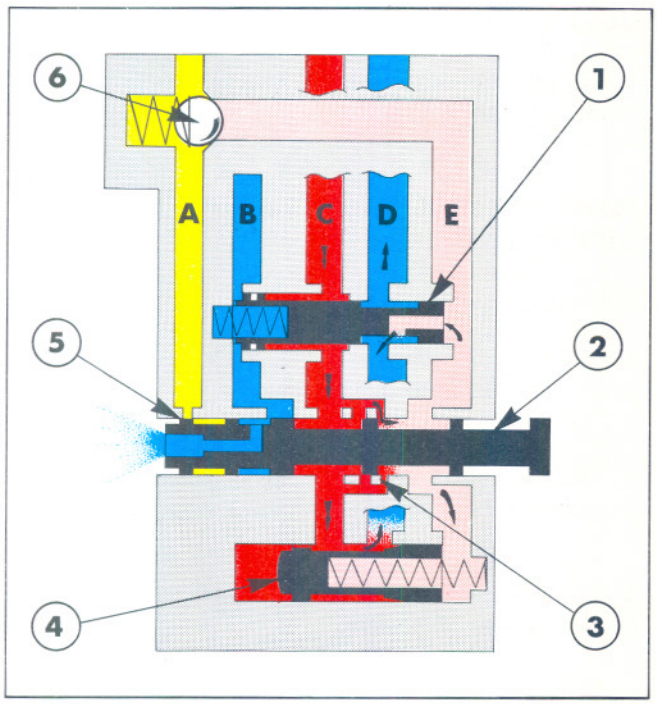

Figure 20
Oil Flow in Neutral

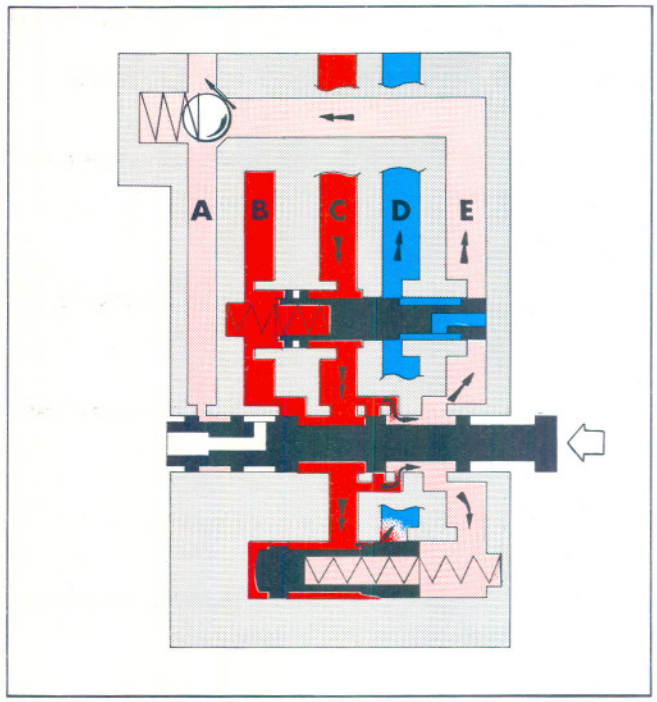

Figure 22
Oil Flow when Slow Raising

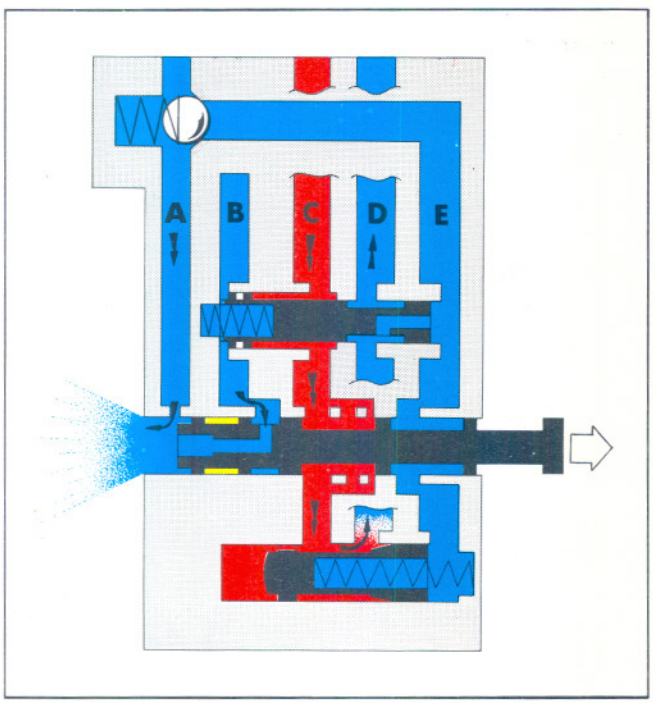

Figure 21
Oil Flow when Lowering

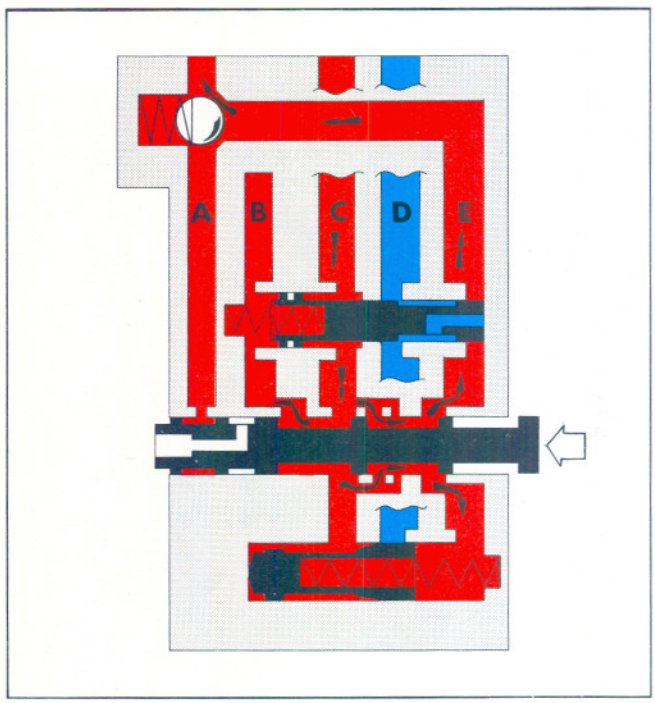

Figure 23
Oil Flow when Fast Raising

OIL FLOW IN LIFT CYLINDER VALVES

FULL FLOW OIL
REDUCED FLOW OIL
RESERVOIR SUCTION AND EXHAUST OIL
TRAPPED OIL

1. Unload Valve
2. Control Valve
3. Control Valve Bushing
4. Feathering Valve
5. Control Valve Front Land
6. Check Valve

 © FORD MOTOR COMPANY, 1975

2. ADJUSTMENTS

DRAFT AND POSITION CONTROL LINKAGE ADJUSTMENT

NOTE – Draft and Position Control linkage adjustments are made simultaneously.

With reference to Figure 24.

1. With the lift cover removed, place the Draft Control lever at the bottom of the quadrant.

2. Set the Position Control Lever 1.00 in (25.4 mm) from the bottom of the quadrant.

3. Place the lift arms in the full down position.

4. Withdraw the three bolts securing the front cover plate to the lift cylinder and remove the plate.

5. Slacken the adjustable stop locknut and adjust the eccentric to obtain 0.030 in (0.76 mm) from the end of the control valve to the front cover face of the lift cylinder, using Setting Gauge Tool No. SW3 or SW508 to check this dimension.

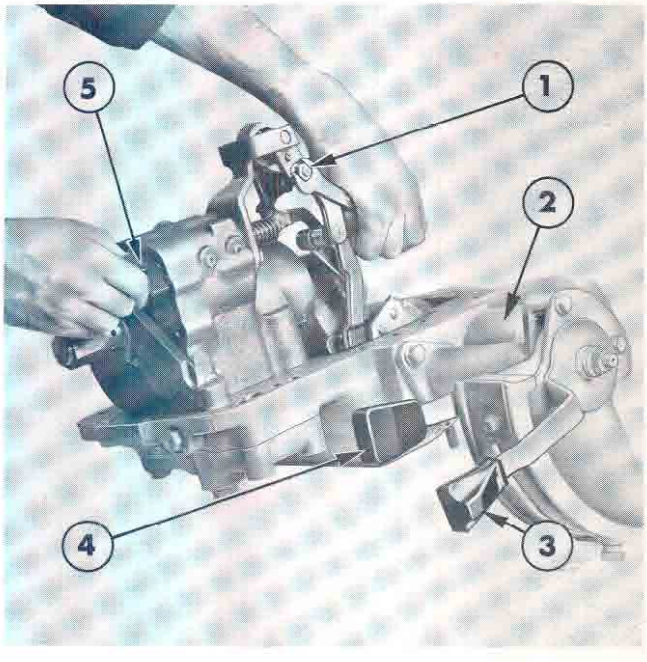

Figure 24
Draft and Position Control Linkage Adjustment

1. Eccentric Adjustable Stop
2. Lift Arms in Lowest Position
3. Position Control Lever 1.00 in (25.4 mm) from Bottom of Quadrant
4. Draft Control Lever at Bottom of Quadrant
5. Tool No. SW3 or SW508

6. Tighten the adjustable stop locknut to a torque of 23-30 ft lbf (33-41 Nm).

FLOW CONTROL VALVE CAM FOLLOWER ADJUSTMENT

With reference to Figure 25.

1. With the lift cover removed, place the Draft Control lever at the bottom of the quadrant.

2. Measure the distance between the bottom of the actuating cam and the lift cover face less gasket.

3. Rotate the flow control knob clockwise as far as possible to the slow flow(S) position.

4. Adjust the cam follower by adding or removing shims between the follower and the adjuster until dimension "A" from the top of the rear axle centre housing less gasket to the top of the follower is 0.000 to 0.010 in (0.000 to 0.254 mm) more than the distance measured in Step 2.

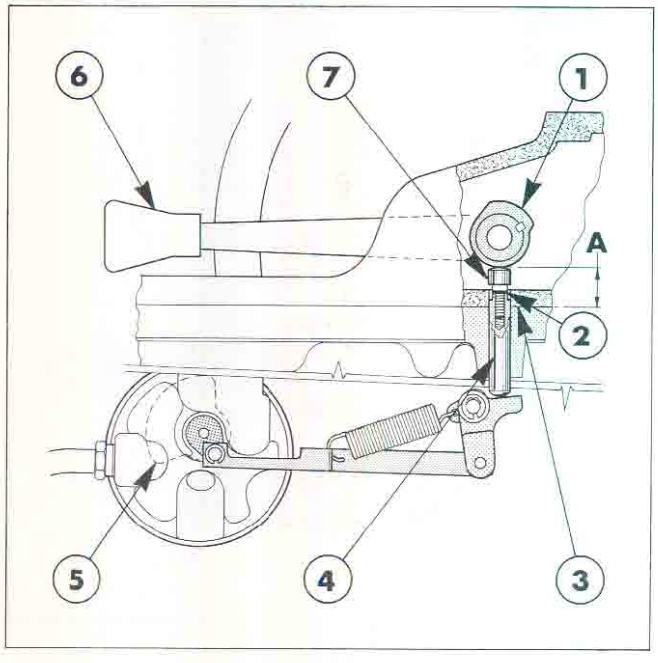

Figure 25
Flow Control Valve Override Linkage

1. Actuating Cam
2. Shims
3. Lift Cover Face
4. Adjuster
5. Flow Control Knob (Reference only)
6. Draft Control Lever
7. Follower

DRAFT CONTROL SELECTOR SHAFT ADJUSTMENT

With reference to Figure 26.

1. With the lift cover removed, place the Draft Control lever in the raise position.

2. Remove the two quadrant retaining bolts and lockwashers.

3. Add or remove spacers between the quadrant plate and the support as required to centralise the draft control selector shaft roller on the draft lever.

4. Replace and tighten the quadrant retaining bolts to a torque of 23-30 ft lbf (33-41 Nm).

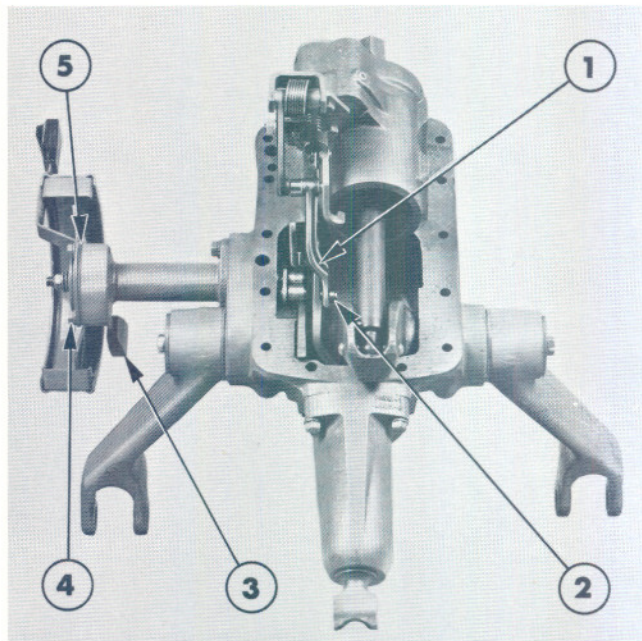

Figure 26
Draft Control Selector Shaft Linkage

1. Draft Lever
2. Draft Control Selector Shaft Roller
3. Draft Control Lever
4. Retaining Bolt
5. Spacers

3. OVERHAUL LIFT CYLINDER ASSEMBLY

A. REMOVAL

1. Remove the hydraulic lift cover as detailed in this Chapter.

2. Withdraw the three remaining bolts securing the accessory cover to the lift cover and remove the accessory cover.

3. Remove the snap ring from the end of the draft lever to actuating lever pivot pin, Figure 27.

4. Remove the four bolts securing the lift cylinder assembly to the lift cover. Move the lift arms to the raised position and remove the lift cylinder by carefully lifting off the locating dowels and moving sideways thereby enabling the draft lever to disengage from the pivot pin.

5. Place the lift cylinder assembly on a bench with the top face exposed.

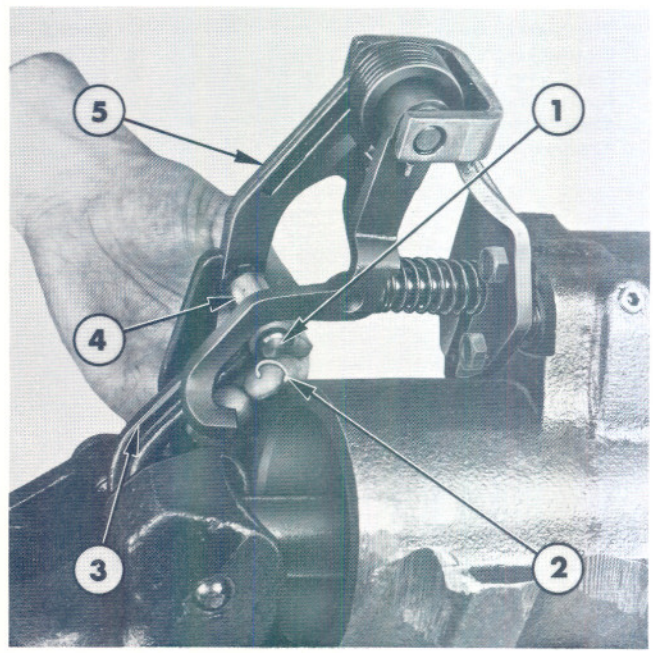

Figure 27
Removing Draft Lever to Actuating Lever Pivot Pin Snap Ring

1. Pivot Pin
2. Snap Ring
3. Draft Lever
4. Roller
5. Actuating Lever

 © FORD MOTOR COMPANY, 1975

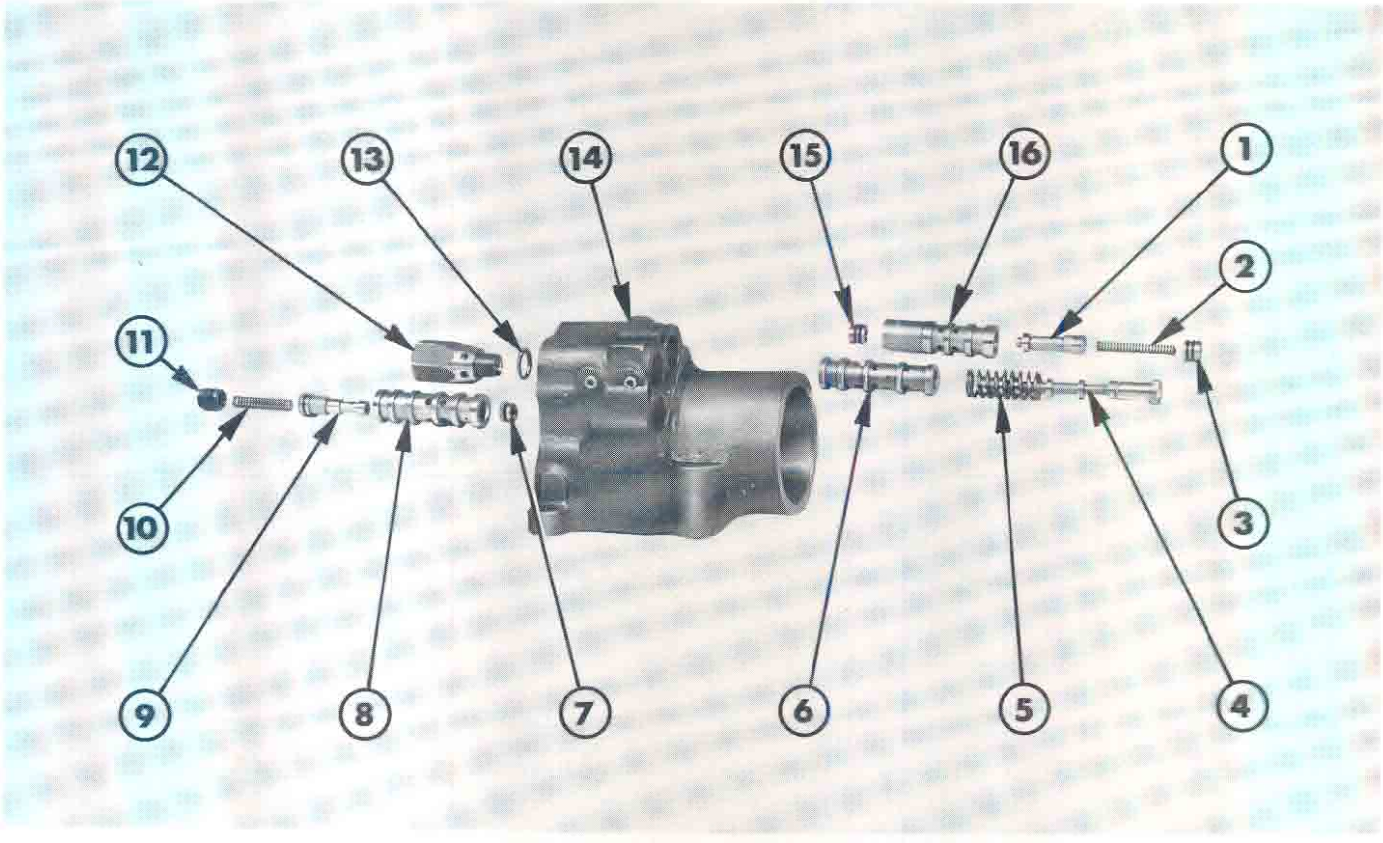

Figure 28
Lift Cylinder Assembly

1. Feathering Valve
2. Feathering Valve Spring
3. Feathering Valve Rear Plug
4. Control Valve
5. Control Valve Spring
6. Control Valve Bushing
7. Unload Valve Rear Plug
8. Unload Valve Bushing
9. Unload Valve
10. Unload Valve Spring
11. Unload Valve Front Plug
12. Lift Cylinder Safety Valve
13. Seal
14. Lift Cylinder Housing
15. Feathering Valve Front Plug
16. Feathering Valve Bushing

B. DISASSEMBLY

With reference to Figure 28.

1. Remove the lift cylinder safety valve and gasket.

NOTE – For Ford 4100 and 4600 models the lift cylinder safety valve is positioned in the end wall of the cylinder and can be removed without first removing the lift cylinder assembly.

2. Discard the five "O" rings fitted in the counterbores of the various oil passages.

3. Ensure that the bench is smooth and clean then turn the lift cylinder to rest on the top face. (Alternatively hold the assembly in a soft jawed vice.)

4. Withdraw the three bolts securing the front cover plate to the lift cylinder and remove the plate.

5. Withdraw the three bolts securing the bracket to the rear of the lift cylinder. Carefully remove the bracket together with the control valve, control valve spring, control valve lever, torsion spring and actuating lever assembly, Figure 29.

6. Remove the actuator pin snap ring, the actuator pin and the actuator. Then compress the control valve spring and carefully slide the control valve face off the bracket.

7. Insert a No. 6-32 UNC screw into the unload valve front plug and using a pair of pliers carefully withdraw the plug and spring.

Discard the two "O" rings fitted to the plug.

8. Insert a No. 6-32 UNC screw into the unload valve rear plug and using a pair of pliers carefully withdraw the plug. Discard the "O" ring fitted to the plug.

9. Remove the unload valve from the front end of the lift cylinder and discard the "O" ring fitted to the large end of the valve.

10. Insert a No. 6-32 UNC screw into the feathering valve front plug and using a pair of pliers carefully remove the plug. Discard the two "O" rings fitted to the plug.

11. Insert a No. 6-32 UNC screw into the feathering valve rear plug and using a pair of pliers carefully remove the plug and spring. Discard the two "O" rings fitted to the plug.

12. Remove the feathering valve from the lift cylinder.

13. Screw the short threaded end of Extension Tool No. T8510-1/b into the Lift Cylinder Bushing Remover and Replacer Tool No. T8510 and pass the Extension through the control valve bushing from the front end of the lift cylinder. Screw the Special Nut Tool No. T8510-1/h onto the rear end of the Extension until the taper on the Special Nut locates squarely in the rear end of the bushing, Figure 30.

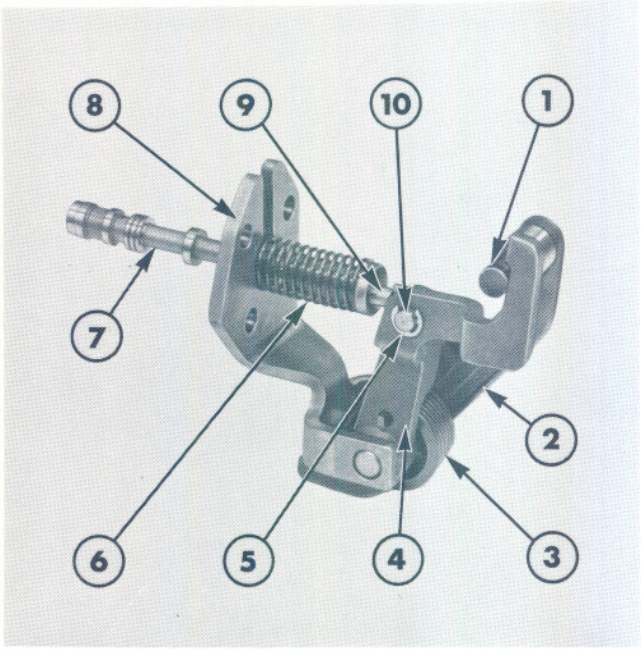

Figure 29
Control Valve and Actuating Linkage

1. Pivot Pin
2. Actuating Lever
3. Torsion Spring
4. Control Valve Lever
5. Snap Ring
6. Control Valve Spring
7. Control Valve
8. Bracket
9. Actuator
10. Actuator Pin

14. Steadily turn the tool handles and withdraw the bushing. Unscrew the Special Nut and remove the bushing from the Extension. Alternatively use Lift Cylinder Bushing Remover and Replacer Tool No. N-508-A to remove the control valve bushing.

15. Pass the Extension Tool No. T8510-1/b through the unload valve bushing from the front end. Screw the Special Nut Tool No. T8510-1/h onto the Extension until the taper on the Special Nut locates squarely in the rear end of the bushing, Figure 31.

NOTE – The unload valve bushing is of a one-piece design.

16. Steadily turn the tool handles and withdraw the bushing. Unscrew the Special Nut and remove the bushing from the Extension. Alternatively use Lift Cylinder Bushing Remover and Replacer Tool No. N-508-A to remove the unload valve bushing.

 © FORD MOTOR COMPANY, 1975

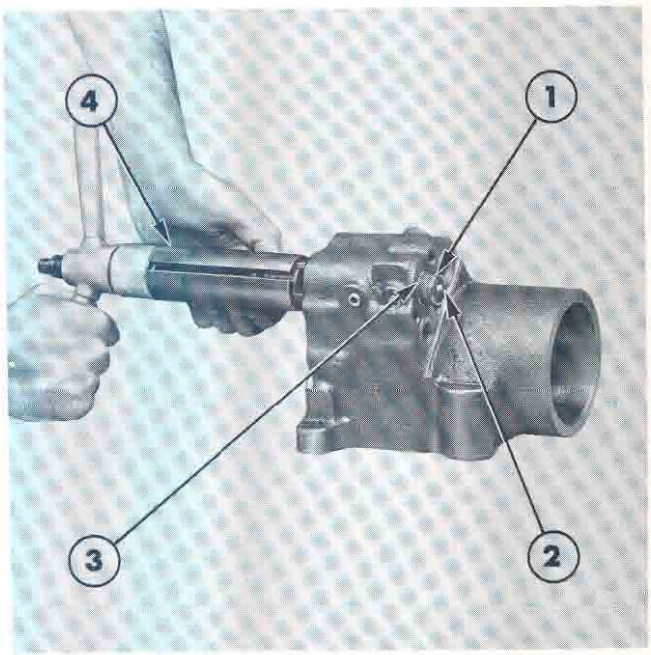

Figure 30
Removing Control Valve Bushing

1. Special Nut Tool No. T8510-1/h
2. Extension Tool No. T8510-1/b
3. Control Valve Bushing
4. Tool No. T8510

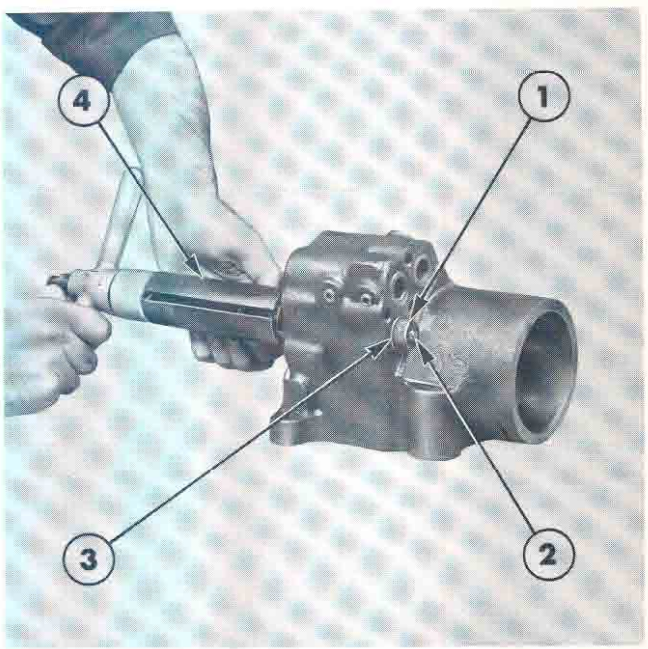

Figure 31
Removing Unload Valve Bushing

1. Special Nut Tool No. T8510-1/h
2. Extension Tool No. T8510-1/b
3. Unload Valve Bushing
4. Tool No. T8510

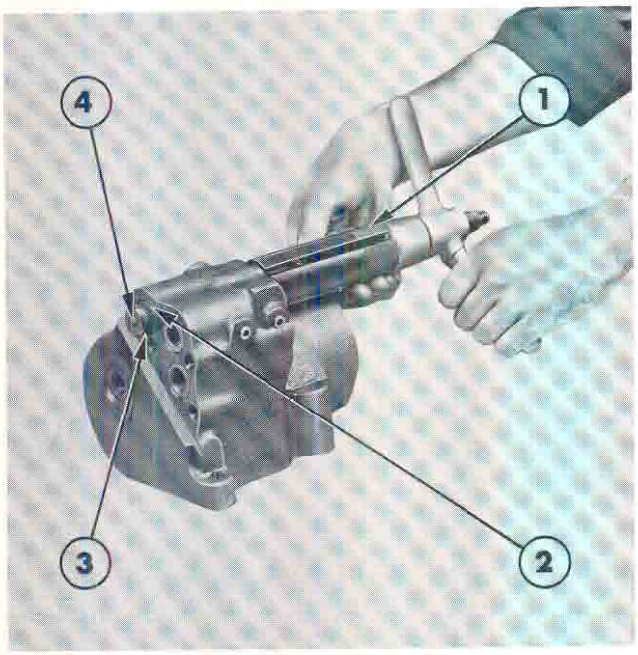

Figure 32
Removing Feathering Valve Bushing

1. Tool No. T8510
2. Feathering Valve Bushing
3. Special Nut Tool No. T8510-1/h
4. Extension Tool No. T8510-1/b

17. Pass the Extension Tool No. T8510-1/b through the feathering valve bushing from the *rear* end. Screw the Special Nut Tool No. T8510-1/h onto the Extension until the taper on the Special Nut locates squarely in the front end of the bushing, Figure 32.

18. Steadily turn the tool handles and withdraw the bushing. Unscrew the Special Nut and remove the bushing from the Extension. Alternatively use Lift Cylinder Bushing Remover and Replacer Tool No. N-508-A to remove the feathering valve bushing from the *rear* end.

19. Withdraw the lift piston and discard the piston seal and ring. A new seal and ring must be installed before re-assembly.

C. INSPECTION AND REPAIR

1. Wash all parts in a suitable solvent and dry with a clean lint free cloth or compressed air.

2. Examine the valves, bushings and plugs for wear, burrs or scratches. Any minor burrs or scratches may be removed with a fine abrasive; ensure such parts are thoroughly washed before reassembly.

Ensure the bushing location bores in the lift cylinder housing are not scored. Any heavy scoring of the bores will necessitate installation of a new lift cylinder assembly.

3. Ensure the valve springs are not broken or damaged.

4. Check all bushing ports and lift cylinder housing oil passages are free from obstruction.

5. Ensure all valves move freely in their respective bushings.

6. Renew all "O" rings and seals.

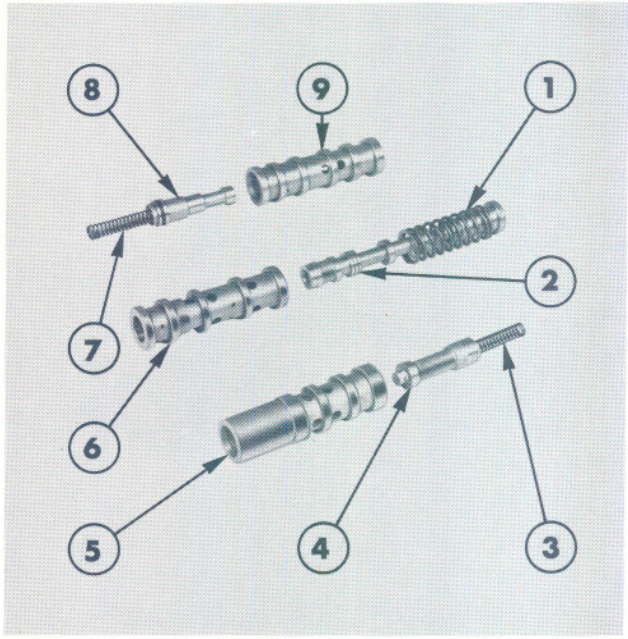

Figure 33
Feathering, Control and Unload Valves and Bushings

1. Control Valve Spring
2. Control Valve
3. Feathering Valve Spring
4. Feathering Valve
5. Feathering Valve Bushing
6. Control Valve Bushing
7. Unload Valve Spring
8. Unload Valve
9. Unload Valve Bushing

D. ASSEMBLY

The installation procedure is identical for each of the following components:

- Feathering Valve Bushing
- Unload Valve Bushing
- Control Valve Bushing

NOTE – The relative position of the valves and bushings are shown in Figure 33.

1. Observe the colour spot on the outside of the lift cylinder housing adjacent to the front end of the relevant valve chamber and select the requisite valve bushing with the corresponding colour markings. (For bushing sizes see "Specifications – Chapter 11").

2. Insert the Guide and Stop Adaptor Tool No. T8510-1/k (Spigot end first) into the front of the respective bushing locating bore in the lift cylinder housing. Screw the short threaded end of Extension Tool No. T8510-1/a into the Lift Cylinder Bushing Remover and Replacer Tool No. T8510 and pass the Extension through the Stop Adaptor from the front end of the lift cylinder. Locate the valve bushing over the Extension and screw the Special Nut Tool No. T8510-1/h onto the rear end of the Extension until the taper on the Special Nut locates squarely in the rear end of the bushing, Figures 34, 35 and 36.

3. Lubricate the bushing and steadily turn the tool handles to pull the bushing into the bore until the front face of the bushing meets the inner face of the Stop Adaptor.

4. Slacken the tool and reverse the Stop Adaptor so that the spigot end locates in the body of the tool and the larger face is presented to the front face of the housing. Retighten the tool and draw the bushing fully into the bore to seat against the Stop Adaptor so that the front end of the bushing is flush with the front face of the housing.

5. Release the Special Nut and withdraw the tool, Stop Adaptor, and Extension from the bushing.

 © FORD MOTOR COMPANY, 1975

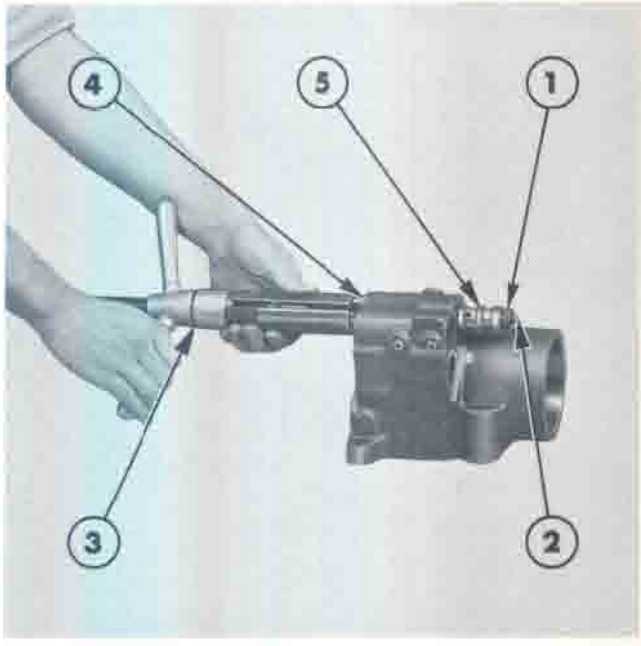

Figure 34
Installing Feathering Valve Bushing

1. Special Nut Tool No. T8510-1/h
2. Extension Tool No. T8510-1/a
3. Tool No. T8510
4. Stop Adaptor Tool No. T8510-1/k
5. Feathering Valve Bushing

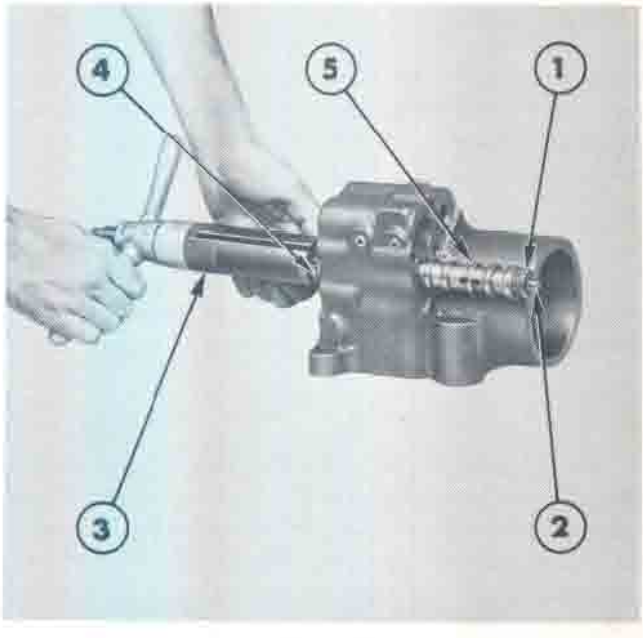

Figure 35
Installing Unload Valve Bushing

1. Special Nut Tool No. T8510-1/h
2. Extension Tool No. T8510-1/a
3. Tool No. T8510
4. Stop Adaptor Tool No. T8510-1/k
5. Unload Valve Bushing

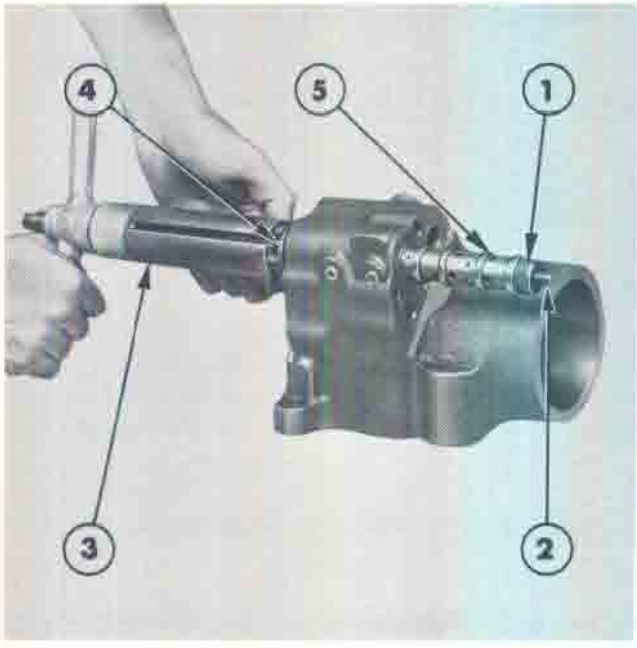

Figure 36
Installing Control Valve Bushing

1. Special Nut Tool No. T8510-1/h
2. Extension Tool No. T8510-1/a
3. Tool No. T8510
4. Stop Adaptor Tool No. T8510-1/k
5. Control Valve Bushing

Alternatively use Lift Cylinder Bushing Remover and Replacer Tool No. N-508-A to install each of the feathering, unload and control valve bushings, from the *rear* end.

6. Lubricate and insert the feathering valve into the corresponding bushing in the lift cylinder housing. Install the valve from the front with the multiple lands facing towards the rear.

7. Install two new "O" rings onto a feathering valve plug and insert the plug, with the threaded centre hole facing outwards, into the front of the feathering valve bushing.

NOTE – The two feathering valve plugs are identical and are not colour coded.

Press the plug into the bushing until the outer face is flush with the front face of the lift cylinder housing.

8. Insert the feathering valve spring into the rear end of the feathering valve.

NOTE – The feathering valve spring is longer than the unload valve spring.

9. Install two new "O" rings onto the second feathering valve plug and insert the plug, with the threaded centre hole facing outwards, into the rear of the feathering valve bushing. Press the plug into the bushing until the outer face is flush with the rear face of the lift cylinder housing.

10. Install a new "O" ring at the large end of the unload valve then lubricate the valve and "O" ring and insert into the corresponding bushing in the lift cylinder housing. Install the valve from the front with the small end facing towards the rear.

11. Install a new 'O" ring onto the unload valve rear plug and insert the plug, with the threaded centre hole facing outwards, into the rear end of the unload valve bushing.

NOTE – The unload valve rear plug is smaller than the front plug and the plugs are not colour coded.

Press the plug into the bushing until the outer face is flush with the rear face of the lift cylinder housing.

12. Insert the unload valve spring into the front end of the unload valve.

13. Install two new "O" rings onto the unload valve front plug and insert the plug, with the threaded centre hole facing outwards, into the front of the unload valve bushing. Press the plug into the bushing until the outer face is flush with the front face of the lift cylinder housing.

14. Select the largest control valve which regardless of colour will operate along the full length of the bushing without binding when turned through 360°.

NOTE – The control valve is colour coded only as a guide for matching the valve to the bushing.

5. Install the control valve spring on the control valve and, whilst compressing the spring, position the control valve in the actuating linkage bracket.

16. Carefully push the control valve into the bushing and secure the bracket with the three bolts.

17. Install the front cover plate and retain with the three bolts.

18. Ensure the two ring dowels are installed in the diagonally opposite counterbored holes in the top face of the cylinder.

19. Install a new ring and seal on the lift piston.

NOTE – The "O" ring seal should be pre-soaked in oil for about 5 minutes before installation on the piston. The "O" ring is to be nearest to the closed end and the back-up seal nearest the open end of the piston.

20. Lubricate the lift piston and install in the lift cylinder.

21. Install the lift cylinder safety valve with a new gasket between the valve and the cylinder.

E. INSTALLATION

1. Ensure the top surface of the cylinder and the mating face on the lift cover are clean and free from scores and burrs.

2. Install new "O" rings in the counterbores of the oil passages and place the forward end of the lift piston connecting rod into the piston. Locate the draft lever on the pivot pin by lateral movement of the lift cylinder. Position the lift cylinder on the locating dowels and reinstall the snap ring on the actuating lever pivot pin. Tighten the retaining bolts to the correct torque. (See "Specifications" – Chapter 11.)

3. Ensure the actuator is located within the control valve sleeve and carry out the Draft and Position Control Linkage Adjustment as described in this Chapter.

4. Install the accessory cover with a new set of "O" rings, assemble the lift cover assembly to the tractor and install the driver's seat.

4. OVERHAUL LIFT COVER ASSEMBLY

A. REMOVAL

1. Remove the hydraulic lift cover assembly from the tractor as detailed in Section 4 – Chapter 1.

B. DISASSEMBLY

1. Secure the lift cover assembly in a vice with the Lifting Bracket Tool No. T.8518 attached to the lift cover and secured in the jaws.

2. Remove the check valve plug from the lift cover.

3. Using a pair of long nosed pliers, remove the check valve spring housing, spring and ball from the lift cover. Remove and discard the "O" rings, Figure 37.

4. Remove the check valve seat as detailed in Section 4 – Chapter 1.

5. Remove the accessory cover from the lift cover by removing the remaining three bolts.

6. Remove the snap ring from the end of the draft lever to actuating lever pivot pin, Figure 38.

7. Remove the four bolts securing the lift cylinder assembly to the lift cover. Move the lift arms to the raised position and remove the lift cylinder by carefully lifting and moving sideways thereby enabling the draft lever to disengage from the pivot pin.

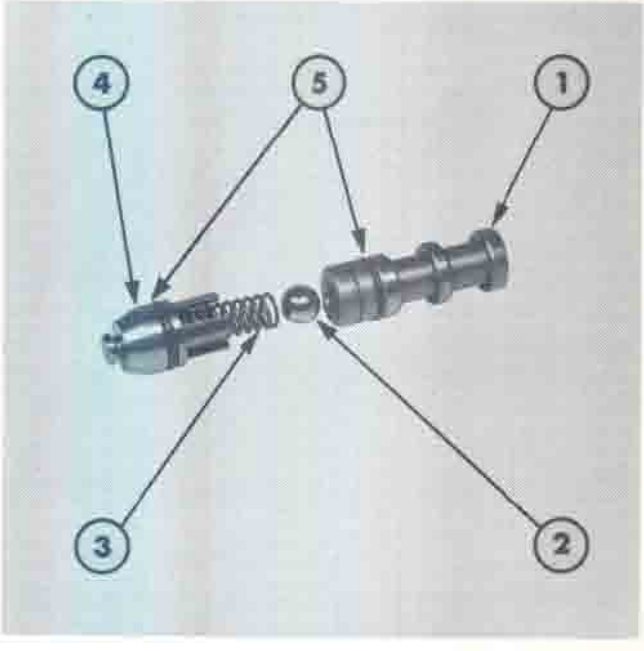

Figure 37
Check Valve Assembly
1. Check Valve Seat
2. Ball
3. Spring
4. Check Valve Spring Housing
5. 'O' Rings

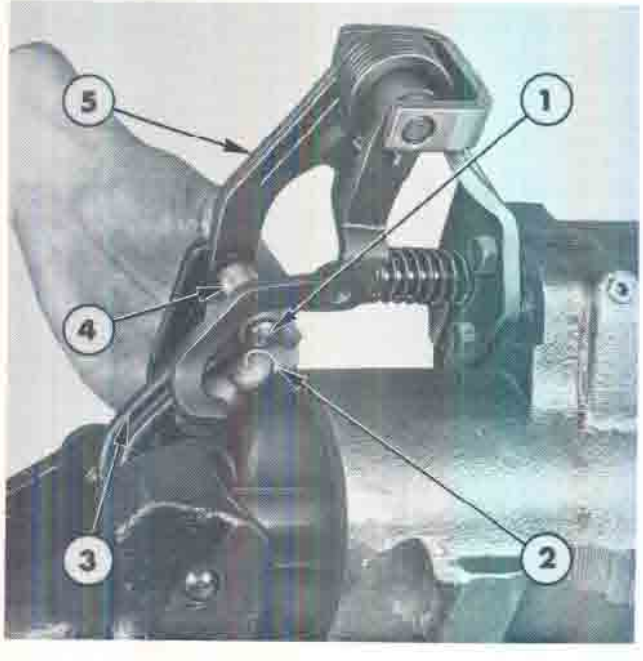

Figure 38
Removing Draft Lever to Actuating Lever Pivot Pin Snap Ring
1. Pivot Pin
2. Snap Ring
3. Draft Lever
4. Roller
5. Actuating Lever

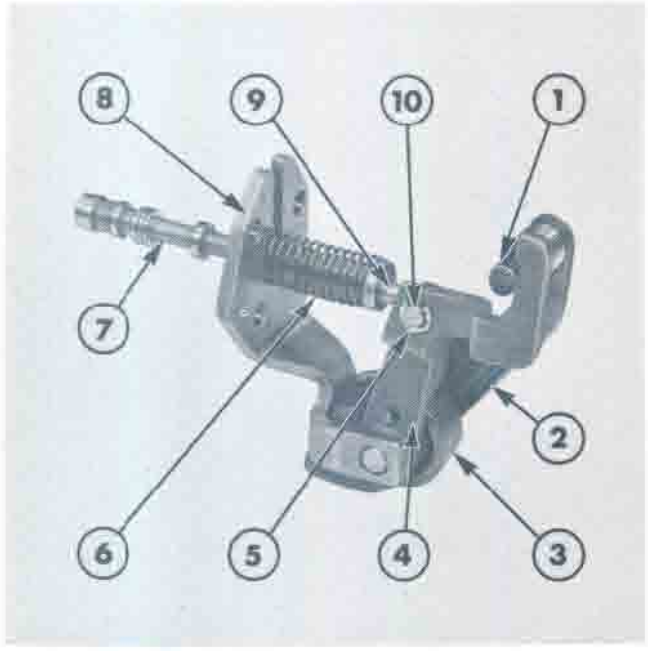

Figure 39
Control Valve and Actuating Linkage

1. Pivot Pin
2. Actuating Lever
3. Torsion Spring
4. Control Valve Lever
5. Snap Ring
6. Control Valve Spring
7. Control Valve
8. Bracket
9. Actuator
10. Actuator Pin

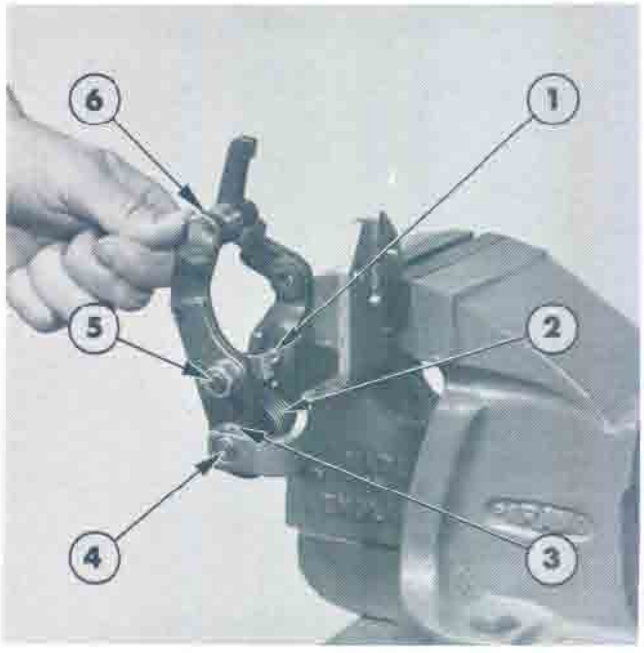

Figure 40
Removing the Adjustable Stop Eccentric

1. Eccentric
2. Torsion Spring
3. Snap Rings
4. Pivot Pin
5. Adjustable Stop Nut
6. Actuating Lever

8. Withdraw the three bolts securing the bracket to the rear of the lift cylinder. Carefully remove the bracket together with the control valve, control valve spring, control valve lever, torsion spring and actuating lever, Figure 39.

9. Remove the actuator pin snap ring, the actuator pin and the actuator. Then compress the control valve spring and carefully slide the control valve face off the bracket.

10. Mount the actuating linkage in a vice as shown in Figure 40.

11. Remove the adjustable stop nut and lockwasher and, whilst applying pressure to the actuating lever, withdraw the eccentric. Relax the pressure on the actuating lever and allow the torsion spring to unwind.

12. Remove the snap rings between the levers and the bracket.

13. Extract the lever pivot pin from the bracket then remove and separate the two levers and the torsion spring.

14. Unscrew the yoke at the rear of the draft control main spring.

Ford 2600: Remove the draft control main spring and the three bolts securing the draft control spring seat support to the rear of the lift cover. Withdraw the seat, seat support, felt ring and plunger locking plate.

Ford 3600, 4100 and 4600: Remove the three bolts securing the draft control main spring housing. Slide the housing, draft control main spring, spring seat and shims over the draft control main spring plunger.

 © FORD MOTOR COMPANY, 1975

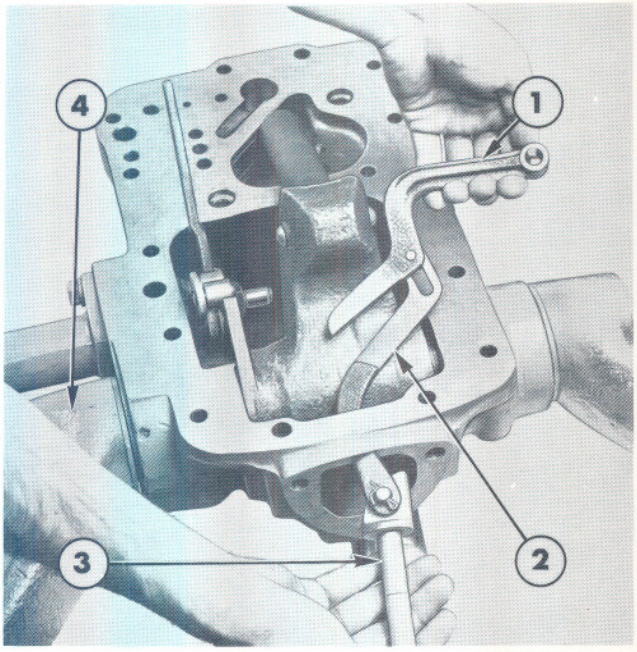

Figure 41
Removing Draft Control Plunger

1. Draft Lever
2. Draft Control Link
3. Draft Control Plunger
4. Lift Arms in Lower Position

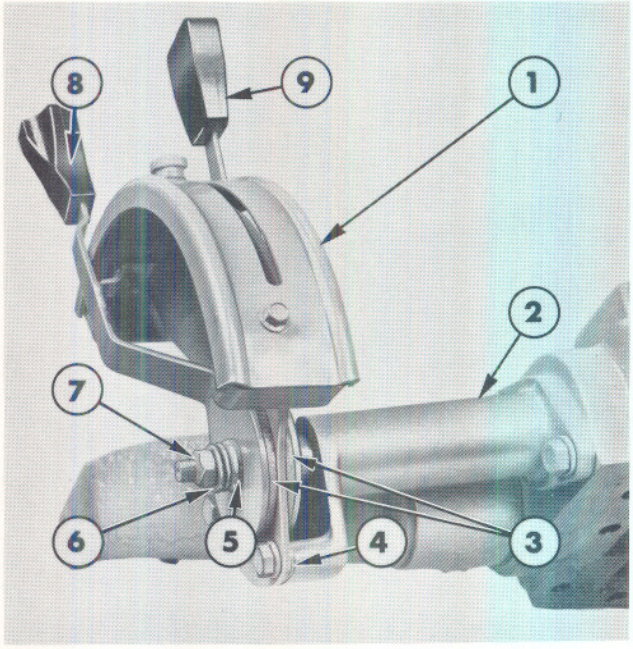

Figure 42
Control Levers and Quadrant Assembly

1. Quadrant
2. Support
3. Friction Discs
4. Spacer(s)
5. Cup Washer
6. Spring
7. Retaining Nut
8. Position Control Lever
9. Draft Control Lever

15. Place the lift arms in the lower position and pull the draft control plunger, draft control link and draft lever assembly through the housing, Figure 41.

16. Straighten the lockwasher tab and remove the bolt and flat washer retaining each lift arm to the lift cross-shaft.

17. Slide both arms from the lift cross-shaft.

Ford 2600 and 3600:

(*a*) Remove the lift cross-shaft from the left hand side of the lift cover. Slide the two bushings and "O" ring off the left hand end of the shaft. Discard the "O" ring.

(*b*) Remove the ram arm and the thrust washer positioned at the right hand side of the ram arm.

(*c*) Remove the two bushings and "O" ring from the cross-shaft locating bore in the right hand side of the lift cover. Discard the "O" ring.

Ford 4100 and 4600: Remove the nylon thrust washers then extract and discard the seals positioned within the outer ends of the cross-shaft bushing locating bores.

18. Remove the position control lever retaining nut, spring, cup washer, position control lever and friction disc, Figure 42.

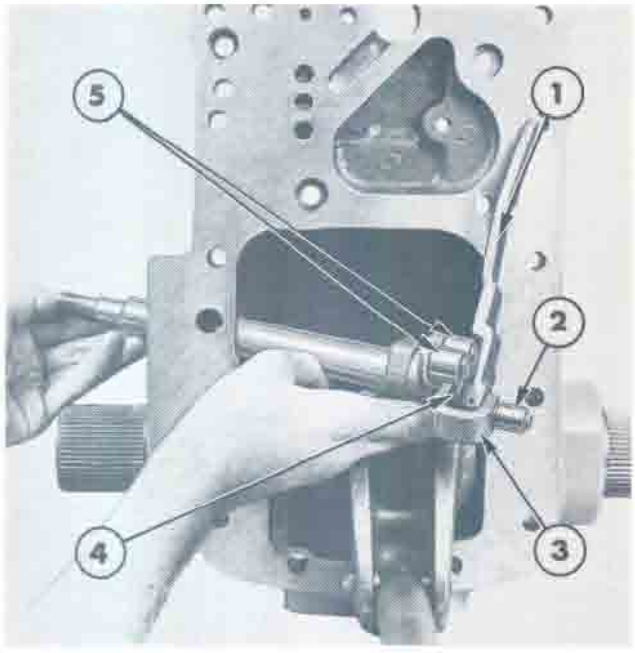

Figure 43
Removing and Installing Control Lever Shafts and Rollers

1. Position Lever
2. Draft Control Roller
3. Draft Control Shaft
4. Position Control Shaft
5. Position Control Rollers

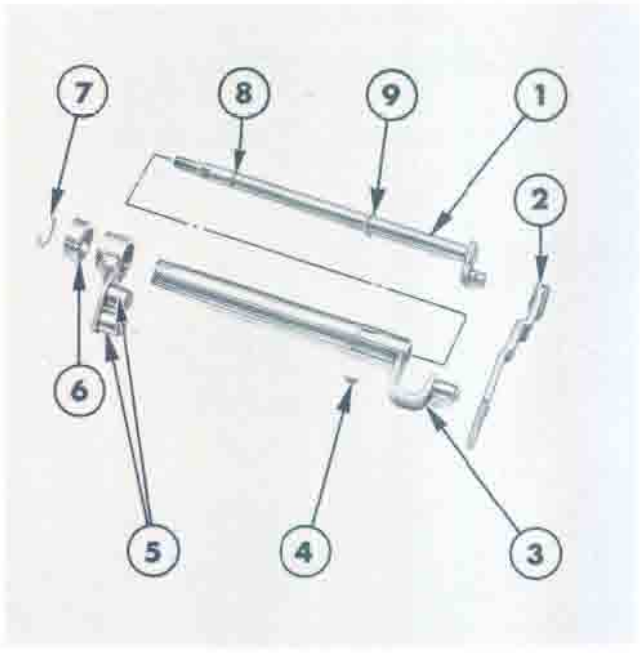

Figure 44
Control Lever Shafts and Rollers

1. Position Control Lever Shaft
2. Position Lever
3. Draft Control Lever Shaft
4. Shaft Key
5. Position Control Rollers
6. Cam
7. Snap Ring
8. 'O' Ring
9. Washer

19. Withdraw the two bolts securing the quadrant to the support and remove the quadrant, friction disc, draft control lever and quadrant to support spacer(s).

20. Remove the two bolts securing the support to the lift cover and withdraw the support over the control lever shafts. Discard the support gasket.

21. Withdraw the control lever shafts and rollers from the centre of the lift cover, Figure 43.

22. Separate the shafts then remove and discard the "O" ring from the position control lever shaft.

23. Remove the snap ring from the draft control lever shaft and remove the cam, the shaft key and the position control rollers, Figure 44.

Ford 4100 and 4600:

NOTE – The Ford 4100 and 4600 models have single cross-shaft bushes pressed into each of the lift cross shaft locating bores. The cross-shaft carries a sleeve, adjacent to the left hand end of the centre splines, which is used to effect removal of the bushings.

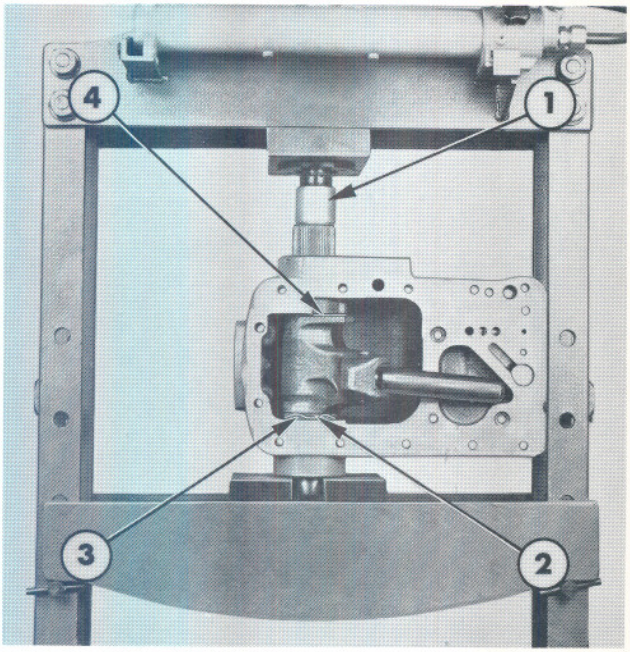

Figure 45
Removing Cross Shaft Left-hand Bushing – Ford 4100 and 4600

1. Press
2. Sleeve
3. Spring Washer
4. Thrust Washer

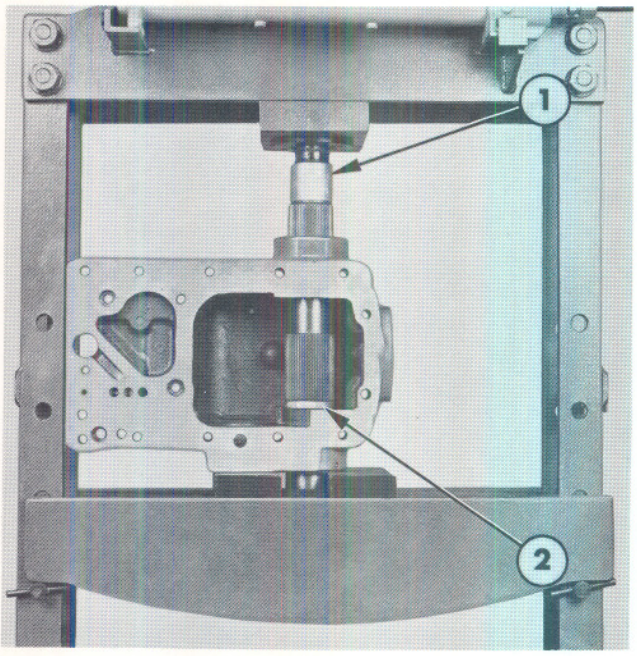

Figure 46
Removing Cross Shaft Right-hand Bushing – Ford 4100 and 4600

1. Press
2. Sleeve

(*a*) Locate the lift cover in a press as shown in Figure 45.

(*b*) Press the cross-shaft through the housing until the sleeve has ejected the left hand bushing. Take care to ensure the cross-shaft does not drop. Release the press.

(*c*) Withdraw the cross shaft then remove the rocker arm, spring and thrust washer from the lift cover.

(*d*) Locate the lift cover in the press as shown in Figure 46.

(*e*) Ensure the sleeve remains located adjacent to the squared shoulders at the left hand end of the cross-shaft centre splines then press the cross-shaft through the housing until the sleeve has ejected the right hand bushing.

Take care to ensure the cross-shaft does not drop. Release the press.

C. INSPECTION AND REPAIR

1. Wash all parts in a suitable solvent and dry with a clean lint free cloth or compressed air.

2. Examine linkage components for burrs, wear or damage. Any minor burrs should be removed with a fine abrasive; ensure such parts are thoroughly washed before re-assembly.

3. Ensure the springs and spring washer are not chipped, damaged or broken.

4. Confirm the draft lever pivot slides easily in the slotted draft control link.

5. Ensure the position control rollers swing freely from the shaft.

6. Check all rollers are free to revolve.

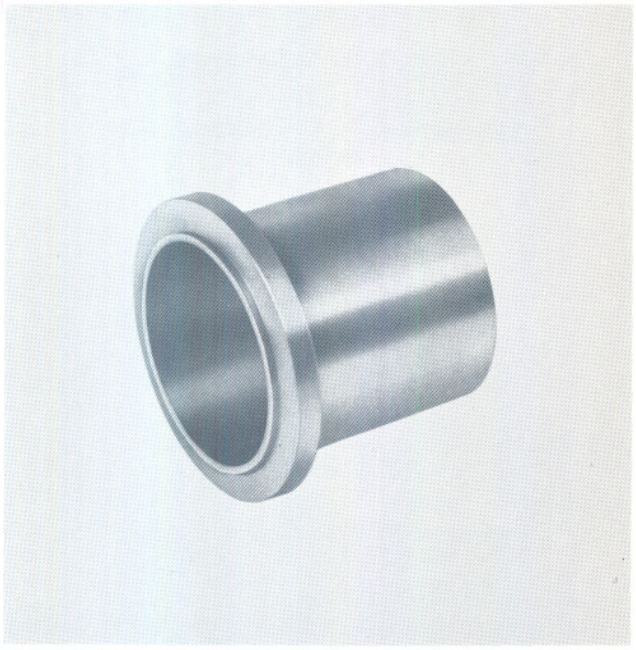

Figure 47
Bushing Locator Tool No. SW 27

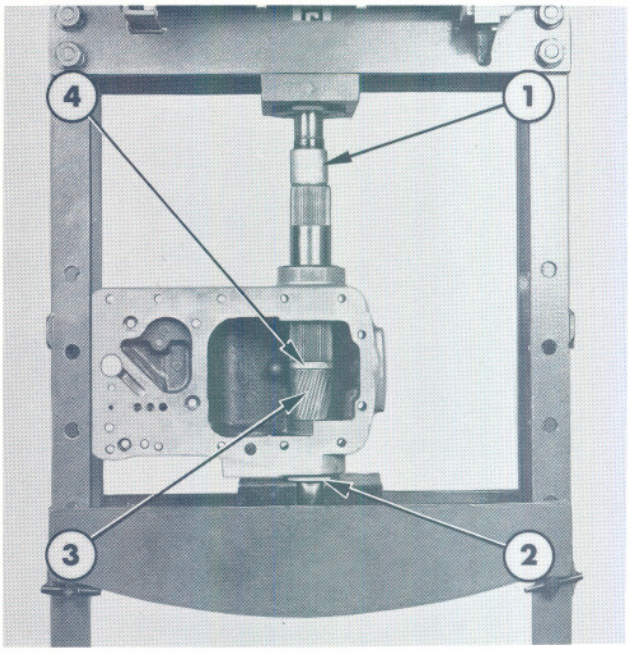

Figure 48
Installing Cross Shaft Right-hand Bushing – Ford 4100 and 4600

1. Press
2. Locator Tool No. SW 27
3. Bushing
4. Sleeve

7. Check all other components for freedom of movement.

8. Renew all "O" rings and seals.

9. Examine the check valve components and ensure the ball moves freely in the check valve housing.

IMPORTANT – Ensure the check valve seat is of the correct type and does not incorporate any radial holes between the lands.

D. ASSEMBLY

Assembly of the lift cover components follows the disassembly procedure in reverse except for the Ford 4100 and 4600 lift cross-shaft bushings which should be installed as follows:

Ford 4100 and 4600:

NOTE – To facilitate installation of the lift cross-shaft bushings for the Ford 4100 and 4600 models it will be necessary to use Bushing Locator Tool No. SW 27 or 6209, Figure 47.

(*a*) Locate the lift cover in the press as shown in Figure 48, with the locator tool positioned in the right hand bushing bore.

(*b*) Ensure the sleeve remains located adjacent to the squared shoulders at the left hand end of the cross-shaft centre splines then press the cross-shaft through the housing until the sleeve has forced the bushing into the bore and against the locator.

(*c*) Release the press, withdraw the cross-shaft and remove the locator tool.

(*d*) Remove the sleeve from the cross-shaft.

(*e*) Position the ram arm, spring washer and thrust washer in the top cover and install the lift cross-shaft with the chamfer at the right hand end of the centre splines entering first.

(*f*) Pass the sleeve down the shaft and centralise the spring washer to enable the sleeve to drop through into the ram arm casting.

(*g*) Place the bushing over the left hand end of the cross-shaft and, using a block of wood, press the bushing into the locating bore until the wood abuts the end of the cross-shaft, Figure 49.
Release the press and remove the block of wood.

 © FORD MOTOR COMPANY, 1975

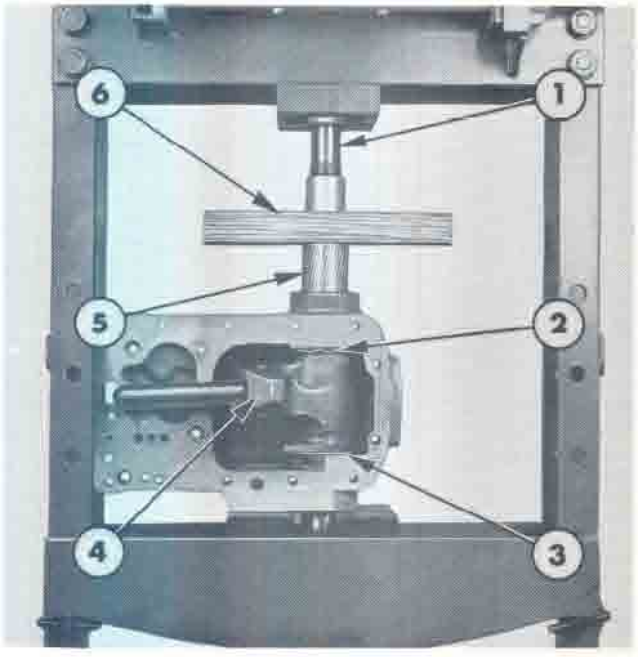

Figure 49
Installing Cross Shaft Left-hand Bushing – Ford 4100 and 4600

1. Press
2. Spring Washer
3. Thrust Washer
4. Ram Arm
5. Bushing
6. Block of Wood

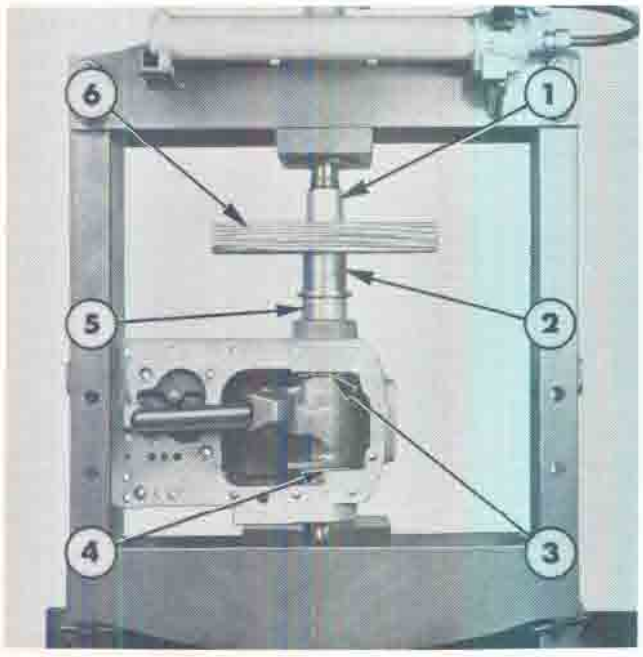

Figure 50
Location of Cross Shaft Left-hand Bushing – Ford 4100 and 4600

1. Press
2. Locator Tool No. SW 27
3. Spring Washer
4. Thrust Washer
5. Bushing
6. Block of Wood

(*h*) Push the right hand end of the cross-shaft upwards and place the locator tool over the projecting left hand end of the cross-shaft and against the bushing.

(*i*) Using the block of wood, press the bushing into the locating bore until the locator tool abuts the top cover, Figure 50.

IMPORTANT – Ensure the spring washer is centralised over the bushing.
Release the press and remove the block of wood and locator tool.

When assembling the lift cover components observe the following requirements:

- Renew all "O" rings, seals and gaskets.
- Ensure the master splines in the ram arm and lift arms are aligned with the corresponding splines on the lift cross-shaft.
- Ensure the check valve seat is of the correct type.
- After installing the retaining washer, lockwasher and bolt to each end of the lift cross-shaft, tighten one bolt fully then loosen one turn. Tighten the second bolt sufficiently to eliminate end float of the cross-shaft without binding then secure the tab locks.
- On assembly lubricate the spaces between the position control lever shaft, draft control lever shaft and the shaft support.

  IMPORTANT – Ensure grease does not contaminate the friction discs.

- After assembly adjust the position control lever retaining nut to maintain a pull of 10-12 lbf (4.5-5.4 Kg) at the handle of the draft control lever when the lever is moved through an arc of 4-5 in (100-125 mm) around the quadrant periphery as measured from the bottom stop.

- Carry out the following adjustments as described in this Chapter:

  (*i*) Draft and Position Control
  (*ii*) Flow Control Valve Cam Follower
  (*ii*) Draft Control Selector Shaft

E. INSTALLATION

1. Install the hydraulic lift cover assembly onto the tractor as detailed in Section 4 – Chapter 1.

5. OVERHAUL FLOW CONTROL VALVE PLATE AND LINKAGE

Repairs which necessitate removal of the flow control valve plate can only be effected after the lift cover has been removed.

To remove the oil cooler valve on a Ford 2600 and 3600 Model, it will first be necessary to remove the flow control valve plate.

NOTE – The standard Ford 2600 model with an engine mounted piston type pump does not feature a flow control valve.

A. REMOVAL

1. Drain the hydraulic oil from the rear axle centre housing.

2. Remove the lift cover assembly.

3. Remove the pressure relief valve from the bottom right hand side of the rear axle centre housing.

NOTE – For the Ford 4100 and 4600 models, the pressure relief valve is situated in the transmission mounted hydraulic pump housing and will not require removal.

4. Slacken the four flow control valve plate retaining bolts, Figure 51.

Ford 2600 and 3600:

Disconnect the oil cooler feed tube from the flow control valve plate.

5. Withdraw the return feed pipe from the centre housing top face.

NOTE – For the standard Ford 3600 model with an engine mounted piston type pump, the return feed pipe is replaced by a return filter pipe which does not require removal, see Figure 52.

6. Disconnect the override link spring from the override link.

7. Extract the flow control override adjuster and cam follower assembly from the centre housing top face.

8. Disconnect the flow control override link from the restrictor by removing the snap ring.

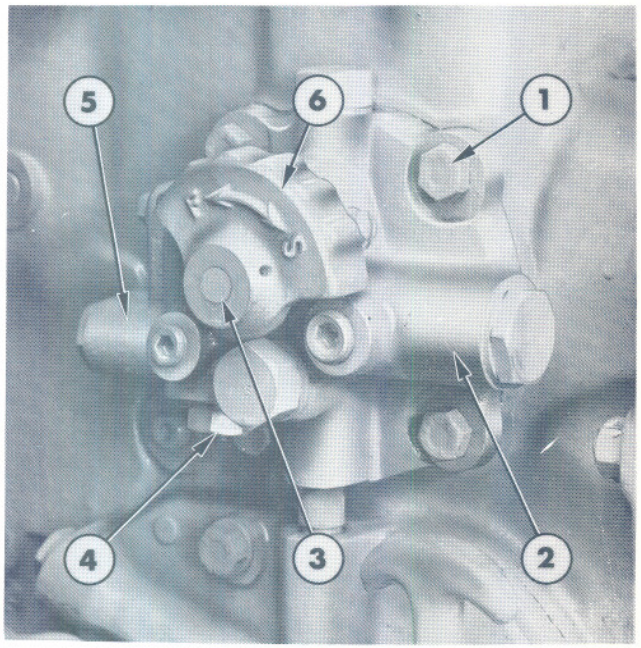

Figure 51
Flow Control Valve Plate Assembly – Ford 4100 and 4600

1. Retaining Bolts
2. Cooler Valve Location
3. Restrictor
4. Outlet to Oil Cooler
5. Flow Control Valve Location
6. Flow Control Knob

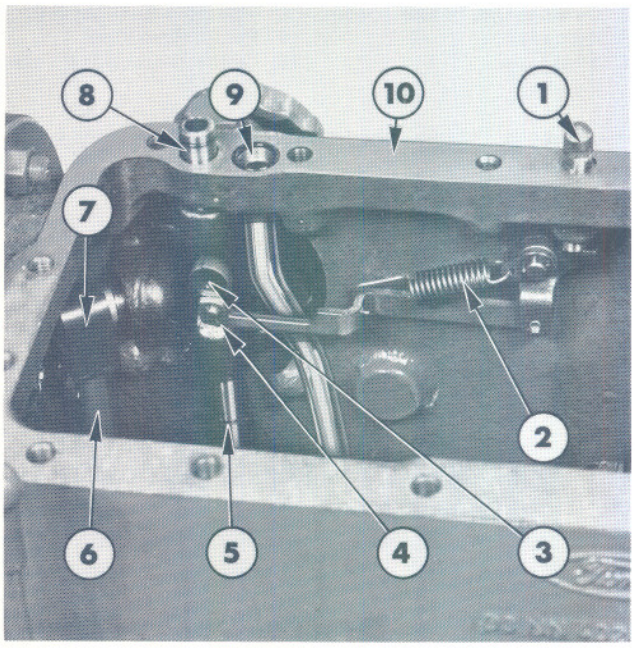

Figure 52
Flow Control Valve Plate Assembly Installed – Ford 3600 with Engine Mounted Piston Type Pump

1. Flow Control Override Adjuster and Cam Follower Assembly
2. Override Link Return Spring
3. Restrictor
4. Snap Ring
5. Lower Feed Pipe
6. Oil Exhaust Tube
7. Clip
8. Top Flow Control Pipe
9. Return Filter Pipe
10. Centre Housing Top Face

 © FORD MOTOR COMPANY, 1975

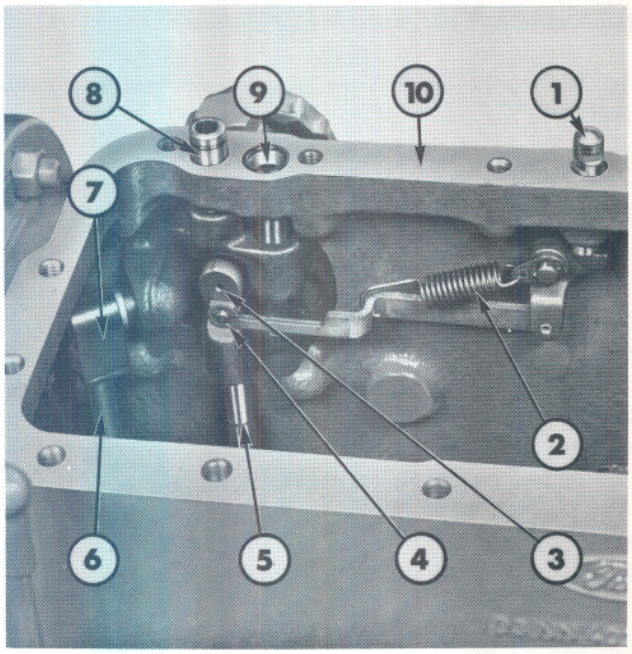

Figure 53
Flow Control Valve Plate Assembly Installed – Ford 2600 and 3600 with Engine Mounted Gear Type Pump

1. Flow Control Override Adjuster and Cam Follower Assembly
2. Override Link Return Spring
3. Restrictor
4. Snap Ring
5. Lower Feed Pipe
6. Oil Exhaust Tube
7. Clip
8. Top Flow Control Pipe
9. Return Feed Pipe
10. Centre Housing Top Face

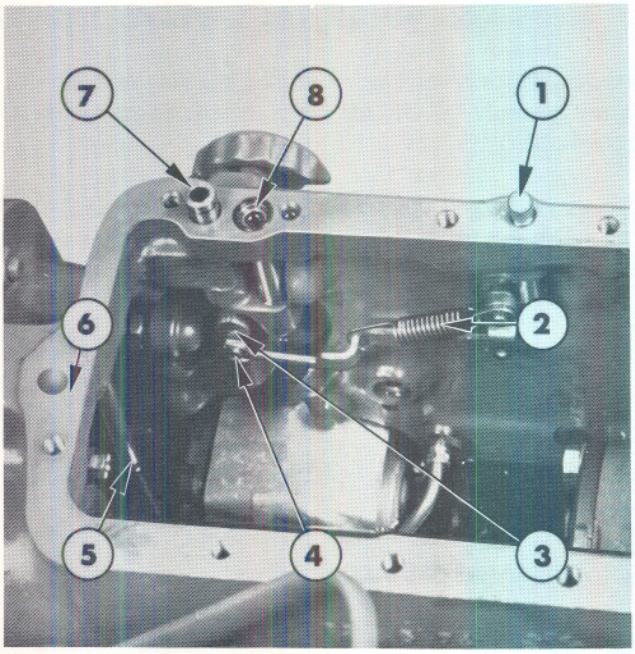

Figure 54
Flow Control Valve Plate Assembly Installed – Ford 4100 and 4600 with Transmission Mounted Gear Type Pump

1. Flow Control Override Adjuster and Cam Follower Assembly
2. Override Link Return Spring
3. Restrictor
4. Snap Ring
5. Oil Exhaust Tube
6. Centre Housing Top Face
7. Top Flow Control Pipe
8. Return Feed Pipe

9. Remove the oil exhaust tube clip and disconnect the tube, Figure 53.

NOTE – For the Ford 4100 and 4600 models the oil exhaust tube is retained by a nut, which must be removed and the tube disconnected, see Figure 54.

10. Withdraw the top flow control pipe from the centre housing top face.

11. Slacken the relief valve baffle retaining bolt, remove the 'C' clip and push the lower feed pipe downwards a sufficient distance to facilitate removal of the flow control valve plate.

NOTE – For the Ford 4100 and 4600 models the lower feed pipe is externally located at the base of the flow control valve plate. To effect removal of the plate, the 'C' clip must be removed and the pipe pushed upwards until clear of the hydraulic pump.

12. Remove the four retaining bolts and withdraw the plate from the rear axle centre housing.

B. DISASSEMBLY

With reference to Figure 55.

1. Remove the oil cooler valve plug and seal.

2. Withdraw the spring from the oil cooler valve housing.

3. Extract the oil cooler valve spool.

4. Remove the flow control valve plug and seal.

5. Withdraw the spring from the flow control valve housing.

6. Extract the flow control valve plunger.

7. Extract the roll pin and remove the flow control knob and spring from the end of the restrictor shaft.

8. Withdraw the restrictor pin and seal and extract the restrictor and shaft from the rear of the plate. Remove and discard the shaft "O" ring seal.

9. Remove and discard the plate gasket.

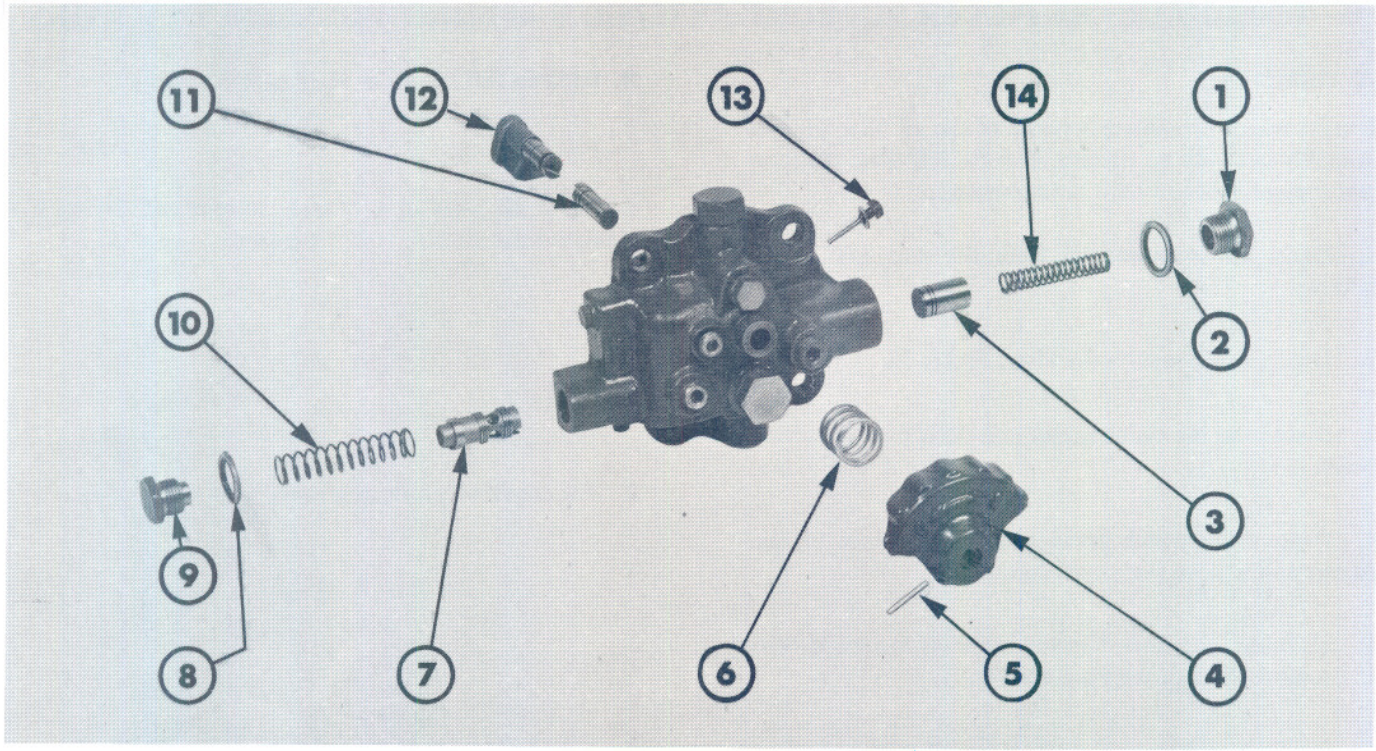

Figure 55
Flow Control Valve Plate Disassembled – Ford 4100 and 4600

1. Oil Cooler Valve Plug
2. Oil Cooler Valve Seal
3. Oil Cooler Valve Spool
4. Flow Control Valve Knob
5. Roll Pin
6. Spring
7. Flow Control Valve Plunger
8. Flow Control Valve Seal
9. Flow Control Valve Plug
10. Flow Control Valve Spring
11. Restrictor Shaft
12. Restrictor
13. Restrictor Retaining Pin and Seal
14. Oil Cooler Valve Spring

C. INSPECTION AND REPAIR

1. Wash all parts in a suitable solvent and dry with a clean lint free cloth or compressed air.

2. Examine the valves for wear, burrs or scratches. Any minor burrs or scratches may be removed with a fine abrasive; ensure such parts are thoroughly washed before reassembly.

3. Ensure the valve bores are not scratched as heavy scoring will necessitate installation of a new flow control valve plate.

4. Check the valve springs are not broken or damaged.

5. Ensure all oil passages are free from obstruction.

6. Check the valves move freely in their bores.

7. Renew the gasket, all "O" rings and seals.

D. REASSEMBLY

1. The reassembly of the flow control valve plate components follows the disassembly procedure in reverse.

E. INSTALLATION

1. The installation of the flow control valve plate follows the removal procedure in reverse.

2. Adjust the flow control override adjuster as detailed in this Chapter.

NOTE – When lowering the lift cover, place a steel rule in the groove between the cam adjuster and the cam follower and resting on the rear axle centre housing. Remove the rule just prior to correct pisitioning of the lift cover, thus ensuring the cover does not drop heavily on the override adjuster.

3. Fill the rear axle with the correct grade and quantity of oil (see "Specifications – Chapter 11").

 © FORD MOTOR COMPANY, 1975

6. OVERHAUL OIL FILTER SUPPORT ASSEMBLY — FORD 4100 & 4600 TRACTORS

A. REMOVAL

Repairs which necessitate removal of the oil filter support assembly can only be effected after the left hand platform and support brackets have been removed.

1. Drain the hydraulic oil from the rear axle centre housing.

2. Unscrew and remove the filter, Figure 56.

3. Disconnect the clutch release rod clevis from the clutch pedal.

4. Depress the clutch pedal sufficient distance to disengage and remove the return spring.

5. Withdraw the three support assembly retaining bolts and remove the return spring bracket.

6. Carefully withdraw the support assembly and tube from the centre housing and discard the gasket.

7. Remove and discard the tube "O" ring seals.

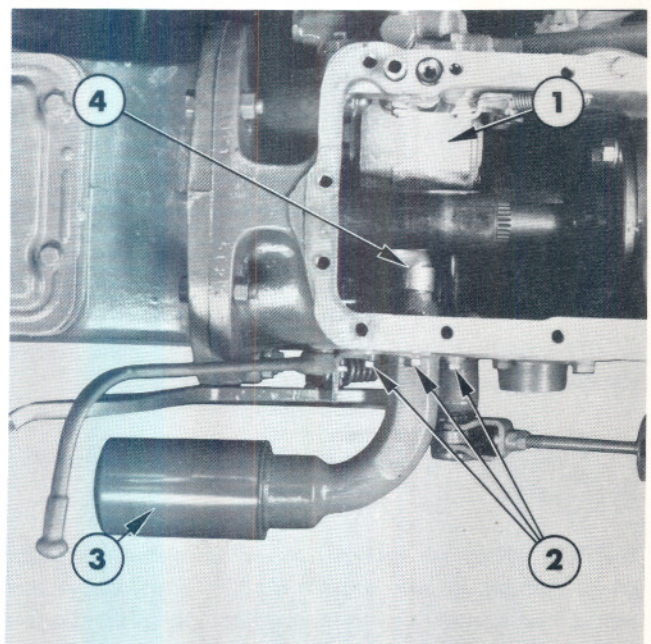

Figure 56
Oil Filter Support Assembly Installed – Ford 4100 and 4600

1. Transmission Mounted Hydraulic Pump
2. Retaining Bolts
3. Oil Filter and Support Assembly
4. Tube

B. INSPECTION AND REPAIR

1. Wash all parts in a suitable solvent and dry with a clean, lint free cloth or compressed air.

2. Ensure all oil passages are free from obstruction.

3. Check the support and tube for cracks or damage.

4. Renew the "O" rings and gasket.

C. INSTALLATION

1. The installation of the oil filter support assembly and tube follows the removal procedure in reverse.

2. Fill the rear axle with the correct grade and quantity of oil (see "Specifications – Chapter 11").

Part 11

HYDRAULIC SYSTEMS

Chapter 8

HYDRAULIC SYSTEM — FORD 5600, 6600, & 7600 TRACTORS

Section		*Page*
1.	Description and Operation	1
2.	Adjustments	9
3.	Overhaul Lift Cylinder Assembly	10
4.	Overhaul Lift Cover Assembly	12
5.	Overhaul Cooler Valve Assembly	13
6.	Overhaul Oil Filter Support and Adaptor Assembly	14

1. DESCRIPTION AND OPERATION

Figure 1 illustrates the hydraulic system for the Ford 5600, 6600 and 7600 models.

The hydraulic system is in many respects similar to that of previous models but incorporates certain design changes to cater for the increased flow of the higher output transmission mounted gear type hydraulic pumps.

HYDRAULIC FILTERS

A full flow micronic suction filter system is featured as standard for all Ford 5600, 6600 and 7600 models.

The micronic filter is located externally to facilitate renewal. The filter is situated at the top right hand side of the rear axle centre housing, Figure 2.

HYDRAULIC OIL COOLER

An air-to-oil type hydraulic oil cooler is featured for the Ford 5600 model with Dual Power and for all Ford 6600 and 7600 models.

Hydraulic system oil is passed through the cooler, situated in front of the radiator, before returning to the front transmission housing to effect gearbox lubrication.

NOTE – For all Ford 7600 models with or less Dual Power, and Ford 5600 and 6600 models with Dual Power, the oil from the cooler is directed, via the Dual Power housing (where fitted), to the centre passages of the countershaft and output shaft which feature cross drillings to facilitate pressure lubrication of the bearings and gears.

For Ford 6600 models less Dual Power the oil is directed to the main countershaft bearing and flows through into the transmission case.

For Ford 5600 models less Dual Power the oil is returned via the cooler valve directly to the rear axle centre housing.

Printed in U.K. 8/75 © FORD MOTOR COMPANY, 1975

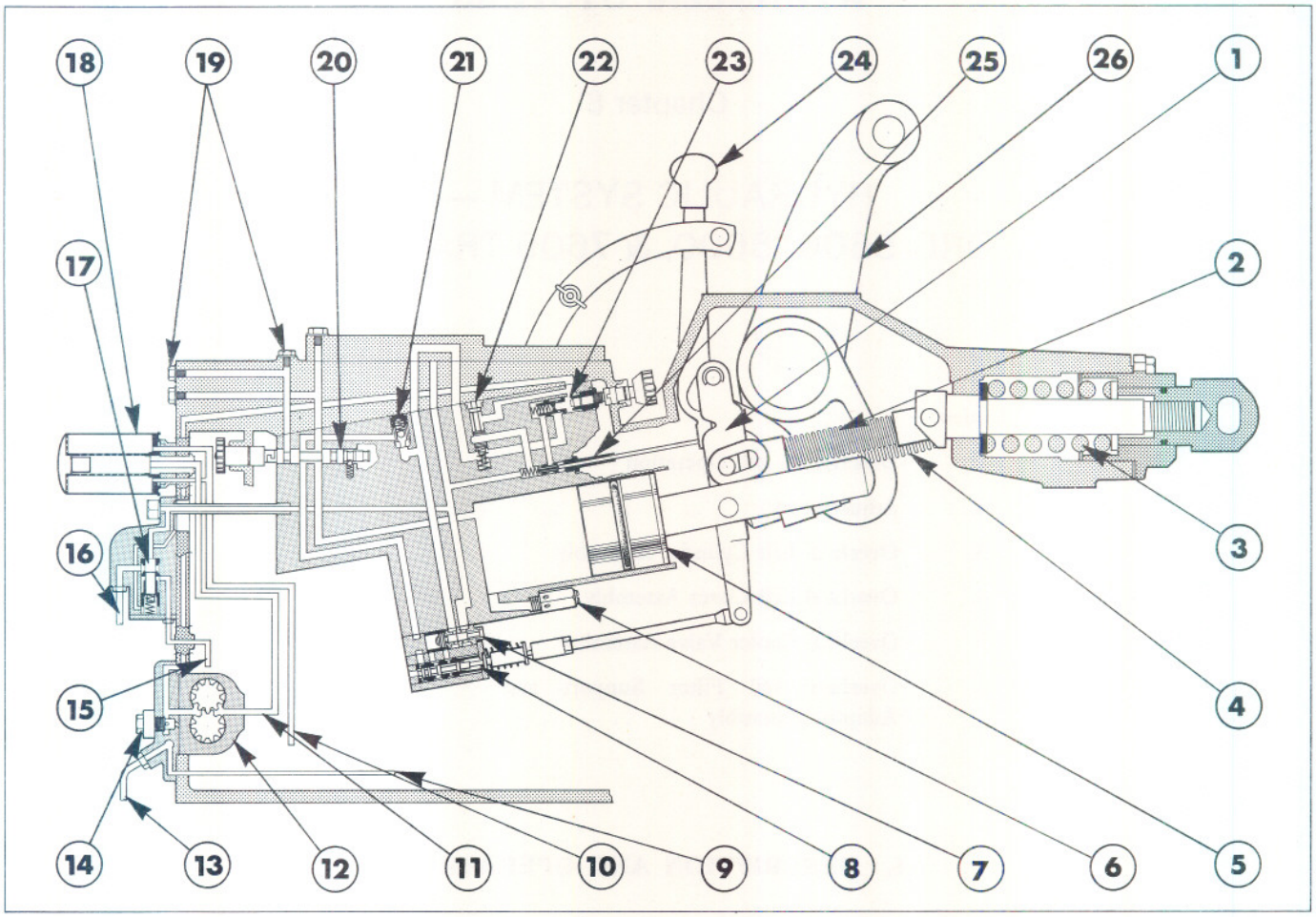

Figure 1
Hydraulic System – Schematic

1. Actuating Lever
2. Draft Control Override Spring
3. Draft Control Main Spring
4. Position Control Spring
5. Lift Piston
6. Lift Cylinder Safety Valve
7. Unload Valve
8. Control Valve
9. To Independent Power Take-Off Clutch (Pressure Feed)
10. Filter Intake Tube
11. Hydraulic Pump Inlet Tube
12. Hydraulic Pump
13. To Dual Power (Pressure Feed)
14. Pressure Relief Valve
15. Dump Pipe
16. To Oil Cooler and Dual Power (Pressure Lubrication)
17. Oil Cooler Valve
18. Micronic Intake Filter
19. Auxiliary Services Ports
20. Selector Valve
21. Check Valve
22. By-Pass Valve
23. Flow Control Valve
24. Lift Control Lever
25. Override Valve
26. Lift Arm

HYDRAULIC LIFT CAPACITY

Increased lift capacity for the Ford 6600 and 7600 models is achieved by increasing the lift cylinder bore diameter from 3.75 in (95.25 mm) to 4.125 in (104.78 mm).

A unique lift cylinder piston, seal and ring are installed and the lift cover, lift cylinder, lift cylinder attaching bolts, lift arms and centre housing (with top cover locating dowels) are all strengthened to cater for the increased lift capacity.

The Ford 5600 model utilises the Ford 6600 lift components except for a unique 3.75 in (95.25 mm) diameter piston.

VALVES IN THE LIFT CYLINDER ASSEMBLY

Flow Control Valve

A high capacity manually operated flow control valve caters for the increased output of the transmission mounted gear type hydraulic pumps. The flow control valve has a shorter nose section than that of the previous valve, see Figure 3.

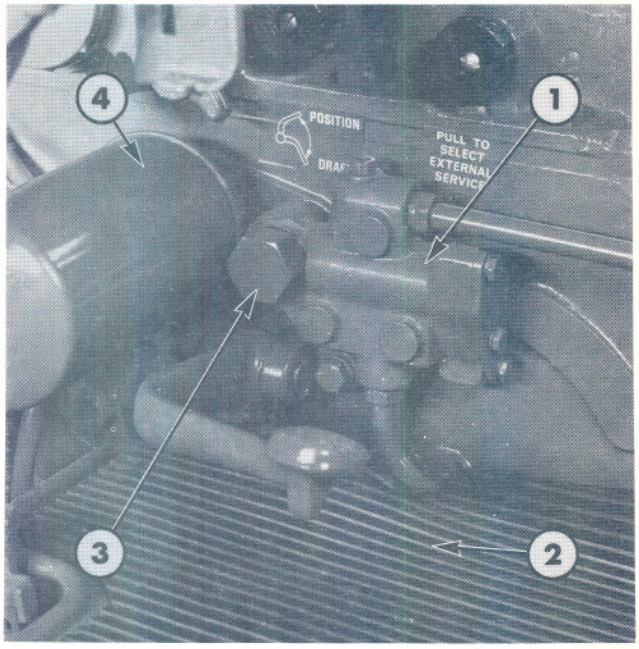

Figure 2
Location of Hydraulic Inlet Filter and Cooler Valve Assembly – Ford 5600, 6600 and 7600
1. Cooler Valve Assembly
2. Right-hand Platform
3. Cap Nut and Sleeve
4. Micronic Inlet Filter

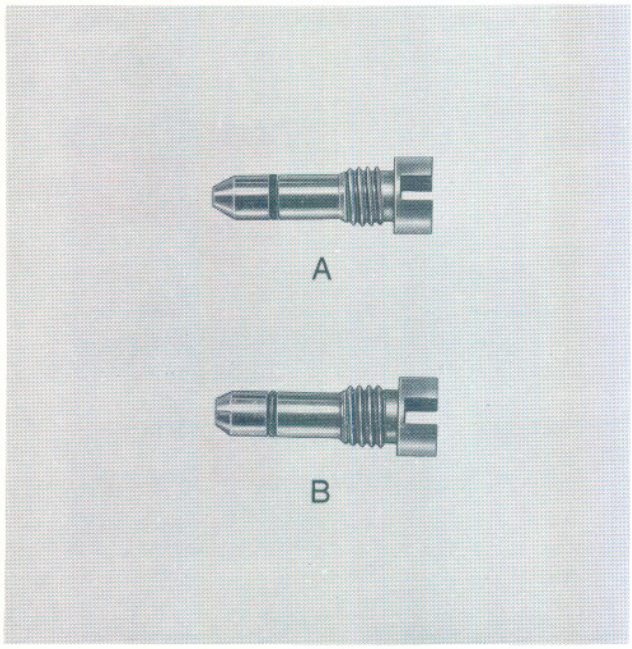

Figure 3
Flow Control Valve
A. Previous Valve
B. Current Valve

To match the flow control valve, and ensure a satisfactory minimum flow of hydraulic oil, the flow control valve spring has been uprated by increasing the wire diameter and decreasing the overall length.

The current flow control valve and spring may be used to service previous models.

Unload Valve

To facilitate the increased flow of hydraulic oil across the unload valve, the valve stem is reduced in diameter and increased in length compared to the previous valve, see Figure 4.

The unload valve rear bushing is similarly increased in length and the slotted ports are enlarged to match the unload valve.

The current unload valve and rear bushing may be used to service previous models.

Unload Valve Plug

The unload valve plug is increased in length and is not interchangeable with previous models.

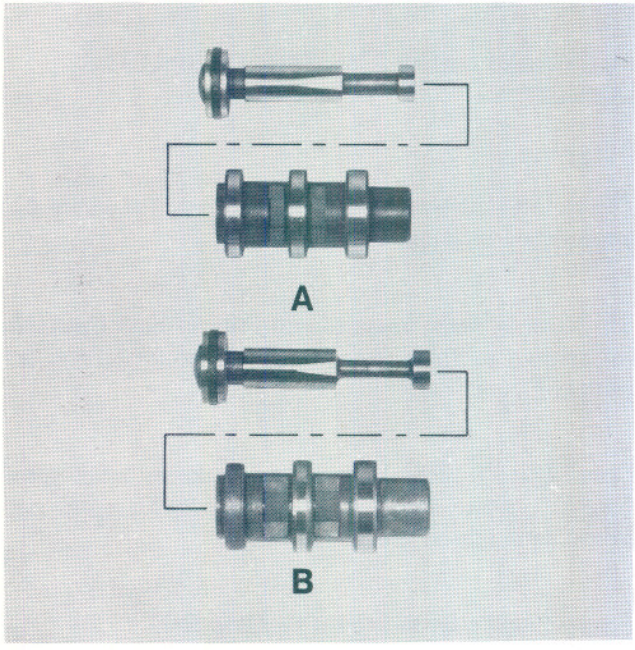

Figure 4
Unload Valve and Rear Bushing
A. Previous Valve and Rear Bushing
B. Current Valve and Rear Bushing

 © FORD MOTOR COMPANY, 1975

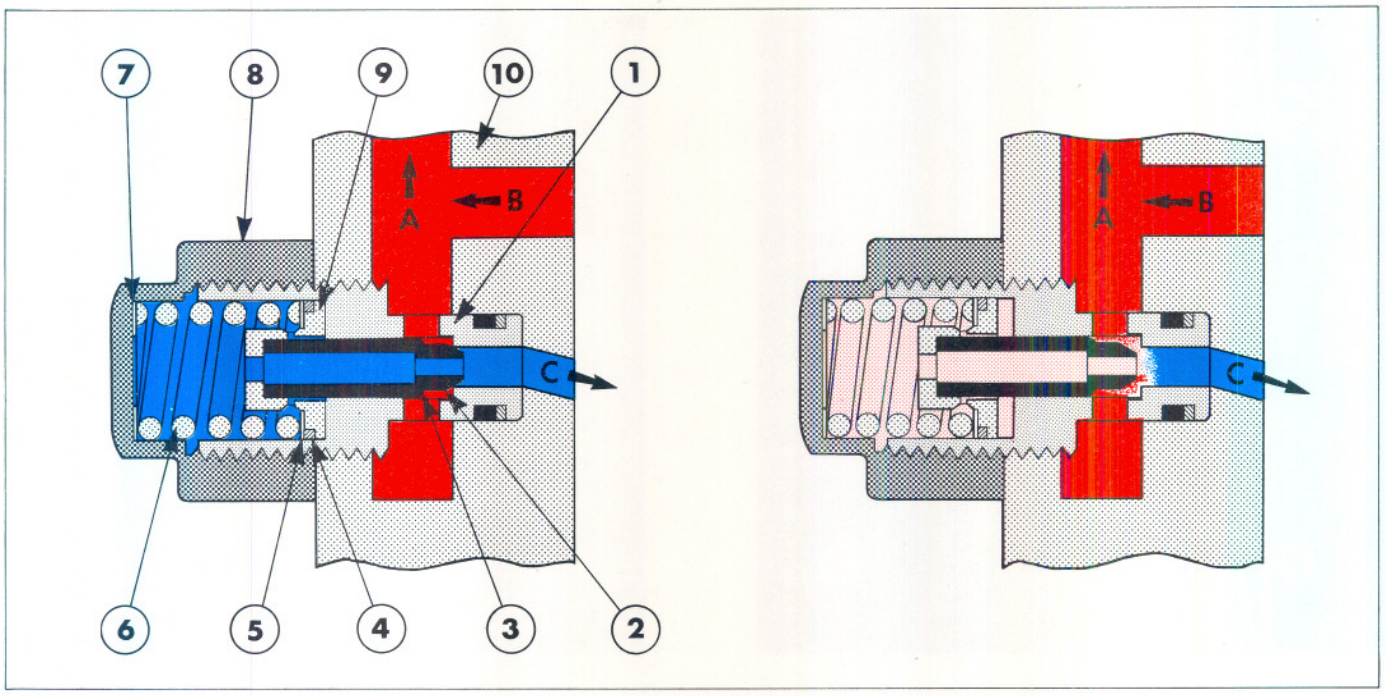

Figure 5
System Relief Valve – Ford 5600, 6600 and 7600

HIGH PRESSURE OIL
REDUCED PRESSURE OIL
RESERVOIR AND EXHAUST OIL

A. To Hydraulic Circuit
B. From Hydraulic Pump
C. To Reservoir
1. Valve Seat
2. Valve
3. Valve Land
4. Friction Seal
5. Back-Up Washer
6. Spring
7. Shims
8. Cap Nut
9. Piston
10. Hydraulic Pump Housing

HYDRAULIC OIL CIRCUIT

PRESSURE VALVES IN THE HYDRAULIC CIRCUIT

Relief Valve

The system relief valve is located in the external face of the transmission mounted hydraulic pump.

The valve is direct operated and features both hydraulic and friction damping to ensure controlled lift-off and re-seating, Figure 5.

Controlled lift-off and re-seating eliminates relief valve "chatter" caused by the valve continually lifting-off and re-seating at critical system pressures.

For operation refer to Section 1 – Chapter 7.

The system relief valve is not interchangeable with previous models.

Check Valve

To cater for the increased flow of hydraulic oil, the check valve retainer incorporates larger ports, Figure 6.

The current check valve retainer may be used to service previous models.

By-Pass Valve

To accommodate the increased flow of hydraulic oil the by-pass valve body is relieved and features deeper anti-friction grooves than that of the previous valve, Figure 7.

To match the by-pass valve, and further ensure a satisfactory minimum flow of hydraulic oil, the by-pass valve spring has been uprated.

The current by-pass valve and spring may be used to service previous models.

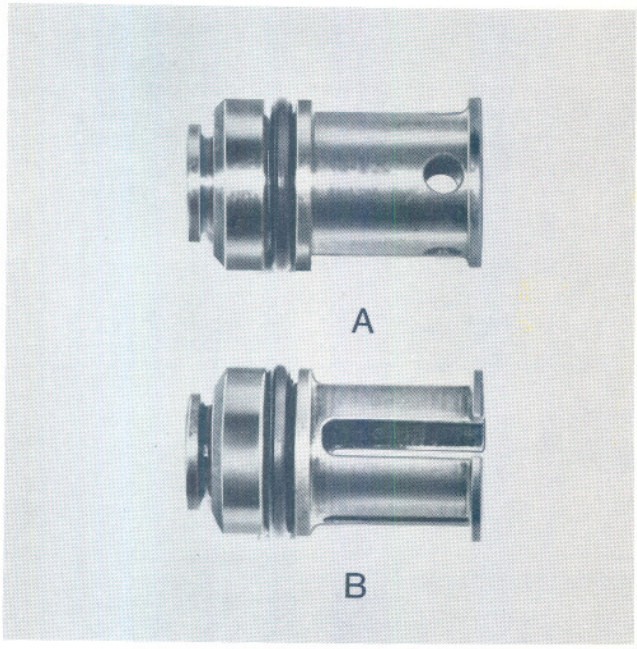

Figure 6
Check Valve Retainer
A. Previous Valve B. Current Valve

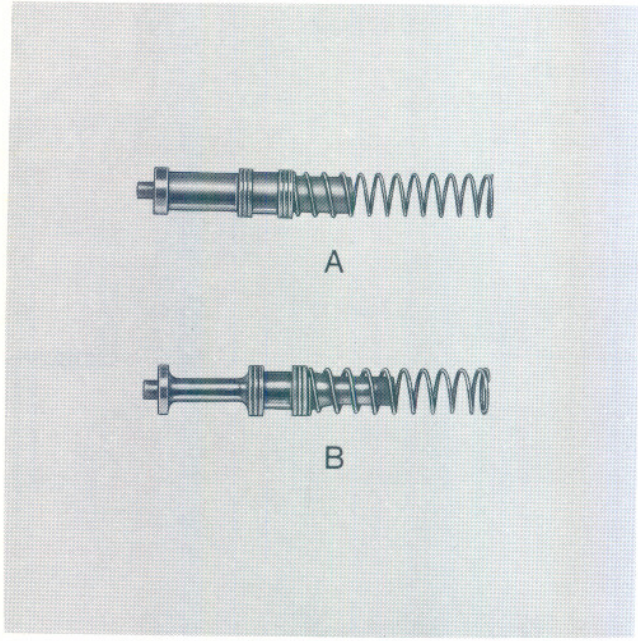

Figure 7
By-Pass Valve and Spring Assembly
A. Previous Valve and Spring Assembly
B. Current Valve and Spring Assembly

Cooler Valve

A two stage cooler valve assembly is located adjacent to the hydraulic inlet filter, see Figure 2. The cooler valve is spring operated and maintains a nominal pressure of 40 lbf/in^2 (2.8 bar) in the hydraulic system, Figure 8.

First stage movement of the valve allows system exhaust oil to pass to the oil cooler. Excessive system pressure will move the valve to a second stage where the oil is dumped straight to the reservoir thereby protecting the oil cooler circuit.

By creating a back pressure in the hydraulic system, the cooler valve ensures effective operation of the unload valve.

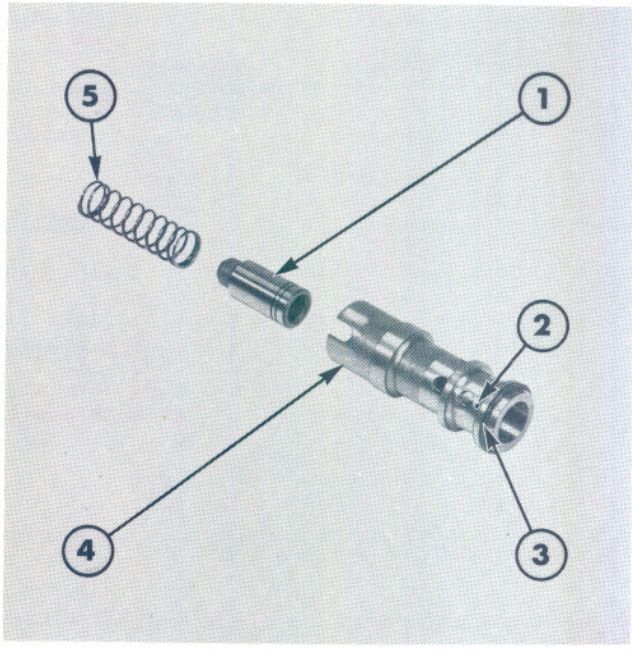

Figure 8
Cooler Valve Assembly
1. Cooler Valve Spool
2. Pin
3. 'O' Ring Seal
4. Sleeve
5. Spring

 © FORD MOTOR COMPANY, 1975

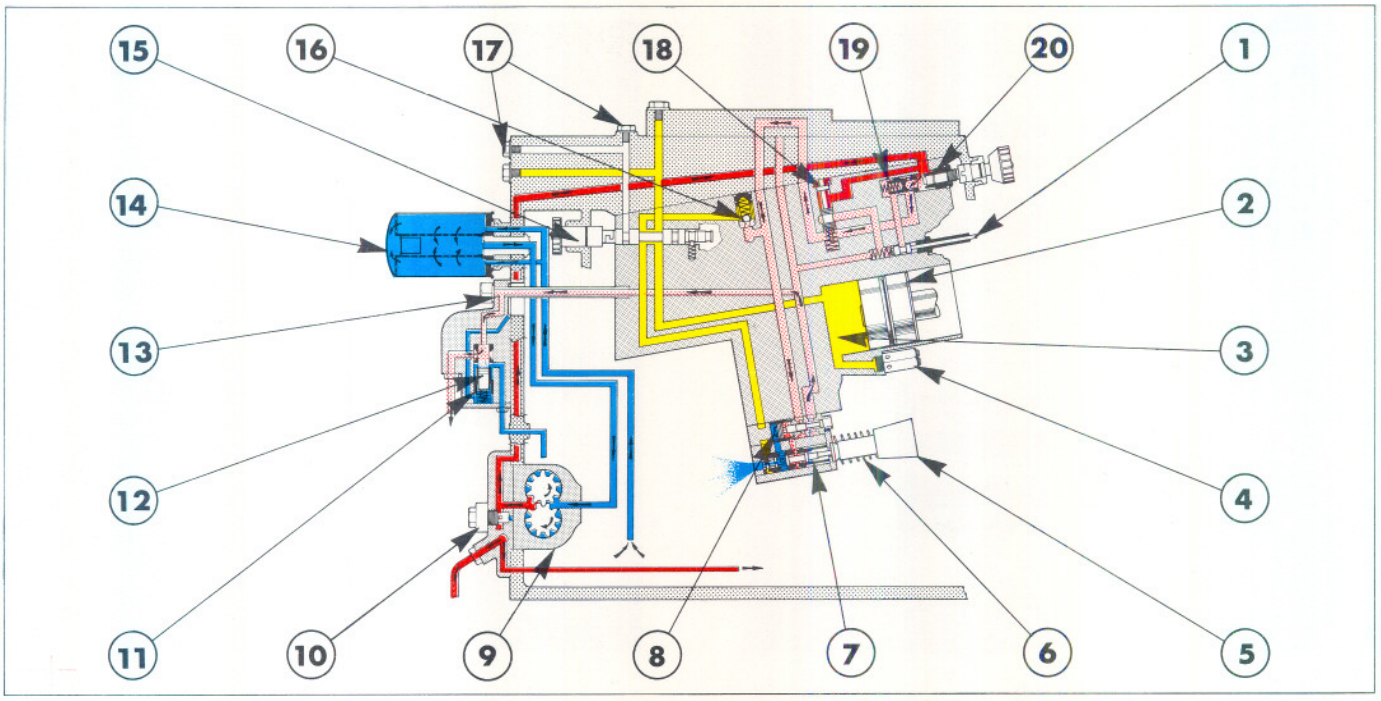

Figure 9
Oil Flow in Neutral

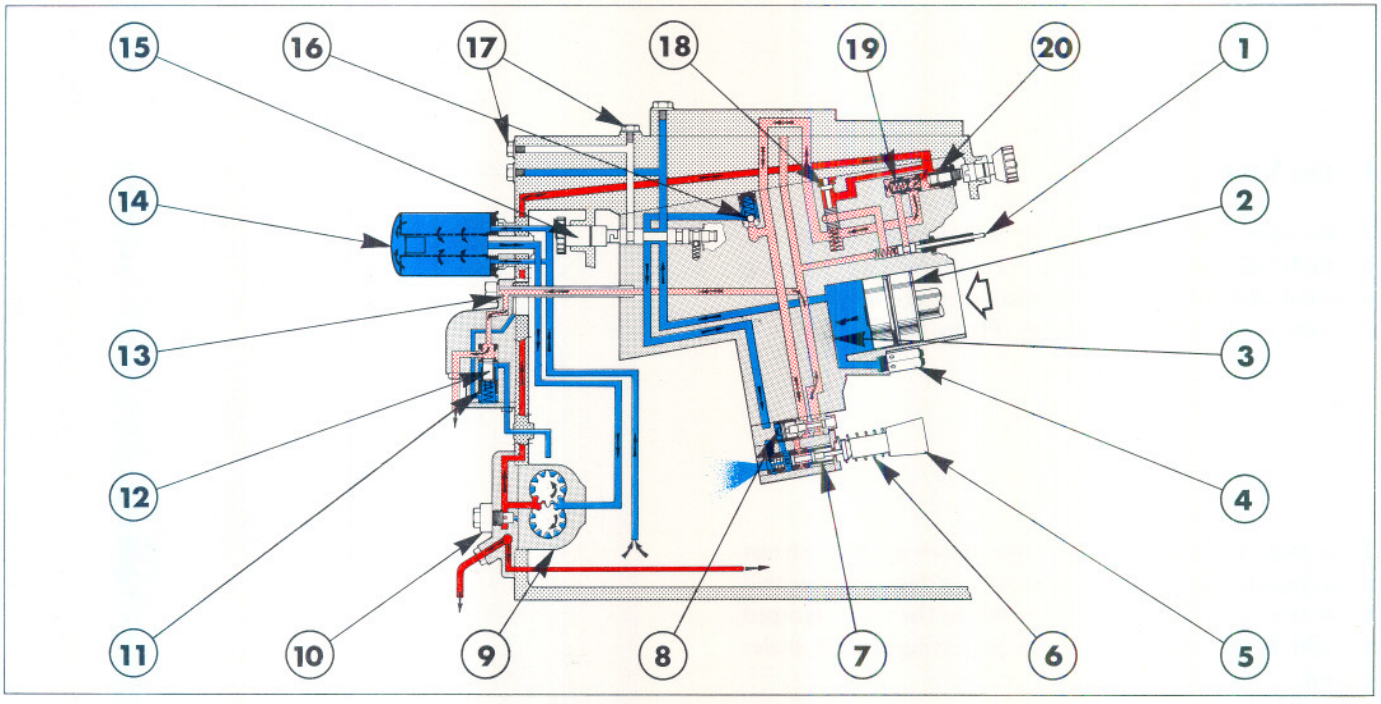

Figure 10
Oil Flow when Lowering

PUMP PRESSURE OIL
REDUCED PUMP PRESSURE OIL
RESERVOIR SUCTION AND EXHAUST OIL
TRAPPED OIL

1. Flow Control Override Plunger
2. Piston
3. Lift Cylinder
4. Lift Cylinder Safety Valve
5. Control Valve
6. Control Valve Return Spring
7. Control Valve Bushing
8. Unload Valve
9. Hydraulic Pump
10. System Relief Valve
11. Cooler Valve Sleeve
12. Cooler Valve
13. Transfer Tube
14. Micronic Intake Filter
15. Auxiliary Service Selector Valve
16. Check Valve
17. Auxiliary Services Feed
18. By-Pass Valve
19. Flow Control Valve
20. Flow Control Valve Restrictor

OIL FLOW

Figures 9, 10, 11 and 12 show the hydraulic system oil flows for the neutral, lowering, raising and auxiliary service functions.

A. Oil Flow in Neutral

With reference to Figure 9.

Hydraulic oil is drawn from the rear axle centre housing reservoir by the hydraulic pump via a full flow micronic intake filter. Pump pressure oil is then circulated to the hydraulic system.

The oil flows to the system relief valve and then vertically upwards and through the hydraulic lift cover before passing to the flow control valve. According to the position of the flow control valve a certain percentage of restricted oil is transferred, across the by-pass valve, to the return side of the hydraulic circuit. The remaining oil passes through the flow control valve restriction and flows to the unload valve.

Due to the position of the control valve, oil on the front face of the unload valve is allowed to pass to the reservoir via a radial hole and internal drilling within the control valve spool. Circuit back pressure, created by the oil cooler valve, acts on the rear face of the unload valve and ensures the valve moves fully to the left. The pump oil now flows across the unload valve and passes out of the lift cylinder area to the oil cooler valve via the transfer tube. The pressure required to open the cooler valve is less than that of the check valve which therefore remains closed.

The first stage movement of the two stage cooler valve allows the system exhaust oil to pass to the oil cooler before flowing back to the reservoir or being used to pressure lubricate a Dual Power transmission (when installed). Excessive system pressure moves the cooler valve to a second stage where the excess oil is dumped to the reservoir thereby protecting the oil cooler circuit.

Hydraulic oil trapped in the lift cylinder circuit is prevented from exhausting by the check valve and the position of the control valve front land.

B. Oil Flow when Lowering

With reference to Figure 10.

When the control valve is moved to the lowering position, that is to the right, the front land of the valve uncovers the lowering port at the front of the control valve bushing. Oil from the lift cylinder circuit is now allowed to exhaust directly to the reservoir. The rest of the circuit is exactly the same as in neutral.

C. Oil Flow when Raising

With reference to Figure 11.

Movement of the control valve to the raise position, that is to the left, blocks off the lowering port at the front of the control valve bushing and allows oil to pass to the front face of the unload valve. Although the oil pressure on both faces of the unload valve is the same, the force on the larger area of the front face is greater so the valve moves to the right. The pump oil, which is now prevented from passing into the return circuit, rapidly increases in pressure, forces the check valve ball off the seat, and flows into the lift cylinder to push the piston out and thus raise the lift arms.

The system will continue to raise until the control valve is moved to the neutral position by a draft correction, movement of the lift control lever or the piston stop pin.

When the control valve is returned to the neutral position the oil on the front face of the unload valve is allowed to pass to the reservoir through the control valve drilling. Oil pressure on the rear face forces the unload valve to move to the left and allows the pump oil to flow across the valve and pass into the return circuit thereby stopping the raising cycle.

D. Oil Flow for Auxiliary Services

With reference to Figure 12.

The positions of the control and unload valves remain the same as for the raising circuit, but, when the selector valve is pulled out, the feed of oil to the lift cylinder is cut off and directed to the outlet ports for Auxiliary Services.

 © FORD MOTOR COMPANY, 1975

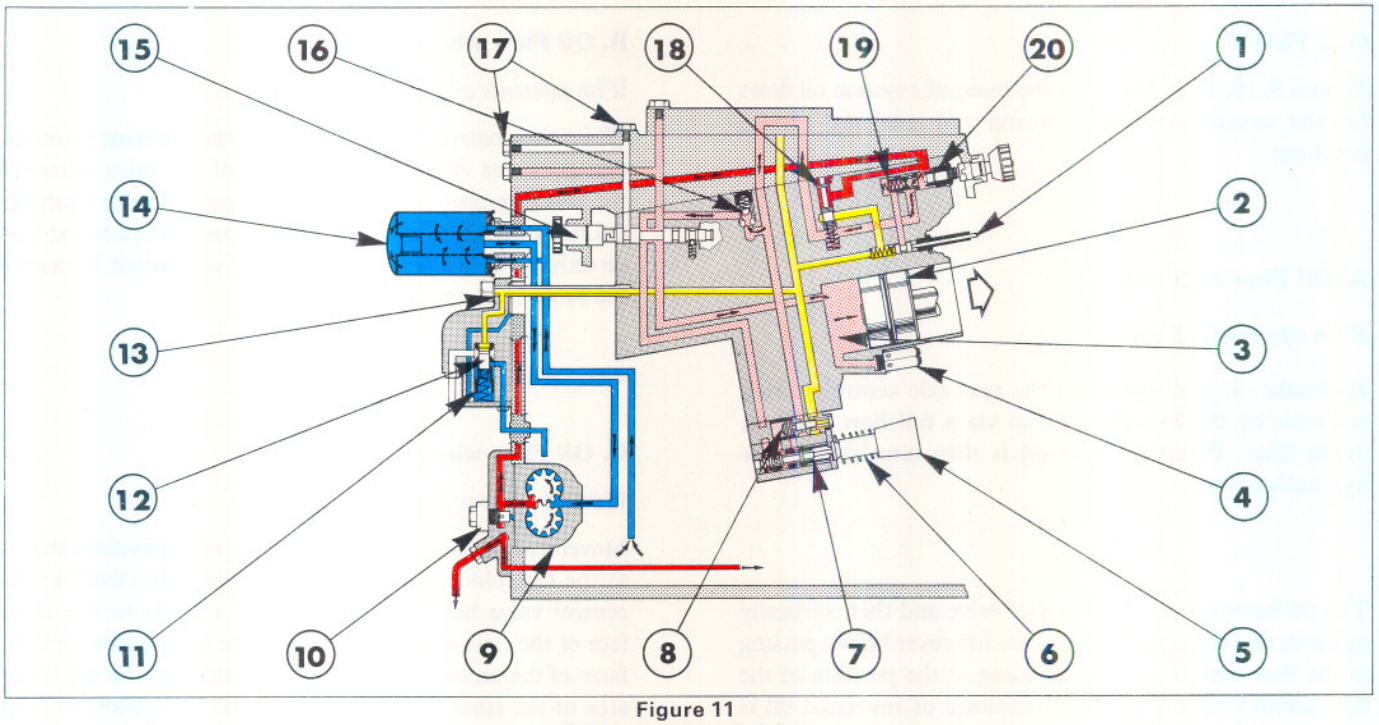

Figure 11
Oil Flow when Raising

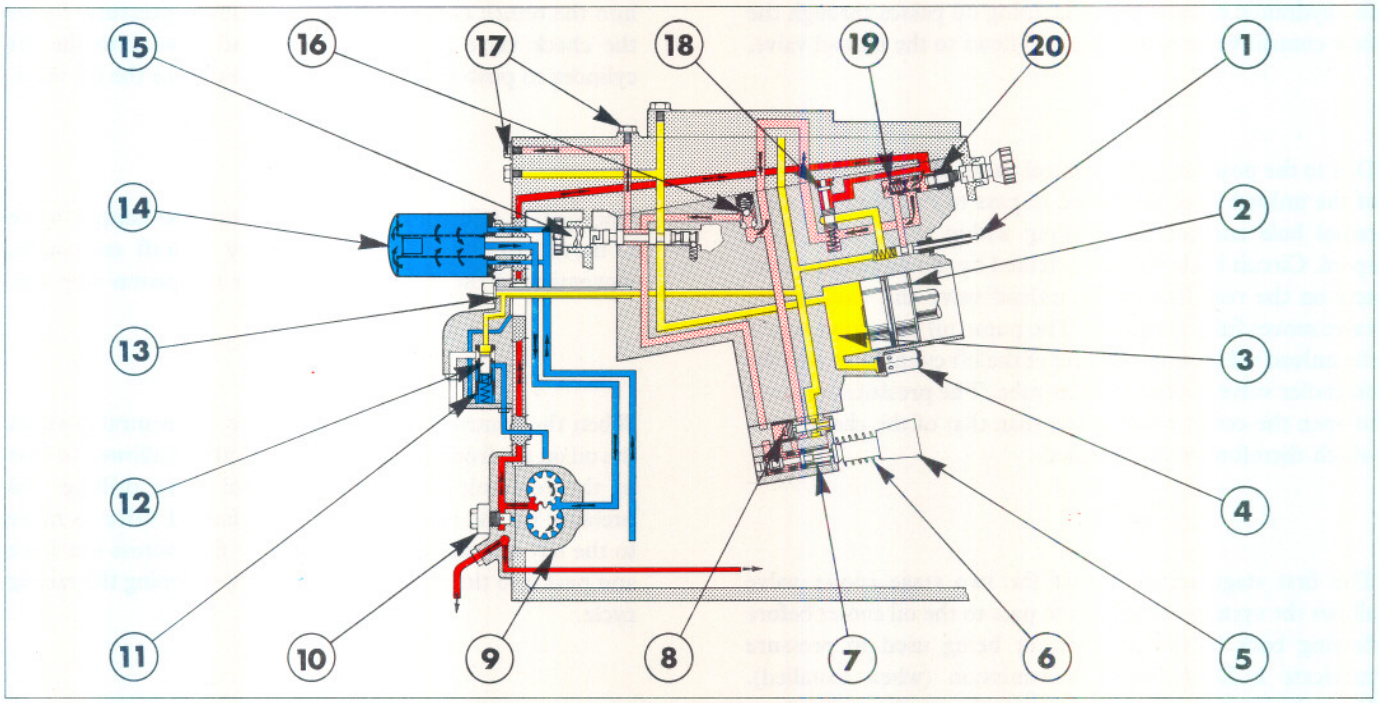

Figure 12
Oil Flow for Auxiliary Service

PUMP PRESSURE OIL
REDUCED PUMP PRESSURE OIL
RESERVOIR SUCTION AND EXHAUST OIL
TRAPPED OIL

1. Flow Control Override Plunger
2. Piston
3. Lift Cylinder
4. Lift Cylinder Safety Valve
5. Control Valve
6. Control Valve Return Spring
7. Control Valve Bushing
8. Unload Valve
9. Hydraulic Pump
10. System Relief Valve
11. Cooler Valve Sleeve
12. Cooler Valve
13. Transfer Tube
14. Micronic Intake Filter
15. Auxiliary Services Selector Valve
16. Check Valve
17. Auxiliary Services Feed
18. By-Pass Valve
19. Flow Control Valve
20. Flow Control Valve Restrictor

2. ADJUSTMENTS

A. HYDRAULIC ADJUSTMENTS FOR TRACTORS LESS LOAD MONITOR

Draft Control Main Spring Adjustment
For spring adjustment refer to Chapter 2.

Draft Control Linkage Adjustment

NOTE – When adjusting the control linkage ensure Draft Control is selected and checked before Position Control.

With reference to Figure 13.

1. Place the selector lever in the draft control position.

2. Raise the lift arms to the highest position.

3. Position the upper edge of the lift control lever 3.25 in (8.25 cm) below the top stop on the quadrant, Figure 14.

4. Remove the control valve plate from the front of the lift cylinder.

5. Withdraw the spacer from the front end of the control valve locating bore.

6. Adjust the turnbuckle to give 0.030 in (0.76 mm) from the end of the control valve to the front face of the control valve bushing, using Setting Gauge Tool No. SW 28 or 6210 to check this dimension.

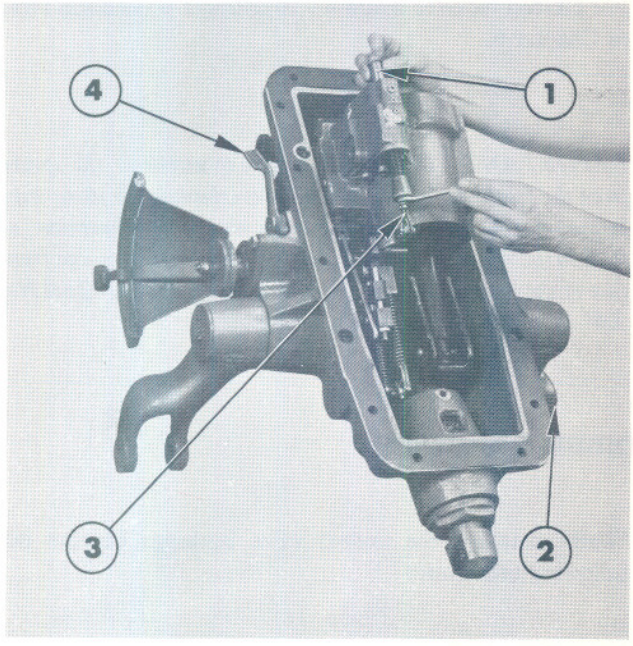

Figure 13
Draft Control Linkage Adjustment
1. Tool No. SW 28
2. Lift Arms in Highest Position
3. Turnbuckle
4. Selector Lever in Draft Control

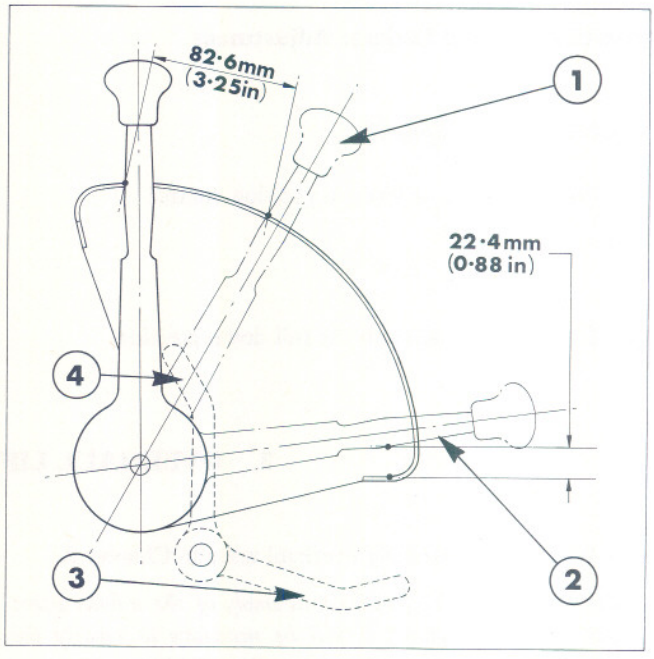

Figure 14
Lift Control Lever Settings for Draft and Position Control
1. Lever Position for setting in Draft Control
2. Lever Position for setting in Position Control
3. Selector Lever in Draft Control
4. Selector Lever in Position Control

 © FORD MOTOR COMPANY, 1975

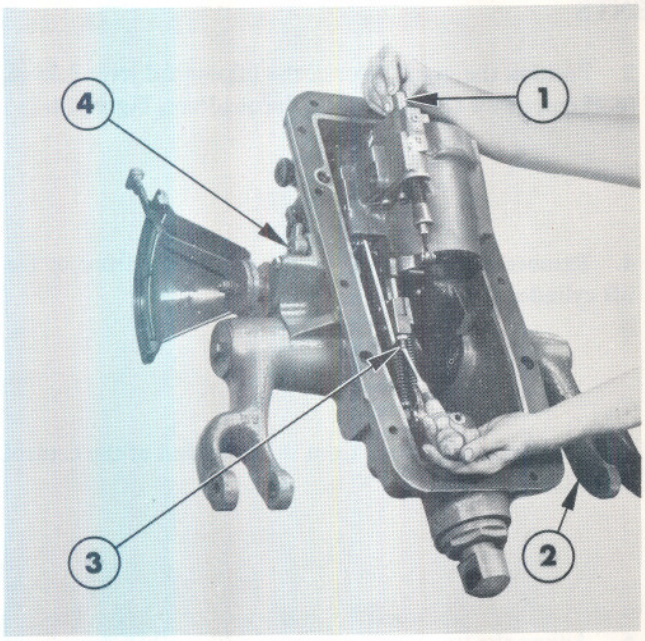

Figure 15
Position Control Linkage Adjustment

1. Tool No. SW 28
2. Lift Arms in Lowest Position
3. Position Control Screw
4. Selector Lever in Position Control

Position Control Linkage Adjustment

With reference to Figure 15.

1. Place the selector lever in position control.

2. Lower the lift arms to the full down position.

3. Position the lower edge of the lift control lever 0.88 in (22.35 mm) above the base edge of the quadrant, Figure 14.

4. With the control valve front plate removed, loosen the locknut and turn the position control adjusting screw to give 0.030 in (0.76 mm) from the end of the control valve to the front face of the control valve bushing, using Setting Gauge Tool No. SW 28 or 6210 to check this dimension.

5. Tighten the locknut to a torque of 15-20 ft lbf (20-27 Nm).

B. HYDRAULIC ADJUSTMENTS FOR TRACTORS WITH LOAD MONITOR

For all load monitor hydraulic adjustment procedures refer to Chapter 6.

IMPORTANT – It will be necessary to withdraw the spacer from the front end of the control valve bushing locating bore before making any adjustments to obtain a dimension of 0.03 in (0.76 mm) from the end of the control valve to the front face of the control valve bushing. Use Setting Gauge Tool No. SW 28 or 6210 to check this dimension.

3. OVERHAUL LIFT CYLINDER ASSEMBLY

For lift cylinder assembly overhaul refer to Chapter 2.

IMPORTANT – To facilitate assembly of the unload valve front and rear bushings, it will be necessary to modify the Special Nut Tool No. T8510-1/e as shown in Figure 16.

NOTE – The modified Special Nut may be used for installing both previous and current unload valve bushings.

A new Special Nut Tool No. T8510-1c/3 which is available in Service, is similarly designed for installation of both previous and current unload valve bushings.

When installing the unload valve bushings observe the following procedure:

With reference to Figure 17.

1. The lift cylinder is marked externally with a colour spot adjacent to the unload valve chamber. Select a front and rear unload valve bushing with corresponding colour markings. (For bushing sizes see "Specifications – Chapter 11.)

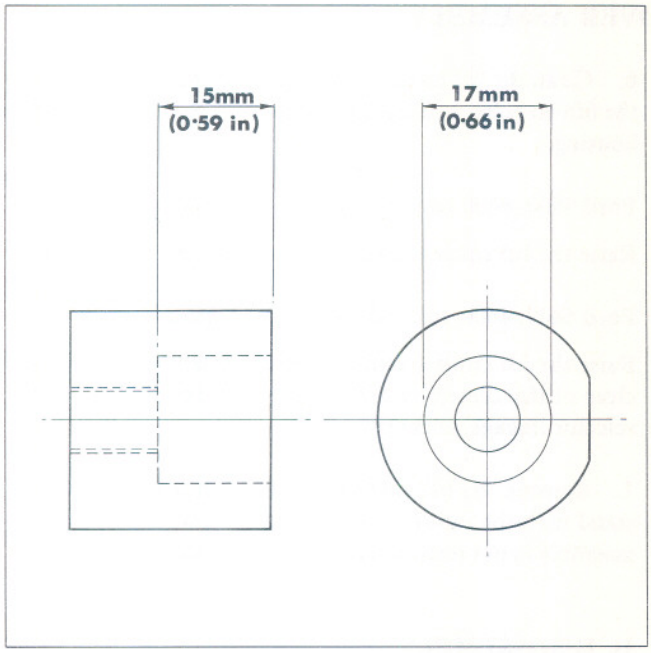

Figure 16
Modification of Special Nut
Tool No. T8510-1/e
Flat bottom drill internal bore to specified depth

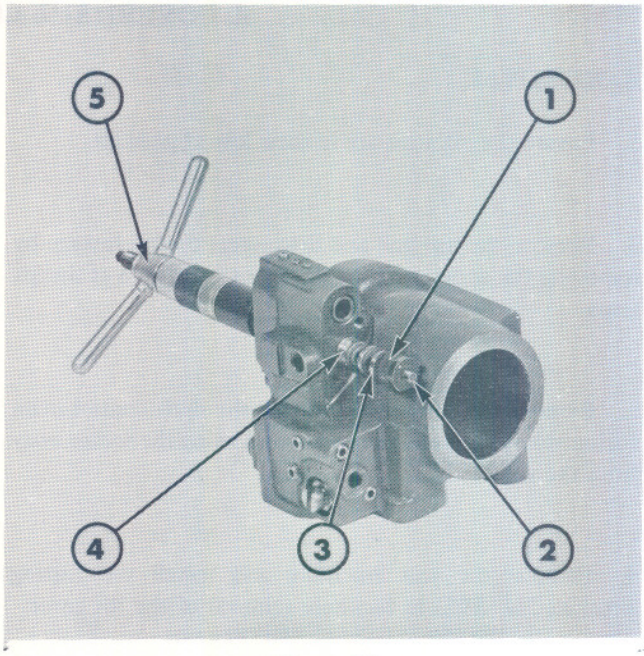

Figure 17
Installing Unload Valve Bushings
1. Modified Special Nut Tool No. T8510-1/e
2. Extension Tool No. T8510-1/a
3. Unload Valve Rear Bushing
4. Unload Valve Front Bushing
5. Tool No. T8510

Attach the short threaded end of Extension Tool No. T8510-1/a into the Lift Cylinder Bushing Remover and Replacer Tool No. T8510 and pass the Extension through the unload valve bushing bore from the front end of the cylinder.

2. Place the unload valve front bushing over the Extension and locate at the entrance to the bore.

3. Place the unload valve rear bushing over the Extension with the long spigot end facing away from the front bushing.

4. Screw the modified Special Nut Tool No. T8510-1/e on to the extension and locate the counterbore in the nut over the spigot end of the rear bushing.

5. Lubricate the bushings and steadily turn the tool handles to pull the bushings into the bore until the inner end of the spigot (the back face of the rear land) on the rear bushing is flush with the rear face of the cylinder. The bushings are correctly located when the front face of the modified Special Nut touches the rear face of the cylinder.

6. Release the special nut and withdraw the tool from the unload valve bushings.

Alternatively use Lift Cylinder Bushing Remover and Replacer Tool No. N-508-A to install the unload valve bushings.

IMPORTANT – After installation of the lift cylinder assembly, carry out the Draft Control and Position Control Linkage Adjustments as described in this Chapter.

 © FORD MOTOR COMPANY, 1975

4. OVERHAUL LIFT COVER ASSEMBLY

A. REMOVAL

1. Ensure the lift arms are in their lowest position.

2. Remove the top link and disconnect the lift linkage by removing the cotter pin and clevis pin from each of the lift arms.

3. Remove the clevis pin securing the draft control main spring yoke plunger to the rocker and swing the rocker away from the yoke.

4. Remove the seat assembly and install the Lifting Bracket, No. SW2 to facilitate removal of the lift cover.

5. Clean the area around the cooler valve assembly and remove the cap nut, Figure 18. Using a suitable wrench, remove the exposed transfer tube from the cooler valve housing.

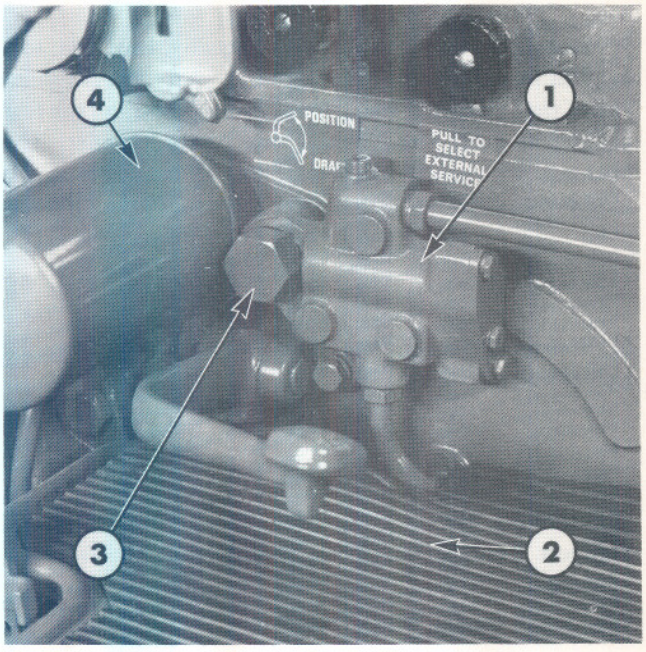

Figure 18
Location of Hydraulic Inlet Filter and Cooler Valve Assembly
1. Cooler Valve Assembly
2. Right-hand Platform
3. Cap Nut and Transfer Tube
4. Micronic Inlet Filter

6. Clean the lift cover around the gasket joint and remove the fifteen bolts securing the lift cover to the rear axle centre housing.

Ford 5600, 6600 and 7600 Less Load Monitor:

Raise the lift cover assembly clear of the centre housing.

Ford 5600, 6600 and 7600 With Load Monitor:

Raise the lift cover assembly approximately 3.5 in (90 mm) clear of the centre housing and detach the strut from the selector linkage assembly.

7. Remove the lift cover from the tractor and place on a stand with the internal linkage facing upwards. Ensure the assembly is not resting on any of the controls.

B. DISASSEMBLY

For lift cover disassembly refer to the relevant chapter as follows:

Ford 5600, 6600 and 7600 Less Load Monitor – Chapter 2.
Ford 5600, 6600 and 7600 With Load Monitor – Chapter 6.

C. ASSEMBLY

For lift cover assembly refer to the relevant chapter as follows:

Ford 5600, 6600 and 7600 Less Load Monitor – Chapter 2.
Ford 5600, 6600 and 7600 With Load Monitor – Chapter 6.

When assembling the lift cover components observe the following requirements:

- After installing the retaining washer, lockwasher and bolt to each end of the lift cross-shaft, torque one bolt to 20-30 ft lbf (27-41 Nm) and secure the tab washer. Tighten the bolt on the other side until the lift arms fall slowly by their own weight then secure the tab washer.

- After assembly adjust the lift control lever retaining nut to maintain a pull of 10-16 lbf (4.5-7.3 Kg) at the handle when the lever is moved through an arc of 4-5 in (100-125 mm) around the quadrant periphery as measured from the bottom stop.

D. INSTALLATION

Installation of the lift cover components follows the removal procedure in reverse.

5. OVERHAUL COOLER VALVE ASSEMBLY

A. REMOVAL

1. Clean the area around the cooler valve assembly and disconnect the oil cooler feed pipe, Figure 19.

2. Remove the cap nut then carefully pull the cooler valve assembly and dump pipe from the rear axle centre housing and discard the gasket.

B. DISASSEMBLY

1. Disconnect the dump pipe, remove and discard the "O" ring seal, Figure 20.

2. Withdraw the three retaining bolts and carefully remove the cover plate. Discard the gasket.

3. Extract the spring, spool and sleeve and pin assembly from the body.

C. INSPECTION AND REPAIR

1. Wash all parts in a suitable solvent and dry with a clean lint free cloth or compressed air.

2. Examine the spool and sleeve and pin assembly for wear, burrs or scratches.

Any minor burrs or scratches may be removed with a fine abrasive; ensure such parts are thoroughly washed before reassembly.

3. Check the valve spring is not broken or damaged.

4. Ensure all oil passages are free from obstruction.

5. Check the spool moves freely within the sleeve.

6. Renew the "O" ring seal and gaskets.

D. REASSEMBLY

1. The reassembly of the oil cooler by-pass valve components follows the disassembly procedure in reverse.

IMPORTANT – Ensure the slots at the front end of the sleeve align with the oil relief gallery porting within the body.

E. INSTALLATION

1. The installation of the oil cooler by-pass valve assembly follows the removal procedure in reverse.

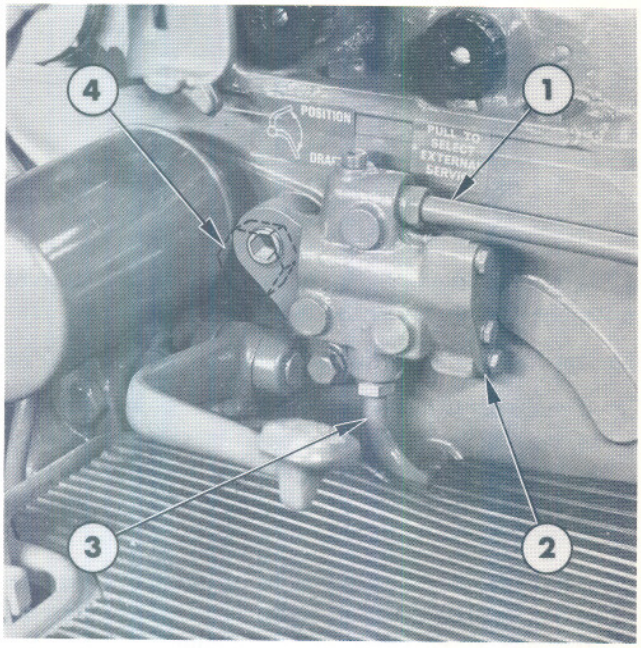

Figure 19
Oil Cooler By-Pass Valve Assembly Installed

1. Oil Cooler Feed Pipe
2. Cover Plate
3. Dump Pipe
4. Cap Nut (Removed) and Transfer Tube

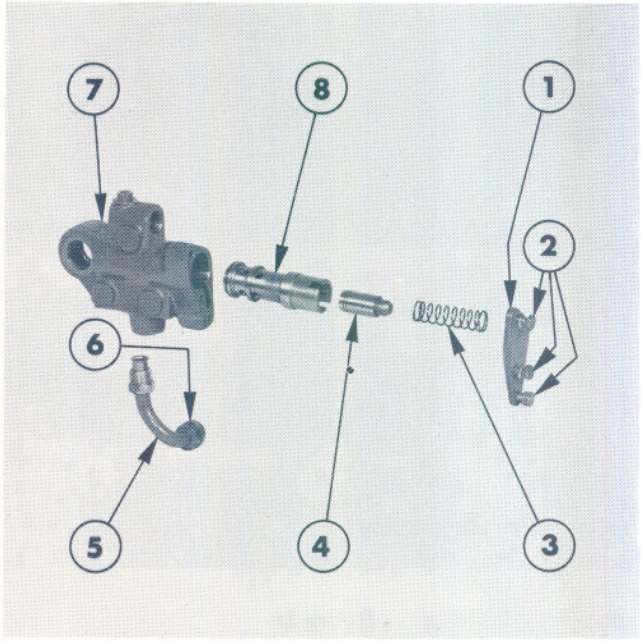

Figure 20
Oil Cooler By-Pass Valve Assembly

1. Cover Plate
2. Retaining Bolts
3. Spring
4. Spool
5. Dump Pipe
6. 'O' Ring Seal
7. Body
8. Sleeve and Pin Assembly

 © FORD MOTOR COMPANY, 1975

6. OVERHAUL OIL FILTER SUPPORT AND ADAPTOR ASSEMBLY

Repairs which necessitate removal of the oil filter support and adaptor assembly can only be effected after the lift cover has been removed as detailed in this Chapter.

A. REMOVAL

1. Drain the hydraulic oil from the rear axle centre housing.

2. Unscrew and remove the filter, Figure 21.

3. Remove the hydraulic pump to centre housing retaining bolts and withdraw the pump.

With Load Monitor:

Withdraw the brake pedal cross-shaft sufficient distance to enable the load monitor fork assembly to be dropped to the bottom of the centre housing. To provide extra clearance, slide the base of the fork towards the front of the housing. For brake cross-shaft removal refer to Part 10, "Rear Axle and Brakes".

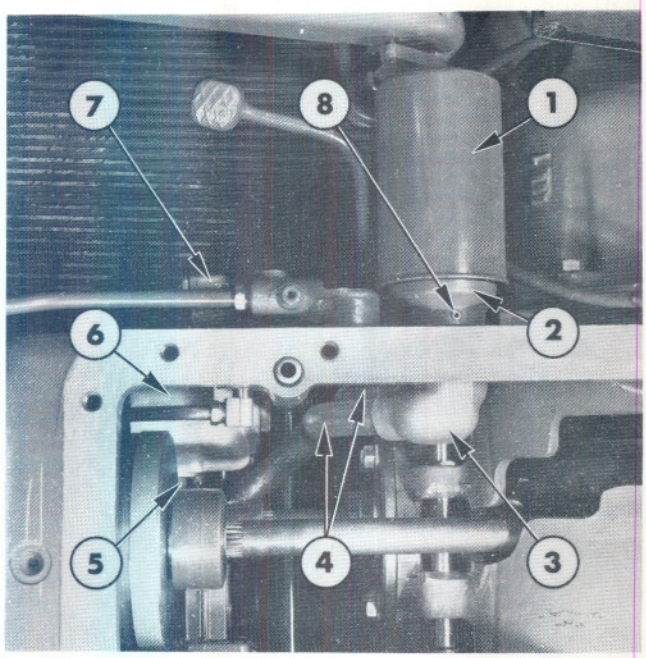

Figure 21
Oil Filter Support and Adaptor Assembly Installed

1. Oil Filter
2. Spacer
3. Support
4. Tubes
5. Adaptor
6. Hydraulic Pump
7. Oil Cooler By-Pass Valve Assembly
8. Spacer Set Screw

4. Slacken the set screw then remove the spacer and discard the "O" ring seal.

5. Carefully tap the end of the support free from the centre housing wall.

6. Withdraw the support and adaptor assembly from the centre housing then remove and discard the internal "O" ring seal at the pump connection end of the adaptor.

B. INSPECTION AND REPAIR

1. Wash all parts in a suitable solvent and dry with a clean, lint free cloth or compressed air.

2. Ensure all oil passages are free from obstruction.

3. Check the support and adaptor tubes and joints for cracks, porosity or damage.

4. Renew the "O" ring and seal.

C. INSTALLATION

1. The installation of the oil filter support and adaptor assembly follows the removal procedure in reverse.

On installation observe the following requirements:

(*i*) If replacing the oil filter mounting tube, seal the joint between the tube and the support by the application of a proprietary sealing compound to Ford specification EST-M4G148-A and tighten the tube to a torque of 30-35 ft lbf (40.7-47.5 Nm).

(*ii*) The hydraulic oil filter must be tightened to ensure the spacer contacts the centre housing face before tightening the spacer set screw to the specified torque. (See "Specifications – Chapter 11".)

2. Fill the rear axle with the correct grade and quantity of oil. (See "Specifications – Chapter 11".)

Part 11

HYDRAULIC SYSTEMS

Chapter 9

HYDRAULIC PUMP — ENGINE MOUNTED GEAR TYPE

Section		*Page*
1.	Description and Operation	1
2.	Overhaul Hydraulic Lift Pump	2

1. DESCRIPTION AND OPERATION

A cross-section of the engine mounted gear type hydraulic pump is shown in Figure 1.

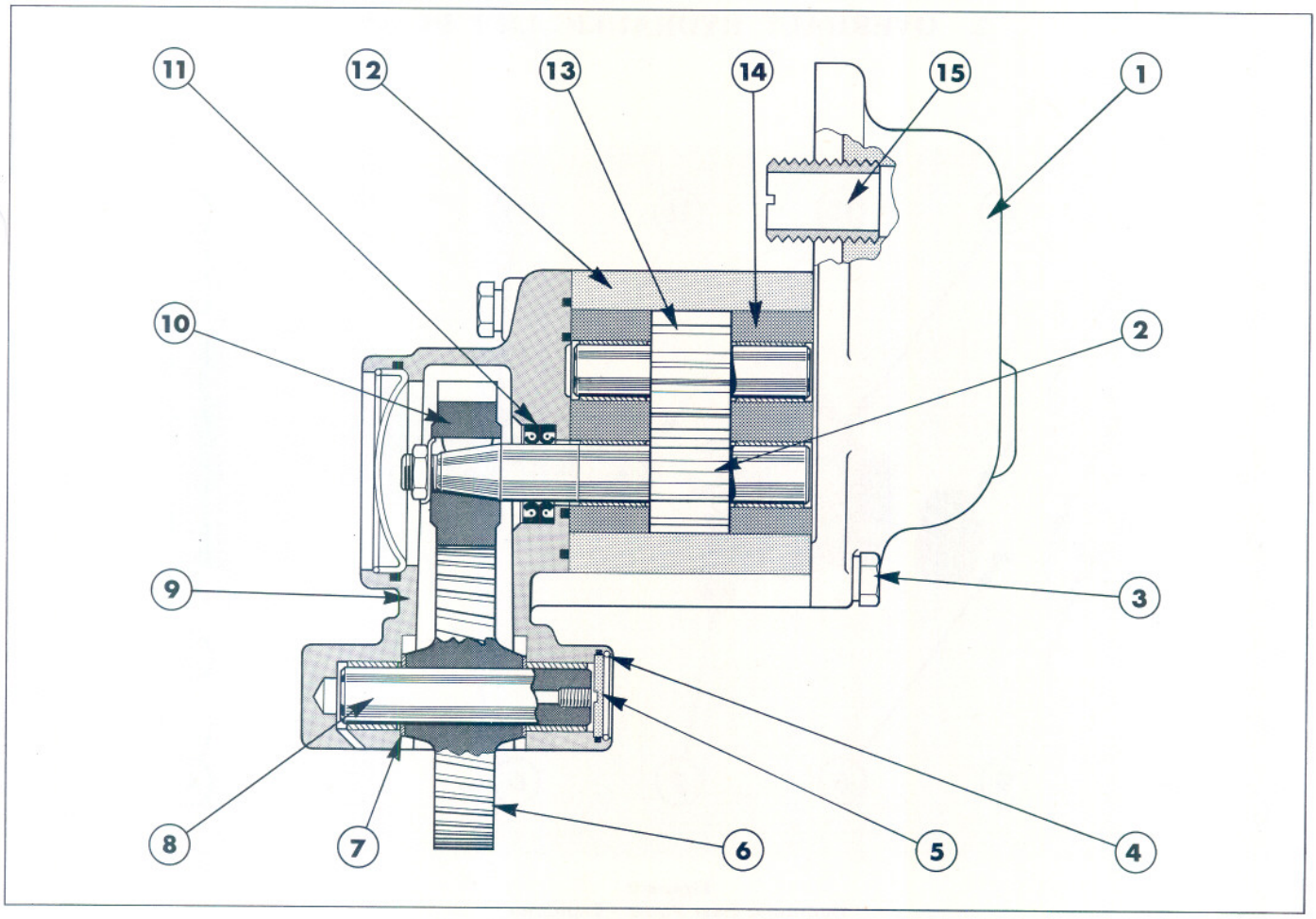

Figure 1
Cross-Section of Engine Mounted Hydraulic Gear Pump

1. Cover
2. Drive Gear
3. Through Bolt
4. Circlip
5. Plug
6. Idler Gear
7. Washer
8. Idler Gear Shaft
9. Housing
10. External Gear
11. Shaft Seal
12. Body
13. Driven Gear
14. Bearing
15. Threaded Adaptor

Printed in U.K. 8/75 © FORD MOTOR COMPANY, 1975

The pump is mounted on a machined face at the rear, left-hand side of the engine and is driven by the camshaft, through helical gears, to give a ratio of engine to pump rev/min of 1:1.06.

Hydraulic oil is supplied to the pump from the rear axle centre housing through an external pipe which connects to an intake port in the pump cover. Before entering the pump, the oil first passes through a replaceable micronic filter which screws onto a threaded adaptor mounted in the cover.

A set of spur gears, incorporated in the body of the pump, supplies oil to the hydraulic power lift. The spur gears are supported in aluminium bearings incorporating steel bushes with porous bronze and P.T.F.E. plus lead linings.

On entering the pump, the oil fills the spaces between the teeth of the revolving gears and is then carried around, within the pump body, to a point where the teeth in the two gears come into mesh. As the oil cannot pass back between the gears it is forced out of the pump body to an outlet port in the pump cover. The oil is then transmitted through an external pipe to the base of the rear axle centre housing and from there, via internal passages, to the lift cover.

2. OVERHAUL HYDRAULIC LIFT PUMP

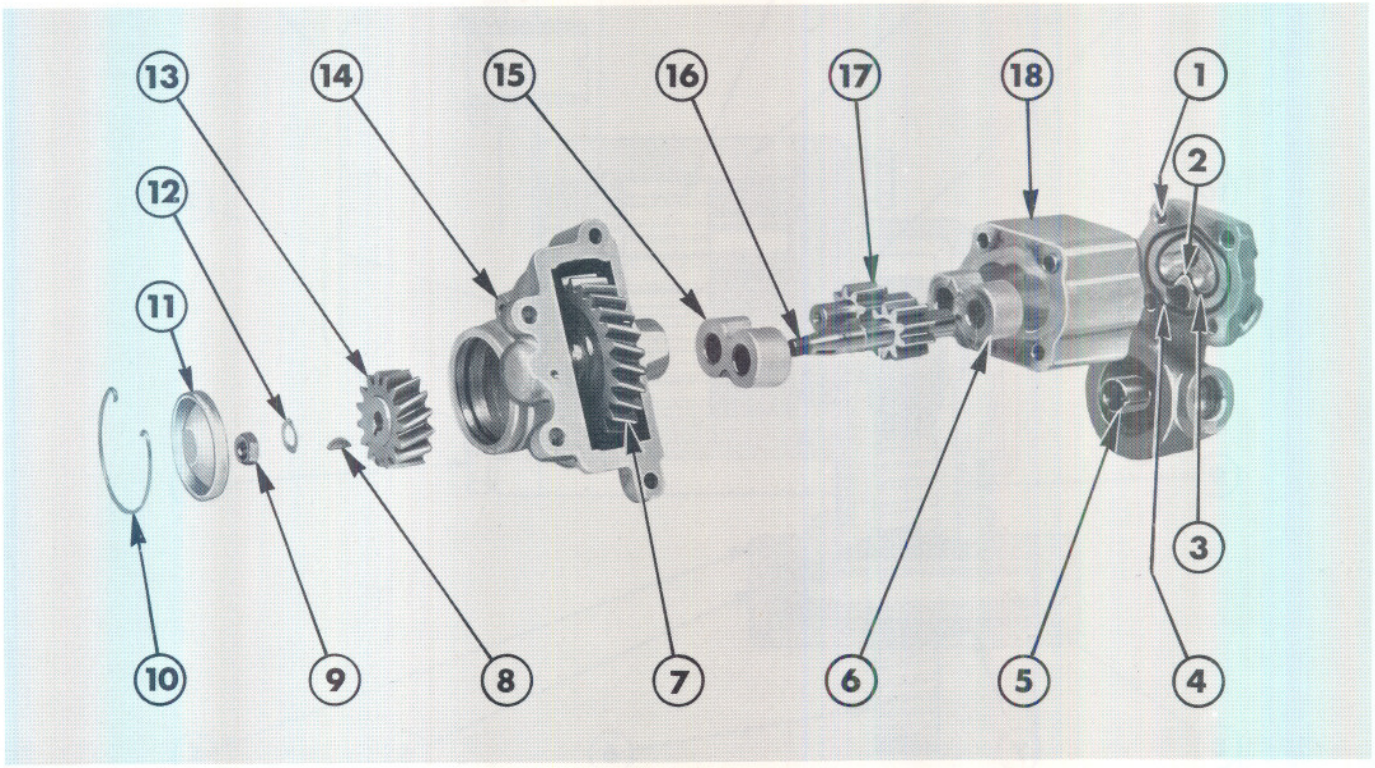

Figure 2
Hydraulic Gear Pump – Exploded

1. Cover
2. Stuffer Strip
3. Pressure Loading Ring
4. Sealing Ring
5. Threaded Adaptor
6. Bearing
7. Idler Gear Assembly
8. Key
9. Locknut
10. Circlip
11. Plug
12. Lockwasher
13. External Gear
14. Housing
15. Bearing
16. Drive Gear
17. Driven Gear
18. Body

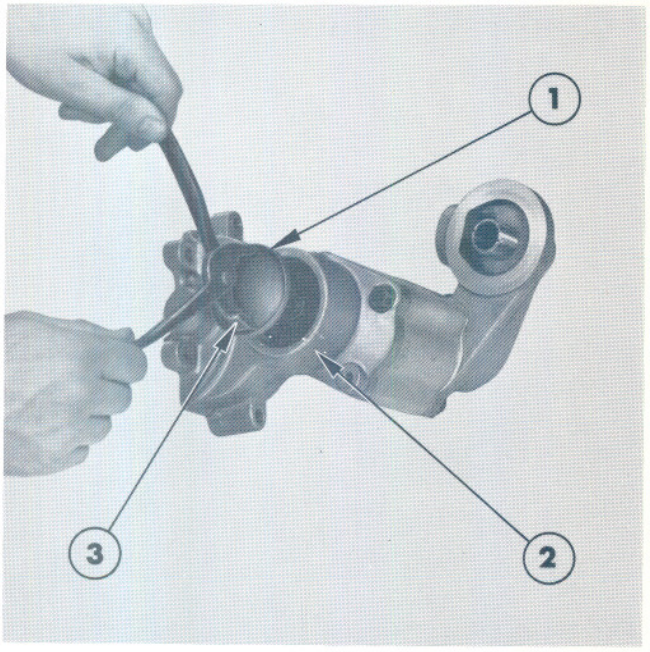

Figure 3
Removing External Gear Housing Plug
1. Plug
2. External Gear Housing
3. Pliers with Relieved Jaws

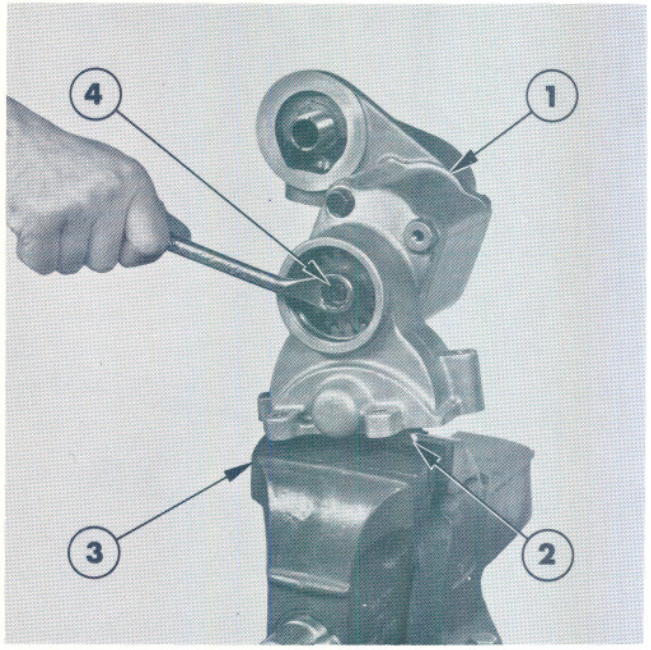

Figure 4
Removing External Gear Retaining Nut
1. Pump Assembly
2. Idler Gear
3. Soft Jaw Vice
4. External Gear Retaining Nut

A. Removal

1. Thoroughly clean the pump at the cover area before removal.

2. Disconnect the intake and pressure tubes from the pump cover. Ensure leakage is prevented and dirt is excluded from the system by covering the pipes with a clean cloth.

3. Remove the retaining bolts, dowel bolts and lock-washers and lift the pump off the tractor.

With reference to Figure 2.

1. Mark the housing, body and cover to facilitate correct re-assembly.

2. Unscrew the filter.

3. Remove the circlip and large dished plug in the external gear housing to expose the pump external drive gear.

NOTE – To facilitate removal of the plug use a pair of pliers with the jaw tops relieved, as shown in Figure 3.

4. Mount the pump in a soft-jawed vice gripping the idler gear, see Figure 4.

5. Release the tab washer and unscrew the external gear retaining nut.

6. Remove the pump from the vice.

7. Remove the four through bolts securing the pump cover and body to the external gear housing.

8. Use a soft faced mallet to separate the external gear housing and rear cover from the body then tap the end of the pump drive gear shaft to release the external gear from the shaft taper.

IMPORTANT – When performing this operation great care must be taken to avoid damage to:
(i) the threads on the end of the pump drive gear shaft, and
(ii) the shaft seal by allowing the key to foul the seal.

9. Remove the external drive gear and key.

 © FORD MOTOR COMPANY, 1975

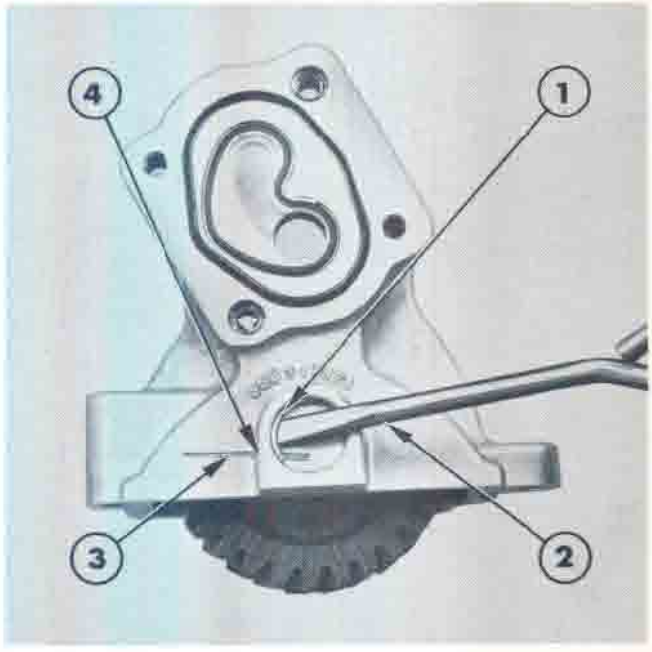

Figure 5
Removing Idler Gear Shaft Plug Retaining Circlip

1. Circlip
2. Screwdriver
3. Rod
4. Access Hole

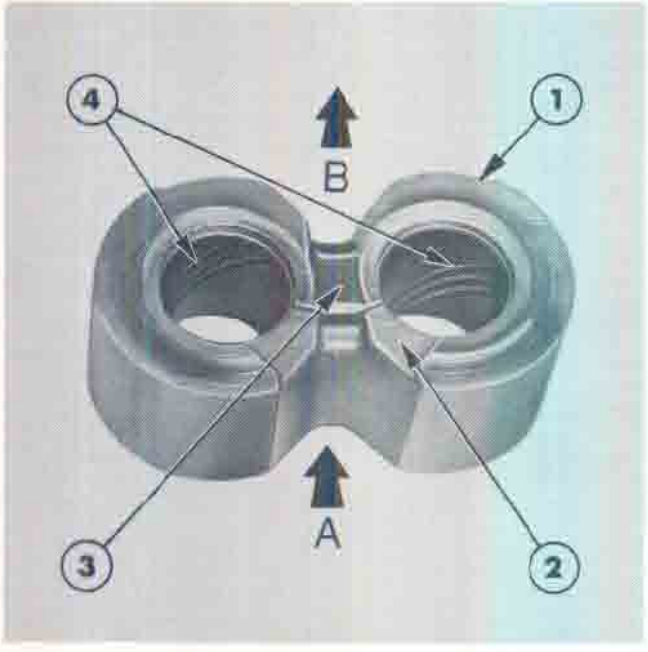

Figure 7
Pump Bearing

A. Pump Inlet
1. Relieved Radius
2. Recess on Face adjacent to Gears
B. Pump Outlet
3. Seal Bridge
4. Lubrication Scrolls

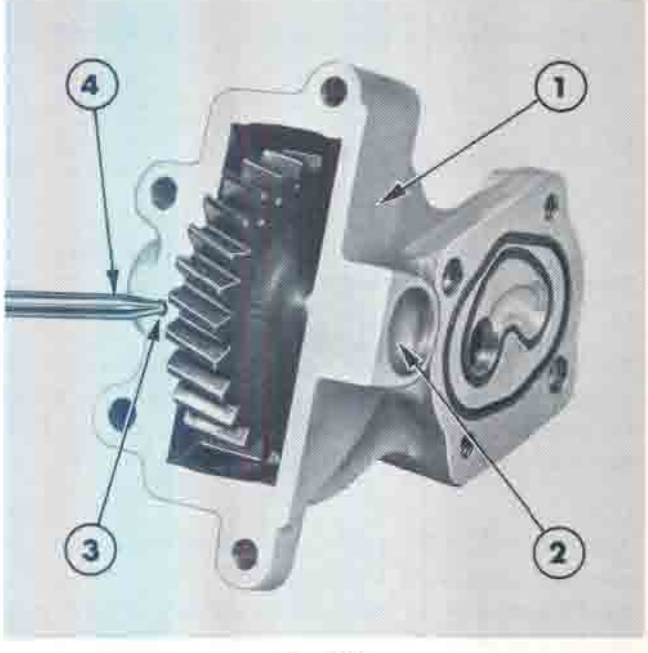

Figure 6
Removing Idler Gear Shaft Plug

1. Idler Gear Housing
2. Plug
3. Bleed Hole
4. Air Line

10. Withdraw the bearings and gear assembly from the pump body, carefully noting their original positions.

11. Remove the circlip from the end of the idler gear shaft by inserting a thin rod through the access hole in the housing, Figure 5.

12. Remove the plug from the end of the idler gear shaft by giving the housing a sharp tap on a wooden block.

NOTE – If the plug fails to drop out of the housing, remove by directing compressed air into the bleed hole located on the pump to engine mounting face, see Figure 6.

13. Remove the idler gear shaft, idler gear and two washers.

C. Inspection and Repair

1. Wash all parts in a suitable solvent to remove any foreign particles and dry with a clean, lint-free cloth or compressed air.

2. Examine each bearing for wear on the face and in the bore. Pay particular attention to the condition of the lubricating scrolls and the seal bridge, Figure 7. At the stage of major overhaul, bearings should be renewed but light score marking may be removed by polishing as follows:

(i) Place a sheet of 'O' grade emery paper, lubricated with paraffin, on a truly flat surface, then polish the bearing face using light rotary motion.

(ii) Outer diameter may be lightly polished to obtain free movement in the body.

3. Inspect the pump body for external damage and cracks. Examine the bores for wear and damage.

NOTE – It is normal for the gears to cut a light track on the inlet side of the body bore and providing the depth of the track does not exceed 0.004 in (0.10 mm) the body is re-usable. Using an internal micrometer measure the body bore at the bearing location and then at the track position to assess the track depth, see Figure 8.

Burrs at the edge of the gear track should be removed with 'O' grade emery paper.

4. Examine the gears for scored or worn side faces or journals, damaged teeth, thread or keyway and surface cracks. Slight wear and scoring on the journals may be erased by mounting between lathe centres and polishing with 'O' grade emery paper lubricated with paraffin. Lightly scored side faces may be renovated by sandwiching emery paper between the gear face and a scrap bearing and rotating the gear, Figure 9.

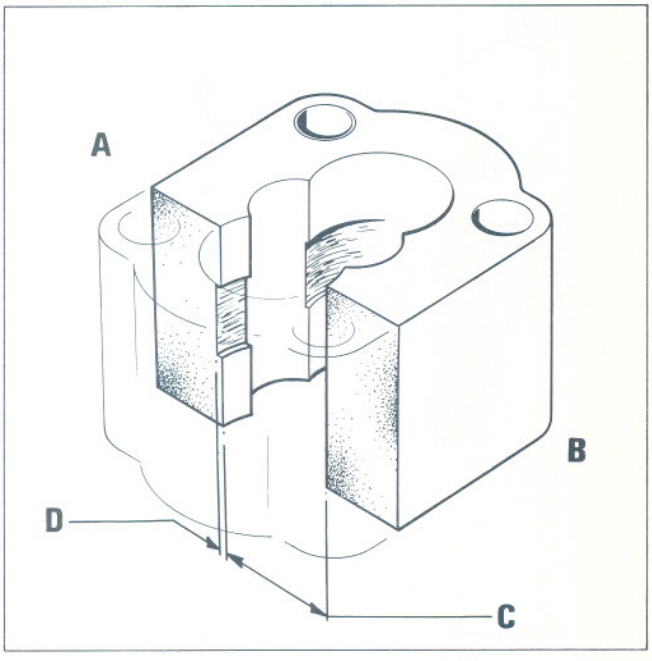

Figure 8
Gear Track in Body

A. Inlet Side
B. Outlet Side
C. Bore Diameter (Bearing Location)
D. Depth of Gear Track

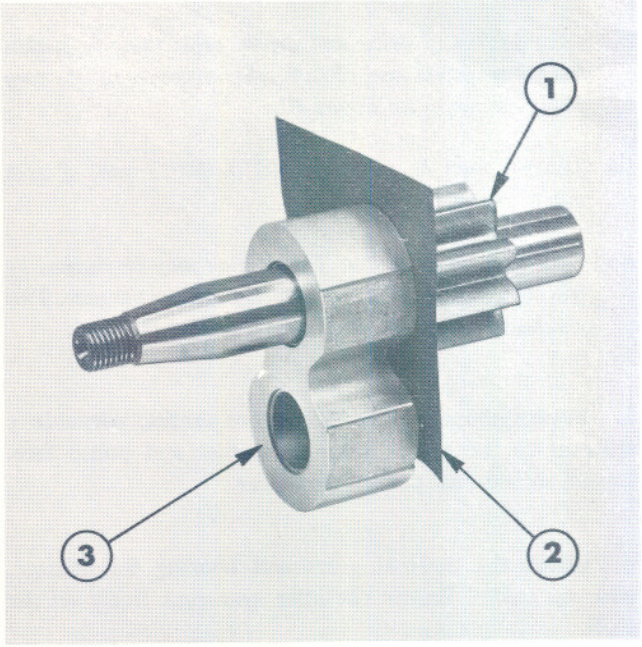

Figure 9
Polishing Gear Faces

1. Gear
2. Emery Paper 'O' Grade
3. Scrap Bearing

 © FORD MOTOR COMPANY, 1975

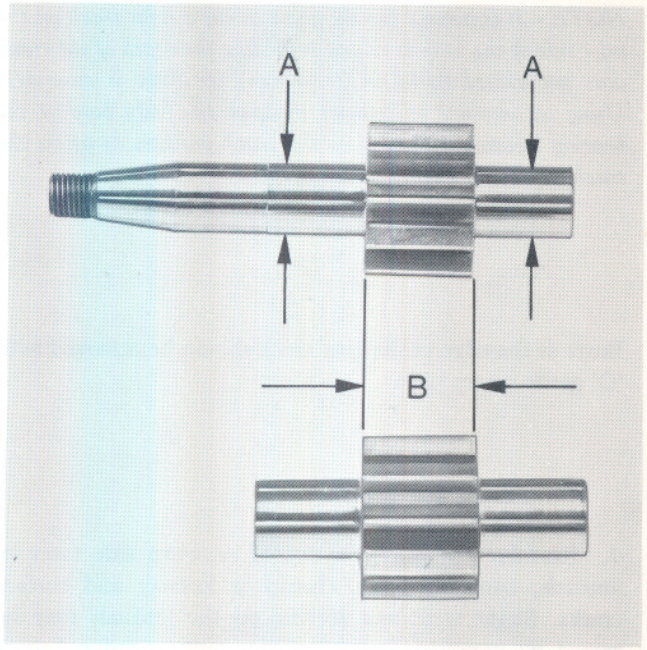

Figure 10
Gear Pairing

A. Journals Paired within 0.0005 in (0.013 mm)
B. Gear Widths Paired within 0.0002 in (0.005 mm)

IMPORTANT – Whilst servicing the drive and driven gears, particular attention must be paid to the following points:

(i) Gear widths of drive and driven gears must be within 0.0002 in (0.005 mm) of each other to ensure satisfactory pump efficiency, see Figure 10.

(ii) Journals must be within 0.0005 in (0.013 mm) of each other, Figure 10.

(iii) Gear faces must be flat. This feature may be checked by blueing a bearing face and rotating against the gear. This check will also reveal any sharp edges on the teeth.

5. Inspect the cover for damage or cracks, particularly adjacent to the ports, filter connection and pump face. Ensure the internal passages are clear.

6. Check the external gears and housing for damage, wear or cracks. Ensure the idler gear runs freely on the shaft.

7. New seals and 'O' rings should be installed when servicing the pump.

In the event of components being unsuitable for further use the advisable action is to clean out the hydraulic system and replace the complete pump unit. Worn components can, in an emergency, be replaced but the following points must be noted:

(i) Under working conditions, hydraulic pressure within the pump loads the gears towards the inlet side of the body thereby cutting the running track. If the bearings or gear journals wear, the gears move over thus deepening the track.

(ii) If the running track is worn past or to the limit for re-use, the installation of new bearings will re-centre the gears and prevent the tips of the teeth bottoming in the track thereby resulting in pump inefficiency.

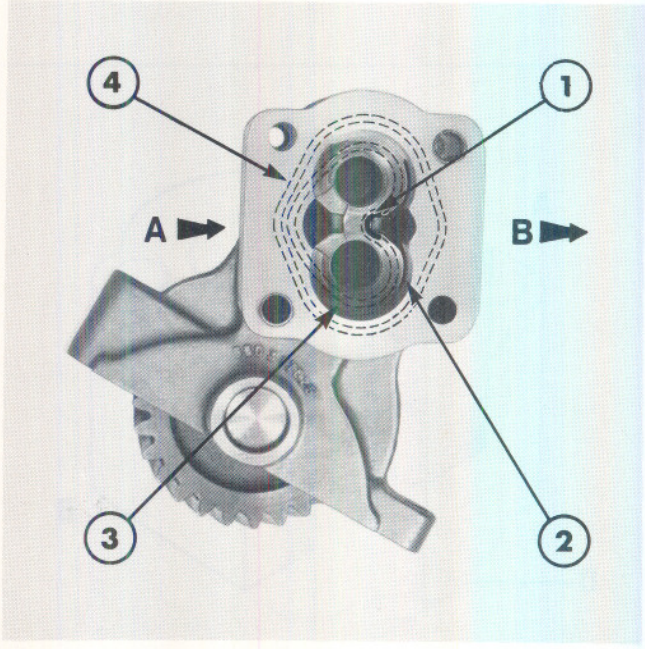

Figure 11
Position of Sealing Rings and Relationship of Bearings to Inlet Side of Body

A. Inlet
B. Outlet
1. Stuffer Strip
2. (Relieved) Radius on Outlet Side of Pump
3. Pressure Loading Ring
4. Outer Sealing Ring

D. Re-Assembly

IMPORTANT – If used bearings are to be refitted they should be installed in their original positions. Inspection of the bearings indicates two distinct features which may be used to ensure correct location.

(i) A Y-shaped recess in the bearing face.

(ii) Relieved radii on one side of the bearing.

Assemble the bearings with the Y-shaped recesses adjacent to the gear faces and the relieved radii facing the outlet side of the body, see Figures 7 and 11.

1. Lightly lubricate all parts with hydraulic oil.

2. Seals and 'O' rings should be coated with petroleum jelly and care taken to ensure the pump sealing rings do not become misplaced during re-assembly, Figure 11.

3. The cavity between the lips of the shaft seal should be packed with high melting point grease.

4. Press the housing on to the body dowels.

5. Assemble the bearings and gear into the body bore.

6. Press the cover on to the body dowels.

7. Install the through bolts and tighten to a torque of 35–40 lbf ft (48–54 Nm).

8. Fit the shaft key, external drive gear, tab washer and retaining nut on to the drive shaft taper. Tighten the nut to a torque of 40–45 lbf ft (54–61 Nm) and turn up the tabs of the washer.

9. Install the dished plug and circlip into the external gear housing.

10. Install the idler gear, two washers, shaft, plug and circlip into the housing.

IMPORTANT – Ensure the plug is assembled with the slot towards the shaft.

11. If the pump is not to be re-used immediately, the ports should be sealed with dust caps.

E. Installation

Installation of the engine mounted gear type hydraulic pump follows the removal procedure in reverse.

IMPORTANT – Ensure a new 'O' ring seal is installed in the pump to ensure an airtight seal with the inlet tube.

 © FORD MOTOR COMPANY, 1975

Part 11

HYDRAULIC SYSTEMS

Chapter 10

HYDRAULIC PUMP - INCREASED CAPACITY TRANSMISSION MOUNTED GEAR TYPE

Section		*Page*
1.	Description and Operation	1
2.	Overhaul Hydraulic Lift Pump	2

1. DESCRIPTION AND OPERATION

A cross-section of the increased capacity transmission mounted gear type hydraulic pump is shown in Figure 1.

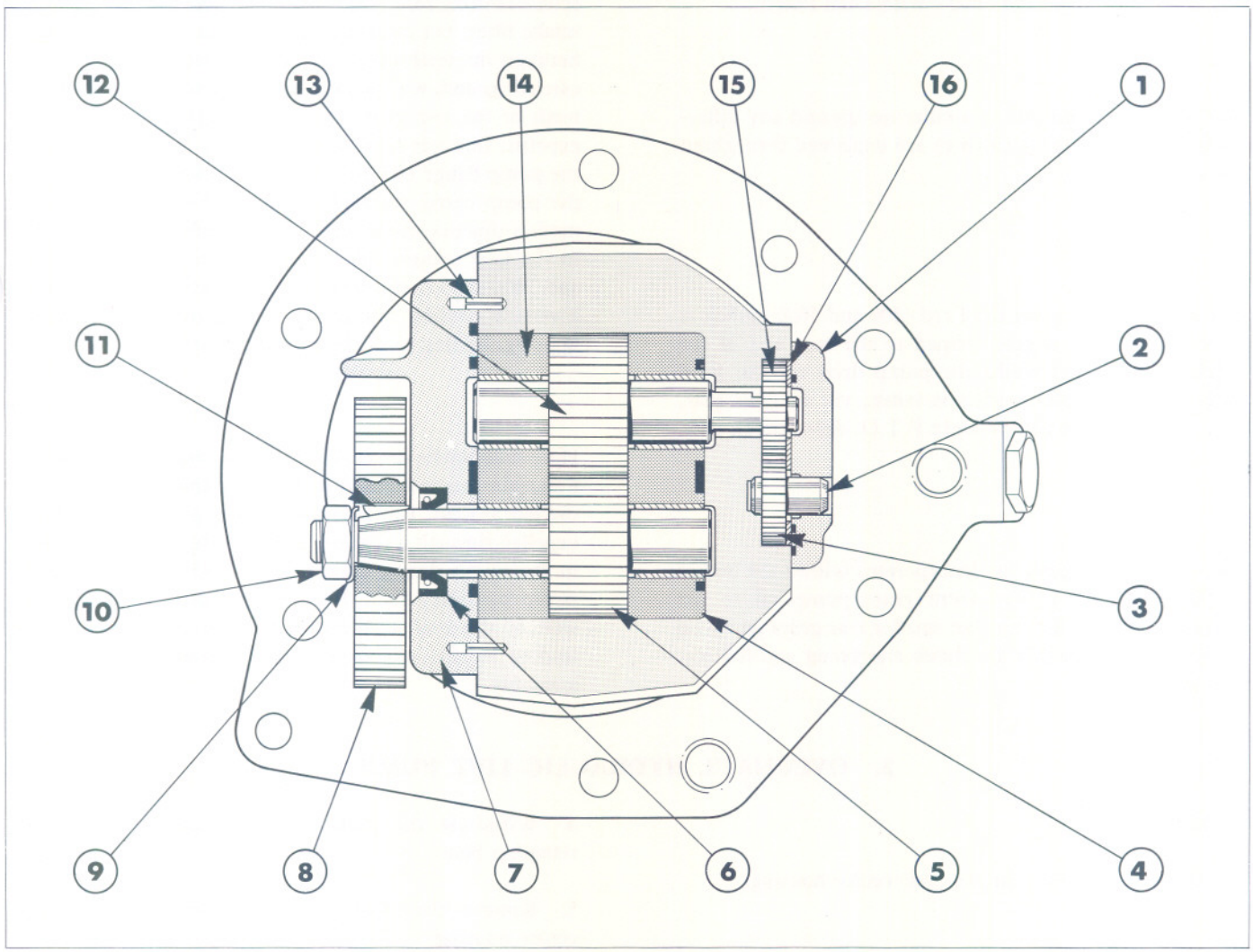

Figure 1
Cross-section of Increased Capacity Transmission Mounted Hydraulic Gear Type Pump

1. Rear Cover
2. Rear Driven Gear Shaft
3. Rear Driven Gear
4. Rear Gear Bearing
5. Front Drive Gear
6. Shaft Seal
7. Front Cover
8. Driven Gear
9. Tab Washer
10. Nut
11. Shaft Key
12. Front Driven Gear
13. Roll Pin Dowel
14. Front Gear Bearing
15. Rear Drive Gear
16. Pressure Plate

Printed in U.K. 8/75 © FORD MOTOR COMPANY, 1975

The increased capacity pumps are tandem gear type units mounted at the lower right-hand side of the rear axle centre housing.

There are three transmission mounted hydraulic gear type pumps available and each pump is specified for a particular model range as follows:

(i) Ford 4100 and 4600
(ii) Ford 5600, 6600 and 7600 – Less Dual Power
(iii) Ford 5600, 6600 and 7600 – With Dual Power

The pumps are basically of similar design and any differences which exist between them are explained throughout this Chapter.

The hydraulic pump for the Ford 4100 and 4600 models is driven directly by a gear splined to the rear end of the P.T.O. countershaft whilst the pump drive for the Ford 5600, 6600 and 7600 models is taken, via an idler gear, from a gear on the independent P.T.O. drive clutch hub.

Two sets of spur gears are incorporated within the bodies of the new pumps. The front gears pump oil to the hydraulic power lift whilst the smaller rear gears pump oil to the independent P.T.O. clutch energising and lubrication circuits.

NOTE – For the Ford 5600, 6600 and 7600 models with Dual Power, the hydraulic power lift return circuit oil is utilised to pressure lubricate the Dual Power transmission and a larger set of rear gears ensure an adequate flow of oil to energise both the Dual Power and P.T.O. hydraulic clutches. The rear pump circuit features a separate relief valve.

The two sets of gears, which are coupled together and revolve at the same speed, are in constant operation whenever the engine is running.

Hydraulic oil is supplied to the pump from the rear axle centre housing reservoir via a replaceable full flow micronic intake filter. On entering the pump the oil fills the spaces between the teeth of the revolving front gears and is then carried around, within the pump body, to a point where the teeth of the two gears come into mesh. The oil is then expelled through an outlet port into a passage formed in the pump flange and incorporating a relief valve to prevent the pump being overloaded. For the Ford 4100 and 4600 models this passage is vertical and connects via a feed pipe to the flow control valve plate. For the Ford 5600, 6600 and 7600 models the passage is horizontal and connects to a vertical drilling, within the wall of the rear axle centre housing, leading to the hydraulic lift cover.

Hydraulic intake oil also passes to the rear pump gears via a transfer passage drilled within the pump body. The oil is carried around, by the rotating rear gears, before being expelled through a rear outlet port into a passage formed in the pump flange. This passage leads to a port on the pump mounting face which directs the oil, through the wall of the rear axle centre housing, into a rigid pipe leading to the independent P.T.O. clutch control valve assembly.

2. OVERHAUL HYDRAULIC LIFT PUMP

A. REMOVAL

1. Drain the oil from the rear axle centre housing.

2. Disconnect the two brake pedal return springs from the right-hand platform.

3. Remove the right-hand platform.

4. Withdraw the pump to rear axle centre housing retaining bolts.

5. Remove the pump from the side of the rear axle centre housing.

NOTE – For Ford 4100 and 4600 models the externally located feed pipe, connecting the pump to the flow control valve plate, must be pushed upwards a sufficient distance to facilitate removal of the pump.

B. DISASSEMBLY

An exploded view of the hydraulic pump is shown in Figure 2.

NOTE – For Ford 5600, 6600 and 7600 models remove the adaptor from intake pipe of the pump and discard the 'O' ring seal.

1. Straighten the locking tab and remove the external driven gear retaining nut.

2. Withdraw the external driven gear from the shaft.

3. Remove the shaft key.

4. Remove the front cover retaining bolts and washers and withdraw the front cover.

5. Pull the front drive gear and bearing from the pump body.

6. Separate the front drive gear from the bearing.

7. Withdraw the front driven gear from the pump body.

8. Remove the rear cover retaining bolts and washers and withdraw the rear cover.

NOTE – For Ford 5600, 6600 and 7600 models with Dual Power the rear cover incorporates a circuit relief valve.

9. Extract the pressure plate from the rear of the pump.

10. Using a pair of long-nose pliers remove the rear gears.

11. Withdraw the rear gear bearing.

NOTE – To facilitate removal of the rear gear bearing it may be necessary to push the bearing from the rear using a suitable rod inserted in the oil transfer passage.

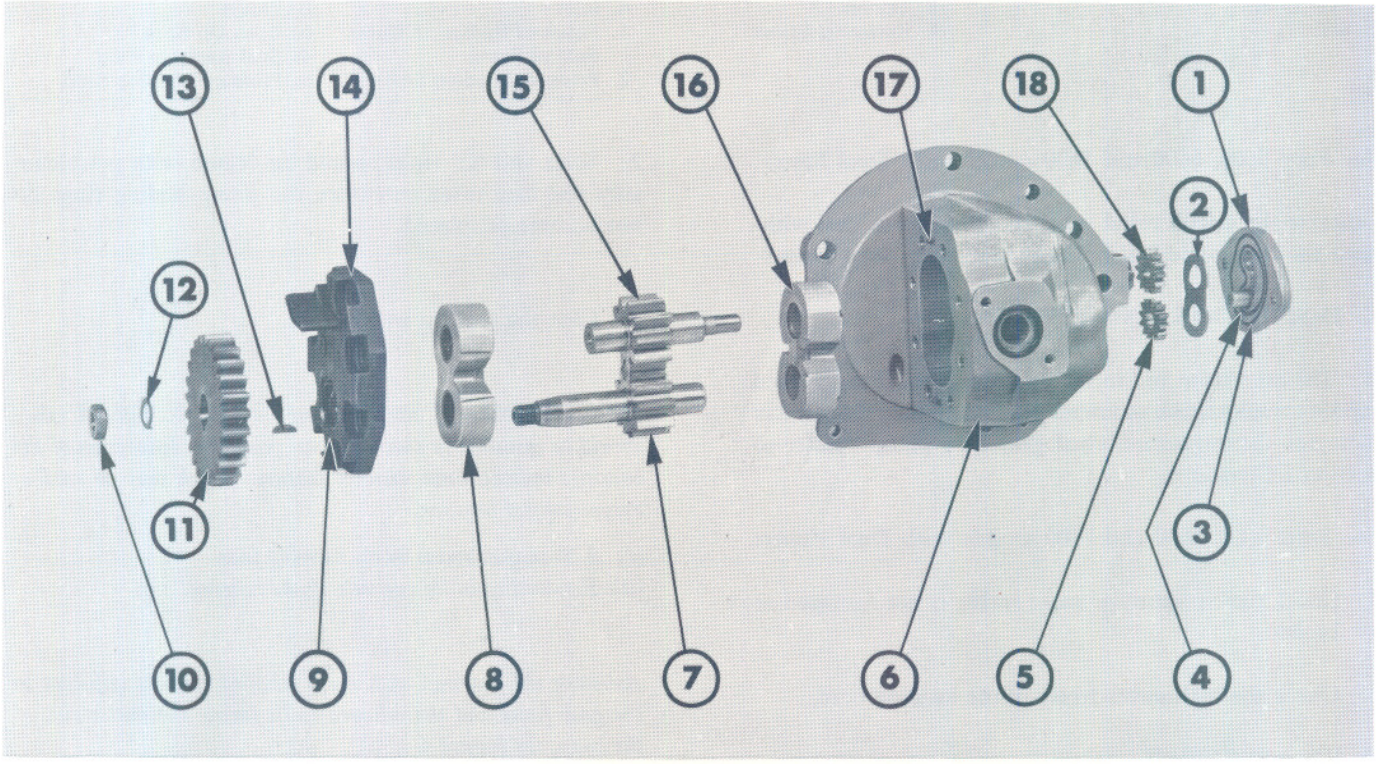

Figure 2
Hydraulic Gear Pump – Exploded

1. Rear Cover
2. Pressure Plate
3. Outer Sealing Ring
4. Pressure Loading Ring
5. Rear Driven Gear
6. Pump Body
7. Front Drive Gear
8. Front Gear Bearing
9. Front Seal
10. Nut
11. External Driven Gear
12. Tab Washer
13. Shaft Key
14. Front Cover
15. Front Driven Gear
16. Rear Gear Bearing
17. Roll Pin Dowel
18. Rear Drive Gear

 © FORD MOTOR COMPANY, 1975

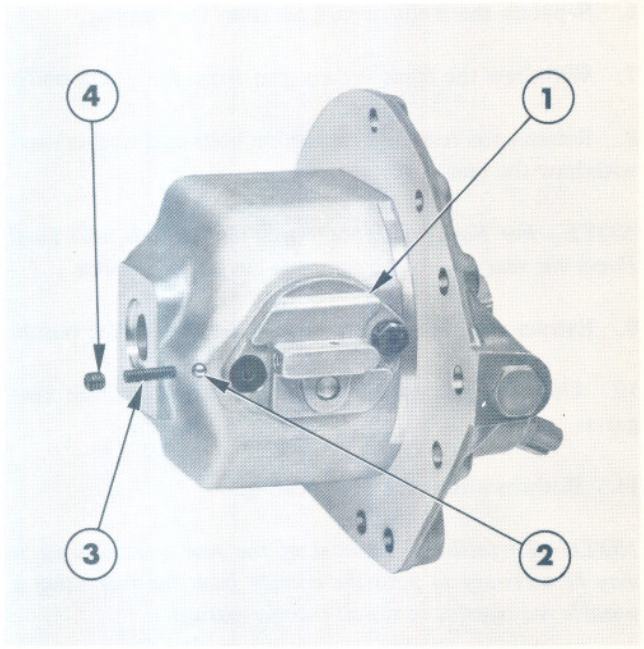

Figure 3
Circuit Relief Valve – Ford 5600, 6600 and 7600 Models with Dual Power

1. Rear Cover
2. Ball
3. Spring
4. Retaining Screw

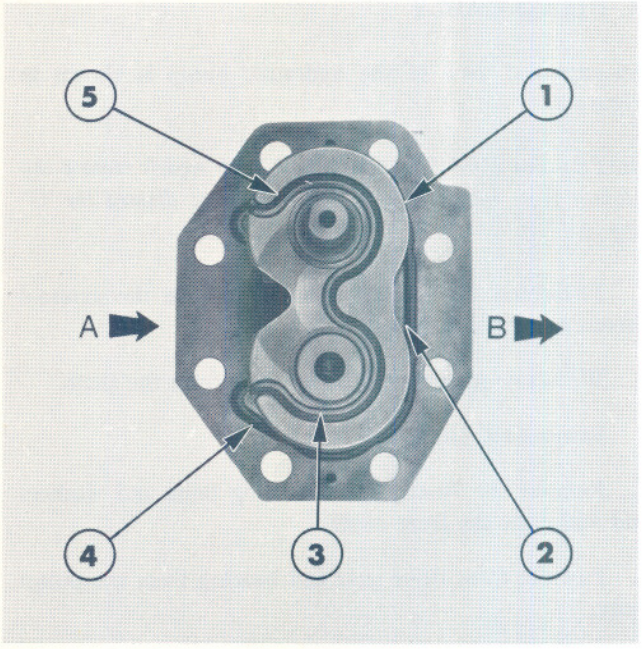

Figure 4
Position of Sealing Rings and Relationship of Bearings to Inlet Side of Body

A. Inlet
B. Outlet
1. Relieved Radius on Outlet Side of Pump
2. Pressure Loading Seal
3. Back Up Strip
4. Seal Back Up Ring
5. Pressure Loading Strip

For Ford 5600, 6600 and 7600 models with Dual Power:

Unscrew the circuit relief valve retaining screw and withdraw the spring and ball from the rear cover, see Figure 3.

C. INSPECTION AND REPAIR

1. The inspection and repair procedures for the increased capacity transmission mounted gear pumps are the same as those for the engine mounted gear type pump – Refer to Section 2 Chapter 9.

For Ford 5600, 6600 and 7600 models with Dual Power:

(i) Check the circuit relief valve spring is not damaged or broken.

(ii) Check the ball moves freely in the locating bore.

D. RE-ASSEMBLY

The re-assembly of the increased capacity hydraulic gear type pumps follows the disassembly procedure in reverse.

When re-assembling the pump, note the following:

1. Lightly lubricate all parts with hydraulic oil.

2. Seals and 'O' rings should be coated with petroleum jelly and care taken to ensure the pump sealing rings do not become misplaced.

3. Coat the seal lip with grease.

IMPORTANT – If used bearings are to be refitted, they should be installed in their original positions. Inspection of the bearings indicates two distinct features which may be used to ensure correct location.

(i) A Y-shaped recess in the bearing face.
(ii) Relieved radii on one side of the bearing.

Assemble the bearings with the Y-shaped recesses adjacent to the gear faces and the relieved radii facing the outlet side of the body, see Figure 4.

E. INSTALLATION

The installation of the increased capacity hydraulic gear type pumps follows the removal procedure in reverse.

PRESSURE TESTING THE HYDRAULIC PUMP

FORD 2600 & 3600 MODELS WITH ENGINE MOUNTED PISTON TYPE PUMP

For pressure test procedure refer to Chapter 5.

FORD 2600 & 3600 MODELS WITH ENGINE MOUNTED GEAR TYPE PUMP AND FORD 4100 & 4600 MODELS WITH INCREASED CAPACITY TRANSMISSION MOUNTED GEAR TYPE PUMP

Install an Auxiliary Service Selector Valve and pull out the spool to the furthest position.

NOTE – Ensure the accessory plug, situated at the top of the selector valve housing, is tight to prevent oil leakage.

For Dealers having T.8503 Test Equipment:
Remove the centre plug from below the flow control knob, Figure 1. Install "T" Adaptor Tool No. T.8503-1/f fitted with pump Thread Adaptor Tool No. T8503-7 in the plug aperture. To one side of the "T" Adaptor attach Pressure Gauge Tool No. T.8503 and to the other side install the Load Valve Tool No. T.8503-1/b and Hose Tool No. T.8503-4/d leading back to the rear axle filler plug.

For Dealers having N-1100 Test Equipment:
Remove the centre plug from below the flow control knob, Figure 2. Install Fitting Tool No. 6211 in the plug aperture and connect "T"-Fitting Tool No. N-1100-L, Load Valve Tool No. N-1100-N, a 0.25×3.0 in (6.35×76.2 mm) Pipe Nipple and a 0.5 in (12.7 mm) Low Pressure Hose leading back to the rear axle filler plug. From the "T"-Fitting connect Adaptor Tool No. N-1100-H and Pressure Gauge Tool No. N-1100-3.

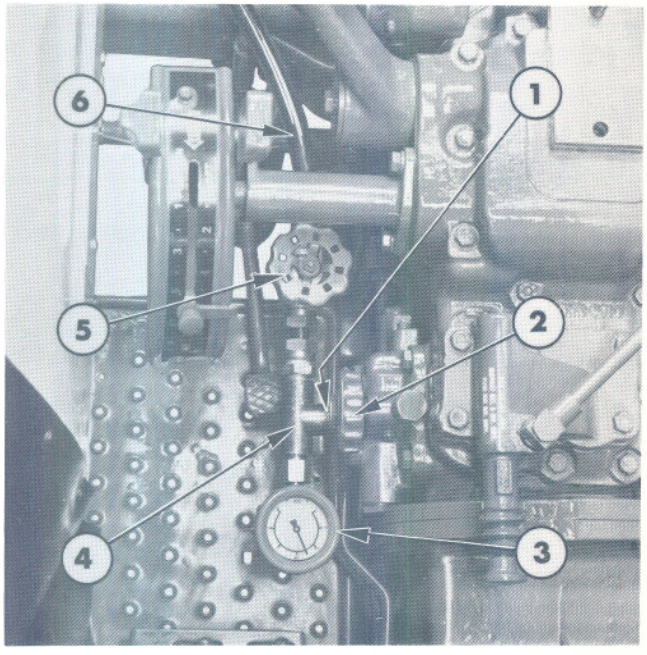

Figure 1
Pressure Testing – Engine Mounted Gear Type Pump – Ford 2600 and 3600

1. Thread Adaptor Tool No. T8503-7
2. Flow Control Knob
3. Pressure Gauge Tool No. T8503
4. T-Piece Adaptor Tool No. T8503-1/f
5. Load Valve Tool No. T8503-1/b
6. Hose Tool No. T8503-4/d

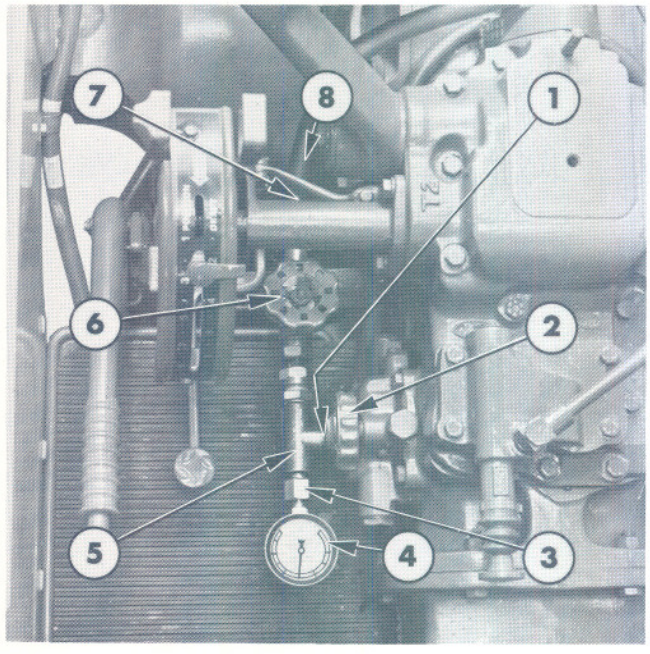

Figure 2
Pressure Testing – Increased Capacity Transmission Mounted Gear Type Pump – Ford 4100 and 4600

1. Fitting Tool No. 6211
2. Flow Control Knob
3. Adaptor Tool No. N-1100-H
4. Pressure Gauge Tool No. N-1100-3
5. T-Fitting Tool No. N-1100-L
6. Load Valve Tool No. N-1100-N
7. 0.25×3.0in (6.35×76.2mm) Pipe Nipple
8. 0.5 in (12.7 mm) Low Pressure Hose

 © FORD MOTOR COMPANY, 1975

Procedure

1. Fully open the loading valve, start the engine and run at 1650 rev/min.

2. Place the lift control lever(s) in the fully raised position. *NOTE – Return the control lever(s) to the lower position before pushing the selector valve to the innermost position.*

3. Gradually close the loading valve and observe the pressure gauge reading which should steadily rise to the relief valve full opening pressure, see "Specifications".

FORD 5600, 6600 & 7600 MODELS WITH INCREASED CAPACITY TRANSMISSION MOUNTED GEAR TYPE PUMPS

For pressure test procedure refer to Chapter 5.

NOTE – The increased capacity hydraulic pumps for the Ford 5600, 6600 and 7600 models also feature a pressure testing point at the end of the horizontal passage incorporating the pressure relief valve.

2. SPECIFICATIONS

LIFT CYLINDER AND PISTON DIAMETER (Nominal)

Ford 2600	3 in	76 mm
Ford 3600	3 in	76 mm
Ford 4100	3.5 in	89 mm
Ford 4600	3.5 in	89 mm
Ford 5600	3.75 in	95 mm
Ford 6600	4.125 in	105 mm
Ford 7600	4.125 in	105 mm

VALVE OPENING PRESSURES

	Ford 2600 & 3600	*Ford 4100 & 4600*	*Ford 5600, 6600 & 7600*
Lift Cylinder Safety Valve Opening Pressure	2750-2850 lbf/in² 193-200 kg/cm² 193-200 bar	2850-2950 lbf/in² 200-207 kg/cm² 200-206 bar	2850-2950 lbf/in² 200-207 kg/cm² 200-206 bar
Oil Cooler Valve Opening Pressure	35-45 lbf/in² 2.5-3.2 kg/cm² 2.4-3.1 bar	35-45 lbf/in² 2.5-3.2 kg/cm² 2.4-3.1 bar	35-45 lbf/in² 2.5-3.2 kg/cm² 2.4-3.1 bar
Check Valve Opening Pressure	71-93 lbf/in² 5.0-6.5 kg/cm² 4.9-6.4 bar	71-93 lbf/in² 5.0-6.5 kg/cm² 4.9-6.4 bar	70-85 lbf/in² 5.0-6.0 kg/cm² 4.9-5.9 bar

PRESSURE RELIEF VALVE

Minimum Crack-off Pressure	2400 lbf/in²	(169 kg/cm²)	(168 bar)
Fully Opening Pressure	2550-2650 lbf/in²	(179-186 kg/cm²)	(178-186 bar)
Tightening Torque	20-25 ft lbf	(27-34 Nm)	
Shim Thickness	0.01 in	(0.254 mm)	
	0.015 in	(0.318 mm)	
Maximum Permissible Thickness of Shim	0.08 in	(2.03 mm)	

FLOW CONTROL VALVE LINKAGE

Ford 2600 (where fitted), 3600, 4100 and 4600

Actuating Follower Shim Thickness	0.01 in	(0.254 mm)

DRAFT CONTROL MAIN SPRING

Ford 3600, 4100 and 4600

Draft Control Spring Shim Thickness	0.015 in	(0.381 mm)
	0.020 in	(0.508 mm)
	0.025 in	(0.635 mm)

HYDRAULIC PUMP — GEAR TYPE

	Imp galls/min	*U.S. galls/min*	*Litres/min*	*Pump Speed*	*Engine Speed*
Ford 2600, 3600					
Flow Capacity – Front Pump	6.9	8.3	31.3	2130 rpm	2000 rpm
Ford 4100, 4600					
Flow Capacity – Front Pump	7	8.4	31.6	1515 rpm	2200 rpm
– Rear Pump	1.37	1.64	6.23	1515 rpm	2200 rpm
Ford 5600, 6600, 7600 – Less Dual Power					
Flow Capacity – Front Pump	7.7	9.3	35.00	1680 rpm	2100 rpm
– Rear Pump	0.83	1.00	3.77	1680 rpm	2100 rpm
Ford 5600, 6600, 7600 – With Dual Power					
Flow Capacity – Front Pump	7.7	9.3	35.00	1680 rpm	2100 rpm
– Rear Pump	1.52	1.82	6.87	1680 rpm	2100 rpm

HYDRAULIC PUMP – PISTON TYPE

	Imp galls/min	*U.S. galls/min*	*Litres/min*	*Pump Speed*	*Engine Speed*
Ford 2600					
Rated Pump Output	3.41	4.09	15.5	2130 rpm	2000 rpm
Ford 3600					
Rated Pump Output	4.23	5.08	19.6	2130 rpm	2000 rpm

 © FORD MOTOR COMPANY, 1975

TORQUE SPECIFICATIONS

Ford 2600, 3600, 4100 and 4600

	Ford 2600 & 3600			*Ford 4100 & 4600*		
	Ft lbf	*Mkg*	*Nm*	*Ft lbf*	*Mkg*	*Nm*
Lift Cylinder Retaining Bolts	50-55	7.0-7.6	68-75	75-80	10.4-11.0	102-109
Lift Cover Retaining Bolts	70-85	9.7-11.7	95-115	70-85	9.7-11.7	95-115
Accessory Cover to Lift Cover Bolts	50-70	7.0-9.7	68-95	50-70	7.0-9.7	68-95
Centre Bolt	12-15	1.7-2.1	17-20	12-15	1.7-2.1	17-20
Control Valve Baffle Plate and Rear Plate Retaining Bolts	24-30	3.3-4.2	33-41	24-30	3.3-4.2	33-41
Quadrant Assembly to Quadrant Support Retaining Bolts	23-30	3.2-4.2	31-41	23-30	3.2-4.2	31-41
Quadrant Support to Lift Cover Housing Retaining Bolts Control Valve Lever	35-47	4.8-6.5	48-64	35-47	4.8-6.5	48-64
Adjustable Stop Retainer Nut	23-30	3.2-4.2	31-41	23-30	3.2-4.2	31-41
Draft Control Spring Housing Bolts	30-50	4.2-7.0	41-68	30-50	4.2-7.0	41-68
Check Valve Plug	45-55	6.2-7.6	61-75	45-55	6.2-7.6	61-75
Flow Control Plate Retaining Bolts	35-47	4.8-6.5	48-64	35-47	4.8-6.5	48-64
Hydraulic Piston Pump Cover Bolts	35-40	4.8-5.5	48-54	—	—	—
Hydraulic Piston Pump Drive Housing Bolts	35-40	4.8-5.5	48-54	—	—	—
Hydraulic Piston Pump Shaft Nut	25-35	3.5-4.8	34-48	—	—	—
Lift Cylinder Safety Valve	45-55	6.2-7.6	61-75	75-90	10.4-12.4	102-122
Engine Mounted Gear Pump to Engine Retaining Bolts	25-35	3.5-4.8	34-48	—	—	—
Hydraulic Gear Pump to Transmission Housing Retaining Bolts	—	—	—	43-57	5.9-7.9	58-77
Hydraulic Gear Type Pump Through Bolts	35-40	4.8-5.5	48-54	35-40	4.8-5.5	48-54

Ford 5600, 6600 and 7600

	Ft lbf	*Mkg*	*Nm*
Lift Cylinder Retaining Bolts	165-200	23-28	224-271
Lift Cover Retaining Bolts	100-125	14.0-17.5	135-169
Accessory Cover to Lift Cover Bolts	42-56	5.8-7.7	57-76
Centre Bolt	15-21	2.1-2.9	20-29
Quadrant Assembly to Lift Cover Housing Bolts	42-56	5.8-7.7	57-76
Hydraulic Pump to Rear Axle Centre Housing Retaining Bolts	43-57	5.9-7.9	58-77
Front and Rear Control Valve Retaining Plate Bolts	27-37	3.7-5.1	37-50
Position Control Rod Nut	15-20	2.1-2.8	20-27
Draft Control Nut Set Screw	20-25	2.8-3.5	27-34
Lift Cylinder Safety Valve	75-90	10.4-12.4	102-122
Oil Filter Spacer Set Screw	4-6	0.6-0.8	5.4-8.1
Lift Cylinder to Oil Cooler Valve Transfer Tube	25-30	3.5-4.2	34-41
Transfer Tube Cap Nut	20-25	2.8-4.0	27-34
Oil Cooler Valve Assembly Retaining Plate Bolts	7-11	1.0-1.5	9.5-15.0
Oil Cooler Valve to Dump Pipe Nut	40-50	5.5-6.9	54-68
Oil Cooler Valve Dump Pipe (Internal) to Elbow Retaining Nut	20-30	2.8-4.2	27-41
Supply Passage Socket Headed Plug	20-25	2.8-3.5	27-34
Hydraulic Lift Filler Plug	35-40	4.8-5.5	47-54

FORD 2600, 3600, 4100 & 4600

TABLE 1
UNLOAD VALVE BUSHING SIZES

(ins)	(mm)	
1.0016	25.441	
1.0014	25.436	Red/White
1.0014	25.436	
1.0012	25.431	Green/White
1.0012	25.431	
1.0010	25.425	Orange
1.0010	25.425	
1.0008	25.420	Green
1.0008	25.420	
1.0006	25.415	Yellow
1.0006	25.415	
1.0004	25.410	Blue
1.0004	25.410	
1.0002	25.405	White
1.0002	25.405	
1.0000	25.400	Blue/White

TABLE 2
FEATHERING VALVE BUSHING SIZES

(ins)	(mm)	
1.0014	25.436	
1.0012	25.431	Green/White
1.0012	25.431	
1.0010	25.425	Orange
1.0010	25.425	
1.0008	25.420	Green
1.0008	25.420	
1.0006	25.415	Yellow
1.0006	25.415	
1.0004	25.410	Blue
1.0004	25.410	
1.0002	25.405	White
1.0002	25.405	
1.0000	25.400	Blue/White

TABLE 3
CONTROL VALVE BUSHING SIZES

(ins)	(mm)	
1.0014	25.436	
1.0012	25.431	Green/White
1.0012	25.431	
1.0010	25.425	Orange
1.0010	25.425	
1.0008	25.420	Green
1.0008	25.420	
1.0006	25.415	Yellow
1.0006	25.415	
1.0004	25.410	Blue
1.0004	25.410	
1.0002	25.405	White
1.0002	25.405	
1.0000	25.400	Blue/White

TABLE 4
CONTROL VALVE SIZES

(ins)	(mm)	
0.5928	15.057	
0.5927	15.055	Orange
0.5926	15.052	
0.5925	15.050	Green
0.5923	15.044	
0.5921	15.039	Yellow
0.5921	15.039	
0.5919	15.034	Blue
0.5919	15.034	
0.5917	15.029	White

 © FORD MOTOR COMPANY, 1975

FORD 5600, 6600 & 7600

TABLE 1 – BY-PASS VALVE SIZES

(ins)	(mm)	
0.6680	16.9672	
0.6678	16.9621	Green
0.6678	16.9621	
0.6676	16.9570	Yellow
0.6676	16.9570	
0.6674	16.9520	Blue
0.6674	16.9520	
0.6672	16.9469	White
0.6672	16.9469	
0.6670	16.9418	Blue/White

TABLE 2 – UNLOAD VALVE BUSHINGS

(ins)	(mm)	
1.0016	25.441	
1.0014	25.436	Red/White
1.0014	25.436	
1.0012	25.431	Green/White
1.0012	25.431	
1.0010	25.425	Orange
1.0010	25.425	
1.0008	25.420	Green
1.0008	25.420	
1.0006	25.415	Yellow
1.0006	24.415	
1.0004	25.410	Blue
1.0004	25.410	
1.0002	25.405	White
1.0002	25.405	
1.0000	25.400	Blue/White

TABLE 3 – UNLOAD VALVE PLUG GRADES

(ins)	(mm)	
1.0016	25.441	
1.0014	25.436	Red/White
1.0014	25.436	
1.0012	25.431	Green/White
1.0012	25.431	
1.0010	25.425	Orange
1.0010	25.425	
1.0008	25.420	Green
1.0008	25.420	
1.0006	25.415	Yellow
1.0006	25.415	
1.0004	25.410	Blue
1.0004	25.410	
1.0002	25.405	White
1.0002	25.405	
1.0000	25.400	Blue/White

TABLE 4 – CONTROL VALVE BUSHING SIZES

(ins)	(mm)	
1.0012	25.431	
1.0010	25.425	Orange
1.0010	25.425	
1.0008	25.420	Green
1.0008	25.420	
1.0006	25.415	Yellow
1.0006	25.415	
1.0004	25.410	Blue
1.0004	25.410	
1.0002	25.405	White

TABLE 5 – CONTROL VALVE SIZES					
(ins)	(mm)		(ins)	(mm)	
0.5928	15.057		0.5921	15.039	
0.5927	15.055	Orange	0.5919	15.034	Blue
0.5926	15.052		0.5919	15.034	
0.5925	15.050	Green	0.5917	15.029	White
0.5923	15.044				
0.5921	15.039	Yellow			

REAR AXLE AND HYDRAULIC OIL

OIL CAPACITY

		Ford 2600	*Ford 3600*	*Ford 4100*	*Ford 4600*	*Ford 5600*	*Ford 6600*	*Ford 7600*
Live P.T.O.	Imp Qts	20.5	20.5	—	—	—	—	—
	U.S. Qts	24.6	24.6	—	—	—	—	—
	(Litres)	(23.3)	(23.3)	—	—	—	—	—
Transmission P.T.O.	Imp Qts	20.5	20.5	—	—	—	—	—
	U.S. Qts	24.6	24.6	—	—	—	—	—
	(Litres)	(23.3)	(23.3)	—	—	—	—	—
Independent P.T.O.	Imp Qts	—	—	40.3	40.3	—	—	—
	U.S. Qts	—	—	48.4	48.4	—	—	—
	(Litres)	—	—	(45.7)	(45.7)	—	—	—
Transmission (Less Dual Power)	Imp Qts	—	—	—	—	10.0	—	—
	U.S. Qts	—	—	—	—	12.0	—	—
	(Litres)	—	—	—	—	(11.4)	—	—
*Rear Axle (Less Dual Power)	Imp Qts	—	—	—	—	35.5	—	—
	U.S. Qts	—	—	—	—	43.0	—	—
	(Litres)	—	—	—	—	(40.7)	—	—
*Transmission/Rear Axle (With Dual Power)	Imp Qts	—	—	—	—	46.3	—	—
	U.S. Qts	—	—	—	—	56.0	—	—
	(Litres)	—	—	—	—	(53.0)	—	—
*Transmission/Rear Axle (With or Less Dual Power)	Imp Qts	—	—	—	—	—	46.3	46.3
	U.S. Qts	—	—	—	—	—	56.0	56.0
	(Litres)	—	—	—	—	—	(53.0)	(53.0)

*With Two Speed P.T.O. installed, these oil capacities should be increased by 3.2 Imperial Quarts, 3.8 U.S. Quarts (3.6 Litres).

LUBRICANTS

Ford Specification	Ford M2C134-A Ford M2C86-A
General Specification	SAE 80 E.P. SAE 20W/30

 © FORD MOTOR COMPANY, 1975

3. SPECIAL TOOLS

Tool No.	*Description*
SW2	Lifting Bracket
T.8518	Lifting Bracket
SW3	Setting Gauge
or SW508	Setting Gauge
SW28 or	Setting Gauge
6210	Setting Gauge
SW9	Seal Replacer
T.8503	Pressure Gauge
T.8503-1/b	Load Valve
T.8503-1/f	"Tee" Piece Adaptor
T.8503-1/g	Swivel Adaptor
T.8503-4/a	Thread Adaptor
T.8503-4/b	Thread Adaptor
T.8503-4/d	Hose Assembly
T.8503-7	Thread Adaptor

or

N-1100-3	Pressure Gauge
N-1100-C	Fitting
N-1100-G	Fitting
N-1100-H	Adaptor
N-1100-J	Hose Assembly
N-1100-L	"Tee" Fitting
N-1100-N	Load Valve
N-1100-P	Fitting
N-1100-Q	Hose Assembly
6211	Fitting

Tool No.	*Description*
T.8510	Bushing and Plug Remover and Replacer
T.8510-1/a	Extension
T.8510-1/b	Extension
T.8510-1C/3	Special Nut
T.8510-1/g	Extension
T.8510-1/h	Special Nut
T.8510-1/k	Guide and Stop Adaptor
T.8510-1B/n	Adaptor

or

N-508-A	Bushing Remover and Replacer
T.8511	Check Valve Seat Replacer

or

NCA.997	Check Valve Seat Remover and Replacer
NCA.997-A	Adaptor
N-881-B	Needle Bearing Replacer
N-881-C	Oil Seal Replacer
NCA.600G	Seat Remover
NCA.600EA	Seat Replacer
1003	Puller-Single End Arm (Large)
951	Pulling Attachment (small)
625-6	Shaft Protector
943	Internal/External Pulling Attachment
943-S	Slide Hammer
630-3	Step Plate Adaptor
630-11	Step Plate Adaptor
SW27 or	Bushing Locator Tool
6209	Bushing Locator Tool

Part 11

HYDRAULIC SYSTEMS

Chapter 11

TROUBLE SHOOTING, SPECIFICATIONS AND SPECIAL TOOLS — FORD 2600, 3600, 4100, 4600, 5600, 6600 & 7600 TRACTORS

Section		*Page*
1.	Trouble Shooting	1
2.	Specifications	6
3.	Special Tools	12

1. TROUBLE SHOOTING

The most important factor to consider in hydraulic system trouble shooting is verification of the problem by observing the operation of the system.

To assist in the diagnosis of the fault determine under which of the following headings the problem may be classified:

(*a*) Failure to Lift.

(*b*) Slow Lift or Failure to Lift under Load.

(*c*) Lift and No Drop.

(*d*) Lift with Control Lever in Lower or Neutral but Drops when Engine Stopped and Control Lever in Lower.

(*e*) Implement Lifts but Drops when Control Lever in Neutral or Raise Position.

Appropriate fault finding procedure charts are provided in the following pages but, before attempting to diagnose a fault in the hydraulic system, conduct certain preliminary checks as follows:

1. Ensure the Auxiliary Services Control valve is pushed fully in.

2. Check external linkage is free from obstruction.

3. Ensure the hydraulic oil in the rear axle is of the correct grade and quantity.

4. Ensure the hydraulic piston type pump (where fitted) is primed.

5. Attempt to lift in Position Control.

6. Attempt to lift in Draft Control.

NOTE – If the problem occurs in Position Control but not in Draft Control (or vice-versa) an internal linkage fault is indicated.

The fault finding procedure charts follow a logical sequence of operations to facilitate fault diagnosis with the minimum amount of work and duplication.

FAULT FINDING PROCEDURE

NOTE – An Auxiliary Service Selector Valve must be installed for diagnosis of certain hydraulic system faults on Ford 2600, 3600, 4100 and 4600 models.

1. Attach suitable weights or an implement to the lift arms.

2. Start the engine and set at 1650 rev/min.

3. Select Draft Control and move the lift control lever to the top of the quadrant.

4. Adjust the Flow Control knob (where fitted) to give the maximum flow.

5. Observe and diagnose the operation of the hydraulic system according to the instructions shown on the appropriate chart.

Printed in U.K. 8/75 © FORD MOTOR COMPANY, 1975

(*a*)

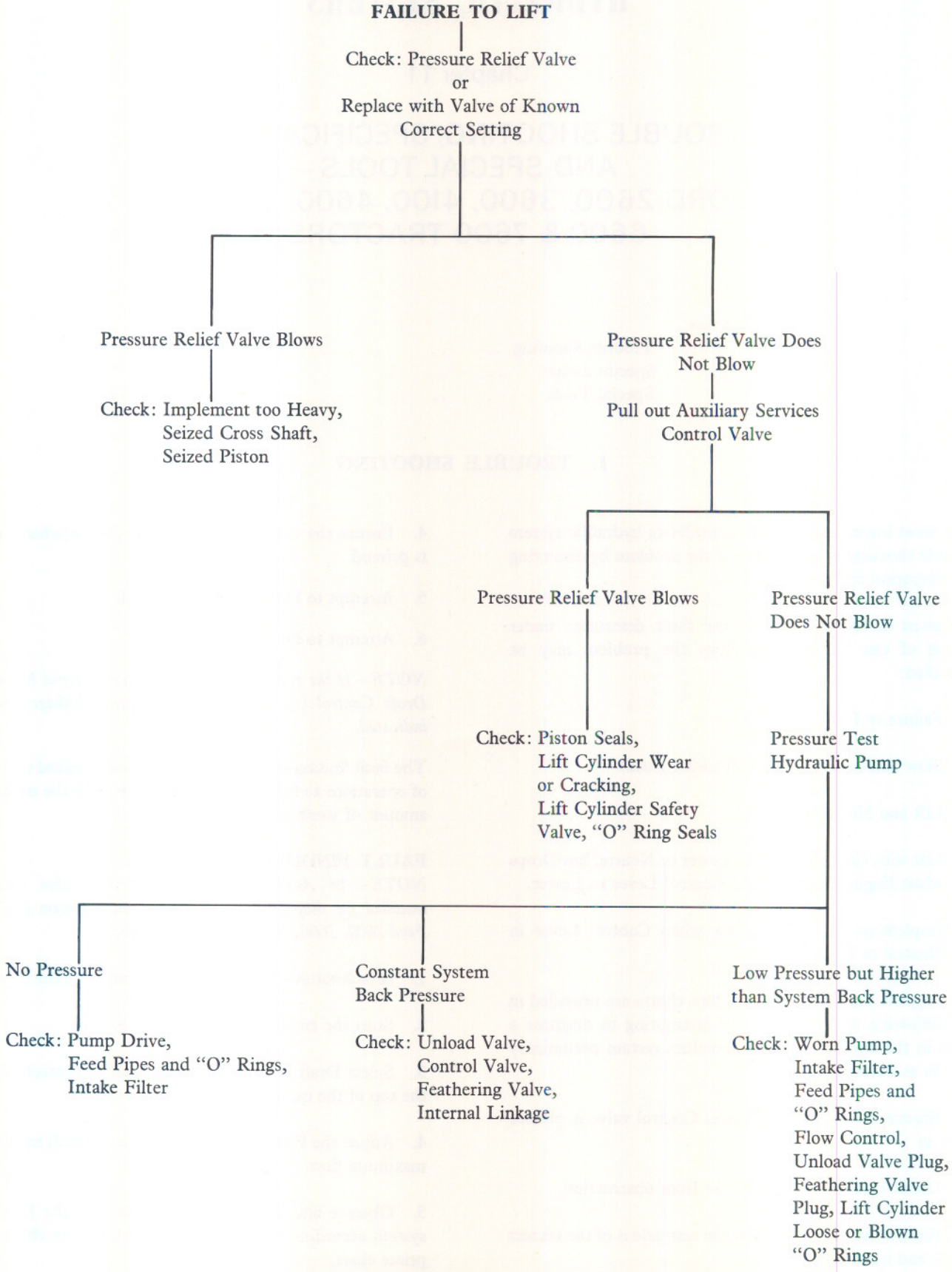
FAILURE TO LIFT
Check: Pressure Relief Valve
or
Replace with Valve of Known
Correct Setting
Pressure Relief Valve Blows
Check: Implement too Heavy,
Seized Cross Shaft,
Seized Piston
Pressure Relief Valve Does
Not Blow
Pull out Auxiliary Services
Control Valve
Pressure Relief Valve Blows
Check: Piston Seals,
Lift Cylinder Wear
or Cracking,
Lift Cylinder Safety
Valve, "O" Ring Seals
Pressure Relief Valve
Does Not Blow
Pressure Test
Hydraulic Pump
No Pressure
Check: Pump Drive,
Feed Pipes and "O" Rings,
Intake Filter
Constant System
Back Pressure
Check: Unload Valve,
Control Valve,
Feathering Valve,
Internal Linkage
Low Pressure but Higher
than System Back Pressure
Check: Worn Pump,
Intake Filter,
Feed Pipes and
"O" Rings,
Flow Control,
Unload Valve Plug,
Feathering Valve
Plug, Lift Cylinder
Loose or Blown
"O" Rings

(*b*)

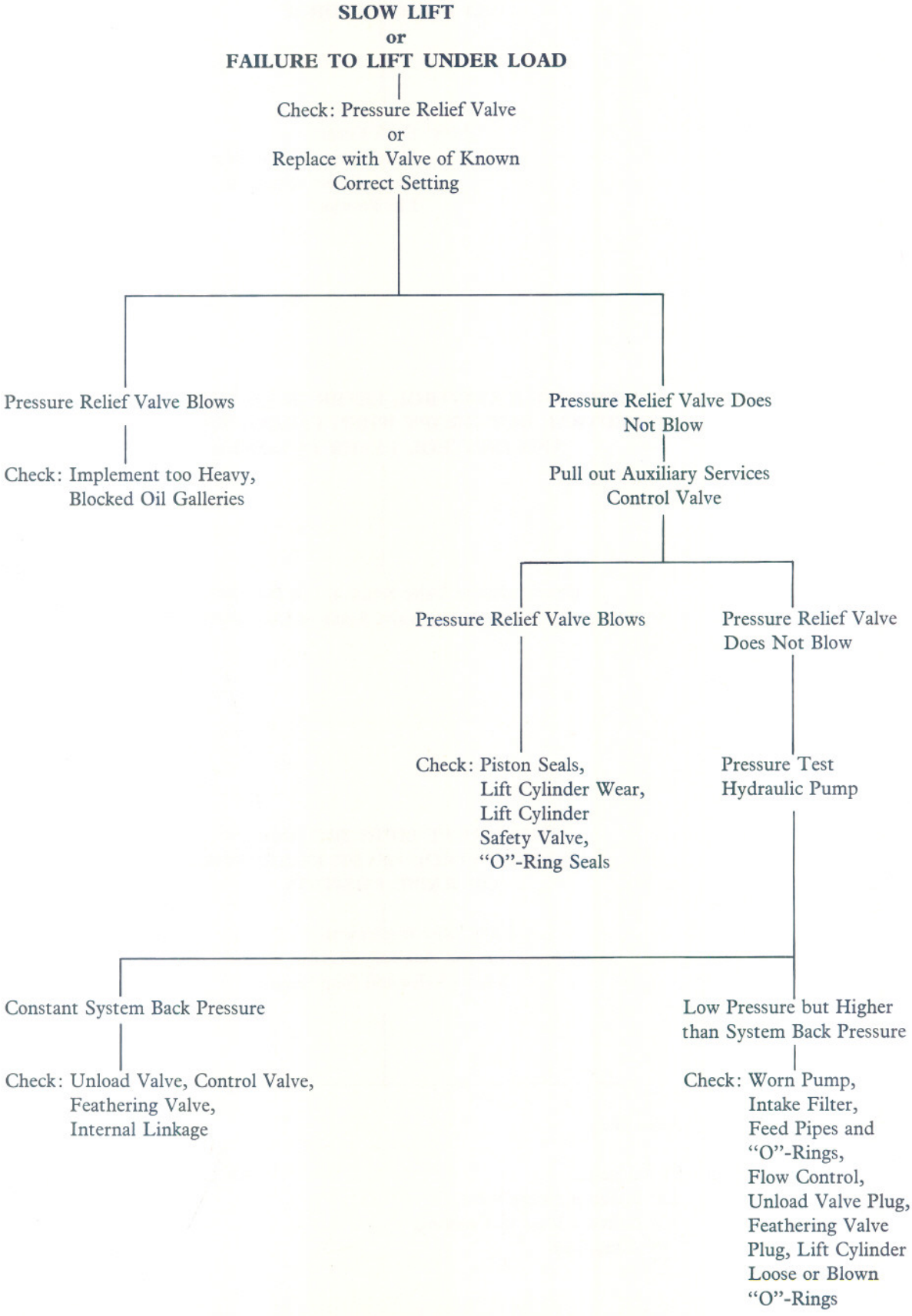

 © FORD MOTOR COMPANY, 1975

(*c*)

LIFT AND NO DROP

Check: Draft Control
Main Spring Adjustment,
Control Valve Stuck in
Lift Position

(*d*)

LIFT WITH CONTROL LEVER IN LOWER OR NEUTRAL BUT DROPS WHEN ENGINE STOPPED AND CONTROL LEVER IN LOWER

Check: Unload Valve Stuck in Lift Position,
Feathering Valve Stuck in Lift Position

(*e*)

IMPLEMENT LIFTS BUT DROPS WHEN CONTROL LEVER IN NEUTRAL OR RAISE POSITION

Fully Raise Implement,
Pull Out Auxiliary Services
Control Valve and Stop Engine

Lift Arms Drop

Check: Piston Seals,
Lift Cylinder Safety Valve,
Lift Cylinder Wear or Cracking,
"O"-Ring Seals

Lift Arms Hold

Check: Check Valve and Seat,
Unload Valve Plug,
Feathering Valve Plug,
Control Valve,
Feathering Valve,
"O"-Ring Seals